RUTHZIL TRATOR COMERCIAL DE PEÇAS LTDA 11 97083-6812 ROLANDO CITRANGULO

LIEBHERR

Catalog
Catálogo

R 944 C-LC 1446 47788

Important for spare parts orders!

Check delivery documentation for machine details.

Required information for spare parts orders:
Spare parts orders can only be completed quickly and correctly if the order contains the following data.

- Type (see data tag)
- Machine S/N (see data tag)
- Article number, description and quantity of the desired part.
  - If a manufacturer's number for the part is entered in your spare parts list, for example [2003 28 0481], then it must be noted on the order.
  - When ordering spare parts for engines, the Diesel engine serial number must be noted. This serial number can be found on the data tag of the Diesel engine.
- Type of delivery and exact delivery address.
  - Please confirm phone orders in writing.

Note
- Technical detail changes compared to the data and illustrations in available documentation are reserved.
- Parts not listed are not spare parts!

Information for spare parts page

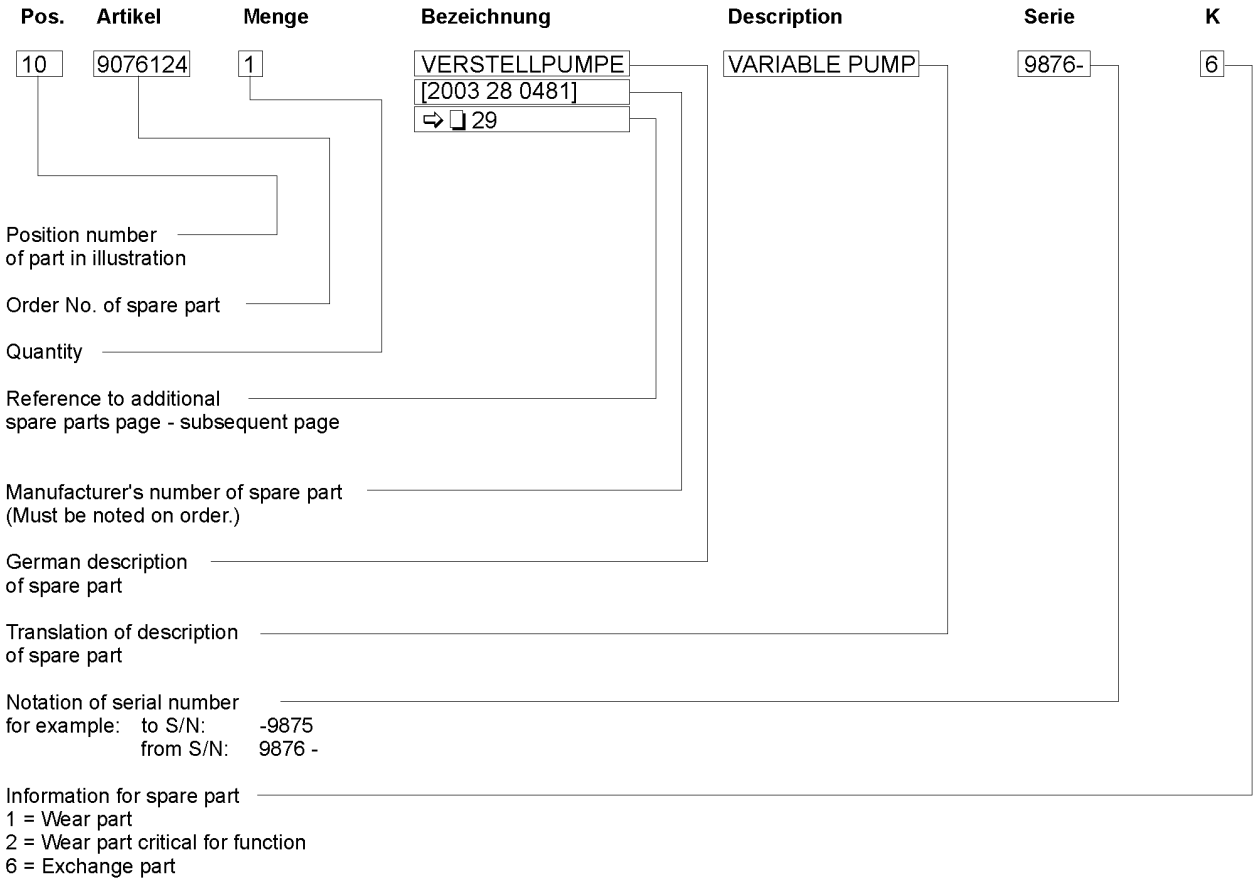

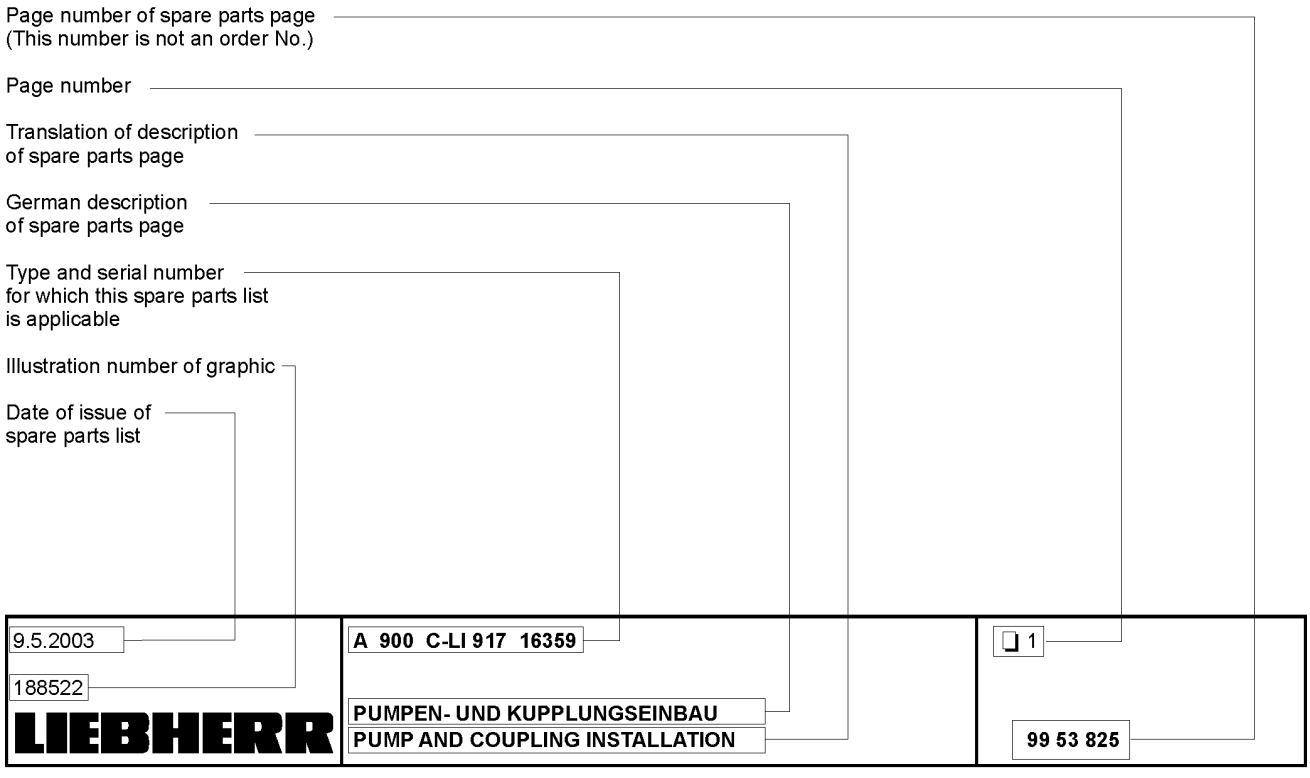

Informação importante para os pedidos de peças de reposição

Informações necessárias para pedidos de peças de reposição:

Os pedidos só poderão ser processados corretamente se tiverem os seguintes dados:

- Tipo da máquina (ver dados da placa de identificação do equipamento).
- Número de identificação do equipamento (ver dados da placa de identificação do equipamento).
- Código de referência, descrição e quantidade da peça que será comprada.
  Se no seu catálogo de peças tiver um número de série junto à peça por exemplo, [083239201] , então este número deverá ser indicado ao fazer o pedido.
  Quando encomendar peças de reposição para motores, o número de série do motor diesel deverá ser indicado. Dados sobre o número de série do motor diesel podem ser encontrados na placa de identificação que acompanha o componente.
- Tipo de entrega e endereço exato para o envio do pedido.
  Solicitamos a confirmação por escrito dos pedidos realizados por telefone.

Nota
- A Liebherr reserva-se o direito de alterar detalhes técnicos dos dados e figuras da documentação disponível.
- Peças não listadas no catálogo de peças não são consideradas peças de reposição.

Informações sobre a folha de peças de reposição

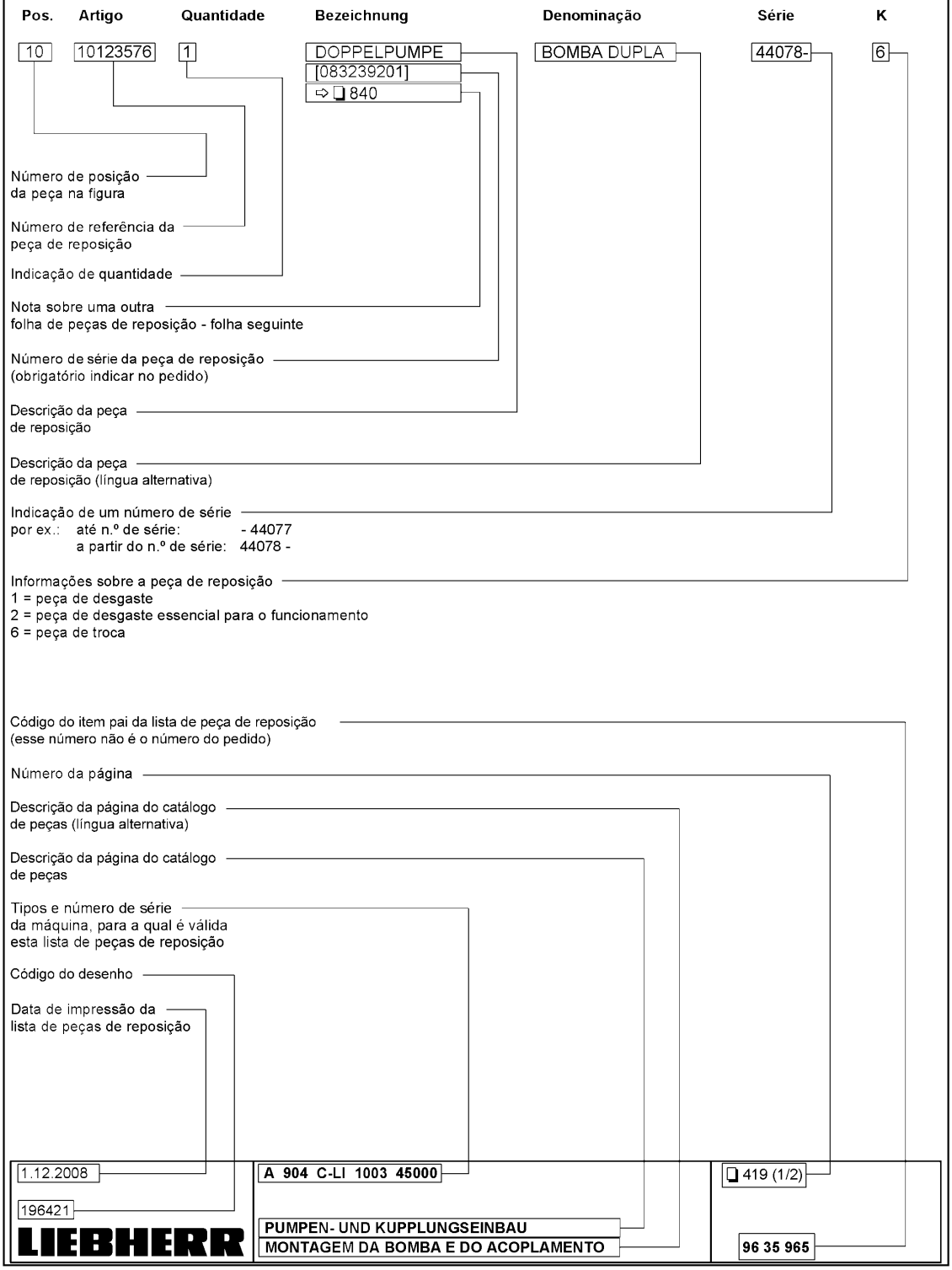

Pos.	Item	Quantity	Description	Designação	Serie	K
10	10498851	1	BASIC MACHINE ⇨ ❑ 13	MÁQUINA BASE		
20	11161081	2	TRACK CHAIN LUBRICATED 500mm ⇨ ❑ 81	ESTEIRA		1
30	11102911	1	HOIST CYLINDERS ⇨ ❑ 750	CILINDRO DE ELEVACAO		
46	10358602	1	TRAVEL ALARM ⇨ ❑ 749	ALARME DE TRANSLACAO		
47	10498878	1	CHANGE KIT TRACK D7 INTO D7G ⇨ ❑ 77	KIT MODIF. ESTEIRA D7 PARA D		
48	10498368	1	AIR PREFILTER O4 - KC 111 ⇨ ❑ 792	PRÉ-FILTRO DE AR		
50	10498331	1	FIRE EXTINGUISHER ⇨ ❑ 790	EXTINTOR DE INCÊNDIO		
55	11102652	1	PREMOUNTING F.RADIO ⇨ ❑ 784	INSTALAÇÃO P/ RÁDIO		
56	11346626	1	CAR RADIO	RÁDIO		
65	11102813	1	KIT IN BASIC MACHINE ⇨ ❑ 755	KIT MÁQUINA BASE		
66	11102814	1	KIT GOOSENECK BOOM 6.45M ⇨ ❑ 715	KIT MONOBLOCO		
67	11102815	1	KIT STICK 2.10M ⇨ ❑ 724	KIT DE ATUALIZAÇÃO		
70	10498467	1	ADDNL. FLOODLIGHT ⇨ ❑ 782	FAROL ADICIONAL		
100	11102946	1	GOOSENECK BOOM 6,45M ⇨ ❑ 714	LANÇA MONOBLOCO		
120	10825621	1	OPT.DATA CAPTURE-DATA TRANSFER ⇨ ❑ 785	JC LEVANTAMENTO DADOS-TRA		
121	10841184	1	MODIF.COMP.ELECTR. V4.58.3 ⇨ ❑ 787	MODIF. COMPONENTES ELÉTRI		
215	11102806	1	STICK 2,10M ⇨ ❑ 723	BRAÇO DA CAÇAMBA		
216	10072157	1	PROTECTION F.STICK 2,10M	PROTECAO CINTA INFERIOR P/		
232	11102585	1	BACKHOE BUCKET HD ⇨ ❑ 734	CAÇAMBA RETRO HD		
233	11102590	5	TOOTH Z50CL ⇨ ❑ 781	DENTE		
300	11102616	1	PAINTING	PINTURA		
310	11363764	1	LABEL KIT ⇨ ❑ 794	KIT DE ADESIVOS		
910	11363764	1	LABEL KIT ⇨ ❑ 794	KIT DE ADESIVOS		
911	510160916	1	HAND PUMP	BOMBA MANUAL		

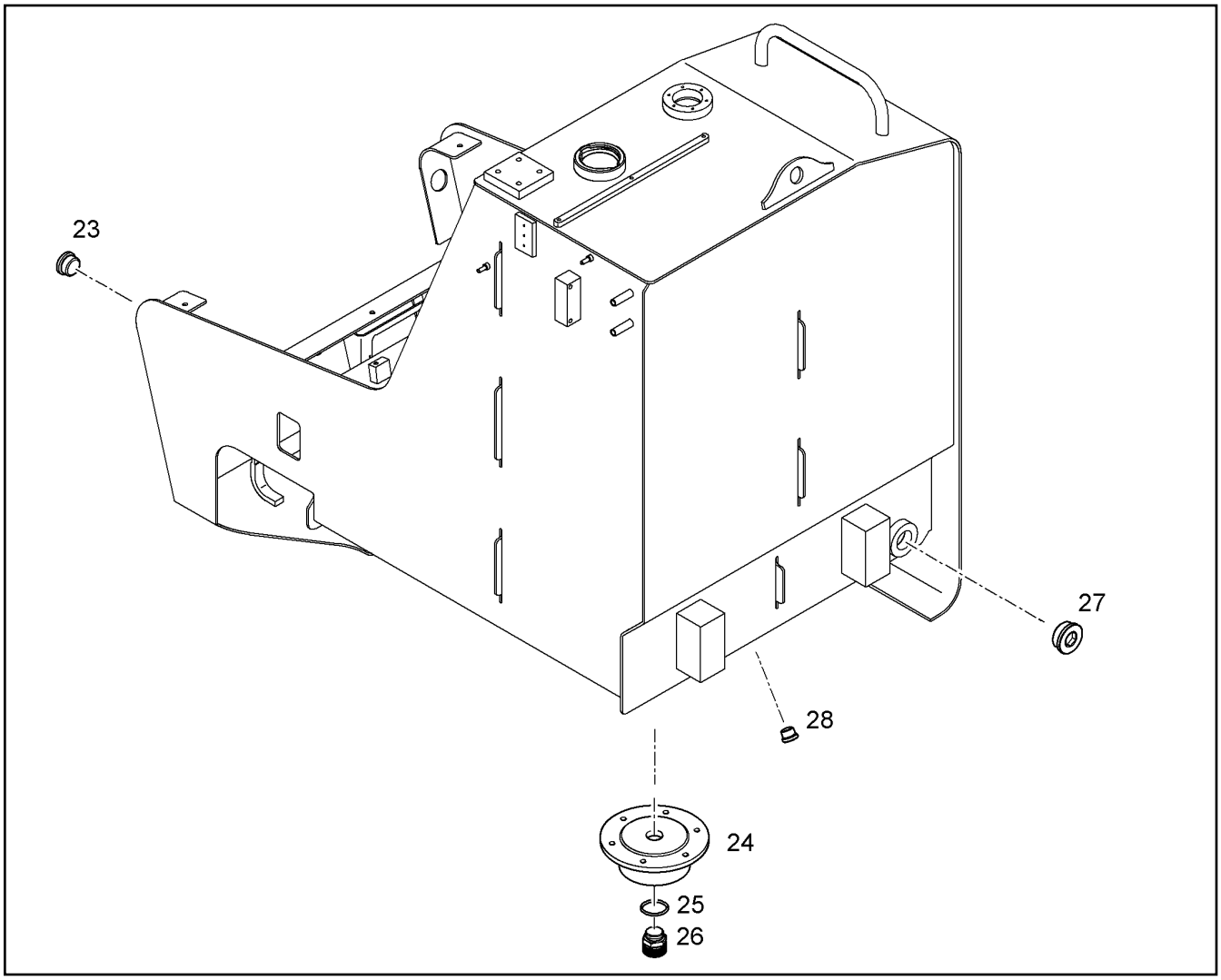

Pos.	Item	Quantity	Description	Designação	Serie	K
23	7363717	1	SCREW PLUG G1A	PARAFUSO DE FECHAMENTO		
24	10067706	1	COVER	TAMPA		
25	7101021	1	SEALING RING DIN 7603 A 30X36X2	ANEL DE VEDAÇÃO		
26	5004624	1	OIL DRAIN PLUG M 30 1,5 ⇨ ❑ 577	PARAFUSO DE DRENAGEM DE Ó		
27	7363177	1	SCREW PLUG M48X2 ED	PARAFUSO DE FECHAMENTO		
28	10137075	1	SCREW PLUG VSTI M22X1,5	PARAFUSO DE FECHAMENTO		

Pos.	Item	Quantity	Description	Designação	Serie	K
2	10045530	1	WORK LIGHT ⇨ ❑ 517	FAROL DE TRABALHO		
5	6200685	1	LIGHT BULB H3 24V 70W/PK22S	LÂMPADA INCANDESCENTE		
7	10075063	1	WIRING HARNESS HEAD LIGHT X179-E2	CHICOTE ELETRICO FAROL		
8	10037727	11	CLAMP HRBGS 0A G 11 TPE73	BRAÇADEIRA		
9	10037723	11	BRACKET	ESTRIBO		
10	10651864	11	SOCKET HEAD SCREW ISO 4762 M6X10 10	PARAFUSO CILÍNDRICO		

Pos.	Item	Quantity	Description	Designação	Serie	K
10	10060146	1	HYDR.INSTAL.FOOT BOARD ⇨ ❑ 269	INTALAÇ HIDR PEDAIS DE COM		
20	11383427	1	HYDR.INSTAL.ARM REST LEFT ⇨ ❑ 267	INST. HIDR. MANETE ESQUERD		
30	11383429	1	HYDR.INSTAL.ARM REST RIGHT ⇨ ❑ 268	INST. HIDRAULICA DA MANETE		
50	12861404	1	FIXING PARTS	PECAS DE FIXACAO		
60	10071611	1	INSCRIPTION TAPE ⇨ ❑ 270	FITA DE IDENTIFICAÇÃO		

Pos.	Item	Quantity	Description	Designação	Serie	K
10	9950385	1	HOLDER	SUPORTE		
11	9950358	1	DISTANCE SLEEVE 15X20X19	LUVA DISTANCIADORA		1
12	10299659	1	SOCKET HEAD SCREW ISO 4762 M10X40 10	PARAFUSO CILÍNDRICO		
13	10289795	1	WASHER 10 300HV	ARRUELA		
20	10079307	1	HOLDER	SUPORTE		
21	11002747	1	SOCKET HEAD SCREW ISO 4762 M12X25 10	PARAFUSO CILÍNDRICO		
22	10289804	1	WASHER 12 300HV	ARRUELA		
30	9950357	1	HOLDER	SUPORTE		
31	11002747	1	SOCKET HEAD SCREW ISO 4762 M12X25 10	PARAFUSO CILÍNDRICO		
32	10289804	1	WASHER 12 300HV	ARRUELA		
50	7414232	3	CLAMP DIN 3016-1 D1 50X20 W1-2-CR	BRAÇADEIRA		
51	7412943	3	CLAMP DIN 3016-1 D1 40X20 W1-2-CR	BRAÇADEIRA		
52	7365080	1	CLAMP DIN 3016-1 D1 45X20 W1-2-CR	BRAÇADEIRA		
53	7362603	1	CLAMP DIN 3016-1 D1 15X20 W1-2-CR	BRAÇADEIRA		
55	12211820	5	DOUBLE-ENDED STUD DIN 939 M8X20 8.8 4	PARAFUSO PRISIONEIRO		
56	10289803	7	WASHER 8 300HV	ARRUELA		
57	10299669	7	HEX NUT M8	PORCA SEXTAVADA		

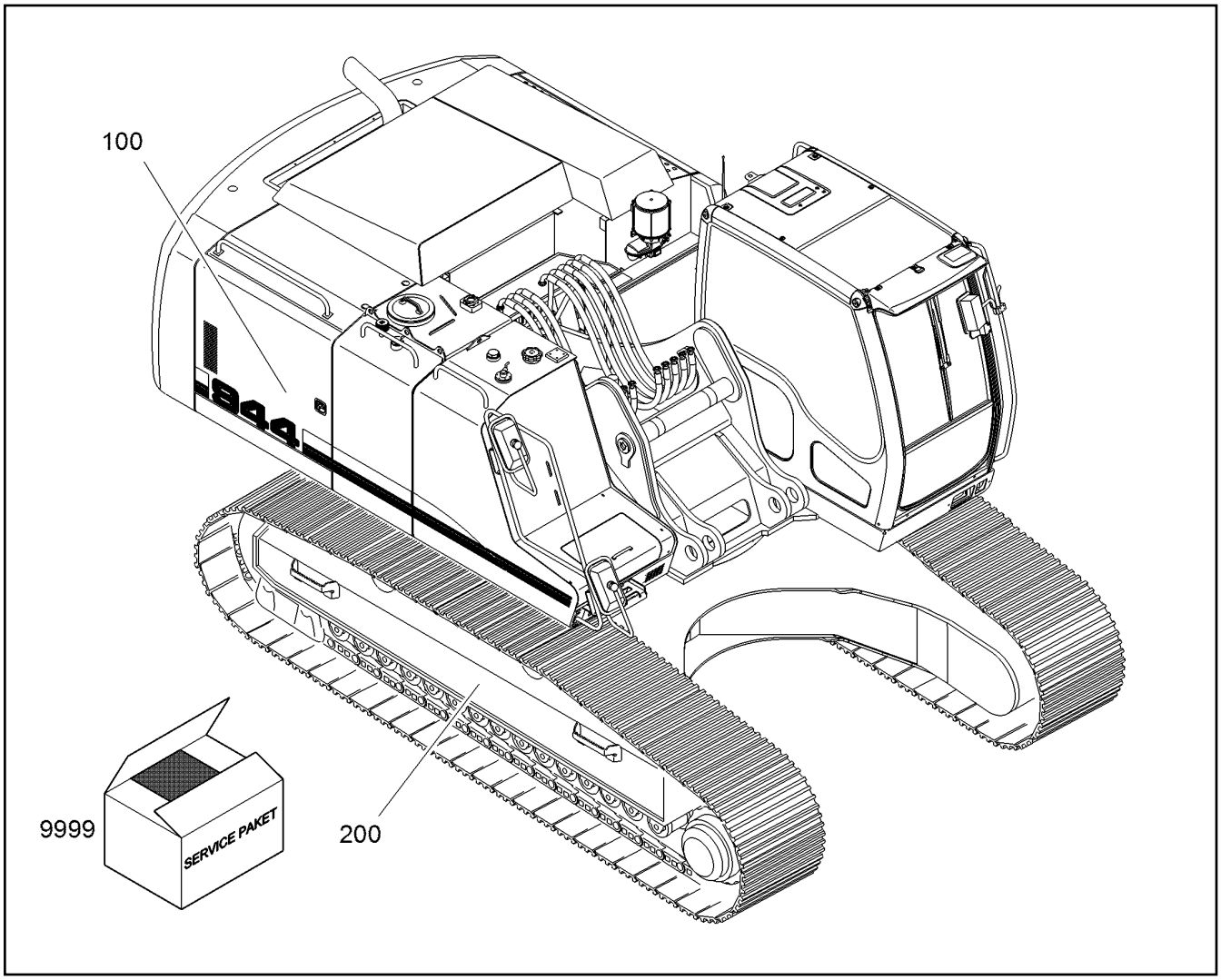

Pos.	Item	Quantity	Description	Designação	Serie	K
100		1	UPPERCARRIAGE ⇨ ❑ 123	CARRO SUPERIOR		
200		1	UNDERCARRIAGE CPL ⇨ ❑ 75	CARRO INFERIOR COMPLETO		
9999		1	SERVICE MATERIAL ⇨ ❑ 14	MATERIAL DE SERVIÇO		

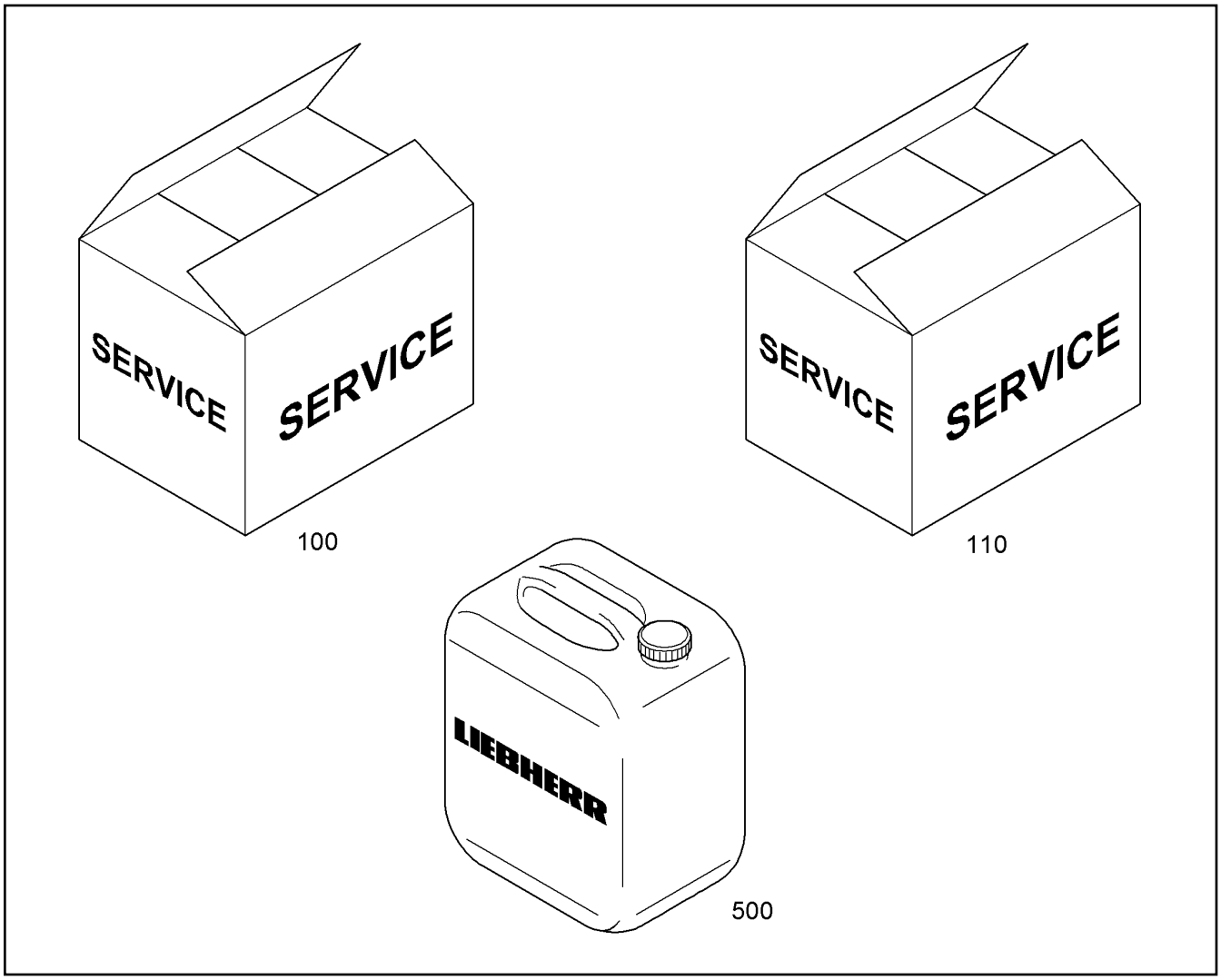

Pos.	Item	Quantity	Description	Designação	Serie	K
100		1	SERVICE KITS 0-2000h ⇨ ❑ 63	KIT DE MANUTENÇÃO		
110	10069940	1	SERVICE KIT FUEL FILTER ⇨ ❑ 126	KIT DE FILTRO DE COMBUSTÍVE		
500		1	TYPES OF LUBRICANTS ⇨ ❑ 15			

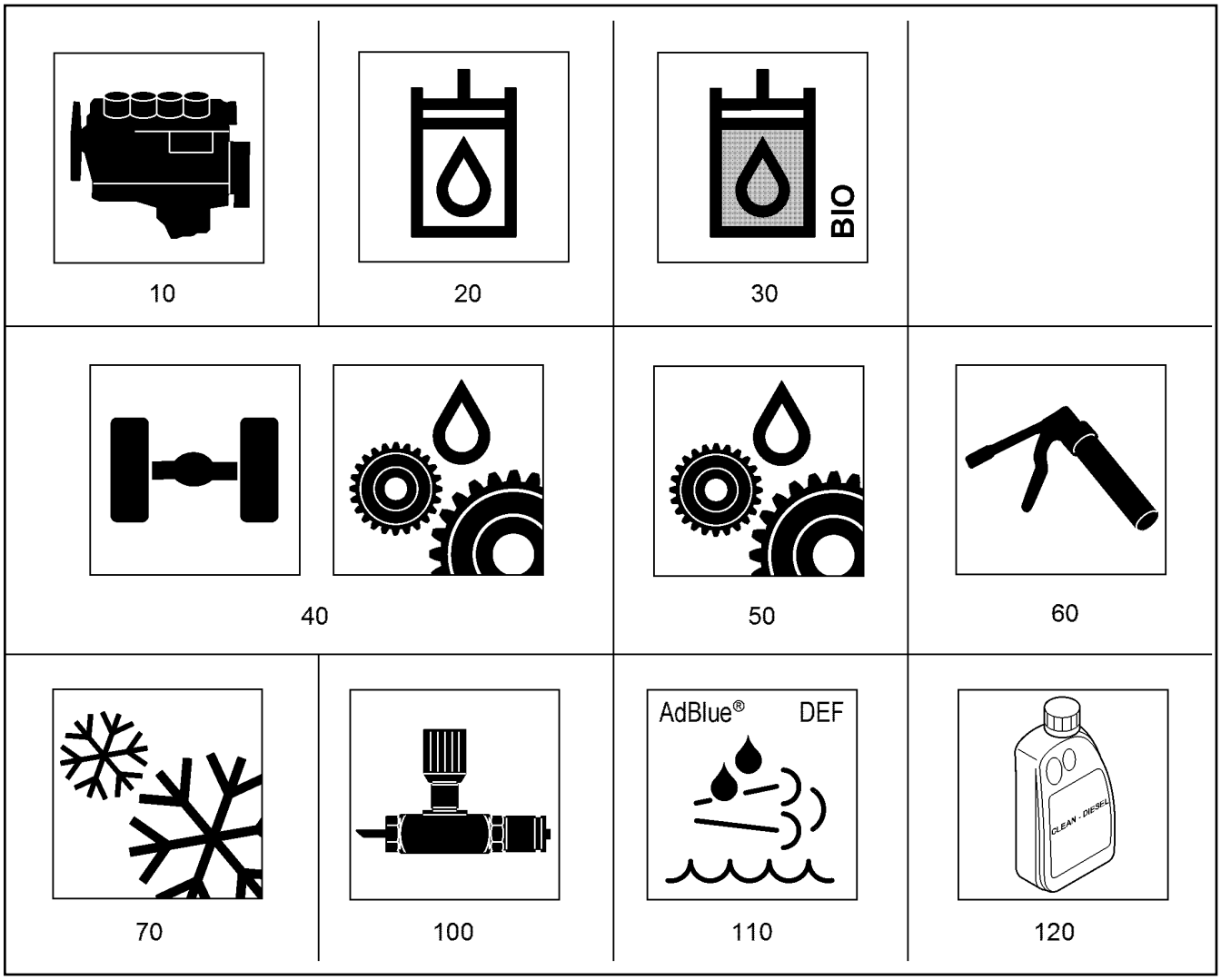

Pos.	Item	Quantity	Description	Designação	Serie	K
10		1	MOTOR OIL ⇨ ❑ 18	ÓLEO DE MOTOR		
20		1	HYDRAULIC OIL ⇨ ❑ 19	ÓLEO HIDRÁULICO		
30		1	BIODEGRADABLE HYDRAULIC-OIL ⇨ ❑ 20	ÓLEO HIDRÁULICO SUSTENTÁ		
40		1	AXLE AND GEAR-OIL ⇨ ❑ 21	OLEO PARA CAMBIO E EIXOS		
50		1	GEAR OIL ⇨ ❑ 22	ÓLEO DE TRANSMISSÃO		
60		1	GREASES ⇨ ❑ 23	LUBRIFICANTES		
70		1	COOLANT ⇨ ❑ 17	LIQUIDO DE ARREFECIMENTO		
100		1	ACCESSORIES ⇨ ❑ 51	ACESSÓRIOS		
110		1l	UREA SOLUTION ⇨ ❑ 54	SOLUÇÃO DE UREIA		
120		1	SATACEN DIESEL ADDITIVE ⇨ ❑ 59	ADITIVO PARA DIESEL		

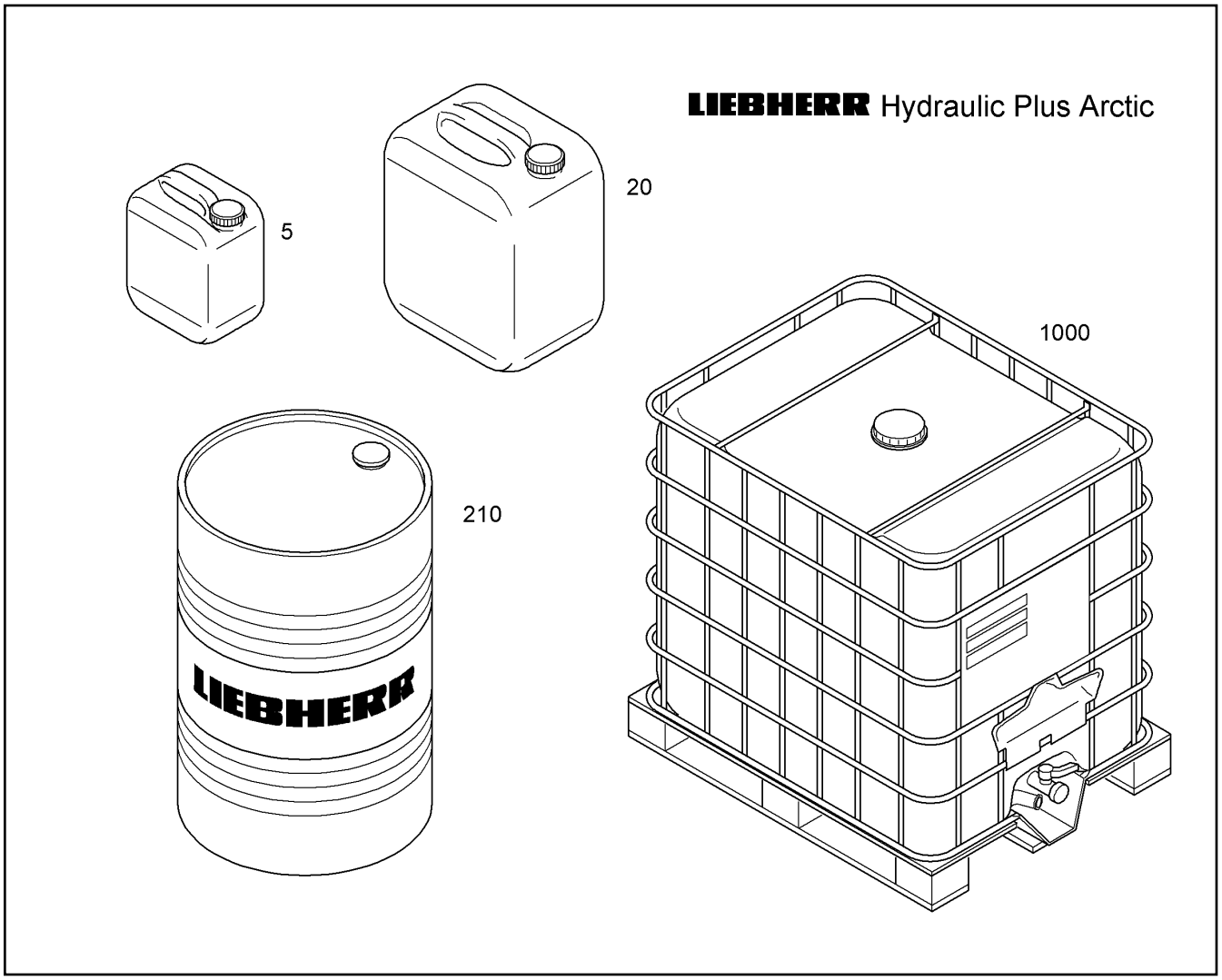

Pos.	Item	Quantity	Description	Designação	Serie	K
5	10296479	1	HYDRAULIC OIL LIEBHERR HYDRAUL. PLUS	ÓLEO HIDRÁULICO		
20	10330277	1	HYDRAULIC OIL LIEBHERR HYDRAUL. PLUS	ÓLEO HIDRÁULICO		
210	10330278	1	HYDRAULIC OIL LIEBHERR HYDRAUL. PLUS	ÓLEO HIDRÁULICO		
1000	10296478	1	HYDRAULIC OIL LIEBHERR HYDRAUL. PLUS	ÓLEO HIDRÁULICO		



Pos.	Item	Quantity	Description	Designação	Serie	K
100		1l	ANTICORROSION ANTIFREEZER ⇨ ❑ 57	LIQUIDO DE ARREFECIMENTO		

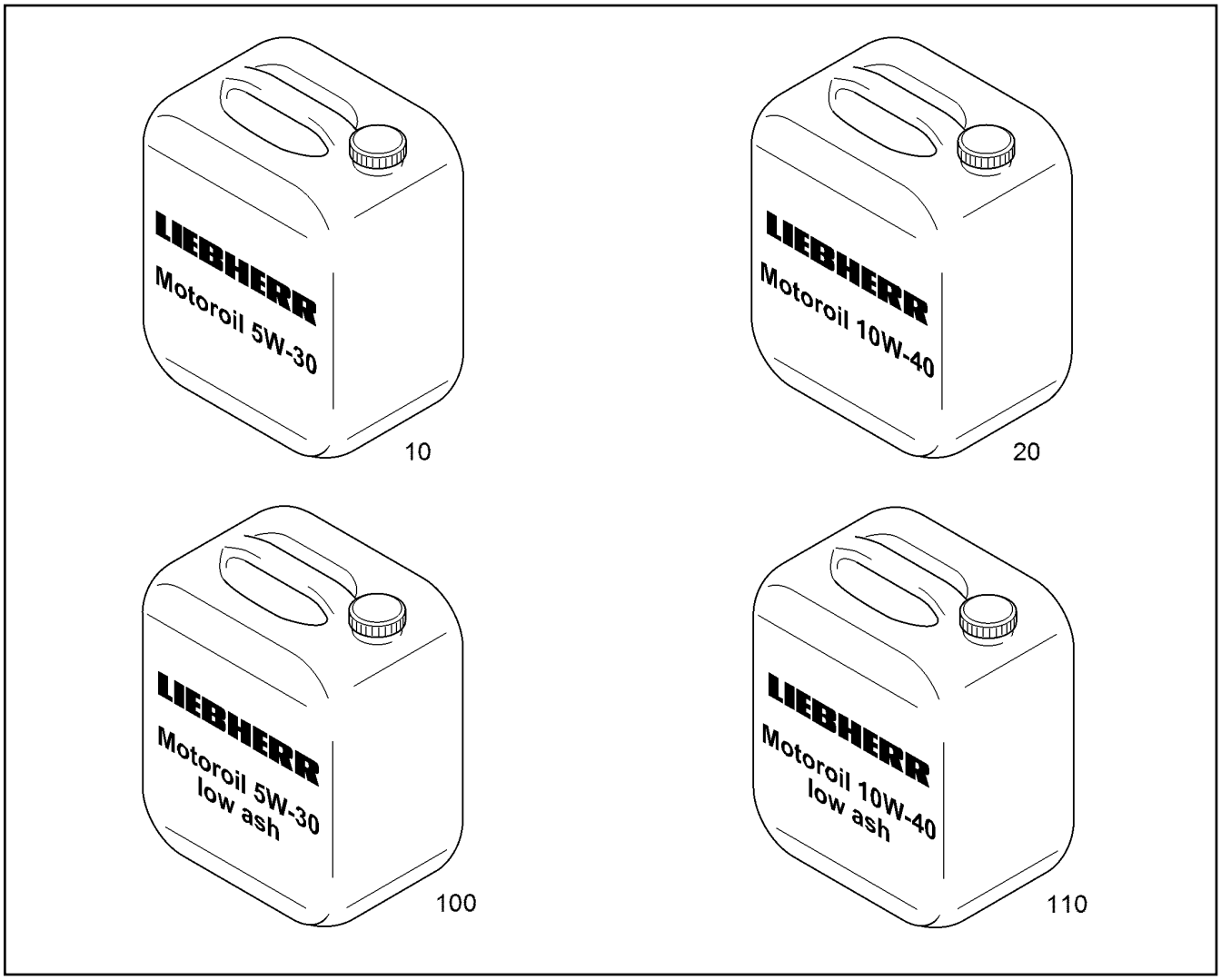

Pos.	Item	Quantity	Description	Designação	Serie	K
10		1l	ENGINE OIL LIEBHERR/5W-30 ⇨ ❑ 39	OLEO DE MOTOR		
20		1l	ENGINE OIL LIEBHERR/10W-40 ⇨ ❑ 26	OLEO DE MOTOR		
100		1l	ENGINE OIL LIEBHERR LOW ASH/5W-30 ⇨ ❑ 41	OLEO DE MOTOR		
110		1l	ENGINE OIL LIEBHERR LOW ASH/10W-40 ⇨ ❑ 27	OLEO DE MOTOR		

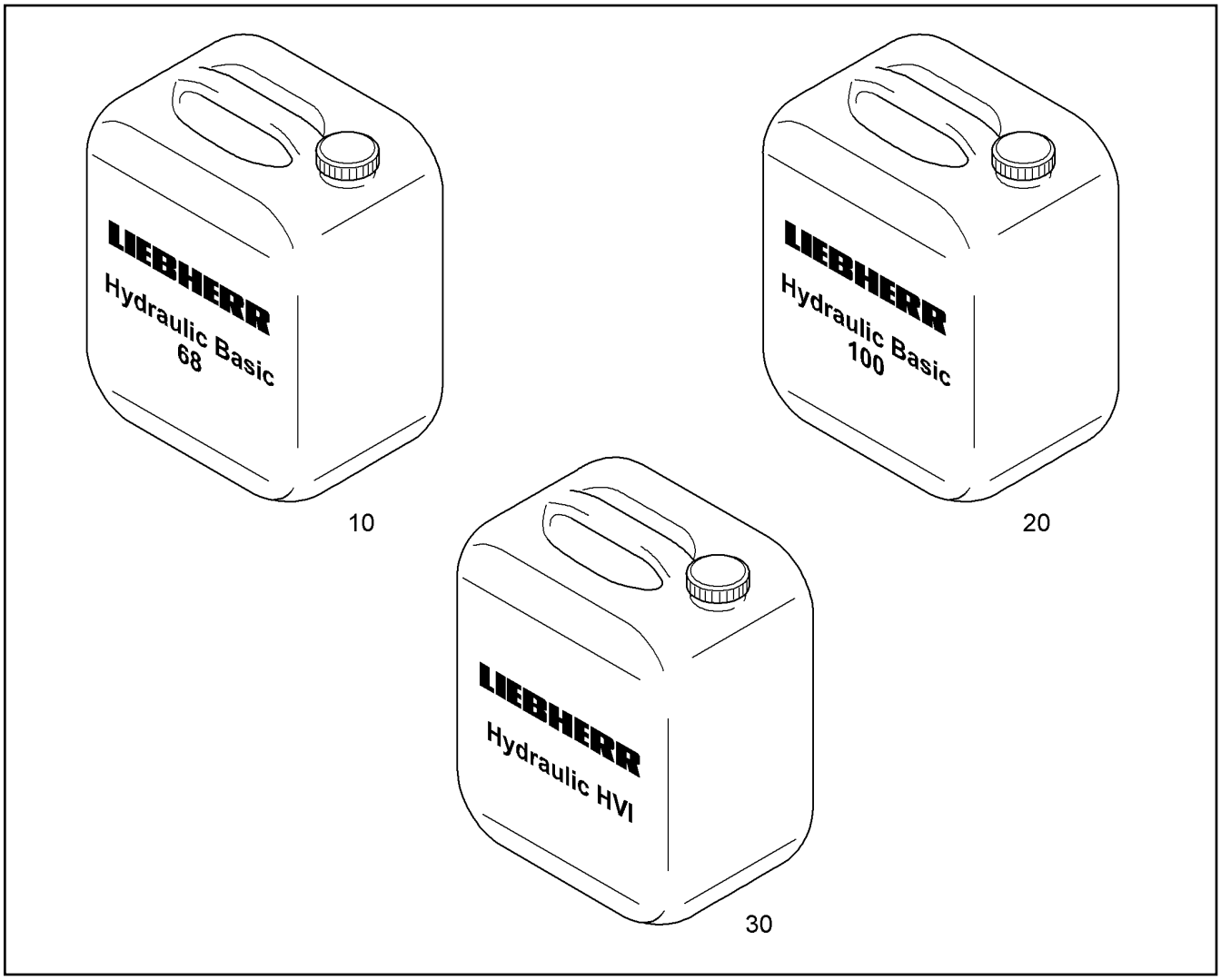

Pos.	Item	Quantity	Description	Designação	Serie	K
10		1l	HYDRAULIC OIL LIEBHERR/ISO VG 68 ⇨ ❑ 28	ÓLEO HIDRÁULICO		
20		1l	HYDRAULIC OIL LIEBHERR/ISO-VG 100 ⇨ ❑ 24	ÓLEO HIDRÁULICO		
30		1l	HYDRAULIC OIL LIEBHERR/ISO VG 46 ⇨ ❑ 25	ÓLEO HIDRÁULICO		

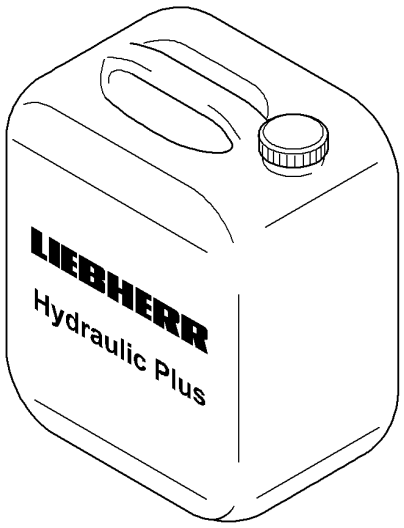

10

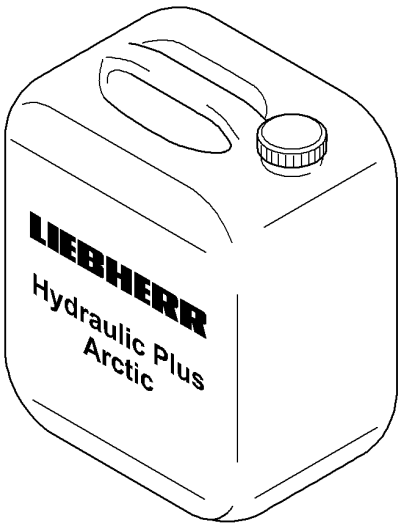

20

Pos.	Item	Quantity	Description	Designação	Serie	K
10		1l	HYDRAULIC OIL LIEBHERR/ISO-VG 46 ⇨ ❑ 66	ÓLEO HIDRÁULICO		
20		1l	HYDRAULIC OIL LIEBHERR/ISO VG 15-46 ⇨ ❑ 16	ÓLEO HIDRÁULICO		

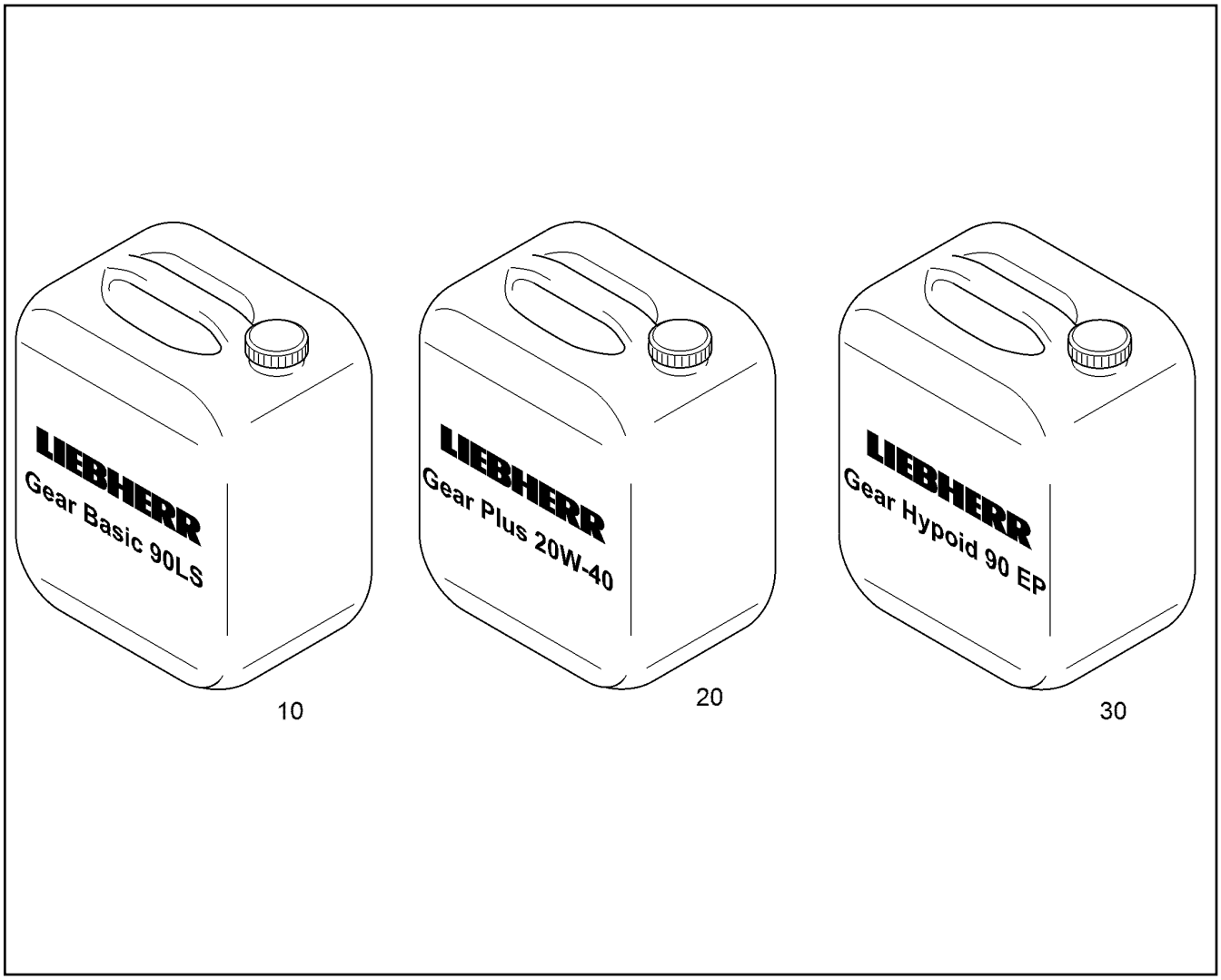

Pos.	Item	Quantity	Description	Designação	Serie	K
10		1l	AXLE AND GEAR-OIL LIEBHERR/85W-90 ⇨ ❑ 32	OLEO PARA CAMBIO E EIXOS		
20		1l	AXLE-OIL LIEBHERR/20W-40 ⇨ ❑ 33	ÓLEO DO EIXO		
30		1l	LIEBHERR TRANSMISSION OIL HYPOID90E ⇨ ❑ 40	ÓLEO TRANSMISSÃO LIEBHERR		

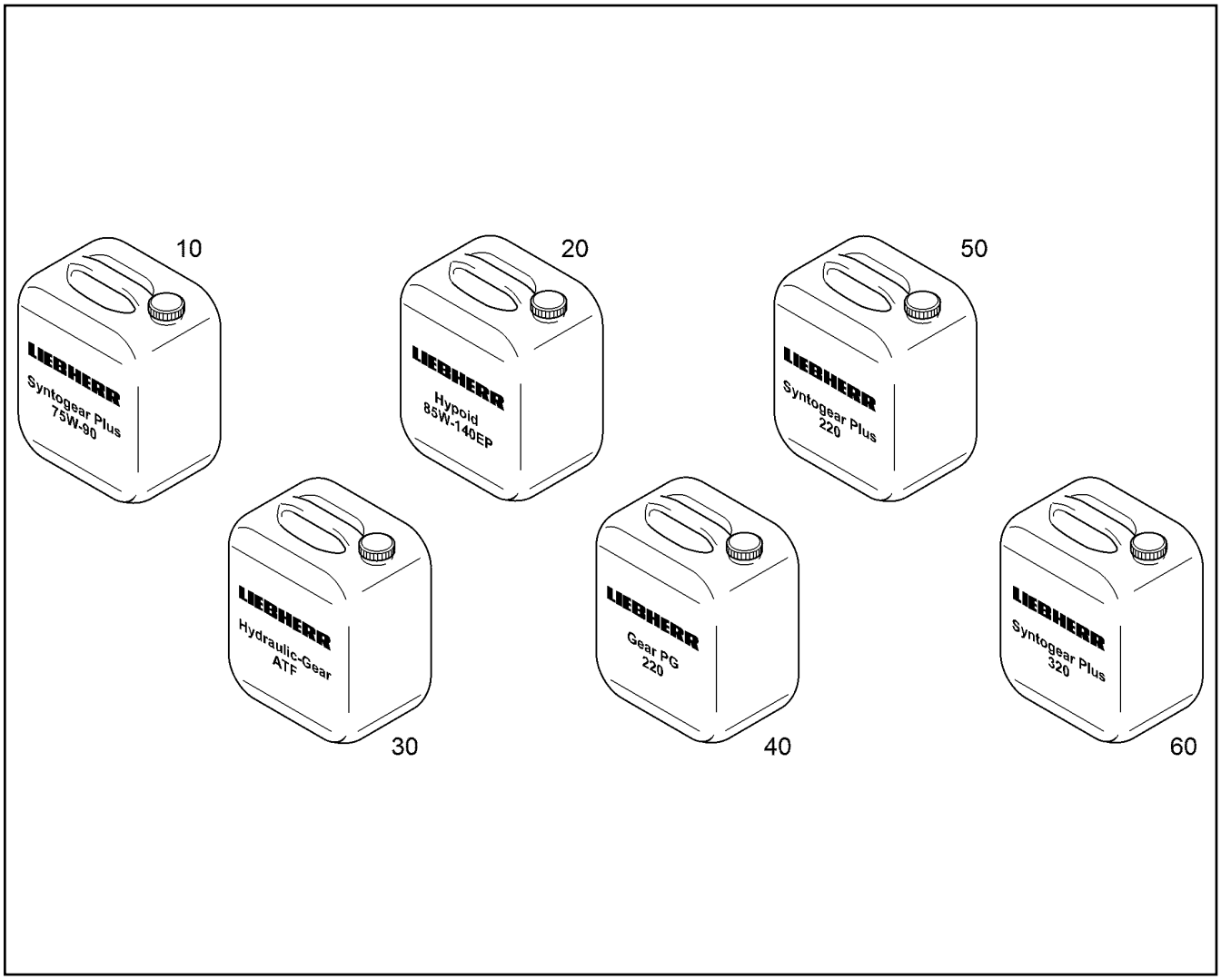

Pos.	Item	Quantity	Description	Designação	Serie	K
10		1l	GEAR OIL LIEBHERR/75W-90 ⇨ ❑ 29	ÓLEO DE TRANSMISSÃO		
20		1l	GEAR OIL LIEBHERR/85W-140 ⇨ ❑ 30	ÓLEO DE TRANSMISSÃO		
30		1l	HYDRAULIC+GEAR-OIL LIEBHERR/5W-20 ⇨ ❑ 31	HIDRÁULICA+ÓLEO DE ENGRE		
40		1l	GEAR OIL LIEBHERR/ISO VG 220 ⇨ ❑ 44	ÓLEO DE TRANSMISSÃO		
50		1l	GEAR OIL LIEBHERR/ISO VG 220 ⇨ ❑ 45	ÓLEO DE TRANSMISSÃO		
60		1l	GEAR OIL LIEBHERR/ISO VG 320 ⇨ ❑ 46	ÓLEO DE TRANSMISSÃO		

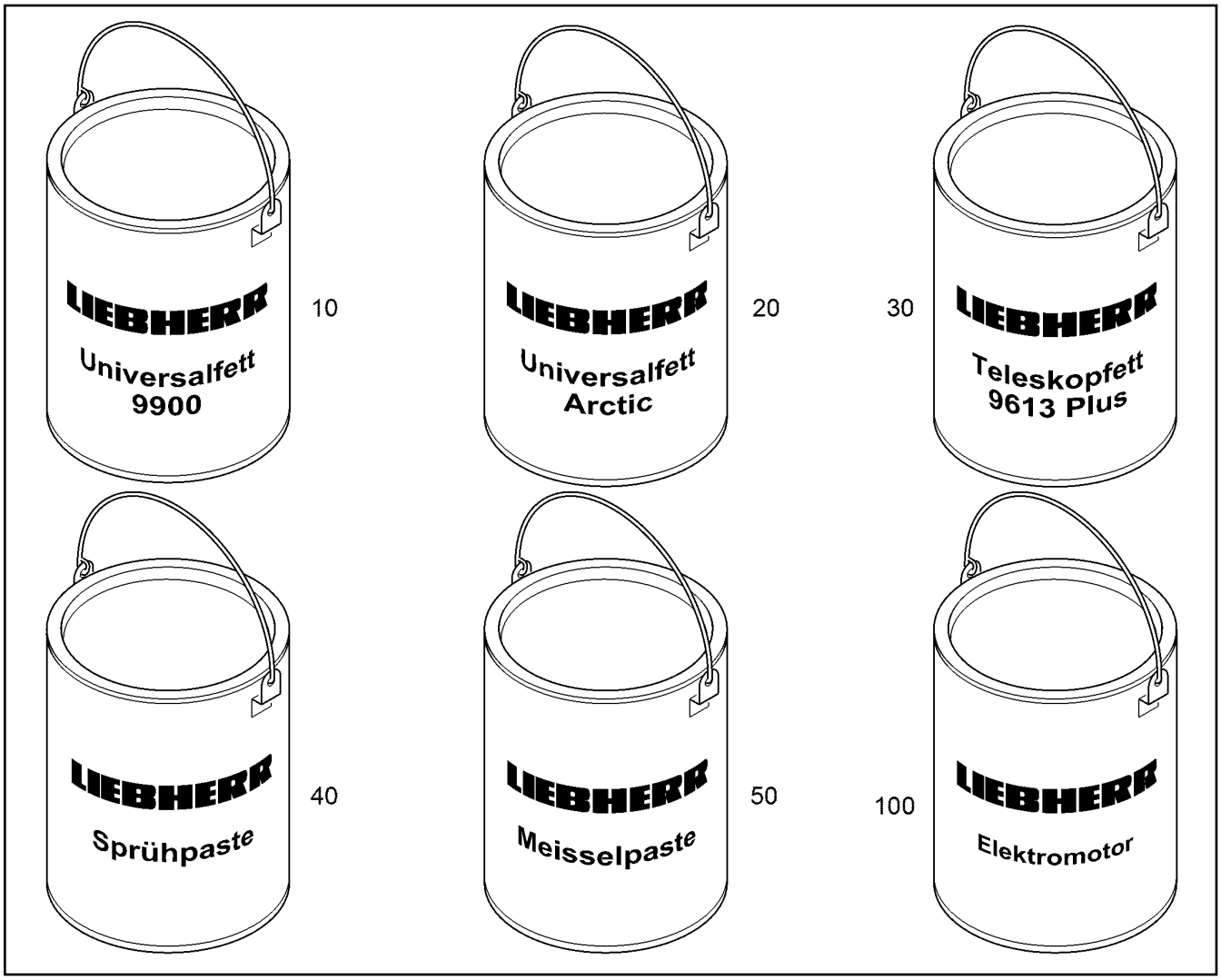

Pos.	Item	Quantity	Description	Designação	Serie	K
10		1kg	UNIVERSAL GREASE LIEBHERR ⇨ ❑ 36	GRAXA UNIVERSAL		
20		1kg	LOW TEMPERATURE GREASE LIEBHERR ⇨ ❑ 35	GRAXA PARA BAIXAS TEMPER		
30		1kg	SPECIAL GREASE LIEBHERR ⇨ ❑ 34	GRAXA ESPECIAL		
40		1kg	SPRAY-PASTE LIEBHERR ⇨ ❑ 37	PASTA EM PULVERIZADOR		
50		1kg	BIT-PASTE LIEBHERR ⇨ ❑ 38	PASTA DE CINZEL		
100		1	SPECIAL GREASE ELECTRIC MOTOR ⇨ ❑ 58			

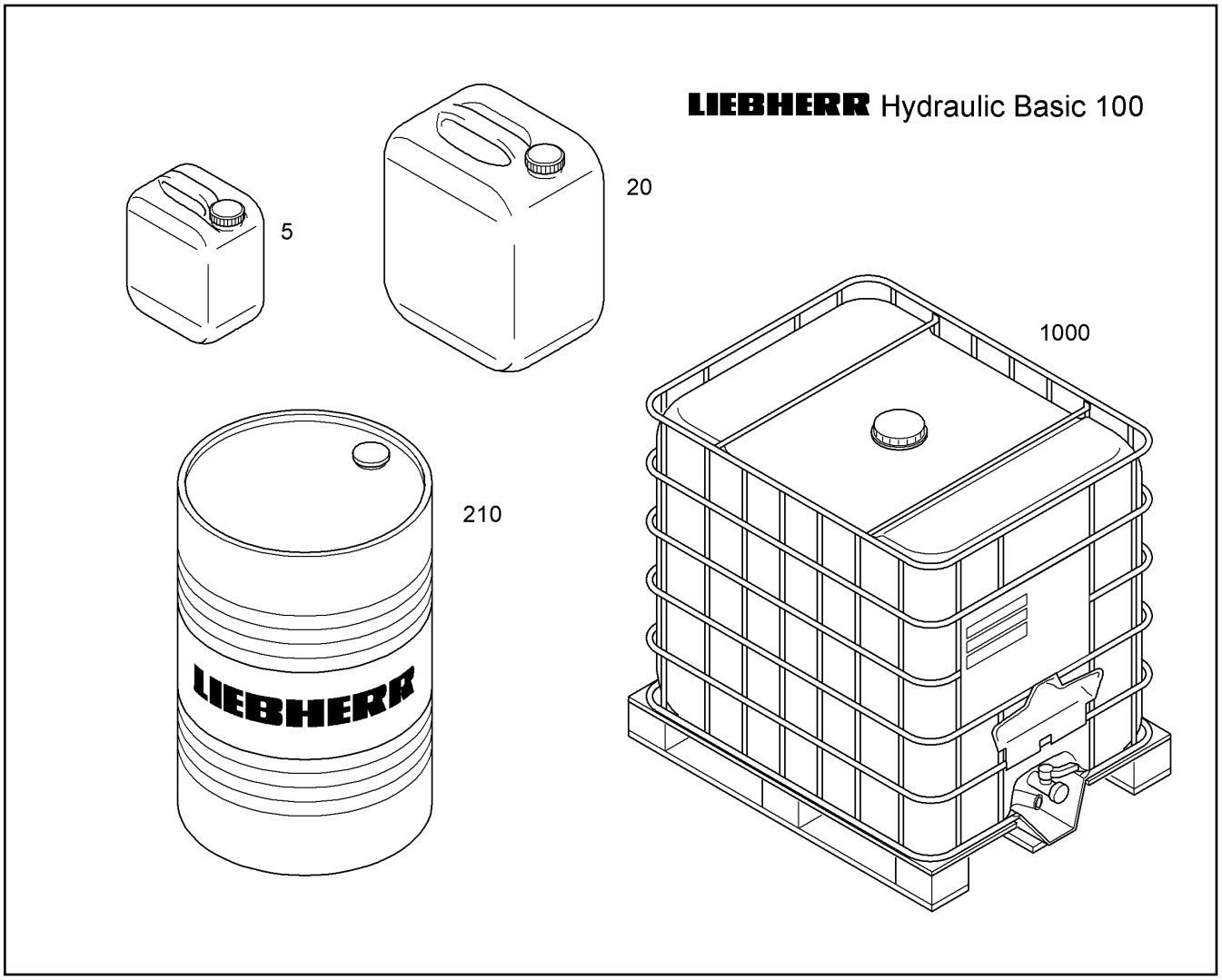

Pos.	Item	Quantity	Description	Designação	Serie	K
5	10344024	1	HYDRAULIC OIL LIEBHERR/ISO-VG 100/5L	ÓLEO HIDRÁULICO		
20	10344025	1	HYDRAULIC OIL LIEBHERR/ISO-VG 100/20L	ÓLEO HIDRÁULICO		
210	10344026	1	HYDRAULIC OIL LIEBHERR/ISO-VG 100/210	ÓLEO HIDRÁULICO		
1000	10344027	1	HYDRAULIC OIL LIEBHERR/ISO-VG 100/1000	ÓLEO HIDRÁULICO		

LIEBHERR Hydraulic HVI

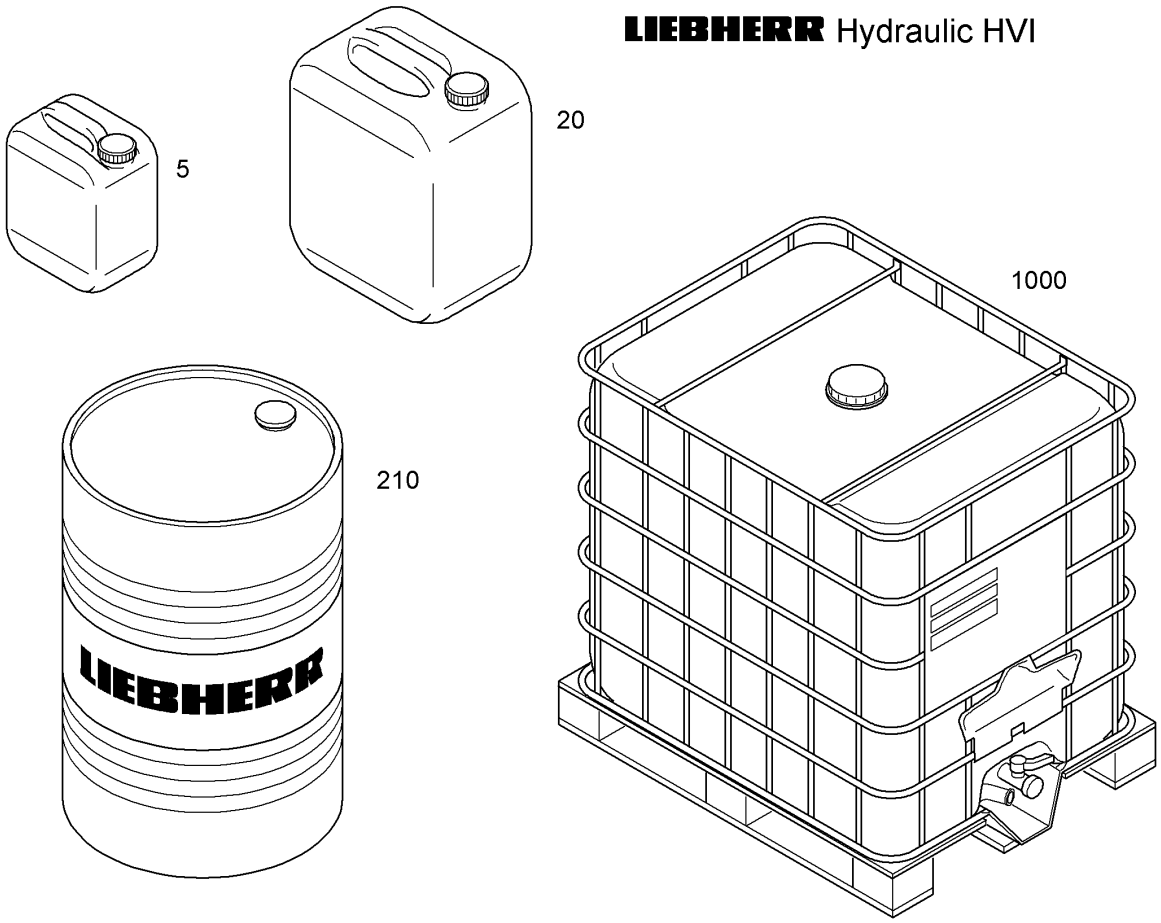

Pos.	Item	Quantity	Description	Designação	Serie	K
5	10330266	1	HYDRAULIC OIL LIEBHERR/ISO VG 46/5L	ÓLEO HIDRÁULICO		
20	10330268	1	HYDRAULIC OIL LIEBHERR/ISO VG 46/20L	ÓLEO HIDRÁULICO		
210	10330270	1	HYDRAULIC OIL LIEBHERR/ISO VG 46/210L	ÓLEO HIDRÁULICO		
1000	10330271	1	HYDRAULIC OIL LIEBHERR/ISO VG 46/1000	ÓLEO HIDRÁULICO		

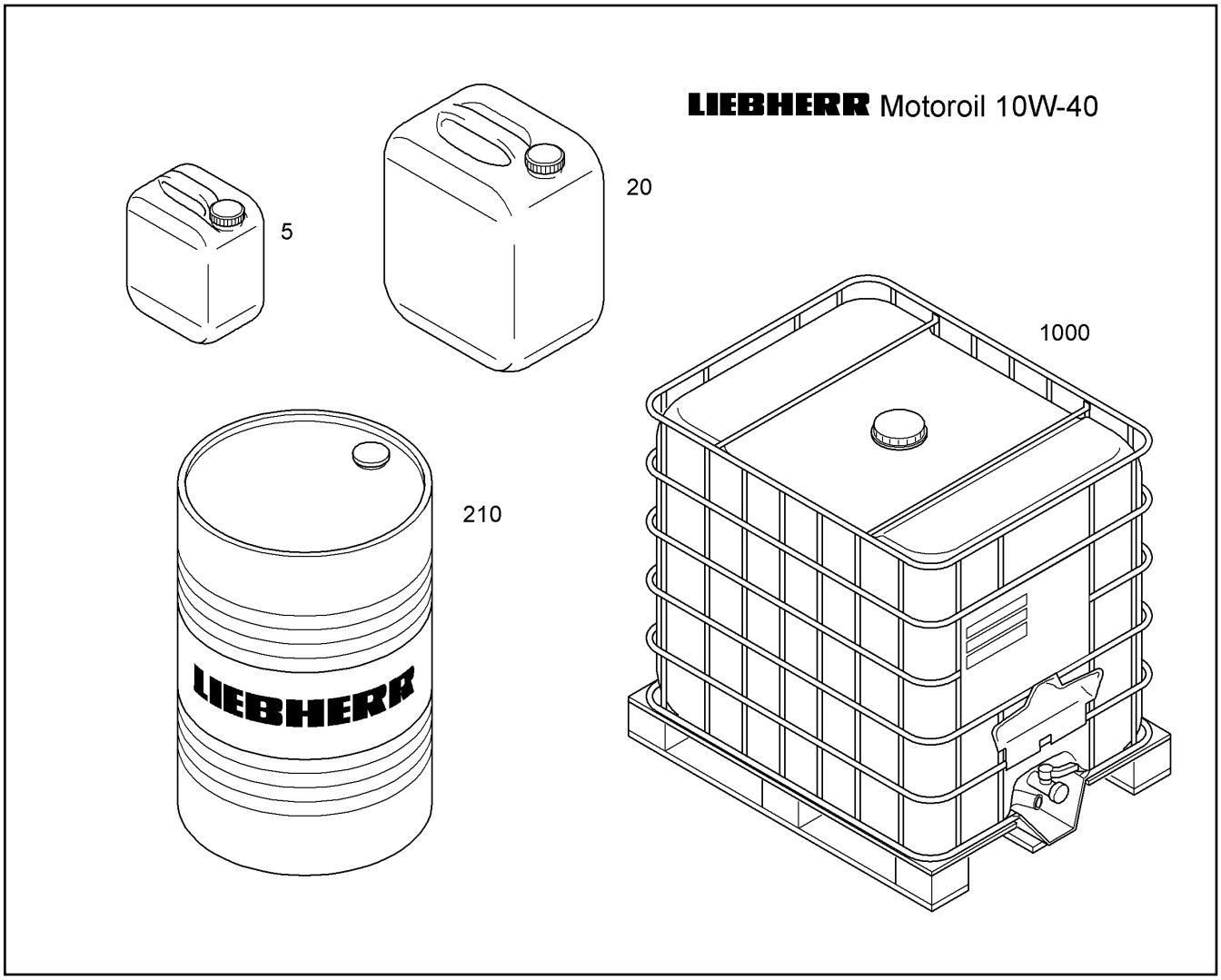

Pos.	Item	Quantity	Description	Designação	Serie	K
5	10290506	1	ENGINE OIL LIEBHERR/10W-40/5L	OLEO DE MOTOR		
20	10330239	1	ENGINE OIL LIEBHERR/10W-40/20L	OLEO DE MOTOR		
210	10330246	1	ENGINE OIL LIEBHERR/10W-40/210L	OLEO DE MOTOR		
1000	10286279	1	ENGINE OIL LIEBHERR/10W-40/1000L	OLEO DE MOTOR		

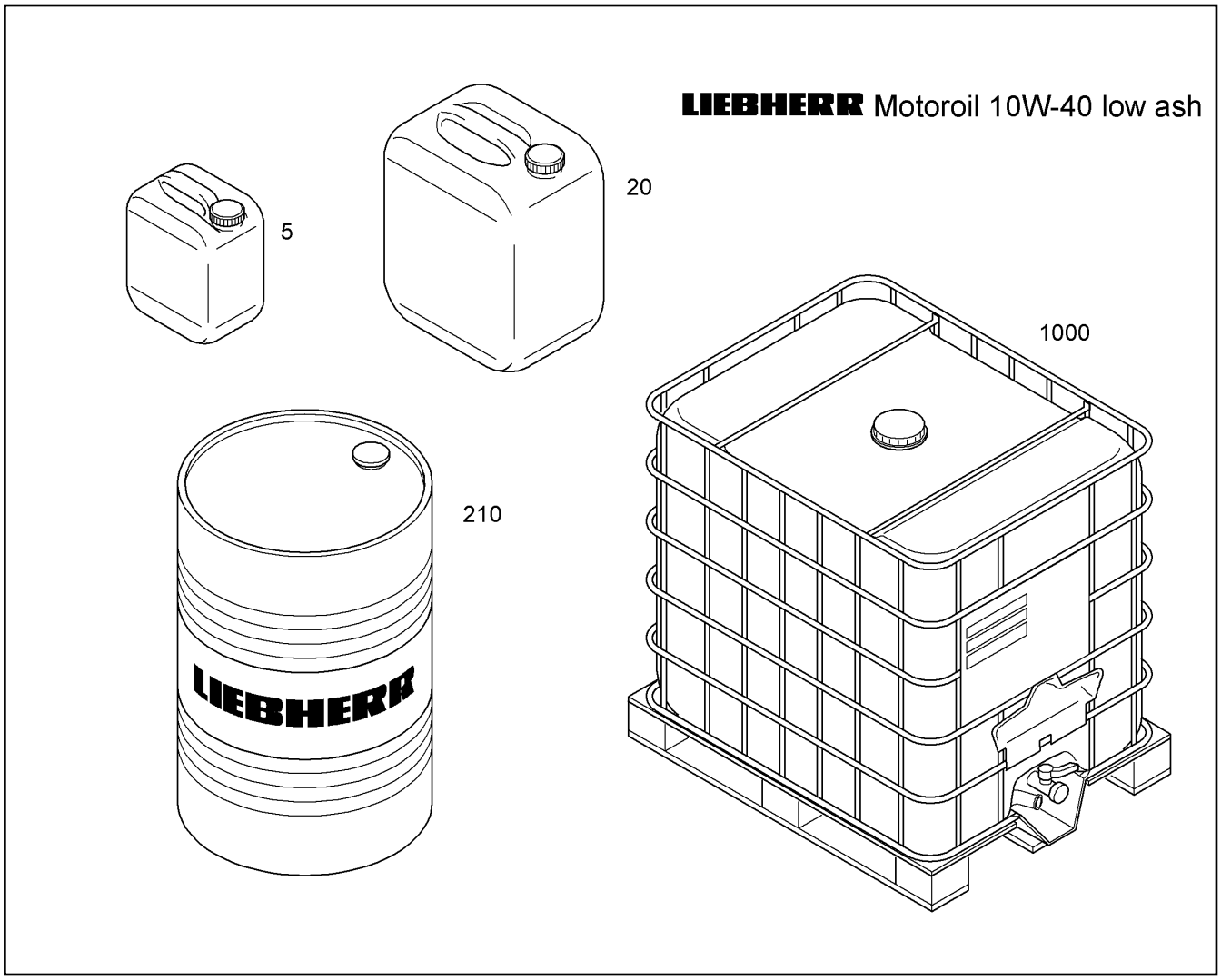

Pos.	Item	Quantity	Description	Designação	Serie	K
5	10326113	1	ENGINE OIL LIEBHERR LOW ASH/10W-40/5	OLEO DE MOTOR		
20	10326112	1	ENGINE OIL LIEBHERR LOW ASH/10W-40/20	OLEO DE MOTOR		
210	10326111	1	ENGINE OIL LIEBHERR LOW ASH/10W-40/2	OLEO DE MOTOR		
1000	10326110	1	ENGINE OIL LIEBHERR LOW ASH/10W-40/10	OLEO DE MOTOR		

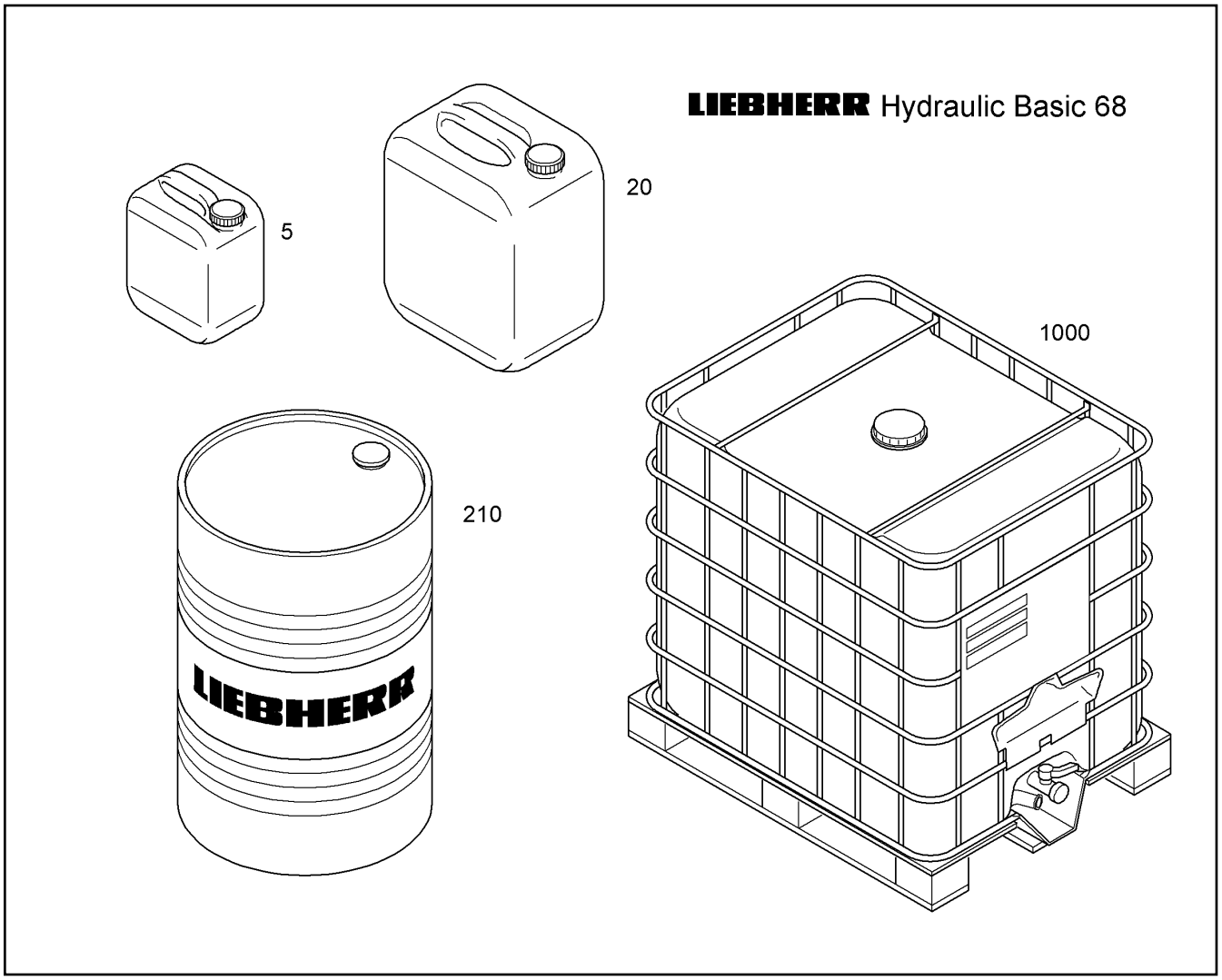

Pos.	Item	Quantity	Description	Designação	Serie	K
5	10330255	1	HYDRAULIC OIL LIEBHERR/ISO VG 68/5L	ÓLEO HIDRÁULICO		
20	10330258	1	HYDRAULIC OIL LIEBHERR/ISO VG 68/20L	ÓLEO HIDRÁULICO		
210	10330259	1	HYDRAULIC OIL LIEBHERR/ISO VG 68/210L	ÓLEO HIDRÁULICO		
1000	10330260	1	HYDRAULIC OIL LIEBHERR/ISO VG 68/1000	ÓLEO HIDRÁULICO		

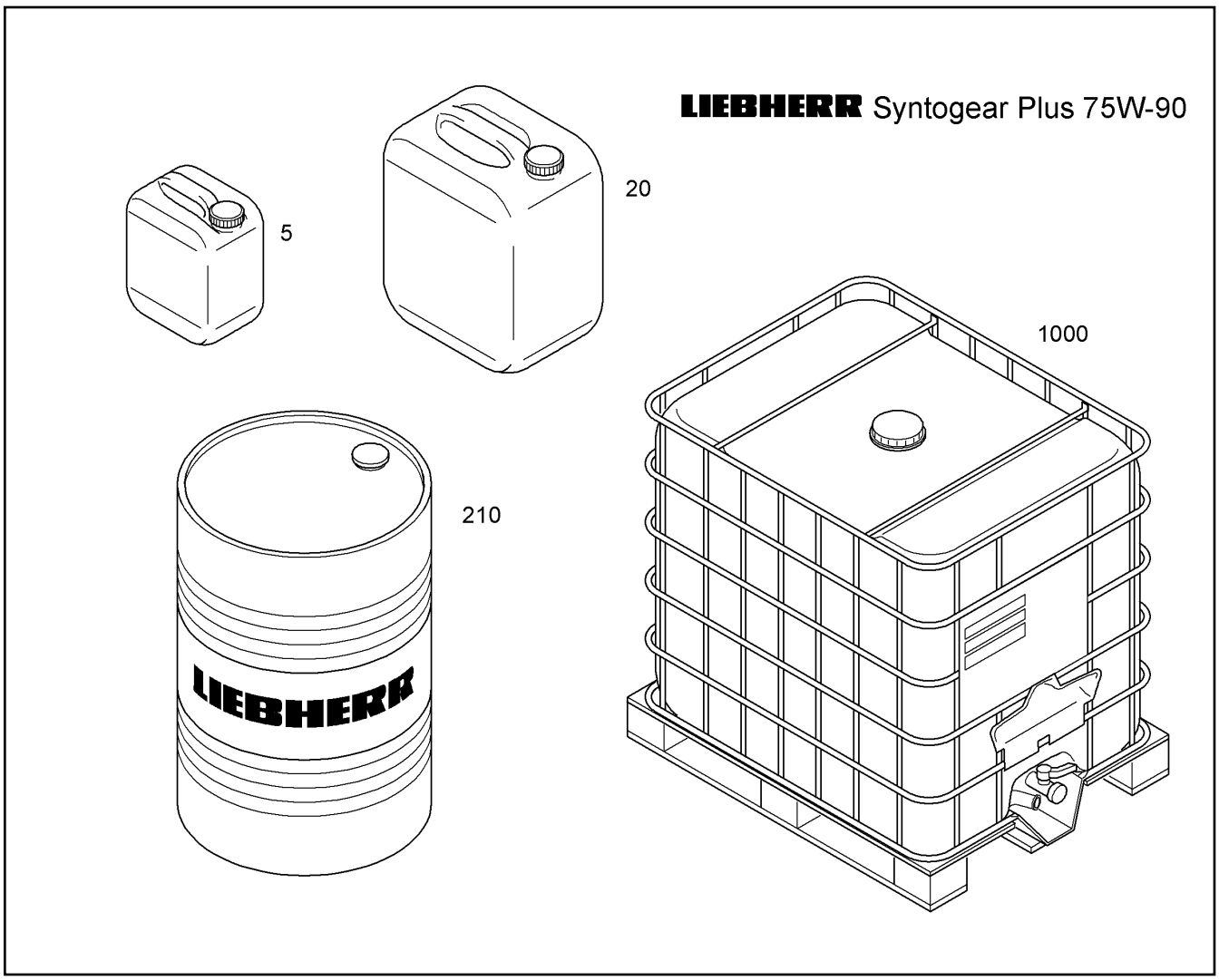

Pos.	Item	Quantity	Description	Designação	Serie	K
5	10330285	1	GEAR OIL LIEBHERR/75W-90/5L	ÓLEO DE TRANSMISSÃO		
20	10330287	1	GEAR OIL LIEBHERR/75W-90/20L	ÓLEO DE TRANSMISSÃO		
210	10330288	1	GEAR OIL LIEBHERR/75W-90/210L	ÓLEO DE TRANSMISSÃO		
1000	10296477	1	GEAR OIL LIEBHERR/75W-90/1000L	ÓLEO DE TRANSMISSÃO		

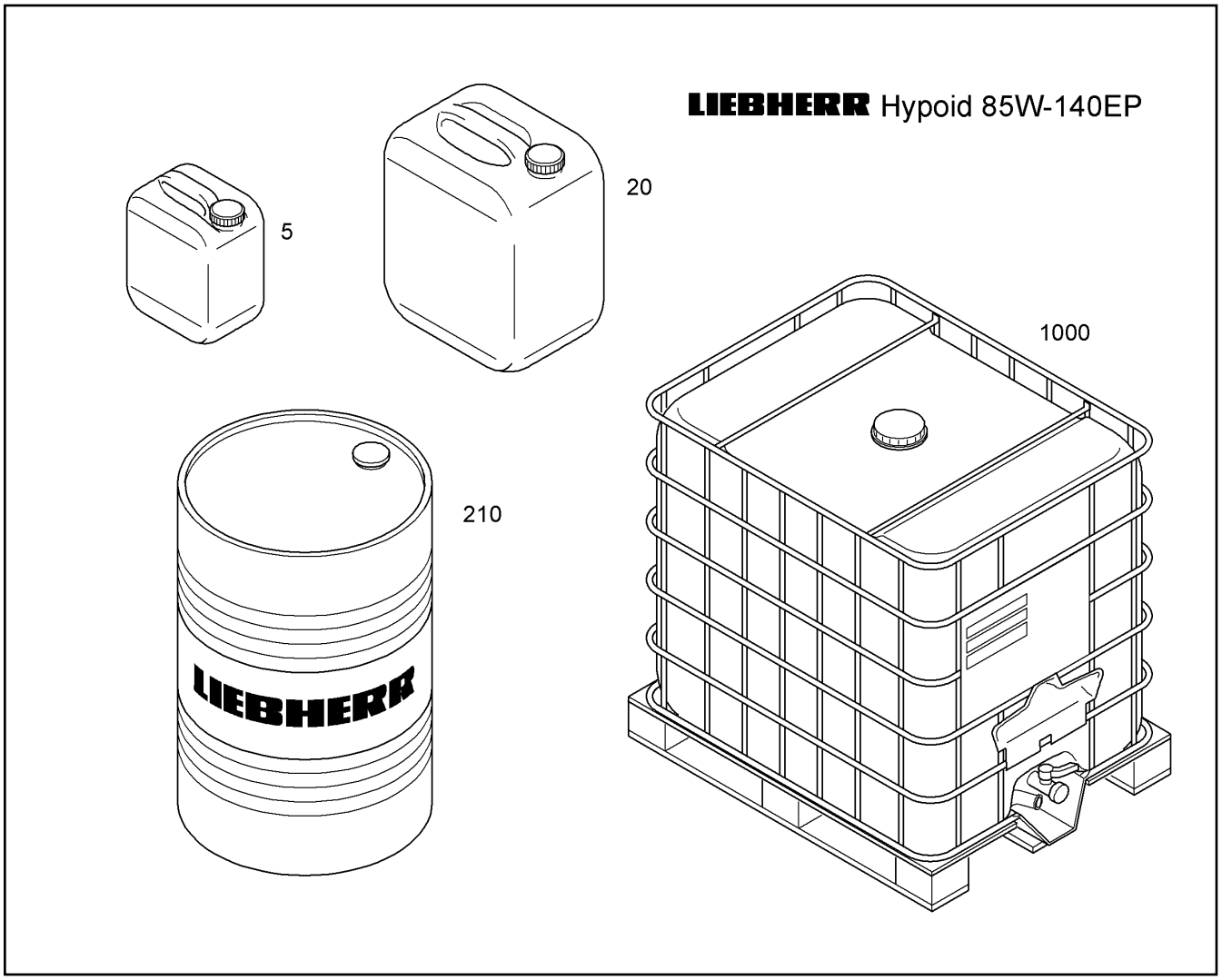

Pos.	Item	Quantity	Description	Designação	Serie	K
5	10285639	1	GEAR OIL LIEBHERR/85W-140/5L	ÓLEO DE TRANSMISSÃO		
20	10330291	1	GEAR OIL LIEBHERR/85W-140/20L	ÓLEO DE TRANSMISSÃO		
210	10301680	1	GEAR OIL LIEBHERR/85W-140/210L	ÓLEO DE TRANSMISSÃO		
1000	10330292	1	GEAR OIL LIEBHERR/85W-140/1000L	ÓLEO DE TRANSMISSÃO		

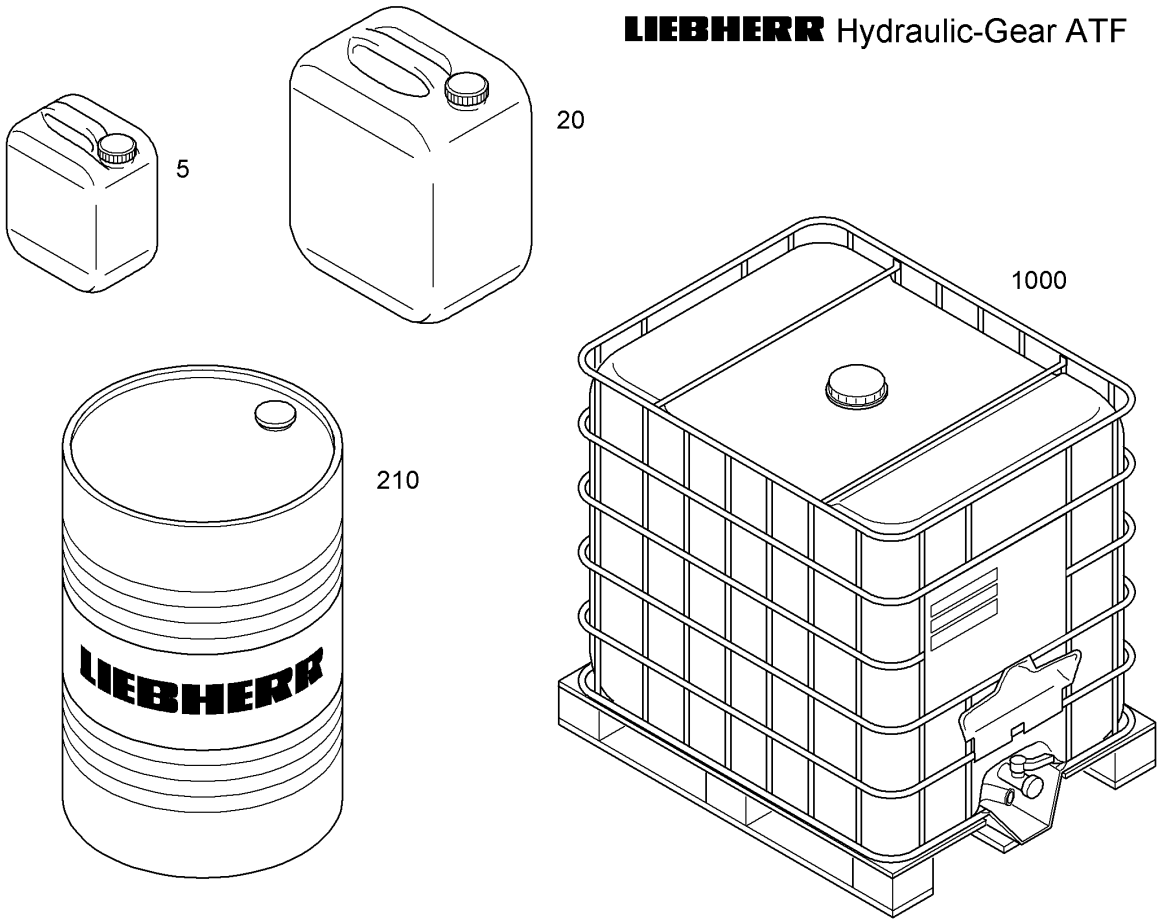

Pos.	Item	Quantity	Description	Designação	Serie	K
5	10330280	1	HYDRAULIC+GEAR-OIL LIEBHERR/5W-20/5	HIDRÁULICA+ÓLEO DE ENGRE		
20	10330282	1	HYDRAULIC+GEAR-OIL LIEBHERR/5W-20/20	HIDRÁULICA+ÓLEO DE ENGRE		
210	10330283	1	HYDRAULIC+GEAR-OIL LIEBHERR/5W-20/2	HIDRÁULICA+ÓLEO DE ENGRE		
1000	10296482	1	HYDRAULIC+GEAR-OIL LIEBHERR/5W-20/10	HIDRÁULICA+ÓLEO DE ENGRE		

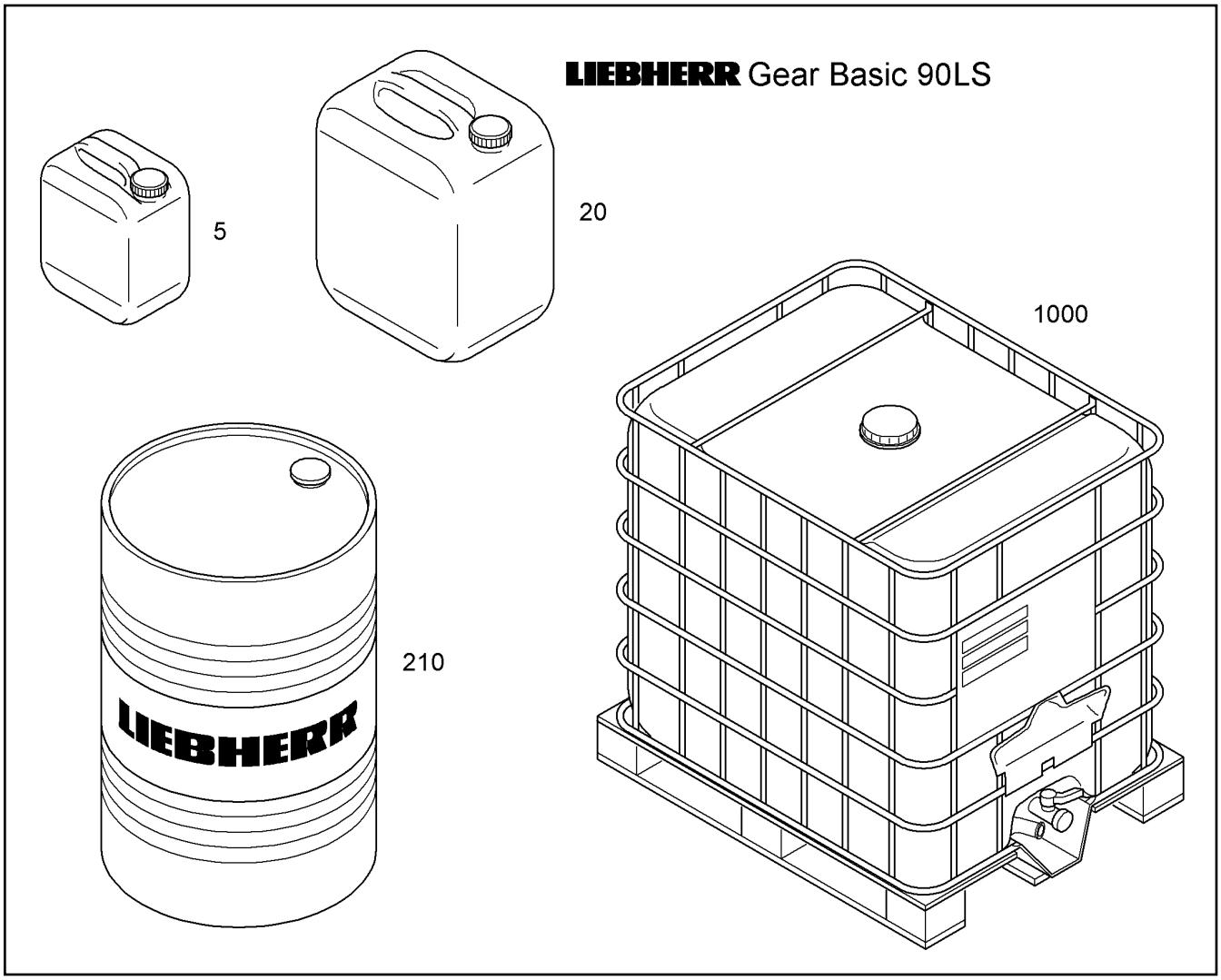

Pos.	Item	Quantity	Description	Designação	Serie	K
5	10330295	1	AXLE AND GEAR-OIL LIEBHERR GEAR BASI	OLEO PARA CAMBIO E EIXOS		
20	10330296	1	AXLE AND GEAR-OIL LIEBHERR GEAR BASI	OLEO PARA CAMBIO E EIXOS		
210	10285702	1	AXLE AND GEAR-OIL LIEBHERR GEAR BASI	OLEO PARA CAMBIO E EIXOS		
1000	10286280	1	AXLE AND GEAR-OIL LIEBHERR GEAR BASI	OLEO PARA CAMBIO E EIXOS		

LIEBHERR Gear Plus 20W-40

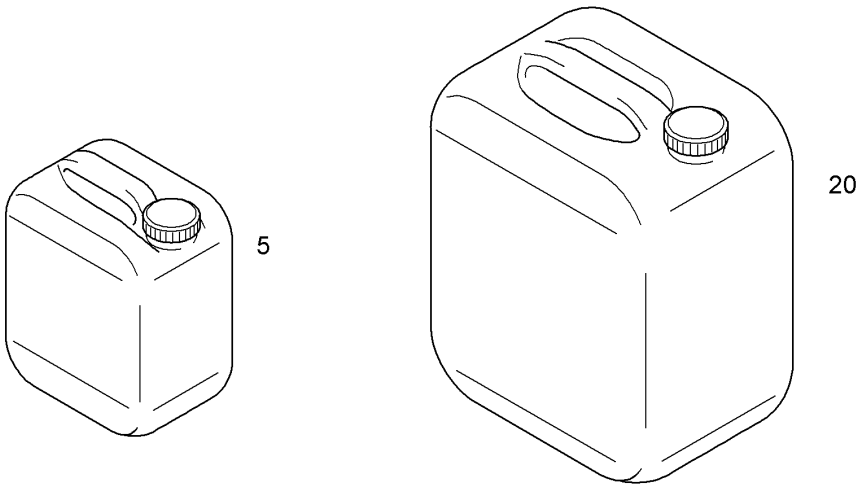

Pos.	Item	Quantity	Description	Designação	Serie	K
5	10285640	1	AXLE-OIL LIEBHERR/20W-40/5L	ÓLEO DO EIXO		
20	10330294	1	AXLE-OIL LIEBHERR/20W-40/20L	ÓLEO DO EIXO		

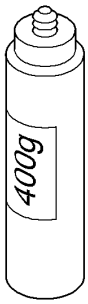

1

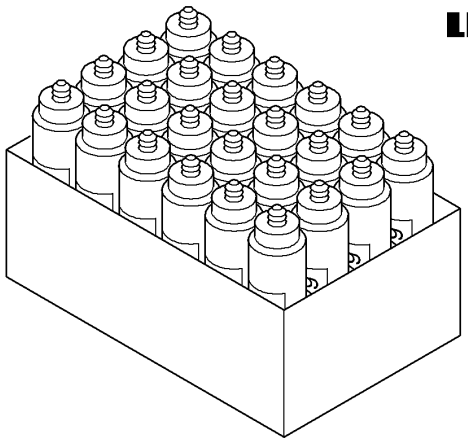

2

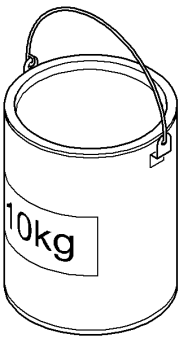

10

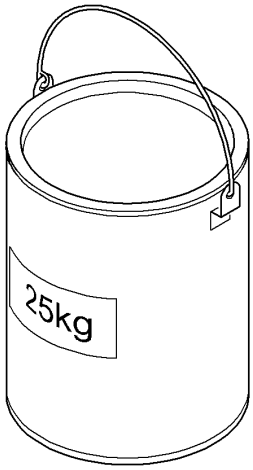

25

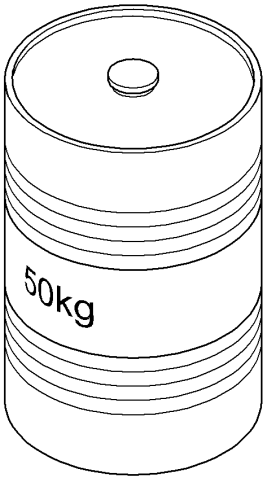

50

Pos.	Item	Quantity	Description	Designação	Serie	K
1	861305508	1	SPECIAL GREASE LIEBHERR/0,4kg	GRAXA ESPECIAL		
2	10296820	1	SPECIAL GREASE LIEBHERR/24X0,4kg	GRAXA ESPECIAL		
10	861304208	1	SPECIAL GREASE LIEBHERR/10kg	GRAXA ESPECIAL		
25	861303608	1	SPECIAL GREASE LIEBHERR/25kg	GRAXA ESPECIAL		
50	861305608	1kg	SPECIAL GREASE LIEBHERR/50kg	GRAXA ESPECIAL		

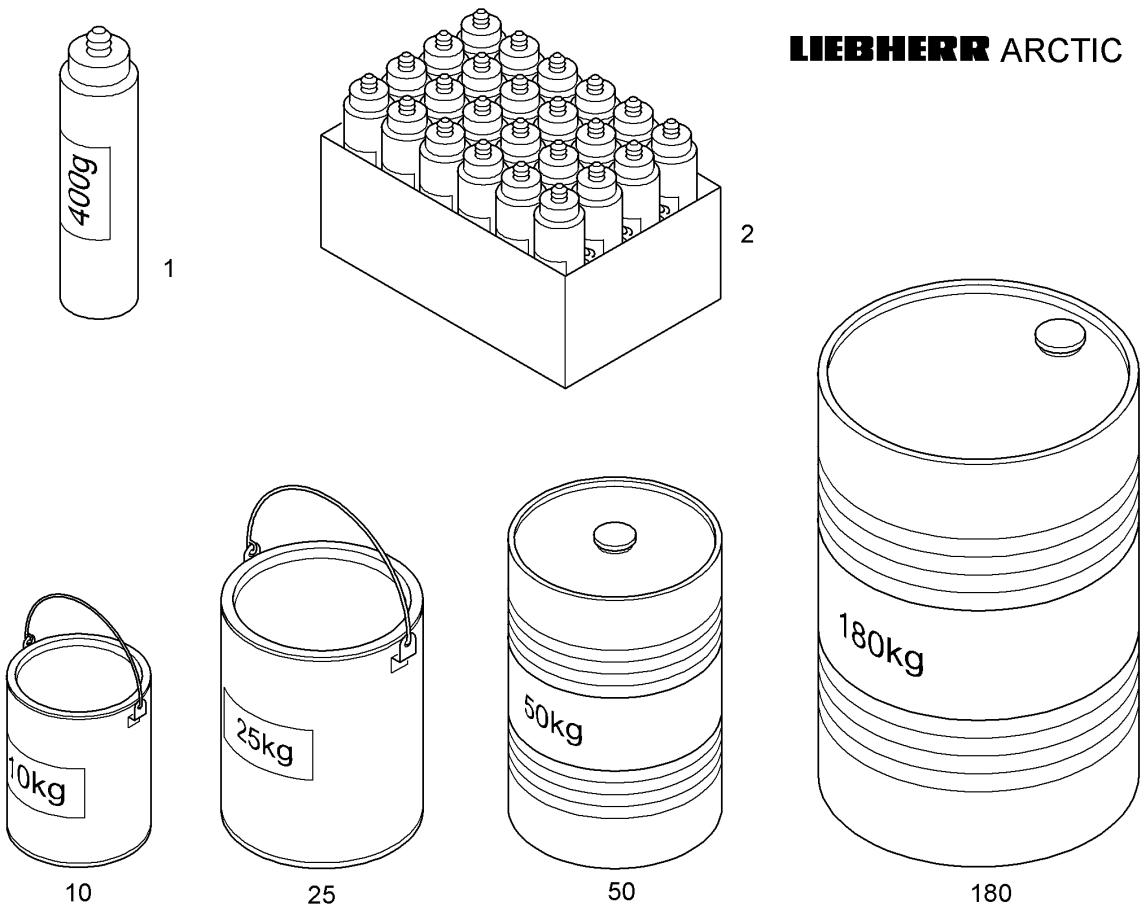

Pos.	Item	Quantity	Description	Designação	Serie	K
1	10296828	1	LOW TEMPERATURE GREASE LIEBHERR/0,	GRAXA PARA BAIXAS TEMPER		
2	10296827	1	LOW TEMPERATURE GREASE LIEBHERR/2	GRAXA PARA BAIXAS TEMPER		
10	10296825	1	LOW TEMPERATURE GREASE LIEBHERR/1	GRAXA PARA BAIXAS TEMPER		
25	10296824	1	LOW TEMPERATURE GREASE LIEBHERR/2	GRAXA PARA BAIXAS TEMPER		
50	10296823	1	LOW TEMPERATURE GREASE LIEBHERR/5	GRAXA PARA BAIXAS TEMPER		
180	10296822	1	LOW TEMPERATURE GREASE LIEBHERR/18	GRAXA PARA BAIXAS TEMPER		

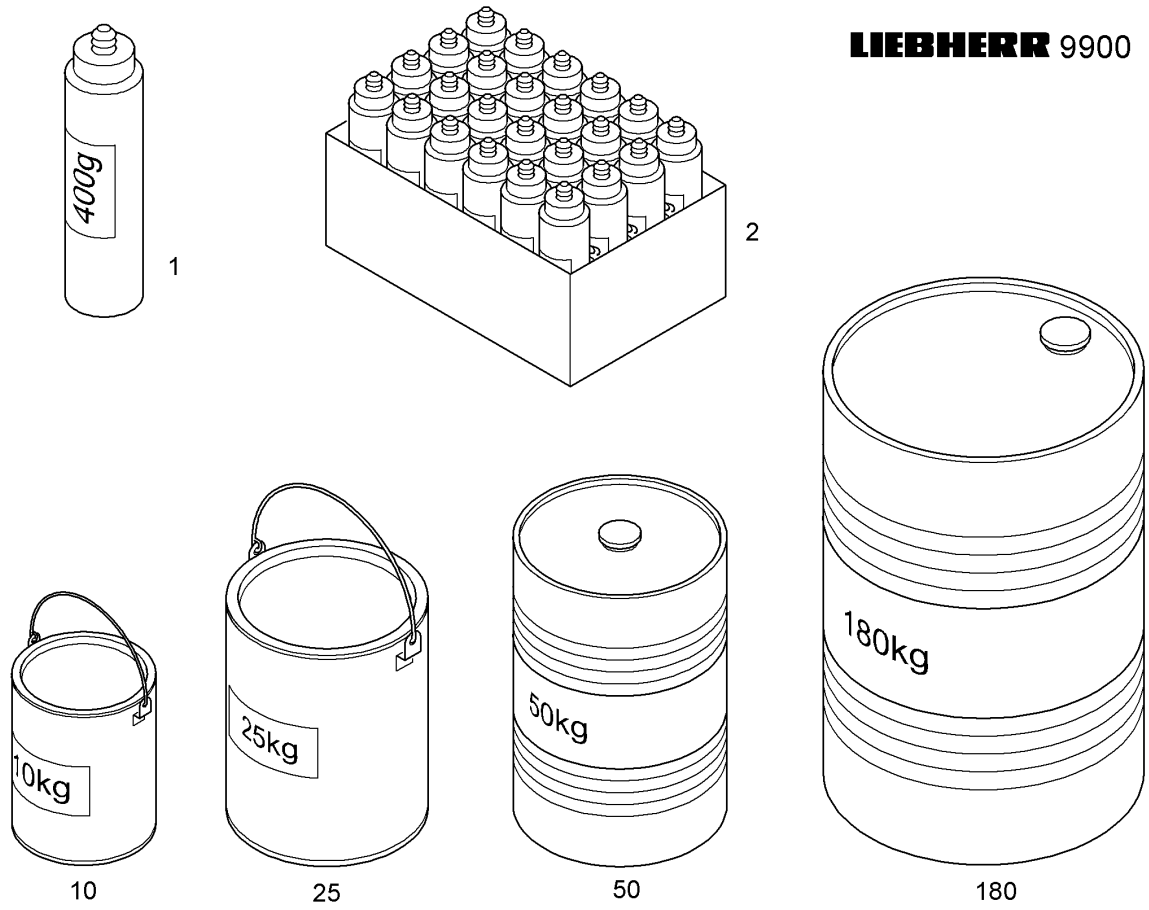

Pos.	Item	Quantity	Description	Designação	Serie	K
1	10296816	1	UNIVERSAL GREASE LIEBHERR/0,4kg	GRAXA UNIVERSAL		
2	10296815	1	UNIVERSAL GREASE LIEBHERR/24X0,4kg	GRAXA UNIVERSAL		
10	10296813	1	UNIVERSAL GREASE LIEBHERR/10kg	GRAXA UNIVERSAL		
25	10296812	1	UNIVERSAL GREASE LIEBHERR/25kg	GRAXA UNIVERSAL		
50	10296811	1	UNIVERSAL GREASE LIEBHERR/50kg	GRAXA UNIVERSAL		
180	10296810	1	UNIVERSAL GREASE LIEBHERR/180kg	GRAXA UNIVERSAL		

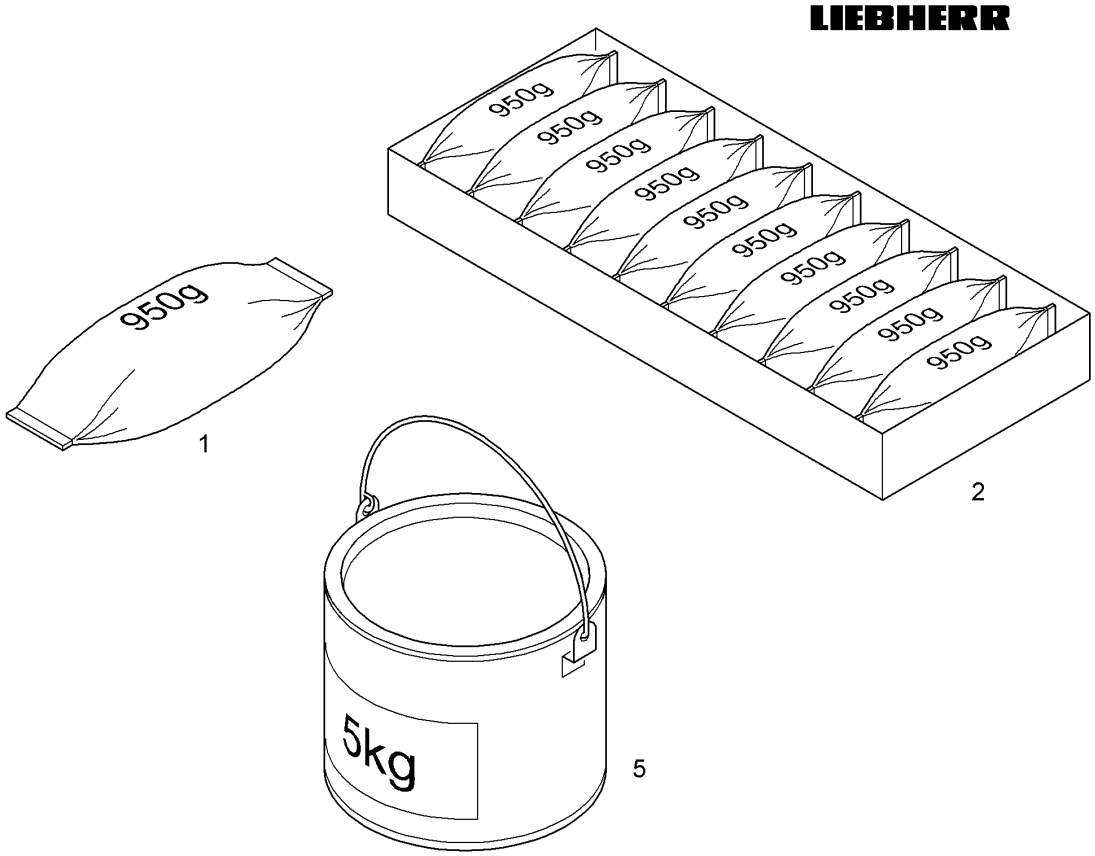

Pos.	Item	Quantity	Description	Designação	Serie	K
1	10330308	1	SPRAY-PASTE LIEBHERR/0,950kg	PASTA EM PULVERIZADOR		
2	10330310	1	SPRAY-PASTE LIEBHERR/10X0,950kg	PASTA EM PULVERIZADOR		
5		1	SPRAY-PASTE LIEBHERR/5kg	PASTA EM PULVERIZADOR		

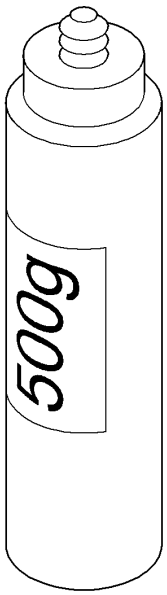

1

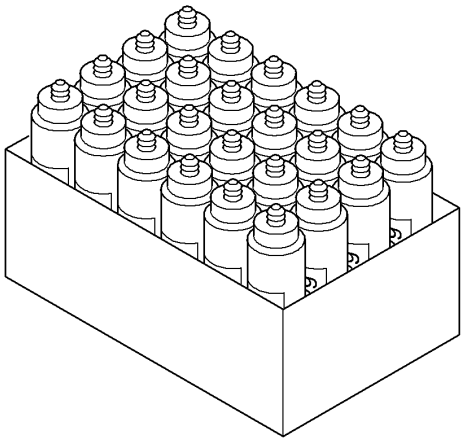

2

Pos.	Item	Quantity	Description	Designação	Serie	K
1	8610230	1	BIT-PASTE LIEBHERR/0,5kg	PASTA DE CINZEL		
2	10330306	1	BIT-PASTE LIEBHERR/20X0,5kg	PASTA DE CINZEL		

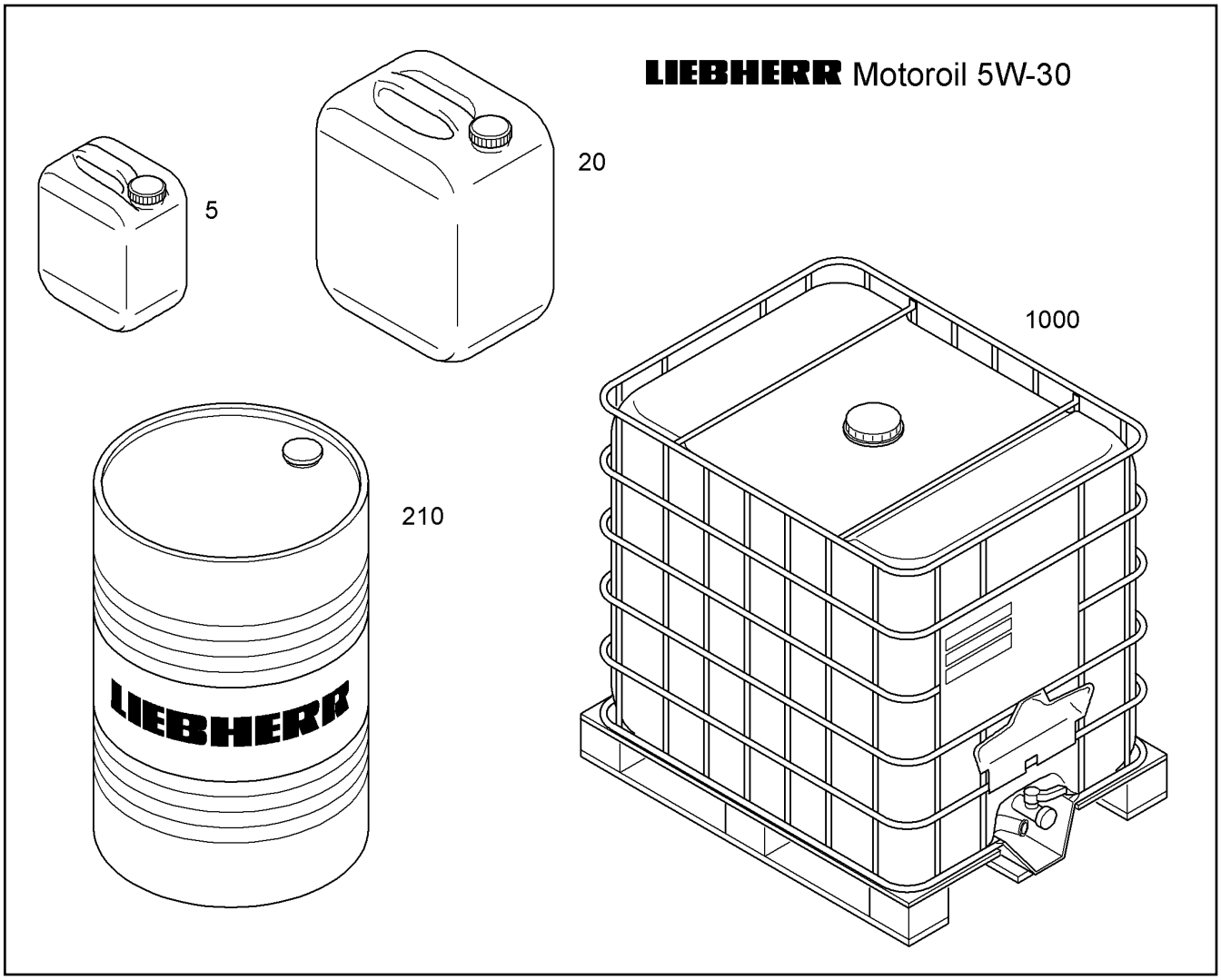

Pos.	Item	Quantity	Description	Designação	Serie	K
5	10425712	1	ENGINE OIL LIEBHERR/5W-30/5L	OLEO DE MOTOR		
20	10425713	1	ENGINE OIL LIEBHERR/5W-30/20L	OLEO DE MOTOR		
210	10425715	1	ENGINE OIL LIEBHERR/5W-30/210L	OLEO DE MOTOR		
1000	10425719	1	ENGINE OIL LIEBHERR/5W-30/1000L	OLEO DE MOTOR		

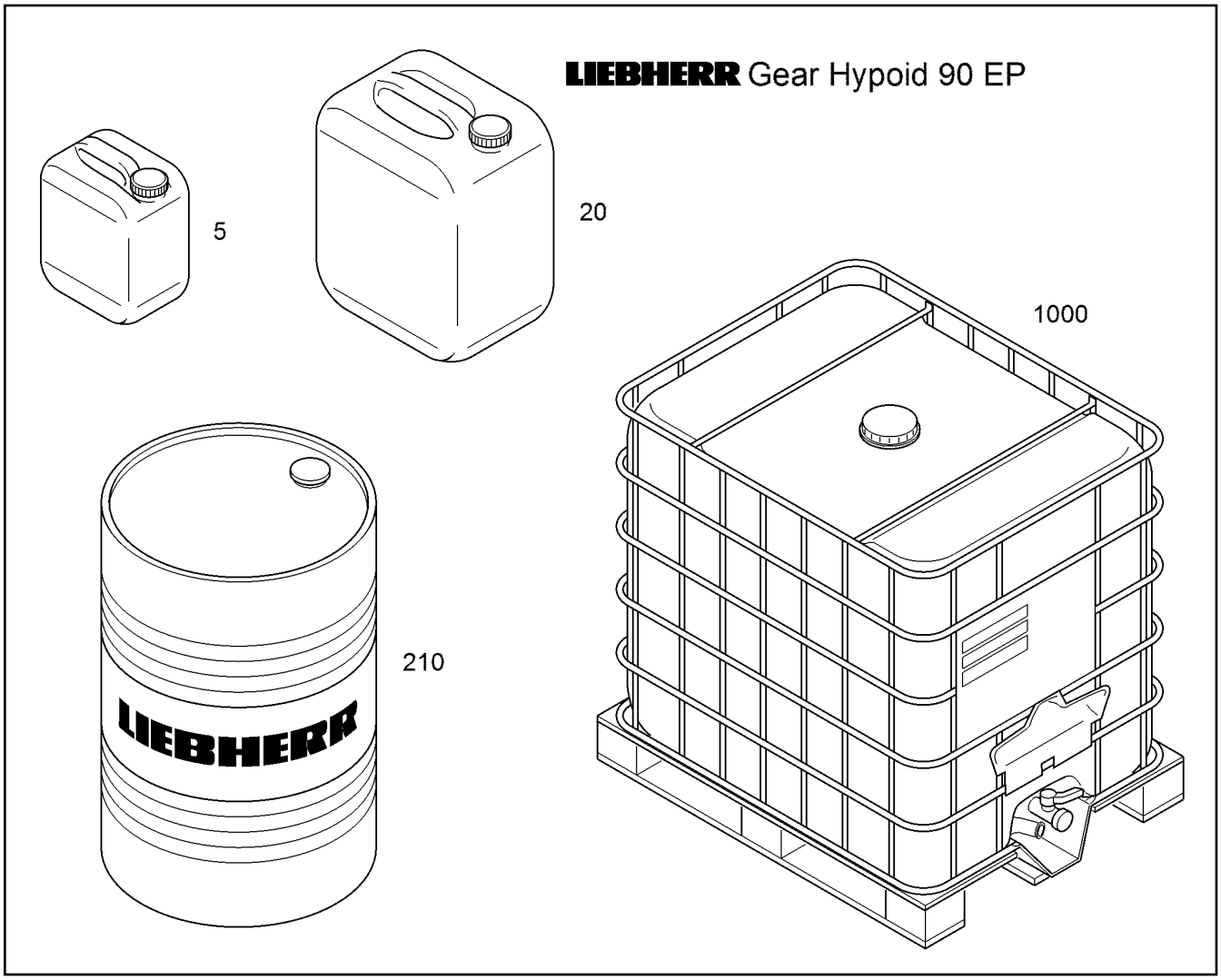

Pos.	Item	Quantity	Description	Designação	Serie	K
5	10664874	1	LIEBHERR TRANSMISSION OIL HYPOID90	ÓLEO DE TRANSMISSÃO LIEBH		
20	10664875	1	LIEBHERR TRANSMISSION OIL HYPOID90E	ÓLEO DE TRANSMISSÃO LIEBH		
210	10664876	1	LIEBHERR TRANSMISSION OIL HYPOID90	ÓLEO DE TRANSMISSÃO LIEBH		
1000	10441636	1	LIEBHERR TRANSMISSION OIL LIEBHERR G	ÓLEO DE TRANSMISSÃO LIEBH		

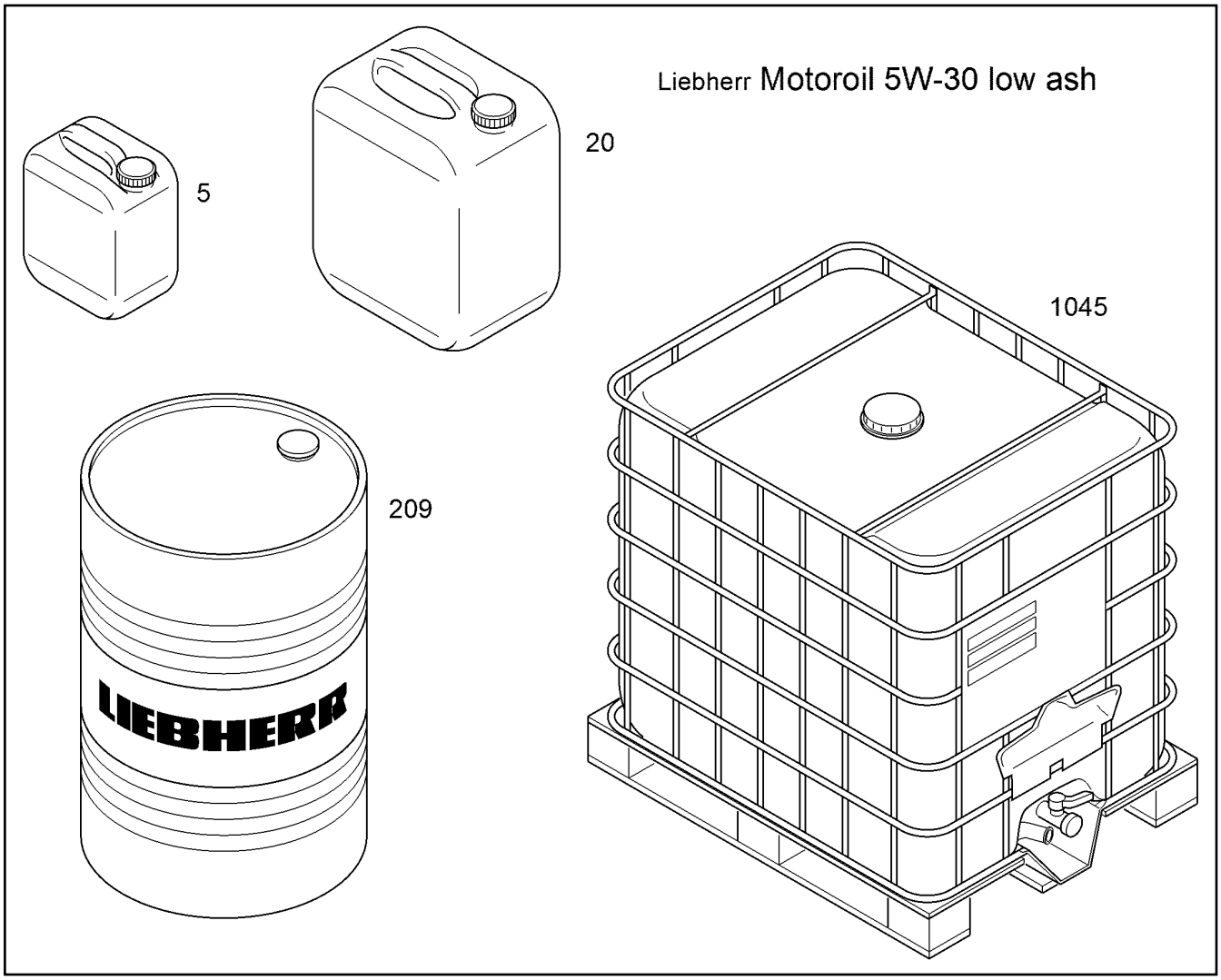

Pos.	Item	Quantity	Description	Designação	Serie	K
5	11066029	1	ENGINE OIL LIEBHERR LOW ASH/5W-30/5L	OLEO DE MOTOR		
20	11066030	1	ENGINE OIL LIEBHERR LOW ASH/5W-30/20	OLEO DE MOTOR		
209	11066031	1	ENGINE OIL LIEBHERR LOW ASH/5W-30/21	OLEO DE MOTOR		
1045	11066032	1	ENGINE OIL LIEBHERR LOW ASH/5W-30/10	OLEO DE MOTOR		

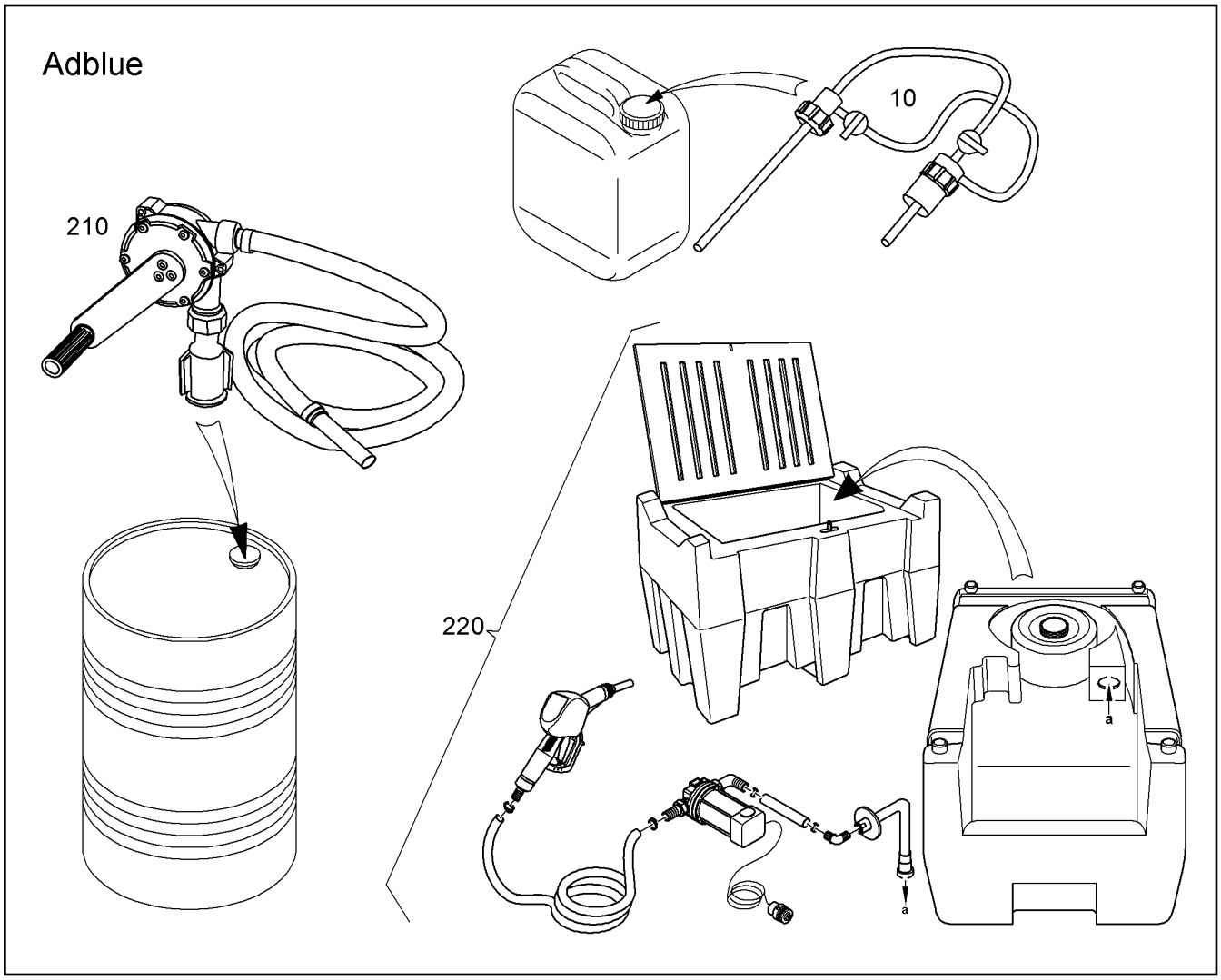

Pos.	Item	Quantity	Description	Designação	Serie	K
10	12200137	1	UREA DISPENSER SYSTEM			
210		1	ACCESSORIES 210L ⇨ ❑ 47	ACESSÓRIOS		
220	11695012	1	UREA FILLING KIT ⇨ ❑ 796	KIT DE ABASTECIMENTO DE U		

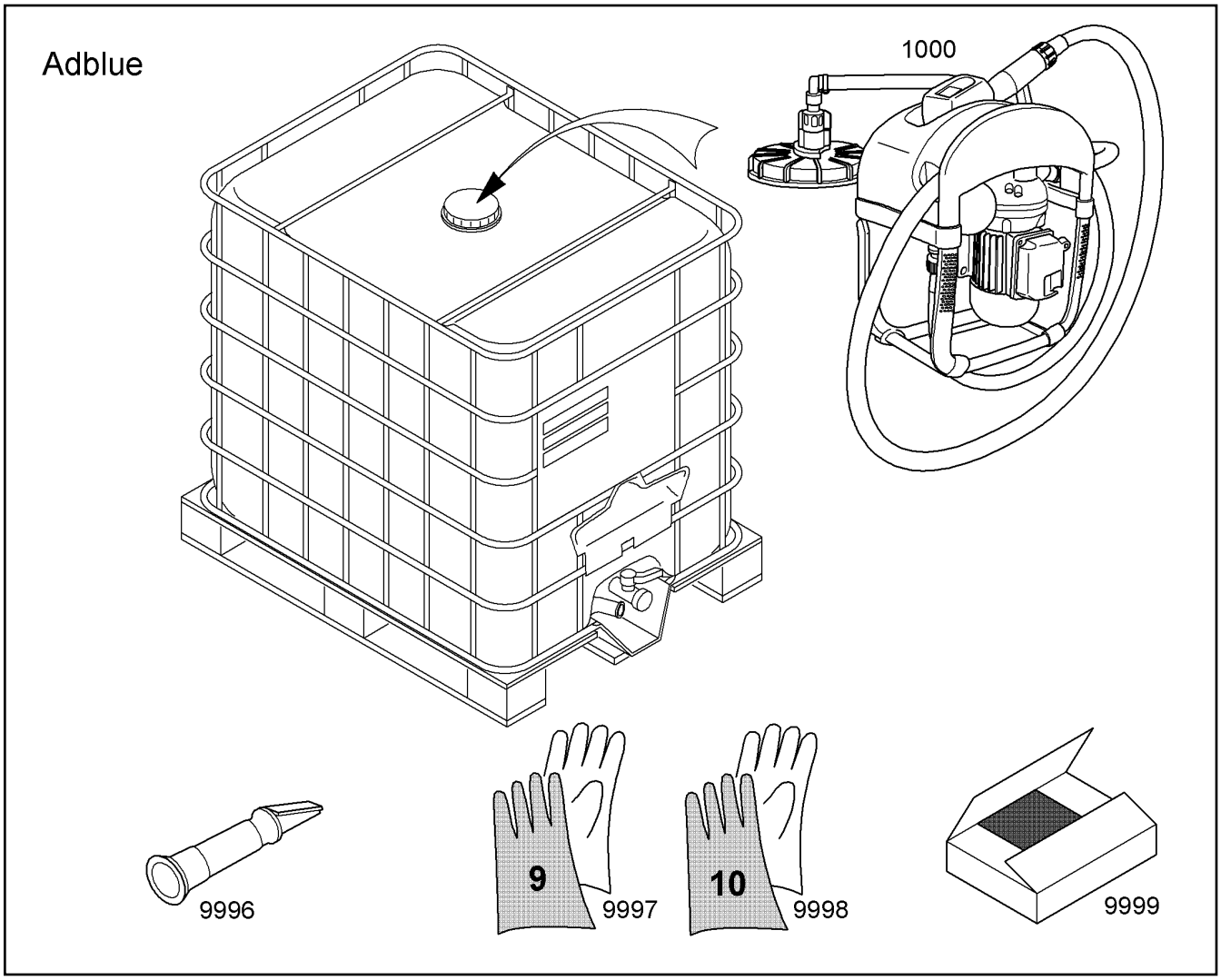

Pos.	Item	Quantity	Description	Designação	Serie	K
1000		1	ACCESSORIES 1000L ⇨ ❑ 48	ACESSÓRIOS		
9996	11830573	1	REFRACTOMETER	REFRATÔMETRO		
9997	11644535	1Pair	GLOVE Gr. 9 GELB	LUVA		
9998	8593004	1Pair	GLOVE Gr. 10 GELB	LUVA		
9999	11698484	1	UREA TEST KIT	KIT DE TESTE DE UREA		

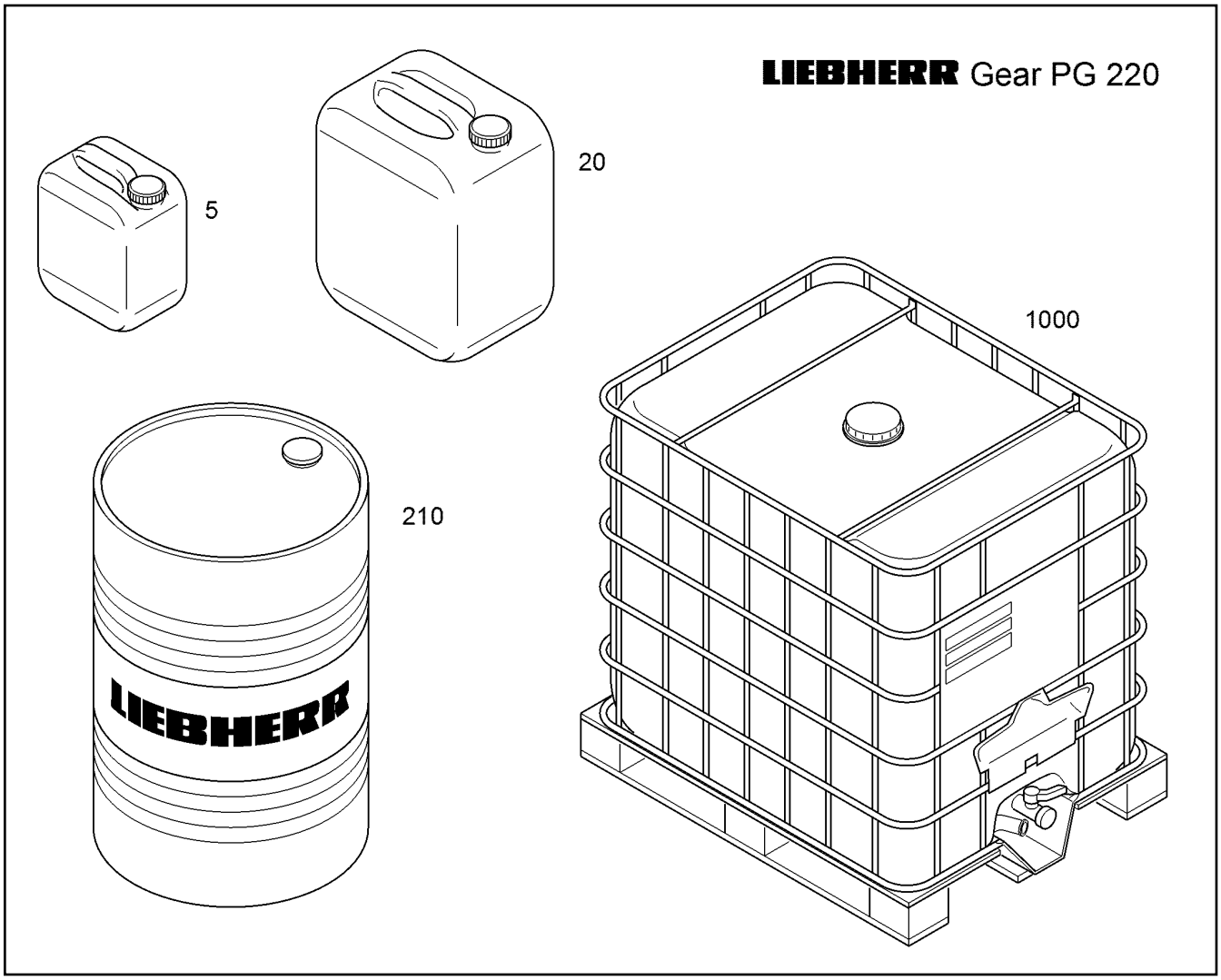

Pos.	Item	Quantity	Description	Designação	Serie	K
5	11000867	1	LIEBHERR TRANSMISSION OIL PG 220/ISO	ÓLEO DE TRANSMISSÃO LIEBH		
20	11000869	1	LIEBHERR TRANSMISSION OIL PG 220/ISO	ÓLEO DE TRANSMISSÃO LIEBH		
210	11000870	1	LIEBHERR TRANSMISSION OIL PG 220/ISO	ÓLEO DE TRANSMISSÃO LIEBH		
1000	11000871	1	LIEBHERR TRANSMISSION OIL PG 220/ISO	ÓLEO DE TRANSMISSÃO LIEBH		

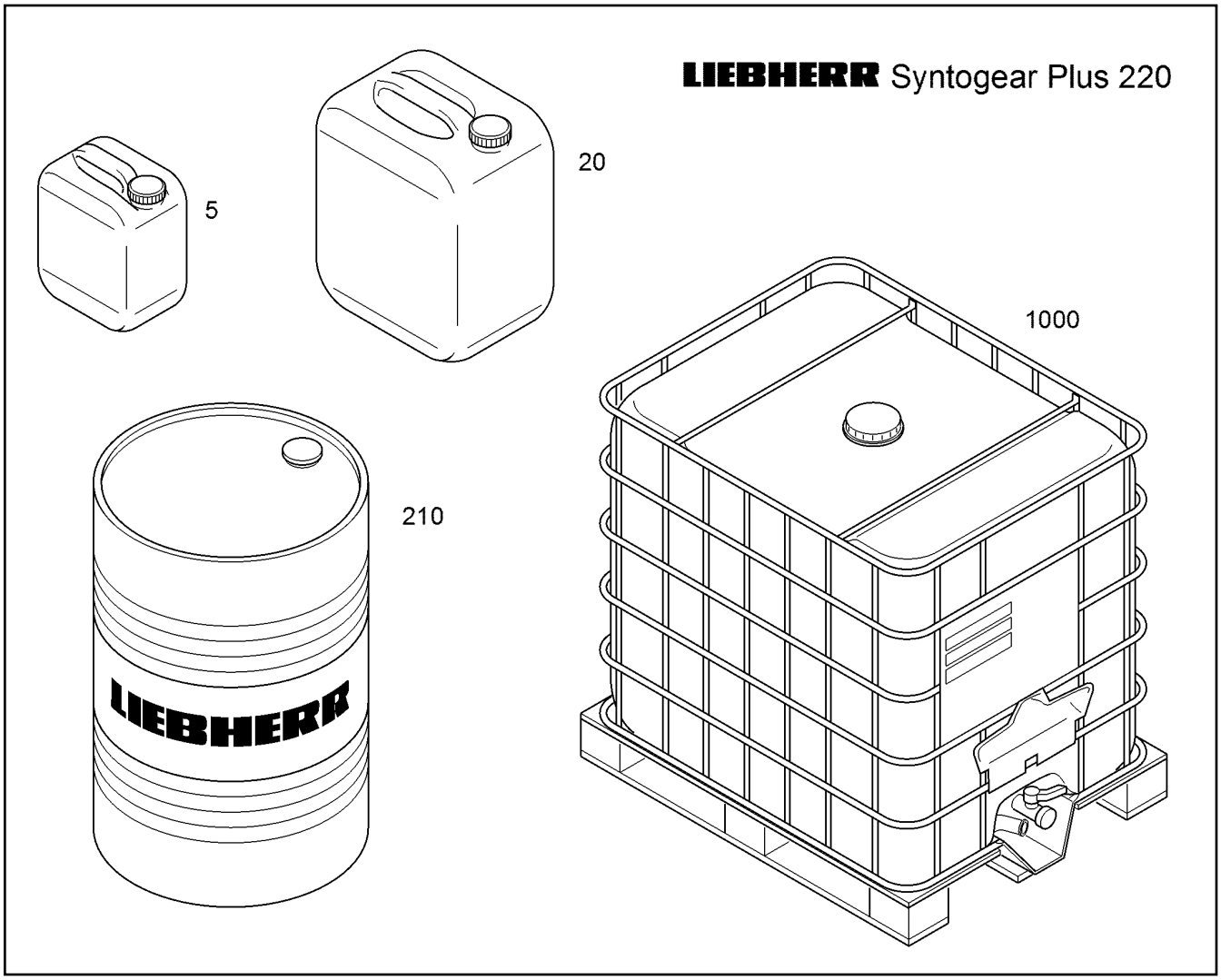

Pos.	Item	Quantity	Description	Designação	Serie	K
5	10190387	1	GEAR OIL LIEBHERR SYNTOGEAR PLUS/IS	ÓLEO DE TRANSMISSÃO		
20	10190388	1	GEAR OIL LIEBHERR SYNTOGEAR PLUS/IS	ÓLEO DE TRANSMISSÃO		
210	10190389	1l	GEAR OIL LIEBHERR SYNTOGEAR PLUS/IS	ÓLEO DE TRANSMISSÃO		
1000	10190390	1l	GEAR OIL LIEBHERR SYNTOGEAR PLUS/IS	ÓLEO DE TRANSMISSÃO		

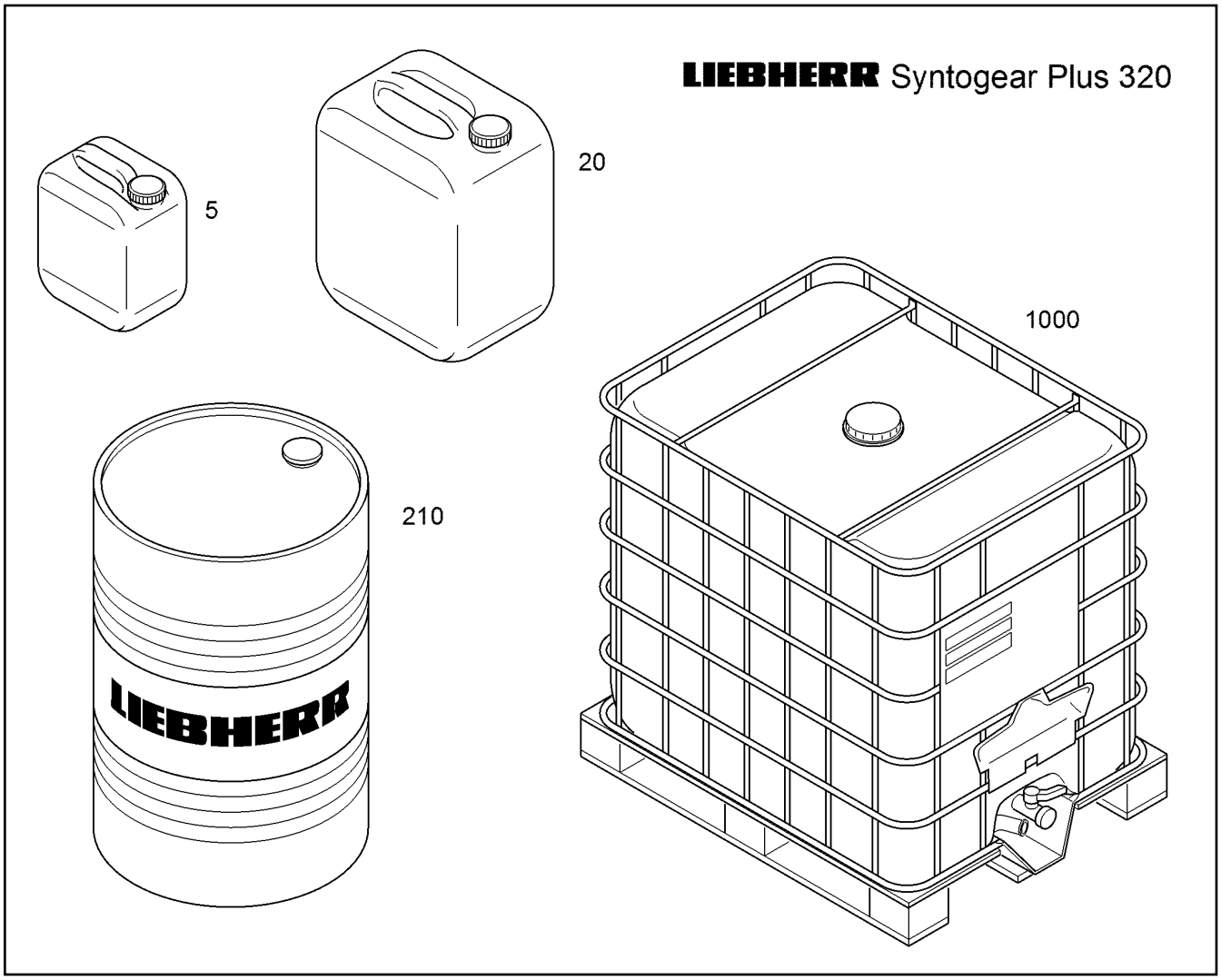

Pos.	Item	Quantity	Description	Designação	Serie	K
5	10190391	1	GEAR OIL LIEBHERR SYNTOGEAR PLUS/32	ÓLEO DE TRANSMISSÃO		
20	10190392	1	GEAR OIL LIEBHERR SYNTOGEAR PLUS/32	ÓLEO DE TRANSMISSÃO		
210	10190393	1l	GEAR OIL LIEBHERR SYNTOGEAR PLUS/32	ÓLEO DE TRANSMISSÃO		
1000	10190394	1l	GEAR OIL LIEBHERR SYNTOGEAR PLUS/32	ÓLEO DE TRANSMISSÃO		

Adblue

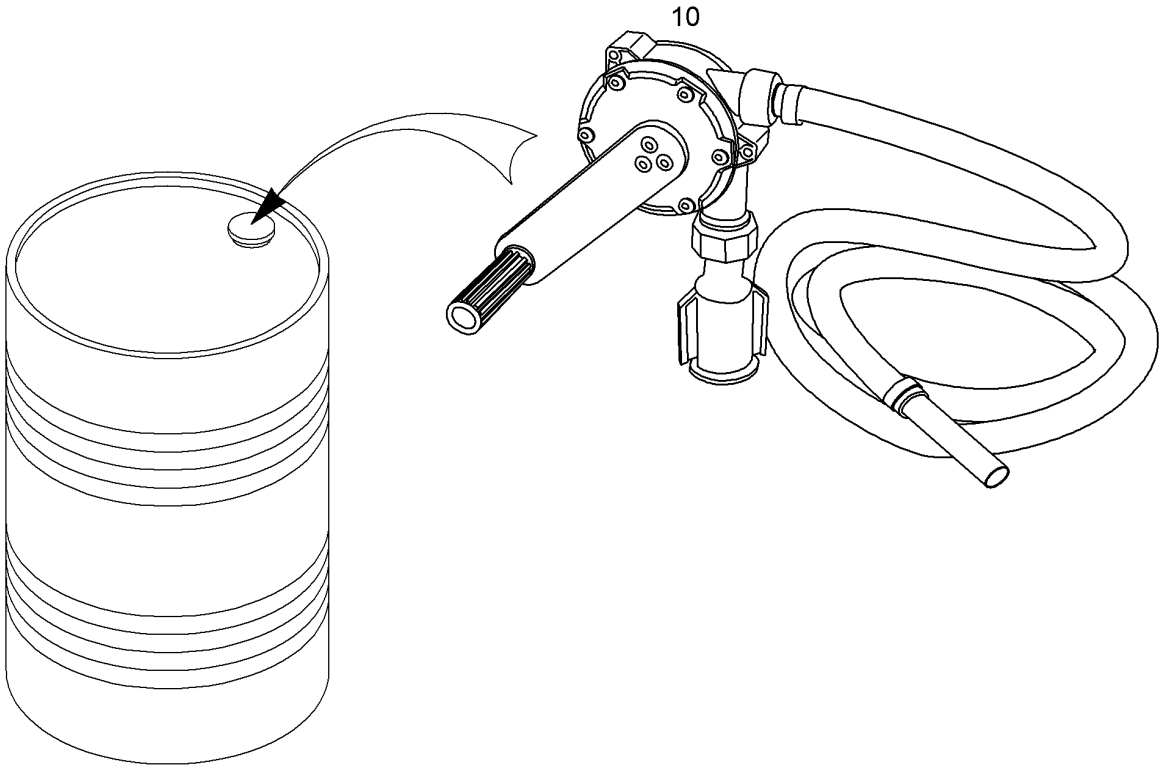

Pos.	Item	Quantity	Description	Designação	Serie	K
10	11825956	1	HAND PUMP ⇨ ❑ 50	BOMBA MANUAL		

Adblue

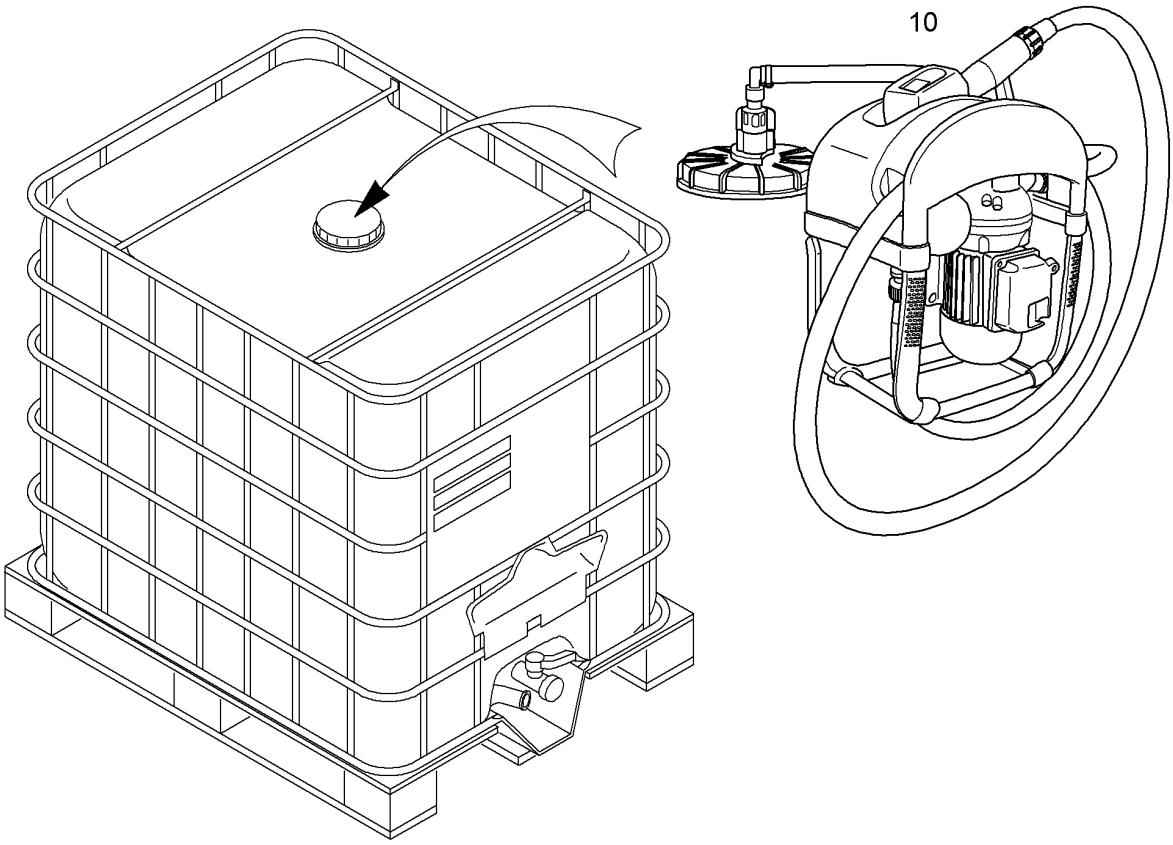

Pos.	Item	Quantity	Description	Designação	Serie	K
10	11823200	1	UREA DISPENSER SYSTEM ⇨ ❑ 49			

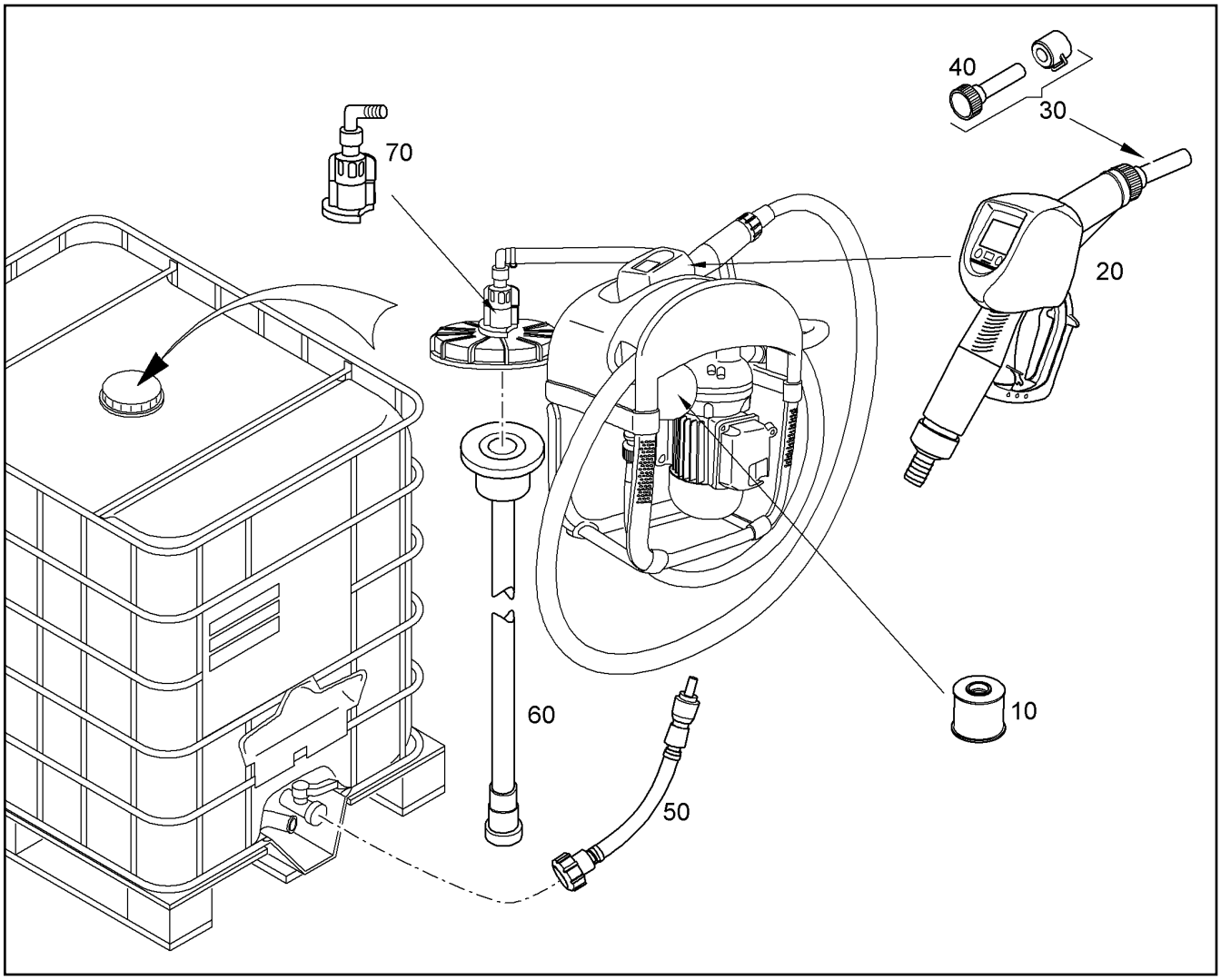

Pos.	Item	Quantity	Description	Designação	Serie	K
10	11825923	1	FILTER	FILTRO		
20	11825924	1	ANTIDRIP NOZZLE			
30	11825938	1	UREA TANK	TANQUE DE URÉIA		
40	11825926	1	END PIECE	PEÇA FINAL		
50	11825936	1	CONNECTING HOSE	MANGUEIRA DE LIGAÇÃO		1
60	11825935	1	SIPHON PIPE	MANGUEIRA DE SUCÇÃO		1
70	11825937	1	SUCTION CONNECTION	PEÇA DE CONEXÃO		

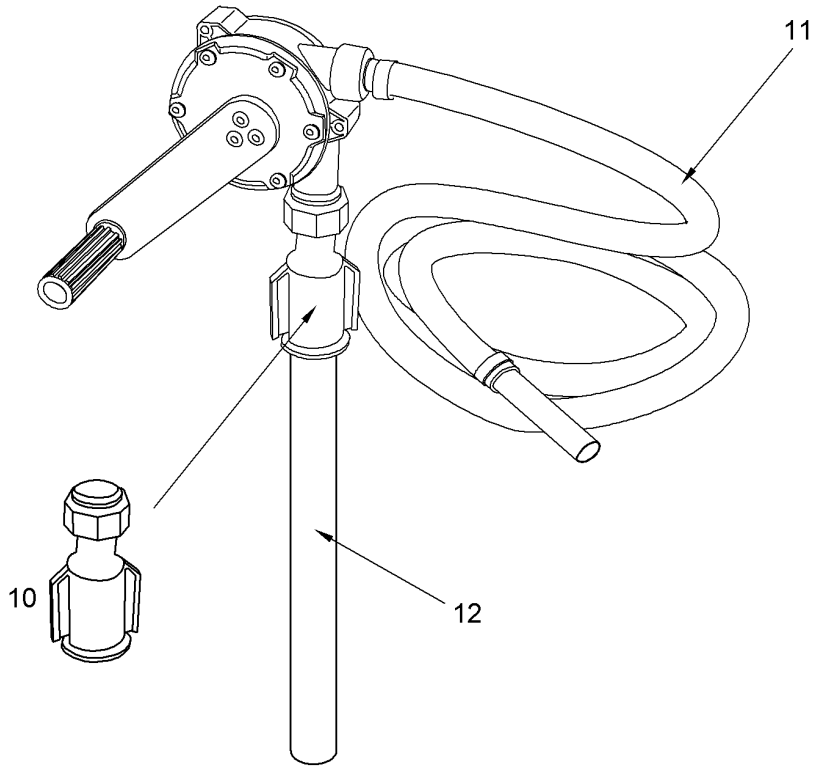

Pos.	Item	Quantity	Description	Designação	Serie	K
10	11826483	1	CONNECTING PIECE	PEÇA DE UNIÃO		
11	12200110	1	HOSE	MANGUEIRA		1
12	12200111	1	SIPHON PIPE	MANGUEIRA DE SUCÇÃO		1

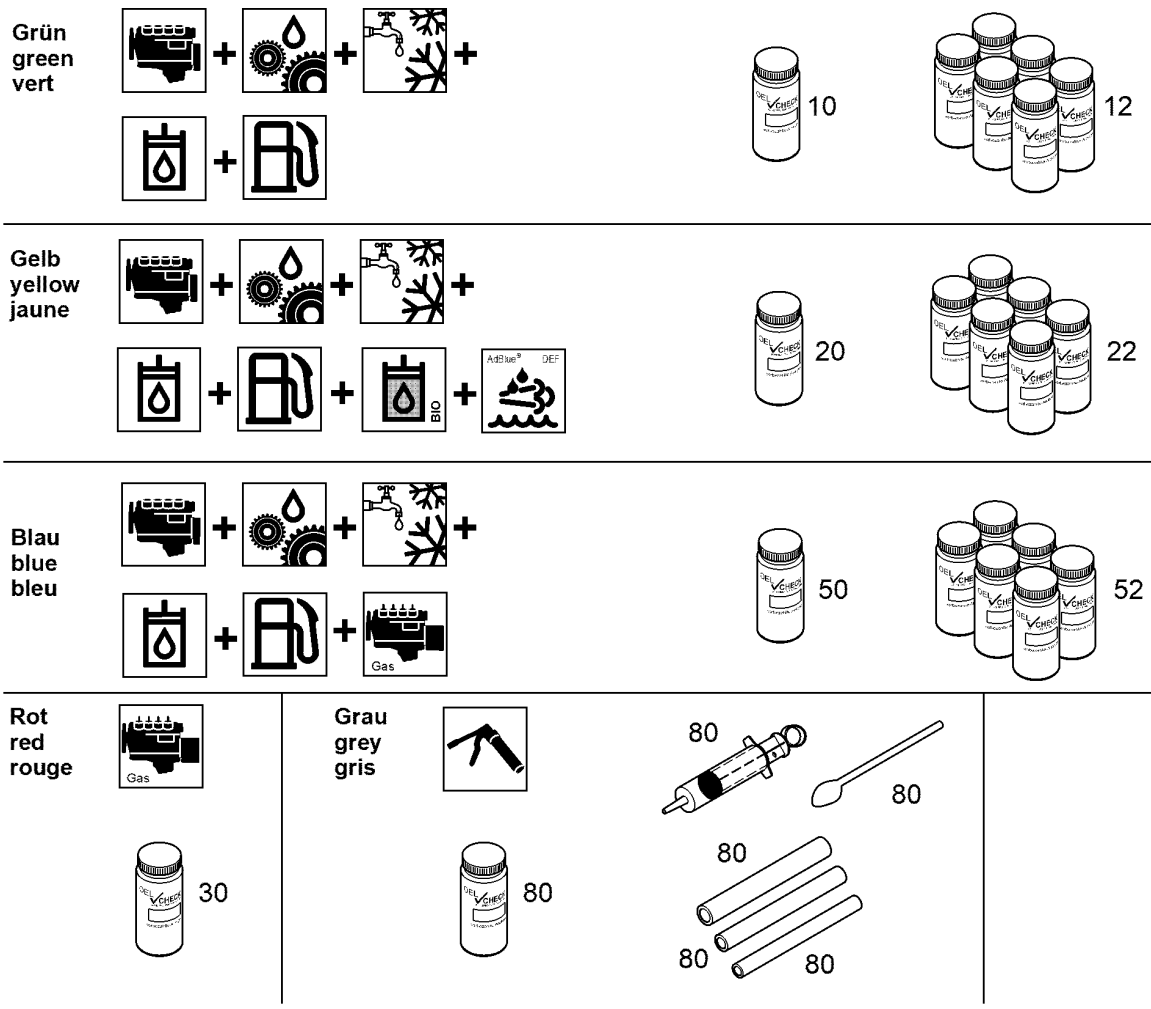

Pos.	Item	Quantity	Description	Designação	Serie	K
10	8145660	1	OIL ANALYSIS SET	CAIXA DE TRANSFERÊNCIA M		
12	7018368	1	OIL ANALYSIS SET	CAIXA DE TRANSFERÊNCIA M		
20	7026817	1	BIO-OIL-ANALYSIS SET	CONJ. DE ANÁLISE ÓLEO BIOL.		
22	7026088	1	BIO-OIL-ANALYSIS SET	CONJ. DE ANÁLISE ÓLEO BIOL.		
30	12208231	1	ANALYSIS SET	KIT DE ANÁLISE		
50	12208230	1	ANALYSIS SET	KIT DE ANÁLISE		
52	10191453	1	ANALYSIS SET	KIT DE ANÁLISE		
80	12693519	1	GREASE ANALYSIS SET			

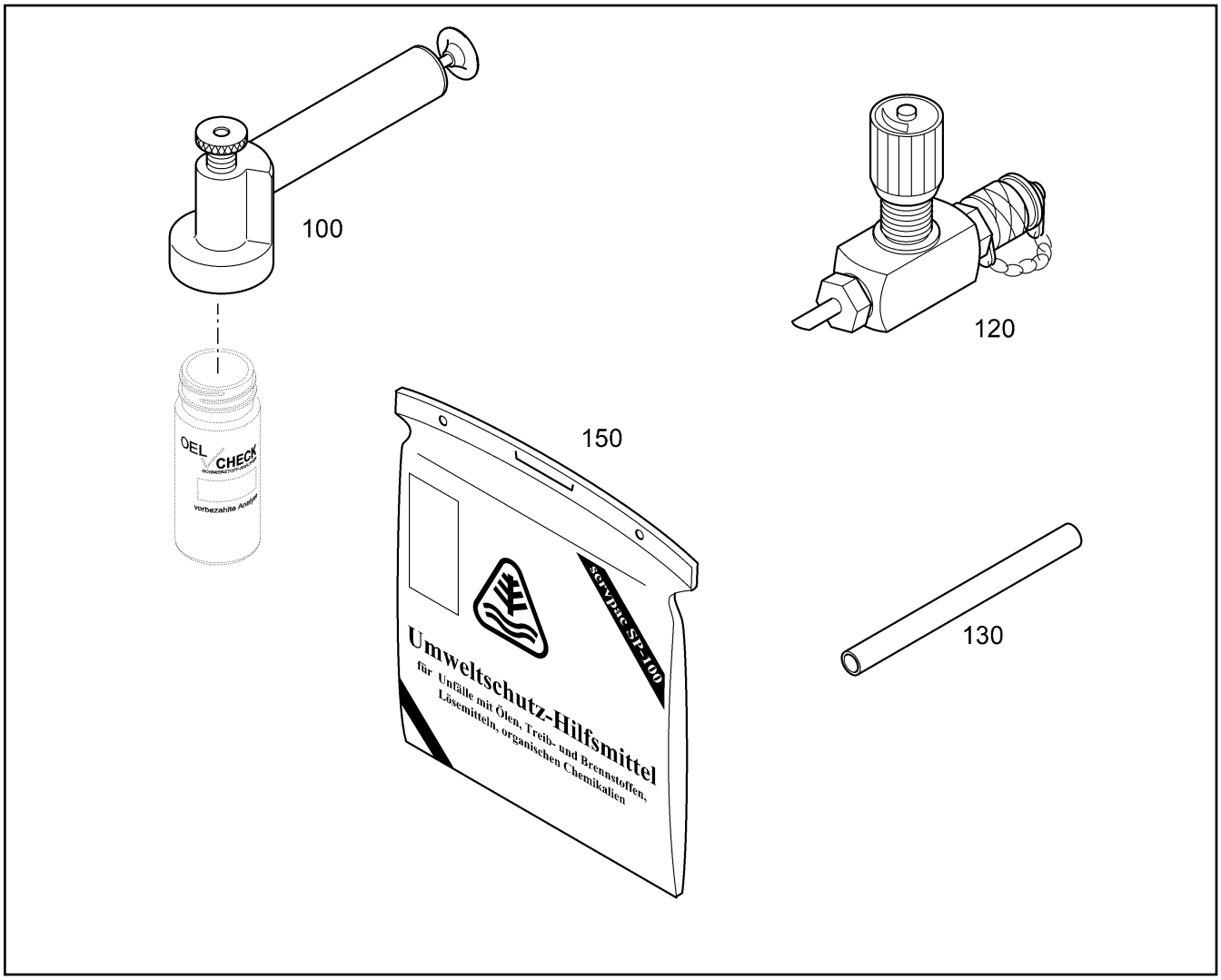

Pos.	Item	Quantity	Description	Designação	Serie	K
100	8145666	1	HAND PUMP	BOMBA MANUAL		
120	7019068	1	EXTRACTION VALVE	VÁLVULA DE EXTRAÇÃO		
130	10219500	1m	SIPHON PIPE	MANGUEIRA DE SUCÇÃO		1
150	7023359	1	OIL ACCIDENT CASE ZW	KIT PARA ACIDENTE COM ÓLEO		

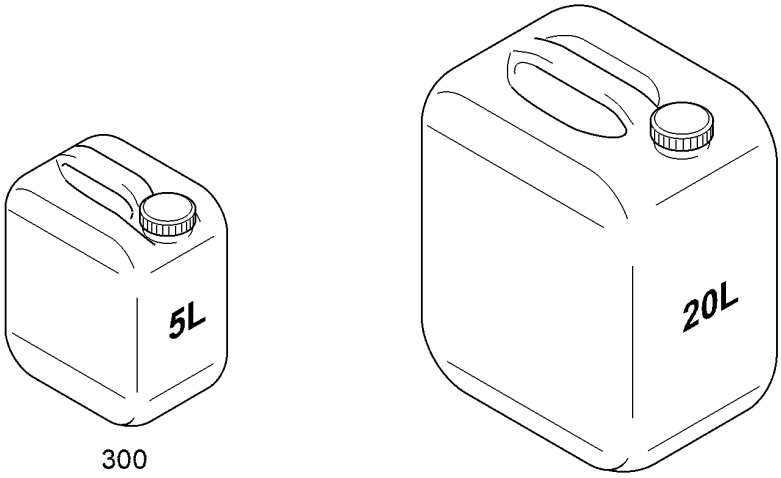

300
302

350
352

302 + 352	**blau** **blue** **bleu**
300 + 350	**weiss** **white** **blanc**

Pos.	Item	Quantity	Description	Designação	Serie	K
300	11481250	1				
302	11481247	1				
350	11481248	1				
352	11481249	1				

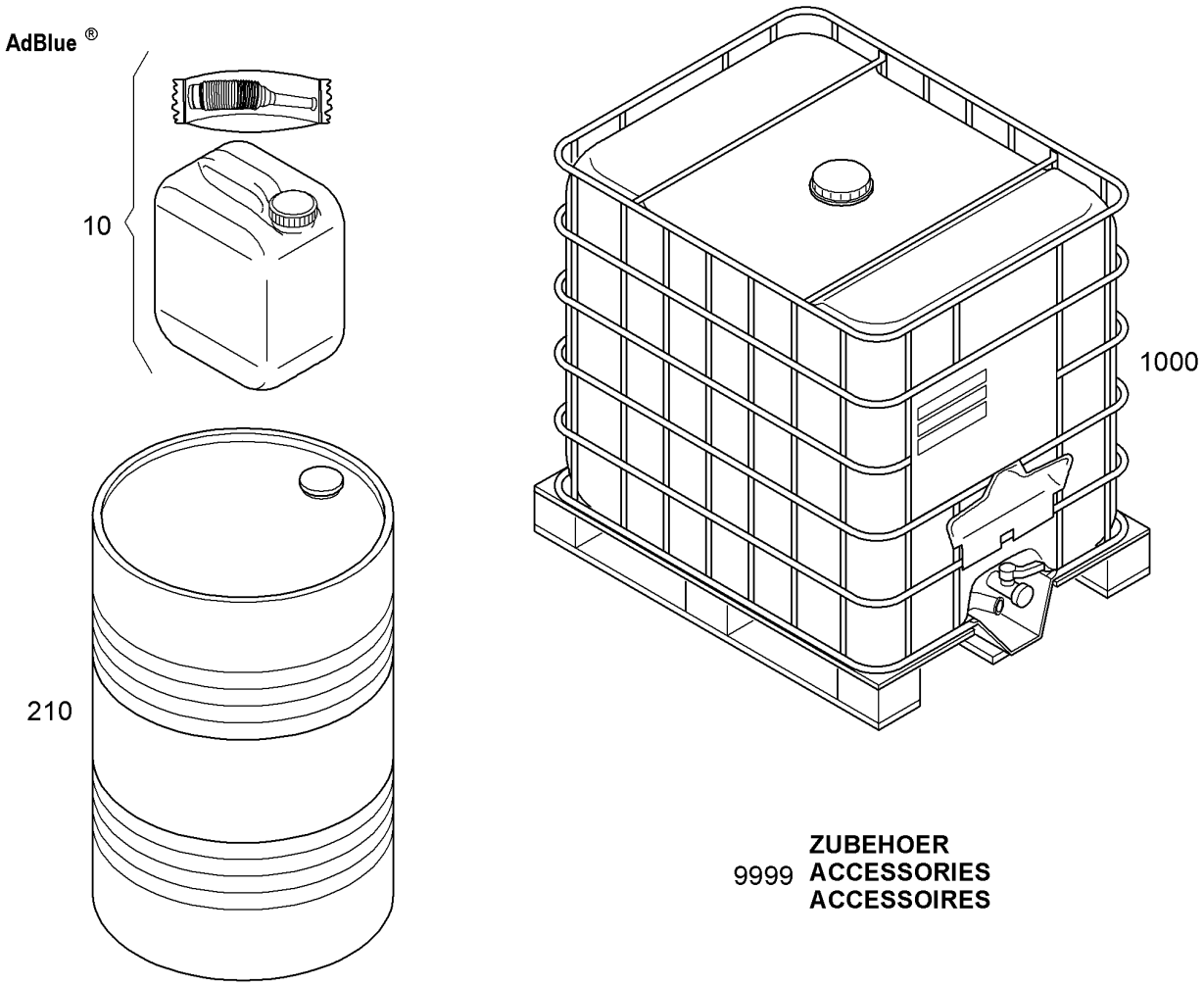

Pos.	Item	Quantity	Description	Designação	Serie	K
10	11485620	1	UREA SOLUTION 10L KANISTER	SOLUÇÃO DE UREIA		
210	11485621	1	UREA SOLUTION	SOLUÇÃO DE UREIA		
1000	11485622	1	UREA SOLUTION	SOLUÇÃO DE UREIA		
9999		1	ACCESSORIES ⇨ ❑ 42	ACESSÓRIOS		

LIEBHERR Antifreeze OS Concentrate

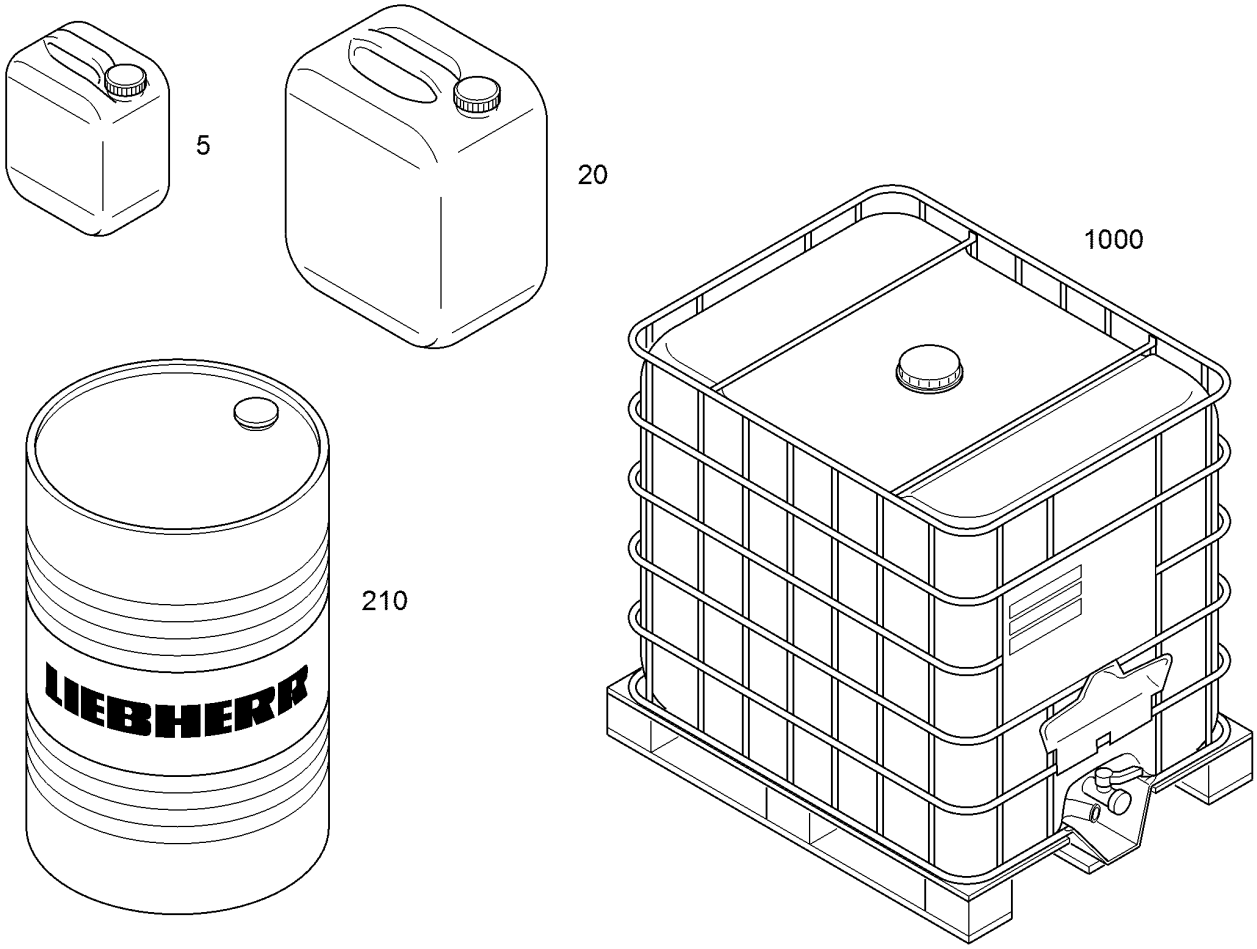

Pos.	Item	Quantity	Description	Designação	Serie	K
5	11657384	1	ANTICORROSION ANTIFREEZER	LIQUIDO DE ARREFECIMENTO		
20	11657385	1	ANTICORROSION ANTIFREEZER	LIQUIDO DE ARREFECIMENTO		
210	11657386	1	ANTICORROSION ANTIFREEZER	LIQUIDO DE ARREFECIMENTO		
1000	11657387	1	ANTICORROSION ANTIFREEZER	LIQUIDO DE ARREFECIMENTO		

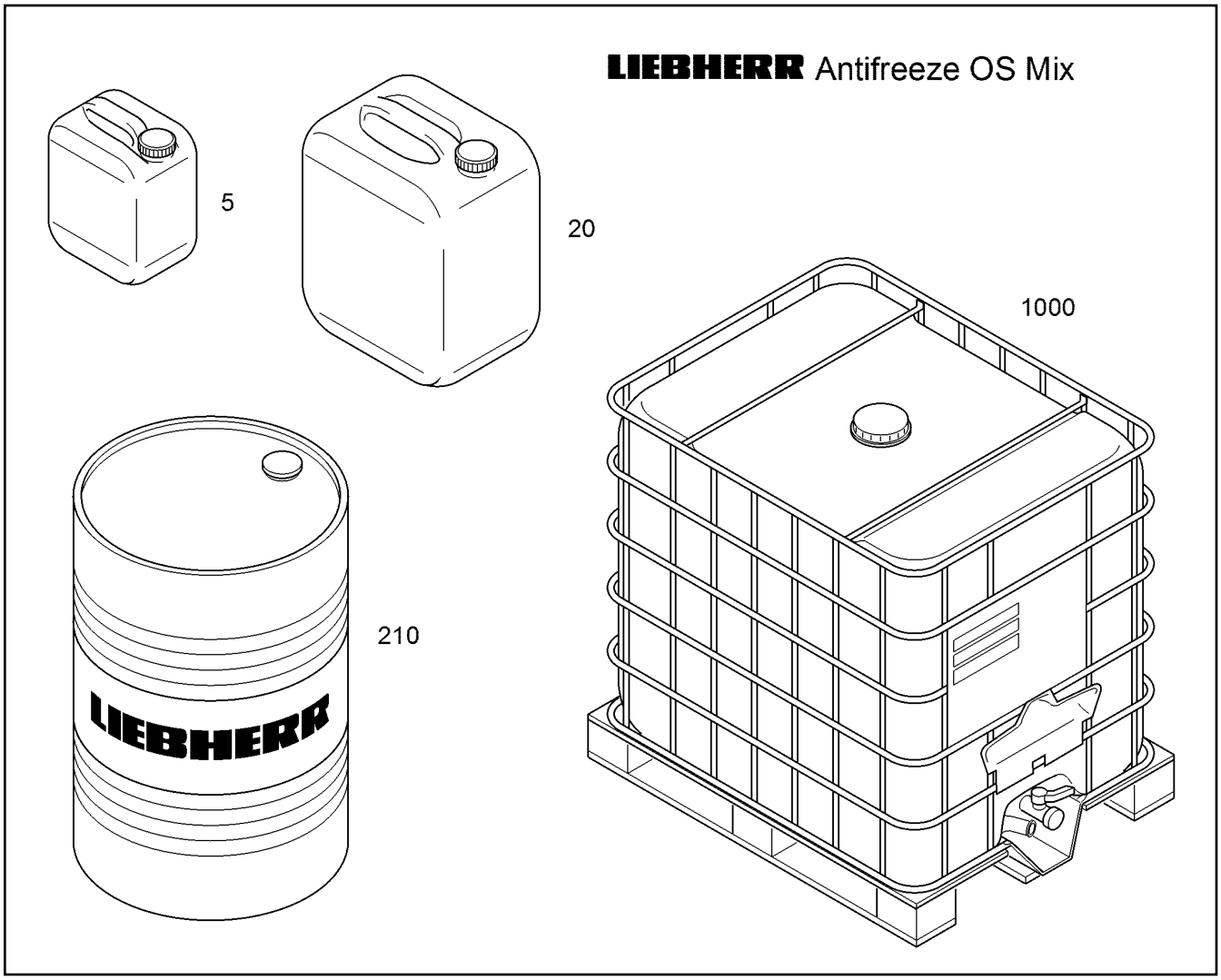

Pos.	Item	Quantity	Description	Designação	Serie	K
5	11657389	1	ANTICORROSION ANTIFREEZER	LIQUIDO DE ARREFECIMENTO		
20	11657390	1	ANTICORROSION ANTIFREEZER	LIQUIDO DE ARREFECIMENTO		
210	11657391	1	ANTICORROSION ANTIFREEZER	LIQUIDO DE ARREFECIMENTO		
1000	11657392	1	ANTICORROSION ANTIFREEZER	LIQUIDO DE ARREFECIMENTO		



10



20

Pos.	Item	Quantity	Description	Designação	Serie	K
10		1l	ANTICORROSION ANTIFREEZER ⇨ ❑ 55	LIQUIDO DE ARREFECIMENTO		
20		1l	ANTICORROSION ANTIFREEZER ⇨ ❑ 56	LIQUIDO DE ARREFECIMENTO		

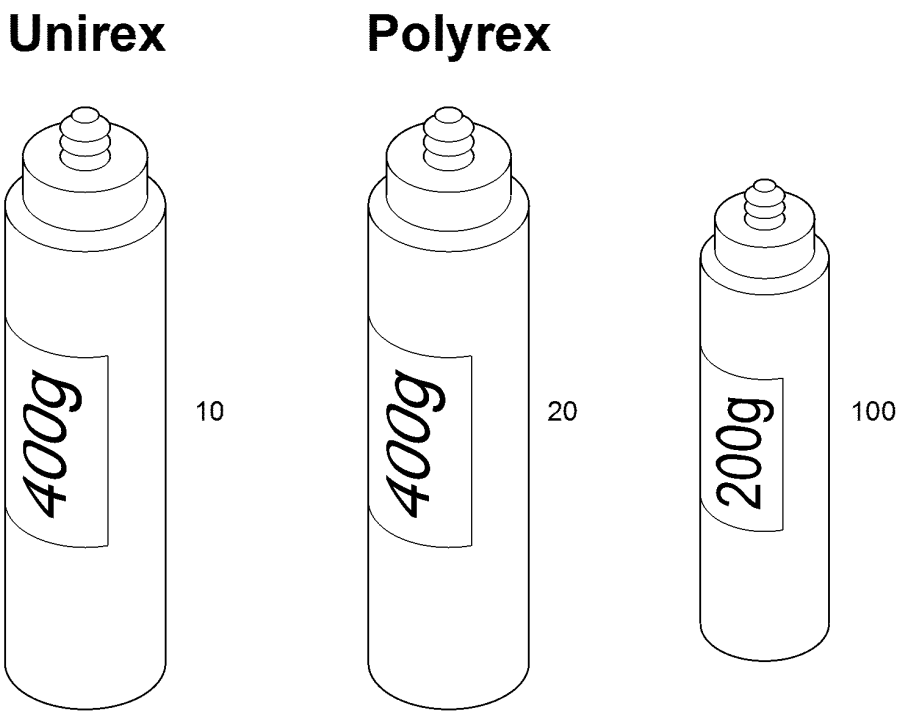

Pos.	Item	Quantity	Description	Designação	Serie	K
10	11008141	1	GREASE /0,4kg	GRAXA		
20	11693757	1	GREASE /0,4kg	GRAXA		
100	10802651	1	LOW TEMPERATURE GREASE LGLT2/0,2kg	GRAXA PARA BAIXAS TEMPER		

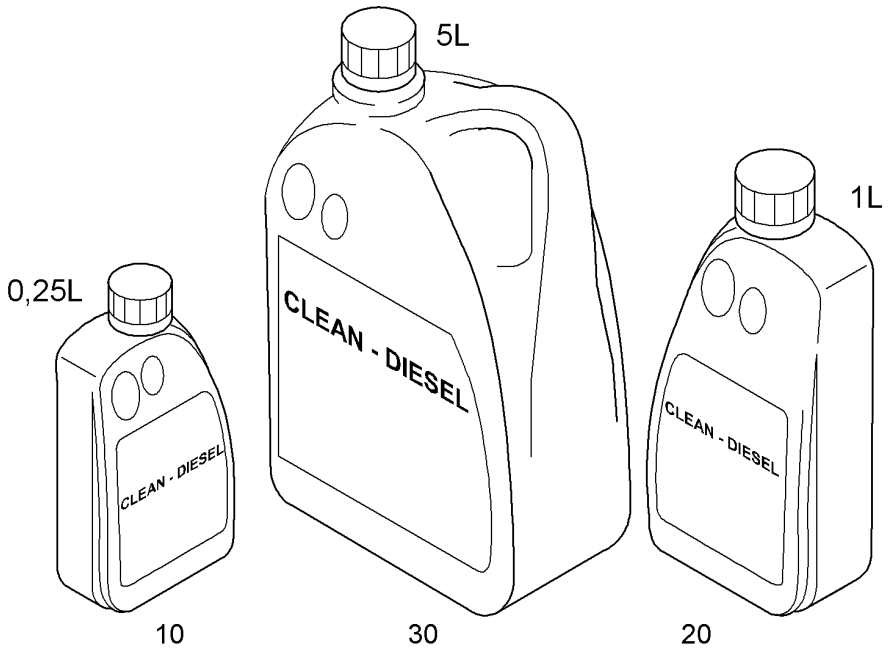

Pos.	Item	Quantity	Description	Designação	Serie	K
10	11690885	1	SATACEN DIESEL ADDITIVE 0,25L FLASCH	ADITIVO PARA DIESEL		
20	11485238	1	SATACEN DIESEL ADDITIVE	ADITIVO PARA DIESEL		
30	11485237	1	SATACEN DIESEL ADDITIVE	ADITIVO PARA DIESEL		



10

Pos.	Item	Quantity	Description	Designação	Serie	K
10	8610025	1	LUBRICANT	LUBRIFICANTE		

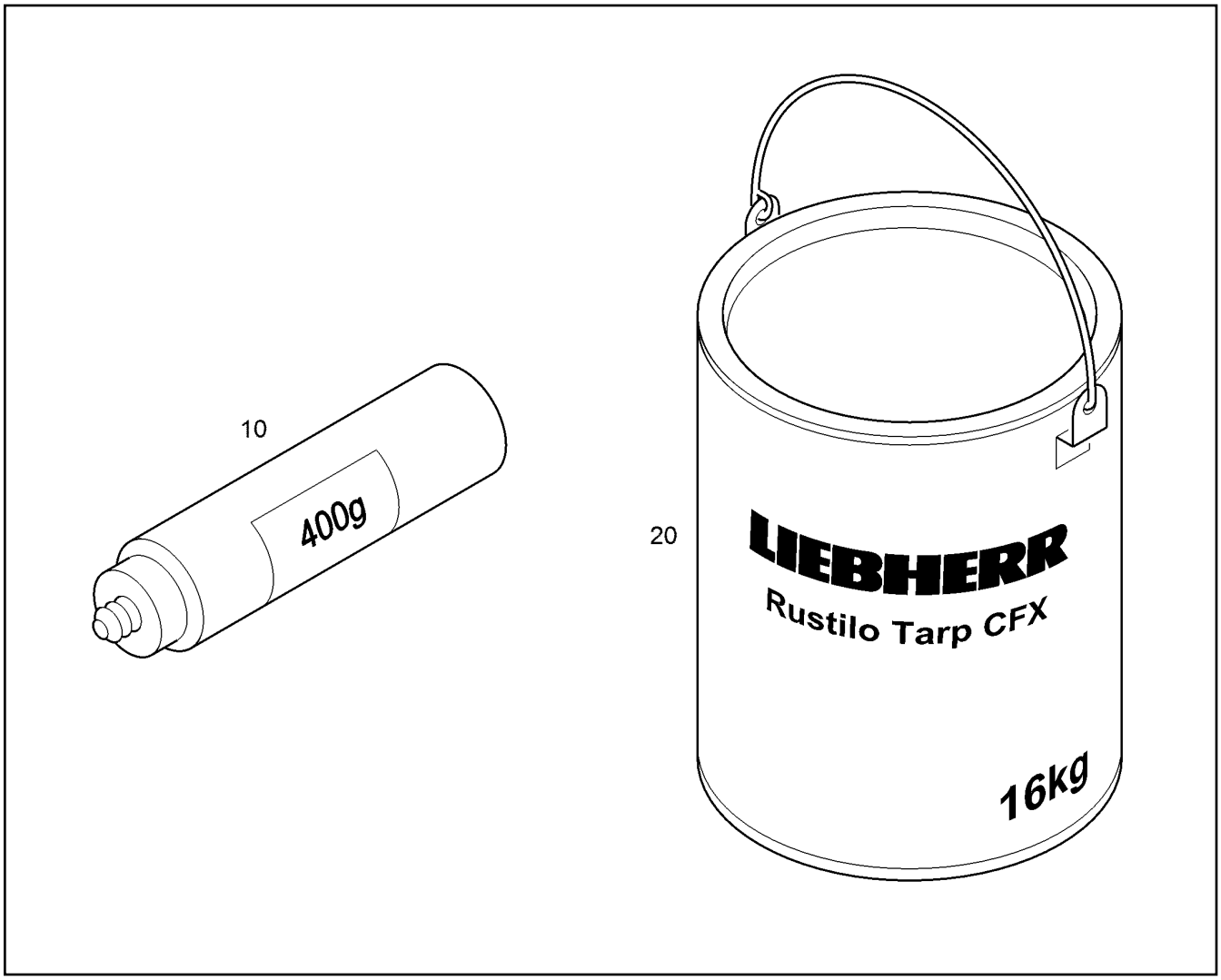

Pos.	Item	Quantity	Description	Designação	Serie	K
10	11841450	1	UNIVERSAL GREASE FUCHS LUBRITECH/0,	GRAXA UNIVERSAL		
20	8611031	1kg	RUSTILO TARP 16KG	RUSTILO TARP		

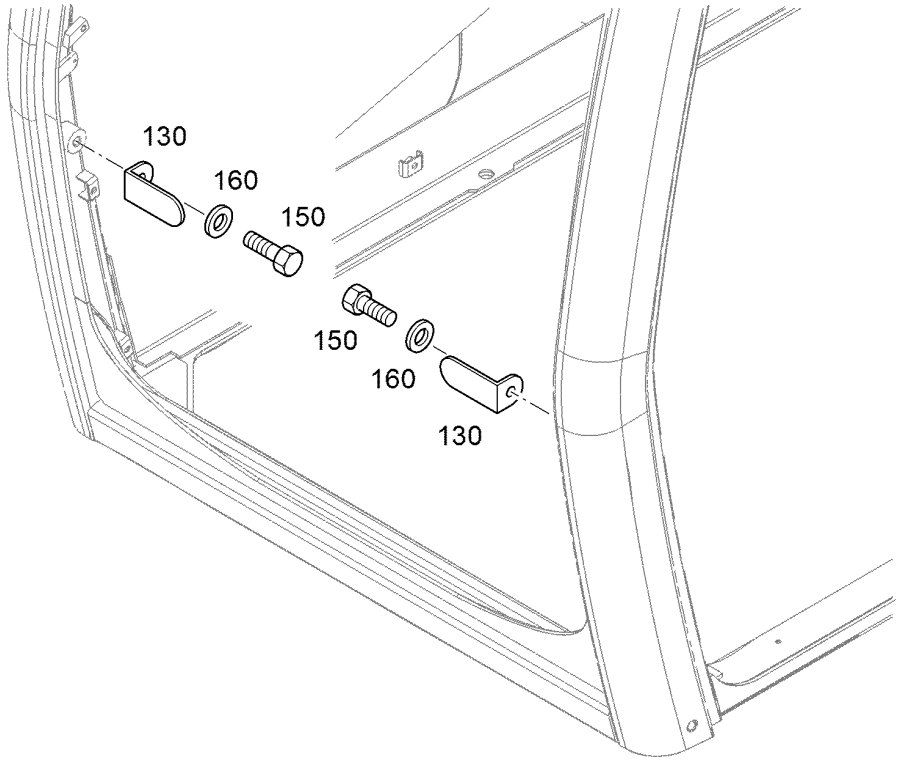

Pos.	Item	Quantity	Description	Designação	Serie	K
130		2	SHEET	PLACA DE APOIO		
150		2	HEX SCREW ISO 4017 M8X25 8.8 480H	PARAFUSO SEXTAVADO		
160		2	WASHER 8 300HV	ARRUELA		

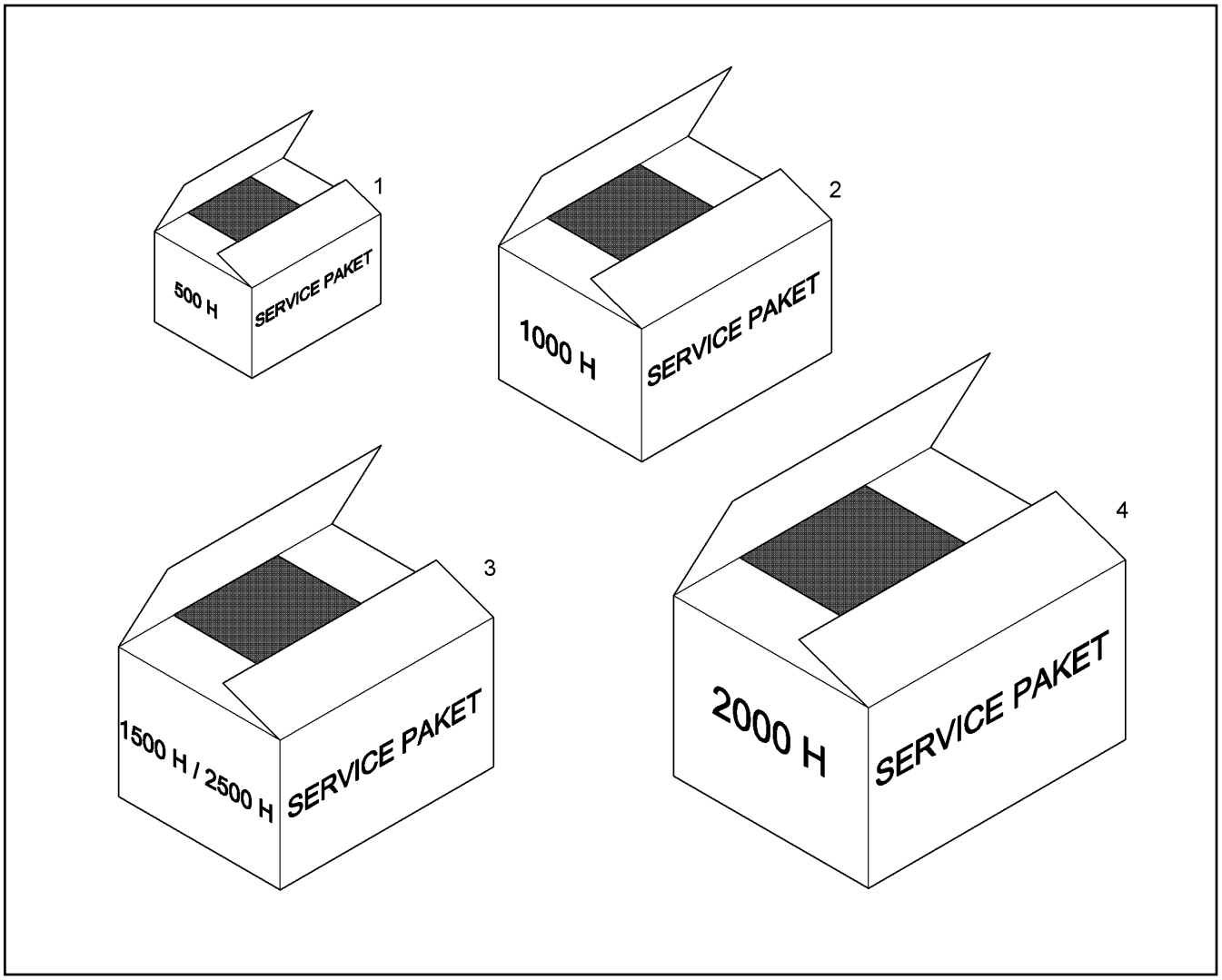

Pos.	Item	Quantity	Description	Designação	Serie	K
1	12486931	1	SERVICE KIT FIRST 500h ⇨ ❑ 64	KIT DE MANUTENCAO		
2	12486932	1	SERVICE KIT 1000h ⇨ ❑ 67	KIT DE MANUTENÇÃO		
3	12486933	1	SERVICE KIT 1500-2500h ⇨ ❑ 70	KIT DE MANUTENÇÃO		
4	12486934	1	SERVICE KIT 2000h ⇨ ❑ 71	KIT DE MANUTENÇÃO		

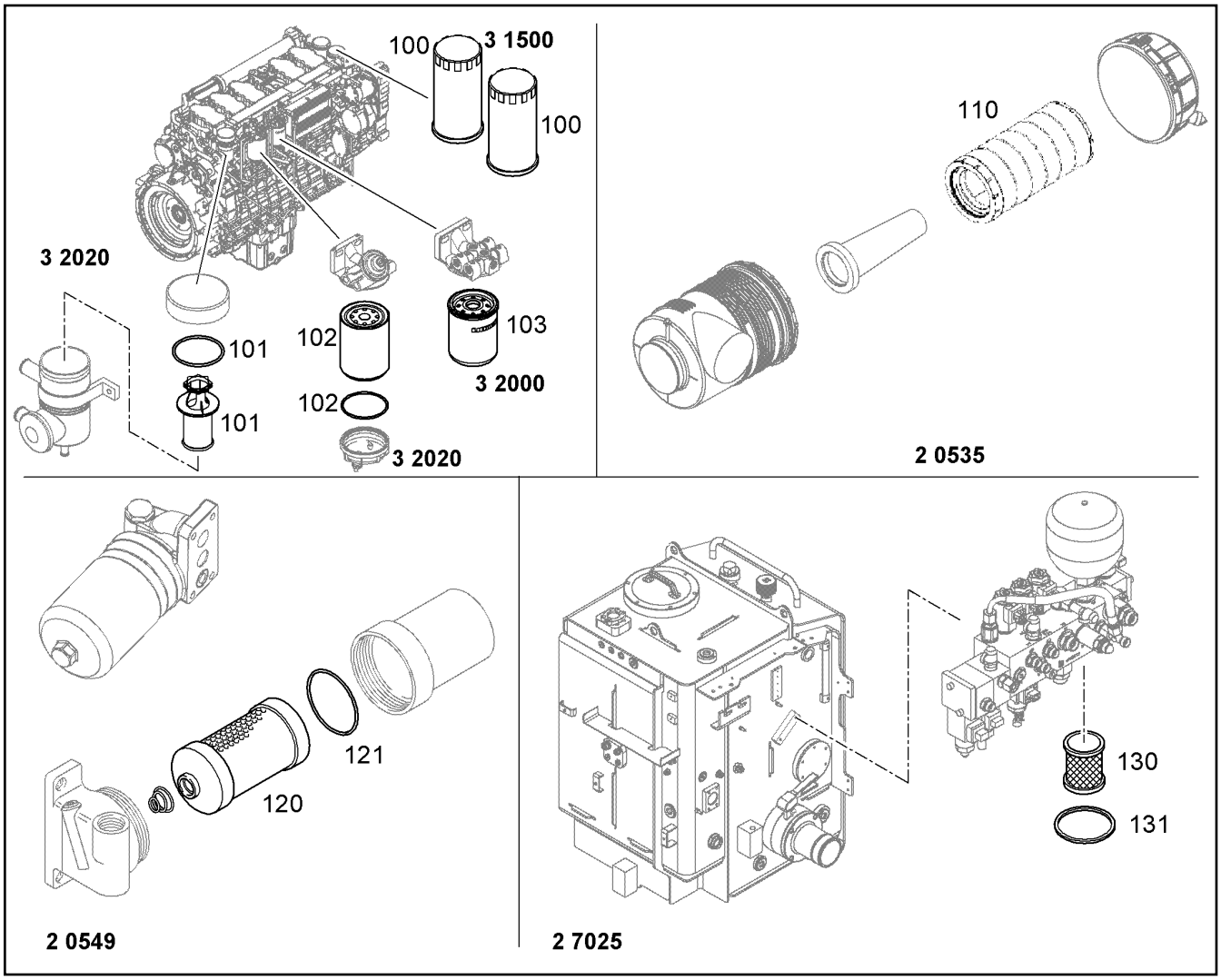

Pos.	Item	Quantity	Description	Designação	Serie	K
100	10297295	2	EASY-CHANGE FILTER 9µm	FILTRO INTERCAMBIÁVEL		
101	12417487	1	SPARE ELEMENT OEL	ELEMENTO DE SUBST. DO FILTR		
102	10044302	1	FUEL PREFILTER	PRE-FILTRO DE COMBUSTÍVEL		
103	12820742	1	FUEL FINE FILTER 3-5µm	FILTRO DE COMBUSTÍVEL		
110	10217169	1	AIR FILTER CARTRIDGE	CARTUCHO DE FILTRO DE AR		
120	10220705	1	FILTER ELEMENT	ELEMENTO FILTRANTE		
121	10220707	1	O-RING 78,97X3,53	ANEL-O		
130	11342118	1	FILTER ELEMENT 16µm	ELEMENTO FILTRANTE		
131	7264028	1	O-RING	ANEL-O		

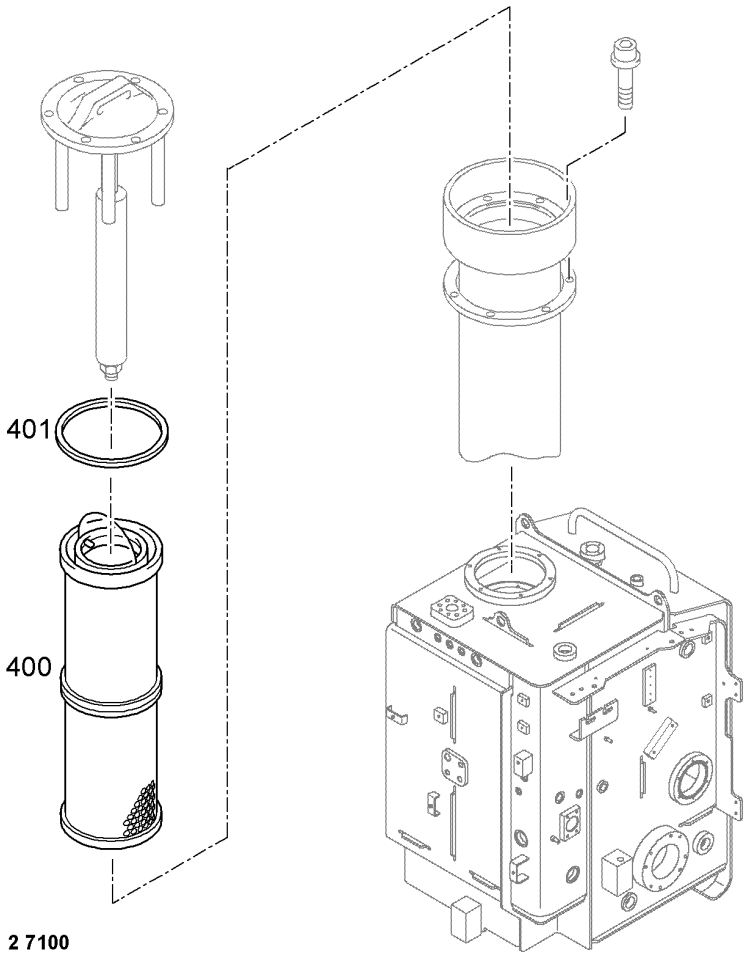

Pos.	Item	Quantity	Description	Designação	Serie	K
400	11060250	1	FIBRE GLASS FILTER INSERT 15/5µm	FILTRO DE FIBRA DE VIDRO		
401	7368993	1	SEAL	VEDAÇÃO		

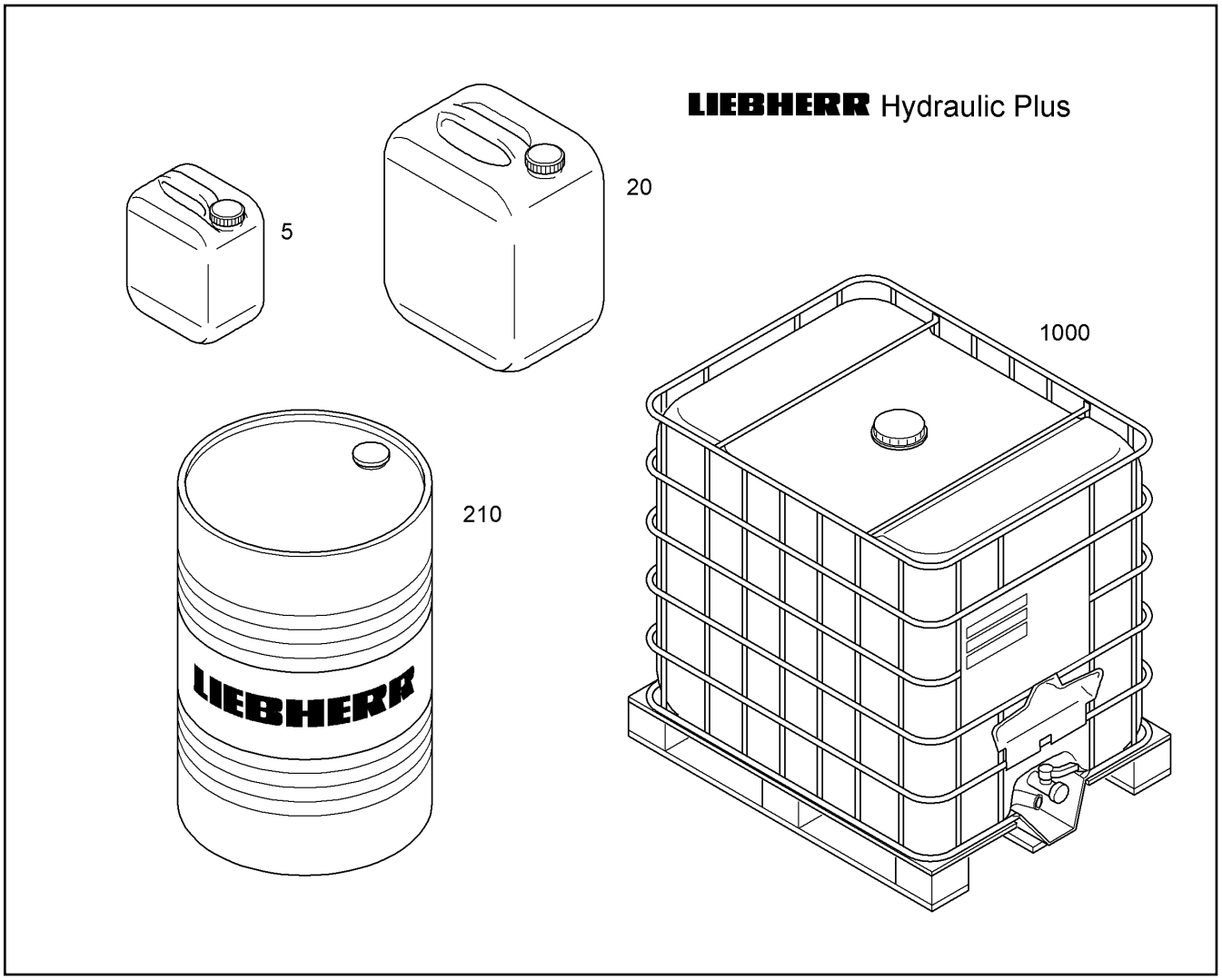

Pos.	Item	Quantity	Description	Designação	Serie	K
5	10296480	1	HYDRAULIC OIL LIEBHERR/ISO-VG 46/5L	ÓLEO HIDRÁULICO		
20	10330272	1	HYDRAULIC OIL LIEBHERR/ISO-VG 46/20L	ÓLEO HIDRÁULICO		
210	10330276	1	HYDRAULIC OIL LIEBHERR/ISO-VG 46/210L	ÓLEO HIDRÁULICO		
1000	10296481	1	HYDRAULIC OIL LIEBHERR/ISO-VG 46/1000	ÓLEO HIDRÁULICO		

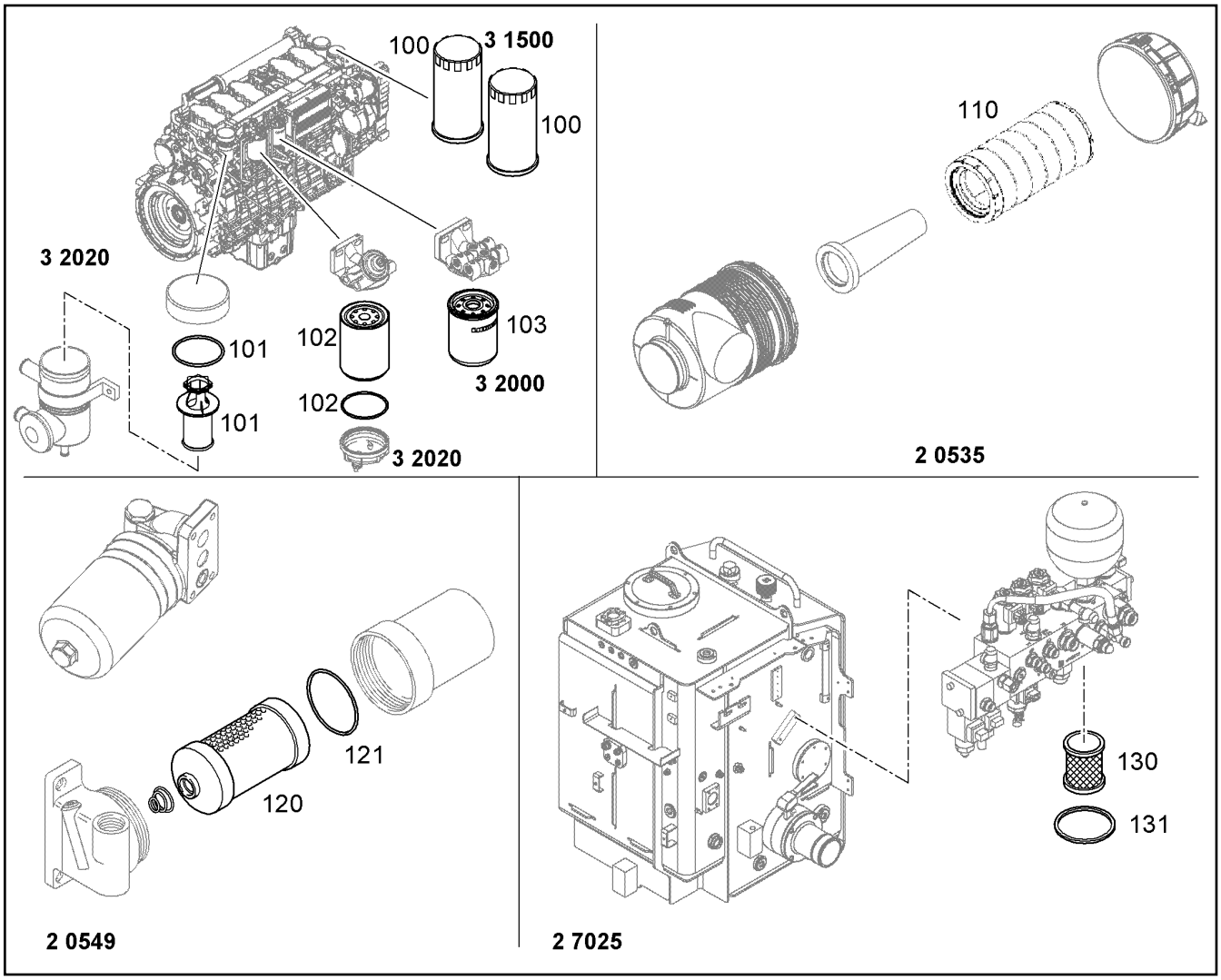

Pos.	Item	Quantity	Description	Designação	Serie	K
100	10297295	2	EASY-CHANGE FILTER 9µm	FILTRO INTERCAMBIÁVEL		
101	12417487	1	SPARE ELEMENT OEL	ELEMENTO DE SUBST. DO FILTR		
102	10044302	1	FUEL PREFILTER	PRE-FILTRO DE COMBUSTÍVEL		
103	12820742	1	FUEL FINE FILTER 3-5µm	FILTRO DE COMBUSTÍVEL		
110	10217169	1	AIR FILTER CARTRIDGE	CARTUCHO DE FILTRO DE AR		
120	10220705	1	FILTER ELEMENT	ELEMENTO FILTRANTE		
121	10220707	1	O-RING 78,97X3,53	ANEL-O		
130	11342118	1	FILTER ELEMENT 16µm	ELEMENTO FILTRANTE		
131	7264028	1	O-RING	ANEL-O		

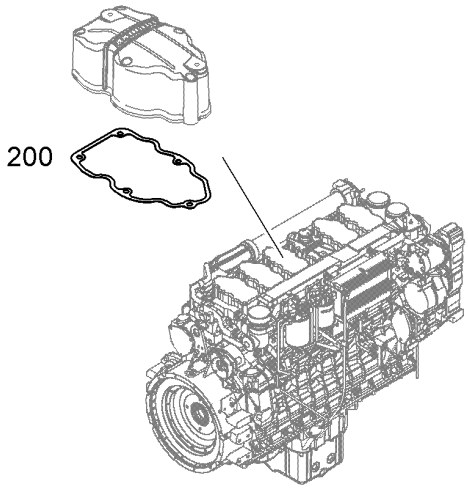

3 0800

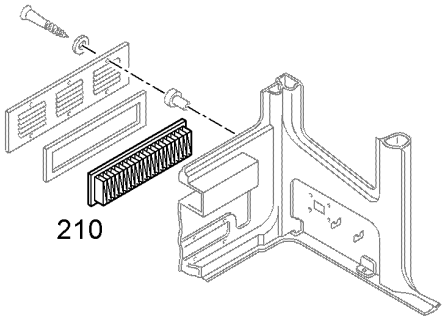

2 8780

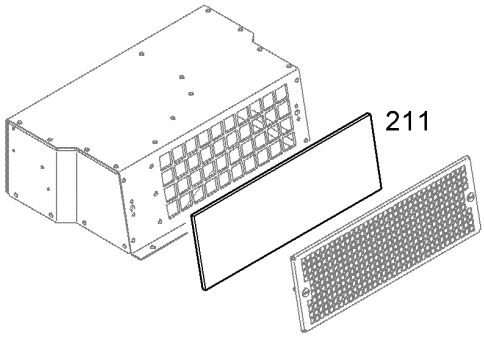

2 6283

Pos.	Item	Quantity	Description	Designação	Serie	K
200	10118554	6	SEAL	VEDAÇÃO		
210	7028951	1	AIR FILTER	FILTRO DE AR		
211	10022770	1	FILTER MAT	ESTEIRA DE FILTRO		

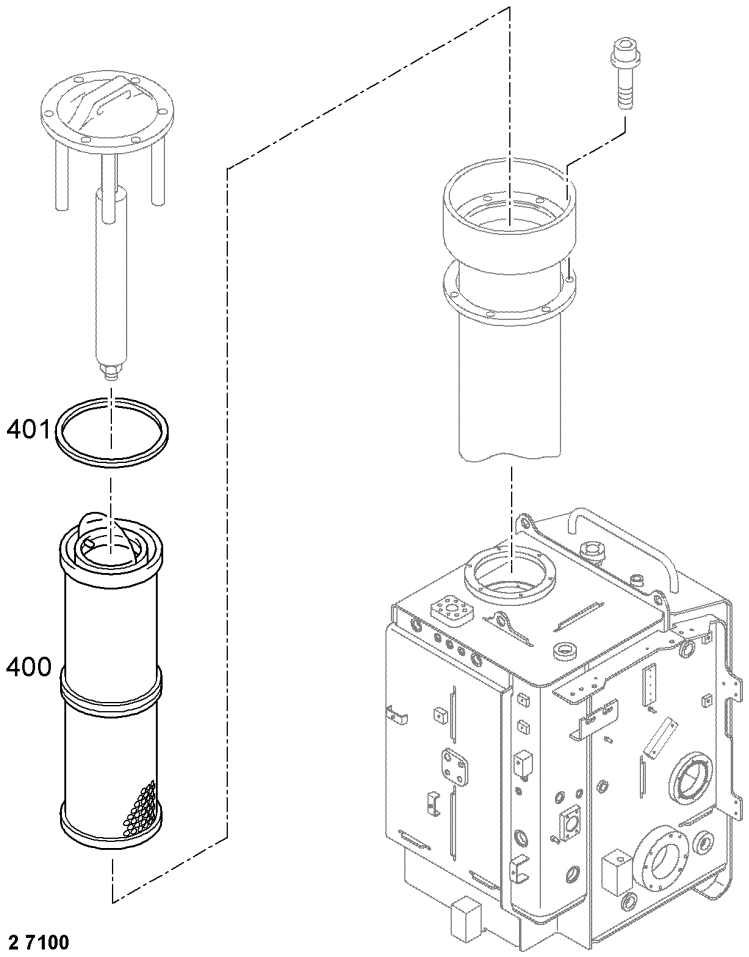

Pos.	Item	Quantity	Description	Designação	Serie	K
400	11060250	1	FIBRE GLASS FILTER INSERT 15/5µm	FILTRO DE FIBRA DE VIDRO		
401	7368993	1	SEAL	VEDAÇÃO		

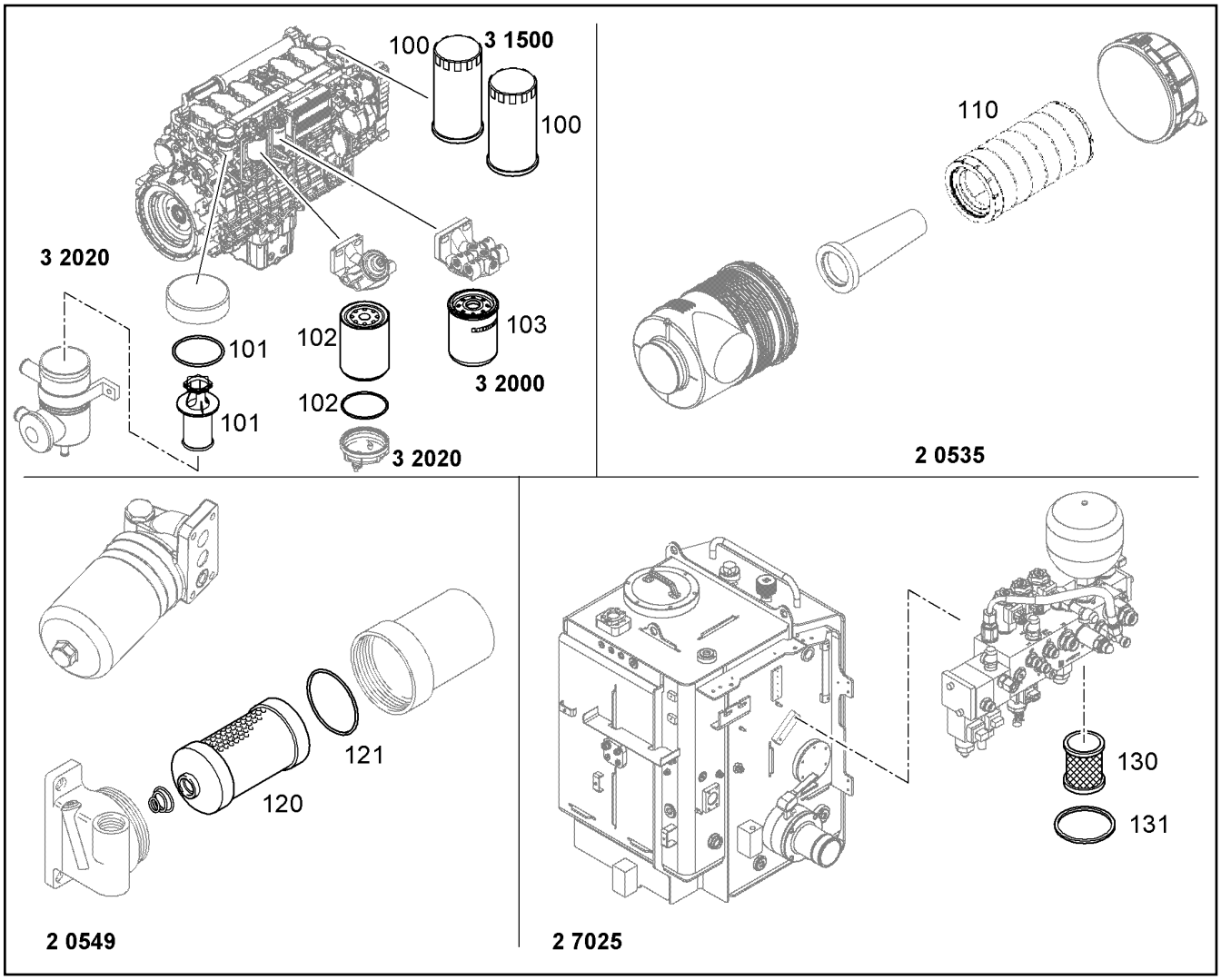

Pos.	Item	Quantity	Description	Designação	Serie	K
100	10297295	2	EASY-CHANGE FILTER 9µm	FILTRO INTERCAMBIÁVEL		
101	12417487	1	SPARE ELEMENT OEL	ELEMENTO DE SUBST. DO FILTR		
102	10044302	1	FUEL PREFILTER	PRE-FILTRO DE COMBUSTÍVEL		
103	12820742	1	FUEL FINE FILTER 3-5µm	FILTRO DE COMBUSTÍVEL		
110	10217169	1	AIR FILTER CARTRIDGE	CARTUCHO DE FILTRO DE AR		
120	10220705	1	FILTER ELEMENT	ELEMENTO FILTRANTE		
121	10220707	1	O-RING 78,97X3,53	ANEL-O		
130	11342118	1	FILTER ELEMENT 16µm	ELEMENTO FILTRANTE		
131	7264028	1	O-RING	ANEL-O		

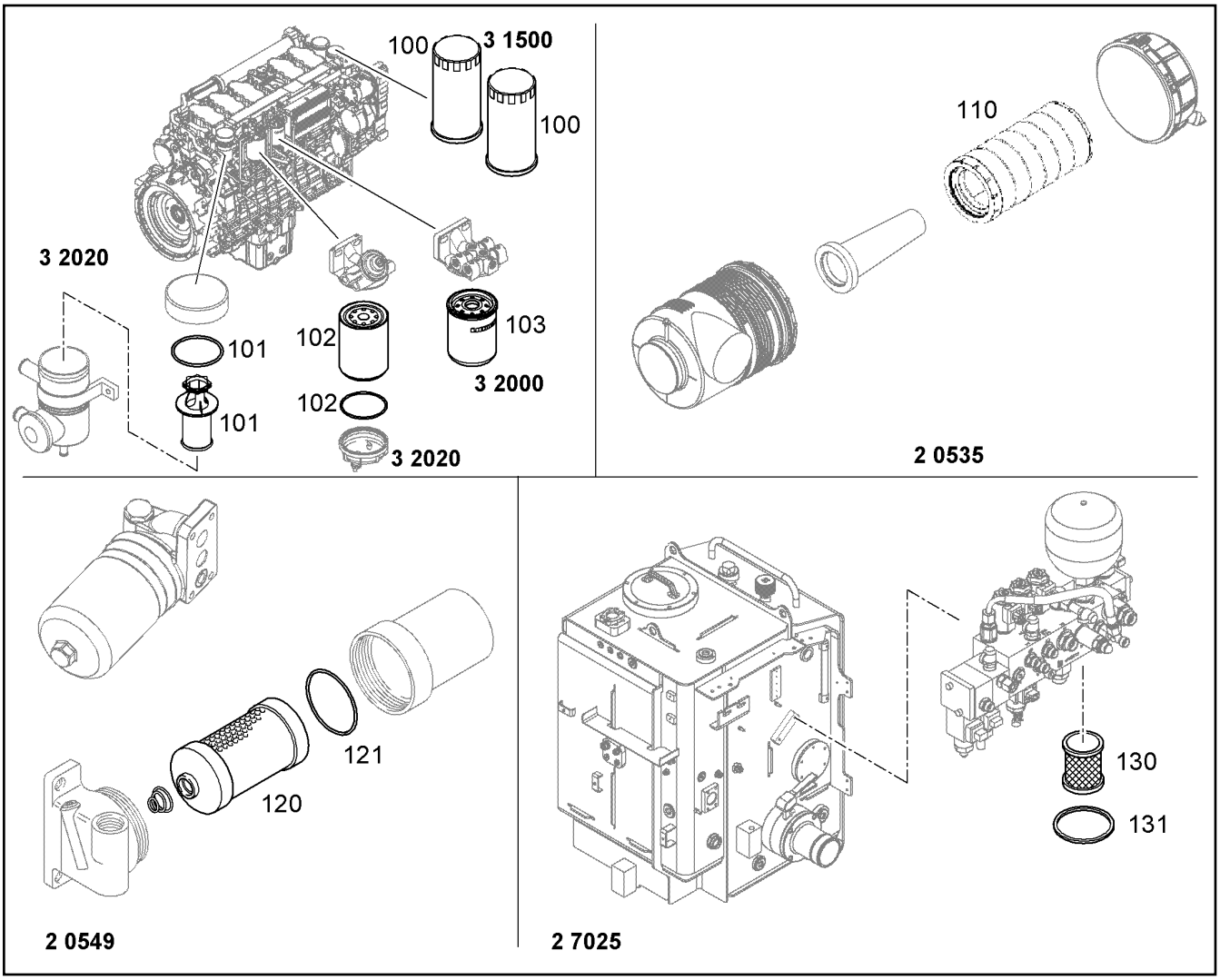

Pos.	Item	Quantity	Description	Designação	Serie	K
100	10297295	2	EASY-CHANGE FILTER 9µm	FILTRO INTERCAMBIÁVEL		
101	12417487	1	SPARE ELEMENT OEL	ELEMENTO DE SUBST. DO FILTR		
102	10044302	1	FUEL PREFILTER	PRE-FILTRO DE COMBUSTÍVEL		
103	12820742	1	FUEL FINE FILTER 3-5µm	FILTRO DE COMBUSTÍVEL		
110	10217169	1	AIR FILTER CARTRIDGE	CARTUCHO DE FILTRO DE AR		
120	10220705	1	FILTER ELEMENT	ELEMENTO FILTRANTE		
121	10220707	1	O-RING 78,97X3,53	ANEL-O		
130	11342118	1	FILTER ELEMENT 16µm	ELEMENTO FILTRANTE		
131	7264028	1	O-RING	ANEL-O		

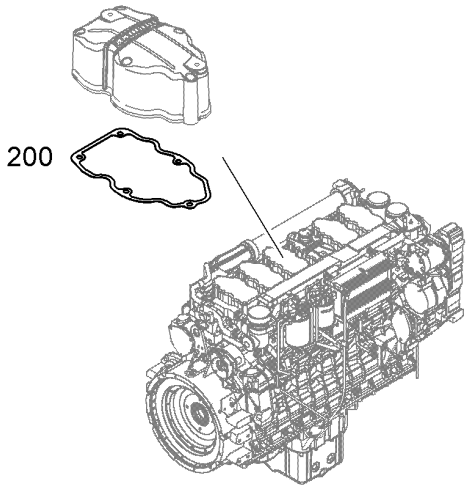

3 0800

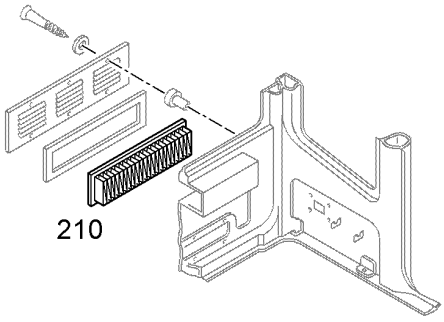

2 8780

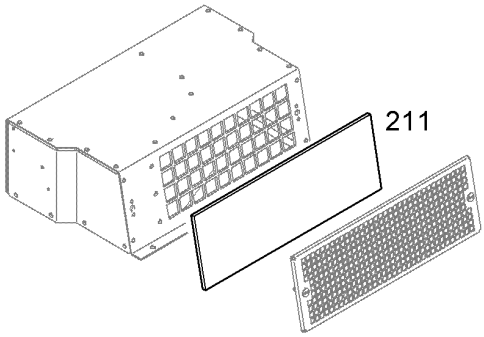

2 6283

Pos.	Item	Quantity	Description	Designação	Serie	K
200	10118554	6	SEAL	VEDAÇÃO		
210	7028951	1	AIR FILTER	FILTRO DE AR		
211	10022770	1	FILTER MAT	ESTEIRA DE FILTRO		

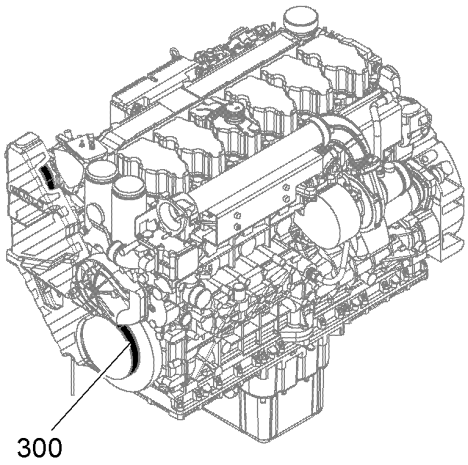

3 3400

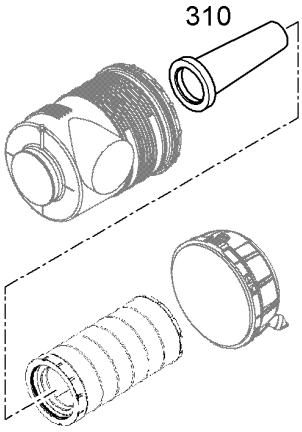

2 0535

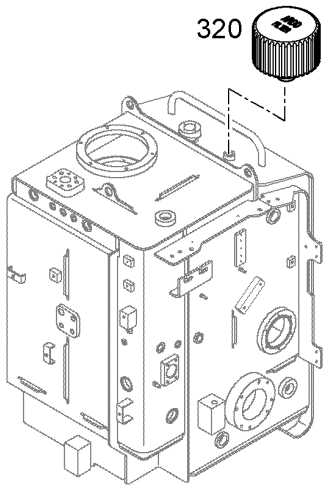

2 7100

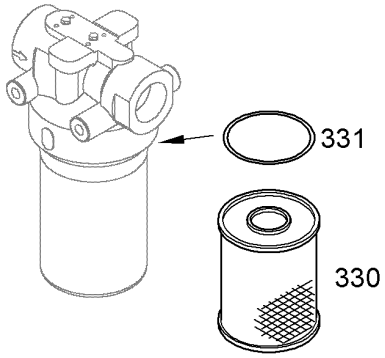

2 7097

Pos.	Item	Quantity	Description	Designação	Serie	K
300	11005218	1	V-RIPPED BELT DIN 7867 8XPK 1755 HP	CORREIA DENTADA EM V		
310	10217168	1	SAFETY CARTRIDGE	ELEMENTO FILTRANTE		
320	10222393	1	AERATION FILTER 2µm ⇨ ❑ 397	FILTRO DE RESPIRO		
330	10115197	1	FILTER INSERT 60µm	ELEMENTO FILTRANTE		
331	7380071	1	O-RING ISO 3601-1 88,57X2,62	ANEL-O		

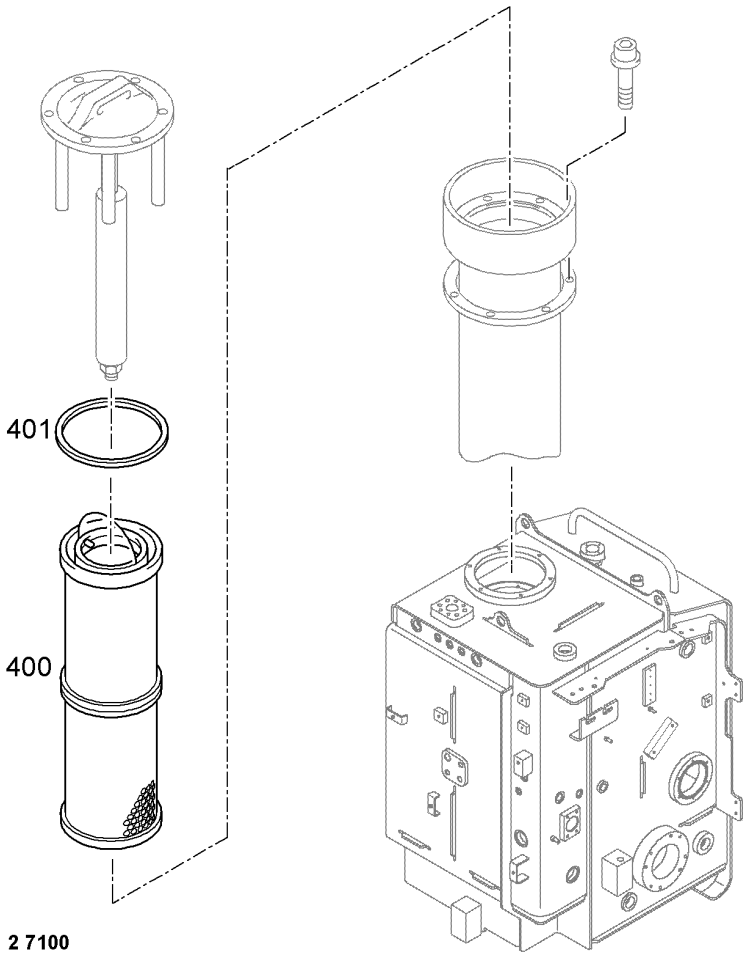

Pos.	Item	Quantity	Description	Designação	Serie	K
400	11060250	1	FIBRE GLASS FILTER INSERT 15/5µm	FILTRO DE FIBRA DE VIDRO		
401	7368993	1	SEAL	VEDAÇÃO		

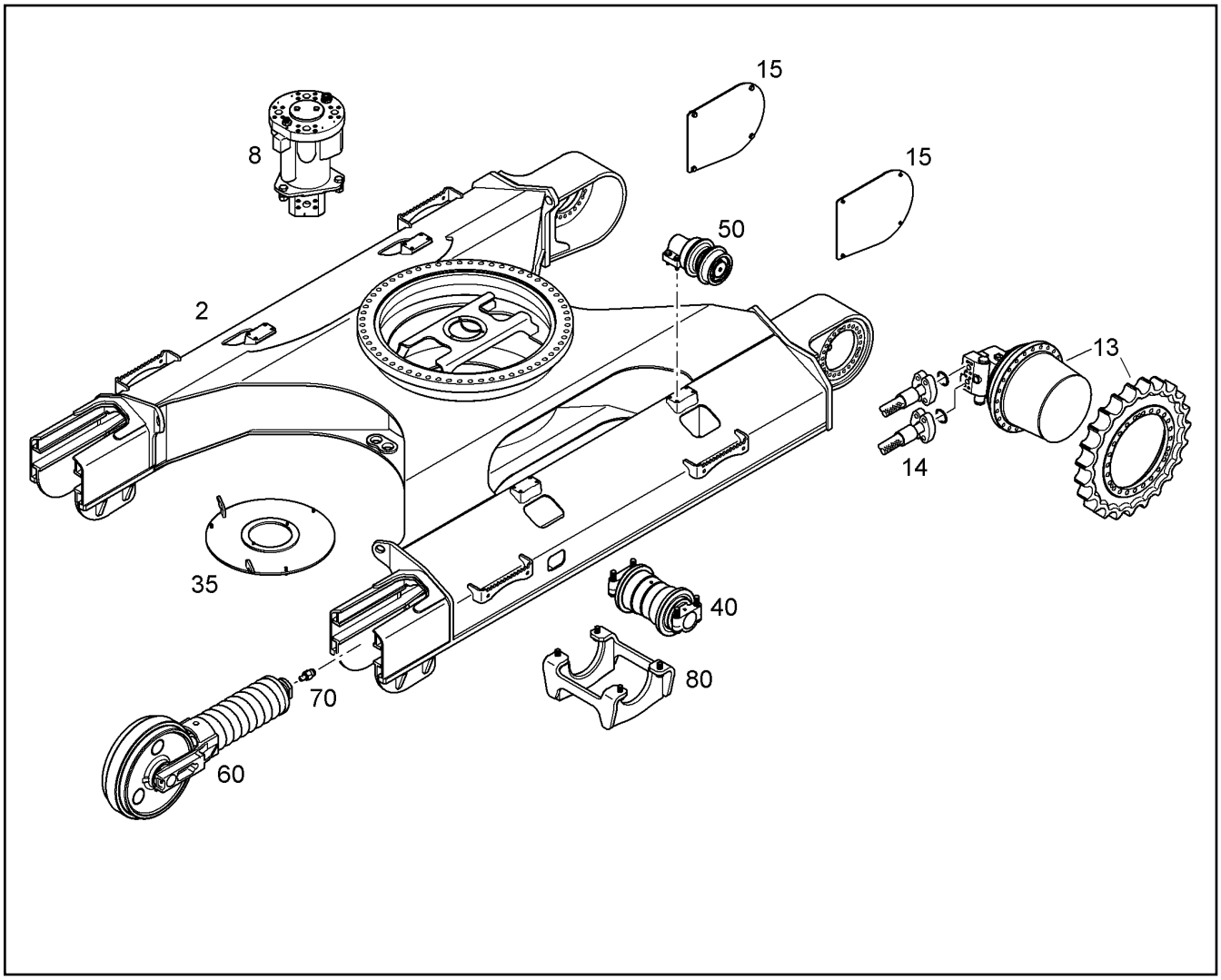

Pos.	Item	Quantity	Description	Designação	Serie	K
2	10498853	1	UNDERCARRIAGE	CARRO INFERIOR	-99998	
2	11102551	1	UNDERCARRIAGE [MOA004018]	CARRO INFERIOR	-99999	
8	10404126	1	ROTARY CONNECTION INSTALLATION ⇨ ❑ 99	COLETOR GIRATÓRIO - INSTAL	-99998	
8	11463935	1	ROTARY CONNECTION INSTALLATION ⇨ ❑ 100	COLETOR GIRATÓRIO - INSTAL	-99999	
13	10836930	1	TRACTION DRIVE ⇨ ❑ 107	MECANISMO DE TRANSLAÇÃO	-99998	2
13	11102968	1	TRACTION DRIVE ⇨ ❑ 108	MECANISMO DE TRANSLAÇÃO	-99999	2
14	10404129	1	HYDR.INSTALLATION UNDERCARR. ⇨ ❑ 121	INST.HIDR.CARRO INFERIOR		
15		2	LID CPL ⇨ ❑ 86	TAMPA COMPLETA		
35		1	LID CPL ⇨ ❑ 87	TAMPA COMPLETA		
40	10392317	18	TRACK ROLLER INSTALLATION D7 ⇨ ❑ 88	ROLDANA MONTAGEM		1
50	10392320	4	CARRIER ROLLER INSTALLATION D7 ⇨ ❑ 90	ROLETE SUPERIOR - INSTALAÇÃ		1
60	10651678	2	INSTALLATION GUIDING WHEEL D7 ⇨ ❑ 92	RODA GUIA - INSTALAÇÃO	-999998	1
60	12219721	2	INSTALLATION GUIDING WHEEL D7 ⇨ ❑ 93	RODA GUIA - INSTALAÇÃO	999999-	1

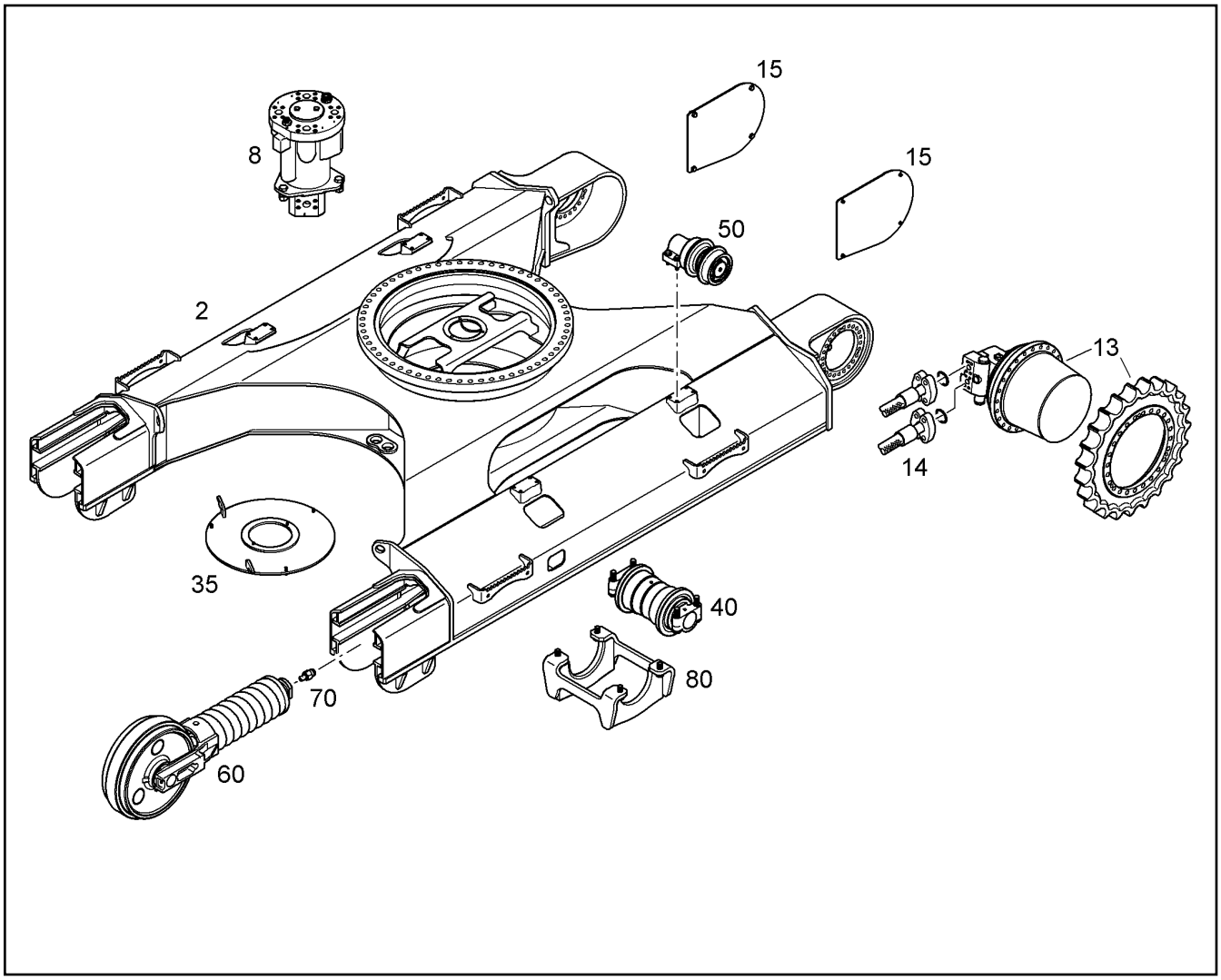

Pos.	Item	Quantity	Description	Designação	Serie	K
70	10498874	2	GREASE NIPPLE ⇨ ❑ 96	NIPLE DE LUBRIFICAÇÃO		
80	10403732	2	TRACK GUIDE INSTALLATION 265X205 ⇨ ❑ 97	GUIA DE CORRENTE - INSTALA		1

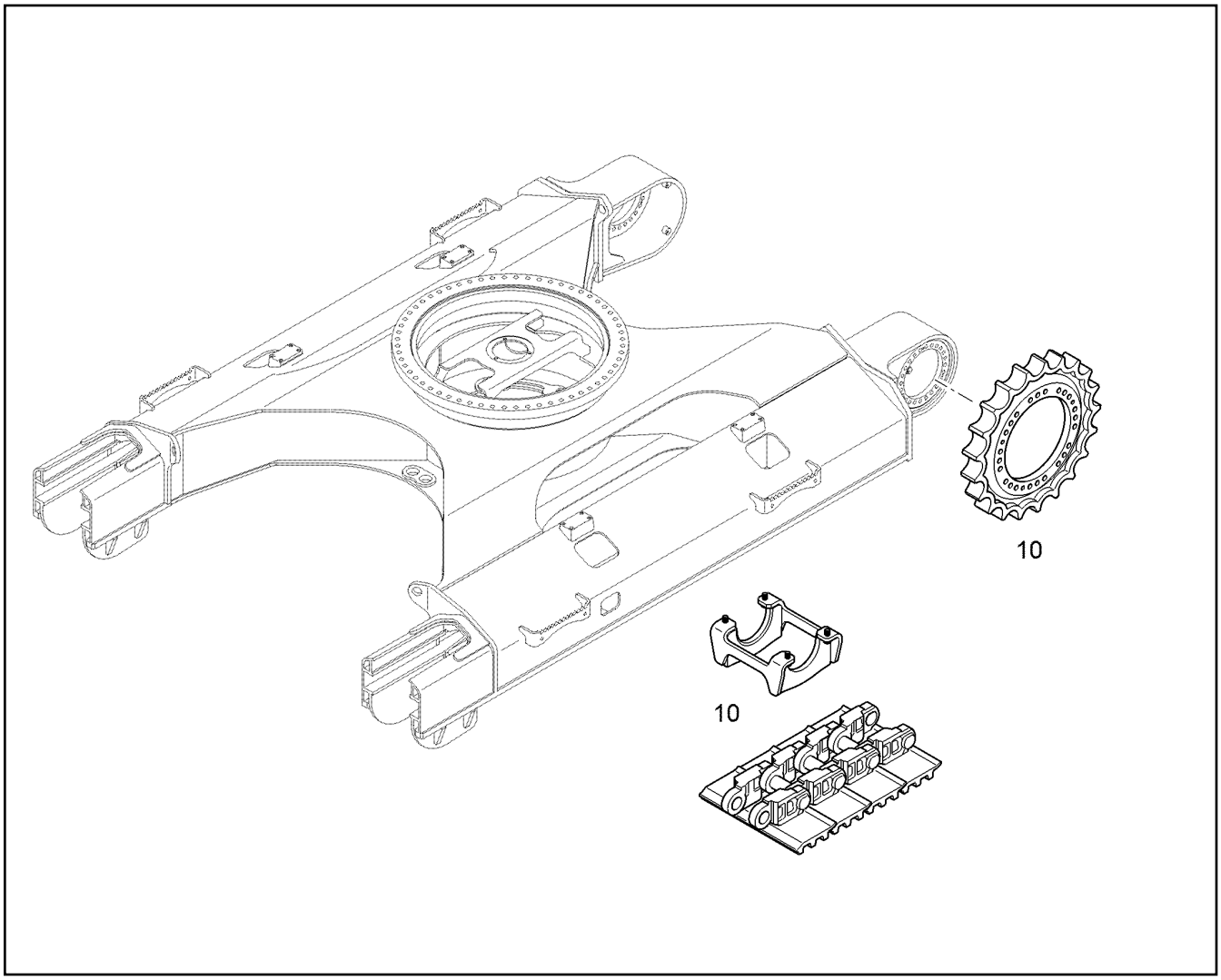

Pos.	Item	Quantity	Description	Designação	Serie	K
10	10498877	1	ADDITIONAL KIT ⇨ ❑ 78	KIT ADICIONAL		

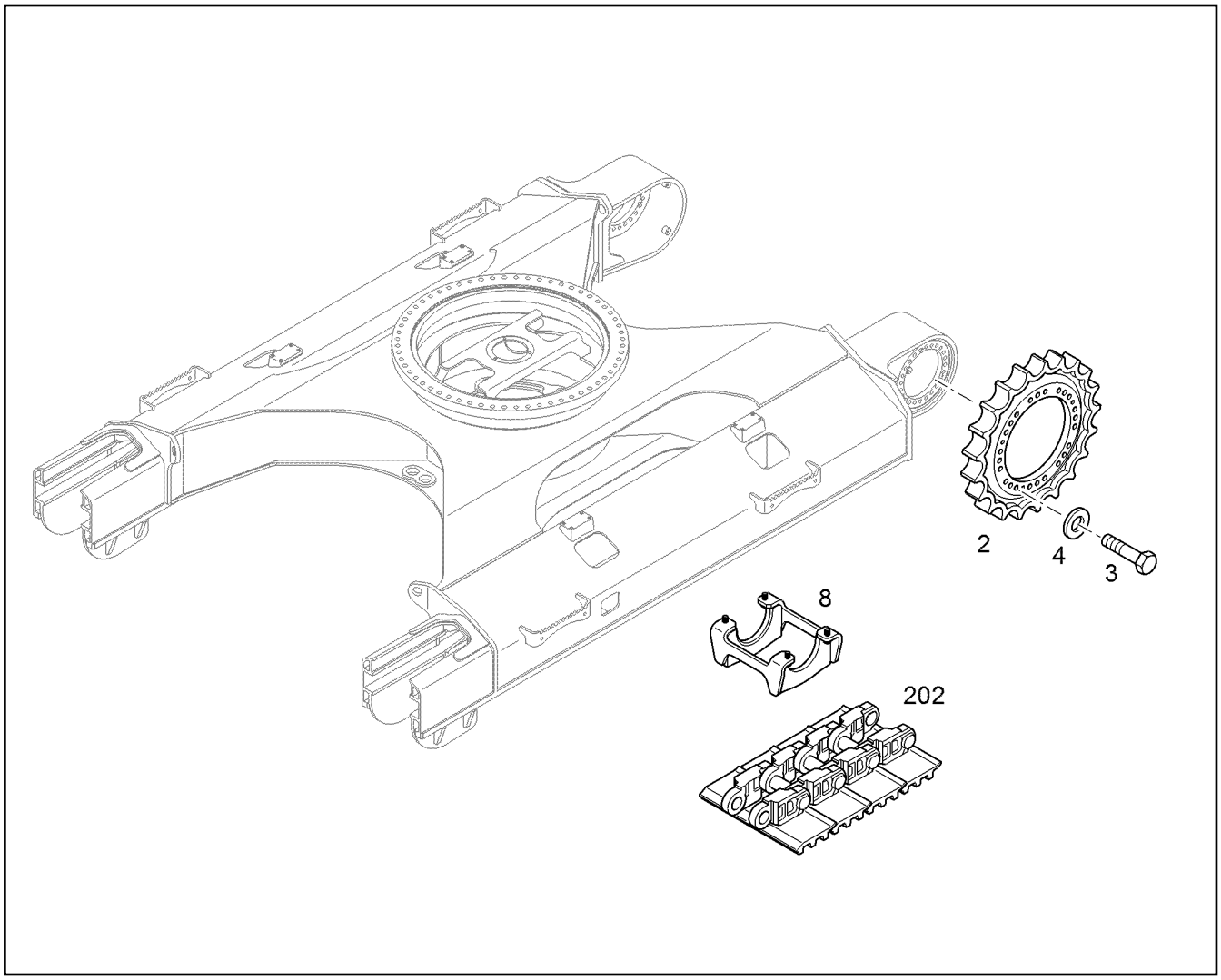

Pos.	Item	Quantity	Description	Designação	Serie	K
2	9391363	2	TUMBLER WHEEL D7E	RODA MOTRIZ		1
3	10425656	48	HEX SCREW ISO 4017 M20X70 10.9 FLZN	PARAFUSO SEXTAVADO		
4	9918229	48	WASHER 20,5/34X5	ARRUELA		
8	10403732	6	TRACK GUIDE INSTALLATION 265X205 ⇨ ❑ 97	GUIA DE CORRENTE - INSTALA		1
202	10675010	2	TRACK CHAIN LUBRICATED 500mm ⇨ ❑ 80	ESTEIRA		1

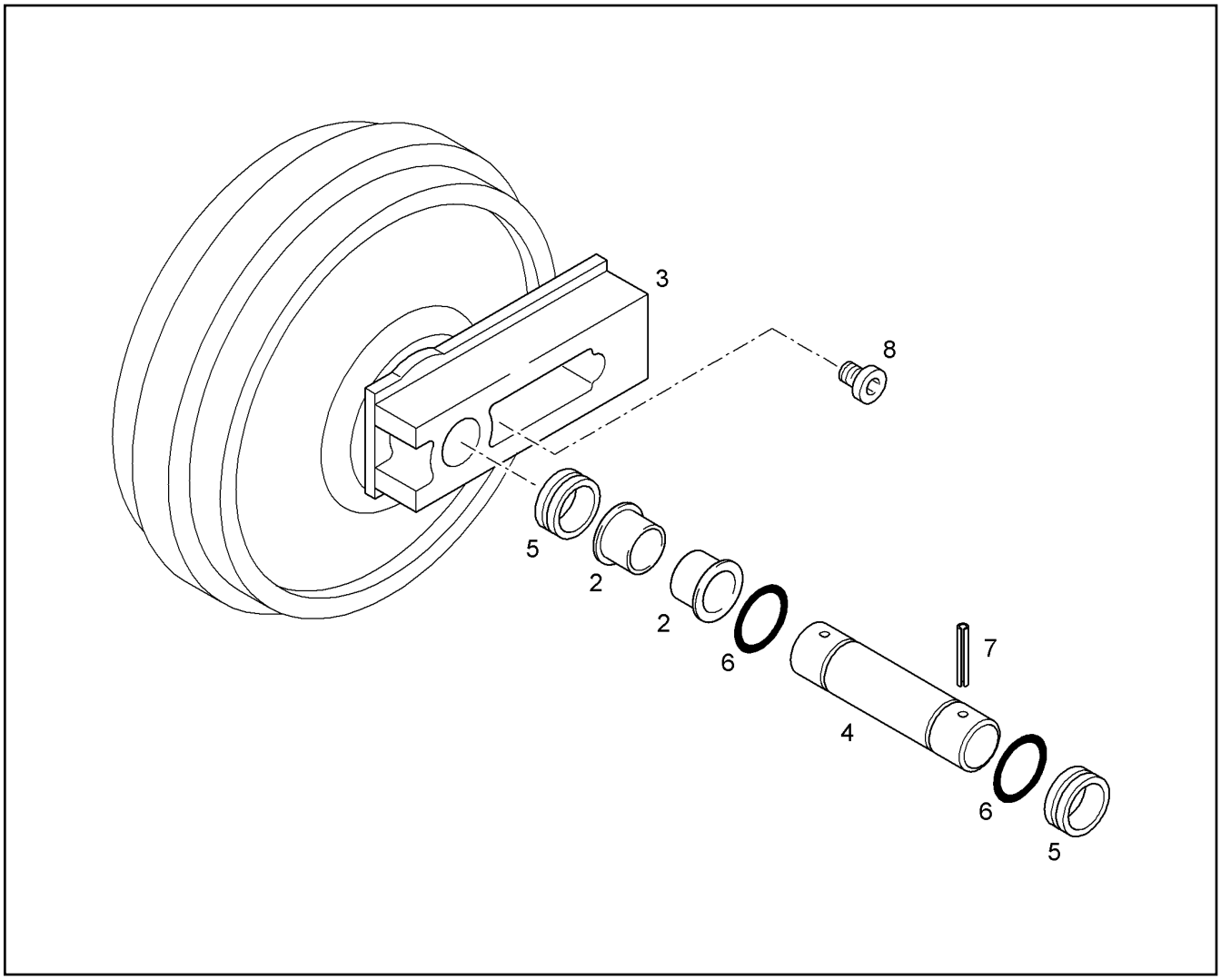

Pos.	Item	Quantity	Description	Designação	Serie	K
2	11823089	2	BUSHING	BUCHA		1
3	12221003	2	SLIDER	PEÇA DESLIZANTE		
4	12221002	1	AXLE	EIXO		1
5	12220997	2	AXIAL FACE SEAL	ANEL DE VEDAÇÃO DESLIZANT		
6	10028991	2	O-RING	ANEL-O		
7	12220999	2	CLAMPING SLEEVE	LUVA		1
8	10017569	2	SCREW PLUG	PARAFUSO DE FECHAMENTO		

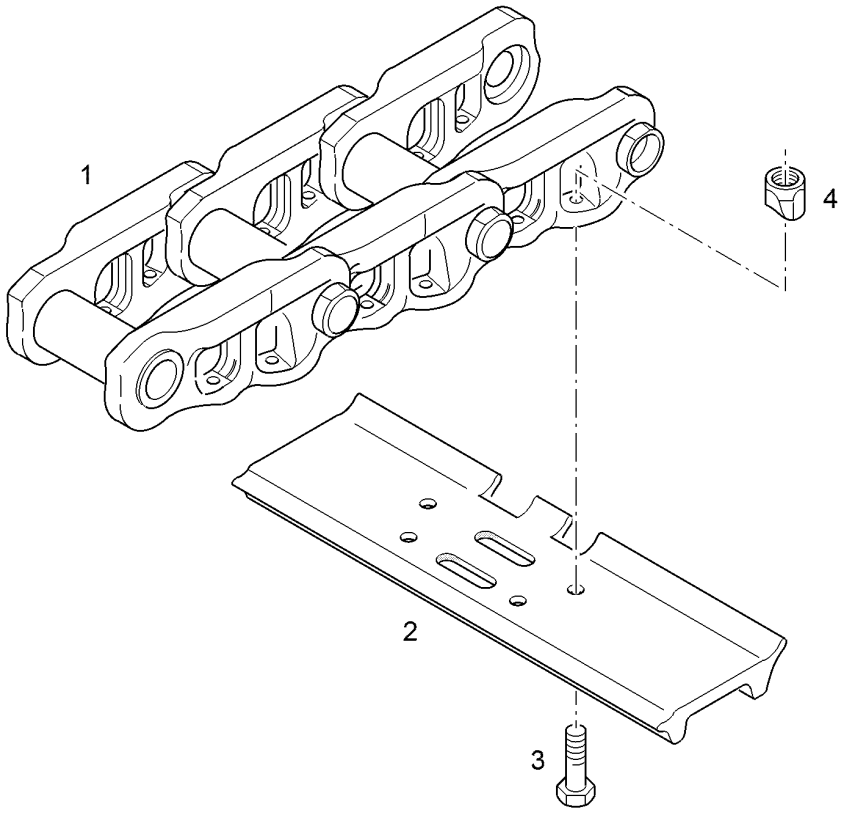

Pos.	Item	Quantity	Description	Designação	Serie	K
1	10675003	1	NAKED CRAWLER CHAIN ⇨ ❑ 82	CORRENTE DA ESTEIRA		1
2	10470093	49	FLOOR PLATE 500mm	SAPATA		1
3	11214366	196	TRACK PAD SCREW M22X1,5X70X35 13.9	PARAFUSO PARA SAPATA		
4	7369103	196	TRACK PAD NUT M22	PORCA		

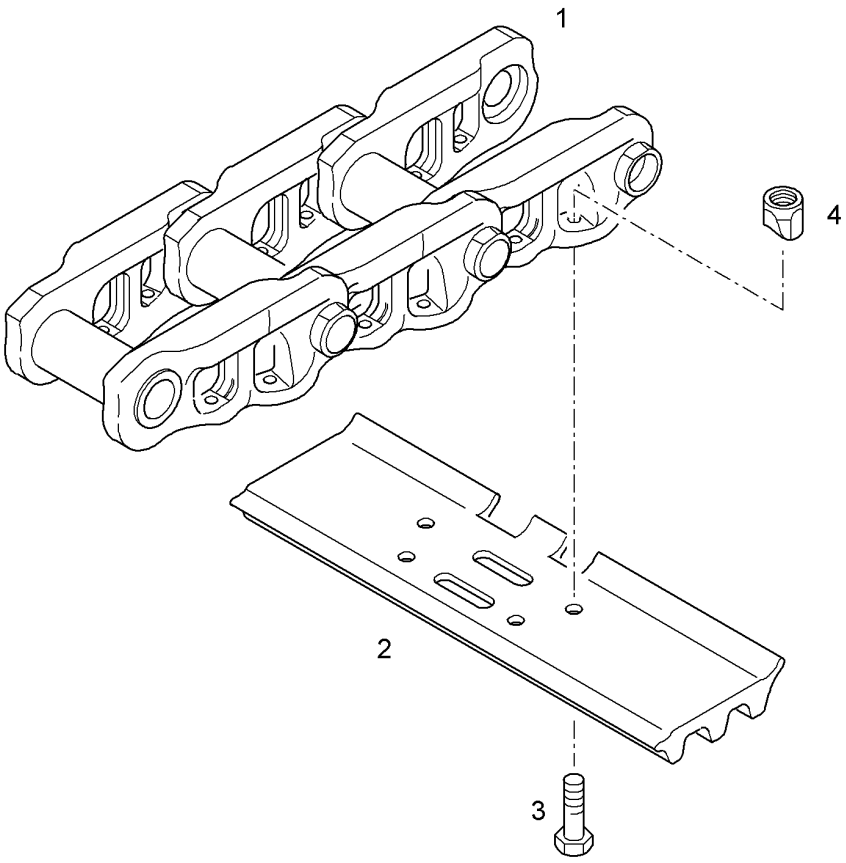

Pos.	Item	Quantity	Description	Designação	Serie	K
1	10675003	1	NAKED CRAWLER CHAIN ⇨ ❑ 82	CORRENTE DA ESTEIRA		1
2	5615742	49	FLOOR PLATE 500mm	SAPATA		1
3	11214366	196	TRACK PAD SCREW M22X1,5X70X35 13.9	PARAFUSO PARA SAPATA		
4	7369103	196	TRACK PAD NUT M22	PORCA		

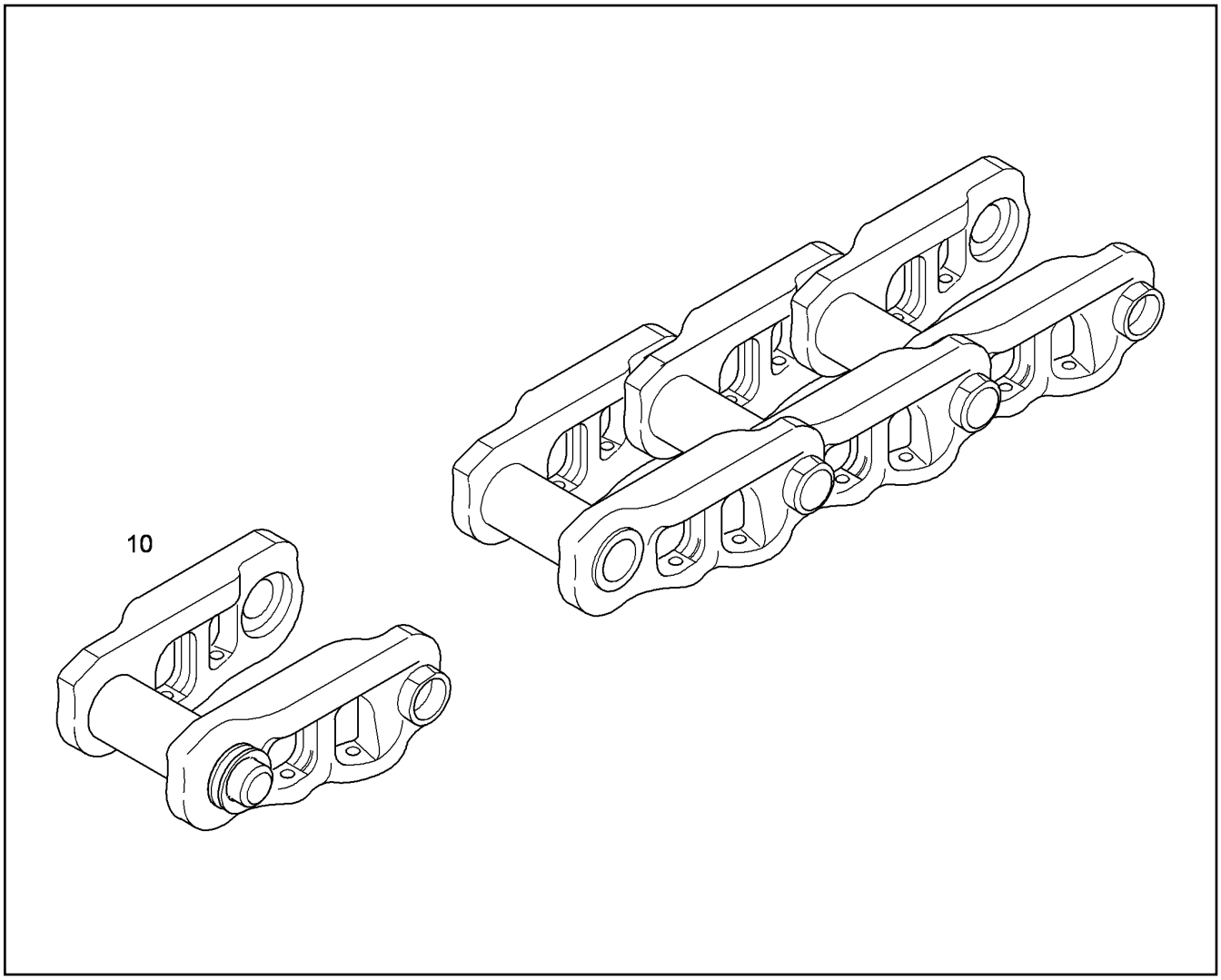

Pos.	Item	Quantity	Description	Designação	Serie	K
10	5617975	1	CHAIN END LINK ⇨ ❑ 83	ELO FINAL DA CORRENTE		

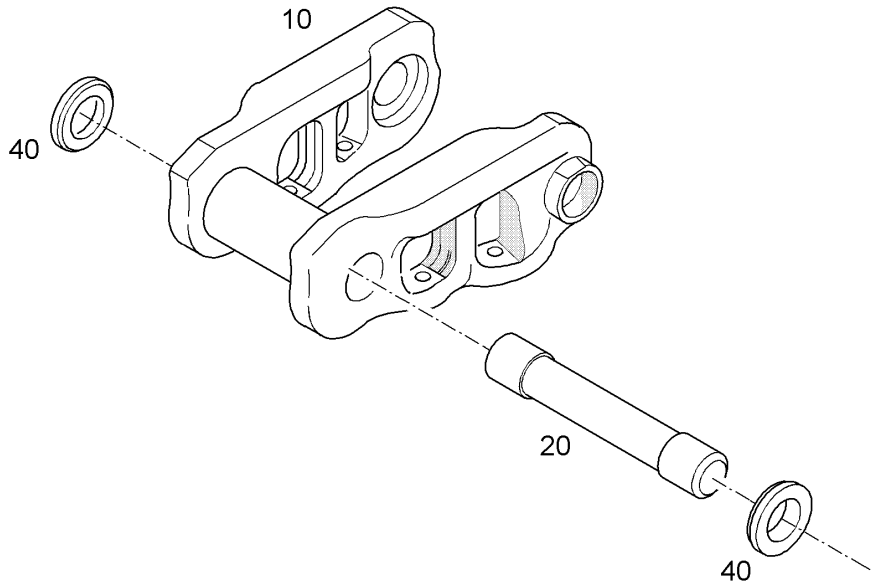

Pos.	Item	Quantity	Description	Designação	Serie	K
10		1	MASTER LINK ASSY ⇨ ❑ 84	ELO MESTRE DA CORRENTE		1
20	5617102	2	MASTER PIN	PINO MESTRE		
40	7373031	4	TERMINAL DISK 48,6/71,6X12,7	DISCO TERMINAL		

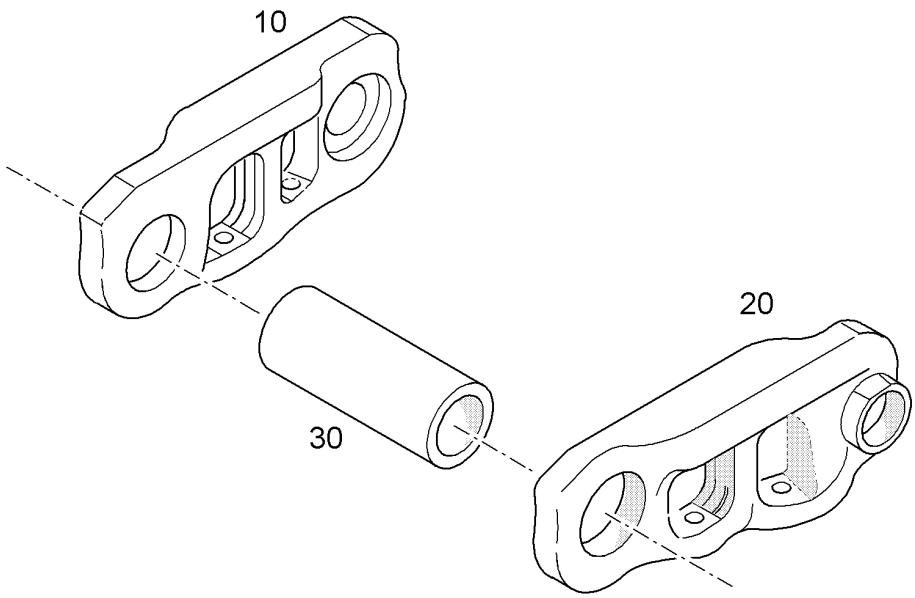

Pos.	Item	Quantity	Description	Designação	Serie	K
10		1	MASTERLINK LEFT	ELO DE CORRENTE ESQUERDO		1
20		1	MASTERLINK RIGHT	ELO DE CORRENTE DIREITO		1
30		1	END BUSHING	BUCHA TERMINAL		1

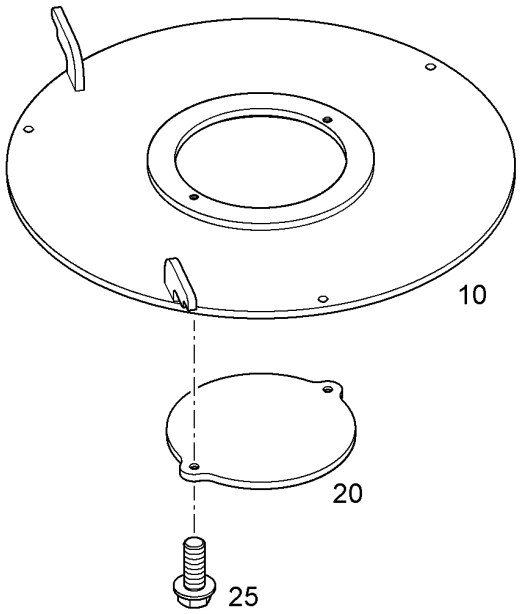

Pos.	Item	Quantity	Description	Designação	Serie	K
10	10073069	1	COVER	TAMPA		
20	10051238	1	COVER	TAMPA		
25	4900641	2	LOCKING SCREW M12X30 FLZN	PARAFUSO TRAVA		

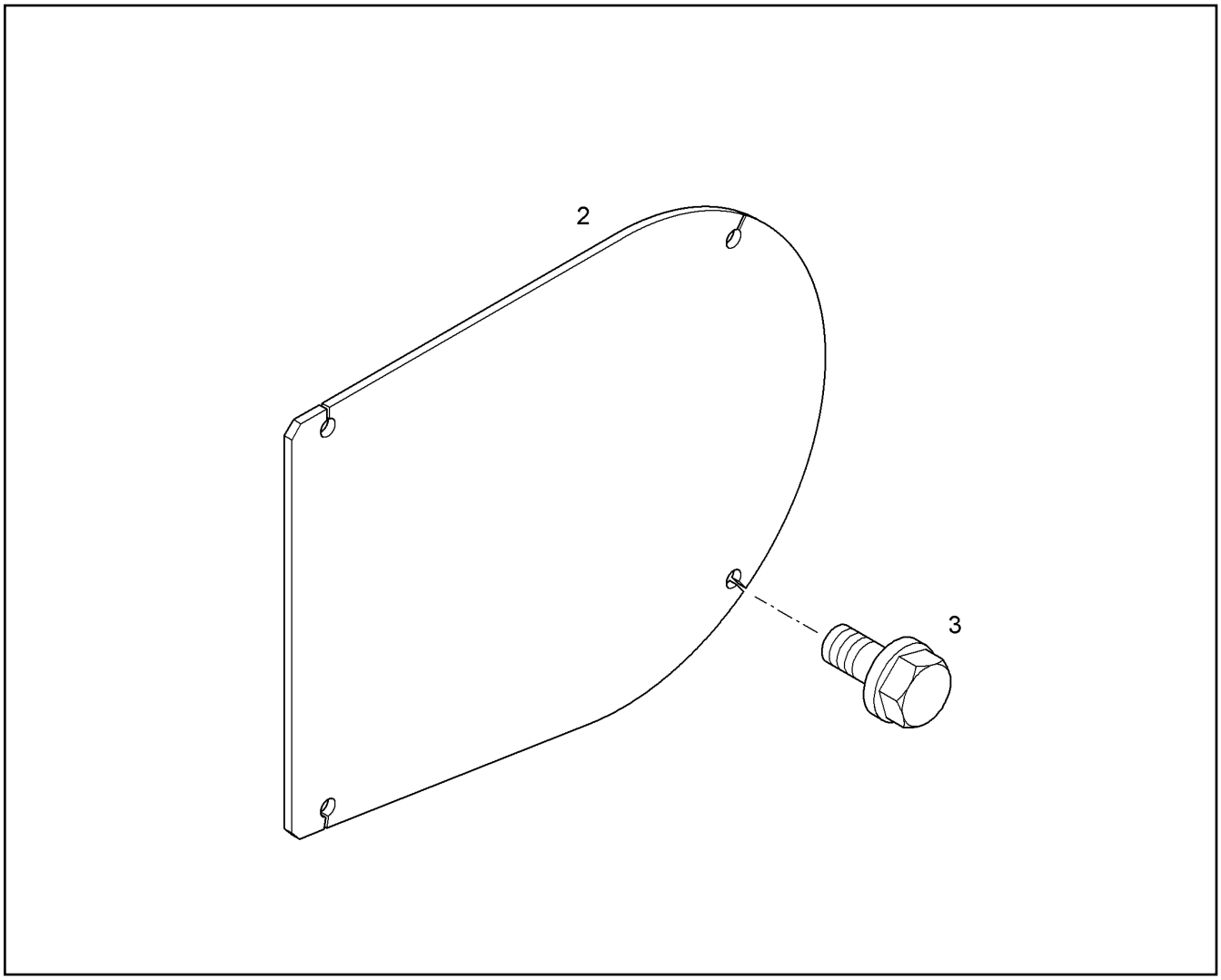

Pos.	Item	Quantity	Description	Designação	Serie	K
2	10376165	1	COVER	TAMPA		
3	4900641	4	LOCKING SCREW M12X30 FLZN	PARAFUSO TRAVA		

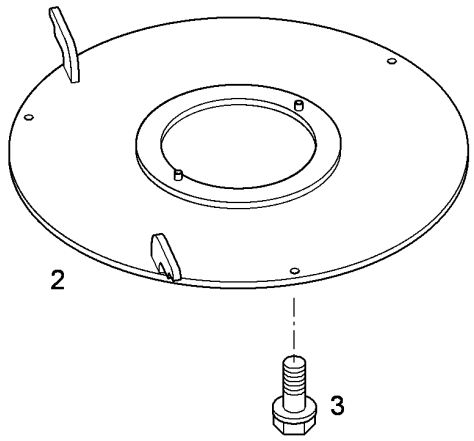

Pos.	Item	Quantity	Description	Designação	Serie	K
2		1	COVER ⇨ ❑ 85	TAMPA		
3	4900641	3	LOCKING SCREW M12X30 FLZN	PARAFUSO TRAVA		

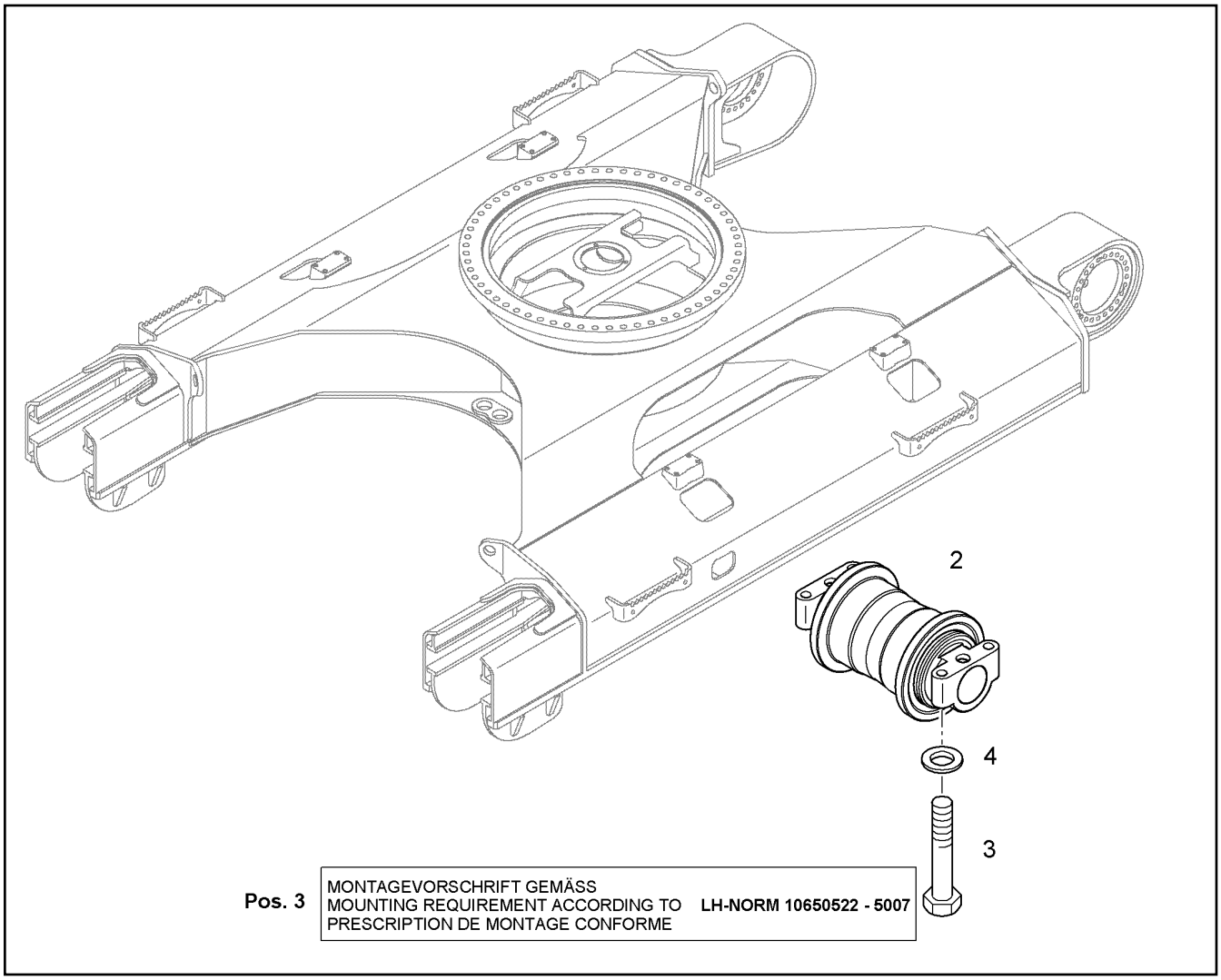

Pos.	Item	Quantity	Description	Designação	Serie	K
2	11600107	1	TRACK ROLLER D7 ⇨ ❑ 89	ROLAMENTO DE ESFERA	35881-	1
3	10425724	4	HEX SCREW ISO 4014 M20X100 10.9 FLZN	PARAFUSO SEXTAVADO		
4	9918229	4	WASHER 20,5/34X5	ARRUELA		

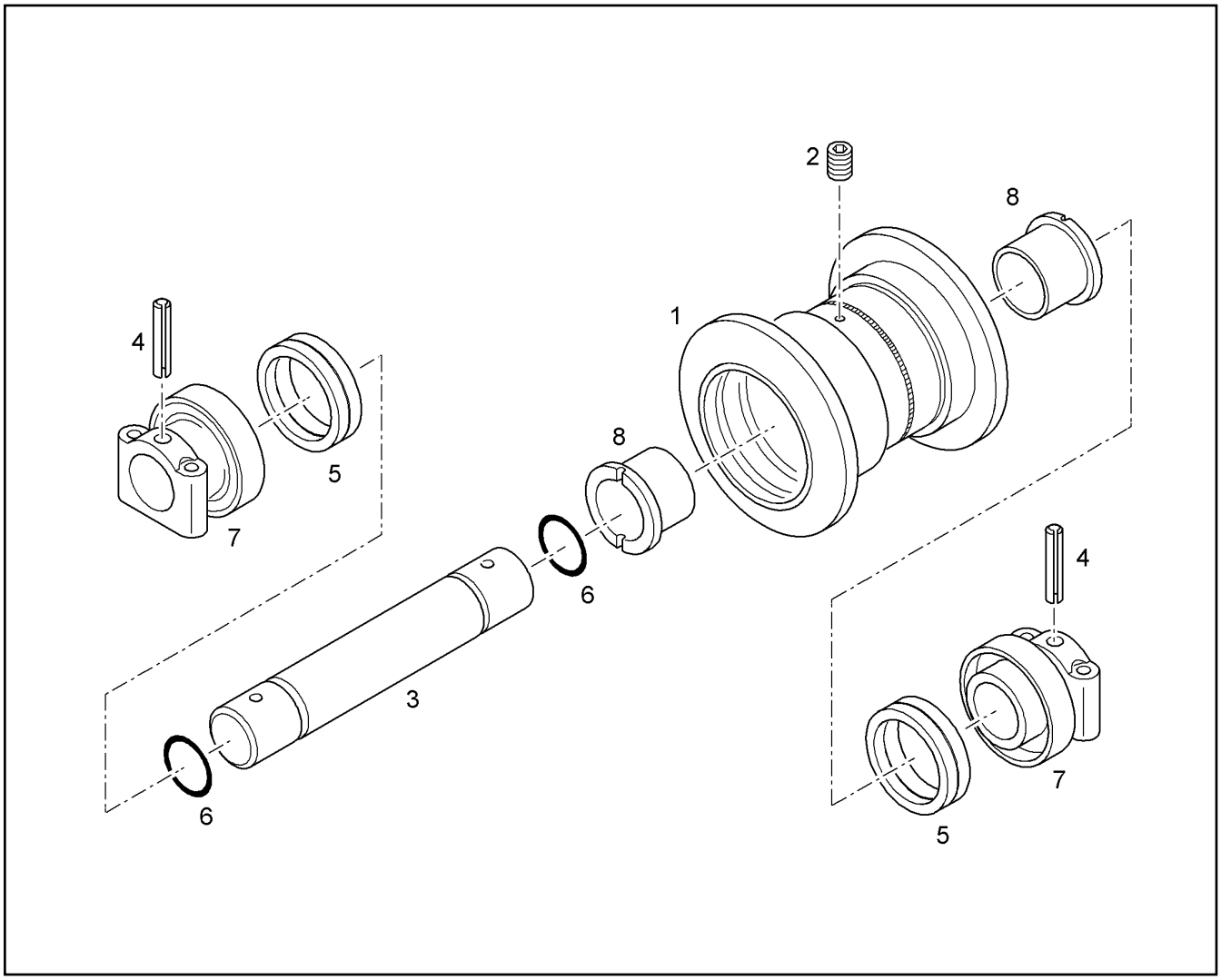

Pos.	Item	Quantity	Description	Designação	Serie	K
1		1	TRACK ROLLER HOUSING	ROLDANA		
2	10097983	1	SCREW PLUG	PARAFUSO DE FECHAMENTO		
3	7373748	1	AXLE	EIXO		1
4	7373742	2	DOWEL PIN	PINO ELÁSTICO		
5	12215144	2	AXIAL FACE SEAL	ANEL DE VEDAÇÃO DESLIZANT		
6	7373747	2	O-RING 68X3,50	ANEL-O		
7	11003780	2	END PIECE	PEÇA FINAL		
8	11003782	2	BUSHING	BUCHA		1

Pos. 3

MONTAGEVORSCHRIFT GEMÄSS
MOUNTING REQUIREMENT ACCORDING TO **LH-NORM 10650522 - 5008**
PRESCRIPTION DE MONTAGE CONFORME

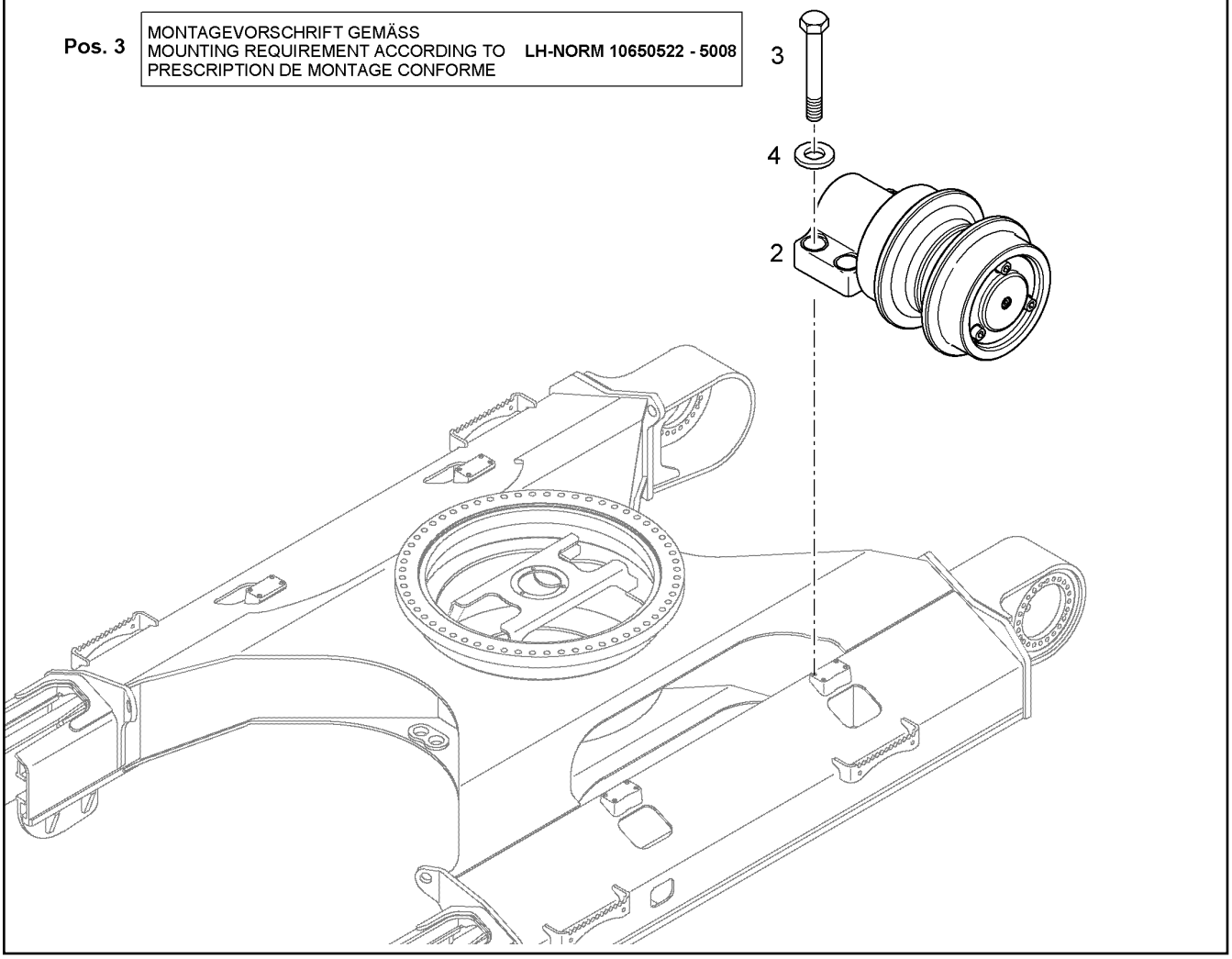

Pos.	Item	Quantity	Description	Designação	Serie	K
2	10651677	1	CARRYING ROLLER D7 ⇨ ❑ 91	ROLETE SUPERIOR		1
3	4600203	4	HEX SCREW ISO 4014 M16X65 10.9 FLZN	PARAFUSO SEXTAVADO		
4	12220084	4	WASHER 16 295-350HV10HV	ARRUELA		

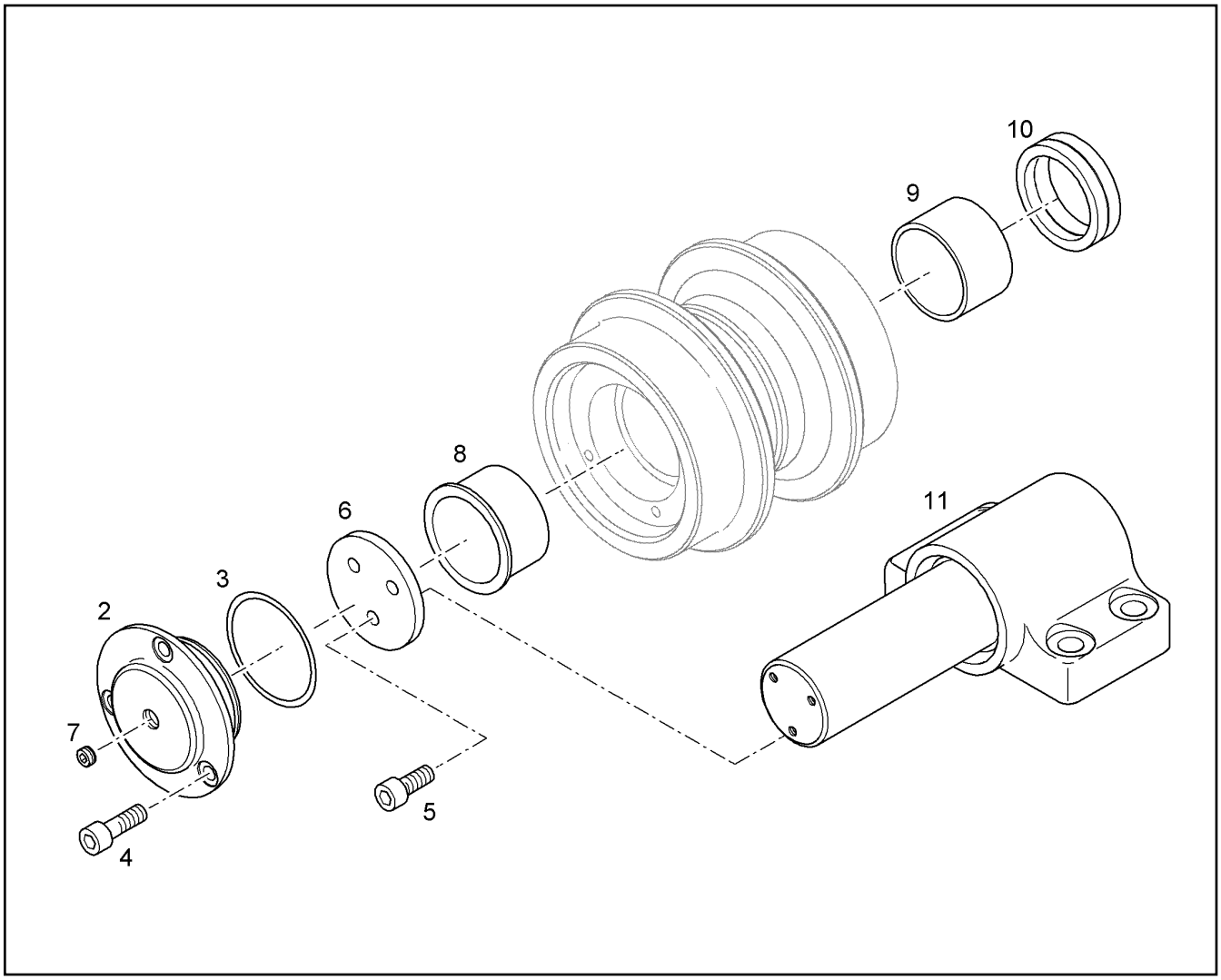

Pos.	Item	Quantity	Description	Designação	Serie	K
2	11004096	1	COVER	TAMPA		
3	11004095	1	O-RING	ANEL-O		
4	11004100	3	SOCKET HEAD SCREW M10X25	PARAFUSO CILÍNDRICO		
5	11004099	3	SOCKET HEAD SCREW M10X18	PARAFUSO CILÍNDRICO		
6	11004098	1	SHEET GASKET	DISCO DE VEDAÇÃO		1
7	10489176	1	SCREW PLUG	PARAFUSO DE FECHAMENTO		
8	11004093	1	COLLER BUSHING	BUCHA COM FLANGE		1
9	11004094	1	BUSHING	BUCHA		1
10	12244095	1	LIFETIME SEAL	VEDACAO LIFETIME		
11	11004101	1	AXLE	EIXO		

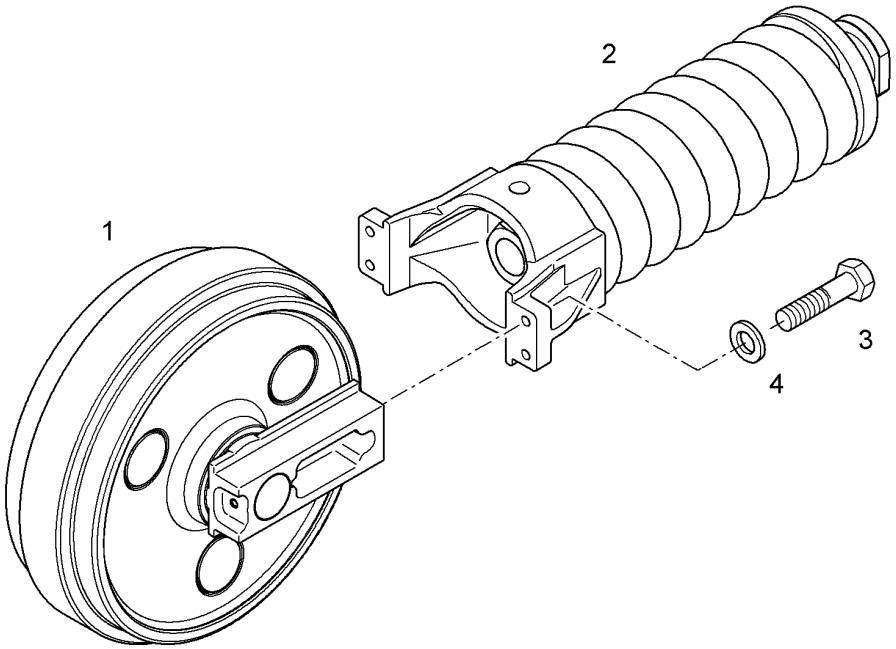

Pos.	Item	Quantity	Description	Designação	Serie	K
1		1	GUIDE WHEEL B6 ⇨ ❑ 94	RODA GUIA		1
2		1	SPRING ASSEMBLY CPL ⇨ ❑ 95	PACOTE DE MOLAS COMPLETO		
3	4600203	4	HEX SCREW ISO 4014 M16X65 10.9 FLZN	PARAFUSO SEXTAVADO		
4	4240007	4	WASHER SPRING A 16	ARRUELA DE PRESSÃO		

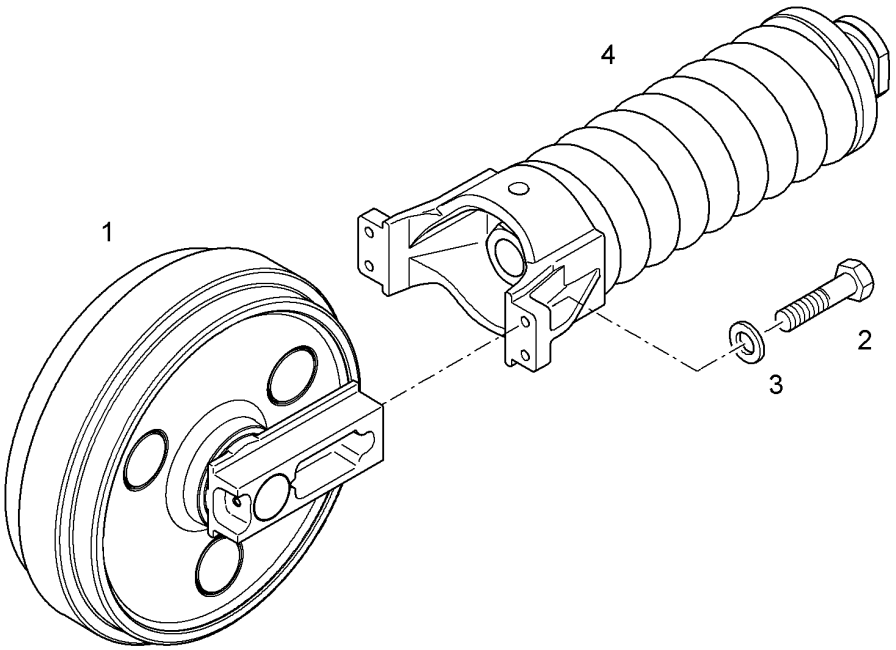

Pos.	Item	Quantity	Description	Designação	Serie	K
1	12221001	1	GUIDE WHEEL ⇨ ❑ 79	RODA GUIA		1
2	4600203	4	HEX SCREW ISO 4014 M16X65 10.9 FLZN	PARAFUSO SEXTAVADO		
3	4240007	4	WASHER SPRING A 16	ARRUELA DE PRESSÃO		
4	11004103	1	SPRING ASSEMBLY CPL ⇨ ❑ 95	PACOTE DE MOLAS COMPLETO		

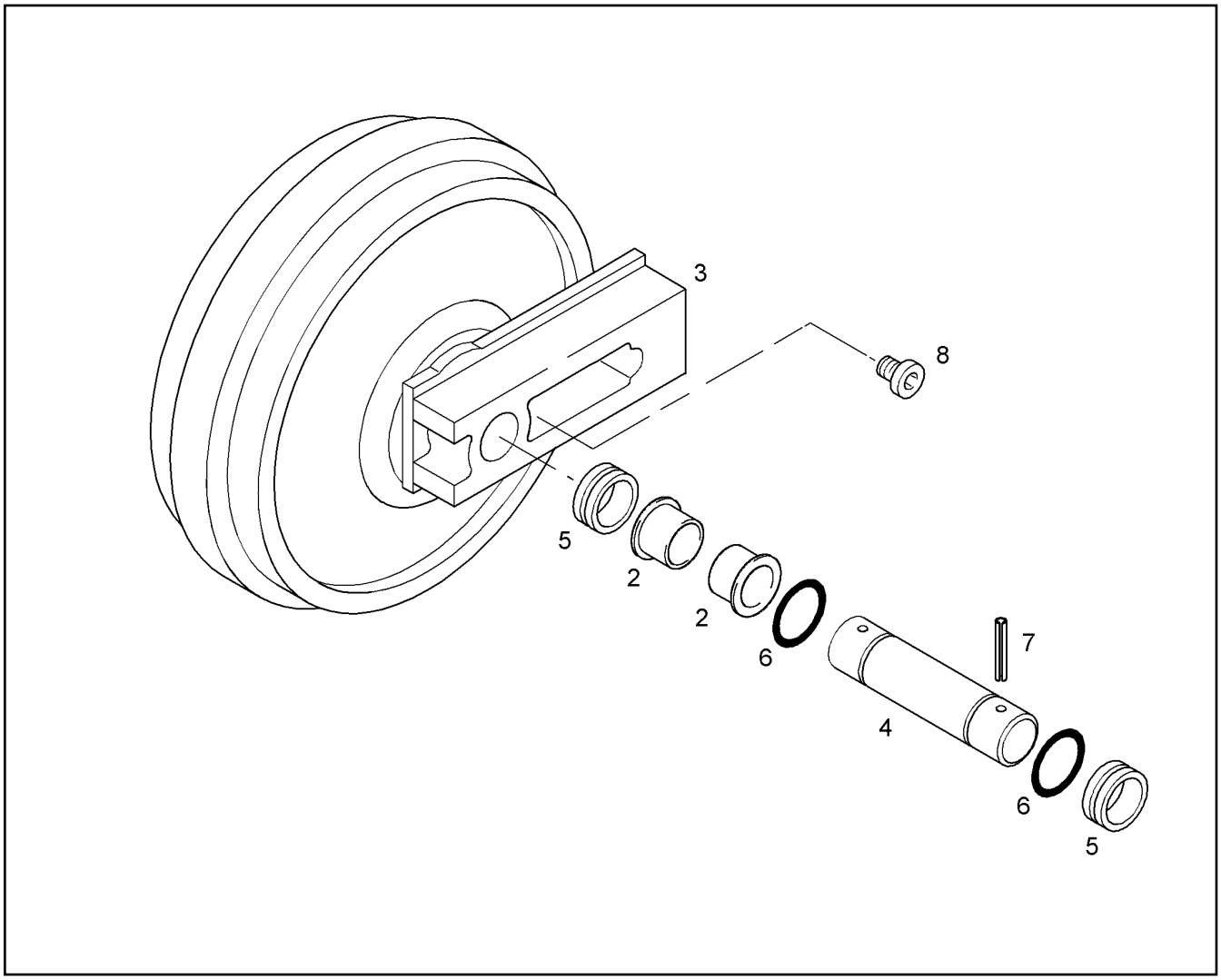

Pos.	Item	Quantity	Description	Designação	Serie	K
2	10028992	2	BUSHING	BUCHA		1
3	5611548	2	SLIDER	PEÇA DESLIZANTE		
4	5611549	1	AXLE	EIXO		1
5	10028993	2	AXIAL FACE SEAL	ANEL DE VEDAÇÃO DESLIZANT		
6	10028991	2	O-RING	ANEL-O		
7	10017567	2	CLAMPING SLEEVE	LUVA		1
8	10017569	2	SCREW PLUG	PARAFUSO DE FECHAMENTO		

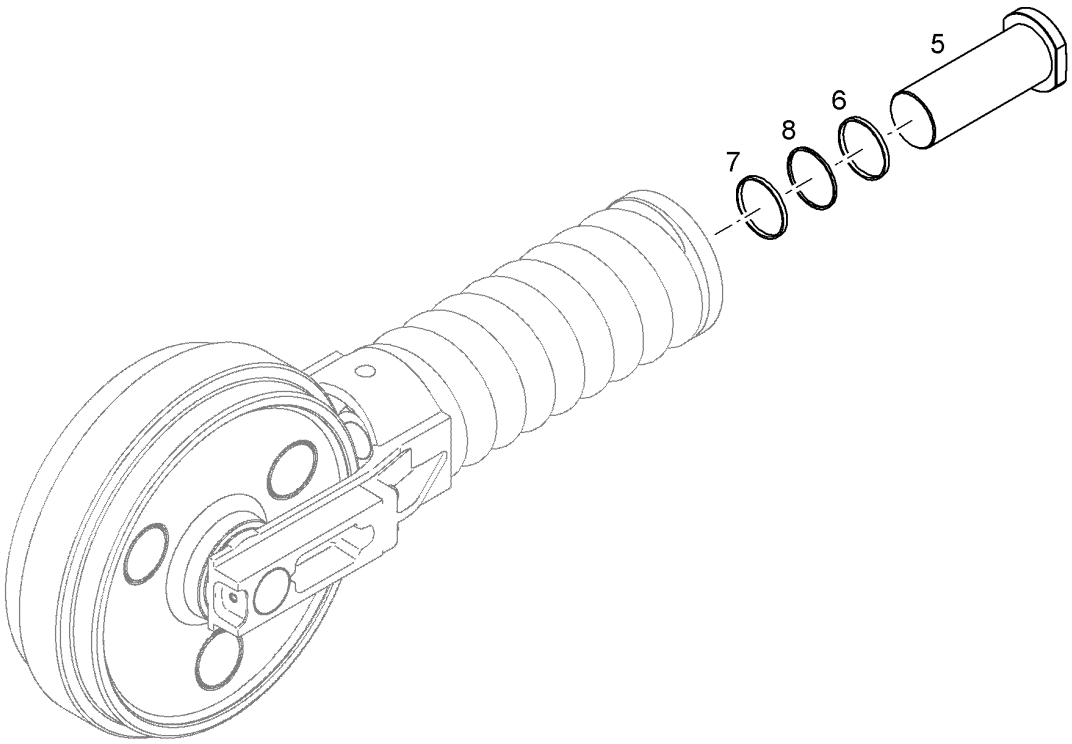

Pos.	Item	Quantity	Description	Designação	Serie	K
5	11314611	1	PISTON	PISTÃO		
6	5602110	1	SCRAPER	RASPADOR		
7	7366049	1	LIP RING SEALING 48138	ANEL DE VEDAÇÃO RANHURAD		
8	7369169	1	SUPPORTING RING 1/107,9X2,00	ANEL DE APOIO		

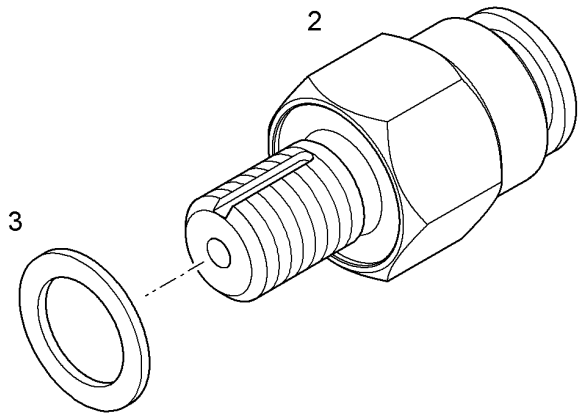

Pos.	Item	Quantity	Description	Designação	Serie	K
2	11114605	1	GREASE NIPPLE TR/A M16x1,5	NIPLE DE LUBRIFICAÇÃO		
3	5209400	1	USIT RING	ANEL DE VEDAÇÃO USIT		

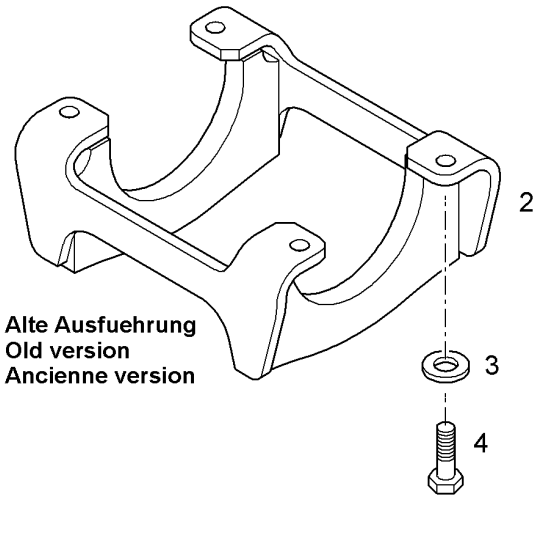

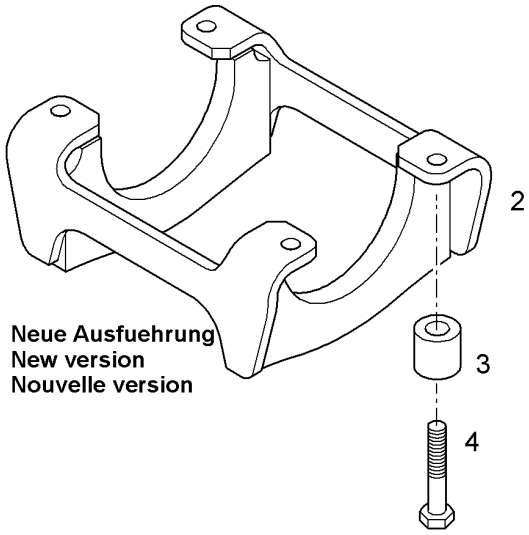

Pos. 4 MONTAGEVORSCHRIFT GEMÄSS
MOUNTING REQUIREMENT ACCORDING TO **LH-NORM 10650522 - 5009**
PRESCRIPTION DE MONTAGE CONFORME

Pos.	Item	Quantity	Description	Designação	Serie	K
2	12501735	1	CHAIN GUIDE 265X200	GUIA DE CORRENTE		
3	10857134	4	SLEEVE 20,5X34X45	LUVA	32264-	1
4	10425699	4	HEX SCREW ISO 4014 M20X90 10.9 FLZN	PARAFUSO SEXTAVADO	32264-	

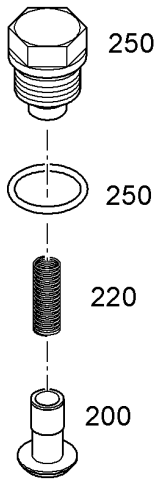

Pos.	Item	Quantity	Description	Designação	Serie	K
200		1	TAPER	CONE		
220		1	PRESSURE SPRING 0,8X6,8X28,5	MOLA DE PRESSÃO		
250		1	SCREW PLUG	PARAFUSO DE FECHAMENTO		

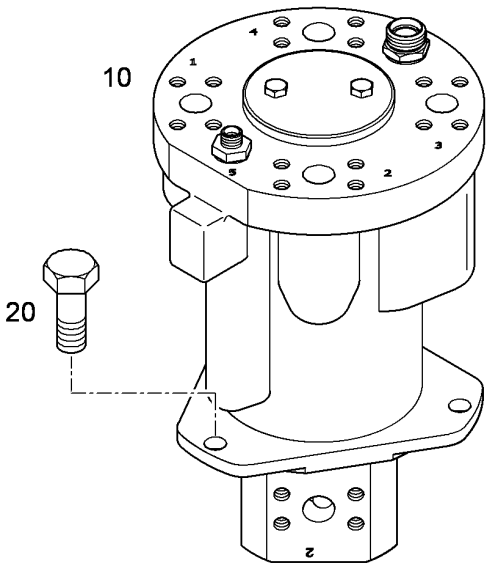

Pos.	Item	Quantity	Description	Designação	Serie	K
10	10404127	1	ROTARY CONNECTION CPL ⇨ ❑ 101	CONEXÃO GIRATÓRIA COMPLET		
20		1	FIXING PARTS ROTARY CONNECTION ⇨ ❑ 105	PEÇAS FIXAÇÃO COLETOR GIRA		

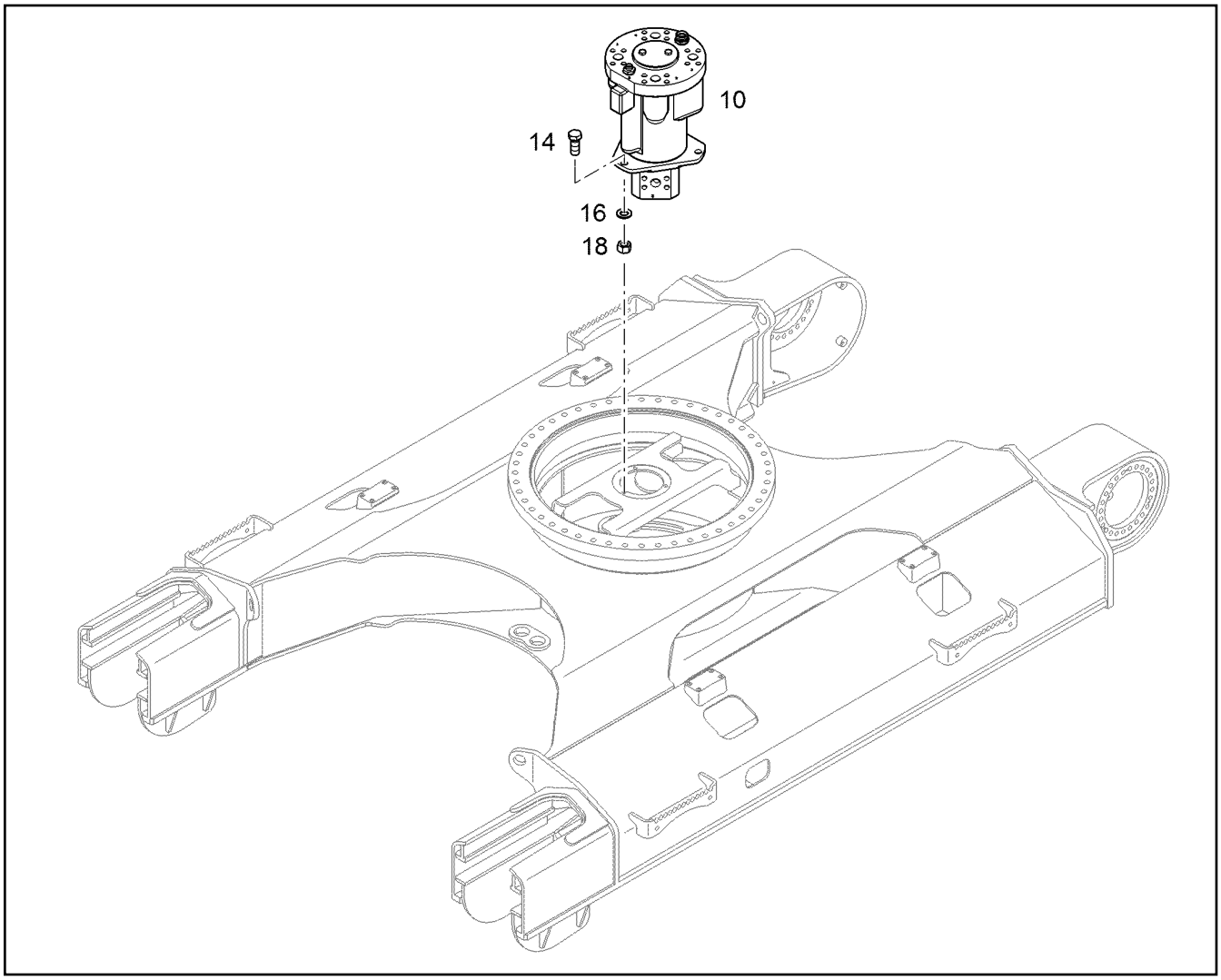

Pos.	Item	Quantity	Description	Designação	Serie	K
10	11463939	1	ROTARY CONNECTION CPL ⇨ ❑ 102	CONEXÃO GIRATÓRIA COMPLET		
14	10001073	3	HEX SCREW ISO 4017 M16X40 10.9 FLZN	PARAFUSO SEXTAVADO		
16	10289806	3	WASHER 16 300HV	ARRUELA		
18	4000420	3	HEX NUT M16	PORCA SEXTAVADA		

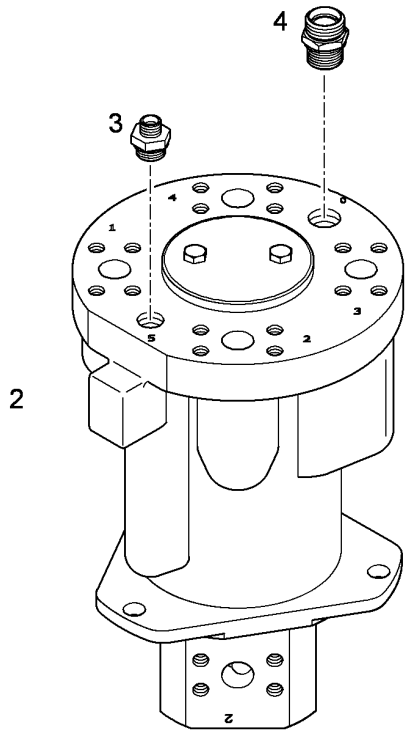

Pos.	Item	Quantity	Description	Designação	Serie	K
2	9611367	1	ROTARY FEED THROUGH ⇨ ❑ 104	COLETOR GIRATÓRIO		
3	7618380	1	SCREW-ON CONNECTION GE 10L M22X1,5	CONEXÃO ROSCADA		
4	7362515	1	FITTING GE 22L M26X1,5	UNIÃO ROSCADA		

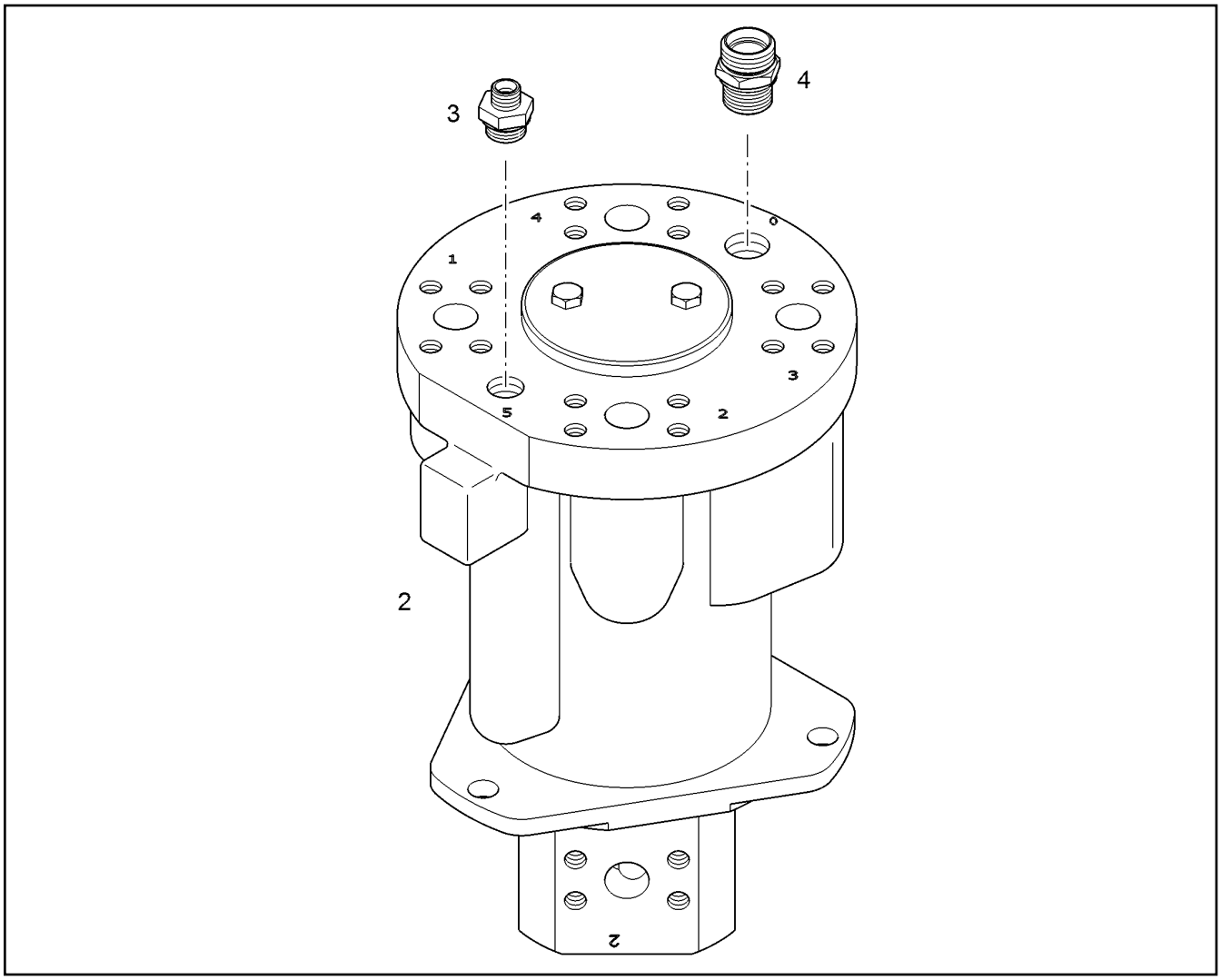

Pos.	Item	Quantity	Description	Designação	Serie	K
2	11643314	1	ROTARY FEED THROUGH [6054T06] ⇨ ❑ 103	COLETOR GIRATÓRIO		2
3	7618380	1	SCREW-ON CONNECTION GE 10L M22X1,5	CONEXÃO ROSCADA		
4	7362515	1	FITTING GE 22L M26X1,5	UNIÃO ROSCADA		

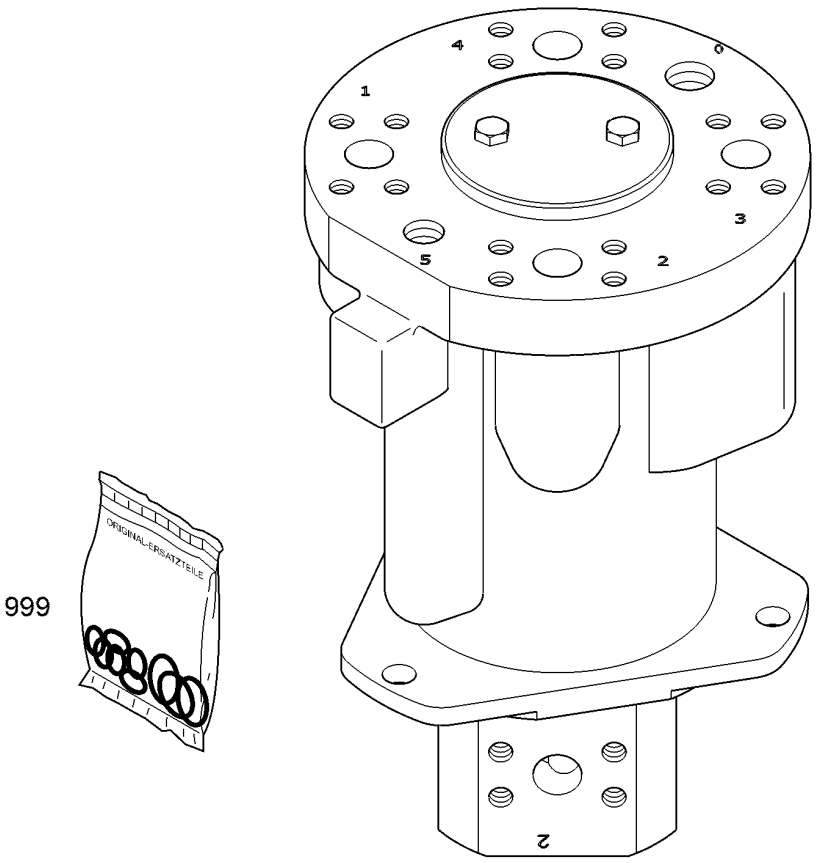

Pos.	Item	Quantity	Description	Designação	Serie	K
999	11692624	1	SEAL KIT	KIT DE VEDAÇÃO		

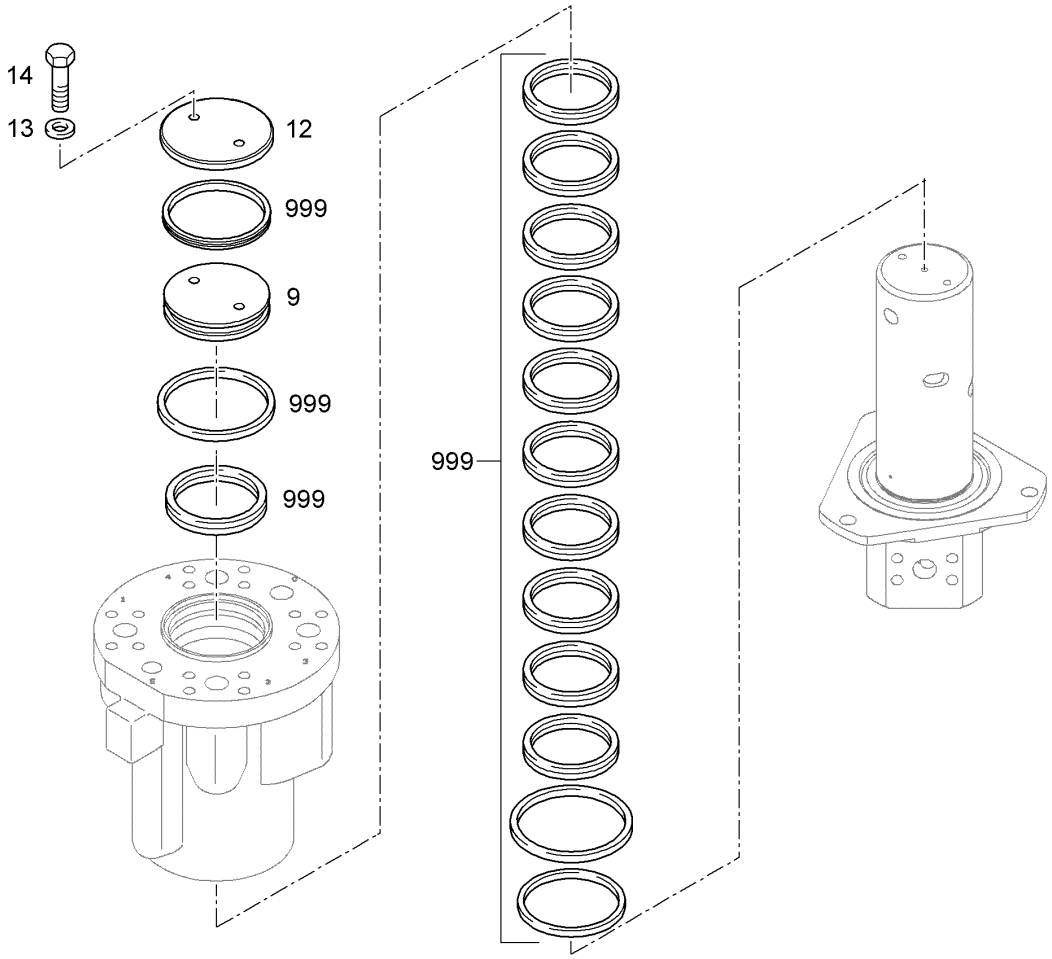

Pos.	Item	Quantity	Description	Designação	Serie	K
9	10356235	1	COVER	TAMPA		
12	10356239	1	PROTECTIVE COVER	TAMPA DE PROTEÇÃO		
13	4001445	2	SERRATED LOCK WASHER DIN 6798A10,5	ARRUELA DENTADA		
14	4066098	2	HEX SCREW ISO 4017 M10X30 10.9 A3C	PARAFUSO SEXTAVADO		
999	10356547	1	SEAL KIT ⇨ ❑ 106	KIT DE VEDAÇÃO		

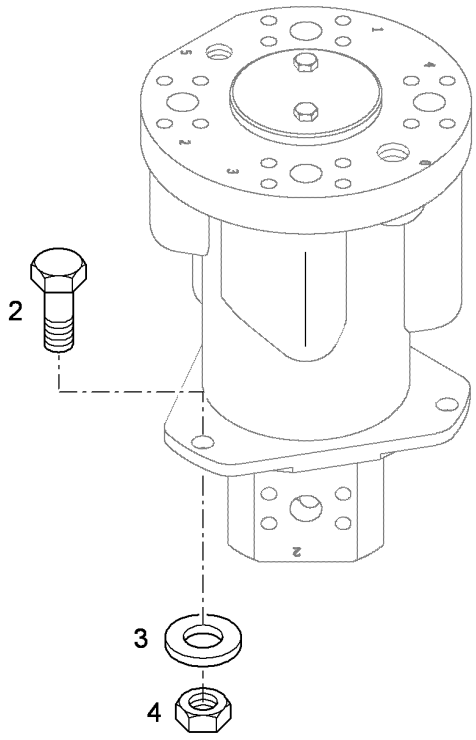

Pos.	Item	Quantity	Description	Designação	Serie	K
2	10001073	3	HEX SCREW ISO 4017 M16X40 10.9 FLZN	PARAFUSO SEXTAVADO		
3	10289806	3	WASHER 16 300HV	ARRUELA		
4	4000420	3	HEX NUT M16	PORCA SEXTAVADA		

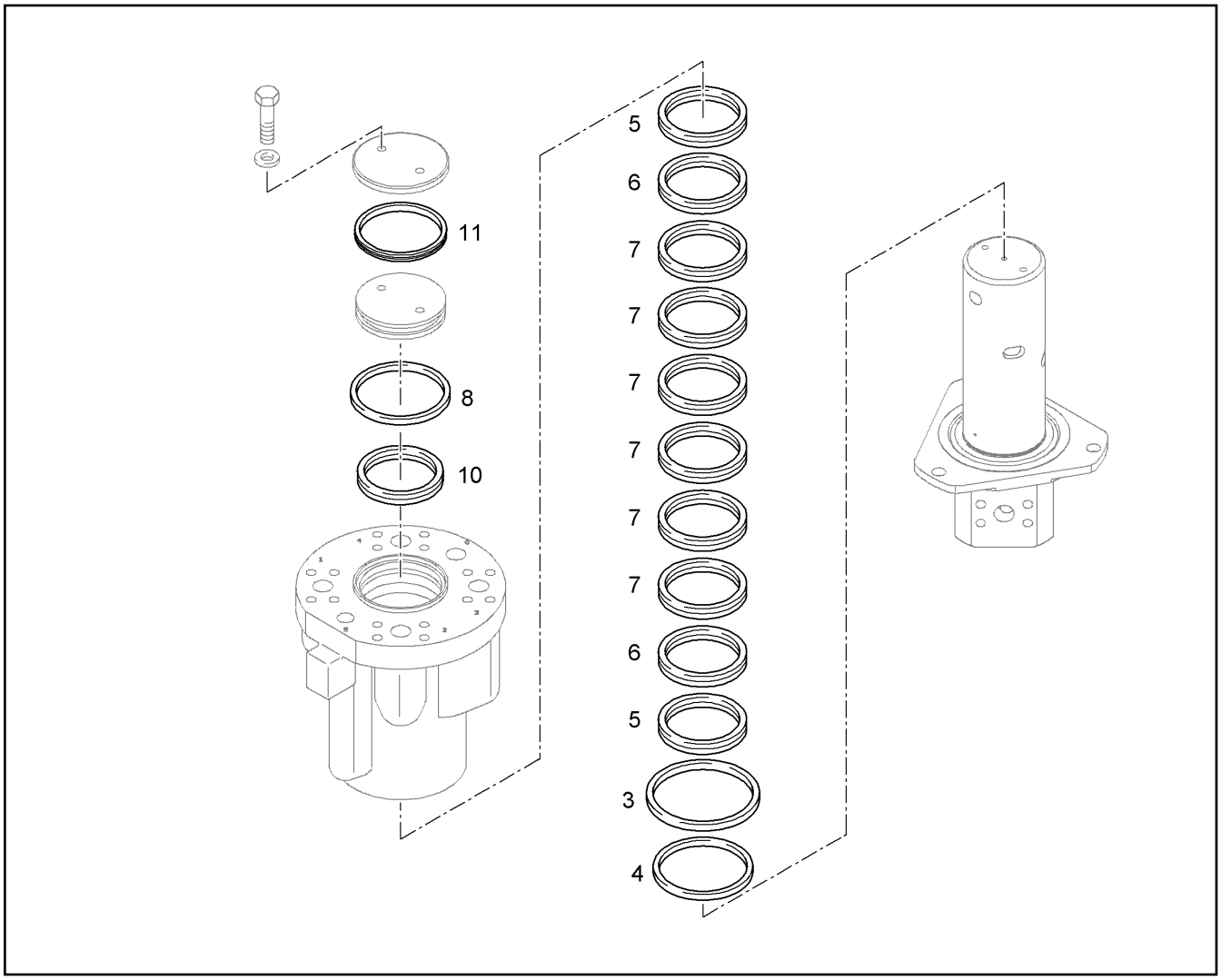

Pos.	Item	Quantity	Description	Designação	Serie	K
3		1	V-SEALING	VEDAÇÃO EM V		
4		1	SLIDE RING 100X130	ANEL DESLIZANTE		
5		2	SUPPORTING RING 100/109,3X1,7	ANEL DE APOIO		
6		2	O-RING 100,00X5,34	ANEL-O		
7		6	SEAL	VEDAÇÃO		
8		1	SLIDE RING 100X109	ANEL DESLIZANTE		
10		1	O-RING 78,97X353	ANEL-O		
11		1	SEALING RING 103/114x5	ANEL DE VEDAÇÃO		

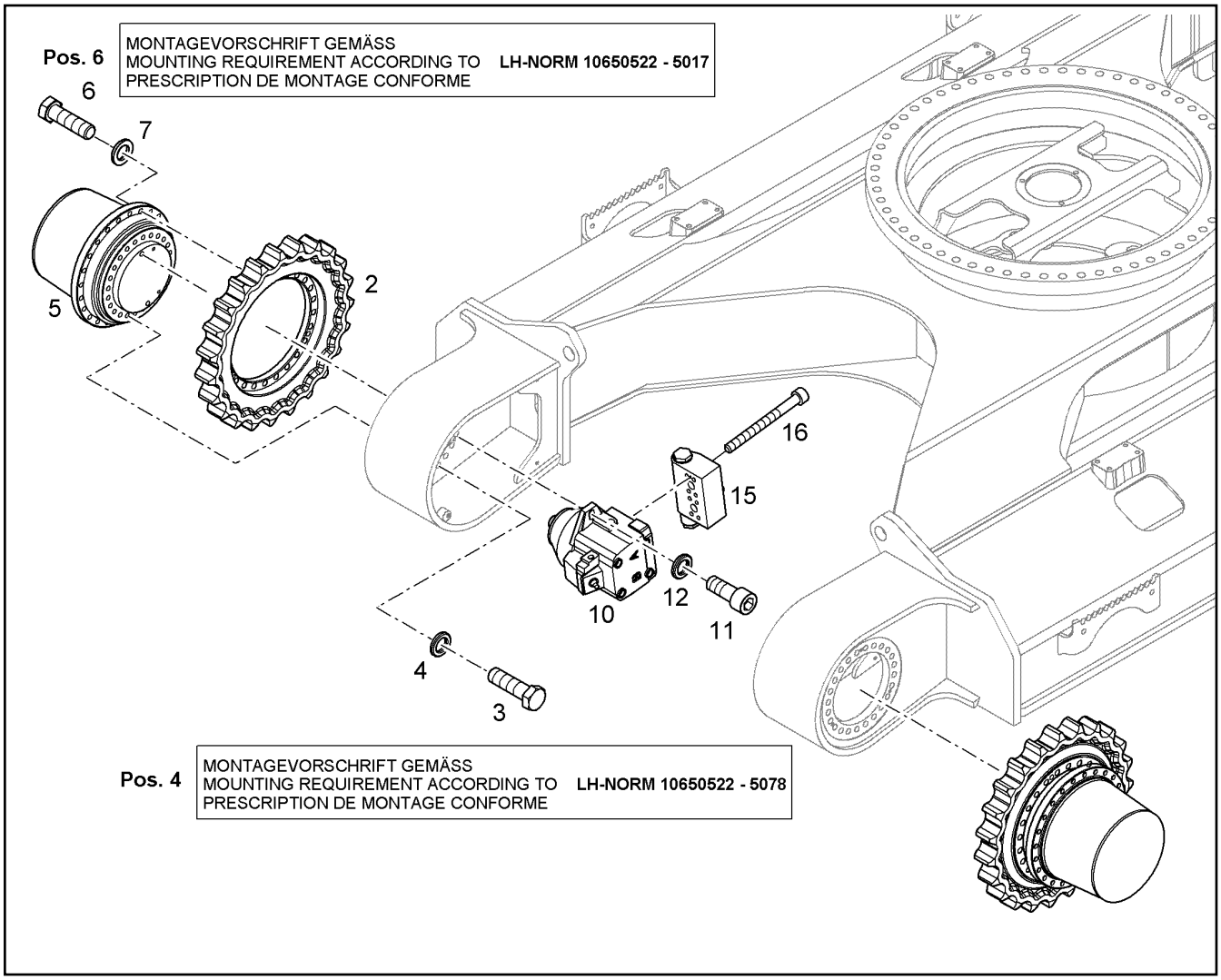

Pos.	Item	Quantity	Description	Designação	Serie	K
2	9391227	2	TUMBLER WHEEL D7	RODA MOTRIZ		1
3	10425656	48	HEX SCREW ISO 4017 M20X70 10.9 FLZN	PARAFUSO SEXTAVADO		
4	9918229	48	WASHER 20,5/34X5	ARRUELA		
5	968744301	2	TRACTION DRIVE FAT 400P073 [0001580] [0001579] ⇨ ❑ 109	MECANISMO DE TRANSLAÇÃO		6
6	10425656	48	HEX SCREW ISO 4017 M20X70 10.9 FLZN	PARAFUSO SEXTAVADO		
7	9918229	48	WASHER 20,5/34X5	ARRUELA		
10	9073888	2	HYDRAULIC INSTALLATION MOTOR [191616927] [191616924] ⇨ ❑ 799	MOTOR HIDRÁULICO		6
11	10425665	4	SOCKET HEAD SCREW ISO 4762 M20X50 10	PARAFUSO CILÍNDRICO		
12	9918229	4	WASHER 20,5/34X5	ARRUELA		
15	10002011	2	BRAKE VALVE [6480] [6466] ⇨ ❑ 112	VALVULA DE FREIO		
16	10876360	2	SOCKET HEAD SCREW ISO 4762 M6X65 8.8	PARAFUSO CILÍNDRICO		

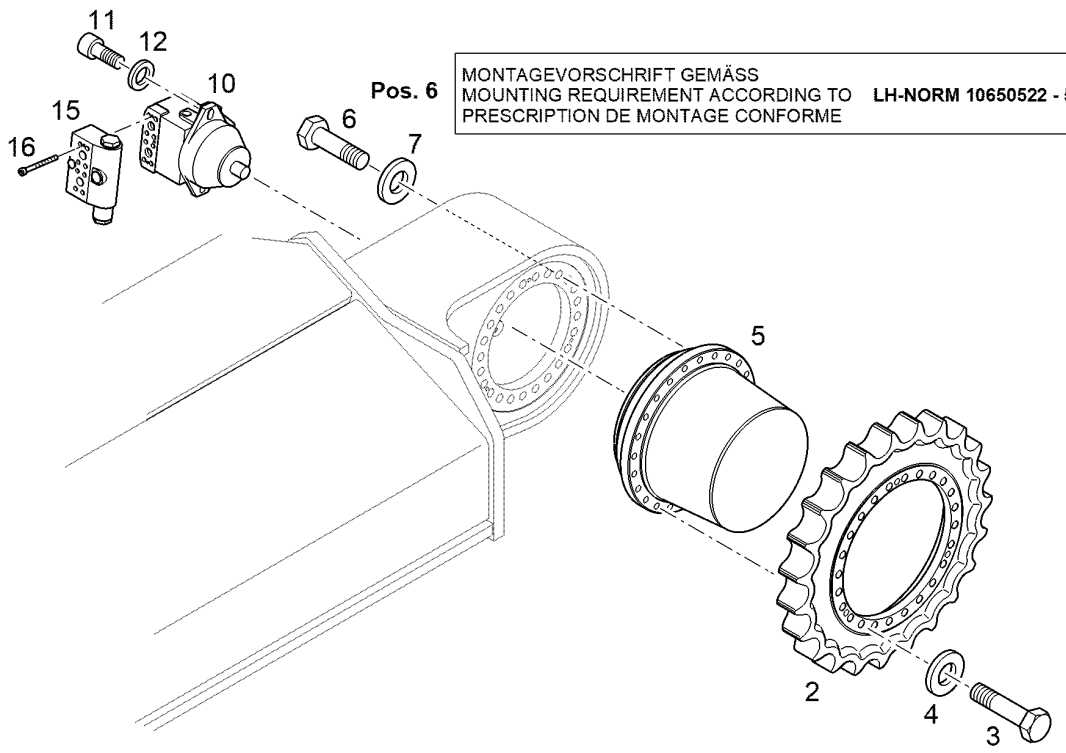

Pos.	Item	Quantity	Description	Designação	Serie	K
2	9391227	2	TUMBLER WHEEL D7	RODA MOTRIZ		1
3	10425656	48	HEX SCREW ISO 4017 M20X70 10.9 FLZN	PARAFUSO SEXTAVADO		
4	9918229	48	WASHER 20,5/34X5	ARRUELA		
5	968744301	2	TRACTION DRIVE FAT 400P073 ⇨ ❑ 109	MECANISMO DE TRANSLAÇÃO		6
6	10425656	48	HEX SCREW ISO 4017 M20X70 10.9 FLZN	PARAFUSO SEXTAVADO		
7	9918229	48	WASHER 20,5/34X5	ARRUELA		
10	9073888	2	HYDRAULIC INSTALLATION MOTOR ⇨ ❑ 799	MOTOR HIDRÁULICO		6
11	10425651	4	HEX SCREW ISO 4017 M20X50 10.9 FLZN	PARAFUSO SEXTAVADO		
12	9918229	4	WASHER 20,5/34X5	ARRUELA		
15	10002011	2	BRAKE VALVE ⇨ ❑ 112	VALVULA DE FREIO		
16	4002418	2	SOCKET HEAD SCREW ISO 4762 M6X65 8.8	PARAFUSO CILÍNDRICO		

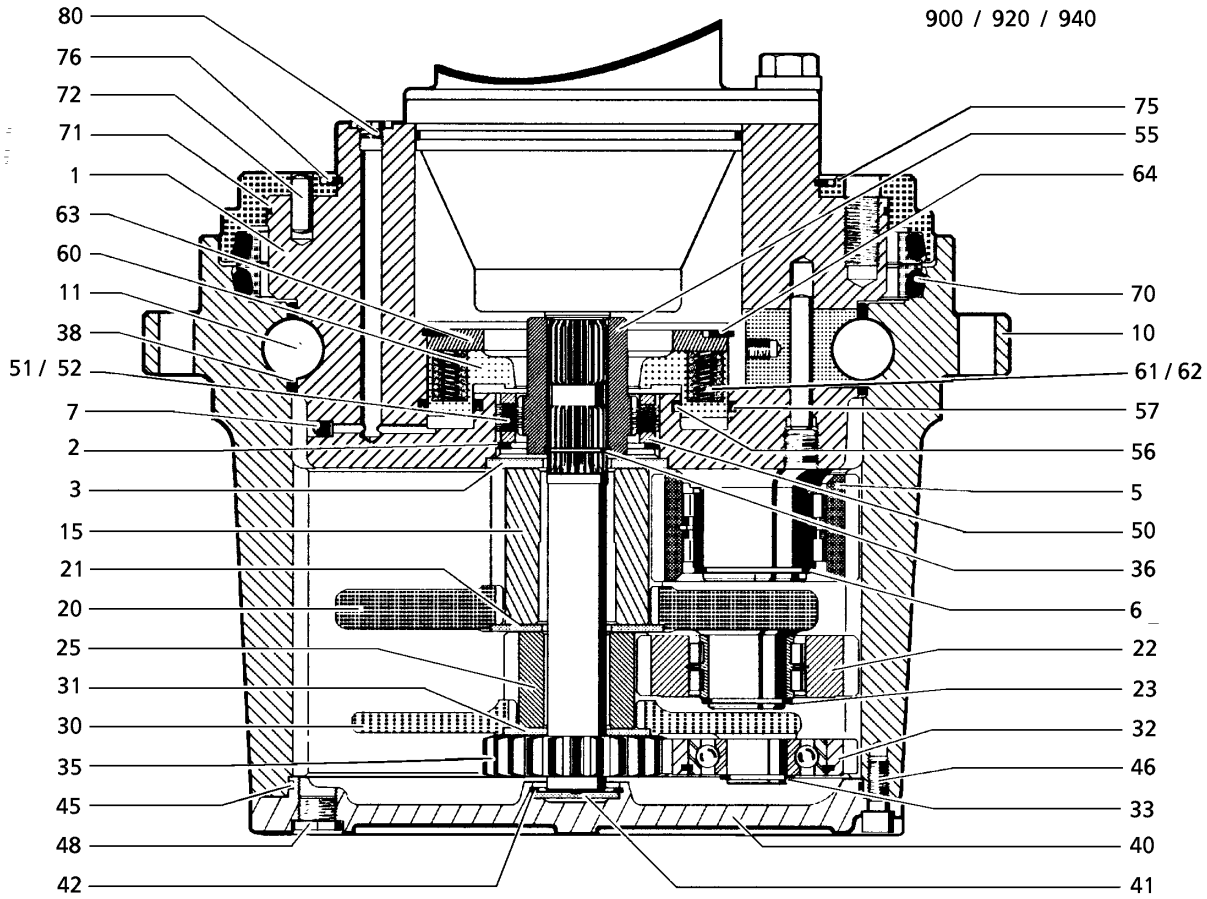

Pos.	Item	Quantity	Description	Designação	Serie	K
1	9443002	1	CONNECTION CARRIER	SUPORTE DE CONEXAO		
2	10171632	1	LOCKING RING DIN 472 90	ANEL DE RETENÇÃO		
3	9443003	1	RETAINING DISK	DISCO DE RETENÇÃO		
5	944300403	5	PLANET WHEEL M=4 Z=27 ⇨ ❑ 113	ENGRENAGEM PLANETÁRIA		
6	4280089	5	LOCKING RING DIN 471 60	ANEL DE RETENÇÃO		
7	7610819	1	SEALING PLUG MB 700	TAMPÃO DE VEDAÇÃO		
10	944315903	1	INNER WHEEL M=4 Z=78	RODA INTERNA		
11	747002001	26	STEEL BALL d=35 - G40	ESFERA DE AÇO		
15	9443007	1	SUN WHEEL M=4 Z=22	ENGRENAGEM SOLAR		
20	944300803	1	PLANETARY CARRIER	SUPORTE PLANETÁRIO		
21	9443009	1	RETAINING DISK	DISCO DE RETENÇÃO		
22	944301003	3	PLANET WHEEL M=4 Z=29 ⇨ ❑ 114	ENGRENAGEM PLANETÁRIA		
23	428012101	3	LOCKING RING DIN 471 45	ANEL DE RETENÇÃO		
25	9443012	1	SUN WHEEL M=4 Z=18	ENGRENAGEM SOLAR		
30	9443013	1	PLANETARY CARRIER	SUPORTE PLANETÁRIO		
31	9443014	1	RETAINING DISK	DISCO DE RETENÇÃO		
32	968614201	3	PLANET WHEEL M=4 Z=28 ⇨ ❑ 115	ENGRENAGEM PLANETÁRIA		
33	4000874	3	LOCKING RING DIN 471 35	ANEL DE RETENÇÃO		
35	944301703	1	DRIVE SHAFT M=4 Z=21	EIXO DE ACIONAMENTO		
36	7471662	1	SNAP RING DIN 7993 A 35	ANEL DE RETENÇÃO		
38	9443217	13	BALL CAGE	GAIOLA DA ESFERA		1
40	968610601	1	END COVER	TAMPA DE FECHAMENTO		
41	9443033	1	RETAINING DISK	DISCO DE RETENÇÃO		

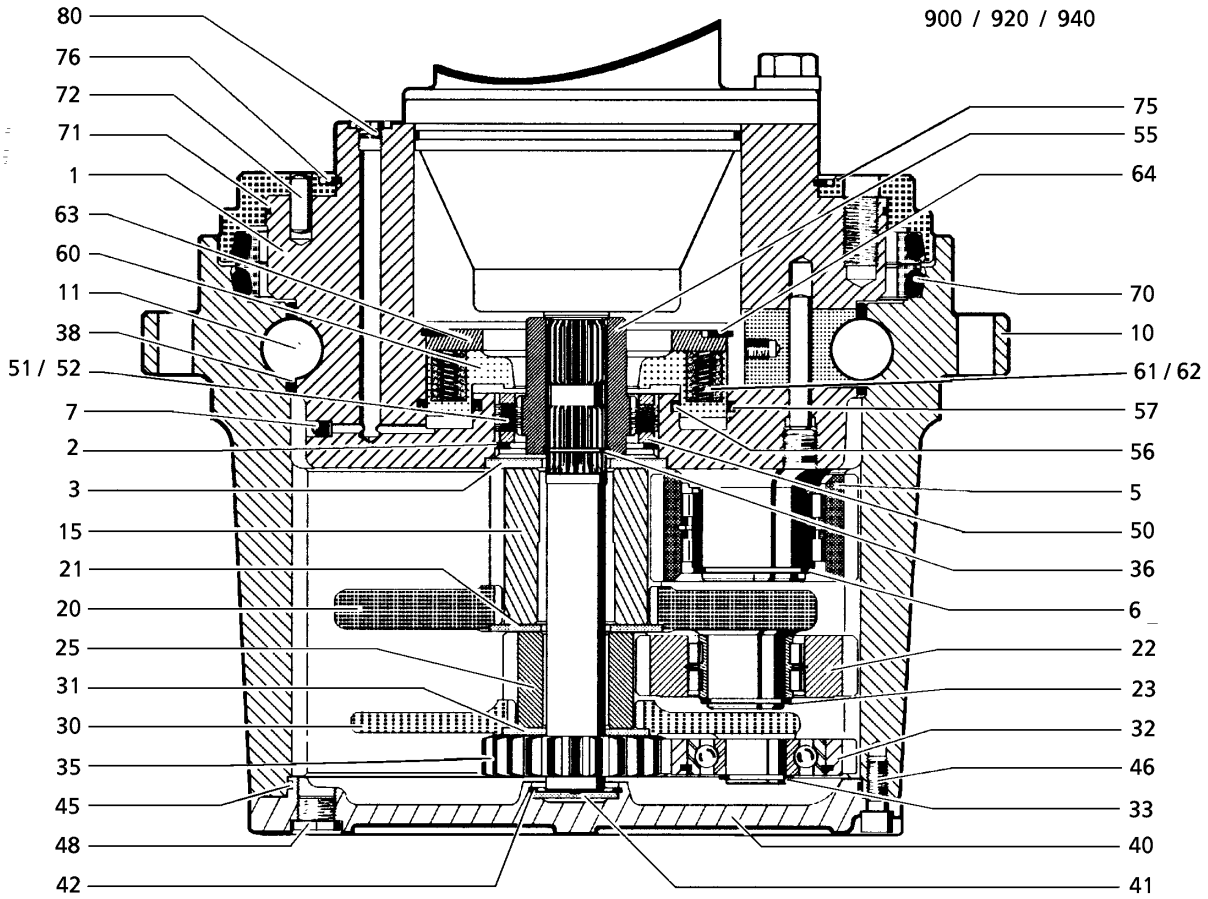

Pos.	Item	Quantity	Description	Designação	Serie	K
42	429612001	1	L RING JL 50	ANEL L		
45	7610203	1	O-RING DIN 3771 320X3	ANEL-O		
46	4042032	12	SOCKET HEAD SCREW ISO 4762 M12X30 8.	PARAFUSO CILÍNDRICO		
48	477510401	3	SCREW PLUG VSTI M22X1,5	PARAFUSO DE FECHAMENTO		
50	9443019	2	COMPRESSION RING	ANEL DE PRESSÃO		
51	944302003	5	DISC INSIDE TOOTHED	LAMELAS INTERNAS		
52	9443021	6	OUTER MULTI-DISC	LAMELA EXTERNA		
55	944302203	1	MULTI-DISC CARRIER	SUPORTE DAS LAMELAS		1
56	761050503	1	ROD SEAL 120X110,4X5,5	ANEL RANHURADO		
57	761050603	1	ROD SEAL 184,6X175X5,5	ANEL RANHURADO		
60	9443023	1	ANNULAR PISTON	ANEL DE PISTÃO		
61	7610100	20	PRESSURE SPRING	MOLA DE PRESSÃO		
62	7610101	20	PRESSURE SPRING	MOLA DE PRESSÃO		
63	9443024	1	SHUTTER WASHER	DISCO DE FECHAMENTO		
64	4630032	1	LOCKING RING DIN 472 175	ANEL DE RETENÇÃO		
70	710925401	1	AXIAL FACE SEAL 366,5X394,5X37	ANEL DE VEDAÇÃO DESLIZANT		
71	7610210	1	O-RING 350X3	ANEL-O		
72	431300701	1	CORE PIN 10H11	PINO COM ENTALHE		
75	9443025	1	CONNECTING RING	ANEL DE CONEXAO		
76	7610188	1	SNAP RING SW280	ANEL DE RETENÇÃO		
80	7890017	1	STOP PLUG	PLUG DE FECHAMENTO		
900	9443027	1	SEAL KIT ⇨ ❑ 120	KIT DE VEDAÇÃO		
920	944302803	1	BRAKE MULTI-DISC SET ⇨ ❑ 117	JOGO DE LAMELAS DO FREIO		1

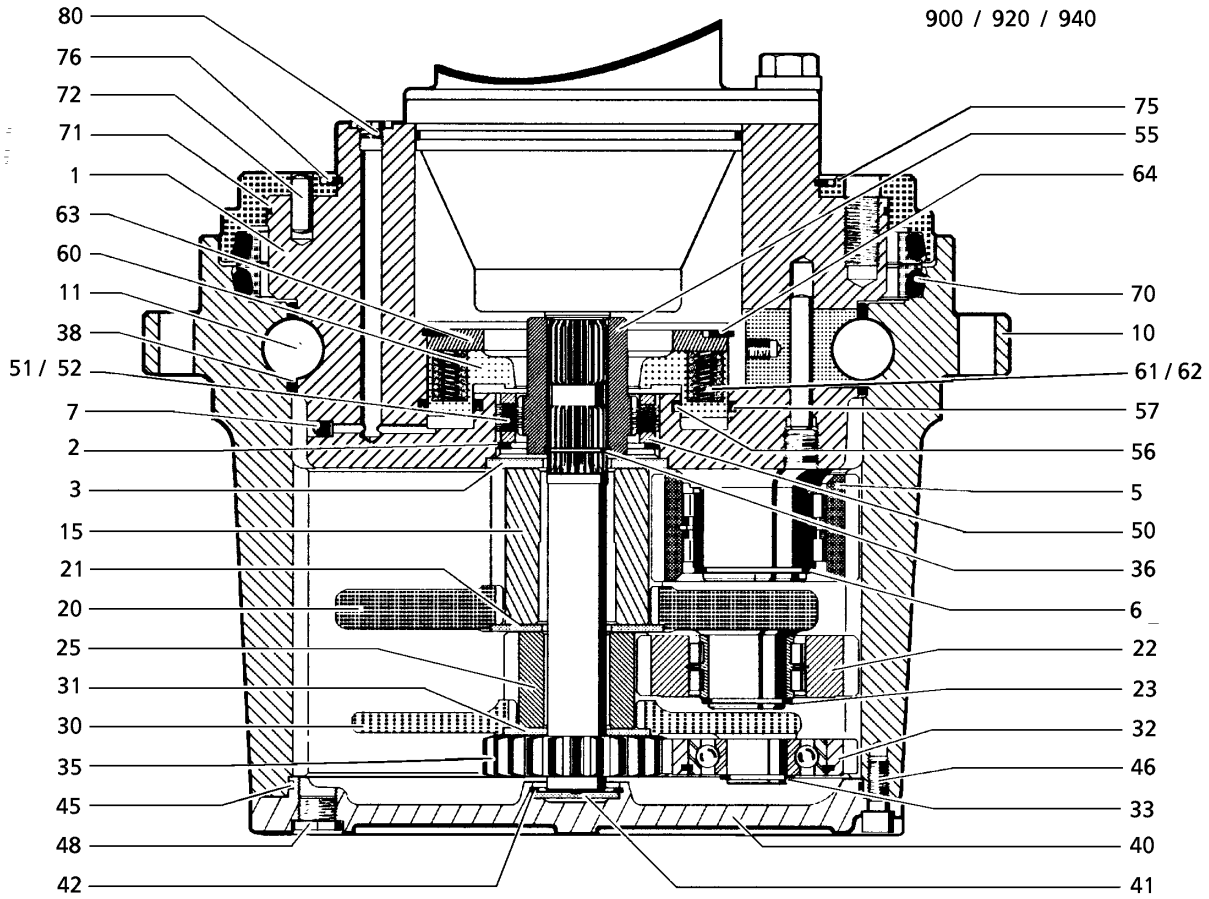

Pos.	Item	Quantity	Description	Designação	Serie	K
940	944302903	1	BRAKE REPAIR KIT ⇨ ❑ 118	KIT DE REPARO DO FREIO		1

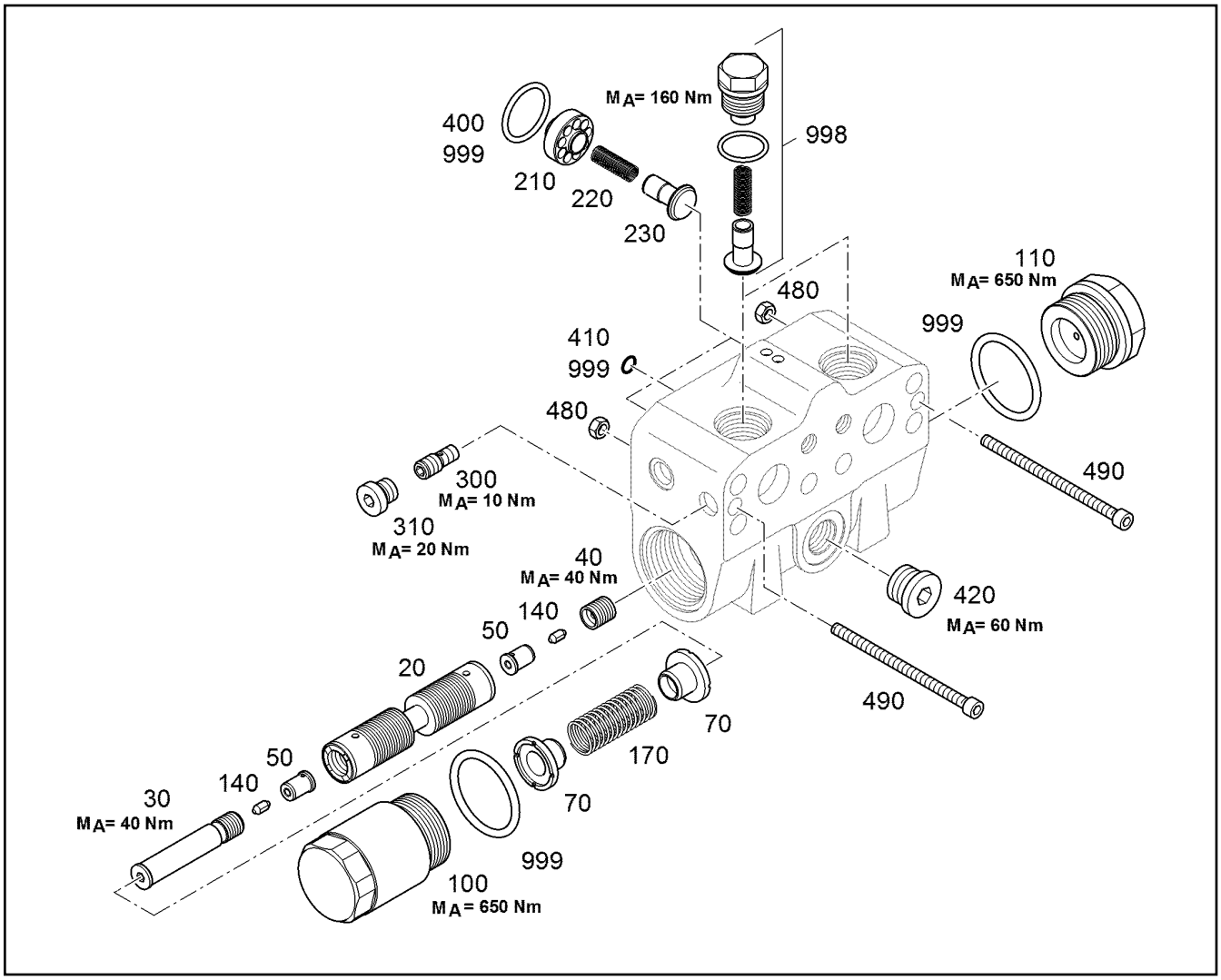

Pos.	Item	Quantity	Description	Designação	Serie	K
20	7029398	1	PISTON	PISTÃO		
30	7026126	1	PIN	PINO		
40	7026127	1	VALVE SEAT	ASSENTO DA VÁLVULA		
50	7414522	2	VALVE BUSHING	BUCHA DE VÁLVULA		1
70	7026129	2	SPRING SUPPORT	PRATO DA MOLA		
100	7021762	1	SCREW PLUG M45X1X78	PARAFUSO DE FECHAMENTO		
110	7369483	1	SCREW PLUG M45X1	PARAFUSO DE FECHAMENTO		
140	10122779	2	RESTRICTOR PIN 5,4X11,5X2,5	PINO DE RESTRICAO		
170	7369476	1	PRESSURE SPRING 6,3X25X67	MOLA DE PRESSÃO		
210	5611650	2	GUIDE	GUIA		
220		2	PRESSURE SPRING 0,8X6,8X28,5	MOLA DE PRESSÃO		
230	7017729	2	TAPER	CONE		
300	7021767	1	SHUTTLE VALVE	VALVULA DIRECIONAL		
310	7370432	4	SCREW PLUG M10X1 A3C	PARAFUSO DE FECHAMENTO		
400	7264508	2	O-RING DIN 3771 32,92X3,53	ANEL-O		
410	7021769	1	O-RING 9X2	ANEL-O		
420	10137075	1	SCREW PLUG VSTI M22X1,5	PARAFUSO DE FECHAMENTO		
480	4000379	2	HEX NUT M6	PORCA SEXTAVADA		
490	4000363	2	SOCKET HEAD SCREW ISO 4762 M6X100 1	PARAFUSO CILÍNDRICO		
998	12233625	2	SPARE PARTS KIT ⇨ ❑ 98	KIT DE PEÇAS DE REPOSIÇÃO		
999	7026136	1	SEAL KIT	KIT DE VEDAÇÃO		

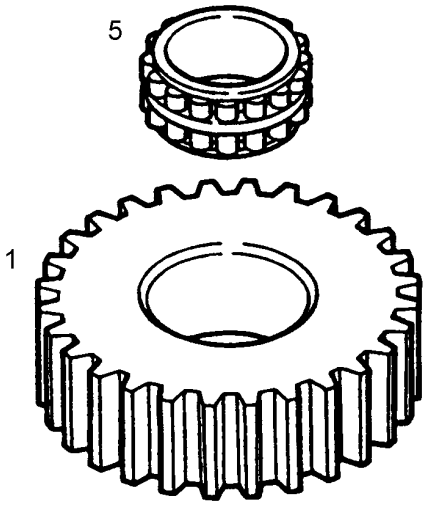

Pos.	Item	Quantity	Description	Designação	Serie	K
1		1	PLANET WHEEL	ENGRENAGEM PLANETÁRIA		
5	761003403	1	CYLINDRICAL ROLLER BEARING RNN 60X8	ROLAMENTO DE ROLOS CILÍN		

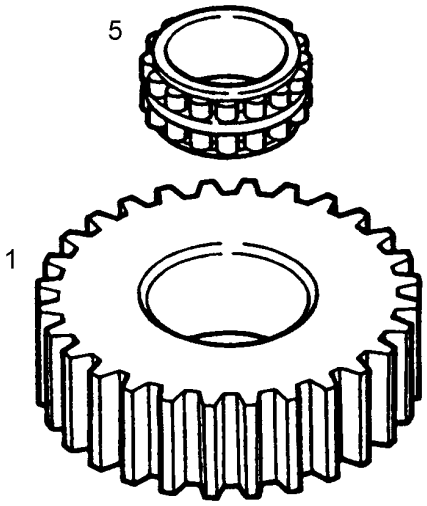

Pos.	Item	Quantity	Description	Designação	Serie	K
1		1	PLANET WHEEL M=4 Z=29	ENGRENAGEM PLANETÁRIA		
5	761003303	1	CYLINDRICAL ROLLER BEARING RNN 45X6	ROLAMENTO DE ROLOS CILÍN		

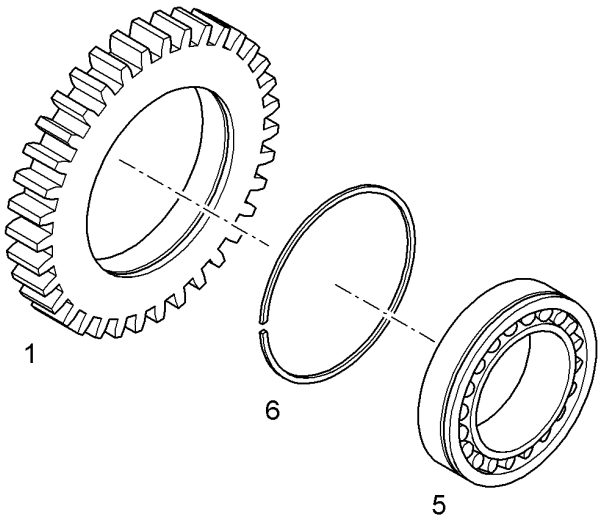

Pos.	Item	Quantity	Description	Designação	Serie	K
1		1	PLANET WHEEL M=4 Z=28	ENGRENAGEM PLANETÁRIA		
5	10166804	1	CYLINDRICAL ROLLER BEARING NUP-307E	ROLAMENTO DE ROLOS CILÍN		
6	10167277	1	SNAP RING DIN 5417SP 80	ANEL DE RETENÇÃO		

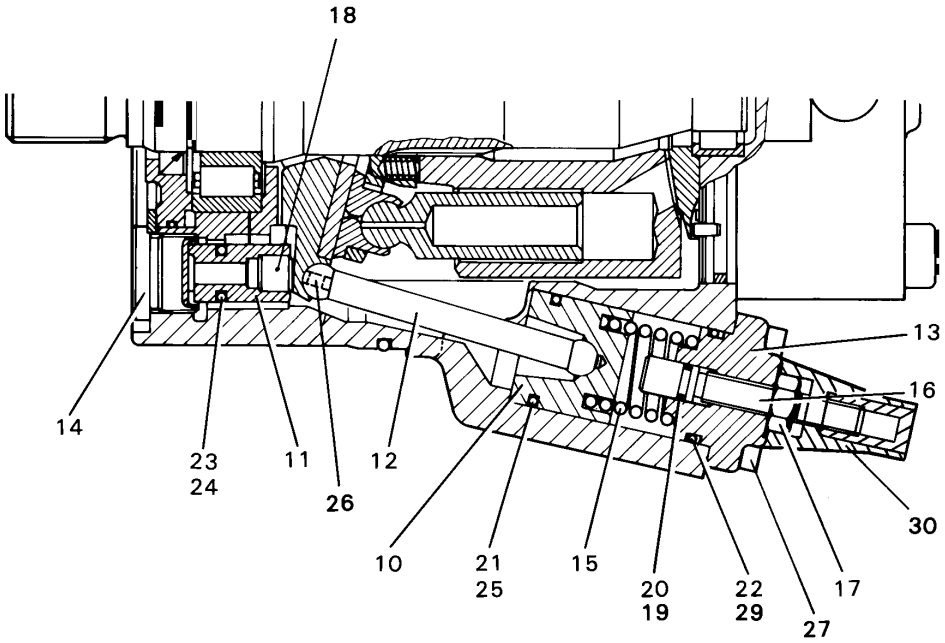

Pos.	Item	Quantity	Description	Designação	Serie	K
10	9276983	1	ADJUSTING PISTON NG 100	PISTÃO DE AJUSTAMENTO		
11	9276984	2	ADJUSTING PISTON	PISTÃO DE AJUSTAMENTO		
12	9276985	1	ADJUSTING LEVER	ALAVANCA DE REGULAGEM		
13	9882761	1	COVER NG 100	TAMPA		
14	7360563	2	FITTING M27X2	UNIÃO ROSCADA		
15	7381763	1	PRESSURE SPRING 3,60X28,40X49,68	MOLA DE PRESSÃO		
16	9265279	1	LIMIT STOP SCREW M12X38X8 42CrMo4+N	PARAFUSO LIMITADOR		6
17	11002808	1	HEX NUT M12	PORCA SEXTAVADA		
18	9277556	2	BALL THRUST SCREW M12X16X4,5 BO	PARAFUSO ESFERICO DE PRES		
19	7381809	1	BACK-UP RING CUT 11,7/15X1,4	ANEL DE ENCOSTO		
20	7380596	1	O-RING DIN 3771 11,00X2,00	ANEL-O		
21	7381124	1	O-RING ISO 3601-1 29,74X3,53	ANEL-O		
22	7380719	1	O-RING ISO 3601-1 36,17X2,62	ANEL-O		
23	7380935	2	O-RING ISO 3601-1 12,37X2,62	ANEL-O		
24	7381413	2	LIFETIME SEAL 21X13,5X3,2	ANEL DE VEDAÇÃO DE DESLIZE		
25	7381414	1	LIFETIME SEAL 42X31X4,2	ANEL DE VEDAÇÃO DE DESLIZE		
26	9880132	2	LOCKING SCREW M5X6X4,2 ETG 100	PARAFUSO TRAVA		
27	4043082	4	SOCKET HEAD SCREW ISO 4762 M8X20 10.	PARAFUSO CILÍNDRICO		
29	7381758	1	BACK-UP RING UNCUT 37,5/42X1,4	ANEL DE APOIO		
30	7380730	1	SAFETY CAP SW19/M12X32X21	CAPA DE PROTECAO		

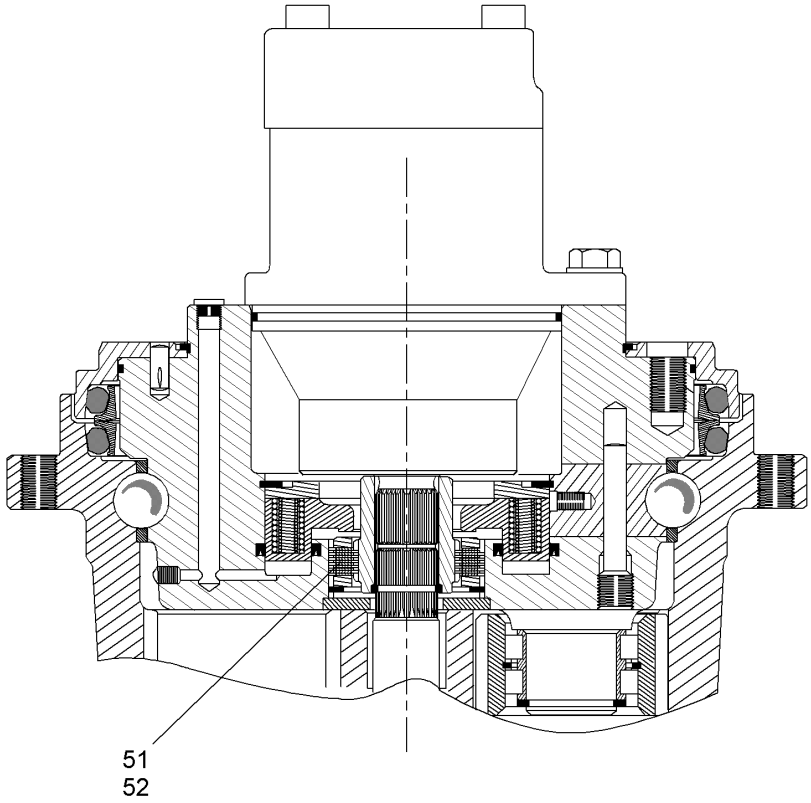

Pos.	Item	Quantity	Description	Designação	Serie	K
51	944302003	5	DISC INSIDE TOOTHED	LAMELAS INTERNAS		
52	9443021	6	OUTER MULTI-DISC	LAMELA EXTERNA		

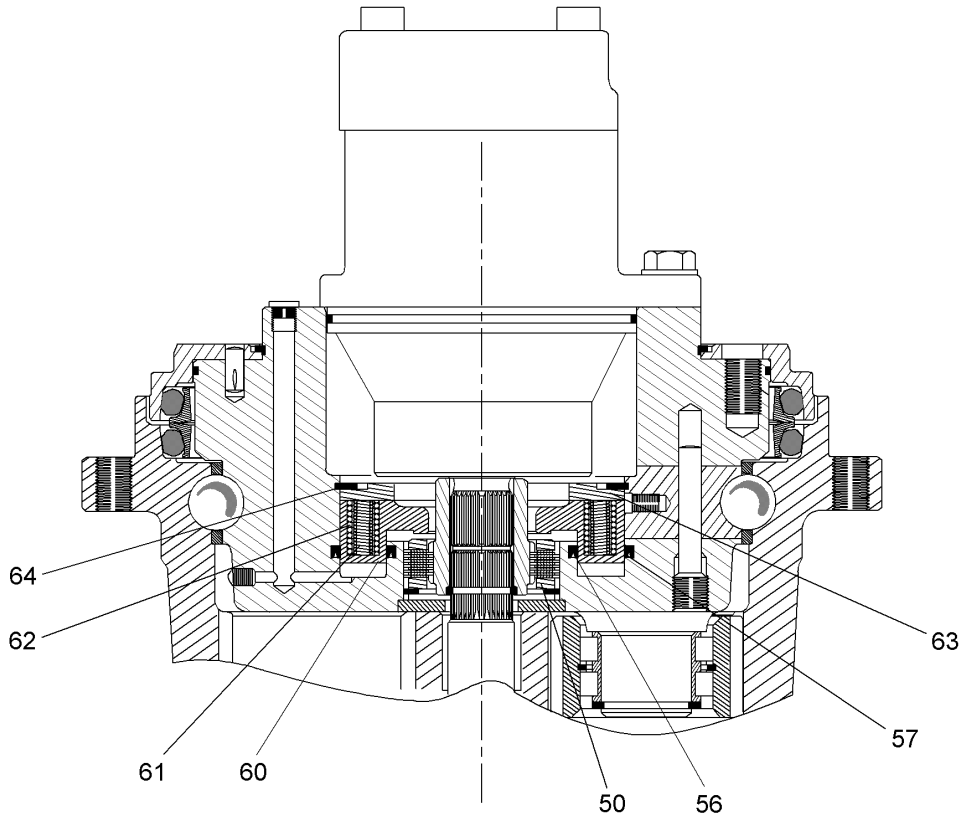

Pos.	Item	Quantity	Description	Designação	Serie	K
50		2	COMPRESSION RING	ANEL DE PRESSÃO		
56		1	ROD SEAL 120X110,4X5,5	ANEL RANHURADO		
57		1	ROD SEAL 184,6X175X5,5	ANEL RANHURADO		
60		1	ANNULAR PISTON	ANEL DE PISTÃO		
61		20	PRESSURE SPRING	MOLA DE PRESSÃO		
62		20	PRESSURE SPRING	MOLA DE PRESSÃO		
63		1	SHUTTER WASHER	DISCO DE FECHAMENTO		
64		1	LOCKING RING DIN 472 175	ANEL DE RETENÇÃO		

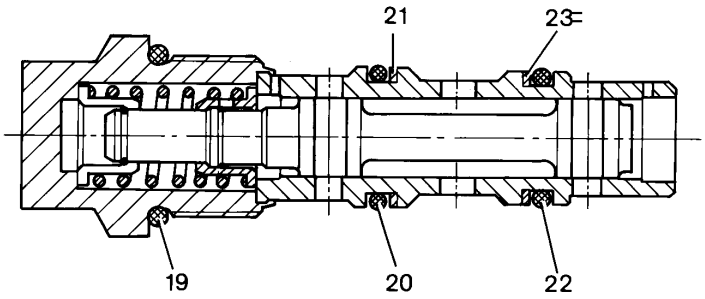

Pos.	Item	Quantity	Description	Designação	Serie	K
19		1	O-RING DIN 3771 21,30X2,40	ANEL-O		
20		1	O-RING DIN 3771 16X2,50	ANEL-O		
21		1	BACK-UP RING CUT 16,7/21X1	ANEL DE ENCOSTO		
22		1	O-RING DIN 3771 15,00X2,50	ANEL-O		
23		1	BACK-UP RING CUT 15,7/20X1	ANEL DE ENCOSTO		

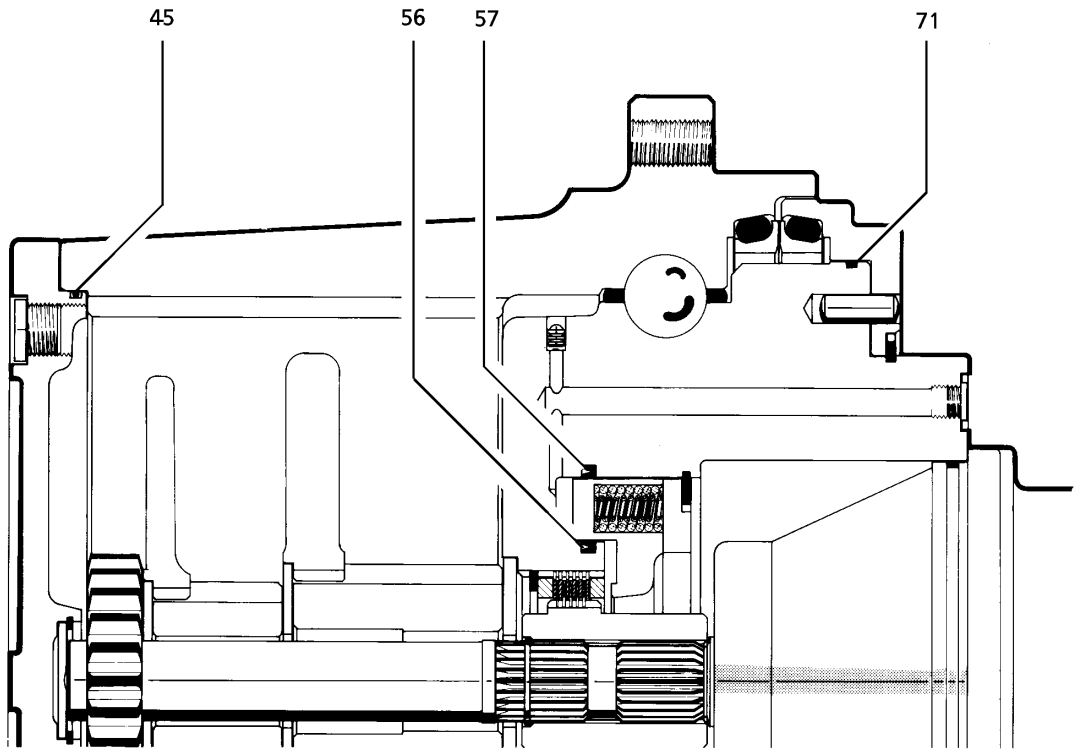

Pos.	Item	Quantity	Description	Designação	Serie	K
45		1	O-RING DIN 3771 320X3	ANEL-O		
56	761050503	1	ROD SEAL 120X110,4X5,5	ANEL RANHURADO		
57	761050603	1	ROD SEAL 184,6X175X5,5	ANEL RANHURADO		
71		1	O-RING 350X3	ANEL-O		

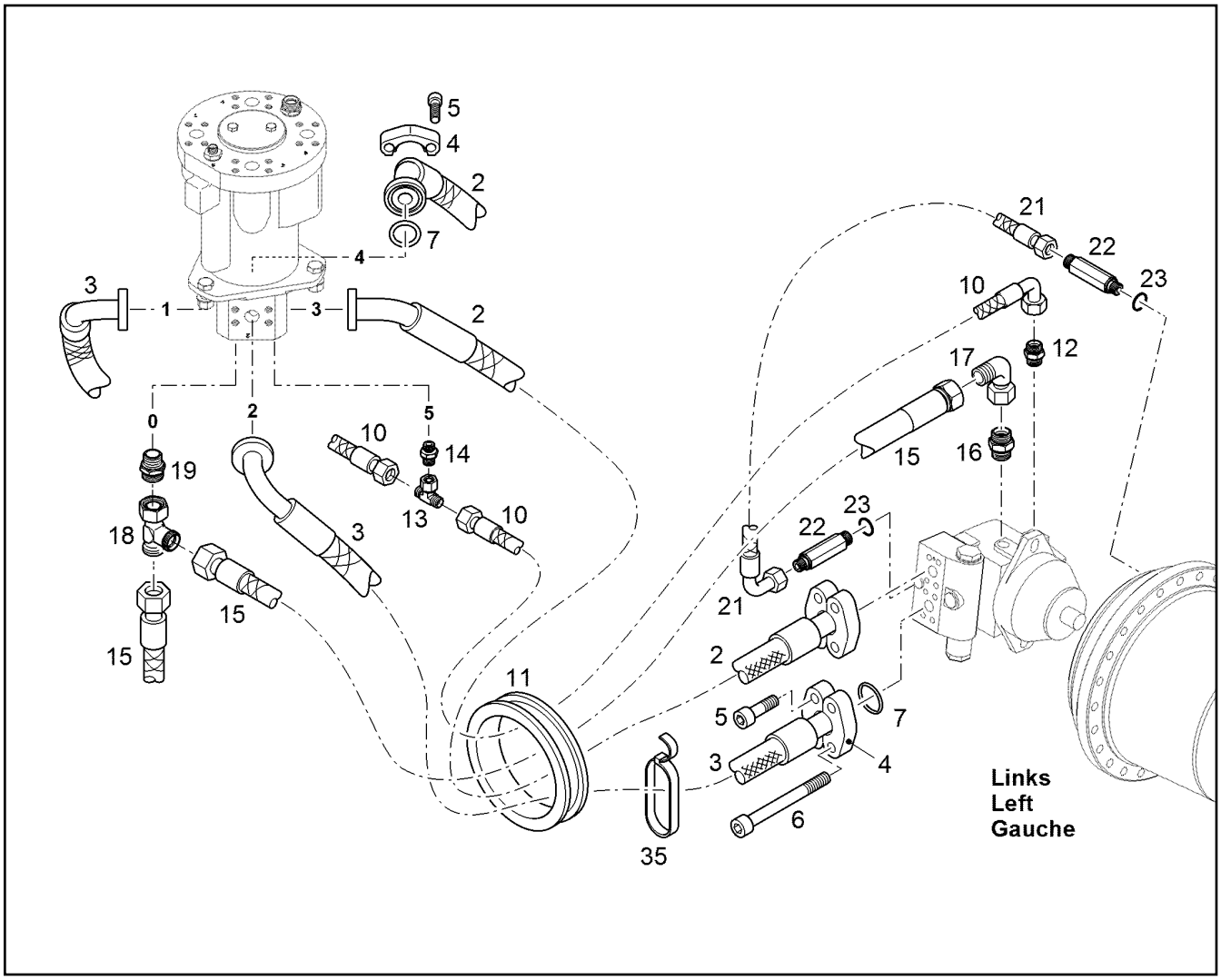

Pos.	Item	Quantity	Description	Designação	Serie	K
2	5617140	2	HOSE 25X2250	MANGUEIRA		1
3	5616707	2	HOSE 25X2350	MANGUEIRA		1
4	11485638	16	FLANGE HALF WITH BOSSING SAE J518 S	MEIO FLANGE COM RELEVO		
5	11002749	20	SOCKET HEAD SCREW ISO 4762 M12X40 10	PARAFUSO CILÍNDRICO		
6	11321147	12	SOCKET HEAD SCREW ISO 4762 M12X115	PARAFUSO CILÍNDRICO		
7	10490781	8	RECTANGULAR SECTION RING 40,15X2,80	ANEL DE SEÇÃO RETANGULAR		
10	7402273	2	CONTROL HOSE	MANGUEIRA DE COMANDO		1
11	10074863	2	EDGE PROTECTION	PROTEÇÃO DA BORDA		
12	7003814	2	FITTING GE 10L M14X1,5	UNIÃO ROSCADA		
13	482430314	1	FITTING ET 10L M16X1,5	UNIÃO ROSCADA		
14	7021521	1	FITTING GE 10L	UNIÃO ROSCADA		
15	10017996	2	HOSE 20X2400	MANGUEIRA		1
16	4001446	2	FITTING GE 22L G3/4A ED	UNIÃO ROSCADA		
17	247126202	3	FITTING EW 22L	UNIÃO ROSCADA		
18	247138602	1	FITTING EL 22L	UNIÃO ROSCADA		
19	7362515	1	FITTING GE 22L M26X1,5	UNIÃO ROSCADA		
21	7005047	2	CONTROL HOSE 8X500	MANGUEIRA DE COMANDO		1
22	9757423	4	FITTINGS	CONEXÃO		
23	5602583	4	SEALING RING 14	ANEL DE VEDAÇÃO		
35	7621780	4	LASHING STRAP 18X0,35m 380daN TEXTILG	CINTA DE AMARRACAO		

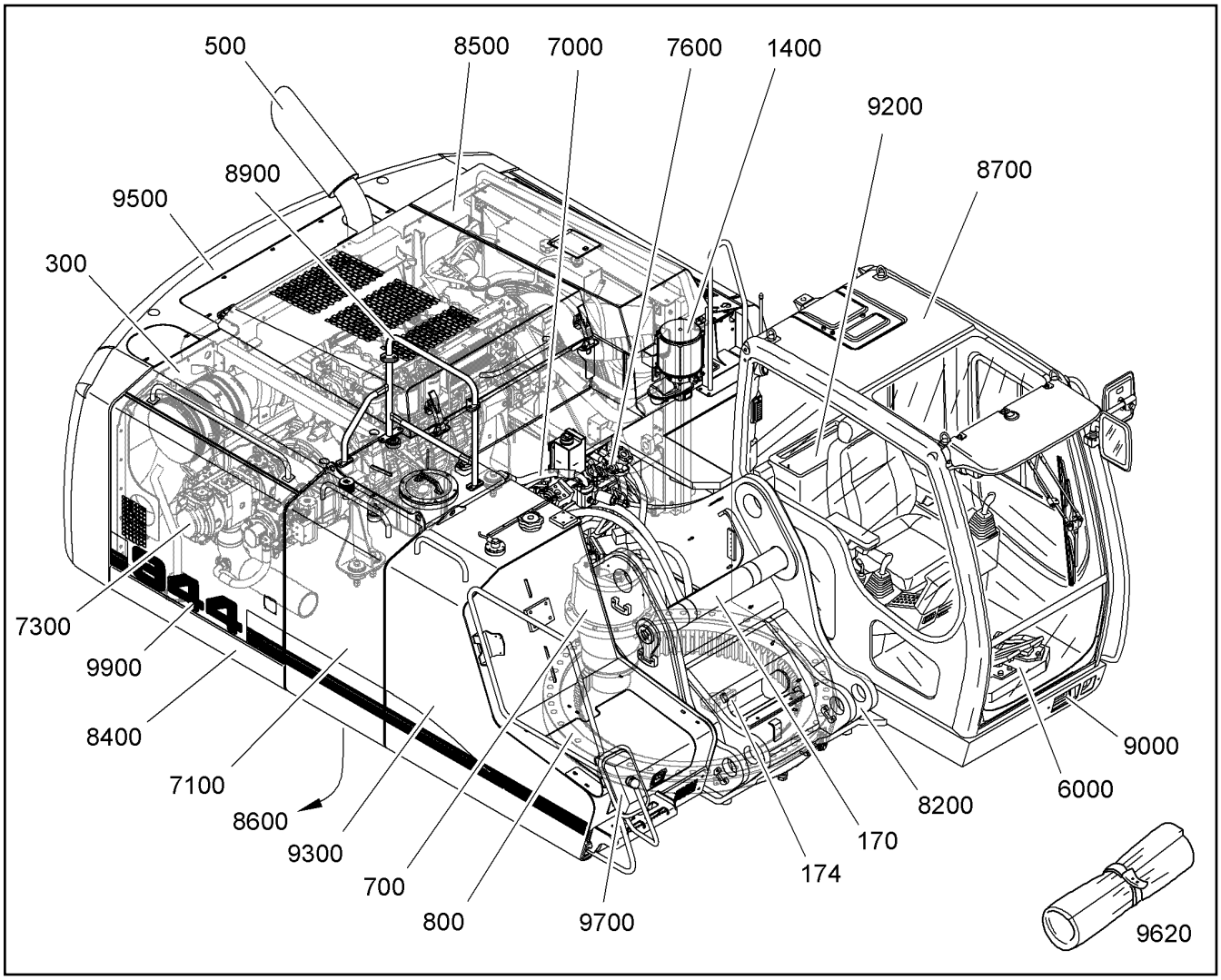

Pos.	Item	Quantity	Description	Designação	Serie	K
170		1	ATTACHMENTS MOUNTING PARTS ⇨ ❑ 127	PEÇAS MONT. DE EQUIP		
174		1	DRIVER INSTALLATION ⇨ ❑ 128	ARRASTADOR - INSTALACAO		
300		1	FRAME INSTALLATION ⇨ ❑ 129	QUADRO INSTALACAO		
500		1	MOTOR INSTALLATION ⇨ ❑ 132	INSTALAÇÃO DO MOTOR		
700		1	SWING GEAR INSTALLATION ⇨ ❑ 217	INSTALACAO MECANISMO GIR		
800		1	FIX.PARTS SWING RING UNDERCAR. ⇨ ❑ 242	PEÇAS FIX.COROA GIG.CHASSI I		
1400	11102813	1	KIT IN BASIC MACHINE ⇨ ❑ 755	KIT MÁQUINA BASE		
1400		1	CENTRALIZED LUBRICATION UPPER ⇨ ❑ 246	LUBRIFICACAO CENTRALIZADA	-99999	
6000		1	OPERATOR'S PLATFORM ⇨ ❑ 266	POSTO DE COMANDO	29398-	
7000		1	HYDRAULIC INSTALLATION UPPER ⇨ ❑ 343	INSTALACAO HIDRAULICA		
7100		1	HYDRAULIC TANK INSTALLATION ⇨ ❑ 386	TANQUE HIDRAULICO INSTALA	-99998	
7100		1	HYDRAULIC TANK INSTALLATION ⇨ ❑ 383	TANQUE HIDRAULICO INSTALA	-99999	
7300		1	PUMPS + COUPLING INSTALLATION ⇨ ❑ 141	INSTALACAO BOMBA E EMBREA		

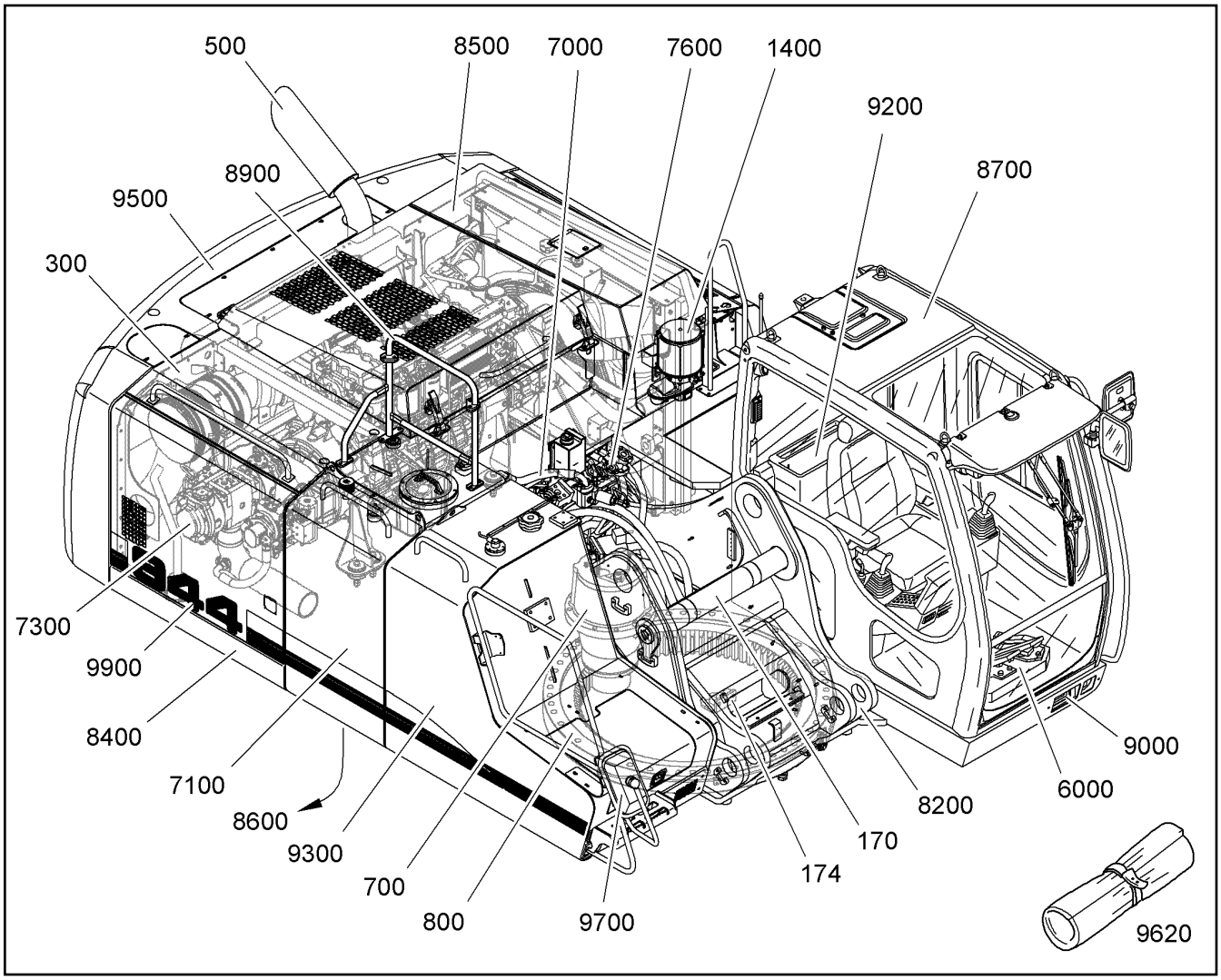

Pos.	Item	Quantity	Description	Designação	Serie	K
7600		1	CONTROL VALVE INSTALLATION ⇨ ❑ 406	INSTALAÇÃO BLOCO DE VÁLVU		
8200	10358826	1	SLEWING PLATFORM [MOA004014]	PLATAFORMA GIRATÓRIA	24757-	
8400		1	COVERING ROTATING DECK ⇨ ❑ 443	REVESTIMENTO DA PLAT.GIRAT		
8500		1	COVERS ⇨ ❑ 445	REVESTIMENTO		
8600		1	LOWER COVERING ⇨ ❑ 470	TAMPAS INFERIORES		
8700		1	OPERATOR'S CAB ⇨ ❑ 471	CABINE DE OPERADOR		
8900	11733762	1	GUARD RAILING FIXTURE ⇨ ❑ 513	CORRIMÃO - INSTALAÇÃO		
9000		1	ELECTRICAL SYSTEM ⇨ ❑ 514	INSTALAÇÃO ELÉTRICA		
9200		1	AIR CONDITION HOSES INSTALLAT. ⇨ ❑ 524	MAGUEIRAS DO AR-CONDICION		
9300		1	FUEL TANK ASSY. ⇨ ❑ 530	TANQUE COMBUSTIVEL INSTA	31797-	
9300		1	FUEL TANK ASSY. ⇨ ❑ 531	TANQUE COMBUSTIVEL INSTA	-99998	
9300		1	FUEL TANK ASSY. ⇨ ❑ 529	TANQUE COMBUSTIVEL INSTA	-99999	
9500		1	COUNTERWEIGHT INSTALLATION ⇨ ❑ 536	INSTALAÇÃO DO CONTRAPESO	26685-	

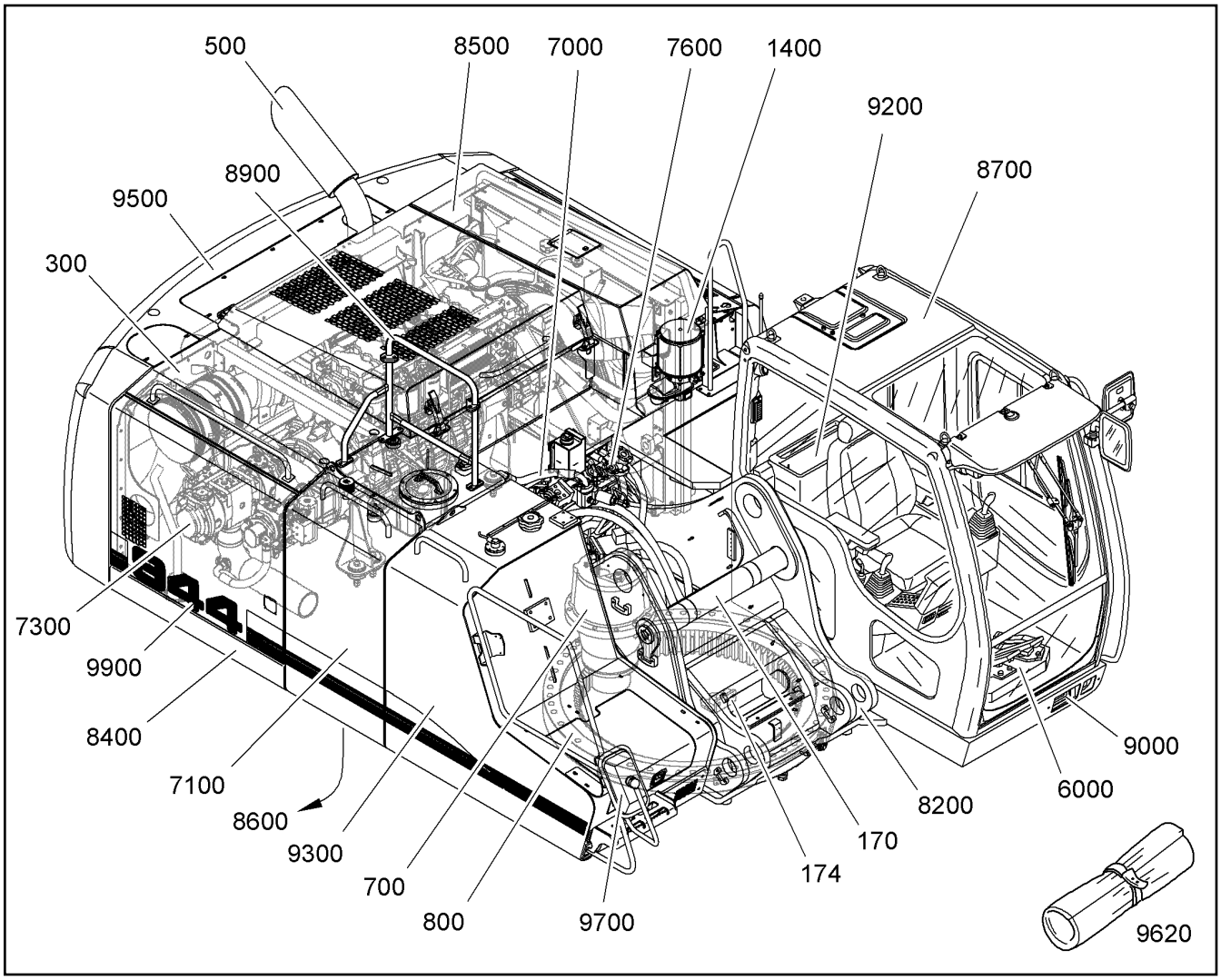

Pos.	Item	Quantity	Description	Designação	Serie	K
9620	10084286	1	TOOL EQUIPMENT ⇨ ❑ 538	KIT DE FERRAMENTAS		
9700		1	OUTSIDE MIRROR ASSEMBLY ⇨ ❑ 542	ESPELHO EXTERNO - INSTALA	32393-	
9700		1	OUTSIDE MIRROR ASSEMBLY ⇨ ❑ 542	ESPELHO EXTERNO - INSTALA		
9900		1	SIGNS ⇨ ❑ 546	ADESIVO DE SINALIZAÇÃO	26685-	

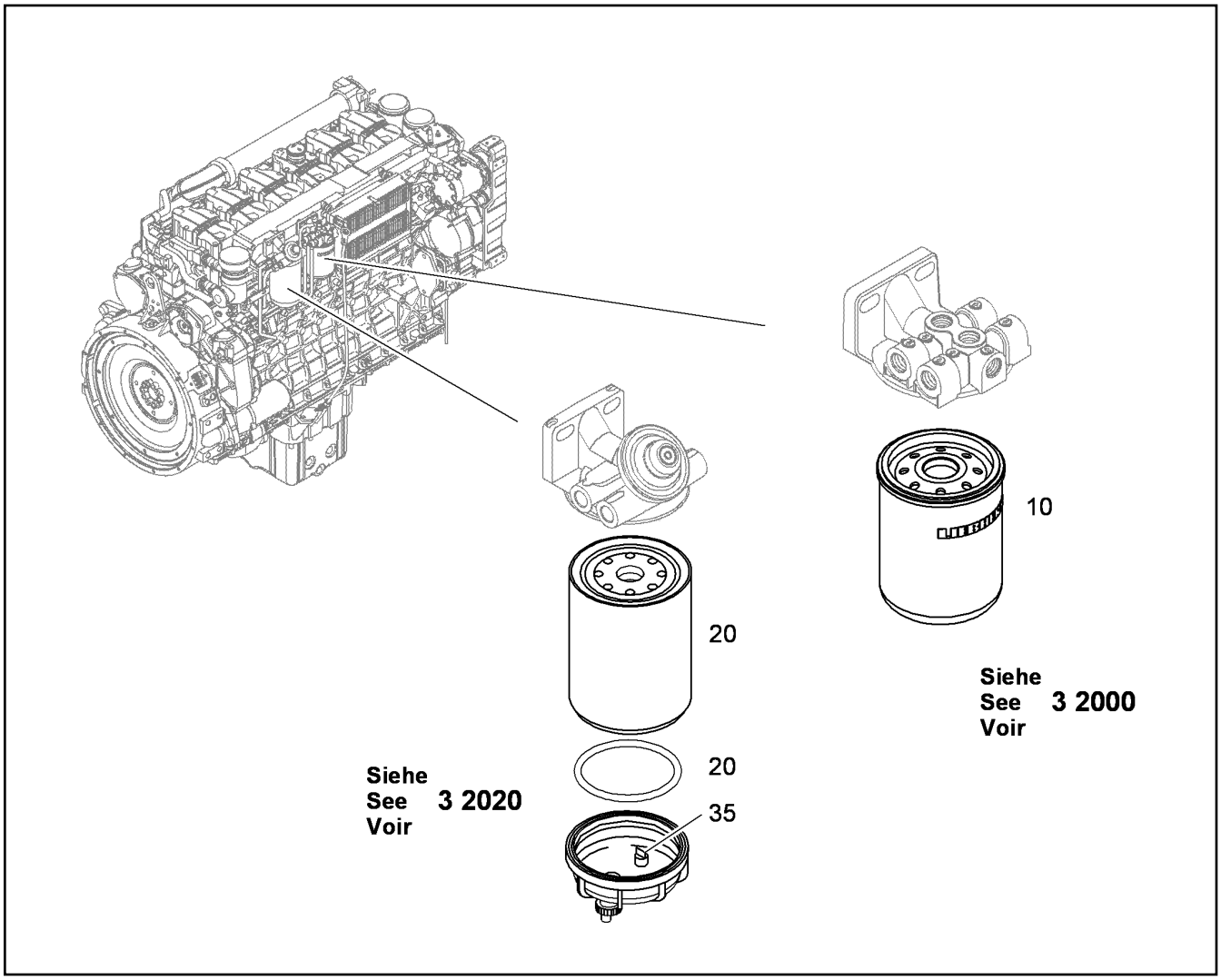

Pos.	Item	Quantity	Description	Designação	Serie	K
10	10429946	8	FUEL FINE FILTER 3-5µm	FILTRO DE COMBUSTÍVEL		
20	10044302	8	FUEL PREFILTER	PRE-FILTRO DE COMBUSTÍVEL		
35	10289208	2	RK OIL DRAIN SCREW D 930	KIT DE REPARO DO DRENO DE		

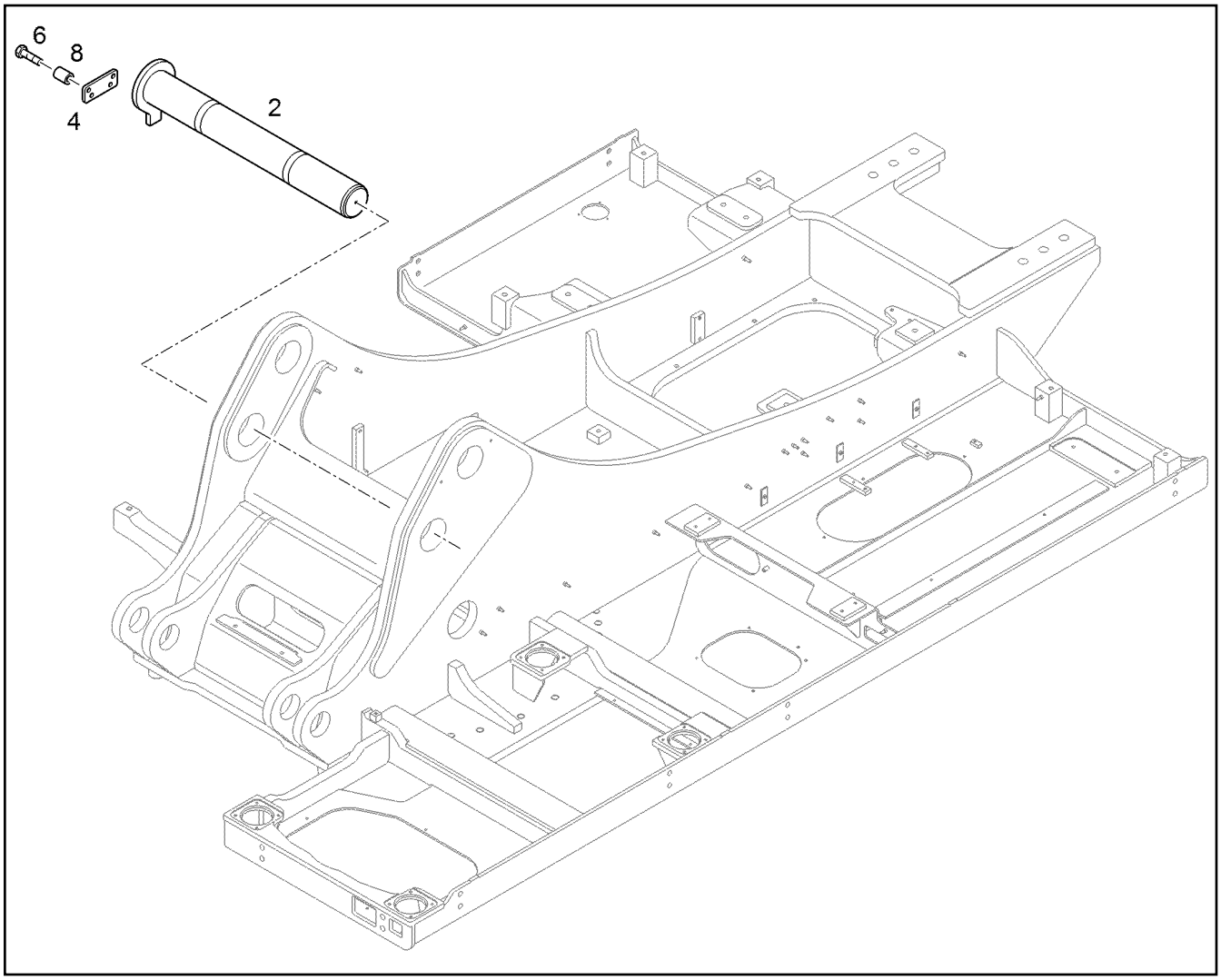

Pos.	Item	Quantity	Description	Designação	Serie	K
2	10057907	1	PIN 130X1065X1015	PINO		
4	9014773	1	SHEET	PLACA DE APOIO		
6	4000577	4	HEX SCREW ISO 4014 M16X70 10.9 FLZN	PARAFUSO SEXTAVADO		
8	9349698	4	SLEEVE 17X30X40	LUVA		1

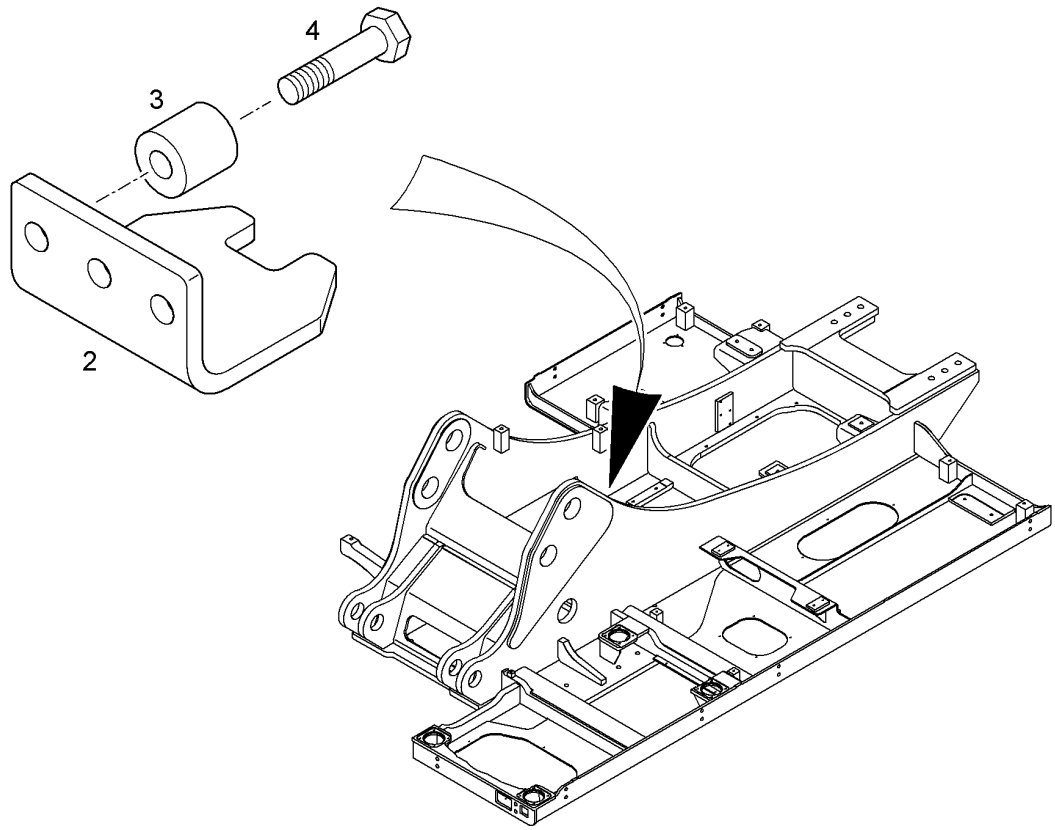

Pos.	Item	Quantity	Description	Designação	Serie	K
2	10058096	1	DRIVER	GUIA		
3	9327516	3	SLEEVE 17X40X40	LUVA		1
4	4000577	3	HEX SCREW ISO 4014 M16X70 10.9 FLZN	PARAFUSO SEXTAVADO		

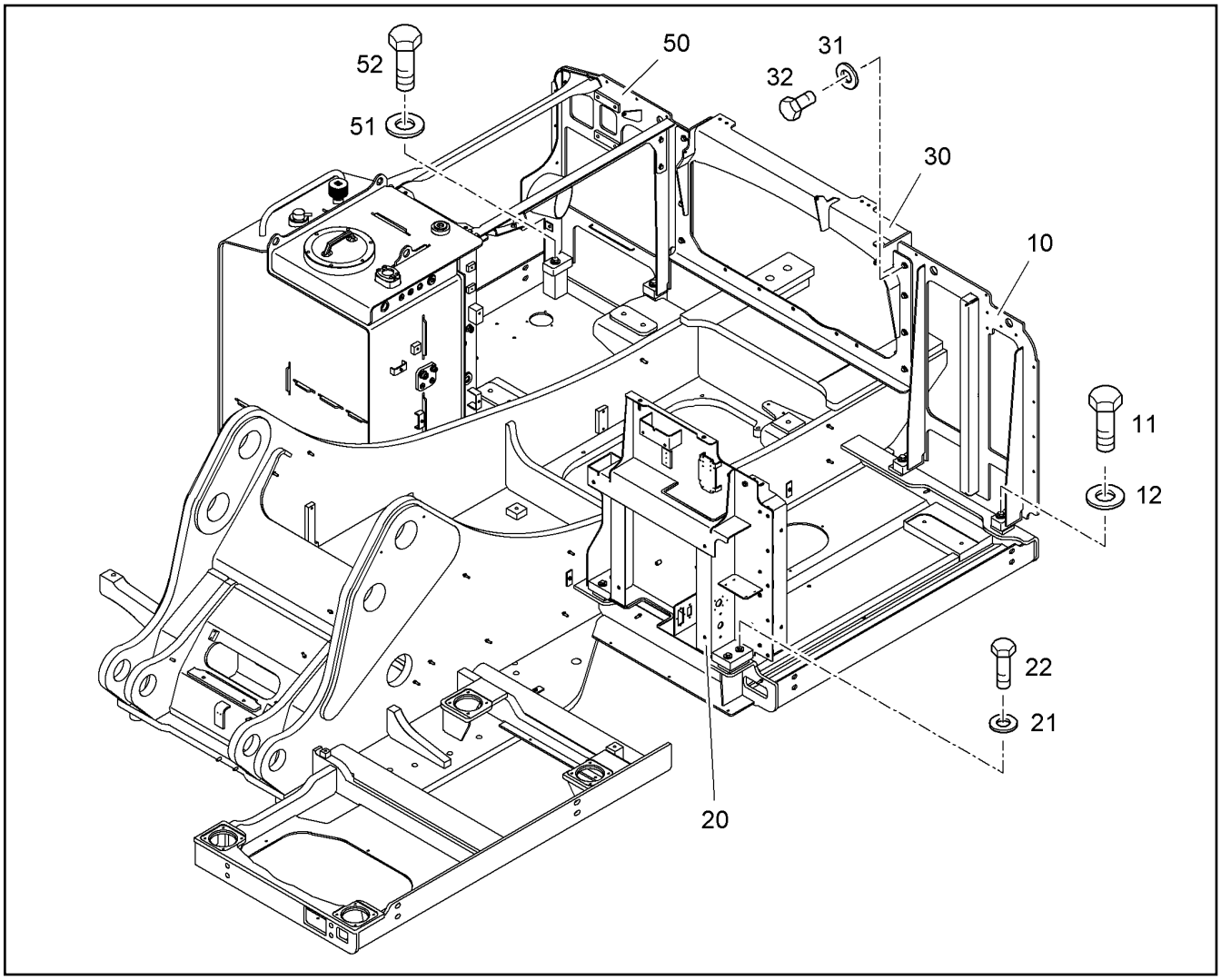

Pos.	Item	Quantity	Description	Designação	Serie	K
10	10080046	1	FRAME BACKSIDE LEFT INSTAL.	QUADRO TRASEIRO ESQUERD		
11	4600180	2	WASHER 17	ARRUELA		
12	4000577	2	HEX SCREW ISO 4014 M16X70 10.9 FLZN	PARAFUSO SEXTAVADO		
20	10062618	1	PARTITION ⇨ ❑ 131	PAREDE DIVISÓRIA		
21	10179356	4	WASHER 13	ARRUELA		
22	11002730	4	HEX SCREW ISO 4017 M12X60 10.9 FLZN	PARAFUSO SEXTAVADO		
30	10080047	1	FRAME BACKSIDE CENTER INSTAL.	QUADRO TRASEIRO CENTRAL		
31	10289804	8	WASHER 12 300HV	ARRUELA		
32	11002726	8	HEX SCREW ISO 4017 M12X30 10.9 FLZN	PARAFUSO SEXTAVADO		
50	10498368	1	AIR PREFILTER O4 - KC 111 ⇨ ❑ 792	PRÉ-FILTRO DE AR		
51	4600180	2	WASHER 17	ARRUELA		
52	4000577	2	HEX SCREW ISO 4014 M16X70 10.9 FLZN	PARAFUSO SEXTAVADO		

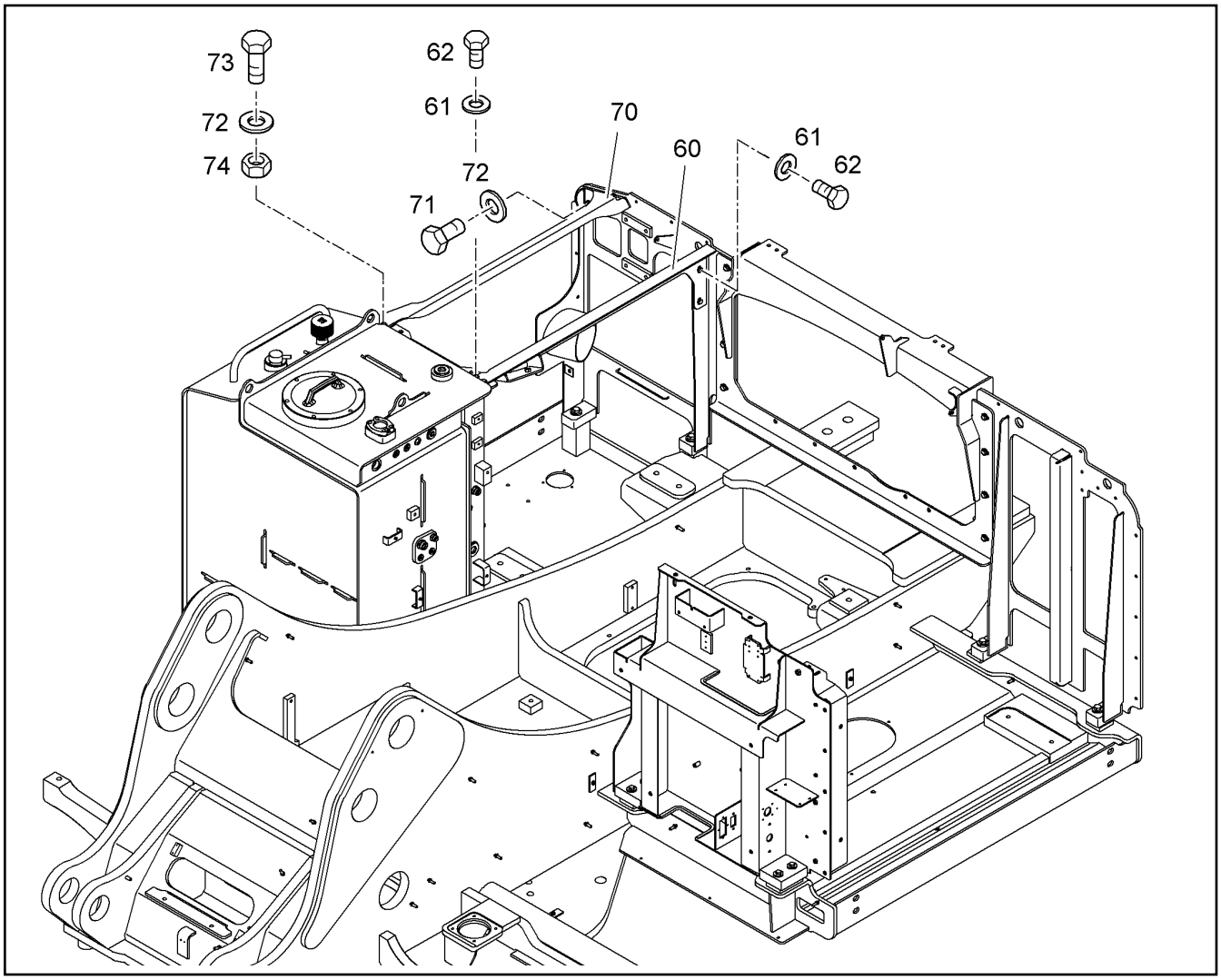

Pos.	Item	Quantity	Description	Designação	Serie	K
60	10078106	1	REINFORCEMENT	REFORÇO		
61	10289795	4	WASHER 10 300HV	ARRUELA		
62	11002715	4	HEX SCREW ISO 4017 M10X30 10.9 FLZN	PARAFUSO SEXTAVADO		
70	10078120	1	REINFORCEMENT	REFORÇO		
71	10299574	2	HEX SCREW ISO 4017 M12X35 10.9 FLZN	PARAFUSO SEXTAVADO		
72	9918226	6	WASHER 12,5/21X	ARRUELA		
73	11002726	2	HEX SCREW ISO 4017 M12X30 10.9 FLZN	PARAFUSO SEXTAVADO		
74	11002808	2	HEX NUT M12	PORCA SEXTAVADA		

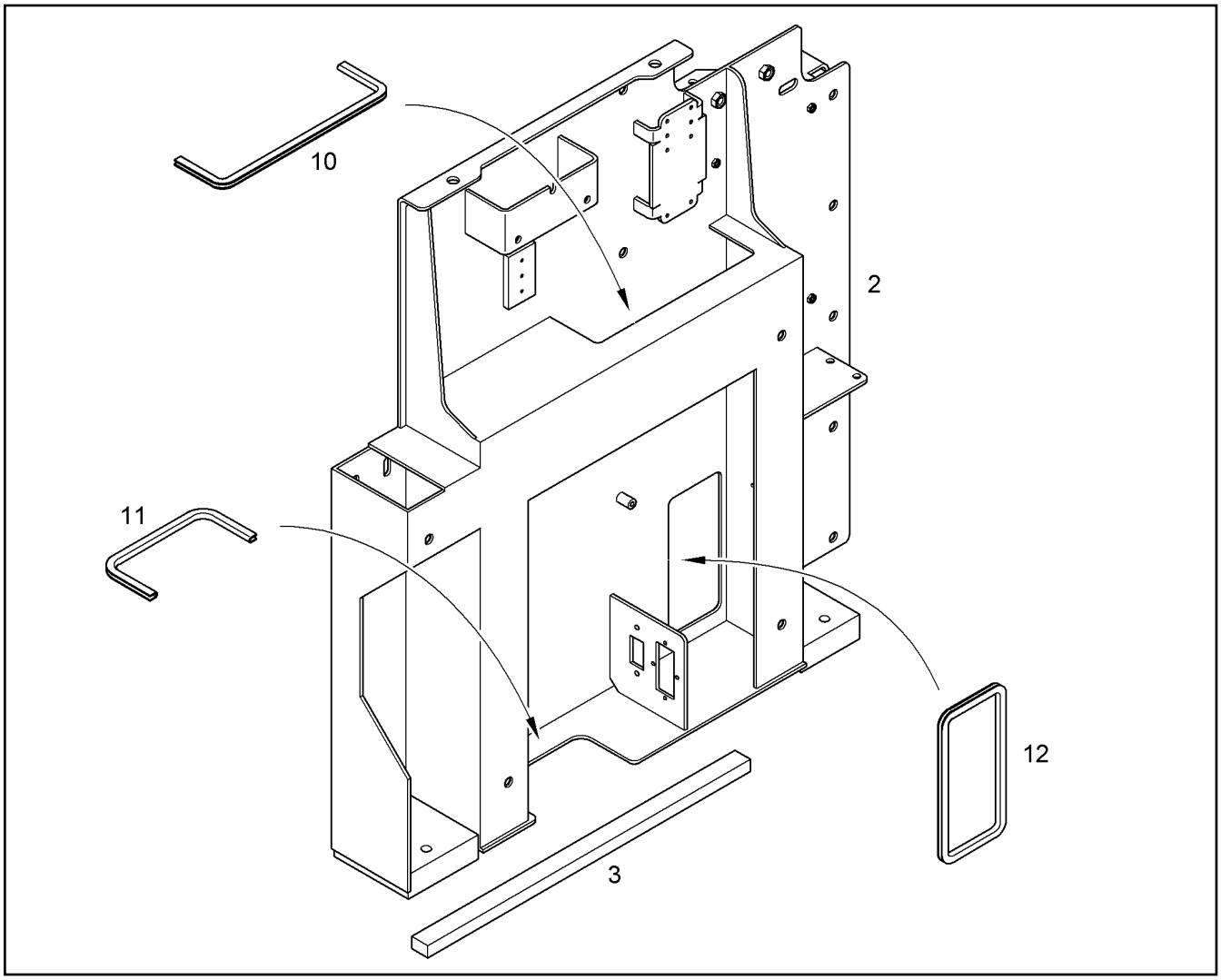

Pos.	Item	Quantity	Description	Designação	Serie	K
2		1	PARTITION	PAREDE DIVISÓRIA		
3	12205993	0.86m	PROFILE	PERFIL		
10	226016702	0.45m	SECTION 1-4/14,5X10 SCHWARZ	PERFIL DE PROTECAO DE CANT		
11	226016702	0.34m	SECTION 1-4/14,5X10 SCHWARZ	PERFIL DE PROTECAO DE CANT		
12	226016702	0.63m	SECTION 1-4/14,5X10 SCHWARZ	PERFIL DE PROTECAO DE CANT		

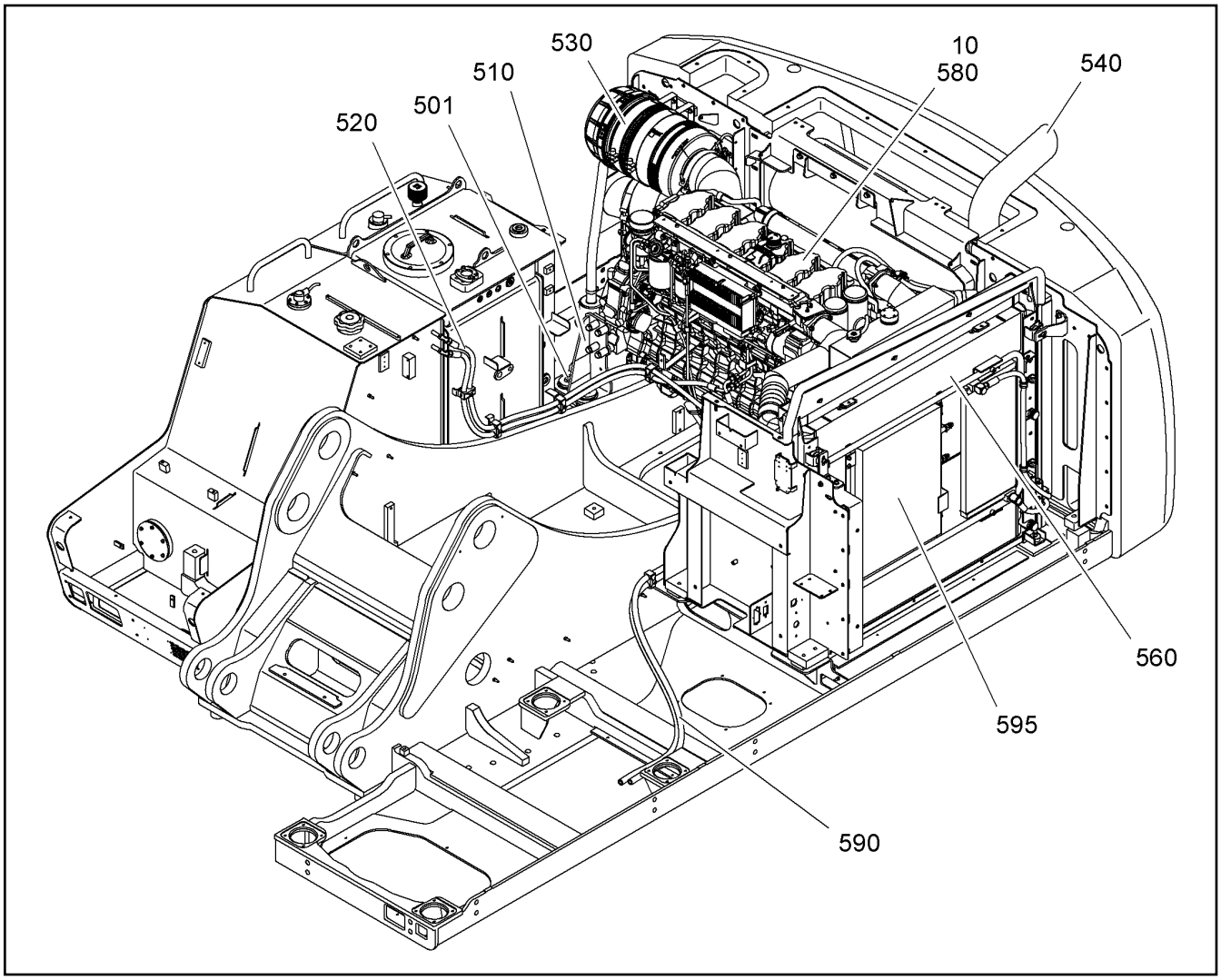

Pos.	Item	Quantity	Description	Designação	Serie	K
10	10117145	1	DIESEL ENGINE D936 L A6 190 kW [2019041141] ⇨ ❑ 549	MOTOR DIESEL		2
501		1	FIXING PARTS ENGINE ⇨ ❑ 133	PECAS DE FIXACAO DO MOTOR		
510		1	MOTOR SUPPORT ⇨ ❑ 134	SUSPENSAO DO MOTOR		
520		1	FUEL SYSTEM ⇨ ❑ 135	INSTALACAO DE COMBUSTIVEL		
530		1	AIR FILTER INSTALLATION ⇨ ❑ 137	FILTRO DE AR - INSTALAÇÃO		
540		1	EXHAUST SYSTEM ⇨ ❑ 139	SISTEMA DE ESCAPAMENTO	-99998	
540		1	EXHAUST SYSTEM ⇨ ❑ 140	SISTEMA DE ESCAPAMENTO	99999-	
560		1	ENGINE COOLING ⇨ ❑ 193	ARREFECIMENTO DO MOTOR		
580		1	MOTOR-ELEKTRIK ⇨ ❑ 209	SISTEMA ELETRICO DO MOTOR		
590		1	ENGINE ADD-ON PARTS ⇨ ❑ 212	MOTOR - PECAS ANEXAS		
595		1	AIR CONDIT.CONDENSER INSTAL. ⇨ ❑ 214	COMPRESSOR DO AR-CONDICI		

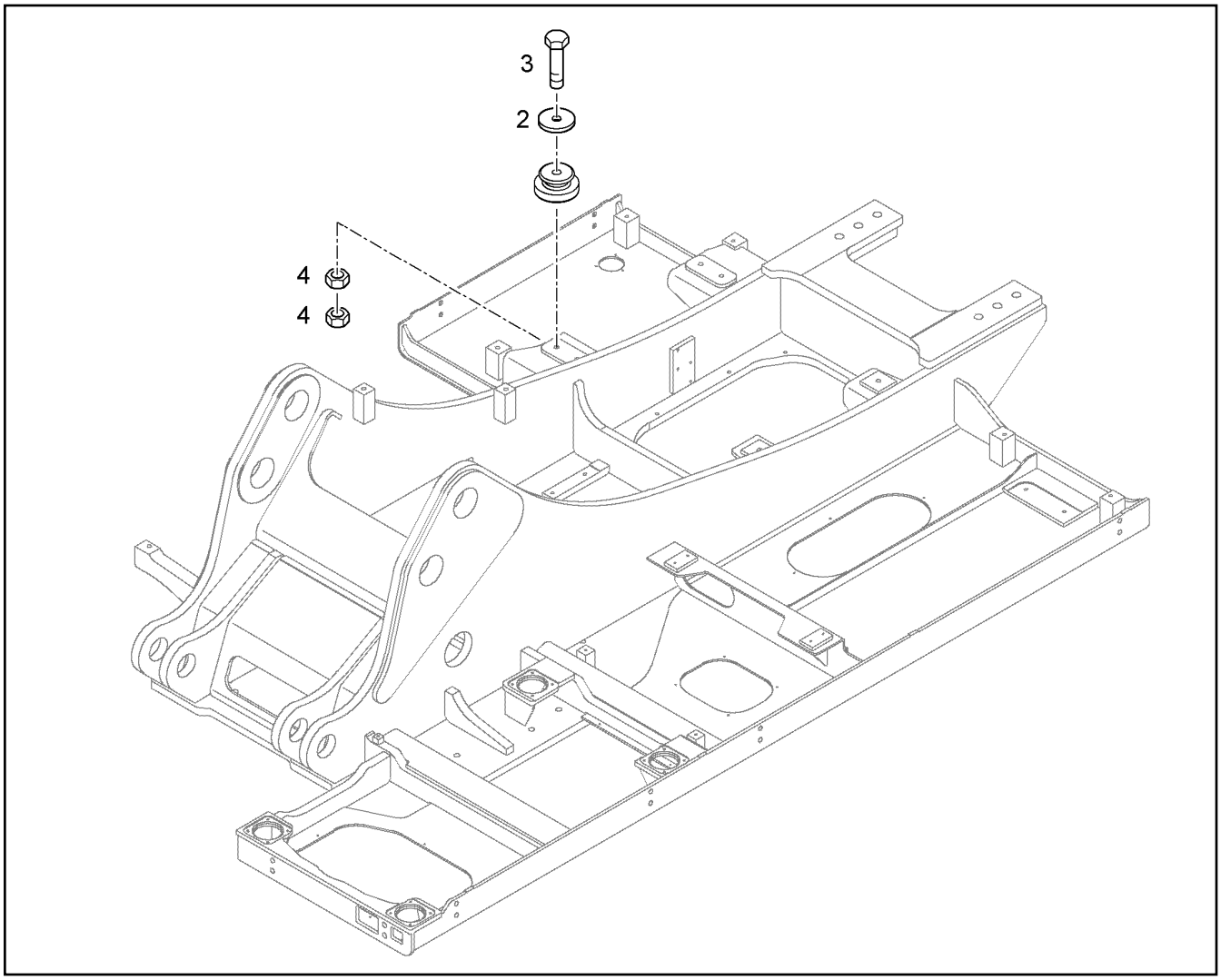

Pos.	Item	Quantity	Description	Designação	Serie	K
2	10358205	6	WASHER 19/80X10	ARRUELA		
3	4901365	6	HEX SCREW ISO 4014 M18X130 10.9 FLZN	PARAFUSO SEXTAVADO		
4	4600348	12	HEX NUT M18	PORCA SEXTAVADA		

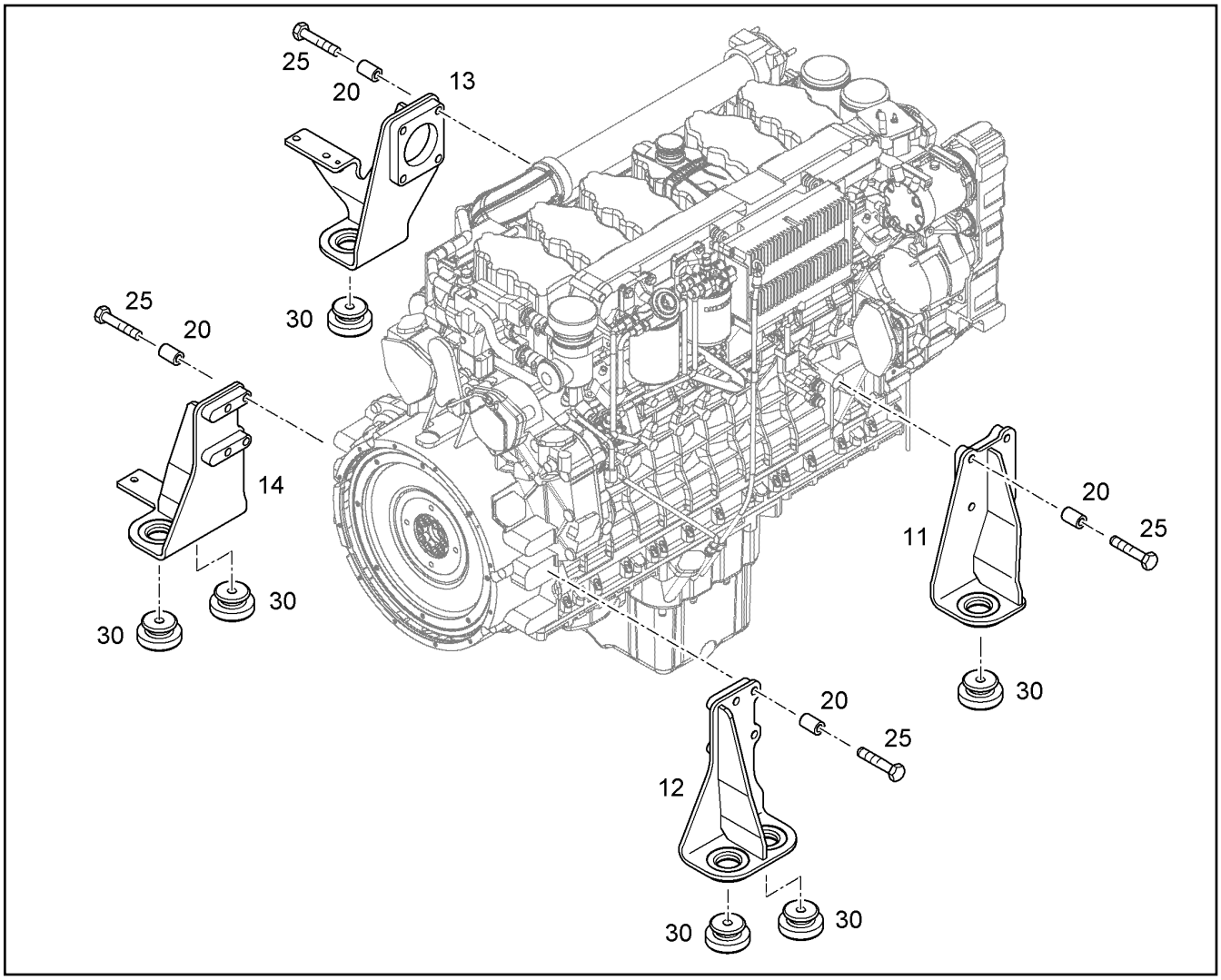

Pos.	Item	Quantity	Description	Designação	Serie	K
11	10048546	1	BRACKET FRONT LEFT	SUPORTE DIANTEIRO ESQUERD		
12	10048548	1	BRACKET FRONT RIGHT	CONSOLE DIANTEIRO DIREITO		
13	10048545	1	BRACKET REAR LEFT	CONSOLE TRASEIRA ESQUERD		
14	10048547	1	BRACKET REAR RIGHT	SUPORTE TRASEIRO DIREITO		
20	9349698	16	SLEEVE 17X30X40	LUVA		1
25	4062066	16	HEX SCREW ISO 4014 M16X100 10.9 FLZN	PARAFUSO SEXTAVADO		
30	7366558	6	RUBBER BUFFER	AMORTECEDOR DE BORRACHA		

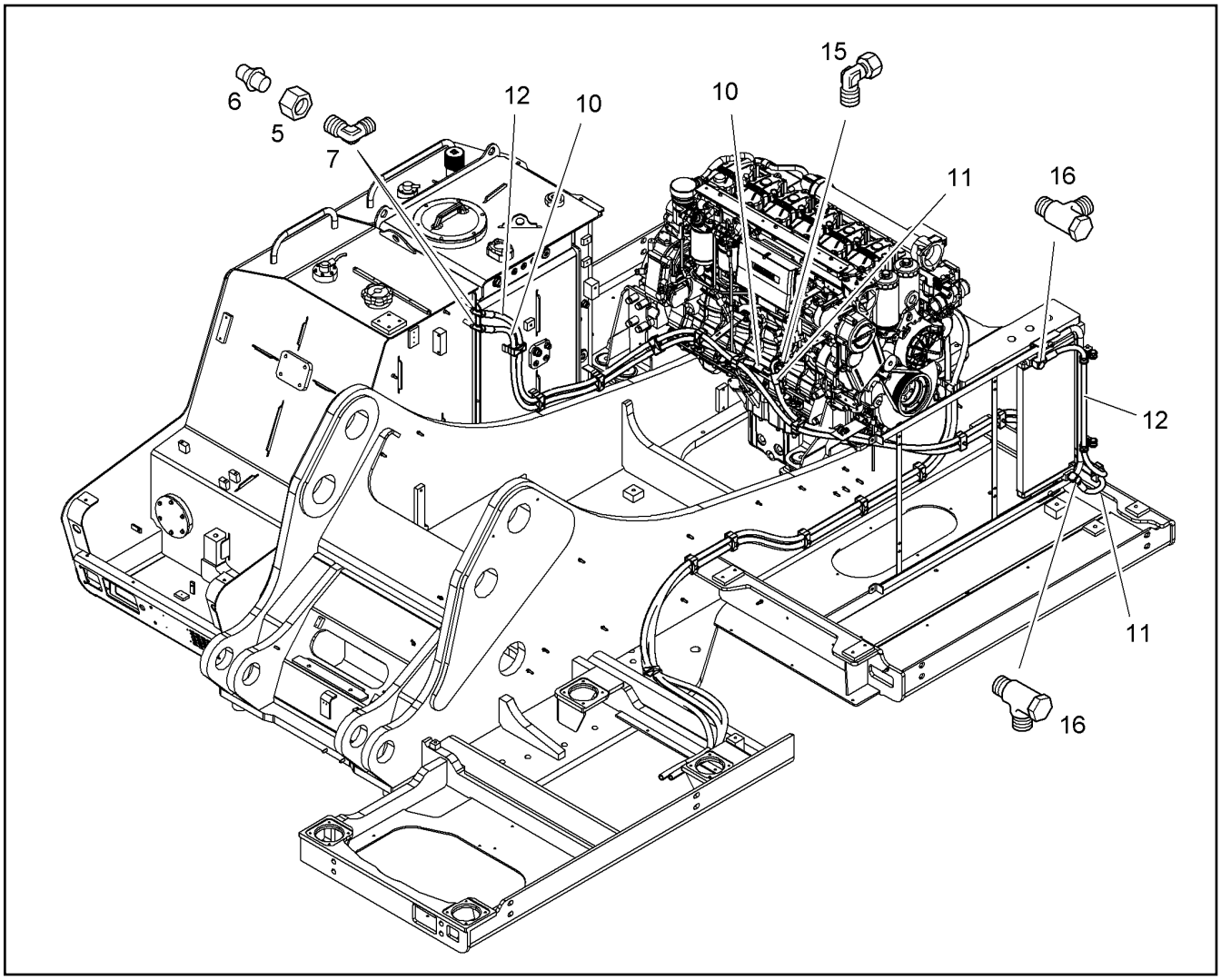

Pos.	Item	Quantity	Description	Designação	Serie	K
5	4774003	2	BOX NUT ISO 8434-1 NL15	PORCA DE CONEXÃO		
6	4771003	2	CUTTING RING DIN 3861 A L 15	ANEL DE CORTE		
7	7362109	2	FITTING W 15L	UNIÃO ROSCADA		
10	10333666	1	FUEL HOSE	MANGUEIRA DE COMBUSTÍVEL		1
11	10333666	1	FUEL HOSE	MANGUEIRA DE COMBUSTÍVEL		1
12	10441297	1	FUEL HOSE	MANGUEIRA DE COMBUSTÍVEL		1
15	7615379	2	FITTING EW 15L	UNIÃO ROSCADA		
16	7368478	2	FITTING WH 15L G1/2A	UNIÃO ROSCADA		

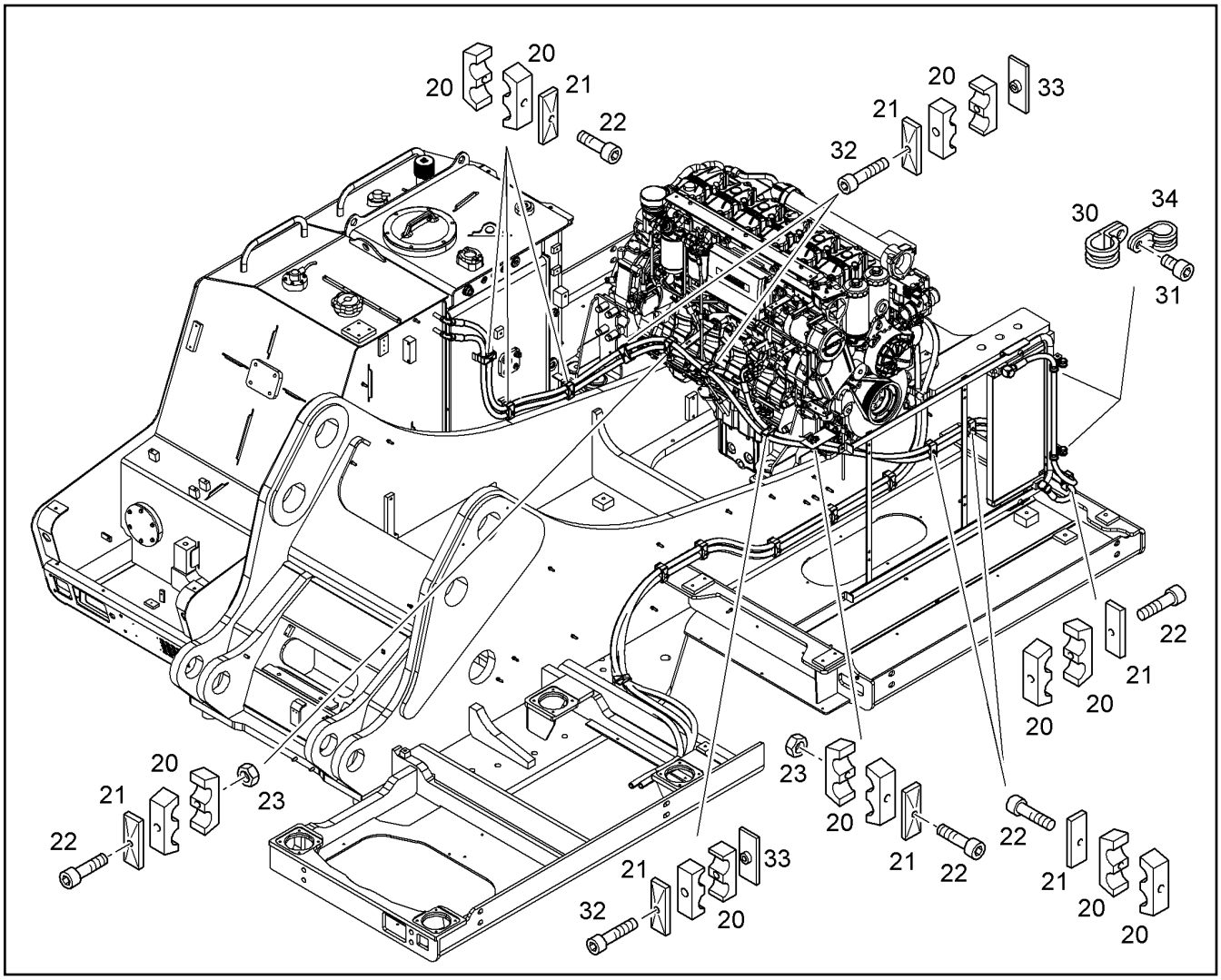

Pos.	Item	Quantity	Description	Designação	Serie	K
20	7029979	22	CLAMP-HALF AEHNL.DIN 3015-3 Z 3 G 23 23	MEIA ABRAÇADEIRA		
21	7401349	11	LID PLATE DIN 3015-3 Z-DP 3 W1-ZN	PLACA		
22	12208099	8	SOCKET HEAD SCREW ISO 4762 M8X60 10	PARAFUSO CILÍNDRICO		
23	10876581	2	HEX NUT M8	PORCA SEXTAVADA		
30	7362547	2	CLAMP DIN 3016-1 D1 24X20 W1-2-CR	BRAÇADEIRA		
31	10663450	2	SOCKET HEAD SCREW ISO 4762 M8X16 10	PARAFUSO CILÍNDRICO		
32	10468234	3	SOCKET HEAD SCREW ISO 4762 M8X45 10	PARAFUSO CILÍNDRICO		
33	4635455	3	WELD PLATE DIN 3015-3 Z-AP 3 W1-ZN	PLACA SOLDADA		
34	7362602	2	CLAMP DIN 3016-1 D1 18X20 W1-2-CR	BRAÇADEIRA		

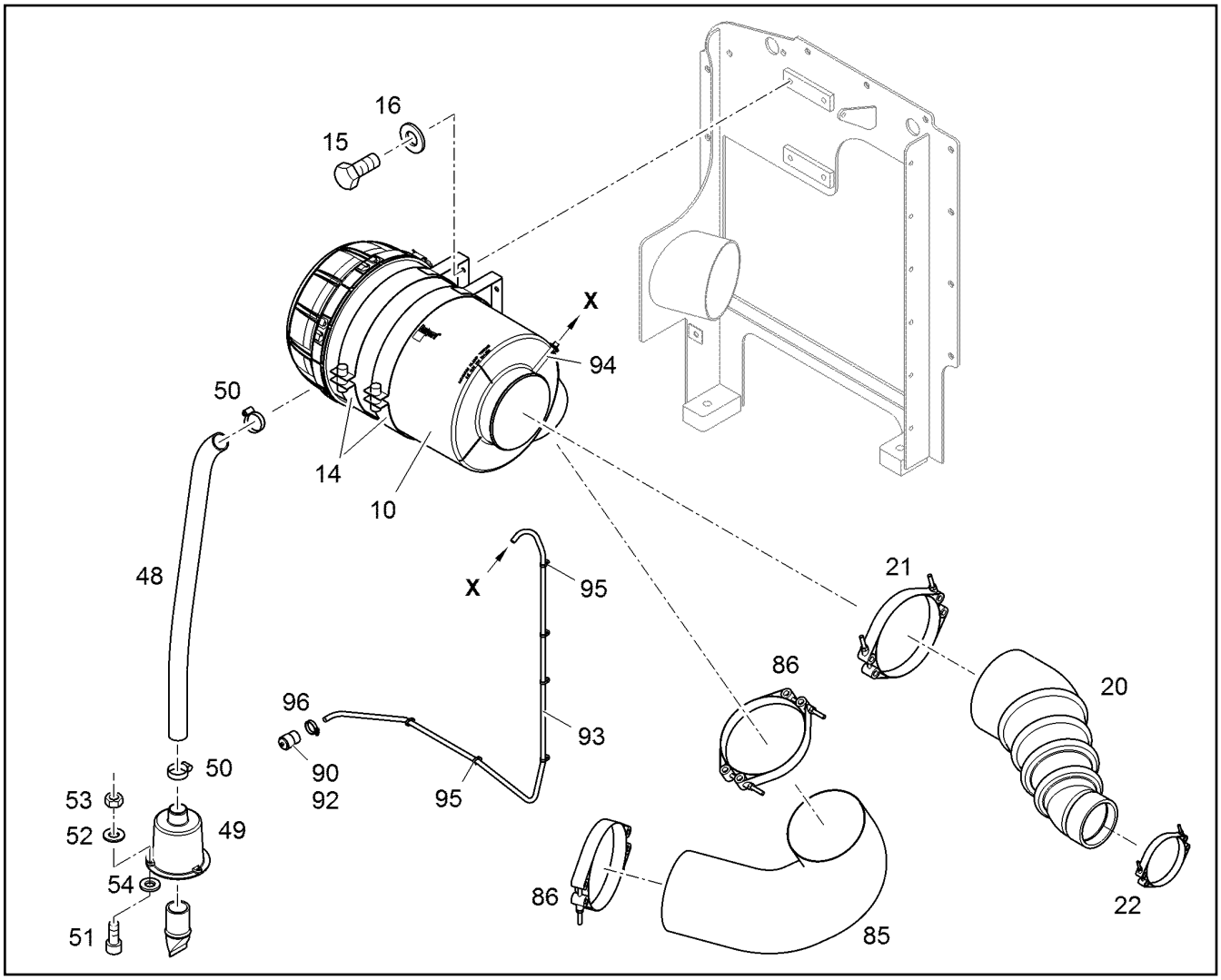

Pos.	Item	Quantity	Description	Designação	Serie	K
10	10217173	1	AIR FILTER ⇨ ❑ 138	FILTRO DE AR		
14	10217172	2	CLAMP	BRAÇADEIRA		
15	4001246	4	HEX SCREW ISO 4017 M10X35 10.9 A3C	PARAFUSO SEXTAVADO		
16	4229913	4	LOCK WASHER VS 10	ARRUELA DE PRESSÃO		
20	10081376	1	AIR FILTER HOSE	MANGUEIRA DO FILTRO DE AR		1
21	10355921	1	HOSE CLAMP HKF 183 172-194X15,8 W2	ABRAÇADEIRA DE MANGUEIRA		
22	774252314	1	HOSE CLAMP 100 95-117X15,8	ABRAÇADEIRA DE MANGUEIRA		
48	10410125	1	PLASTIC SPIRAL HOSE DN40X770	MANGUEIRA ESPIRAL		1
49	9361518	1	HOSE HOLDER	SUPORTE DE MANGUEIRA		
50	7615767	2	HOSE CLAMP DIN 3017-1 A 41 32-50X13 W2-	ABRAÇADEIRA DE MANGUEIRA		
51	11820284	3	SOCKET HEAD SCREW ISO 4762 M6X30 8.8	PARAFUSO CILÍNDRICO		
52	10289802	3	WASHER 6 300HV	ARRUELA		
53	4000379	3	HEX NUT M6	PORCA SEXTAVADA		
54	11693878	3	WASHER 6,4 200HV	ARRUELA		
85	10217797	1	AIR HOSE 180X4X700	MANGUEIRA DE AR		1
86	10355921	2	HOSE CLAMP HKF 183 172-194X15,8 W2	ABRAÇADEIRA DE MANGUEIRA		
90	5106421	1	VACUUM INDICATOR	INDICADOR DE VACUO		
92	4782008	1	NIPPLE	NIPLE		
93	7360075	1.5m	HOSE	MANGUEIRA		1
94	4900169	1	NIPPLE	NIPLE		
95	7005587	6	TIE WRAP 7,8X365	AMARRA PARA CABOS		
96	4635044	2	HOSE CLAMP DIN 3017-1 A 12 8-16X9 W2-2	ABRAÇADEIRA DE MANGUEIRA		

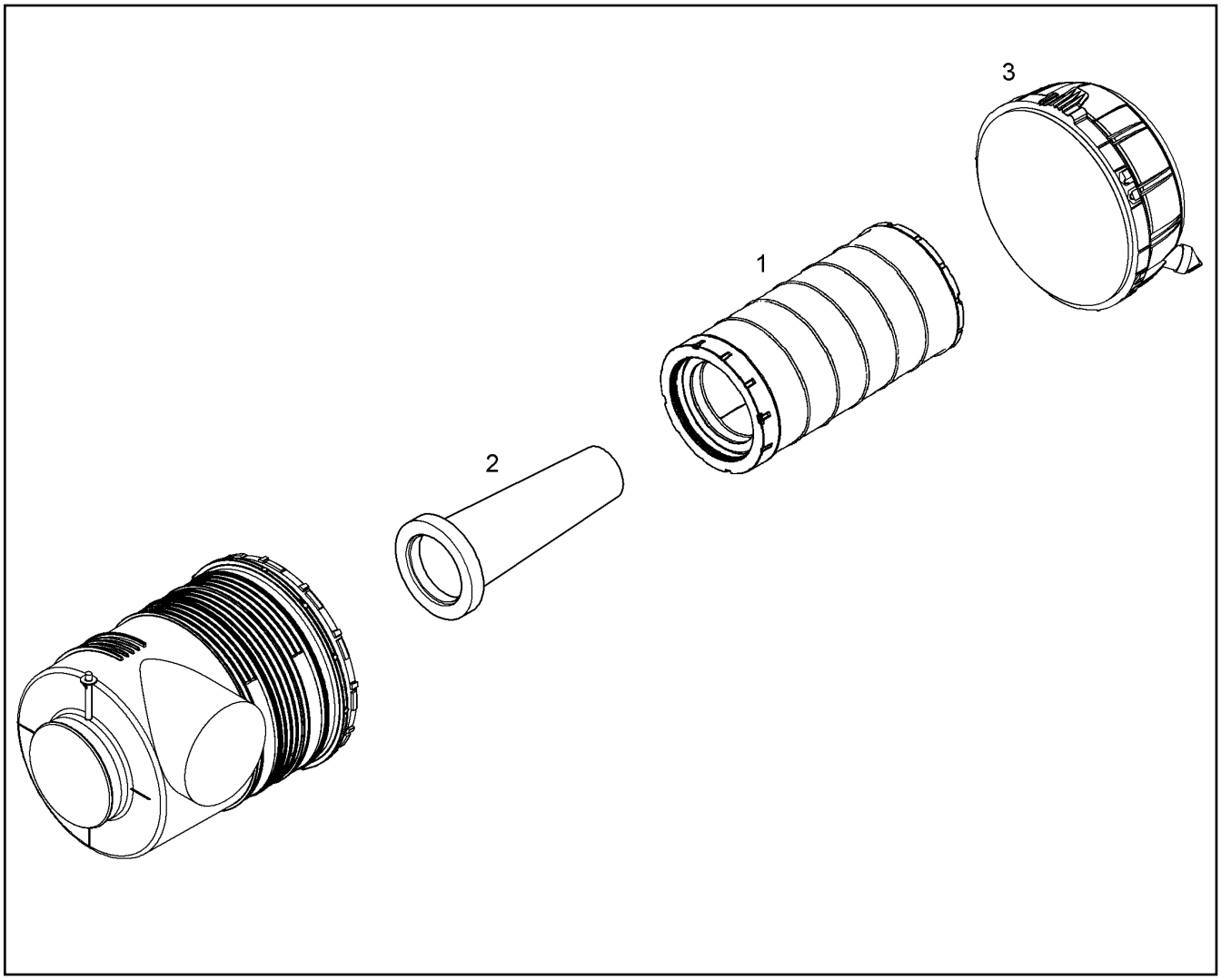

Pos.	Item	Quantity	Description	Designação	Serie	K
1	10217169	1	AIR FILTER CARTRIDGE	CARTUCHO DE FILTRO DE AR		
2	10217168	1	SAFETY CARTRIDGE	ELEMENTO FILTRANTE		
3	10300926	1	COVER	TAMPA		
3	10335966	1	-DRAIN VALVE	-VÁLVULA DE DRENAGEM		

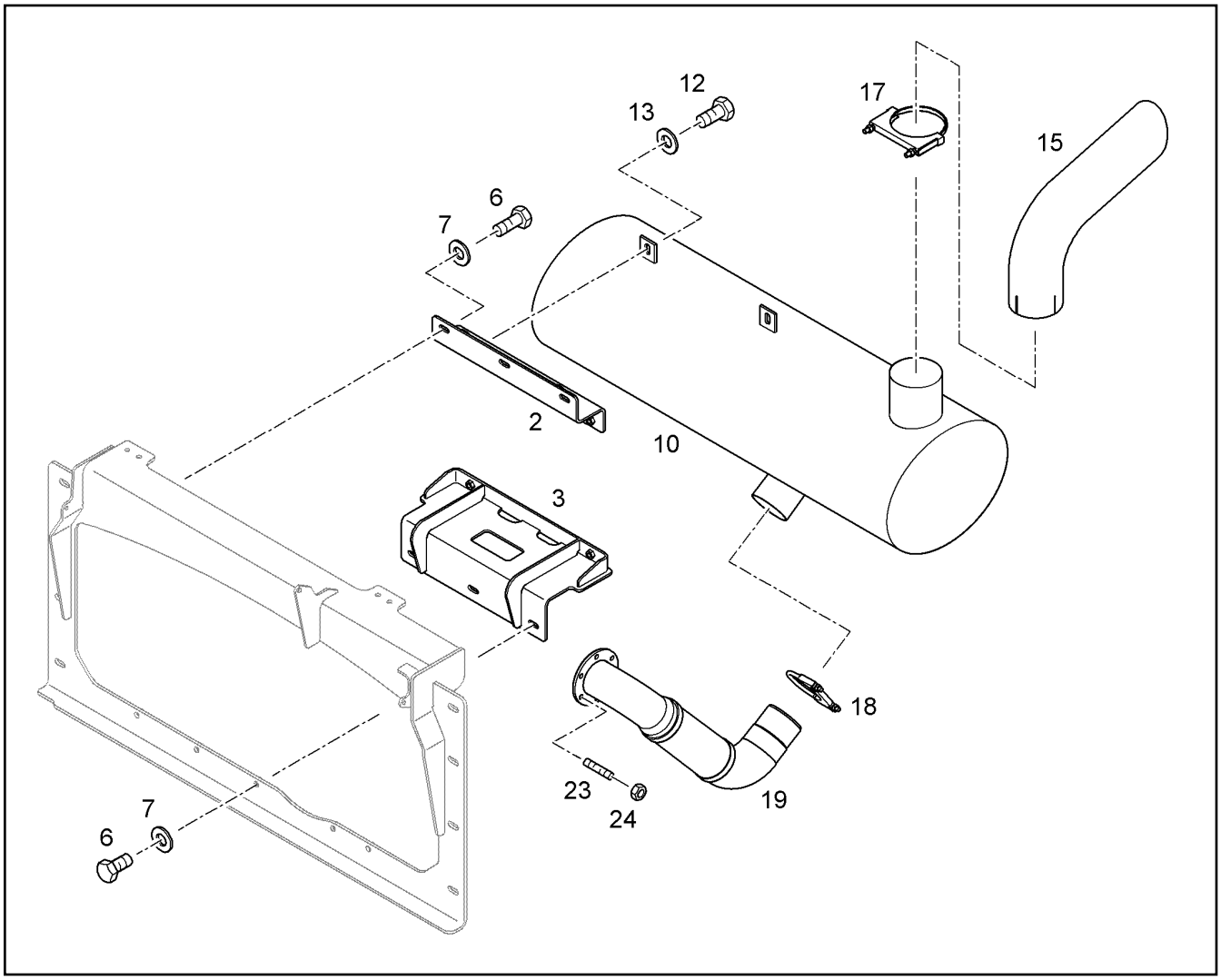

Pos.	Item	Quantity	Description	Designação	Serie	K
2	10080886	1	HOLDER	SUPORTE		
3	10080887	1	HOLDER	SUPORTE		
6	10800024	6	HEX SCREW ISO 4017 M12X25 10.9 FLZN	PARAFUSO SEXTAVADO		
7	10289804	6	WASHER 12 300HV	ARRUELA		
10	10040818	1	EXHAUST SILENCER	SILENCIADOR		
12	10800024	4	HEX SCREW ISO 4017 M12X25 10.9 FLZN	PARAFUSO SEXTAVADO		
13	10289804	4	WASHER 12 300HV	ARRUELA		
15	7373403	1	END PIPE	TUBULAÇÃO TERMINAL		
17	7369271	1	BOW-TYPE CLAMP	BRACADEIRA DE ARCO		
18	7621247	1	BOW-TYPE CLAMP A 106	BRACADEIRA DE ARCO		
19	10057780	1	EXHAUST PIPE LINE	TUBO DE ESCAPE		
23	12211807	6	DOUBLE-ENDED STUD DIN 939 M10X30 10.9	PARAFUSO PRISIONEIRO		
24	4901429	6	HEX NUT M10	PORCA SEXTAVADA		

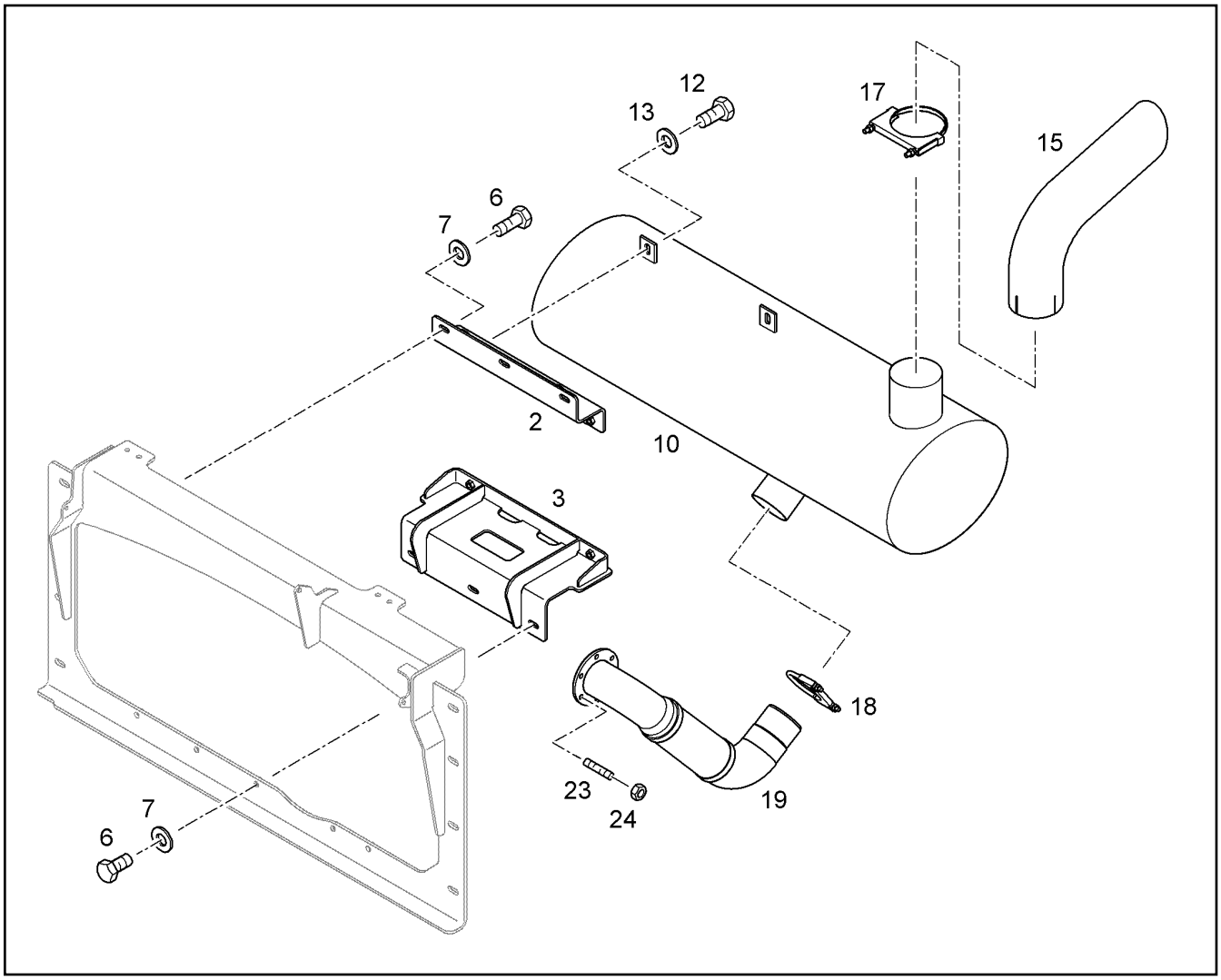

Pos.	Item	Quantity	Description	Designação	Serie	K
2	10080886	1	HOLDER	SUPORTE		
3	10080887	1	HOLDER	SUPORTE		
6	4600184	6	HEX SCREW ISO 4017 M12X25 10.9 A3C	PARAFUSO SEXTAVADO		
7	10289804	6	WASHER 12 300HV	ARRUELA		
10	11692910	1	EXHAUST SILENCER	SILENCIADOR	99999-	
12	4600184	4	HEX SCREW ISO 4017 M12X25 10.9 A3C	PARAFUSO SEXTAVADO		
13	10289804	4	WASHER 12 300HV	ARRUELA		
15	7373403	1	END PIPE	TUBULAÇÃO TERMINAL		
17	7369271	1	BOW-TYPE CLAMP	BRACADEIRA DE ARCO		
18	7621247	1	BOW-TYPE CLAMP A 106	BRACADEIRA DE ARCO		
19	10057780	1	EXHAUST PIPE LINE	TUBO DE ESCAPE		
23	12211807	6	DOUBLE-ENDED STUD DIN 939 M10X30 10.9	PARAFUSO PRISIONEIRO		
24	4901429	6	HEX NUT M10	PORCA SEXTAVADA		

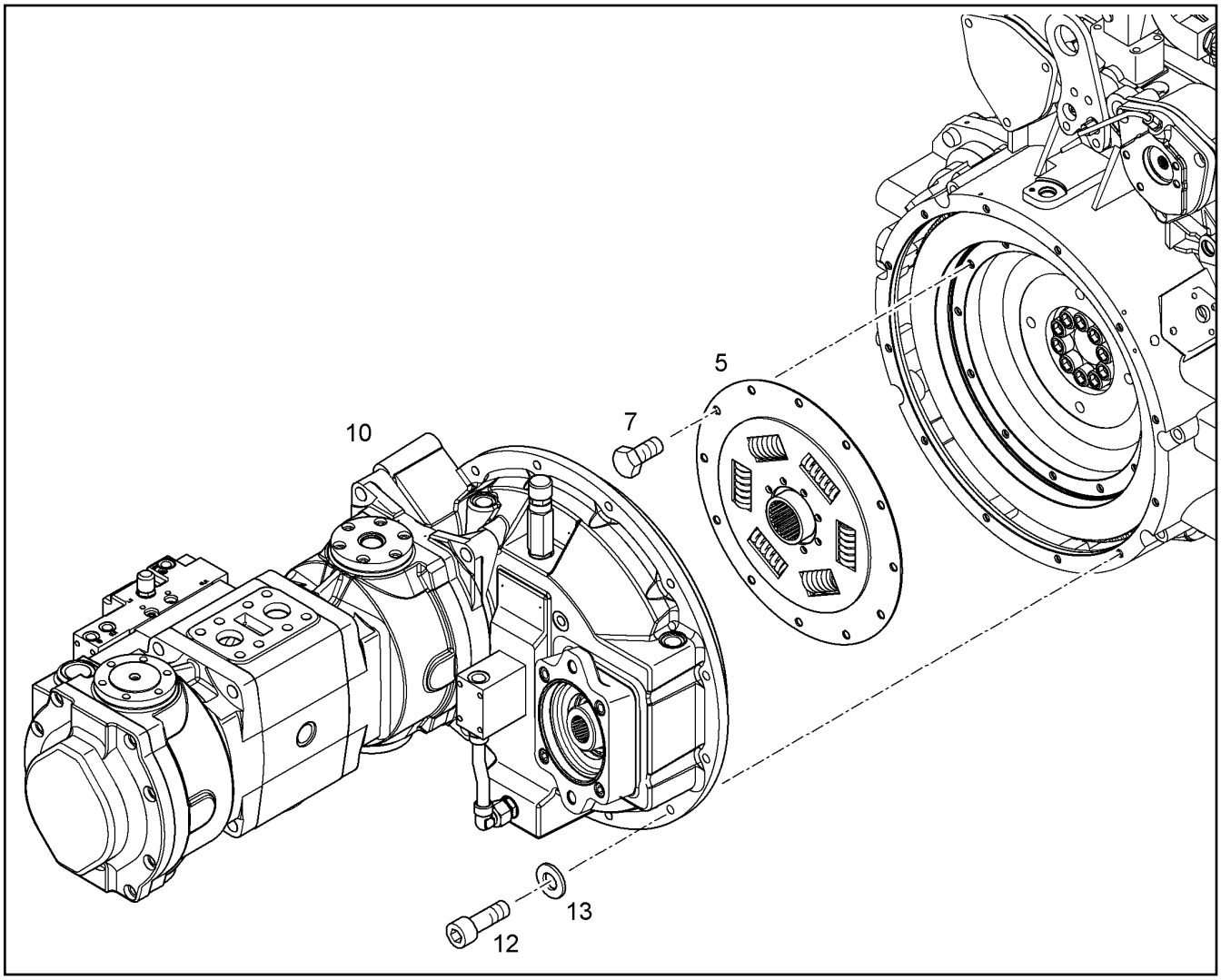

Pos.	Item	Quantity	Description	Designação	Serie	K
5	10003465	1	TORSIONAL VIBRATION DAMPER	AMORTECEDOR DE TORÇÃO		
7	4002133	12	HEX SCREW ISO 4014 M10X55 10.9 A3C	PARAFUSO SEXTAVADO		
10	10134618	1	MULTIPLE CIRCUIT AGGREGATE [196228785] ⇨ ❑ 150	AGREAGADO CIRCUITOS MULT	31913-	2
12	4900855	11	SOCKET HEAD SCREW ISO 4762 M10X35 1	PARAFUSO CILÍNDRICO		
13	10289795	11	WASHER 10 300HV	ARRUELA		

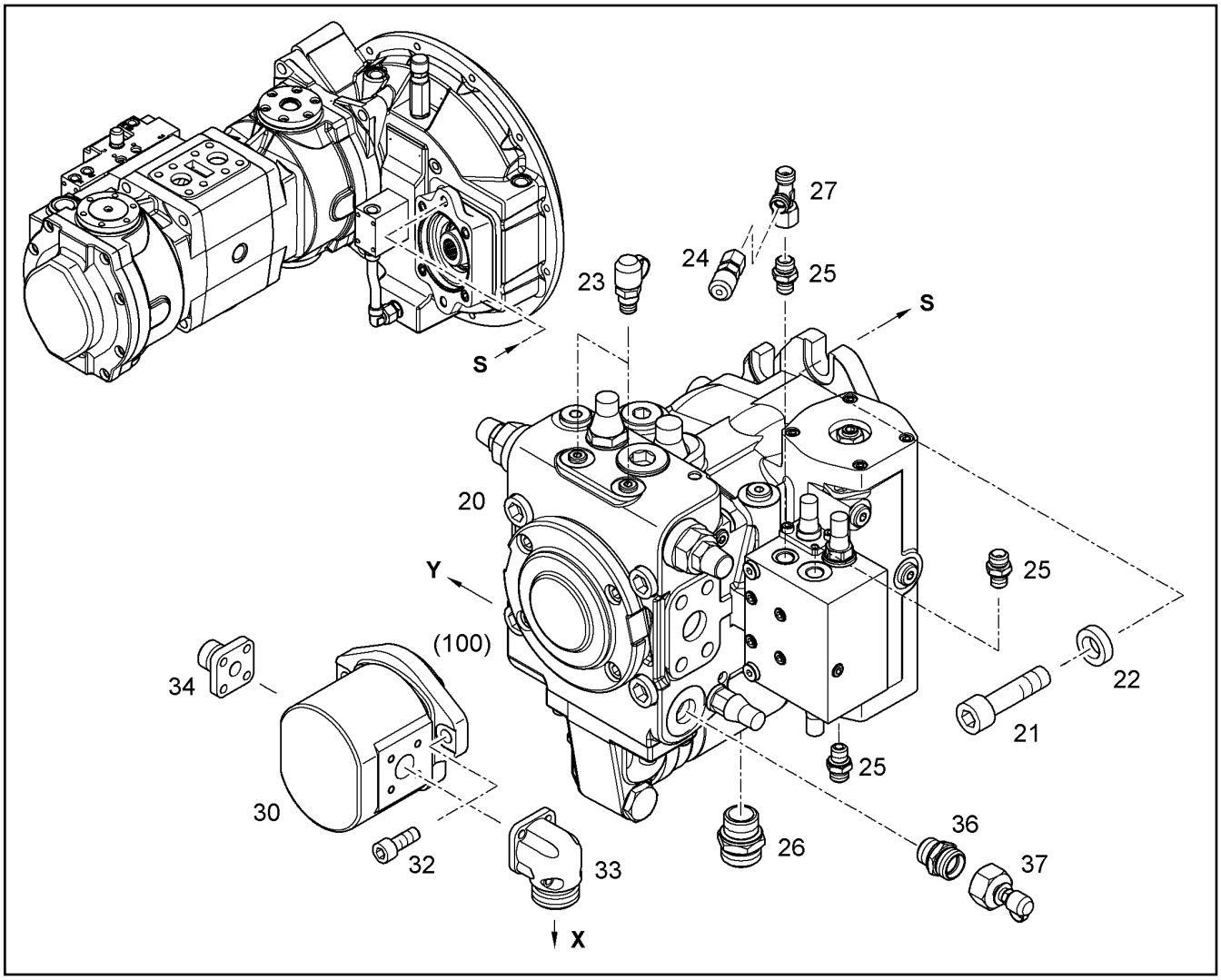

Pos.	Item	Quantity	Description	Designação	Serie	K
21	10001076	2	SOCKET HEAD SCREW ISO 4762 M16X45 10	PARAFUSO CILÍNDRICO		
22	4002742	2	WASHER 16 295-350HV10HV	ARRUELA		
23	7407071	2	SCREW COUPLING M12X1,5	ACOPLAMENTO ROSCADO		
24	7406864	1	GAUGE CONNECTION VKA3 10L M16X1,5	BOCAL DE MEDIÇÃO		
25	7003814	3	FITTING GE 10L M14X1,5	UNIÃO ROSCADA		
26	7362515	1	FITTING GE 22L M26X1,5	UNIÃO ROSCADA		
27	472330208	1	FITTING EL 10L	UNIÃO ROSCADA		
32	4043124	2	SOCKET HEAD SCREW ISO 4762 M10X25 1	PARAFUSO CILÍNDRICO		
33	7405006	1	TUBE NOZZLE BFW 28L ⇨ ❑ 152	FLANGE		
34	7616897	1	FLANGE CONNECTION L ⇨ ❑ 153	CONEXÃO FLAGEADA		
36	7362515	1	FITTING GE 22L M26X1,5	UNIÃO ROSCADA		
37	7019891	1	GAUGE CONNECTION VKA3 22L M30X2	BOCAL DE MEDIÇÃO		

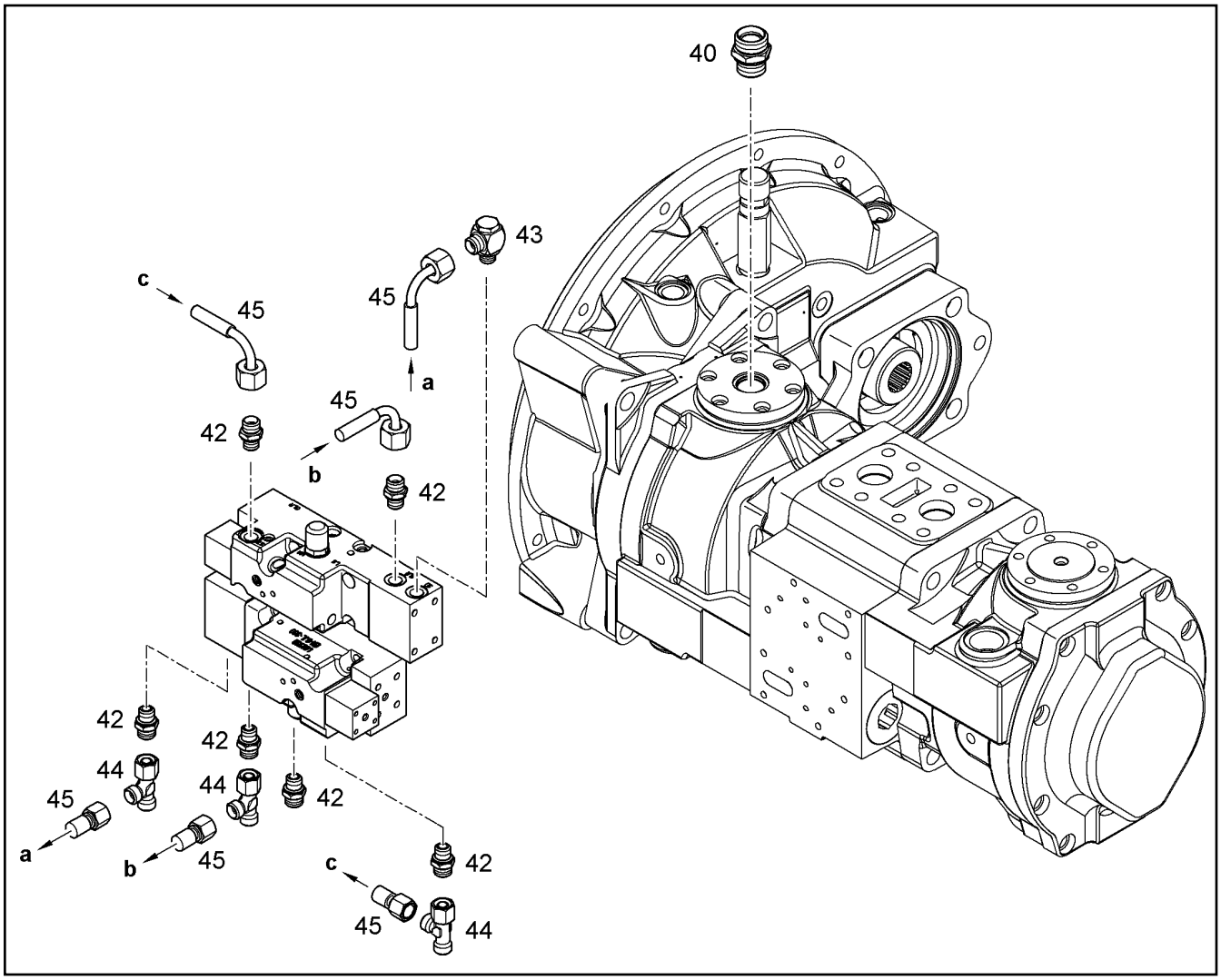

Pos.	Item	Quantity	Description	Designação	Serie	K
40	7362515	1	FITTING GE 22L M26X1,5	UNIÃO ROSCADA		
42	7003814	6	FITTING GE 10L M14X1,5	UNIÃO ROSCADA		
43	7617714	1	HINGED THREADED UNION WH 10L M14X1,	CONEXÃO ROSCADA		
44	472330208	3	FITTING EL 10L	UNIÃO ROSCADA		
45	7401757	3	CONTROL HOSE 8X480	MANGUEIRA DE COMANDO		1

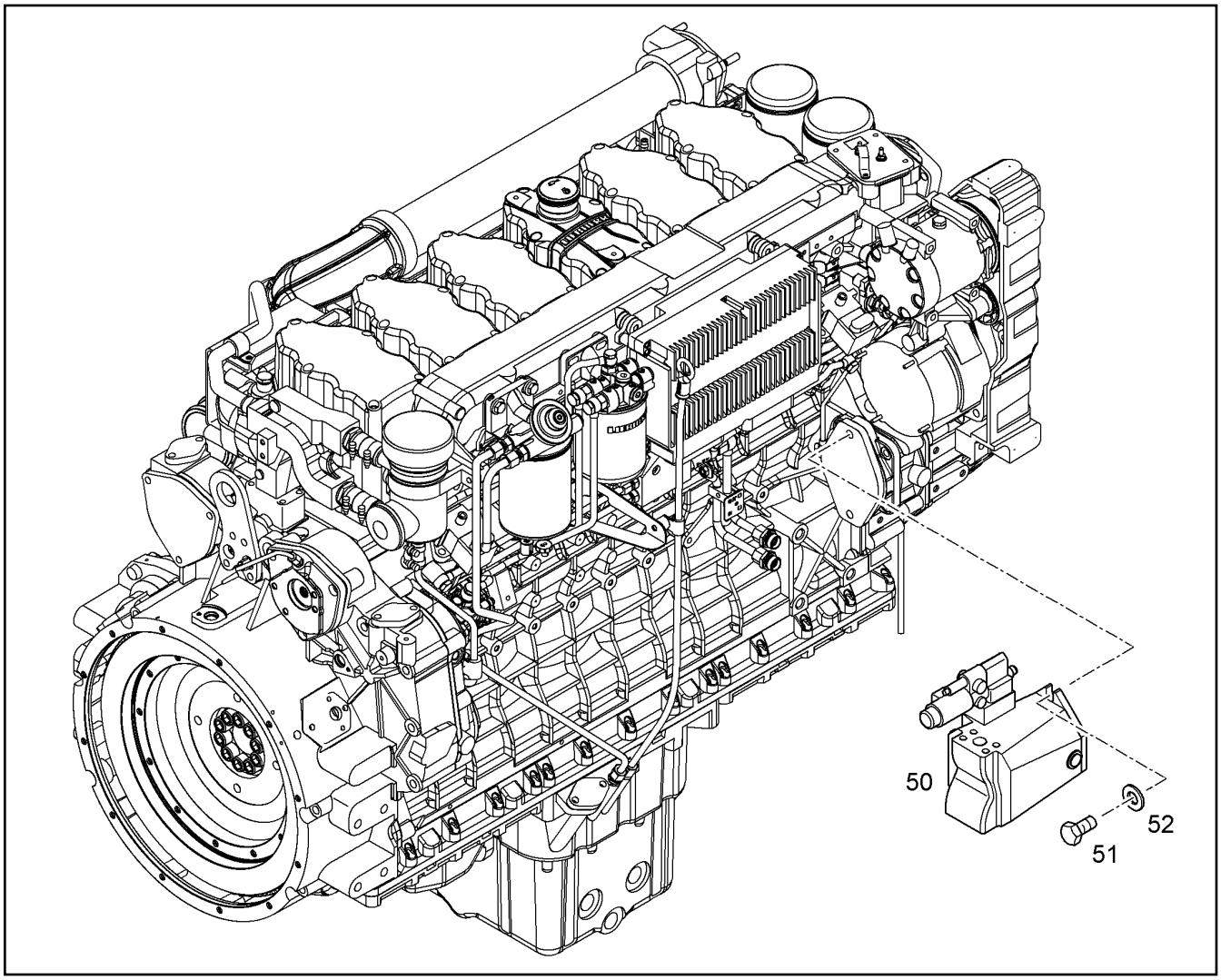

Pos.	Item	Quantity	Description	Designação	Serie	K
50	10289177	1	HYDRAULIC PUMP [15078422] ⇨ ❑ 146	BOMBA HIDRÁULICA		2
51	4066122	2	HEX SCREW ISO 4017 M12X35 10.9 A3C	PARAFUSO SEXTAVADO		
52	10289804	2	WASHER 12 300HV	ARRUELA		

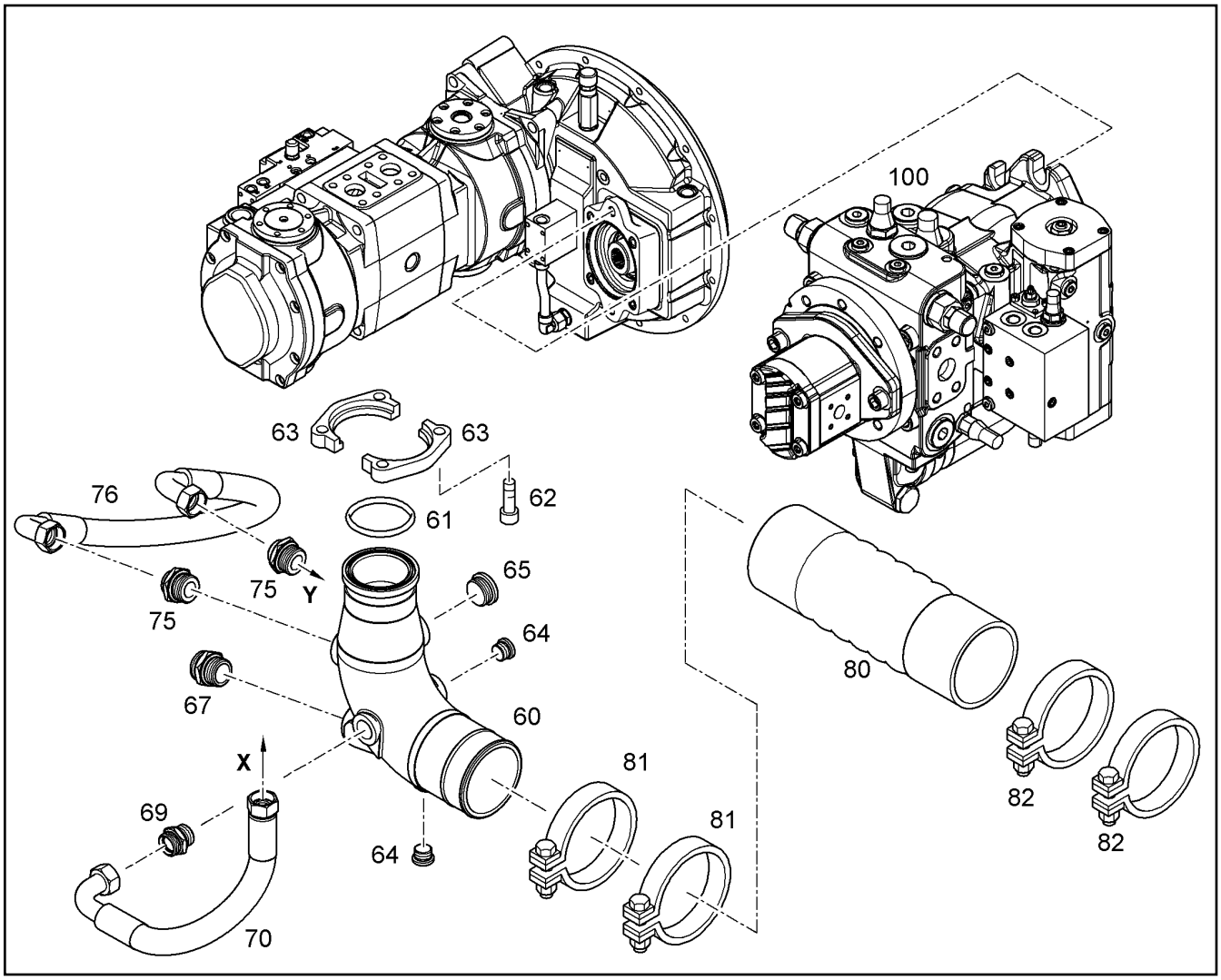

Pos.	Item	Quantity	Description	Designação	Serie	K
60	10063835	1	INTAKE STACK	BOCAL DE SUCÇÃO		
61	7013694	1	O-RING 98,02X3,53	ANEL-O		
62	10001076	4	SOCKET HEAD SCREW ISO 4762 M16X45 10	PARAFUSO CILÍNDRICO		
63	11490403	2	FLANGE HALF WITH BOSSING SAE J518 S	MEIO FLANGE COM RELEVO		
64	7362698	2	SCREW PLUG M26X1,5 ED	PARAFUSO DE FECHAMENTO		
65	7363073	1	SCREW PLUG M42X2 ED	PARAFUSO DE FECHAMENTO		
67	4900486	1	FITTING GE 35L M42X2	UNIÃO ROSCADA		
69	7003800	1	FITTING GE 28L M33X2	UNIÃO ROSCADA		
70	10217005	1	HOSE 25X540	MANGUEIRA		1
75	7615629	2	FITTING GE 28L M42X2	UNIÃO ROSCADA		
76	10286611	1	HOSE 25X900	MANGUEIRA		1
80	10060418	1	OIL SUCTION HOSE 791 7300 31-000	MANGUEIRA DE ASPIRACAO DE		
81	7367106	2	HOSE CLAMP DIN 3017-2 B2 140 136-144X25	ABRAÇADEIRA DE MANGUEIRA		
82	7367106	2	HOSE CLAMP DIN 3017-2 B2 140 136-144X25	ABRAÇADEIRA DE MANGUEIRA		
100		1	HYDR.MULTI CIRC.PUMP [91335276] ⇨ ❑ 164	BOMBA HIDR. DE VÁRIAS VIAS	42210-	

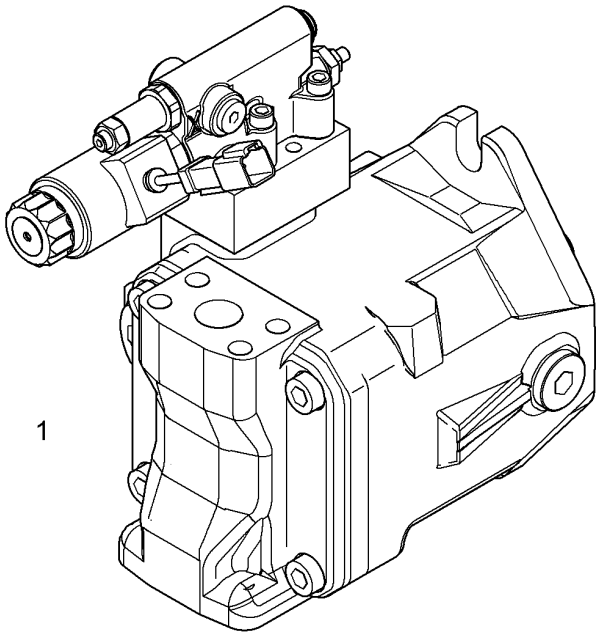

Pos.	Item	Quantity	Description	Designação	Serie	K
1		1	HYDRAULIC PUMP ⇨ ❑ 147	BOMBA HIDRÁULICA		2

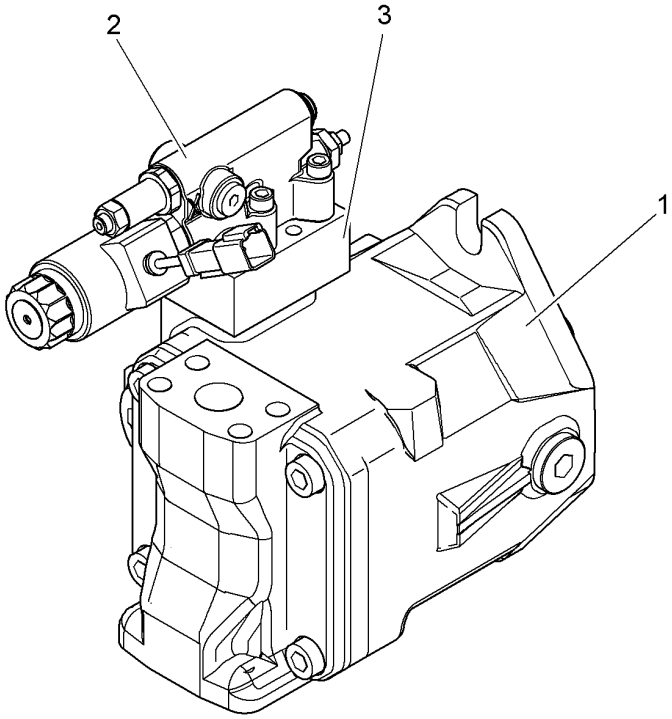

Pos.	Item	Quantity	Description	Designação	Serie	K
1		1	PUMP ⇨ ❑ 400	BOMBA		
2		1	CONTROL VALVE ⇨ ❑ 148	VÁLVULA DE CONTROLE		
3	10297874	1	INTERMEDIATE PLATE ⇨ ❑ 149	PLACA INTERMEDIÁRIA		

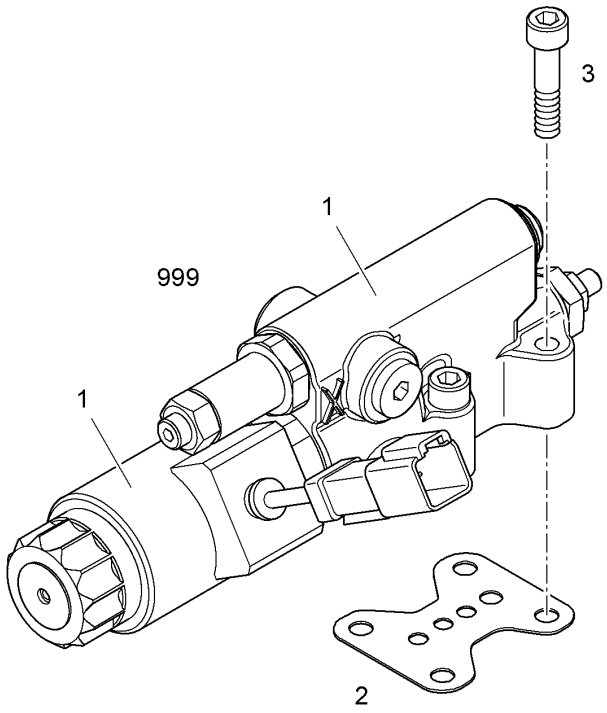

Pos.	Item	Quantity	Description	Designação	Serie	K
1	10297877	1	CONTROL VALVE	VÁLVULA DE CONTROLE		
1	6905956	1	-MAGNET	-BOBINA MAGNÉTICA		
2	10297876	1	SEAL	VEDAÇÃO		
3	11820284	4	SOCKET HEAD SCREW ISO 4762 M6X30 8.8	PARAFUSO CILÍNDRICO		
999	10410335	1	SEAL KIT	KIT DE VEDAÇÃO		

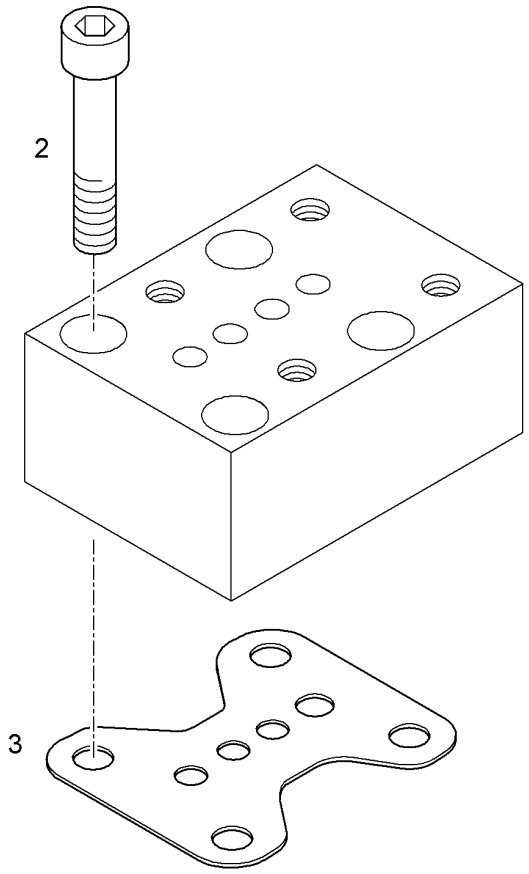

Pos.	Item	Quantity	Description	Designação	Serie	K
2	11820284	4	SOCKET HEAD SCREW ISO 4762 M6X30 8.8	PARAFUSO CILÍNDRICO		
3	10297876	1	SEAL	VEDAÇÃO		

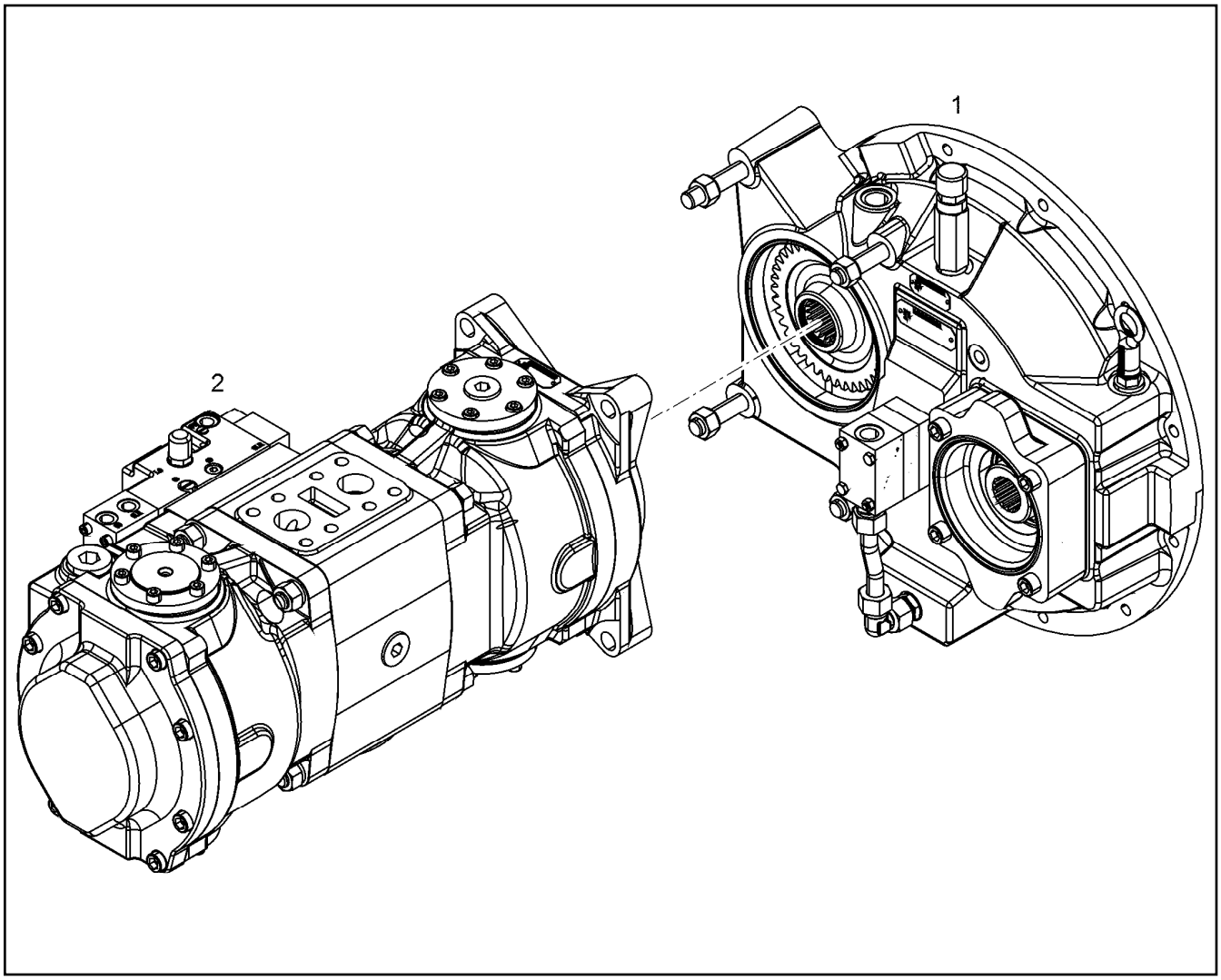

Pos.	Item	Quantity	Description	Designação	Serie	K
1	10118860	1	PUMP DISTRIBUTION GEAR [197323840] ⇨ ❑ 158	REDUTOR DISTRIBUICAO BOMB		6
2	10133037	1	HYDR.DOUBLE PUMP [191328227] ⇨ ❑ 801	BOMBA HIDRÁULICA DUPLA		6

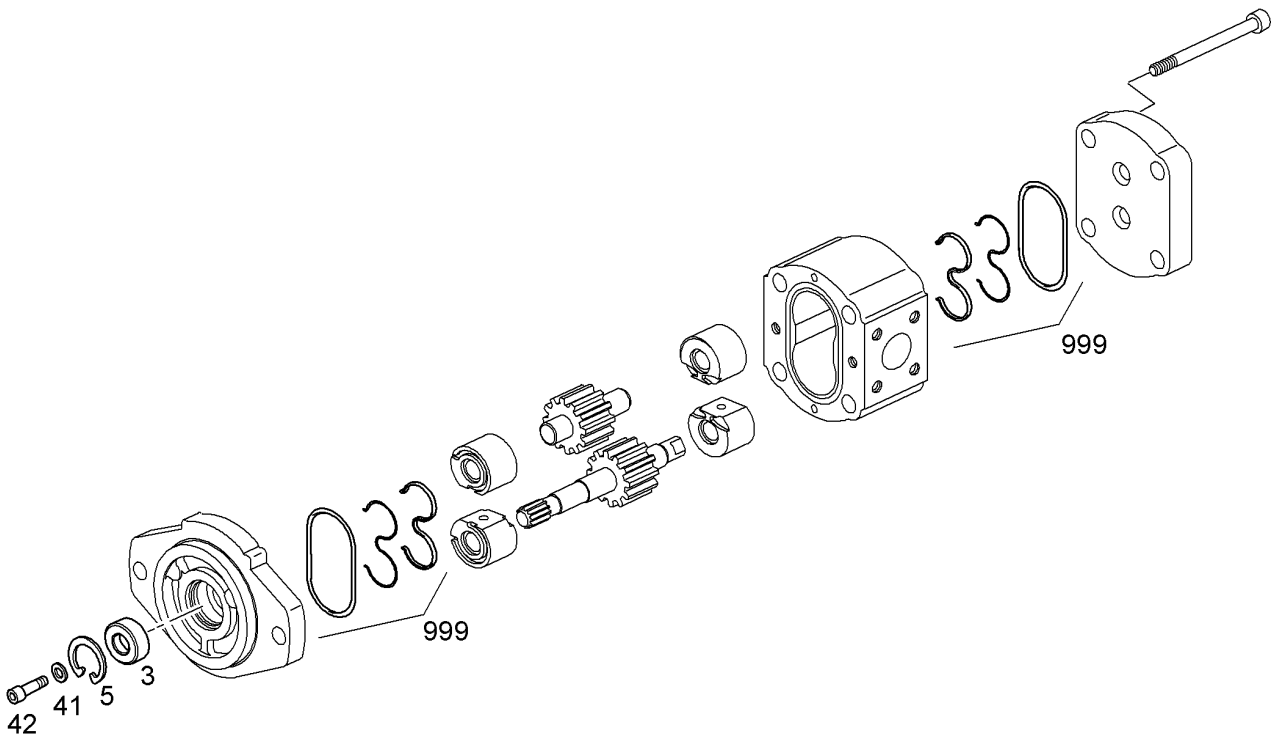

Pos.	Item	Quantity	Description	Designação	Serie	K
3	10335855	1	SHAFT SEAL	ANEL RETENTOR		
5	7368534	1	LOCKING RING	ANEL DE RETENÇÃO		
41	10346513	1	WASHER	ARRUELA		
42	10297187	1	SOCKET HEAD SCREW	PARAFUSO CILÍNDRICO		
999	7029301	1	SEAL KIT	KIT DE VEDAÇÃO		

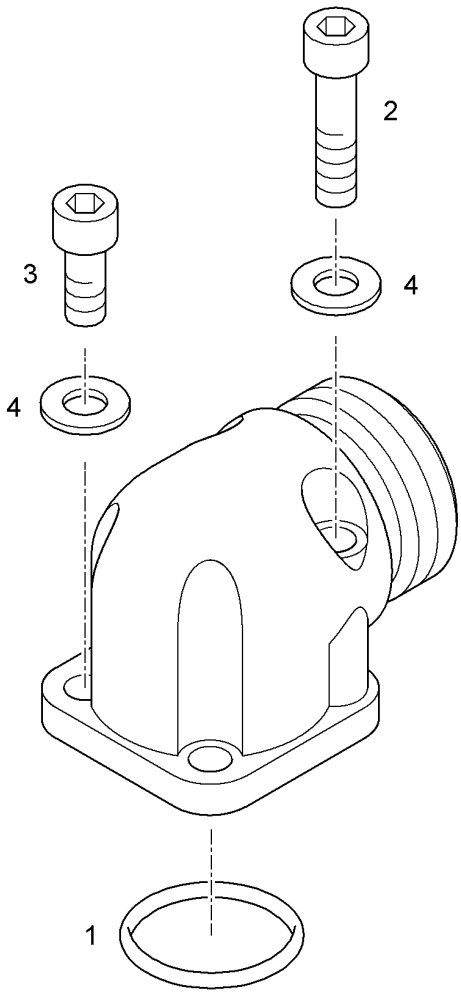

Pos.	Item	Quantity	Description	Designação	Serie	K
1	7016122	1	O-RING DIN 3771 26X2,5	ANEL-O		
2	4043050	2	SOCKET HEAD SCREW ISO 4762 M6X50 10.	PARAFUSO CILÍNDRICO		
3	4901161	2	SOCKET HEAD SCREW ISO 4762 M6X20 10.	PARAFUSO CILÍNDRICO		
4	4600218	4	WASHER SPRING B 6	ARRUELA DE PRESSÃO		

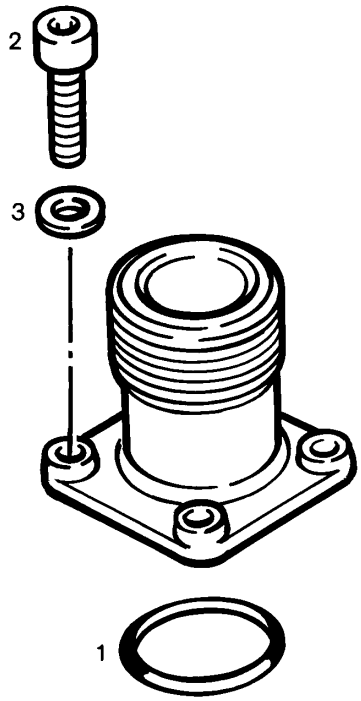

Pos.	Item	Quantity	Description	Designação	Serie	K
1	10032888	1	O-RING 20x2,5	ANEL-O		
2	4600068	4	SOCKET HEAD SCREW ISO 4762 M6X22 10.	PARAFUSO CILÍNDRICO		
3	4600218	4	WASHER SPRING B 6	ARRUELA DE PRESSÃO		

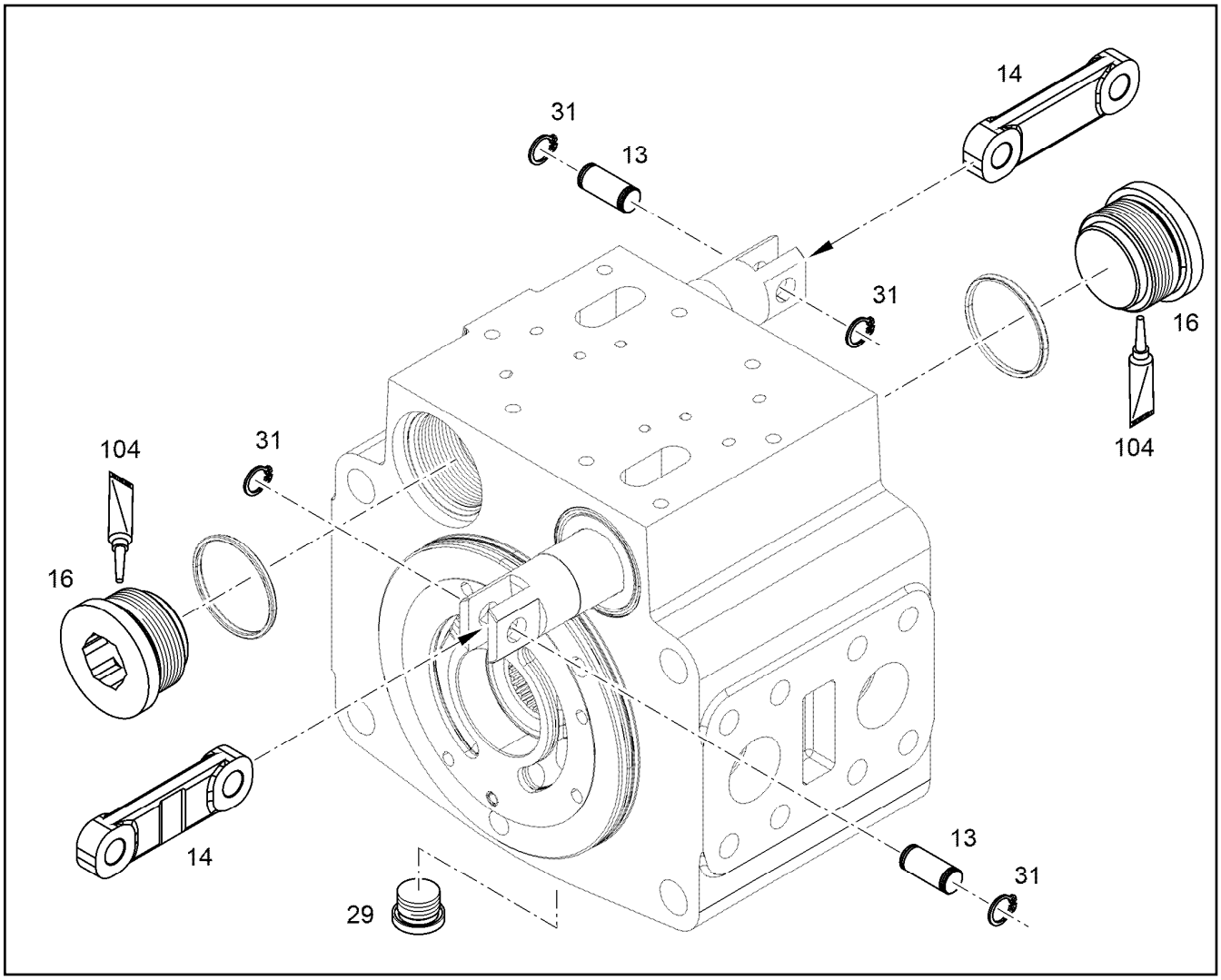

Pos.	Item	Quantity	Description	Designação	Serie	K
13	9477439	2	PIN 12X28X1,5	PINO		1
14	9887828	2	CONNECTING LINK NG 150	PEÇA DE LIGAÇÃO		
16	9274672	2	SCREW PLUG M48X2 C45E+C	PARAFUSO DE FECHAMENTO		
29	10137108	1	SCREW PLUG VSTI M26X1,5	PARAFUSO DE FECHAMENTO		
31	4280008	4	LOCKING RING DIN 471 12	ANEL DE RETENÇÃO		
104	8628192	1	SCREW LOCKING	COLA PARA ELEMENTOS FIXA		

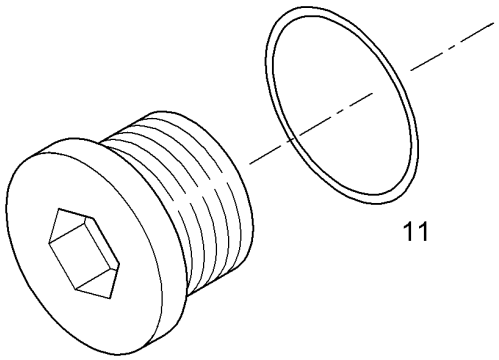

Pos.	Item	Quantity	Description	Designação	Serie	K
11	11003560	1	O-RING 6,2X1,5	ANEL-O		

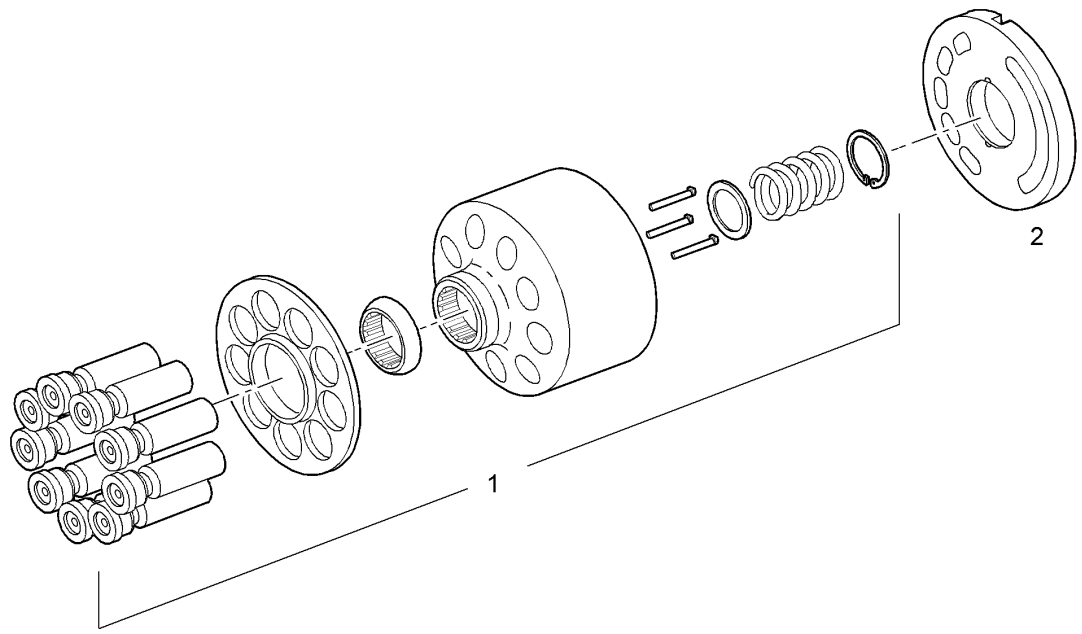

Pos.	Item	Quantity	Description	Designação	Serie	K
1	10008095	1	DRIVING GEAR ⇨ ❑ 157	MECANISMO DE ACIONAMENTO		
2	11008542	1	DISTRIBUTOR PLATE	PLACA DE DISTRIBUIÇÃO		

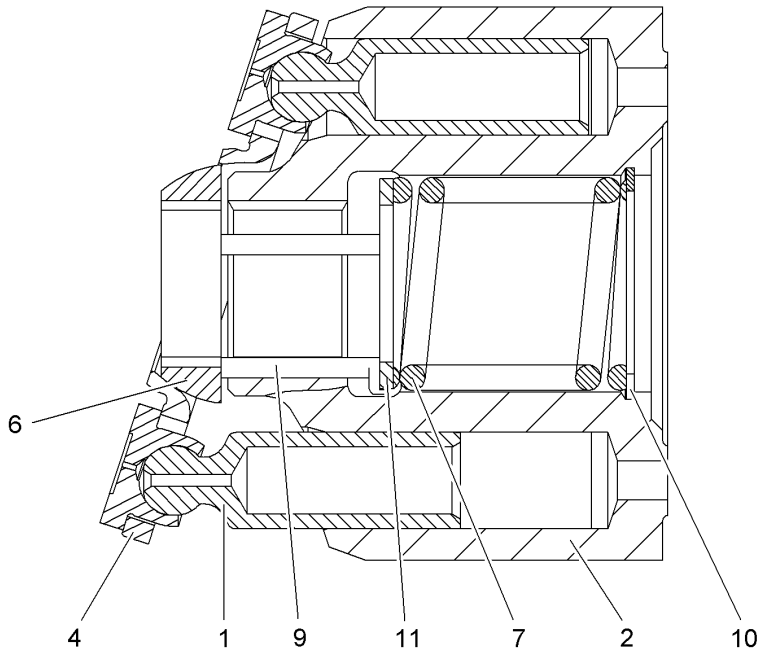

Pos.	Item	Quantity	Description	Designação	Serie	K
1		9	PISTON	PISTÃO		
2	10009376	1	CYLINDER	CILINDRO		
4	10008426	1	PULL-BACK PLATE	PLACA DE RETORNO		
6	7370837	1	PULL-BACK BALL	ESFERA DE RETORNO		
7	7370835	1	SPRING	MOLA		
9	10008429	1	PRESSURE PIN	PINO DE PRESSAO		
10	10008428	1	V-RING	ANEL EM V		
11	10008425	1	SUPPORTING WASHER	ARRUELA DE APOIO		

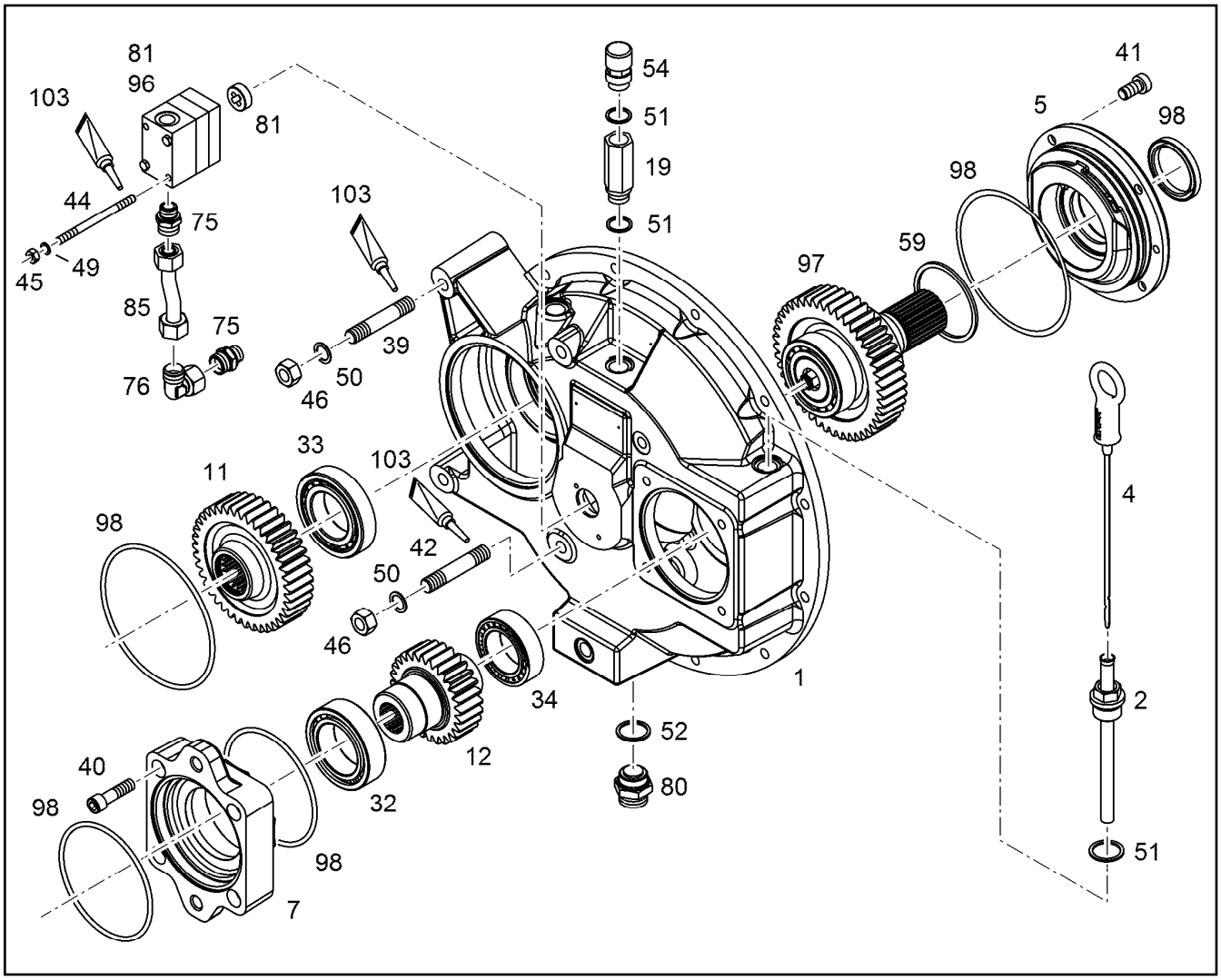

Pos.	Item	Quantity	Description	Designação	Serie	K
1		1	HOUSING PVG 351 B 382	CARCAÇA		
2	9080212	1	GUIDE FOR OIL DIPSTICK CPL.	GUIA VARETA NÍVEL DE ÓLEO		
4	9080209	1	OIL DIPSTICK	VARETA DE NÍVEL DE ÓLEO C/		
4	10215824	1	O-RING DIN 3771 5,10X1,60	ANEL-O		
5	9080191	1	BEARING COVER	TAMPA DO MANCAL		
7	9080803	1	BEARING FLANGE	FLANGE MANCAL		
11	10119090	1	SPUR WHEEL Z=40 M=3,5	ENGRENAGEM		
12	9080174	1	SPUR WHEEL Z=28 M=3,5	ENGRENAGEM		
19	9268725	1	FITTINGS	CONEXÃO		
32	7380470	1	CYLINDRICAL ROLLER BEARING	ROLAMENTO DE ROLOS CILÍN		
33	4980228	1	CYLINDRICAL ROLLER BEARING NJ-211ECP	ROLAMENTO DE ROLOS CILÍN		
34	10216295	1	CYLINDRICAL ROLLER BEARING	ROLAMENTO DE ROLOS CILÍN		
39	11698908	1	DOUBLE-ENDED STUD DIN 939 M16X70 8.8	PARAFUSO PRISIONEIRO		
40	4042035	4	SOCKET HEAD SCREW ISO 4762 M12X45 8.	PARAFUSO CILÍNDRICO		
41	4980935	4	SOCKET HEAD SCREW DIN 6912 M10X20 0	PARAFUSO CILÍNDRICO		
42	4980023	3	DOUBLE-ENDED STUD DIN 939 M16X60 8.8	PARAFUSO PRISIONEIRO		
44	4981153	2	DOUBLE-ENDED STUD DIN 939 M6X80 8.8	PARAFUSO PRISIONEIRO		
45	4000379	2	HEX NUT M6	PORCA SEXTAVADA		
46	4000420	4	HEX NUT M16	PORCA SEXTAVADA		
49	423910601	2	LOCK WASHER VS 6	ARRUELA DE PRESSÃO		
50	4239009	4	LOCK WASHER VS 16	ARRUELA DE PRESSÃO		
51	7101015	3	SEALING RING DIN 7603 A 22X27X1,5	ANEL DE VEDAÇÃO		
52	7101021	1	SEALING RING DIN 7603 A 30X36X2	ANEL DE VEDAÇÃO		
54	7002458	1	VENTILATION UNIT	FILTRO VENTILACAO E EXAUS		
59	10331853	2	SHIM RING 63X70X1	ARRUELA DE AJUSTE		
75	7003570	2	FITTING GE 15L M18X1,5 ED	UNIÃO ROSCADA		

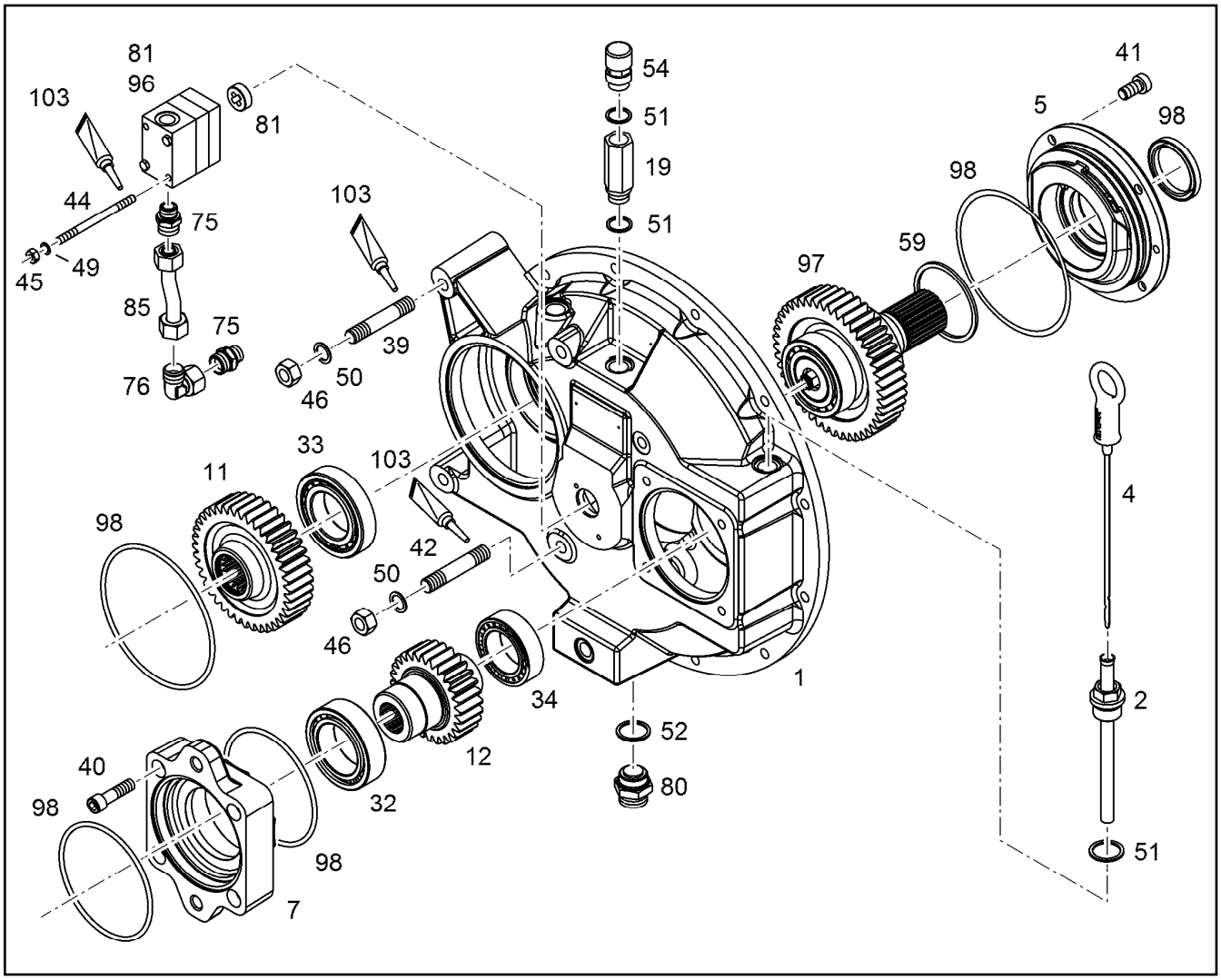

Pos.	Item	Quantity	Description	Designação	Serie	K
76	7615379	1	FITTING EW 15L	UNIÃO ROSCADA		
80	5004624	1	OIL DRAIN PLUG M 30 1,5 ⇨ ❑ 577	PARAFUSO DE DRENAGEM DE Ó		
81	9884140	1	COOLING CIRCUIT PUMP ⇨ ❑ 185	BOMBA CIRCUITO ARREFECIME		
85	9884464	1	SUCTION PIPE	TUBO DE SUCÇÃO		
96	10119482	1	SEAL KIT COOLING PUMP ZPA 5 ⇨ ❑ 832	KIT DE VEDAÇÃO		
97	10119093	1	REPAIR KIT DRIVE SHAFT PVG 351 B 382 ⇨ ❑ 821	KIT DE REP DO EIXO DE ACION		
98	9080194	1	SEAL KIT ⇨ ❑ 216	KIT DE VEDAÇÃO		
103	811205708	1	SCREW LOCKING	COLA PARA ELEMENTOS FIXA		

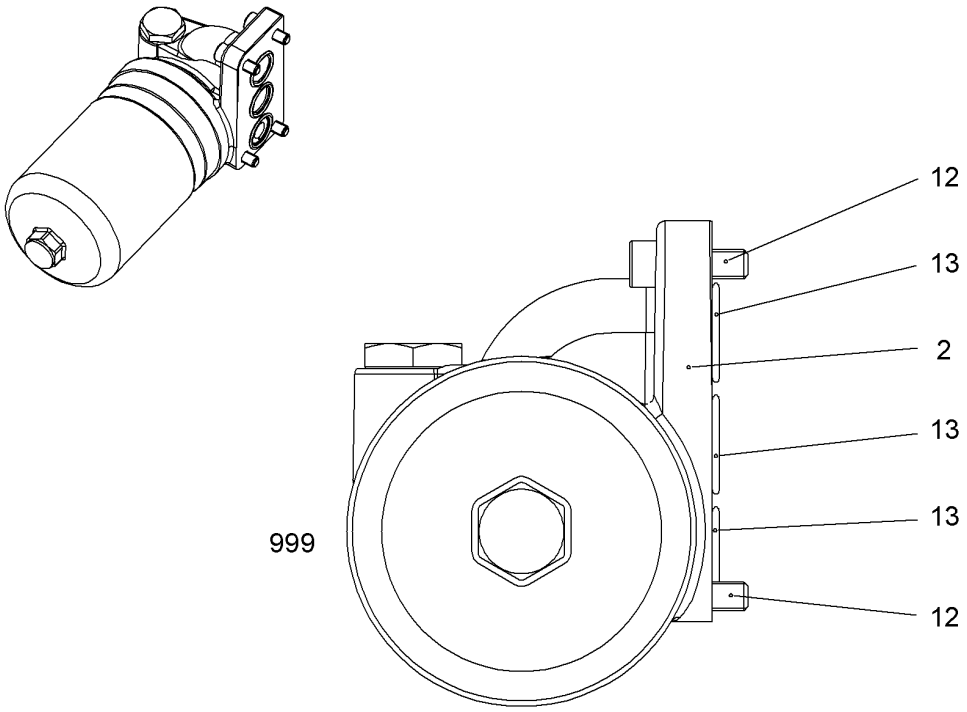

Pos.	Item	Quantity	Description	Designação	Serie	K
2	11821519	1	FILTER ⇨ ❑ 175	FILTRO		
12	10875599	4	SOCKET HEAD SCREW ISO 4762 M8X25 8.8	PARAFUSO CILÍNDRICO		
13	10220698	3	O-RING 21,89X2,62	ANEL-O		
999	11821521	1	SEAL KIT FILTER			

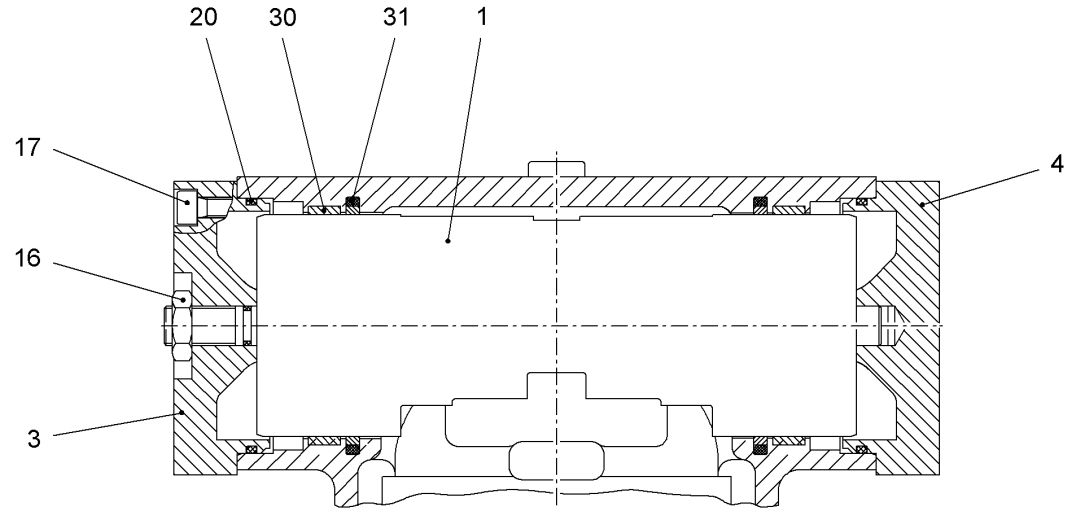

Pos.	Item	Quantity	Description	Designação	Serie	K
1	10291975	1	ADJUSTING PISTON ⇨ ❑ 172	PISTÃO DE AJUSTAMENTO		
3	10216731	1	COVER	TAMPA		
4	10216732	1	COVER	TAMPA		
16	10217578	1	HEX NUT M12X1,5	PORCA SEXTAVADA		
17	4901161	8	SOCKET HEAD SCREW ISO 4762 M6X20 10.	PARAFUSO CILÍNDRICO		
20	7006216	2	O-RING 69,52X2,62	ANEL-O		
30	10216733	2	GUIDE RING	ANEL GUIA		
31	10220529	2	TURCON GLYD RING 77,7X67X4,1	ANEL TURCON GLYD		

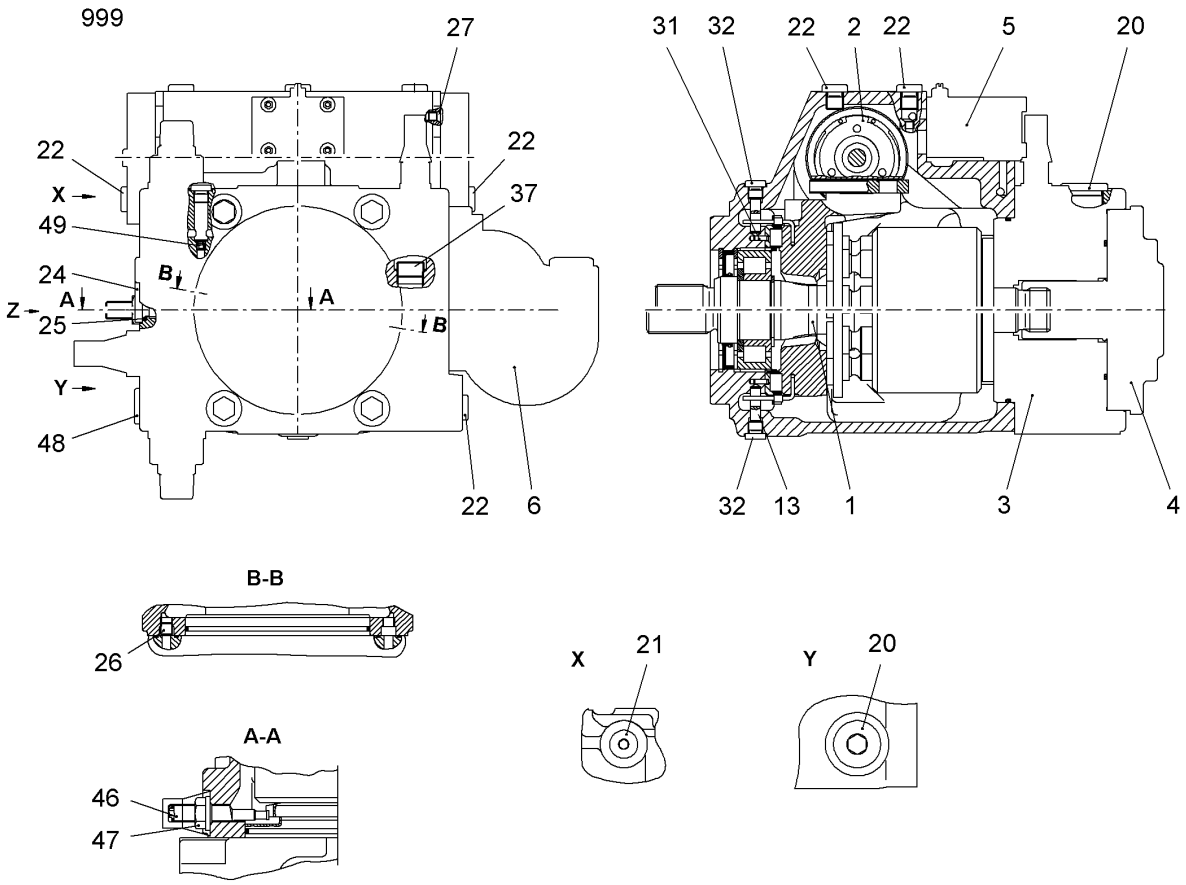

Pos.	Item	Quantity	Description	Designação	Serie	K
1	11491894	1	DRIVING GEAR ⇨ ❑ 399	MECANISMO DE ACIONAMENTO		
2	10291978	1	HYDRAULIC ADJUSTMENT ⇨ ❑ 161	REGULAGEM HIDRAULICA		
3	11491890	1	CONNECTING PLATE ⇨ ❑ 398	PLACA DE LIGAÇÃO		
4	5717149	1	INTERNAL GEAR PUMP SET ⇨ ❑ 165	REPARO DA BOMBA		
5	7028075	1	CONTROL UNIT ⇨ ❑ 177	UNIDADE DE CONTROLE		
6	10220417	1	FILTER ⇨ ❑ 160	FILTRO		
13	11822439	2	PIVOT PIN	PINO ARTICULADO		
20	10137108	2	SCREW PLUG VSTI M26X1,5	PARAFUSO DE FECHAMENTO		
21	10137113	1	SCREW PLUG VSTI M14X1,5	PARAFUSO DE FECHAMENTO		
22	7372624	4	SCREW PLUG M12X1,5	PARAFUSO DE FECHAMENTO		
24	10137121	1	SCREW PLUG VSTI M33X2	PARAFUSO DE FECHAMENTO		
25	7006212	1	O-RING 29,82X2,62	ANEL-O		
26	7362689	1	SCREW PLUG M8X1 ED	PARAFUSO DE FECHAMENTO		
27	7022127	1	DOUBLE PLUG	PARAFUSO FECH. DE FILETE D		
31	4002729	2	DOWEL PIN 3	PINO ELÁSTICO		
32	7372626	2	SCREW PLUG M10X1 NBR	PARAFUSO DE FECHAMENTO		
37	10220424	1	SCREW PLUG DIN 906 M18X1,5 5.8 PHR	PARAFUSO DE FECHAMENTO		
46	10220418	1	ECCENTRIC SCREW	PARAFUSO EXCÊNTRICO		
47	7009369	1	SEAL-LOCK-SHOULDER NUT	PORCA		
48	10220419	1	SCREW PLUG M18X1,5	PARAFUSO DE FECHAMENTO		

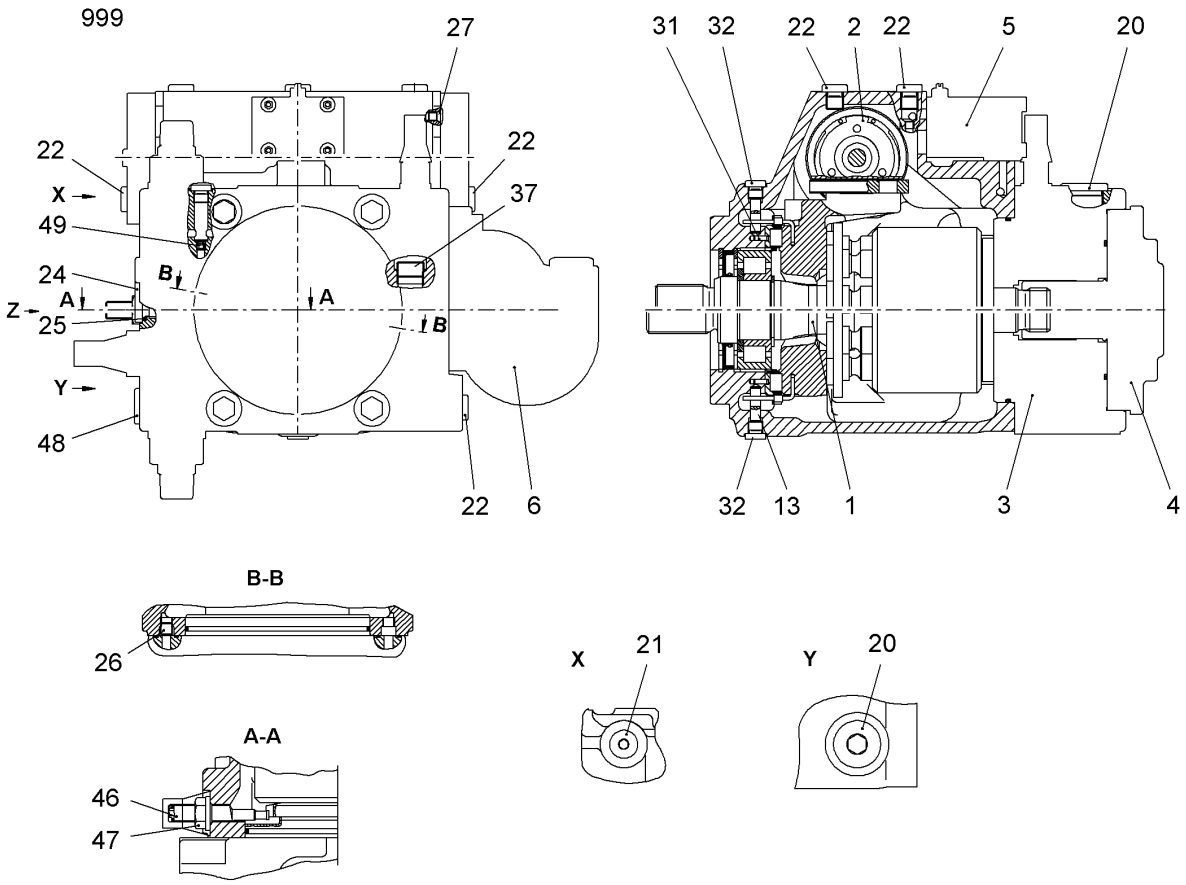

Pos.	Item	Quantity	Description	Designação	Serie	K
49	10220421	1	BLANKING PLUG	TAMPÃO		
999	10220423	1	SEAL KIT	KIT DE VEDAÇÃO		

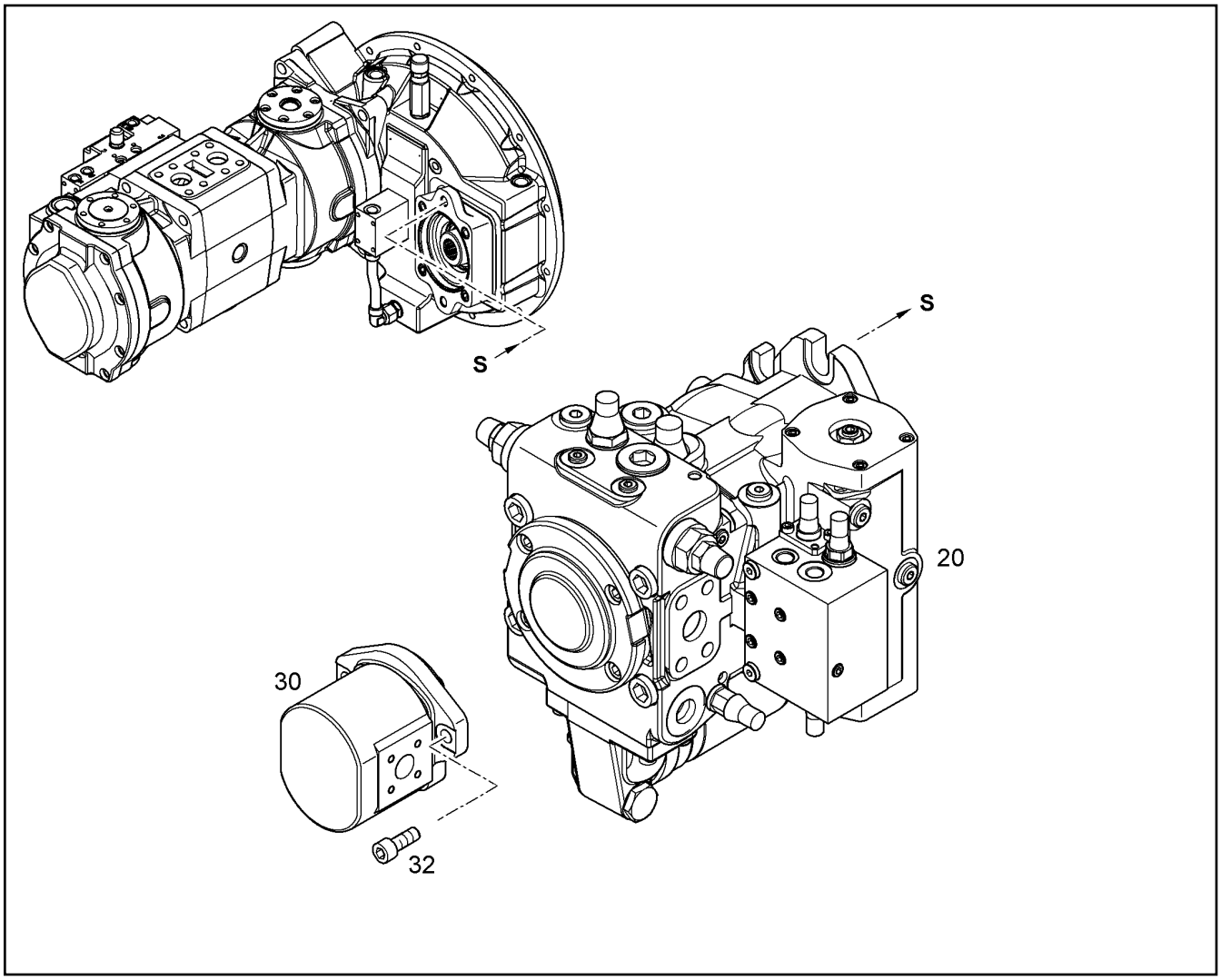

Pos.	Item	Quantity	Description	Designação	Serie	K
20	11342491	1	AXIAL PISTON PUMP ⇨ ❑ 162	BOMBA DE PISTÃO AXIAL		6
30	10291544	1	GEAR PUMP ⇨ ❑ 151	BOMBA DE ENGRENAGENS		2
32	4043124	2	SOCKET HEAD SCREW ISO 4762 M10X25 1	PARAFUSO CILÍNDRICO		

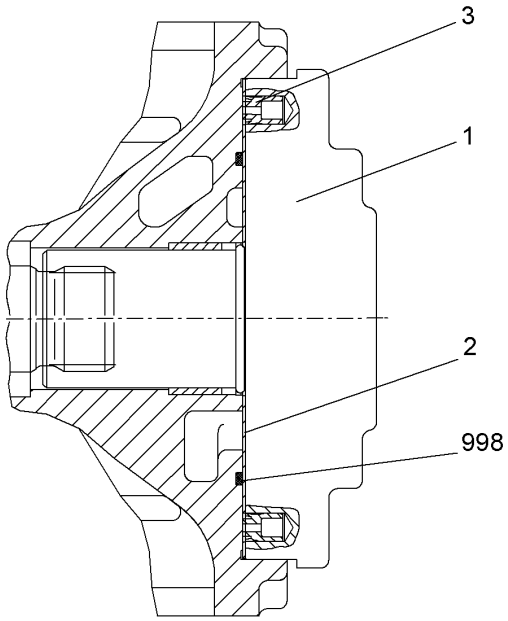

Pos.	Item	Quantity	Description	Designação	Serie	K
1	10282647	1	GEAR PUMP ⇨ ❑ 170	BOMBA DE ENGRENAGENS		2
2	10216816	1	WEARING PLATE ⇨ ❑ 167	PLACA DE DESGASTE		
3	11009211	2	RETAINING PLUG	PLUG DE RETENÇÃO		
998	10292139	1	SEAL KIT	KIT DE VEDAÇÃO		

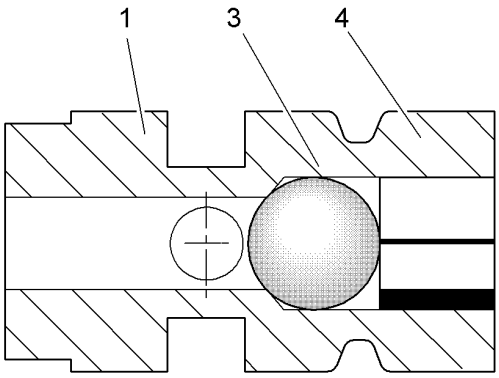

Pos.	Item	Quantity	Description	Designação	Serie	K
1	10014067	1	BRAKE PISTON	PISTÃO DE FREIO		1
3	10014076	1	BALL d=4,5 - G28	ESFERA		
4	10008299	1	CYL.ROLLER	ROLETE CILÍNDRICO		

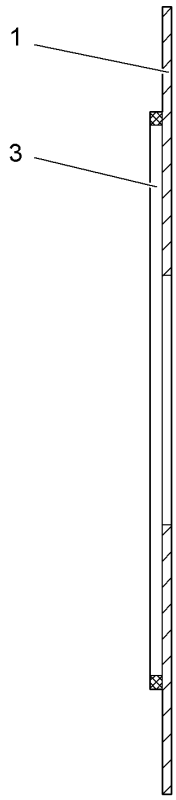

Pos.	Item	Quantity	Description	Designação	Serie	K
1	10216828	1	WEARING PLATE	PLACA DE DESGASTE		
3	10220668	1	O-RING 88,57X2,62	ANEL-O		

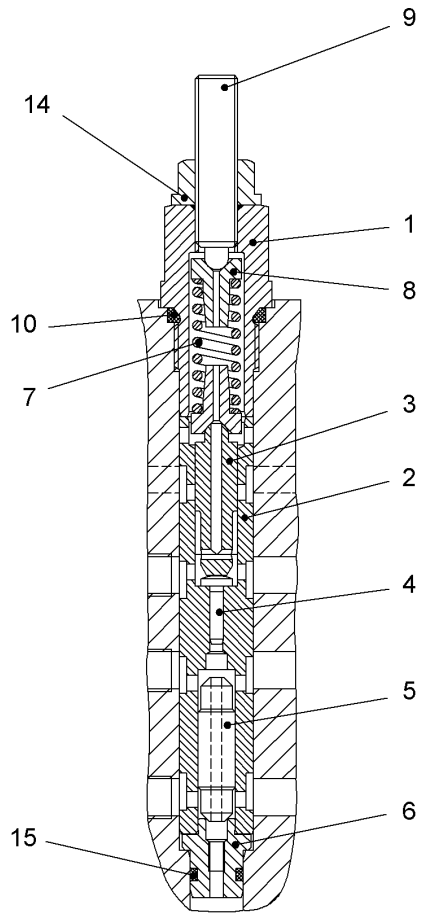

Pos.	Item	Quantity	Description	Designação	Serie	K
1	10220659	1	SCREW PLUG	PARAFUSO DE FECHAMENTO		
2		1	VALVE BUSHING	BUCHA DE VÁLVULA		1
3		1	SPOOL	PISTAO DE COMANDO		
4		1	PISTON	PISTÃO		
5		1	VALVE PISTON	PISTAO DA VALVULA		
6		1	VALVE SEAT	ASSENTO DA VÁLVULA		
7	11261514	1	PRESSURE SPRING	MOLA DE PRESSÃO		
8		2	SPRING SUPPORT	PRATO DA MOLA		
9	10220665	1	ADJUSTING SCREW	PARAFUSO DE AJUSTE		
10	7028158	1	O-RING 12,37X2,62	ANEL-O		
14	7361601	1	GROMMET NUT M8	PORCA DE VEDAÇÃO		
15	7028159	1	O-RING 6,07X1,78	ANEL-O		

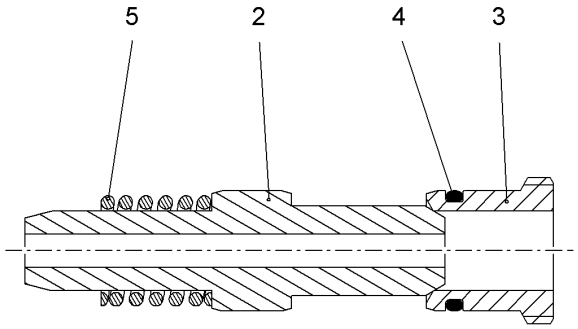

Pos.	Item	Quantity	Description	Designação	Serie	K
2		1	VALVE PISTON	PISTAO DA VALVULA		
3		1	VALVE SEAT	ASSENTO DA VÁLVULA		
4	10220819	1	O-RING 14x2	ANEL-O		
5		1	PRESSURE SPRING	MOLA DE PRESSÃO		

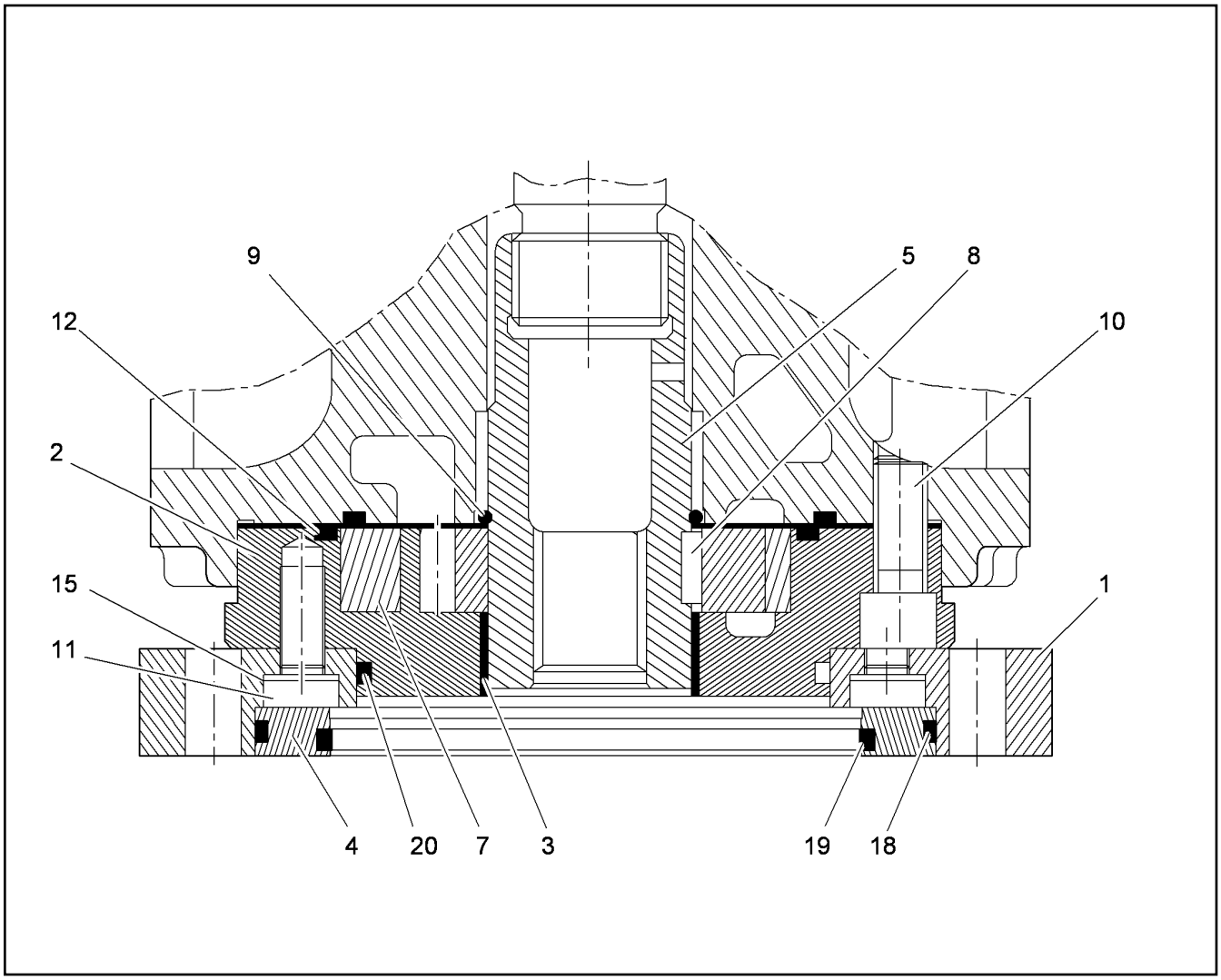

Pos.	Item	Quantity	Description	Designação	Serie	K
1	10216818	1	INTERMEDIATE FLANGE	FLANGE INTERMEDIÁRIO		
2	10428856	1	PUMP COVER	TAMPA DA BOMBA		
3	10220637	1	BEARING BUSH	BUCHA MANCAL		1
4	10216823	1	RING	ANEL		
5	10216824	1	DRIVE-THROUGH SHAFT	EIXO DO DIFERENCIAL		
7	10220693	1	WHEEL SET	KIT DE ENGRENAGENS		
8	7028166	1	FITTING KEY	CHAVETA		
9	4635246	1	SNAP RING DIN 7993 A 38	ANEL DE RETENÇÃO		
10	4042014	4	SOCKET HEAD SCREW ISO 4762 M10X25 8.	PARAFUSO CILÍNDRICO		
11	4901007	6	SOCKET HEAD SCREW DIN 6912 M8X16 08.	PARAFUSO CILÍNDRICO		
12	10220668	1	O-RING 88,57X2,62	ANEL-O		
15	10044740	6	SEALING RING 8,7X13X1	ANEL DE VEDAÇÃO		
18	10216826	1	O-RING	ANEL-O		
19	11212833	1	O-RING 102X2,5	ANEL-O		
20	10010293	1	O-RING 82,22X2,62	ANEL-O		

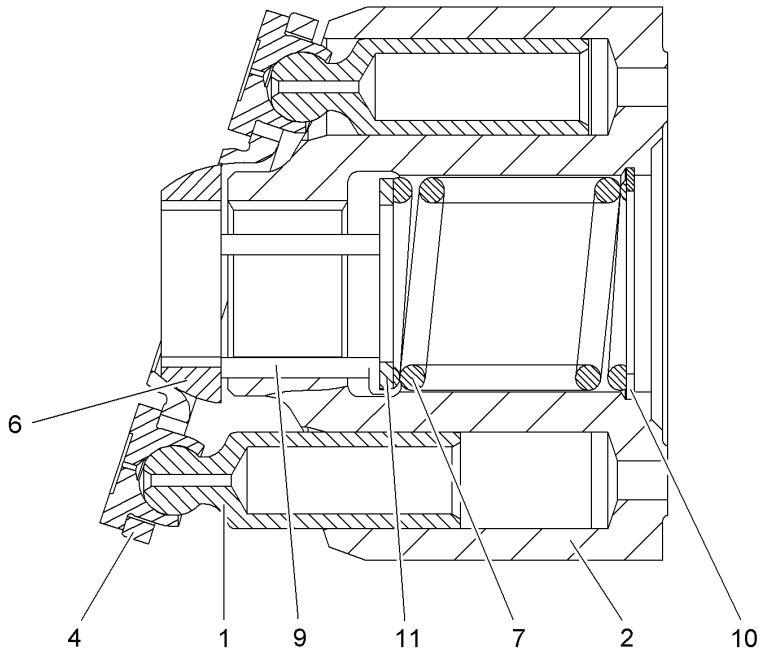

Pos.	Item	Quantity	Description	Designação	Serie	K
1		9	PISTON	PISTÃO		
2		1	CYLINDER	CILINDRO		
4		1	PULL-BACK PLATE	PLACA DE RETORNO		
6		1	PULL-BACK BALL	ESFERA DE RETORNO		
7	10287730	1	SPRING	MOLA		
9	10665379	3	PRESSURE PIN	PINO DE PRESSAO		
10	7413414	1	V-RING	ANEL EM V		
11	10287892	1	SUPPORTING WASHER	ARRUELA DE APOIO		

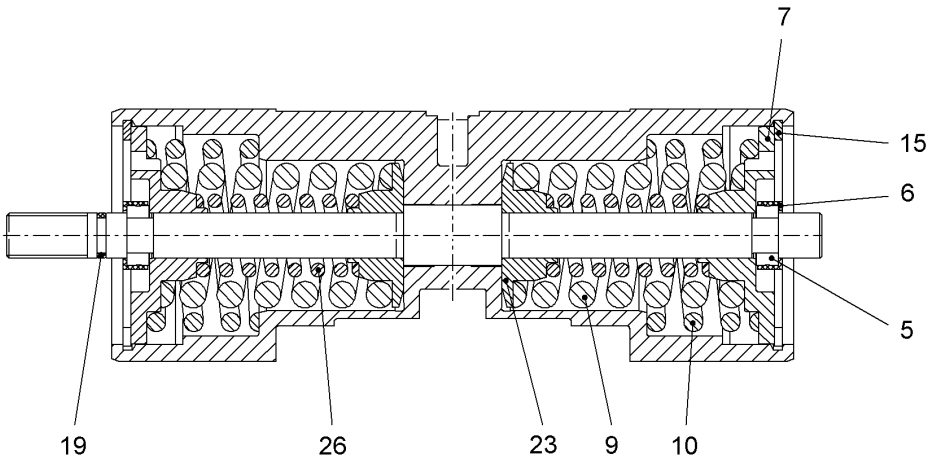

Pos.	Item	Quantity	Description	Designação	Serie	K
5	7028114	2	RING 5,82	ANEL		
5	7028113	2	RING 5,77	ANEL		
5	7028115	2	RING 5,87	ANEL		
5	7028116	2	RING 5,92	ANEL		
5	7028117	2	RING 5,97	ANEL		
5	7028118	2	RING 6,02	ANEL		
5	7028119	2	RING 5,67	ANEL		
5	7028120	2	RING 5,72	ANEL		
6		2	RETAINING RING	ANEL DE ALOJAMENTO		
7		2	SPRING SUPPORT	PRATO DA MOLA		
9		2	PRESSURE SPRING	MOLA DE PRESSÃO		
10		2	PRESSURE SPRING	MOLA DE PRESSÃO		
15	4980663	2	LOCKING RING DIN 47258	ANEL DE RETENÇÃO		
19	10220549	1	O-RING 9,25X1,78	ANEL-O		
23	10216737	2	SPRING SUPPORT	PRATO DA MOLA		
26	10220550	2	PRESSURE SPRING	MOLA DE PRESSÃO		

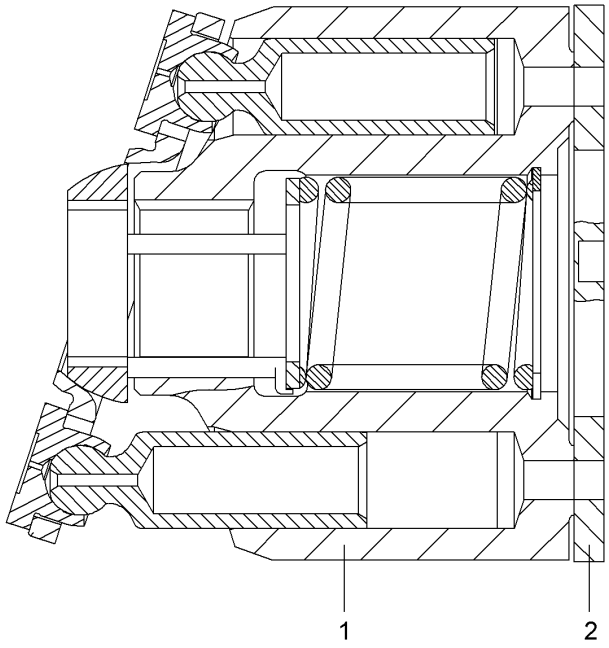

Pos.	Item	Quantity	Description	Designação	Serie	K
1	10287725	1	DRIVING GEAR ⇨ ❑ 171	MECANISMO DE ACIONAMENTO		
2	11008542	1	DISTRIBUTOR PLATE	PLACA DE DISTRIBUIÇÃO		

OHNE BILD

WITHOUT DRAWING

SANS DESSIN

Pos.	Item	Quantity	Description	Designação	Serie	K
1		1	SCREW PLUG	PARAFUSO DE FECHAMENTO		
2		1	ADJUSTING SCREW	PARAFUSO DE AJUSTE		
3		1	VALVE PISTON	PISTAO DA VALVULA		
4		1	SPRING SUPPORT	PRATO DA MOLA		
5		1	PRESSURE SPRING	MOLA DE PRESSÃO		
8		1	O-RING 23,47X2,62	ANEL-O		
9		1	SEAL-LOCK-SHOULDER NUT M10X1	PORCA		

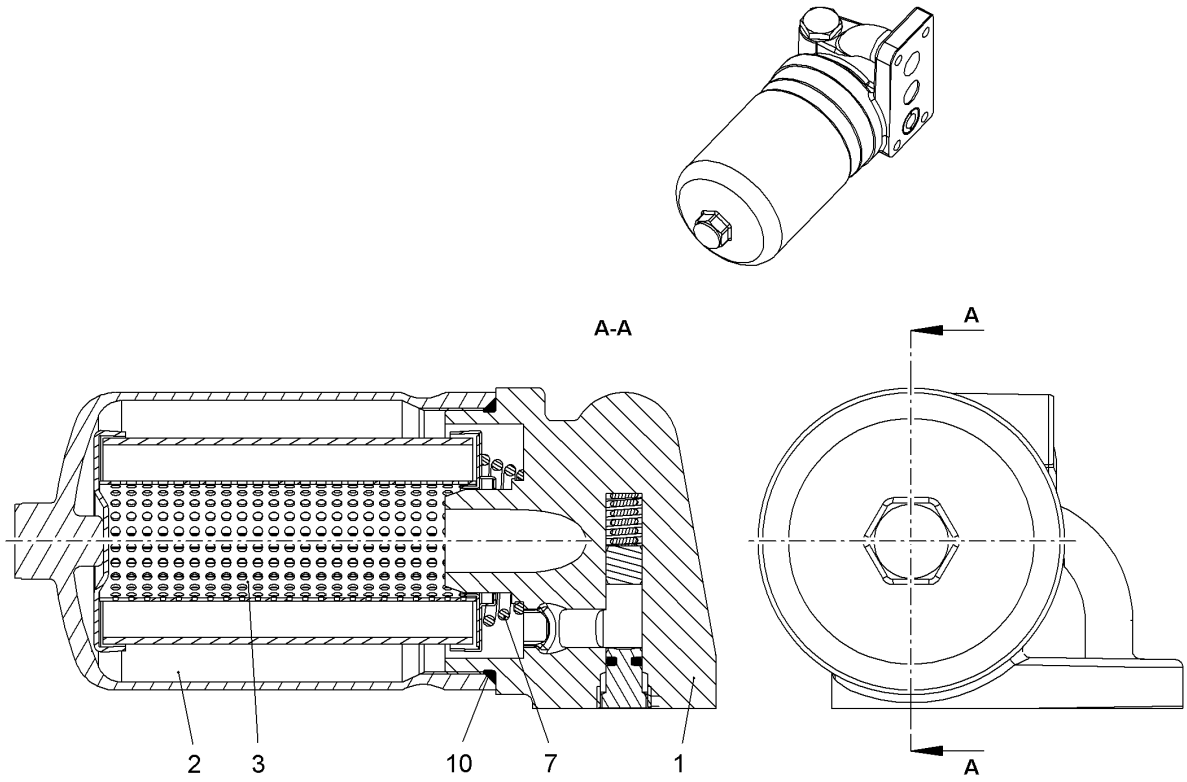

Pos.	Item	Quantity	Description	Designação	Serie	K
1	11821534	1	FILTER HEAD ⇨ ❑ 176	CABEÇOTE DO FILTRO		
2	10220702	1	FILTER HOUSING	CARCACA DO FILTRO		
3	10220705	1	FILTER ELEMENT	ELEMENTO FILTRANTE		
7	10220706	1	SPRING	MOLA		
10	10220707	1	O-RING 78,97X3,53	ANEL-O		

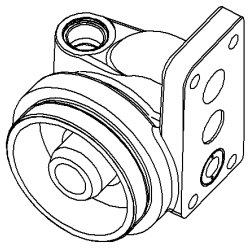

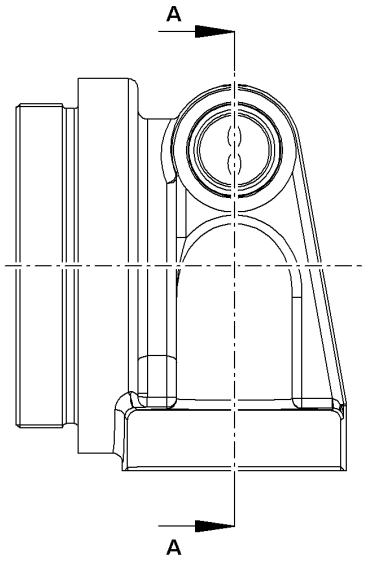

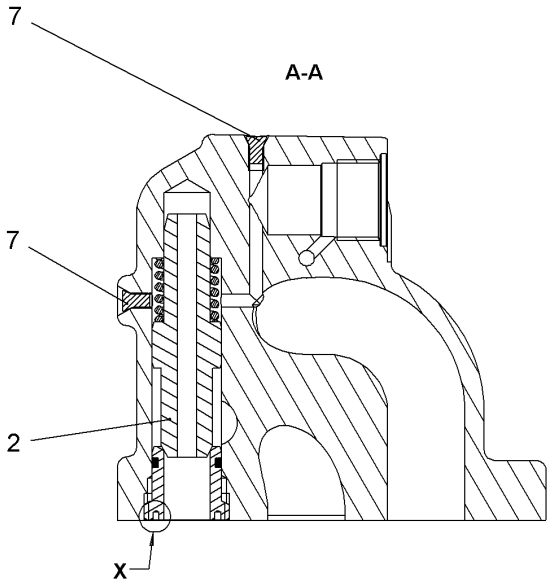

Pos.	Item	Quantity	Description	Designação	Serie	K
2	10220816	1	COLD STAR VALVE ⇨ ❑ 169	VÁLVULA DE PARTIDA FRIA		
7	7618568	1	DOUBLE PLUG	PARAFUSO FECH. DE FILETE D		

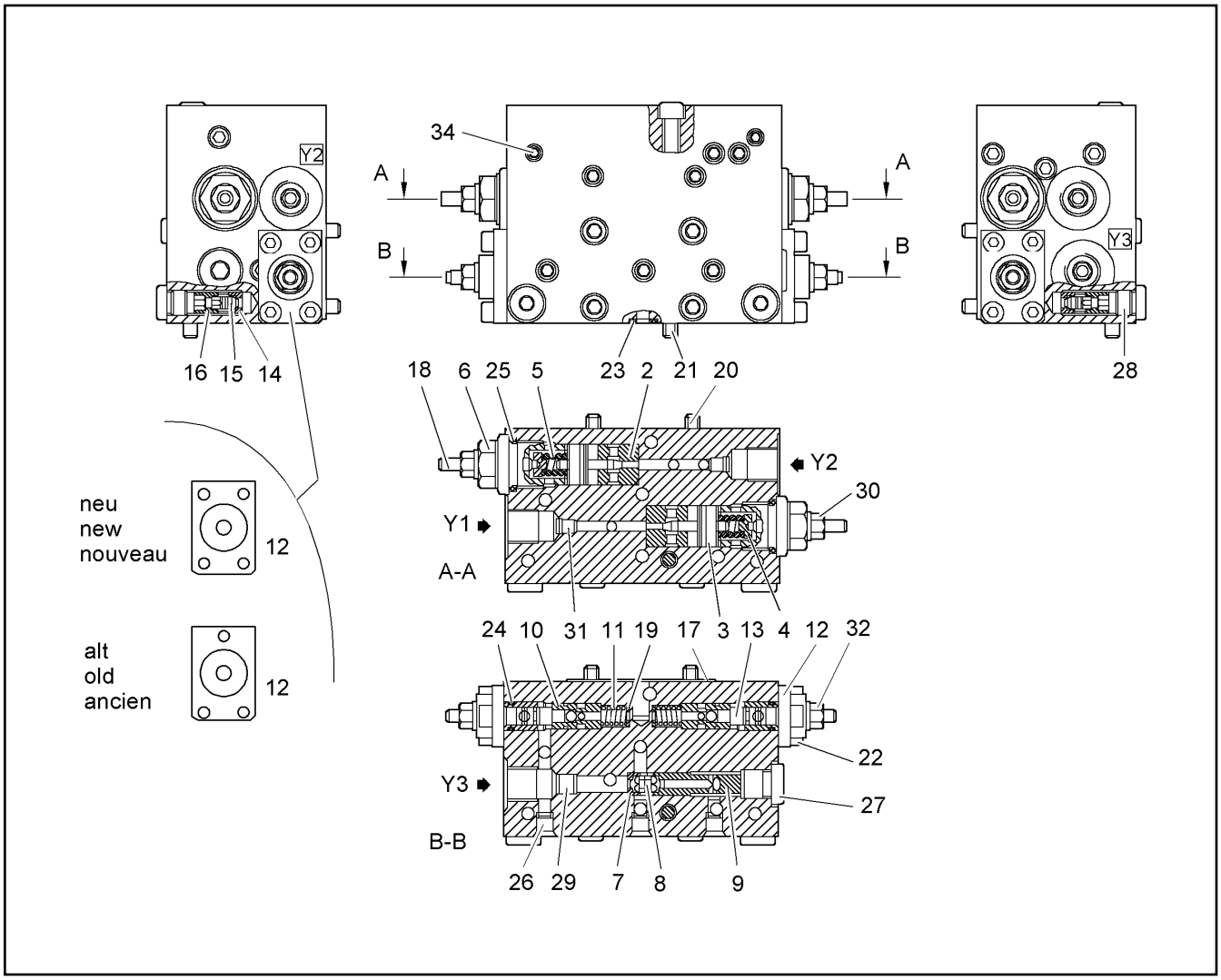

Pos.	Item	Quantity	Description	Designação	Serie	K
2	7028168	2	VALVE BUSHING	BUCHA DE VÁLVULA		1
3	7028169	2	PISTON	PISTÃO		
4	7028170	2	SPRING SUPPORT	PRATO DA MOLA		1
5	7028171	2	PRESSURE SPRING	MOLA DE PRESSÃO		
6	7028172	2	SCREW PLUG	PARAFUSO DE FECHAMENTO		
7	7028173	1	VALVE HOUSING	CARCAÇA DA VÁLVULA		
8	7028174	1	VALVE PIN	PINO DA VALVULA		
9	7028175	1	VALVE HOUSING	CARCAÇA DA VÁLVULA		
10	7028176	2	BRAKE PISTON ⇨ ❑ 166	PISTÃO DE FREIO		1
11	7028177	2	PRESSURE SPRING	MOLA DE PRESSÃO		
12	10012263	2	END COVER	TAMPA DE FECHAMENTO		
13	7028179	2	VALVE PISTON	PISTAO DA VALVULA		
14	7615603	2	THROTTLE SCREW	PARAFUSO DE ESTRANGULAME		
15	7028180	2	VALVE PIN	PINO DA VALVULA		
16	7615604	2	THROTTLE SCREW	PARAFUSO DE ESTRANGULAME		
17	10475895	1	SEAL	VEDAÇÃO		
18	7028181	2	GRUB SCREW	PARAFUSO		
19	7028182	2	SHIM RING	ARRUELA DE AJUSTE		
20	4002418	4	SOCKET HEAD SCREW ISO 4762 M6X65 8.8	PARAFUSO CILÍNDRICO		
21	404205608	1	SOCKET HEAD SCREW ISO 4762 M6X90 8.8	PARAFUSO CILÍNDRICO		
22	4001521	8	SOCKET HEAD SCREW ISO 4762 M5X10 8.8	PARAFUSO CILÍNDRICO		
23	7028183	1	O-RING 6,02X2,62	ANEL-O		
24	7028184	2	O-RING 9,25X1,78	ANEL-O		
25	7028185	2	O-RING 17,12X2,62	ANEL-O		
26	7022127	14	DOUBLE PLUG	PARAFUSO FECH. DE FILETE D		

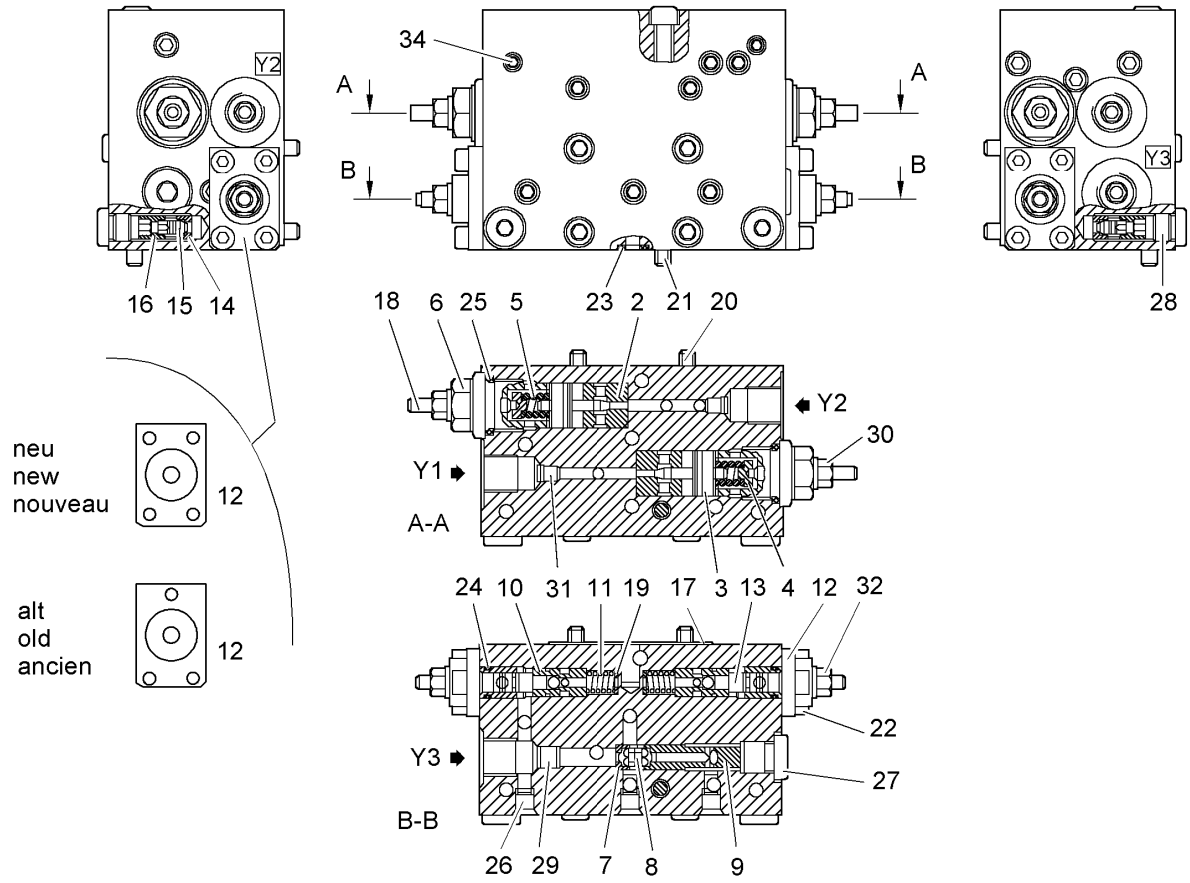

Pos.	Item	Quantity	Description	Designação	Serie	K
27	7363178	1	SCREW PLUG M12X1,5	PARAFUSO DE FECHAMENTO		
27	10100680	1	SCREW PLUG M12X1,5	PARAFUSO DE FECHAMENTO		
28	7362674	2	SCREW PLUG M10X1 ED	PARAFUSO DE FECHAMENTO		
29	4001571	1	GRUB SCREW DIN 913 M8X8 45H	PARAFUSO		
30	7361600	2	GROMMET NUT M6	PORCA DE VEDAÇÃO		
31	5612246	2	NOZZLE	BOCAL		
32	7027052	2	SEAL-LOCK-SHOULDER NUT M6X0,5	PORCA		
34	7618568	6	DOUBLE PLUG	PARAFUSO FECH. DE FILETE D		

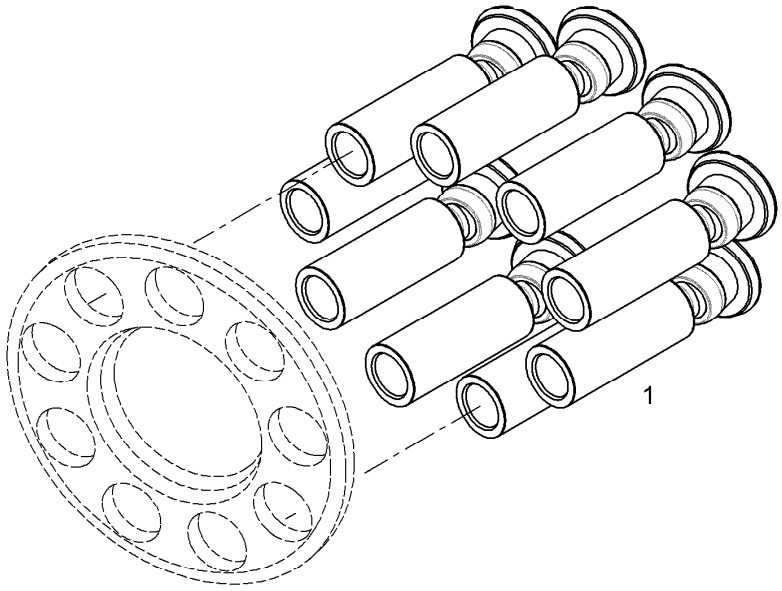

Pos.	Item	Quantity	Description	Designação	Serie	K
1		9	PISTON WITH GUIDE SHOE NG 100	PISTÃO PATIM		

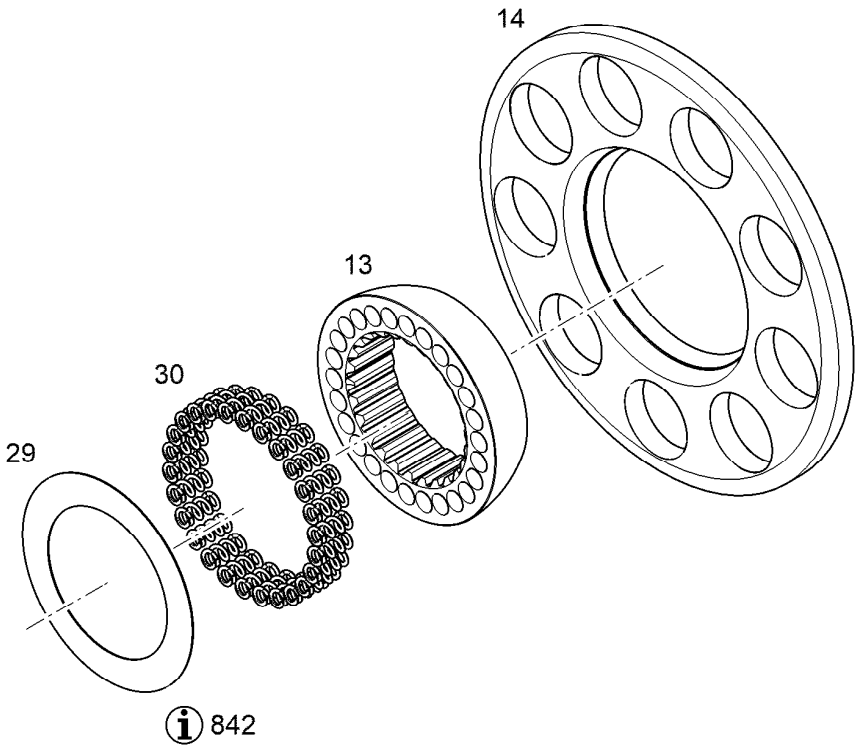

Pos.	Item	Quantity	Description	Designação	Serie	K
13		1	PULL-BACK BALL NG 100-107	ESFERA DE RETORNO		
14		1	PULL-BACK PLATE NG 100-107	PLACA DE RETORNO		
29		1	WASHER SET NG 100-107	KIT DE ARRUELAS		
30	7382188	22	PRESSURE SPRING 1,30X5,20X13,90	MOLA DE PRESSÃO		
842		1	MOUNTING REQUIREMENT	NORMA DE MONTAGEM		

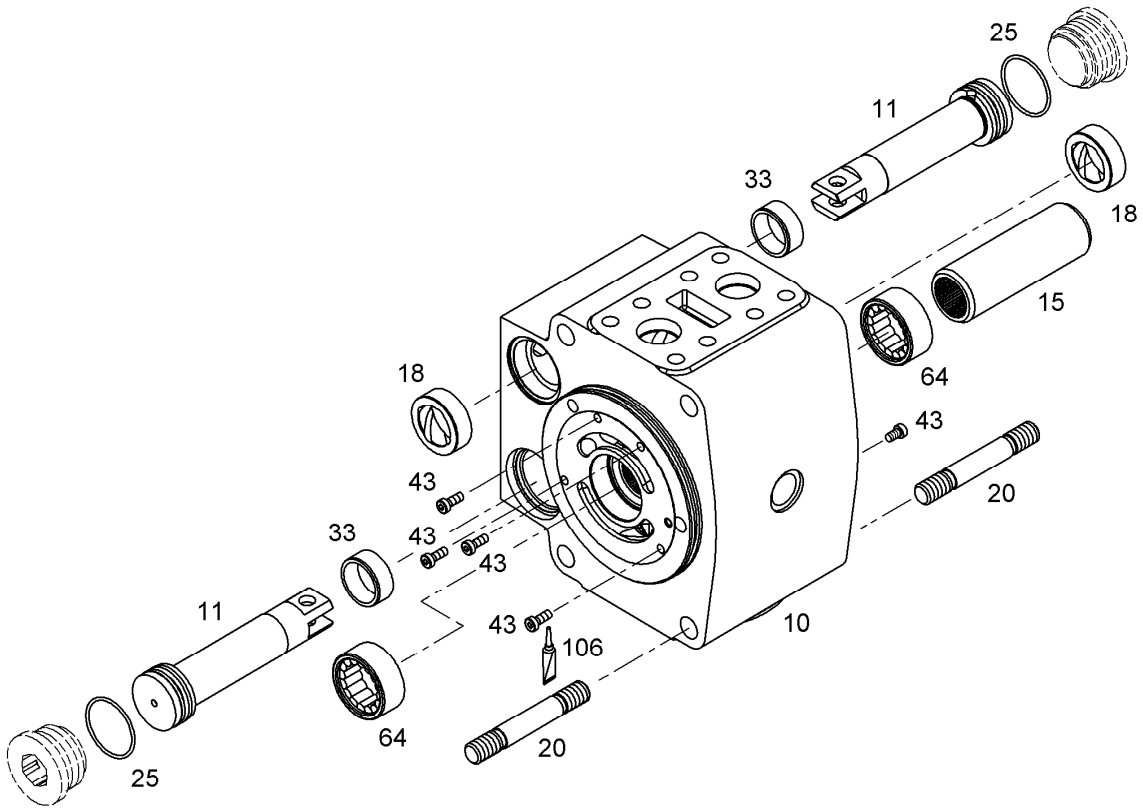

Pos.	Item	Quantity	Description	Designação	Serie	K
10	9074876	1	CONNECTION HOUSING NG 140-150	CARCAÇA DE CONEXÕES		
11	9072592	2	ADJUSTING PISTON NG 125-150	PISTÃO DE AJUSTAMENTO		
15	9073827	1	COUPLING FERRULE N32X1,25X24X9H	LUVA DE ACOPLAMENTO		
18	9266680	2	GUIDE RING	ANEL GUIA		
20	9275003	8	DOUBLE-ENDED STUD M16X1,5 41Cr4	PARAFUSO PRISIONEIRO		
25	10285620	2	SEALING RING 45X34X4,2	ANEL DE VEDAÇÃO		
33	9881114	2	GUIDE RING	ANEL GUIA		
43	4981218	8	SOCKET HEAD SCREW ISO 14580 M6X16 1	PARAFUSO CILÍNDRICO		
64	7469905	2	CYL.NEEDLE BEARING	ROLAMENTO		1
106	8700012	1	SCREW LOCKING	COLA PARA ELEMENTOS FIXA		

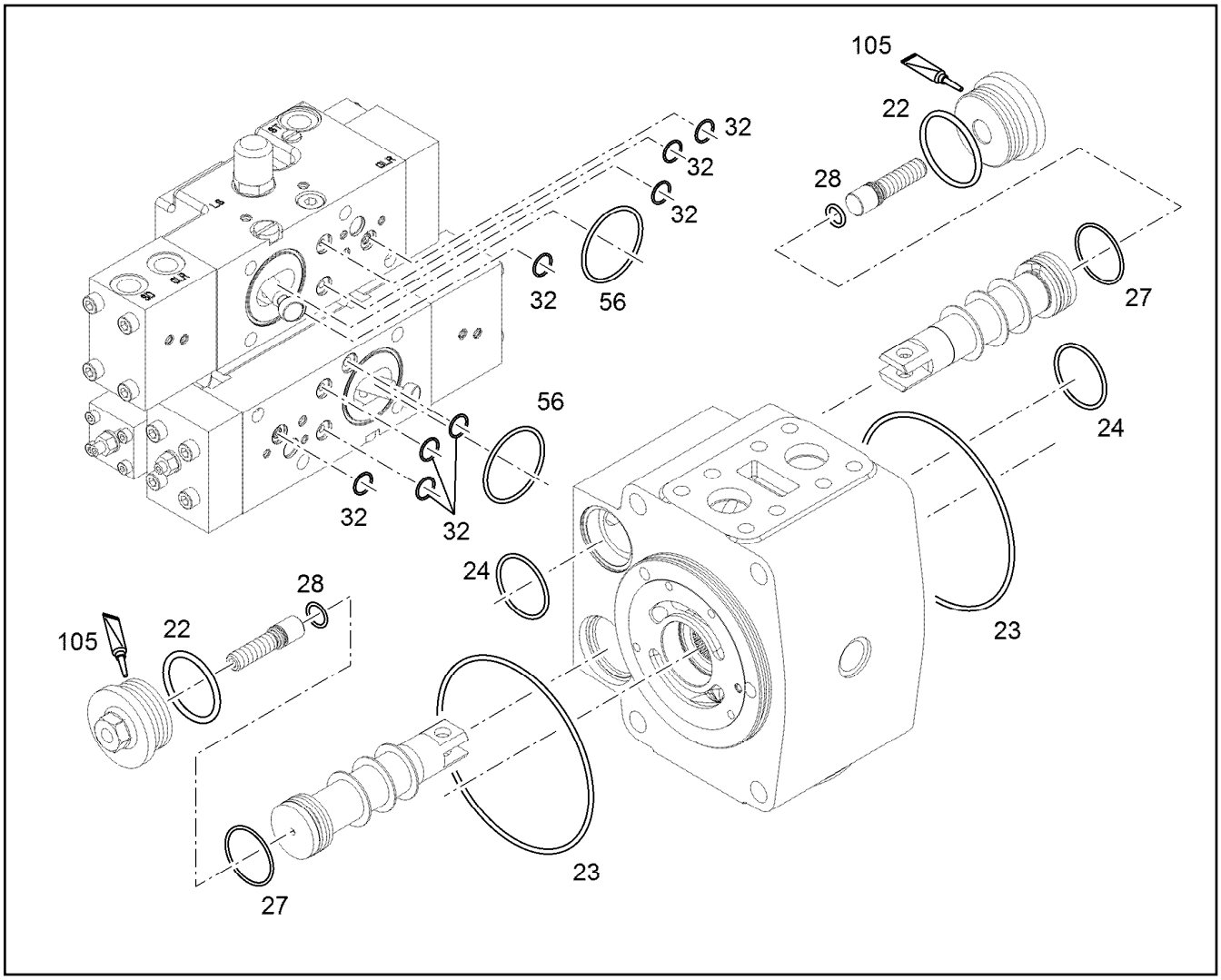

Pos.	Item	Quantity	Description	Designação	Serie	K
22	7381615	2	O-RING ISO 3601-1 44,12X2,62	ANEL-O		
23	7380659	2	O-RING ISO 3601-1 145,64X3,53	ANEL-O		
24	7380348	2	O-RING DIN 3771 48,00X3,00	ANEL-O		
27	10285620	2	SEALING RING 45X34X4,2	ANEL DE VEDAÇÃO		
28	10664998	2	O-RING 11X2	ANEL-O		
32	7380648	10	O-RING ISO 3601-1 6,02X2,62	ANEL-O		
56	7380888	2	O-RING ISO 3601-1 41X1,78	ANEL-O		
105	8655016	1	SCREW LOCKING	COLA PARA ELEMENTOS FIXA		

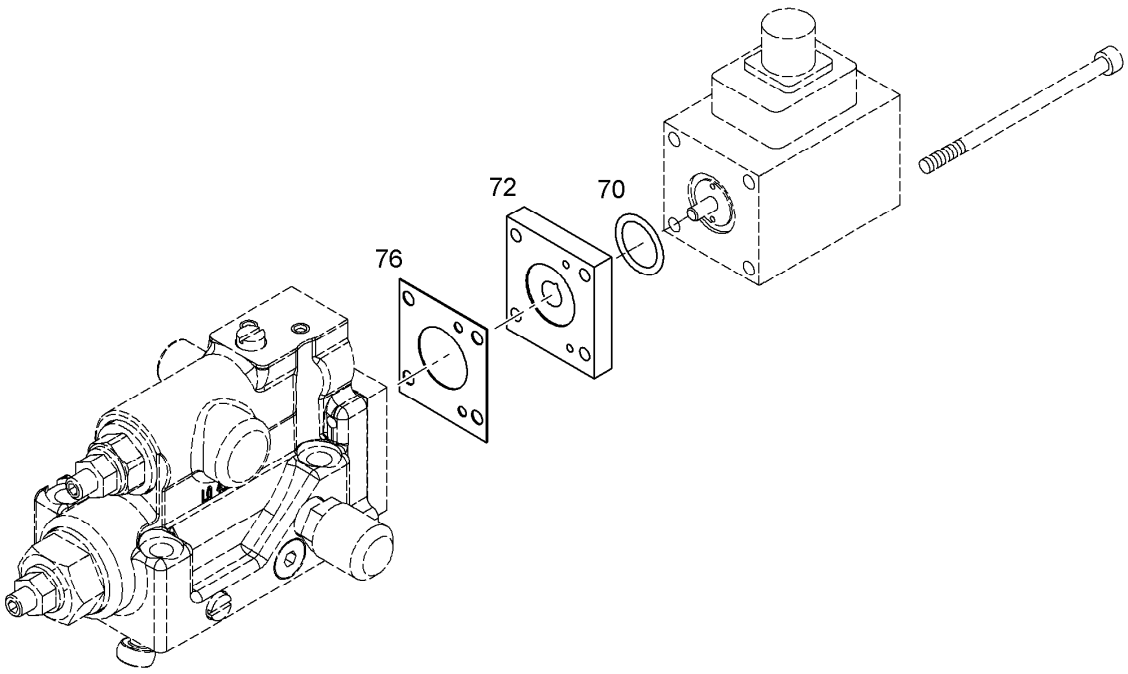

Pos.	Item	Quantity	Description	Designação	Serie	K
70		1	O-RING ISO 3601-1 18,77X1,78	ANEL-O		
72		1	COVER	TAMPA		
76		1	SEAL	VEDAÇÃO		

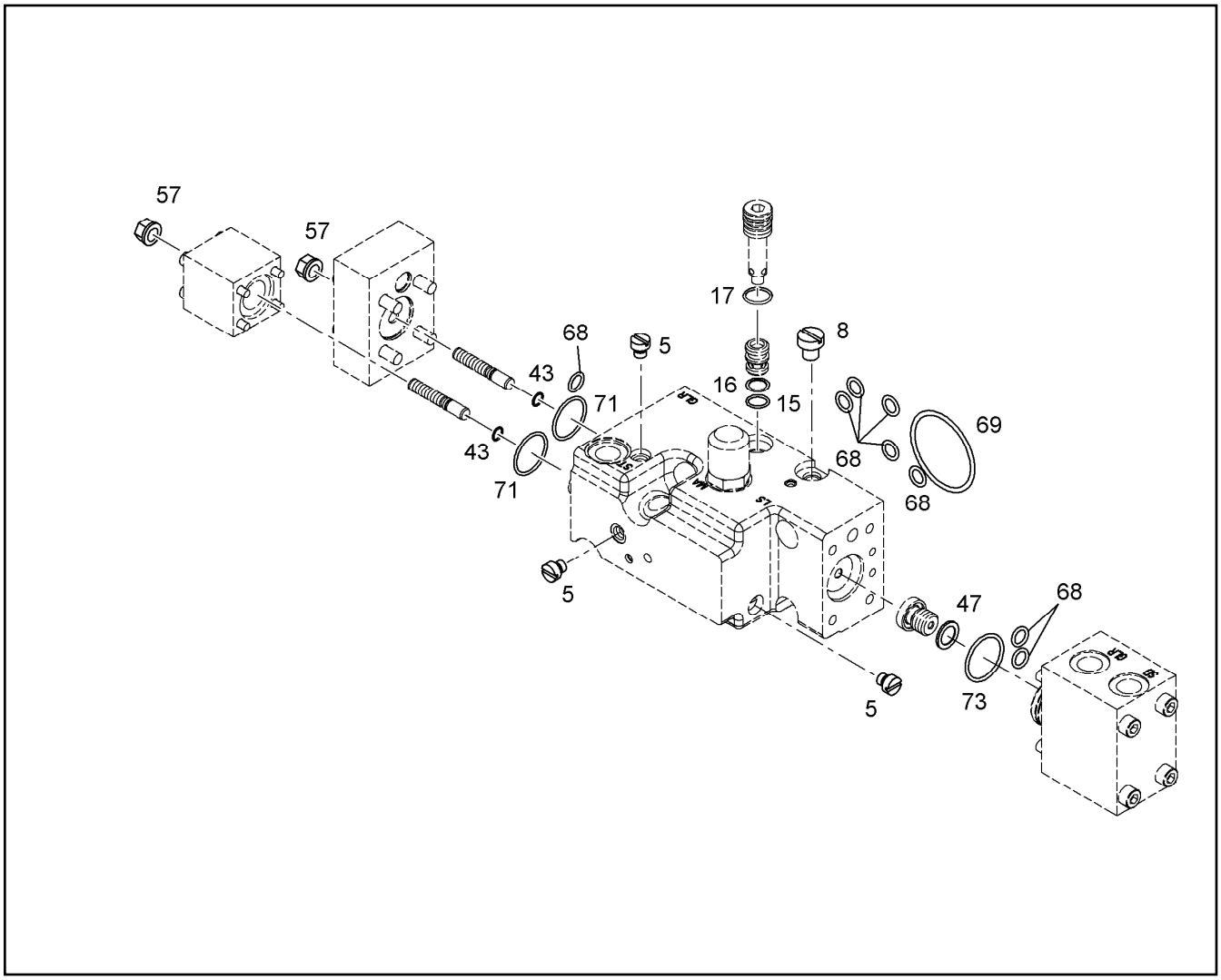

Pos.	Item	Quantity	Description	Designação	Serie	K
5		4	SCREW PLUG M6	PARAFUSO DE FECHAMENTO		
8		1	SCREW PLUG M8X1 ⇨ ❑ 155	PARAFUSO DE FECHAMENTO		
15		1	O-RING ISO 3601-1 7,65X1,78	ANEL-O		
16		1	BACK-UP RING UNCUT 8,7/11,75X1	ANEL DE APOIO		
17		1	O-RING ISO 3601-1 10,82X1,78	ANEL-O		
43		2	O-RING 4X1	ANEL-O		
47	7013114	1	SEALING RING 12	ANEL DE VEDAÇÃO		
57		2	GROMMET NUT M6	PORCA DE VEDAÇÃO		
68		8	O-RING ISO 3601-1 6,02X2,62	ANEL-O		
69		1	O-RING ISO 3601-1 41X1,78	ANEL-O		
71		2	O-RING ISO 3601-1 18,72X2,62	ANEL-O		
73		1	O-RING ISO 3601-1 21,95X1,78	ANEL-O		

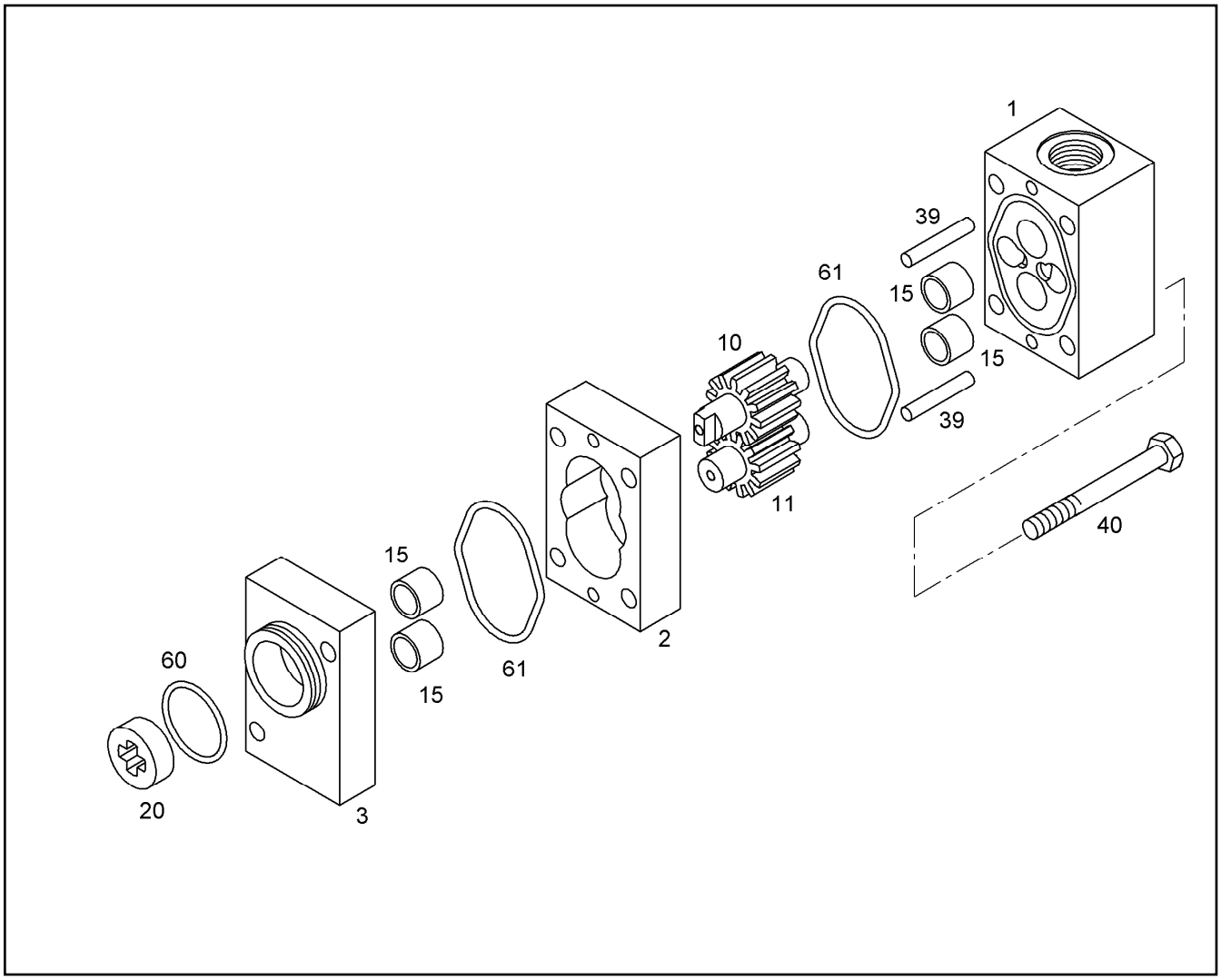

Pos.	Item	Quantity	Description	Designação	Serie	K
1		1	CONNECTION HOUSING	CARCAÇA DE CONEXÕES		
2		1	INTERMEDIATE PLATE	PLACA INTERMEDIÁRIA		
3		1	CONNECTION HOUSING	CARCAÇA DE CONEXÕES		
10		1	DRIVE SHAFT Z=12 M=1,75	EIXO DE ACIONAMENTO		
11		1	GEAR WHEEL Z=12 M=1,75	ENGRENAGEM		
15		4	BEARING BUSH MB 12/14X10	BUCHA MANCAL		1
20	9073639	1	CLUTCH RING	ANEL DE ACOPLAMENTO		
39		2	PARALLEL PIN 5h6	PINO CILÍNDRICO		
40		2	HEX SCREW ISO 4014 M6X65 8.8 A2C	PARAFUSO SEXTAVADO		
60	7381903	1	O-RING ISO 3601-1 28,30X1,78	ANEL-O		
61	7381861	2	O-RING 44,10X1,78	ANEL-O		

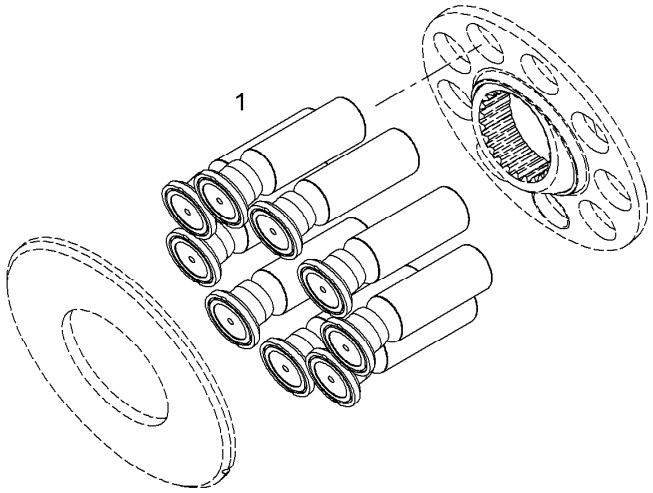

Pos.	Item	Quantity	Description	Designação	Serie	K
1		9	PISTON WITH GUIDE SHOE NG 140	PISTÃO PATIM		

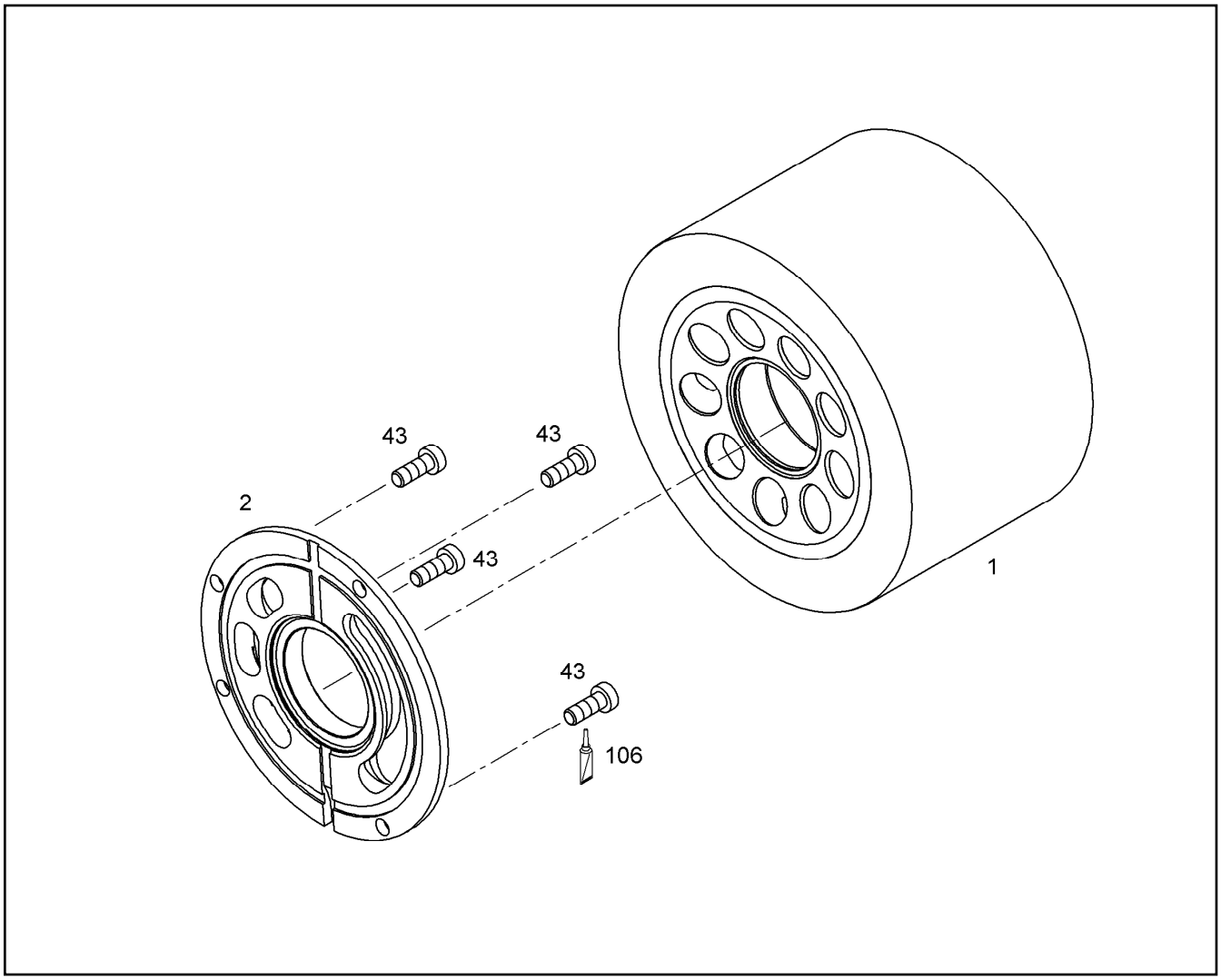

Pos.	Item	Quantity	Description	Designação	Serie	K
1		1	CYLINDER WITH BUSHING NG 140	CILINDRO COM BUCHA		
2		1	CONTROL PLATE RIGHT NG 140	PLACA DE COMANDO DIREITA		
43	4981218	4	SOCKET HEAD SCREW ISO 14580 M6X16 1	PARAFUSO CILÍNDRICO		
106	8700012	1	SCREW LOCKING	COLA PARA ELEMENTOS FIXA		

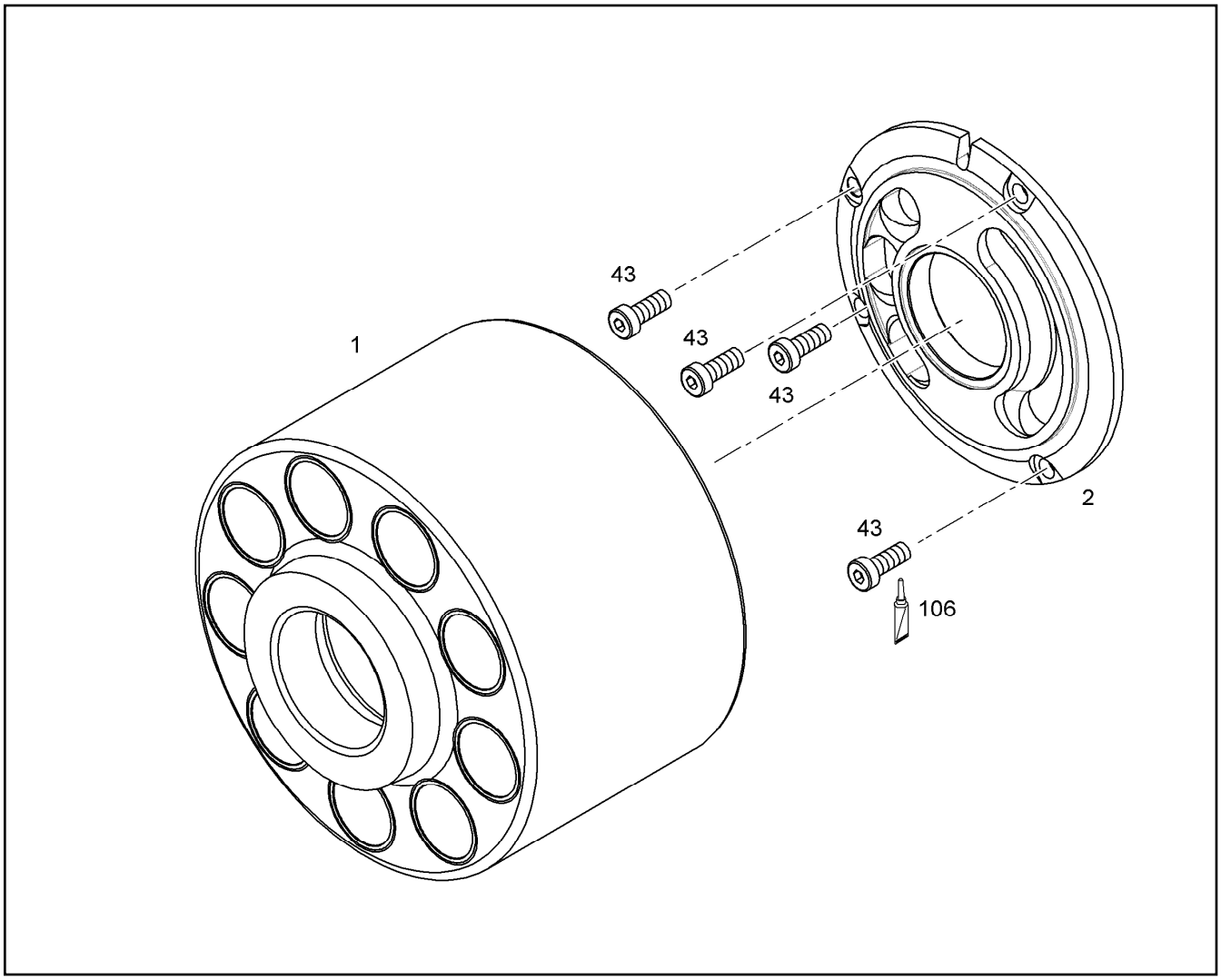

Pos.	Item	Quantity	Description	Designação	Serie	K
1		1	CYLINDER WITH BUSHING NG 140-150	CILINDRO COM BUCHA		
2		1	CONTROL PLATE LEFT NG 140	PLACA DE COMANDO ESQUERD		
43	4981218	4	SOCKET HEAD SCREW ISO 14580 M6X16 1	PARAFUSO CILÍNDRICO		
106	8700012	1	SCREW LOCKING	COLA PARA ELEMENTOS FIXA		

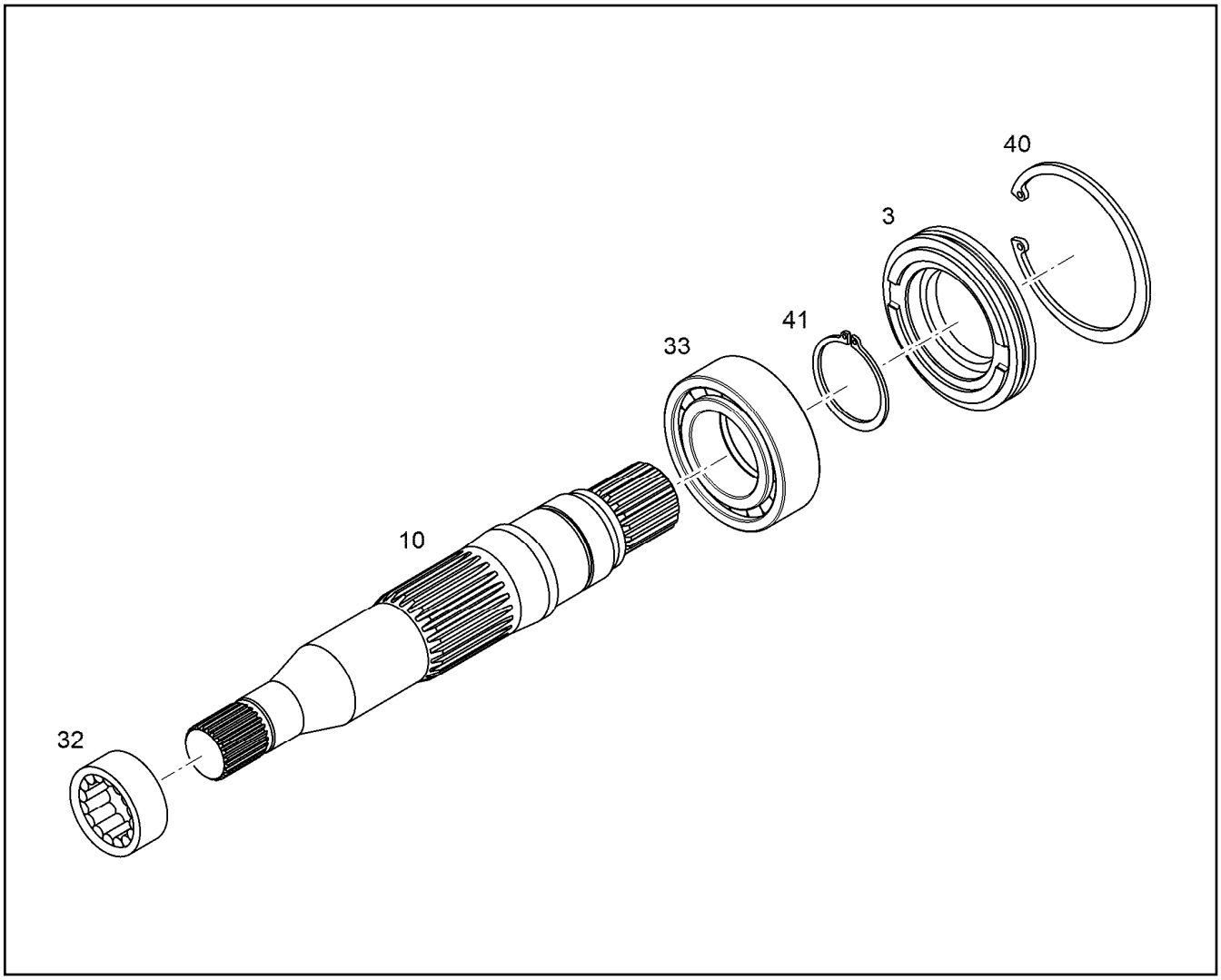

Pos.	Item	Quantity	Description	Designação	Serie	K
3		1	CLOSING RING PRE-ASS. NG 125-150 ⇨ ❑ 813			
10		1	DRIVING SHAFT NG 140-150	EIXO DO MOTOR		
32		1	CYL.NEEDLE BEARING	ROLAMENTO		1
33		1	CYLINDRICAL ROLLER BEARING	ROLAMENTO DE ROLOS CILÍN		
40		1	LOCKING RING DIN 472 100	ANEL DE RETENÇÃO		
41		1	LOCKING RING DIN 471 50	ANEL DE RETENÇÃO		

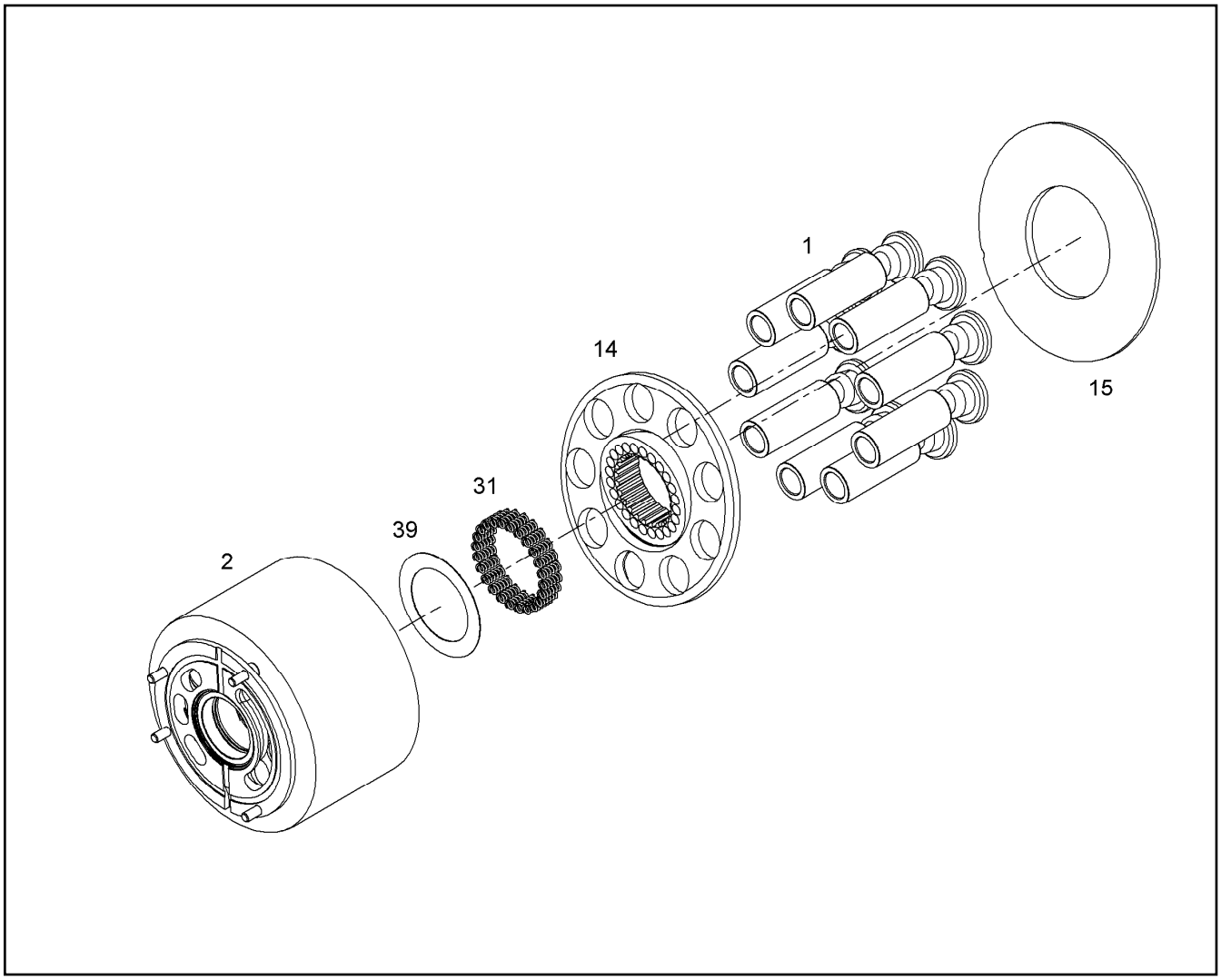

Pos.	Item	Quantity	Description	Designação	Serie	K
1		9	RK PISTON WITH GUIDE SHOE NG 140 ⇨ ❑ 186	KIT DE REPARO PISTÕES AXIAI		
2		1	RK CYLINDER+CONTROL PLATE NG 140 R ⇨ ❑ 187	KIT DE REPARO GRUPO ROTÓR		
14	9889988	1	RK PULL-BACK BALL+PULL-B.PLATENG 140 ⇨ ❑ 192	KIT REPARO ESF.+PLACA RETO		
15		1	SLIDING DISC 72X152X6	ARRUELA DESLIZANTE		
31		24	PRESSURE SPRING 1,30X5,50X18,10	MOLA DE PRESSÃO		
39		1	WASHER SET NG 140-150 ⇨ ❑ 405	KIT DE ARRUELAS		

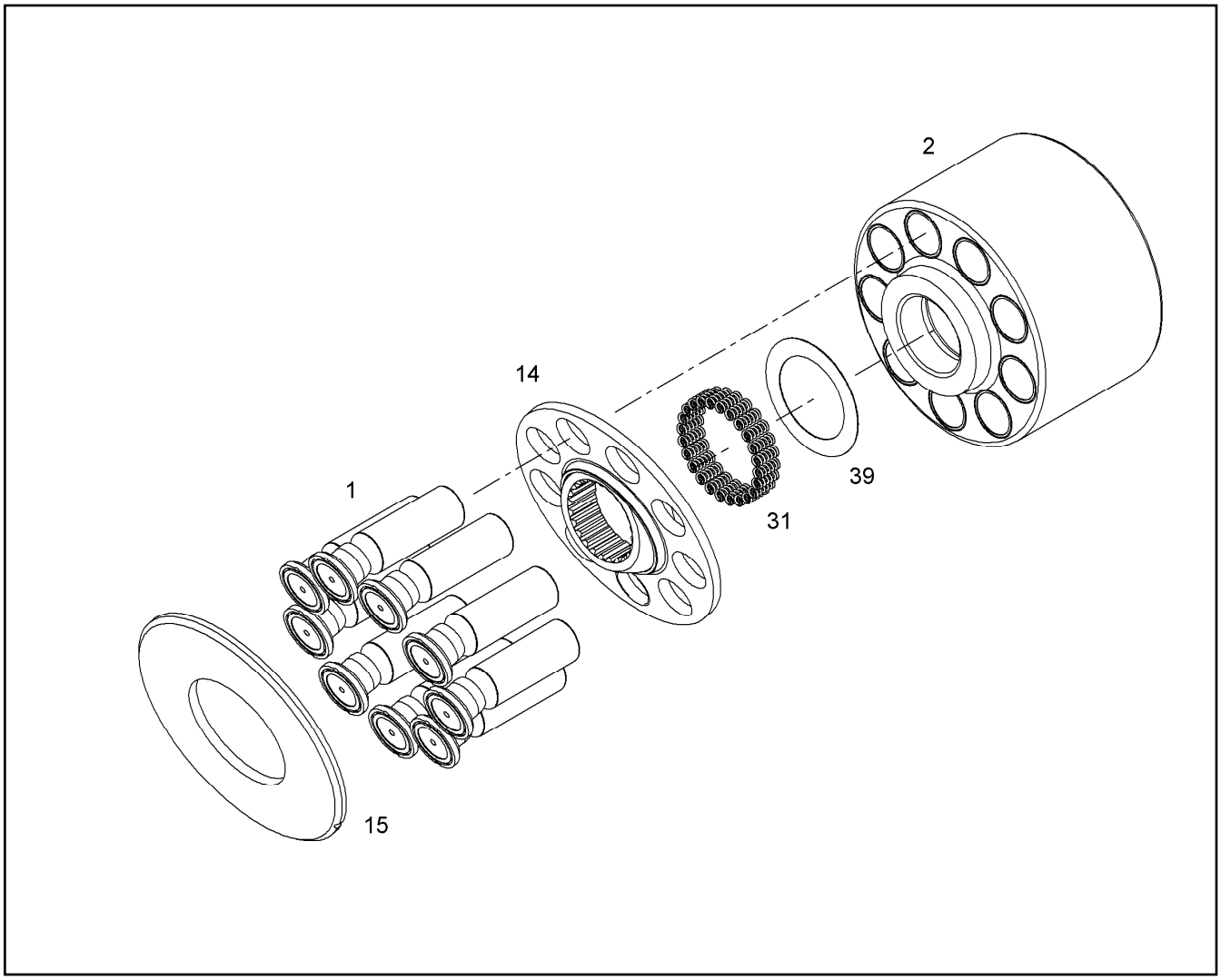

Pos.	Item	Quantity	Description	Designação	Serie	K
1		9	RK PISTON WITH GUIDE SHOE NG 140 ⇨ ❑ 186	KIT DE REPARO PISTÕES AXIAI		
2		1	RK CYLINDER+CONTROL PLATE NG 140 LI ⇨ ❑ 188	KIT DE REPARO GRUPO ROTÓR		
14		1	RK PULL-BACK BALL+PULL-B.PLATENG 140 ⇨ ❑ 192	KIT REPARO ESF.+PLACA RETO		
15		1	SLIDING DISC 72X152X6	ARRUELA DESLIZANTE		
31		24	PRESSURE SPRING 1,30X5,50X18,10	MOLA DE PRESSÃO		
39		1	WASHER SET	KIT DE ARRUELAS		

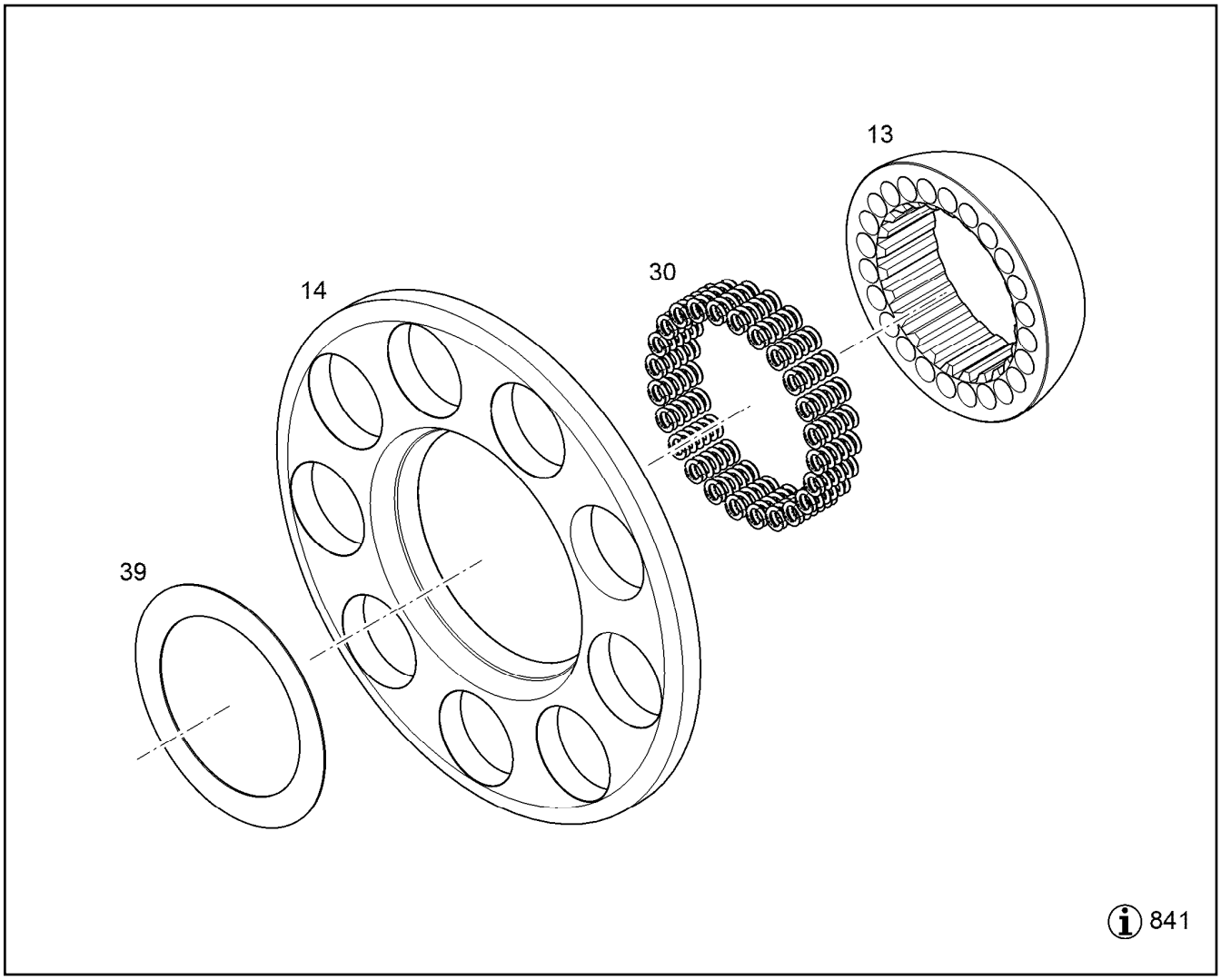

Pos.	Item	Quantity	Description	Designação	Serie	K
13		1	PULL-BACK BALL NG 140-150	ESFERA DE RETORNO		
14		1	PULL-BACK PLATE NG 140-150	PLACA DE RETORNO		
30	7382167	24	PRESSURE SPRING 1,30X5,50X18,10	MOLA DE PRESSÃO		
39		1	WASHER SET	KIT DE ARRUELAS		
841		1	MOUNTING REQUIREMENT	NORMA DE MONTAGEM		

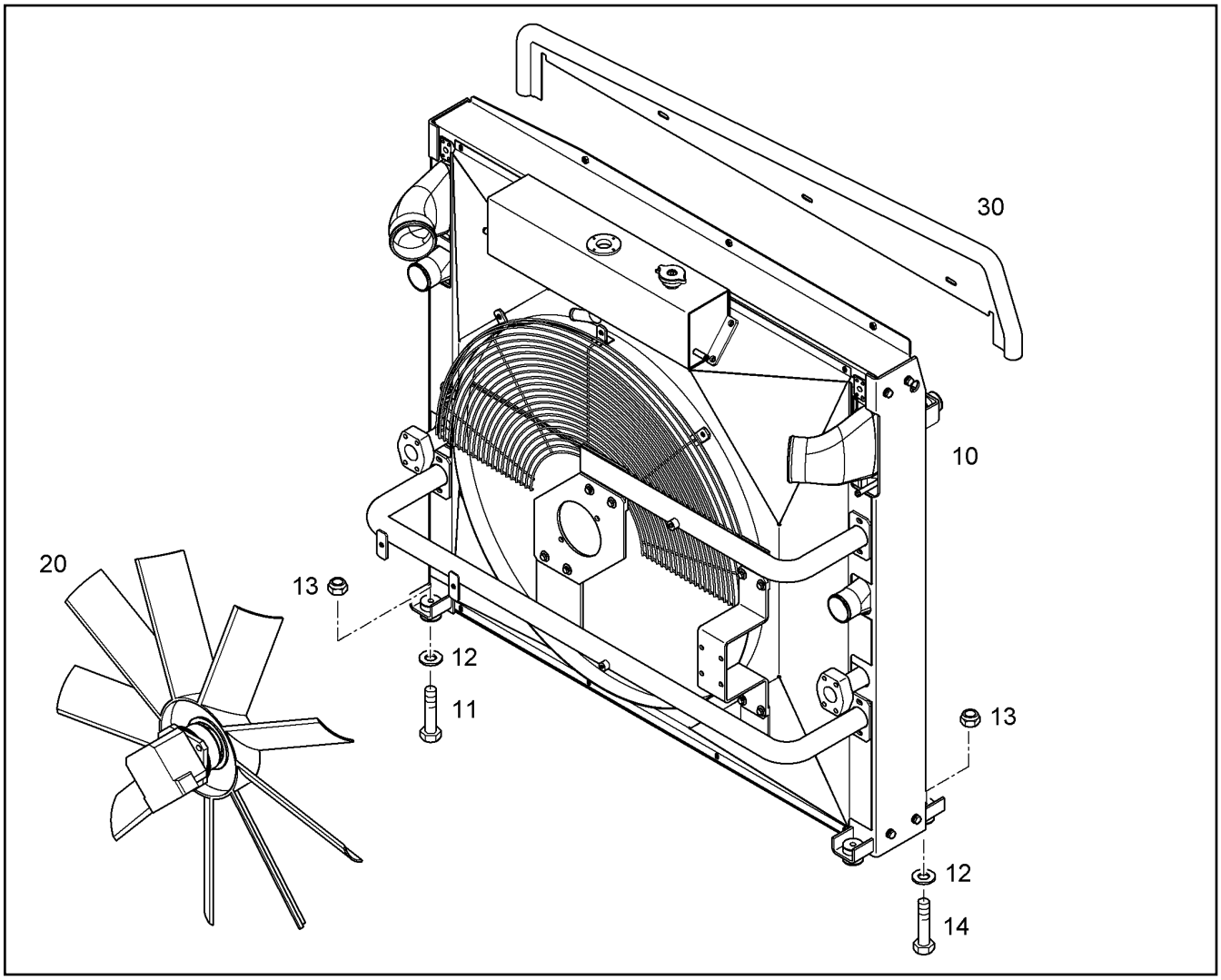

Pos.	Item	Quantity	Description	Designação	Serie	K
10	10218513	1	COMBINATED RADIATOR ⇨ ❑ 199	RADIADOR COMBINADO	-99998	
10	11694726	1	COMBINATED RADIATOR [3811] ⇨ ❑ 202	RADIADOR COMBINADO	-99999	
11	11320347	2	SOCKET HEAD SCREW ISO 4762 M10X110	PARAFUSO CILÍNDRICO		
12	10179357	4	WASHER 10,5	ARRUELA		
13	11140466	4	HEX NUT M10	PORCA SEXTAVADA		
14	4901269	2	SOCKET HEAD SCREW ISO 4762 M10X110 1	PARAFUSO CILÍNDRICO	-99998	
14	11002745	2	SOCKET HEAD SCREW ISO 4762 M10X80 10	PARAFUSO CILÍNDRICO		
20		1	FAN INSTALLATION ⇨ ❑ 205	VENTILADOR - INSTALACAO	34002-	
30	10063093	1	COOLER SEALING ⇨ ❑ 204	VEDACAO DO RADIADOR		

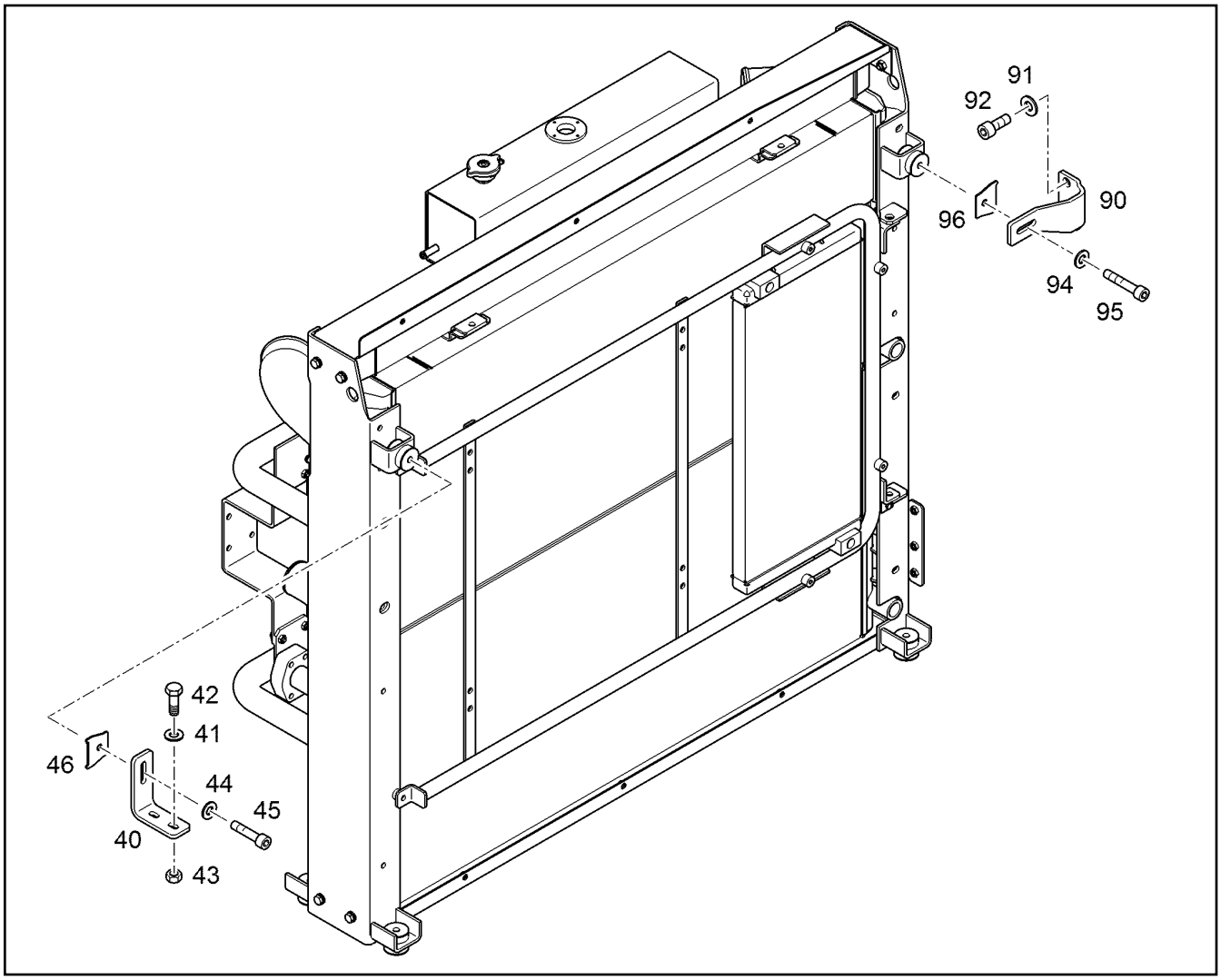

Pos.	Item	Quantity	Description	Designação	Serie	K
40	10063092	1	PLATE	PLACA		
41	10179357	4	WASHER 10,5	ARRUELA		
42	11002716	2	HEX SCREW ISO 4017 M10X35 10.9 FLZN	PARAFUSO SEXTAVADO		
43	11140466	2	HEX NUT M10	PORCA SEXTAVADA		
44	10179357	1	WASHER 10,5	ARRUELA		
45	11320356	1	SOCKET HEAD SCREW ISO 4762 M10X70 10	PARAFUSO CILÍNDRICO		
46	10063305	1	THREADED PLATE	PLACA ROSCADA		
90	10060165	1	PLATE	PLACA		
91	10289804	2	WASHER 12 300HV	ARRUELA		
92	11321126	2	SOCKET HEAD SCREW ISO 4762 M12X30 10	PARAFUSO CILÍNDRICO		
94	10179357	1	WASHER 10,5	ARRUELA		
95	11320356	1	SOCKET HEAD SCREW ISO 4762 M10X70 10	PARAFUSO CILÍNDRICO		
96	10063305	1	THREADED PLATE	PLACA ROSCADA		

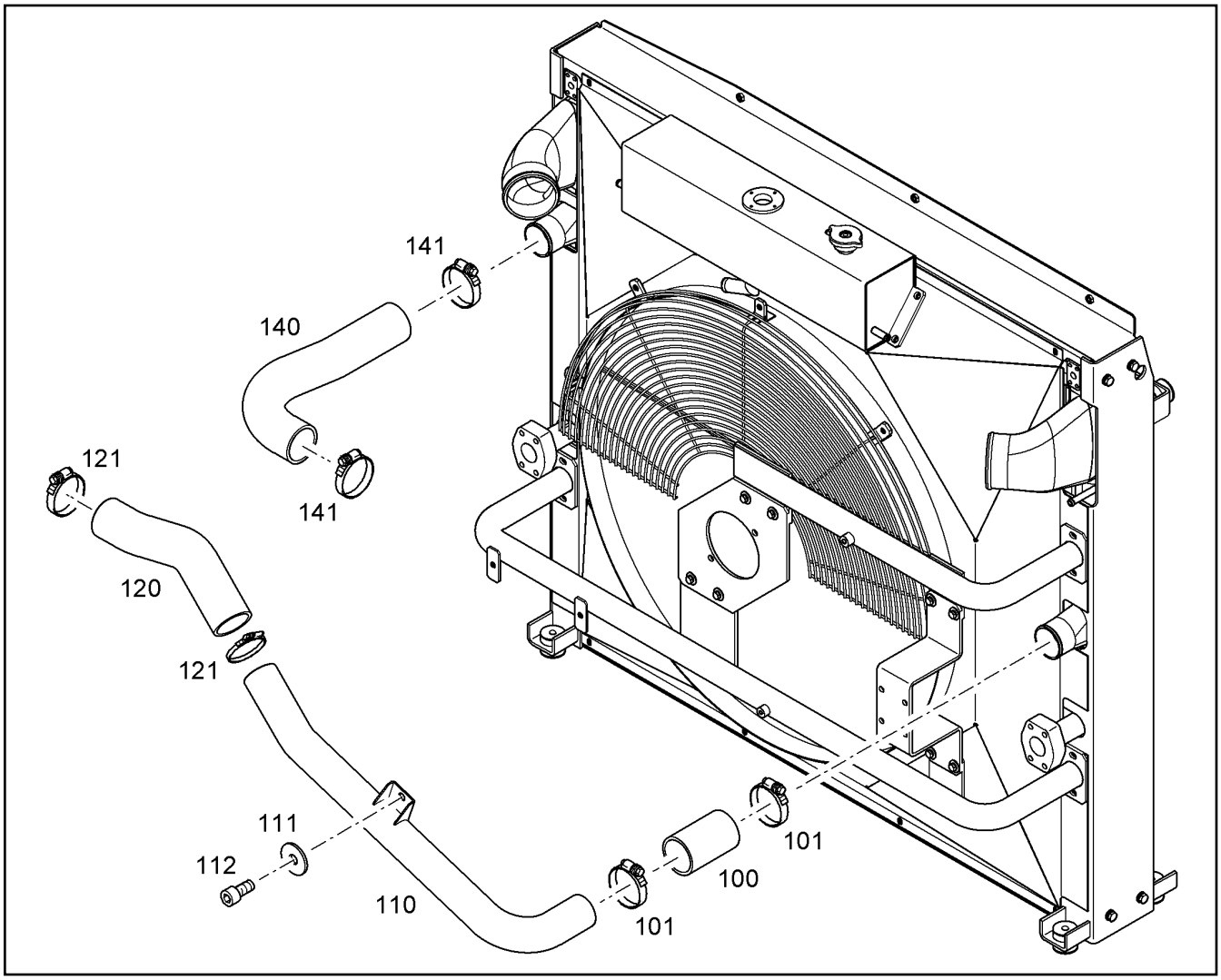

Pos.	Item	Quantity	Description	Designação	Serie	K
100	10054704	1	WATER HOSE 976 0560 24-000	MANGUEIRA DE ÁGUA		
101	10012761	2	HOSE CLAMP HKFK 70 60-80X14,3 W2-2	ABRAÇADEIRA DE MANGUEIRA		
110	10057921	1	WATER PIPE	TUBO DE AGUA		
111	10179357	1	WASHER 10,5	ARRUELA		
112	11002741	1	SOCKET HEAD SCREW ISO 4762 M10X20 10	PARAFUSO CILÍNDRICO		
120	10057698	1	WATER HOSE	MANGUEIRA DE ÁGUA		
121	10012761	2	HOSE CLAMP HKFK 70 60-80X14,3 W2-2	ABRAÇADEIRA DE MANGUEIRA		
140	10057777	1	WATER HOSE	MANGUEIRA DE ÁGUA		
141	10012761	2	HOSE CLAMP HKFK 70 60-80X14,3 W2-2	ABRAÇADEIRA DE MANGUEIRA		

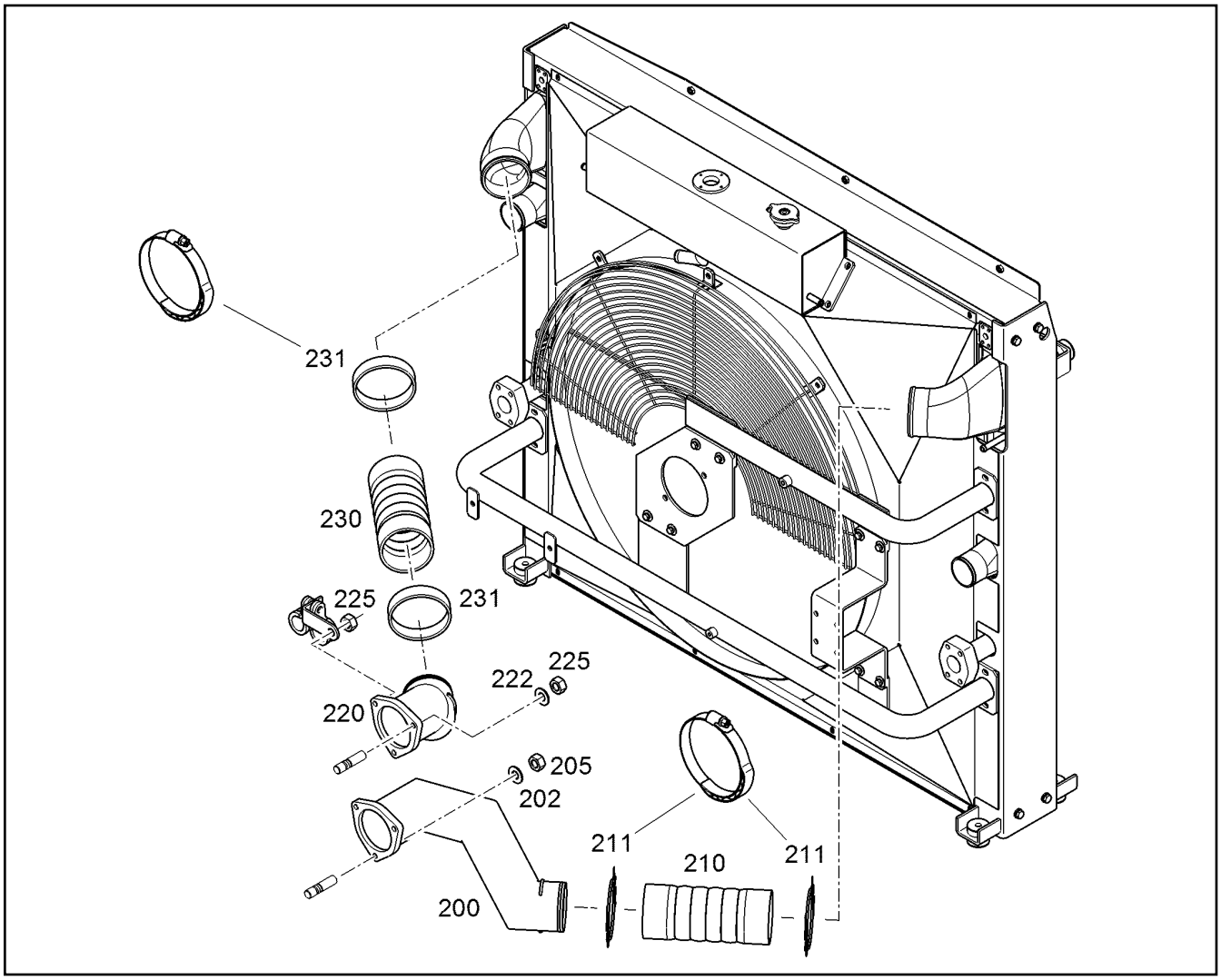

Pos.	Item	Quantity	Description	Designação	Serie	K
200	10057779	1	AIR PIPE	TUBO DE AR		
202	10289795	3	WASHER 10 300HV	ARRUELA		
205	11002716	3	HEX SCREW ISO 4017 M10X35 10.9 FLZN	PARAFUSO SEXTAVADO		
210	10082117	1	SILICONE HOSE	MANGUEIRA DE SILICONE		
211	774217008	2	HOSE CLAMP C8/TXWF 100 90-110X12 W3	ABRAÇADEIRA DE MANGUEIRA		
220	10057778	1	AIR PIPE	TUBO DE AR		
222	10289795	2	WASHER 10 300HV	ARRUELA		
225	11002716	3	HEX SCREW ISO 4017 M10X35 10.9 FLZN	PARAFUSO SEXTAVADO		
230	10082117	1	SILICONE HOSE	MANGUEIRA DE SILICONE		
231	774217008	2	HOSE CLAMP C8/TXWF 100 90-110X12 W3	ABRAÇADEIRA DE MANGUEIRA		

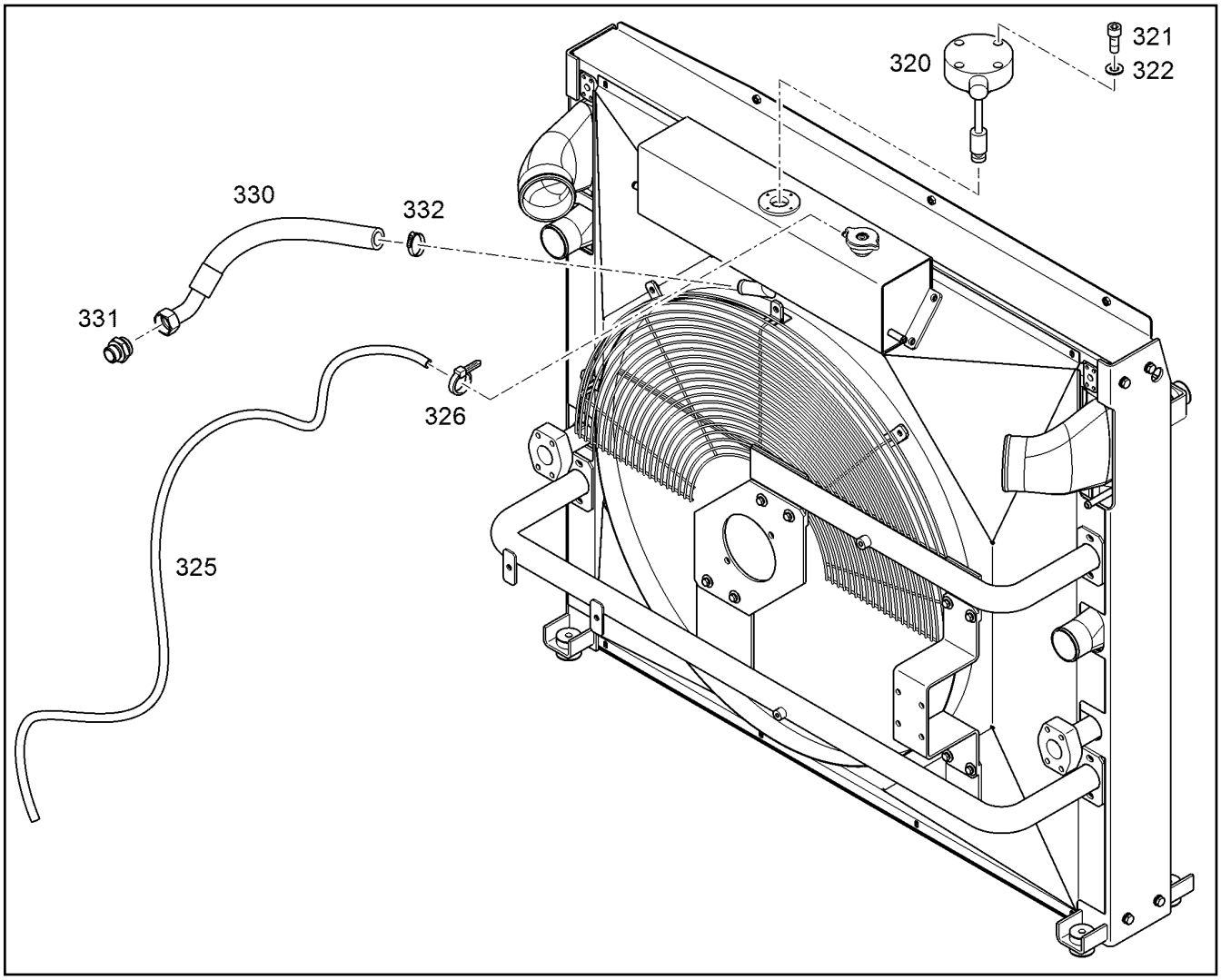

Pos.	Item	Quantity	Description	Designação	Serie	K
320	6205496	1	FLOAT SWITCH	SENSOR DE NÍVEL		
321	10875583	4	SOCKET HEAD SCREW ISO 4762 M5X20 8.8	PARAFUSO CILÍNDRICO		
322	11140403	4	WASHER 5 200HV	ARRUELA		
325	7363060	2m	HOSE	MANGUEIRA		1
326	7005587	5	TIE WRAP 7,8X365	AMARRA PARA CABOS		
330	10065124	1	WATER HOSE	MANGUEIRA DE ÁGUA		
331	7371875	1	FITTING GE 28L M30X1,5	UNIÃO ROSCADA		
332	4900778	1	HOSE CLAMP DIN 3017-1 A 26 20-32X13 W2-	ABRAÇADEIRA DE MANGUEIRA		

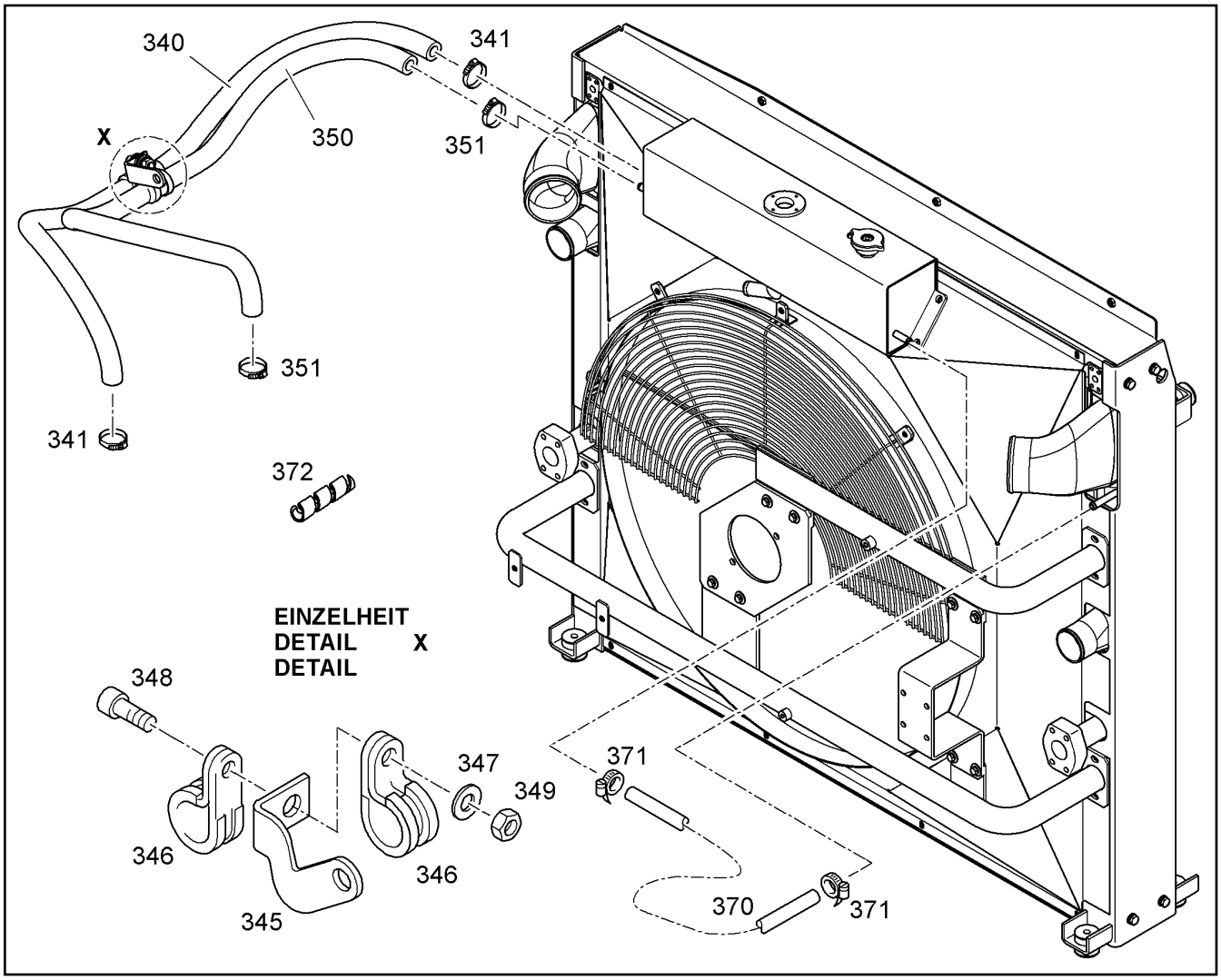

Pos.	Item	Quantity	Description	Designação	Serie	K
340	7361678	0.9m	HOSE	MANGUEIRA		1
341	4601105	2	CLAMP DIN 3017-1 A 16 12-20X9 W2-2	BRAÇADEIRA		
345	10063527	1	ANGLE	CANTONEIRA		
346	7362602	2	CLAMP DIN 3016-1 D1 18X20 W1-2-CR	BRAÇADEIRA		
347	10289803	1	WASHER 8 300HV	ARRUELA		
348	10468332	1	SOCKET HEAD SCREW ISO 4762 M8X25 10	PARAFUSO CILÍNDRICO		
349	10299669	1	HEX NUT M8	PORCA SEXTAVADA		
350	7361678	0.9m	HOSE	MANGUEIRA		1
351	4601105	2	CLAMP DIN 3017-1 A 16 12-20X9 W2-2	BRAÇADEIRA		
370	7361678	0.7m	HOSE	MANGUEIRA		1
371	4601105	2	CLAMP DIN 3017-1 A 16 12-20X9 W2-2	BRAÇADEIRA		
372	774383508	0.6m	TUBING COIL	SERPENTINA DE TUBO		

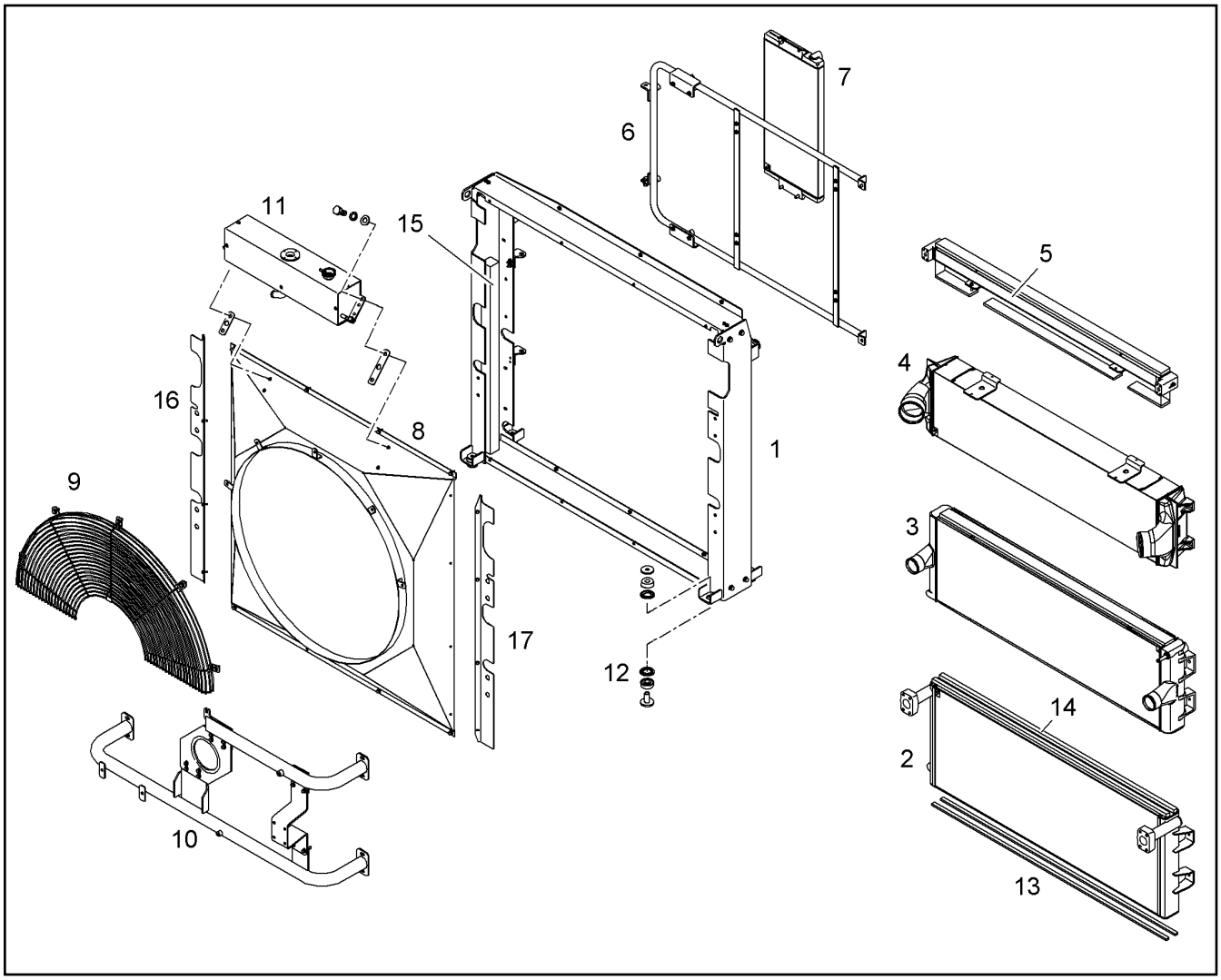

Pos.	Item	Quantity	Description	Designação	Serie	K
1	10300991	1	FRAME	MOLDURA		
2	10300992	1	OIL COOLING SYSTEM	RADIADOR DE ÓLEO HIDRÁULIC		
3	10300994	1	WATER COOLER	RADIADOR DE ÁGUA		
4	10300995	1	CHARGE AIR COOLER	RADIADOR DE AR		
5	10300993	1	GEARBOX OIL COOLER	RADIADOR OLEO DA TRANSMIS		
6	10300997	1	HOLDER	SUPORTE		
7	10300996	1	FUEL COOLER	RADIADOR DE COMBUSTIVEL		
8	10300998	1	FAN COWL	TAMPA DO VENTILADOR		
9	10300999	1	GUARD	GRADE DE PROTEÇÃO		
10	10301002	1	MOTOR MOUNTING	FIXACAO DO MOTOR		
11	10301001	1	EQUALIZING RESERVOIR	TANQUE DE EXPANSÃO		
12	10301000	6	RUBBER BEARING	MANCAL DE BORRACHA		
13	10301004	2	SEALING TAPE	FITA DE VEDAÇÃO		2
14	10301005	2	SEALING TAPE	FITA DE VEDAÇÃO		2
15	10301003	2	SEALING TAPE	FITA DE VEDAÇÃO		2
16	10301006	1	SEALING PLATE	PLACA DE VEDACAO		
17	10301009	1	SEALING PLATE	PLACA DE VEDACAO		

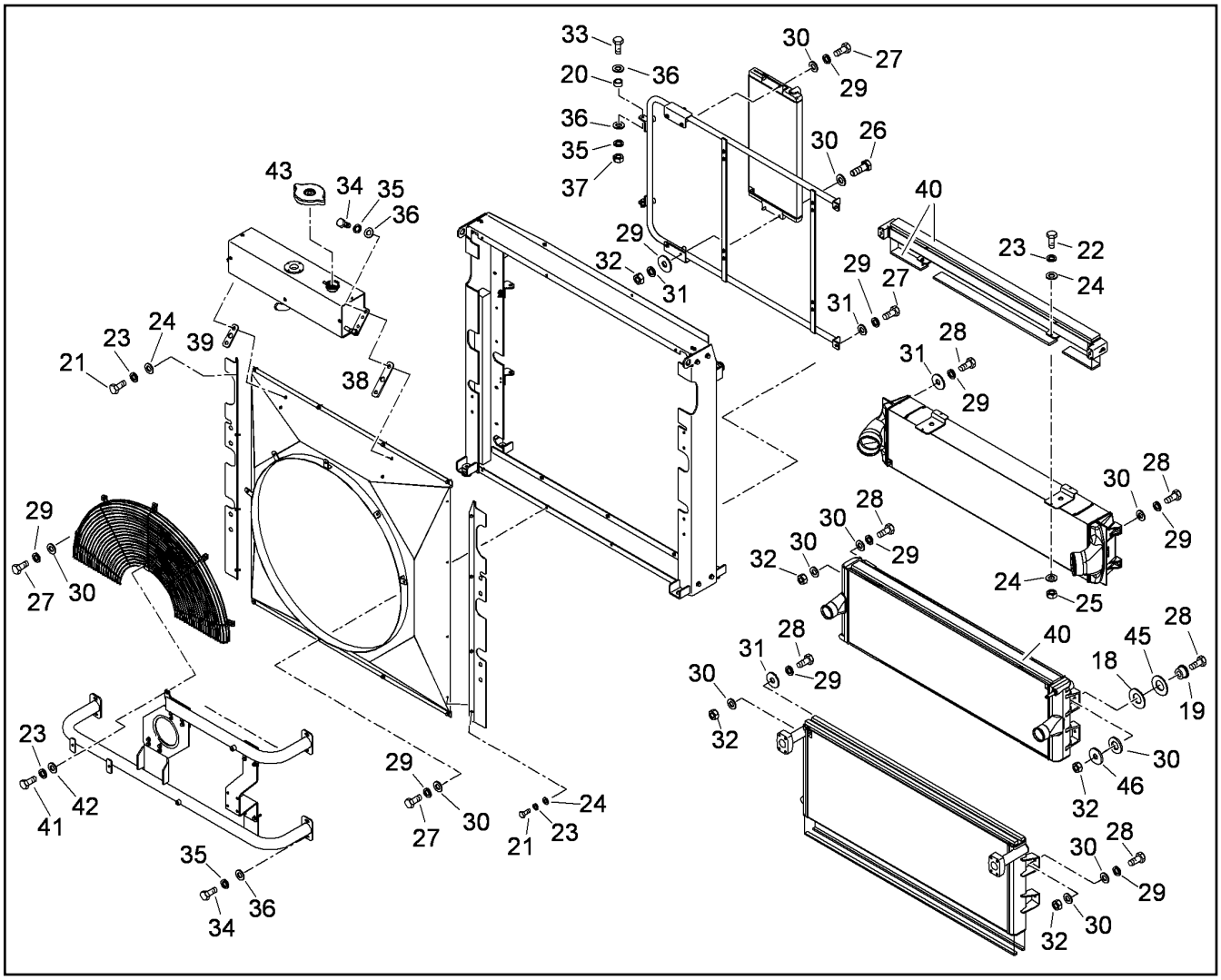

Pos.	Item	Quantity	Description	Designação	Serie	K
18	10289806	2	WASHER 16 300HV	ARRUELA		
19	10301011	2	SLEEVE	LUVA		1
20	10301014	2	SLEEVE	LUVA		1
21	4065099	8	HEX SCREW ISO 4017 M6X16 8.8 A2C	PARAFUSO SEXTAVADO		
22	4600102	4	HEX SCREW ISO 4017 M6X30 8.8 A2C	PARAFUSO SEXTAVADO		
23	10289802	13	WASHER 6 300HV	ARRUELA		
24	10289802	16	WASHER 6 300HV	ARRUELA		
25	4000379	4	HEX NUT M6	PORCA SEXTAVADA		
26	11642261	2	HEX SCREW ISO 4017 M8X25 8.8 480H	PARAFUSO SEXTAVADO		
27	11651767	17	HEX SCREW ISO 4017 M8X20 8.8 480H	PARAFUSO SEXTAVADO		
28	4065126	12	HEX SCREW ISO 4017 M8X35 8.8 A2C	PARAFUSO SEXTAVADO		
29	4000499	29	WASHER SPRING A 8	ARRUELA DE PRESSÃO		
30	10289803	31	WASHER 8 300HV	ARRUELA		
31	12203968	8	WASHER 8,4 30HV	ARRUELA		
32	4000381	10	HEX NUT M8	PORCA SEXTAVADA		
33	4000828	2	HEX SCREW ISO 4017 M10X30 8.8 A3C	PARAFUSO SEXTAVADO		
34	11631816	10	HEX SCREW ISO 4017 M10X25 8.8 FLZN	PARAFUSO SEXTAVADO		
35	4600009	12	WASHER SPRING 10	ARRUELA DE PRESSÃO		
36	10289795	14	WASHER 10 300HV	ARRUELA		
37	4000383	2	HEX NUT M10	PORCA SEXTAVADA		
38	10340117	1	PLATE RIGHT	PLACA DIREITA		
39	10340116	1	PLATE LEFT	PLACA ESQUERDA		
40	10340115	3m	SEALING TAPE	FITA DE VEDAÇÃO		2
41	11644899	1	HEX SCREW ISO 4017 M6X20 8.8 480H	PARAFUSO SEXTAVADO		
42	11693878	1	WASHER 6,4 200HV	ARRUELA		
43	10301015	1	END COVER	TAMPA DE FECHAMENTO		

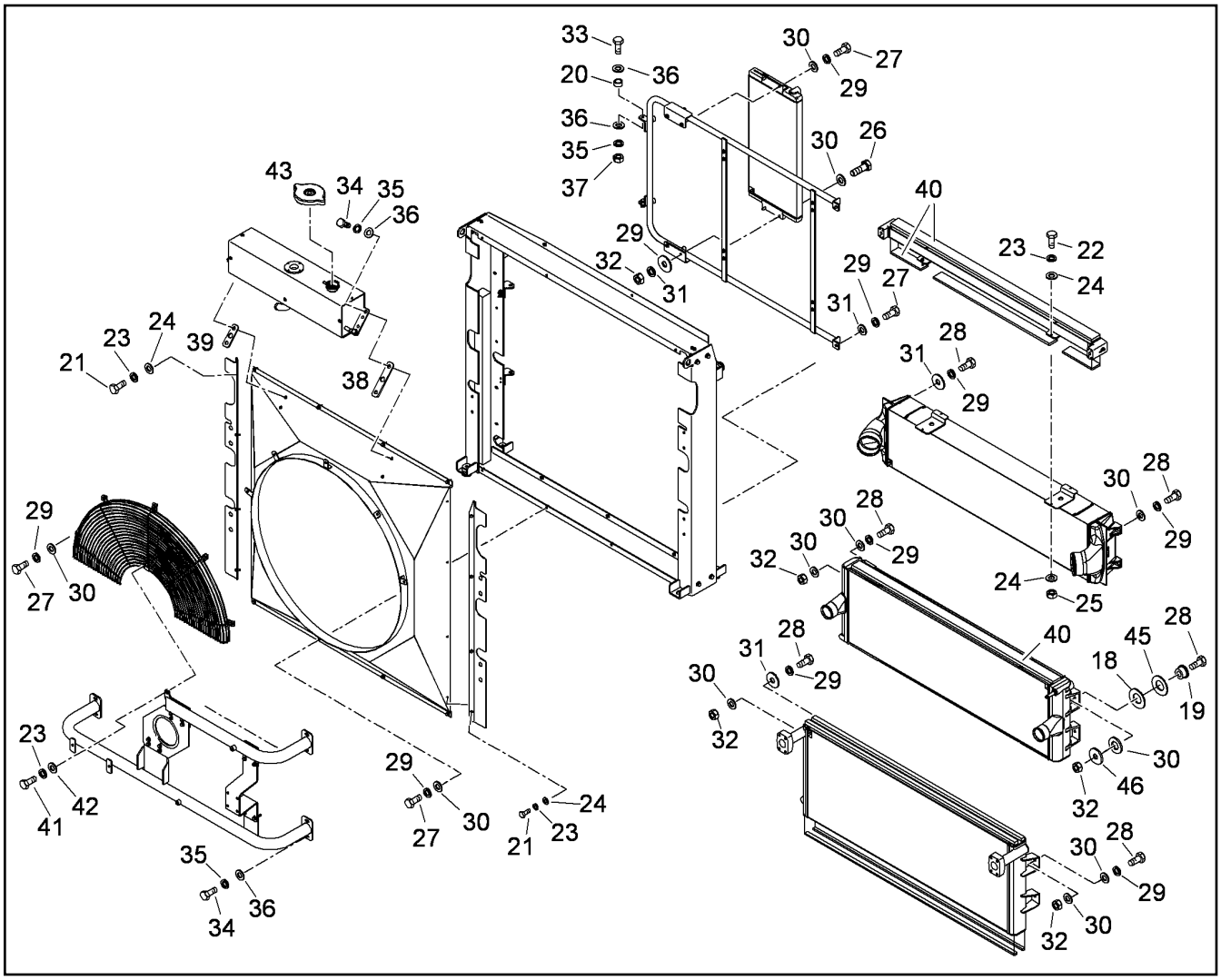

Pos.	Item	Quantity	Description	Designação	Serie	K
45	4980761	2	SPRING WASHER B 16	ARRUELA DE PRESSÃO		
46	4240002	2	WASHER SPRING B 8	ARRUELA DE PRESSÃO		

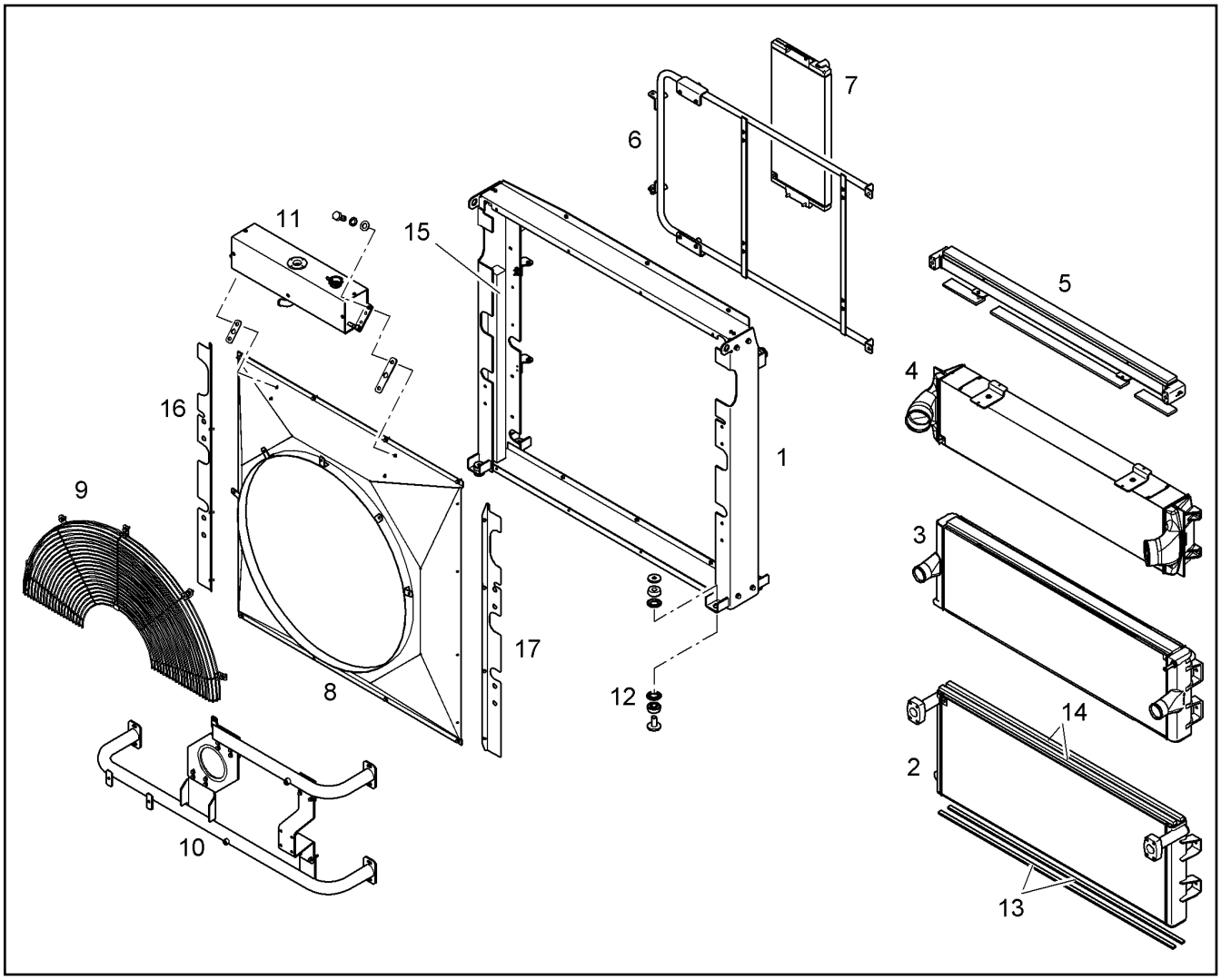

Pos.	Item	Quantity	Description	Designação	Serie	K
1	10300991	1	FRAME	MOLDURA		
2	11694727	1	OIL COOLING SYSTEM	RADIADOR DE ÓLEO HIDRÁULIC		
3	10300994	1	WATER COOLER	RADIADOR DE ÁGUA		
4	10300995	1	CHARGE AIR COOLER	RADIADOR DE AR		
5	10300993	1	GEARBOX OIL COOLER	RADIADOR OLEO DA TRANSMIS		
6	10300997	1	HOLDER	SUPORTE		
7	10300996	1	FUEL COOLER	RADIADOR DE COMBUSTIVEL		
8	10300998	1	FAN COWL	TAMPA DO VENTILADOR		
9	10300999	1	GUARD	GRADE DE PROTEÇÃO		
10	10301002	1	MOTOR MOUNTING	FIXACAO DO MOTOR		
11	10301001	1	EQUALIZING RESERVOIR	TANQUE DE EXPANSÃO		
12	10301000	6	RUBBER BEARING	MANCAL DE BORRACHA		
13	10301004	2	SEALING TAPE	FITA DE VEDAÇÃO		2
14	10301005	2	SEALING TAPE	FITA DE VEDAÇÃO		2
15	10301003	2	SEALING TAPE	FITA DE VEDAÇÃO		2
16	10301006	1	SEALING PLATE	PLACA DE VEDACAO		
17	10301009	1	SEALING PLATE	PLACA DE VEDACAO		

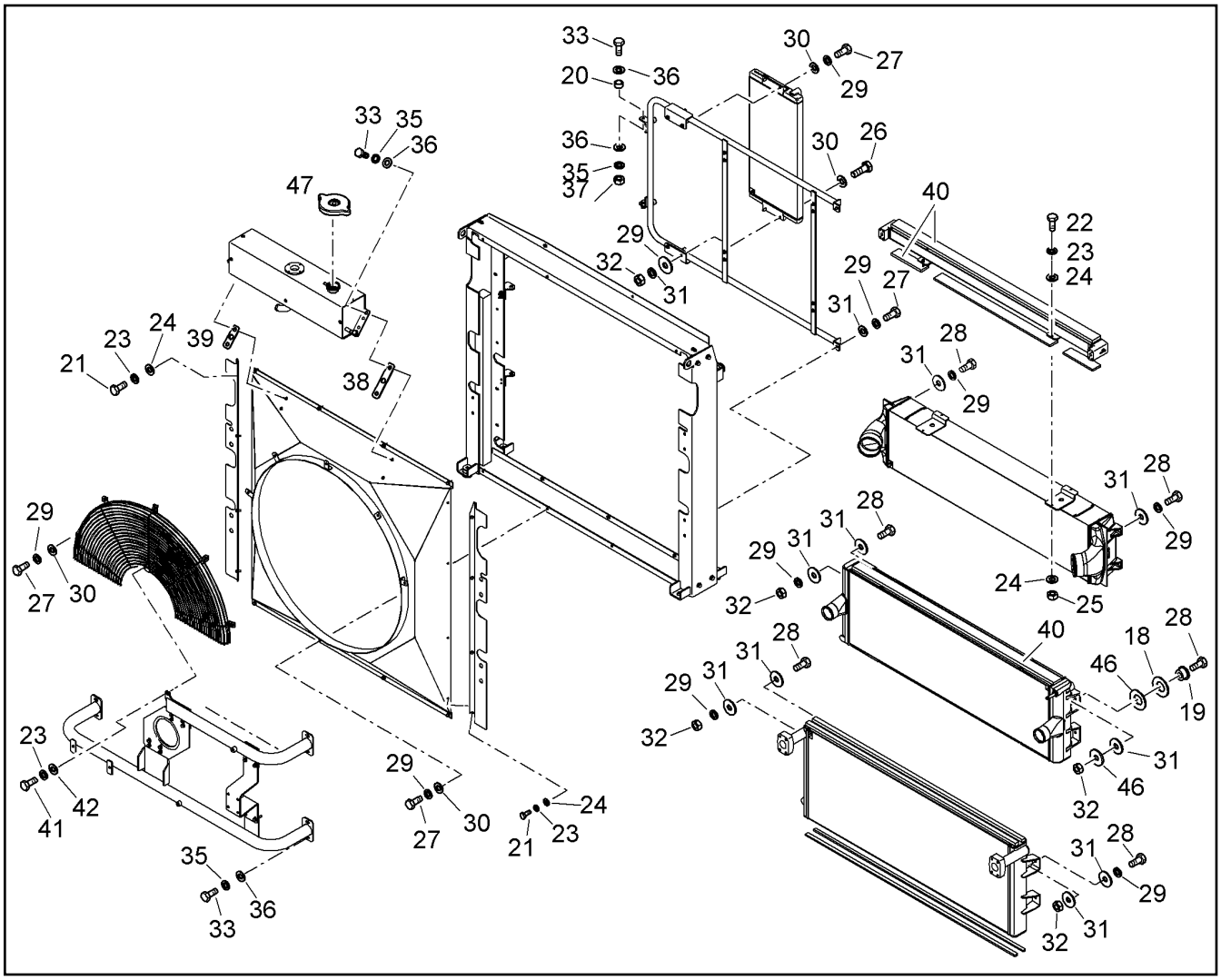

Pos.	Item	Quantity	Description	Designação	Serie	K
18	10289806	2	WASHER 16 300HV	ARRUELA		
19	10301011	2	SLEEVE	LUVA		1
20	10301014	2	SLEEVE	LUVA		1
21	4065099	8	HEX SCREW ISO 4017 M6X16 8.8 A2C	PARAFUSO SEXTAVADO		
22	4900539	4	HEX SCREW ISO 4017 M6X25 8.8 A2C	PARAFUSO SEXTAVADO		
23	10289802	13	WASHER 6 300HV	ARRUELA		
24	10289802	16	WASHER 6 300HV	ARRUELA		
25	4000379	4	HEX NUT M6	PORCA SEXTAVADA		
26	11642261	2	HEX SCREW ISO 4017 M8X25 8.8 480H	PARAFUSO SEXTAVADO		
27	11651767	17	HEX SCREW ISO 4017 M8X20 8.8 480H	PARAFUSO SEXTAVADO		
28	4065126	12	HEX SCREW ISO 4017 M8X35 8.8 A2C	PARAFUSO SEXTAVADO		
29	4000499	29	WASHER SPRING A 8	ARRUELA DE PRESSÃO		
30	10289803	17	WASHER 8 300HV	ARRUELA		
31	12203968	22	WASHER 8,4 30HV	ARRUELA		
32	4000381	10	HEX NUT M8	PORCA SEXTAVADA		
33	4000828	12	HEX SCREW ISO 4017 M10X30 8.8 A3C	PARAFUSO SEXTAVADO		
35	4600009	12	WASHER SPRING 10	ARRUELA DE PRESSÃO		
36	10289795	14	WASHER 10 300HV	ARRUELA		
37	4000383	2	HEX NUT M10	PORCA SEXTAVADA		
38	10340117	1	PLATE RIGHT	PLACA DIREITA		
39	10340116	1	PLATE LEFT	PLACA ESQUERDA		
40	10340115	3m	SEALING TAPE	FITA DE VEDAÇÃO		2
41	11644899	1	HEX SCREW ISO 4017 M6X20 8.8 480H	PARAFUSO SEXTAVADO		
42	11693878	1	WASHER 6,4 200HV	ARRUELA		
46	4240002	2	WASHER SPRING B 8	ARRUELA DE PRESSÃO		
47	10301015	1	END COVER	TAMPA DE FECHAMENTO		

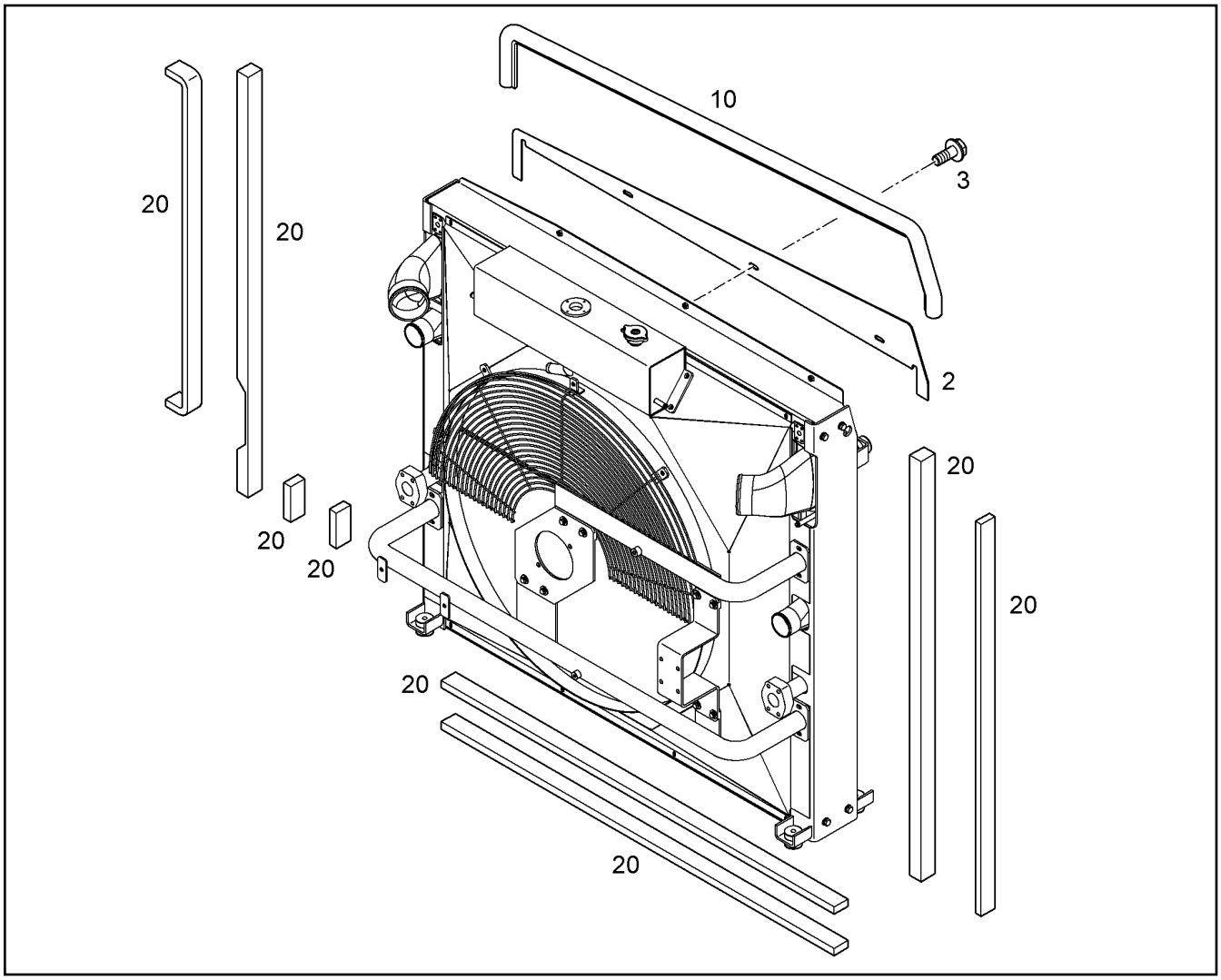

Pos.	Item	Quantity	Description	Designação	Serie	K
2	10063268	1	PLATE	PLACA		
3	12225945	3	LOCKING SCREW M8X16 480H	PARAFUSO TRAVA		
10	10332542	1	CLAMPING PROFILE	PERFIL DE FIXAÇÃO		
20	12205993	8.4m	PROFILE	PERFIL		

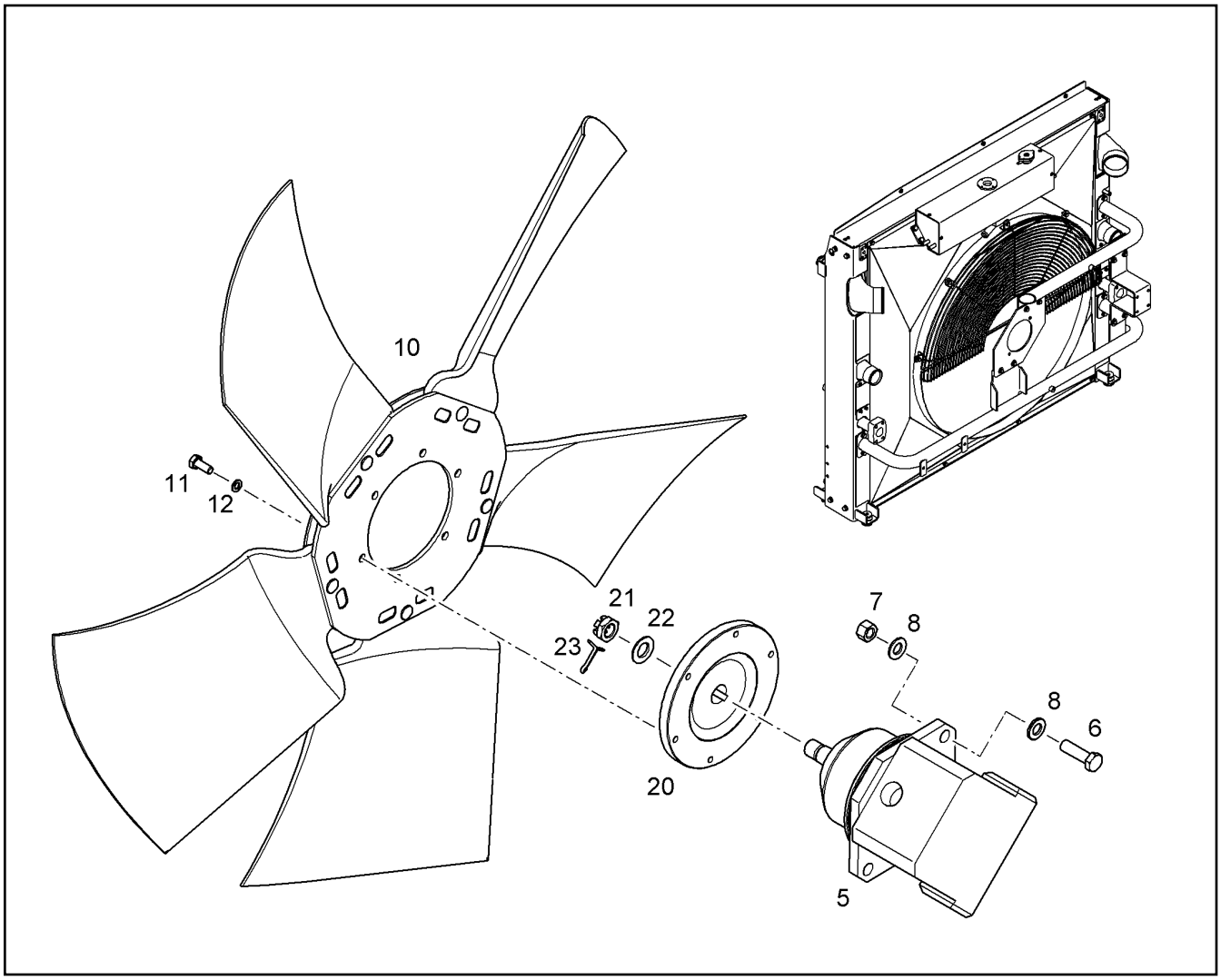

Pos.	Item	Quantity	Description	Designação	Serie	K
5	5619045	1	AXIAL PISTON MOTOR [15531217] ⇨ ❑ 208	MOTOR DE PISTÃO AXIAL		2
5	5619045	1	AXIAL PISTON MOTOR [15531217] ⇨ ❑ 208	MOTOR DE PISTÃO AXIAL		2
6	11002727	2	HEX SCREW ISO 4017 M12X40 10.9 FLZN	PARAFUSO SEXTAVADO		
7	11002808	2	HEX NUT M12	PORCA SEXTAVADA		
8	10289804	4	WASHER 12 300HV	ARRUELA		
10	10815061	1	FAN	VENTILADOR		
11	11651767	6	HEX SCREW ISO 4017 M8X20 8.8 480H	PARAFUSO SEXTAVADO		
12	10289803	6	WASHER 8 300HV	ARRUELA		
20	10406048	1	HUB	CUBO		
21	12220008	1	CROWN NUT UNF5/8	PORCA-CASTELO		
22	4901893	1	WASHER 16 200HV	ARRUELA		
23	4330015	1	SPLIT PIN 4X32	CONTRAPINO		

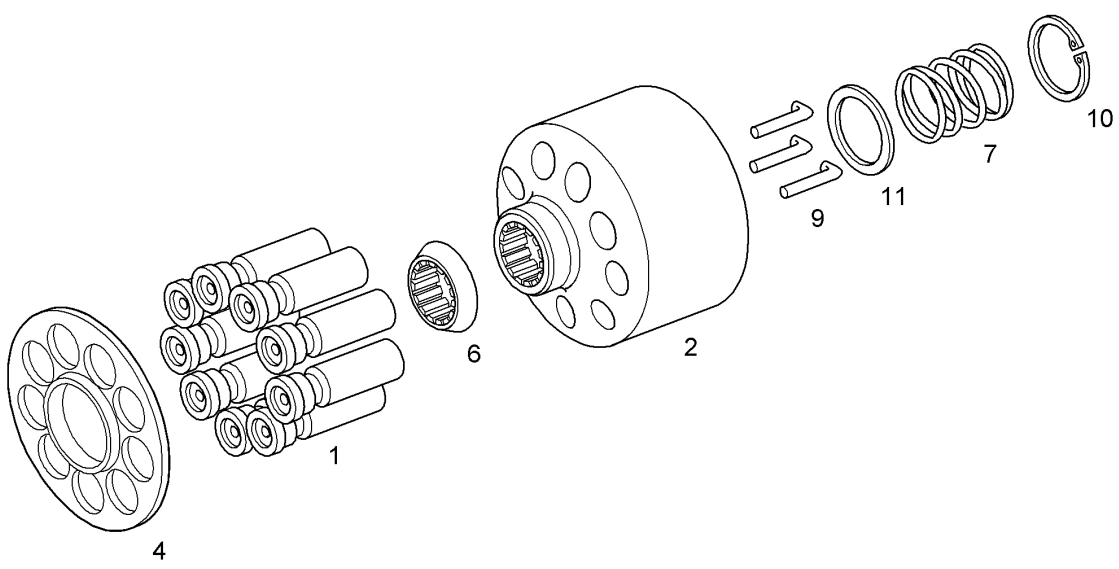

Pos.	Item	Quantity	Description	Designação	Serie	K
1	10008403	9	PISTON	PISTÃO		
2	10008431	1	CYLINDER	CILINDRO		
4	10008426	1	PULL-BACK PLATE	PLACA DE RETORNO		
6	7370837	1	PULL-BACK BALL	ESFERA DE RETORNO		
7	10008430	1	SPRING	MOLA		
9	10008429	3	PRESSURE PIN	PINO DE PRESSAO		
10	10008428	1	V-RING	ANEL EM V		
11	10008425	1	SUPPORTING WASHER	ARRUELA DE APOIO		

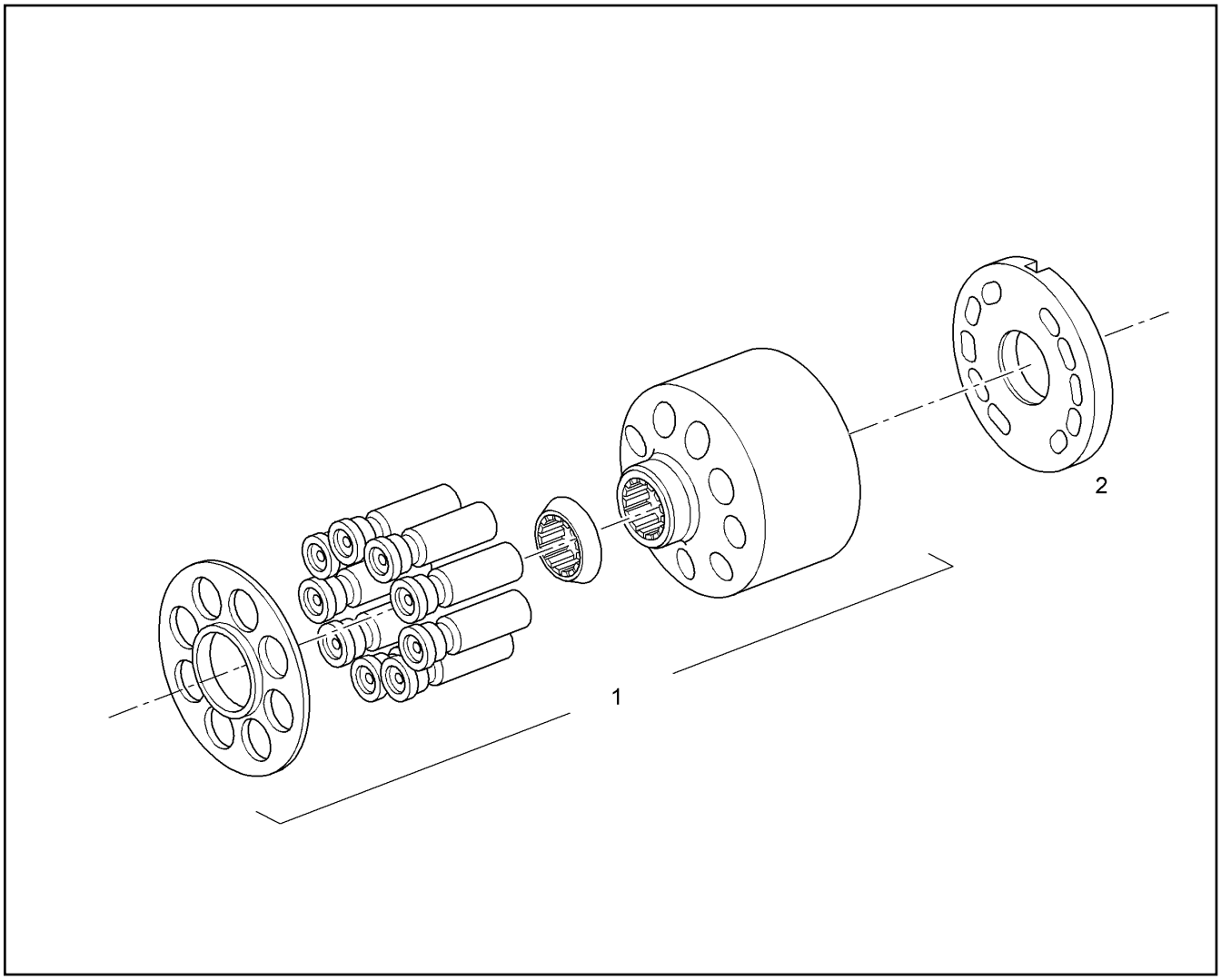

Pos.	Item	Quantity	Description	Designação	Serie	K
1	10008405	1	DRIVING GEAR ⇨ ❑ 206	MECANISMO DE ACIONAMENTO		
2	10008404	1	DISTRIBUTOR PLATE	PLACA DE DISTRIBUIÇÃO		

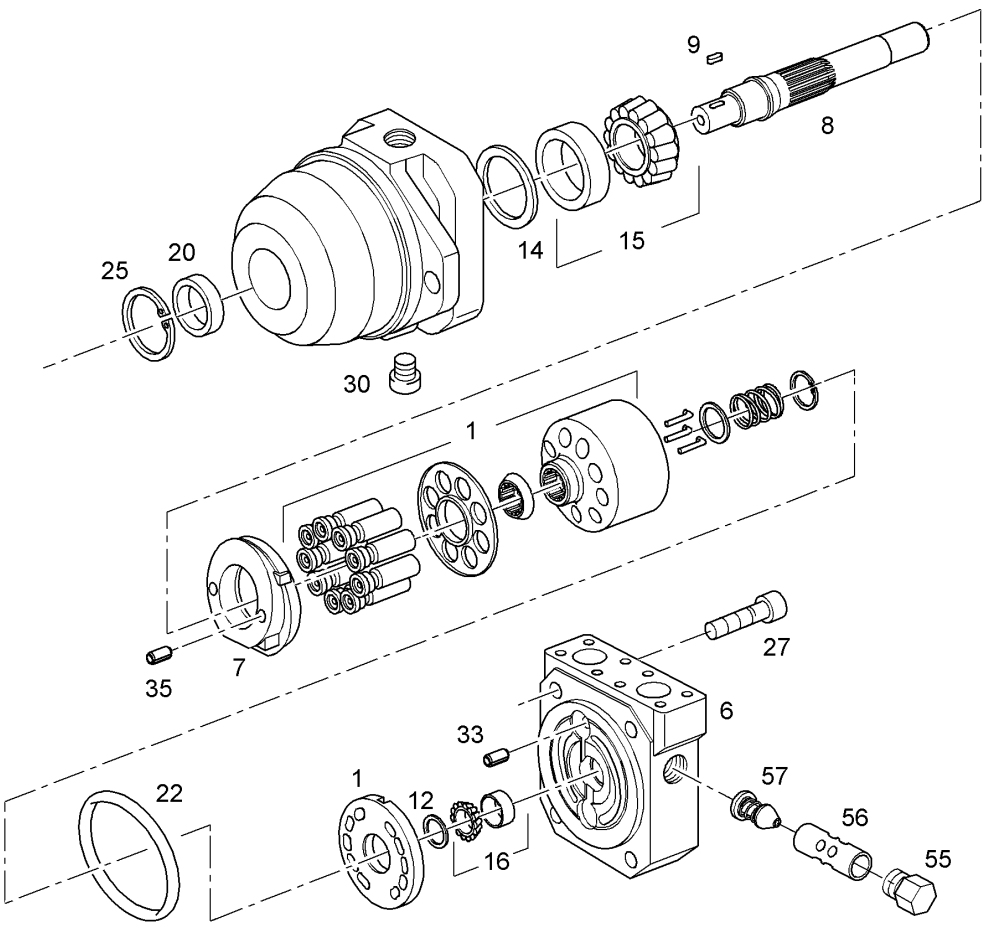

Pos.	Item	Quantity	Description	Designação	Serie	K
1	10008433	1	DRIVING GEAR ⇨ ❑ 207	MECANISMO DE ACIONAMENTO		
6	10008432	1	CONNECTING PLATE	PLACA DE LIGAÇÃO		
7	10008424	1	HOISTING DISK	DISCO DE ELEVAÇÃO		
8	10008423	1	DRIVE SHAFT	EIXO DE ACIONAMENTO		
9	10008422	1	FITTING KEY	CHAVETA		
12	10008421	1	ADJUSTING SHIM	ARRUELA DE AJUSTE		
14	10008088	1	LIMIT STOP RING	ANEL DE ENCOSTO		
15	10008089	1	TAPERED ROLLER BEARING	ROLAMENTO DE ROLETES CÔNI		
16	7025903	1	TAPERED ROLLER BEARING	ROLAMENTO DE ROLETES CÔNI		
20	10008419	1	SHAFT SEAL	ANEL RETENTOR		
22	10008418	1	O-RING 110X2,5	ANEL-O		
25	10008417	1	LOCKING RING DIN 984 35	ANEL DE RETENÇÃO		
27	11320346	4	SOCKET HEAD SCREW ISO 4762 M10X60 10	PARAFUSO CILÍNDRICO		
30	7370843	1	SCREW PLUG	PARAFUSO DE FECHAMENTO		
33	7408829	1	PARALLEL PIN 6m6	PINO CILÍNDRICO		
35	4000570	2	PARALLEL PIN 6m6	PINO CILÍNDRICO		
55	11835019	1	SCREW PLUG M20X1,5 ED	PARAFUSO DE FECHAMENTO		
56	10008407	1	VALVE SEAT SLEEVE	LUVA DE ASSENTO DA VALVUL		
57	10008406	1	VALVE INSERT	VÁLVULA DE RESTRIÇÃO		

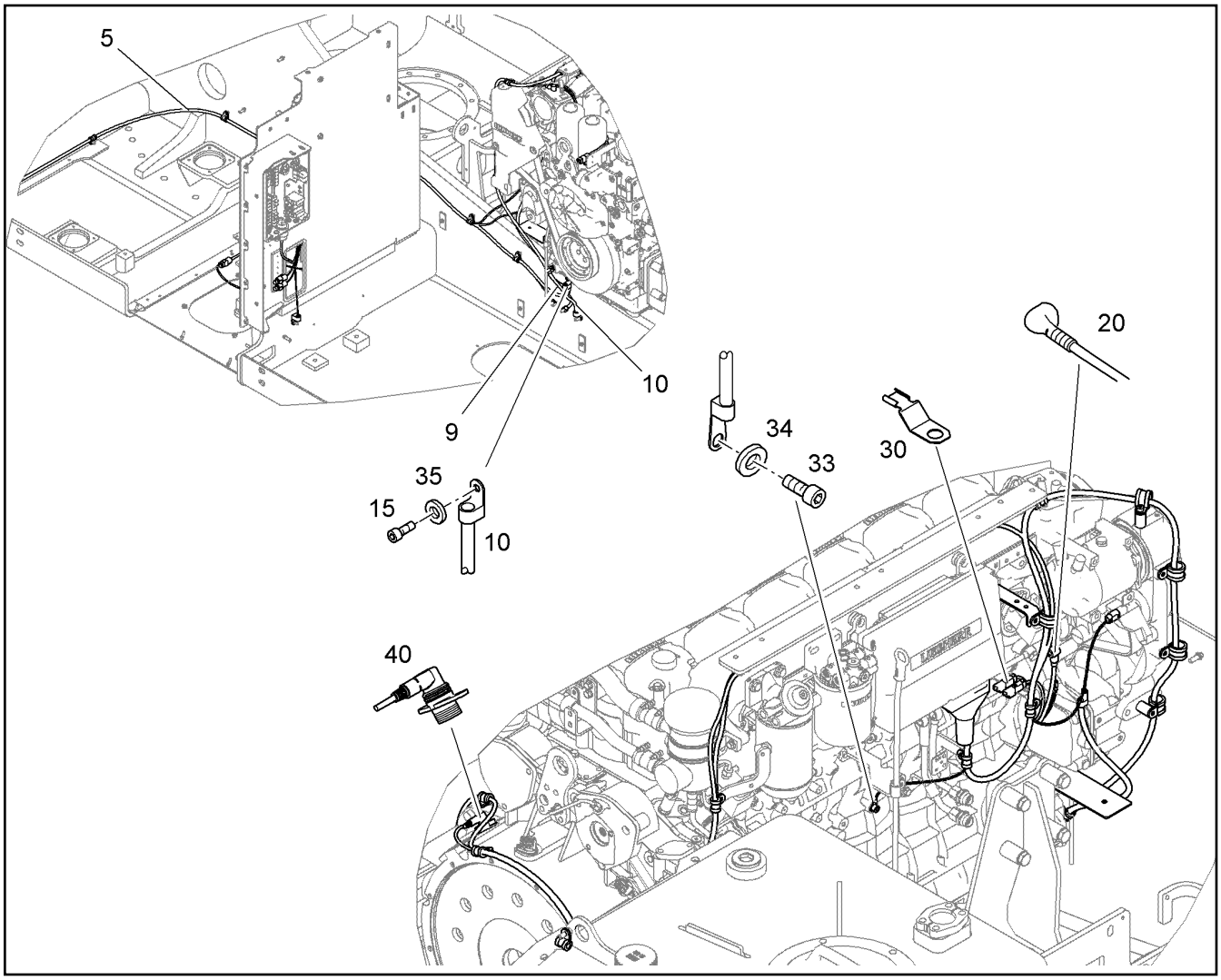

Pos.	Item	Quantity	Description	Designação	Serie	K
5	9948316	1	WIRING HARNESS ENGINE	CHICOTE ELETRICO DO MOTOR		
9	10064514	1	WIRING HARNESS DYNAMO GROUND	CHICOTE ELETRICO		
10	10064515	1	EARTH CABLE	CABO MASSA		
15	11002741	1	SOCKET HEAD SCREW ISO 4762 M10X20 10	PARAFUSO CILÍNDRICO		
20	7623222	1	PROTECTING CAP 16,0X20X8	CAPA DE PROTEÇÃO		
30	7624322	4	HOLDER	SUPORTE		
33	12233290	1	SOCKET HEAD SCREW ISO 4762 M8X12 10	PARAFUSO CILÍNDRICO		
34	10289803	1	WASHER 8 300HV	ARRUELA		
35	10289795	1	WASHER 10 300HV	ARRUELA		
40	635867001	1	SENSOR	SENSOR		

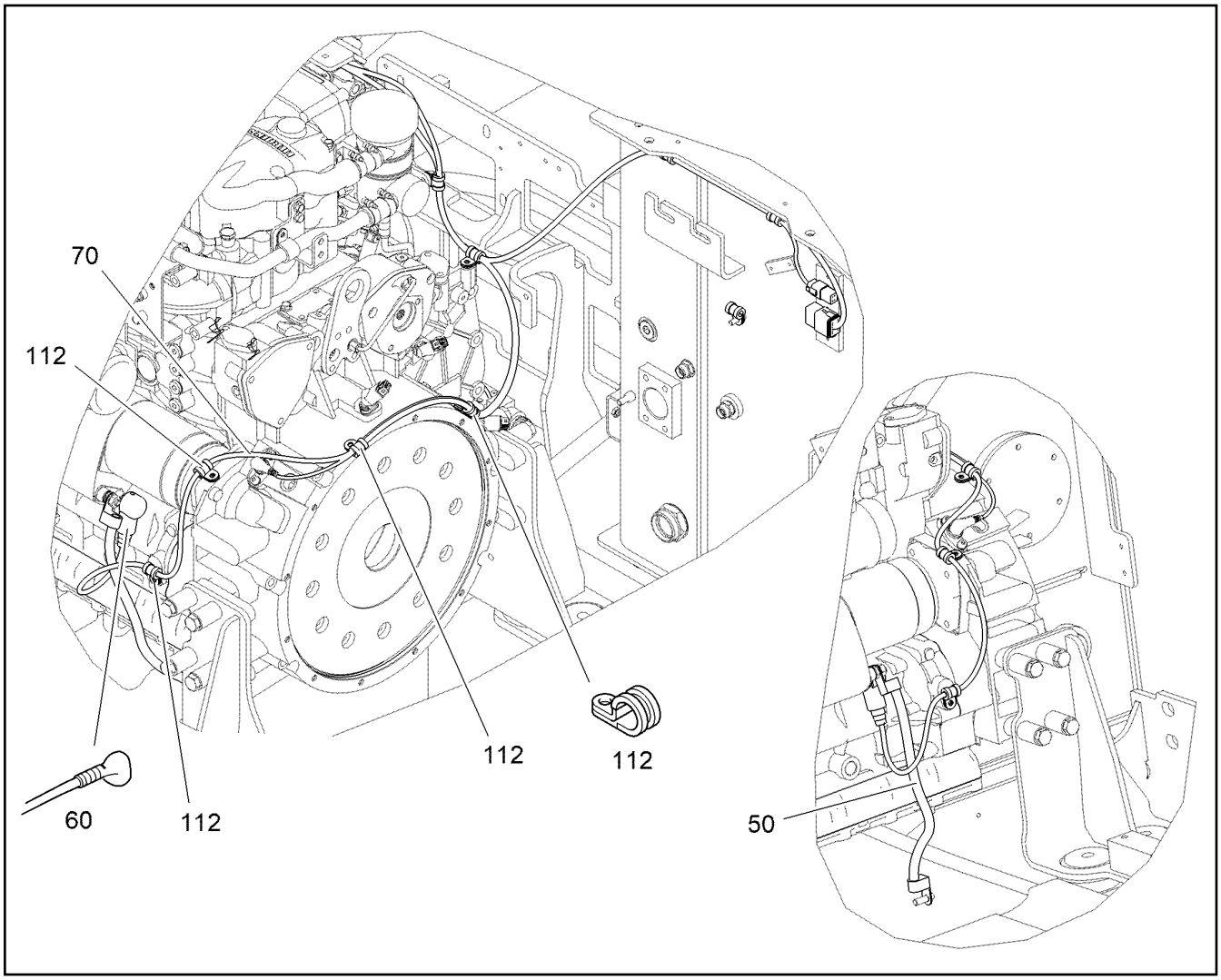

Pos.	Item	Quantity	Description	Designação	Serie	K
50	10405134	1	WIRING HARNESS STARTER MASS	CHICOTE ELÉTRICO	27654-	
60	7623221	1	PROTECTING CAP	CAPA DE PROTEÇÃO		
70	10064512	1	WIRING HARNESS STARTER DYNAMO	CHICOTE ELETRICO		
112	7362546	4	CLAMP DIN 3016-1 D1 12X15 W1-2-CR	BRAÇADEIRA		

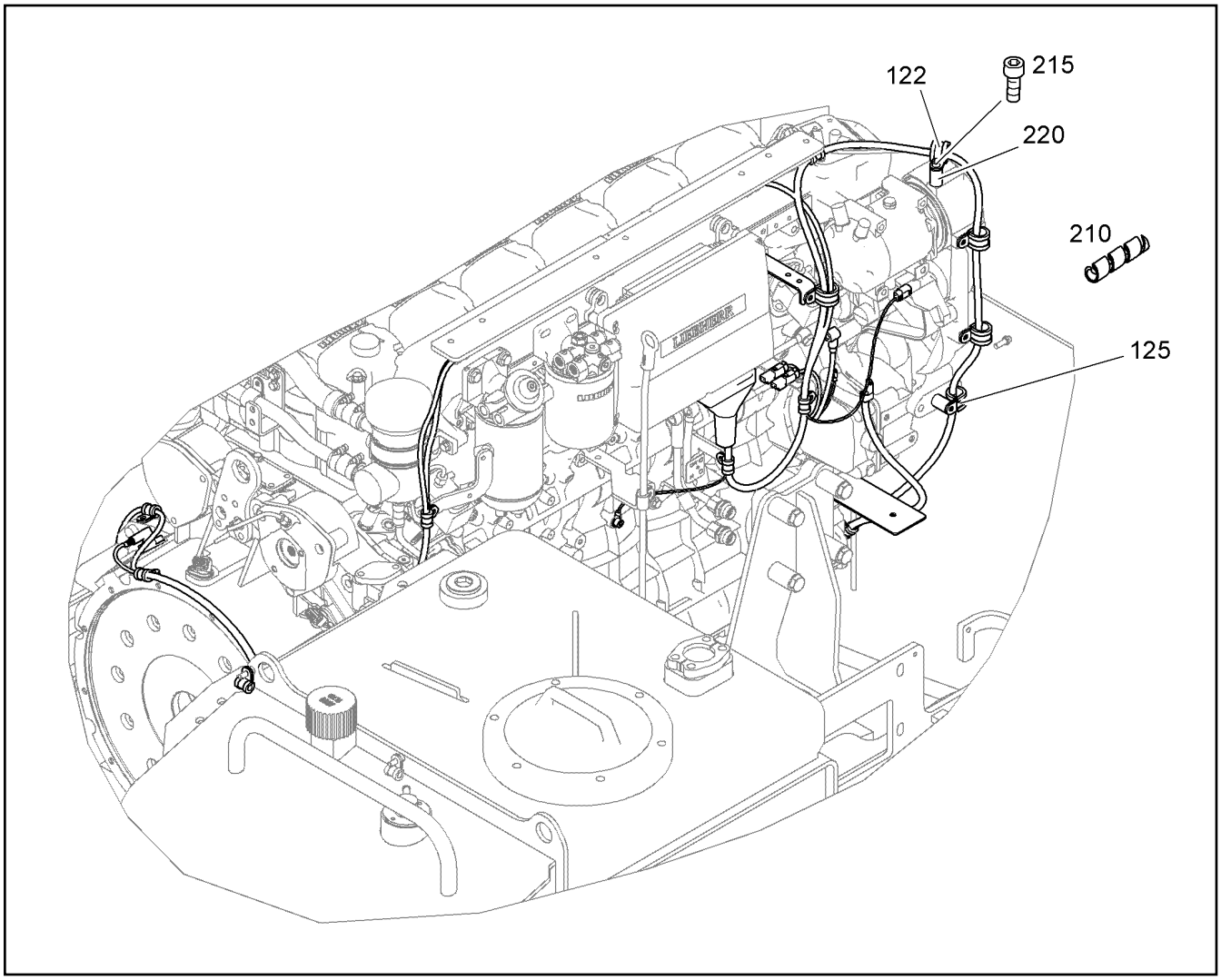

Pos.	Item	Quantity	Description	Designação	Serie	K
122	7362545	3	CLAMP DIN 3016-1 D1 22X20 W1-2-CR	BRAÇADEIRA		
125	7008622	1	CLAMP DIN 3016-1 D1 25X20 W1-2-CR	BRAÇADEIRA		
210	774383508	1.4m	TUBING COIL	SERPENTINA DE TUBO		
215	10468238	1	SOCKET HEAD SCREW ISO 4762 M8X50 10	PARAFUSO CILÍNDRICO		
220	9989595	2	DISTANCE TUBE	TUBO DISTANCIADOR		

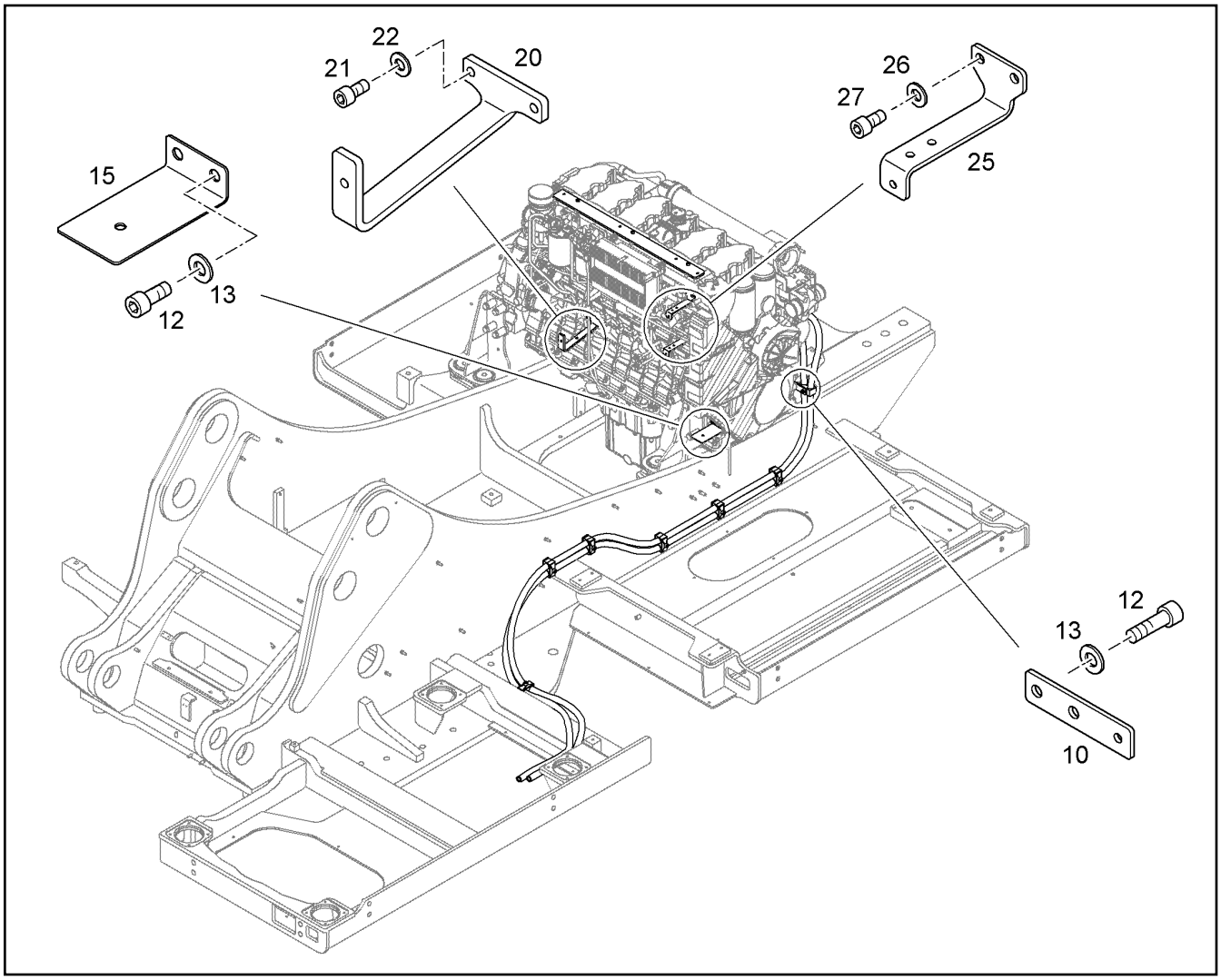

Pos.	Item	Quantity	Description	Designação	Serie	K
10	9949403	1	HOLDER	SUPORTE		
12	11002741	4	SOCKET HEAD SCREW ISO 4762 M10X20 10	PARAFUSO CILÍNDRICO		
13	10289795	4	WASHER 10 300HV	ARRUELA		
15	9949402	1	HOLDER	SUPORTE		
20	10063654	1	PLATE	PLACA		
21	10663523	2	SOCKET HEAD SCREW ISO 4762 M8X20 10	PARAFUSO CILÍNDRICO		
22	10289803	2	WASHER 8 300HV	ARRUELA		
25	10059516	2	HOLDER	SUPORTE		
26	10289803	4	WASHER 8 300HV	ARRUELA		
27	11651612	4	HEX SCREW ISO 4017 M8X16 8.8 480H	PARAFUSO SEXTAVADO		

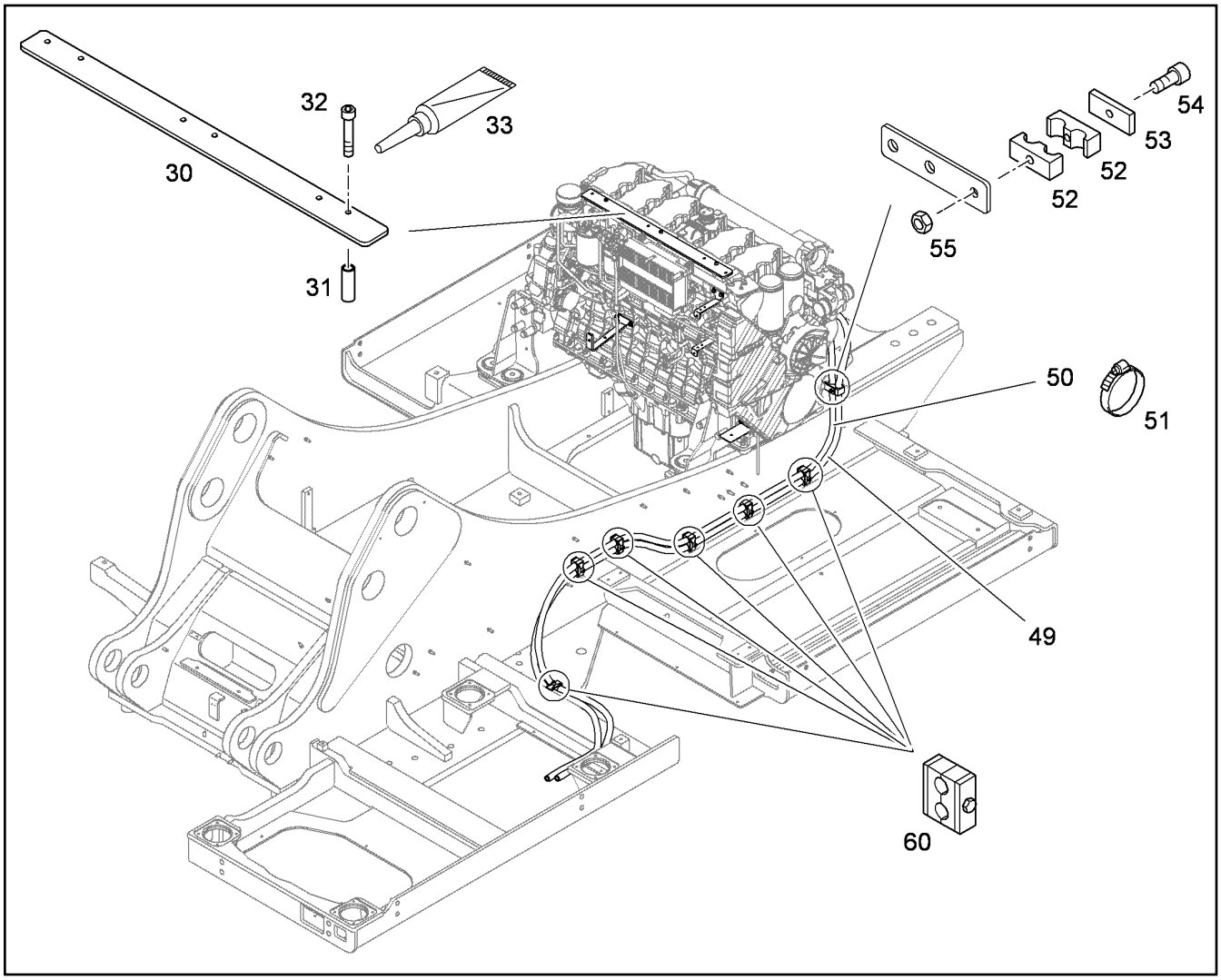

Pos.	Item	Quantity	Description	Designação	Serie	K
30	10056401	1	MOTOR BRACKET	CONSOLE DO MOTOR		
31	9275161	3	SPACER PIECE 9X18X35	ESPAÇADOR		
32	12208099	3	SOCKET HEAD SCREW ISO 4762 M8X60 10	PARAFUSO CILÍNDRICO		
33	8629969	0.001	SCREW LOCKING	COLA PARA ELEMENTOS FIXA		
49	10063712	1	HEATING+AIR-CONDITION.HOSES ⇨ ❑ 215	MANGUEIRAS AQUEC.E AR-CO		1
50	10063712	1	HEATING+AIR-CONDITION.HOSES ⇨ ❑ 215	MANGUEIRAS AQUEC.E AR-CO		1
51	4901138	2	HOSE CLAMP DIN 3017-1 A 21 16-27X9 W2-	ABRAÇADEIRA DE MANGUEIRA		
52	7029979	2	CLAMP-HALF AEHNL.DIN 3015-3 Z 3 G 23 23	MEIA ABRAÇADEIRA		
53	7401349	1	LID PLATE DIN 3015-3 Z-DP 3 W1-ZN	PLACA		
54	12208099	1	SOCKET HEAD SCREW ISO 4762 M8X60 10	PARAFUSO CILÍNDRICO		
55	10876581	1	HEX NUT M8	PORCA SEXTAVADA		
60	9388597	6	HOSE CLAMP ⇨ ❑ 748	ABRAÇADEIRA DE MANGUEIRA		

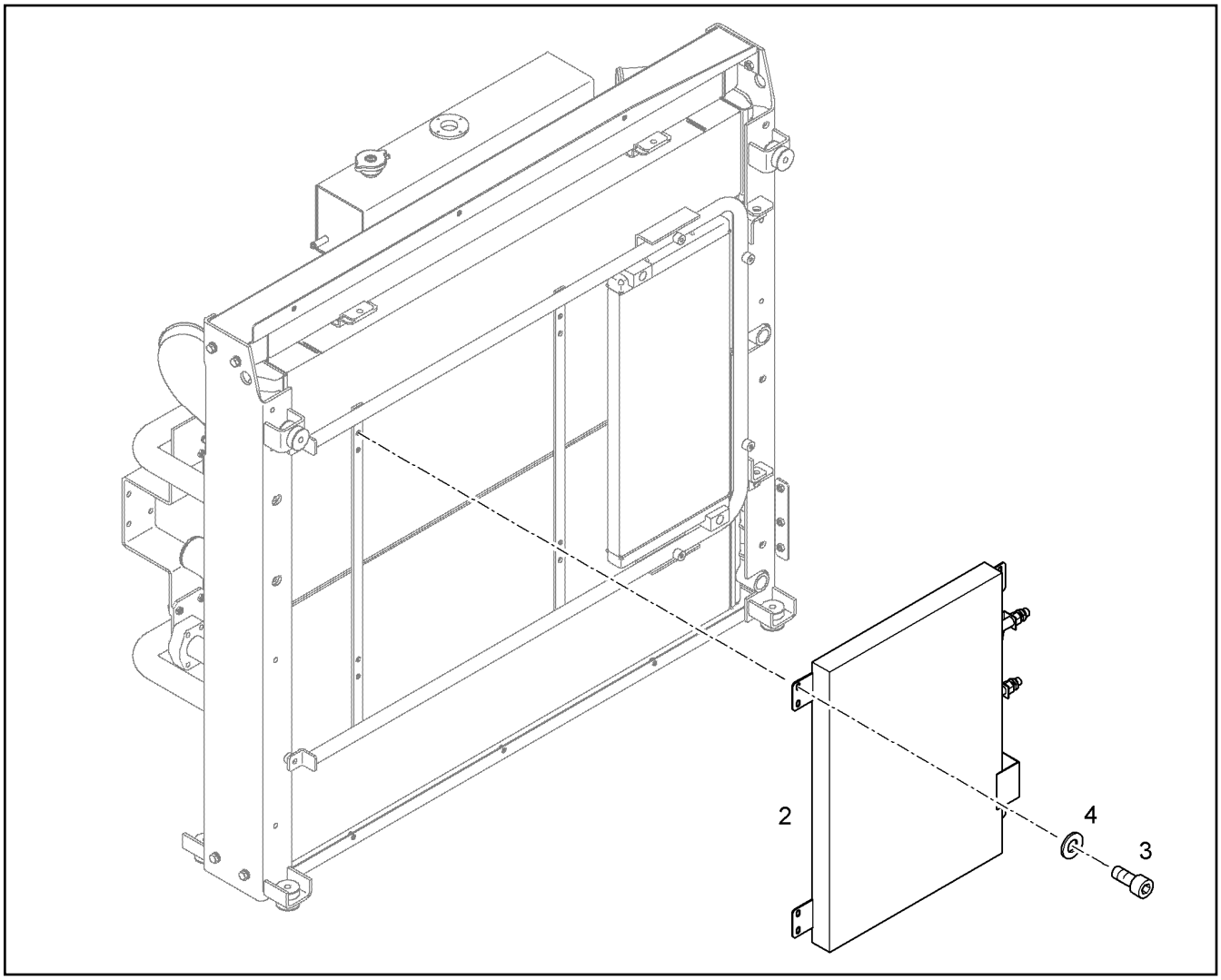

Pos.	Item	Quantity	Description	Designação	Serie	K
2	10005670	1	AIR CONDITIONER CONDENSER UKD 215/4 [DS0002372-1597]	CONDENSADOR DE AR-CONDIC		
3	10663450	8	SOCKET HEAD SCREW ISO 4762 M8X16 10	PARAFUSO CILÍNDRICO		
4	10289803	8	WASHER 8 300HV	ARRUELA		

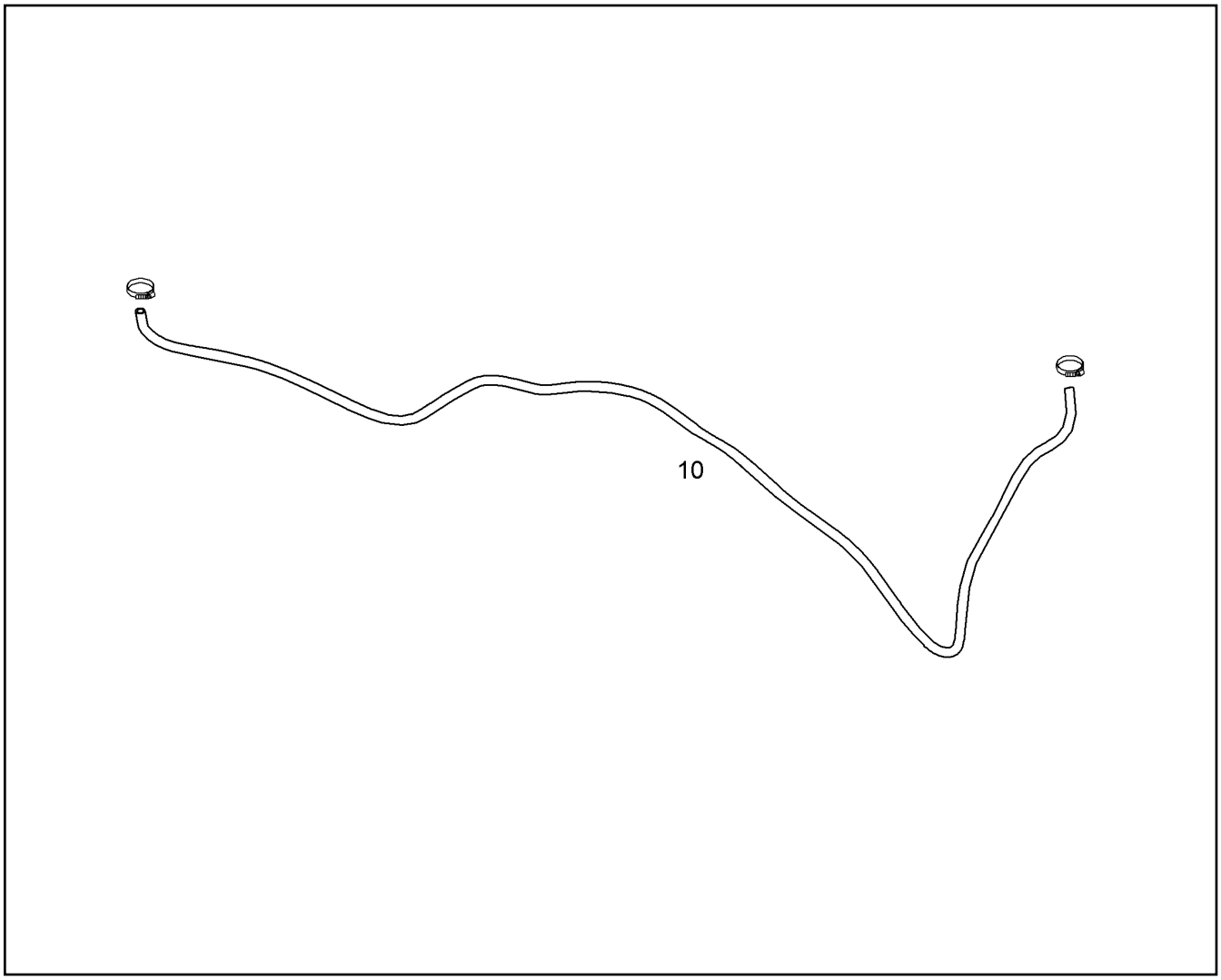

Pos.	Item	Quantity	Description	Designação	Serie	K
10	7361679	3.9m	HOSE	MANGUEIRA		1

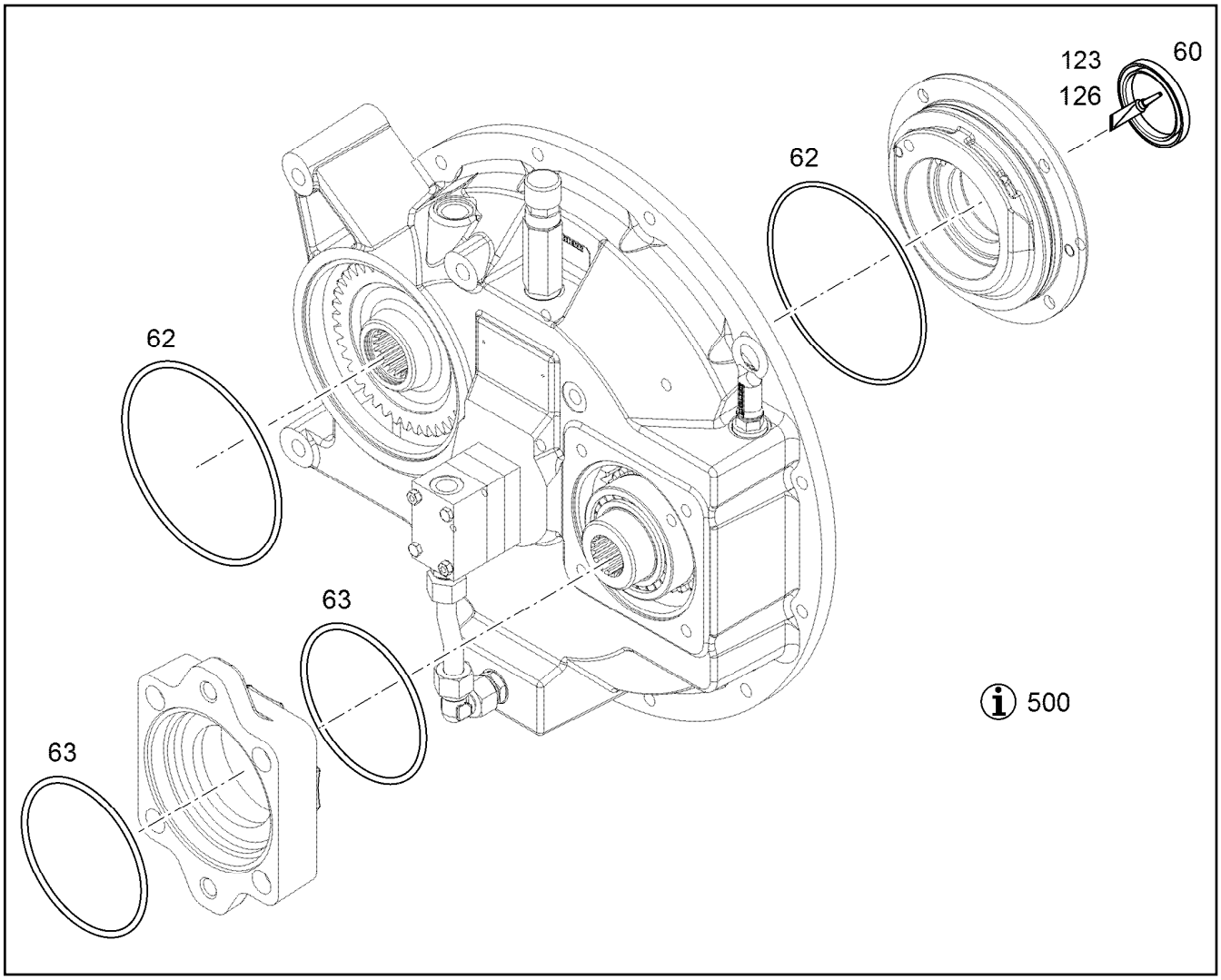

Pos.	Item	Quantity	Description	Designação	Serie	K
60		1	ROTARY SHAFT LIP SEAL X55X70X8	ANEL DE VEDAÇÃO DO EIXO RA		
62		2	O-RING ISO 3601-1 158,34X3,53	ANEL-O		
63		2	O-RING ISO 3601-1 126,59X3,53	ANEL-O		
123	8627609	1	SEALANT	MATERIAL VEDANTE		
126	8655008	1	GREASE L55/3/0,001kg	GRAXA		
500		1	TABLE ANWEISUNGEN	TABELA		

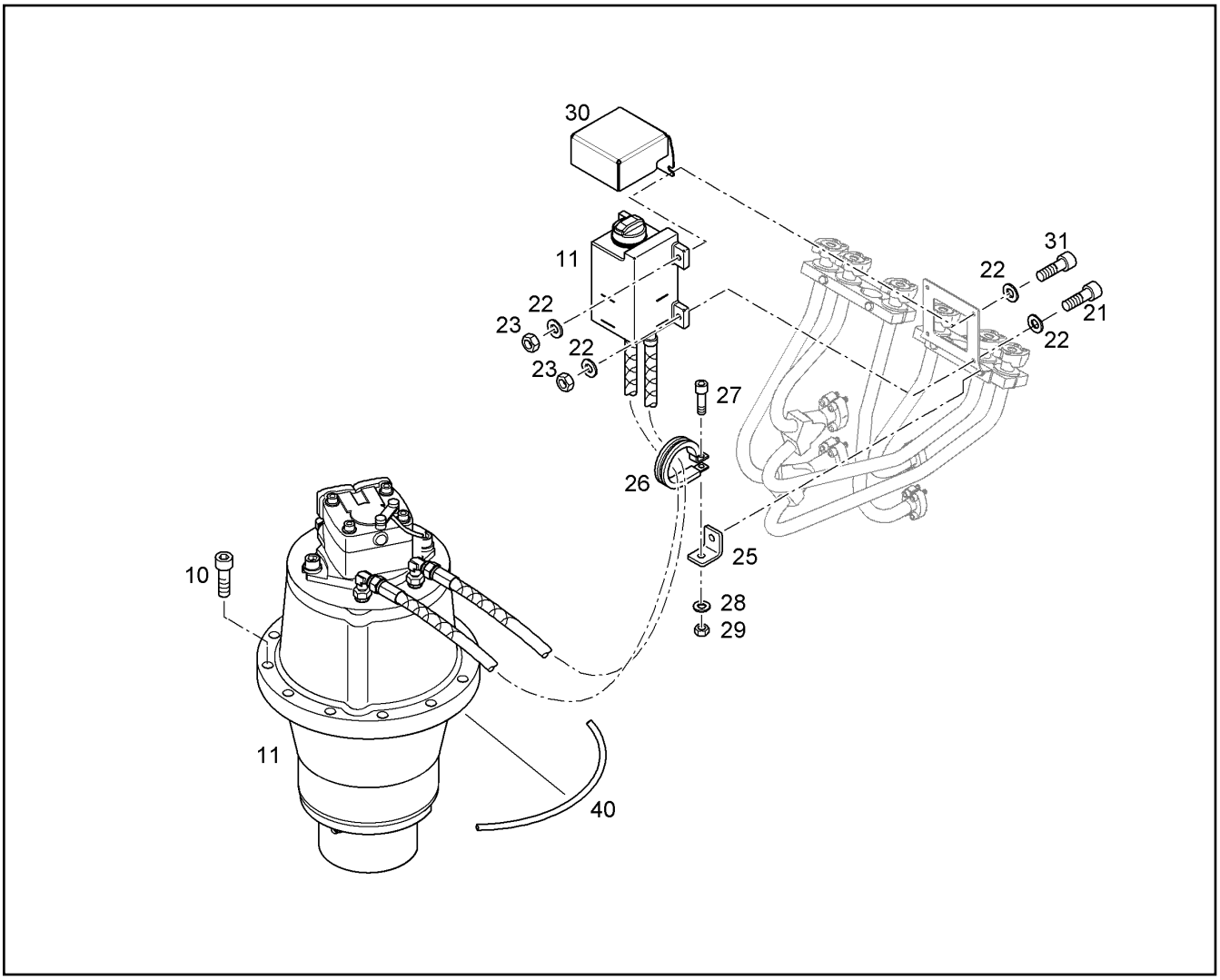

Pos.	Item	Quantity	Description	Designação	Serie	K
10		1	FIXING PARTS SWING ⇨ ❑ 218	PECAS FIXACAO		
11		1	SLEWING GEAR ⇨ ❑ 219	MECANISMO DE GIRO		
21	11002713	2	HEX SCREW ISO 4017 M10X40 10.9 FLZN	PARAFUSO SEXTAVADO		
22	11491889	8	WASHER 10 300HV	ARRUELA		
23	10875606	4	HEX NUT M10	PORCA SEXTAVADA		
25	10358447	1	ANGLE	CANTONEIRA		
26	7365080	1	CLAMP DIN 3016-1 D1 45X20 W1-2-CR	BRAÇADEIRA		
27	10663523	1	SOCKET HEAD SCREW ISO 4762 M8X20 10	PARAFUSO CILÍNDRICO		
28	10289803	1	WASHER 8 300HV	ARRUELA		
29	10299669	1	HEX NUT M8	PORCA SEXTAVADA		
30	12905309	1	PROTECTION GUARD	CHAPA DE PROTEÇÃO		
31	11002718	2	HEX SCREW ISO 4017 M10X50 10.9 FLZN	PARAFUSO SEXTAVADO		
40	10215888	0.05	PACKING CORD	CORDÃO DE VEDAÇÃO		

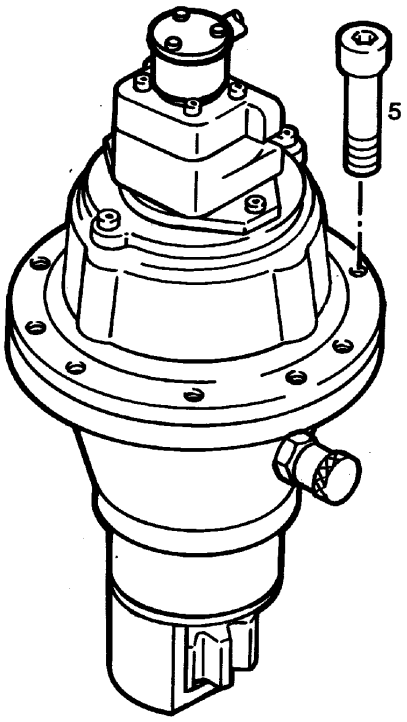

Pos.	Item	Quantity	Description	Designação	Serie	K
5	10425669	12	SOCKET HEAD SCREW ISO 4762 M20X75 10	PARAFUSO CILÍNDRICO		

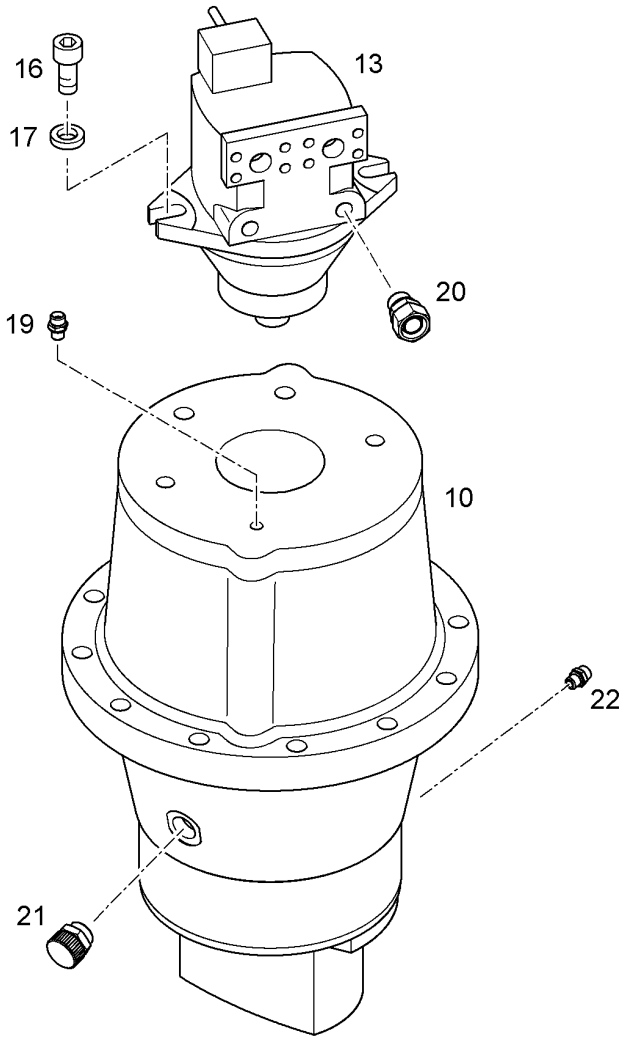

Pos.	Item	Quantity	Description	Designação	Serie	K
10		1	SLEWING DRIVE SAT 325/254 [159-0000438] ⇨ ❑ 220	REDUTOR DE GIRO	37238-	6
13	9074075	1	HYDRAULIC INSTALLATION MOTOR [191024244] ⇨ ❑ 230	MOTOR HIDRÁULICO	24265-	6
16	10425665	2	SOCKET HEAD SCREW ISO 4762 M20X50 10	PARAFUSO CILÍNDRICO		
17	12220081	2	WASHER 20 295 BIS 350HV	ARRUELA		
19	7003814	1	FITTING GE 10L M14X1,5	UNIÃO ROSCADA		
20	4001446	1	FITTING GE 22L G3/4A ED	UNIÃO ROSCADA		
21	5004624	1	OIL DRAIN PLUG M 30 1,5 ⇨ ❑ 577	PARAFUSO DE DRENAGEM DE Ó		
22	7619197	1	FITTING GE 8L M14X1,5	UNIÃO ROSCADA		

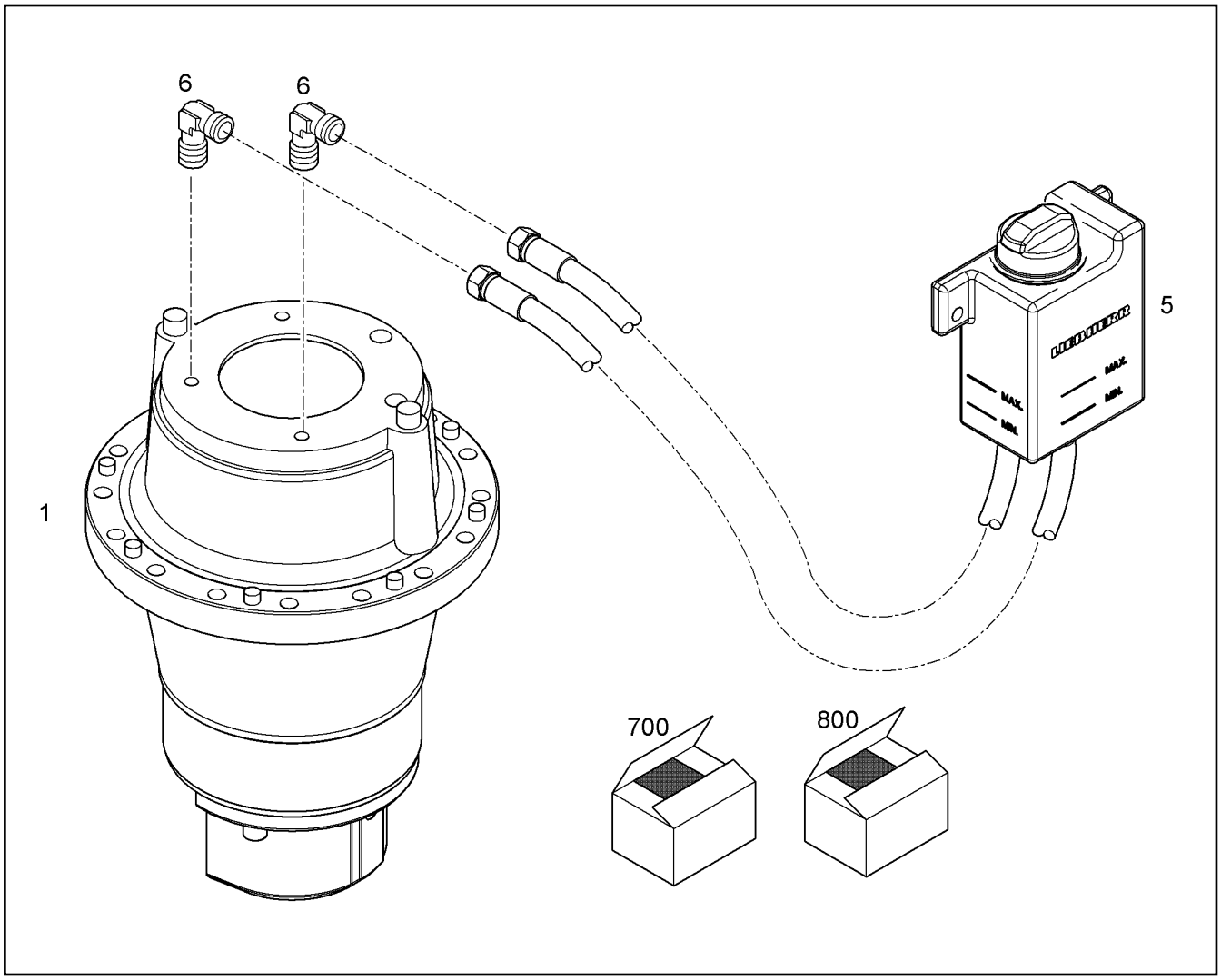

Pos.	Item	Quantity	Description	Designação	Serie	K
1	90027905	1	SLEWING DRIVE ⇨ ❑ 223	REDUTOR DE GIRO		6
5	969105601	1	OIL TANK ⇨ ❑ 237	RESERVATÓRIO DE ÓLEO		
6	247108302	2	FITTING EW 18L M26X1,5	UNIÃO ROSCADA		
700	90021973	1	MODIFICATION KIT ⇨ ❑ 222	KIT DE MODIFICAÇÃO		
800	90014538	1	MODIFICATION KIT ⇨ ❑ 221	KIT DE MODIFICAÇÃO		

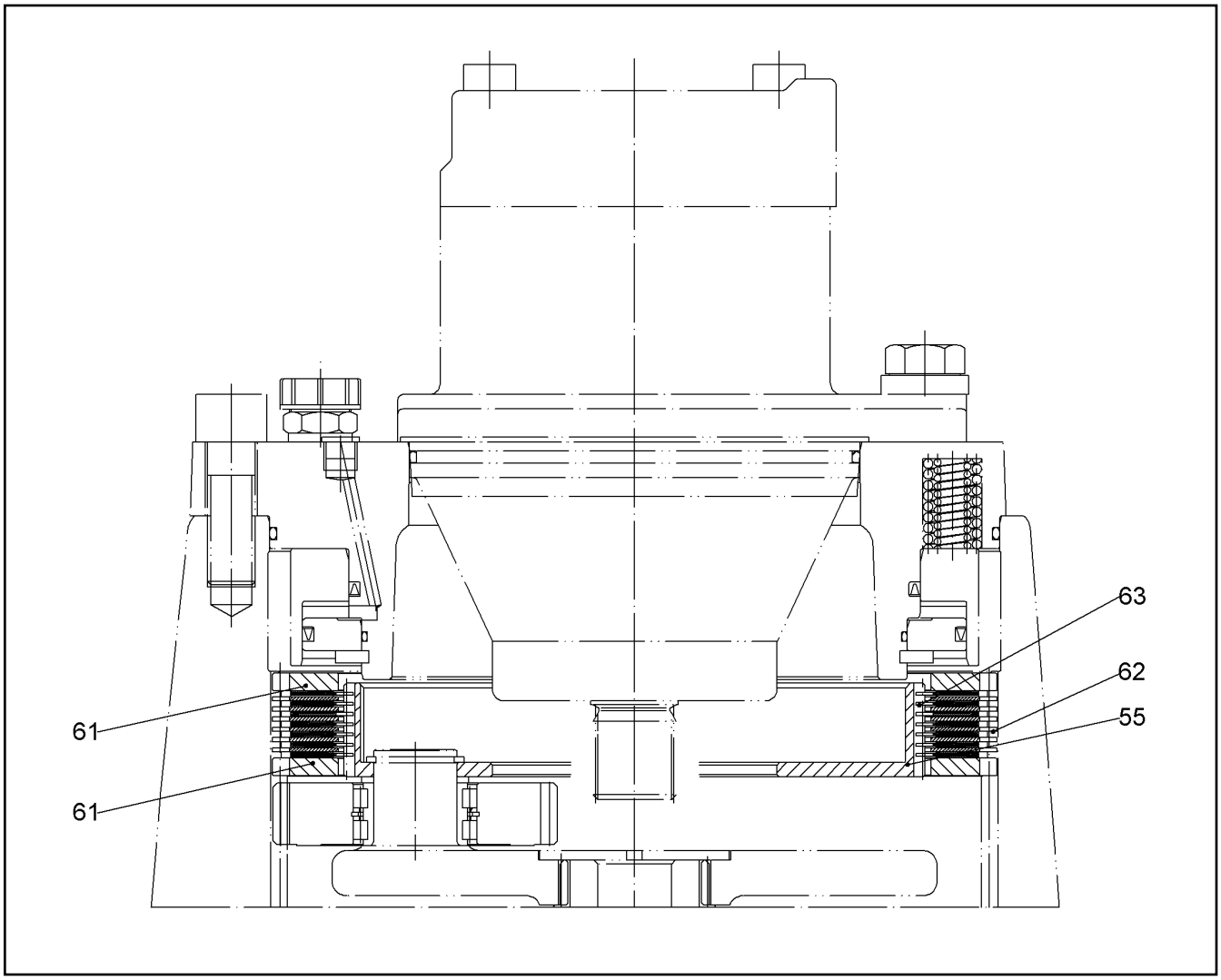

Pos.	Item	Quantity	Description	Designação	Serie	K
55		1	MULTI-DISC CARRIER	SUPORTE DAS LAMELAS		
61		2	COMPRESSION RING	ANEL DE PRESSÃO		
62		6	OUTER MULTI-DISC	LAMELA EXTERNA		1
63		7	DISC INSIDE TOOTHED	LAMELAS INTERNAS		1

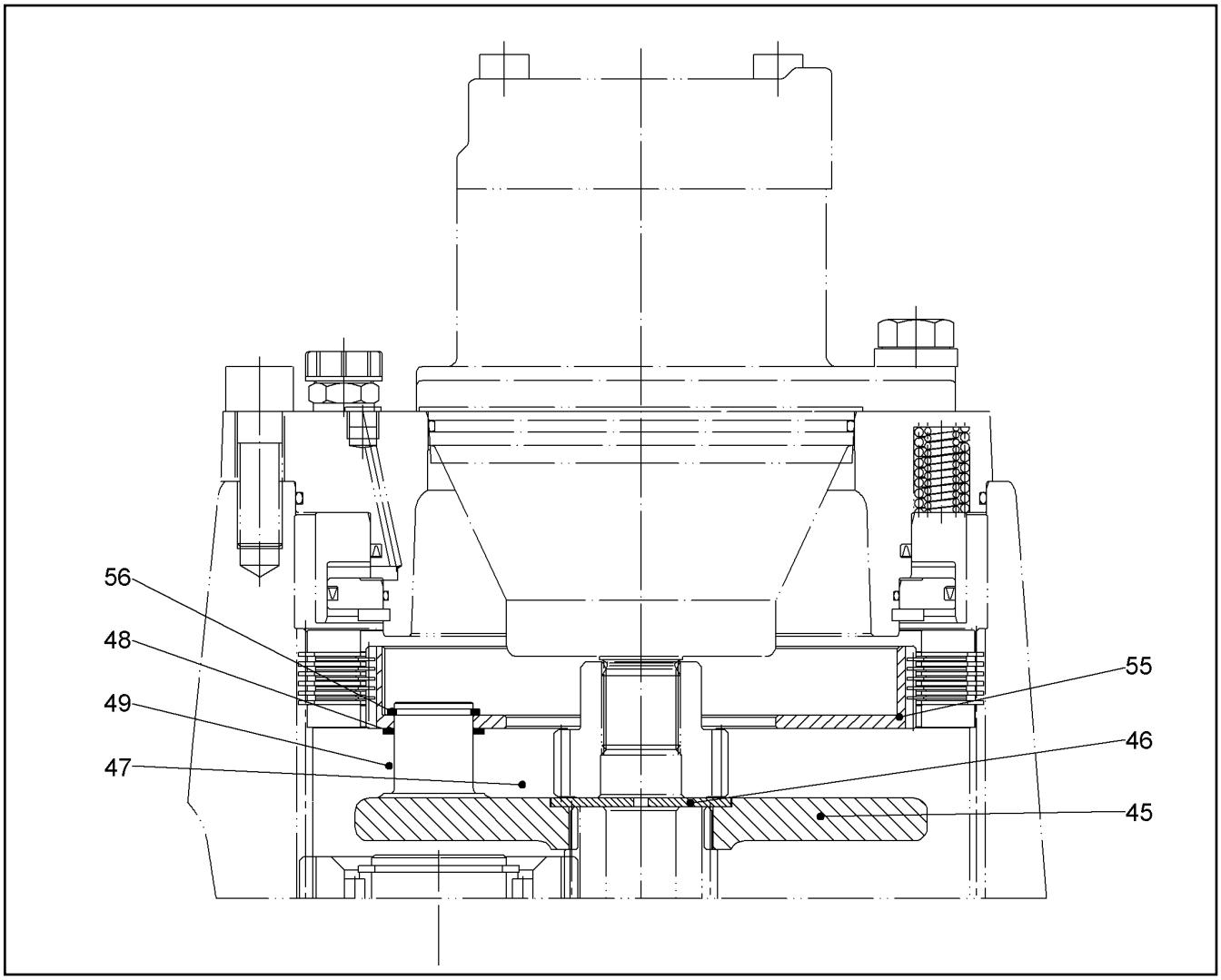

Pos.	Item	Quantity	Description	Designação	Serie	K
45	932777701	1	PLANETARY CARRIER	SUPORTE PLANETÁRIO		
46	9441122	1	RETAINING DISK	DISCO DE RETENÇÃO		
47	932777901	3	PLANET WHEEL M=3,25 Z=34	ENGRENAGEM PLANETÁRIA		
48	422006601	3	SUPPORTING WASHER 35X45X2,5	ARRUELA DE APOIO		
49	10167557	3	CYLINDRICAL ROLLER BEARING RNN 35X5	ROLAMENTO DE ROLOS CILÍN		
55	932778001	1	MULTI-DISC CARRIER	SUPORTE DAS LAMELAS		
56	4000874	3	LOCKING RING DIN 471 35	ANEL DE RETENÇÃO		

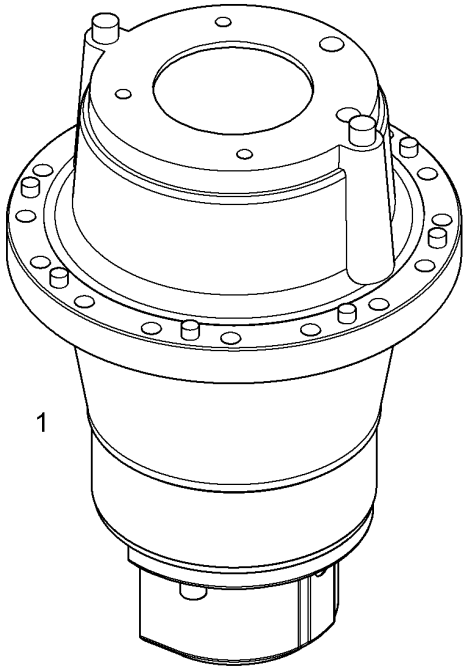

Pos.	Item	Quantity	Description	Designação	Serie	K
1		1	SLEWING DRIVE SAT 325/254 ⇨ ❑ 226	REDUTOR DE GIRO		

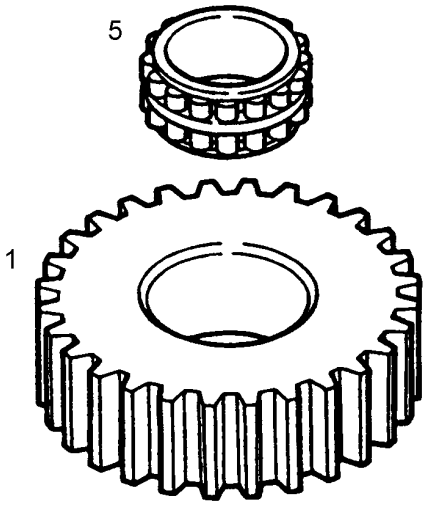

Pos.	Item	Quantity	Description	Designação	Serie	K
1		1	PLANET WHEEL M=3,25 Z=34	ENGRENAGEM PLANETÁRIA		
5	7610001	1	CYLINDRICAL ROLLER BEARING RNN 35X5	ROLAMENTO DE ROLOS CILÍN	-99998	
5	10167557	1	CYLINDRICAL ROLLER BEARING RNN 35X5	ROLAMENTO DE ROLOS CILÍN	99999-	

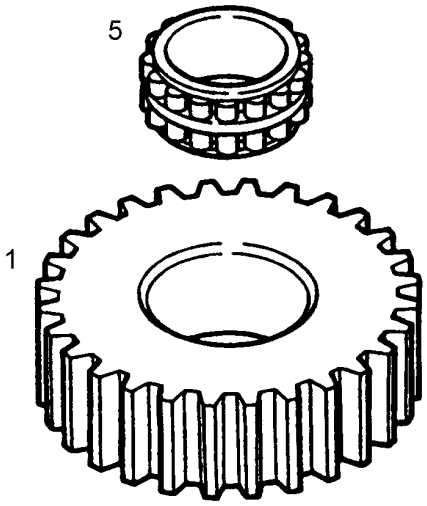

Pos.	Item	Quantity	Description	Designação	Serie	K
1		1	PLANET WHEEL M=3,25 Z=35	ENGRENAGEM PLANETÁRIA		6
5	761003403	1	CYLINDRICAL ROLLER BEARING RNN 60X8	ROLAMENTO DE ROLOS CILÍN		

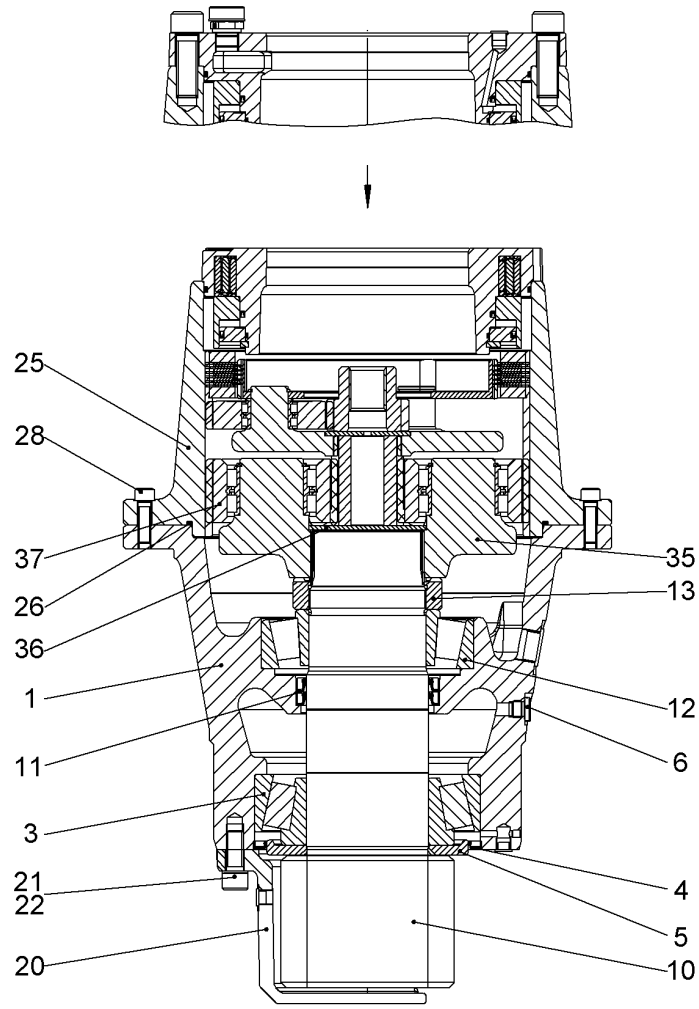

Pos.	Item	Quantity	Description	Designação	Serie	K
1		1	OUTPUT SHAFT HOUSING	CARCAÇA DO EIXO DE SAÍDA		
3	10030908	1	TAPERED ROLLER BEARING	ROLAMENTO DE ROLETES CÔNI		
4	10172723	1	ROTARY SHAFT LIP SEAL AX190X215X8	ANEL DE VEDAÇÃO DO EIXO RA		
5	90008634	1	WASHER	ARRUELA		
6	477511301	1	SCREW PLUG M16X1,5 ED	PARAFUSO DE FECHAMENTO		
10	90200992	1	OUTPUT SHAFT M=12 Z=11	EIXO DE SAIDA		6
11	710030801	2	ROTARY SHAFT LIP SEAL B1X115X135X13	ANEL DE VEDAÇÃO DO EIXO RA		
12	746231601	1	TAPERED ROLLER BEARING -322 22 110X2	ROLAMENTO DE ROLETES CÔNI		
13	932814201	1	SLOTTED NUT	PORCA RANHURADA (CASTELO		
20	90028782	1	GREASE HOUSING	CAPA DE LUBRIFICAÇÃO		
21	404316901	2	SOCKET HEAD SCREW ISO 4762 M16X40 1	PARAFUSO CILÍNDRICO		
22	10006372	2	LOCK WASHER VS 16	ARRUELA DE PRESSÃO		
25	932777601	1	INNER WHEEL M=3,25 Z=90	RODA INTERNA		
26	7610343	1	O-RING 320X4	ANEL-O		
28	4043003	6	SOCKET HEAD SCREW ISO 4762 M12X40 1	PARAFUSO CILÍNDRICO		
35	9444501	1	PLANETARY CARRIER	SUPORTE PLANETÁRIO		
36	9441716	1	RETAINING DISK	DISCO DE RETENÇÃO		
37	944356303	4	PLANET WHEEL M=3,25 Z=35	ENGRENAGEM PLANETÁRIA		
			⇨ ❑ 225			

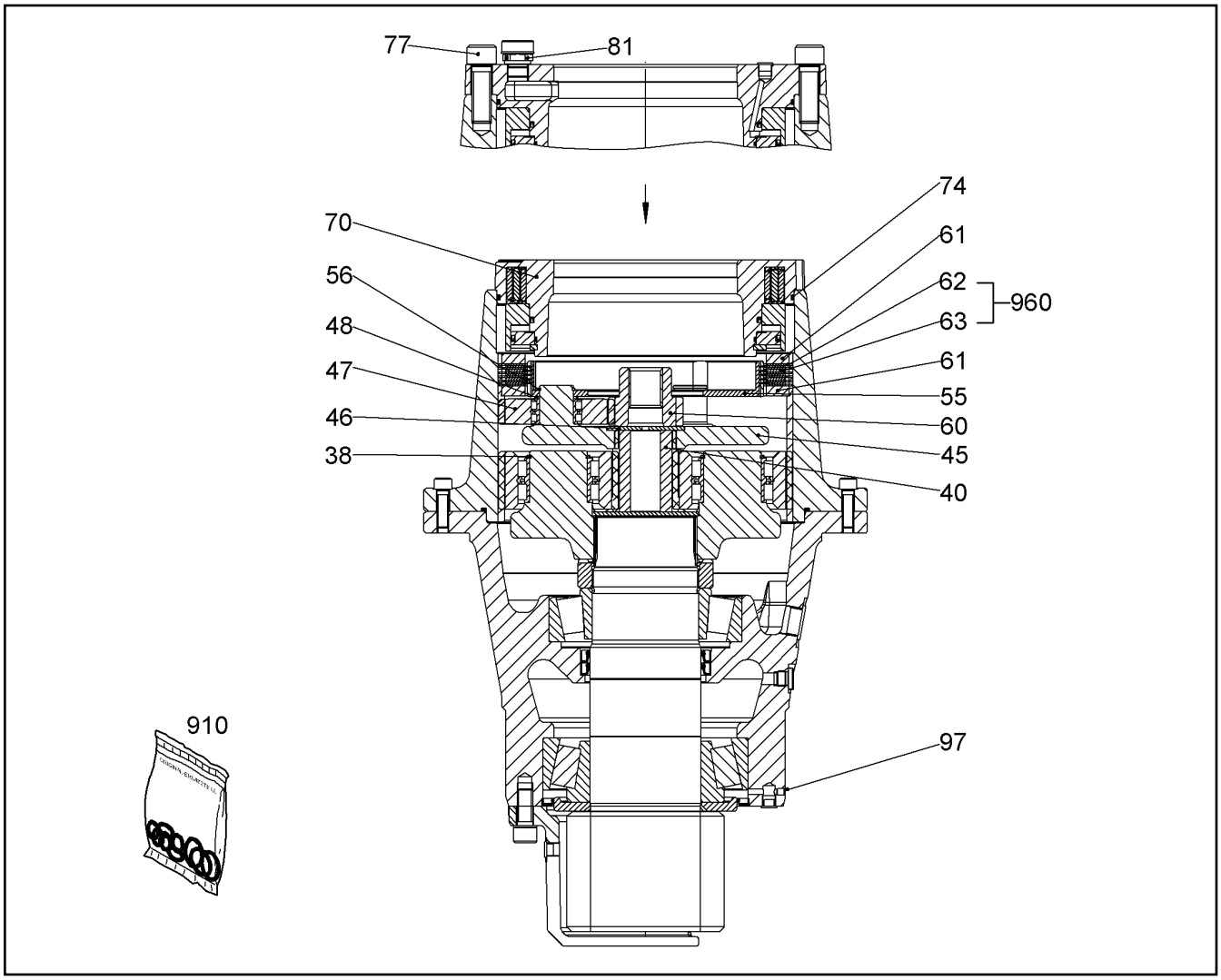

Pos.	Item	Quantity	Description	Designação	Serie	K
38	4280089	4	LOCKING RING DIN 471 60	ANEL DE RETENÇÃO		
40	944217103	1	SUN WHEEL M=3,25 Z=18	ENGRENAGEM SOLAR		
45	932777701	1	PLANETARY CARRIER	SUPORTE PLANETÁRIO		
46	9441122	1	RETAINING DISK	DISCO DE RETENÇÃO		
47	932777801	3	PLANET WHEEL M=3,25 Z=34 ⇨ ❑ 224	ENGRENAGEM PLANETÁRIA		
48	422006601	3	SUPPORTING WASHER 35X45X2,5	ARRUELA DE APOIO		
55	932778001	1	MULTI-DISC CARRIER	SUPORTE DAS LAMELAS		
56	4000874	3	LOCKING RING DIN 471 35	ANEL DE RETENÇÃO		
60	932778101	1	SUN WHEEL M=3,25 Z=21	ENGRENAGEM SOLAR		
61	932855901	2	COMPRESSION RING 10X297,5/250RD	ANEL DE PRESSÃO		1
62		6	OUTER MULTI-DISC	LAMELA EXTERNA		1
63		5	DISC INSIDE TOOTHED	LAMELAS INTERNAS		1
70	932801801	1	BRAKE ⇨ ❑ 228	FREIO		1
74	7610335	1	O-RING 290X4	ANEL-O		
77	404221101	2	SOCKET HEAD SCREW ISO 4762 M20X60 8.	PARAFUSO CILÍNDRICO		
81	7003572	2	FITTING GE 18L M22X1,5	UNIÃO ROSCADA		
97	7380480	1	SEALING PLUG MB 700/7	TAMPÃO DE VEDAÇÃO		
910	944452203	1	SEAL KIT ⇨ ❑ 241	KIT DE VEDAÇÃO		
960	944218003	1	BRAKE MULTI-DISC SET ⇨ ❑ 229	JOGO DE LAMELAS DO FREIO		1

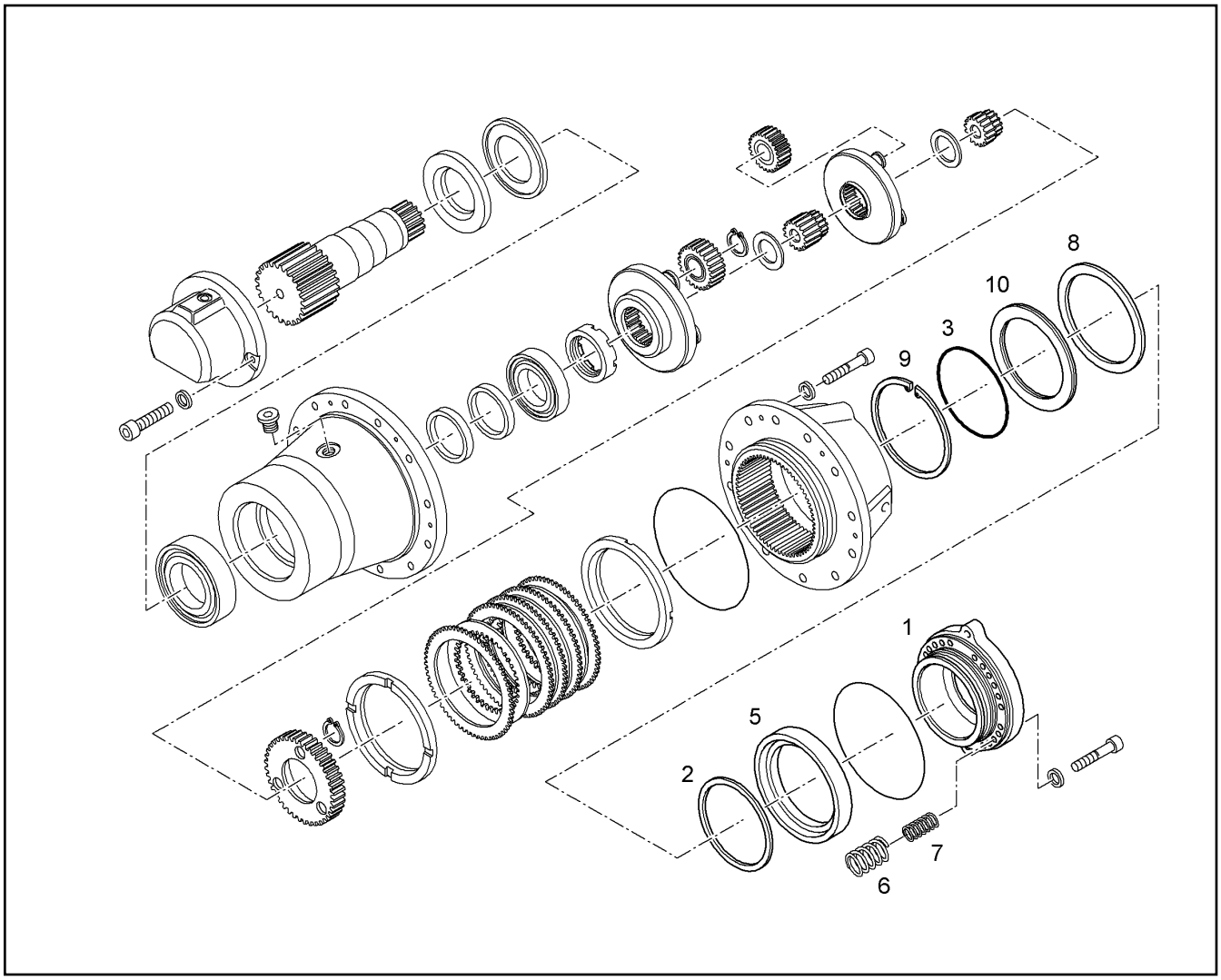

Pos.	Item	Quantity	Description	Designação	Serie	K
1		1	BRAKE HOUSING	CARCAÇA DO FREIO		1
2		1	ROD SEAL 231,4X241X5,5	ANEL RANHURADO		
3		1	O-RING 220X3	ANEL-O		
5		1	ANNULAR PISTON	ANEL DE PISTÃO		
6		23	PRESSURE SPRING	MOLA DE PRESSÃO		
7		23	PRESSURE SPRING	MOLA DE PRESSÃO		
8		1	ROD SEAL 280X270,4X5,5	ANEL RANHURADO		
9		1	LOCKING RING DIN 471 230	ANEL DE RETENÇÃO		
10		1	CLOSING RING	ANEL DE FECHAMENTO		

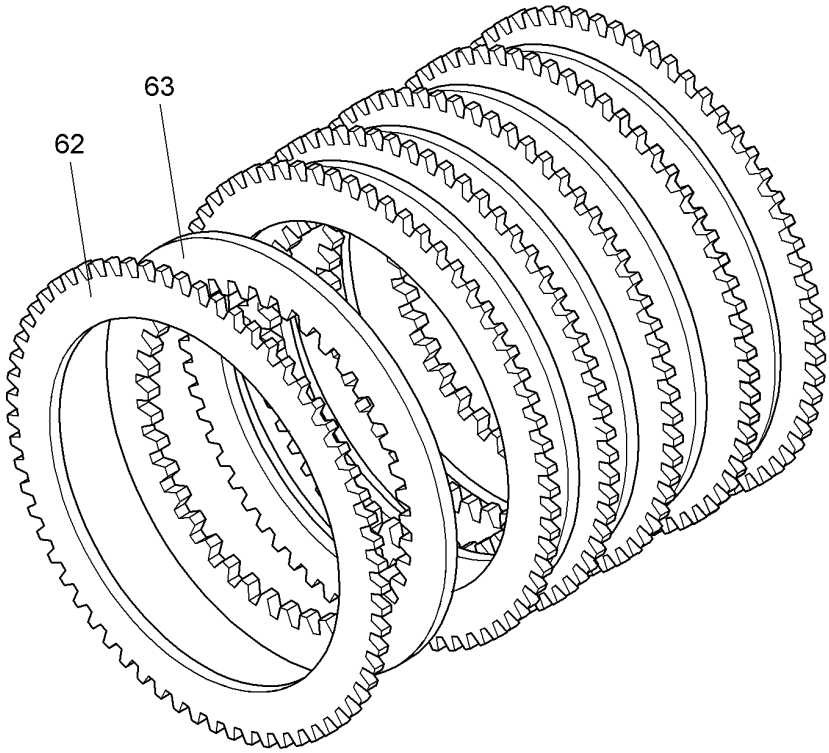

Pos.	Item	Quantity	Description	Designação	Serie	K
62		6	OUTER MULTI-DISC	LAMELA EXTERNA		1
63		5	DISC INSIDE TOOTHED	LAMELAS INTERNAS		1

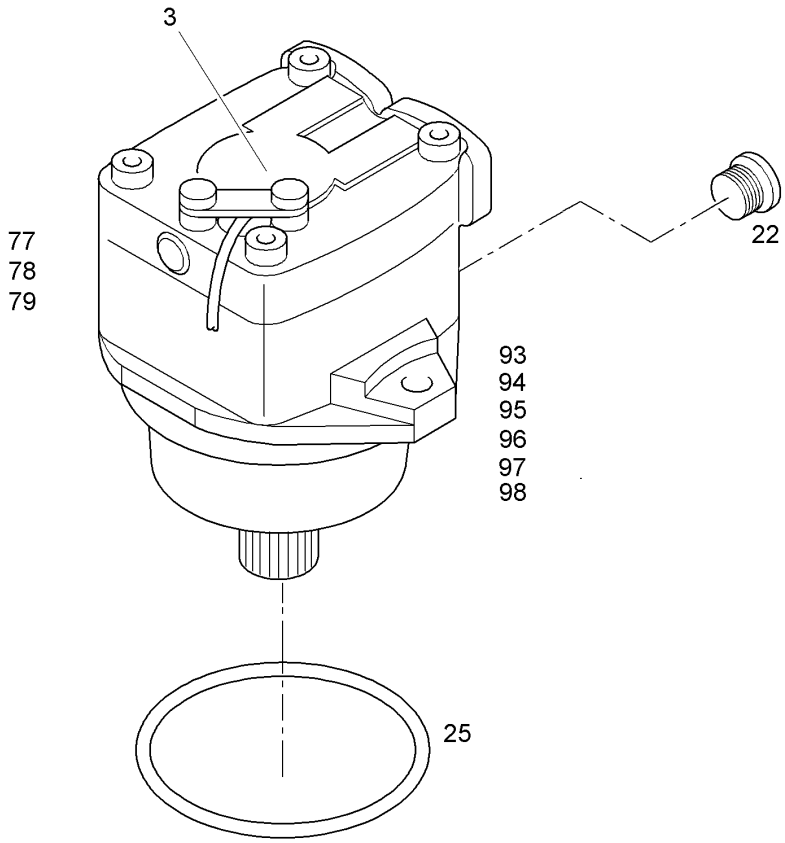

Pos.	Item	Quantity	Description	Designação	Serie	K
3		1	CONNECTING PLATE NG 090 ⇨ ❑ 817	PLACA DE LIGAÇÃO		
22	10137389	1	SCREW PLUG VSTI G3/4A	PARAFUSO DE FECHAMENTO		
25	7380512	1	O-RING ISO 3601-1 177,39X3,53	ANEL-O		
77		1	RK PISTON WITH GUIDE SHOE NG 090 ⇨ ❑ 830	KIT DE REPARO PISTÕES AXIAI		
78		1	RK PULL-BACK BALL+PULL-B.PLATENG 090 ⇨ ❑ 231	KIT REPARO ESF.+PLACA RETO		
79		1	RK CYLINDER+CONTROL PLATE ⇨ ❑ 232	KIT DE REPARO GRUPO ROTÓR		
93		1	SEAL KIT SHUTTLE VALVE WV 10 ⇨ ❑ 119	KIT DE VED VÁLVULA DE SUBST		
94		1	REPAIR KIT DRIVING MECHANISM NG 090 ⇨ ❑ 234	KIT DE REPARO		
95		1	REPAIR KIT SHAFT NG 090 ⇨ ❑ 233	KIT DE REPARO DO EIXO		
96		1	REPAIR KIT LOCK RING NG 090 ⇨ ❑ 828	KIT DE REPARO		
97		1	SEALING SET VALVE DBE 10 ⇨ ❑ 837	KIT DE VEDACAO DA VALVULA		
98	9273163	1	SEAL KIT NG 090 ⇨ ❑ 235	KIT DE VEDAÇÃO		

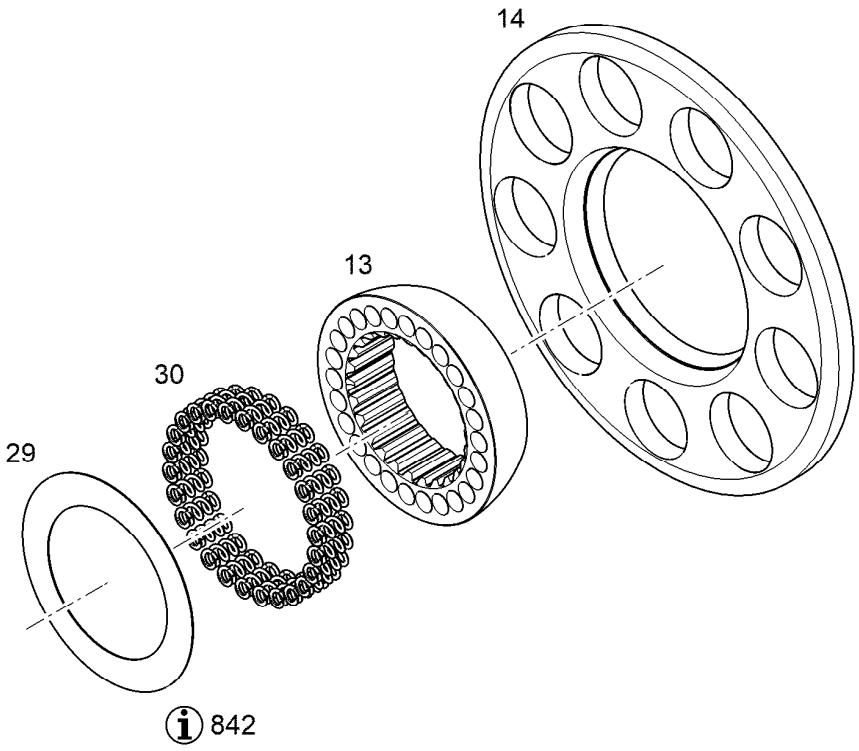

Pos.	Item	Quantity	Description	Designação	Serie	K
13		1	PULL-BACK BALL NG 090	ESFERA DE RETORNO		
14		1	PULL-BACK PLATE NG 090	PLACA DE RETORNO		
29		1	WASHER SET ⇨ ❑ 834	KIT DE ARRUELAS		
30	7382188	21	PRESSURE SPRING 1,30X5,20X13,90	MOLA DE PRESSÃO		
842		1	MOUNTING REQUIREMENT	NORMA DE MONTAGEM		

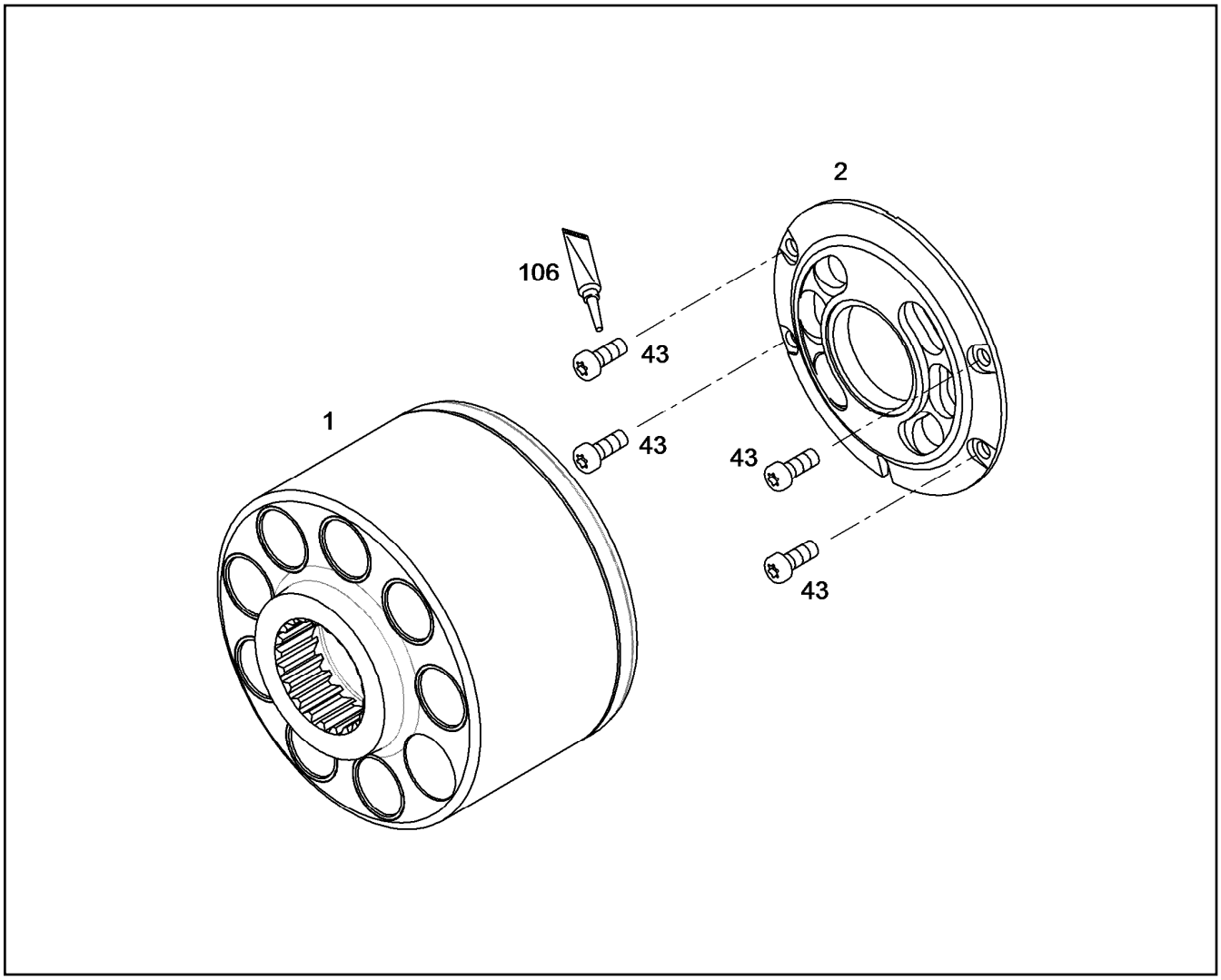

Pos.	Item	Quantity	Description	Designação	Serie	K
1		1	CYLINDER WITH BUSHING NG 090	CILINDRO COM BUCHA		
2		1	GUIDE PLATE NG 090	PLACA GUIA		
43		4	SOCKET HEAD SCREW ISO 14580 M6X16 1	PARAFUSO CILÍNDRICO		
106	8700012	1	SCREW LOCKING	COLA PARA ELEMENTOS FIXA		

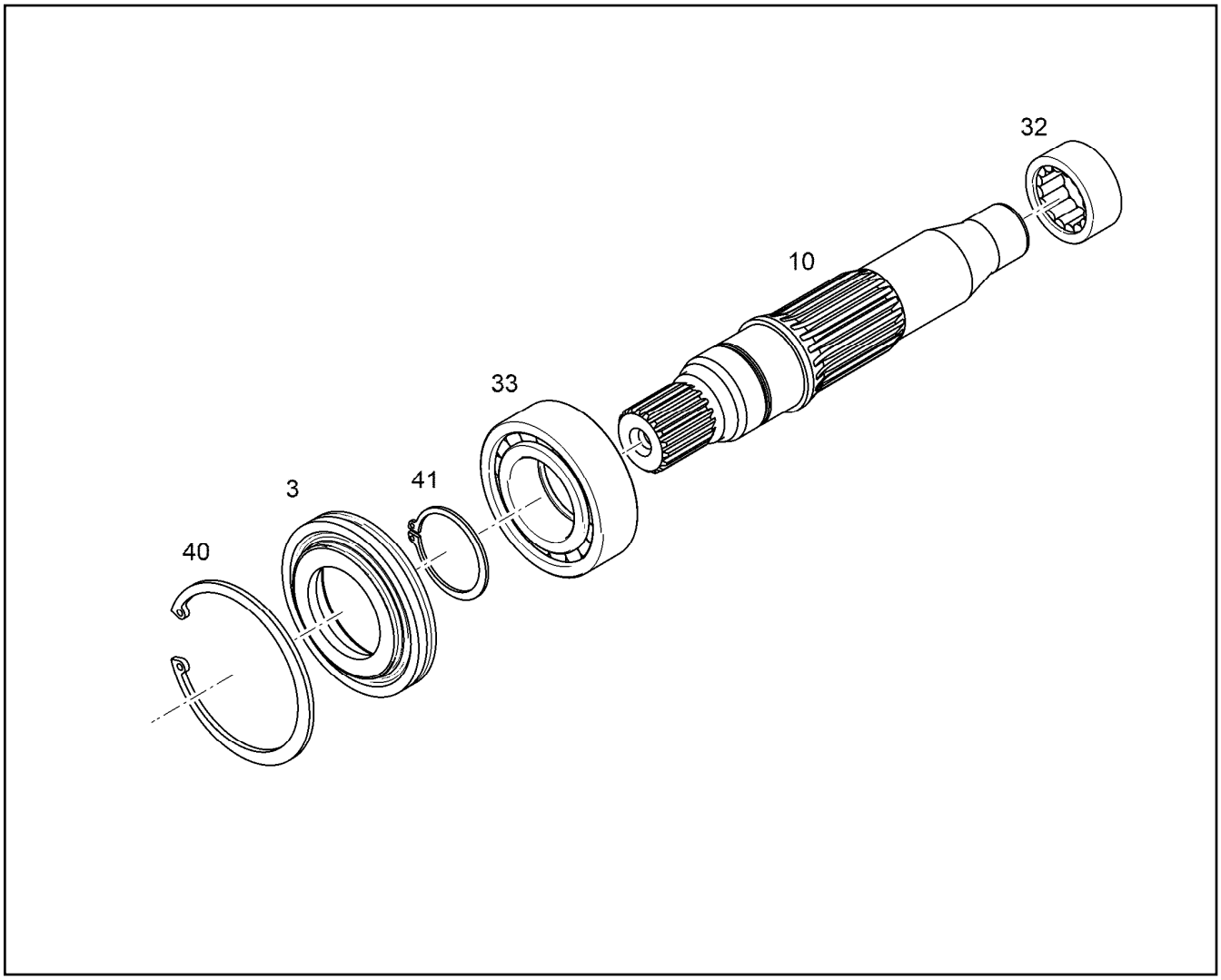

Pos.	Item	Quantity	Description	Designação	Serie	K
3		1	CLOSING RING PRE-ASS. NG 090-107 ⇨ ❑ 814			
10		1	DRIVING SHAFT NG 090	EIXO DO MOTOR		
32	12593102	1	CYLINDRICAL ROLLER BEARING	ROLAMENTO DE ROLOS CILÍN		
33	7380070	1	CYLINDRICAL ROLLER BEARING	ROLAMENTO DE ROLOS CILÍN		
40	4281017	1	LOCKING RING DIN 472 95	ANEL DE RETENÇÃO		
41	11697578	1	LOCKING RING DIN 471 B 45	ANEL DE RETENÇÃO		

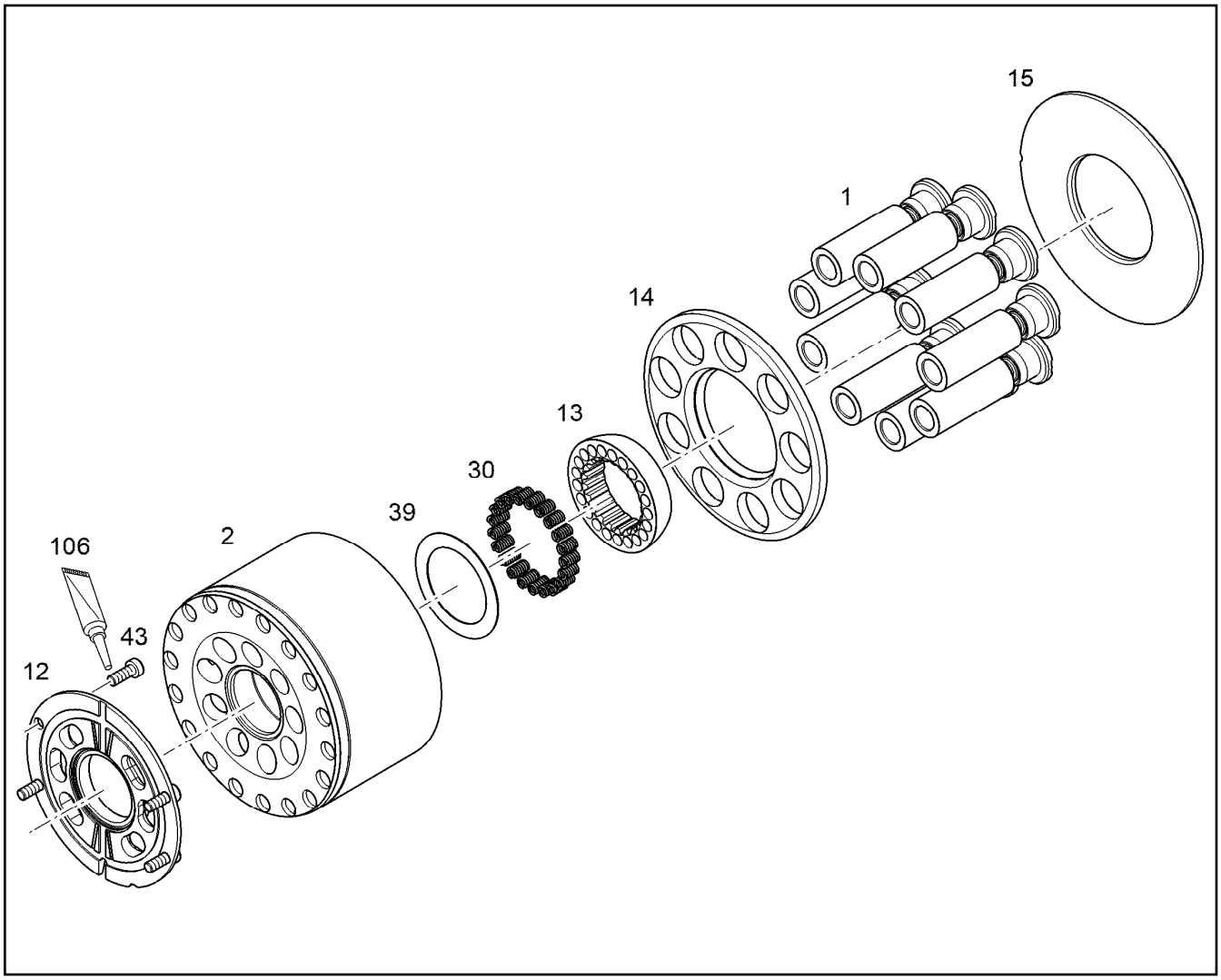

Pos.	Item	Quantity	Description	Designação	Serie	K
1		9	PISTON WITH GUIDE SHOE NG 090	PISTÃO PATIM		
2		1	CYLINDER WITH BUSHING NG 090	CILINDRO COM BUCHA		
12		1	GUIDE PLATE NG 090	PLACA GUIA		
13		1	PULL-BACK BALL NG 090	ESFERA DE RETORNO		
14		1	PULL-BACK PLATE NG 090	PLACA DE RETORNO		
15		1	SLIDING DISC 62X135X5	ARRUELA DESLIZANTE		
30	7382188	21	PRESSURE SPRING 1,30X5,20X13,90	MOLA DE PRESSÃO		
39	9885928	1	WASHER SET ⇨ ❑ 834	KIT DE ARRUELAS		
43	4981218	4	SOCKET HEAD SCREW ISO 14580 M6X16 1	PARAFUSO CILÍNDRICO		
106	8700039	1	ADHESIVE 50ML TUBE ROT	COLA		

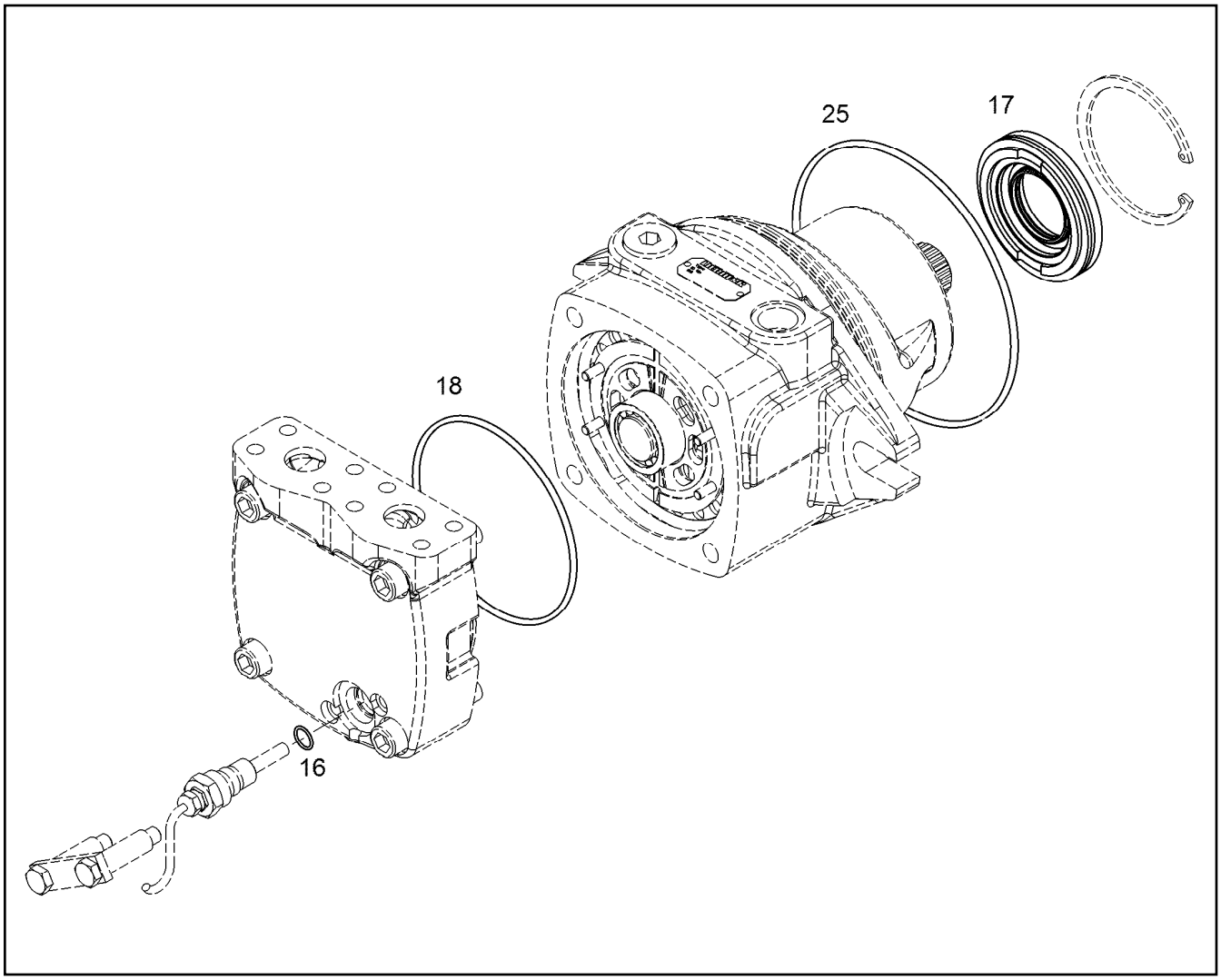

Pos.	Item	Quantity	Description	Designação	Serie	K
16		1	O-RING DIN 3771 13,10X2,62	ANEL-O		
17		1	CLOSING RING NG 090-107	ANEL DE FECHAMENTO		
18		1	O-RING ISO 3601-1 129,77X3,53	ANEL-O		
25		1	O-RING ISO 3601-1 177,39X3,53	ANEL-O		

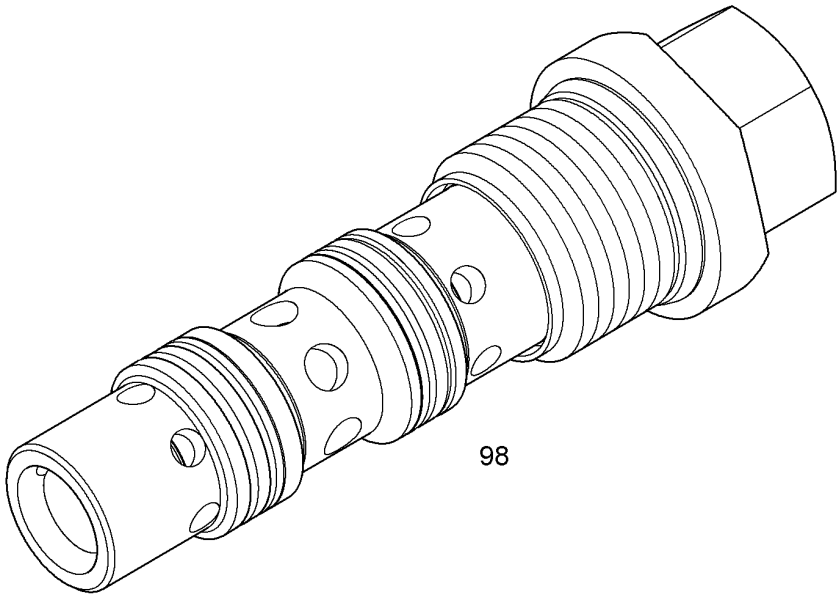

Pos.	Item	Quantity	Description	Designação	Serie	K
98	9266232	1	SEAL KIT SHUTTLE VALVE WV 10 ⇨ ❑ 119	KIT DE VED VÁLVULA DE SUBST		

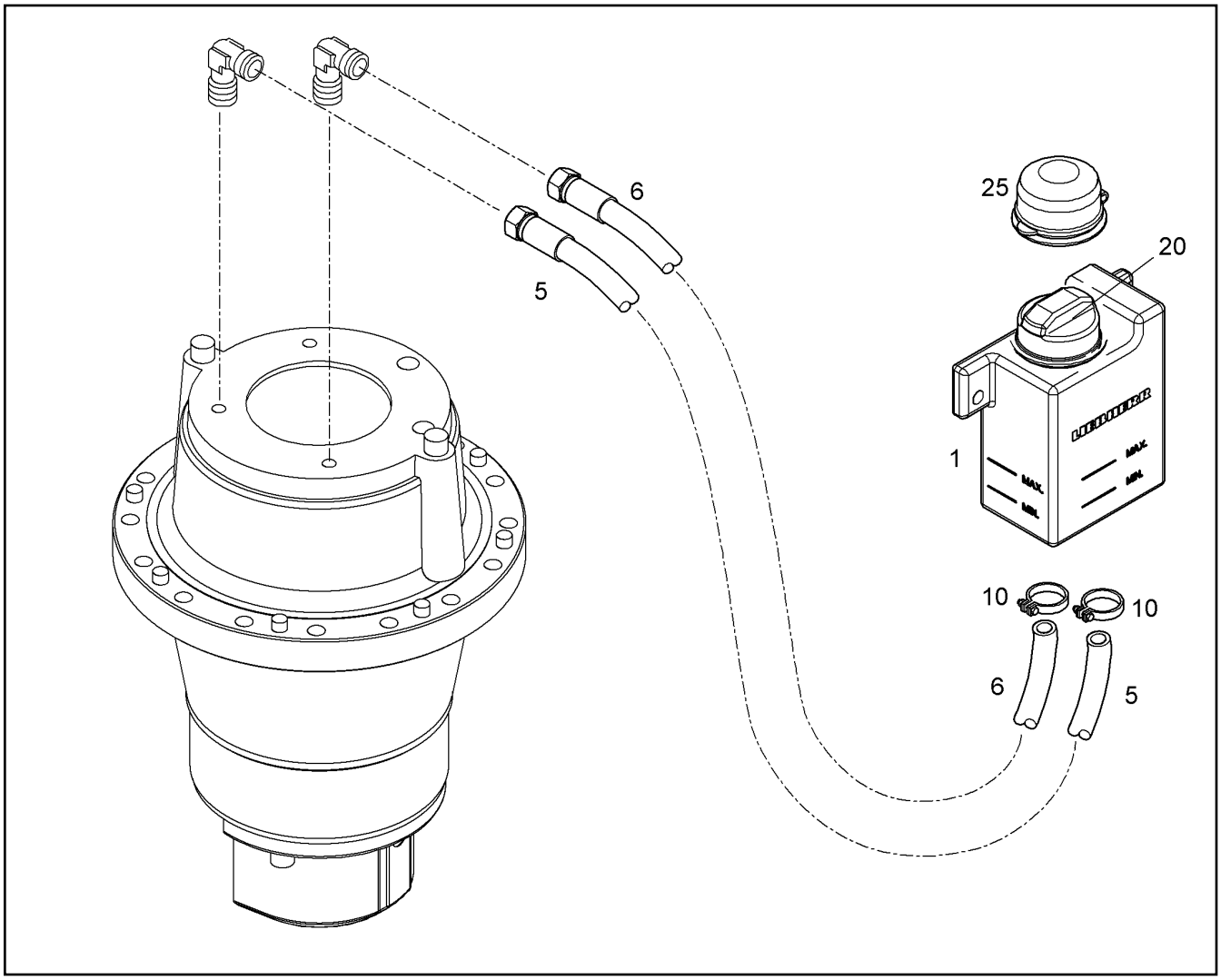

Pos.	Item	Quantity	Description	Designação	Serie	K
1	968868001	1	OIL TANK	RESERVATÓRIO DE ÓLEO		
5	10167654	2	HYDRAULIC HOSE 16X670	MANGUEIRA HIDRAULICA		1
6	10293570	1	HOSE 16X750	MANGUEIRA		1
10	10170796	2	HOSE CLAMP DIN 3017-2 B1 23 21,5-24,5X1	ABRAÇADEIRA DE MANGUEIRA		
20	7610826	1	LOCKABLE TANK CAP d=45	FECHO DO TANQUE		
25	968461801	1	COVER LID	CAPA DE COBERTURA		

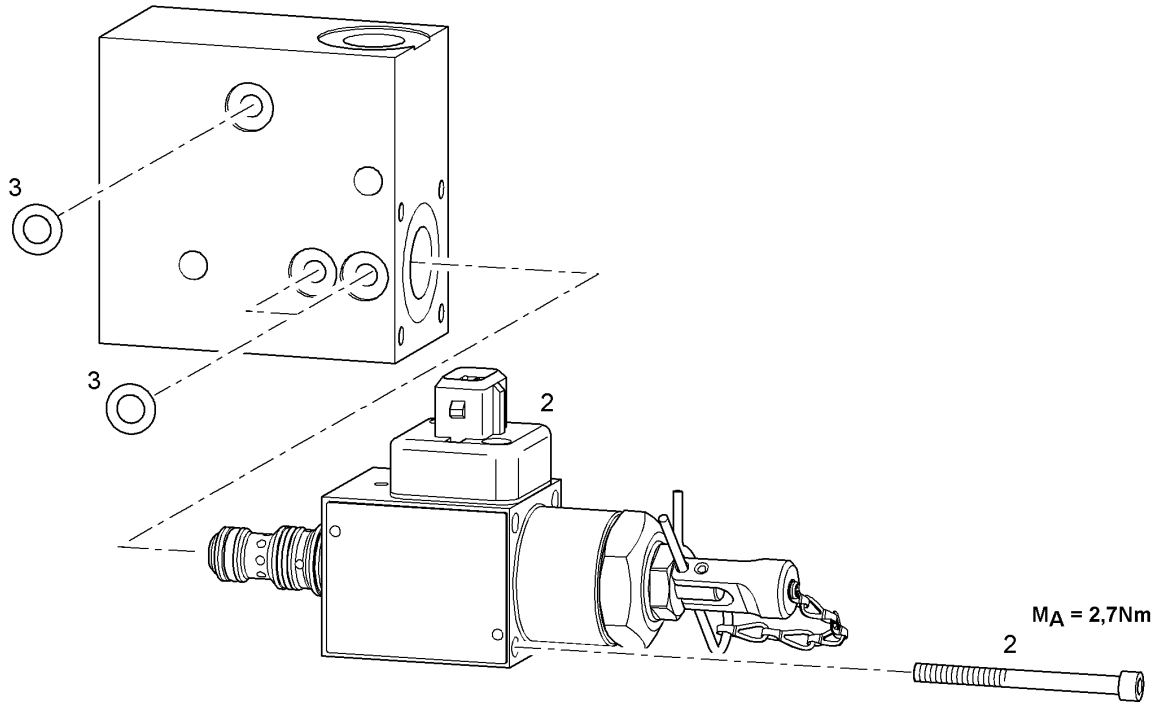

Pos.	Item	Quantity	Description	Designação	Serie	K
2	10021915	1	CONTROL SOLENOID VALVE DRUCKRESUZ ⇨ ❑ 369	VÁLVULA SOLENÓIDE		
3	10024675	3	O-RING 7,65X1,78	ANEL-O		

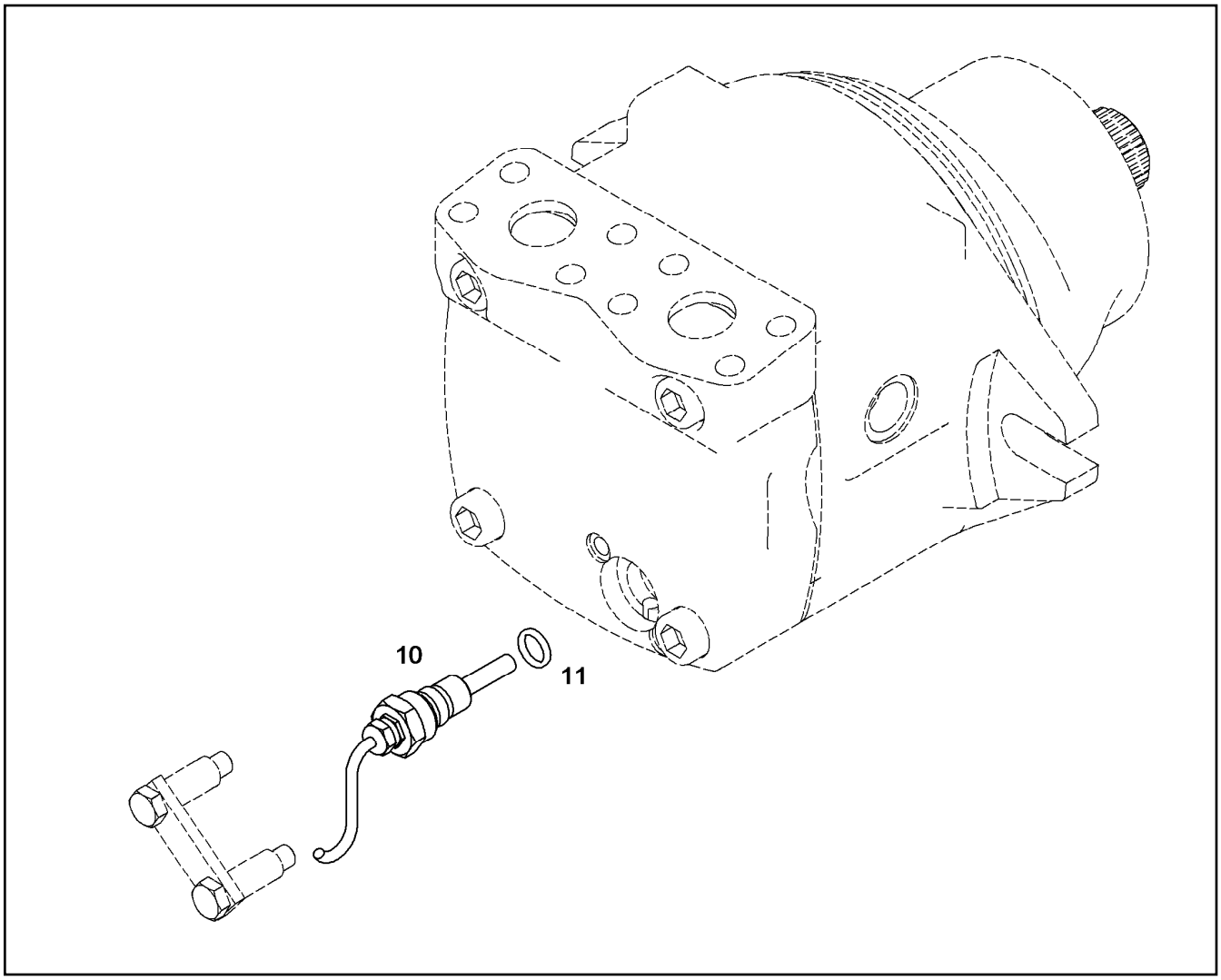

Pos.	Item	Quantity	Description	Designação	Serie	K
10		1	ROTATIONAL SPEED SENSOR ⇨ ❑ 240	SENSOR DE VELOCIDADE		
11		1	O-RING DIN 3771 13,10X2,62	ANEL-O		

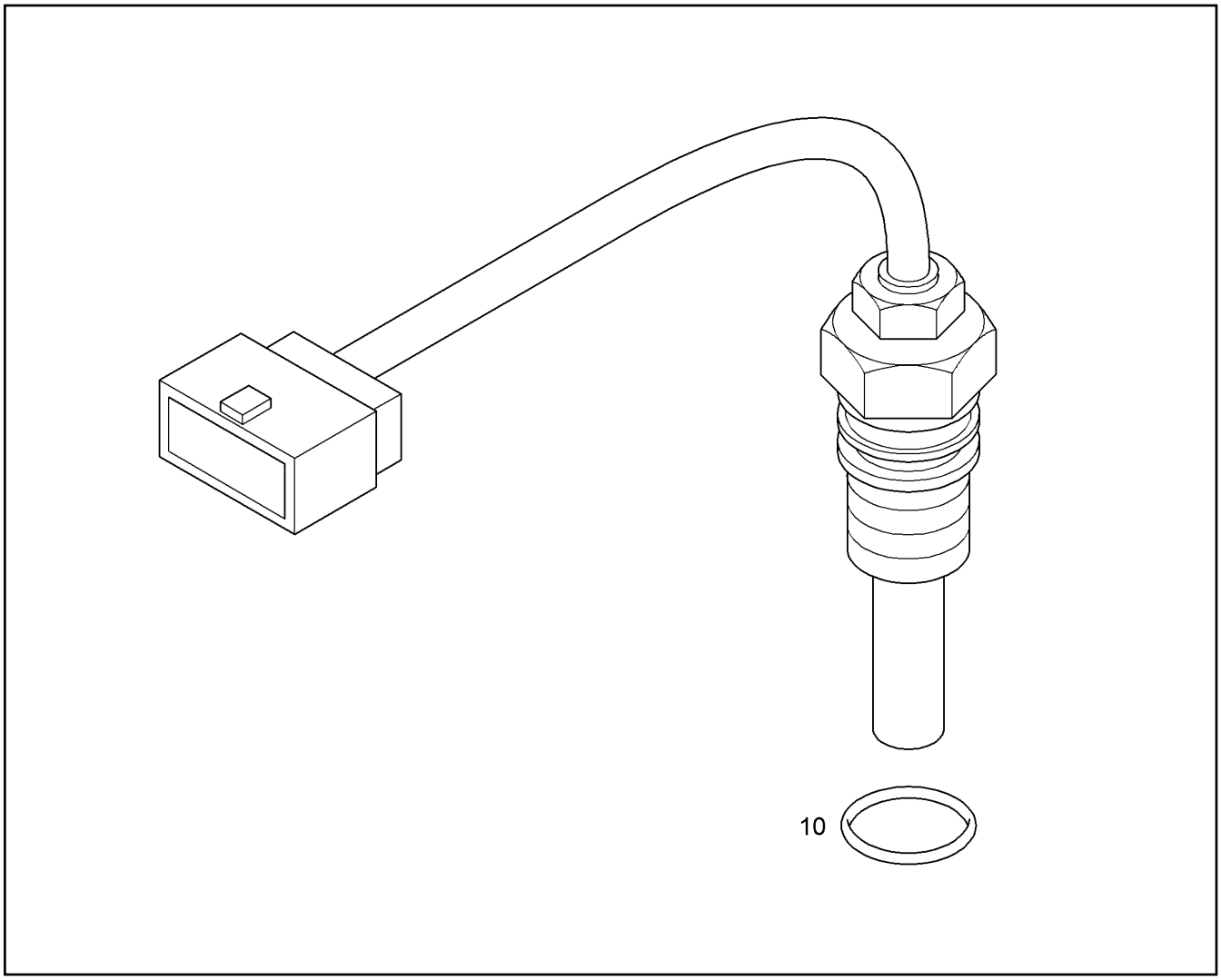

Pos.	Item	Quantity	Description	Designação	Serie	K
10	7381018	1	O-RING DIN 3771 13,10X2,62	ANEL-O		

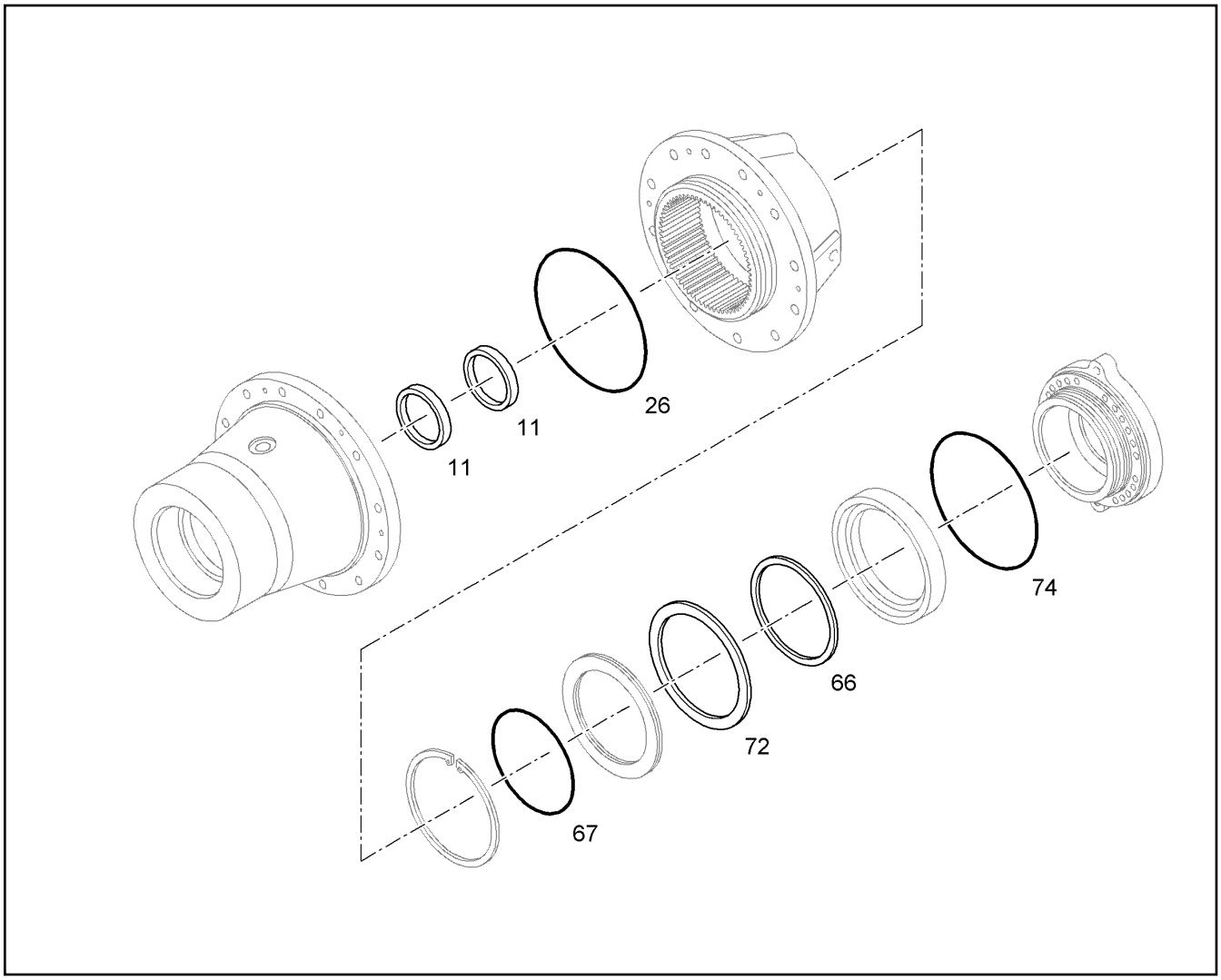

Pos.	Item	Quantity	Description	Designação	Serie	K
11		2	ROTARY SHAFT LIP SEAL B1X115X135X13	ANEL DE VEDAÇÃO DO EIXO RA		
26		1	O-RING 320X4	ANEL-O		
66		1	ROD SEAL 231,4X241X5,5	ANEL RANHURADO		
67		1	O-RING 220X3	ANEL-O		
72		1	ROD SEAL 280X270,4X5,5	ANEL RANHURADO		
74		1	O-RING 290X4	ANEL-O		

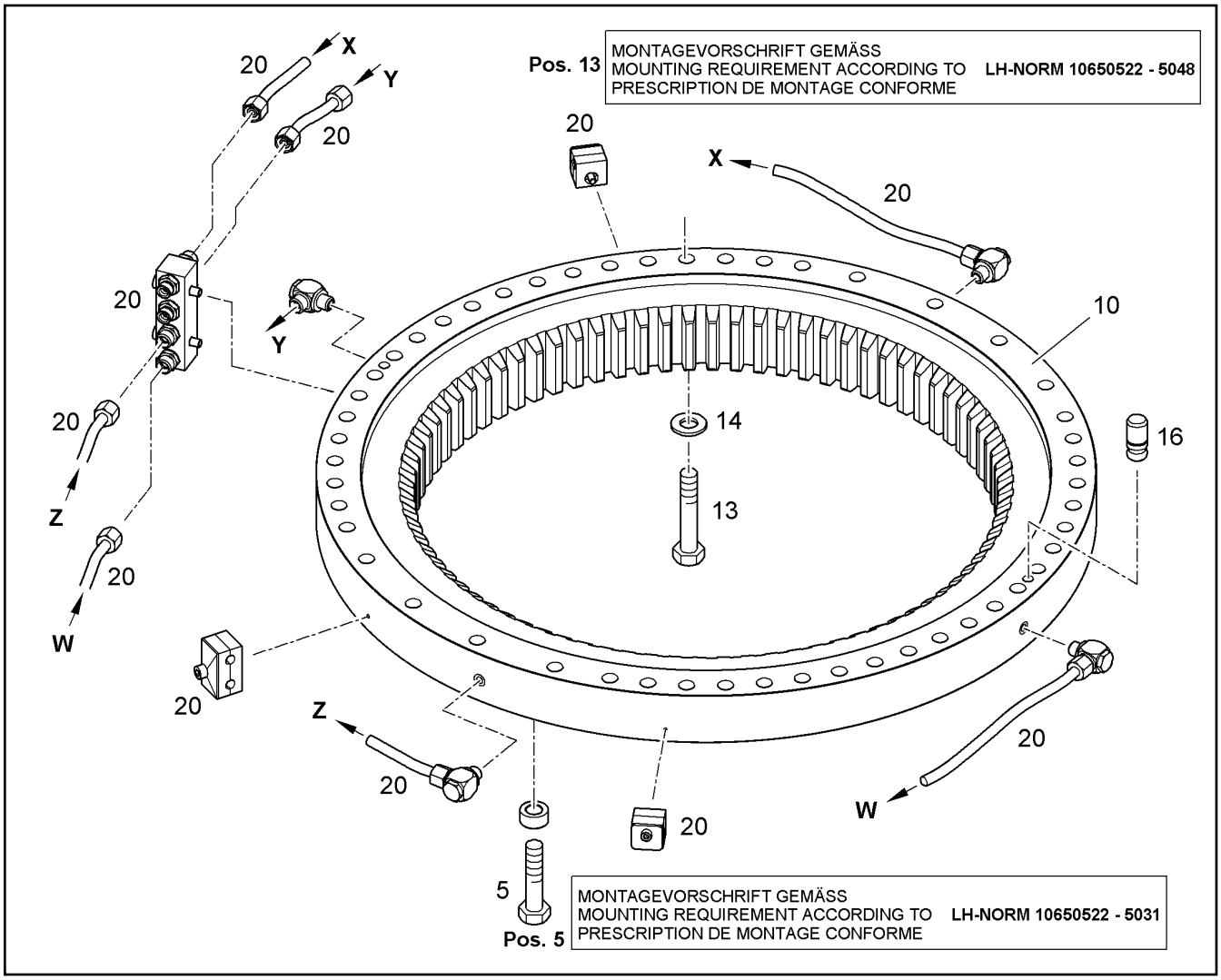

Pos.	Item	Quantity	Description	Designação	Serie	K
5		1	FIXING PARTS SWING RING ⇨ ❑ 243	PEÇAS FIXAÇÃO COROA GIRA		
10	933628601	1	BALL SLEWING RING [137-0000263] ⇨ ❑ 245	ROLAMENTO DE ESFERAS		
13	10425625	50	HEX SCREW ISO 4014 M27X150 10.9 FLZN	PARAFUSO SEXTAVADO		
14	9586495	50	WASHER 27,5/45X6	ARRUELA		
16	90018066	1	CENTERING PIN 20X45	PINO DE CENTRAGEM		
20		1	GREASE PIPE INSTALLATION ⇨ ❑ 244	TUBO LUBRIFICAÇÃO - INSTAL		

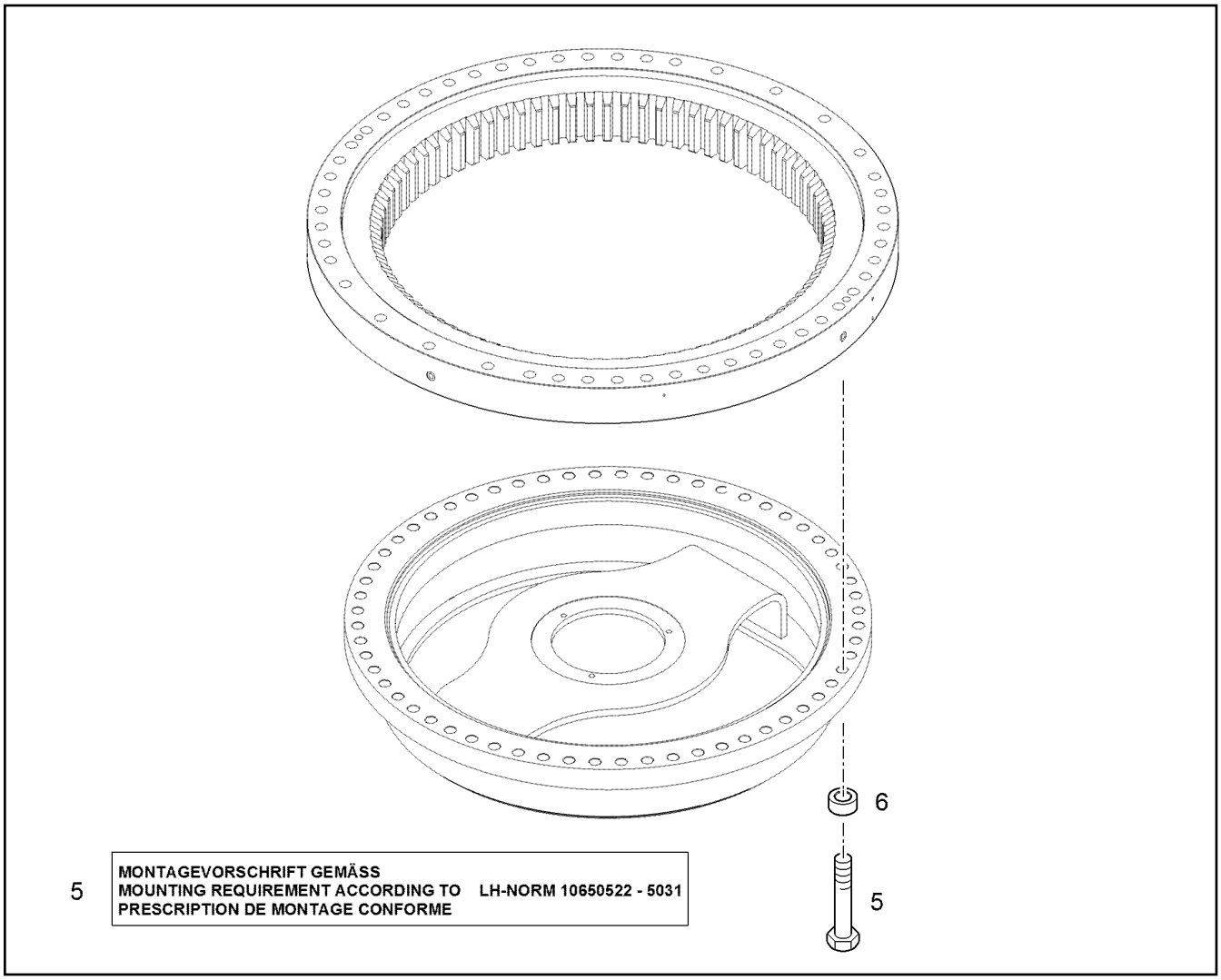

Pos.	Item	Quantity	Description	Designação	Serie	K
5	10425702	60	HEX SCREW ISO 4014 M27X110 10.9 FLZN	PARAFUSO SEXTAVADO		
6	10062070	60	SLEEVE 28X50X15	LUVA		

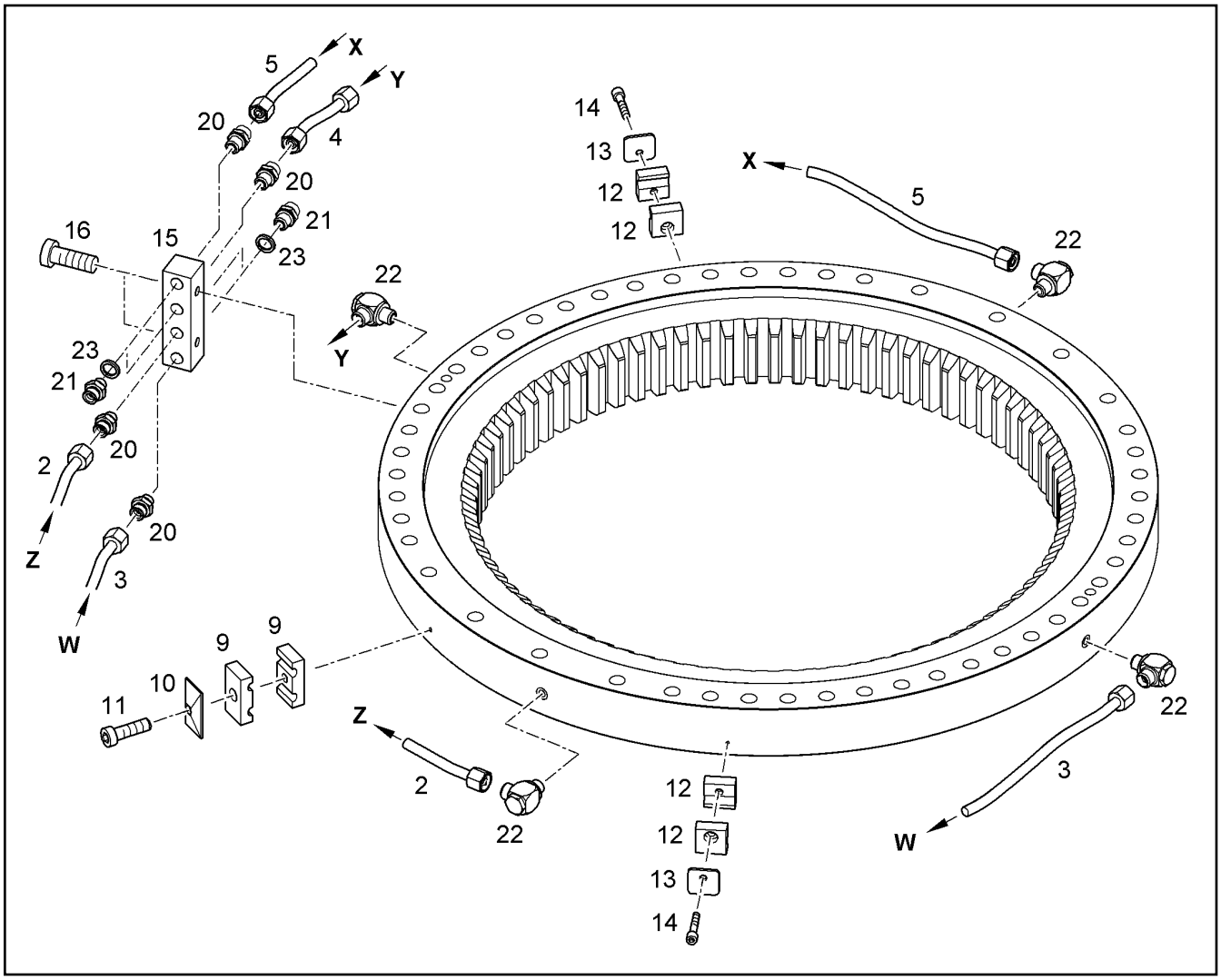

Pos.	Item	Quantity	Description	Designação	Serie	K
2	9946410	1	GREASE PIPE	TUBO DE LUBRIFICAÇÃO		
3	9946411	1	GREASE PIPE	TUBO DE LUBRIFICAÇÃO		
4	9946412	1	GREASE PIPE	TUBO DE LUBRIFICAÇÃO		
5	9946413	1	GREASE PIPE	TUBO DE LUBRIFICAÇÃO		
9	7365069	2	CLAMP-HALF AEHNL.DIN 3015 Z 2 R 10 10 P	MEIA ABRAÇADEIRA		
10	7362606	1	LID PLATE DIN 3015-3 Z-DP 2 W1-ZN	PLACA		
11	10468312	1	SOCKET HEAD SCREW ISO 4762 M8X40 10	PARAFUSO CILÍNDRICO		
12	7364901	4	CLAMP-HALF DIN 3015-1 L 0 R 10 PP SW	MEIA ABRAÇADEIRA		
13	7364904	2	LID PLATE DIN 3015-1 L-DP 0 W1-ZN	PLACA		
14	10875590	2	SOCKET HEAD SCREW ISO 4762 M6X35 8.8	PARAFUSO CILÍNDRICO		
15	9375276	1	LUBRICATING PAD	PLACA DE LUBRIFICACAO		
16	10468312	2	SOCKET HEAD SCREW ISO 4762 M8X40 10	PARAFUSO CILÍNDRICO		
20	7003814	4	FITTING GE 10L M14X1,5	UNIÃO ROSCADA		
21	7368545	4	FITTING GE SA301 6L M14X1,5	UNIÃO ROSCADA		
22	7617714	4	HINGED THREADED UNION WH 10L M14X1,	CONEXÃO ROSCADA		
23	7101008	4	SEALING RING DIN 7603 A 14X18	ANEL DE VEDAÇÃO		

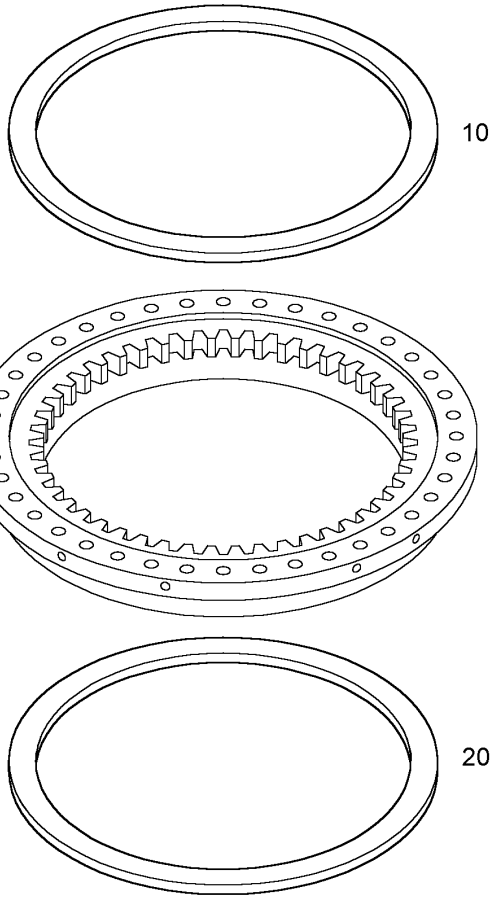

Pos.	Item	Quantity	Description	Designação	Serie	K
10	262181001	4.11m	SEALING PROFILE	PERFIL DE VEDAÇÃO		
20	262181001	4.15m	SEALING PROFILE	PERFIL DE VEDAÇÃO		

Pos.	Item	Quantity	Description	Designação	Serie	K
2		1	AUTOMATIC CENTRALIZED LUBRICA. ⇨ ❑ 248	LUBRIFICAÇÃO CENTR. AUTOMÁ		
3		1	CENTRAL LUBRICATING SYSTEM ⇨ ❑ 247	LUBRIFICAÇÃO CENTRALIZADA		

Pos.	Item	Quantity	Description	Designação	Serie	K
4	7008622	1	CLAMP DIN 3016-1 D1 25X20 W1-2-CR	BRAÇADEIRA		
5	7366260	6	CLAMP DIN 3016-1 D1 34X20 W1-2-CR	BRAÇADEIRA		
6	10299669	4	HEX NUT M8	PORCA SEXTAVADA		
7	10663450	3	SOCKET HEAD SCREW ISO 4762 M8X16 10	PARAFUSO CILÍNDRICO		
15	10293001	1	DISTRIBUTION BLOCK MX-F 4/6 ⇨ ❑ 254	BLOCO DE DISTRIBUIÇÃO		
16	12228961	2	SOCKET HEAD SCREW ISO 4762 M5X65 8.8	PARAFUSO CILÍNDRICO		
20	10037728	2	CLAMP HRBGS 0A G 8 TPE73	BRAÇADEIRA		
21	10037723	2	BRACKET	ESTRIBO		
22	10651864	2	SOCKET HEAD SCREW ISO 4762 M6X10 10	PARAFUSO CILÍNDRICO		
25	10037726	2	CLAMP HRBGS 1 G 8 8	BRAÇADEIRA		
26	10037722	2	BRACKET	ESTRIBO		
27	10651864	2	SOCKET HEAD SCREW ISO 4762 M6X10 10	PARAFUSO CILÍNDRICO		
29	7361498	1	CLAMP DIN 3016-1 D1 15X15 W1-2-CR	BRAÇADEIRA		
30	9344777	2	HOSE GUIDE	GUIA DE MANGUEIRA		
39	12860504	1	CONSOLE	CONSOLE		
40	10074866	1	CONSOLE	CONSOLE		
41	10299578	2	HEX SCREW ISO 4017 M10X25 10.9 FLZN	PARAFUSO SEXTAVADO		
43	10056984	2	SHEET	PLACA DE APOIO		
44	10056981	4	HALF CLAMP COLLAR d=11	MEIA ABRAÇADEIRA		
45	10468234	4	SOCKET HEAD SCREW ISO 4762 M8X45 10	PARAFUSO CILÍNDRICO		

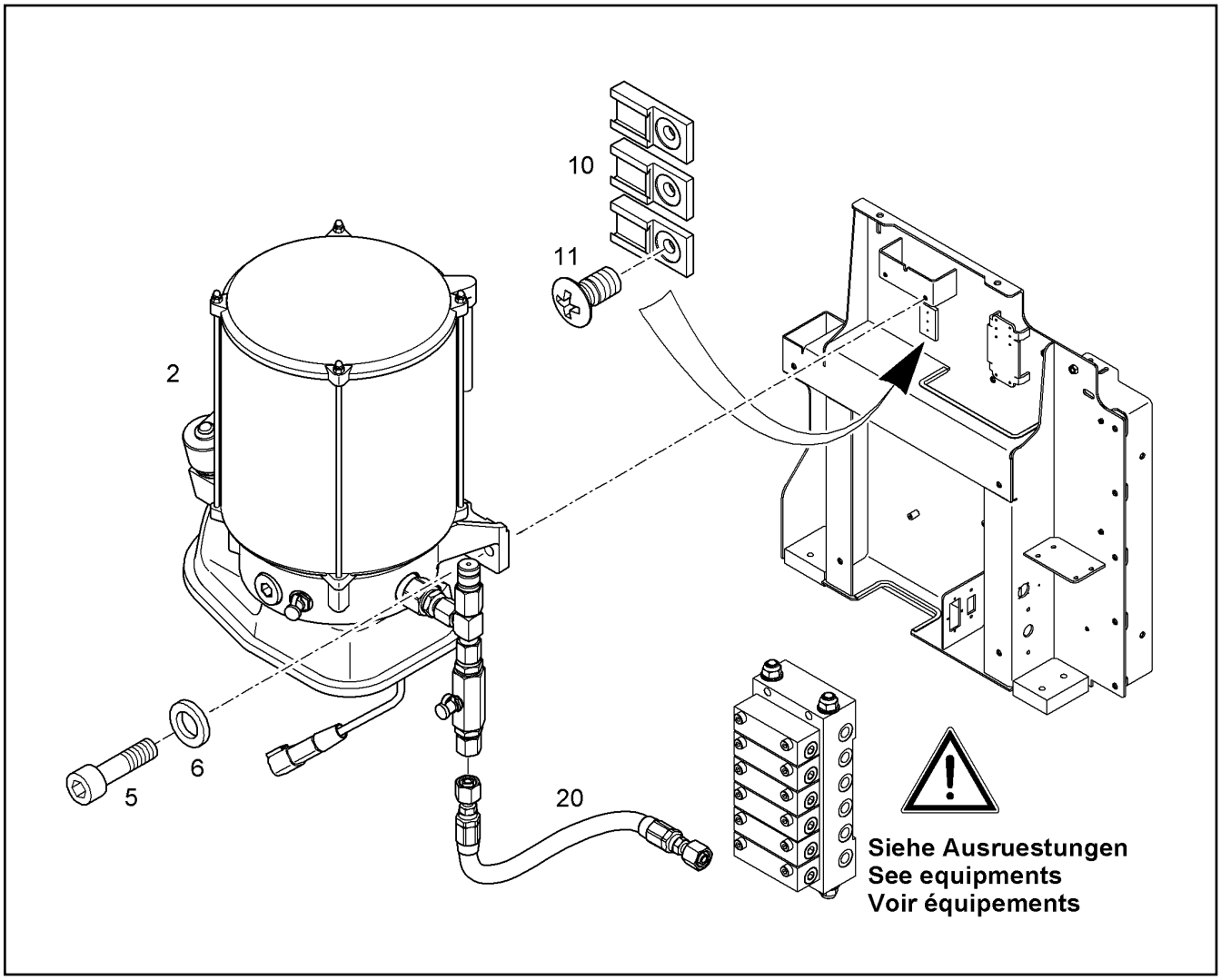

Pos.	Item	Quantity	Description	Designação	Serie	K
2	10228443	1	LUBRICATION PUMP ⇨ ❑ 249	BOMBA DE LUBRIFICACAO		
5	12230847	2	SOCKET HEAD SCREW ISO 4762 M8X30 10	PARAFUSO CILÍNDRICO		
6	10289803	2	WASHER 8 300HV	ARRUELA		
10	6203497	3	FASTENER F.DT STECKER	ELEMENTO DE FIXACAO		
11	12233288	3	COUNTERSUNK SCREW ISO 10642 M5X10	PARAFUSO ESCAREADO		
20	10037533	1	HOSE 6,3X355	MANGUEIRA		1

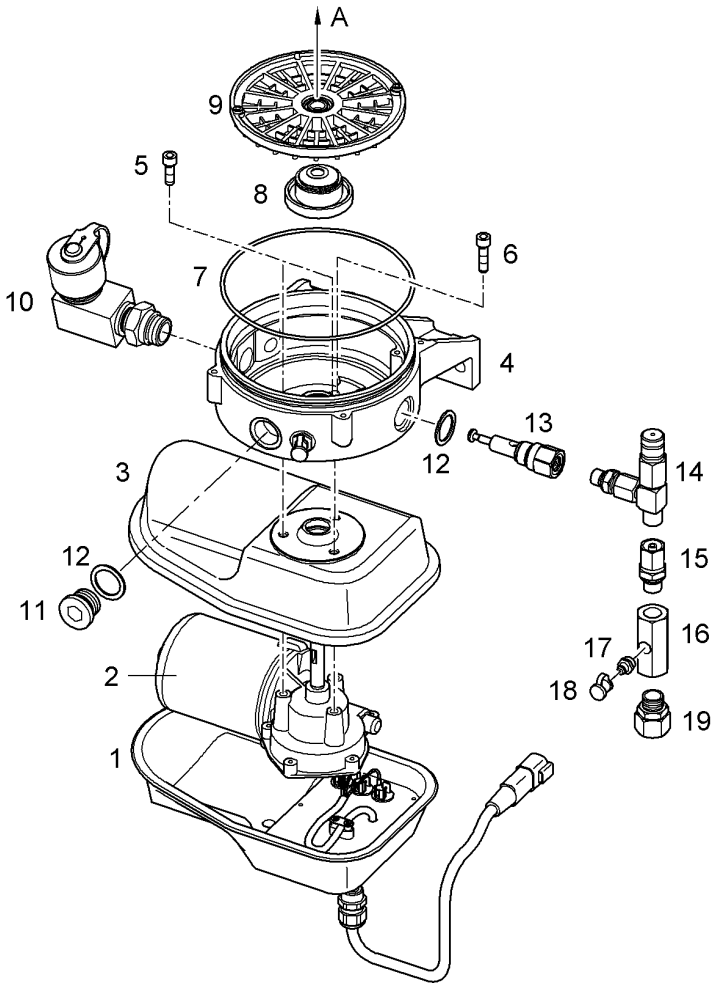

Pos.	Item	Quantity	Description	Designação	Serie	K
1	10220513	1	MOTOR HOUSING	CARCAÇA DO MOTOR		
2	10014691	1	DIRECT-CURRENT MOTOR	MOTOR DE CORRENTE CONTI		
3	10014692	1	MOTOR HOUSING	CARCAÇA DO MOTOR		
4	10014693	1	PUMP HOUSING	CARCAÇA DA BOMBA		
5	11140465	2	SOCKET HEAD SCREW ISO 4762 M6X20 8.8	PARAFUSO CILÍNDRICO		
6	10875588	1	SOCKET HEAD SCREW ISO 4762 M6X25 8.8	PARAFUSO CILÍNDRICO		
7	10663931	1	O-RING DIN 3771 135X3	ANEL-O		
8	10014729	1	DRIVER	GUIA		
9	10014730	1	INTERMEDIATE RING	ANEL INTERMEDIÁRIO		
10	10296552	1	FILLING CONNECTION 90°	CONEXÃO DE ABASTECIMENTO		
11	4041102	1	SCREW PLUG DIN 910 M20X1,5 ST	PARAFUSO DE FECHAMENTO		
12	10014697	2	SEALING RING	ANEL DE VEDAÇÃO		
13	10216340	1	PUMP ELEMENT	ELEMENTO DA BOMBA		
14	7621324	1	PRESSURE RELIEF VALVE	VÁLVULA SOBRE PRESSÃO		
15	10014698	1	PIPE SOCKET R1/4"	CONEXÃO DE MANGUEIRA		
16	10014699	1	CONNECTING PIECE	PEÇA DE UNIÃO		
17	571578608	1	HYDRAULIC-TYPE LUBRICAT.NIPPLEDIN 7	NIPLE DE LUBRIFICACAO CONIC		
18	10014701	1	GREASE NIPPLE CAP	CAPA DO NIPLE DE LUBRIFICA		
19	10013875	1	PIPE UNION GE 8L R 1/4"	CONEXÃO ROSCADA		

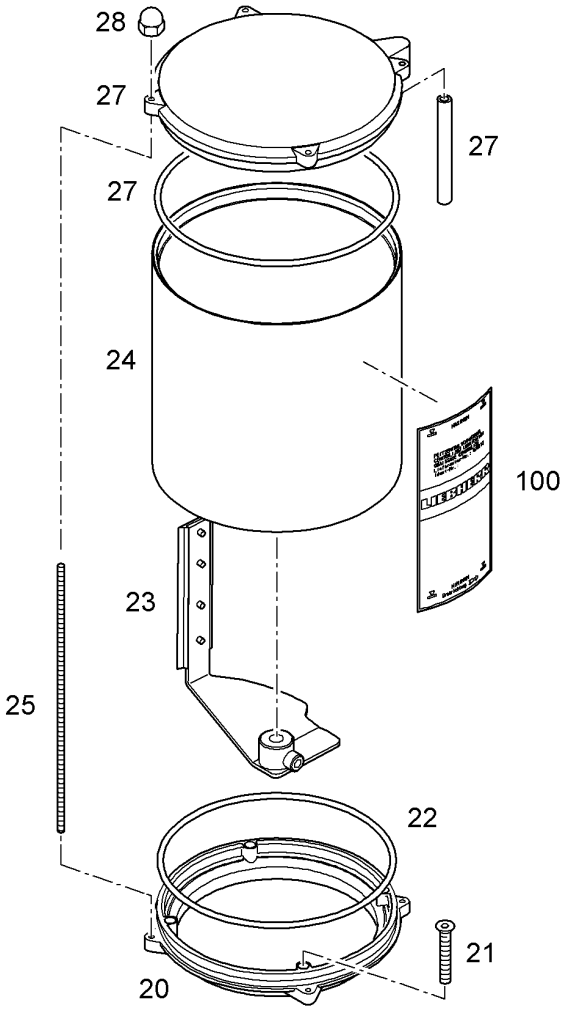

Pos.	Item	Quantity	Description	Designação	Serie	K
20	10014707	1	INTERMEDIATE FLANGE	FLANGE INTERMEDIÁRIO		
21	10014709	4	COUNTERSUNK SCREW M4X35	PARAFUSO ESCAREADO		
22	10014711	1	O-RING 165X3	ANEL-O		
23	10014712	1	AGITATOR PADDLE	PÁ AGITADORA		
24	7621058	1	TRANSPARENT CONTAINER	RECIPIENTE TRANSPARENTE		
25	10014715	4	PULL ROD	TIRANTE DE TRAÇÃO		
27	10014717	1	CONTAINER COVER ⇨ ❑ 256	CAPA COBERTURA DO RECIPIE		
28	10099210	4	CAP NUT M4	PORCA		
100	10441600	1	STICKER	ETIQUETA ADESIVA		

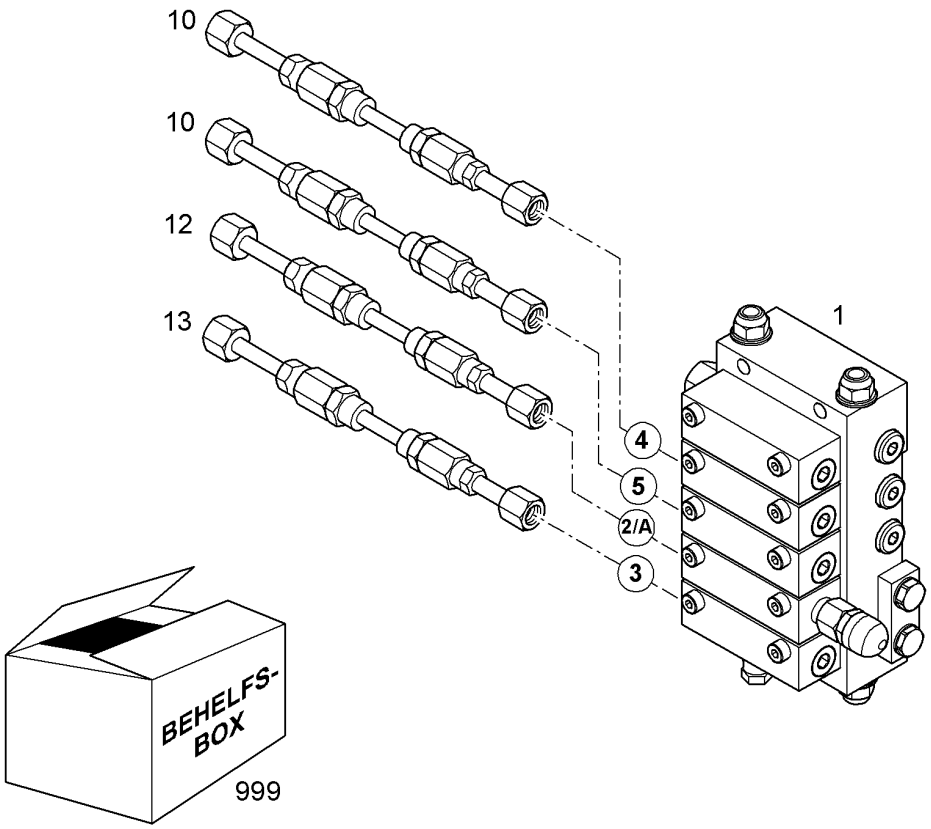

Pos.	Item	Quantity	Description	Designação	Serie	K
1	10664722	1	DISTRIBUTION BLOCK SXE-2 5/4 ⇨ ❑ 253	BLOCO DE DISTRIBUIÇÃO		
10	10292128	2	HOSE 6,3X4925	MANGUEIRA		1
12	10292129	1	HOSE 6,3X3775	MANGUEIRA		1
13	10292130	1	HOSE 6,3X3775	MANGUEIRA		1
999	10014611	1	AUXILIARY BOX ⇨ ❑ 262	CAIXA AUXILIAR		

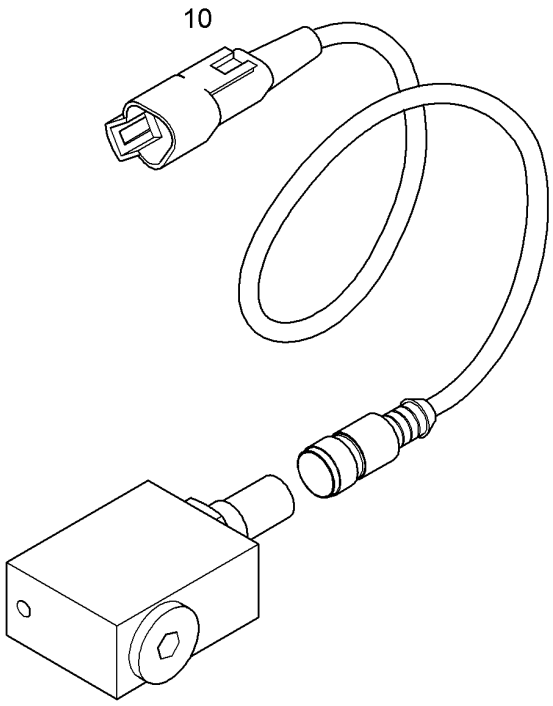

Pos.	Item	Quantity	Description	Designação	Serie	K
10	10014589	1	CONNECTING LINE 3X2,5 0,80m DT04-3P	CABO DE CONEXAO		

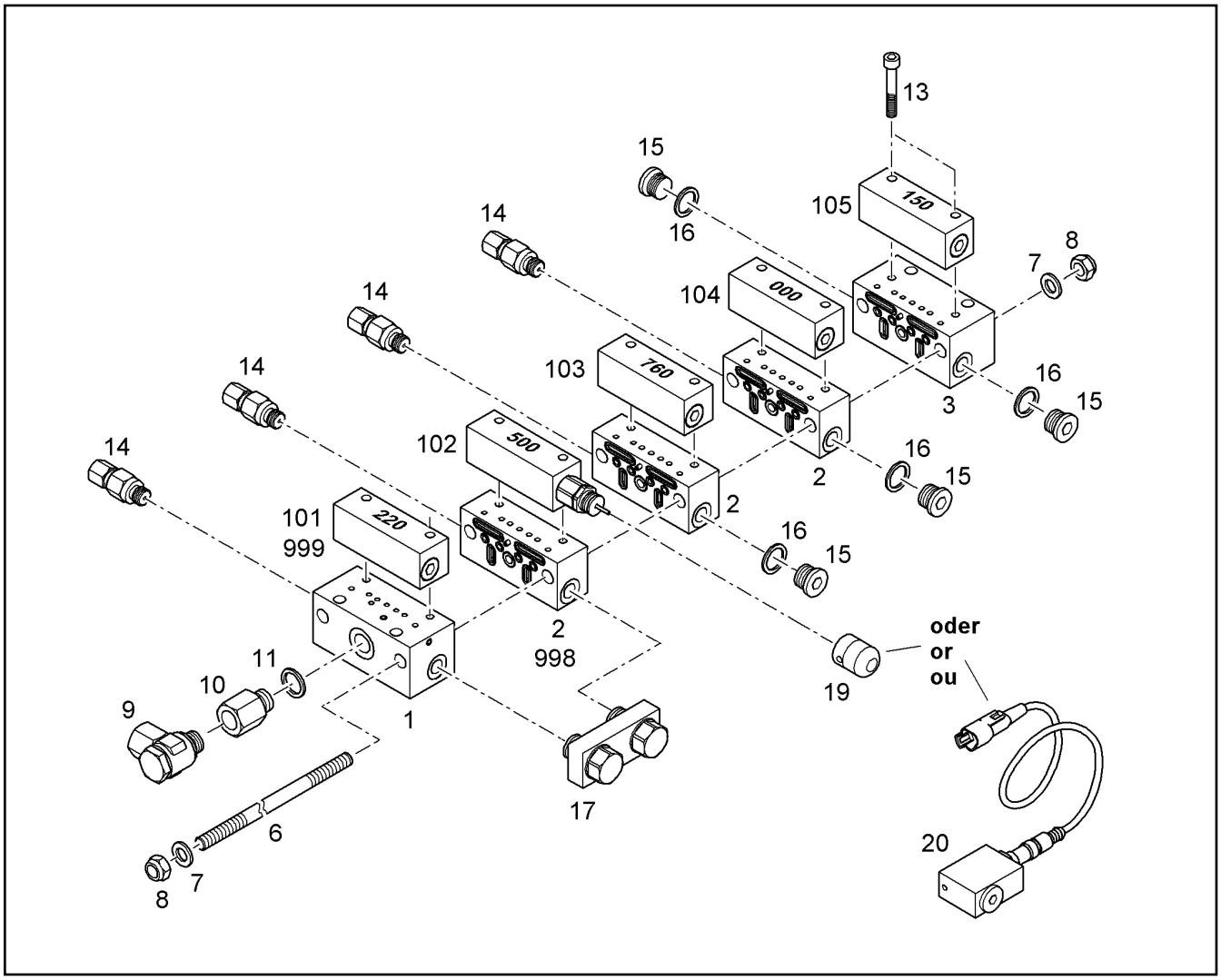

Pos.	Item	Quantity	Description	Designação	Serie	K
1	10013835	1	STARTING ELEMENT SXE-2	ELEMENTO INICIAL		
2	10013837	3	CENTRAL ELEMENT SXE-2	ELEMENTO CENTRAL		
3	10013839	1	END ELEMENT SXE-2	ELEMENTO FINAL		
6	10013857	2	PULL ROD M8X140	TIRANTE DE TRAÇÃO		
7	10289803	4	WASHER 8 300HV	ARRUELA		
8	4901573	4	HEX NUT M8	PORCA SEXTAVADA		
9	7412734	1	HINGED THREADED UNION WH 8L G1/4A	CONEXÃO ROSCADA		
10	10009602	1	EXTENSION	EXTENSÃO		
11	4600544	1	SEALING RING DIN 7603 A 13 X 17 CU	ANEL DE VEDAÇÃO		
13	12204614	10	SOCKET HEAD SCREW ISO 4762 M5X35 8.8	PARAFUSO CILÍNDRICO		
14	10009606	4	VALVE GUIDE	CONEXAO DE SAIDA		
15	7001338	2	SCREW PLUG VSTI G1/8A	PARAFUSO DE FECHAMENTO		
16	7101003	2	SEALING RING DIN 7603 A 10X13,5	ANEL DE VEDAÇÃO		
17	10009784	2	DISTRIBUTOR	BLOCO DE DISTRIBUICAO		
19	10009596	1	COVER	TAMPA		
20	10009330	1	PROXIMITY SWITCH ⇨ ❑ 252	SENSOR DE APROXIMAÇÃO		
101	10013843	1	PROPORTIONING ELEMENT SXE-2 220	ELEMENTO DE DOSAGEM		
102	10013851	1	PROPORTIONING ELEMENT SXE-2 500	ELEMENTO DE DOSAGEM		
103	10013848	1	PROPORTIONING ELEMENT SXE-2 760	ELEMENTO DE DOSAGEM		
104	10013840	1	PROPORTIONING ELEMENT SXE-2 000	ELEMENTO DE DOSAGEM		
105	10013842	1	PROPORTIONING ELEMENT SXE-2 150	ELEMENTO DE DOSAGEM		
998	10018373	1	O-RING KIT	JOGO DE ANEL O		
999	10018375	1	O-RING KIT	JOGO DE ANEL O		

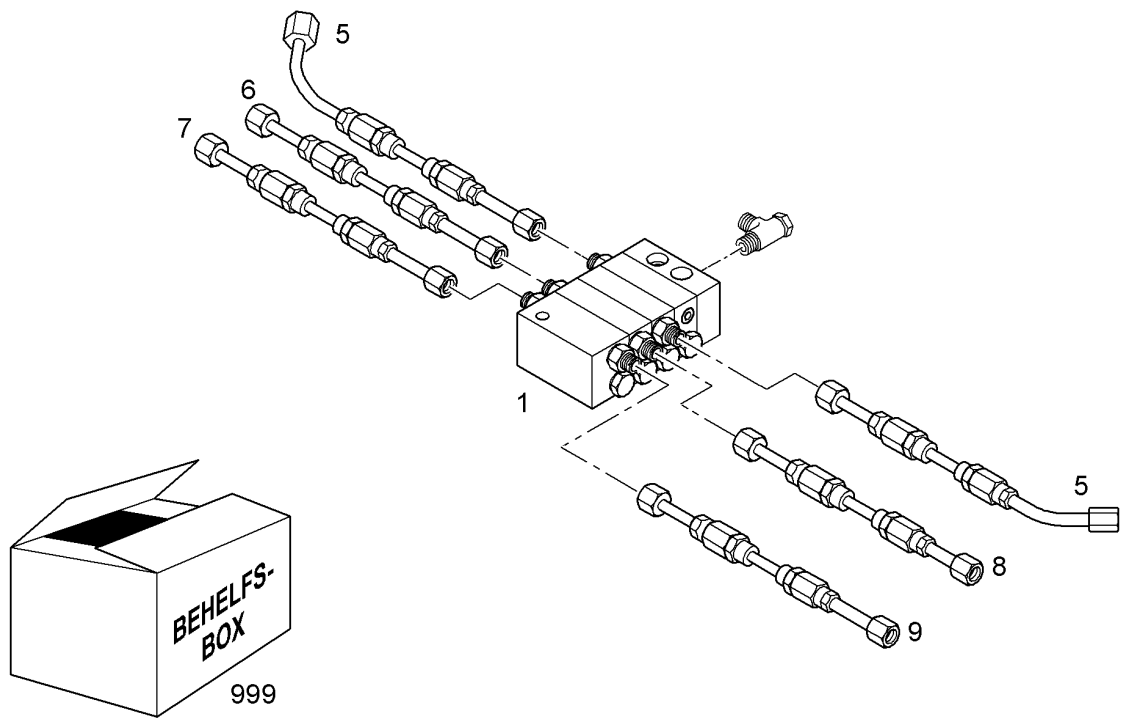

Pos.	Item	Quantity	Description	Designação	Serie	K
1	10293003	1	DISTRIBUTION BLOCK MX-F 4/6 ⇨ ❑ 255	BLOCO DE DISTRIBUIÇÃO		
5	10293030	2	HOSE 4X1097	MANGUEIRA		1
6	10291382	1	HOSE 4X732	MANGUEIRA		1
7	10293029	1	HOSE 4X702	MANGUEIRA		1
8	10293028	1	HOSE 4X720	MANGUEIRA		1
9	10293026	1	HOSE 4X690	MANGUEIRA		1
999	10014611	1	AUXILIARY BOX ⇨ ❑ 262	CAIXA AUXILIAR		

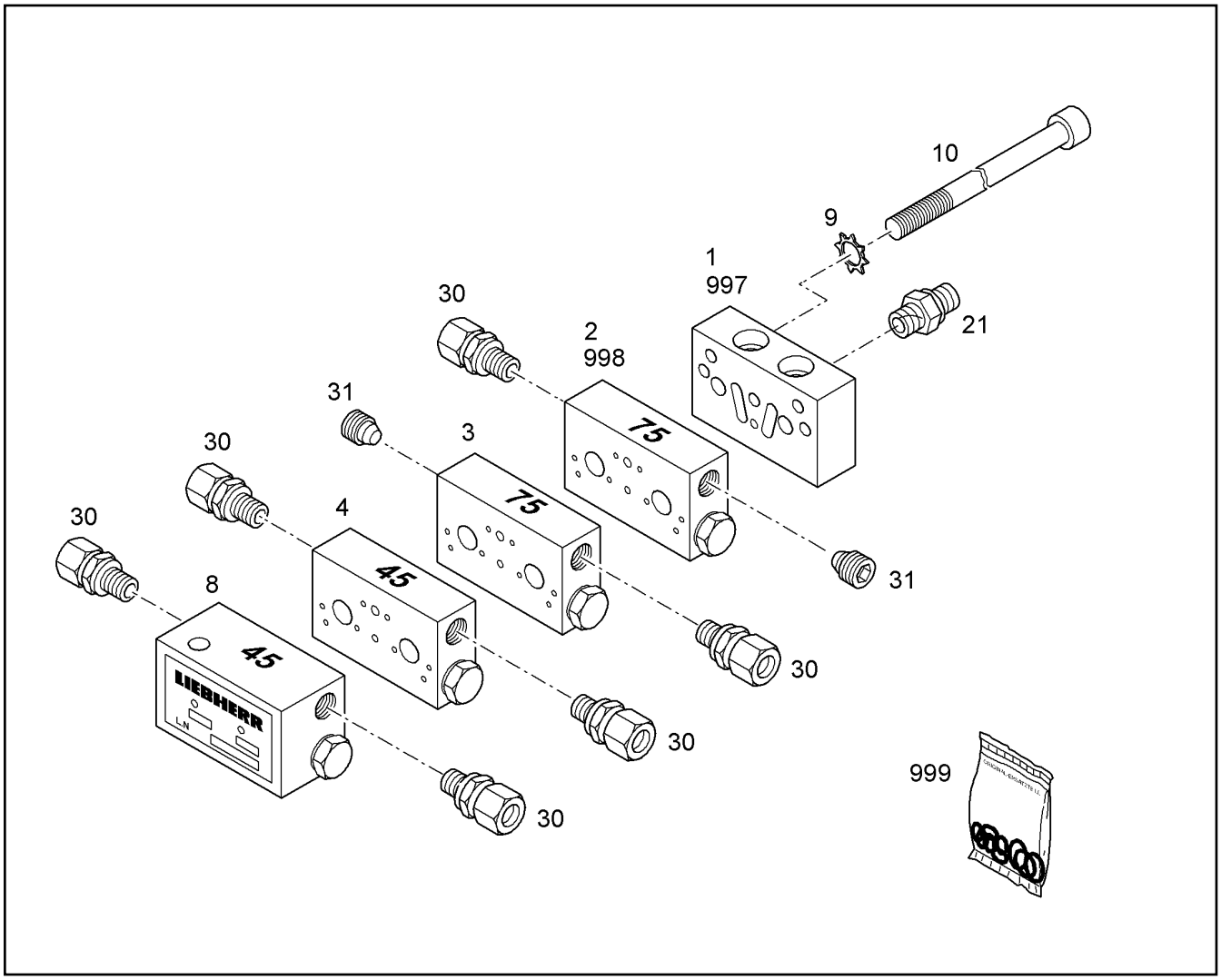

Pos.	Item	Quantity	Description	Designação	Serie	K
1	7027937	1	STARTING ELEMENT MX-F	ELEMENTO INICIAL		
2	7027940	1	CENTRAL ELEMENT MX-F 75	ELEMENTO CENTRAL		
3	7027940	1	CENTRAL ELEMENT MX-F 75	ELEMENTO CENTRAL		
4	7027939	1	CENTRAL ELEMENT MX-F 45	ELEMENTO CENTRAL		
8	7027943	1	END ELEMENT MX-F 45	ELEMENTO FINAL		
9	4002259	2	TOOTH LOCK WASHER A 6,4	ARRUELA DENTADA		
10	4002418	2	SOCKET HEAD SCREW ISO 4762 M6X65 8.8	PARAFUSO CILÍNDRICO		
21	10009054	1	FITTING WSV 8LL M10X1	UNIÃO ROSCADA		
30	7622803	6	NON-RETURN VALVE	VÁLVULA DE RETORNO		
31	774378208	2	SCREW PLUG	PARAFUSO DE FECHAMENTO		
997	10021311	1	SEAL KIT ⇨ ❑ 265	KIT DE VEDAÇÃO		
998	10021310	1	SEAL KIT ⇨ ❑ 264	KIT DE VEDAÇÃO		
999	10021308	1	O-RING	ANEL-O		

OHNE BILD

WITHOUT DRAWING

SANS DESSIN

Pos.	Item	Quantity	Description	Designação	Serie	K
10		1	COVER LID	CAPA DE COBERTURA		
20		1	VENTILATION TUBE	TUBO DE VENTILAÇÃO	-999998	
20	10016664	1	VENTILATION TUBE	TUBO DE VENTILAÇÃO	-999999	
30	7624285	1	O-RING 160X2,5	ANEL-O		

20 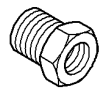	21 	30 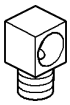	40 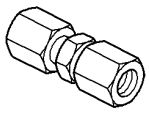	70 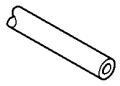	**6L/6LL**
80 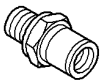	90 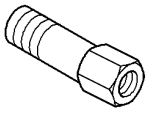				

Pos.	Item	Quantity	Description	Designação	Serie	K
20	7027675	1	MALE FITTING FOR PIPES M10X1	LUVA DE CONEXÃO		
21	7027946	1	DOUBLE TAPER RING DKR 6	ANILHA CÔNICA		
30	774373608	1	FITTING WE 6LL M10X1K	UNIÃO ROSCADA		
40	774374208	1	FITTING G 6LL	UNIÃO ROSCADA		
70	774373708	1m	TUBE	TUBO		
80	7026654	1	SCREW COUPLING	CONEX. ROSCA DE ENCAIXE R		2
90	7027714	1	EXTENSION M6X1K-M10X1-24MM	EXTENSÃO		
90	774373408	1	EXTENSION M10X1K/M10X1	EXTENSÃO		

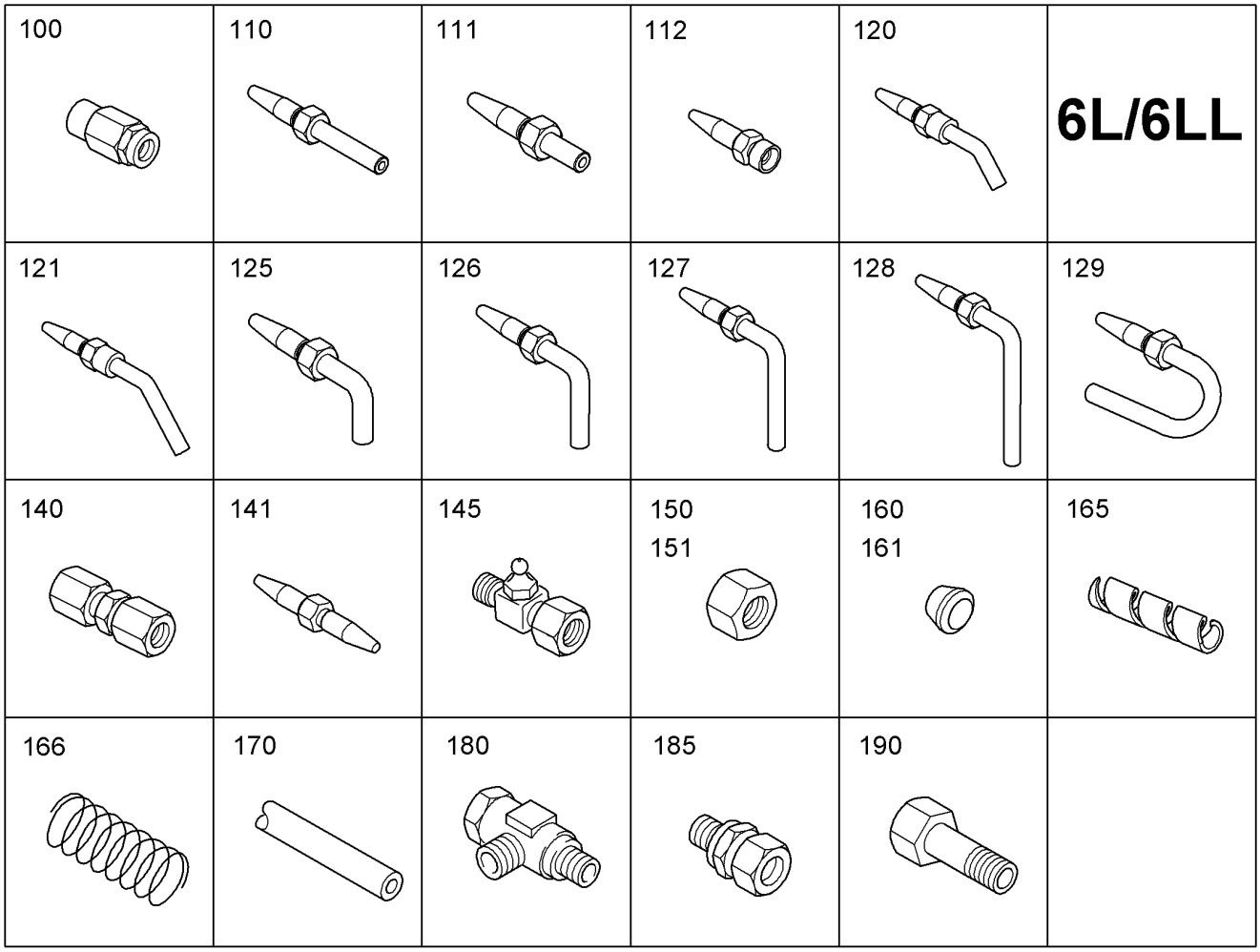

Pos.	Item	Quantity	Description	Designação	Serie	K
100	774376008	1	SCREW SLEEVE DN6	LUVA ROSQUEADA		
110	774371808	1	HOSE UNION DN4 STAHL	CONEXÃO DE MANGUEIRA		
111	7624177	1	PIPE SOCKET DN6	CONEXÃO DE MANGUEIRA		
112	12253955	1	PIPE SOCKET M10X1-M7X0,75	CONEXÃO DE MANGUEIRA		
120	10802630	1	PIPE SOCKET	CONEXÃO DE MANGUEIRA		
121	7623705	1	PIPE SOCKET DN6	CONEXÃO DE MANGUEIRA		
125	7623704	1	PIPE SOCKET DN6	CONEXÃO DE MANGUEIRA		
126	10027260	1	PIPE SOCKET 90°,H=33MM 6S	CONEXÃO DE MANGUEIRA		
127	511701914	1	PIPE SOCKET DN4	CONEXÃO DE MANGUEIRA		
128	7623707	1	PIPE SOCKET DN6	CONEXÃO DE MANGUEIRA		
129	12222582	1	PIPE SOCKET	CONEXÃO DE MANGUEIRA		
140	774374208	1	FITTING G 6LL	UNIÃO ROSCADA		
141	12253954	1	PIPE SOCKET M7X0,75-M7X0,75	CONEXÃO DE MANGUEIRA		
145	10220950	1	FITTING 6L	UNIÃO ROSCADA		
145	10342221	1	FITTING 6LL	UNIÃO ROSCADA		
150	4774024	1	BOX NUT ISO 8434-1 NL6	PORCA DE CONEXÃO		
151	4600342	1	BOX NUT DIN 3870 ALL6	PORCA DE CONEXÃO		
160	4771000	1	CUTTING RING DIN 3861 A S 6	ANEL DE CORTE		
161	4600341	1	CUTTING RING DIN 3861 A LL 6	ANEL DE CORTE		
165	774383508	1m	TUBING COIL	SERPENTINA DE TUBO		
166	10011996	1m	ANTI-KINK DEVICE SPIRAL	ESPIRAL DE PROT.CONTRA DOB		1
170	774376108	1m	HIGH PRESSURE HOSE	MANGUEIRA DE ALTA PRESSÃO		1
180	7623106	1	FITTING WE6LL M8X1	UNIÃO ROSCADA		
180	7624176	1	BANJO COUPLING SWVE 6LL M10X1	CONEXÃO GIRATORIA		
185	491035414	1	FITTING GE 6LL M6	UNIÃO ROSCADA		
185	774376508	1	FITTING GE 6LL M10X1	UNIÃO ROSCADA		

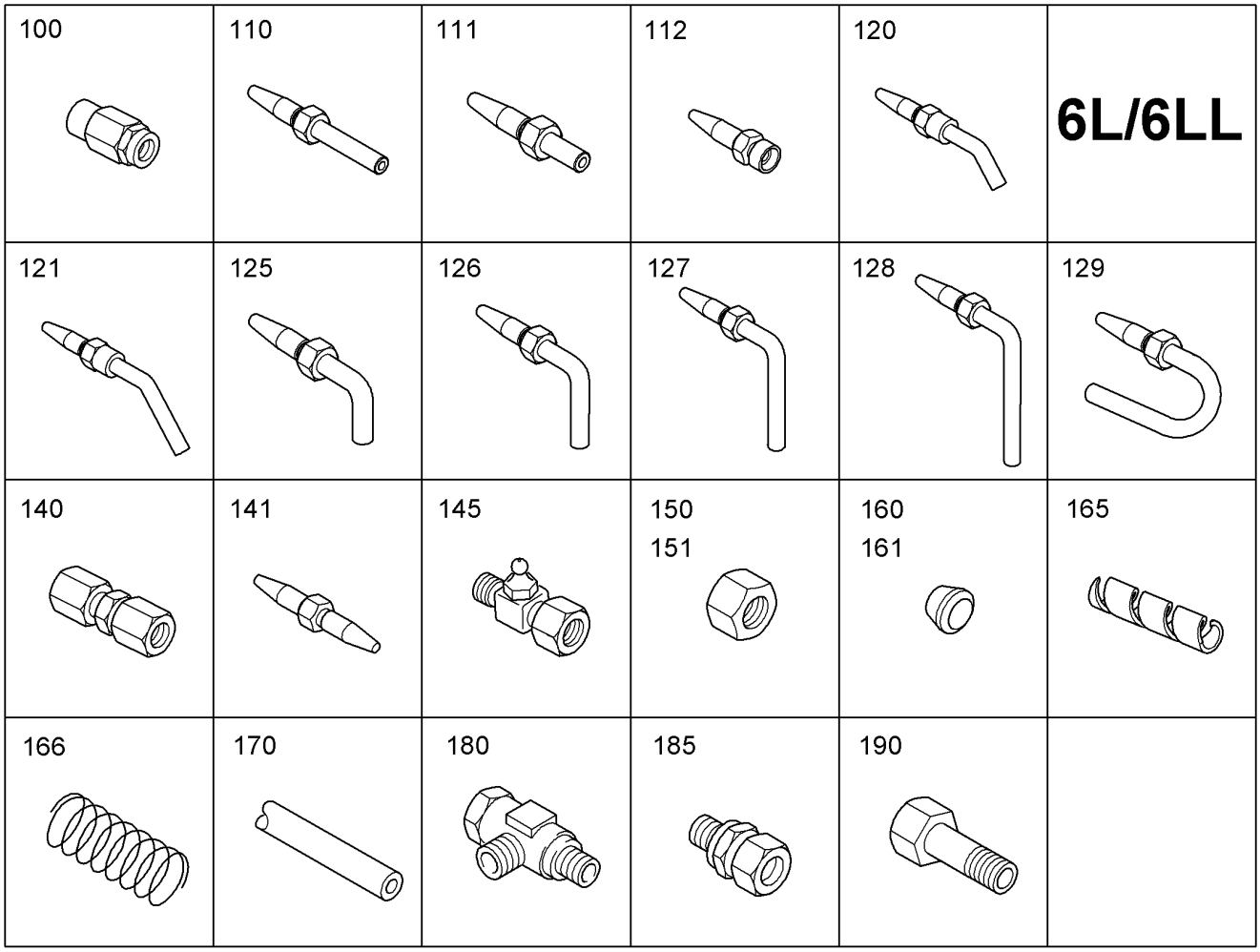

Pos.	Item	Quantity	Description	Designação	Serie	K
190	7027714	1	EXTENSION M6X1K-M10X1-24MM	EXTENSÃO		
190	774373408	1	EXTENSION M10X1K/M10X1	EXTENSÃO		

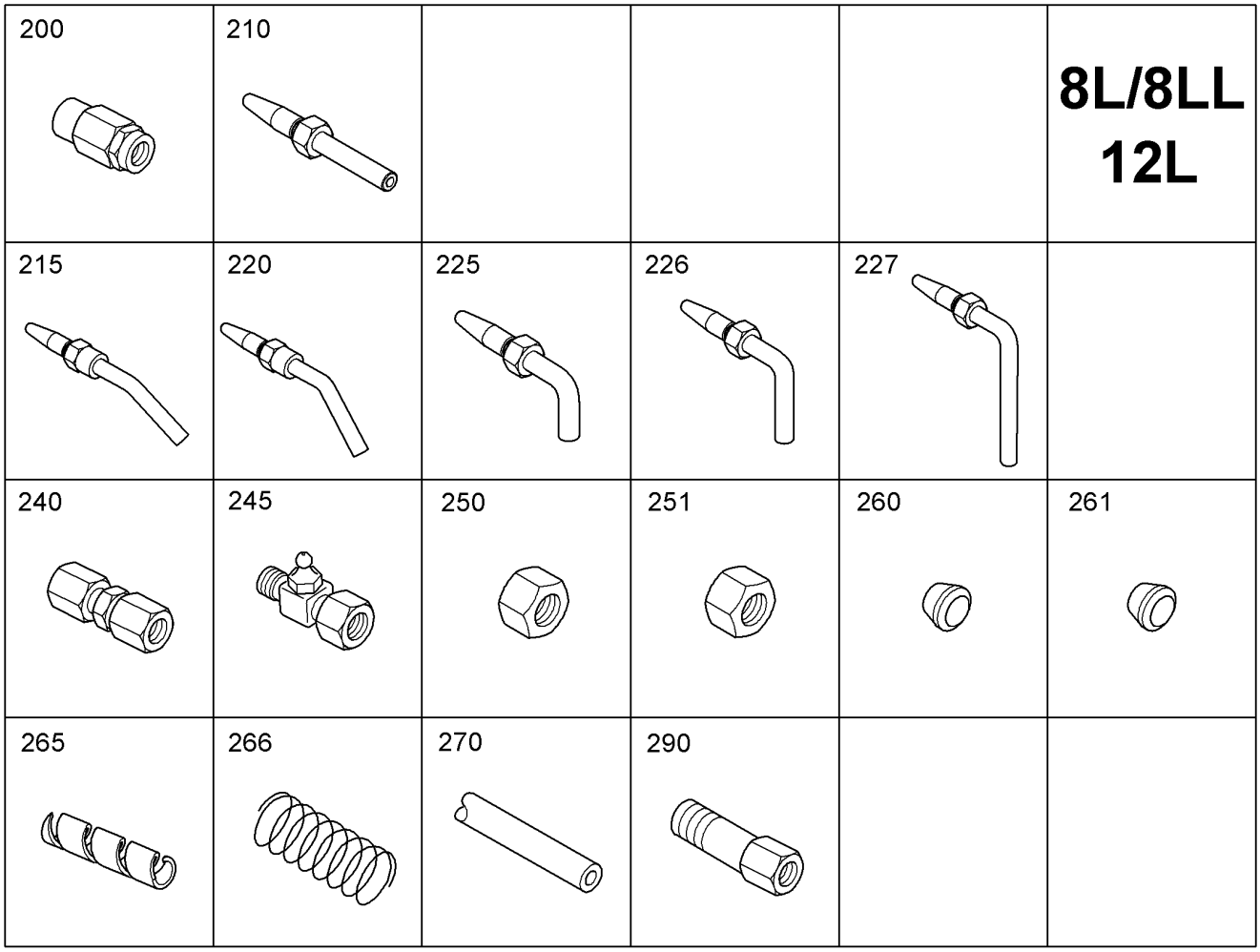

Pos.	Item	Quantity	Description	Designação	Serie	K
200	10012024	1	SCREW SLEEVE DN6,5 ST	LUVA ROSQUEADA		
210	10011995	1	PIPE SOCKET	CONEXÃO DE MANGUEIRA		
215	10412844	1	PIPE SOCKET 15° D8	CONEXÃO DE MANGUEIRA		
220	10040776	1	PIPE SOCKET DN8	CONEXÃO DE MANGUEIRA		
225	10040777	1	PIPE SOCKET DN8	CONEXÃO DE MANGUEIRA		
226	10040778	1	PIPE SOCKET DN8	CONEXÃO DE MANGUEIRA		
227	10040779	1	PIPE SOCKET DN8	CONEXÃO DE MANGUEIRA		
240	10014575	1	FITTING G 8L M14X1,5	UNIÃO ROSCADA		
245	10220951	1	FITTING	UNIÃO ROSCADA		
245	10330614	1	FITTING 8LL	UNIÃO ROSCADA		
245	10652561	1	FITTING 12L	UNIÃO ROSCADA		
250	4900507	1	BOX NUT ISO 8434-1 NL8	PORCA DE CONEXÃO		
251	10013550	1	BOX NUT MLL8	PORCA DE CONEXÃO		
260	4771020	1	CUTTING RING DIN 3861 A S 8	ANEL DE CORTE		
261	10013545	1	CUTTING RING	ANEL DE CORTE		
265	774383508	1m	TUBING COIL	SERPENTINA DE TUBO		
266	11213893	1	ANTI-KINK DEVICE SPIRAL DN2X16X5000	ESPIRAL DE PROT.CONTRA DOB		1
270	10043525	1m	HOSE	MANGUEIRA		1
290	774373408	1	EXTENSION M10X1K/M10X1	EXTENSÃO		

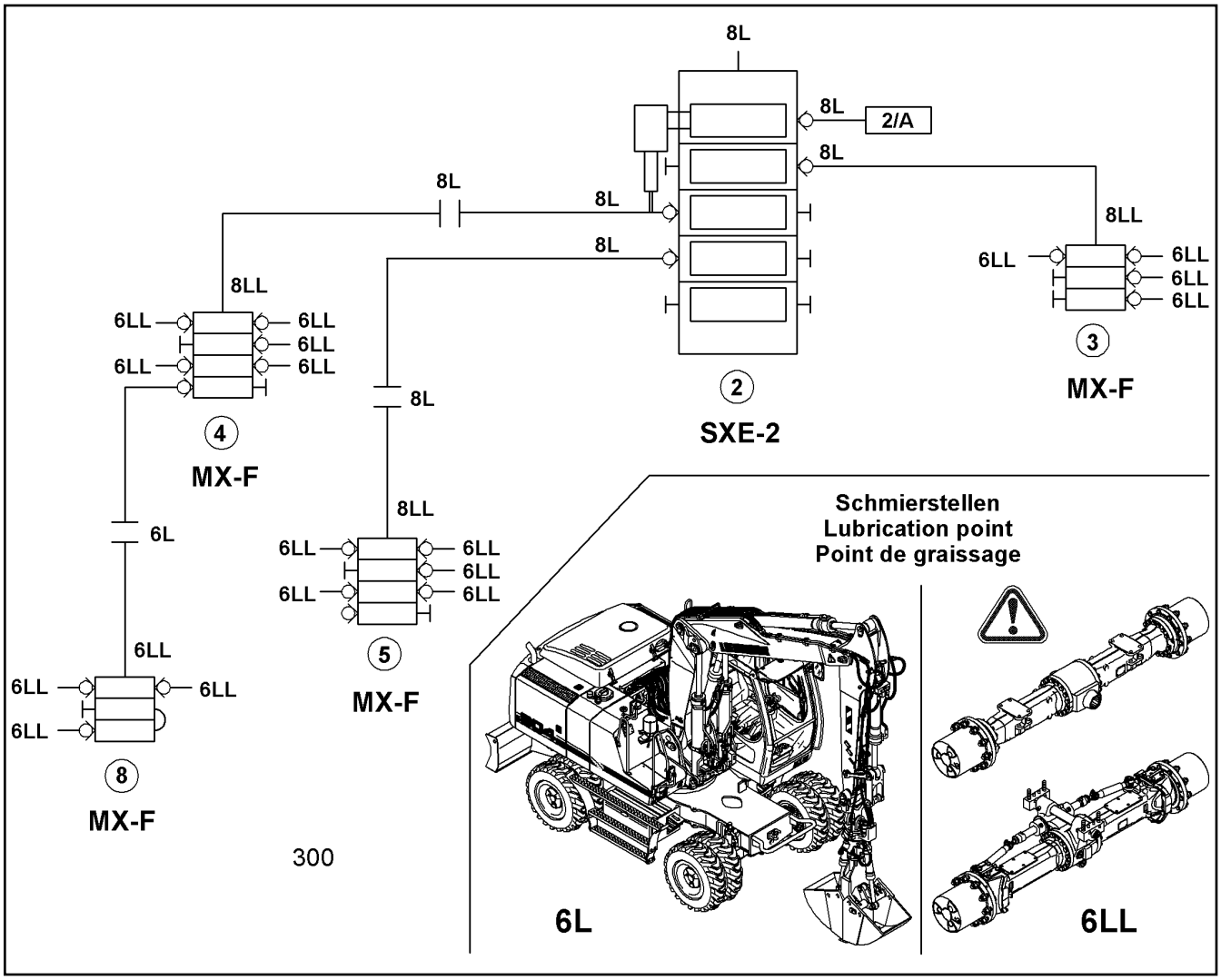
8L
8L
2/A
8L
8L
8L
8L
8LL
6LL
6LL
6

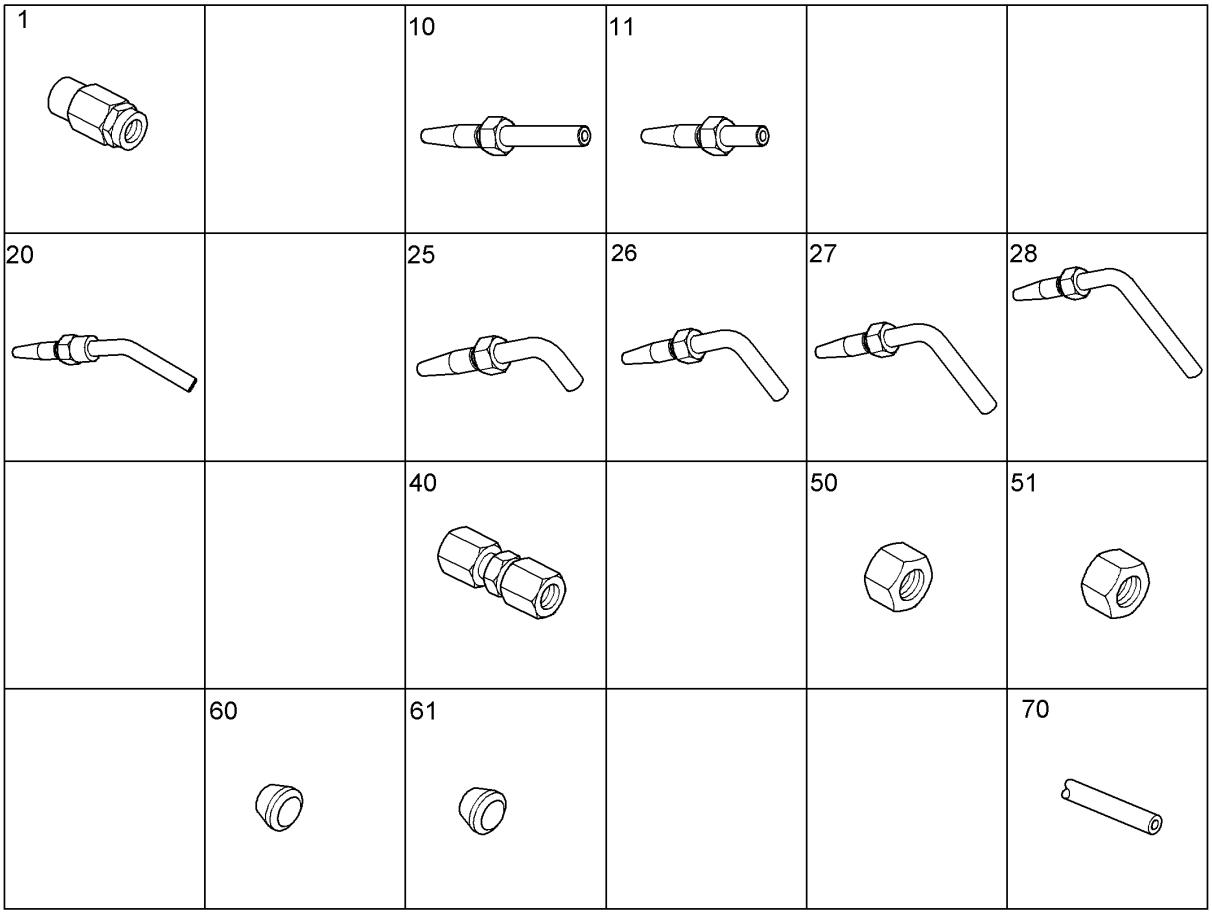

Pos.	Item	Quantity	Description	Designação	Serie	K
1	774376008	31	SCREW SLEEVE DN6	LUVA ROSQUEADA		
10	774371808	10	HOSE UNION DN4 STAHL	CONEXÃO DE MANGUEIRA		
11	7624177	5	PIPE SOCKET DN6	CONEXÃO DE MANGUEIRA		
20	7623705	6	PIPE SOCKET DN6	CONEXÃO DE MANGUEIRA		
25	7623704	4	PIPE SOCKET DN6	CONEXÃO DE MANGUEIRA		
26	10027260	4	PIPE SOCKET 90°,H=33MM 6S	CONEXÃO DE MANGUEIRA		
27	511701914	4	PIPE SOCKET DN4	CONEXÃO DE MANGUEIRA		
28	7623707	2	PIPE SOCKET DN6	CONEXÃO DE MANGUEIRA		
40	774374208	6	FITTING G 6LL	UNIÃO ROSCADA		
50	4774024	10	BOX NUT ISO 8434-1 NL6	PORCA DE CONEXÃO		
51	4600342	10	BOX NUT DIN 3870 ALL6	PORCA DE CONEXÃO		
60	4771000	10	CUTTING RING DIN 3861 A S 6	ANEL DE CORTE		
61	4600341	10	CUTTING RING DIN 3861 A LL 6	ANEL DE CORTE		
70	774376108	15m	HIGH PRESSURE HOSE	MANGUEIRA DE ALTA PRESSÃO		1

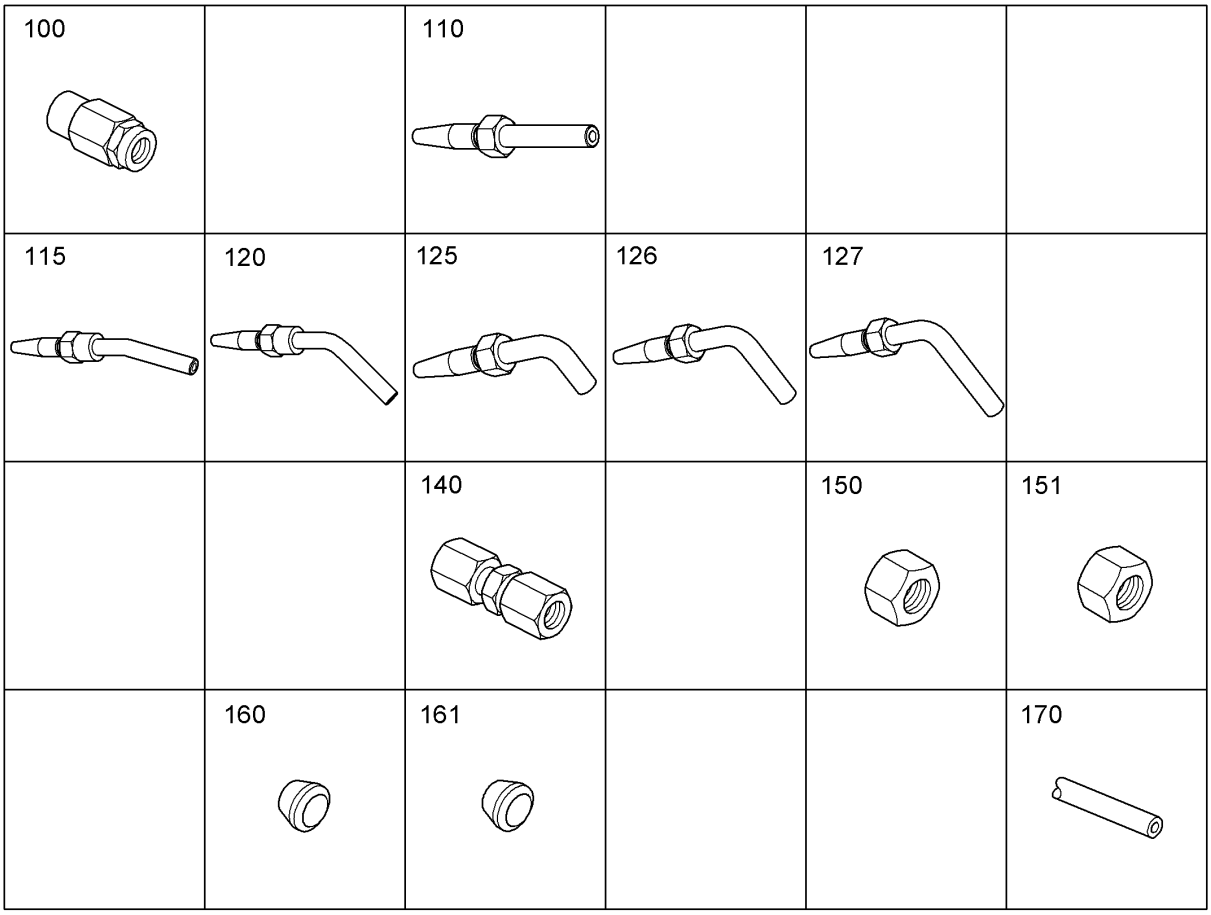

Pos.	Item	Quantity	Description	Designação	Serie	K
100	10012024	6	SCREW SLEEVE DN6,5 ST	LUVA ROSQUEADA		
110	10011995	6	PIPE SOCKET	CONEXÃO DE MANGUEIRA		
115	10412844	2	PIPE SOCKET 15° D8	CONEXÃO DE MANGUEIRA		
120	10040776	2	PIPE SOCKET DN8	CONEXÃO DE MANGUEIRA		
125	10040777	2	PIPE SOCKET DN8	CONEXÃO DE MANGUEIRA		
126	10040778	2	PIPE SOCKET DN8	CONEXÃO DE MANGUEIRA		
127	10040779	2	PIPE SOCKET DN8	CONEXÃO DE MANGUEIRA		
140	10014575	3	FITTING G 8L M14X1,5	UNIÃO ROSCADA		
150	4900507	10	BOX NUT ISO 8434-1 NL8	PORCA DE CONEXÃO		
151	10013550	10	BOX NUT MLL8	PORCA DE CONEXÃO		
160	4771020	10	CUTTING RING DIN 3861 A S 8	ANEL DE CORTE		
161	10013545	10	CUTTING RING	ANEL DE CORTE		
170	10043525	10m	HOSE	MANGUEIRA		1

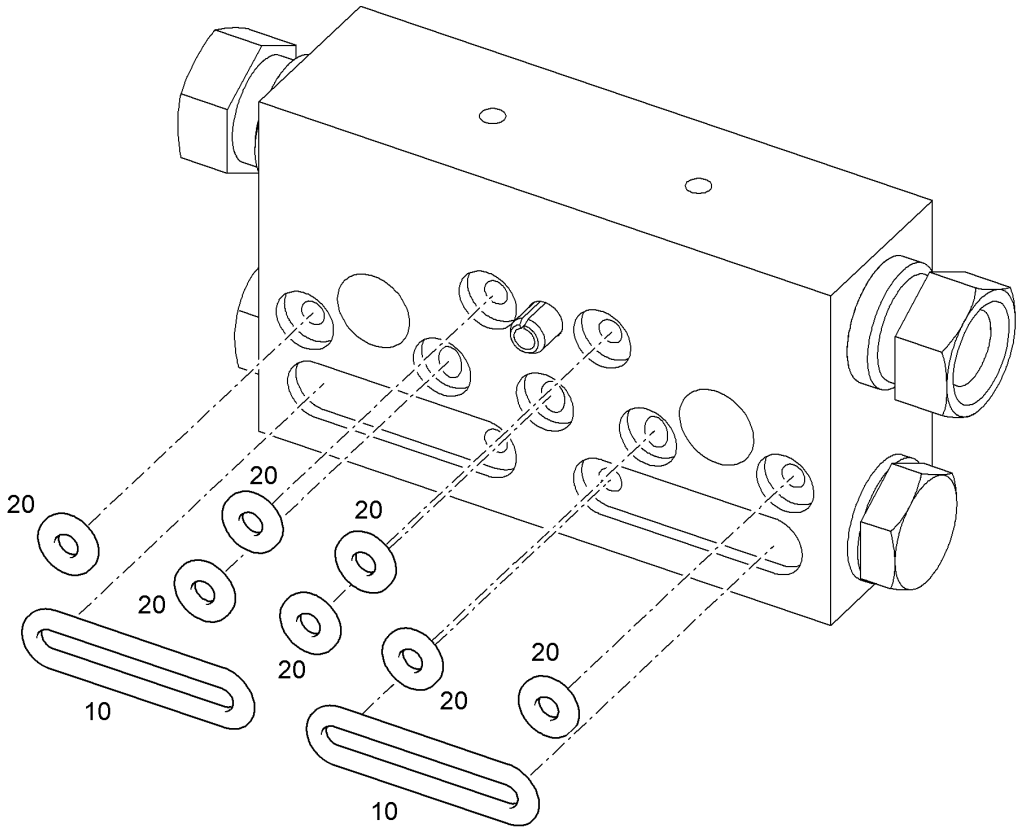

Pos.	Item	Quantity	Description	Designação	Serie	K
10		2	O-RING 11,5X1,5	ANEL-O		
20		7	O-RING 2X1,5	ANEL-O		

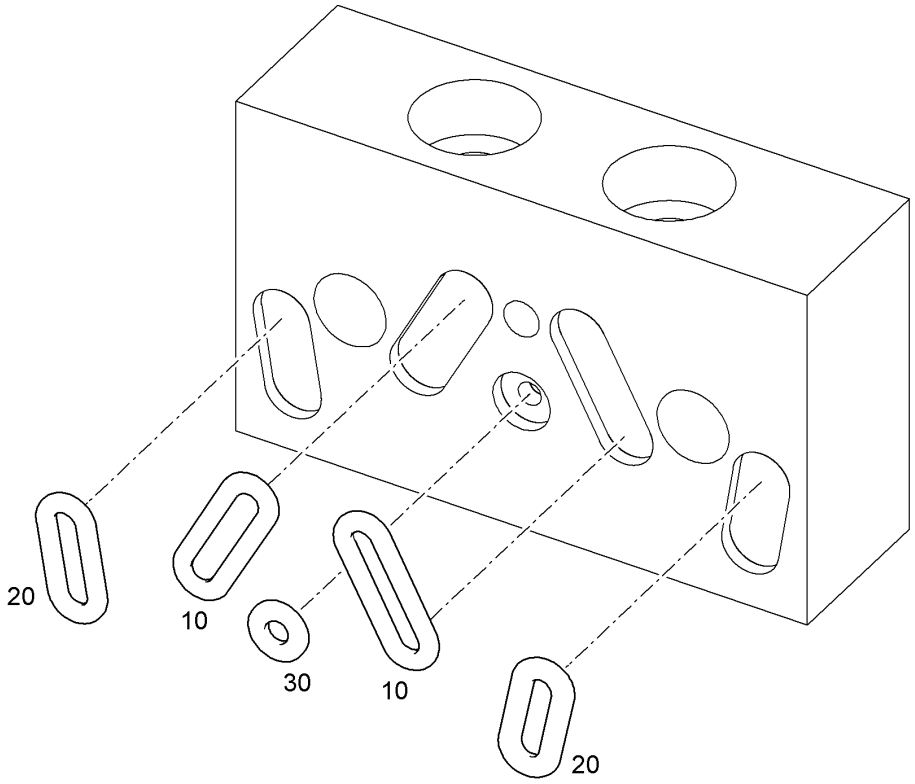

Pos.	Item	Quantity	Description	Designação	Serie	K
10		2	O-RING 7,5X1,5	ANEL-O		
20		2	O-RING 6X1,5	ANEL-O		
30		1	O-RING 2X1,5	ANEL-O		

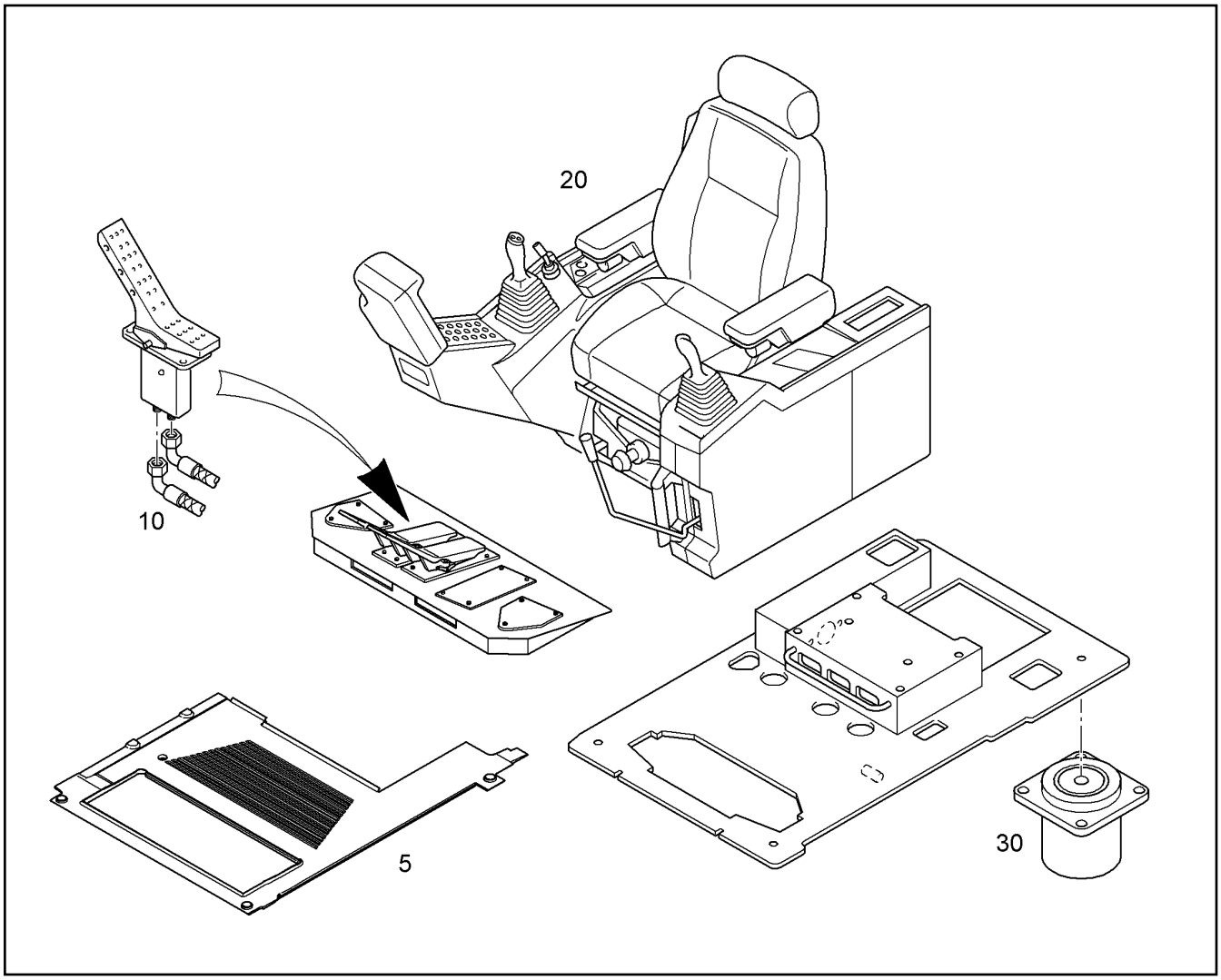

Pos.	Item	Quantity	Description	Designação	Serie	K
5	10382585	1	FLOOR COVERING	REVESTIMENTO DO PISO (CARP		
10		1	HYDR.INSTALLATION CONTROL CAB	INSTALACAO HIDRAULICA		
20		1	DRIVER STAND BASE SECTION ⇨ ❑ 271	POSTO DE COMANDO - PEÇA B	32766-	
30		1	BOTTOM PLATE MOUNTING ⇨ ❑ 342	PLACA DO ASSOALHO DA CABIN		

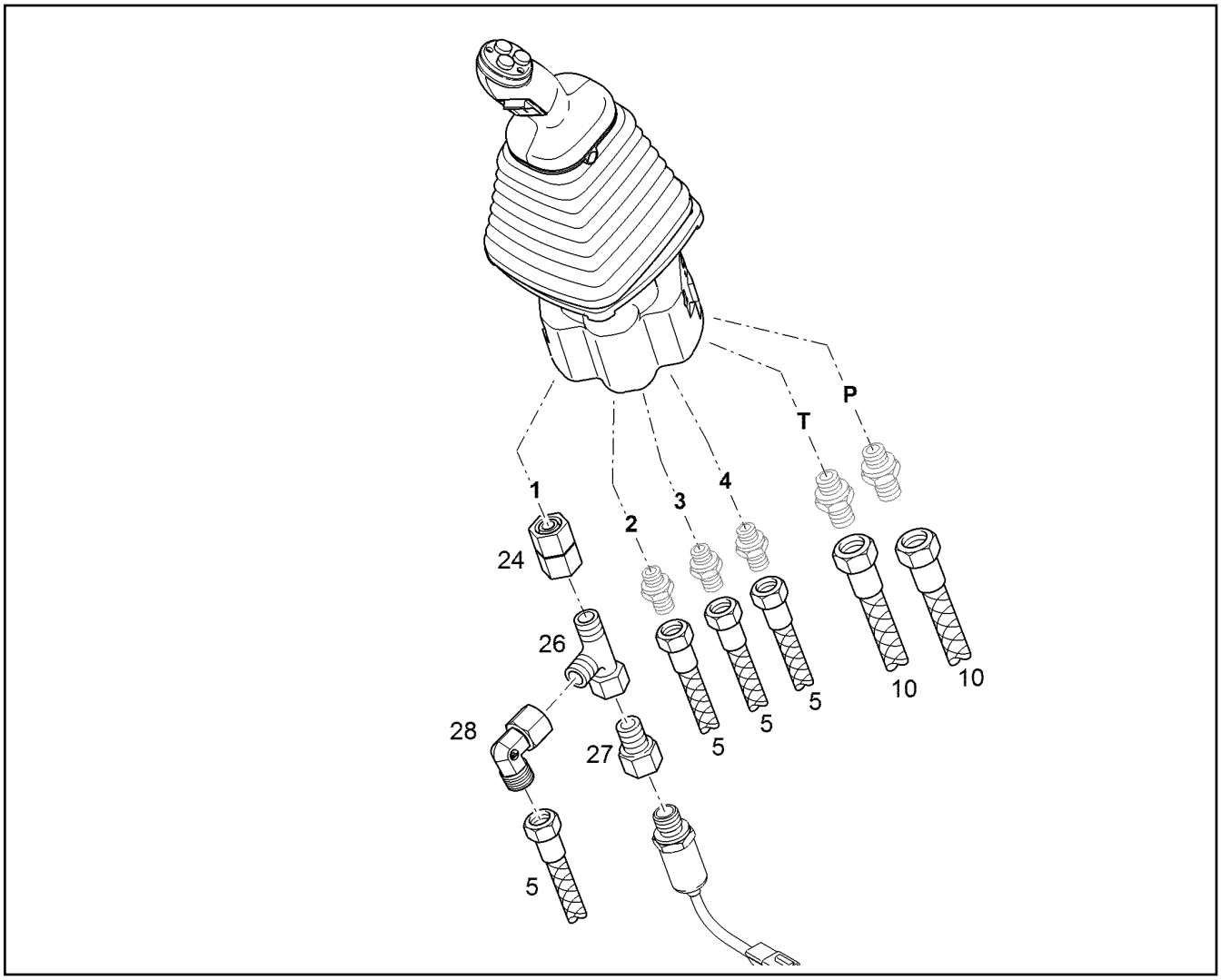

Pos.	Item	Quantity	Description	Designação	Serie	K
5	7009933	4	CONTROL HOSE 8X2000	MANGUEIRA DE COMANDO		1
10	10287541	2	HOSE 10X2400	MANGUEIRA		1
24	7410211	1	FITTING GZ 10L	UNIÃO ROSCADA		
26	472330208	1	FITTING EL 10L	UNIÃO ROSCADA		
27	7364696	1	SCREW EXTENSION TUBE GAI 10L G1/4	BOCAL ROSCADO		
28	7403569	1	FITTING EW 10L M16X1,5	UNIÃO ROSCADA		

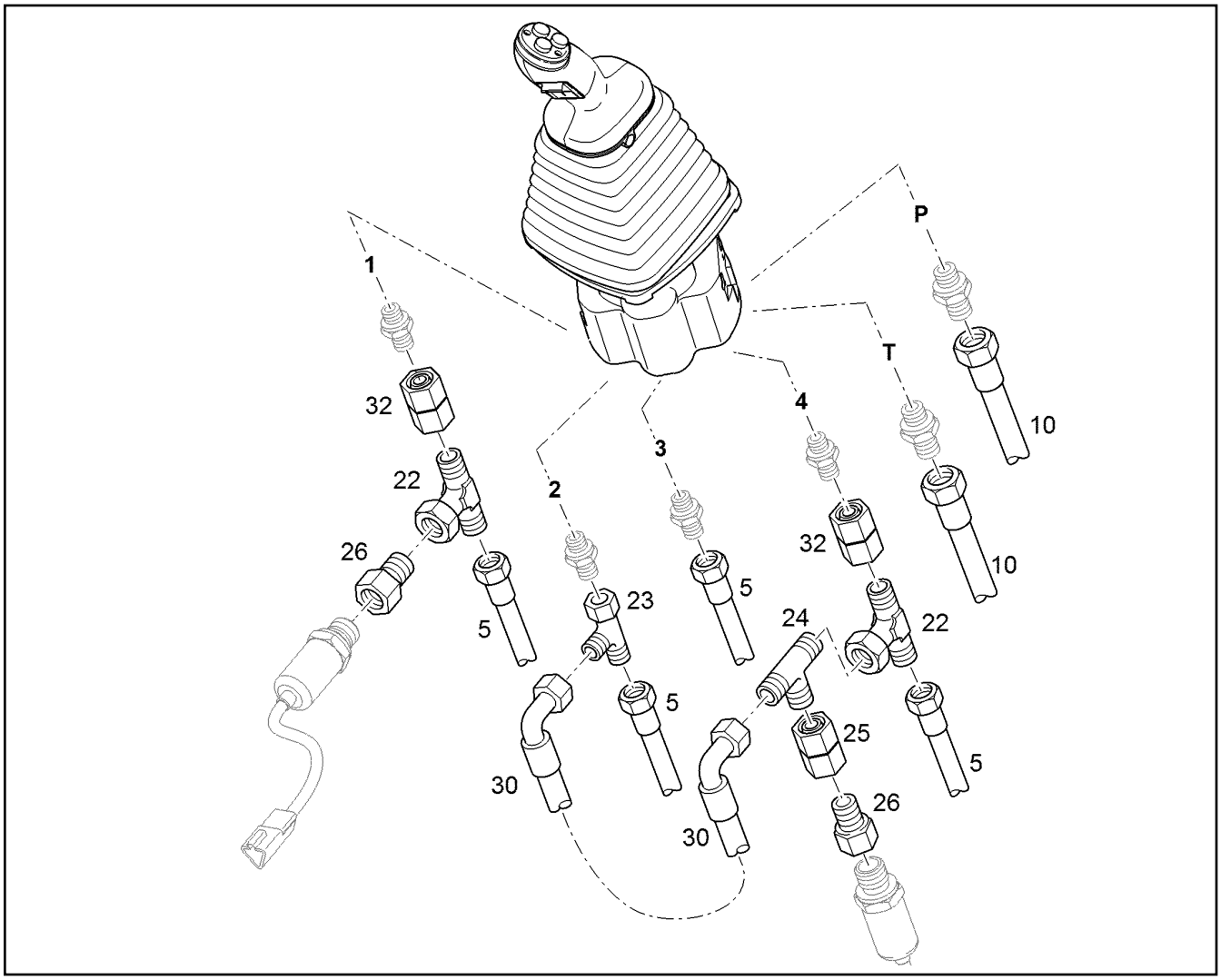

Pos.	Item	Quantity	Description	Designação	Serie	K
5	7009933	4	CONTROL HOSE 8X2000	MANGUEIRA DE COMANDO		1
10	10287541	2	HOSE 10X2400	MANGUEIRA		1
22	482430314	2	FITTING ET 10L M16X1,5	UNIÃO ROSCADA		
23	472330208	1	FITTING EL 10L	UNIÃO ROSCADA		
24	7403972	1	SHUTTLE VALVE	VALVULA DIRECIONAL		
25	7410211	1	FITTING GZ 10L	UNIÃO ROSCADA		
26	7364696	2	SCREW EXTENSION TUBE GAI 10L G1/4	BOCAL ROSCADO		
30	10472994	1	CONTROL HOSE 8X250	MANGUEIRA DE COMANDO		1
32	7410211	2	FITTING GZ 10L	UNIÃO ROSCADA		

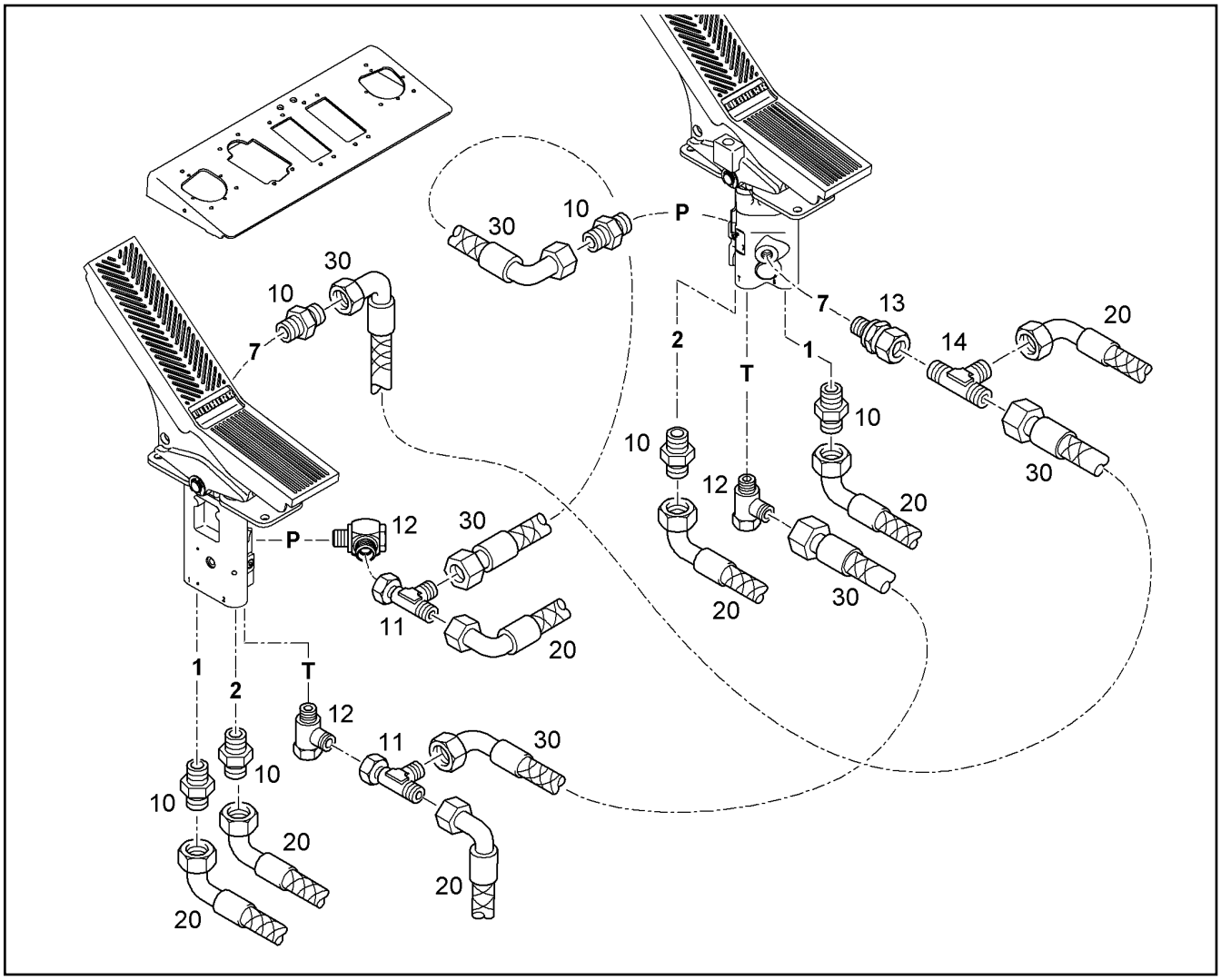

Pos.	Item	Quantity	Description	Designação	Serie	K
10	7362091	6	FITTING GE 10L G1/4A	UNIÃO ROSCADA		
11	472330208	2	FITTING EL 10L	UNIÃO ROSCADA		
12	7617261	3	HINGED THREADED UNION WH 10L G1/4A	CONEXÃO ROSCADA		
13	7617262	1	FITTING EGE 10L	UNIÃO ROSCADA		
14	7403972	1	SHUTTLE VALVE	VALVULA DIRECIONAL		
20	7402835	7	CONTROL HOSE	MANGUEIRA DE COMANDO		1
30	7005047	3	CONTROL HOSE 8X500	MANGUEIRA DE COMANDO		1

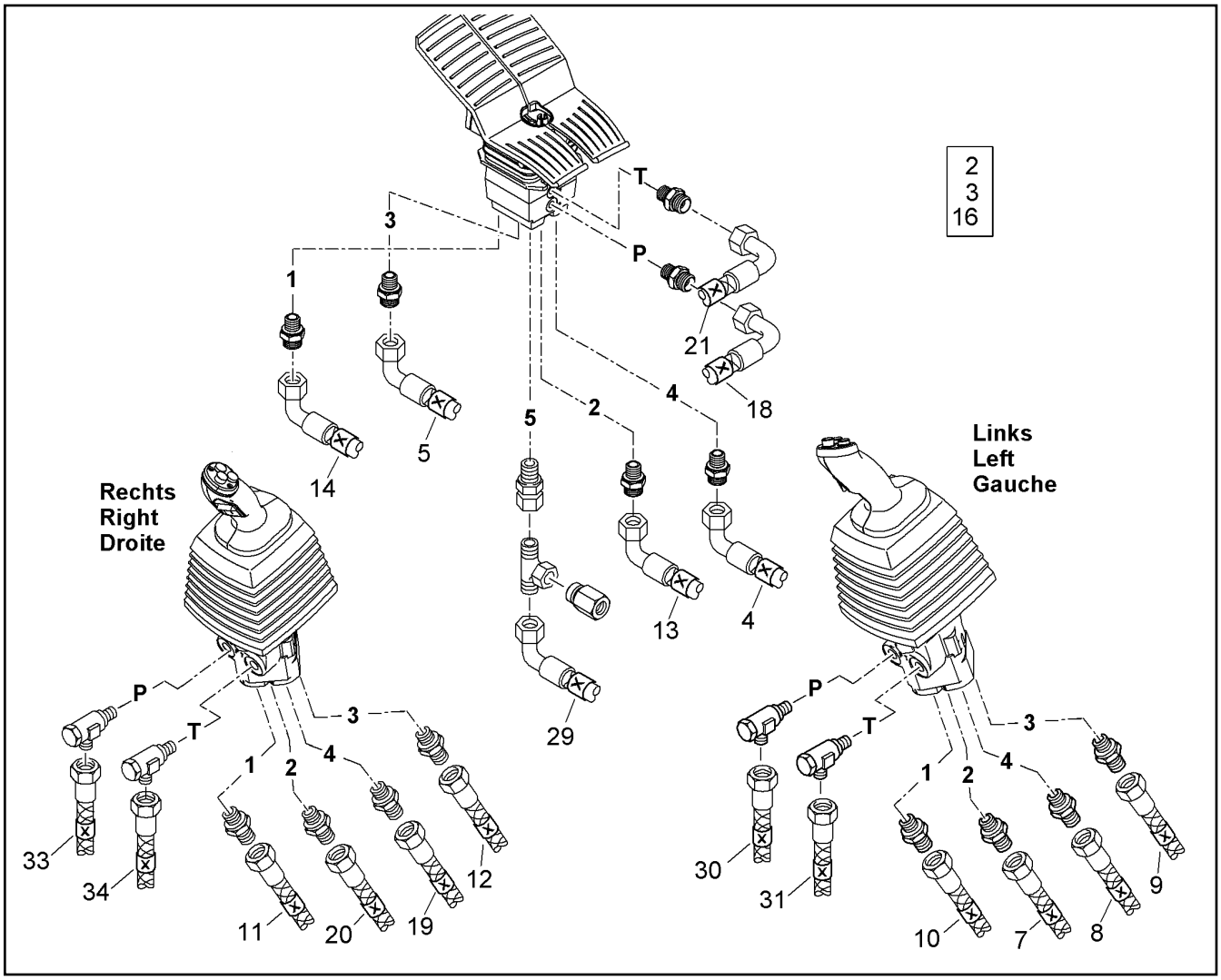

Pos.	Item	Quantity	Description	Designação	Serie	K
2	7018520	10	INSCRIPTION TAPE	FITA DE IDENTIFICAÇÃO		
3	7018521	10	INSCRIPTION TAPE	FITA DE IDENTIFICAÇÃO		
4	7018495	2	INSCRIPTION TAPE	FITA DE IDENTIFICAÇÃO		
5	7018496	2	INSCRIPTION TAPE	FITA DE IDENTIFICAÇÃO		
7	7018498	2	INSCRIPTION TAPE	FITA DE IDENTIFICAÇÃO		
8	7024733	2	INSCRIPTION TAPE	FITA DE IDENTIFICAÇÃO		
9	7024734	2	INSCRIPTION TAPE 09	FITA DE IDENTIFICAÇÃO		
10	7018499	2	INSCRIPTION TAPE 10	FITA DE IDENTIFICAÇÃO		
11	7018500	2	INSCRIPTION TAPE 11	FITA DE IDENTIFICAÇÃO		
12	7018501	2	INSCRIPTION TAPE 12	FITA DE IDENTIFICAÇÃO		
13	7018502	2	INSCRIPTION TAPE 13	FITA DE IDENTIFICAÇÃO		
14	7018503	2	INSCRIPTION TAPE 14	FITA DE IDENTIFICAÇÃO		
16	7018504	2	INSCRIPTION TAPE	FITA DE IDENTIFICAÇÃO		
18	7018507	2	INSCRIPTION TAPE	FITA DE IDENTIFICAÇÃO		
19	7018508	2	INSCRIPTION TAPE	FITA DE IDENTIFICAÇÃO		
20	7018509	2	INSCRIPTION TAPE	FITA DE IDENTIFICAÇÃO		
21	7018510	2	INSCRIPTION TAPE	FITA DE IDENTIFICAÇÃO		
29	10298638	2	INSCRIPTION TAPE	FITA DE IDENTIFICAÇÃO		
30	7018513	2	INSCRIPTION TAPE	FITA DE IDENTIFICAÇÃO		
31	7018514	2	INSCRIPTION TAPE	FITA DE IDENTIFICAÇÃO		
33	7018516	2	INSCRIPTION TAPE	FITA DE IDENTIFICAÇÃO		
34	7018517	2	INSCRIPTION TAPE	FITA DE IDENTIFICAÇÃO		

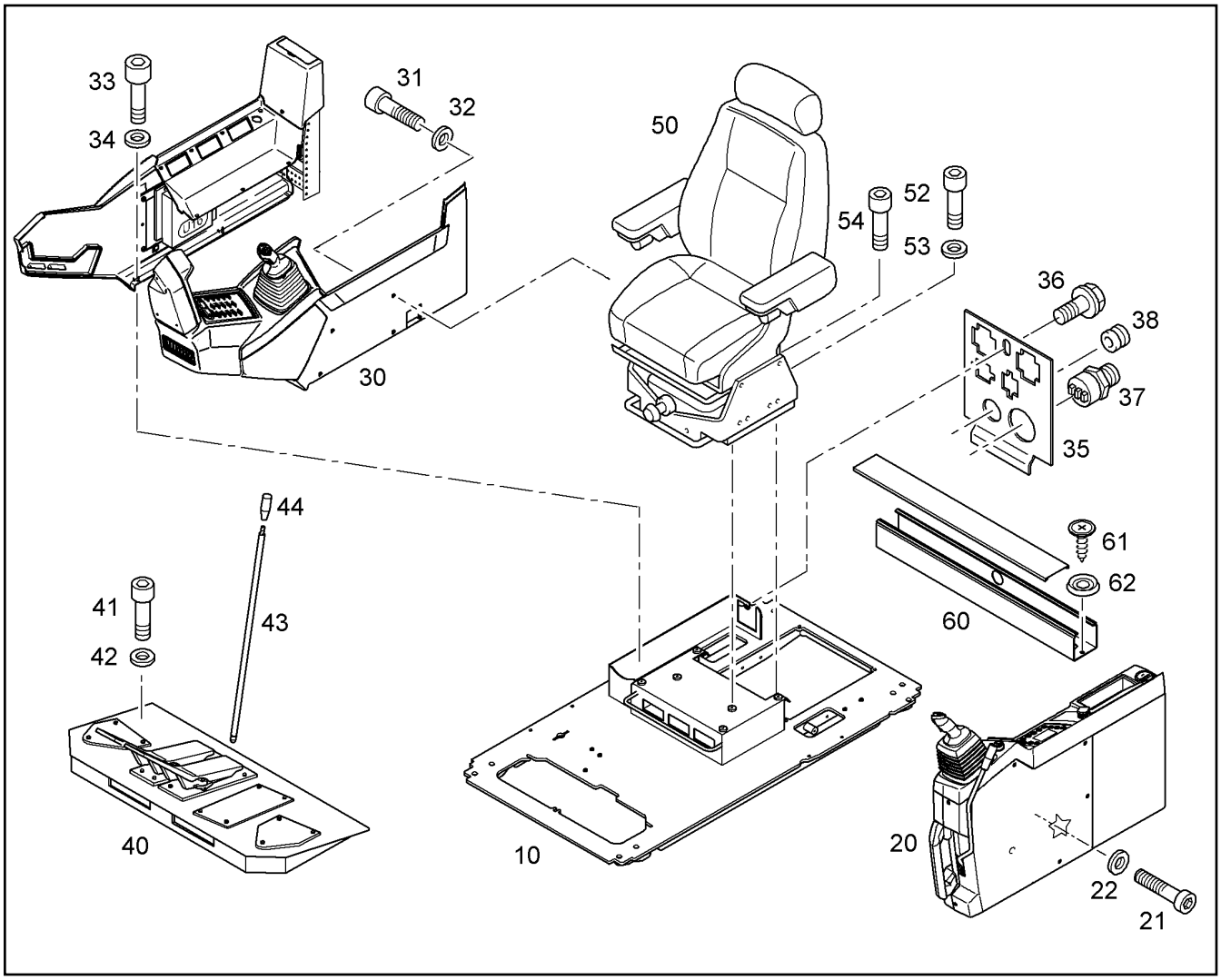

Pos.	Item	Quantity	Description	Designação	Serie	K
10	9010347	1	CAB BOTTOM PLATE ⇨ ❑ 6	PLACA DO ASSOALHO DA CABIN	-99998	
10	10498690	1	CAB BOTTOM PLATE ⇨ ❑ 6	PLACA DO ASSOALHO DA CABIN	-99999	
20		1	ARM REST LEFT ⇨ ❑ 291	APOIO DE BRAÇO LADO ESQUE	-999998	
20		1	ARM REST LEFT ⇨ ❑ 275	APOIO DE BRAÇO LADO ESQUE	999999-	
21	4043124	4	SOCKET HEAD SCREW ISO 4762 M10X25 1	PARAFUSO CILÍNDRICO		
22	10289795	4	WASHER 10 300HV	ARRUELA		
30		1	ARM REST RIGHT ⇨ ❑ 301	APOIO DE BRAÇO LADO DIREIT	-999998	
30		1	ARM REST RIGHT ⇨ ❑ 305	APOIO DE BRAÇO LADO DIREIT	-999998	
30		1	ARM REST RIGHT ⇨ ❑ 277	APOIO DE BRAÇO LADO DIREIT	999999-	
31	4043127	4	SOCKET HEAD SCREW ISO 4762 M10X40 1	PARAFUSO CILÍNDRICO		
32	10289795	4	WASHER 10 300HV	ARRUELA		
33	4902267	2	SOCKET HEAD SCREW ISO 4762 M6X25 10.	PARAFUSO CILÍNDRICO		
34	10289802	2	WASHER 6 300HV	ARRUELA		
35	9757779	1	SHEET	PLACA DE APOIO		
36	7366804	1	LOCKING SCREW M8X20 A2E	PARAFUSO TRAVA		
37	6000578	1	BUZZER	SIRENE		
38	5607889	1	DIAPHRAGM GROMMET 16/22,5/27,5	LUVA DE PASSAGEM		
40		1	FOOT PILOT VALVE INSTALLATION ⇨ ❑ 320	PRÉ-COMANDO DE PEDAL MON		

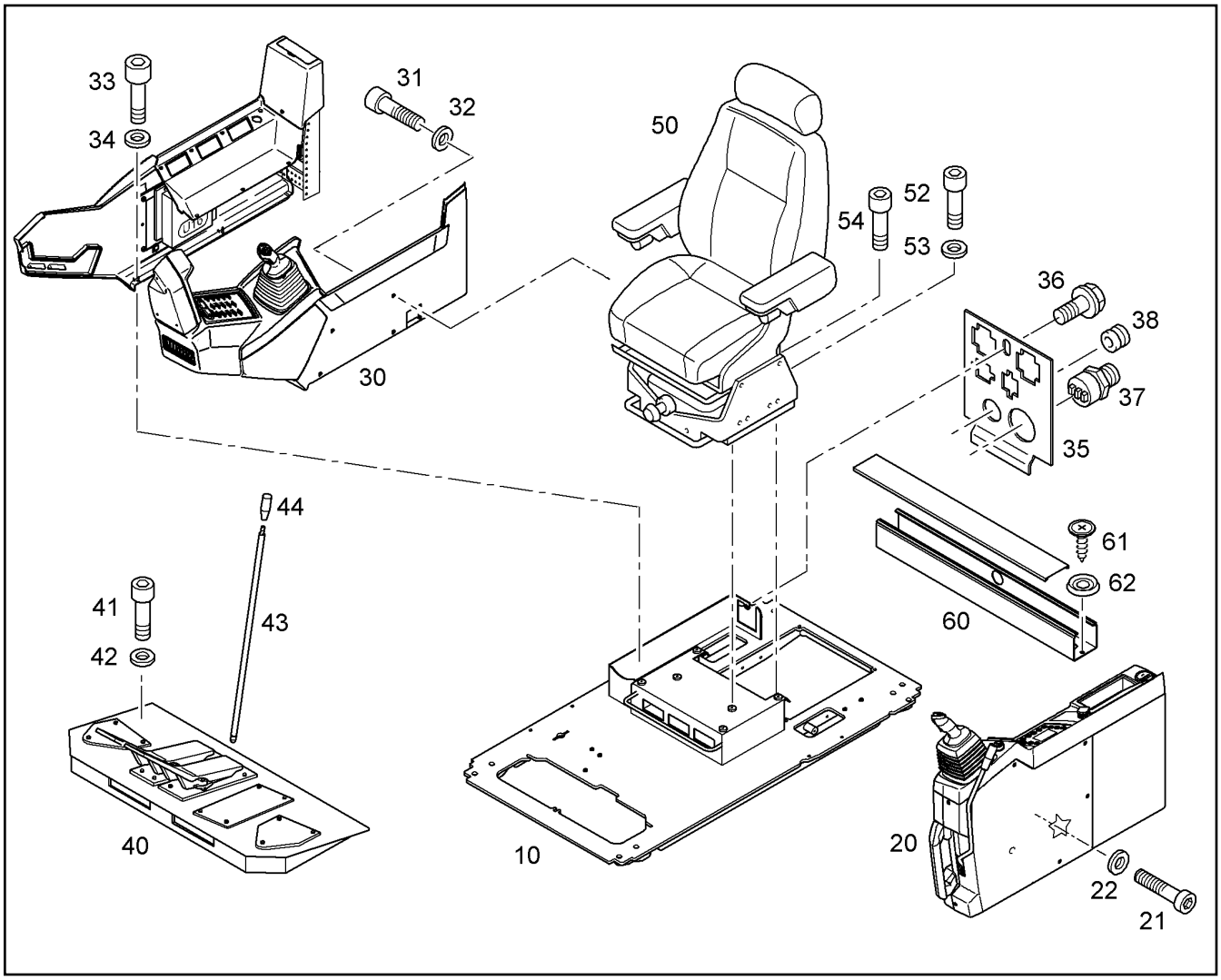

Pos.	Item	Quantity	Description	Designação	Serie	K
41	4043000	1	SOCKET HEAD SCREW ISO 4762 M10X30 1	PARAFUSO CILÍNDRICO		
42	4600033	3	WASHER SPRING 10	ARRUELA DE PRESSÃO		
43	9480525	2	ROD M10X500X10	HASTE		
44	7370689	2	LEVER HANDLE	ALAVANCA		
50	10043632	1	OPERATOR SEAT ⇨ ❑ 282	ASSENTO DO OPERADOR	-99998	
50	94022477	1	OPERATOR SEAT ⇨ ❑ 284	ASSENTO DO OPERADOR	-99999	
52	4902231	4	SOCKET HEAD SCREW ISO 4762 M8X16 10.	PARAFUSO CILÍNDRICO		
53	423910801	4	LOCK WASHER VS 8	ARRUELA DE PRESSÃO		
54	4902231	2	SOCKET HEAD SCREW ISO 4762 M8X16 10.	PARAFUSO CILÍNDRICO		
60	10841508	1	CABLE CHANNEL ⇨ ❑ 6	CANALETA DE CABOS		
61	4002386	1	SHEET-METAL SCREW ISO 7051 ST5,5X19 S	PARAFUSO		
62	7362752	1	ROSE	ARRUELA		

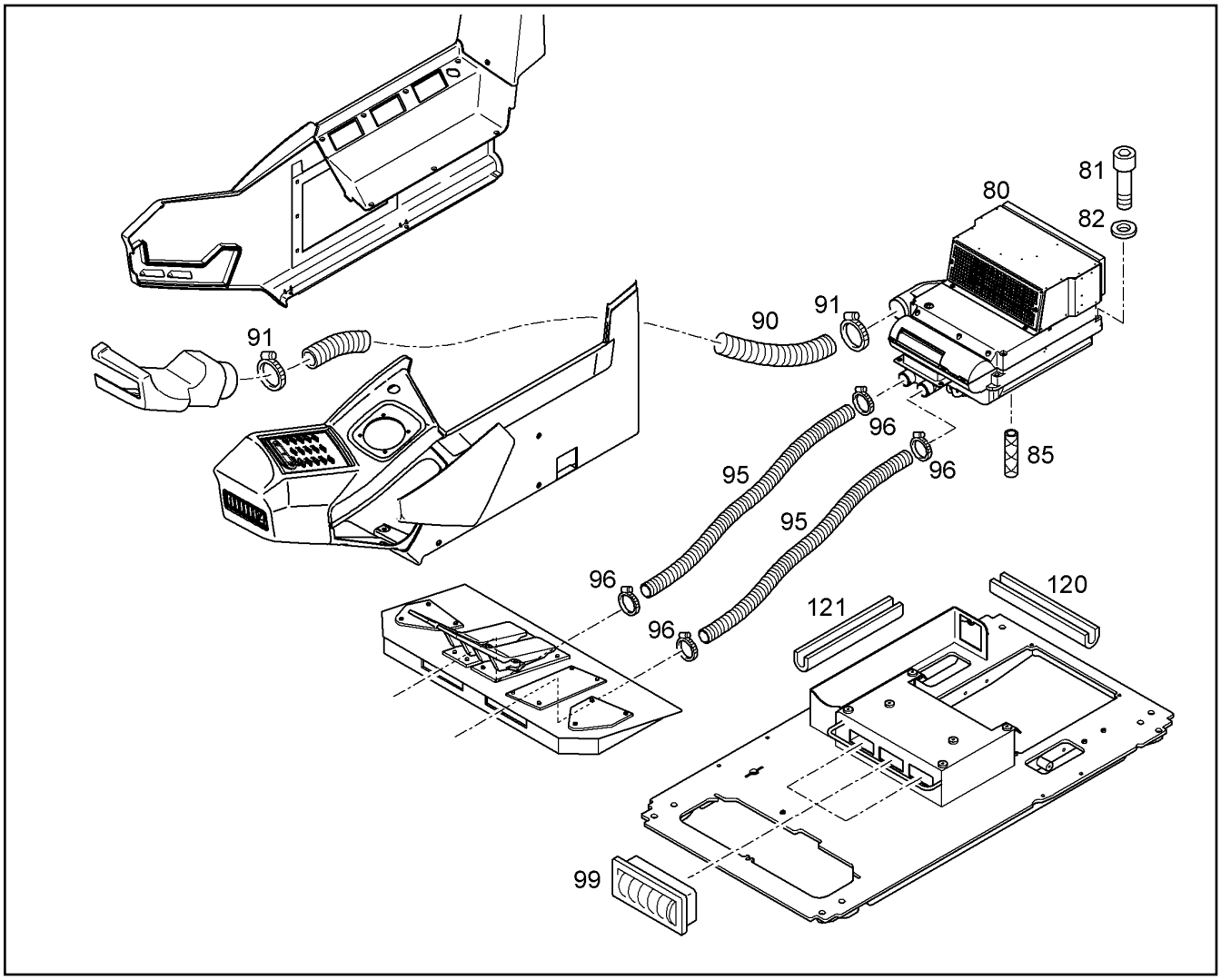

Pos.	Item	Quantity	Description	Designação	Serie	K
80		1	AIR CONDITIONING ⇨ ❑ 328	AR CONDICIONADO		
81	4901067	4	SOCKET HEAD SCREW ISO 4762 M12X65 1	PARAFUSO CILÍNDRICO		
82	10289804	1	WASHER 12 300HV	ARRUELA		
85	7361679	0.1m	HOSE	MANGUEIRA		1
90	10005860	1	AIR HOSE	MANGUEIRA DE AR		1
91	7002008	2	HOSE CLAMP DIN 3017-1 A 80 70-90X13 W2-	ABRAÇADEIRA DE MANGUEIRA		
95	10005859	2	AIR HOSE	MANGUEIRA DE AR		1
96	550838008	4	HOSE CLAMP C8/TXWF 50 40-60X12 W3	ABRAÇADEIRA DE MANGUEIRA		
99	5611480	3	AIR EJECTION NOZZLE	DIFUSOR DE AR		
120	226016702	1m	SECTION 1-4/14,5X10 SCHWARZ	PERFIL DE PROTECAO DE CANT		
121	10009781	1.8m	SECTION	PERFIL DE PROTECAO DE CANT		

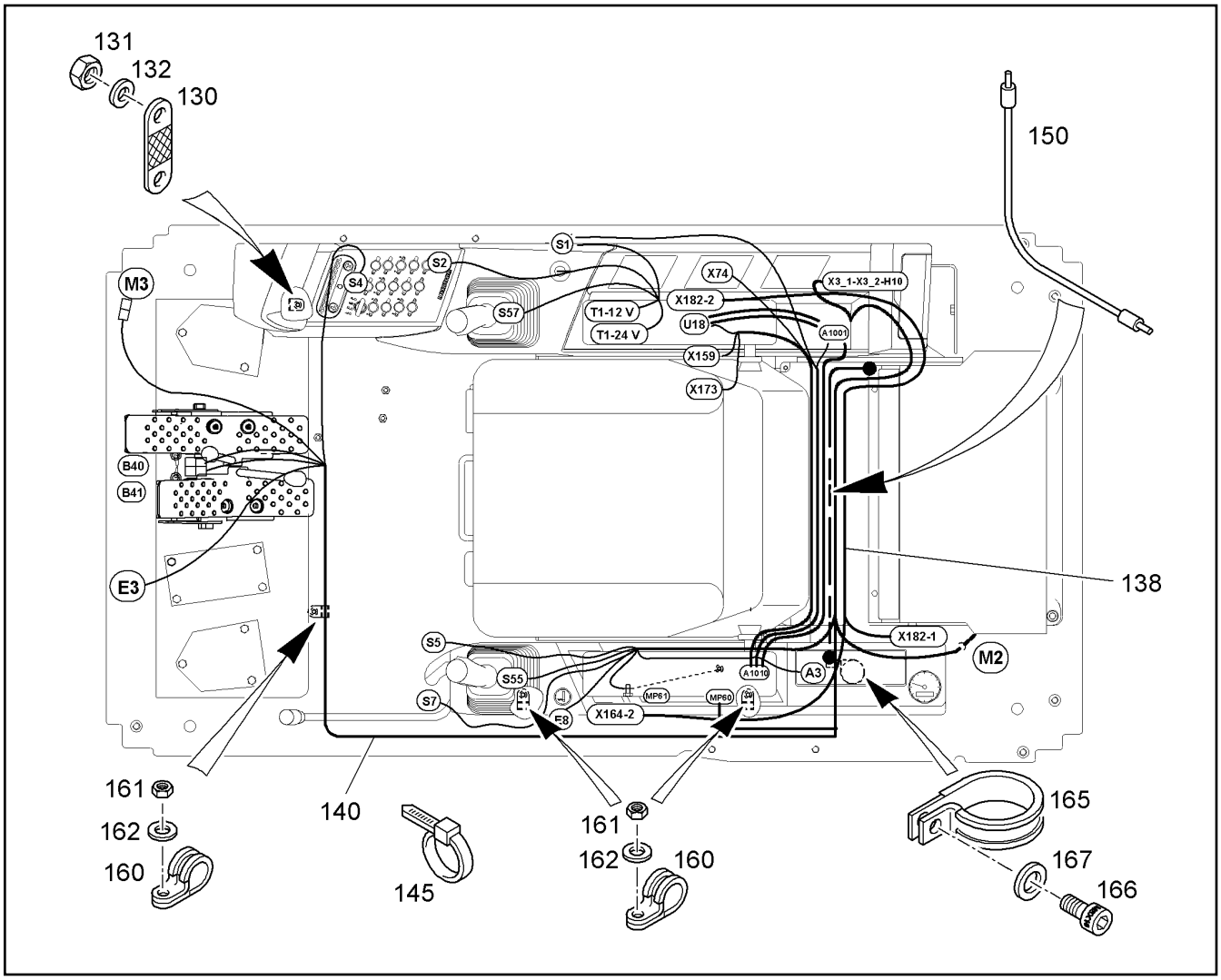

Pos.	Item	Quantity	Description	Designação	Serie	K
130	6204632	1	EARTH STRAP	CABO MASSA TRANÇADO		
131	4000381	1	HEX NUT M8	PORCA SEXTAVADA		
132	10289803	1	WASHER 8 300HV	ARRUELA		
138	10055095	1	CABLE LOOM X164-X182 ⇨ ❑ 6	CHICOTE ELÉTRICO		
140	10408513	1	WIR.HARNESS UNDER CONTROL CAB ⇨ ❑ 6	CHIC ELÉTR DO POSTO DE COM		
145	7001877	10	TIE WRAP 4,8X200	AMARRA PARA CABOS		
150	6204404	1	ANTENNA CABLE	CABO DE ANTENA		
160	7363004	3	CLAMP DIN 3016-1 D1 10X20 W1-2-CR	BRAÇADEIRA		
161	4000381	3	HEX NUT M8	PORCA SEXTAVADA		
162	10289803	3	WASHER 8 300HV	ARRUELA		
165	7366260	1	CLAMP DIN 3016-1 D1 34X20 W1-2-CR	BRAÇADEIRA		
166	4902231	1	SOCKET HEAD SCREW ISO 4762 M8X16 10.	PARAFUSO CILÍNDRICO		
167	10289803	1	WASHER 8 300HV	ARRUELA		

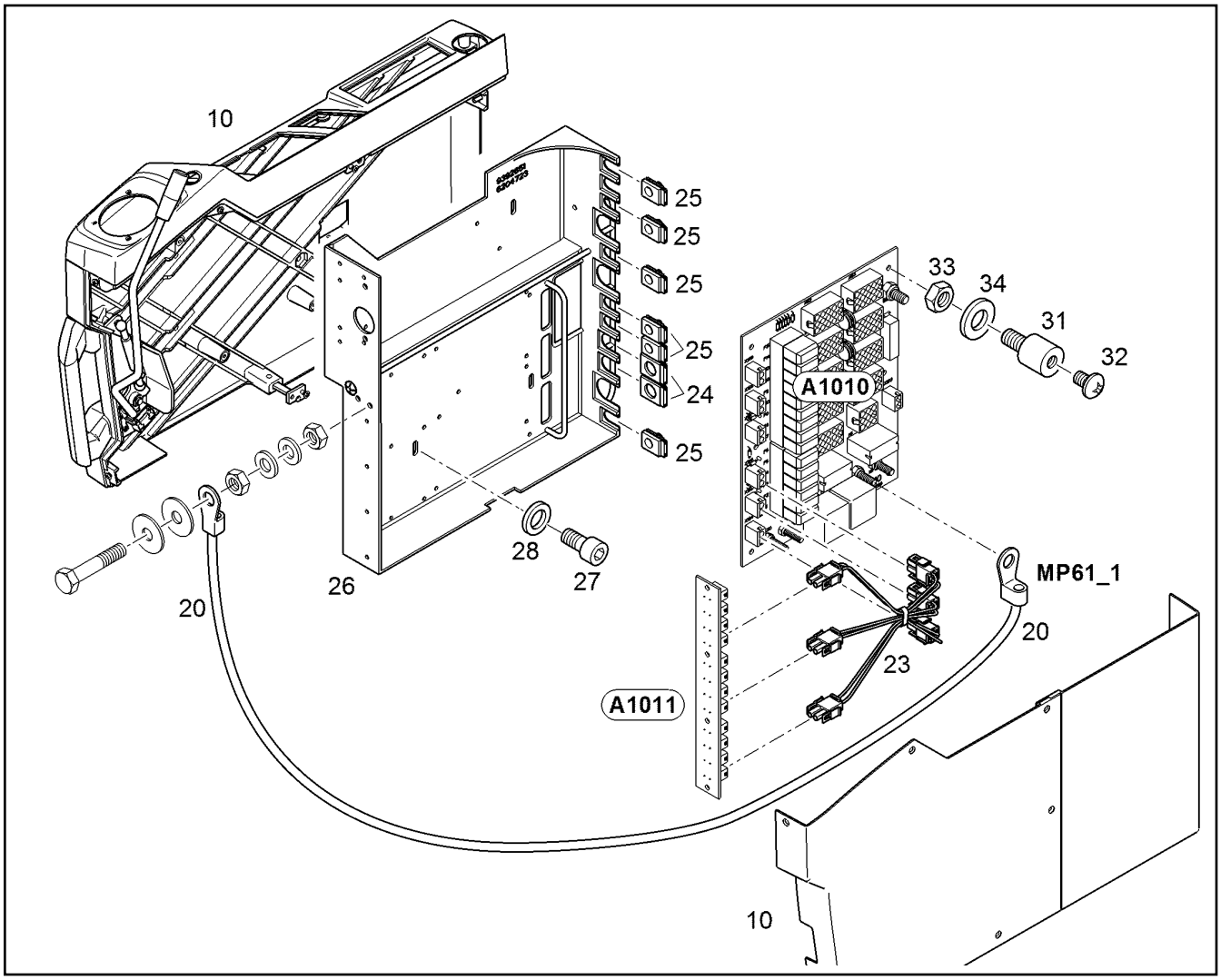

Pos.	Item	Quantity	Description	Designação	Serie	K
10		1	CONTROL BRACKET LEFT INST. ⇨ ❑ 293	CONSOLE DE COMANDO		
20	10066076	1	CABLE LOOM MP65 - MP61/1	CHICOTE ELÉTRICO		
23	9893072	1	CABLE LOOM A1010-A1011	CHICOTE ELÉTRICO		
24	6202703	2	CABLE SLEEVE 14,0/15,7/19	LUVA PARA CABOS		
25	7362986	7	CABLE SLEEVE 8,5/14/20	LUVA PARA CABOS		
26	9392651	1	ELECTRIC BOX	CAIXA ELETRICA		
27	10875563	4	SOCKET HEAD SCREW DIN 7984 M6X12 08	PARAFUSO CILÍNDRICO		
28	11693878	4	WASHER 6,4 200HV	ARRUELA		
31	7014560	28	RUBBER BUFFER	AMORTECEDOR DE BORRACHA		
32	12222642	28	SOCKET HEAD SCREW ISO 4762 M4X6 8.8 4	PARAFUSO CILÍNDRICO		
33	12224463	6	HEX NUT M4	PORCA SEXTAVADA		1
34	10875645	26	WASHER 4 200HV	ARRUELA		

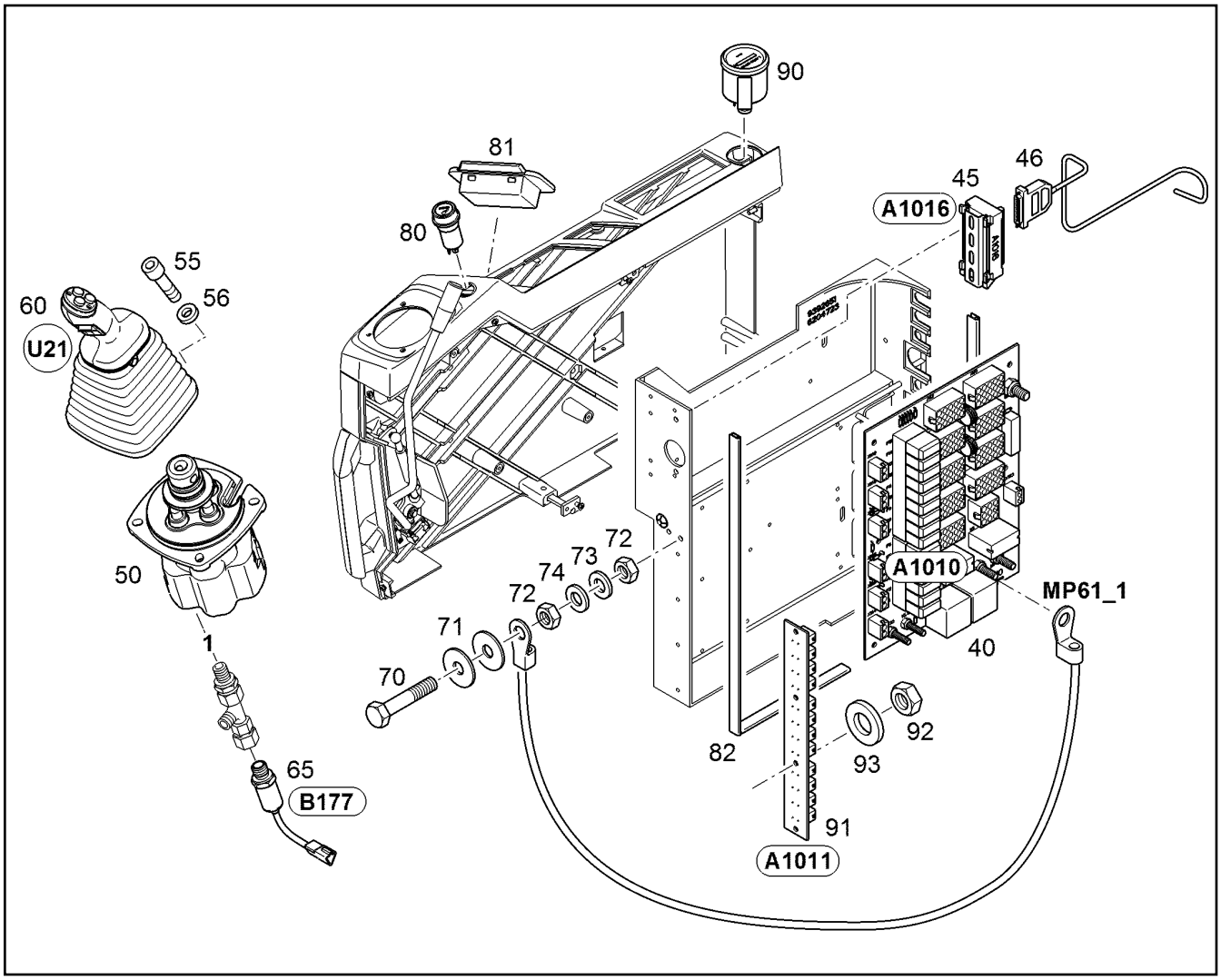

Pos.	Item	Quantity	Description	Designação	Serie	K
40	975881501	1	E-BOARD ⇨ ❑ 295	PLACA ELETRÔNICA		
45	9874988	1	PLATINES INSTALLATION ⇨ ❑ 296	PLACAS - INSTALAÇÃO		
46	6204634	1	CABLE LOOM 25 ABGESCHIRMT	CHICOTE ELÉTRICO		
50	11375606	1	PILOT CONTROL UNIT VG6-8 4-4 Z11 000 ⇨ ❑ 808	MANETE DE COMANDO		
55	10875588	1	SOCKET HEAD SCREW ISO 4762 M6X25 8.8	PARAFUSO CILÍNDRICO		
56	10289802	4	WASHER 6 300HV	ARRUELA		
60	10058792	1	MANIPULATOR LEFT ⇨ ❑ 298	SENSOR DE PRE-COMANDO ES		
65	10100708	1	PRESSURE SWITCH	PRESSOSTATO		
70	12220678	1	HEX SCREW ISO 4017 M5X25 8.8 480H	PARAFUSO SEXTAVADO		
71	12220087	2	WASHER 5,3 200HV	ARRUELA		
72	12224012	2	HEX NUT M5	PORCA SEXTAVADA		
73	11140403	1	WASHER 5 200HV	ARRUELA		
74	11140403	1	WASHER 5 200HV	ARRUELA		
80	11836911	1	CIGARETTE LIGHTER	ACENDEDOR DE CIGARROS		
81	7366731	1	ASH TRAY	CINZEIRO		
82	7360171	1.38m	CORNER PROTECT.PROFILE	PERFIL DE VEDACAO		
90	11699679	1	OPERATING HOURS COUNTER	HORÍMETRO		
91	989165301	1	E-BOARD	PLACA ELETRÔNICA		
92	12224463	4	HEX NUT M4	PORCA SEXTAVADA		1
93	10875645	4	WASHER 4 200HV	ARRUELA		

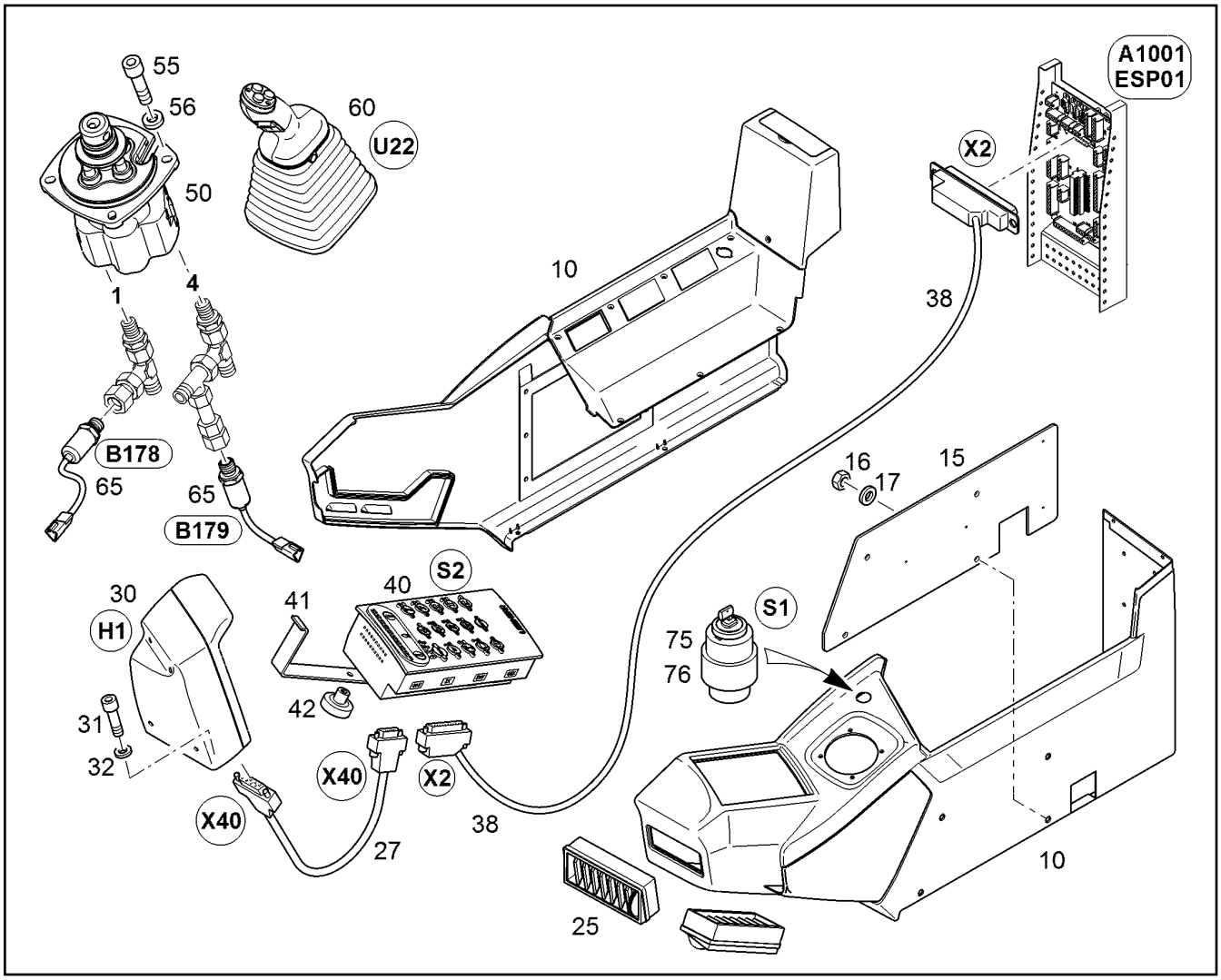

Pos.	Item	Quantity	Description	Designação	Serie	K
10		1	CONTROL CONSOLE RIGHT ⇨ ❑ 310	CONSOLE DE COMANDO DIREIT		
15	9392646	1	SHEET	PLACA DE APOIO		
16	11002807	4	HEX NUT M10	PORCA SEXTAVADA		
17	10289795	4	WASHER 10 300HV	ARRUELA		
25	5611480	2	AIR EJECTION NOZZLE	DIFUSOR DE AR		
27	9768248	1	CONNECTING CABLE	CABO ELÉTRICO		
30		1	DISPLAY CPL. V4.7.7 ⇨ ❑ 308	DISPLAY ESCAVADEIRA COMPL		
30		1	DISPLAY CPL. V4.7.9 ⇨ ❑ 309	DISPLAY ESCAVADEIRA COMPL		
31	11140465	1	SOCKET HEAD SCREW ISO 4762 M6X20 8.8	PARAFUSO CILÍNDRICO		
32	10289802	1	WASHER 6 300HV	ARRUELA		
38	9768247	1	CABLE LOOM	CHICOTE ELÉTRICO		
40		1	KEYBOARD CPL. V4.7.9 ⇨ ❑ 312	TECLADO ESCAVADEIRA COMPL		
41	9388848	1	CLAMPING BRACKET	SUPORTE DE FIXAÇÃO		
42	7370096	1	TWIST HANDLE	MANÍPULO		
50	11375606	1	PILOT CONTROL UNIT VG6-8 4-4 Z11 000 ⇨ ❑ 808	MANETE DE COMANDO		
55	10875588	4	SOCKET HEAD SCREW ISO 4762 M6X25 8.8	PARAFUSO CILÍNDRICO		
56	10289802	4	WASHER 6 300HV	ARRUELA		
60		1	MANIPULATOR RIGHT ⇨ ❑ 313	SENSOR DE PRE-COMANDO DI		
65	10100708	2	PRESSURE SWITCH	PRESSOSTATO		

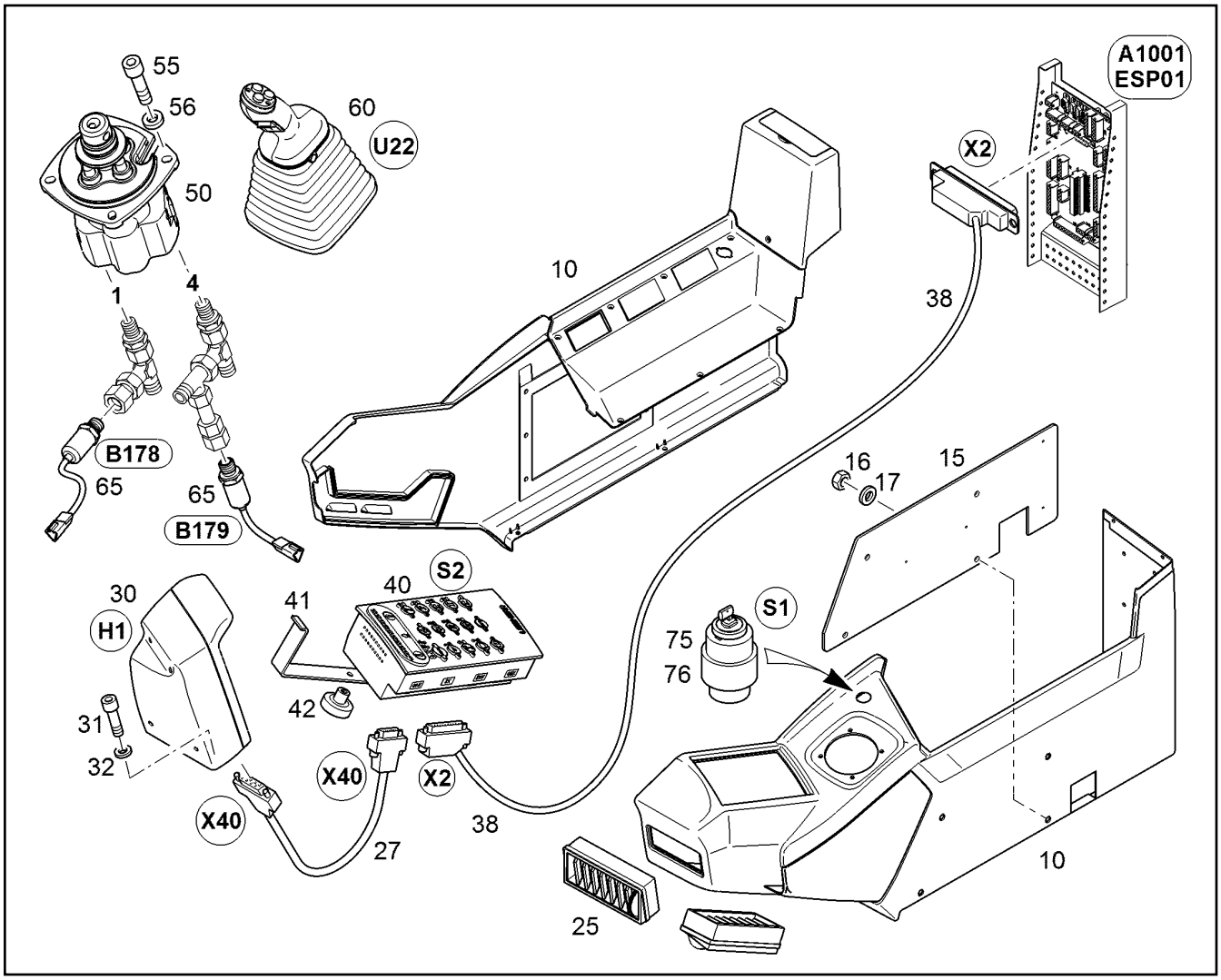

Pos.	Item	Quantity	Description	Designação	Serie	K
75	10228151	1	HEATER STARTER SWITCH ⇨ ❑ 340	CHAVE DE IGNICAO		
76	10221073	1	IGNITION KEY	CHAVE DE IGNICAO		

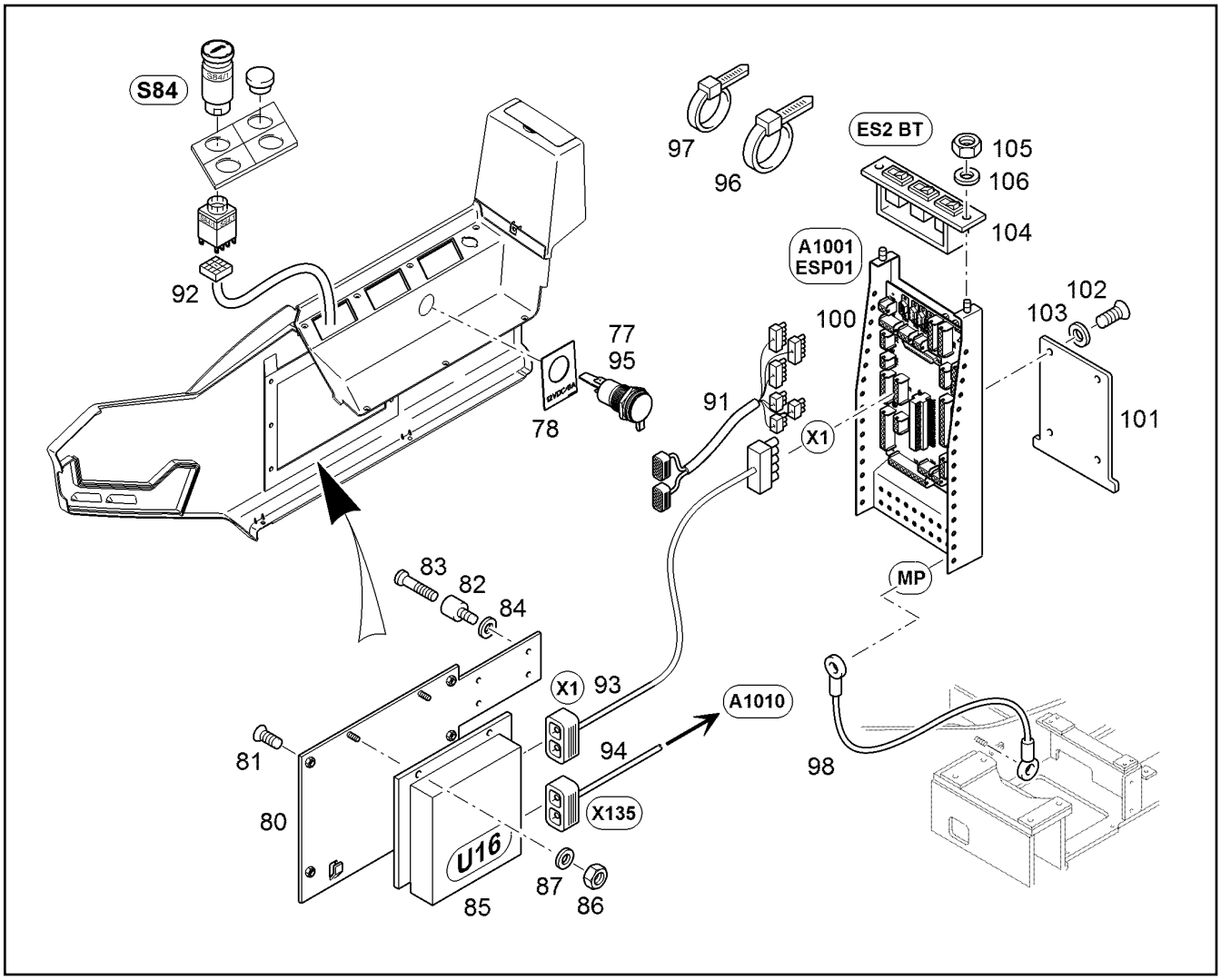

Pos.	Item	Quantity	Description	Designação	Serie	K
77	6001963	1	SOCKET	PLUGUE ELÉTRICO		
78	10086265	1	LABEL 12VDC/8A 30mmX40mm	ETIQUETA		
80	9690616	1	CONSOLE	CONSOLE		
81	11820388	6	COUNTERSUNK SCREW ISO 10642 M6X20	PARAFUSO ESCAREADO		
82	7014560	4	RUBBER BUFFER	AMORTECEDOR DE BORRACHA		
83	12222642	4	SOCKET HEAD SCREW ISO 4762 M4X6 8.8 4	PARAFUSO CILÍNDRICO		
84	10875645	4	WASHER 4 200HV	ARRUELA		
85		1	PUMPS CONTROL CPL. R5.10/V4.7.7 ⇨ ❑ 6	MODULO COMANDO ESCAVADEI		
86	10299668	2	HEX NUT M6	PORCA SEXTAVADA		
87	10289802	2	WASHER 6 300HV	ARRUELA		
91	12418014	1	CABLE LOOM A1010-A1001	CHICOTE ELÉTRICO		
92	10057843	1	CABLE LOOM X182-2/S84-1	CHICOTE ELÉTRICO		
93	10079010	1	CABLE LOOM X1/U16-X1/A1001	CHICOTE ELÉTRICO		
94	9949686	1	CABLE LOOM A1010-U16	CHICOTE ELÉTRICO		
95	10079846	1	CABLE LOOM X66-X734	CHICOTE ELÉTRICO		
96	7001877	10	TIE WRAP 4,8X200	AMARRA PARA CABOS		
97	7362507	4	CABLE CLIP d=200-3,6	BRAÇADEIRA DE CABOS		
98	9689583	1	EARTH CABLE	CABO MASSA		
100	10687417	1	OUTPUT STAGE [08035] ⇨ ❑ 317	PLACA ELETRÔNICA		
101	9758230	1	PLATE	PLACA		
102	11820388	4	COUNTERSUNK SCREW ISO 10642 M6X20	PARAFUSO ESCAREADO		
103	7362752	4	ROSE	ARRUELA		

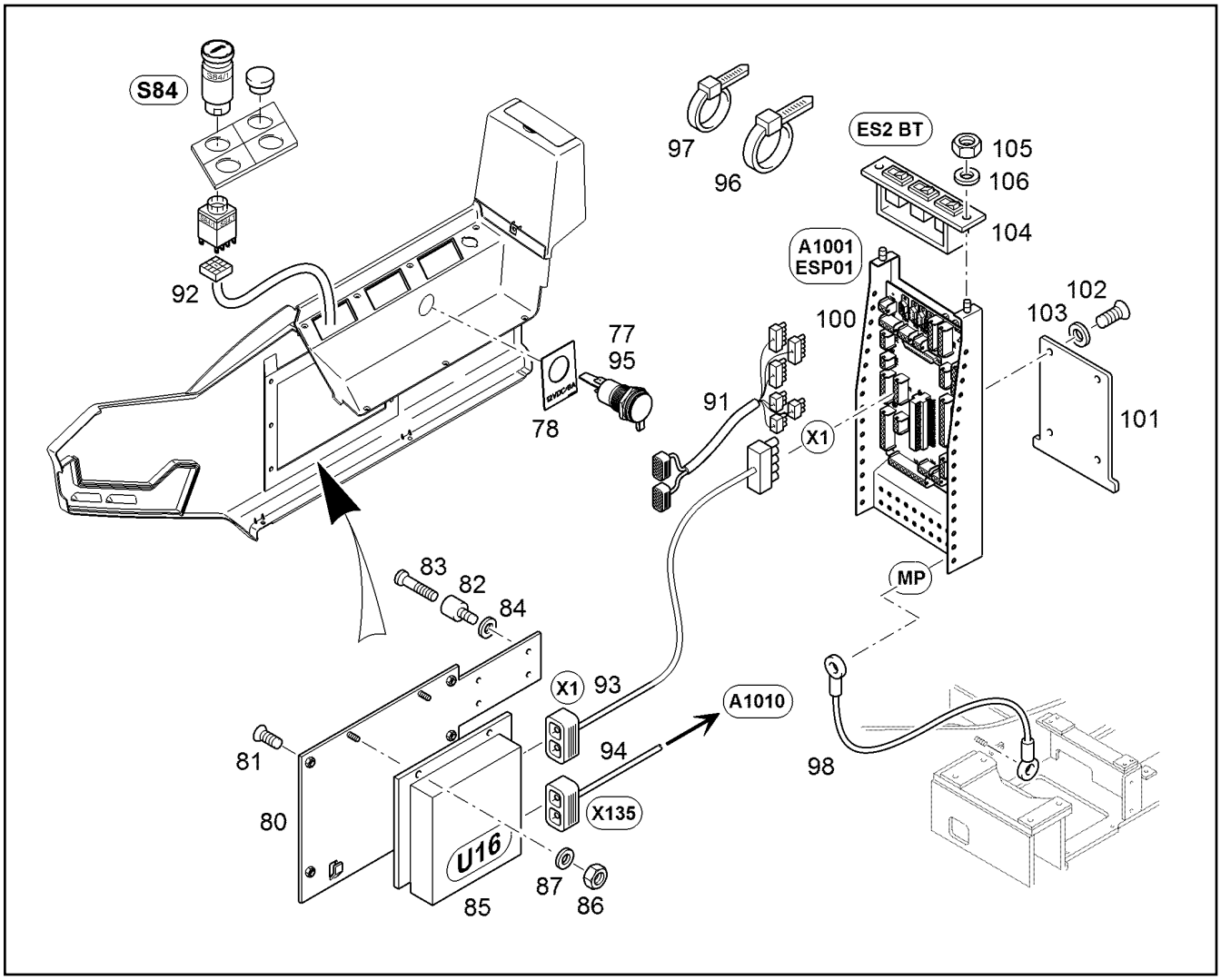

Pos.	Item	Quantity	Description	Designação	Serie	K
104	9013811	1	EMERGENCY CONTROL CPL ⇨ ❑ 316	ACION. DE EMERGÊNCIA COMPL		
105	12224463	2	HEX NUT M4	PORCA SEXTAVADA		1
106	10875645	2	WASHER 4 200HV	ARRUELA		

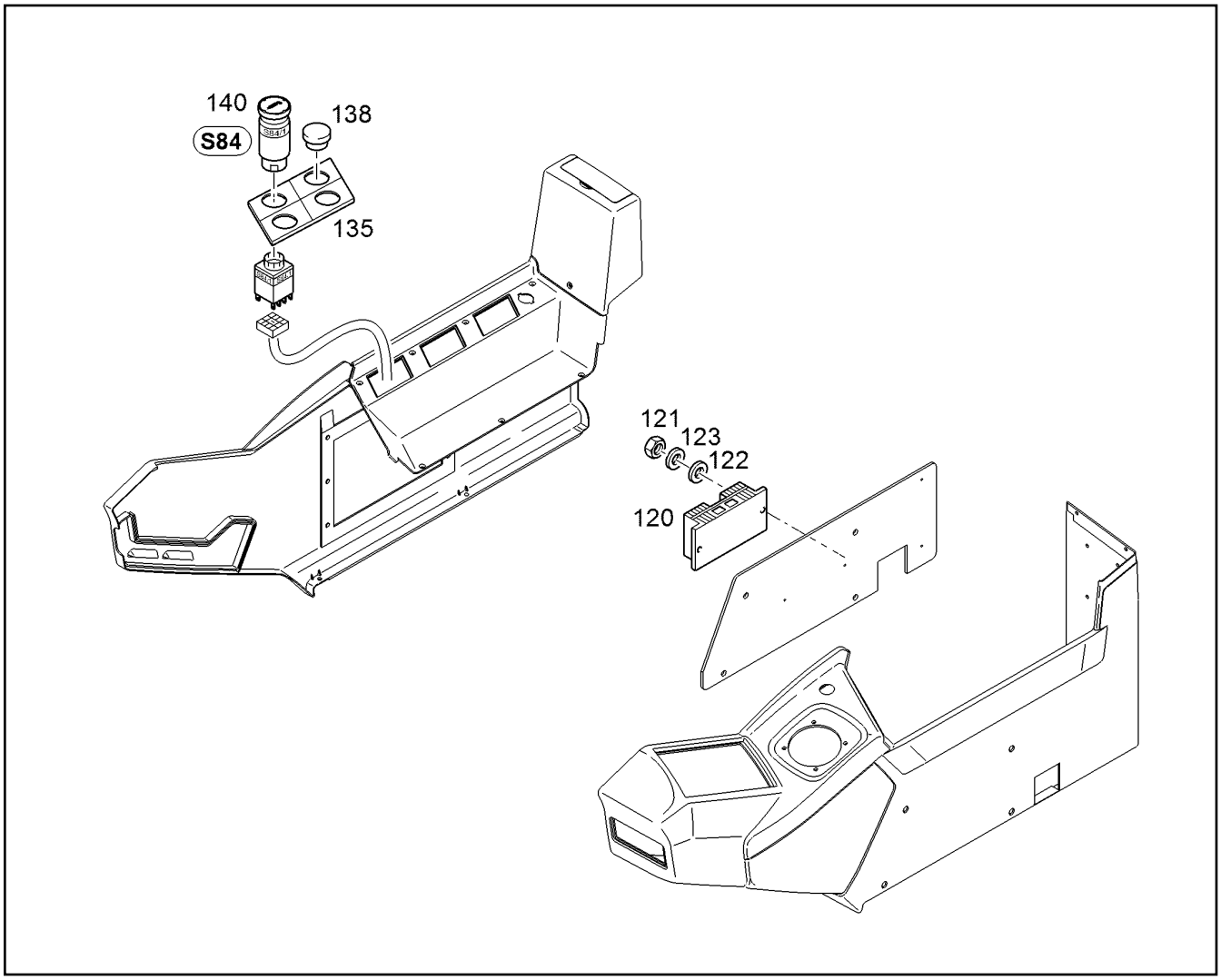

Pos.	Item	Quantity	Description	Designação	Serie	K
120	7026493	1	VOLTAGE TRANSFORMER	TRANSFORMADOR		
121	12224463	2	HEX NUT M4	PORCA SEXTAVADA		1
122	10875645	2	WASHER 4 200HV	ARRUELA		
123	10875645	2	WASHER 4 200HV	ARRUELA		
135	7371141	1	SWITCH MODULE	MODULO DA CHAVE		2
138	7371142	3	STOPPER PLUG F.SCHALTERMODUL	PARAFUSO DE FECHAMENTO		
140		1	SWITCH INSTALLATION ⇨ ❑ 315	INTERRUPTOR - INSTALAÇÃO		

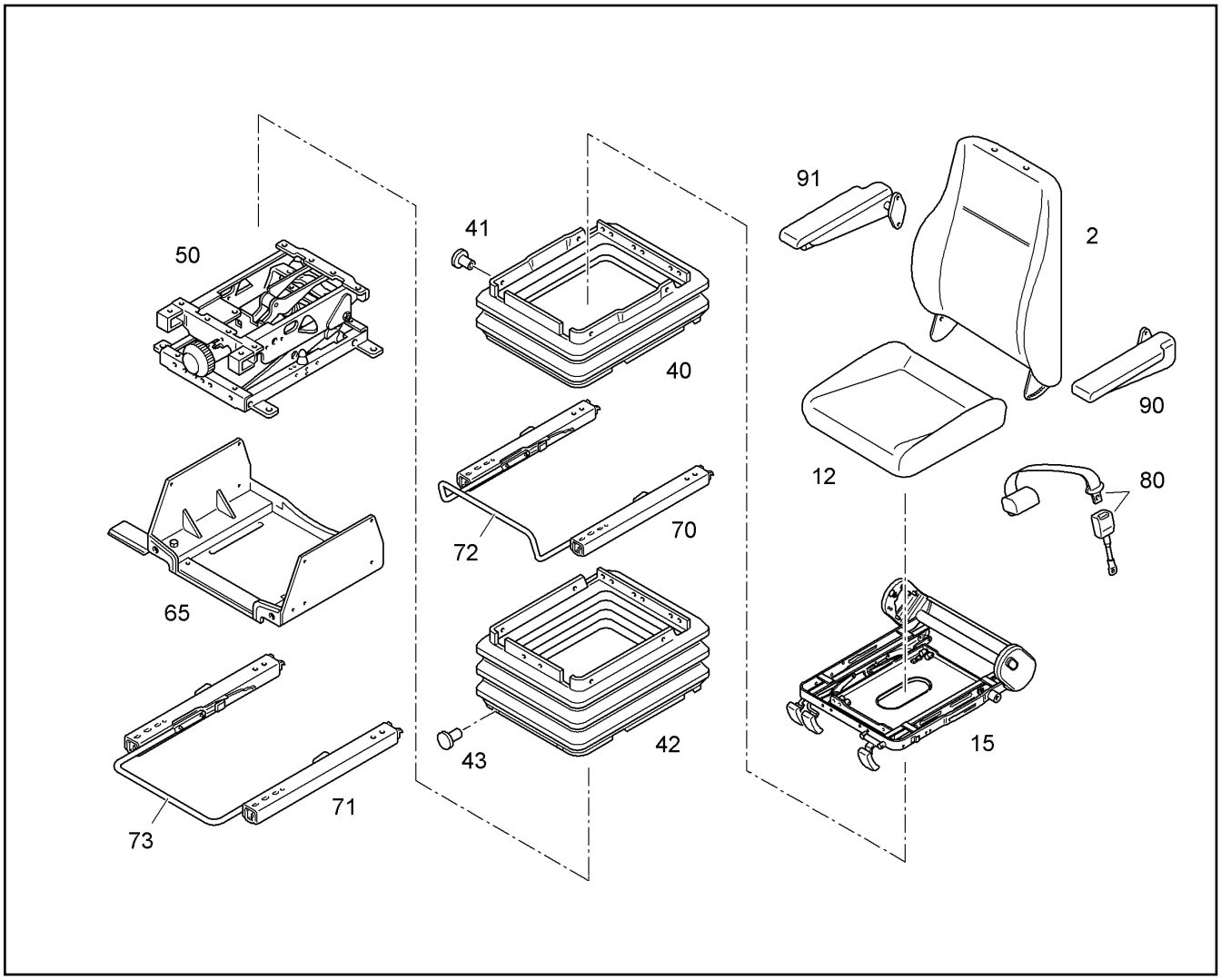

Pos.	Item	Quantity	Description	Designação	Serie	K
2	10289988	1	PACK PIECE LEFT	PEÇA TRASEIRA ESQUERDA		
2	7024985	1	-COVERING	-REVESTIMENTO DO ASSENTO		
12	7024981	1	SEAT PART	PECA DO ASSENTO		
12	7024986	1	-COVERING	-REVESTIMENTO DO ASSENTO		
15		1	SEAT FRAME ⇨ ❑ 290	SUPORTE DO ASSENTO		
40	7025004	1	RUBBER BELLOWS	BORRACHA SANFONADA		
41	10289973	1	FASTENERS SET	KIT DE FIXAÇÃO		
42	7366620	1	RUBBER BELLOWS	BORRACHA SANFONADA		
43	10289975	4	BUTTON	BOTAO		
50		1	VIBRATING SYSTEM ⇨ ❑ 289	SISTEMA AMORTECIMENTO		
65	10165637	1	SEAT VAT	BASE DO ASSENTO		
70	10289990	1	SLIDE SEAT GUIDE	TRILHO DO BANCO DO OPERA		
71	10289989	1	SLIDE SEAT GUIDE	TRILHO DO BANCO DO OPERA		
72	10289976	1	-BRACKET	-ESTRIBO		
73	7370581	1	-RAIL STIRRUP d=26319	-ESTRIBO DO TRILHO		
80	7371746	1	HIP BELT	CINTO DE SEGURANCA ABDOMI		
90	7024982	1	ARM REST LEFT	APOIO DE BRAÇO LADO ESQUE		
90	7025993	1	-SUPPORT LEFT	-APOIO ESQUERDO		
91	7024983	1	ARM REST RIGHT	APOIO DE BRAÇO LADO DIREIT		
91	7025994	1	-SUPPORT RIGHT	-APOIO DIREITO		

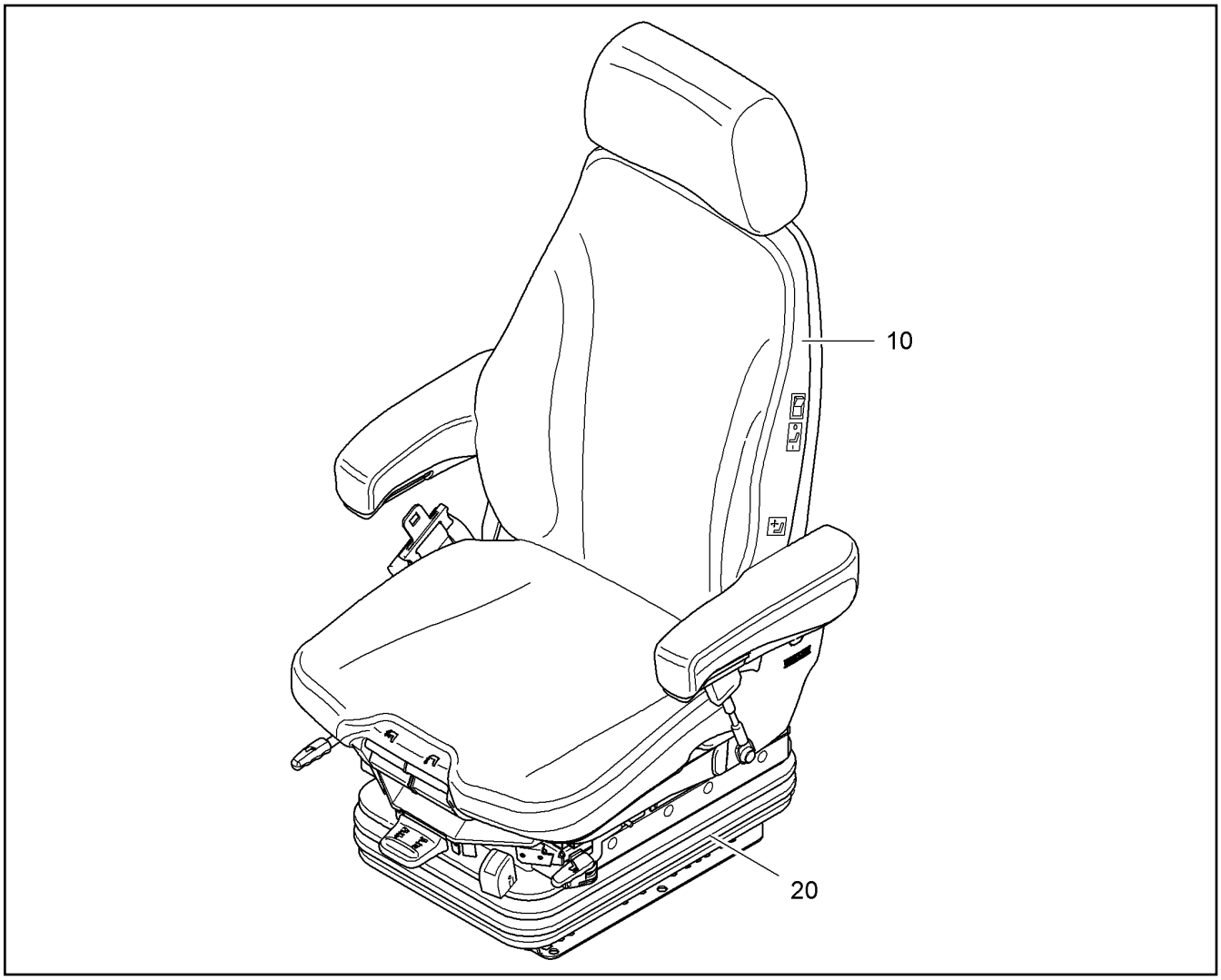

Pos.	Item	Quantity	Description	Designação	Serie	K
10		1	SEAT TOP ⇨ ❑ 285	PARTE SUPERIOR DE ASSENTO		
20		1	SUSPENSION ⇨ ❑ 287	SUSPENSAO		

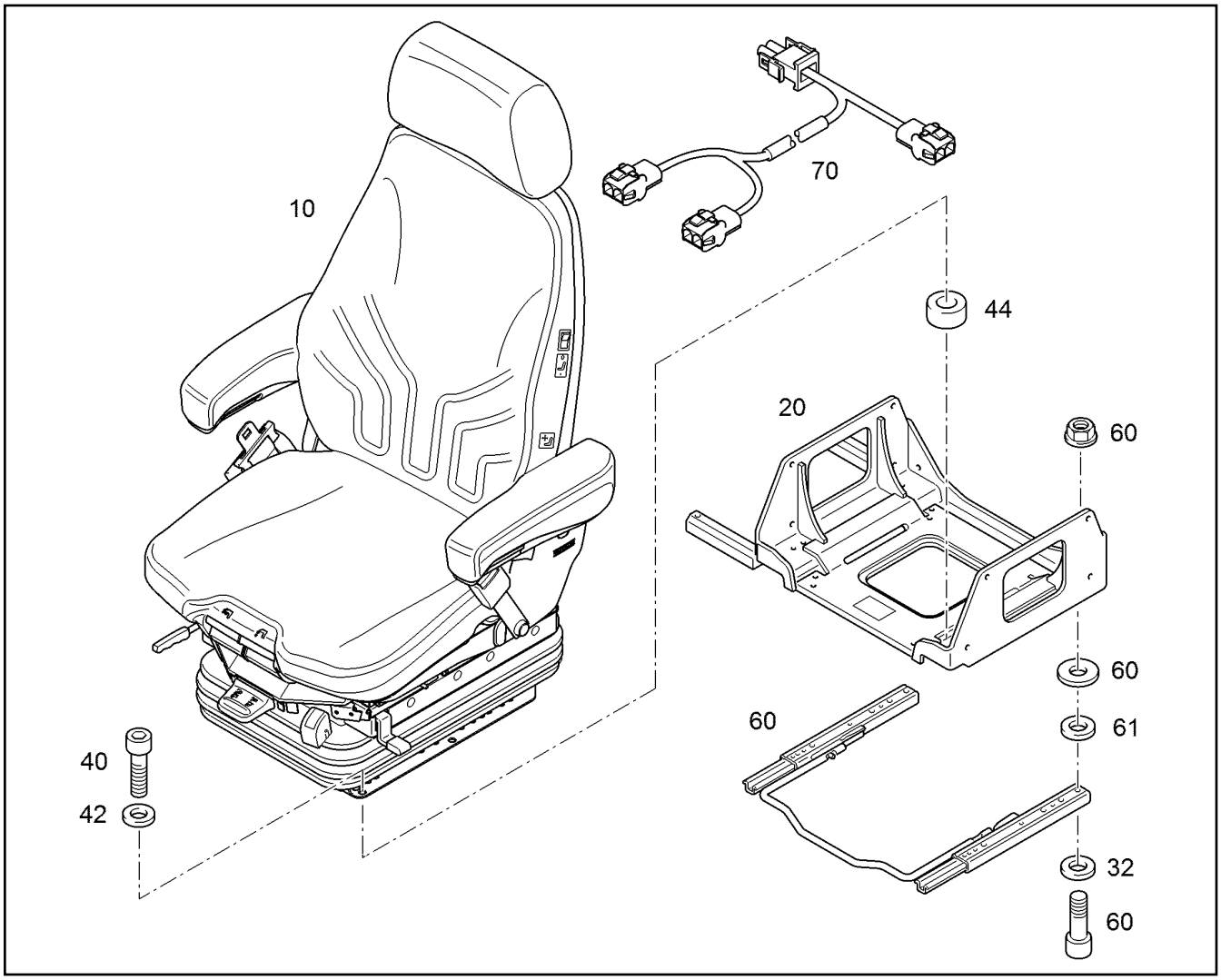

Pos.	Item	Quantity	Description	Designação	Serie	K
10	11000856	1	DRIVER'S SEAT WITH PNEUM.SUSP. [159421660011] ⇨ ❑ 283	BANCO COM SUSP. PNEUMATIC		
20	94025779	1	SEAT VAT	BASE DO ASSENTO		
32	10289803	4	WASHER 8 300HV	ARRUELA		
40	10875599	4	SOCKET HEAD SCREW ISO 4762 M8X25 8.8	PARAFUSO CILÍNDRICO		
42	10289803	4	WASHER 8 300HV	ARRUELA		
44	94022280	4	SPACER SLEEVE ZINCING 9X20X10	LUVA DISTANCIADORA GALVANI		1
60		1	SLIDE SEAT GUIDE ⇨ ❑ 341	TRILHO DO BANCO DO OPERA		
61	11693876	4	WASHER 8 300HV	ARRUELA		
70	9956949	1	POWER SUPPLY WH	ALIMETAÇÃO DE TENSÃO KS		

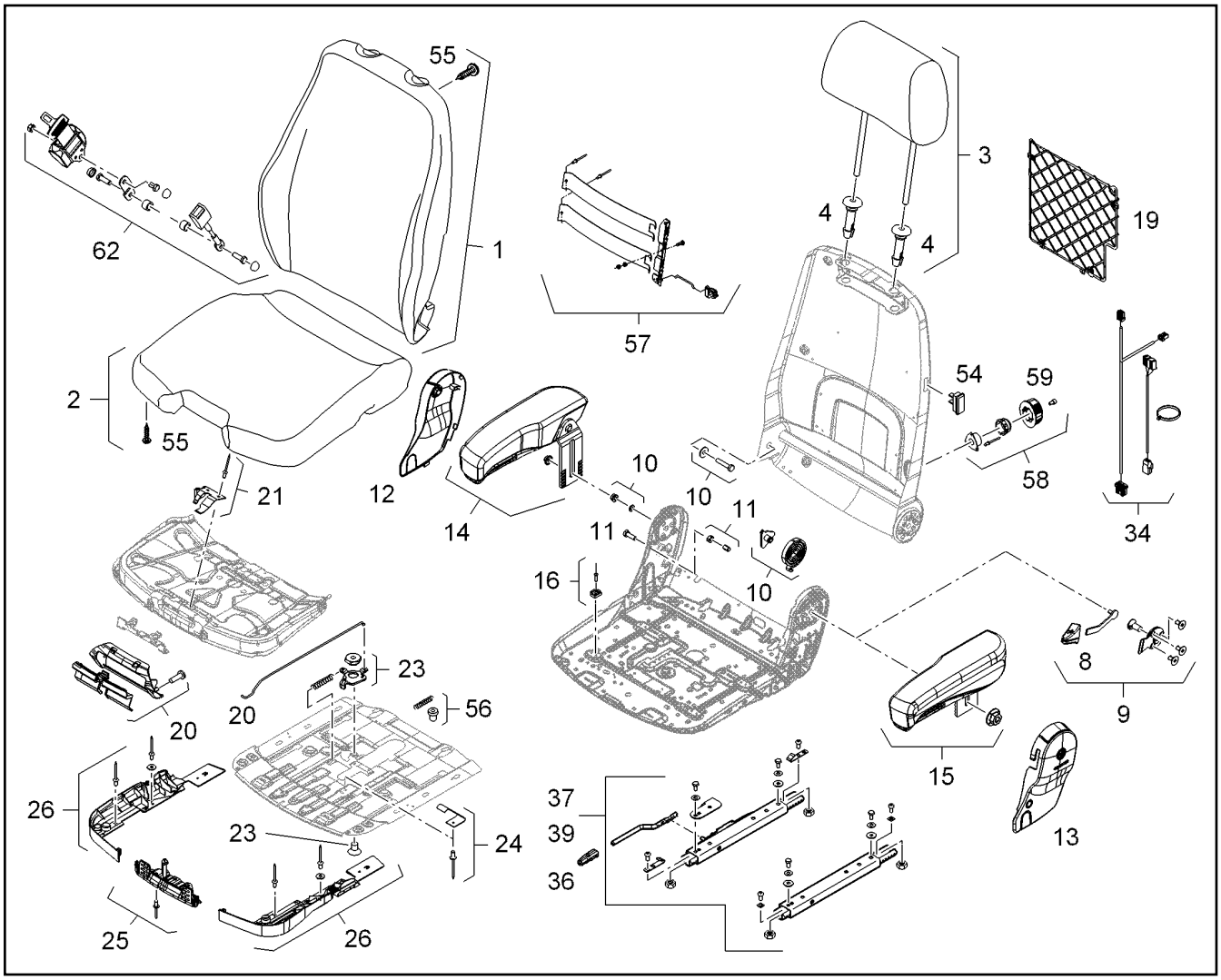

Pos.	Item	Quantity	Description	Designação	Serie	K
1	11082671	1	PAD	ASSENTO		
2	11082672	1	SEAT UPHOLSTERY	ENCOSTO DO ASSENTO		
3	10493046	1	HEAD REST	APOIO DA CABEÇA		
4	10493047	1	GUIDE	GUIA		
8	10491783	1	OPERATION	ACIONAMENTO		
9	10491783	1	OPERATION	ACIONAMENTO		
10	10493351	1	SET OF FASTENINGS/FASTENER RECHTS K	KIT DE FIXAÇÃO		
11	10493050	1	LIMIT STOP	LIMITADOR		
12	7027783	1	COVERING RIGHT	COBERTURA DIREITA		
13	10493986	1	COVERING LEFT	COBERTURA ESQUERDA		
14	10113062	1	ARM REST RIGHT	APOIO DE BRAÇO LADO DIREIT		
15	10113060	1	ARM REST LEFT	APOIO DE BRAÇO LADO ESQUE		
16	10493369	1	GUIDE FUER SITZTIEFENVERSTELLUNG KP	DESLIZADOR		
19	10492435	1	NETWORK	REDE		
20	10493341	1	OPERATION	ACIONAMENTO		
21	7027784	1	SPRING PLATE	CHAPA DE MOLA		
23	7027794	1	LEVER	ALAVANCA		
24	10493054	1	SPRING PLATE	CHAPA DE MOLA		
25	7027776	1	RASTER	ENGATE		
26	11100087	1	COVER F.LNV	TAMPA		
34	10493344	1	CABLE	CABO ELÉTRICO		
36	10029676	1	GRIP	PUXADOR		
37	11100088	1	ADJUSTABLE RAIL	TRILHOS DE AJUSTE		
39	10814706	1	FIXING PARTS	PECAS DE FIXACAO		
54	10493348	1	SWITCH	INTERRUPTOR		
55	10493345	1	SMALL PARTS	PEÇAS PEQUENAS		

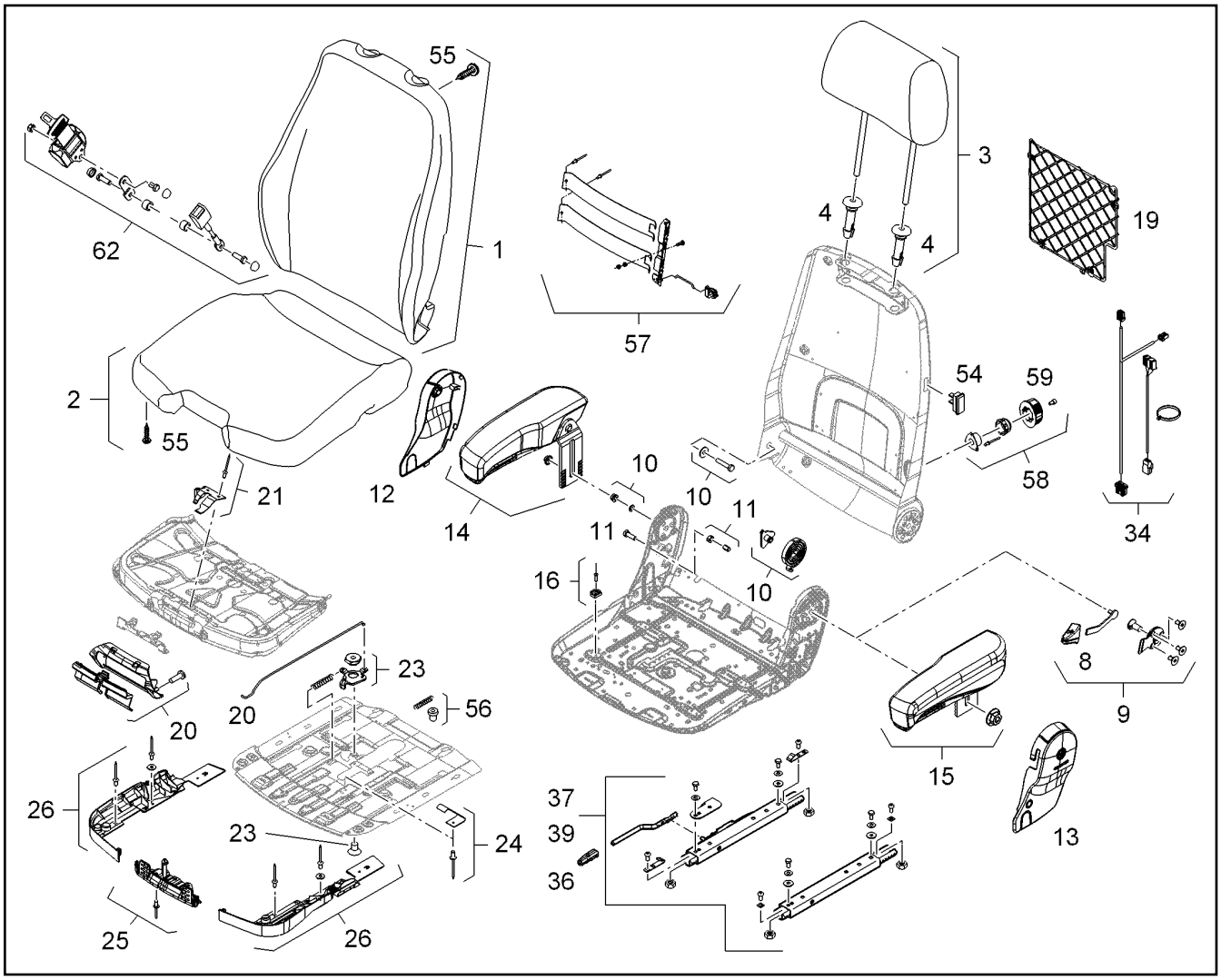

Pos.	Item	Quantity	Description	Designação	Serie	K
56	10493397	1	SMALL PARTS SITZPLATZTIEFENVERSTELL	PEÇAS PEQUENAS		
57	10219021	1	DISC-REST	APOIO PARA COLUNA		
58	10493048	1	OPERATION	ACIONAMENTO		
59	10467429	1	GRIP	PUXADOR		
62	10493984	1	HIP BELT	CINTO DE SEGURANCA ABDOMI		

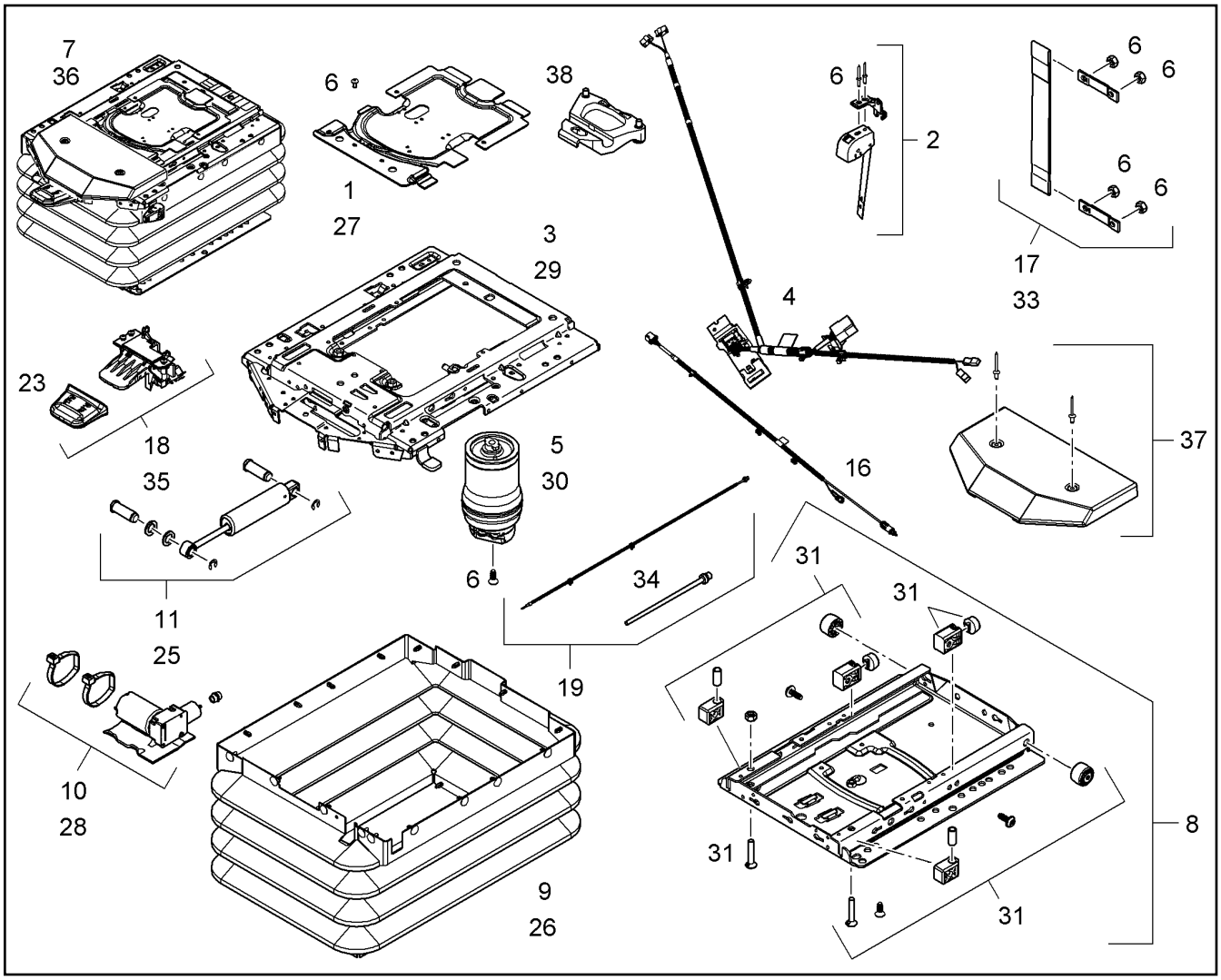

Pos.	Item	Quantity	Description	Designação	Serie	K
1	10492977	1	COVER CPL	TAMPA COMPLETA		
2	11066525	1	LEVEL INDICATOR	INDICAÇÃO DE NÍVEL		
3	11066526	1	RESILIENT UPPER PART	PARTE SUPERIOR DA SUSPEN		
4	11066527	1	CABLE HARNESS	CHICOTE ELÉTRICO		
5	10492981	1	PNEUMATIC SPRING	MOLA PNEUMÁTICA		
6	10493010	1	WEARING PART	PECA DE DESGASTE		
7	11659214	1	SUSPENSION	SUSPENSAO		
8	10492983	1	RESILIENT BASE	PEÇA INFERIOR DE MOLA		
9	11066528	1	RUBBER BELLOWS	BORRACHA SANFONADA		
10	10492985	1	COMPRESSOR CPL.	COMPRESSOR COMPL.		
11	10493469	1	SHOCK ABSORBER	AMORTECEDOR		
16	11100090	1	ADAPTER CABLE	CABO ELÉTRICO ADAPTADOR		
17	10493994	1	BELT STRIP	CINTA		
18	11066530	1	OPERATION	ACIONAMENTO		
19	11066531	1	AIR HOSE CPL.	MANGUEIRA DE AR COMPL.		
23	10814718	1	GRIP	PUXADOR		
25	10493027	1	REPAIR KIT, SHOCK ABSORBER	KIT DE REPARO AMORTECEDO		
26	10493025	1	FIXING PARTS	PECAS DE FIXACAO		
27	10493008	1	RK COVER	KIT DE REPARO COBERTURA		
28	10493026	1	REPAIR KIT F.COMPRESSOR	CR COMPRESSOR		
29	10493022	1	REPAIR KIT, SUSPENSION	KIT DE REPARO SUSPENSÃO		
30	10493023	1	REPAIR KIT, PNEUMATIC SPRING	KIT DE REPARO SUSPENSÃO PN		
31	10493024	1	REPAIR KIT, SUSPENSION	KIT DE REPARO SUSPENSÃO		
33	10493009	1	REPAIR KIT, BELT	KIT DE REPARO CORREIA		
34	10493032	1	REPAIR KIT, AIR HOSE	KIT DE REPARO MANGUEIRA DE		
35	10493031	1	REPAIR KIT, HEIGHT ADJ MODULE	KIT REPAR MÓDUL AJUS DE AL		

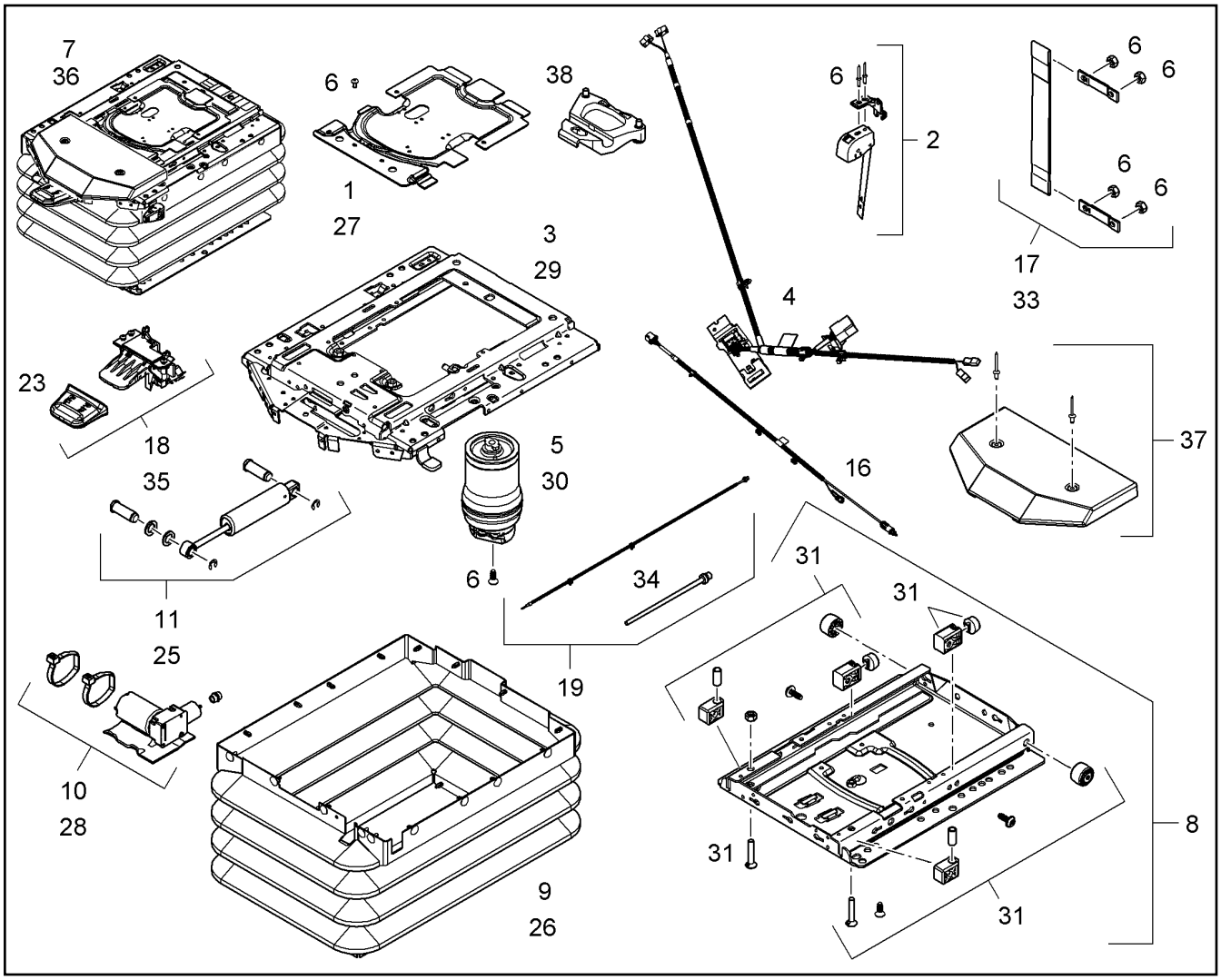

Pos.	Item	Quantity	Description	Designação	Serie	K
36	11066536	1	FIXING PARTS	PECAS DE FIXACAO		
37	7027816	1	COVER	TAMPA		
38	11066532	1	THRUST BEARING / FIXED BEARING OT KPL	MANCAL FIXO		

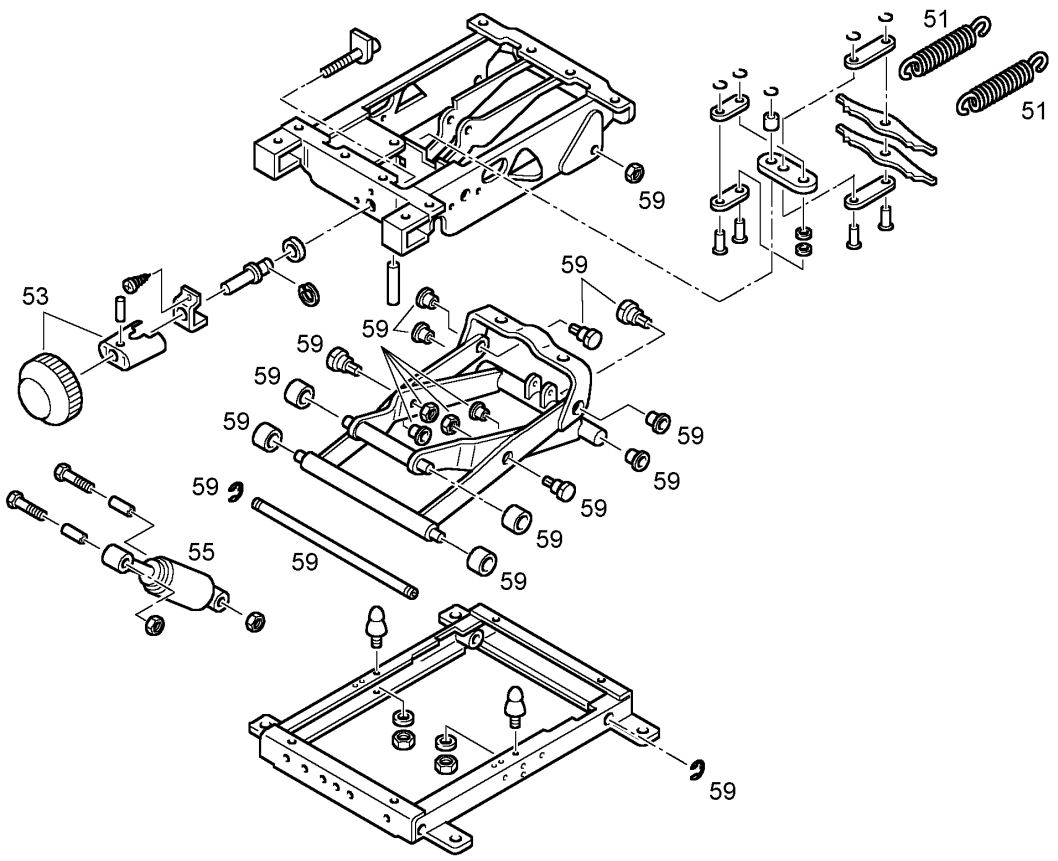

Pos.	Item	Quantity	Description	Designação	Serie	K
51	7617520	2	TENSION SPRING	MOLA DE TRAÇÃO		
53	5609144	1	HANDWHEEL	VOLANTE		
55	10289994	1	SHOCK ABSORBER	AMORTECEDOR		
59	7025009	1	BEARING	ROLAMENTO DO MECANISMO A		

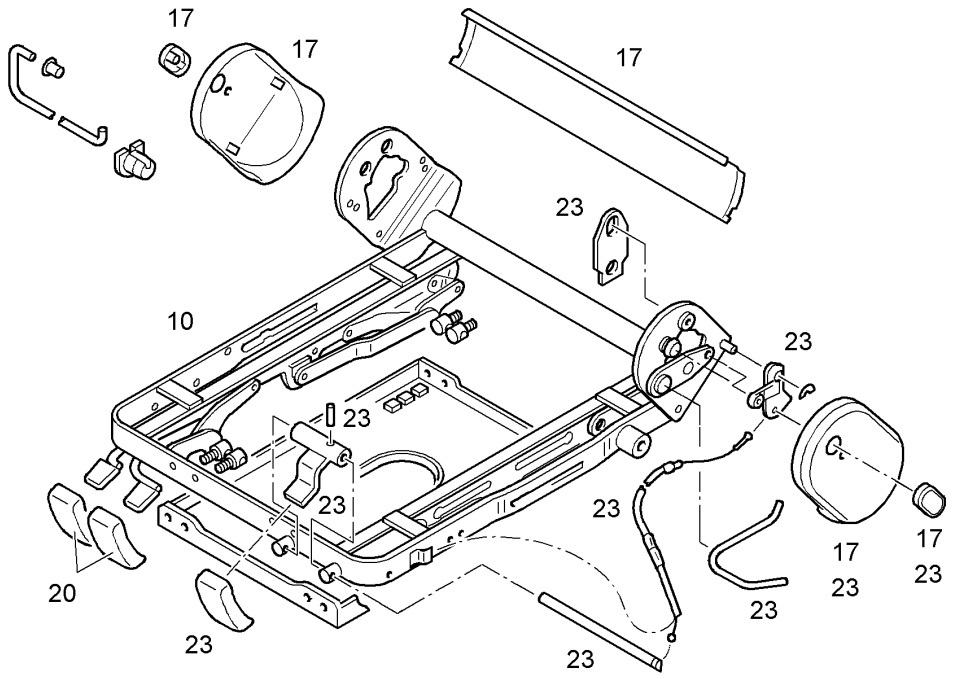

Pos.	Item	Quantity	Description	Designação	Serie	K
10		1	SEAT FRAME	SUPORTE DO ASSENTO		
17	7025005	1	COVER LID	CAPA DE COBERTURA		
20	7025006	1	GRIP	PUXADOR		
23	7025007	1	REGULATION DEVICE SEAT BACK	REGULAGEM DO ENCOSTO		

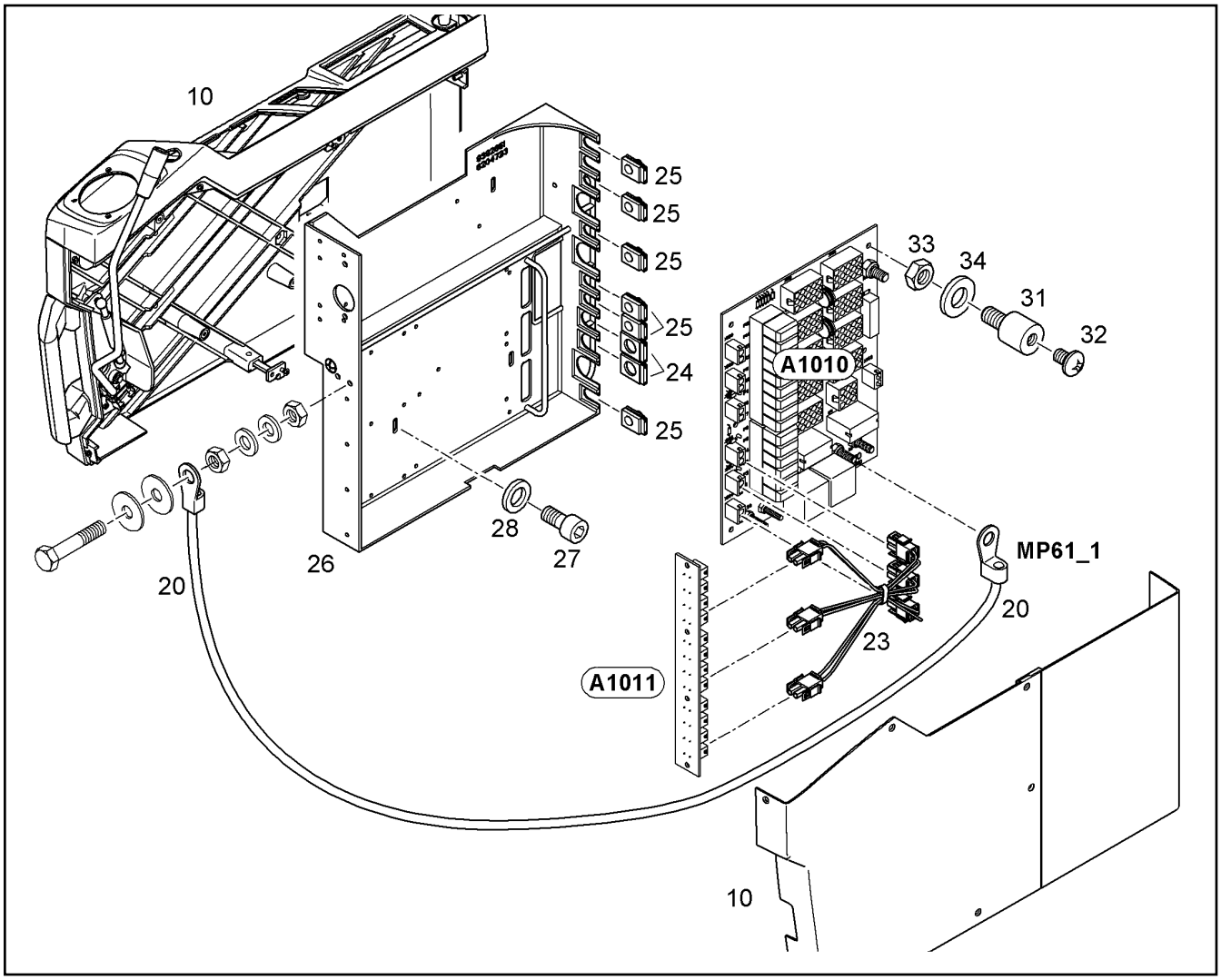

Pos.	Item	Quantity	Description	Designação	Serie	K
10	10057362	1	CONTROL BRACKET LEFT INST. ⇨ ❑ 293	CONSOLE DE COMANDO		
20	10066076	1	CABLE LOOM MP65 - MP61/1	CHICOTE ELÉTRICO		
23	9893072	1	CABLE LOOM A1010-A1011	CHICOTE ELÉTRICO		
24	6202703	2	CABLE SLEEVE 14,0/15,7/19	LUVA PARA CABOS		
25	7362986	7	CABLE SLEEVE 8,5/14/20	LUVA PARA CABOS		
26	9392651	1	ELECTRIC BOX	CAIXA ELETRICA		
27	11690044	4	SOCKET HEAD SCREW ISO 4762 M6X12 8.8	PARAFUSO CILÍNDRICO		
28	11693878	4	WASHER 6,4 200HV	ARRUELA		
31	7014560	28	RUBBER BUFFER	AMORTECEDOR DE BORRACHA		
32	12222642	28	SOCKET HEAD SCREW ISO 4762 M4X6 8.8 4	PARAFUSO CILÍNDRICO		
33	12224463	6	HEX NUT M4	PORCA SEXTAVADA		1
34	10875645	26	WASHER 4 200HV	ARRUELA		

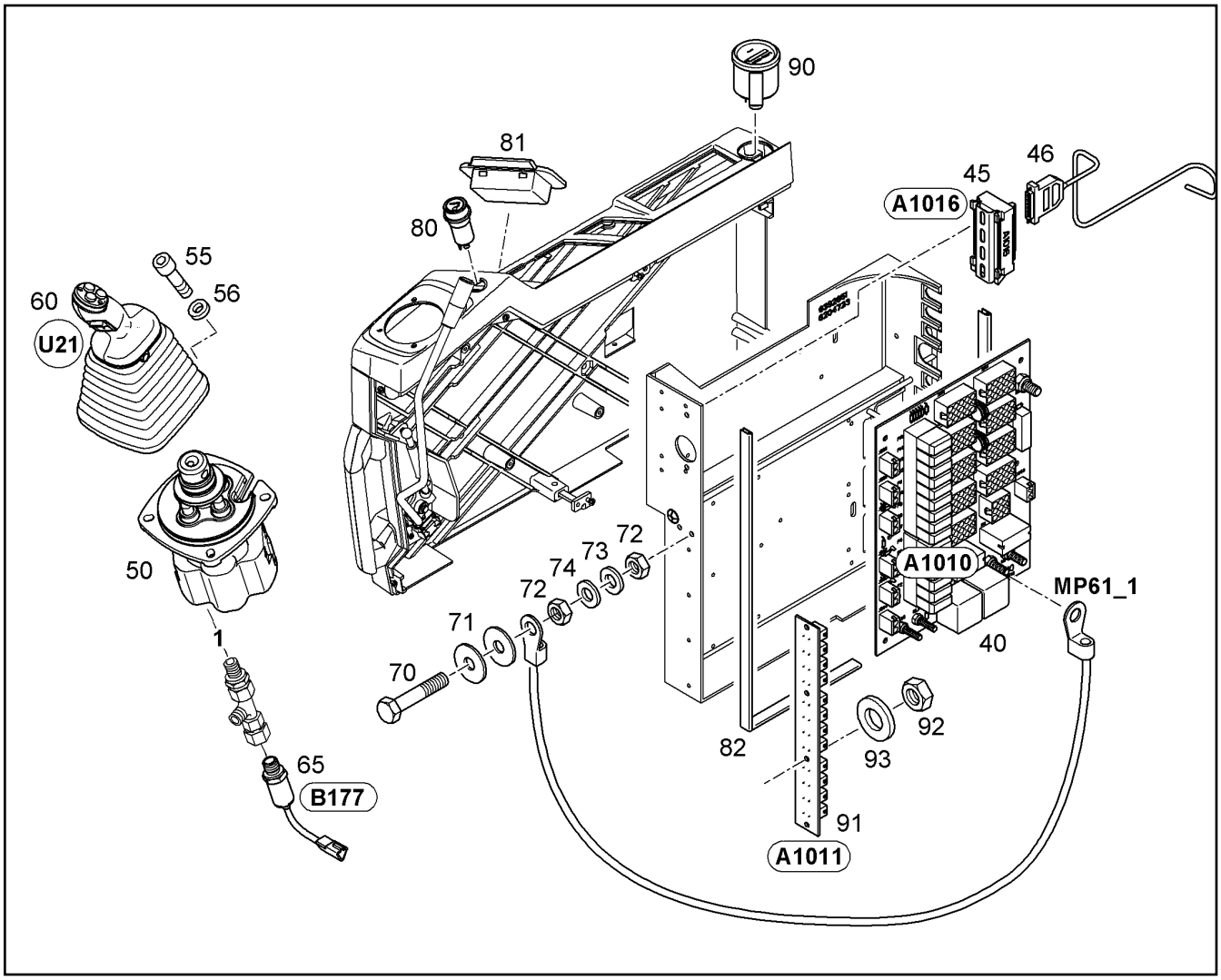

Pos.	Item	Quantity	Description	Designação	Serie	K
40	975881501	1	E-BOARD [28413] ⇨ ❑ 295	PLACA ELETRÔNICA		
45	9874988	1	PLATINES INSTALLATION ⇨ ❑ 296	PLACAS - INSTALAÇÃO		
46	6204634	1	CABLE LOOM 25 ABGESCHIRMT	CHICOTE ELÉTRICO		
50	10118561	1	PILOT CONTROL UNIT VG6-8 4-4 Z11 000 ⇨ ❑ 807	MANETE DE COMANDO		
55	10875588	4	SOCKET HEAD SCREW ISO 4762 M6X25 8.8	PARAFUSO CILÍNDRICO		
56	10289802	4	WASHER 6 300HV	ARRUELA		
60	10058792	1	MANIPULATOR LEFT ⇨ ❑ 298	SENSOR DE PRE-COMANDO ES		
65	10100708	1	PRESSURE SWITCH	PRESSOSTATO		
70	12220678	1	HEX SCREW ISO 4017 M5X25 8.8 480H	PARAFUSO SEXTAVADO		
71	12220087	2	WASHER 5,3 200HV	ARRUELA		
72	12224012	2	HEX NUT M5	PORCA SEXTAVADA		
73	11140403	1	WASHER 5 200HV	ARRUELA		
74	11140403	1	WASHER 5 200HV	ARRUELA		
80	7369377	1	CIGARETTE LIGHTER ⇨ ❑ 300	ACENDEDOR DE CIGARROS		
81	7366731	1	ASH TRAY	CINZEIRO		
82	7360171	1.38m	CORNER PROTECT.PROFILE	PERFIL DE VEDACAO		
90	11699679	1	OPERATING HOURS COUNTER	HORÍMETRO		
91	989165301	1	E-BOARD	PLACA ELETRÔNICA		
92	12224463	4	HEX NUT M4	PORCA SEXTAVADA		1
93	10875645	4	WASHER 4 200HV	ARRUELA		

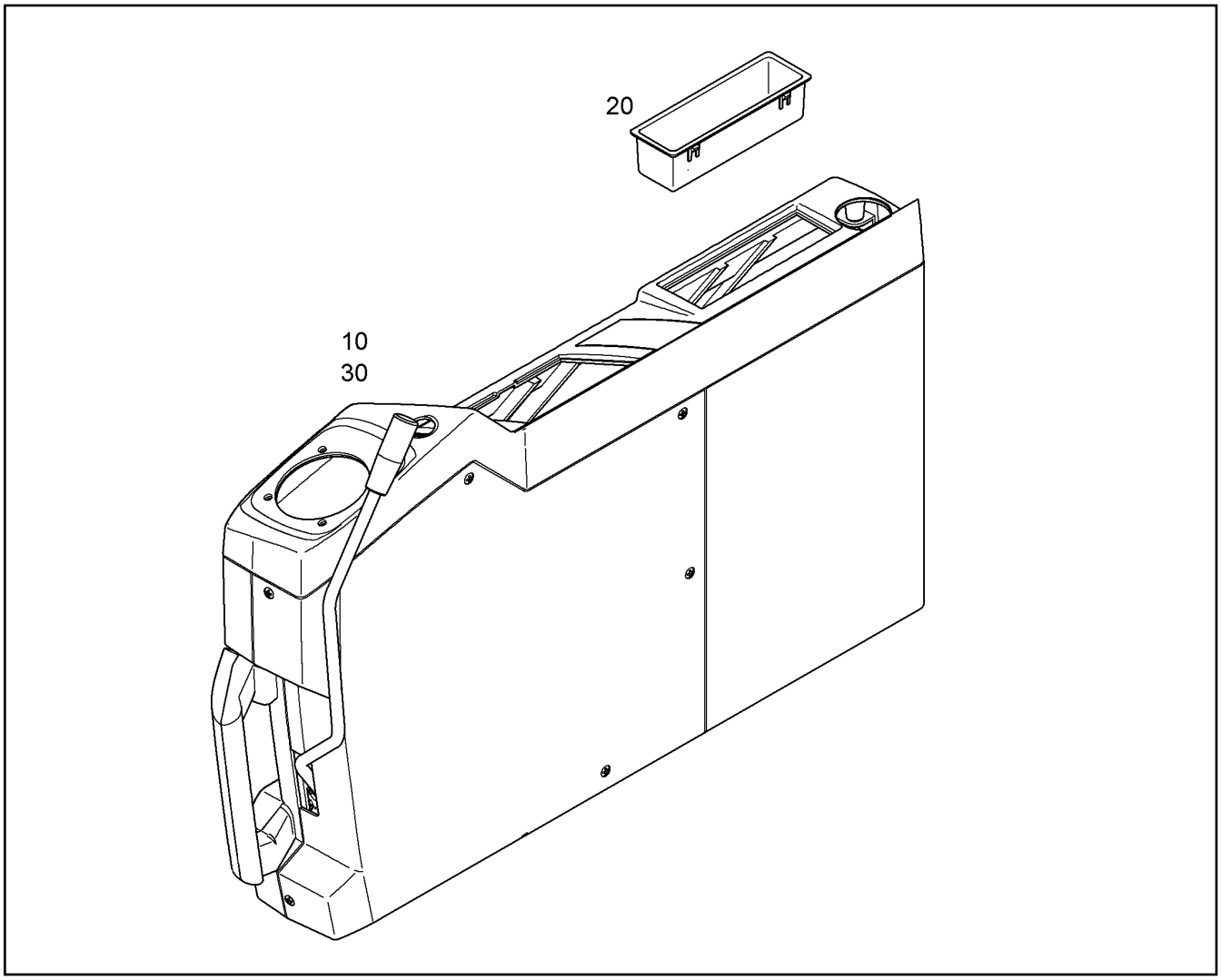

Pos.	Item	Quantity	Description	Designação	Serie	K
10		1	STEERING CONSOLE ⇨ ❑ 294	CONSOLE DE COMANDO		
20	10043180	1	REST	SUPORTE		
30		1	MODIFICAT.CONTROL BRACKET LEFT			

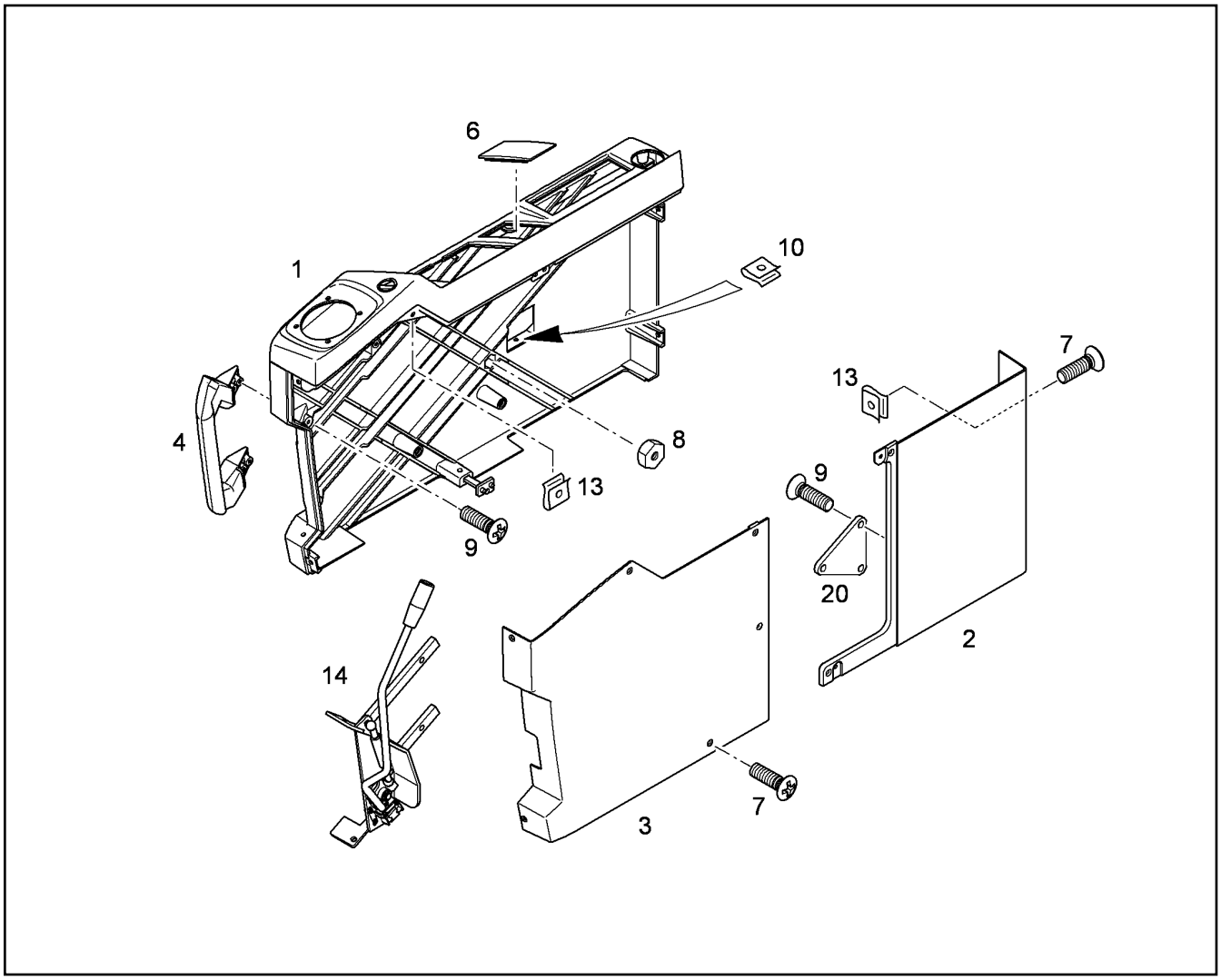

Pos.	Item	Quantity	Description	Designação	Serie	K
1	10005863	1	BASIC BODY	CORPO BASICO		
2	7370896	1	COVER	TAMPA		
3	7370895	1	COVER	TAMPA		
4	7370897	1	GRIP	PUXADOR		
6	7370899	1	BLANK LID	TAMPA DE PROTEÇÃO		
7	7371577	10	COUNTERSUNK SCREW ISO 7047 M6X20 4	PARAFUSO ESCAREADO		
8	7370889	2	HEX NUT M10	PORCA SEXTAVADA		
9	7370888	4	SCREW	PARAFUSO		
10	7366862	1	SHEET METAL NUT	PORCA DE CHAPA		
13	7370883	7	SHEET METAL NUT M6	PORCA DE CHAPA		
14		1	SAFETY LEVER ⇨ ❑ 297	ALAVANCA DE SEGURANCA		
20	10652159	1	SHEET	PLACA DE APOIO		

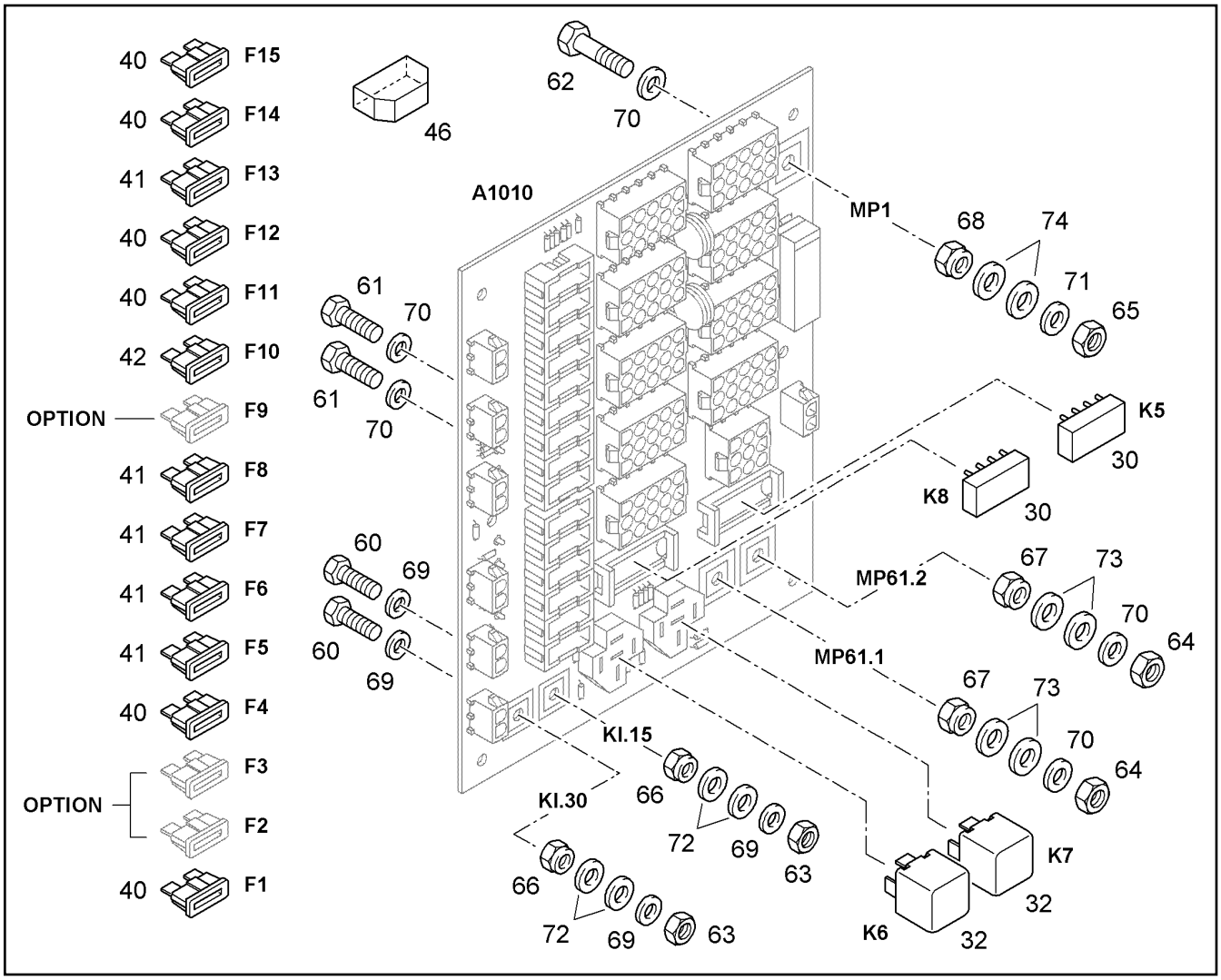

Pos.	Item	Quantity	Description	Designação	Serie	K
30	6202646	2	RELAY	RELE		
32	6002381	2	RELAY	RELE		
40	4901512	9	FUSE CARTRIDGE C 15A 32 FKS	FUSÍVEL TIPO CARTUCHO		
41	4901513	5	FUSE CARTRIDGE C 7,5A 32/56 FKS	FUSÍVEL TIPO CARTUCHO		
42	6001471	1	FUSE CARTRIDGE 25A 32V C	FUSÍVEL TIPO CARTUCHO		
46	604521501	15	COVER	TAMPA		
60	12220678	2	HEX SCREW ISO 4017 M5X25 8.8 480H	PARAFUSO SEXTAVADO		
61	4900539	2	HEX SCREW ISO 4017 M6X25 8.8 A2C	PARAFUSO SEXTAVADO		
62	11642261	1	HEX SCREW ISO 4017 M8X25 8.8 480H	PARAFUSO SEXTAVADO		
63	4000466	2	HEX NUT M5	PORCA SEXTAVADA		
64	4000379	2	HEX NUT M6	PORCA SEXTAVADA		
65	411508001	1	HEX NUT M8	PORCA SEXTAVADA		
66	4001866	2	HEX NUT M5	PORCA SEXTAVADA		
67	4002477	2	HEX NUT M6	PORCA SEXTAVADA		
68	4600783	1	HEX NUT M8	PORCA SEXTAVADA		
69	11140403	4	WASHER 5 200HV	ARRUELA		
70	10289802	4	WASHER 6 300HV	ARRUELA		
71	423910801	2	LOCK WASHER VS 8	ARRUELA DE PRESSÃO		
72	11140403	4	WASHER 5 200HV	ARRUELA		
73	10289802	4	WASHER 6 300HV	ARRUELA		
74	10289803	2	WASHER 8 300HV	ARRUELA		

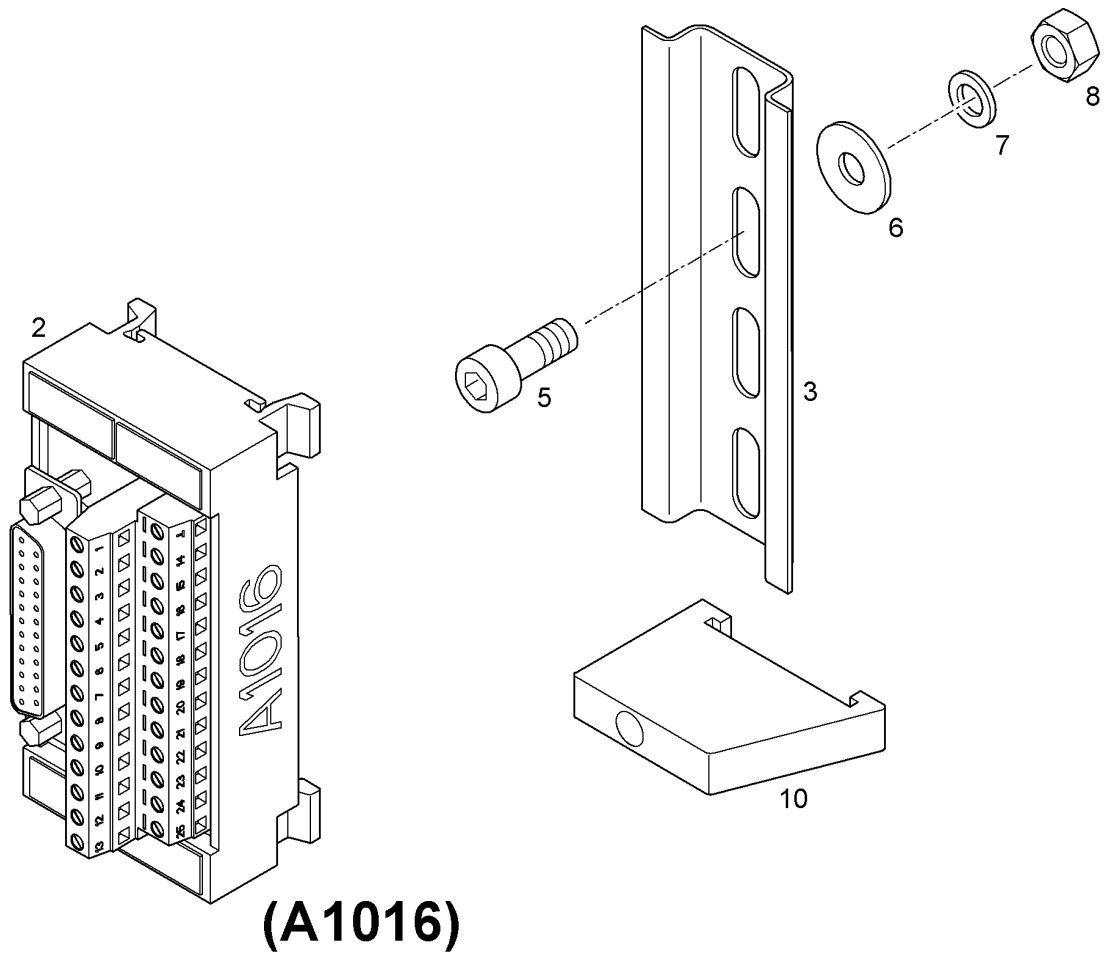

(A1016)

Pos.	Item	Quantity	Description	Designação	Serie	K
2	10287118	1	MODULE	MÓDULO		
3	9874961	1	CARRIER RAIL	TRILHO SUPORTE		
5	11647553	2	SOCKET HEAD SCREW ISO 4762 M5X16 8.8	PARAFUSO CILÍNDRICO		
6	11693878	2	WASHER 6,4 200HV	ARRUELA		
7	4600200	4	WASHER 5 200HV	ARRUELA		
8	4000466	2	HEX NUT M5	PORCA SEXTAVADA		
10	6203433	1	FIXING BRACKET	PEÇA DE FIXAÇÃO		

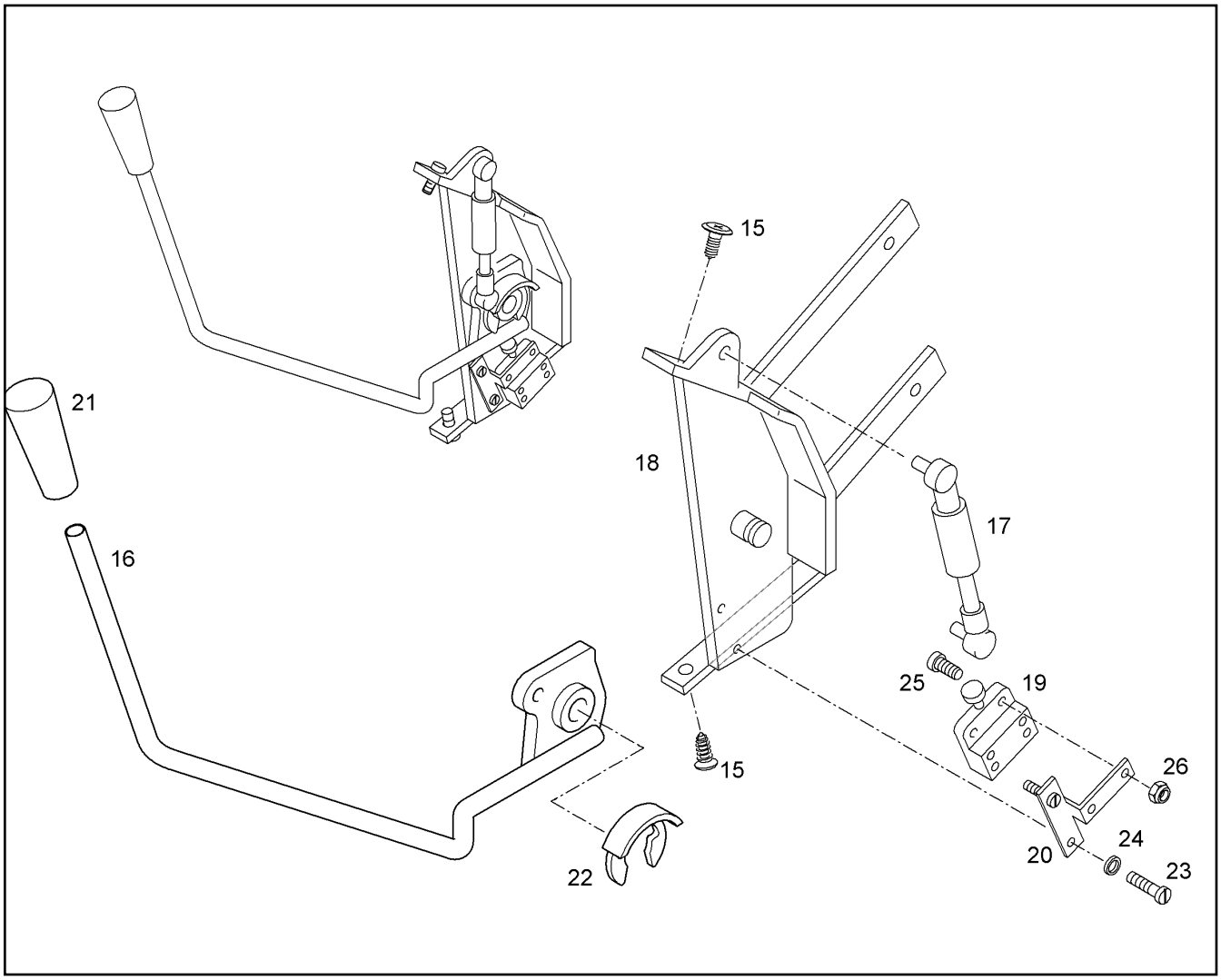

Pos.	Item	Quantity	Description	Designação	Serie	K
15	4902073	2	SHEET-METAL SCREW ISO 1479 ST6,3X38 S	PARAFUSO		
16	7372353	1	LEVER	ALAVANCA		
17	7372354	1	GAS SPRING	MOLA A GÁS		
18	7372355	1	HOLDER	SUPORTE		
19	6001027	1	SNAP SWITCH	INTERRUPTOR INSTANTÂNEO		2
20	7373825	1	HOLDER	SUPORTE		
21	7025347	1	HANDLE CAP	CAPA DO PUNHO		
22	7027038	1	FUSE	FUSÍVEL		
23	4901395	2	SOCKET HEAD SCREW ISO 1207 M3X10 MS	PARAFUSO CILÍNDRICO		
24	4600814	2	WASHER 3 200HV	ARRUELA		
25	4600815	2	SOCKET HEAD SCREW ISO 1207 M3X20 4.8	PARAFUSO CILÍNDRICO		
26	10003140	2	HEX NUT M3	PORCA SEXTAVADA		

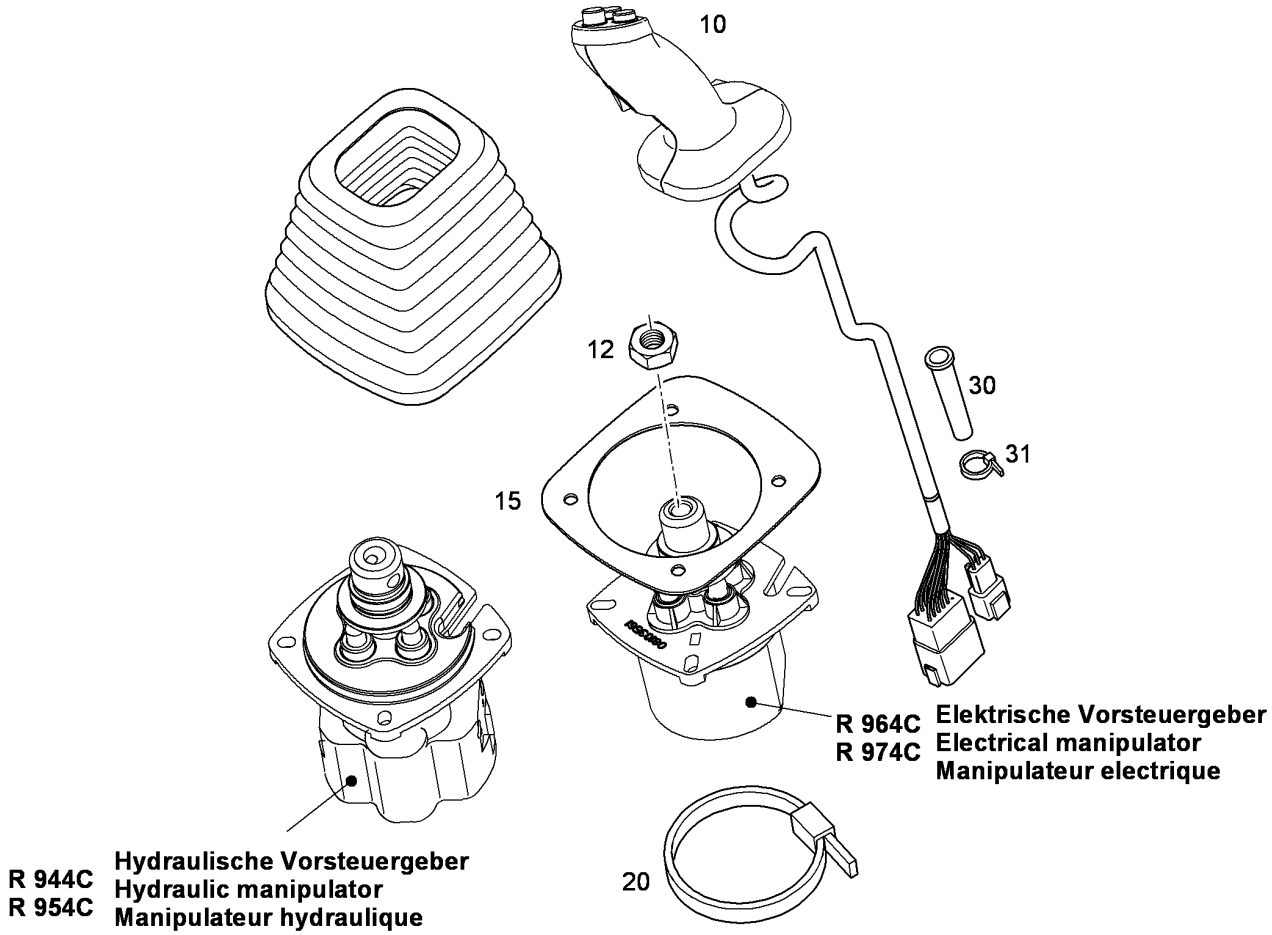

Pos.	Item	Quantity	Description	Designação	Serie	K
10	9968625	1	LH-JOYSTICK LEFT ⇨ ❑ 299	MANETE - LH ESQUERDA		
12	10179555	1	HEX NUT M12	PORCA SEXTAVADA		
15	10058949	1	SHEET	PLACA DE APOIO		
20	7002480	1	TIE WRAP 12,5X720	AMARRA PARA CABOS		
30	10010154	1	PROTECTING SLEEVE 8/8/2,2	FUNIL DE PROTEÇÃO		
31	7009088	1	TIE WRAP 2,5X102	AMARRA PARA CABOS		

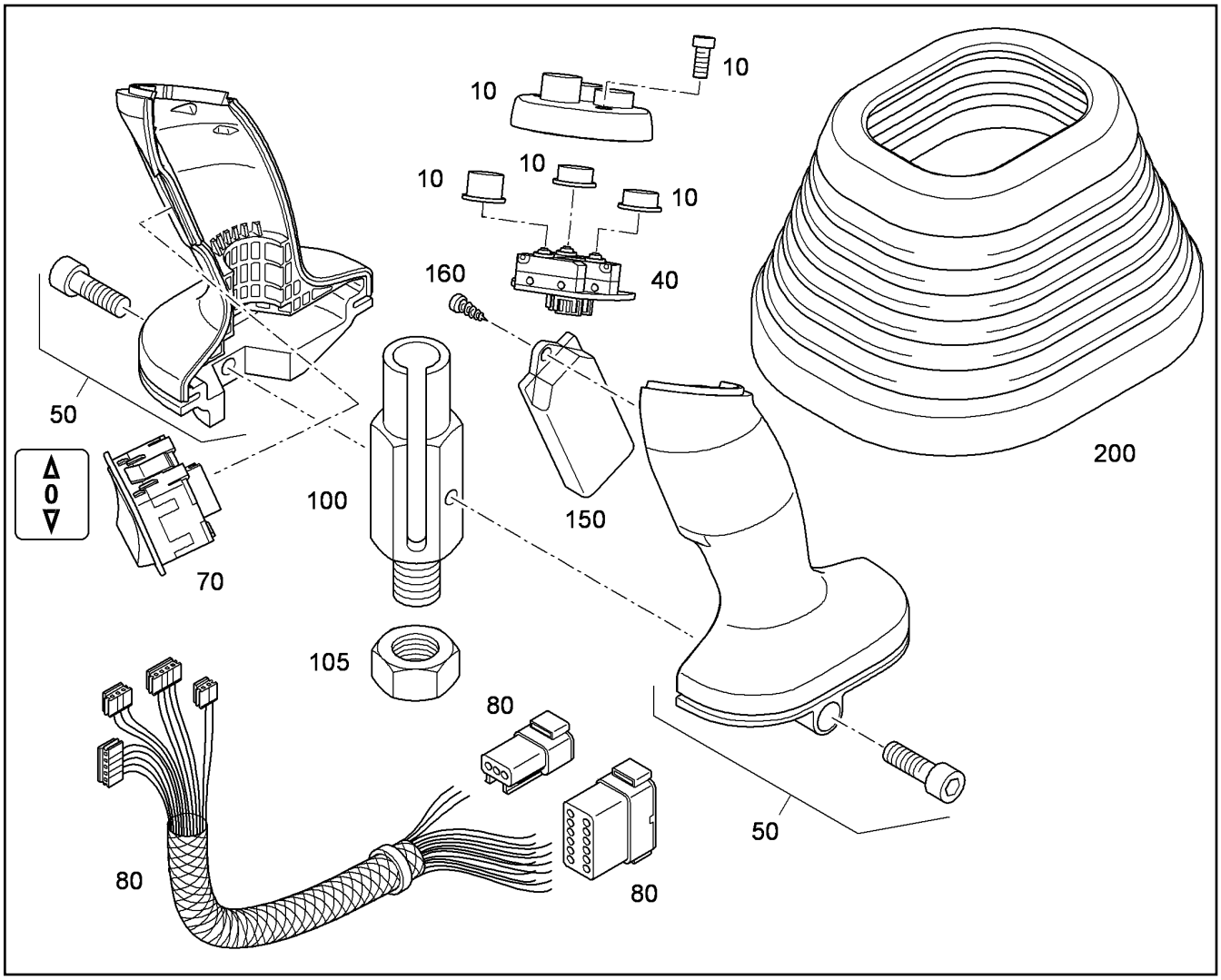

Pos.	Item	Quantity	Description	Designação	Serie	K
10	10469917	1	PUSH-BUTTON COVER LEFT	BOTOES DA MANETE ESQUERD		
40	9968578	1	PUSH BUTTON	BOTÃO DE PRESSÃO		
50	10469933	1	HANDLES LEFT	CARCAÇA DA MANETE ESQUE		
70	9968546	1	SWITCH T-0-T	INTERRUPTOR ELÉTRICO		2
80	9968591	1	WIRE HARNESS HANDLE	CHICOTE ELETRICO DA MANET		
100	10015495	1	CONNECTING SLEEVE 3	LUVA DE CONEXÃO		1
105	4001927	1	HEX NUT M14X1,5	PORCA SEXTAVADA		
150	10017824	1	SENSORIC	SENSOR DE APROXIMACAO		
160	10017926	2	SCREW 22X6	PARAFUSO		
200	10014790	1	RUBBER BELLOWS	BORRACHA SANFONADA		

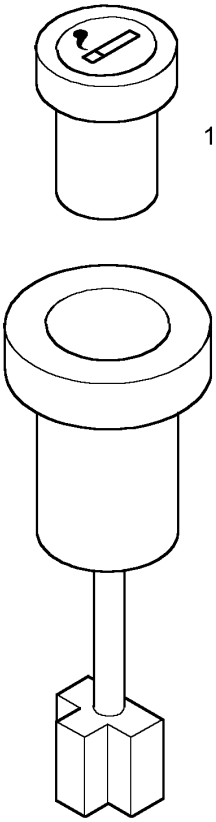

Pos.	Item	Quantity	Description	Designação	Serie	K
1	7025644	1	PLUG	PLUGUE		

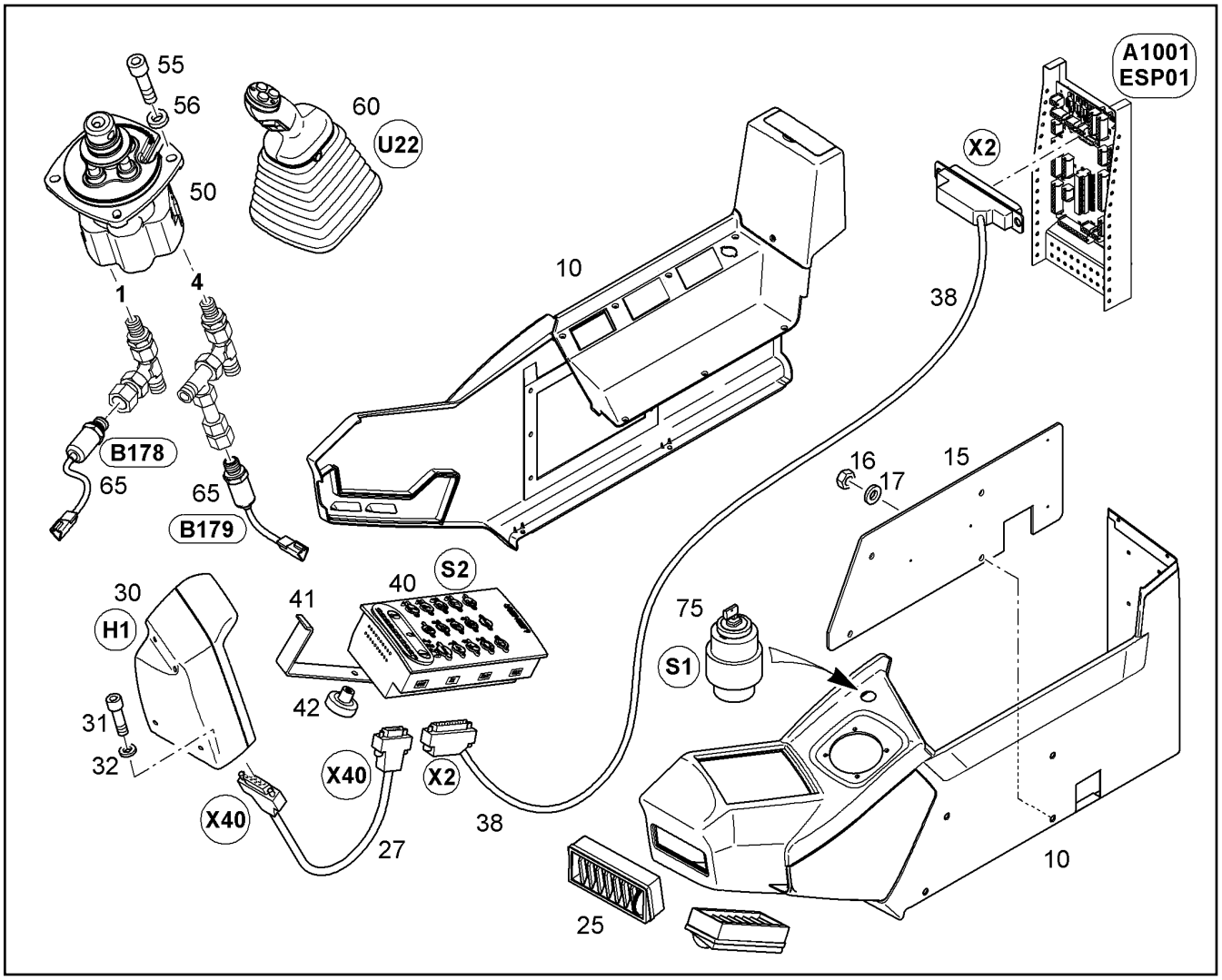

Pos.	Item	Quantity	Description	Designação	Serie	K
10	5618923	1	CONTROL CONSOLE RIGHT ⇨ ❑ 310	CONSOLE DE COMANDO DIREIT		
15	9392646	1	SHEET	PLACA DE APOIO		
16	11002807	4	HEX NUT M10	PORCA SEXTAVADA		
17	10289795	4	WASHER 10 300HV	ARRUELA		
25	5611480	2	AIR EJECTION NOZZLE	DIFUSOR DE AR		
27	9768248	1	CONNECTING CABLE	CABO ELÉTRICO		
30	11452271	1	DISPLAY CPL. V4.7.7 ⇨ ❑ 308	DISPLAY ESCAVADEIRA COMPL		
31	11140465	1	SOCKET HEAD SCREW ISO 4762 M6X20 8.8	PARAFUSO CILÍNDRICO		
32	10289802	1	WASHER 6 300HV	ARRUELA		
38	9768247	1	CABLE LOOM	CHICOTE ELÉTRICO		
40	11452274	1	KEYBOARD CPL. V4.7.7 ⇨ ❑ 311	TECLADO ESCAVADEIRA COMPL		
41	9388848	1	CLAMPING BRACKET	SUPORTE DE FIXAÇÃO		
42	7370096	1	TWIST HANDLE	MANÍPULO		
50		1	PILOT CONTROL UNIT VG6-8 4-4 Z11 000 ⇨ ❑ 807	MANETE DE COMANDO		
55	10875588	4	SOCKET HEAD SCREW ISO 4762 M6X25 8.8	PARAFUSO CILÍNDRICO		
56	10289802	4	WASHER 6 300HV	ARRUELA		
60	10058794	1	MANIPULATOR RIGHT ⇨ ❑ 313	SENSOR DE PRE-COMANDO DI		
65	10100708	2	PRESSURE SWITCH	PRESSOSTATO		
75	10228151	1	HEATER STARTER SWITCH ⇨ ❑ 340	CHAVE DE IGNICAO		

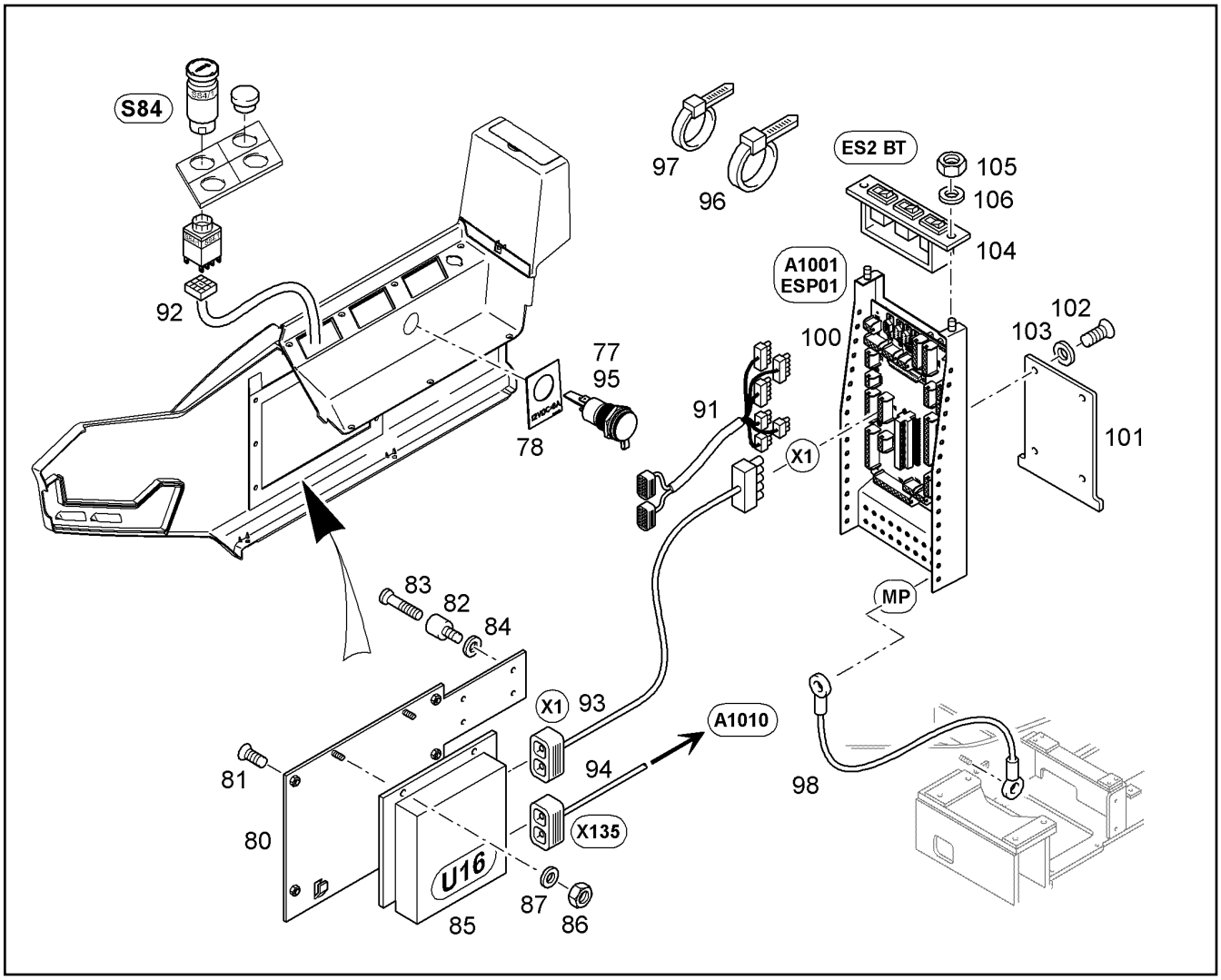

Pos.	Item	Quantity	Description	Designação	Serie	K
77	6001963	1	SOCKET	PLUGUE ELÉTRICO		
78	10086265	1	LABEL 12VDC/8A 30mmX40mm	ETIQUETA		
80	9690616	1	CONSOLE	CONSOLE		
81	11820388	6	COUNTERSUNK SCREW ISO 10642 M6X20	PARAFUSO ESCAREADO		
82	7014560	4	RUBBER BUFFER	AMORTECEDOR DE BORRACHA		
83	12222642	4	SOCKET HEAD SCREW ISO 4762 M4X6 8.8 4	PARAFUSO CILÍNDRICO		
84	10875645	4	WASHER 4 200HV	ARRUELA		
85	11452277	1	PUMPS CONTROL CPL. R5.10/V4.7.7 ⇨ ❑ 6	MODULO COMANDO ESCAVADEI		
86	10299668	2	HEX NUT M6	PORCA SEXTAVADA		
87	10289802	2	WASHER 6 300HV	ARRUELA		
91	12418014	1	CABLE LOOM A1010-A1001	CHICOTE ELÉTRICO		
92	10057843	1	CABLE LOOM X182-2/S84-1	CHICOTE ELÉTRICO		
93	10079010	1	CABLE LOOM X1/U16-X1/A1001	CHICOTE ELÉTRICO		
94	9949686	1	CABLE LOOM A1010-U16	CHICOTE ELÉTRICO		
95	10079846	1	CABLE LOOM X66-X734	CHICOTE ELÉTRICO		
96	7001877	10	TIE WRAP 4,8X200	AMARRA PARA CABOS		
97	7362507	4	CABLE CLIP d=200-3,6	BRAÇADEIRA DE CABOS		
98	9689583	1	EARTH CABLE	CABO MASSA		
100	10687417	1	OUTPUT STAGE ⇨ ❑ 317	PLACA ELETRÔNICA		
101	9758230	1	PLATE	PLACA		
102	11820388	4	COUNTERSUNK SCREW ISO 10642 M6X20	PARAFUSO ESCAREADO		
103	7362752	4	ROSE	ARRUELA		
104	9013811	1	EMERGENCY CONTROL CPL ⇨ ❑ 316	ACION. DE EMERGÊNCIA COMPL		

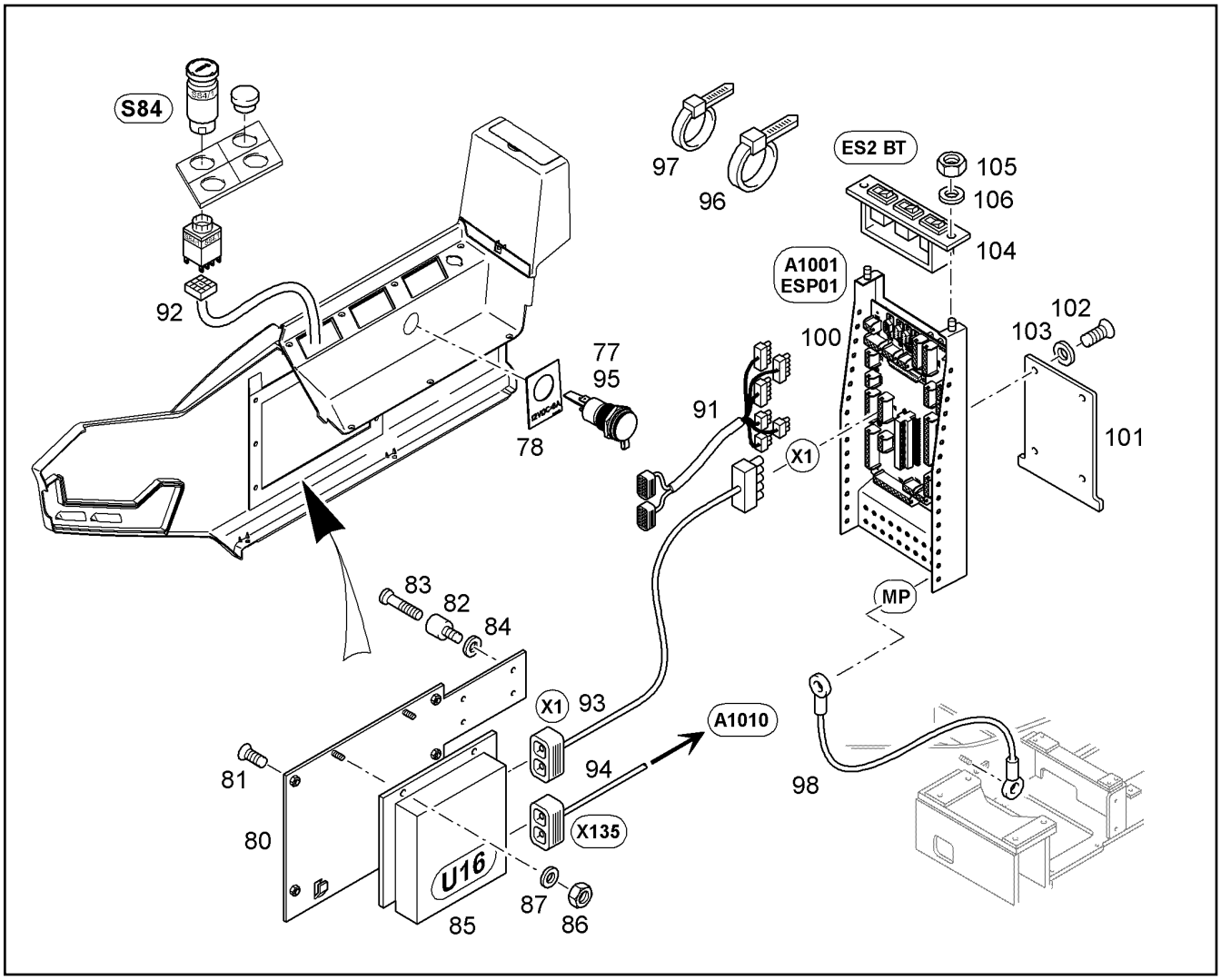

Pos.	Item	Quantity	Description	Designação	Serie	K
105	12224463	2	HEX NUT M4	PORCA SEXTAVADA		1
106	10875645	2	WASHER 4 200HV	ARRUELA		

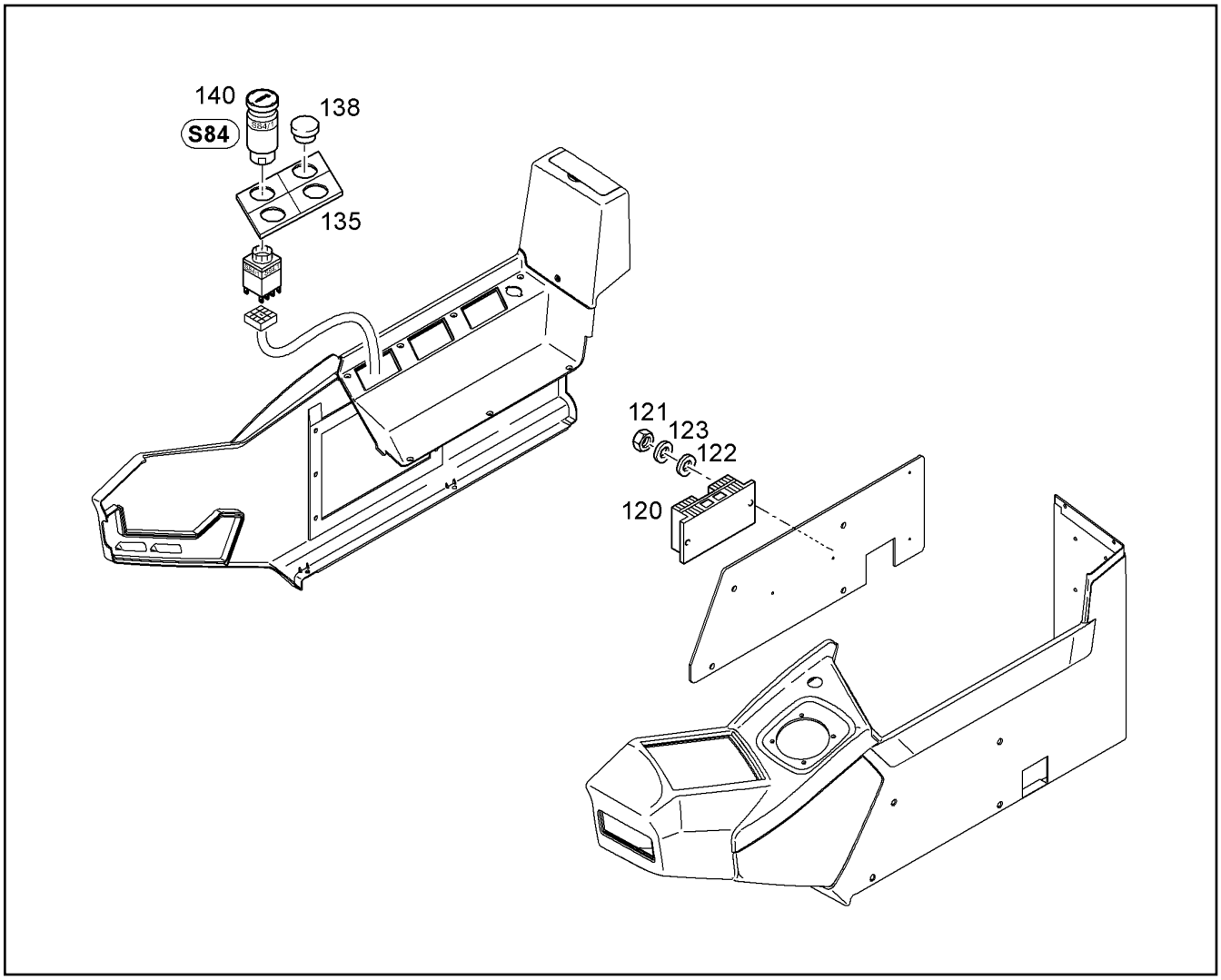

Pos.	Item	Quantity	Description	Designação	Serie	K
120	7026493	1	VOLTAGE TRANSFORMER	TRANSFORMADOR		
121	12224463	2	HEX NUT M4	PORCA SEXTAVADA		1
122	10875645	2	WASHER 4 200HV	ARRUELA		
123	10875645	2	WASHER 4 200HV	ARRUELA		
135	7371141	1	SWITCH MODULE	MODULO DA CHAVE		2
138	7371142	3	STOPPER PLUG F.SCHALTERMODUL	PARAFUSO DE FECHAMENTO		
140	10055071	1	SWITCH INSTALLATION ⇨ ❑ 315	INTERRUPTOR - INSTALAÇÃO		

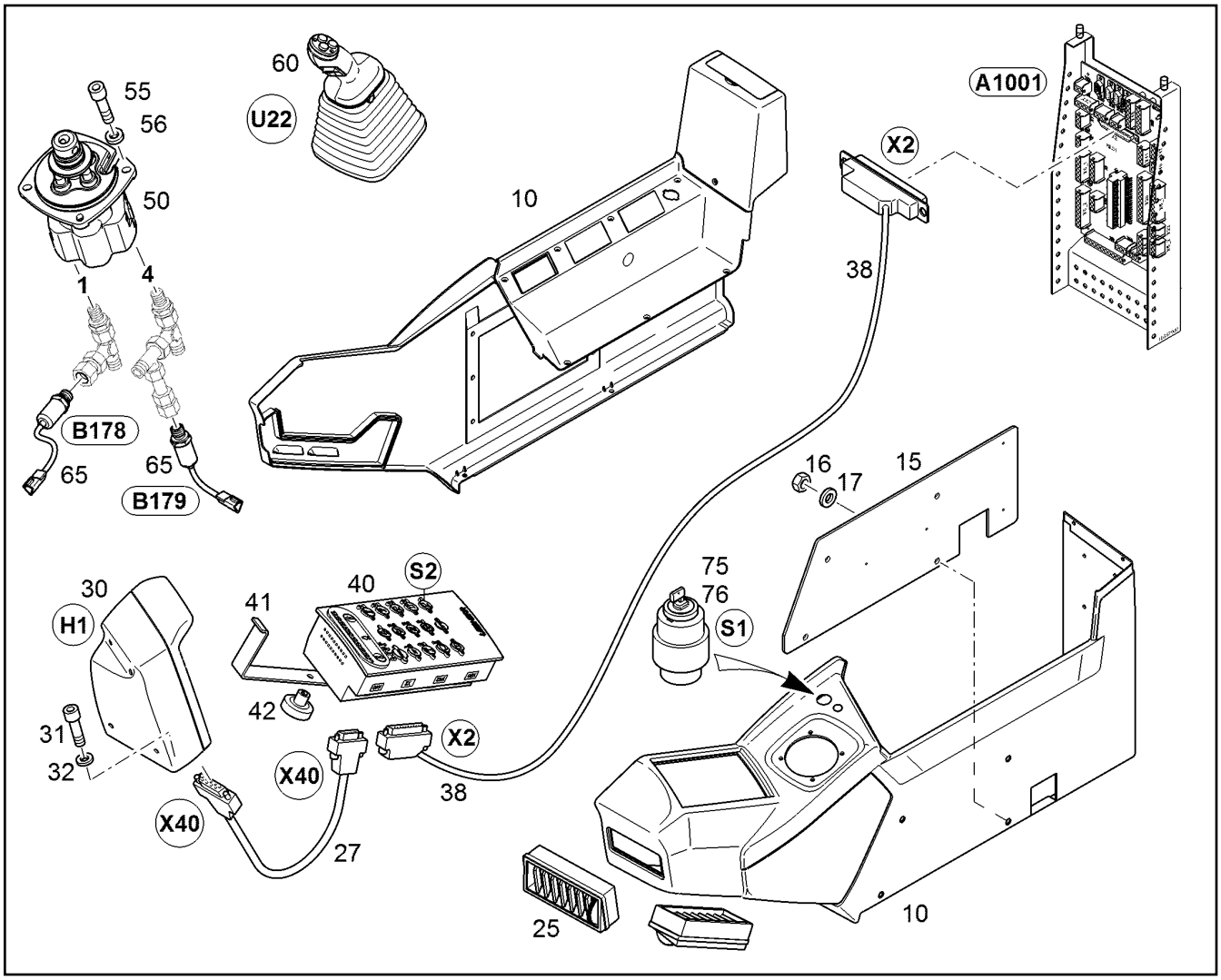

Pos.	Item	Quantity	Description	Designação	Serie	K
10	5618923	1	CONTROL CONSOLE RIGHT ⇨ ❑ 310	CONSOLE DE COMANDO DIREIT		
15	9392646	1	SHEET	PLACA DE APOIO		
16	11002807	4	HEX NUT M10	PORCA SEXTAVADA		
17	10289795	4	WASHER 10 300HV	ARRUELA		
25	5611480	2	AIR EJECTION NOZZLE	DIFUSOR DE AR		
27	9768248	1	CONNECTING CABLE	CABO ELÉTRICO		
31	11140465	1	SOCKET HEAD SCREW ISO 4762 M6X20 8.8	PARAFUSO CILÍNDRICO		
32	10289802	1	WASHER 6 300HV	ARRUELA		
38	9768247	1	CABLE LOOM	CHICOTE ELÉTRICO		
40		1	KEYBOARD CPL. V4.7.11 ⇨ ❑ 797	TECLADO ESCAVADEIRA COMPL		
41	9388848	1	CLAMPING BRACKET	SUPORTE DE FIXAÇÃO		
42	7370096	1	TWIST HANDLE	MANÍPULO		
50	10118561	1	PILOT CONTROL UNIT VG6-8 4-4 Z11 000 ⇨ ❑ 807	MANETE DE COMANDO		
55	10875588	4	SOCKET HEAD SCREW ISO 4762 M6X25 8.8	PARAFUSO CILÍNDRICO		
56	10289802	4	WASHER 6 300HV	ARRUELA		
60	10058794	1	MANIPULATOR RIGHT ⇨ ❑ 313	SENSOR DE PRE-COMANDO DI		
65	10100708	2	PRESSURE SWITCH	PRESSOSTATO		
75	10228151	1	HEATER STARTER SWITCH ⇨ ❑ 340	CHAVE DE IGNICAO		
76	10221073	1	IGNITION KEY	CHAVE DE IGNICAO		

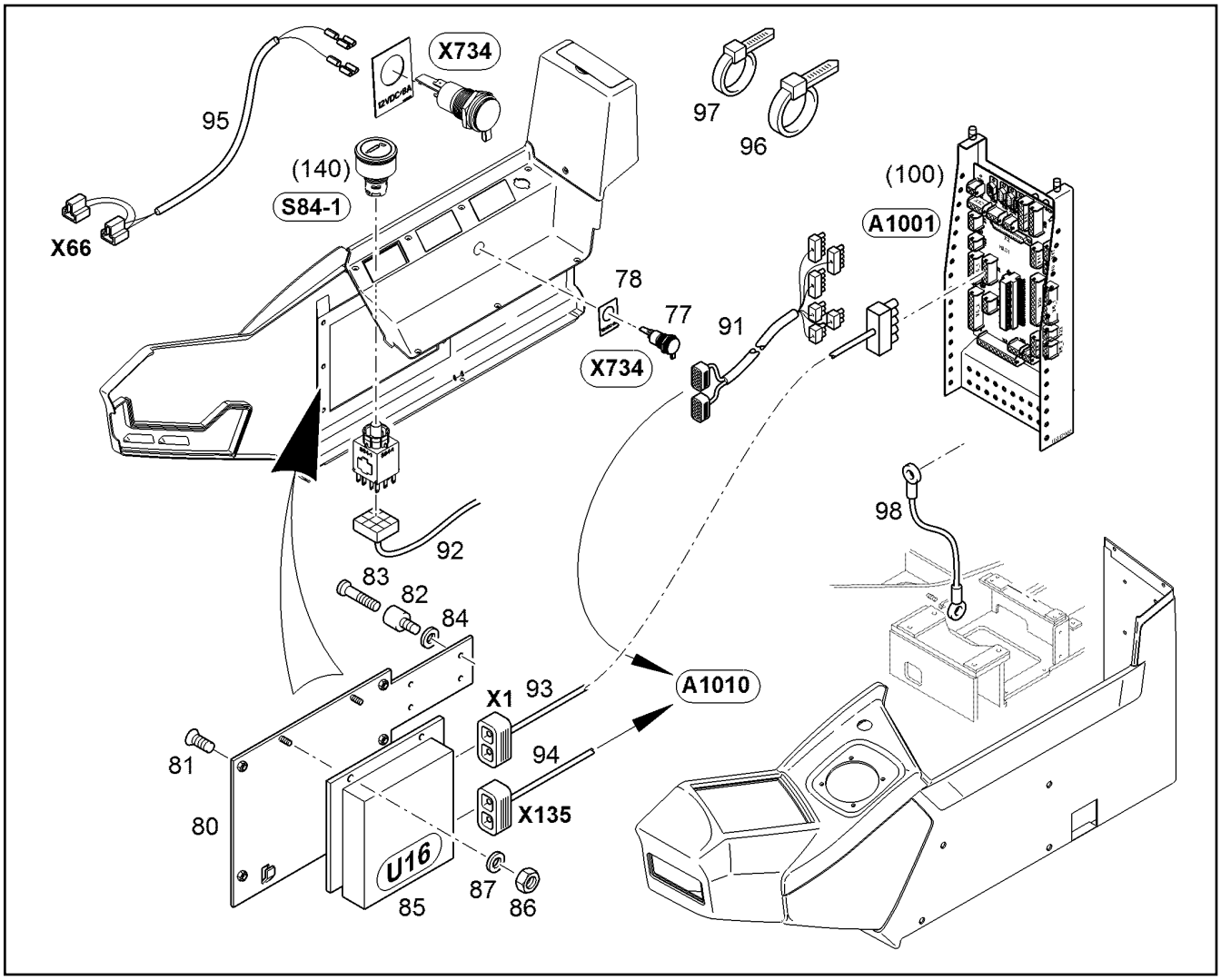

Pos.	Item	Quantity	Description	Designação	Serie	K
77	6001963	1	SOCKET	PLUGUE ELÉTRICO		
78	10086265	1	LABEL 12VDC/8A 30mmX40mm	ETIQUETA		
80	9690616	1	CONSOLE	CONSOLE		
81	11820388	6	COUNTERSUNK SCREW ISO 10642 M6X20	PARAFUSO ESCAREADO		
82	7014560	4	RUBBER BUFFER	AMORTECEDOR DE BORRACHA		
83	12222642	4	SOCKET HEAD SCREW ISO 4762 M4X6 8.8 4	PARAFUSO CILÍNDRICO		
84	10875645	4	WASHER 4 200HV	ARRUELA		
85		1	PUMPS CONTROL CPL. R5.10/V4.7.7 ⇨ ❑ 6	MODULO COMANDO ESCAVADEI		
86	10299668	2	HEX NUT M6	PORCA SEXTAVADA		
87	10289802	2	WASHER 6 300HV	ARRUELA		
91	12418014	1	CABLE LOOM A1010-A1001	CHICOTE ELÉTRICO		
92	10057843	1	CABLE LOOM X182-2/S84-1	CHICOTE ELÉTRICO		
93	10079010	1	CABLE LOOM X1/U16-X1/A1001	CHICOTE ELÉTRICO		
94	9949686	1	CABLE LOOM A1010-U16	CHICOTE ELÉTRICO		
95	10079846	1	CABLE LOOM X66-X734	CHICOTE ELÉTRICO		
96	7001877	10	TIE WRAP 4,8X200	AMARRA PARA CABOS		
97	7362507	4	CABLE CLIP d=200-3,6	BRAÇADEIRA DE CABOS		
98	9689583	1	EARTH CABLE	CABO MASSA		

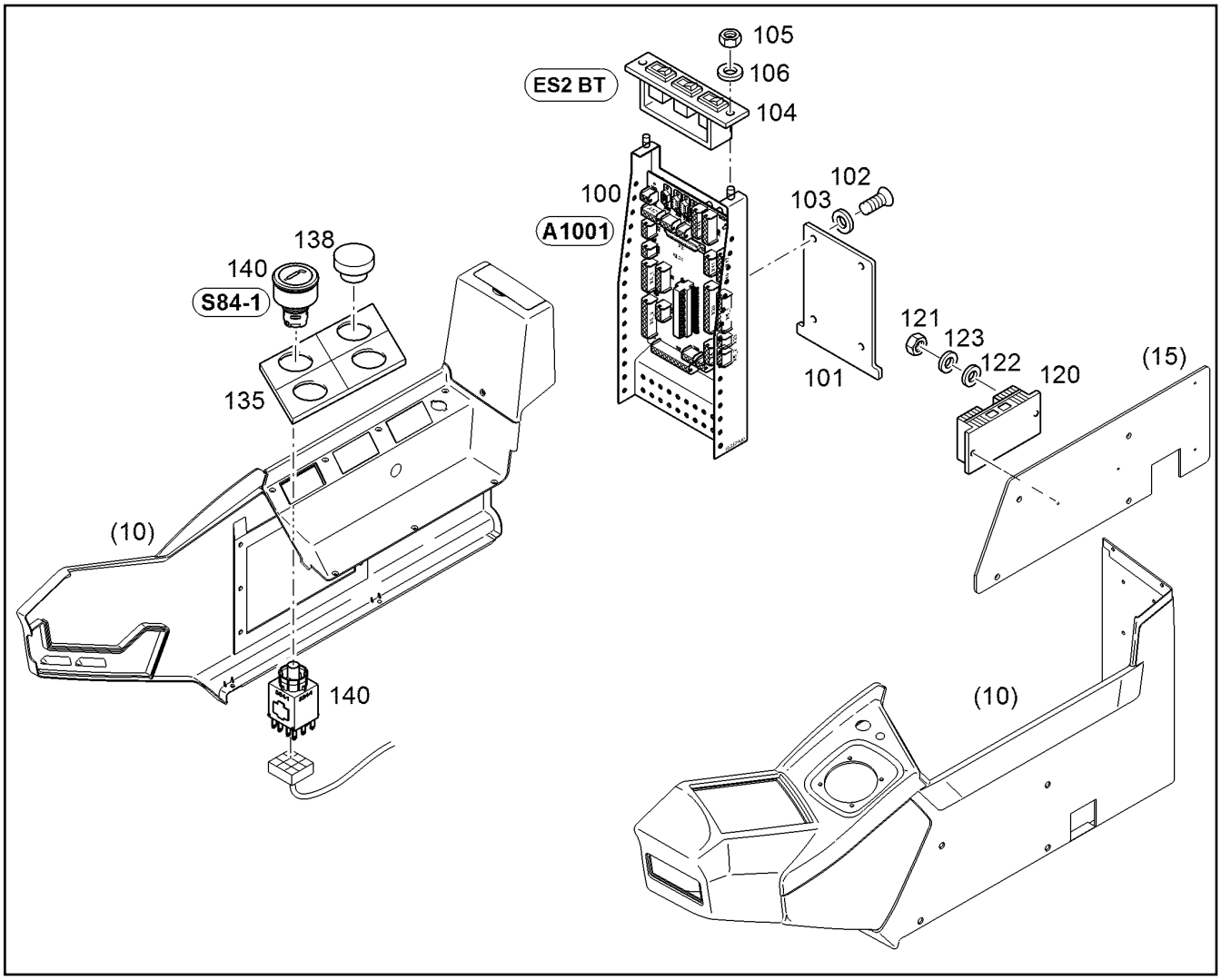

Pos.	Item	Quantity	Description	Designação	Serie	K
100	10687417	1	OUTPUT STAGE ⇨ ❑ 317	PLACA ELETRÔNICA		
101	9758230	1	PLATE	PLACA		
102	11820388	4	COUNTERSUNK SCREW ISO 10642 M6X20	PARAFUSO ESCAREADO		
103	7362752	4	ROSE	ARRUELA		
104	9013811	1	EMERGENCY CONTROL CPL ⇨ ❑ 316	ACION. DE EMERGÊNCIA COMPL		
105	12224463	1	HEX NUT M4	PORCA SEXTAVADA		1
106	10875645	2	WASHER 4 200HV	ARRUELA		
120	7026493	1	VOLTAGE TRANSFORMER	TRANSFORMADOR		
121	12224463	2	HEX NUT M4	PORCA SEXTAVADA		1
122	10875645	2	WASHER 4 200HV	ARRUELA		
123	10875645	2	WASHER 4 200HV	ARRUELA		
135	7371141	1	SWITCH MODULE	MODULO DA CHAVE		2
138	7371142	3	STOPPER PLUG F.SCHALTERMODUL	PARAFUSO DE FECHAMENTO		
140	10055071	1	SWITCH INSTALLATION ⇨ ❑ 315	INTERRUPTOR - INSTALAÇÃO		

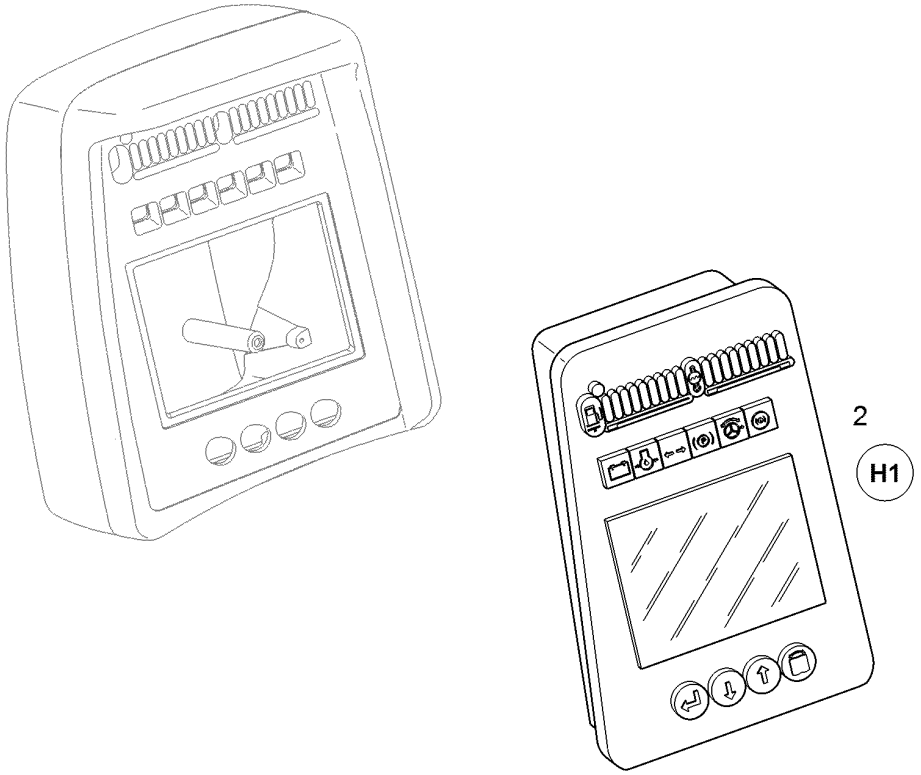

Pos.	Item	Quantity	Description	Designação	Serie	K
2	10685206	1	EXCAVATOR DISPLAY [055168]	DISPLAY DE ESCAVADEIRA		6

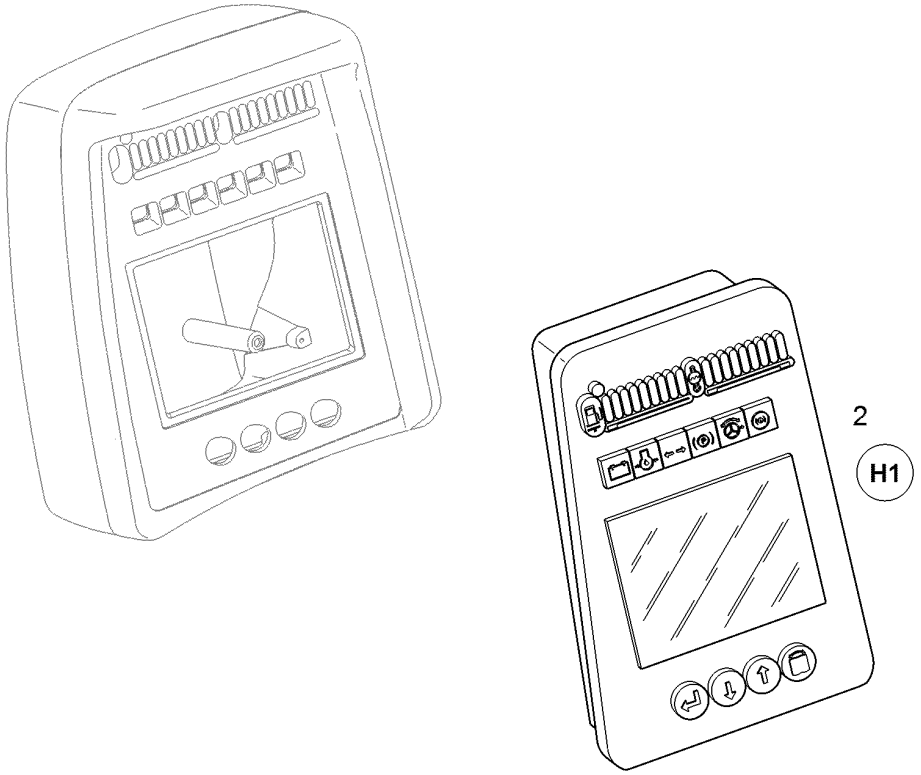

Pos.	Item	Quantity	Description	Designação	Serie	K
2	10884044	1	EXCAVATOR DISPLAY	DISPLAY DE ESCAVADEIRA		

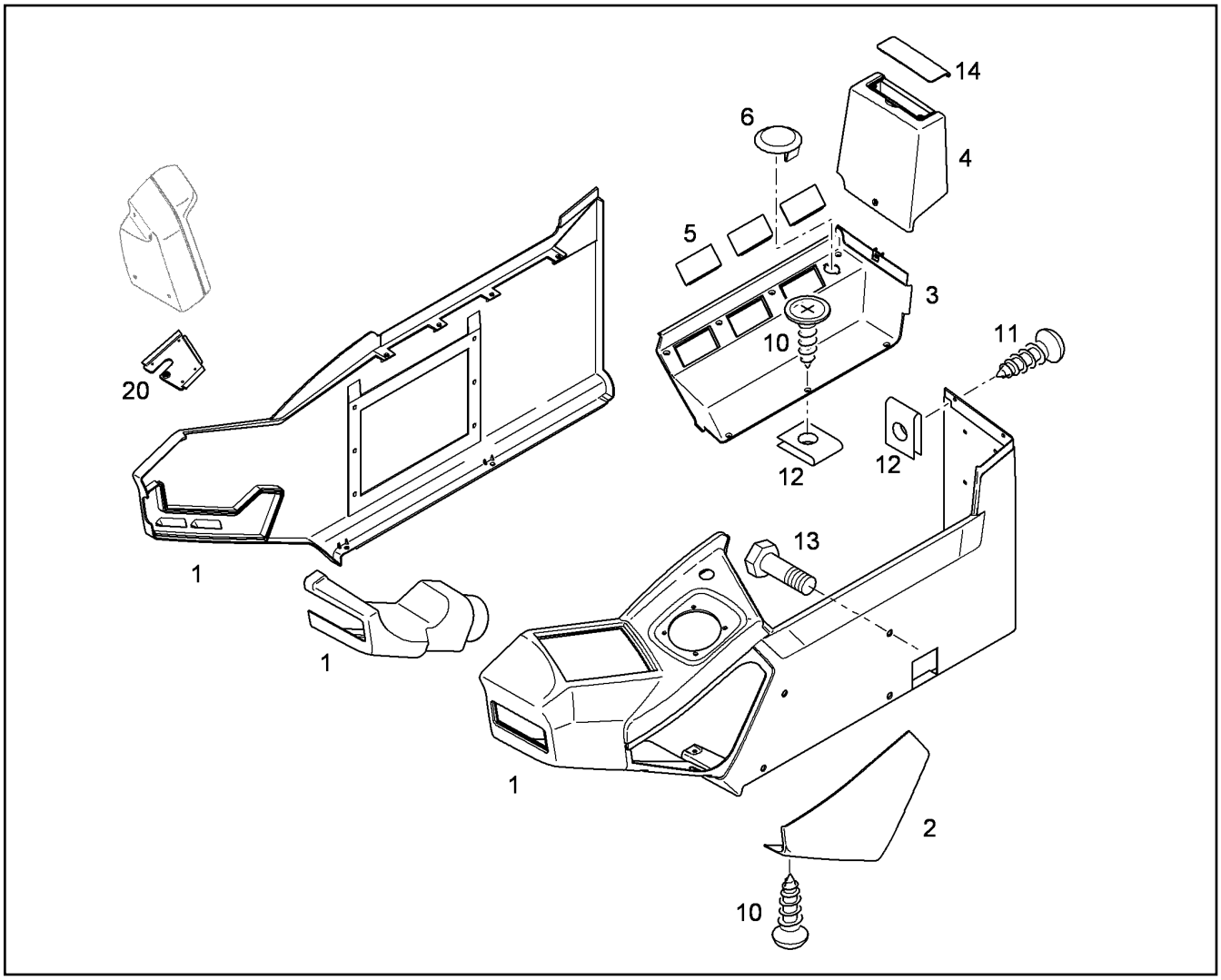

Pos.	Item	Quantity	Description	Designação	Serie	K
1		1	BASIC BODY	CORPO BASICO		
2	7370894	1	VISIT COVER	TAMPA DE MANUTENCAO		
3	7370891	1	SHELL	CARENAGEM		
4	7370892	1	COVER HOOD X753402	TAMPA DE COBERTURA		
5	7370890	3	BLANK LID	TAMPA DE PROTEÇÃO		
6	10292443	1	STOP PLUG Ø18,4-Ø22/Ø25 SCHWARZ	PLUG DE FECHAMENTO		
10	7371577	9	COUNTERSUNK SCREW ISO 7047 M6X20 4	PARAFUSO ESCAREADO		
11	7372158	2	SCREW	PARAFUSO		
12	7370883	11	SHEET METAL NUT M6	PORCA DE CHAPA		
13	7370889	4	HEX NUT M10	PORCA SEXTAVADA		
14	7370893	1	FOLDING LID	TAMPA		
20	7373268	1	DISPLAY SUPPORT	BASE DO DISPLAY		

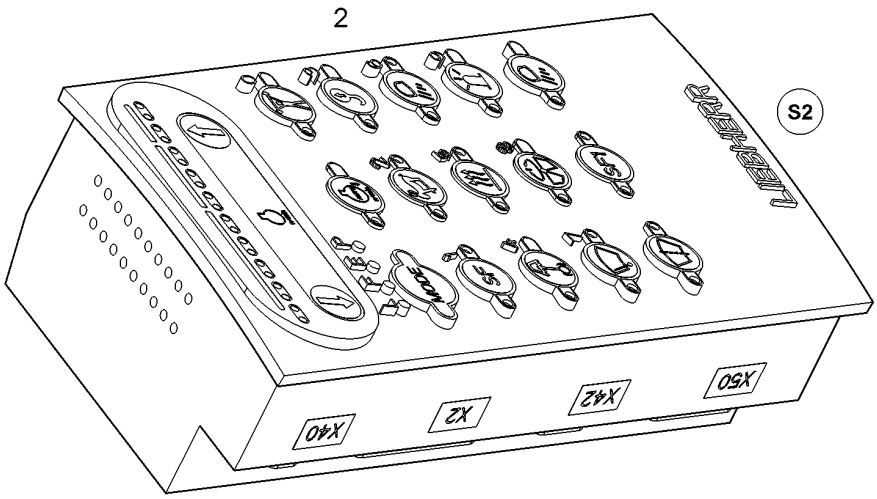

Pos.	Item	Quantity	Description	Designação	Serie	K
2	10685277	1	KEYBOARD [059073]	TECLADO		

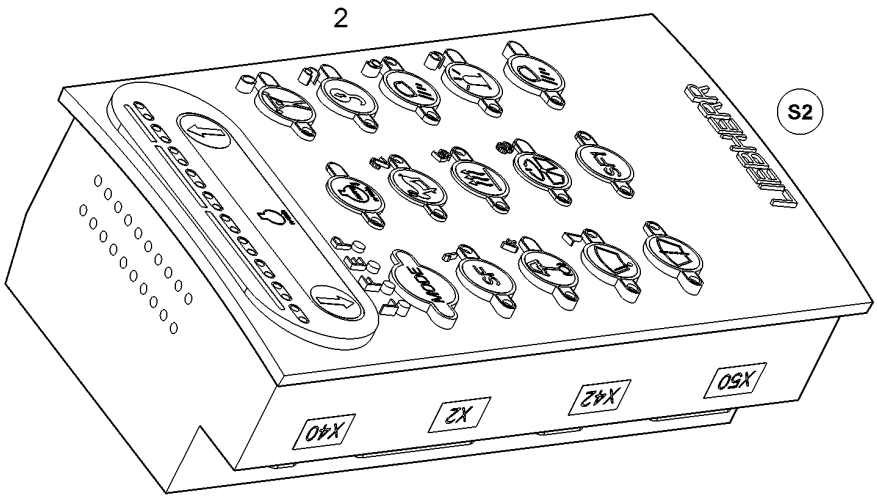

Pos.	Item	Quantity	Description	Designação	Serie	K
2	10884047	1	KEYBOARD	TECLADO		

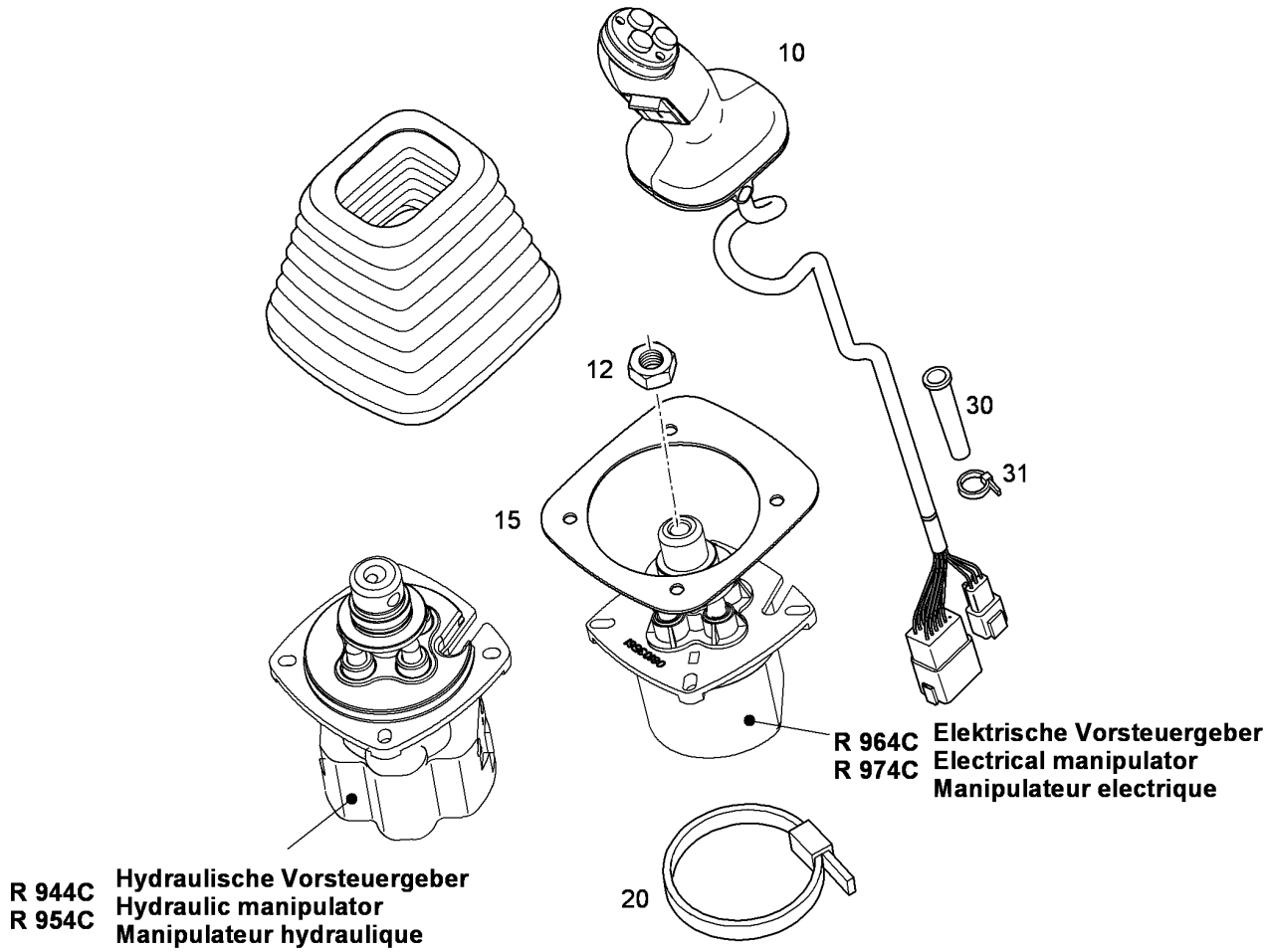

Pos.	Item	Quantity	Description	Designação	Serie	K
10	9968611	1	LH-JOYSTICK RIGHT ⇨ ❑ 314	MANETE DIREITA		
12	10179555	1	HEX NUT M12	PORCA SEXTAVADA		
15	10058949	1	SHEET	PLACA DE APOIO		
20	7002480	1	TIE WRAP 12,5X720	AMARRA PARA CABOS		
30	10010154	1	PROTECTING SLEEVE 8/8/2,2	FUNIL DE PROTEÇÃO		
31	7009088	1	TIE WRAP 2,5X102	AMARRA PARA CABOS		

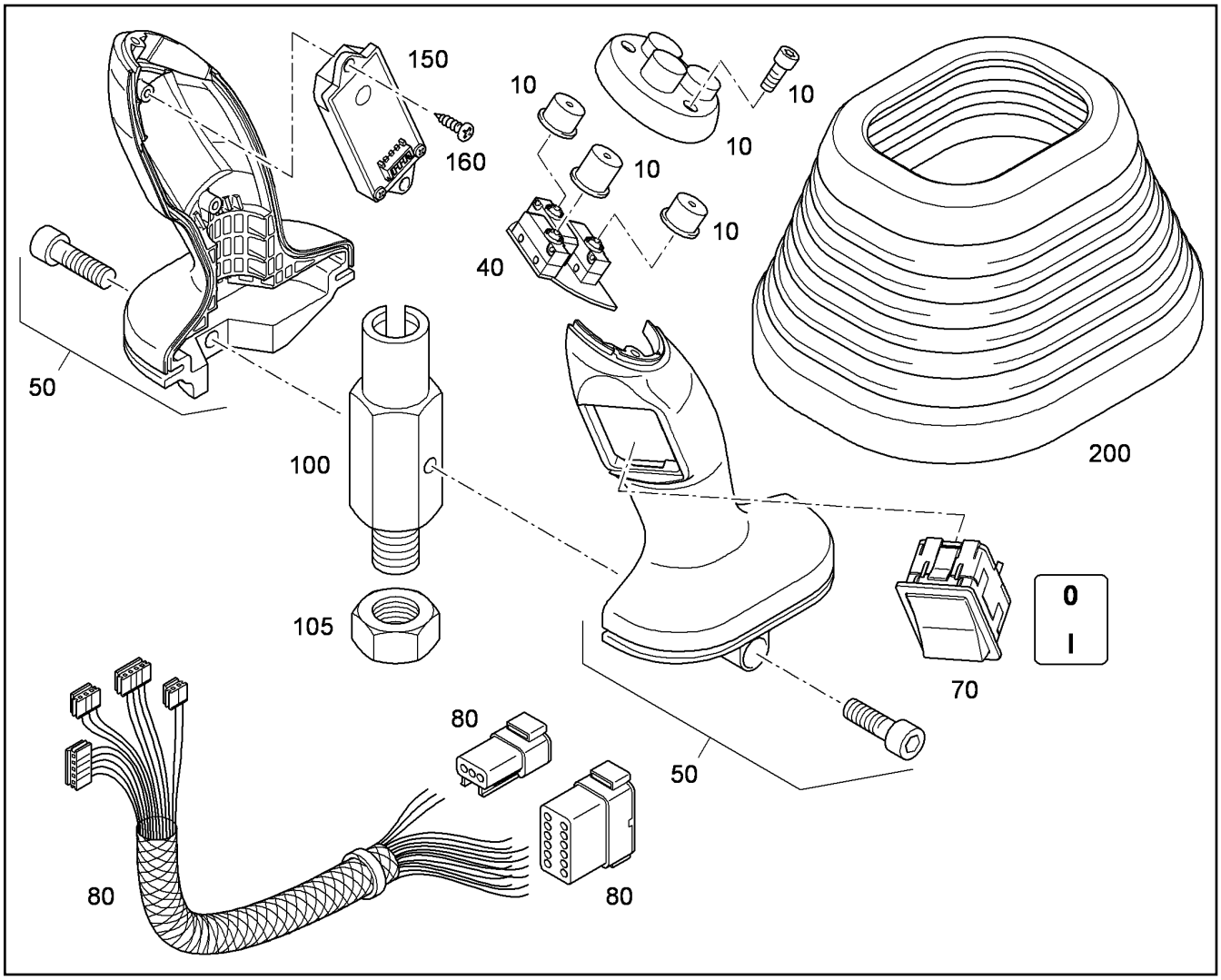

Pos.	Item	Quantity	Description	Designação	Serie	K
10	10469918	1	PUSH-BUTTON COVER RIGHT	BOTOES MANETE DIREITA		
40	9968580	1	PUSH BUTTON	BOTÃO DE PRESSÃO		
50	10469932	1	HANDLES RIGHT	CARCAÇA DA MANETE DIREITA		
70	9968570	1	SWITCH R-R	INTERRUPTOR ELÉTRICO		2
80	9968591	1	WIRE HARNESS HANDLE	CHICOTE ELETRICO DA MANET		
100	10015495	1	CONNECTING SLEEVE 3	LUVA DE CONEXÃO		1
105	4001927	1	HEX NUT M14X1,5	PORCA SEXTAVADA		
150	10017824	1	SENSORIC	SENSOR DE APROXIMACAO		
160	10017926	2	SCREW 22X6	PARAFUSO		
200	10014790	1	RUBBER BELLOWS	BORRACHA SANFONADA		

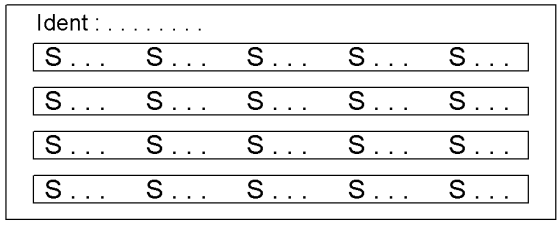

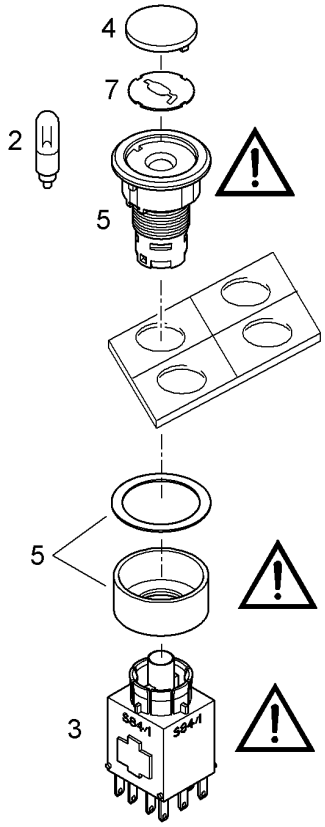

Diese Teile immer mit Pos. 6 bestellen damit diese markiert werden können.
Allways order this parts with pos. 6 to be able to label them.
Toujours commander ces pièces avec la pièce pos. 6 pour étiquetage.

Pos.	Item	Quantity	Description	Designação	Serie	K
2	6001713	1	LIGHT BULB T5 30V 1,2W	LÂMPADA INCANDESCENTE		
3	6001593	1	LUMINOUS SWITCH CONTACT SENDER	CONTATO ELÉTRICO DE ILUMIN		
4	6204368	1	SPHERICAL CAP	CALOTA		
5	6204367	1	ACTUATOR	ATUADOR		
6	10076837	1	LABEL S84/1 100mmX39mm	ETIQUETA		
7	9911745	1	SYMBOL LUBRICATOR Ø19mm	SIMBOLO LUBRIFICACAO		

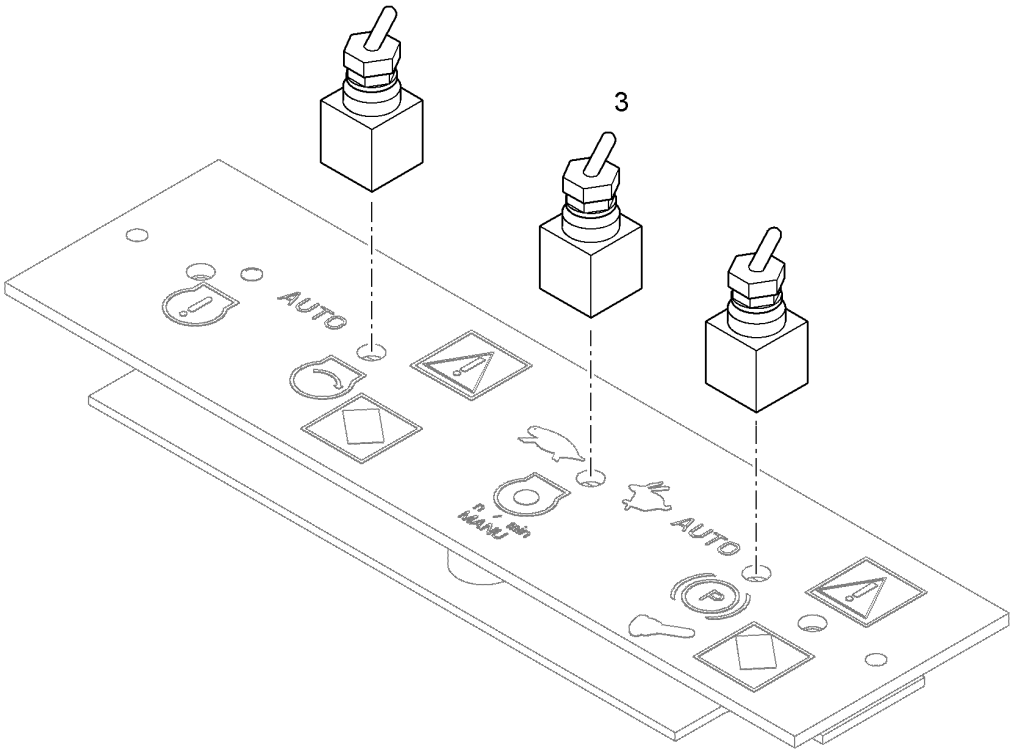

Pos.	Item	Quantity	Description	Designação	Serie	K
3	10036533	1	CONTROL	COMANDO		

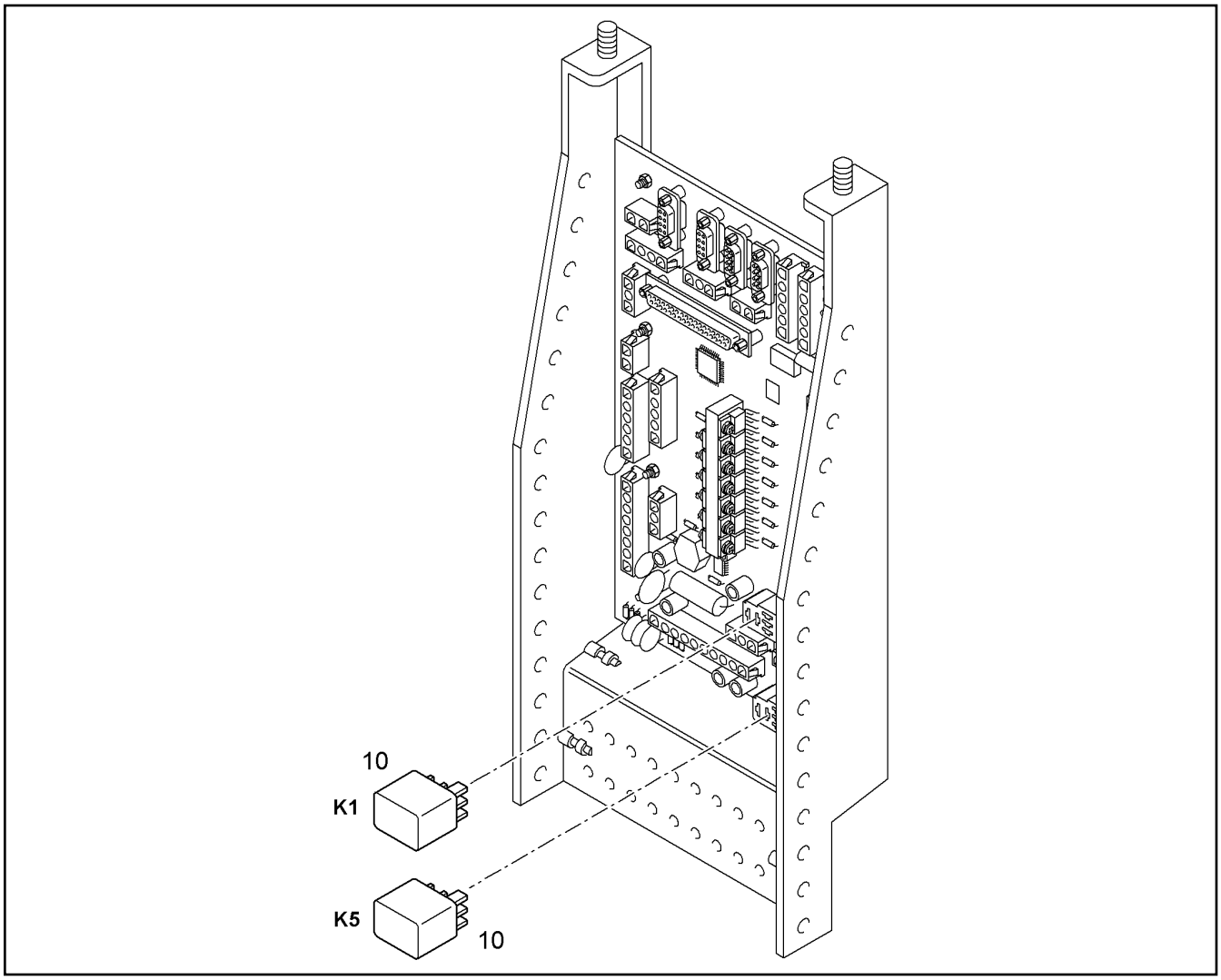

Pos.	Item	Quantity	Description	Designação	Serie	K
10	6001682	2	RELAY	RELE		

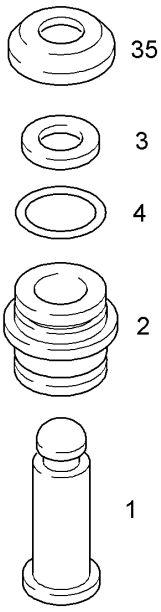

Pos.	Item	Quantity	Description	Designação	Serie	K
1		1	TAPPET	TUCHO		
2		1	BUSHING	BUCHA		
3		1	ROTOR GASKET 10X13,6X2,3	VEDAÇÃO DO ROTOR		
4		1	O-RING ISO 3601-1 14X1,78	ANEL-O		
35		1	PROTECTING CAP 19	CAPA DE PROTEÇÃO		

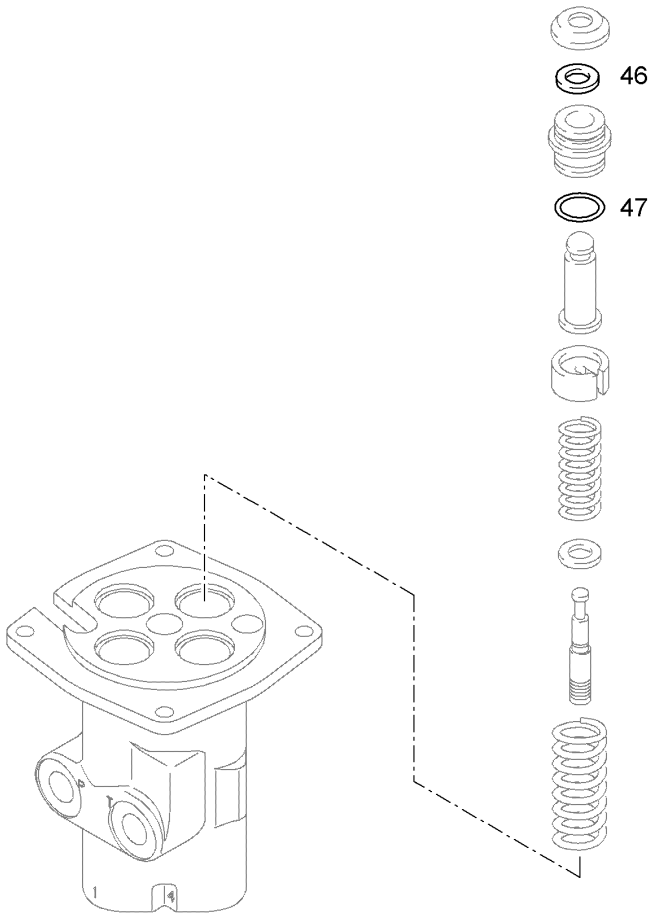

Pos.	Item	Quantity	Description	Designação	Serie	K
46		4	ROTOR GASKET 10X13,6X2,3	VEDAÇÃO DO ROTOR		
47		4	O-RING ISO 3601-1 14X1,78	ANEL-O		

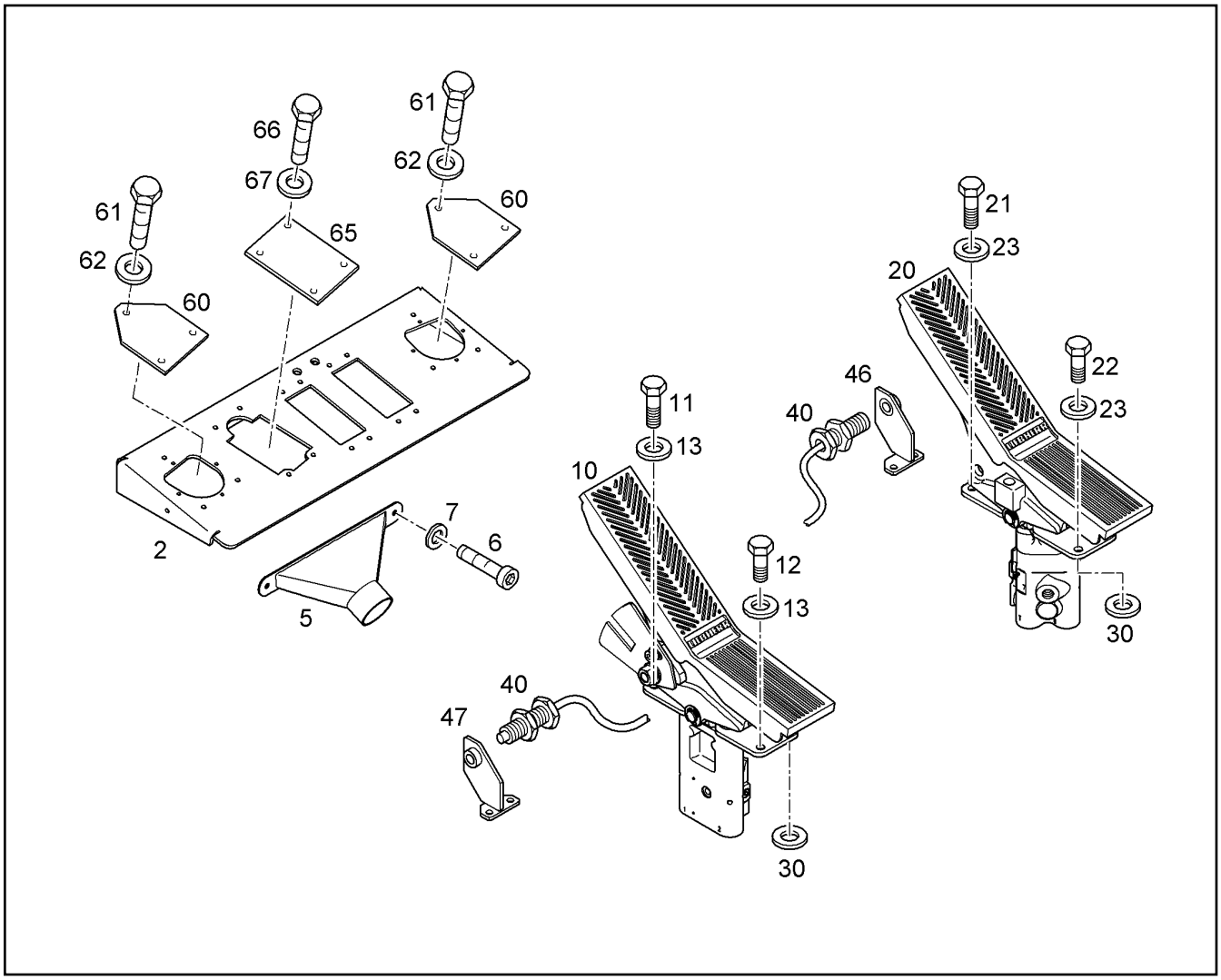

Pos.	Item	Quantity	Description	Designação	Serie	K
2	9946939	1	STEP PLATE	PLACA DE ESTRIBO		
5	10016540	2	AIR NOZZLE	DIFUSOR DE AR		
6	11656585	4	SOCKET HEAD SCREW ISO 4762 M6X10 8.8	PARAFUSO CILÍNDRICO		
7	11693878	4	WASHER 6,4 200HV	ARRUELA		
10		1	FOOT PILOT VALVE LEFT ⇨ ❑ 321	PEDAL ESQUERDO COMPLETO		
11	11642261	2	HEX SCREW ISO 4017 M8X25 8.8 480H	PARAFUSO SEXTAVADO		
12	11651767	2	HEX SCREW ISO 4017 M8X20 8.8 480H	PARAFUSO SEXTAVADO		
13	10289803	4	WASHER 8 300HV	ARRUELA		
20		1	FOOT PILOT VALVE RIGHT ⇨ ❑ 322	PEDAL DIREITO COMPLETO		
21	11642261	2	HEX SCREW ISO 4017 M8X25 8.8 480H	PARAFUSO SEXTAVADO		
22	11651767	2	HEX SCREW ISO 4017 M8X20 8.8 480H	PARAFUSO SEXTAVADO		
23	10289803	4	WASHER 8 300HV	ARRUELA		
30	4635197	4	SHIM RING 8	ARRUELA DE AJUSTE		
40		2	PROXIMITY SWITCH W/ CONNECT. ⇨ ❑ 327	SENSOR DE APROXIMAÇÃO		
46	9943365	1	BRACKET	ESTRIBO		
47	9943105	1	BRACKET	ESTRIBO		
60	9171589	2	COVER	TAMPA		
61	11690048	6	HEX SCREW ISO 4017 M8X12 8.8 480H	PARAFUSO SEXTAVADO		
62	10289803	6	WASHER 8 300HV	ARRUELA		
65	9371217	1	COVER	TAMPA		
66	11690048	4	HEX SCREW ISO 4017 M8X12 8.8 480H	PARAFUSO SEXTAVADO		
67	10289803	4	WASHER 8 300HV	ARRUELA		

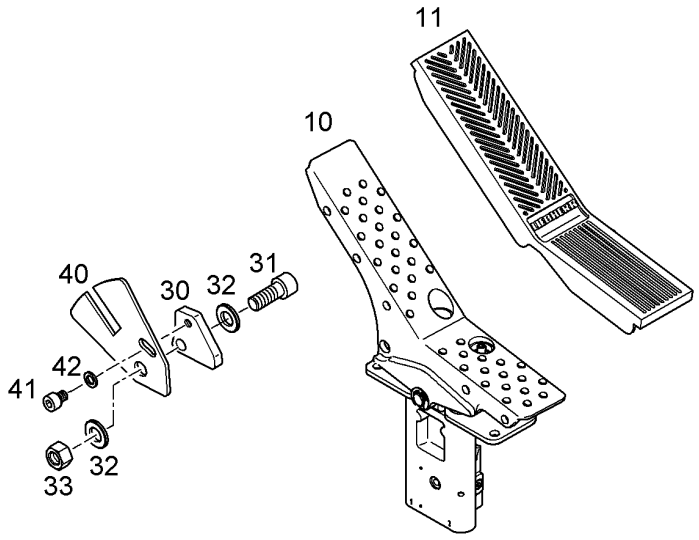

Pos.	Item	Quantity	Description	Designação	Serie	K
10		1	PILOT CONTROL UNIT VG7 2-3 L07 000 B ⇨ ❑ 325	MANETE DE COMANDO		
11	9480295	1	FOOT BOARD COVERING	REVESTIMENTO PLACA DE ES		
30	9946134	1	PLATE	PLACA		
31	4043164	1	SOCKET HEAD SCREW ISO 4762 M12X35 1	PARAFUSO CILÍNDRICO		
32	10289804	2	WASHER 12 300HV	ARRUELA		
33	11002808	1	HEX NUT M12	PORCA SEXTAVADA		
40	9943165	1	PLATE	PLACA		
41	4902254	1	SOCKET HEAD SCREW ISO 4762 M8X12 10.	PARAFUSO CILÍNDRICO		
42	10289803	1	WASHER 8 300HV	ARRUELA		

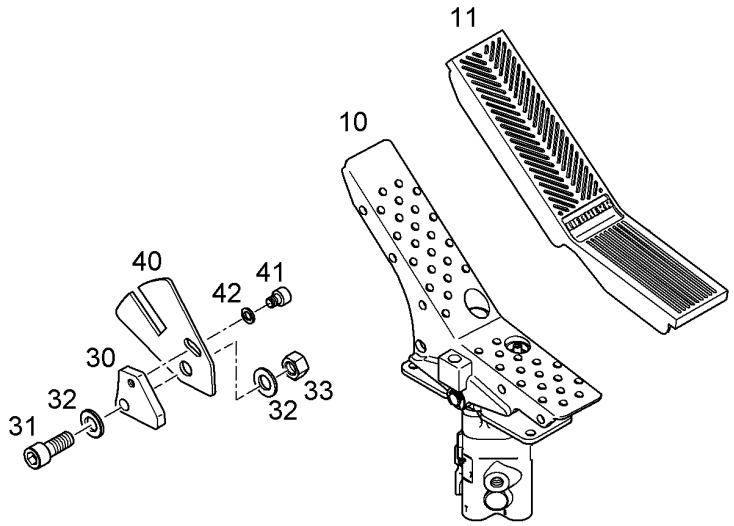

Pos.	Item	Quantity	Description	Designação	Serie	K
10		1	PILOT CONTROL UNIT VG7 2-3 R07 000 B ⇨ ❑ 323	MANETE DE COMANDO		
11	9480295	1	FOOT BOARD COVERING	REVESTIMENTO PLACA DE ES		
30	9946134	1	PLATE	PLACA		
31	4043164	1	SOCKET HEAD SCREW ISO 4762 M12X35 1	PARAFUSO CILÍNDRICO		
32	10289804	2	WASHER 12 300HV	ARRUELA		
33	11002808	1	HEX NUT M12	PORCA SEXTAVADA		
40	9943165	1	PLATE	PLACA		
41	4902254	1	SOCKET HEAD SCREW ISO 4762 M8X12 10.	PARAFUSO CILÍNDRICO		
42	10289803	1	WASHER 8 300HV	ARRUELA		

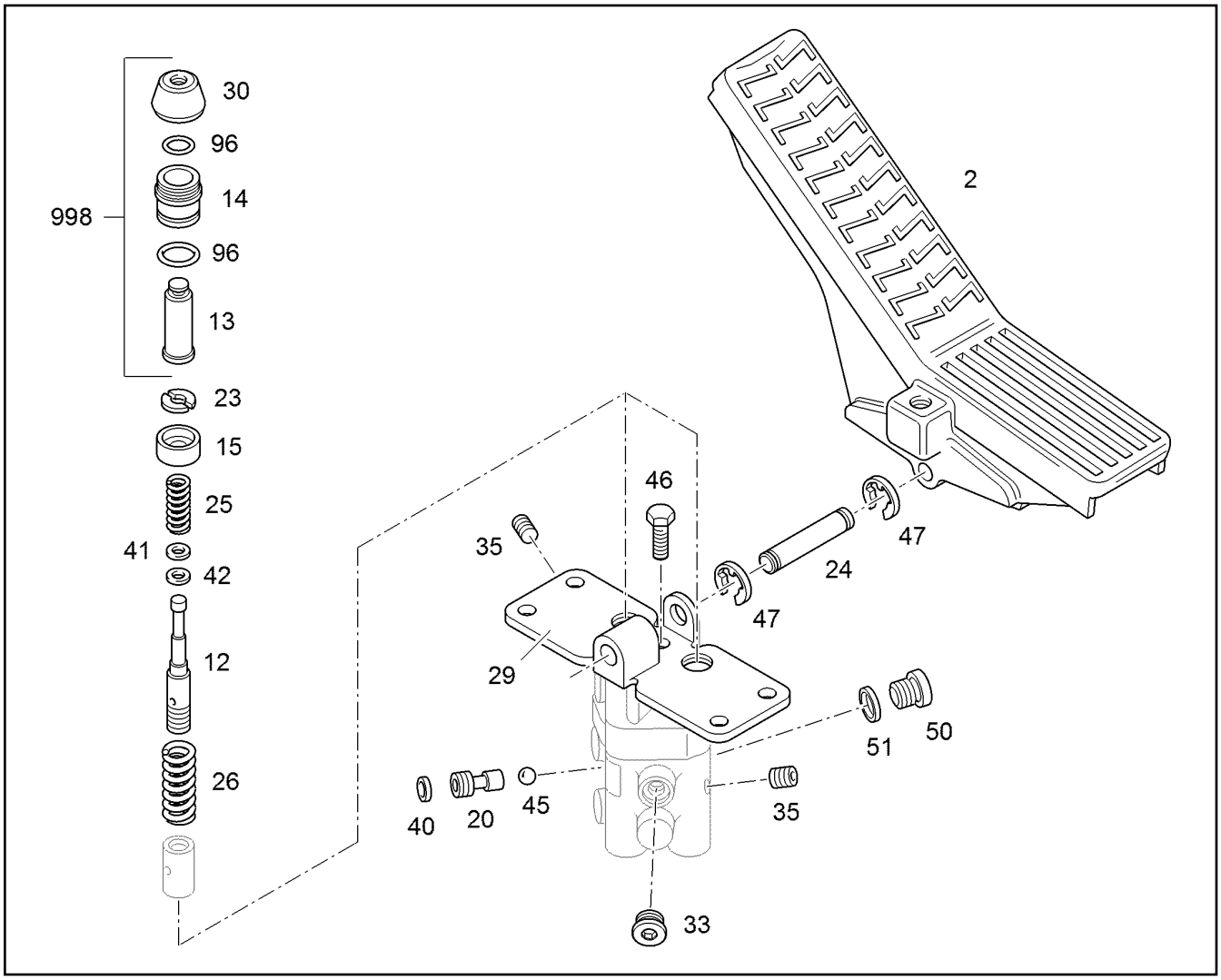

Pos.	Item	Quantity	Description	Designação	Serie	K
2	9476369	1	FOOT PEDAL LEFT ASSEMBLY ⇨ ❑ 326	PLACA DE DEGRAU MONT. ESQ.		
12	9265392	2	PISTON	PISTÃO		
13	9885351	2	TAPPET	TUCHO		
14	9265394	2	BUSHING	BUCHA		
15	9079261	2	SPRING SUPPORT	PRATO DA MOLA		
20	9265400	1	VALVE SEAT	ASSENTO DA VÁLVULA		
23	9265402	4	WASHER 3,8X12,5X1	ARRUELA		
24	9265410	1	AXLE	EIXO		
25	9268054	2	PRESSURE SPRING 1,30X6,10X30,30	MOLA DE PRESSÃO		
26	7381807	2	PRESSURE SPRING 2,00X10,80X46,50	MOLA DE PRESSÃO		
29	12862561	1	LID PLATE	PLACA		
30	9265414	2	RUBBER CAP	CAPA DE BORRACHA		
33	10137392	1	SCREW PLUG VSTI G1/4A	PARAFUSO DE FECHAMENTO		
35	7380133	2	SEALING PLUG MB 700/5	TAMPÃO DE VEDAÇÃO		
40	7380136	1	LIFETIME SEAL 10	ANEL DE VEDAÇÃO DE DESLIZE		
41	7380137	2	SUPPORTING WASHER S 4,9X7,5X0,1	ARRUELA DE APOIO		
42	7380138	2	SUPPORTING WASHER S 4,9X7,5X0,3	ARRUELA DE APOIO		
45	4980057	1	BALL DIN 5401 d=5 - G20	ESFERA		
46	11692824	3	HEX SCREW ISO 4017 M6X12 8.8 480H	PARAFUSO SEXTAVADO		
47	12217993	2	WASHER DIN 6799 12	ARRUELA		
50	12214496	1	SCREW PLUG DIN 908 M8X1 St 480H	PARAFUSO DE FECHAMENTO		
51	4980059	1	SEALING RING DIN 7603 A 8X13X1	ANEL DE VEDAÇÃO		
96	9269690	1	SEAL KIT VG7-4/... ⇨ ❑ 319	KIT DE VEDAÇÃO		

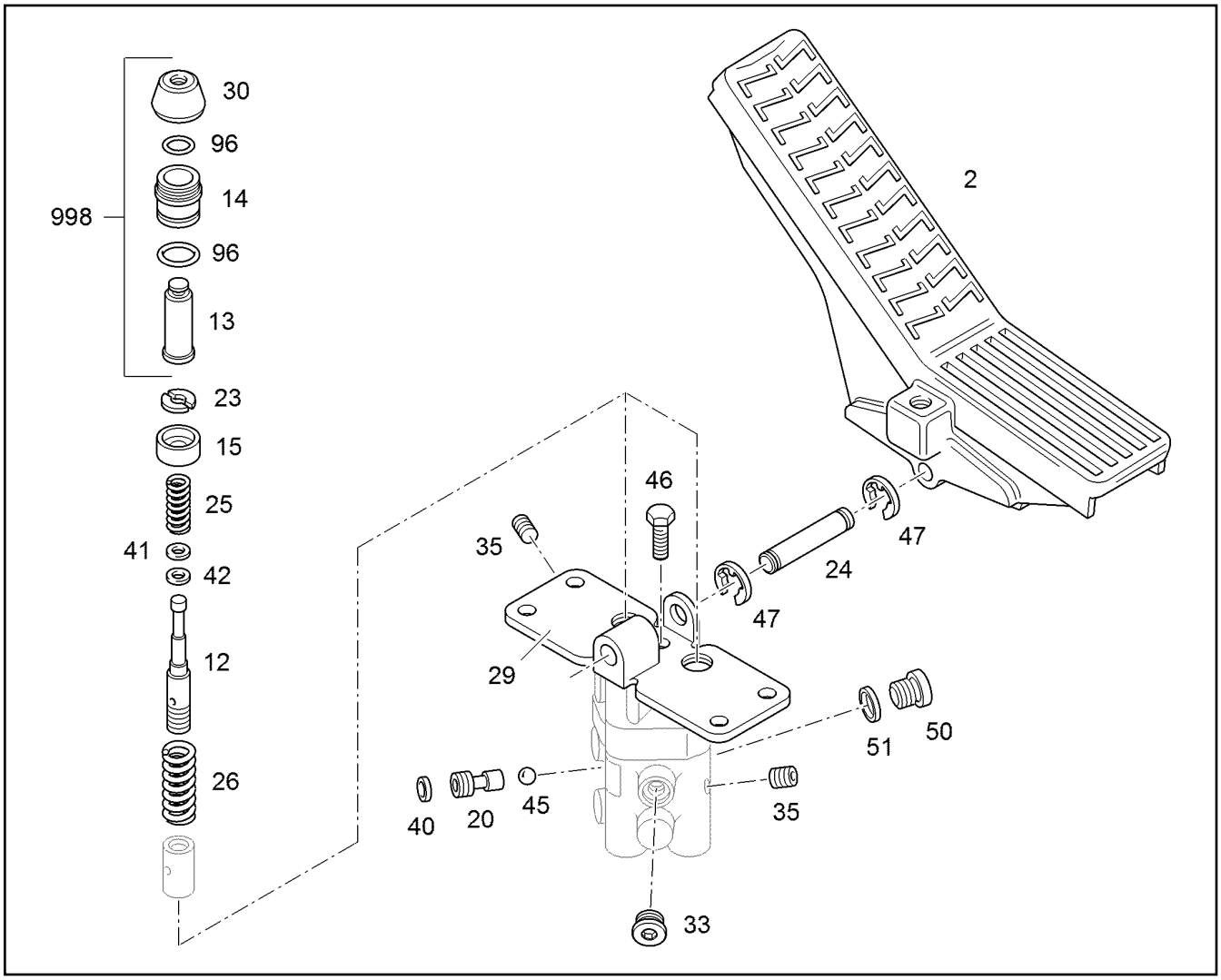

Pos.	Item	Quantity	Description	Designação	Serie	K
998	9079277	1	REPAIR SET PLUNGER ⇨ ❑ 743	CR TACO		

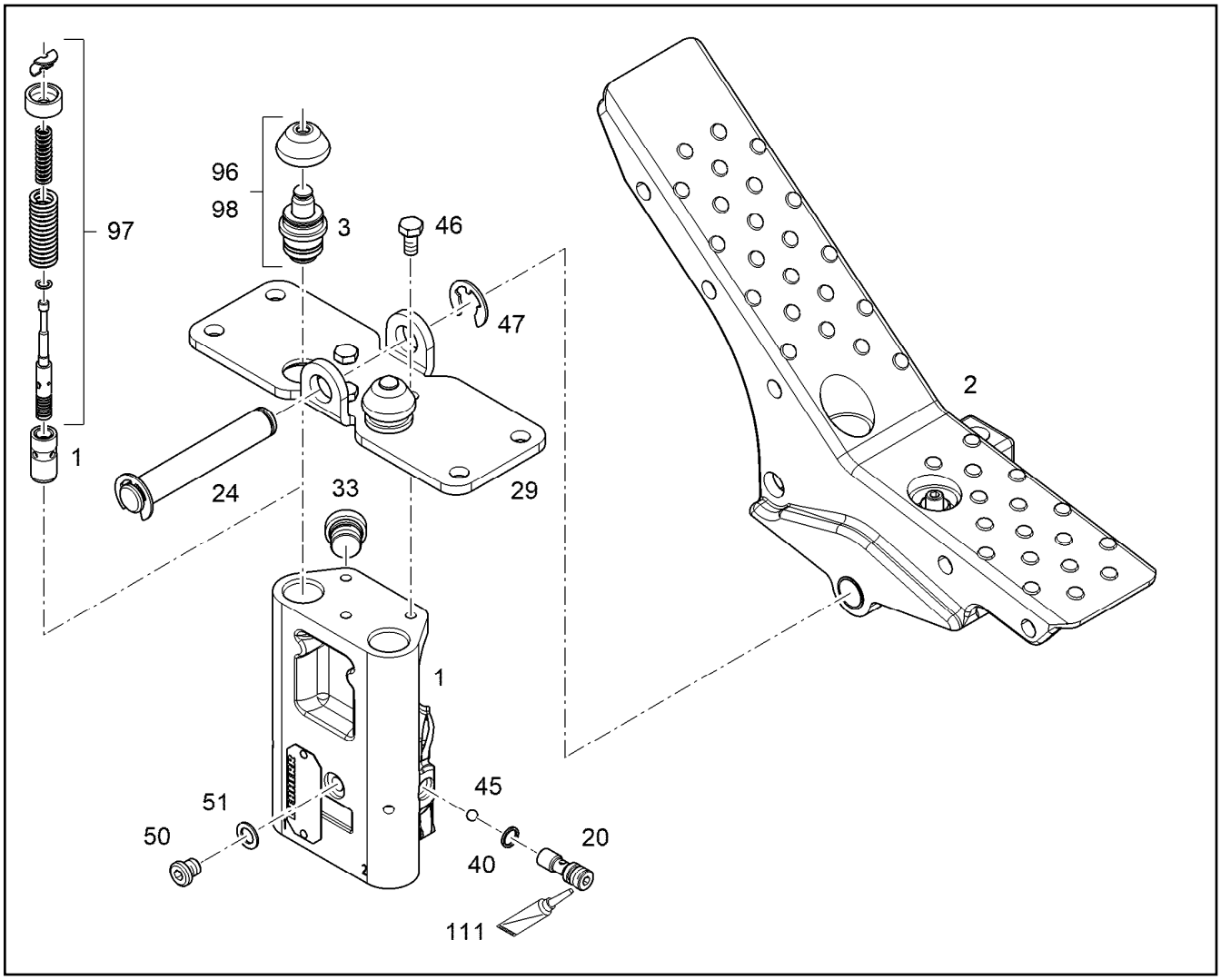

Pos.	Item	Quantity	Description	Designação	Serie	K
1		1	HOUSING WITH BUSHING	CARCACA COM BUCHA		
2		1	FOOT PEDAL RIGHT ASSEMBLY ⇨ ❑ 741	PLACA DE DEGRAU MONT. DIR.		
3		2	BUSHING	BUCHA		
20		1	VALVE SEAT	ASSENTO DA VÁLVULA		
24		1	AXLE	EIXO		
29		1	LID PLATE	PLACA		
33	10137392	1	SCREW PLUG VSTI G1/4A	PARAFUSO DE FECHAMENTO		
40		1	LIFETIME SEAL 10	ANEL DE VEDAÇÃO DE DESLIZE		
45		1	BALL DIN 5401 d=5 - G20	ESFERA		
46		3	HEX SCREW ISO 4017 M6X12 8.8 480H	PARAFUSO SEXTAVADO		
47		2	WASHER DIN 6799 12	ARRUELA		
50	12214496	1	SCREW PLUG DIN 908 M8X1 St 480H	PARAFUSO DE FECHAMENTO		
51	4980059	1	SEALING RING DIN 7603 A 8X13X1	ANEL DE VEDAÇÃO		
96	9269690	1	SEAL KIT VG7-4/... ⇨ ❑ 319	KIT DE VEDAÇÃO		
97	9079264	1	MODIFICATION KIT VG7-2/3 ⇨ ❑ 742	KIT DE MODIFICAÇÃO		
98	9079277	1	REPAIR SET PLUNGER ⇨ ❑ 743	CR TACO		
111	8700014	1	THREAD SEAL	VEDAÇÃO PARA ROSCA		

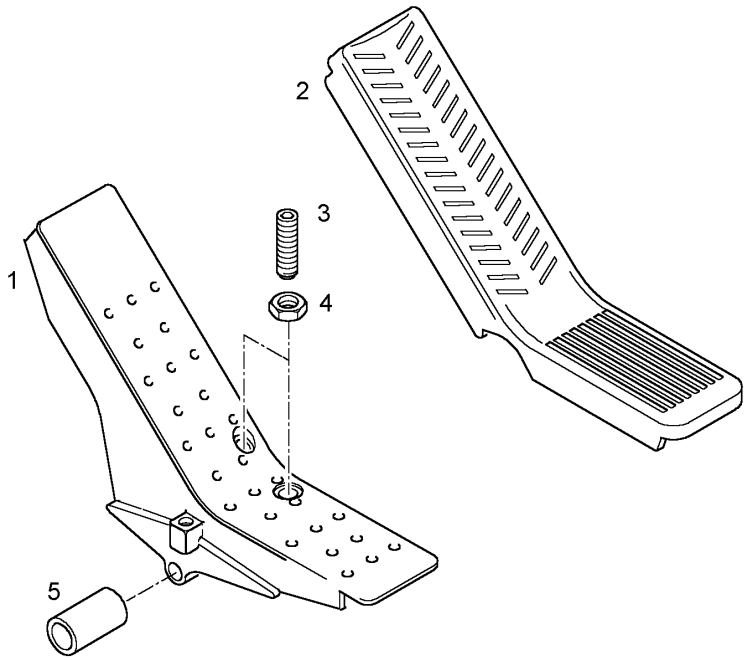

Pos.	Item	Quantity	Description	Designação	Serie	K
1	9476442	1	PEDAL LEFT	PEDAL ESQUERDO		
2	9480295	1	FOOT BOARD COVERING	REVESTIMENTO PLACA DE ES		
3	4981197	2	GRUB SCREW DIN 915 M8X50 45H A2B	PARAFUSO		
4	4901096	2	HEX NUT M8	PORCA SEXTAVADA		
5	7362583	2	BUSHING 14/16X10	BUCHA		1

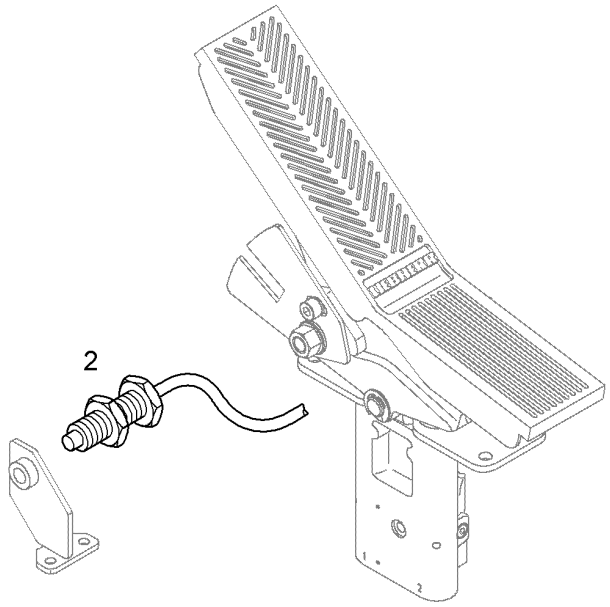

Pos.	Item	Quantity	Description	Designação	Serie	K
2	10024864	1	PROXIMITY SWITCH	SENSOR DE APROXIMAÇÃO		

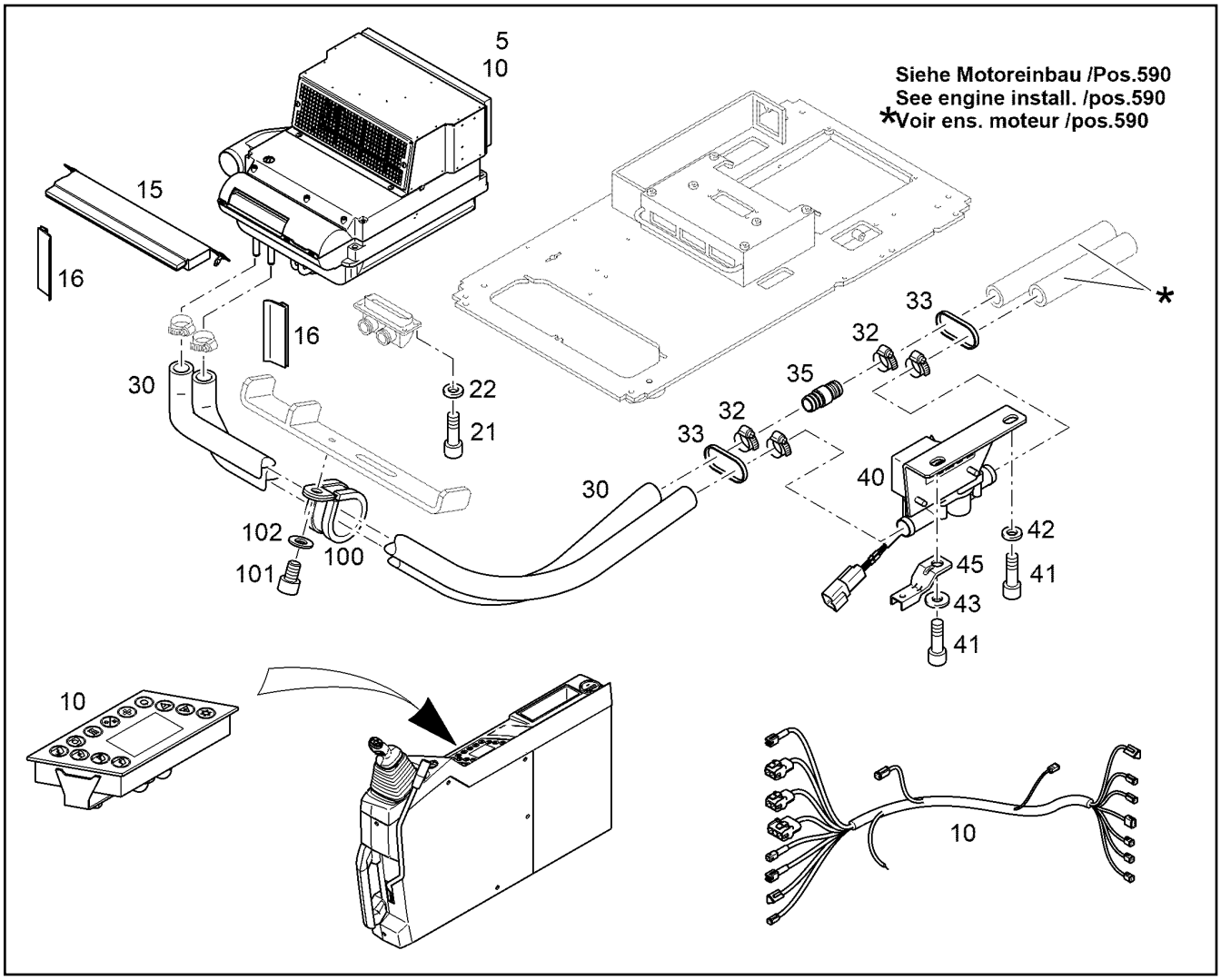

Pos.	Item	Quantity	Description	Designação	Serie	K
5		1	DELI.PARTS EVAPORATOR ⇨ ❑ 329	CF VAPORIZADOR		
10	10816666	1	EVAPORATOR ⇨ ❑ 330	EVAPORADOR		
15		1	COVER PLATE	CHAPA DE COBERTURA		
16	10008649	0.28m	SEALING PROFILE	PERFIL DE VEDAÇÃO		
21	11002746	4	SOCKET HEAD SCREW ISO 4762 M12X20 10	PARAFUSO CILÍNDRICO		
22	10289804	4	WASHER 12 300HV	ARRUELA		
30	9008530	2	WATER HOSE 918 6280 30-002	MANGUEIRA DE ÁGUA		
32	4901138	4	HOSE CLAMP DIN 3017-1 A 21 16-27X9 W2-	ABRAÇADEIRA DE MANGUEIRA		
33	7001877	2	TIE WRAP 4,8X200	AMARRA PARA CABOS		
35	7365704	1	INTERMEDIATE PART DN15	PEÇA INTEMEDIÁRIA		
40	10292661	1	WATER VALVE	VÁLVULA DE ÁGUA		
41	10468332	2	SOCKET HEAD SCREW ISO 4762 M8X25 10	PARAFUSO CILÍNDRICO		
42	10289803	1	WASHER 8 300HV	ARRUELA		
43	12203968	1	WASHER 8,4 30HV	ARRUELA		
45	10041876	1	HOLDER	SUPORTE		
100	7367691	1	CLAMP DIN 3016-1 D1 40X25 W1-2-CR	BRAÇADEIRA		
101	12233290	1	SOCKET HEAD SCREW ISO 4762 M8X12 10	PARAFUSO CILÍNDRICO		
102	10289803	1	WASHER 8 300HV	ARRUELA		

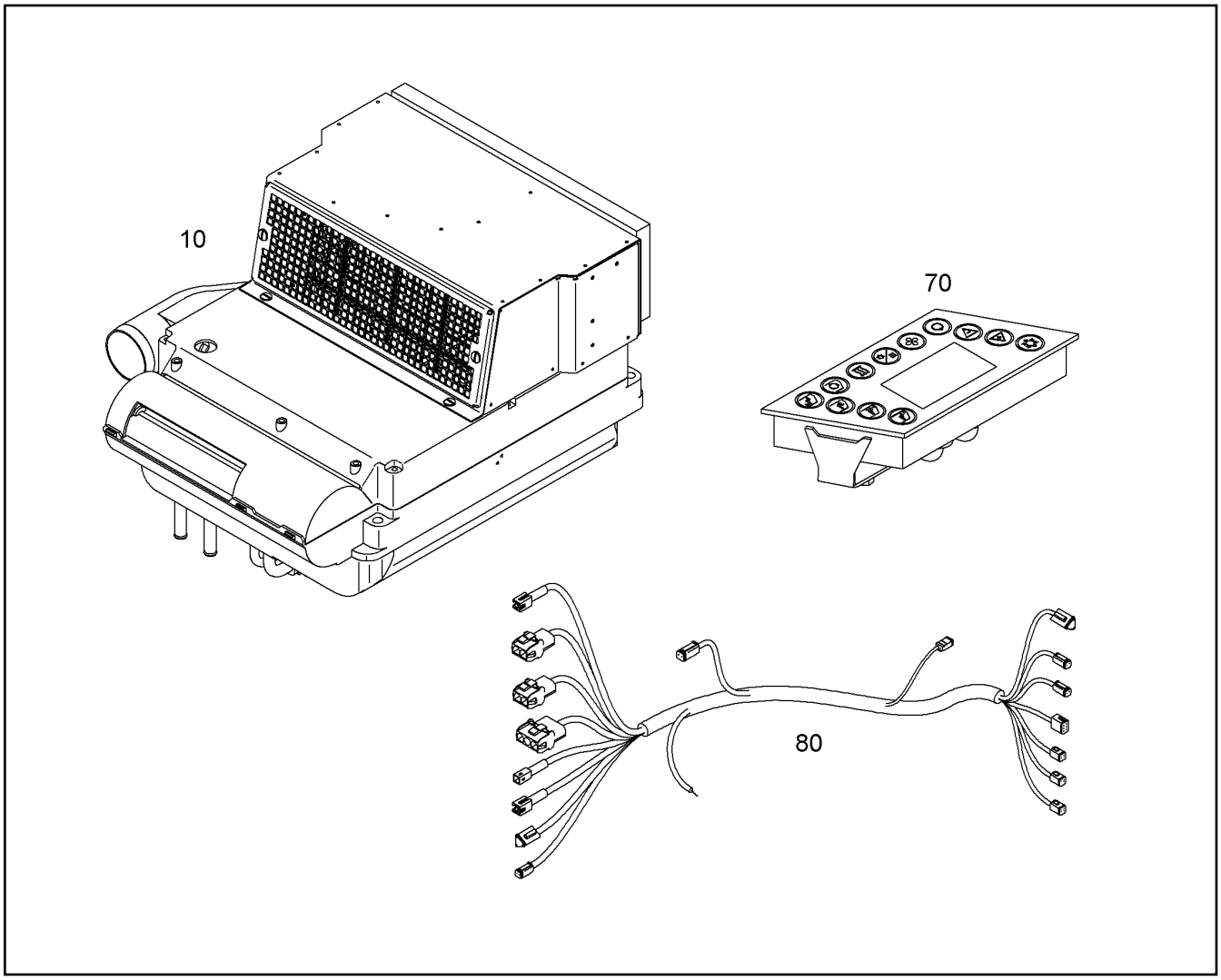

Pos.	Item	Quantity	Description	Designação	Serie	K
10	10816666	1	EVAPORATOR [100073348-0003] ⇨ ❑ 330	EVAPORADOR		
70	10493087	1	OPERATING ELEMENT ⇨ ❑ 334	PAINEL DE OPERAÇÃO		
80	10006617	1	CABLE LOOM	CHICOTE ELÉTRICO		

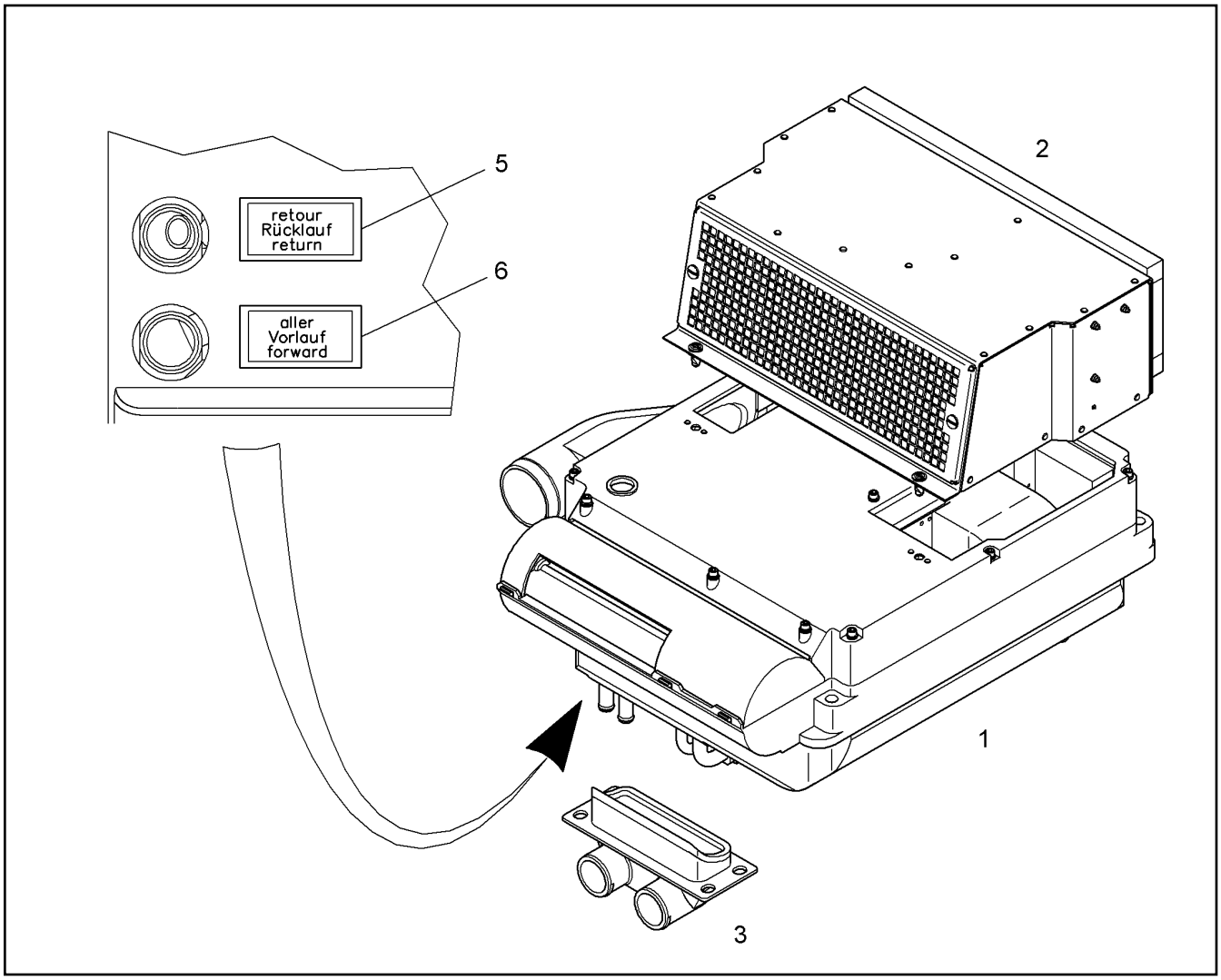

Pos.	Item	Quantity	Description	Designação	Serie	K
1	11003594	1	HOUSING ⇨ ❑ 335	CARCAÇA		
2	10022117	1	AIR CIRCULATION CASE ⇨ ❑ 333	CARCACA DE CONDUCAO DE A		
3	10022119	1	CASE ⇨ ❑ 338	CAIXA		
5	10022635	1	SIGN RUECKLAUF	IDENTIFICAÇÃO		
6	10022636	1	SIGN VORLAUF	IDENTIFICAÇÃO		

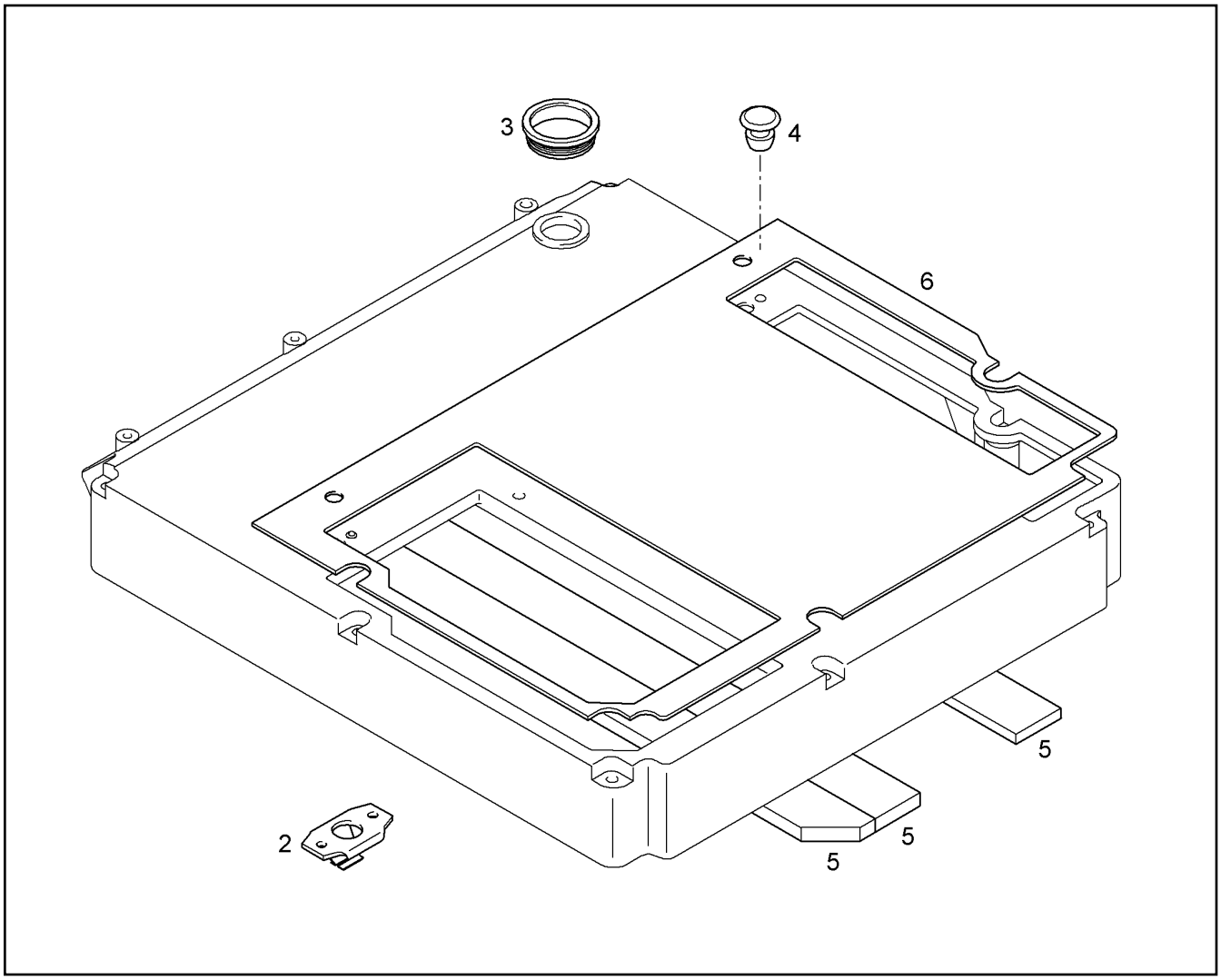

Pos.	Item	Quantity	Description	Designação	Serie	K
2	7369754	2	SPRING CLIPS	CLIPE DE MOLA		
3	10022774	1	BLANKING PLUG	TAMPÃO		
4	4451001	4	BLIND RIVET A3,0 6,0	REBITE CEGO		
5	7027401	3	SEALING STRIP	VEDACÃO EM TIRA		
6	11644222	1	INSULATING SHEET	PLACA ISOLANTE		

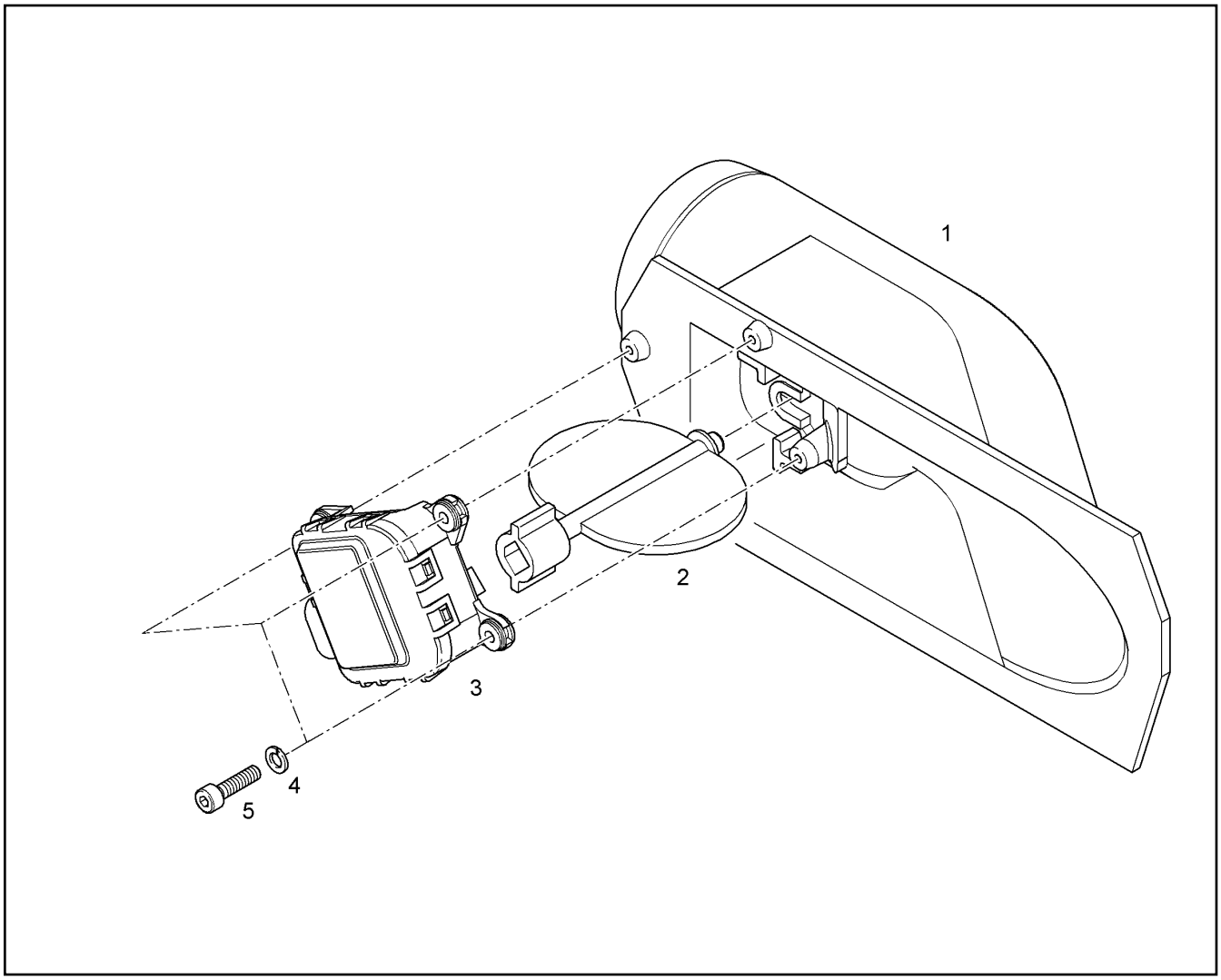

Pos.	Item	Quantity	Description	Designação	Serie	K
1	10005677	1	AIR CIRCULATION PART	PEÇA GUIA DE AR		
2	10005674	1	AIR FLAP	ENTRADA DE AR		
3	10022766	1	SERVOMOTOR	SERVOMOTOR		
4	4600036	3	WASHER SPRING 4	ARRUELA DE PRESSÃO		
5	4600337	3	SOCKET HEAD SCREW ISO 4762 M4X16 8.8	PARAFUSO CILÍNDRICO		

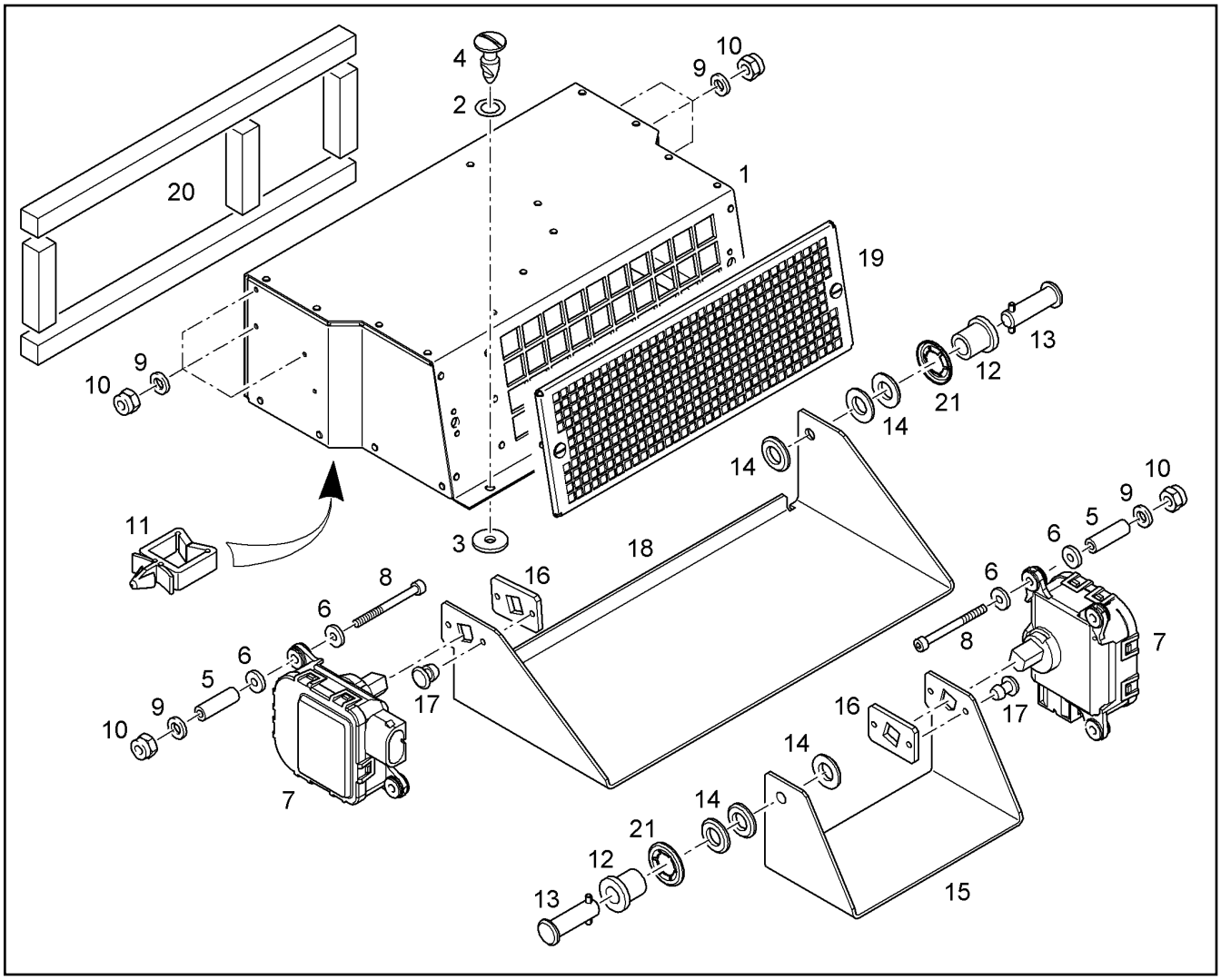

Pos.	Item	Quantity	Description	Designação	Serie	K
1	10022787	1	AIR CIRCULATION CASE	CARCACA DE CONDUCAO DE A		
2	10022769	2	HEAD-TYPE WASHER 9,5X15X0,2	ARRUELA		
3	10022767	2	WASHER T 5,5X18X2	ARRUELA		
4	10022785	2	QUICK LOCK	FECHO RAPIDO		
5	10022783	6	SPACER BUSHING	BUCHA DISTANCIADORA		1
6	421802008	12	WASHER 4	ARRUELA		
7	10022766	2	SERVOMOTOR	SERVOMOTOR		
8	4981259	6	SOCKET HEAD SCREW ISO 4762 M4X45 10.	PARAFUSO CILÍNDRICO		
9	4001645	6	WASHER 4 200HV	ARRUELA		
10	4600625	6	HEX NUT M4	PORCA SEXTAVADA		
11	10023106	2	CABLE CLAMP	SUPORTE DE CABOS		
12	10022782	2	BUSHING	BUCHA		1
13	10022781	2	PIN	PINO		
14	10289802	6	WASHER 6 300HV	ARRUELA		
15	10022780	1	AIR FLAP	ENTRADA DE AR		
16	10022779	2	REINFORCING SECTION	PERFIL DE REFORÇO		
17	7401288	4	BLIND RIVET A 4X8	REBITE CEGO		
18	10022778	1	AIR FLAP	ENTRADA DE AR		
19		1	CIRCULATING AIR GRID ⇨ ❑ 339	GRADE DE CIRCULACAO DE AR		
20	10022776	1	BURR FASTENING TAPE	ESPUMA DE PE		
21	7025121	2	SPRING WASHER	ARRUELA DE PRESSÃO		

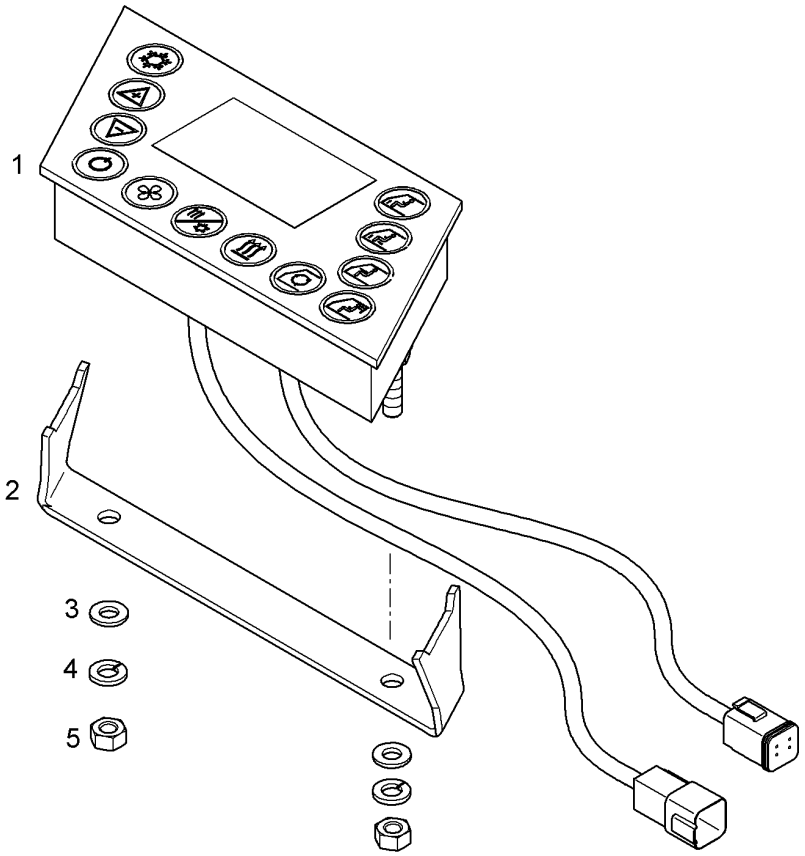

Pos.	Item	Quantity	Description	Designação	Serie	K
1	10493088	1	OPERATING ELEMENT	PAINEL DE OPERAÇÃO		
2	10021823	1	MOUNTING BRACKET	ARCO DE FIXACAO		
3	10289802	2	WASHER 6 300HV	ARRUELA		
4	10289802	2	WASHER 6 300HV	ARRUELA		
5	4000379	2	HEX NUT M6	PORCA SEXTAVADA		

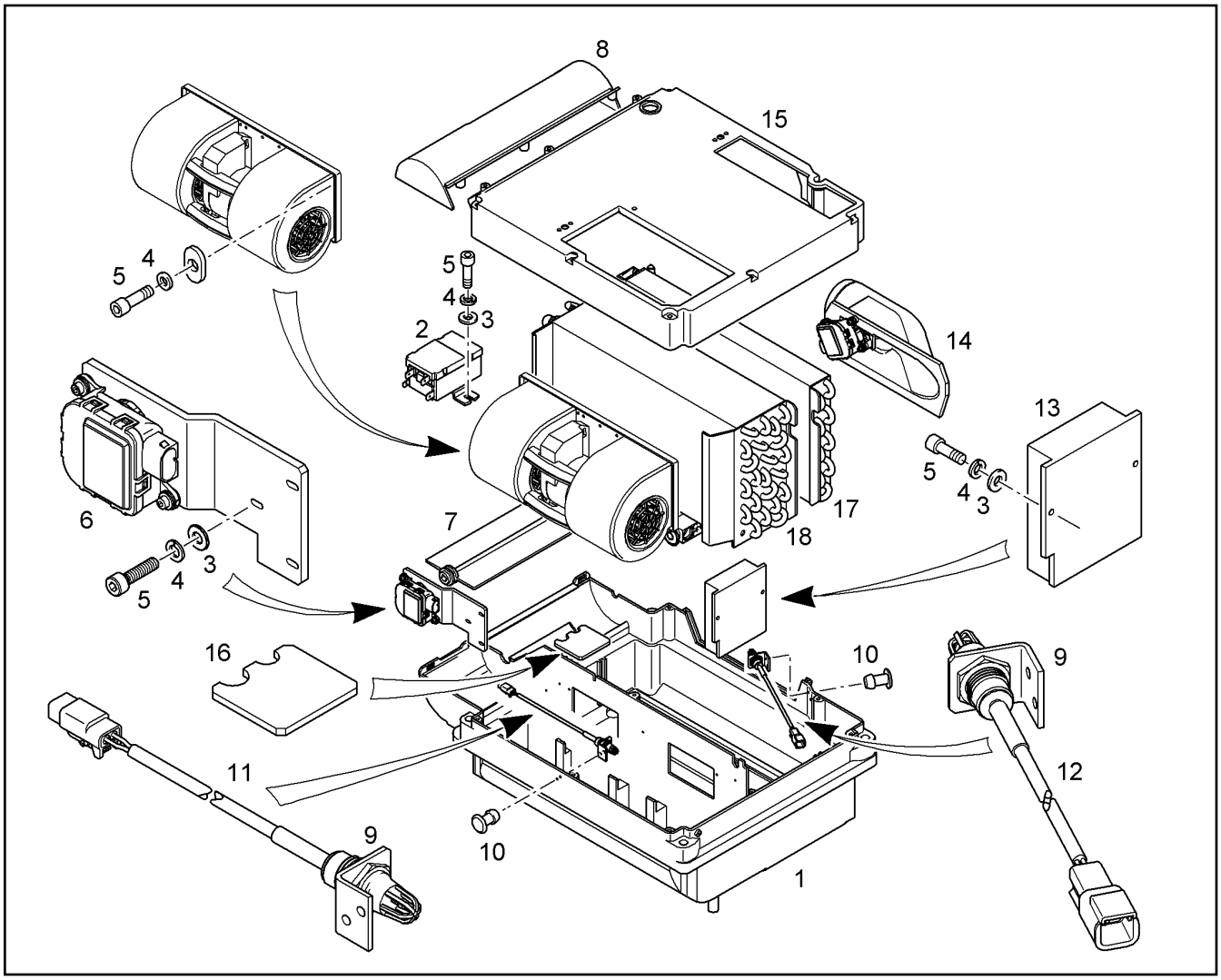

Pos.	Item	Quantity	Description	Designação	Serie	K
1	10005672	1	EVAPORATOR HOUSING	CARCAÇA DO EVAPORADOR		
2	10022048	1	THERMOSTAT	TERMOSTATO		
3	4002887	7	WASHER 4 200HV	ARRUELA		
4	4600036	10	WASHER SPRING 4	ARRUELA DE PRESSÃO		
5	4600337	10	SOCKET HEAD SCREW ISO 4762 M4X16 8.8	PARAFUSO CILÍNDRICO		
6	10022078	1	ASSEMBLY BRACKET ⇨ ❑ 337	CANTONEIRA DE MONTAGEM		
7	10005675	1	AIR FLAP	ENTRADA DE AR		
8	10005679	1	EVAPORATOR HOUSING	CARCAÇA DO EVAPORADOR		
9	10022049	2	FIXING BRACKET	PEÇA DE FIXAÇÃO		
10	10022656	4	BLIND RIVET	REBITE CEGO		
11	10022067	1	TEMPERATURE SENSOR	SENSOR DE TEMPERATURA		
12	10022077	1	TEMPERATURE SENSOR	SENSOR DE TEMPERATURA		
13	10493089	1	CONTROL ELEMENT	ELEMENTO DE CONTROLE		
14	10022083	1	AIR CONNECTION PART ⇨ ❑ 332	BOCAL DE AR		
15	10022069	1	EVAPORATOR HOUSING ⇨ ❑ 331	CARCAÇA DO EVAPORADOR		
16	10022051	1	COVER	TAMPA		
17	10022070	1	HEATING BATTERY	BATERIA DE AQUECIMENTO		
18	10022068	1	EVAPORATOR	EVAPORADOR		

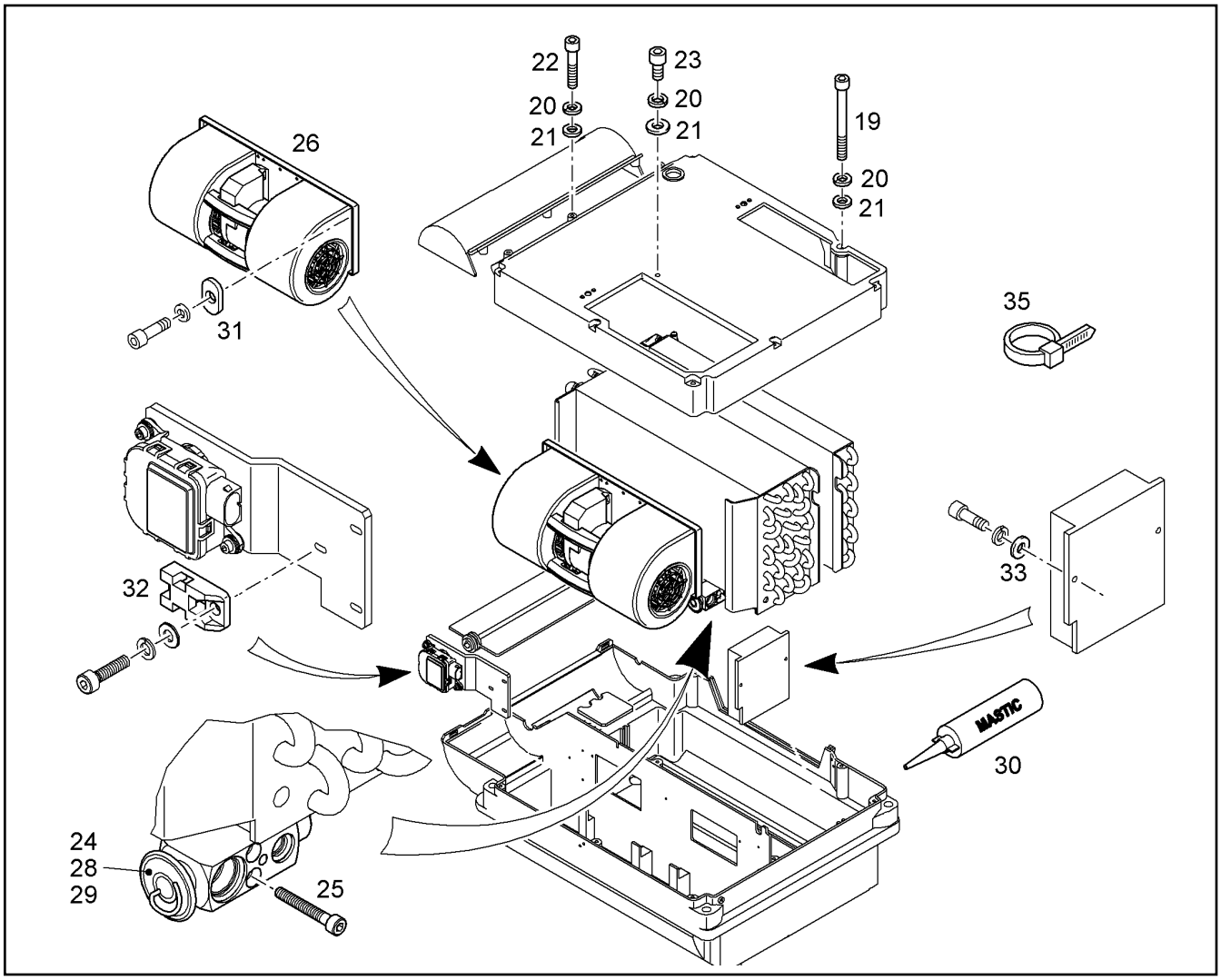

Pos.	Item	Quantity	Description	Designação	Serie	K
19	404205308	7	SOCKET HEAD SCREW ISO 4762 M6X75 8.8	PARAFUSO CILÍNDRICO		
20	10289802	11	WASHER 6 300HV	ARRUELA		
21	4901878	11	WASHER 6 200HV	ARRUELA		
22	10875588	3	SOCKET HEAD SCREW ISO 4762 M6X25 8.8	PARAFUSO CILÍNDRICO		
23	4001596	1	SOCKET HEAD SCREW ISO 4762 M6X16 10.	PARAFUSO CILÍNDRICO		
24	7025110	1	VALVE	VÁLVULA		
25	12204614	2	SOCKET HEAD SCREW ISO 4762 M5X35 8.8	PARAFUSO CILÍNDRICO		
26	10022052	1	DOUBLE BLOWER	VENTILADOR DUPLO		
28	5610999	1	O-RING 10,82X1,78	ANEL-O		
29	7411823	1	O-RING	ANEL-O		
30	10022063	1	SEALING PUTTY	KIT DE VEDAÇÃO		
31	10022653	3	PROFILE	PERFIL		
32	11003600	1	MOUNTING BASE	BASE DE FIXACAO		
33	421802008	4	WASHER 4	ARRUELA		
35	11002474	8	CABLE TIE	ABRAÇADEIRA DE CABO		

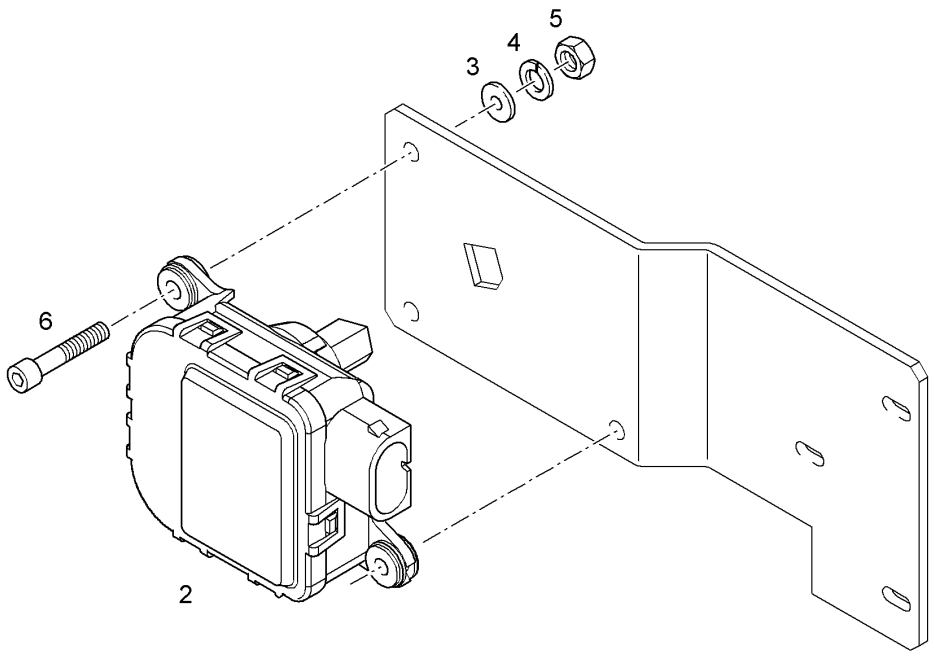

Pos.	Item	Quantity	Description	Designação	Serie	K
2	10022766	1	SERVOMOTOR	SERVOMOTOR		
3	4001645	3	WASHER 4 200HV	ARRUELA		
4	4600036	3	WASHER SPRING 4	ARRUELA DE PRESSÃO		
5	4000376	3	HEX NUT M4	PORCA SEXTAVADA		
6	4600337	3	SOCKET HEAD SCREW ISO 4762 M4X16 8.8	PARAFUSO CILÍNDRICO		

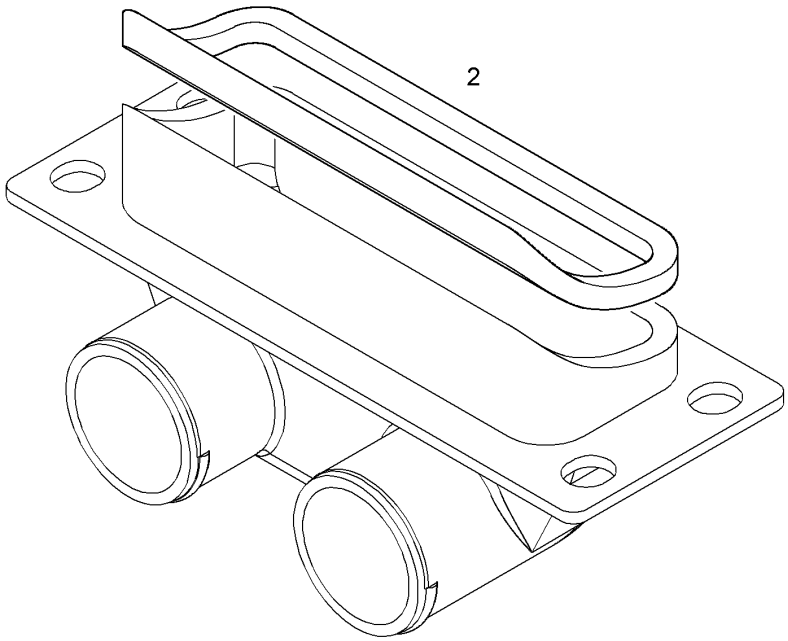

Pos.	Item	Quantity	Description	Designação	Serie	K
2	10022772	1	FOAM RUBBER INSULATION	TIRA DE ESPUMA		

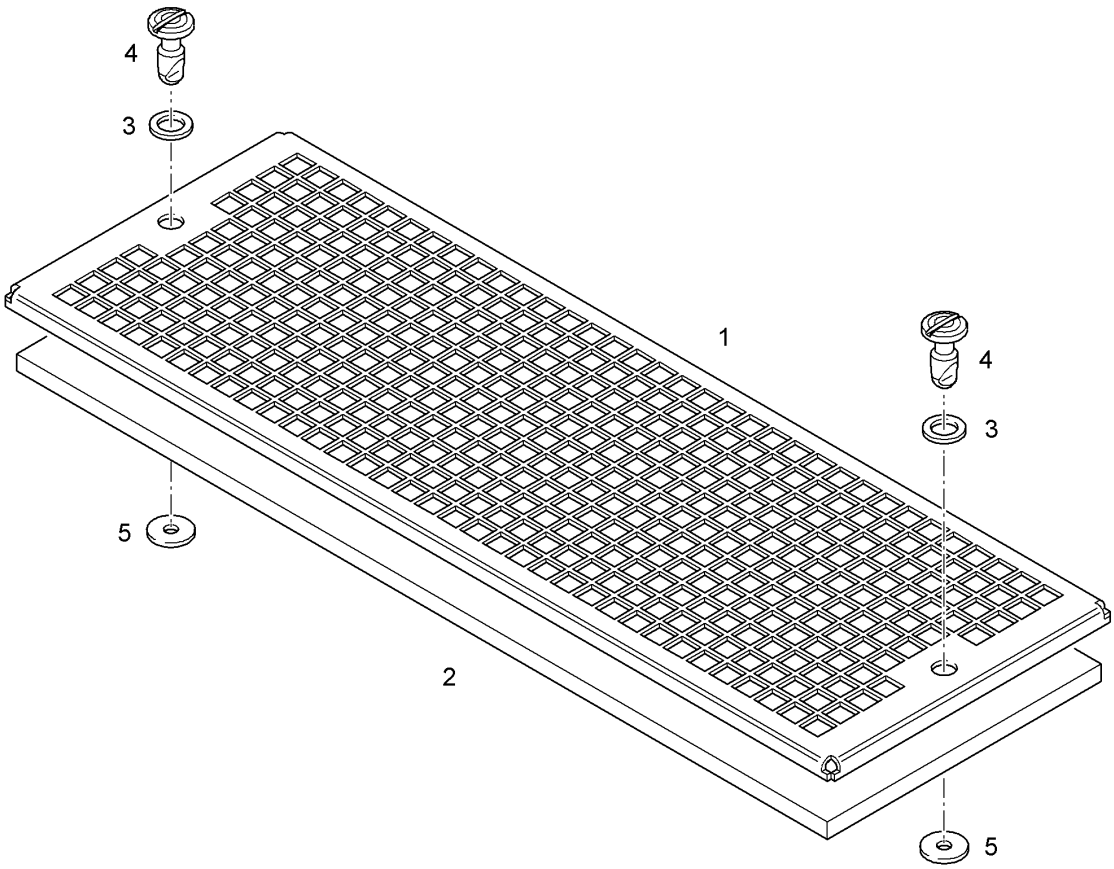

Pos.	Item	Quantity	Description	Designação	Serie	K
1	10022771	1	CIRCULATING AIR GRID	GRADE DE CIRCULACAO DE AR		
2	10022770	1	FILTER MAT	ESTEIRA DE FILTRO		
3	10022769	2	HEAD-TYPE WASHER 9,5X15X0,2	ARRUELA		
4	10022768	2	QUICK LOCK	FECHO RAPIDO		
5	10022767	2	WASHER T 5,5X18X2	ARRUELA		

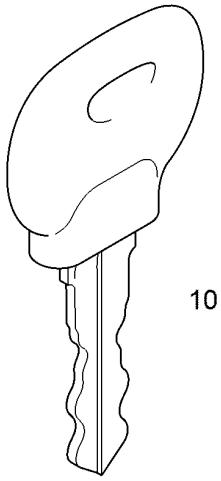

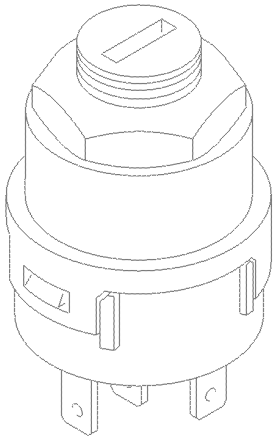

Pos.	Item	Quantity	Description	Designação	Serie	K
10	10221073	1	IGNITION KEY	CHAVE DE IGNICAO		

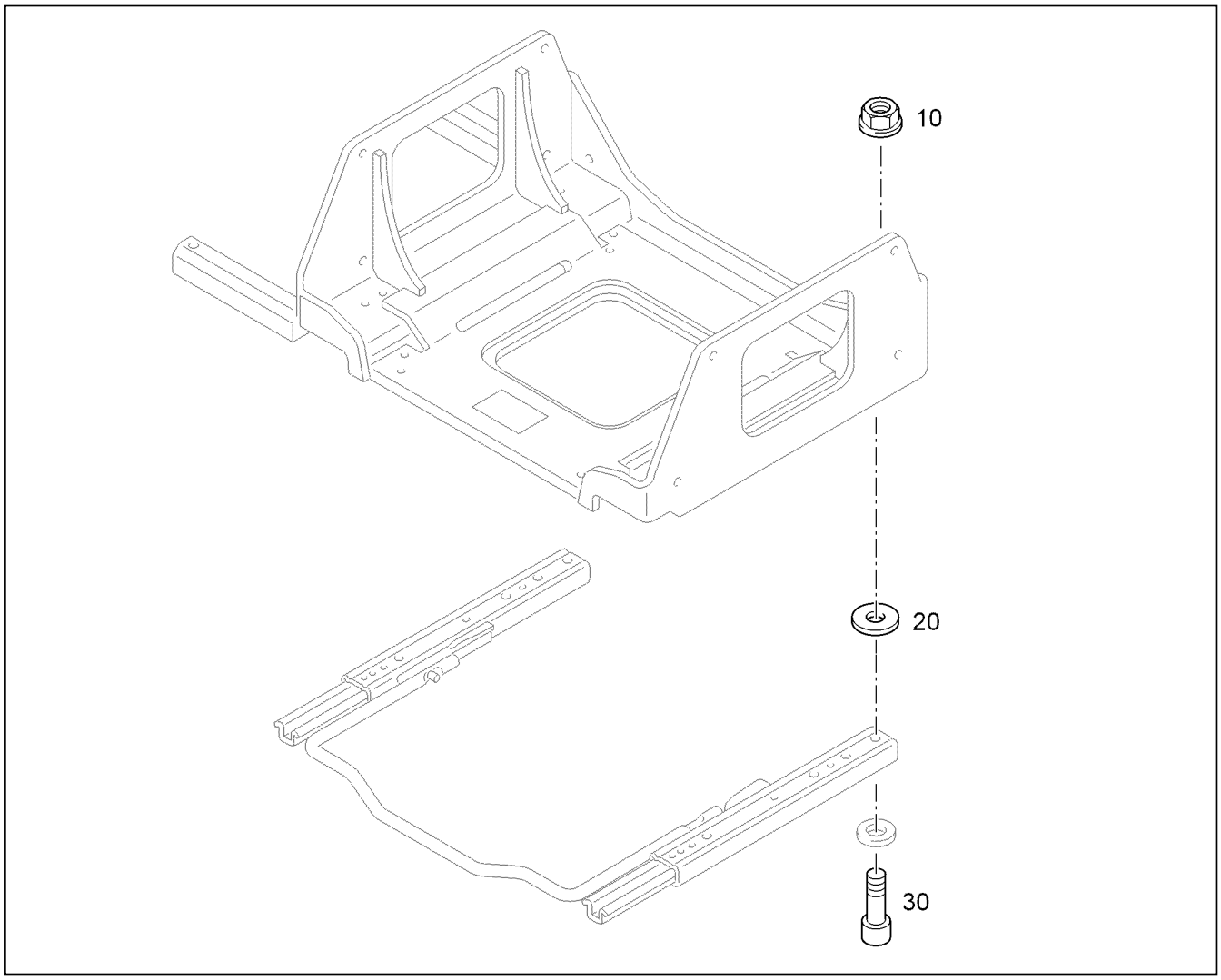

Pos.	Item	Quantity	Description	Designação	Serie	K
10	241015402	4	HEX NUT M8	PORCA SEXTAVADA		
20	12203968	4	WASHER 8,4 30HV	ARRUELA		
30	4600079	4	SOCKET HEAD SCREW ISO 4762 M8X20 8.8	PARAFUSO CILÍNDRICO		

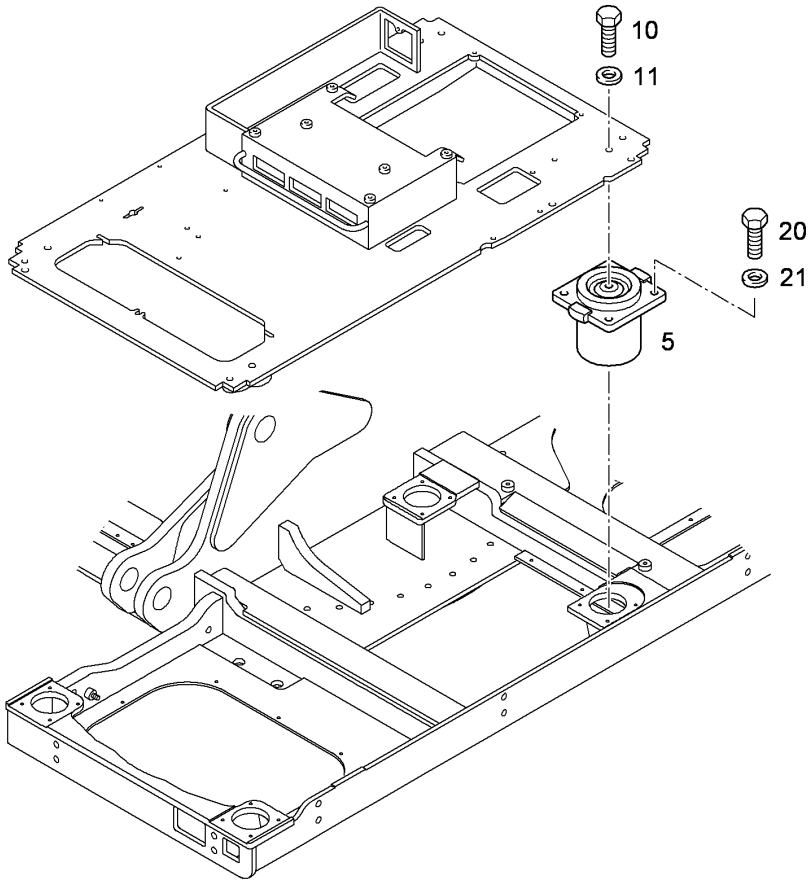

Pos.	Item	Quantity	Description	Designação	Serie	K
5	10013573	4	FLUID BEARING	COXIM	9848-	1
10	4066202	4	HEX SCREW ISO 4017 M16X60 10.9 FLZN	PARAFUSO SEXTAVADO		
11	9918228	4	WASHER 16,5/28X4	ARRUELA		
20	10299578	16	HEX SCREW ISO 4017 M10X25 10.9 FLZN	PARAFUSO SEXTAVADO		
21	10289795	16	WASHER 10 300HV	ARRUELA		

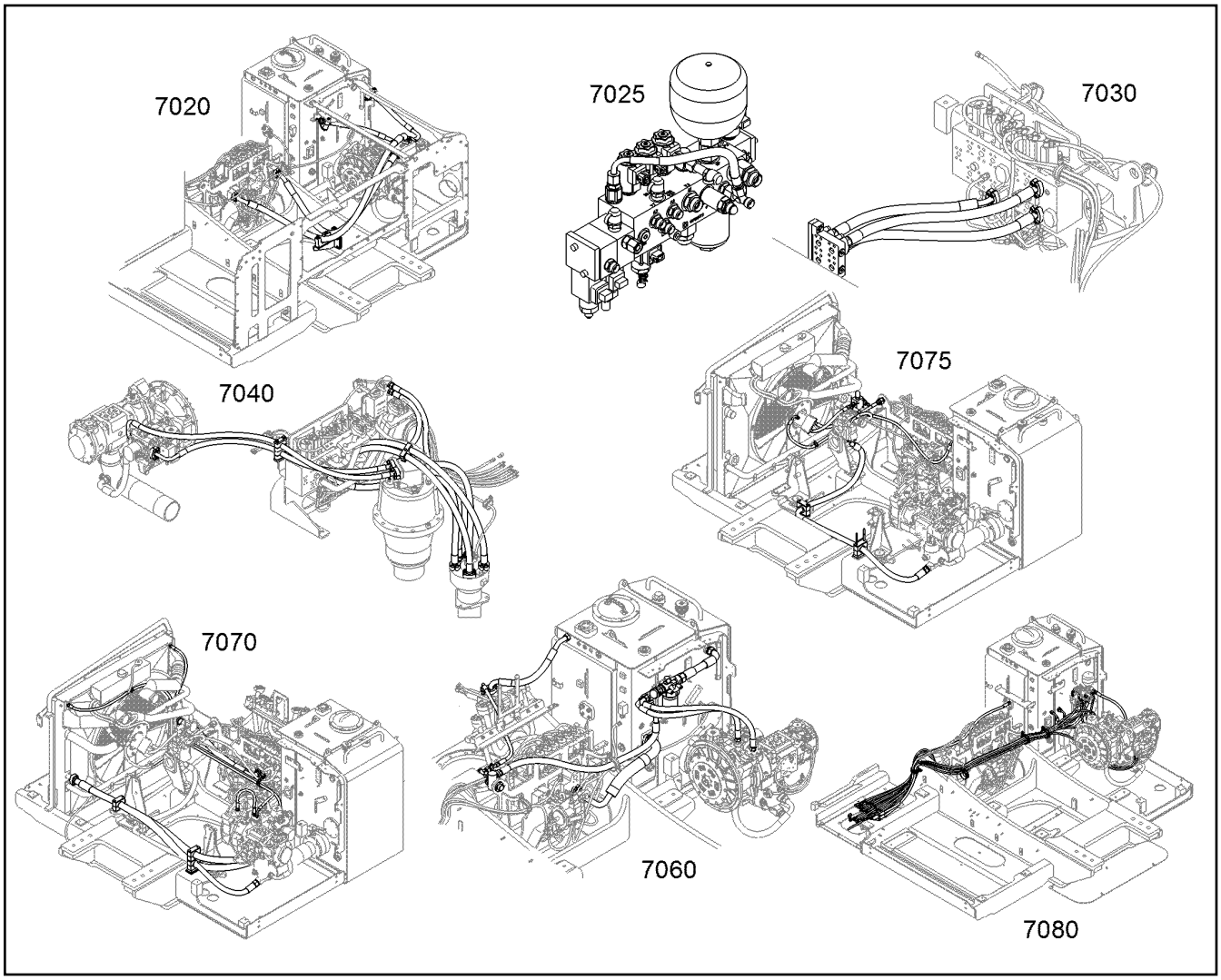

Pos.	Item	Quantity	Description	Designação	Serie	K
7020		1	HYDR.PUMPS TO SPOOL VALVE ⇨ ❑ 344	INSTALACAO HDRAULICA		
7025		1	OIL PILOT VALVE INSTALLATION ⇨ ❑ 346	UNIDADE DE COMANDO DE OLE		
7030		1	HYDR.INSTAL.VALVES TO ATTACHM. ⇨ ❑ 350	INSTALAÇÃO HIDRÁULICA		
7040		1	HYDR.INST.ROTARY CONNECTION ⇨ ❑ 351	INSTALACAO HIDRAULICA		
7060		1	HYDR.SUCT.+RETURN OIL HOSES ⇨ ❑ 353	MANGUEIRAS HIDRAULICAS		
7070		1	HYDR.AND GEAR OIL COOLING ⇨ ❑ 356	ARREFECIMENTO DE OLEO		
7075		1	HYDR.INSTALLATION FAN DRIVE ⇨ ❑ 358	INSTALACAO HIDRAULICA		
7080		1	HYDR.INSTAL.CONTROL TUBES ⇨ ❑ 360	INSTALACAO HIDRAULICA		

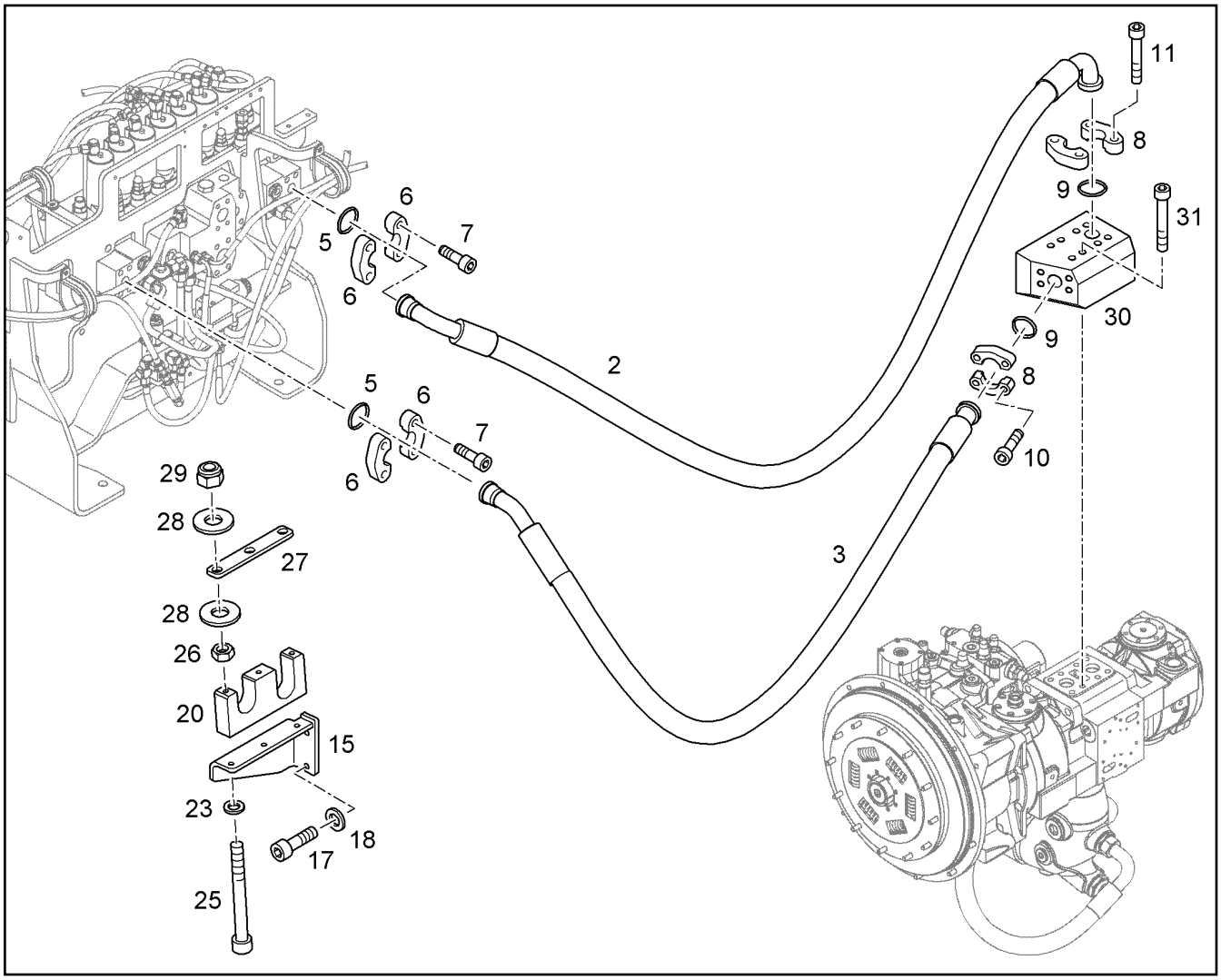

Pos.	Item	Quantity	Description	Designação	Serie	K
2	10280087	1	HOSE 32X2460	MANGUEIRA		1
3	10330920	1	HOSE 32X2200	MANGUEIRA		1
5	10490781	2	RECTANGULAR SECTION RING 40,15X2,80	ANEL DE SEÇÃO RETANGULAR		
6	11485638	4	FLANGE HALF WITH BOSSING SAE J518 S	MEIO FLANGE COM RELEVO		
7	11321145	8	SOCKET HEAD SCREW ISO 4762 M12X105	PARAFUSO CILÍNDRICO		
8	11485639	4	FLANGE HALF WITH BOSSING SAE J518 SA	MEIO FLANGE COM RELEVO		
9	10472425	4	RECTANGULAR SECTION RING 45,05X2,80	ANEL DE SEÇÃO RETANGULAR		
10	4902327	4	SOCKET HEAD SCREW ISO 4762 M14X45 10	PARAFUSO CILÍNDRICO		
11	4902068	4	SOCKET HEAD SCREW ISO 4762 M14X160	PARAFUSO CILÍNDRICO		
15	10059947	1	HOLDER	SUPORTE		
17	4043163	2	SOCKET HEAD SCREW ISO 4762 M12X30 1	PARAFUSO CILÍNDRICO		
18	10289804	4	WASHER 12 300HV	ARRUELA		
20	10087053	1	HALF CLAMP COLLAR PE-HD 500 BLACK	MEIA ABRAÇADEIRA		
23	10289795	3	WASHER 10 300HV	ARRUELA		
25	11320358	3	SOCKET HEAD SCREW ISO 4762 M10X150	PARAFUSO CILÍNDRICO		
26	4000383	3	HEX NUT M10	PORCA SEXTAVADA		
27	10087054	1	LID PLATE	PLACA		
28	4900531	6	WASHER 10 200HV	ARRUELA		
29	4600579	3	HEX NUT M10	PORCA SEXTAVADA		
30	9896609	1	BLOCK	BLOCO		
31	4901471	4	SOCKET HEAD SCREW ISO 4762 M14X130	PARAFUSO CILÍNDRICO		

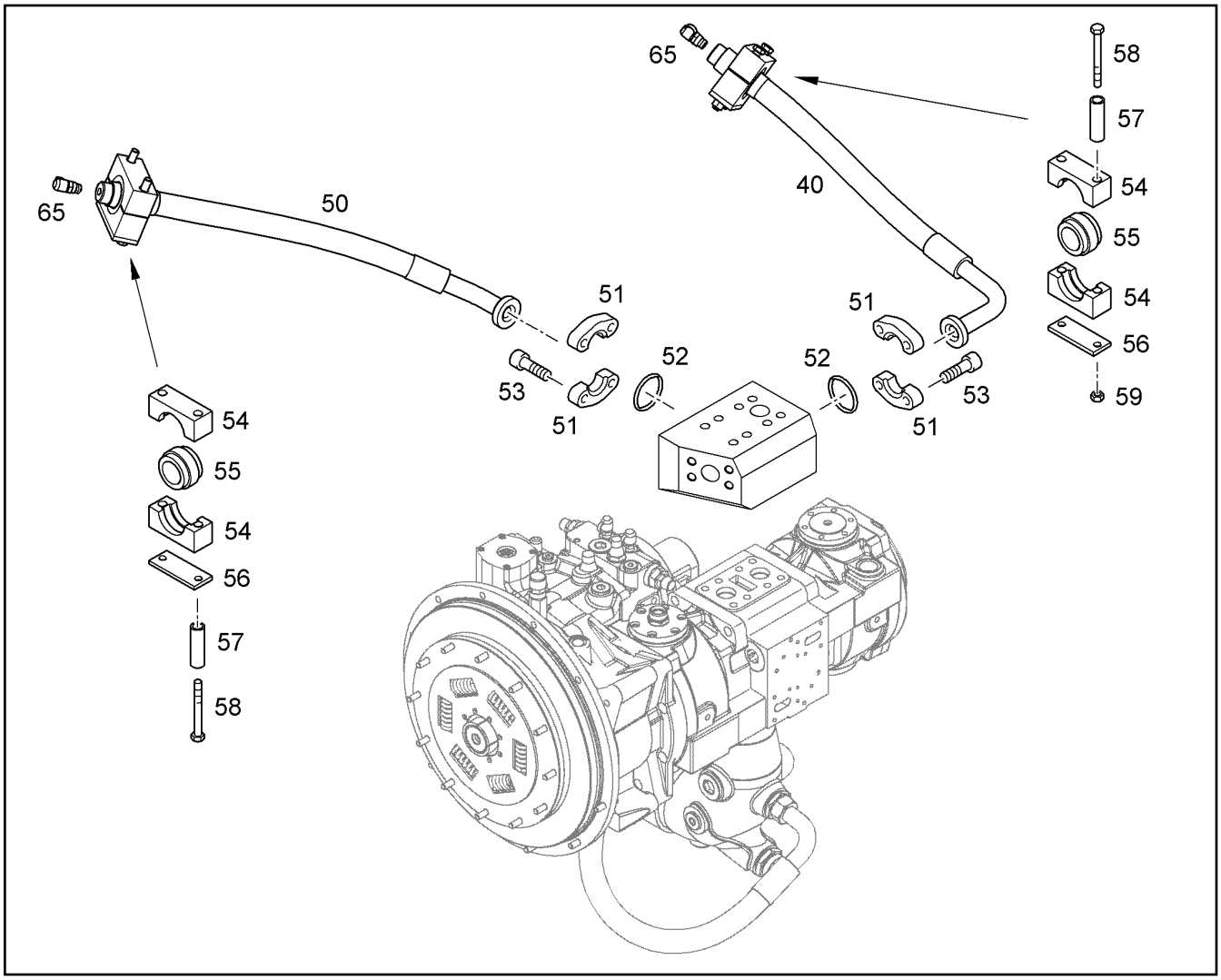

Pos.	Item	Quantity	Description	Designação	Serie	K
40	10330967	1	HOSE 25X680	MANGUEIRA		1
50	10330968	1	HOSE 25X745	MANGUEIRA		1
51	11485639	4	FLANGE HALF WITH BOSSING SAE J518 SA	MEIO FLANGE COM RELEVO		
52	10472425	2	RECTANGULAR SECTION RING 45,05X2,80	ANEL DE SEÇÃO RETANGULAR		
53	4902327	8	SOCKET HEAD SCREW ISO 4762 M14X45 10	PARAFUSO CILÍNDRICO		
54	7367236	4	CLAMP-HALF AEHNL.DIN 3015-2 S 4 E 65 PP	MEIA ABRAÇADEIRA		
55	7363334	2	ELASTOMER INSERT S EL 4 45,5/64X45 TP	INSERTO DE ELASTOMERO		
56	9476811	2	SHEET	PLACA DE APOIO		
57	7367211	4	SLEEVE HRS 4 HUE 12,4X16X87	LUVA		1
58	4901253	4	HEX SCREW ISO 4014 M12X120 10.9 A3C	PARAFUSO SEXTAVADO		
59	4900546	2	HEX NUT M12	PORCA SEXTAVADA		
65	7409720	2	SCREW COUPLING G1/4	ACOPLAMENTO ROSCADO		

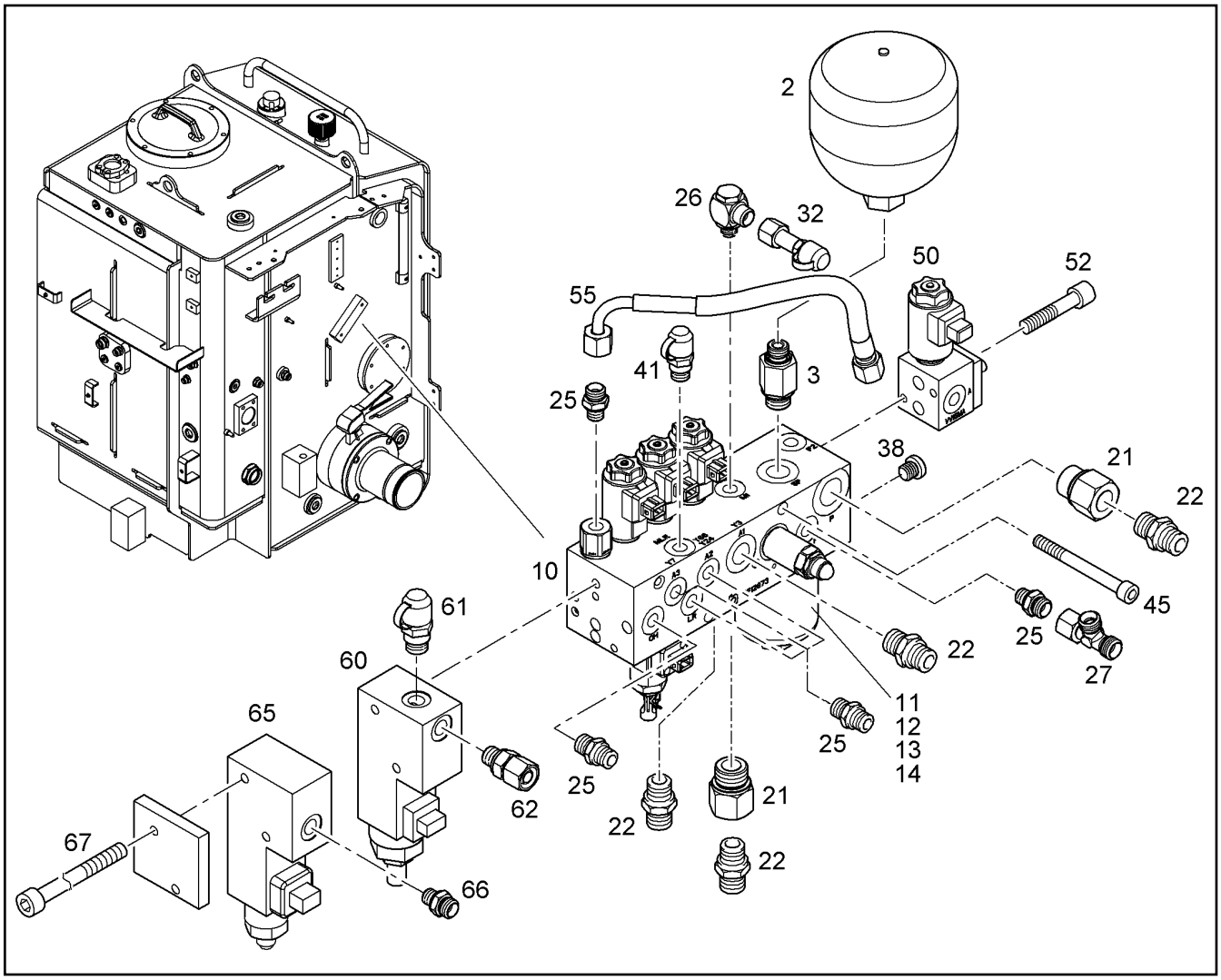

Pos.	Item	Quantity	Description	Designação	Serie	K
2	5617780	1	DIAPHRAGM ACCUMULATOR 0,75l/50bar/15 [5506489]	ACUMULADOR DE PRESSÃO		
3	9399179	1	INTERMEDIATE COUPLING ⇨ ❑ 349	CONEXAO P/ ACUMULADOR PR		
10	10042729	1	OIL PILOT VALVE [27052019] ⇨ ❑ 362	BLOCO DE VÁLVULAS DE COMA		
11	5609948	1	OIL FILTER SET ⇨ ❑ 348	KIT DE FILTRO DE OLEO		
12	5605365	1	HOUSING	CARCAÇA		
13	11342118	1	FILTER ELEMENT 16µm	ELEMENTO FILTRANTE		
14	7264028	1	O-RING	ANEL-O		
21	7617743	2	FITTING RI G3/4XG1/2	UNIÃO ROSCADA		
22	4600518	4	FITTING GE 15L G1/2A	UNIÃO ROSCADA		
25	7362091	6	FITTING GE 10L G1/4A	UNIÃO ROSCADA		
26	7617261	1	HINGED THREADED UNION WH 10L G1/4A	CONEXÃO ROSCADA		
27	472330208	1	FITTING EL 10L	UNIÃO ROSCADA		
32	7406864	1	GAUGE CONNECTION VKA3 10L M16X1,5	BOCAL DE MEDIÇÃO		
38	7361553	3	SCREW PLUG G1/4	PARAFUSO DE FECHAMENTO		
41	7409720	1	SCREW COUPLING G1/4	ACOPLAMENTO ROSCADO		
45	11320349	2	SOCKET HEAD SCREW ISO 4762 M10X100	PARAFUSO CILÍNDRICO		
50	10280279	1	VALVE ⇨ ❑ 363	VÁLVULA		
52	4043052	2	SOCKET HEAD SCREW ISO 4762 M6X60 10.	PARAFUSO CILÍNDRICO		
55	7403175	1	CONTROL HOSE 8X300	MANGUEIRA DE COMANDO		1

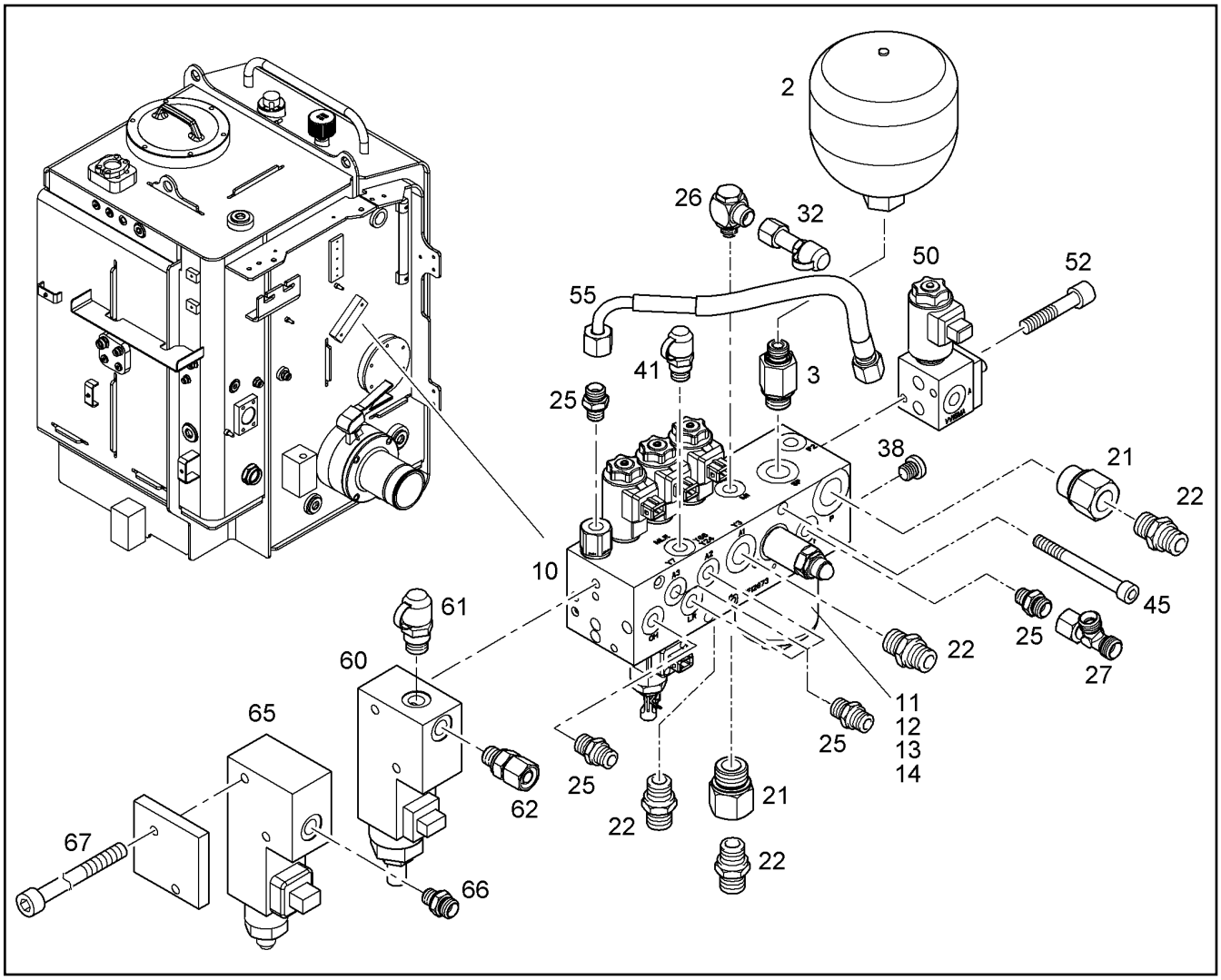

Pos.	Item	Quantity	Description	Designação	Serie	K
60	10040480	1	CONTROL VALVE ⇨ ❑ 238	VÁLVULA DE CONTROLE	-99999	
61	7409720	1	SCREW COUPLING G1/4	ACOPLAMENTO ROSCADO	-99999	
62	7617262	1	FITTING EGE 10L	UNIÃO ROSCADA	-99999	
65	5617123	1	PRESSURE REDUCTION VALVE ⇨ ❑ 367	VÁLVULA REDUTORA DE PRES		
66	7362091	1	FITTING GE 10L G1/4A	UNIÃO ROSCADA	-99999	
67	4000363	2	SOCKET HEAD SCREW ISO 4762 M6X100 1	PARAFUSO CILÍNDRICO	-99999	
67	4902191	2	SOCKET HEAD SCREW ISO 4762 M6X95 10.	PARAFUSO CILÍNDRICO		

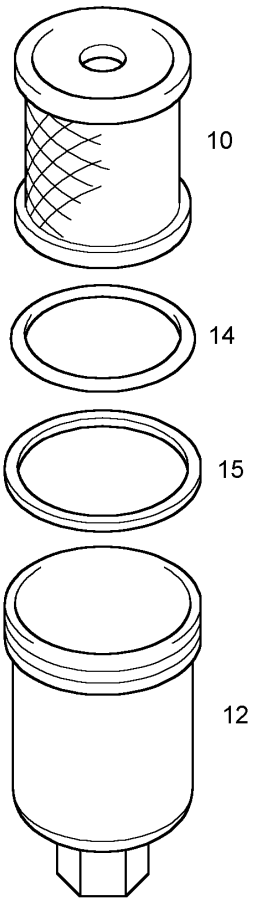

Pos.	Item	Quantity	Description	Designação	Serie	K
10	11342118	1	FILTER ELEMENT 16µm	ELEMENTO FILTRANTE		
12	5605365	1	HOUSING	CARCAÇA		
14	7264028	1	O-RING	ANEL-O		
15	7410773	1	SUPPORTING RING 58,5/63,5X1,4	ANEL DE APOIO		

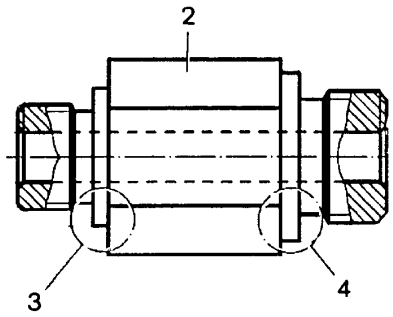

Pos.	Item	Quantity	Description	Designação	Serie	K
2		1	INTERMEDIATE FITTING	BOCAL INTERMEDIARIO		
3	7371654	1	SEALING RING 17	ANEL DE VEDAÇÃO		
4	7371651	1	SEALING RING 21	ANEL DE VEDAÇÃO		

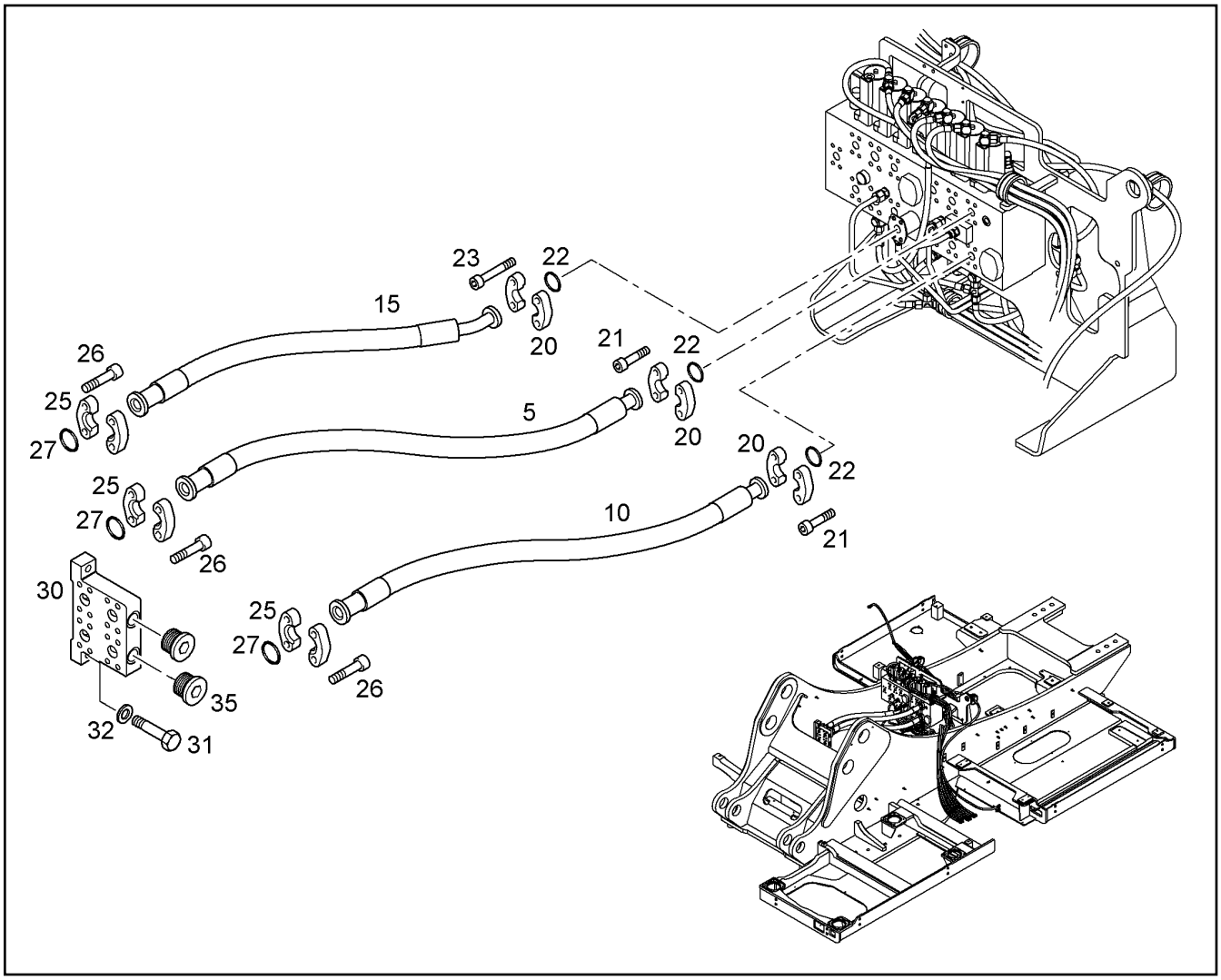

Pos.	Item	Quantity	Description	Designação	Serie	K
5	10286757	1	HOSE 25X950	MANGUEIRA		1
10	10286758	1	HOSE 25X970	MANGUEIRA		1
15	10286756	1	HOSE 25X770	MANGUEIRA		1
20	11485637	6	FLANGE HALF WITH BOSSING SAE J518 S	MEIO FLANGE COM RELEVO		
21	4900855	8	SOCKET HEAD SCREW ISO 4762 M10X35 1	PARAFUSO CILÍNDRICO		
22	10490784	3	RECTANGULAR SECTION RING 32,30X2,80	ANEL DE SEÇÃO RETANGULAR		
23	4043136	4	SOCKET HEAD SCREW ISO 4762 M10X90 1	PARAFUSO CILÍNDRICO		
25	11485638	6	FLANGE HALF WITH BOSSING SAE J518 S	MEIO FLANGE COM RELEVO		
26	4043003	12	SOCKET HEAD SCREW ISO 4762 M12X40 1	PARAFUSO CILÍNDRICO		
27	10490781	3	RECTANGULAR SECTION RING 40,15X2,80	ANEL DE SEÇÃO RETANGULAR		
30	9355505	1	DISTRIBUTOR BLOCK	BLOCO DE DISTRIBUIÇÃO		
31	4600706	2	HEX SCREW ISO 4017 M12X45 10.9 A3C	PARAFUSO SEXTAVADO		
32	9918226	2	WASHER 12,5/21X	ARRUELA		
35	7360563	2	FITTING M27X2	UNIÃO ROSCADA		

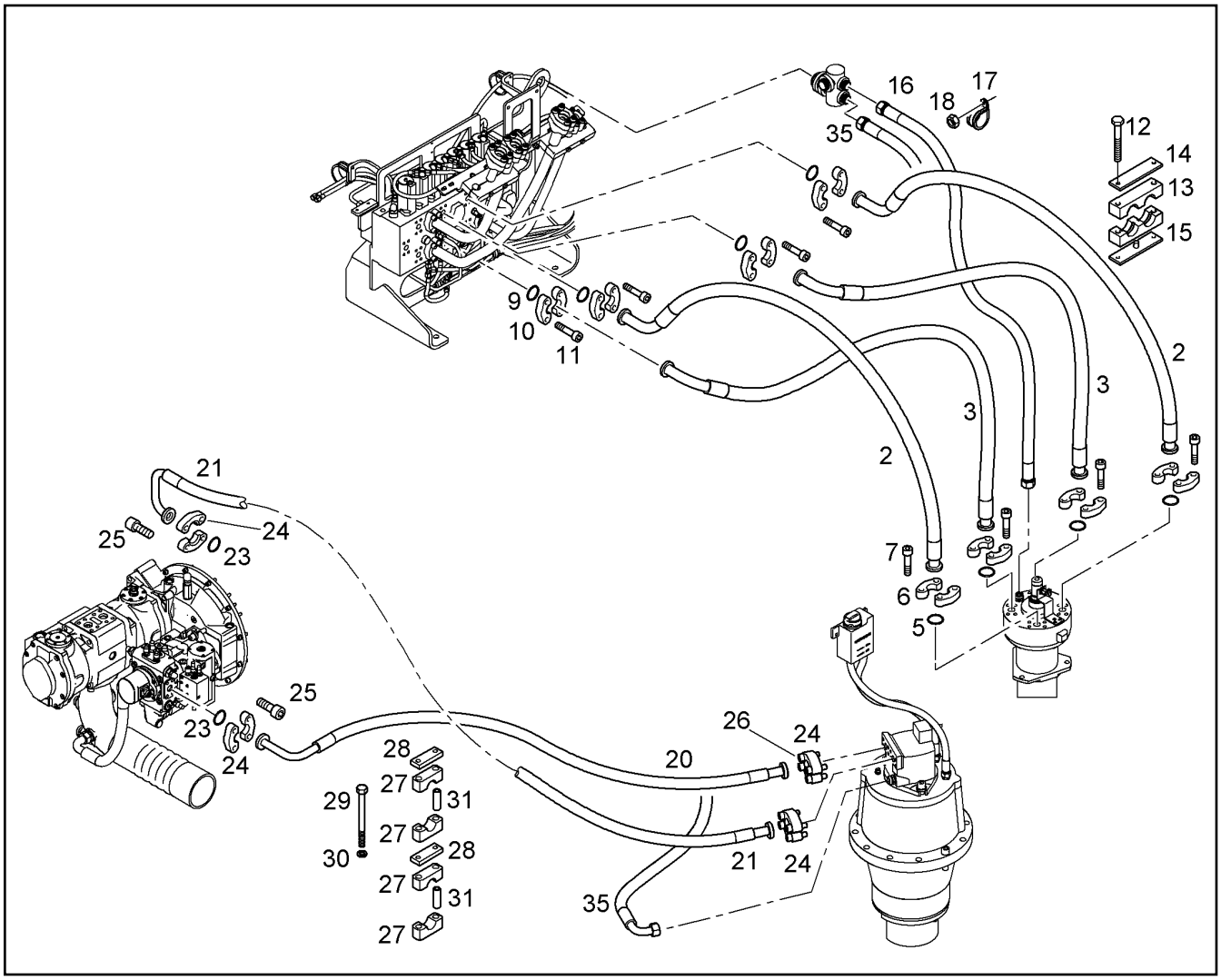

Pos.	Item	Quantity	Description	Designação	Serie	K
2	10286612	2	HOSE 25X1730	MANGUEIRA		1
3	10280230	2	HOSE 25X1500	MANGUEIRA		1
5	10490781	4	RECTANGULAR SECTION RING 40,15X2,80	ANEL DE SEÇÃO RETANGULAR		
6	11485638	8	FLANGE HALF WITH BOSSING SAE J518 S	MEIO FLANGE COM RELEVO		
7	11002749	16	SOCKET HEAD SCREW ISO 4762 M12X40 10	PARAFUSO CILÍNDRICO		
9	10490784	4	RECTANGULAR SECTION RING 32,30X2,80	ANEL DE SEÇÃO RETANGULAR		
10	11485637	8	FLANGE HALF WITH BOSSING SAE J518 S	MEIO FLANGE COM RELEVO		
11	10468820	16	SOCKET HEAD SCREW ISO 4762 M10X35 10	PARAFUSO CILÍNDRICO		
12	12212107	1	HEX SCREW ISO 4017 M8X70 8.8 480H	PARAFUSO SEXTAVADO		
13	10216217	2	CLAMP-HALF DIN 3015-3 Z 5 G 38 38 PP SW	MEIA ABRAÇADEIRA		
14	7005097	1	LID PLATE DIN 3015-3 Z-DP 5 W1-ZN	PLACA		
15	4002688	1	WELD PLATE DIN 3015-3 Z-AP 5 W1-ZN	PLACA SOLDADA		
16	5602645	1	HOSE 20X1000	MANGUEIRA		1
17	7361513	2	CLAMP DIN 3016-1 D1 55X20 W1-2-CR	BRAÇADEIRA		
18	10299669	2	HEX NUT M8	PORCA SEXTAVADA		
20	10286610	1	HOSE 20X1750	MANGUEIRA		1
21	10286619	1	HOSE 20X2100	MANGUEIRA		1
23	10490781	4	RECTANGULAR SECTION RING 40,15X2,80	ANEL DE SEÇÃO RETANGULAR		
24	11485638	8	FLANGE HALF WITH BOSSING SAE J518 S	MEIO FLANGE COM RELEVO		
25	11002749	8	SOCKET HEAD SCREW ISO 4762 M12X40 10	PARAFUSO CILÍNDRICO		
26	11002727	8	HEX SCREW ISO 4017 M12X40 10.9 FLZN	PARAFUSO SEXTAVADO		
27	7367237	4	CLAMP-HALF AEHNL.DIN 3015 S 3 G 32 PP	MEIA ABRAÇADEIRA		
28	9483466	2	SHEET	PLACA DE APOIO		
29	10299630	2	HEX SCREW ISO 4014 M10X160 10.9 FLZN	PARAFUSO SEXTAVADO		
30	10289795	2	WASHER 10 300HV	ARRUELA		
31	7367212	4	SLEEVE HRS 3 HUE 11X14X58	LUVA		1

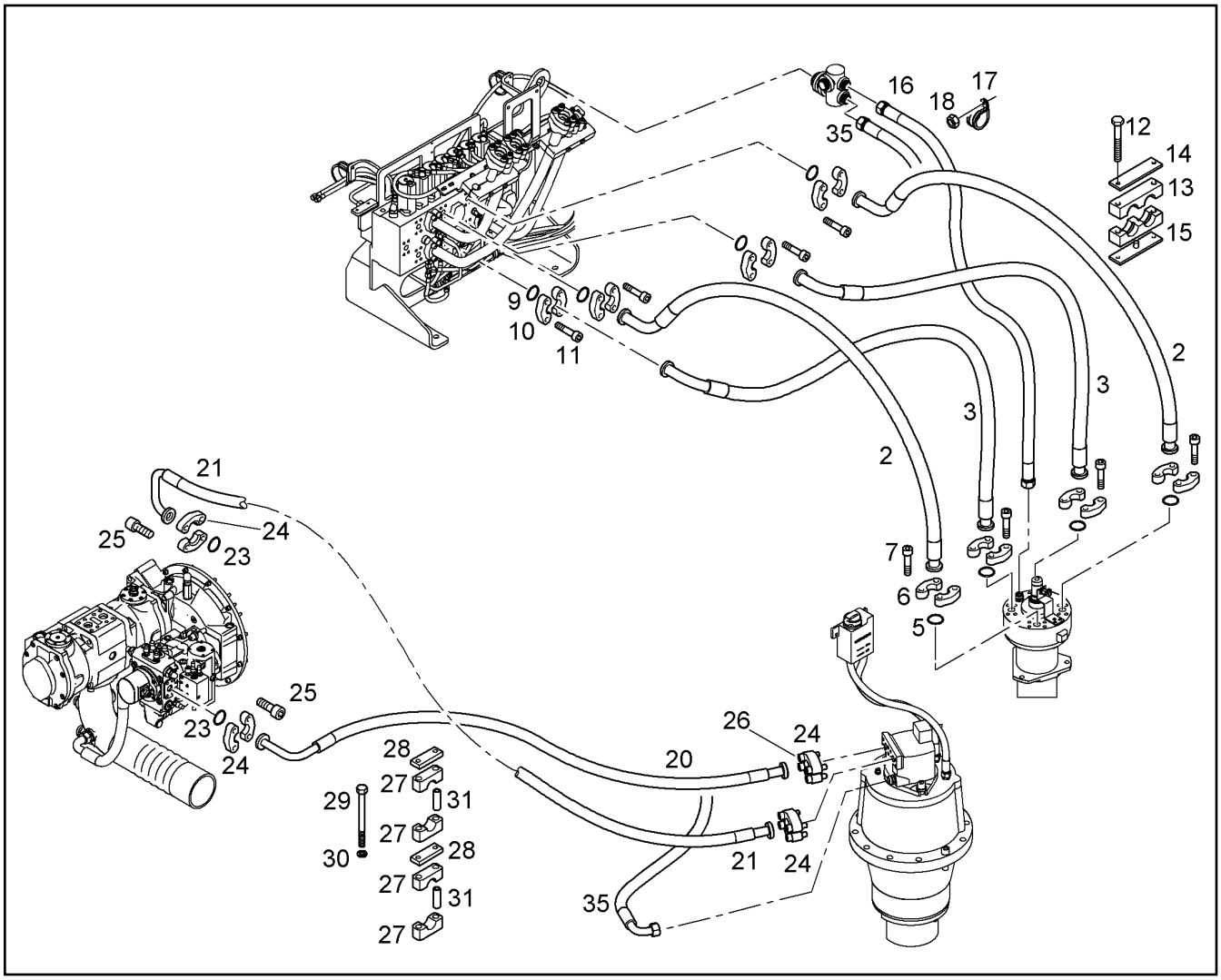

Pos.	Item	Quantity	Description	Designação	Serie	K
35	10286608	1	HOSE 20X1650	MANGUEIRA		1

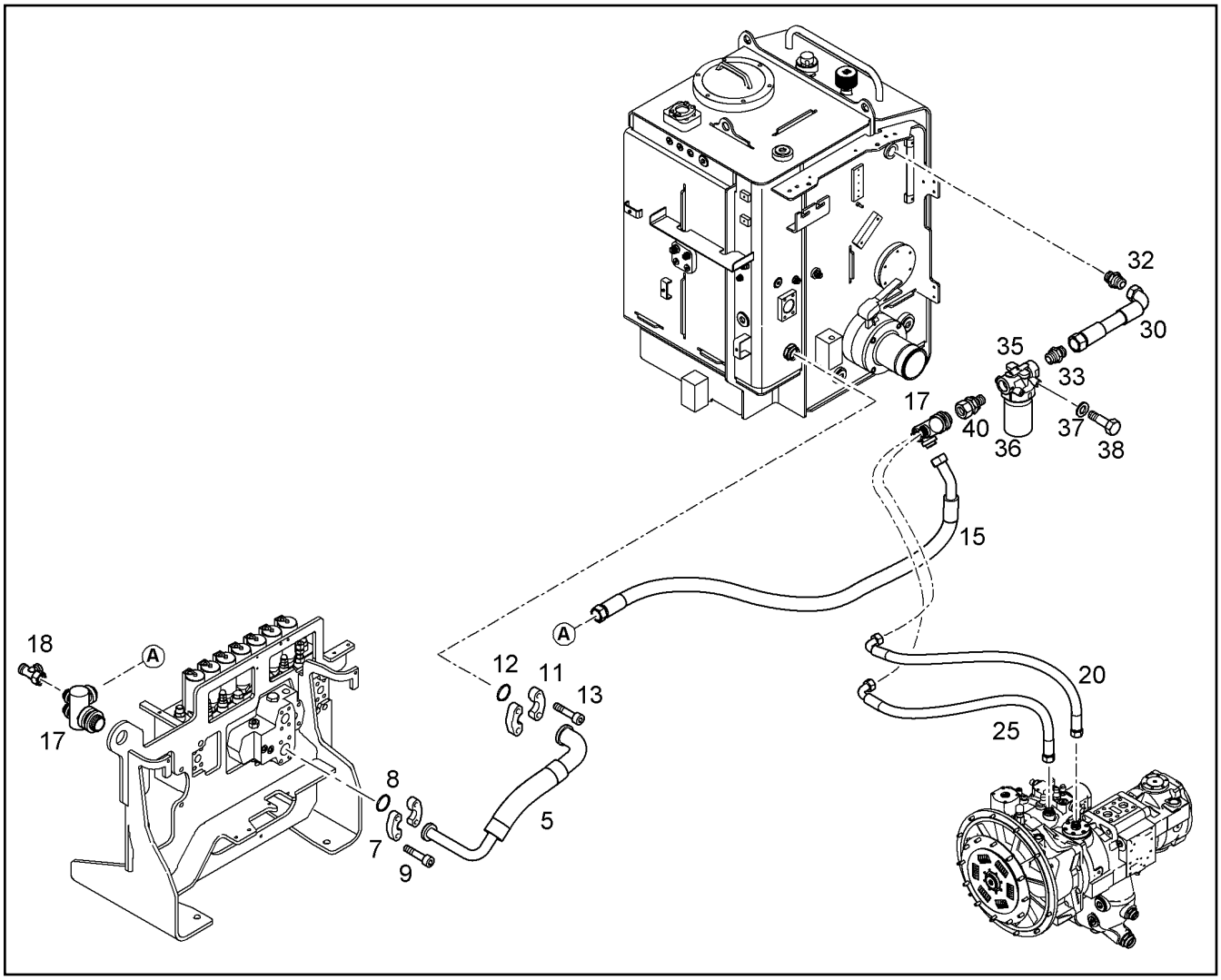

Pos.	Item	Quantity	Description	Designação	Serie	K
5	10280078	1	HOSE 50X590	MANGUEIRA		1
7	11490402	2	FLANGE HALF WITH BOSSING SAE J518 S	MEIO FLANGE COM RELEVO		
8	10490787	1	RECTANGULAR SECTION RING 54,40X2,80	ANEL DE SEÇÃO RETANGULAR		
9	4043164	4	SOCKET HEAD SCREW ISO 4762 M12X35 1	PARAFUSO CILÍNDRICO		
11	11485645	2	FLANGE HALF WITH BOSSING SAE J518 S	MEIO FLANGE COM RELEVO		
12	10490786	1	RECTANGULAR SECTION RING 63,90X2,80	ANEL DE SEÇÃO RETANGULAR		
13	4043164	4	SOCKET HEAD SCREW ISO 4762 M12X35 1	PARAFUSO CILÍNDRICO		
15	10000561	1	HOSE 25X1500	MANGUEIRA		1
17	10288158	2	DISTRIBUTOR	DISTRIBUIDOR		
18	247138602	1	FITTING EL 22L	UNIÃO ROSCADA		
20	10286607	1	HOSE 20X930	MANGUEIRA		1
25	10286607	1	HOSE 20X930	MANGUEIRA		1
30	5610426	1	HOSE 32X350	MANGUEIRA		1
32	4900486	1	FITTING GE 35L M42X2	UNIÃO ROSCADA		
33	4001871	1	FITTING GE 35L G1 1/4A	UNIÃO ROSCADA		
35	10044624	1	PRESSURE FILTER ⇨ ❑ 355	FILTRO DE PRESSÃO		
36	10115197	1	FILTER INSERT 60µm	ELEMENTO FILTRANTE		
37	10289804	2	WASHER 12 300HV	ARRUELA		
38	4066124	2	HEX SCREW ISO 4017 M12X30 10.9 A3C	PARAFUSO SEXTAVADO		
40	7410268	1	FITTING EGE 35L G1 1/4A	UNIÃO ROSCADA		

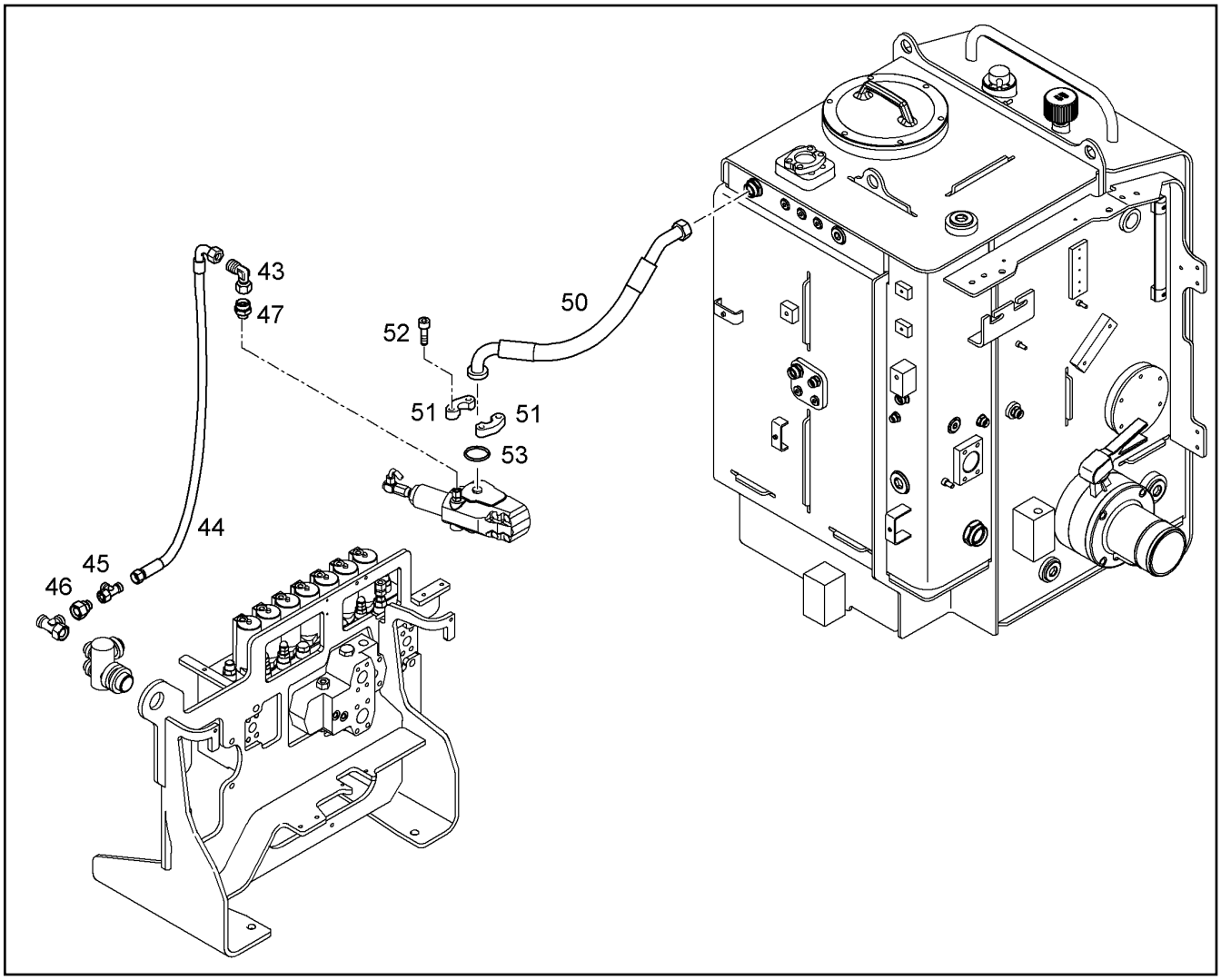

Pos.	Item	Quantity	Description	Designação	Serie	K
43	7615379	1	FITTING EW 15L	UNIÃO ROSCADA		
44	10000437	1	HOSE 12X1000	MANGUEIRA		1
45	472300414	1	FITTING EL 15L	UNIÃO ROSCADA		
46	7616913	1	FITTING RED 22/15L M30X2/M22X1,5	UNIÃO ROSCADA		
47	7406699	1	FITTING GR 15/10L	UNIÃO ROSCADA		
50	10303335	1	HOSE 25X680	MANGUEIRA		1
51	11485638	2	FLANGE HALF WITH BOSSING SAE J518 S	MEIO FLANGE COM RELEVO		
52	4043003	4	SOCKET HEAD SCREW ISO 4762 M12X40 1	PARAFUSO CILÍNDRICO		
53	10490781	1	RECTANGULAR SECTION RING 40,15X2,80	ANEL DE SEÇÃO RETANGULAR		

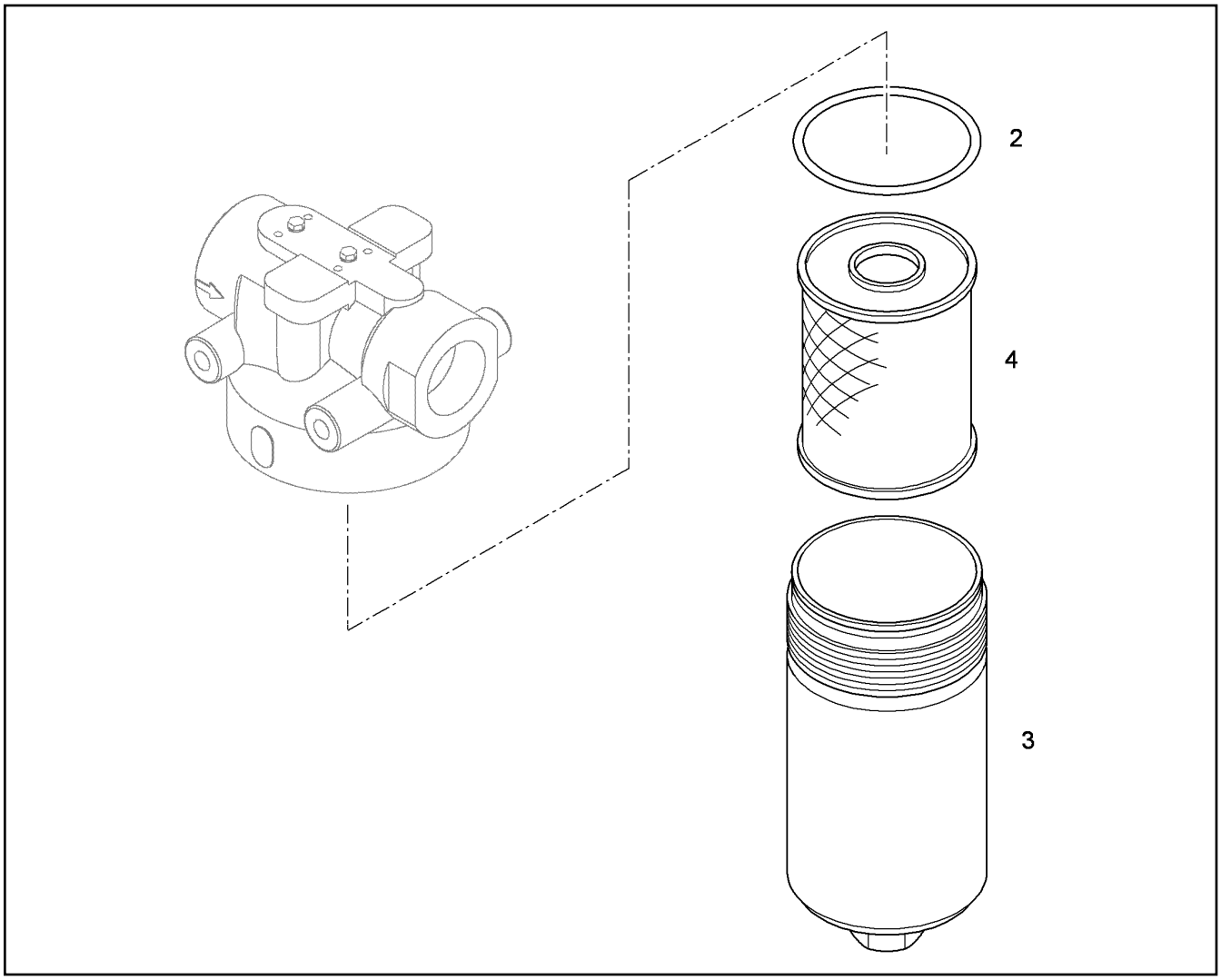

Pos.	Item	Quantity	Description	Designação	Serie	K
2	7380071	1	O-RING ISO 3601-1 88,57X2,62	ANEL-O		
3		1	POT	ANEL		
4	10115197	1	FILTER INSERT 60µm	ELEMENTO FILTRANTE		

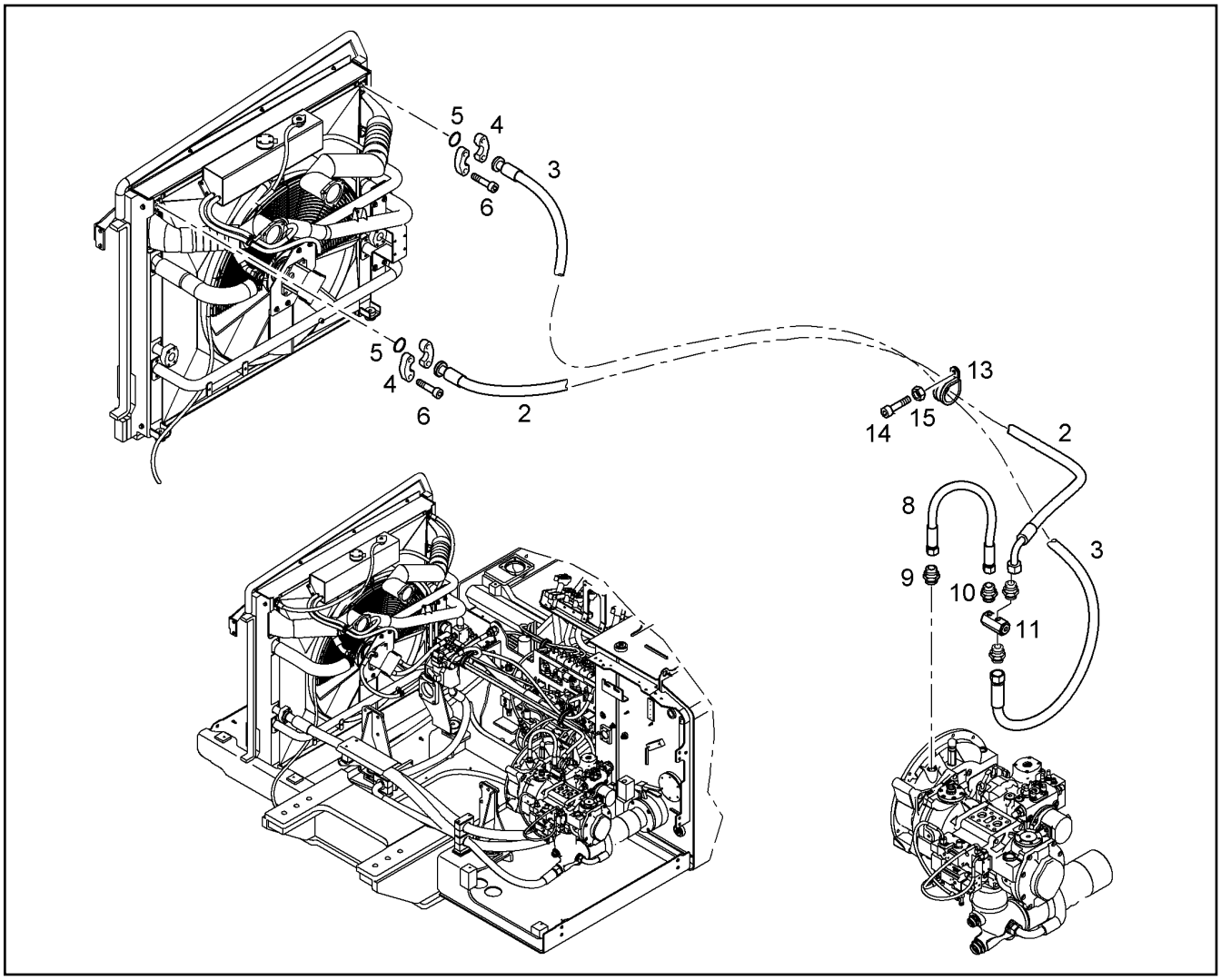

Pos.	Item	Quantity	Description	Designação	Serie	K
2	10286606	1	HOSE 12X4550	MANGUEIRA		1
3	10286605	1	HOSE 12X3700	MANGUEIRA		1
4	11485642	4	FLANGE HALF WITH BOSSING SAE J518 S	MEIO FLANGE COM RELEVO		
5	10490785	2	RECTANGULAR SECTION RING 25,85X2,80	ANEL DE SEÇÃO RETANGULAR		
6	10468332	8	SOCKET HEAD SCREW ISO 4762 M8X25 10	PARAFUSO CILÍNDRICO		
8	10027315	1	HOSE 12X450	MANGUEIRA		1
9	7403083	1	FITTING GE 15L M22X1,5	UNIÃO ROSCADA		
10	7617485	1	FITTING EGE 15L	UNIÃO ROSCADA		
11	10100946	1	DISTRIBUTOR	DISTRIBUIDOR		
13	7362545	6	CLAMP DIN 3016-1 D1 22X20 W1-2-CR	BRAÇADEIRA		
14	10468332	4	SOCKET HEAD SCREW ISO 4762 M8X25 10	PARAFUSO CILÍNDRICO		
15	4000381	2	HEX NUT M8	PORCA SEXTAVADA		

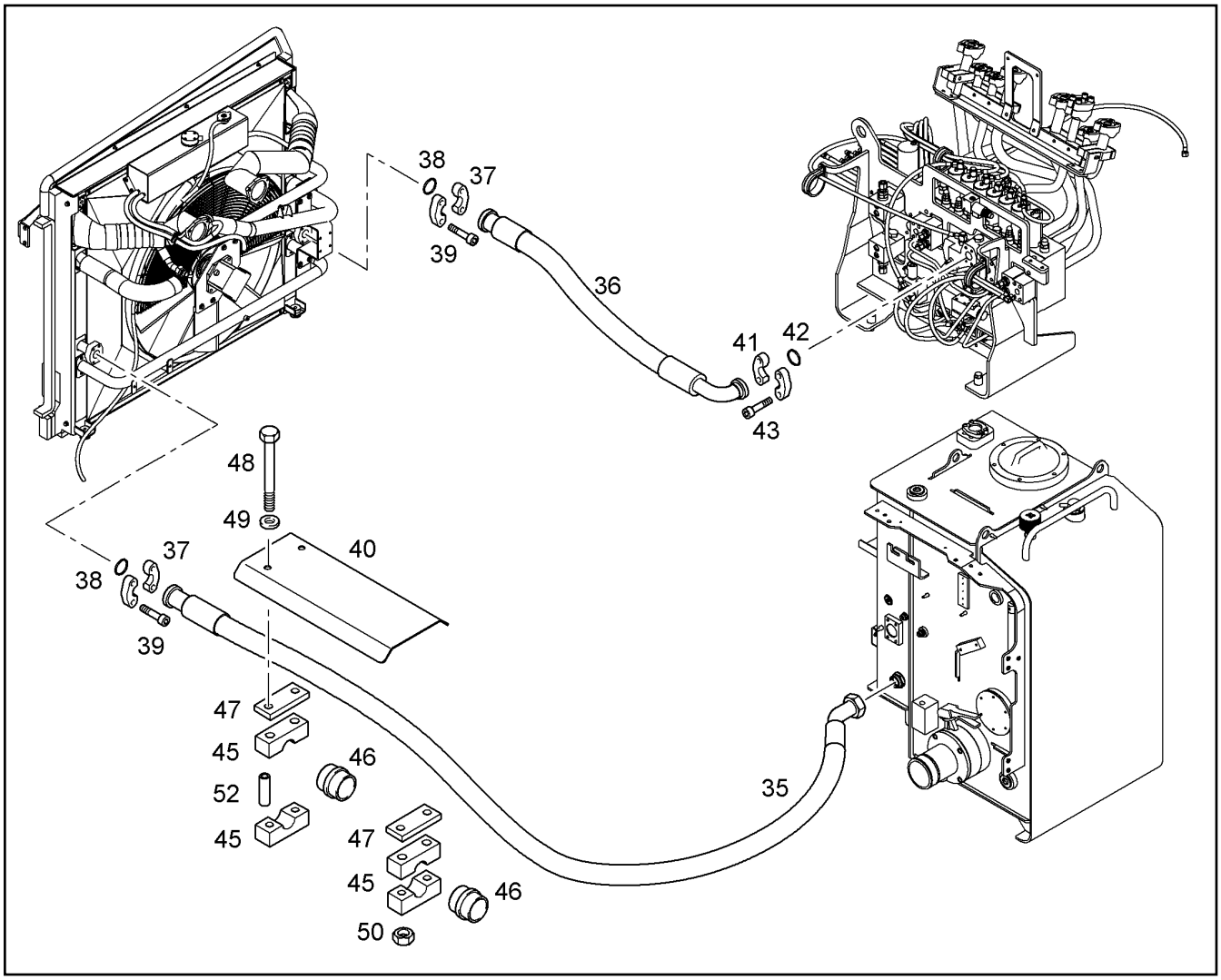

Pos.	Item	Quantity	Description	Designação	Serie	K
35	10286627	1	HOSE 40X2900	MANGUEIRA		1
36	10280077	1	HOSE 40X1140	MANGUEIRA		1
37	11490402	4	FLANGE HALF WITH BOSSING SAE J518 S	MEIO FLANGE COM RELEVO		
38	10490787	2	RECTANGULAR SECTION RING 54,40X2,80	ANEL DE SEÇÃO RETANGULAR		
39	4043164	8	SOCKET HEAD SCREW ISO 4762 M12X35 1	PARAFUSO CILÍNDRICO		
40	10067867	1	PROTECTION GUARD	CHAPA DE PROTEÇÃO		
41	11647393	2	FLANGE HALF WITH BOSSING SAE J518 S	MEIO FLANGE COM RELEVO		
42	10472425	1	RECTANGULAR SECTION RING 45,05X2,80	ANEL DE SEÇÃO RETANGULAR		
43	11002743	4	SOCKET HEAD SCREW ISO 4762 M10X30 10	PARAFUSO CILÍNDRICO		
45	7367236	4	CLAMP-HALF AEHNL.DIN 3015-2 S 4 E 65 PP	MEIA ABRAÇADEIRA		
46	7370423	2	ELASTOMER INSERT DIN 3015 S EL 4 48/64	INSERTO DE ELASTOMERO		
47	9476811	2	SHEET	PLACA DE APOIO		
48	4601290	2	HEX SCREW ISO 4014 M12X130 10.9 A3C	PARAFUSO SEXTAVADO		
49	4900093	2	LOCK WASHER VS 12	ARRUELA DE PRESSÃO		
50	11002808	2	HEX NUT M12	PORCA SEXTAVADA		
52	7367211	4	SLEEVE HRS 4 HUE 12,4X16X87	LUVA		1

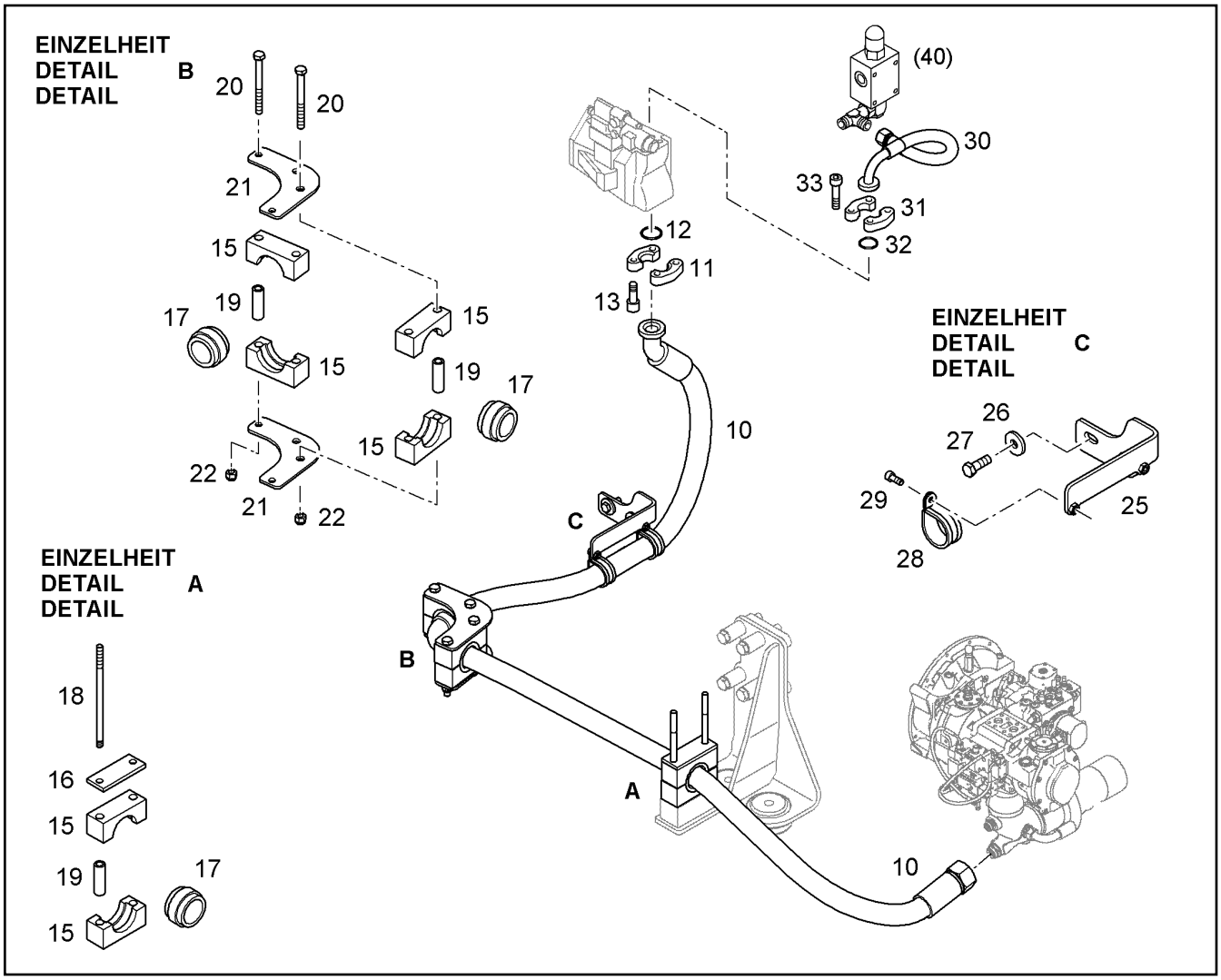

Pos.	Item	Quantity	Description	Designação	Serie	K
10	10286636	1	HOSE 32X1300/1570	MANGUEIRA		1
11	11647393	2	FLANGE HALF WITH BOSSING SAE J518 S	MEIO FLANGE COM RELEVO		
12	10472425	1	RECTANGULAR SECTION RING 45,05X2,80	ANEL DE SEÇÃO RETANGULAR		
13	11002743	4	SOCKET HEAD SCREW ISO 4762 M10X30 10	PARAFUSO CILÍNDRICO		
15	7367236	6	CLAMP-HALF AEHNL.DIN 3015-2 S 4 E 65 PP	MEIA ABRAÇADEIRA		
16	9476811	1	SHEET	PLACA DE APOIO		
17	7370423	3	ELASTOMER INSERT DIN 3015 S EL 4 48/64	INSERTO DE ELASTOMERO		
18	12216149	2	DOUBLE-ENDED STUD DIN 939 M12X220 10	PARAFUSO PRISIONEIRO		
19	7367211	6	SLEEVE HRS 4 HUE 12,4X16X87	LUVA		1
20	11002733	4	HEX SCREW ISO 4014 M12X130 10.9 FLZN	PARAFUSO SEXTAVADO		
21	10379349	2	HOLDER	SUPORTE		
22	10876514	2	HEX NUT M12	PORCA SEXTAVADA		
25	10379347	1	HOLDER	SUPORTE		
26	10179356	2	WASHER 13	ARRUELA		
27	10287617	2	HEX SCREW ISO 4017 M12X45 10.9 FLZN	PARAFUSO SEXTAVADO		
28	7365080	2	CLAMP DIN 3016-1 D1 45X20 W1-2-CR	BRAÇADEIRA		
29	10663523	2	SOCKET HEAD SCREW ISO 4762 M8X20 10	PARAFUSO CILÍNDRICO		
30	10280105	1	HOSE 12X850	MANGUEIRA		1
31	11485643	2	FLANGE HALF WITH BOSSING SAE J518 S	MEIO FLANGE COM RELEVO		
32	10490784	1	RECTANGULAR SECTION RING 32,30X2,80	ANEL DE SEÇÃO RETANGULAR		
33	11002743	4	SOCKET HEAD SCREW ISO 4762 M10X30 10	PARAFUSO CILÍNDRICO		

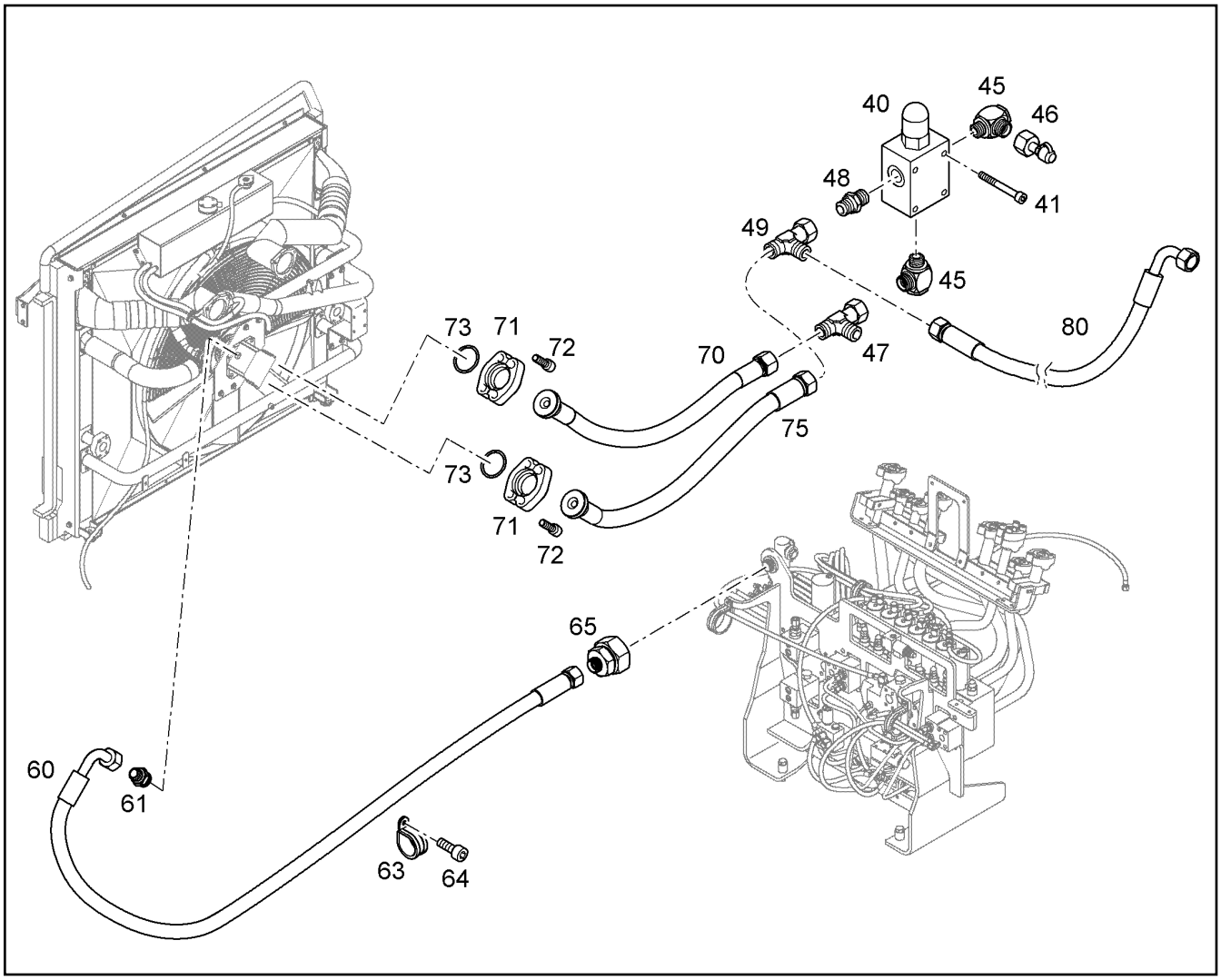

Pos.	Item	Quantity	Description	Designação	Serie	K
40	5602487	1	PRESSURE LIMITING VALVE ⇨ ❑ 365	VÁLVULA LIMITADORA DE PRES		
41	12223036	4	SOCKET HEAD SCREW ISO 4762 M8X80 10	PARAFUSO CILÍNDRICO		
45	7018549	2	HINGED THREADED UNION WH 16S G1/2A	CONEXÃO ROSCADA		
46	7409923	1	GAUGE CONNECTION VKA3 16S	BOCAL DE MEDIÇÃO		
47	7407098	1	FITTING EL 16S	UNIÃO ROSCADA		
48	7003578	1	FITTINGS GE 18L G1/2A	CONEXÃO		
49	247128502	1	FITTING EL 18L	UNIÃO ROSCADA		
60	7620786	1	HOSE 12X1450	MANGUEIRA		1
61	7410457	1	FITTING GE 15L	UNIÃO ROSCADA		
63	7381630	1	CLAMP DIN 3016-1 D1 22X20 W1-2-MVQ	BRAÇADEIRA		
64	10663450	1	SOCKET HEAD SCREW ISO 4762 M8X16 10	PARAFUSO CILÍNDRICO		
65	7367749	1	FITTING RED 35/15L	UNIÃO ROSCADA		
70	10280090	1	HOSE 12X450	MANGUEIRA		1
71	11485637	4	FLANGE HALF WITH BOSSING SAE J518 S	MEIO FLANGE COM RELEVO		
72	10468820	8	SOCKET HEAD SCREW ISO 4762 M10X35 10	PARAFUSO CILÍNDRICO		
73	10490784	2	RECTANGULAR SECTION RING 32,30X2,80	ANEL DE SEÇÃO RETANGULAR		
75	10280076	1	HOSE 16X550	MANGUEIRA		1
80	10002828	1	HOSE 16X1400	MANGUEIRA		1

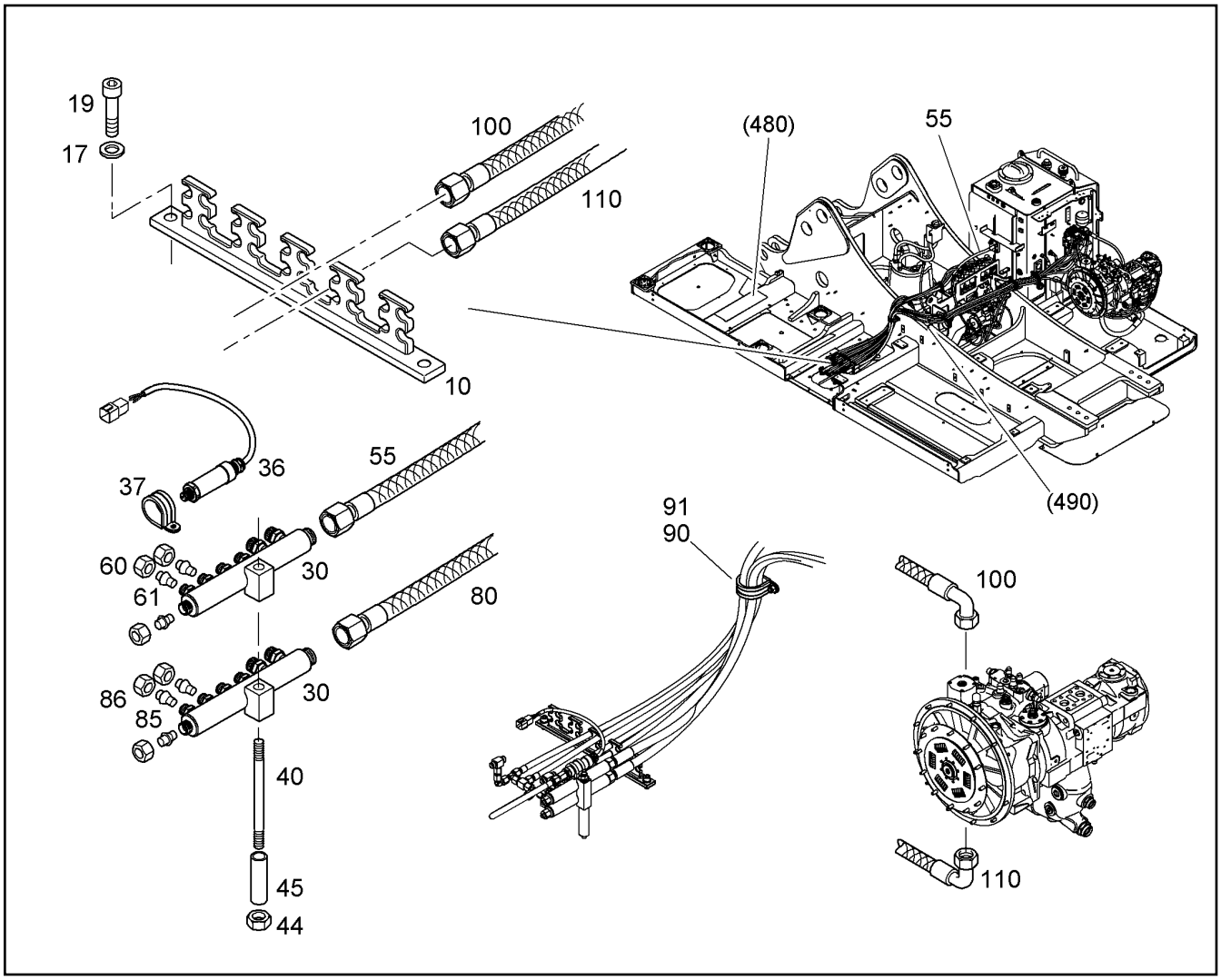

Pos.	Item	Quantity	Description	Designação	Serie	K
10	7373042	1	CONSOLE	CONSOLE		
17	10289795	2	WASHER 10 300HV	ARRUELA		
19	4043124	2	SOCKET HEAD SCREW ISO 4762 M10X25 1	PARAFUSO CILÍNDRICO		
30	10101615	2	DISTRIBUTOR	DISTRIBUIDOR		
36	10467727	1	PRESSURE SWITCH	PRESSOSTATO		
37	7362816	1	CLAMP DIN 3016-1 D1 25X25 W1-2-CR	BRAÇADEIRA		
40	4902278	1	DOUBLE-ENDED STUD DIN 939 M10X190 10.	PARAFUSO PRISIONEIRO		
44	4600579	1	HEX NUT M10	PORCA SEXTAVADA		
45	9953691	1	SLEEVE 12,4X25X85	LUVA		1
55	10002465	1	HOSE 12X2600	MANGUEIRA		1
60	477700408	3	BLANKING PLUG PL 10L/S	TAMPÃO		
61	4774001	3	BOX NUT ISO 8434-1 NL10	PORCA DE CONEXÃO		
80	10001019	1	HOSE 12X3400	MANGUEIRA		1
85	477700408	3	BLANKING PLUG PL 10L/S	TAMPÃO		
86	4774001	3	BOX NUT ISO 8434-1 NL10	PORCA DE CONEXÃO		
90	7367135	1	CLAMP DIN 3016-1 D1 100X25 W1-2-CR	BRAÇADEIRA		
91	4600579	1	HEX NUT M10	PORCA SEXTAVADA		
100	10015548	1	CONTROL HOSE 8X3200	MANGUEIRA DE COMANDO		1
110	10015548	1	CONTROL HOSE 8X3200	MANGUEIRA DE COMANDO		1

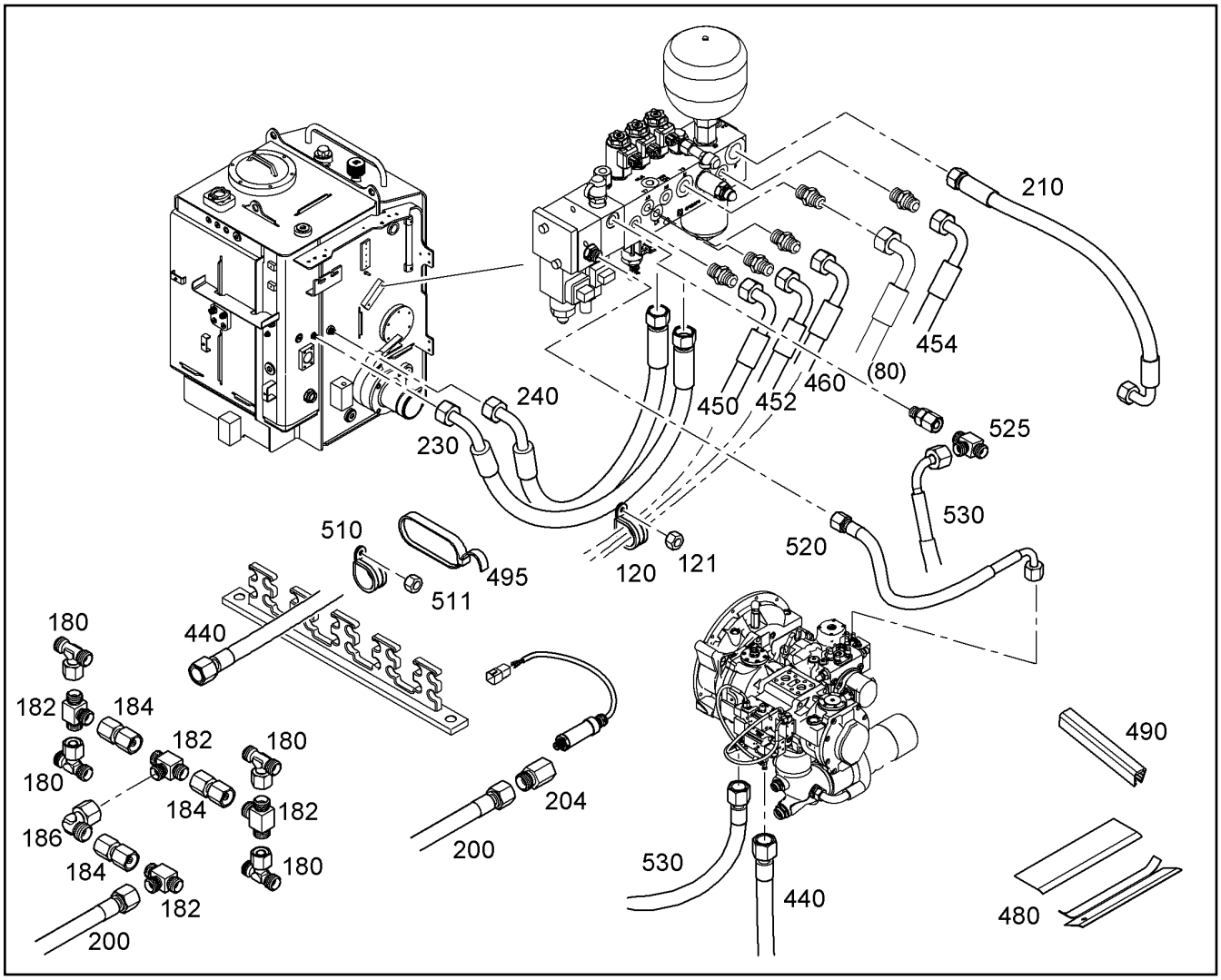

Pos.	Item	Quantity	Description	Designação	Serie	K
120	7363247	1	CLAMP DIN 3016-1 D1 74X25 W1-2-CR	BRAÇADEIRA		
121	4600579	1	HEX NUT M10	PORCA SEXTAVADA		
180	482430314	4	FITTING ET 10L M16X1,5	UNIÃO ROSCADA		
182	7403972	4	SHUTTLE VALVE	VALVULA DIRECIONAL		
184	7410211	3	FITTING GZ 10L	UNIÃO ROSCADA		
186	7403569	1	FITTING EW 10L M16X1,5	UNIÃO ROSCADA		
200	7406682	1	CONTROL HOSE	MANGUEIRA DE COMANDO		1
204	7364696	1	SCREW EXTENSION TUBE GAI 10L G1/4	BOCAL ROSCADO		
210	5618477	1	HOSE 12X600	MANGUEIRA		1
230	5618477	1	HOSE 12X600	MANGUEIRA		1
240	5618477	1	HOSE 12X600	MANGUEIRA		1
440	5611206	1	CONTROL HOSE 8X4200	MANGUEIRA DE COMANDO		1
450	7005035	1	CONTROL HOSE 8X1600	MANGUEIRA DE COMANDO		1
452	7005035	1	CONTROL HOSE 8X1600	MANGUEIRA DE COMANDO		1
454	7005035	1	CONTROL HOSE 8X1600	MANGUEIRA DE COMANDO		1
460	5604525	1	CONTROL HOSE 8X2900	MANGUEIRA DE COMANDO		1
480	10007928	2	RUBBER MAT	TAPETE DE BORRACHA		
490	9591327	1	CLAMPING PROFILE	PERFIL DE FIXAÇÃO		
495	7621780	3	LASHING STRAP 18X0,35m 380daN TEXTILG	CINTA DE AMARRACAO		
510	7405120	1	CLAMP DIN 3016-1 D1 48X25 W1-2-CR	BRAÇADEIRA		
511	4600579	1	HEX NUT M10	PORCA SEXTAVADA		
520	7402576	1	CONTROL HOSE 8X350	MANGUEIRA DE COMANDO		1
525	7403972	1	SHUTTLE VALVE	VALVULA DIRECIONAL		
530	7016508	1	CONTROL HOSE 8X430	MANGUEIRA DE COMANDO		1

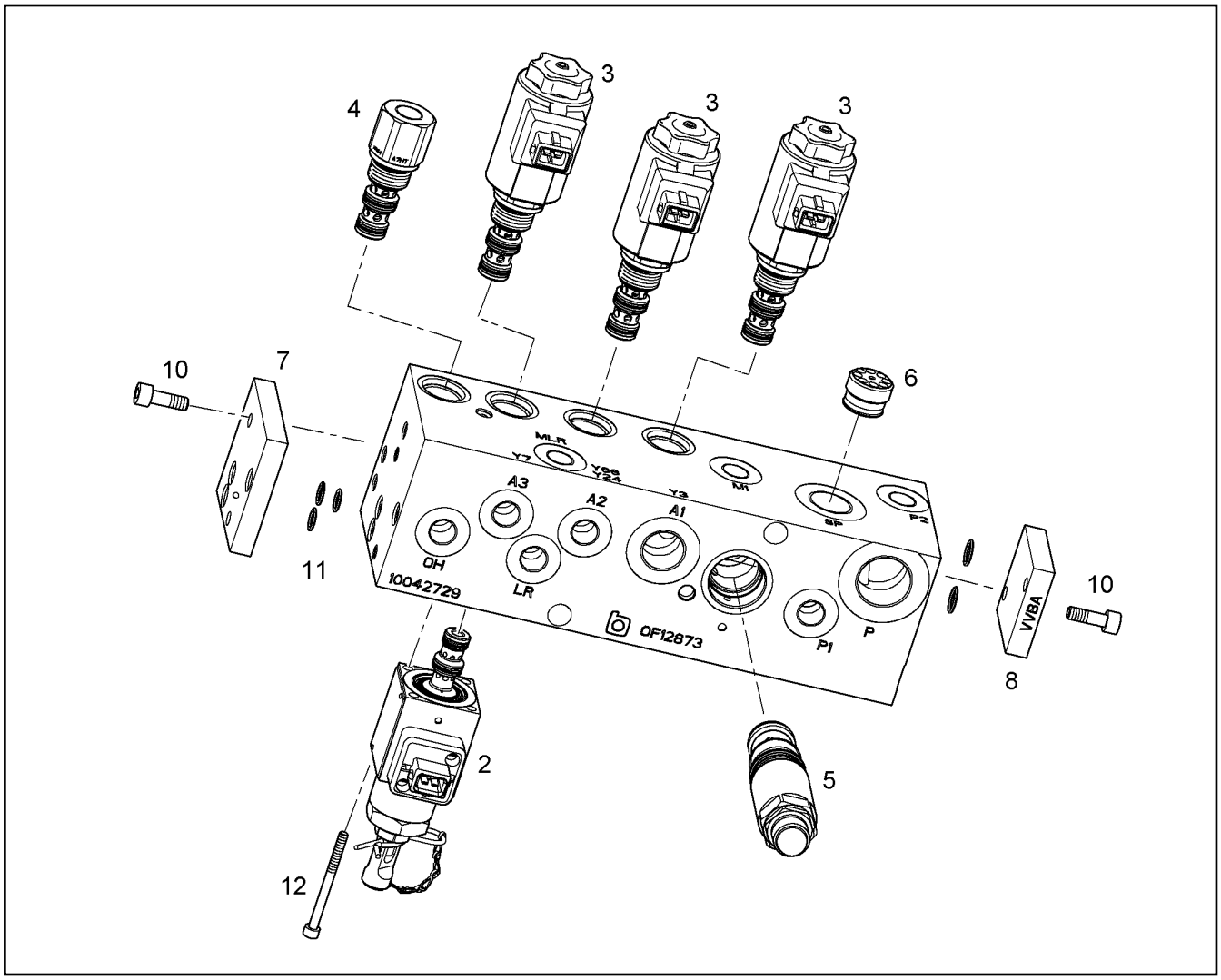

Pos.	Item	Quantity	Description	Designação	Serie	K
2	10280461	1	CONTROL SOLENOID VALVE ⇨ ❑ 370	VÁLVULA SOLENÓIDE		
3	5615344	3	SOLENOID VALVE ⇨ ❑ 366	VÁLVULA SOLENÓIDE		
4	5614029	1	PILOT VALVE	VÁLVULA DE COMANDO		
4	5009562	1	SEAL KIT DIRECTIONAL VALVE ⇨ ❑ 380	KIT VEDAÇÃO VÁLVULA DIRECI		
5	5009565	1	PRESSURE LIMITING CARTRIDGE ⇨ ❑ 364	CARTUCHO LIMITADOR DE PR		
6	5608327	1	NON-RETURN VALVE ⇨ ❑ 373	VÁLVULA DE RETORNO		
6	7371590	1	-O-RING 16,0X1,5	-ANEL-O		
7	7372237	1	COVER	TAMPA		
8	7371025	1	BREECH PLATE ⇨ ❑ 375	PLACA DE FECHAMENTO		
10	4002417	4	SOCKET HEAD SCREW ISO 4762 M6X18 8.8	PARAFUSO CILÍNDRICO		
11	10024675	2	O-RING 7,65X1,78	ANEL-O		
12	4901531	4	SOCKET HEAD SCREW ISO 4762 M4X50 8.8	PARAFUSO CILÍNDRICO		

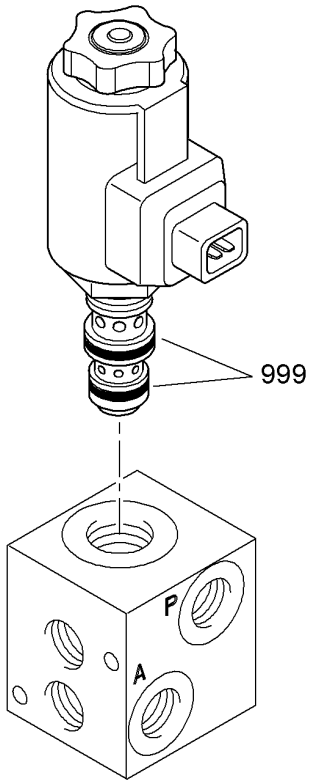

Pos.	Item	Quantity	Description	Designação	Serie	K
999	5009562	1	SEAL KIT DIRECTIONAL VALVE ⇨ ❑ 380	KIT VEDAÇÃO VÁLVULA DIRECI		

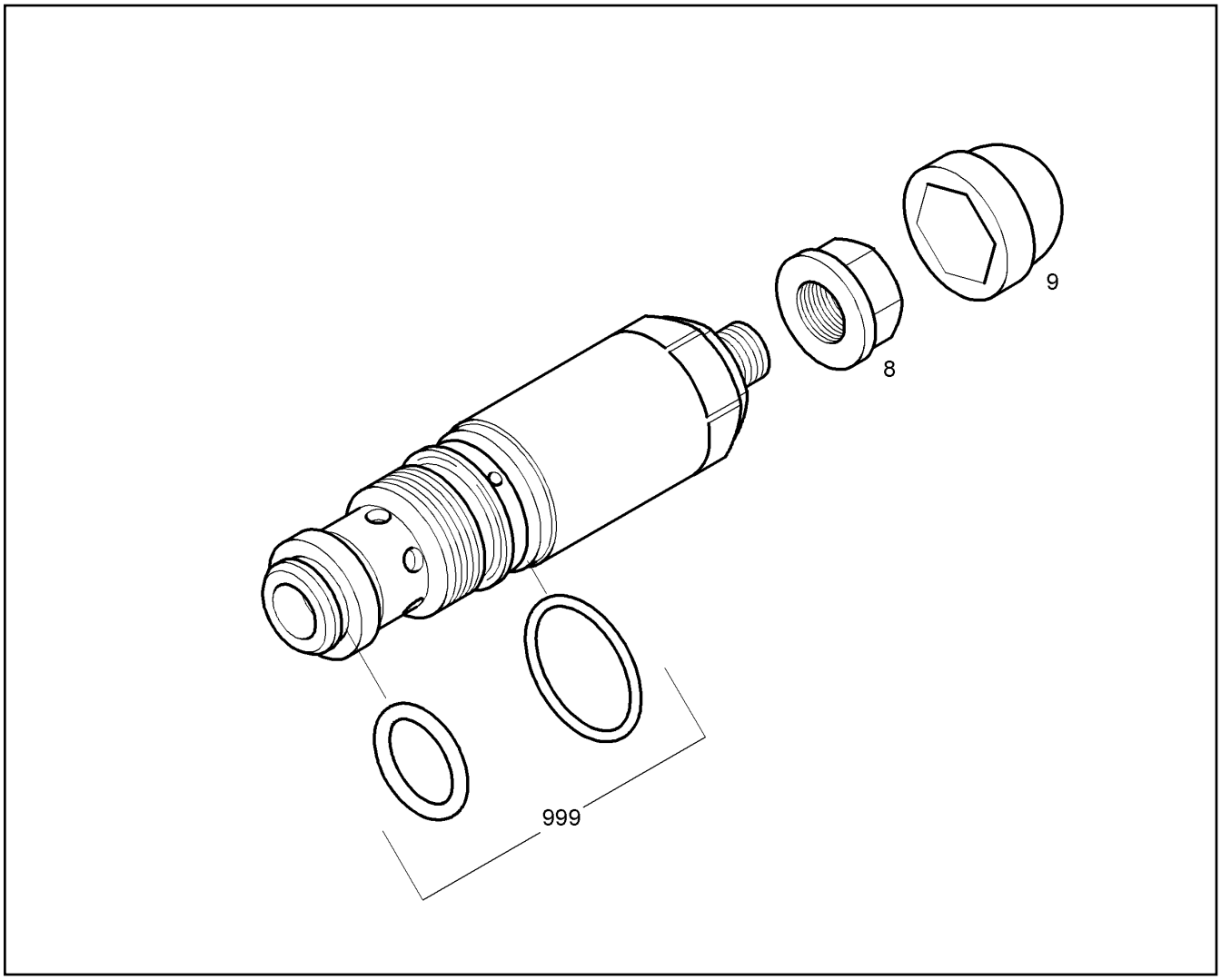

Pos.	Item	Quantity	Description	Designação	Serie	K
8	7361601	1	GROMMET NUT M8	PORCA DE VEDAÇÃO		
9	7616949	1	PROTECTING CAP	CAPA DE PROTEÇÃO		
999	7025142	1	SEAL KIT ⇨ ❑ 381	KIT DE VEDAÇÃO		

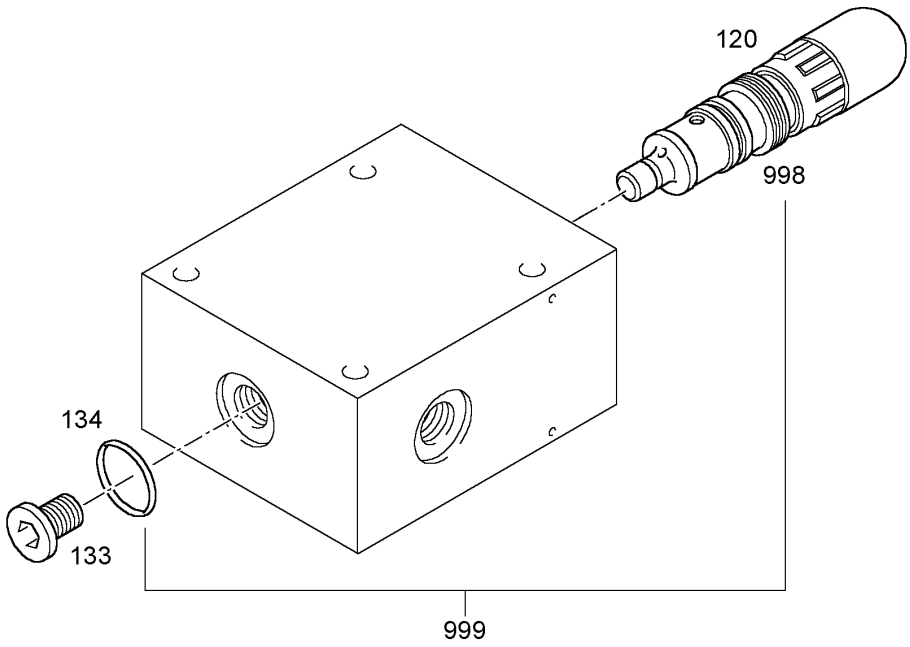

Pos.	Item	Quantity	Description	Designação	Serie	K
120		1	PRESSURE LIMITING VALVE ⇨ ❑ 374	VÁLVULA LIMITADORA DE PRES		
133	7002760	1	SCREW PLUG G 1/2	PARAFUSO DE FECHAMENTO		
134	7101015	1	SEALING RING DIN 7603 A 22X27X1,5	ANEL DE VEDAÇÃO		
998		1	SEAL KIT LIMIT VALVE ⇨ ❑ 382	KIT DE VEDAÇÃO		
999	5604334	1	SEALING SET VALVE	KIT DE VEDACAO DA VALVULA		

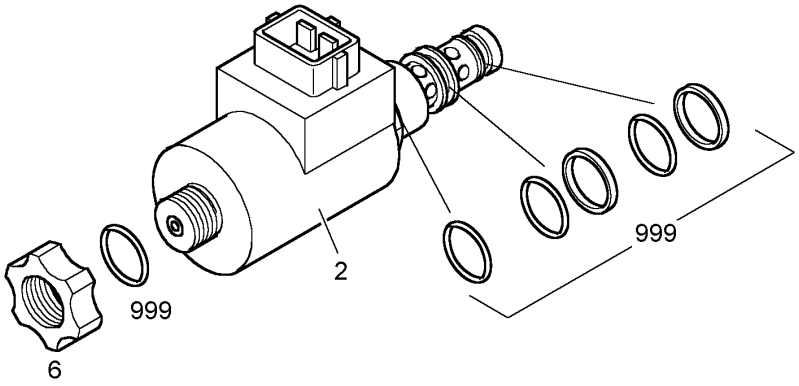

Pos.	Item	Quantity	Description	Designação	Serie	K
2	10333044	1	MAGNET COIL	BOBINA MAGNÉTICA		
6	7023934	1	NUT	PORCA SERRILHADA		
999	5009562	1	SEAL KIT DIRECTIONAL VALVE ⇨ ❑ 380	KIT VEDAÇÃO VÁLVULA DIRECI		

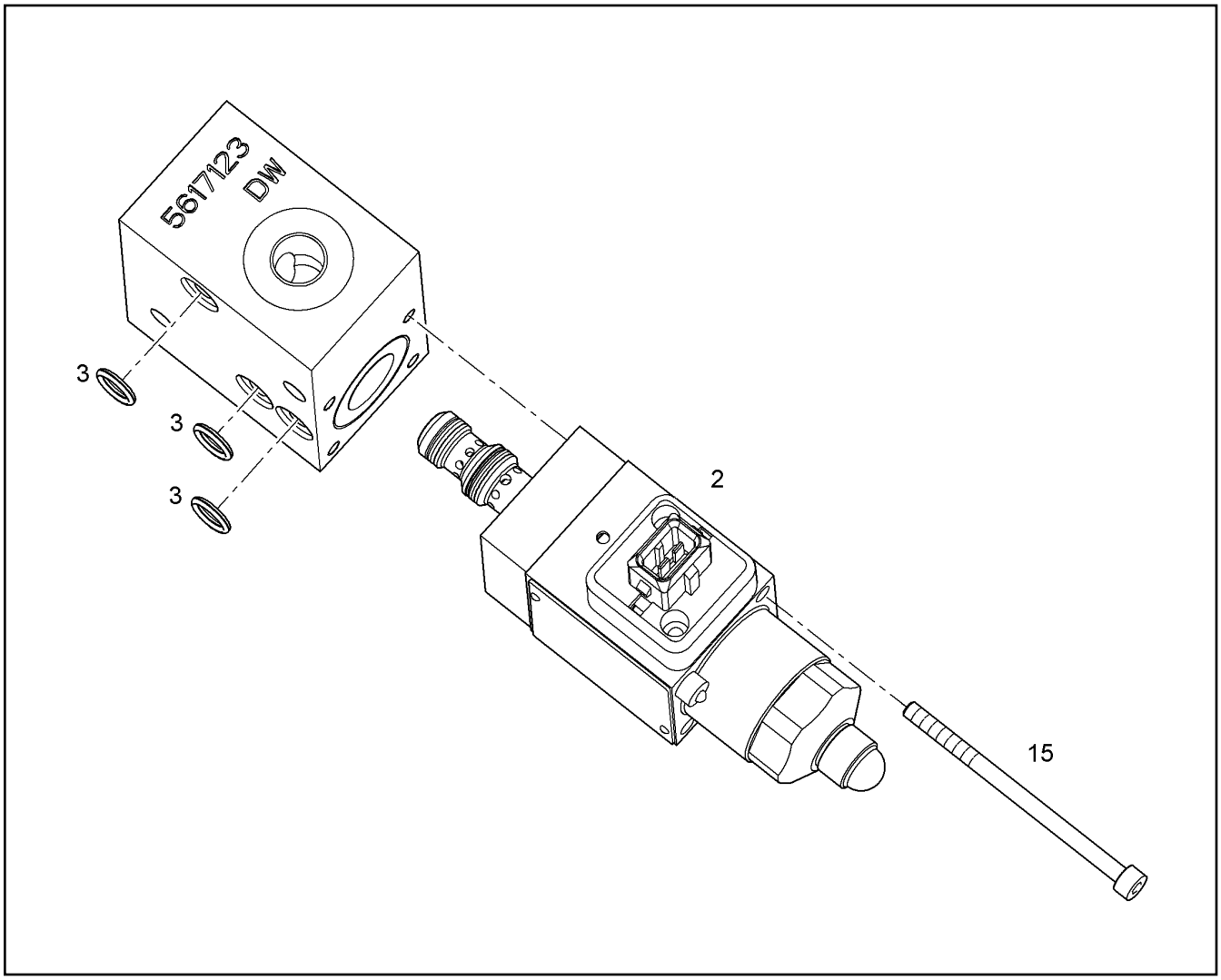

Pos.	Item	Quantity	Description	Designação	Serie	K
2	10323728	1	PRESSURE REDUCTION VALVE ⇨ ❑ 371	VÁLVULA REDUTORA DE PRES		
3	10024675	3	O-RING 7,65X1,78	ANEL-O		
15	4600338	2	SOCKET HEAD SCREW ISO 4762 M4X65 8.8	PARAFUSO CILÍNDRICO		

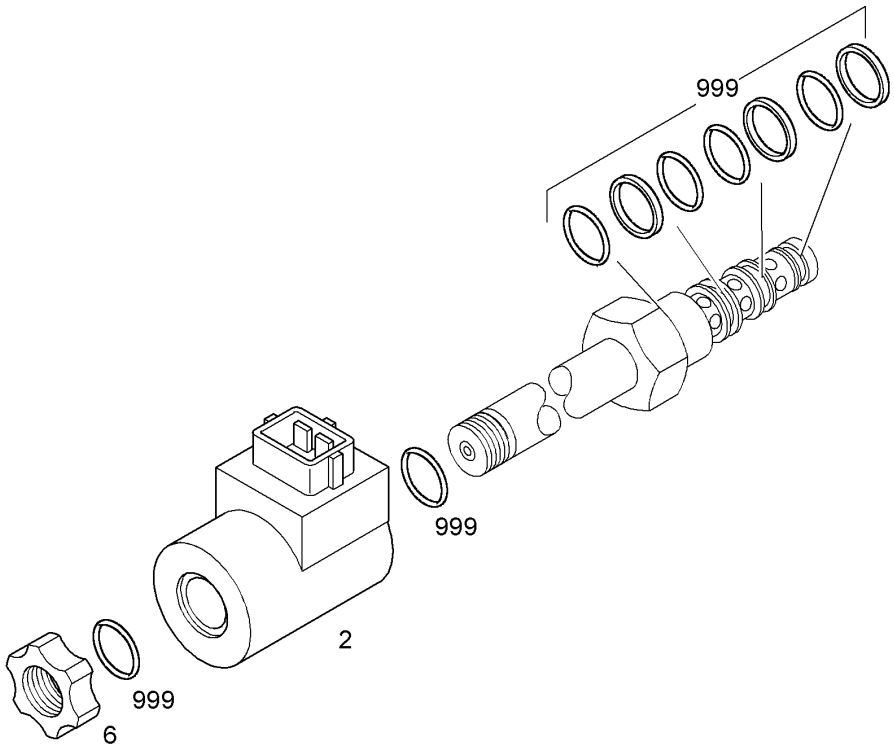

Pos.	Item	Quantity	Description	Designação	Serie	K
2	6204416	1	MAGNET COIL	BOBINA MAGNÉTICA		
6	7023934	1	NUT	PORCA SERRILHADA		
999	5009391	1	SEAL KIT DIRECTIONAL VALVE ⇨ ❑ 379	KIT VEDAÇÃO VÁLVULA DIRECI		

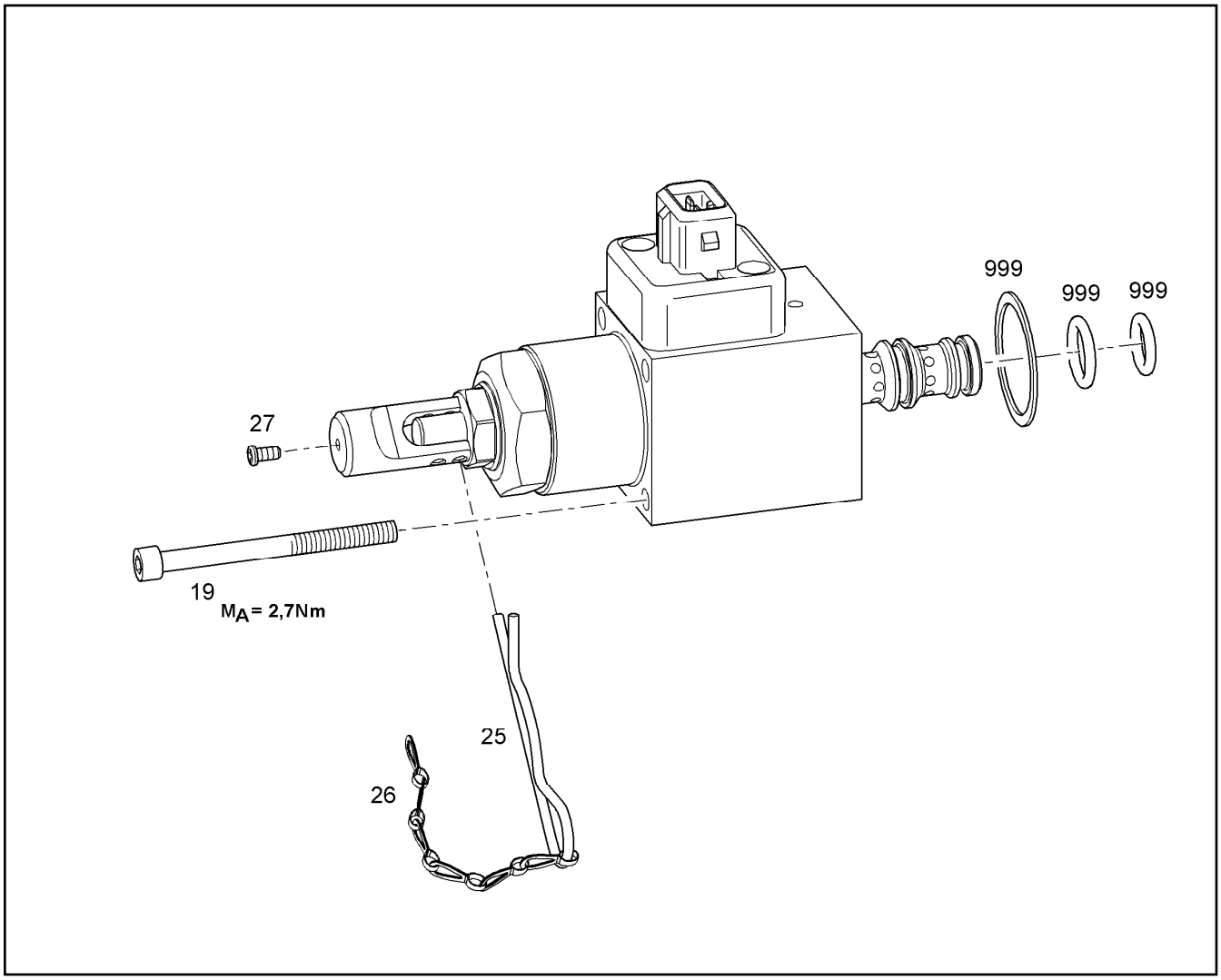

Pos.	Item	Quantity	Description	Designação	Serie	K
19	4901531	4	SOCKET HEAD SCREW ISO 4762 M4X50 8.8	PARAFUSO CILÍNDRICO		
25	7024629	1	SPRING	MOLA ENCAIXE PRÉVIO		
26	7024630	1	CHAIN	CORRENTE		1
27	7024631	1	SCREW DIN 7500C M2,5X5,3	PARAFUSO		
999	10220997	1	SEAL KIT ⇨ ❑ 376	KIT DE VEDAÇÃO		

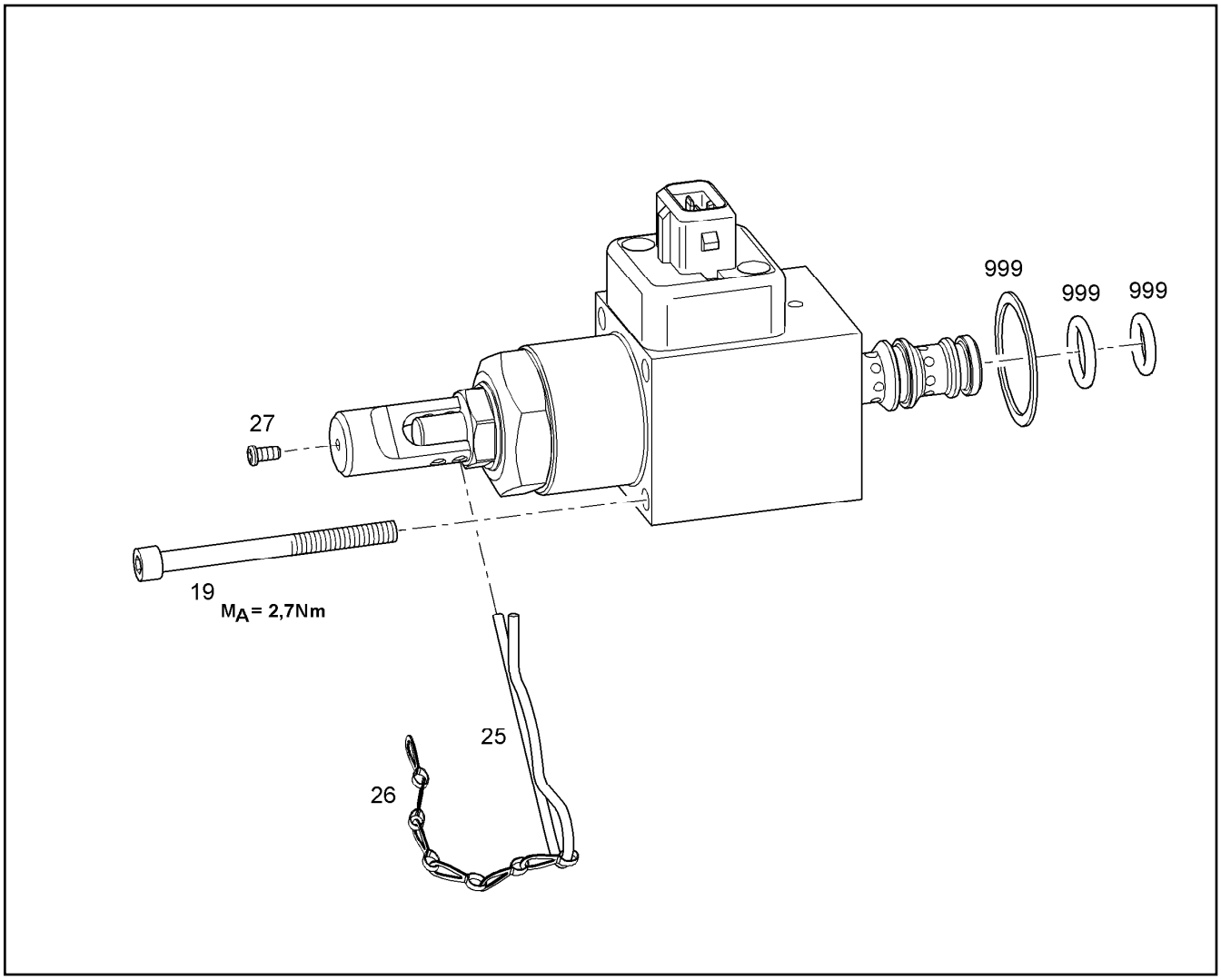

Pos.	Item	Quantity	Description	Designação	Serie	K
19	4901531	4	SOCKET HEAD SCREW ISO 4762 M4X50 8.8	PARAFUSO CILÍNDRICO		
25	7024629	1	SPRING	MOLA ENCAIXE PRÉVIO		
26	7024630	1	CHAIN	CORRENTE		1
27	7024631	1	SCREW DIN 7500C M2,5X5,3	PARAFUSO		
999	10220997	1	SEAL KIT ⇨ ❑ 376	KIT DE VEDAÇÃO		

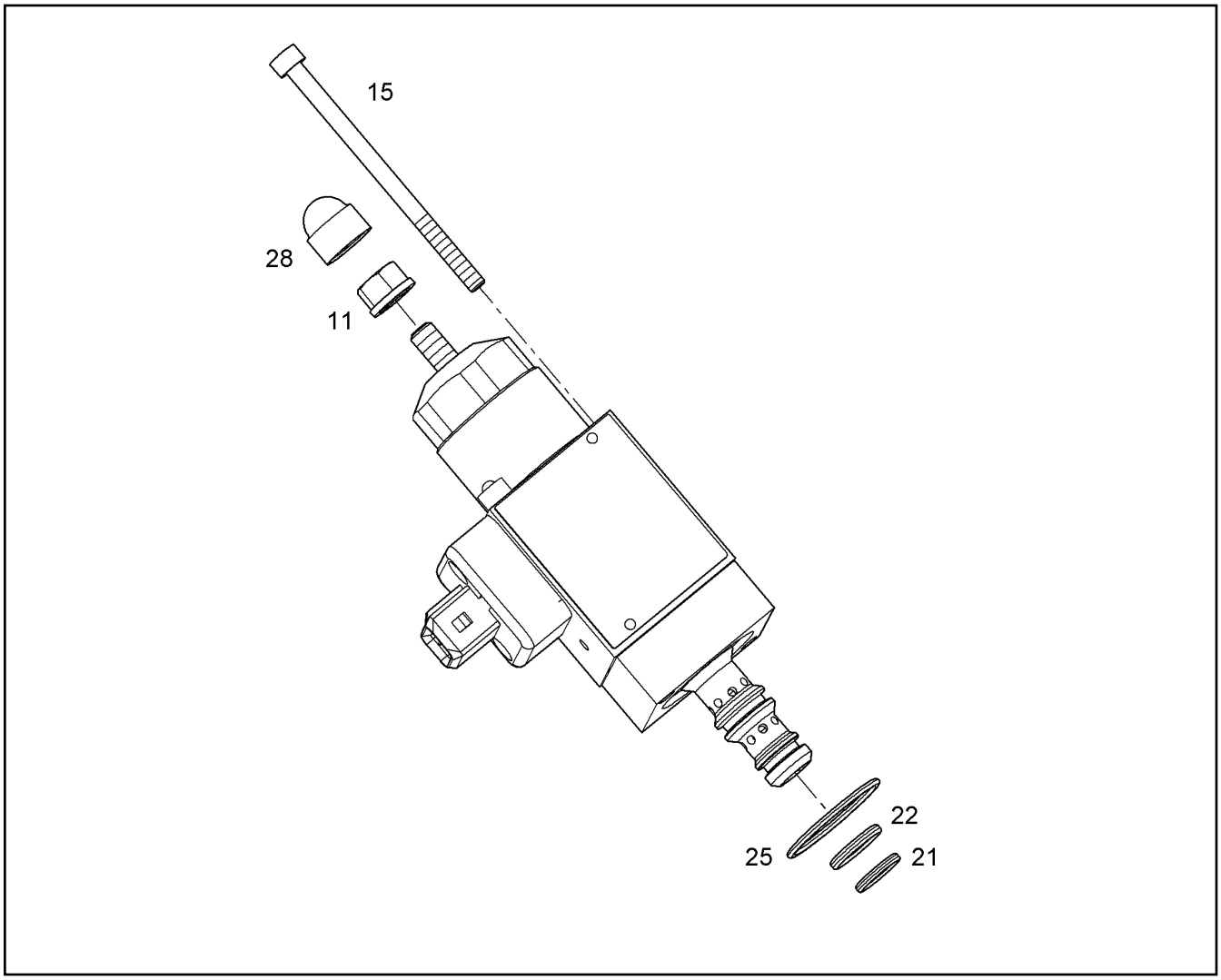

Pos.	Item	Quantity	Description	Designação	Serie	K
11	7372252	1	GROMMET NUT M8	PORCA DE VEDAÇÃO		
15	4600338	2	SOCKET HEAD SCREW ISO 4762 M4X65 8.8	PARAFUSO CILÍNDRICO		
21	7023929	1	O-RING 9,25X1,78	ANEL-O		
22	7023930	1	O-RING 10,82X1,78	ANEL-O		
25	7017668	1	O-RING ISO 3601-1 23,52X1,78	ANEL-O		
28	10292499	1	HEX PROTECTING CAP	COBERTURA DE PROTEÇÃO S		

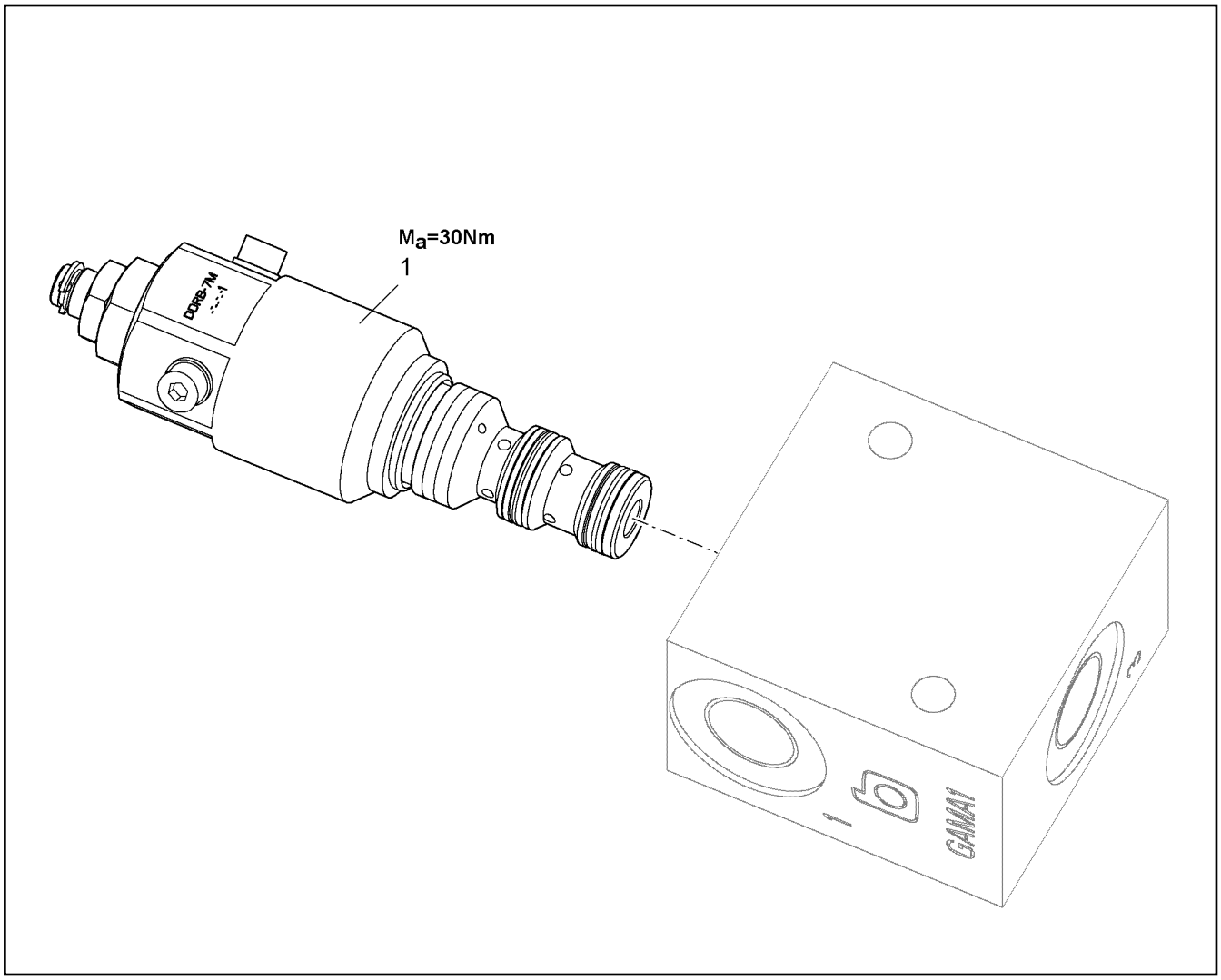

Pos.	Item	Quantity	Description	Designação	Serie	K
1	10454715	1	PRESSURE REDUCTION VALVE ⇨ ❑ 377	VÁLVULA REDUTORA DE PRES		

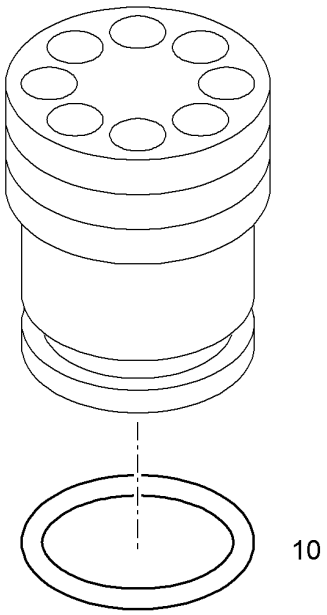

Pos.	Item	Quantity	Description	Designação	Serie	K
10	7371590	1	O-RING 16,0X1,5	ANEL-O		

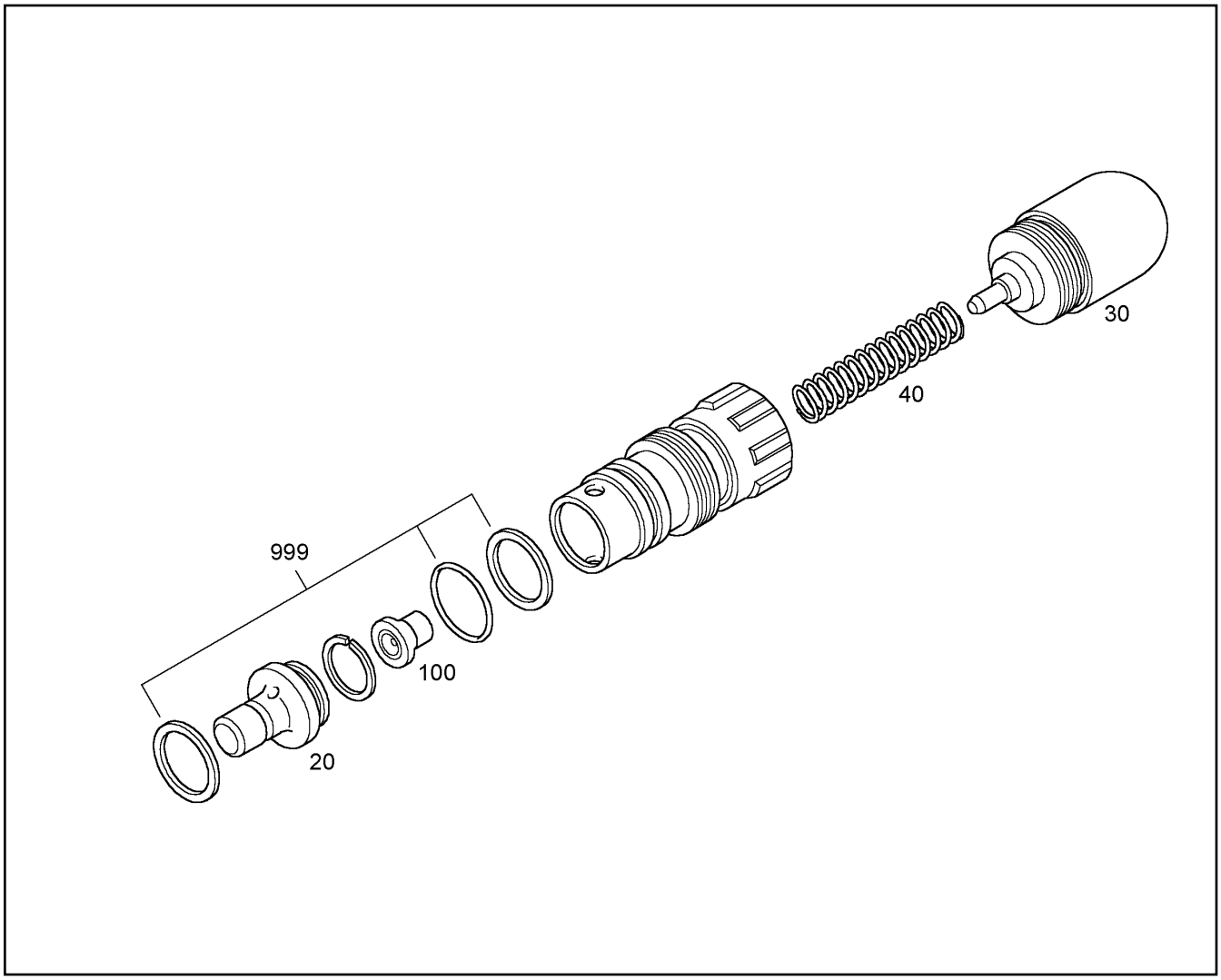

Pos.	Item	Quantity	Description	Designação	Serie	K
20		1	VALVE SEAT	ASSENTO DA VÁLVULA		
30	7028926	1	INSTALLER SET REGULATION	KIT DE MONTAGEM DO REGULA		
40	7028302	1	PRESSURE SPRING	MOLA DE PRESSÃO		
100	7028303	1	SPRING SUPPORT	PRATO DA MOLA		1
999		1	SEAL KIT LIMIT VALVE ⇨ ❑ 382	KIT DE VEDAÇÃO		

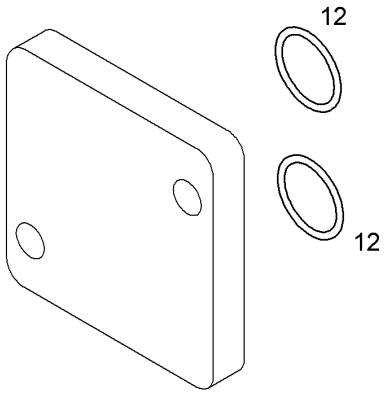

Pos.	Item	Quantity	Description	Designação	Serie	K
12	7023929	2	O-RING 9,25X1,78	ANEL-O		

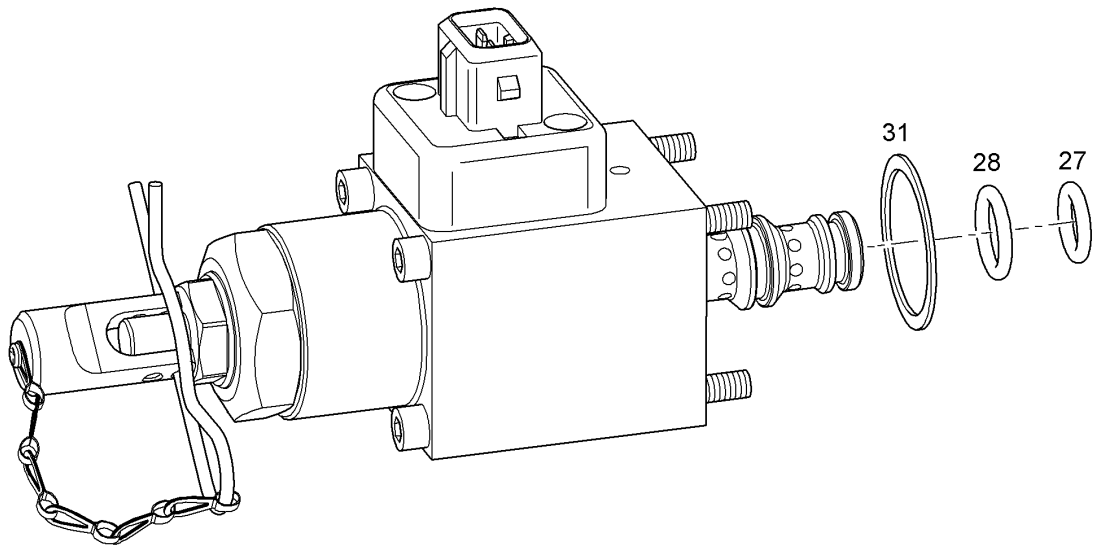

Pos.	Item	Quantity	Description	Designação	Serie	K
27		1	O-RING 9,25X1,78	ANEL-O		
28		1	O-RING 10,82X1,78	ANEL-O		
31		1	O-RING 23,52X1,78	ANEL-O		

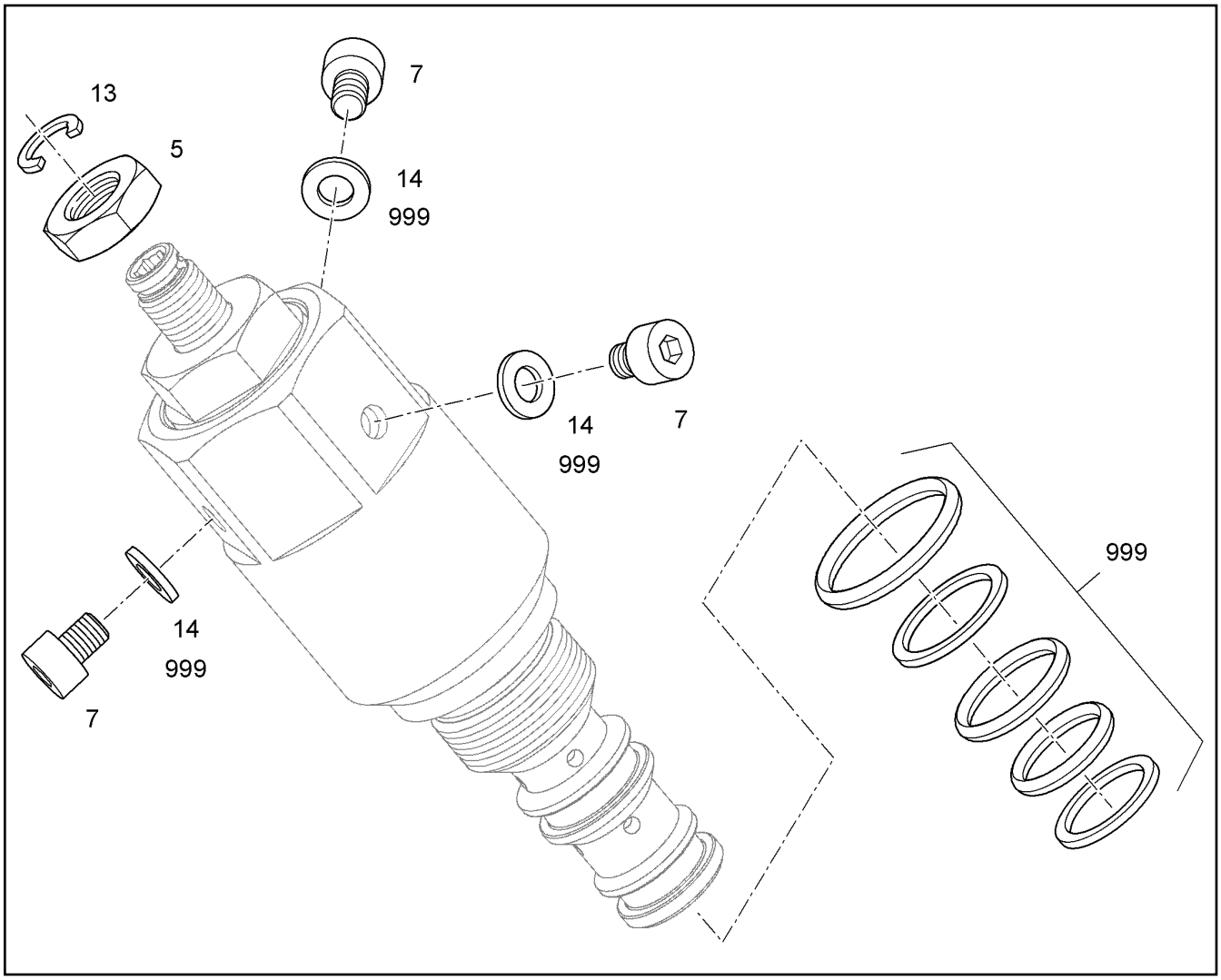

Pos.	Item	Quantity	Description	Designação	Serie	K
5	10330725	1	NUT M8X1	PORCA		
7	4002752	3	SOCKET HEAD SCREW ISO 4762 M4X5 8.8	PARAFUSO CILÍNDRICO		
13	10330726	1	LOCKING RING	ANEL DE RETENÇÃO		
14	4002750	3	SEALING RING DIN 7603 A 4 X 8 CU	ANEL DE VEDAÇÃO		
999	10454716	1	SEAL KIT ⇨ ❑ 378	KIT DE VEDAÇÃO		

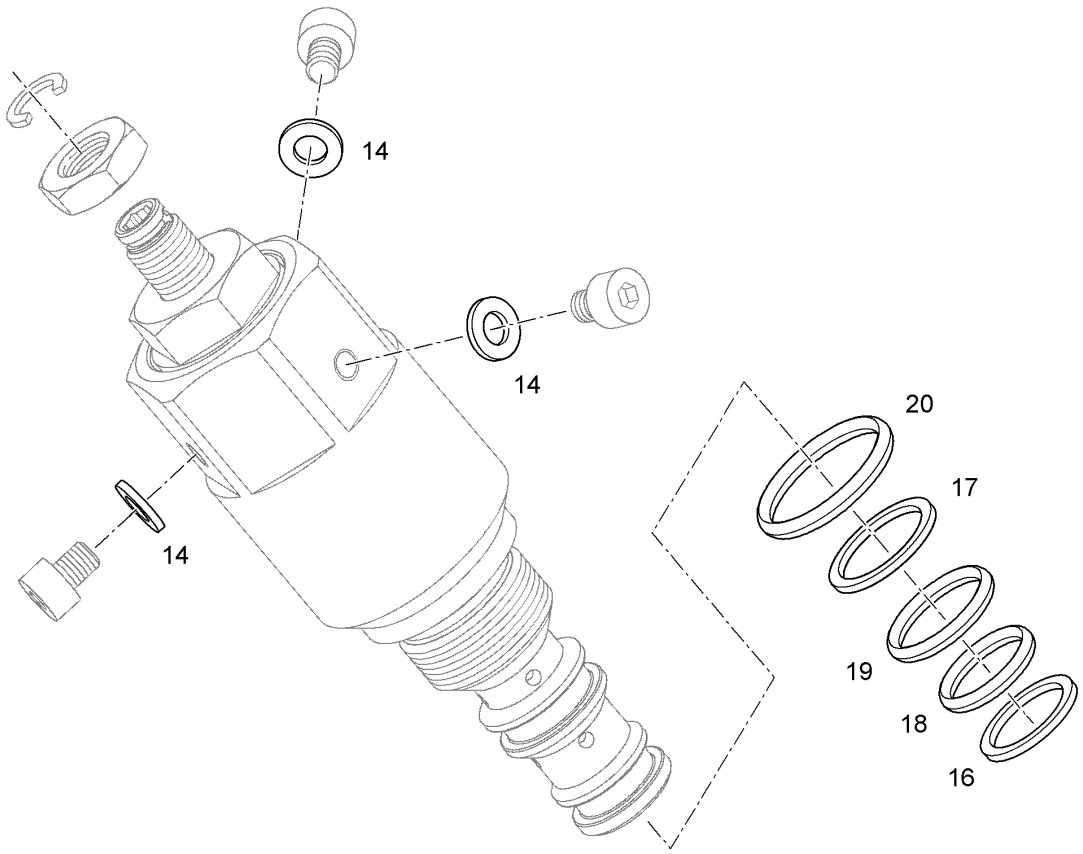

Pos.	Item	Quantity	Description	Designação	Serie	K
14		3	SEALING RING DIN 7603 A 4 X 8 CU	ANEL DE VEDAÇÃO		
16		1	SUPPORTING RING 9,4/12,3X1	ANEL DE APOIO		
17		1	SUPPORTING RING 10,7/13,6X1	ANEL DE APOIO		
18		1	O-RING 10,82X1,78	ANEL-O		
19		1	O-RING 12,42X1,78	ANEL-O		
20		1	O-RING 17,17X1,78	ANEL-O		

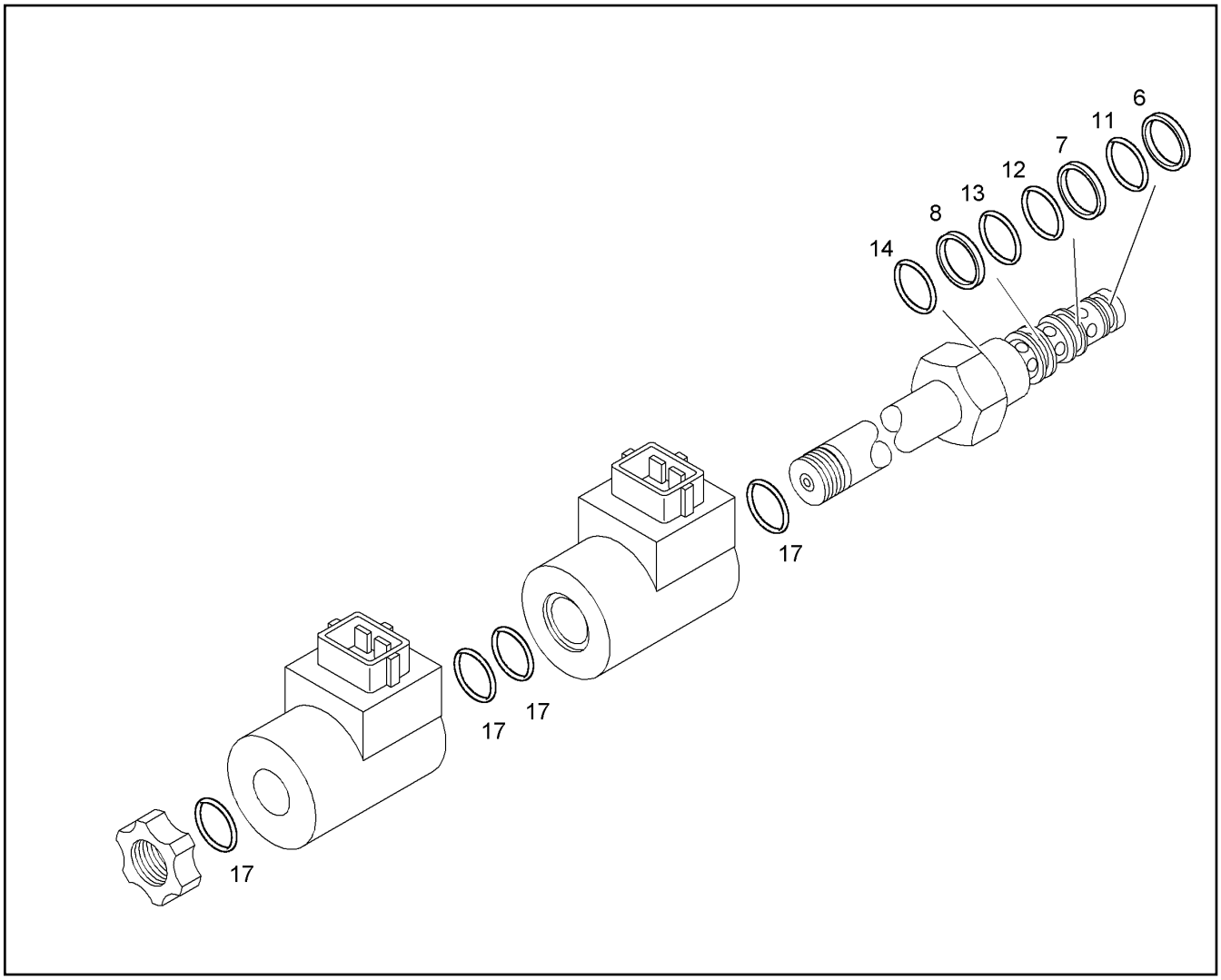

Pos.	Item	Quantity	Description	Designação	Serie	K
6		1	SUPPORTING RING 9,8/12,7X1	ANEL DE APOIO		
7		1	SUPPORTING RING 9,4/12,3X1	ANEL DE APOIO		
8		1	SUPPORTING RING 10,7/13,6X1	ANEL DE APOIO		
11		1	O-RING 9,25X1,78	ANEL-O		
12		1	O-RING 10,82X1,78	ANEL-O		
13		1	O-RING 12,42X1,78	ANEL-O		
14		1	O-RING 17,17X1,78	ANEL-O		
17		4	O-RING 16X2	ANEL-O		

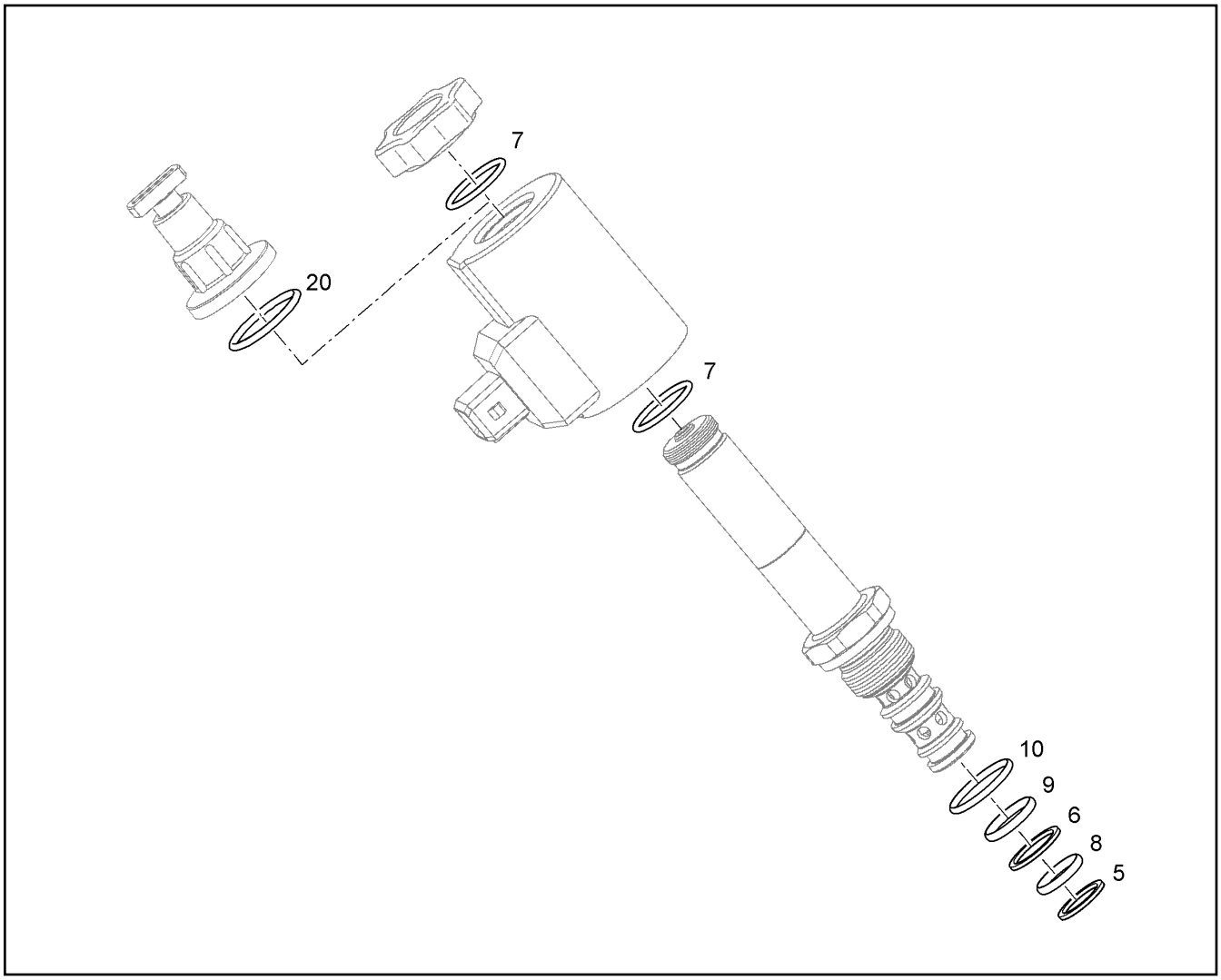

Pos.	Item	Quantity	Description	Designação	Serie	K
5		1	SUPPORTING RING 9,4/12,3X1	ANEL DE APOIO		
6		1	SUPPORTING RING 10,7/13,6X1	ANEL DE APOIO		
7		2	O-RING 16X2	ANEL-O		
8		1	O-RING 10,82X1,78	ANEL-O		
9		1	O-RING 12,42X1,78	ANEL-O		
10		1	O-RING 17,17X1,78	ANEL-O		
20		1	O-RING 21,89X2,62	ANEL-O		

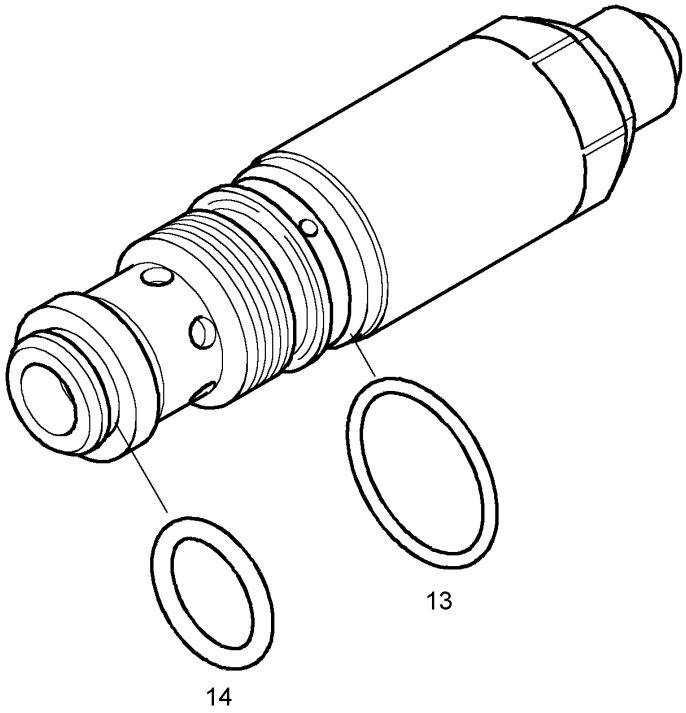

Pos.	Item	Quantity	Description	Designação	Serie	K
13		1	O-RING 21,95X1,78	ANEL-O		
14		1	O-RING 15,54X2,62	ANEL-O		

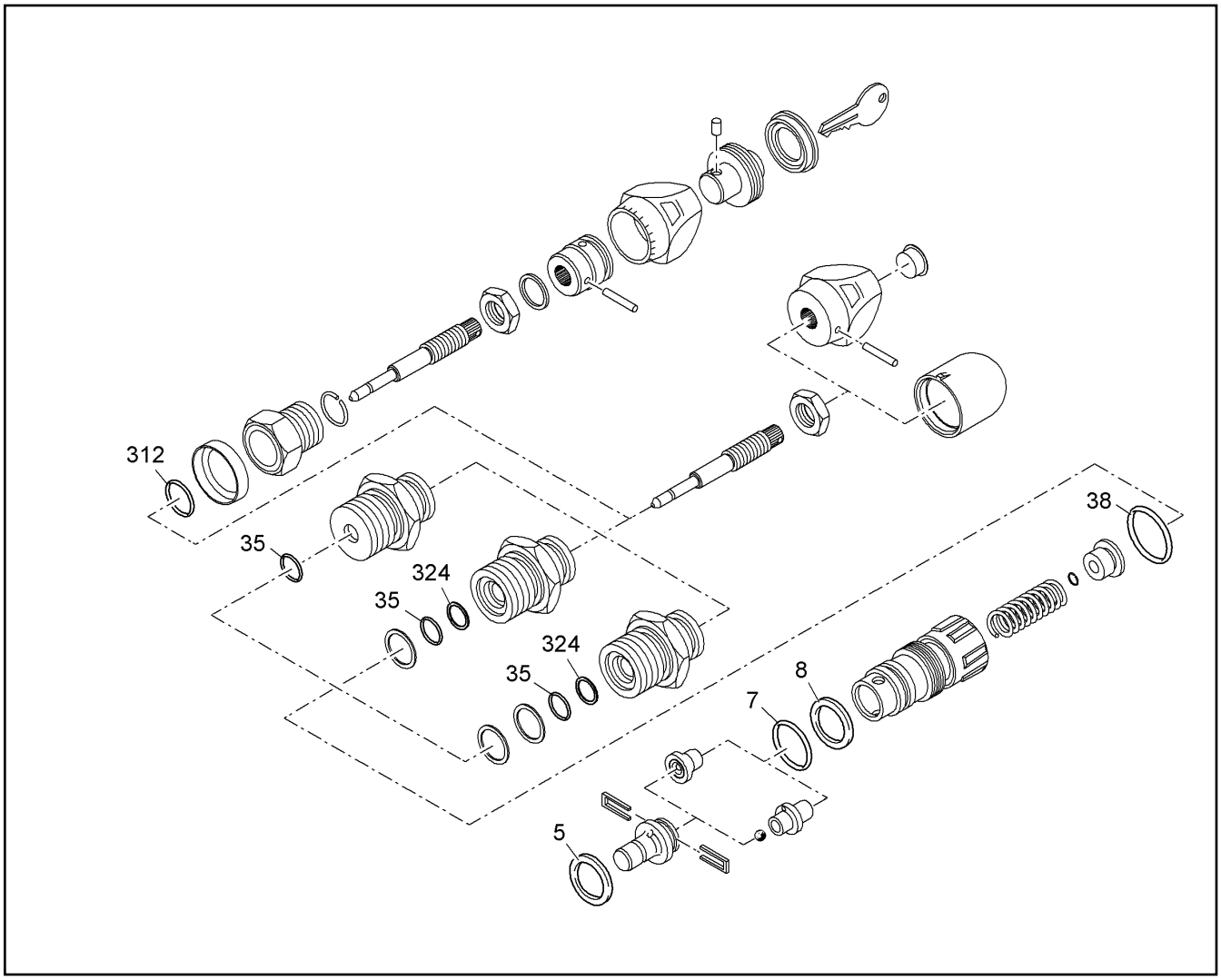

Pos.	Item	Quantity	Description	Designação	Serie	K
5		1	O-RING 21,89X2,62	ANEL-O		
5		1	RECTANGULAR SECTION RING 22,53X2,62X	ANEL DE SEÇÃO RETANGULAR		
5		1	USIT RING 24,7X31X2	ANEL DE VEDAÇÃO USIT		
5		1	O-RING 20,29X2,62	ANEL-O		
7		1	O-RING 26X3	ANEL-O		
8		1	SPIRAL RING 27,3/32X1	ANEL ESPIRAL		
35		1	O-RING 10X2	ANEL-O		
38		1	O-RING 20X2	ANEL-O		
312		1	O-RING 24X1,5	ANEL-O		
324		1	SUPPORTING RING 10/13X1	ANEL DE APOIO		

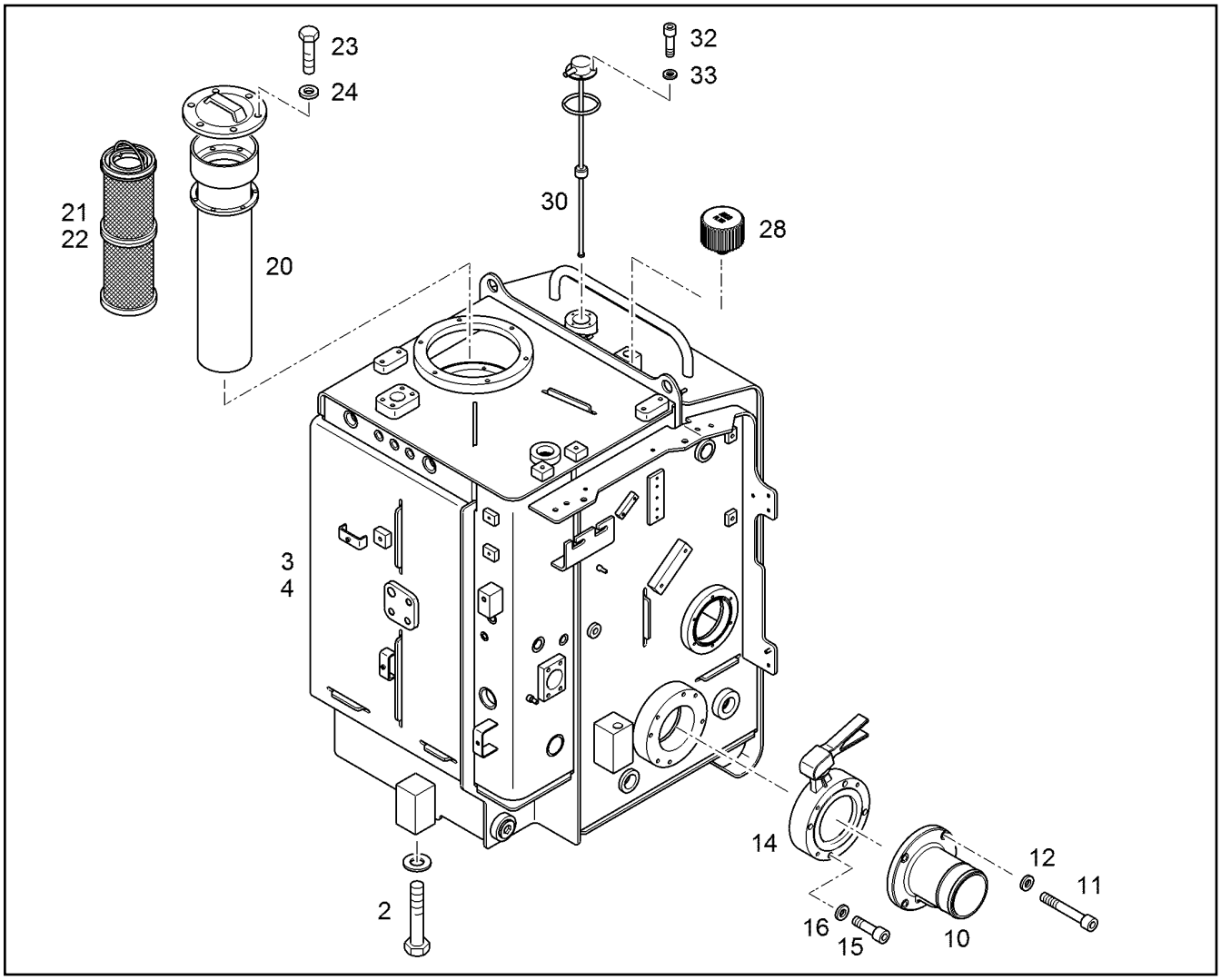

Pos.	Item	Quantity	Description	Designação	Serie	K
2		1	FIXING PARTS HYDRAULIC TANK ⇨ ❑ 388	FIXACAO TANQUE HIDRAULICO		
3		1	HYDRAULIC TANK [1545W10] ⇨ ❑ 394	TANQUE HIDRÁULICO		
4	10061129	1	HYDRAULIC TANK FOR EXCHANGE	TANQUE HIDRÁULICO		
10	10072499	1	INTAKE STACK	BOCAL DE SUCÇÃO		
11	11659114	4	HEX SCREW ISO 4017 M12X90 10.9 FLZN	PARAFUSO SEXTAVADO		
12	10289804	4	WASHER 12 300HV	ARRUELA		
14	5617688	1	SHUT OFF DEVICE ⇨ ❑ 390	VÁLVULA DE FECHAMENTO		
15	10468239	4	SOCKET HEAD SCREW ISO 4762 M12X60 10	PARAFUSO CILÍNDRICO		
16	7015815	4	WEDGE LOCK WASHER 13/19,5X2,5 NORD-L	ARRUELA DE FECHAMENTO		
20	10333903	1	RETURN FILTER 20/5µm ⇨ ❑ 392	FILTRO DE RETORNO		
21	11060250	1	FIBRE GLASS FILTER INSERT 15/5µm	FILTRO DE FIBRA DE VIDRO		
22	7373881	1	FIBRE GLASS FILTER INSERT 20/5µm ⇨ ❑ 393	FILTRO DE FIBRA DE VIDRO	-99998	
22	11060250	1	FIBRE GLASS FILTER INSERT 15/5µm	FILTRO DE FIBRA DE VIDRO		
23	10800024	6	HEX SCREW ISO 4017 M12X25 10.9 FLZN	PARAFUSO SEXTAVADO		
24	10289804	6	WASHER 12 300HV	ARRUELA		
28	10222393	1	AERATION FILTER 2µm ⇨ ❑ 397	FILTRO DE RESPIRO		
30	10022175	1	LEVEL SENSOR ⇨ ❑ 396	SENSOR DE NÍVEL		
32	11690042	4	SOCKET HEAD SCREW ISO 4762 M5X12 8.8	PARAFUSO CILÍNDRICO		

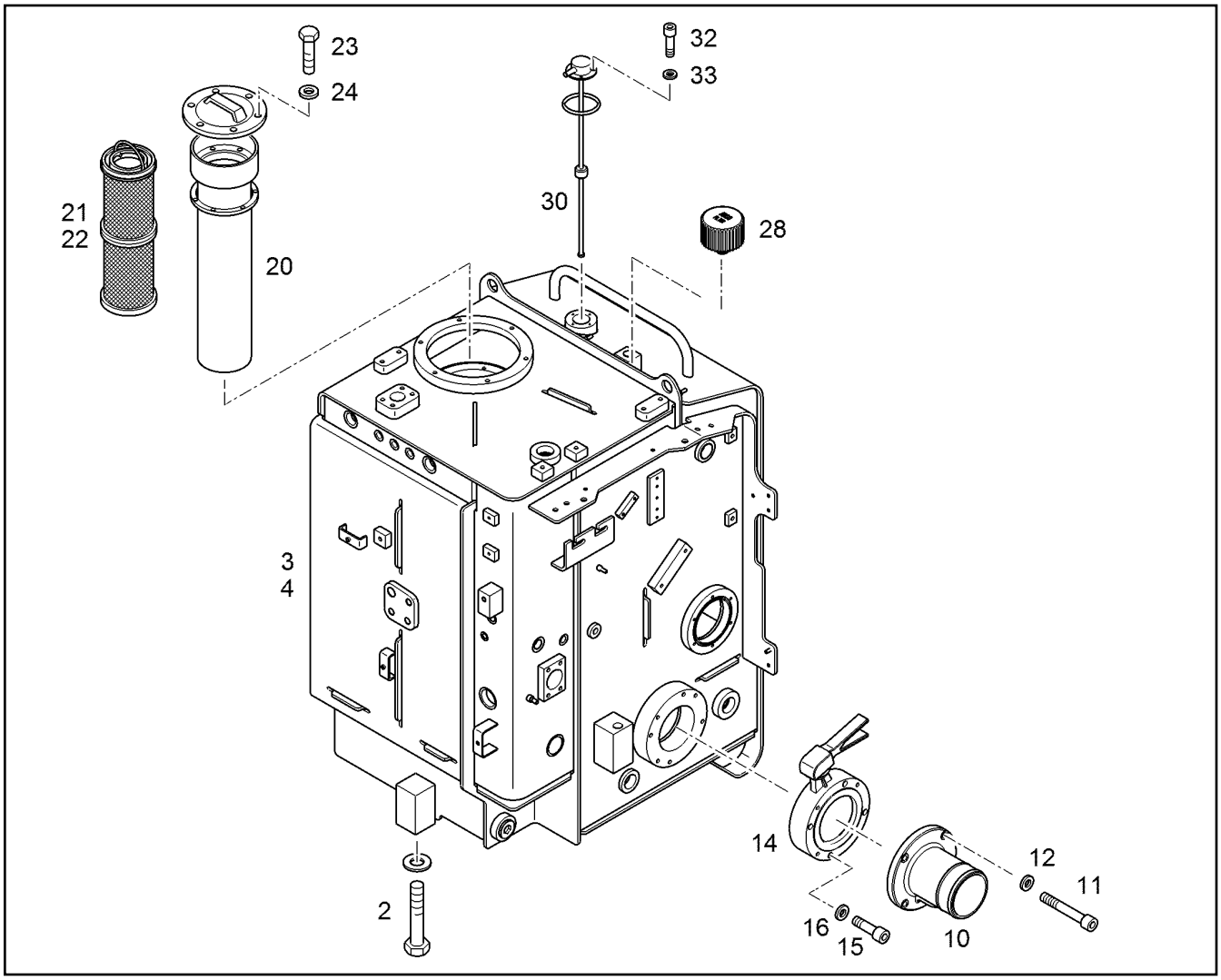

Pos.	Item	Quantity	Description	Designação	Serie	K
33	11140403	4	WASHER 5 200HV	ARRUELA		

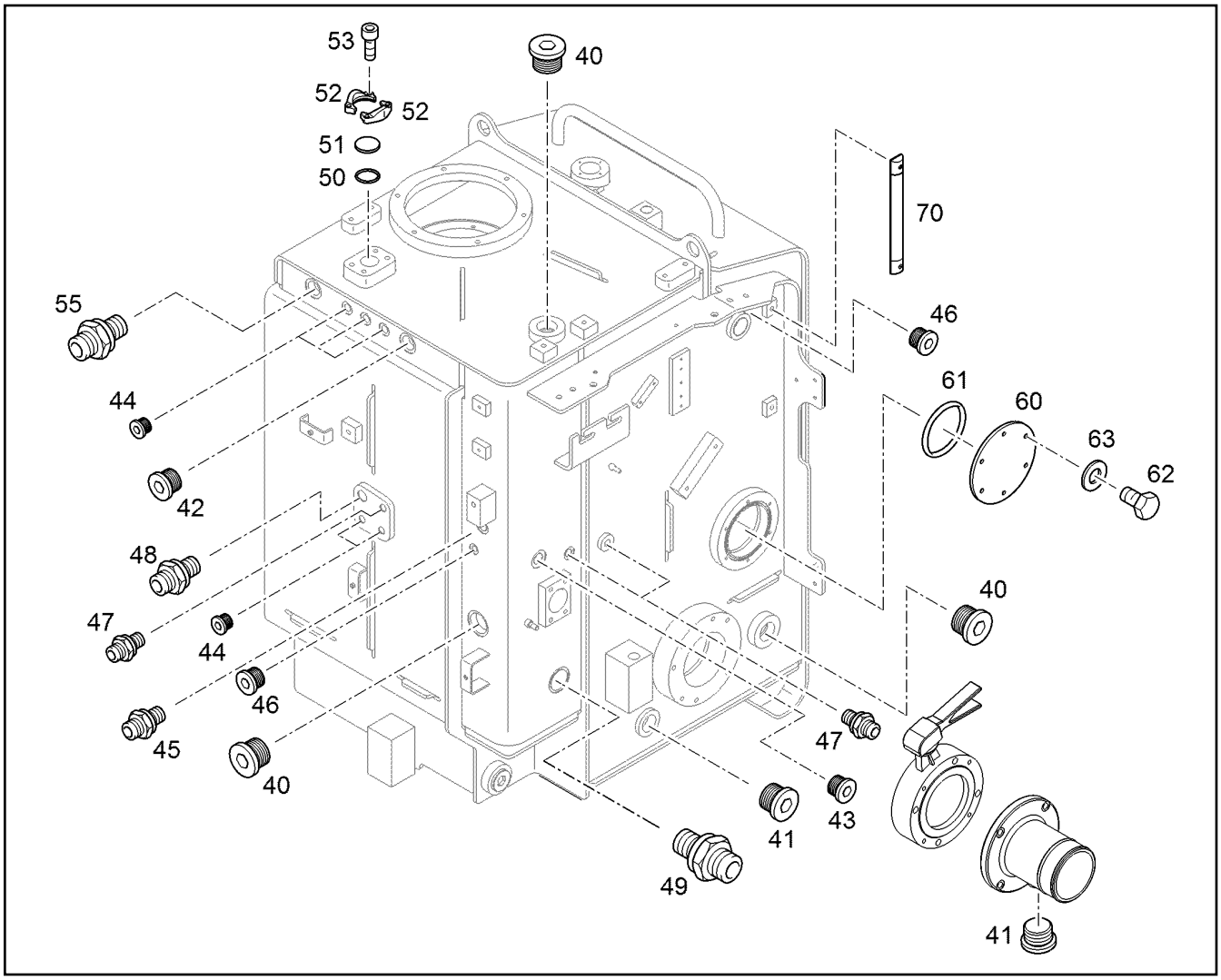

Pos.	Item	Quantity	Description	Designação	Serie	K
40	7363177	3	SCREW PLUG M48X2 ED	PARAFUSO DE FECHAMENTO		
41	7363073	2	SCREW PLUG M42X2 ED	PARAFUSO DE FECHAMENTO		
42	7361329	1	SCREW PLUG M33X2 ED	PARAFUSO DE FECHAMENTO		
43	7362698	1	SCREW PLUG M26X1,5 ED	PARAFUSO DE FECHAMENTO		
44	7361960	5	SCREW PLUG M18X1,5 ED	PARAFUSO DE FECHAMENTO		
45	7003572	1	FITTING GE 18L M22X1,5	UNIÃO ROSCADA		
46	7363125	2	SCREW PLUG M14X1,5 ED ⇨ ❑ 764	PARAFUSO DE FECHAMENTO		
47	7003570	3	FITTING GE 15L M18X1,5 ED	UNIÃO ROSCADA		
48	7362515	1	FITTING GE 22L M26X1,5	UNIÃO ROSCADA		
49	7368096	1	FITTING GE 42L M48X2 ED	UNIÃO ROSCADA		
50	10490787	1	RECTANGULAR SECTION RING 54,40X2,80	ANEL DE SEÇÃO RETANGULAR		
51	9566165	1	SAE BLIND FLANGE SAE 1 1/2" CODE 61	FLANGE CEGO		
52	11490402	2	FLANGE HALF WITH BOSSING SAE J518 S	MEIO FLANGE COM RELEVO		
53	11002748	4	SOCKET HEAD SCREW ISO 4762 M12X35 10	PARAFUSO CILÍNDRICO		
55	7003800	1	FITTING GE 28L M33X2	UNIÃO ROSCADA		
60	9767890	1	COVER	TAMPA		
61	7380073	1	O-RING ISO 3601-1 129,77X3,53	ANEL-O		
62	11651612	6	HEX SCREW ISO 4017 M8X16 8.8 480H	PARAFUSO SEXTAVADO		
63	10289803	6	WASHER 8 300HV	ARRUELA		
70	7368081	1	SIGHT GLASS ⇨ ❑ 389	VIDRO DE INSPECAO		

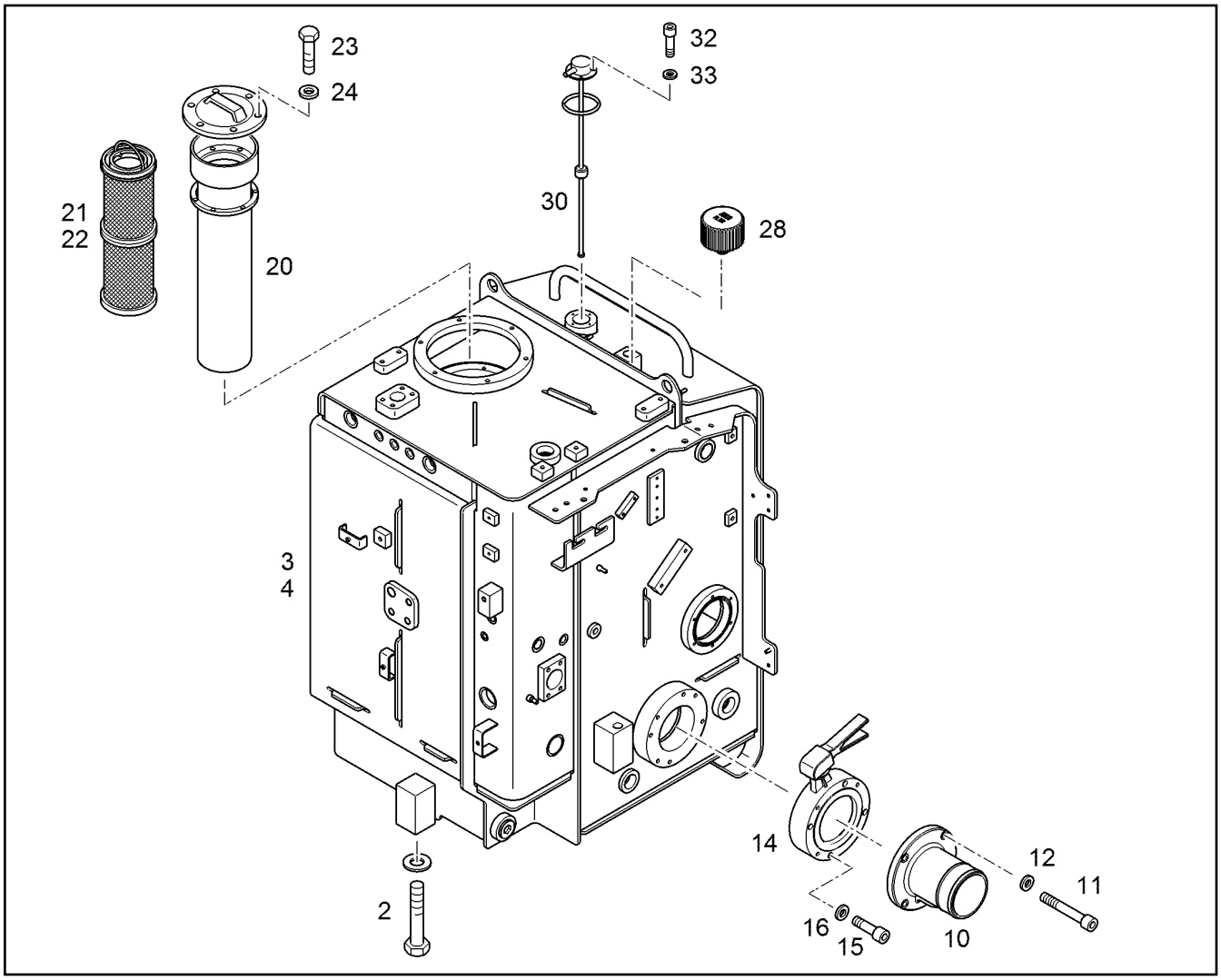

Pos.	Item	Quantity	Description	Designação	Serie	K
2		1	FIXING PARTS HYDRAULIC TANK ⇨ ❑ 388	FIXACAO TANQUE HIDRAULICO		
3		1	HYDRAULIC TANK ⇨ ❑ 395	TANQUE HIDRÁULICO		
4	10358635	1	HYDRAULIC TANK FOR EXCHANGE	TANQUE HIDRÁULICO		
10	10072499	1	INTAKE STACK	BOCAL DE SUCÇÃO		
11	463021003	4	SOCKET HEAD SCREW ISO 4762 M12X95 1	PARAFUSO CILÍNDRICO		
12	10289804	4	WASHER 12 300HV	ARRUELA		
14	5617688	1	SHUT OFF DEVICE ⇨ ❑ 390	VÁLVULA DE FECHAMENTO		
15	10468239	4	SOCKET HEAD SCREW ISO 4762 M12X60 10	PARAFUSO CILÍNDRICO		
16	7015815	4	WEDGE LOCK WASHER 13/19,5X2,5 NORD-L	ARRUELA DE FECHAMENTO		
20	10333903	1	RETURN FILTER 20/5µm ⇨ ❑ 392	FILTRO DE RETORNO		
21	11060250	1	FIBRE GLASS FILTER INSERT 15/5µm	FILTRO DE FIBRA DE VIDRO		
22	7373881	1	FIBRE GLASS FILTER INSERT 20/5µm ⇨ ❑ 393	FILTRO DE FIBRA DE VIDRO	-99998	
22	11060250	1	FIBRE GLASS FILTER INSERT 15/5µm	FILTRO DE FIBRA DE VIDRO		
23	10800024	6	HEX SCREW ISO 4017 M12X25 10.9 FLZN	PARAFUSO SEXTAVADO		
24	10289804	6	WASHER 12 300HV	ARRUELA		
28	10222393	1	AERATION FILTER 2µm ⇨ ❑ 397	FILTRO DE RESPIRO		
30	10022175	1	LEVEL SENSOR ⇨ ❑ 396	SENSOR DE NÍVEL		
32	11690042	4	SOCKET HEAD SCREW ISO 4762 M5X12 8.8	PARAFUSO CILÍNDRICO		
33	11140403	4	WASHER 5 200HV	ARRUELA		

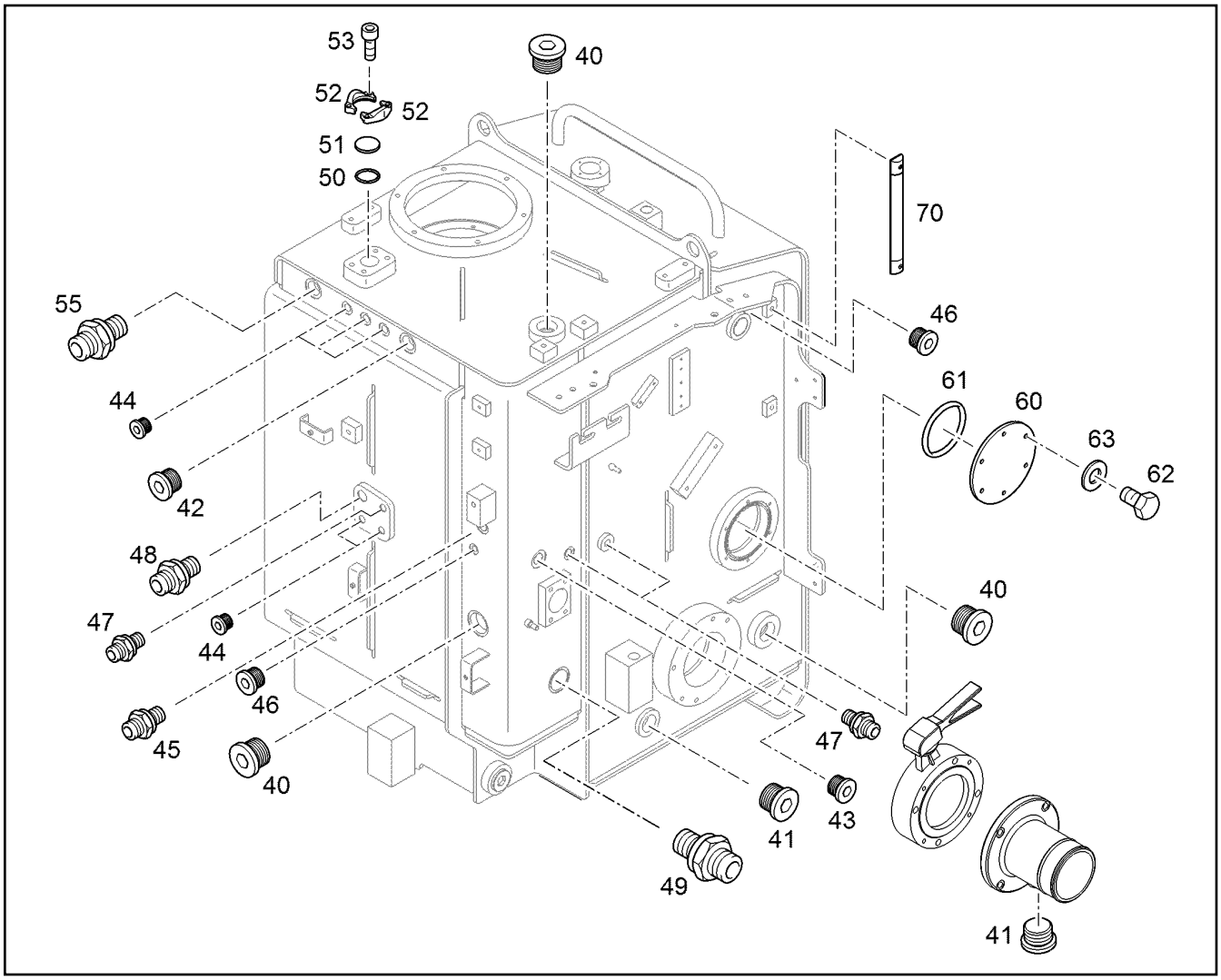

Pos.	Item	Quantity	Description	Designação	Serie	K
40	7363177	3	SCREW PLUG M48X2 ED	PARAFUSO DE FECHAMENTO		
41	7363073	2	SCREW PLUG M42X2 ED	PARAFUSO DE FECHAMENTO		
42	7361329	1	SCREW PLUG M33X2 ED	PARAFUSO DE FECHAMENTO		
43	7362698	1	SCREW PLUG M26X1,5 ED	PARAFUSO DE FECHAMENTO		
44	7361960	5	SCREW PLUG M18X1,5 ED	PARAFUSO DE FECHAMENTO		
45	7003572	1	FITTING GE 18L M22X1,5	UNIÃO ROSCADA		
46	7363125	2	SCREW PLUG M14X1,5 ED ⇨ ❑ 764	PARAFUSO DE FECHAMENTO		
47	7003570	3	FITTING GE 15L M18X1,5 ED	UNIÃO ROSCADA		
48	7362515	1	FITTING GE 22L M26X1,5	UNIÃO ROSCADA		
49	7368096	1	FITTING GE 42L M48X2 ED	UNIÃO ROSCADA		
50	10490787	1	RECTANGULAR SECTION RING 54,40X2,80	ANEL DE SEÇÃO RETANGULAR		
51	9566165	1	SAE BLIND FLANGE SAE 1 1/2" CODE 61	FLANGE CEGO		
52	11490402	2	FLANGE HALF WITH BOSSING SAE J518 S	MEIO FLANGE COM RELEVO		
53	11002748	4	SOCKET HEAD SCREW ISO 4762 M12X35 10	PARAFUSO CILÍNDRICO		
55	7003800	1	FITTING GE 28L M33X2	UNIÃO ROSCADA		
60	9767890	1	COVER	TAMPA		
61	7380073	1	O-RING ISO 3601-1 129,77X3,53	ANEL-O		
62	11651612	6	HEX SCREW ISO 4017 M8X16 8.8 480H	PARAFUSO SEXTAVADO		
63	423910801	6	LOCK WASHER VS 8	ARRUELA DE PRESSÃO		
70	7368081	1	SIGHT GLASS ⇨ ❑ 389	VIDRO DE INSPECAO		

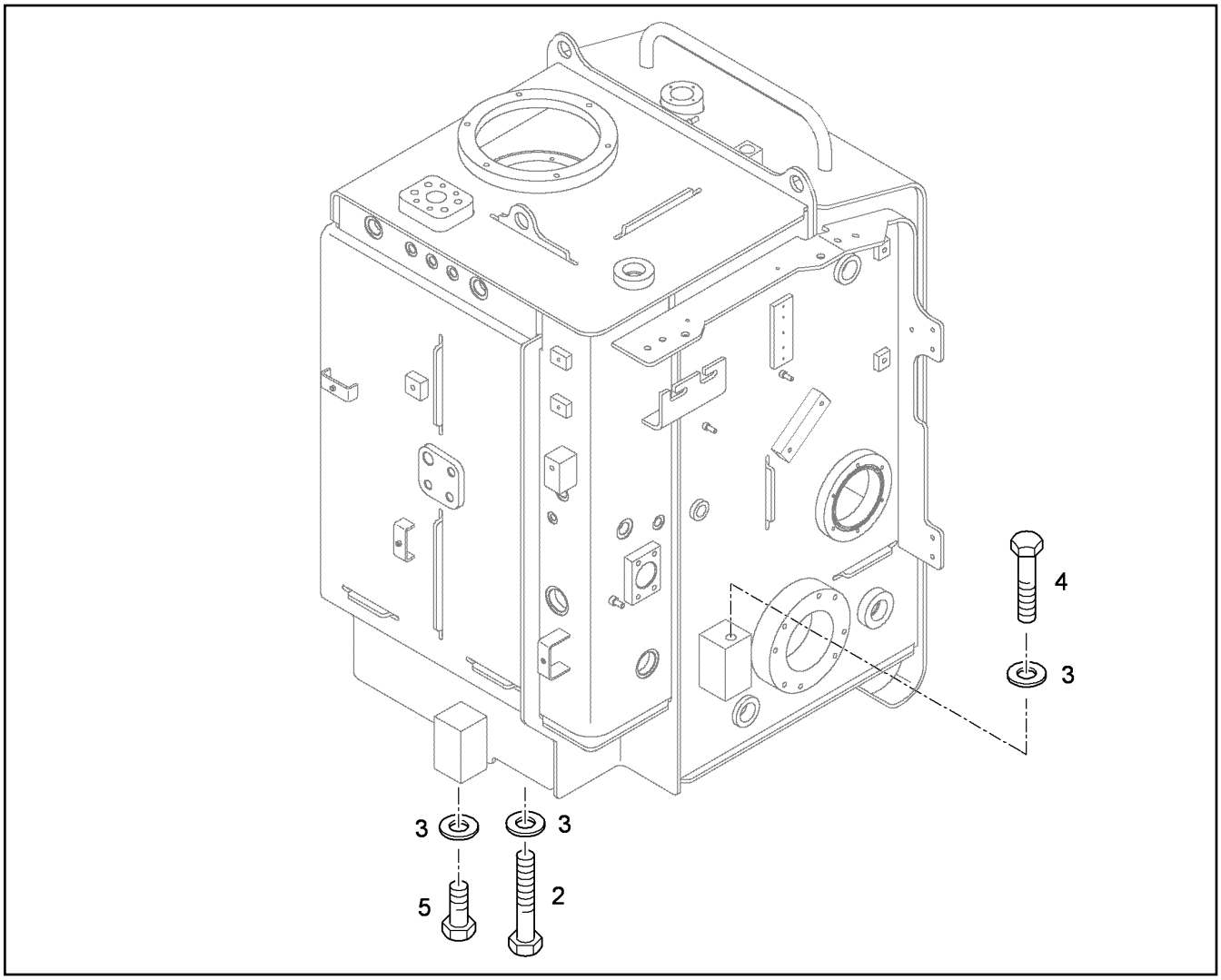

Pos.	Item	Quantity	Description	Designação	Serie	K
2	10425598	1	HEX SCREW ISO 4014 M20X200 10.9 FLZN	PARAFUSO SEXTAVADO		
3	9918229	3	WASHER 20,5/34X5	ARRUELA		
4	10425595	1	HEX SCREW ISO 4014 M20X150 10.9 FLZN	PARAFUSO SEXTAVADO		
5	10425592	1	HEX SCREW ISO 4014 M20X110 10.9 FLZN	PARAFUSO SEXTAVADO		

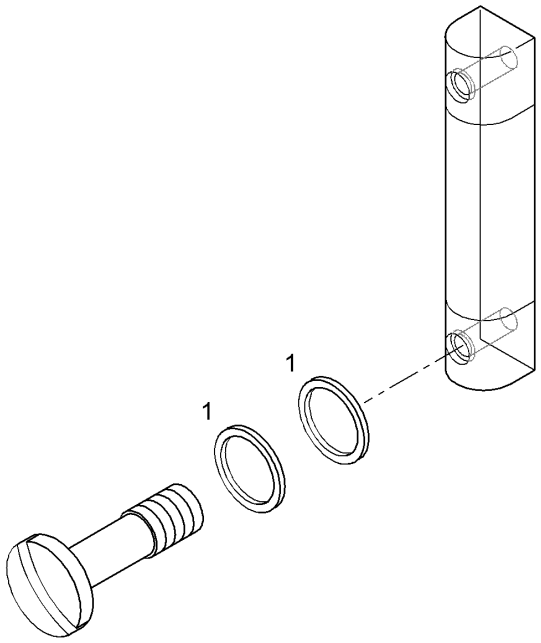

Pos.	Item	Quantity	Description	Designação	Serie	K
1	7369456	4	O-RING	ANEL-O		

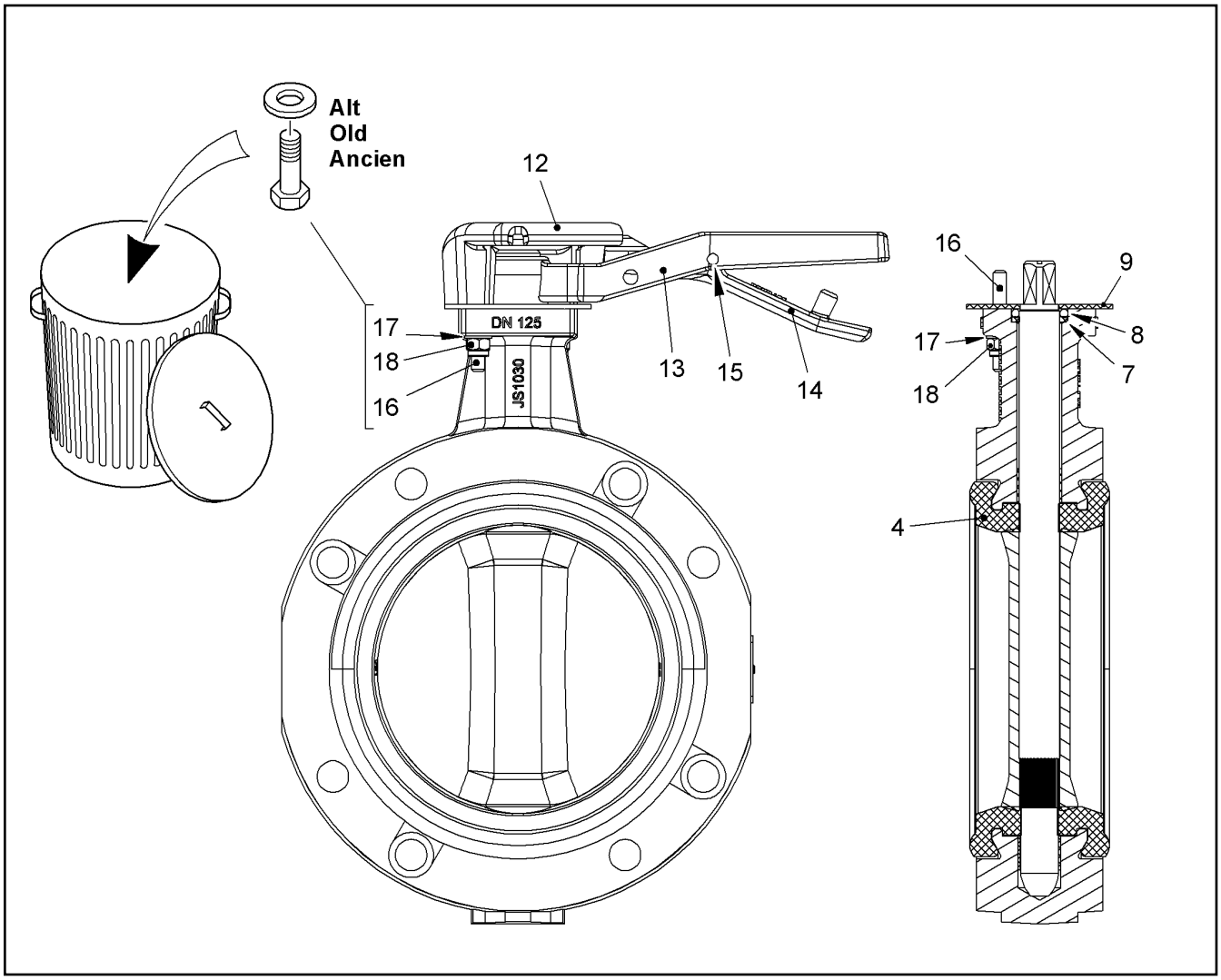

Pos.	Item	Quantity	Description	Designação	Serie	K
4	7029248	1	COLLAR JOINT	VEDACAO		
7	11007770	1	SHEET GASKET	DISCO DE VEDAÇÃO		
8	7028346	1	O-RING	ANEL-O		
9	7028343	1	SEAL	VEDAÇÃO		
12	7028349	1	COVER	TAMPA		
13	7028347	1	HAND LEVER	ALAVANCA MANUAL		
14	7028348	1	LEVER	ALAVANCA		
15	7028351	1	PIN	PINO		
16	11007768	2	GRUB SCREW DIN 913 M6X45 45H A2	PARAFUSO		
17	10289802	2	WASHER 6 300HV	ARRUELA		
18	4000900	2	HEX NUT M6	PORCA SEXTAVADA		

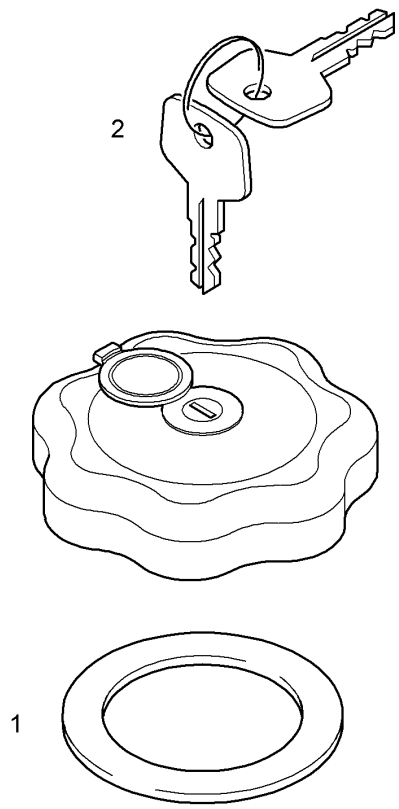

Pos.	Item	Quantity	Description	Designação	Serie	K
1	7041345	1	SEAL 78,5X105X2,5	VEDAÇÃO		
2	7365626	1	KEY	CHAVE		

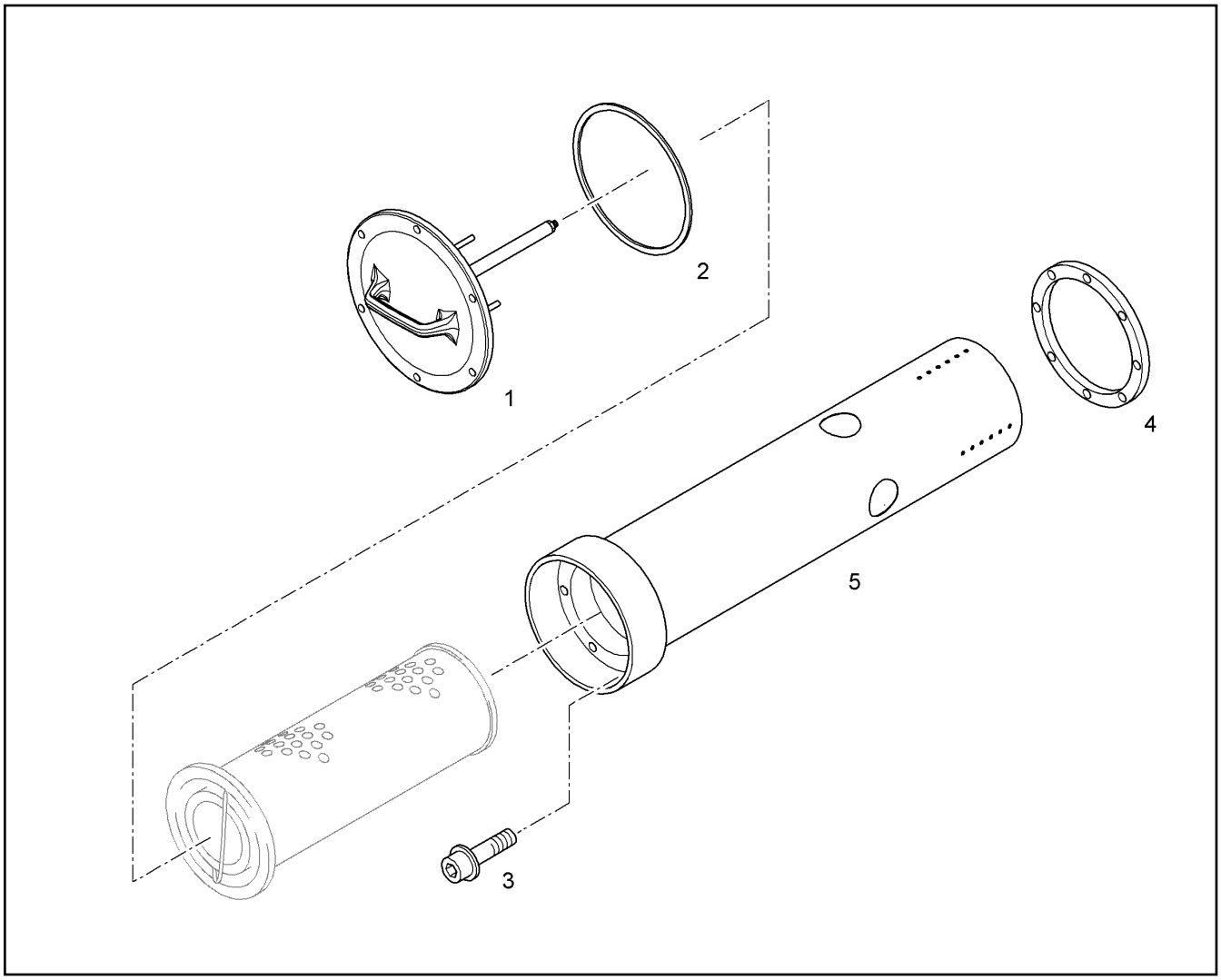

Pos.	Item	Quantity	Description	Designação	Serie	K
1	7370924	1	HANDLE COVER	TAMPA COM ALÇA		
2	7368993	1	SEAL	VEDAÇÃO		
3	7368996	6	LOCKING SCREW M8X40 12.9	PARAFUSO TRAVA		
4	7368994	1	SEAL 189X22X4	VEDAÇÃO		
5	10335592	1	RETURN PIPE	TUBO DE RETORNO		

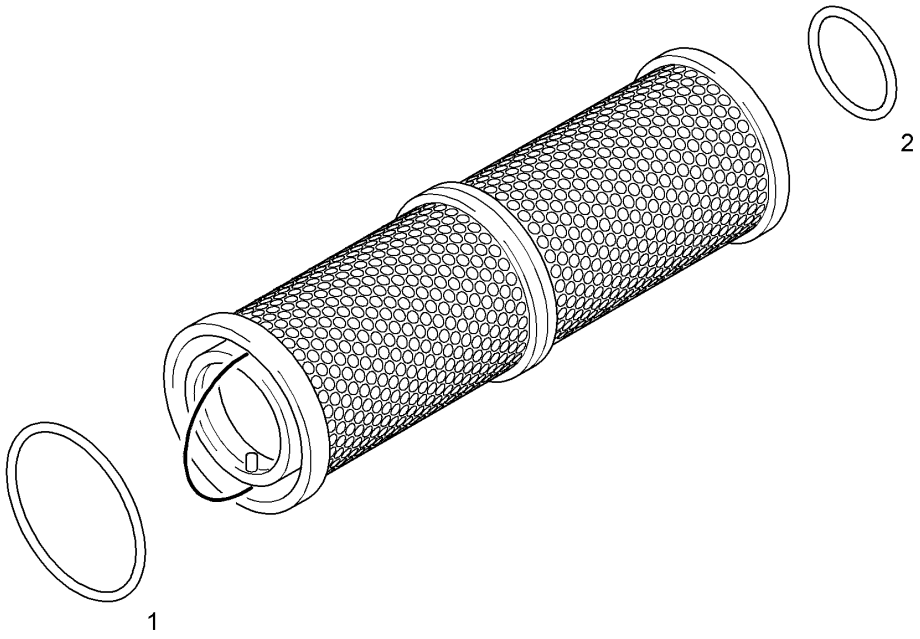

Pos.	Item	Quantity	Description	Designação	Serie	K
1	7369266	1	O-RING 142X7	ANEL-O		
2	7369286	1	O-RING 83X7	ANEL-O		

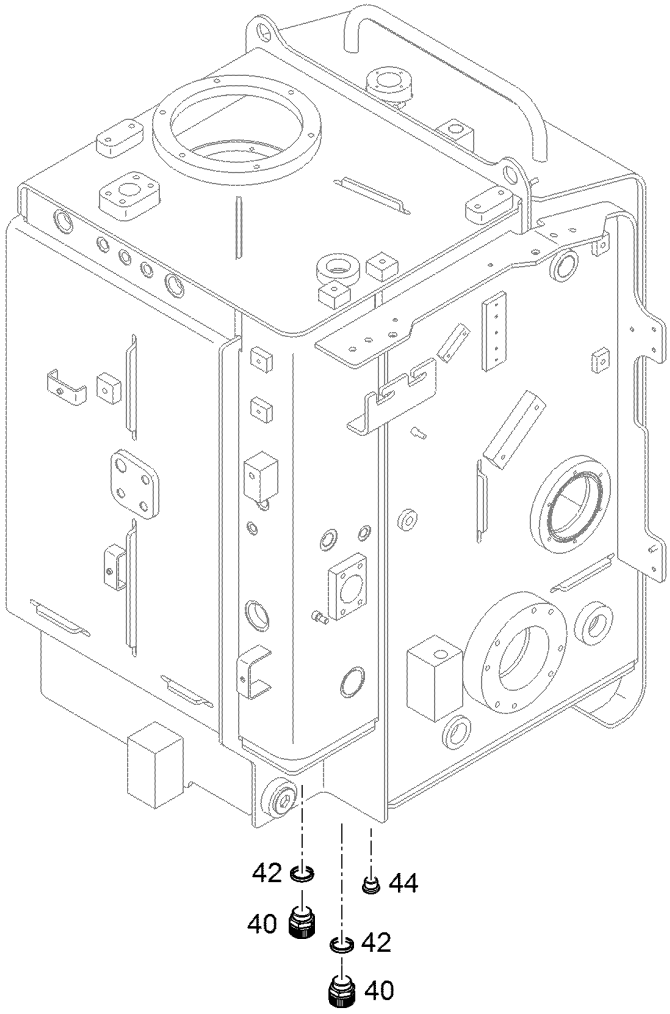

Pos.	Item	Quantity	Description	Designação	Serie	K
40	5004624	2	OIL DRAIN PLUG M 30 1,5 ⇨ ❑ 577	PARAFUSO DE DRENAGEM DE Ó		
42	7101039	2	SEALING RING DIN 7603 A 30X38	ANEL DE VEDAÇÃO		
44	7363073	1	SCREW PLUG M42X2 ED	PARAFUSO DE FECHAMENTO		

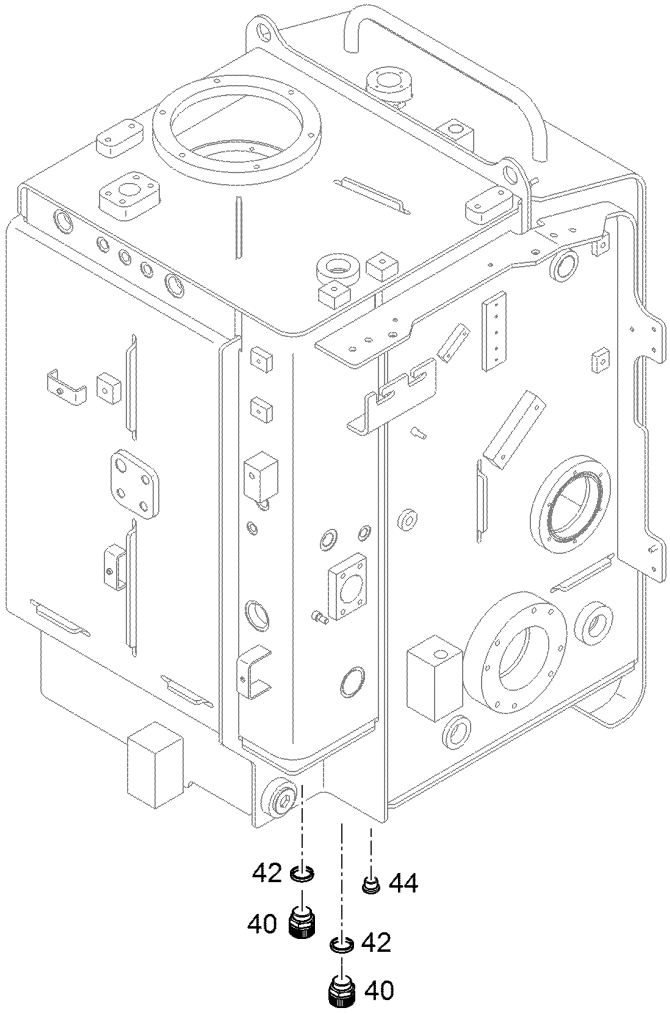

Pos.	Item	Quantity	Description	Designação	Serie	K
40	5004624	2	OIL DRAIN PLUG M 30 1,5 ⇨ ❑ 577	PARAFUSO DE DRENAGEM DE Ó		
42	7101039	2	SEALING RING DIN 7603 A 30X38	ANEL DE VEDAÇÃO		
44	7363073	1	SCREW PLUG M42X2 ED	PARAFUSO DE FECHAMENTO		

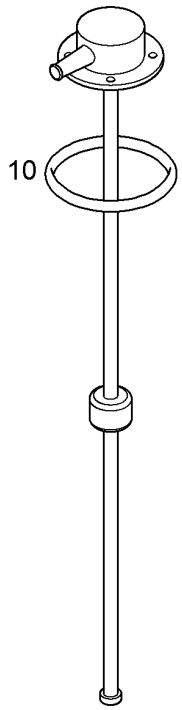

Pos.	Item	Quantity	Description	Designação	Serie	K
10	7368904	1	O-RING 46X3	ANEL-O		

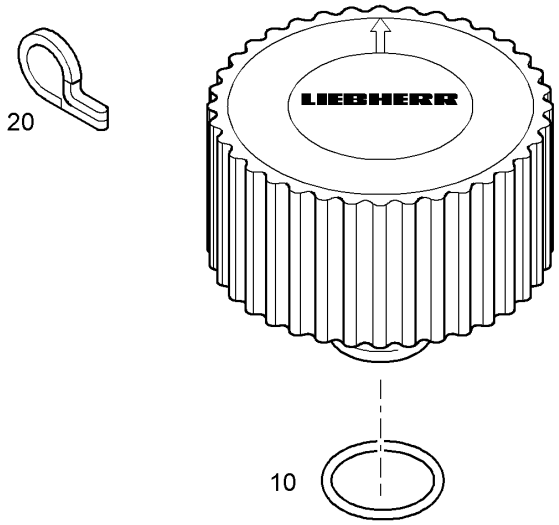

Pos.	Item	Quantity	Description	Designação	Serie	K
10	7015407	1	O-RING 25X3,53	ANEL-O		
20	10012889	1	PLUG	PLUGUE		

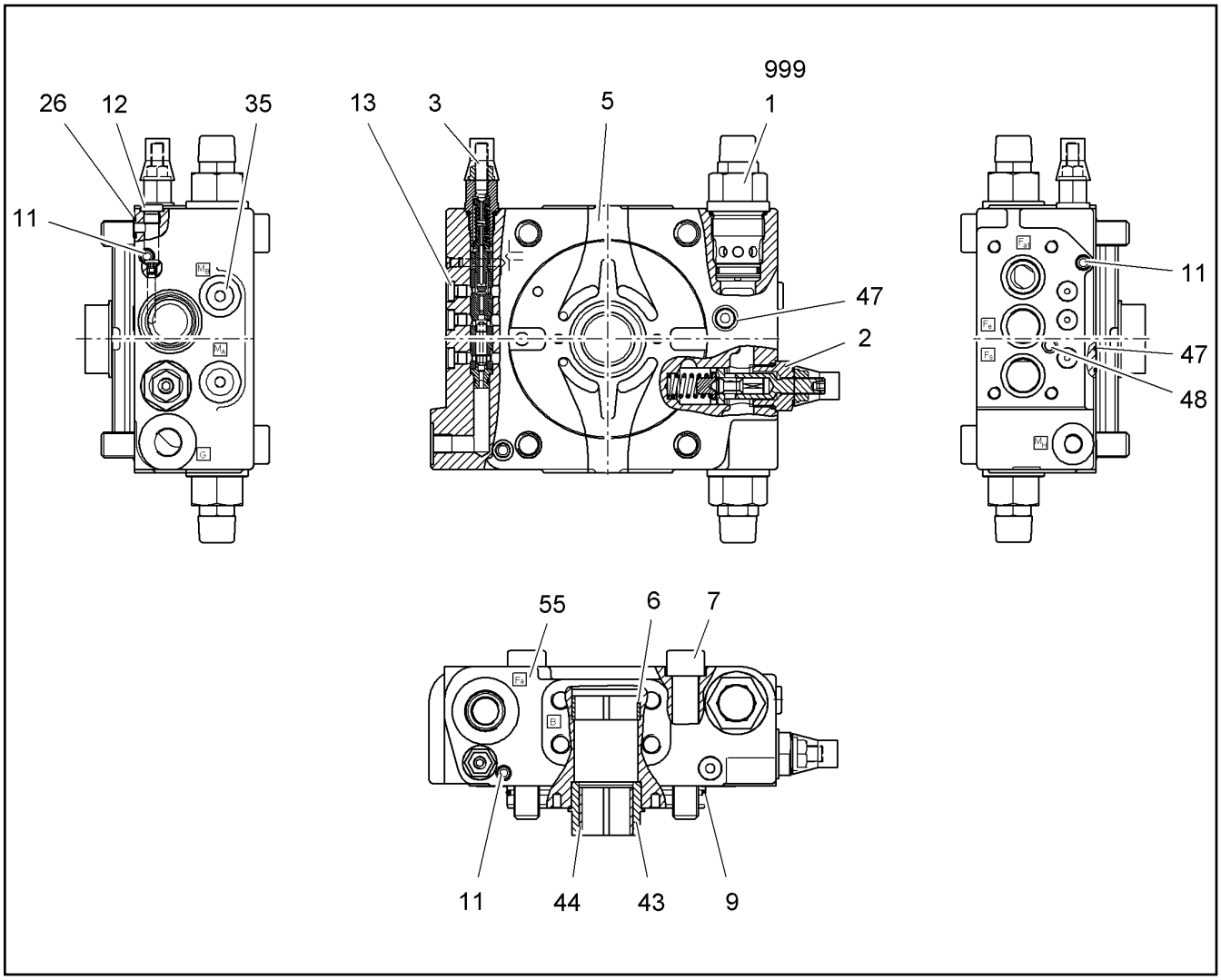

Pos.	Item	Quantity	Description	Designação	Serie	K
1	11006050	2	PRESSURE LIMITING VALVE ⇨ ❑ 403	VÁLVULA LIMITADORA DE PRES		
2	12246692	1	PRESSURE LIMITING VALVE ⇨ ❑ 404	VÁLVULA LIMITADORA DE PRES		
3	10220635	1	SHUTDOWN VALVE ⇨ ❑ 168	VALVULA INTERRUPTORA		
5	11491892	1	CONNECTING PLATE	PLACA DE LIGAÇÃO		
6	12256125	1	BEARING BUSH	BUCHA MANCAL		1
7	404317901	4	SOCKET HEAD SCREW ISO 4762 M16X90 1	PARAFUSO CILÍNDRICO		
9	10220638	1	O-RING	ANEL-O		
11	7022127	2	DOUBLE PLUG	PARAFUSO FECH. DE FILETE D		
12	7372626	1	SCREW PLUG M10X1 NBR	PARAFUSO DE FECHAMENTO		
13	7027497	3	SCREW PLUG M8X1 OR-NBR	PARAFUSO DE FECHAMENTO		
26	7028184	2	O-RING 9,25X1,78	ANEL-O		
35	7372624	2	SCREW PLUG M12X1,5	PARAFUSO DE FECHAMENTO		
43	10216741	1	BUSHING	BUCHA		
44	12256127	1	BEARING BUSH	BUCHA MANCAL		1
47	10220641	2	O-RING 12,42X1,78	ANEL-O		
48	7012971	1	DOUBLE PLUG	PARAFUSO FECH. DE FILETE D		
55	10220668	1	O-RING 88,57X2,62	ANEL-O		
999	10291972	1	SEAL KIT	KIT DE VEDAÇÃO		

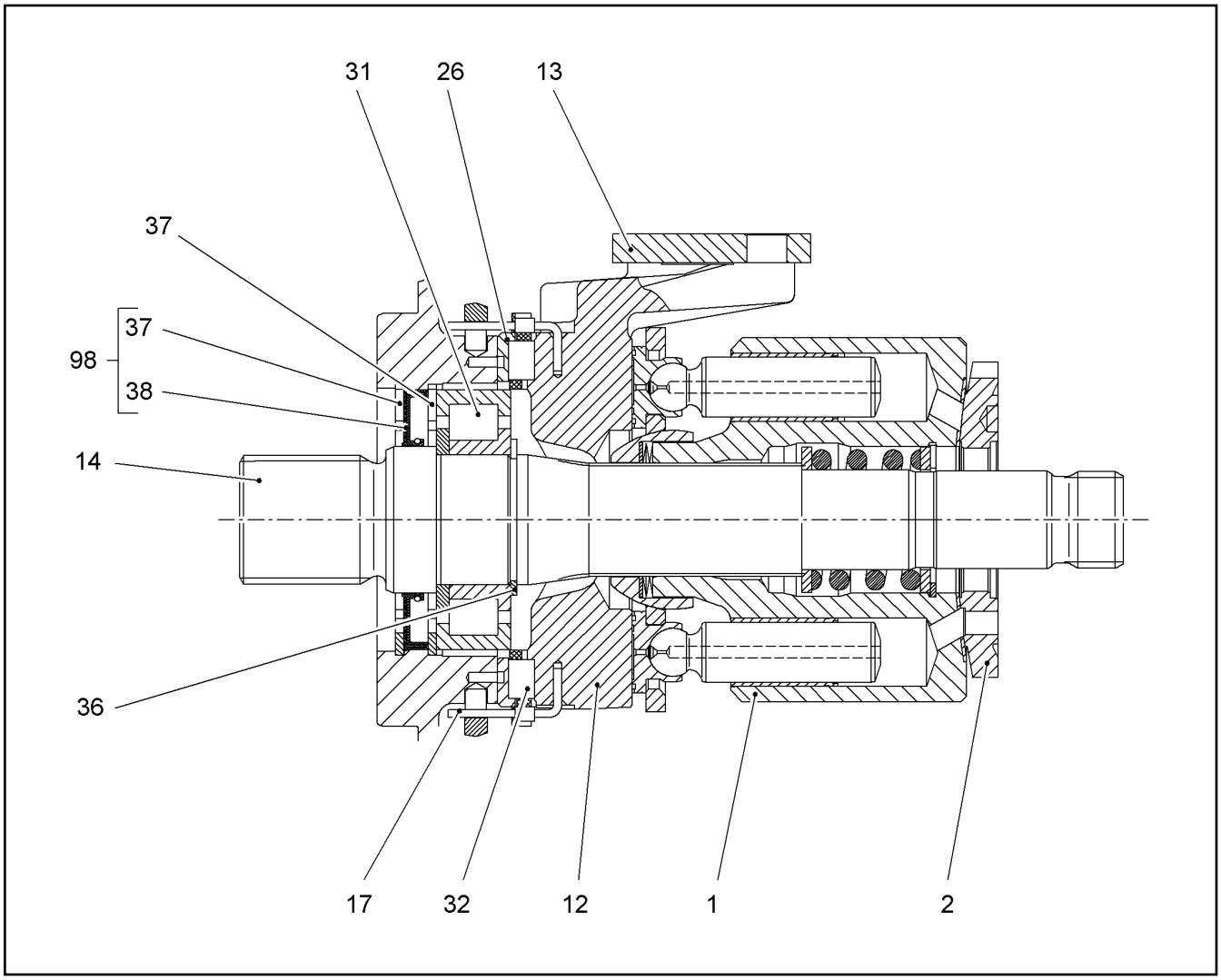

Pos.	Item	Quantity	Description	Designação	Serie	K
1	10220427	1	DRIVING GEAR ⇨ ❑ 402	MECANISMO DE ACIONAMENTO		
2	10291976	1	GUIDE PLATE	PLACA GUIA		
12		1	CRADLE	PLACA DE ANGULAÇÃO		
13	10216694	1	SLIDING PAD	PEÇA DESLIZANTE		
14	10216701	1	DRIVING SHAFT	EIXO DO MOTOR		
17	11491891	2	WIRE	ARAME		
26	7023749	1	BEARING SHELL	CASQUILHO DE MANCAL		1
31	7618605	1	CYLINDRICAL ROLLER BEARING	ROLAMENTO DE ROLOS CILÍN		
32	10216468	1	CAGE	SUPORTE		
36	4280030	1	LOCKING RING DIN 471 40	ANEL DE RETENÇÃO		
37	10010138	2	LOCKING RING DIN 984 80	ANEL DE RETENÇÃO		
38	10220431	1	SHAFT SEAL	ANEL RETENTOR		
98	10220432	1	SEAL KIT GEAR DRIVE	JG V MECANISMO DE TRANSMIS		

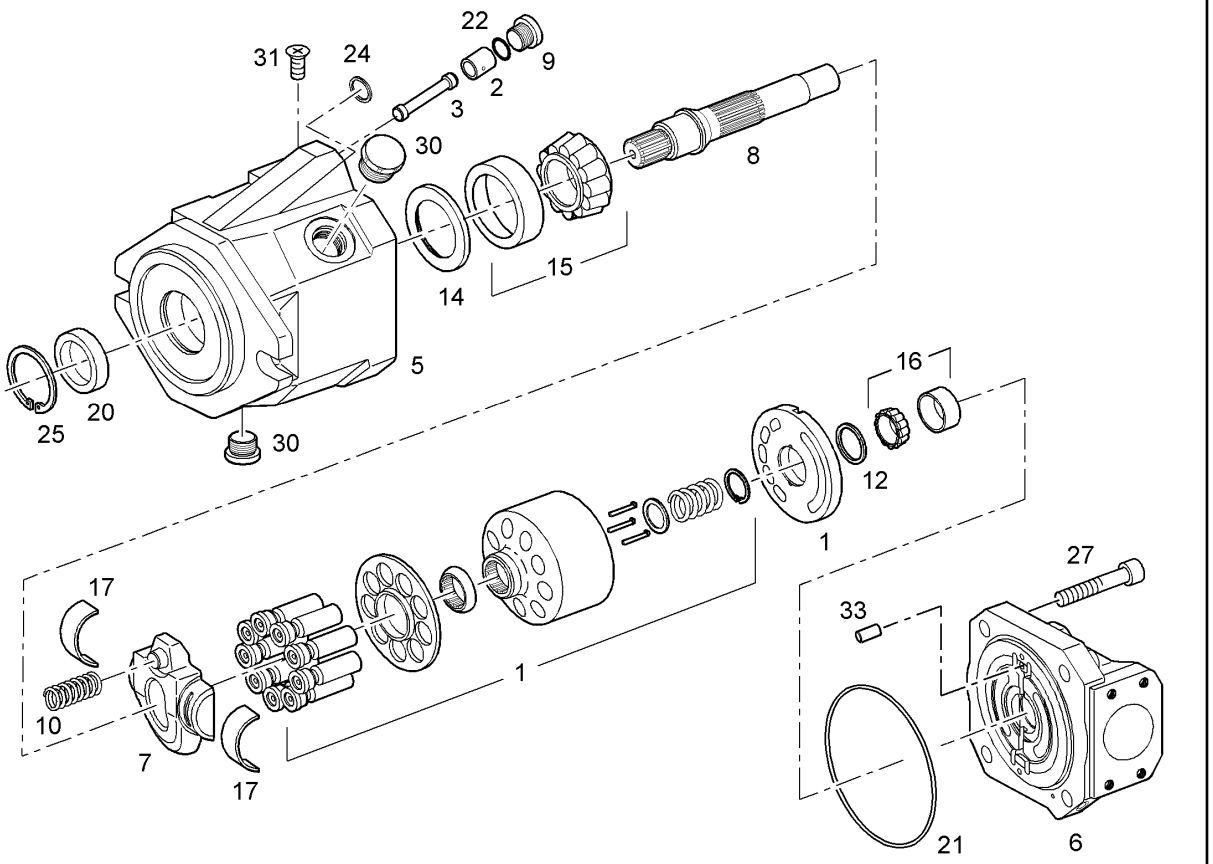

Pos.	Item	Quantity	Description	Designação	Serie	K
1	10008080	1	DRIVING GEAR ⇨ ❑ 156	MECANISMO DE ACIONAMENTO		
1	10297875	1	DRIVING GEAR ⇨ ❑ 173	MECANISMO DE ACIONAMENTO		
2	10008081	1	DISPLACEMENT PISTON	PISTAO DE REGULAGEM		
3	10008082	1	PISTON ROD	HASTE DO CILINDRO		
3	10297878	1	PISTON ROD	HASTE DO CILINDRO		
5	10008083	1	PUMP HOUSING	CARCAÇA DA BOMBA		
6	10008084	1	CONNECTING PLATE	PLACA DE LIGAÇÃO		
7	10008085	1	SWING ROCKER	BALANCO GIRATORIO		
8	10008086	1	DRIVE SHAFT	EIXO DE ACIONAMENTO		
9	10001103	1	SCREW PLUG	PARAFUSO DE FECHAMENTO		
10	10008087	1	PRESSURE SPRING	MOLA DE PRESSÃO		
12	10008421	1	ADJUSTING SHIM	ARRUELA DE AJUSTE		
14	10008088	1	LIMIT STOP RING	ANEL DE ENCOSTO		
15	10008089	1	TAPERED ROLLER BEARING	ROLAMENTO DE ROLETES CÔNI		
16	7025903	1	TAPERED ROLLER BEARING	ROLAMENTO DE ROLETES CÔNI		
17	10008090	2	BEARING SHELL	CASQUILHO DE MANCAL		1
20	7413402	1	SHAFT SEAL X25X35X6	ANEL RETENTOR		
21	10008091	1	O-RING 110X2,5	ANEL-O		
22	10001112	1	O-RING	ANEL-O		
24	10001114	1	RECTANGULAR SECTION RING 7,65X1,68	ANEL DE SEÇÃO RETANGULAR		
25	10008092	1	LOCKING RING DIN 984 35	ANEL DE RETENÇÃO		
27	4980673	4	SOCKET HEAD SCREW ISO 4762 M10X30 1	PARAFUSO CILÍNDRICO		
30	10008093	2	SCREW PLUG	PARAFUSO DE FECHAMENTO		
31	7022127	1	DOUBLE PLUG	PARAFUSO FECH. DE FILETE D		

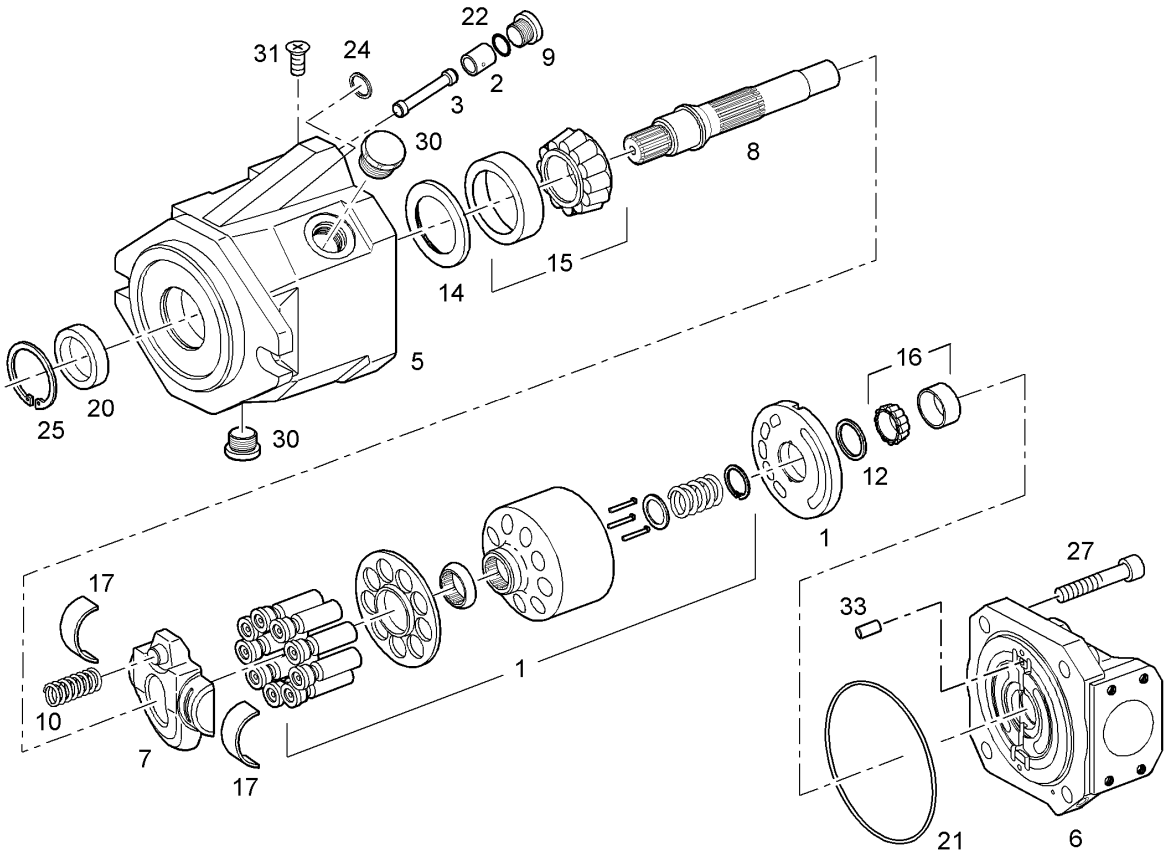

Pos.	Item	Quantity	Description	Designação	Serie	K
33	7408829	1	PARALLEL PIN 6m6	PINO CILÍNDRICO		

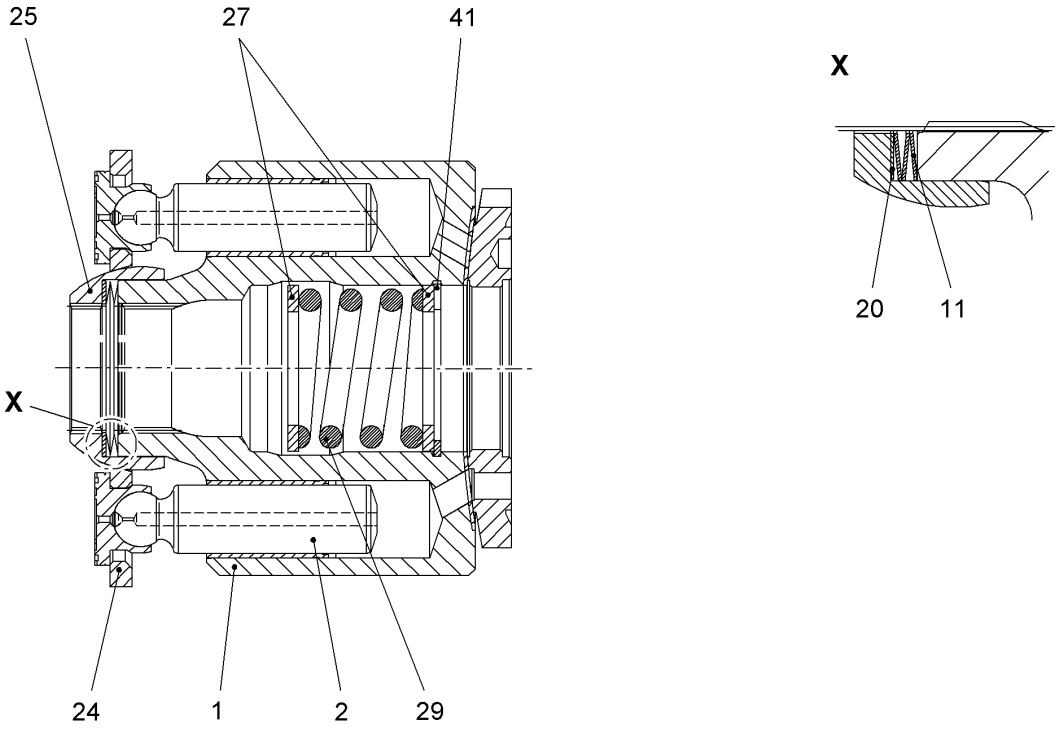

Pos.	Item	Quantity	Description	Designação	Serie	K
1	12215553	1	CYLINDER W.BUSHING	CILINDRO COM BUCHA		
2	10216691	9	PISTON	PISTÃO		
11	11213510	1	CUP SPRING PILLAR	COLUNA DE MOLAS-PRATO		
20	10216704	1	SHIM RING	ARRUELA DE AJUSTE		
20	10216705	1	SHIM RING	ARRUELA DE AJUSTE		
20	10216703	1	SHIM RING	ARRUELA DE AJUSTE		
20	10216706	1	SHIM RING	ARRUELA DE AJUSTE		
24	10216707	1	PULL-BACK PLATE	PLACA DE RETORNO		
25	10216710	1	PULL-BACK BALL	ESFERA DE RETORNO		
27	10216714	2	WASHER	ARRUELA		
29	10216715	1	PRESSURE SPRING	MOLA DE PRESSÃO		
41	4000688	1	LOCKING RING DIN 472 45	ANEL DE RETENÇÃO		

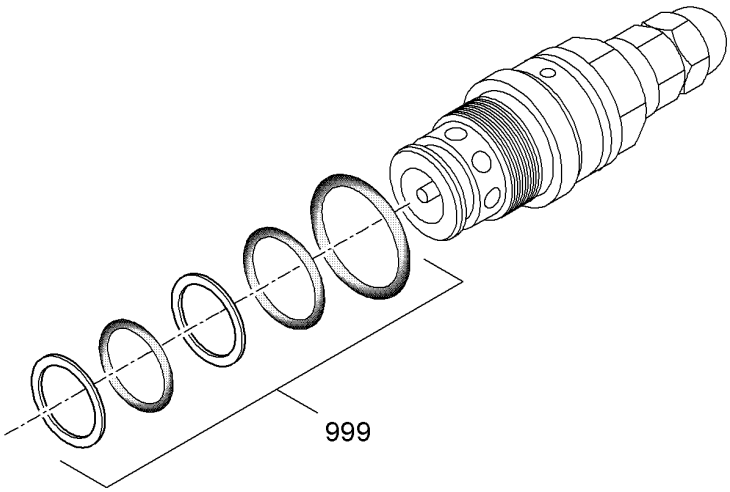

Pos.	Item	Quantity	Description	Designação	Serie	K
999	10340130	1	SEAL KIT PRESSURE VALVE	KIT DE VED DA VÁLV. DE PRESS		

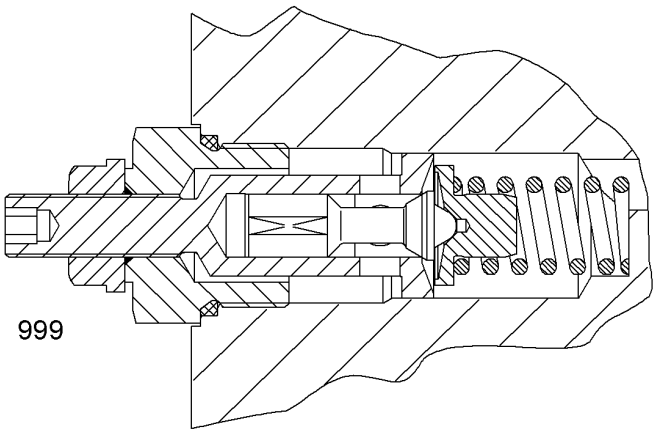

Pos.	Item	Quantity	Description	Designação	Serie	K
999	11821513	1	SEALING SET VALVE ⇨ ❑ 174	KIT DE VEDACAO DA VALVULA		

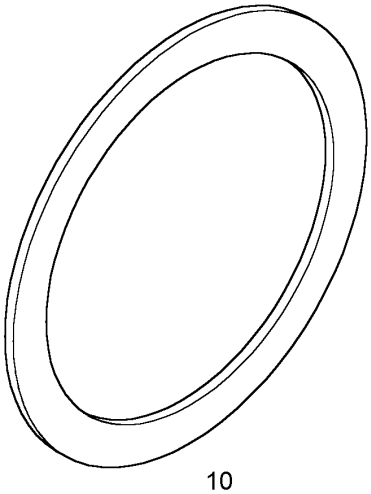

Pos.	Item	Quantity	Description	Designação	Serie	K
10	7380698	1	SUPPORTING WASHER S 52X70X0,4	ARRUELA DE APOIO		
10	7380697	1	SUPPORTING WASHER S 52X70X0,5	ARRUELA DE APOIO		
10	7380696	1	SUPPORTING WASHER S 52X70X0,6	ARRUELA DE APOIO		
10	7380695	1	SUPPORTING WASHER S 52X70X0,7	ARRUELA DE APOIO		

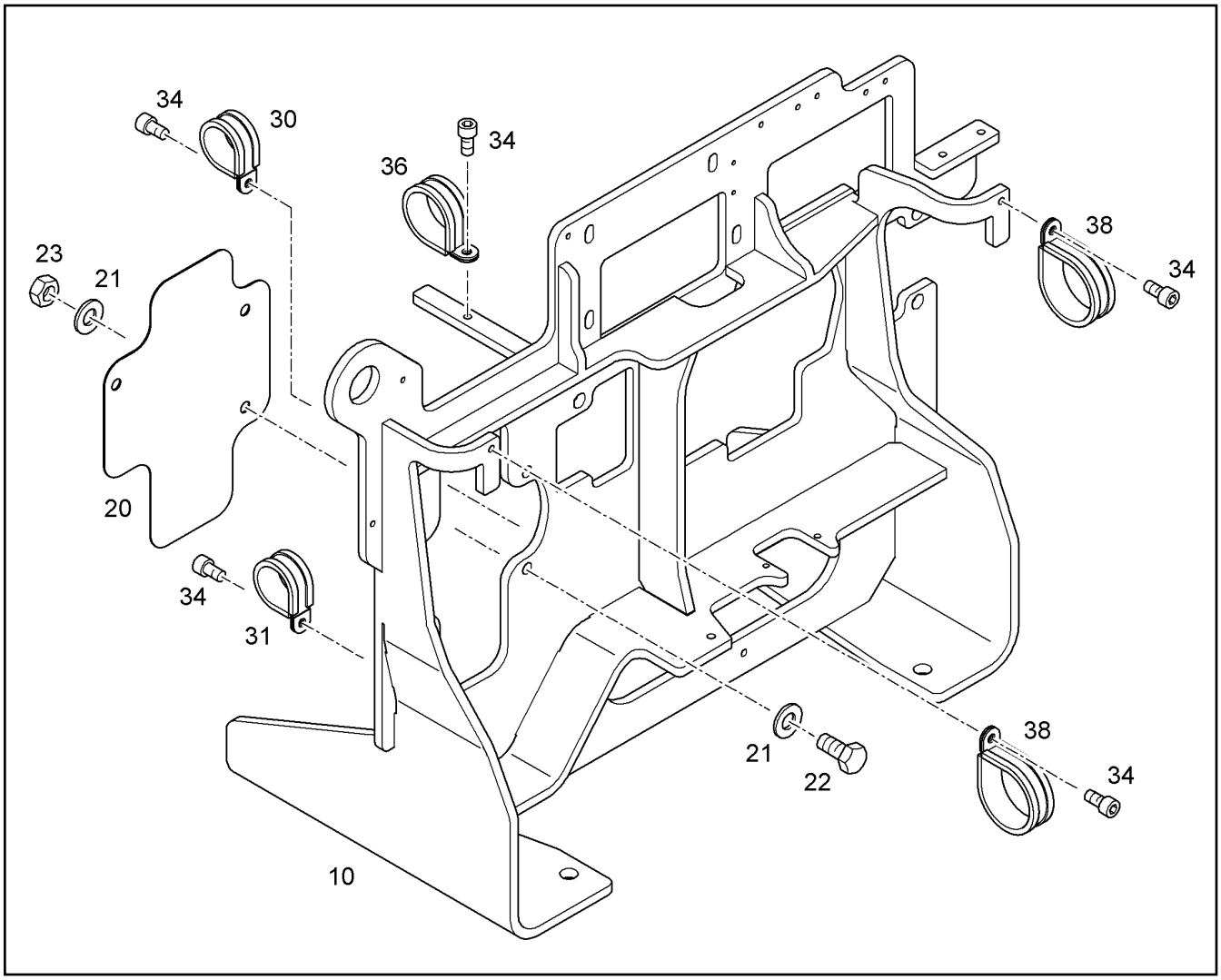

Pos.	Item	Quantity	Description	Designação	Serie	K
10	10358191	1	CONTROL VALVES BRACKET	CONSOLE DE VÁLVULA DE CO		
20	10066134	1	PLATE	PLACA		
21	10289804	6	WASHER 12 300HV	ARRUELA		
22	4066124	3	HEX SCREW ISO 4017 M12X30 10.9 A3C	PARAFUSO SEXTAVADO		
23	4900546	3	HEX NUT M12	PORCA SEXTAVADA		
30	7405120	2	CLAMP DIN 3016-1 D1 48X25 W1-2-CR	BRAÇADEIRA		
31	7615522	1	CLAMP DIN 3016-1 D1 60X25 W1-2-CR	BRAÇADEIRA		
34	4043122	5	SOCKET HEAD SCREW ISO 4762 M10X20 1	PARAFUSO CILÍNDRICO		
36	7615522	1	CLAMP DIN 3016-1 D1 60X25 W1-2-CR	BRAÇADEIRA		
38	7363247	2	CLAMP DIN 3016-1 D1 74X25 W1-2-CR	BRAÇADEIRA		

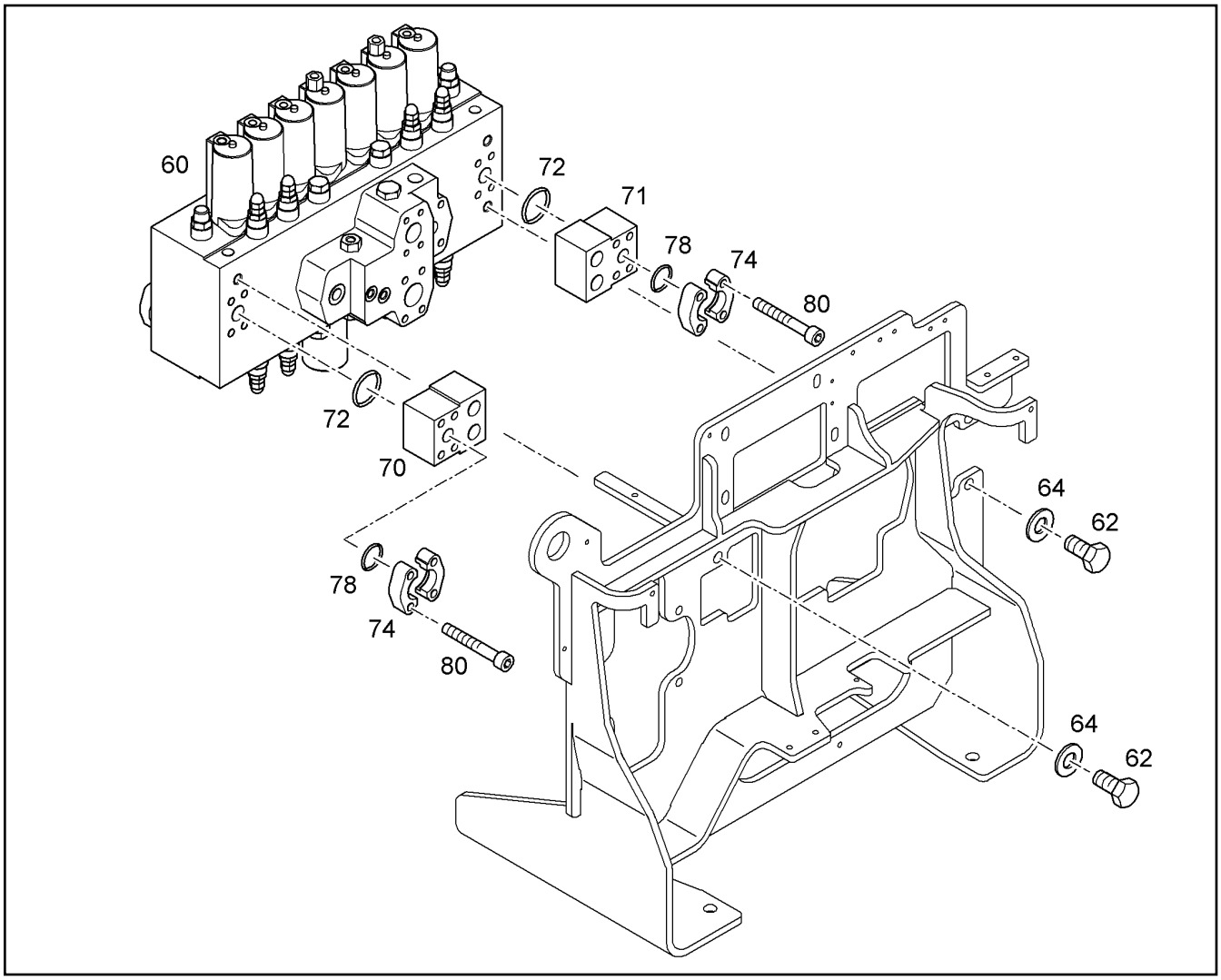

Pos.	Item	Quantity	Description	Designação	Serie	K
60	10113860	1	CONTROL BLOCK [1776] ⇨ ❑ 424	BLOCO DE COMANDO		
62	4600805	3	HEX SCREW ISO 4017 M16X30 10.9 FLZN	PARAFUSO SEXTAVADO		
64	10289806	3	WASHER 16 300HV	ARRUELA		
70	10285358	1	NON-RETURN VALVE ⇨ ❑ 426	VÁLVULA DE RETORNO		
71	10299997	1	NON-RETURN VALVE ⇨ ❑ 427	VÁLVULA DE RETORNO		
72	10490781	2	RECTANGULAR SECTION RING 40,15X2,80	ANEL DE SEÇÃO RETANGULAR		
74	11485638	4	FLANGE HALF WITH BOSSING SAE J518 S	MEIO FLANGE COM RELEVO		
78	10490781	2	RECTANGULAR SECTION RING 40,15X2,80	ANEL DE SEÇÃO RETANGULAR		
80	404313108	8	SOCKET HEAD SCREW ISO 4762 M12X105 1	PARAFUSO CILÍNDRICO		

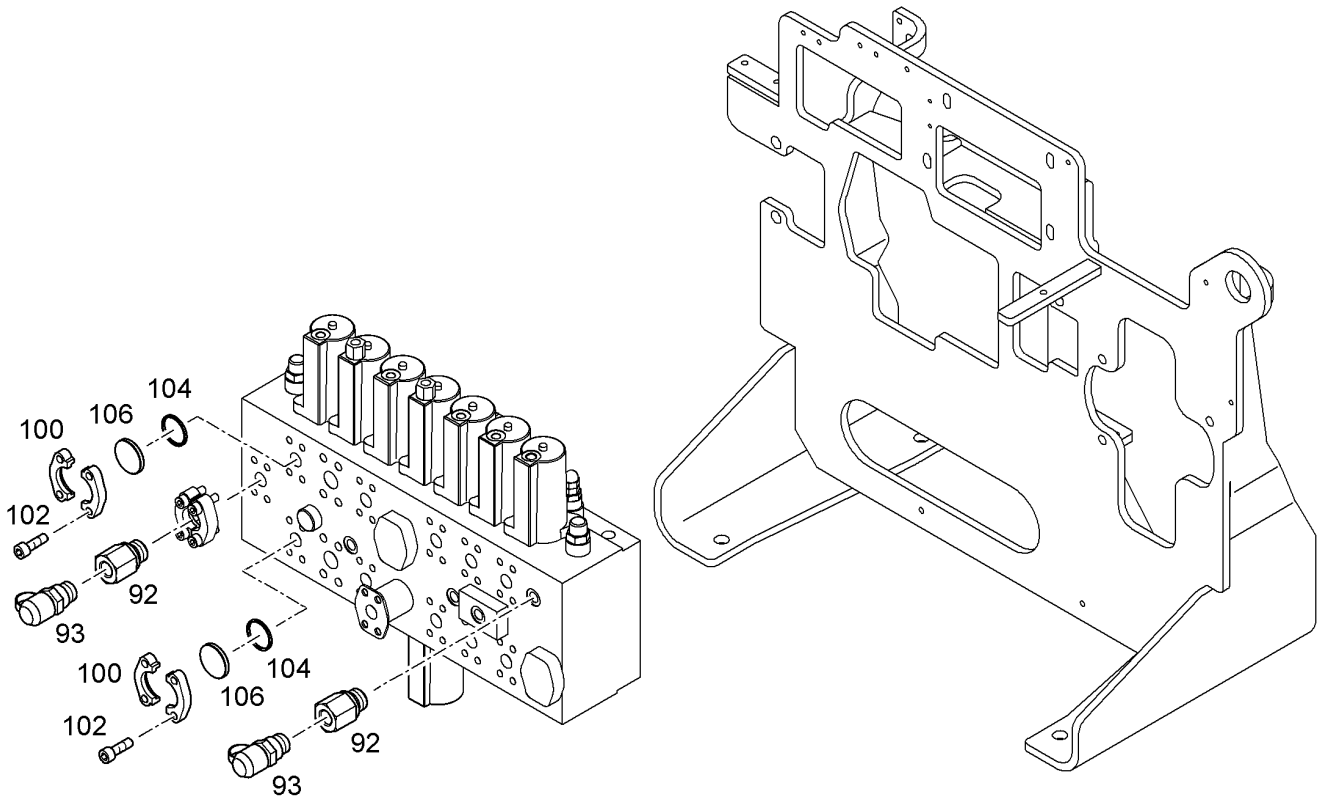

Pos.	Item	Quantity	Description	Designação	Serie	K
92	7022687	2	FITTING RI G3/8XG1/4	UNIÃO ROSCADA		
93	7409720	2	SCREW COUPLING G1/4	ACOPLAMENTO ROSCADO		
100	11485637	4	FLANGE HALF WITH BOSSING SAE J518 S	MEIO FLANGE COM RELEVO		
102	4900855	8	SOCKET HEAD SCREW ISO 4762 M10X35 1	PARAFUSO CILÍNDRICO		
104	10490784	2	RECTANGULAR SECTION RING 32,30X2,80	ANEL DE SEÇÃO RETANGULAR		
106	9429977	2	SAE BLIND FLANGE	FLANGE CEGO		

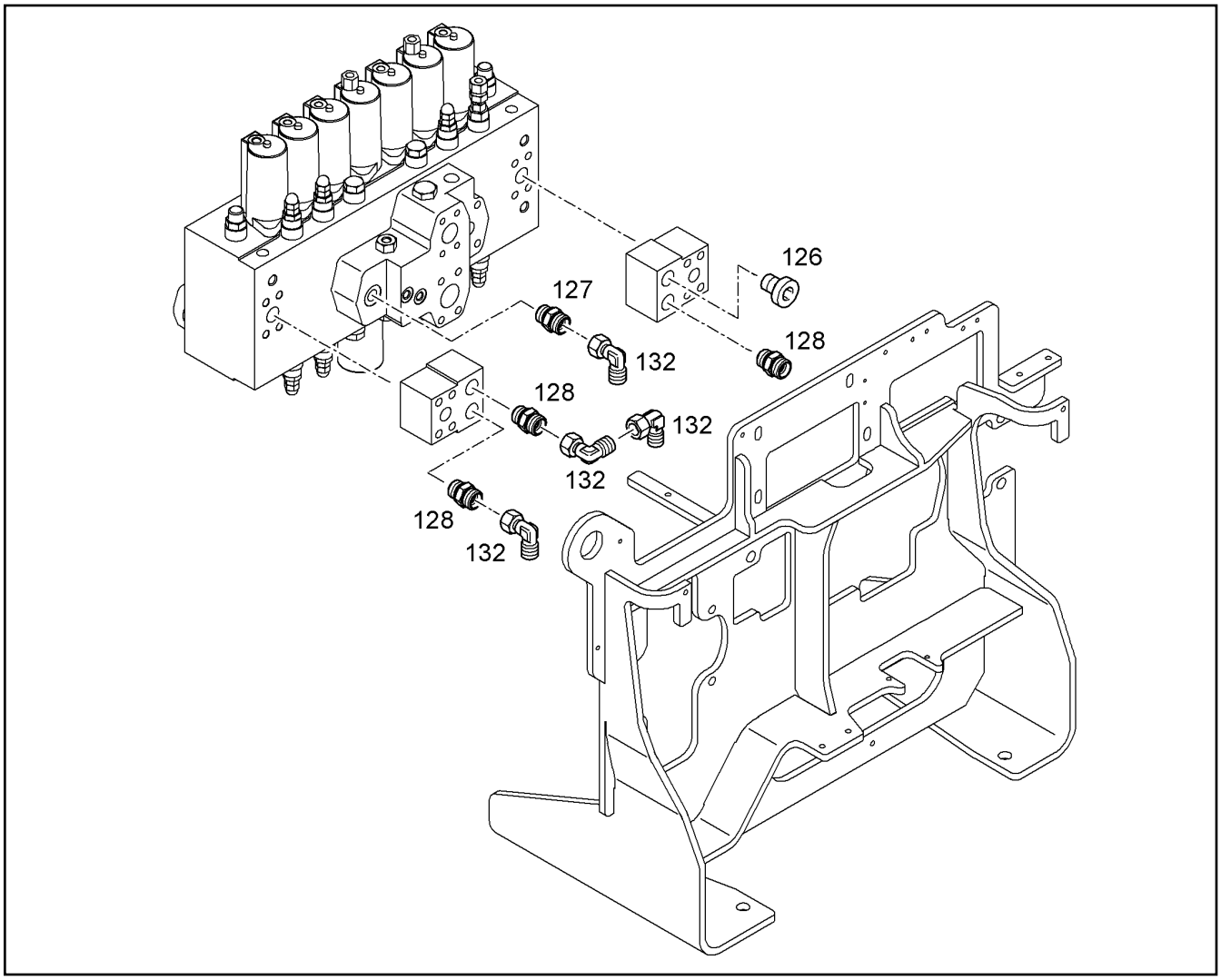

Pos.	Item	Quantity	Description	Designação	Serie	K
126	7360563	1	FITTING M27X2	UNIÃO ROSCADA		
127	7002361	1	FITTING GE 16S G1/2A	UNIÃO ROSCADA		
128	7018370	3	FITTING GE 16S M27X2	UNIÃO ROSCADA		
132	7617460	4	FITTING EW 16S	UNIÃO ROSCADA		

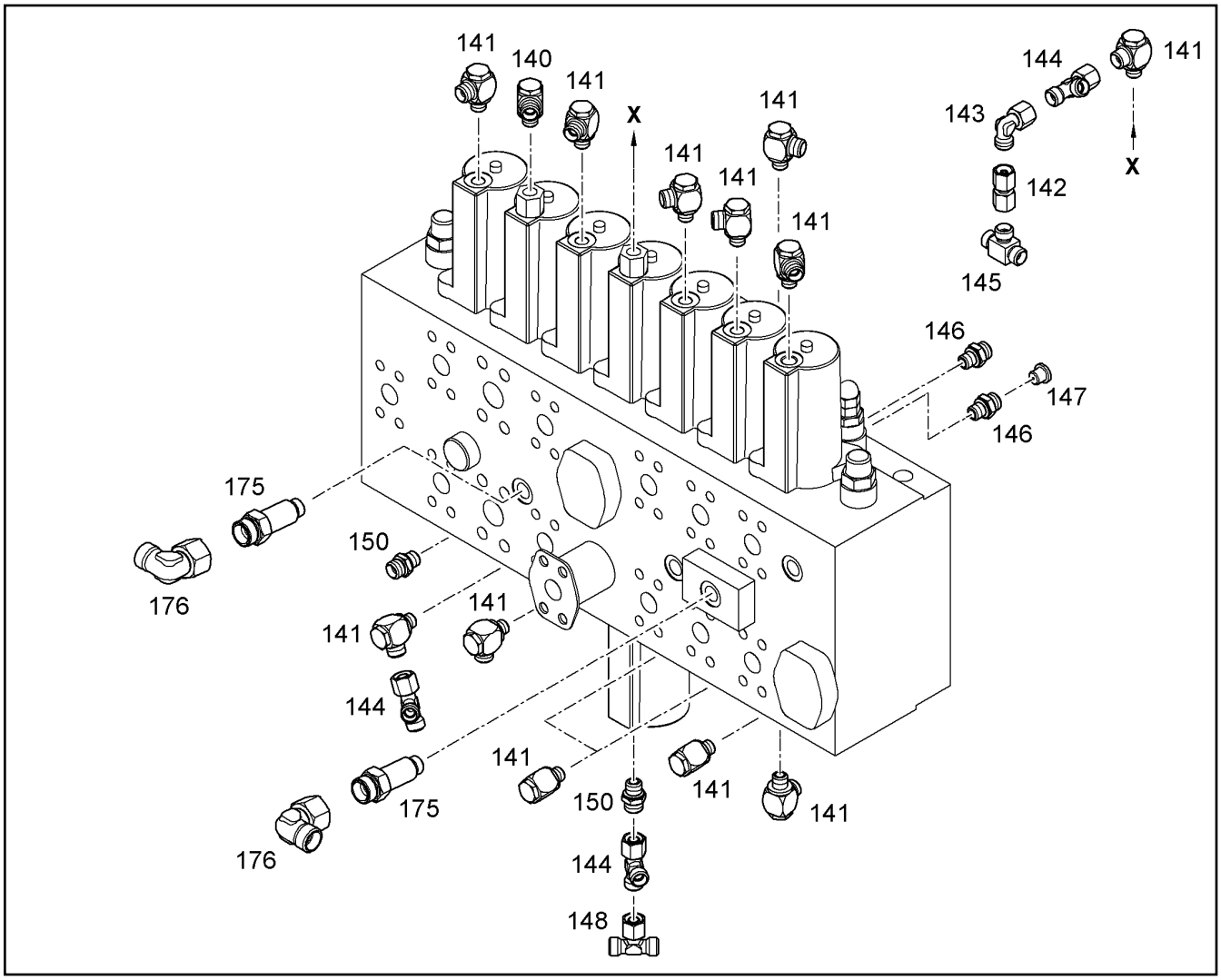

Pos.	Item	Quantity	Description	Designação	Serie	K
140	7368531	1	FITTING TH 10L G1/4A	UNIÃO ROSCADA		
141	7617261	13	HINGED THREADED UNION WH 10L G1/4A	CONEXÃO ROSCADA		
142	7410211	1	FITTING GZ 10L	UNIÃO ROSCADA		
143	7403569	1	FITTING EW 10L M16X1,5	UNIÃO ROSCADA		
144	472330208	3	FITTING EL 10L	UNIÃO ROSCADA		
145	7403972	1	SHUTTLE VALVE	VALVULA DIRECIONAL		
146	7362091	2	FITTING GE 10L G1/4A	UNIÃO ROSCADA		
147	9231952	1	ORIFICE NG 1,0MM / 6X6,5	ANTEPARO		
148	482430314	1	FITTING ET 10L M16X1,5	UNIÃO ROSCADA		
150	7362091	2	FITTING GE 10L G1/4A	UNIÃO ROSCADA		
175	10076195	2	FITTINGS ⇨ ❑ 419	CONEXÃO		
176	7617460	2	FITTING EW 16S	UNIÃO ROSCADA		

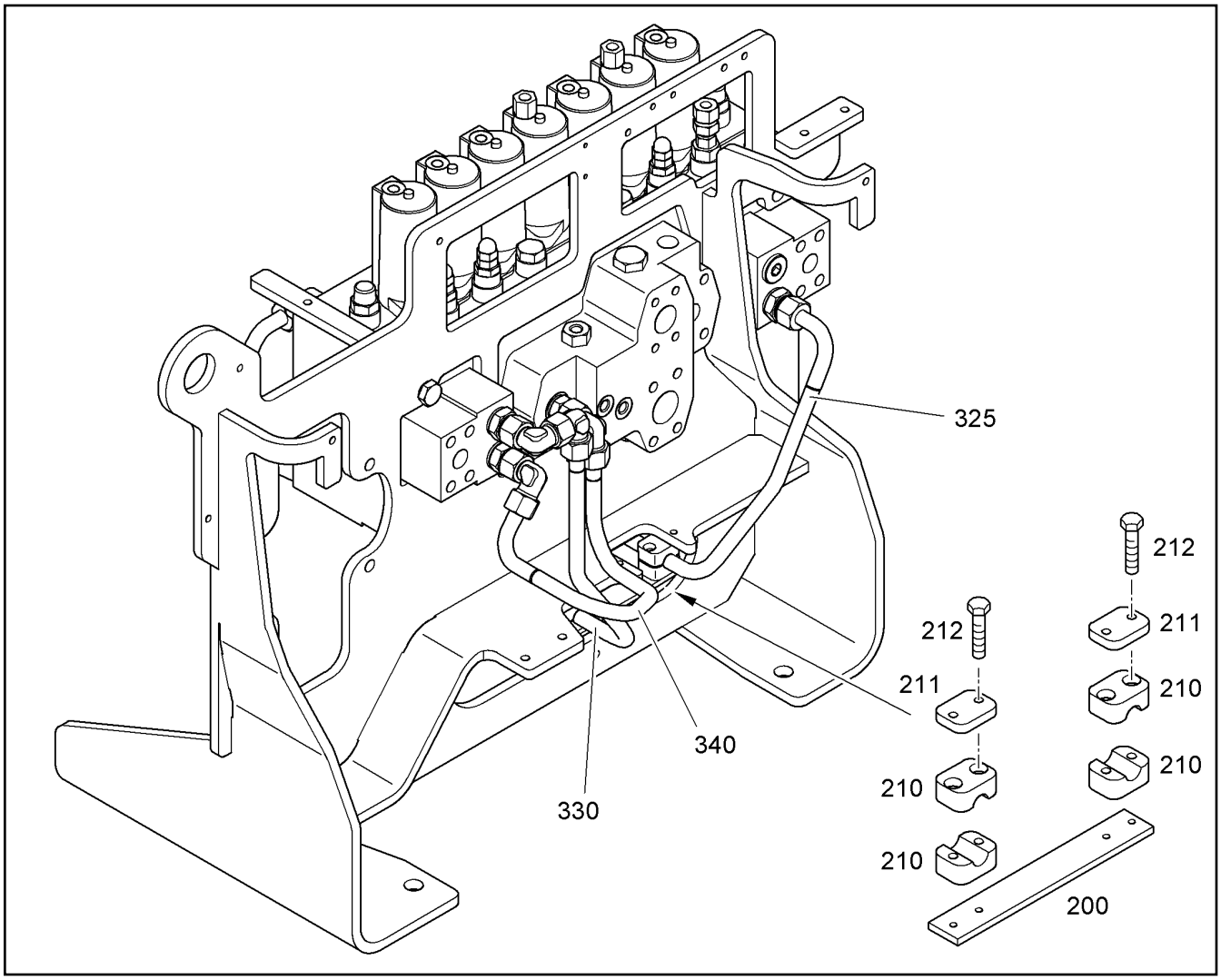

Pos.	Item	Quantity	Description	Designação	Serie	K
200	10070437	1	CONSOLE	CONSOLE		
210	7362946	4	CLAMP-HALF DIN 3015-1 L 2 R 16 PP SW	MEIA ABRAÇADEIRA		
211	7362949	2	LID PLATE DIN 3015-1 L-DP 2 W1-ZN	PLACA		
212	12216201	4	HEX SCREW ISO 4017 M6X45 8.8 480H	PARAFUSO SEXTAVADO		
325	10065976	1	TUBE	TUBO	-99998	
325	10498956	1	TUBE	TUBO	99999-	
330	10070400	1	TUBE	TUBO	-99998	
330	10842063	1	TUBE	TUBO	99999-	
340	10070399	1	TUBE	TUBO	-99998	
340	10842065	1	TUBE	TUBO	99999-	

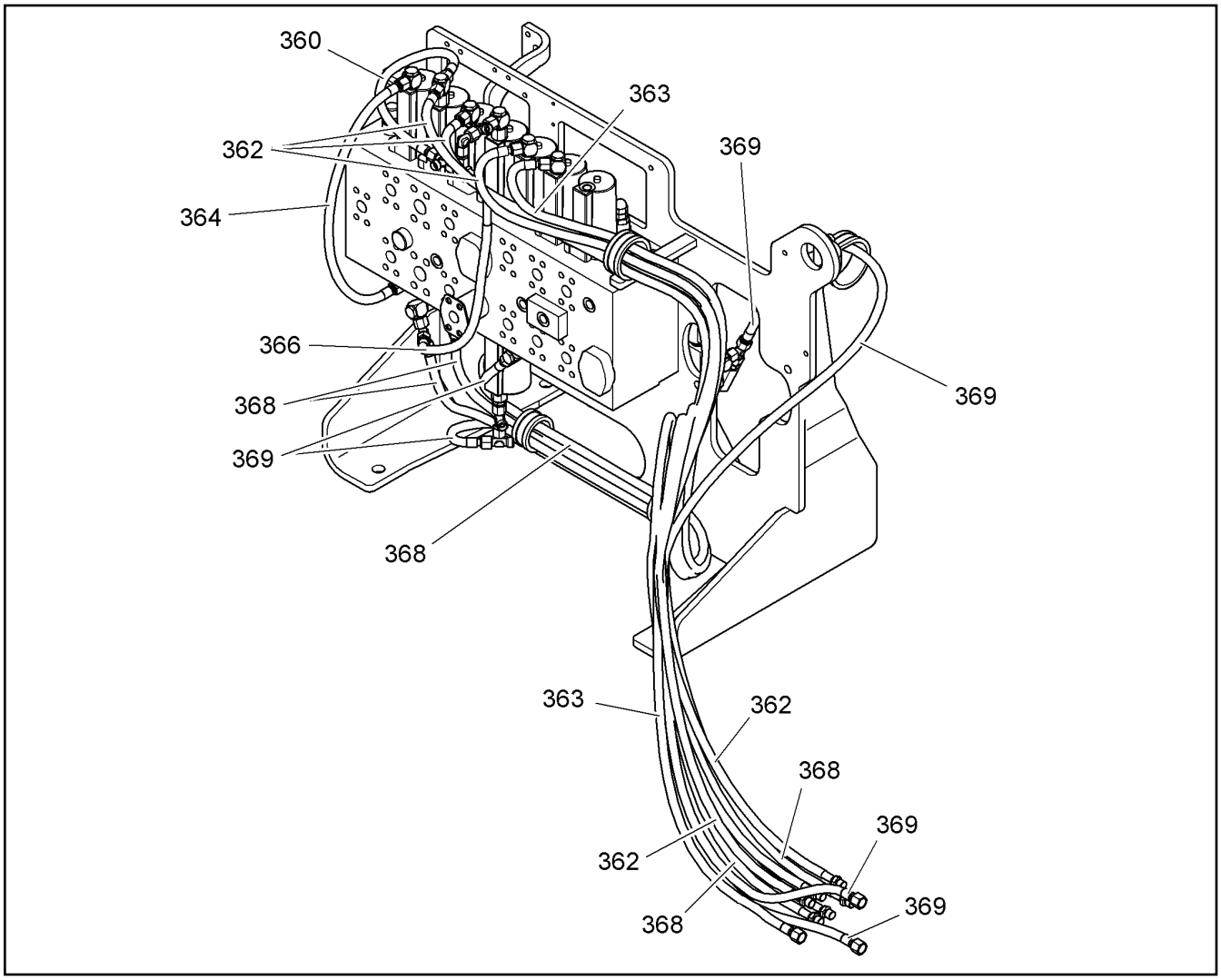

Pos.	Item	Quantity	Description	Designação	Serie	K
360	7406682	1	CONTROL HOSE	MANGUEIRA DE COMANDO		1
362	10007230	3	CONTROL HOSE 8X2100	MANGUEIRA DE COMANDO		1
363	7014580	1	CONTROL HOSE 8X2100	MANGUEIRA DE COMANDO		1
364	7403978	1	CONTROL HOSE	MANGUEIRA DE COMANDO		1
366	7401757	1	CONTROL HOSE 8X480	MANGUEIRA DE COMANDO		1
368	10218975	3	CONTROL HOSE 8X2600	MANGUEIRA DE COMANDO		1
369	7618290	3	CONTROL HOSE 8X2600	MANGUEIRA DE COMANDO		1

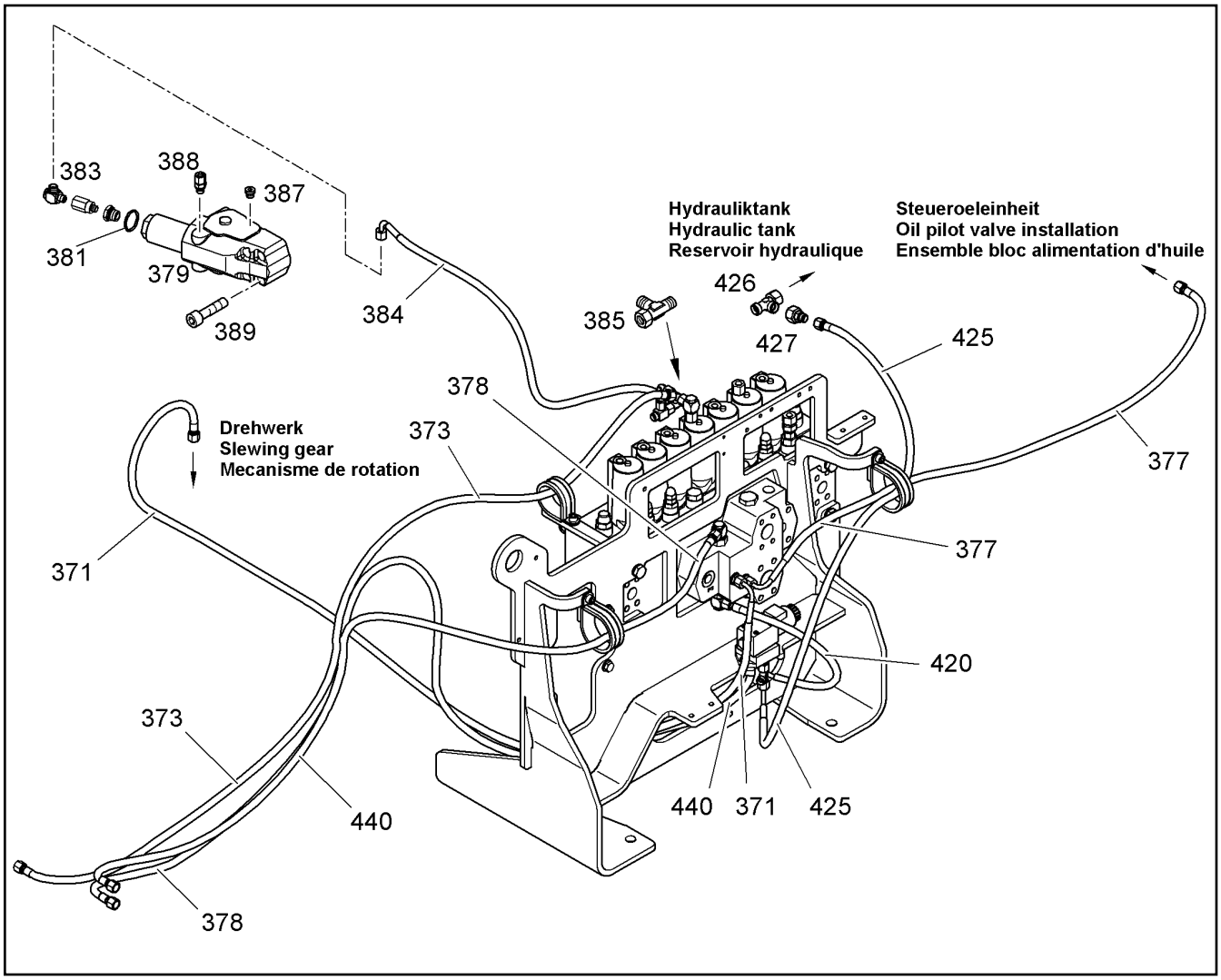

Pos.	Item	Quantity	Description	Designação	Serie	K
371	7402833	1	CONTROL HOSE	MANGUEIRA DE COMANDO		1
373	5604011	1	CONTROL HOSE 8X1950	MANGUEIRA DE COMANDO		1
377	7003723	1	CONTROL HOSE 8X1500	MANGUEIRA DE COMANDO		1
378	7402440	1	CONTROL HOSE	MANGUEIRA DE COMANDO		1
379	10300798	1	STICK BYPASS VALVE ⇨ ❑ 421	VALVULA DE RETENCAO		
381	10490781	1	RECTANGULAR SECTION RING 40,15X2,80	ANEL DE SEÇÃO RETANGULAR		
383	7617261	1	HINGED THREADED UNION WH 10L G1/4A	CONEXÃO ROSCADA		
384	7401756	1	CONTROL HOSE	MANGUEIRA DE COMANDO		1
385	472330208	1	FITTING EL 10L	UNIÃO ROSCADA		
387	7361553	1	SCREW PLUG G1/4	PARAFUSO DE FECHAMENTO		
388	7617262	1	FITTING EGE 10L	UNIÃO ROSCADA		
389	4000613	4	SOCKET HEAD SCREW ISO 4762 M12X60 1	PARAFUSO CILÍNDRICO		
420	7005665	1	CONTROL HOSE 8X600	MANGUEIRA DE COMANDO		1
425	7002561	1	CONTROL HOSE 8X1300	MANGUEIRA DE COMANDO		1
426	472300414	1	FITTING EL 15L	UNIÃO ROSCADA		
427	7616915	1	FITTING RED 15/10L	UNIÃO ROSCADA		
440	7014248	1	CONTROL HOSE 8X2800	MANGUEIRA DE COMANDO		1

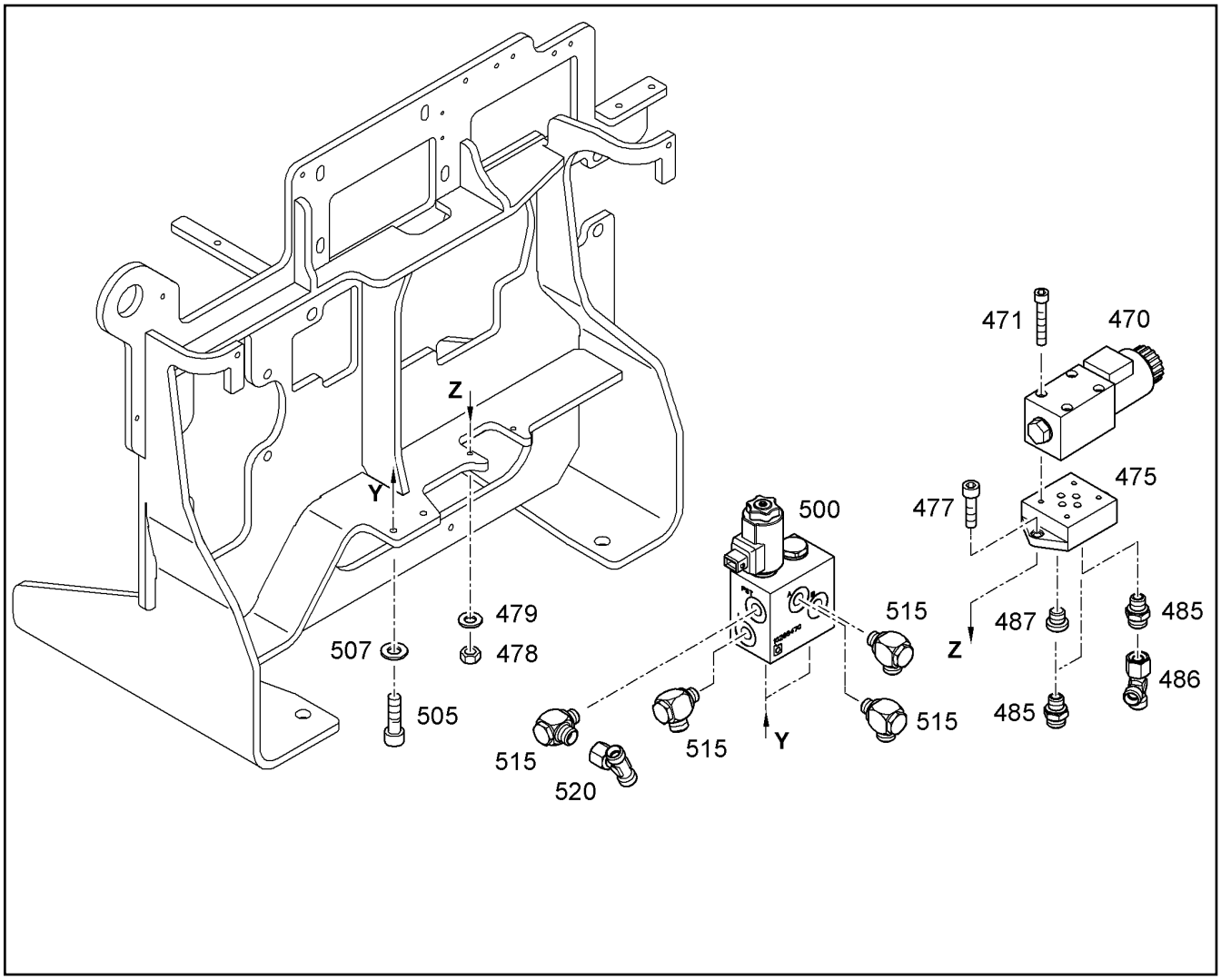

Pos.	Item	Quantity	Description	Designação	Serie	K
470	10003485	1	DIRECTIONAL CONTROL VALVE ⇨ ❑ 744	VÁLVULA DIRECIONAL		
471	4600552	4	SOCKET HEAD SCREW ISO 4762 M5X50 10.	PARAFUSO CILÍNDRICO		
475	7013559	1	CONNECTING PLATE	PLACA DE LIGAÇÃO		
477	4901159	2	SOCKET HEAD SCREW ISO 4762 M6X30 10.	PARAFUSO CILÍNDRICO		
478	4000379	2	HEX NUT M6	PORCA SEXTAVADA		
479	10289802	2	WASHER 6 300HV	ARRUELA		
485	7362091	3	FITTING GE 10L G1/4A	UNIÃO ROSCADA		
486	472330208	1	FITTING EL 10L	UNIÃO ROSCADA		
487	7361553	1	SCREW PLUG G1/4	PARAFUSO DE FECHAMENTO		
500	10288470	1	CONTROL PLATE ⇨ ❑ 418	REGUA DE COMANDO		
505	4600791	2	SOCKET HEAD SCREW ISO 4762 M8X30 10.	PARAFUSO CILÍNDRICO		
507	423910801	2	LOCK WASHER VS 8	ARRUELA DE PRESSÃO		
515	7617261	4	HINGED THREADED UNION WH 10L G1/4A	CONEXÃO ROSCADA		
520	482430314	1	FITTING ET 10L M16X1,5	UNIÃO ROSCADA		

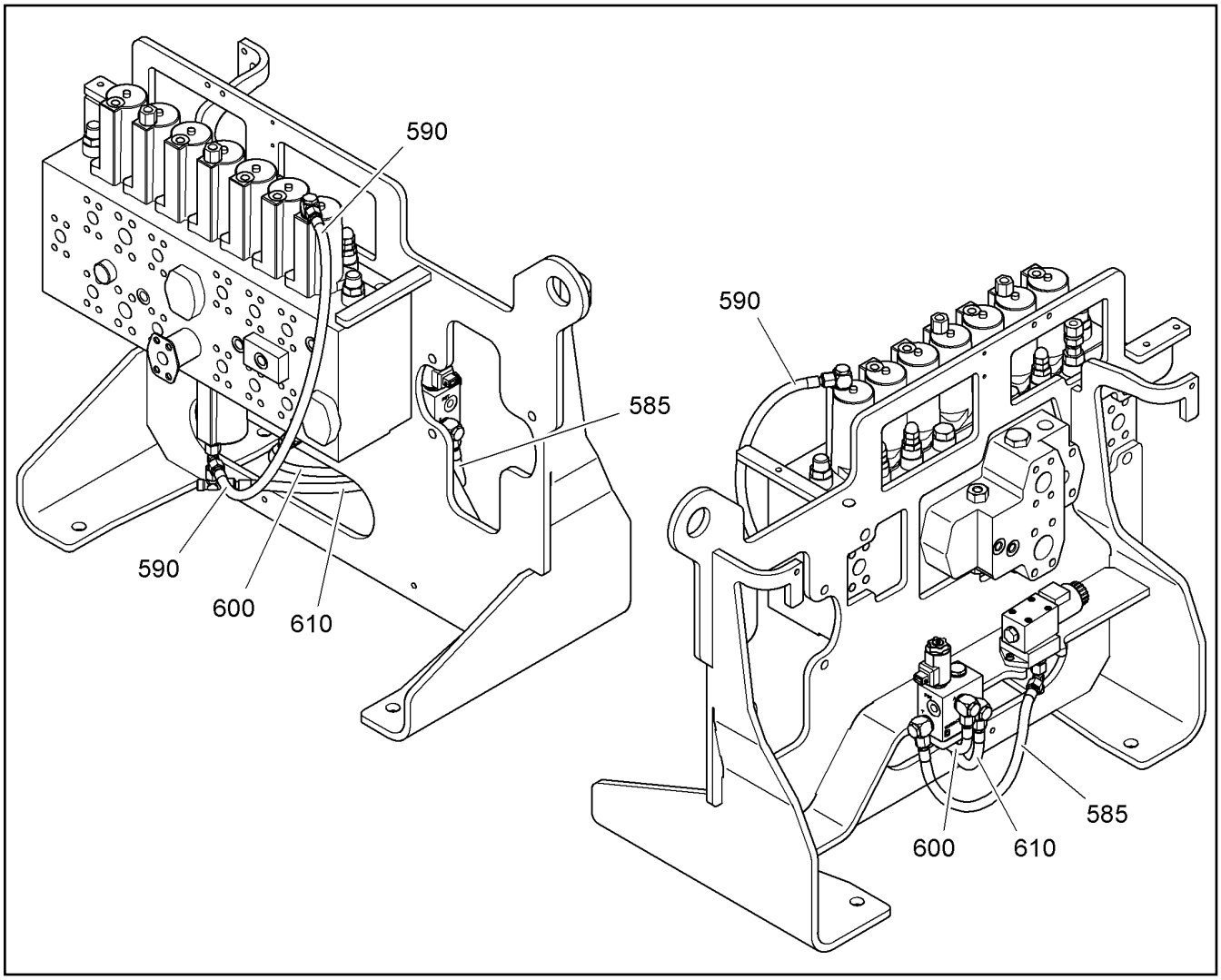

Pos.	Item	Quantity	Description	Designação	Serie	K
585	7401007	1	CONTROL HOSE	MANGUEIRA DE COMANDO		1
590	7015992	1	CONTROL HOSE 8X800	MANGUEIRA DE COMANDO		1
600	7401007	1	CONTROL HOSE	MANGUEIRA DE COMANDO		1
610	7402483	1	CONTROL HOSE	MANGUEIRA DE COMANDO		1

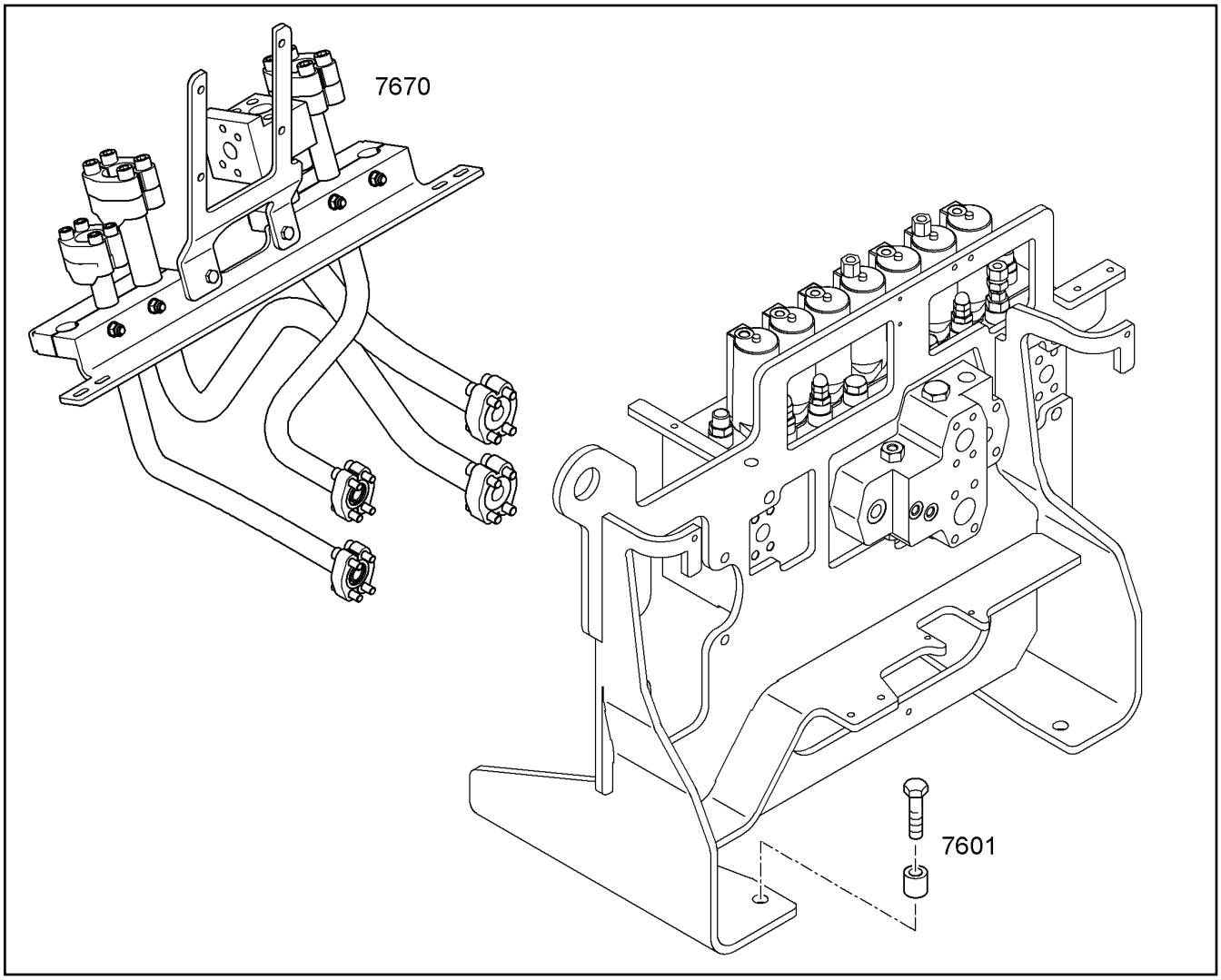

Pos.	Item	Quantity	Description	Designação	Serie	K
7601	10063986	1	FIXING PARTS CONTROL VALVE ⇨ ❑ 417	PECAS DE FIXACAO PARA VALV		
7670	10358637	1	HYDR.TUBES INSTALLATION ⇨ ❑ 420	TUBULACOES PRESSAO INSTA		

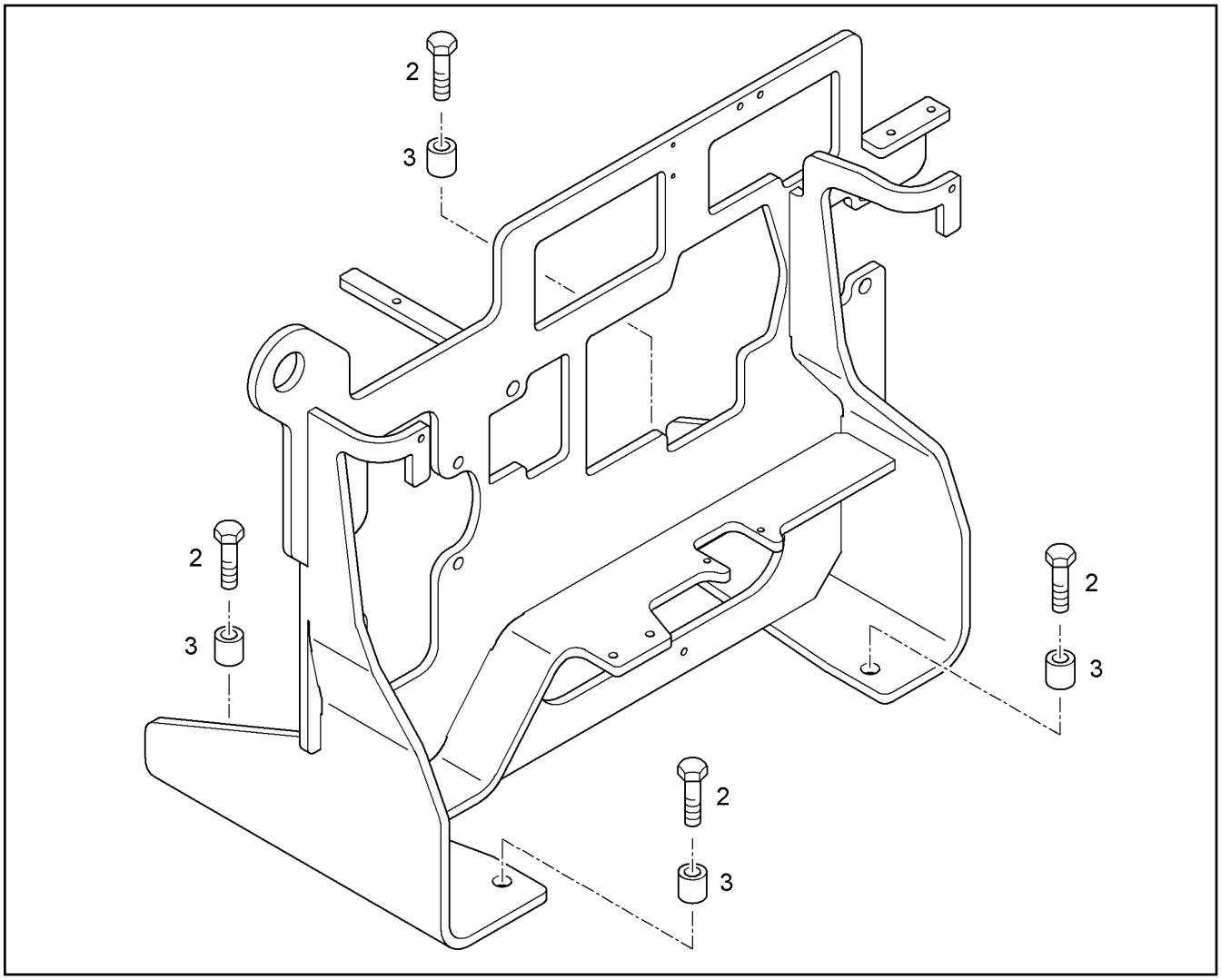

Pos.	Item	Quantity	Description	Designação	Serie	K
2	4066202	4	HEX SCREW ISO 4017 M16X60 10.9 FLZN	PARAFUSO SEXTAVADO		
3	9123332	4	SLEEVE 17X30X30	LUVA		1

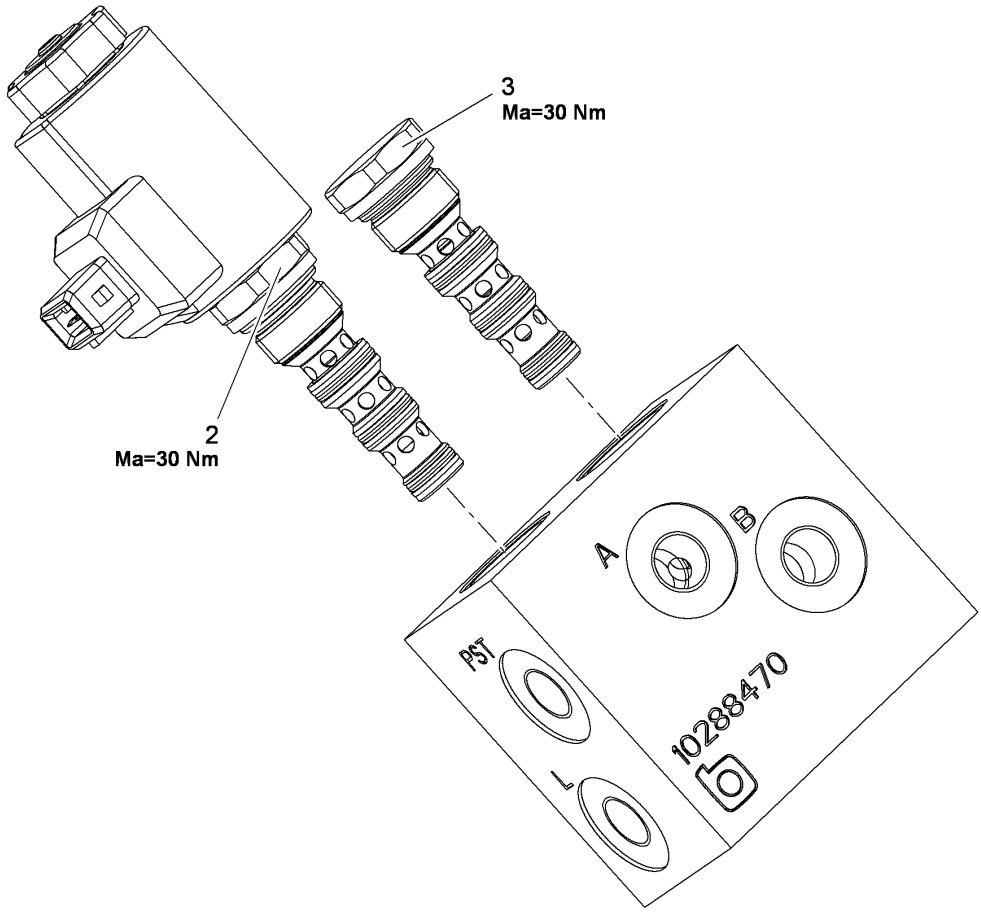

Pos.	Item	Quantity	Description	Designação	Serie	K
2	10018725	1	DIRECTIONAL CONTROL VALVE ⇨ ❑ 368	VÁLVULA DIRECIONAL		
3	10292692	1	DIRECTIONAL CONTROL VALVE	VÁLVULA DIRECIONAL		

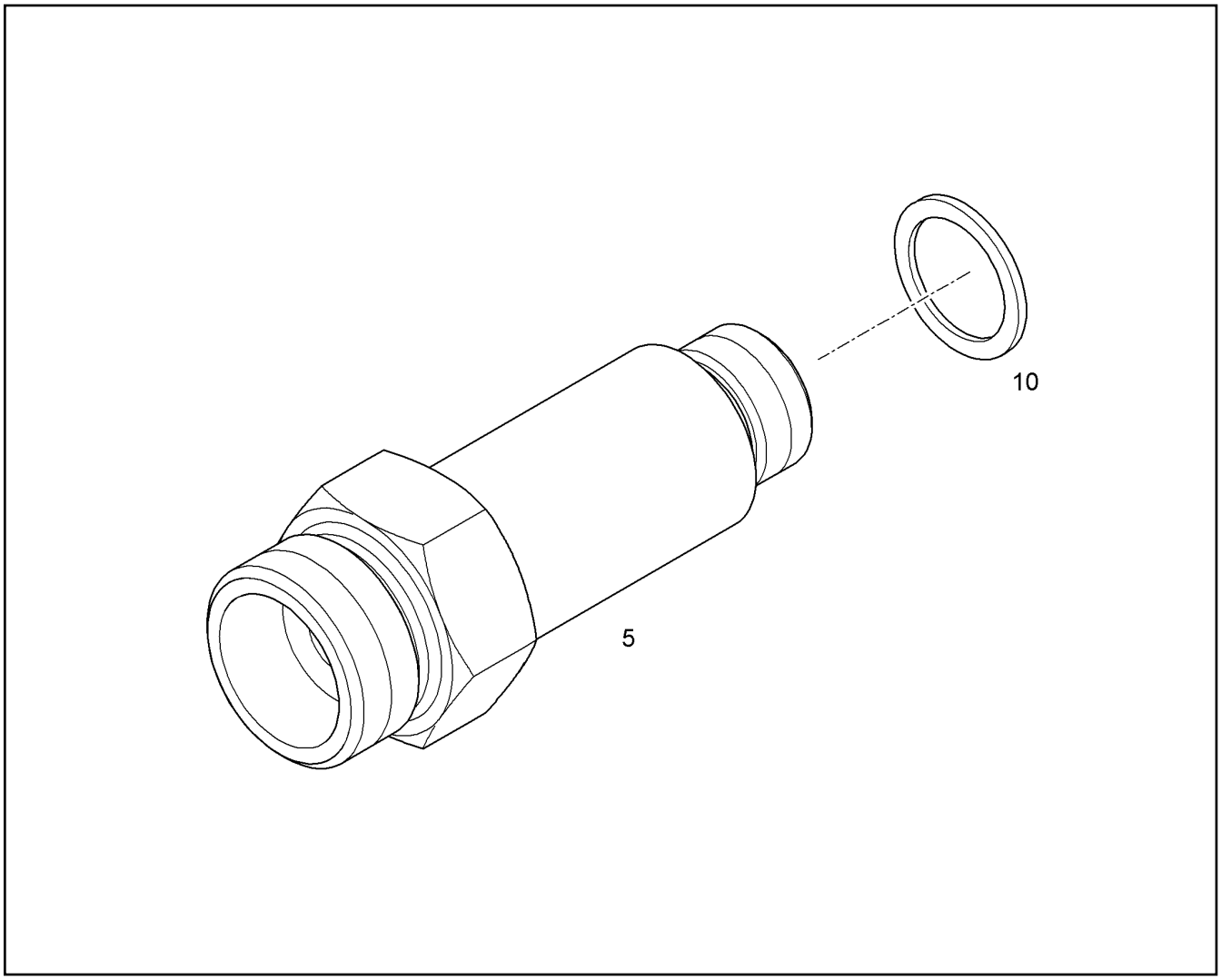

Pos.	Item	Quantity	Description	Designação	Serie	K
5		1	FITTINGS M24X1,5 - G3/8	CONEXÃO		
10	7371654	1	SEALING RING 17	ANEL DE VEDAÇÃO		

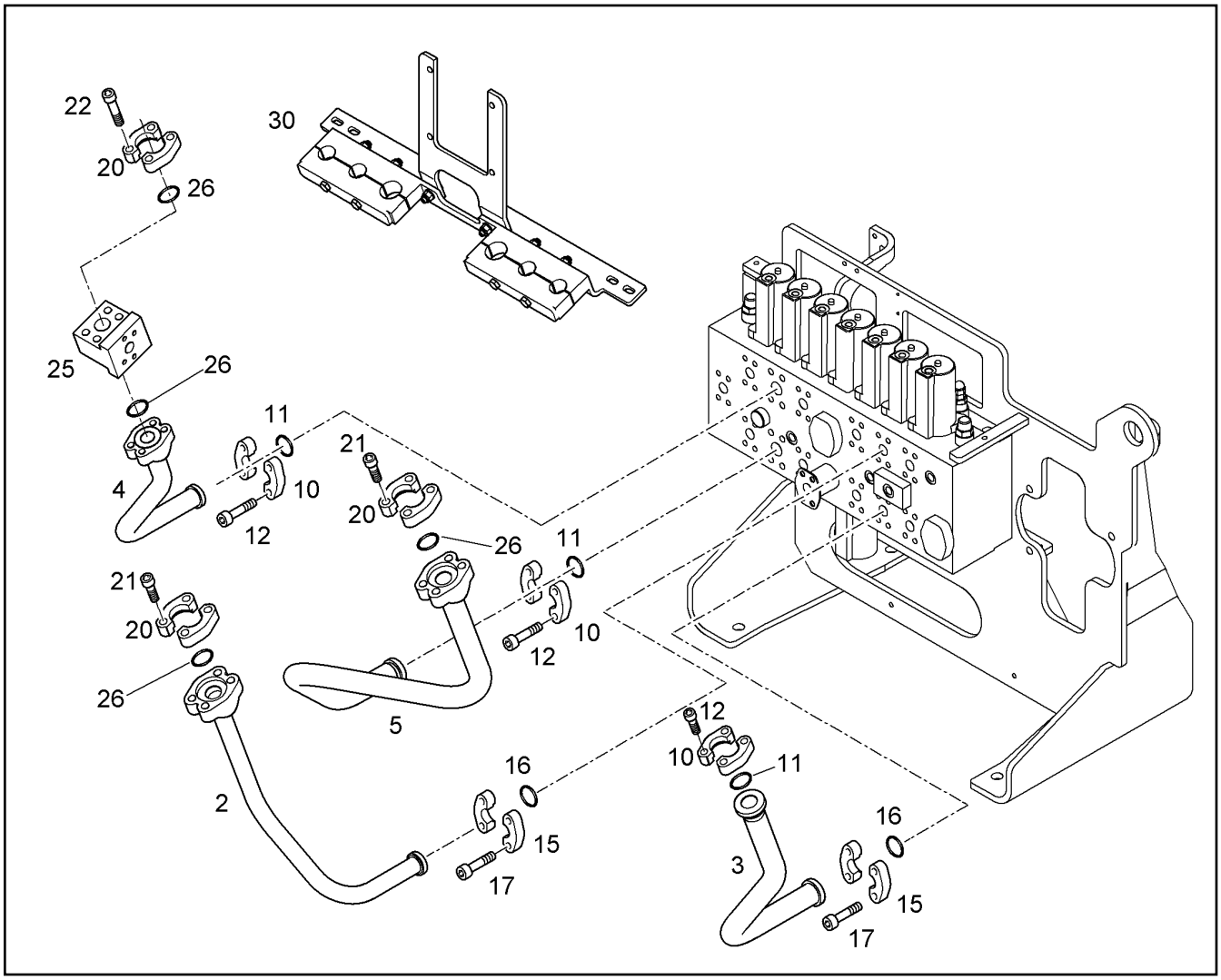

Pos.	Item	Quantity	Description	Designação	Serie	K
2	10057722	1	PRESSURE LINE CPL	TUBULAÇÃO DE PRESSÃO COM		
3	10057723	1	PRESSURE LINE CPL	TUBULAÇÃO DE PRESSÃO COM		
4	10057721	1	PRESSURE LINE CPL	TUBULAÇÃO DE PRESSÃO COM		
5	10057720	1	PRESSURE LINE CPL	TUBULAÇÃO DE PRESSÃO COM		
10	11485638	6	FLANGE HALF WITH BOSSING SAE J518 S	MEIO FLANGE COM RELEVO		
11	10490781	3	RECTANGULAR SECTION RING 40,15X2,80	ANEL DE SEÇÃO RETANGULAR		
12	11002749	12	SOCKET HEAD SCREW ISO 4762 M12X40 10	PARAFUSO CILÍNDRICO		
15	11485637	4	FLANGE HALF WITH BOSSING SAE J518 S	MEIO FLANGE COM RELEVO		
16	10490784	2	RECTANGULAR SECTION RING 32,30X2,80	ANEL DE SEÇÃO RETANGULAR		
17	10468820	8	SOCKET HEAD SCREW ISO 4762 M10X35 10	PARAFUSO CILÍNDRICO		
20	11485639	6	FLANGE HALF WITH BOSSING SAE J518 SA	MEIO FLANGE COM RELEVO		
21	4902327	8	SOCKET HEAD SCREW ISO 4762 M14X45 10	PARAFUSO CILÍNDRICO		
22	4901241	4	SOCKET HEAD SCREW ISO 4762 M14X100	PARAFUSO CILÍNDRICO		
25	10073399	1	BLOCK	BLOCO		
26	10472425	4	RECTANGULAR SECTION RING 45,05X2,80	ANEL DE SEÇÃO RETANGULAR		
30	10358636	1	PIPE CLAMP	BRAÇADEIRA DE TUBO		
			⇨ ❑ 423			

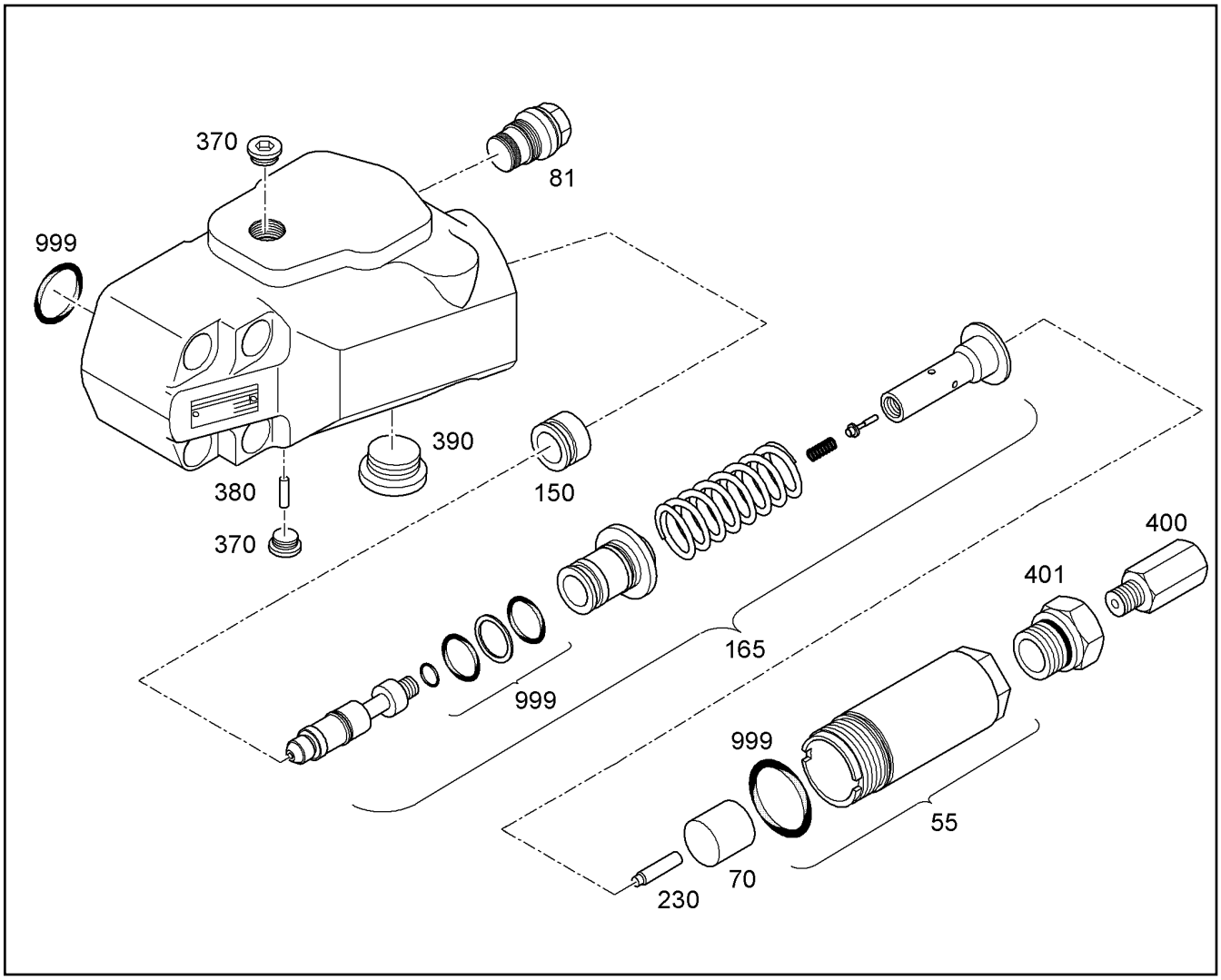

Pos.	Item	Quantity	Description	Designação	Serie	K
55	7373200	1	REDUCING PIECE	PEÇA DE REDUÇÃO		
70	5617474	1	PISTON	PISTÃO		
81	10333763	1	SCREW PLUG ⇨ ❑ 422	PARAFUSO DE FECHAMENTO		
150	5617471	1	BUSHING	BUCHA		1
165	10333760	1	PISTON W/ SPRING	PISTÃO COM PACOTE DE MOLA		
230	7373201	1	PARALLEL PIN 8	PINO CILÍNDRICO		
370	7013032	2	SCREW PLUG G 1/4	PARAFUSO DE FECHAMENTO		
380	7373202	1	PARALLEL PIN 4	PINO CILÍNDRICO		
390	7373203	1	SCREW PLUG M16X1,5 ST A3C	PARAFUSO DE FECHAMENTO		
400	10301271	1	FLOW REGULATING CHECK VALVE ⇨ ❑ 429	VÁLVULA REGULADORA DE FL		
401	10333765	1	REDUCING PIECE	PEÇA DE REDUÇÃO		
999	5617472	1	SEAL KIT LOAD-HOLDING VALVE	KIT DE VEDAÇÃO VÁLV. SEGUR		

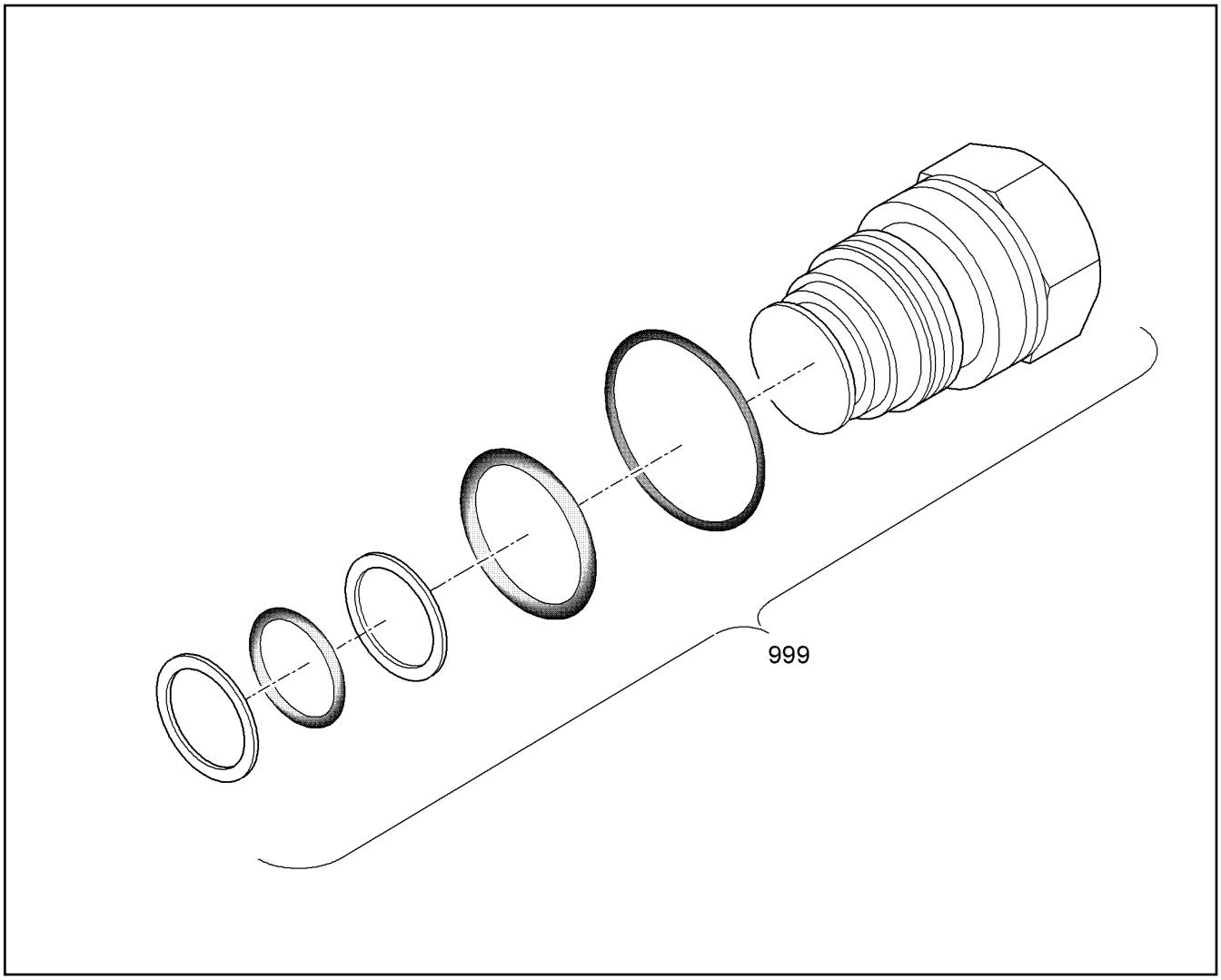

Pos.	Item	Quantity	Description	Designação	Serie	K
999	10337560	1	SEAL KIT	KIT DE VEDAÇÃO		

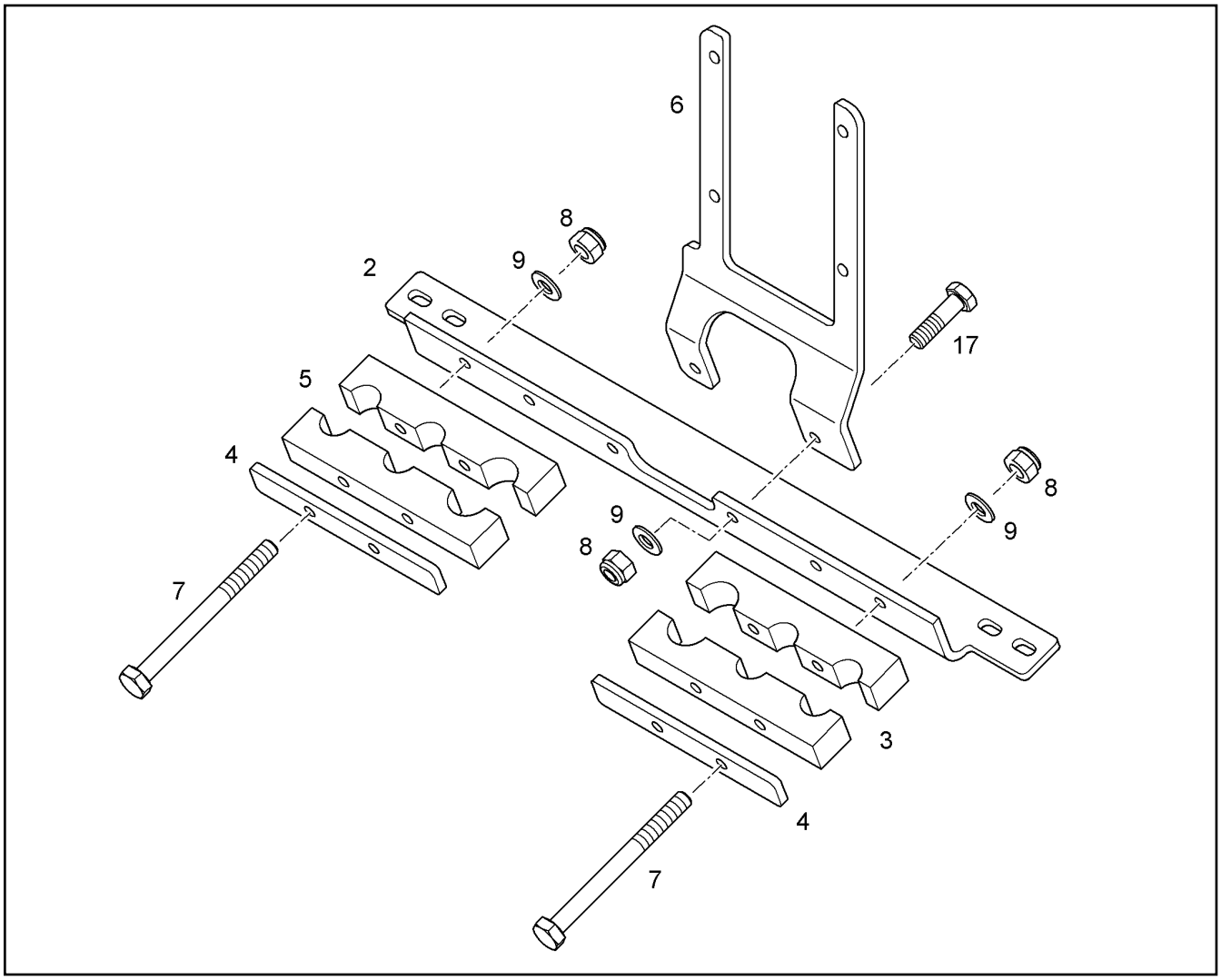

Pos.	Item	Quantity	Description	Designação	Serie	K
2	10080598	1	CONSOLE	CONSOLE		
3	10060190	2	HALF CLAMP COLLAR d=15-19	MEIA ABRAÇADEIRA		
4	10060193	2	PLATE	PLACA		
5	10060195	2	HALF CLAMP COLLAR d=15-19	MEIA ABRAÇADEIRA		
6	10060199	1	PLATE	PLACA		
7	4600728	4	HEX SCREW ISO 4014 M10X110 10.9 A3C	PARAFUSO SEXTAVADO		
8	4600579	6	HEX NUT M10	PORCA SEXTAVADA		
9	10289795	6	WASHER 10 300HV	ARRUELA		
17	4001246	2	HEX SCREW ISO 4017 M10X35 10.9 A3C	PARAFUSO SEXTAVADO		

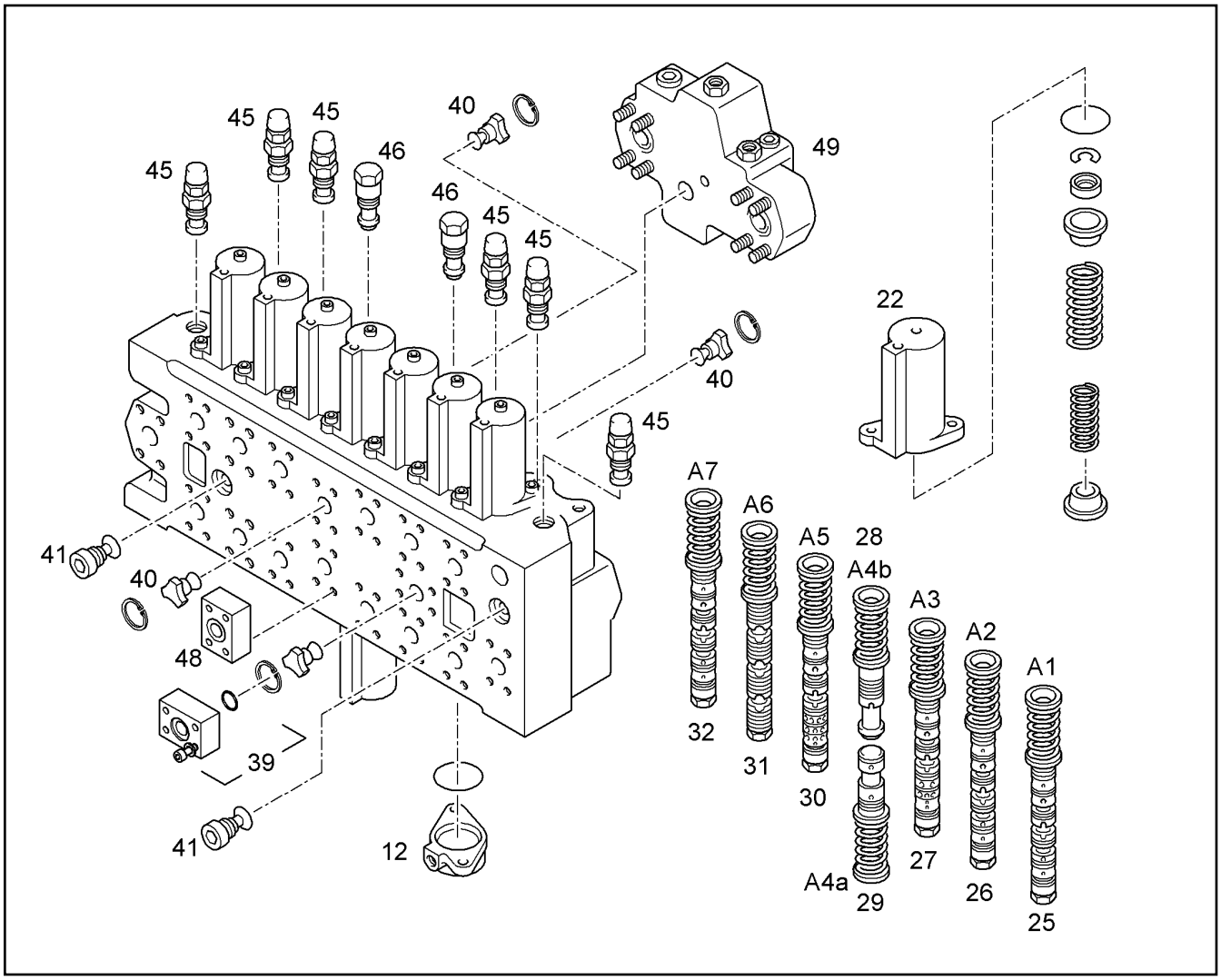

Pos.	Item	Quantity	Description	Designação	Serie	K
12	5003249	6	COVER	TAMPA		
22	7369781	8	COVER	TAMPA		
25	10295718	1	PISTON W/ SPRING	PISTÃO COM PACOTE DE MOLA		
26	10333329	1	PISTON W/ SPRING	PISTÃO COM PACOTE DE MOLA		
27	10296859	1	PISTON W/ SPRING	PISTÃO COM PACOTE DE MOLA		
28	10333330	1	PISTON W/ SPRING	PISTÃO COM PACOTE DE MOLA		
29	10333331	1	PISTON W/ SPRING	PISTÃO COM PACOTE DE MOLA		
30	10296859	1	PISTON W/ SPRING	PISTÃO COM PACOTE DE MOLA		
31	10330735	1	PISTON W/ SPRING	PISTÃO COM PACOTE DE MOLA		
32	10333333	1	PISTON W/ SPRING	PISTÃO COM PACOTE DE MOLA		
39	10296864	1	CONNECTING PLATE	PLACA DE LIGAÇÃO		
40	5006719	3	NON-RETURN VALVE ⇨ ❑ 434	VÁLVULA DE RETORNO		
41	5006720	2	NON-RETURN VALVE ⇨ ❑ 435	VÁLVULA DE RETORNO		
45	5007236	9	PRESSURE FEEDER VALVE ⇨ ❑ 436	VALVULA LIMITADORA PRESSA		
46	5006555	4	NON-RETURN VALVE ⇨ ❑ 438	VÁLVULA DE RETORNO		
48	5008855	1	NON-RETURN VALVE ⇨ ❑ 437	VÁLVULA DE RETORNO		
49	10330736	1	TRAVEL PILOT VALVE ⇨ ❑ 431	VÁLVULA DE COMUT.DE MOVIM		

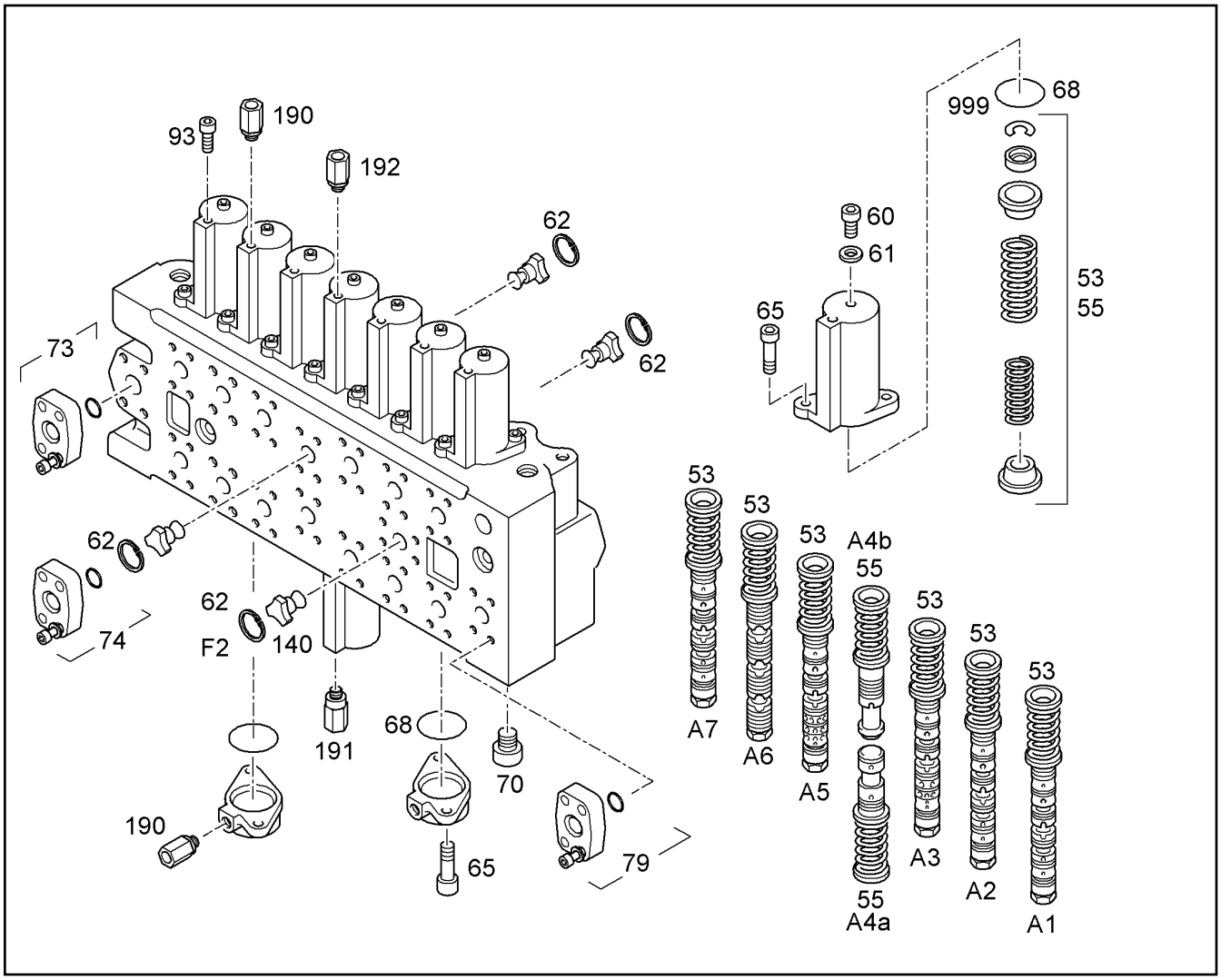

Pos.	Item	Quantity	Description	Designação	Serie	K
53	7369779	6	PRESSURE SPRING ⇨ ❑ 432	MOLA DE PRESSÃO		
55	7369780	2	PRESSURE SPRING	MOLA DE PRESSÃO		
60	7361391	7	VENTILATION SCREW M6X8 8.8 A2A	PARAFUSO DE RESPIRO		
61	7101040	7	SEALING RING DIN 7603 A 6X10	ANEL DE VEDAÇÃO		
62	4281001	4	LOCKING RING DIN 472 28	ANEL DE RETENÇÃO		
65	4600051	28	SOCKET HEAD SCREW ISO 4762 M8X16 8.8	PARAFUSO CILÍNDRICO		
68	7264024	14	O-RING 50X3	ANEL-O		
70	10296869	1	SCREW PLUG M27X1,5	PARAFUSO DE FECHAMENTO		
73	10300941	1	CONNECTION FLANGE ⇨ ❑ 433	FLANGE DE CONEXAO		
74	10296870	1	BLIND FLANGE	FLANGE CEGO		
79	10296871	1	BLIND FLANGE	FLANGE CEGO		
93	7024958	2	SCREW PLUG G 1/4-19	PARAFUSO DE FECHAMENTO		
140	11170764	1	NON-RETURN VALVE	VÁLVULA DE RETORNO		
190	10301270	2	SHUTTLE-VALVE ⇨ ❑ 428	VÁLVULA ALTERNADORA		
191	10301272	1	FLOW REGULATING CHECK VALVE ⇨ ❑ 430	VÁLVULA REGULADORA DE FL		
192	10301271	1	FLOW REGULATING CHECK VALVE ⇨ ❑ 429	VÁLVULA REGULADORA DE FL		
999	5602345	1	SEAL KIT ⇨ ❑ 439	KIT DE VEDAÇÃO		

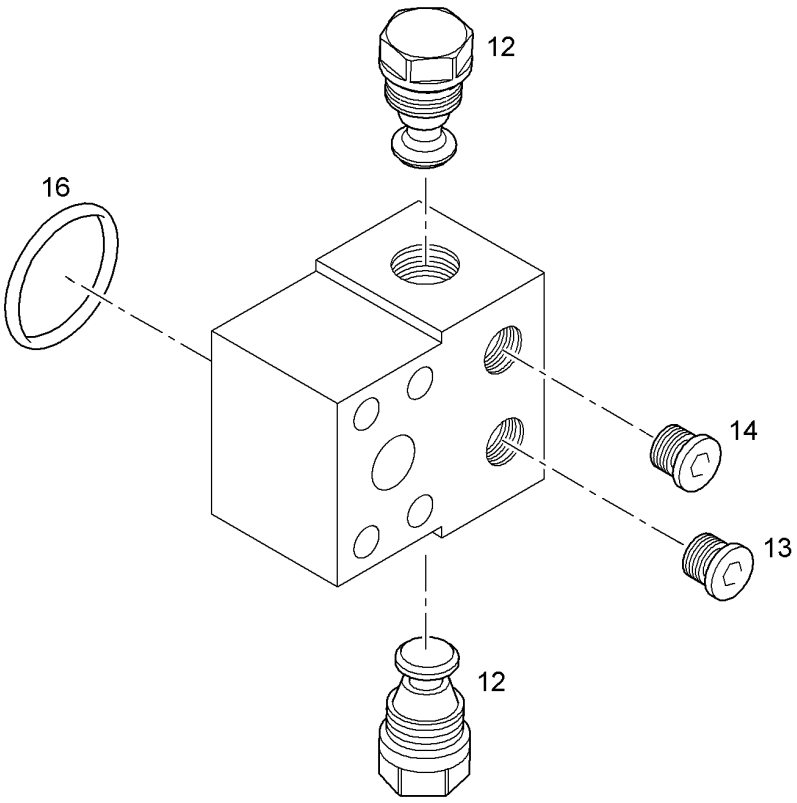

Pos.	Item	Quantity	Description	Designação	Serie	K
12	5008169	2	NON-RETURN VALVE	VÁLVULA DE RETORNO		
13	10297782	1	THROTTLE SCREW M20X1,5X19	PARAFUSO DE ESTRANGULAME		
14	10297782	1	THROTTLE SCREW M20X1,5X19	PARAFUSO DE ESTRANGULAME		
16	7007733	1	O-RING 32,92X3,53	ANEL-O		

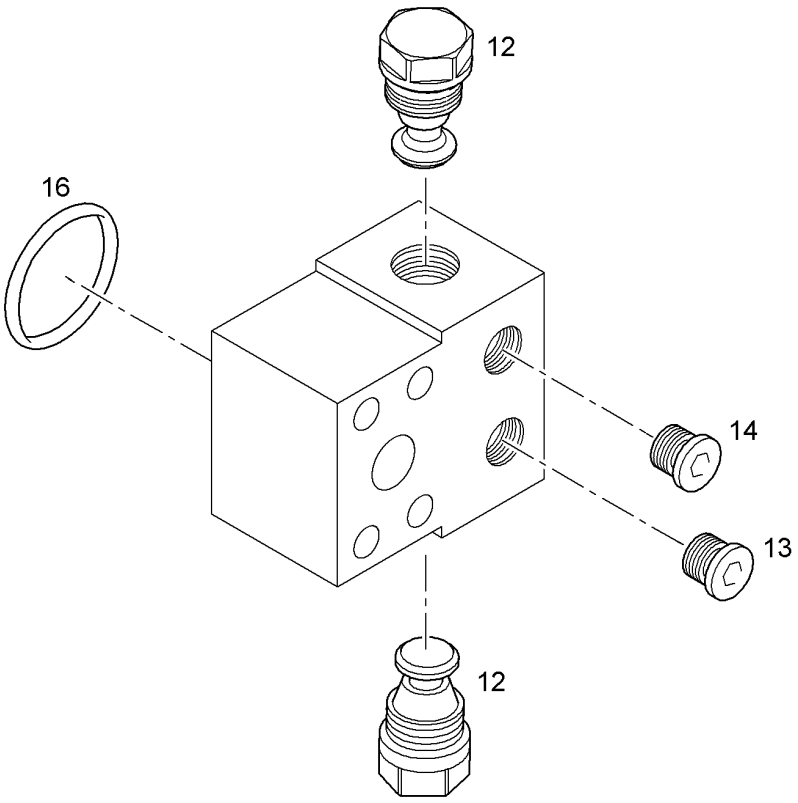

Pos.	Item	Quantity	Description	Designação	Serie	K
12	5008169	2	NON-RETURN VALVE	VÁLVULA DE RETORNO		
13	10297782	1	THROTTLE SCREW M20X1,5X19	PARAFUSO DE ESTRANGULAME		
14	10296854	1	SCREW PLUG M20X1,5X19	PARAFUSO DE FECHAMENTO		
16	7007733	1	O-RING 32,92X3,53	ANEL-O		

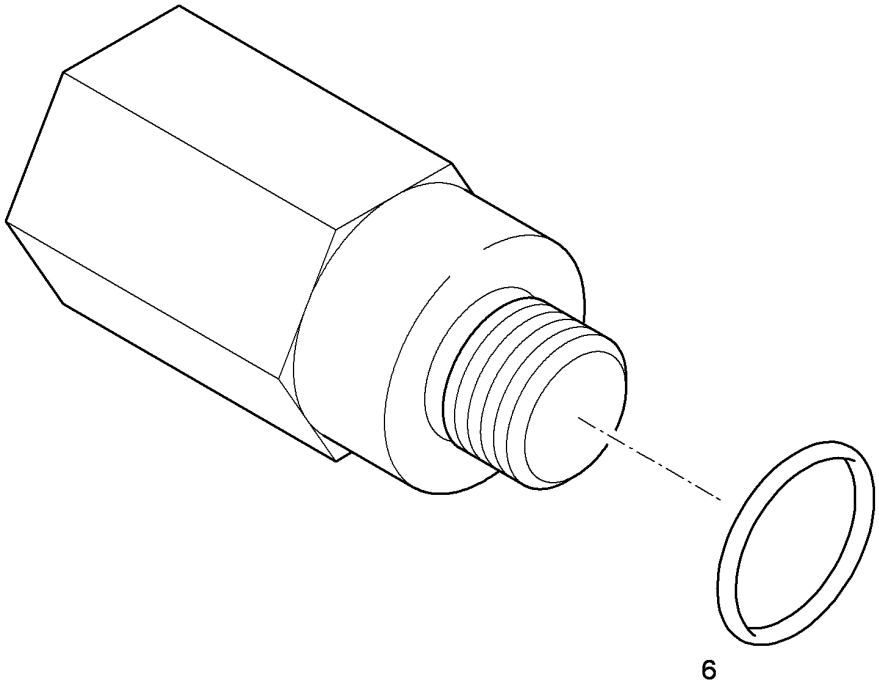

Pos.	Item	Quantity	Description	Designação	Serie	K
6	7017771	1	O-RING 15,6X1,78	ANEL-O		

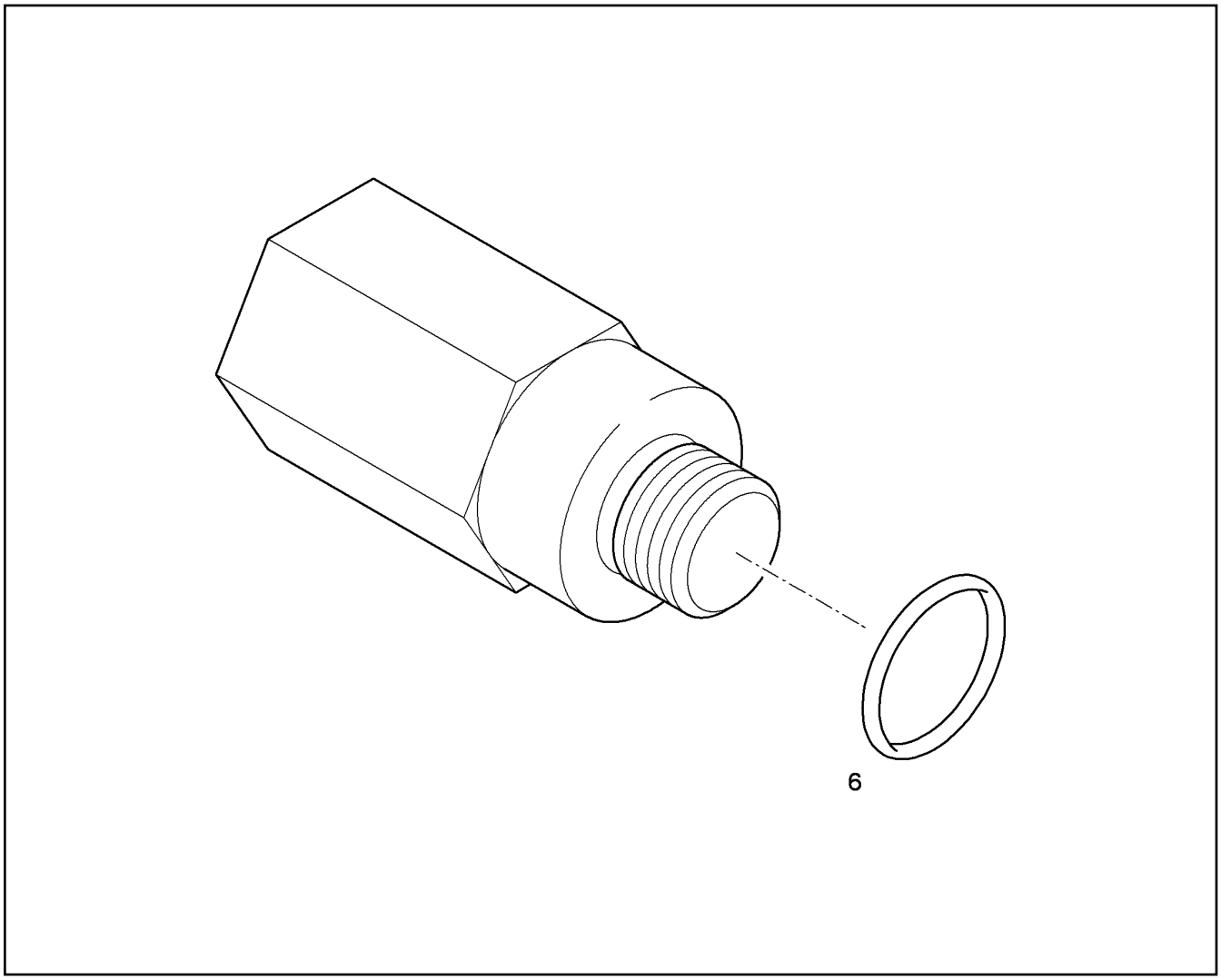

Pos.	Item	Quantity	Description	Designação	Serie	K
6	7017771	1	O-RING 15,6X1,78	ANEL-O		

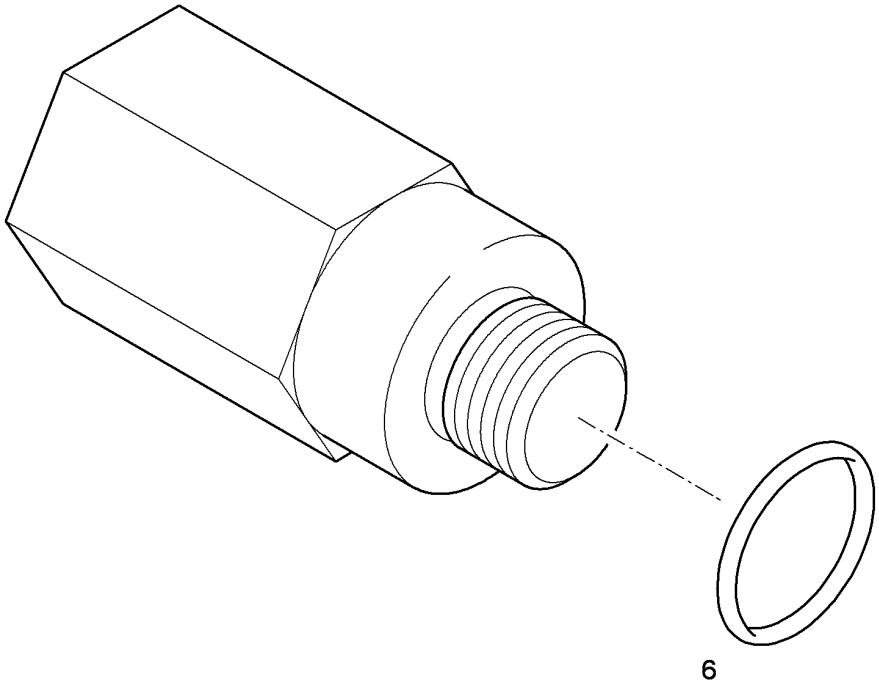

Pos.	Item	Quantity	Description	Designação	Serie	K
6	7017771	1	O-RING 15,6X1,78	ANEL-O		

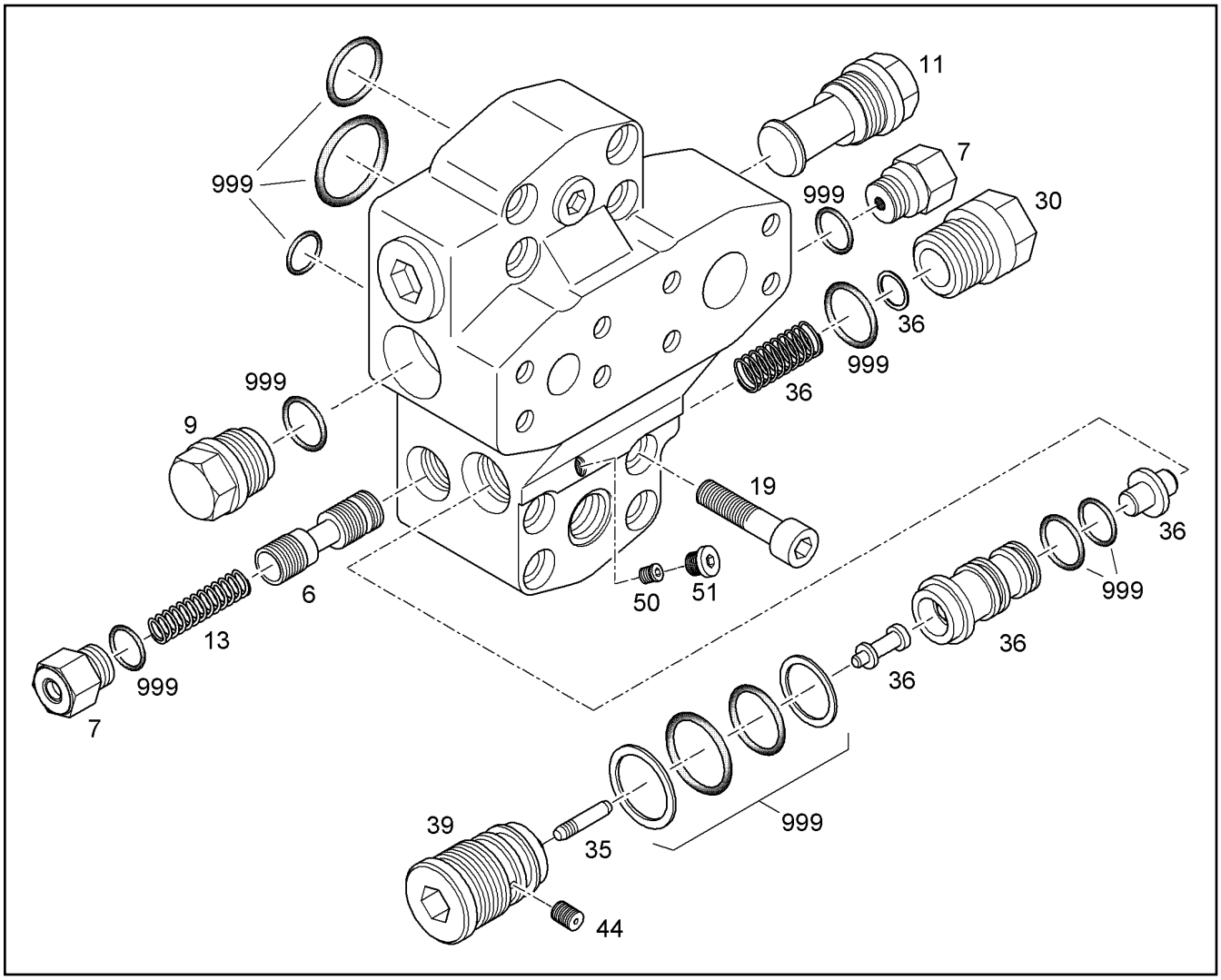

Pos.	Item	Quantity	Description	Designação	Serie	K
6	5008441	1	PISTON	PISTÃO		
7	7366888	2	SCREW PLUG	PARAFUSO DE FECHAMENTO		
9	7366889	1	SCREW PLUG M34X1,5	PARAFUSO DE FECHAMENTO		
11	10330919	1	NON-RETURN VALVE	VÁLVULA DE RETORNO		
13	7366885	1	PRESSURE SPRING 1,8X12,2X65,5	MOLA DE PRESSÃO		
19	10001466	8	SOCKET HEAD SCREW ISO 4762 M14X60 10	PARAFUSO CILÍNDRICO		
30	7020568	1	SCREW PLUG M22X1,5X34	PARAFUSO DE FECHAMENTO		
35	7020571	1	PIN	PINO		
36	5009820	1	REPAIR KIT VALVE	KIT DE REPARO DA VALVULA		
39	7020573	1	BUSHING	BUCHA		1
44	7020577	1	NOZZLE	BOCAL		
50	7021767	1	SHUTTLE VALVE	VALVULA DIRECIONAL		
51	7371258	1	SCREW PLUG M8X1 NBR	PARAFUSO DE FECHAMENTO		
999	7015341	1	SEAL KIT STRAI.AHEAD TRAV.VALV ⇨ ❑ 441	KIT VEDAÇÃO VÁL.COMPEN.P/		

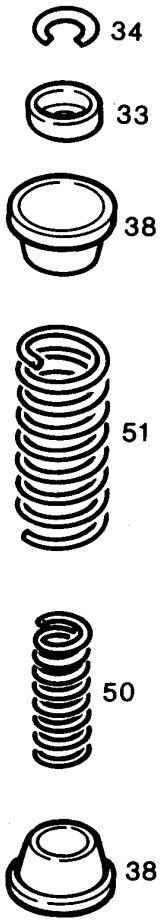

Pos.	Item	Quantity	Description	Designação	Serie	K
33	7002887	1	RING 21X30X4	ANEL		
34	7002888	1	SNAP RING A 18,7	ANEL DE RETENÇÃO		
38	7002893	2	SPRING SUPPORT	PRATO DA MOLA		
50	7002884	1	PRESSURE SPRING 6,5X28,1X75,5	MOLA DE PRESSÃO		
51	7004020	1	PRESSURE SPRING 5X42,4X126	MOLA DE PRESSÃO		

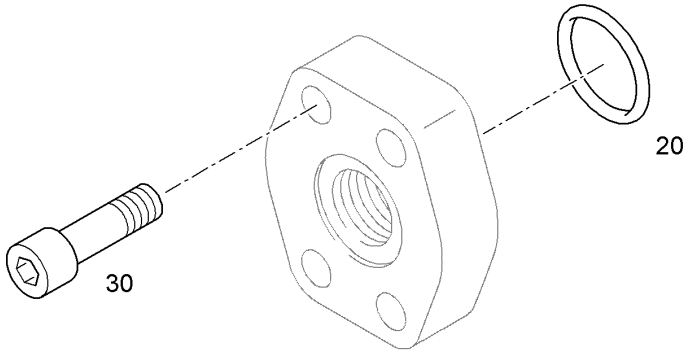

Pos.	Item	Quantity	Description	Designação	Serie	K
20	7015292	1	O-RING 25x3,53	ANEL-O		
30	4900855	4	SOCKET HEAD SCREW ISO 4762 M10X35 1	PARAFUSO CILÍNDRICO		

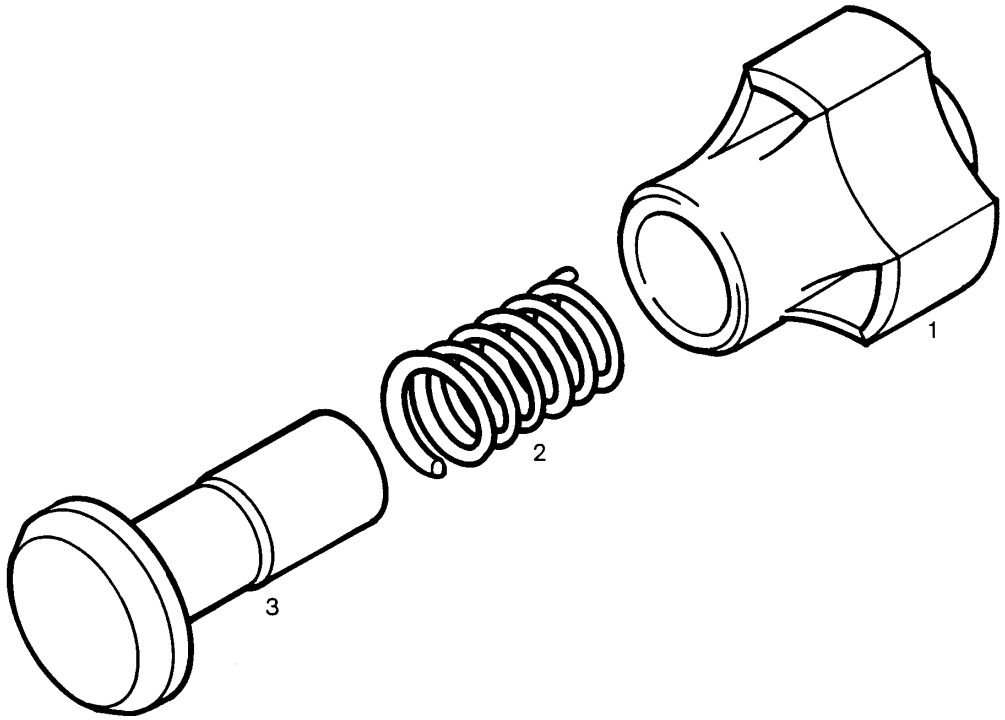

Pos.	Item	Quantity	Description	Designação	Serie	K
1	7015997	1	GUIDE	GUIA		
2	7015994	1	PRESSURE SPRING 0,8X6,8X28,5	MOLA DE PRESSÃO		
3	7017729	1	TAPER	CONE		

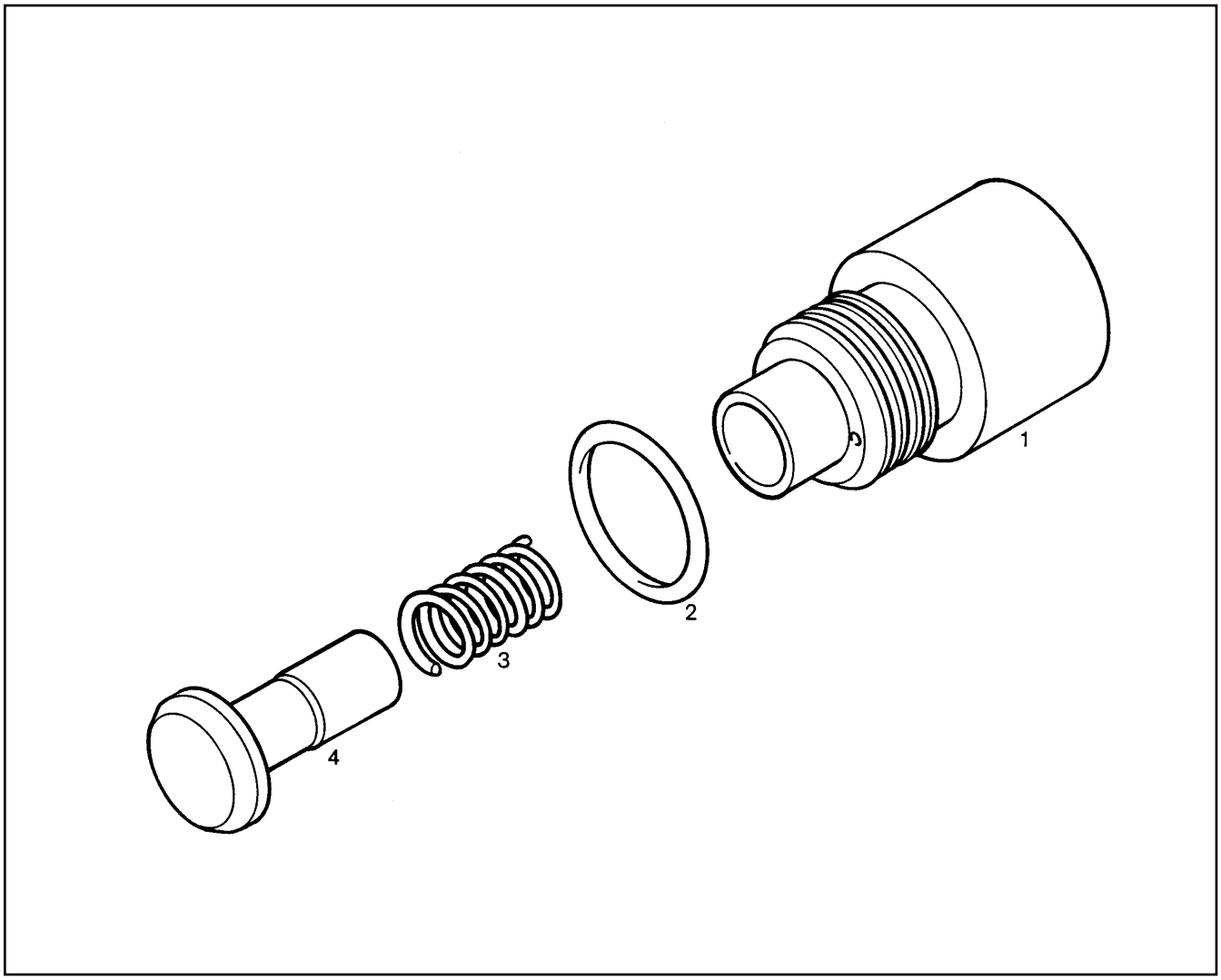

Pos.	Item	Quantity	Description	Designação	Serie	K
1	7015996	1	SCREW PLUG	PARAFUSO DE FECHAMENTO		
2	7361456	1	O-RING 23,00X3	ANEL-O		
3	7015994	1	PRESSURE SPRING 0,8X6,8X28,5	MOLA DE PRESSÃO		
4	7017729	1	TAPER	CONE		

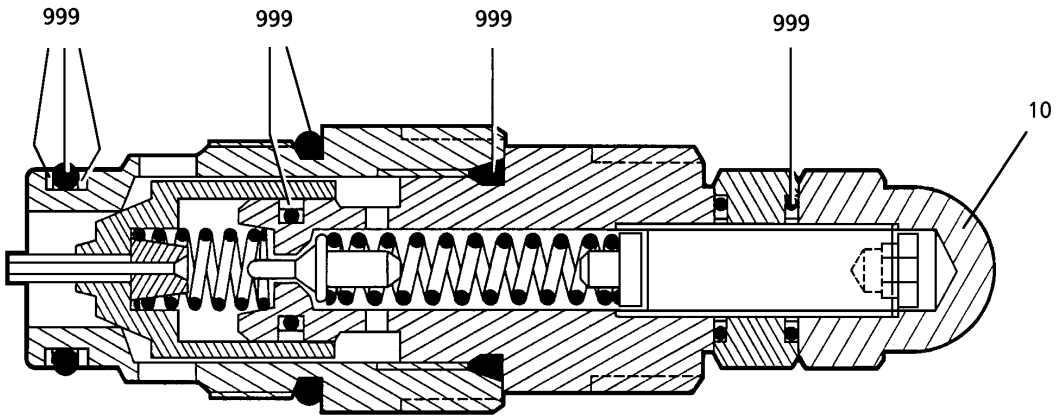

Pos.	Item	Quantity	Description	Designação	Serie	K
10	7018700	1	CAP NUT M10X1	PORCA		
999	7017835	1	SEALING SET VALVE ⇨ ❑ 442	KIT DE VEDACAO DA VALVULA		

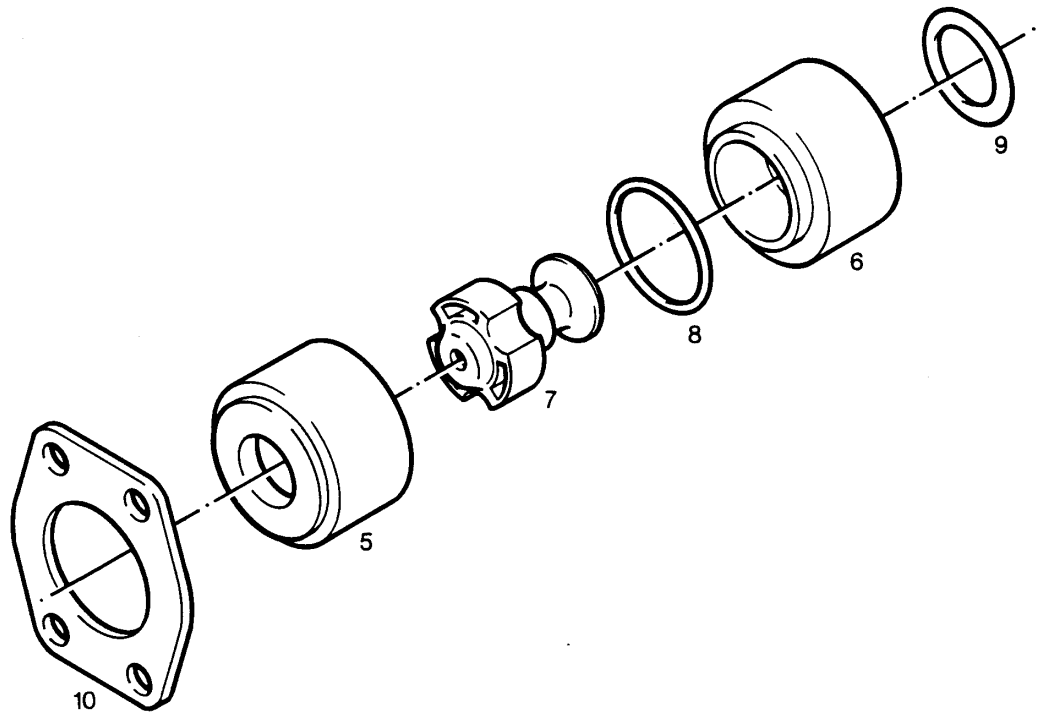

Pos.	Item	Quantity	Description	Designação	Serie	K
5	7021783	1	VALVE SEAT	ASSENTO DA VÁLVULA		
6	7021784	1	VALVE SEAT	ASSENTO DA VÁLVULA		
7	5006719	1	NON-RETURN VALVE ⇨ ❑ 434	VÁLVULA DE RETORNO		
8	7015290	1	O-RING 31,42X2,62	ANEL-O		
9	7015292	1	O-RING 25x3,53	ANEL-O		
10	7021785	1	INTERMEDIATE PLATE	PLACA INTERMEDIÁRIA		

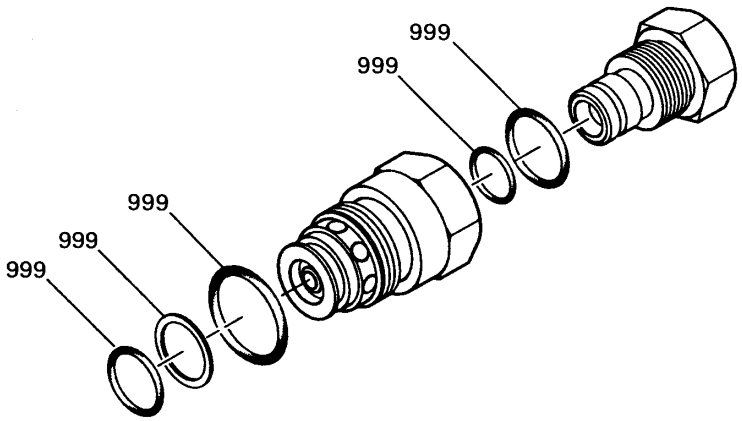

Pos.	Item	Quantity	Description	Designação	Serie	K
999	7013133	1	SEAL KIT BRAKE VALVE ⇨ ❑ 440	KIT DE VEDACAO DO FREIO		

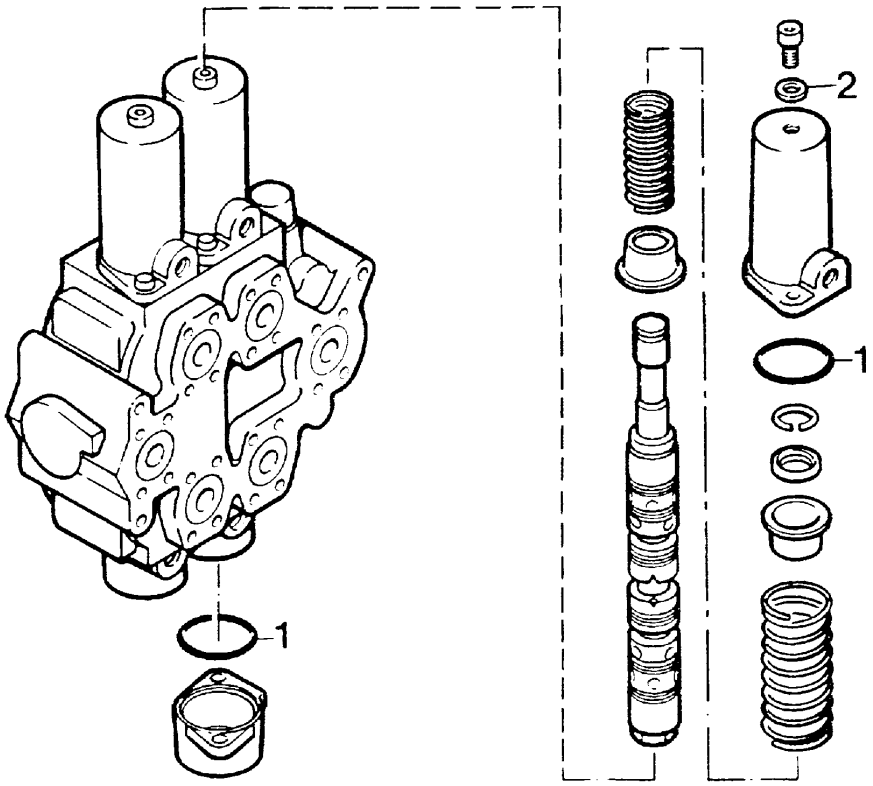

Pos.	Item	Quantity	Description	Designação	Serie	K
1		2	O-RING 50X3	ANEL-O		
2		1	SEALING RING DIN 7603 A 6X10	ANEL DE VEDAÇÃO		

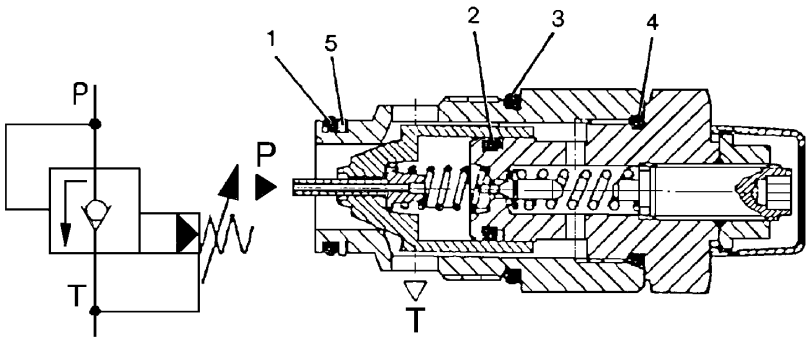

Pos.	Item	Quantity	Description	Designação	Serie	K
1		1	O-RING 17,12X2,62	ANEL-O		
2		1	TURCON-STEPSEAL	VEDAÇÃO TURCON		
3		1	O-RING ISO 3601-1 23,47X2,62	ANEL-O		
4		1	O-RING 18,72X2,62	ANEL-O		
5		1	SUPPORTING RING 17,83/22,18X1,3	ANEL DE APOIO		

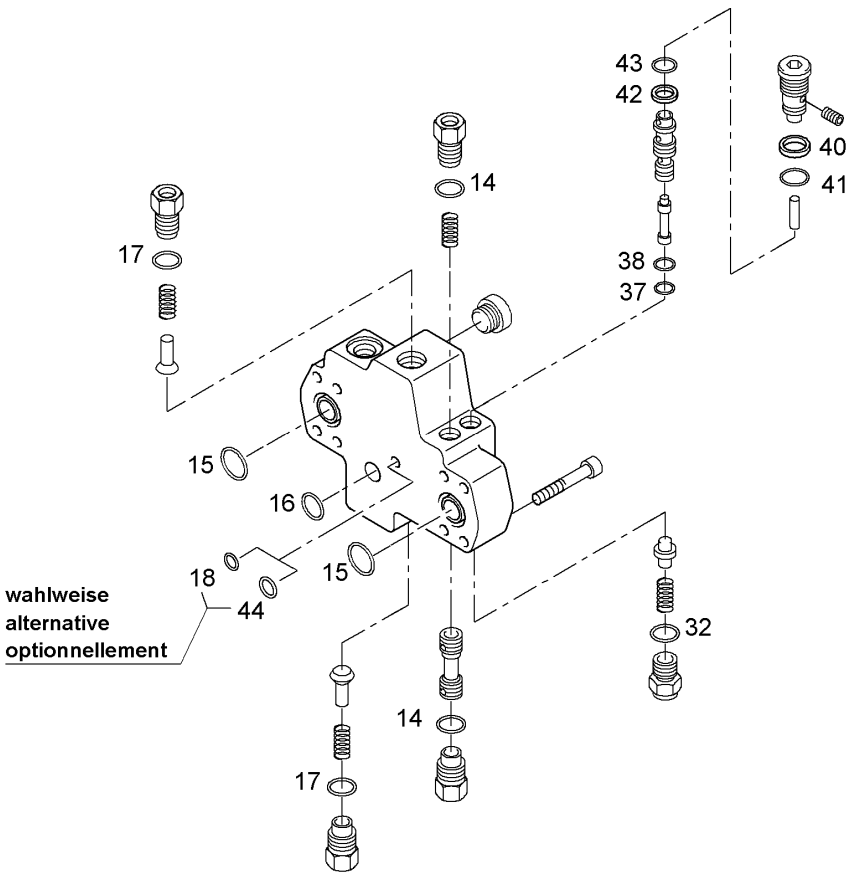

Pos.	Item	Quantity	Description	Designação	Serie	K
14		2	O-RING ISO 3601-1 18,72X2,62	ANEL-O		
15		2	O-RING DIN 3771 37,69X3,53	ANEL-O		
16		1	O-RING 47,22X3,53	ANEL-O		
17		2	O-RING 30X3	ANEL-O		
18		1	O-RING 13X2,5	ANEL-O		
32		1	O-RING 19,4X2,1	ANEL-O		
37		1	O-RING 15,6X1,78	ANEL-O		
38		1	O-RING 15,6X1,78	ANEL-O		
40		1	SUPPORTING RING /25,86X2,18	ANEL DE APOIO		
41		1	O-RING ISO 3601-1 25,07X2,62	ANEL-O		
42		1	SUPPORTING RING /21,11X2,18	ANEL DE APOIO		
43		1	O-RING 20,29X2,62	ANEL-O		
44		1	O-RING 15,54X2,62	ANEL-O		

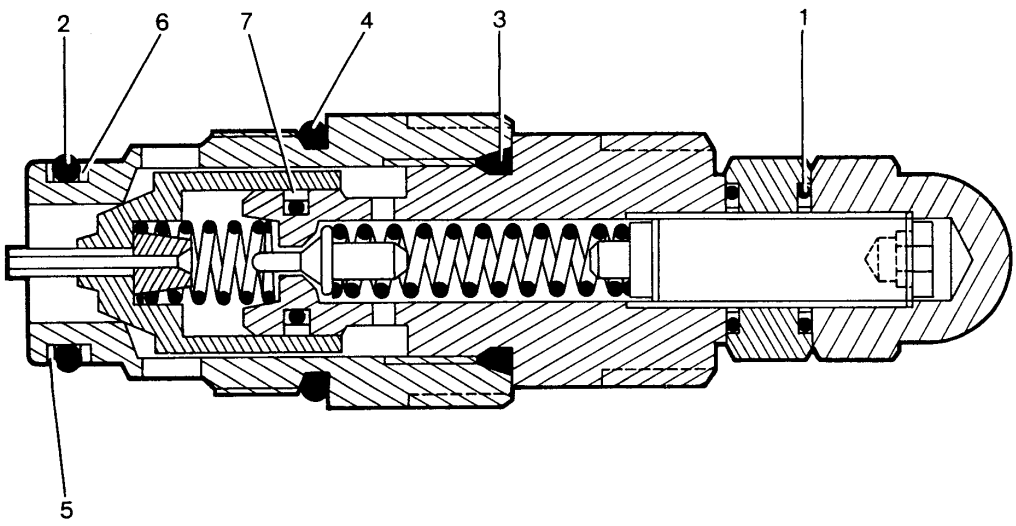

Pos.	Item	Quantity	Description	Designação	Serie	K
1		2	O-RING 12,42X1,78	ANEL-O		
2		1	O-RING 17,12X2,62	ANEL-O		
3		1	O-RING 18,72X2,62	ANEL-O		
4		1	O-RING 23,47X2,62	ANEL-O		
5		1	SUPPORTING RING	ANEL DE APOIO		
6		1	SUPPORTING RING	ANEL DE APOIO		
7		1	PISTON SEAL	VEDACAO DO PISTAO		

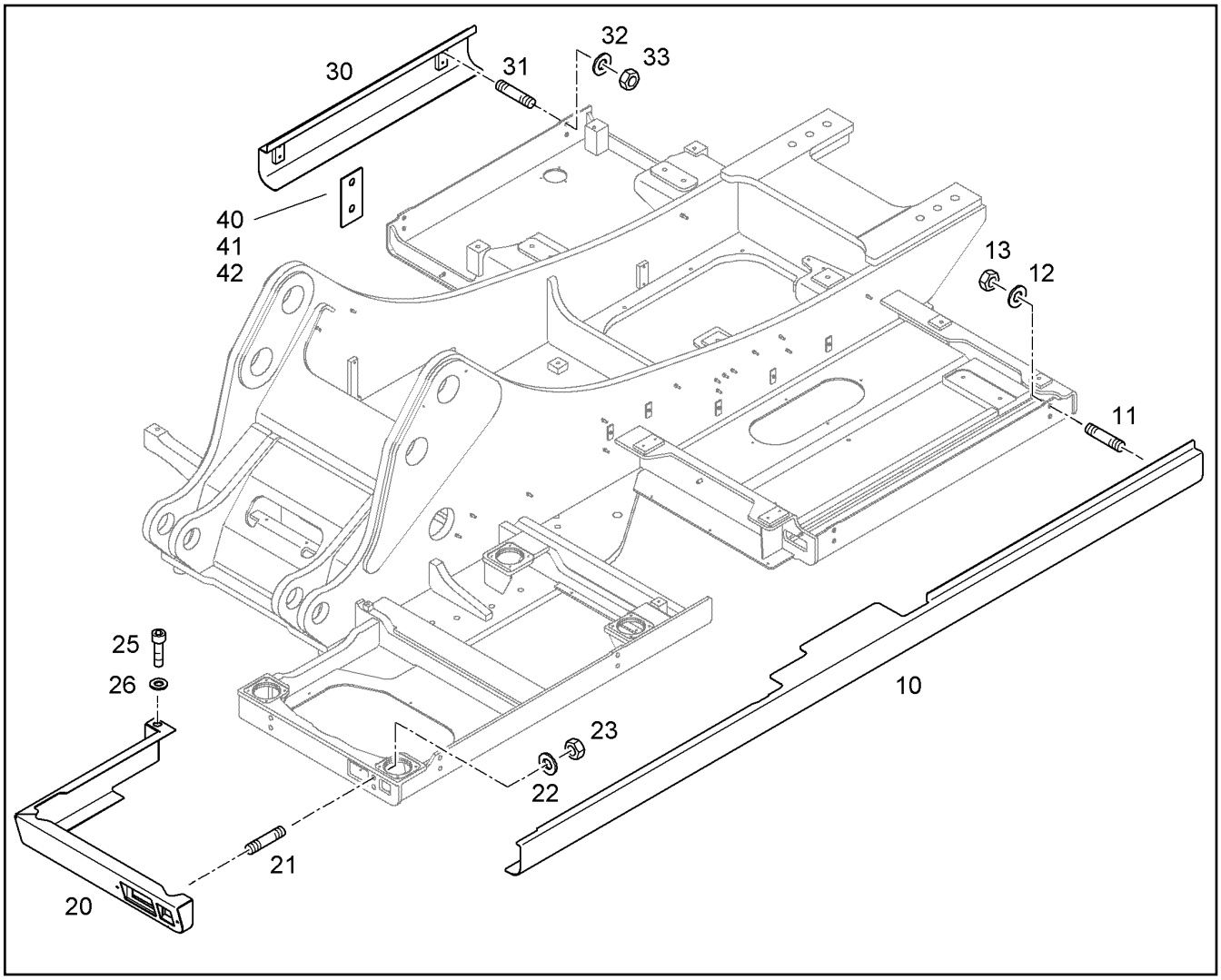

Pos.	Item	Quantity	Description	Designação	Serie	K
10	10065493	1	COVERING LEFT	REVESTIMENTO ESQUERDO		
11	11968282	8	DOUBLE-ENDED STUD DIN 939 M12X40 10.	PARAFUSO PRISIONEIRO		
12	10179356	8	WASHER 13	ARRUELA		
13	11002808	8	HEX NUT M12	PORCA SEXTAVADA		
20	10060549	1	COVERING IN FRONT	REVESTIMENTO DIANTEIRO		
21	11968282	4	DOUBLE-ENDED STUD DIN 939 M12X40 10.	PARAFUSO PRISIONEIRO		
22	10179356	4	WASHER 13	ARRUELA		
23	11002808	4	HEX NUT M12	PORCA SEXTAVADA		
25	4043124	1	SOCKET HEAD SCREW ISO 4762 M10X25 1	PARAFUSO CILÍNDRICO	-99998	
25	10800024	1	HEX SCREW ISO 4017 M12X25 10.9 FLZN	PARAFUSO SEXTAVADO		
26	10179356	1	WASHER 13	ARRUELA		
30	10094135	1	COVERING RIGHT ⇨ ❑ 444	REVESTIMENTO DIREITO		
31	11968282	4	DOUBLE-ENDED STUD DIN 939 M12X40 10.	PARAFUSO PRISIONEIRO		
32	10179356	4	WASHER 13	ARRUELA		
33	11002808	4	HEX NUT M12	PORCA SEXTAVADA		
40	9622842	2	DISTANCE PLATE 1X50X100	PLACA DISTANCIADORA		
41	9622843	2	DISTANCE PLATE 2X50X100	PLACA DISTANCIADORA		
42	9622844	2	DISTANCE PLATE 3X50X100	PLACA DISTANCIADORA		

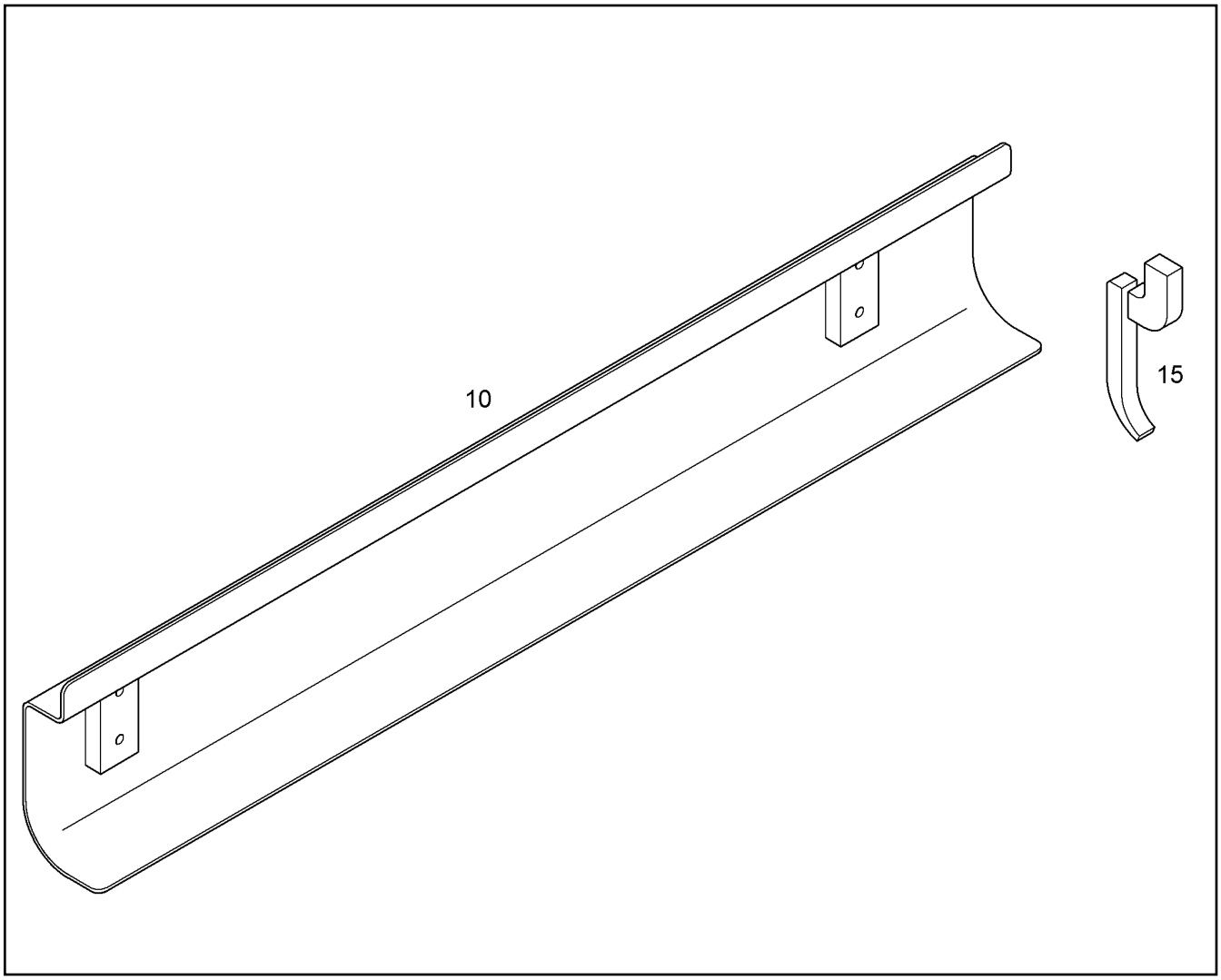

Pos.	Item	Quantity	Description	Designação	Serie	K
10	10094136	1	COVERING RIGHT	REVESTIMENTO DIREITO		
15	10002427	1m	PROFILE	PERFIL		

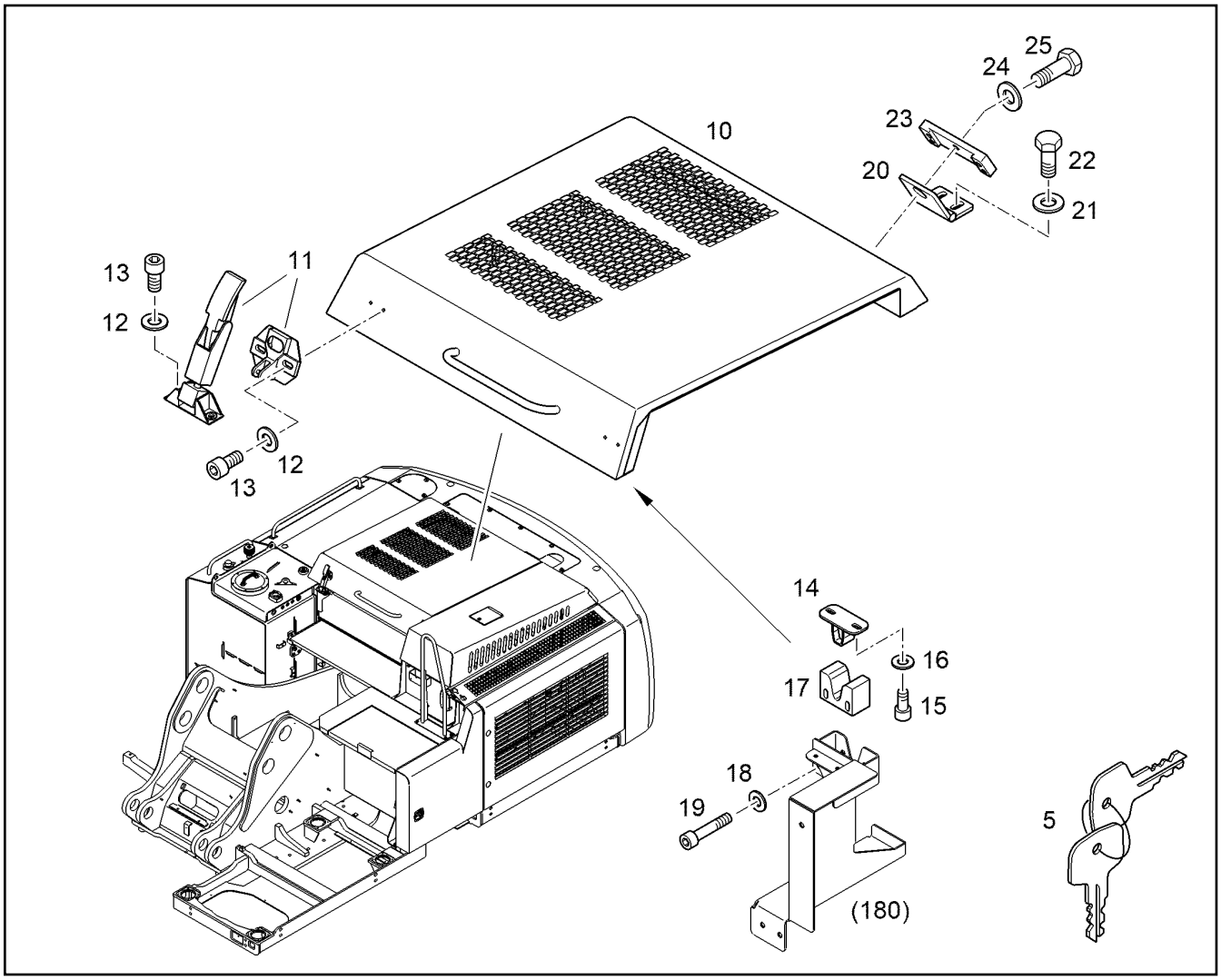

Pos.	Item	Quantity	Description	Designação	Serie	K
5	7365626	1	KEY	CHAVE		
10	10058169	1	ENGINE BONNET ⇨ ❑ 453	CAPOTA DO MOTOR		
11	10039590	2	LOCK	FECHADURA		
12	10289803	8	WASHER 8 300HV	ARRUELA		
13	10663523	8	SOCKET HEAD SCREW ISO 4762 M8X20 10	PARAFUSO CILÍNDRICO		
14	10081454	1	SPIGOT	PEÇA DE UNIÃO (MACHO)		
15	11002743	2	SOCKET HEAD SCREW ISO 4762 M10X30 10	PARAFUSO CILÍNDRICO		
16	10179357	2	WASHER 10,5	ARRUELA		
17	10081451	1	BASE PLATE	PLACA DE APOIO		
18	11491889	2	WASHER 10 300HV	ARRUELA		
19	11320355	2	SOCKET HEAD SCREW ISO 4762 M10X75 10	PARAFUSO CILÍNDRICO		
20	9939056	2	HINGE	DOBRADIÇA		
21	11491889	4	WASHER 10 300HV	ARRUELA		
22	10299578	4	HEX SCREW ISO 4017 M10X25 10.9 FLZN	PARAFUSO SEXTAVADO		
23	9903712	2	CLAMPING STRIP	RÉGUA DE FIXAÇÃO		
24	10289795	6	WASHER 10 300HV	ARRUELA		
25	11002716	6	HEX SCREW ISO 4017 M10X35 10.9 FLZN	PARAFUSO SEXTAVADO		

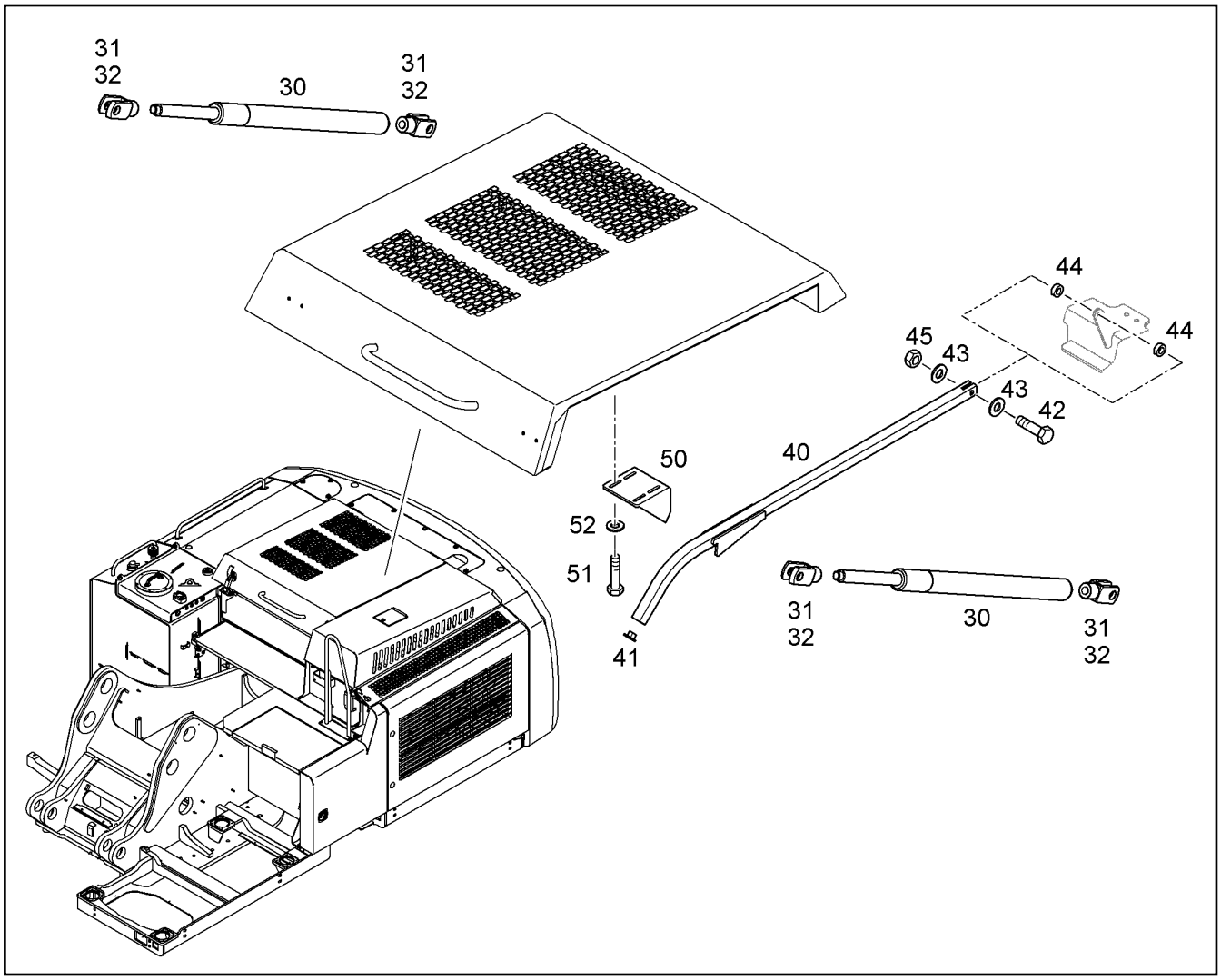

Pos.	Item	Quantity	Description	Designação	Serie	K
30	10037209	2	GAS SPRING ⇨ ❑ 468	MOLA A GÁS		
31	4000746	4	YOKE G 8X16	TERMINAL GARFO		
32	7738704	4	PIN 8X16	PINO		
40	9927479	1	ROD	HASTE		
41	7373405	1	BLANKING PLUG GPN 260 Q30303	TAMPÃO		
42	11002729	1	HEX SCREW ISO 4017 M12X55 10.9 FLZN	PARAFUSO SEXTAVADO		
43	10289804	2	WASHER 12 300HV	ARRUELA		
44	9837954	2	SLEEVE	LUVA		1
45	10876514	1	HEX NUT M12	PORCA SEXTAVADA		
50	9834805	1	CONSOLE	CONSOLE		
51	11651767	4	HEX SCREW ISO 4017 M8X20 8.8 480H	PARAFUSO SEXTAVADO		
52	10289803	4	WASHER 8 300HV	ARRUELA		

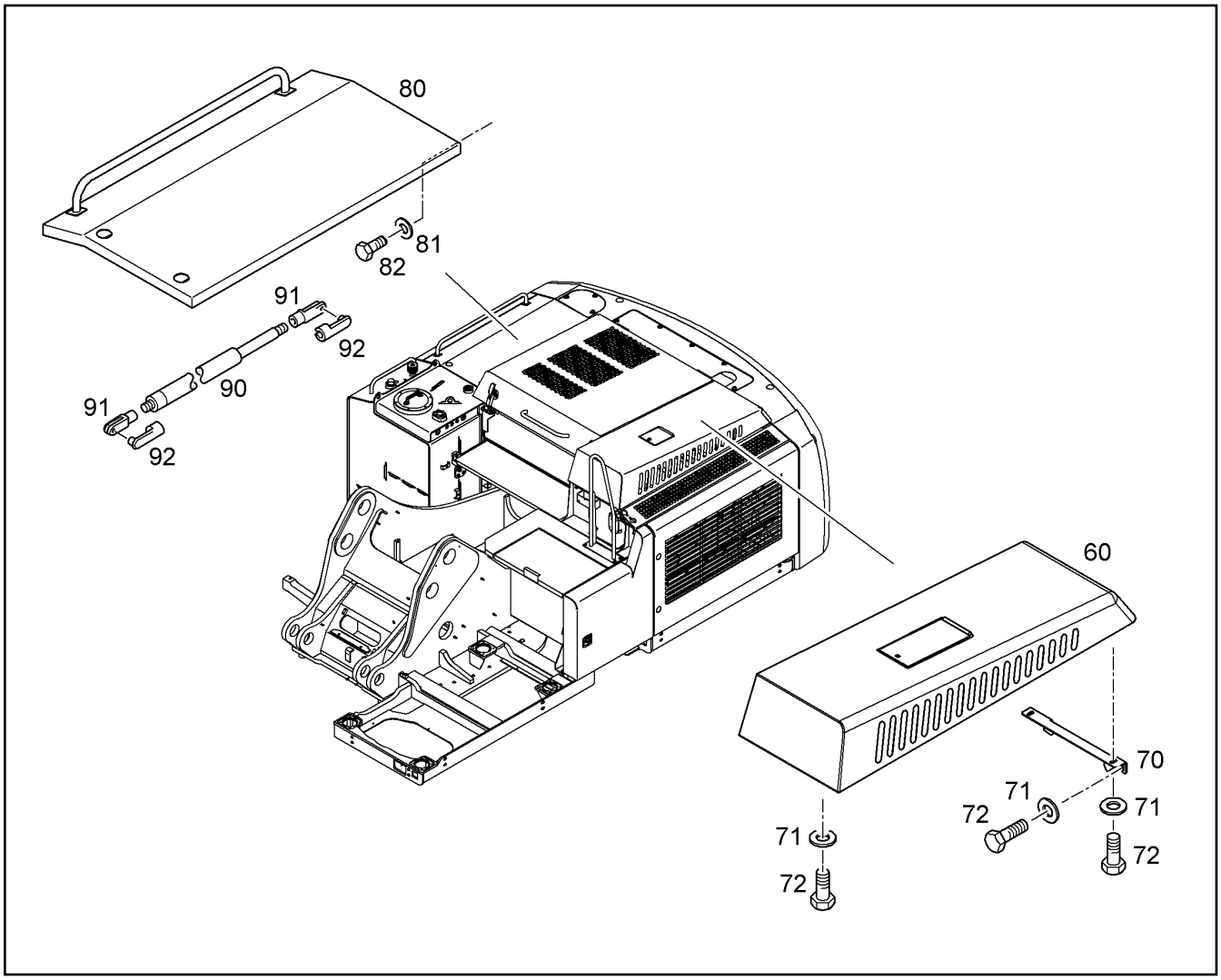

Pos.	Item	Quantity	Description	Designação	Serie	K
60	10064360	1	RADIATOR HOOD ⇨ ❑ 455	CAPO DO RADIADOR		
70	10064302	1	PLATE	PLACA		
71	10179356	6	WASHER 13	ARRUELA		
72	10800024	6	HEX SCREW ISO 4017 M12X25 10.9 FLZN	PARAFUSO SEXTAVADO		
80	10051838	1	BONNET RIGHT ⇨ ❑ 456	CAPO DIREITO		
81	10179356	3	WASHER 13	ARRUELA		
82	10800024	3	HEX SCREW ISO 4017 M12X25 10.9 FLZN	PARAFUSO SEXTAVADO		
90	10037209	1	GAS SPRING ⇨ ❑ 468	MOLA A GÁS		
91	4000746	2	YOKE G 8X16	TERMINAL GARFO		
92	7738704	2	PIN 8X16	PINO		

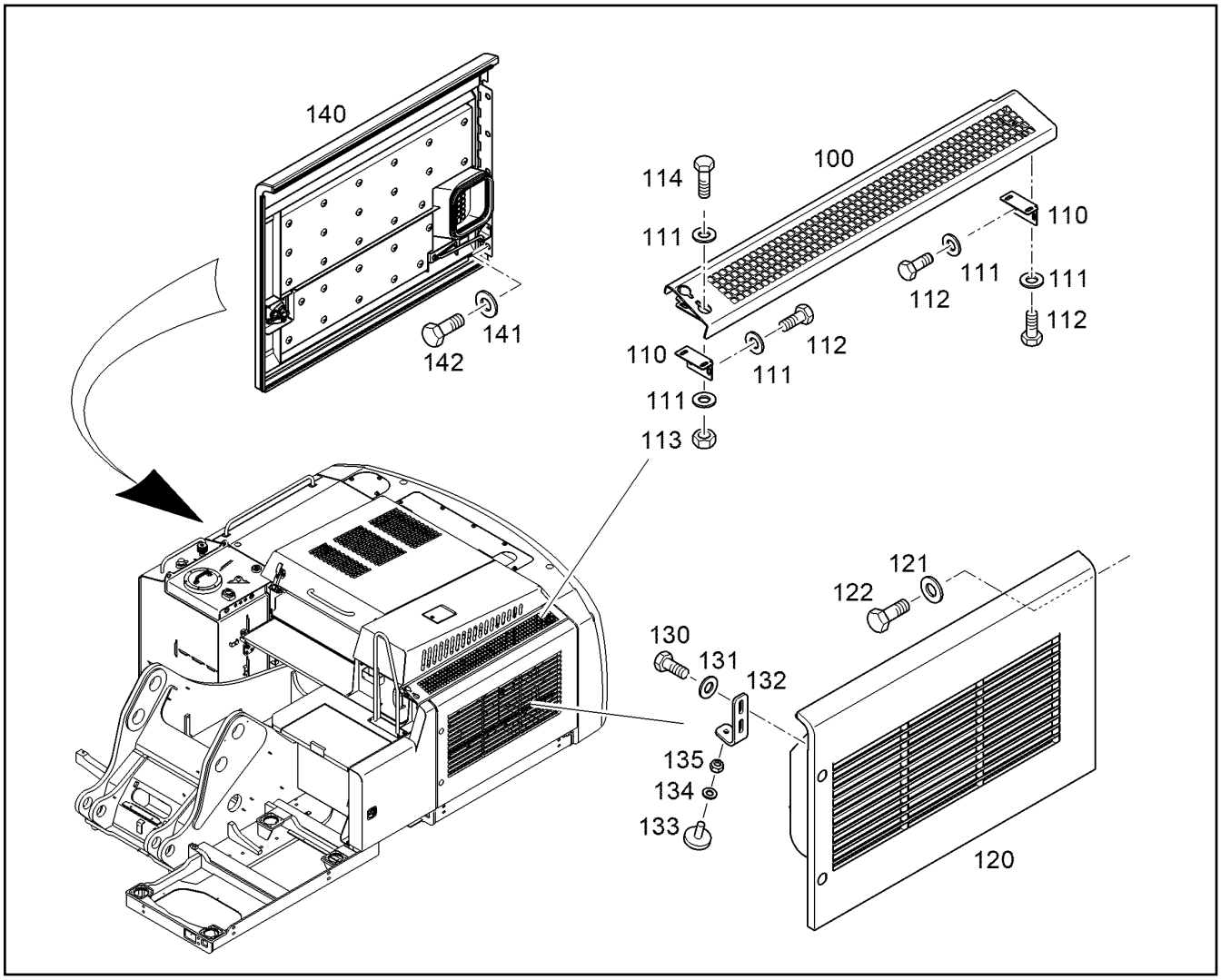

Pos.	Item	Quantity	Description	Designação	Serie	K
100	10062629	1	BONNET LEFT	CAPO ESQUERDO		
110	10062655	2	PLATE	PLACA		
111	10179356	10	WASHER 13	ARRUELA		
112	10800024	6	HEX SCREW ISO 4017 M12X25 10.9 FLZN	PARAFUSO SEXTAVADO		
113	11002808	2	HEX NUT M12	PORCA SEXTAVADA		
114	11002726	2	HEX SCREW ISO 4017 M12X30 10.9 FLZN	PARAFUSO SEXTAVADO		
120	10358229	1	SIDE DOOR LEFT ⇨ ❑ 457	PORTA LATERAL ESQUERDA		
121	10179356	5	WASHER 13	ARRUELA		
122	10800024	5	HEX SCREW ISO 4017 M12X25 10.9 FLZN	PARAFUSO SEXTAVADO		
130	10299578	2	HEX SCREW ISO 4017 M10X25 10.9 FLZN	PARAFUSO SEXTAVADO		
131	10289795	2	WASHER 10 300HV	ARRUELA		
132	9927487	1	ANGLE	CANTONEIRA		
133	7363930	1	LIMIT STOP BUFFER	BATENTE		
134	10289803	1	WASHER 8 300HV	ARRUELA		
135	10875614	1	HEX NUT M8	PORCA SEXTAVADA		
140	10064235	1	SIDE DOOR RIGHT ⇨ ❑ 459	PORTA LATERAL DIREITA	-99997	
141	10179356	5	WASHER 13	ARRUELA		
142	10800024	5	HEX SCREW ISO 4017 M12X25 10.9 FLZN	PARAFUSO SEXTAVADO		

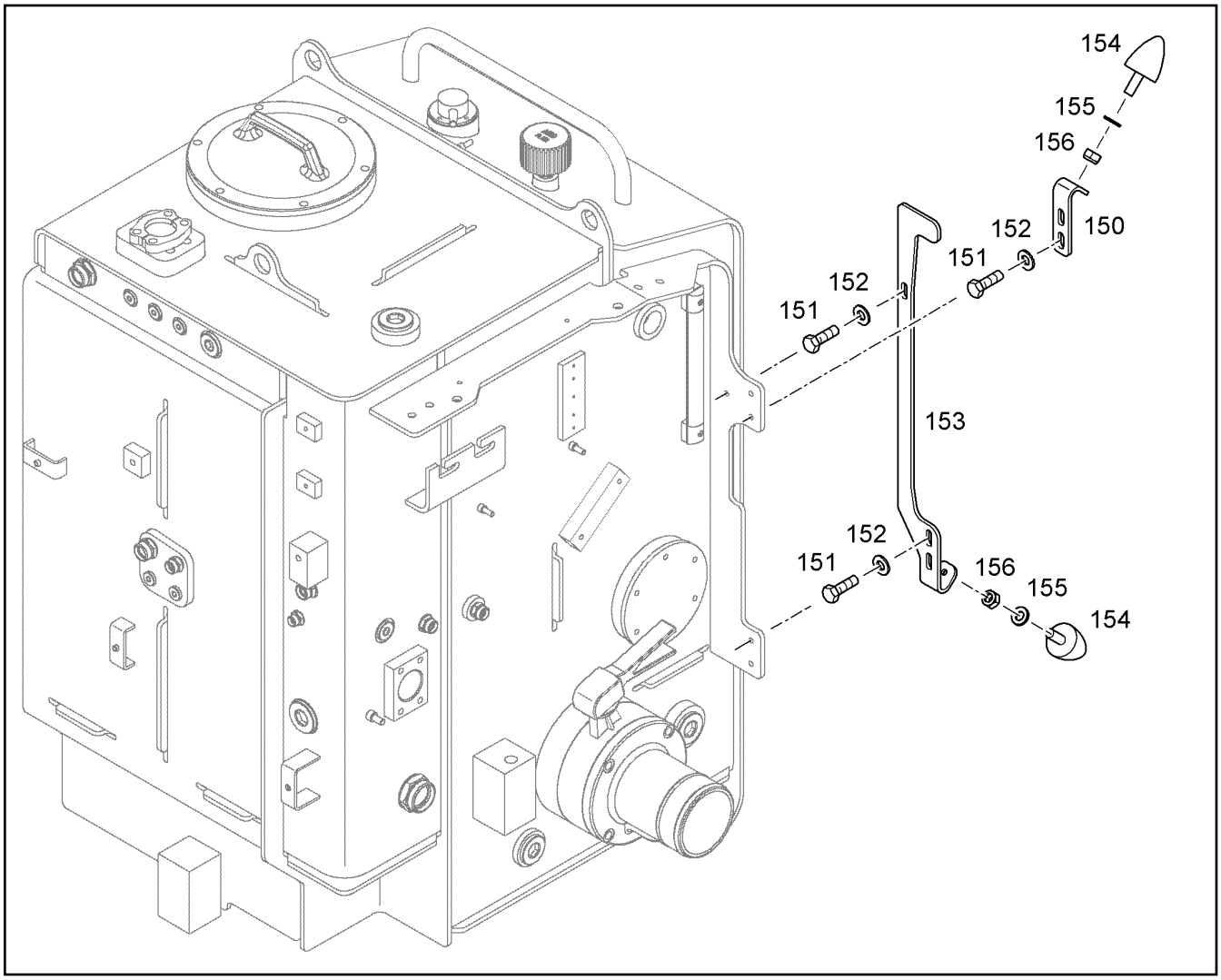

Pos.	Item	Quantity	Description	Designação	Serie	K
150	10064242	1	ANGLE	CANTONEIRA		
151	11651767	5	HEX SCREW ISO 4017 M8X20 8.8 480H	PARAFUSO SEXTAVADO		
152	11140469	5	WASHER 8 200HV	ARRUELA		
153	10064243	1	ANGLE	CANTONEIRA		
154	10112636	2	LIMIT STOP BUFFER	BATENTE		
155	10289803	2	WASHER 8 300HV	ARRUELA		
156	10875614	2	HEX NUT M8	PORCA SEXTAVADA		

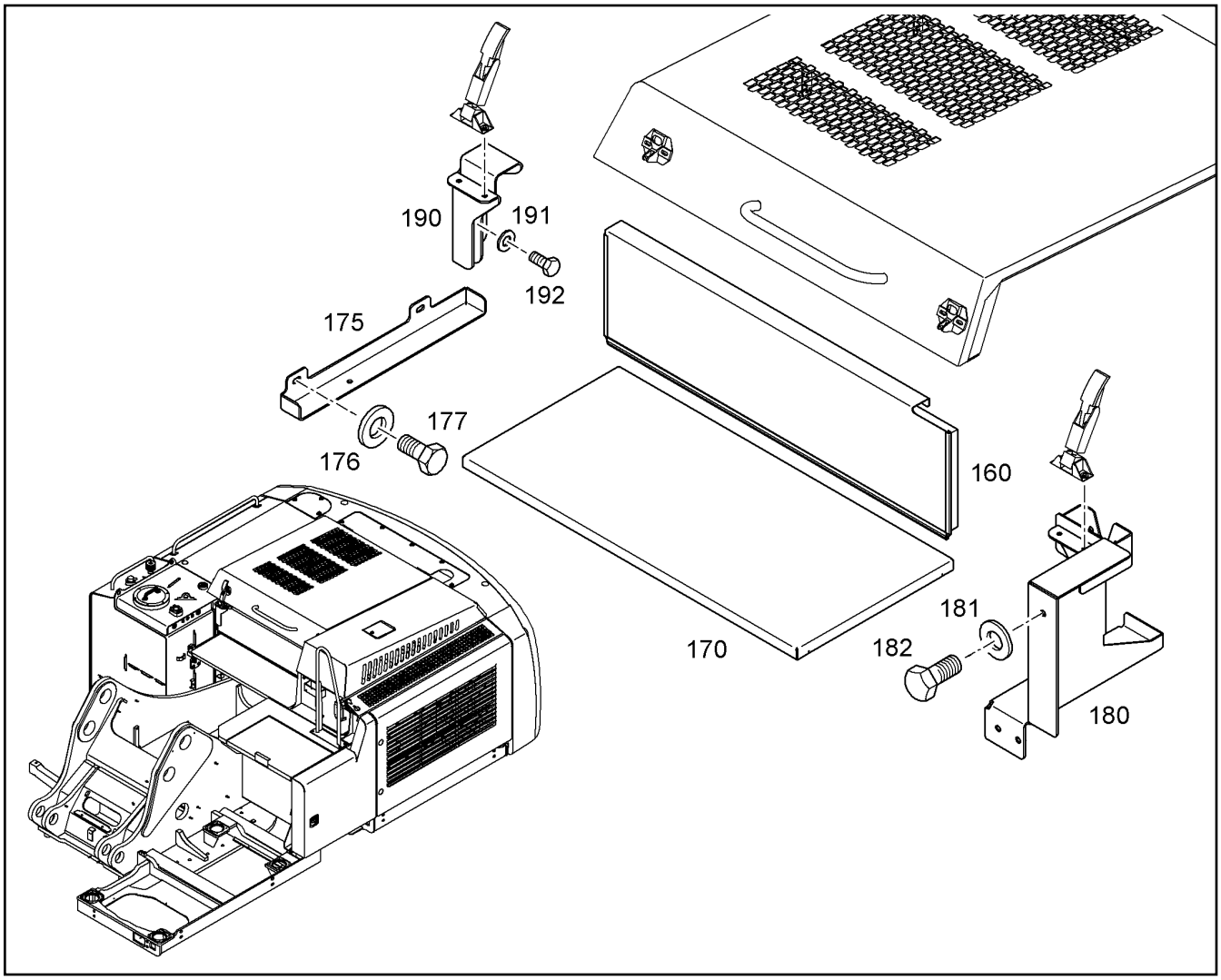

Pos.	Item	Quantity	Description	Designação	Serie	K
160	10065762	1	DIVIDING WALL MIDDLE ⇨ ❑ 465	DIVISÓRIA CENTRAL		
170	10070335	1	COVER MIDDLE ⇨ ❑ 461	TAMPA CENTRAL		
175	10062023	1	PLATE	PLACA		
176	10289804	2	WASHER 12 300HV	ARRUELA		
177	10800024	2	HEX SCREW ISO 4017 M12X25 10.9 FLZN	PARAFUSO SEXTAVADO		
180	10081811	1	LINK	SUPORTE DE ENCAIXE		
181	10289804	3	WASHER 12 300HV	ARRUELA		
182	10800024	3	HEX SCREW ISO 4017 M12X25 10.9 FLZN	PARAFUSO SEXTAVADO		
190	10064138	1	LINK	SUPORTE DE ENCAIXE		
191	10289803	2	WASHER 8 300HV	ARRUELA		
192	10299649	2	HEX SCREW ISO 4017 M8X16 10.9 480H	PARAFUSO SEXTAVADO		

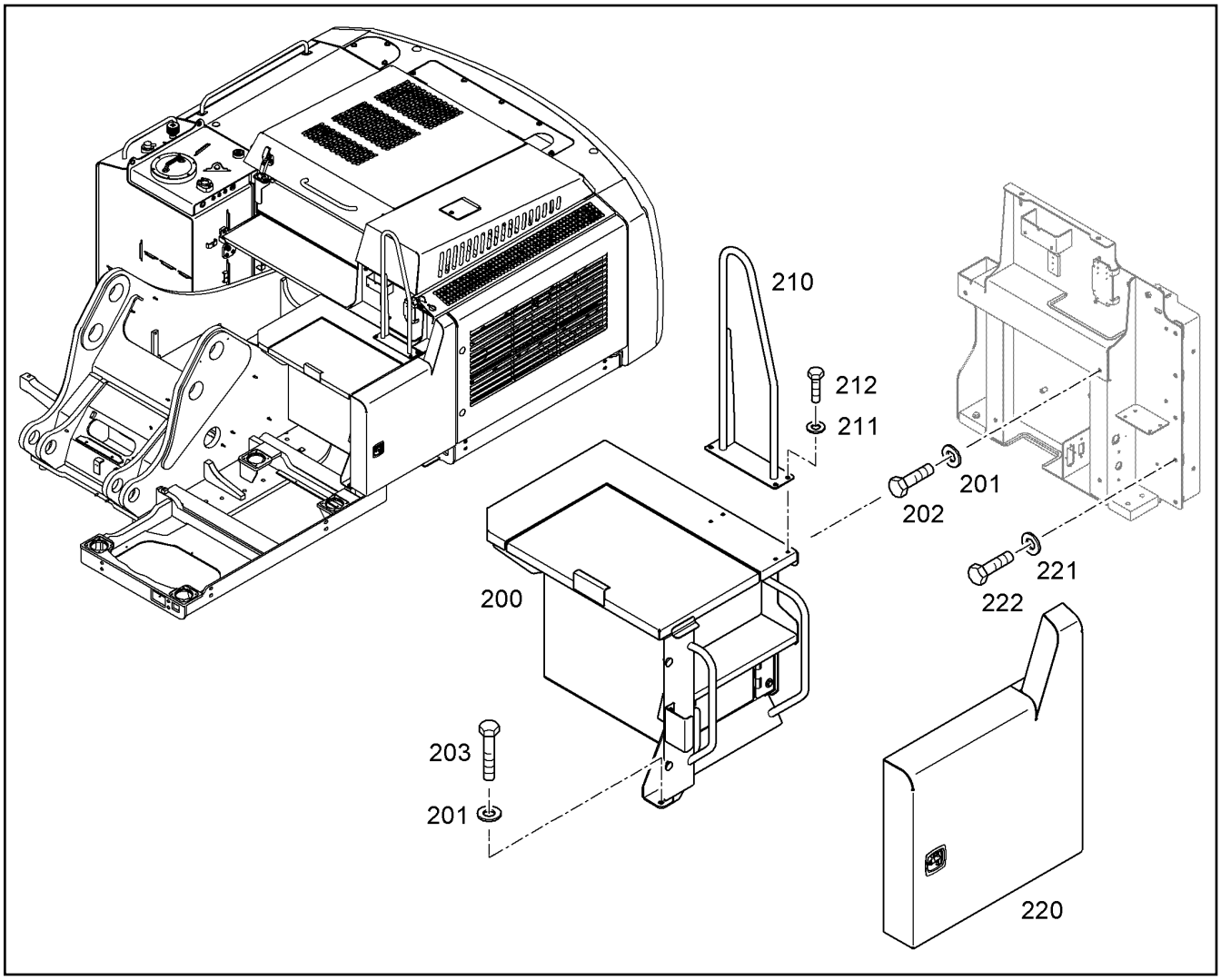

Pos.	Item	Quantity	Description	Designação	Serie	K
200	10358264	1	TOOL BOX ⇨ ❑ 462	CAIXA DE FERRAMENTAS		
201	10179356	5	WASHER 13	ARRUELA		
202	10800024	4	HEX SCREW ISO 4017 M12X25 10.9 FLZN	PARAFUSO SEXTAVADO		
203	11002726	1	HEX SCREW ISO 4017 M12X30 10.9 FLZN	PARAFUSO SEXTAVADO		
210	10065814	1	RAILING LEFT	CORRIMÃO ESQUERDO		
211	10289795	4	WASHER 10 300HV	ARRUELA		
212	10299578	4	HEX SCREW ISO 4017 M10X25 10.9 FLZN	PARAFUSO SEXTAVADO		
220	10358230	1	SIDE DOOR FRONT LEFT ⇨ ❑ 466	PORTA LATERAL DIANTEIRA	-99997	
221	10179356	5	WASHER 13	ARRUELA		
222	10800024	5	HEX SCREW ISO 4017 M12X25 10.9 FLZN	PARAFUSO SEXTAVADO		

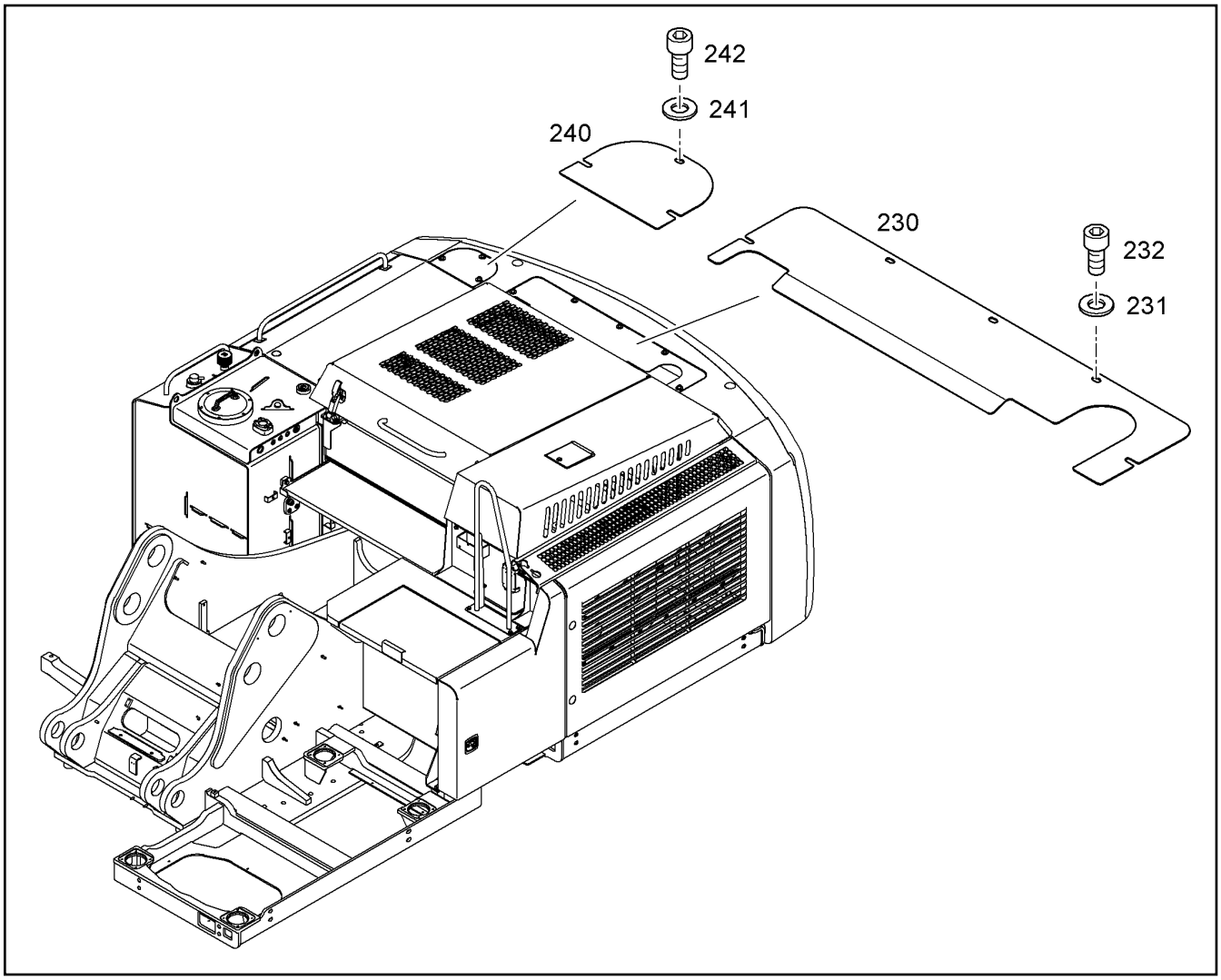

Pos.	Item	Quantity	Description	Designação	Serie	K
230	10062868	1	PLATE	PLACA		
231	10179356	5	WASHER 13	ARRUELA		
232	11002747	5	SOCKET HEAD SCREW ISO 4762 M12X25 10	PARAFUSO CILÍNDRICO		
240	10498368	1	AIR PREFILTER O4 - KC 111 ⇨ ❑ 792	PRÉ-FILTRO DE AR		
241	10179356	3	WASHER 13	ARRUELA		
242	11002747	3	SOCKET HEAD SCREW ISO 4762 M12X25 10	PARAFUSO CILÍNDRICO		

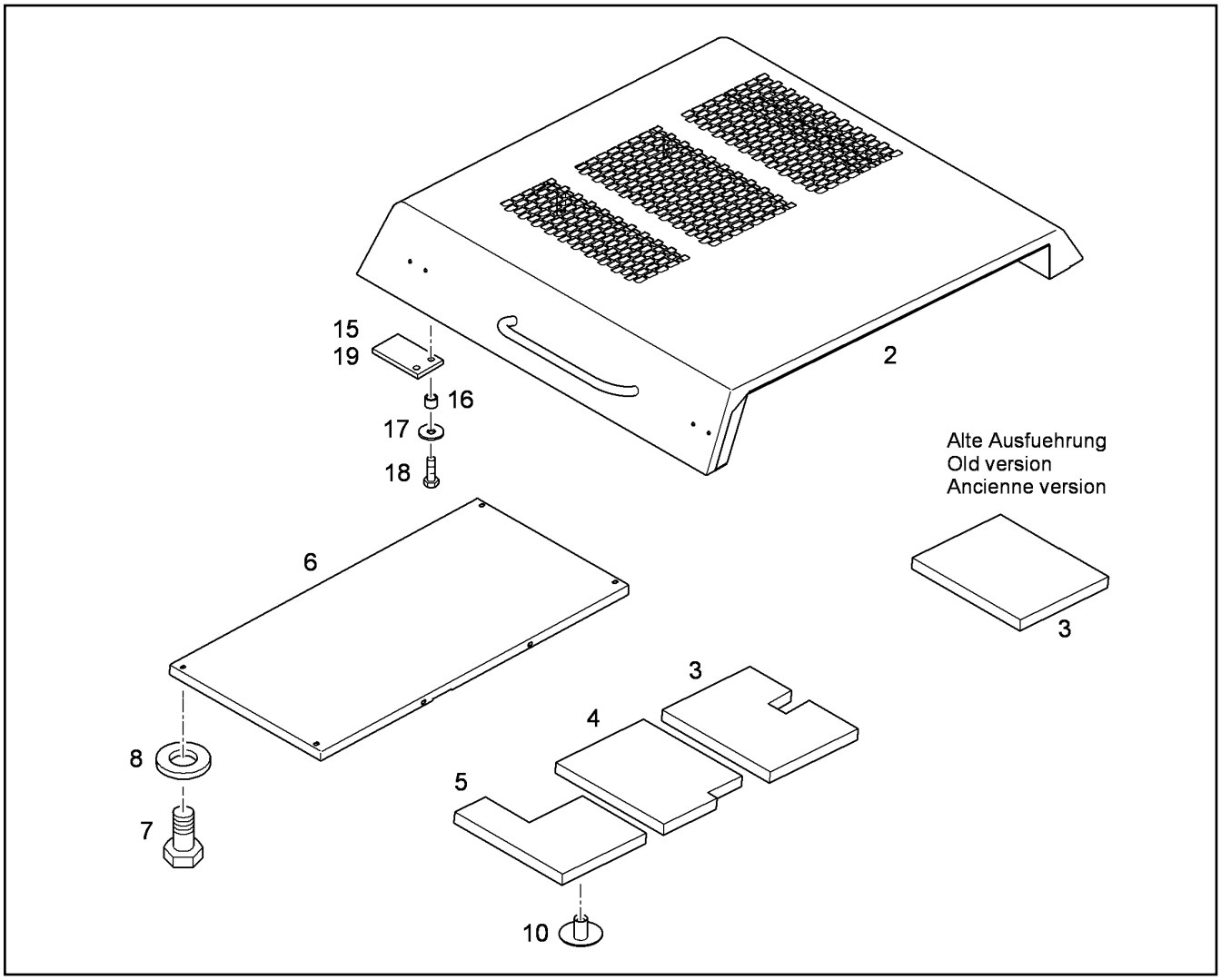

Pos.	Item	Quantity	Description	Designação	Serie	K
2		1	ENGINE BONNET	CAPOTA DO MOTOR		
3	10400258	1	INSULATING MAT	MANTA DE ISOLAMENTO ACÚST	28017-	
4	10058253	1	INSULATING MAT	MANTA DE ISOLAMENTO ACÚST		
5	10058254	1	INSULATING MAT	MANTA DE ISOLAMENTO ACÚST		
6	10058234	1	SCOOP ⇨ ❑ 454	DEFLETOR		
7	11651612	8	HEX SCREW ISO 4017 M8X16 8.8 480H	PARAFUSO SEXTAVADO		
8	10289803	8	WASHER 8 300HV	ARRUELA		
10	10412536	25	CLIP	CLIPE		
15	10075430	1	RUBBER PART	PEÇAS DE BORRACHA		
16	9753989	2	TUBE	TUBO		
17	12203968	2	WASHER 8,4 30HV	ARRUELA		
18	11642261	2	HEX SCREW ISO 4017 M8X25 8.8 480H	PARAFUSO SEXTAVADO		
19	10355107	0.1	GLUE	COLA		

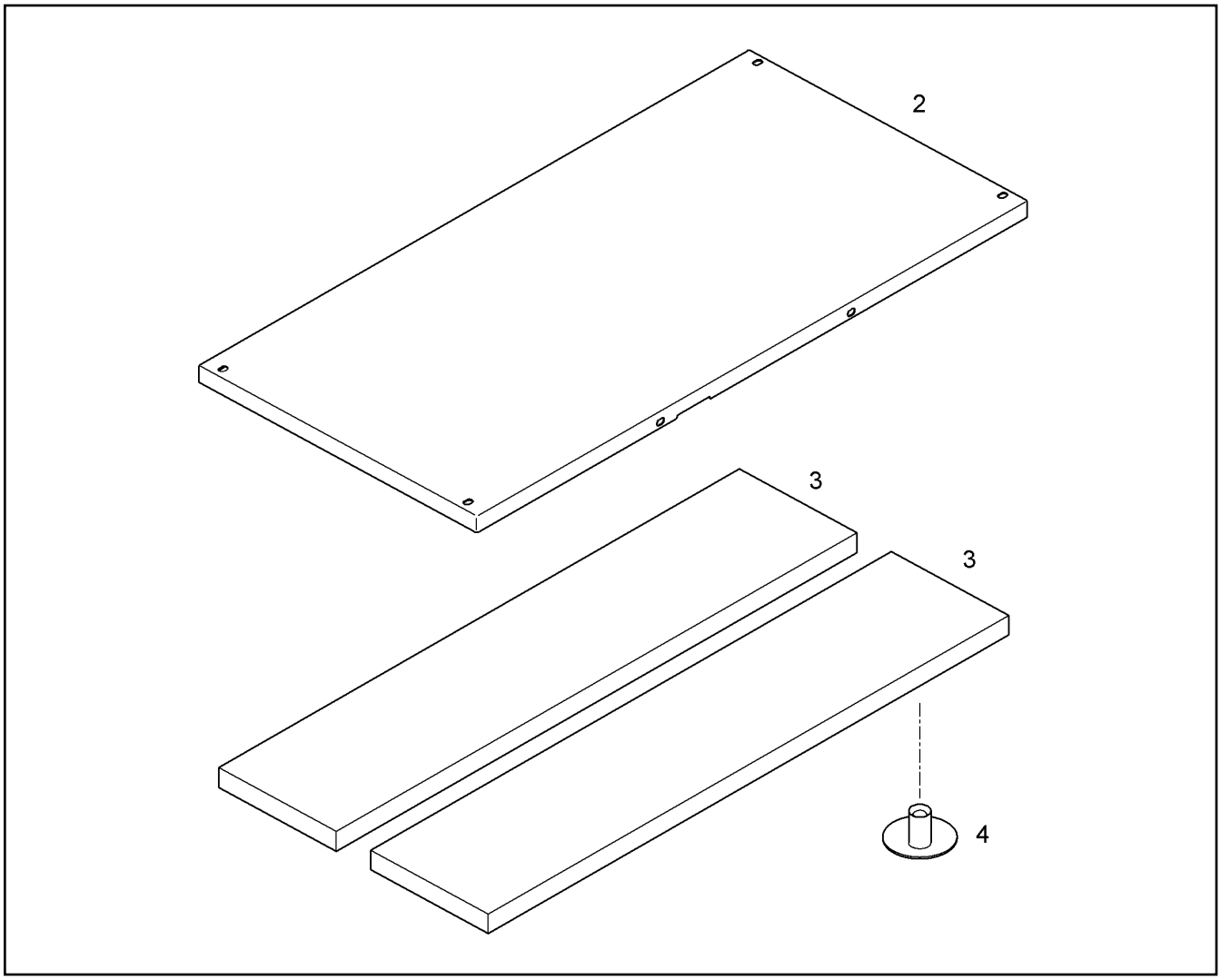

Pos.	Item	Quantity	Description	Designação	Serie	K
2		1	SCOOP	DEFLETOR		
3	10058255	2	INSULATING MAT	MANTA DE ISOLAMENTO ACÚST		
4	10412536	31	CLIP	CLIPE		

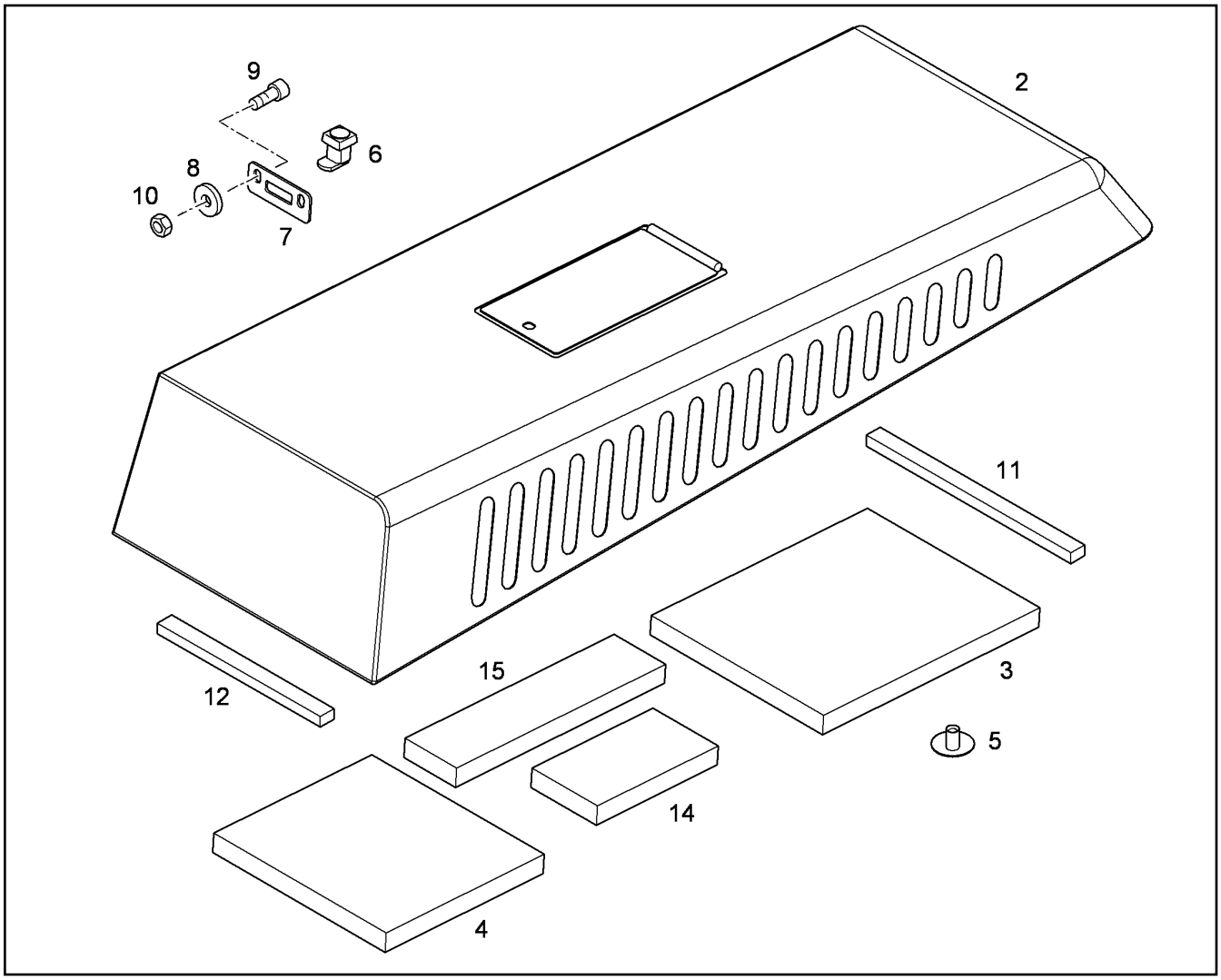

Pos.	Item	Quantity	Description	Designação	Serie	K
2		1	RADIATOR HOOD	CAPO DO RADIADOR		
3	10094745	1	INSULATING MAT	MANTA DE ISOLAMENTO ACÚST	99999-	
4	10064366	1	INSULATING MAT	MANTA DE ISOLAMENTO ACÚST		
5	10412536	23	CLIP	CLIPE		
6	7365293	1	LOCK	FECHADURA		
7	9356574	1	CONSOLE	CONSOLE		
8	11693878	2	WASHER 6,4 200HV	ARRUELA		
9	11690044	2	SOCKET HEAD SCREW ISO 4762 M6X12 8.8	PARAFUSO CILÍNDRICO		
10	10299668	2	HEX NUT M6	PORCA SEXTAVADA		
11	10002428	0.35m	PROFILE	PERFIL		
12	10002428	0.47m	PROFILE	PERFIL		
14	10388068	1	INSULATING MAT	MANTA DE ISOLAMENTO ACÚST		
15	10388069	1	INSULATING MAT	MANTA DE ISOLAMENTO ACÚST		

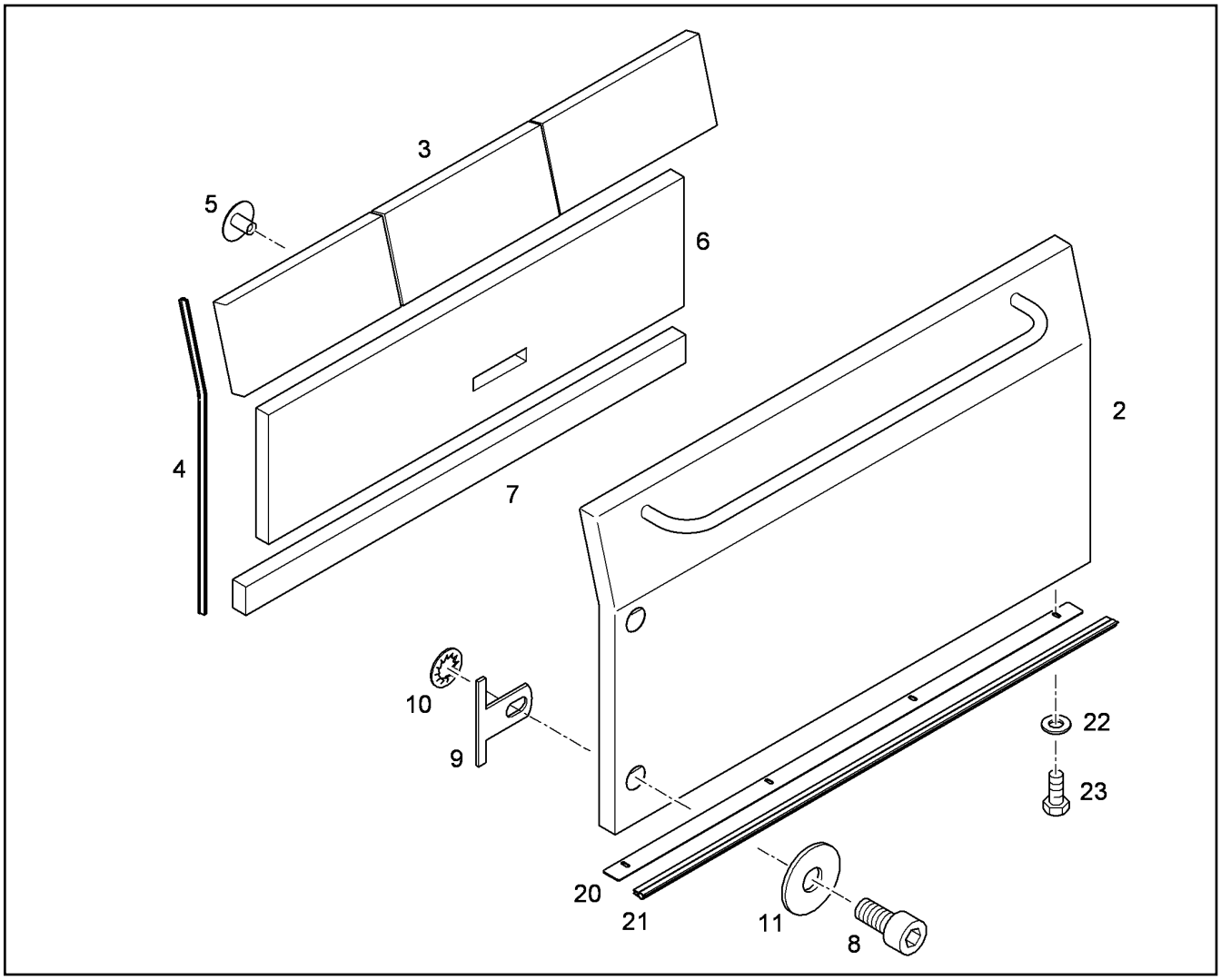

Pos.	Item	Quantity	Description	Designação	Serie	K
2		1	BONNET RIGHT	CAPO DIREITO		
3	10051839	3	INSULATING MAT	MANTA DE ISOLAMENTO ACÚST		
4	7360171	0.7m	CORNER PROTECT.PROFILE	PERFIL DE VEDACAO		
5	10412536	42	CLIP	CLIPE		
6	10051840	1	INSULATING MAT	MANTA DE ISOLAMENTO ACÚST		
7	10051841	1	INSULATING MAT	MANTA DE ISOLAMENTO ACÚST		
8	11002748	2	SOCKET HEAD SCREW ISO 4762 M12X35 10	PARAFUSO CILÍNDRICO		
9	10406664	2	PLATE	PLACA		
10	7363743	2	TOOTH LOCK WASHER	ARRUELA DENTADA		
11	10074972	2	WASHER	ARRUELA		
20	10081831	1	PLATE	PLACA		
21	10292662	1.25m	EDGE PROTECTION	PROTEÇÃO DA BORDA		
22	10289803	4	WASHER 8 300HV	ARRUELA		
23	11651612	4	HEX SCREW ISO 4017 M8X16 8.8 480H	PARAFUSO SEXTAVADO		

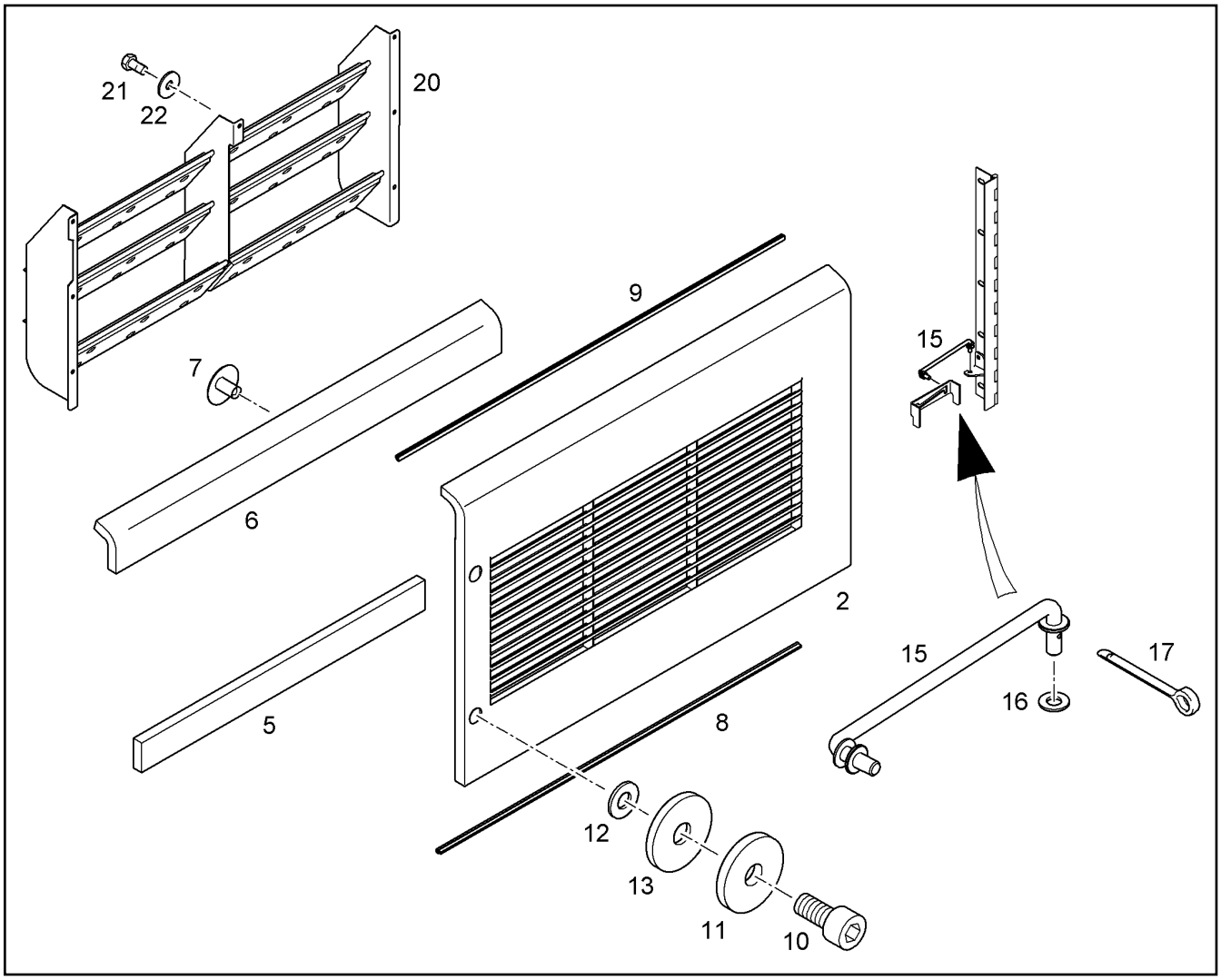

Pos.	Item	Quantity	Description	Designação	Serie	K
2		1	SIDE DOOR LEFT	PORTA LATERAL ESQUERDA		
5	10059643	1	INSULATING MAT	MANTA DE ISOLAMENTO ACÚST		
6	10059644	1	INSULATING MAT	MANTA DE ISOLAMENTO ACÚST		
7	10412536	20	CLIP	CLIPE		
8	7360171	1.475m	CORNER PROTECT.PROFILE	PERFIL DE VEDACAO		
9	7008157	1.578m	CORNER PROTECT.PROFILE	PERFIL DE VEDACAO		
10	4043163	2	SOCKET HEAD SCREW ISO 4762 M12X30 1	PARAFUSO CILÍNDRICO		
11	10076844	2	WASHER	ARRUELA		
12	7363743	2	TOOTH LOCK WASHER	ARRUELA DENTADA		
13	10074972	2	WASHER	ARRUELA		
15	10358170	1	ROD	HASTE		
16	10289795	1	WASHER 10 300HV	ARRUELA		
17	4330011	1	SPLIT PIN 3,2X25	CONTRAPINO		
20	10059633	1	SCOOP	DEFLETOR		
			⇨ ❑ 458			
21	11002753	7	HEX SCREW ISO 4017 M10X20 10.9 FLZN	PARAFUSO SEXTAVADO		
22	10179357	7	WASHER 10,5	ARRUELA		

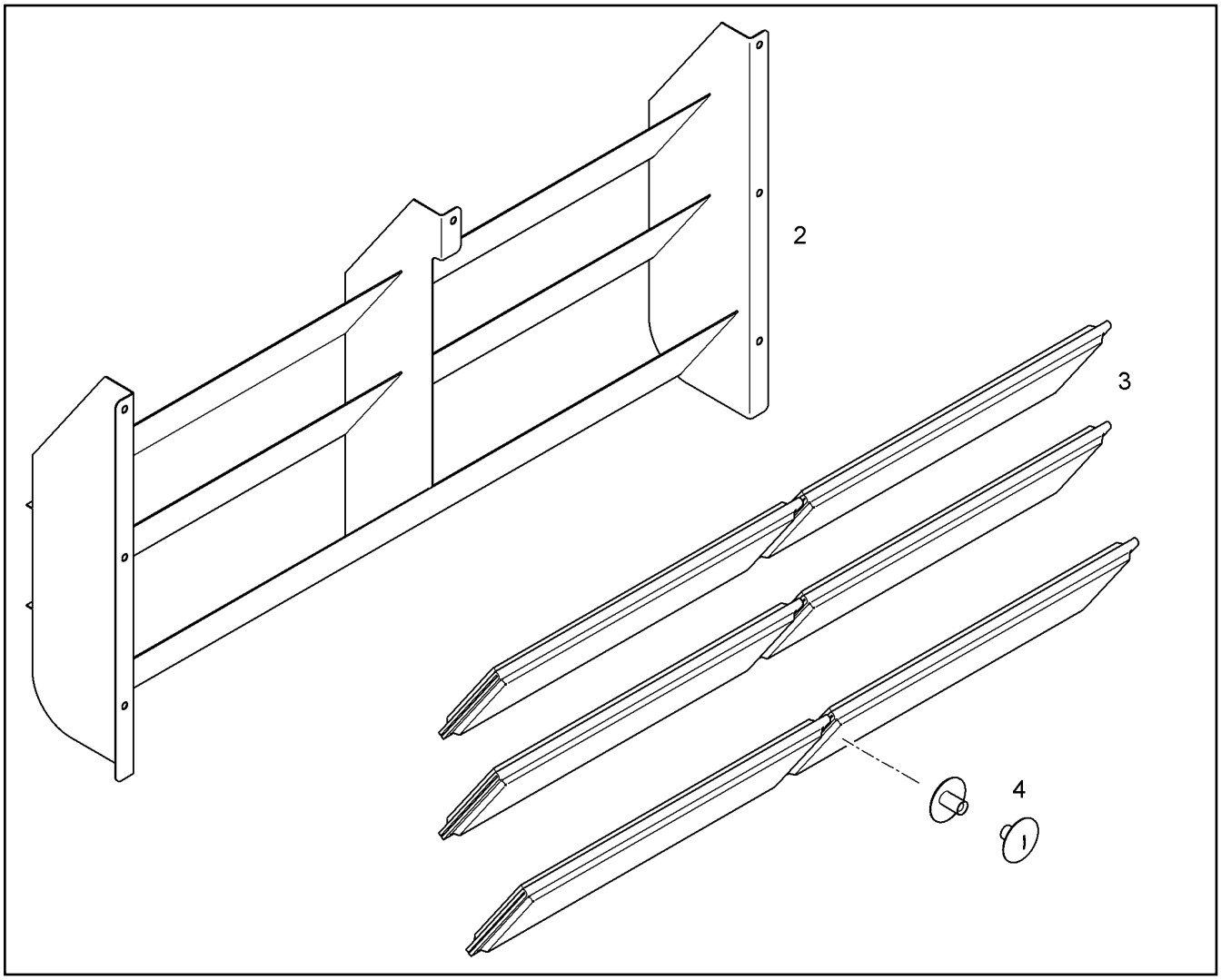

Pos.	Item	Quantity	Description	Designação	Serie	K
2		1	SCOOP	DEFLETOR		
3	10059636	6	INSULATING MAT	MANTA DE ISOLAMENTO ACÚST		
4	10412536	72	CLIP	CLIPE		

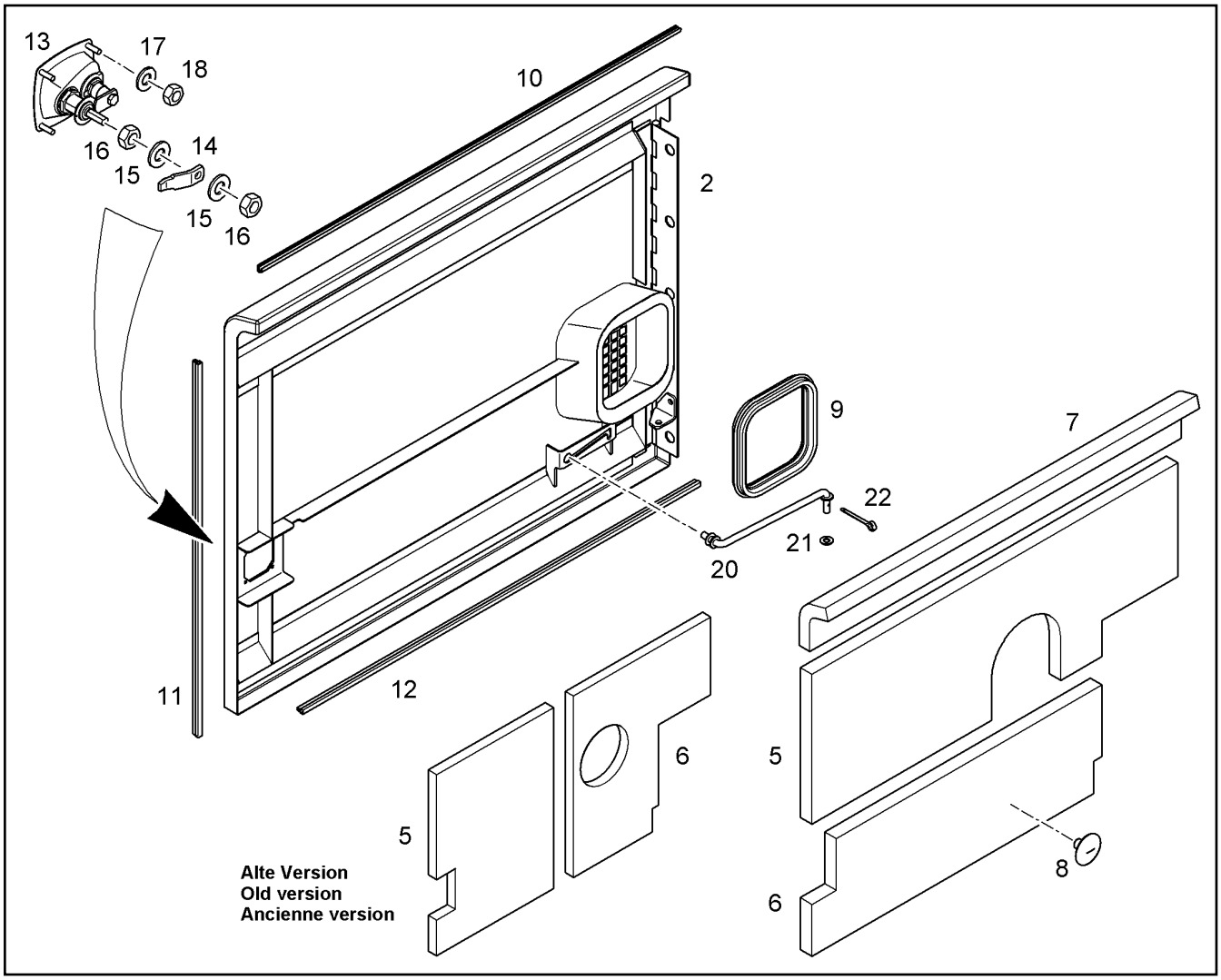

Pos.	Item	Quantity	Description	Designação	Serie	K
2		1	SIDE DOOR RIGHT	PORTA LATERAL DIREITA		
5	10064412	1	INSULATING MAT	MANTA DE ISOLAMENTO ACÚST	-99998	
5	10094702	1	INSULATING MAT	MANTA DE ISOLAMENTO ACÚST	99999-	
6	10051825	1	INSULATING MAT	MANTA DE ISOLAMENTO ACÚST	-99998	
6	10094703	1	INSULATING MAT	MANTA DE ISOLAMENTO ACÚST	99999-	
7	10051826	1	INSULATING MAT	MANTA DE ISOLAMENTO ACÚST		
8	10412536	45	CLIP	CLIPE		
9	7018489	0.71m	CLAMPING PROFILE	PERFIL DE FIXAÇÃO		
10	7008157	1m	CORNER PROTECT.PROFILE	PERFIL DE VEDACAO		
11	7360171	0.93m	CORNER PROTECT.PROFILE	PERFIL DE VEDACAO		
12	7360171	1.24m	CORNER PROTECT.PROFILE	PERFIL DE VEDACAO		
13	10025254	1	DOOR LOCK ⇨ ❑ 467	FECHO DA PORTA		
14	10113250	1	LOCKING BAR	TRAVA		
15	10289795	2	WASHER 10 300HV	ARRUELA		
16	11656735	2	HEX NUT M10	PORCA SEXTAVADA		
17	10289802	4	WASHER 6 300HV	ARRUELA		
18	10299668	4	HEX NUT M6	PORCA SEXTAVADA		
20	9942679	1	ROD	HASTE		
21	10289795	1	WASHER 10 300HV	ARRUELA		
22	4330011	1	SPLIT PIN 3,2X25	CONTRAPINO		

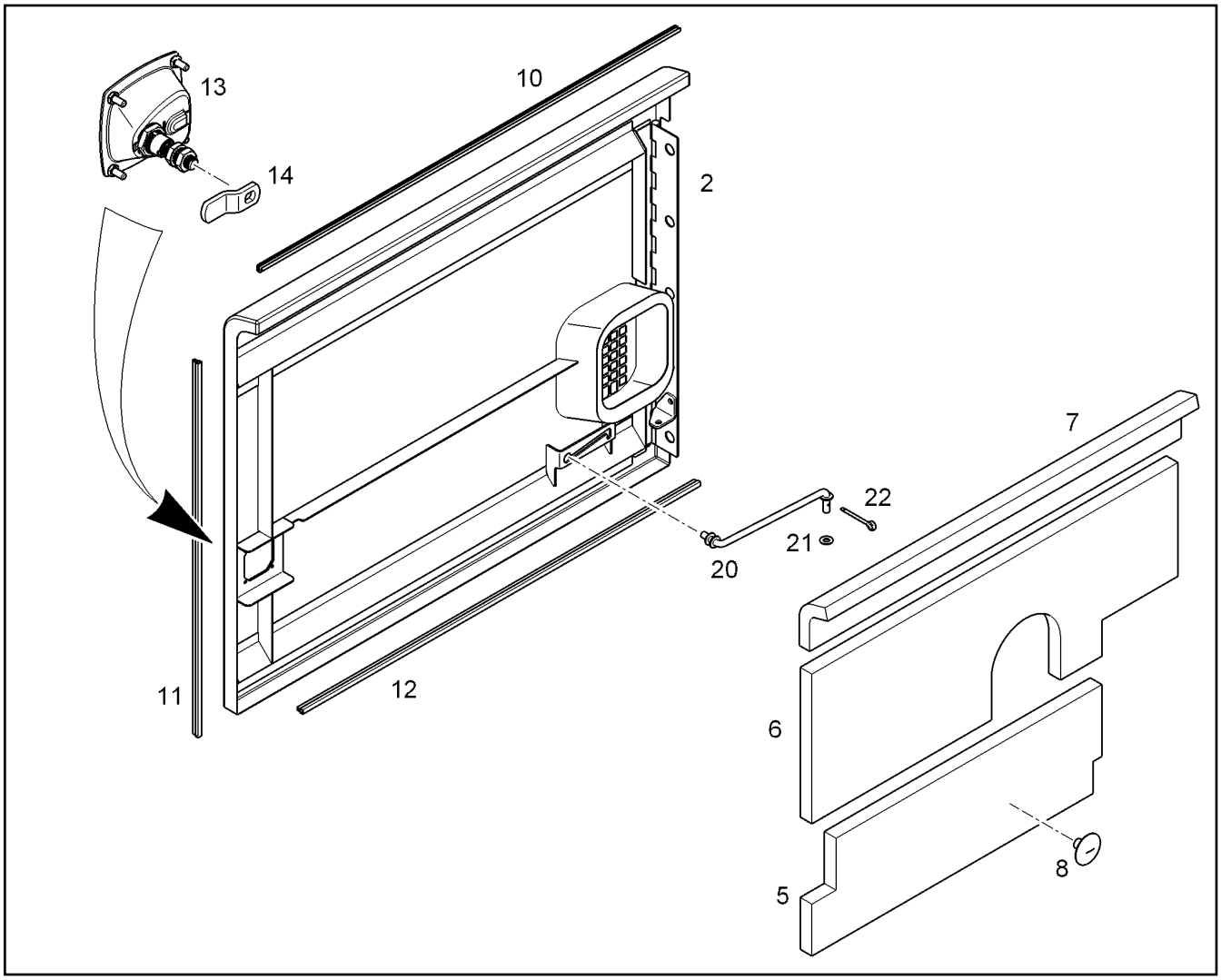

Pos.	Item	Quantity	Description	Designação	Serie	K
2	10498567	1	SIDE DOOR RIGHT	PORTA LATERAL DIREITA		
5	10498646	1	INSULATING MAT	MANTA DE ISOLAMENTO ACÚST		
6	10498647	1	INSULATING MAT	MANTA DE ISOLAMENTO ACÚST		
7	10051826	1	INSULATING MAT	MANTA DE ISOLAMENTO ACÚST		
8	10412536	42	CLIP	CLIPE		
10	7008157	1m	CORNER PROTECT.PROFILE	PERFIL DE VEDACAO		
11	7360171	0.93m	CORNER PROTECT.PROFILE	PERFIL DE VEDACAO		
12	7360171	1.24m	CORNER PROTECT.PROFILE	PERFIL DE VEDACAO		
13	10353879	1	DOOR LOCK ⇨ ❑ 469	FECHADURA DA PORTA		
14	9634109	1	LOCKING BAR	TRAVA		
20	9942679	1	ROD	HASTE		
21	10289795	1	WASHER 10 300HV	ARRUELA		
22	4330011	1	SPLIT PIN 3,2X25	CONTRAPINO		

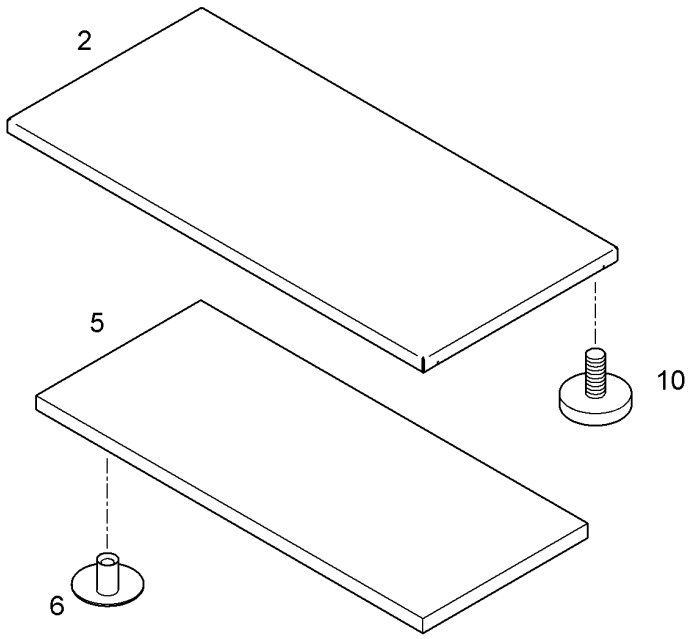

Pos.	Item	Quantity	Description	Designação	Serie	K
2		1	COVER MIDDLE ⇨ ❑ 6	TAMPA CENTRAL		
5	10070338	1	INSULATING MAT	MANTA DE ISOLAMENTO ACÚST		
6	10412536	12	CLIP	CLIPE		
10	7363930	4	LIMIT STOP BUFFER	BATENTE		

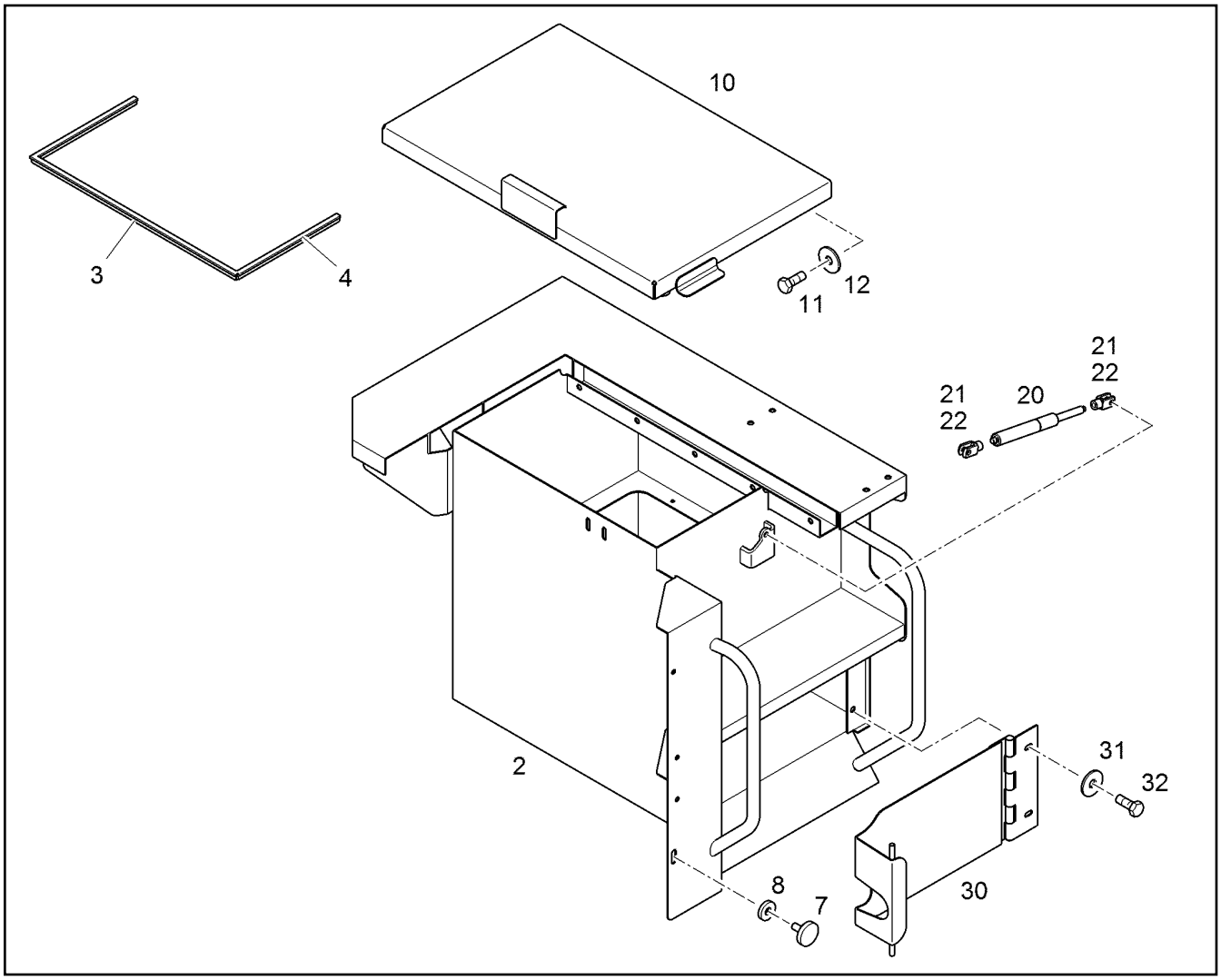

Pos.	Item	Quantity	Description	Designação	Serie	K
2	10082767	1	TOOL BOX	CAIXA DE FERRAMENTAS		
3	7360171	0.85m	CORNER PROTECT.PROFILE	PERFIL DE VEDACAO		
4	7360171	0.28m	CORNER PROTECT.PROFILE	PERFIL DE VEDACAO		
7	7363930	2	LIMIT STOP BUFFER	BATENTE		
8	12203968	2	WASHER 8,4 30HV	ARRUELA		
10	10082763	1	COVER ⇨ ❑ 464	TAMPA		
11	4066093	5	HEX SCREW ISO 4017 M10X25 10.9 A3C	PARAFUSO SEXTAVADO		
12	10179357	5	WASHER 10,5	ARRUELA		
20	10037196	1	GAS SPRING	MOLA A GÁS		
21	4000746	2	YOKE G 8X16	TERMINAL GARFO		
22	7738704	2	PIN 8X16	PINO		
30	10082759	1	INSIDE DOORS	PORTAS INTERNAS		
31	10179357	2	WASHER 10,5	ARRUELA		
32	4066093	2	HEX SCREW ISO 4017 M10X25 10.9 A3C	PARAFUSO SEXTAVADO		

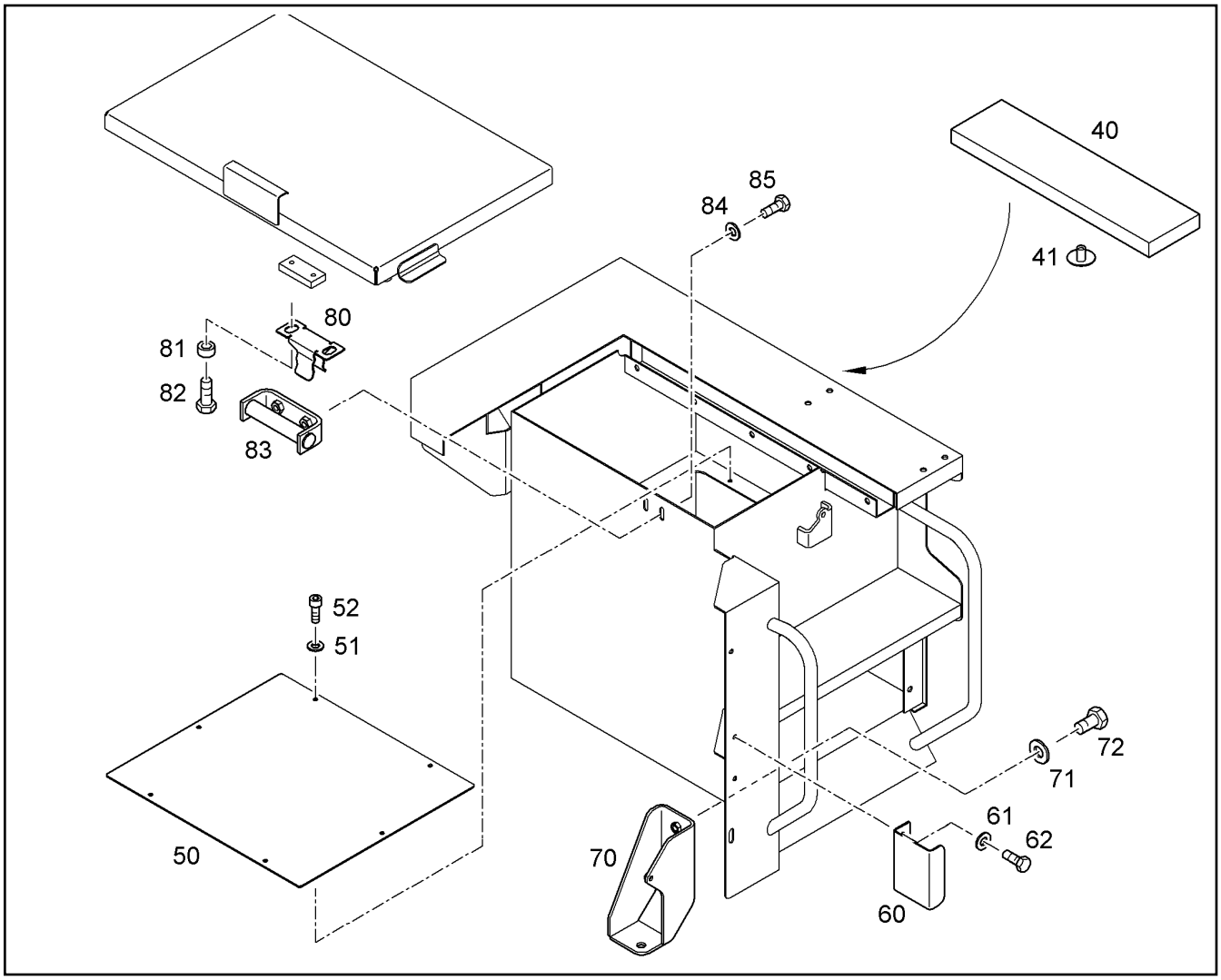

Pos.	Item	Quantity	Description	Designação	Serie	K
40	10071146	1	INSULATING MAT	MANTA DE ISOLAMENTO ACÚST		
41	10412536	3	CLIP	CLIPE		
50	10071171	1	PLATE	PLACA		
51	11693878	6	WASHER 6,4 200HV	ARRUELA		
52	409361108	6	SOCKET HEAD SCREW DIN 7984 M6X16 08.	PARAFUSO CILÍNDRICO		
60	10082807	1	PLATE	PLACA		
61	10289803	2	WASHER 8 300HV	ARRUELA		
62	11651767	2	HEX SCREW ISO 4017 M8X20 8.8 480H	PARAFUSO SEXTAVADO		
70	10082757	1	MOUNTING SHEET	CHAPA DE FIXAÇÃO		
71	10179356	2	WASHER 13	ARRUELA		
72	4600184	2	HEX SCREW ISO 4017 M12X25 10.9 A3C	PARAFUSO SEXTAVADO		
80	9376917	1	LOCKING	TRAVA		
81	10358266	2	WASHER 12/20X10	ARRUELA		
82	11002753	2	HEX SCREW ISO 4017 M10X20 10.9 FLZN	PARAFUSO SEXTAVADO		
83	10358265	1	LOCKING	TRAVA		
84	10289803	2	WASHER 8 300HV	ARRUELA		
85	4600334	2	HEX SCREW ISO 4017 M8X18 8.8 A2C	PARAFUSO SEXTAVADO		

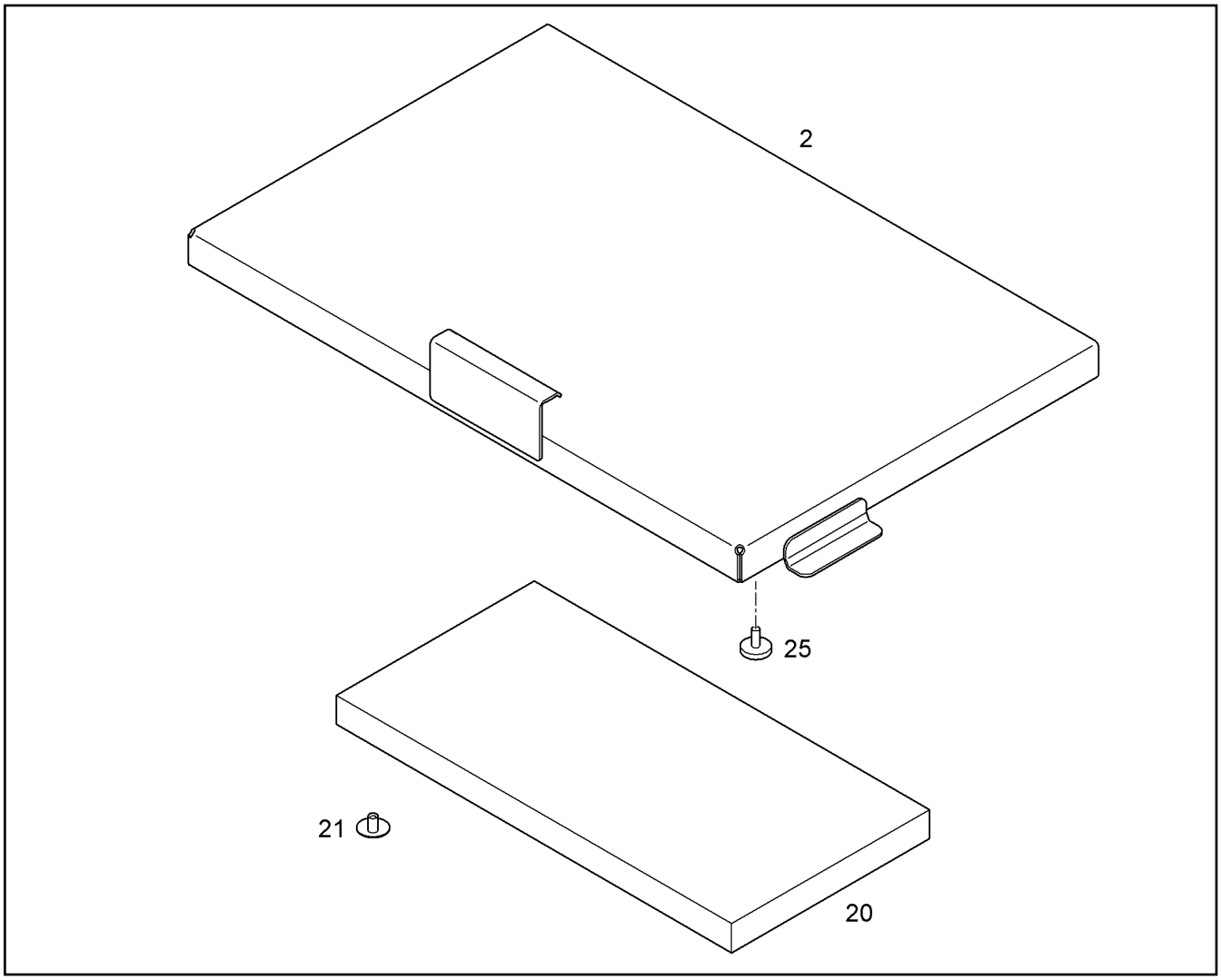

Pos.	Item	Quantity	Description	Designação	Serie	K
2		1	COVER	TAMPA		
20	10071145	1	INSULATING MAT	MANTA DE ISOLAMENTO ACÚST		
21	10412536	6	CLIP	CLIPE		
25	7363930	1	LIMIT STOP BUFFER	BATENTE		

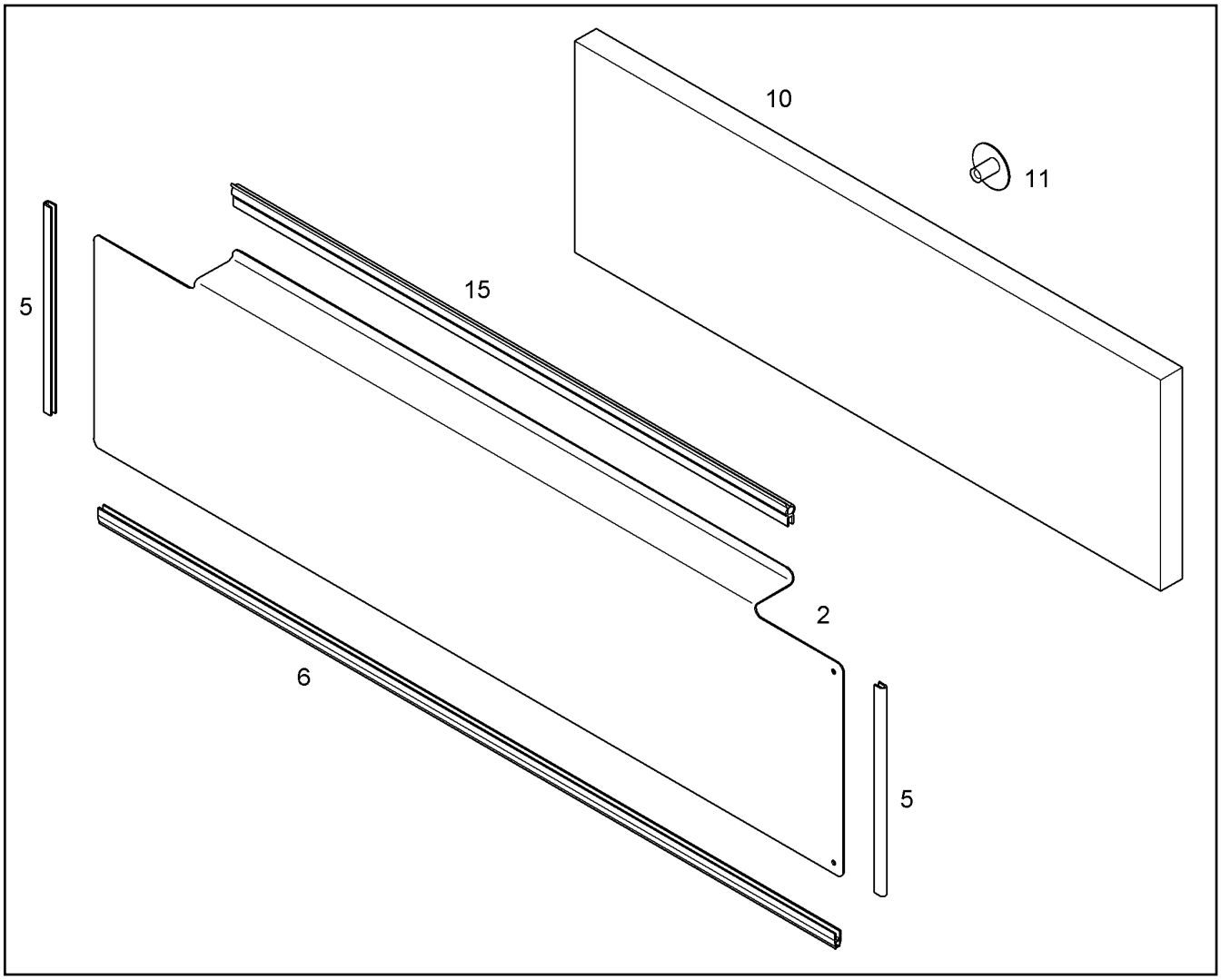

Pos.	Item	Quantity	Description	Designação	Serie	K
2		1	DIVIDING WALL MIDDLE	DIVISÓRIA CENTRAL		
5	226016702	0.57m	SECTION 1-4/14,5X10 SCHWARZ	PERFIL DE PROTECAO DE CANT		
6	7006451	1.169m	CORNER PROTECT.PROFILE	PERFIL DE VEDACAO		
10	10065764	1	INSULATING MAT	MANTA DE ISOLAMENTO ACÚST		
11	10412536	10	CLIP	CLIPE		
15	10292662	0.88m	EDGE PROTECTION	PROTEÇÃO DA BORDA		

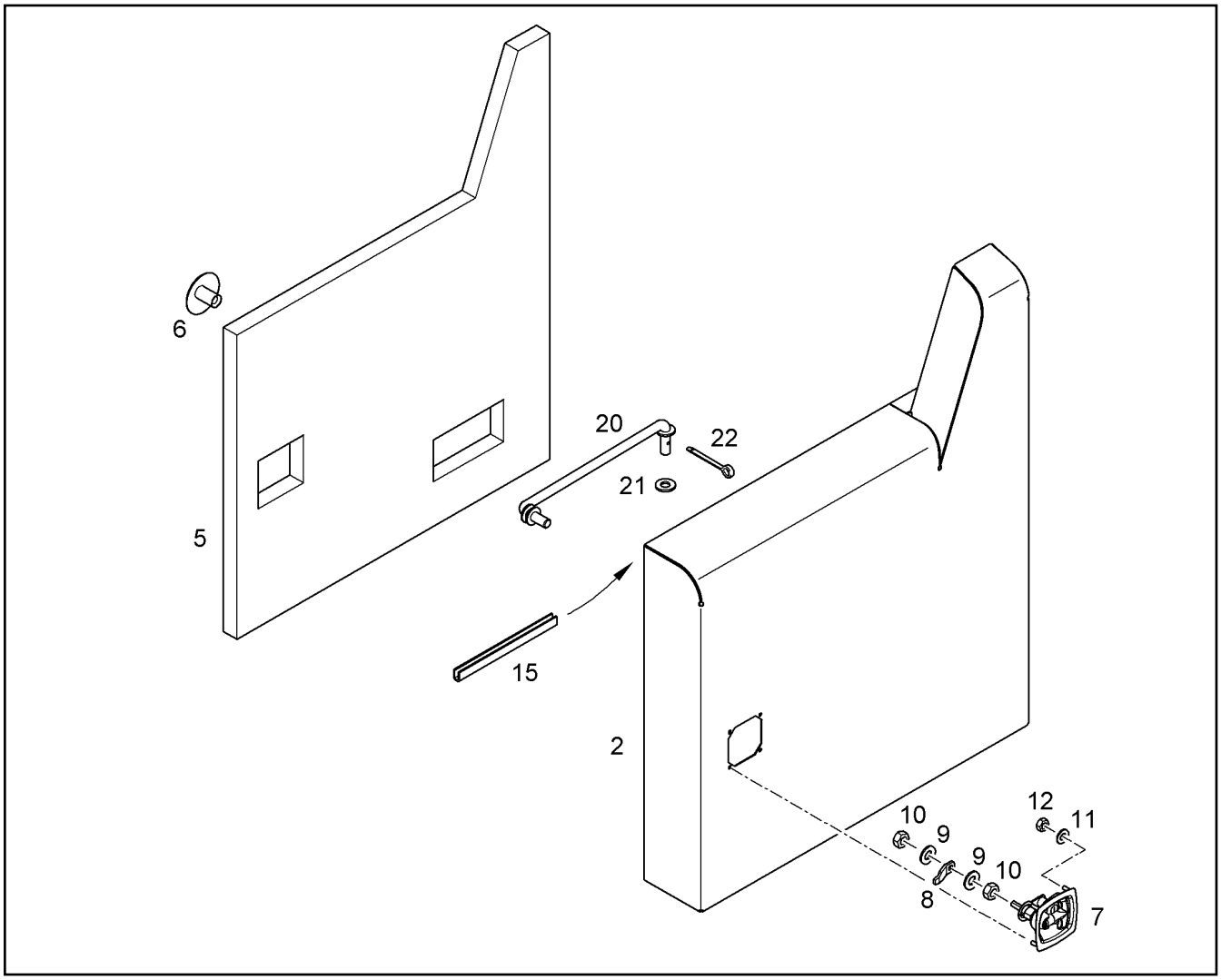

Pos.	Item	Quantity	Description	Designação	Serie	K
2	10065196	1	SIDE DOOR LEFT FRONT	PORTA LATERAL DIANTEIRA		
5	10065195	1	INSULATING MAT	MANTA DE ISOLAMENTO ACÚST		
6	10412536	13	CLIP	CLIPE		
7	10025254	1	DOOR LOCK ⇨ ❑ 467	FECHO DA PORTA		
8	10113250	1	LOCKING BAR	TRAVA		
9	4229913	2	LOCK WASHER VS 10	ARRUELA DE PRESSÃO		
10	11656735	2	HEX NUT M10	PORCA SEXTAVADA		
11	10289802	4	WASHER 6 300HV	ARRUELA		
12	4000379	4	HEX NUT M6	PORCA SEXTAVADA		
15	226016702	0.13m	SECTION 1-4/14,5X10 SCHWARZ	PERFIL DE PROTECAO DE CANT		
20	10358170	1	ROD	HASTE		
21	10289795	1	WASHER 10 300HV	ARRUELA		
22	4330011	1	SPLIT PIN 3,2X25	CONTRAPINO		

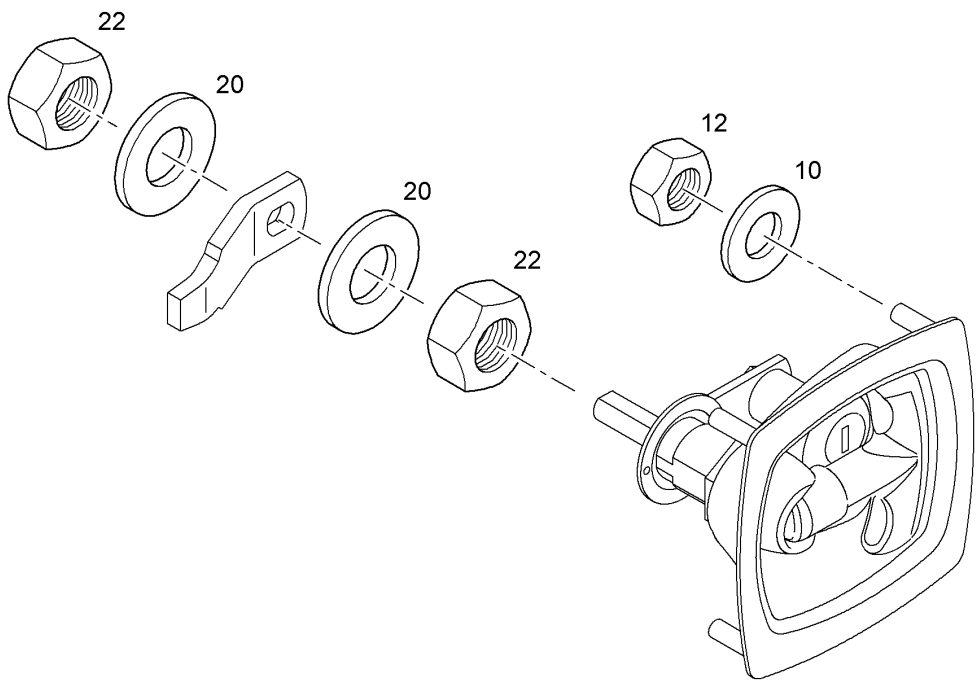

Pos.	Item	Quantity	Description	Designação	Serie	K
10	10289802	4	WASHER 6 300HV	ARRUELA		
12	4000379	4	HEX NUT M6	PORCA SEXTAVADA		
20	4229913	2	LOCK WASHER VS 10	ARRUELA DE PRESSÃO		
22	11656735	2	HEX NUT M10	PORCA SEXTAVADA		

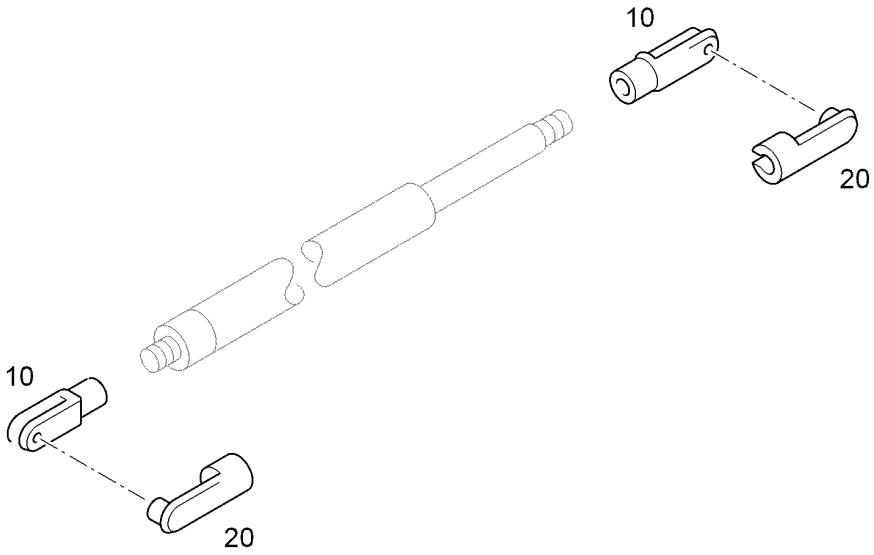

Pos.	Item	Quantity	Description	Designação	Serie	K
10	4000746	2	YOKE G 8X16	TERMINAL GARFO		
20	7738704	2	PIN 8X16	PINO		

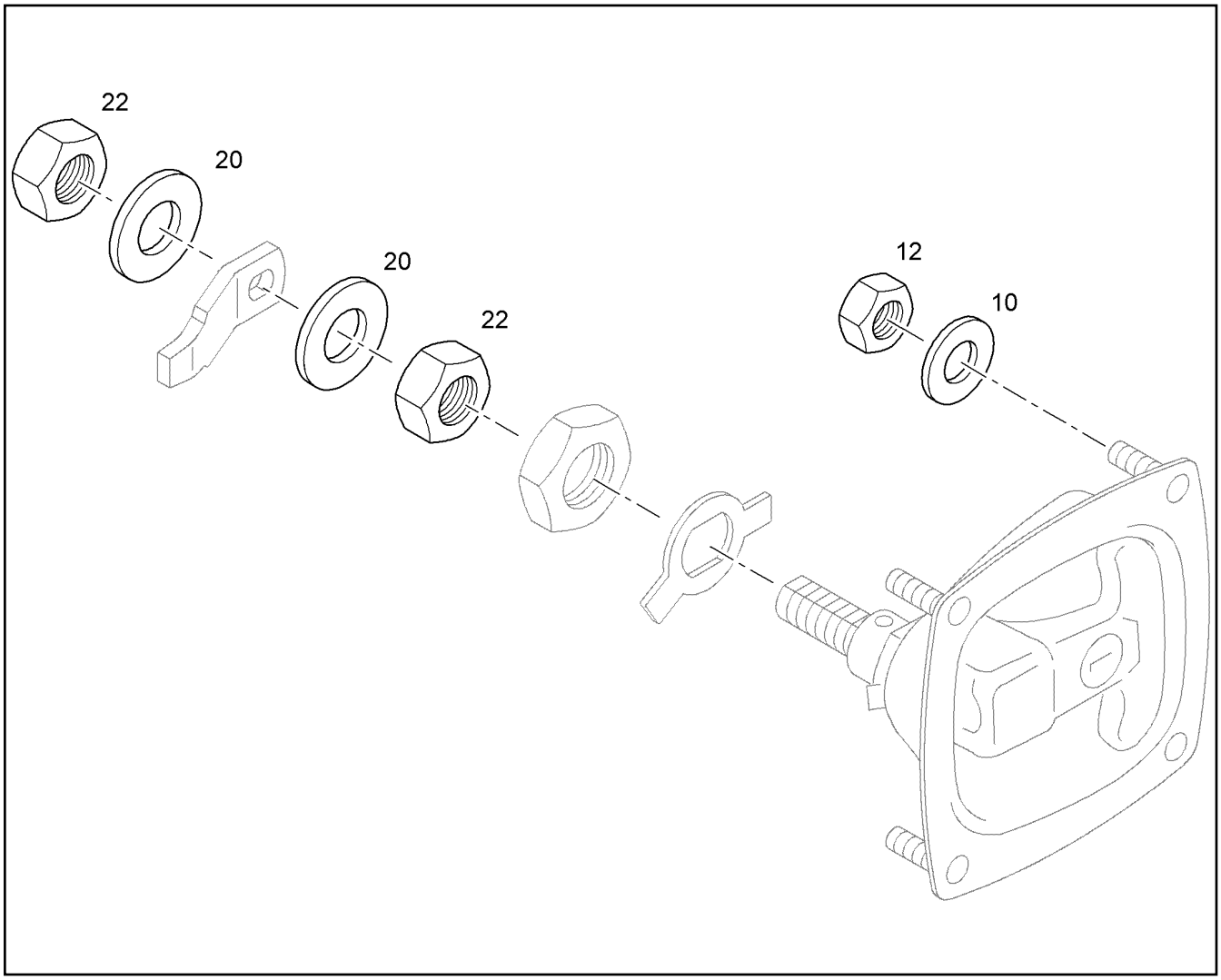

Pos.	Item	Quantity	Description	Designação	Serie	K
10	423910601	4	LOCK WASHER VS 6	ARRUELA DE PRESSÃO		
12	10299668	4	HEX NUT M6	PORCA SEXTAVADA		
20	4900093	2	LOCK WASHER VS 12	ARRUELA DE PRESSÃO		
22	10179555	2	HEX NUT M12	PORCA SEXTAVADA		

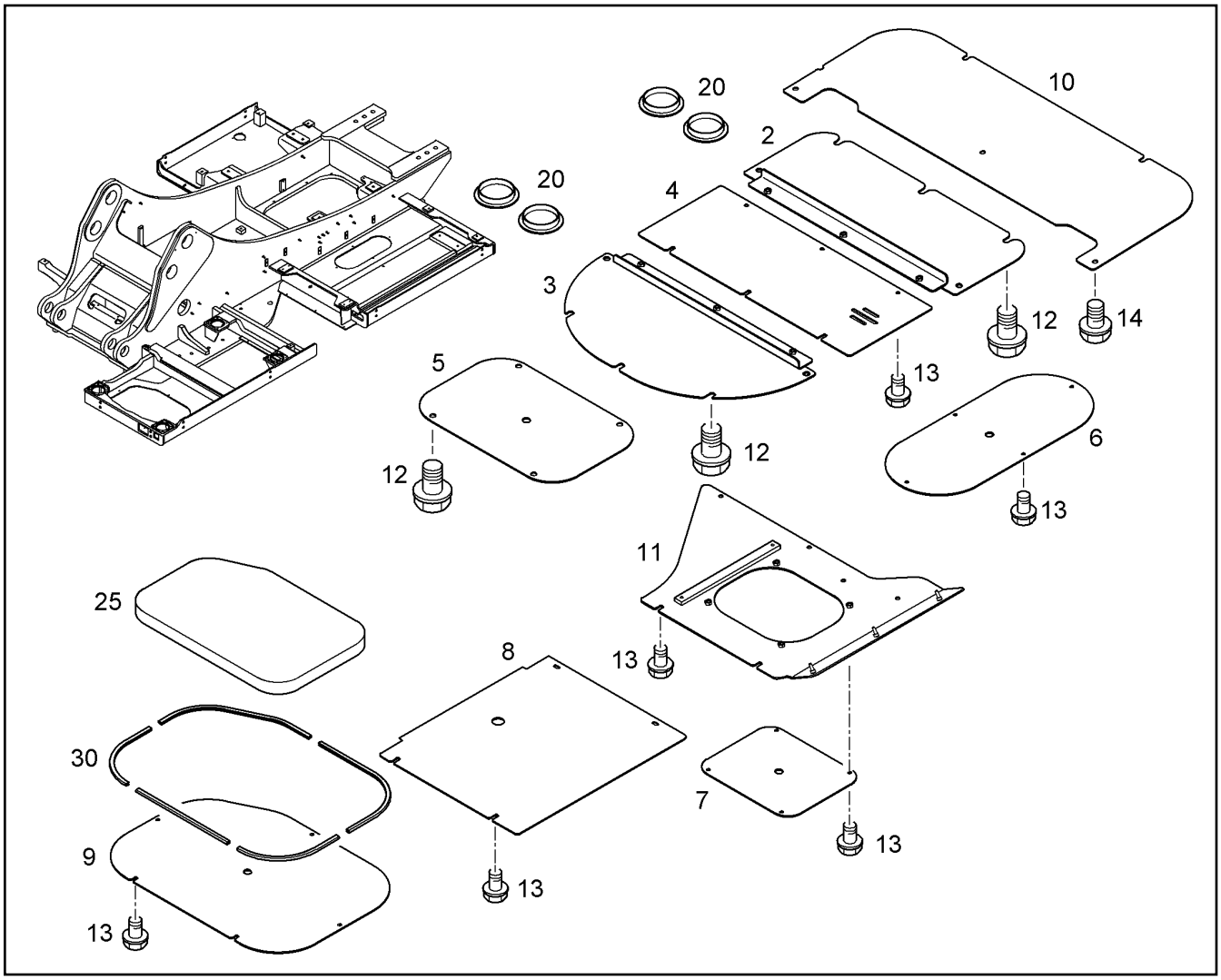

Pos.	Item	Quantity	Description	Designação	Serie	K
2	10063237	1	LOWER PROTECTIVE SHEET	CHAPA DE PROTECAO INFERIO		
3	10060648	1	LOWER PROTECTIVE SHEET	CHAPA DE PROTECAO INFERIO		
4	10060652	1	PLATE	PLACA		
5	9949077	1	PLATE	PLACA		
6	10063243	1	PLATE	PLACA		
7	9949436	1	PLATE	PLACA		
8	10358258	1	PLATE	PLACA		
9	10358259	1	PLATE	PLACA		
10	10060668	1	PLATE	PLACA		
11	10063239	1	LOWER COVERING	TAMPAS INFERIORES		
12	7364949	14	LOCKING SCREW M16X35 FLZN	PARAFUSO TRAVA		
13	7366851	28	LOCKING SCREW M10X20 FLZN	PARAFUSO TRAVA		
14	7365430	5	LOCKING SCREW M12X20 100 VERBUS-RI	PARAFUSO TRAVA		
20	10287248	4	MULTI-PLATE PLUG	TAMPÃO		
25	10064359	1	INSULATING MAT	MANTA DE ISOLAMENTO ACÚST		
30	226016702	2.1m	SECTION 1-4/14,5X10 SCHWARZ	PERFIL DE PROTECAO DE CANT		

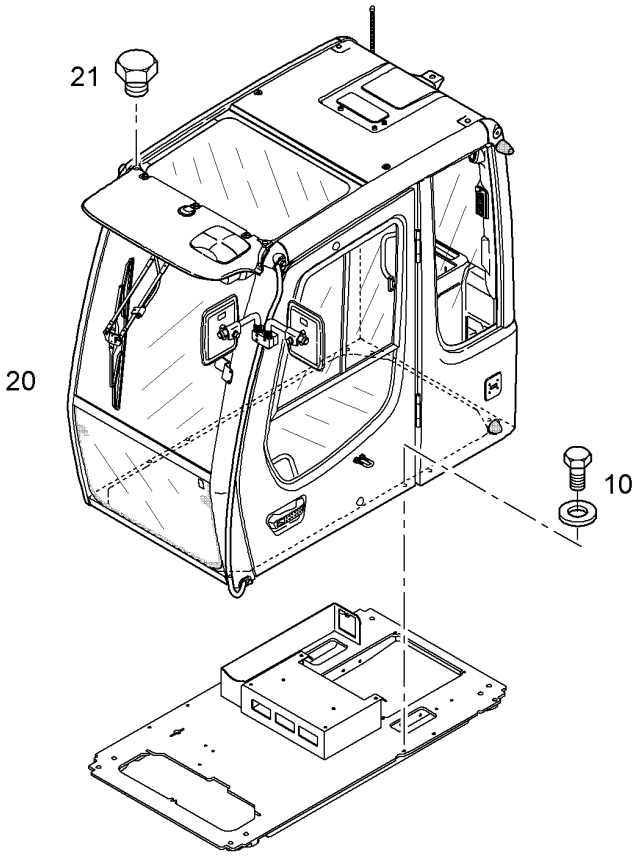

Pos.	Item	Quantity	Description	Designação	Serie	K
10	10357979	1	FIXING PARTS CAB ⇨ ❑ 6	PECAS DE FIXACAO PARA A CA		
20		1	OPERATOR'S CAB ⇨ ❑ 472	CABINE DE OPERADOR	-99998	
20		1	OPERATOR'S CAB [GD32496] ⇨ ❑ 474	CABINE DE OPERADOR	99999-	
21	10028013	4	HEX SCREW ISO 4017 M12X12 10.9 A3C	PARAFUSO SEXTAVADO		

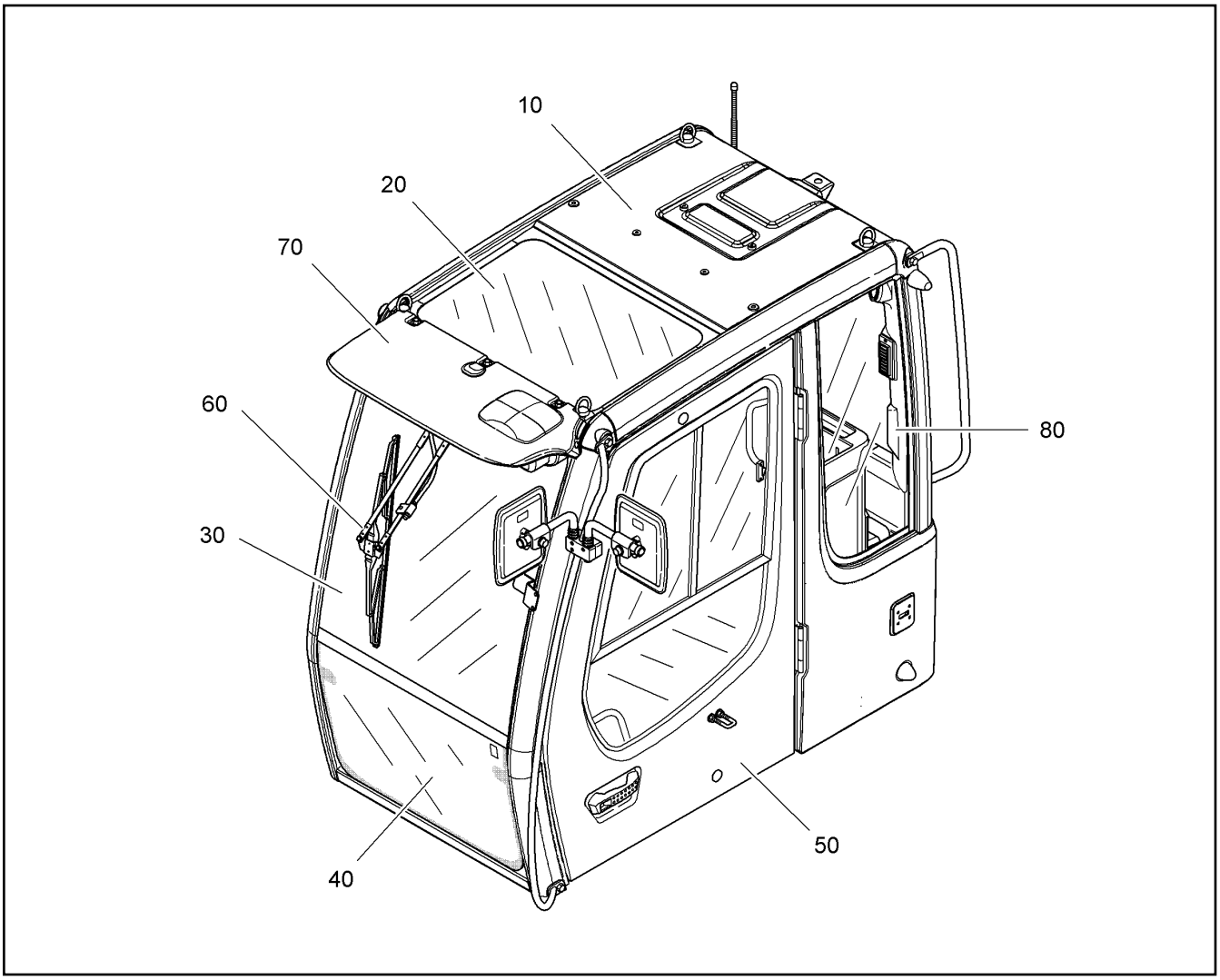

Pos.	Item	Quantity	Description	Designação	Serie	K
10	10216362	1	ET-CABIN	PEÇA REP.CABINE		
20		1	GLASS PANES ⇨ ❑ 476	VIDRO FIXO		
30		1	FRONT PANE TOP ⇨ ❑ 481	PÁRA-BRISA SUPERIOR		
40		1	FRONT WINDOW BOTTOM ⇨ ❑ 479	PÁRA-BRISA INFERIOR		
50		1	DRIVER'S CAB DOOR ⇨ ❑ 484	PORTA DA CABINE DO OPERA		
60		1	ELECTRICAL INSTALLATION ⇨ ❑ 490	INSTALACAO ELETRICA		
70		1	COMPONENTS ⇨ ❑ 503	PEÇAS DE MONTAGEM		
80		1	INTERIOR PANELING ⇨ ❑ 508	REVESTIMENTO INTERNO		

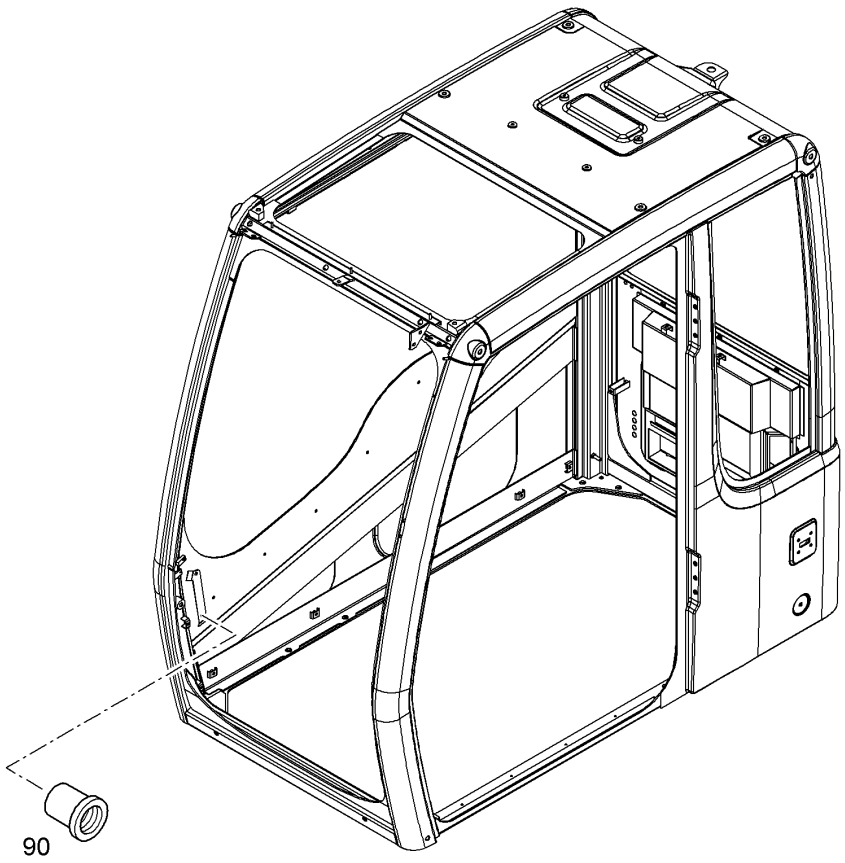

Pos.	Item	Quantity	Description	Designação	Serie	K
90	7028765	3	THREADED INSERT	INSERTO ROSCADO		

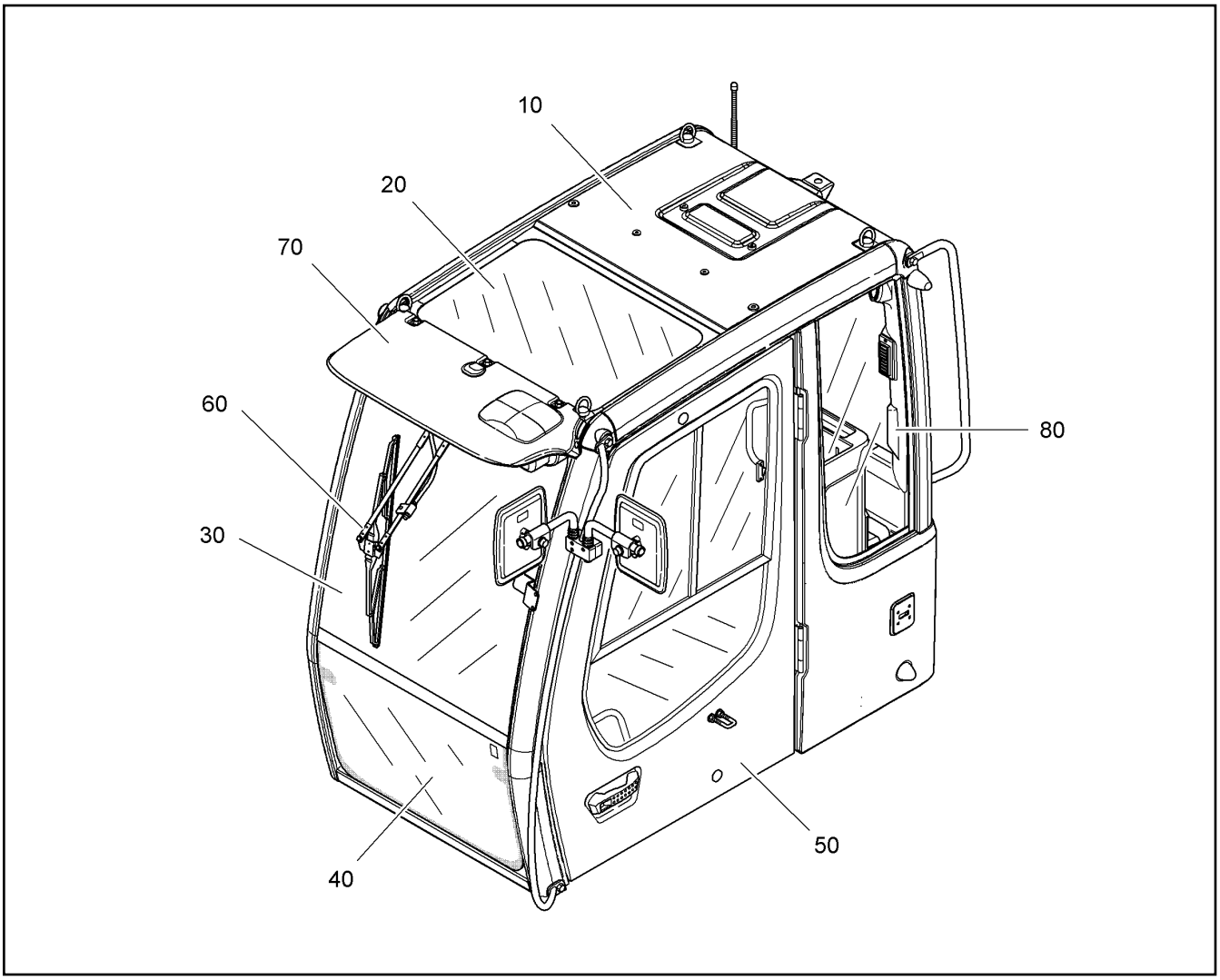

Pos.	Item	Quantity	Description	Designação	Serie	K
10	10216362	1	ET-CABIN	PEÇA REP.CABINE		
20		1	GLASS PANES ⇨ ❑ 476	VIDRO FIXO		
30		1	FRONT PANE TOP ⇨ ❑ 481	PÁRA-BRISA SUPERIOR		
40		1	FRONT WINDOW BOTTOM ⇨ ❑ 479	PÁRA-BRISA INFERIOR		
50		1	DRIVER'S CAB DOOR ⇨ ❑ 484	PORTA DA CABINE DO OPERA		
60		1	ELECTRICAL INSTALLATION ⇨ ❑ 493	INSTALACAO ELETRICA		
70		1	COMPONENTS ⇨ ❑ 503	PEÇAS DE MONTAGEM		
80		1	INTERIOR PANELING ⇨ ❑ 510	REVESTIMENTO INTERNO		

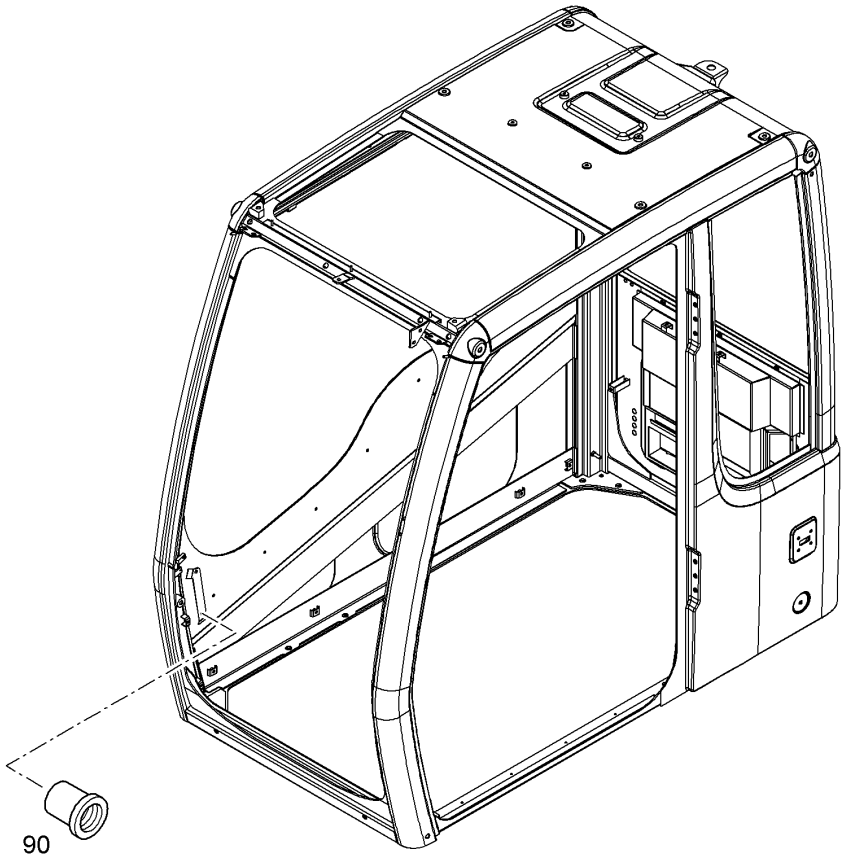

Pos.	Item	Quantity	Description	Designação	Serie	K
90	7028765	3	THREADED INSERT	INSERTO ROSCADO		

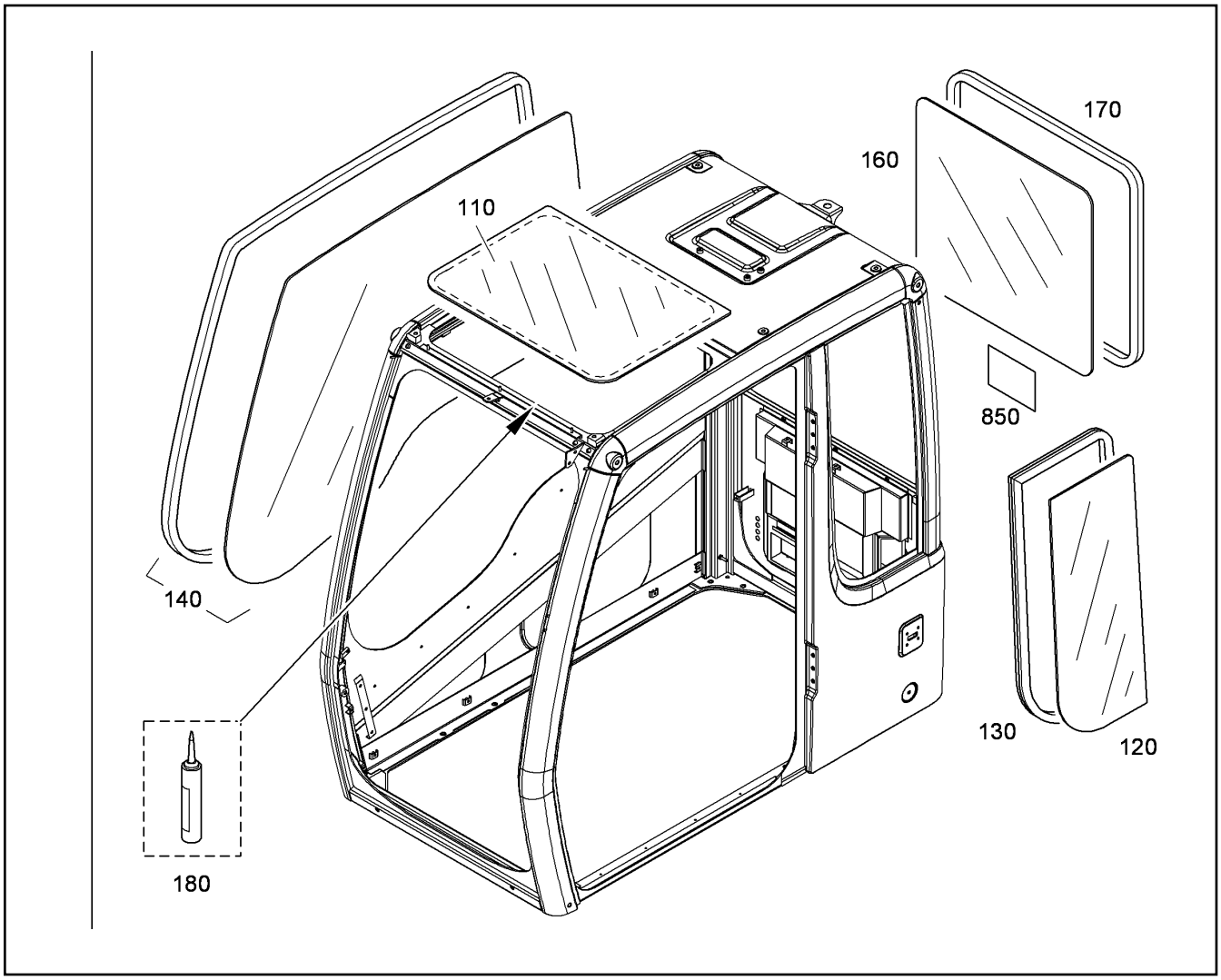

Pos.	Item	Quantity	Description	Designação	Serie	K
110	7030318	1	WINDOW GLASS	VIDRO		
120	7028789	1	WINDOW GLASS	VIDRO		
130	7028790	1	SEAL	VEDAÇÃO		
140	10358890	1	ADDITIONAL KIT SIDE PANE ⇨ ❑ 478	KIT REEQ.DISCO LATERAL		
160	7028787	1	WINDOW GLASS	VIDRO		
170	7028788	1	SEAL ⇨ ❑ 477	VEDAÇÃO		
180	7029402	1	GLUEING SET			
850	10039562	1	LABEL EMERGENCY EXIT	PLAQUETA SAIDA DE EMERGEN		

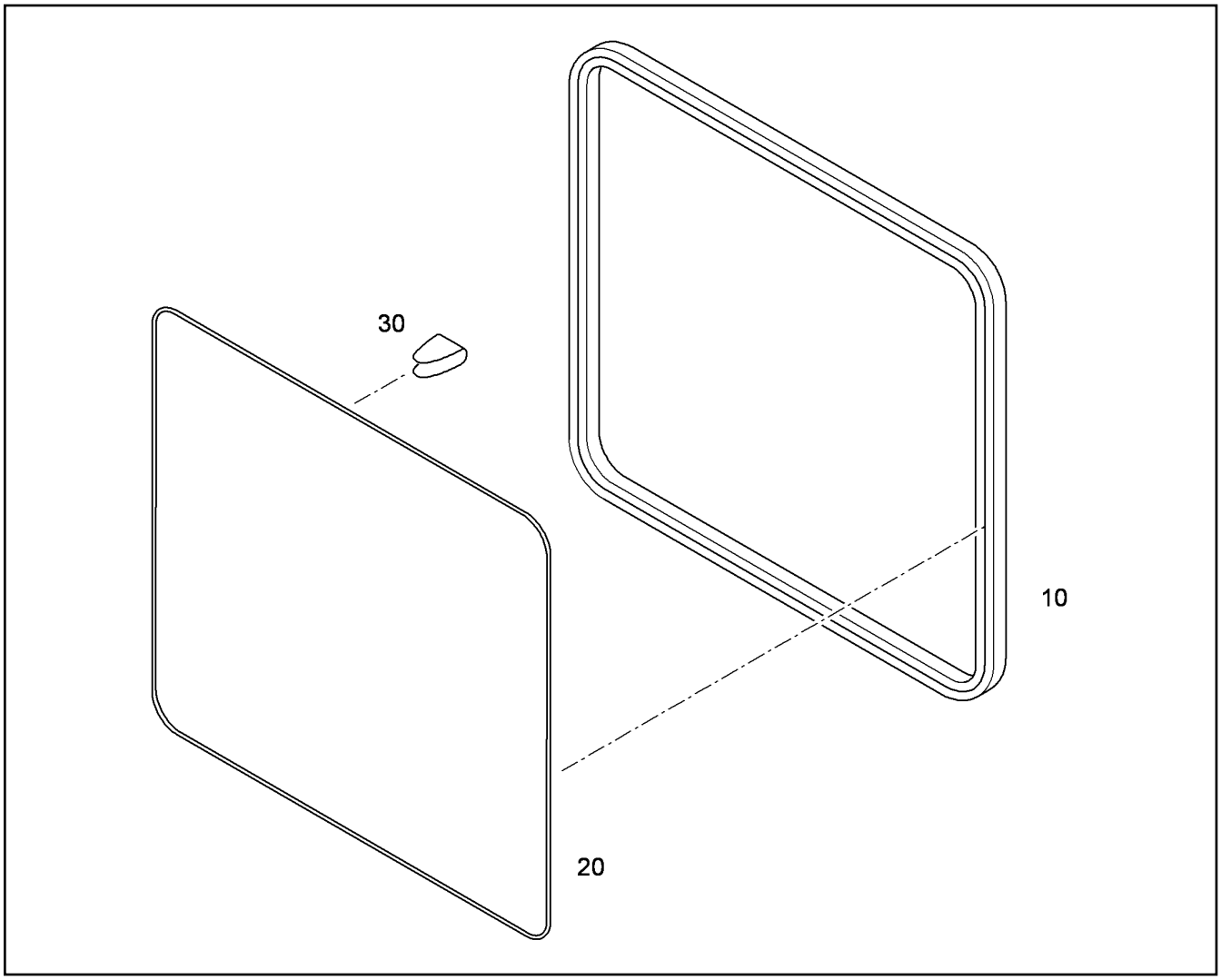

Pos.	Item	Quantity	Description	Designação	Serie	K
10	10471479	1	SEAL	VEDAÇÃO		
20	10471490	1	RUBBER BEADING	PERFIL DE ENCHIMENTO		
30	10429055	1	BUTT STRAP	TALA		

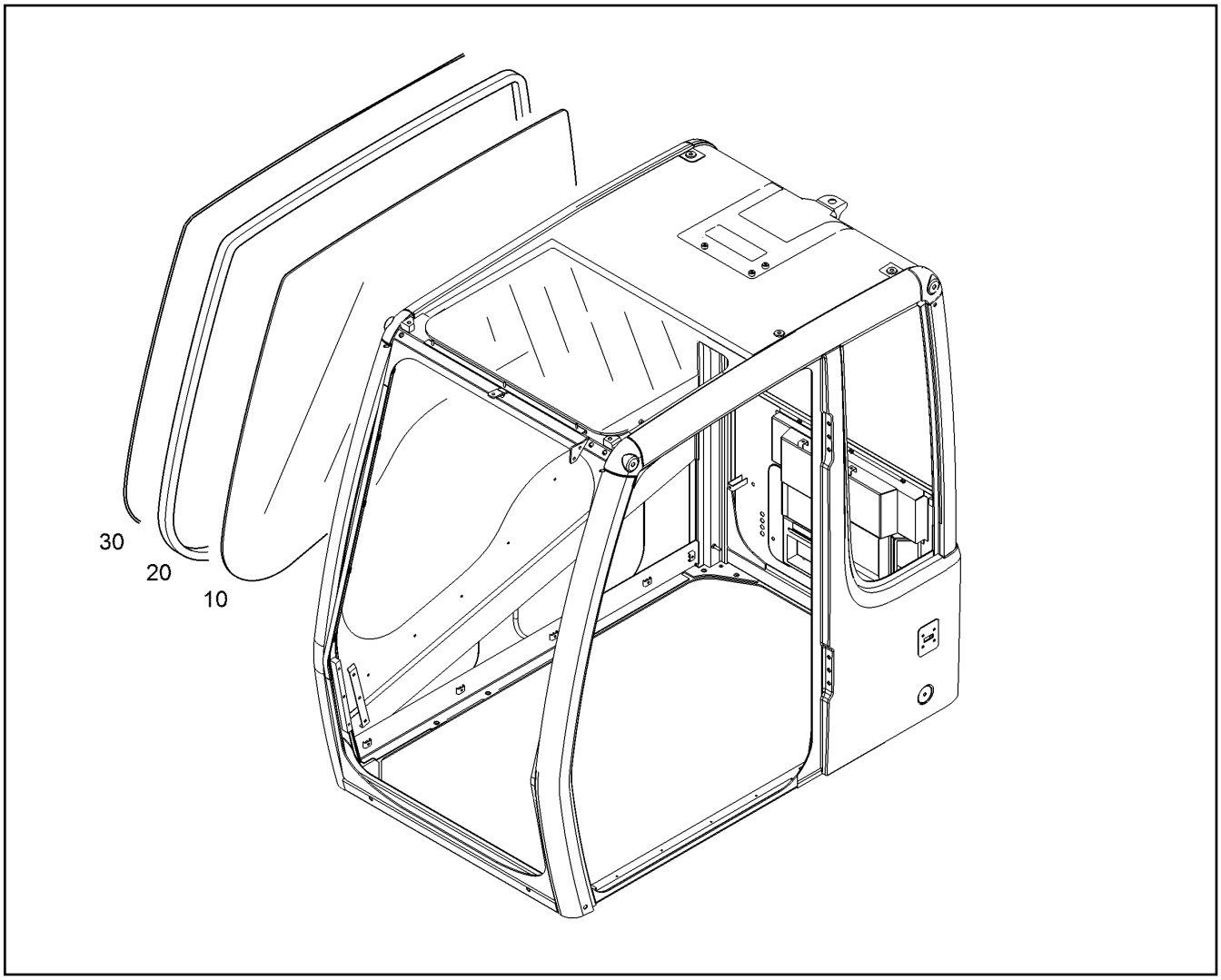

Pos.	Item	Quantity	Description	Designação	Serie	K
10	7030316	1	WINDOW GLASS	VIDRO		
20	7028792	1	SEAL	VEDAÇÃO		
30	10409866	1	MOUNTING ROPE	CABO DE MONTAGEM		

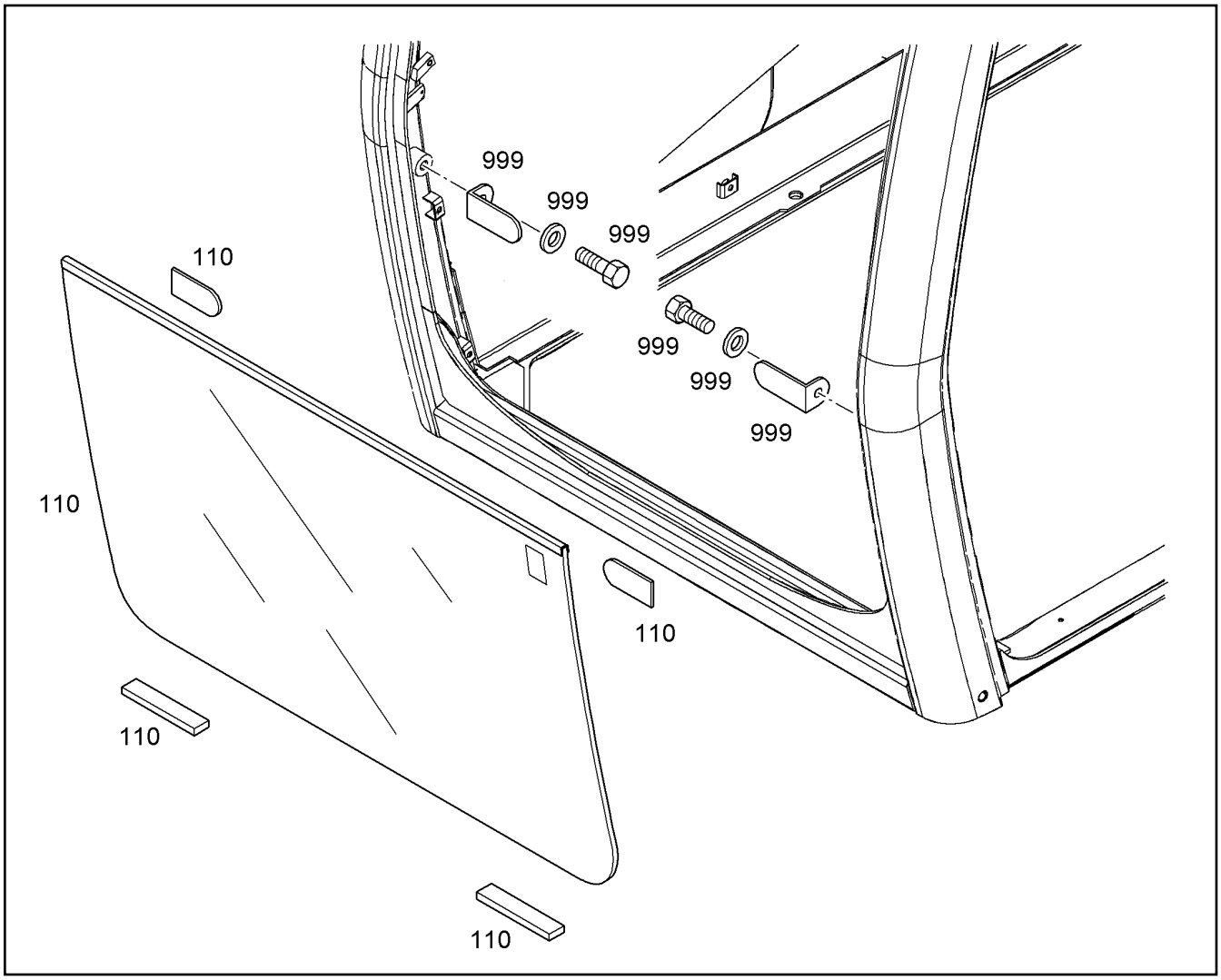

Pos.	Item	Quantity	Description	Designação	Serie	K
110		1	FRONT WINDOW BOTTOM ⇨ ❑ 480	PÁRA-BRISA INFERIOR		
999	12506407	1	FASTENINGPIECE FRONT WINDOW ⇨ ❑ 62			

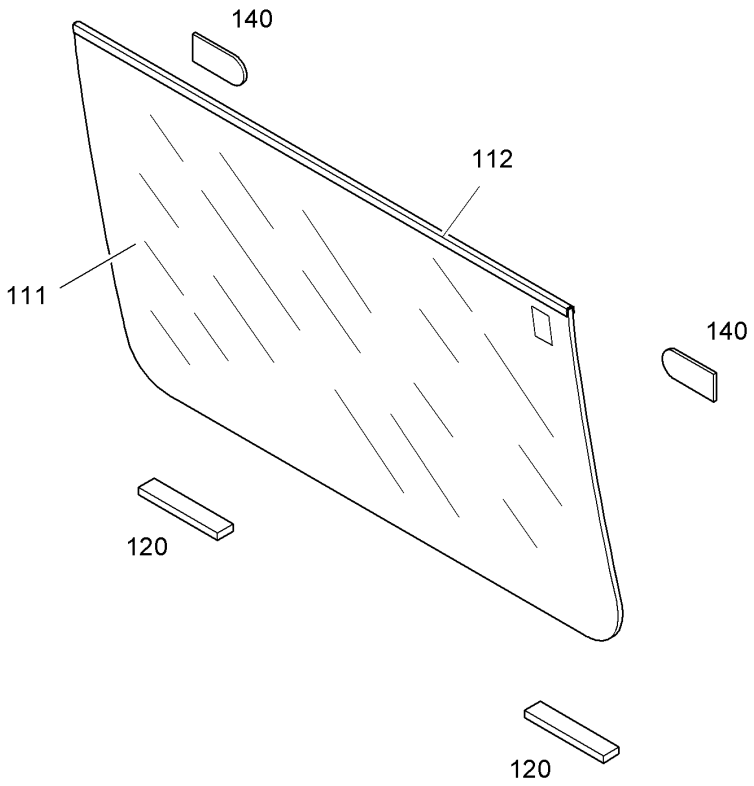

Pos.	Item	Quantity	Description	Designação	Serie	K
111	7030040	1	FRONT WINDOW BOTTOM	PÁRA-BRISA INFERIOR		
112	7028800	1	PROTECTION	PROTEÇÃO		
120	7028801	2	HOLDER	SUPORTE		
140	7028803	2	SEAL	VEDAÇÃO		

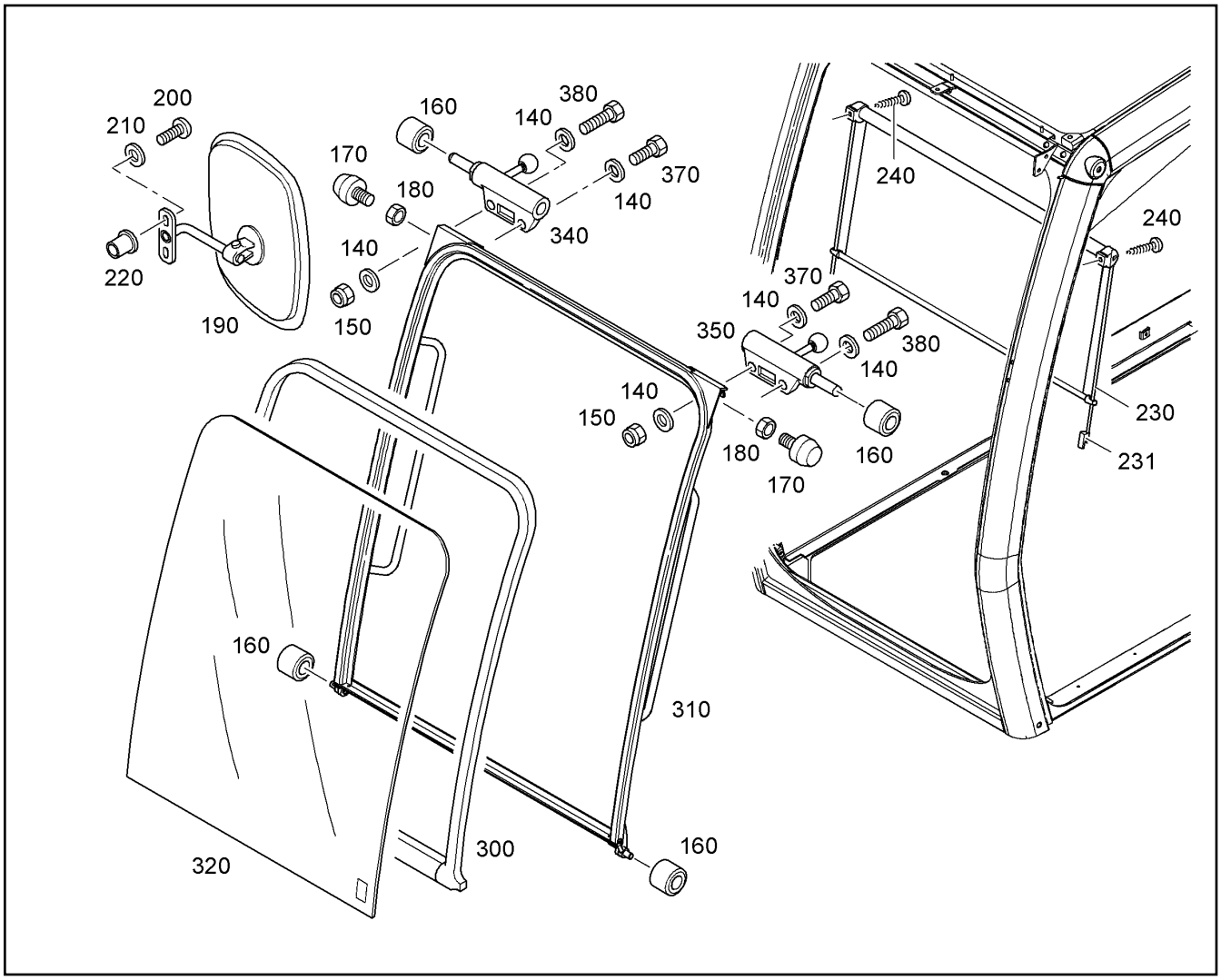

Pos.	Item	Quantity	Description	Designação	Serie	K
140	10289803	6	WASHER 8 300HV	ARRUELA		
150	10814800	2	HEX NUT M8	PORCA SEXTAVADA		
160	7028809	4	ROLLER	ROLETE		1
170	7028810	2	METALASTIC BUFFER	COXIM		
180	4000379	2	HEX NUT M6	PORCA SEXTAVADA		
190	7019142	1	REAR-VIEW MIRROR	ESPELHO RETROVISOR		
200	4002612	2	PAN-HEAD SCREW ISO 7045 M6X20 4.8 H	PARAFUSO DE CABEÇA PLANA		
210	10289802	2	WASHER 6 300HV	ARRUELA		
220	7020610	2	THREADED INSERT M6	INSERTO ROSCADO		
230	7028811	1	SUNHALDE SET	KIT DE MONTAGEM DO PARA-SO		
231	10027438	2	-HOLDER	-SUPORTE		
240	4002399	2	SHEET-METAL SCREW ISO 7049 ST3,5X16 F	PARAFUSO		
300	7028806	1	GLAZING PROFILE	PERFIL DE ENVIDRACAMENTO		
310	7028804	1	FRAME	MOLDURA		
320	7028805	1	WINDOW GLASS	VIDRO		
340	7028807	1	LOCK RIGHT HAND ⇨ ❑ 482	TRAVA DIREITA		
350	7028808	1	LOCK LEFT HAND ⇨ ❑ 483	TRAVA ESQUERDA		
370	11642261	2	HEX SCREW ISO 4017 M8X25 8.8 480H	PARAFUSO SEXTAVADO		
380	4062002	2	HEX SCREW ISO 4017 M8X30 10.9 A2C	PARAFUSO SEXTAVADO		

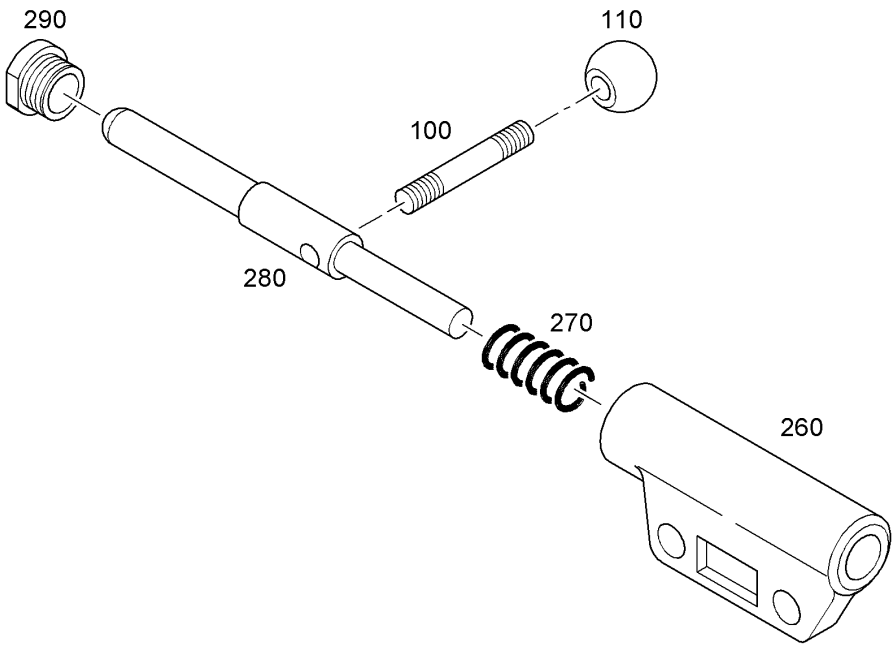

Pos.	Item	Quantity	Description	Designação	Serie	K
100		1	THREADED ROD	HASTE ROSCADA		
110	7028818	1	SPHERICAL KNOB	BOTÃO ESFÉRICO		
260		1	LOCKING BAR	TRAVA		
270		1	PRESSURE SPRING	MOLA DE PRESSÃO		
280		1	ROD	HASTE		
290		1	BUSHING	BUCHA		1

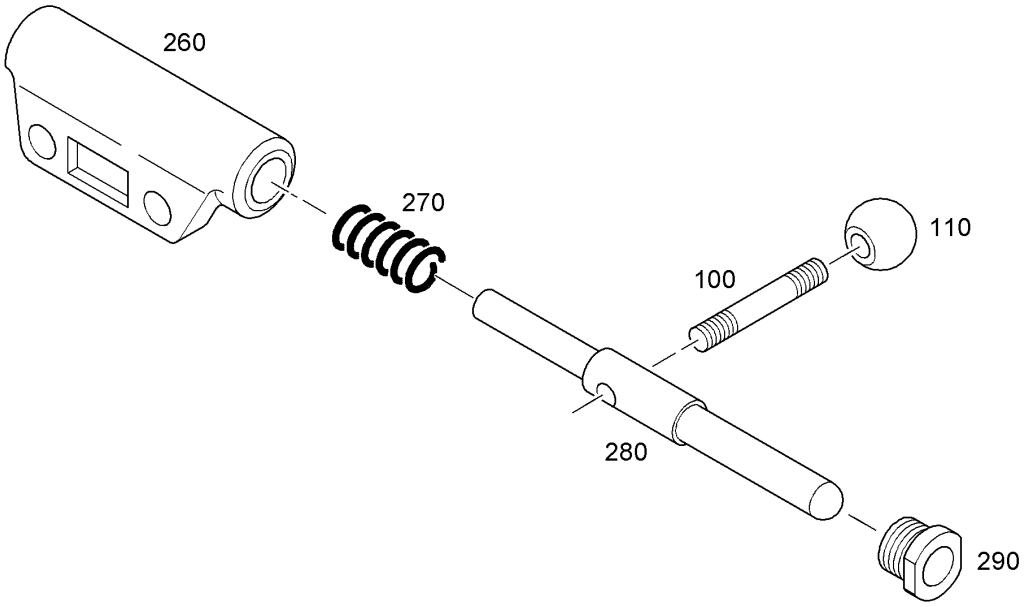

Pos.	Item	Quantity	Description	Designação	Serie	K
100		1	THREADED ROD	HASTE ROSCADA		
110	7019167	1	SPHERICAL KNOB	BOTÃO ESFÉRICO		
260		1	LOCKING BAR	TRAVA		
270		1	PRESSURE SPRING	MOLA DE PRESSÃO		
280		1	ROD	HASTE		
290		1	BUSHING	BUCHA		1

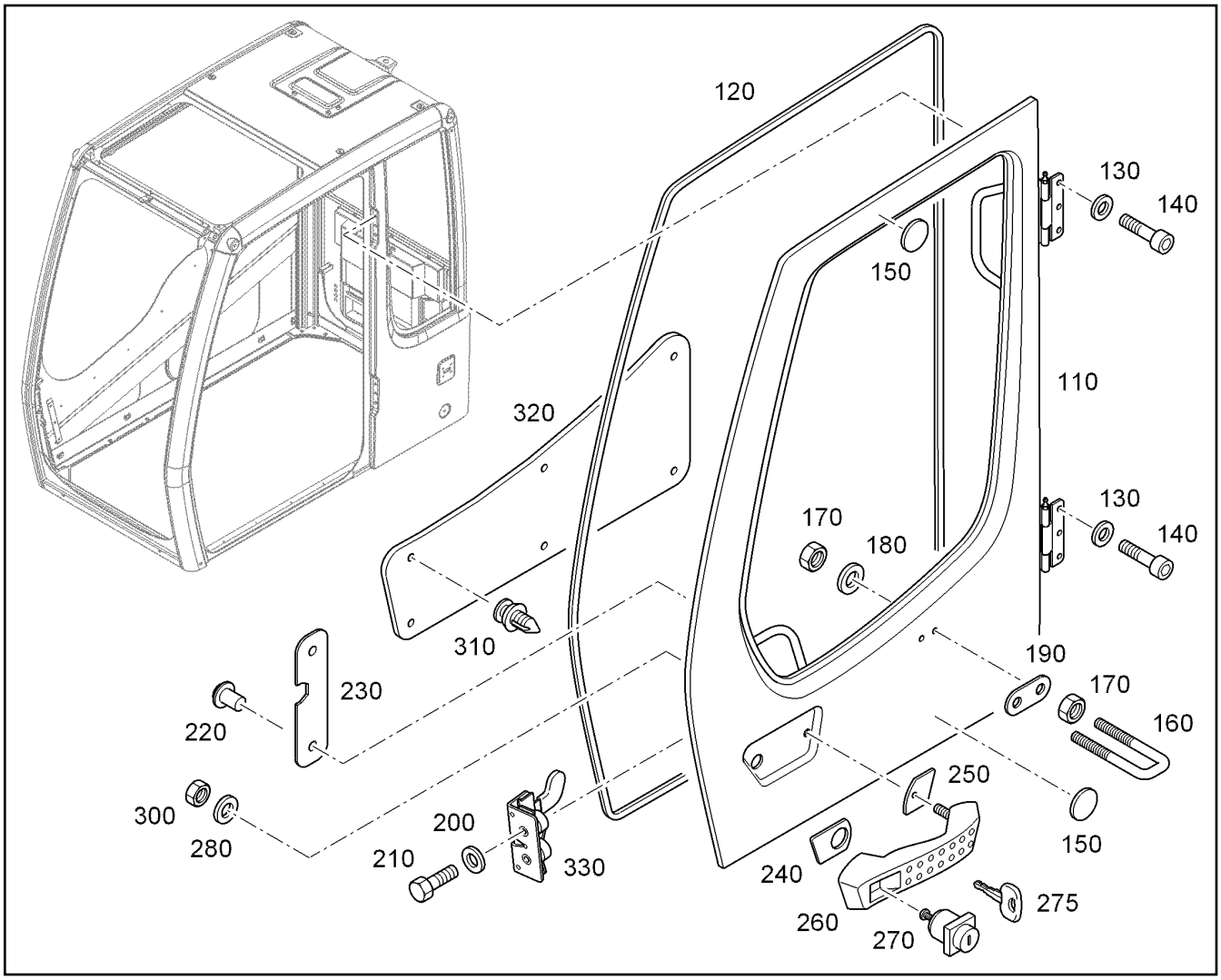

Pos.	Item	Quantity	Description	Designação	Serie	K
110	7028842	1	DOOR FRAME ⇨ ❑ 486	MARCO DA PORTA		
120	12225873	1	SEAL	VEDAÇÃO		
130	10289795	6	WASHER 10 300HV	ARRUELA		
140	11002743	6	SOCKET HEAD SCREW ISO 4762 M10X30 10	PARAFUSO CILÍNDRICO		
150	7019801	2	WASHER	ARRUELA		
160	7028838	1	BRACKET	ESTRIBO		
170	4000381	4	HEX NUT M8	PORCA SEXTAVADA		
180	10289803	2	WASHER 8 300HV	ARRUELA		
190	7028839	1	SHEET	PLACA DE APOIO		
200	10289803	2	WASHER 8 300HV	ARRUELA		
210	11642261	2	HEX SCREW ISO 4017 M8X25 8.8 480H	PARAFUSO SEXTAVADO		
220	7024438	2	BODY-BOUND RIVET	REBITE		
230	7028836	1	COVER	TAMPA		
240	7019154	1	SEAL	VEDAÇÃO		
250	7019155	1	SEAL	VEDAÇÃO		
260	7019153	1	GRIP	PUXADOR		
270	7019156	1	PUSHER	BOTÃO		
275	10221073	1	IGNITION KEY	CHAVE DE IGNICAO		
280	10289802	1	WASHER 6 300HV	ARRUELA		
300	4000379	1	HEX NUT M6	PORCA SEXTAVADA		
310	7029433	6	BLIND RIVET	REBITE CEGO		
320	7028837	1	COVERS	REVESTIMENTO		
330	7028833	1	LOCK	FECHADURA		

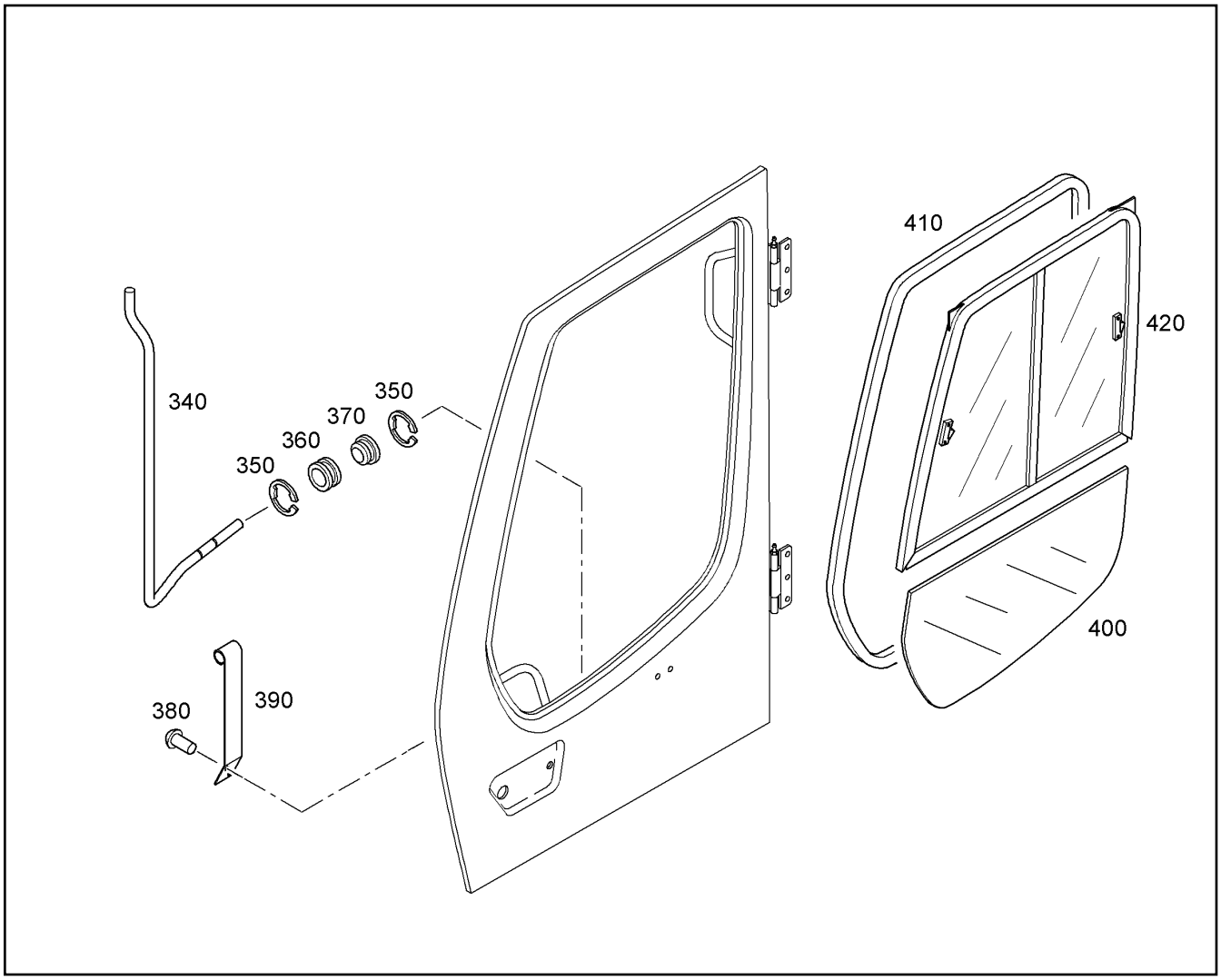

Pos.	Item	Quantity	Description	Designação	Serie	K
340	7028834	1	ROD	HASTE		
350	7019794	2	LOCKING RING	ANEL DE RETENÇÃO		
360	7019160	1	SPOUT 6/10/13	LUVA		
370	7020613	1	SPOUT	LUVA		
380	7020612	2	RIVET	REBITE		
390	7028835	1	SPRING	MOLA		
400	7028830	1	WINDOW GLASS	VIDRO		
410	7028832	1	SEAL	VEDAÇÃO		
420	7028831	1	SLIDING WINDOW	JANELA DE CORRER		
			⇨ ❑ 487			

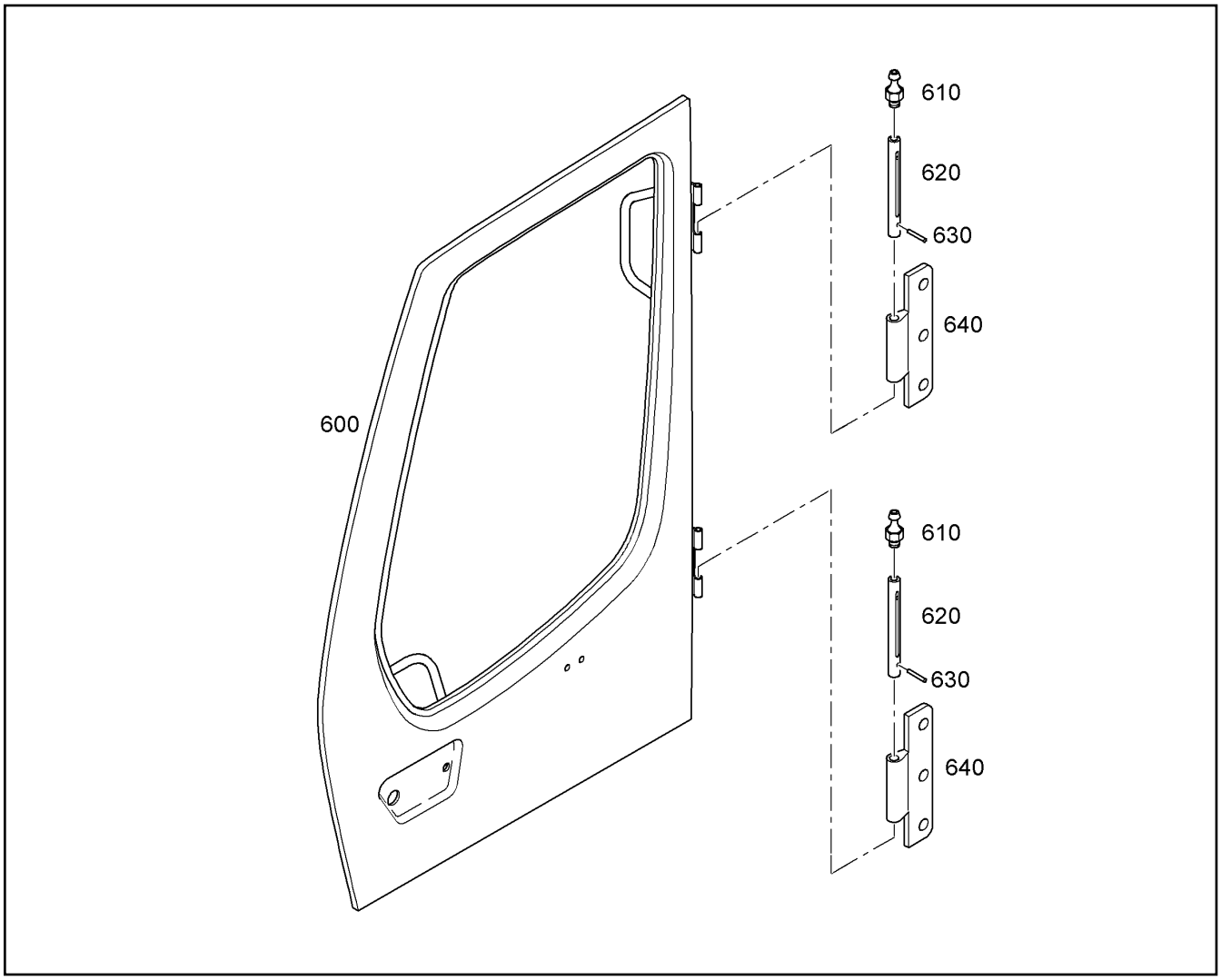

Pos.	Item	Quantity	Description	Designação	Serie	K
600	7028782	1	FRAME	MOLDURA		
610	7743245	2	HYDRAULIC-TYPE LUBRICAT.NIPPLEDIN 7	NIPLE DE LUBRIFICACAO CONIC		
620	7028840	2	PIN	PINO		1
630	4900372	2	DOWEL PIN 3	PINO ELÁSTICO		
640	7029409	2	HINGE	DOBRADIÇA		

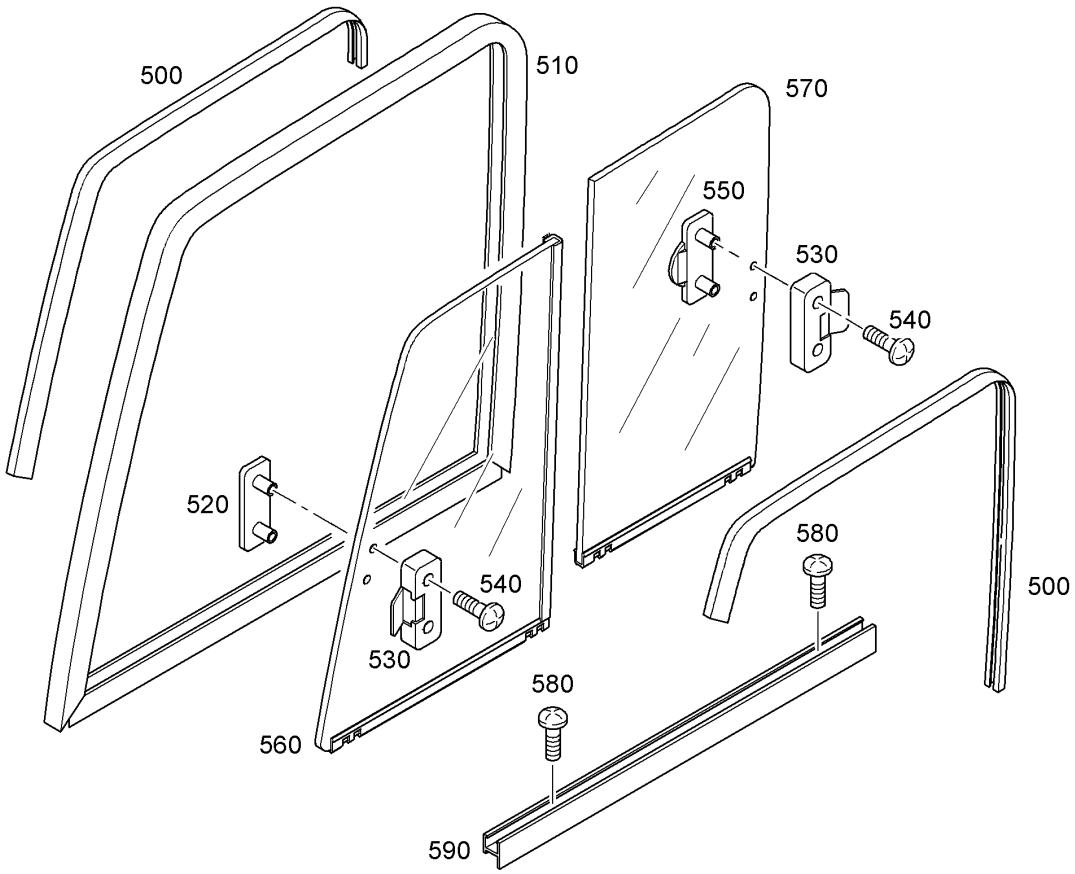

Pos.	Item	Quantity	Description	Designação	Serie	K
500	7029418	2	SEAL	VEDAÇÃO		
510		1	FRAME	MOLDURA		
520	7029420	1	SHEET	PLACA DE APOIO		
530	7029421	2	GRIP	PUXADOR		
540	4601376	4	COUNTERSUNK SCREW ISO 7047 M5X30 4.	PARAFUSO ESCAREADO		
550	7029422	1	SHEET	PLACA DE APOIO		
560	7029423	1	GLASS PANE FRONT ⇨ ❑ 488	VIDRO DIANTEIRO		
570	7029424	1	GLASS PANE BEHIND ⇨ ❑ 489	VIDRO TRASEIRO		
580	4901473	2	COUNTERSUNK SCREW ISO 7047 M4X6 4.8	PARAFUSO ESCAREADO		
590	7029425	1	PROFILE	PERFIL		

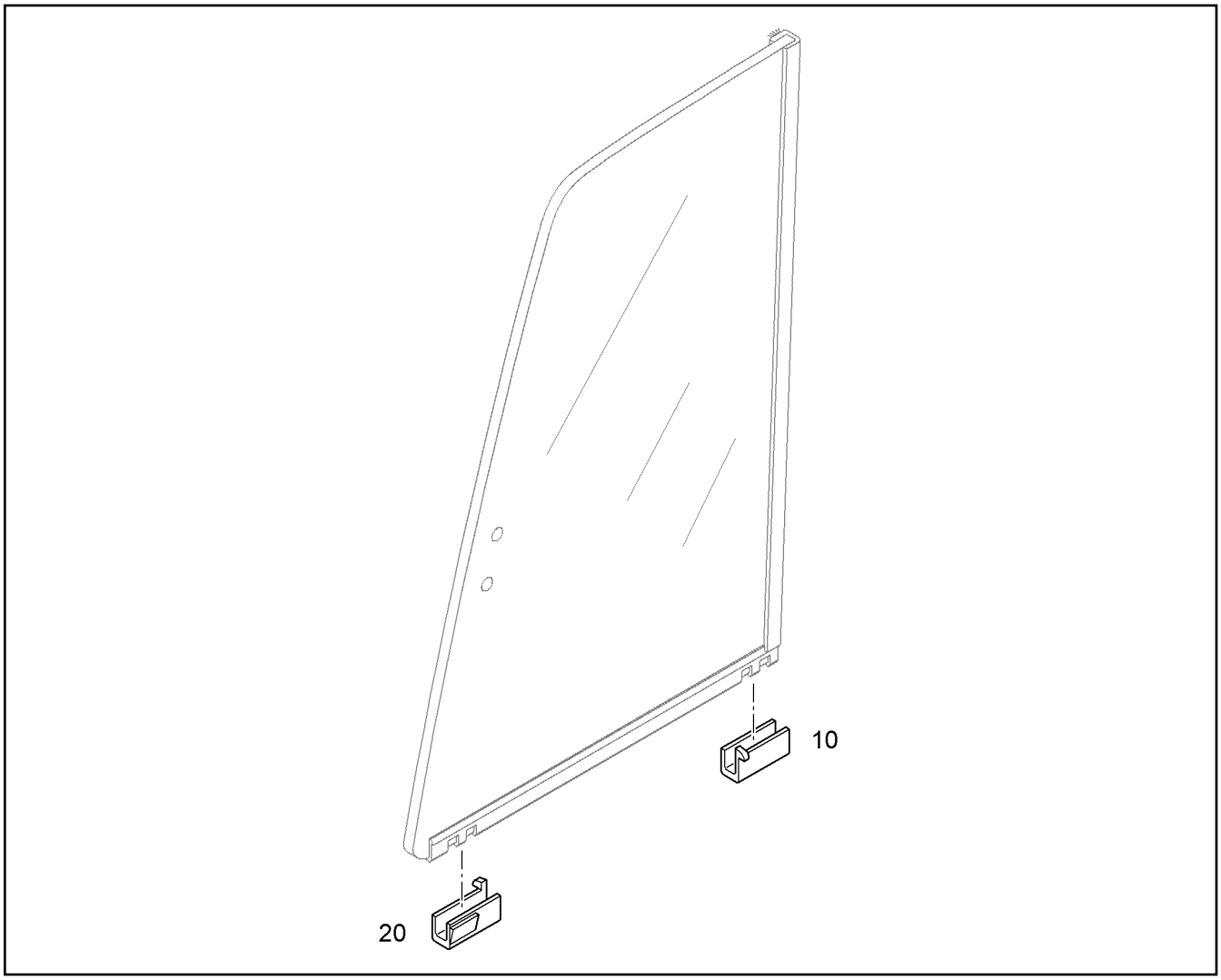

Pos.	Item	Quantity	Description	Designação	Serie	K
10	10423838	1	END PIECE	PEÇA FINAL		
20	10423840	1	END PIECE	PEÇA FINAL		

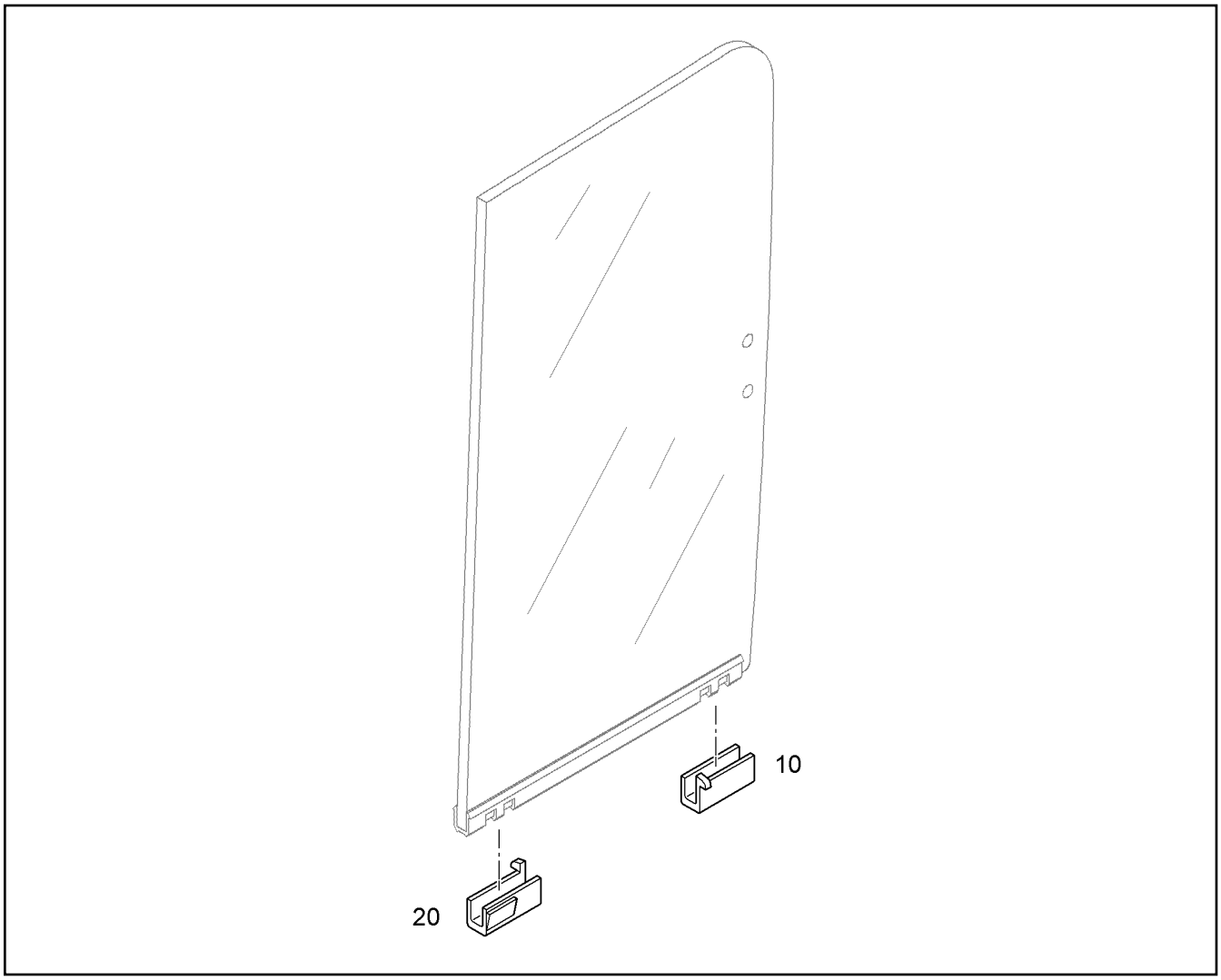

Pos.	Item	Quantity	Description	Designação	Serie	K
10	10423838	1	END PIECE	PEÇA FINAL		
20	10423840	1	END PIECE	PEÇA FINAL		

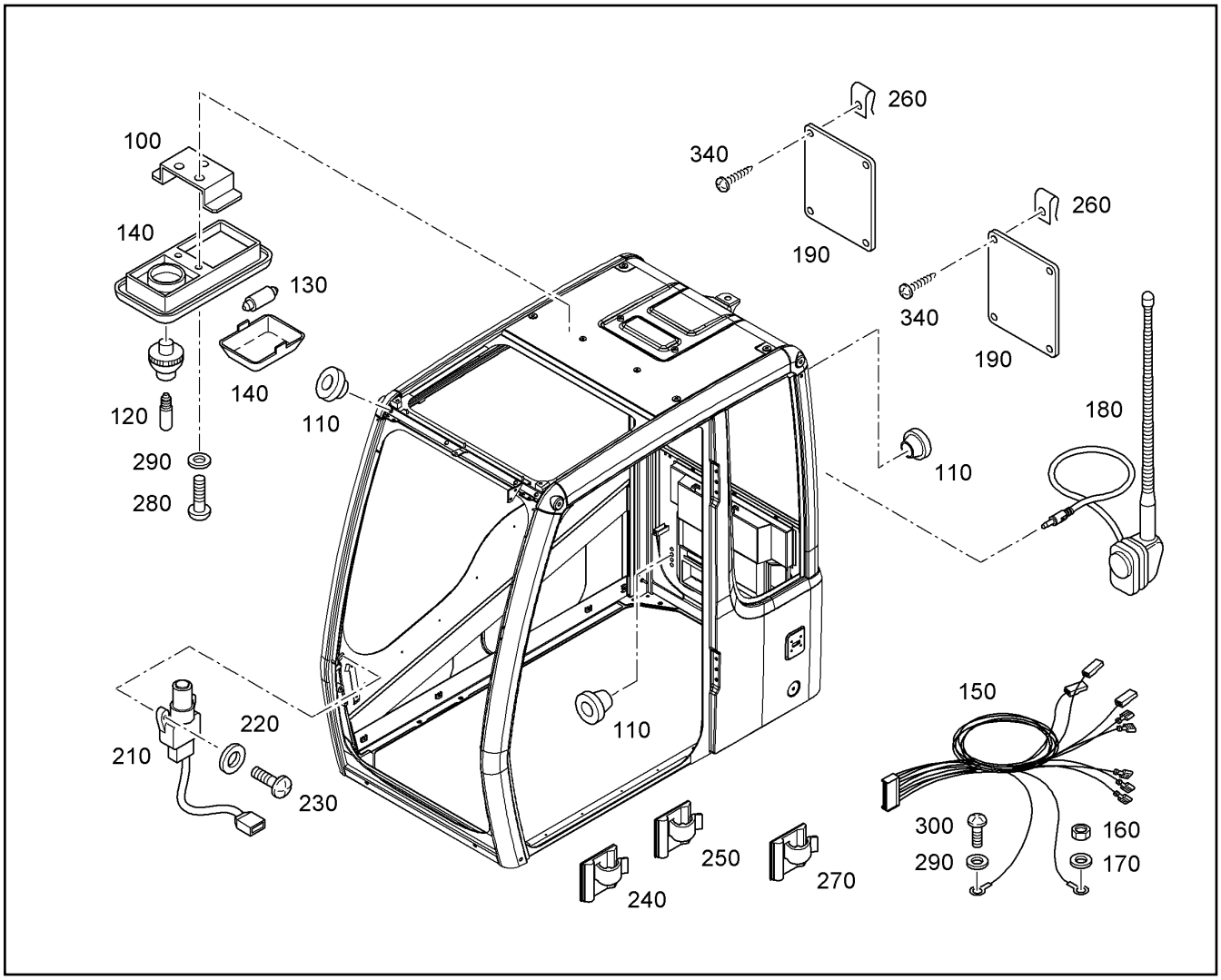

Pos.	Item	Quantity	Description	Designação	Serie	K
100	10009015	1	BRACKET	ESTRIBO		
110	7019171	10	SPOUT 5/16/20	LUVA		
120	7028859	1	DOUBLE-ENDED TUBULAR LAMP	LAMPADA TUBULAR		
130	10044338	1	DOUBLE-ENDED TUBULAR LAMP 8,5-8 24V	LAMPADA TUBULAR		
140	7028857	1	CEILING LAMP	LUMINÁRIA DE TETO		
150	10290353	1	WIRE HARNESS - CABIN	CHICOTE ELÉTRICO DA CABINE		
160	4000381	1	HEX NUT M8	PORCA SEXTAVADA		
170	7028855	1	TOOTH LOCK WASHER	ARRUELA DENTADA		
180	6001556	1	ANTENNA	ANTENA		
190	10009021	2	SHEET	PLACA DE APOIO		
210	7028856	1	SWITCH	INTERRUPTOR		
220	4001645	2	WASHER 4 200HV	ARRUELA		
230	408311008	2	PAN-HEAD SCREW ISO 7045 M4X14 4.8 H	PARAFUSO DE CABEÇA PLANA		
240	7028768	9	HOLDER	SUPORTE		
250	7028812	11	HOLDER	SUPORTE		
260	10009079	8	SHEET METAL NUT ST3,5	PORCA DE CHAPA		
270	10009023	2	HOLDER	SUPORTE		
280	4600975	2	PAN-HEAD SCREW ISO 7045 M4X25 4.8 H	PARAFUSO DE CABEÇA PLANA		
290	4001645	3	WASHER 4 200HV	ARRUELA		
300	409701608	1	PAN-HEAD SCREW DIN 7500 M4X10 STAHL	PARAFUSO DE CABEÇA PLANA		
340	4601386	8	SHEET-METAL SCREW ISO 7049 ST3,5X16	PARAFUSO		

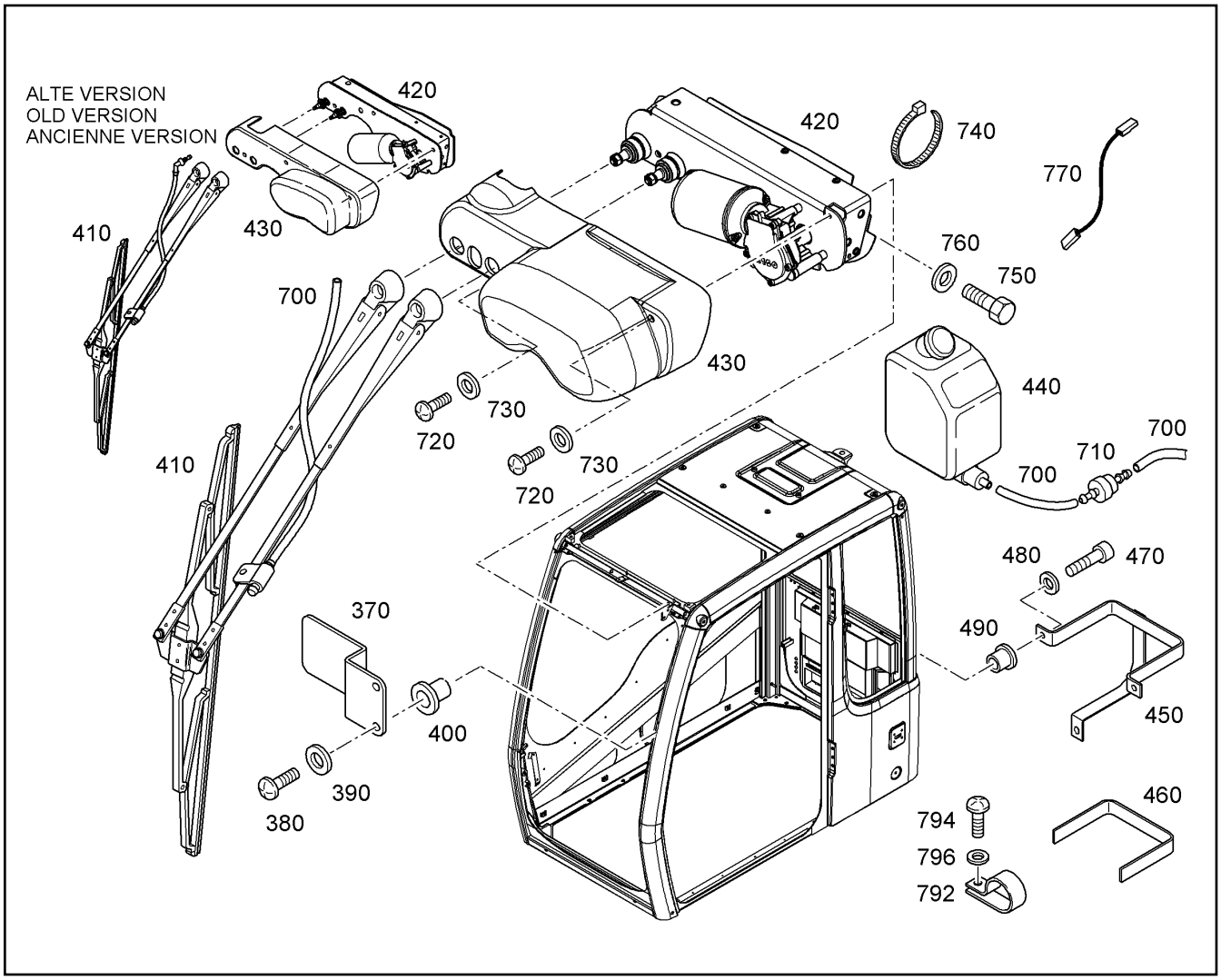

Pos.	Item	Quantity	Description	Designação	Serie	K
370	7028870	1	SHEET	PLACA DE APOIO		
380	4600723	2	PAN-HEAD SCREW ISO 7045 M6X16 4.8 H	PARAFUSO DE CABEÇA PLANA		
390	10289802	2	WASHER 6 300HV	ARRUELA		
400	7028765	2	THREADED INSERT	INSERTO ROSCADO		
410		1	WINDSCREEN WIPER ⇨ ❑ 500	LIMPADOR DE PÁRA-BRISA	-99998	1
410		1	WINDSCREEN WIPER ⇨ ❑ 499	LIMPADOR DE PÁRA-BRISA	99999-	1
420		1	WIPPER MOTOR SET ⇨ ❑ 497	KIT DO MOTOR DO LIMPADOR	-99998	
420		1	WIPPER MOTOR SET ⇨ ❑ 496	KIT DO MOTOR DO LIMPADOR	99999-	
430	7028865	1	COVER	TAMPA		
430	10290262	1	COVER	TAMPA		
440	5618664	1	WATER BASIN ⇨ ❑ 498	RESERVATÓRIO DE ÁGUA		
450	7028872	1	BRACKET	ESTRIBO		
460	7024455	1	SEAL	VEDAÇÃO		
470	4600079	3	SOCKET HEAD SCREW ISO 4762 M8X20 8.8	PARAFUSO CILÍNDRICO		
480	10289803	3	WASHER 8 300HV	ARRUELA		
490	10044343	3	THREADED INSERT	INSERTO ROSCADO		
700	6200461	6m	HOSE	MANGUEIRA		1
710	7017201	1	NON-RETURN VALVE	VÁLVULA DE RETORNO		
720	4600723	2	PAN-HEAD SCREW ISO 7045 M6X16 4.8 H	PARAFUSO DE CABEÇA PLANA		
730	10289802	2	WASHER 6 300HV	ARRUELA		
740	7028864	8	TIE WRAP	AMARRA PARA CABOS		

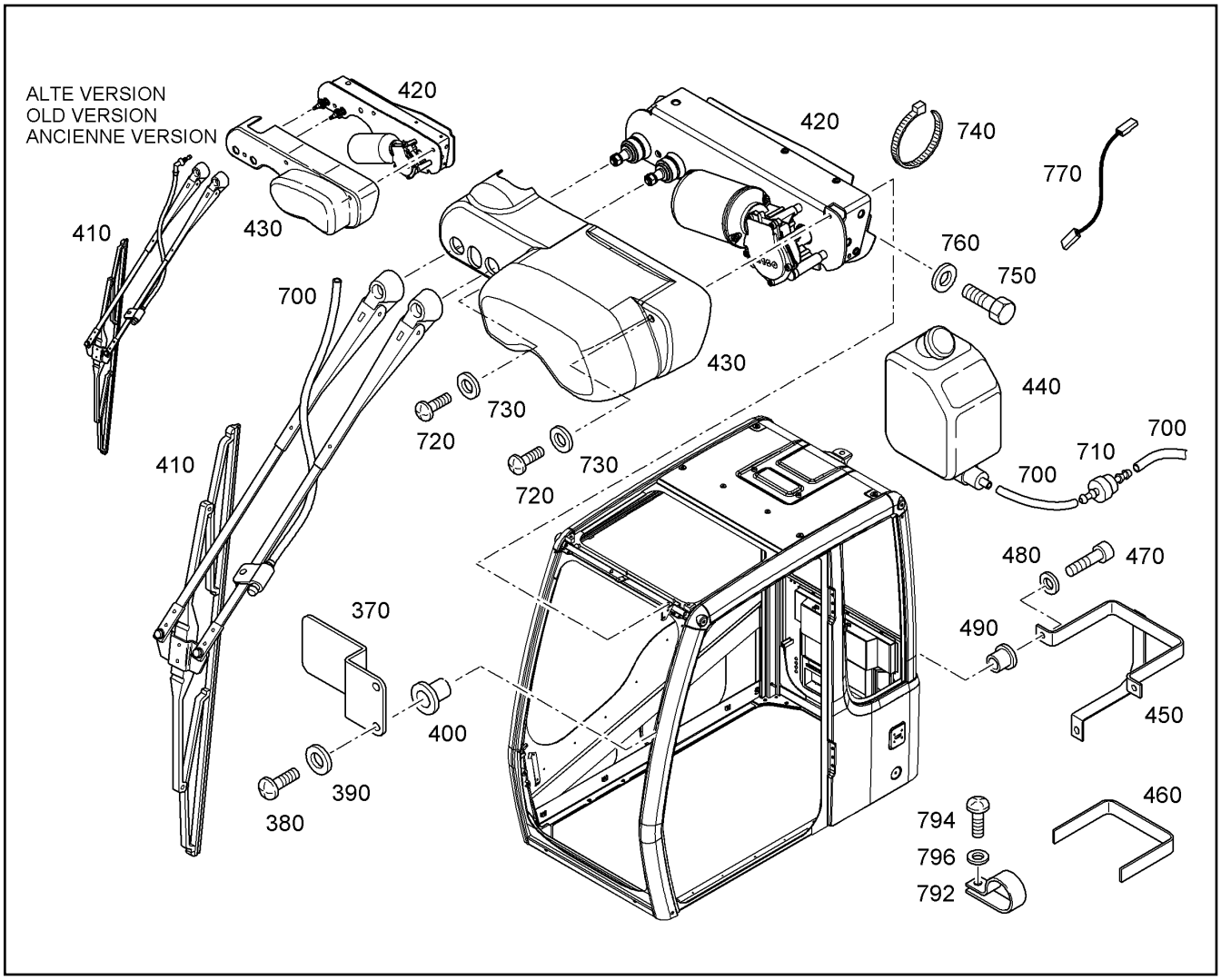

Pos.	Item	Quantity	Description	Designação	Serie	K
750	11651767	3	HEX SCREW ISO 4017 M8X20 8.8 480H	PARAFUSO SEXTAVADO		
760	10289803	3	WASHER 8 300HV	ARRUELA		
770	10009024	1	EARTH CABLE	CABO MASSA		
792	10044344	1	CABLE CLIP	BRAÇADEIRA DE CABOS		
794	4002308	1	PAN-HEAD SCREW ISO 7045 M6X12 4.8 H	PARAFUSO DE CABEÇA PLANA		
796	10289802	1	WASHER 6 300HV	ARRUELA		

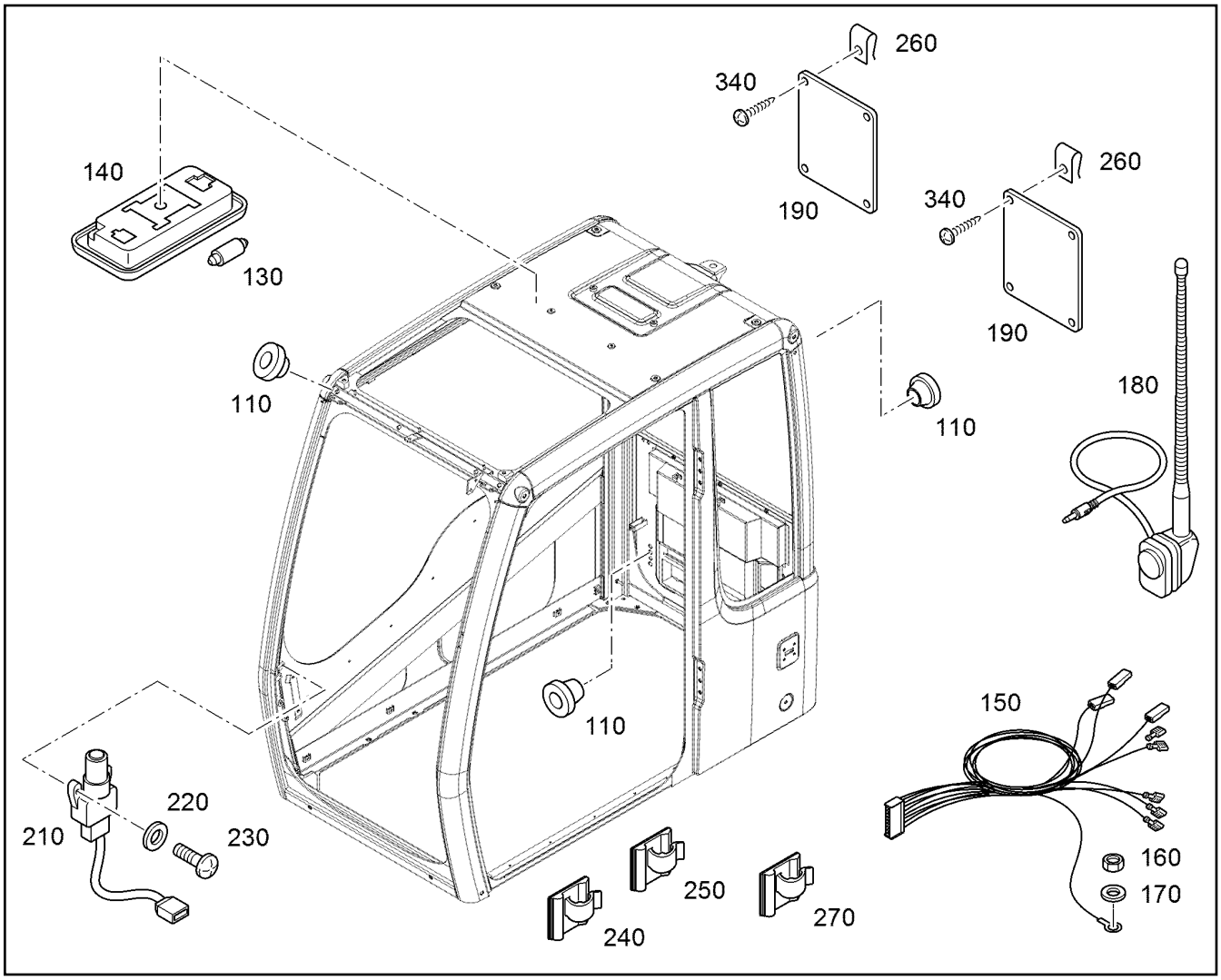

Pos.	Item	Quantity	Description	Designação	Serie	K
110	7019171	10	SPOUT 5/16/20	LUVA		
130	6000167	1	LIGHT BULB K 24V 10W	LÂMPADA INCANDESCENTE		
140	10428776	1	LIGHT	LUMINÁRIA		
150	10651894	1	WIRE HARNESS - CABIN	CHICOTE ELÉTRICO DA CABINE		
160	4000381	1	HEX NUT M8	PORCA SEXTAVADA		
170	7028855	1	TOOTH LOCK WASHER	ARRUELA DENTADA		
180	6001556	1	ANTENNA	ANTENA		
190	7020608	2	COVER	TAMPA		
210	7028856	1	SWITCH	INTERRUPTOR		
220	4001645	2	WASHER 4 200HV	ARRUELA		
230	408311008	2	PAN-HEAD SCREW ISO 7045 M4X14 4.8 H	PARAFUSO DE CABEÇA PLANA		
240	7028768	9	HOLDER	SUPORTE		
250	7028812	11	HOLDER	SUPORTE		
260	10009079	8	SHEET METAL NUT ST3,5	PORCA DE CHAPA		
270	10009023	2	HOLDER	SUPORTE		
340	4601386	8	SHEET-METAL SCREW ISO 7049 ST3,5X16	PARAFUSO		

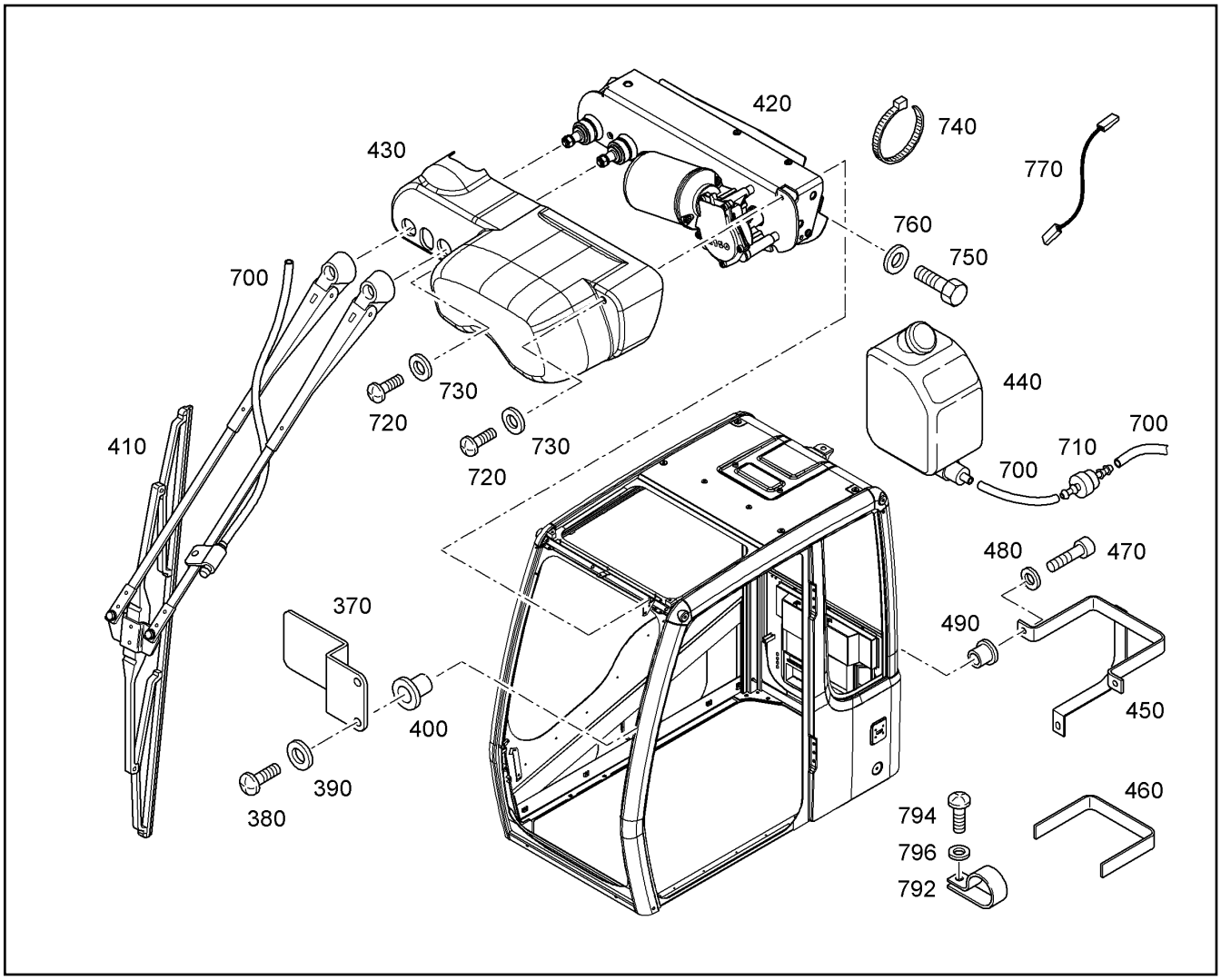

Pos.	Item	Quantity	Description	Designação	Serie	K
370	7028870	1	SHEET	PLACA DE APOIO		
380	4002612	2	PAN-HEAD SCREW ISO 7045 M6X20 4.8 H	PARAFUSO DE CABEÇA PLANA		
390	10289802	2	WASHER 6 300HV	ARRUELA		
400	7028765	2	THREADED INSERT	INSERTO ROSCADO		
410		1	WINDSCREEN WIPER ⇨ ❑ 499	LIMPADOR DE PÁRA-BRISA		1
420		1	WIPPER MOTOR SET ⇨ ❑ 496	KIT DO MOTOR DO LIMPADOR		
430	10290262	1	COVER	TAMPA		
440	5618664	1	WATER BASIN ⇨ ❑ 498	RESERVATÓRIO DE ÁGUA		
450	7028872	1	BRACKET	ESTRIBO		
460	7024455	1	SEAL	VEDAÇÃO		
470	4600079	3	SOCKET HEAD SCREW ISO 4762 M8X20 8.8	PARAFUSO CILÍNDRICO		
480	10289803	3	WASHER 8 300HV	ARRUELA		
490	10044343	3	THREADED INSERT	INSERTO ROSCADO		
700	6200461	6m	HOSE	MANGUEIRA		1
710	5800090	1	VALVE	VÁLVULA		
720	4600723	2	PAN-HEAD SCREW ISO 7045 M6X16 4.8 H	PARAFUSO DE CABEÇA PLANA		
730	10289802	2	WASHER 6 300HV	ARRUELA		
740	7028864	8	TIE WRAP	AMARRA PARA CABOS		
750	11651767	3	HEX SCREW ISO 4017 M8X20 8.8 480H	PARAFUSO SEXTAVADO		
760	10289803	3	WASHER 8 300HV	ARRUELA		
770	10009024	1	EARTH CABLE	CABO MASSA		
792	10044344	1	CABLE CLIP	BRAÇADEIRA DE CABOS		
794	4002308	1	PAN-HEAD SCREW ISO 7045 M6X12 4.8 H	PARAFUSO DE CABEÇA PLANA		

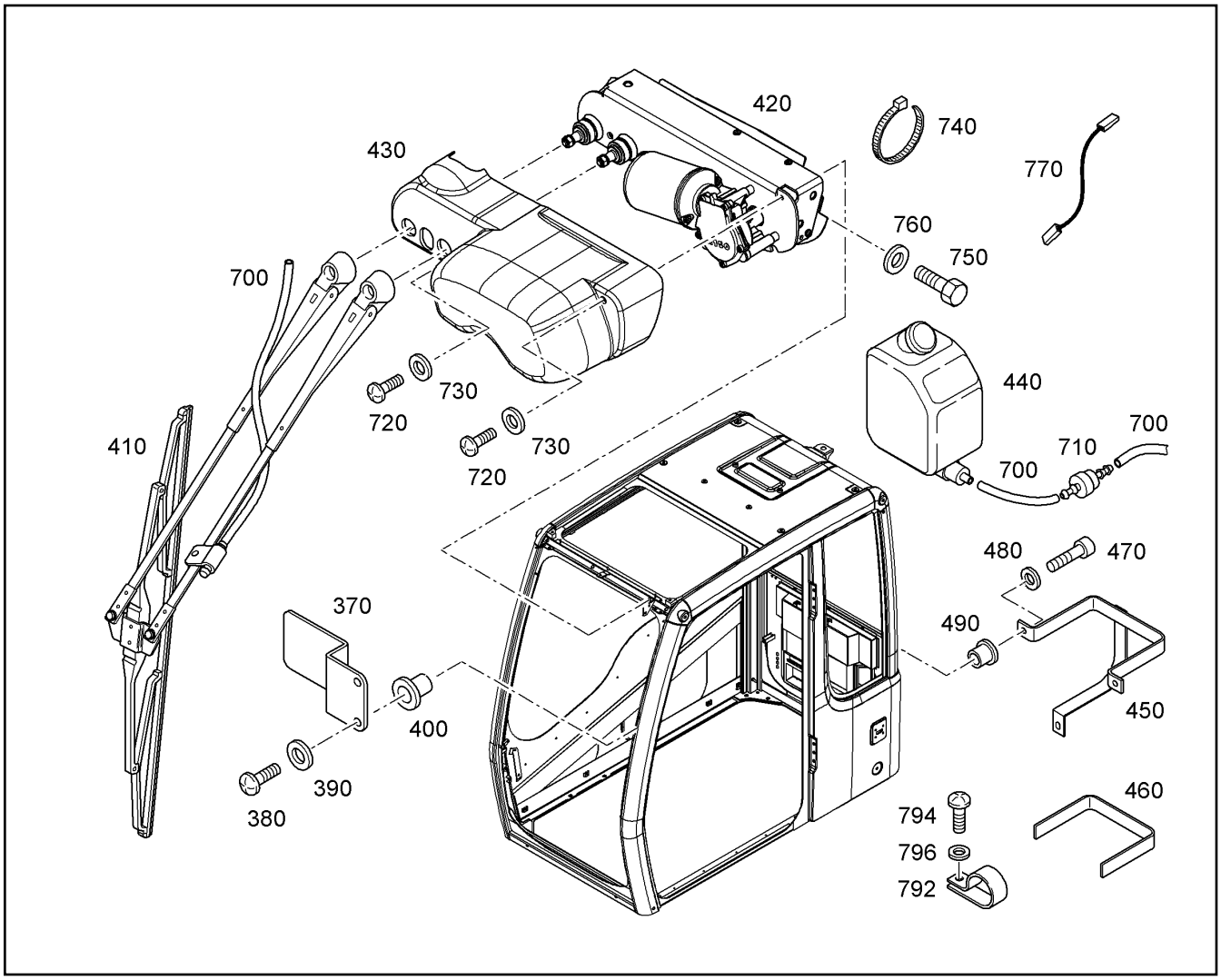

Pos.	Item	Quantity	Description	Designação	Serie	K
796	10289802	1	WASHER 6 300HV	ARRUELA		

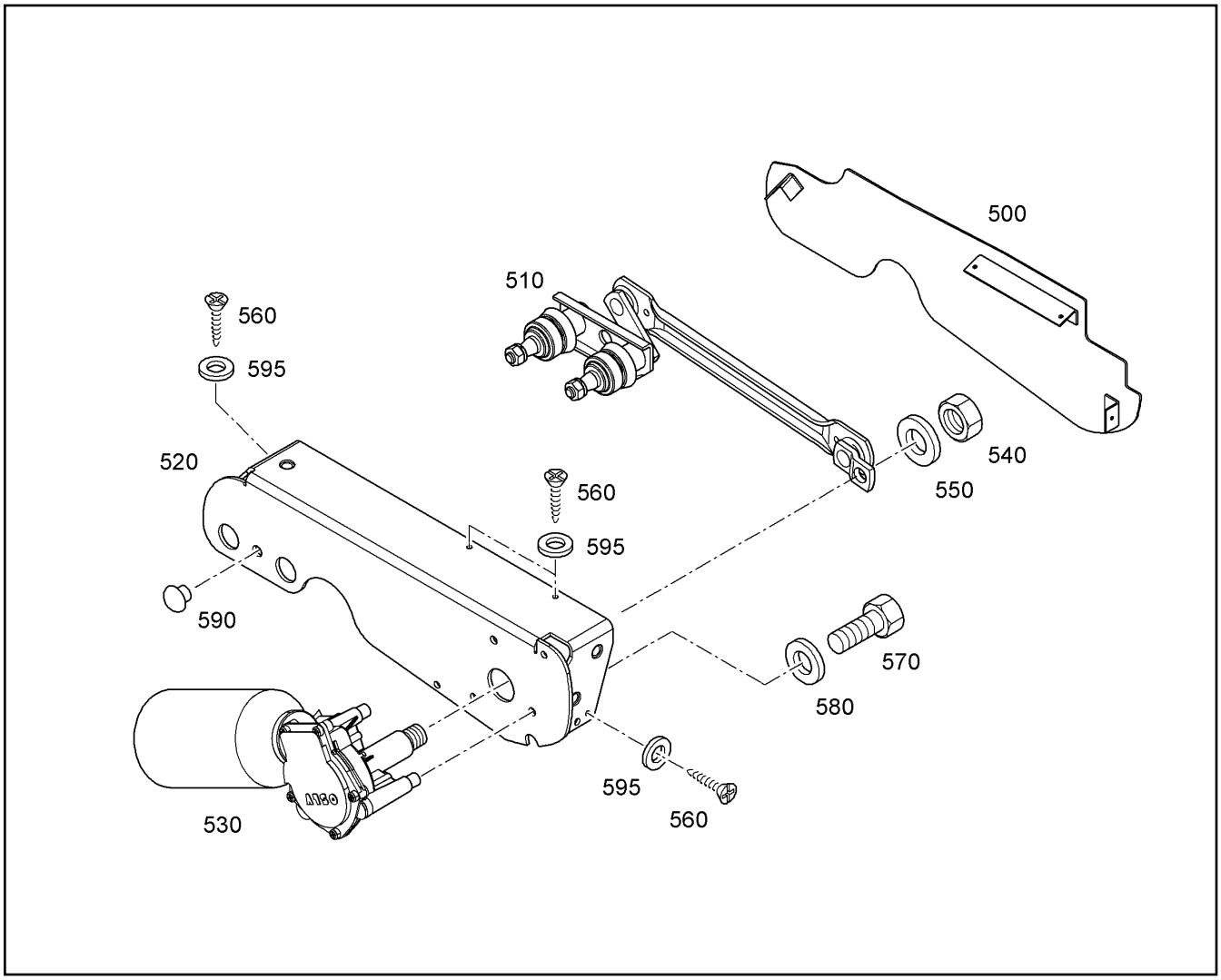

Pos.	Item	Quantity	Description	Designação	Serie	K
500	10290263	1	COVER	TAMPA		
510	10290346	1	GEARBOX	REDUTOR		2
520	10290356	1	SHEET	PLACA DE APOIO		
530	10290398	1	WIPER MOTOR	MOTOR DO LIMPADOR		
540	4000381	1	HEX NUT M8	PORCA SEXTAVADA		
550	10289803	1	WASHER 8 300HV	ARRUELA		
560	10216104	4	SHEET-METAL SCREW ISO 7050 ST3,5X9,5	PARAFUSO		
570	4065099	3	HEX SCREW ISO 4017 M6X16 8.8 A2C	PARAFUSO SEXTAVADO		
580	10289802	3	WASHER 6 300HV	ARRUELA		
590	10291063	1	STOP PLUG	PLUG DE FECHAMENTO		
595	4001645	4	WASHER 4 200HV	ARRUELA		

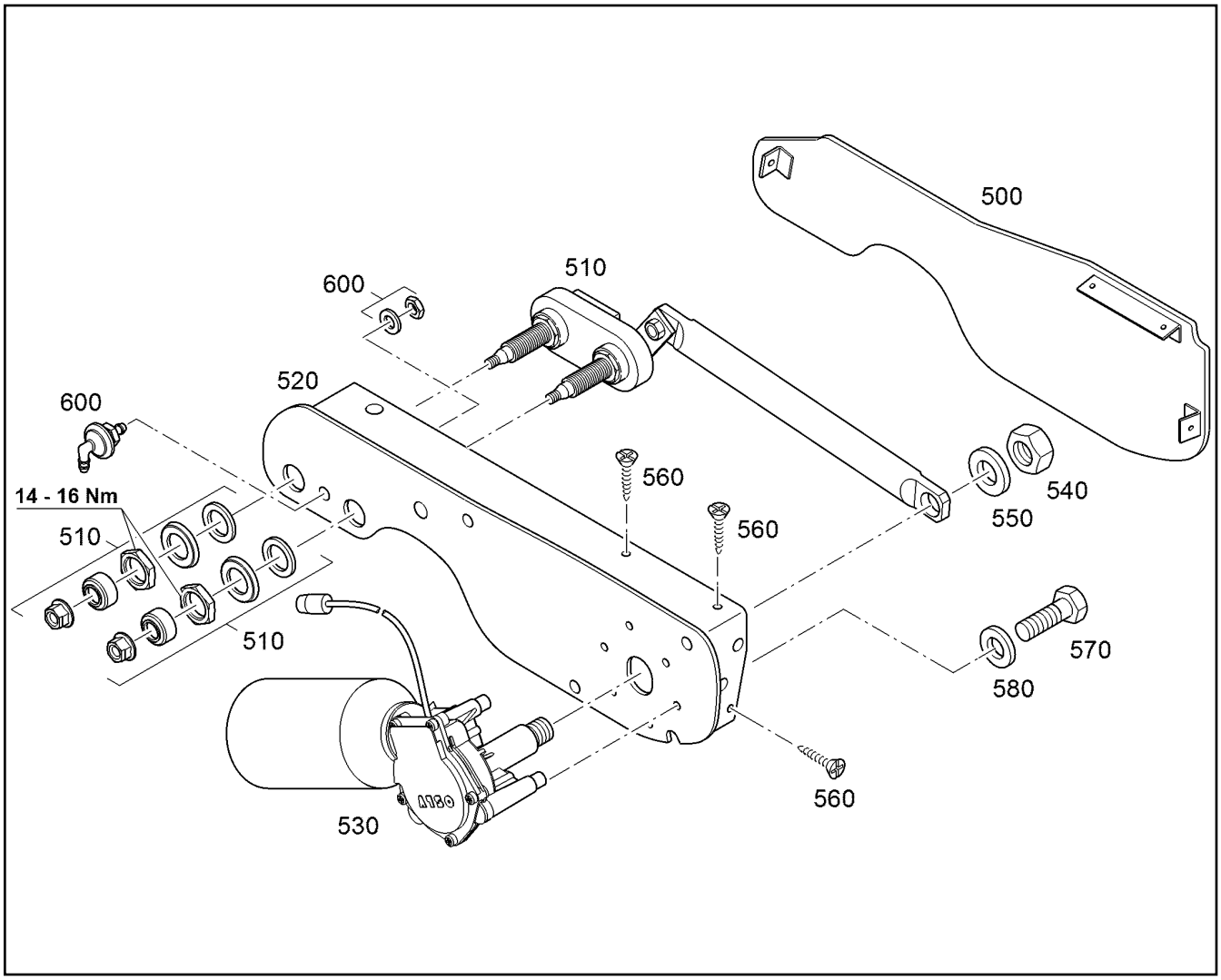

Pos.	Item	Quantity	Description	Designação	Serie	K
500	7028881	1	COVER	TAMPA		
510	7028883	1	GEARBOX	REDUTOR		
520	7028878	1	SHEET	PLACA DE APOIO		
530	10290398	1	WIPER MOTOR	MOTOR DO LIMPADOR		
540	4000381	1	HEX NUT M8	PORCA SEXTAVADA		
550	10289803	1	WASHER 8 300HV	ARRUELA		
560	408286100	4	SHEET-METAL SCREW ISO 7050 ST3,5X13 S	PARAFUSO		
570	4065099	3	HEX SCREW ISO 4017 M6X16 8.8 A2C	PARAFUSO SEXTAVADO		
580	10289802	3	WASHER 6 300HV	ARRUELA		
600	7020046	1	CONNECTION PIECE	PEÇA DE CONEXÃO		

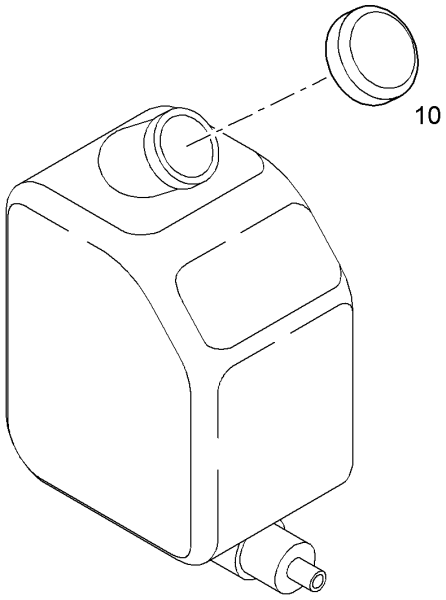

Pos.	Item	Quantity	Description	Designação	Serie	K
10	7025845	1	COVER	TAMPA		

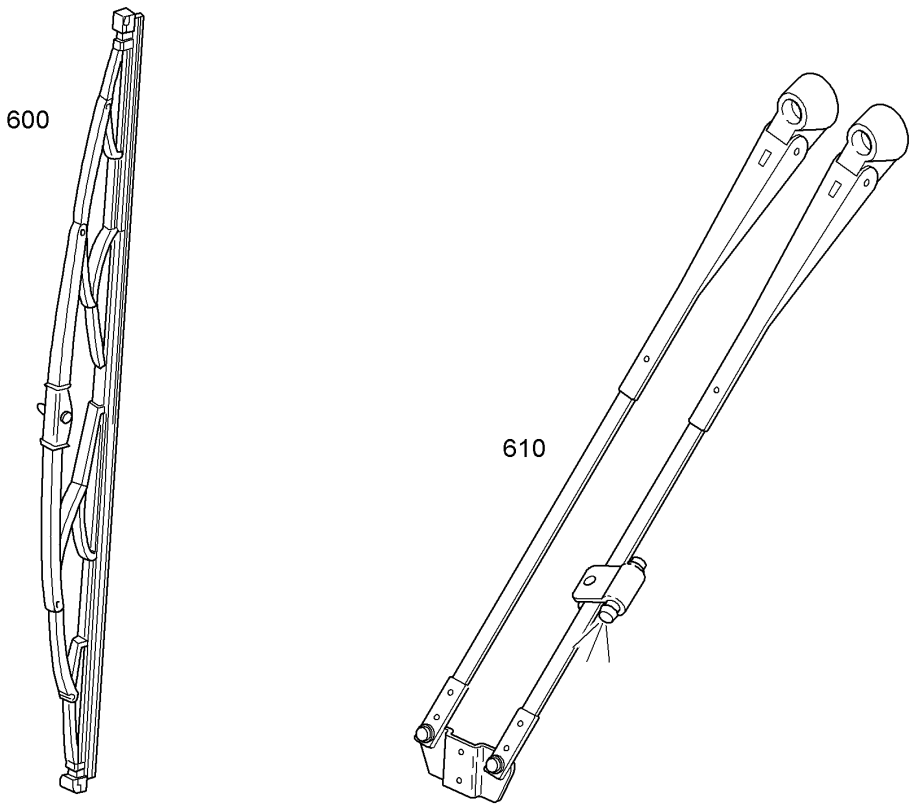

Pos.	Item	Quantity	Description	Designação	Serie	K
600	7028869	1	WIPER BLADE 800mm	PALHETA DO LIMPADOR		1
610	10290361	1	WIPER ARM ⇨ ❑ 501	BRACO DO LIMPADOR		

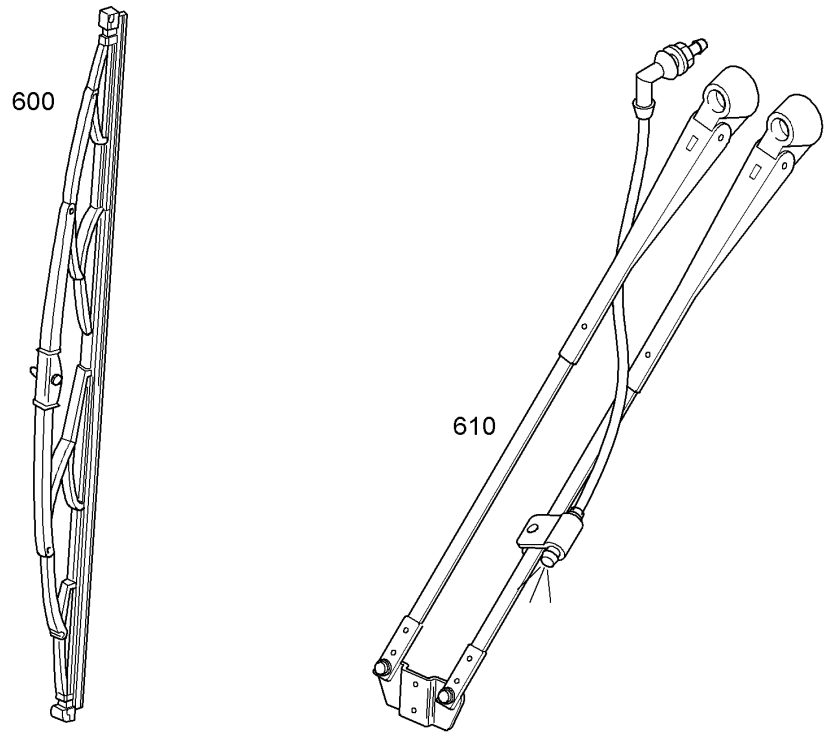

Pos.	Item	Quantity	Description	Designação	Serie	K
600	7028869	1	WIPER BLADE 800mm	PALHETA DO LIMPADOR		1
610	7028866	1	WIPER ARM ⇨ ❑ 502	BRACO DO LIMPADOR		

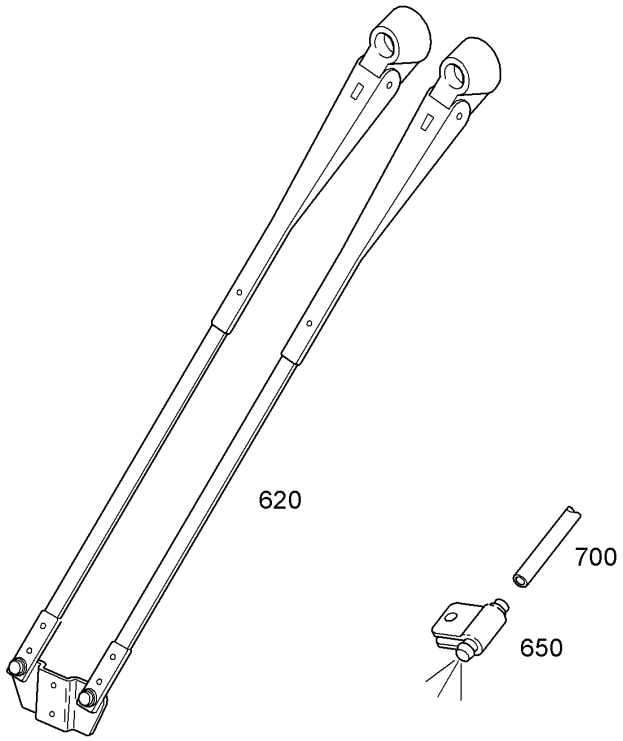

Pos.	Item	Quantity	Description	Designação	Serie	K
620	10290360	1	WIPER ARM	BRACO DO LIMPADOR		
650	7028867	1	SPRAY NOZZLE	BICO PULVERIZADOR		
700	12262634	1	HOSE	MANGUEIRA		1

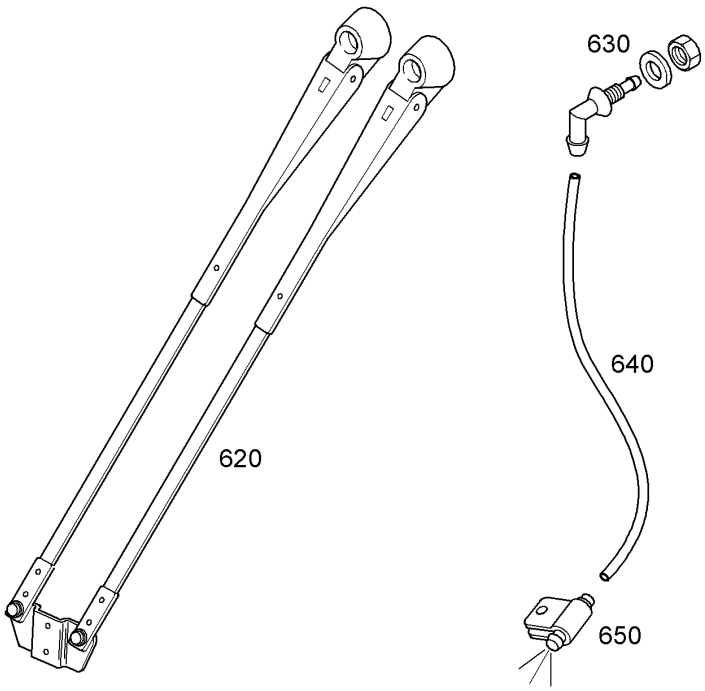

Pos.	Item	Quantity	Description	Designação	Serie	K
620		1	WIPER ARM	BRACO DO LIMPADOR		
630	7028868	1	NIPPLE	NIPLE		
640	7029428	1	HOSE	MANGUEIRA		1
650	7028867	1	SPRAY NOZZLE	BICO PULVERIZADOR		

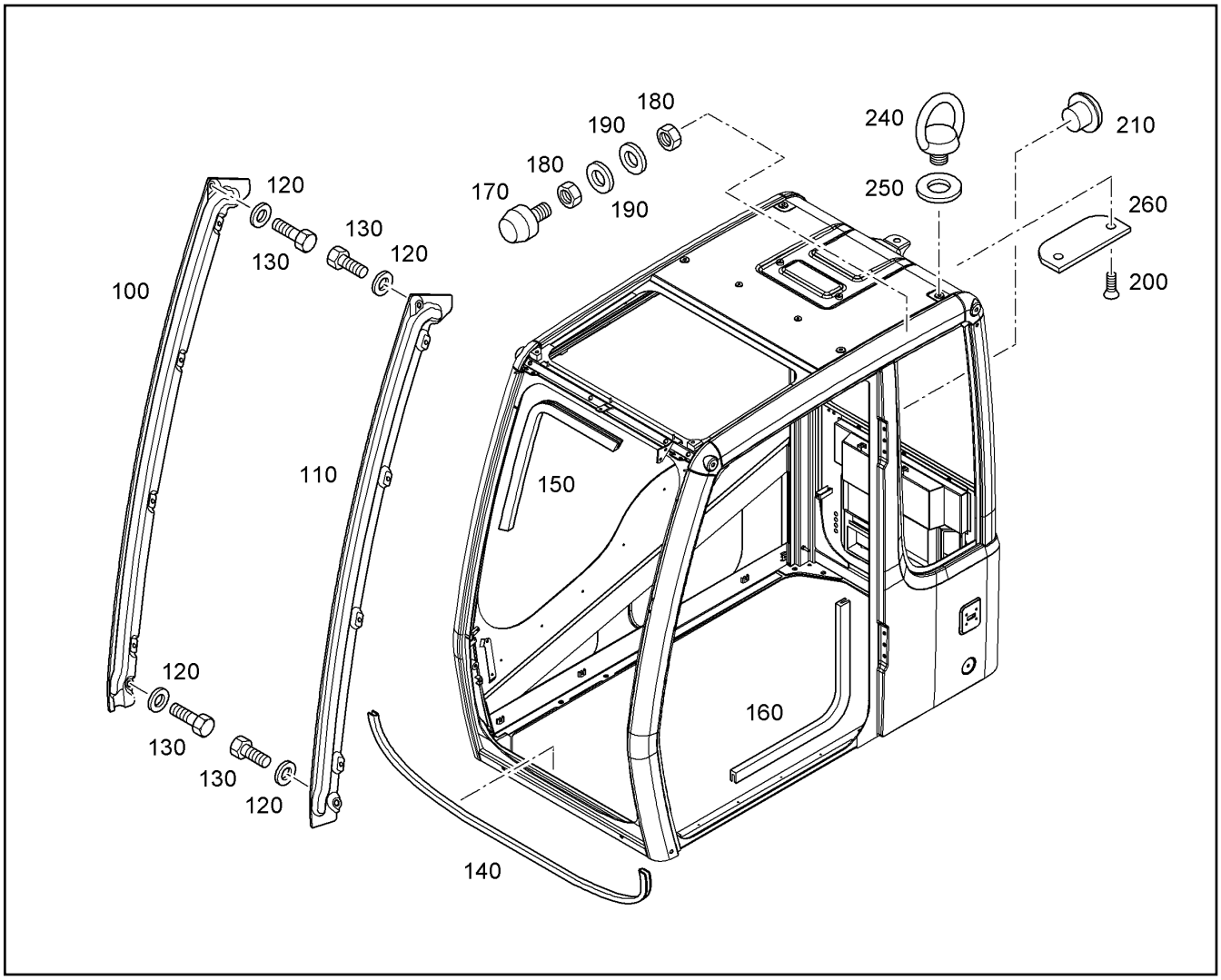

Pos.	Item	Quantity	Description	Designação	Serie	K
100	7028894	1	GUIDE	GUIA		
110	7028893	1	GUIDE	GUIA		
120	10289803	4	WASHER 8 300HV	ARRUELA		
130	4002534	4	HEX SCREW ISO 4017 M8X14 8.8 A2C	PARAFUSO SEXTAVADO		
140	7028891	1	SEAL	VEDAÇÃO		
150	7028890	1	SEAL	VEDAÇÃO		
160	7028892	1	SEAL	VEDAÇÃO		
170	7028810	2	METALASTIC BUFFER	COXIM		
180	4000381	4	HEX NUT M8	PORCA SEXTAVADA		
190	10289803	4	WASHER 8 300HV	ARRUELA		
200	4002850	2	COUNTERSUNK SCREW DIN 7991 M5X8 8.8	PARAFUSO ESCAREADO		
210	10044354	2	STOP PLUG	PLUG DE FECHAMENTO		
240	4026006	4	RING BOLT DIN 580 M12 C15E A3C	PARAFUSO COM OLHAL		
250	10289804	4	WASHER 12 300HV	ARRUELA		
260	7028895	1	PLATE LEFT	PLACA ESQUERDA		

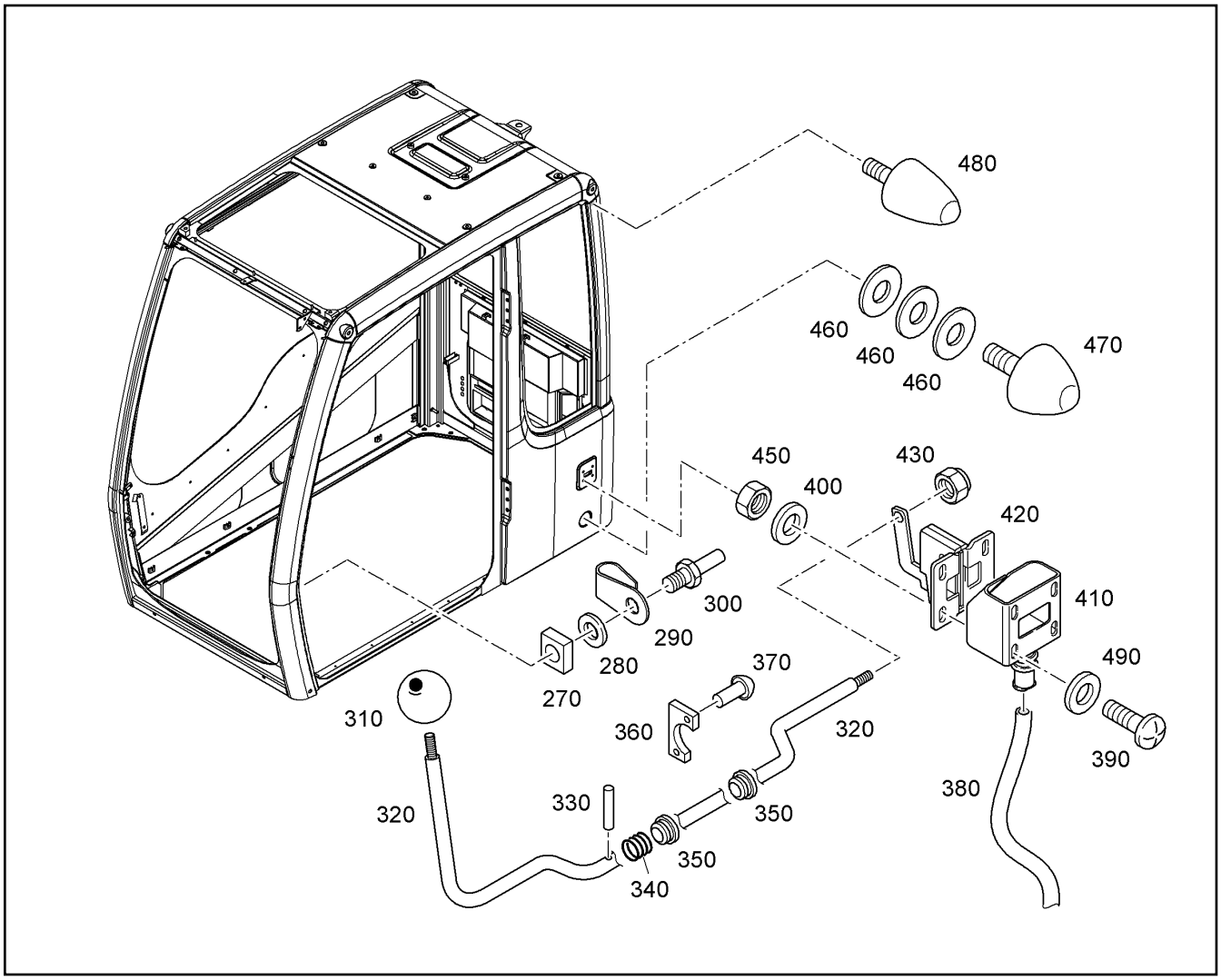

Pos.	Item	Quantity	Description	Designação	Serie	K
270	7028898	1	SHEET 10X20X25	PLACA DE APOIO		
280	10289804	1	WASHER 12 300HV	ARRUELA		
290	9408711	1	BRACKET	SUPORTE		
300	7028896	1	CLOSING PIN	PINO DE FECHAMENTO		
310	7019167	1	SPHERICAL KNOB	BOTÃO ESFÉRICO		
320	7028919	1	LEVER	ALAVANCA		
330	4900372	1	DOWEL PIN 3	PINO ELÁSTICO		
340	7028901	1	SPRING	MOLA		
350	7019122	2	BUSHING	BUCHA		1
360	7020611	2	SHEET 3X20X37	PLACA DE APOIO		
370	7020612	4	RIVET	REBITE		
380	7028899	1	PLASTIC TUBE	TUBO DE PLÁSTICO		
390	4002612	4	PAN-HEAD SCREW ISO 7045 M6X20 4.8 H	PARAFUSO DE CABEÇA PLANA		
400	10289802	8	WASHER 6 300HV	ARRUELA		
410	7019165	1	PROTECTING CAP	CAPA DE PROTEÇÃO		
420	7019164	1	DOOR STOPPER	LIMITADOR DA PORTA		
430	4600783	1	HEX NUT M8	PORCA SEXTAVADA		
450	4000379	4	HEX NUT M6	PORCA SEXTAVADA		
460	10013965	2	WASHER	ARRUELA		
470	7019129	1	METALASTIC BUFFER	COXIM		
480	7021047	1	METALASTIC BUFFER	COXIM		
490	10289802	4	WASHER 6 300HV	ARRUELA		

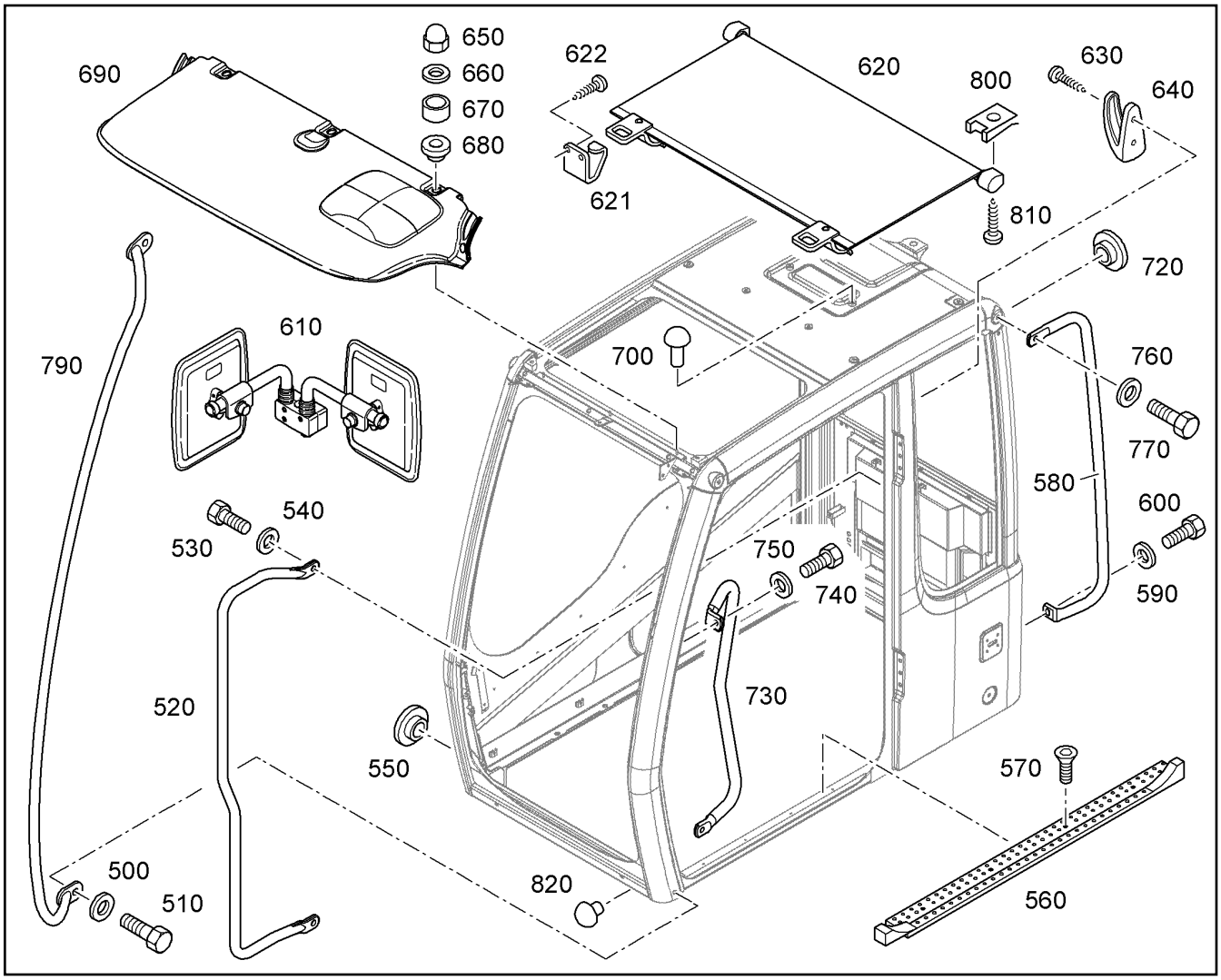

Pos.	Item	Quantity	Description	Designação	Serie	K
500	10289804	2	WASHER 12 300HV	ARRUELA		
510	4600184	2	HEX SCREW ISO 4017 M12X25 10.9 A3C	PARAFUSO SEXTAVADO		
520	10490894	1	HANDLE	PUXADOR		
530	4066098	2	HEX SCREW ISO 4017 M10X30 10.9 A3C	PARAFUSO SEXTAVADO		
540	10289795	2	WASHER 10 300HV	ARRUELA		
550	10220397	7	STOP PLUG GPN 350	PLUG DE FECHAMENTO		
560	7028910	1	PROTECTION GUARD	CHAPA DE PROTEÇÃO		
570	240127002	3	COUNTERSUNK SCREW DIN 7991 M6X12 8.	PARAFUSO ESCAREADO		
580	10298669	1	HANDLE BEHIND	CORRIMÃO TRASEIRO		
590	10289795	1	WASHER 10 300HV	ARRUELA		
600	11002753	1	HEX SCREW ISO 4017 M10X20 10.9 FLZN	PARAFUSO SEXTAVADO		
610	10044353	1	OUTSIDE MIRROR ⇨ ❑ 507	ESPELHO EXTERNO		
620	7028909	1	SUNHALDE SET	KIT DE MONTAGEM DO PARA-SO		
621	10039678	2	HOLDER	SUPORTE		
622	408252101	4	SHEET-METAL SCREW ISO 7049 ST2,9X6,5	PARAFUSO		
630	10035322	2	SHEET-METAL SCREW ISO 7050 ST3,5X13 S	PARAFUSO		
640	7019131	1	COAT HOOK	CABIDE		
650	7028908	5	CAP NUT	PORCA		
660	10220138	5	WASHER	ARRUELA		
670	7028907	5	SPACER BUSHING	BUCHA DISTANCIADORA		1
680	7028906	5	SPOUT	LUVA		
690	10020982	1	CAB ROOF	AVANCO DO TETO DA CABINE		
700	7020615	6	STOP PLUG	PLUG DE FECHAMENTO		
720	7020616	1	STOP PLUG	PLUG DE FECHAMENTO		
730	10009025	1	HANDLE	PUXADOR		

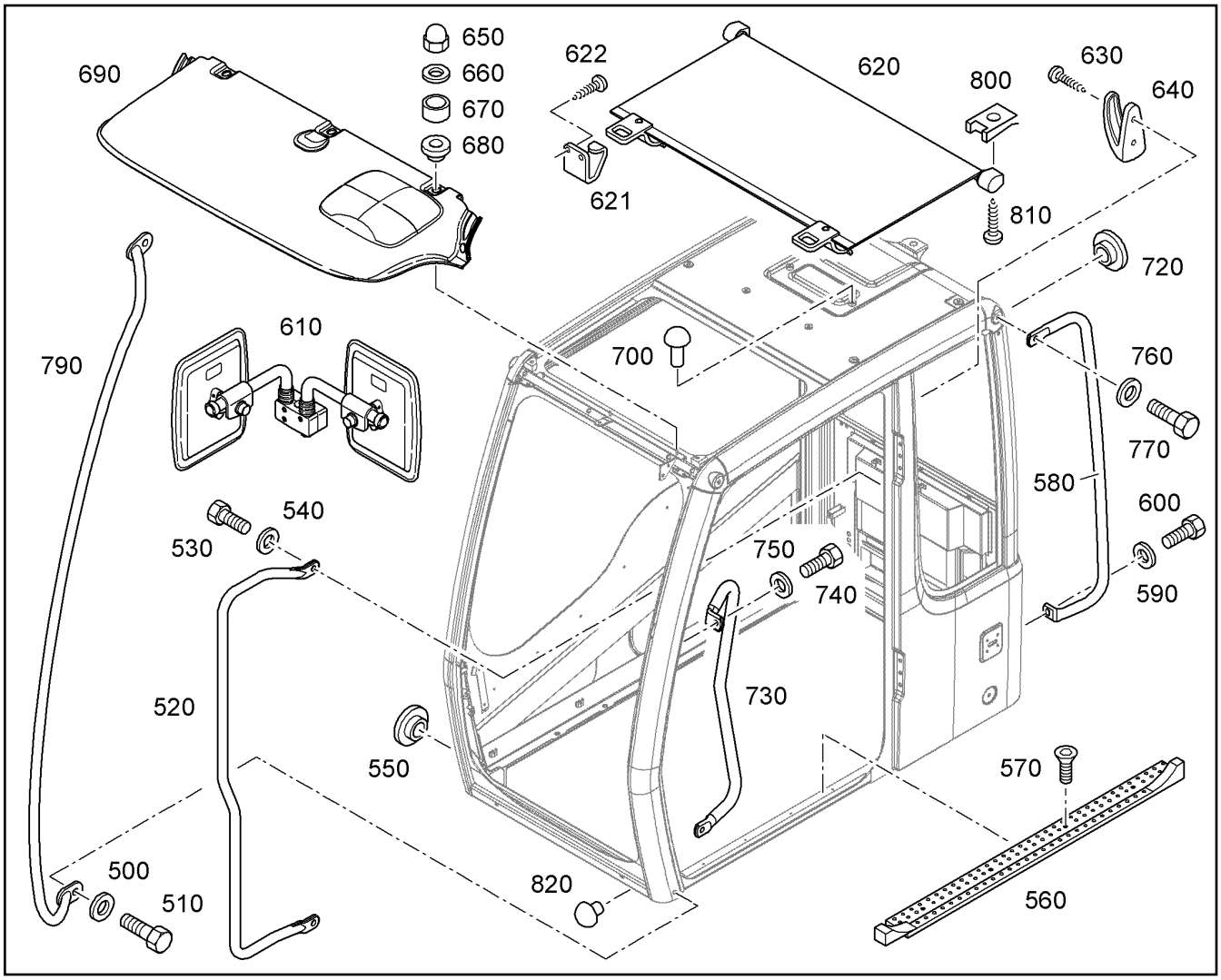

Pos.	Item	Quantity	Description	Designação	Serie	K
740	4066098	2	HEX SCREW ISO 4017 M10X30 10.9 A3C	PARAFUSO SEXTAVADO		
750	10289795	2	WASHER 10 300HV	ARRUELA		
760	10289804	1	WASHER 12 300HV	ARRUELA		
770	4066122	1	HEX SCREW ISO 4017 M12X35 10.9 A3C	PARAFUSO SEXTAVADO		
790	10291064	1	HANDLE	PUXADOR		
800	10290260	2	SHEET METAL NUT	PORCA DE CHAPA		
810	10220139	2	SHEET-METAL SCREW ISO 7049 ST4,2X22	PARAFUSO		
820	10000286	2	STOP PLUG	PLUG DE FECHAMENTO		

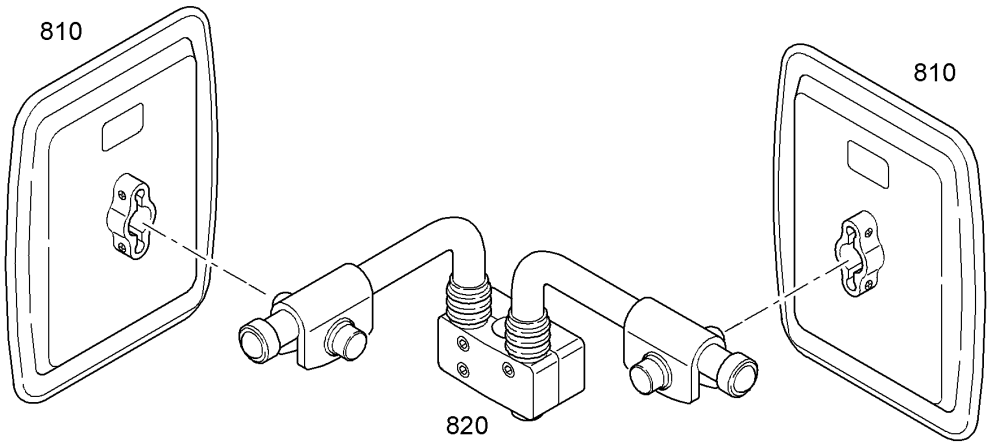

Pos.	Item	Quantity	Description	Designação	Serie	K
810	7019140	2	OUTSIDE MIRROR 243X155	ESPELHO EXTERNO		
820	7019141	1	MIRROR SUPPORT	BRACO DO ESPELHO		

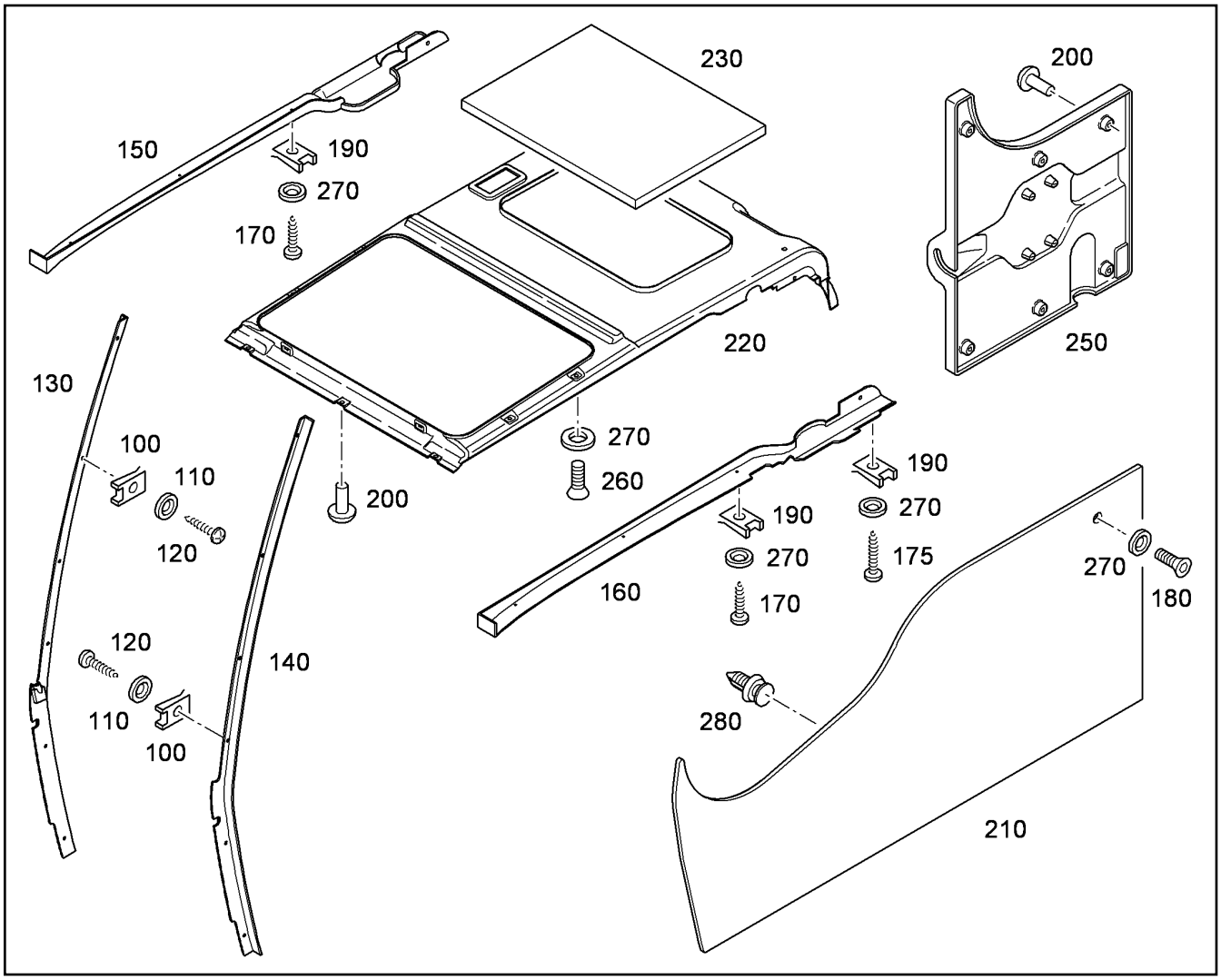

Pos.	Item	Quantity	Description	Designação	Serie	K
100	10044356	12	SHEET METAL NUT	PORCA DE CHAPA		
110	11140403	12	WASHER 5 200HV	ARRUELA		
120	4635258	12	SHEET-METAL SCREW ISO 7049 ST4,8X16	PARAFUSO		
130	7028940	1	COVER PLATE FRONT RIGHT	COBERTURA DIANTEIRA DIREIT		
140	10009132	1	COVER FRONT LEFT	COB. DIANTEIRA NA ESQUERDA		
150	10009193	1	COVER UPPER RIGHT	TAMPA DIREITA SUPERIOR		
160	10044360	1	COVER	TAMPA		
170	4635258	10	SHEET-METAL SCREW ISO 7049 ST4,8X16	PARAFUSO		
175	4002456	2	SHEET-METAL SCREW ISO 7049 ST4,8X25	PARAFUSO		
180	4002401	10	COUNTERSUNK SCREW ISO 7047 M6X12 4.	PARAFUSO ESCAREADO		
190	7028941	10	SHEET METAL NUT ST4,8	PORCA DE CHAPA		
200	7024438	12	BODY-BOUND RIVET	REBITE		
210	10290359	1	COVERS	REVESTIMENTO		
220	10013978	1	COVERS	REVESTIMENTO		
230	10290261	1	ABSORPTION PANEL	PLACA DE ISOLAMENTO		
250	10470128	1	CASING, CPL ⇨ ❑ 512	REVESTIMENTO COMPLETO		
260	4901294	6	COUNTERSUNK SCREW ISO 7047 M6X16 4.	PARAFUSO ESCAREADO		
270	10023245	6	ROSE	ARRUELA		
280	7029433	12	BLIND RIVET	REBITE CEGO		

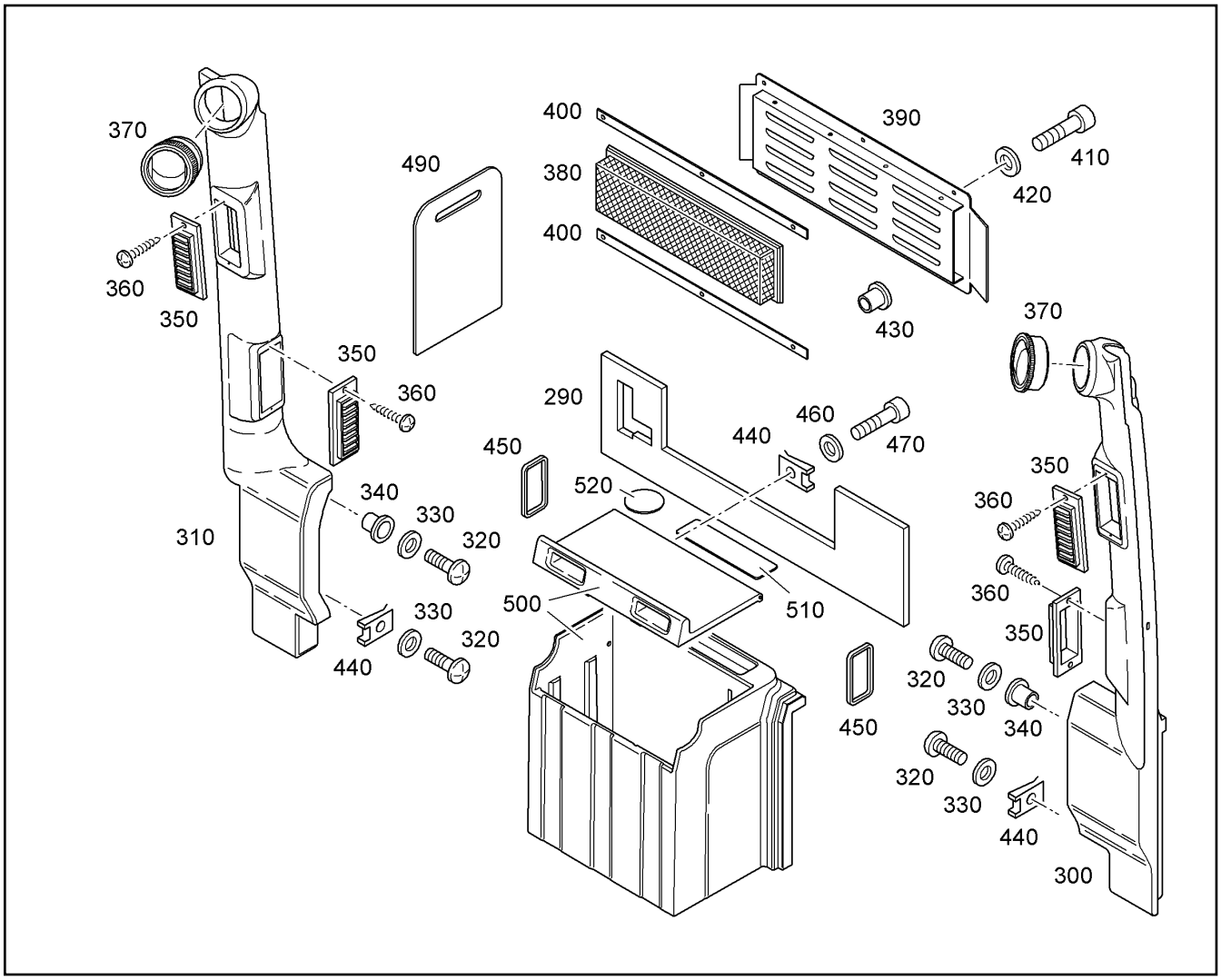

Pos.	Item	Quantity	Description	Designação	Serie	K
290	10009181	1	ABSORPTION PANEL	PLACA DE ISOLAMENTO		
300	10009183	1	CHANNEL REAR LEFT	CANAL TRASEIRA ESQUERDA		
310	10014497	1	CHANNEL REAR RIGHT	CANAL TRASEIRA DIREITA		
320	4600723	4	PAN-HEAD SCREW ISO 7045 M6X16 4.8 H	PARAFUSO DE CABEÇA PLANA		
330	11693878	4	WASHER 6,4 200HV	ARRUELA		
340	7020610	2	THREADED INSERT M6	INSERTO ROSCADO		
350	7024446	4	AIR NOZZLE	DIFUSOR DE AR		
360	7024447	8	SCREW	PARAFUSO		
370	7028950	2	AIR NOZZLE	DIFUSOR DE AR		
380	7028951	1	AIR FILTER	FILTRO DE AR		
390	10009188	1	COVER	TAMPA		
400	7028953	2	SEAL	VEDAÇÃO		
410	4600580	6	PAN-HEAD SCREW ISO 7045 M6X25 4.8 H	PARAFUSO DE CABEÇA PLANA		
420	10289802	6	WASHER 6 300HV	ARRUELA		
430	10044359	1	THREADED INSERT	INSERTO ROSCADO		
440	10009189	4	SHEET METAL NUT M6	PORCA DE CHAPA		
450	10009027	2	SEAL	VEDAÇÃO		
460	11693878	2	WASHER 6,4 200HV	ARRUELA		
470	4635344	2	PAN-HEAD SCREW DIN 7985 M6X25 8.8 H	PARAFUSO DE CABEÇA PLANA		
490	10009201	1	PARTITION	PAREDE DIVISÓRIA		
500	10024192	1	CHANNEL	CONDUTOR DE AR		
510	10289996	1	MAT	ESTEIRA		
520	10289997	1	MAT	ESTEIRA		

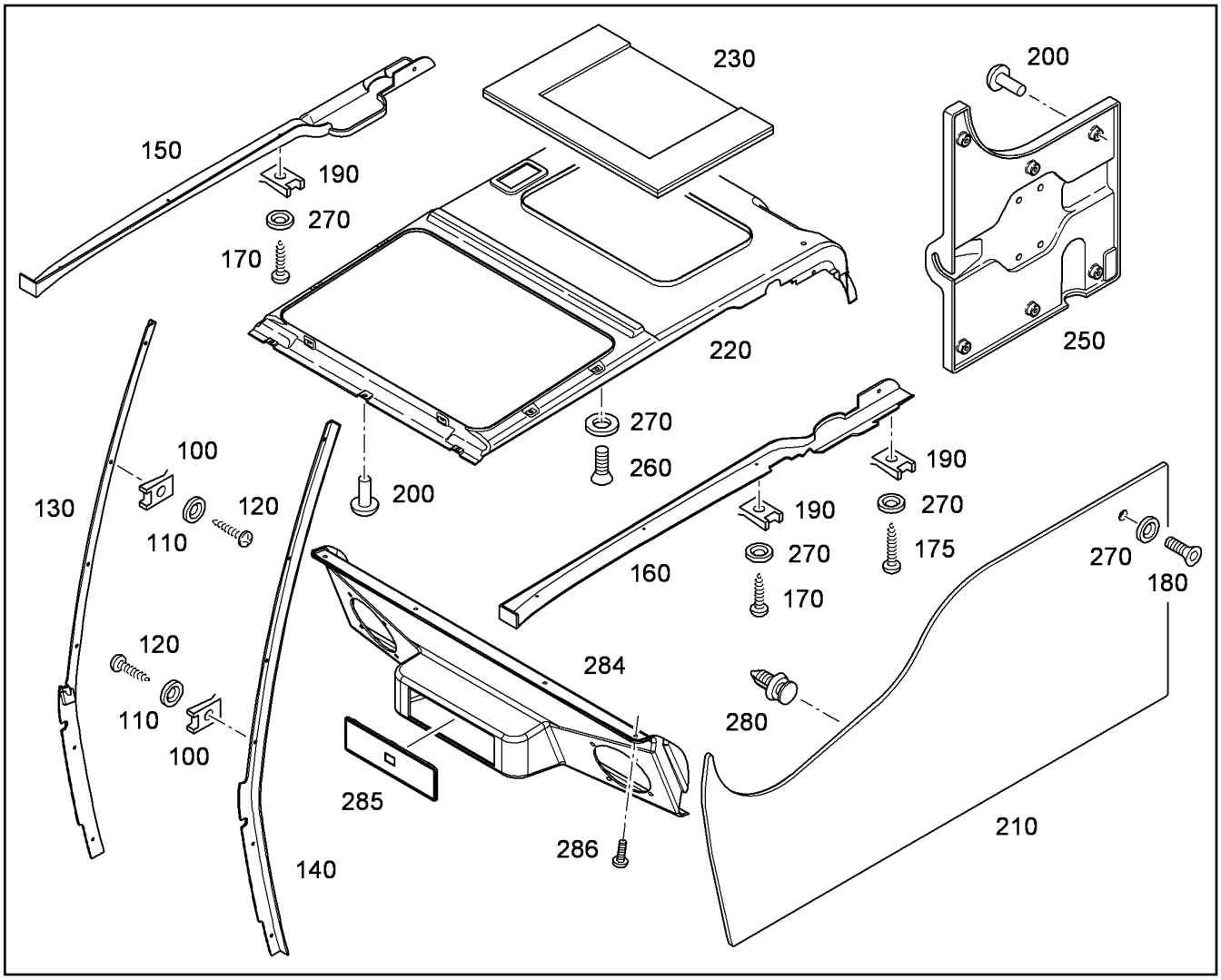

Pos.	Item	Quantity	Description	Designação	Serie	K
100	10044356	12	SHEET METAL NUT	PORCA DE CHAPA		
110	11140403	12	WASHER 5 200HV	ARRUELA		
120	4635258	12	SHEET-METAL SCREW ISO 7049 ST4,8X16	PARAFUSO		
130	7028940	1	COVER PLATE FRONT RIGHT	COBERTURA DIANTEIRA DIREIT		
140	10009132	1	COVER FRONT LEFT	COB. DIANTEIRA NA ESQUERDA		
150	10009193	1	COVER UPPER RIGHT	TAMPA DIREITA SUPERIOR		
160	10044360	1	COVER	TAMPA		
170	4635258	10	SHEET-METAL SCREW ISO 7049 ST4,8X16	PARAFUSO		
175	4002456	2	SHEET-METAL SCREW ISO 7049 ST4,8X25	PARAFUSO		
180	4002401	10	COUNTERSUNK SCREW ISO 7047 M6X12 4.	PARAFUSO ESCAREADO		
190	7028941	10	SHEET METAL NUT ST4,8	PORCA DE CHAPA		
200	7024438	12	BODY-BOUND RIVET	REBITE		
210	10290359	1	COVERS	REVESTIMENTO		
220	10217034	1	COVERS	REVESTIMENTO		
230	10290261	1	ABSORPTION PANEL	PLACA DE ISOLAMENTO		
250	10470128	1	CASING, CPL ⇨ ❑ 512	REVESTIMENTO COMPLETO		
260	4901294	6	COUNTERSUNK SCREW ISO 7047 M6X16 4.	PARAFUSO ESCAREADO		
270	10023245	6	ROSE	ARRUELA		
280	7029433	12	BLIND RIVET	REBITE CEGO		
284	10455060	1	COVERS	REVESTIMENTO		
285	7618883	1	BLANK LID	TAMPA DE PROTEÇÃO		
286	10215970	4	FIXING SCREW	PARAFUSO DE FIXACAO		

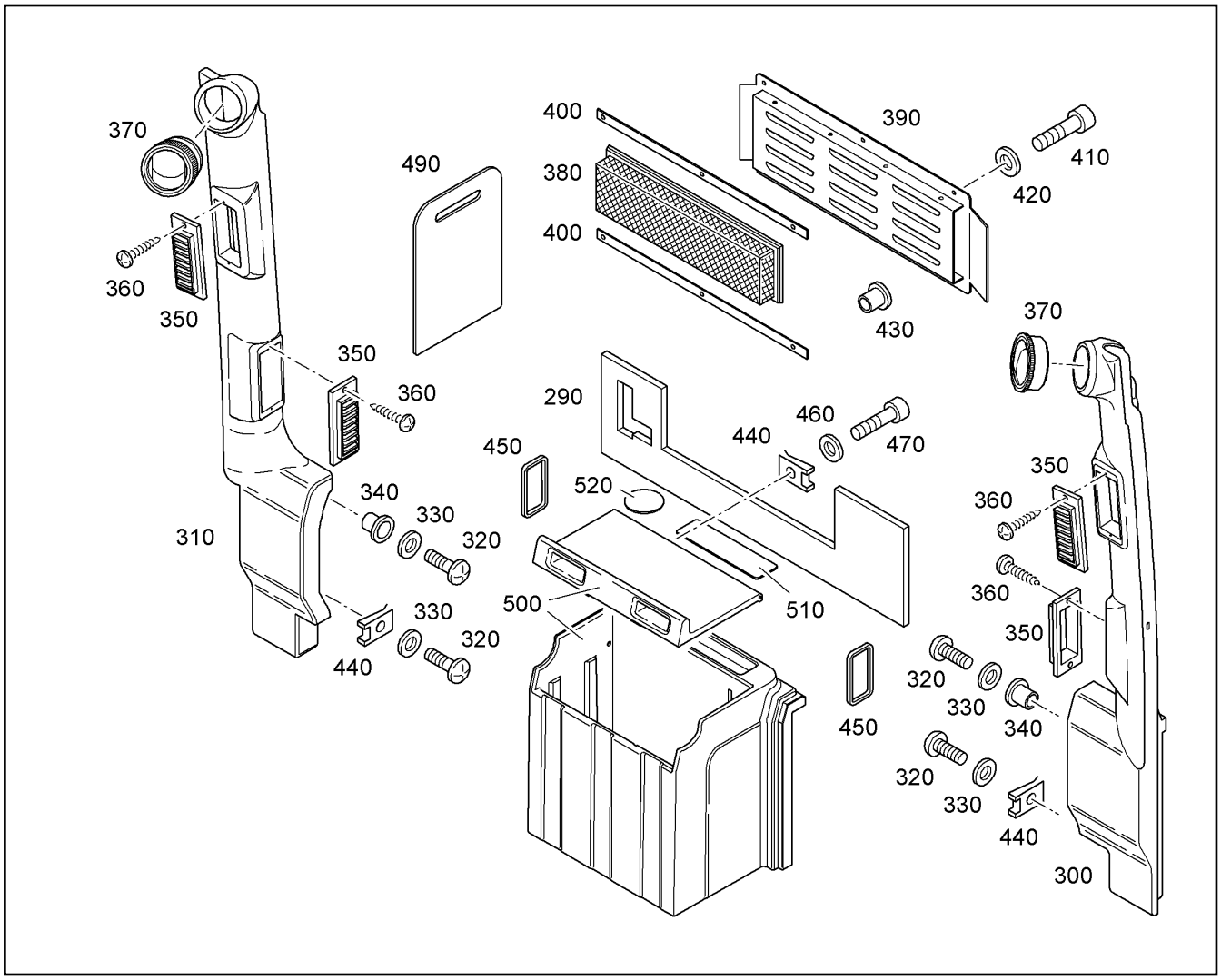

Pos.	Item	Quantity	Description	Designação	Serie	K
290	10009181	1	ABSORPTION PANEL	PLACA DE ISOLAMENTO		
300	10009183	1	CHANNEL REAR LEFT	CANAL TRASEIRA ESQUERDA		
310	10014497	1	CHANNEL REAR RIGHT	CANAL TRASEIRA DIREITA		
320	4600723	4	PAN-HEAD SCREW ISO 7045 M6X16 4.8 H	PARAFUSO DE CABEÇA PLANA		
330	11693878	4	WASHER 6,4 200HV	ARRUELA		
340	7020610	2	THREADED INSERT M6	INSERTO ROSCADO		
350	7024446	4	AIR NOZZLE	DIFUSOR DE AR		
360	7024447	8	SCREW	PARAFUSO		
370	7028950	2	AIR NOZZLE	DIFUSOR DE AR		
380	7028951	1	AIR FILTER	FILTRO DE AR		
390	10009188	1	COVER	TAMPA		
400	7028953	2	SEAL	VEDAÇÃO		
410	4600580	6	PAN-HEAD SCREW ISO 7045 M6X25 4.8 H	PARAFUSO DE CABEÇA PLANA		
420	10289802	6	WASHER 6 300HV	ARRUELA		
430	10044359	1	THREADED INSERT	INSERTO ROSCADO		
440	10009189	4	SHEET METAL NUT M6	PORCA DE CHAPA		
450	10009027	2	SEAL	VEDAÇÃO		
460	11693878	2	WASHER 6,4 200HV	ARRUELA		
470	4635344	2	PAN-HEAD SCREW DIN 7985 M6X25 8.8 H	PARAFUSO DE CABEÇA PLANA		
490	10009201	1	PARTITION	PAREDE DIVISÓRIA		
500	10024192	1	CHANNEL	CONDUTOR DE AR		
510	10289996	1	MAT	ESTEIRA		
520	10289997	1	MAT	ESTEIRA		

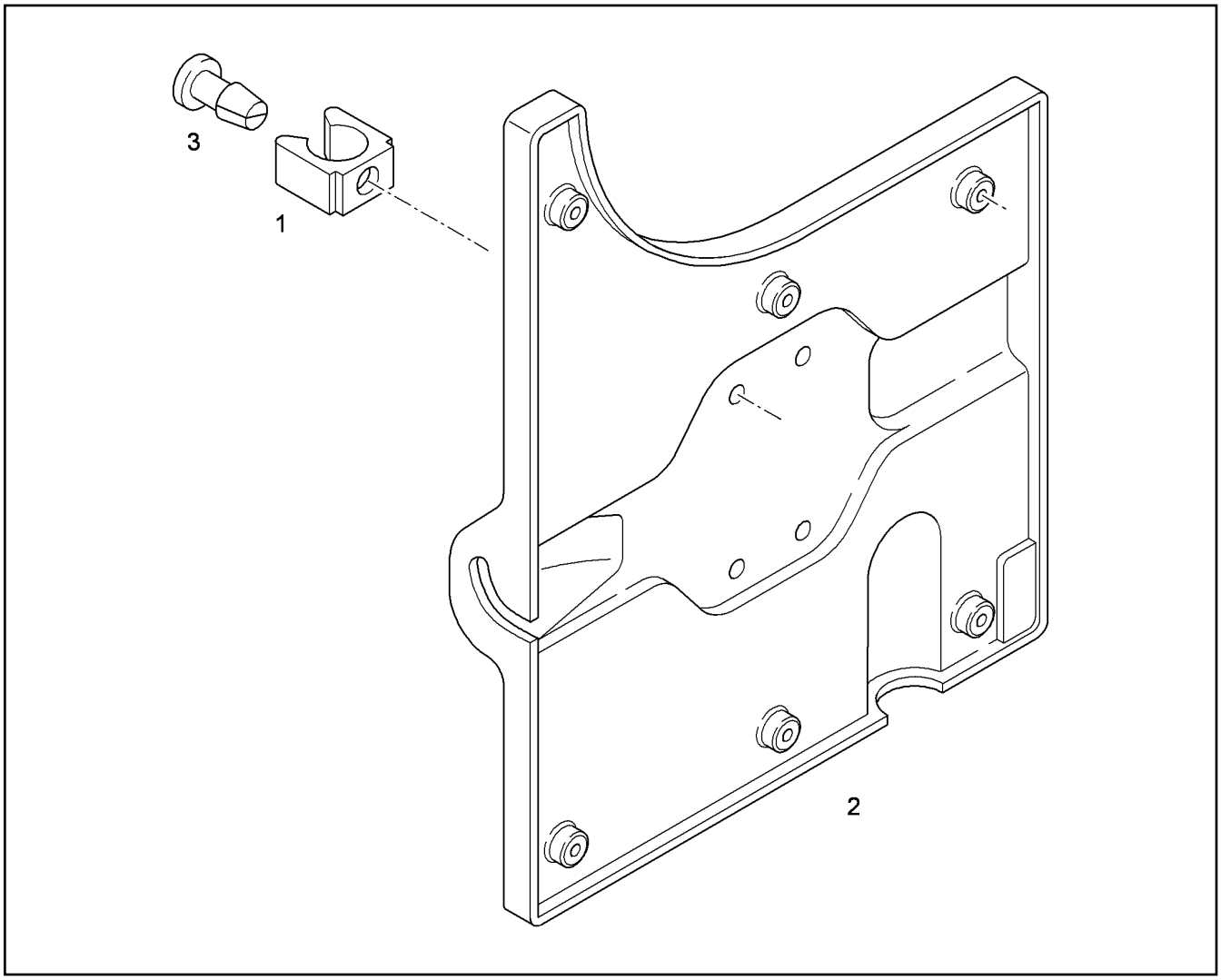

Pos.	Item	Quantity	Description	Designação	Serie	K
1	7373592	4	CLAMP	GRAMPO		
2		1	COVERING LEFT	REVESTIMENTO ESQUERDO		
3	10470127	4	RIVET	REBITE		

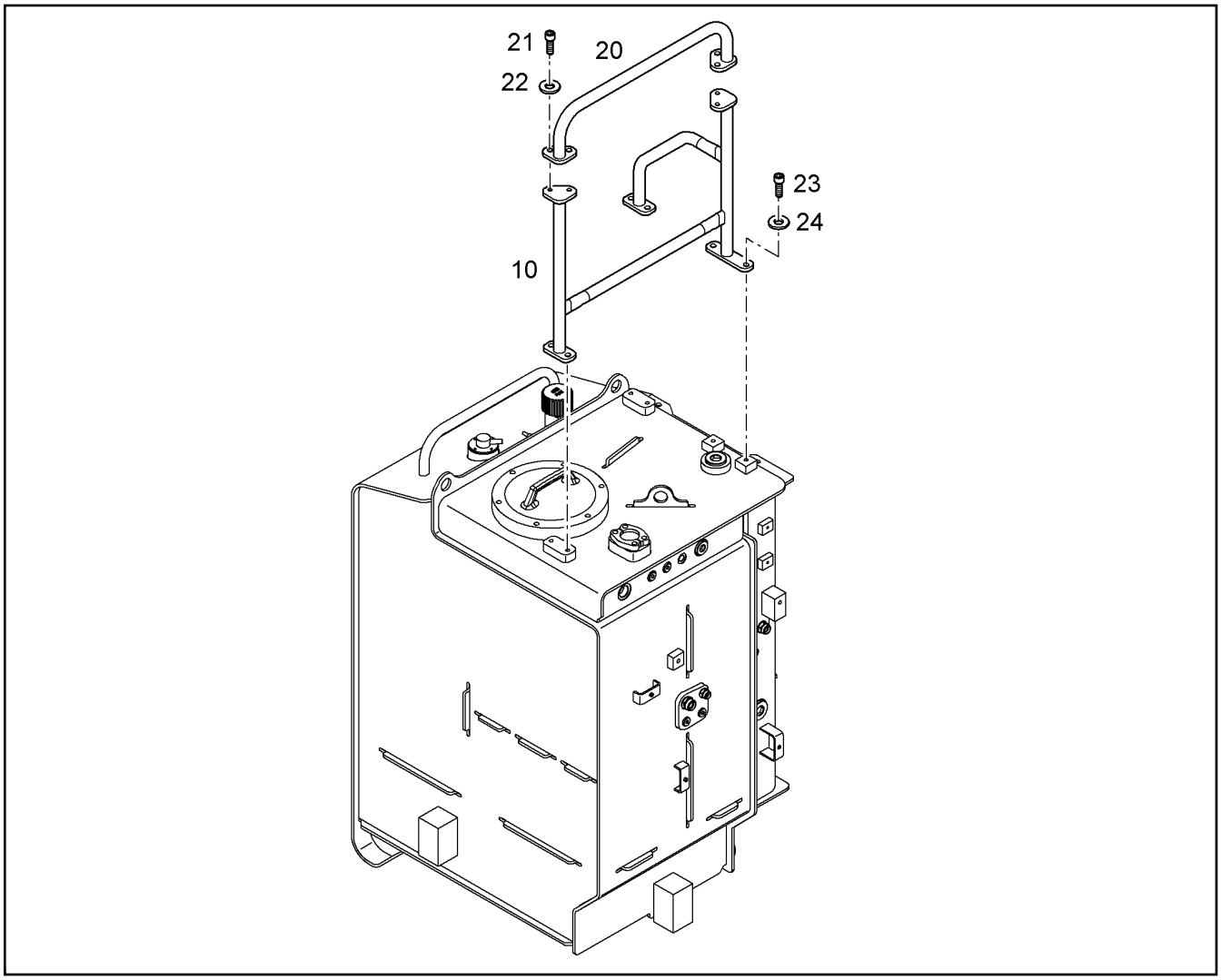

Pos.	Item	Quantity	Description	Designação	Serie	K
10	11730369	1	RAILING RIGHT	CORRIMÃO DIREITO		
20	11730370	1	RAILING RIGHT	CORRIMÃO DIREITO		
21	11321126	4	SOCKET HEAD SCREW ISO 4762 M12X30 10	PARAFUSO CILÍNDRICO		
22	10289804	4	WASHER 12 300HV	ARRUELA		
23	11002748	6	SOCKET HEAD SCREW ISO 4762 M12X35 10	PARAFUSO CILÍNDRICO		
24	10289804	6	WASHER 12 300HV	ARRUELA		

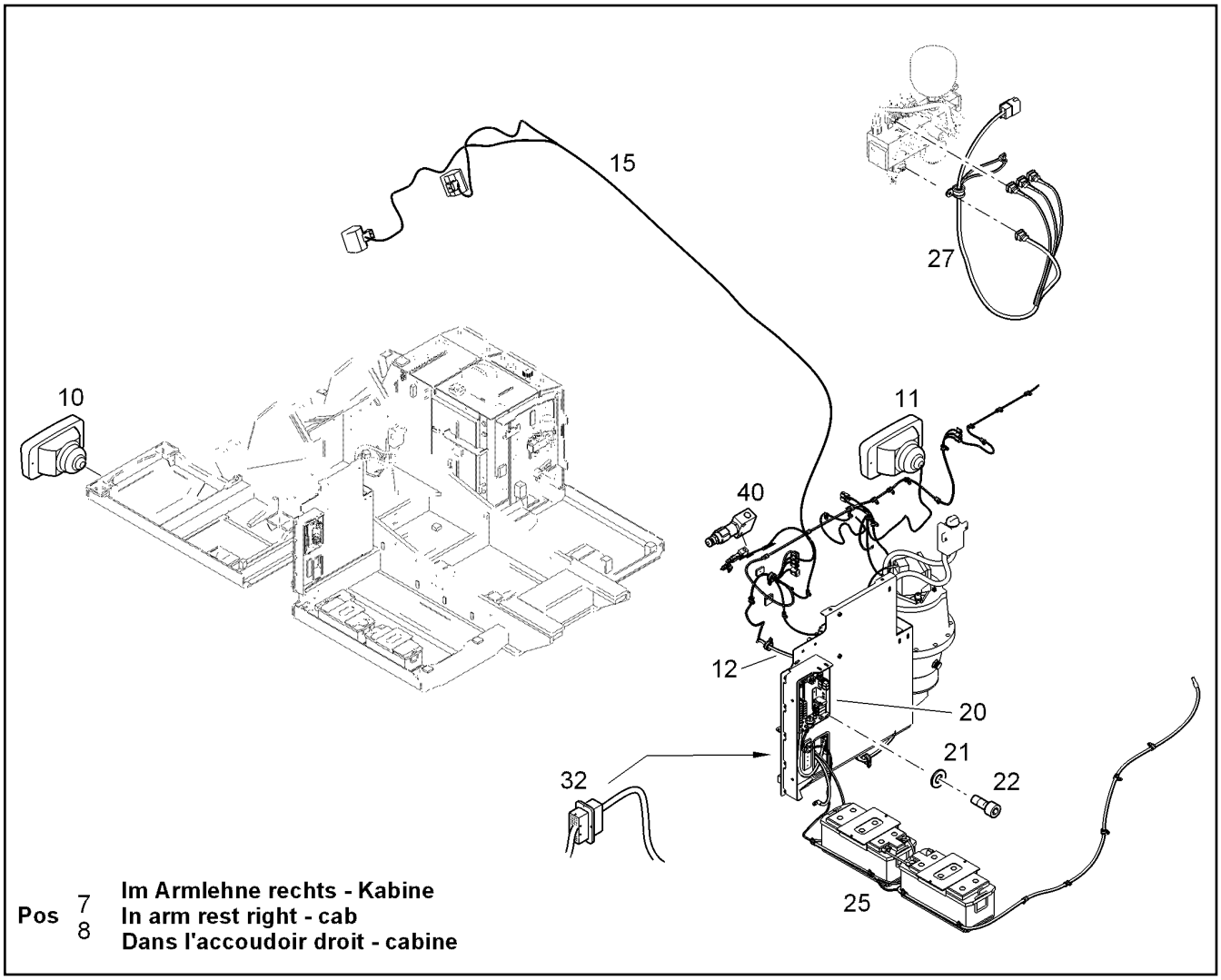

Pos.	Item	Quantity	Description	Designação	Serie	K
7	975857901	1	CODING PLUG	PLUGUE ELÉTRICO CODIFICAD		
8	9699174	1	CODING PLUG	PLUGUE ELÉTRICO CODIFICAD		
10	9941040	1	FLOODLIGHT INSTALLATION ⇨ ❑ 516	FAROL CPL - INSTALAÇÃO		
11	9941040	1	FLOODLIGHT INSTALLATION ⇨ ❑ 516	FAROL CPL - INSTALAÇÃO		
12	9948251	1	WIRING HARNESS ROTATING DECK	CHICOTE ELETRICO		
15	12859103	1	FLOODLIGHT INSTALLATION	FAROL CPL - INSTALAÇÃO		
20	9948254	1	ELECTRIC BOX CPL. [18975] ⇨ ❑ 518	CAIXA ELÉTRICA COMPLETA		
21	10289802	4	WASHER 6 300HV	ARRUELA		
22	10181392	4	SOCKET HEAD SCREW ISO 4762 M6X30 10	PARAFUSO CILÍNDRICO		
25	10358665	1	BATTERY INSTALLATION ⇨ ❑ 521	BATERIA - INSTALACAO		
27	10051599	1	WIRING HARNESS HYDRAULIC TANK	CHICOTE ELETRICO		
32	10049073	1	CONSOLE	CONSOLE		
40	10280390	1	PRESSURE TRANSMITTER 400bar ⇨ ❑ 523	TRANSDUTOR DE PRESSÃO		

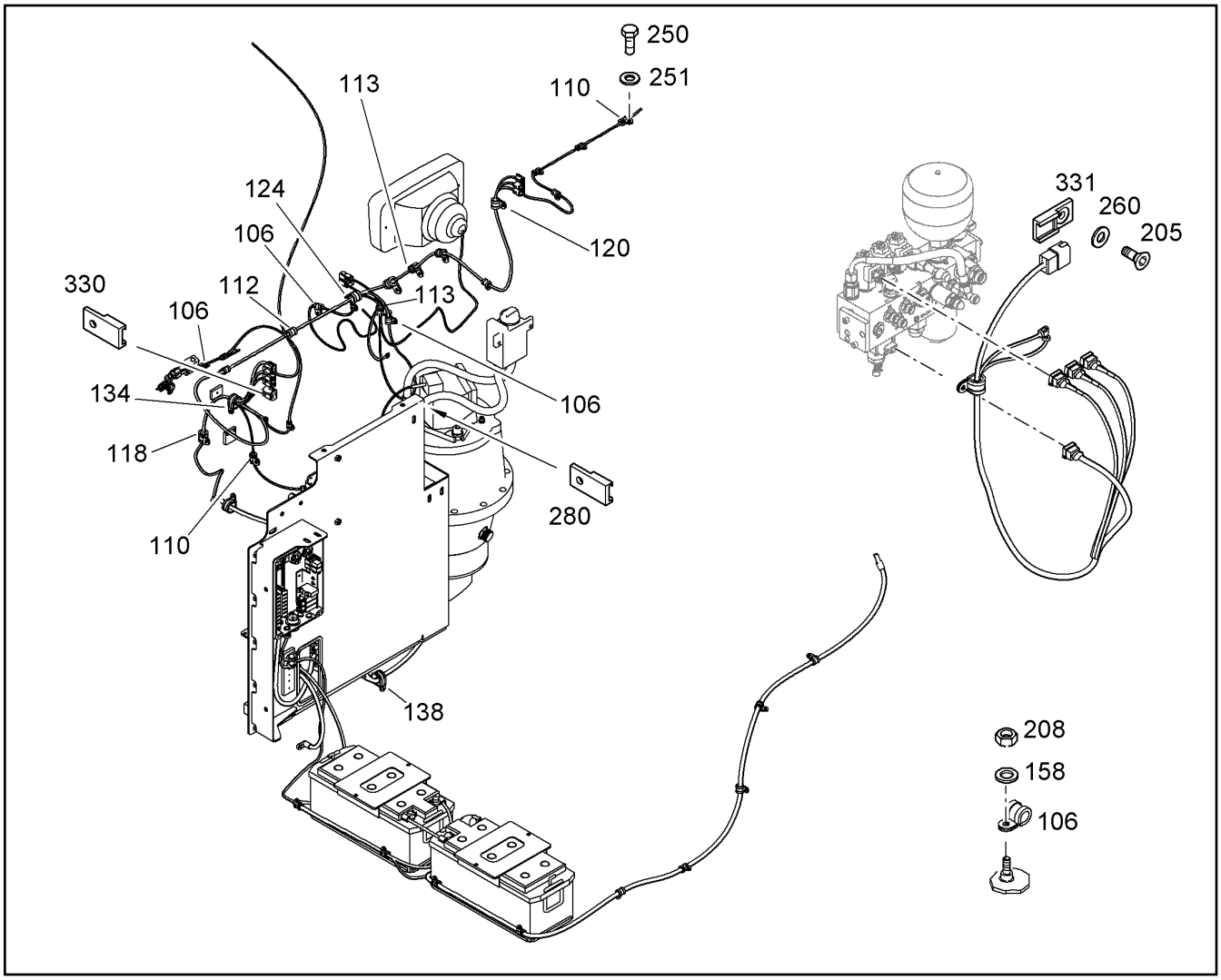

Pos.	Item	Quantity	Description	Designação	Serie	K
106	7381565	11	CLAMP DIN 3016-1 D1 6X20 W1-2-CR	BRAÇADEIRA		
110	7363004	8	CLAMP DIN 3016-1 D1 10X20 W1-2-CR	BRAÇADEIRA		
112	7002957	1	CLAMP DIN 3016-1 D1 12X20 W1-2-CR	BRAÇADEIRA		
113	7362734	6	CLAMP DIN 3016-1 D1 13X20 W1-2-CR	BRAÇADEIRA		
118	7362602	1	CLAMP DIN 3016-1 D1 18X20 W1-2-CR	BRAÇADEIRA		
120	7362665	1	CLAMP DIN 3016-1 D1 20X20 W1-2-CR	BRAÇADEIRA		
124	7362547	3	CLAMP DIN 3016-1 D1 24X20 W1-2-CR	BRAÇADEIRA		
134	7366260	6	CLAMP DIN 3016-1 D1 34X20 W1-2-CR	BRAÇADEIRA		
138	7362551	1	CLAMP DIN 3016-1 D1 38X20 W1-2-CR	BRAÇADEIRA		
158	10289803	36	WASHER 8 300HV	ARRUELA		
205	12216231	15	COUNTERSUNK SCREW ISO 7047 M5X10 4	PARAFUSO ESCAREADO		
208	10299669	36	HEX NUT M8	PORCA SEXTAVADA		
250	10663450	3	SOCKET HEAD SCREW ISO 4762 M8X16 10	PARAFUSO CILÍNDRICO		
251	10289803	3	WASHER 8 300HV	ARRUELA		
260	423910501	15	LOCK WASHER VS 5	ARRUELA DE PRESSÃO		
280	10041876	1	HOLDER	SUPORTE		
330	6905671	1	HOLDER	SUPORTE		
331	6203497	14	FASTENER F.DT STECKER	ELEMENTO DE FIXACAO		

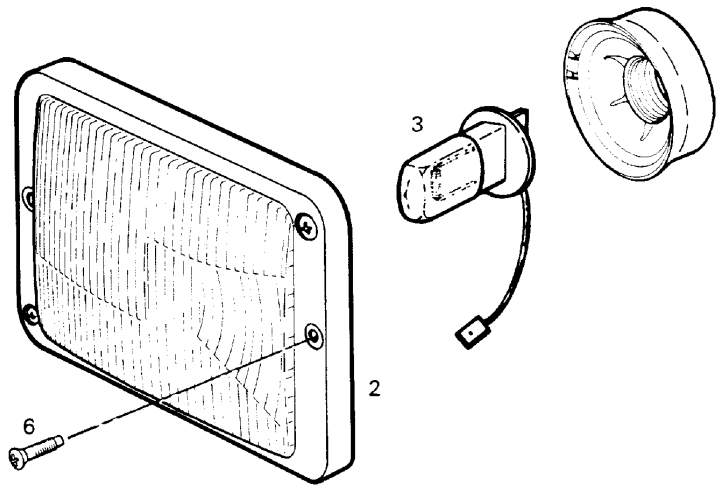

Pos.	Item	Quantity	Description	Designação	Serie	K
2	10007848	1	WORK LIGHT	FAROL DE TRABALHO		
3	6200685	2	LIGHT BULB H3 24V 70W/PK22S	LÂMPADA INCANDESCENTE		
6	12226086	2	SELF-TAPPING SCREW AEHNL.DIN 7516 AE	PARAFUSO AUTO-ATARRAXANT		

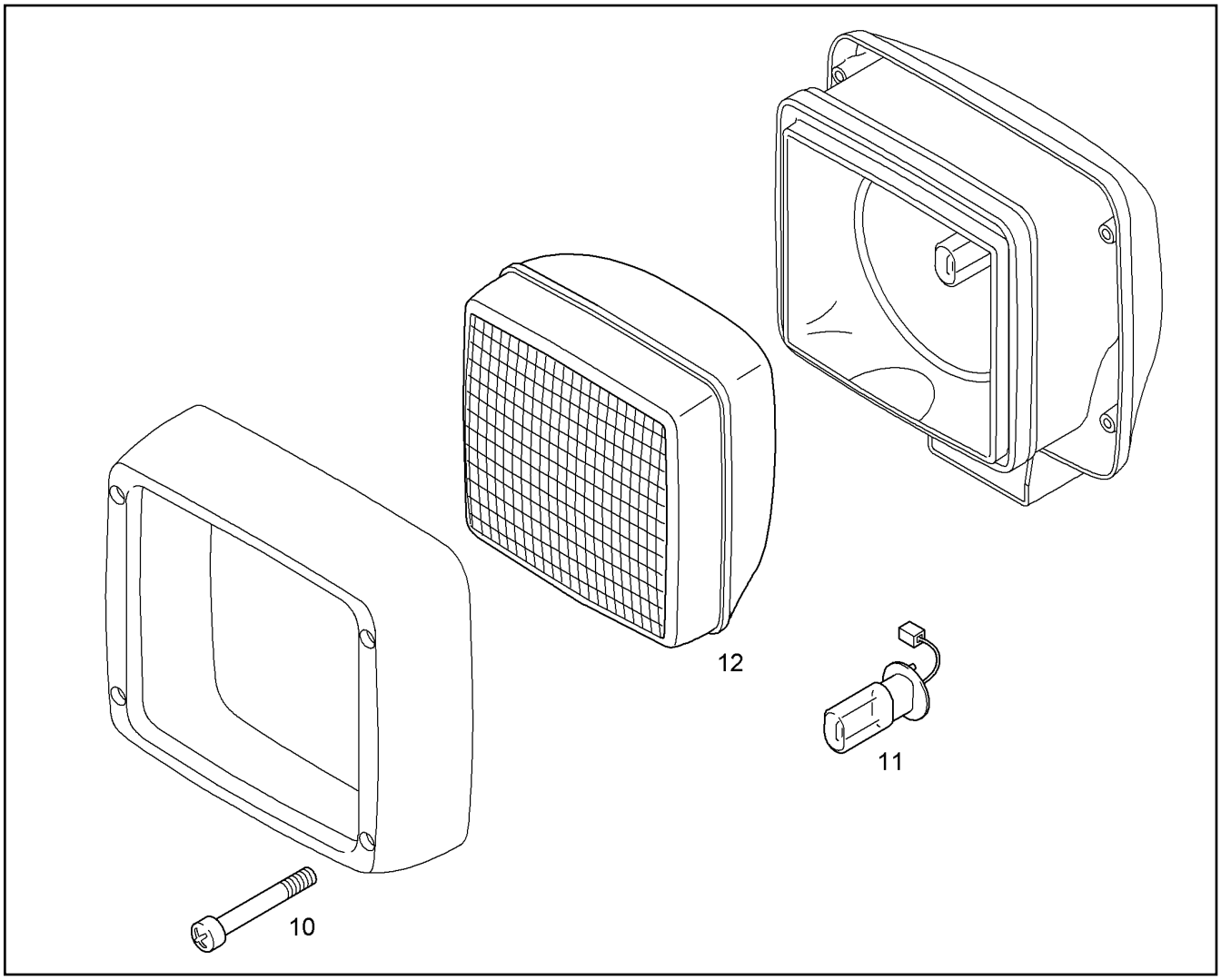

Pos.	Item	Quantity	Description	Designação	Serie	K
10	4002838	4	SHEET-METAL SCREW DIN 7981 ST3,9X50	PARAFUSO		
11	6200685	1	LIGHT BULB H3 24V 70W/PK22S	LÂMPADA INCANDESCENTE		
12	10286644	1	HEAD LIGHT INSERT	FAROL		

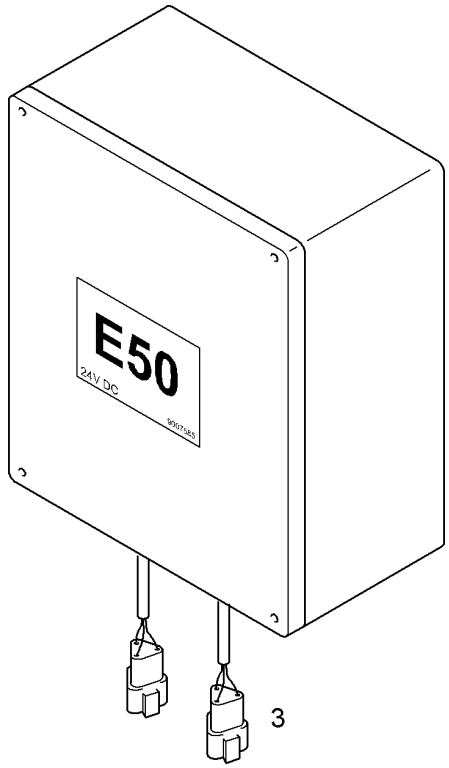

Im Batteriekasten
In battery box
Dans le caisson batteries

Pos.	Item	Quantity	Description	Designação	Serie	K
2	9947707	1	ELECTRIC BOX	CAIXA ELETRICA		
3		1	ELECTRICAL SYSTEM E50 ⇨ ❑ 519	INSTALAÇÃO ELÉTRICA		

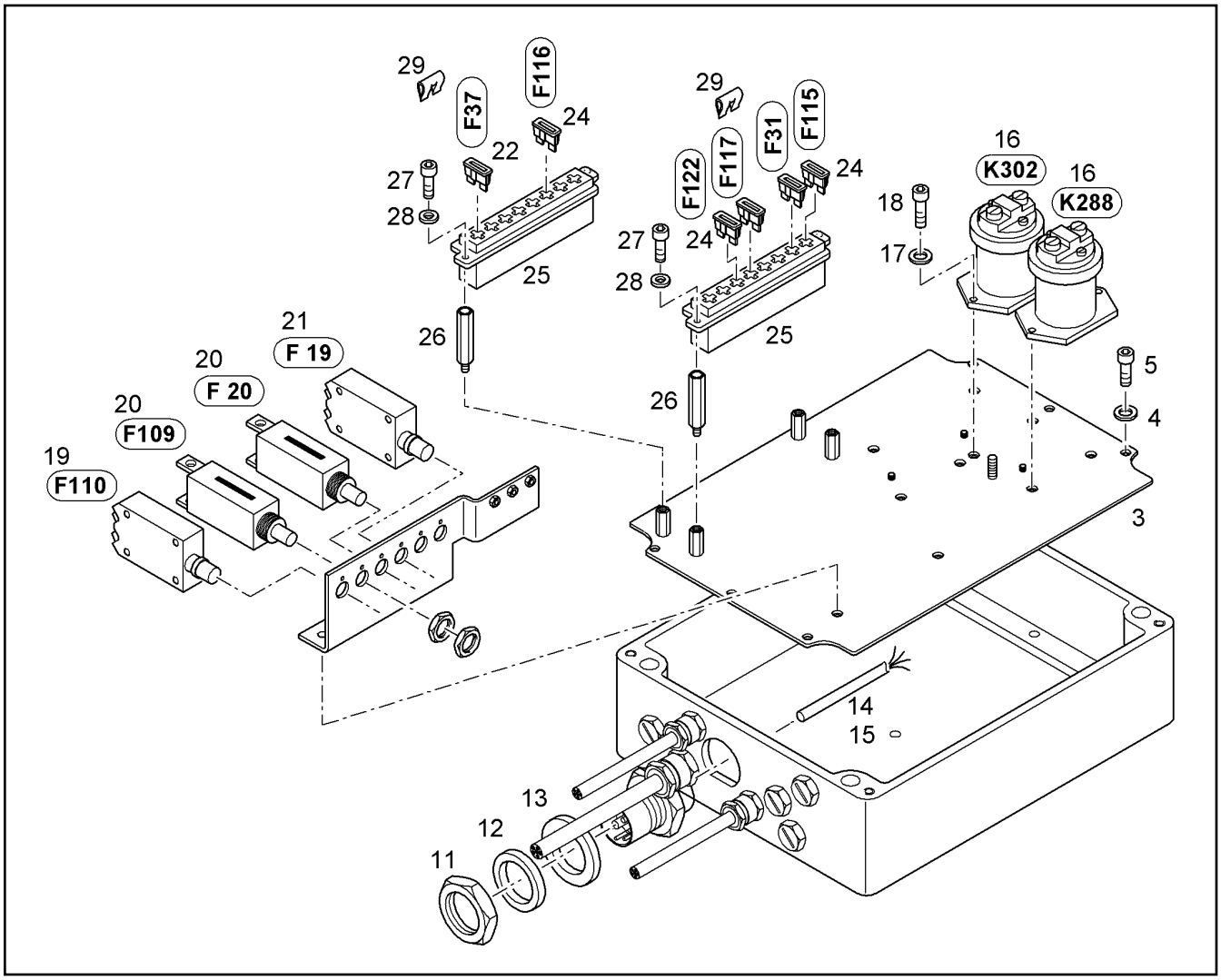

Pos.	Item	Quantity	Description	Designação	Serie	K
3	9947713	1	SUBPLATE	PLACA DE MONTAGEM		
4	10289802	6	WASHER 6 300HV	ARRUELA		
5	4902252	6	SOCKET HEAD SCREW ISO 4762 M6X12 10.	PARAFUSO CILÍNDRICO		
10	6204241	1	PIN HOUSING HD 9-POL 100A 1500V	CARCAÇA DE CONECTOR ELÉ		
11	6905277	1	COUNTER NUT UNEF1 11/16X18	CONTRA-PORCA		
12	7369776	1	WASHER	ARRUELA		
13	7026772	1	SEAL	VEDAÇÃO		
14	9929151	1	WIRING HARNESS ELECTRIC BOX E50	CHICOTE ELETRICO		
15	9949750	1	WIRING HARNESS ELECTRIC BOX E50	CHICOTE ELETRICO		
16	10009888	2	PERFORMANCE RELAY	RELE DE POTENCIA		
17	11140403	4	WASHER 5 200HV	ARRUELA		
18	11647553	4	SOCKET HEAD SCREW ISO 4762 M5X16 8.8	PARAFUSO CILÍNDRICO		
19	6202944	1	CABLE PROTECTION SWITCH	DISJUNTOR ELÉTRICO		
20	10012172	2	POWER SAFETY SWITCH	DISJUNTOR		
21	6203687	1	CABLE PROTECTION SWITCH	DISJUNTOR ELÉTRICO		
22	6001472	1	FUSE CARTRIDGE 20A 32V C	FUSÍVEL TIPO CARTUCHO		
24	4901513	5	FUSE CARTRIDGE C 7,5A 32/56 FKS	FUSÍVEL TIPO CARTUCHO		
25	6000783	2	BLADE-TYPE ELECT. FUSE SOCKET	CAIXA DE FUSIVEIS CHATOS		
26	7016412	4	HEX SPACER PIN M4X9X40/MX4X8	PINO DISTANCIADOR HEXAGO		
27	4600337	4	SOCKET HEAD SCREW ISO 4762 M4X16 8.8	PARAFUSO CILÍNDRICO		
28	4001645	4	WASHER 4 200HV	ARRUELA		
29	6001474	10	GANTRY 2 FACH	PONTE (JUMPER)		

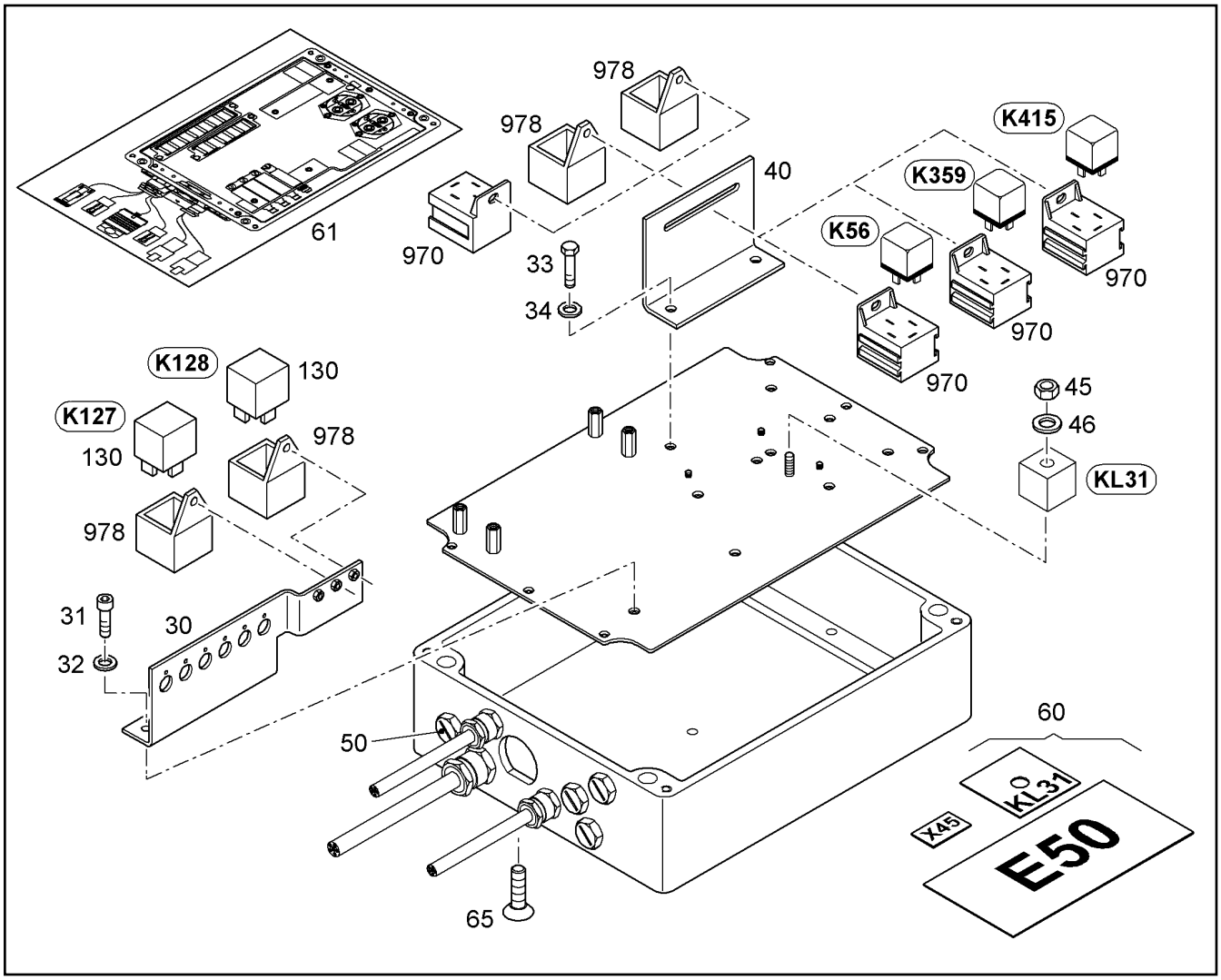

Pos.	Item	Quantity	Description	Designação	Serie	K
30	10048398	1	ELECTRIC BOX MOUNTING PARTS	PEÇAS MONTAGEM QUADRO EL		
31	4001596	4	SOCKET HEAD SCREW ISO 4762 M6X16 10.	PARAFUSO CILÍNDRICO		
32	10289802	4	WASHER 6 300HV	ARRUELA		
33	4000417	2	HEX SCREW ISO 4017 M5X12 8.8 A2C	PARAFUSO SEXTAVADO		
34	4000466	2	HEX NUT M5	PORCA SEXTAVADA		
40	9948149	1	ELECTRIC BOX MOUNTING PARTS	PEÇAS MONTAGEM QUADRO EL		
45	4901651	1	HEX NUT M6XLH	PORCA SEXTAVADA		
46	10289802	1	WASHER 6 300HV	ARRUELA		
50	602514201	4	STOPPER PLUG	PARAFUSO DE FECHAMENTO		
60	9007585	1	LABEL E50 24V DC 120mmX60mm	ETIQUETA		
61	9928891	1	ADHESIVE FOIL	ADESIVO		
65	4980801	1	COUNTERSUNK SCREW DIN 7991 M5X12 1	PARAFUSO ESCAREADO		
130	6001921	2	RELAY	RELE		
970	6002816	4	RELAY HEADER	BASE DE RELE		
978	6001681	4	CONNECTOR BASE	BASE DE SOQUETE		

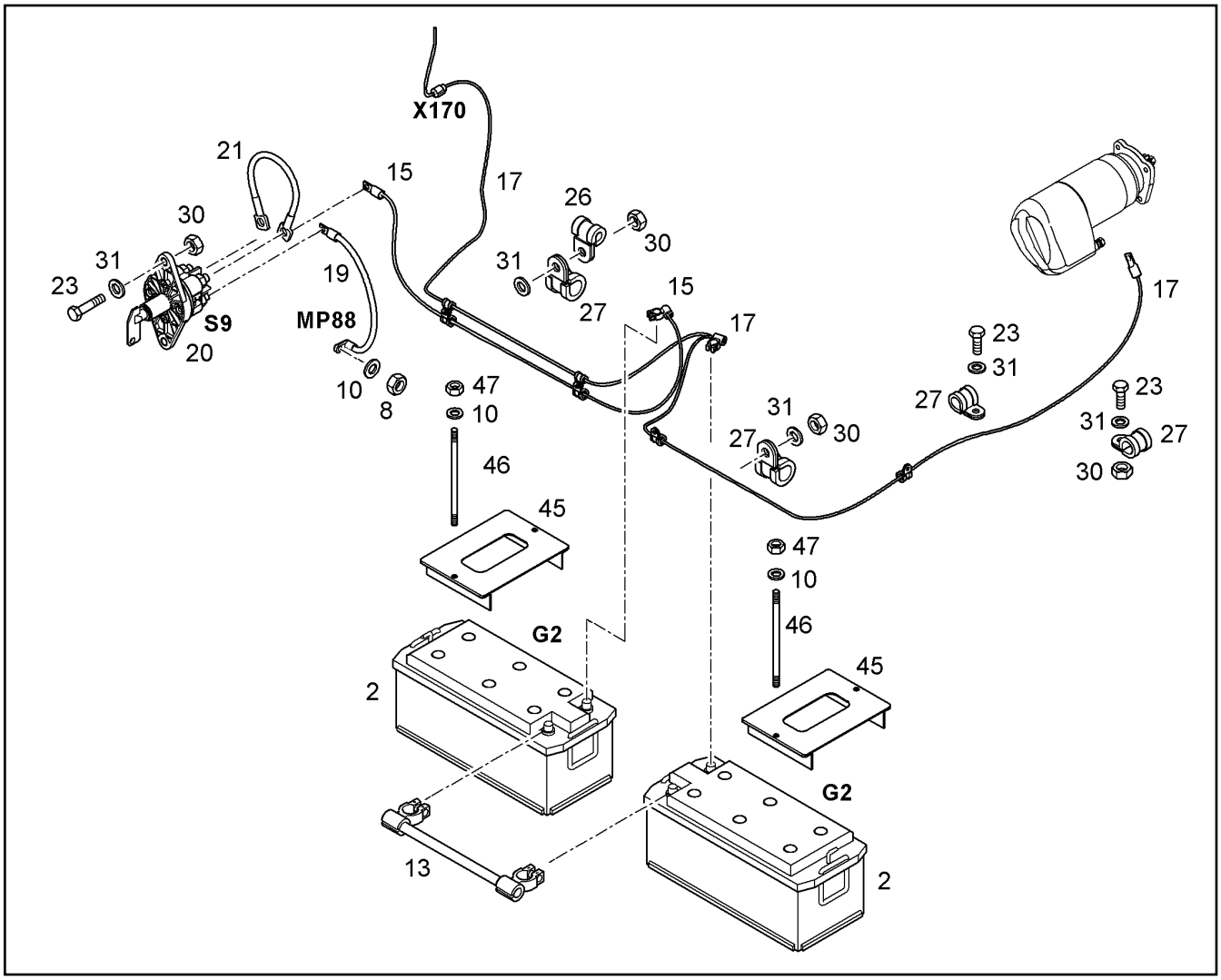

Pos.	Item	Quantity	Description	Designação	Serie	K
2	613200116	2	BATTERY	BATERIA		1
8	11002807	1	HEX NUT M10	PORCA SEXTAVADA		
10	10289795	5	WASHER 10 300HV	ARRUELA		
13	9989395	1	BATTERY CONNECTION CABLE	CABO DE LIGACAO DA BATERIA		
15	10064386	1	WIRING HARN.BATTERY SHUT-OFF	CABO ELETRICO DA BATERIA		
17	9893089	1	WIRING HARN.BATTERY-STARTER	CHICOTE ELETRICO		
19	10064398	1	WIRING HARNESS SHUT-OFF/MASS	CHICOTE ELETRICO CHAVE-TE		
20	10012119	1	BATTERY MAIN SWITCH ⇨ ❑ 522	INTERRUPTOR PRINCIPAL BATE		
21	9686191	1	WIRING HARNESS S9/S9	CHICOTE ELETRICO S9/S9		
23	11642261	4	HEX SCREW ISO 4017 M8X25 8.8 480H	PARAFUSO SEXTAVADO		
26	7363004	2	CLAMP DIN 3016-1 D1 10X20 W1-2-CR	BRAÇADEIRA		
27	7362603	11	CLAMP DIN 3016-1 D1 15X20 W1-2-CR	BRAÇADEIRA		
30	11693875	13	HEX NUT M8	PORCA SEXTAVADA		
31	10289803	13	WASHER 8 300HV	ARRUELA		
45	9560855	2	COUNTER BRACKET	SUPORTE DE FIXAÇÃO		
46	9006346	4	THREADED ROD M10X245	HASTE ROSCADA		
47	11140466	4	HEX NUT M10	PORCA SEXTAVADA		

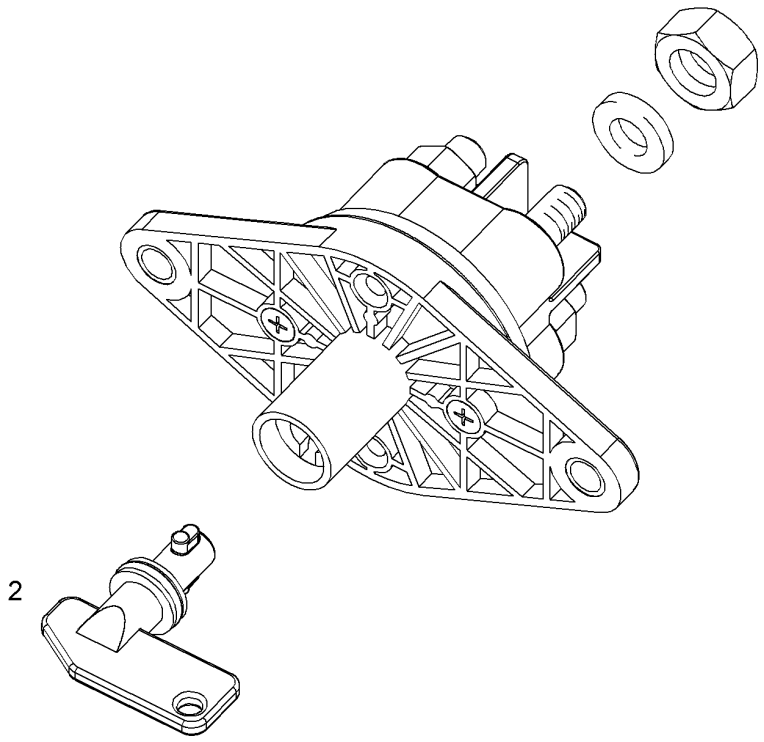

Pos.	Item	Quantity	Description	Designação	Serie	K
2	10024214	1	SWITCH LEVER	ALAVANCA DE MUDANCAS		

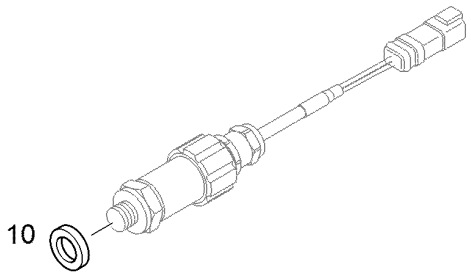

Pos.	Item	Quantity	Description	Designação	Serie	K
10	5602583	1	SEALING RING 14	ANEL DE VEDAÇÃO		

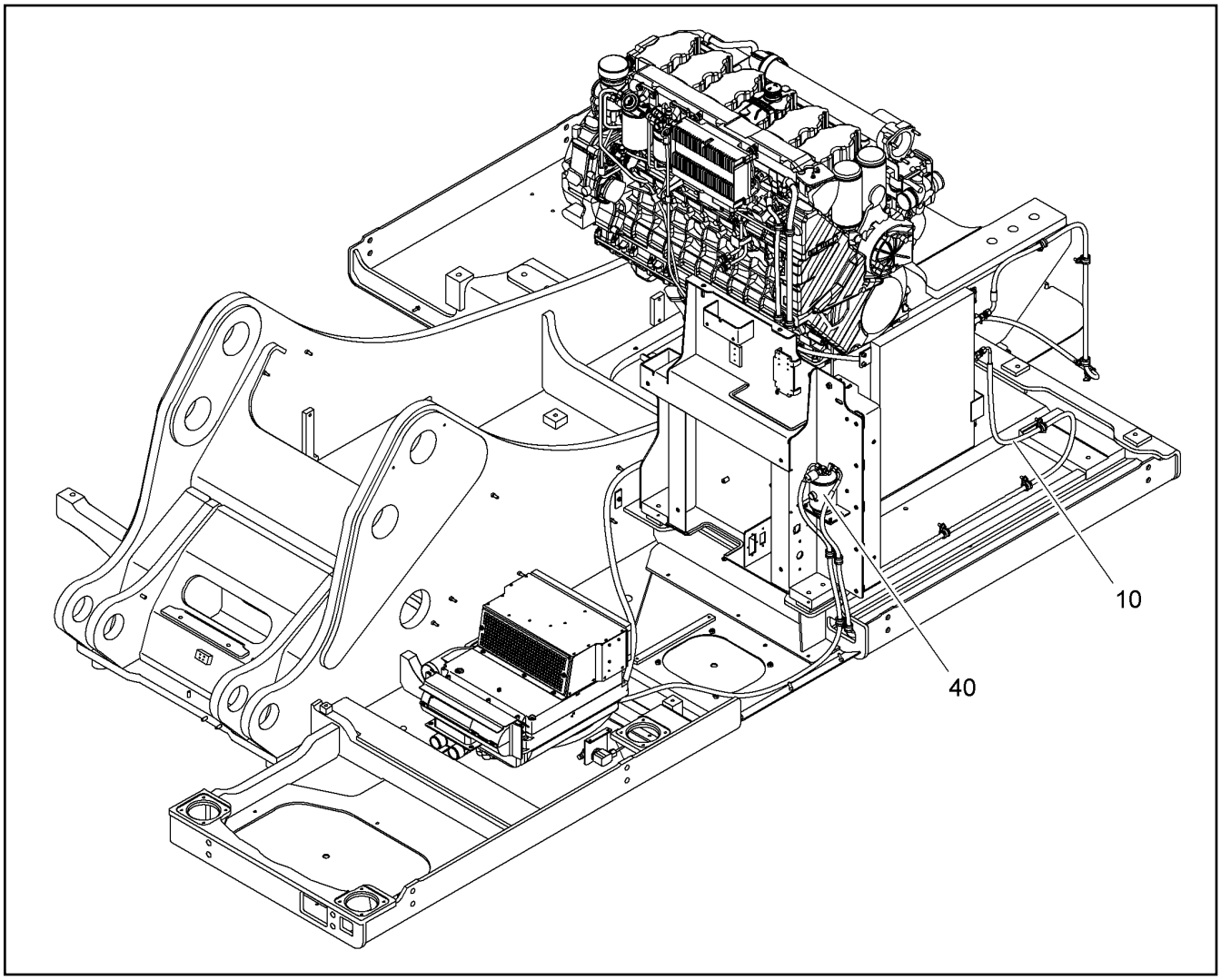

Pos.	Item	Quantity	Description	Designação	Serie	K
10		1	AIR CONDITION HOSES INSTALLAT. ⇨ ❑ 525	MAGUEIRAS DO AR-CONDICION		
40		1	DRIER INSTALLATION ⇨ ❑ 526	SECADOR - INSTALACAO		

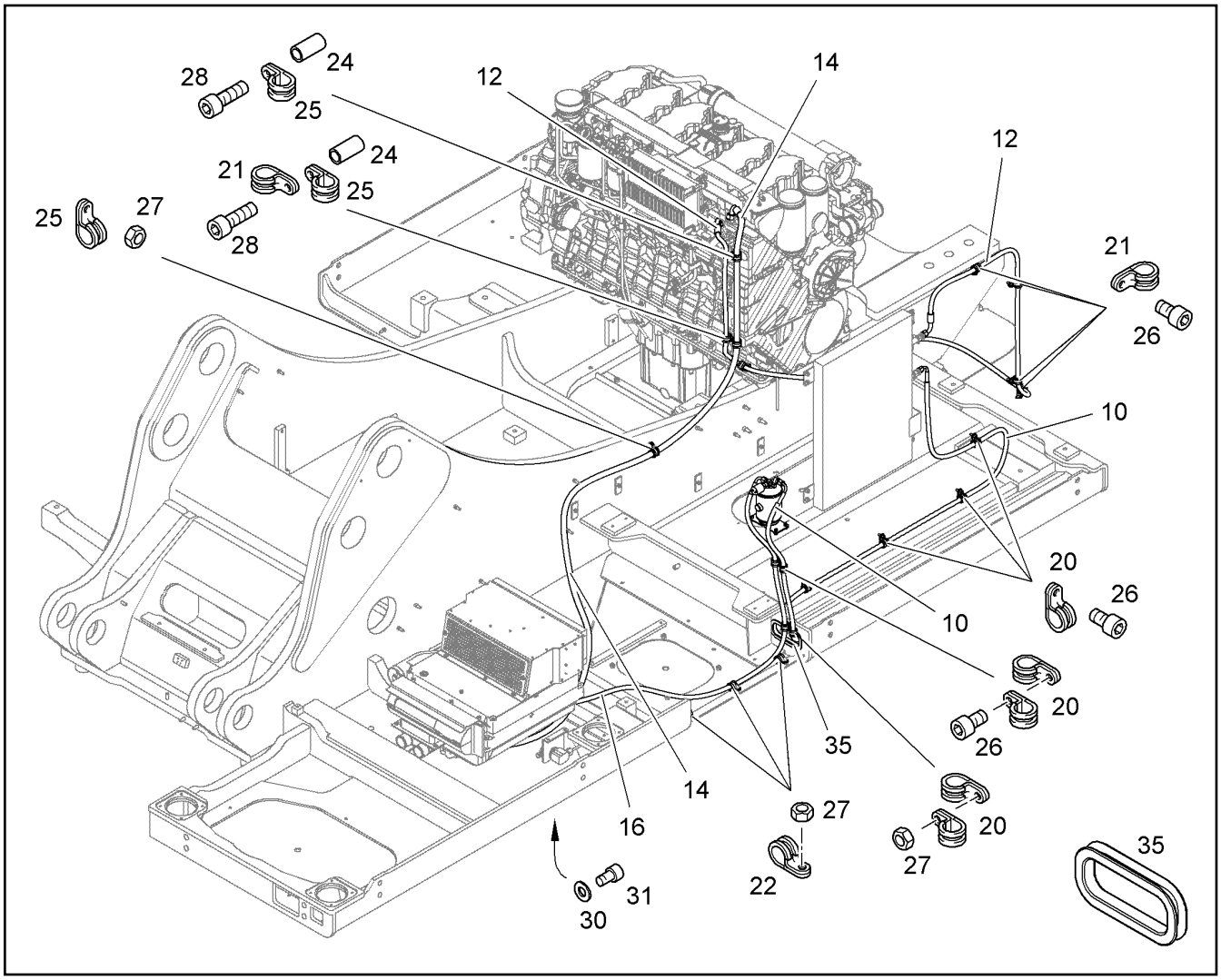

Pos.	Item	Quantity	Description	Designação	Serie	K
10	10286645	1	HOSE 8X3200	MANGUEIRA		1
10	10286645	1	-HOSE 8X3200	-MANGUEIRA		1
12	10286646	1	HOSE ⇨ ❑ 528	MANGUEIRA		1
14	10282709	1	HOSE	MANGUEIRA		1
16	10286643	1	HOSE	MANGUEIRA		1
20	7362603	8	CLAMP DIN 3016-1 D1 15X20 W1-2-CR	BRAÇADEIRA		
21	7362602	8	CLAMP DIN 3016-1 D1 18X20 W1-2-CR	BRAÇADEIRA		
22	7362547	3	CLAMP DIN 3016-1 D1 24X20 W1-2-CR	BRAÇADEIRA		
24	9989595	3	DISTANCE TUBE	TUBO DISTANCIADOR		
25	7008622	1	CLAMP DIN 3016-1 D1 25X20 W1-2-CR	BRAÇADEIRA		
26	10663523	10	SOCKET HEAD SCREW ISO 4762 M8X20 10	PARAFUSO CILÍNDRICO		
27	10299669	5	HEX NUT M8	PORCA SEXTAVADA		
28	12208099	3	SOCKET HEAD SCREW ISO 4762 M8X60 10	PARAFUSO CILÍNDRICO		
30	10289802	1	WASHER 6 300HV	ARRUELA		
31	10875586	1	SOCKET HEAD SCREW ISO 4762 M6X16 8.8	PARAFUSO CILÍNDRICO		
35	10009781	1m	SECTION	PERFIL DE PROTECAO DE CANT		

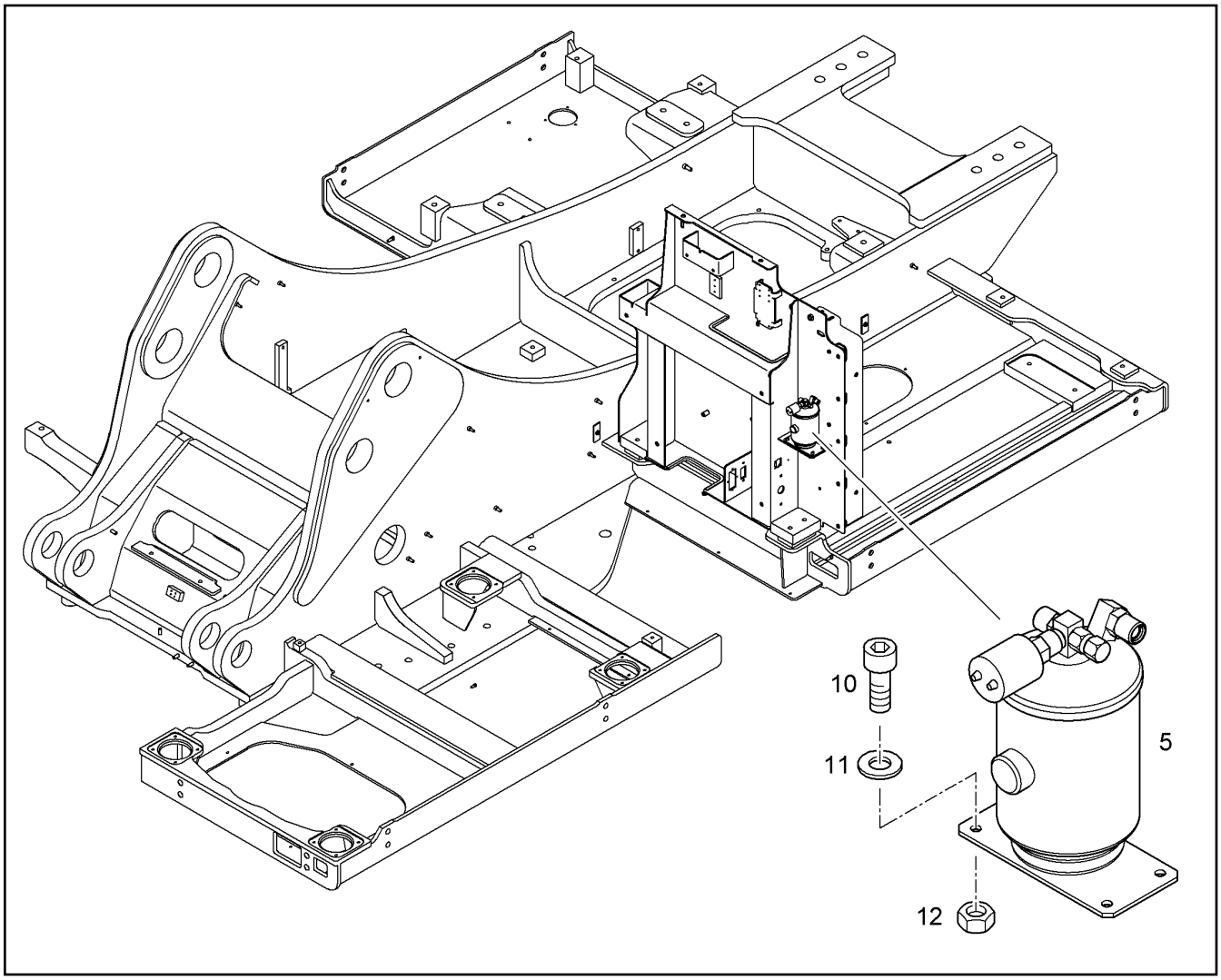

Pos.	Item	Quantity	Description	Designação	Serie	K
5		1	UNIT RECEIVER-DRYER [100068842-0021] ⇨ ❑ 527	SECADOR COLETOR		
10	4600048	4	SOCKET HEAD SCREW ISO 4762 M6X16 8.8	PARAFUSO CILÍNDRICO		
11	10289802	4	WASHER 6 300HV	ARRUELA		
12	4000379	4	HEX NUT M6	PORCA SEXTAVADA		

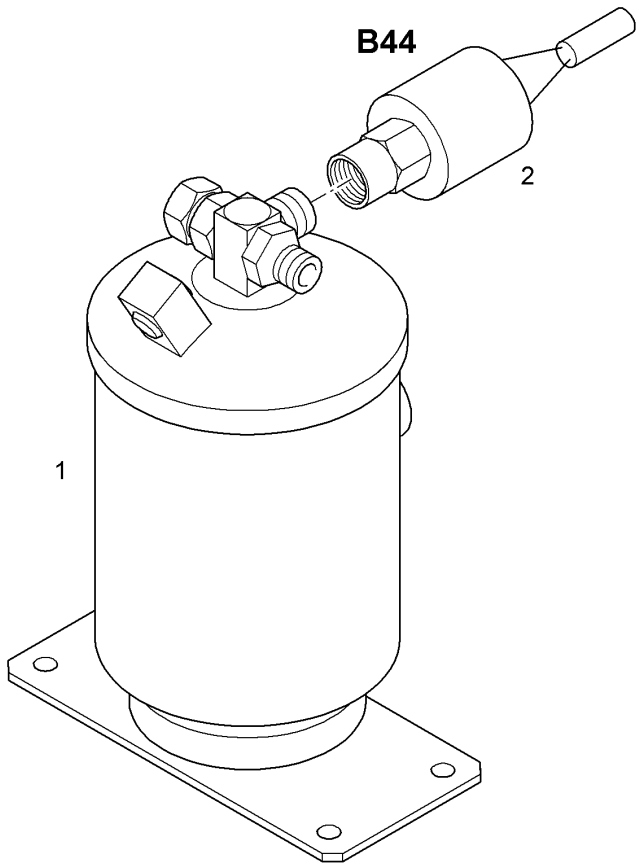

Pos.	Item	Quantity	Description	Designação	Serie	K
1	5611990	1	RECEIVER-DRIER	COLETOR-SECADOR		
2	10292659	1	PRESSURE SWITCH	PRESSOSTATO		

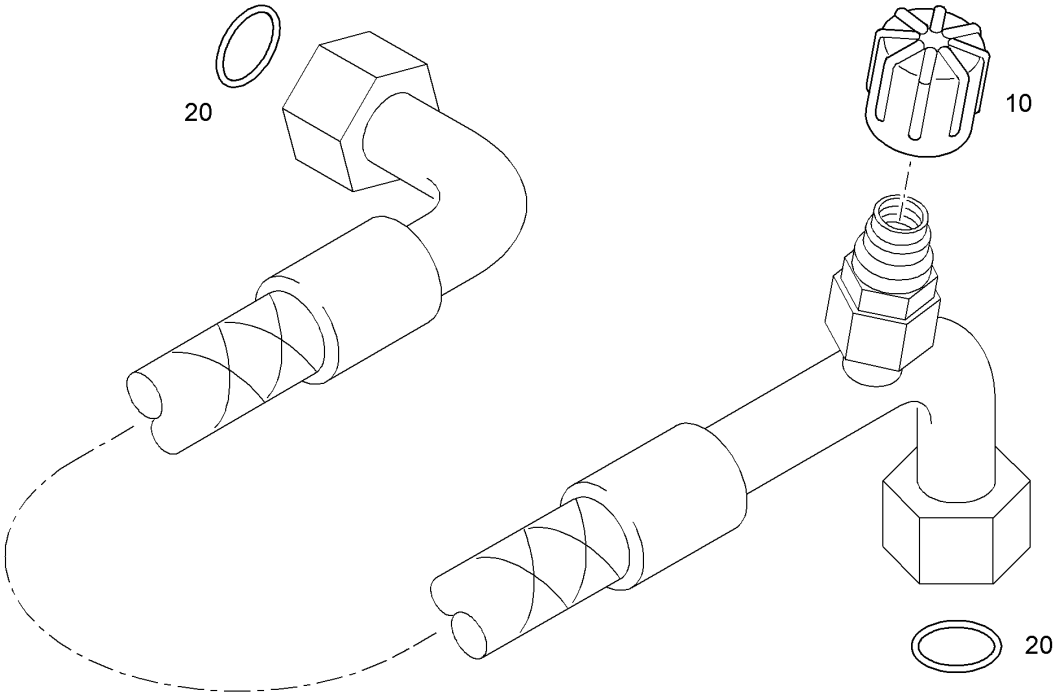

Pos.	Item	Quantity	Description	Designação	Serie	K
10	10015404	1	BLANKING PLUG	TAMPÃO		
20	5610999	2	O-RING 10,82X1,78	ANEL-O		

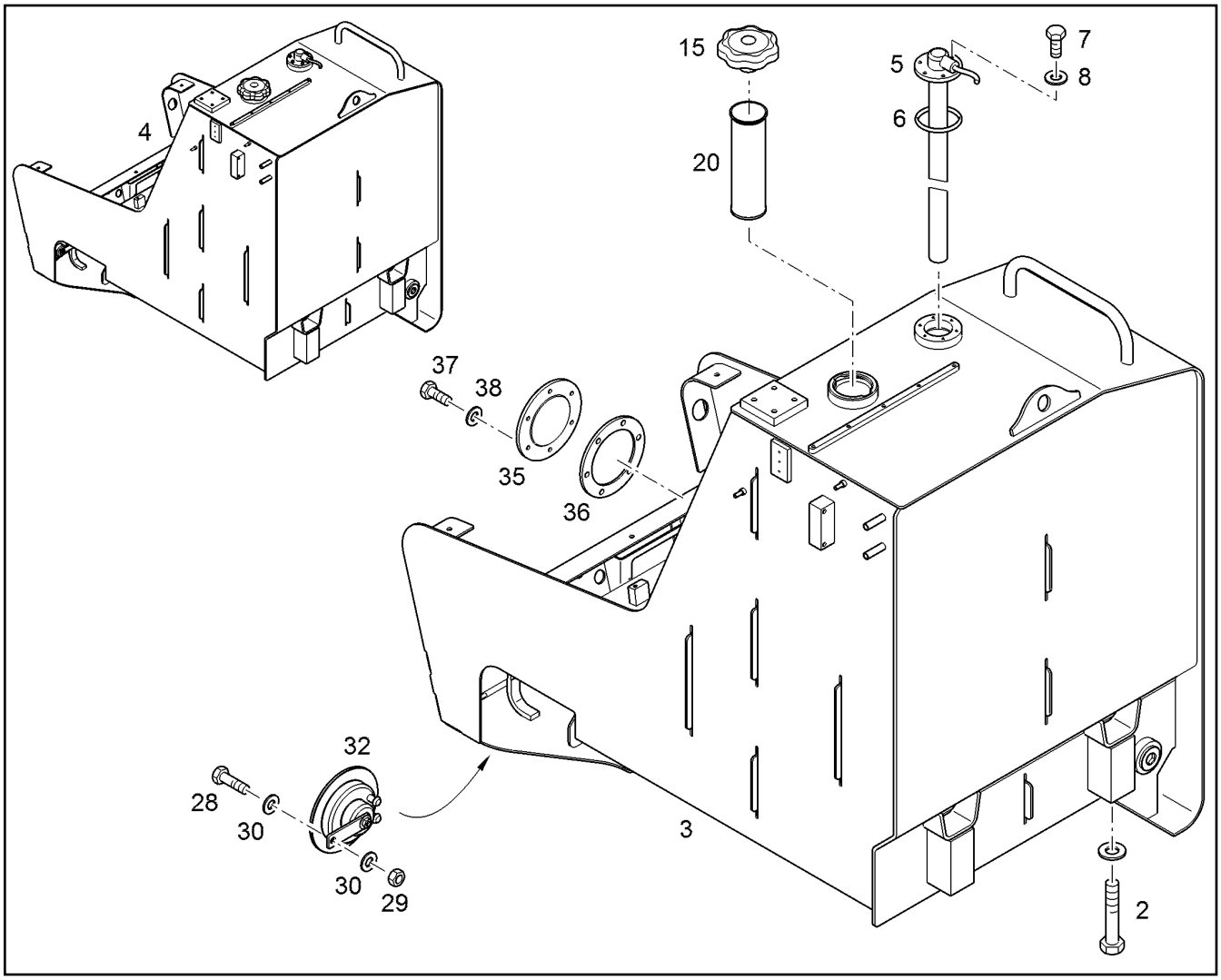

Pos.	Item	Quantity	Description	Designação	Serie	K
2	10061810	1	FIXING PARTS FUEL TANK ⇨ ❑ 533	FIXACAO TANQUE DE COMBUS		
3		1	FUEL TANK [2075X06] ⇨ ❑ 534	TANQUE DE COMBUSTÍVEL	17431-	
4	10067707	1	FUEL TANK FOR EXCHANGE	TANQUE COMBUSTIVEL REPOSI	17431-	
5	6204564	1	FUEL LEVEL INDICATOR	SENSOR DO NÍVEL DO COMBU		
6	7001386	1	RUBBER GASKET	VEDAÇÃO DE BORRACHA		
7	11140465	6	SOCKET HEAD SCREW ISO 4762 M6X20 8.8	PARAFUSO CILÍNDRICO		
8	10289802	6	WASHER 6 300HV	ARRUELA		
15	12230797	1	LOCKABLE TANK CAP d=80	FECHO DO TANQUE		
20	10296919	1	FILLER SIEVE	PENEIRA		
28	11002716	1	HEX SCREW ISO 4017 M10X35 10.9 FLZN	PARAFUSO SEXTAVADO		
29	11002807	1	HEX NUT M10	PORCA SEXTAVADA		
30	10289795	2	WASHER 10 300HV	ARRUELA		
32	6204593	1	SUPERTONE HORN	BUZINA		
35	9767890	1	COVER	TAMPA		
36	7380073	1	O-RING ISO 3601-1 129,77X3,53	ANEL-O		
37	11651767	6	HEX SCREW ISO 4017 M8X20 8.8 480H	PARAFUSO SEXTAVADO		
38	10289803	6	WASHER 8 300HV	ARRUELA		

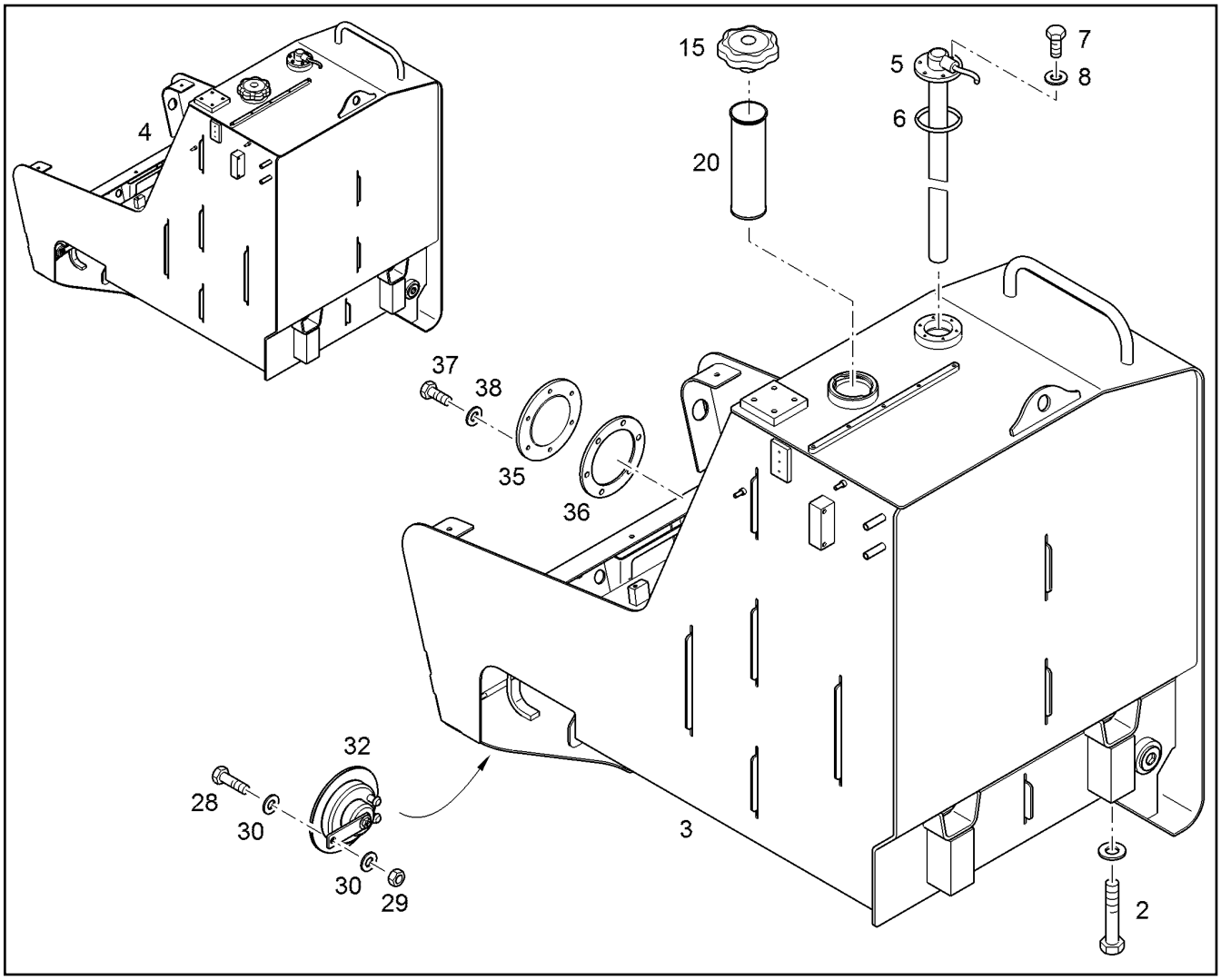

Pos.	Item	Quantity	Description	Designação	Serie	K
2		1	FIXING PARTS FUEL TANK ⇨ ❑ 533	FIXACAO TANQUE DE COMBUS		
3		1	FUEL TANK ⇨ ❑ 535	TANQUE DE COMBUSTÍVEL		
4	10498728	1	FUEL TANK FOR EXCHANGE	TANQUE COMBUSTIVEL REPOSI	31493-	
5	6204564	1	FUEL LEVEL INDICATOR	SENSOR DO NÍVEL DO COMBU		
6	7001386	1	RUBBER GASKET	VEDAÇÃO DE BORRACHA		
7	4042002	6	SOCKET HEAD SCREW ISO 4762 M6X20 8.8	PARAFUSO CILÍNDRICO		
8	10289802	6	WASHER 6 300HV	ARRUELA		
15	7414913	1	LOCKABLE TANK CAP d=80 ⇨ ❑ 391	FECHO DO TANQUE		
20	10296919	1	FILLER SIEVE	PENEIRA		
28	4001246	1	HEX SCREW ISO 4017 M10X35 10.9 A3C	PARAFUSO SEXTAVADO		
29	4000383	1	HEX NUT M10	PORCA SEXTAVADA		
30	10289795	2	WASHER 10 300HV	ARRUELA		
32	6204593	1	SUPERTONE HORN	BUZINA		
35	9767890	1	COVER	TAMPA		
36	7380073	1	O-RING ISO 3601-1 129,77X3,53	ANEL-O		
37	4001606	6	HEX SCREW ISO 4017 M8X16 10.9 A2C	PARAFUSO SEXTAVADO		
38	10289803	6	WASHER 8 300HV	ARRUELA		

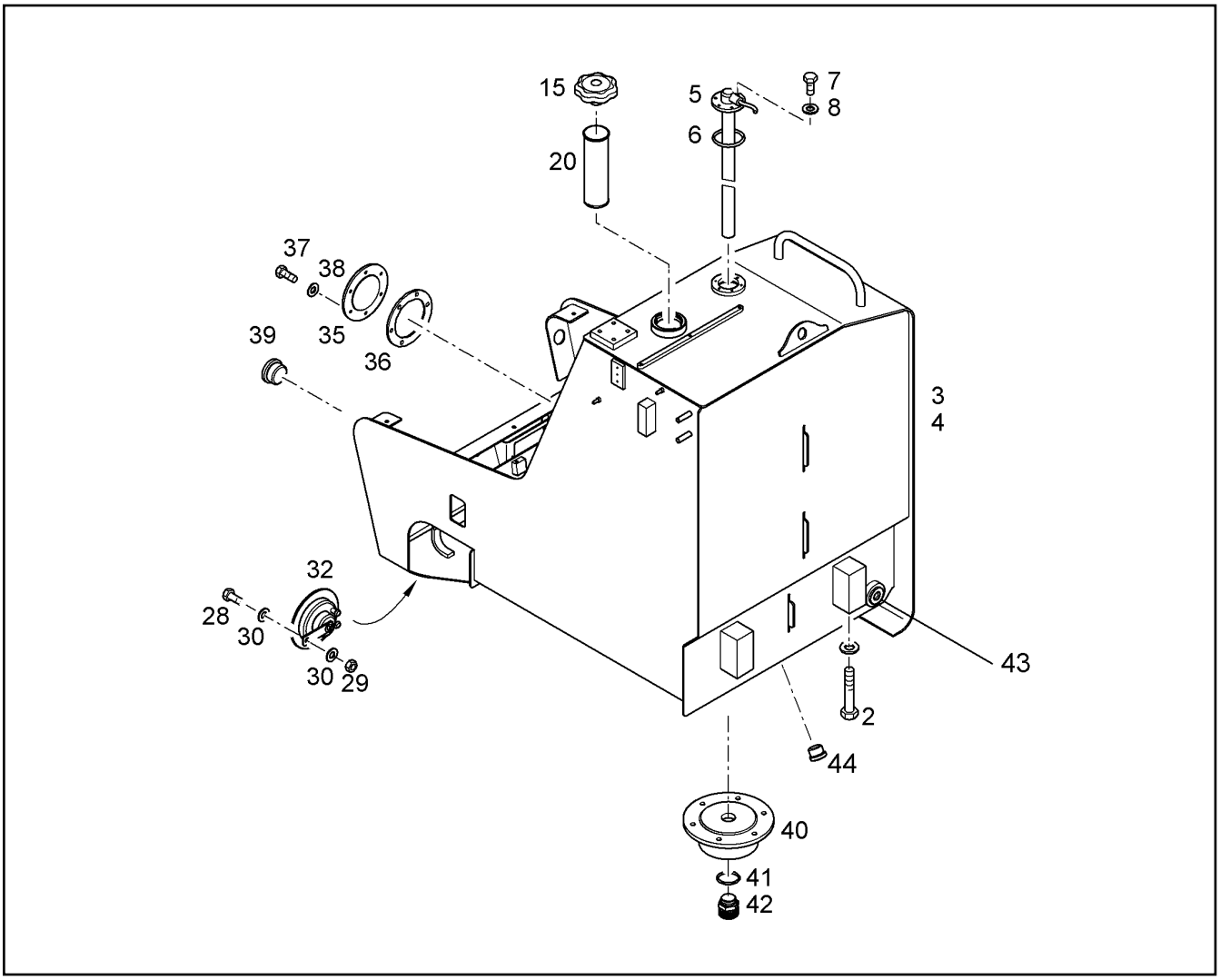

Pos.	Item	Quantity	Description	Designação	Serie	K
2	10061810	1	FIXING PARTS FUEL TANK ⇨ ❑ 533	FIXACAO TANQUE DE COMBUS		
3	11102620	1	FUEL TANK	TANQUE DE COMBUSTÍVEL		
4	11102602	1	FUEL TANK FOR EXCHANGE	TANQUE COMBUSTIVEL REPOSI		
5	6204564	1	FUEL LEVEL INDICATOR	SENSOR DO NÍVEL DO COMBU		
6	7001386	1	RUBBER GASKET	VEDAÇÃO DE BORRACHA		
7	4042002	6	SOCKET HEAD SCREW ISO 4762 M6X20 8.8	PARAFUSO CILÍNDRICO		
8	10289802	6	WASHER 6 300HV	ARRUELA		
15	7414913	1	LOCKABLE TANK CAP d=80 ⇨ ❑ 391	FECHO DO TANQUE		
20	10296919	1	FILLER SIEVE	PENEIRA		
28	4001246	1	HEX SCREW ISO 4017 M10X35 10.9 A3C	PARAFUSO SEXTAVADO		
29	4000383	1	HEX NUT M10	PORCA SEXTAVADA		
30	10289795	2	WASHER 10 300HV	ARRUELA		
32	6204593	1	SUPERTONE HORN	BUZINA		
35	9767890	1	COVER	TAMPA		
36	7380073	2	O-RING ISO 3601-1 129,77X3,53	ANEL-O		
37	4001606	12	HEX SCREW ISO 4017 M8X16 10.9 A2C	PARAFUSO SEXTAVADO	-99998	
37	11651767	12	HEX SCREW ISO 4017 M8X20 8.8 480H	PARAFUSO SEXTAVADO	99999-	
38	10289803	12	WASHER 8 300HV	ARRUELA		
39	7363717	1	SCREW PLUG G1A	PARAFUSO DE FECHAMENTO		
40	10067706	1	COVER	TAMPA		
41	7101021	1	SEALING RING DIN 7603 A 30X36X2	ANEL DE VEDAÇÃO		
42	5004624	1	OIL DRAIN PLUG M 30 1,5 ⇨ ❑ 577	PARAFUSO DE DRENAGEM DE Ó		
43	7363177	1	SCREW PLUG M48X2 ED	PARAFUSO DE FECHAMENTO		

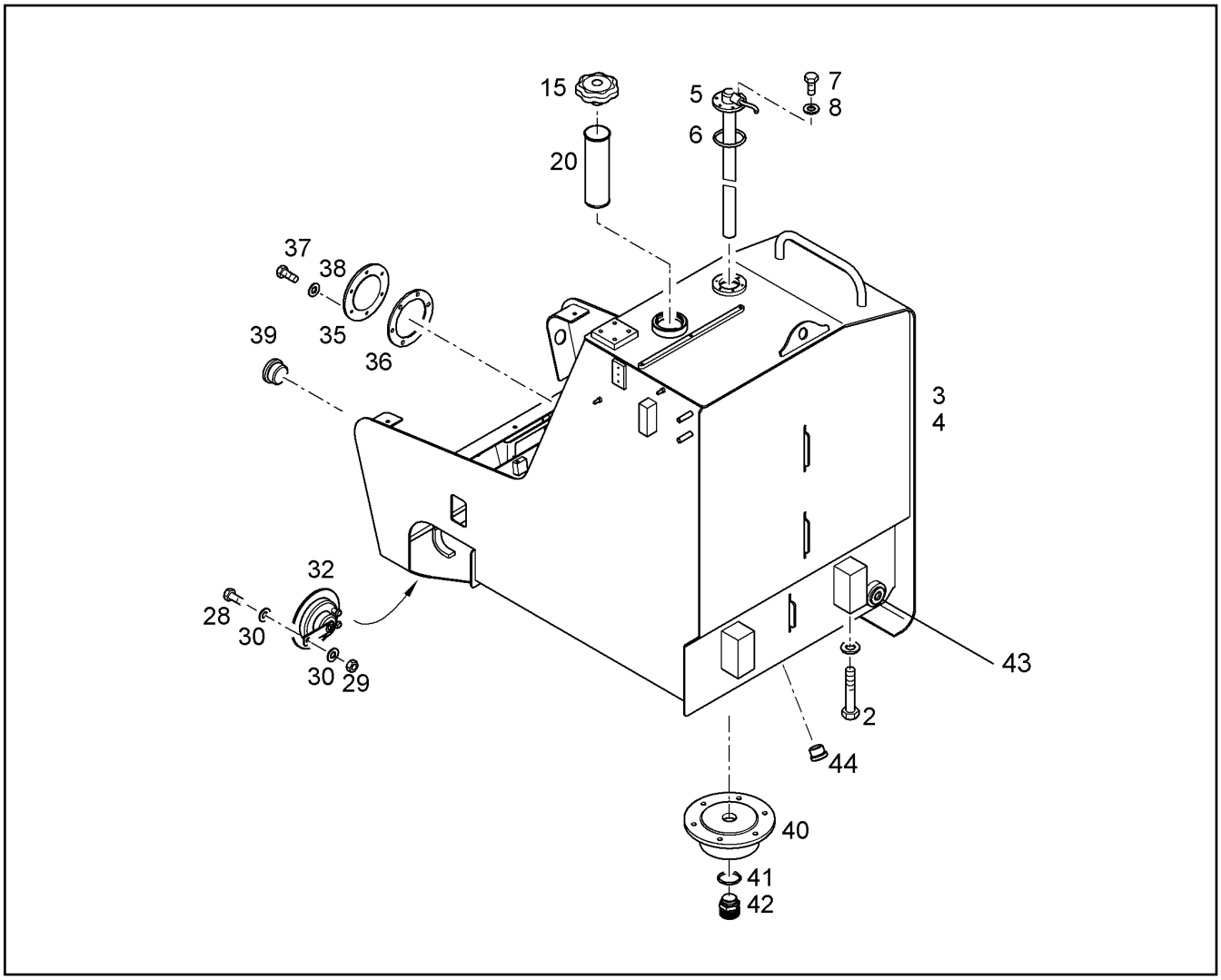

Pos.	Item	Quantity	Description	Designação	Serie	K
44	10137075	1	SCREW PLUG VSTI M22X1,5	PARAFUSO DE FECHAMENTO		

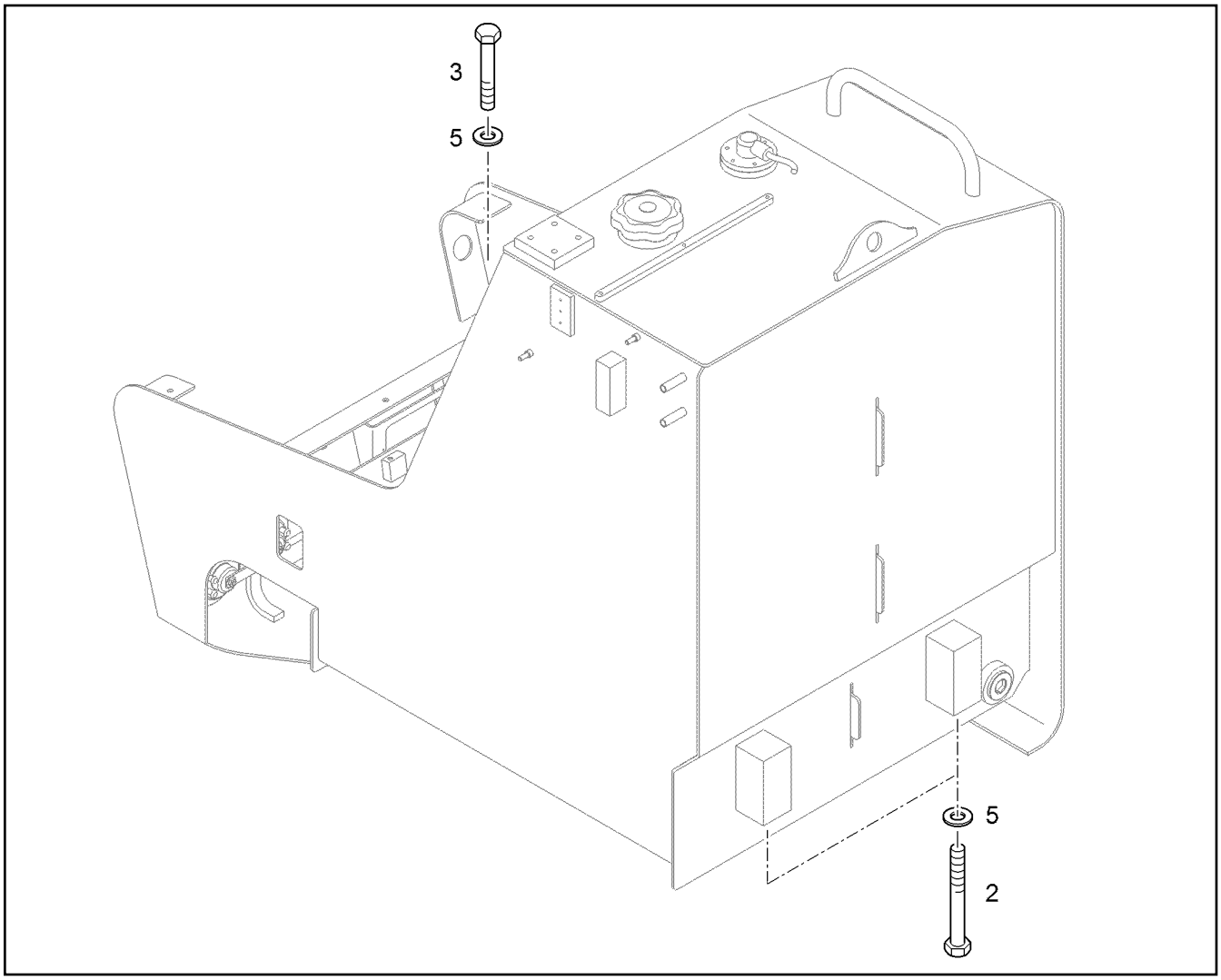

Pos.	Item	Quantity	Description	Designação	Serie	K
2	10425598	2	HEX SCREW ISO 4014 M20X200 10.9 FLZN	PARAFUSO SEXTAVADO		
3	10425595	1	HEX SCREW ISO 4014 M20X150 10.9 FLZN	PARAFUSO SEXTAVADO		
5	4600222	3	WASHER 20 300-370HV	ARRUELA		

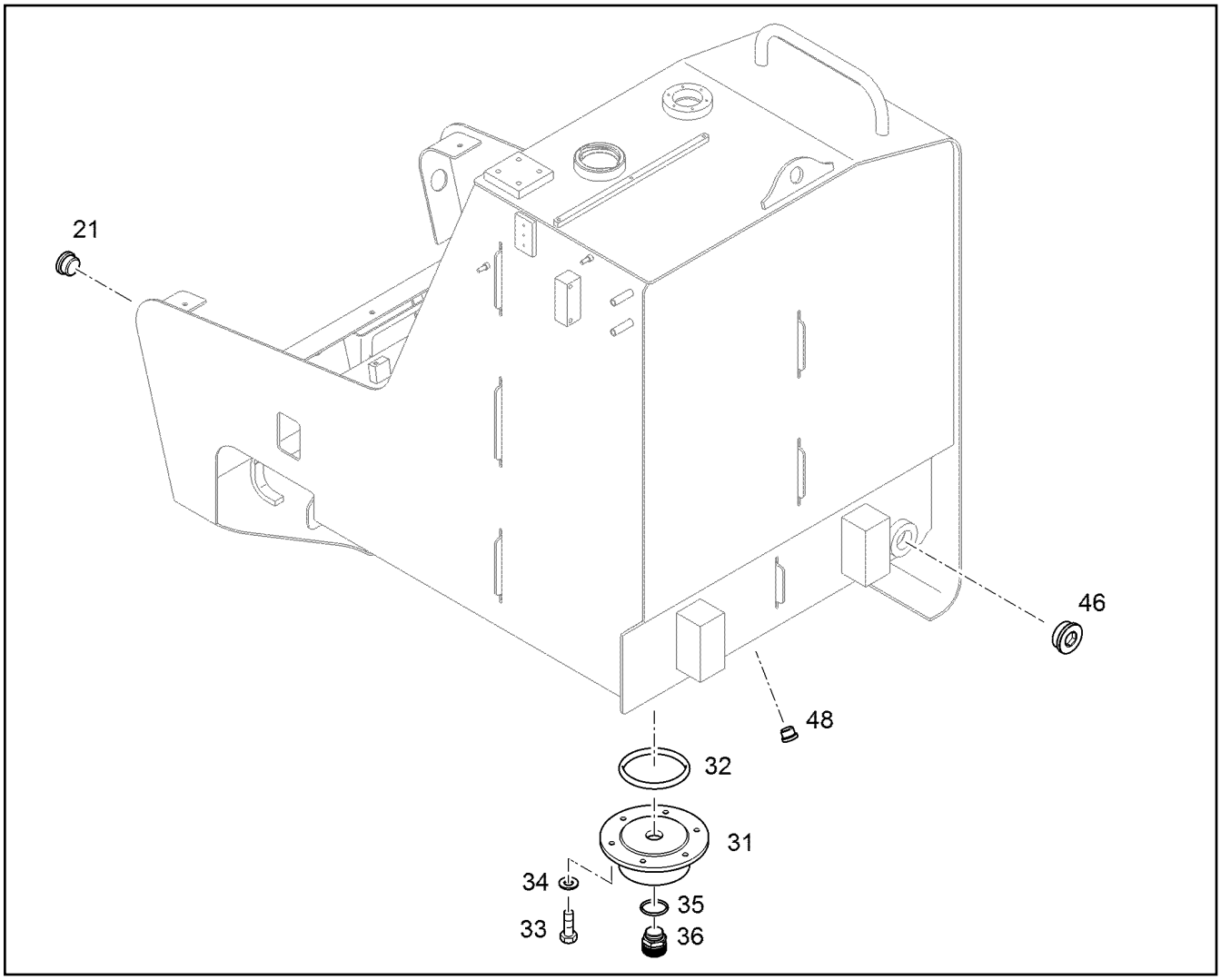

Pos.	Item	Quantity	Description	Designação	Serie	K
21	7363717	1	SCREW PLUG G1A	PARAFUSO DE FECHAMENTO		
31	10067706	1	COVER	TAMPA		
32	7380073	1	O-RING ISO 3601-1 129,77X3,53	ANEL-O		
33	11651767	6	HEX SCREW ISO 4017 M8X20 8.8 480H	PARAFUSO SEXTAVADO		
34	10289803	6	WASHER 8 300HV	ARRUELA		
35	7101021	1	SEALING RING DIN 7603 A 30X36X2	ANEL DE VEDAÇÃO		
36	5004624	1	OIL DRAIN PLUG M 30 1,5 ⇨ ❑ 577	PARAFUSO DE DRENAGEM DE Ó		
46	7363177	1	SCREW PLUG M48X2 ED	PARAFUSO DE FECHAMENTO		
48	10137075	1	SCREW PLUG VSTI M22X1,5	PARAFUSO DE FECHAMENTO		

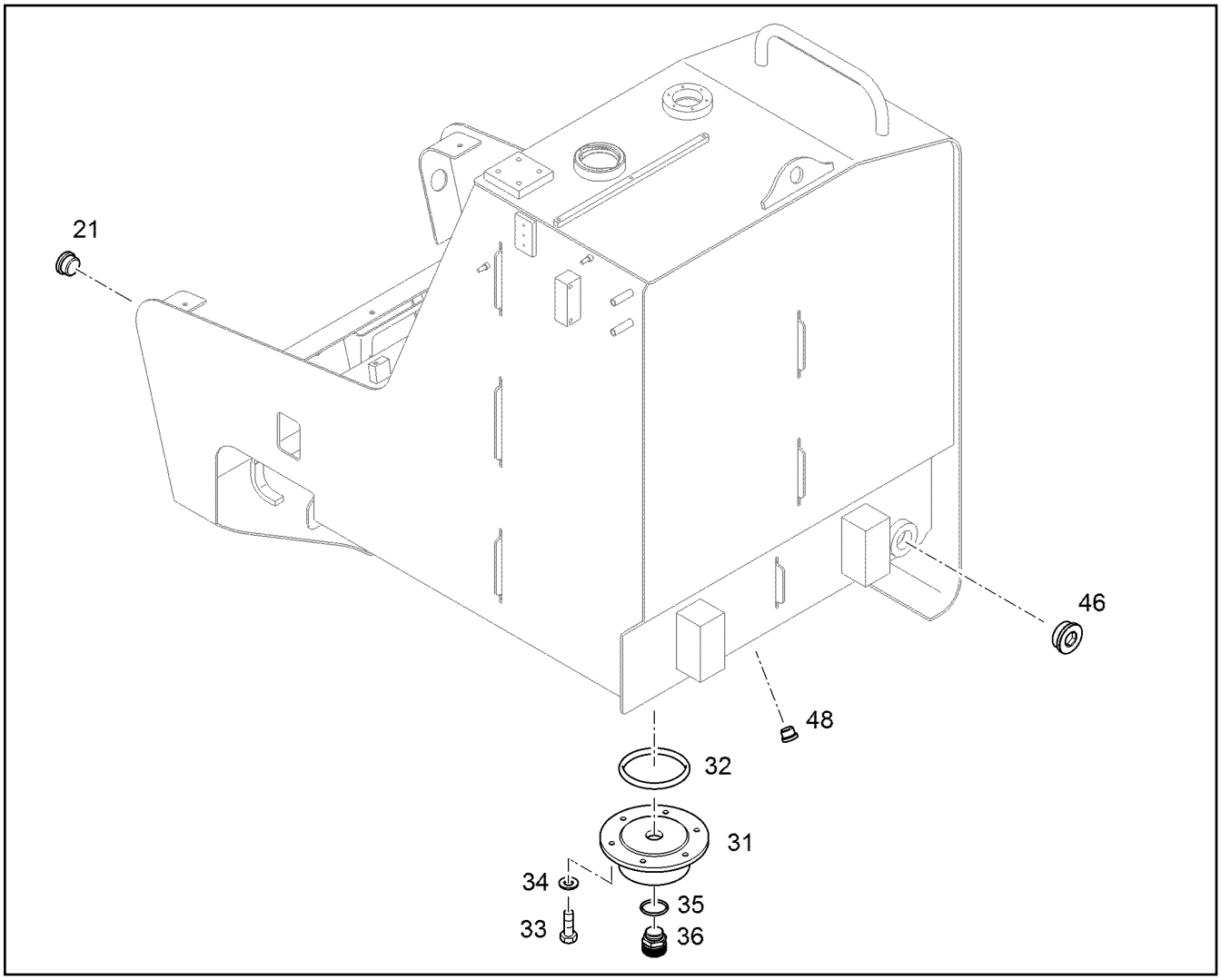

Pos.	Item	Quantity	Description	Designação	Serie	K
21	7363717	1	SCREW PLUG G1A	PARAFUSO DE FECHAMENTO		
31	10067706	1	COVER	TAMPA		
32	7380073	1	O-RING ISO 3601-1 129,77X3,53	ANEL-O		
33	4001606	6	HEX SCREW ISO 4017 M8X16 10.9 A2C	PARAFUSO SEXTAVADO		
34	10289803	6	WASHER 8 300HV	ARRUELA		
35	7101021	1	SEALING RING DIN 7603 A 30X36X2	ANEL DE VEDAÇÃO		
36	5004624	1	OIL DRAIN PLUG M 30 1,5 ⇨ ❑ 577	PARAFUSO DE DRENAGEM DE Ó		
46	7363177	1	SCREW PLUG M48X2 ED	PARAFUSO DE FECHAMENTO		
48	7361961	1	SCREW PLUG M22X1,5 ED	PARAFUSO DE FECHAMENTO		

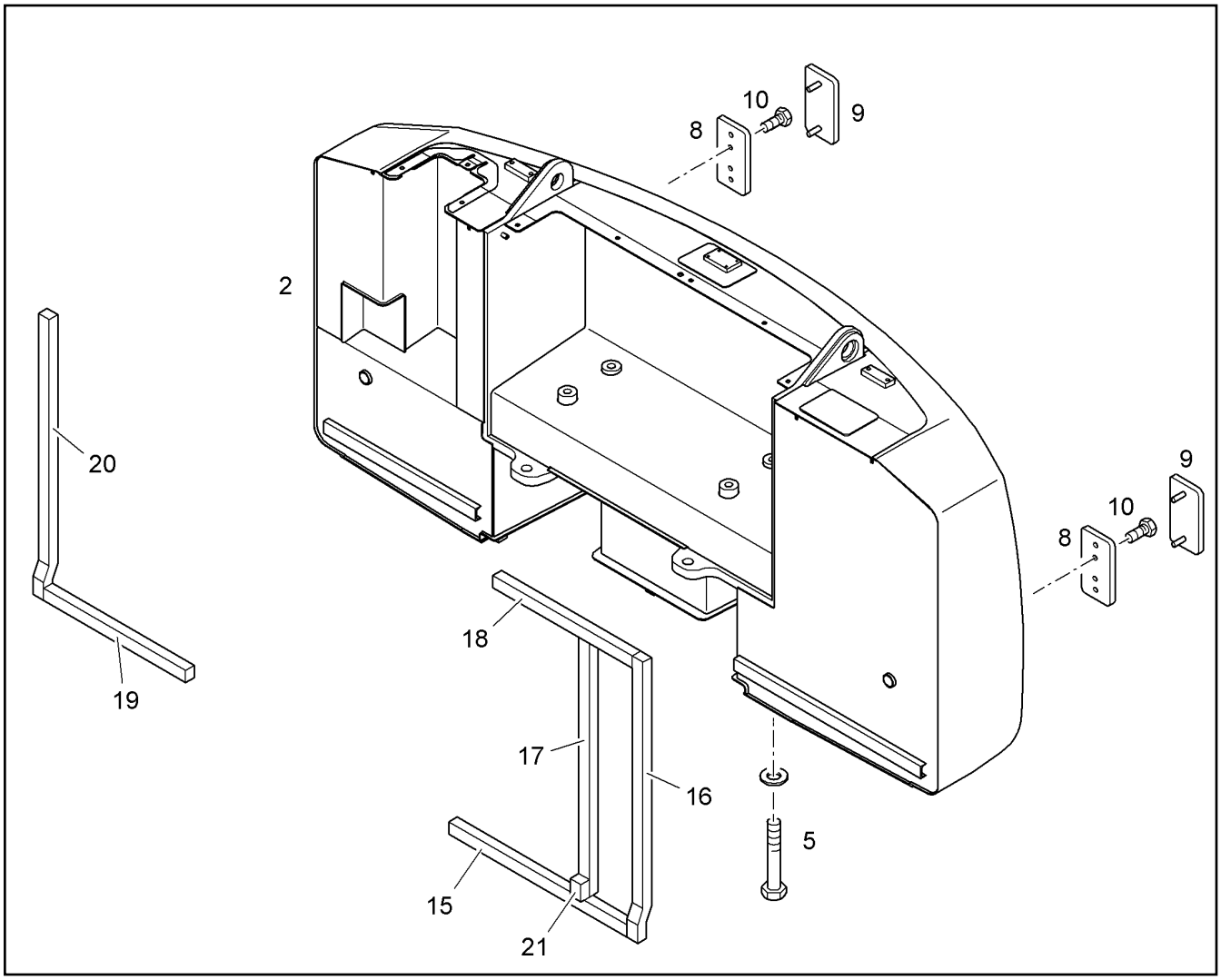

Pos.	Item	Quantity	Description	Designação	Serie	K
2	10498003	1	COUNTERWEIGHT 7,7T [ML1019]	CONTRAPESO		
5	10063914	1	FIXING PARTS COUNTERWEIGHT ⇨ ❑ 537	PECAS FIXACAO PARA CONTR		
8	9892073	2	PLATE	PLACA		
9	6204631	2	REAR REFLECTOR D196X88 ROT	REFLETOR LUMINOSO		
10	12219808	4	SELF-TAPPING SCREW DIN 7516 AE M5X16	PARAFUSO AUTO-ATARRAXANT		
15	12205993	1.16m	PROFILE	PERFIL		
16	12205993	1.58m	PROFILE	PERFIL		
17	12205993	1.43m	PROFILE	PERFIL		
18	12205993	0.91m	PROFILE	PERFIL		
19	12205993	0.93m	PROFILE	PERFIL		
20	12205993	1.58m	PROFILE	PERFIL		
21	12205993	0.98m	PROFILE	PERFIL		

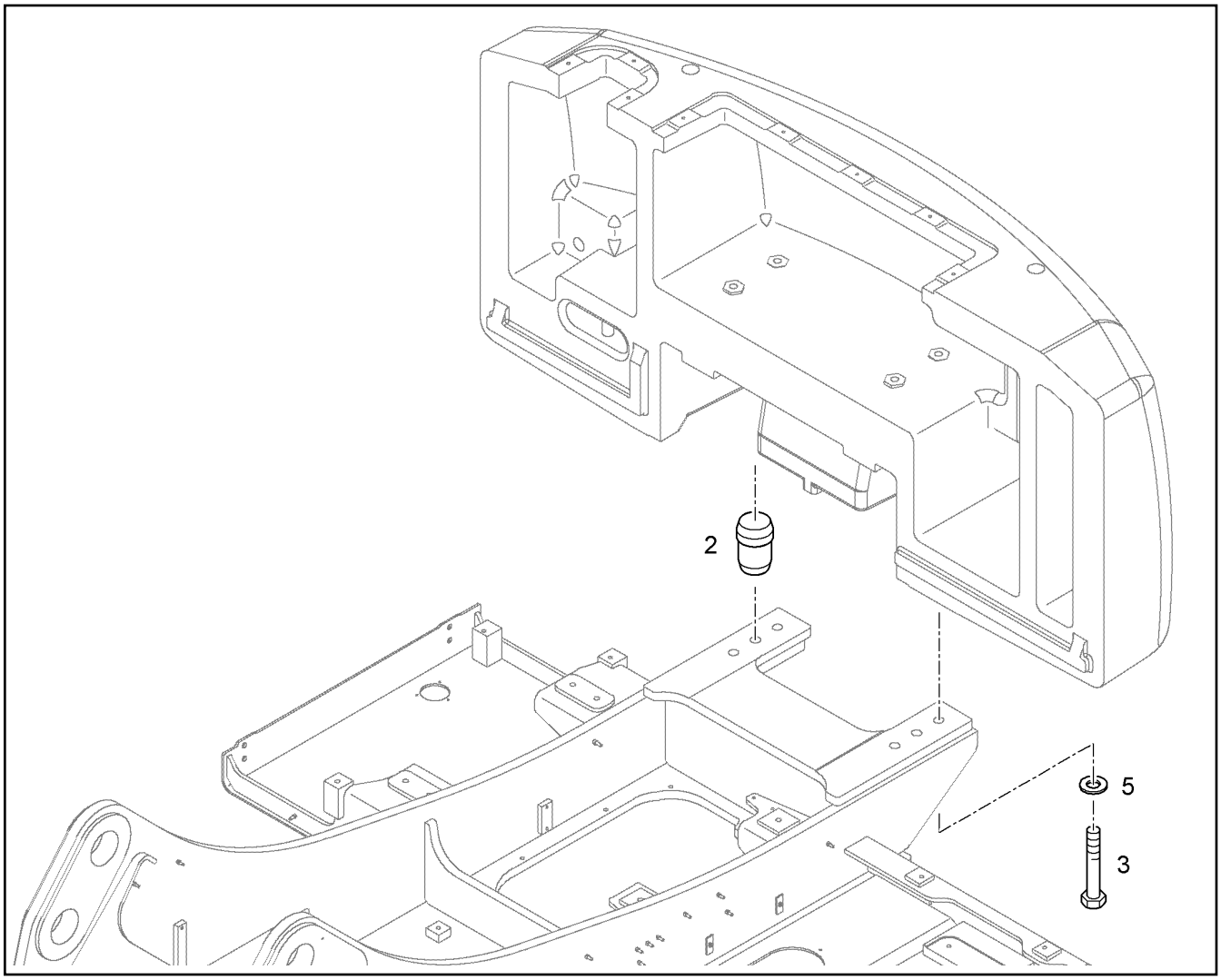

Pos.	Item	Quantity	Description	Designação	Serie	K
2	9698698	2	CENTERING PIN 35X60X40	PINO DE CENTRAGEM		1
3	10425707	4	HEX SCREW ISO 4014 M30X360 10.9 FLZN	PARAFUSO SEXTAVADO		
5	9918231	4	WASHER 31/52X6	ARRUELA		

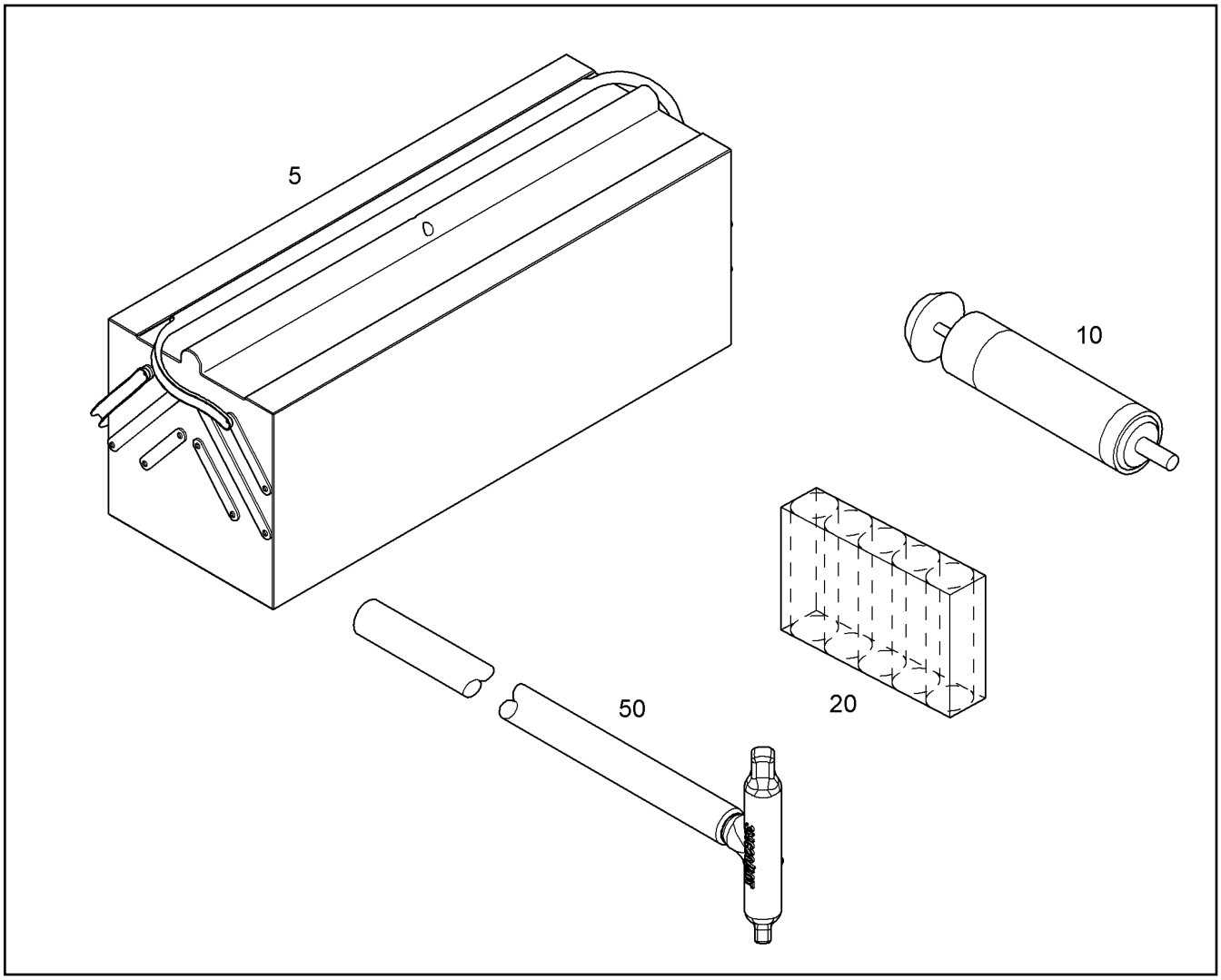

Pos.	Item	Quantity	Description	Designação	Serie	K
5	10848562	1	TOOL EQUIPMENT ⇨ ❑ 539	KIT DE FERRAMENTAS		
10	10009239	1	FILLING PUMP	BOMBA DE ENCHIMENTO		
20	8501565	1	PASTE 400G	PASTA		
50	10451202	1	EXTRACTOR	FERRAMENTA DE EXTRAÇÃO		1

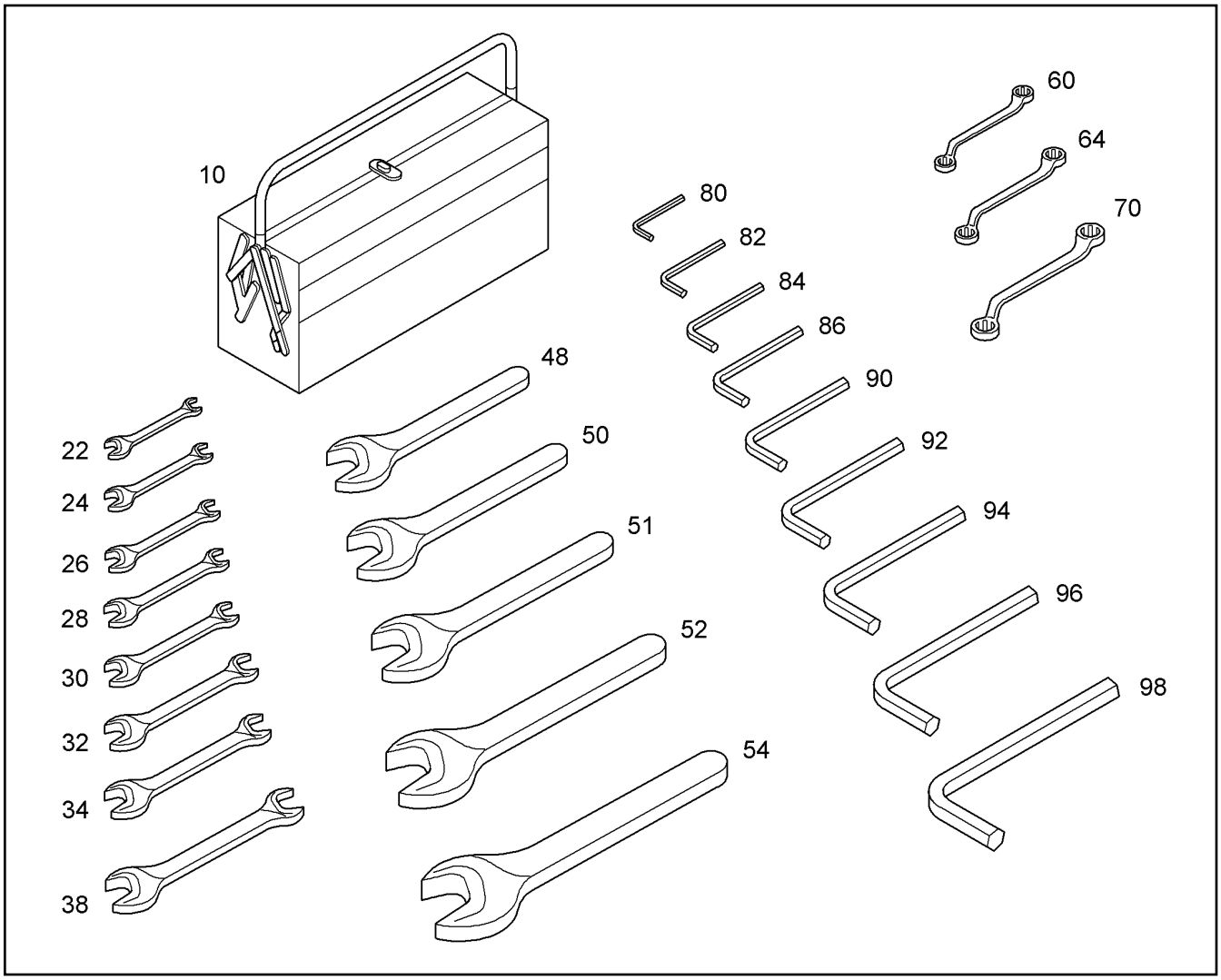

Pos.	Item	Quantity	Description	Designação	Serie	K
10	7016002	1	TOOL BOX	CAIXA DE FERRAMENTAS		
22	11162163	1	DOUBLE-HEADED SPANNER SW8 X 9 DIN 3	CHAVE FIXA DUPLA		
24	11162164	1	DOUBLE-HEADED SPANNER SW10 X 11 DIN	CHAVE FIXA DUPLA		
26	11162165	1	DOUBLE-HEADED SPANNER SW12 X 13 DIN	CHAVE FIXA DUPLA		
28	11162167	1	DOUBLE-HEADED SPANNER SW14 X 15 DIN	CHAVE FIXA DUPLA		
30	11162169	1	DOUBLE-HEADED SPANNER SW16 X 17 DIN	CHAVE FIXA DUPLA		
32	11162170	1	DOUBLE-HEADED SPANNER SW18 X 19 DIN	CHAVE FIXA DUPLA		
34	11162171	1	DOUBLE-HEADED SPANNER SW22 X 24 DIN	CHAVE FIXA DUPLA		
38	11162173	1	DOUBLE-HEADED SPANNER SW27 X 30 DIN	CHAVE FIXA DUPLA		
48	11162174	1	SINGLE-END SPANNER SW32 DIN 894	CHAVE DE BOCA SIMPLES		
50	11162175	1	SINGLE-END SPANNER SW36 DIN 894	CHAVE DE BOCA SIMPLES		
51	11162177	1	SINGLE-END SPANNER SW41 DIN 894	CHAVE DE BOCA SIMPLES		
52	11162178	1	SINGLE-END SPANNER SW46 DIN 894	CHAVE DE BOCA SIMPLES		
54	11162179	1	SINGLE-END SPANNER SW50 DIN 894	CHAVE DE BOCA SIMPLES		
60	11162097	1	DOUBLE RING SPANNER SW10X13 DIN 838	CHAVE ESTRELA DUPLA		
64	11162099	1	DOUBLE RING SPANNER SW16X18 DIN 838	CHAVE ESTRELA DUPLA		
70	11162100	1	DOUBLE RING SPANNER SW24X30 DIN 838	CHAVE ESTRELA DUPLA		
80	11162101	1	ANGLE SCREW DRIVER 3X66 ISO 2936	CHAVE ALLEN		
82	11162111	1	ANGLE SCREW DRIVER 4X74 ISO 2936	CHAVE ALLEN		
84	11162119	1	ANGLE SCREW DRIVER 5X85 ISO 2936	CHAVE ALLEN		
86	11162120	1	ANGLE SCREW DRIVER 6X186	CHAVE ALLEN		
90	11162121	1	ANGLE SCREW DRIVER 8X208	CHAVE ALLEN		
92	11162122	1	ANGLE SCREW DRIVER 10X234	CHAVE ALLEN		
94	11162123	1	ANGLE SCREW DRIVER 12X137 ISO 2936	CHAVE ALLEN		
96	11162124	1	ANGLE SCREW DRIVER 14X154 ISO 2936	CHAVE ALLEN		
98	11162125	1	ANGLE SCREW DRIVER 17X168 ISO 2936	CHAVE ALLEN		

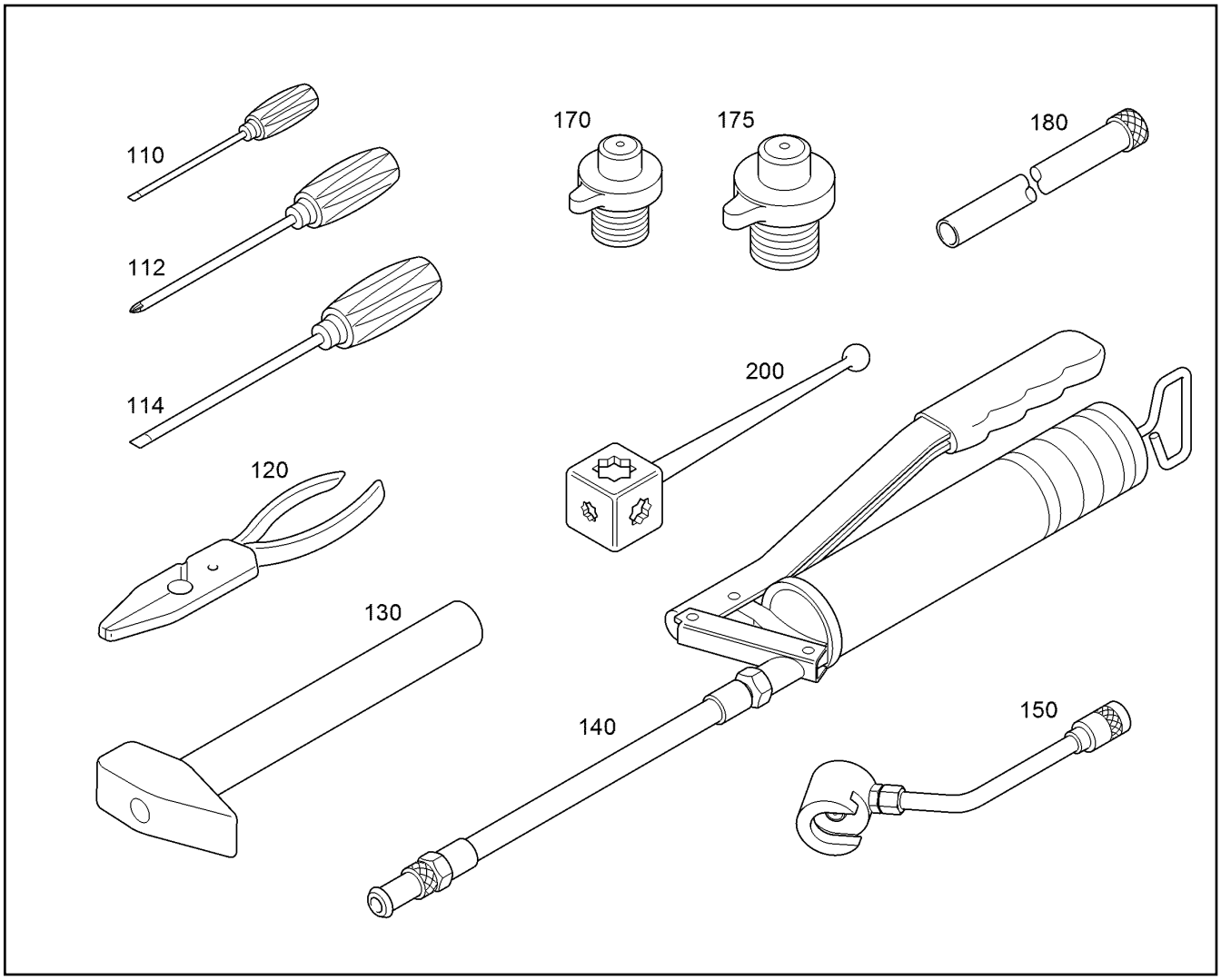

Pos.	Item	Quantity	Description	Designação	Serie	K
110	11162126	1	SLOTTE SCREW DRIVER 5.5X200	CHAVE DE FENDA		
112	11162132	1	SCREWDR.F.RECESSED-HEAD SCREWS2X	CHAVE DE FENDA PHILLIPS		
114	11162133	1	SLOTTE SCREW DRIVER 10X300	CHAVE DE FENDA		
120	11162134	1	COMBI PLIERS	ALICATE UNIVERSAL		
130	11162135	1	ENGINEER'S HAMMER 1500	MARTELO DE PENA		
140	7900280	1	LEVER TYPE HAND GREASE GUN	PISTOLA GRAXA MANUAL COM		
150	7900836	1	NOZZLE PIPE	TUBO INJETOR		
170	9103255	1	IMPACT SCREW M36X40X28	PARAFUSO DE IMPACTO		
175	7361276	1	MOUNTING PIN	SACA PINO		
180		1	OIL DRAIN HOSE ⇨ ❑ 541	MANGUEIRA HID. ESCOAMENT		1
200	10359147	1	GRIP SW9,12,14,17 GEKROEPFT	PUXADOR		

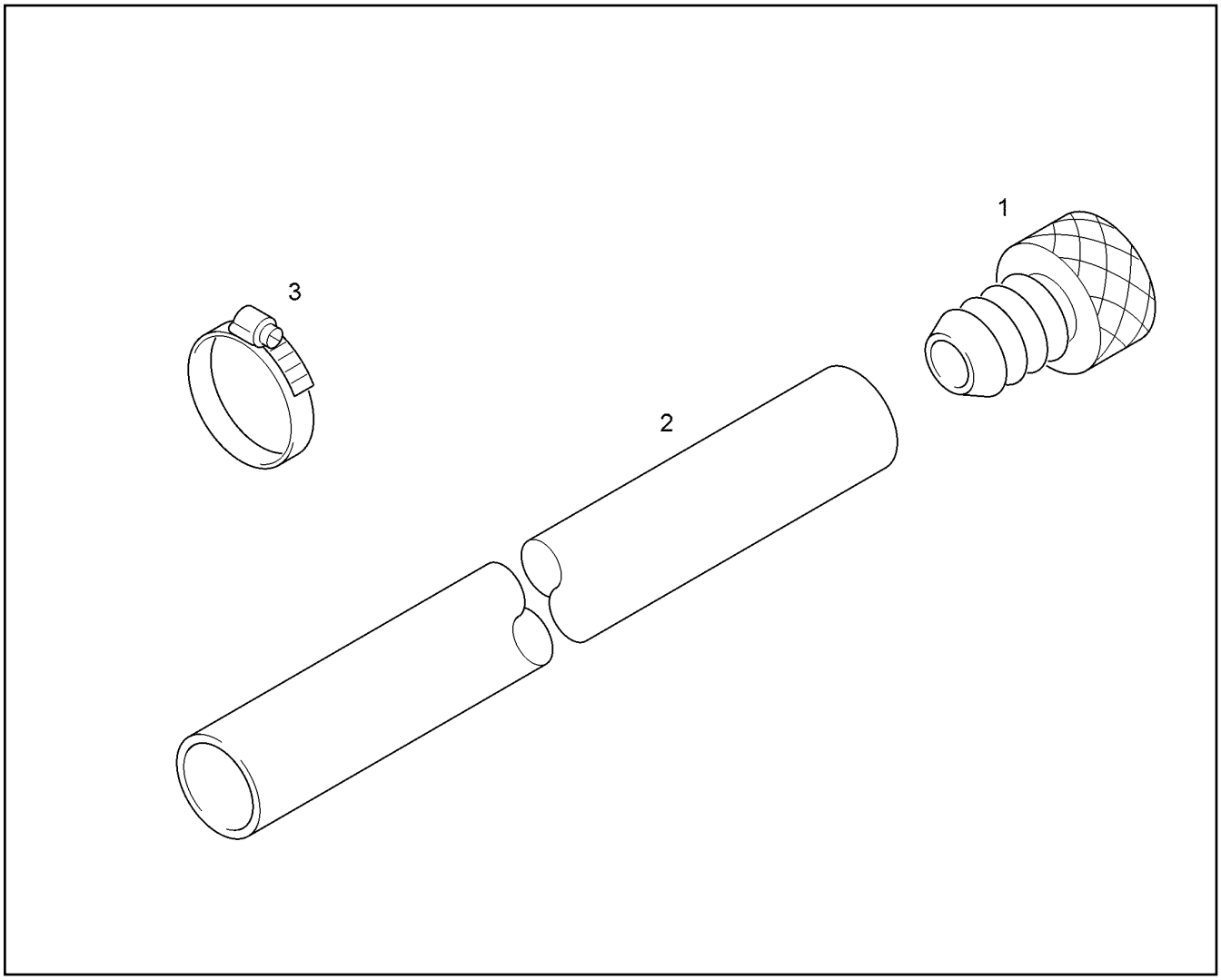

Pos.	Item	Quantity	Description	Designação	Serie	K
1	7402657	1	DRAIN COUPLING	TERMINAL DE DRENAGEM		
2	7402658	1m	OIL DRAIN HOSE DN18X3	MANGUEIRA HID. ESCOAMENT		1
3	11347332	1	2-LUG LOSE CLIP 25 23-27	GRAMPO MANGUEIRA DE 2 OR		

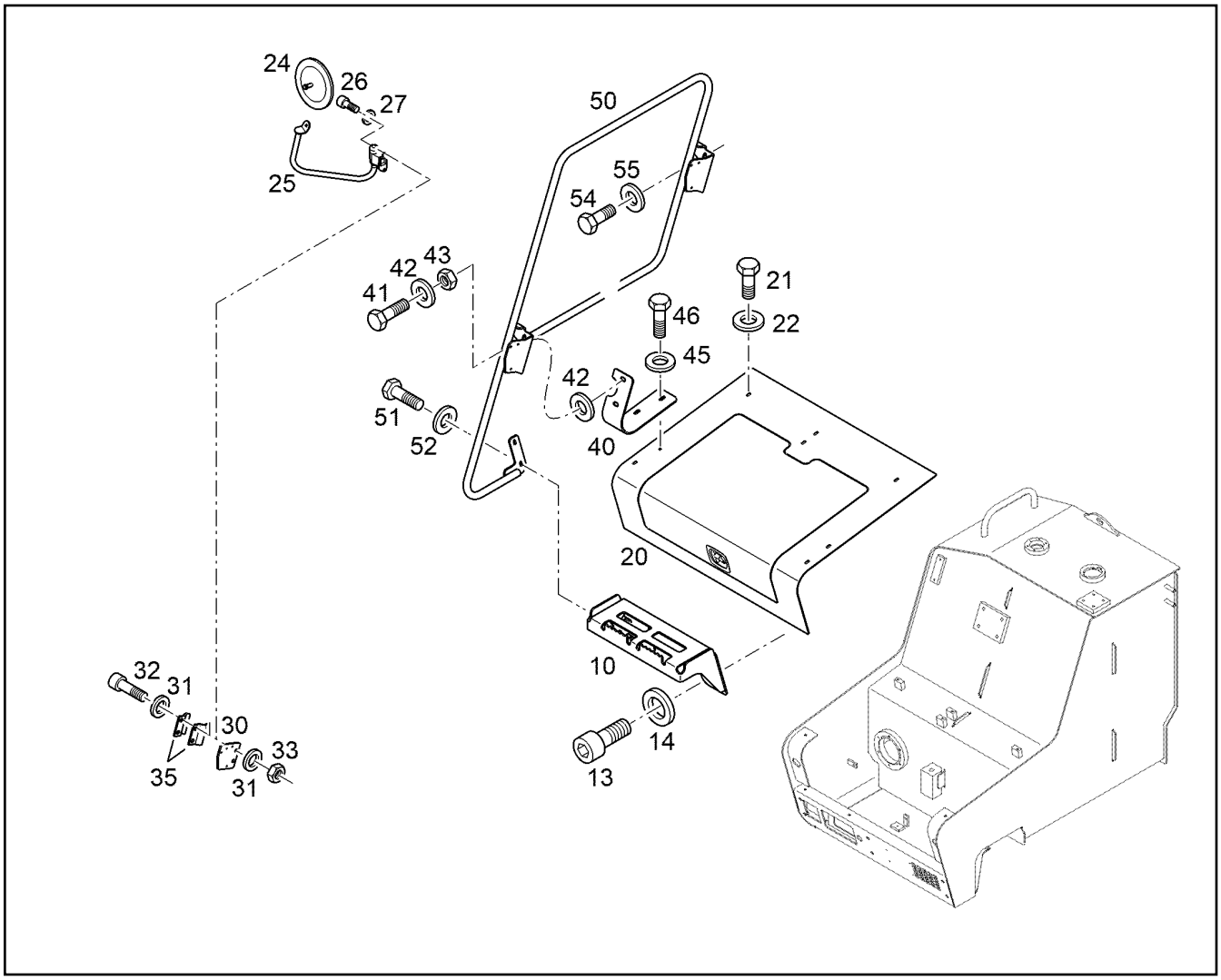

Pos.	Item	Quantity	Description	Designação	Serie	K
10	10087659	1	ACCESS LADDER	ESCADA DE ACESSO		
13	11321126	4	SOCKET HEAD SCREW ISO 4762 M12X30 10	PARAFUSO CILÍNDRICO		
14	10289804	4	WASHER 12 300HV	ARRUELA		
20		1	COVER ⇨ ❑ 545	TAMPA		
21	10299666	5	HEX SCREW ISO 4017 M8X20 10.9 480H	PARAFUSO SEXTAVADO		
22	11140469	5	WASHER 8 200HV	ARRUELA		
24	11001492	1	MIRROR	ESPELHO		
25	10650964	1	MIRROR SUPPORT	SUPORTE DO ESPELHO		
26	10299666	2	HEX SCREW ISO 4017 M8X20 10.9 480H	PARAFUSO SEXTAVADO		
27	423910801	2	LOCK WASHER VS 8	ARRUELA DE PRESSÃO		
30	10083050	1	PLATE	PLACA		
31	10289804	4	WASHER 12 300HV	ARRUELA		
32	11002749	2	SOCKET HEAD SCREW ISO 4762 M12X40 10	PARAFUSO CILÍNDRICO		
33	11002808	2	HEX NUT M12	PORCA SEXTAVADA		
35	7373873	2	HALF FLANGE	MEIO FLANGE		
40	10087238	1	REINFORCEMENT	REFORÇO		
41	10299581	2	HEX SCREW ISO 4017 M8X25 10.9 480H	PARAFUSO SEXTAVADO		
42	11140469	4	WASHER 8 200HV	ARRUELA		
43	10299669	2	HEX NUT M8	PORCA SEXTAVADA		
45	11140469	2	WASHER 8 200HV	ARRUELA		
46	10299581	2	HEX SCREW ISO 4017 M8X25 10.9 480H	PARAFUSO SEXTAVADO		
50	10358190	1	GRIP	PUXADOR		
51	10299581	2	HEX SCREW ISO 4017 M8X25 10.9 480H	PARAFUSO SEXTAVADO		
52	11140469	2	WASHER 8 200HV	ARRUELA		
54	10299666	2	HEX SCREW ISO 4017 M8X20 10.9 480H	PARAFUSO SEXTAVADO		

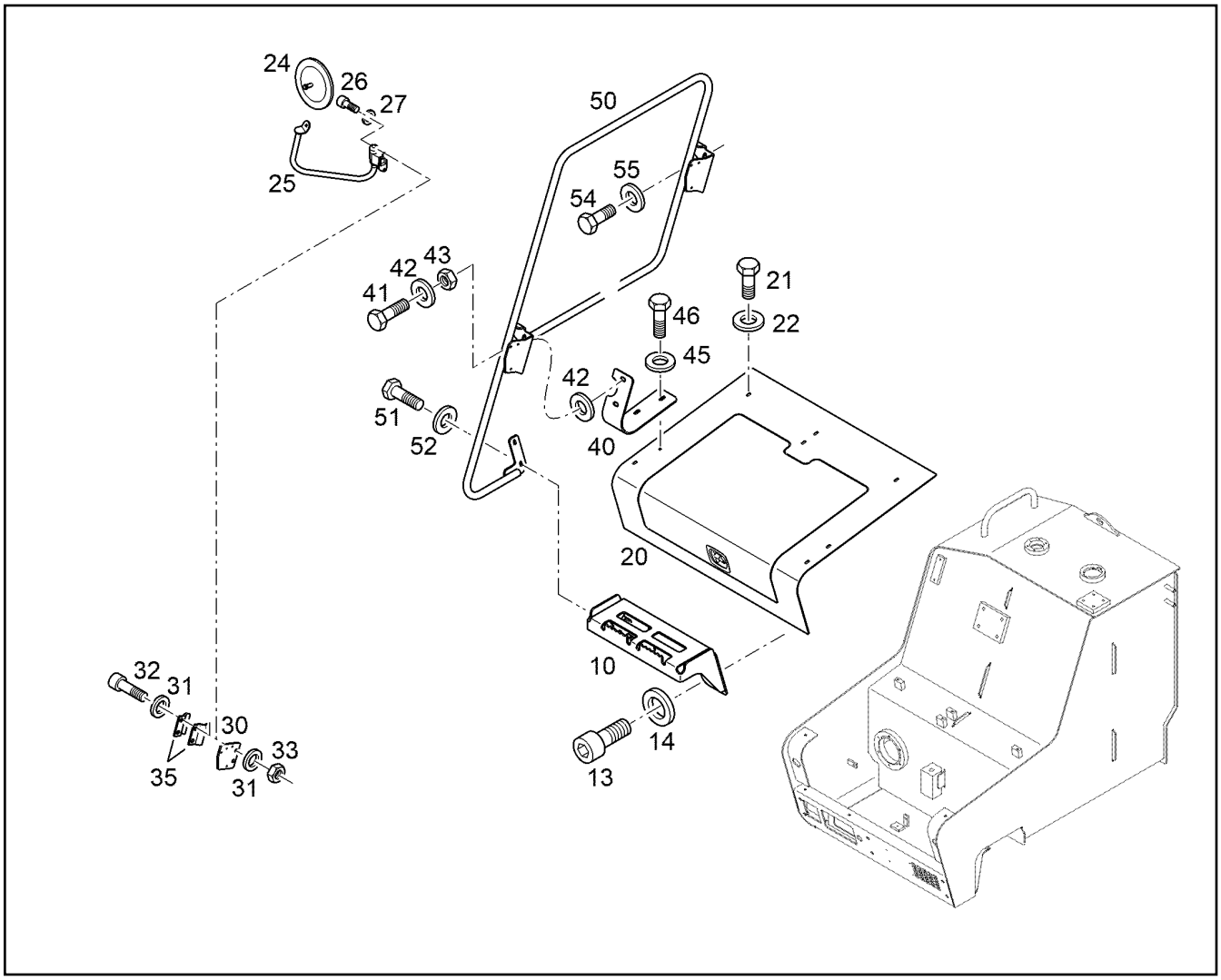

Pos.	Item	Quantity	Description	Designação	Serie	K
55	11140469	2	WASHER 8 200HV	ARRUELA		

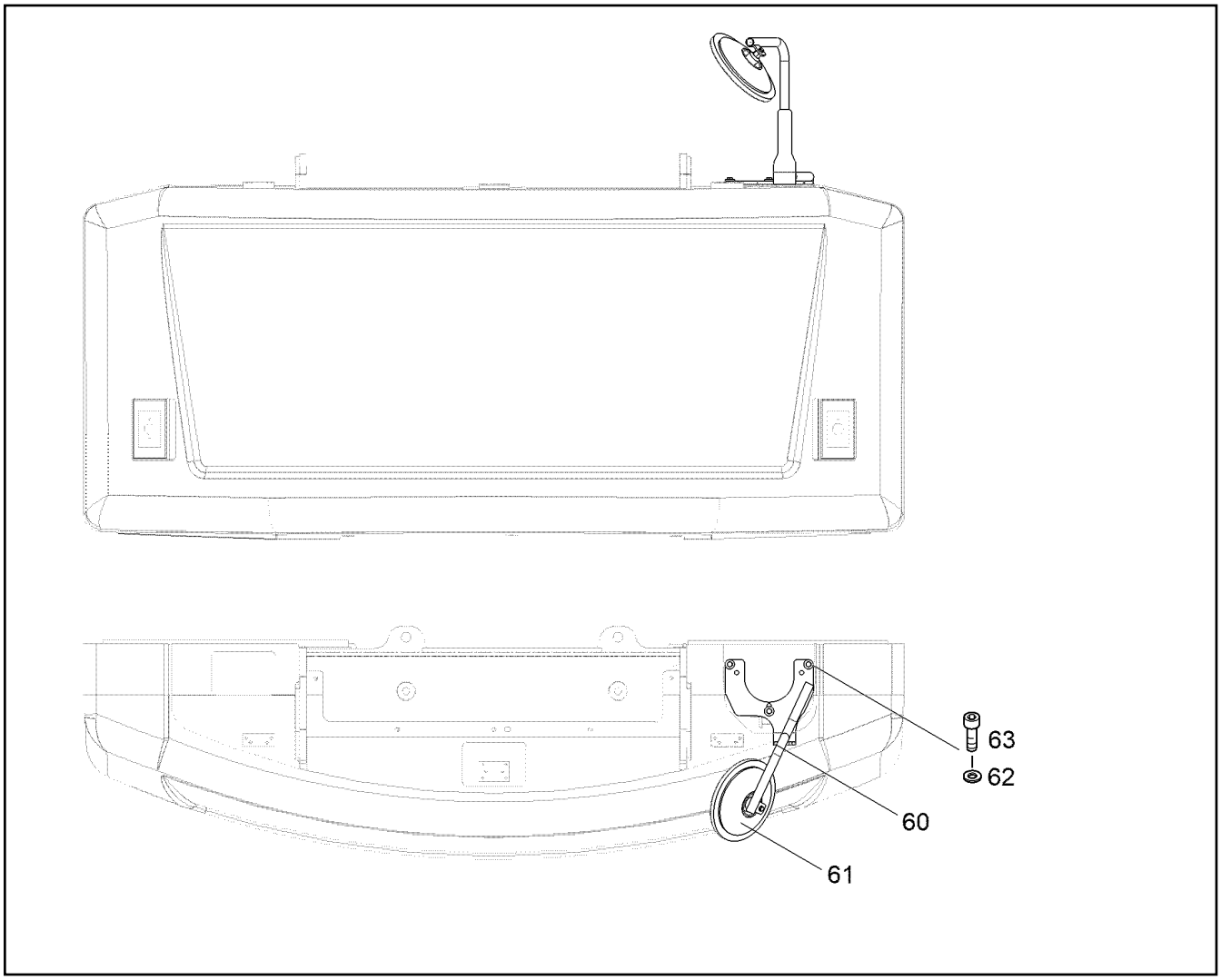

Pos.	Item	Quantity	Description	Designação	Serie	K
60	10822312	1	MIRROR SUPPORT	SUPORTE DO ESPELHO	-999998	
60	12569773	1	MIRROR SUPPORT	SUPORTE DO ESPELHO	999999-	
61	11001492	1	MIRROR	ESPELHO		
62	10179356	3	WASHER 13	ARRUELA		
63	11321128	3	SOCKET HEAD SCREW ISO 4762 M12X45 10	PARAFUSO CILÍNDRICO		

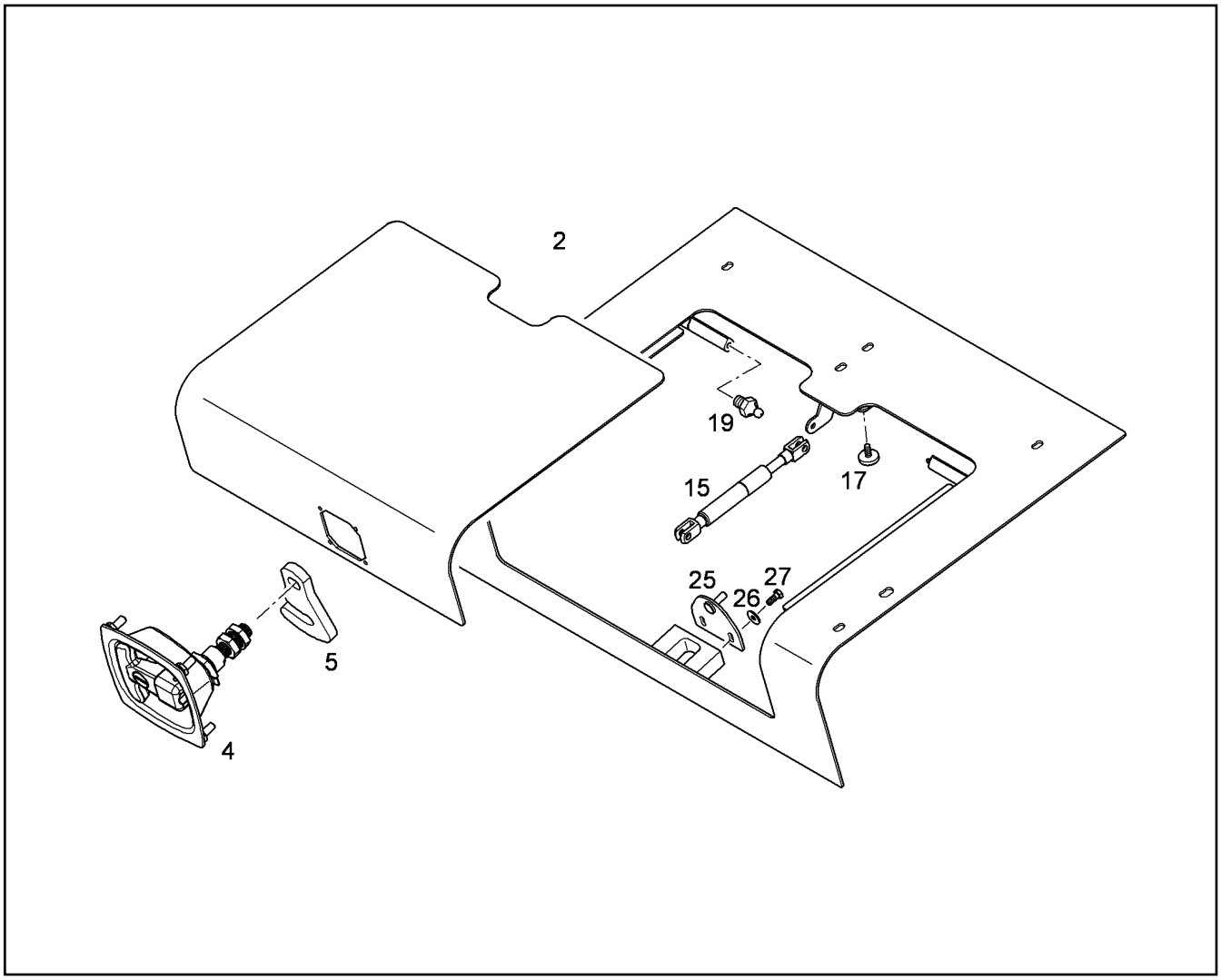

Pos.	Item	Quantity	Description	Designação	Serie	K
2	10079217	1	COVER	TAMPA		
4	10353879	1	DOOR LOCK ⇨ ❑ 469	FECHADURA DA PORTA		
5	10368556	1	LOCKING BAR	TRAVA		
15	10037207	1	GAS SPRING	MOLA A GÁS		
17	7363930	1	LIMIT STOP BUFFER	BATENTE		
19	10005440	2	GREASE NIPPLE AEHNL.DIN 71412 A M10X	NIPLE DE LUBRIFICAÇÃO		
25	10079279	1	LOCKING BAR	TRAVA		
26	12203968	2	WASHER 8,4 30HV	ARRUELA		
27	11651767	2	HEX SCREW ISO 4017 M8X20 8.8 480H	PARAFUSO SEXTAVADO		

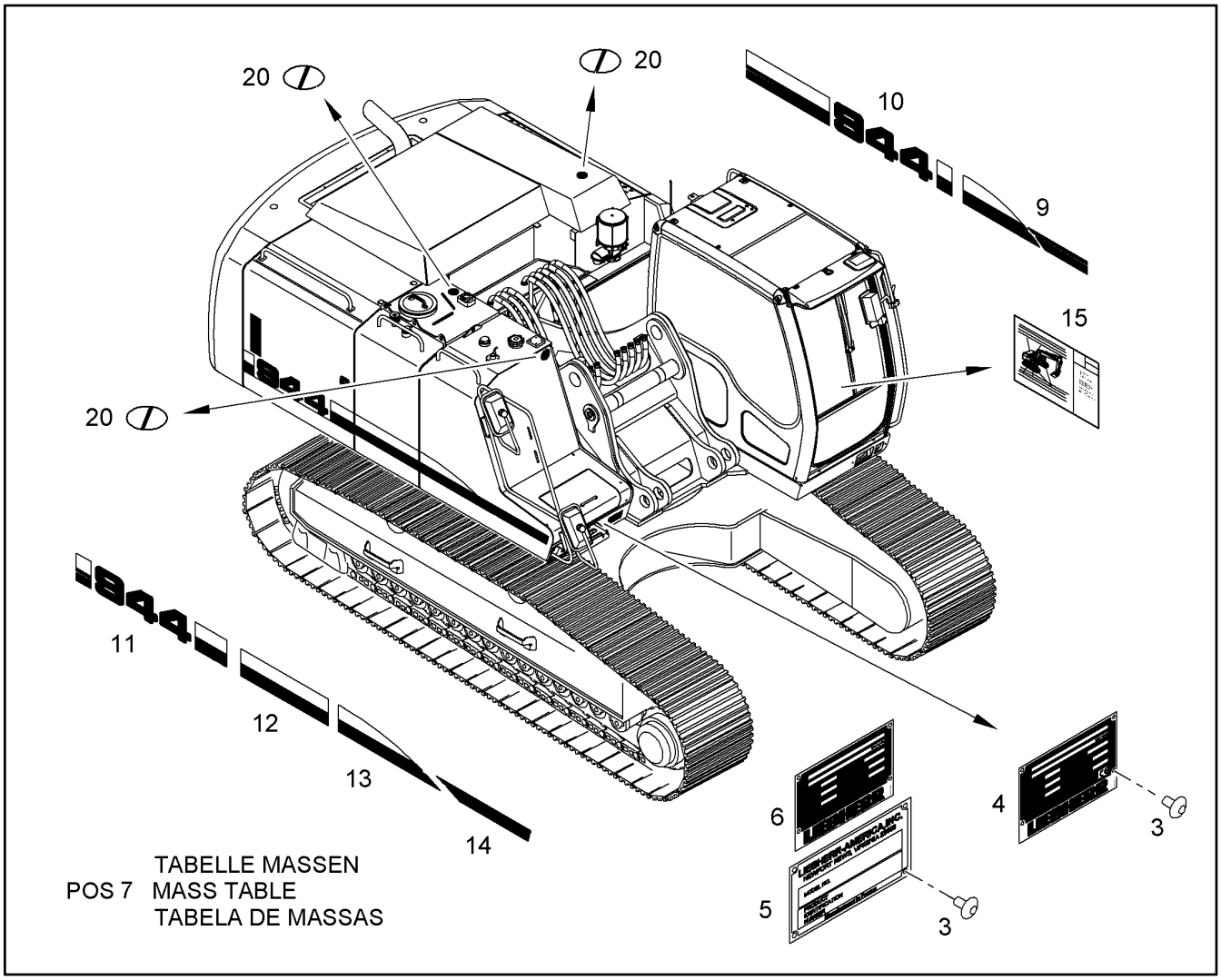

Pos.	Item	Quantity	Description	Designação	Serie	K
3	4900053	4	BLIND RIVET 4,0X15	REBITE CEGO		
4	10498223	1	TYPE PLATE 150mmX100mm	PLACA DE IDENTIFICAÇÃO		
5	9354303	1	NAMEPLATE 83mmX152mm	PLAQUETA DE TIPO LAM		
6	10405887	1	TYPEPLATE LFR 150mmX100mm	PLAQUETA DE TIPO LFR		
7	11359932	1	MARKING TYPE PLATE	PLACA DE IDENTIFICAÇÃO		
9	10072785	1	STICKER 977mmX190mm	ETIQUETA ADESIVA		
10	10067667	1	STICKER	ETIQUETA ADESIVA		
11	10074169	1	STICKER	ETIQUETA ADESIVA		
12	10067668	1	STICKER 698mmX190mm	ETIQUETA ADESIVA		
13	9949751	1	STICKER 826,08mmX190mm	ETIQUETA ADESIVA		
14	10074171	1	STICKER	ETIQUETA ADESIVA		
15	10840318	1	LUBRICATION DIAGRAM	PLANO DE LUBRIFICACAO		
20	7366794	4	PROHIBITION SIGN	PLACA DE PROIBICAO		

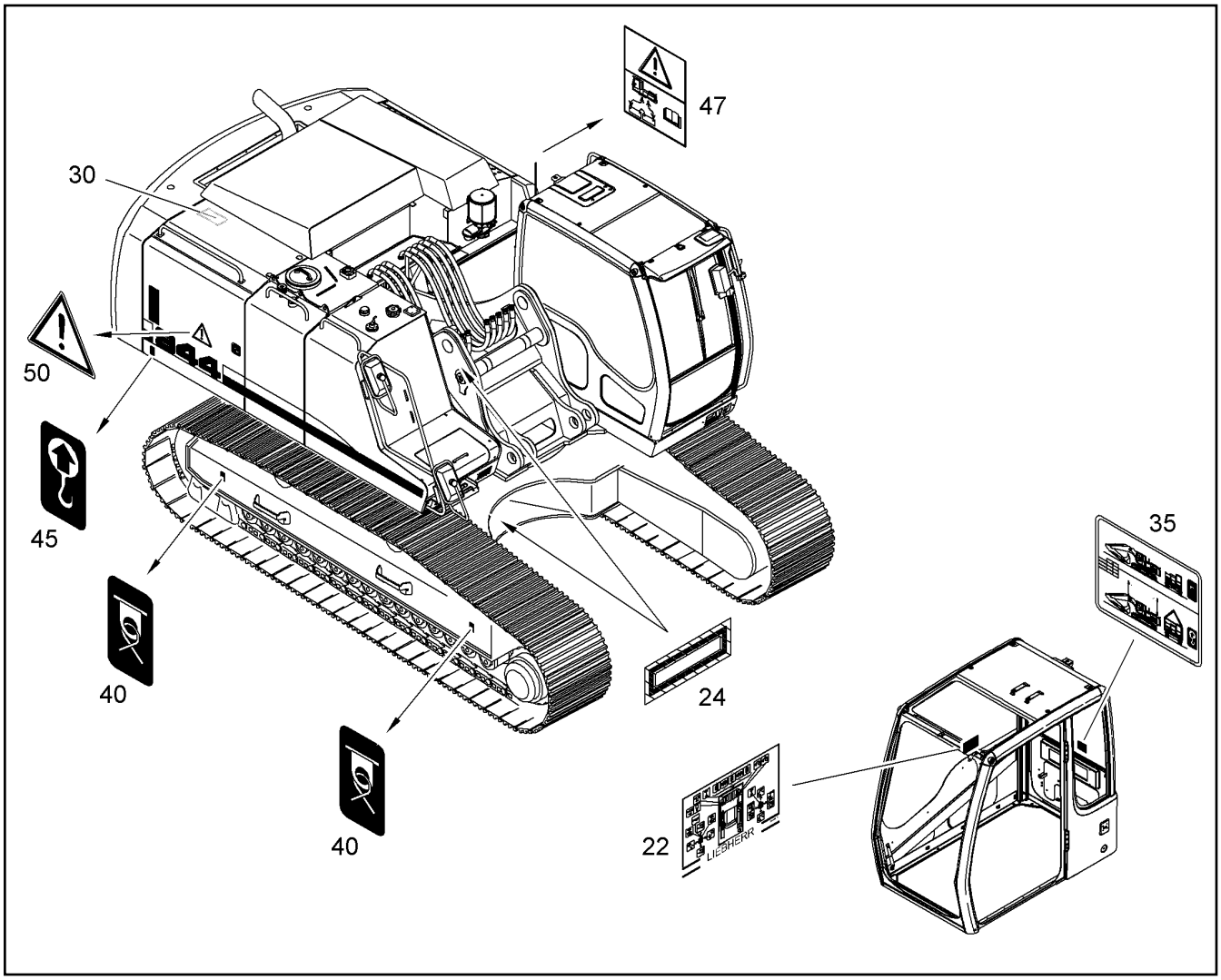

Pos.	Item	Quantity	Description	Designação	Serie	K
22	10092123	1	CONTROL PLATE 297mmX210mm	PLACA ADESIVA		
24	9350400	2	STICKER 112mmX42mm	ETIQUETA ADESIVA		
30	11004408	1	STICKER 132mmX115mm	ETIQUETA ADESIVA		
35	10386773	1	LOADING SHEME UPPERCARRIAGE	ESQUEMA DE TRANSPORTE		
40	9402376	4	REFERENCE PLATE	PLACA INDICAÇ PONTO DE AM		
45	9402377	2	REFERENCE PLATE	PLACA INDICAÇÃO-PONTO IÇAM		
47	9909254	1	NAMEPLATE REMOTE START 80mmX120m	PLAQUETA PARTIDA EXTERNA		
50	9910464	2	DANGER SIGN DANGER SPOT 200mmX17	PLAQUETA DE ADVERTENCIA		

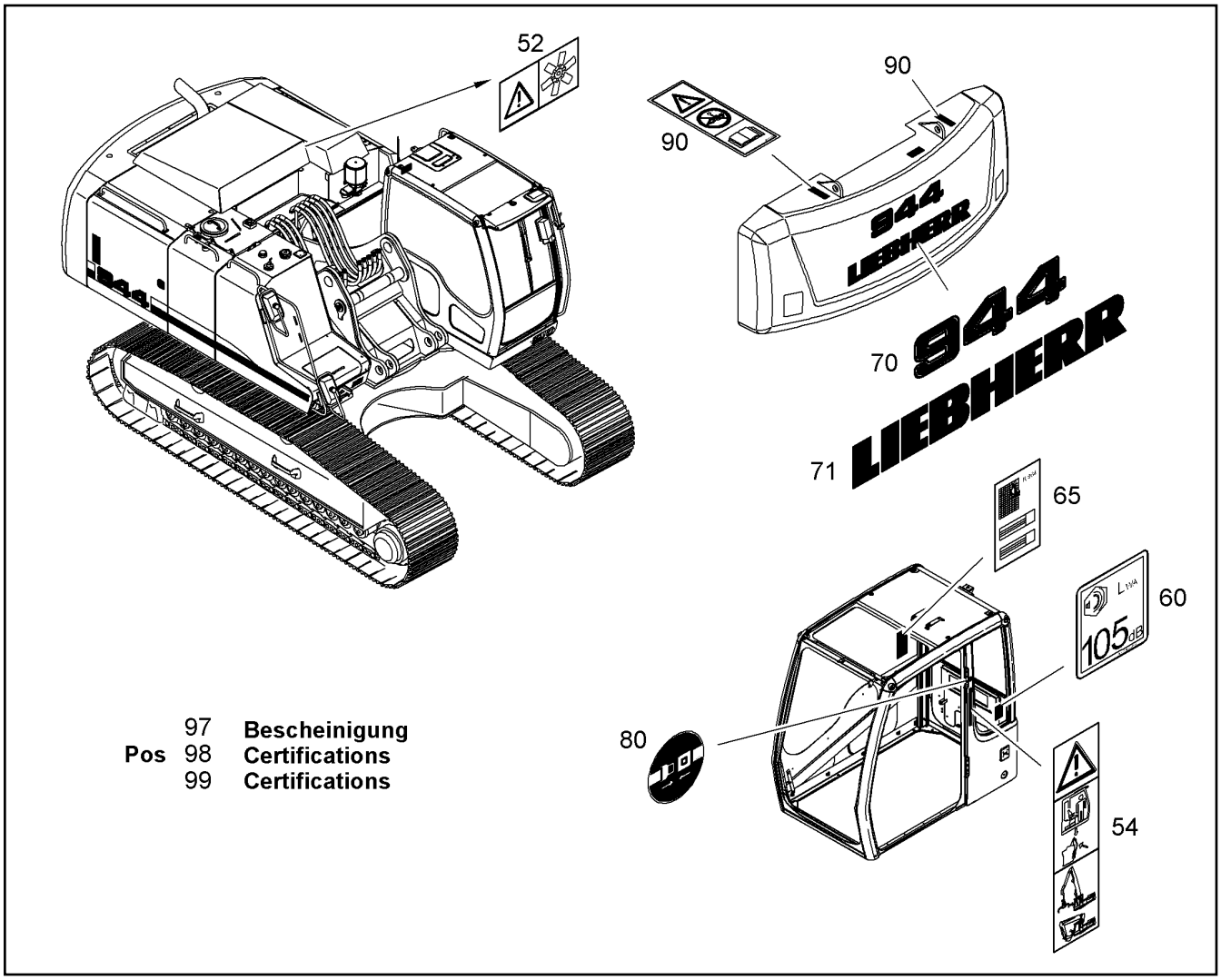

Pos		
	97	**Bescheinigung**
	98	**Certifications**
	99	**Certifications**

Pos.	Item	Quantity	Description	Designação	Serie	K
52	9619934	1	SIGN MOTORSTILLSTAND 120mmX60mm	IDENTIFICAÇÃO		
54	9581113	1	WARNING SIGN 65mmX285mm	PLACA DE ADVERTÊNCIA/ AVIS		
60	9874359	1	STICKER SOUND VOLUME LEVEL LWA 105	ADESIVO DE INTENSIDADE SON		
65		1	LOAD DIAGRAM CONF.TO ISO 1056710567	TABELA DE CAPACIDADE DE CA		
70	10381173	1	SIGN	IDENTIFICAÇÃO	26685-	
71	9613673	1	STICKER LIEBHERR 1872mmX250mm	ETIQUETA ADESIVA	26685-	
80	10066101	1	LABEL SAFETY BELT Ø65mm	PLAQUETA - CINTO DE SEGURA		
90	10380915	2	WARNING SIGN 74mmX204mm	PLACA DE ADVERTÊNCIA/ AVIS	26685-	
97	9399606	1	EEC CERTIFICATE	CERTIFICADO EWG		
98	9399607	1	EU CONFORMITY DECLARATION	DECLARACAO DE CONFORMIDA		
99	9399608	1	EU MANUFACTURER DECLARATION	DECLARACAO DO FABRICANTE		

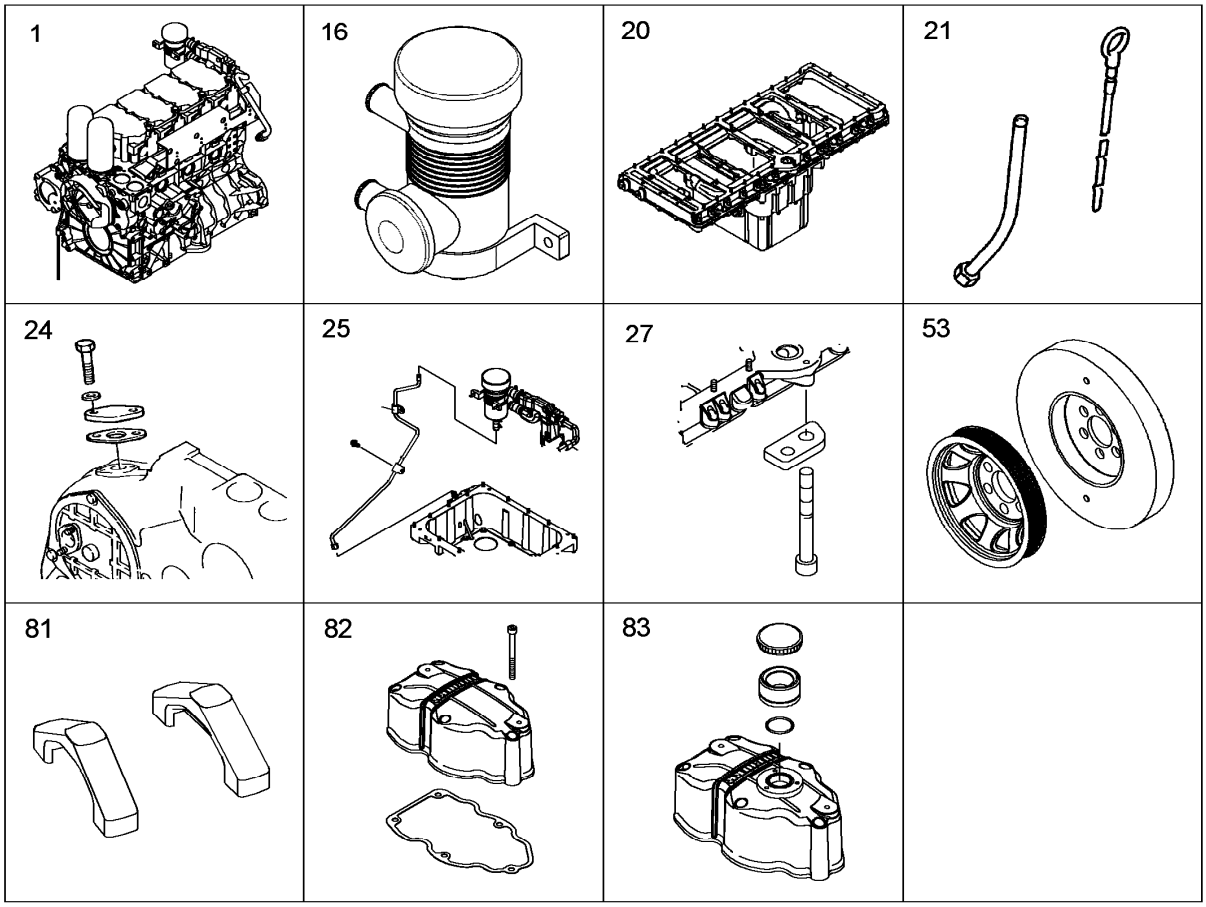

Pos.	Item	Quantity	Description	Designação	Serie	K
1		1	BASIC ENGINE D936 L HIGH 300 kW ⇨ ❑ 557	MOTOR BÁSICO		2
16		1	CRANKCASE BREATHER ASSEMBLY ⇨ ❑ 567	CARCAÇA MANIVELA PURGAM.	-2006047616	
16		1	CRANKCASE BREATHER ASSEMBLY D936 ⇨ ❑ 566	CARCAÇA MANIVELA PURGAM.	2006047617-	
20		1	OIL SUMP ⇨ ❑ 571	CÁRTER DE ÓLEO		
21		1	OIL DIPSTICK WITH PIPE ⇨ ❑ 576	VARETA MEDIÇ.NÍVEL ÓLEO C/		
24		2	LOCKING PIECES ⇨ ❑ 580	PEÇAS DE FECHAMENTO		
25		1	OIL LINE PRE-ASSEMBLY 10X1 ⇨ ❑ 575	LINHA DE ÓLEO PRÉ-MONTADA		
27		1	CLAMP - ADD-ON UNIT ⇨ ❑ 579	SUPORTE DE MONTAGEM		
53		1	CRANKSHAFT ADD-ON PARTS ⇨ ❑ 584	VIRABREQUIM PEÇAS DE ACE		
81		6	ROCKER ARM BRACKET CPL. ⇨ ❑ 601	CAVALETE BALANCINS COMPL		
82		5	CYLINDER HEAD COVER ⇨ ❑ 596	TAMPA DO CABEÇOTE	-2006047616	
82		5	CYLINDER HEAD COVER ASSEMBLY ⇨ ❑ 593	INSTALAÇÃO TAMPA DO CABEÇ	2006047617-	
83		1	CYLINDER HEAD COVER ⇨ ❑ 595	TAMPA DO CABEÇOTE	-2006047616	

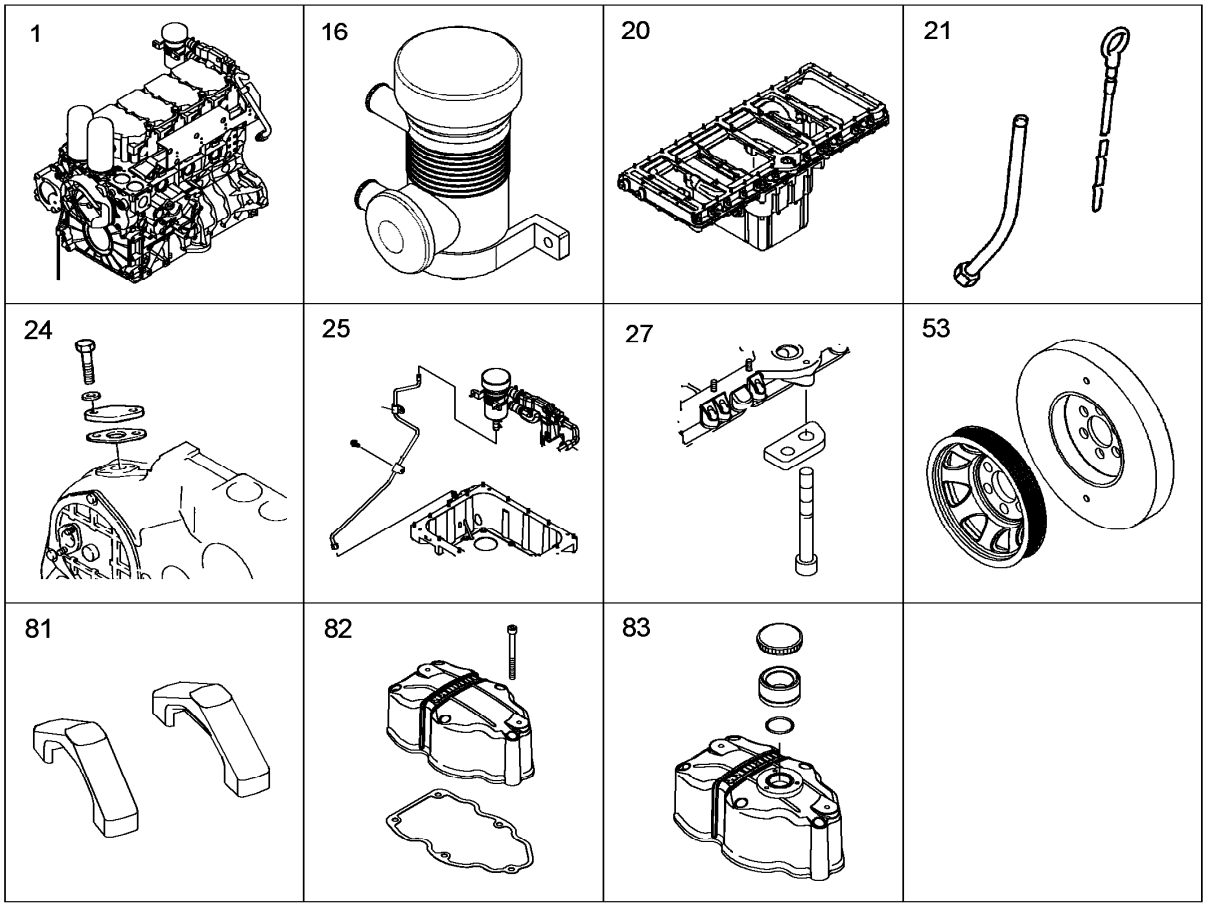

Pos.	Item	Quantity	Description	Designação	Serie	K
83		1	CYLINDER HEAD COVER ASSEMBLY ⇨ ❑ 592	INSTALAÇÃO TAMPA DO CABEÇ	2006047617-	

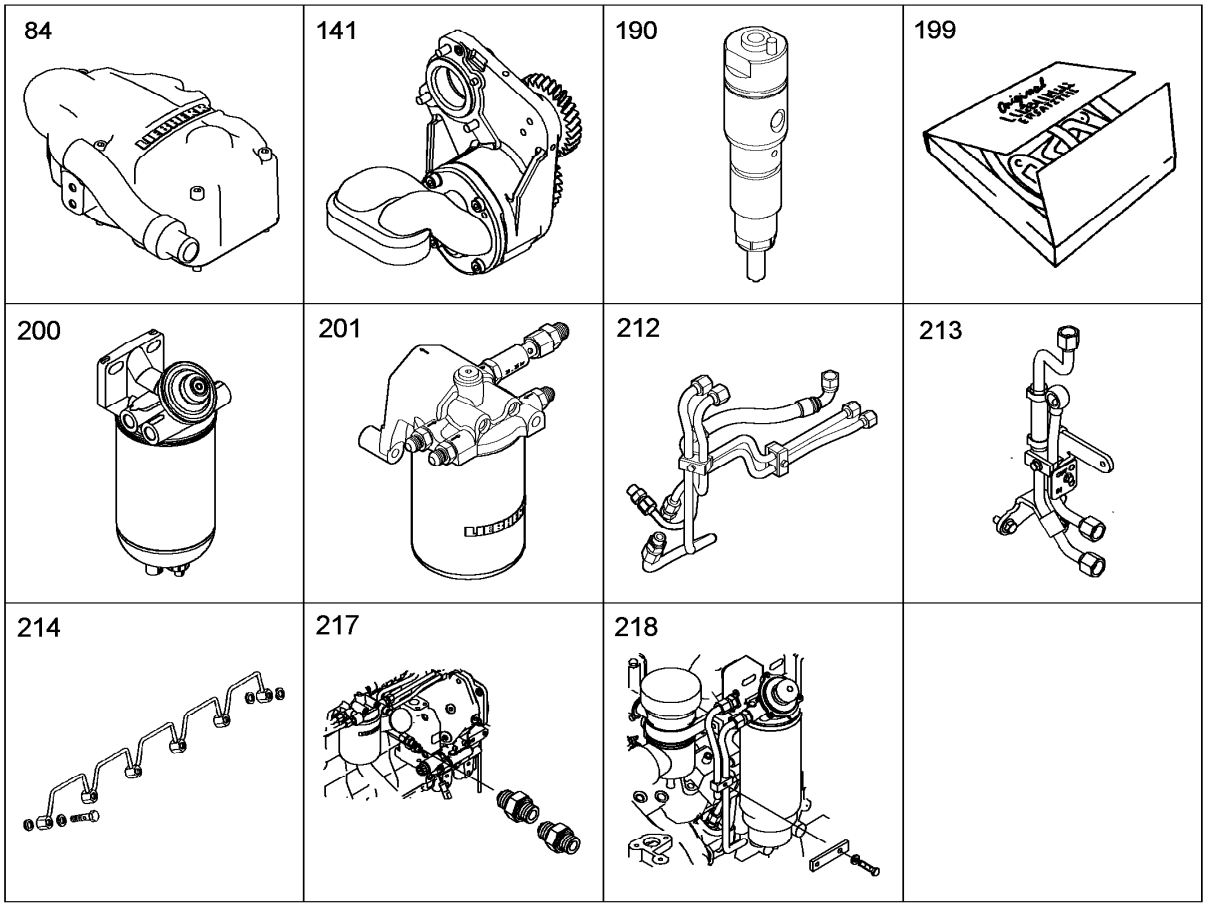

Pos.	Item	Quantity	Description	Designação	Serie	K
84		1	CYLINDER HEAD COVER ASSEMBLY ⇨ ❑ 594	INSTALAÇÃO TAMPA DO CABEÇ	2006047617-	
141		1	SUCTION PUMP WITH FASTENING ⇨ ❑ 617	BOMBA DE SUCÇÃO COM FIXA		
190		6	INJECTION NOZZLE W.FASTENING ⇨ ❑ 624	BICO INJETOR COM ELEMENTO		
199	10115854	1	SEAL KIT INJECTION NOZZLE ⇨ ❑ 628	KIT DE VEDACAO DO BICO INJET		
200		1	FUEL-PREFILTER ASS. ⇨ ❑ 629	MONT DO PRÉ FILTRO DE COMB		
201		1	FUEL FINE-FILTER ASSEMBLY ⇨ ❑ 630	FILTRO FINO DE COMBUSTÍVEL		
212		1	FUEL LINE ⇨ ❑ 634	TUBULAÇÃO DE COMBUSTÍVEL		
213		1	CONNECTION PIECE ⇨ ❑ 641	PEÇA DE CONEXÃO		
214		1	LEAK OIL RETURN LINE ⇨ ❑ 637	RETORNO DE OLEO VAZADO		
217		1	CONNECTING PIECE PRE-ASS. ⇨ ❑ 640	PEÇA DE FECHO PRÉ-MONTAD		
218		1	CLAMP - ADD-ON UNIT ⇨ ❑ 638	SUPORTE DE MONTAGEM		

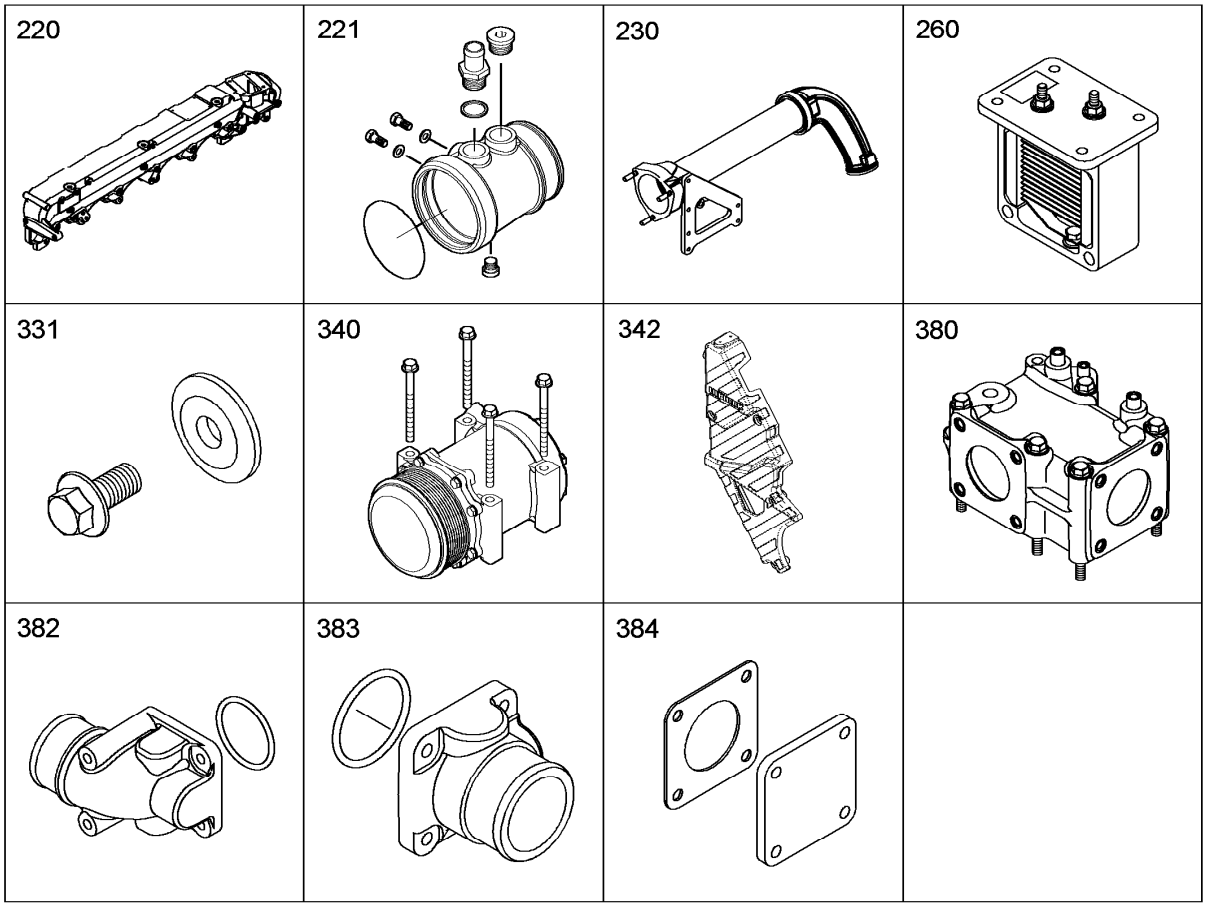

Pos.	Item	Quantity	Description	Designação	Serie	K
220		1	AIR INTAKE PIPE ASS. ⇨ ❑ 642	TUBO DE ADMISSÃO DE AR		
221		1	CONNECTING BRANCH ADD-ON ⇨ ❑ 643	LUVA DE CONEXÃO MONTAGE		6
230		1	CONNECTING LINE ADD-ON ⇨ ❑ 644	LINHA DE CONEXAO	-2008040016	
230		1	CONNECTING LINE ADD-ON ⇨ ❑ 645	LINHA DE CONEXAO	2008040017-	
260		1	HEATING FLANGE ADD-ON ⇨ ❑ 647	FLANGE DE AQUECIMENTO		
331		1	LOCKING PIECES ⇨ ❑ 649	PEÇAS DE FECHAMENTO		
340		1	AIR COND. COMPRESSOR ADD-ON ⇨ ❑ 650	COMPRESSOR DO AR-CONDICI		
342		1	COVERING ASSEMBLY ⇨ ❑ 651	COBERTURA	-99998	
342		1	COVERING ASSEMBLY ⇨ ❑ 652	COBERTURA	99999-	
380		1	THERMOSTAT HOUSING ASSEMBLY 79°C ⇨ ❑ 657	CARCAÇA DO TERMOSTATO	-2008040016	
380	10119830	1	THERMOSTAT HOUSING ASSEMBLY ⇨ ❑ 656	CARCAÇA DO TERMOSTATO	2008040017-	
382		1	COOLANT PIPE BEND ADD-ON ⇨ ❑ 659	TUBO CURV.PROD.REFRIGER-A		
383		1	COOLANT PIPE BEND ADD-ON ⇨ ❑ 660	TUBO CURV.PROD.REFRIGER-A		

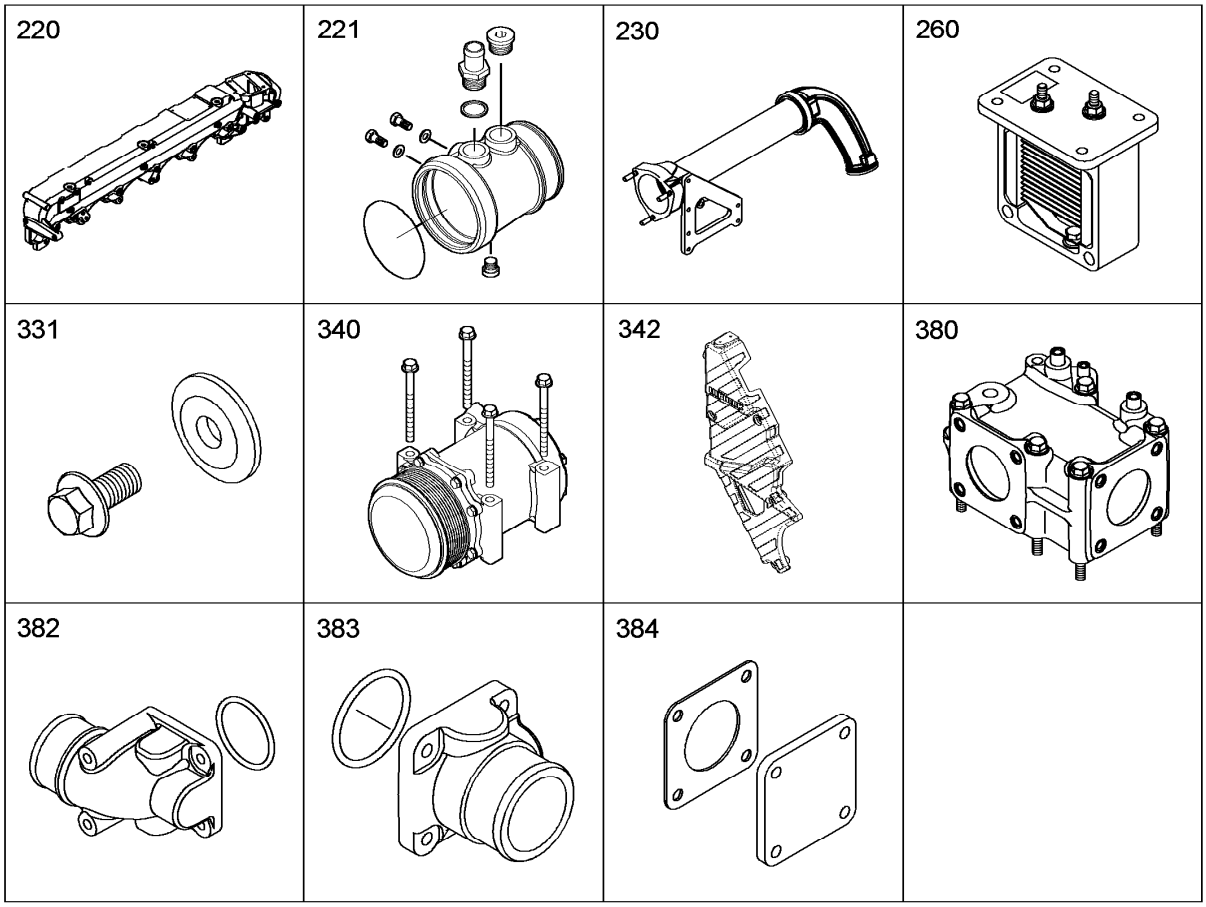

Pos.	Item	Quantity	Description	Designação	Serie	K
384		1	LOCKING PIECES ⇨ ❑ 661	PEÇAS DE FECHAMENTO		

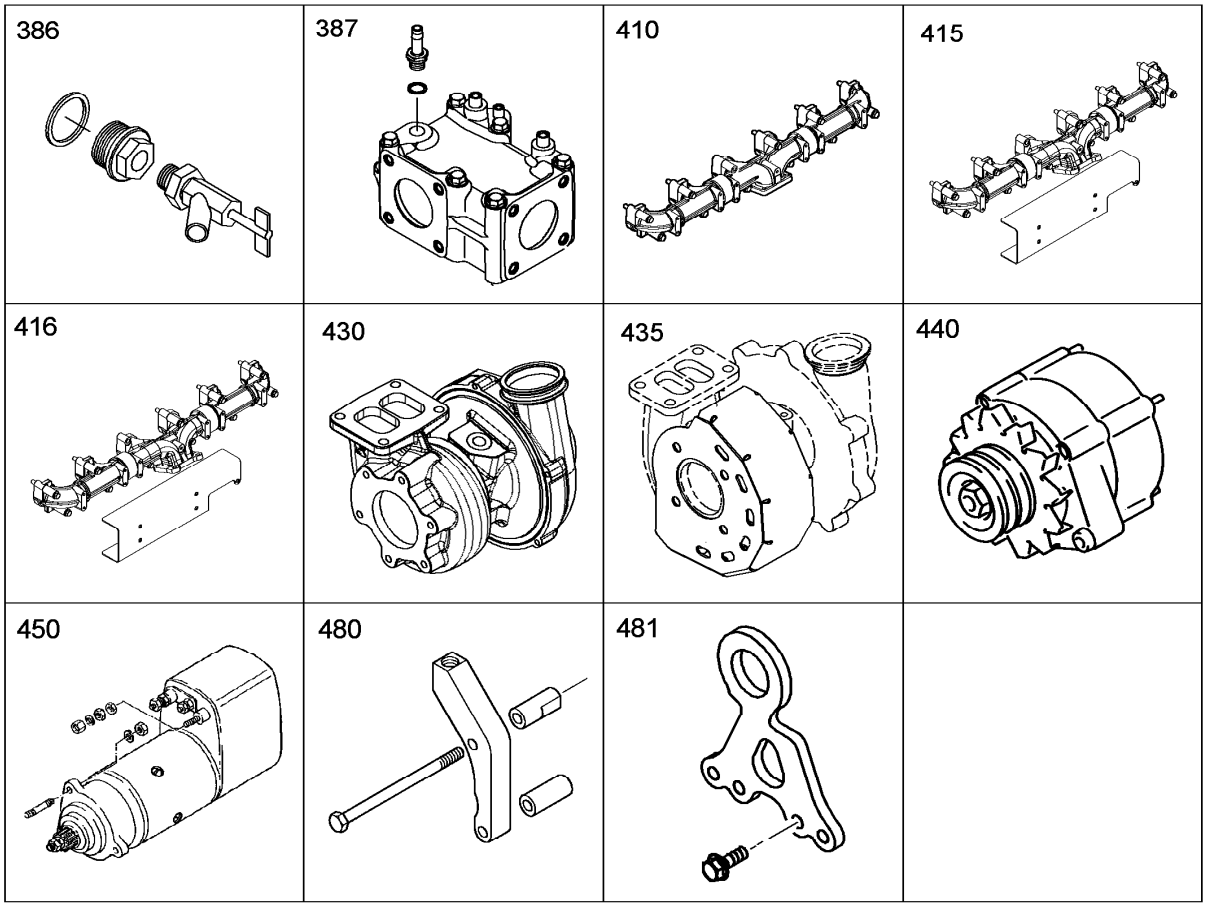

Pos.	Item	Quantity	Description	Designação	Serie	K
386		1	HEATER CONNECTION ⇨ ❑ 662	CONEXÃO DE AQUECIMENTO		
387		1	COOLING WATER AIR BLEEDING D 12 ⇨ ❑ 658	PURGAMENTO DA ÁGUA REFR		
410		1	EXHAUST PIPE ASSEMBLY ⇨ ❑ 670	TUBO DE ESCAPAMENTO MON		
415		1	HEAT PROTECTION W.FASTENING ⇨ ❑ 664	PROT.CONTRA CALOR COM FI		
416		1	HEAT PROTECTION W.FASTENING D936 ⇨ ❑ 663	PROT.CONTRA CALOR COM FI	2006047617-	
430		1	EXHAUST TC MOUNTING ⇨ ❑ 665	KIT DO TURBO COMPRESSOR		
435	10116015	1	COVER ⇨ ❑ 666	TAMPA		
440		1	GENERATOR, PRE-ASSEMBLED ⇨ ❑ 667	ALTERNADOR PRE-MONTADO		
450		1	STARTER ⇨ ❑ 669	MOTOR DE PARTIDA		
480		1	TRANSPORT DEVICE ATTACHEMENT ⇨ ❑ 672	DISPOSITIVO TRANSP.MONT.E		
481		1	TRANSPORT DEVICE ATTACHEMENT ⇨ ❑ 671	DISPOSITIVO TRANSP.MONT.E		

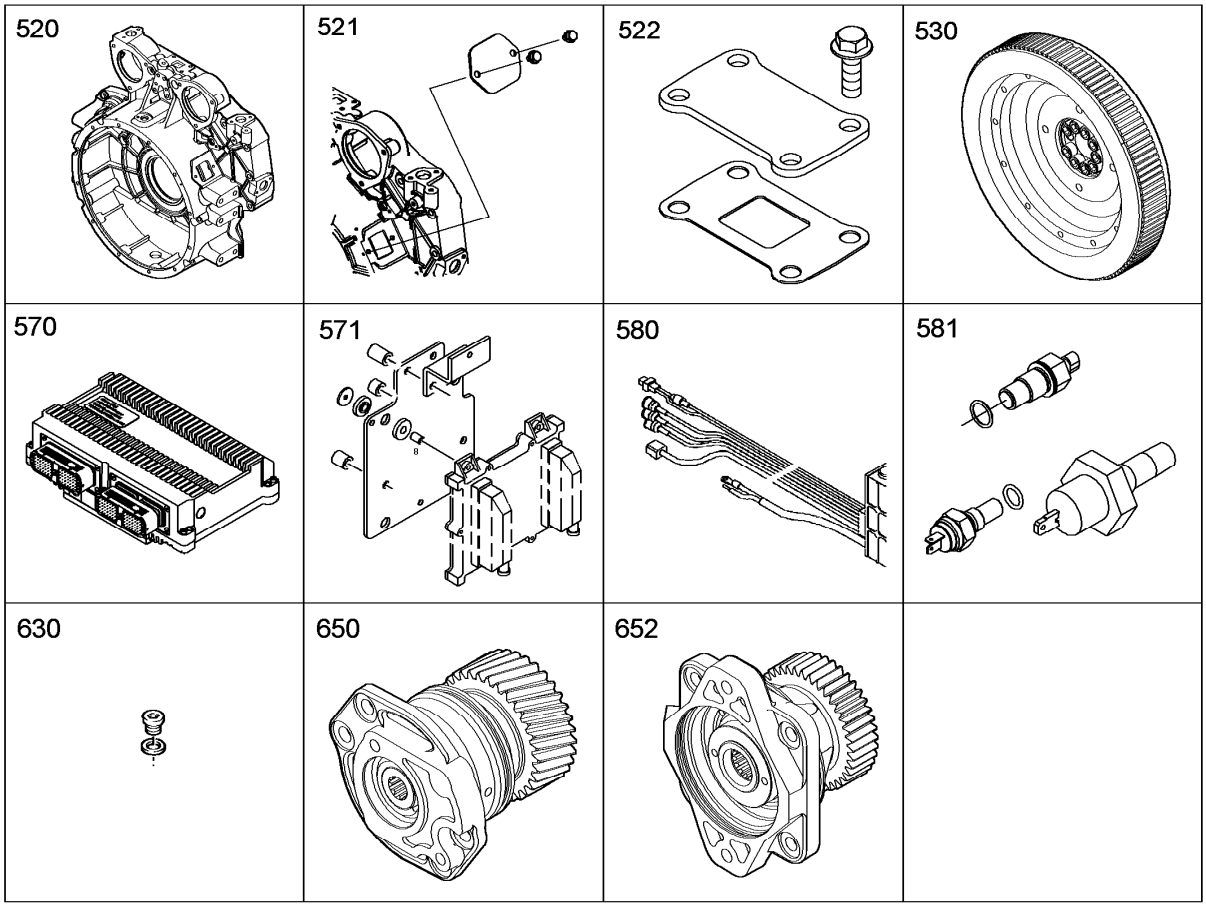

Pos.	Item	Quantity	Description	Designação	Serie	K
520		1	FLYWHEEL HOUSING MOUNTING SAE 2 ⇨ ❑ 680	CÁRTER VOLANTE MONT. EXT.		
521		1	LOCKING PIECES ⇨ ❑ 681	PEÇAS DE FECHAMENTO		
522		1	LOCKING PIECES ⇨ ❑ 682	PEÇAS DE FECHAMENTO	2006047617-	
530		1	FLYWHEEL ASSEMBLY SAE 2 ⇨ ❑ 683	VOLANTE MONTAGEM EXTERIO		
530		1	FLYWHEEL ASSEMBLY SAE 2 ⇨ ❑ 683	VOLANTE MONTAGEM EXTERIO		
570	10117248	1	MOTOR CONTROL DEVICE [211900235] ⇨ ❑ 685	UNIDADE DE CONTROLE DO MO		
571		1	CONTROL BOX ANNEXE ⇨ ❑ 684	DISPOSITIVO COMANDO - MONT		
580		1	CABLE HARNESS MOUNTING ⇨ ❑ 686	CHICOTE DE CABOS ACESSÓRI		
581		1	ENGINE CONTROL SENSORS ⇨ ❑ 673	SENSOR DE CONTROLE DO MO		
630		1	LOCKING PIECES ⇨ ❑ 689	PEÇAS DE FECHAMENTO		
650		1	POWER TAKE-OFF ADD-ON ⇨ ❑ 690	SAIDA AUXILIAR ANEXA		
652		1	POWER TAKE-OFF ADD-ON ⇨ ❑ 692	SAIDA AUXILIAR ANEXA		6

654

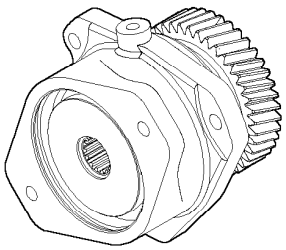

656

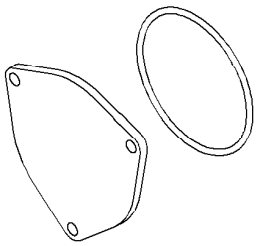

939

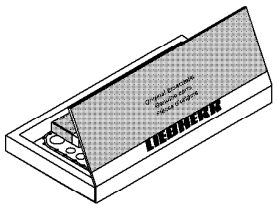

992

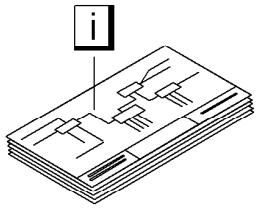

Pos.	Item	Quantity	Description	Designação	Serie	K
654		1	POWER TAKE-OFF ADD-ON ⇨ ❑ 691	SAIDA AUXILIAR ANEXA		
656		1	LOCKING PIECES ⇨ ❑ 698	PEÇAS DE FECHAMENTO		
939	10115838	1	SEAL KIT DIESEL ENGINE D936 KPL. ⇨ ❑ 702	JOGO DE VEDAÇÃO MOTOR DIE		
992		1	ENGINE ELECTRICS D936 L A6 MOTOR ⇨ ❑ 709	SISTEMA ELETRCO DO MOTOR		

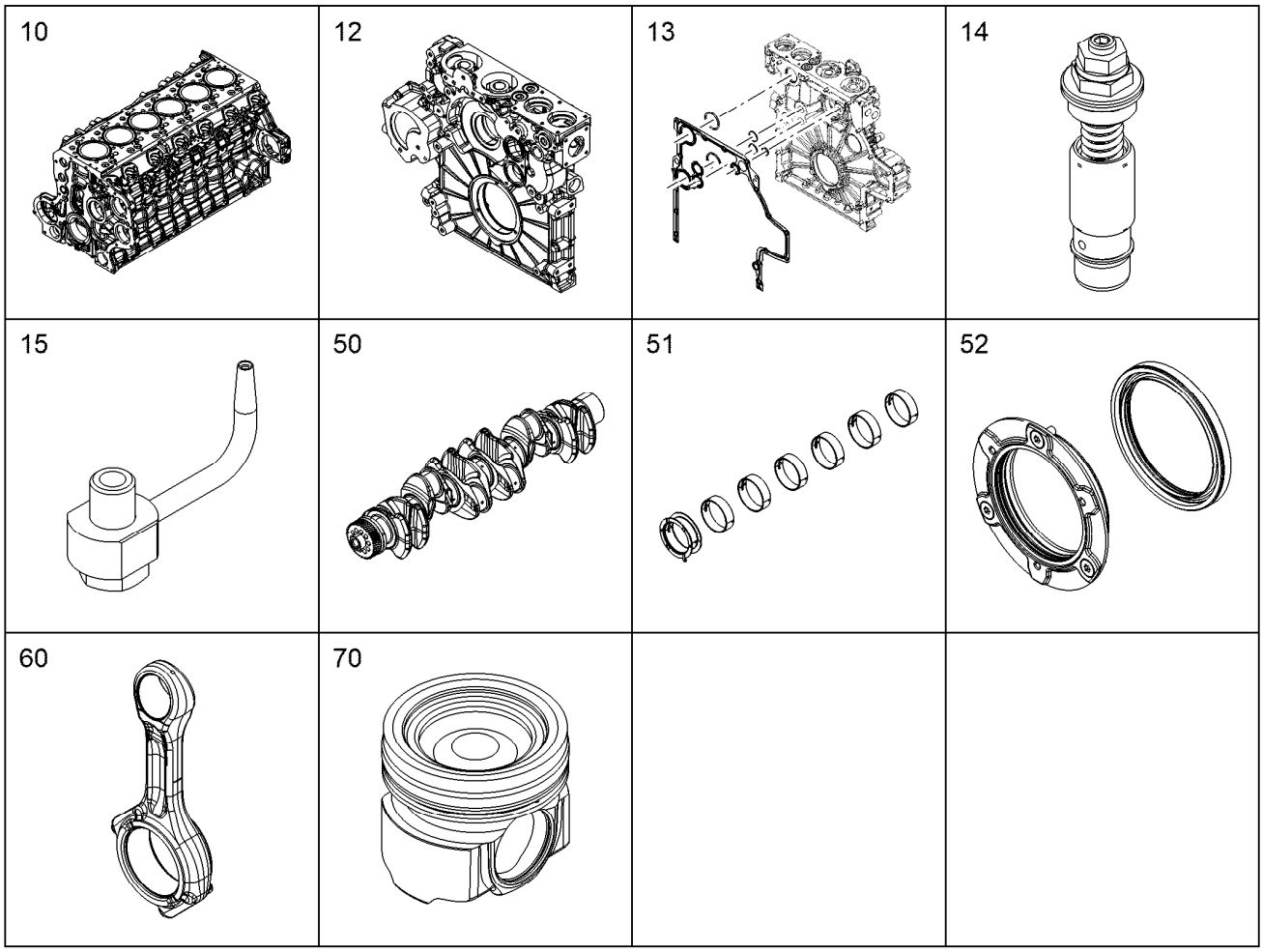

Pos.	Item	Quantity	Description	Designação	Serie	K
10	12824837	1	CRANKCASE CPL. WITH CYLINDER ⇨ ❑ 560	CÁRTER COMPLETO COM CILIN		
12		1	POWER UNIT SUPPORT ATTACHMENT ⇨ ❑ 570	SUPORTE DOS AGREGADOS		
13	10118014	1	SEAL KIT AGGREGATE CARRIER ⇨ ❑ 699	KIT DE VEDACAO		
14		1	FINAL CONTROL VALVE ⇨ ❑ 564	VALVULA DE REGULAGEM FINA	-2006040340	
14		1	FINAL CONTROL VALVE ⇨ ❑ 563	VALVULA DE REGULAGEM FINA	2006040341-	
15		6	PISTON COOLING ⇨ ❑ 562	ARREFECIMENTO DO PISTAO		
50		1	CRANKSHAFT WITH GEAR ⇨ ❑ 581	VIRABREQUIM COM ENGRENA		
51		1	SET MAIN BEARINGS ⇨ ❑ 582	JOGO DE MANCAIS DO VIRABRE		
52	9075133	1	CRANKSHAFT SEALING ⇨ ❑ 583	VEDAÇÃO DO VIRABREQUIM		
60		6	CONROD ⇨ ❑ 585	BIELA		
70	9080687	6	PISTON CPL. d=122 ⇨ ❑ 588	PISTÃO COMPLETO		

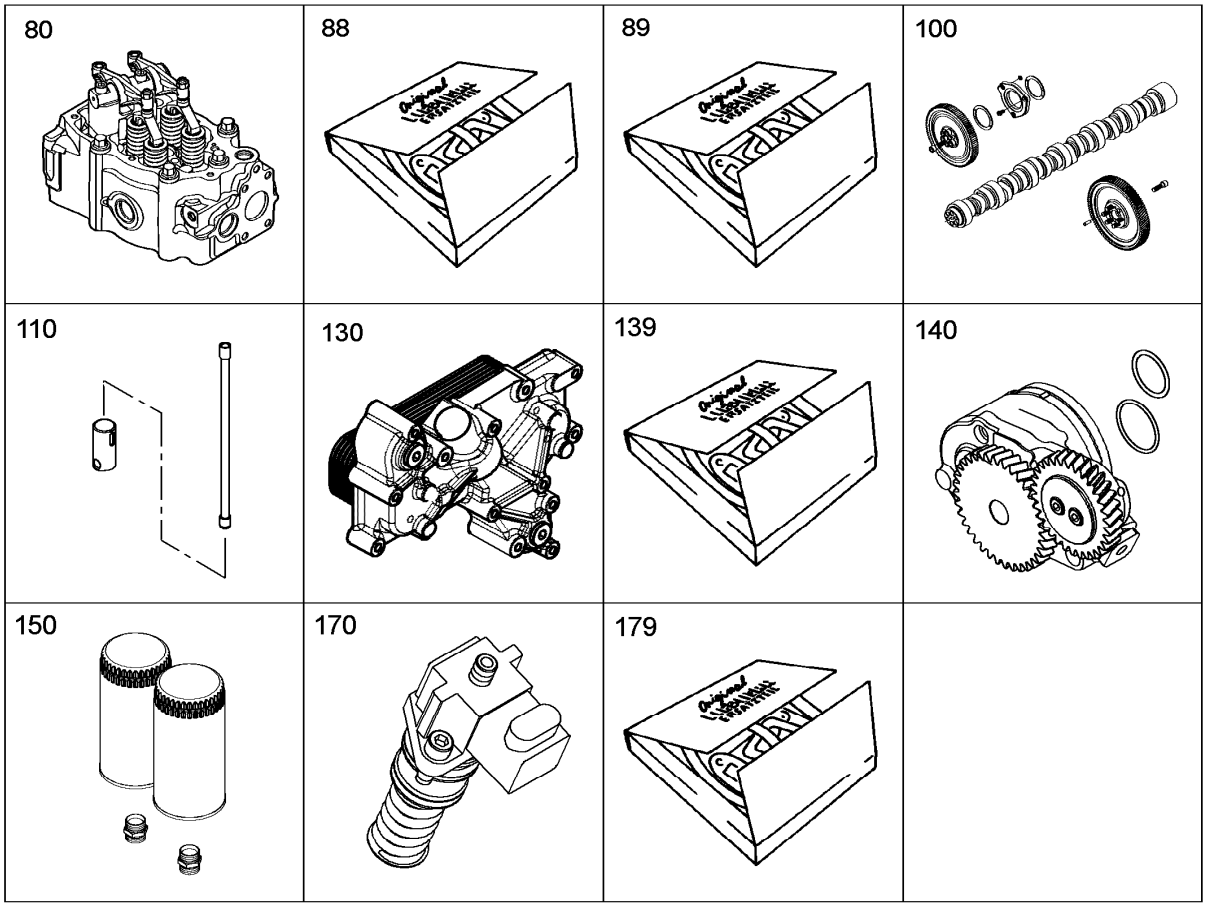

Pos.	Item	Quantity	Description	Designação	Serie	K
80		6	CYLINDER HEAD ASSEMBLY ⇨ ❑ 590	MONTAGEM DO CABEÇOTE DO		
88	10115851	1	SEAL KIT CYLINDER HEAD ⇨ ❑ 606	KIT DE VED DO CABEÇOTE CILÍN		
89	10115853	1	SEAL KIT ZYLINDER HEAD CPL. ⇨ ❑ 608	KIT DE VEDAÇÃO CABEÇOTE CO		
100		1	CAMSHAFT CPL. ⇨ ❑ 610	EIXO DE EXCÊNTRICOS COMPL		
110		6	CONTROL PARTS ⇨ ❑ 611	PEÇAS DO COMANDO		
130		1	OIL COOLER ADD-ON D936 ⇨ ❑ 612	RADIADOR DE ÓLEO - ACESSÓ		
139	10115850	1	SEALING SET OIL COOLER D936 ⇨ ❑ 615	KIT DE VEDAÇÃO		
140		1	LUBE OIL PUMP WITH FASTENING ⇨ ❑ 616	BOMBA ÓLEO LUBR. C/FIX.		2
150		1	LUBE OIL FILTER ASSEMBLY ⇨ ❑ 620	FILTRO ÓLEO LUBRIF. MONT. EX		
170		6	INJECTION PUMP ASSEMBLY ⇨ ❑ 621	BOMBA DE INJECAO - ACESSOR		
179	10115855	1	SEAL KIT INJECTION PUMP UP20 ⇨ ❑ 623	KIT VEDACAO DA BOMBA INJET		

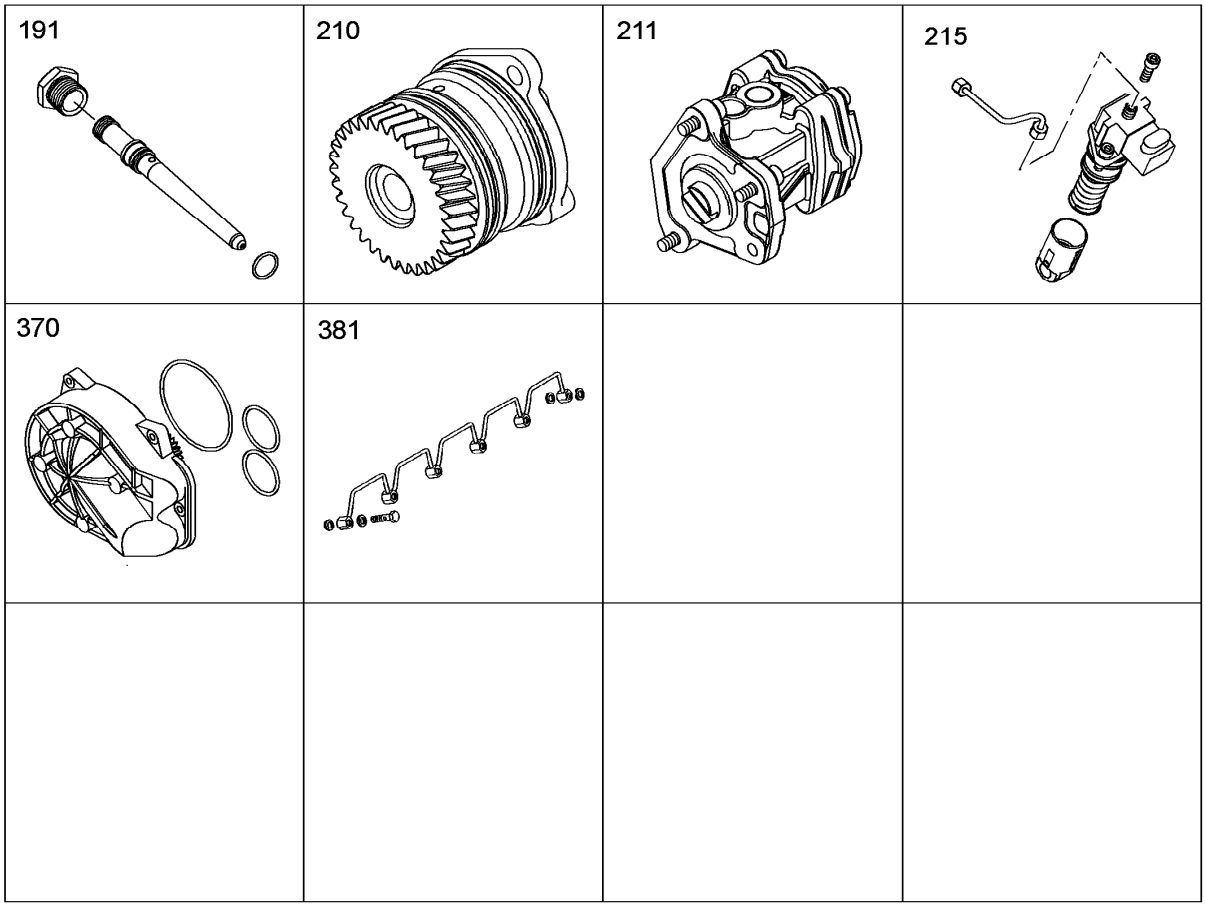

Pos.	Item	Quantity	Description	Designação	Serie	K
191	9075395	6	HIGH PRESSURE CONNECTOR ASS. ⇨ ❑ 627	BICO INJ. DE TUBO DE PRESSA		
210		1	POWER TAKE-OFF ADD-ON ⇨ ❑ 636	SAIDA AUXILIAR ANEXA		
211		1	FUEL PUMP ASSEMBLY ⇨ ❑ 622	BOMBA DE COMBUSTÍVEL ACE		
215	9080410	6	INJECTION LINE	TUBO DE INJEÇÃO		
370		1	WATER PUMP WITH FASTENING ⇨ ❑ 654	KIT MONTAGEM DA BOMBA AGU		6
381		1	PIPELINE INSTALLATION ⇨ ❑ 639	TUBULACAO ANEXO		

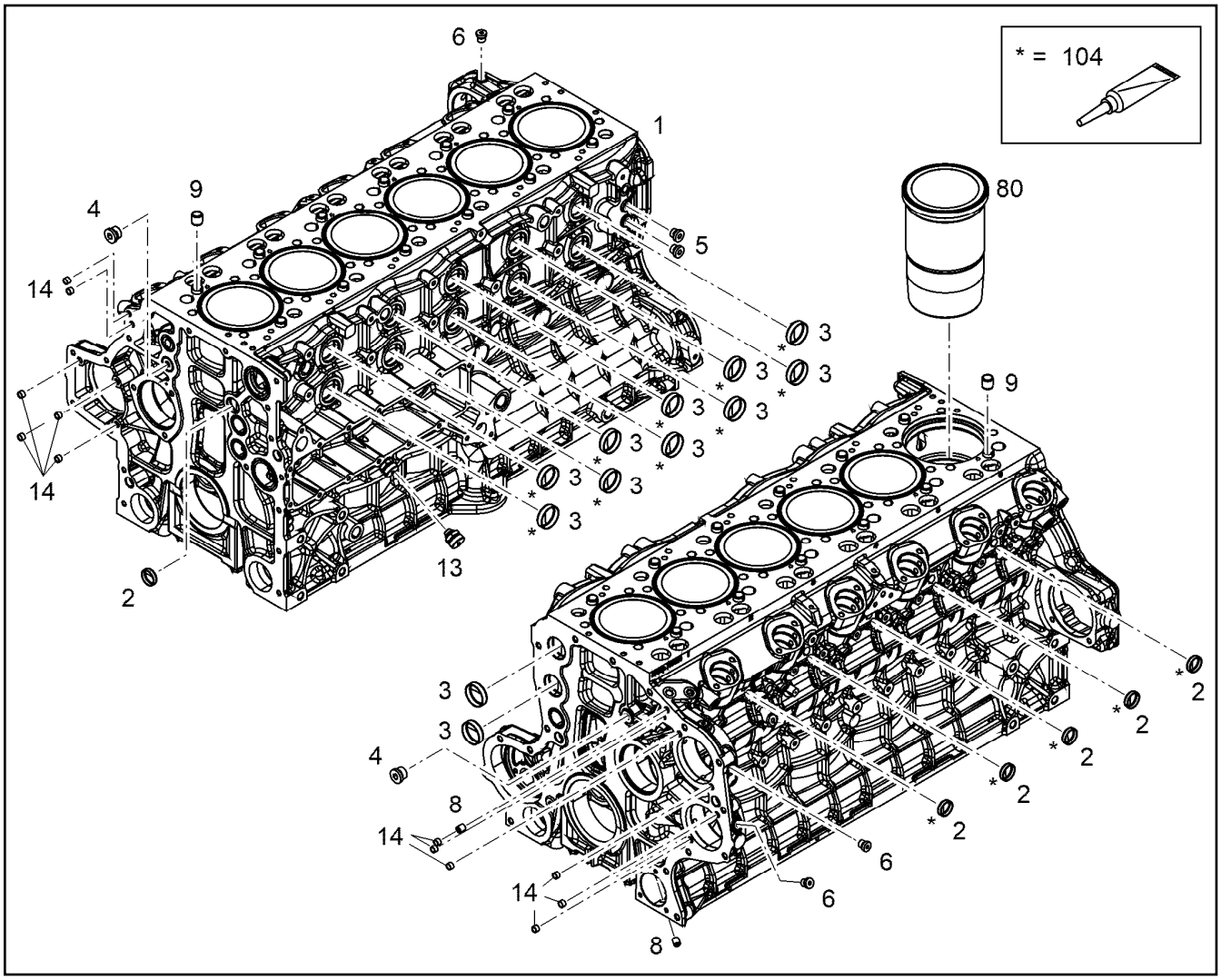

Pos.	Item	Quantity	Description	Designação	Serie	K
1		1	CRANKCASE PRE-ASSY. ⇨ ❑ 561	BLOCO DO MOTOR		
2	12209779	6	END COVER B/32	TAMPA DE FECHAMENTO		
3	12209783	12	END COVER B/45	TAMPA DE FECHAMENTO		
4	7380177	2	SCREW PLUG VSTI M22X1,5	PARAFUSO DE FECHAMENTO		
5	7382203	2	SCREW PLUG VSTI M16X1,5	PARAFUSO DE FECHAMENTO		
6	7380566	3	SCREW PLUG VSTI M14X1,5	PARAFUSO DE FECHAMENTO		
8	7382069	2	SEALING PLUG MB 850/12	TAMPÃO DE VEDAÇÃO		
9	9074798	12	TIGHT FIT SLEEVE 16X20X20	LUVA DE AJUSTE		1
13	9078233	1	VALVE M14X1,5 ⇨ ❑ 614	VÁLVULA		
14	10030837	12	SEALING PLUG LK 950/12	TAMPÃO DE VEDAÇÃO		
80	9073083	6	CYLINDER ⇨ ❑ 565	CILINDRO		
104	8655023	1	GLUE	COLA		

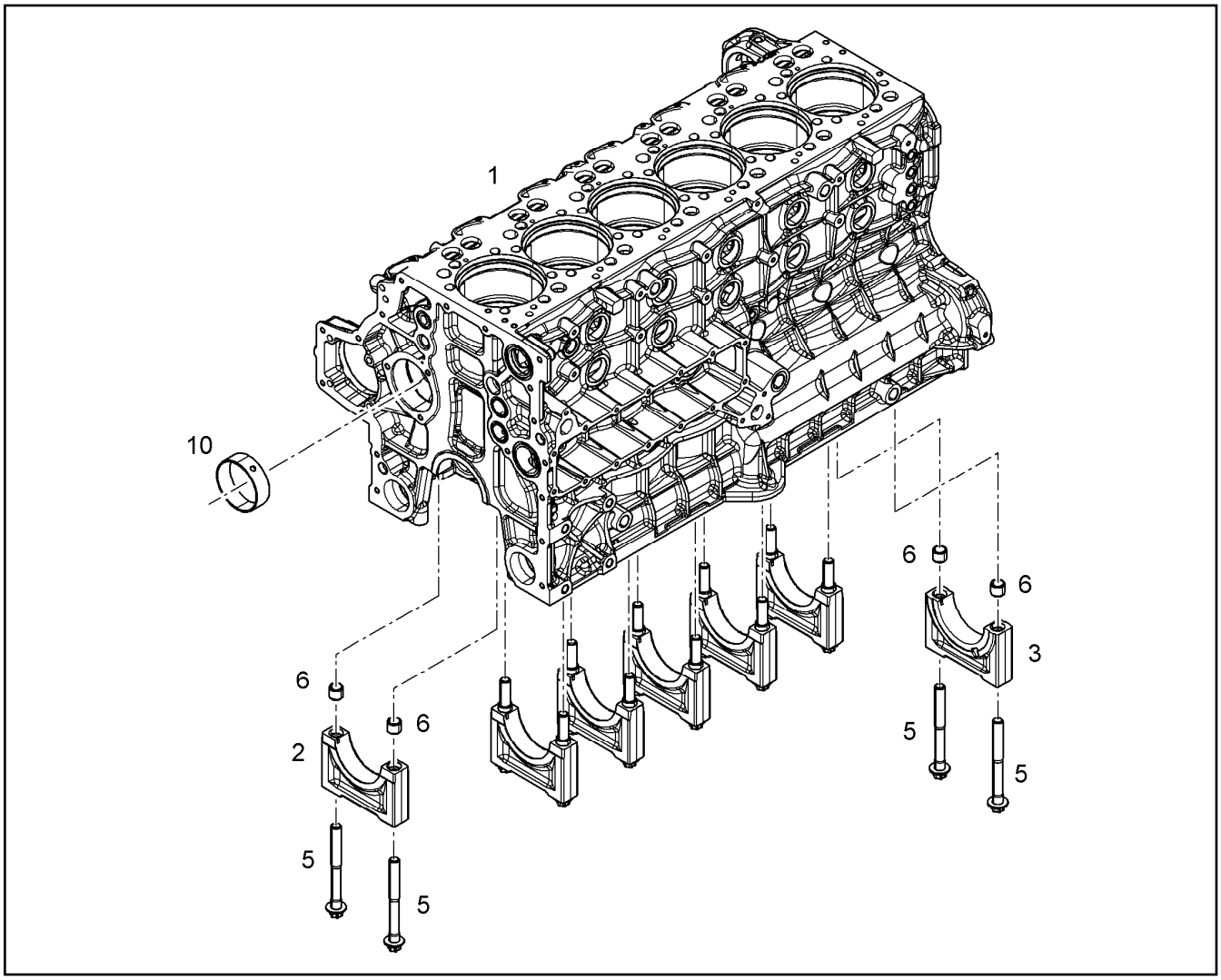

Pos.	Item	Quantity	Description	Designação	Serie	K
1		1	CRANKCASE	BLOCO DO MOTOR		
2		6	MAIN BEARING CAP			
3		1	TIGHT FIT BEARING COVER	TAMPA DE MANCAL DE AJUSTE		
5	10131581	14	HEXALOBULAR HEAD SCREW M18X170 32	PARAFUSO HEXAGONAL REDO		
6	9177636	14	TIGHT FIT SLEEVE 15,5X19,5X24	LUVA DE AJUSTE		1
10	9073745	7	CAMS SHAFT BUSHING	BUCHA DO EIXO DE COMANDO		

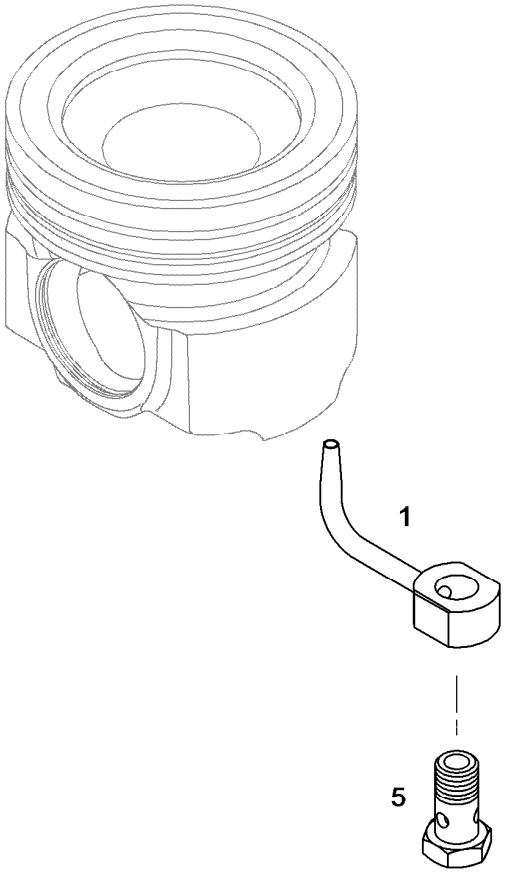

Pos.	Item	Quantity	Description	Designação	Serie	K
1	9073796	1	PISTON COOLING NOZZLE	BICO DE LUBRIFICACAO DO PI		
5	9073678	1	HOLLOW SCREW -2	PARAFUSO OCO		

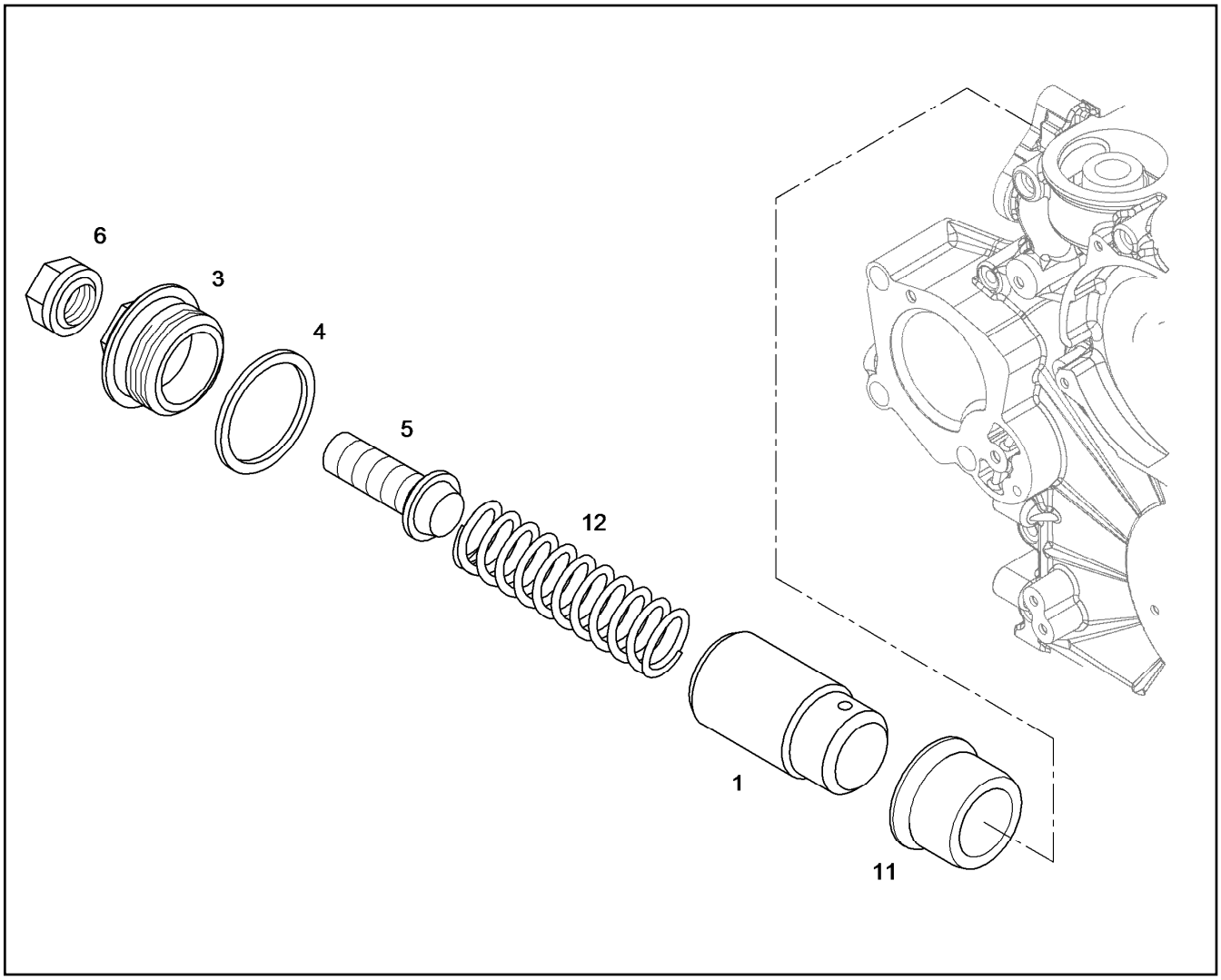

Pos.	Item	Quantity	Description	Designação	Serie	K
1	9075361	1	PISTON	PISTÃO		
3	9077172	1	SCREW PLUG M30X1,5 9SMnPb28K FE/ZN 5	PARAFUSO DE FECHAMENTO		
4	7101021	1	SEALING RING DIN 7603 A 30X36X2	ANEL DE VEDAÇÃO		
5	10117949	1	ADJUSTING SCREW M12X36X4 8.8 FE/ZN 5	PARAFUSO DE AJUSTE		
6	7381226	1	SEALING NUT M12	PORCA DE VEDACAO		
11	9133637	1	VALVE SEAT	ASSENTO DA VÁLVULA		
12	10120929	1	PRESSURE SPRING 2,5X16X61	MOLA DE PRESSÃO		

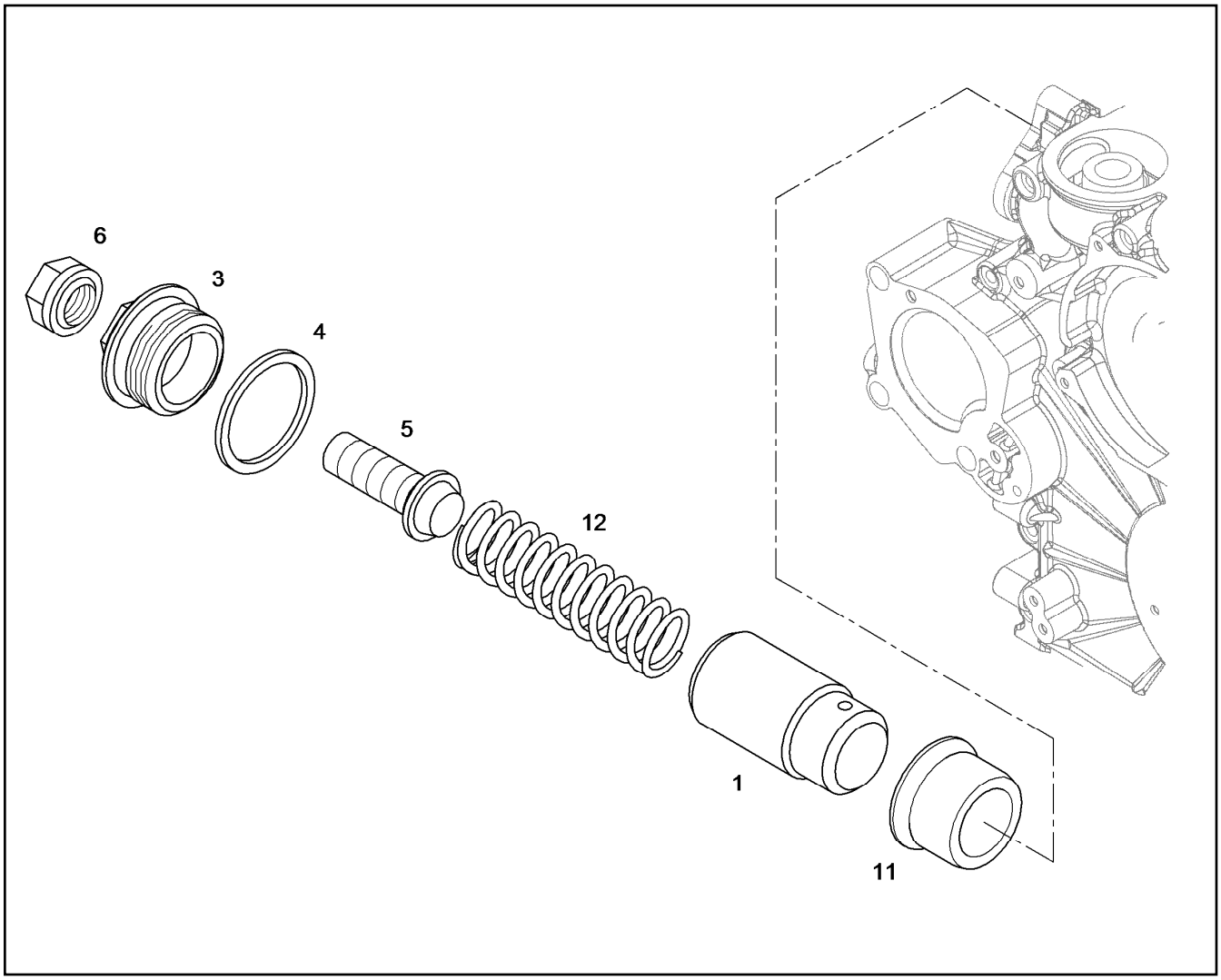

Pos.	Item	Quantity	Description	Designação	Serie	K
1	9075361	1	PISTON	PISTÃO		
3	9077172	1	SCREW PLUG M30X1,5 9SMnPb28K FE/ZN 5	PARAFUSO DE FECHAMENTO		
4	7101021	1	SEALING RING DIN 7603 A 30X36X2	ANEL DE VEDAÇÃO		
5	9075642	1	ADJUSTING SCREW M12X36X4 8.8 FE/ZN 5	PARAFUSO DE AJUSTE		
6	7381226	1	SEALING NUT M12	PORCA DE VEDACAO		
11	9133637	1	VALVE SEAT	ASSENTO DA VÁLVULA		
12	9145973	1	PRESSURE SPRING 2,25X18X62	MOLA DE PRESSÃO		

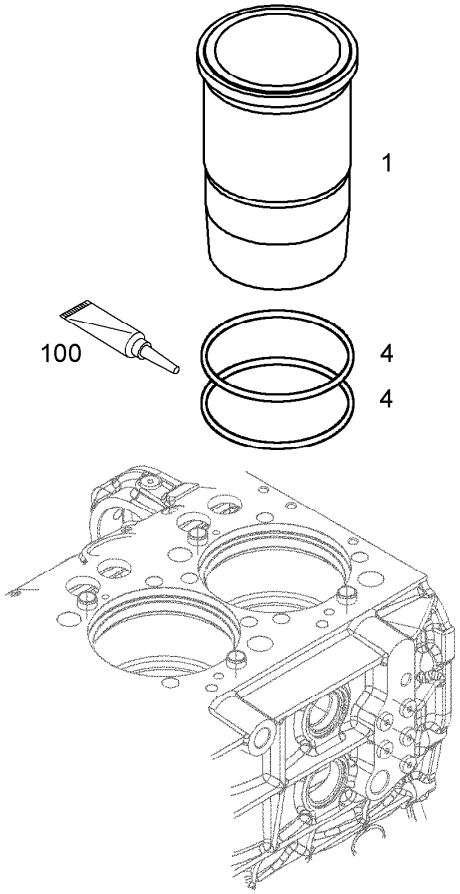

Pos.	Item	Quantity	Description	Designação	Serie	K
1	9080084	1	CYLINDER BUSHING	BUCHA CILINDRICA		
4	10006499	2	O-RING 140	ANEL-O		
100	10282622	1	GREASE STABURAGS NBU 30/0,010kg	GRAXA		

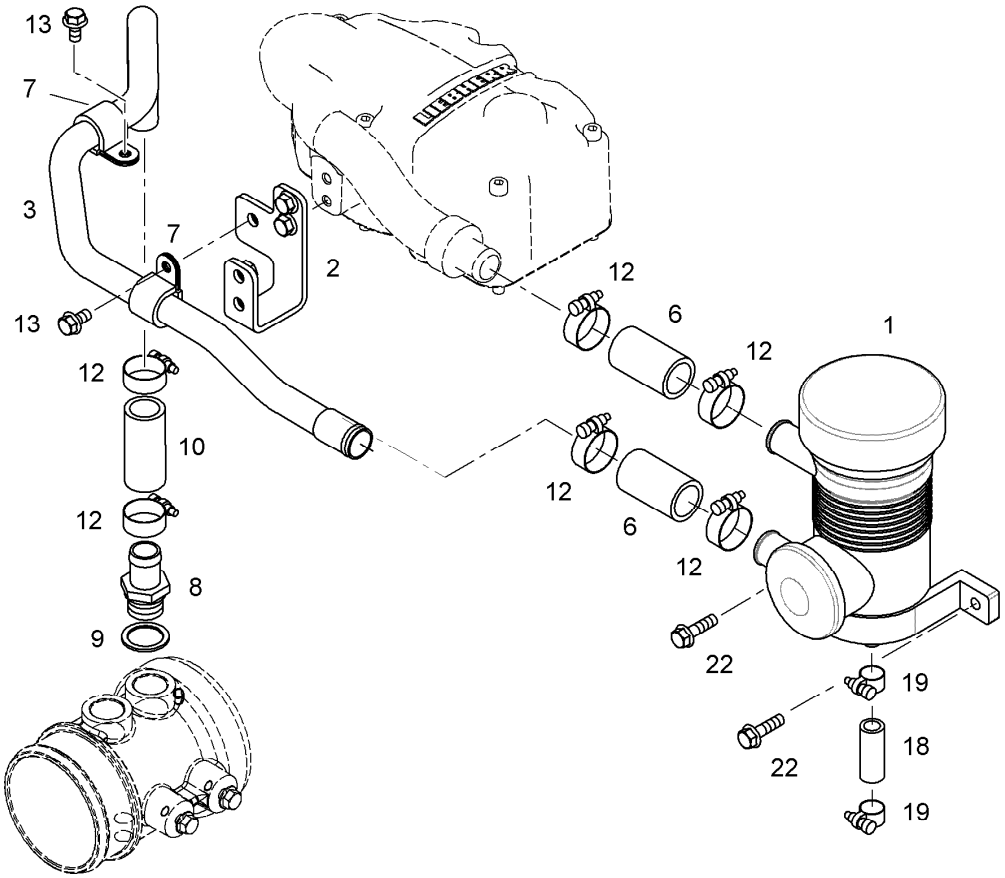

Pos.	Item	Quantity	Description	Designação	Serie	K
1	9075483	1	CRANKCASE BREATHER ⇨ ❑ 568	VENTILACAO DO CARTER		
2	10119127	1	CLAMP - ADD-ON UNIT ⇨ ❑ 633	SUPORTE DE MONTAGEM		
3	10119168	1	PIPELINE 22X1,5	TUBULAÇÃO		
6	9271340	2	RUBBER CONNECTION 25 X35/33X56 L.	LUVA DE BORRACHA		
7	7381630	2	CLAMP DIN 3016-1 D1 22X20 W1-2-MVQ	BRAÇADEIRA		
8	9140351	1	HOSE NIPPLE DN23,7	NIPLE DE MANGUEIRA		6
9	10011870	1	SEALING RING 26,7X34,93X2	ANEL DE VEDAÇÃO		
10	9273161	1	RUBBER CONNECTION 22X30X65L.	LUVA DE BORRACHA		
12	4900778	6	HOSE CLAMP DIN 3017-1 A 26 20-32X13 W2-	ABRAÇADEIRA DE MANGUEIRA		
13	11656992	2	HEX SCREW EN 1665 M8X16 8.8 480H	PARAFUSO SEXTAVADO		
18	9079603	1	RUBBER CONNECTION 12 X 18 X 45	LUVA DE BORRACHA		
19	4981029	2	HOSE CLAMP DIN 3017-2 B1 17 16 - 18X12	ABRAÇADEIRA DE MANGUEIRA	-2015140113	
19	4601105	2	CLAMP DIN 3017-1 A 16 12-20X9 W2-2	BRAÇADEIRA	2015140114-	
22	10007782	2	HEX SCREW DIN 6921 M8X30 8.8 A2C	PARAFUSO SEXTAVADO		

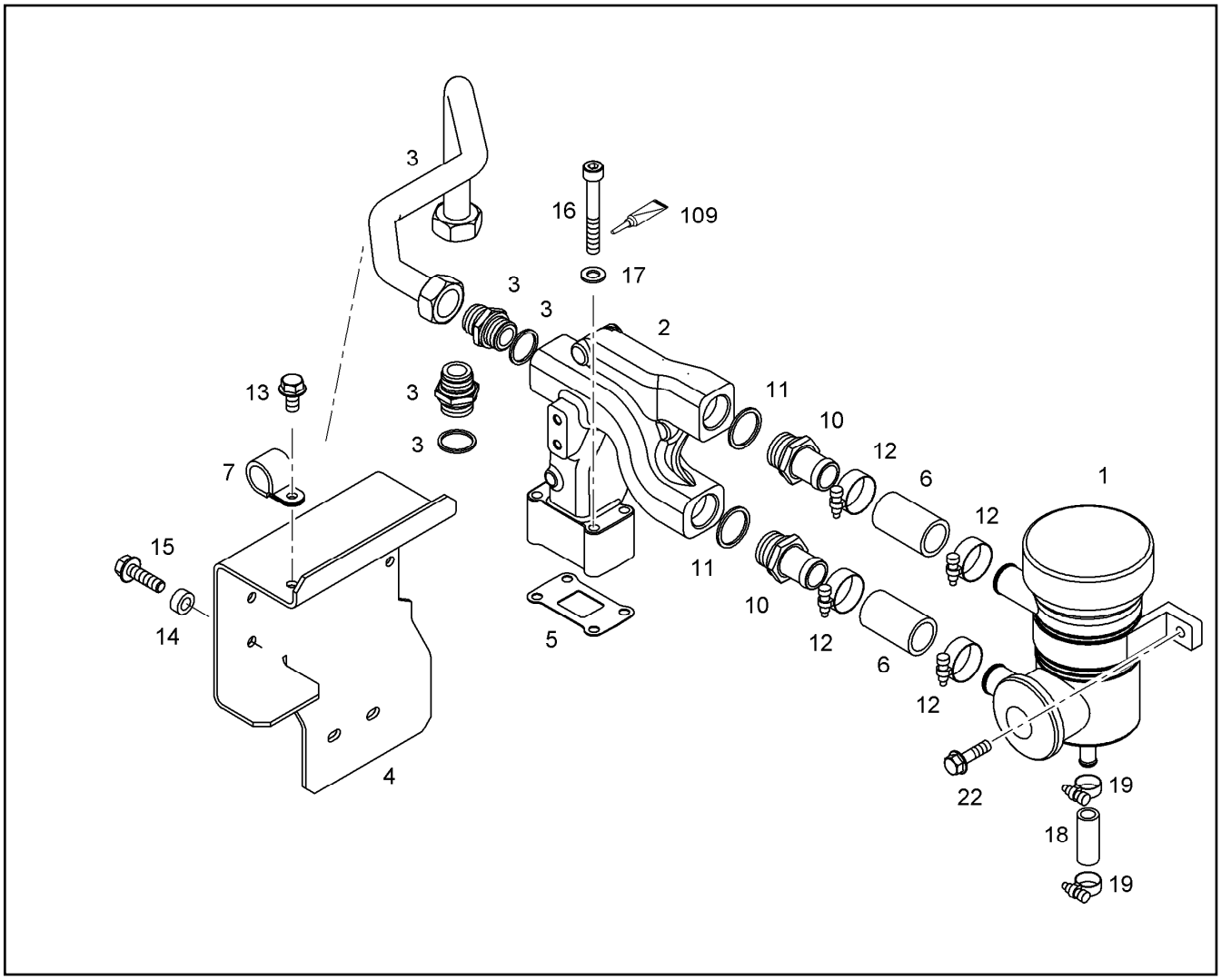

Pos.	Item	Quantity	Description	Designação	Serie	K
1	9075483	1	CRANKCASE BREATHER ⇨ ❑ 568	VENTILACAO DO CARTER		
2	9079009	1	HOUSING	CARCAÇA		
3	10118329	1	REPAIR KIT PIPE LINE D936 ⇨ ❑ 569	KIT DE REPARO DA TUBULAÇÃ		
4	10115540	1	HEAT PROTECTION SHEET	CHAPA DE PROTEÇÃO TÉRMIC		
5	9079130	1	SEAL 1	VEDAÇÃO		
6	9271340	2	RUBBER CONNECTION 25 X35/33X56 L.	LUVA DE BORRACHA		
7	7381630	1	CLAMP DIN 3016-1 D1 22X20 W1-2-MVQ	BRAÇADEIRA		
10	9274720	2	HOSE NIPPLE DN25	NIPLE DE MANGUEIRA		
11	10113731	2	SEALING RING 30,7X39X2	ANEL DE VEDAÇÃO		
12	4900778	4	HOSE CLAMP DIN 3017-1 A 26 20-32X13 W2-	ABRAÇADEIRA DE MANGUEIRA		
13	11656992	1	HEX SCREW EN 1665 M8X16 8.8 480H	PARAFUSO SEXTAVADO		
14	9132577	4	DISTANCE SLEEVE 8,5X18X10	LUVA DISTANCIADORA		6
15	10009007	4	HEX SCREW DIN 6921 M8X25 8.8 A2C	PARAFUSO SEXTAVADO		
16	4600188	4	SOCKET HEAD SCREW ISO 4762 M8X60 8.8	PARAFUSO CILÍNDRICO		
17	4980155	4	WASHER 8 200HV	ARRUELA		
18	9079603	1	RUBBER CONNECTION 12 X 18 X 45	LUVA DE BORRACHA		
19	4981029	2	HOSE CLAMP DIN 3017-2 B1 17 16 - 18X12	ABRAÇADEIRA DE MANGUEIRA		
22	10007782	2	HEX SCREW DIN 6921 M8X30 8.8 A2C	PARAFUSO SEXTAVADO		
109	8628192	1	SCREW LOCKING	COLA PARA ELEMENTOS FIXA		

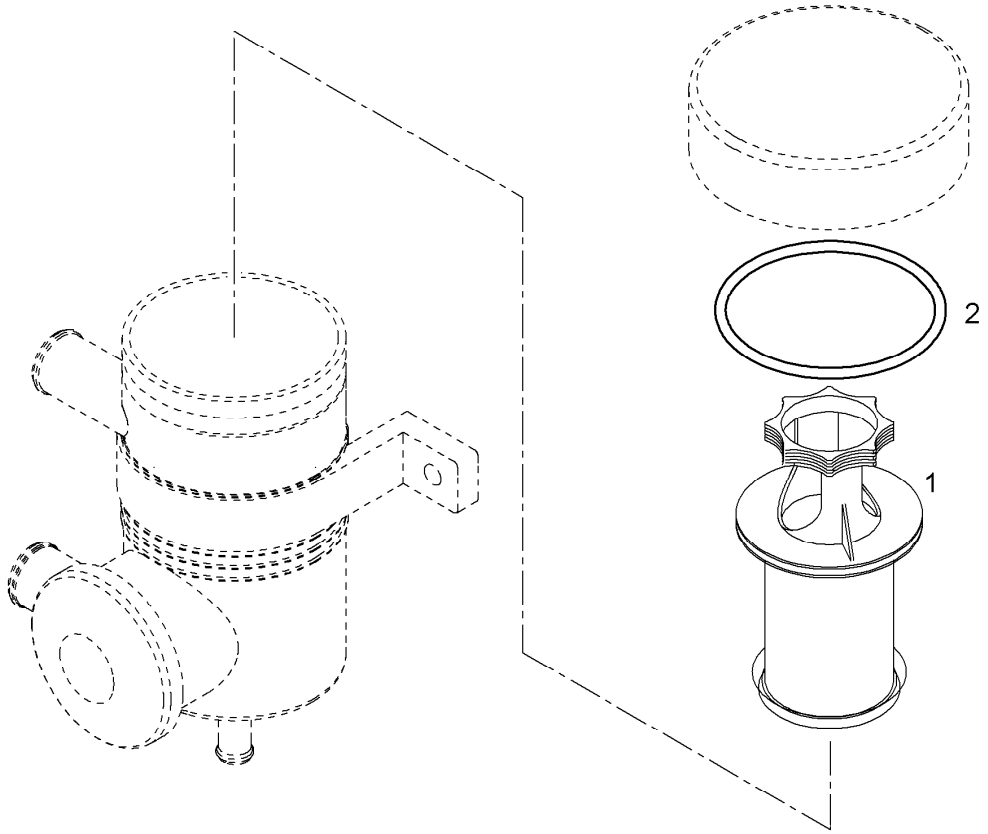

Pos.	Item	Quantity	Description	Designação	Serie	K
1	12417487	1	SPARE ELEMENT OEL	ELEMENTO DE SUBST. DO FILTR		
2	10295116	1	O-RING DIN 3771 79X4	ANEL-O		

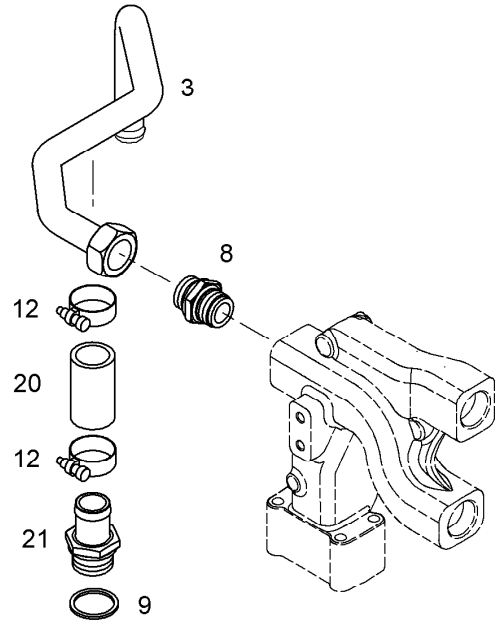

Pos.	Item	Quantity	Description	Designação	Serie	K
3	10117950	1	PIPELINE	TUBULAÇÃO		
8	7362515	1	FITTING GE 22L M26X1,5	UNIÃO ROSCADA		
9	10011870	1	SEALING RING 26,7X34,93X2	ANEL DE VEDAÇÃO		
12	4900778	2	HOSE CLAMP DIN 3017-1 A 26 20-32X13 W2-	ABRAÇADEIRA DE MANGUEIRA		
20	9273161	1	RUBBER CONNECTION 22X30X65L.	LUVA DE BORRACHA		
21	9140351	1	HOSE NIPPLE DN23,7	NIPLE DE MANGUEIRA		6

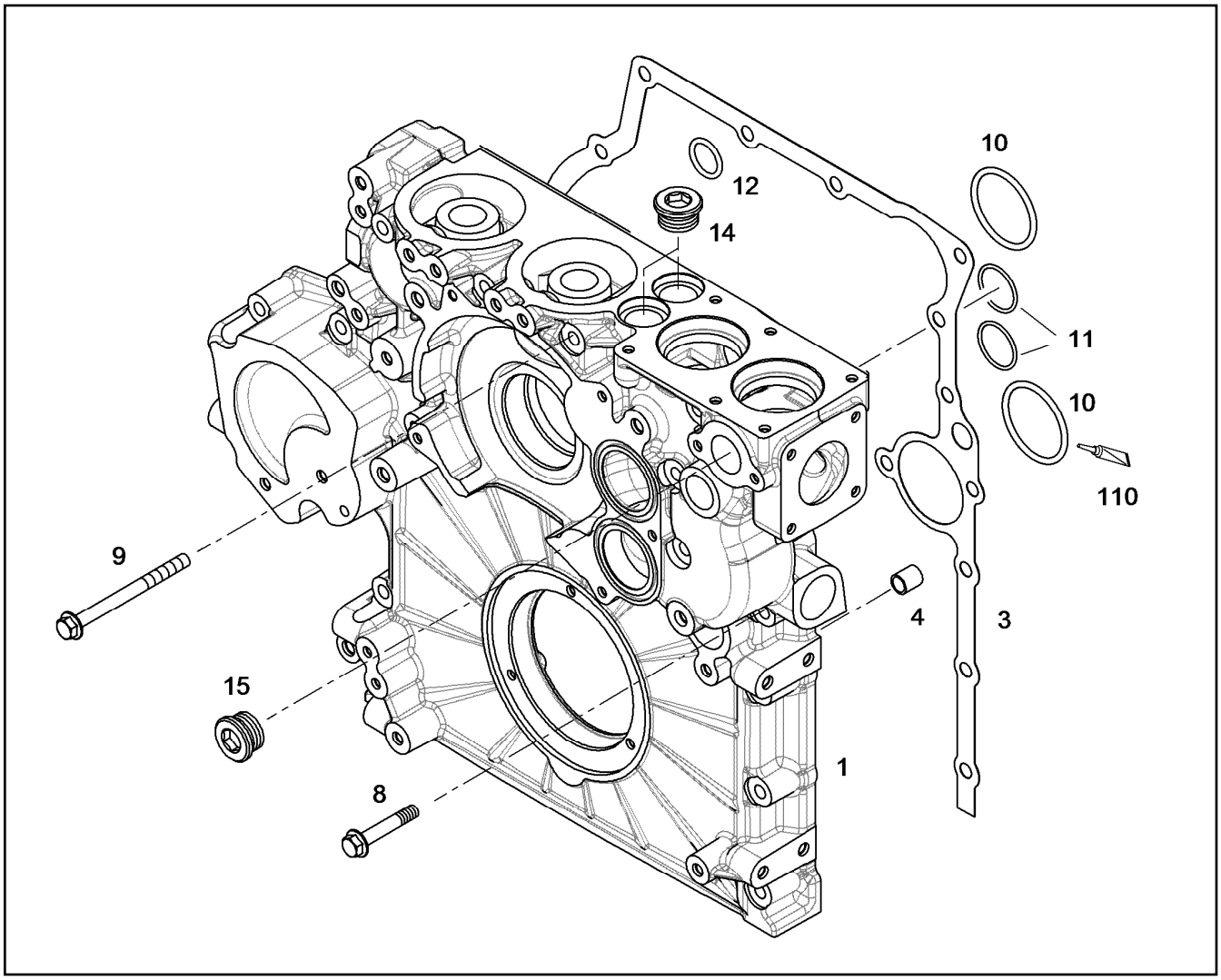

Pos.	Item	Quantity	Description	Designação	Serie	K
1	10141908	1	POWER UNIT SUPPORT	SUPORTE DOS AGREGADOS		
3	10126738	1	SEAL 0,33	VEDAÇÃO		
4	10134348	2	TIGHT FIT SLEEVE 16X20X20	LUVA DE AJUSTE		1
8	10299587	12	HEX SCREW EN 1665 M10X60 10.9 FLZN	PARAFUSO SEXTAVADO		
9	10037312	6	HEX SCREW DIN 6921 M10X120 10.9 A3C	PARAFUSO SEXTAVADO		
10	7381779	2	O-RING DIN 3771 59,92X3,53	ANEL-O		
11	7380653	2	O-RING ISO 3601-1 34,59X2,62	ANEL-O		
12	10004261	1	O-RING 26X3	ANEL-O		
14	7382204	3	SCREW PLUG M30X1,5 ED-FPM	PARAFUSO DE FECHAMENTO		
15	10043136	1	SCREW PLUG M33X2 ED-FPM	PARAFUSO DE FECHAMENTO		
110	10282622	1	GREASE STABURAGS NBU 30/0,010kg	GRAXA		

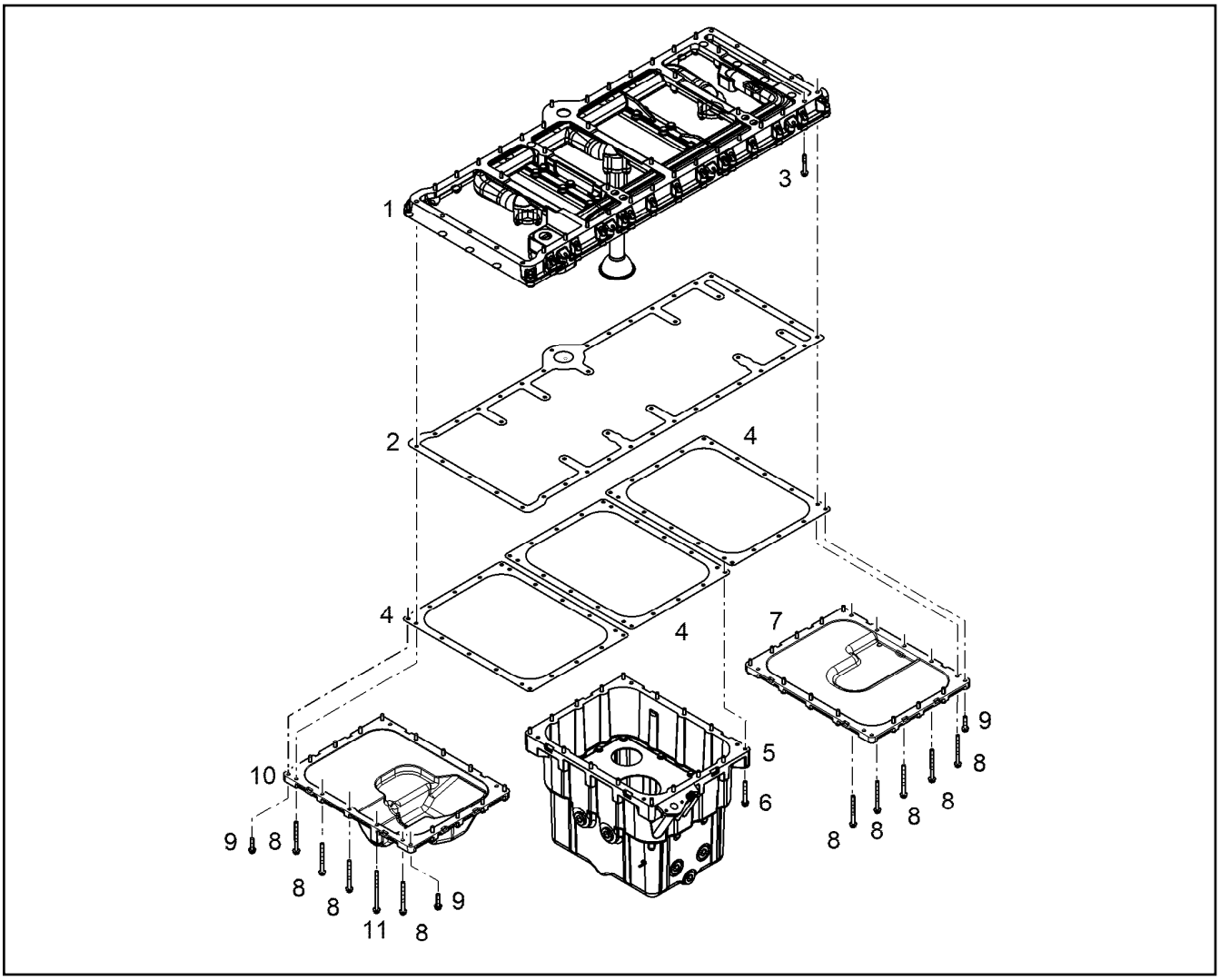

Pos.	Item	Quantity	Description	Designação	Serie	K
1	12832453	1	LADDER-TYPE FRAME PRE-ASSEMBLYD93			
2	12582865	1	SEAL 1X10	VEDAÇÃO		
3	10333554	34	HEX SCREW DIN 6921 M8X55 8.8	PARAFUSO SEXTAVADO		
4	10123735	3	SEAL	VEDAÇÃO		
5	12832454	1	OIL SUMP PRE-ASS. ⇨ ❑ 574	CARTER DE ÓLEO		
6	12210057	16	HEX SCREW EN 1665 M8X65 8.8 480H	PARAFUSO SEXTAVADO		
7		1	COVER PRE-ASSY. ⇨ ❑ 572	TAMPA PRÉ MONTADA		6
8	10876385	9	HEX SCREW EN 1665 M8X90 8.8 480H	PARAFUSO SEXTAVADO		
9	11827987	26	HEX SCREW EN 1665 M8X35 8.8 480H	PARAFUSO SEXTAVADO		
10		1	COVER PRE-ASSY. ⇨ ❑ 573	TAMPA PRÉ MONTADA		6
11	12207553	1	HEX SCREW EN 1665 M8X120 8.8 480H	PARAFUSO SEXTAVADO		

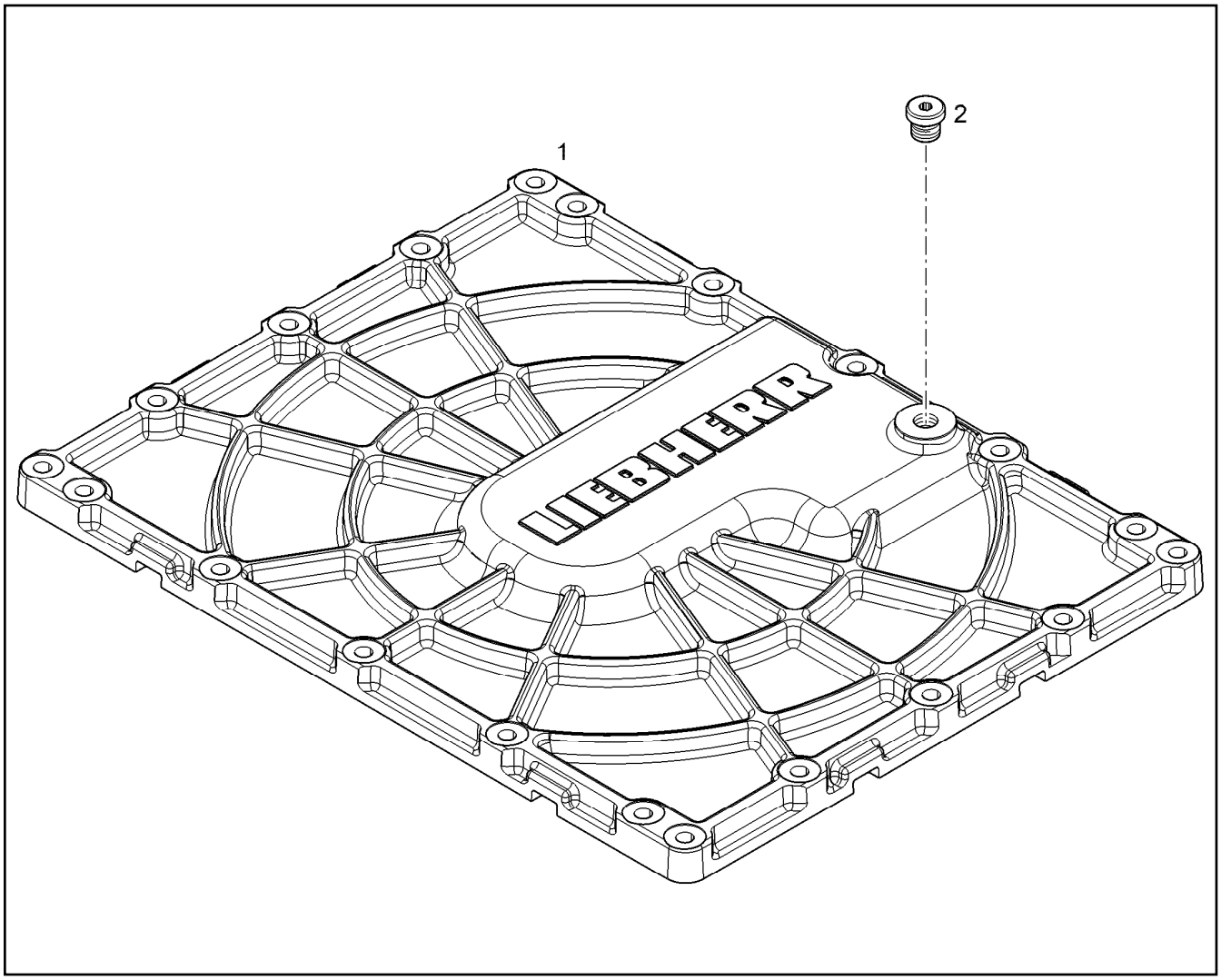

Pos.	Item	Quantity	Description	Designação	Serie	K
1	10123870	1	SHEET	PLACA DE APOIO		
2	7380566	1	SCREW PLUG VSTI M14X1,5	PARAFUSO DE FECHAMENTO		

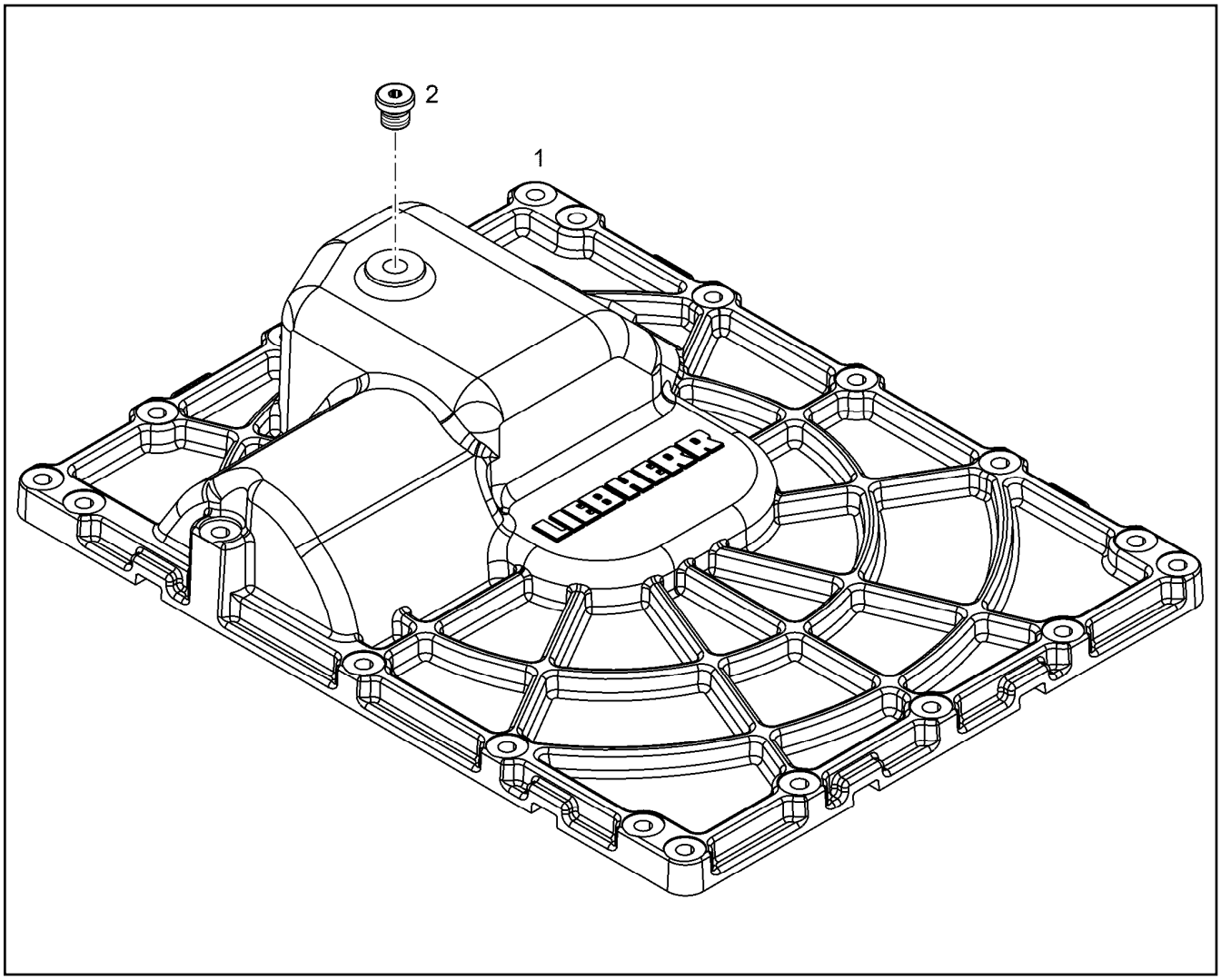

Pos.	Item	Quantity	Description	Designação	Serie	K
1	10123873	1	SHEET	PLACA DE APOIO		
2	7380566	1	SCREW PLUG VSTI M14X1,5	PARAFUSO DE FECHAMENTO		

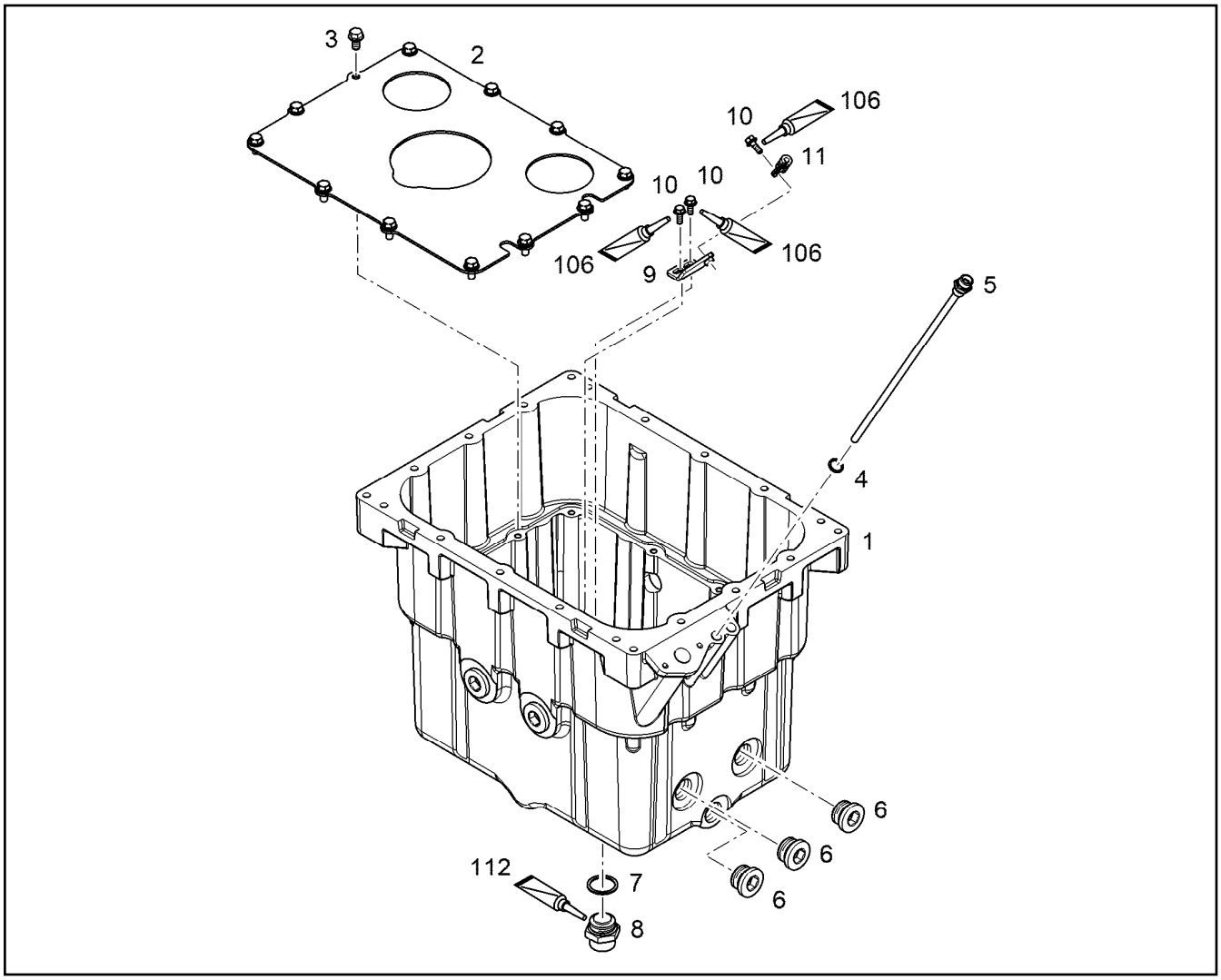

Pos.	Item	Quantity	Description	Designação	Serie	K
1		1	OIL SUMP	CÁRTER DE ÓLEO		
2	9079494	1	SHEET	PLACA DE APOIO		
3	10005511	12	HEX SCREW DIN 6921 M8X16 8.8	PARAFUSO SEXTAVADO		
4	7101008	1	SEALING RING DIN 7603 A 14X18	ANEL DE VEDAÇÃO		
5	9079845	1	TUBE	TUBO		
6	7382204	3	SCREW PLUG M30X1,5 ED-FPM	PARAFUSO DE FECHAMENTO		
7	7101021	1	SEALING RING DIN 7603 A 30X36X2	ANEL DE VEDAÇÃO		
8	5004624	1	OIL DRAIN PLUG M 30 1,5 ⇨ ❑ 577	PARAFUSO DE DRENAGEM DE Ó		
9	9079844	1	HOLDER	SUPORTE		
10	11840297	3	HEX SCREW EN 1665 M6X16 8.8 480H	PARAFUSO SEXTAVADO		
11	7381292	1	CLAMP DIN 3016-1 D1 6X15 W1-2-MVQ	BRAÇADEIRA		
106	8700039	1	ADHESIVE 50ML TUBE ROT	COLA		
112	8627609	1	SEALANT	MATERIAL VEDANTE		

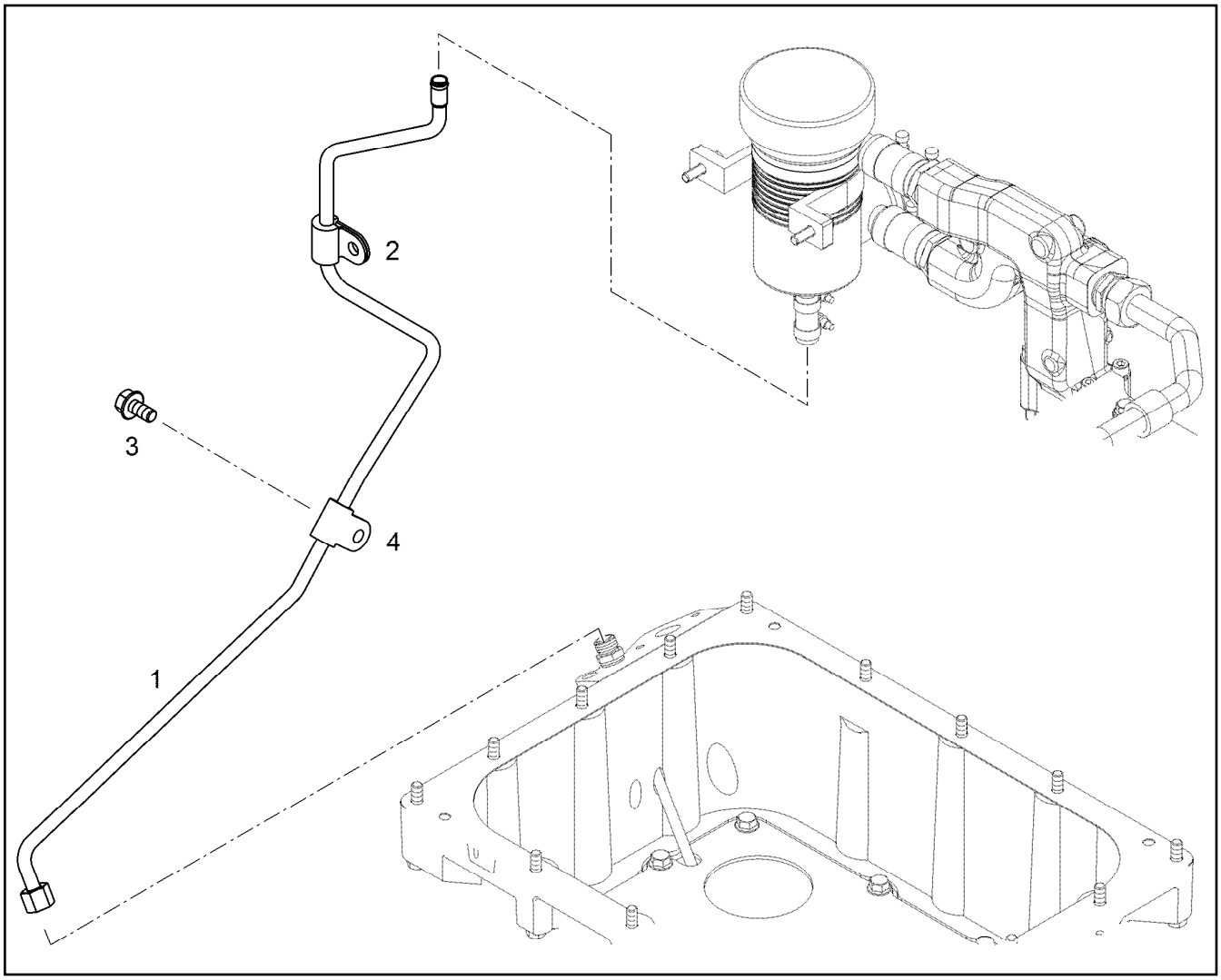

Pos.	Item	Quantity	Description	Designação	Serie	K
1	9079972	1	OIL RETURN PIPE 10X1	TUBO DE RETORNO DE ÓLEO		
2	7382092	2	CLAMP DIN 3016-1 D1 10X25 W1-2-MVQ	BRAÇADEIRA		
3	10016906	1	HEX SCREW DIN 6921 M8X20 8.8 A2C	PARAFUSO SEXTAVADO		
4	7381628	1	CLAMP DIN 3016-1 D1 10X20 W1-2-MVQ	BRAÇADEIRA		

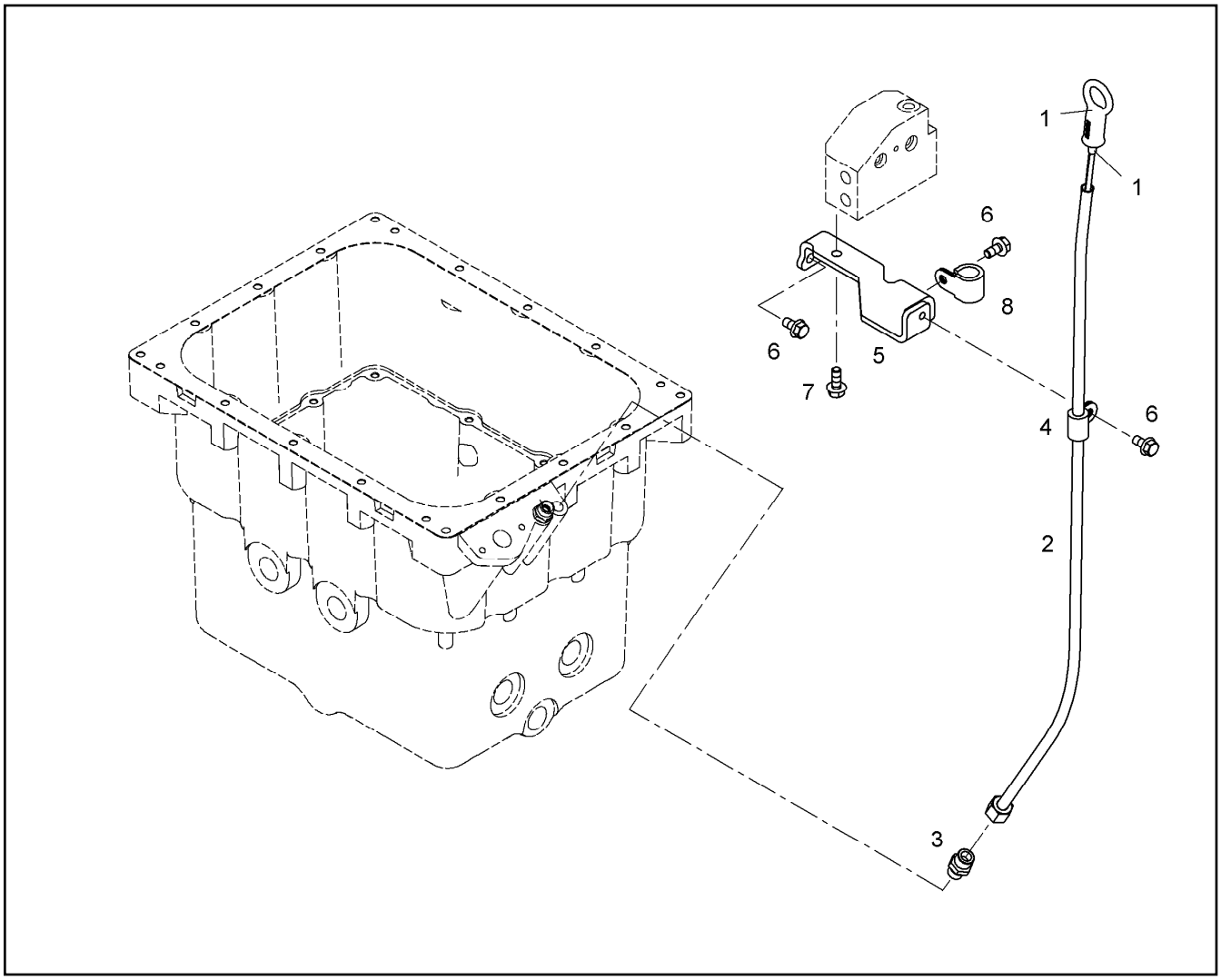

Pos.	Item	Quantity	Description	Designação	Serie	K
1	10115740	1	OIL DIPSTICK	VARETA DE NÍVEL DE ÓLEO C/		
1	10215824	1	O-RING DIN 3771 5,10X1,60	ANEL-O		
2	9079867	1	GUIDING PIPE	TUBO GUIA		
3	4981235	1	FITTING GE 10L M14X1,5 ED VITON	UNIÃO ROSCADA		
4	7381628	1	CLAMP DIN 3016-1 D1 10X20 W1-2-MVQ	BRAÇADEIRA		
5	10119311	1	HOLDER	SUPORTE		
6	11656992	3	HEX SCREW EN 1665 M8X16 8.8 480H	PARAFUSO SEXTAVADO		
7	10016906	1	HEX SCREW DIN 6921 M8X20 8.8 A2C	PARAFUSO SEXTAVADO		
8	7381635	1	CLAMP DIN 3016-1 D1 18X20 W1-2-MVQ	BRAÇADEIRA		

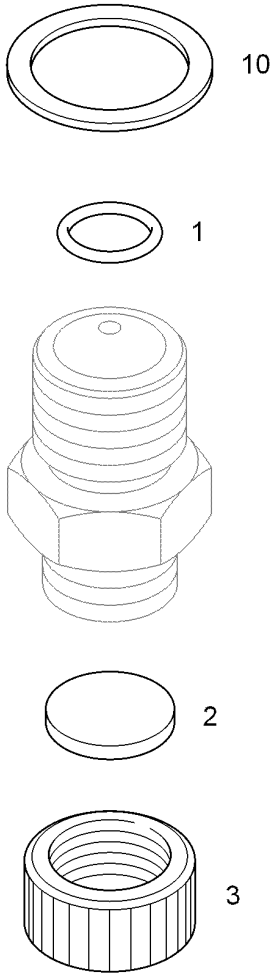

Pos.	Item	Quantity	Description	Designação	Serie	K
1	7264625	1	O-RING 15X2	ANEL-O		
2	7011131	1	SEAL	VEDAÇÃO		
3	7013456	1	PROTECTING CAP	CAPA DE PROTEÇÃO		
10	7101021	1	SEALING RING DIN 7603 A 30X36X2	ANEL DE VEDAÇÃO		

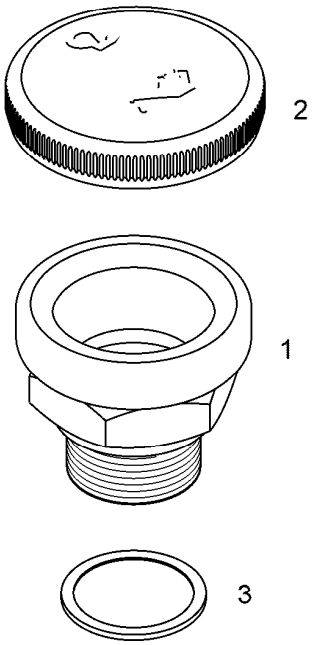

Pos.	Item	Quantity	Description	Designação	Serie	K
1	10119031	1	FILLER NECK CPL.	BOCAL COMPL DE ABASTECIME		
2	9144757	1	END COVER 60/64 ⇨ ❑ 648	TAMPA DE FECHAMENTO		
3	10335629	1	PROFILE PACKING 33	PERFIL DE VEDAÇÃO		

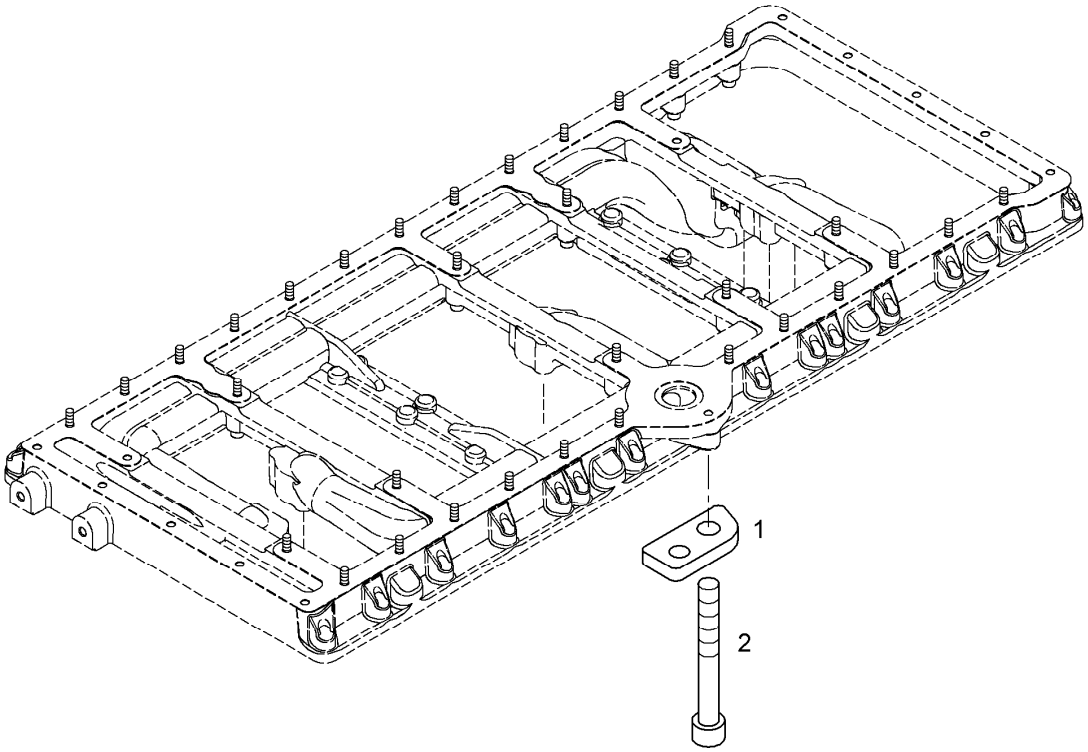

Pos.	Item	Quantity	Description	Designação	Serie	K
1	10116295	1	HOLDER	SUPORTE		
2	4600144	1	SOCKET HEAD SCREW ISO 4762 M8X65 8.8	PARAFUSO CILÍNDRICO		

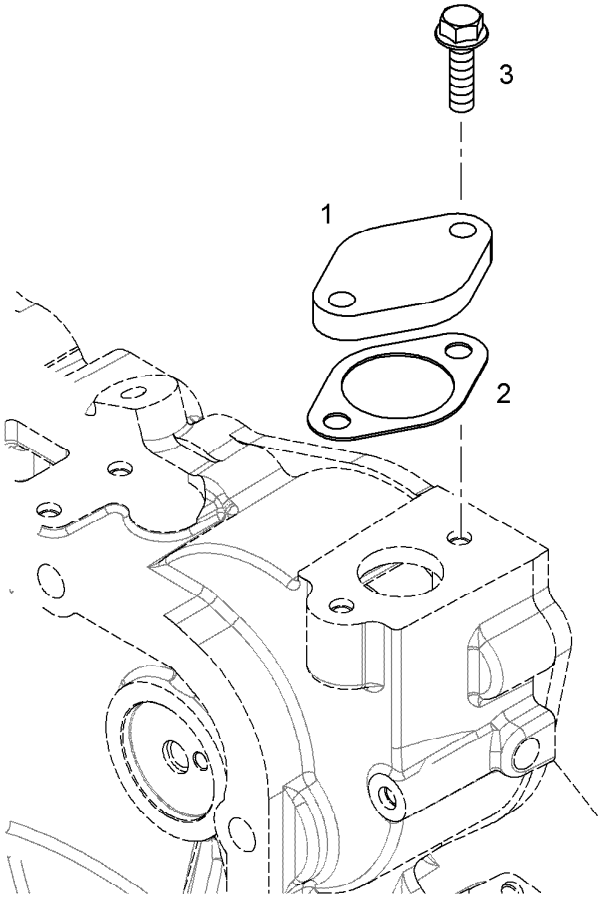

Pos.	Item	Quantity	Description	Designação	Serie	K
1	9077777	1	COVER	TAMPA		
2	9275766	1	SEAL TD2	VEDAÇÃO		
3	10009007	2	HEX SCREW DIN 6921 M8X25 8.8 A2C	PARAFUSO SEXTAVADO		

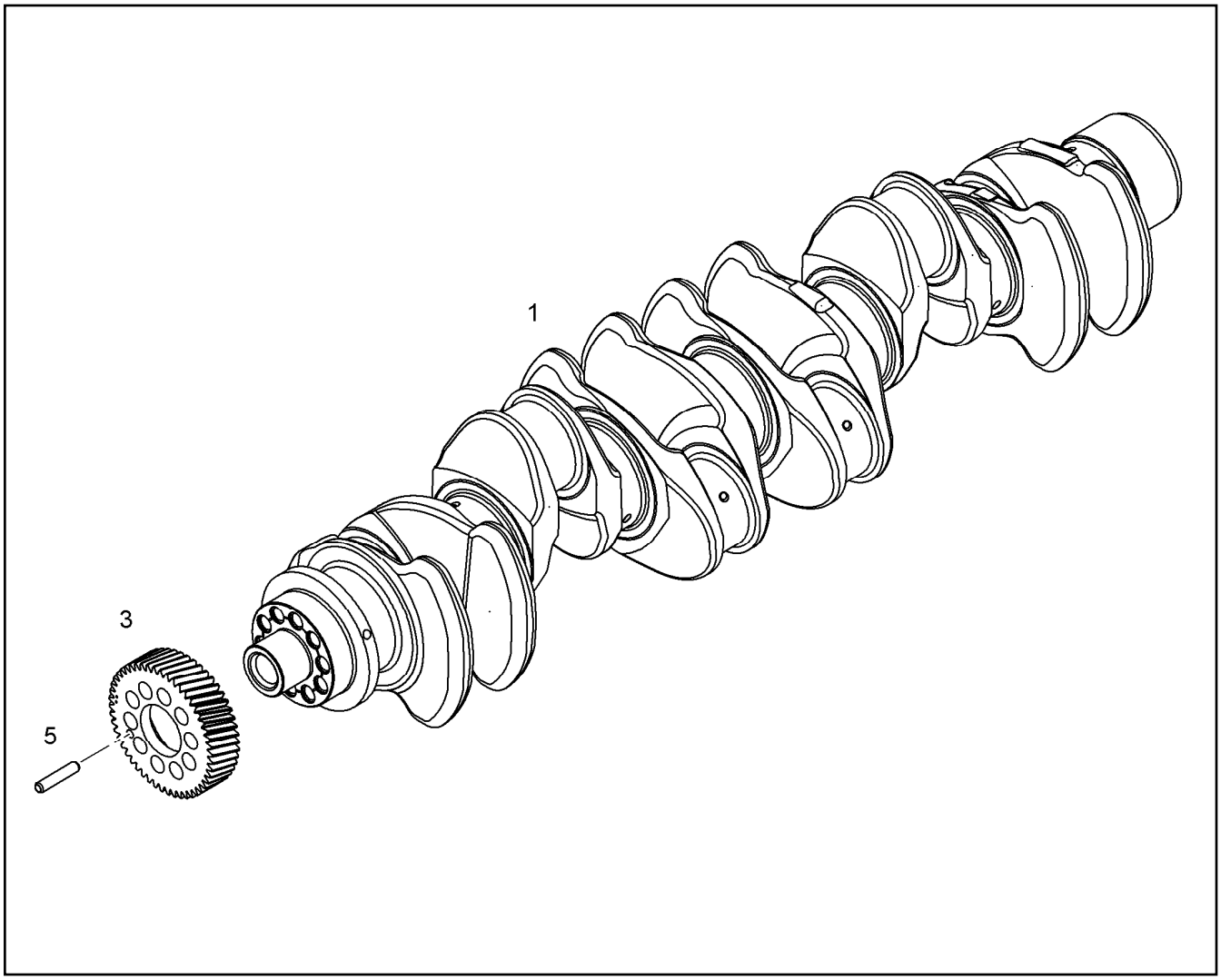

Pos.	Item	Quantity	Description	Designação	Serie	K
1		1	CRANKSHAFT	VIRABREQUIM		
3	9072834	1	GEAR WHEEL Z=50 M=2,5	ENGRENAGEM		
5	12216034	1	TENSION PIN 8	PINO ELÁSTICO		

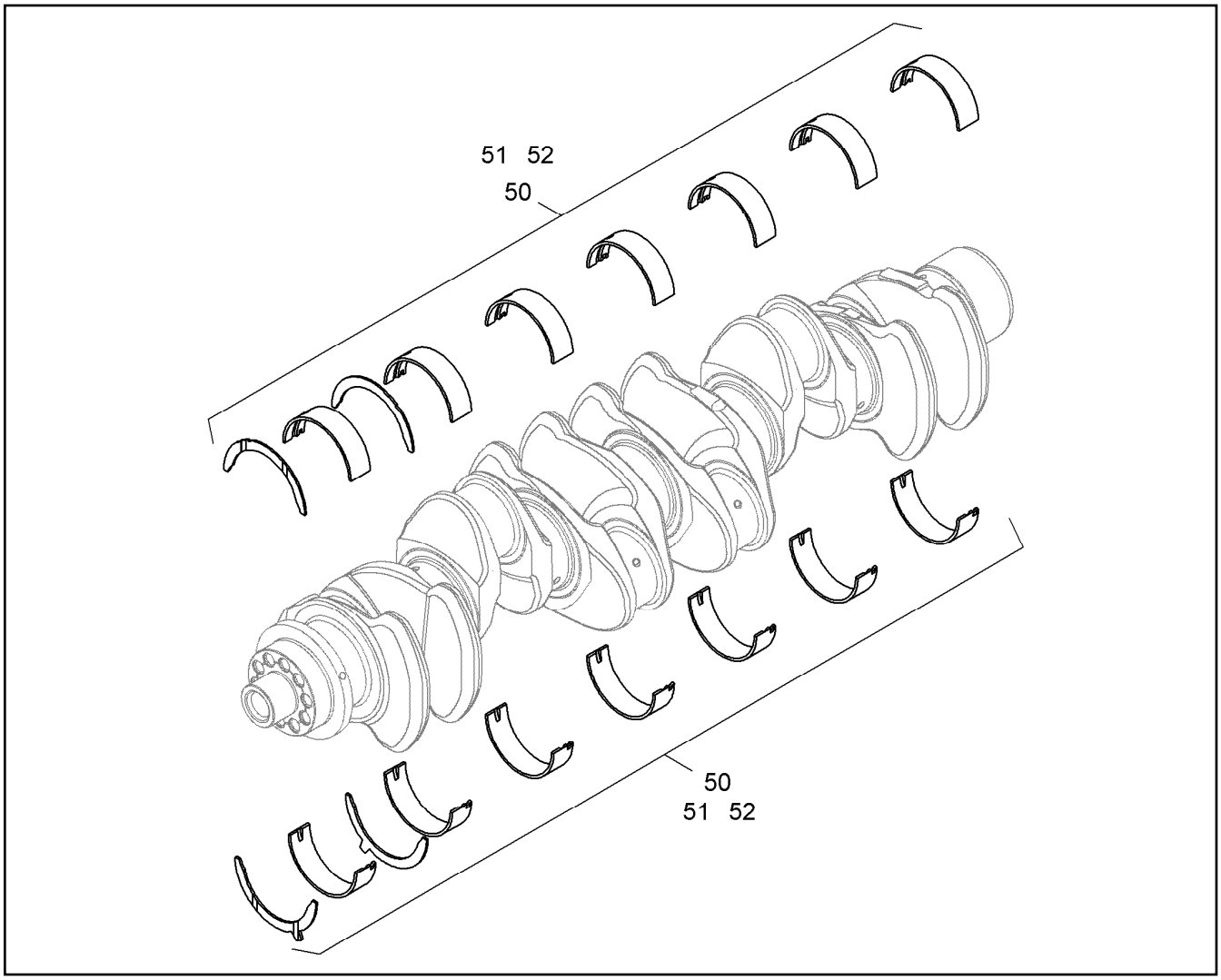

Pos.	Item	Quantity	Description	Designação	Serie	K
50	10116928	1	RS CRANKSHAFT BEARING KPL. D936	KIT REPARO MANCAL VIRABREQ		
51	10140597	1	RK1 MAIN BEARING CPL.	KR1 ROLAMENTO DA CAMBOTA		
52	10140601	1	RK2 MAIN BEARING CPL.	KR2 ROLAMENTO DA CAMBOTA		

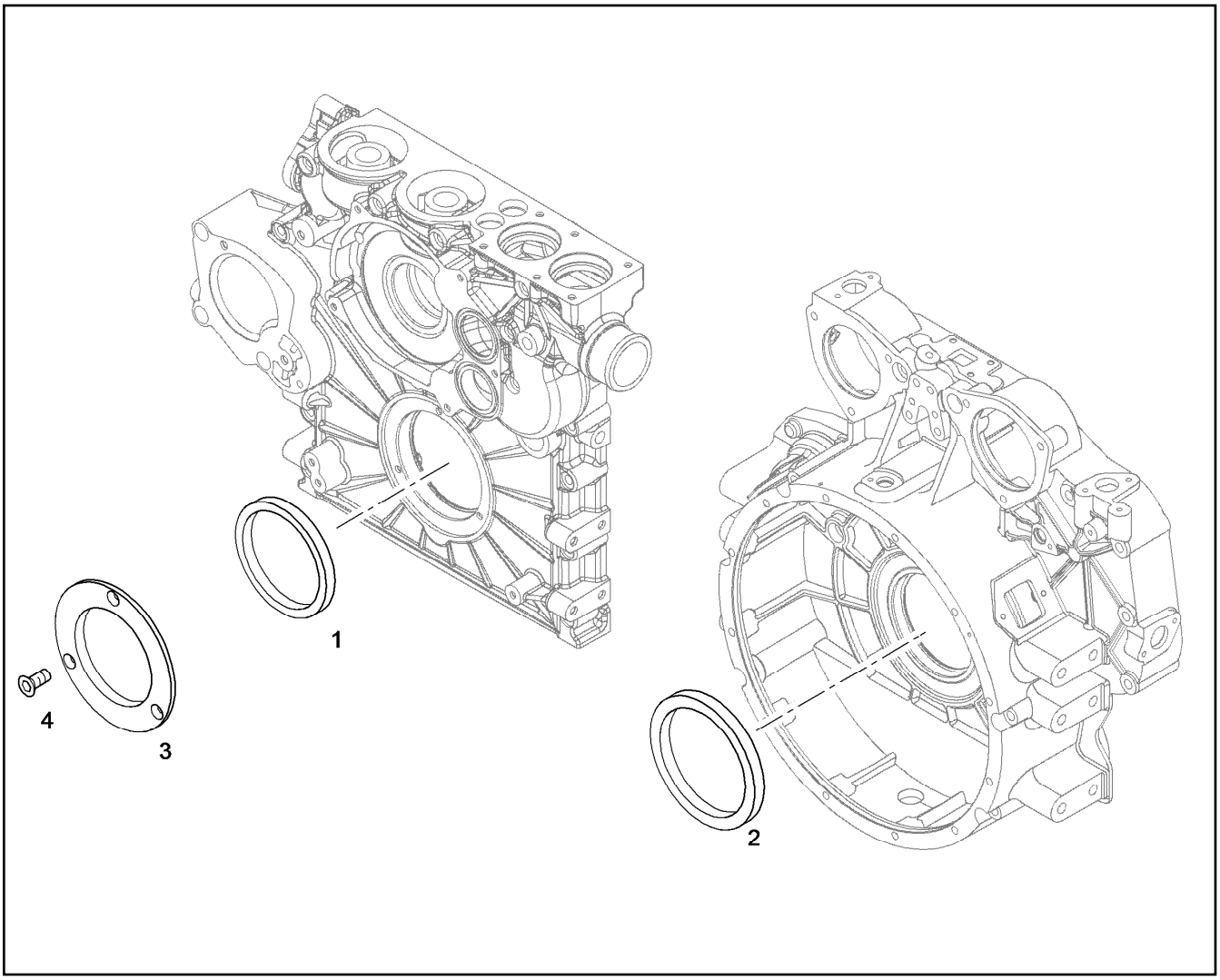

Pos.	Item	Quantity	Description	Designação	Serie	K
1	10006550	1	ROTARY SHAFT LIP SEAL ASWRDX110X130	ANEL DE VEDAÇÃO DO EIXO RA		
2	10006551	1	ROTARY SHAFT LIP SEAL ASWLDX115X140	ANEL DE VEDAÇÃO DO EIXO RA		
3	10120443	1	GUARD RING	ANEL DE PROTEÇÃO		
4	4600157	3	COUNTERSUNK SCREW DIN 7991 M8X20 8.	PARAFUSO ESCAREADO		

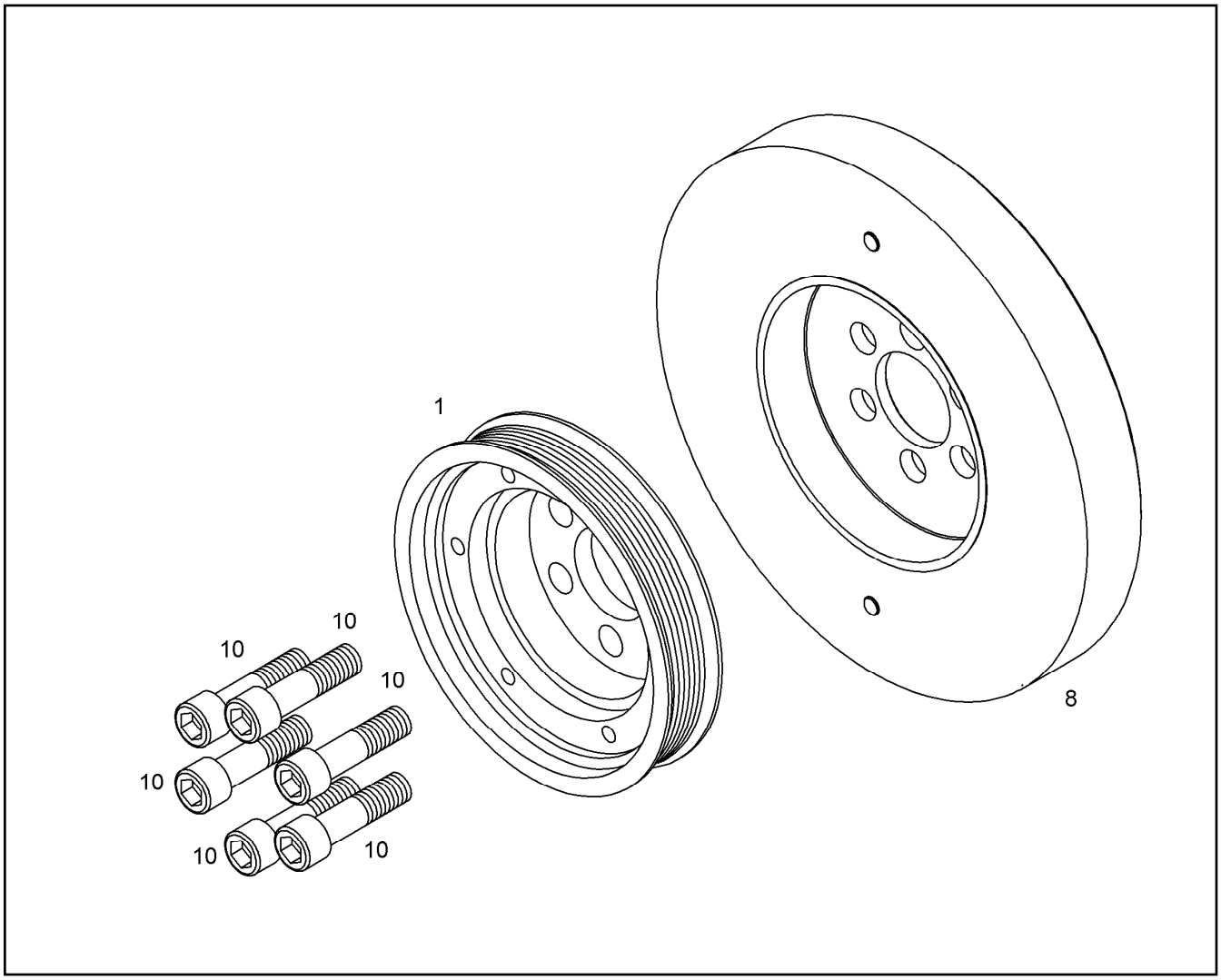

Pos.	Item	Quantity	Description	Designação	Serie	K
1	10116366	1	BELT PULLEY 8PKd=186	POLIA		6
8	9080380	1	VISCOSE DAMPER	AMORTECEDOR DE VISCOSE		
10	10118786	6	HEXALOBULAR HEAD SCREW M16X1,5X60	PARAFUSO HEXAGONAL REDO		

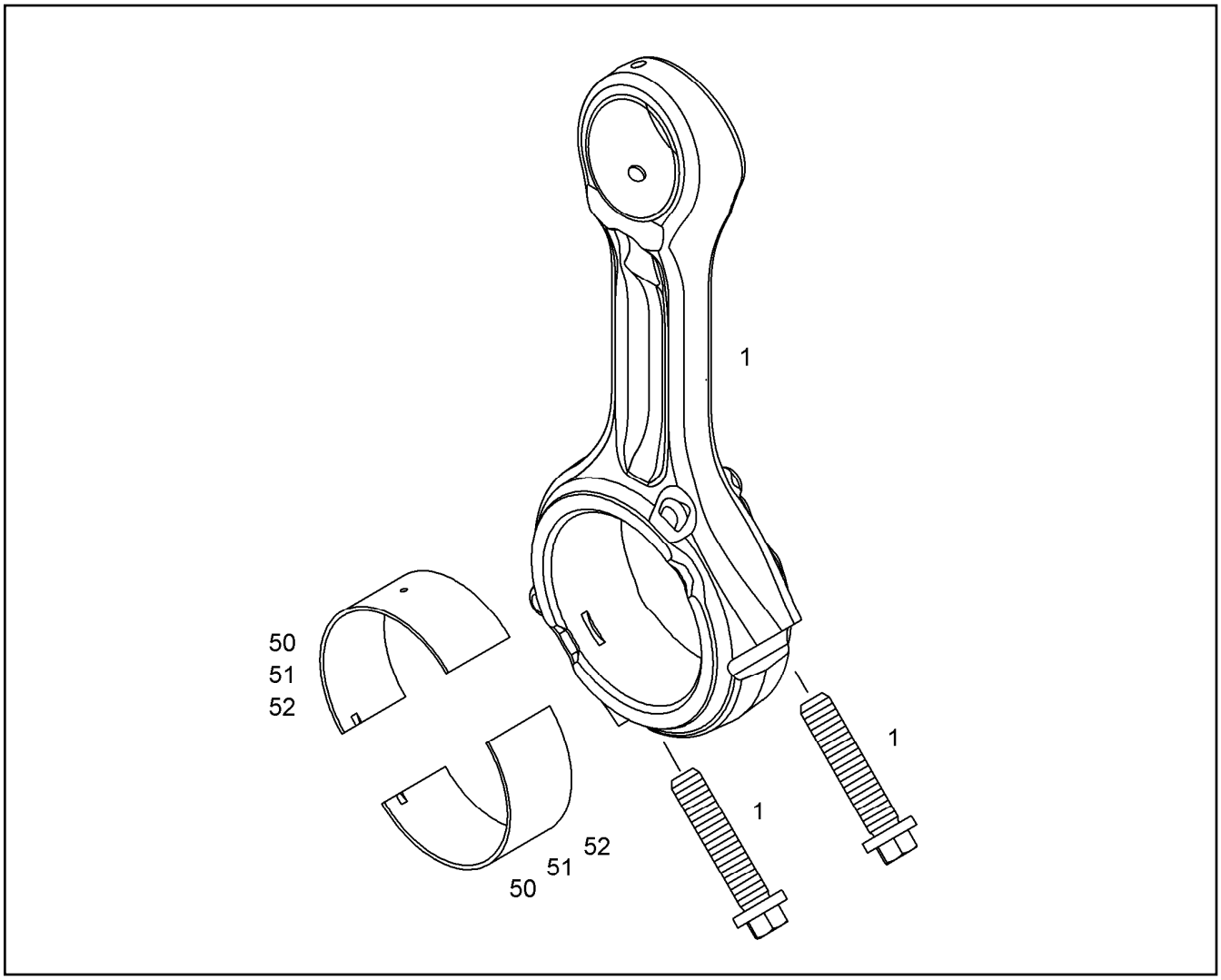

Pos.	Item	Quantity	Description	Designação	Serie	K
1	11348054	1	CONROD ⇨ ❑ 587	BIELA		
1	9174981	2	-CONROD BOLT M14X1,5X65	-PARAFUSO DA BIELA		
50	10116934	1	RK BIG-END BEARING D930 ⇨ ❑ 586	KIT REPARO BRONZINA DA BIEL		
51	10140487	1	-RK1 BIG-END BEARING	-CASQUILHO		
52	10140488	1	-RK2 BIG-END BEARING	-CASQUILHO		

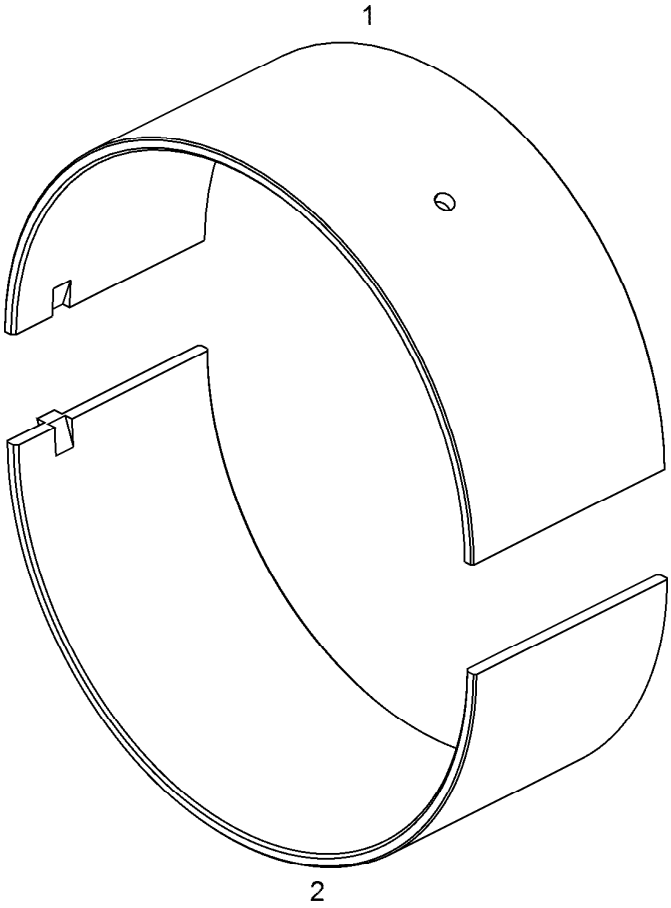

Pos.	Item	Quantity	Description	Designação	Serie	K
1		1	CONNECTING ROD BEARING	CASQUILHO DA BIELA		
2		1	CONNECTING ROD BEARING	CASQUILHO DA BIELA		

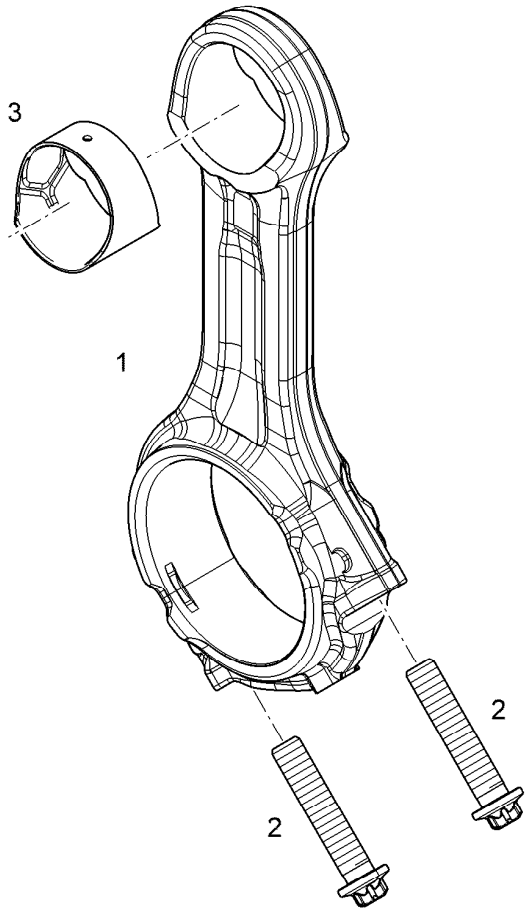

Pos.	Item	Quantity	Description	Designação	Serie	K
1		1	CONROD	BIELA		
2	9174981	2	CONROD BOLT M14X1,5X65	PARAFUSO DA BIELA		
3		1	CONNECTING ROD BUSHING	BUCHA DA BIELA		

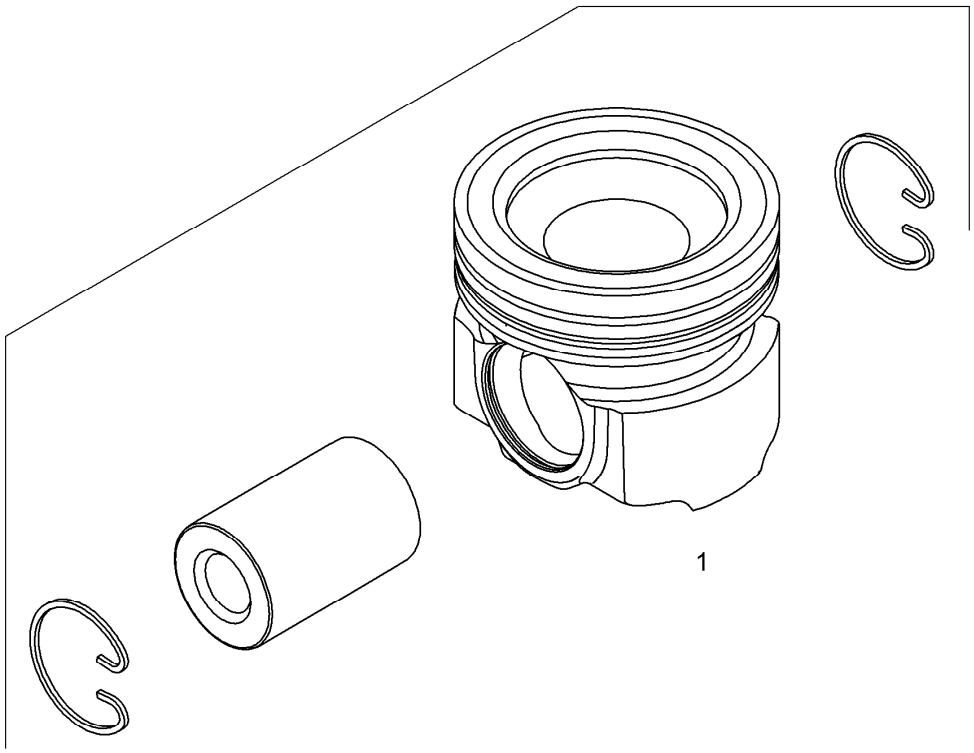

Pos.	Item	Quantity	Description	Designação	Serie	K
1	9080686	1	PISTON PRE-ASS. ⇨ ❑ 589	PISTÃO PRÉ-MONT.		

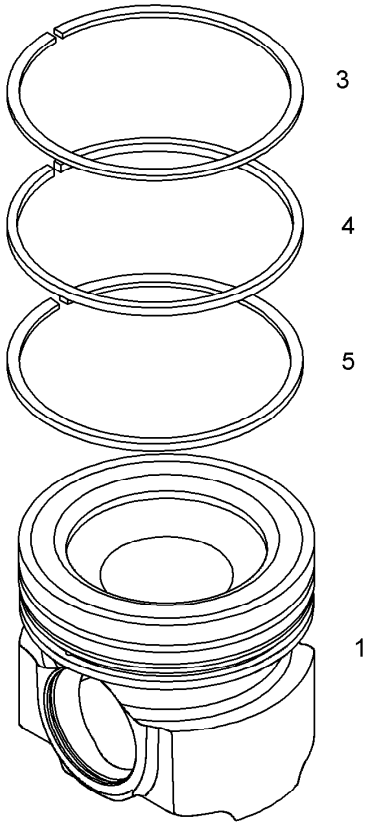

Pos.	Item	Quantity	Description	Designação	Serie	K
1		1	PISTON d=122	PISTÃO		
3	10472345	1	KB-RING 122X113,1X3,5	ANEL PARA PISTÃO		
4	10472346	1	PISTON RING MG 122X112,1X2,5	ANEL		
5	10472347	1	DSF RING 122X113,36X4	ANEL DSF		

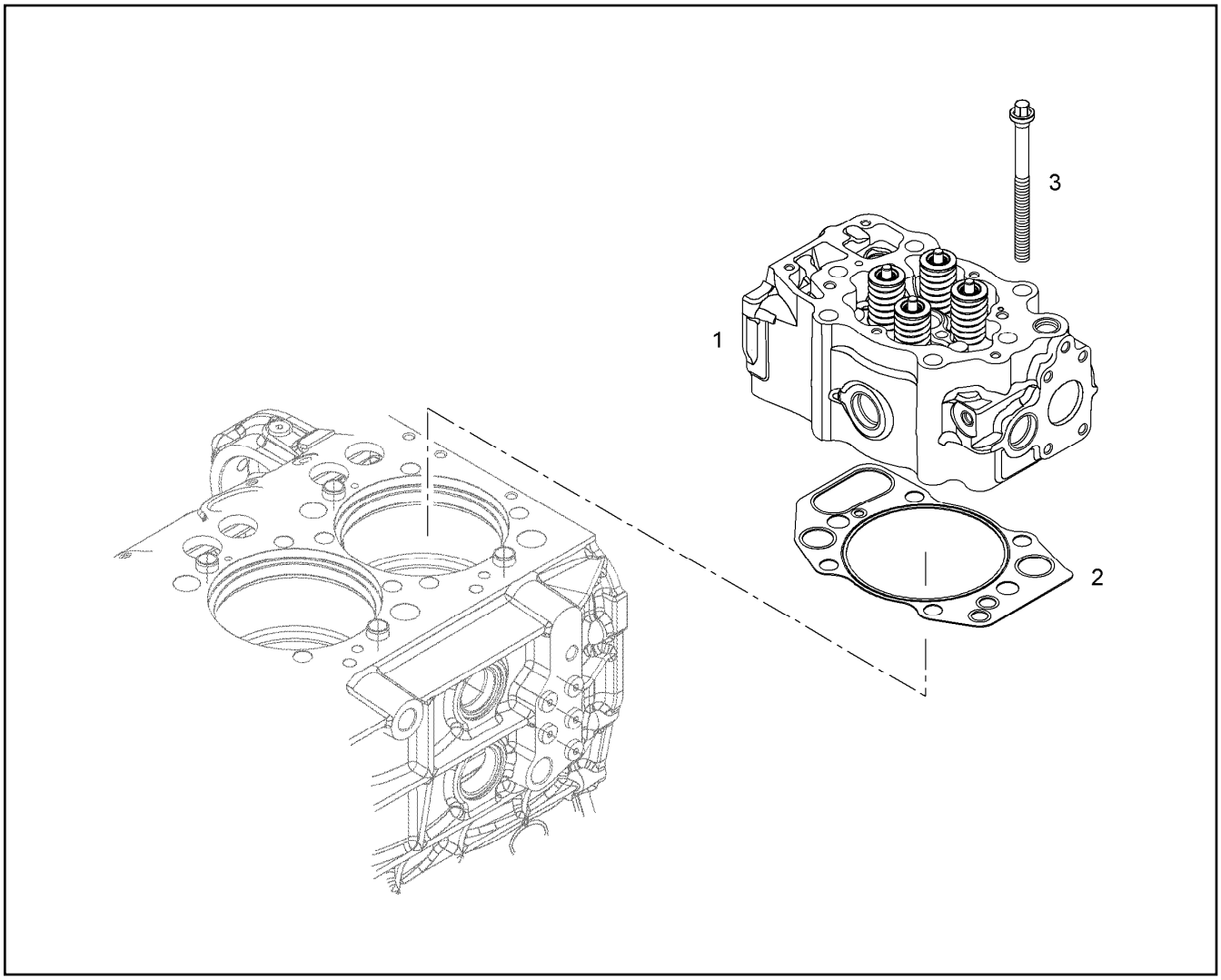

Pos.	Item	Quantity	Description	Designação	Serie	K
1	10119427	1	CYLINDER HEAD PRE-ASSY. ⇨ ❑ 597	CABEÇOTE - PRÉ MONTADO	-2007043839	
1	10120364	1	CYLINDER HEAD PRE-ASSY. ⇨ ❑ 598	CABEÇOTE - PRÉ MONTADO	-2011044974	
1	10141554	1	CYLINDER HEAD PRE-ASSY. ⇨ ❑ 591	CABEÇOTE - PRÉ MONTADO	2011044975-	
2	10120844	1	CYLINDER HEAD GASKET	JUNTA DO CABEÇOTE		
3	10131573	6	HEXALOBULAR HEAD SCREW M16X195 32C	PARAFUSO HEXAGONAL REDO		

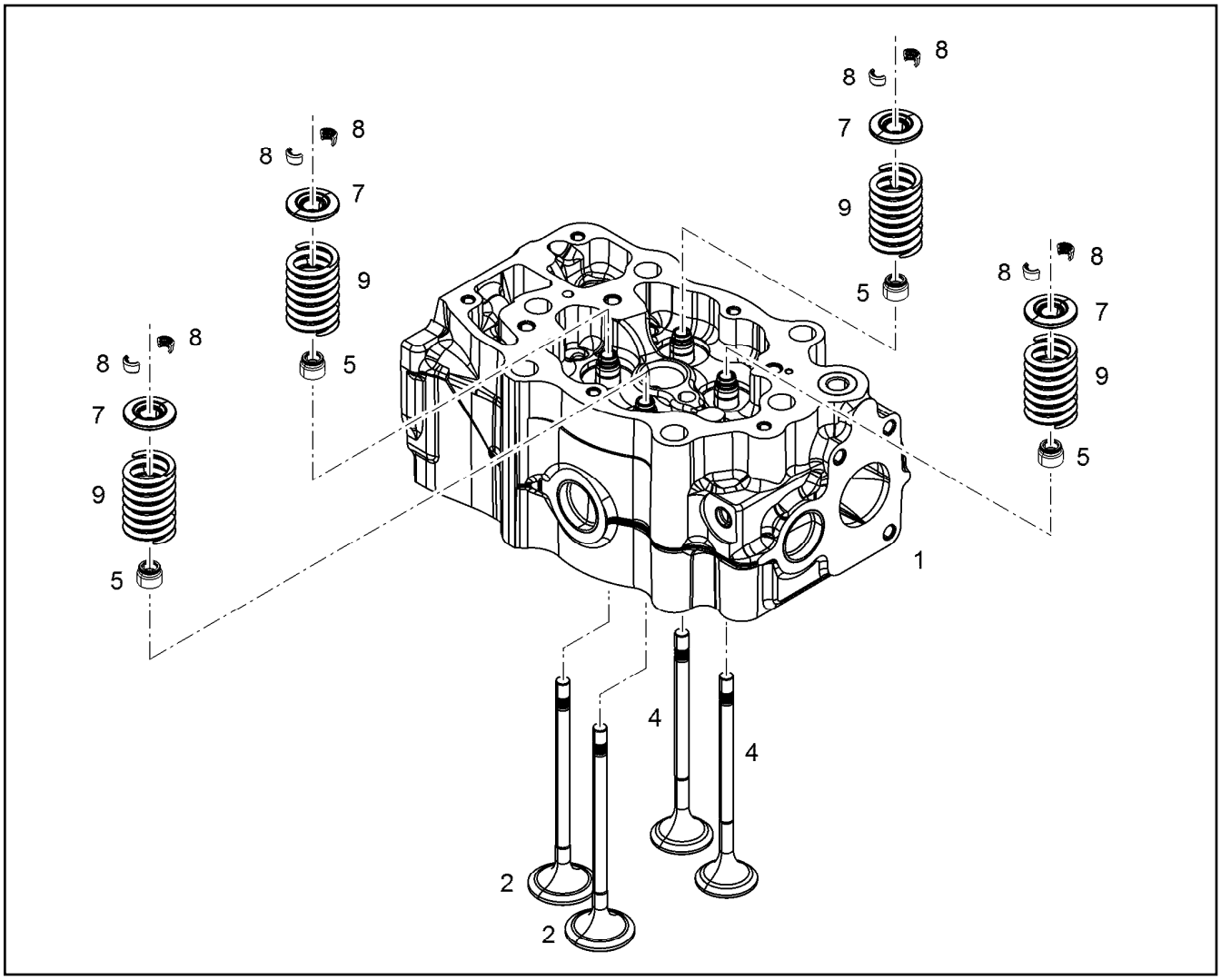

Pos.	Item	Quantity	Description	Designação	Serie	K
1	10120384	1	CYLINDER HEAD ⇨ ❑ 602	CABEÇOTE CILÍNDRICO		
2	10136752	2	INLET VALVE	VÁLVULA DE ADMISSÃO		
4	10136753	2	OUTLET VALVE	VÁLVULA DE ESCAPE		
5	10120334	4	VALVE STEM SEAL RING	ANEL VEDACAO HASTE VALVUL		
7	9074480	4	SPRING CUP ABOVE	PRATO MOLA SUPERIOR		
8	11357514	8	VALVE COLLET MK9	CHAVETA VÁLVULA		
9	9074481	4	PRESSURE SPRING 4,60X28,40X62,70	MOLA DE PRESSÃO		

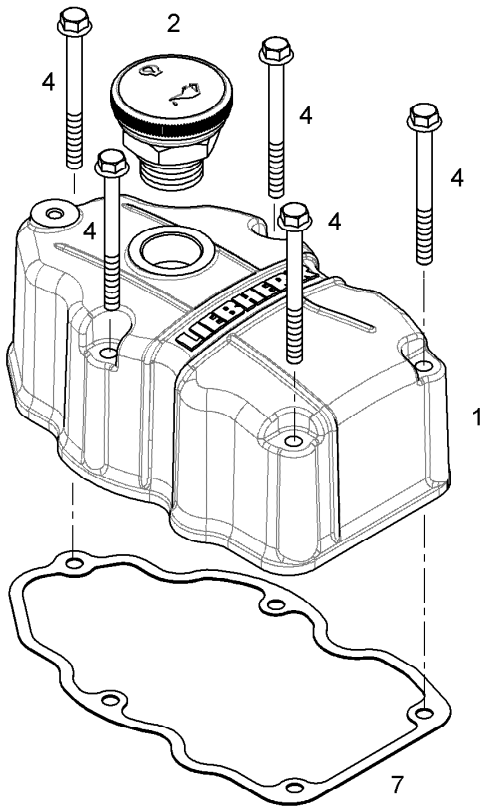

Pos.	Item	Quantity	Description	Designação	Serie	K
1	10127488	1	CYLINDER HEAD COVER	TAMPA DO CABEÇOTE		
2	10119030	1	OIL FILLER INLET ⇨ ❑ 578	ABASTECIMENTO DE ÓLEO		
4	10100303	5	HEX SCREW DIN 6921 M8X90 8.8 A2C	PARAFUSO SEXTAVADO		
7	10118554	1	SEAL	VEDAÇÃO		

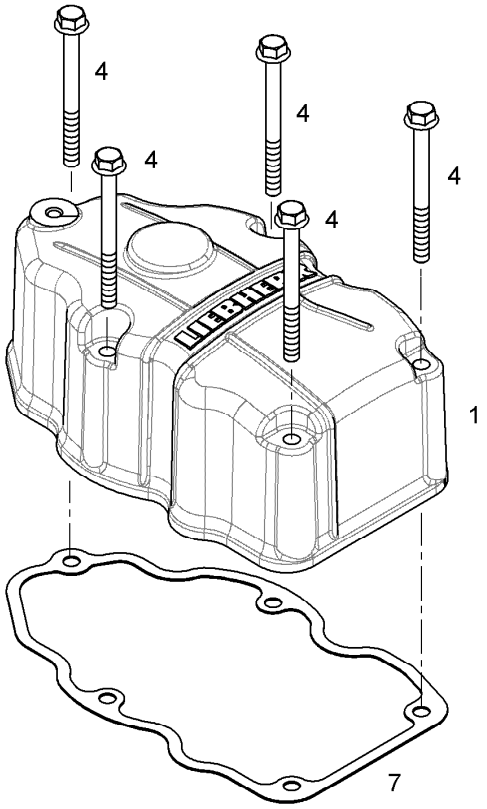

Pos.	Item	Quantity	Description	Designação	Serie	K
1	10127489	1	CYLINDER HEAD COVER	TAMPA DO CABEÇOTE		
4	10100303	5	HEX SCREW DIN 6921 M8X90 8.8 A2C	PARAFUSO SEXTAVADO		
7	10118554	1	SEAL	VEDAÇÃO		

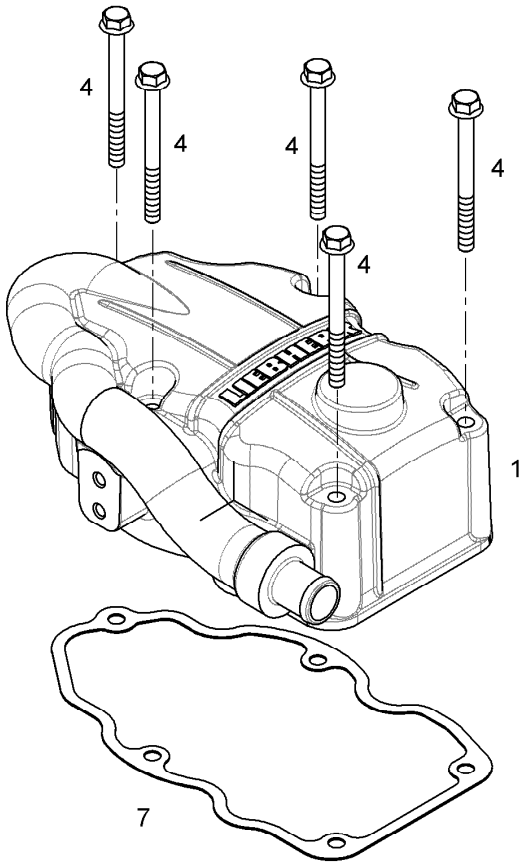

Pos.	Item	Quantity	Description	Designação	Serie	K
1	10119011	1	CYLINDER HEAD COVER	TAMPA DO CABEÇOTE		
4	10100303	5	HEX SCREW DIN 6921 M8X90 8.8 A2C	PARAFUSO SEXTAVADO		
7	10118554	1	SEAL	VEDAÇÃO		

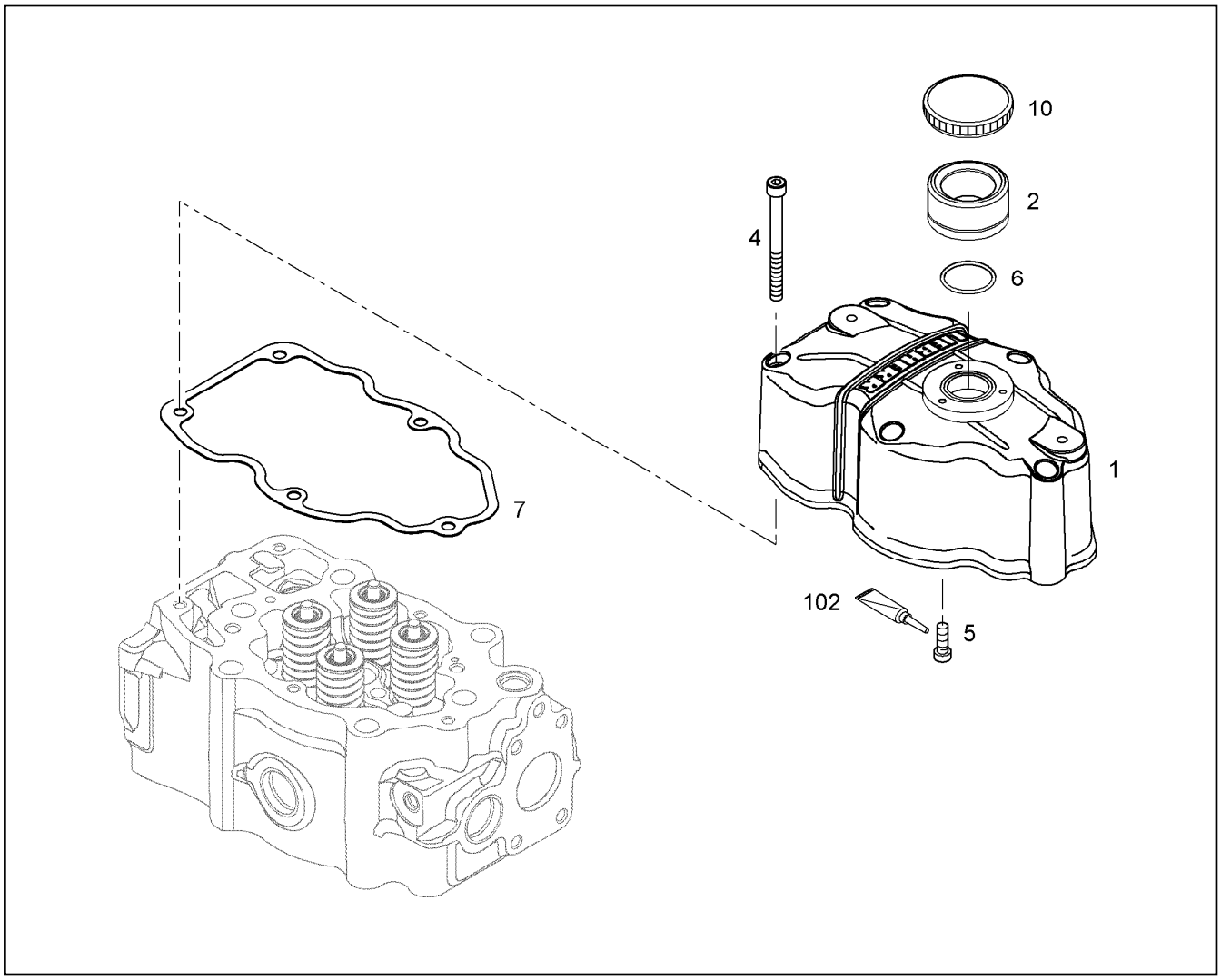

Pos.	Item	Quantity	Description	Designação	Serie	K
1	9079839	1	CYLINDER HEAD COVER	TAMPA DO CABEÇOTE		
2	9270846	1	FILLER NECK	TUBO DE ABASTECIMENTO		
4	4900323	5	SOCKET HEAD SCREW ISO 4762 M8X90 8.8	PARAFUSO CILÍNDRICO		
5	4042002	3	SOCKET HEAD SCREW ISO 4762 M6X20 8.8	PARAFUSO CILÍNDRICO		
6	7381270	1	O-RING DIN 3771 34,65X1,78	ANEL-O		
7	10118554	1	SEAL	VEDAÇÃO		
10	9144757	1	END COVER 60/64 ⇨ ❑ 648	TAMPA DE FECHAMENTO		
102	8700011	1	SCREW LOCKING	COLA PARA ELEMENTOS FIXA		

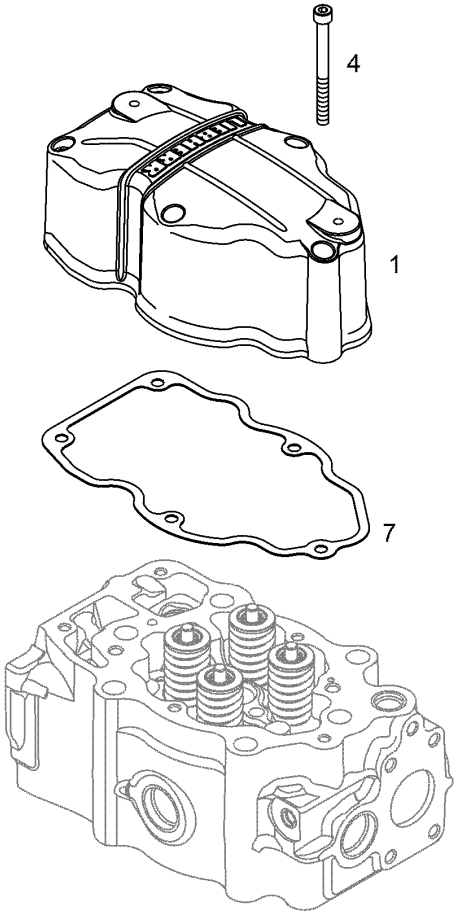

Pos.	Item	Quantity	Description	Designação	Serie	K
1	9074513	1	CYLINDER HEAD COVER	TAMPA DO CABEÇOTE		
4	4900323	5	SOCKET HEAD SCREW ISO 4762 M8X90 8.8	PARAFUSO CILÍNDRICO		
7	10118554	1	SEAL	VEDAÇÃO		

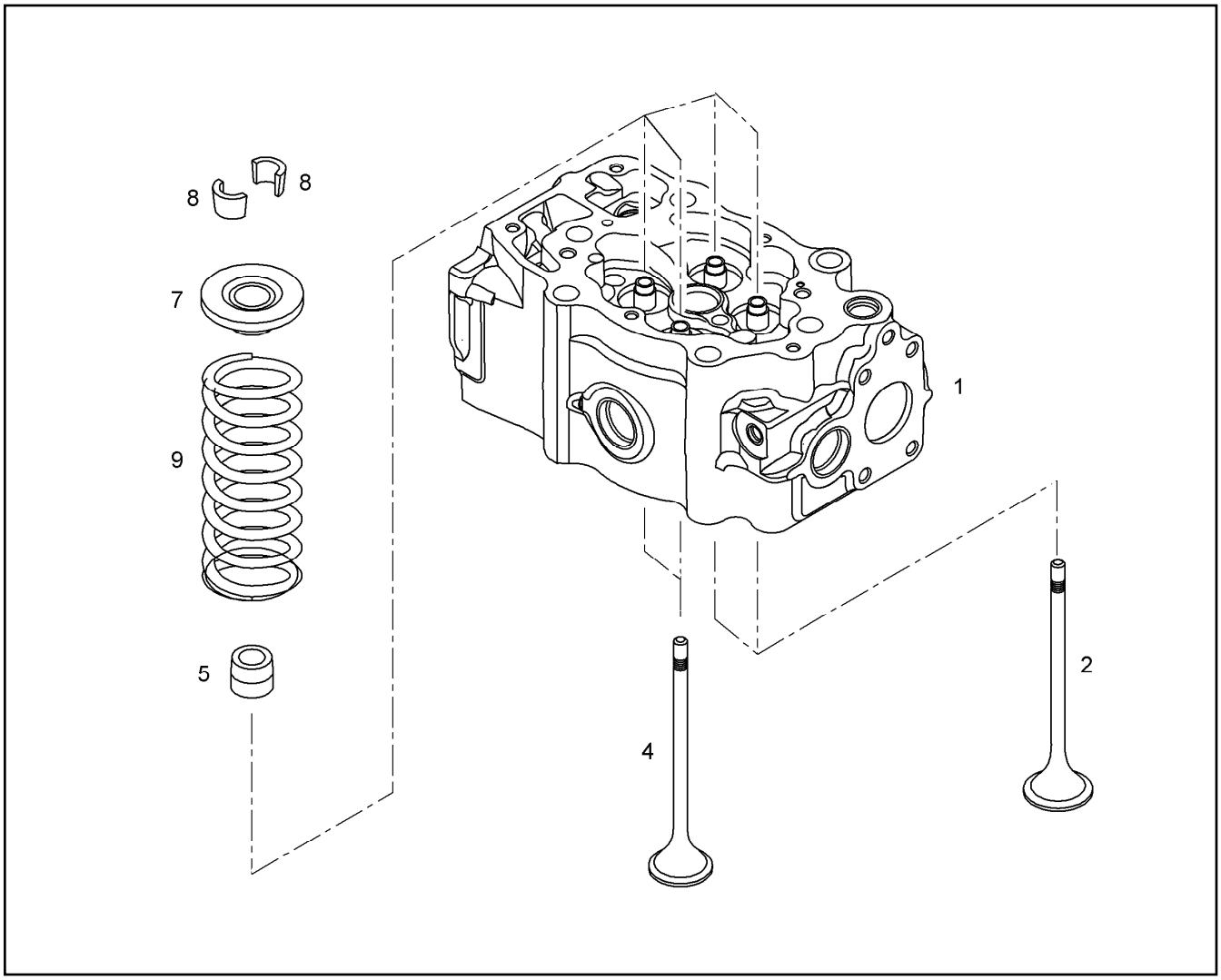

Pos.	Item	Quantity	Description	Designação	Serie	K
1	10120384	1	CYLINDER HEAD ⇨ ❑ 602	CABEÇOTE CILÍNDRICO		
2	9074450	2	INLET VALVE	VÁLVULA DE ADMISSÃO		
4	9074451	2	OUTLET VALVE	VÁLVULA DE ESCAPE		
5	10119305	4	VALVE STEM SEAL RING	ANEL VEDACAO HASTE VALVUL		
7	9074480	4	SPRING CUP ABOVE	PRATO MOLA SUPERIOR		
8	11357514	8	VALVE COLLET MK9	CHAVETA VÁLVULA		
9	9074481	4	PRESSURE SPRING 4,60X28,40X62,70	MOLA DE PRESSÃO		

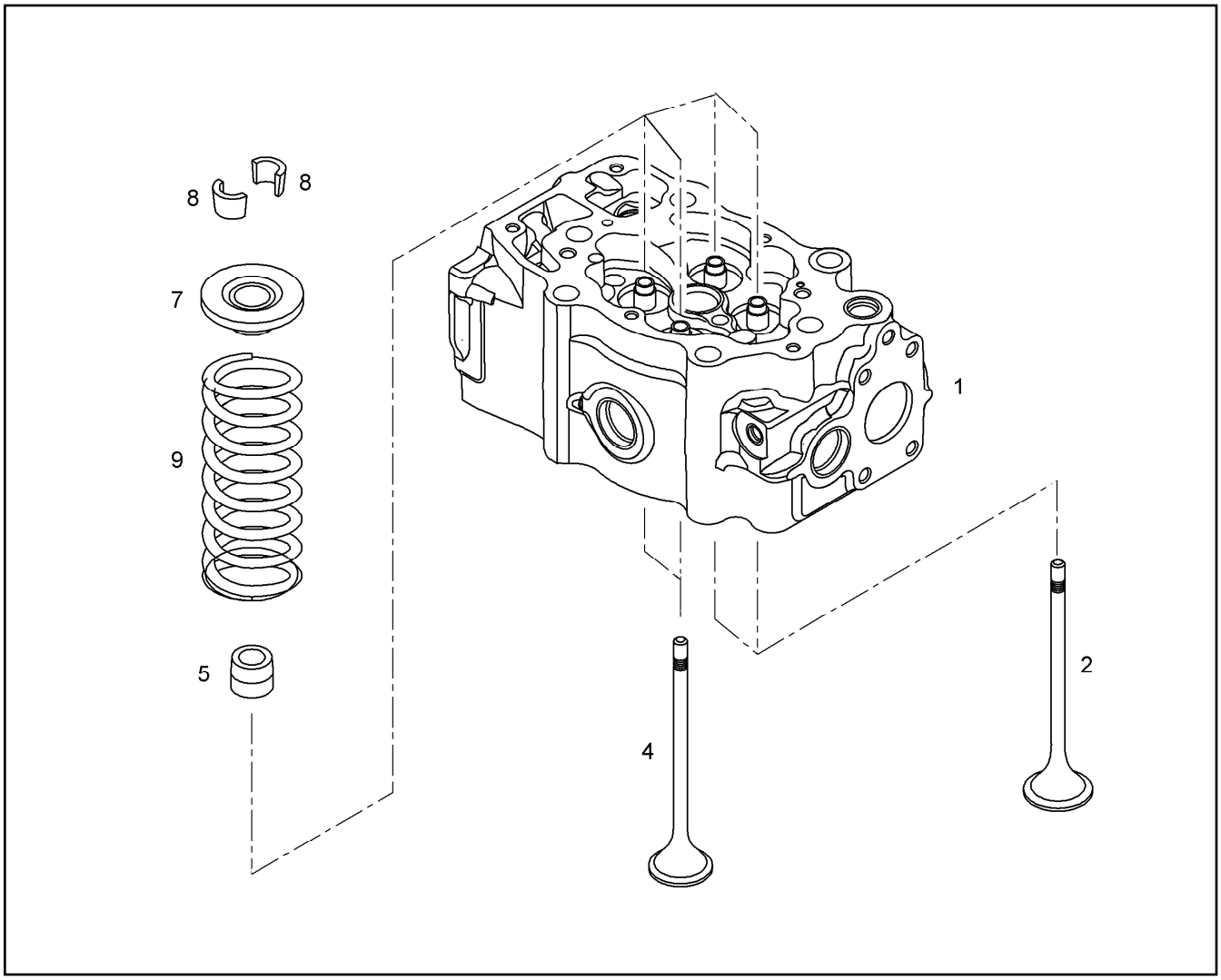

Pos.	Item	Quantity	Description	Designação	Serie	K
1	10120384	1	CYLINDER HEAD ⇨ ❑ 602	CABEÇOTE CILÍNDRICO		
2	9074450	2	INLET VALVE	VÁLVULA DE ADMISSÃO		
4	9074451	2	OUTLET VALVE	VÁLVULA DE ESCAPE		
5	10120334	4	VALVE STEM SEAL RING	ANEL VEDACAO HASTE VALVUL		
7	9074480	4	SPRING CUP ABOVE	PRATO MOLA SUPERIOR		
8	11357514	8	VALVE COLLET MK9	CHAVETA VÁLVULA		
9	9074481	4	PRESSURE SPRING 4,60X28,40X62,70	MOLA DE PRESSÃO		

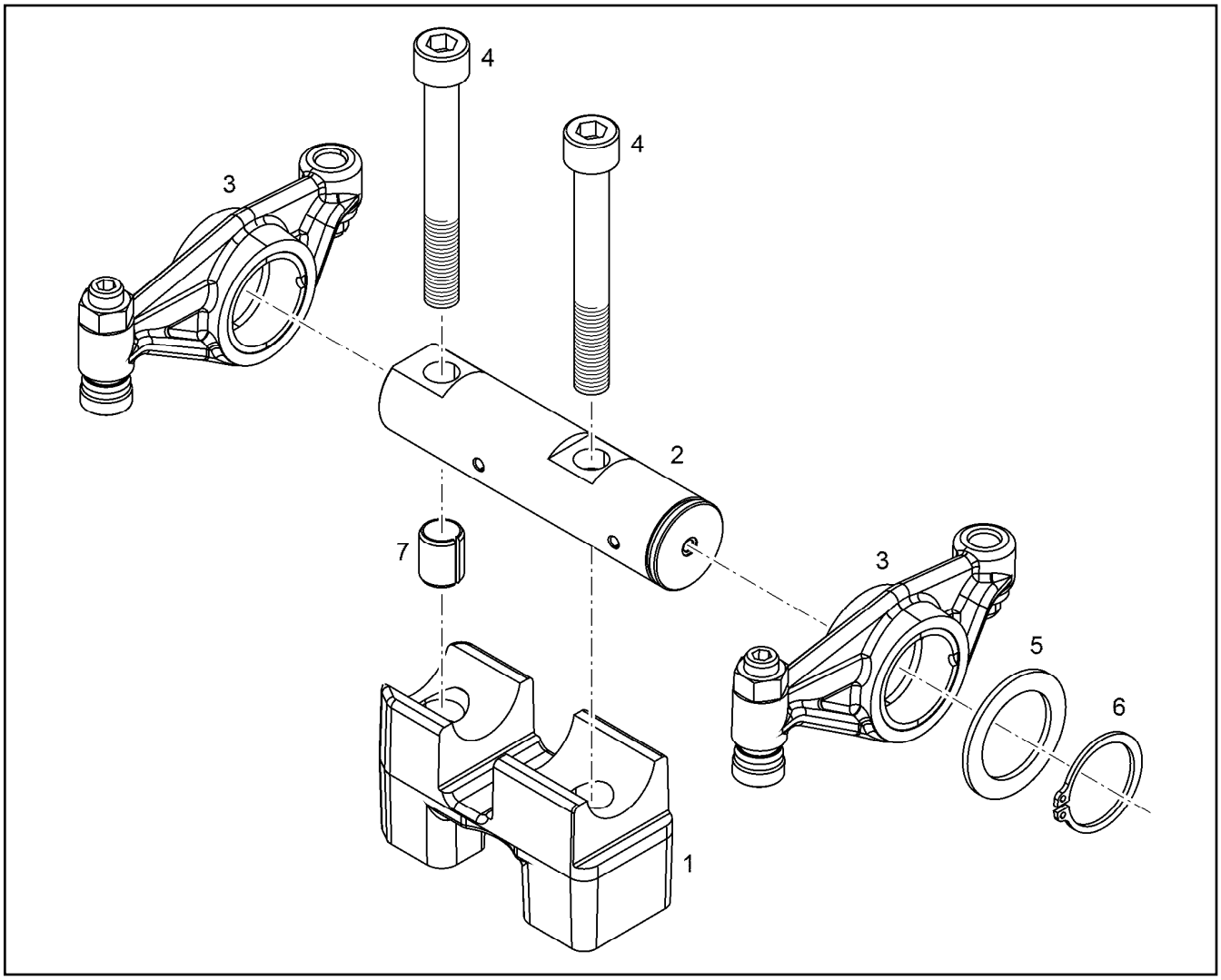

Pos.	Item	Quantity	Description	Designação	Serie	K
1	9074504	1	ROCKER ARM SUPPORT	MANCAL DO BALANCIM		
2	10142820	1	ROCKER AXLE PRE-ASS. ⇨ ❑ 603	EIXO DO BALANCIM PRÉ-MONT		
3	12402053	2	ROCKER ARM PRE-ASSY. ⇨ ❑ 600	BALANCIM PRE-MONTAGEM		
4	10298820	2	SOCKET HEAD SCREW ISO 4762 M10X80 1	PARAFUSO CILÍNDRICO		
5	422001001	1	SUPPORTING WASHER S 28X40X2	ARRUELA DE APOIO		
6	4280022	1	LOCKING RING DIN 471 28	ANEL DE RETENÇÃO		
7	10004442	1	DOWEL PIN 13	PINO ELÁSTICO		

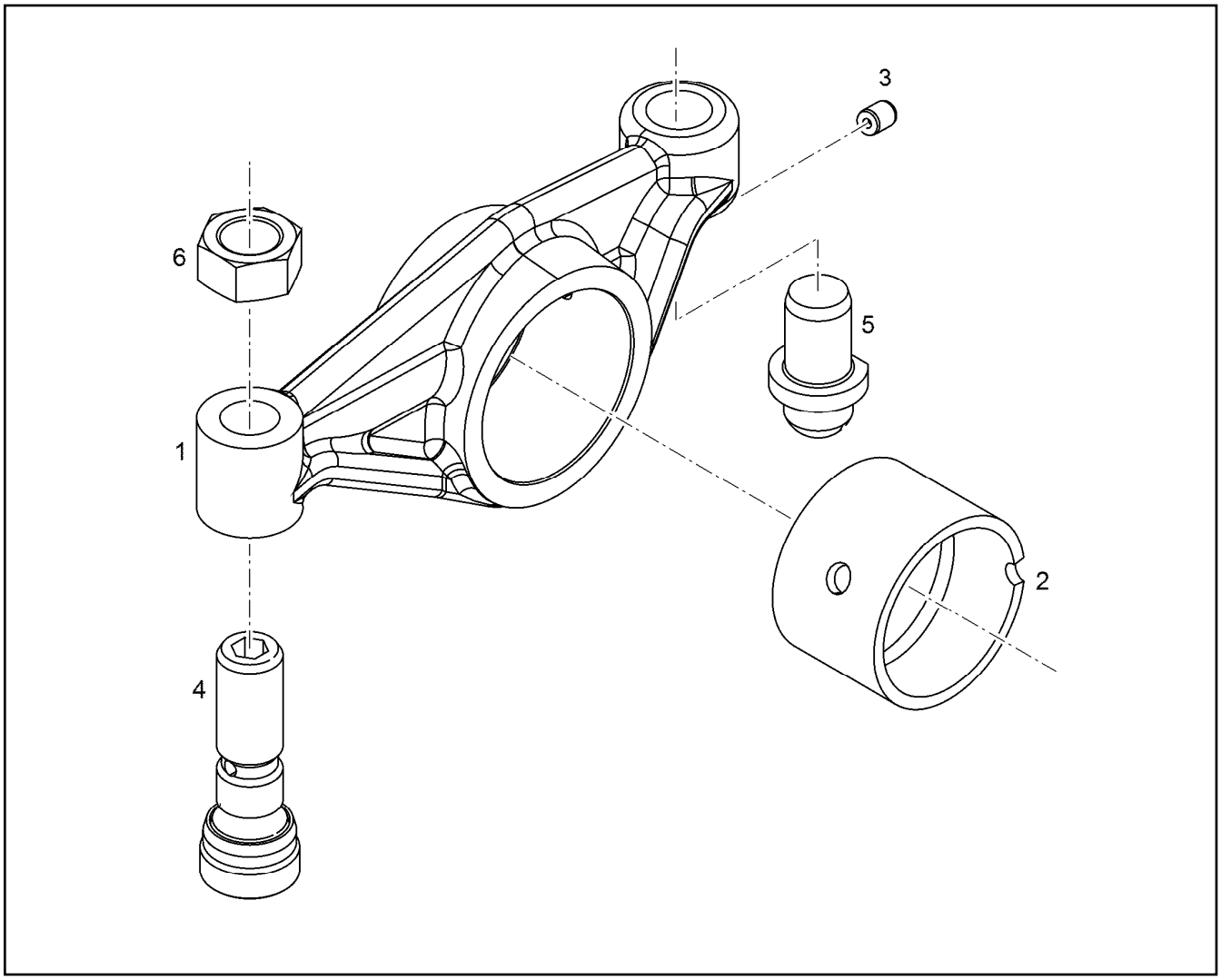

Pos.	Item	Quantity	Description	Designação	Serie	K
1		1	ROCKER ARM	BALANCIM		
2		1	ROCKER ARM BUSCH	BUCHA DO BALANCIM		
3	9074510	1	LUBRICANT NOZZLE	BOCAL LUBRIFICANTE		
4	10012225	1	ADJUSTING SCREW M10X1	PARAFUSO DE AJUSTE		
5	12400273	1	BALL STUD 10X25,59X2	PINO ESFERICO		
6	10012557	1	HEX NUT M10X1	PORCA SEXTAVADA		

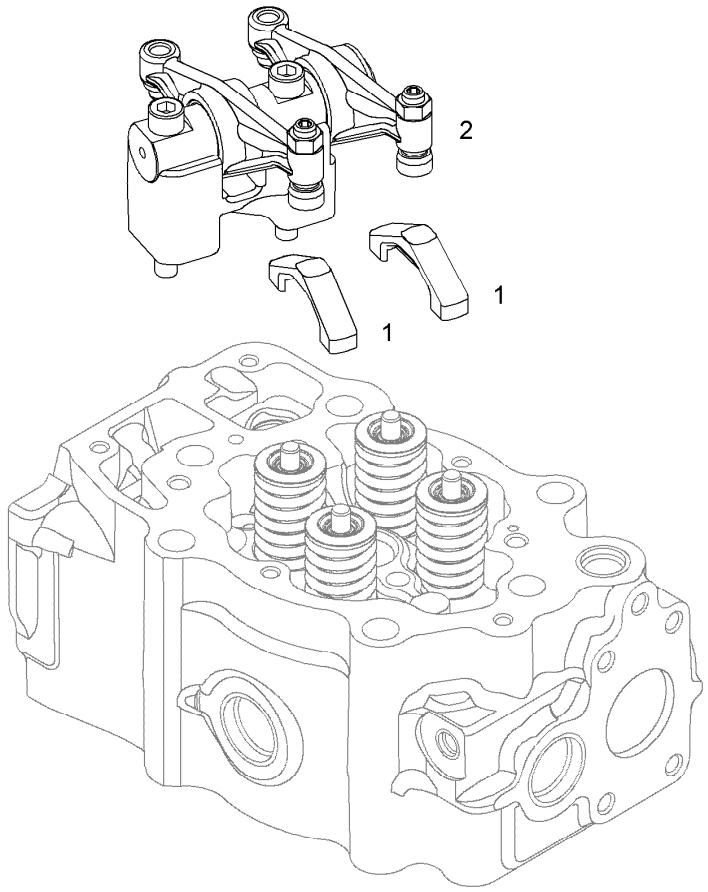

Pos.	Item	Quantity	Description	Designação	Serie	K
1	10119695	2	VALVE BRIDGE	PONTE DE VÁLVULAS		6
2	9074505	1	ROCKER ARM BRACKET PRE-ASS. ⇨ ❑ 604	BALANCIM PRÉ MONTADO	-2017041568	
2	12402055	1	ROCKER ARM BRACKET PRE-ASS. ⇨ ❑ 599	BALANCIM PRÉ MONTADO	2017041569-	

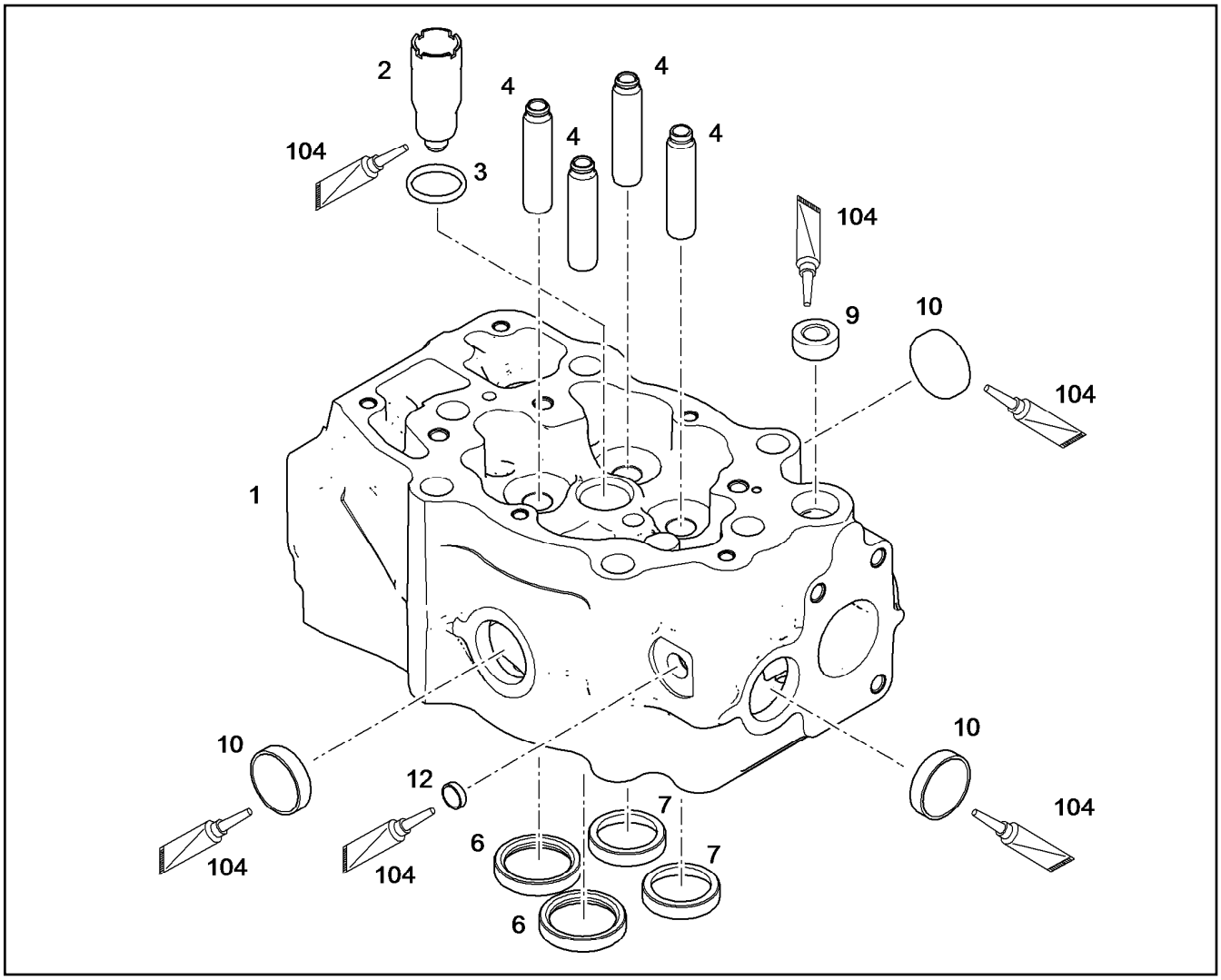

Pos.	Item	Quantity	Description	Designação	Serie	K
1		1	CYLINDER HEAD	CABEÇOTE CILÍNDRICO		
2	10149189	1	SLEEVE	LUVA		
3	10342770	1	O-RING AEHNL.ISO 3601-1 25X3	ANEL-O		
4		4	VALVE STEM GUIDE	GUIA DE VÁLVULA		
6		2	INLET VALVE SEAT INSERT	ANEL DE ASSENTO DA VÁLV A		
7		2	EXHAUST VALVE SEAT INSERT	ANEL DE ASSENTO VÁLVULA ES		
9	9079078	1	THREADED BUSHING	BUCHA ROSCADA		
10	4980363	3	END COVER B/36	TAMPA DE FECHAMENTO		
12	4981042	1	END COVER B/14	TAMPA DE FECHAMENTO		
104	811208201	1	GLUE	COLA		

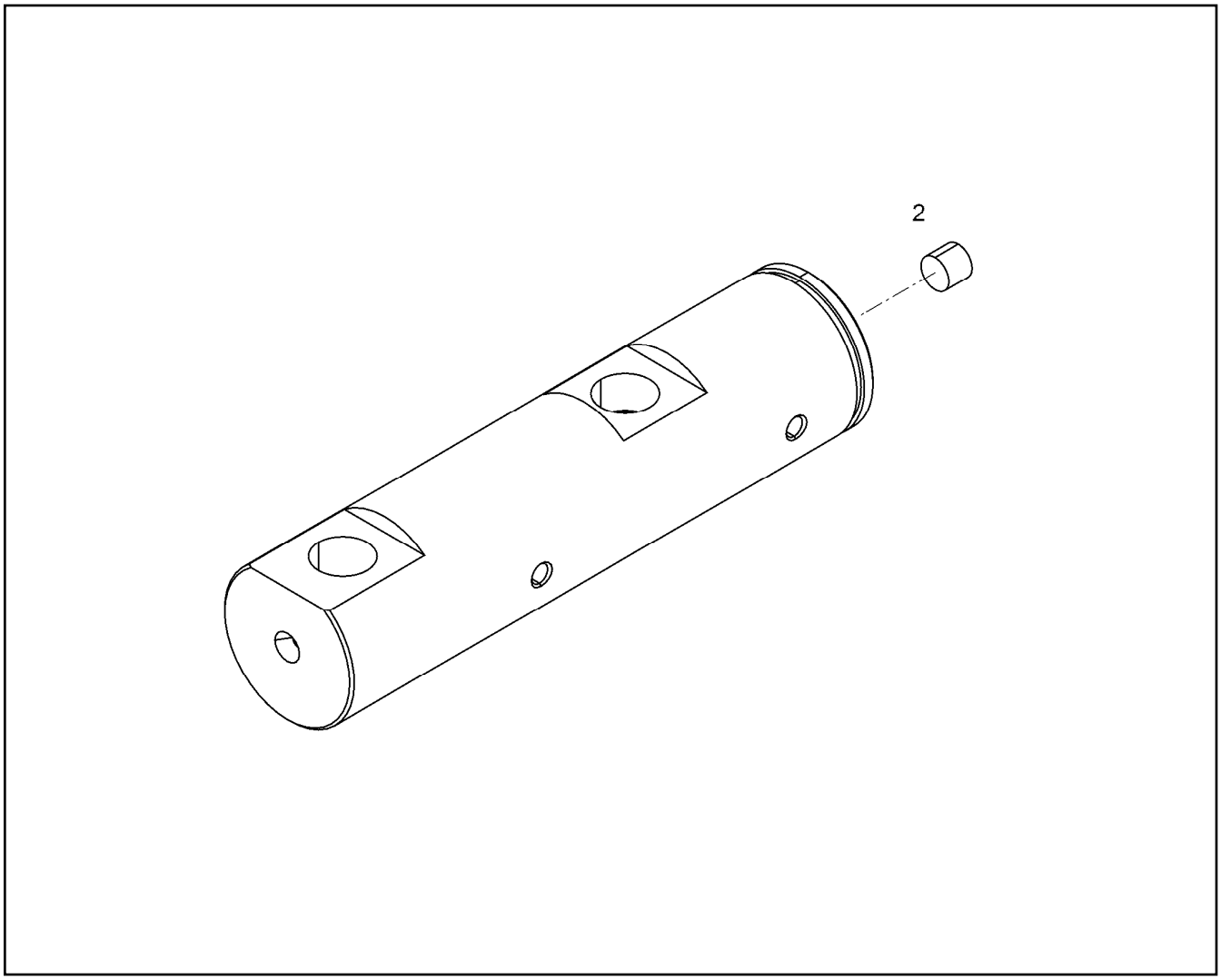

Pos.	Item	Quantity	Description	Designação	Serie	K
2	10036325	1	SEALING PLUG LK 950/6	TAMPÃO DE VEDAÇÃO		

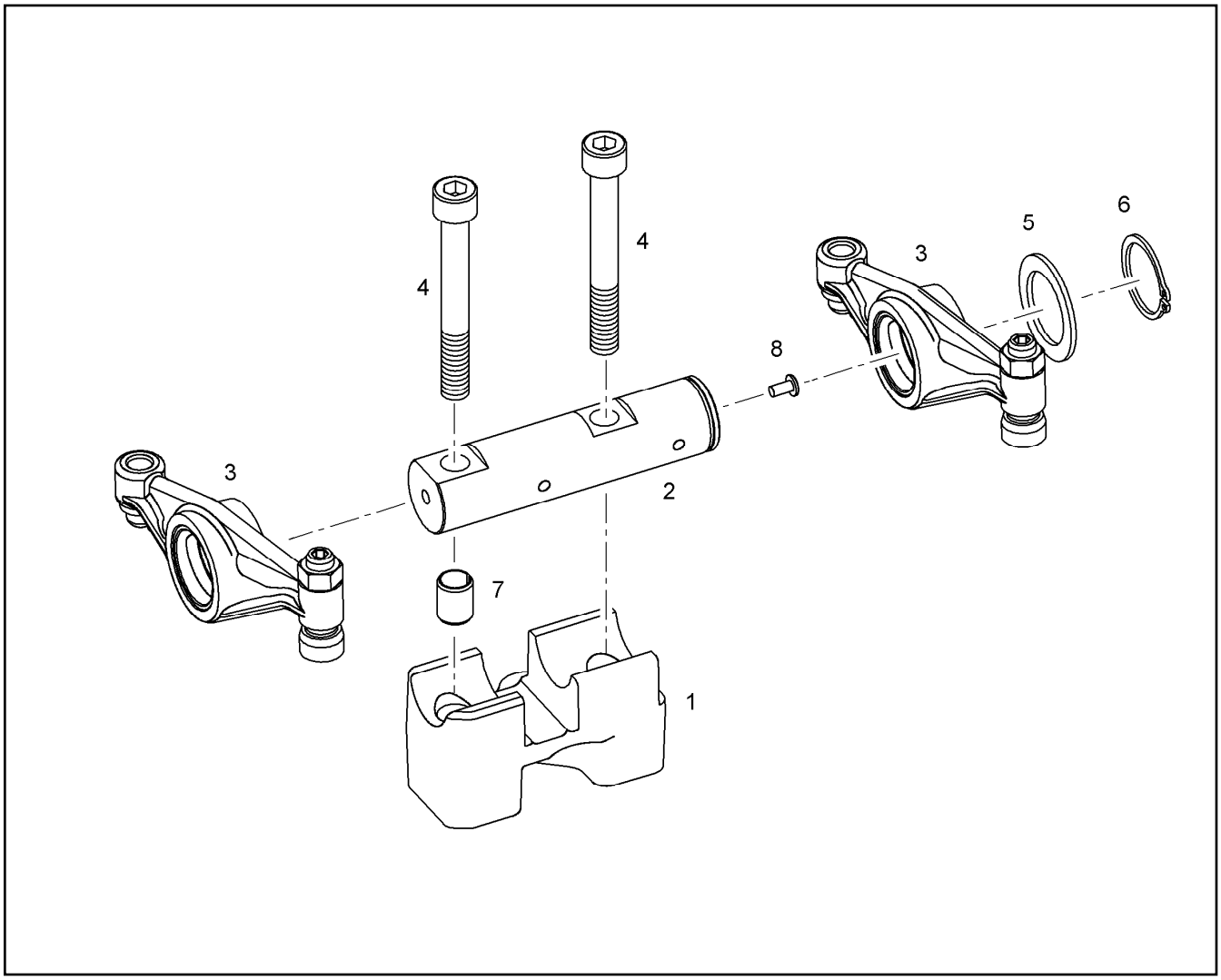

Pos.	Item	Quantity	Description	Designação	Serie	K
1	9074504	1	ROCKER ARM SUPPORT	MANCAL DO BALANCIM		
2	9074506	1	ROCKER AXLE	EIXO DOS BALANCINS		
3	9074507	2	ROCKER ARM PRE-ASSY. ⇨ ❑ 605	BALANCIM PRE-MONTAGEM		
4	4001595	2	SOCKET HEAD SCREW ISO 4762 M10X80 1	PARAFUSO CILÍNDRICO		
5	422001001	1	SUPPORTING WASHER S 28X40X2	ARRUELA DE APOIO		
6	4280022	1	LOCKING RING DIN 471 28	ANEL DE RETENÇÃO		
7	10004442	1	DOWEL PIN 13	PINO ELÁSTICO		
8	10040412	1	BLIND RIVET A 4X8	REBITE CEGO		

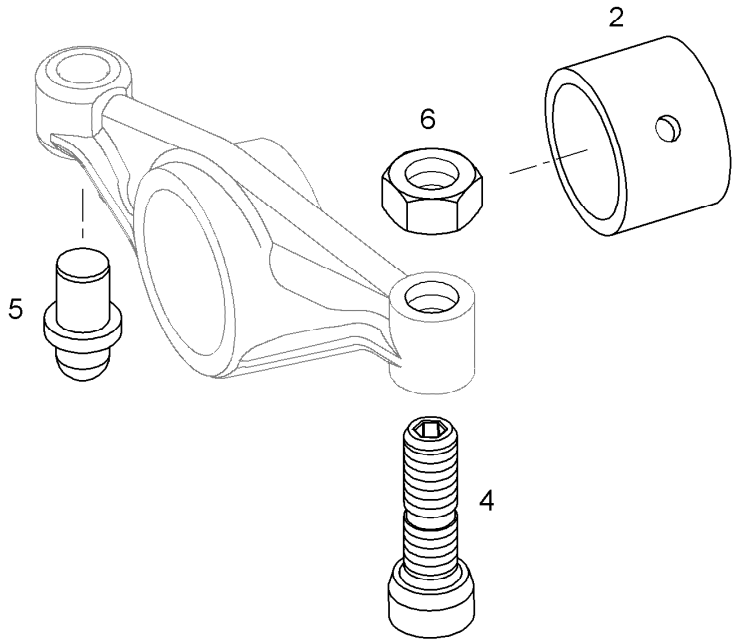

Pos.	Item	Quantity	Description	Designação	Serie	K
2	9080027	1	ROCKER ARM BUSCH	BUCHA DO BALANCIM		
4	10004419	1	ADJUSTING SREW PRE-ASS. M10X1X27,8X	PARAFUSO DE AJUSTE PRÉ-M		
5	10004426	1	BALL STUD 10X25,59X2	PINO ESFERICO		1
6	7381781	1	NUT M10X1	PORCA		

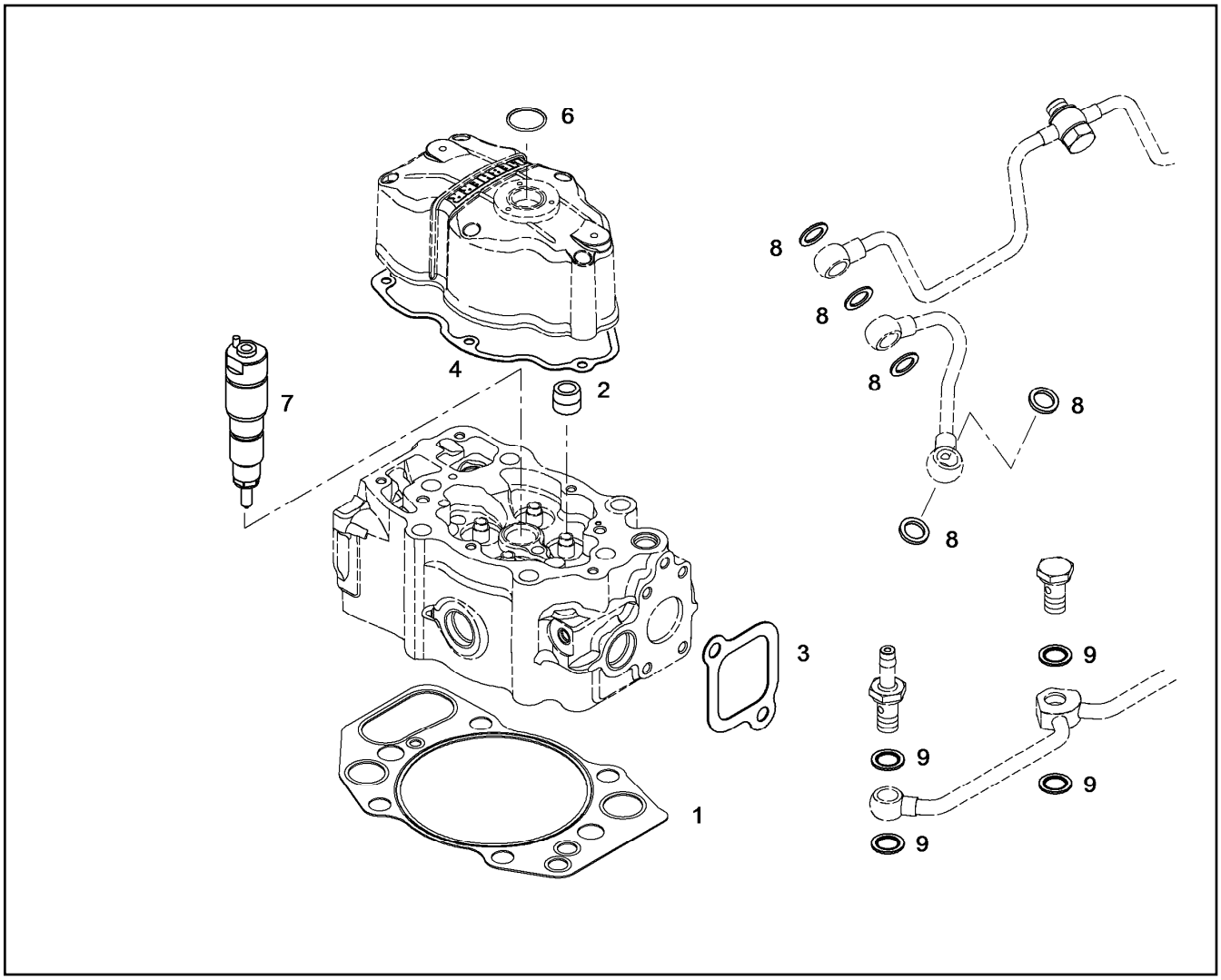

Pos.	Item	Quantity	Description	Designação	Serie	K
1	10120844	1	CYLINDER HEAD GASKET	JUNTA DO CABEÇOTE		
2	10119305	4	VALVE STEM SEAL RING	ANEL VEDACAO HASTE VALVUL	-2007043839	
2	10120334	4	VALVE STEM SEAL RING	ANEL VEDACAO HASTE VALVUL	2007043840-	
3	10118556	6	SEAL	VEDAÇÃO		
4	10118554	1	SEAL	VEDAÇÃO		
6	7381270	1	O-RING DIN 3771 34,65X1,78	ANEL-O		
7	10115854	1	SEAL KIT INJECTION NOZZLE ⇨ ❑ 628	KIT DE VEDACAO DO BICO INJET		
8	7007952	15	SEALING RING DIN 7603 A 10X15X1	ANEL DE VEDAÇÃO		
9	10011866	12	SEALING RING 14,7X22X1,5	ANEL DE VEDAÇÃO		

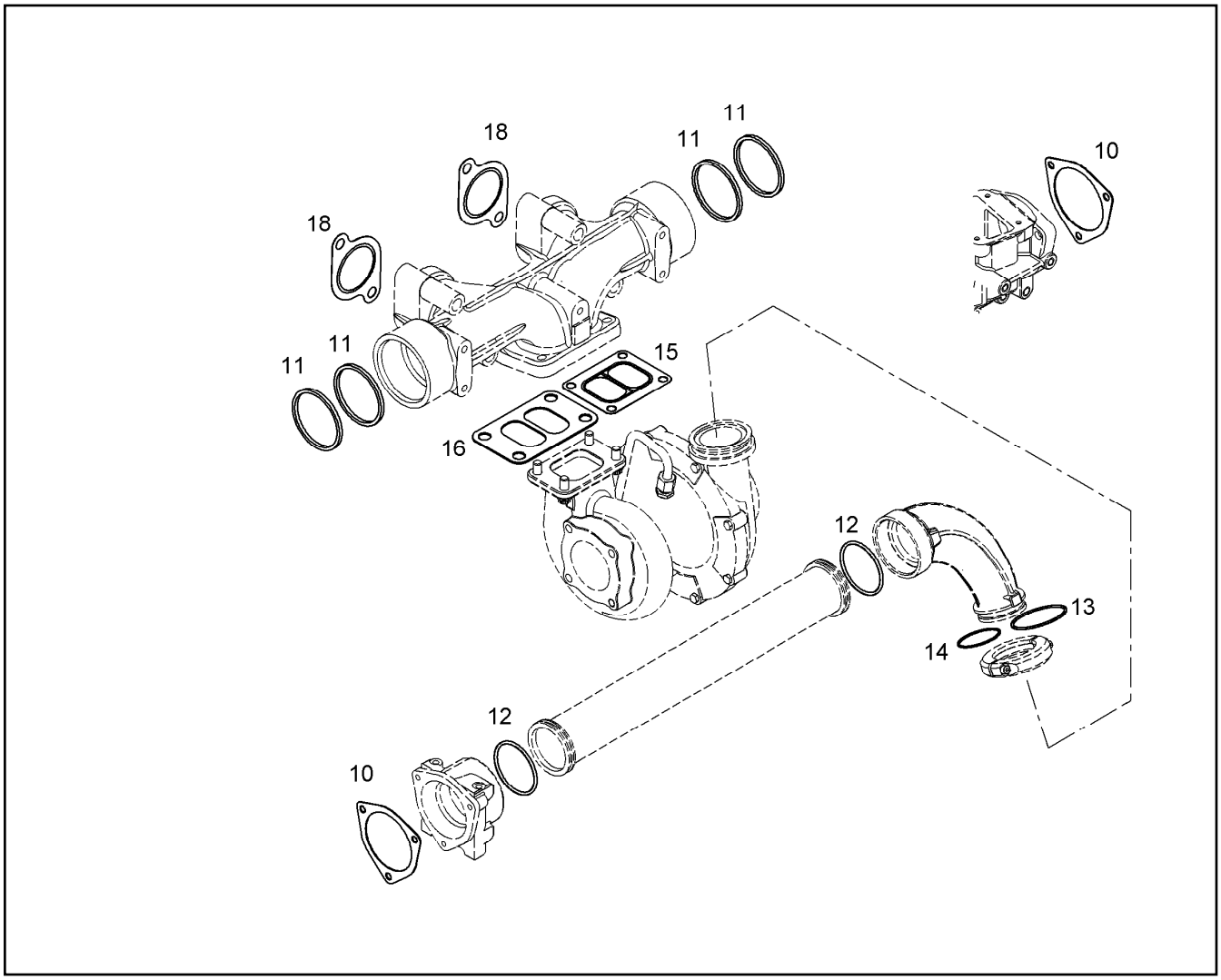

Pos.	Item	Quantity	Description	Designação	Serie	K
10	9271963	2	SEAL 1,5X128 98/141	VEDAÇÃO		
11	10008448	4	LAMELLAR DISK KIT 62,0/56,4X3,3	KIT DE ANEIS LAMELARES		
12	10022320	2	O-RING 80X5,0	ANEL-O		
13	7380970	1	O-RING 63,17X2,62	ANEL-O		
14	7380919	1	O-RING ISO 3601-1 52,07X2,62	ANEL-O		
15	9270109	1	SEAL	VEDAÇÃO		
16	9268129	1	SEAL	VEDAÇÃO		
18	10141557	6	SEAL	VEDAÇÃO		

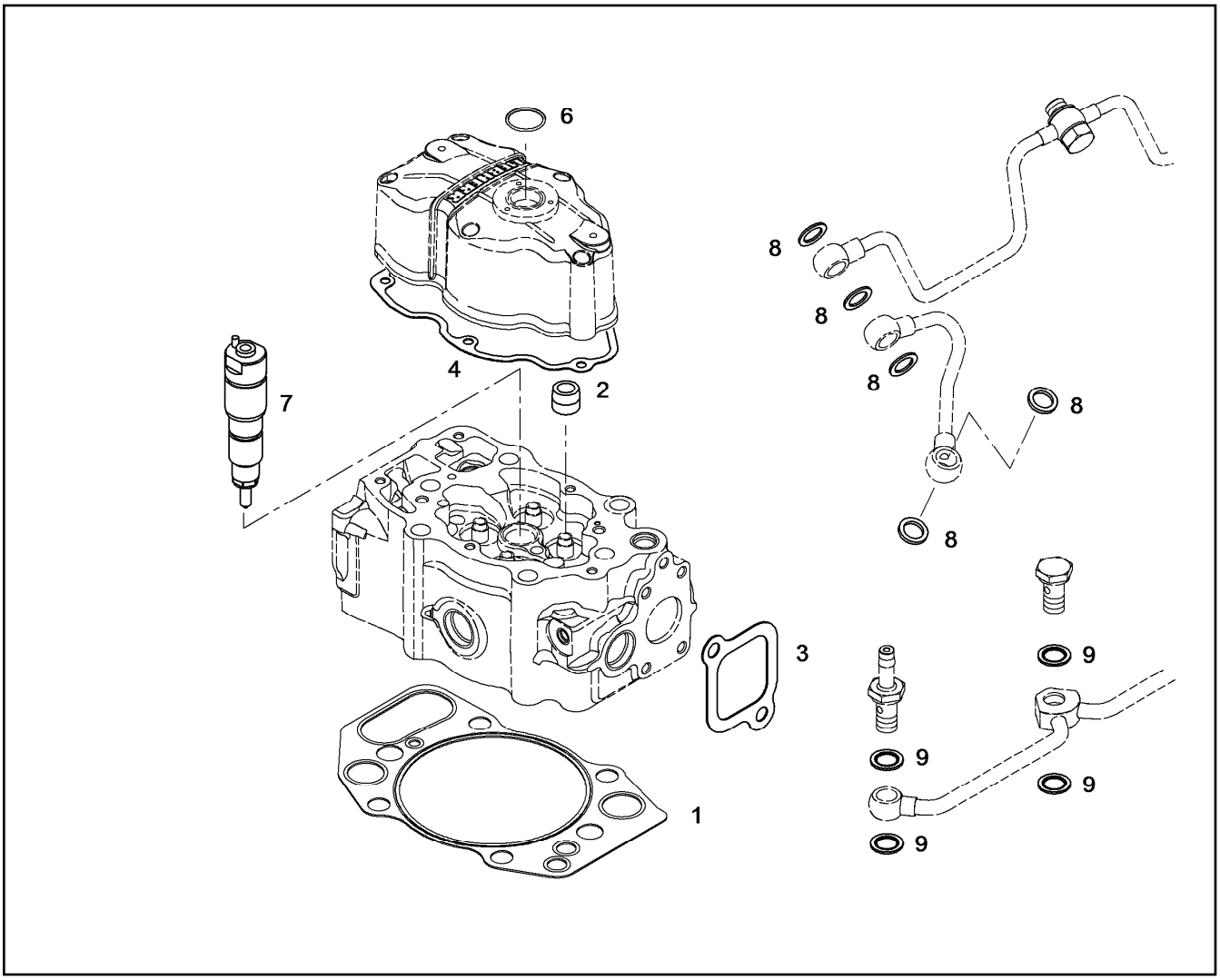

Pos.	Item	Quantity	Description	Designação	Serie	K
1	10120844	6	CYLINDER HEAD GASKET	JUNTA DO CABEÇOTE		
2	10119305	24	VALVE STEM SEAL RING	ANEL VEDACAO HASTE VALVUL	-2007043839	
2	10120334	24	VALVE STEM SEAL RING	ANEL VEDACAO HASTE VALVUL	2007043840-	
3	10118556	6	SEAL	VEDAÇÃO		
4	10118554	6	SEAL	VEDAÇÃO		
6	7381270	1	O-RING DIN 3771 34,65X1,78	ANEL-O		
7	10115854	1	SEAL KIT INJECTION NOZZLE ⇨ ❑ 628	KIT DE VEDACAO DO BICO INJET		
8	7007952	15	SEALING RING DIN 7603 A 10X15X1	ANEL DE VEDAÇÃO		
9	10011866	12	SEALING RING 14,7X22X1,5	ANEL DE VEDAÇÃO		

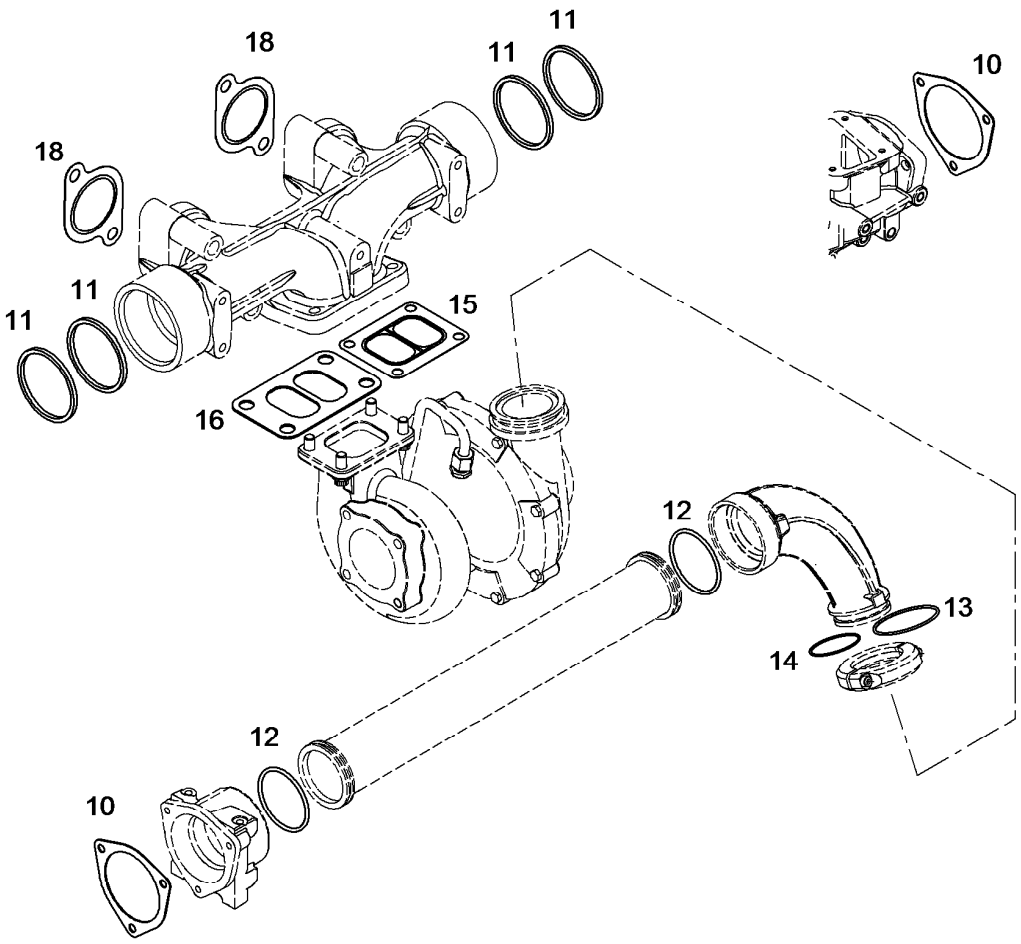

Pos.	Item	Quantity	Description	Designação	Serie	K
10	9271963	2	SEAL 1,5X128 98/141	VEDAÇÃO		
11	10008448	4	LAMELLAR DISK KIT 62,0/56,4X3,3	KIT DE ANEIS LAMELARES		
12	10022320	2	O-RING 80X5,0	ANEL-O		
13	7380970	1	O-RING 63,17X2,62	ANEL-O		
14	7380919	1	O-RING ISO 3601-1 52,07X2,62	ANEL-O		
15	9270109	1	SEAL	VEDAÇÃO		
16	9268129	1	SEAL	VEDAÇÃO		
18	10141557	6	SEAL	VEDAÇÃO		

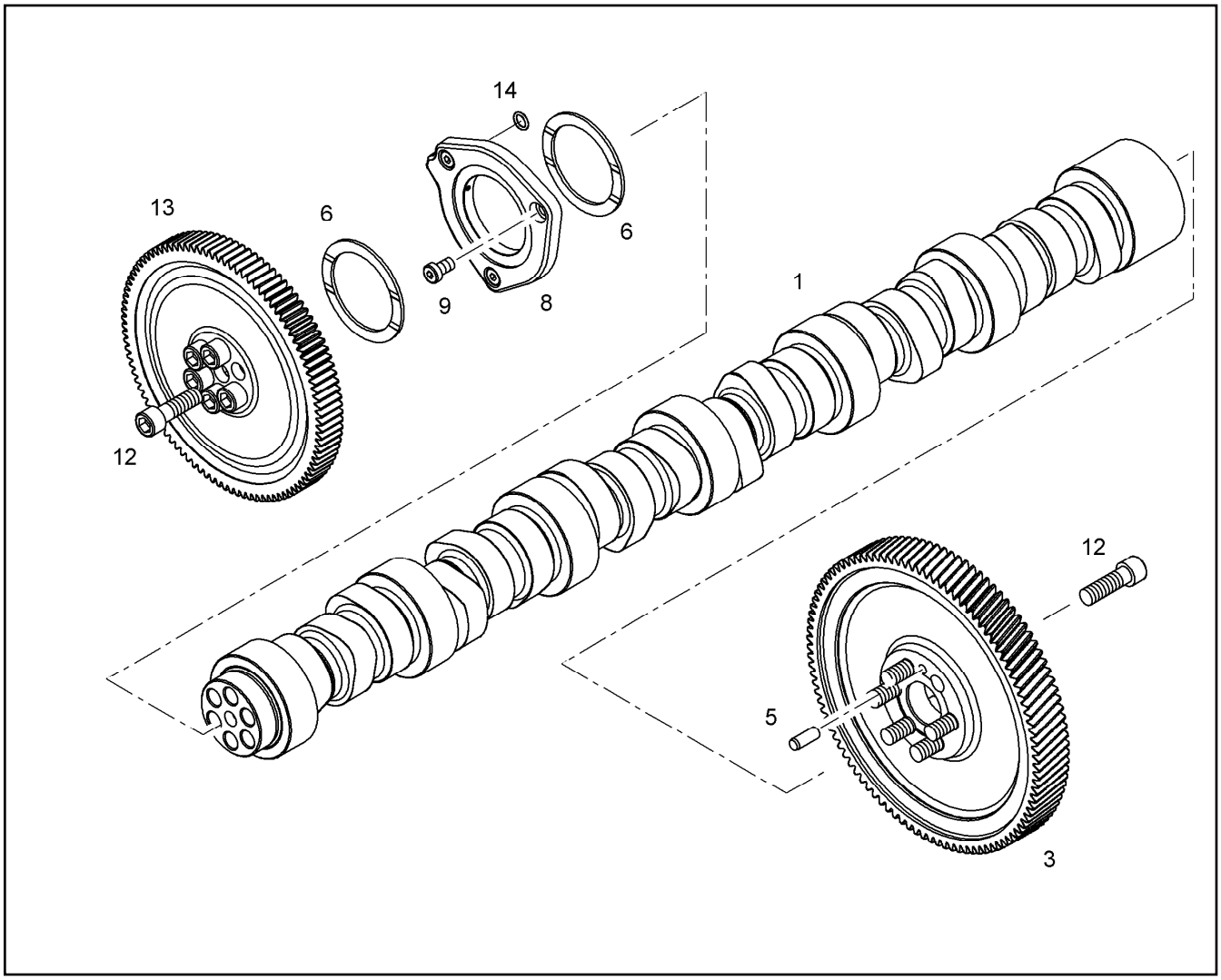

Pos.	Item	Quantity	Description	Designação	Serie	K
1	10119424	1	CAMSHAFT	EIXO DE COMANDO		
3	9073098	1	GEAR WHEEL Z=100 M=2,5	ENGRENAGEM		
5	4980853	1	PARALLEL PIN 8m6	PINO CILÍNDRICO		
6	9073188	2	WEARING RING	ANEL DE ENCOSTO		
8	9073163	1	FLANGE PRE-ASS.	FLANGE PRE-MONTAGEM		
9	4980927	3	SOCKET HEAD SCREW DIN 7984 M10X18 0	PARAFUSO CILÍNDRICO		
12	4902327	12	SOCKET HEAD SCREW ISO 4762 M14X45 10	PARAFUSO CILÍNDRICO		
13	9073100	1	GEAR WHEEL Z=99 M=2,25	ENGRENAGEM		
14	7381685	1	O-RING DIN 3771 7,00X1,5	ANEL-O		

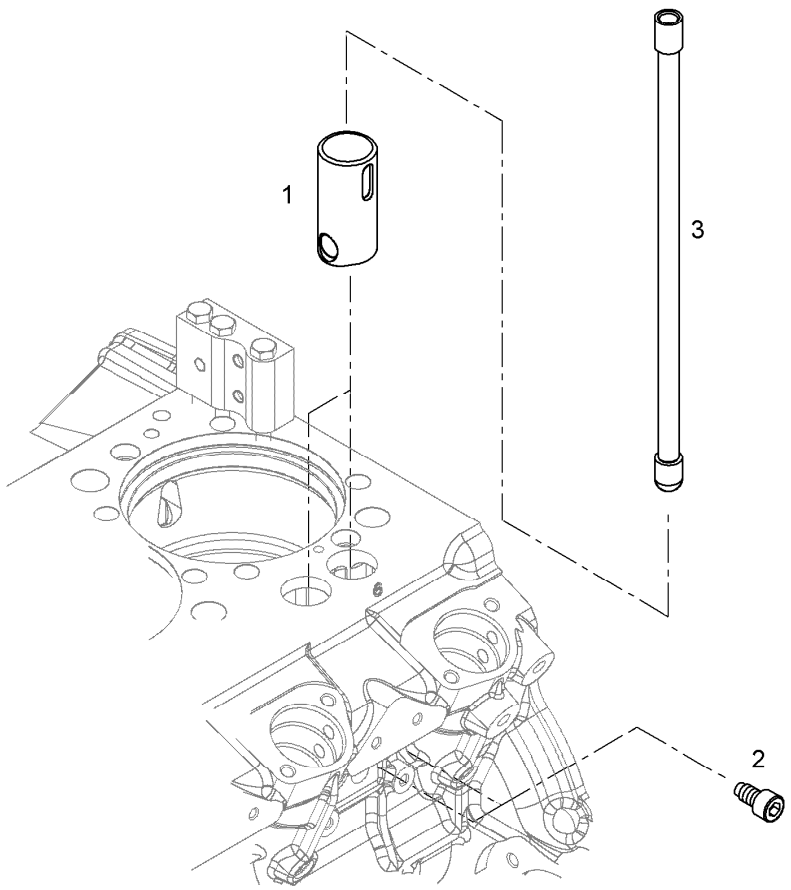

Pos.	Item	Quantity	Description	Designação	Serie	K
1	10153536	2	ROLLER TAPPET	TUCHO DE ROLETE		
2	10153538	2	LOCKING SCREW M10X19X15 10.9 KLR	PARAFUSO TRAVA		
3	9079131	2	TAPPET PUSH ROD	HASTE DO TUCHO		

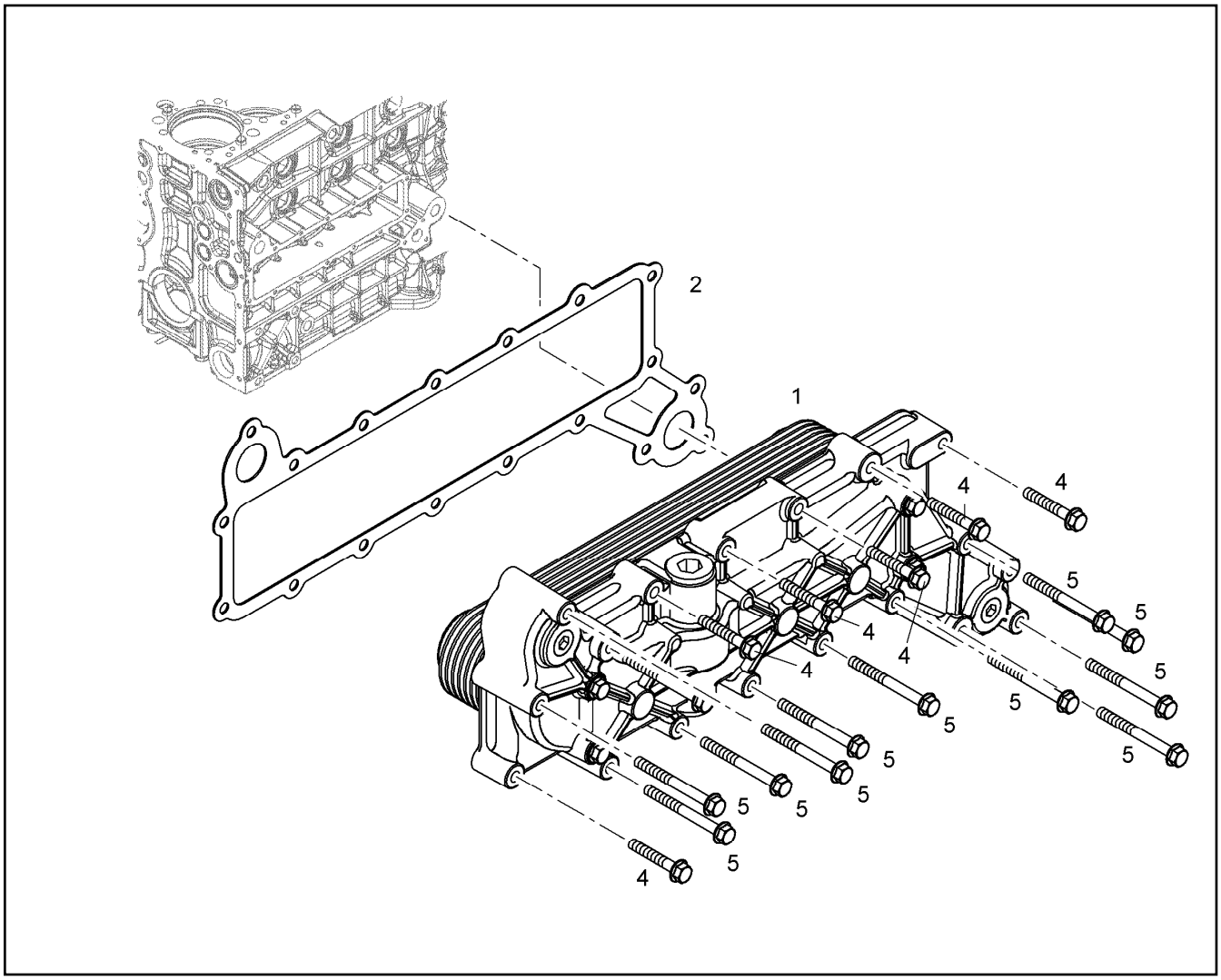

Pos.	Item	Quantity	Description	Designação	Serie	K
1	9073507	1	OIL COOLER, PRE-ASSEMBLED ⇨ ❑ 613	RADIADOR DE OLEO PRE-MON		6
2	9073506	1	SEAL 1,5	VEDAÇÃO		
4	10005073	6	HEX SCREW DIN 6921 M8X50 8.8 A2C	PARAFUSO SEXTAVADO		
5	10005074	12	HEX SCREW DIN 6921 M8X80 8.8 A2C	PARAFUSO SEXTAVADO		

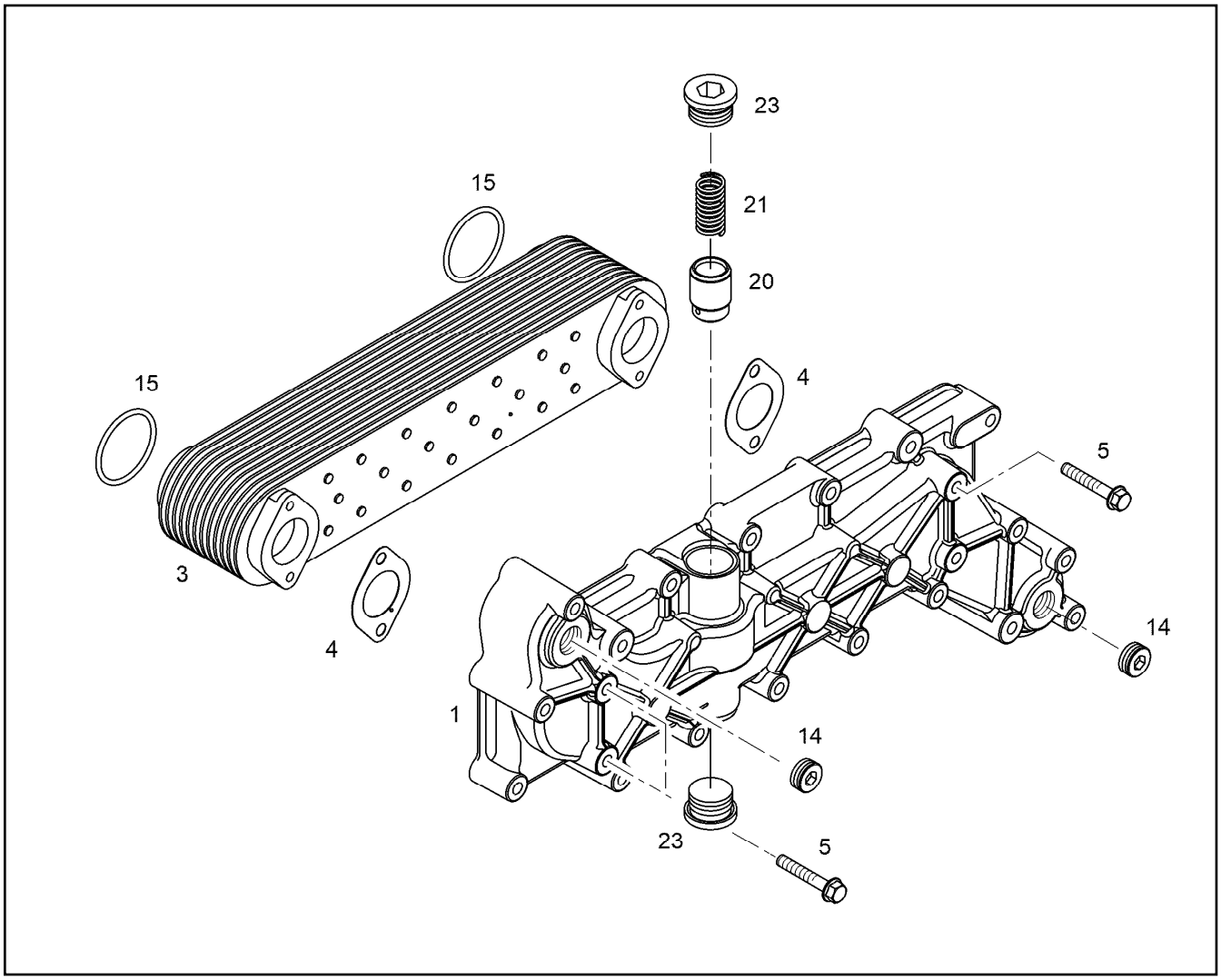

Pos.	Item	Quantity	Description	Designação	Serie	K
1	9073505	1	OIL COOLER HOUSING D936	CARCACA DO RADIADOR DE O		6
3	5700087	1	OIL COOLER 12 FLACHROHRE	RADIADOR DE ÓLEO		
4	9267472	2	SEAL 0,5	VEDAÇÃO		
5	10299606	4	HEX SCREW EN 1665 M8X50 10.9 480H	PARAFUSO SEXTAVADO		
14	4981202	2	SCREW PLUG DIN 906 M22X1,5 St A3C	PARAFUSO DE FECHAMENTO		
15	7381994	2	O-RING DIN 3771 50,39X3,53	ANEL-O		
20	9886591	1	PISTON	PISTÃO		
21	9886756	1	PRESSURE SPRING 2,10X17,80X75,00	MOLA DE PRESSÃO		
23	7382204	2	SCREW PLUG M30X1,5 ED-FPM	PARAFUSO DE FECHAMENTO		

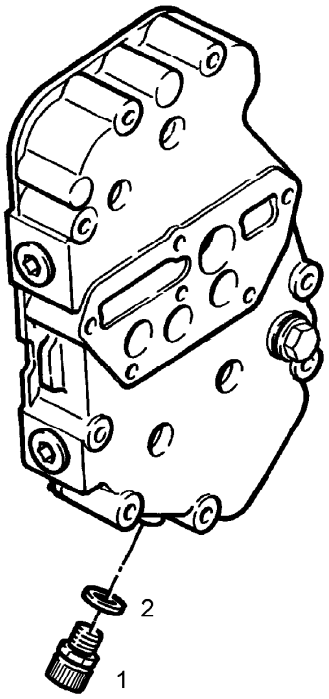

Pos.	Item	Quantity	Description	Designação	Serie	K
1	10011832	1	VALVE	VÁLVULA		
2	7381225	1	SEALING RING DIN 7603 A 14X20X2,5	ANEL DE VEDAÇÃO		

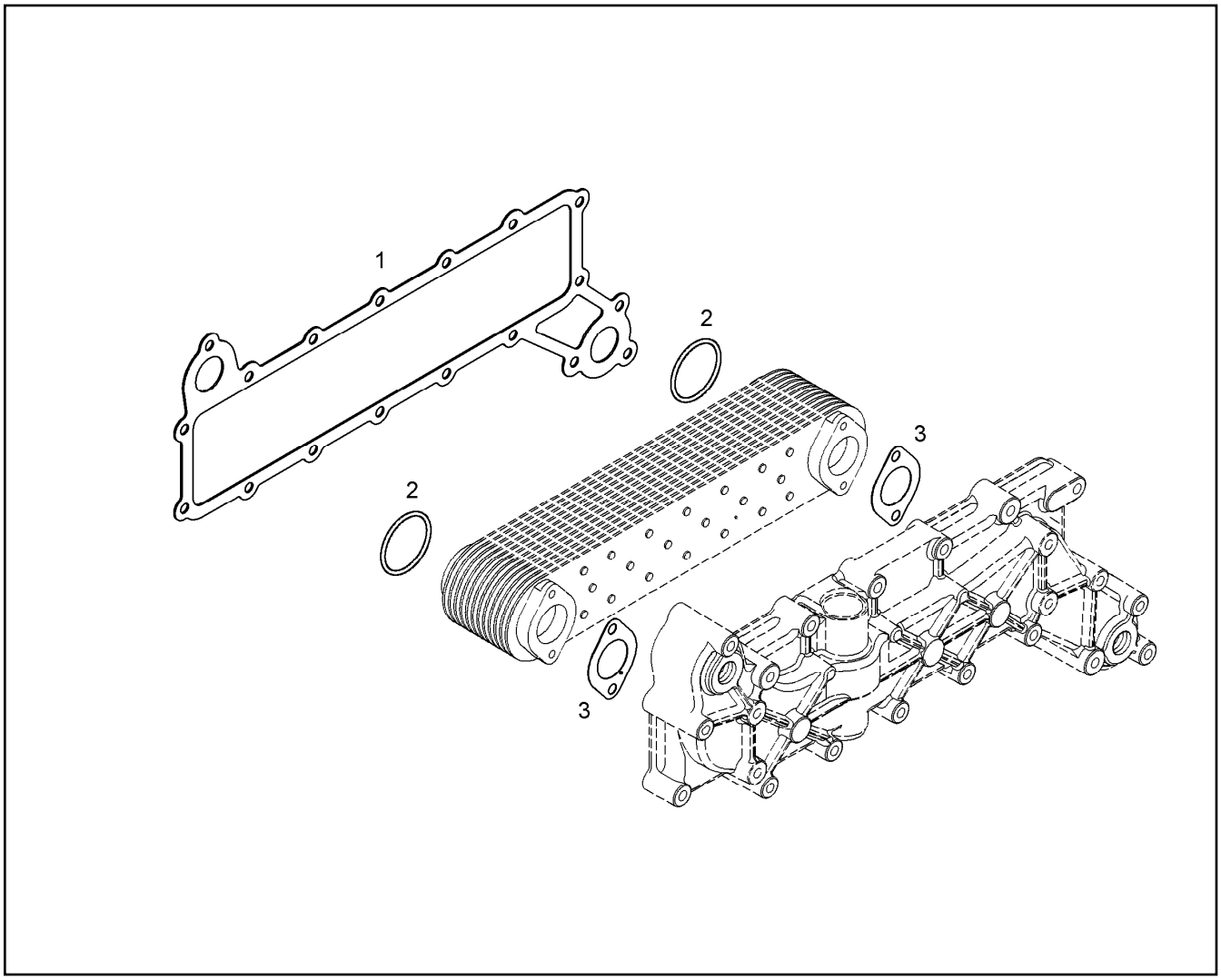

Pos.	Item	Quantity	Description	Designação	Serie	K
1		1	SEAL	VEDAÇÃO		
2		2	O-RING ISO 3601-1 47,22X3,53	ANEL-O		
3		2	SEAL	VEDAÇÃO		

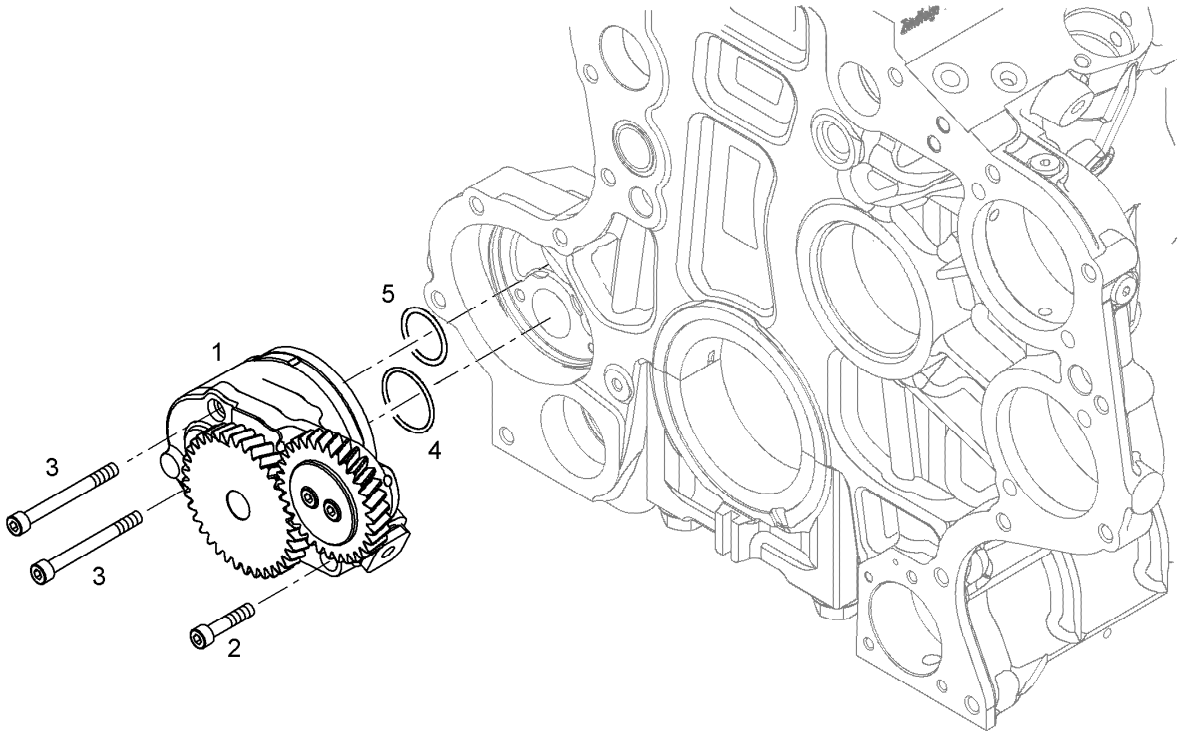

Pos.	Item	Quantity	Description	Designação	Serie	K
1	9072781	1	LUBRICATING OIL PUMP ⇨ ❑ 618	BOMBA DE ÓLEO DE LUBRIFICA		6
2	404204405	1	SOCKET HEAD SCREW ISO 4762 M8X45 8.8	PARAFUSO CILÍNDRICO		
3	240050802	2	SOCKET HEAD SCREW ISO 4762 M8X80 8.8	PARAFUSO CILÍNDRICO		
4	7381812	1	O-RING ISO 3601-1 39,34X2,62	ANEL-O		
5	7382059	1	O-RING ISO 3601-1 34,59X2,62	ANEL-O		

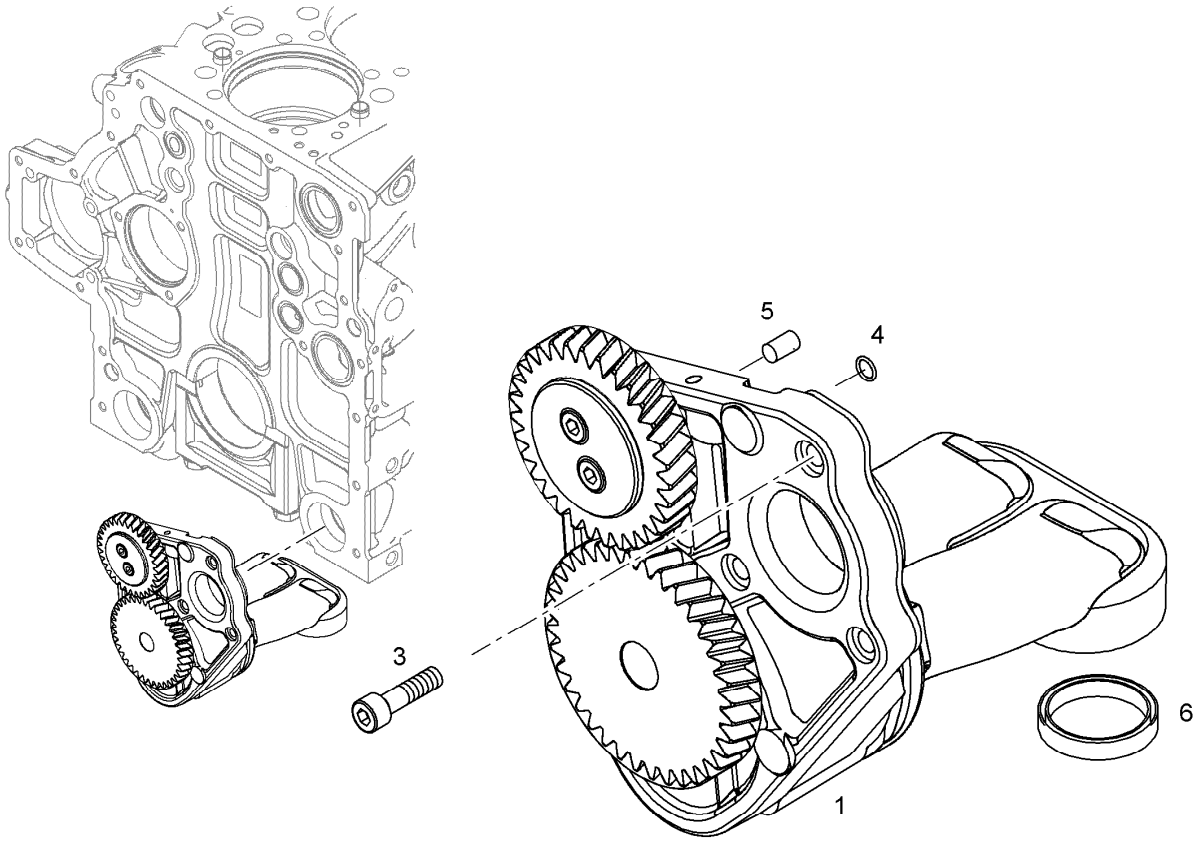

Pos.	Item	Quantity	Description	Designação	Serie	K
1	9080277	1	SUCTION PUMP PRE-ASS. ⇨ ❑ 619	BOMBA DE SUCÇÃO PRÉ-MONT		6
3	240049802	3	SOCKET HEAD SCREW ISO 4762 M8X30 8.8	PARAFUSO CILÍNDRICO		
4	7381685	1	O-RING DIN 3771 7,00X1,5	ANEL-O		
5	4980000	1	PARALLEL PIN 6m6	PINO CILÍNDRICO		
6	9079608	2	SEAL	VEDAÇÃO		

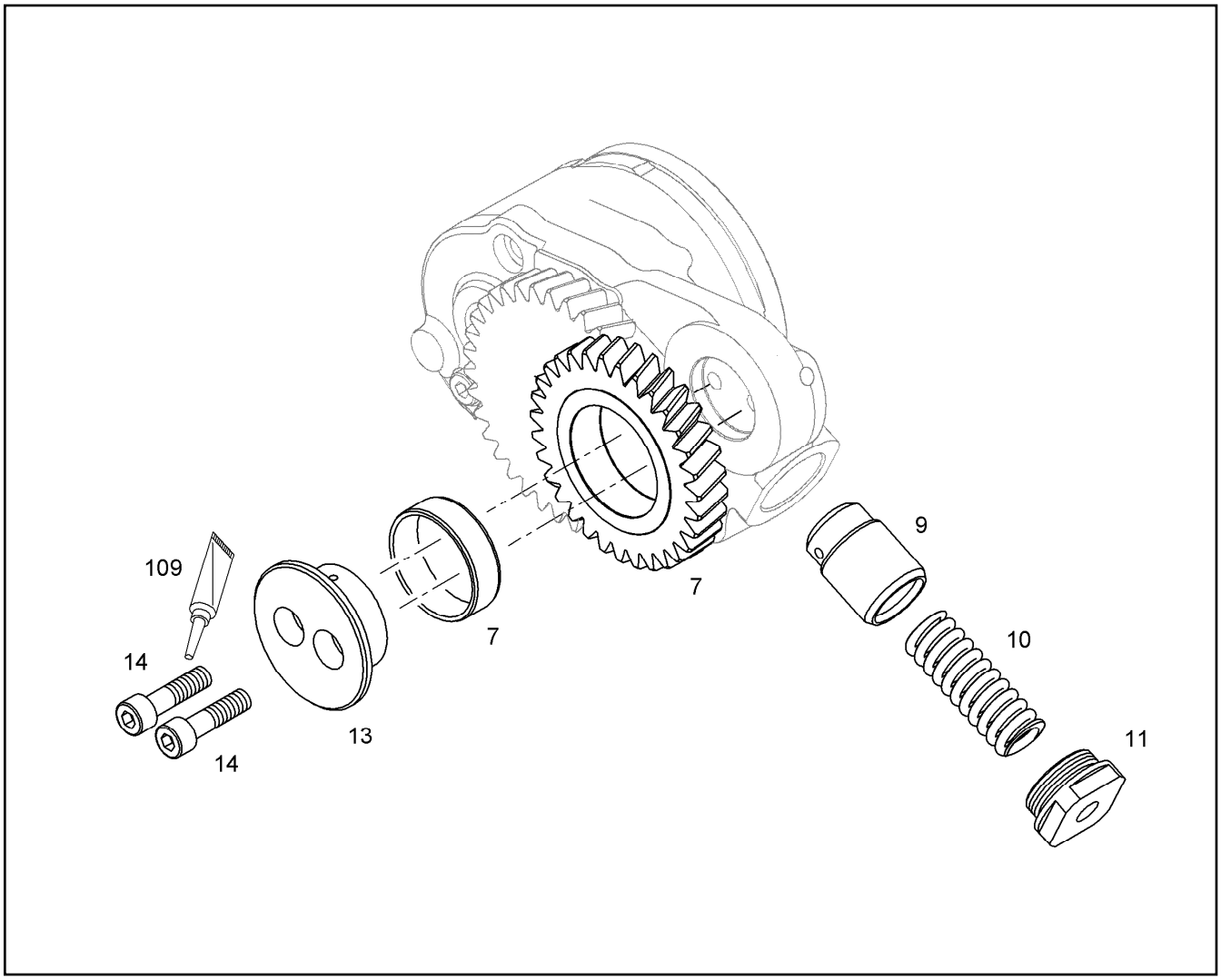

Pos.	Item	Quantity	Description	Designação	Serie	K
7	9072633	1	INTERMEDIATE GEAR PRE-ASSY.	ENGRENAGEM INTERMEDIARIA		
7	9267183	1	-BEARING BUSH 40/44X13	-BUCHA MANCAL		1
9	9886591	1	PISTON	PISTÃO		
10	7381302	1	PRESSURE SPRING 3,40X16,60X71,31	MOLA DE PRESSÃO		
11	9275590	1	SCREW PLUG M30X1,5 St Rm>450N/mm² FE/	PARAFUSO DE FECHAMENTO		
13	9267273	1	HUB	CUBO		
14	240049802	2	SOCKET HEAD SCREW ISO 4762 M8X30 8.8	PARAFUSO CILÍNDRICO		
109	811205708	1	SCREW LOCKING	COLA PARA ELEMENTOS FIXA		

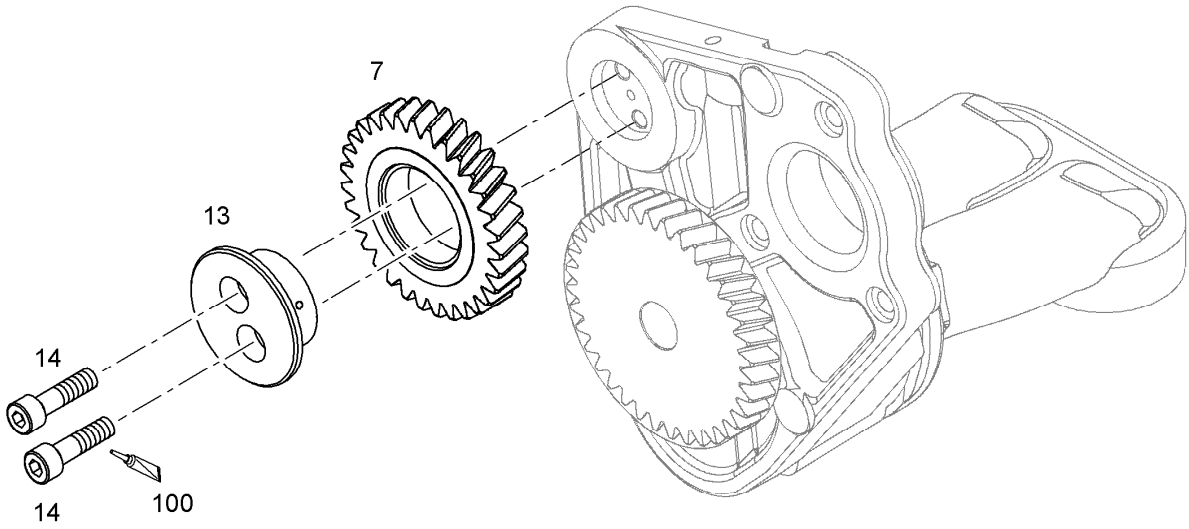

Pos.	Item	Quantity	Description	Designação	Serie	K
7	9072633	1	INTERMEDIATE GEAR PRE-ASSY.	ENGRENAGEM INTERMEDIARIA		
7	9267183	1	-BEARING BUSH 40/44X13	-BUCHA MANCAL		1
13	9267273	1	HUB	CUBO		
14	240049802	2	SOCKET HEAD SCREW ISO 4762 M8X30 8.8	PARAFUSO CILÍNDRICO		
100	8700039	1	ADHESIVE 50ML TUBE ROT	COLA		

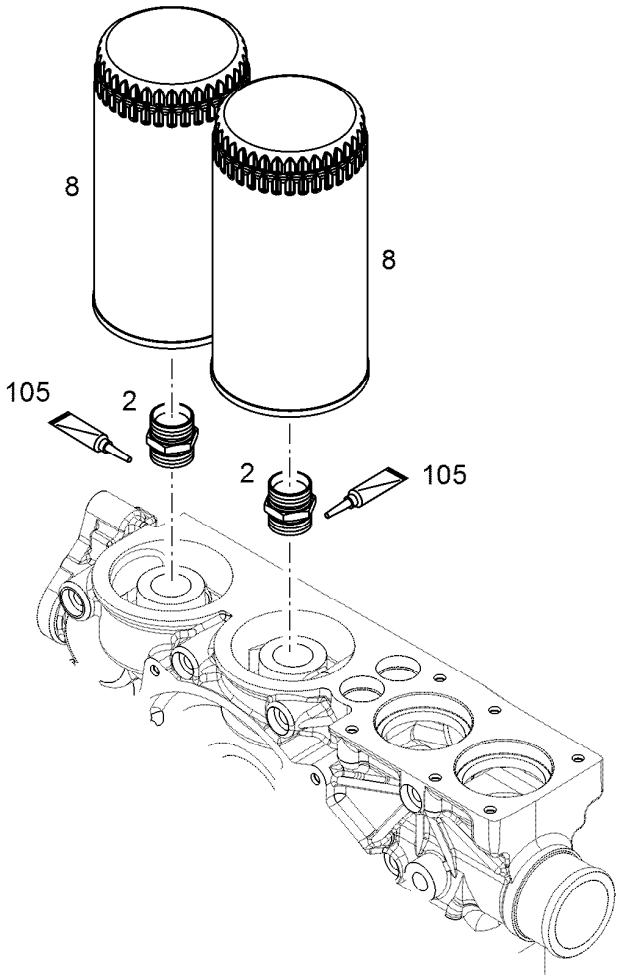

Pos.	Item	Quantity	Description	Designação	Serie	K
2	9273271	2	FITTINGS	CONEXÃO		
8	10297295	2	EASY-CHANGE FILTER 9µm	FILTRO INTERCAMBIÁVEL		
105	8655016	1	SCREW LOCKING	COLA PARA ELEMENTOS FIXA		

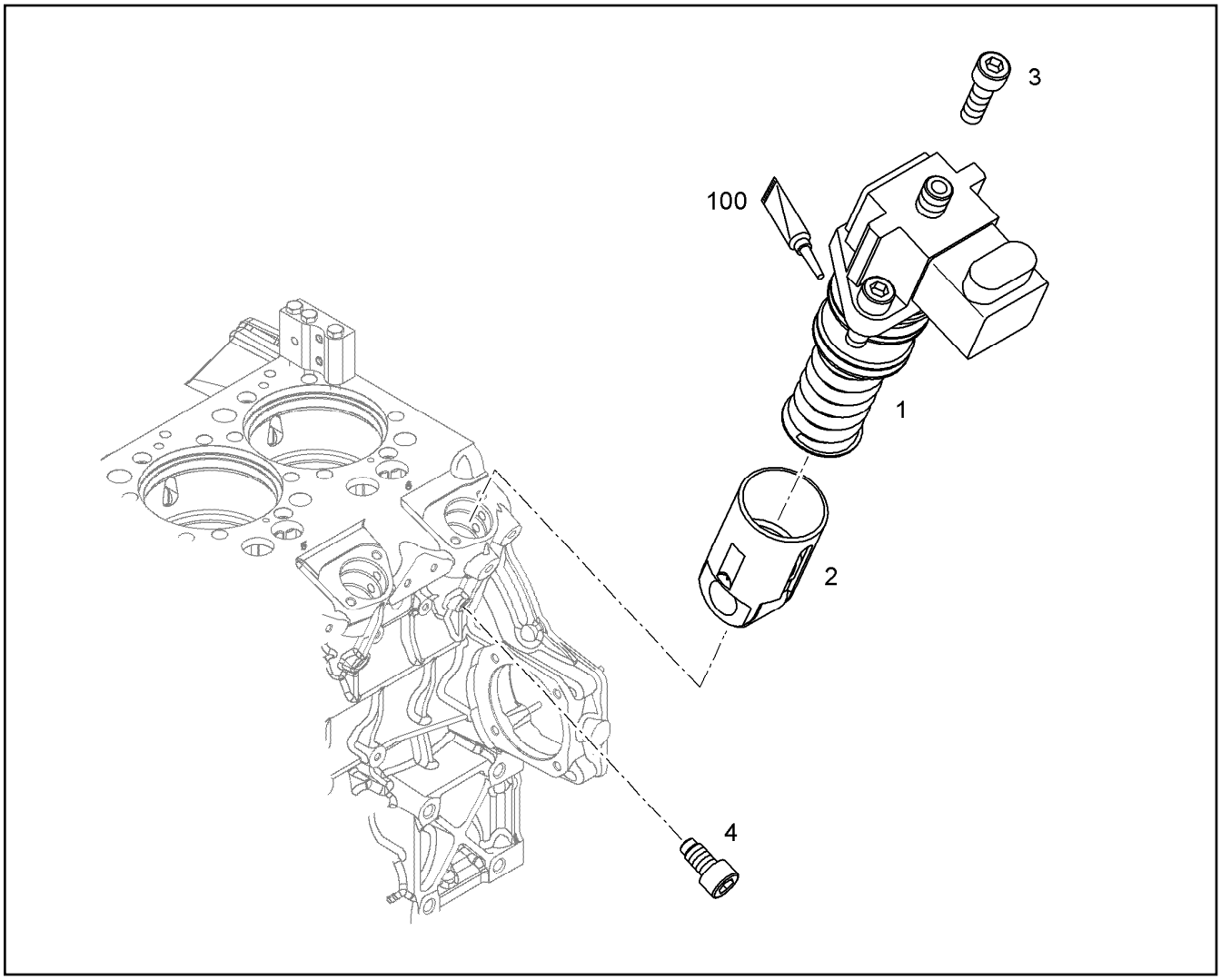

Pos.	Item	Quantity	Description	Designação	Serie	K
1	10116257	1	INJECTION PUMP	BOMBA INJETORA		6
2	9074628	1	ROLLER TAPPET D=44	TUCHO DE ROLETE		
3	11002743	2	SOCKET HEAD SCREW ISO 4762 M10X30 10	PARAFUSO CILÍNDRICO		
4	10153538	1	LOCKING SCREW M10X19X15 10.9 KLR	PARAFUSO TRAVA		
100	10282622	1	GREASE STABURAGS NBU 30/0,010kg	GRAXA		

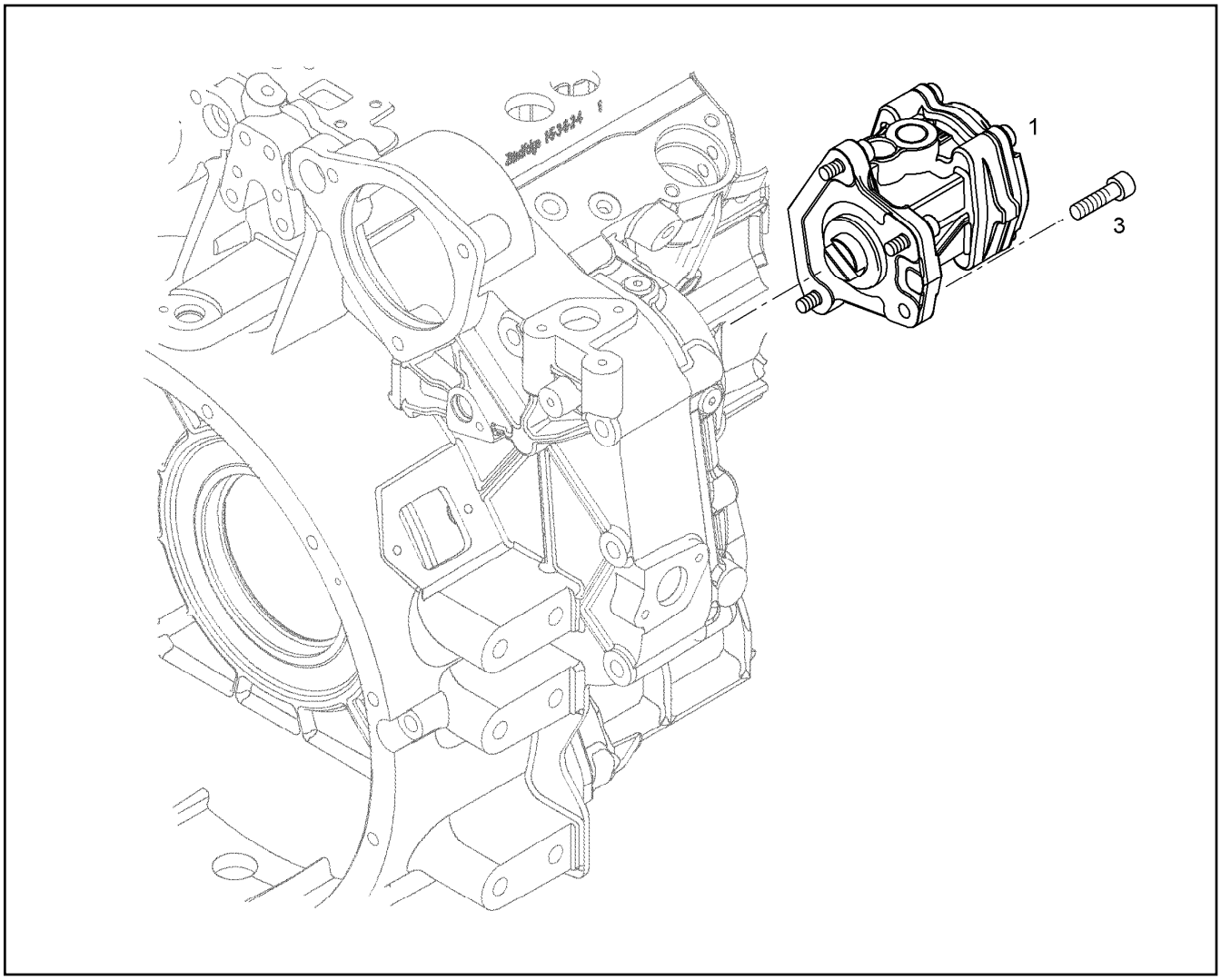

Pos.	Item	Quantity	Description	Designação	Serie	K
1	9078681	1	DELIVERY PUMP	BOMBA ALIMENTAÇÃO COMBUS		
3	4042002	4	SOCKET HEAD SCREW ISO 4762 M6X20 8.8	PARAFUSO CILÍNDRICO		

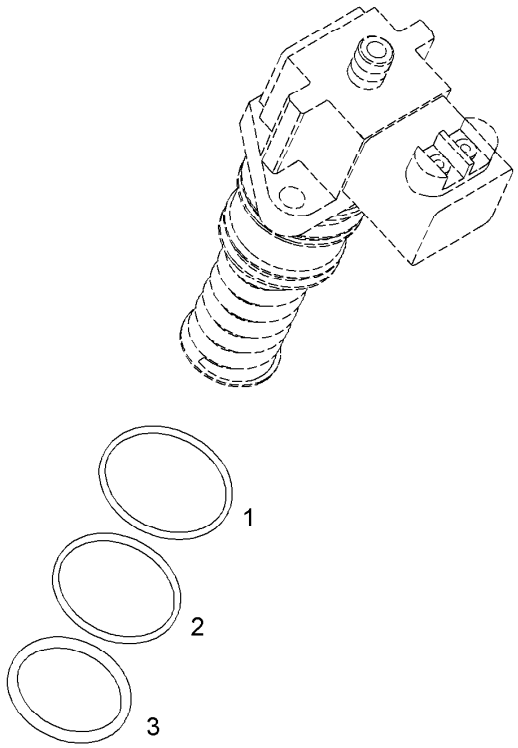

Pos.	Item	Quantity	Description	Designação	Serie	K
1		1	O-RING 47X2,50	ANEL-O		
2		1	O-RING 45X2,50	ANEL-O		
3		1	O-RING 40X4	ANEL-O		

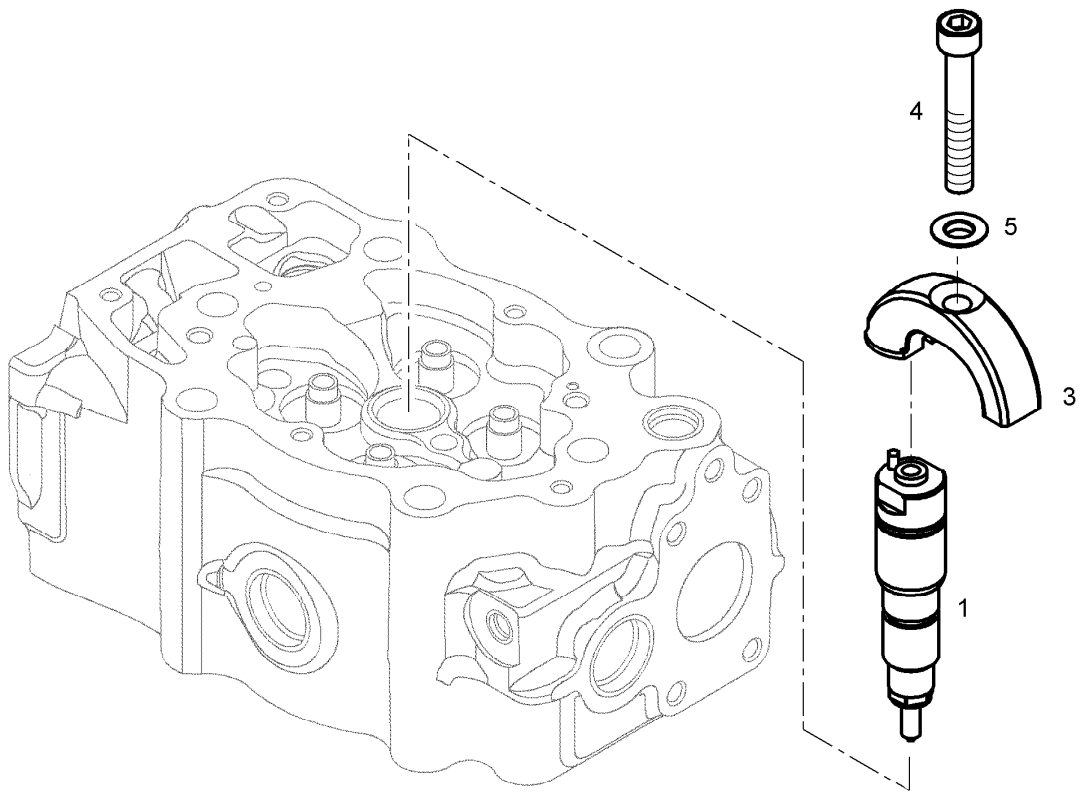

Pos.	Item	Quantity	Description	Designação	Serie	K
1	10117093	1	RK INJECTION NOZZLE ⇨ ❑ 625	KIT DE REPARO DO BICO INJE		
3	9075372	1	JAW	GARRA		
4	404209808	1	SOCKET HEAD SCREW ISO 4762 M10X65 8.	PARAFUSO CILÍNDRICO		
5	4980377	1	SPHERICAL WASHER C 10,5X21X4	ARRUELA ESFÉRICA		

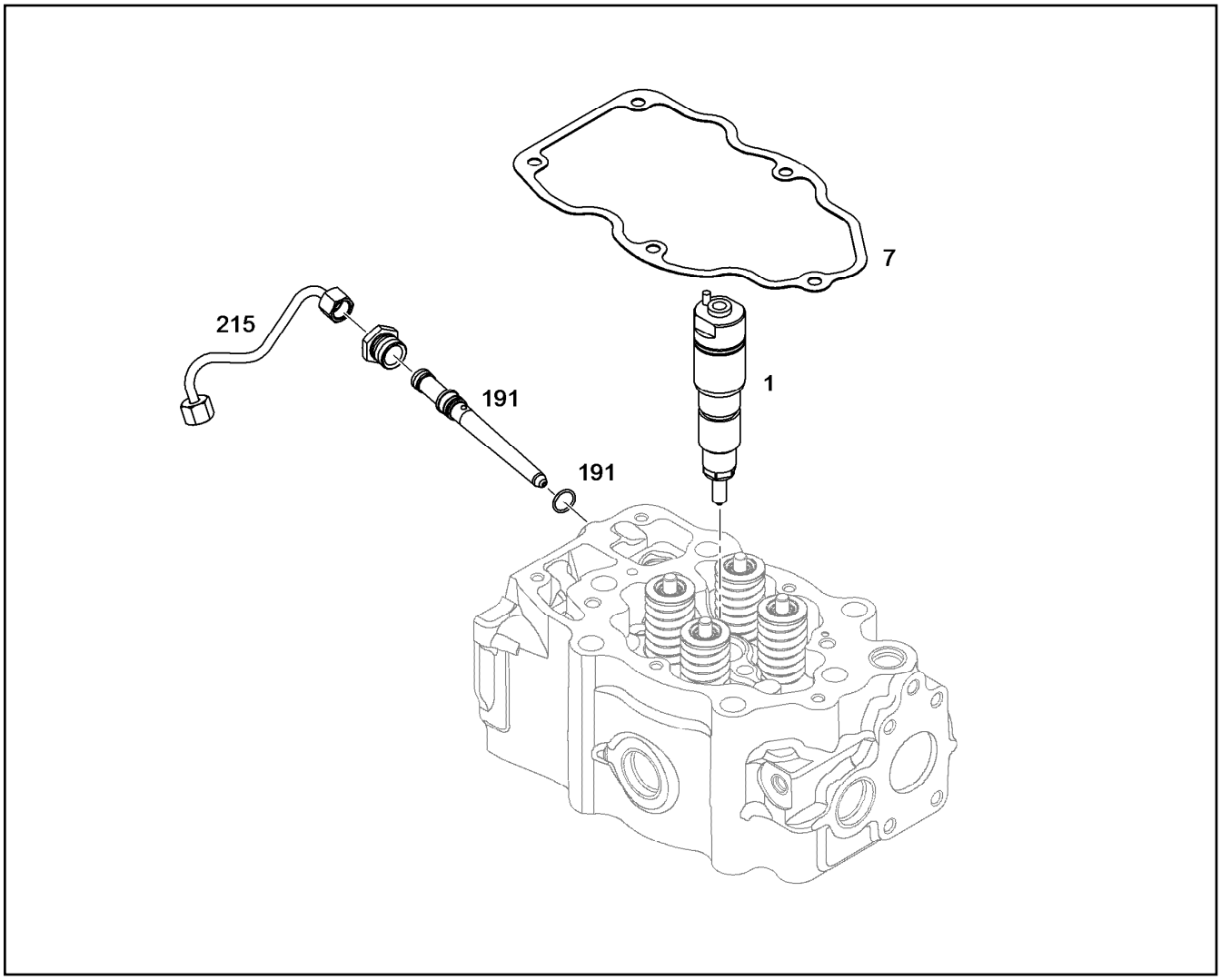

Pos.	Item	Quantity	Description	Designação	Serie	K
1	10116587	1	INJECTOR ⇨ ❑ 626	INJETOR		
7	10118554	1	SEAL	VEDAÇÃO		
191	9075395	1	HIGH PRESSURE CONNECTOR ASS. ⇨ ❑ 627	BICO INJ. DE TUBO DE PRESSA		
215	9080410	1	INJECTION LINE	TUBO DE INJEÇÃO		

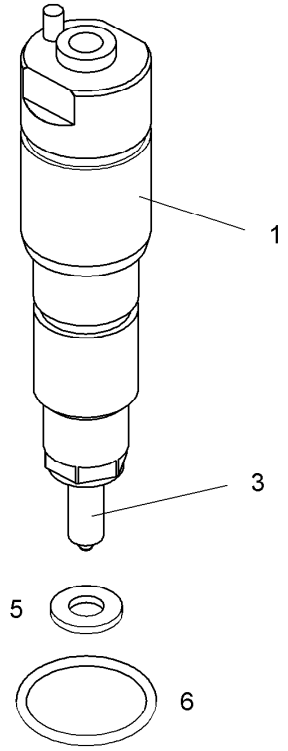

Pos.	Item	Quantity	Description	Designação	Serie	K
1	10027735	1	NOZZLE HOLDER	BICO INJETOR		
3	10289344	1	NOZZLE DLLA 145 P 1503	BOCAL		
5	10040406	1	SHEET GASKET 7,03X15,1X1,5	DISCO DE VEDAÇÃO		
6	10040399	1	O-RING 20,90X3	ANEL-O		

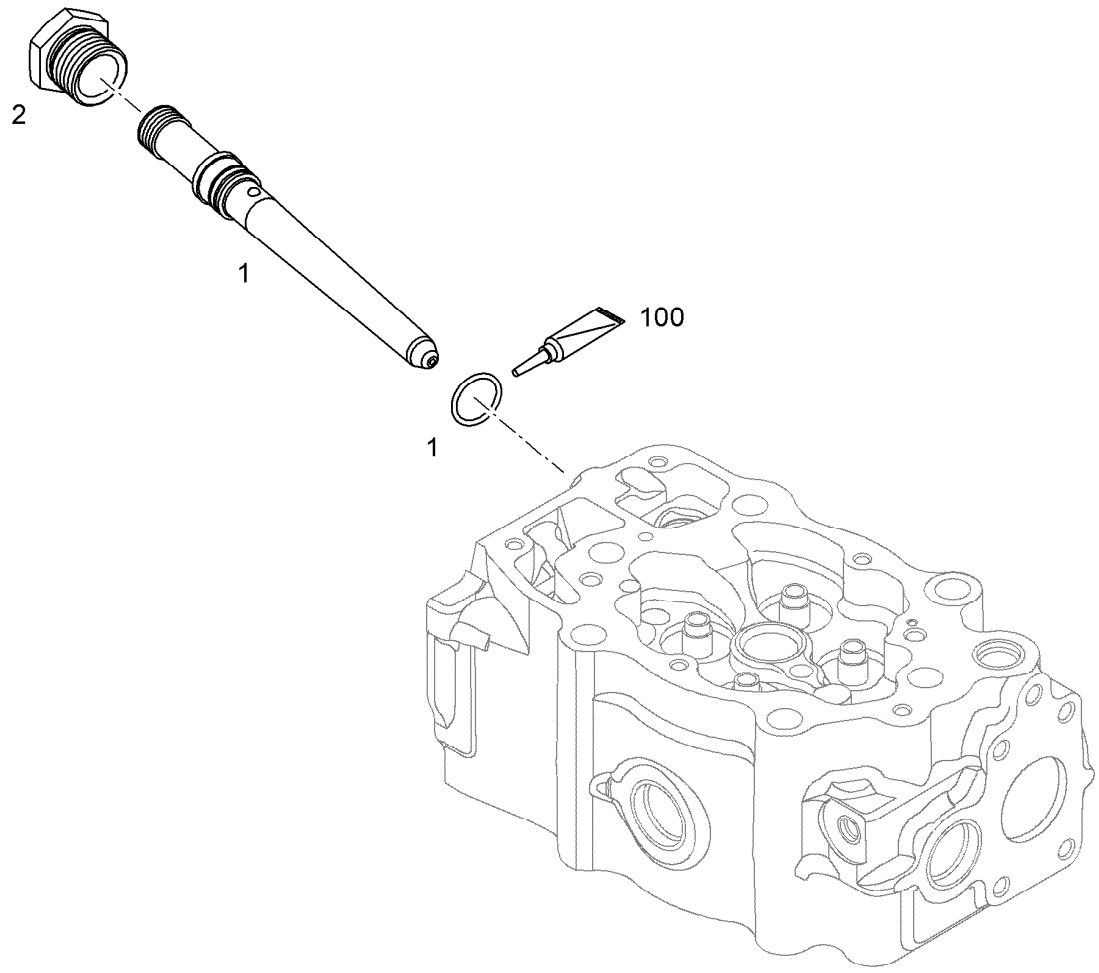

Pos.	Item	Quantity	Description	Designação	Serie	K
1	9074677	1	HIGH PRESSURE CONNECTOR F 00Z R20	BOCAL DE TUBO DE PRESSAO		
1	10040401	1	-O-RING 12,60X2,80	-ANEL-O		
2	9075763	1	BOX NUT	PORCA DE CONEXÃO		
100	10282622	1	GREASE STABURAGS NBU 30/0,010kg	GRAXA		

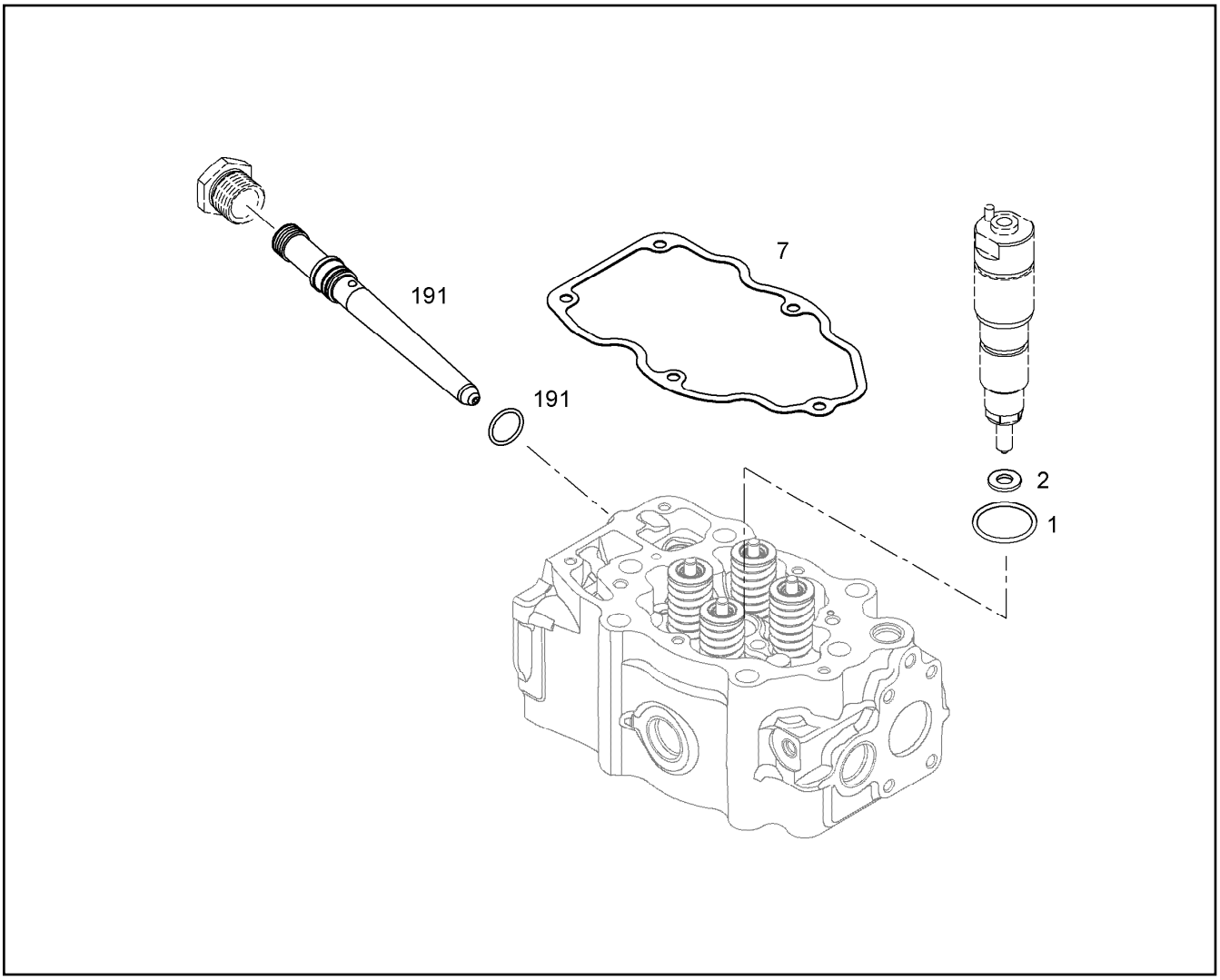

Pos.	Item	Quantity	Description	Designação	Serie	K
1		1	O-RING 20,90X3	ANEL-O		
2		1	SHEET GASKET 7,03X15,1X1,5	DISCO DE VEDAÇÃO		
7		1	SEAL	VEDAÇÃO		
191	9075395	1	HIGH PRESSURE CONNECTOR ASS. ⇨ ❑ 627	BICO INJ. DE TUBO DE PRESSA		

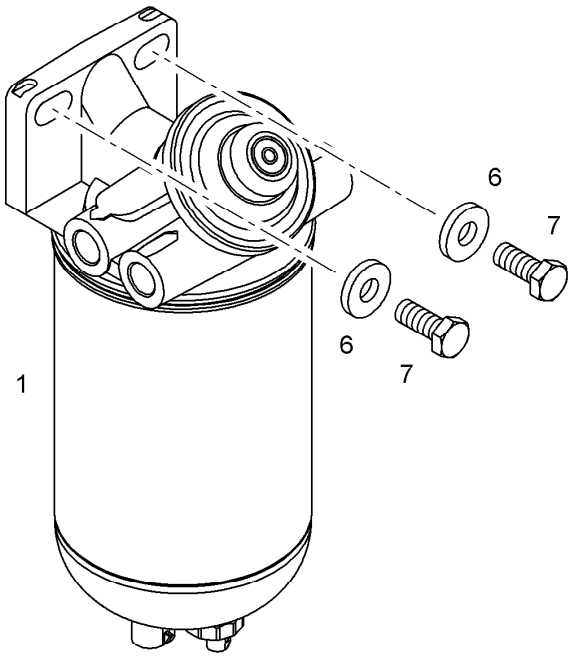

Pos.	Item	Quantity	Description	Designação	Serie	K
1	10222819	1	FUEL PRE-FILTER CPL. ⇨ ❑ 632	PRÉ-FILTRO COMBUST.COMPL.		
6	10179357	2	WASHER 10,5	ARRUELA		
7	4000828	2	HEX SCREW ISO 4017 M10X30 8.8 A3C	PARAFUSO SEXTAVADO		

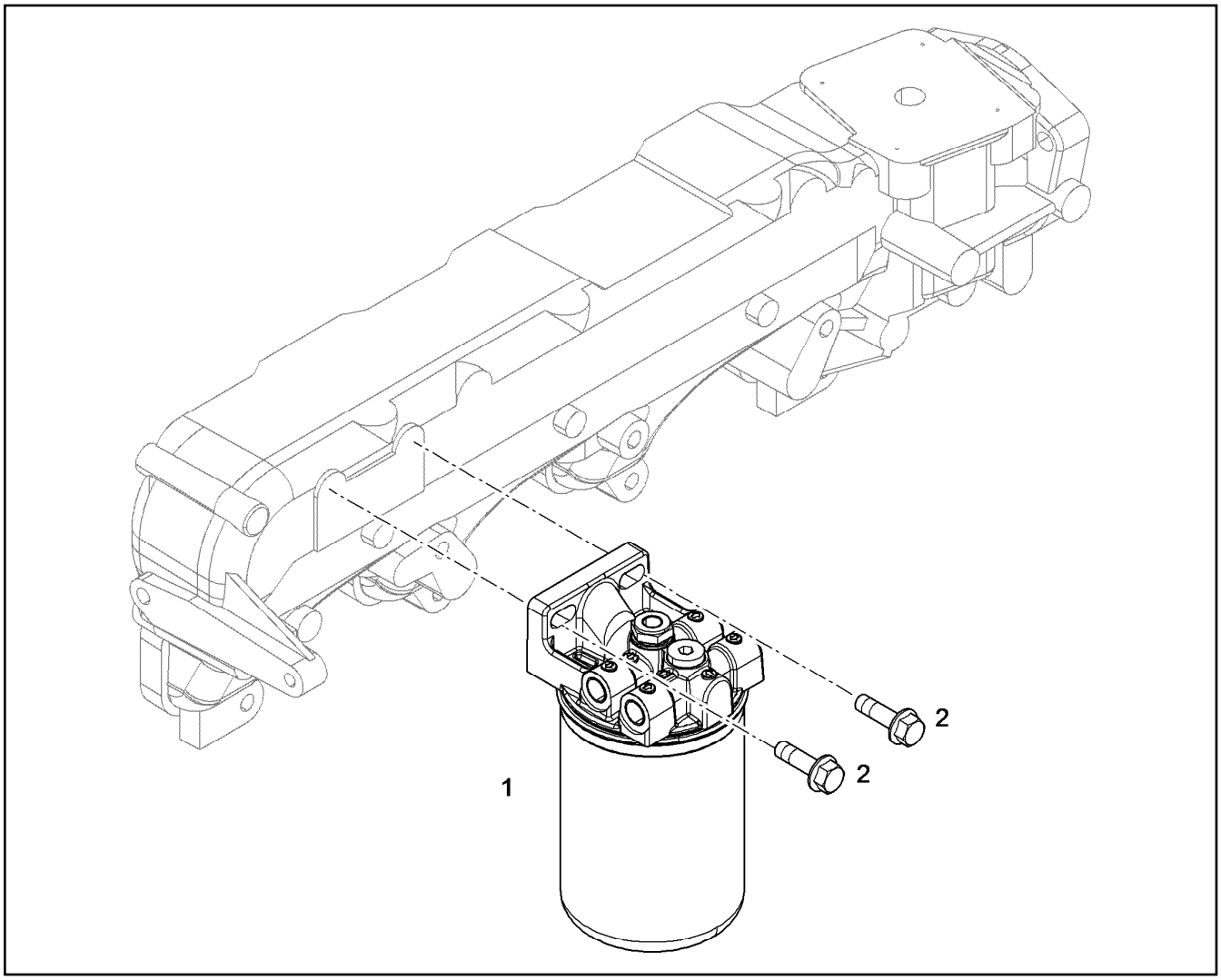

Pos.	Item	Quantity	Description	Designação	Serie	K
1	10125801	1	FUEL FINE FILTER ⇨ ❑ 631	FILTRO DE COMBUSTÍVEL		
2	10333464	2	HEX SCREW DIN 6921 M10X35 8.8 A3C	PARAFUSO SEXTAVADO		

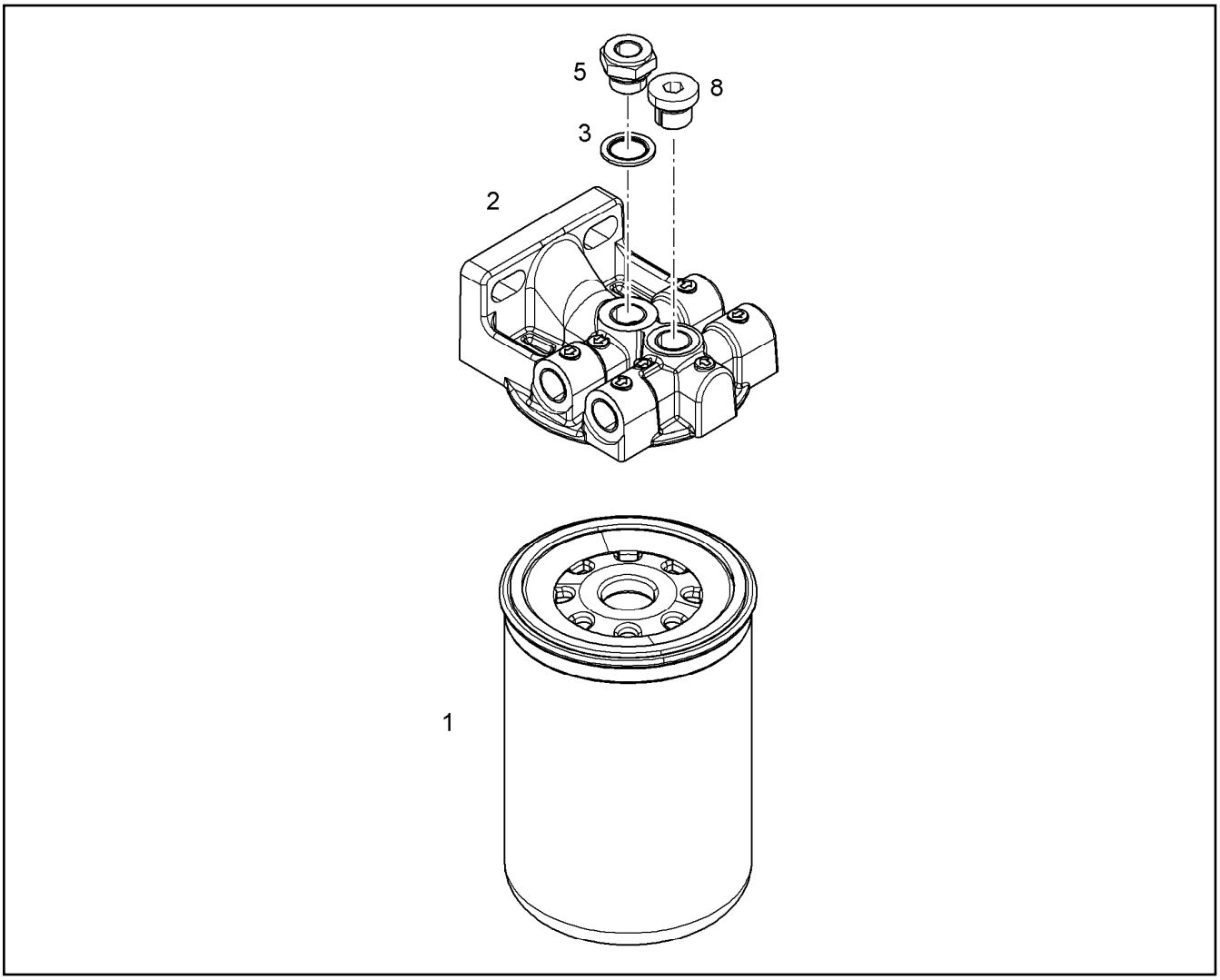

Pos.	Item	Quantity	Description	Designação	Serie	K
1	12820742	1	FUEL FINE FILTER 3-5µm	FILTRO DE COMBUSTÍVEL		
2	12455531	1	FUEL FILTER HEAD	CABECA DO FILTRO COMBUSTI		
3	10011867	1	SEALING RING 16,7X24X1,5	ANEL DE VEDAÇÃO		
5	10120066	1	REDUCING PIECE M16X1,5/M12X1,5	PEÇA DE REDUÇÃO		
8	7382203	1	SCREW PLUG VSTI M16X1,5	PARAFUSO DE FECHAMENTO		

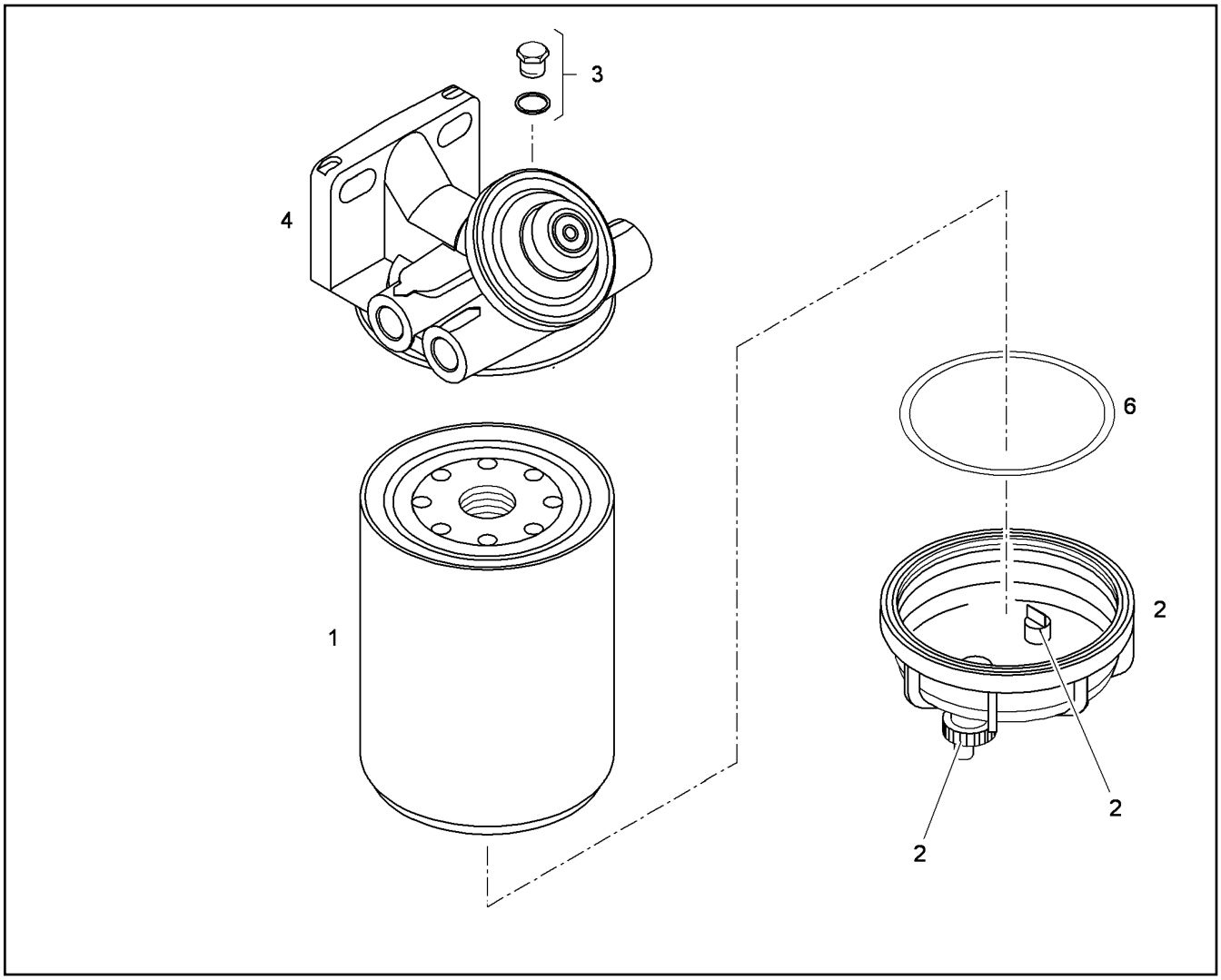

Pos.	Item	Quantity	Description	Designação	Serie	K
1	10044302	1	FUEL PREFILTER	PRE-FILTRO DE COMBUSTÍVEL		
2	10222821	1	TRANSPARENT CONTAINER	RECIPIENTE TRANSPARENTE		
2	10280185	1	-WATER SENSOR	-SENSOR DE ÁGUA		
2	10289208	1	-RK OIL DRAIN SCREW D 930	-KIT DE REPARO DO DRENO DE		
3	10101997	1	VENTILATION SCREW	PARAFUSO DE RESPIRO		
4	10046958	1	FUEL FILTER HEAD	CABECA DO FILTRO COMBUSTI		
6	10289210	1	O-RING ISO 3601-1 101,19X3,53	ANEL-O		

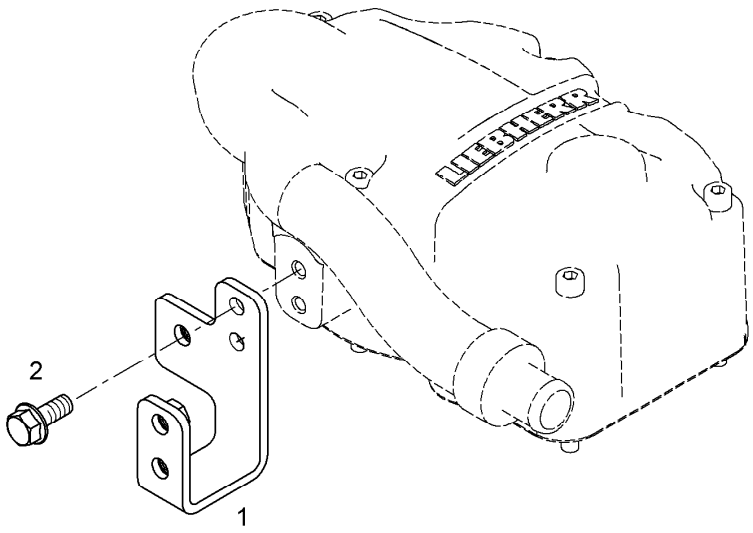

Pos.	Item	Quantity	Description	Designação	Serie	K
1	10119119	1	RETAINER CPL.	SUPORTE CPL		
2	10016906	2	HEX SCREW DIN 6921 M8X20 8.8 A2C	PARAFUSO SEXTAVADO		

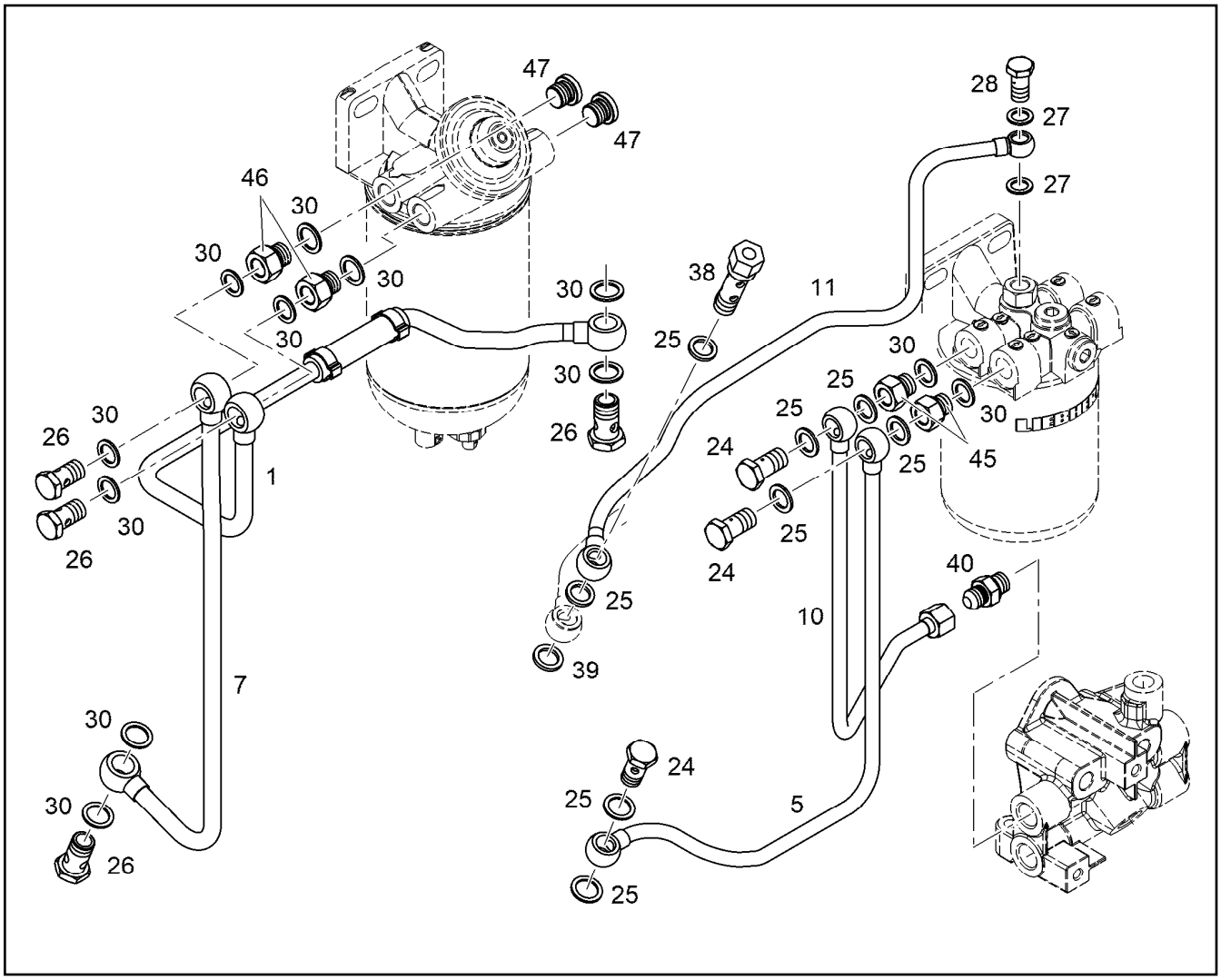

Pos.	Item	Quantity	Description	Designação	Serie	K
1	10116499	1	PIPELINE	TUBULAÇÃO		
5	10116453	1	PIPELINE 10X1	TUBULAÇÃO		
7	10116467	1	PIPELINE 12X1	TUBULAÇÃO		
10	10116290	1	PIPELINE 10X1	TUBULAÇÃO		
11	10116482	1	PIPELINE 10X1	TUBULAÇÃO		
23	10011867	12	SEALING RING 16,7X24X1,5	ANEL DE VEDAÇÃO		
24	12210013	4	HOLLOW SCREW 10-3	PARAFUSO OCO		
25	10011866	11	SEALING RING 14,7X22X1,5	ANEL DE VEDAÇÃO		
26	12210025	5	HOLLOW SCREW 12-3	PARAFUSO OCO		
27	10011865	4	SEALING RING 12,7X18X1,5	ANEL DE VEDAÇÃO		
28	7381925	2	HOLLOW SCREW WITH THROTTLE	PARAFUSO OCO COM ESTRANG		
30	10011867	14	SEALING RING 16,7X24X1,5	ANEL DE VEDAÇÃO		
38	10115499	1	DOUBLE BANJO BOLT 10X1	PARAFUSO OCO DUPLO		
39	10011866	3	SEALING RING 14,7X22X1,5	ANEL DE VEDAÇÃO		
40	10021563	4	FITTING GE 10 M14X1,5/9/16-18	UNIÃO ROSCADA		
45	10038817	2	REDUCING STUD M16X1,5/M14X1,5	REDUÇÃO		
46	10115649	2	FITTINGS M16X1,5/M16X1,5	CONEXÃO		
47	7382203	2	SCREW PLUG VSTI M16X1,5	PARAFUSO DE FECHAMENTO		

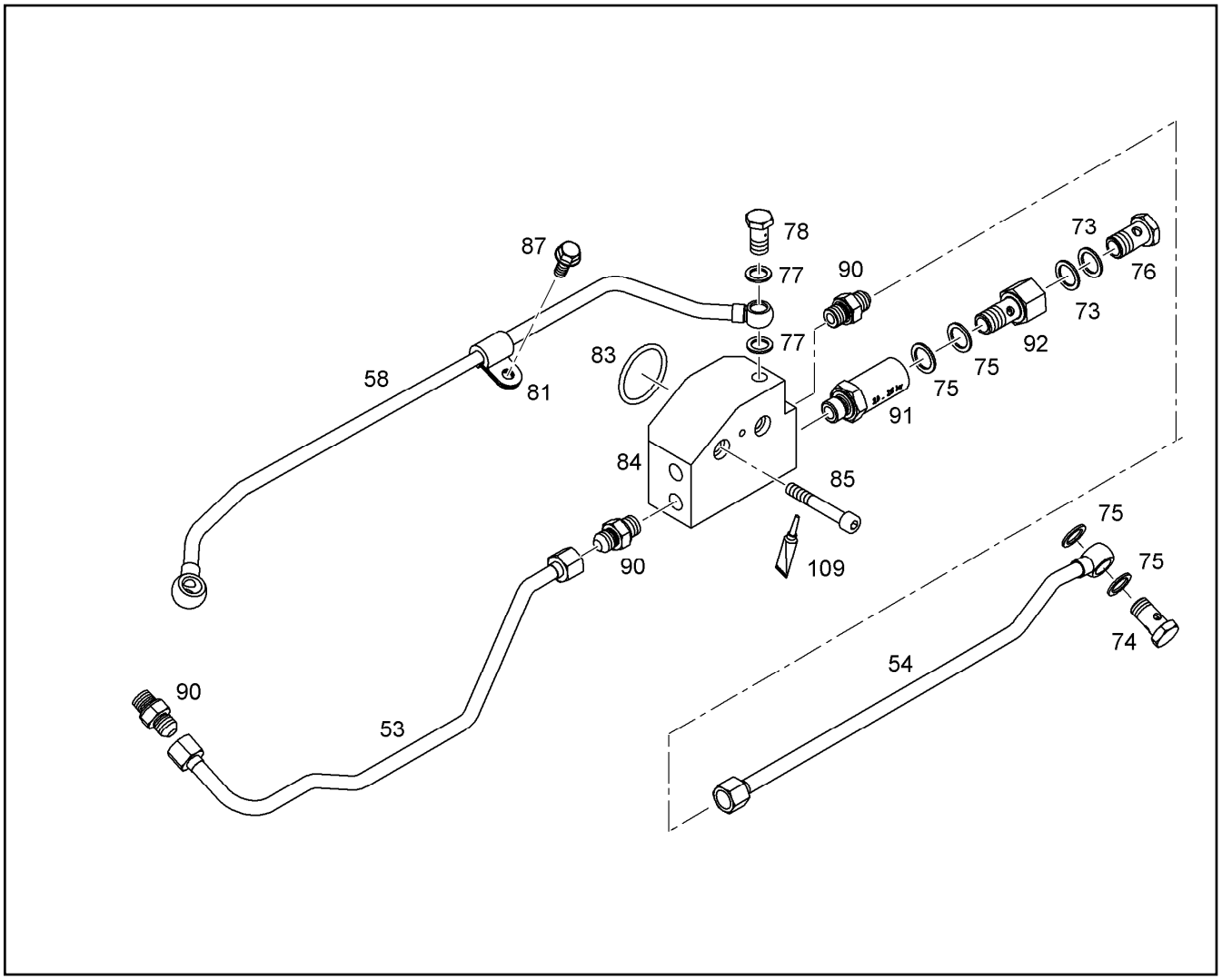

Pos.	Item	Quantity	Description	Designação	Serie	K
53	10116289	1	PIPELINE 10X1	TUBULAÇÃO		
54	10116287	1	PIPELINE 10X1	TUBULAÇÃO		
58	9080922	1	PIPELINE 10X1	TUBULAÇÃO		
73	7101010	2	SEALING RING DIN 7603 A 16X22	ANEL DE VEDAÇÃO		
74	12210013	1	HOLLOW SCREW 10-3	PARAFUSO OCO		
75	4900262	5	SEALING RING DIN 7603 A 14X20	ANEL DE VEDAÇÃO		
76	4980741	1	HOLLOW SCREW 12-3	PARAFUSO OCO		
77	7101007	2	SEALING RING DIN 7603 A 12X18	ANEL DE VEDAÇÃO		
78	7381925	1	HOLLOW SCREW WITH THROTTLE	PARAFUSO OCO COM ESTRANG		
81	7381628	1	CLAMP DIN 3016-1 D1 10X20 W1-2-MVQ	BRAÇADEIRA		
83	7381415	1	O-RING ISO 3601-1 21,95X1,78	ANEL-O		
84	10116036	1	DISTRIBUTOR BLOCK	BLOCO DE DISTRIBUIÇÃO		
85	4042150	2	SOCKET HEAD SCREW ISO 4762 M8X55 8.8	PARAFUSO CILÍNDRICO		
87	10016906	1	HEX SCREW DIN 6921 M8X20 8.8 A2C	PARAFUSO SEXTAVADO		
90	10021563	4	FITTING GE 10 M14X1,5/9/16-18	UNIÃO ROSCADA		
91	10038572	1	OVERFLOW VALVE	VALVULA DE ALÍVIO		
92	9078685	1	HOLLOW SCREW 10-3	PARAFUSO OCO		
109	8628192	1	SCREW LOCKING	COLA PARA ELEMENTOS FIXA		

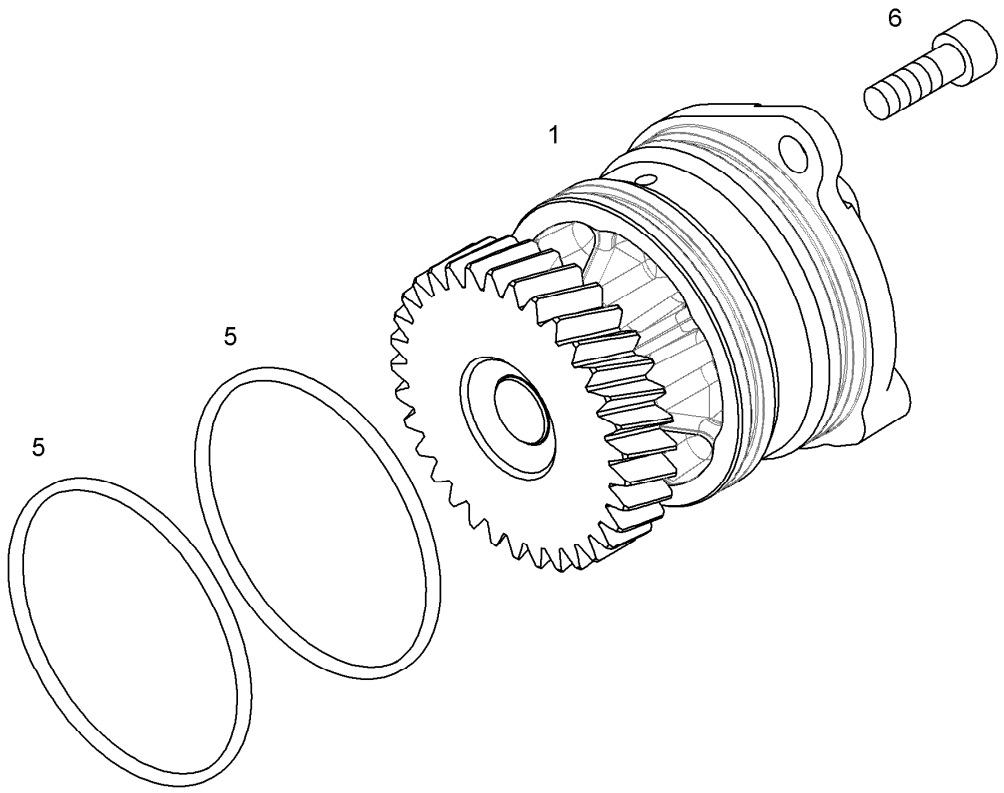

Pos.	Item	Quantity	Description	Designação	Serie	K
1	10117836	1	AUXILIARY DRIVE PRE-ASS.	TOMADA PRÉ MONTADA		
5	7381361	2	O-RING ISO 3601-1 85,32X3,53	ANEL-O		
6	11002743	2	SOCKET HEAD SCREW ISO 4762 M10X30 10	PARAFUSO CILÍNDRICO		

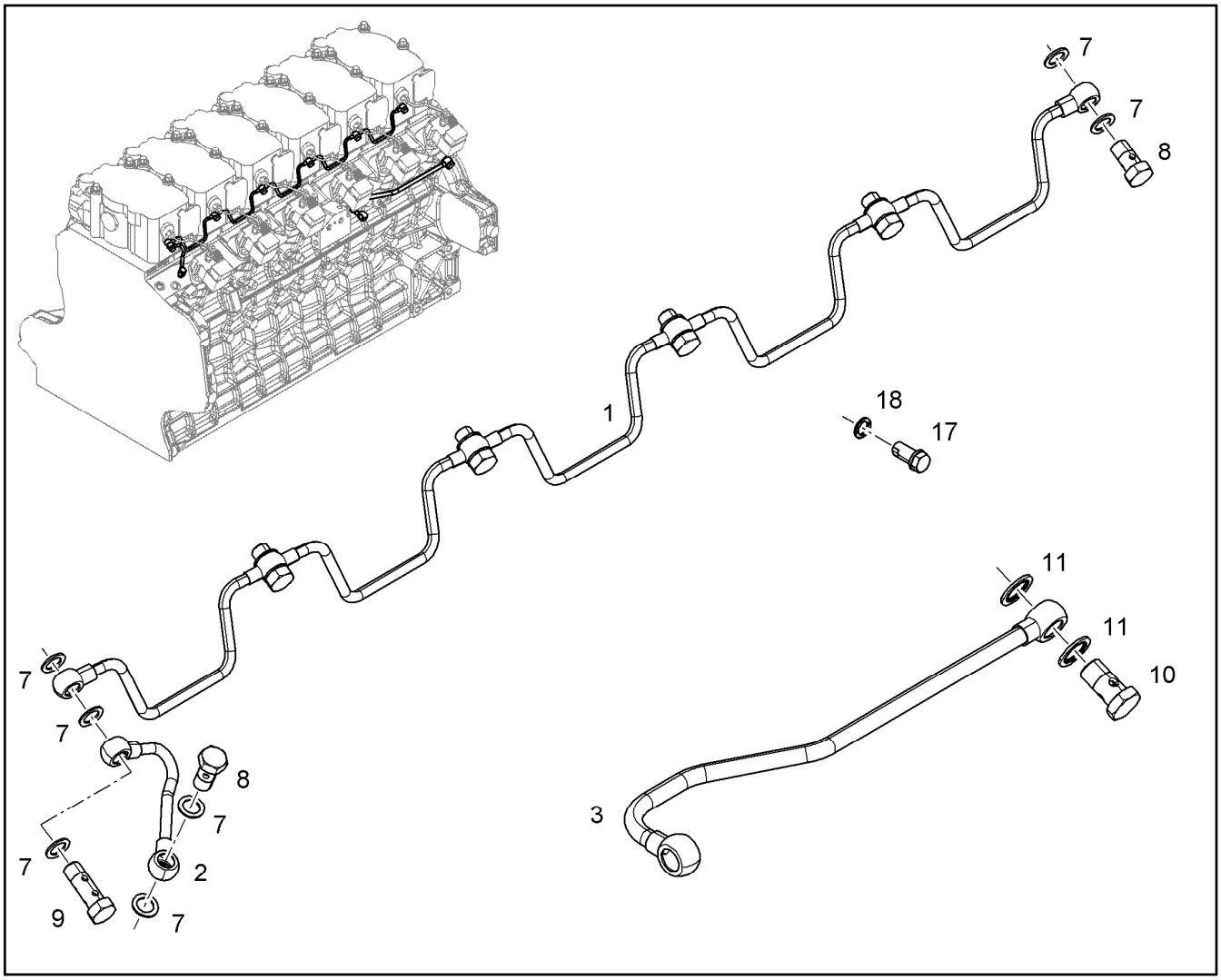

Pos.	Item	Quantity	Description	Designação	Serie	K
1	9076621	1	FUEL LINE	TUBULAÇÃO DE COMBUSTÍVEL		
2	10115491	1	PIPELINE 6X1	TUBULAÇÃO		
3	10115489	1	PIPELINE 10X1	TUBULAÇÃO		
7	7007952	15	SEALING RING DIN 7603 A 10X15X1	ANEL DE VEDAÇÃO		
8	4079160	6	HOLLOW SCREW 6-3	PARAFUSO OCO		
9	10014864	1	DOUBLE BANJO BOLT 6-6	PARAFUSO OCO DUPLO		
10	12210013	1	HOLLOW SCREW 10-3	PARAFUSO OCO		
11	10011866	2	SEALING RING 14,7X22X1,5	ANEL DE VEDAÇÃO		
17	7009590	1	VENTILATION SCREW	PARAFUSO DE RESPIRO		
18	7101001	1	SEALING RING DIN 7603 A 8X12	ANEL DE VEDAÇÃO		

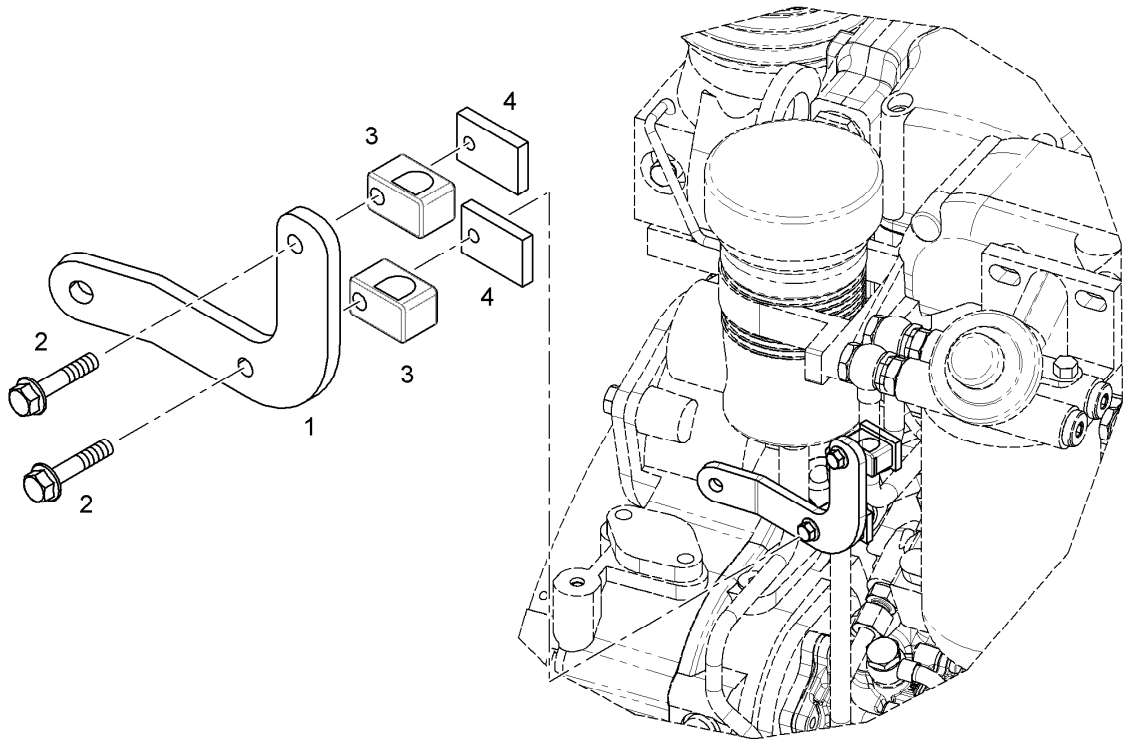

Pos.	Item	Quantity	Description	Designação	Serie	K
1	10117267	1	HOLDER	SUPORTE		
2	10290537	2	HEX SCREW DIN 6921 M6X30 8.8 A2C	PARAFUSO SEXTAVADO		
3	7382081	2	PIPE CLAMP d=12	BRAÇADEIRA DE TUBO		
4	9274060	2	SUPPORT PLATE	PLACA DE APOIO		

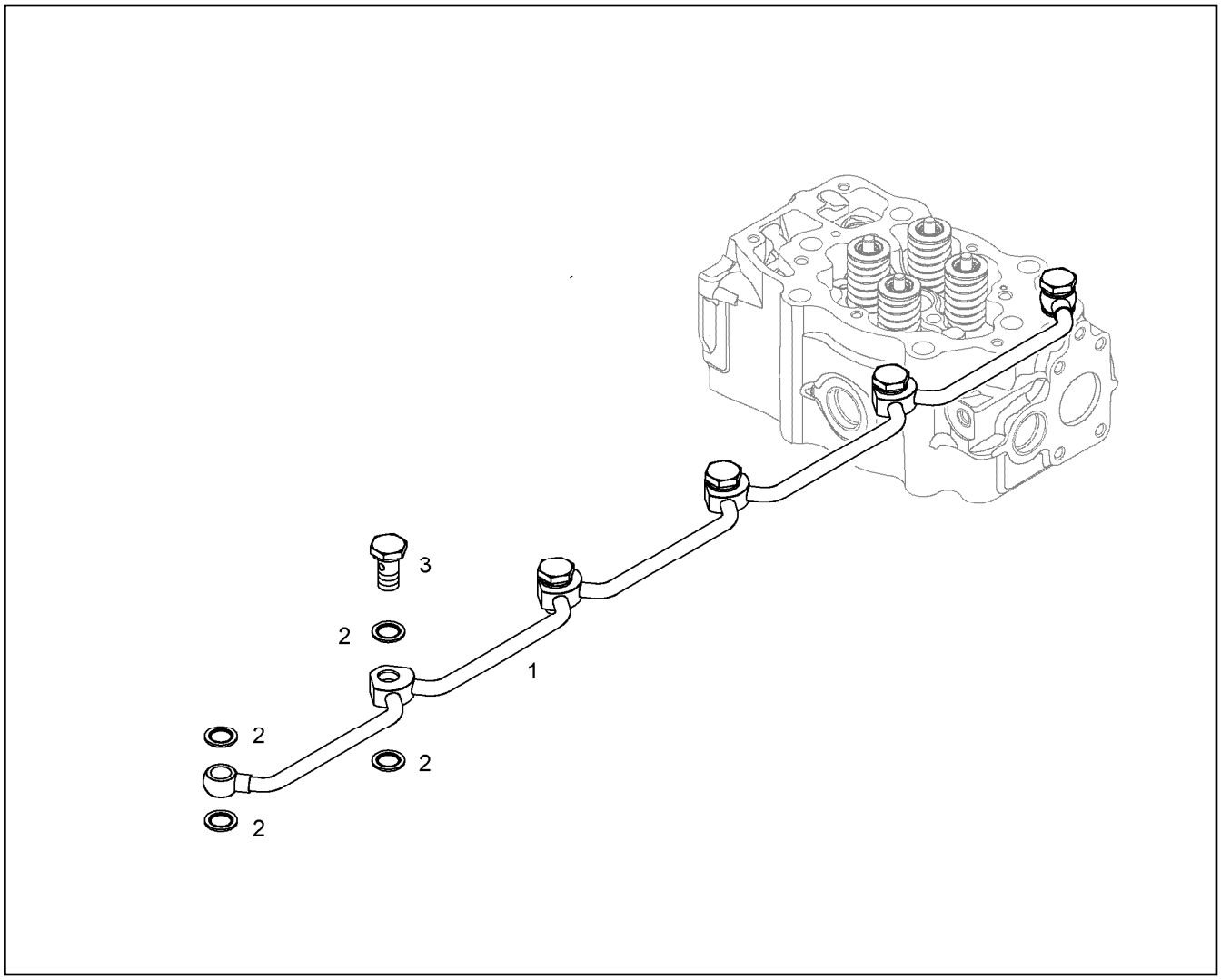

Pos.	Item	Quantity	Description	Designação	Serie	K
1	9079082	1	PIPELINE	TUBULAÇÃO		
2	10011866	12	SEALING RING 14,7X22X1,5	ANEL DE VEDAÇÃO		
3	9080466	5	HOLLOW SCREW 10-1	PARAFUSO OCO		

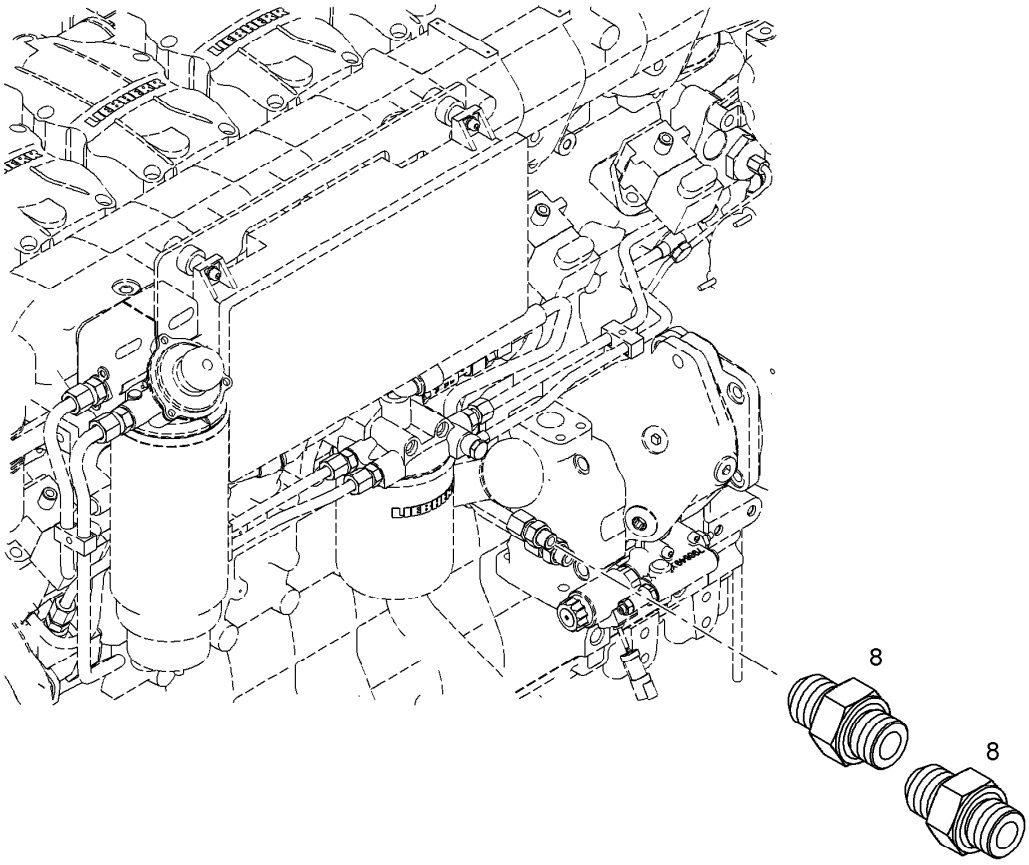

Pos.	Item	Quantity	Description	Designação	Serie	K
8	9080360	2	FITTINGS 3/4-16/M22X1,5	CONEXÃO		

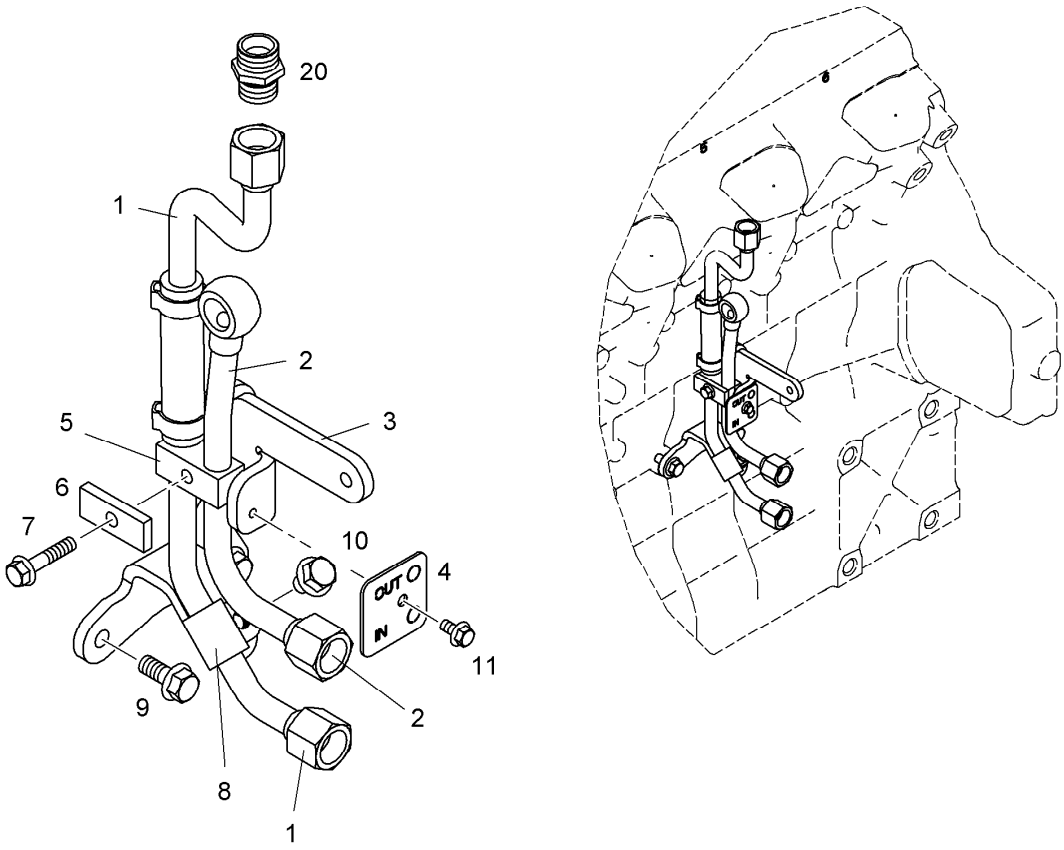

Pos.	Item	Quantity	Description	Designação	Serie	K
1	10116573	1	PIPELINE	TUBULAÇÃO		
2	10116572	1	PIPELINE	TUBULAÇÃO		
3	10116522	1	HOLDER	SUPORTE		
4	10115591	1	PLATE	PLACA		
5	7382216	1	PIPE CLAMP d=12	BRAÇADEIRA DE TUBO		
6	9073190	1	SUPPORT PLATE	PLACA DE APOIO		
7	10290537	1	HEX SCREW DIN 6921 M6X30 8.8 A2C	PARAFUSO SEXTAVADO		
8	7381629	1	CLAMP DIN 3016-1 D1 12X20 W1-2-MVQ	BRAÇADEIRA		
9	10016906	2	HEX SCREW DIN 6921 M8X20 8.8 A2C	PARAFUSO SEXTAVADO		
10	10024115	1	HEX SCREW DIN 6921 M8X12 8.8 A2C	PARAFUSO SEXTAVADO		
11	10290538	1	HEX SCREW DIN 6921 M5X10 8.8 A2C	PARAFUSO SEXTAVADO		
20	10038568	1	FITTING GE 12 M16X1,5/3/4-16	UNIÃO ROSCADA		

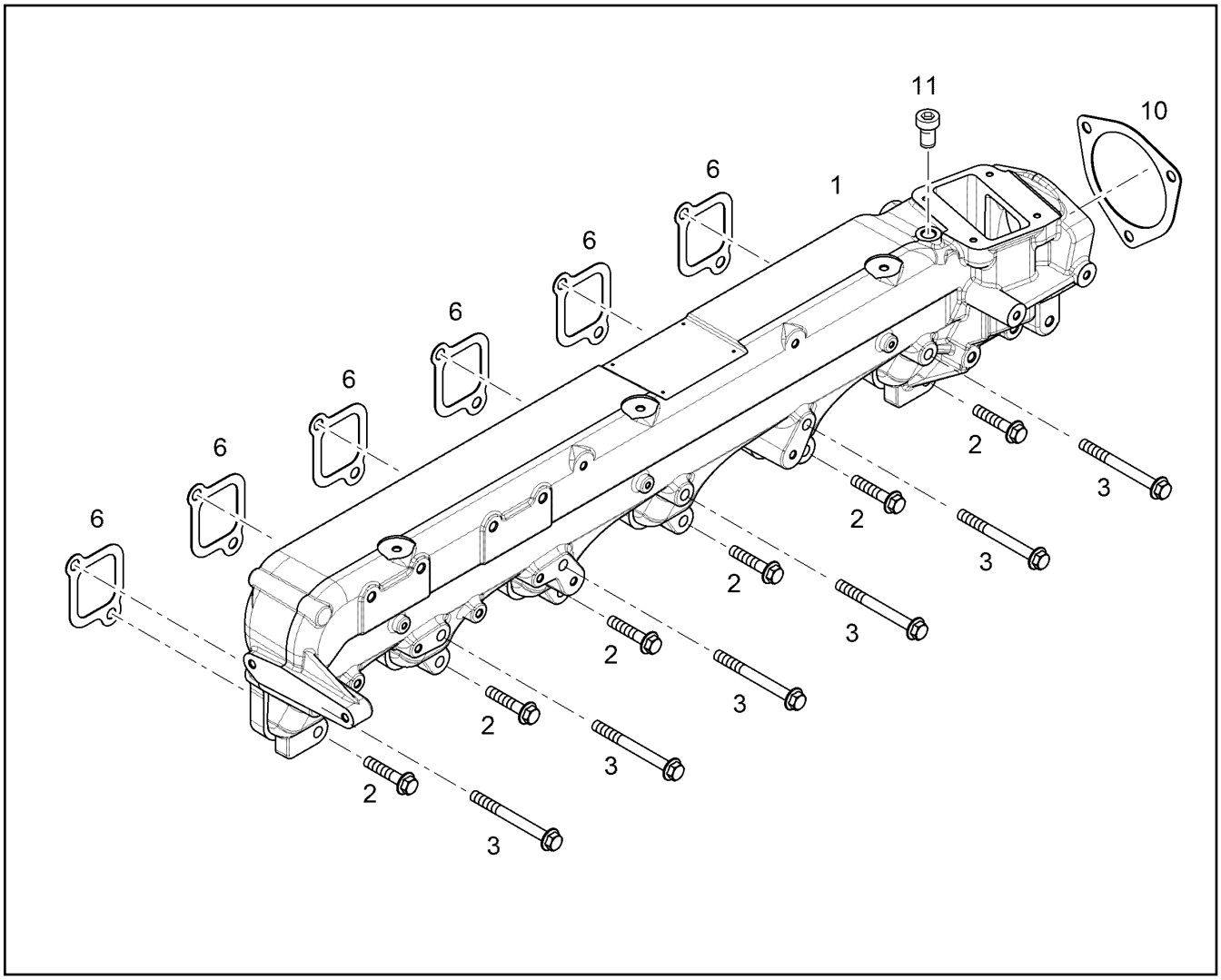

Pos.	Item	Quantity	Description	Designação	Serie	K
1	10147789	1	AIR SUCTION PIPE	TUBO DE ASPIRAÇÃO DE AR		
2	10005461	6	HEX SCREW DIN 6921 M10X50 8.8 A3C	PARAFUSO SEXTAVADO		
3	10005462	6	HEX SCREW DIN 6921 M10X100 8.8 A3C	PARAFUSO SEXTAVADO		
6	10118556	6	SEAL	VEDAÇÃO		
10	9271963	1	SEAL 1,5X128 98/141	VEDAÇÃO		
11	7380566	1	SCREW PLUG VSTI M14X1,5	PARAFUSO DE FECHAMENTO		

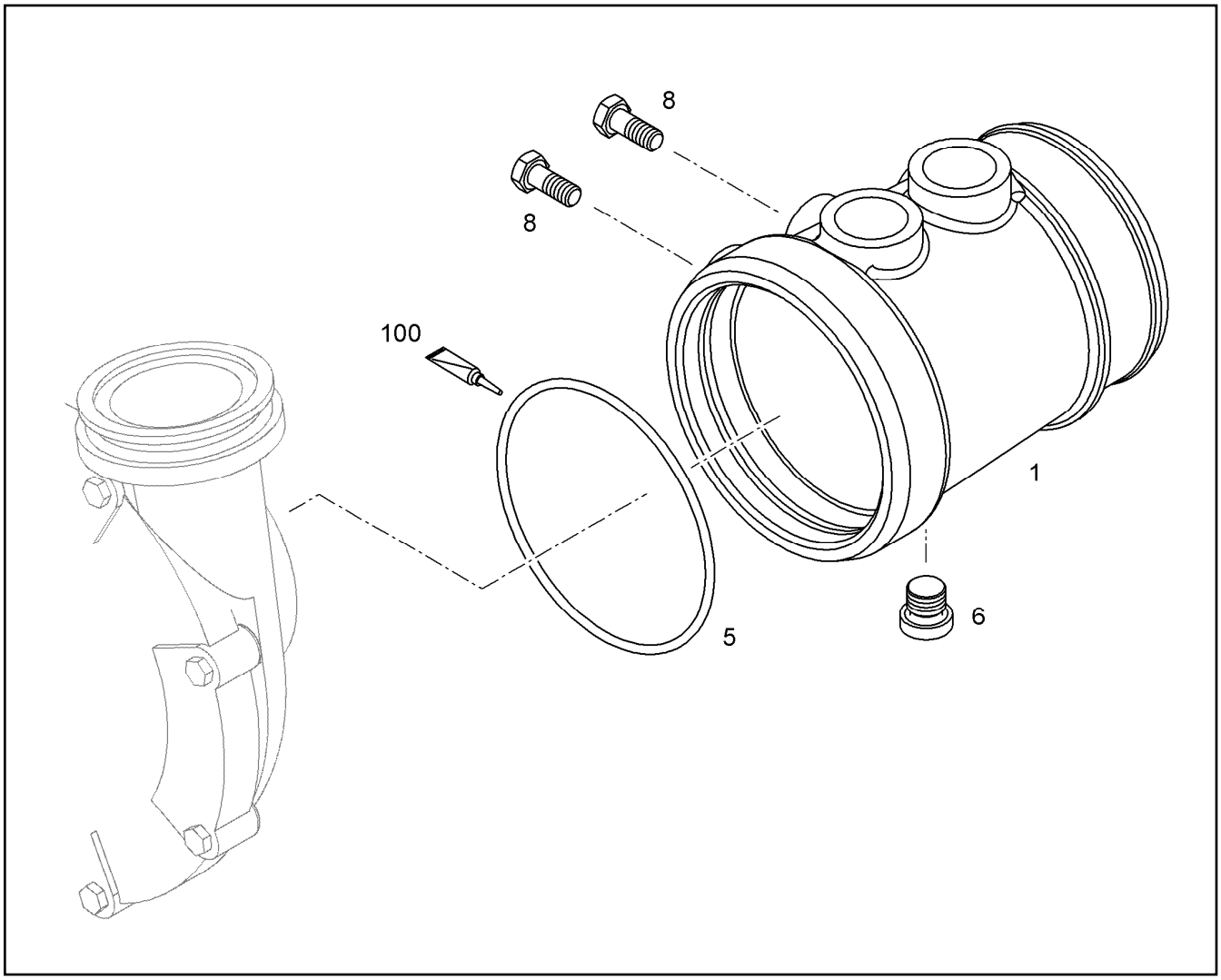

Pos.	Item	Quantity	Description	Designação	Serie	K
1	12838220	1	CONNECTION STUB	BOCAL		
5	11008055	1	O-RING 100X5	ANEL-O		
6	7380566	1	SCREW PLUG VSTI M14X1,5	PARAFUSO DE FECHAMENTO		
8	10016906	2	HEX SCREW DIN 6921 M8X20 8.8 A2C	PARAFUSO SEXTAVADO		
100	10282622	1	GREASE STABURAGS NBU 30/0,010kg	GRAXA		

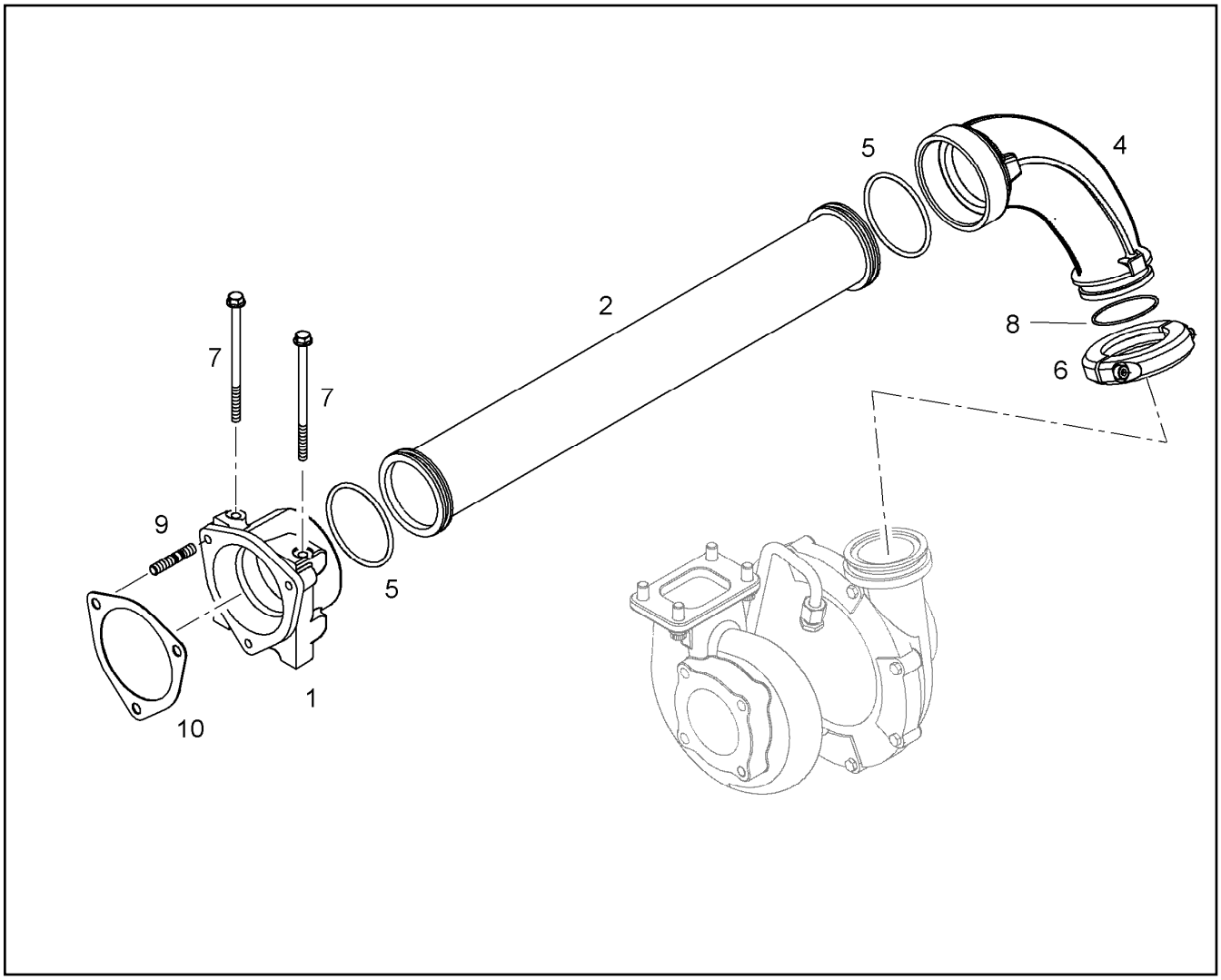

Pos.	Item	Quantity	Description	Designação	Serie	K
1	9079582	1	CONNECTION FLANGE	FLANGE DE CONEXAO		
2	10115705	1	CONNECTING LINE	CONDUTOR DE LIGAÇÃO		
4	9079936	1	CHARGE AIR ELBOW	TUBO CURVADO DE AR DE ADMI		
5	10022320	2	O-RING 80X5,0	ANEL-O		
6	9079957	1	PIPE CLAMP d=69	BRAÇADEIRA DE TUBO		
7	10101543	2	HEX SCREW DIN 6921 M8X140 8.8 A2C	PARAFUSO SEXTAVADO		
8	7380970	1	O-RING 63,17X2,62	ANEL-O		
9	4900454	3	DOUBLE-ENDED STUD DIN 835 M10X35 8.8	PARAFUSO PRISIONEIRO		
10	9271963	1	SEAL 1,5X128 98/141	VEDAÇÃO		

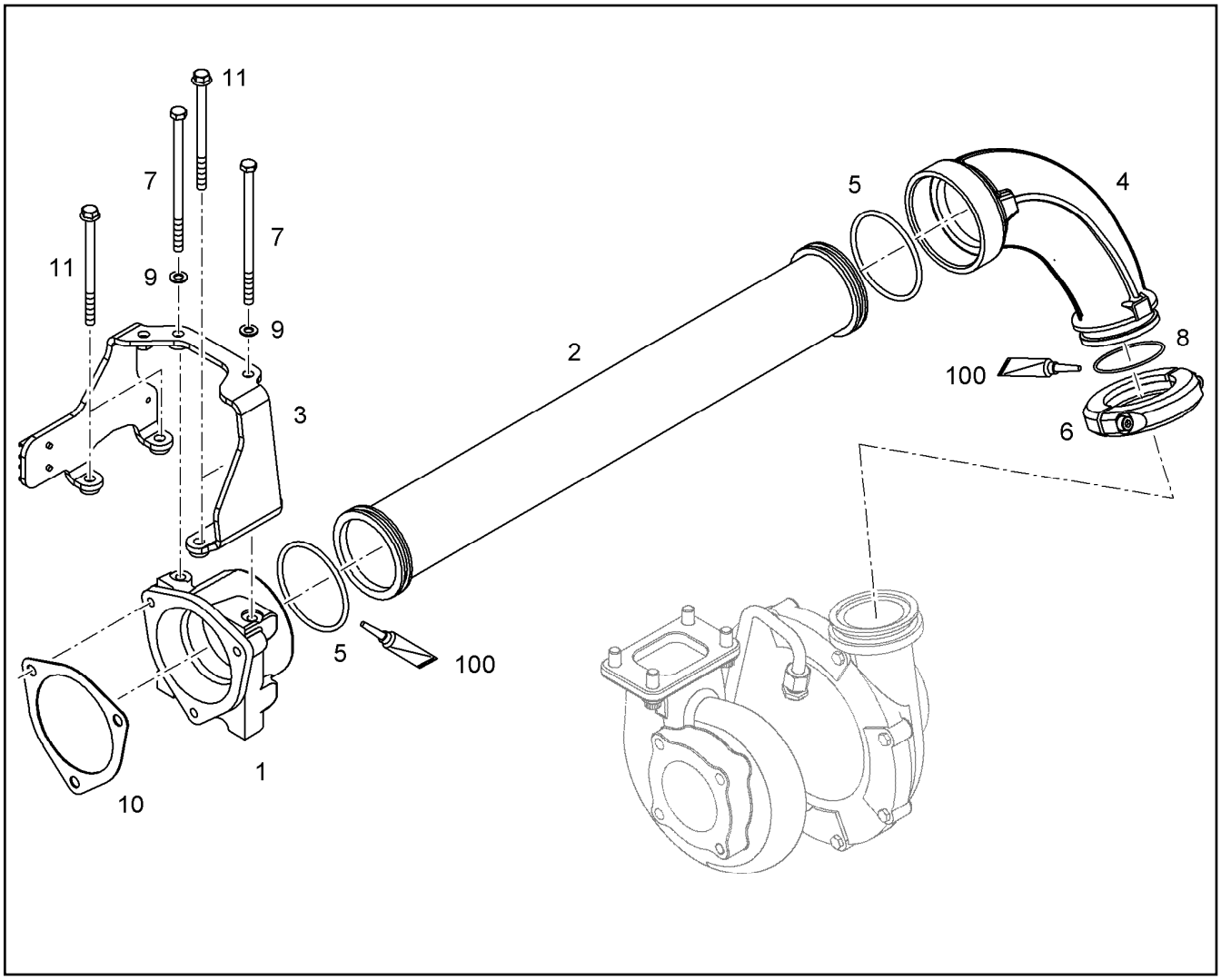

Pos.	Item	Quantity	Description	Designação	Serie	K
1	9079582	1	CONNECTION FLANGE	FLANGE DE CONEXAO		
2	10115705	1	CONNECTING LINE	CONDUTOR DE LIGAÇÃO		
3	10121676	1	RETAINER CPL.	SUPORTE CPL		
4	9079936	1	CHARGE AIR ELBOW	TUBO CURVADO DE AR DE ADMI		
5	10022320	2	O-RING 80X5,0	ANEL-O		
6	9079957	1	PIPE CLAMP d=69	BRAÇADEIRA DE TUBO		
7	12203658	2	HEX SCREW ISO 4014 M8X150 8.8 480H	PARAFUSO SEXTAVADO		
8	7380970	1	O-RING 63,17X2,62	ANEL-O		
9	420001201	2	WASHER 8 200HV	ARRUELA		
10	9271963	1	SEAL 1,5X128 98/141	VEDAÇÃO		
11	10017158	4	HEX SCREW DIN 6921 M8X120 8.8 A2C	PARAFUSO SEXTAVADO		
100	10282622	1	GREASE STABURAGS NBU 30/0,010kg	GRAXA		

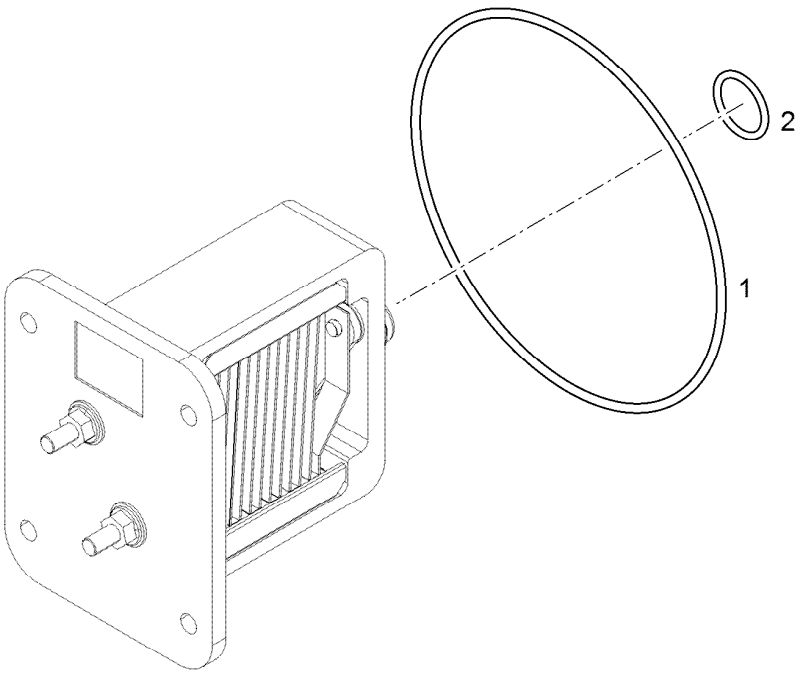

Pos.	Item	Quantity	Description	Designação	Serie	K
1	10116255	1	O-RING DIN 3771 94,50X3,00	ANEL-O		
2	7380935	1	O-RING ISO 3601-1 12,37X2,62	ANEL-O		

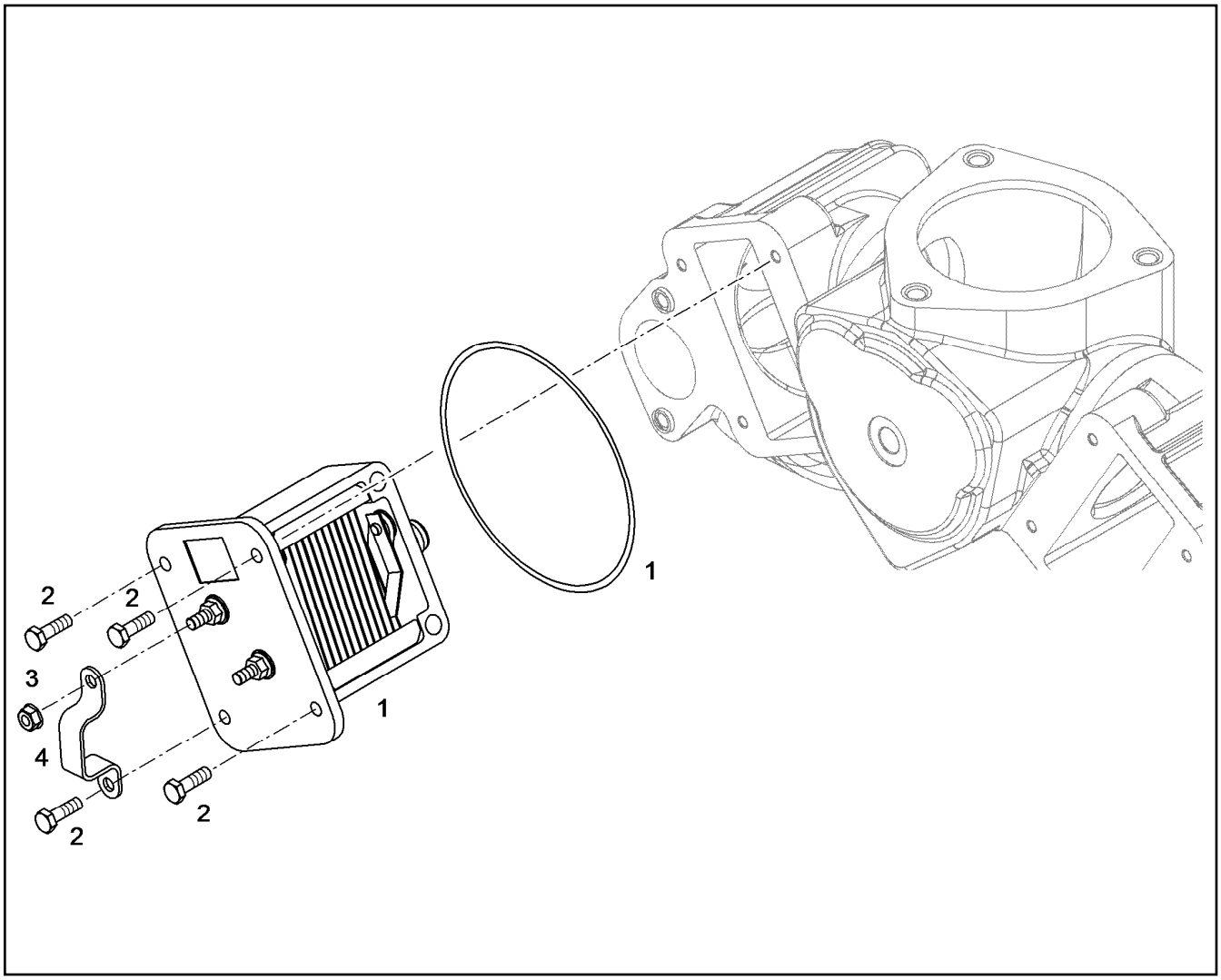

Pos.	Item	Quantity	Description	Designação	Serie	K
1	10299988	1	HEATING FLANGE PRE.ASS. ⇨ ❑ 646	FLANGE CALEFAÇÃO PRÉ-MONT		
1	10116255	1	-O-RING DIN 3771 94,50X3,00	-ANEL-O		
2	12207548	4	HEX SCREW EN 1665 M6X20 8.8 480H	PARAFUSO SEXTAVADO		
3	10003366	1	RIBBED HEX NUT M6	PORCA SEXTAVADA		
4	9080911	1	EARTH CONNECTION PLATE	PAINEL DE UNIÃO DE MASSA		

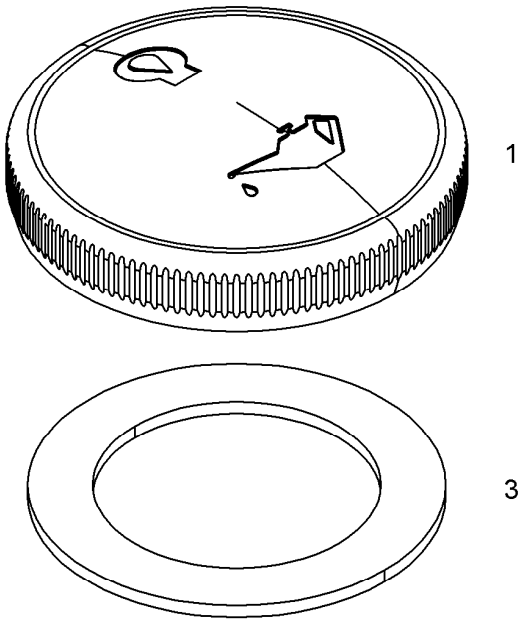

Pos.	Item	Quantity	Description	Designação	Serie	K
1	9144761	1	COVER	TAMPA		
3	9144762	1	SEAL	VEDAÇÃO		

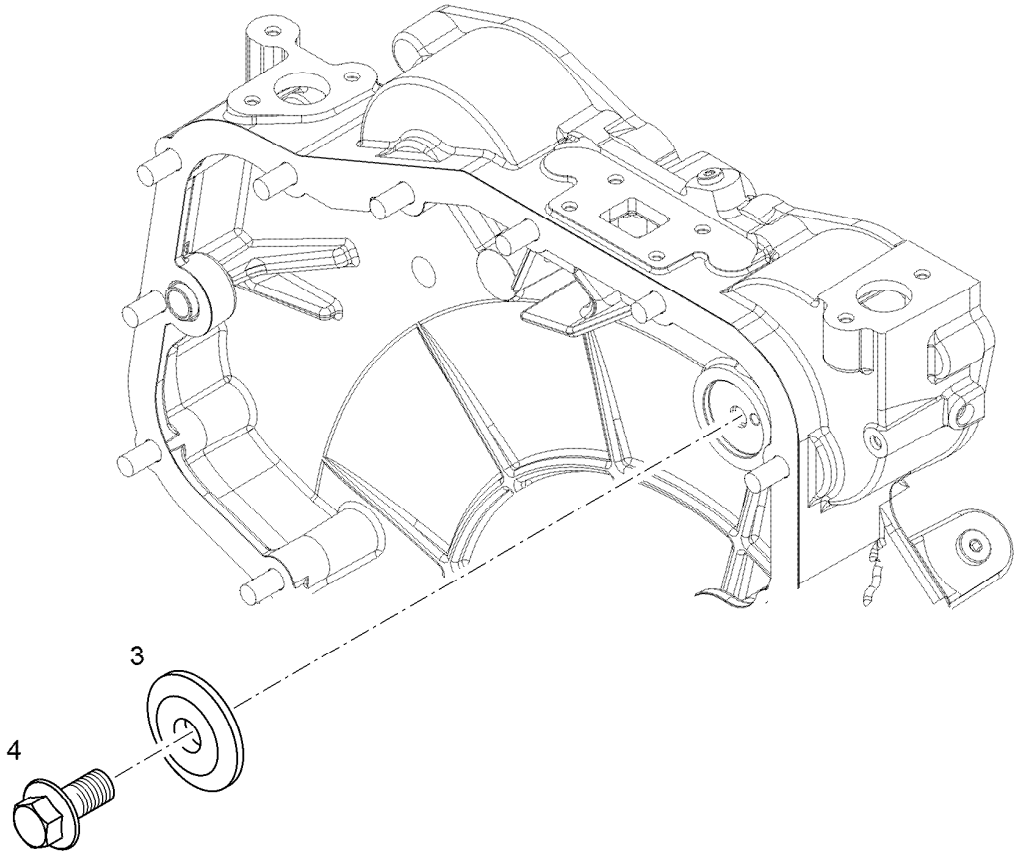

Pos.	Item	Quantity	Description	Designação	Serie	K
3	9072908	1	BEARING COVER	TAMPA DO MANCAL		
4	11690438	1	HEX SCREW DIN 6921 M12X25 8.8 MK	PARAFUSO SEXTAVADO		

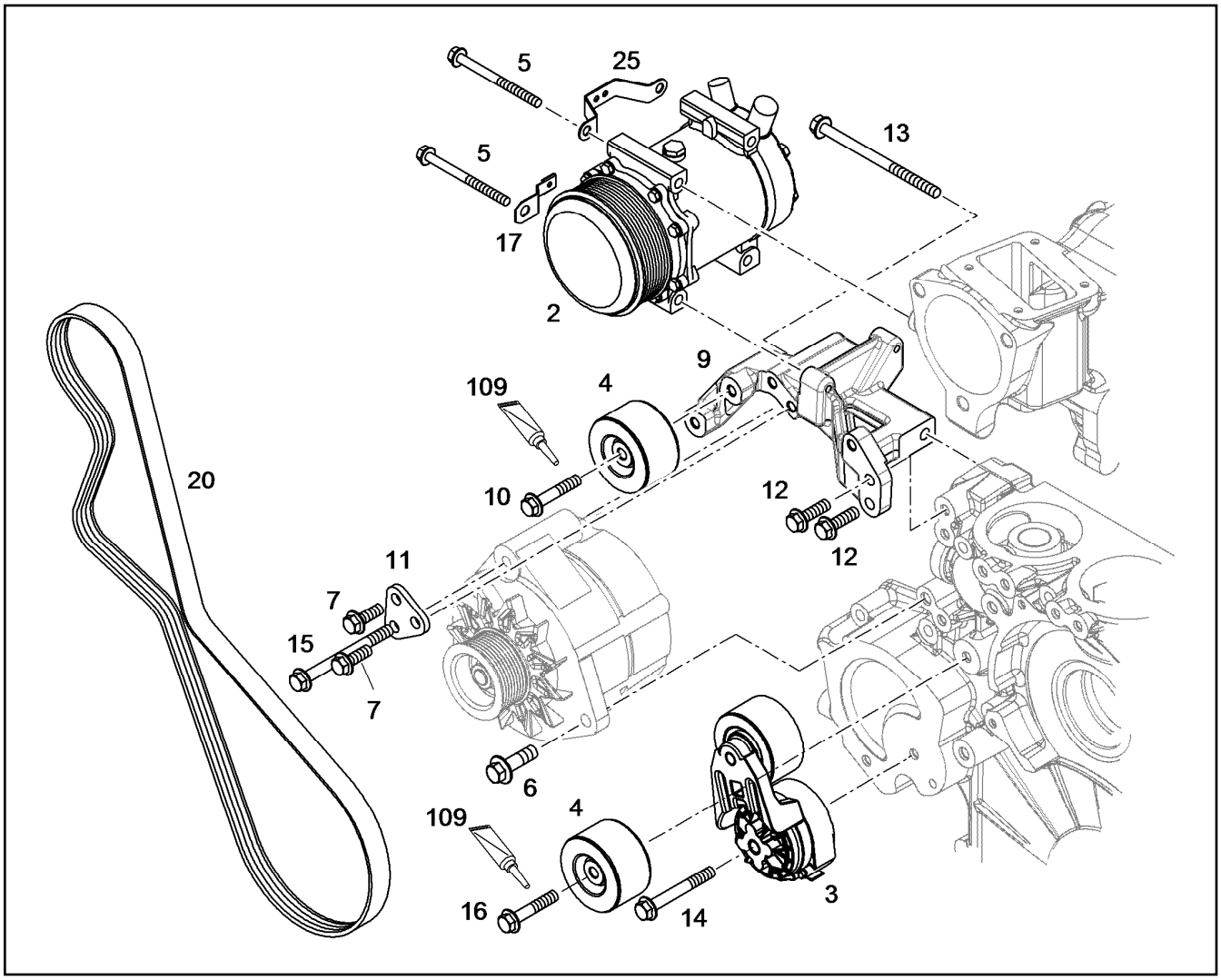

Pos.	Item	Quantity	Description	Designação	Serie	K
2	10116769	1	AIR CONDITIONING COMPRESSOR SD7H1	COMPRESSOR DO AR-CONDICI	17243-	
2	10115771	1	-COUPLING CPL.	-ACOPLAMENTO COMPLETO	17243-	
2	10040064	1	-DUST-PROF COVER	-TAMPA VEDAÇÃO		
3	9887461	1	CLAMP FITTING EQUIPM. PRE-ASS.	DISPOSITIVO APERTO		
4	9077708	2	GUIDE PULLEY COMPL.	ROLDANA DE DESVIO PRÉ-MO		
5	10014042	4	HEX SCREW DIN 6921 M8X100 8.8 A2C	PARAFUSO SEXTAVADO		
6	4601426	1	HEX SCREW DIN 6921 M12X40 8.8 A3C	PARAFUSO SEXTAVADO		
7	10219457	2	HEX SCREW DIN 6921 M10X25 10.9 A3C	PARAFUSO SEXTAVADO		
9	10116053	1	CONSOLE	CONSOLE		
10	10024139	1	HEX SCREW DIN 6921 M10X55 8.8 A3C	PARAFUSO SEXTAVADO		
11	9079591	1	HOLDER	SUPORTE		
12	10023049	2	HEX SCREW DIN 6921 M10X35 8.8	PARAFUSO SEXTAVADO		
13	10113710	1	HEX SCREW DIN 6921 M10X120 8.8 A3C	PARAFUSO SEXTAVADO		
14	10101657	1	HEX SCREW DIN 6921 M10X80 8.8 A3C	PARAFUSO SEXTAVADO		
15	10005462	1	HEX SCREW DIN 6921 M10X100 8.8 A3C	PARAFUSO SEXTAVADO		
16	10014638	1	HEX SCREW DIN 6921 M10X60 8.8 A3C	PARAFUSO SEXTAVADO		
17	10041876	1	HOLDER	SUPORTE		
20	10289149	1	V-RIPPED BELT DIN 7867 8XPK 1755	CORREIA DENTADA EM V		
25	10119139	1	HOLDER	SUPORTE		
109	8628192	1	SCREW LOCKING	COLA PARA ELEMENTOS FIXA		

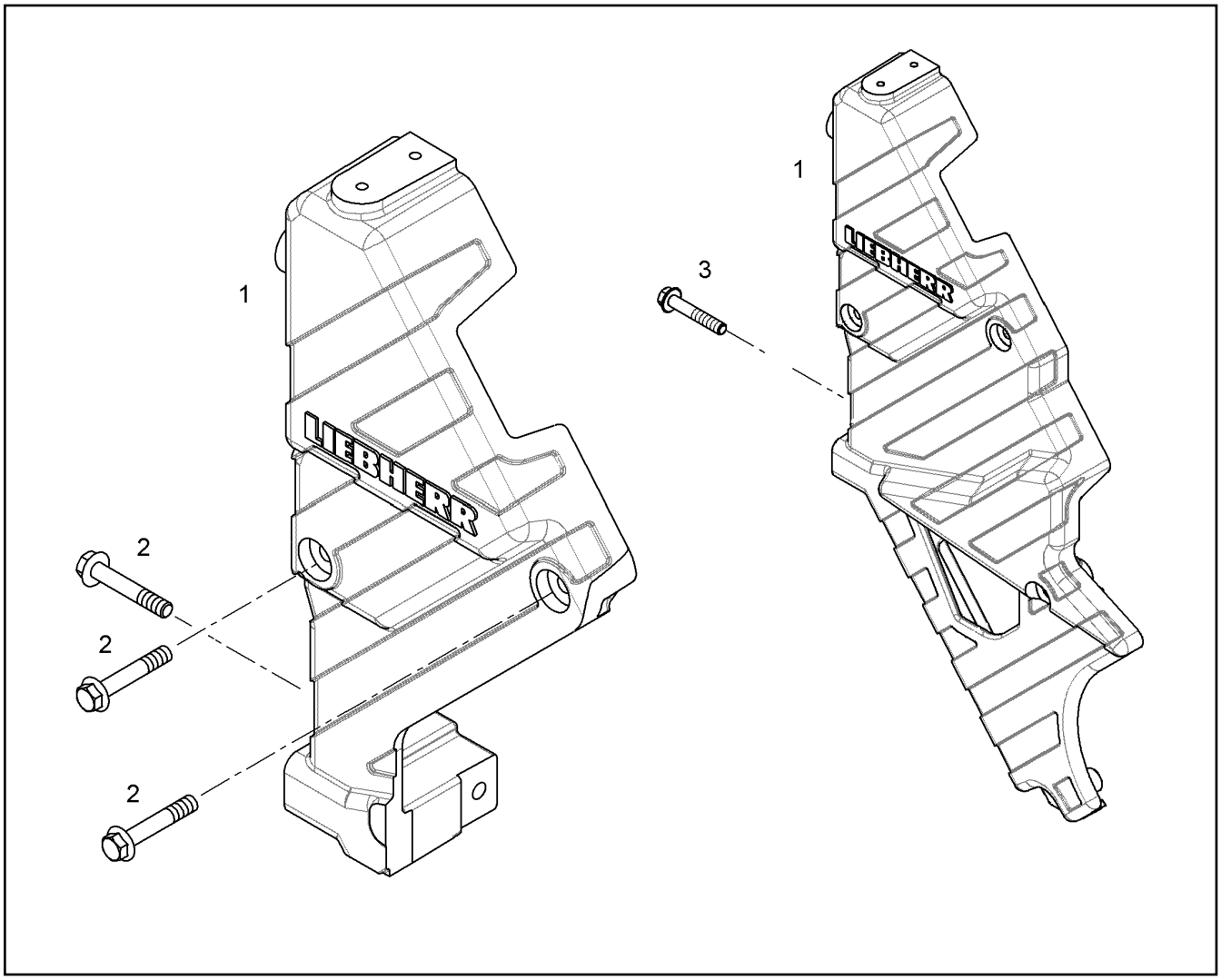

Pos.	Item	Quantity	Description	Designação	Serie	K
1	9076414	1	COVER	TAMPA	-2006046356	
1	10119485	1	COVER	TAMPA	2006046357-	
2	10014638	4	HEX SCREW DIN 6921 M10X60 8.8 A3C	PARAFUSO SEXTAVADO		
3	10003076	1	HEX SCREW DIN 6921 M12X65 8.8 A3C	PARAFUSO SEXTAVADO	-2006046356	

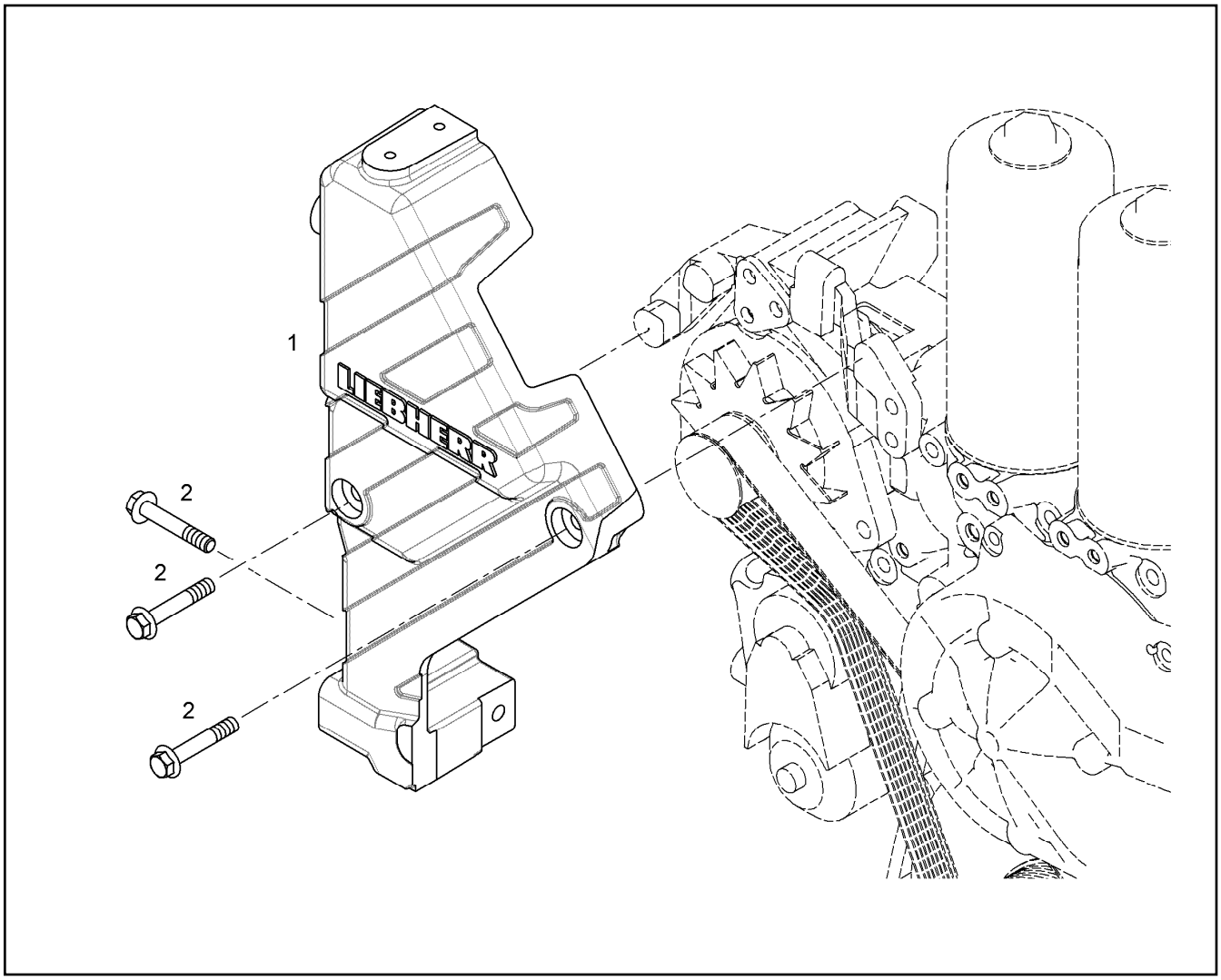

Pos.	Item	Quantity	Description	Designação	Serie	K
1	10119485	1	COVER	TAMPA		
2	10014638	3	HEX SCREW DIN 6921 M10X60 8.8 A3C	PARAFUSO SEXTAVADO		

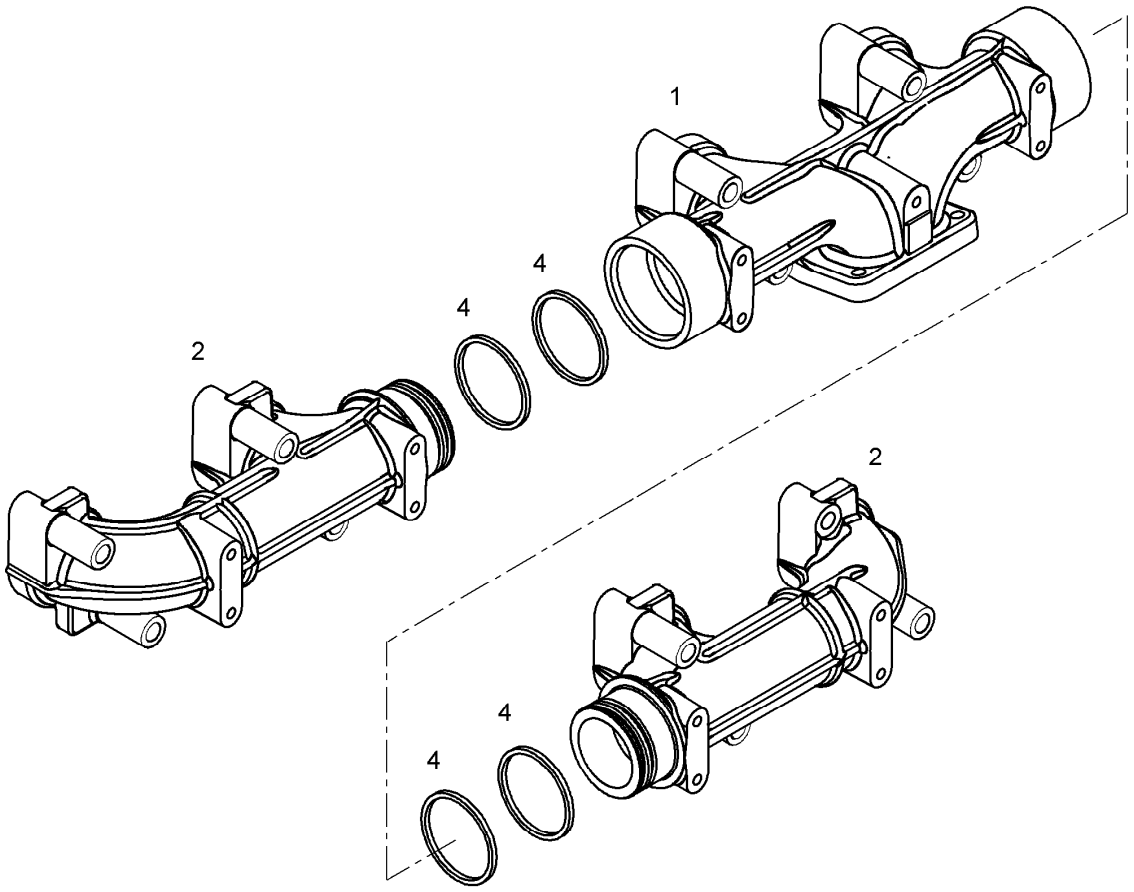

Pos.	Item	Quantity	Description	Designação	Serie	K
1	9080876	1	OUTLET MANIFOLD	COLETOR DE ESCAPAMENTO	-2017041463	
1	11446526	1	OUTLET MANIFOLD	COLETOR DE ESCAPAMENTO	2017041464-	
2	10118611	2	OUTLET MANIFOLD	COLETOR DE ESCAPAMENTO		
4	10008448	4	LAMELLAR DISK KIT 62,0/56,4X3,3	KIT DE ANEIS LAMELARES		

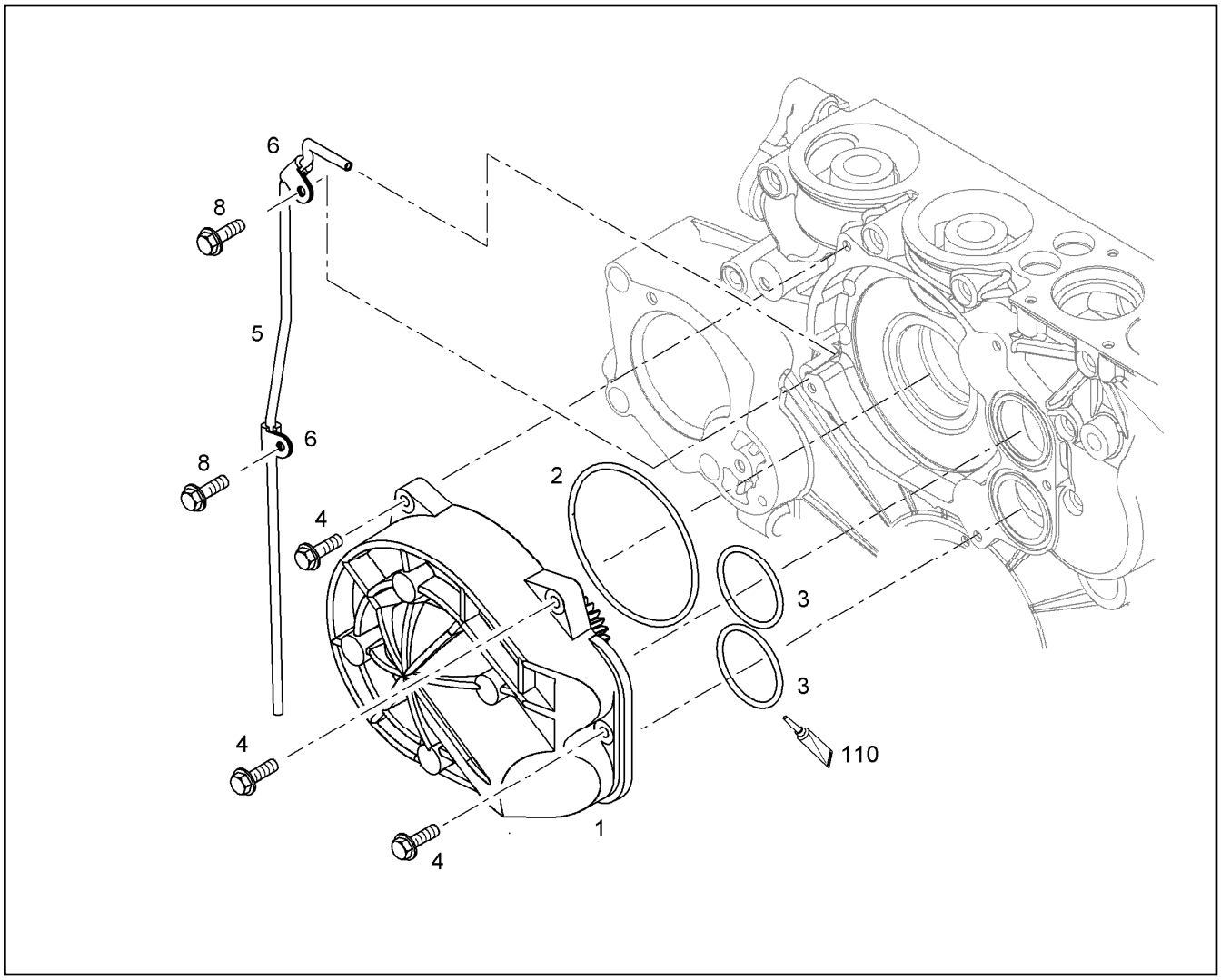

Pos.	Item	Quantity	Description	Designação	Serie	K
1	10132817	1	WATER PUMP, PRE-ASSEMBLED ⇨ ❑ 655	BOMBA DE ÁGUA PRÉ-MONTAD		6
2	7264365	1	O-RING DIN 3771 113,89X3,53	ANEL-O		
3	7381779	2	O-RING DIN 3771 59,92X3,53	ANEL-O		
4	10113711	5	HEX SCREW DIN 6921 M8X35 8.8 A2C	PARAFUSO SEXTAVADO		
5	10009943	0.6m	HOSE	MANGUEIRA		1
6	7382090	2	CLAMP DIN 3016-1 D1 8X20 W1-2-MVQ	BRAÇADEIRA		
8	10016906	2	HEX SCREW DIN 6921 M8X20 8.8 A2C	PARAFUSO SEXTAVADO		
110	8655030	1	GREASE NBU 12/1kg	GRAXA		

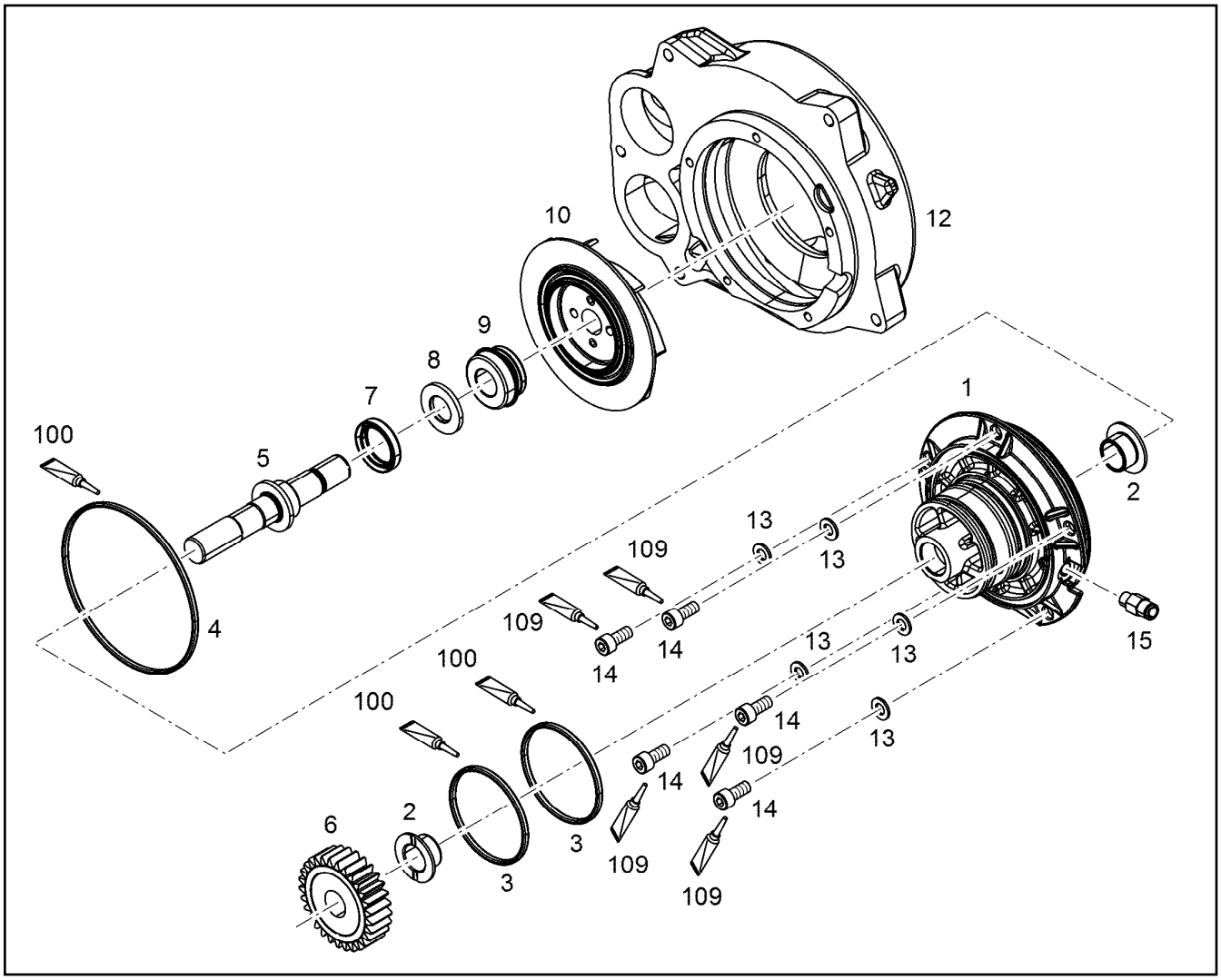

Pos.	Item	Quantity	Description	Designação	Serie	K
1		1	WATER PUMP HOUSING	CARCACA DA BOMBA DE AGUA		
2	9074969	2	PLAIN BEARING BUSHING 20/24X15	BUCHA DE MANCAL DESLIZANT		1
3	7381593	2	O-RING 68,26X3,53	ANEL-O		
4	12819435	1	O-RING 120,50X3,53	ANEL-O		
5	9074935	1	WATER PUMP SHAFT	EIXO DA BOMBA DE AGUA		
6	9073342	1	GEAR WHEEL Z=29 M=2,25	ENGRENAGEM		
7	10033074	1	ROTARY SHAFT LIP SEAL ASX28X38X7	ANEL DE VEDAÇÃO DO EIXO RA		
8	10119136	1	WHIRL RING	ANEL		
9	7381986	1	AXIAL FACE SEAL	ANEL DE VEDACAO - CASSETE		
10	9074936	1	TRAVEL WHEEL D936	RODA LIVRE		
12	10134069	1	WATER PUMP LID	TAMPA DA BOMBA DE ÁGUA		
13	12691573	5	WASHER 8 200HV	ARRUELA		
14	4600377	5	SOCKET HEAD SCREW ISO 4762 M8X18 8.8	PARAFUSO CILÍNDRICO		
15	257103802	1	PLUG-TYPE SCREW COUPLING QS 8 R1/8	UNIÃO ROSCADA DE ENCAIXE		
100	10282622	1	GREASE STABURAGS NBU 30/0,010kg	GRAXA		
109	811205708	1	SCREW LOCKING	COLA PARA ELEMENTOS FIXA		

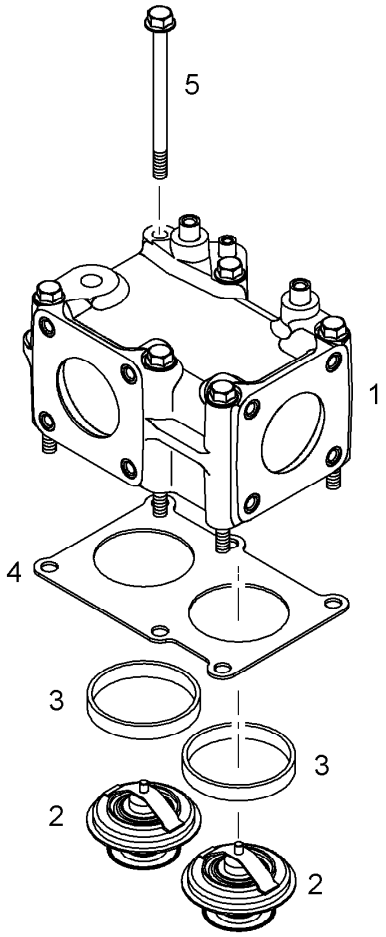

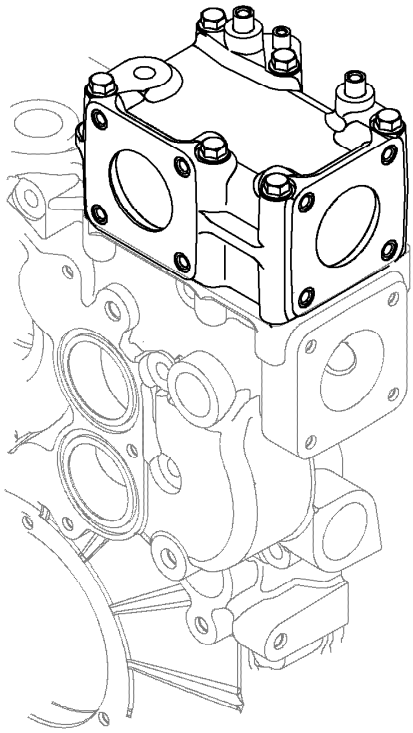

Pos.	Item	Quantity	Description	Designação	Serie	K
1	10119984	1	THERMOSTAT HOUSING PRE-ASS.	CARCACA DO TERMOSTATO		
2	7380833	2	THERMOSTAT	TERMOSTATO		
3	9275735	2	SUPPORTING RING	ANEL DE APOIO		
4	9080279	1	SEAL 2	VEDAÇÃO		
5	10112929	2	HEX SCREW DIN 6921 M8X110 8.8 A2C	PARAFUSO SEXTAVADO		

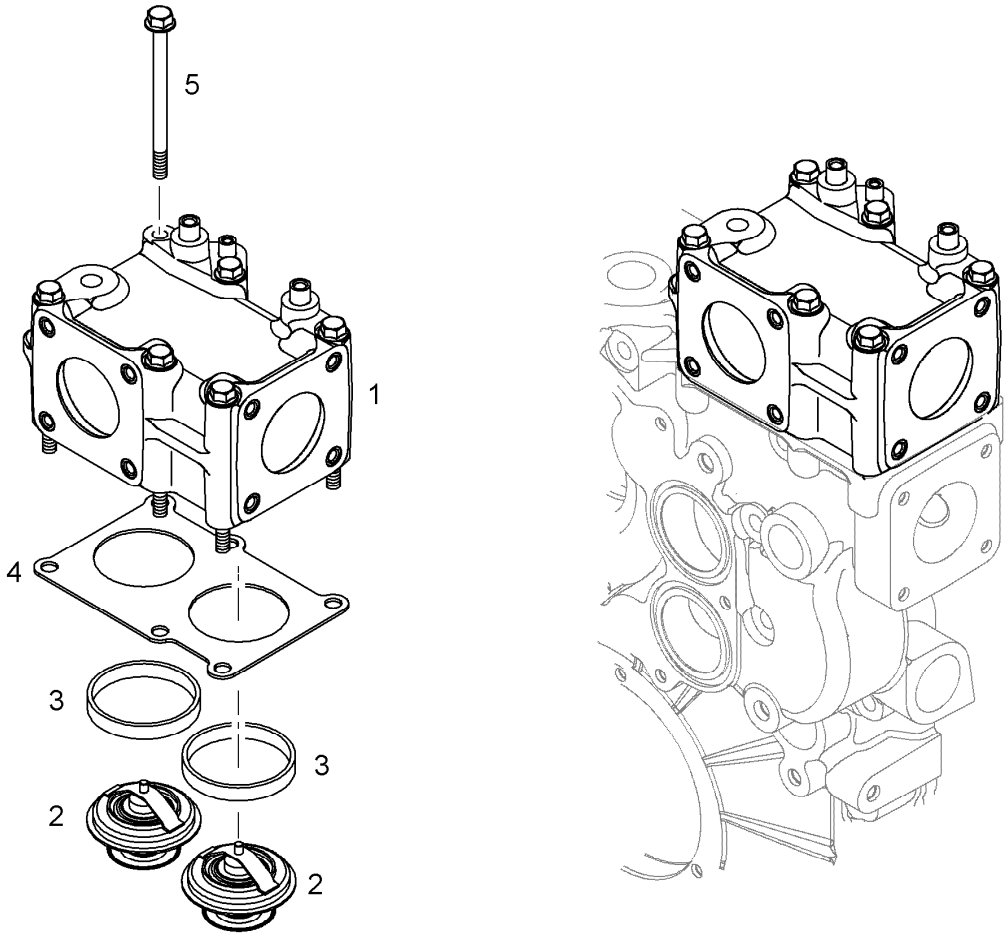

Pos.	Item	Quantity	Description	Designação	Serie	K
1	10119984	1	THERMOSTAT HOUSING PRE-ASS.	CARCACA DO TERMOSTATO		
2	7380833	2	THERMOSTAT	TERMOSTATO		
3	9275735	2	SUPPORTING RING	ANEL DE APOIO		
4	9080279	1	SEAL 2	VEDAÇÃO		
5	10112929	6	HEX SCREW DIN 6921 M8X110 8.8 A2C	PARAFUSO SEXTAVADO		

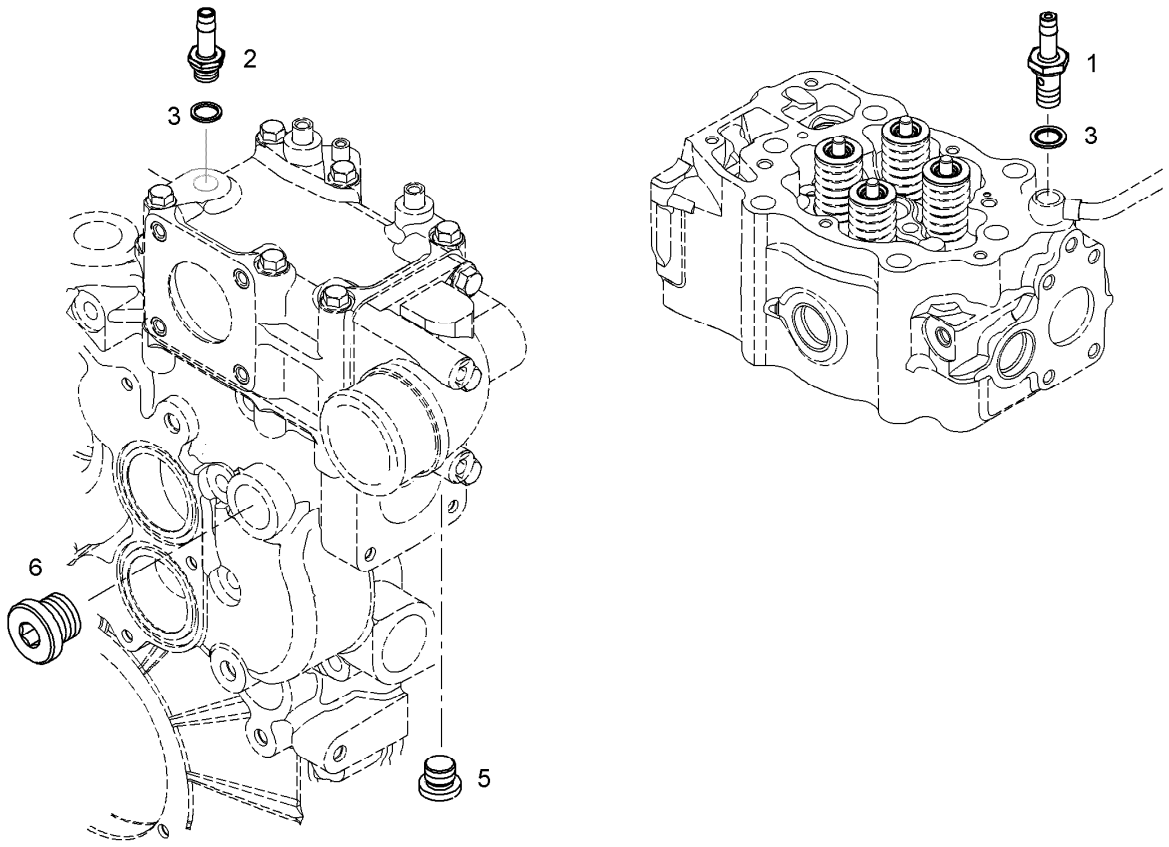

Pos.	Item	Quantity	Description	Designação	Serie	K
1	10115523	1	HOSE NIPPLE DN13 11SMn30+C	NIPLE DE MANGUEIRA		
2	10115608	1	HOSE NIPPLE 11SMnPb30+C	NIPLE DE MANGUEIRA		
3	10011866	2	SEALING RING 14,7X22X1,5	ANEL DE VEDAÇÃO		
5	7380566	1	SCREW PLUG VSTI M14X1,5	PARAFUSO DE FECHAMENTO		
6	7382204	1	SCREW PLUG M30X1,5 ED-FPM	PARAFUSO DE FECHAMENTO		

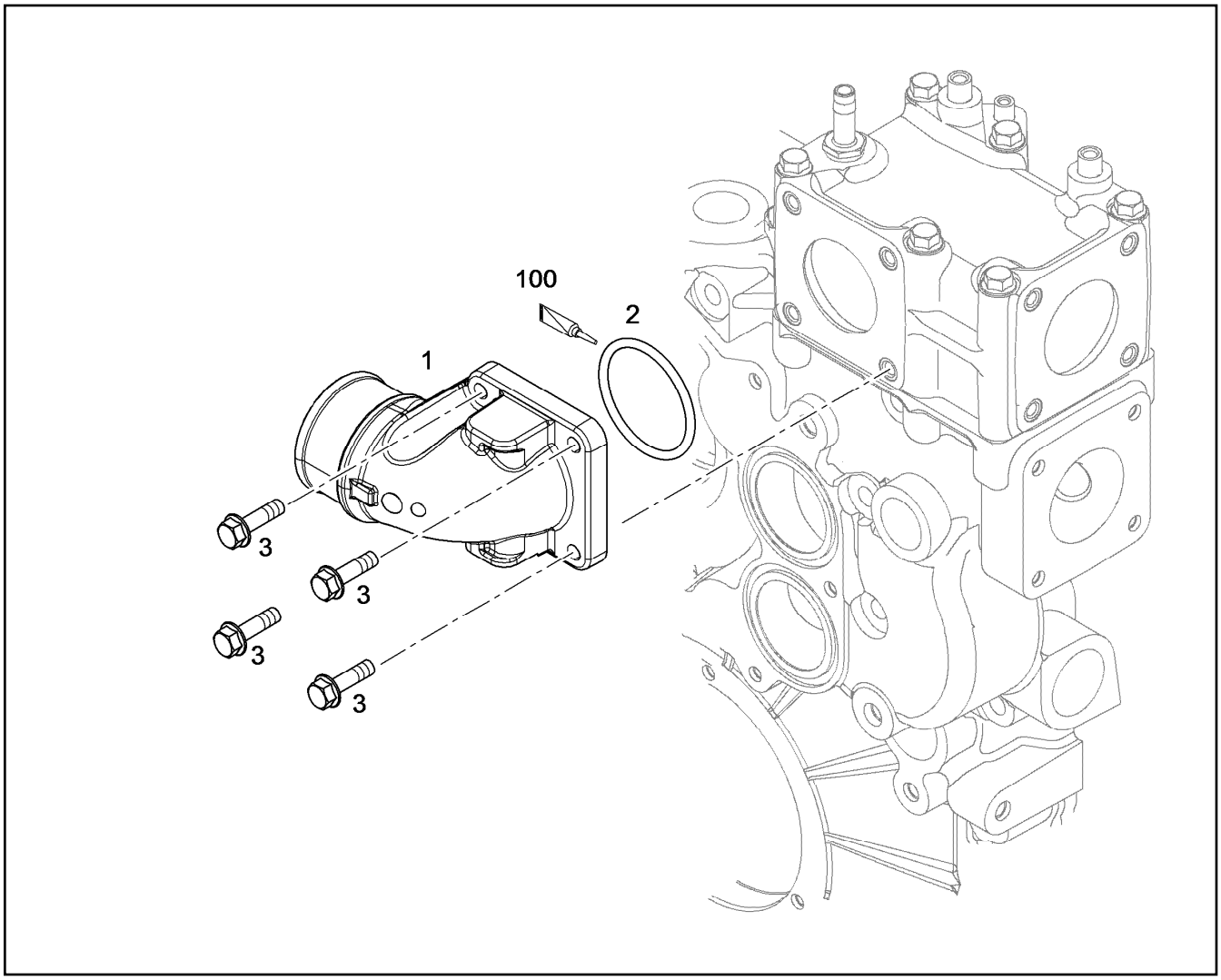

Pos.	Item	Quantity	Description	Designação	Serie	K
1	10120000	1	COOLANT PIPE BEND	TUBO CURVADO		
2	7381779	1	O-RING DIN 3771 59,92X3,53	ANEL-O		
3	10007782	4	HEX SCREW DIN 6921 M8X30 8.8 A2C	PARAFUSO SEXTAVADO		
100	10282622	1	GREASE STABURAGS NBU 30/0,010kg	GRAXA		

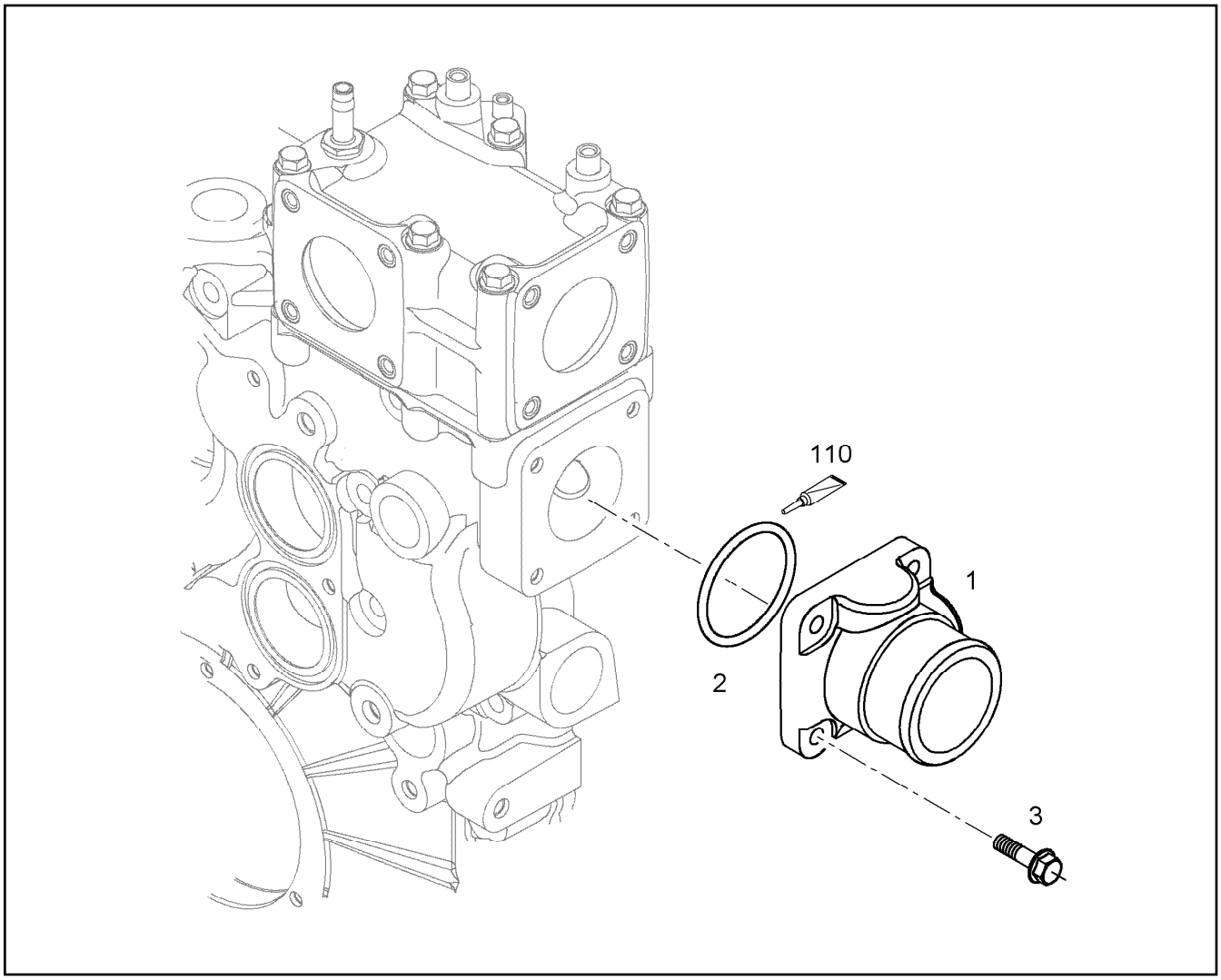

Pos.	Item	Quantity	Description	Designação	Serie	K
1	12585058	1	COOLANT PIPE BEND	TUBO CURVADO		
2	7381779	1	O-RING DIN 3771 59,92X3,53	ANEL-O		
3	10007782	4	HEX SCREW DIN 6921 M8X30 8.8 A2C	PARAFUSO SEXTAVADO		
110	10282622	1	GREASE STABURAGS NBU 30/0,010kg	GRAXA		

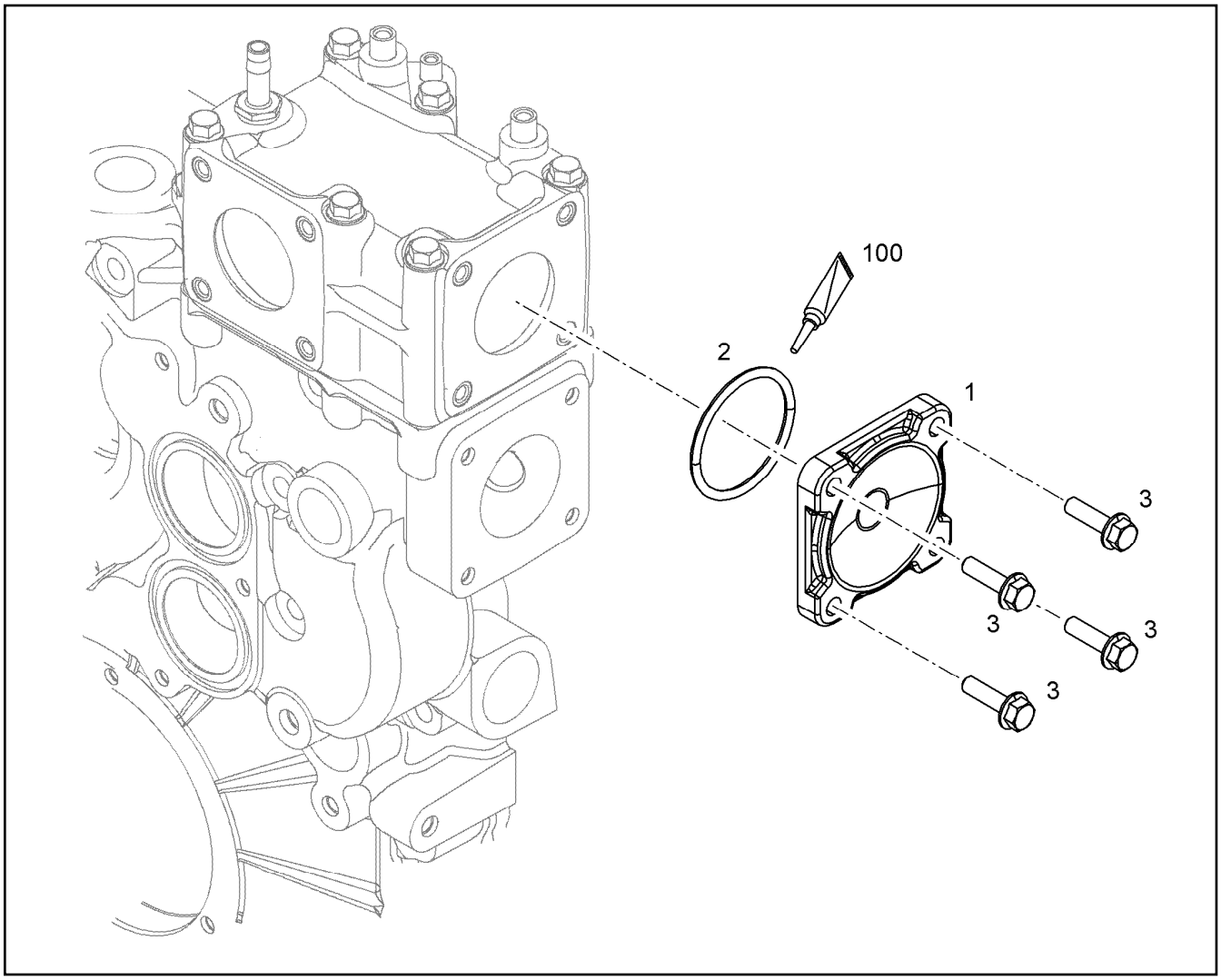

Pos.	Item	Quantity	Description	Designação	Serie	K
1		1	COVER	TAMPA		
2	7381779	1	O-RING DIN 3771 59,92X3,53	ANEL-O		
3	10007782	4	HEX SCREW DIN 6921 M8X30 8.8 A2C	PARAFUSO SEXTAVADO		
100	10282622	1	GREASE STABURAGS NBU 30/0,010kg	GRAXA		

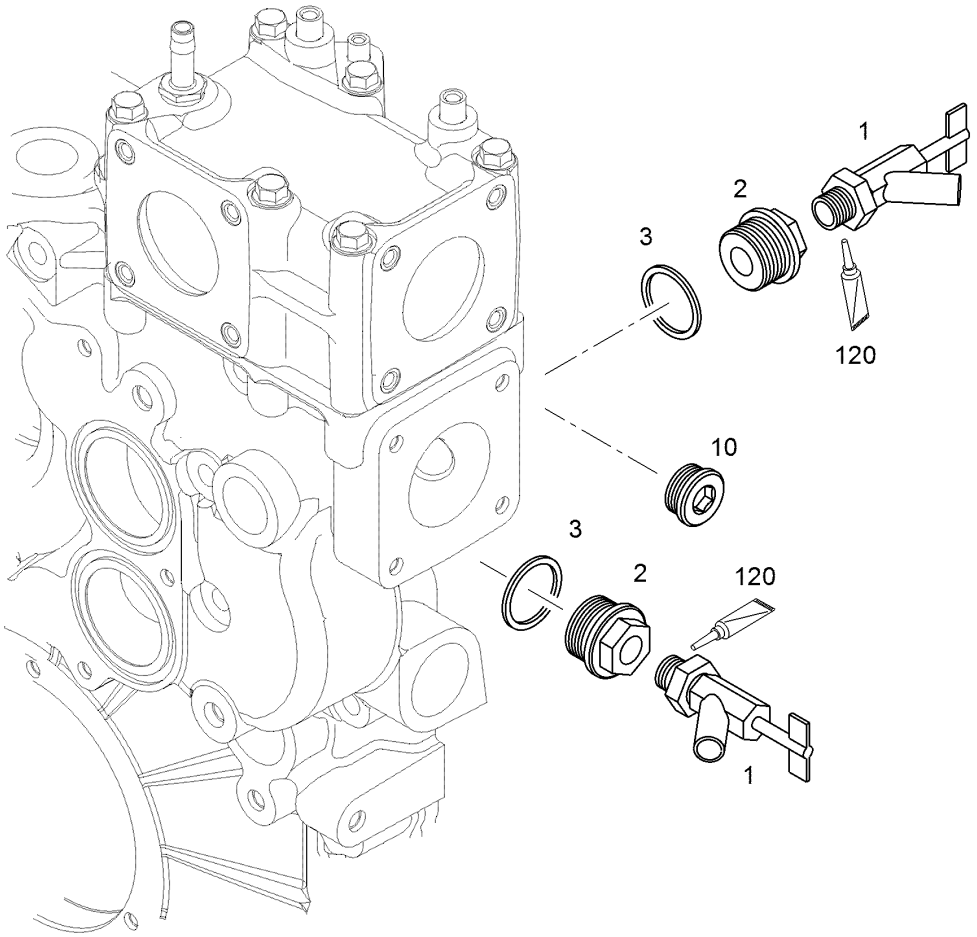

Pos.	Item	Quantity	Description	Designação	Serie	K
1	7001072	2	WATER COCK	TORNEIRA		
2	9276784	2	REDUCING STUD M16X1,5/M30X1,5	REDUÇÃO		
3	10113731	2	SEALING RING 30,7X39X2	ANEL DE VEDAÇÃO		
10	7381457	1	SCREW PLUG VSTI M26X1,5	PARAFUSO DE FECHAMENTO		
120	811205101	1	THROAT SEAL LIQUID			

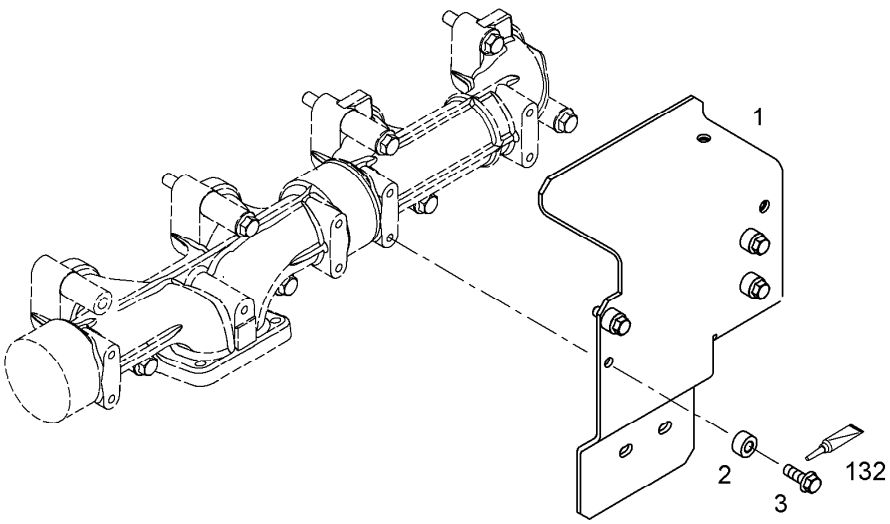

Pos.	Item	Quantity	Description	Designação	Serie	K
1	10115540	1	HEAT PROTECTION SHEET	CHAPA DE PROTEÇÃO TÉRMIC		
2	9132577	4	DISTANCE SLEEVE 8,5X18X10	LUVA DISTANCIADORA		6
3	10336200	4	HEX SCREW DIN 6921 M8X25 X5NiCrTi26-15	PARAFUSO SEXTAVADO		
132	10002552	1	COPPER PASTE	PASTA DE COBRE		

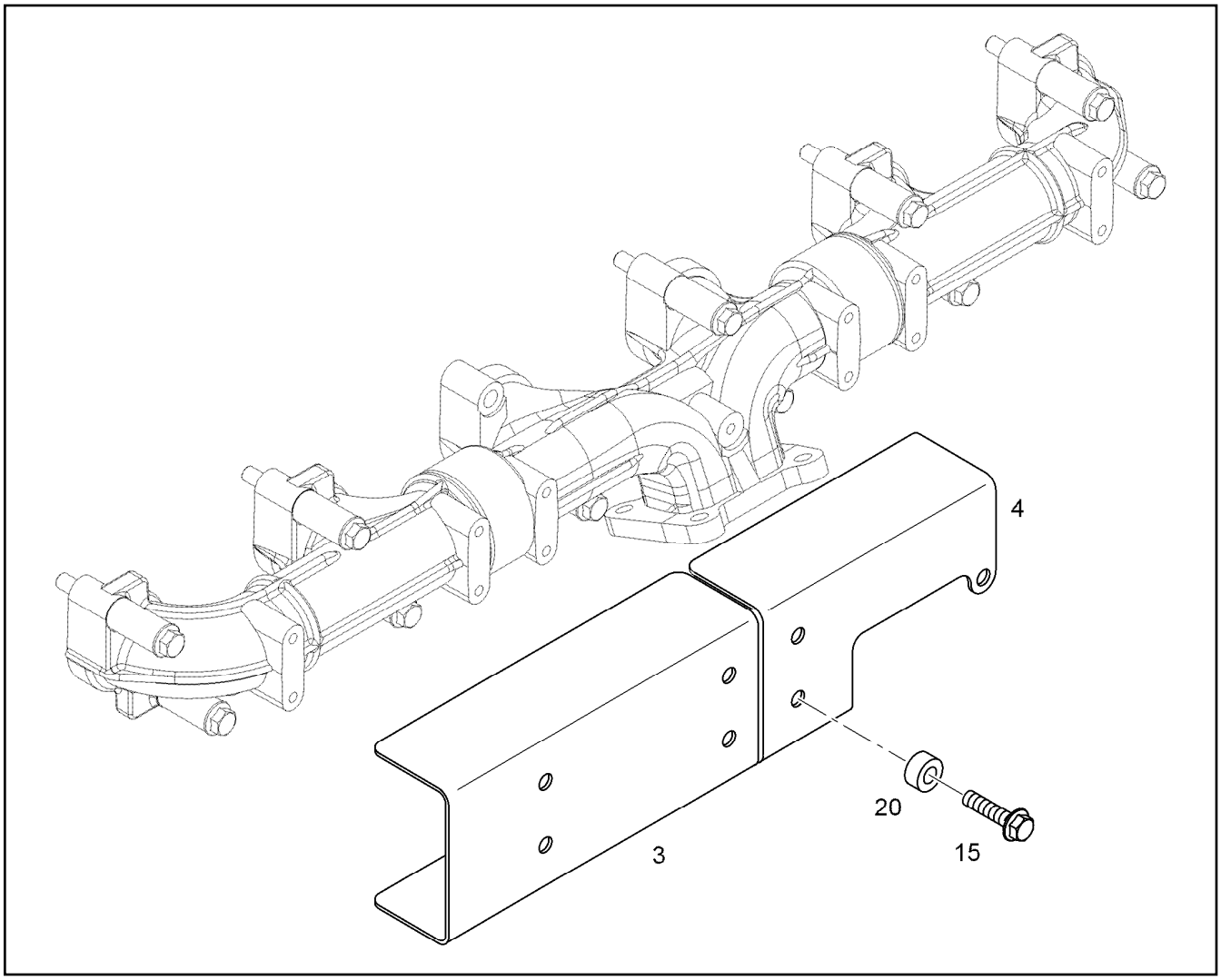

Pos.	Item	Quantity	Description	Designação	Serie	K
3	10118257	1	HEAT PROTECTION SHEET	CHAPA DE PROTEÇÃO TÉRMIC		
4	10115717	1	HEAT PROTECTION SHEET	CHAPA DE PROTEÇÃO TÉRMIC		
15	10336200	7	HEX SCREW DIN 6921 M8X25 X5NiCrTi26-15	PARAFUSO SEXTAVADO		
20	9132577	7	DISTANCE SLEEVE 8,5X18X10	LUVA DISTANCIADORA		6

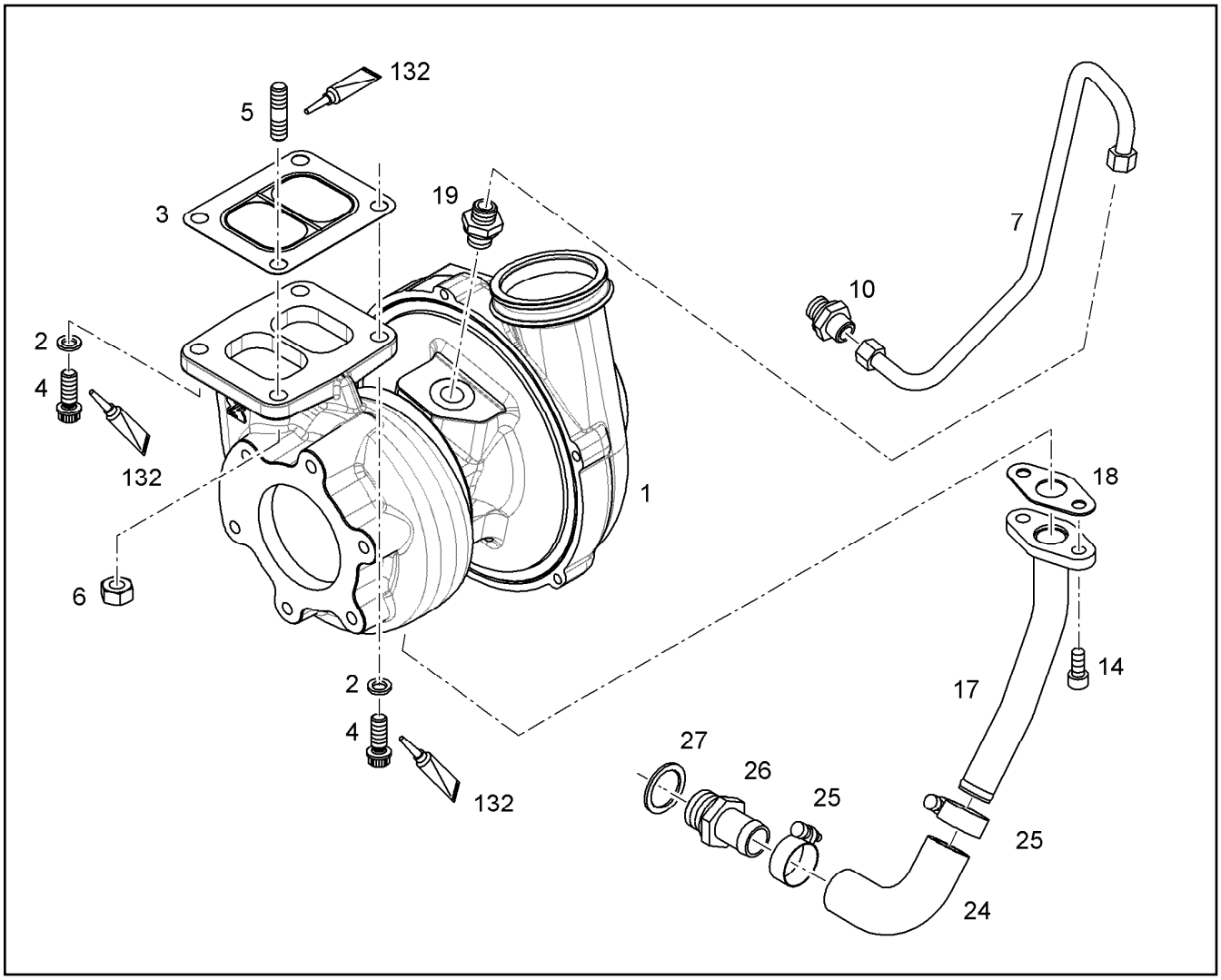

Pos.	Item	Quantity	Description	Designação	Serie	K
1	10139607	1	EXHAUST GAS TURBOCHARGER K29 [VA50313898-00002]	TURBOCOMPRESSOR	-99999	6
2	9076638	3	WASHER 10,5X18,5X2	ARRUELA		
3	9270109	1	SEAL	VEDAÇÃO		
4	12475399	3	12-SIDED SCREW M10X25X20,5 X5NiCrTi26	PARAFUSO DODECAGONAL		
5	4981172	1	DOUBLE-ENDED STUD DIN 939 M10X25 X5N	PARAFUSO PRISIONEIRO		
6	4981173	1	HEX NUT M10	PORCA SEXTAVADA		
7	10115521	1	LUBRICATING OIL LINE 10X1	TUBULAÇÃO DE ÓLEO LUBRIFIC		
10	4981235	1	FITTING GE 10L M14X1,5 ED VITON	UNIÃO ROSCADA		
14	10663523	2	SOCKET HEAD SCREW ISO 4762 M8X20 10	PARAFUSO CILÍNDRICO		
17	9080684	1	OIL RETURN PIPE	TUBO DE RETORNO DE ÓLEO	-2006035495	
17	10118689	1	OIL RETURN PIPE 22X1,5	TUBO DE RETORNO DE ÓLEO	2006035496-	6
18	9268131	1	SEAL 1,5	VEDAÇÃO		
19	7021521	1	FITTING GE 10L	UNIÃO ROSCADA		
24	10116310	1	RUBBER CONNECTION	LUVA DE BORRACHA		
25	4900778	2	HOSE CLAMP DIN 3017-1 A 26 20-32X13 W2-	ABRAÇADEIRA DE MANGUEIRA		
26	9075128	1	SCREW-ON CONNECTION M26X1,5	CONEXÃO ROSCADA	-2006035495	
26	9140351	1	HOSE NIPPLE DN23,7	NIPLE DE MANGUEIRA	2006035496-	6
27	10011870	1	SEALING RING 26,7X34,93X2	ANEL DE VEDAÇÃO		
132	10002552	1	COPPER PASTE	PASTA DE COBRE		

OHNE BILD

WITHOUT ILLUSTRATION

SANS PLANCHE

Pos.	Item	Quantity	Description	Designação	Serie	K
2	10116413	1	COVER PLATE	PLACA DE COBERTURA		

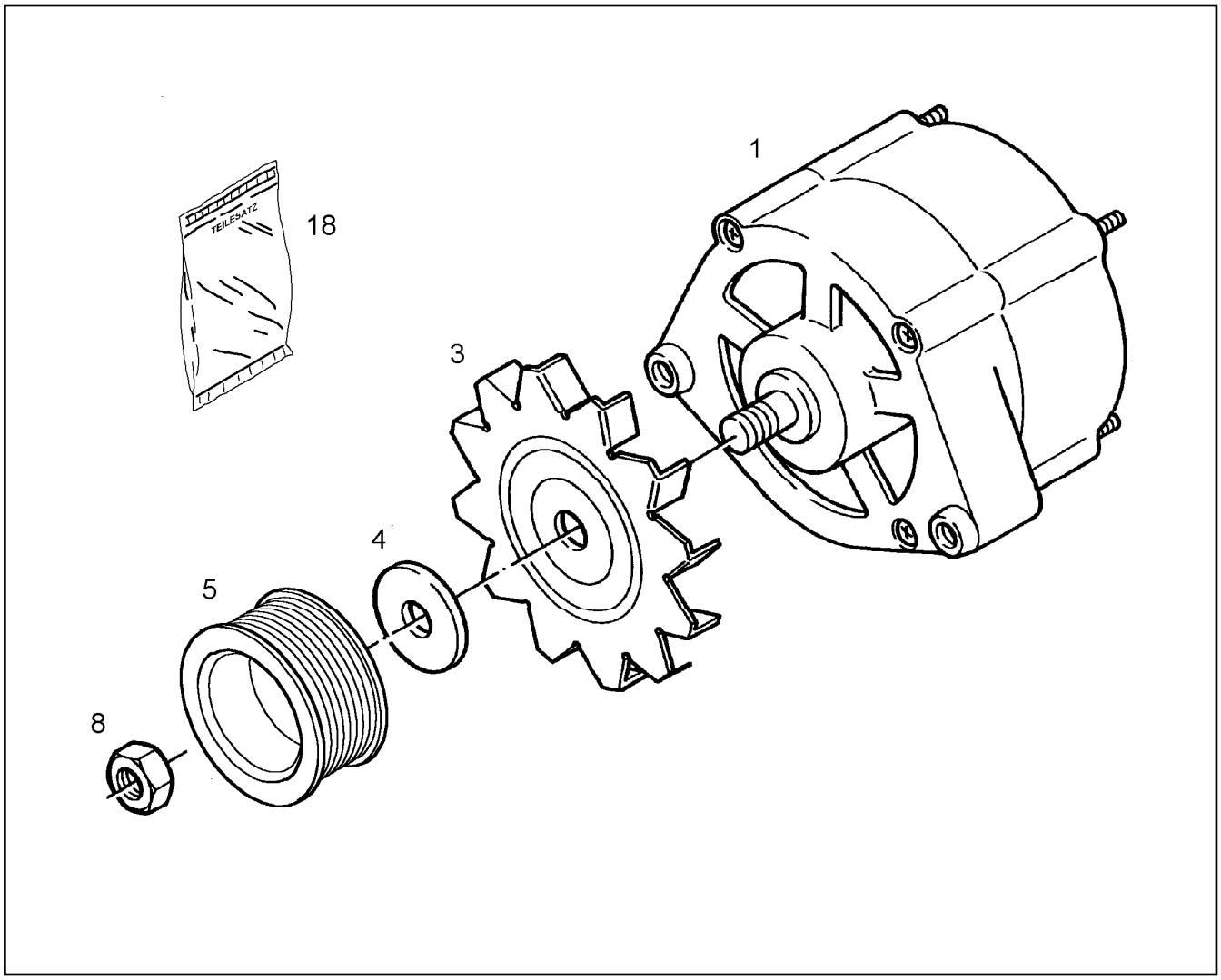

Pos.	Item	Quantity	Description	Designação	Serie	K
1	6290070	1	THREE PHASE CURRENT GENERATOR	ALTERNADOR		6
1	6002867	1	-REGULATOR	-REGULADOR		
3	5005641	1	FAN	VENTILADOR		
4	7010008	1	SUPPORTING WASHER S 17X55X2,5	ARRUELA DE APOIO		
5	10116372	1	BELT PULLEY 8 PKd=54,5	POLIA	-2015040549	
5	11355616	1	BELT PULLEY 8 PKd=54,5	POLIA	2015040550-	
8	4980478	1	HEX NUT M16X1,5	PORCA SEXTAVADA		
18		1	SET OF PARTS ⇨ ❑ 668	KIT DE PEÇAS		

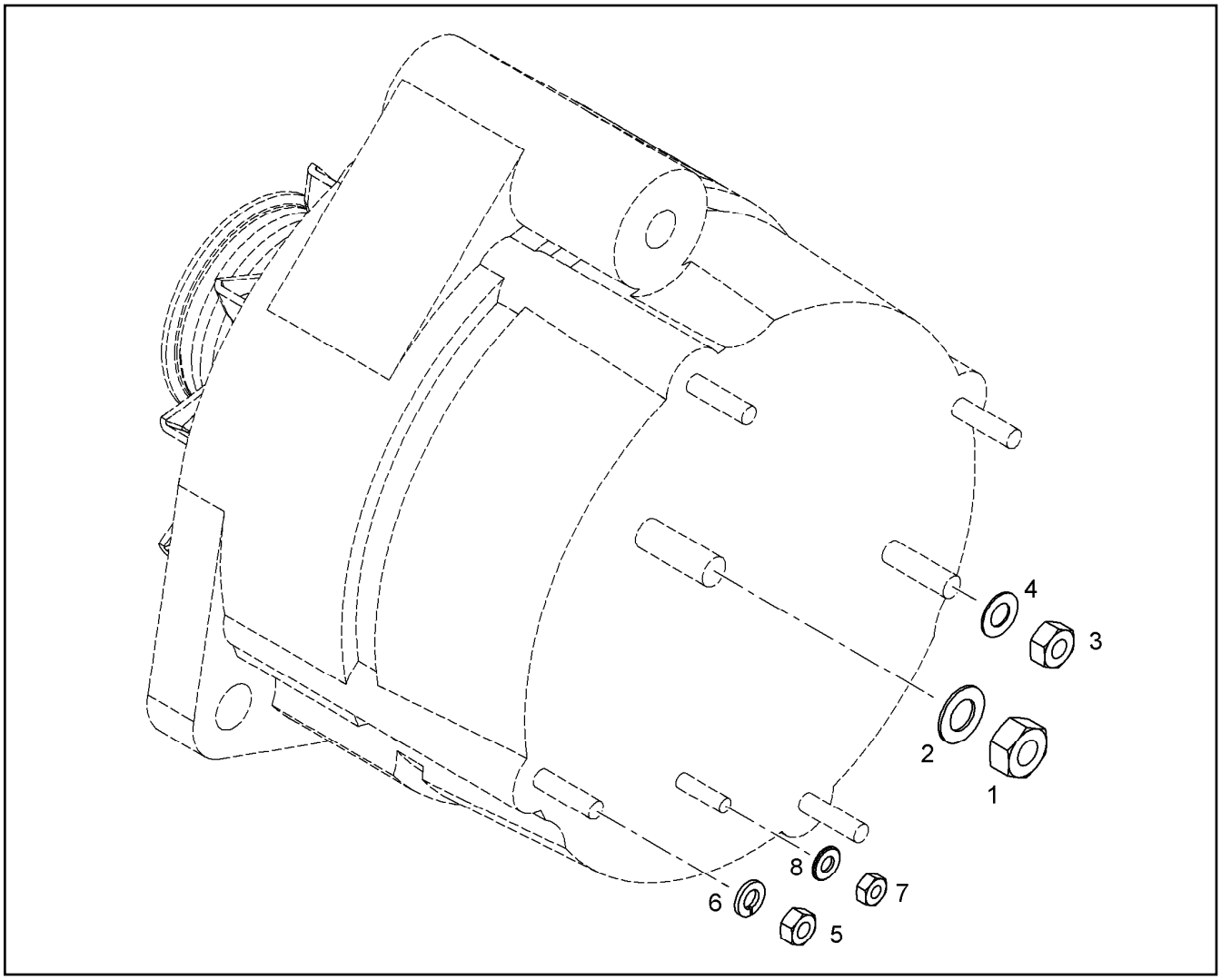

Pos.	Item	Quantity	Description	Designação	Serie	K
1	4000381	1	HEX NUT M8	PORCA SEXTAVADA		
2	4600615	1	SPRING WASHER B 8	ARRUELA DE PRESSÃO		
3	4000379	1	HEX NUT M6	PORCA SEXTAVADA		
4	4901089	1	SPRING WASHER B 6	ARRUELA DE PRESSÃO		
5	4000466	1	HEX NUT M5	PORCA SEXTAVADA		
6	4240000	1	WASHER SPRING B 5	ARRUELA DE PRESSÃO		
7	4000376	1	HEX NUT M4	PORCA SEXTAVADA		
8	4001850	1	WASHER 4 200HV	ARRUELA		

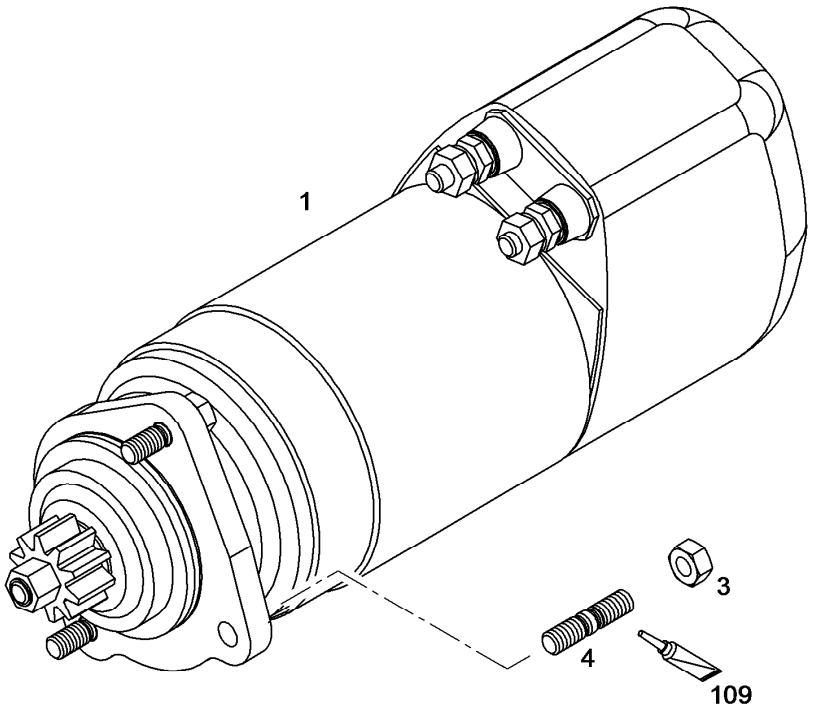

Pos.	Item	Quantity	Description	Designação	Serie	K
1	11371669	1	STARTER	MOTOR DE PARTIDA		
3	4980805	3	HEX NUT M10	PORCA SEXTAVADA		
4	4901450	3	DOUBLE-ENDED STUD DIN 835 M10X30 8.8	PARAFUSO PRISIONEIRO		
109	811205708	1	SCREW LOCKING	COLA PARA ELEMENTOS FIXA		

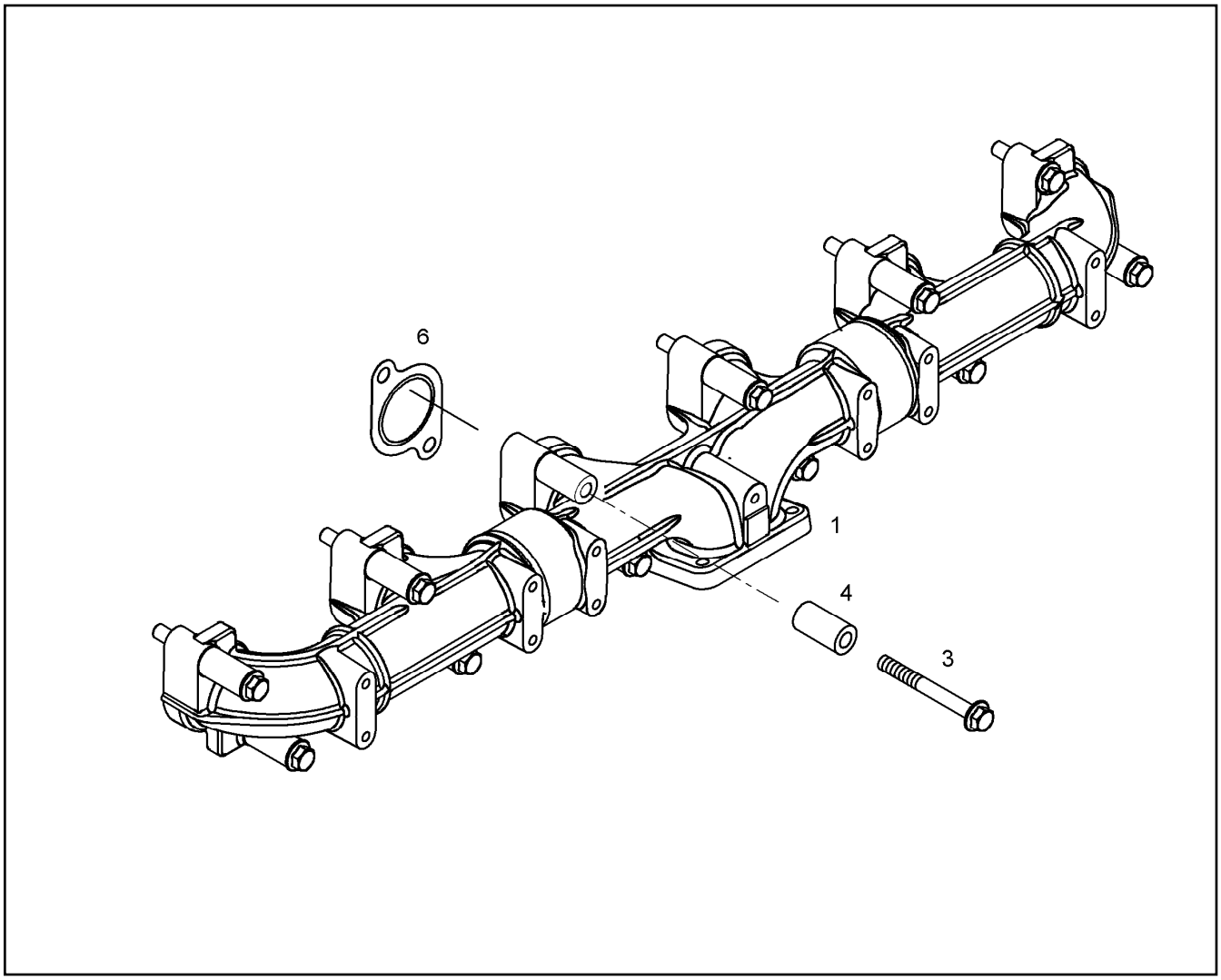

Pos.	Item	Quantity	Description	Designação	Serie	K
1	10115479	1	EXHAUST PIPE PRE-ASS. ⇨ ❑ 653	TUBO ESCAPAMENTO PRE-MON		
3	10006131	12	HEX SCREW DIN 6921 M10X90 10.9	PARAFUSO SEXTAVADO		
4	9074977	12	DISTANCE SLEEVE 11X21X40	LUVA DISTANCIADORA		1
6	10118621	6	SEAL 1,31	VEDAÇÃO	-2015041652	
6	10141557	6	SEAL	VEDAÇÃO	2015041653-	

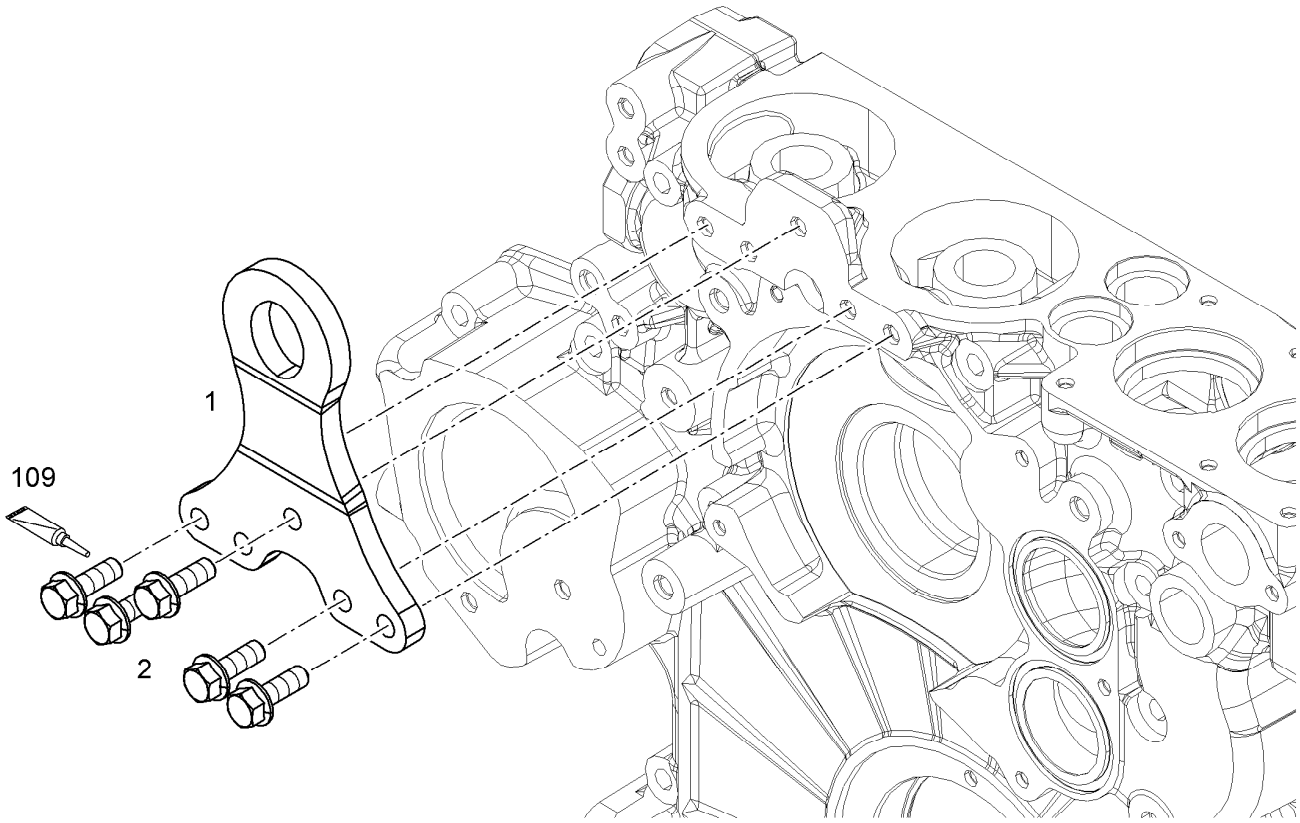

Pos.	Item	Quantity	Description	Designação	Serie	K
1	10141949	1	TRANSPORTER CONSOLE	CONSOLE DE TRANSPORTE		
2	10016908	4	HEX SCREW DIN 6921 M10X30 8.8 A3C	PARAFUSO SEXTAVADO		
109	8655016	1	SCREW LOCKING	COLA PARA ELEMENTOS FIXA		

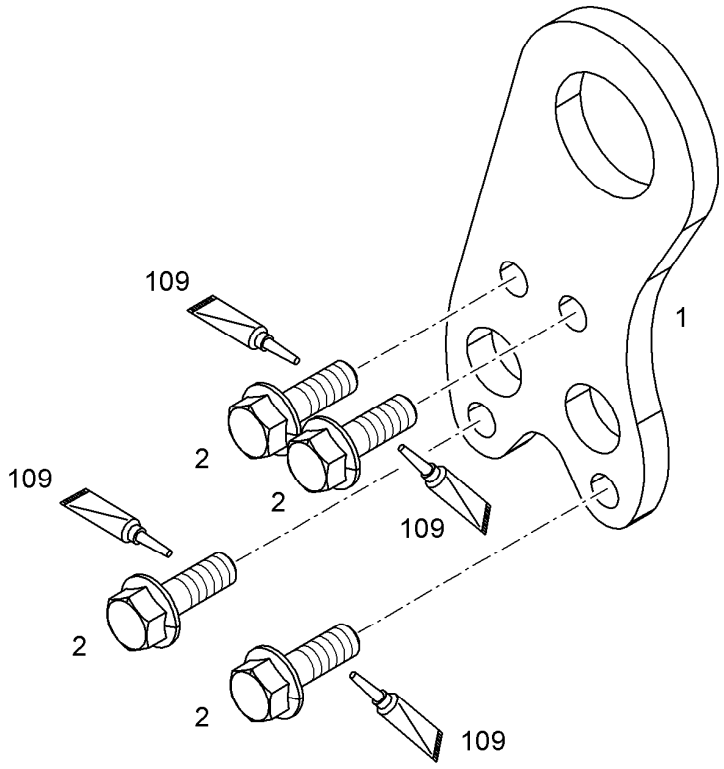

Pos.	Item	Quantity	Description	Designação	Serie	K
1	9078849	1	TRANSPORTER CONSOLE	CONSOLE DE TRANSPORTE		
2	10299564	4	HEX SCREW EN 1665 M10X30 10.9 FLZN	PARAFUSO SEXTAVADO		
109	811205708	1	SCREW LOCKING	COLA PARA ELEMENTOS FIXA		

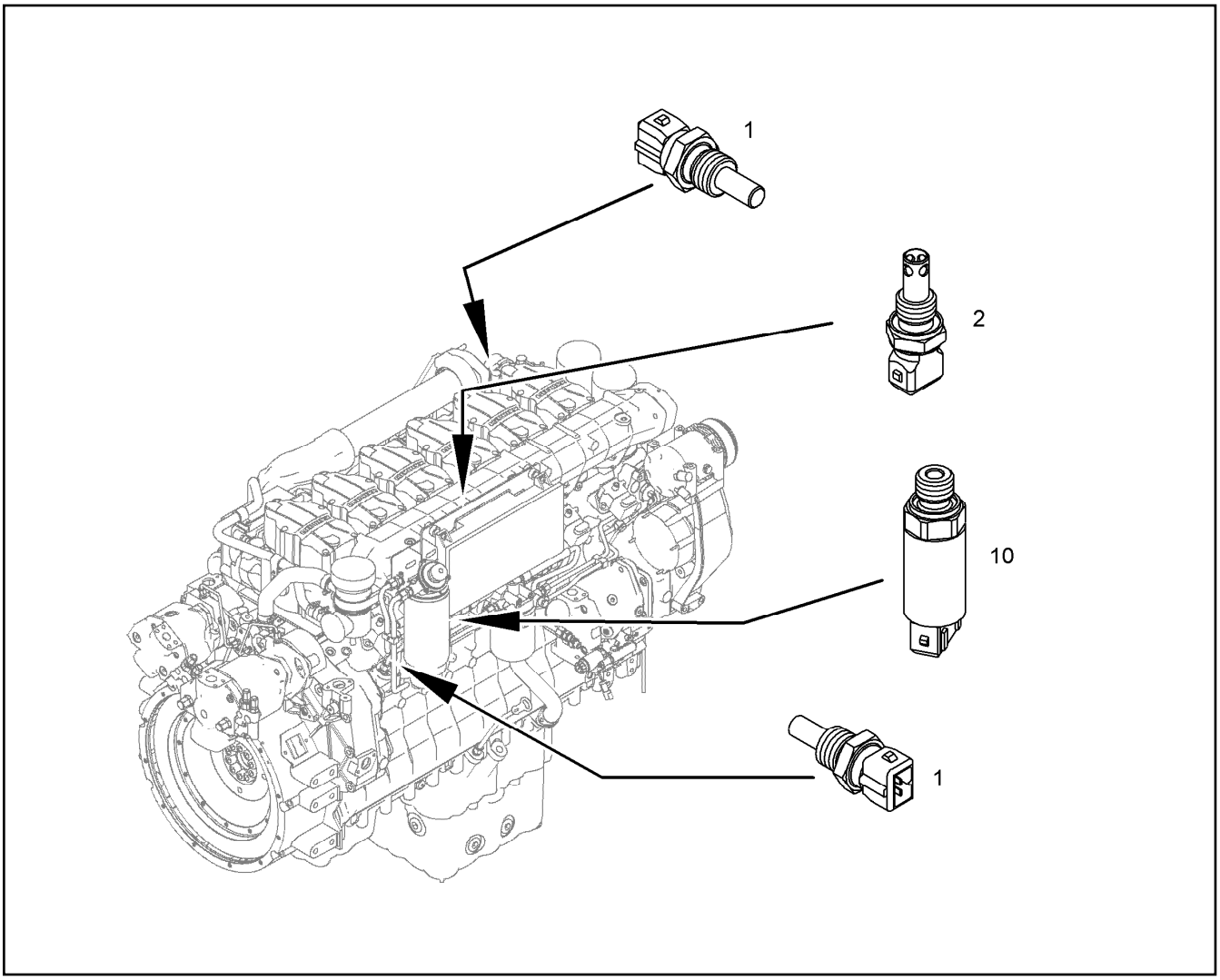

Pos.	Item	Quantity	Description	Designação	Serie	K
1	6290130	2	TEMPERATURE SENSOR	SENSOR DE TEMPERATURA		
2		1	TEMPERATURE PROBE CPL. ⇨ ❑ 675	SENSOR DE TEMPERATURA CO		
10		1	PRESSURE TRANSMITTER CPL. ⇨ ❑ 678	TRANSDUTOR DE PRESSAO CO		

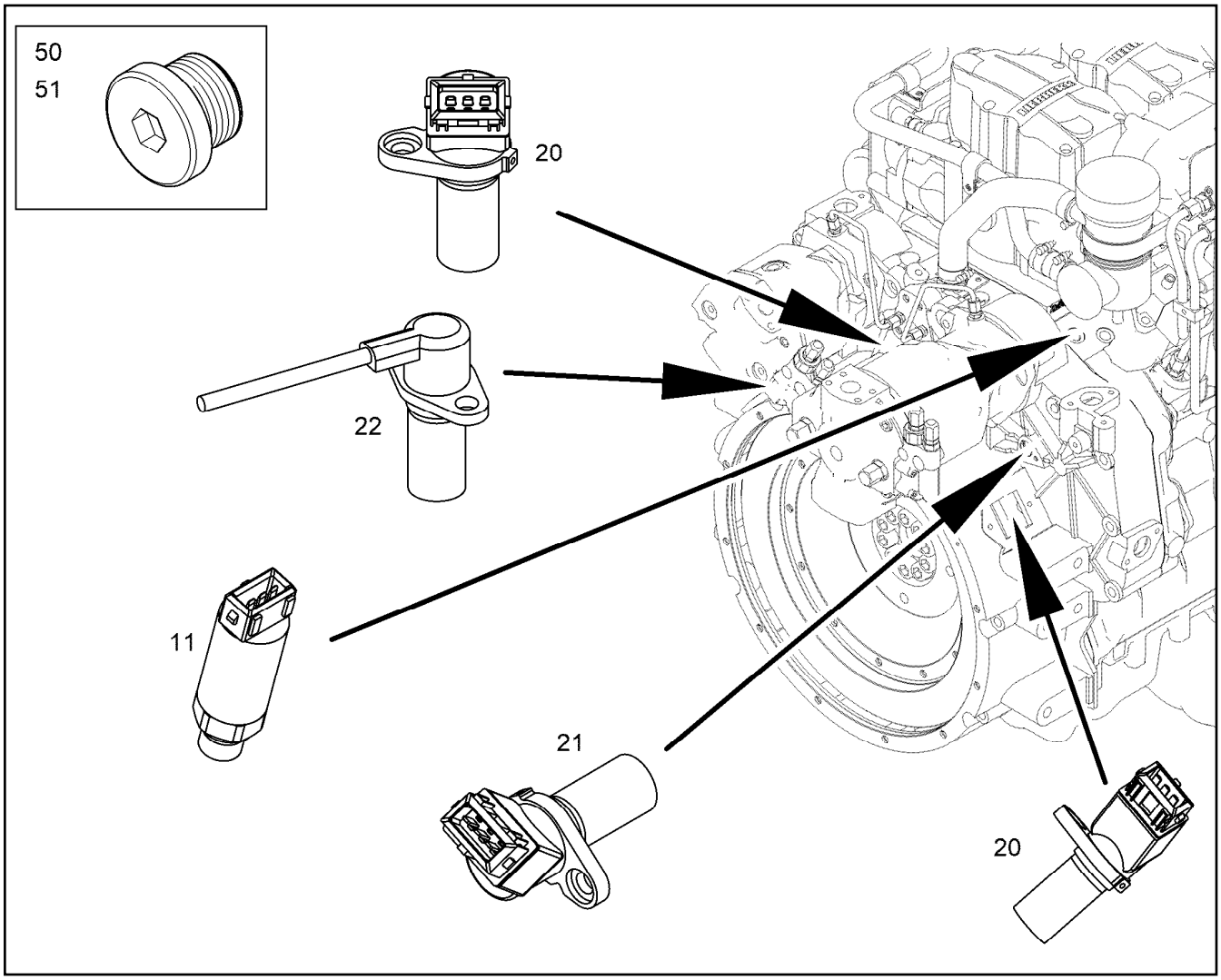

Pos.	Item	Quantity	Description	Designação	Serie	K
11		1	PRESSURE TRANSMITTER CPL. 0-10bar ⇨ ❑ 676	TRANSDUTOR DE PRESSAO CO		2
20		2	ROTATIONAL SPEED SENSOR CPL. ⇨ ❑ 688	SENSOR DE ROTACAO		
21		1	ROTATIONAL SPEED SENSOR CPL. ⇨ ❑ 677	SENSOR DE ROTACAO		
22		1	ROTATIONAL SPEED SENSOR ATTACH ⇨ ❑ 679	MONTAGEM SENSOR DE VELOC		
50	7380566	1	SCREW PLUG VSTI M14X1,5	PARAFUSO DE FECHAMENTO		
51	7361960	1	SCREW PLUG M18X1,5 ED	PARAFUSO DE FECHAMENTO		

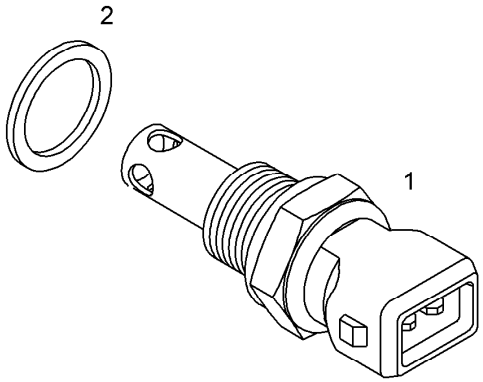

Pos.	Item	Quantity	Description	Designação	Serie	K
1	691180608	1	TEMPERATURE SENSOR	SENSOR DE TEMPERATURA		
2	10040984	1	PROFILE PACKING 14	PERFIL DE VEDAÇÃO		

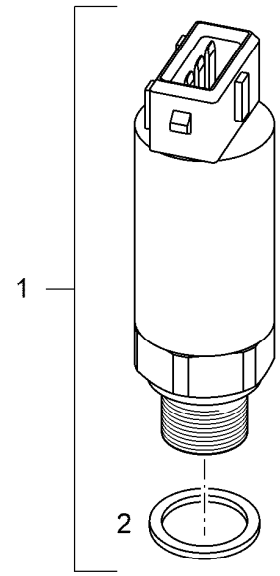

Pos.	Item	Quantity	Description	Designação	Serie	K
1	10025124	1	PRESSURE TRANSMITTER 0-10bar	TRANSDUTOR DE PRESSÃO		
2	10040984	1	PROFILE PACKING 14	PERFIL DE VEDAÇÃO		

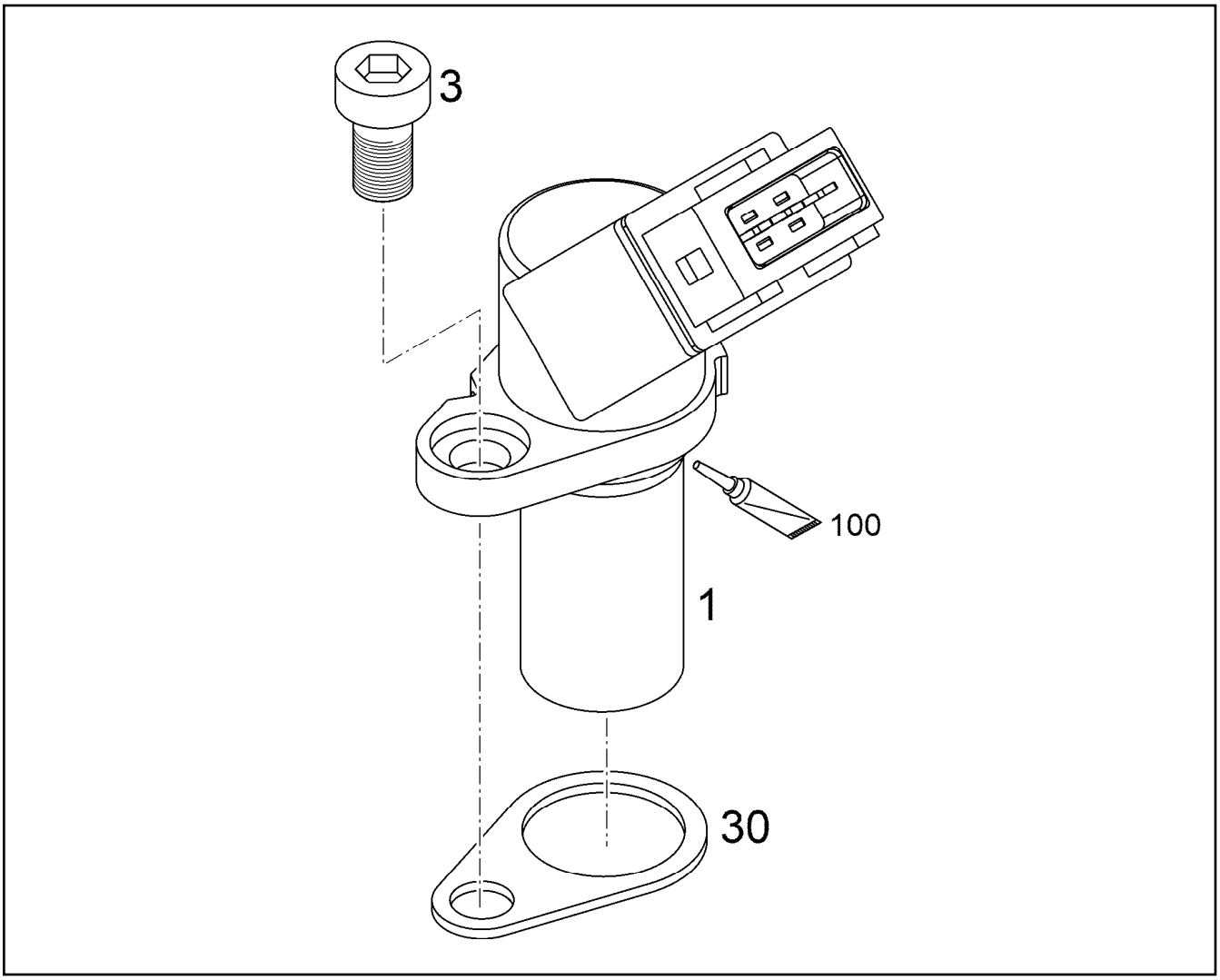

Pos.	Item	Quantity	Description	Designação	Serie	K
1	11442694	1	ROTATIONAL SPEED SENSOR	SENSOR DE ROTAÇAO		
3	10875586	1	SOCKET HEAD SCREW ISO 4762 M6X16 8.8	PARAFUSO CILÍNDRICO		
30	9079064	1	SPACER PIECE	ESPAÇADOR		
100	10285708	1	GREASE NBU 30/1kg	GRAXA		
			⇨ ❑ 708			

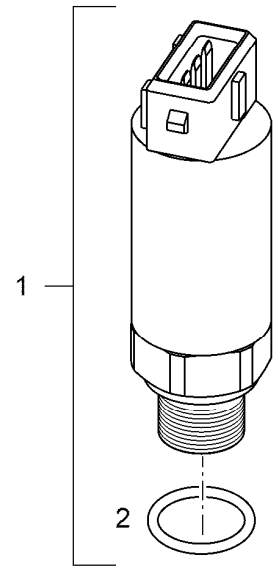

Pos.	Item	Quantity	Description	Designação	Serie	K
1	10100781	1	PRESSURE TRANSMITTER 0,5-4,5bar	TRANSDUTOR DE PRESSÃO		
2	10113975	1	O-RING 15,50X2,00	ANEL-O		

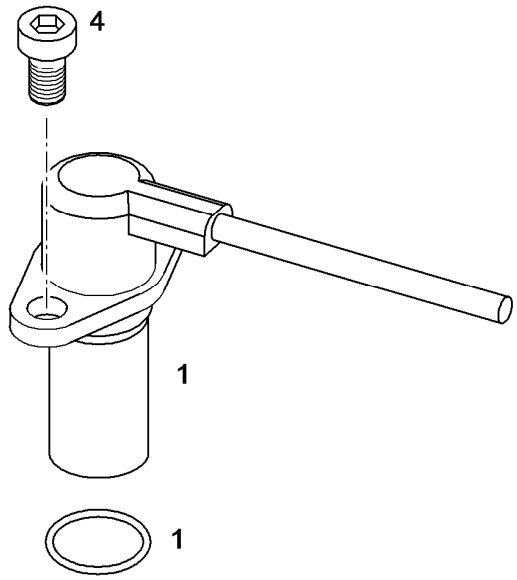

Pos.	Item	Quantity	Description	Designação	Serie	K
1	635867001	1	SENSOR	SENSOR		
4	10024115	2	HEX SCREW DIN 6921 M8X12 8.8 A2C	PARAFUSO SEXTAVADO		

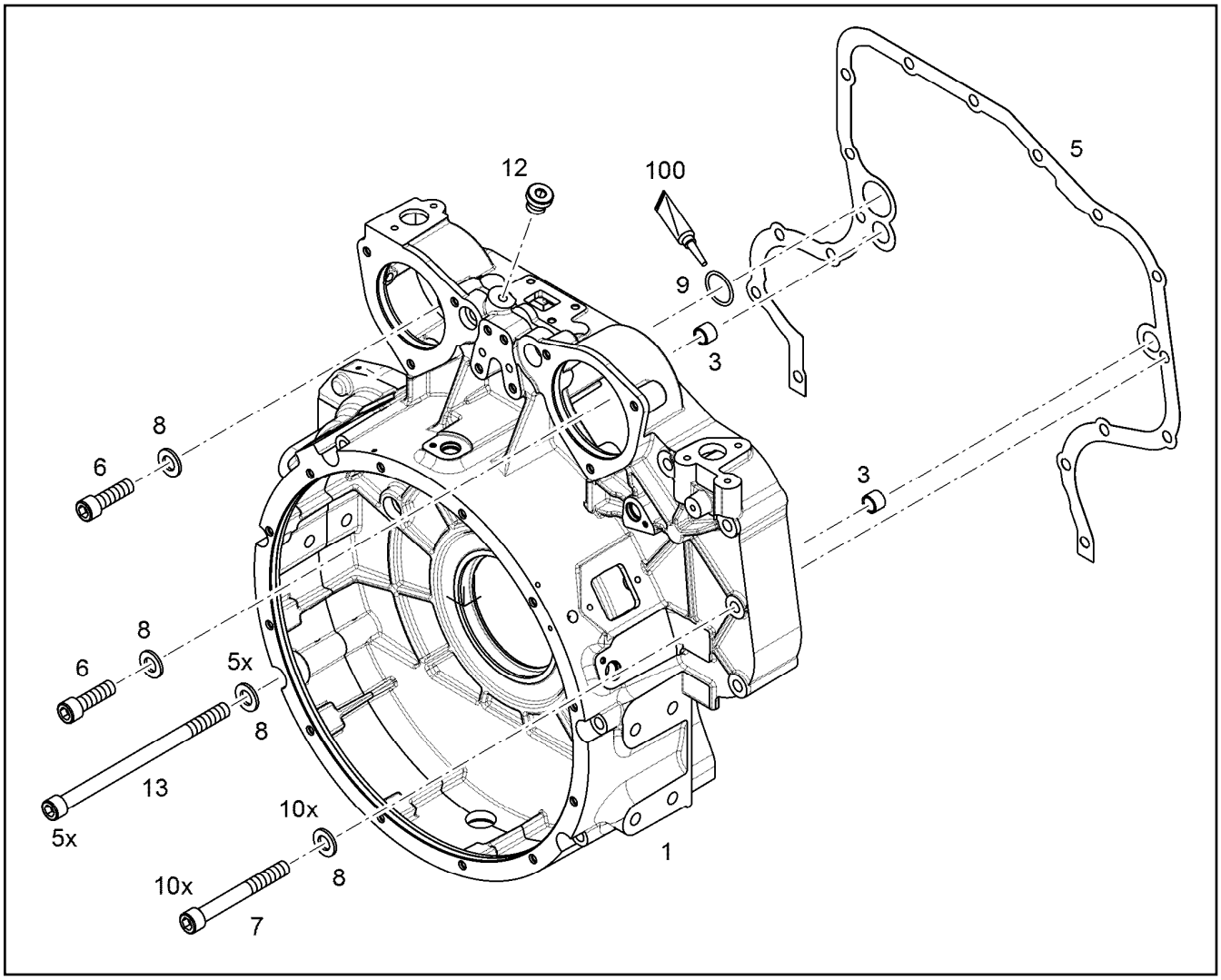

Pos.	Item	Quantity	Description	Designação	Serie	K
1	10116113	1	FLYWHEEL HOUSING PRE-ASS. SAE 2	CARCAÇA DO VOLANTE PRÉ- M		
3	10134348	2	TIGHT FIT SLEEVE 16X20X20	LUVA DE AJUSTE		1
5	10137721	1	SEAL 0,33	VEDAÇÃO		
6	4980012	2	SOCKET HEAD SCREW ISO 4762 M12X40 1	PARAFUSO CILÍNDRICO		
7	4600385	10	SOCKET HEAD SCREW ISO 4762 M12X100 1	PARAFUSO CILÍNDRICO		
8	10289804	17	WASHER 12 300HV	ARRUELA		
9	7380653	1	O-RING ISO 3601-1 34,59X2,62	ANEL-O		
12	7381638	1	SCREW PLUG VSTI M10X1	PARAFUSO DE FECHAMENTO		
13	4902229	5	SOCKET HEAD SCREW ISO 4762 M12X210 1	PARAFUSO CILÍNDRICO		
100	10282622	1	GREASE STABURAGS NBU 30/0,010kg	GRAXA		

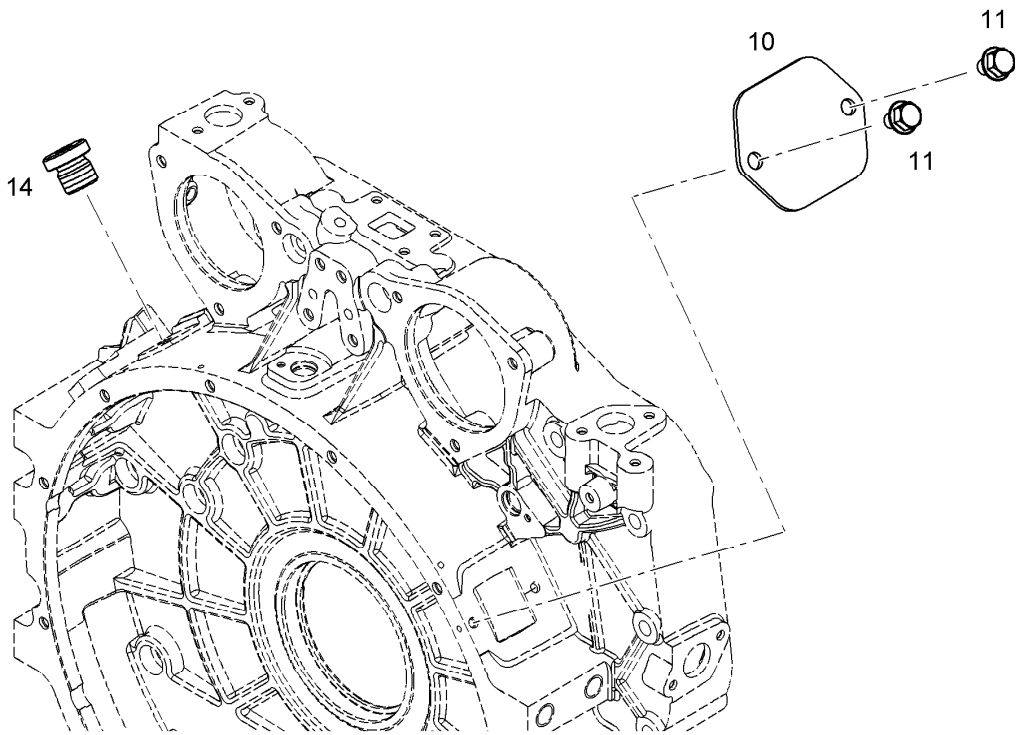

Pos.	Item	Quantity	Description	Designação	Serie	K
10	10117094	1	COVER	TAMPA		
11	11656992	2	HEX SCREW EN 1665 M8X16 8.8 480H	PARAFUSO SEXTAVADO		
14	7380177	1	SCREW PLUG VSTI M22X1,5	PARAFUSO DE FECHAMENTO		

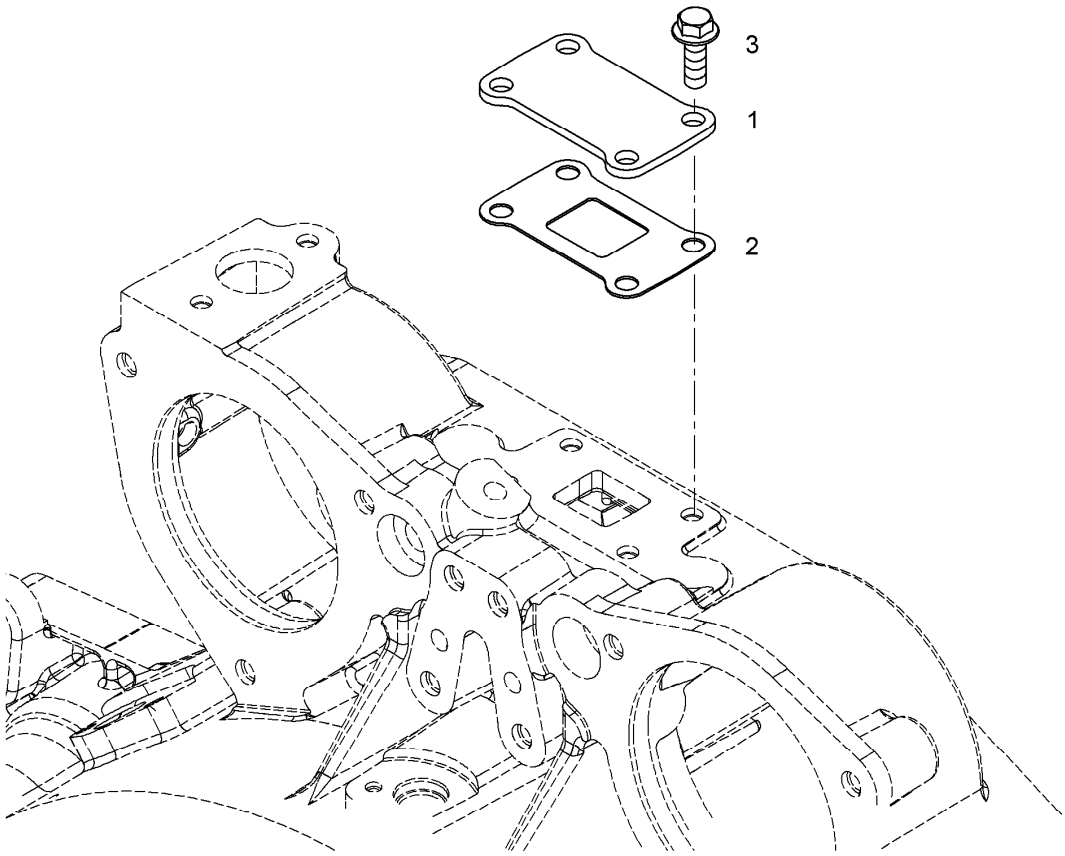

Pos.	Item	Quantity	Description	Designação	Serie	K
1	10119129	1	SHEET	PLACA DE APOIO		
2	9079130	1	SEAL 1	VEDAÇÃO		
3	10016906	4	HEX SCREW DIN 6921 M8X20 8.8 A2C	PARAFUSO SEXTAVADO		

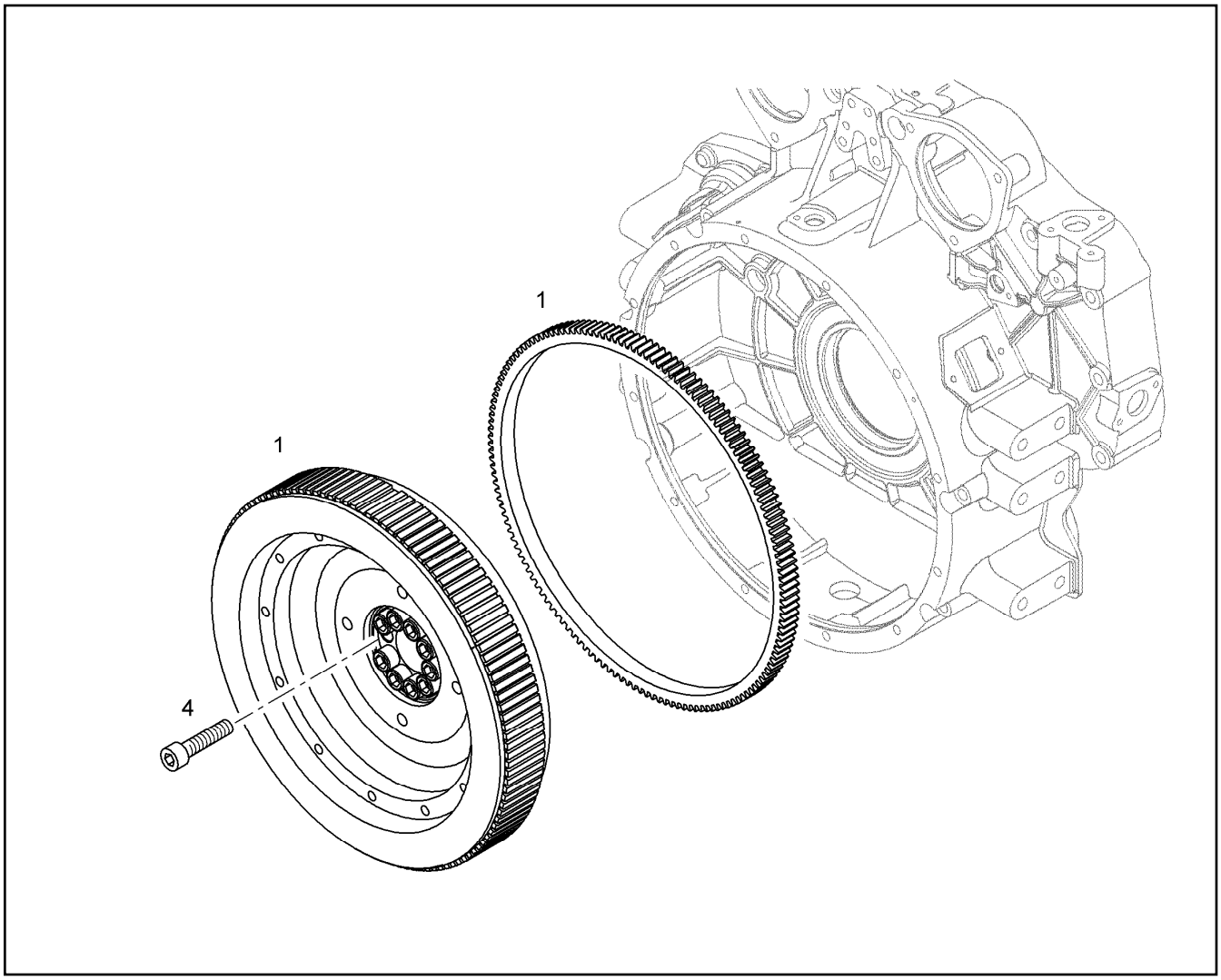

Pos.	Item	Quantity	Description	Designação	Serie	K
1	10115861	1	FLYWHEEL PRE-ASS. SAE 2	VOLANTE DO MOTOR - PRÉ-M		
1	9177676	1	-CROWN GEAR	-COROA DENTADA		
4	9080925	10	SOCKET HEAD SCREW M16X1,5X88X17 32C	PARAFUSO CILÍNDRICO		

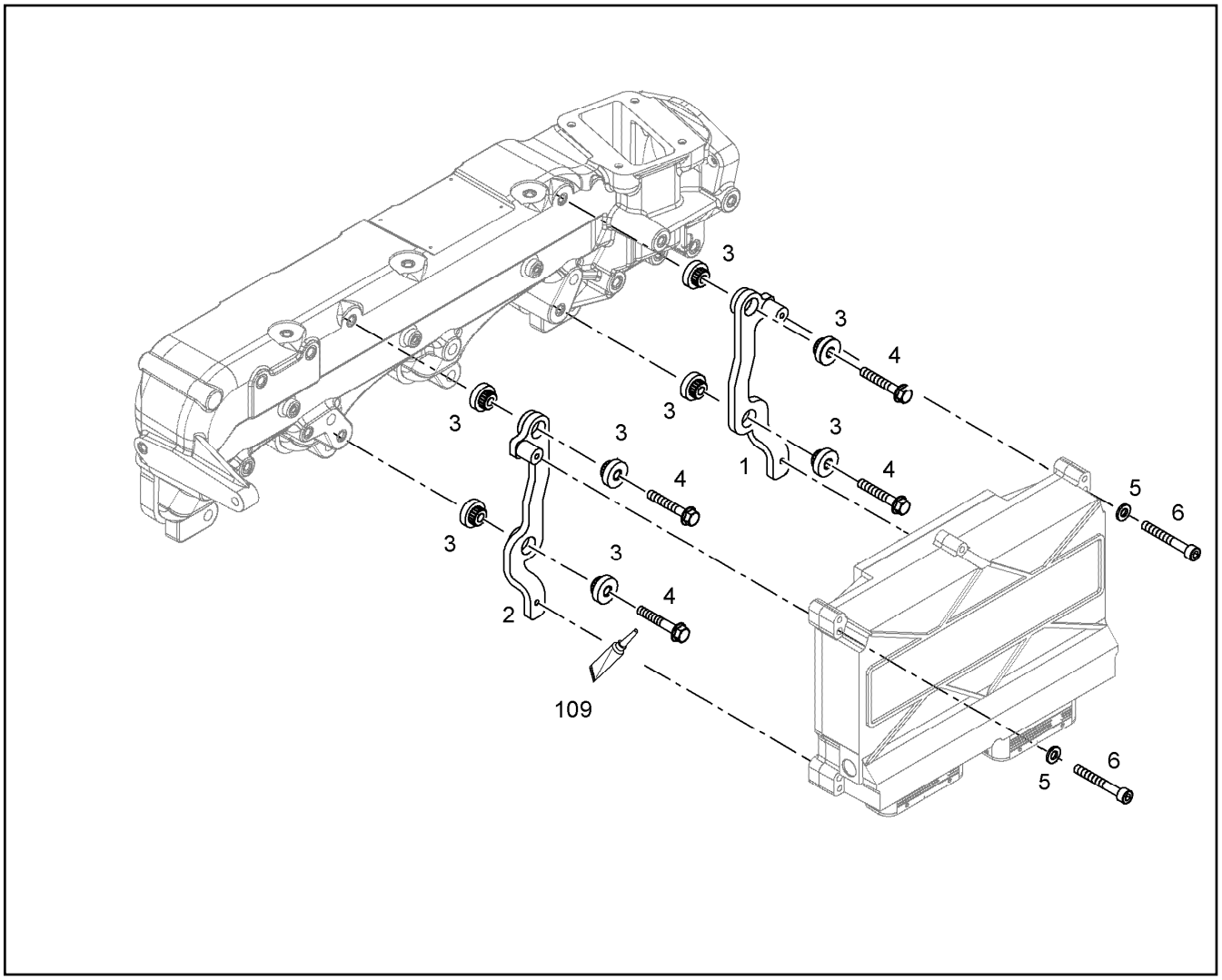

Pos.	Item	Quantity	Description	Designação	Serie	K
1	10115996	1	RETAINER CPL.	SUPORTE CPL		
2	10115994	1	RETAINER CPL.	SUPORTE CPL		
3	10040032	8	RUBBER BUFFER	AMORTECEDOR DE BORRACHA		
4	10035575	4	HEX SCREW DIN 6921 M8X40 10.9 A2C	PARAFUSO SEXTAVADO		
5	10289802	4	WASHER 6 300HV	ARRUELA		
6	4042109	4	SOCKET HEAD SCREW ISO 4762 M6X45 8.8	PARAFUSO CILÍNDRICO		
109	8628192	1	SCREW LOCKING	COLA PARA ELEMENTOS FIXA		

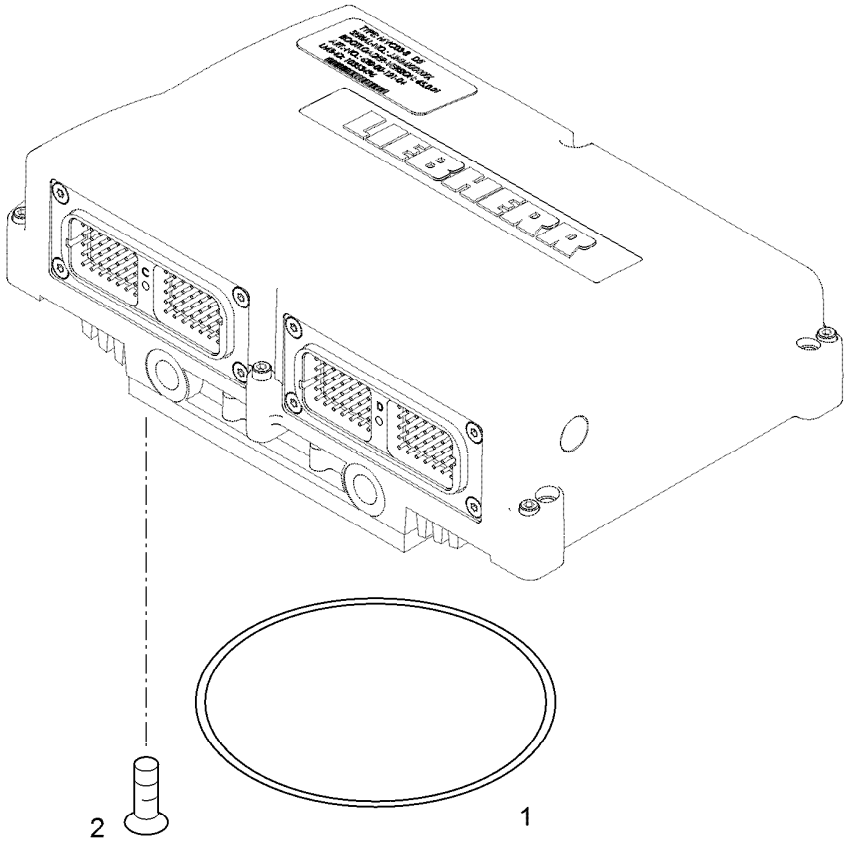

Pos.	Item	Quantity	Description	Designação	Serie	K
1	11067315	1	O-RING 200X4	ANEL-O		
2	11067312	14	COUNTERSUNK SCREW M5X20 8.8 CR6-F	PARAFUSO ESCAREADO		

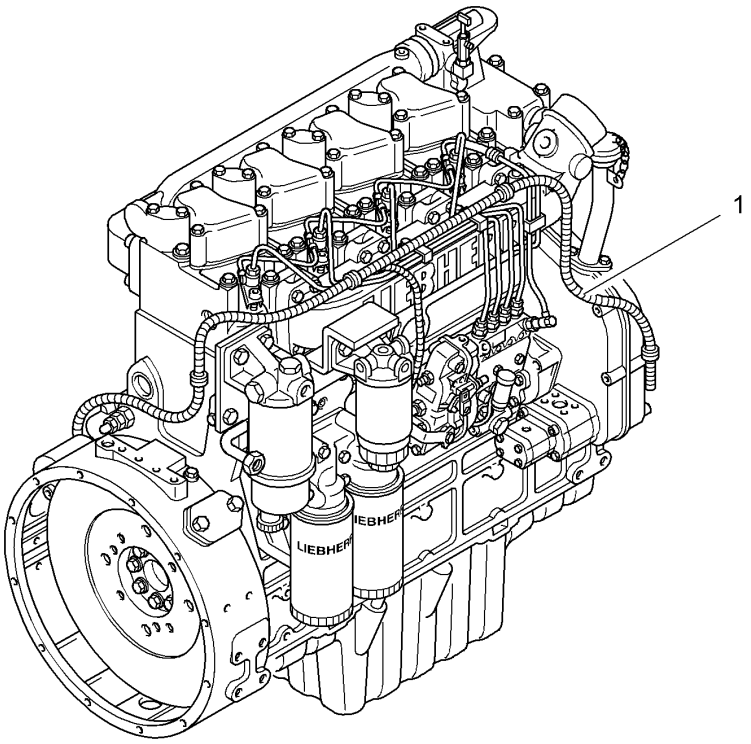

Pos.	Item	Quantity	Description	Designação	Serie	K
1	10115746	1	WIRING HARNESS PRE-ASS.	CHICOTE ELÉTRICO PRÉ MONT		

9 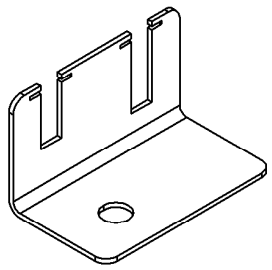	17 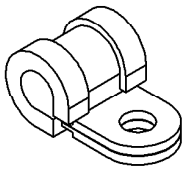	18 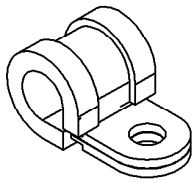	24 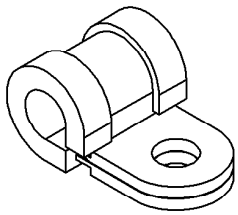
27 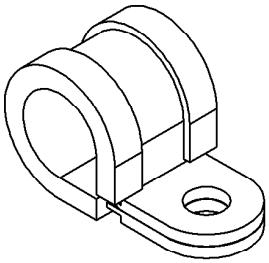	31 / 32 / 35 / 36 / 37 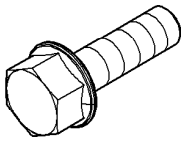	40 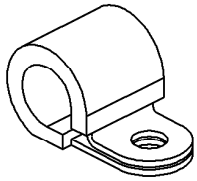	42 
47 	72 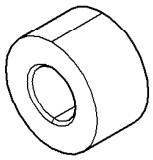		

Pos.	Item	Quantity	Description	Designação	Serie	K
9	9080038	1	HOLDER	SUPORTE		
17	7381771	4	CLAMP DIN 3016-1 D1 8X15 W1-2-MVQ	BRAÇADEIRA		
18	7381770	1	CLAMP DIN 3016-1 D1 10X15 W1-2-MVQ	BRAÇADEIRA		
24	7381628	1	CLAMP DIN 3016-1 D1 10X20 W1-2-MVQ	BRAÇADEIRA		
27	7381635	2	CLAMP DIN 3016-1 D1 18X20 W1-2-MVQ	BRAÇADEIRA		
31	407350208	6	HEX SCREW DIN 6921 M6X16 8.8 A2C	PARAFUSO SEXTAVADO		
32	10018711	3	HEX SCREW DIN 6921 M6X20 8.8 A2C	PARAFUSO SEXTAVADO		
35	11656992	2	HEX SCREW EN 1665 M8X16 8.8 480H	PARAFUSO SEXTAVADO		
36	10016906	1	HEX SCREW DIN 6921 M8X20 8.8 A2C	PARAFUSO SEXTAVADO		
37	10009007	1	HEX SCREW DIN 6921 M8X25 8.8 A2C	PARAFUSO SEXTAVADO		
40	7382087	1	CLAMP DIN 3016-1 D1 12X15 W1-2-MVQ	BRAÇADEIRA		
42	4000379	1	HEX NUT M6	PORCA SEXTAVADA		
47	10289802	1	WASHER 6 300HV	ARRUELA		
72	9132577	1	DISTANCE SLEEVE 8,5X18X10	LUVA DISTANCIADORA		6

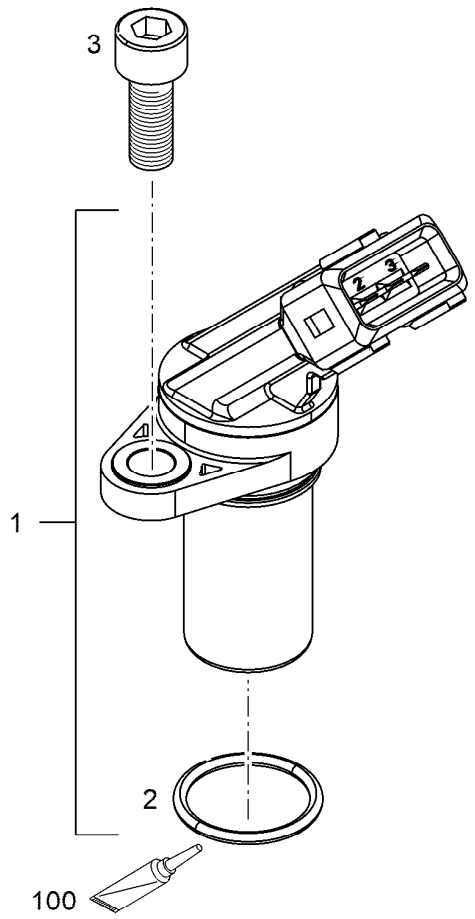

Pos.	Item	Quantity	Description	Designação	Serie	K
1	11442694	1	ROTATIONAL SPEED SENSOR	SENSOR DE ROTAÇAO		
2	7381103	1	O-RING ISO 3601-1 17,17X1,78	ANEL-O		
3	10875586	1	SOCKET HEAD SCREW ISO 4762 M6X16 8.8	PARAFUSO CILÍNDRICO		
100	10282622	1	GREASE STABURAGS NBU 30/0,010kg	GRAXA		

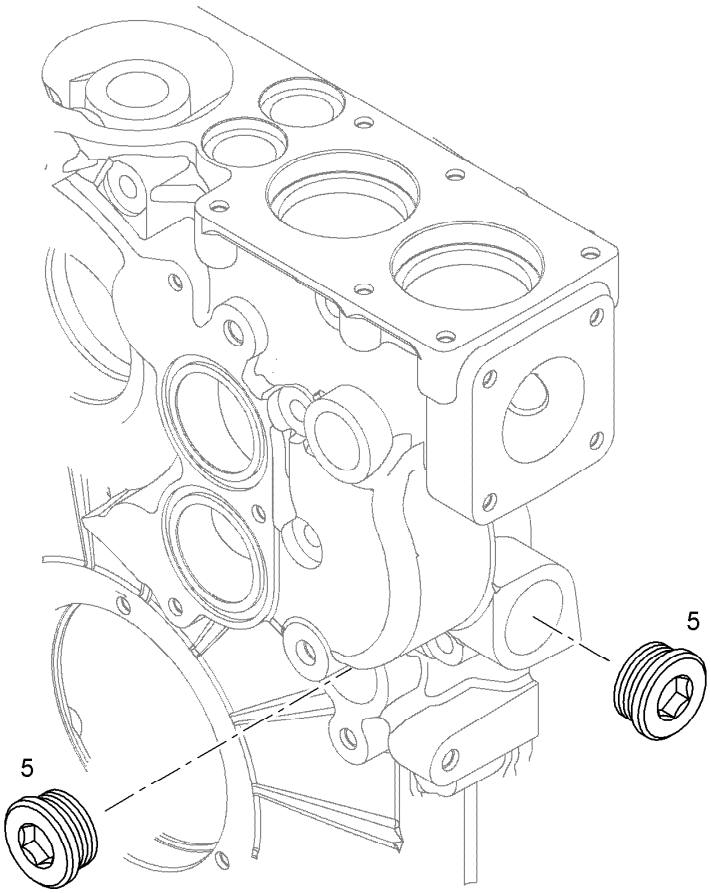

Pos.	Item	Quantity	Description	Designação	Serie	K
5	7382202	2	SCREW PLUG VSTI M38X1,5	PARAFUSO DE FECHAMENTO		

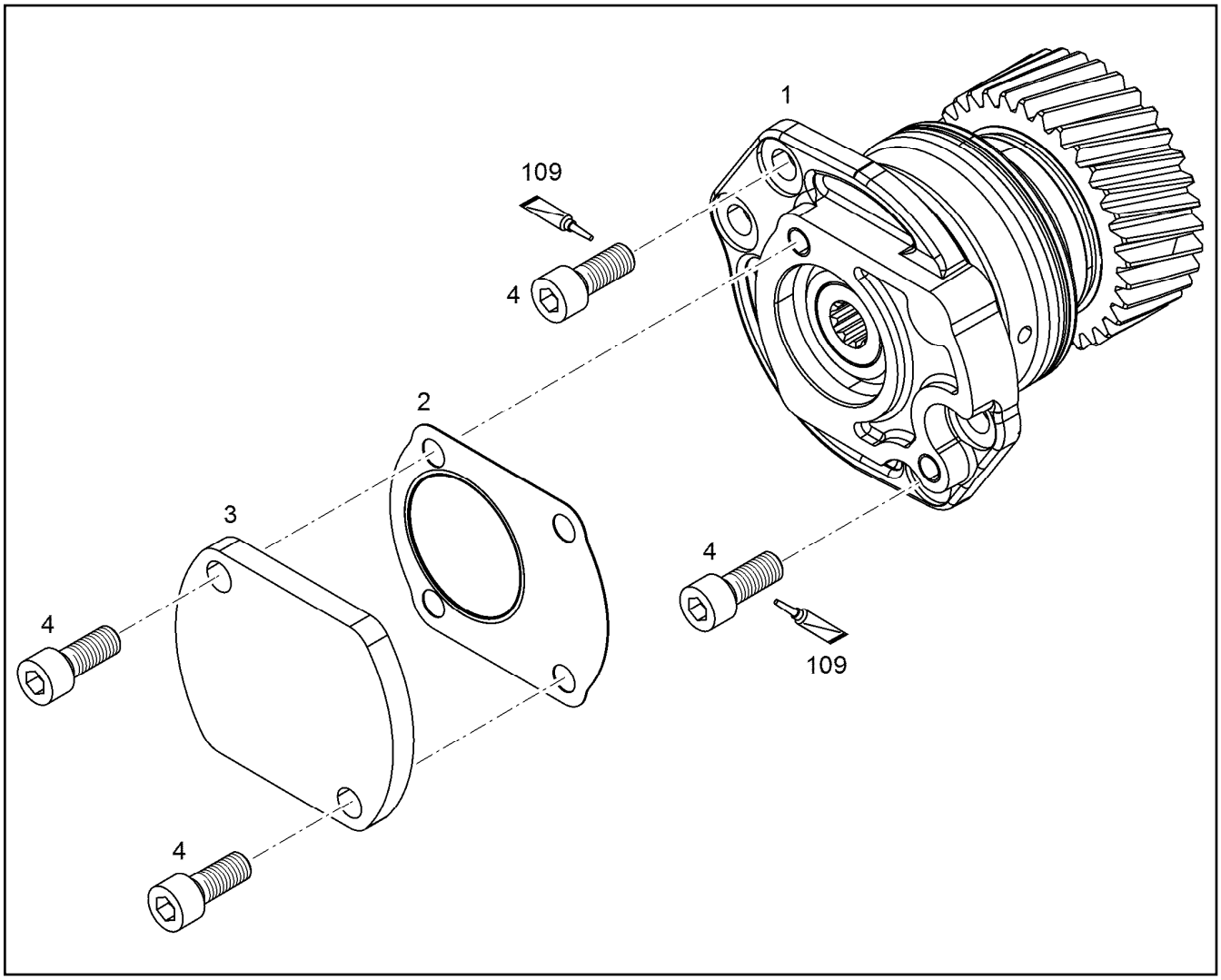

Pos.	Item	Quantity	Description	Designação	Serie	K
1		1	AUXILIARY DRIVE PRE-ASS. ⇨ ❑ 694	TOMADA PRÉ MONTADA		
2	9885529	1	SEAL	VEDAÇÃO		
3		1	COVER	TAMPA		
4	4043124	4	SOCKET HEAD SCREW ISO 4762 M10X25 1	PARAFUSO CILÍNDRICO		
109	811205708	1	SCREW LOCKING	COLA PARA ELEMENTOS FIXA		

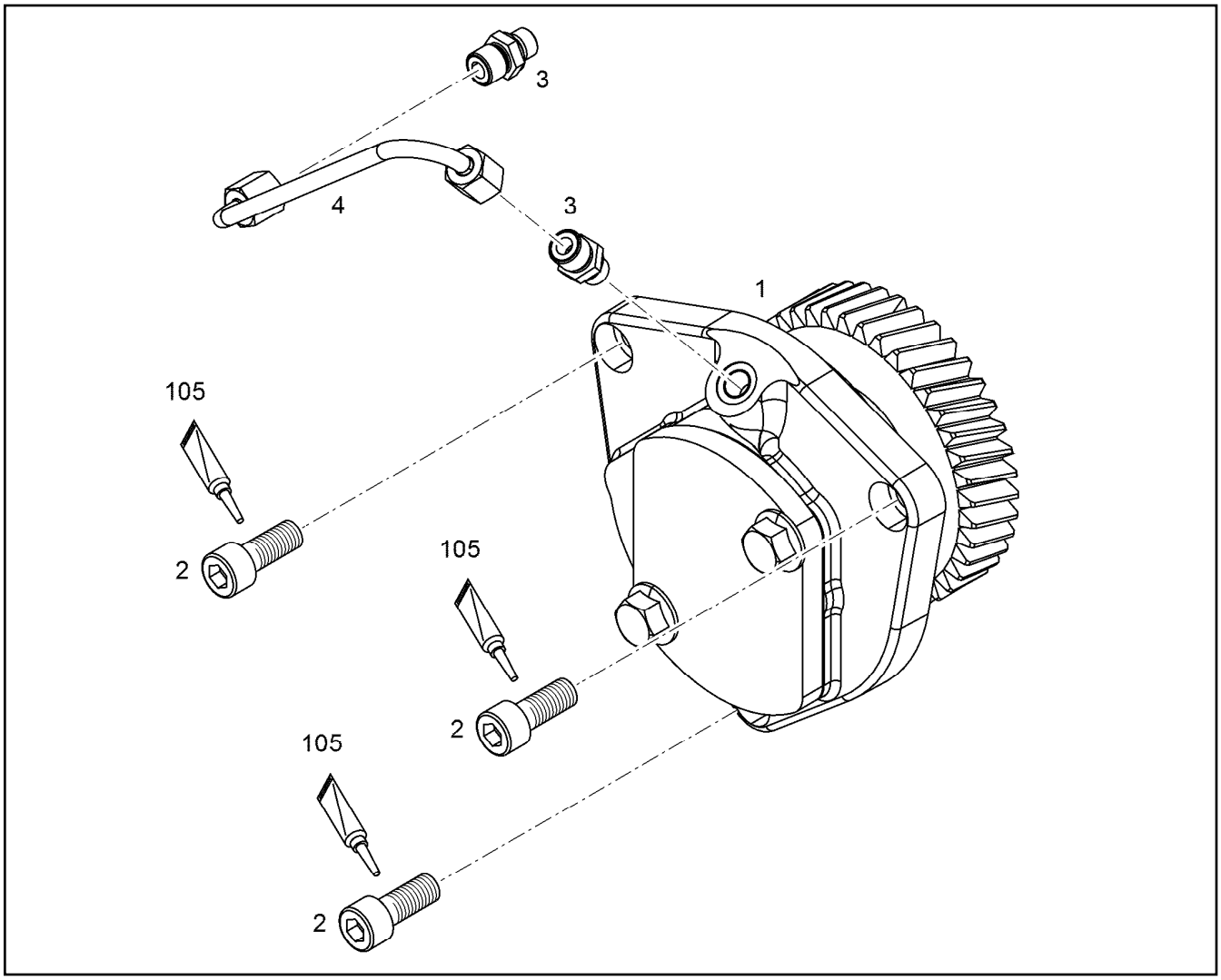

Pos.	Item	Quantity	Description	Designação	Serie	K
1		1	AUXILIARY DRIVE PRE-ASS. ⇨ ❑ 695	TOMADA PRÉ MONTADA		
2	4042014	3	SOCKET HEAD SCREW ISO 4762 M10X25 8.	PARAFUSO CILÍNDRICO		
3	4981233	2	FITTING GE 6L M10X1	UNIÃO ROSCADA		
4	9078984	1	PIPELINE 6X1	TUBULAÇÃO		
105	811205708	1	SCREW LOCKING	COLA PARA ELEMENTOS FIXA		

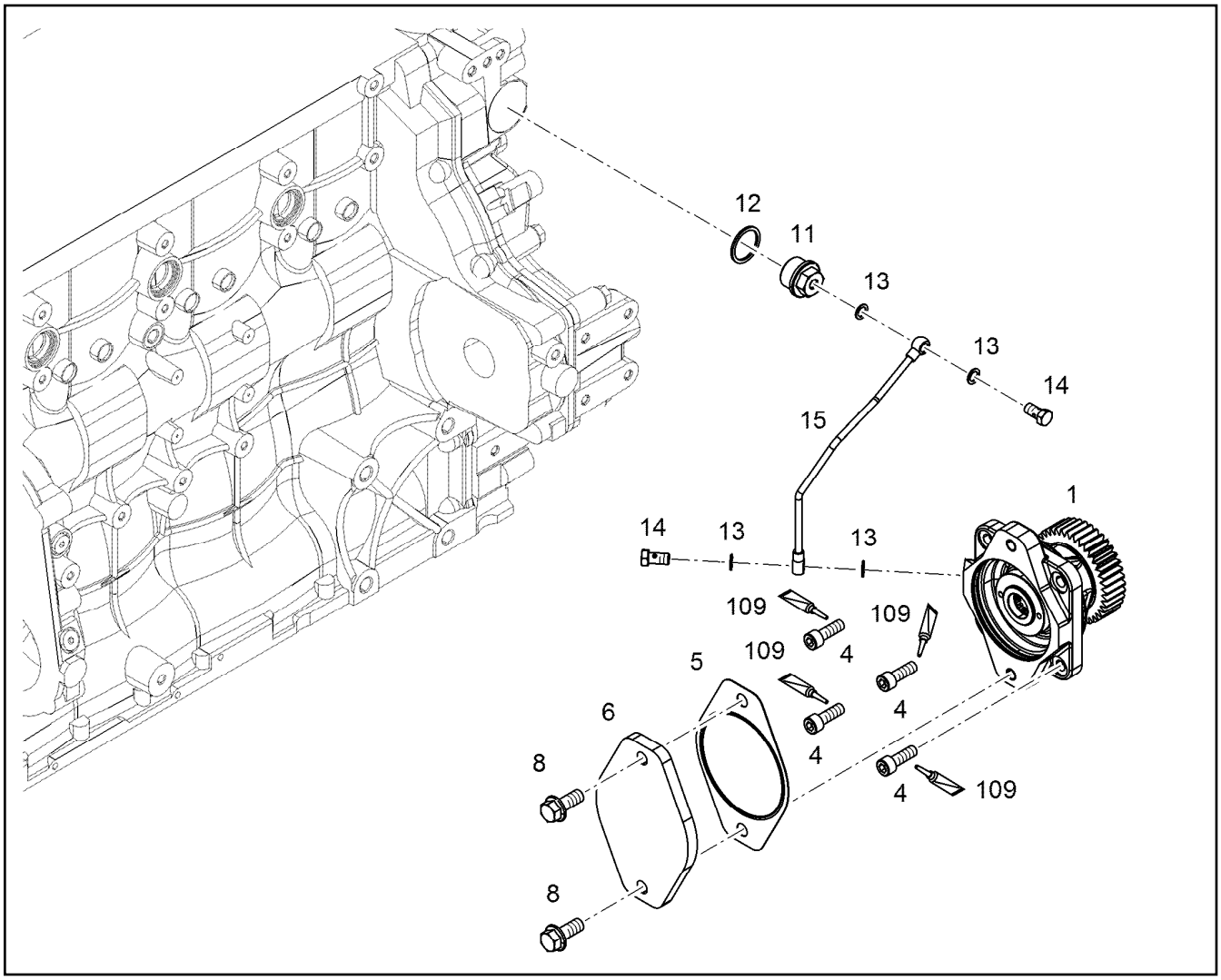

Pos.	Item	Quantity	Description	Designação	Serie	K
1	9077386	1	AUXILIARY DRIVE PRE-ASS. ⇨ ❑ 693	TOMADA PRÉ MONTADA		
4	11002743	4	SOCKET HEAD SCREW ISO 4762 M10X30 10	PARAFUSO CILÍNDRICO		
5	9273691	1	SEAL	VEDAÇÃO		
6	9273690	1	COVER	TAMPA		
8	10410790	2	HEX SCREW DIN 6921 M12X30 8.8 A3C	PARAFUSO SEXTAVADO		
11	9080013	1	REDUCING STUD M30X1,5	REDUÇÃO		
12	7101021	1	SEALING RING DIN 7603 A 30X36X2	ANEL DE VEDAÇÃO		
13	7007952	4	SEALING RING DIN 7603 A 10X15X1	ANEL DE VEDAÇÃO		
14	4079160	2	HOLLOW SCREW 6-3	PARAFUSO OCO		
15	9080009	1	PIPELINE 6X1	TUBULAÇÃO		
109	811205708	1	SCREW LOCKING	COLA PARA ELEMENTOS FIXA		

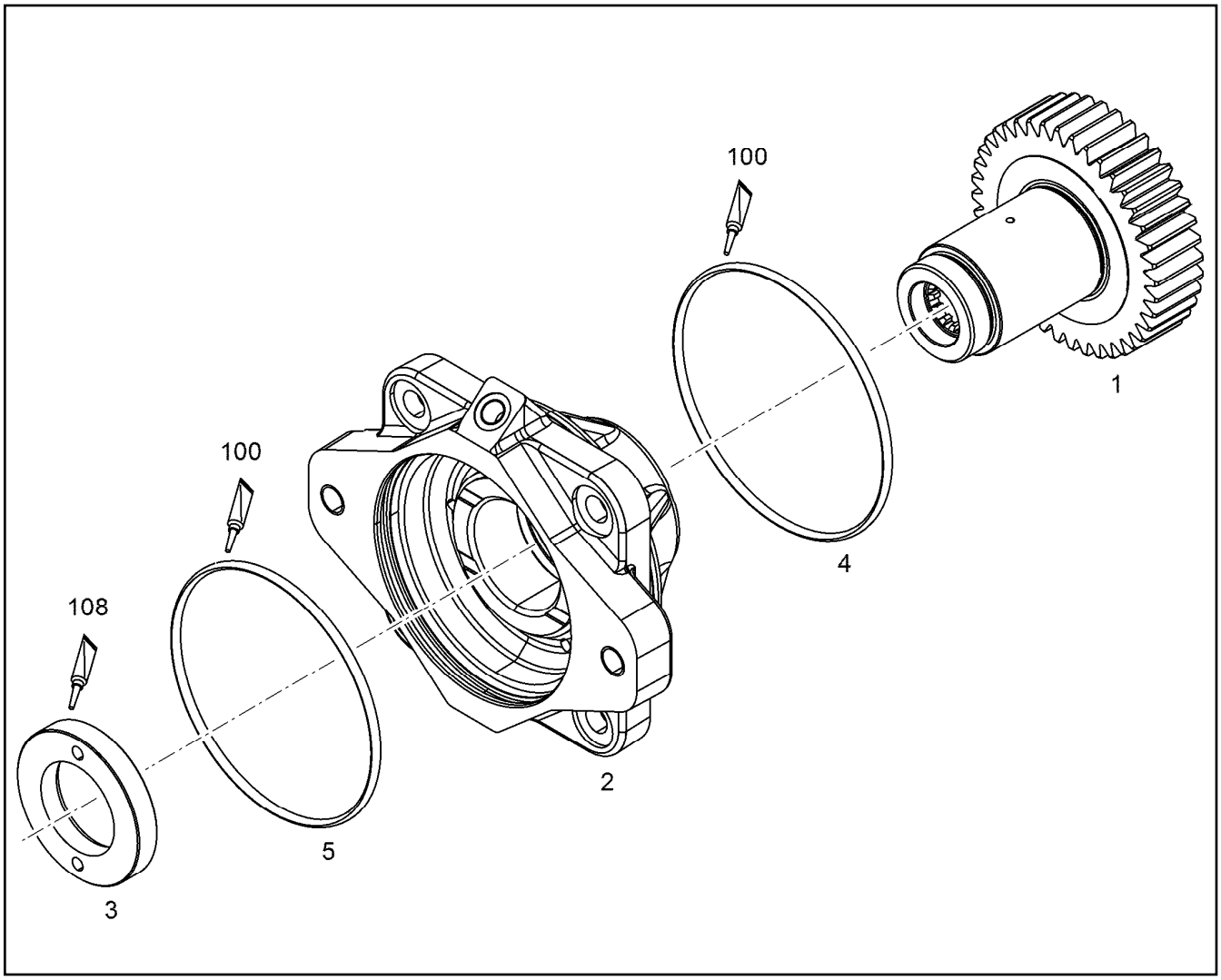

Pos.	Item	Quantity	Description	Designação	Serie	K
1	9077327	1	PUMP SHAFT Z=40 M=2,25	EIXO DA BOMBA		
2		1	BEARING HOUSING, PRE-ASSEMBLED ⇨ ❑ 696	CARCACA DO MANCAL PRE-MO		
3	9077612	1	WEARING RING M 40X1,5	ANEL DE ENCOSTO		
4	7380520	1	O-RING DIN 3771 104,37X3,53	ANEL-O		
5	7380401	1	O-RING DIN 3771 101,20X3,53	ANEL-O		
100	10282622	1	GREASE STABURAGS NBU 30/0,010kg	GRAXA		
108	8622905	1	SEALANT	MATERIAL VEDANTE		

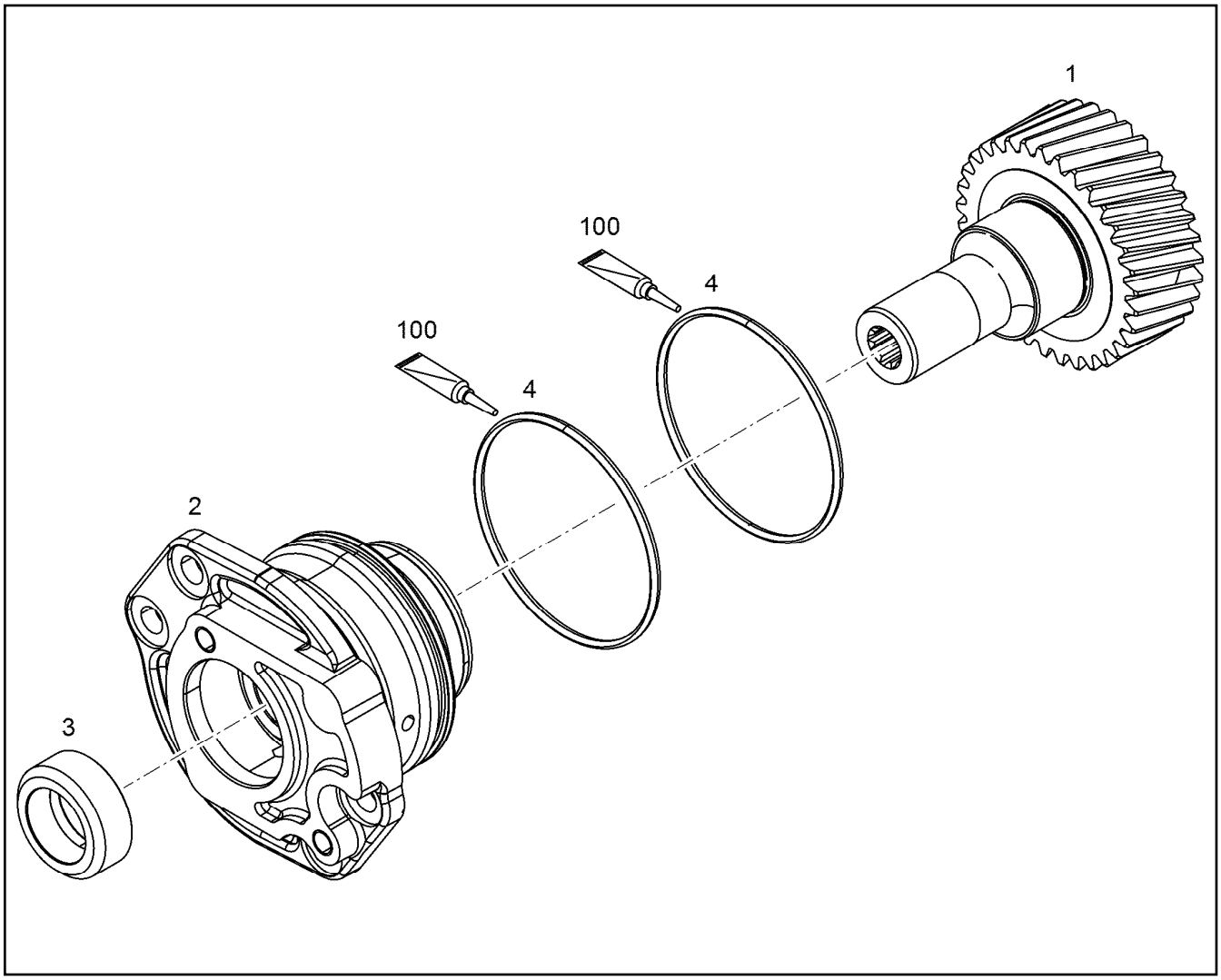

Pos.	Item	Quantity	Description	Designação	Serie	K
1	9077713	1	PUMP SHAFT Z=33 M=2,5	EIXO DA BOMBA		
2		1	BEARING HOUSING, PRE-ASSEMBLED ⇨ ❑ 697	CARCACA DO MANCAL PRE-MO		
3	9077714	1	LIMIT STOP	LIMITADOR		
4	7381361	2	O-RING ISO 3601-1 85,32X3,53	ANEL-O		
100	10282622	1	GREASE STABURAGS NBU 30/0,010kg	GRAXA		

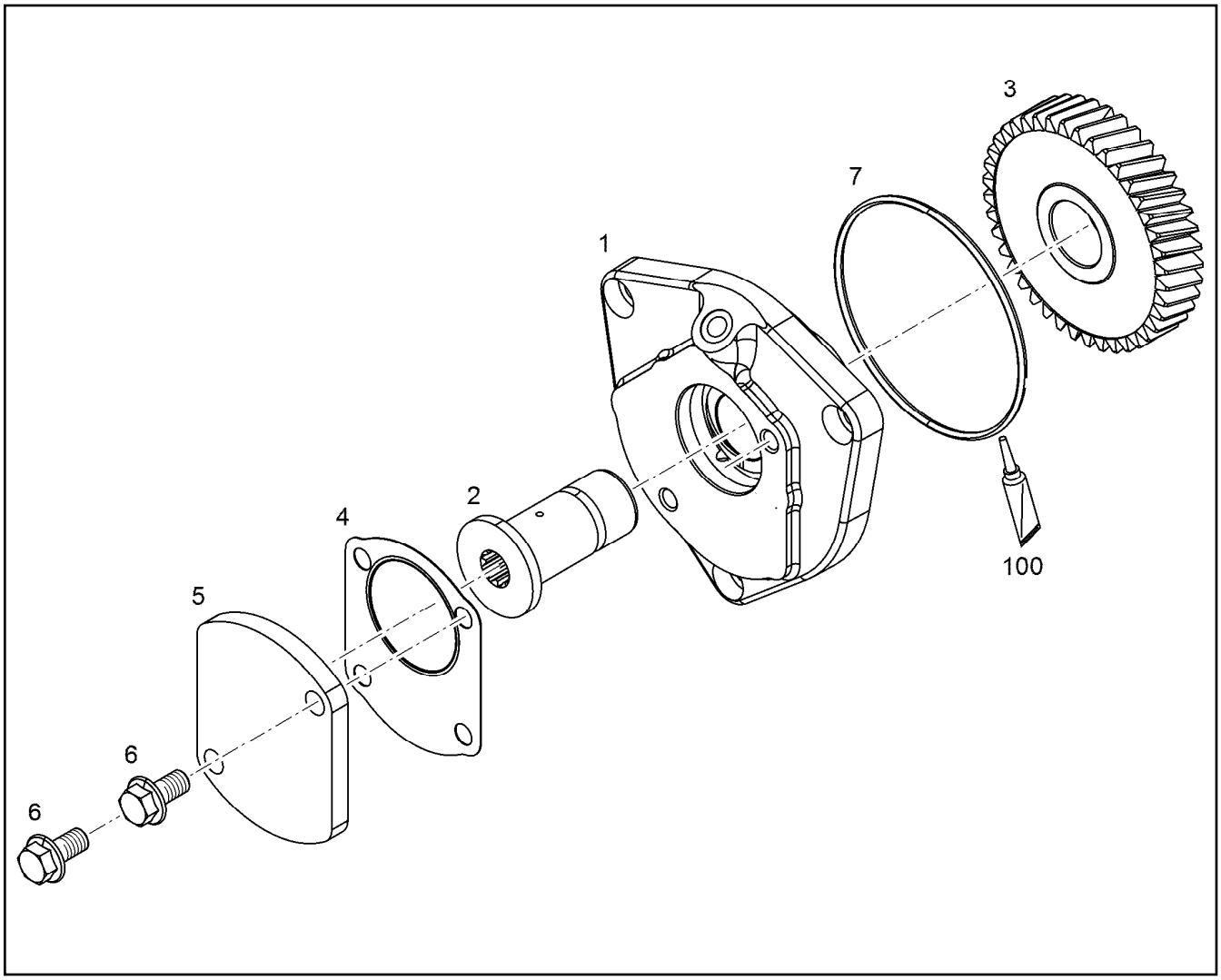

Pos.	Item	Quantity	Description	Designação	Serie	K
1		1	BEARING HOUSING, PRE-ASSEMBLED	CARCACA DO MANCAL PRE-MO		
2		1	PUMP SHAFT	EIXO DA BOMBA		
3		1	GEAR WHEEL	ENGRENAGEM		
4	9885529	1	SEAL	VEDAÇÃO		
5	9178294	1	COVER	TAMPA		
6	10030518	2	HEX SCREW DIN 6921 M10X20 8.8 A3C	PARAFUSO SEXTAVADO		
7	7382158	1	O-RING DIN 3771 101,20X3,53	ANEL-O		
100	10282622	1	GREASE STABURAGS NBU 30/0,010kg	GRAXA		

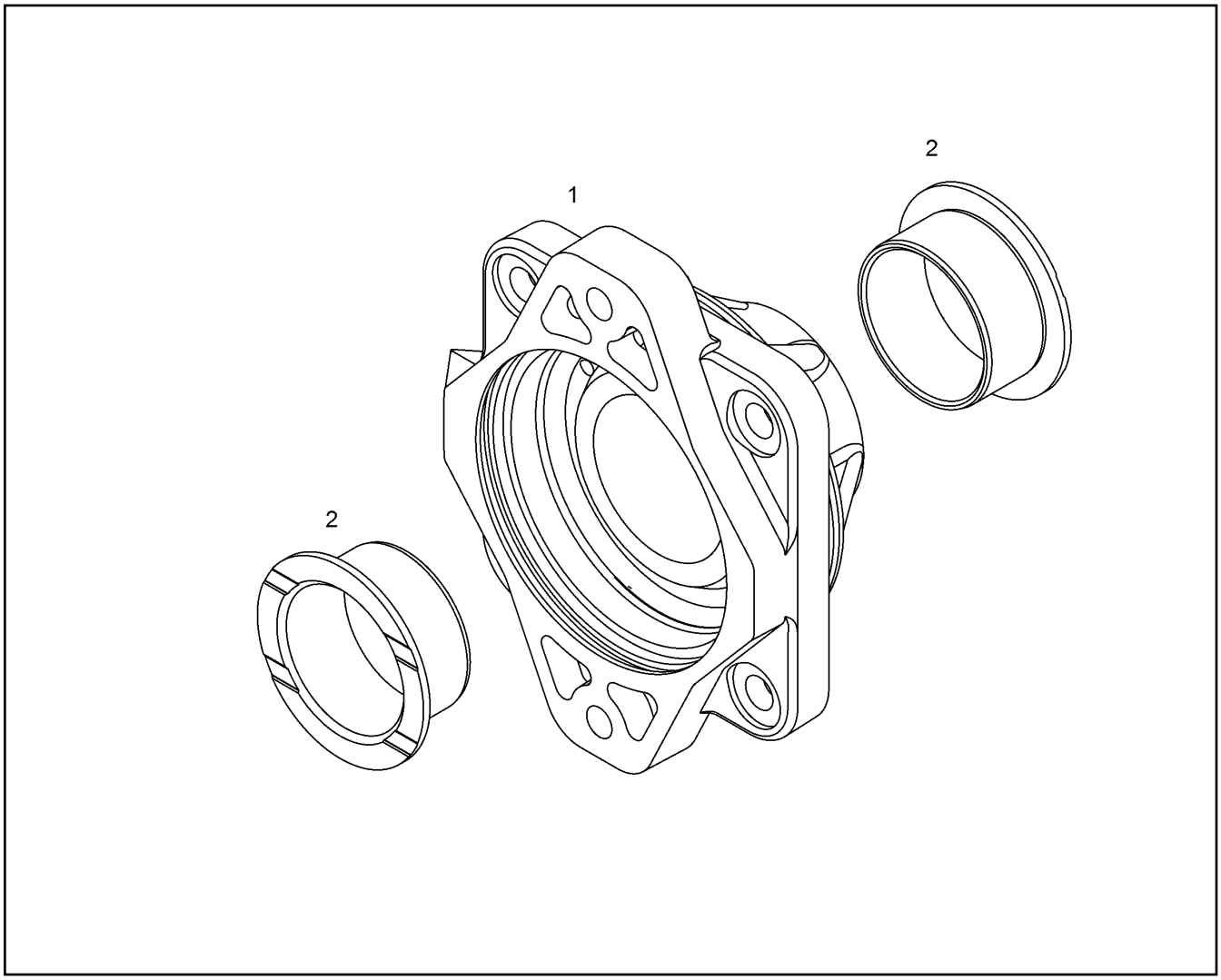

Pos.	Item	Quantity	Description	Designação	Serie	K
1		1	BEARING HOUSING	CARCAÇA DO MANCAL		
2	9888448	2	FLANGE SLEEVE 45/50X25	BUCHA COM FLANGE		

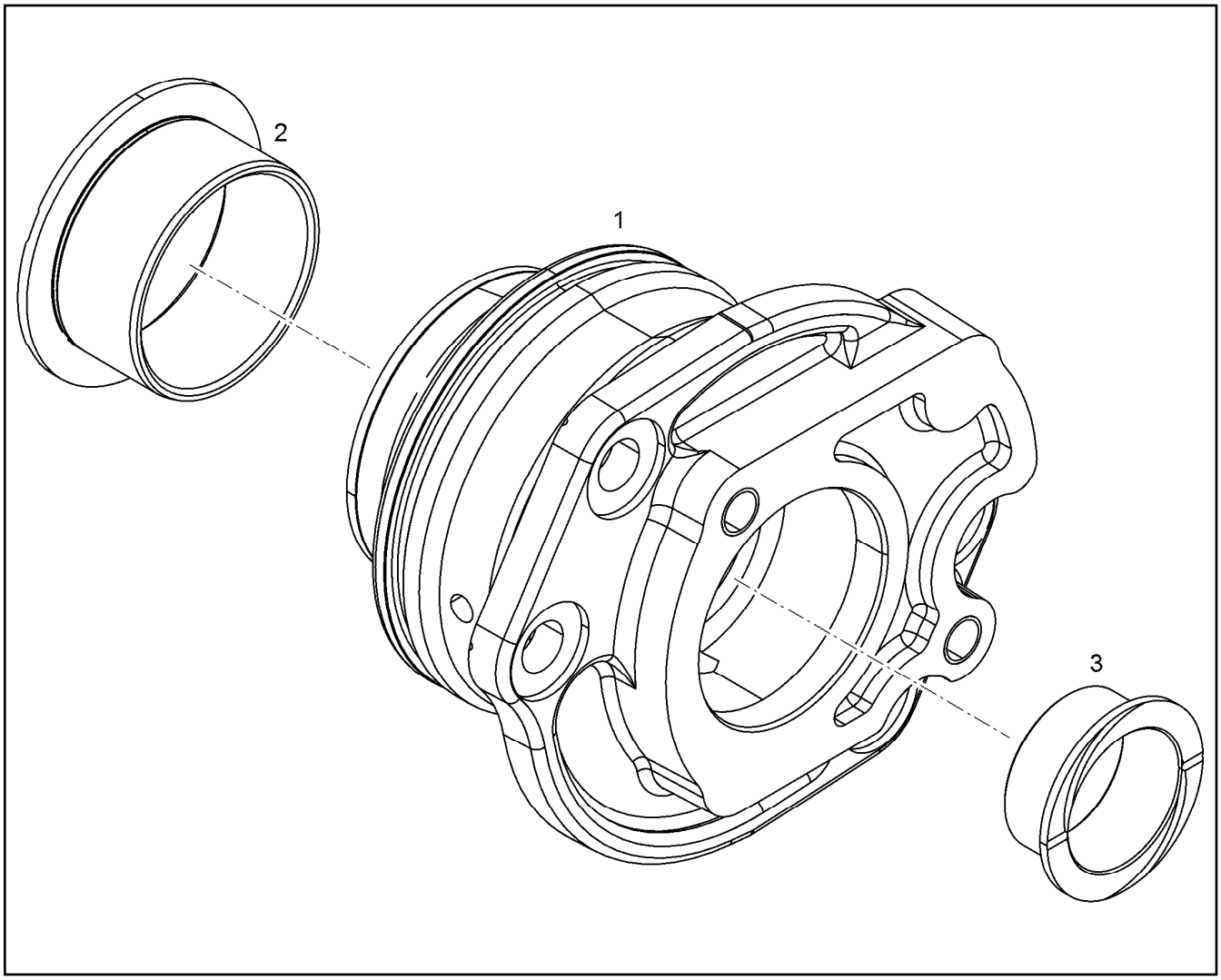

Pos.	Item	Quantity	Description	Designação	Serie	K
1		1	BEARING HOUSING	CARCAÇA DO MANCAL		
2	9888448	1	FLANGE SLEEVE 45/50X25	BUCHA COM FLANGE		
3	9889290	1	PLAIN BEARING BUSHING 30/34X16	BUCHA DE MANCAL DESLIZANT		

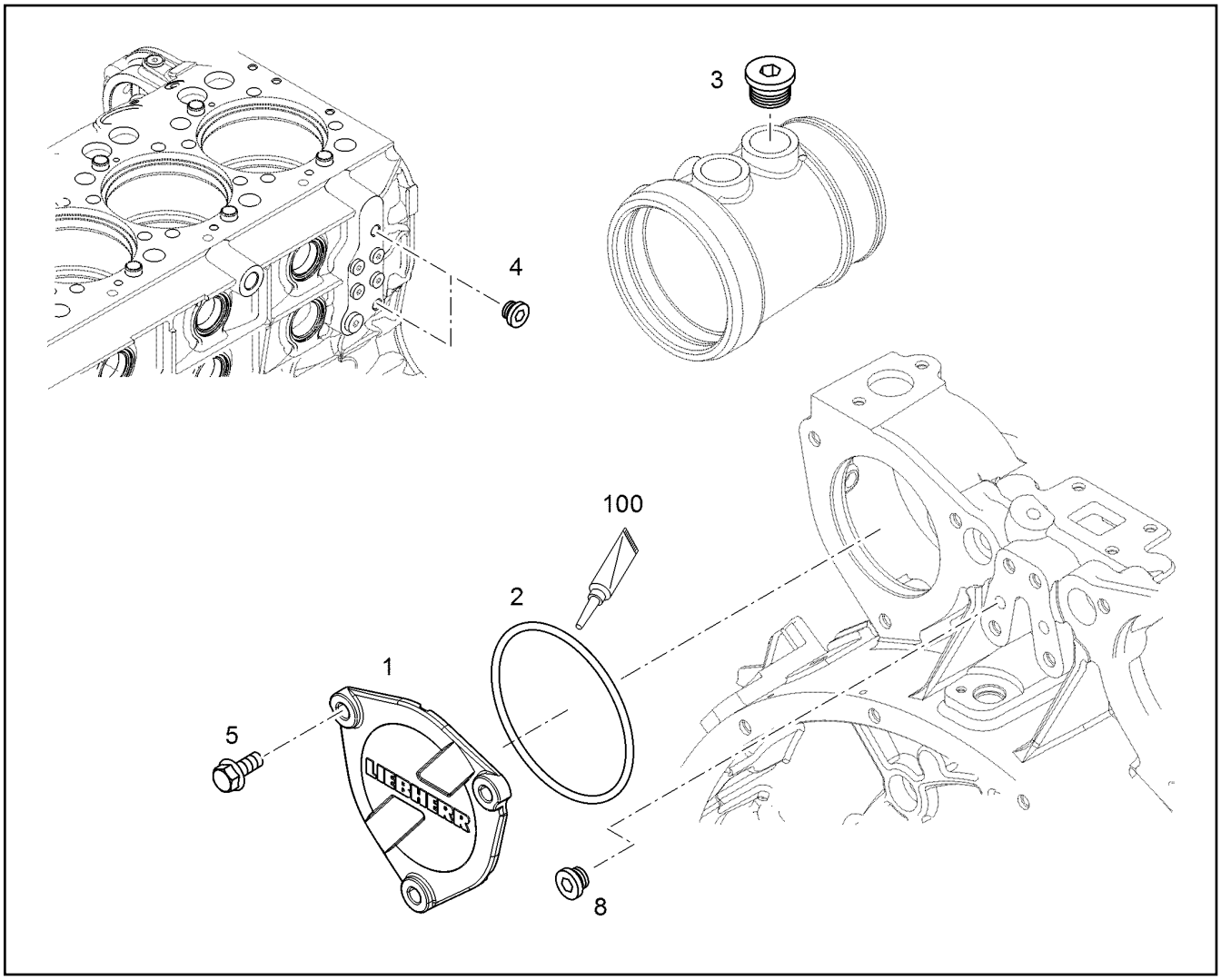

Pos.	Item	Quantity	Description	Designação	Serie	K
1	10122317	1	COVER	TAMPA		
2	7380657	1	O-RING ISO 3601-1 91,67X3,53	ANEL-O		
3	7381457	1	SCREW PLUG VSTI M26X1,5	PARAFUSO DE FECHAMENTO		
4		2	LOCKING PIECES	PEÇAS DE FECHAMENTO		
5	10336008	3	HEX SCREW DIN 6921 M10X25 8.8 A3C	PARAFUSO SEXTAVADO		
8	7381638	1	SCREW PLUG VSTI M10X1	PARAFUSO DE FECHAMENTO		
100	10282622	1	GREASE STABURAGS NBU 30/0,010kg	GRAXA		

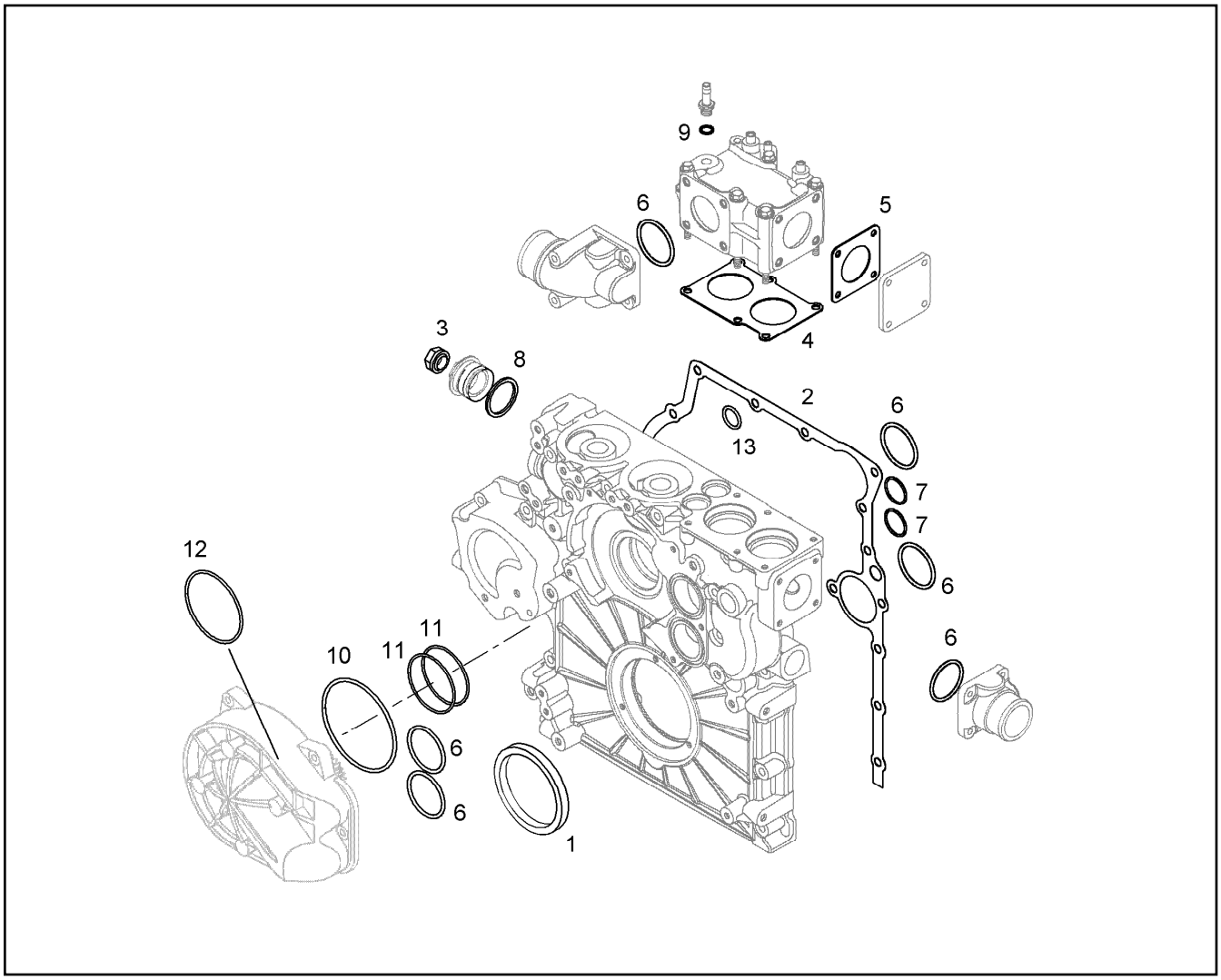

Pos.	Item	Quantity	Description	Designação	Serie	K
1	10121952	1	RK CRANKSHAFT SEAL 110 VORNE	KIT DE VEDAÇÃO DO VIRABREQ		
2	10118620	1	SEAL	VEDAÇÃO		
3	7381226	1	SEALING NUT M12	PORCA DE VEDACAO		
4	9080279	1	SEAL 2	VEDAÇÃO		
5	9080280	1	LOCKING PIECES ⇨ ❑ 661	PEÇAS DE FECHAMENTO		
6	7381779	7	O-RING DIN 3771 59,92X3,53	ANEL-O		
7	7380653	2	O-RING ISO 3601-1 34,59X2,62	ANEL-O		
8	7101021	4	SEALING RING DIN 7603 A 30X36X2	ANEL DE VEDAÇÃO		
9	10011866	2	SEALING RING 14,7X22X1,5	ANEL DE VEDAÇÃO		
10	7264365	1	O-RING DIN 3771 113,89X3,53	ANEL-O		
11	7381593	2	O-RING 68,26X3,53	ANEL-O		
12	12819435	1	O-RING 120,50X3,53	ANEL-O		
13	10004261	1	O-RING 26X3	ANEL-O		

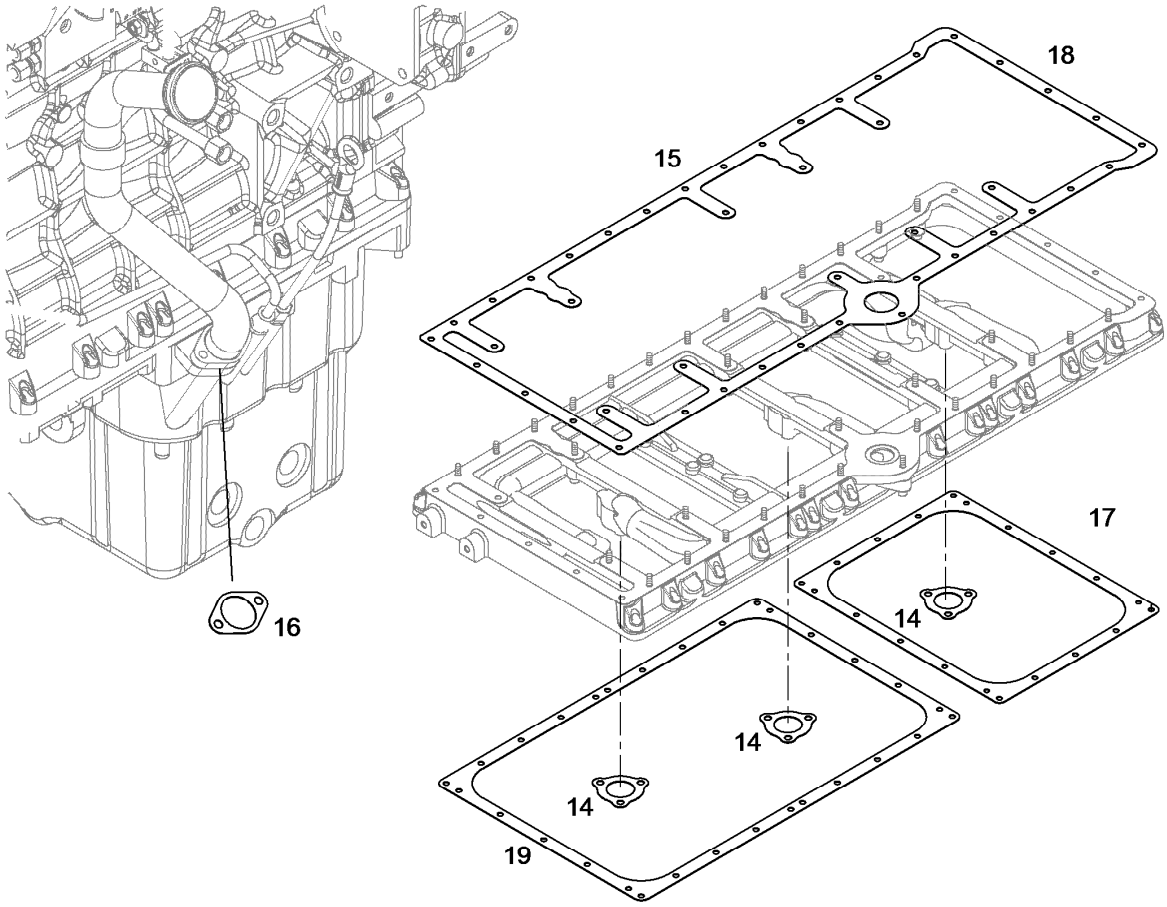

Pos.	Item	Quantity	Description	Designação	Serie	K
14	9079124	3	SEAL	VEDAÇÃO		
15	12582865	1	SEAL 1X10	VEDAÇÃO		
16	9275766	1	SEAL TD2	VEDAÇÃO		
17	10118551	3	SEAL	VEDAÇÃO		
18	12451554	1	SEAL 1	VEDAÇÃO		
19	10118550	1	SEAL	VEDAÇÃO		

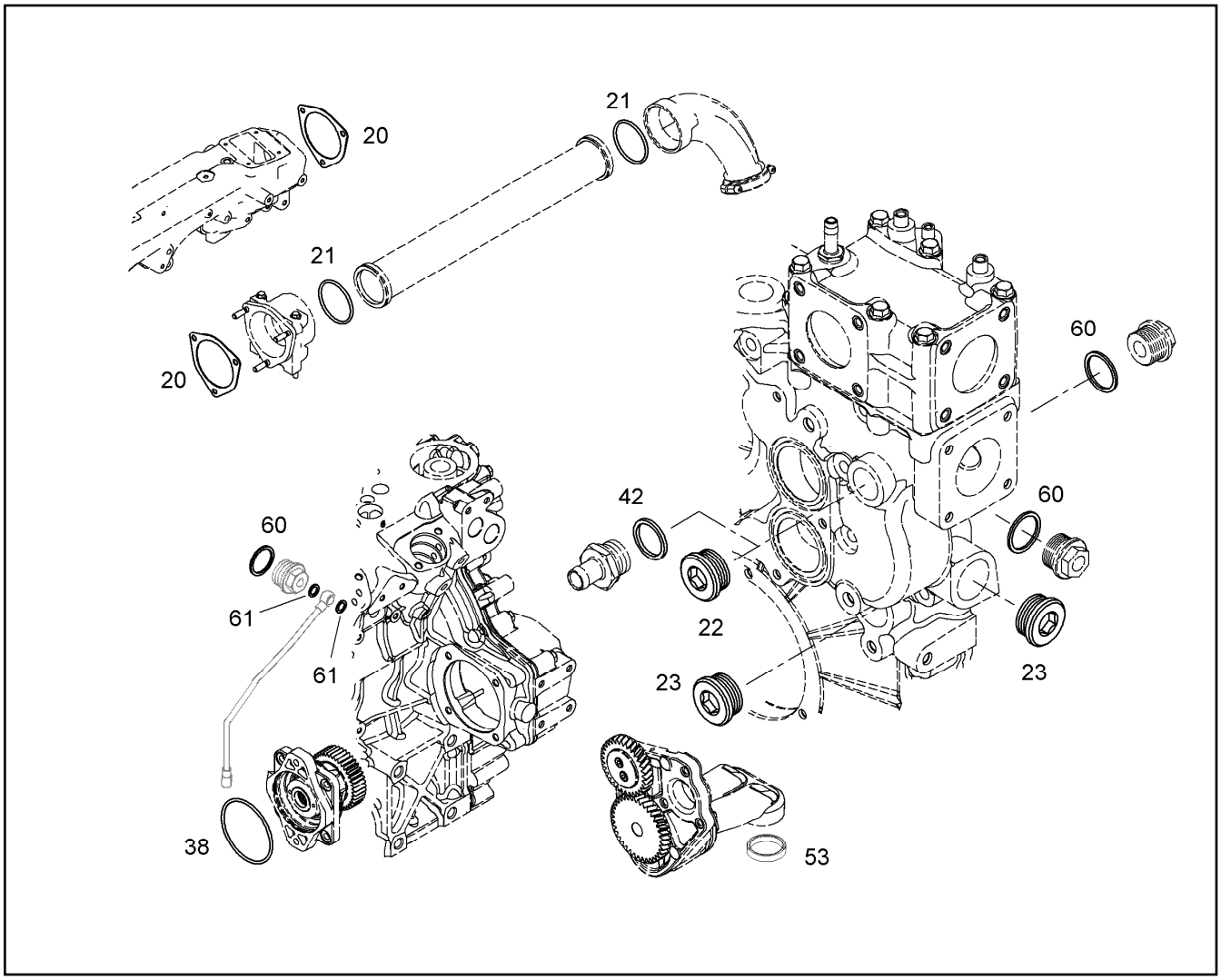

Pos.	Item	Quantity	Description	Designação	Serie	K
20	9271963	2	SEAL 1,5X128 98/141	VEDAÇÃO		
21	10022320	2	O-RING 80X5,0	ANEL-O		
22	7382204	2	SCREW PLUG M30X1,5 ED-FPM	PARAFUSO DE FECHAMENTO		
23	7382202	2	SCREW PLUG VSTI M38X1,5	PARAFUSO DE FECHAMENTO		
38	7380520	1	O-RING DIN 3771 104,37X3,53	ANEL-O		
42	10113731	2	SEALING RING 30,7X39X2	ANEL DE VEDAÇÃO		
53	9079608	2	SEAL	VEDAÇÃO		
60	7101021	3	SEALING RING DIN 7603 A 30X36X2	ANEL DE VEDAÇÃO		
61	7007952	2	SEALING RING DIN 7603 A 10X15X1	ANEL DE VEDAÇÃO		

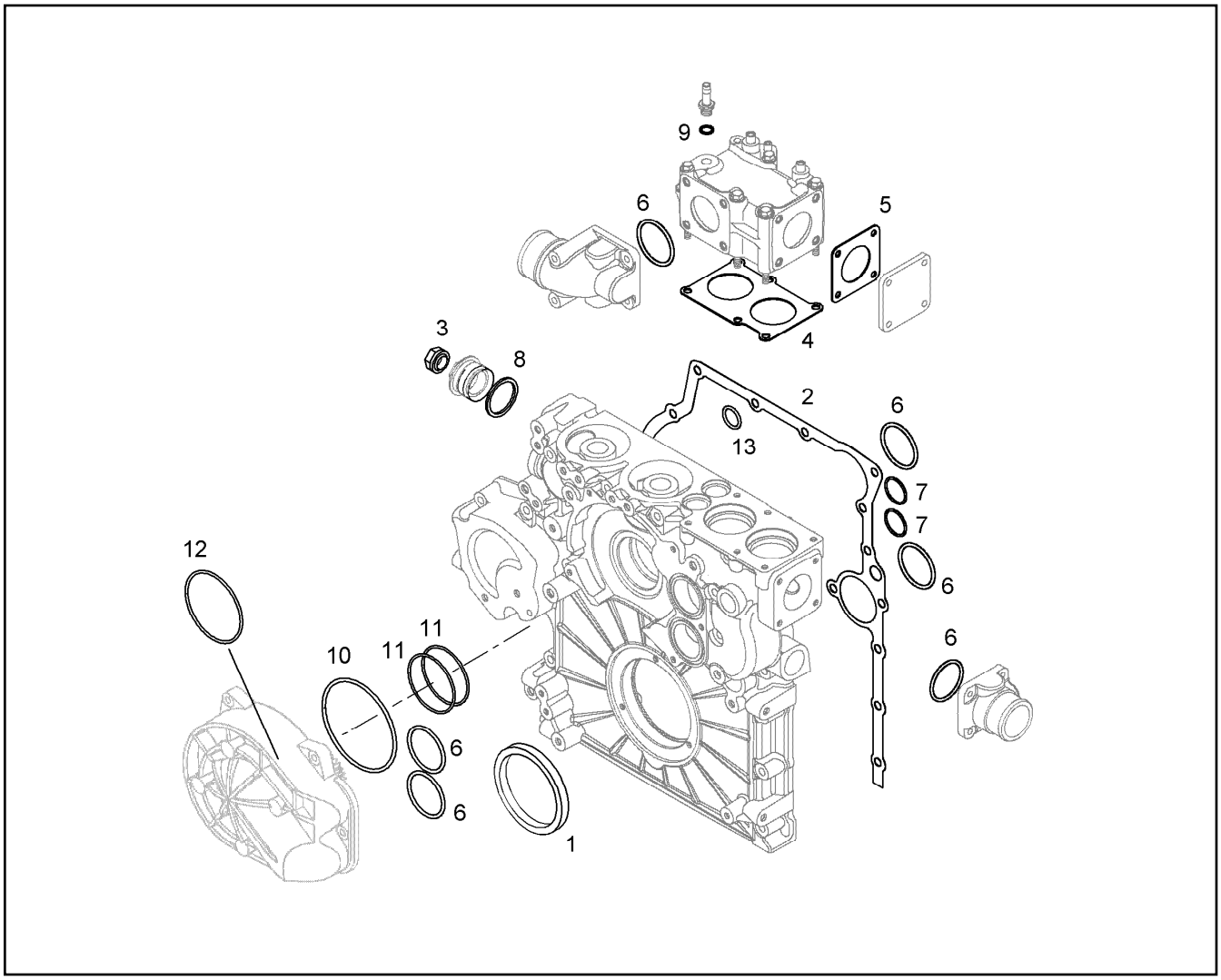

Pos.	Item	Quantity	Description	Designação	Serie	K
1	10121952	1	RK CRANKSHAFT SEAL 110 VORNE	KIT DE VEDAÇÃO DO VIRABREQ		
2	10126738	1	SEAL 0,33	VEDAÇÃO		
3	7381226	1	SEALING NUT M12	PORCA DE VEDACAO		
4	9080279	1	SEAL 2	VEDAÇÃO		
5		2	LOCKING PIECES ⇨ ❑ 661	PEÇAS DE FECHAMENTO		
6	7381779	6	O-RING DIN 3771 59,92X3,53	ANEL-O		
7	7380653	2	O-RING ISO 3601-1 34,59X2,62	ANEL-O		
8	7101021	1	SEALING RING DIN 7603 A 30X36X2	ANEL DE VEDAÇÃO		
9	7101008	2	SEALING RING DIN 7603 A 14X18	ANEL DE VEDAÇÃO		
10	7264365	1	O-RING DIN 3771 113,89X3,53	ANEL-O		
11	7381593	2	O-RING 68,26X3,53	ANEL-O		
12	12819435	1	O-RING 120,50X3,53	ANEL-O		
13	10004261	1	O-RING 26X3	ANEL-O		

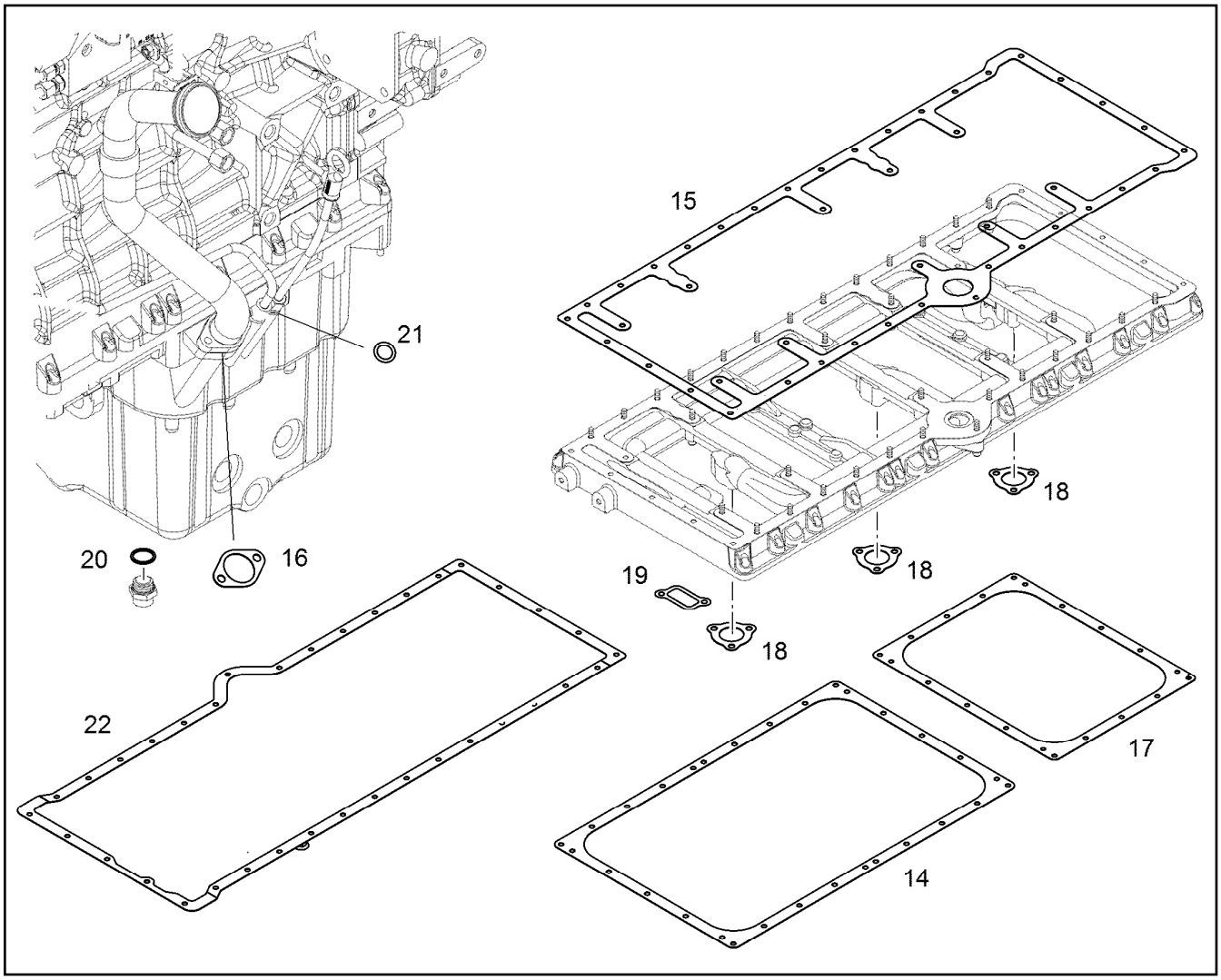

Pos.	Item	Quantity	Description	Designação	Serie	K
14	10126304	1	SEAL	VEDAÇÃO		
15	12582865	1	SEAL 1X10	VEDAÇÃO		
16	9275766	3	SEAL TD2	VEDAÇÃO		
17	10123735	3	SEAL	VEDAÇÃO		
18	9079124	3	SEAL	VEDAÇÃO		
19	9079125	1	SEAL	VEDAÇÃO		
20	7101021	1	SEALING RING DIN 7603 A 30X36X2	ANEL DE VEDAÇÃO		
21	7101008	2	SEALING RING DIN 7603 A 14X18	ANEL DE VEDAÇÃO		
22	10126427	1	SEAL	VEDAÇÃO		

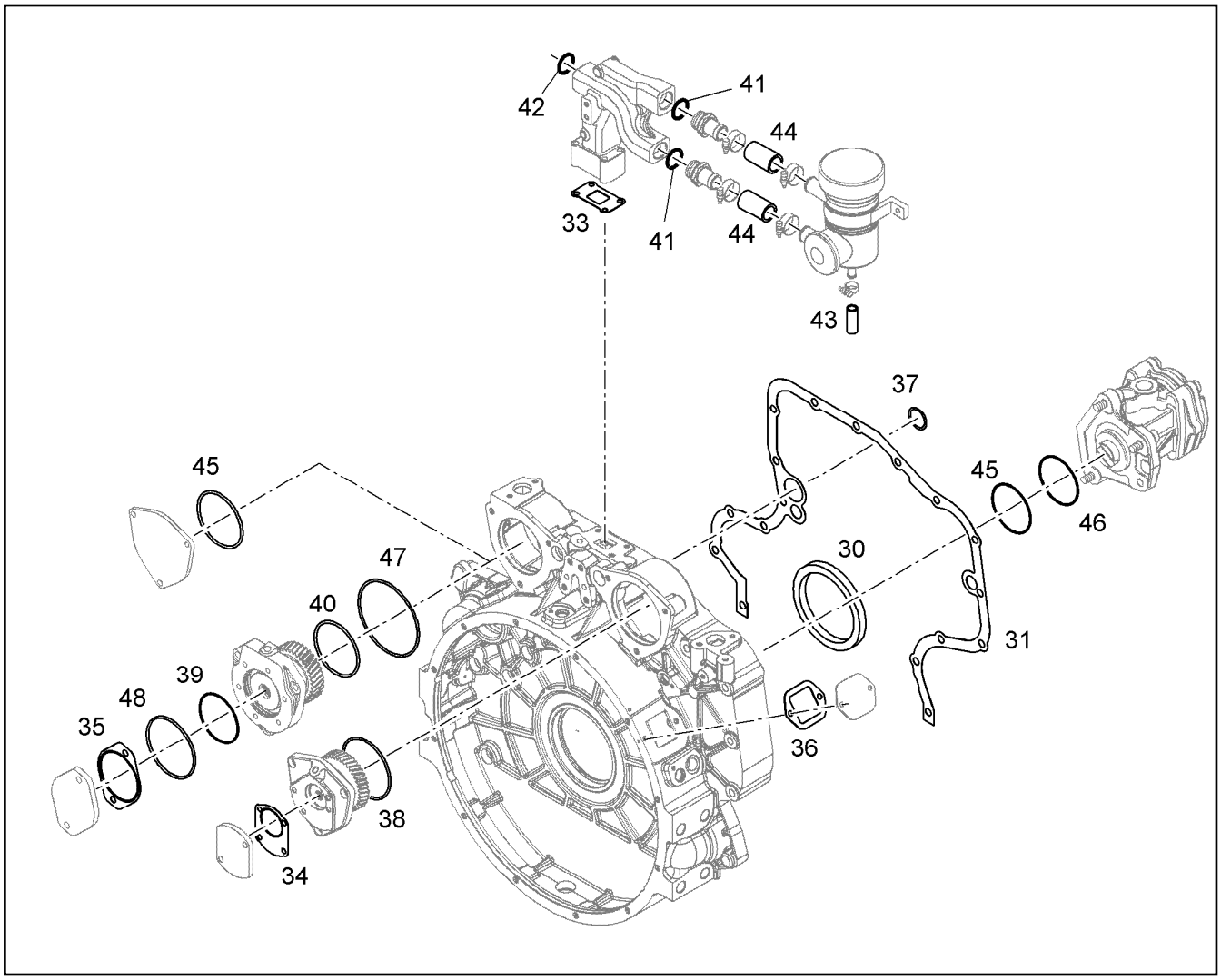

Pos.	Item	Quantity	Description	Designação	Serie	K
30	10121335	1	RK CRANKSHAFT SEAL 115 HINTEN	KIT DE VEDAÇÃO DO VIRABREQ		
31	10137721	1	SEAL 0,33	VEDAÇÃO		
33	9079130	1	SEAL 1	VEDAÇÃO		
34	9885529	1	SEAL	VEDAÇÃO		
35	9077329	3	SEAL	VEDAÇÃO		
36	9274974	1	SEAL	VEDAÇÃO		
37	7380653	1	O-RING ISO 3601-1 34,59X2,62	ANEL-O		
38	7380520	1	O-RING DIN 3771 104,37X3,53	ANEL-O		
39	7380598	1	O-RING ISO 3601-1 82,22X2,62	ANEL-O		
40	7380657	1	O-RING ISO 3601-1 91,67X3,53	ANEL-O		
41	7101021	2	SEALING RING DIN 7603 A 30X36X2	ANEL DE VEDAÇÃO		
42	10113731	2	SEALING RING 30,7X39X2	ANEL DE VEDAÇÃO		
43	9079603	1	RUBBER CONNECTION 12 X 18 X 45	LUVA DE BORRACHA		
44	9271340	2	RUBBER CONNECTION 25 X35/33X56 L.	LUVA DE BORRACHA		
45	9177948	2	O-RING DIN 3771 120X3	ANEL-O		
46	10040400	1	O-RING	ANEL-O		
47	10002310	1	O-RING 125X2	ANEL-O		
48	7380401	1	O-RING DIN 3771 101,20X3,53	ANEL-O		

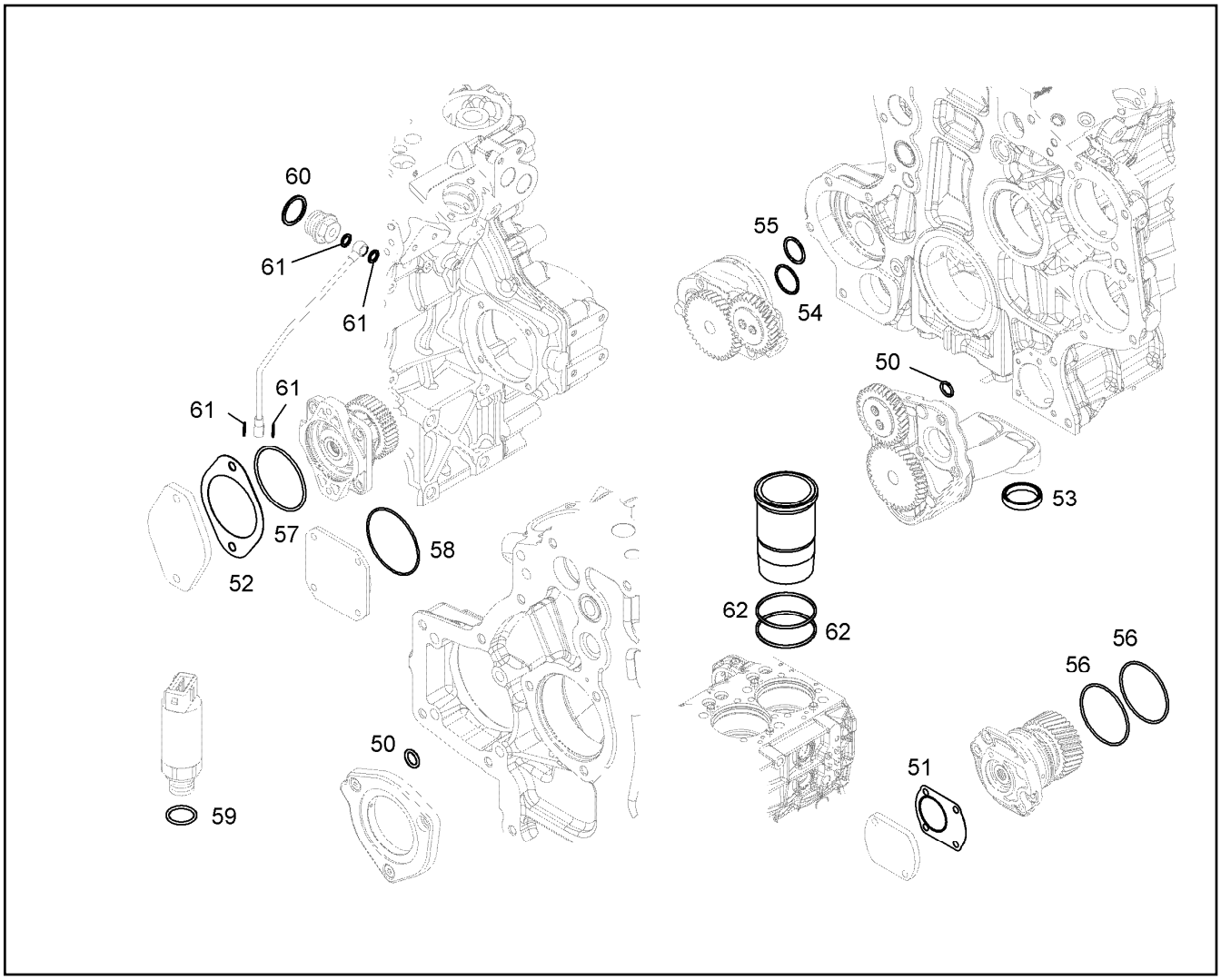

Pos.	Item	Quantity	Description	Designação	Serie	K
50	7381685	2	O-RING DIN 3771 7,00X1,5	ANEL-O		
51	9885529	2	SEAL	VEDAÇÃO		
52	9273691	1	SEAL	VEDAÇÃO		
53	9079608	2	SEAL	VEDAÇÃO		
54	7381812	1	O-RING ISO 3601-1 39,34X2,62	ANEL-O		
55	7382059	1	O-RING ISO 3601-1 34,59X2,62	ANEL-O		
56	7381361	6	O-RING ISO 3601-1 85,32X3,53	ANEL-O		
57	7380520	2	O-RING DIN 3771 104,37X3,53	ANEL-O		
58	7382158	3	O-RING DIN 3771 101,20X3,53	ANEL-O		
59	10113975	1	O-RING 15,50X2,00	ANEL-O		
60	7101021	2	SEALING RING DIN 7603 A 30X36X2	ANEL DE VEDAÇÃO		
61	7007952	2	SEALING RING DIN 7603 A 10X15X1	ANEL DE VEDAÇÃO		
62	10006499	12	O-RING 140	ANEL-O		

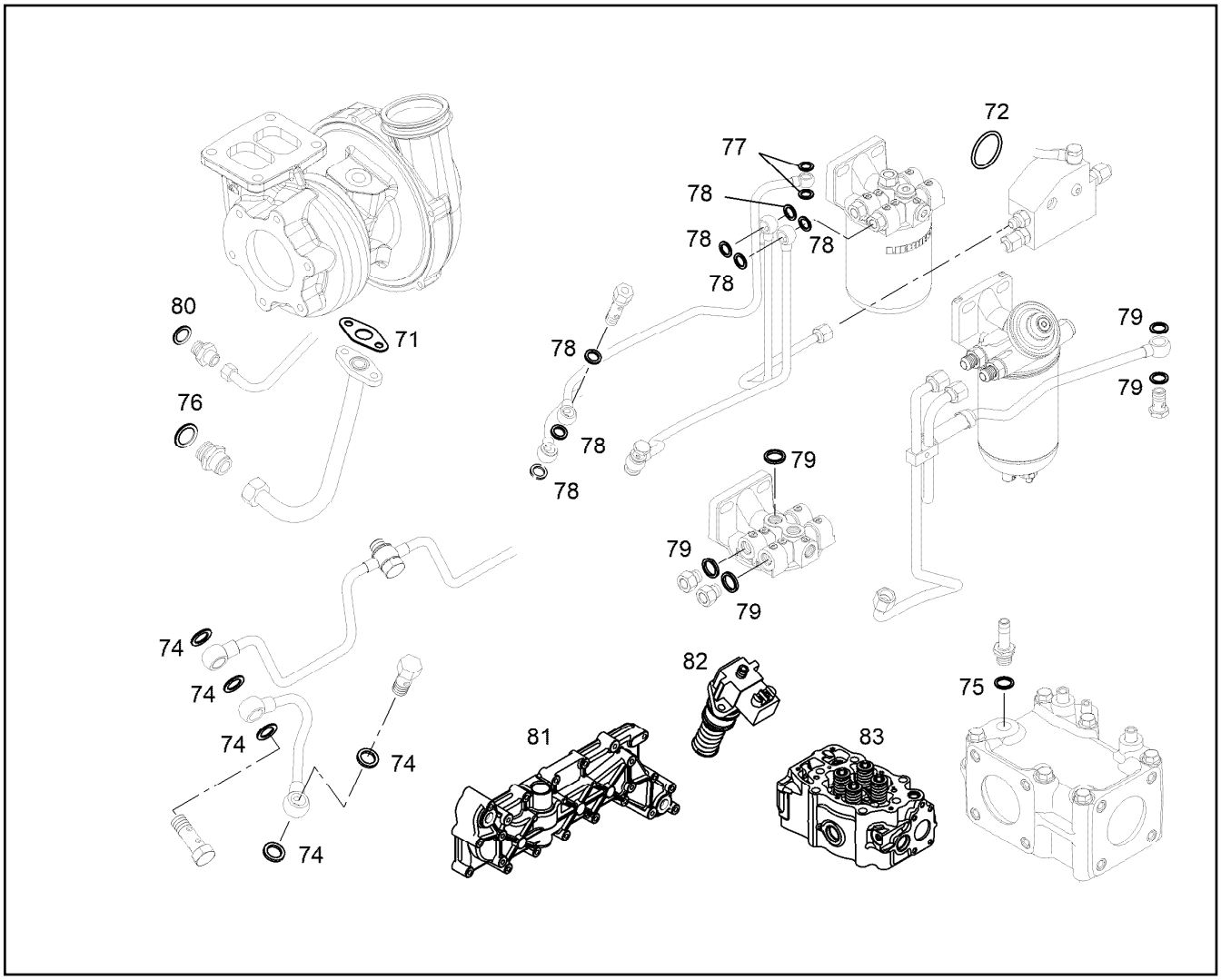

Pos.	Item	Quantity	Description	Designação	Serie	K
71	9268131	1	SEAL 1,5	VEDAÇÃO		
72	7381415	1	O-RING ISO 3601-1 21,95X1,78	ANEL-O		
74	7007952	5	SEALING RING DIN 7603 A 10X15X1	ANEL DE VEDAÇÃO		
75	10011866	1	SEALING RING 14,7X22X1,5	ANEL DE VEDAÇÃO		
76	10011870	5	SEALING RING 26,7X34,93X2	ANEL DE VEDAÇÃO		
77	10011865	4	SEALING RING 12,7X18X1,5	ANEL DE VEDAÇÃO		
78	10011866	26	SEALING RING 14,7X22X1,5	ANEL DE VEDAÇÃO		
79	10011867	5	SEALING RING 16,7X24X1,5	ANEL DE VEDAÇÃO		
80	10011867	7	SEALING RING 16,7X24X1,5	ANEL DE VEDAÇÃO		
81		1	SEALING SET OIL COOLER D936 ⇨ ❑ 615	KIT DE VEDAÇÃO		
82		6	SEAL KIT INJECTION PUMP UP20 ⇨ ❑ 623	KIT VEDACAO DA BOMBA INJET		
83		1	SEAL KIT ZYLINDER HEAD CPL. ⇨ ❑ 608	KIT DE VEDAÇÃO CABEÇOTE CO		

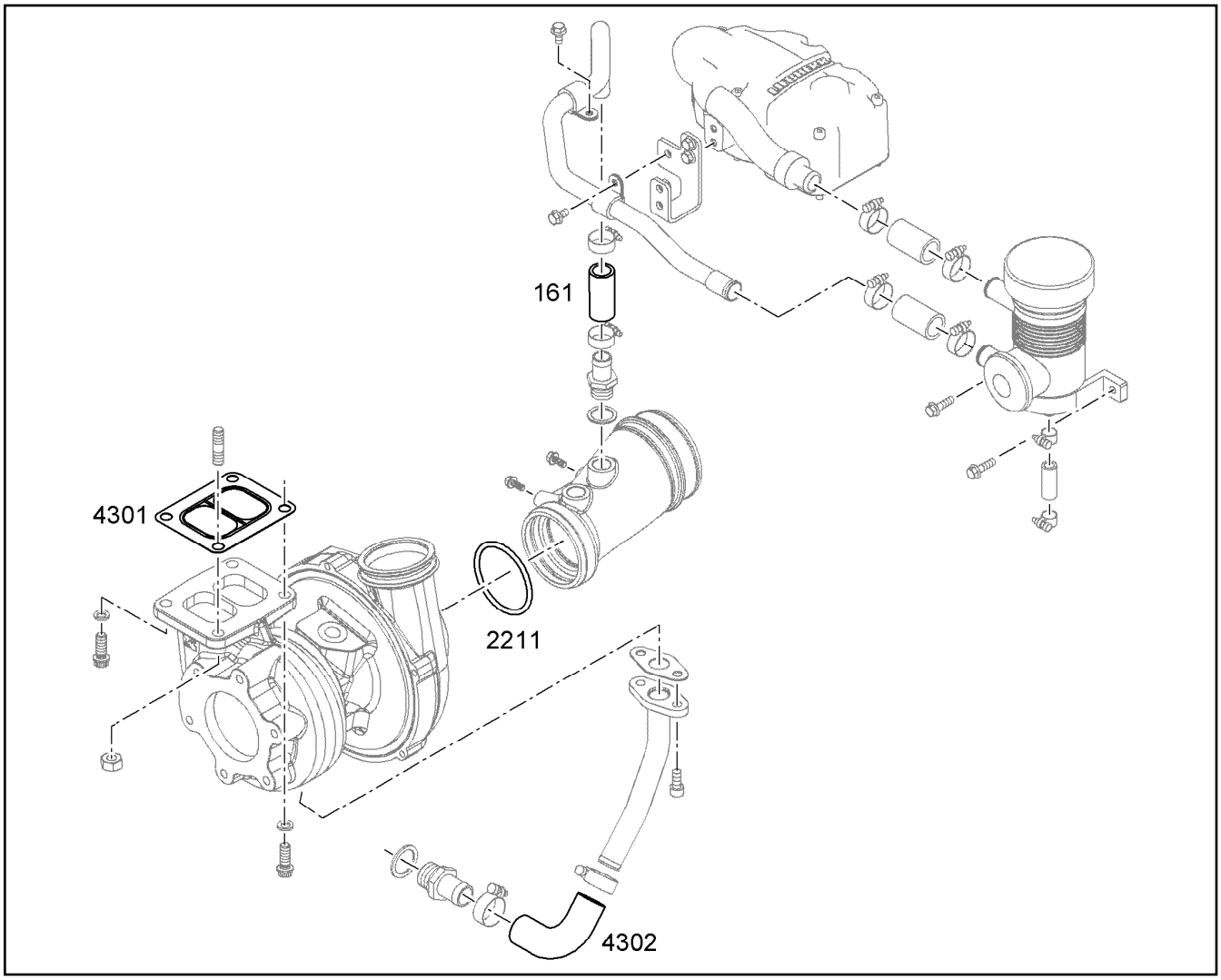

Pos.	Item	Quantity	Description	Designação	Serie	K
161	9273161	1	RUBBER CONNECTION 22X30X65L.	LUVA DE BORRACHA		
2211	11008055	1	O-RING 100X5	ANEL-O		
4301	9270109	1	SEAL	VEDAÇÃO		
4302	10116310	1	RUBBER CONNECTION	LUVA DE BORRACHA		

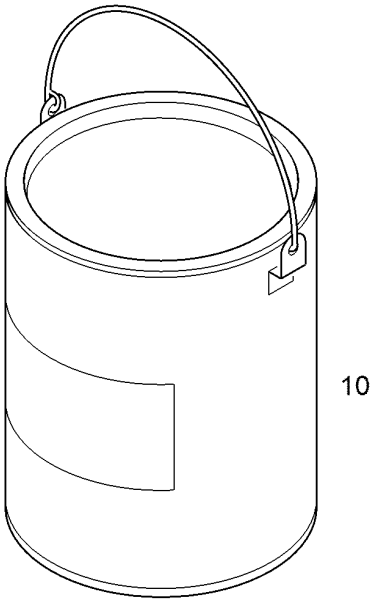

Pos.	Item	Quantity	Description	Designação	Serie	K
10	10282622	1	GREASE STABURAGS NBU 30/0,010kg	GRAXA		

OHNE BILD

WITHOUT ILLUSTRATION

SANS PLANCHE

Pos.	Item	Quantity	Description	Designação	Serie	K
90		1	ELECTRICAL CIRCUIT DIAGRAM D936 A6	ESQUEMA ELETRICO		

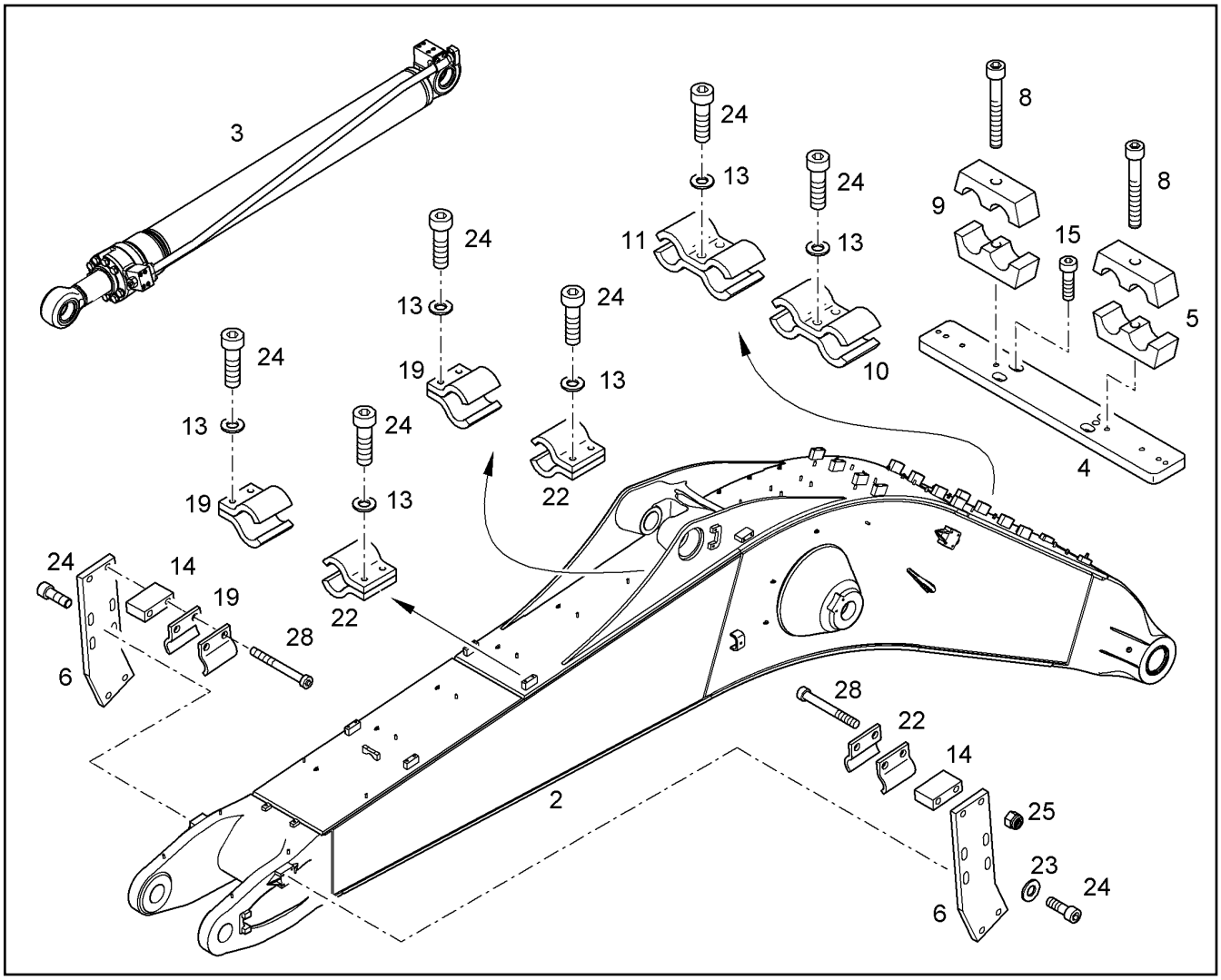

Pos.	Item	Quantity	Description	Designação	Serie	K
2	11102944	1	GOOSENECK BOOM 6.45M [MOA004026] ⇨ ❑ 718	LANÇA MONOBLOCO		
3		1	HYDR.CYLINDER W/ADDITION.PARTS ⇨ ❑ 759	CILINDRO HIDR. COM ACESSÓR		
4	11460484	1	SHEET	PLACA DE APOIO		
5	9877726	2	HALF CLAMP COLLAR	MEIA ABRAÇADEIRA		
6	10061628	2	SHEET	PLACA DE APOIO		
8	11321142	2	SOCKET HEAD SCREW ISO 4762 M12X85 10	PARAFUSO CILÍNDRICO		
9	10061872	2	HALF CLAMP COLLAR LH 380-LH 10217649	MEIA ABRAÇADEIRA		
10	7373978	4	HALF FLANGE d=30-38	MEIO FLANGE		
11	9927398	4	HALF CLAMP COLLAR	MEIA ABRAÇADEIRA		
13	10289804	22	WASHER 12 300HV	ARRUELA		
14	10358253	2	INTERMEDIATE PART	PEÇA INTEMEDIÁRIA		
15	11321126	4	SOCKET HEAD SCREW ISO 4762 M12X30 10	PARAFUSO CILÍNDRICO		
19	7373875	6	HALF FLANGE d=38--	MEIO FLANGE		
22	7373874	6	HALF FLANGE d=30--	MEIO FLANGE		
23	10179356	8	WASHER 13	ARRUELA		
24	11002748	24	SOCKET HEAD SCREW ISO 4762 M12X35 10	PARAFUSO CILÍNDRICO		
25	10876514	4	HEX NUT M12	PORCA SEXTAVADA		
28	11321144	4	SOCKET HEAD SCREW ISO 4762 M12X100	PARAFUSO CILÍNDRICO		

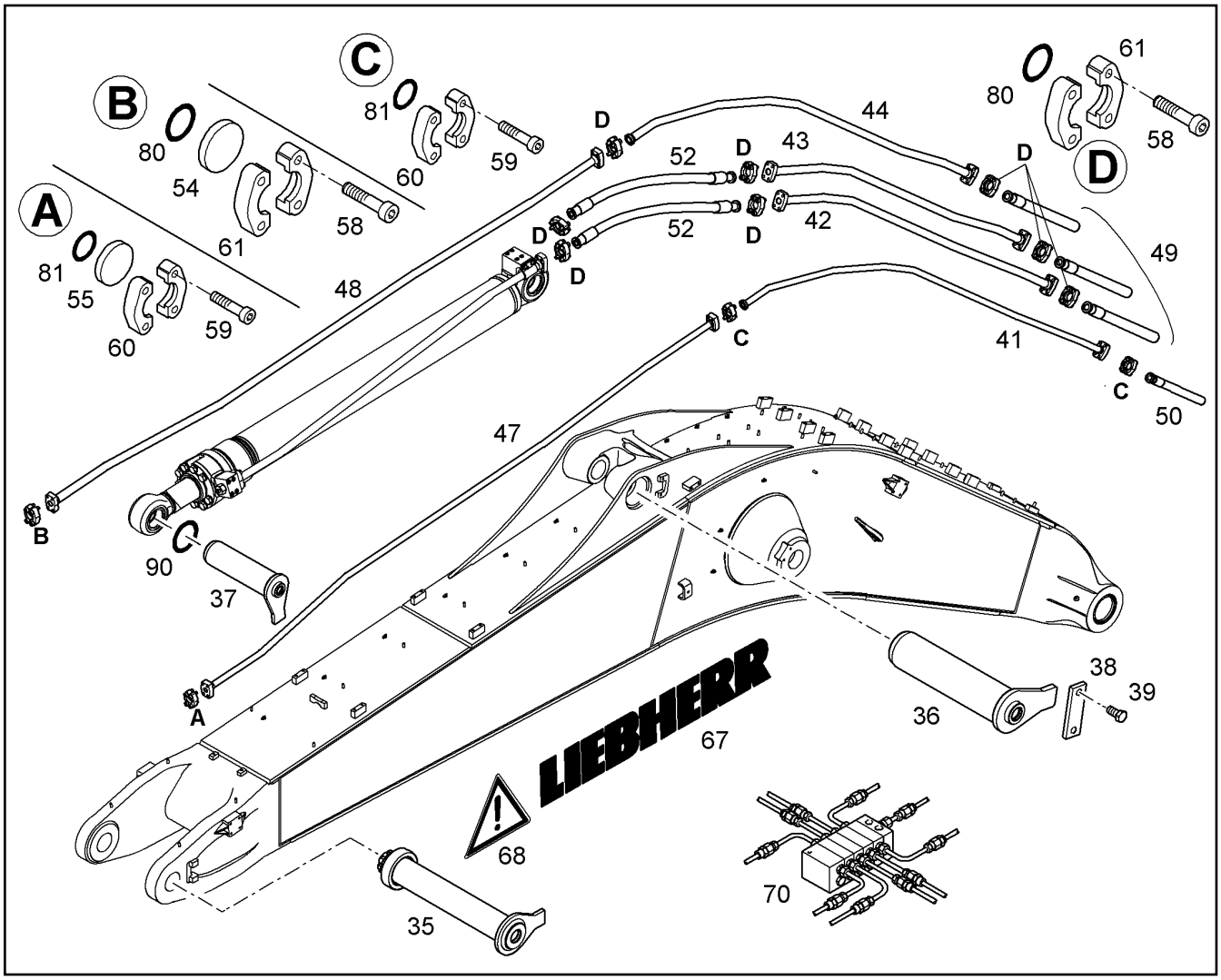

Pos.	Item	Quantity	Description	Designação	Serie	K
35	921594916	1	PIN CPL ⇨ ❑ 747	PINO COMPLETO		1
36	9486090	1	PIN CPL 100X430X380	PINO COMPLETO		1
37	9354695	1	PIN CPL 100X380X330	PINO COMPLETO		1
38	9830148	1	SHEET	PLACA DE APOIO		
39	10800024	2	HEX SCREW ISO 4017 M12X25 10.9 FLZN	PARAFUSO SEXTAVADO		
41	10061574	1	PRESSURE LINE CPL	TUBULAÇÃO DE PRESSÃO COM	44265-	
42	10061575	1	PRESSURE LINE CPL	TUBULAÇÃO DE PRESSÃO COM		
43	10061576	1	PRESSURE LINE CPL	TUBULAÇÃO DE PRESSÃO COM		
44	10061577	1	PRESSURE LINE CPL	TUBULAÇÃO DE PRESSÃO COM	44265-	
47	10061580	1	PRESSURE LINE CPL	TUBULAÇÃO DE PRESSÃO COM	44265-	
48	10061581	1	PRESSURE LINE CPL	TUBULAÇÃO DE PRESSÃO COM	44265-	
49	10286434	3	HOSE 32X1500	MANGUEIRA		1
50	10286515	1	HOSE 25X1560	MANGUEIRA		1
52	5601076	2	HOSE 32X1280	MANGUEIRA		1
54	9429965	1	SHUTTER DISK	DISCO DE FECHAMENTO		
55	9429964	1	SAE BLIND FLANGE	FLANGE CEGO		
58	4902327	36	SOCKET HEAD SCREW ISO 4762 M14X45 10	PARAFUSO CILÍNDRICO		
59	11002749	12	SOCKET HEAD SCREW ISO 4762 M12X40 10	PARAFUSO CILÍNDRICO		
60	11485638	6	FLANGE HALF WITH BOSSING SAE J518 S	MEIO FLANGE COM RELEVO		
61	11485639	18	FLANGE HALF WITH BOSSING SAE J518 SA	MEIO FLANGE COM RELEVO		
67	9874049	2	STICKER LIEBHERR 1602mmX214mm	ETIQUETA ADESIVA		
68	9910464	2	DANGER SIGN DANGER SPOT 200mmX17	PLAQUETA DE ADVERTENCIA		
70		1	CENTRAL LUBRICATING SYSTEM ⇨ ❑ 721	LUBRIFICAÇÃO CENTRALIZADA		
80	10472425	9	RECTANGULAR SECTION RING 45,05X2,80	ANEL DE SEÇÃO RETANGULAR		

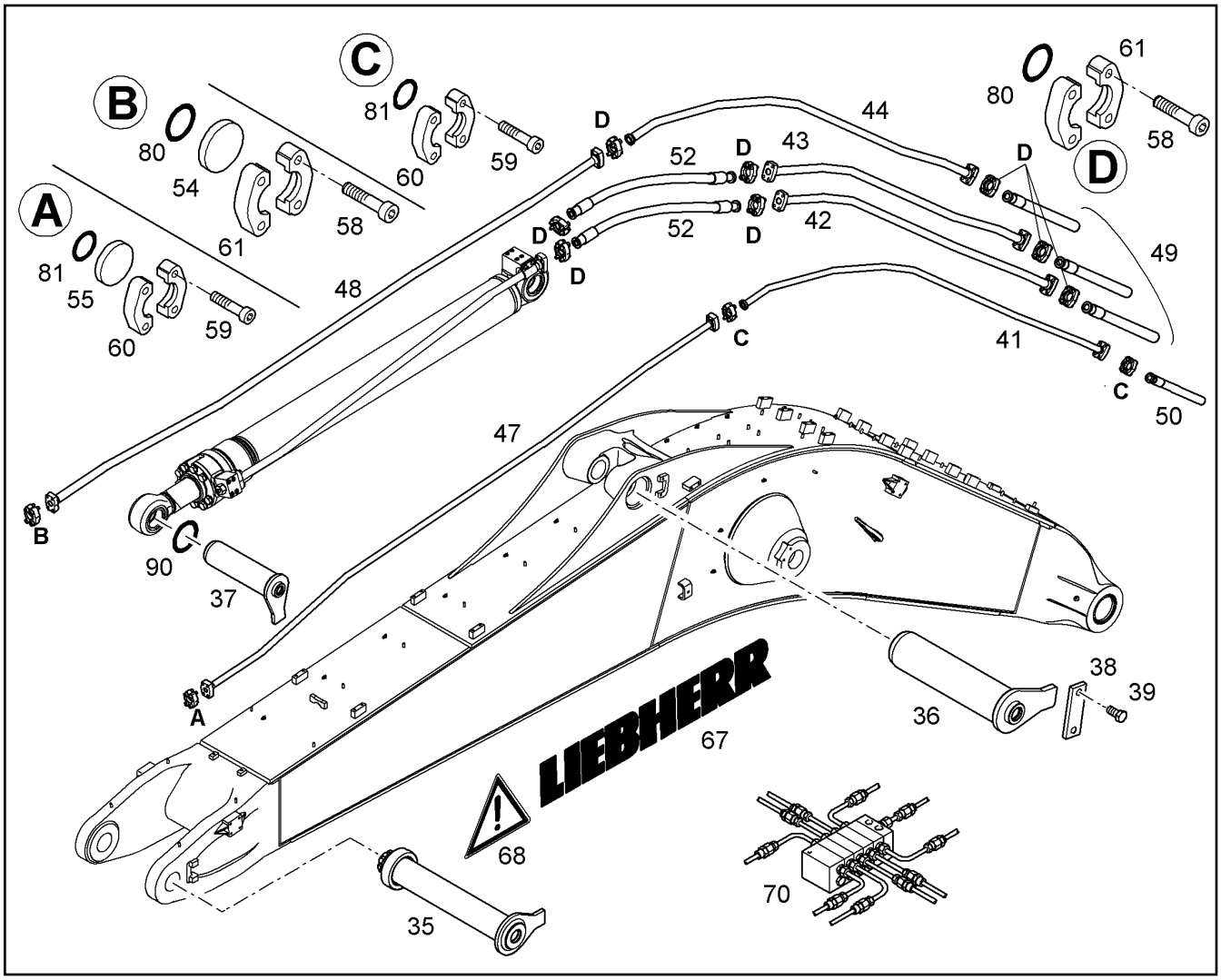

Pos.	Item	Quantity	Description	Designação	Serie	K
81	10490781	3	RECTANGULAR SECTION RING 40,15X2,80	ANEL DE SEÇÃO RETANGULAR		
90	921596716	2	WASHER KIT FOR D=100 ⇨ ❑ 774	JOGO DE ARRUELAS		

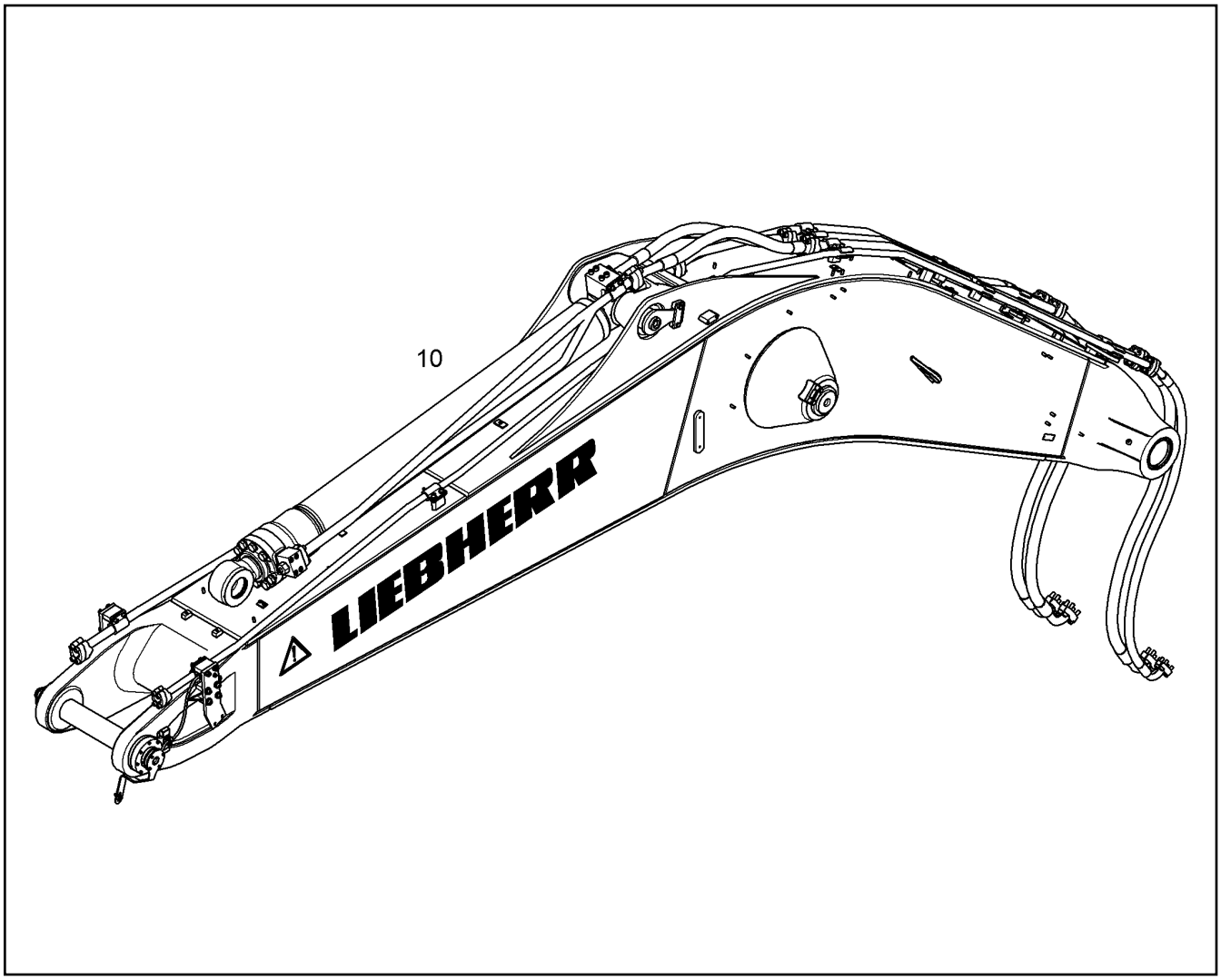

Pos.	Item	Quantity	Description	Designação	Serie	K
10		1	GOOSENECK BOOM 6.45M ⇨ ❑ 711	LANÇA MONOBLOCO		

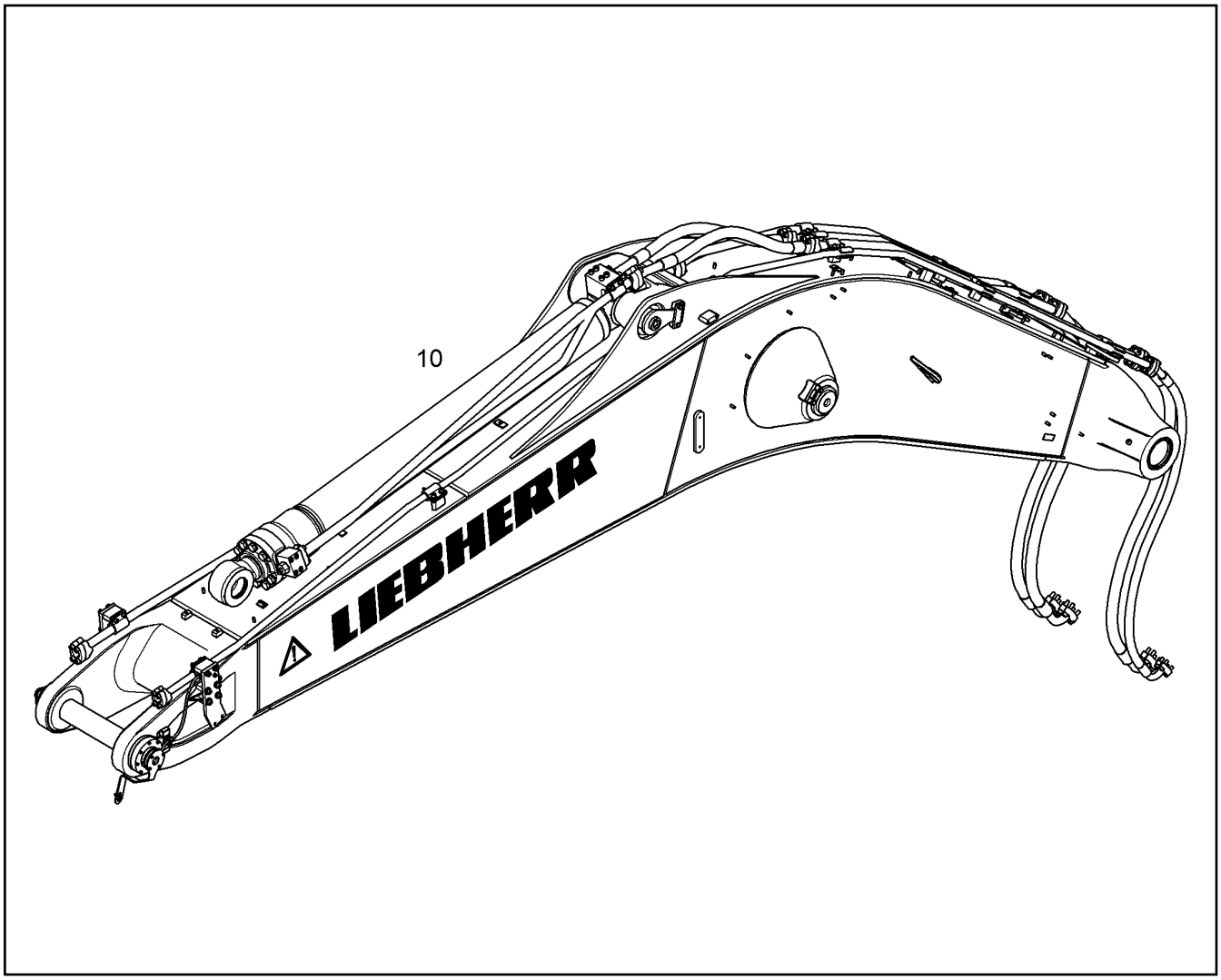

Pos.	Item	Quantity	Description	Designação	Serie	K
10		1	KIT GOOSENECK BOOM 6.45M ⇨ ❑ 716	KIT MONOBLOCO		

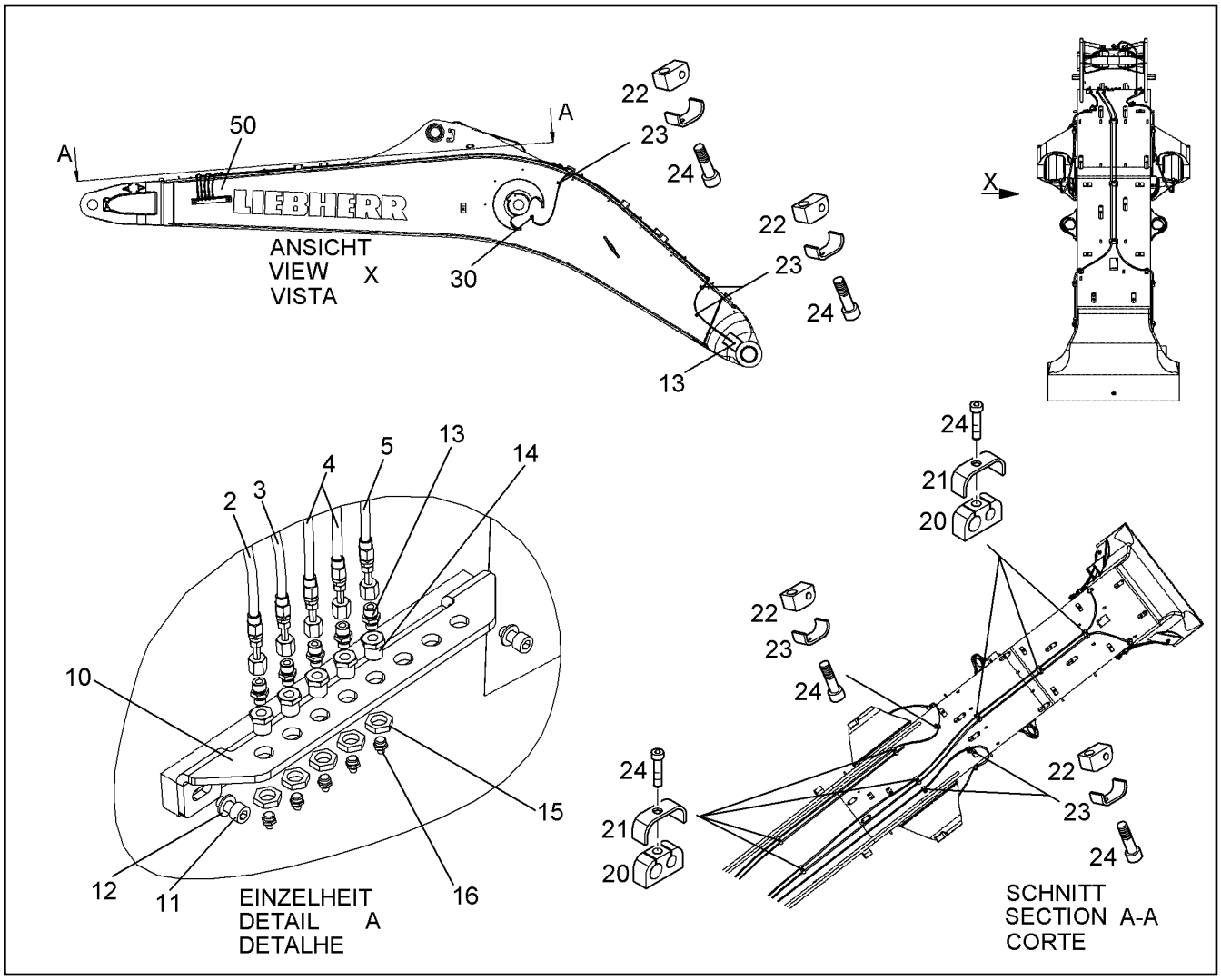

Pos.	Item	Quantity	Description	Designação	Serie	K
2	11659617	1	HOSE CPL. 4X5000	MANGUEIRA COMPLETA		1
3	11659621	1	HOSE CPL. 4X4000	MANGUEIRA COMPLETA		1
4	11659622	2	HOSE CPL. 4X6500	MANGUEIRA COMPLETA		1
5	11659616	1	HOSE CPL. 4X4600	MANGUEIRA COMPLETA		1
10	11102795	1	FOLDING SHEET	CHAPA DOBRADA		
11	11002741	2	SOCKET HEAD SCREW ISO 4762 M10X20 10	PARAFUSO CILÍNDRICO		
12	10289795	2	WASHER 10 300HV	ARRUELA		
13	7362169	7	FITTING GE 6L M10X1	UNIÃO ROSCADA		
14	9685685	5	BULKHEAD CONNECTOR M16x1,5 - M10x1	UNIÃO ROSCADA DE ANTEPAR		
15	4901153	5	NUT M16X1,5	PORCA		
16	10005440	5	GREASE NIPPLE AEHNL.DIN 71412 A M10X	NIPLE DE LUBRIFICAÇÃO		
20	10037724	14	CLAMP HRGBS 1 G 11 11 TPE73	BRAÇADEIRA		
21	10037722	14	BRACKET	ESTRIBO		
22	10037727	14	CLAMP HRBGS 0A G 11 TPE73	BRAÇADEIRA		
23	10037723	14	BRACKET	ESTRIBO		
24	11656585	28	SOCKET HEAD SCREW ISO 4762 M6X10 8.8	PARAFUSO CILÍNDRICO		
30	7368426	3	FITTING WH 6L M10X1 KDS	UNIÃO ROSCADA		
50	11691100	1	SIGN	IDENTIFICAÇÃO		

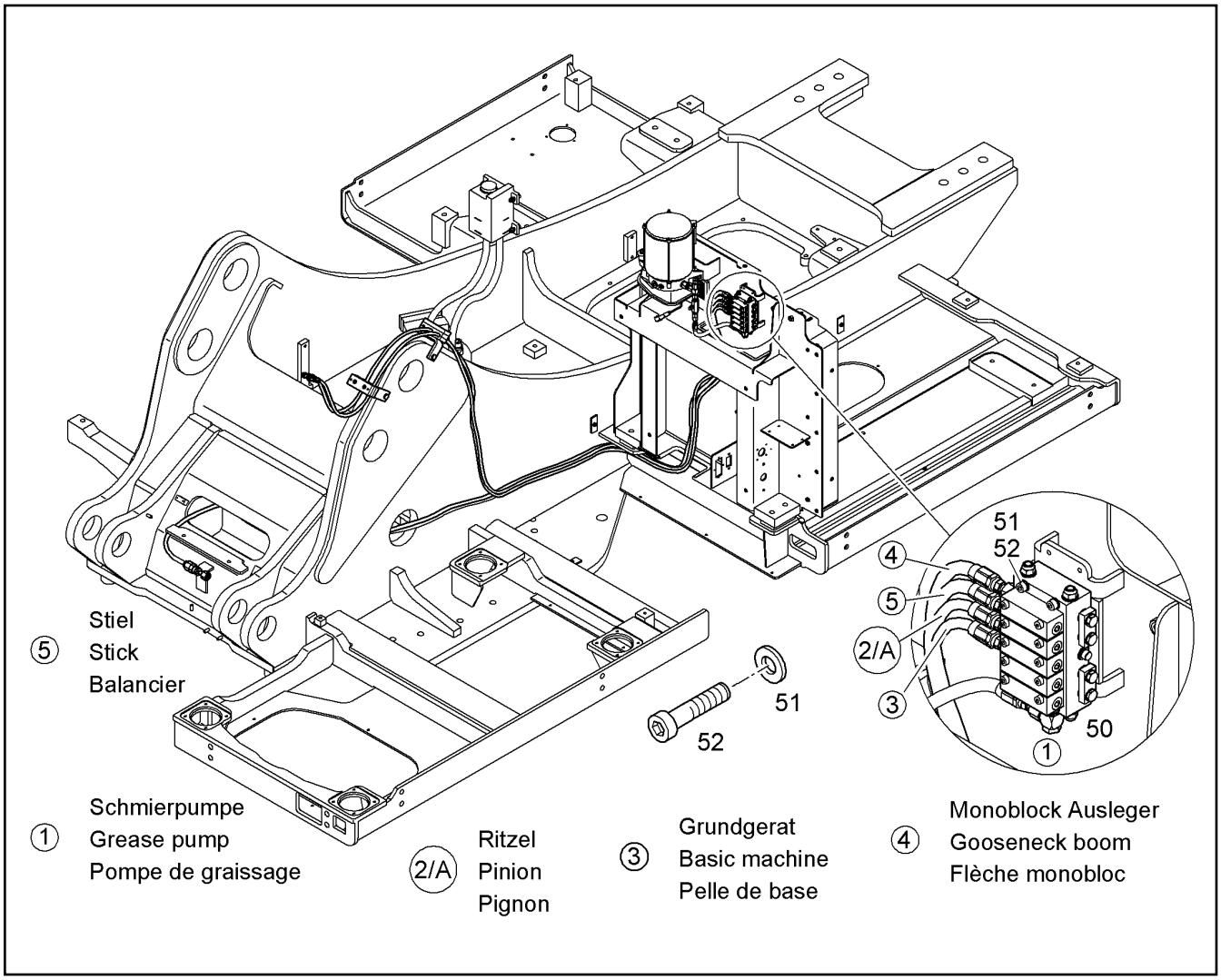

Pos.	Item	Quantity	Description	Designação	Serie	K
50	10664719	1	DISTRIBUTION BLOCK SXE-2 5/4 ⇨ ❑ 251	BLOCO DE DISTRIBUIÇÃO		
51	10289802	4	WASHER 6 300HV	ARRUELA		
52	10875591	4	SOCKET HEAD SCREW ISO 4762 M6X40 8.8	PARAFUSO CILÍNDRICO		

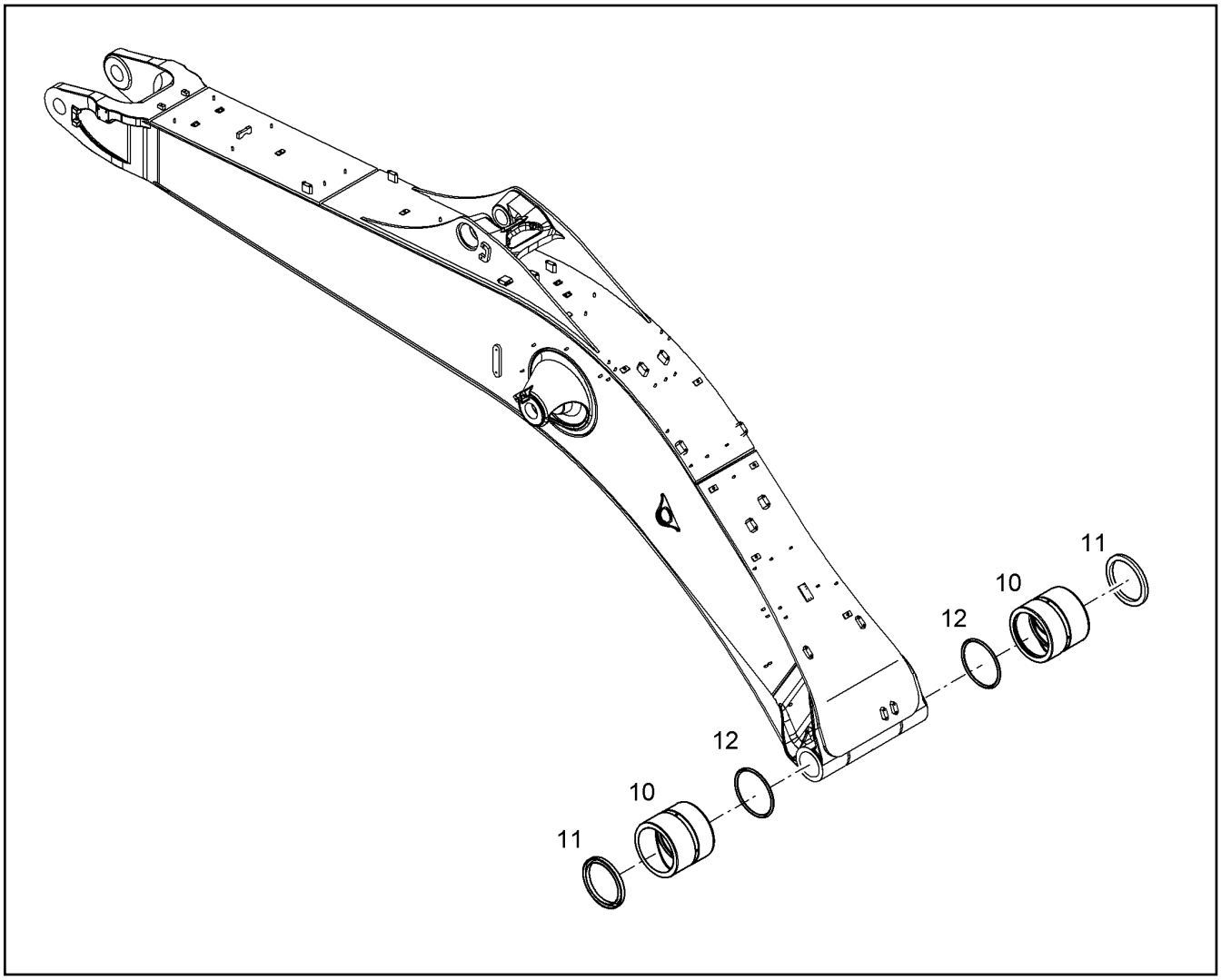

Pos.	Item	Quantity	Description	Designação	Serie	K
10	11817818	2	STEEL BUSHING A1 130/160X140	BUCHA DE AÇO		1
11	7017199	2	RADIAL SEAL X130X160X12	ANEL DE VEDAÇÃO RADIAL		
12	7027827	2	O-RING DIN 3771 129,54X7	ANEL-O		

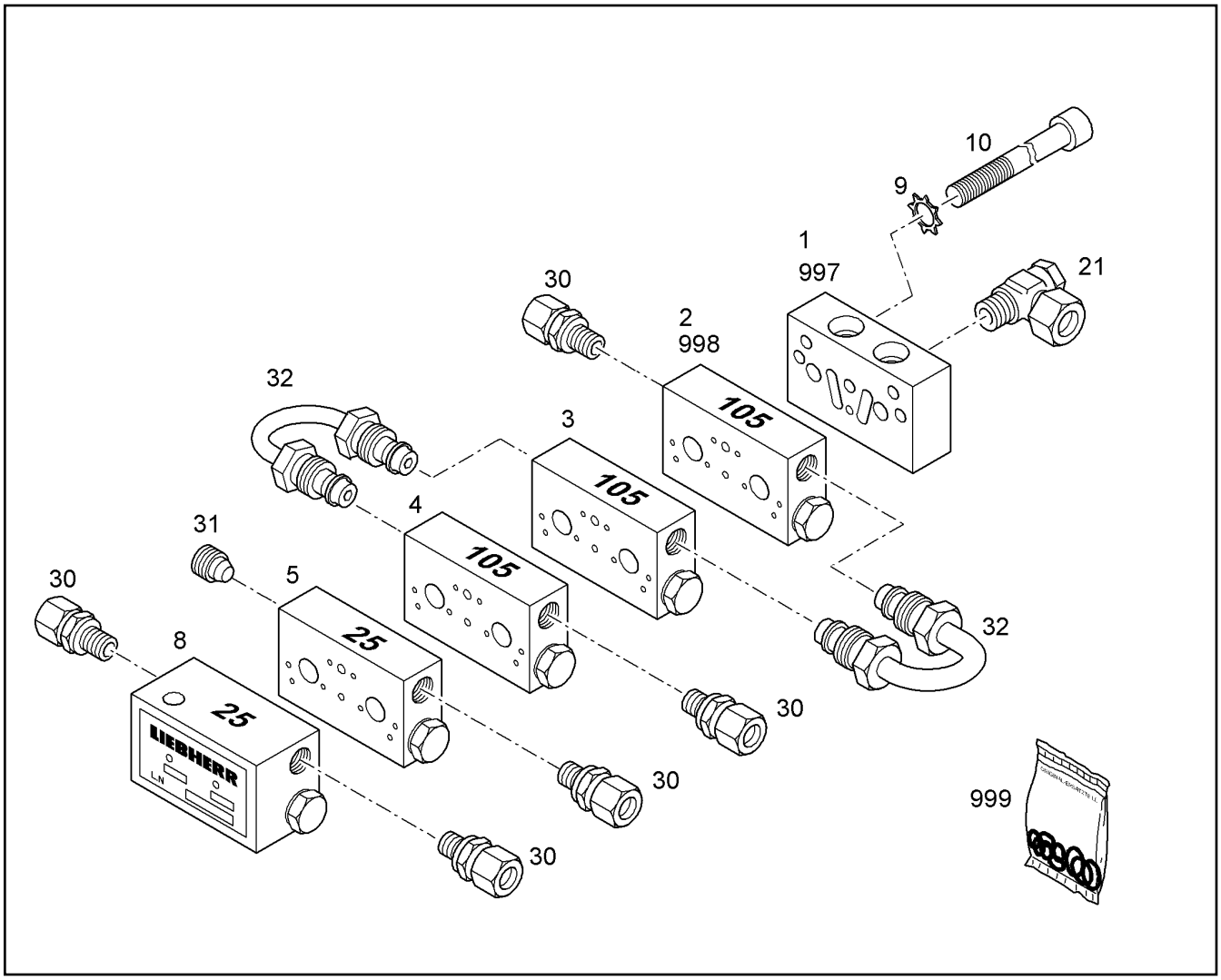

Pos.	Item	Quantity	Description	Designação	Serie	K
1	7027937	1	STARTING ELEMENT MX-F	ELEMENTO INICIAL		
2	7027941	1	CENTRAL ELEMENT MX-F 105	ELEMENTO CENTRAL		
3	7027941	1	CENTRAL ELEMENT MX-F 105	ELEMENTO CENTRAL		
4	7027941	1	CENTRAL ELEMENT MX-F 105	ELEMENTO CENTRAL		
5	7027938	1	CENTRAL ELEMENT MX-F 25	ELEMENTO CENTRAL		
8	7027942	1	END ELEMENT MX-F 25	ELEMENTO FINAL		
9	4002259	2	TOOTH LOCK WASHER A 6,4	ARRUELA DENTADA		
10	404205408	2	SOCKET HEAD SCREW ISO 4762 M6X80 8.8	PARAFUSO CILÍNDRICO		
21	10009054	1	FITTING WSV 8LL M10X1	UNIÃO ROSCADA		
30	7622803	5	NON-RETURN VALVE	VÁLVULA DE RETORNO		
31	774378208	1	SCREW PLUG	PARAFUSO DE FECHAMENTO		
32	774378008	2	PIPELINE	TUBULAÇÃO		
997	10021311	1	SEAL KIT ⇨ ❑ 265	KIT DE VEDAÇÃO		
998	10021310	1	SEAL KIT ⇨ ❑ 264	KIT DE VEDAÇÃO		
999	10021308	1	O-RING	ANEL-O		

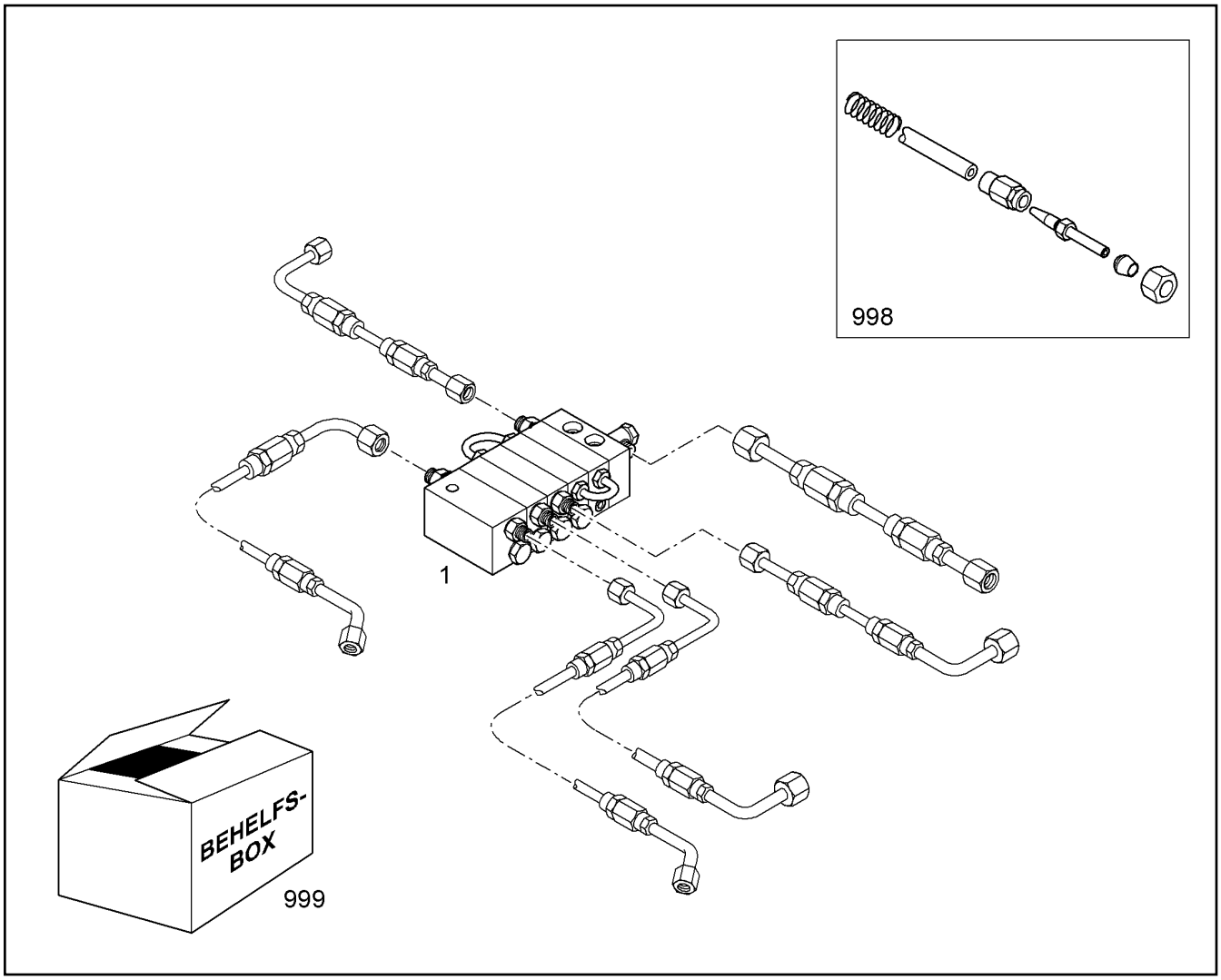

Pos.	Item	Quantity	Description	Designação	Serie	K
1		1	DISTRIBUTION BLOCK MX-F 5/5 ⇨ ❑ 719	BLOCO DE DISTRIBUIÇÃO		
998		1	CONNECTING ELEMENT ⇨ ❑ 257	ELEMENTO DE CONEXÃO		
999	10014611	1	AUXILIARY BOX ⇨ ❑ 262	CAIXA AUXILIAR		

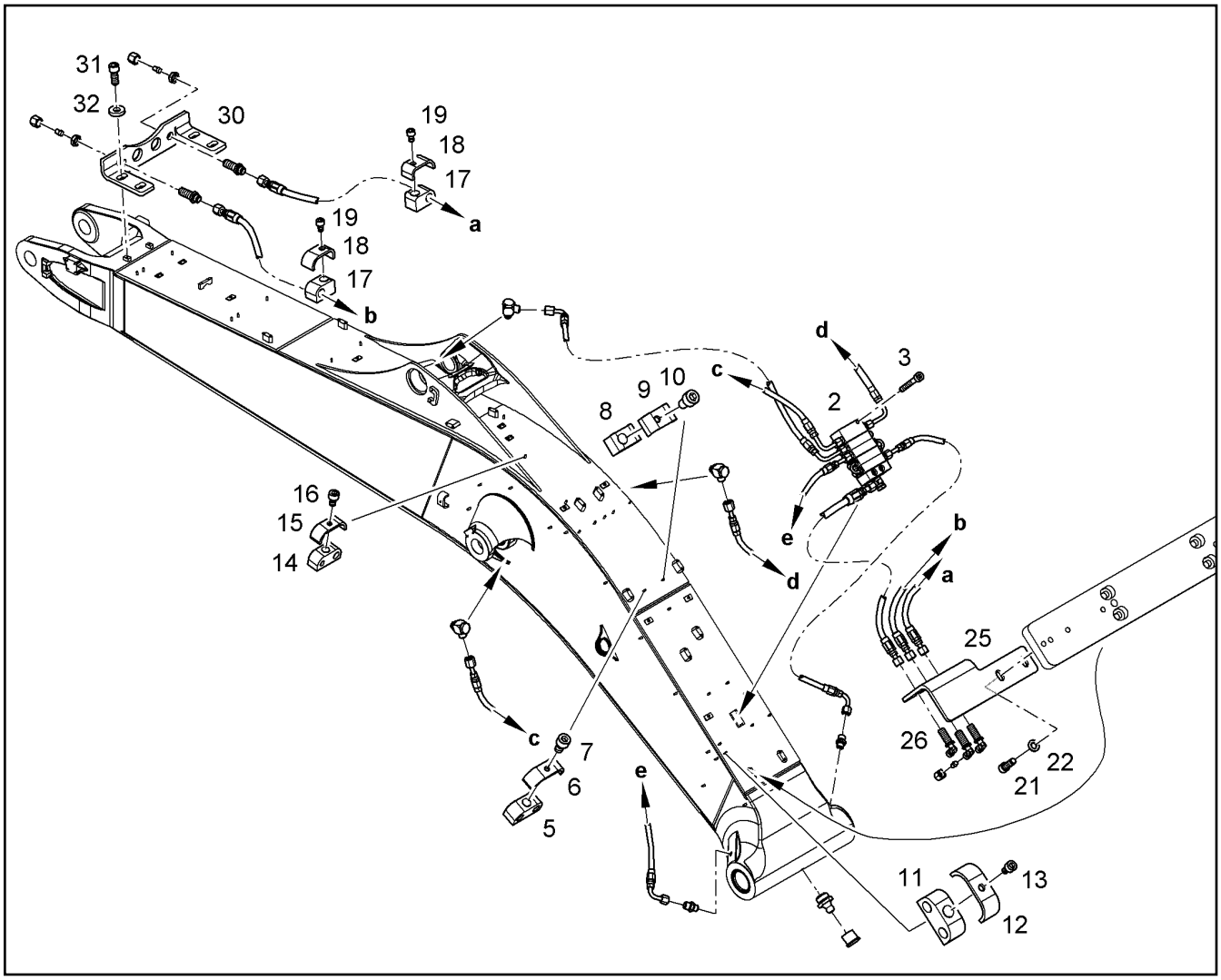

Pos.	Item	Quantity	Description	Designação	Serie	K
2		1	DISTRIBUTION BLOCK MX-F 5/5 ⇨ ❑ 720	BLOCO DE DISTRIBUIÇÃO		
3	12204614	3	SOCKET HEAD SCREW ISO 4762 M5X35 8.8	PARAFUSO CILÍNDRICO		
5	10037726	3	CLAMP HRBGS 1 G 8 8	BRAÇADEIRA		
6	10037722	3	BRACKET	ESTRIBO		
7	11656585	3	SOCKET HEAD SCREW ISO 4762 M6X10 8.8	PARAFUSO CILÍNDRICO		
8	10037728	10	CLAMP HRBGS 0A G 8 TPE73	BRAÇADEIRA		
9	10037723	10	BRACKET	ESTRIBO		
10	11656585	10	SOCKET HEAD SCREW ISO 4762 M6X10 8.8	PARAFUSO CILÍNDRICO		
11	10037724	4	CLAMP HRGBS 1 G 11 11 TPE73	BRAÇADEIRA		
12	10037722	4	BRACKET	ESTRIBO		
13	11656585	4	SOCKET HEAD SCREW ISO 4762 M6X10 8.8	PARAFUSO CILÍNDRICO		
14	10037725	2	CLAMP HRBGS 1 G 8 11 TPE73	BRAÇADEIRA		
15	10037722	2	BRACKET	ESTRIBO		
16	11656585	2	SOCKET HEAD SCREW ISO 4762 M6X10 8.8	PARAFUSO CILÍNDRICO		
17	10037727	7	CLAMP HRBGS 0A G 11 TPE73	BRAÇADEIRA		
18	10037723	7	BRACKET	ESTRIBO		
19	11656585	7	SOCKET HEAD SCREW ISO 4762 M6X10 8.8	PARAFUSO CILÍNDRICO		
21	11002748	2	SOCKET HEAD SCREW ISO 4762 M12X35 10	PARAFUSO CILÍNDRICO		
22	10289804	2	WASHER 12 300HV	ARRUELA		
25	10080096	1	CONSOLE	CONSOLE		
26	7368115	3	FITTING WSV 8L M14X1,5	UNIÃO ROSCADA		
30	9808806	1	BULKHEAD PLATE	PLACA DE ANTEPARO		
31	11321126	2	SOCKET HEAD SCREW ISO 4762 M12X30 10	PARAFUSO CILÍNDRICO		
32	10006370	2	WASHER 13 200HV	ARRUELA		

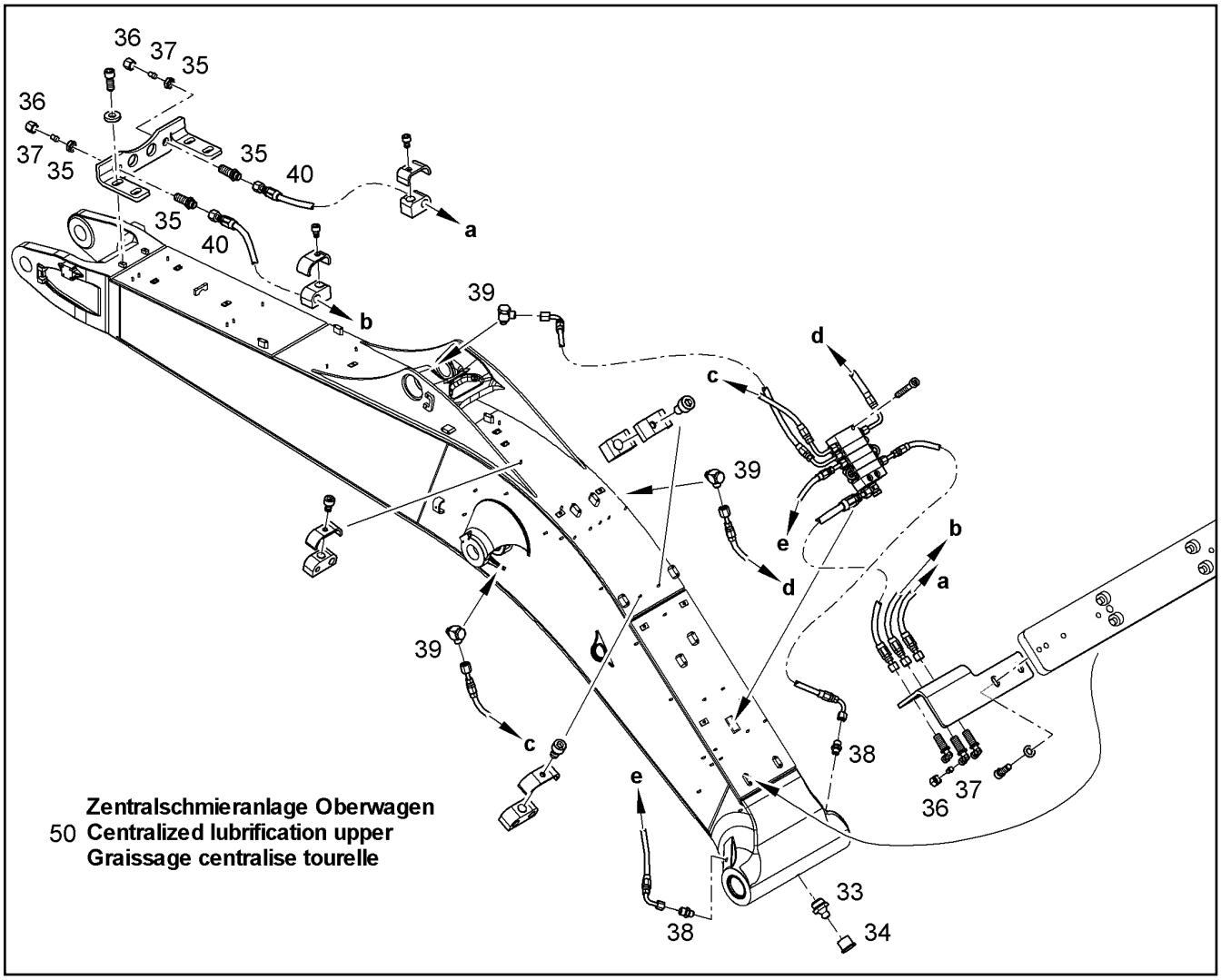

Zentralschmieranlage Oberwagen
50 **Centralized lubrification upper**
Graissage centralise tourelle

Pos.	Item	Quantity	Description	Designação	Serie	K
33	10005440	1	GREASE NIPPLE AEHNL.DIN 71412 A M10X	NIPLE DE LUBRIFICAÇÃO		
34	8500251	1	GREASE NIPPLE CAP GPN 985 FORM A	CAPA DO NIPLE DE LUBRIFICA		
35	7368106	2	FITTING SV 8L M14X1,5	UNIÃO ROSCADA		
36	4900507	3	BOX NUT ISO 8434-1 NL8	PORCA DE CONEXÃO		
37	4900305	3	TAPER COLLET VKA 8	CONE DE FECHAMENTO		
38	7362169	2	FITTING GE 6L M10X1	UNIÃO ROSCADA		
39	7368426	3	FITTING WH 6L M10X1 KDS	UNIÃO ROSCADA		
40	10042817	2	HOSE 6,3X6400	MANGUEIRA		1
50		1	CENTRALIZED LUBRICATION UPPER ⇨ ❑ 717	LUBRIFICACAO CENTRALIZADA		

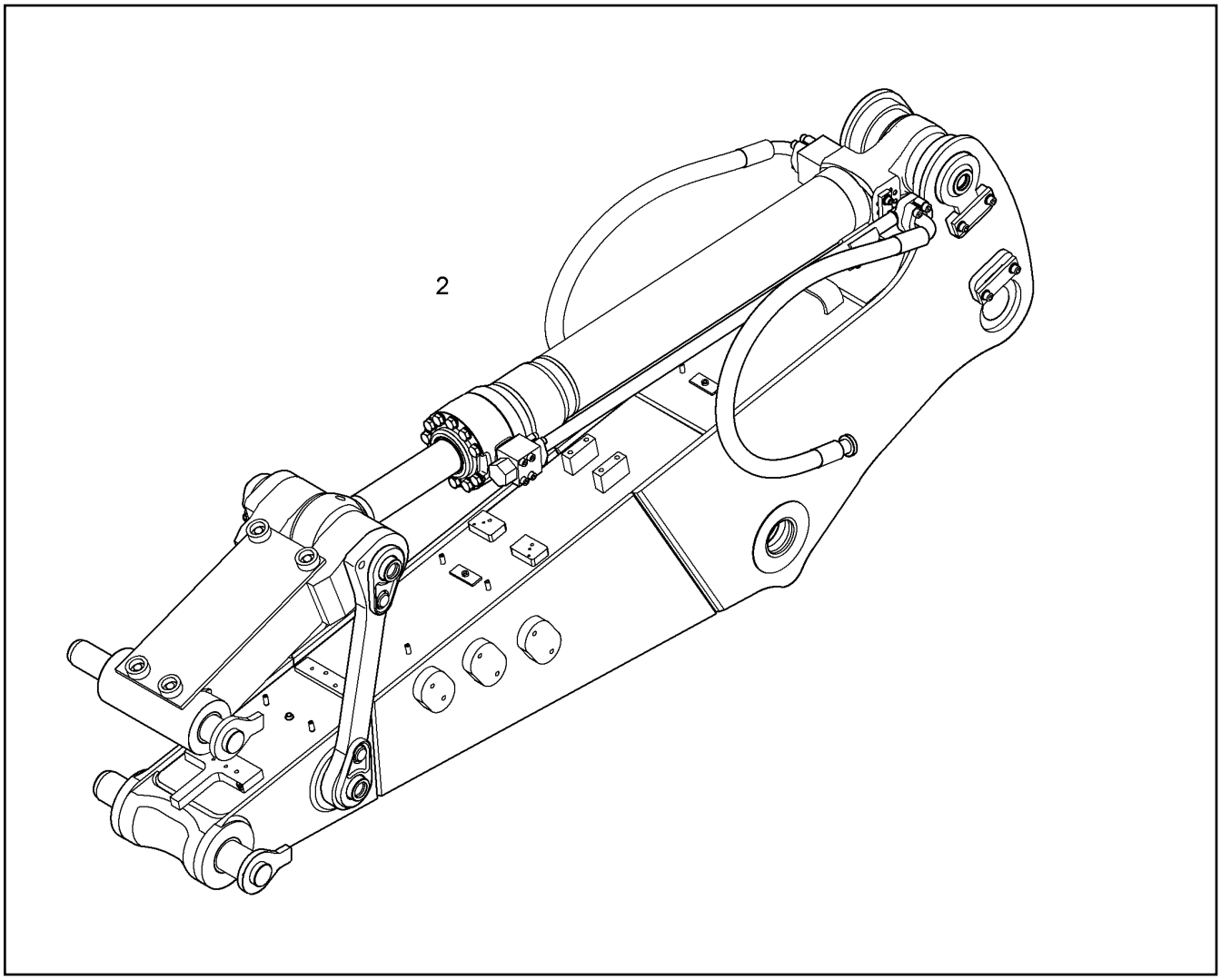

Pos.	Item	Quantity	Description	Designação	Serie	K
2		1	STICK 2.10M ⇨ ❑ 725	BRAÇO DA CAÇAMBA		

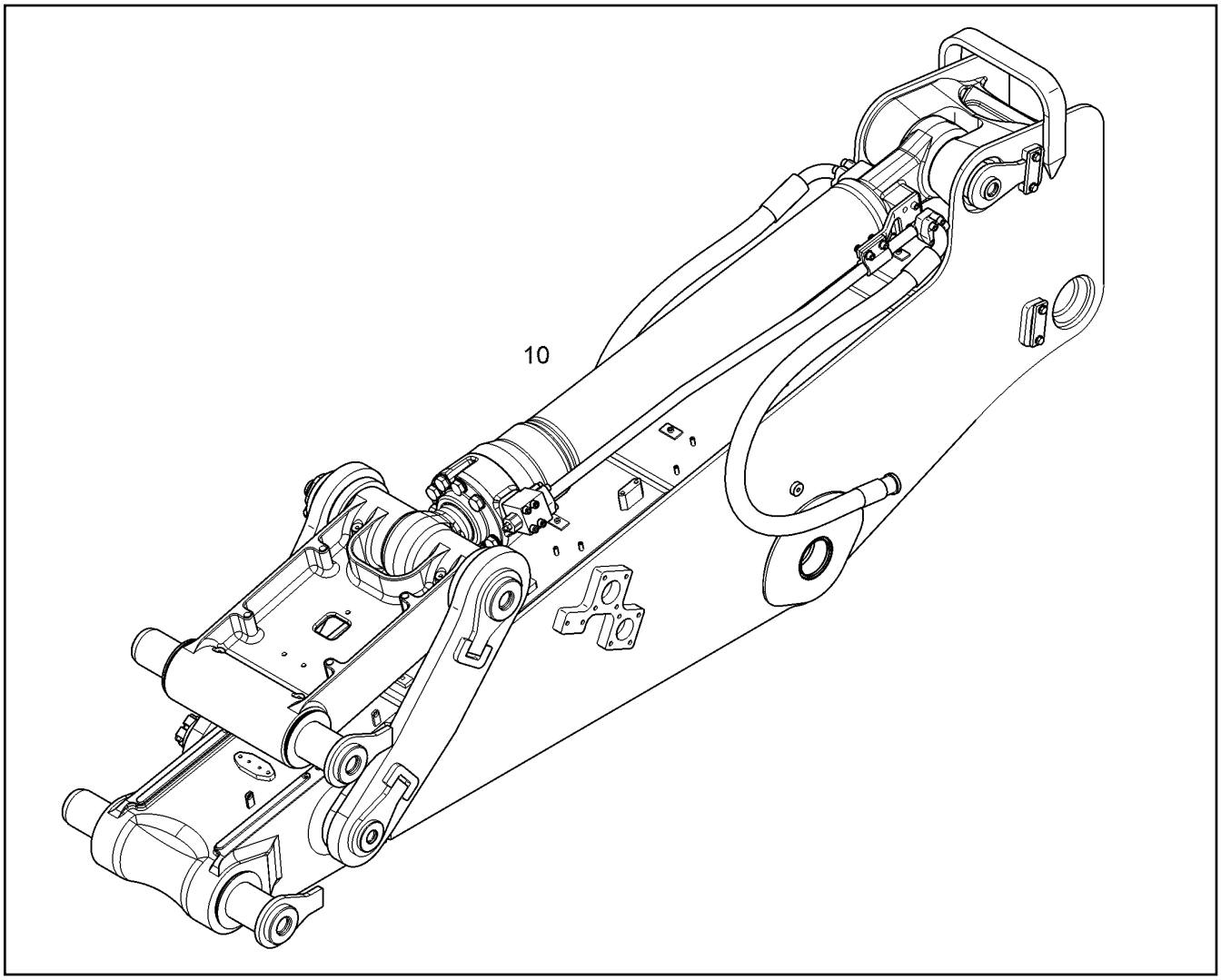

Pos.	Item	Quantity	Description	Designação	Serie	K
10		1	KIT STICK 2.10M ⇨ ❑ 727	KIT DE ATUALIZAÇÃO		

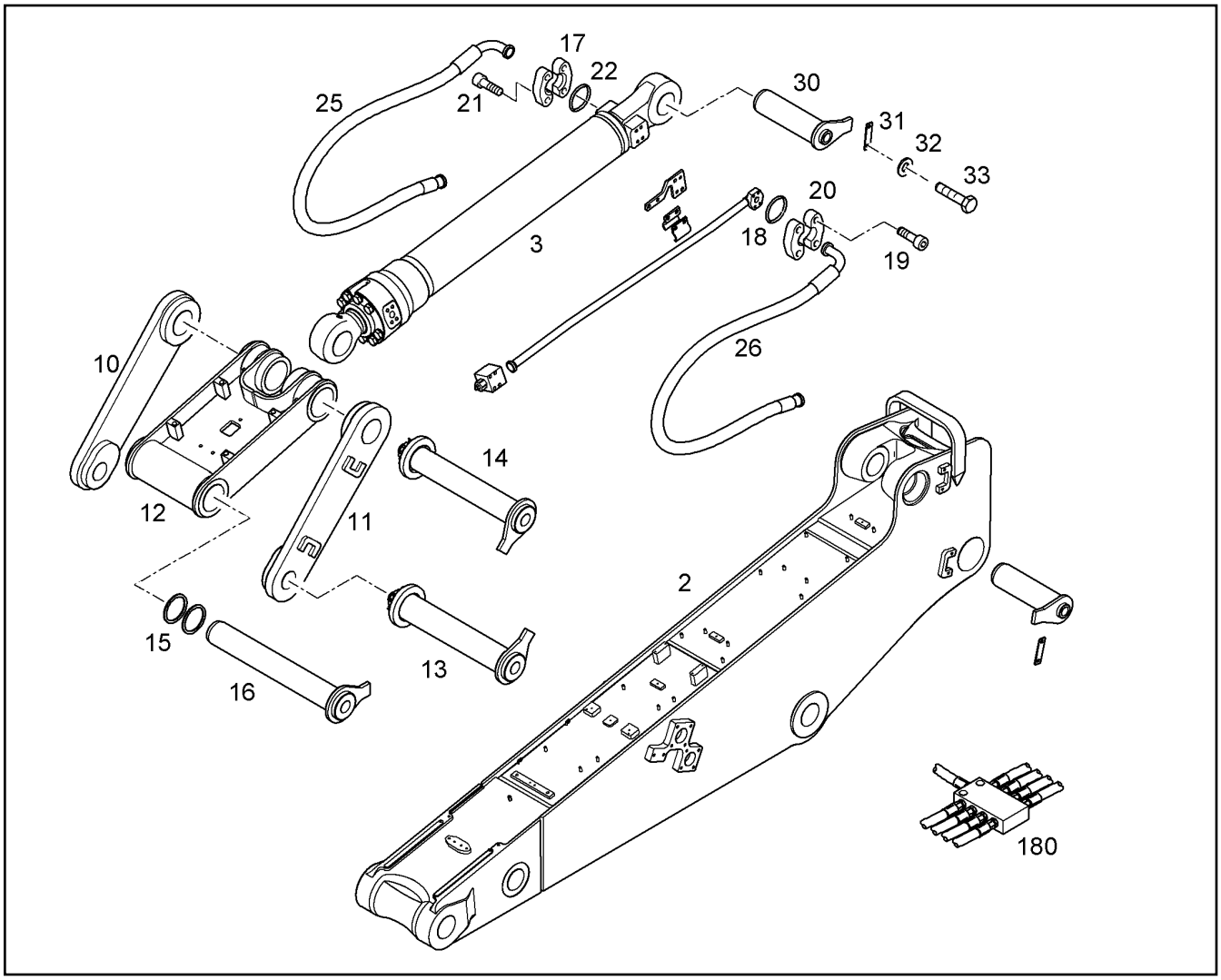

Pos.	Item	Quantity	Description	Designação	Serie	K
2	11102808	1	STICK 2,10M [MOA004024] ⇨ ❑ 729	BRAÇO DA CAÇAMBA	99999-	
3		1	HYDR.CYLINDER W/ADDITION.PARTS ⇨ ❑ 758	CILINDRO HIDR. COM ACESSÓR		
10	10062497	1	SHIFT LEVER RIGHT	ALAVANCA DE REVERSÃO DIRE		
11	10062471	1	SHIFT LEVER LEFT	ALAVANCA REVERSORA ESQUE		
12	10358750	1	CONNECTING LINK [.] ⇨ ❑ 740	PEÇA DE LIGAÇÃO	99999-	
13	10083907	1	PIN CPL ⇨ ❑ 746	PINO COMPLETO		
14	10062583	1	PIN CPL ⇨ ❑ 745	PINO COMPLETO		
15	10358577	4	RING ⇨ ❑ 728	ANEL		
16	10065223	2	PIN 100X755X700	PINO		1
17	11485639	2	FLANGE HALF WITH BOSSING SAE J518 SA	MEIO FLANGE COM RELEVO		
18	4902327	4	SOCKET HEAD SCREW ISO 4762 M14X45 10	PARAFUSO CILÍNDRICO		
19	10472425	1	RECTANGULAR SECTION RING 45,05X2,80	ANEL DE SEÇÃO RETANGULAR		
20	11485638	2	FLANGE HALF WITH BOSSING SAE J518 S	MEIO FLANGE COM RELEVO		
21	4043003	4	SOCKET HEAD SCREW ISO 4762 M12X40 1	PARAFUSO CILÍNDRICO		
22	10490781	1	RECTANGULAR SECTION RING 40,15X2,80	ANEL DE SEÇÃO RETANGULAR		
25	5611543	1	HOSE 32X1600	MANGUEIRA		1
26	5613713	1	HOSE 25X1600	MANGUEIRA		1
30	9354695	1	PIN CPL 100X380X330	PINO COMPLETO		1

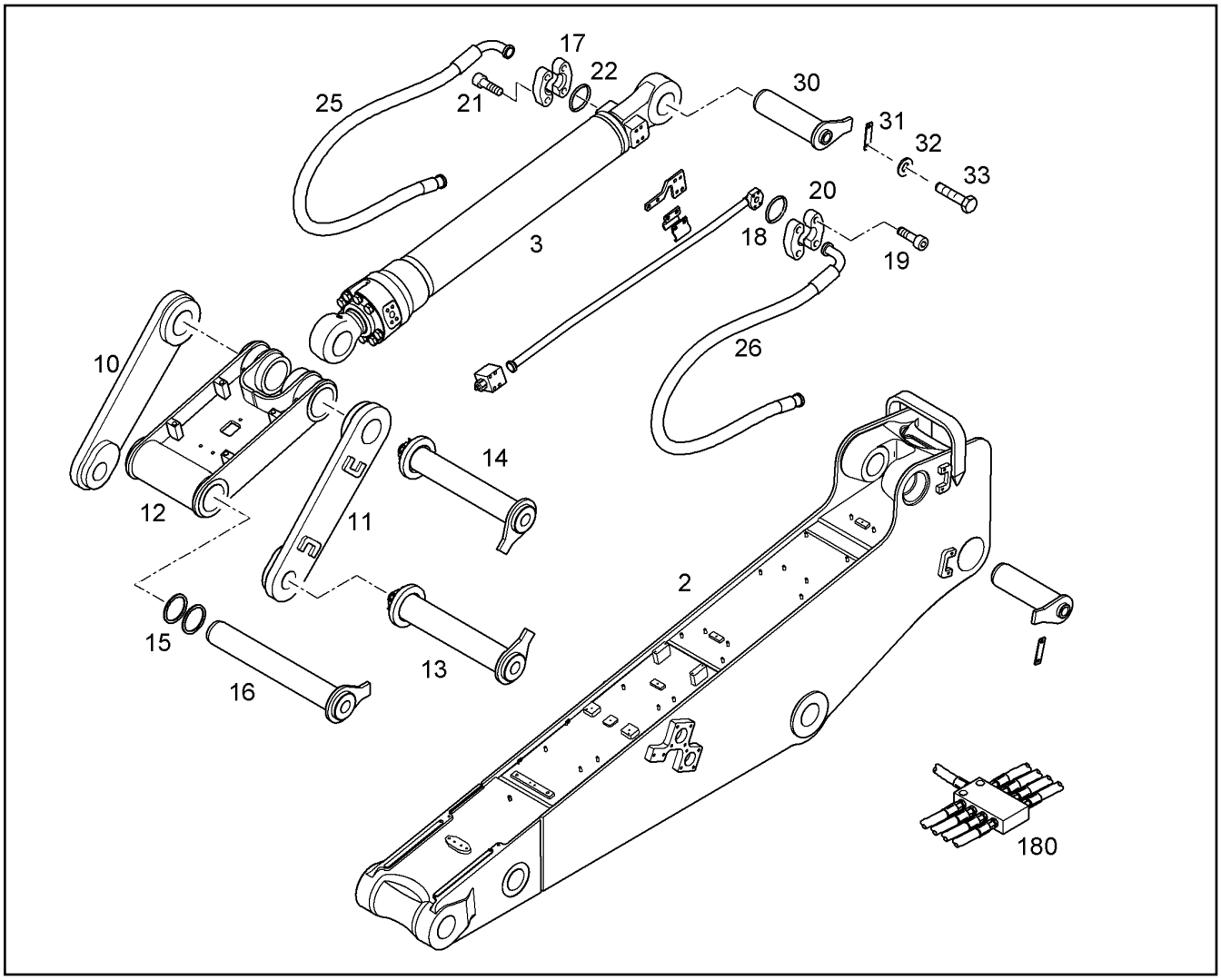

Pos.	Item	Quantity	Description	Designação	Serie	K
31	9830148	2	SHEET	PLACA DE APOIO		
32	10289804	4	WASHER 12 300HV	ARRUELA		
33	4600184	4	HEX SCREW ISO 4017 M12X25 10.9 A3C	PARAFUSO SEXTAVADO		
180		1	CENTRAL GREASING ⇨ ❑ 730	LUBRIFICAÇÃO CENTRALIZADA		

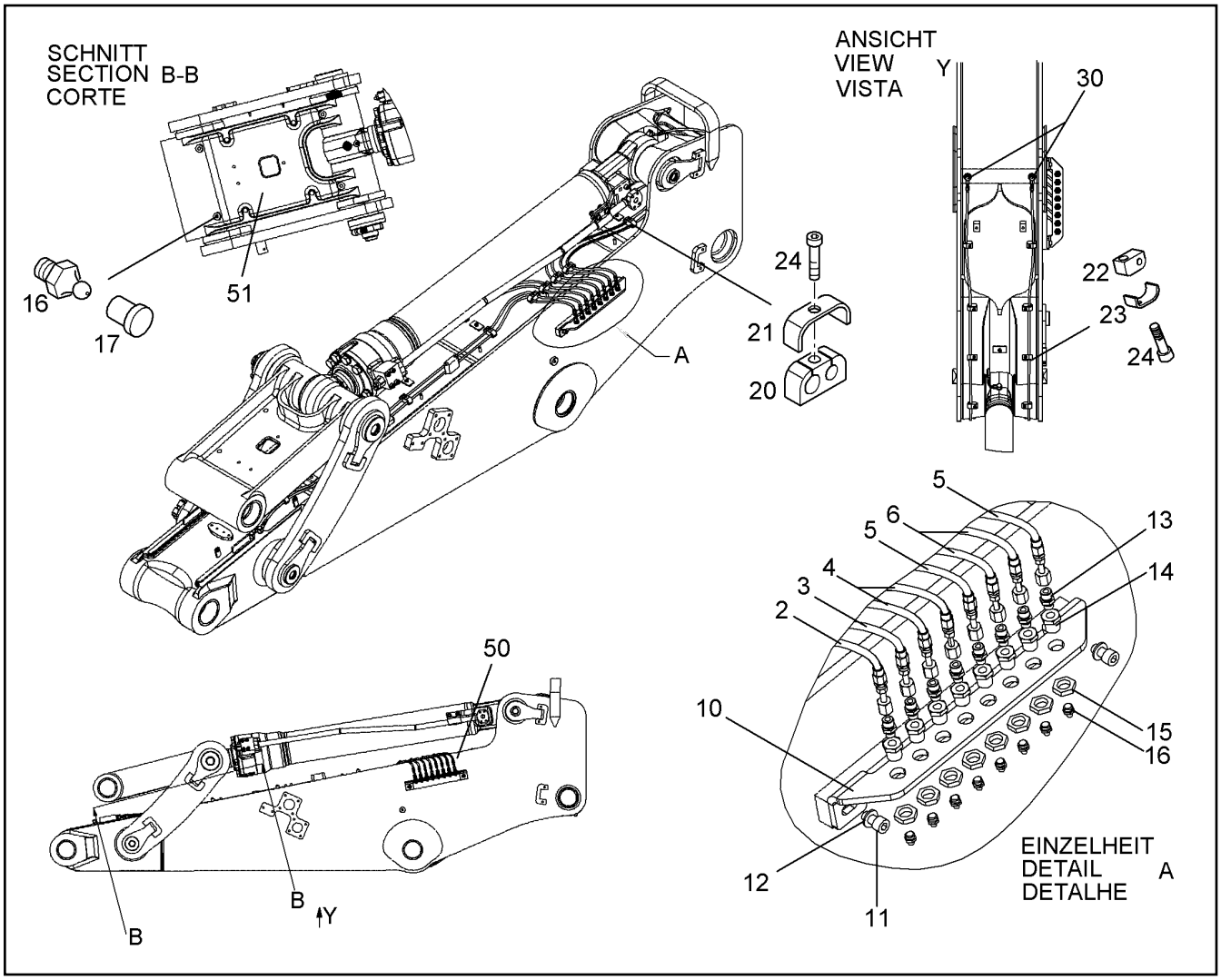

Pos.	Item	Quantity	Description	Designação	Serie	K
2	11659608	1	HOSE CPL. 4X2000	MANGUEIRA COMPLETA		1
3	11659609	1	HOSE CPL. 4X2100	MANGUEIRA COMPLETA		1
4	11659610	2	HOSE CPL. 4X2200	MANGUEIRA COMPLETA		1
5	11659619	2	HOSE CPL. 4X1900	MANGUEIRA COMPLETA		1
6	11659613	2	HOSE CPL. 4X2700	MANGUEIRA COMPLETA		1
10	11102795	1	FOLDING SHEET	CHAPA DOBRADA		
11	11002741	2	SOCKET HEAD SCREW ISO 4762 M10X20 10	PARAFUSO CILÍNDRICO		
12	10289795	2	WASHER 10 300HV	ARRUELA		
13	7362169	8	FITTING GE 6L M10X1	UNIÃO ROSCADA		
14	9685685	8	BULKHEAD CONNECTOR M16x1,5 - M10x1	UNIÃO ROSCADA DE ANTEPAR		
15	4901153	8	NUT M16X1,5	PORCA		
16	10005440	13	GREASE NIPPLE AEHNL.DIN 71412 A M10X	NIPLE DE LUBRIFICAÇÃO		
17	8500251	5	GREASE NIPPLE CAP GPN 985 FORM A	CAPA DO NIPLE DE LUBRIFICA		
20	10037724	16	CLAMP HRGBS 1 G 11 11 TPE73	BRAÇADEIRA		
21	10037722	16	BRACKET	ESTRIBO		
22	10037727	8	CLAMP HRBGS 0A G 11 TPE73	BRAÇADEIRA		
23	10037723	8	BRACKET	ESTRIBO		
24	11656585	24	SOCKET HEAD SCREW ISO 4762 M6X10 8.8	PARAFUSO CILÍNDRICO		
30	7368426	8	FITTING WH 6L M10X1 KDS	UNIÃO ROSCADA		
50	11691205	1	SIGN	IDENTIFICAÇÃO		
51	11691206	1	SIGN	IDENTIFICAÇÃO		

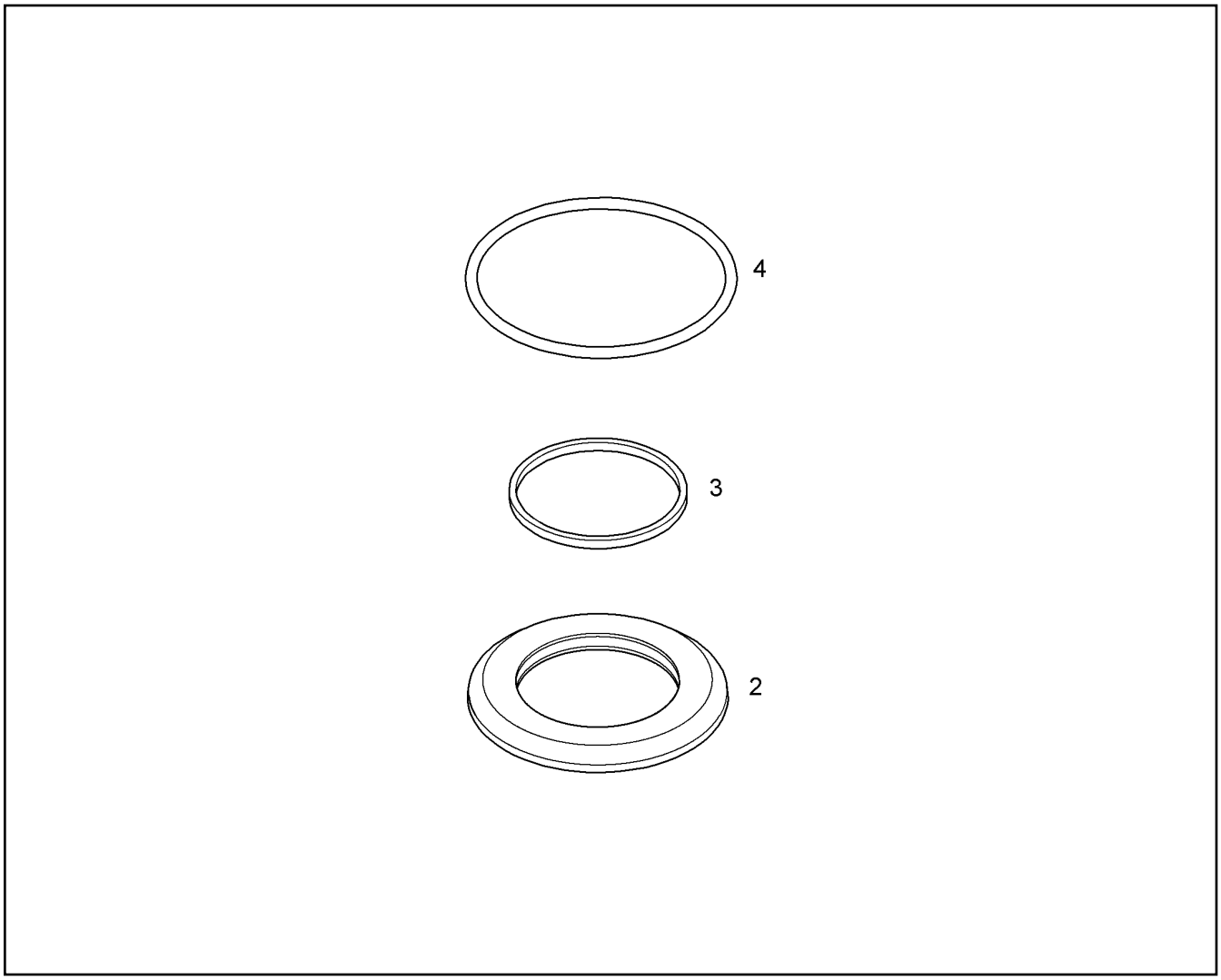

Pos.	Item	Quantity	Description	Designação	Serie	K
2	10358254	1	RING	ANEL		
3	7264419	1	O-RING 100,97X5,33	ANEL-O		
4	7264423	1	O-RING 139,07X7	ANEL-O		

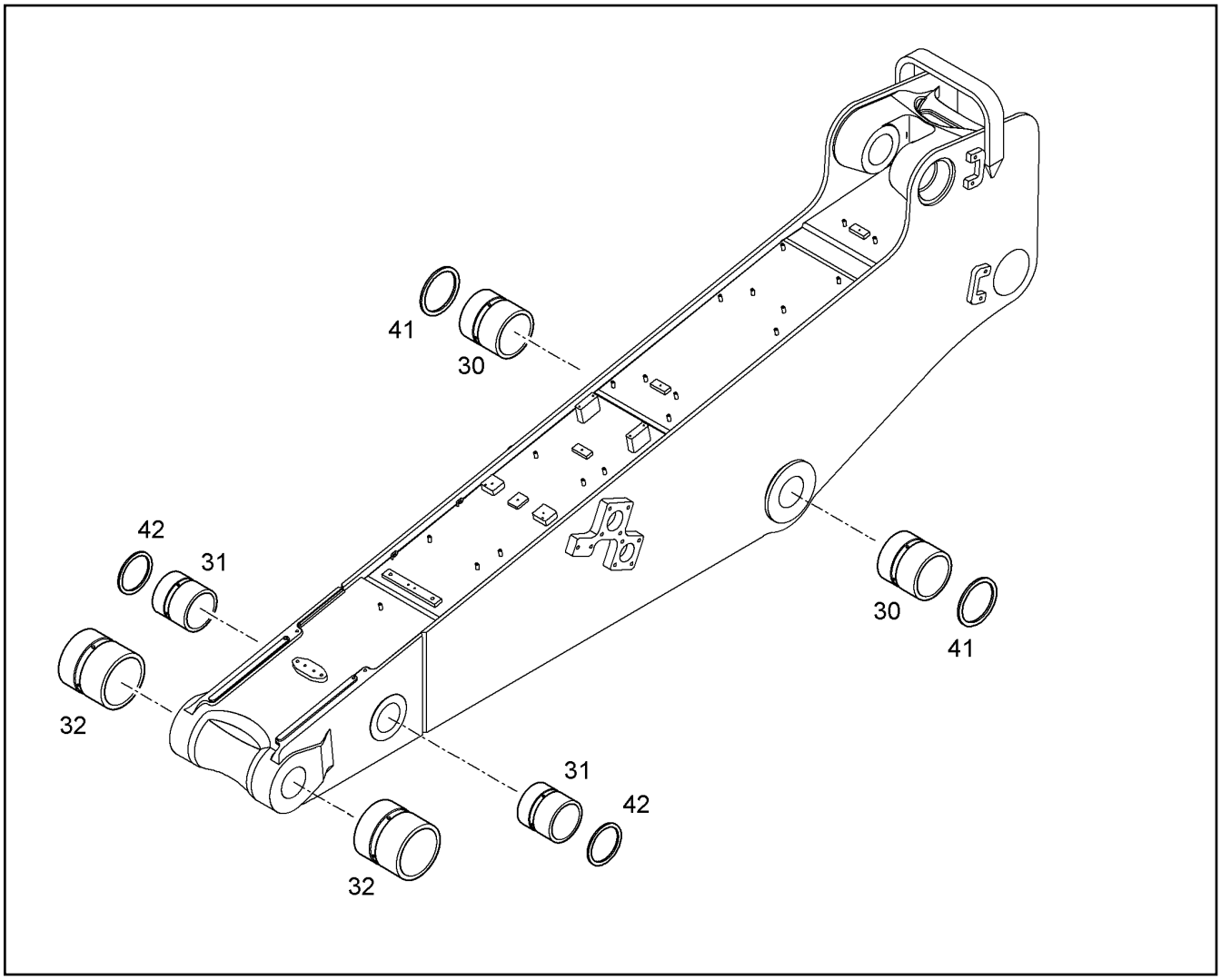

Pos.	Item	Quantity	Description	Designação	Serie	K
30	10399732	2	BUSHING B1 100/120X120	BUCHA		1
31	10820900	2	BUSHING A1 80/95X80	BUCHA		1
32	10399732	2	BUSHING B1 100/120X120	BUCHA		1
41	7362182	2	RADIAL SEAL X100X120X8	ANEL DE VEDAÇÃO RADIAL		
42	7362180	2	RADIAL SEAL X80X95X8	ANEL DE VEDAÇÃO RADIAL		

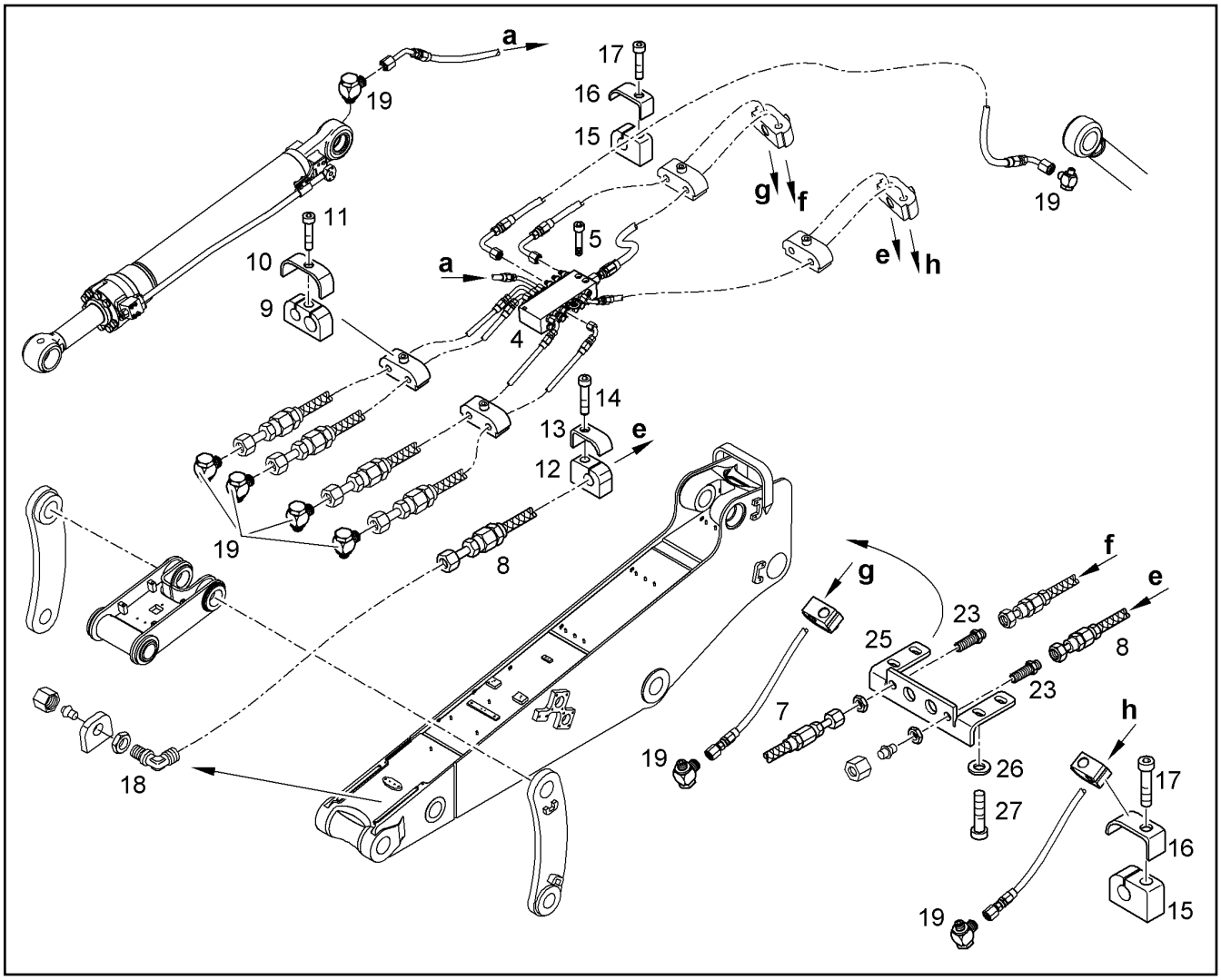

Pos.	Item	Quantity	Description	Designação	Serie	K
4		1	DISTRIBUTION BLOCK MX-F 7/8 ⇨ ❑ 732	BLOCO DE DISTRIBUIÇÃO		
5	12203070	3	SOCKET HEAD SCREW ISO 4762 M5X40 8.8	PARAFUSO CILÍNDRICO		
7	10297950	1	HOSE 6,3X755	MANGUEIRA		1
8	10220774	1	HOSE 6,3X3795	MANGUEIRA		1
9	10037726	12	CLAMP HRBGS 1 G 8 8	BRAÇADEIRA		
10	10037722	12	BRACKET	ESTRIBO		
11	11656585	12	SOCKET HEAD SCREW ISO 4762 M6X10 8.8	PARAFUSO CILÍNDRICO		
12	10037727	5	CLAMP HRBGS 0A G 11 TPE73	BRAÇADEIRA		
13	10037723	5	BRACKET	ESTRIBO		
14	11656585	5	SOCKET HEAD SCREW ISO 4762 M6X10 8.8	PARAFUSO CILÍNDRICO		
15	10037728	1	CLAMP HRBGS 0A G 8 TPE73	BRAÇADEIRA		
16	10037723	1	BRACKET	ESTRIBO		
17	11656585	1	SOCKET HEAD SCREW ISO 4762 M6X10 8.8	PARAFUSO CILÍNDRICO		
18	7368115	1	FITTING WSV 8L M14X1,5	UNIÃO ROSCADA		
19	7368426	8	FITTING WH 6L M10X1 KDS	UNIÃO ROSCADA		
23	7368106	2	FITTING SV 8L M14X1,5	UNIÃO ROSCADA		
25	9808806	1	BULKHEAD PLATE	PLACA DE ANTEPARO		
26	10006370	2	WASHER 13 200HV	ARRUELA		
27	11321126	2	SOCKET HEAD SCREW ISO 4762 M12X30 10	PARAFUSO CILÍNDRICO		

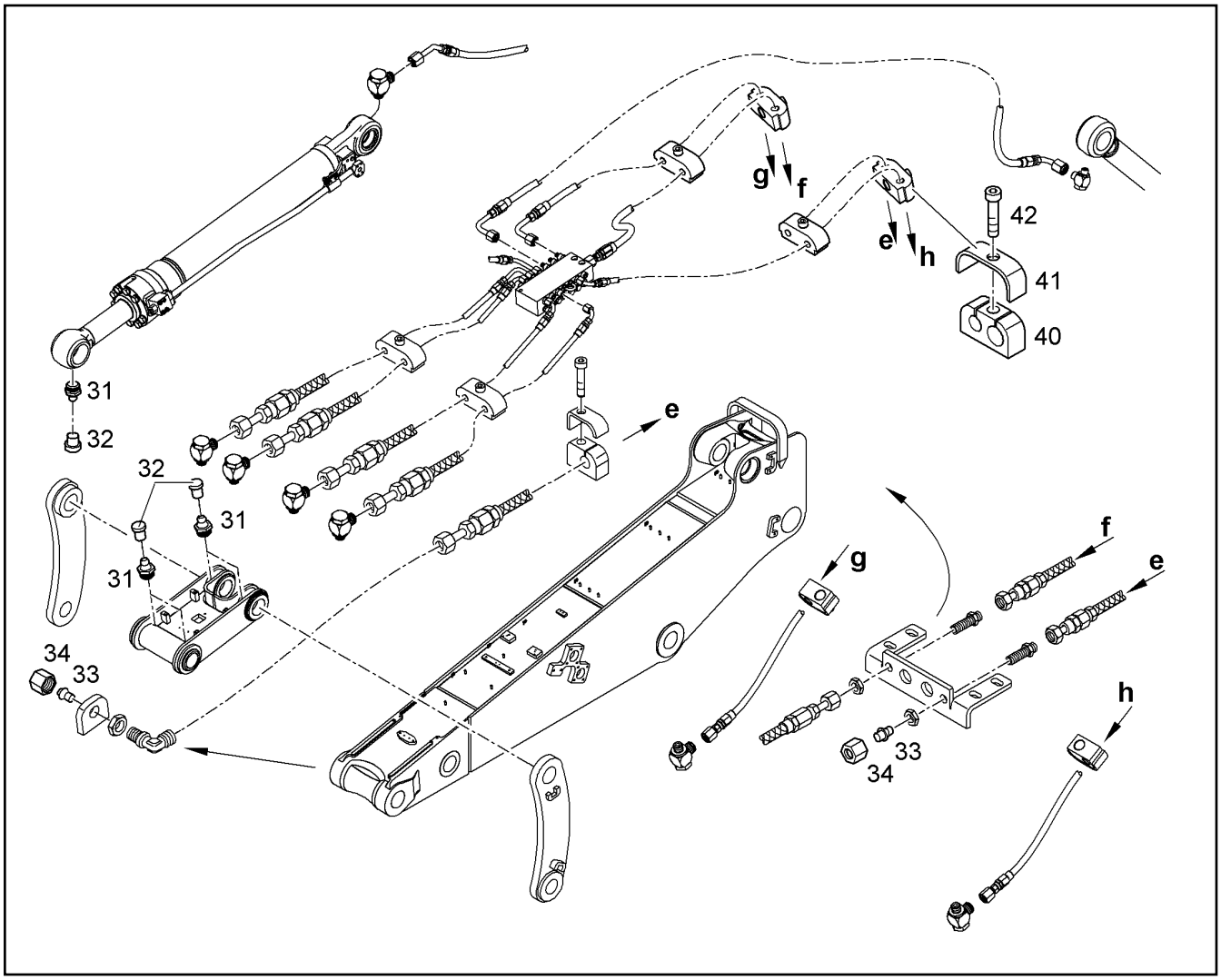

Pos.	Item	Quantity	Description	Designação	Serie	K
31	10005440	5	GREASE NIPPLE AEHNL.DIN 71412 A M10X	NIPLE DE LUBRIFICAÇÃO		
32	8500251	5	GREASE NIPPLE CAP GPN 985 FORM A	CAPA DO NIPLE DE LUBRIFICA		
33	4900305	2	TAPER COLLET VKA 8	CONE DE FECHAMENTO		
34	4900507	2	BOX NUT ISO 8434-1 NL8	PORCA DE CONEXÃO		
40	10037725	8	CLAMP HRBGS 1 G 8 11 TPE73	BRAÇADEIRA		
41	10037722	8	BRACKET	ESTRIBO		
42	11656585	8	SOCKET HEAD SCREW ISO 4762 M6X10 8.8	PARAFUSO CILÍNDRICO		

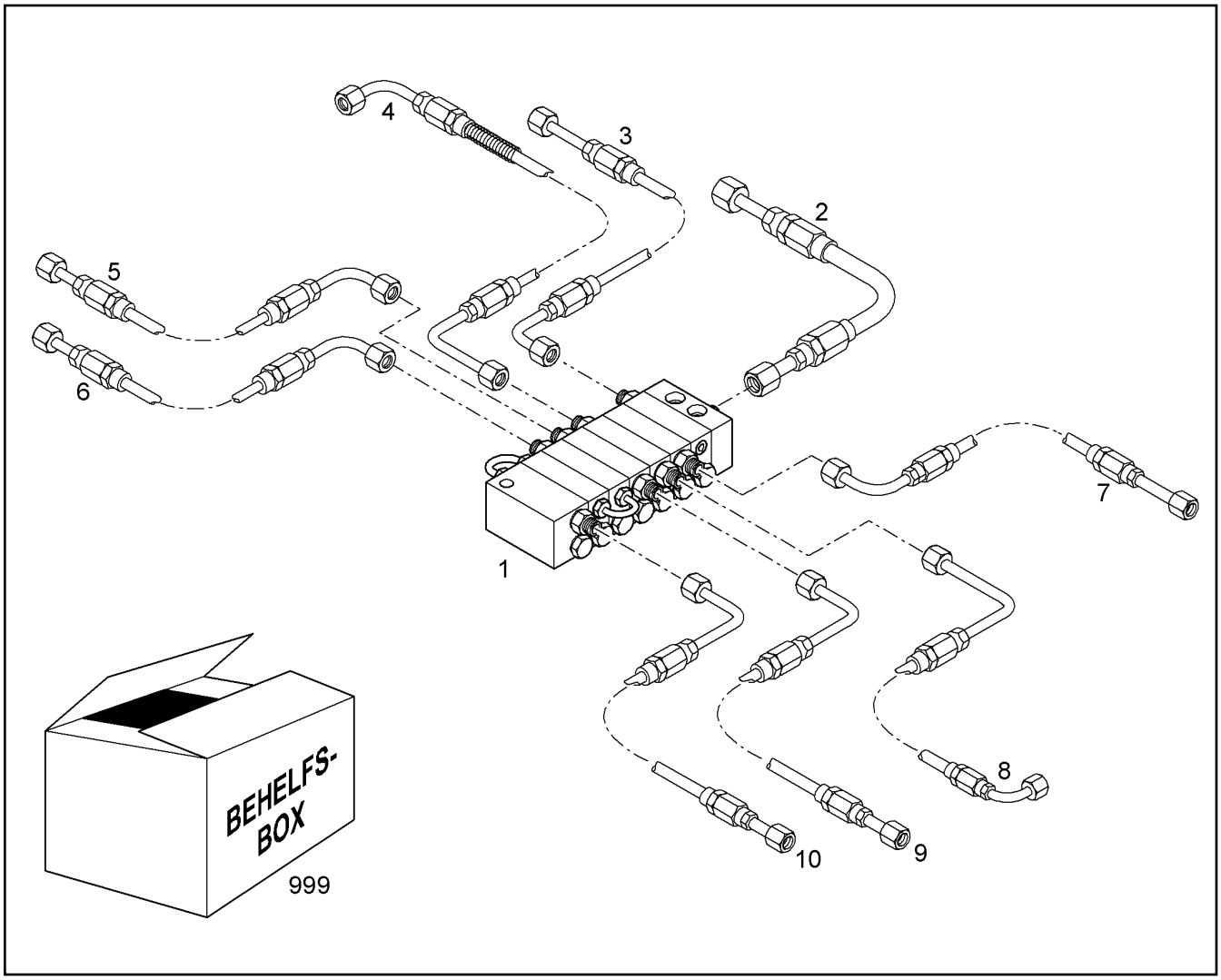

Pos.	Item	Quantity	Description	Designação	Serie	K
1	10664755	1	DISTRIBUTION BLOCK MX-F 7/8 ⇨ ❑ 733	BLOCO DE DISTRIBUIÇÃO		
2	11341352	1	HOSE	MANGUEIRA		1
3	10300384	1	HOSE 4X1672	MANGUEIRA		1
4	10300385	1	HOSE 4X1028	MANGUEIRA		1
5	10300389	1	HOSE 4X2632	MANGUEIRA		1
6	10300390	1	HOSE 4X2697	MANGUEIRA		1
7	10300384	1	HOSE 4X1672	MANGUEIRA		1
8	10300387	1	HOSE 4X588	MANGUEIRA		1
9	10300389	1	HOSE 4X2632	MANGUEIRA		1
10	10300390	1	HOSE 4X2697	MANGUEIRA		1
999	10014611	1	AUXILIARY BOX ⇨ ❑ 262	CAIXA AUXILIAR		

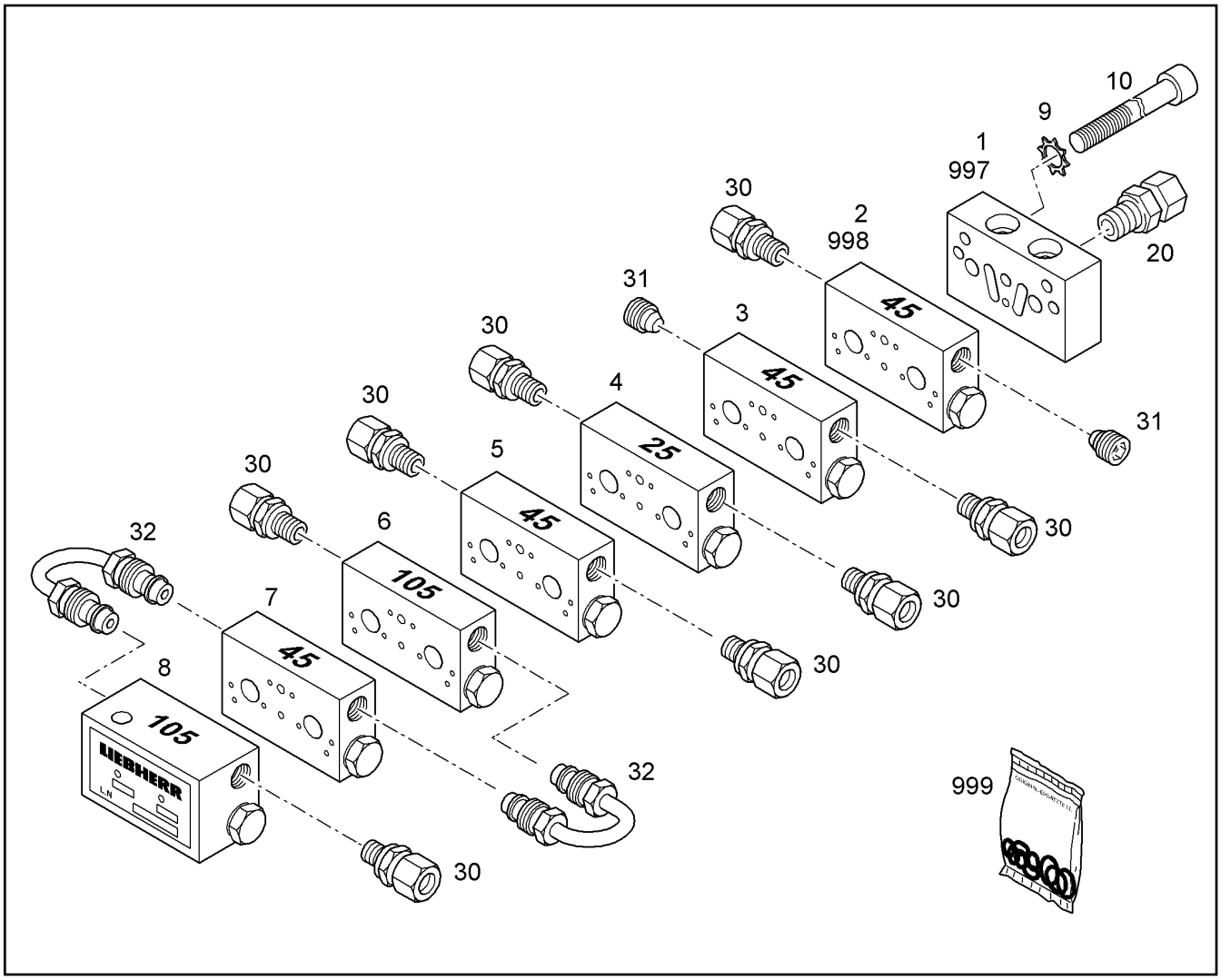

Pos.	Item	Quantity	Description	Designação	Serie	K
1	7027937	1	STARTING ELEMENT MX-F	ELEMENTO INICIAL		
2	7027939	1	CENTRAL ELEMENT MX-F 45	ELEMENTO CENTRAL		
3	7027939	1	CENTRAL ELEMENT MX-F 45	ELEMENTO CENTRAL		
4	7027938	1	CENTRAL ELEMENT MX-F 25	ELEMENTO CENTRAL		
5	7027939	1	CENTRAL ELEMENT MX-F 45	ELEMENTO CENTRAL		
6	7027941	1	CENTRAL ELEMENT MX-F 105	ELEMENTO CENTRAL		
7	7027939	1	CENTRAL ELEMENT MX-F 45	ELEMENTO CENTRAL		
8	7027945	1	END ELEMENT MX-F 105	ELEMENTO FINAL		
9	4002259	2	TOOTH LOCK WASHER A 6,4	ARRUELA DENTADA		
10	4601461	2	SOCKET HEAD SCREW ISO 4762 M6X110 1	PARAFUSO CILÍNDRICO		
20	10009053	1	FITTING GE 8LL M10X1	UNIÃO ROSCADA		
30	7622803	8	NON-RETURN VALVE	VÁLVULA DE RETORNO		
31	774378208	2	SCREW PLUG	PARAFUSO DE FECHAMENTO		
32	774378008	2	PIPELINE	TUBULAÇÃO		
997	10021311	1	SEAL KIT ⇨ ❑ 265	KIT DE VEDAÇÃO		
998	10021310	1	SEAL KIT ⇨ ❑ 264	KIT DE VEDAÇÃO		
999	10021308	1	O-RING	ANEL-O		

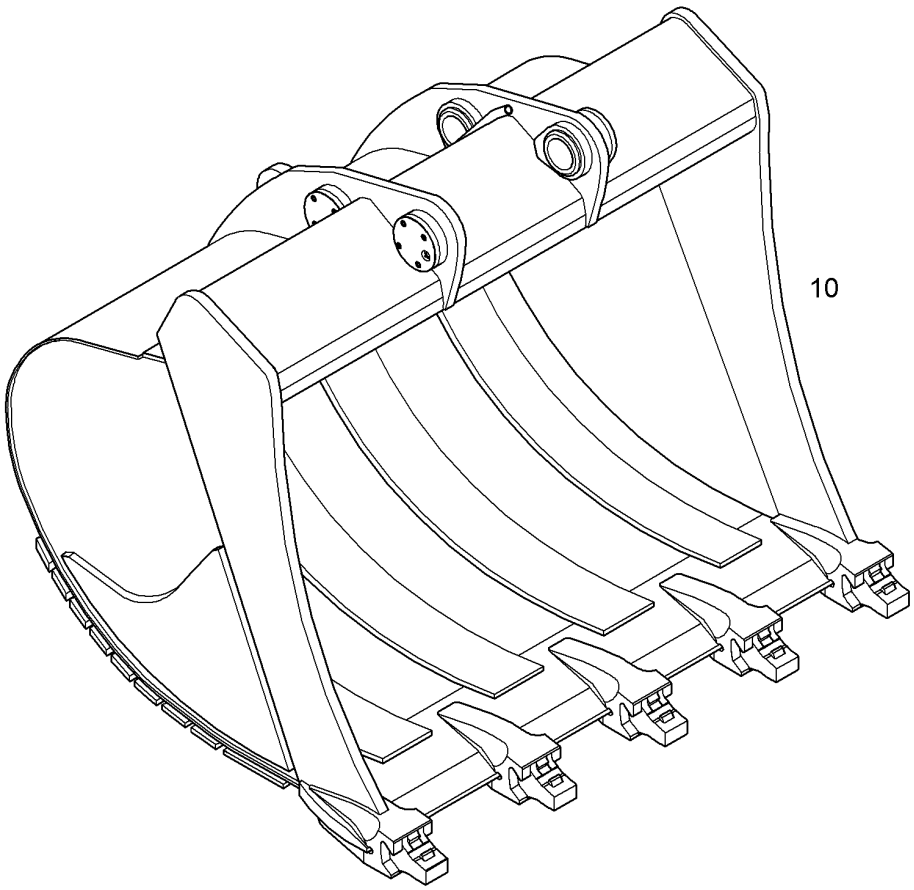

Pos.	Item	Quantity	Description	Designação	Serie	K
10		1	BACKHOE BUCKET HD 1800MM 2,60M3 ⇨ ❑ 735	CAÇAMBA RETRO HD		

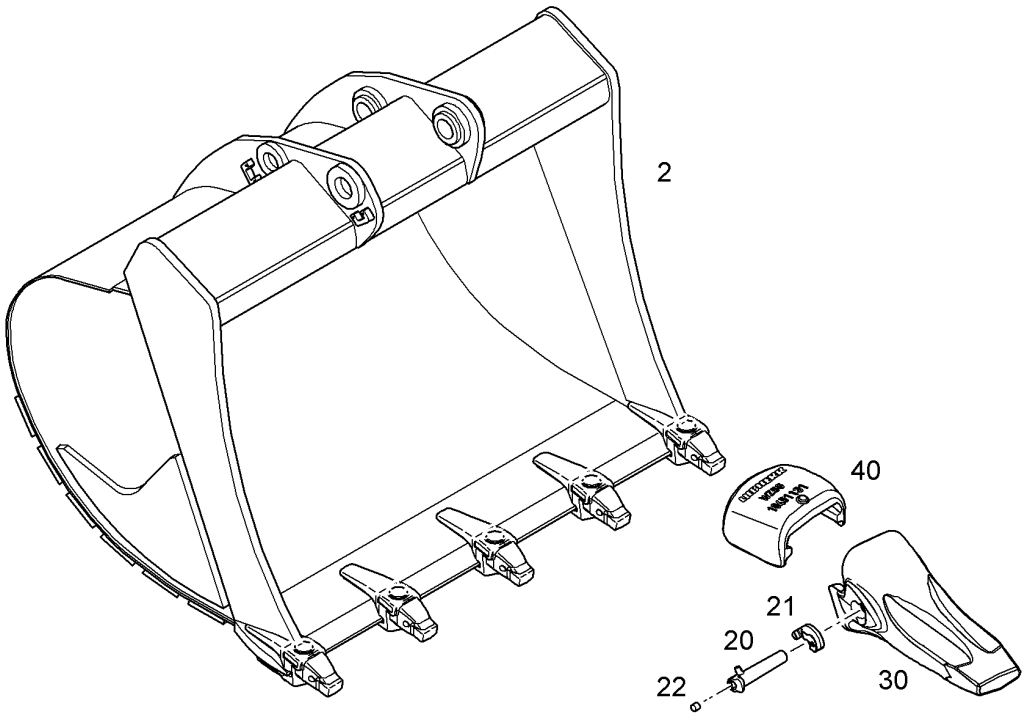

Pos.	Item	Quantity	Description	Designação	Serie	K
2	11102587	1	BACKHOE BUCKET HD 1800MM 2,60M3 [MOA002945-009X05] ⇨ ❑ 736	CAÇAMBA RETRO HD		
20	10451129	5	LOCKING BOLT	PINO DE TRAVAMENTO		1
21	10451187	5	BLOCK PART	PEÇA DE BLOQUEIO		1
22	10451200	5	EXPANDED FOAM PLUG	TAMPÃO - MATERIAL ESPUMA		1
30	10451133	5	TOOTH	DENTE		1
40	10451131	5	WEARING CAP	CAPA DE DESGASTE		1

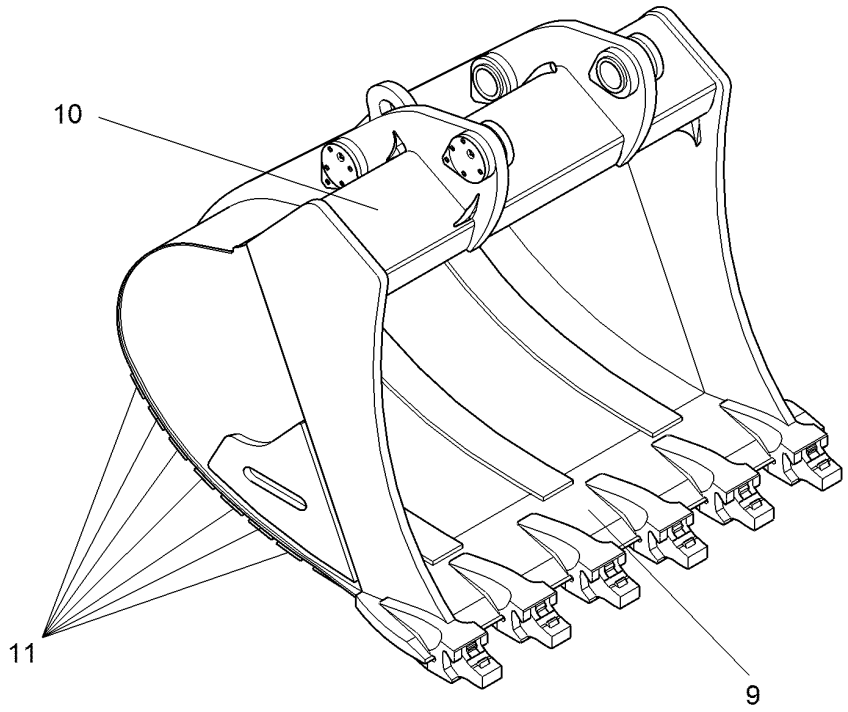

Pos.	Item	Quantity	Description	Designação	Serie	K
9		1	BUCKET BIT ⇨ ❑ 737	LÂMINA RETRO		
10		1	BEARING BLOCK ⇨ ❑ 739	BLOCO DO MANCAL		
11		1	WEARING PARTS SET ⇨ ❑ 738	KIT DE PEÇAS DE DESGASTE		

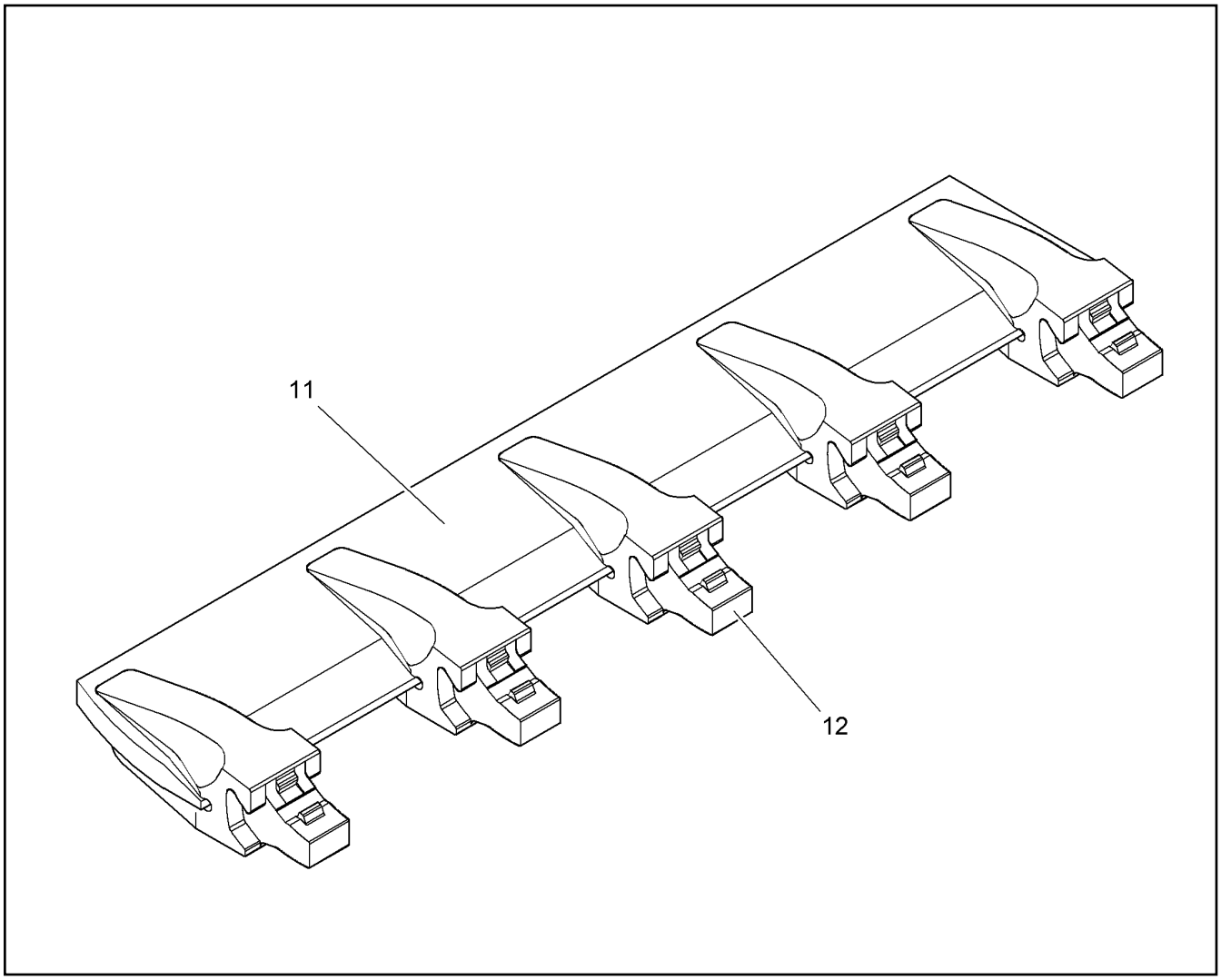

Pos.	Item	Quantity	Description	Designação	Serie	K
11	10498524	1	CUTTER	LÂMINA		
12	10451130	5	ADAPTOR	ADAPTADOR		1

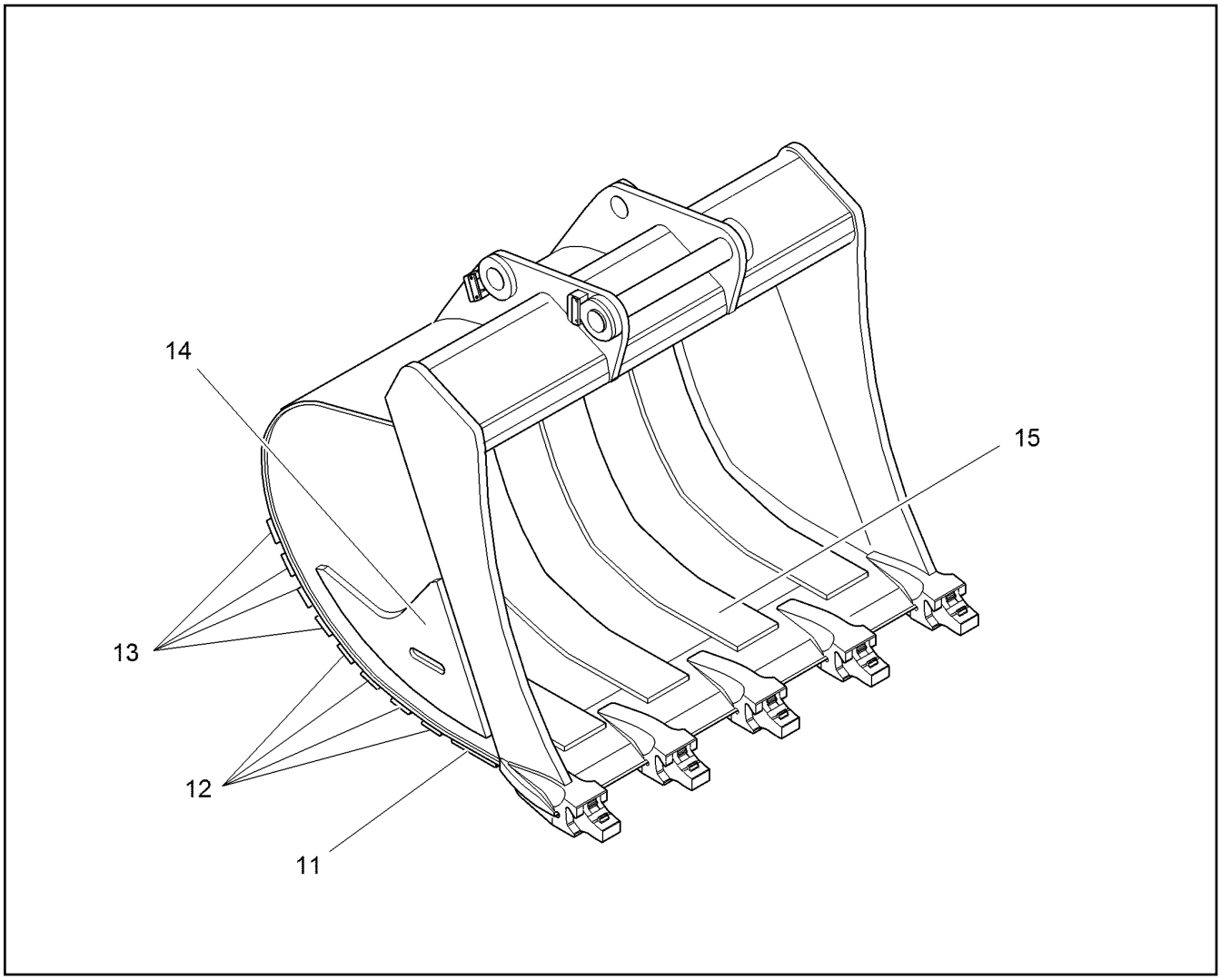

Pos.	Item	Quantity	Description	Designação	Serie	K
11	10498781	1	WEARING PLATE	PLACA DE DESGASTE		
12	10498782	4	WEARING PLATE	PLACA DE DESGASTE		
13	10498783	4	WEARING PLATE	PLACA DE DESGASTE		
14	10498791	2	WEARING PLATE	CHAPA DE DESGASTE		
15	10498792	4	WEAR PLATE	PLACA DE DESGASTE		

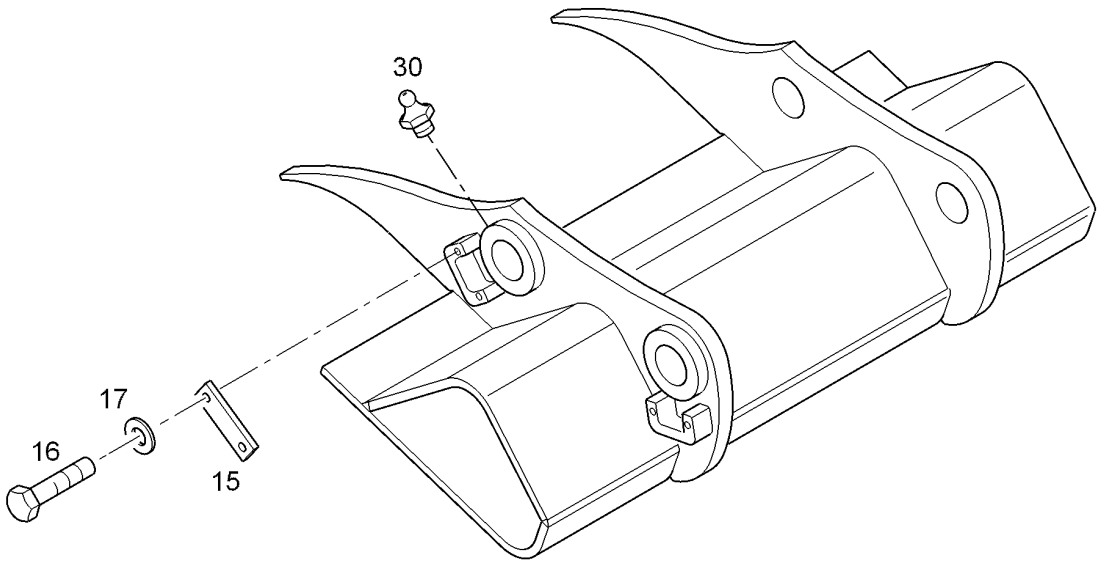

Pos.	Item	Quantity	Description	Designação	Serie	K
15	9830148	2	SHEET	PLACA DE APOIO		
16	4600184	4	HEX SCREW ISO 4017 M12X25 10.9 A3C	PARAFUSO SEXTAVADO		
17	10289804	4	WASHER 12 300HV	ARRUELA		
30	10005440	4	GREASE NIPPLE AEHNL.DIN 71412 A M10X	NIPLE DE LUBRIFICAÇÃO		

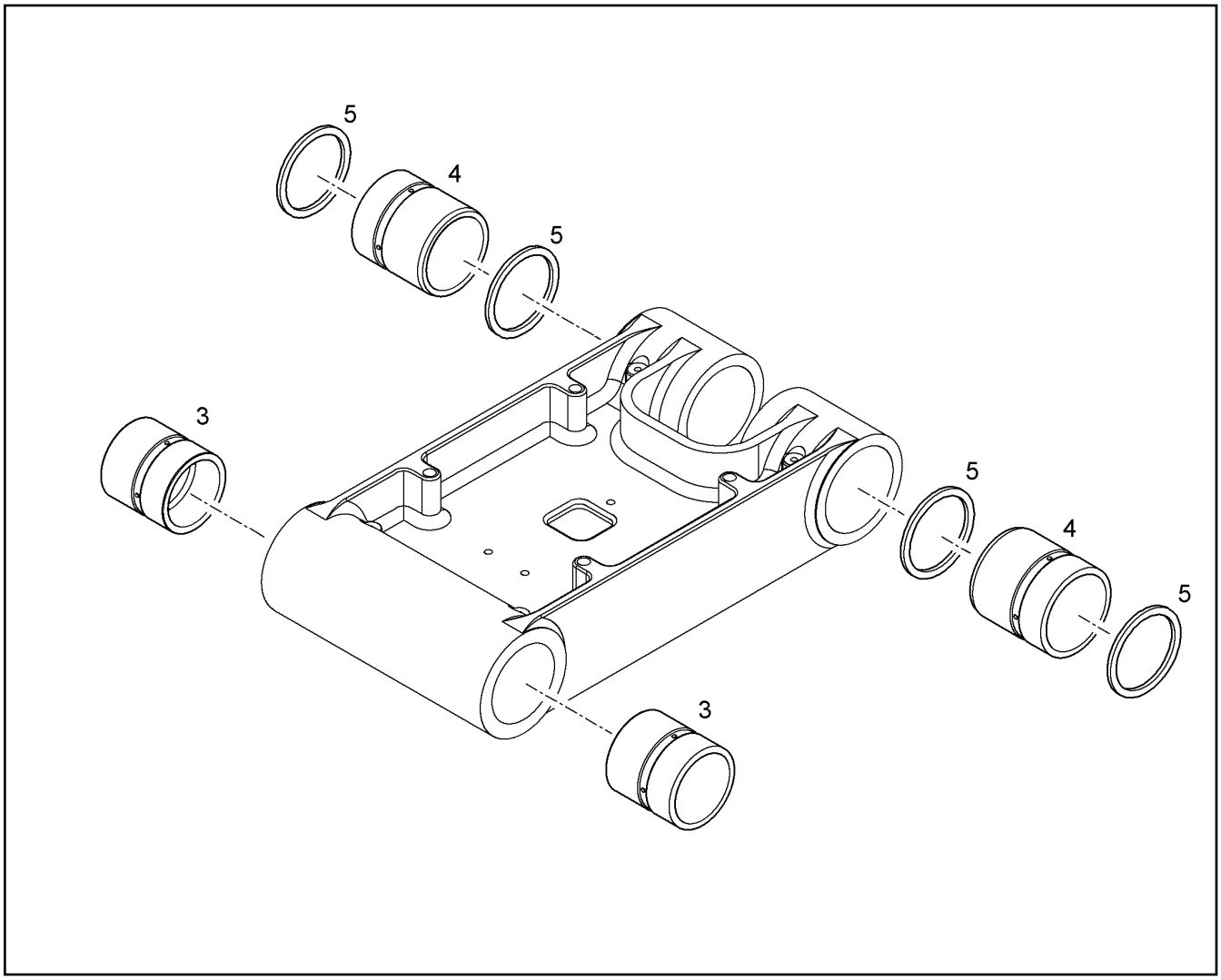

Pos.	Item	Quantity	Description	Designação	Serie	K
3	10399732	2	BUSHING B1 100/120X120	BUCHA		1
4	10820891	2	BUSHING B1 110/130X135	BUCHA	30010-	1
5	7362183	4	RADIAL SEAL X110X130X8	ANEL DE VEDAÇÃO RADIAL		

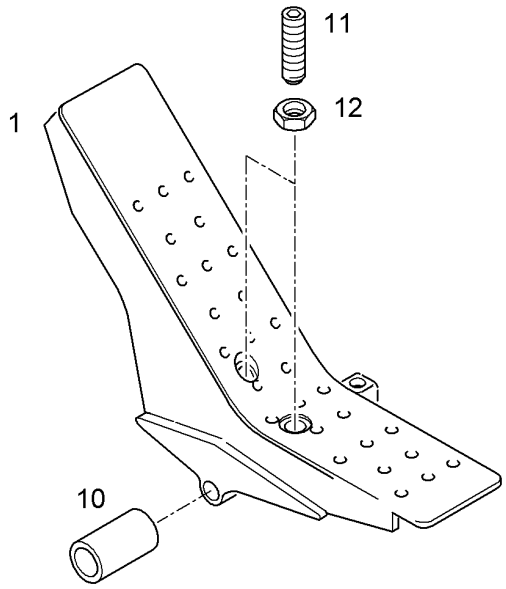

Pos.	Item	Quantity	Description	Designação	Serie	K
1	9079302	1	PEDAL RIGHT	PEDAL DIREITO		
10	7362583	2	BUSHING 14/16X10	BUCHA		1
11	9078701	2	GRUB SCREW M8X50X5 22H DAC	PARAFUSO		
12	4101100	2	HEX NUT M8	PORCA SEXTAVADA		

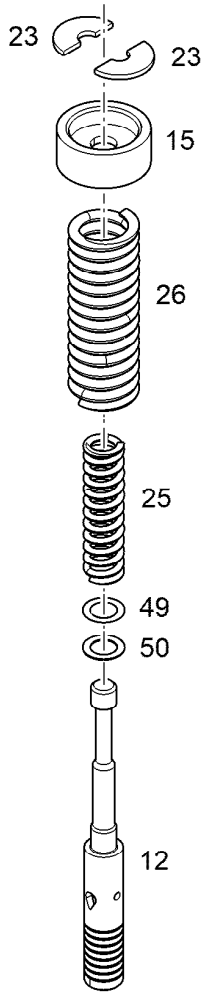

Pos.	Item	Quantity	Description	Designação	Serie	K
12		2	PISTON	PISTÃO		
15		2	SPRING SUPPORT	PRATO DA MOLA		
23		4	WASHER 3,8X12,5X1	ARRUELA		
25		2	PRESSURE SPRING 1,40X6,30X29	MOLA DE PRESSÃO		
26		2	PRESSURE SPRING 2,00X10,80X46,50	MOLA DE PRESSÃO		
49	7380137	2	SUPPORTING WASHER S 4,9X7,5X0,1	ARRUELA DE APOIO		
50		2	SUPPORTING WASHER S 4,9X7,5X0,3	ARRUELA DE APOIO		

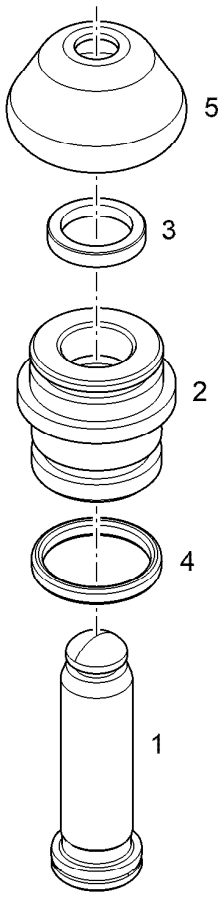

Pos.	Item	Quantity	Description	Designação	Serie	K
1		1	TAPPET	TUCHO		
2		1	BUSHING	BUCHA		
3		1	ROTOR GASKET 10X13,6X2,3	VEDAÇÃO DO ROTOR		
4		1	O-RING ISO 3601-1 14X1,78	ANEL-O		
5		1	RUBBER CAP	CAPA DE BORRACHA		

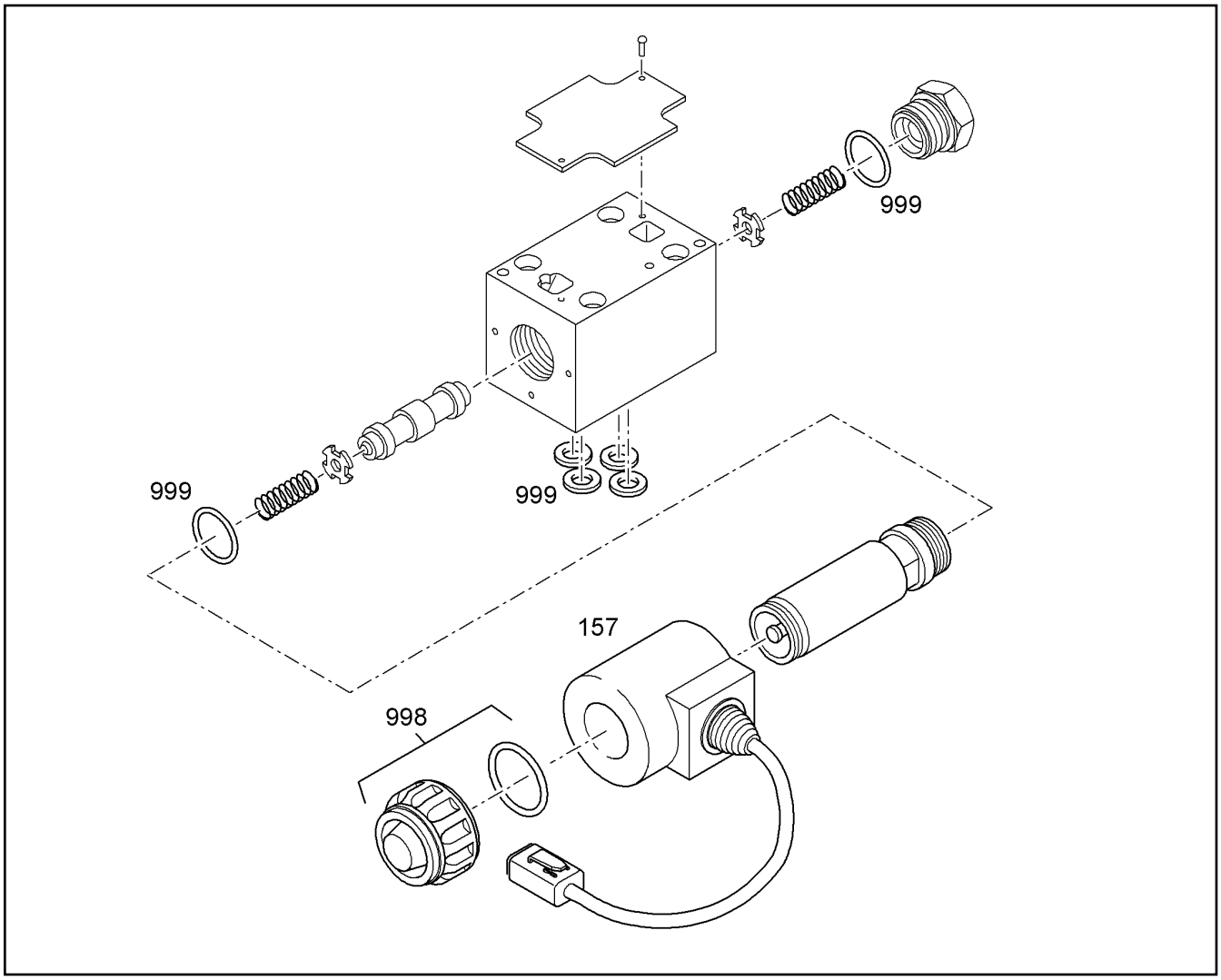

Pos.	Item	Quantity	Description	Designação	Serie	K
157	10101523	1	COIL	BOBINA MAGNÉTICA		
998	7027459	1	NUT	PORCA		
999	7624268	1	SEAL KIT	KIT DE VEDAÇÃO		

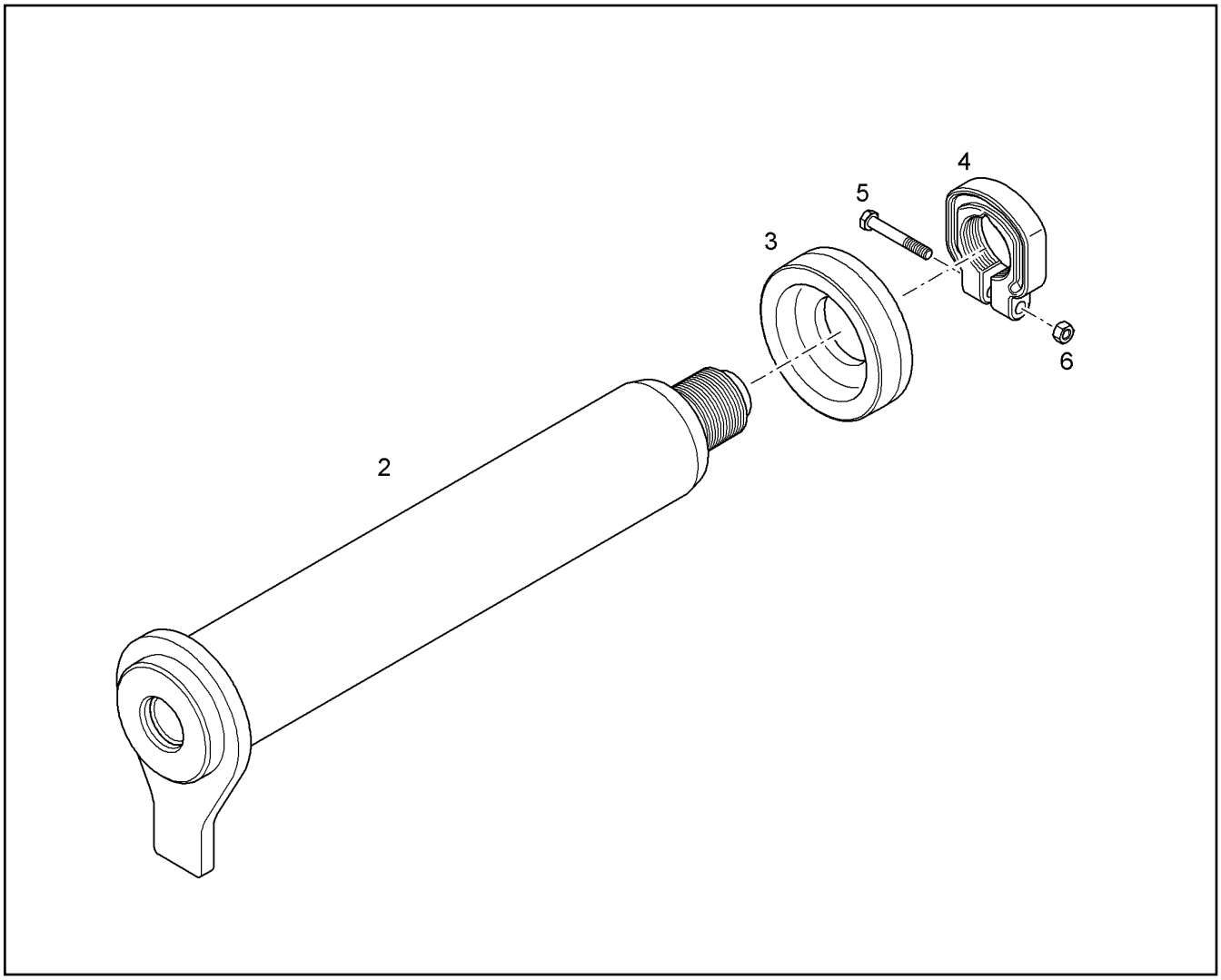

Pos.	Item	Quantity	Description	Designação	Serie	K
2		1	PIN 110X703X585	PINO		1
3	3001446	1	WASHER	ARRUELA		
4	9240322	1	LOCK NUT M64	PORCA DE APERTO		
5	4002079	1	HEX SCREW ISO 4014 M10X70 10.9 A3C	PARAFUSO SEXTAVADO		
6	4901429	1	HEX NUT M10	PORCA SEXTAVADA		

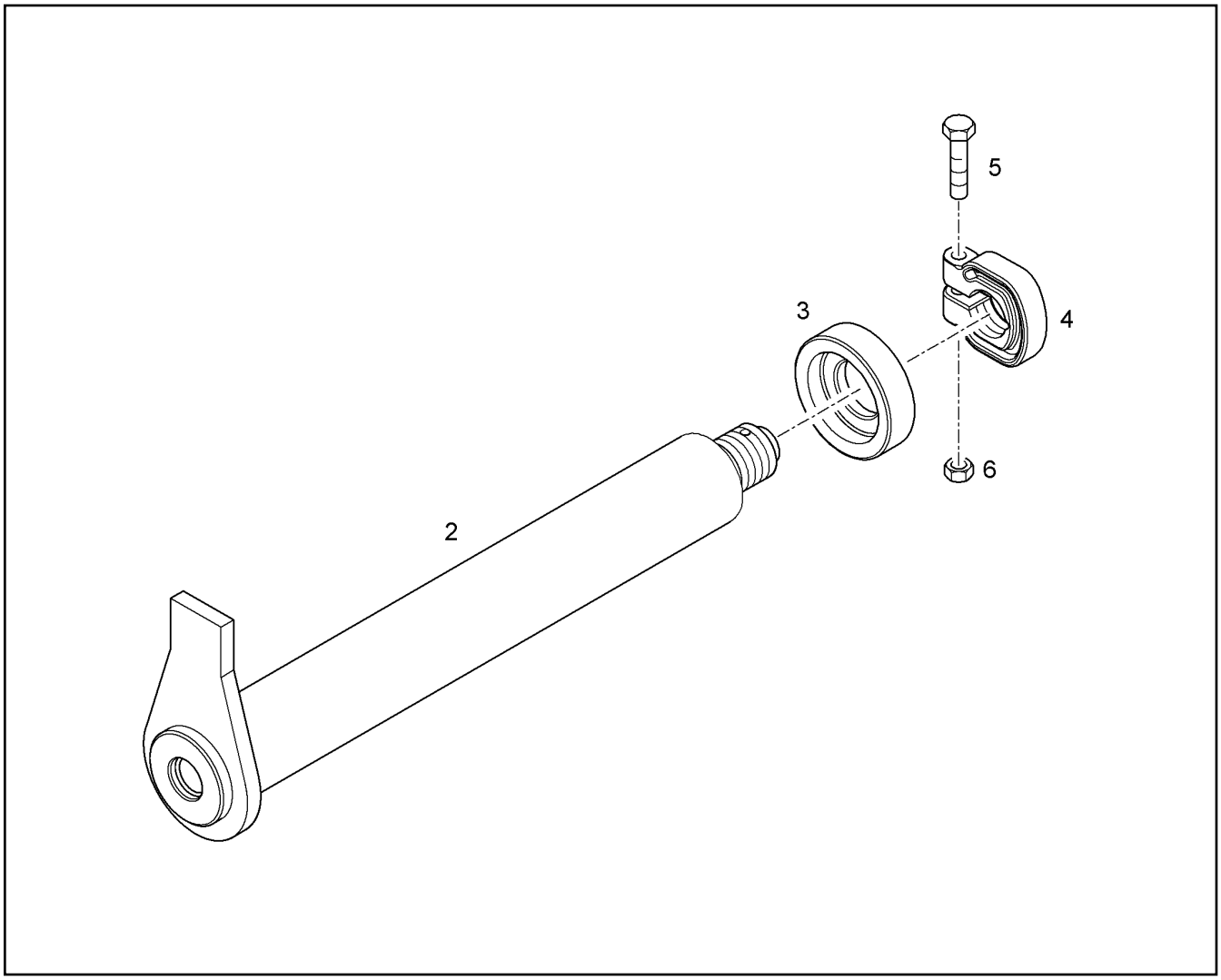

Pos.	Item	Quantity	Description	Designação	Serie	K
2		1	PIN 80X669X588	PINO		1
3	3001445	1	WASHER	ARRUELA		
4	9229473	1	LOCK NUT M48	PORCA DE APERTO		
5	4002079	1	HEX SCREW ISO 4014 M10X70 10.9 A3C	PARAFUSO SEXTAVADO		
6	4901429	1	HEX NUT M10	PORCA SEXTAVADA		

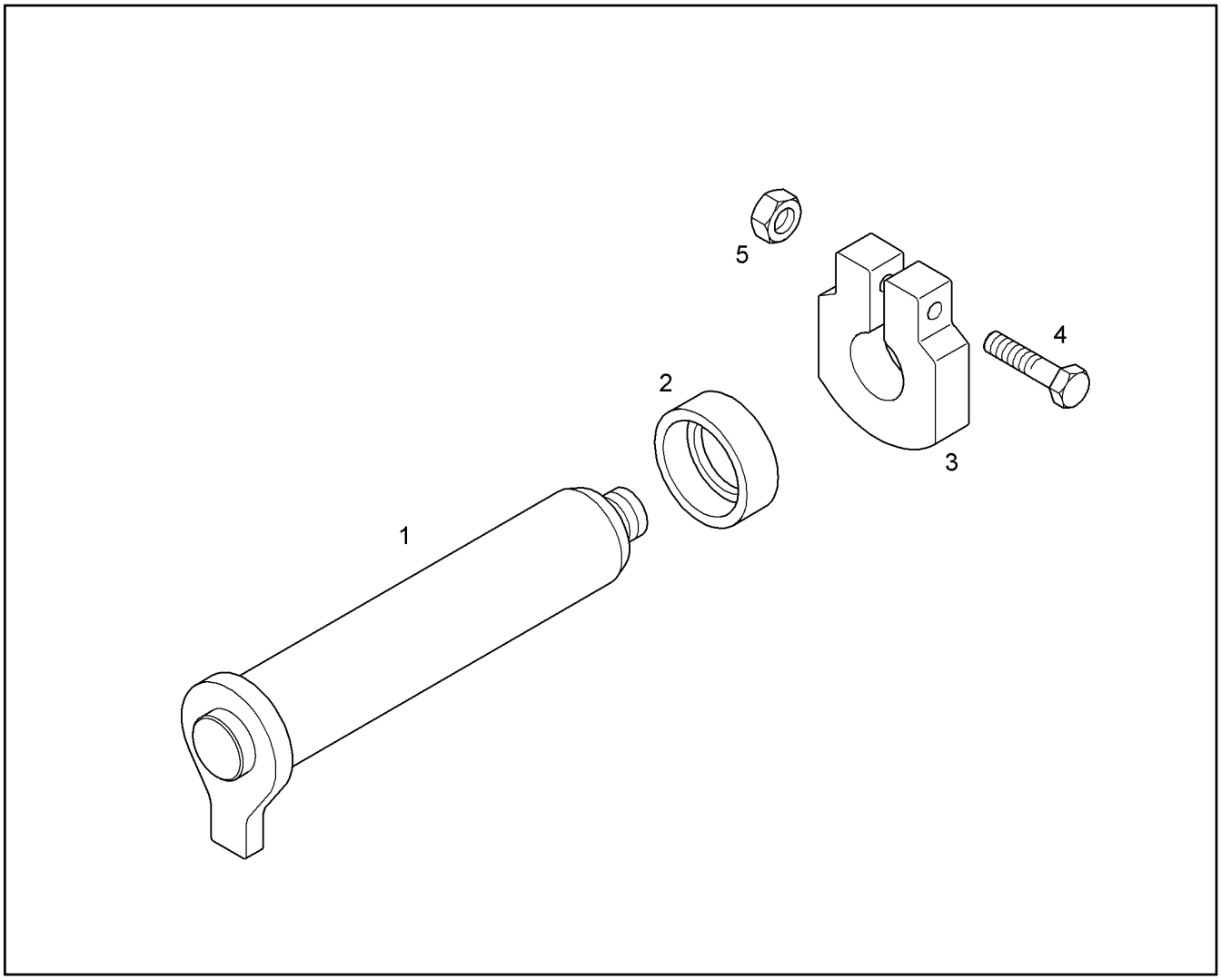

Pos.	Item	Quantity	Description	Designação	Serie	K
1		1	PIN 100X682X555	PINO		
2	3001446	1	WASHER	ARRUELA		
3	9240322	1	LOCK NUT M64	PORCA DE APERTO		
4	10178863	1	HEX SCREW ISO 4014 M10X75 10.9 FLZN	PARAFUSO SEXTAVADO		
5	11140466	1	HEX NUT M10	PORCA SEXTAVADA		

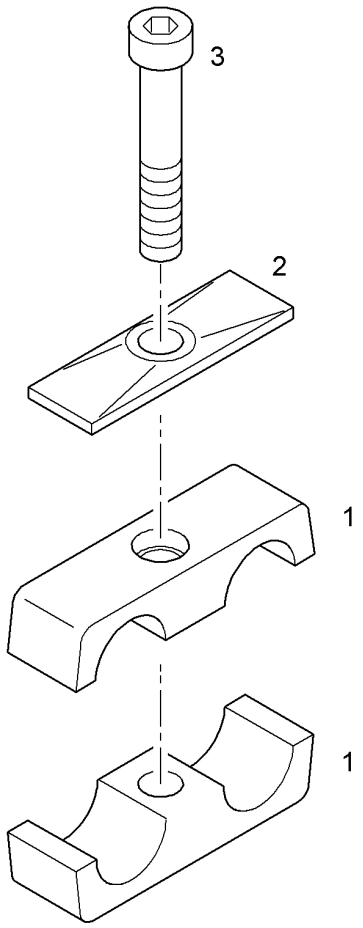

Pos.	Item	Quantity	Description	Designação	Serie	K
1	7029979	2	CLAMP-HALF AEHNL.DIN 3015-3 Z 3 G 23 23	MEIA ABRAÇADEIRA		
2	7401349	1	LID PLATE DIN 3015-3 Z-DP 3 W1-ZN	PLACA		
3	4601316	1	HEX SCREW ISO 4017 M8X50 10.9 A2C	PARAFUSO SEXTAVADO		

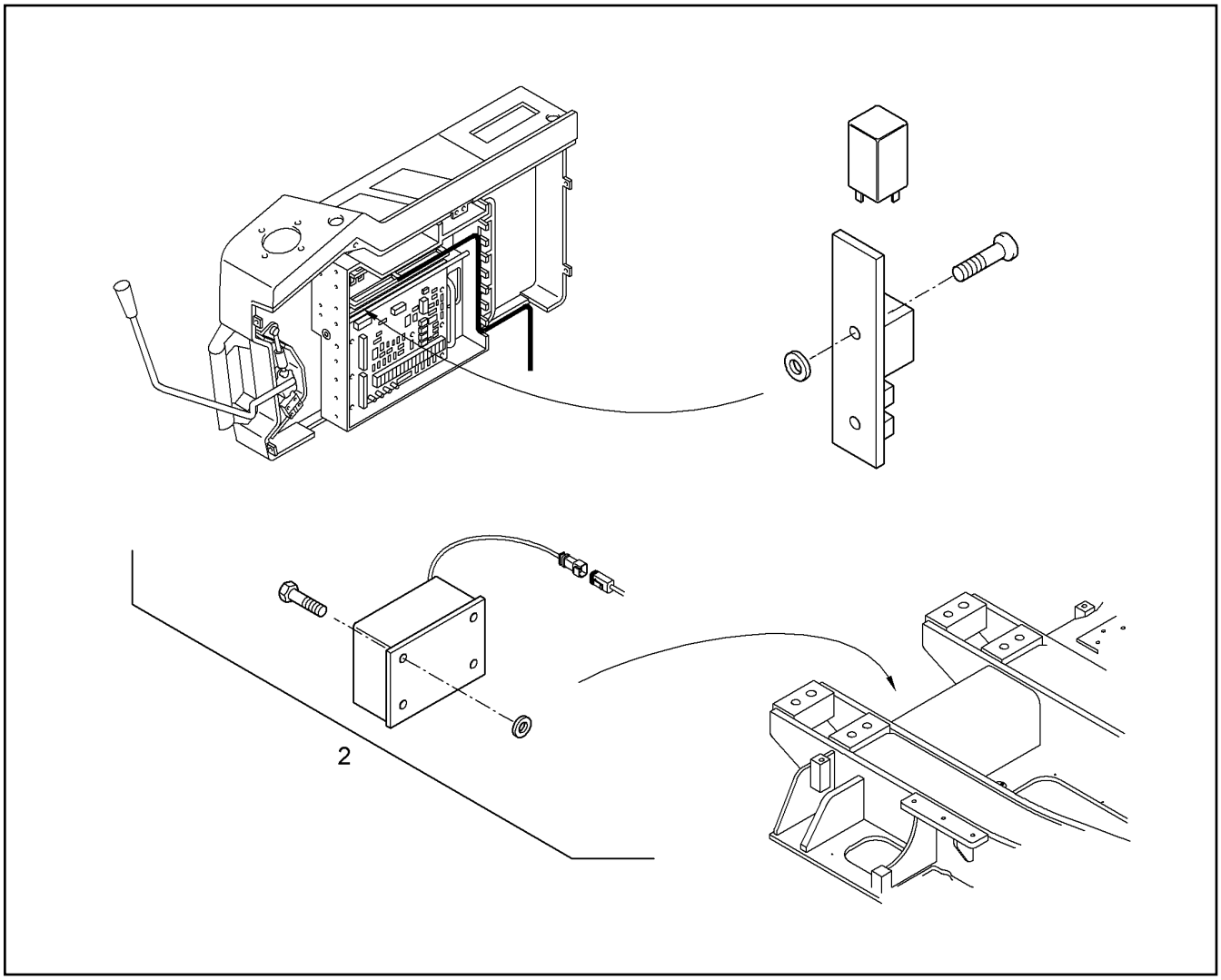

Pos.	Item	Quantity	Description	Designação	Serie	K
2	10358601	1	TRAVEL ALARM ⇨ ❑ 751	ALARME DE TRANSLACAO		

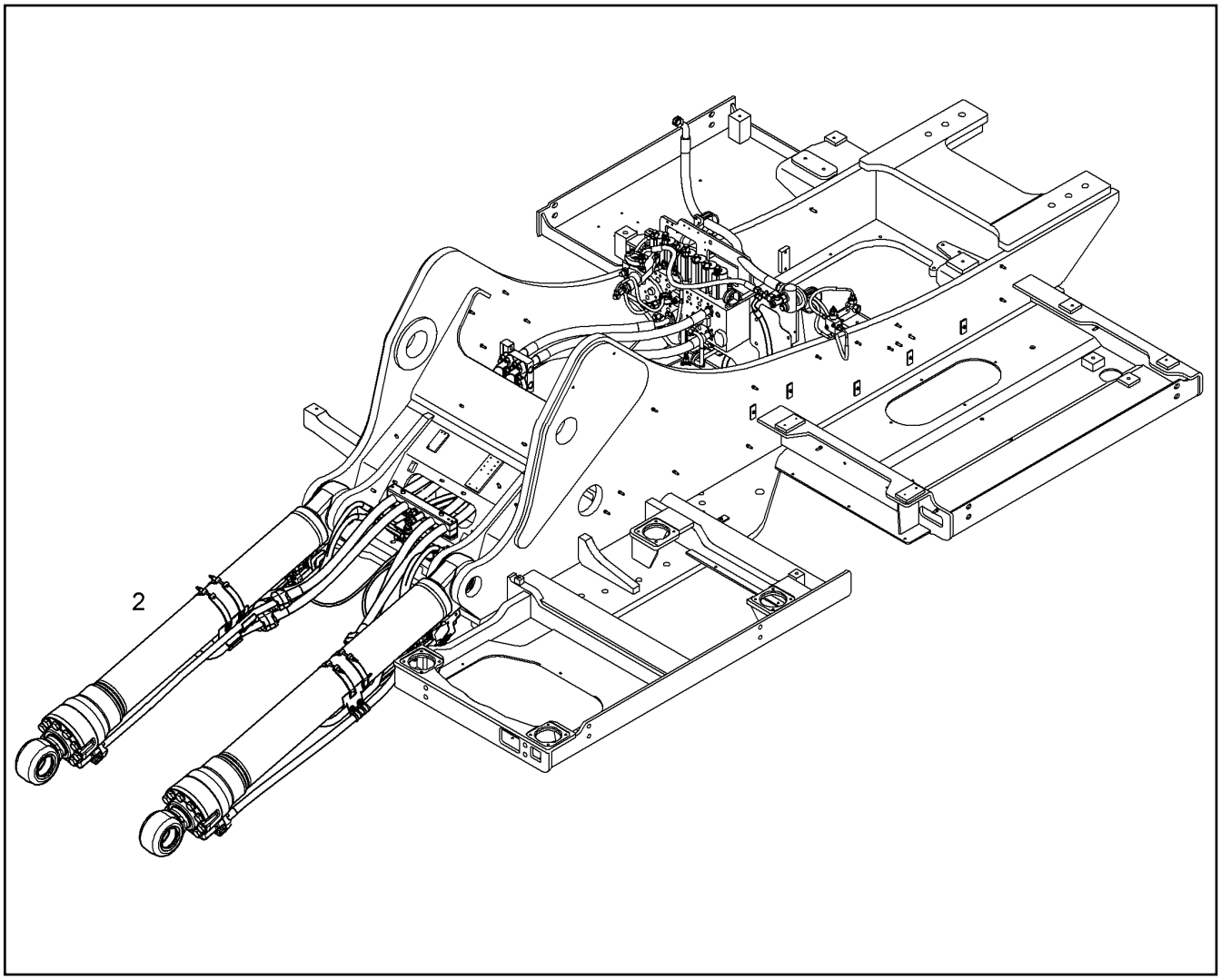

Pos.	Item	Quantity	Description	Designação	Serie	K
2		1	HOIST CYLINDER INSTALLATION ⇨ ❑ 752	MONTAGEM CILINDRO DE ELE		

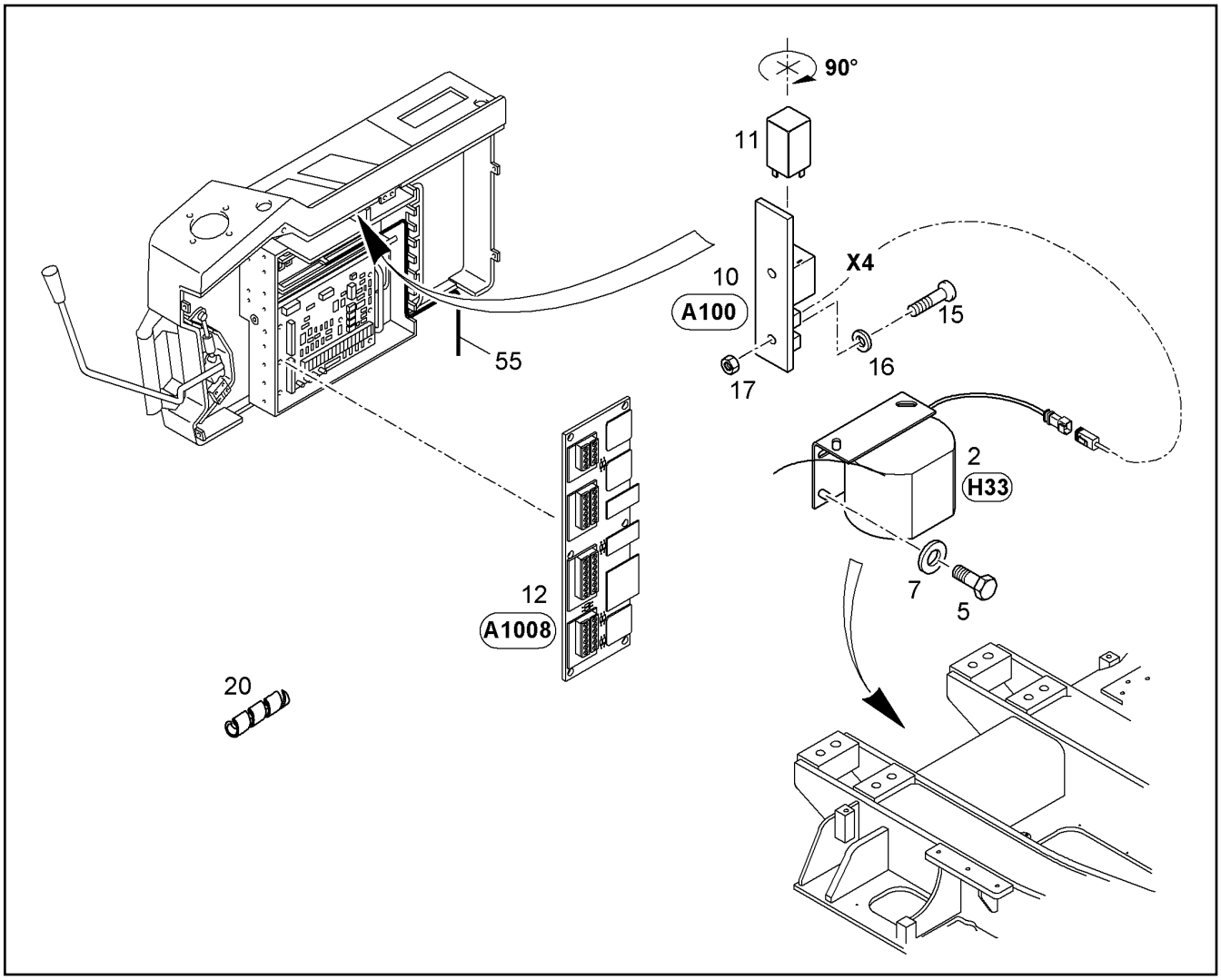

Pos.	Item	Quantity	Description	Designação	Serie	K
2	10288438	1	REVERSING WARNER	ALERTA DE MARCHA À RÉ		
5	11651767	4	HEX SCREW ISO 4017 M8X20 8.8 480H	PARAFUSO SEXTAVADO		
7	10289803	8	WASHER 8 300HV	ARRUELA		
10	9202120	1	PLATINE	PLACA ELETRONICA		
11	6001418	1	TIME RELAY	RELE TEMPORIZADOR		
15	12222642	2	SOCKET HEAD SCREW ISO 4762 M4X6 8.8 4	PARAFUSO CILÍNDRICO		
16	10875645	2	WASHER 4 200HV	ARRUELA		
17	12224463	2	HEX NUT M4	PORCA SEXTAVADA		1
20	774383508	0.5m	TUBING COIL	SERPENTINA DE TUBO		
55	9699736	1	CABLE LOOM A100-A1008	CHICOTE ELÉTRICO		

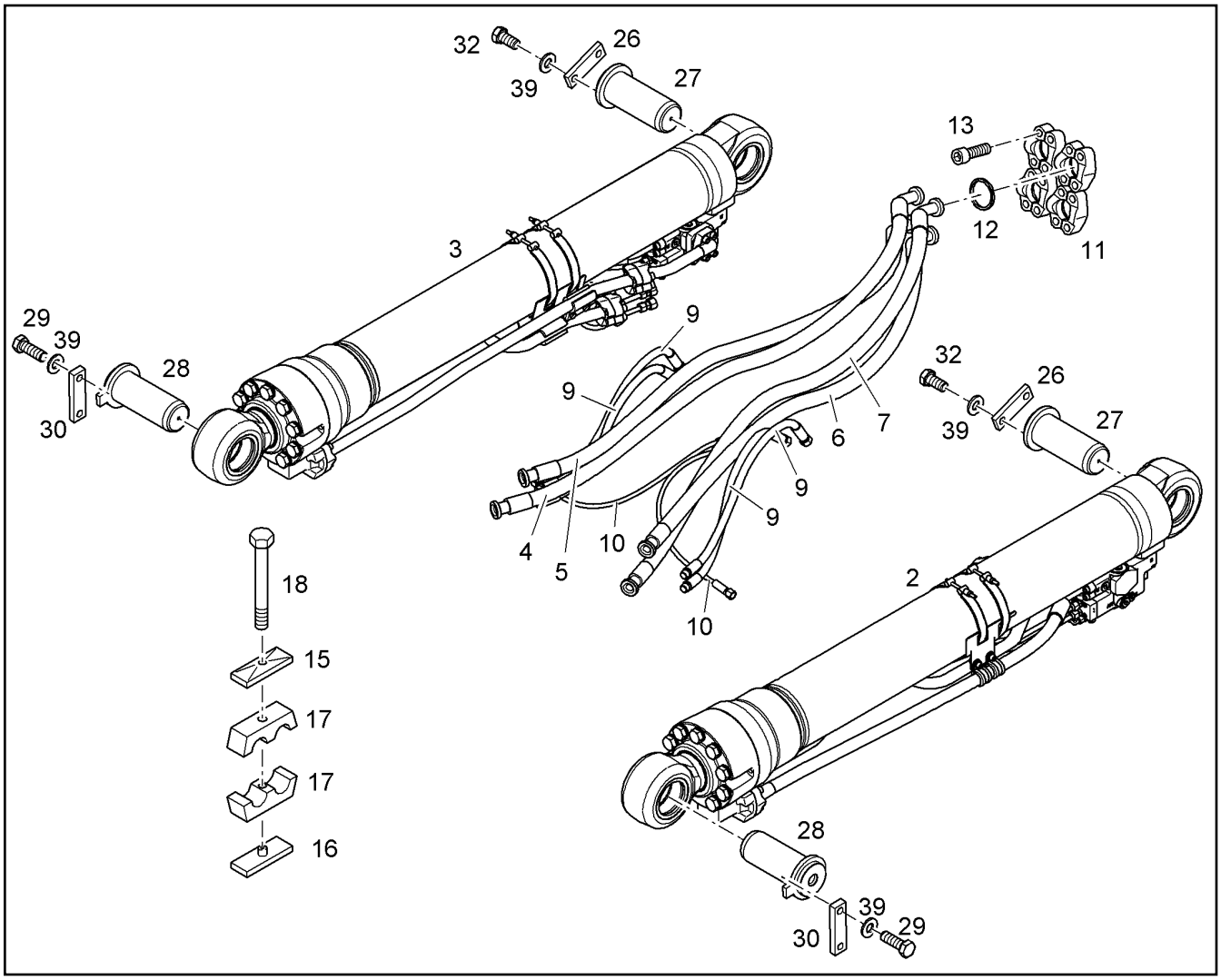

Pos.	Item	Quantity	Description	Designação	Serie	K
2		1	HOIST CYLINDER LEFT ⇨ ❑ 778	CILINDRO DE ELEVACAO ESQUE		
3		1	HOIST CYLINDER RIGHT ⇨ ❑ 775	CILINDRO DE ELEVACAO DIREIT		
4	10470978	1	HOSE 25X1870	MANGUEIRA		1
5	10470976	1	HOSE 25X1720	MANGUEIRA		1
6	10470977	1	HOSE 25X1780	MANGUEIRA		1
7	10470978	1	HOSE 25X1870	MANGUEIRA		1
9	10300205	4	HOSE 12X780	MANGUEIRA		1
10	10355894	2	HOSE 6X850	MANGUEIRA		1
11	11485638	8	FLANGE HALF WITH BOSSING SAE J518 S	MEIO FLANGE COM RELEVO		
12	10490781	8	RECTANGULAR SECTION RING 40,15X2,80	ANEL DE SEÇÃO RETANGULAR		
13	4901724	16	SOCKET HEAD SCREW ISO 4762 M12X40 A4	PARAFUSO CILÍNDRICO		
15	7362606	1	LID PLATE DIN 3015-3 Z-DP 2 W1-ZN	PLACA		
16	4002685	1	WELD PLATE DIN 3015-3 Z-AP 2 W1-ZN	PLACA SOLDADA		
17	7363276	2	CLAMP-HALF DIN 3015-3 Z 2 R 18 18 PP SW	MEIA ABRAÇADEIRA		
18	12202976	1	SOCKET HEAD SCREW ISO 4762 M8X40 8.8	PARAFUSO CILÍNDRICO		
26	9434249	2	SHEET	PLACA DE APOIO		
27	10056391	2	PIN 100X267X217	PINO		
28	10405387	2	PIN 100X267X217	PINO		1
29	10299574	4	HEX SCREW ISO 4017 M12X35 10.9 FLZN	PARAFUSO SEXTAVADO		
30	9830148	2	SHEET	PLACA DE APOIO		
32	10800024	4	HEX SCREW ISO 4017 M12X25 10.9 FLZN	PARAFUSO SEXTAVADO		
39	10289804	8	WASHER 12 300HV	ARRUELA		

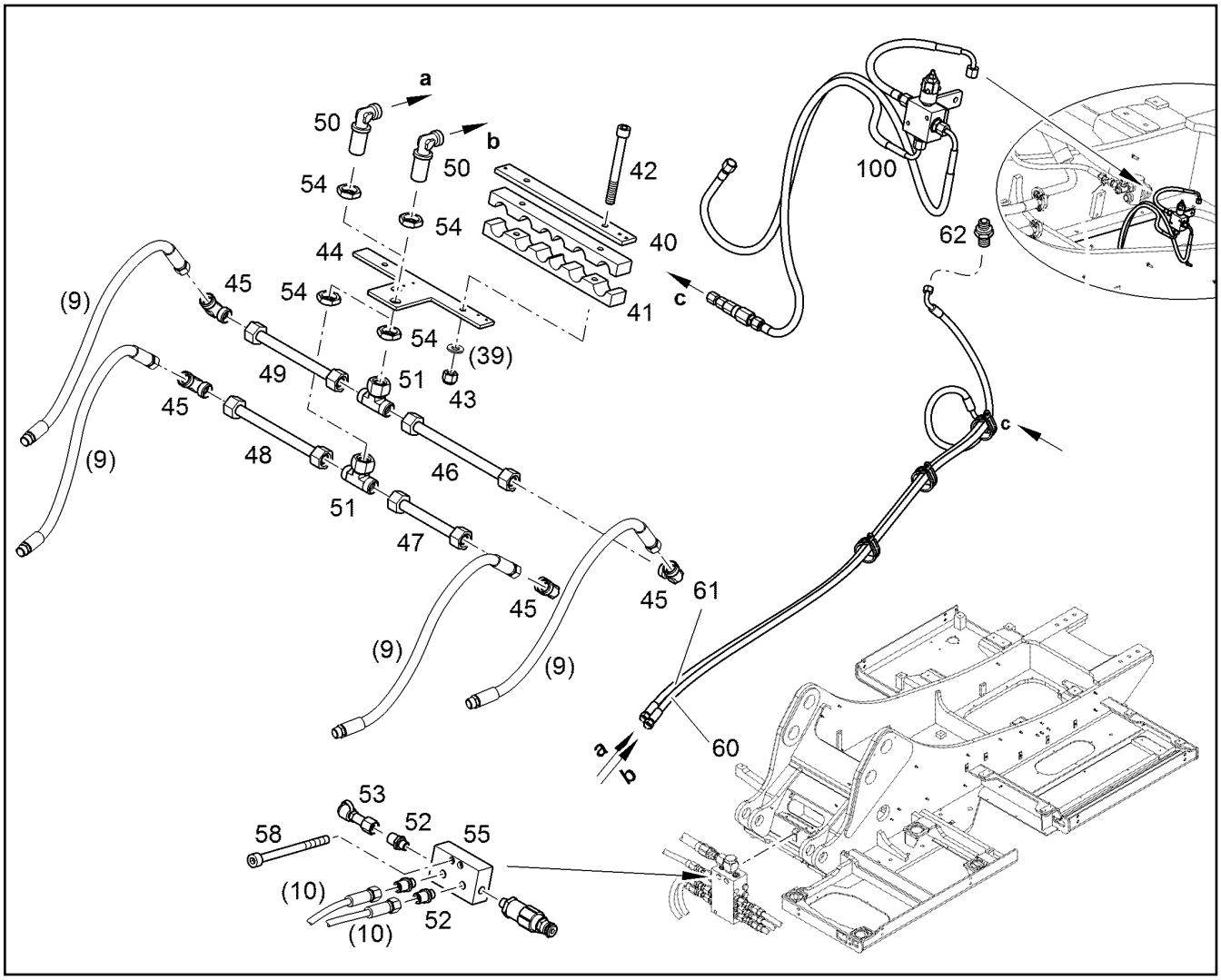

Pos.	Item	Quantity	Description	Designação	Serie	K
40	10068116	1	PLATE	PLACA		
41	7028742	2	HALF CLAMP COLLAR HRRL 4 38 38-2X35-2	MEIA ABRAÇADEIRA		
42	11321146	2	SOCKET HEAD SCREW ISO 4762 M12X110	PARAFUSO CILÍNDRICO		
43	4000619	2	HEX NUT M12	PORCA SEXTAVADA		
44	9864658	1	SHEET	PLACA DE APOIO		
45	7362109	4	FITTING W 15L	UNIÃO ROSCADA		
46	9399772	1	PRESSURE LINE CPL	TUBULAÇÃO DE PRESSÃO COM		
47	9399770	1	PRESSURE LINE CPL	TUBULAÇÃO DE PRESSÃO COM		
48	9399771	1	PRESSURE LINE CPL	TUBULAÇÃO DE PRESSÃO COM		
49	9399769	1	PRESSURE LINE CPL	TUBULAÇÃO DE PRESSÃO COM		
50	7364350	2	FITTING WSV 15L M22X1,5	UNIÃO ROSCADA		
51	472430408	2	FITTING ET 15L M22X1,5	UNIÃO ROSCADA		
52	4901382	3	FITTING GE 8S G1/4A	UNIÃO ROSCADA		
53	5607605	1	GAUGE CONNECTION M16X1,5	BOCAL DE MEDIÇÃO		
54	12227355	4	HEX NUT M22X1,5	PORCA SEXTAVADA		
55	10068108	1	BLOCK	BLOCO		
58	12223045	2	SOCKET HEAD SCREW ISO 4762 M5X35 10	PARAFUSO CILÍNDRICO		
60	5618658	1	HOSE 12X2300	MANGUEIRA		1
61	10000473	1	HOSE 12X3000	MANGUEIRA		1
62	7406699	1	FITTING GR 15/10L	UNIÃO ROSCADA		
100		1	BASIC MACHINE MOUNTING PARTS ⇨ ❑ 754	PEÇAS MONT.- MÁQUINA BASE		

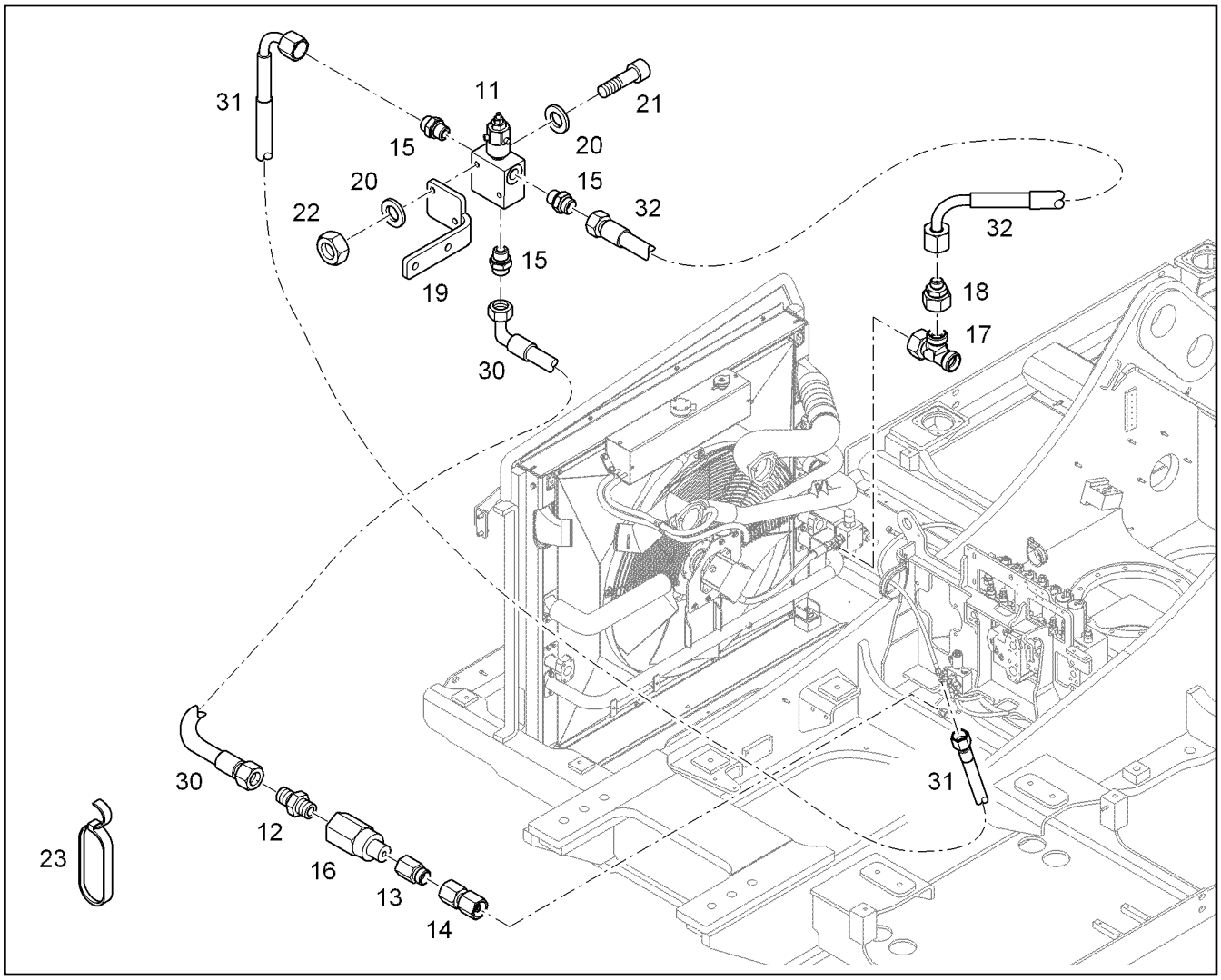

Pos.	Item	Quantity	Description	Designação	Serie	K
11	10441579	1	PRESSURE RELIEF VALVE ⇨ ❑ 372	VÁLVULA REDUTORA DE PRES		
12	7362091	1	FITTING GE 10L G1/4A	UNIÃO ROSCADA		
13	7364696	1	SCREW EXTENSION TUBE GAI 10L G1/4	BOCAL ROSCADO		
14	7410211	1	FITTING GZ 10L	UNIÃO ROSCADA		
15	7002830	3	FITTING GE 10L G3/8A	UNIÃO ROSCADA		
16	10301270	1	SHUTTLE-VALVE ⇨ ❑ 428	VÁLVULA ALTERNADORA		
17	247128502	1	FITTING EL 18L	UNIÃO ROSCADA		
18	7616916	1	FITTING RED 18/10L	UNIÃO ROSCADA		
19	10854638	1	CONSOLE	CONSOLE		
20	11693878	4	WASHER 6,4 200HV	ARRUELA		
21	12202784	2	SOCKET HEAD SCREW ISO 4762 M6X60 8.8	PARAFUSO CILÍNDRICO		
22	10814799	2	HEX NUT M6	PORCA SEXTAVADA		
23	10491557	6	VELCRO TAPE	FITA DE VELCRO		
30	7621217	1	HOSE 8X1100	MANGUEIRA		1
31	7401772	1	CONTROL HOSE	MANGUEIRA DE COMANDO		1
32	7403175	1	CONTROL HOSE 8X300	MANGUEIRA DE COMANDO		1

Siehe Untergruppen

See sub - group

Voir sous - groupe

Pos.	Item	Quantity	Description	Designação	Serie	K
10		1	KIT IN BASIC MACHINE ⇨ ❑ 756	KIT MÁQUINA BASE		

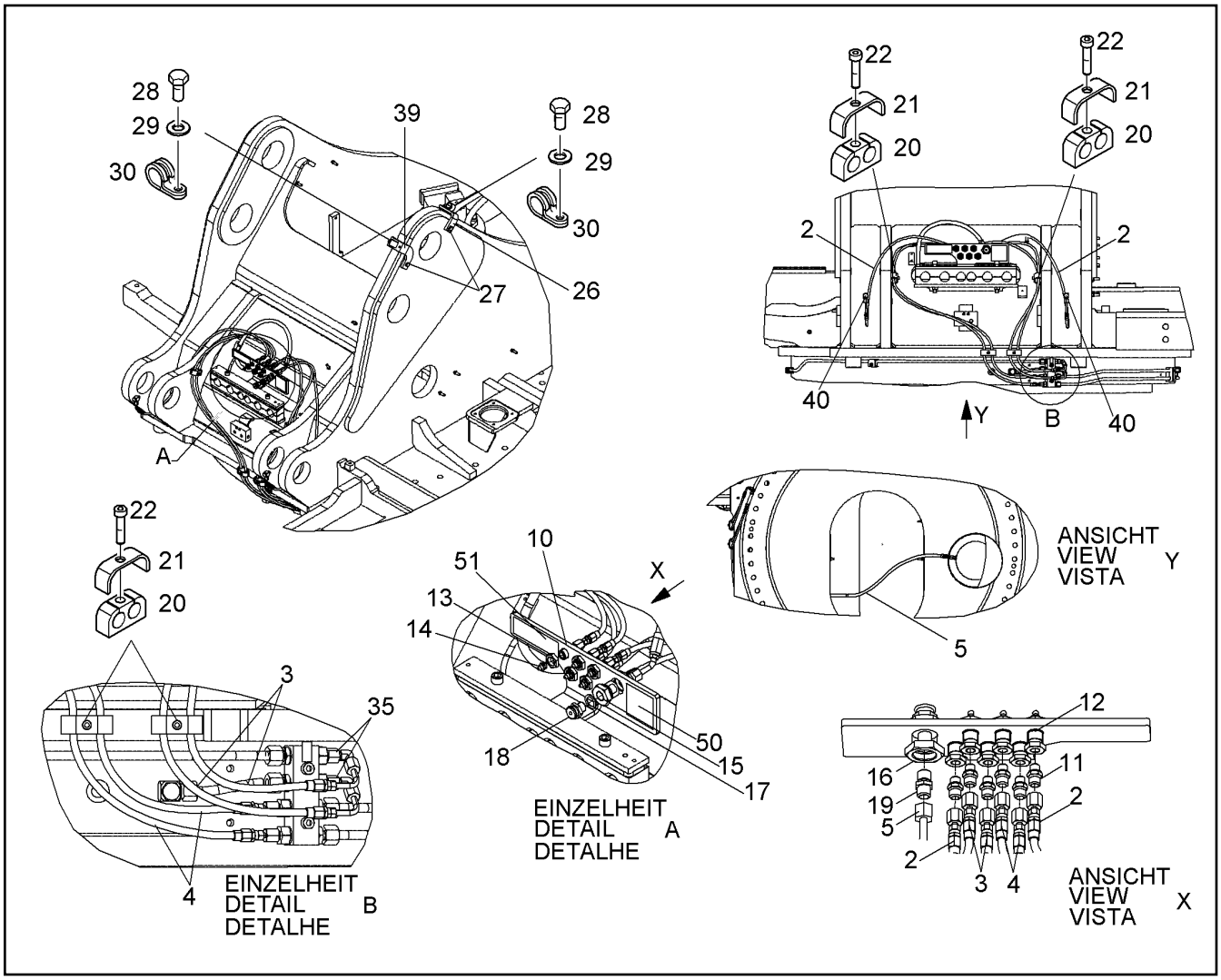

Pos.	Item	Quantity	Description	Designação	Serie	K
2	11659615	2	HOSE CPL. 4X1100	MANGUEIRA COMPLETA		1
3	11659618	2	HOSE CPL. 4X1200	MANGUEIRA COMPLETA		1
4	11659607	2	HOSE CPL. 4X1400	MANGUEIRA COMPLETA		1
5	11659623	1	HOSE CPL. 6X1700	MANGUEIRA COMPLETA		1
10	12913919	1	FOLDING SHEET 8X181X390	CHAPA DOBRADA		
11	7362169	6	FITTING GE 6L M10X1	UNIÃO ROSCADA		
12	9685685	6	BULKHEAD CONNECTOR M16x1,5 - M10x1	UNIÃO ROSCADA DE ANTEPAR		
13	4901153	6	NUT M16X1,5	PORCA		
14	10005440	6	GREASE NIPPLE AEHNL.DIN 71412 A M10X	NIPLE DE LUBRIFICAÇÃO		
15	11102819	1	BULKHEAD CONNECTOR	UNIÃO ROSCADA DE ANTEPAR		
16	12227356	1	HEX NUT M26X1,5	PORCA SEXTAVADA		
17	5209400	1	USIT RING	ANEL DE VEDAÇÃO USIT		
18	4901128	1	BUTTON HEAD LUBRICATING NIPPLEDIN 3	NIPLE DE LUBRIFICACAO		
19	7619197	1	FITTING GE 8L M14X1,5	UNIÃO ROSCADA		
20	10037724	4	CLAMP HRGBS 1 G 11 11 TPE73	BRAÇADEIRA		
21	10037722	4	BRACKET	ESTRIBO		
22	10651864	4	SOCKET HEAD SCREW ISO 4762 M6X10 10	PARAFUSO CILÍNDRICO		
26	10074866	1	CONSOLE	CONSOLE		
27	10299578	2	HEX SCREW ISO 4017 M10X25 10.9 FLZN	PARAFUSO SEXTAVADO		
28	10663450	2	SOCKET HEAD SCREW ISO 4762 M8X16 10	PARAFUSO CILÍNDRICO		
29	10289803	2	WASHER 8 300HV	ARRUELA		
30	7381630	2	CLAMP DIN 3016-1 D1 22X20 W1-2-MVQ	BRAÇADEIRA		
35	247021702	2	FITTING EW 6L	UNIÃO ROSCADA		
39	12860504	1	CONSOLE	CONSOLE		
40	7368426	2	FITTING WH 6L M10X1 KDS	UNIÃO ROSCADA		
50	11659791	1	SIGN	IDENTIFICAÇÃO		

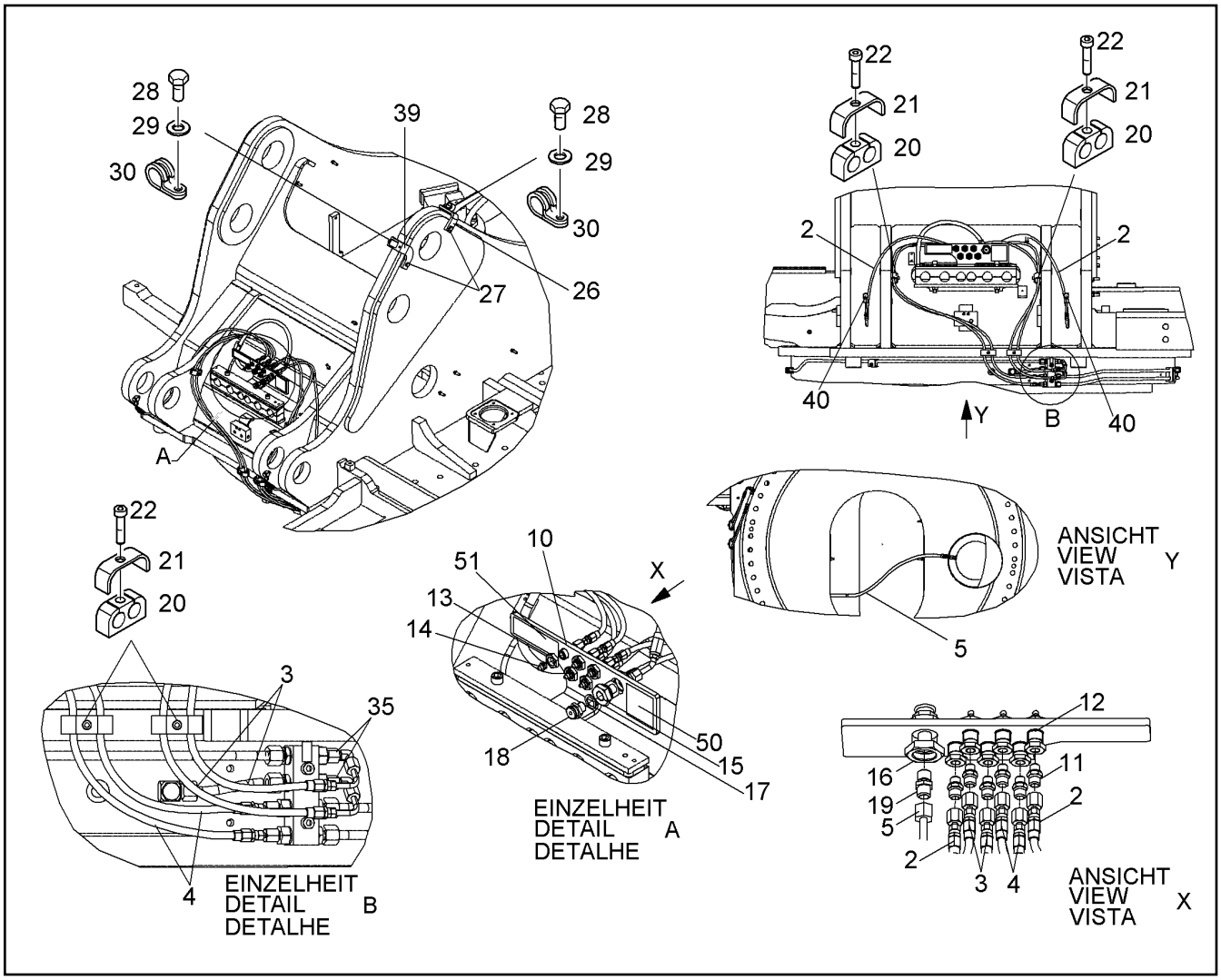

Pos.	Item	Quantity	Description	Designação	Serie	K
51	12250858	1	STICKER	ETIQUETA ADESIVA		

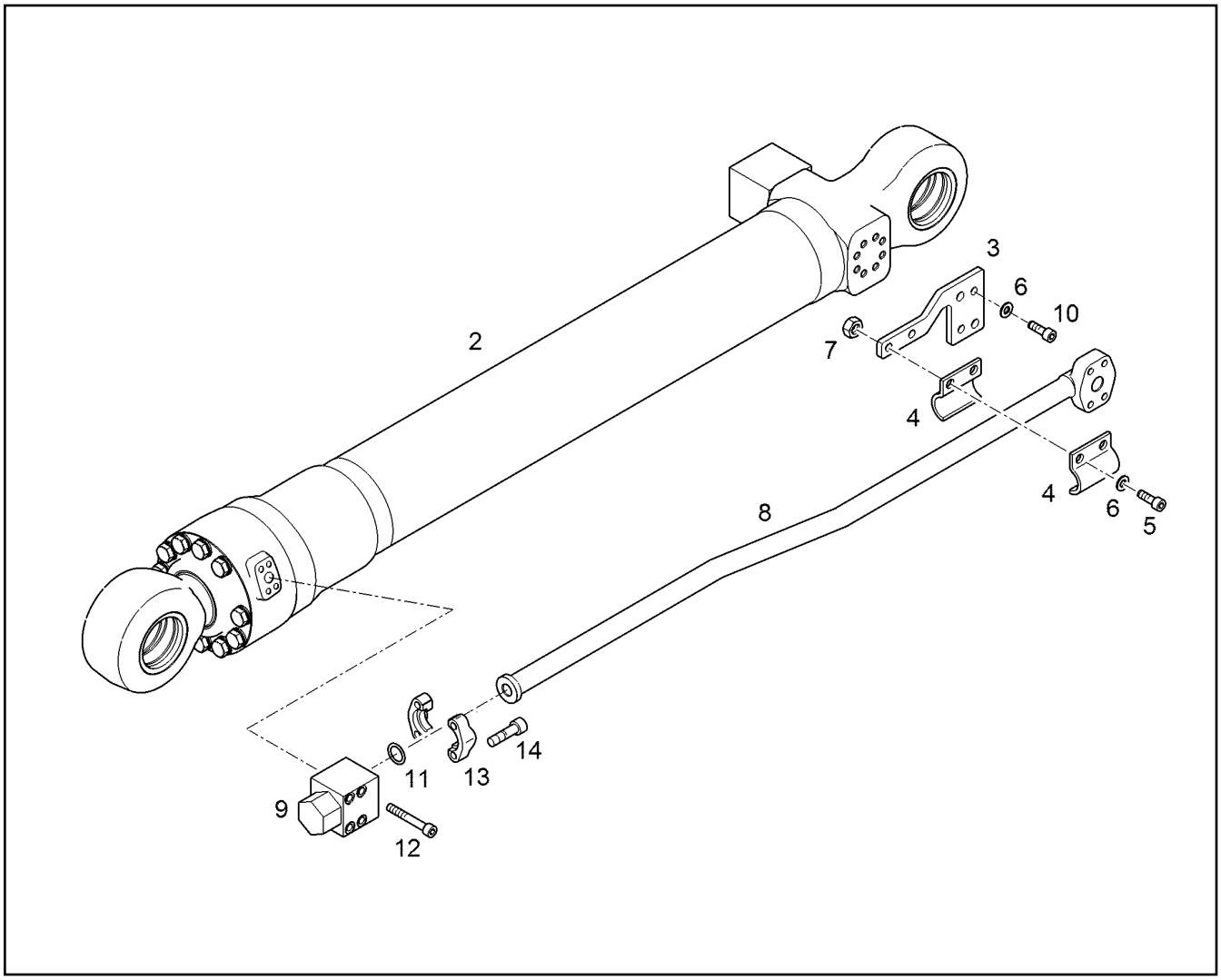

Pos.	Item	Quantity	Description	Designação	Serie	K
2	9644648	1	HYDRAULIC CYLINDER [20015W11] ⇨ ❑ 762	CILINDRO HIDRÁULICO	99999-	6
3	10061525	1	CONSOLE	CONSOLE		
4	7373874	2	HALF FLANGE d=30--	MEIO FLANGE		
5	7406028	2	SOCKET HEAD SCREW ISO 4762 M12X45 1	PARAFUSO CILÍNDRICO		
6	10289804	2	WASHER 12 300HV	ARRUELA		
7	4000619	2	HEX NUT M12	PORCA SEXTAVADA		
8	10061561	1	PRESSURE LINE CPL	TUBULAÇÃO DE PRESSÃO COM		
9	9265178	1	FLOW REGULATING CHECK VALVE ⇨ ❑ 765	VÁLVULA REGULADORA DE FL		
10	4043163	2	SOCKET HEAD SCREW ISO 4762 M12X30 1	PARAFUSO CILÍNDRICO		
11	10490781	2	RECTANGULAR SECTION RING 40,15X2,80	ANEL DE SEÇÃO RETANGULAR		
12	4600169	4	SOCKET HEAD SCREW ISO 4762 M12X90 1	PARAFUSO CILÍNDRICO		
13	11485638	2	FLANGE HALF WITH BOSSING SAE J518 S	MEIO FLANGE COM RELEVO		
14	4043003	4	SOCKET HEAD SCREW ISO 4762 M12X40 1	PARAFUSO CILÍNDRICO		

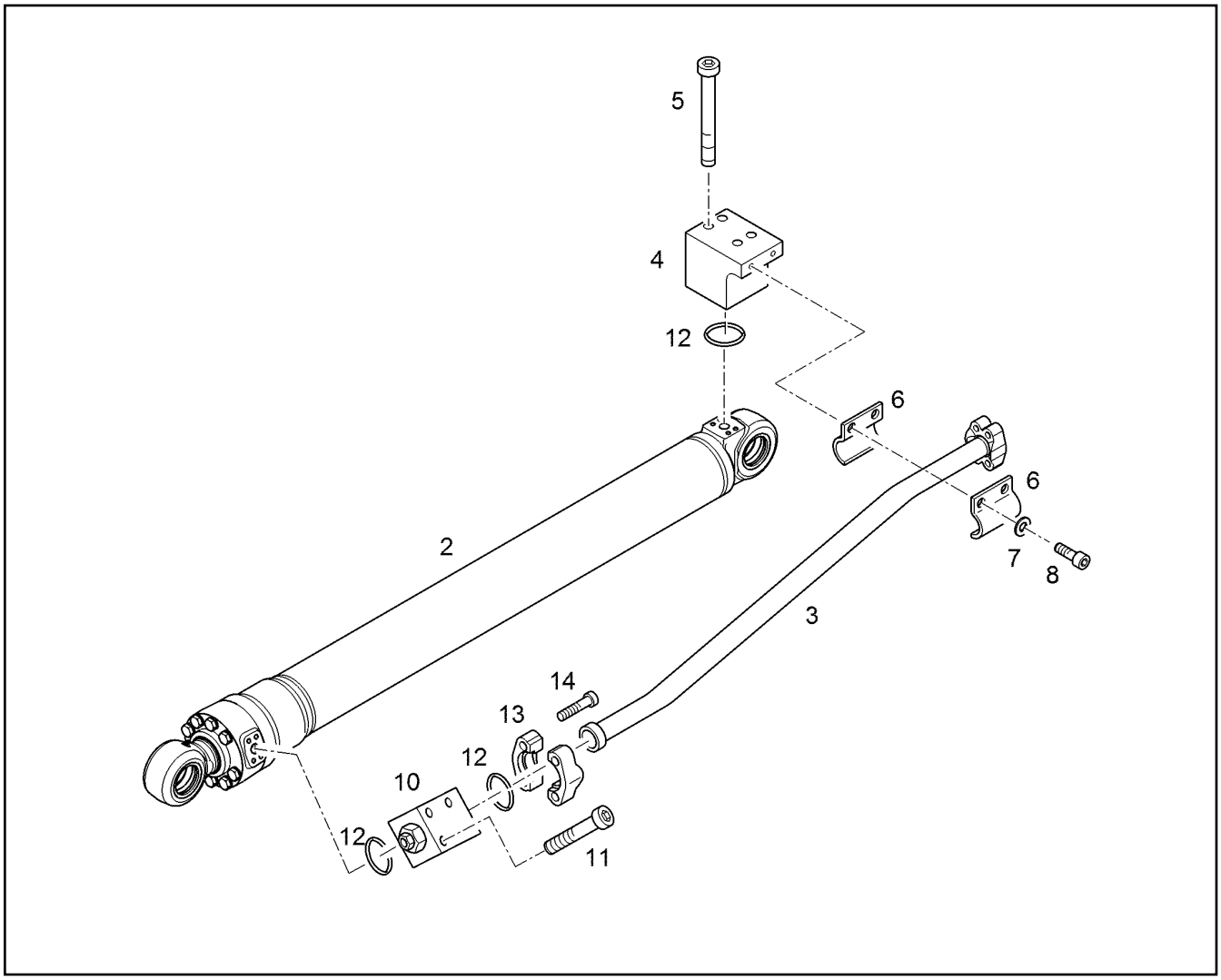

Pos.	Item	Quantity	Description	Designação	Serie	K
2	11681447	1	HYDRAULIC CYLINDER [0020034X08] ⇨ ❑ 760	CILINDRO HIDRÁULICO	-99999	6
3	10064402	1	PRESSURE LINE CPL	TUBULAÇÃO DE PRESSÃO COM		
4	9871977	1	BLOCK	BLOCO		
5	4901471	4	SOCKET HEAD SCREW ISO 4762 M14X130	PARAFUSO CILÍNDRICO		
6	7373875	2	HALF FLANGE d=38--	MEIO FLANGE		
7	10289804	2	WASHER 12 300HV	ARRUELA		
8	11002748	2	SOCKET HEAD SCREW ISO 4762 M12X35 10	PARAFUSO CILÍNDRICO		
10	10116717	1	FLOW REGULATING CHECK VALVE ⇨ ❑ 763	VÁLVULA REGULADORA DE FL		
11	10001079	4	SOCKET HEAD SCREW ISO 4762 M14X90 10	PARAFUSO CILÍNDRICO		
12	10472425	3	RECTANGULAR SECTION RING 45,05X2,80	ANEL DE SEÇÃO RETANGULAR		
13	11485639	2	FLANGE HALF WITH BOSSING SAE J518 SA	MEIO FLANGE COM RELEVO		
14	4902327	4	SOCKET HEAD SCREW ISO 4762 M14X45 10	PARAFUSO CILÍNDRICO		

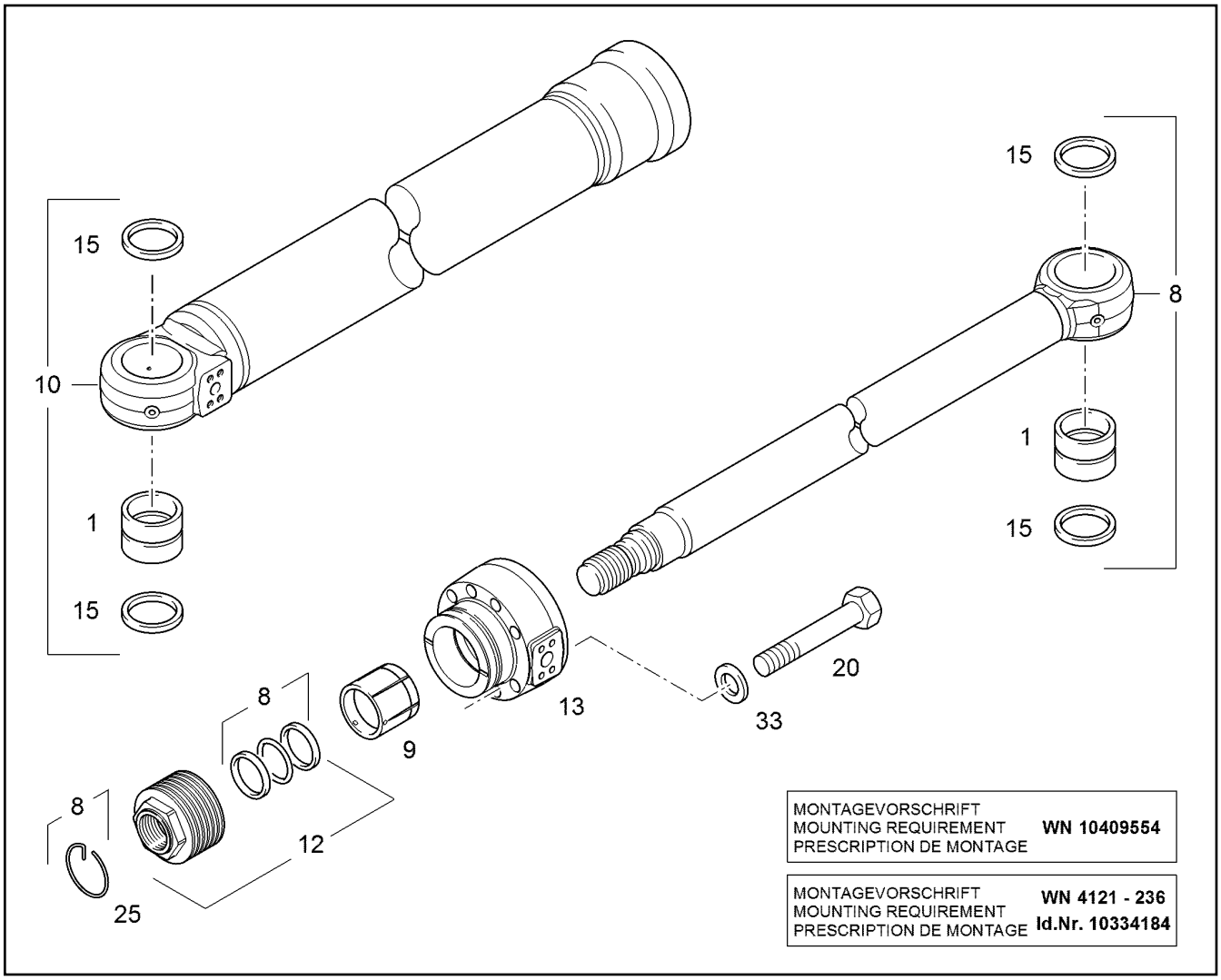

Pos.	Item	Quantity	Description	Designação	Serie	K
1	9170985	2	BUSHING SPIRAL 100/120X90	BUCHA		1
8	94046929	1	PISTON ROD	HASTE DO CILINDRO		
9	11680163	1	DAMPING SLEEVE	LUVA DE AMORTECIMENTO		
10	9594224	1	CYLINDER	CILINDRO		
12	94040389	1	PISTON ⇨ ❑ 769	PISTÃO		
13	94006888	1	PISTON ROD BEARING ⇨ ❑ 771	MANCAL DA HASTE DO PISTÃO		
15	7362182	4	RADIAL SEAL X100X120X8	ANEL DE VEDAÇÃO RADIAL		
20	10285423	9	HEX SCREW ISO 4014 M24X140 10.9	PARAFUSO SEXTAVADO		
25	4001869	1	RING DIN 70951 89	ANEL		
33	9918230	9	WASHER 24,5/40X5	ARRUELA		

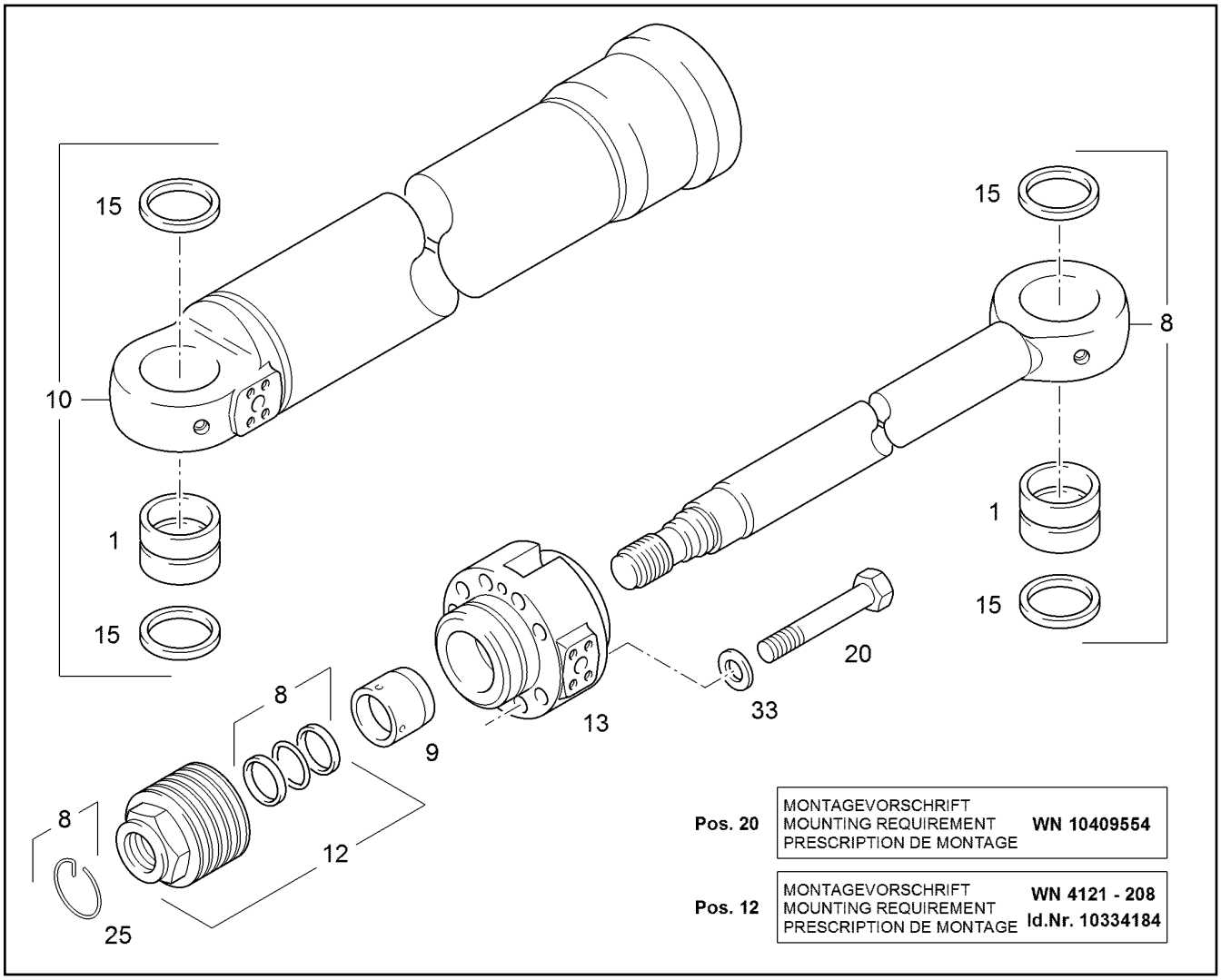

Pos.	Item	Quantity	Description	Designação	Serie	K
1	9170985	2	BUSHING SPIRAL 100/120X90	BUCHA		1
8	9594190	1	PISTON ROD	HASTE DO CILINDRO		
9	9245586	1	DAMPING SLEEVE	LUVA DE AMORTECIMENTO		
10	9594191	1	CYLINDER	CILINDRO		
12	9644625	1	PISTON ⇨ ❑ 770	PISTÃO		
13	94027949	1	PISTON ROD BEARING ⇨ ❑ 772	MANCAL DA HASTE DO PISTÃO		
15	7362182	4	RADIAL SEAL X100X120X8	ANEL DE VEDAÇÃO RADIAL		
20	10425609	9	HEX SCREW ISO 4014 M24X140 10.9 FLZN	PARAFUSO SEXTAVADO		
25	4242024	1	RING DIN 70951 74	ANEL		
33	9918230	9	WASHER 24,5/40X5	ARRUELA		

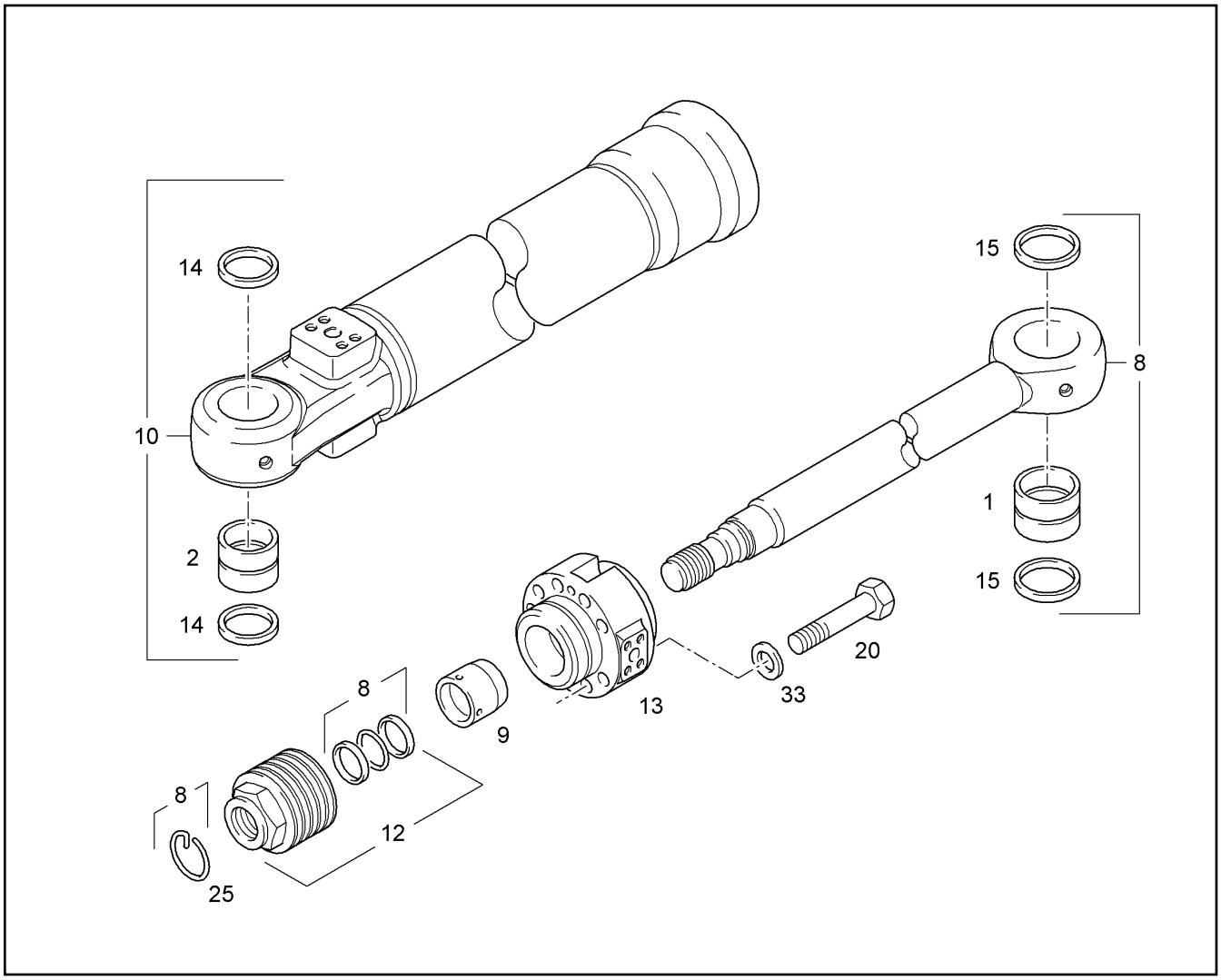

Pos.	Item	Quantity	Description	Designação	Serie	K
1	9593363	1	BUSHING RAUTE 110/130X90	BUCHA		1
2	9962061	1	BUSHING	BUCHA		1
8	9594127	1	PISTON ROD	HASTE DO CILINDRO		
9	9245586	1	DAMPING SLEEVE	LUVA DE AMORTECIMENTO		
10	9594128	1	CYLINDER	CILINDRO		
12	9644625	1	PISTON ⇨ ❑ 770	PISTÃO		
13	9591741	1	PISTON ROD BEARING ⇨ ❑ 773	MANCAL DA HASTE DO PISTÃO		
14	7362182	2	RADIAL SEAL X100X120X8	ANEL DE VEDAÇÃO RADIAL		
15	7362183	2	RADIAL SEAL X110X130X8	ANEL DE VEDAÇÃO RADIAL		
20	10425609	9	HEX SCREW ISO 4014 M24X140 10.9 FLZN	PARAFUSO SEXTAVADO		
25	4242024	1	RING DIN 70951 74	ANEL		
33	9918230	9	WASHER 24,5/40X5	ARRUELA		

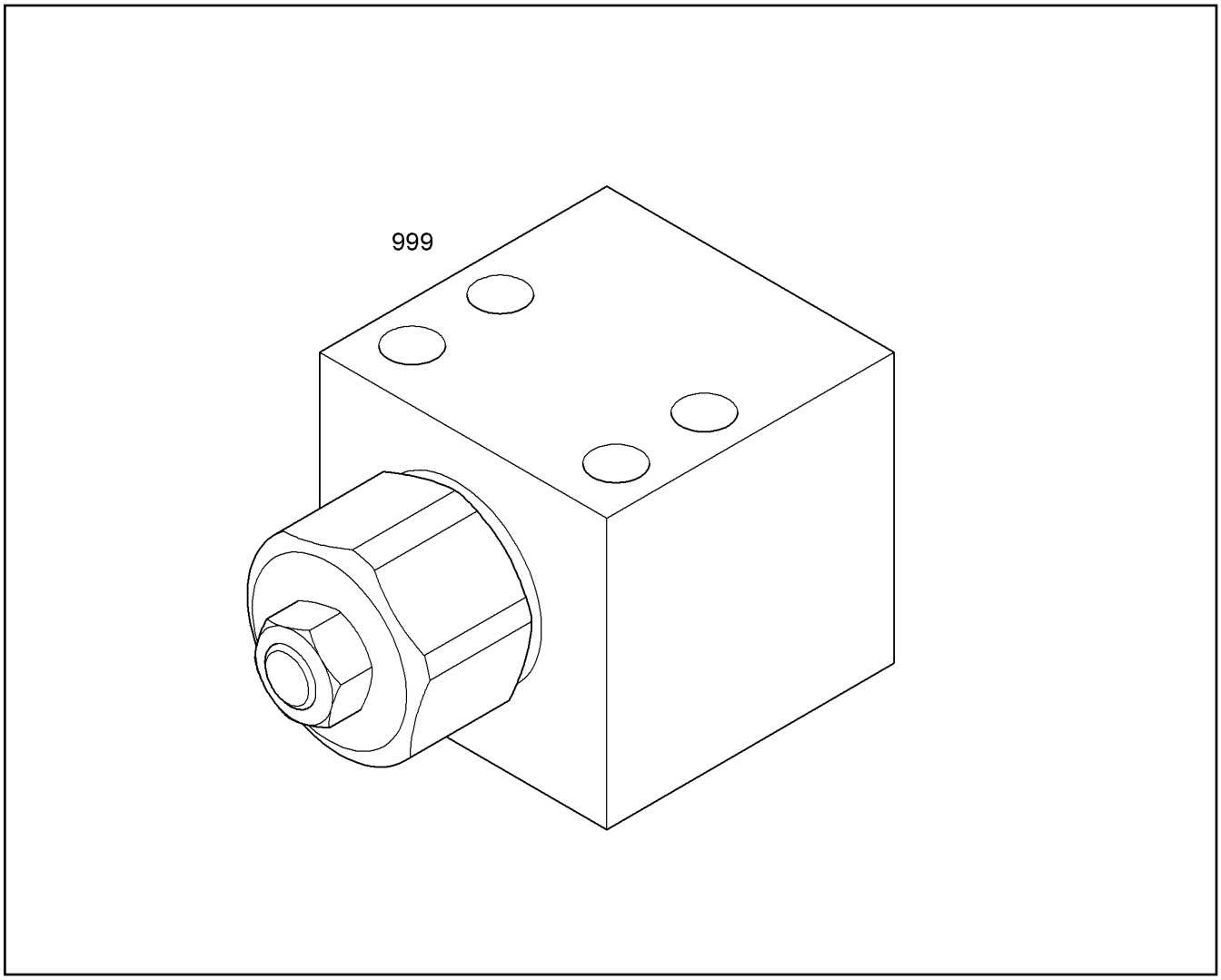

Pos.	Item	Quantity	Description	Designação	Serie	K
999	9270390	1	SEAL KIT DRV DRV 1 1/4" ⇨ ❑ 768	JG V VÁLVULA RET. DE ESTRA		

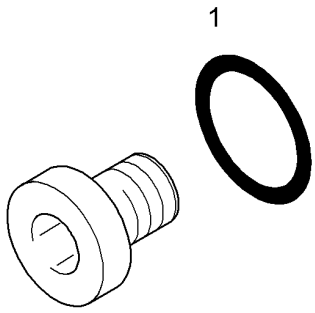

Pos.	Item	Quantity	Description	Designação	Serie	K
1	5602583	1	SEALING RING 14	ANEL DE VEDAÇÃO		

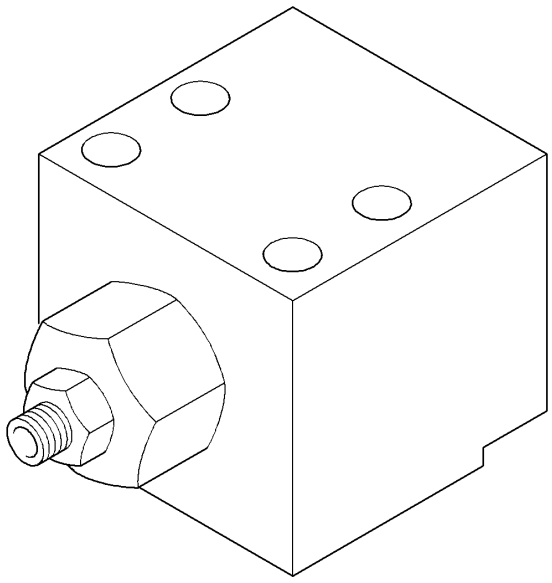

Pos.	Item	Quantity	Description	Designação	Serie	K
997	9265299	1	SEAL KIT DRV DSRV 1" ⇨ ❑ 767	JG V VÁLVULA RET. DE ESTRA		
998	9265991	1	FLOW REGULATING CHECK VALVE ⇨ ❑ 766	VÁLVULA REGULADORA DE FL		

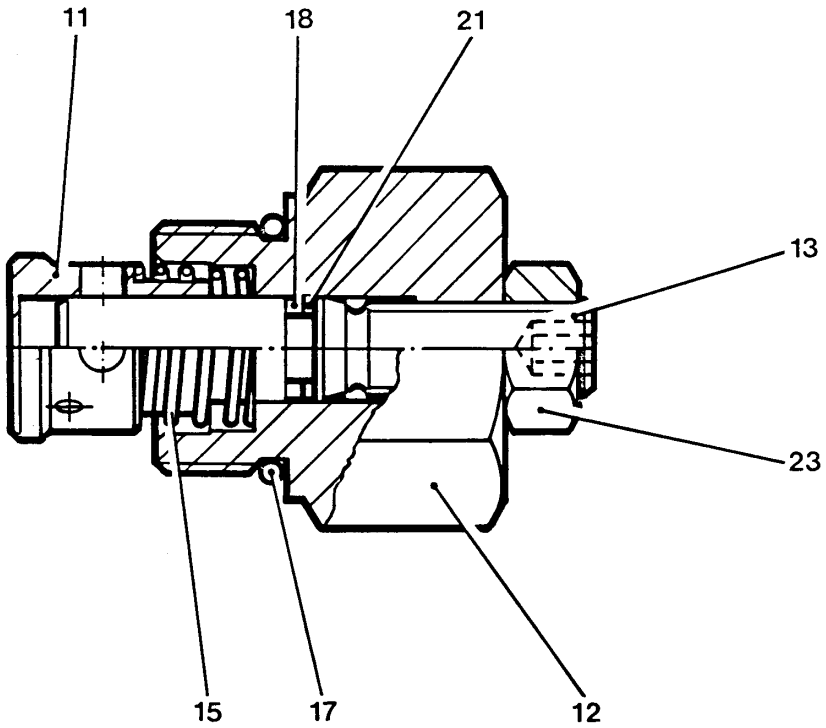

Pos.	Item	Quantity	Description	Designação	Serie	K
11		1	PISTON	PISTÃO		
12		1	SCREW PLUG	PARAFUSO DE FECHAMENTO		
13		1	SPINDLE M12	FUSO		
15		1	PRESSURE SPRING 1,50X20,00X23,00	MOLA DE PRESSÃO		
17		1	O-RING DIN 3771 29X3	ANEL-O		
18		1	O-RING ISO 3601-1 9,19X2,62	ANEL-O		
21		1	BACK-UP RING UNCUT 9,4/2,7X1,1	ANEL DE APOIO		
23		1	HEX NUT M12	PORCA SEXTAVADA		

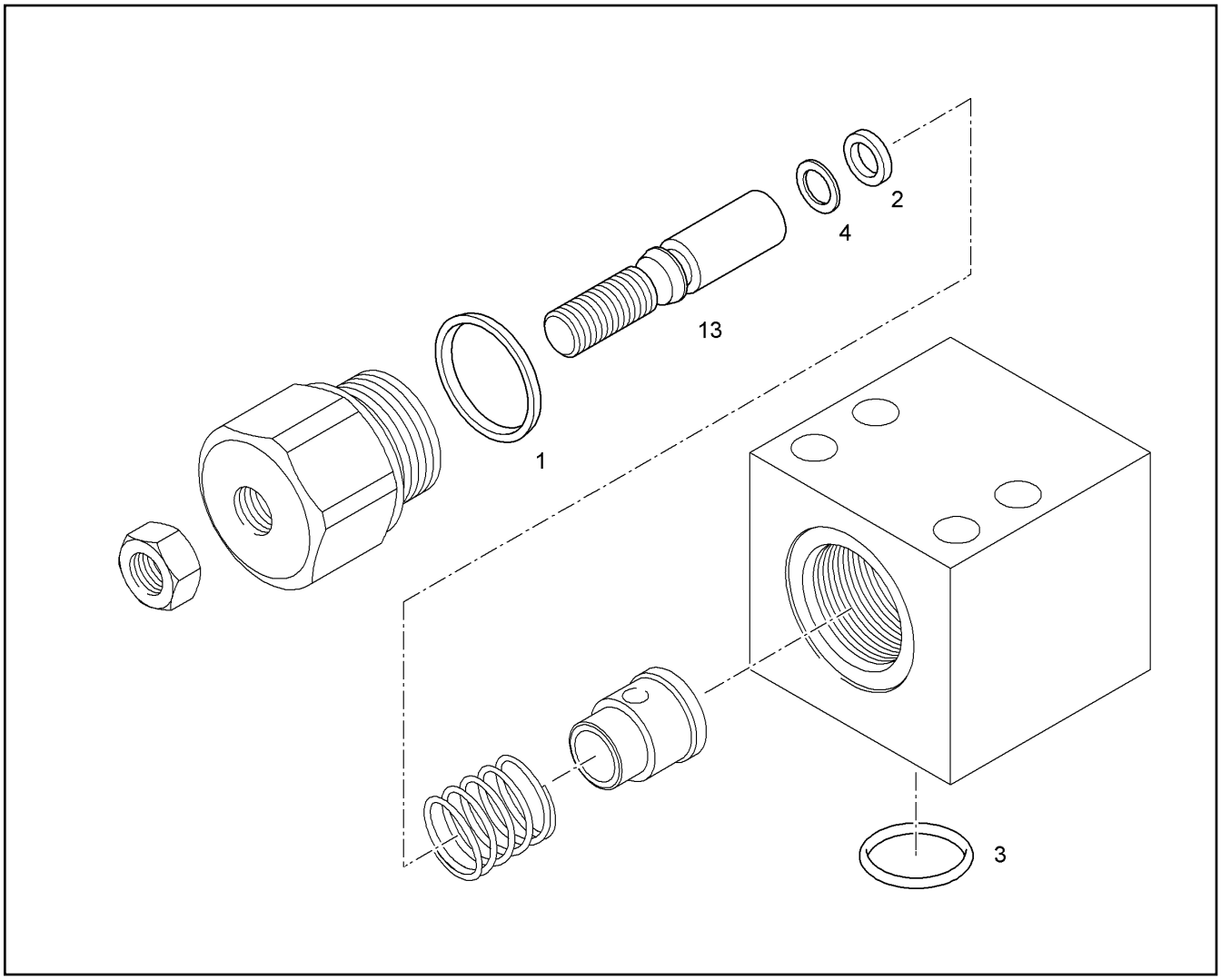

Pos.	Item	Quantity	Description	Designação	Serie	K
1		1	O-RING DIN 3771 29X3	ANEL-O		
2		1	O-RING ISO 3601-1 9,19X2,62	ANEL-O		
3		1	O-RING DIN 3771 32,92X3,53	ANEL-O		
4		1	BACK-UP RING UNCUT 9,4/14X1,1	ANEL DE APOIO		
13		1	SPINDLE M12	FUSO		

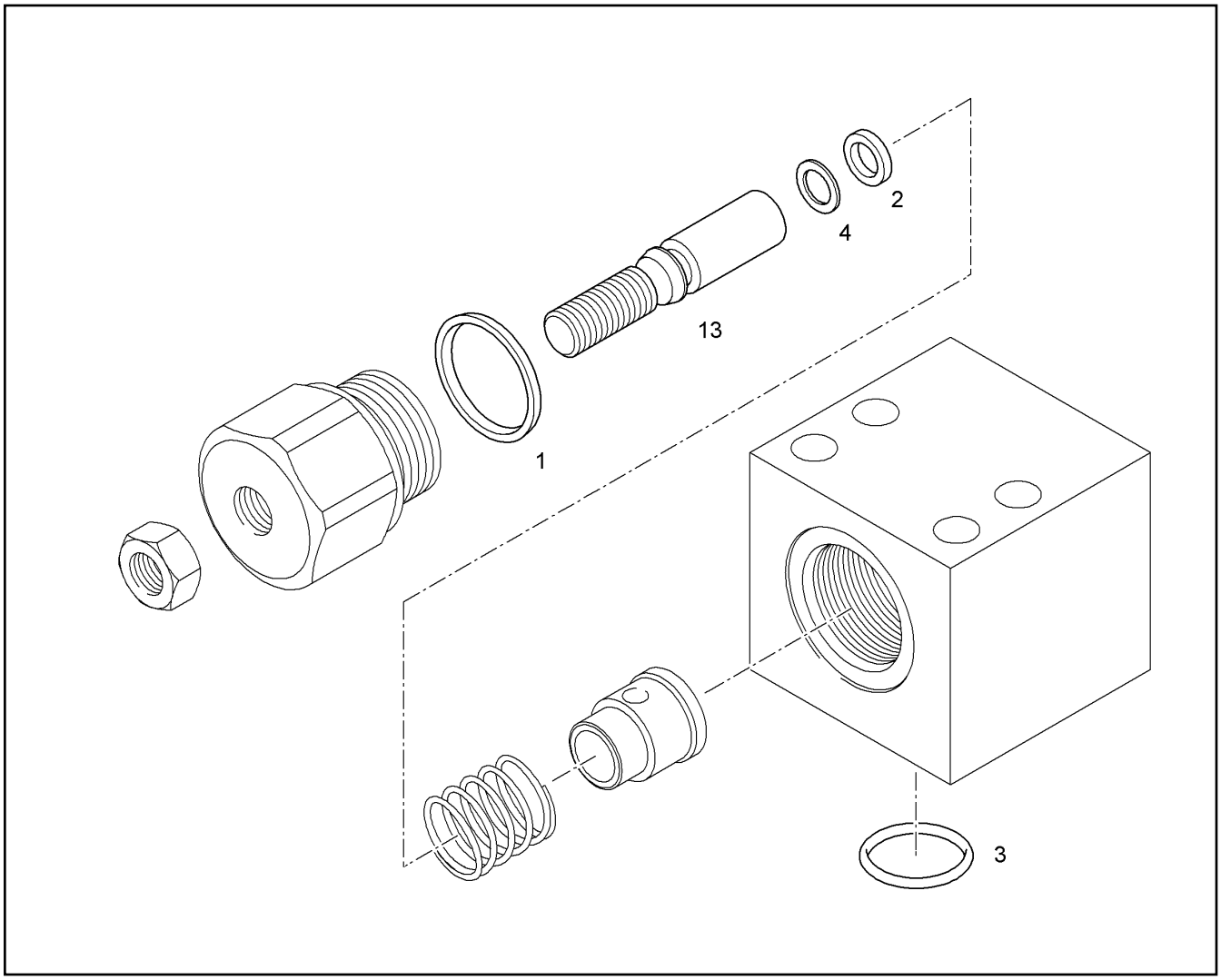

Pos.	Item	Quantity	Description	Designação	Serie	K
1		1	O-RING DIN 3771 32X3	ANEL-O		
2		1	O-RING ISO 3601-1 9,19X2,62	ANEL-O		
3		1	O-RING DIN 3771 37,69X3,53	ANEL-O		
4		1	BACK-UP RING CUT 9,4/14X1,1	ANEL DE ENCOSTO		
13		1	SPINDLE M12	FUSO		

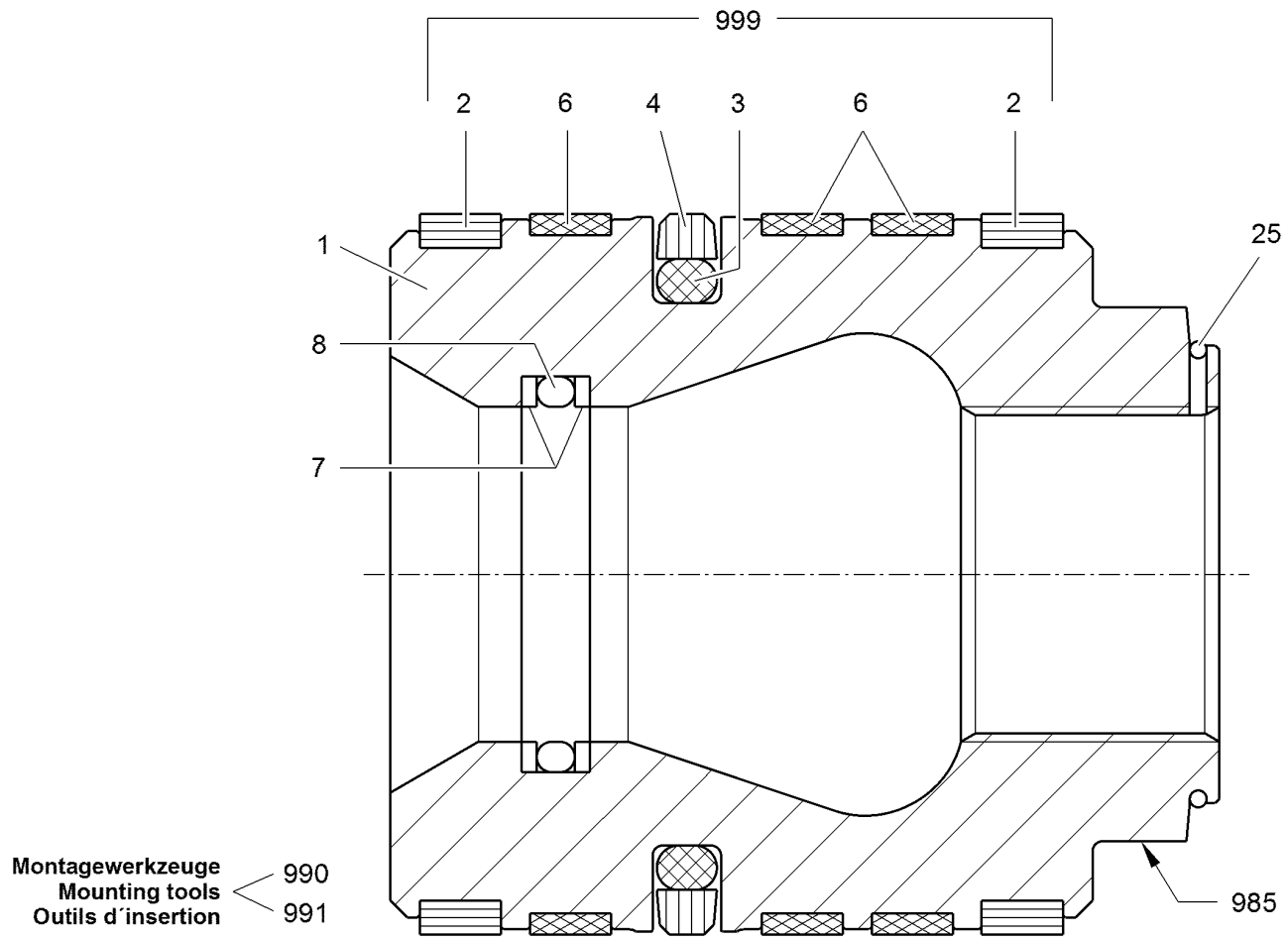

Pos.	Item	Quantity	Description	Designação	Serie	K
1		1	PISTON	PISTÃO		
2	9177717	2	PISTON GUIDE RING 170X162X9,7	ANEL GUIA DO PISTÃO		
3	7000290	1	O-RING 148,59X7	ANEL-O		
4	7000293	1	TURCON GLYD RING 170X149X8,1	ANEL TURCON GLYD		
6	7003429	3	PISTON GUIDE RING 170X165X9,7	ANEL GUIA DO PISTÃO		
7	7006870	2	SUPPORTING RING 88/93X1,5	ANEL DE APOIO		
8	7264087	1	O-RING 88X3	ANEL-O		
25	4001869	1	RING DIN 70951 89	ANEL		
985	9600769	1	PISTON WRENCH SW120	CHAVE PARA MONTAGEM DO P		
990	9107931	1	ASSEMBLY BUSHING 170	LUVA DE MONTAGEM		1
991	9110412	1	EXPANDING BUSHING D=170MM	BUCHA EXPANSIVA		
999	9169653	1	SEALING SET FOR PISTON d=170	KIT DE VEDAÇÃO DO CILINDRO		

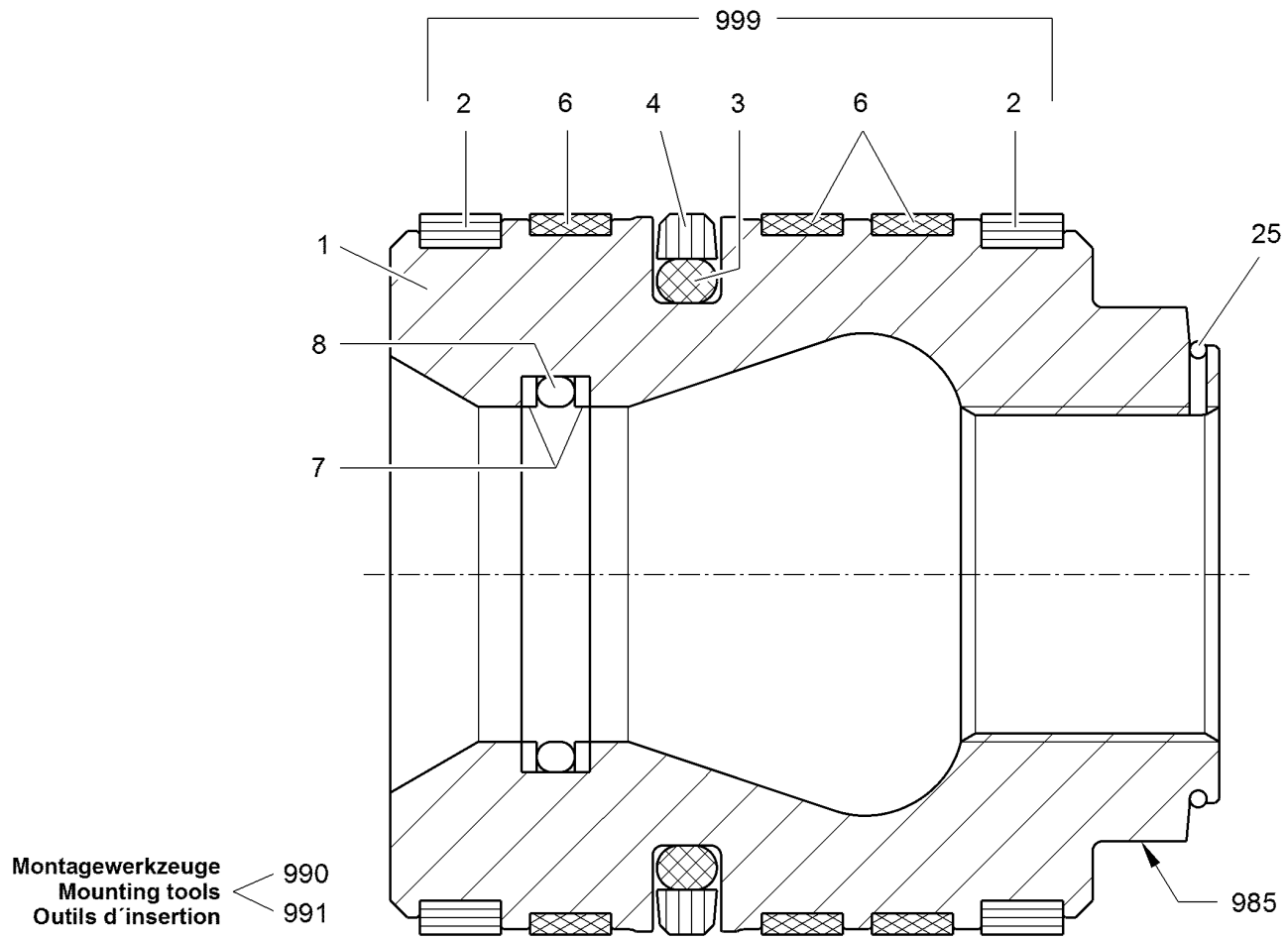

Pos.	Item	Quantity	Description	Designação	Serie	K
1		1	PISTON	PISTÃO		
2	9177716	2	PISTON GUIDE RING 160X152X9,7	ANEL GUIA DO PISTÃO		
3	7264423	1	O-RING 139,07X7	ANEL-O		
4	7002062	1	TURCON GLYD RING 160X139X8,1	ANEL TURCON GLYD		
6	7003430	3	PISTON GUIDE RING 160X155X9,7	ANEL GUIA DO PISTÃO		
7	7003533	2	SUPPORTING RING 78/83X1,5	ANEL DE APOIO		
8	7264035	1	O-RING 79X3	ANEL-O		
25	4242024	1	RING DIN 70951 74	ANEL		
985	9600928	1	PISTON WRENCH SW 110	CHAVE PARA MONTAGEM DO P		
990	9998621	1	ASSEMBLY BUSHING 160	LUVA DE MONTAGEM		
991	9110411	1	EXPANDING BUSHING	BUCHA EXPANSIVA		
999	9154141	1	SEALING SET FOR PISTON d=160	KIT DE VEDAÇÃO DO CILINDRO		

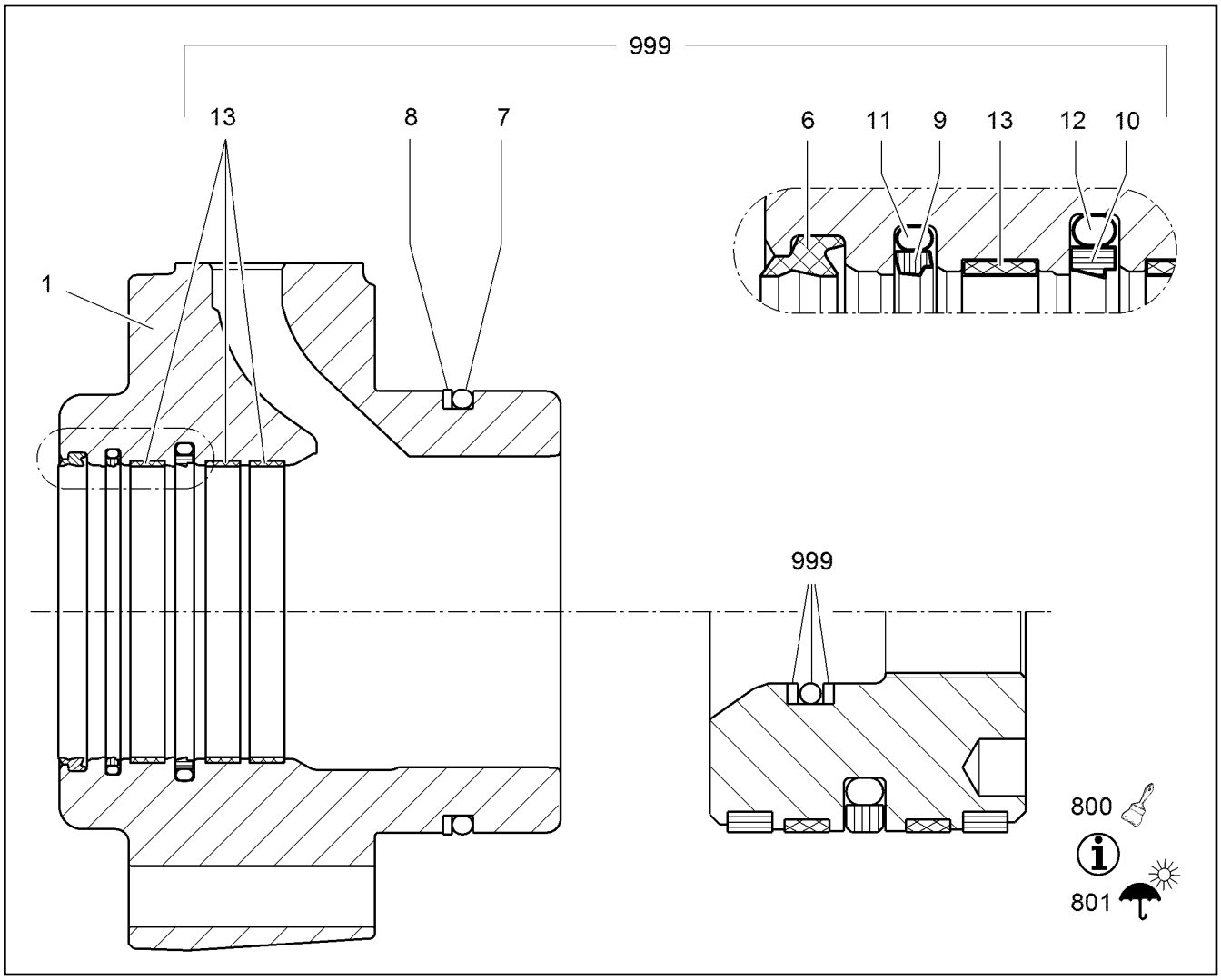

Pos.	Item	Quantity	Description	Designação	Serie	K
1		1	BEARING HEAD	CABEÇOTE DO MANCAL		
6	10651474	1	SCRAPER RING 115X127,2X8,1	ANEL RASPADOR		
7	7264098	1	O-RING 159,3X5,7	ANEL-O		
8	10097243	1	SUPPORTING RING 160,7/170X1,7	ANEL DE APOIO		
9	7023397	1	RIMSEAL 115,0X130,1X6,3	ANEL DE VEDAÇÃO		
10	7023395	1	SEALING RING 115X135,5X8,1	ANEL DE VEDAÇÃO		
11	7019832	1	O-RING 120,02X5,33	ANEL-O		
12	7264113	1	O-RING 120,02X7	ANEL-O		
13	7023396	3	GUIDE RING 115X120X15,00	ANEL GUIA		
800		1	LUBRICATING PASTE ⇨ ❑ 60	PASTA DE LUBRIFICAÇÃO		
801		1	PROTECTION AGAINST CORROSION ⇨ ❑ 61	PROTEÇÃO CONTRA CORROSÃ		
999	94006889	1	SEAL KIT F.PISTON ROD BEARING 115	KIT DE VED MANCAL HASTE ÊM		

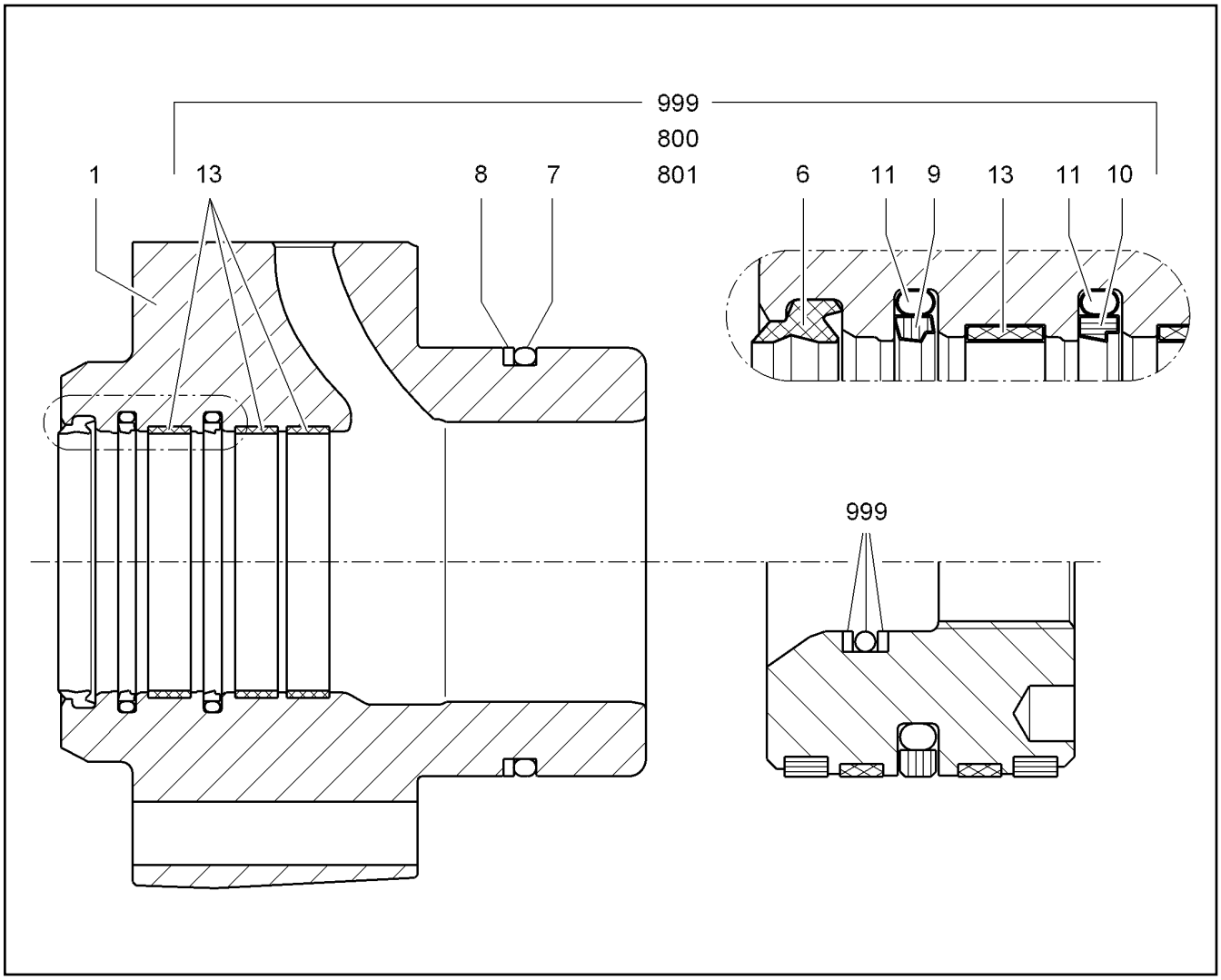

Pos.	Item	Quantity	Description	Designação	Serie	K
1		1	BEARING HEAD	CABEÇOTE DO MANCAL		
6	7026111	1	SCRAPER RING 110X122,2X8,1	ANEL RASPADOR		
7	10008233	1	O-RING 148X6	ANEL-O		
8	10028125	1	SUPPORTING RING 150/160X1,7	ANEL DE APOIO		
9	7017148	1	RIMSEAL 110X130,5X8,1	ANEL DE VEDAÇÃO		
10	7017711	1	TURCON-STEPSEAL 110,0X130,5X8,1	VEDAÇÃO TURCON		
11	7002054	2	O-RING 116,84X7	ANEL-O		
13	7005249	3	GUIDE RING 110X115X15,00	ANEL GUIA		
800		1	LUBRICATING PASTE ⇨ ❑ 60	PASTA DE LUBRIFICAÇÃO		
801		1	PROTECTION AGAINST CORROSION ⇨ ❑ 61	PROTEÇÃO CONTRA CORROSÃ		
999	94027947	1	SEAL KIT F.PISTON ROD BEARING 110	KIT DE VED MANCAL HASTE ÊM		

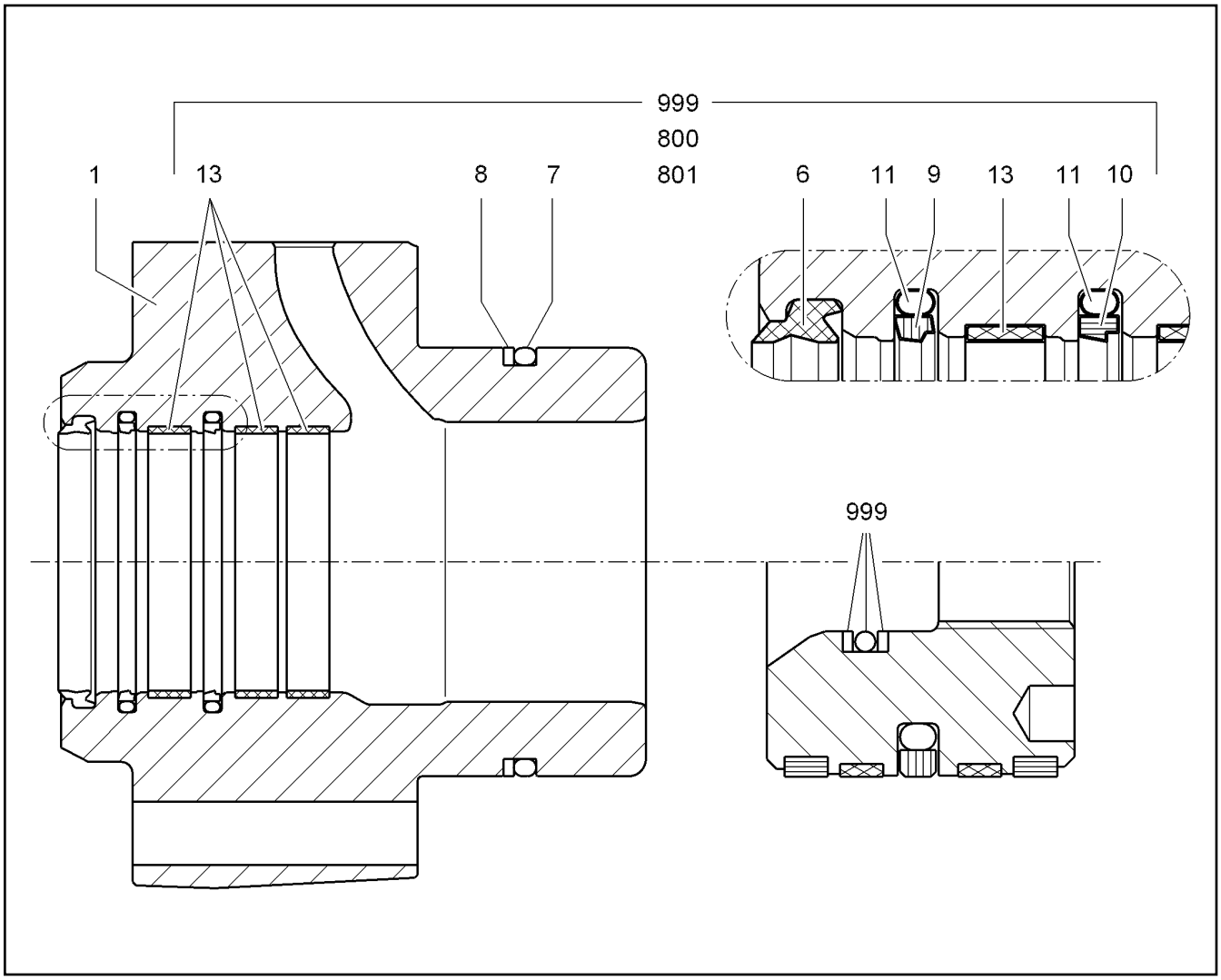

Pos.	Item	Quantity	Description	Designação	Serie	K
1		1	BEARING HEAD	CABEÇOTE DO MANCAL		
6	7026111	1	SCRAPER RING 110X122,2X8,1	ANEL RASPADOR		
7	10008233	1	O-RING 148X6	ANEL-O		
8	10028125	1	SUPPORTING RING 150/160X1,7	ANEL DE APOIO		
9	7017148	1	RIMSEAL 110X130,5X8,1	ANEL DE VEDAÇÃO		
10	7017711	1	TURCON-STEPSEAL 110,0X130,5X8,1	VEDAÇÃO TURCON		
11	7002054	2	O-RING 116,84X7	ANEL-O		
13	7005249	3	GUIDE RING 110X115X15,00	ANEL GUIA		
800		1	LUBRICATING PASTE ⇨ ❑ 60	PASTA DE LUBRIFICAÇÃO		
801		1	PROTECTION AGAINST CORROSION ⇨ ❑ 61	PROTEÇÃO CONTRA CORROSÃ		
999	9063688	1	SEAL KIT F.PISTON ROD BEARING 110	KIT DE VED MANCAL HASTE ÊM		

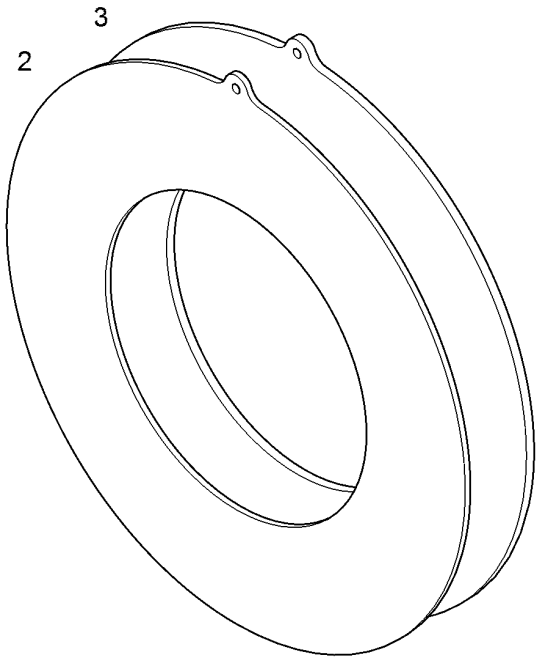

Pos.	Item	Quantity	Description	Designação	Serie	K
2	9364507	4	WASHER 101X2,00	ARRUELA		
3	9364508	2	WASHER 101X3,00	ARRUELA		

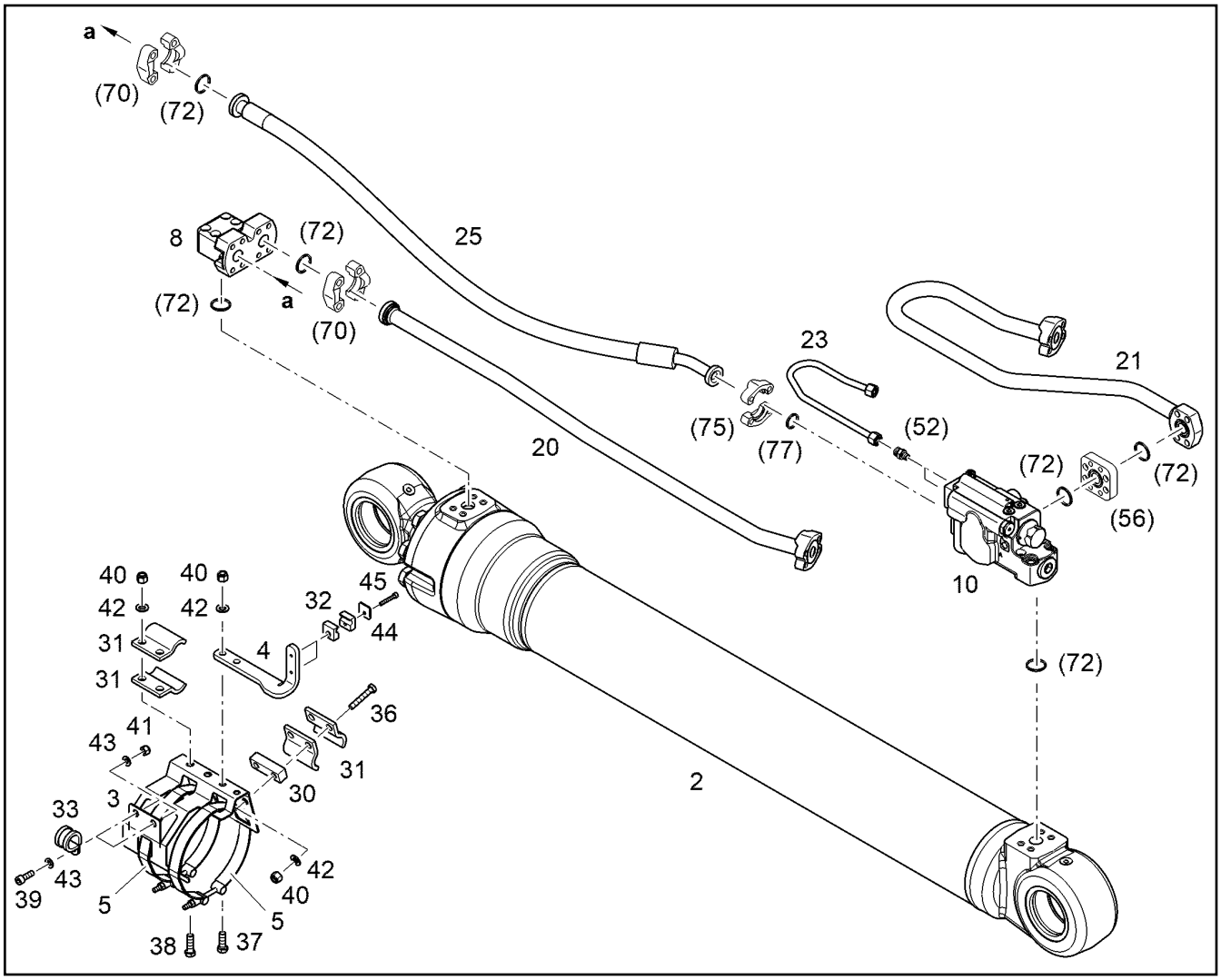

Pos.	Item	Quantity	Description	Designação	Serie	K
2	9593026	1	HYDRAULIC CYLINDER [0020050X07] ⇨ ❑ 761	CILINDRO HIDRÁULICO		6
3	10080030	1	CONSOLE	CONSOLE		
4	10374247	1	CONSOLE	CONSOLE		
5	10353683	2	RETAINER CLIP WITH RUBBER 188-196/192	ABRACADERIA COM BORRACH		
8	10408898	1	BLOCK	BLOCO		
10	11825269	1	PIPE FRACTION SAFETY VALVE [18057340]	VÁLVULA DE SEGURANÇA RUP	-77777	
20	10080548	1	PRESSURE LINE CPL	TUBULAÇÃO DE PRESSÃO COM		
21	10374095	1	PRESSURE LINE CPL	TUBULAÇÃO DE PRESSÃO COM		
23	10852757	2	PRESSURE LINE CPL	TUBULAÇÃO DE PRESSÃO COM		
25	10813329	1	HOSE 20X1330	MANGUEIRA		1
30	9008100	1	INTERMEDIATE PART H=20	PEÇA INTEMEDIÁRIA		
31	7373874	4	HALF FLANGE d=30--	MEIO FLANGE		
32	7365090	4	CLAMP-HALF DIN 3015-1 L 0 R 12 PP SW	MEIA ABRAÇADEIRA		
33	7367448	2	CLAMP DIN 3016-1 D1 30X25 W1-2-CR	BRAÇADEIRA		
36	11002730	2	HEX SCREW ISO 4017 M12X60 10.9 FLZN	PARAFUSO SEXTAVADO		
37	11002727	2	HEX SCREW ISO 4017 M12X40 10.9 FLZN	PARAFUSO SEXTAVADO		
38	11002727	2	HEX SCREW ISO 4017 M12X40 10.9 FLZN	PARAFUSO SEXTAVADO		
39	11002743	2	SOCKET HEAD SCREW ISO 4762 M10X30 10	PARAFUSO CILÍNDRICO		
40	10876514	6	HEX NUT M12	PORCA SEXTAVADA		
41	11140466	2	HEX NUT M10	PORCA SEXTAVADA		
42	10289804	6	WASHER 12 300HV	ARRUELA		
43	10289795	4	WASHER 10 300HV	ARRUELA		
44	7364904	2	LID PLATE DIN 3015-1 L-DP 0 W1-ZN	PLACA		

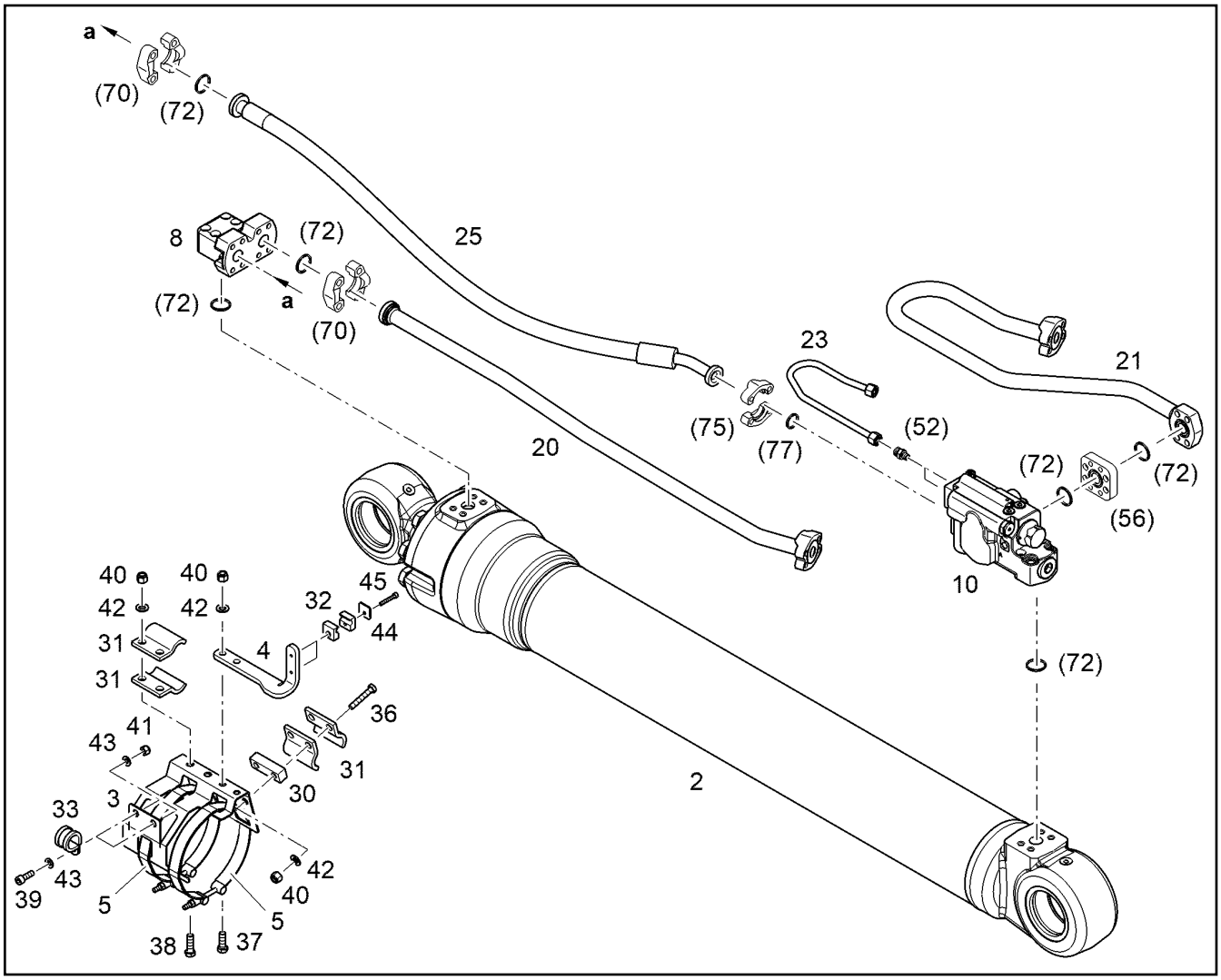

Pos.	Item	Quantity	Description	Designação	Serie	K
45	10875591	2	SOCKET HEAD SCREW ISO 4762 M6X40 8.8	PARAFUSO CILÍNDRICO		

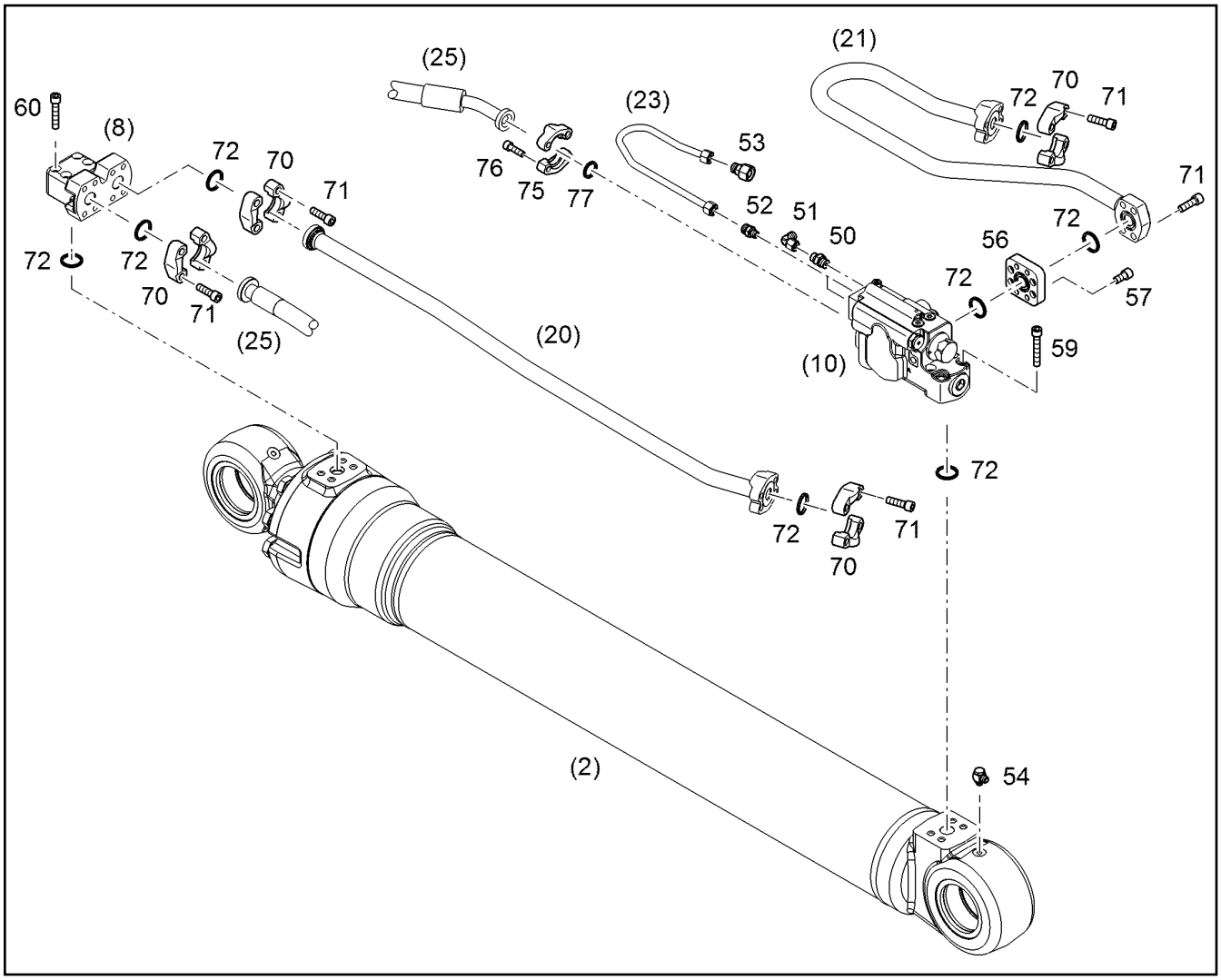

Pos.	Item	Quantity	Description	Designação	Serie	K
50	7412159	1	FITTING GE 8S G3/8A	UNIÃO ROSCADA		
51	7404186	1	FITTING EW 8S M16X1,5	UNIÃO ROSCADA		
52	7362117	2	FITTING GE 12L G1/4A	UNIÃO ROSCADA		
53	7367745	2	FITTING RED 15/12L	UNIÃO ROSCADA		
54	7368426	1	FITTING WH 6L M10X1 KDS	UNIÃO ROSCADA		
56	9939942	1	INTERMEDIATE FLANGE	FLANGE INTERMEDIÁRIO		
57	11002747	4	SOCKET HEAD SCREW ISO 4762 M12X25 10	PARAFUSO CILÍNDRICO		
59	11321139	4	SOCKET HEAD SCREW ISO 4762 M12X70 10	PARAFUSO CILÍNDRICO		
60	10468239	4	SOCKET HEAD SCREW ISO 4762 M12X60 10	PARAFUSO CILÍNDRICO		
70	11485638	8	FLANGE HALF WITH BOSSING SAE J518 S	MEIO FLANGE COM RELEVO		
71	11002749	20	SOCKET HEAD SCREW ISO 4762 M12X40 10	PARAFUSO CILÍNDRICO		
72	10490781	8	RECTANGULAR SECTION RING 40,15X2,80	ANEL DE SEÇÃO RETANGULAR		
75	11485637	2	FLANGE HALF WITH BOSSING SAE J518 S	MEIO FLANGE COM RELEVO		
76	10468820	4	SOCKET HEAD SCREW ISO 4762 M10X35 10	PARAFUSO CILÍNDRICO		
77	10490784	1	RECTANGULAR SECTION RING 32,30X2,80	ANEL DE SEÇÃO RETANGULAR		

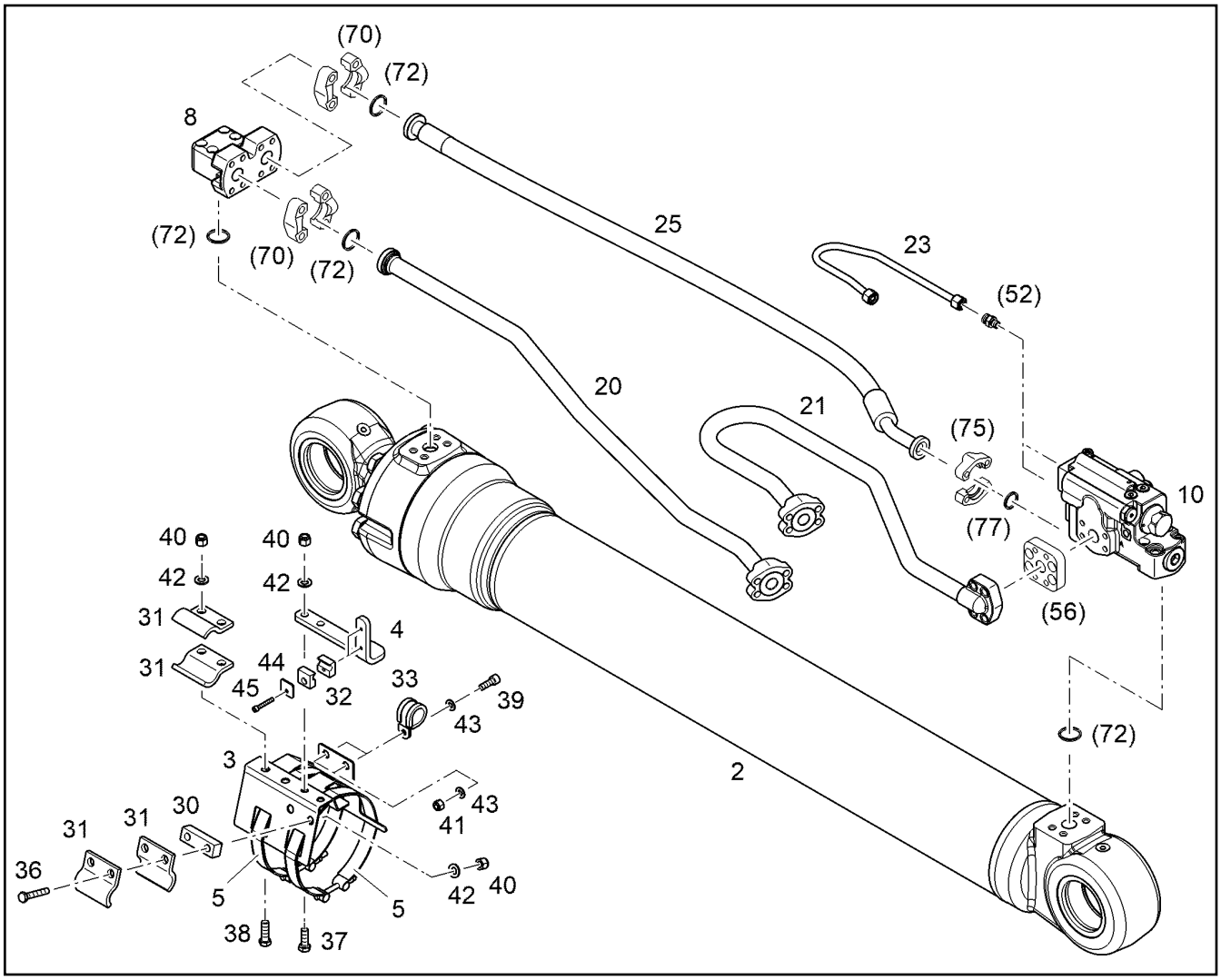

Pos.	Item	Quantity	Description	Designação	Serie	K
2	9593026	1	HYDRAULIC CYLINDER [0020049X07] ⇨ ❑ 761	CILINDRO HIDRÁULICO		6
3	10080219	1	CONSOLE	CONSOLE		
4	10374115	1	CONSOLE	CONSOLE		
5	10353683	2	RETAINER CLIP WITH RUBBER 188-196/192	ABRACADERIA COM BORRACH		
8	10408898	1	BLOCK	BLOCO		
10	11825272	1	PIPE FRACTION SAFETY VALVE [18033827]	VÁLVULA DE SEGURANÇA RUP	-77777	
20	10080549	1	PRESSURE LINE CPL	TUBULAÇÃO DE PRESSÃO COM		
21	10374090	1	PRESSURE LINE CPL	TUBULAÇÃO DE PRESSÃO COM		
23	10852757	2	PRESSURE LINE CPL	TUBULAÇÃO DE PRESSÃO COM		
25	10813329	1	HOSE 20X1330	MANGUEIRA		1
30	9008100	1	INTERMEDIATE PART H=20	PEÇA INTEMEDIÁRIA		
31	7373874	4	HALF FLANGE d=30--	MEIO FLANGE		
32	7365090	4	CLAMP-HALF DIN 3015-1 L 0 R 12 PP SW	MEIA ABRAÇADEIRA		
33	7367448	2	CLAMP DIN 3016-1 D1 30X25 W1-2-CR	BRAÇADEIRA		
36	11002730	2	HEX SCREW ISO 4017 M12X60 10.9 FLZN	PARAFUSO SEXTAVADO		
37	11002727	2	HEX SCREW ISO 4017 M12X40 10.9 FLZN	PARAFUSO SEXTAVADO		
38	11002727	2	HEX SCREW ISO 4017 M12X40 10.9 FLZN	PARAFUSO SEXTAVADO		
39	11002743	2	SOCKET HEAD SCREW ISO 4762 M10X30 10	PARAFUSO CILÍNDRICO		
40	10876514	6	HEX NUT M12	PORCA SEXTAVADA		
41	11140466	2	HEX NUT M10	PORCA SEXTAVADA		
42	10289804	6	WASHER 12 300HV	ARRUELA		
43	10289795	4	WASHER 10 300HV	ARRUELA		
44	7364904	2	LID PLATE DIN 3015-1 L-DP 0 W1-ZN	PLACA		

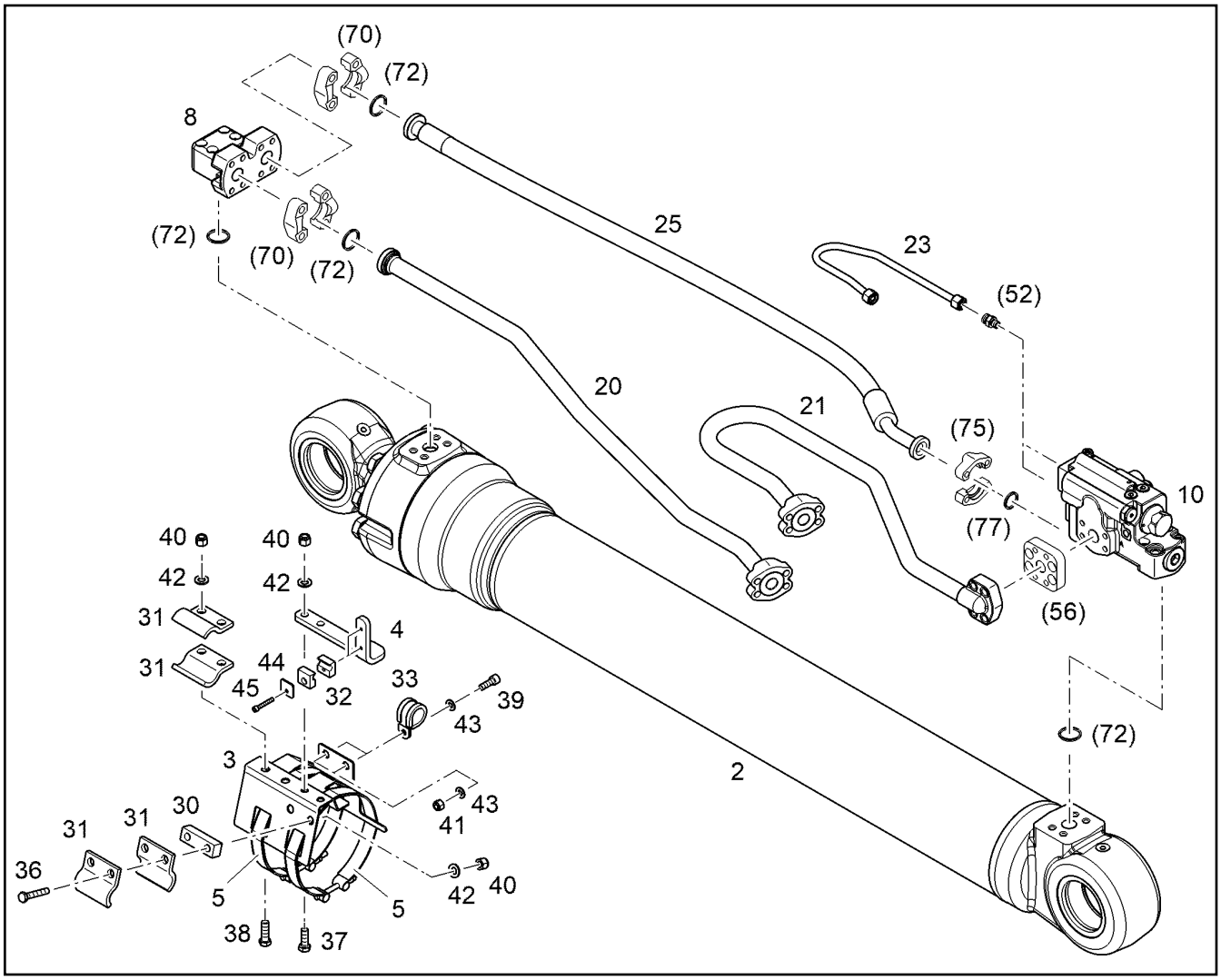

Pos.	Item	Quantity	Description	Designação	Serie	K
45	10875591	2	SOCKET HEAD SCREW ISO 4762 M6X40 8.8	PARAFUSO CILÍNDRICO		

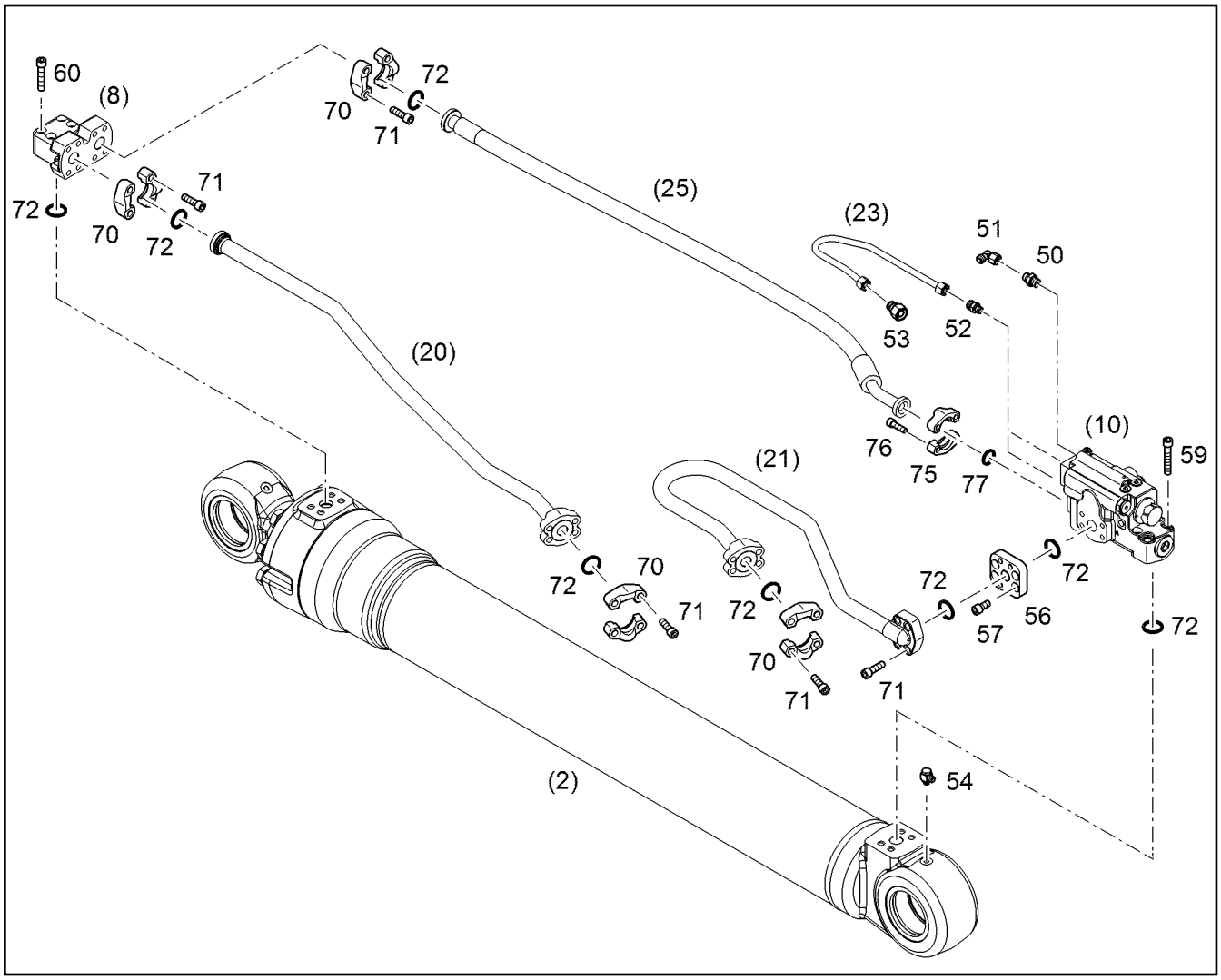

Pos.	Item	Quantity	Description	Designação	Serie	K
50	7412159	1	FITTING GE 8S G3/8A	UNIÃO ROSCADA		
51	7404186	1	FITTING EW 8S M16X1,5	UNIÃO ROSCADA		
52	7362117	2	FITTING GE 12L G1/4A	UNIÃO ROSCADA		
53	7367745	2	FITTING RED 15/12L	UNIÃO ROSCADA		
54	7368426	1	FITTING WH 6L M10X1 KDS	UNIÃO ROSCADA		
56	9939942	1	INTERMEDIATE FLANGE	FLANGE INTERMEDIÁRIO		
57	11002747	4	SOCKET HEAD SCREW ISO 4762 M12X25 10	PARAFUSO CILÍNDRICO		
59	11321139	4	SOCKET HEAD SCREW ISO 4762 M12X70 10	PARAFUSO CILÍNDRICO		
60	10468239	4	SOCKET HEAD SCREW ISO 4762 M12X60 10	PARAFUSO CILÍNDRICO		
70	11485638	8	FLANGE HALF WITH BOSSING SAE J518 S	MEIO FLANGE COM RELEVO		
71	11002749	20	SOCKET HEAD SCREW ISO 4762 M12X40 10	PARAFUSO CILÍNDRICO		
72	10490781	8	RECTANGULAR SECTION RING 40,15X2,80	ANEL DE SEÇÃO RETANGULAR		
75	11485637	2	FLANGE HALF WITH BOSSING SAE J518 S	MEIO FLANGE COM RELEVO		
76	10468820	4	SOCKET HEAD SCREW ISO 4762 M10X35 10	PARAFUSO CILÍNDRICO		
77	10490784	1	RECTANGULAR SECTION RING 32,30X2,80	ANEL DE SEÇÃO RETANGULAR		

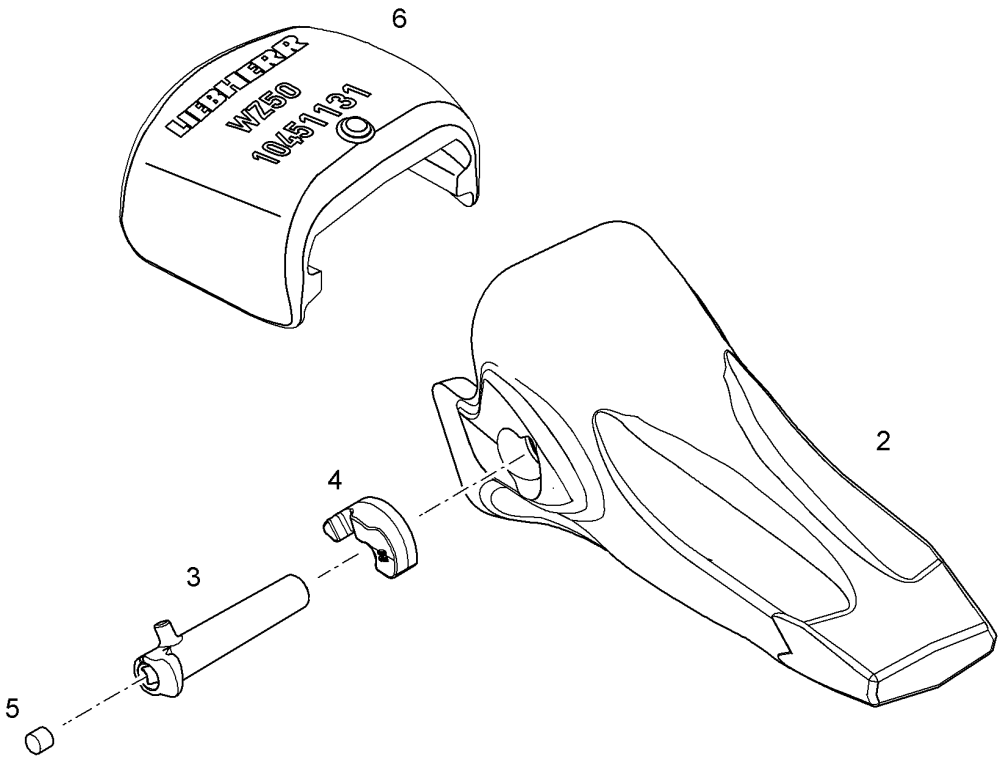

Pos.	Item	Quantity	Description	Designação	Serie	K
2	10451133	1	TOOTH	DENTE		1
3	10451129	1	LOCKING BOLT	PINO DE TRAVAMENTO		1
4	10451187	1	BLOCK PART	PEÇA DE BLOQUEIO		1
5	10451200	1	EXPANDED FOAM PLUG	TAMPÃO - MATERIAL ESPUMA		1
6	10451131	1	WEARING CAP	CAPA DE DESGASTE		1

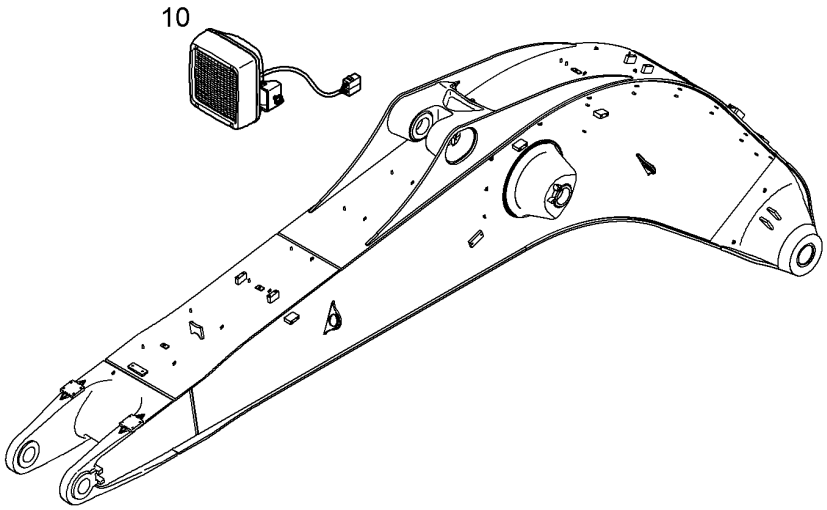

Pos.	Item	Quantity	Description	Designação	Serie	K
10		1	ADDNL. FLOODLIGHT ⇨ ❑ 783	FAROL ADICIONAL		

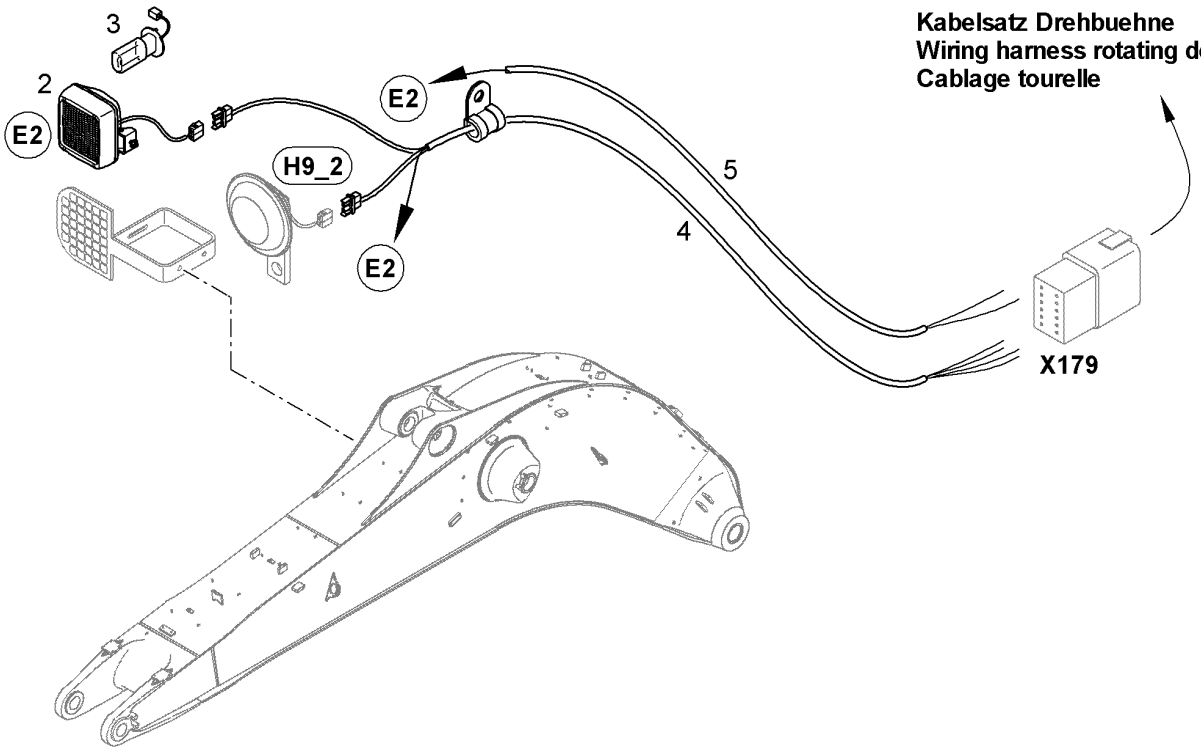

Pos.	Item	Quantity	Description	Designação	Serie	K
2	10045530	1	WORK LIGHT ⇨ ❑ 517	FAROL DE TRABALHO		
3	6200685	1	LIGHT BULB H3 24V 70W/PK22S	LÂMPADA INCANDESCENTE		
4	10088051	1	WIRING HARNESS HEAD LIGHT	CHICOTE ELETRICO FAROL		
5	10075063	1	WIRING HARNESS HEAD LIGHT X179-E2	CHICOTE ELETRICO FAROL		

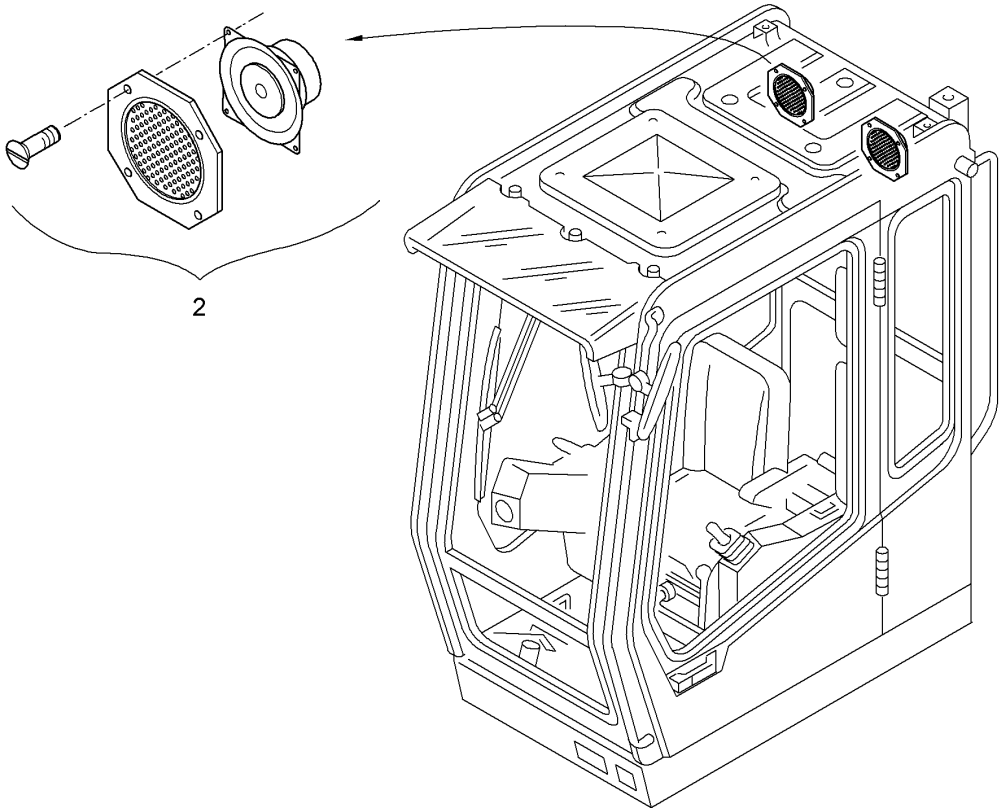

Pos.	Item	Quantity	Description	Designação	Serie	K
2	11102653	1	PREMOUNTING F.RADIO ⇨ ❑ 788	INSTALAÇÃO P/ RÁDIO		

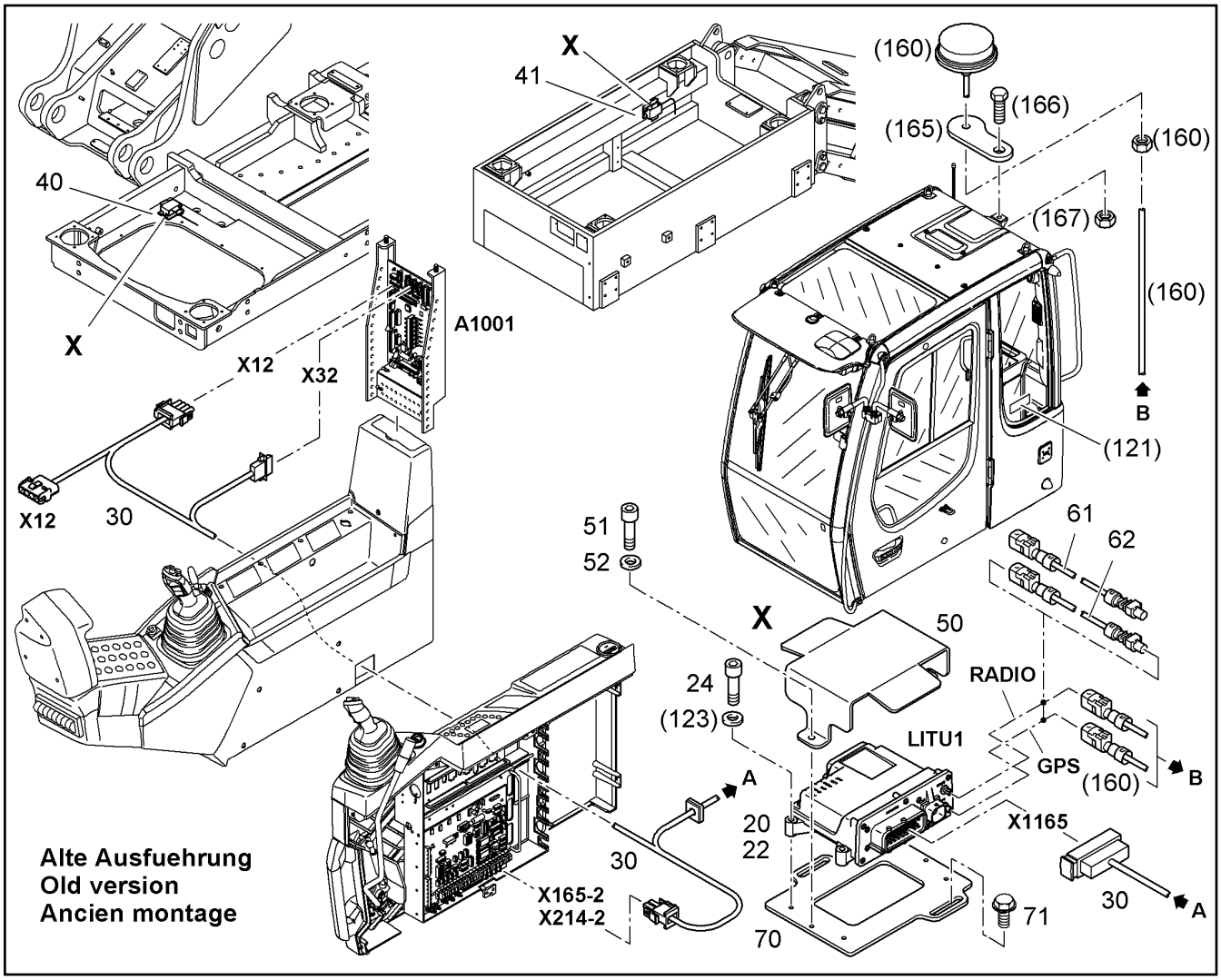

Pos.	Item	Quantity	Description	Designação	Serie	K
20		1	ELECTRONICAL ASSEMBLY GROUP ⇨ ❑ 789	MÓDULO ELETRÔNICO	37883-	
20	10889017	1	TELEMATIC-UNIT [3831109]	MODULO ELETRÔNICO LIDAT/	46219-	
22	10885529	1	ACCU PACK	CONJUNTO ACUMULADOR		

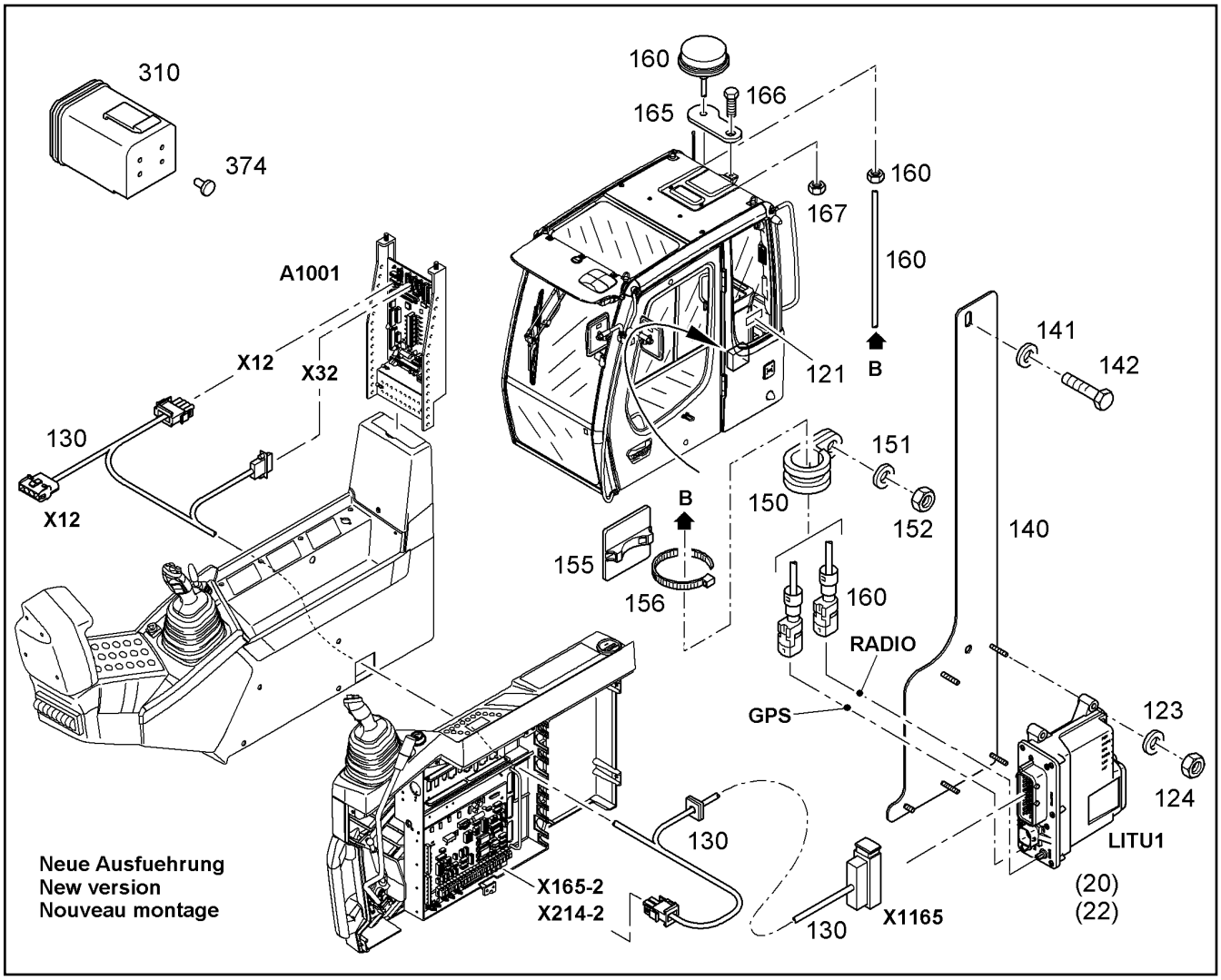

Pos.	Item	Quantity	Description	Designação	Serie	K
121	10541838	1	STICKER LIDAT 100mmX50mm	ETIQUETA ADESIVA		
123	11140403	4	WASHER 5 200HV	ARRUELA		
124	4000376	4	HEX NUT M4	PORCA SEXTAVADA	37099-	
124	12224012	4	HEX NUT M5	PORCA SEXTAVADA		
130	10863490	1	WIRING HARNESS OPTION	CHICOTE ELÉTRICO -KIT MONT	37099-	
140	10859980	1	CONSOLE	CONSOLE	37099-	
141	10289795	1	WASHER 10 300HV	ARRUELA	37099-	
142	4066098	1	HEX SCREW ISO 4017 M10X30 10.9 A3C	PARAFUSO SEXTAVADO	37099-	
142	11002715	1	HEX SCREW ISO 4017 M10X30 10.9 FLZN	PARAFUSO SEXTAVADO		
150	7361498	1	CLAMP DIN 3016-1 D1 15X15 W1-2-CR	BRAÇADEIRA	37099-	
151	10289802	1	WASHER 6 300HV	ARRUELA	37099-	
152	4000379	1	HEX NUT M6	PORCA SEXTAVADA	37099-	
152	10299668	1	HEX NUT M6	PORCA SEXTAVADA		
155	8563210	3	FOOTRING	SUPORTE	37099-	
156	7009088	3	TIE WRAP 2,5X102	AMARRA PARA CABOS	37099-	
160	11645490	1	ANTENNA	ANTENA	-999998	
160	12235856	1	ANTENNA	ANTENA	-999999	
165	10825829	1	HOLDER	SUPORTE		
166	10026122	1	HEX SCREW ISO 4017 M24X25 10.9 FLZN	PARAFUSO SEXTAVADO		
167	10425688	1	HEX NUT M24	PORCA SEXTAVADA		
310	6203136	1	BUSHING HOUSING DT 4-POL 13A 1500V	CARCAÇA DE CONECTOR ELÉ	37099-	
374	7368253	4	STOPPER PLUG	PARAFUSO DE FECHAMENTO	37099-	

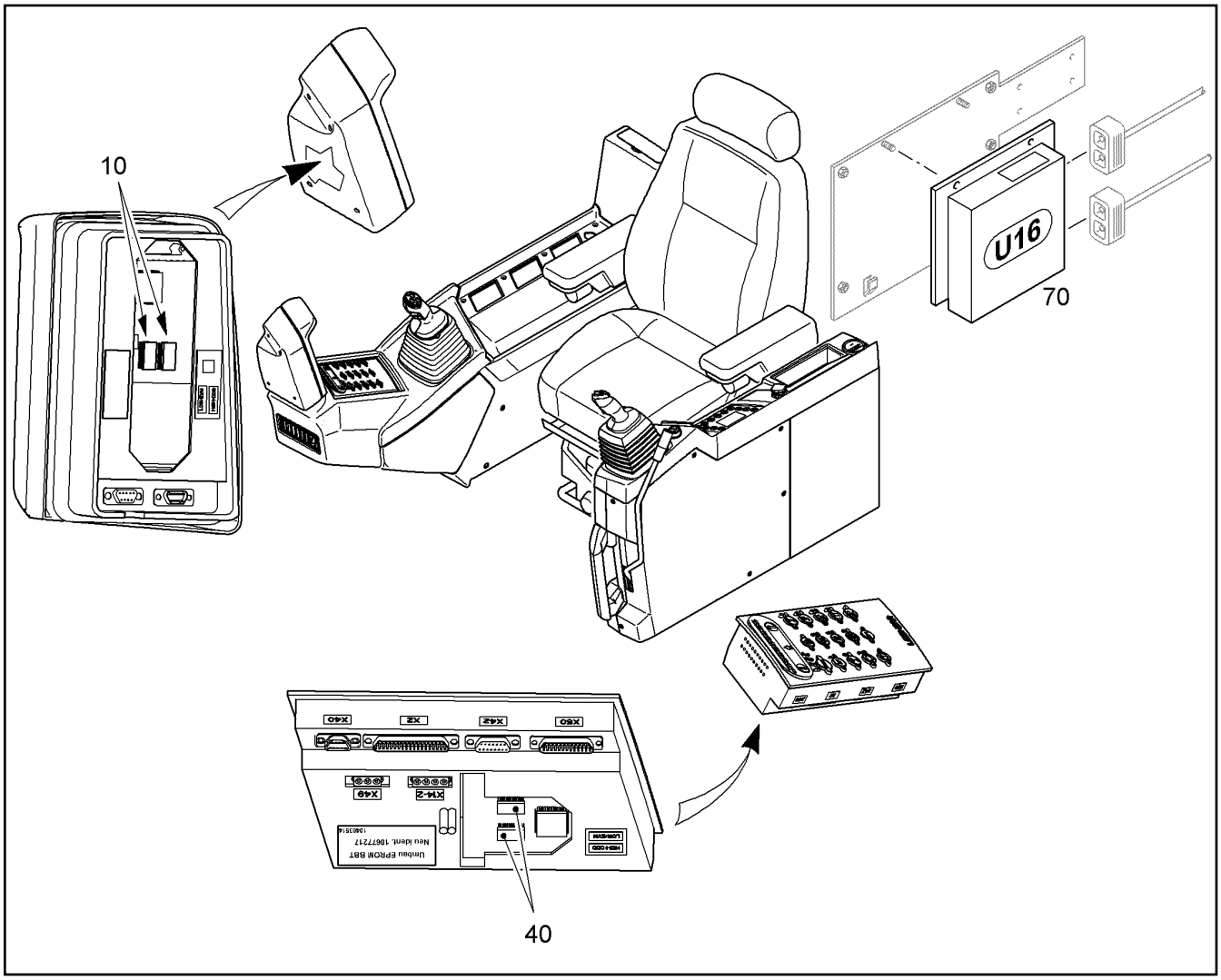

Pos.	Item	Quantity	Description	Designação	Serie	K
10		1	SOFTWARE	SOFTWARE		
40		1	SOFTWARE	SOFTWARE		
70		1	SOFTWARE	SOFTWARE		

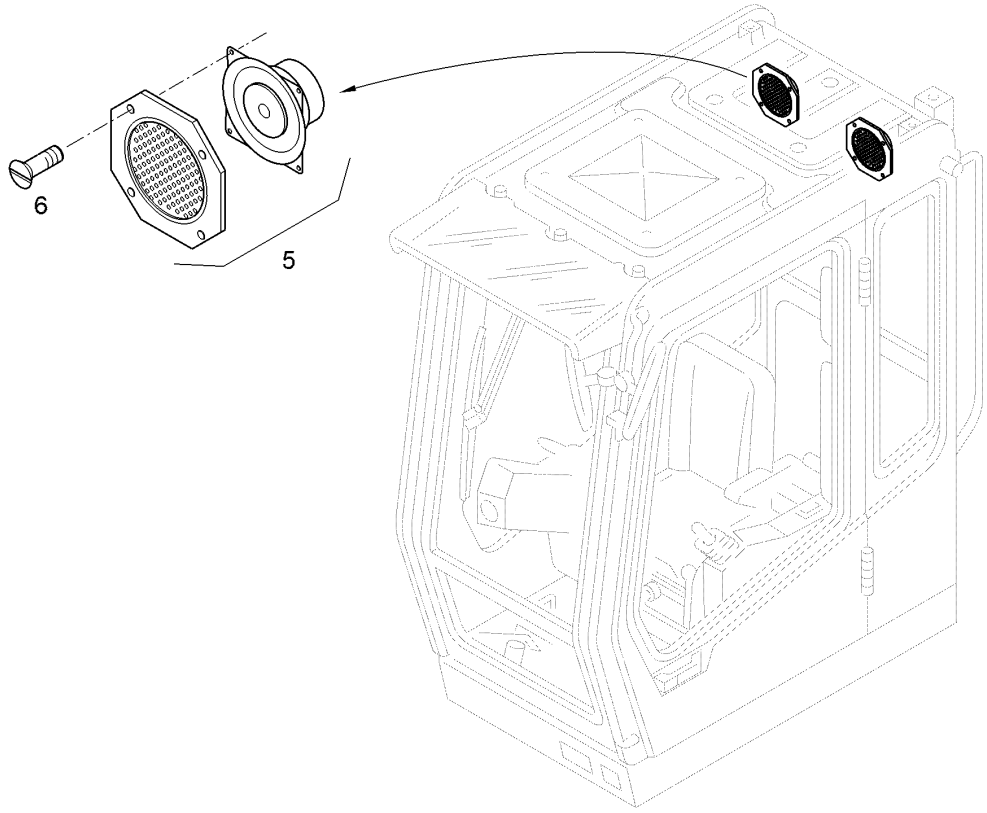

Pos.	Item	Quantity	Description	Designação	Serie	K
5	634308016	2	LOUDSPEAKER	ALTO-FALANTE		
6	4002017	4	SHEET-METAL SCREW ISO 7049 ST4,2X13	PARAFUSO		

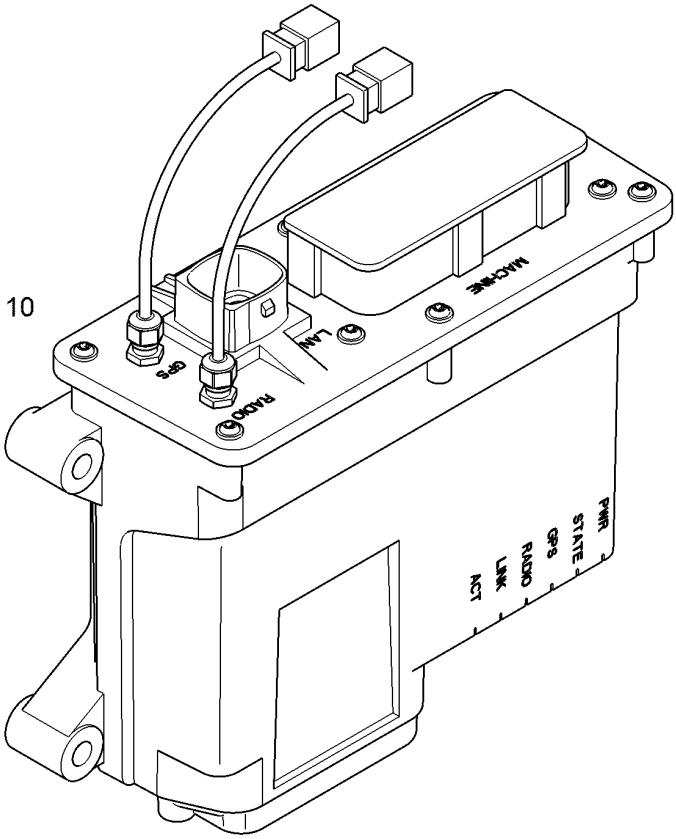

Pos.	Item	Quantity	Description	Designação	Serie	K
10		1	ELECTRONIC MODULES	MÓDULOS ELETRÔNICOS		

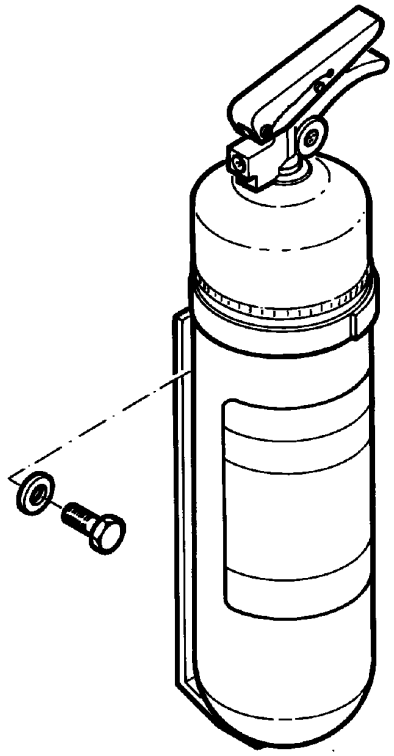

Pos.	Item	Quantity	Description	Designação	Serie	K
10		1	FIRE EXTINGUISHER ⇨ ❑ 791	EXTINTOR DE INCÊNDIO		

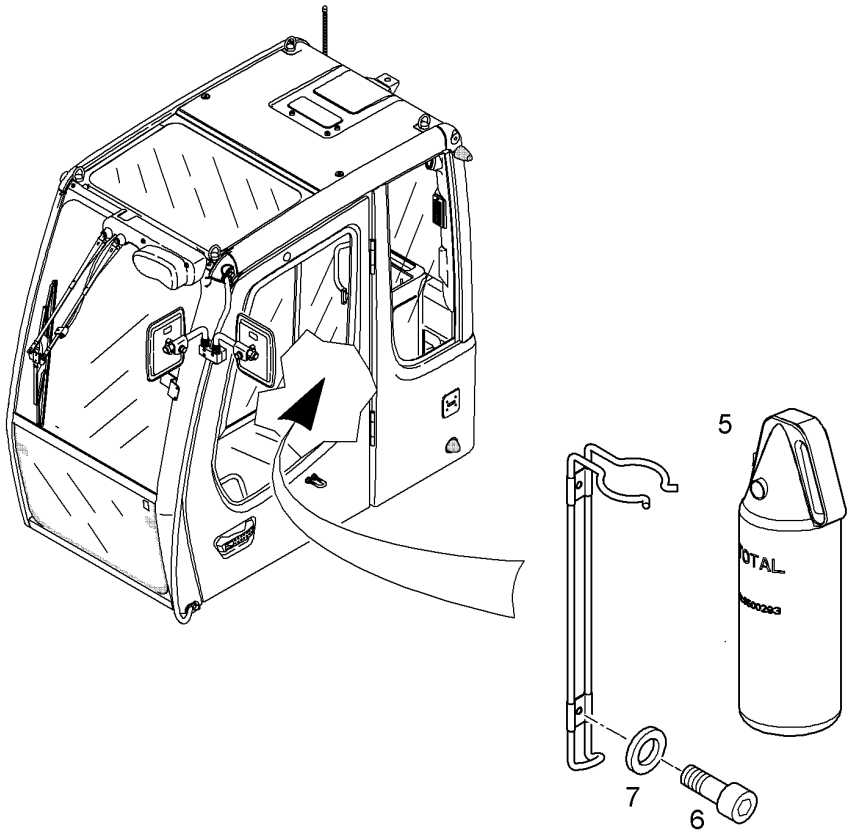

Pos.	Item	Quantity	Description	Designação	Serie	K
5	11690717	1	FIRE EXTINGUISHER ABC PULVER 2 kg	EXTINTOR DE INCÊNDIO		
6	4001596	2	SOCKET HEAD SCREW ISO 4762 M6X16 10.	PARAFUSO CILÍNDRICO		
7	10289802	2	WASHER 6 300HV	ARRUELA		

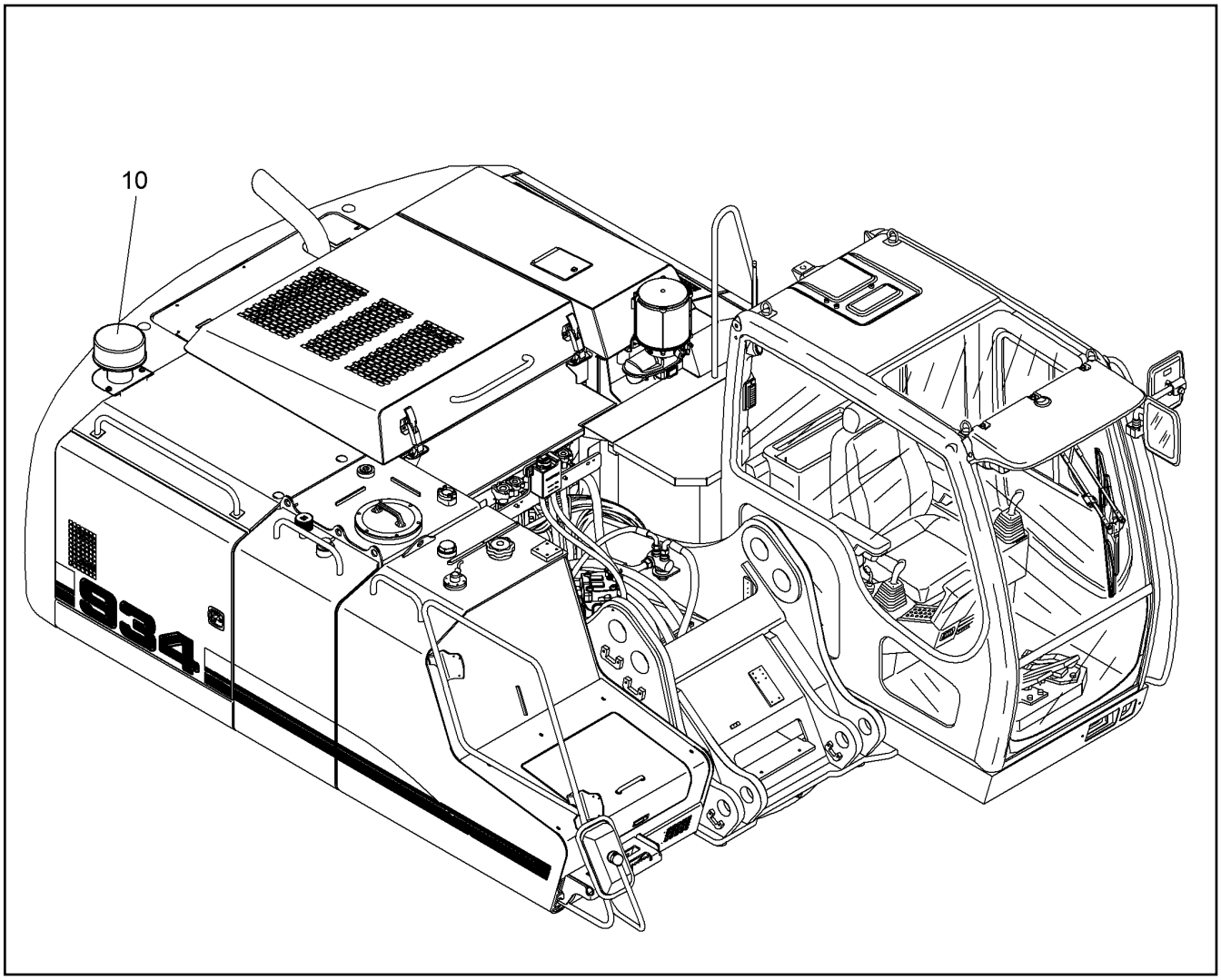

Pos.	Item	Quantity	Description	Designação	Serie	K
10		1	AIR FILTER INSTALLATION ⇨ ❑ 793	FILTRO DE AR - INSTALAÇÃO	31493-	

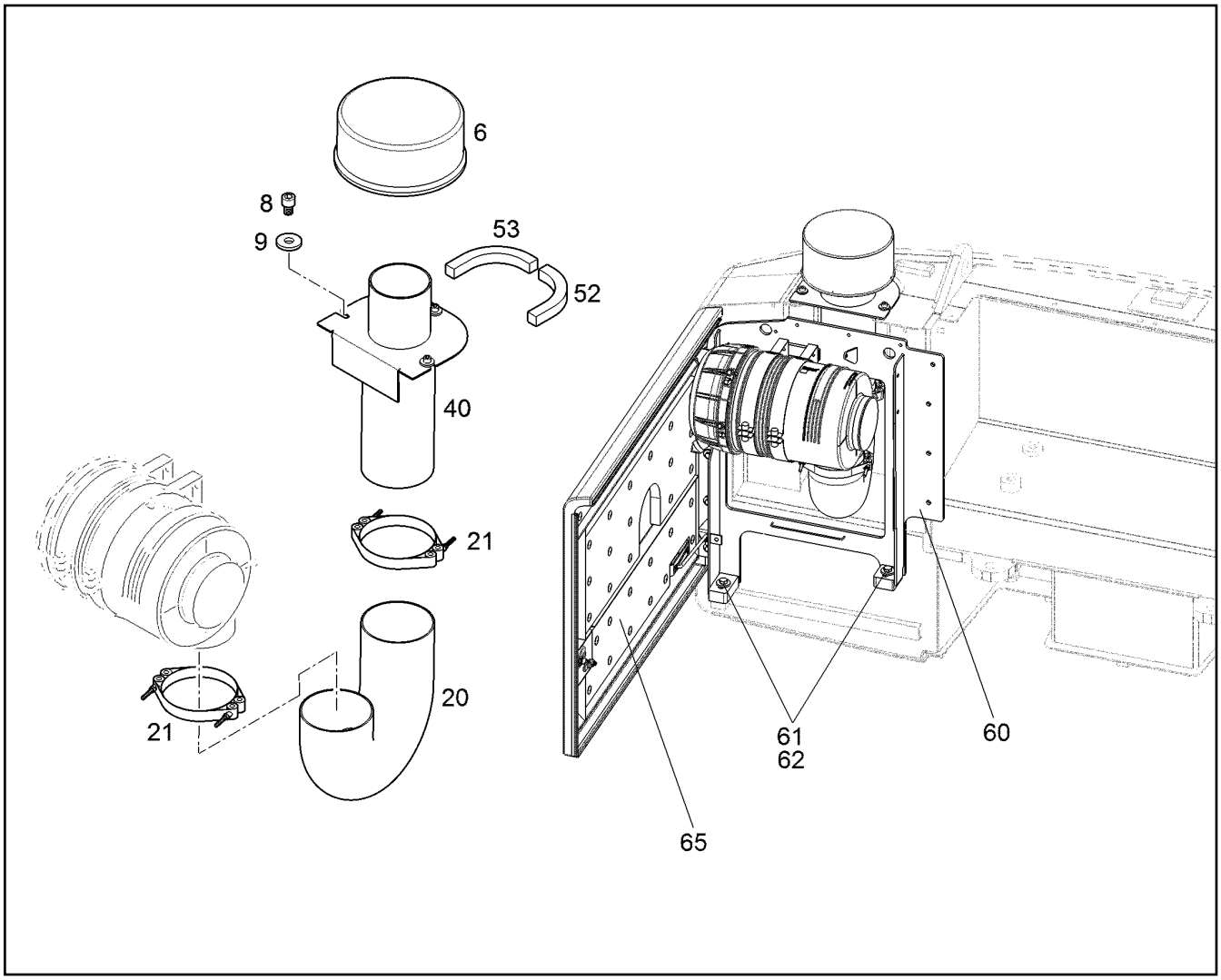

Pos.	Item	Quantity	Description	Designação	Serie	K
6	10813960	1	PRE-SEPARATOR	PRE-FILTRO		
8	4043002	3	SOCKET HEAD SCREW ISO 4762 M12X25 1	PARAFUSO CILÍNDRICO		
9	10179356	3	WASHER 13	ARRUELA		
20	10217797	1	AIR HOSE 180X4X700	MANGUEIRA DE AR		1
21	10355921	2	HOSE CLAMP HKF 183 172-194X15,8 W2	ABRAÇADEIRA DE MANGUEIRA		
40	11006206	1	ADAPTOR	ADAPTADOR		
52	10002427	0.1m	PROFILE	PERFIL		
53	10002427	0.1m	PROFILE	PERFIL		
60	10498564	1	FRAME BACKSIDE RIGHT INSTAL.	MONT.ESTRUTURA TRASEIRA D		
61	4600180	2	WASHER 17	ARRUELA		
62	4000577	2	HEX SCREW ISO 4014 M16X70 10.9 FLZN	PARAFUSO SEXTAVADO		
65	10498566	1	SIDE DOOR RIGHT ⇨ ❑ 460	PORTA LATERAL DIREITA		

Siehe Untergruppen

See sub - group

Voir sous - groupe

Pos.	Item	Quantity	Description	Designação	Serie	K
10		1	LABEL KIT ⇨ ❑ 795	KIT DE ADESIVOS		
10		1	LABEL KIT ⇨ ❑ 795	KIT DE ADESIVOS		

OHNE BILD

WITHOUT DRAWING

SANS DESSIN

Pos.	Item	Quantity	Description	Designação	Serie	K
10	11826208	1	ADHESIVE SIGN	ADESIVO		
20	11826206	1	ADHESIVE SIGN	ADESIVO		
30	11826200	1	ADHESIVE SIGN	ADESIVO		
40	11826202	1	ADHESIVE SIGN	ADESIVO		
50	11826204	1	ADHESIVE SIGN	ADESIVO		
60	11826235	1	ADHESIVE SIGN	ADESIVO		
70	11826231	1	ADHESIVE SIGN	ADESIVO		
80	11826232	1	ADHESIVE SIGN	ADESIVO		

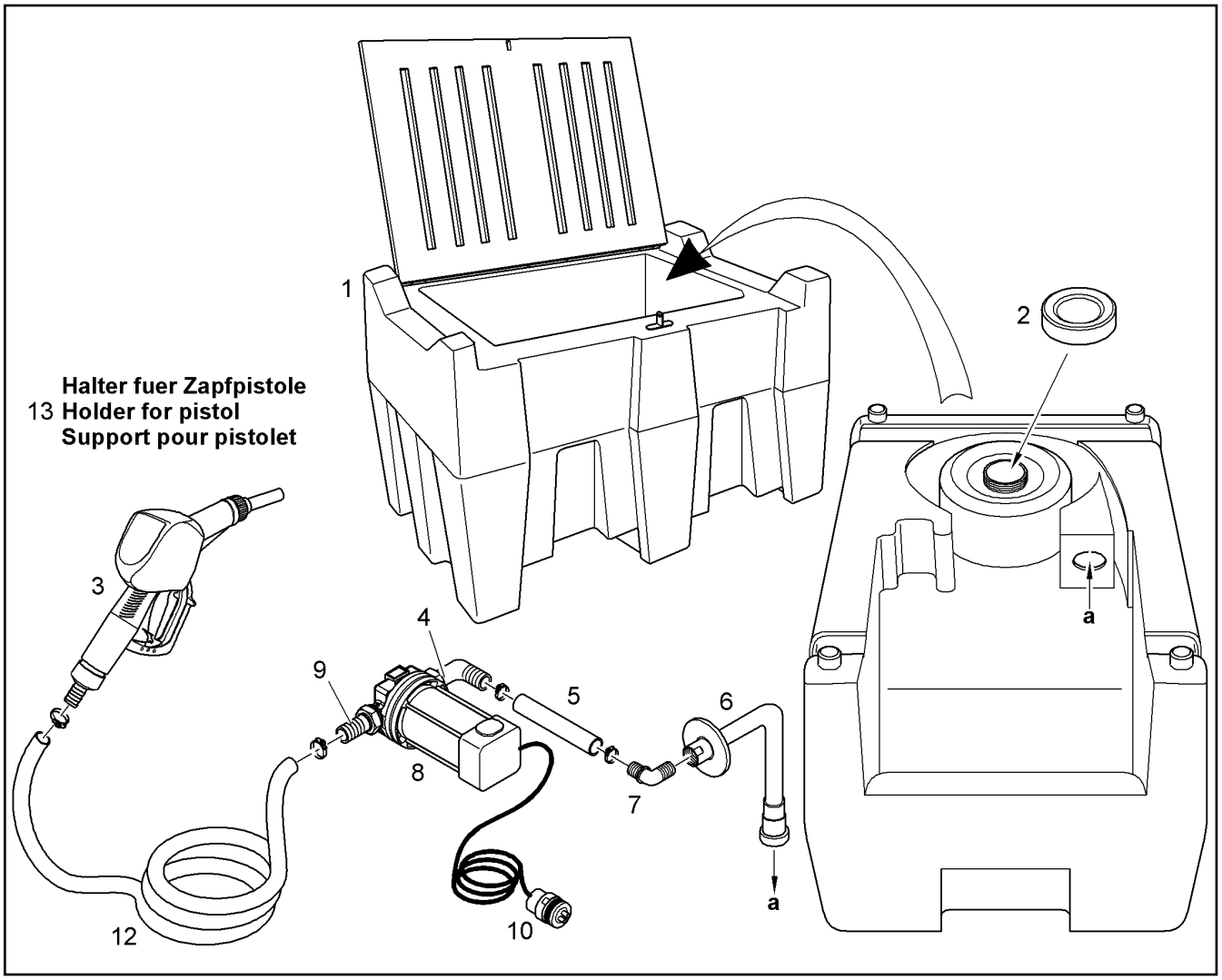

Pos.	Item	Quantity	Description	Designação	Serie	K
1	11835500	1	CASE	CAIXA		
2	11834724	1	STOP PLUG	PLUG DE FECHAMENTO		
3	11834727	1	ANTIDRIP NOZZLE			
4	11834729	1	FITTING	UNIÃO ROSCADA		
5	11834732	1	SIPHON PIPE	MANGUEIRA DE SUCÇÃO		1
6	11834726	1	SIPHON PIPE	MANGUEIRA DE SUCÇÃO		1
7	11834730	1	THREADED ELBOW JOINT	CONEXÃO ROSCADA 90º		
8	11834731	1	PUMP	BOMBA		
9	11834728	1	FITTING	UNIÃO ROSCADA		
10	11834725	1	PLUG	PLUGUE		
12	11834733	4m	HOSE	MANGUEIRA		1
13	11834721	1	FASTENER	SUPORTE		

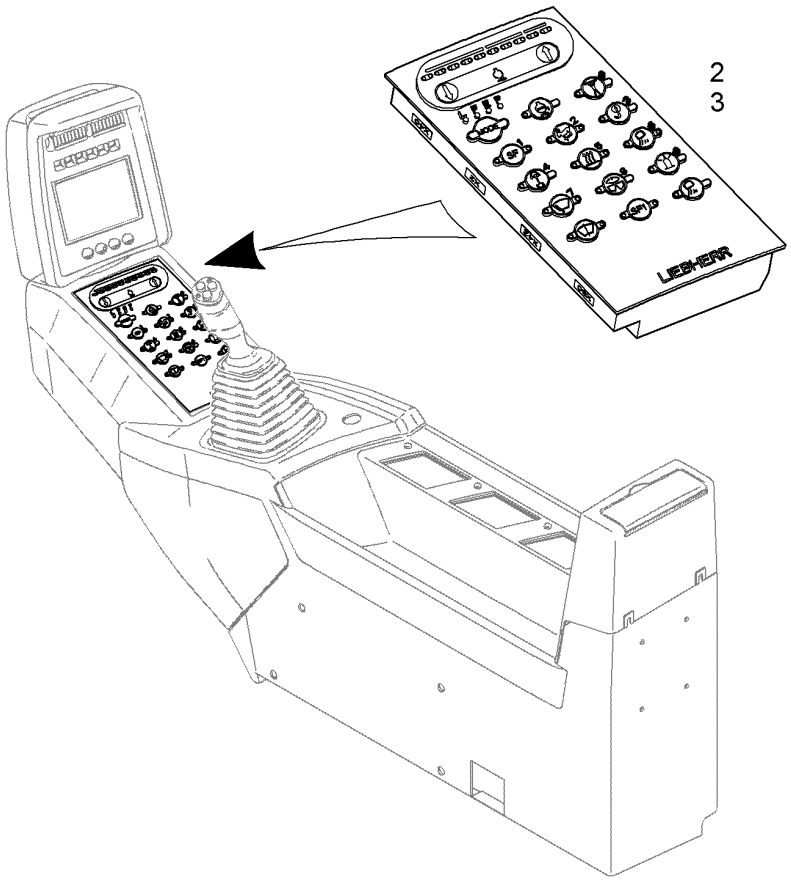

Pos.	Item	Quantity	Description	Designação	Serie	K
2	10884851	1	KEYBOARD	TECLADO		
3		1	SOFTWARE	SOFTWARE		

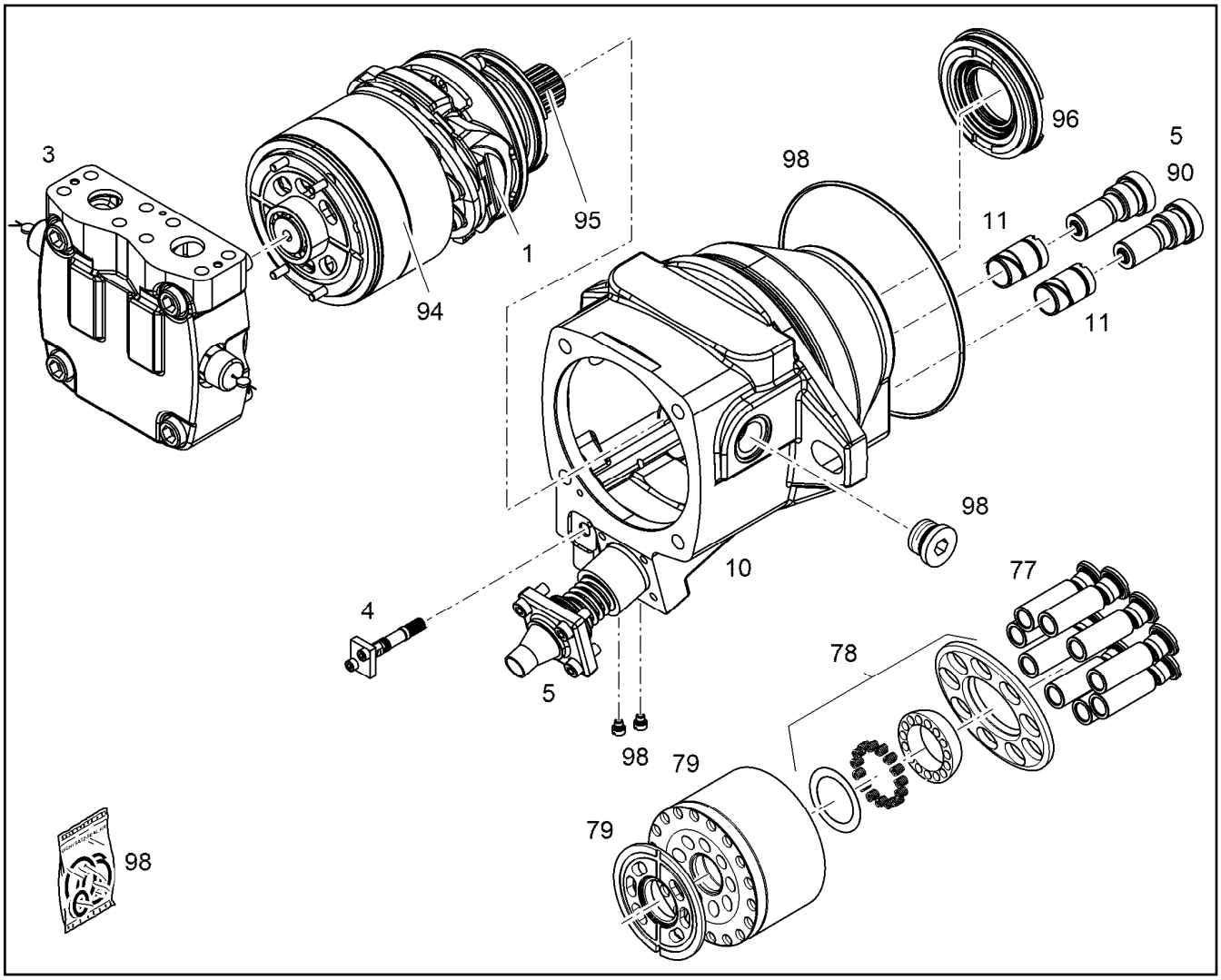

Pos.	Item	Quantity	Description	Designação	Serie	K
1		1	DRIVING GEAR NG 100 ⇨ ❑ 815	MECANISMO DE ACIONAMENTO		
3	9073786	1	CONNECTING PLATE NG 100 ⇨ ❑ 816	PLACA DE LIGAÇÃO		
4	9882832	1	PILOT VALVE ⇨ ❑ 818	VÁLVULA DE COMANDO		
5		1	ADJUSTMENT NG 100 ⇨ ❑ 116	REGULADOR	-151622214	
5	11381313	1	ADJUSTMENT NG 100 ⇨ ❑ 810	REGULADOR	151622215-	
10		1	HOUSING NG 100	CARCAÇA		
11	11356724	2	GUIDE BUSHING	BUCHA GUIA		
77	9072997	1	RK PISTON WITH GUIDE SHOE NG 100 ⇨ ❑ 179	KIT DE REPARO PISTÕES AXIAI		
78	9072998	1	RK PULL-BACK BALL+PULL-B.PLATENG 100 ⇨ ❑ 180	KIT REPARO ESF.+PLACA RETO		
79	9074114	1	RK CYLINDER+CONTROL PLATE ⇨ ❑ 822	KIT DE REPARO GRUPO ROTÓR		
90	11387278	1	REVERSION KIT SCREW PLUG NG 100 ⇨ ❑ 811	KIT REEQUIP.PARAFUSO VEDA		
94	9074122	1	REPAIR KIT DRIVING MECHANISM NG 100 ⇨ ❑ 823	KIT DE REPARO		
95	9074123	1	REPAIR KIT SHAFT NG 100 ⇨ ❑ 824	KIT DE REPARO DO EIXO		
96	9268015	1	REPAIR KIT LOCK RING NG 090 ⇨ ❑ 828	KIT DE REPARO		

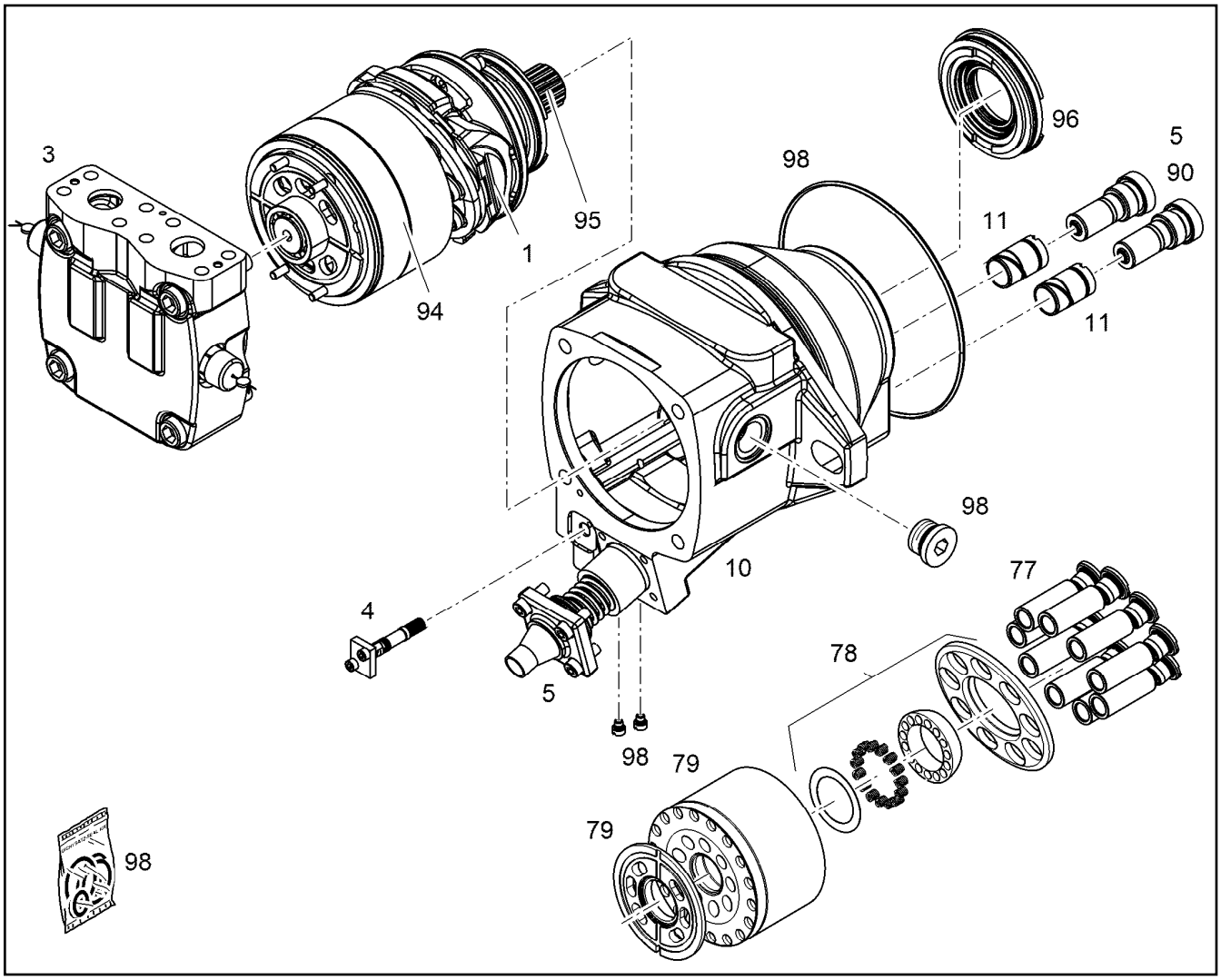

Pos.	Item	Quantity	Description	Designação	Serie	K
98	11381954	1	SEAL KIT NG 100 ⇨ ❑ 833	KIT DE VEDAÇÃO		

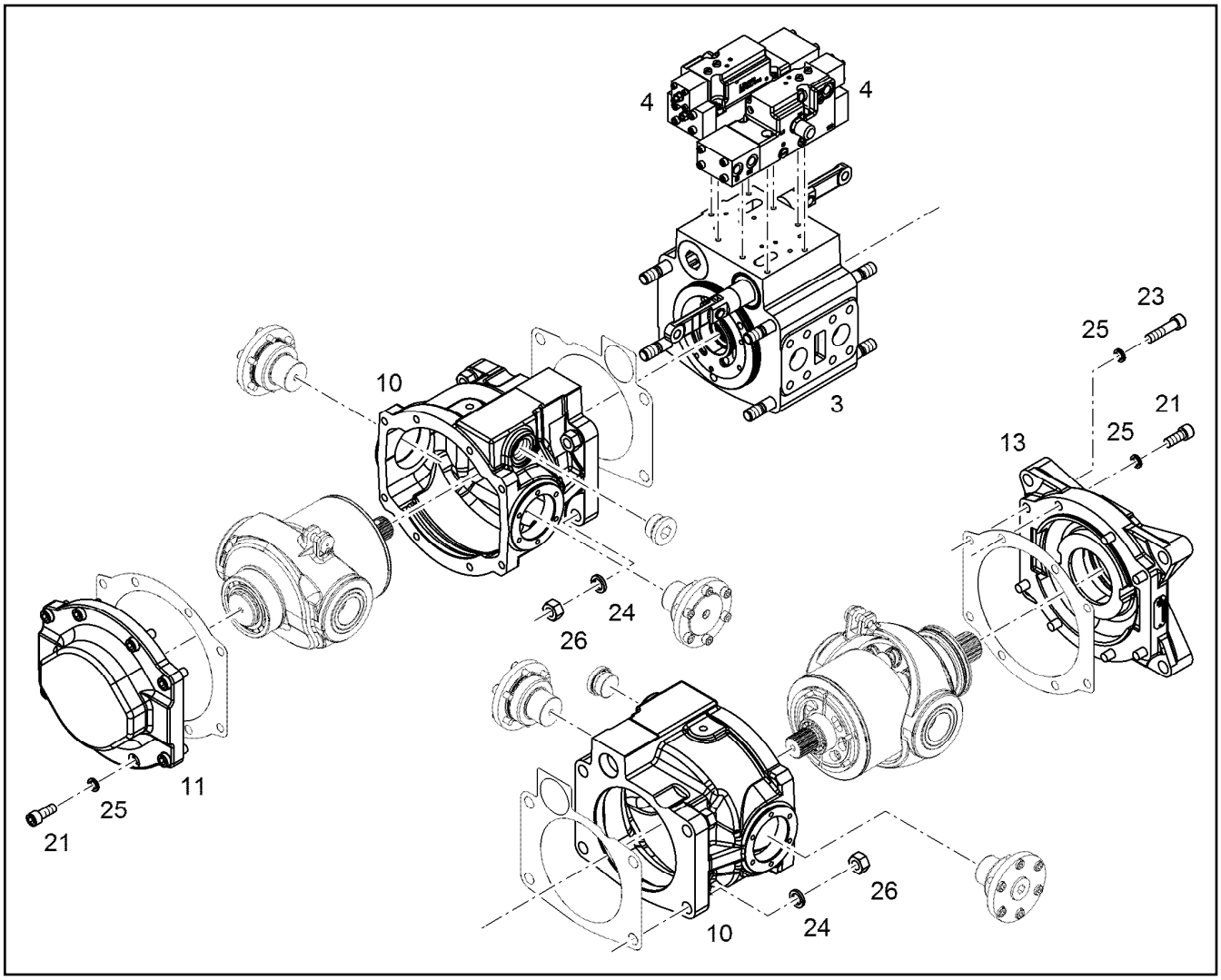

Pos.	Item	Quantity	Description	Designação	Serie	K
3		1	CONNECTION HOUSING NG 150 ⇨ ❑ 154	CARCAÇA DE CONEXÕES		
4	10133061	2	REGULATING VALVE EHR ⇨ ❑ 819	VÁLVULA REGULADORA		
10		2	HOUSING NG 140	CARCAÇA		
11	10136088	1	TERMINAL FLANGE NG 125-150	FLANGE DE FECHAMENTO		
13	9268423	1	CONNECTION FLANGE	FLANGE DE CONEXAO		
21	4980947	12	SOCKET HEAD SCREW ISO 4762 M12X30 1	PARAFUSO CILÍNDRICO		
23	4980434	4	SOCKET HEAD SCREW ISO 4762 M12X50 1	PARAFUSO CILÍNDRICO		
24	10006372	8	LOCK WASHER VS 16	ARRUELA DE PRESSÃO		
25	4600022	16	WASHER SPRING 12	ARRUELA DE PRESSÃO		
26	4980548	8	HEX NUT M16X1,5	PORCA SEXTAVADA		

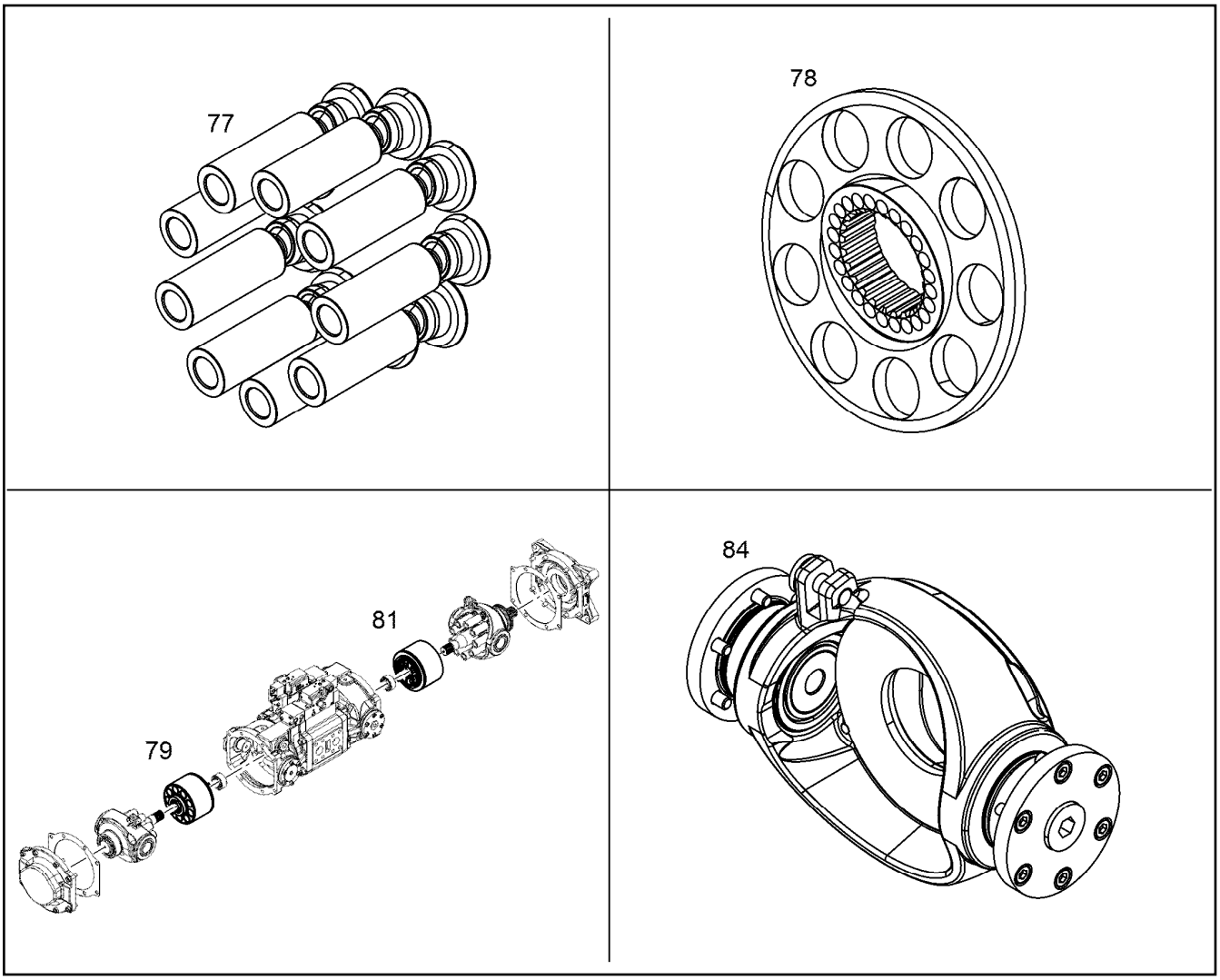

Pos.	Item	Quantity	Description	Designação	Serie	K
77	9889831	2	RK PISTON WITH GUIDE SHOE NG 140 ⇨ ❑ 186	KIT DE REPARO PISTÕES AXIAI		
78	9889988	2	RK PULL-BACK BALL+PULL-B.PLATENG 140 ⇨ ❑ 192	KIT REPARO ESF.+PLACA RETO		
79	9889832	1	RK CYLINDER+CONTROL PLATE NG 140 R ⇨ ❑ 187	KIT DE REPARO GRUPO ROTÓR		
81	9889833	1	RK CYLINDER+CONTROL PLATE NG 140 LI ⇨ ❑ 188	KIT DE REPARO GRUPO ROTÓR		
84	10139752	2	REPAIR SET SWIVEL YOKE NG 140-150 ⇨ ❑ 825	KIT DE REPARO		

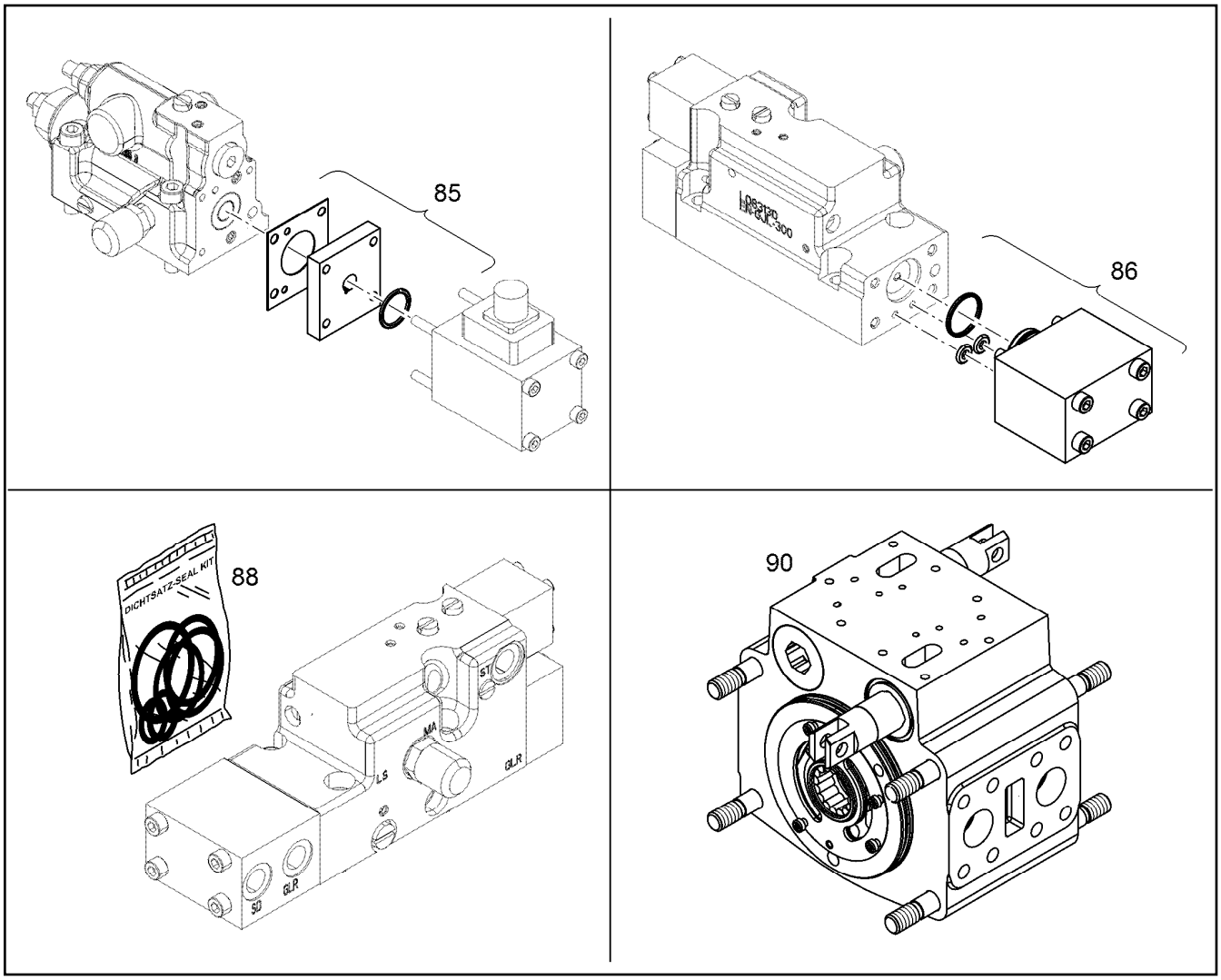

Pos.	Item	Quantity	Description	Designação	Serie	K
85	9275443	2	REPAIR SET LID NG 100 ⇨ ❑ 183	KIT DE REPARO DA TAMPA		
86	9078788	2	REGULATOR COVER LR SD DA ⇨ ❑ 820	KIT REPARO DA TAMPA REGULA		
88	9882875	1	SEAL KIT REGULATING VALVE EHR ⇨ ❑ 184	KIT DE VED DA VÁLVULA REGU		
90	9074893	1	REPAIR KIT CONNECTION HOUSING NG 12 ⇨ ❑ 181	KIT DE REPARO DA CARCAÇA		

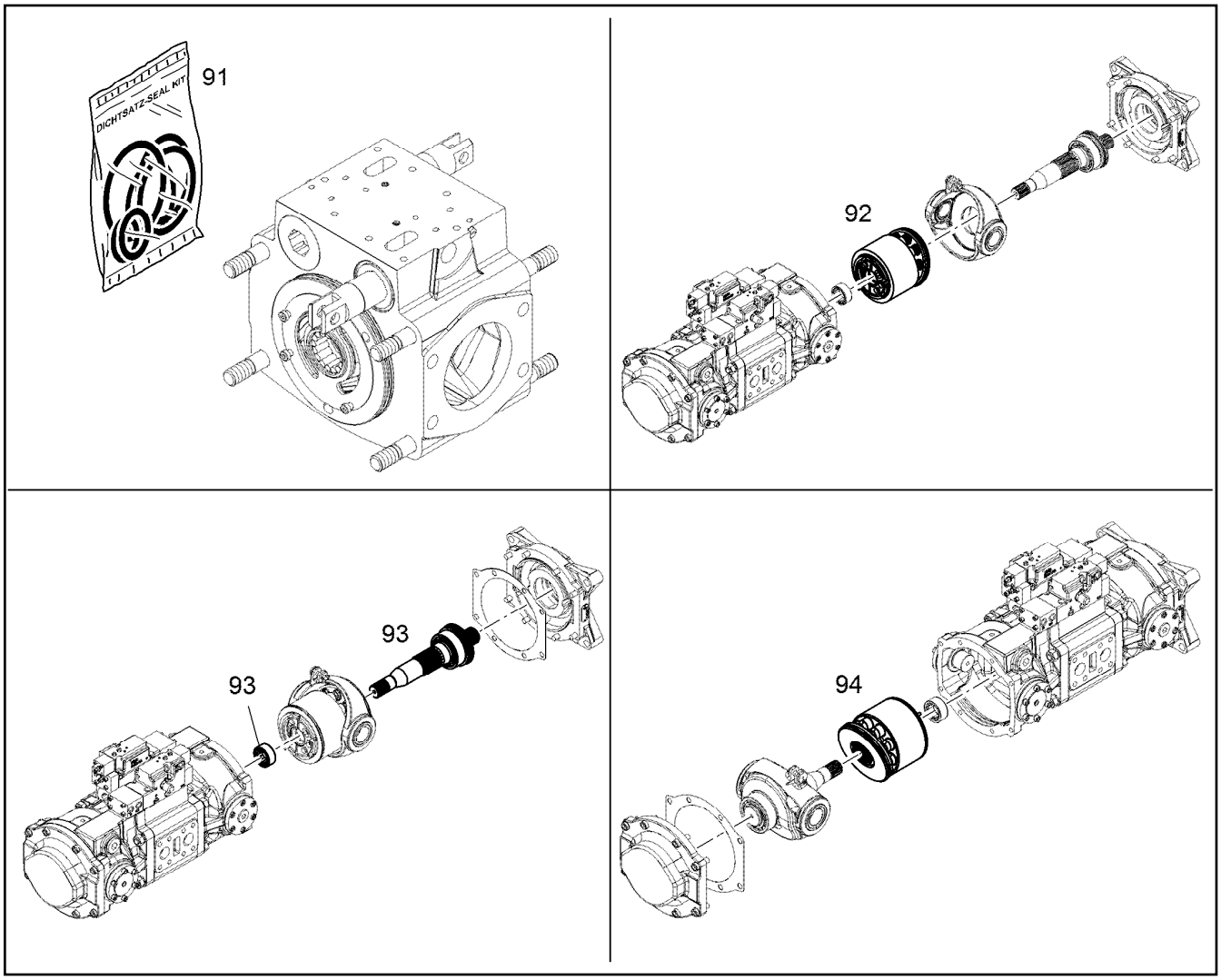

Pos.	Item	Quantity	Description	Designação	Serie	K
91	9274731	1	SEAL KIT CONNECTING HOUSING NG 140 ⇨ ❑ 182	KIT DE VED DA CARCAC DO CO		
92	9889984	1	REPAIR KIT DRIVING MECHANISM NG 140 ⇨ ❑ 191	KIT DE REPARO		
93	9889977	1	REPAIR KIT SHAFT NG 140 ⇨ ❑ 189	KIT DE REPARO DO EIXO		
94	9889983	1	REPAIR KIT DRIVING MECHANISM NG 140 R ⇨ ❑ 190	KIT DE REPARO		

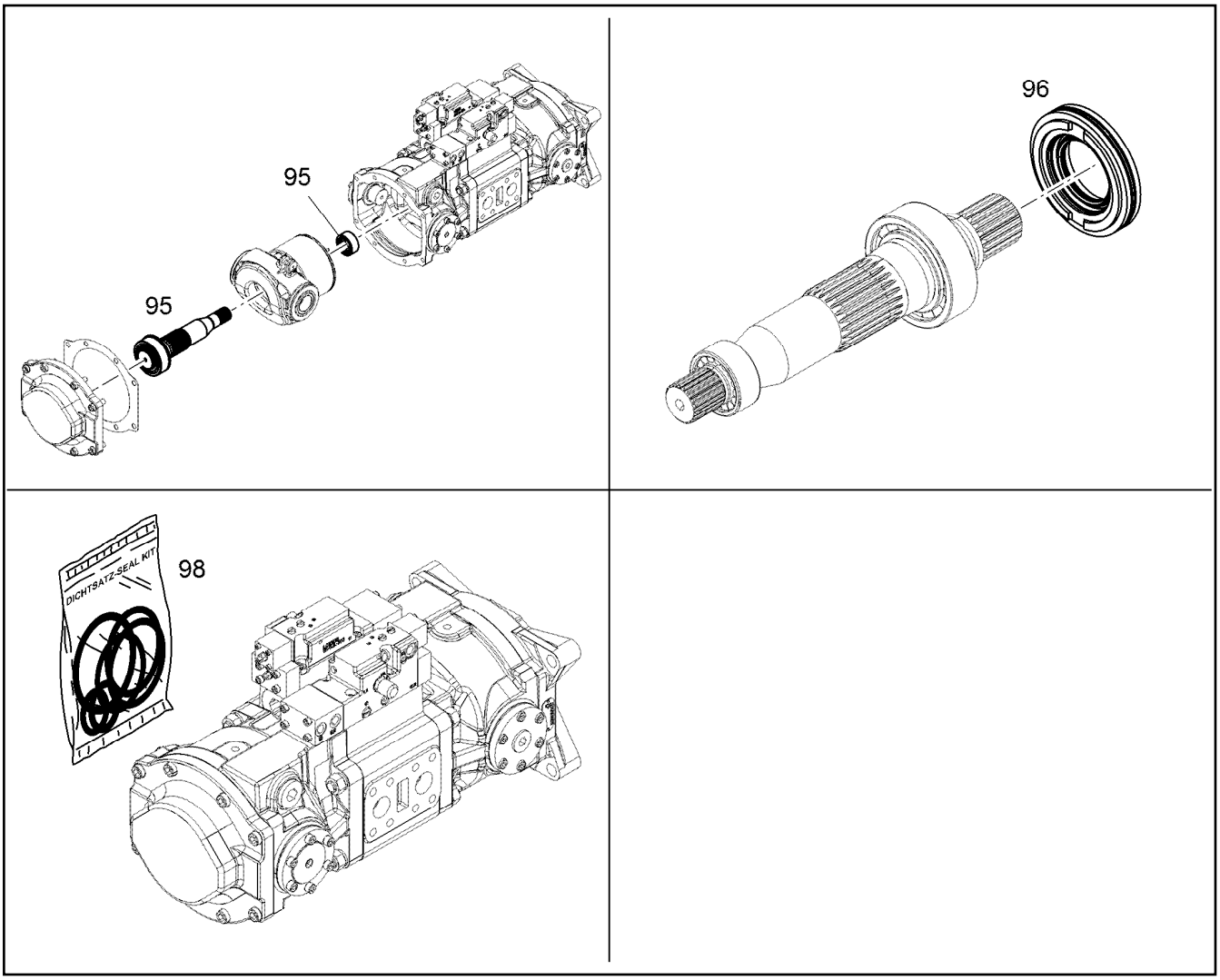

Pos.	Item	Quantity	Description	Designação	Serie	K
95	9889978	1	REPAIR KIT SHAFT NG 140 ⇨ ❑ 831	KIT DE REPARO DO EIXO		
96	9268016	1	REPAIR KIT LOCK RING NG 125 ⇨ ❑ 829	KIT DE REPARO		
98	9265808	1	SEAL KIT DOUBLE PUMP NG 125 ⇨ ❑ 835	KIT DE VEDACAO DA BOMBA DU		

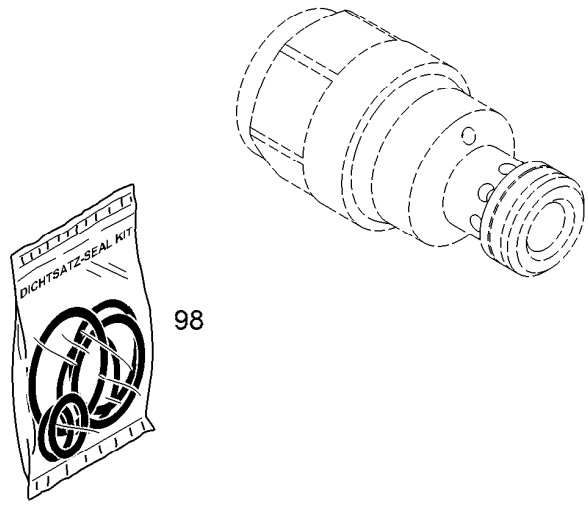

Pos.	Item	Quantity	Description	Designação	Serie	K
98	9266231	1	SEALING SET VALVE DBE 10 ⇨ ❑ 837	KIT DE VEDACAO DA VALVULA		
602		1	TENSIONING INSTRUCTION	PRESCRICAO DE APERTO		

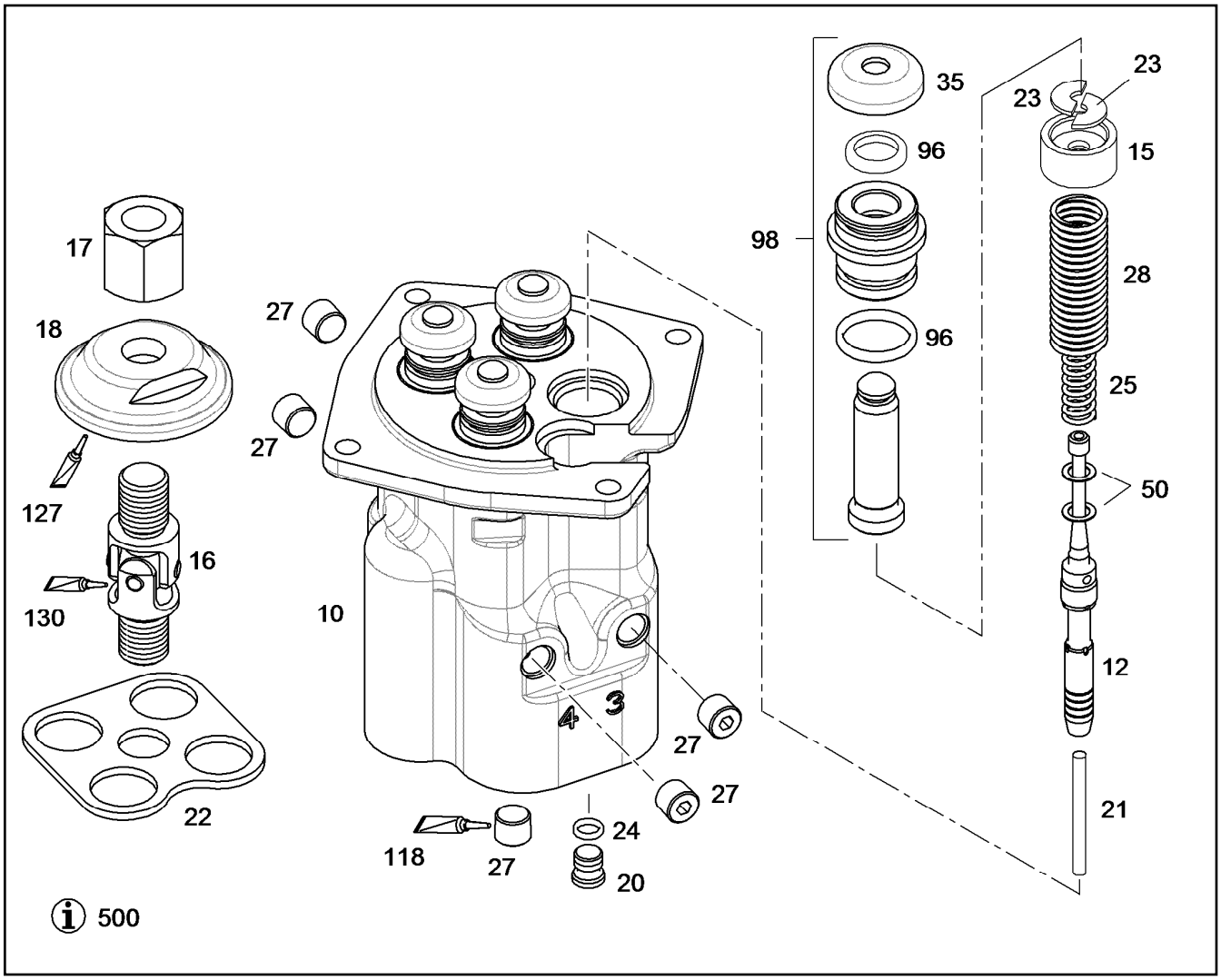

Pos.	Item	Quantity	Description	Designação	Serie	K
10		1	HOUSING	CARCAÇA		
12	10122498	4	PISTON	PISTÃO		
15	9265395	4	SPRING SUPPORT	PRATO DA MOLA		
16	9265396	1	UNIVERSAL PIVOT 20 M. B	CRUZETA		
17	9270475	1	NUT M14X1,5	PORCA		
18	9265398	1	INDEXING PLATE	DISCO DE COMUTACAO		
20	10122499	4	SCREW PLUG M8X1 C45Pb+C	PARAFUSO DE FECHAMENTO		
21	10122500	4	NEEDLE ROLLER d=2X19,8 - G2	ROLAMENTO DE AGULHAS		
22	10118649	1	COVER	TAMPA		
23	9265402	8	WASHER 3,8X12,5X1	ARRUELA		
24	11003560	4	O-RING 6,2X1,5	ANEL-O		
25	10355861	4	PRESSURE SPRING 1,1X6,5X31	MOLA DE PRESSÃO		
27	4901108	5	SCREW PLUG DIN 906 M10X1 ST A3C	PARAFUSO DE FECHAMENTO		
28	9265521	4	PRESSURE SPRING 1,25X11,50X47,00	MOLA DE PRESSÃO		
35	9276880	4	PROTECTING CAP 19	CAPA DE PROTEÇÃO		
50	7380138	8	SUPPORTING WASHER S 4,9X7,5X0,3	ARRUELA DE APOIO		
96	9269690	1	SEAL KIT VG7-4/... ⇨ ❑ 319	KIT DE VEDAÇÃO		
98	9074482	1	REPAIR SET PLUNGER ⇨ ❑ 318	CR TACO		
118	811208201	1	GLUE	COLA		
127	8100714	1	PASTE	PASTA		
130	8620769	1kg	UNIVERSAL GREASE OEST LT190EP/0,9kg	GRAXA UNIVERSAL		
500	9278153	1	TABLE ANWEISUNGEN	TABELA		

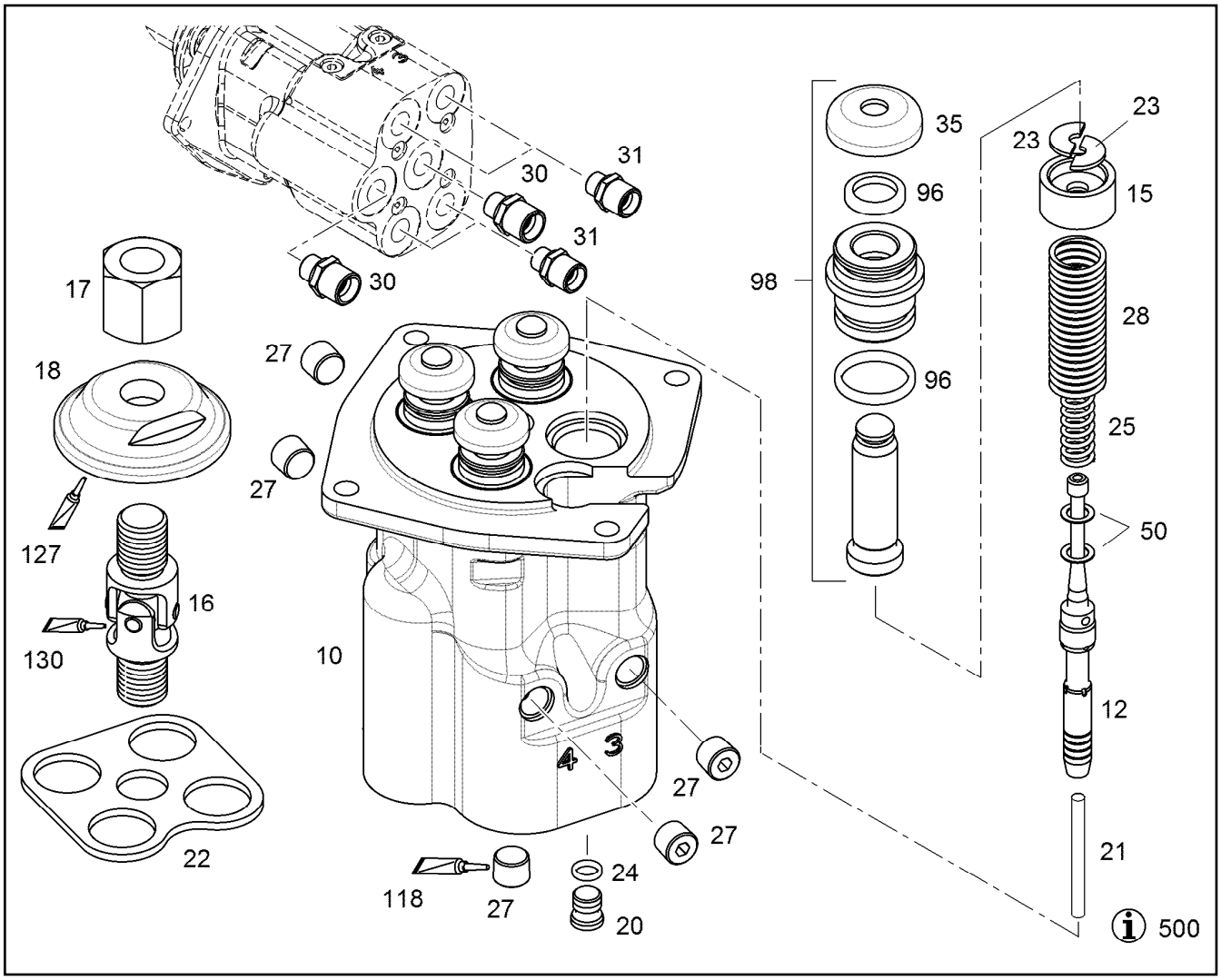

Pos.	Item	Quantity	Description	Designação	Serie	K
10		1	HOUSING	CARCAÇA		
12	10122498	4	PISTON	PISTÃO		
15	9265395	4	SPRING SUPPORT	PRATO DA MOLA		
16	9265396	1	UNIVERSAL PIVOT 20 M. B	CRUZETA		
17	9270475	1	NUT M14X1,5	PORCA		
18	9265398	1	INDEXING PLATE	DISCO DE COMUTACAO		
20	10122499	4	SCREW PLUG M8X1 C45Pb+C	PARAFUSO DE FECHAMENTO		
21	10122500	4	NEEDLE ROLLER d=2X19,8 - G2	ROLAMENTO DE AGULHAS		
22	10118649	1	COVER	TAMPA		
23	9265402	8	WASHER 3,8X12,5X1	ARRUELA		
24	11003560	4	O-RING 6,2X1,5	ANEL-O		
25	10355861	4	PRESSURE SPRING 1,1X6,5X31	MOLA DE PRESSÃO		
27	4980245	5	SCREW PLUG DIN 906 M10X1 St A2B	PARAFUSO DE FECHAMENTO		
28	9265521	4	PRESSURE SPRING 1,25X11,50X47,00	MOLA DE PRESSÃO		
30	7362117	2	FITTING GE 12L G1/4A	UNIÃO ROSCADA		
31	7362091	4	FITTING GE 10L G1/4A	UNIÃO ROSCADA		
35	9276880	4	PROTECTING CAP 19	CAPA DE PROTEÇÃO		
50	7380138	8	SUPPORTING WASHER S 4,9X7,5X0,3	ARRUELA DE APOIO		
96		1	SEAL KIT VG7-4/... ⇨ ❑ 319	KIT DE VEDAÇÃO		
98		1	REPAIR SET PLUNGER ⇨ ❑ 318	CR TACO		
118	811208201	1	GLUE	COLA		
127	8100714	1	PASTE	PASTA		
130	8620769	1kg	UNIVERSAL GREASE OEST LT190EP/0,9kg	GRAXA UNIVERSAL		
500		1	TABLE ANWEISUNGEN	TABELA		

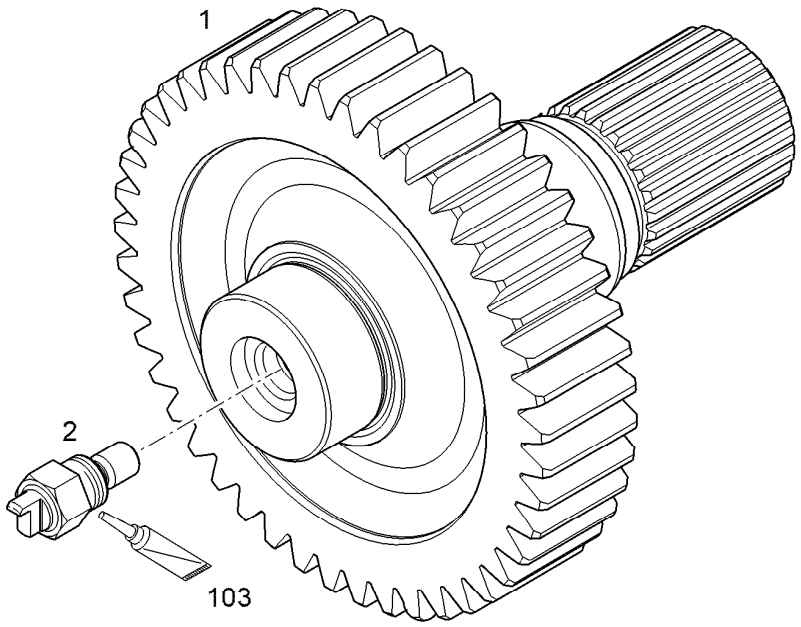

Pos.	Item	Quantity	Description	Designação	Serie	K
1	12854366	1	DRIVE SHAFT Z=45 M=3,5	EIXO DE ACIONAMENTO		
2	10145171	1	SCREW COUPLING	ACOPLAMENTO ROSCADO		
103	811205708	1	SCREW LOCKING	COLA PARA ELEMENTOS FIXA		

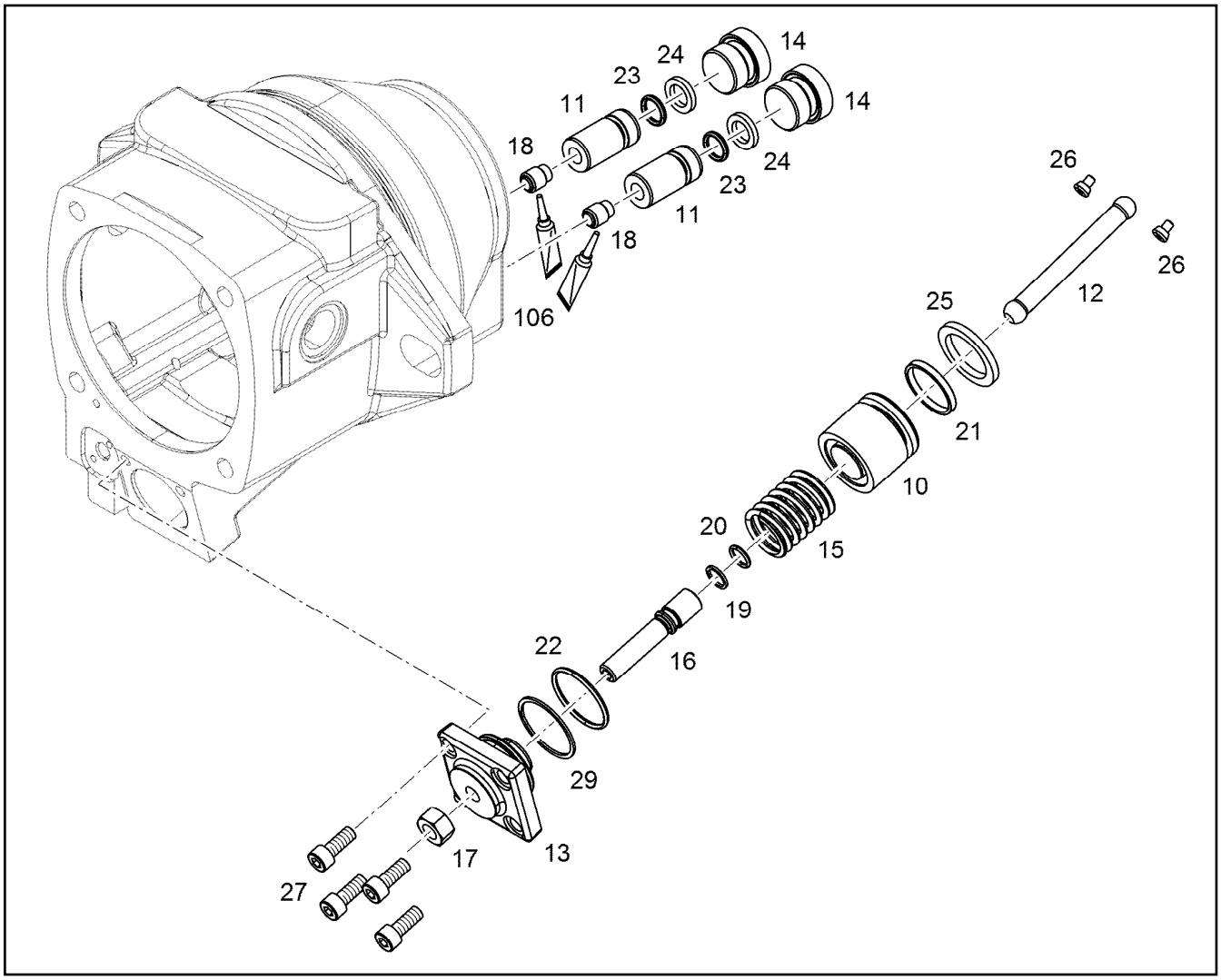

Pos.	Item	Quantity	Description	Designação	Serie	K
10	9276983	1	ADJUSTING PISTON NG 100	PISTÃO DE AJUSTAMENTO		
11	9276984	2	ADJUSTING PISTON	PISTÃO DE AJUSTAMENTO		
12	9276985	1	ADJUSTING LEVER	ALAVANCA DE REGULAGEM		
13	9882761	1	COVER NG 100	TAMPA		
14	12422288	2	SCREW PLUG M27X2 ED-FKM	PARAFUSO DE FECHAMENTO		
15	7381763	1	PRESSURE SPRING 3,60X28,40X49,68	MOLA DE PRESSÃO		
16	9883344	1	LIMIT STOP SCREW M12X46,5X8 42CrMo4	PARAFUSO LIMITADOR		
17	11002808	1	HEX NUT M12	PORCA SEXTAVADA		
18	9277556	2	BALL THRUST SCREW M12X16X4,5 BO	PARAFUSO ESFERICO DE PRES		
19	7381809	1	BACK-UP RING CUT 11,7/15X1,4	ANEL DE ENCOSTO		
20	7380596	1	O-RING DIN 3771 11,00X2,00	ANEL-O		
21	7381124	1	O-RING ISO 3601-1 29,74X3,53	ANEL-O		
22	7380719	1	O-RING ISO 3601-1 36,17X2,62	ANEL-O		
23	7380935	2	O-RING ISO 3601-1 12,37X2,62	ANEL-O		
24	7381413	2	LIFETIME SEAL 21X13,5X3,2	ANEL DE VEDAÇÃO DE DESLIZE		
25	7381414	1	LIFETIME SEAL 42X31X4,2	ANEL DE VEDAÇÃO DE DESLIZE		
26	9880132	2	LOCKING SCREW M5X6X4,2 ETG 100	PARAFUSO TRAVA		
27	4980671	4	SOCKET HEAD SCREW ISO 4762 M8X20 10.	PARAFUSO CILÍNDRICO		
29	7381758	1	BACK-UP RING UNCUT 37,5/42X1,4	ANEL DE APOIO		
106	8700039	1	ADHESIVE 50ML TUBE ROT	COLA		

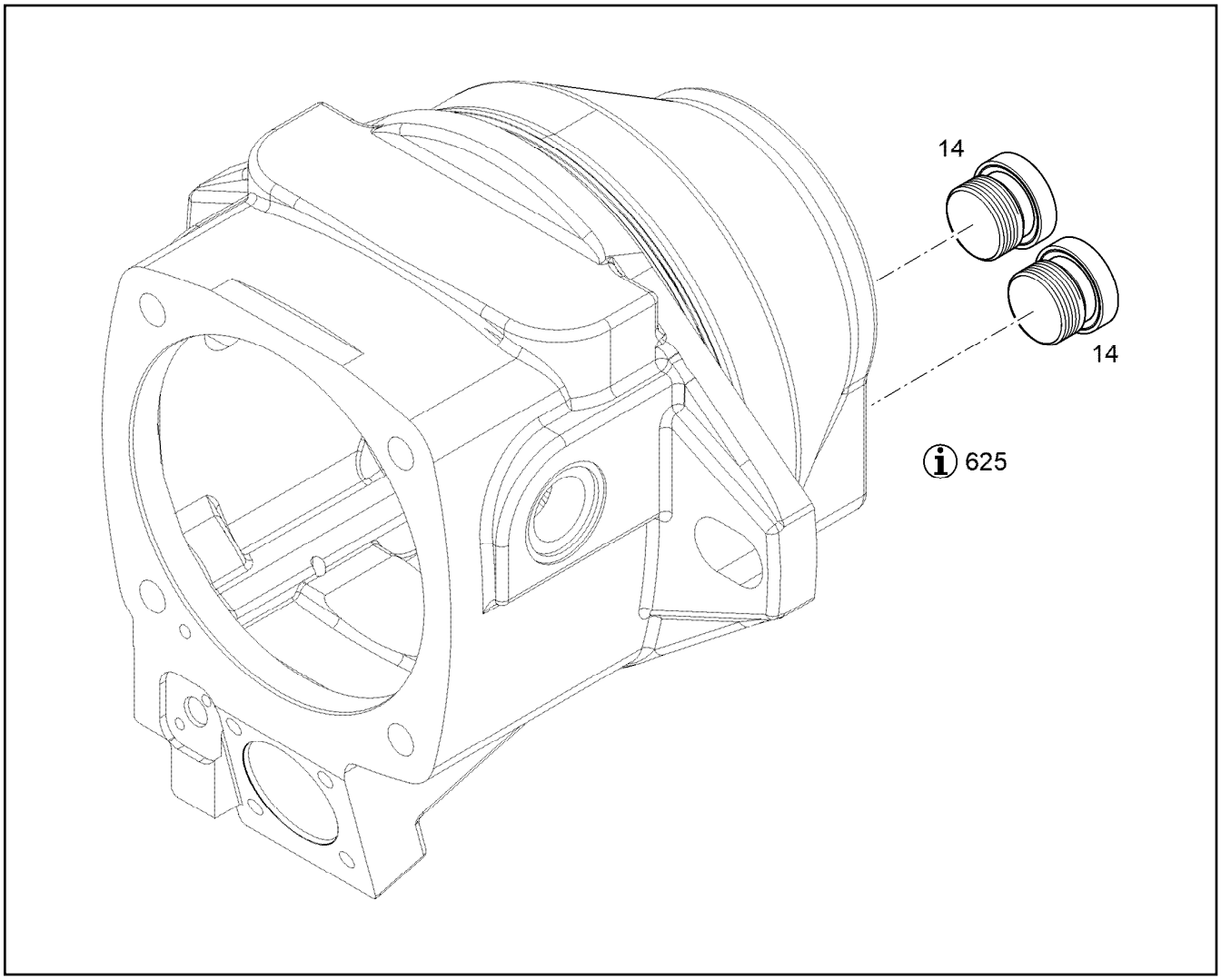

Pos.	Item	Quantity	Description	Designação	Serie	K
14		2	SCREW PLUG M27X2 ED-FKM	PARAFUSO DE FECHAMENTO		
625		1	TENSIONING INSTRUCTION FMV	PRESCRICAO DE APERTO		

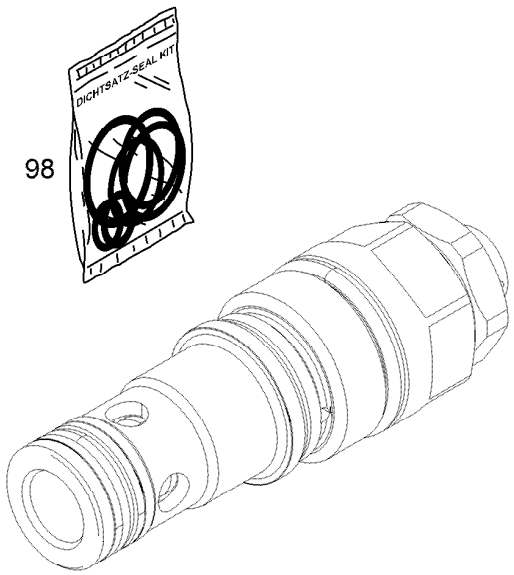

Pos.	Item	Quantity	Description	Designação	Serie	K
98	9266089	1	SEALING SET VALVE DBV 22 ⇨ ❑ 836	KIT DE VEDACAO DA VALVULA		
602		1	TENSIONING INSTRUCTION	PRESCRICAO DE APERTO		

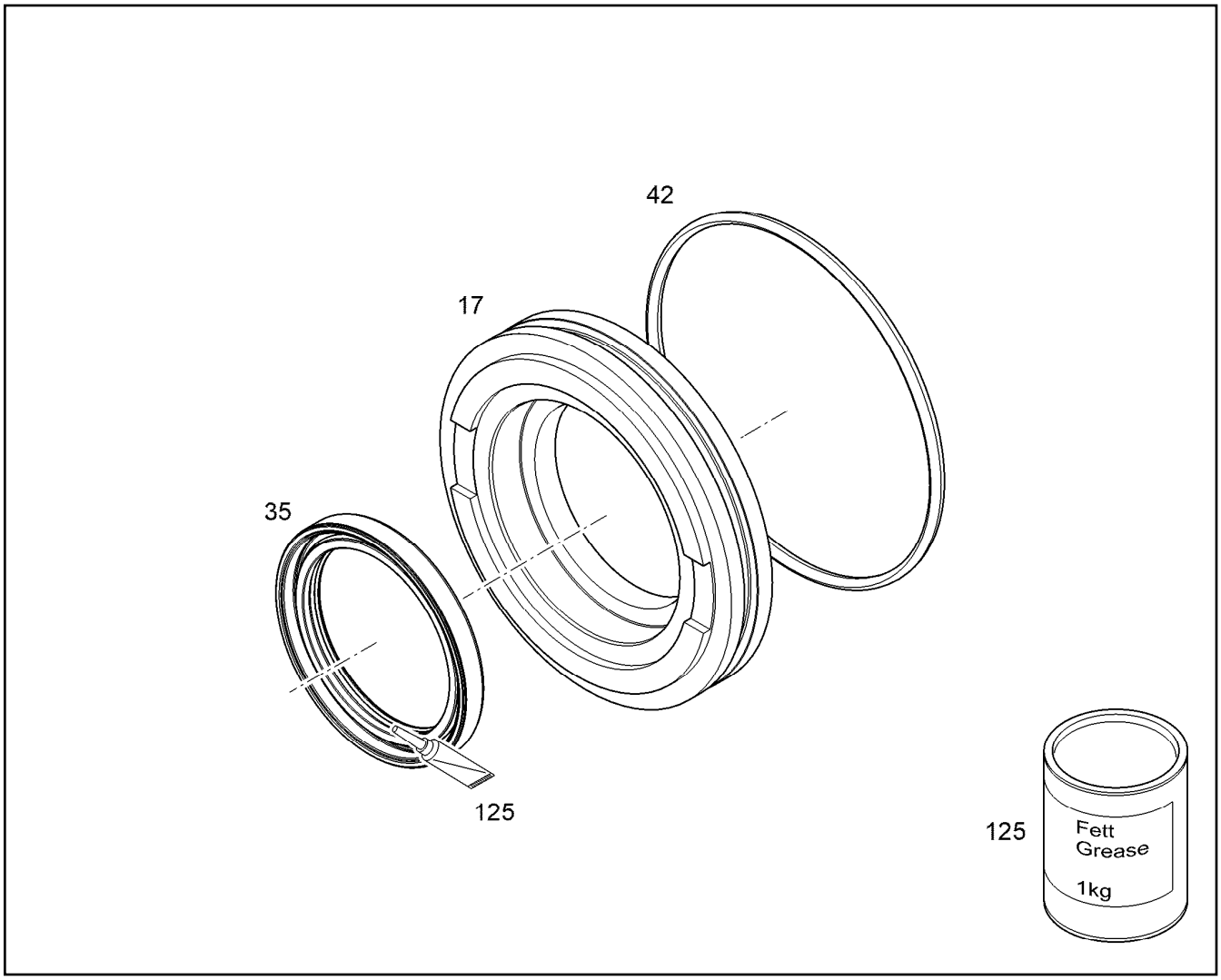

Pos.	Item	Quantity	Description	Designação	Serie	K
17		1	CLOSING RING NG 125-150	ANEL DE FECHAMENTO		
35		1	ROTARY SHAFT LIP SEAL PPSX50X65X7	ANEL DE VEDAÇÃO DO EIXO RA		
42	7380657	1	O-RING ISO 3601-1 91,67X3,53	ANEL-O		
125	12213966	1	SPECIAL GREASE POLYLUB GLY 151/1kg	GRAXA ESPECIAL		

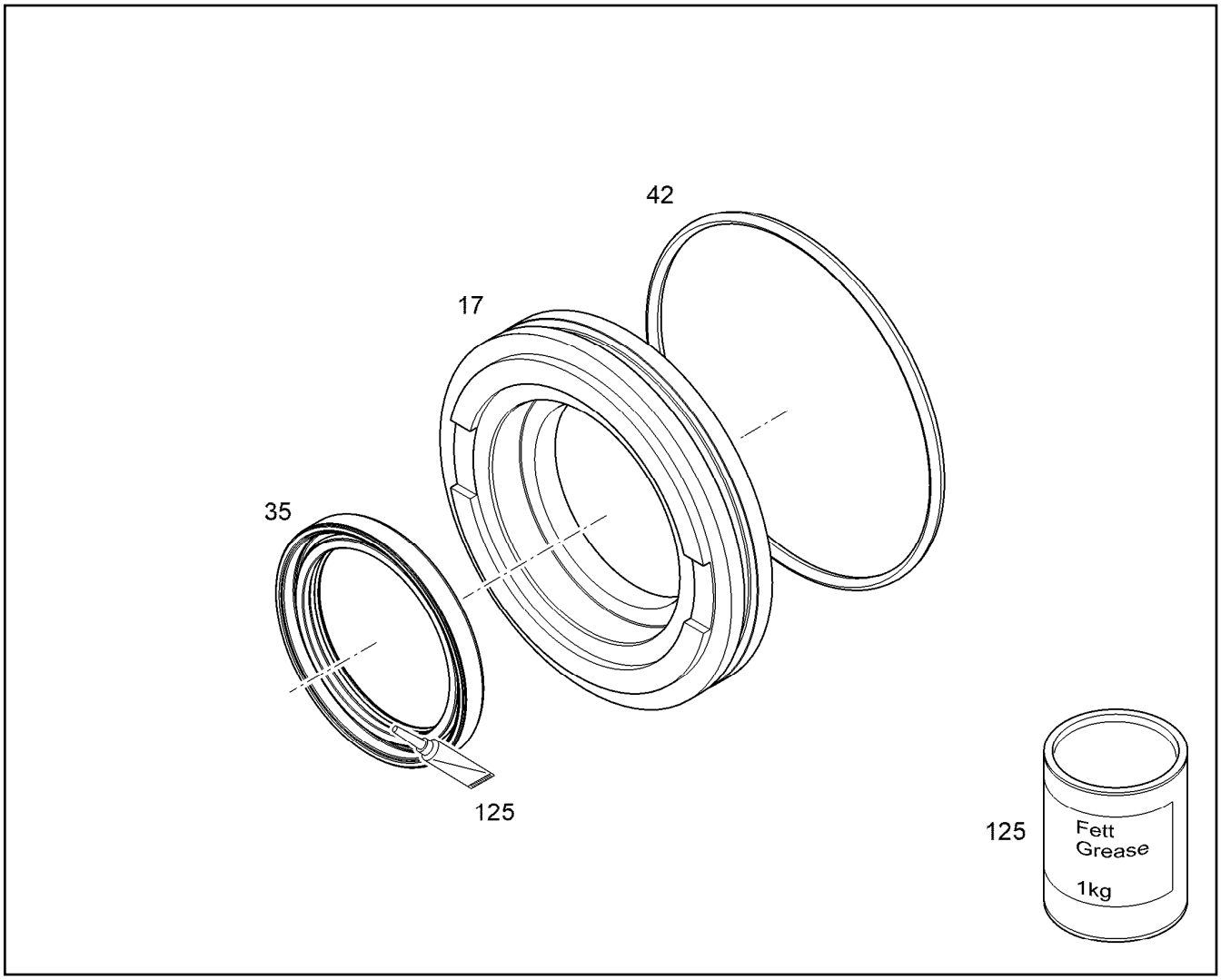

Pos.	Item	Quantity	Description	Designação	Serie	K
17		1	CLOSING RING NG 090-107	ANEL DE FECHAMENTO		
35		1	ROTARY SHAFT LIP SEAL ASX45X62X7	ANEL DE VEDAÇÃO DO EIXO RA		
42	7380297	1	O-RING ISO 3601-1 88,57X2,62	ANEL-O		
125	12213966	1	SPECIAL GREASE POLYLUB GLY 151/1kg	GRAXA ESPECIAL		

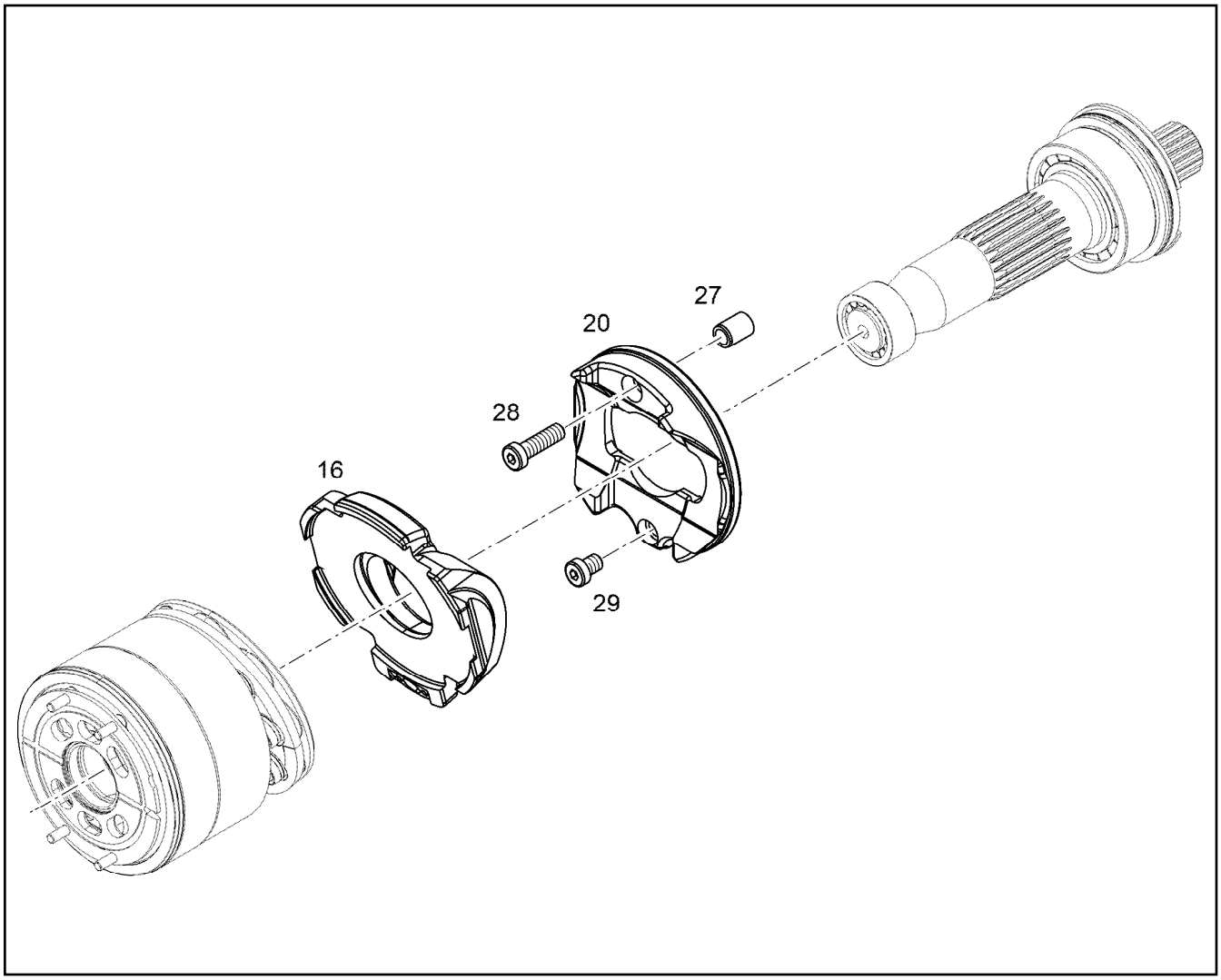

Pos.	Item	Quantity	Description	Designação	Serie	K
16	9276979	1	SWING ROCKER	BALANCO GIRATORIO		
20	12444198	1	BEARING FLANGE NG 100	FLANGE MANCAL		
27	9277898	1	BUSHING	BUCHA		
28	4980928	1	SOCKET HEAD SCREW DIN 7984 M10X35 0	PARAFUSO CILÍNDRICO		
29	4981011	1	SOCKET HEAD SCREW DIN 7984 M10X14 0	PARAFUSO CILÍNDRICO		

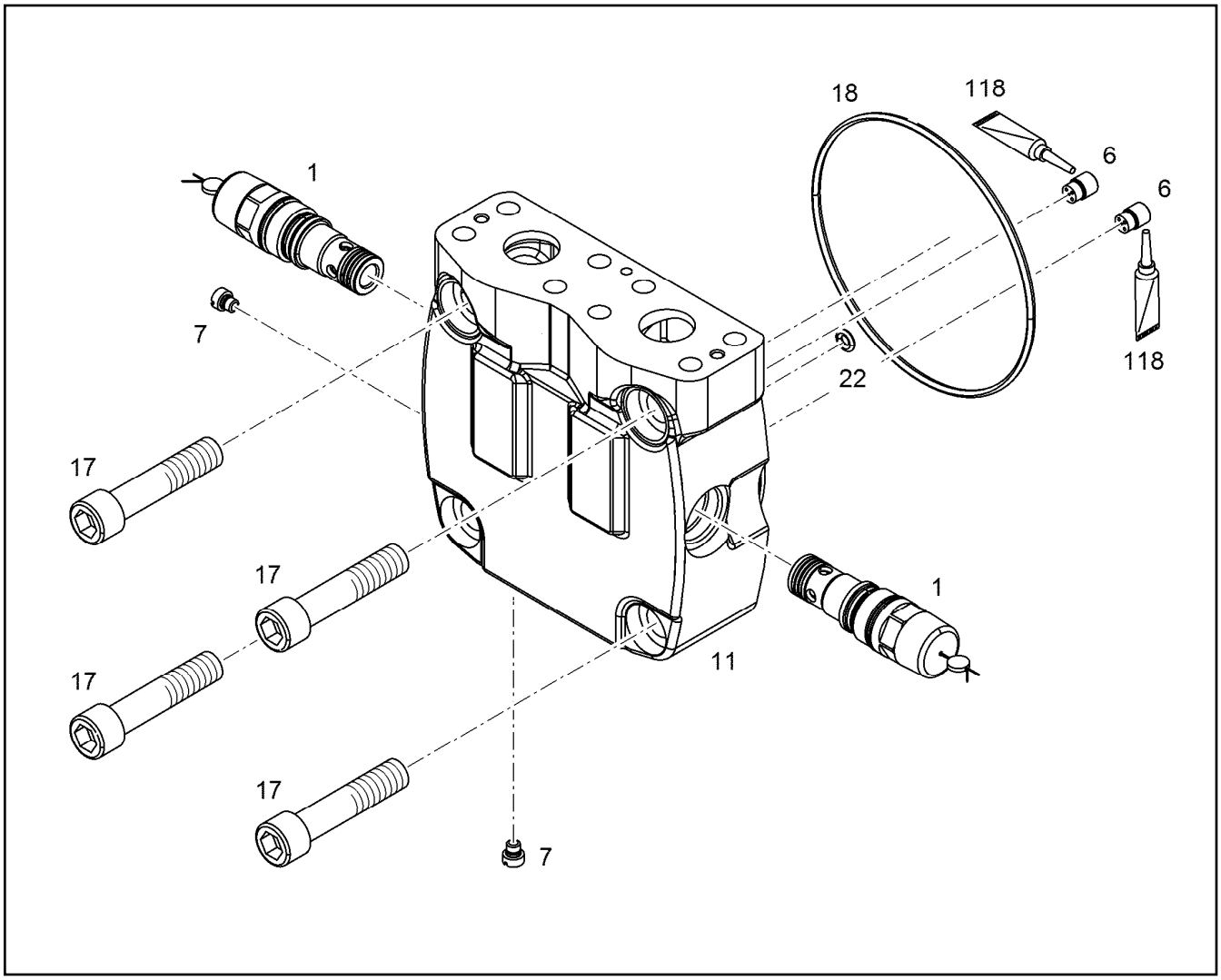

Pos.	Item	Quantity	Description	Designação	Serie	K
1		2	PRESSURE LIMITING VALVE ⇨ ❑ 812	VÁLVULA LIMITADORA DE PRES		
6	9270598	2	NON-RETURN VALVE	VÁLVULA DE RETORNO		
7	9268441	2	SCREW PLUG M6	PARAFUSO DE FECHAMENTO		
11	9073783	1	CONNECTING PLATE NG 100	PLACA DE LIGAÇÃO		
17	4000716	4	SOCKET HEAD SCREW ISO 4762 M14X65 1	PARAFUSO CILÍNDRICO		
18	7380658	1	O-RING ISO 3601-1 129,77X3,53	ANEL-O		
22	7380648	1	O-RING ISO 3601-1 6,02X2,62	ANEL-O		
118	811208201	1	GLUE	COLA		

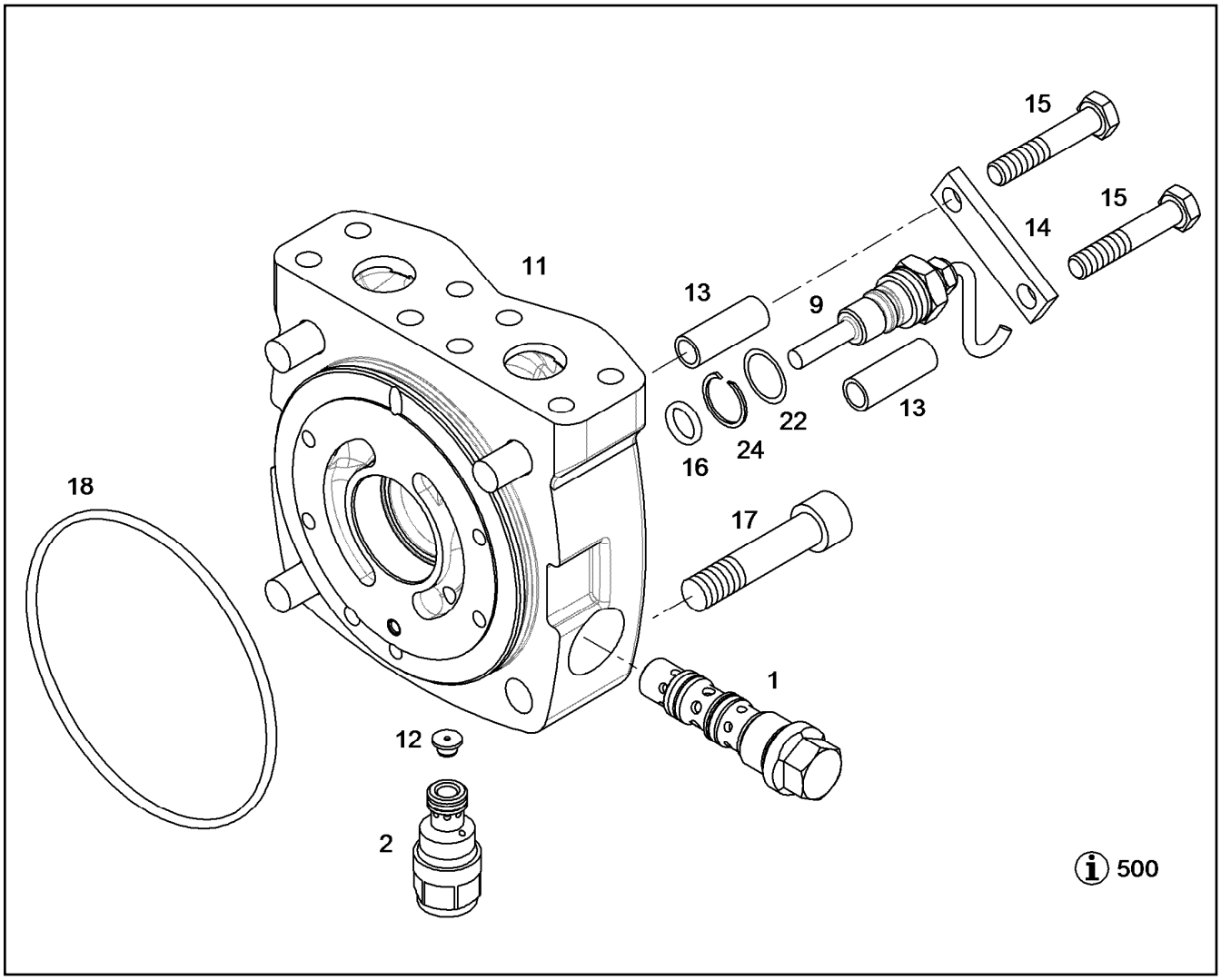

Pos.	Item	Quantity	Description	Designação	Serie	K
1	10119503	1	SHUTTLE VALVE ⇨ ❑ 236	VALVULA DIRECIONAL		
2	9267037	1	PRESSURE LIMITING VALVE ⇨ ❑ 806	VÁLVULA LIMITADORA DE PRES		
9	9278623	1	RK SPEED SENSOR ⇨ ❑ 239	KIT REPARO SENSOR N° ROTAÇ		
11		1	CONNECTING PLATE NG 090	PLACA DE LIGAÇÃO		
12	9266836	1	ORIFICE	ANTEPARO		
13	9275736	2	DISTANCE TUBE	TUBO DISTANCIADOR		
14	9275738	1	PROTECTION GUARD	CHAPA DE PROTEÇÃO		
15	4061037	2	HEX SCREW ISO 4014 M10X55 8.8	PARAFUSO SEXTAVADO		
16	7381018	1	O-RING DIN 3771 13,10X2,62	ANEL-O		
17	4000716	4	SOCKET HEAD SCREW ISO 4762 M14X65 1	PARAFUSO CILÍNDRICO		
18	7380658	1	O-RING ISO 3601-1 129,77X3,53	ANEL-O		
22	7381354	1	SHIM RING 18,5X23X0,2	ARRUELA DE AJUSTE		
24	7381534	1	SNAP RING SB 23	ANEL DE RETENÇÃO		
500	9278153	1	TABLE ANWEISUNGEN	TABELA		

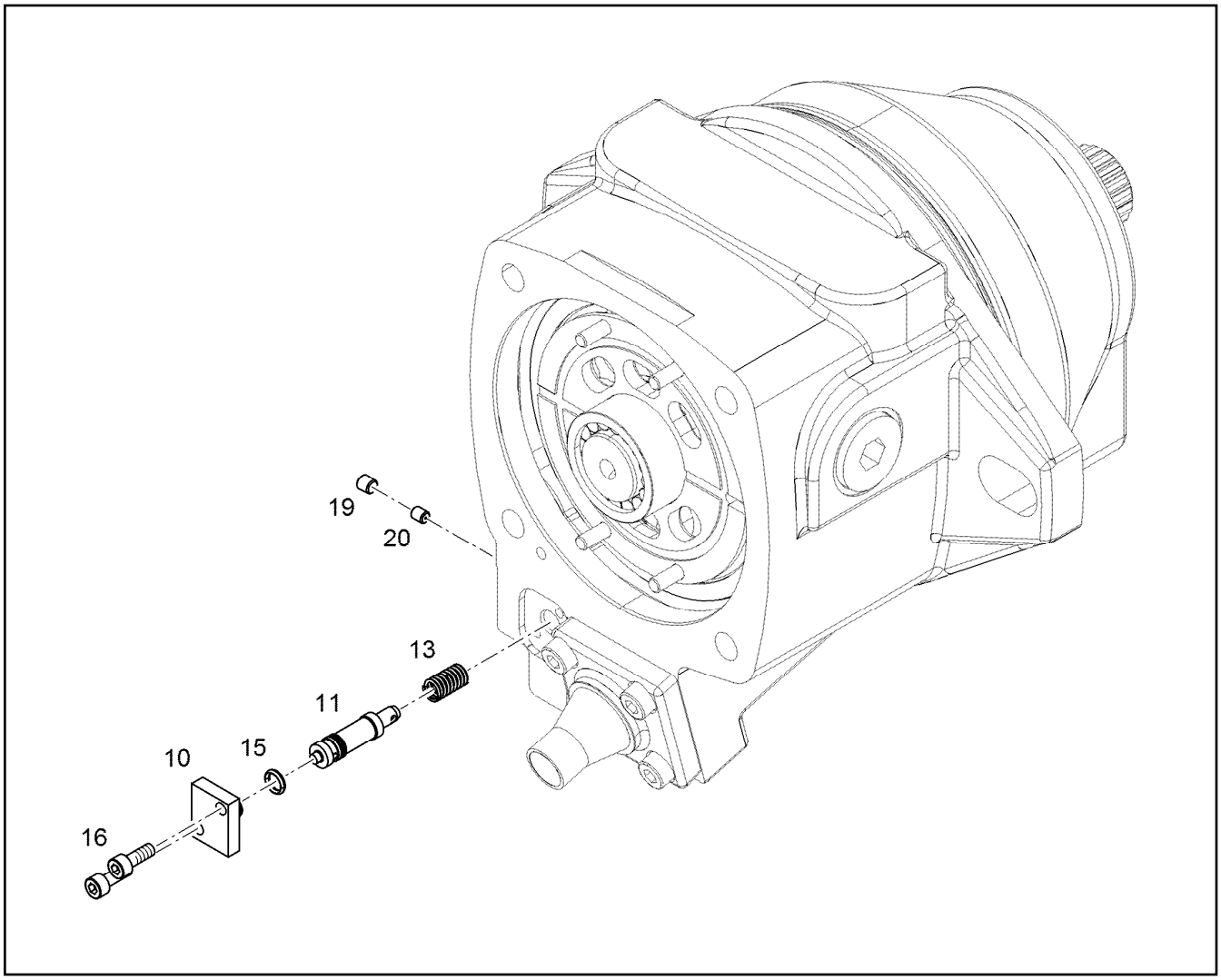

Pos.	Item	Quantity	Description	Designação	Serie	K
10		1	COVER	TAMPA		
11		1	SPOOL SW	PISTAO DE COMANDO		
13		1	PRESSURE SPRING 1,30X7,80X22,40	MOLA DE PRESSÃO		
15		1	O-RING DIN 3771 7,00X1,8	ANEL-O		
16		2	SOCKET HEAD SCREW ISO 4762 M5X14 10.	PARAFUSO CILÍNDRICO		
19		1	SCREW PLUG DIN 906 M6X1 St FLZN	PARAFUSO DE FECHAMENTO		
20		1	NOZZLE	BOCAL		

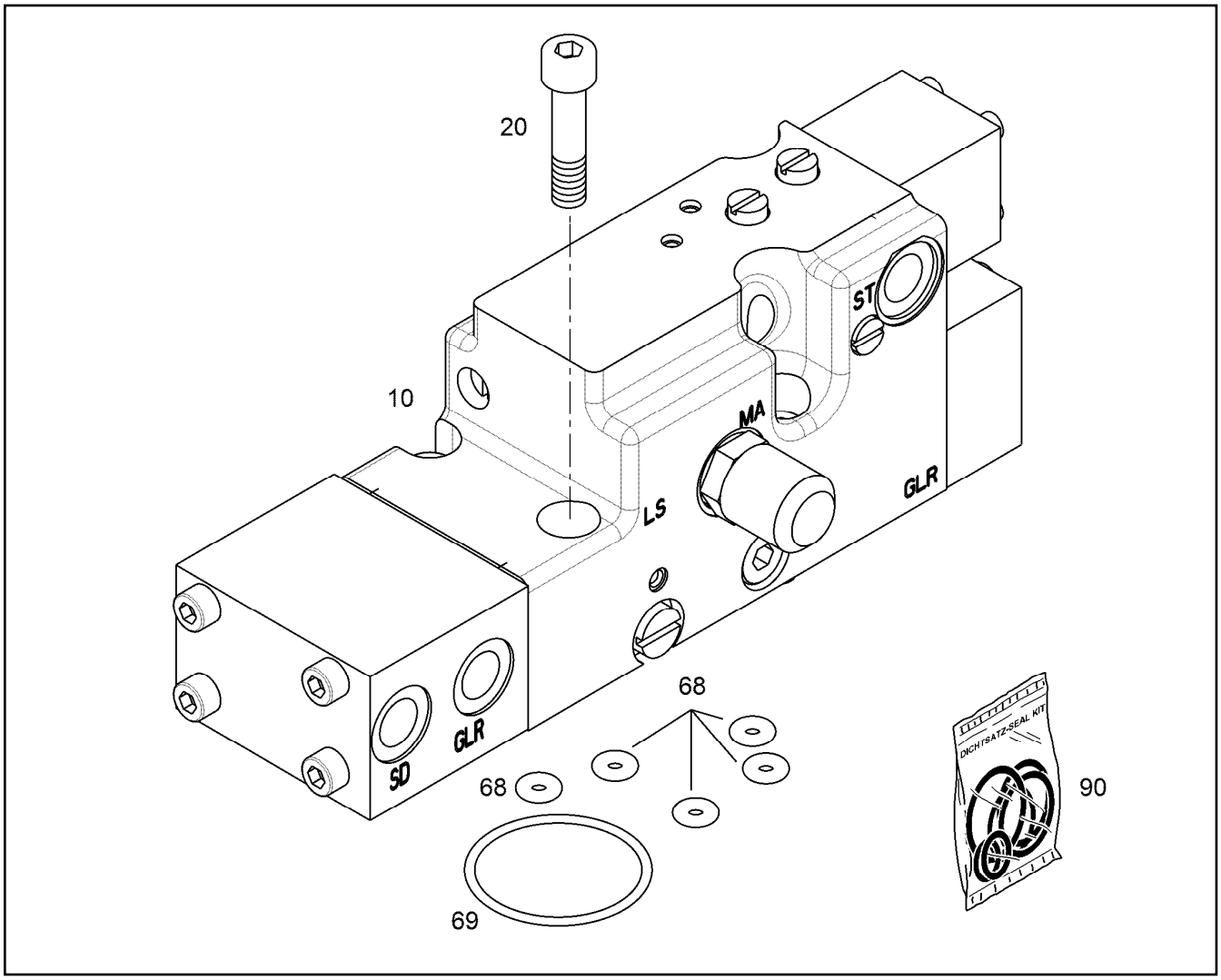

Pos.	Item	Quantity	Description	Designação	Serie	K
10		1	REGULATOR EHR	REGULADOR		6
20	4980388	4	SOCKET HEAD SCREW ISO 4762 M8X35 10.	PARAFUSO CILÍNDRICO		
68	7380648	5	O-RING ISO 3601-1 6,02X2,62	ANEL-O		
69	7380888	1	O-RING ISO 3601-1 41X1,78	ANEL-O		
90	9882875	1	SEAL KIT REGULATING VALVE EHR ⇨ ❑ 184	KIT DE VED DA VÁLVULA REGU		

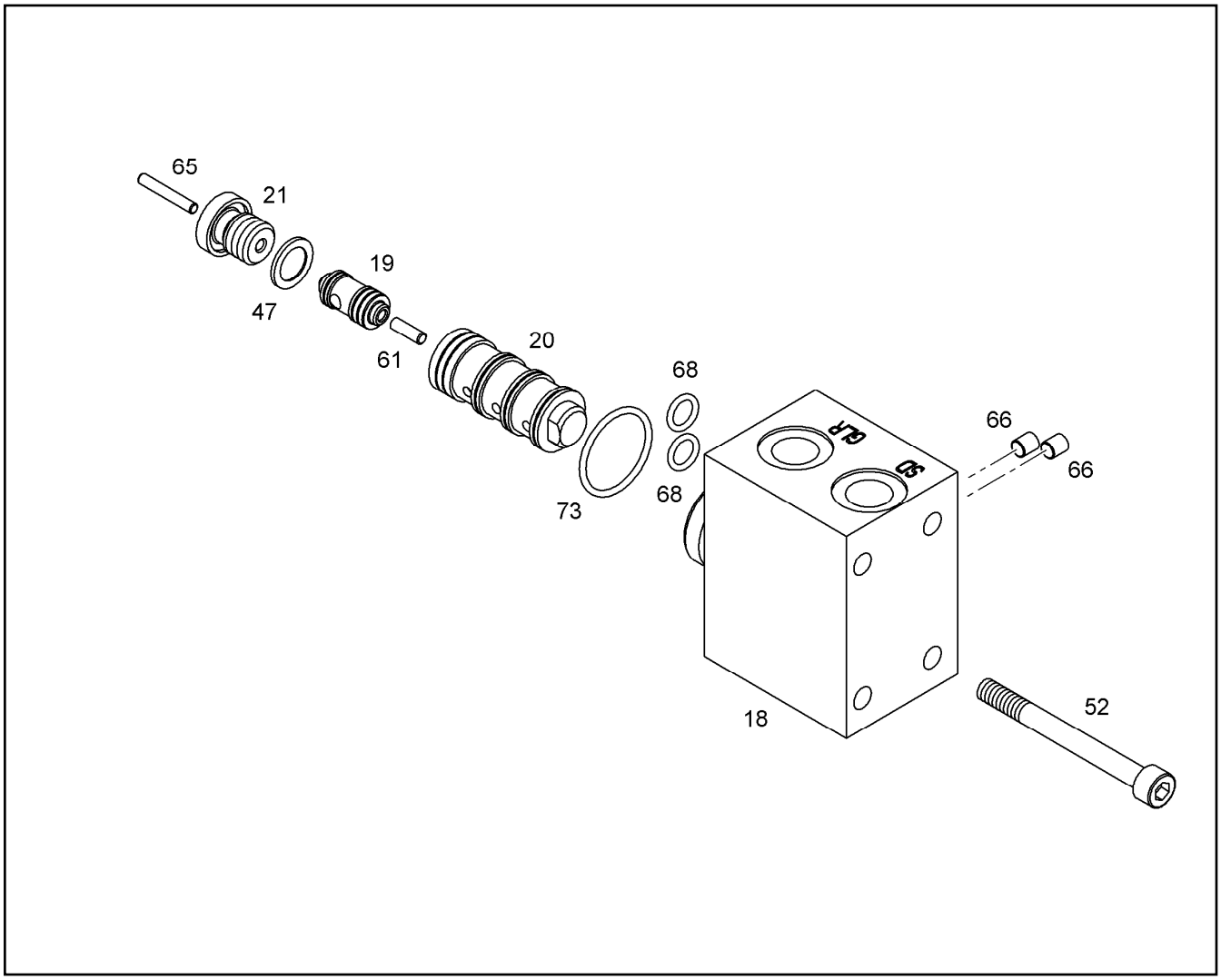

Pos.	Item	Quantity	Description	Designação	Serie	K
18		1	COVER NG 165	TAMPA		
19		1	PISTON GLR NG 165	PISTAO GLR		
20		1	PISTON SD NG 165			
21		1	SCREW PLUG M12X1,5 16MnCrS5	PARAFUSO DE FECHAMENTO		
47	7013114	1	SEALING RING 12	ANEL DE VEDAÇÃO		
52		4	SOCKET HEAD SCREW ISO 4762 M6X60 8.8	PARAFUSO CILÍNDRICO		
61		1	PISTON	PISTÃO		
65		1	NEEDLE ROLLER DIN 5402 B 3,0X19,8	ROLAMENTO DE AGULHAS		
66		2	SEALING PLUG MB 700/5	TAMPÃO DE VEDAÇÃO		
68		1	O-RING ISO 3601-1 6,02X2,62	ANEL-O		
73		1	O-RING ISO 3601-1 21,95X1,78	ANEL-O		

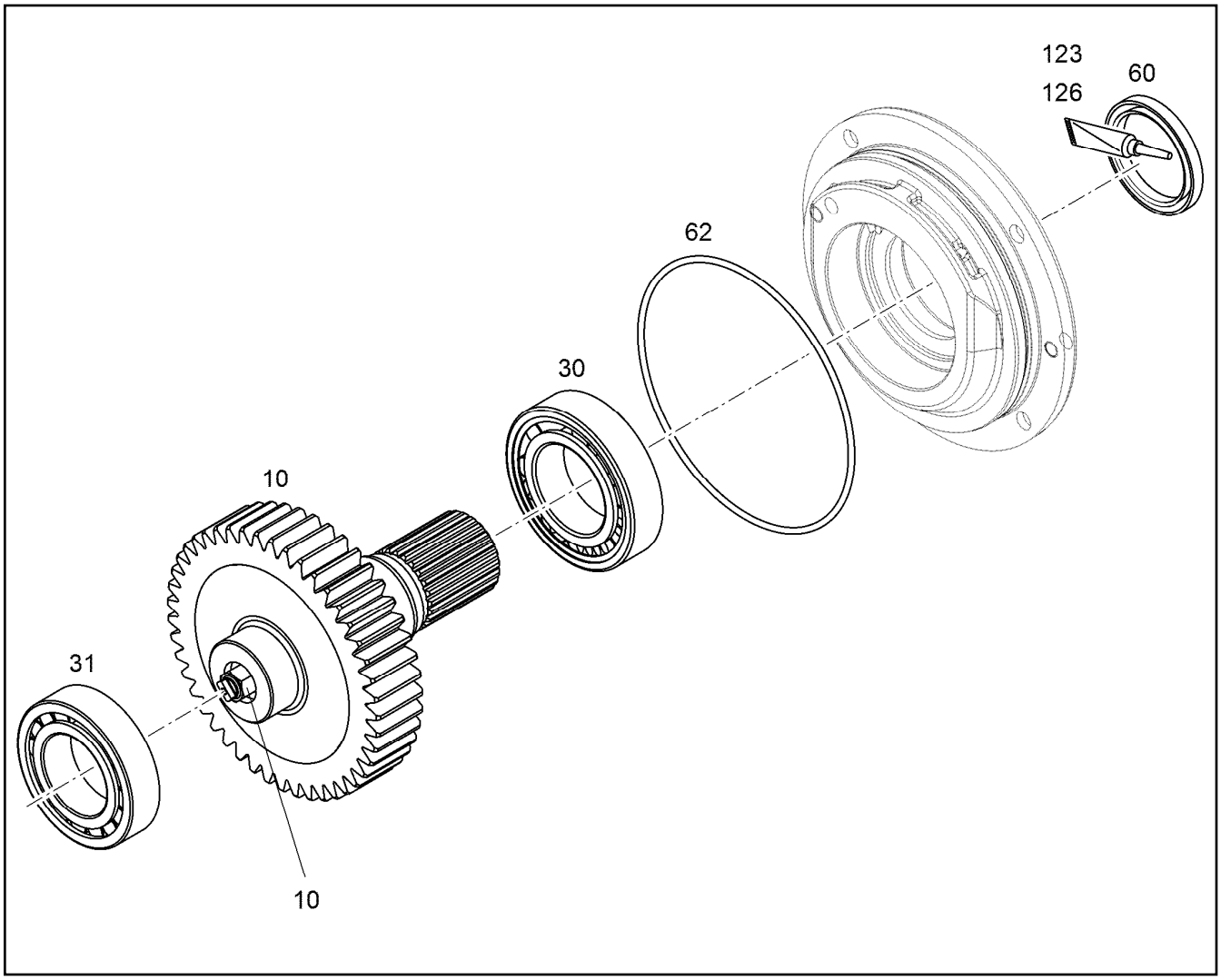

Pos.	Item	Quantity	Description	Designação	Serie	K
10		1	PRIMARY SHAFT CPL. Z=45 M=3,5 ⇨ ❑ 809	EIXO PRIMARIO COMPLETO		
10	10145171	1	-SCREW COUPLING	-ACOPLAMENTO ROSCADO		
30	7380721	1	CYLINDRICAL ROLLER BEARING	ROLAMENTO DE ROLOS CILÍN		
31	7380797	1	CYLINDRICAL ROLLER BEARING	ROLAMENTO DE ROLOS CILÍN		
60		1	ROTARY SHAFT LIP SEAL X55X70X8	ANEL DE VEDAÇÃO DO EIXO RA		
62		1	O-RING ISO 3601-1 158,34X3,53	ANEL-O		
123	8627609	1	SEALANT	MATERIAL VEDANTE		
126	8655008	1	GREASE L55/3/0,001kg	GRAXA		

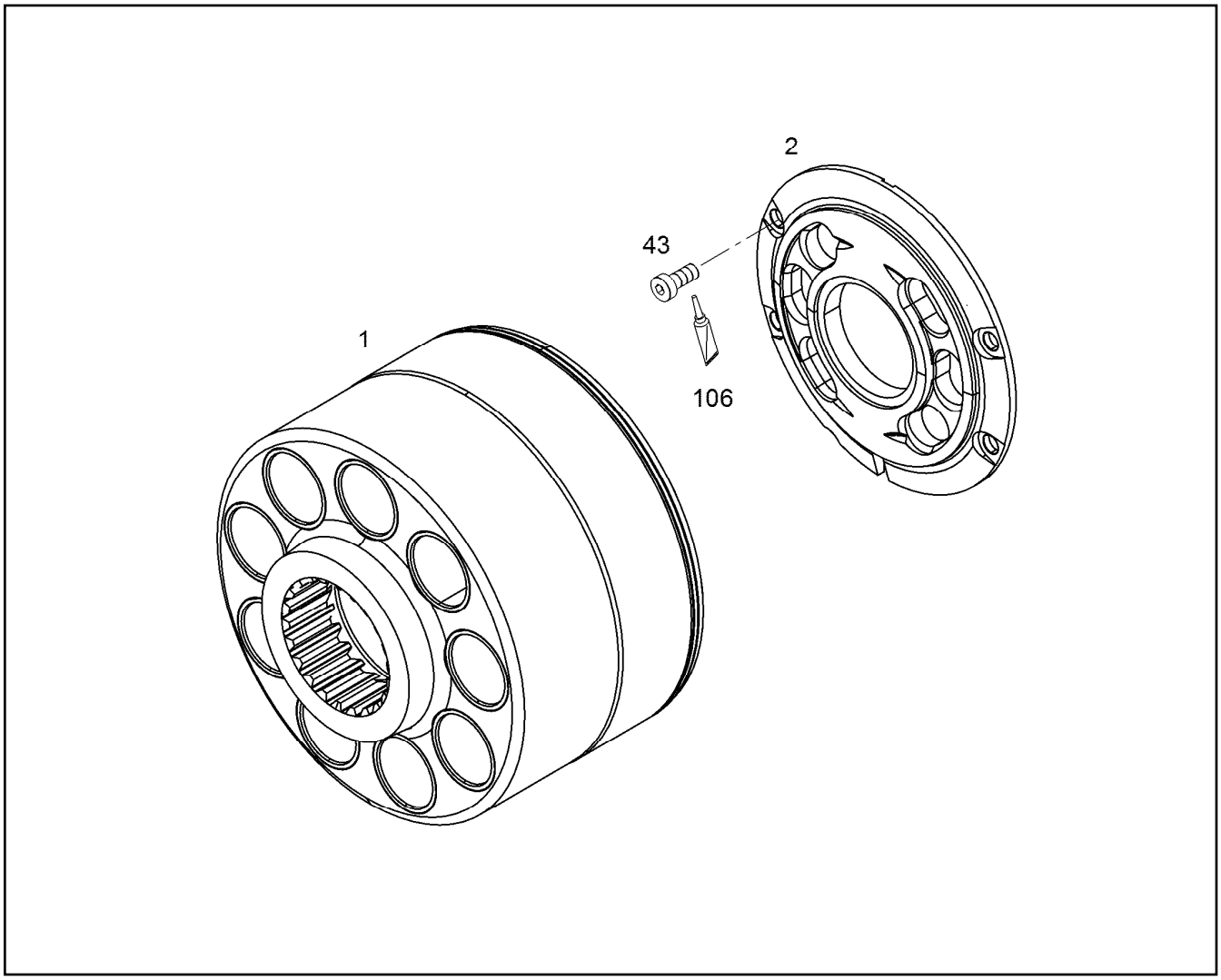

Pos.	Item	Quantity	Description	Designação	Serie	K
1		1	CYLINDER WITH BUSHING NG 100-107	CILINDRO COM BUCHA		
2		1	GUIDE PLATE NG 100	PLACA GUIA		
43	4981218	4	SOCKET HEAD SCREW ISO 14580 M6X16 1	PARAFUSO CILÍNDRICO		
106	8700039	1	ADHESIVE 50ML TUBE ROT	COLA		

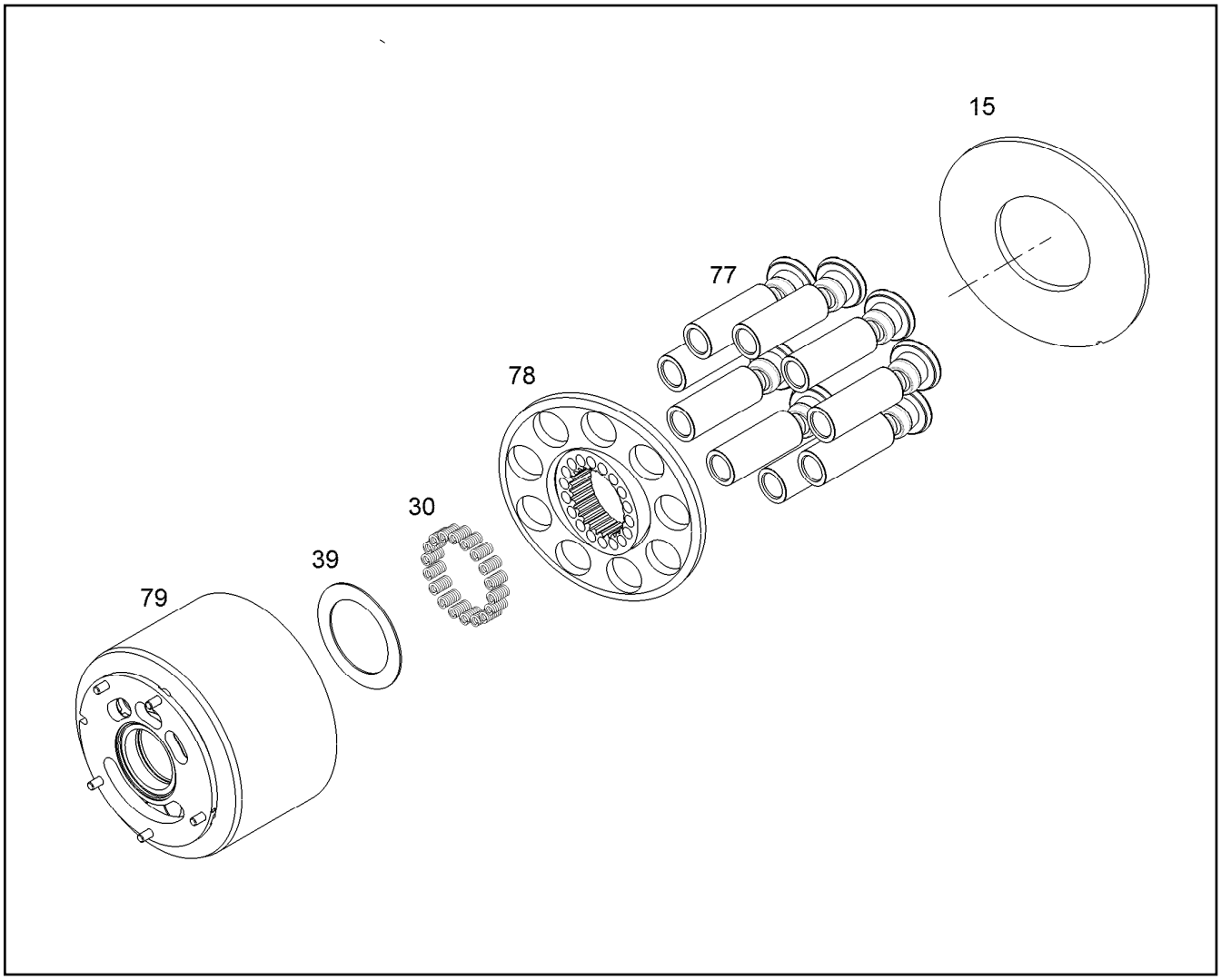

Pos.	Item	Quantity	Description	Designação	Serie	K
15	10124982	1	SLIDING DISC 62X135X5	ARRUELA DESLIZANTE		
30	7382188	22	PRESSURE SPRING 1,30X5,20X13,90	MOLA DE PRESSÃO		
39	9885929	1	WASHER SET NG 100-107	KIT DE ARRUELAS		
77	9072997	1	RK PISTON WITH GUIDE SHOE NG 100 ⇨ ❑ 179	KIT DE REPARO PISTÕES AXIAI		
78	9072998	1	RK PULL-BACK BALL+PULL-B.PLATENG 100 ⇨ ❑ 180	KIT REPARO ESF.+PLACA RETO		
79	9074114	1	RK CYLINDER+CONTROL PLATE ⇨ ❑ 822	KIT DE REPARO GRUPO ROTÓR		

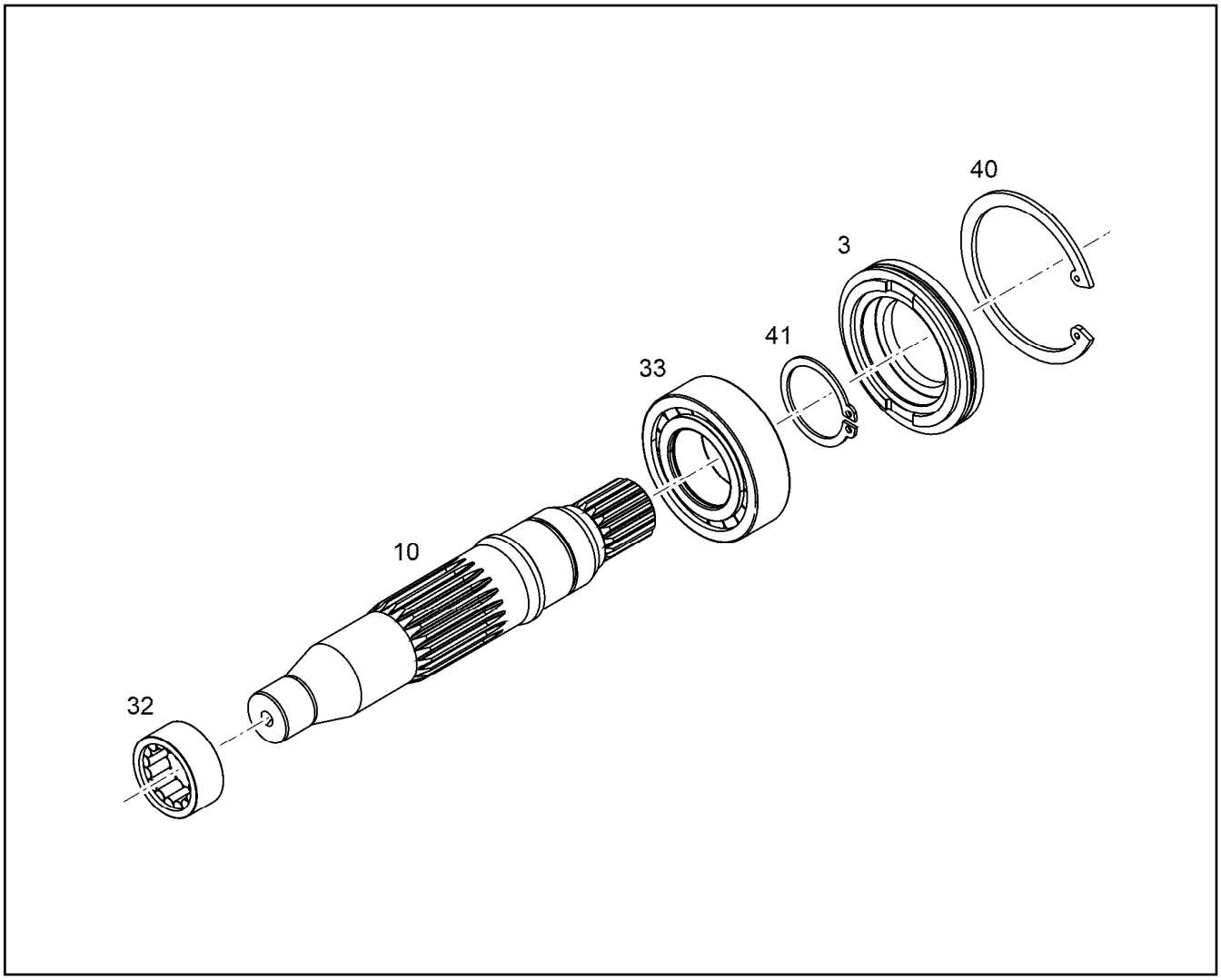

Pos.	Item	Quantity	Description	Designação	Serie	K
3		1	CLOSING RING PRE-ASS. NG 090-107 ⇨ ❑ 814			
10		1	DRIVING SHAFT NG 100	EIXO DO MOTOR		
32	12593102	1	CYLINDRICAL ROLLER BEARING	ROLAMENTO DE ROLOS CILÍN		
33	7380070	1	CYLINDRICAL ROLLER BEARING	ROLAMENTO DE ROLOS CILÍN		
40	4980044	1	LOCKING RING DIN 472 95	ANEL DE RETENÇÃO		
41	11697578	1	LOCKING RING DIN 471 B 45	ANEL DE RETENÇÃO		

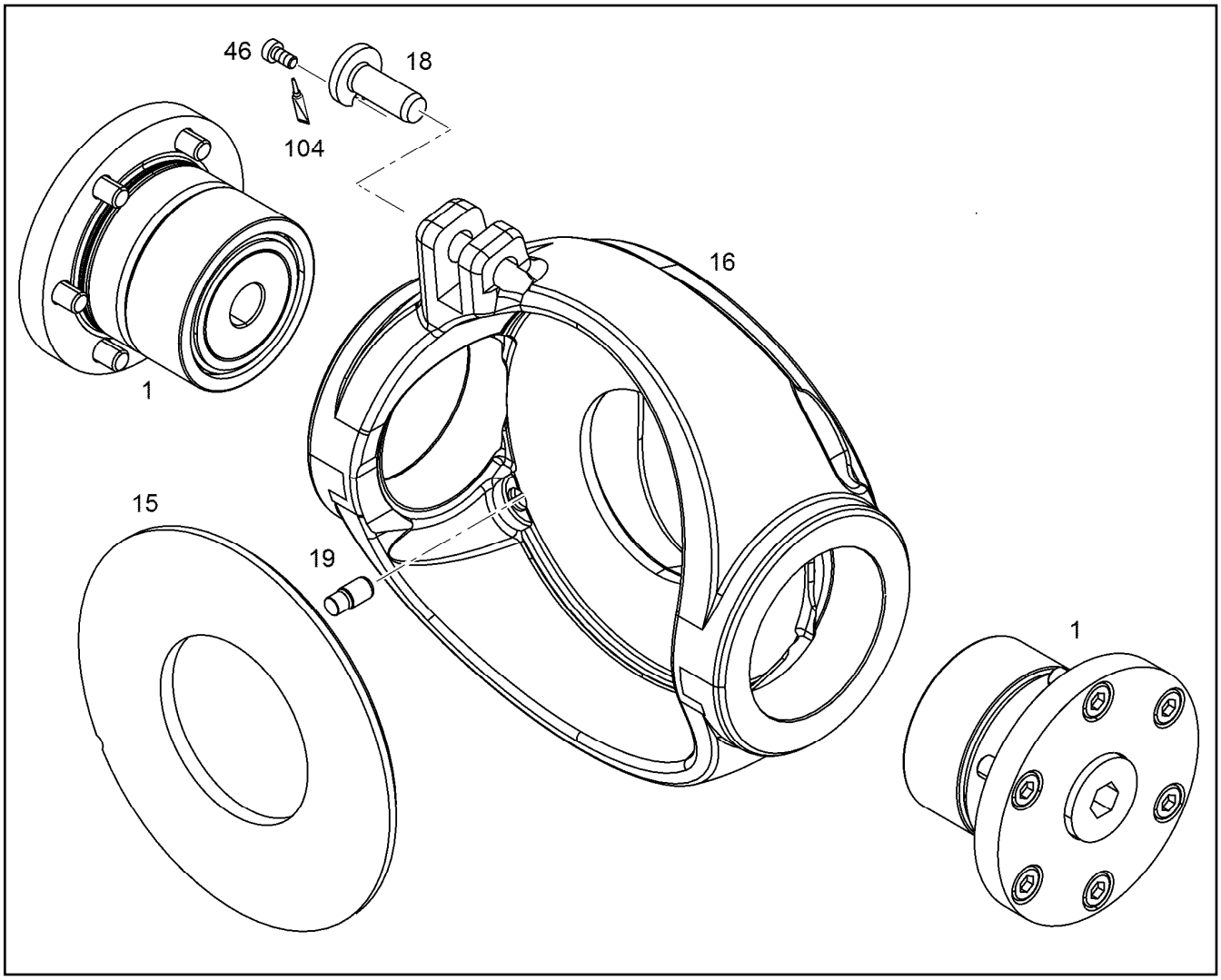

Pos.	Item	Quantity	Description	Designação	Serie	K
1	9077464	2	RS FLANGE NG 125-140-150 ⇨ ❑ 827	CR FLANGE		
15	9889809	1	SLIDING DISC 72X152X6	ARRUELA DESLIZANTE		
16	10139588	1	YOKE NG 140-150	PLACA DE ANGULACAO		
18	9477429	1	PIN	PINO		
19	9888133	1	PIN NG 140-280 (D)	PINO		
46	4980750	1	SOCKET HEAD SCREW DIN 6912 M5X10 08	PARAFUSO CILÍNDRICO		
104	811205708	1	SCREW LOCKING	COLA PARA ELEMENTOS FIXA		

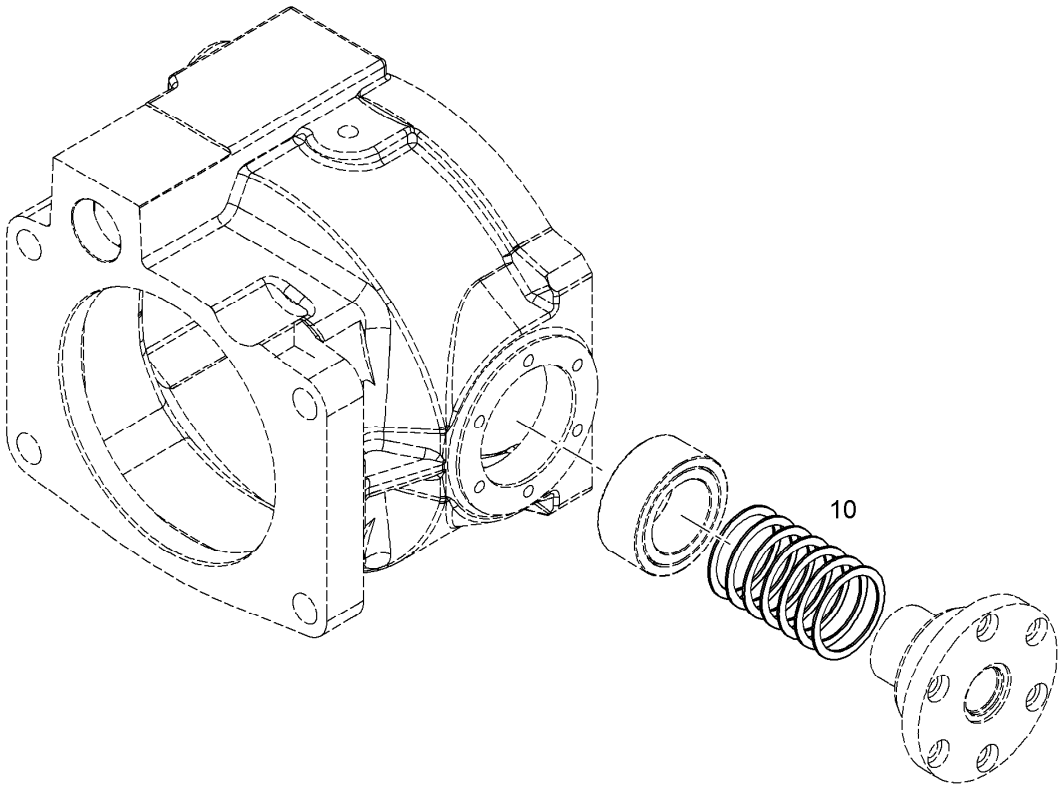

Pos.	Item	Quantity	Description	Designação	Serie	K
10		1	DISTANCE RING 42X51X1,3	ANEL ESPAÇADOR		
10		1	DISTANCE RING 42X51X1,4	ANEL ESPAÇADOR		
10		1	DISTANCE RING 42X51X1,5	ANEL ESPAÇADOR		
10		1	DISTANCE RING 42X51X1,6	ANEL ESPAÇADOR		
10		1	DISTANCE RING 42X51X1,7	ANEL ESPAÇADOR		
10		1	DISTANCE RING 42X51X1,8	ANEL ESPAÇADOR		
10		1	DISTANCE RING 42X51X1,9	ANEL ESPAÇADOR		

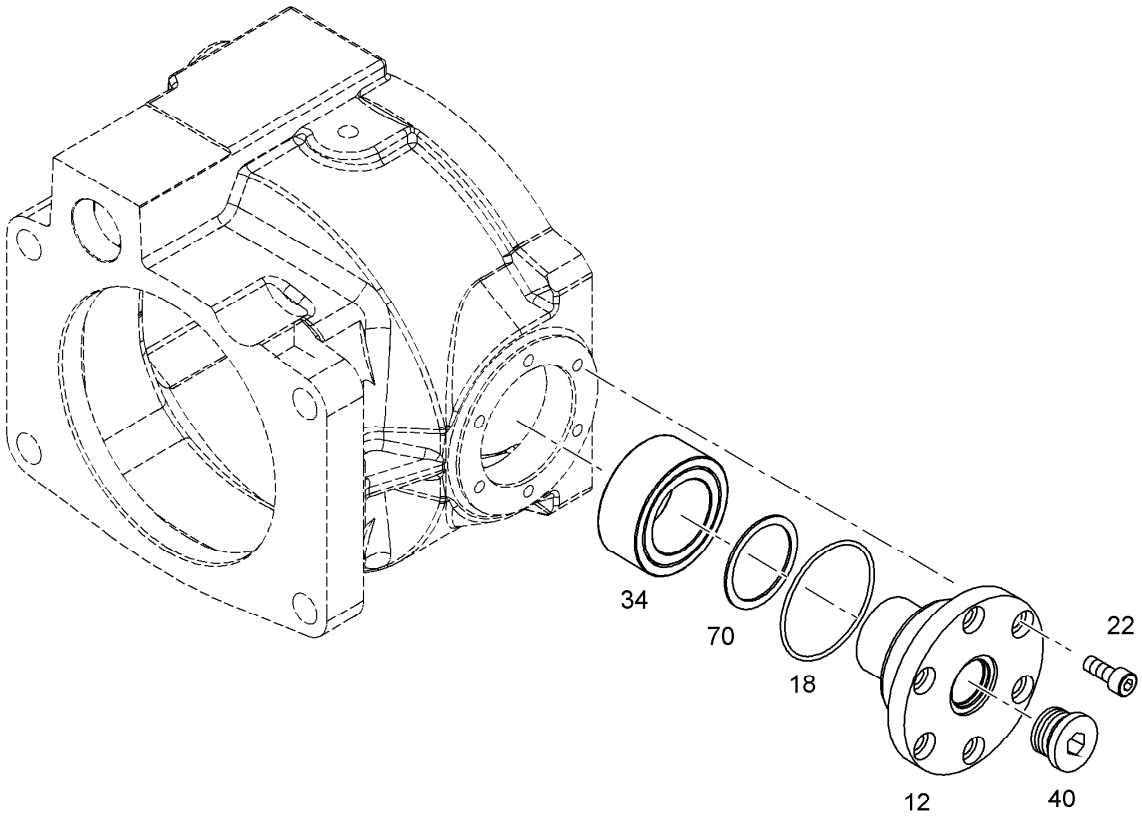

Pos.	Item	Quantity	Description	Designação	Serie	K
12	9072435	1	FLANGE NG 140-150	FLANGE		
18	7380656	1	O-RING ISO 3601-1 61,6X2,62	ANEL-O		
22	240217402	6	SOCKET HEAD SCREW DIN 6912 M8X16 08.	PARAFUSO CILÍNDRICO		
34	7382149	1	CYLINDRICAL ROLLER BEARING	ROLAMENTO DE ROLOS CILÍN		
40	10137108	1	SCREW PLUG VSTI M26X1,5	PARAFUSO DE FECHAMENTO		
70	9072436	1	KIT DISTANCE RINGS	KIT DE ANEIS DISTANCIADORES		
			⇨ ❑ 826			

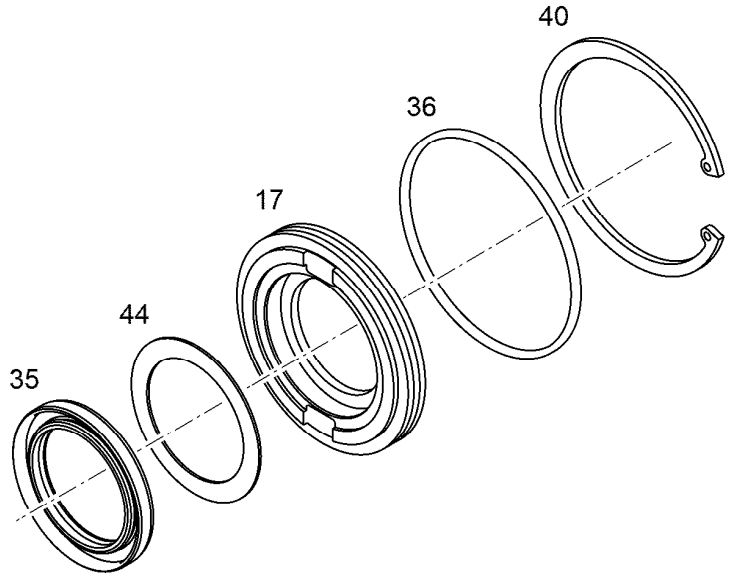

Pos.	Item	Quantity	Description	Designação	Serie	K
17		1	CLOSING RING NG 090-107	ANEL DE FECHAMENTO		
35		1	ROTARY SHAFT LIP SEAL ASX45X62X7	ANEL DE VEDAÇÃO DO EIXO RA		
36		1	O-RING ISO 3601-1 88,57X2,62	ANEL-O		
40	4980044	1	LOCKING RING DIN 472 95	ANEL DE RETENÇÃO		
44		1	SHIM RING 50,15X62X1,5	ARRUELA DE AJUSTE		

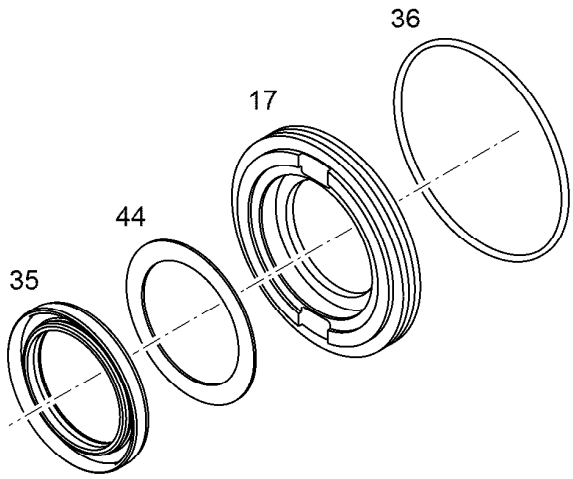

Pos.	Item	Quantity	Description	Designação	Serie	K
17		1	CLOSING RING NG 125-150	ANEL DE FECHAMENTO		
35		1	ROTARY SHAFT LIP SEAL PPSX50X65X7	ANEL DE VEDAÇÃO DO EIXO RA		
36	7380657	1	O-RING ISO 3601-1 91,67X3,53	ANEL-O		
44		1	SHIM RING 55X65X1,5	ARRUELA DE AJUSTE		

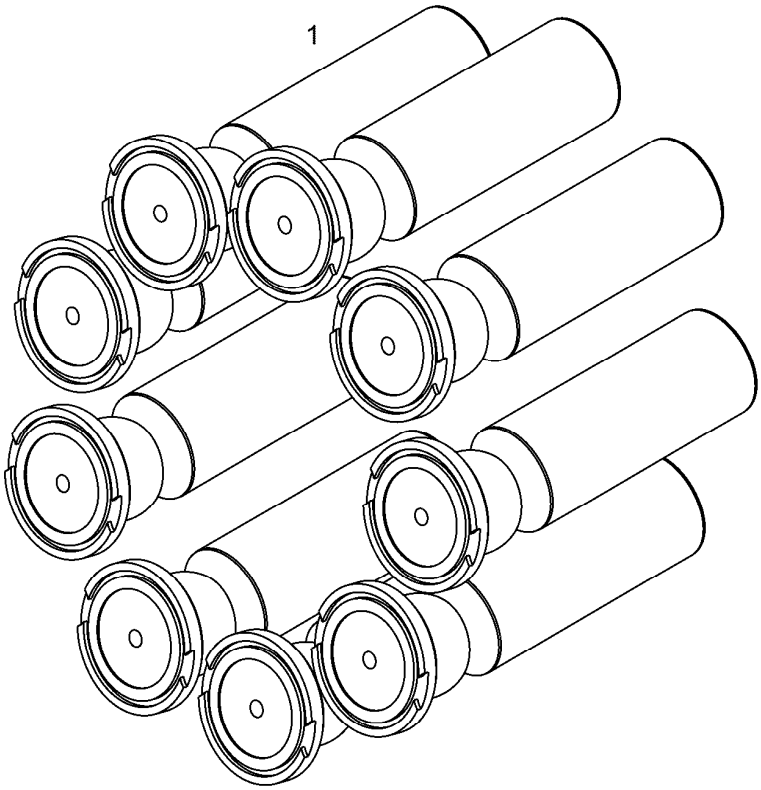

Pos.	Item	Quantity	Description	Designação	Serie	K
1		9	PISTON WITH GUIDE SHOE NG 090	PISTÃO PATIM		

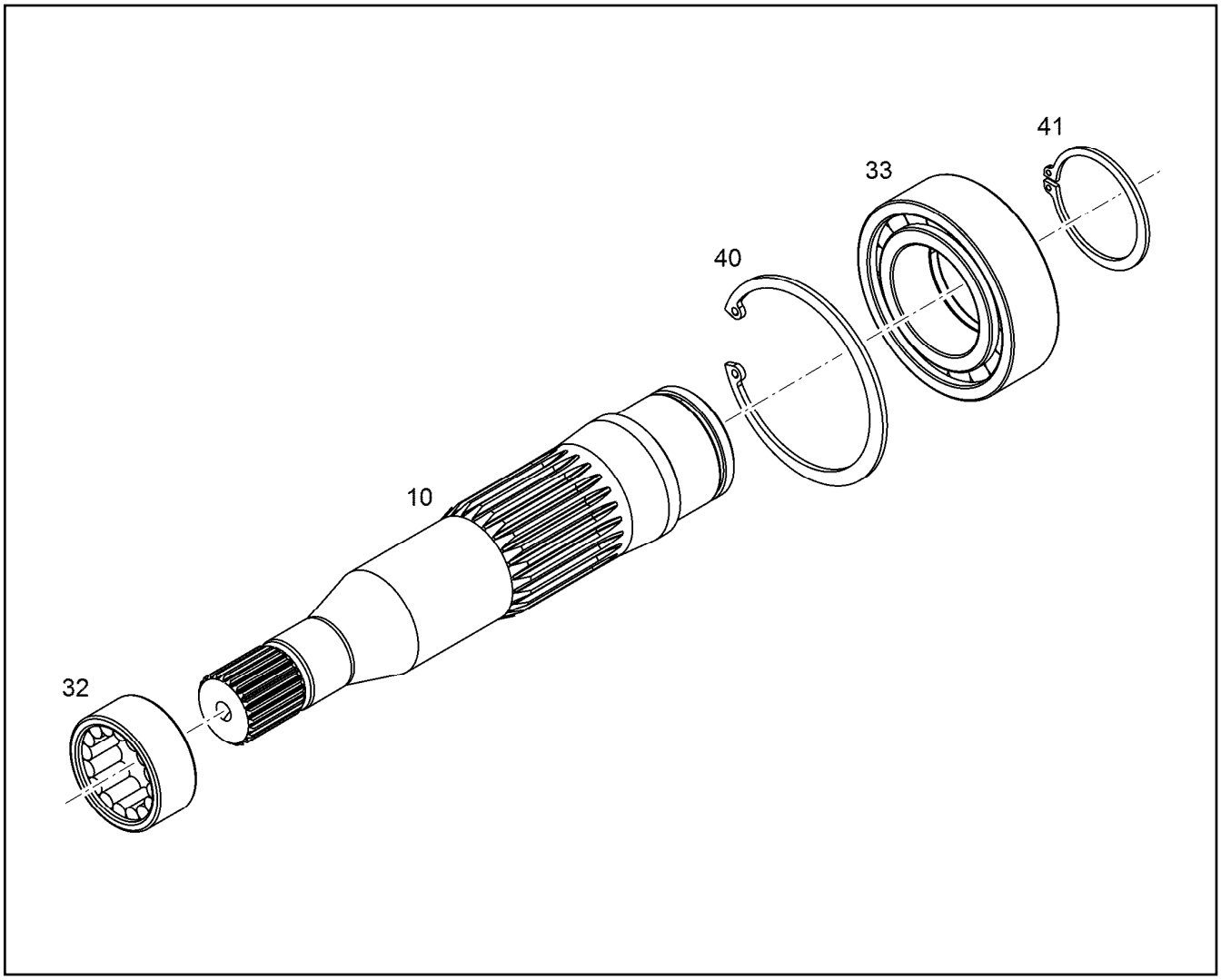

Pos.	Item	Quantity	Description	Designação	Serie	K
10		1	DRIVING SHAFT NG 140	EIXO DO MOTOR		
32		1	CYL.NEEDLE BEARING	ROLAMENTO		1
33		1	CYLINDRICAL ROLLER BEARING	ROLAMENTO DE ROLOS CILÍN		
40	429610801	1	SNAP RING SB 90	ANEL DE RETENÇÃO		
41		1	LOCKING RING DIN 471 50	ANEL DE RETENÇÃO		

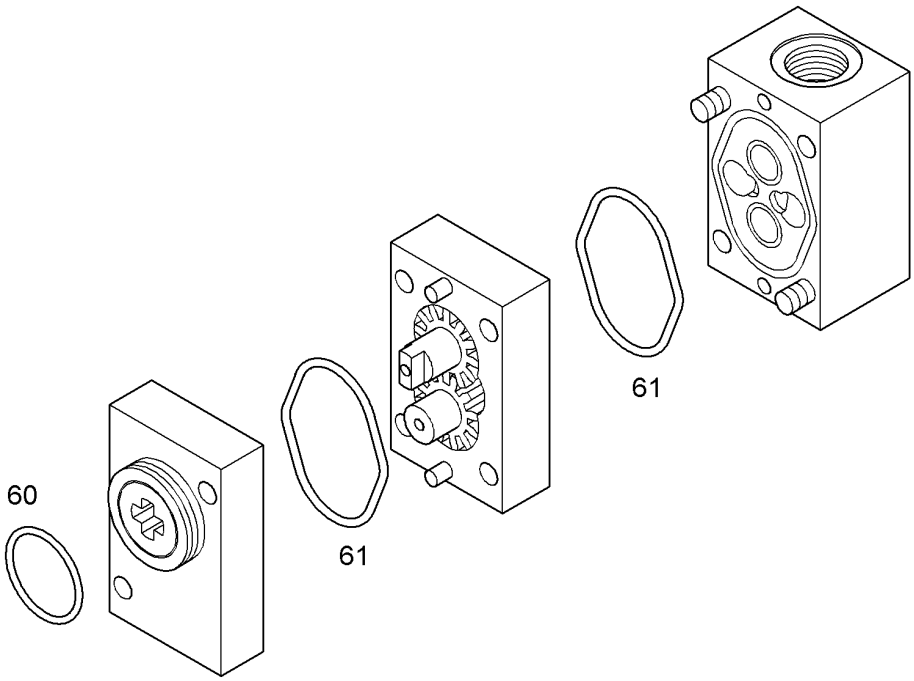

Pos.	Item	Quantity	Description	Designação	Serie	K
60	7381903	1	O-RING ISO 3601-1 28,30X1,78	ANEL-O		
61	7381861	2	O-RING 44,10X1,78	ANEL-O		

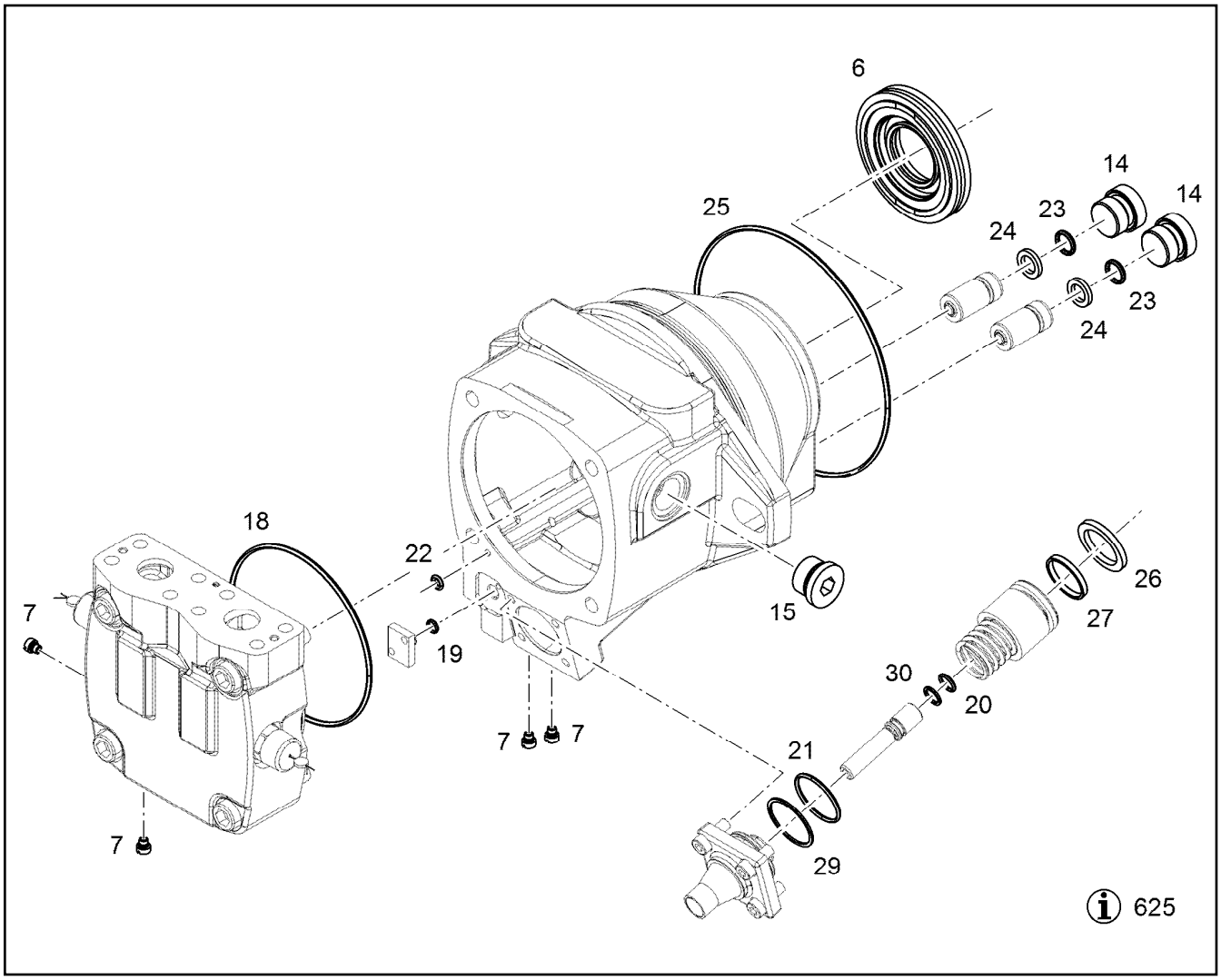

Pos.	Item	Quantity	Description	Designação	Serie	K
6	9268015	1	REPAIR KIT LOCK RING NG 090 ⇨ ❑ 828	KIT DE REPARO		
7	9268441	4	SCREW PLUG M6	PARAFUSO DE FECHAMENTO		
14	12422288	2	SCREW PLUG M27X2 ED-FKM	PARAFUSO DE FECHAMENTO		
15	10137389	1	SCREW PLUG VSTI G3/4A	PARAFUSO DE FECHAMENTO		
18	7380658	1	O-RING ISO 3601-1 129,77X3,53	ANEL-O		
19	7381476	1	O-RING DIN 3771 7,00X1,80	ANEL-O		
20	7380596	1	O-RING DIN 3771 11,00X2,00	ANEL-O		
21	7380719	1	O-RING ISO 3601-1 36,17X2,62	ANEL-O		
22	7380648	1	O-RING ISO 3601-1 6,02X2,62	ANEL-O		
23	7380935	2	O-RING ISO 3601-1 12,37X2,62	ANEL-O		
24	7381413	2	LIFETIME SEAL 21X13,5X3,2	ANEL DE VEDAÇÃO DE DESLIZE		
25	7380512	1	O-RING ISO 3601-1 177,39X3,53	ANEL-O		
26	7381414	1	LIFETIME SEAL 42X31X4,2	ANEL DE VEDAÇÃO DE DESLIZE		
27	7381124	1	O-RING ISO 3601-1 29,74X3,53	ANEL-O		
29	11007756	1	BACK-UP RING CUT 37,5/42X1,4	ANEL DE ENCOSTO		
30	7381809	1	BACK-UP RING CUT 11,7/15X1,4	ANEL DE ENCOSTO		
625		1	TENSIONING INSTRUCTION FMV	PRESCRICAO DE APERTO		

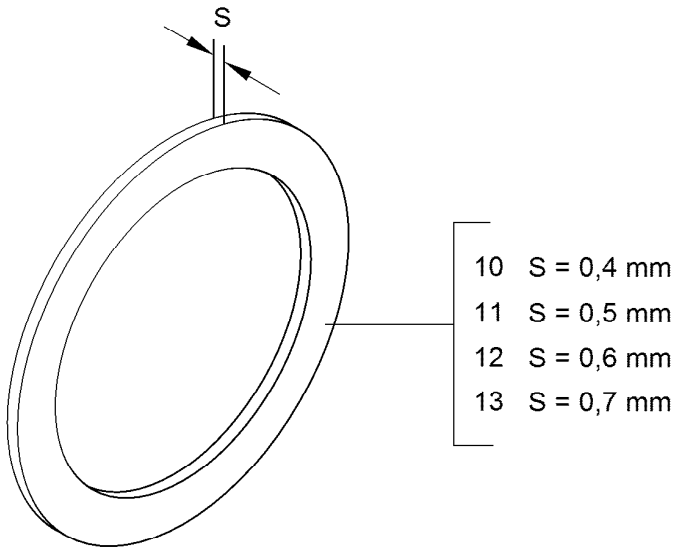

Pos.	Item	Quantity	Description	Designação	Serie	K
10		1	SUPPORTING WASHER S 45X62X0,4	ARRUELA DE APOIO		
11		1	SUPPORTING WASHER S 45X62X0,5	ARRUELA DE APOIO		
12		1	SUPPORTING WASHER S 45X62X0,6	ARRUELA DE APOIO		
13		1	SUPPORTING WASHER S 45X62X0,7	ARRUELA DE APOIO		

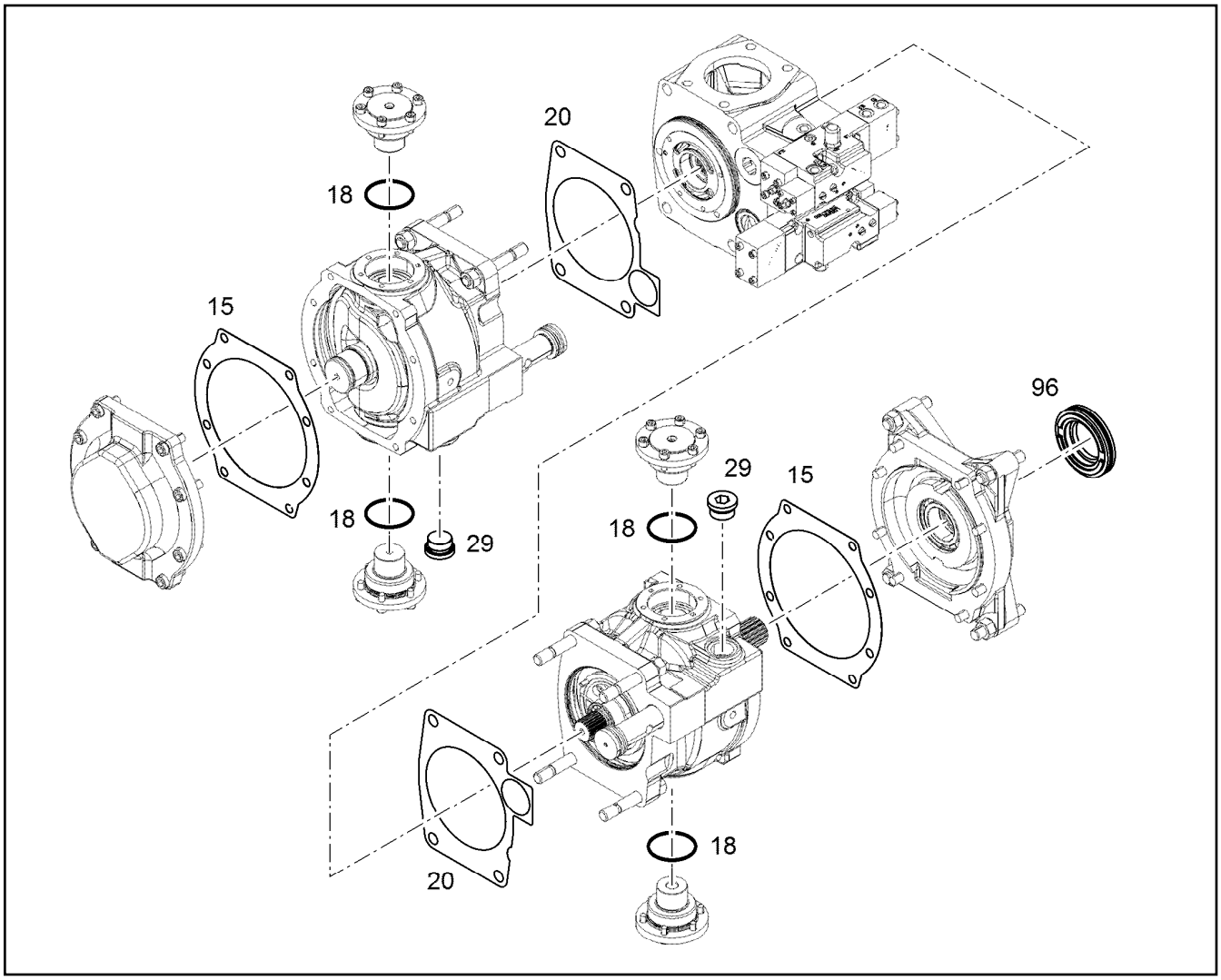

Pos.	Item	Quantity	Description	Designação	Serie	K
15	9882207	2	SEAL	VEDAÇÃO		
18	7380656	4	O-RING ISO 3601-1 61,6X2,62	ANEL-O		
20	9276860	2	FLAT GASKET 0,075	VEDAÇÃO PLANA		
29	10137121	2	SCREW PLUG VSTI M33X2	PARAFUSO DE FECHAMENTO		
96	9268016	1	REPAIR KIT LOCK RING NG 125 ⇨ ❑ 829	KIT DE REPARO		

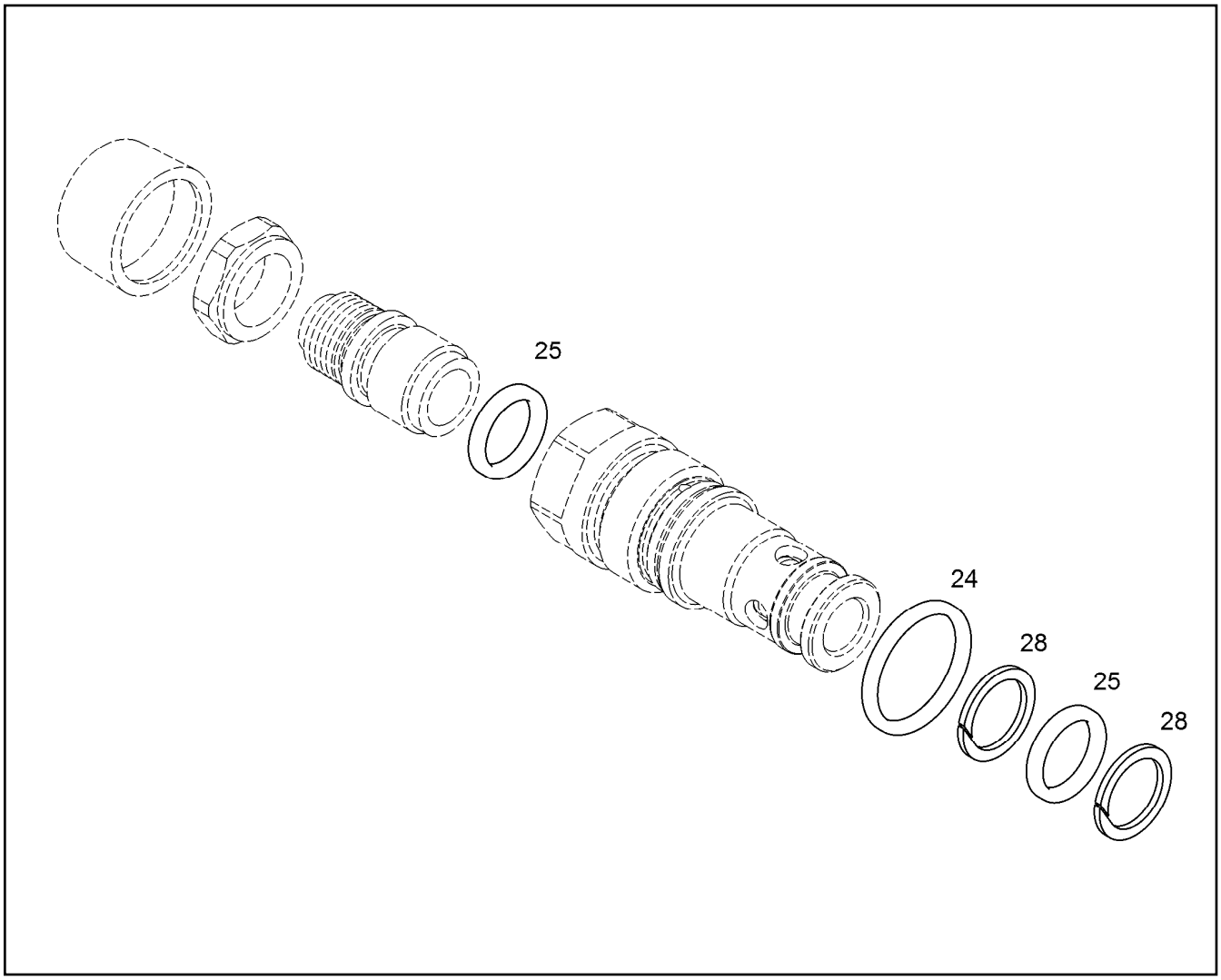

Pos.	Item	Quantity	Description	Designação	Serie	K
24		1	O-RING ISO 3601-1 21,89X2,62	ANEL-O		
25		2	O-RING ISO 3601-1 13,94X2,62	ANEL-O		
28		2	BACK-UP RING CUT 14,5/19X1,4	ANEL DE ENCOSTO		

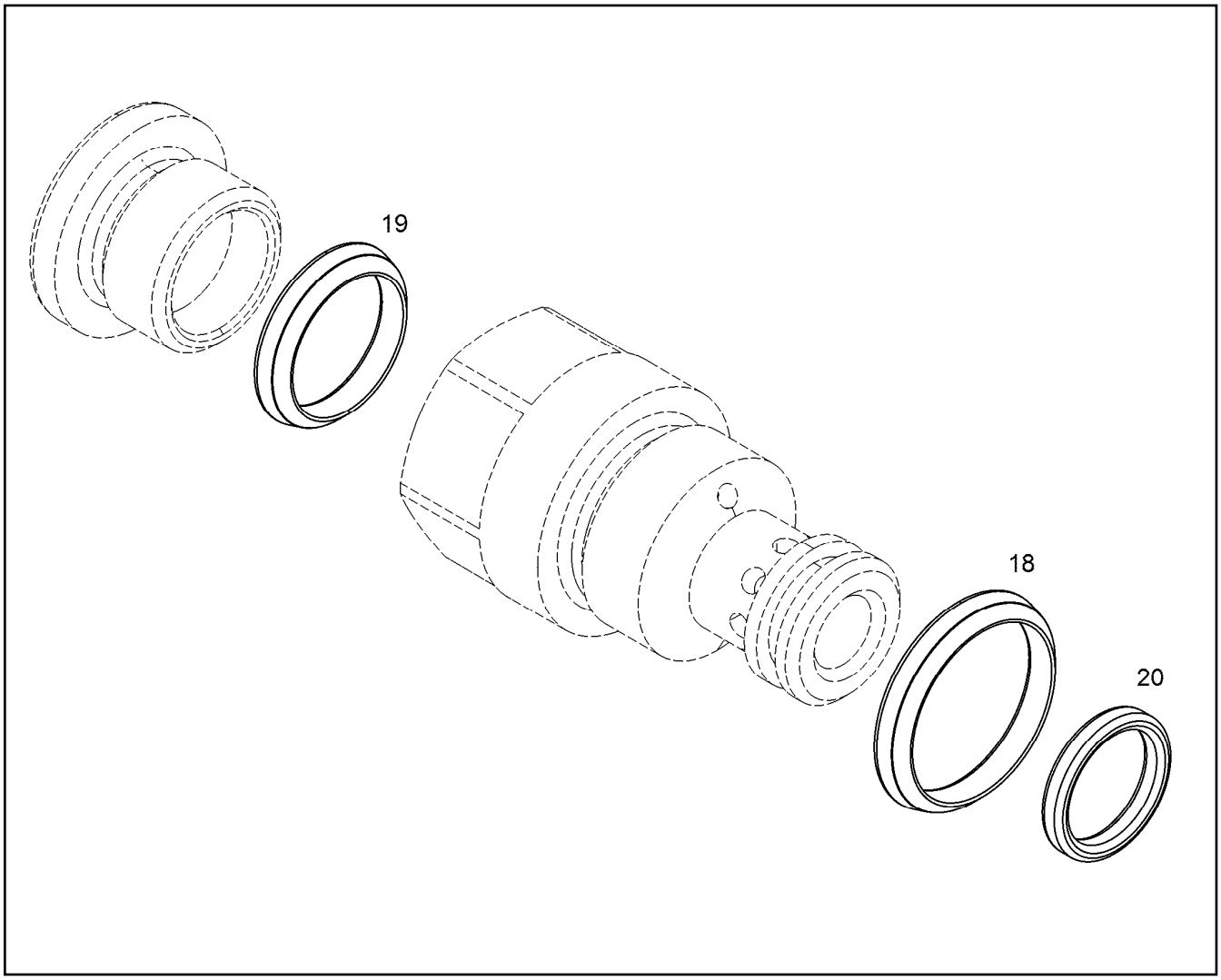

Pos.	Item	Quantity	Description	Designação	Serie	K
18		1	O-RING DIN 3771 19,30X2,40	ANEL-O		
19		1	O-RING DIN 3771 15,30X2,40	ANEL-O		
20		1	O-RING DIN 3771 12,00X2,00	ANEL-O		

Item	Page	Assembly	Pos.	Quantity	Item	Page	Assembly	Pos.	Quantity
10000286	506	10 29 026 4	820	2	10005863	294	10 16 576 6	1	1
10000437	354	10 06 379 8	44	1	10006131	670	10 11 548 0	3	12
10000473	753	11 10 291 2	61	1	10006370	721	10 82 841 3	32	2
10000561	353	10 06 379 8	15	1	10006370	730	10 39 639 6	26	2
10001019	360	10 06 380 1	80	1	10006372	226	90 02 790 4	22	2
10001073	100	11 46 393 5	14	3	10006372	801	10 13 303 7	24	8
10001073	105	10 40 383 4	2	3	10006499	565	90 73 083	4	2
10001076	142	10 04 853 9	21	2	10006499	705	10 11 583 8	62	12
10001076	145	10 04 853 9	62	4	10006550	583	90 75 133	1	1
10001079	759	10 85 361 0	11	4	10006551	583	90 75 133	2	1
10001103	400	10 00 807 7	9	1	10006617	329	11 00 054 6	80	1
10001112	400	10 00 807 7	22	1	10007230	412	10 35 863 8	362	3
10001114	400	10 00 807 7	24	1	10007782	566	10 11 916 7	22	2
10001466	431	10 33 073 6	19	8	10007782	567	90 79 021	22	2
10002011	107	10 83 693 0	15	2	10007782	659	90 79 472	3	4
10002011	108	11 10 296 8	15	2	10007782	660	90 79 474	3	4
10002310	704	10 11 583 8	47	1	10007782	661	90 80 280	3	4
10002427	444	10 09 413 5	15	1m	10007848	516	99 41 040	2	1
10002427	793	10 49 866 6	52	0.1m	10007928	361	10 06 380 1	480	2
10002427	793	10 49 866 6	53	0.1m	10008077	147	10 29 786 7	1	1
10002428	455	10 06 436 0	11	0.35m	10008080	400	10 00 807 7	1	1
10002428	455	10 06 436 0	12	0.47m	10008081	400	10 00 807 7	2	1
10002465	360	10 06 380 1	55	1	10008082	400	10 00 807 7	3	1
10002552	663	10 11 919 9	132	1	10008083	400	10 00 807 7	5	1
10002552	665	90 80 736	132	1	10008084	400	10 00 807 7	6	1
10002828	359	10 35 862 4	80	1	10008085	400	10 00 807 7	7	1
10003076	651	10 11 555 9	3	1	10008086	400	10 00 807 7	8	1
10003140	297	73 73 807	26	2	10008087	400	10 00 807 7	10	1
10003366	647	90 78 314	3	1	10008088	208	56 19 045	14	1
10003465	141	10 04 853 9	5	1	10008088	400	10 00 807 7	14	1
10003485	414	10 35 863 8	470	1	10008089	208	56 19 045	15	1
10004261	570	90 79 480	12	1	10008089	400	10 00 807 7	15	1
10004261	699	10 11 801 4	13	1	10008090	400	10 00 807 7	17	2
10004261	702	10 11 583 8	13	1	10008091	400	10 00 807 7	21	1
10004419	605	90 74 507	4	1	10008092	400	10 00 807 7	25	1
10004426	605	90 74 507	5	1	10008093	400	10 00 807 7	30	2
10004442	599	12 40 205 5	7	1	10008095	156	10 00 808 0	1	1
10004442	604	90 74 505	7	1	10008233	772	94 02 794 9	7	1
10004546	92	10 65 167 8	1	1	10008233	773	95 91 741	7	1
10005073	612	90 73 508	4	6	10008299	166	70 28 176	4	1
10005074	612	90 73 508	5	12	10008403	206	10 00 840 5	1	9
10005440	545	10 37 464 5	19	2	10008404	207	10 00 843 3	2	1
10005440	716	11 10 283 6	16	5	10008405	207	10 00 843 3	1	1
10005440	722	10 82 841 3	33	1	10008406	208	56 19 045	57	1
10005440	727	11 10 281 7	16	13	10008407	208	56 19 045	56	1
10005440	731	10 39 639 6	31	5	10008417	208	56 19 045	25	1
10005440	739	10 49 877 7	30	4	10008418	208	56 19 045	22	1
10005440	756	11 10 281 8	14	6	10008419	208	56 19 045	20	1
10005461	642	10 11 707 3	2	6	10008421	208	56 19 045	12	1
10005462	642	10 11 707 3	3	6	10008421	400	10 00 807 7	12	1
10005462	650	10 11 646 4	15	1	10008422	208	56 19 045	9	1
10005511	574	12 83 245 4	3	12	10008423	208	56 19 045	8	1
10005670	214	10 06 363 0	2	1	10008424	208	56 19 045	7	1
10005672	335	11 00 359 4	1	1	10008425	157	10 00 809 5	11	1
10005674	332	10 02 208 3	2	1	10008425	206	10 00 840 5	11	1
10005675	335	11 00 359 4	7	1	10008426	157	10 00 809 5	4	1
10005677	332	10 02 208 3	1	1	10008426	206	10 00 840 5	4	1
10005679	335	11 00 359 4	8	1	10008428	157	10 00 809 5	10	1
10005859	273	10 49 880 5	95	2	10008428	206	10 00 840 5	10	1
10005860	273	10 49 880 5	90	1	10008429	157	10 00 809 5	9	1

Item	Page	Assembly	Pos.	Quantity	Item	Page	Assembly	Pos.	Quantity
10008429	206	10 00 840 5	9	3	10011866	608	10 11 585 3	9	12
10008430	206	10 00 840 5	7	1	10011866	634	10 11 628 5	25	11
10008431	206	10 00 840 5	2	1	10011866	634	10 11 628 5	39	3
10008432	208	56 19 045	6	1	10011866	637	10 11 559 5	11	2
10008433	208	56 19 045	1	1	10011866	639	90 79 083	2	12
10008444	328	10 40 689 8	15	1	10011866	658	10 11 550 3	3	2
10008448	607	10 11 585 1	11	4	10011866	699	10 11 801 4	9	2
10008448	609	10 11 585 3	11	4	10011866	706	10 11 583 8	75	1
10008448	653	10 11 547 9	4	4	10011866	706	10 11 583 8	78	26
10008649	328	10 40 689 8	16	0.28m	10011867	631	10 12 580 1	3	1
10009007	567	90 79 021	15	4	10011867	634	10 11 628 5	23	12
10009007	580	91 47 512	3	2	10011867	634	10 11 628 5	30	14
10009007	687	10 11 799 7	37	1	10011867	706	10 11 583 8	79	5
10009015	490	10 29 033 7	100	1	10011867	706	10 11 583 8	80	7
10009021	490	10 29 033 7	190	2	10011870	566	10 11 916 7	9	1
10009023	490	10 29 033 7	270	2	10011870	569	10 11 832 9	9	1
10009023	493	10 48 808 7	270	2	10011870	665	90 80 736	27	1
10009024	492	10 29 033 7	770	1	10011870	706	10 11 583 8	76	5
10009024	494	10 48 808 7	770	1	10011995	260	90 64 786	210	1
10009025	505	10 29 026 4	730	1	10011995	263	10 01 461 1	110	6
10009027	509	10 29 035 2	450	2	10011996	258	90 64 786	166	1m
10009027	511	10 48 808 8	450	2	10012024	260	90 64 786	200	1
10009053	733	10 66 475 5	20	1	10012024	263	10 01 461 1	100	6
10009054	255	10 29 300 3	21	1	10012119	521	10 35 866 5	20	1
10009054	719	10 66 480 4	21	1	10012172	519	99 47 695	20	2
10009079	490	10 29 033 7	260	8	10012225	600	12 40 205 3	4	1
10009079	493	10 48 808 7	260	8	10012263	177	70 28 075	12	2
10009132	508	10 29 035 2	140	1	10012557	600	12 40 205 3	6	1
10009132	510	10 48 808 8	140	1	10012761	195	10 04 853 6	101	2
10009181	509	10 29 035 2	290	1	10012761	195	10 04 853 6	121	2
10009181	511	10 48 808 8	290	1	10012761	195	10 04 853 6	141	2
10009183	509	10 29 035 2	300	1	10012889	397	10 22 239 3	20	1
10009183	511	10 48 808 8	300	1	10013545	260	90 64 786	261	1
10009188	509	10 29 035 2	390	1	10013545	263	10 01 461 1	161	10
10009188	511	10 48 808 8	390	1	10013550	260	90 64 786	251	1
10009189	509	10 29 035 2	440	4	10013550	263	10 01 461 1	151	10
10009189	511	10 48 808 8	440	4	10013573	342	98 79 063	5	4
10009193	508	10 29 035 2	150	1	10013835	253	10 66 472 2	1	1
10009193	510	10 48 808 8	150	1	10013837	253	10 66 472 2	2	3
10009201	509	10 29 035 2	490	1	10013839	253	10 66 472 2	3	1
10009201	511	10 48 808 8	490	1	10013840	253	10 66 472 2	104	1
10009239	538	10 08 428 6	10	1	10013842	253	10 66 472 2	105	1
10009330	253	10 66 472 2	20	1	10013843	253	10 66 472 2	101	1
10009376	157	10 00 809 5	2	1	10013848	253	10 66 472 2	103	1
10009596	253	10 66 472 2	19	1	10013851	253	10 66 472 2	102	1
10009602	253	10 66 472 2	10	1	10013857	253	10 66 472 2	6	2
10009606	253	10 66 472 2	14	4	10013875	249	10 22 844 3	19	1
10009781	273	10 49 880 5	121	1.8m	10013965	504	10 29 026 4	460	2
10009781	525	10 06 559 1	35	1m	10013978	508	10 29 035 2	220	1
10009784	253	10 66 472 2	17	2	10014042	650	10 11 646 4	5	4
10009888	519	99 47 695	16	2	10014067	166	70 28 176	1	1
10009943	654	90 80 301	5	0.6m	10014076	166	70 28 176	3	1
10010138	399	11 49 189 4	37	2	10014497	509	10 29 035 2	310	1
10010154	298	10 05 879 2	30	1	10014497	511	10 48 808 8	310	1
10010154	313	10 05 879 4	30	1	10014507	814	12 88 015 2	35	1
10010293	170	10 28 264 7	20	1	10014507	828	92 68 015	35	1
10011832	614	90 78 233	1	1	10014510	813	12 87 963 9	35	1
10011865	634	10 11 628 5	27	4	10014510	829	92 68 016	35	1
10011865	706	10 11 583 8	77	4	10014575	260	90 64 786	240	1
10011866	606	10 11 585 1	9	12	10014575	263	10 01 461 1	140	3

Item	Page	Assembly	Pos.	Quantity	Item	Page	Assembly	Pos.	Quantity
10014589	252	10 00 933 0	10	1	10021308	733	10 66 475 5	999	1
10014611	251	10 66 471 9	999	1	10021310	255	10 29 300 3	998	1
10014611	254	10 29 300 1	999	1	10021310	719	10 66 480 4	998	1
10014611	720	10 66 482 5	999	1	10021310	733	10 66 475 5	998	1
10014611	732	10 66 478 2	999	1	10021311	255	10 29 300 3	997	1
10014638	650	10 11 646 4	16	1	10021311	719	10 66 480 4	997	1
10014638	651	10 11 555 9	2	4	10021311	733	10 66 475 5	997	1
10014638	652	10 11 949 2	2	3	10021563	634	10 11 628 5	40	4
10014691	249	10 22 844 3	2	1	10021563	635	10 11 628 5	90	4
10014692	249	10 22 844 3	3	1	10021823	334	10 49 308 7	2	1
10014693	249	10 22 844 3	4	1	10021915	238	10 04 048 0	2	1
10014697	249	10 22 844 3	12	2	10022048	335	11 00 359 4	2	1
10014698	249	10 22 844 3	15	1	10022049	335	11 00 359 4	9	2
10014699	249	10 22 844 3	16	1	10022051	335	11 00 359 4	16	1
10014701	249	10 22 844 3	18	1	10022052	336	11 00 359 4	26	1
10014707	250	10 22 844 3	20	1	10022063	336	11 00 359 4	30	1
10014709	250	10 22 844 3	21	4	10022067	335	11 00 359 4	11	1
10014711	250	10 22 844 3	22	1	10022068	335	11 00 359 4	18	1
10014712	250	10 22 844 3	23	1	10022069	335	11 00 359 4	15	1
10014715	250	10 22 844 3	25	4	10022070	335	11 00 359 4	17	1
10014717	250	10 22 844 3	27	1	10022077	335	11 00 359 4	12	1
10014718	256	10 01 471 7	20	1	10022078	335	11 00 359 4	6	1
10014729	249	10 22 844 3	8	1	10022083	335	11 00 359 4	14	1
10014730	249	10 22 844 3	9	1	10022117	330	10 81 666 6	2	1
10014790	299	99 68 625	200	1	10022119	330	10 81 666 6	3	1
10014790	314	99 68 611	200	1	10022175	383	10 04 851 7	30	1
10014864	637	10 11 559 5	9	1	10022175	386	10 35 863 4	30	1
10015404	528	10 28 664 6	10	1	10022320	607	10 11 585 1	12	2
10015495	299	99 68 625	100	1	10022320	609	10 11 585 3	12	2
10015495	314	99 68 611	100	1	10022320	644	10 11 570 3	5	2
10015548	360	10 06 380 1	100	1	10022320	645	10 12 190 9	5	2
10015548	360	10 06 380 1	110	1	10022320	701	10 11 801 4	21	2
10016540	320	10 05 981 8	5	2	10022635	330	10 81 666 6	5	1
10016664	256	10 01 471 7	20	1	10022636	330	10 81 666 6	6	1
10016906	575	90 79 978	3	1	10022653	336	11 00 359 4	31	3
10016906	576	90 79 862	7	1	10022656	335	11 00 359 4	10	4
10016906	633	10 11 912 7	2	2	10022766	332	10 02 208 3	3	1
10016906	635	10 11 628 5	87	1	10022766	333	10 02 211 7	7	2
10016906	641	10 11 657 6	9	2	10022766	337	10 02 207 8	2	1
10016906	643	90 77 279	8	2	10022767	333	10 02 211 7	3	2
10016906	654	90 80 301	8	2	10022767	339	10 02 277 7	5	2
10016906	682	10 11 912 8	3	4	10022768	339	10 02 277 7	4	2
10016906	687	10 11 799 7	36	1	10022769	333	10 02 211 7	2	2
10016908	671	90 79 468	2	4	10022769	339	10 02 277 7	3	2
10017158	645	10 12 190 9	11	4	10022770	68	12 48 693 2	211	1
10017567	94	10 00 454 6	7	2	10022770	72	12 48 693 4	211	1
10017569	79	12 22 100 1	8	2	10022770	339	10 02 277 7	2	1
10017569	94	10 00 454 6	8	2	10022771	339	10 02 277 7	1	1
10017824	299	99 68 625	150	1	10022772	338	10 02 211 9	2	1
10017824	314	99 68 611	150	1	10022774	331	10 02 206 9	3	1
10017926	299	99 68 625	160	2	10022776	333	10 02 211 7	20	1
10017926	314	99 68 611	160	2	10022777	333	10 02 211 7	19	1
10017996	121	10 40 412 9	15	2	10022778	333	10 02 211 7	18	1
10018373	253	10 66 472 2	998	1	10022779	333	10 02 211 7	16	2
10018375	253	10 66 472 2	999	1	10022780	333	10 02 211 7	15	1
10018711	687	10 11 799 7	32	3	10022781	333	10 02 211 7	13	2
10018725	418	10 28 847 0	2	1	10022782	333	10 02 211 7	12	2
10020982	505	10 29 026 4	690	1	10022783	333	10 02 211 7	5	6
10021308	255	10 29 300 3	999	1	10022785	333	10 02 211 7	4	2
10021308	719	10 66 480 4	999	1	10022787	333	10 02 211 7	1	1

Item	Page	Assembly	Pos.	Quantity	Item	Page	Assembly	Pos.	Quantity
10023049	650	10 11 646 4	12	2	10037723	247	12 84 952 6	21	2
10023106	333	10 02 211 7	11	2	10037723	716	11 10 283 6	23	14
10023245	508	10 29 035 2	270	6	10037723	721	10 82 841 3	9	10
10023245	510	10 48 808 8	270	6	10037723	721	10 82 841 3	18	7
10024115	641	10 11 657 6	10	1	10037723	727	11 10 281 7	23	8
10024115	679	98 85 618	4	2	10037723	730	10 39 639 6	13	5
10024139	650	10 11 646 4	10	1	10037723	730	10 39 639 6	16	1
10024192	509	10 29 035 2	500	1	10037724	716	11 10 283 6	20	14
10024192	511	10 48 808 8	500	1	10037724	721	10 82 841 3	11	4
10024214	522	10 01 211 9	2	1	10037724	727	11 10 281 7	20	16
10024675	238	10 04 048 0	3	3	10037724	756	11 10 281 8	20	4
10024675	362	10 04 272 9	11	2	10037725	721	10 82 841 3	14	2
10024675	367	56 17 123	3	3	10037725	731	10 39 639 6	40	8
10024864	327	99 37 443	2	1	10037726	247	12 84 952 6	25	2
10025124	676	90 76 531	1	1	10037726	721	10 82 841 3	5	3
10025254	459	10 06 423 5	13	1	10037726	730	10 39 639 6	9	12
10025254	466	10 35 823 0	7	1	10037727	9	12 85 910 3	8	11
10026122	786	10 82 562 1	166	1	10037727	716	11 10 283 6	22	14
10027260	258	90 64 786	126	1	10037727	721	10 82 841 3	17	7
10027260	262	10 01 461 1	26	4	10037727	727	11 10 281 7	22	8
10027315	356	10 35 862 9	8	1	10037727	730	10 39 639 6	12	5
10027438	481	70 28 759	231	2	10037728	247	12 84 952 6	20	2
10027735	626	10 11 658 7	1	1	10037728	721	10 82 841 3	8	10
10028013	471	10 35 796 7	21	4	10037728	730	10 39 639 6	15	1
10028125	772	94 02 794 9	8	1	10038568	641	10 11 657 6	20	1
10028125	773	95 91 741	8	1	10038572	635	10 11 628 5	91	1
10028991	79	12 22 100 1	6	2	10038817	634	10 11 628 5	45	2
10028991	94	10 00 454 6	6	2	10039562	476	70 28 767	850	1
10028992	94	10 00 454 6	2	2	10039590	445	10 35 865 5	11	2
10028993	94	10 00 454 6	5	2	10039678	505	10 29 026 4	621	2
10029370	290	70 24 996	10	1	10040032	684	10 11 599 3	3	8
10029676	285	11 10 016 6	36	1	10040064	650	10 11 646 4	2	1
10030518	695	90 78 962	6	2	10040399	626	10 11 658 7	6	1
10030837	560	12 82 483 7	14	12	10040399	628	10 11 585 4	1	1
10030908	226	90 02 790 4	3	1	10040400	704	10 11 583 8	46	1
10032888	153	76 16 897	1	1	10040401	627	90 75 395	1	1
10033074	655	10 13 281 7	7	1	10040402	623	10 11 585 5	1	1
10035322	505	10 29 026 4	630	2	10040403	623	10 11 585 5	2	1
10035529	472	10 22 830 2	40	1	10040404	623	10 11 585 5	3	1
10035529	474	10 47 616 9	40	1	10040406	626	10 11 658 7	5	1
10035530	479	10 03 552 9	110	1	10040406	628	10 11 585 4	2	1
10035575	684	10 11 599 3	4	4	10040412	604	90 74 505	8	1
10036325	603	10 14 282 0	2	1	10040480	347	10 06 379 3	60	1
10036533	316	90 13 811	3	1	10040776	260	90 64 786	220	1
10037196	462	10 35 826 4	20	1	10040776	263	10 01 461 1	120	2
10037207	545	10 37 464 5	15	1	10040777	260	90 64 786	225	1
10037209	446	10 35 865 5	30	2	10040777	263	10 01 461 1	125	2
10037209	447	10 35 865 5	90	1	10040778	260	90 64 786	226	1
10037312	570	90 79 480	9	6	10040778	263	10 01 461 1	126	2
10037533	248	10 06 750 0	20	1	10040779	260	90 64 786	227	1
10037722	247	12 84 952 6	26	2	10040779	263	10 01 461 1	127	2
10037722	716	11 10 283 6	21	14	10040818	139	10 36 573 8	10	1
10037722	721	10 82 841 3	6	3	10040984	675	90 76 530	2	1
10037722	721	10 82 841 3	12	4	10040984	676	90 76 531	2	1
10037722	721	10 82 841 3	15	2	10041876	328	10 40 689 8	45	1
10037722	727	11 10 281 7	21	16	10041876	515	11 10 255 3	280	1
10037722	730	10 39 639 6	10	12	10041876	650	10 11 646 4	17	1
10037722	731	10 39 639 6	41	8	10042729	346	10 06 379 3	10	1
10037722	756	11 10 281 8	21	4	10042817	722	10 82 841 3	40	2
10037723	9	12 85 910 3	9	11	10043136	570	90 79 480	15	1

Item	Page	Assembly	Pos.	Quantity	Item	Page	Assembly	Pos.	Quantity
10043180	293	10 05 736 2	20	1	10056391	752	11 10 291 2	27	2
10043241	379	50 09 391	11	1	10056401	213	10 04 853 8	30	1
10043525	260	90 64 786	270	1m	10056981	247	12 84 952 6	44	4
10043525	263	10 01 461 1	170	10m	10056984	247	12 84 952 6	43	2
10043632	272	10 49 880 5	50	1	10057362	275	11 38 339 7	10	1
10044302	64	12 48 693 1	102	1	10057362	291	10 38 502 8	10	1
10044302	67	12 48 693 2	102	1	10057404	465	10 06 576 2	2	1
10044302	70	12 48 693 3	102	1	10057698	195	10 04 853 6	120	1
10044302	71	12 48 693 4	102	1	10057720	420	10 35 863 7	5	1
10044302	126	10 06 994 0	20	8	10057721	420	10 35 863 7	4	1
10044302	632	10 22 281 9	1	1	10057722	420	10 35 863 7	2	1
10044338	490	10 29 033 7	130	1	10057723	420	10 35 863 7	3	1
10044343	491	10 29 033 7	490	3	10057777	195	10 04 853 6	140	1
10044343	494	10 48 808 7	490	3	10057778	196	10 04 853 6	220	1
10044344	492	10 29 033 7	792	1	10057779	196	10 04 853 6	200	1
10044344	494	10 48 808 7	792	1	10057780	139	10 36 573 8	19	1
10044353	505	10 29 026 4	610	1	10057780	140	11 10 293 9	19	1
10044354	503	10 29 026 4	210	2	10057843	279	11 38 340 1	92	1
10044356	508	10 29 035 2	100	12	10057843	302	11 45 228 6	92	1
10044356	510	10 48 808 8	100	12	10057843	306	12 50 731 7	92	1
10044359	509	10 29 035 2	430	1	10057907	127	10 08 736 5	2	1
10044359	511	10 48 808 8	430	1	10057921	195	10 04 853 6	110	1
10044360	508	10 29 035 2	160	1	10058096	128	10 04 851 0	2	1
10044360	510	10 48 808 8	160	1	10058169	445	10 35 865 5	10	1
10044624	353	10 06 379 8	35	1	10058231	453	10 05 816 9	2	1
10044740	170	10 28 264 7	15	6	10058234	453	10 05 816 9	6	1
10045530	9	12 85 910 3	2	1	10058235	454	10 05 823 4	2	1
10045530	783	11 10 229 5	2	1	10058253	453	10 05 816 9	4	1
10046958	632	10 22 281 9	4	1	10058254	453	10 05 816 9	5	1
10048398	520	99 47 695	30	1	10058255	454	10 05 823 4	3	2
10048510	123	10 35 861 4	174	1	10058792	276	11 38 339 7	60	1
10048514	123	10 35 861 4	800	1	10058792	292	10 38 502 8	60	1
10048517	123	10 35 861 4	7100	1	10058794	277	11 38 340 1	60	1
10048525	124	10 35 861 4	9300	1	10058794	301	11 45 228 6	60	1
10048531	132	10 35 862 2	510	1	10058794	305	12 50 731 7	60	1
10048536	132	10 35 862 2	560	1	10058949	298	10 05 879 2	15	1
10048537	132	10 35 862 2	580	1	10058949	313	10 05 879 4	15	1
10048538	132	10 35 862 2	590	1	10059516	212	10 04 853 8	25	2
10048539	123	10 35 861 4	7300	1	10059633	457	10 35 822 9	20	1
10048545	134	10 04 853 1	13	1	10059635	458	10 05 963 3	2	1
10048546	134	10 04 853 1	11	1	10059636	458	10 05 963 3	3	6
10048547	134	10 04 853 1	14	1	10059642	457	10 35 822 9	2	1
10048548	134	10 04 853 1	12	1	10059643	457	10 35 822 9	5	1
10049073	514	11 10 255 3	32	1	10059644	457	10 35 822 9	6	1
10051238	85	10 07 306 8	20	1	10059818	271	10 49 880 5	40	1
10051599	514	11 10 255 3	27	1	10059947	344	10 35 862 3	15	1
10051825	459	10 06 423 5	6	1	10059993	131	10 06 261 8	2	1
10051826	459	10 06 423 5	7	1	10060146	10	12 86 140 3	10	1
10051826	460	10 49 856 6	7	1	10060165	194	10 04 853 6	90	1
10051827	383	10 04 851 7	3	1	10060174	320	10 05 981 8	10	1
10051838	447	10 35 865 5	80	1	10060175	320	10 05 981 8	20	1
10051839	456	10 05 183 8	3	3	10060190	423	10 35 863 6	3	2
10051840	456	10 05 183 8	6	1	10060193	423	10 35 863 6	4	2
10051841	456	10 05 183 8	7	1	10060195	423	10 35 863 6	5	2
10051842	456	10 05 183 8	2	1	10060199	423	10 35 863 6	6	1
10054704	195	10 04 853 6	100	1	10060418	145	10 04 853 9	80	1
10055071	281	11 38 340 1	140	1	10060549	443	10 35 865 9	20	1
10055071	304	11 45 228 6	140	1	10060648	470	10 35 866 0	3	1
10055071	307	12 50 731 7	140	1	10060652	470	10 35 866 0	4	1
10055095	274	10 49 880 5	138	1	10060668	470	10 35 866 0	10	1

Item	Page	Assembly	Pos.	Quantity	Item	Page	Assembly	Pos.	Quantity
10061127	383	10 04 851 7	2	1	10064398	521	10 35 866 5	19	1
10061127	386	10 35 863 4	2	1	10064402	759	10 85 361 0	3	1
10061129	383	10 04 851 7	4	1	10064412	459	10 06 423 5	5	1
10061525	758	10 35 857 3	3	1	10064512	210	10 04 853 7	70	1
10061561	758	10 35 857 3	8	1	10064514	209	10 04 853 7	9	1
10061574	712	11 10 294 5	41	1	10064515	209	10 04 853 7	10	1
10061575	712	11 10 294 5	42	1	10065124	197	10 04 853 6	330	1
10061576	712	11 10 294 5	43	1	10065195	466	10 35 823 0	5	1
10061577	712	11 10 294 5	44	1	10065196	466	10 35 823 0	2	1
10061580	712	11 10 294 5	47	1	10065223	725	11 10 280 7	16	2
10061581	712	11 10 294 5	48	1	10065493	443	10 35 865 9	10	1
10061628	711	11 10 294 5	6	2	10065591	524	10 06 272 5	10	1
10061810	529	10 04 852 5	2	1	10065596	524	10 06 272 5	40	1
10061810	530	10 49 836 0	2	1	10065762	450	10 35 865 5	160	1
10061810	531	11 10 262 1	2	1	10065764	465	10 06 576 2	10	1
10061872	711	11 10 294 5	9	2	10065814	451	10 35 865 5	210	1
10061982	217	11 10 291 6	11	1	10065976	411	10 35 863 8	325	1
10061984	242	10 04 851 4	5	1	10066076	275	11 38 339 7	20	1
10061985	242	10 04 851 4	20	1	10066076	291	10 38 502 8	20	1
10062023	450	10 35 865 5	175	1	10066101	548	10 49 803 0	80	1
10062070	243	10 06 198 4	6	60	10066134	406	10 35 863 8	20	1
10062471	725	11 10 280 7	11	1	10067500	246	12 84 952 5	2	1
10062497	725	11 10 280 7	10	1	10067596	529	10 04 852 5	3	1
10062583	725	11 10 280 7	14	1	10067667	546	10 49 803 0	10	1
10062584	745	10 06 258 3	2	1	10067668	546	10 49 803 0	12	1
10062618	129	10 08 004 4	20	1	10067706	8	11 10 260 2	24	1
10062629	448	10 35 865 5	100	1	10067706	531	11 10 262 1	40	1
10062655	448	10 35 865 5	110	2	10067706	534	10 06 759 6	31	1
10062725	124	10 35 861 4	9200	1	10067706	535	10 49 835 9	31	1
10062868	452	10 35 865 5	230	1	10067707	529	10 04 852 5	4	1
10063092	194	10 04 853 6	40	1	10067867	357	10 35 862 9	40	1
10063093	193	10 04 853 6	30	1	10068108	753	11 10 291 2	55	1
10063237	470	10 35 866 0	2	1	10068116	753	11 10 291 2	40	1
10063239	470	10 35 866 0	11	1	10069940	14	10 35 964 8	110	1
10063243	470	10 35 866 0	6	1	10070335	450	10 35 865 5	170	1
10063268	204	10 06 309 3	2	1	10070336	461	10 07 033 5	2	1
10063305	194	10 04 853 6	46	1	10070338	461	10 07 033 5	5	1
10063305	194	10 04 853 6	96	1	10070399	411	10 35 863 8	340	1
10063527	198	10 04 853 6	345	1	10070400	411	10 35 863 8	330	1
10063630	132	10 35 862 2	595	1	10070437	411	10 35 863 8	200	1
10063654	212	10 04 853 8	20	1	10071145	464	10 08 276 3	20	1
10063712	213	10 04 853 8	49	1	10071146	463	10 35 826 4	40	1
10063712	213	10 04 853 8	50	1	10071171	463	10 35 826 4	50	1
10063793	343	10 35 862 6	7025	1	10071611	10	12 86 140 3	60	1
10063798	343	10 35 862 6	7060	1	10072157	7	.	216	1
10063801	343	10 35 862 6	7080	1	10072499	383	10 04 851 7	10	1
10063835	145	10 04 853 9	60	1	10072499	386	10 35 863 4	10	1
10063914	536	10 49 800 2	5	1	10072785	546	10 49 803 0	9	1
10063986	416	10 35 863 8	7601	1	10073068	87	10 39 293 2	2	1
10064138	450	10 35 865 5	190	1	10073069	85	10 07 306 8	10	1
10064235	448	10 35 865 5	140	1	10073399	420	10 35 863 7	25	1
10064236	459	10 06 423 5	2	1	10074169	546	10 49 803 0	11	1
10064242	449	10 35 865 5	150	1	10074171	546	10 49 803 0	14	1
10064243	449	10 35 865 5	153	1	10074863	121	10 40 412 9	11	2
10064302	447	10 35 865 5	70	1	10074866	247	12 84 952 6	40	1
10064359	470	10 35 866 0	25	1	10074866	756	11 10 281 8	26	1
10064360	447	10 35 865 5	60	1	10074972	456	10 05 183 8	11	2
10064361	455	10 06 436 0	2	1	10074972	457	10 35 822 9	13	2
10064366	455	10 06 436 0	4	1	10075063	9	12 85 910 3	7	1
10064386	521	10 35 866 5	15	1	10075063	783	11 10 229 5	5	1

Item	Page	Assembly	Pos.	Quantity	Item	Page	Assembly	Pos.	Quantity
10075430	453	10 05 816 9	15	1	10094745	455	10 06 436 0	3	1
10076195	410	10 35 863 8	175	2	10097243	771	94 00 688 8	8	1
10076196	419	10 07 619 5	5	1	10097983	89	11 60 010 7	2	1
10076837	315	10 05 507 1	6	1	10099210	250	10 22 844 3	28	4
10076844	457	10 35 822 9	11	2	10100303	592	10 11 960 9	4	5
10078106	130	10 08 004 4	60	1	10100303	593	10 11 961 0	4	5
10078120	130	10 08 004 4	70	1	10100303	594	10 11 963 6	4	5
10079010	279	11 38 340 1	93	1	10100680	178	70 28 075	27	1
10079010	302	11 45 228 6	93	1	10100708	276	11 38 339 7	65	1
10079010	306	12 50 731 7	93	1	10100708	277	11 38 340 1	65	2
10079217	545	10 37 464 5	2	1	10100708	292	10 38 502 8	65	1
10079279	545	10 37 464 5	25	1	10100708	301	11 45 228 6	65	2
10079307	11	12 86 140 4	20	1	10100708	305	12 50 731 7	65	2
10079846	279	11 38 340 1	95	1	10100781	678	90 76 550	1	1
10079846	302	11 45 228 6	95	1	10100946	356	10 35 862 9	11	1
10079846	306	12 50 731 7	95	1	10101523	744	10 00 348 5	157	1
10080030	775	11 45 729 6	3	1	10101543	644	10 11 570 3	7	2
10080044	123	10 35 861 4	300	1	10101615	360	10 06 380 1	30	2
10080046	129	10 08 004 4	10	1	10101657	650	10 11 646 4	14	1
10080047	129	10 08 004 4	30	1	10101997	632	10 22 281 9	3	1
10080096	721	10 82 841 3	25	1	10112524	742	90 79 264	25	2
10080219	778	11 45 729 7	3	1	10112636	449	10 35 865 5	154	2
10080548	775	11 45 729 6	20	1	10112929	656	10 11 983 0	5	2
10080549	778	11 45 729 7	20	1	10112929	657	90 75 678	5	6
10080598	423	10 35 863 6	2	1	10113060	285	11 10 016 6	15	1
10080886	139	10 36 573 8	2	1	10113062	285	11 10 016 6	14	1
10080886	140	11 10 293 9	2	1	10113250	459	10 06 423 5	14	1
10080887	139	10 36 573 8	3	1	10113250	466	10 35 823 0	8	1
10080887	140	11 10 293 9	3	1	10113710	650	10 11 646 4	13	1
10081376	137	10 49 819 9	20	1	10113711	654	90 80 301	4	5
10081451	445	10 35 865 5	17	1	10113731	567	90 79 021	11	2
10081454	445	10 35 865 5	14	1	10113731	662	90 79 889	3	2
10081811	450	10 35 865 5	180	1	10113731	701	10 11 801 4	42	2
10081831	456	10 05 183 8	20	1	10113731	704	10 11 583 8	42	2
10082117	196	10 04 853 6	210	1	10113860	407	10 35 863 8	60	1
10082117	196	10 04 853 6	230	1	10113975	678	90 76 550	2	1
10082757	463	10 35 826 4	70	1	10113975	705	10 11 583 8	59	1
10082759	462	10 35 826 4	30	1	10115197	73	12 48 693 4	330	1
10082763	462	10 35 826 4	10	1	10115197	353	10 06 379 8	36	1
10082764	464	10 08 276 3	2	1	10115197	355	10 04 462 4	4	1
10082767	462	10 35 826 4	2	1	10115479	670	10 11 548 0	1	1
10082807	463	10 35 826 4	60	1	10115480	554	10 11 714 5	410	1
10082869	746	10 08 390 7	2	1	10115489	637	10 11 559 5	3	1
10083050	542	10 49 878 6	30	1	10115491	637	10 11 559 5	2	1
10083907	725	11 10 280 7	13	1	10115499	634	10 11 628 5	38	1
10084286	125	10 35 861 4	9620	1	10115503	554	10 11 714 5	387	1
10086265	279	11 38 340 1	78	1	10115521	665	90 80 736	7	1
10086265	302	11 45 228 6	78	1	10115523	658	10 11 550 3	1	1
10086265	306	12 50 731 7	78	1	10115540	567	90 79 021	4	1
10087053	344	10 35 862 3	20	1	10115540	663	10 11 919 9	1	1
10087054	344	10 35 862 3	27	1	10115559	552	10 11 714 5	342	1
10087238	542	10 49 878 6	40	1	10115591	641	10 11 657 6	4	1
10087365	123	10 35 861 4	170	1	10115595	551	10 11 714 5	214	1
10087659	542	10 49 878 6	10	1	10115608	658	10 11 550 3	2	1
10088051	783	11 10 229 5	4	1	10115649	634	10 11 628 5	46	2
10092123	547	10 49 803 0	22	1	10115703	552	10 11 714 5	230	1
10094135	443	10 35 865 9	30	1	10115705	644	10 11 570 3	2	1
10094136	444	10 09 413 5	10	1	10115705	645	10 12 190 9	2	1
10094702	459	10 06 423 5	5	1	10115717	664	10 11 571 8	4	1
10094703	459	10 06 423 5	6	1	10115718	554	10 11 714 5	415	1

Item	Page	Assembly	Pos.	Quantity	Item	Page	Assembly	Pos.	Quantity
10115733	561	10 11 577 8	1	1	10116928	582	90 76 458	50	1
10115740	576	90 79 862	1	1	10116934	585	90 76 459	50	1
10115746	686	10 11 799 7	1	1	10117073	552	10 11 714 5	220	1
10115771	650	10 11 646 4	2	1	10117093	624	10 11 659 1	1	1
10115778	560	12 82 483 7	1	1	10117094	681	90 80 653	10	1
10115838	556	10 11 714 5	939	1	10117145	132	10 35 862 2	10	1
10115850	558	10 11 682 5	139	1	10117153	158	10 11 886 0	1	1
10115850	706	10 11 583 8	81	1	10117248	555	10 11 714 5	570	1
10115851	558	10 11 682 5	88	1	10117267	638	10 11 726 8	1	1
10115853	558	10 11 682 5	89	1	10117268	551	10 11 714 5	218	1
10115853	706	10 11 583 8	83	1	10117836	636	90 73 767	1	1
10115854	551	10 11 714 5	199	1	10117891	615	10 11 585 0	1	1
10115854	606	10 11 585 1	7	1	10117949	563	10 11 795 1	5	1
10115854	608	10 11 585 3	7	1	10117950	569	10 11 832 9	3	1
10115855	558	10 11 682 5	179	1	10117951	557	10 11 682 5	14	1
10115855	706	10 11 583 8	82	6	10117997	555	10 11 714 5	580	1
10115861	683	10 11 586 2	1	1	10118014	557	10 11 682 5	13	1
10115862	555	10 11 714 5	530	1	10118257	664	10 11 571 8	3	1
10115862	555	10 11 714 5	530	1	10118329	567	90 79 021	3	1
10115993	555	10 11 714 5	571	1	10118483	556	10 11 714 5	992	1
10115994	684	10 11 599 3	2	1	10118550	700	10 11 801 4	19	1
10115996	684	10 11 599 3	1	1	10118551	700	10 11 801 4	17	3
10116015	554	10 11 714 5	435	1	10118554	68	12 48 693 2	200	6
10116036	635	10 11 628 5	84	1	10118554	72	12 48 693 4	200	6
10116053	650	10 11 646 4	9	1	10118554	592	10 11 960 9	7	1
10116113	680	10 11 611 4	1	1	10118554	593	10 11 961 0	7	1
10116114	555	10 11 714 5	520	1	10118554	594	10 11 963 6	7	1
10116175	549	10 11 714 5	53	1	10118554	595	90 79 838	7	1
10116255	646	10 29 998 8	1	1	10118554	596	90 79 849	7	1
10116255	647	90 78 314	1	1	10118554	606	10 11 585 1	4	1
10116257	621	10 11 683 9	1	1	10118554	608	10 11 585 3	4	6
10116285	551	10 11 714 5	212	1	10118554	625	10 11 709 3	7	1
10116287	635	10 11 628 5	54	1	10118554	628	10 11 585 4	7	1
10116289	635	10 11 628 5	53	1	10118556	606	10 11 585 1	3	6
10116290	634	10 11 628 5	10	1	10118556	608	10 11 585 3	3	6
10116295	579	10 11 630 0	1	1	10118556	642	10 11 707 3	6	6
10116300	549	10 11 714 5	27	1	10118561	292	10 38 502 8	50	1
10116310	665	90 80 736	24	1	10118561	301	11 45 228 6	50	1
10116310	707	10 11 583 8	4302	1	10118561	305	12 50 731 7	50	1
10116366	584	10 11 617 5	1	1	10118589	698	90 80 504	4	2
10116372	667	10 11 646 3	5	1	10118611	653	10 11 547 9	2	2
10116413	666	10 11 601 5	2	1	10118620	699	10 11 801 4	2	1
10116437	655	10 13 281 7	1	1	10118621	670	10 11 548 0	6	6
10116453	634	10 11 628 5	5	1	10118649	807	10 11 856 1	22	1
10116463	554	10 11 714 5	440	1	10118649	808	11 37 560 6	22	1
10116464	552	10 11 714 5	340	1	10118689	665	90 80 736	17	1
10116467	634	10 11 628 5	7	1	10118712	667	10 11 646 3	18	1
10116482	634	10 11 628 5	11	1	10118786	584	10 11 617 5	10	6
10116499	634	10 11 628 5	1	1	10118815	709	10 11 848 3	90	1
10116522	641	10 11 657 6	3	1	10118860	150	10 13 461 8	1	1
10116562	551	10 11 714 5	200	1	10119011	594	10 11 963 6	1	1
10116572	641	10 11 657 6	2	1	10119030	592	10 11 960 9	2	1
10116573	641	10 11 657 6	1	1	10119031	578	10 11 903 0	1	1
10116576	551	10 11 714 5	213	1	10119089	821	10 11 909 3	10	1
10116587	625	10 11 709 3	1	1	10119090	158	10 11 886 0	11	1
10116591	551	10 11 714 5	190	6	10119093	159	10 11 886 0	97	1
10116717	759	10 85 361 0	10	1	10119119	633	10 11 912 7	1	1
10116769	650	10 11 646 4	2	1	10119127	566	10 11 916 7	2	1
10116825	549	10 11 714 5	1	1	10119128	555	10 11 714 5	522	1
10116839	558	10 11 682 5	170	6	10119129	682	10 11 912 8	1	1

Item	Page	Assembly	Pos.	Quantity	Item	Page	Assembly	Pos.	Quantity
10119136	655	10 13 281 7	8	1	10123873	573	12 83 230 5	1	1
10119139	650	10 11 646 4	25	1	10124982	234	90 74 125	15	1
10119167	549	10 11 714 5	16	1	10124982	823	90 74 122	15	1
10119168	566	10 11 916 7	3	1	10125007	551	10 11 714 5	201	1
10119199	554	10 11 714 5	416	1	10125801	630	10 12 500 7	1	1
10119305	597	10 11 942 7	5	4	10126304	703	10 11 583 8	14	1
10119305	606	10 11 585 1	2	4	10126427	703	10 11 583 8	22	1
10119305	608	10 11 585 3	2	24	10126738	570	90 79 480	3	1
10119311	576	90 79 862	5	1	10126738	702	10 11 583 8	2	1
10119424	610	90 80 713	1	1	10127488	592	10 11 960 9	1	1
10119427	590	90 79 850	1	1	10127489	593	10 11 961 0	1	1
10119482	159	10 11 886 0	96	1	10131176	581	90 75 115	1	1
10119485	651	10 11 555 9	1	1	10131573	590	90 79 850	3	6
10119485	652	10 11 949 2	1	1	10131581	561	10 11 577 8	5	14
10119492	552	10 11 714 5	342	1	10132817	654	90 80 301	1	1
10119503	817	90 74 112	1	1	10133037	150	10 13 461 8	2	1
10119562	600	12 40 205 3	2	1	10133061	801	10 13 303 7	4	2
10119609	550	10 11 714 5	83	1	10133062	819	10 13 306 1	10	1
10119610	549	10 11 714 5	82	5	10134069	655	10 13 281 7	12	1
10119636	551	10 11 714 5	84	1	10134348	570	90 79 480	4	2
10119695	601	90 79 861	1	2	10134348	680	10 11 611 4	3	2
10119830	552	10 11 714 5	380	1	10134618	141	10 04 853 9	10	1
10119923	615	10 11 585 0	3	2	10136088	801	10 13 303 7	11	1
10119984	656	10 11 983 0	1	1	10136171	801	10 13 303 7	10	2
10119984	657	90 75 678	1	1	10136746	817	90 74 112	11	1
10120000	659	90 79 472	1	1	10136752	591	10 14 155 4	2	2
10120005	661	90 80 280	1	1	10136753	591	10 14 155 4	4	2
10120066	631	10 12 580 1	5	1	10137075	8	11 10 260 2	28	1
10120334	591	10 14 155 4	5	4	10137075	112	10 00 201 1	420	1
10120334	598	10 12 036 4	5	4	10137075	532	11 10 262 1	44	1
10120334	606	10 11 585 1	2	4	10137075	534	10 06 759 6	48	1
10120334	608	10 11 585 3	2	24	10137108	154	90 73 242	29	1
10120364	590	90 79 850	1	1	10137108	162	11 34 249 1	20	2
10120384	591	10 14 155 4	1	1	10137108	827	90 77 464	40	1
10120384	597	10 11 942 7	1	1	10137113	162	11 34 249 1	21	1
10120384	598	10 12 036 4	1	1	10137121	162	11 34 249 1	24	1
10120443	583	90 75 133	3	1	10137121	835	92 65 808	29	2
10120844	590	90 79 850	2	1	10137389	230	90 74 075	22	1
10120844	606	10 11 585 1	1	1	10137389	833	11 38 195 4	15	1
10120844	608	10 11 585 3	1	6	10137392	323	90 79 258	33	1
10120929	563	10 11 795 1	12	1	10137392	325	90 79 259	33	1
10121335	704	10 11 583 8	30	1	10137721	680	10 11 611 4	5	1
10121676	645	10 12 190 9	3	1	10137721	704	10 11 583 8	31	1
10121909	552	10 11 714 5	230	1	10139588	825	10 13 975 2	16	1
10121952	699	10 11 801 4	1	1	10139607	665	90 80 736	1	1
10121952	702	10 11 583 8	1	1	10139752	802	10 13 303 7	84	2
10122317	698	90 80 504	1	1	10140487	585	90 76 459	51	1
10122498	807	10 11 856 1	12	4	10140488	585	90 76 459	52	1
10122498	808	11 37 560 6	12	4	10140597	582	90 76 458	51	1
10122499	807	10 11 856 1	20	4	10140601	582	90 76 458	52	1
10122499	808	11 37 560 6	20	4	10141554	590	90 79 850	1	1
10122500	807	10 11 856 1	21	4	10141557	607	10 11 585 1	18	6
10122500	808	11 37 560 6	21	4	10141557	609	10 11 585 3	18	6
10122779	112	10 00 201 1	140	2	10141557	670	10 11 548 0	6	6
10123559	806	92 67 037	602	1	10141908	570	90 79 480	1	1
10123559	812	12 41 005 4	602	1	10141949	671	90 79 468	1	1
10123735	571	90 79 487	4	3	10142820	599	12 40 205 5	2	1
10123735	703	10 11 583 8	17	3	10145100	586	10 11 693 4	1	1
10123868	574	12 83 245 4	1	1	10145101	586	10 11 693 4	2	1
10123870	572	12 83 230 4	1	1	10145171	809	10 11 908 9	2	1

Item	Page	Assembly	Pos.	Quantity	Item	Page	Assembly	Pos.	Quantity
10145171	821	10 11 909 3	10	1	10190394	46	11 62 628 0	1000	1l
10147789	642	10 11 707 3	1	1	10191453	51	90 66 466	52	1
10149189	602	10 12 038 4	2	1	10215824	158	10 11 886 0	4	1
10150204	602	10 12 038 4	4	4	10215824	576	90 79 862	1	1
10151939	811	11 38 727 8	625	1	10215888	217	11 10 291 6	40	0.05
10151939	833	11 38 195 4	625	1	10215970	510	10 48 808 8	286	4
10153536	611	90 79 870	1	2	10216104	496	10 29 036 3	560	4
10153538	611	90 79 870	2	2	10216217	351	10 35 862 8	13	2
10153538	621	10 11 683 9	4	1	10216295	158	10 11 886 0	34	1
10165637	282	10 04 363 2	65	1	10216340	249	10 22 844 3	13	1
10165766	293	10 05 736 2	10	1	10216362	472	10 22 830 2	10	1
10166804	115	96 86 142 01	5	1	10216362	474	10 47 616 9	10	1
10167277	115	96 86 142 01	6	1	10216468	399	11 49 189 4	32	1
10167557	222	90 02 197 3	49	3	10216691	402	10 22 042 7	2	9
10167557	224	93 27 778 01	5	1	10216694	399	11 49 189 4	13	1
10167654	237	96 91 056 01	5	2	10216701	399	11 49 189 4	14	1
10170796	237	96 91 056 01	10	2	10216703	402	10 22 042 7	20	1
10171632	109	96 87 443 01	2	1	10216704	402	10 22 042 7	20	1
10172723	226	90 02 790 4	4	1	10216705	402	10 22 042 7	20	1
10178863	747	92 15 949 16	4	1	10216706	402	10 22 042 7	20	1
10179356	129	10 08 004 4	21	4	10216707	402	10 22 042 7	24	1
10179356	358	10 35 862 4	26	2	10216710	402	10 22 042 7	25	1
10179356	443	10 35 865 9	12	8	10216714	402	10 22 042 7	27	2
10179356	443	10 35 865 9	22	4	10216715	402	10 22 042 7	29	1
10179356	443	10 35 865 9	26	1	10216731	161	10 29 197 8	3	1
10179356	443	10 35 865 9	32	4	10216732	161	10 29 197 8	4	1
10179356	447	10 35 865 5	71	6	10216733	161	10 29 197 8	30	2
10179356	447	10 35 865 5	81	3	10216737	172	10 29 197 5	23	2
10179356	448	10 35 865 5	111	10	10216741	398	11 49 189 0	43	1
10179356	448	10 35 865 5	121	5	10216810	174	11 82 151 3	5	1
10179356	448	10 35 865 5	141	5	10216816	165	57 17 149	2	1
10179356	451	10 35 865 5	201	5	10216818	170	10 28 264 7	1	1
10179356	451	10 35 865 5	221	5	10216823	170	10 28 264 7	4	1
10179356	452	10 35 865 5	231	5	10216824	170	10 28 264 7	5	1
10179356	452	10 35 865 5	241	3	10216826	170	10 28 264 7	18	1
10179356	463	10 35 826 4	71	2	10216828	167	10 21 681 6	1	1
10179356	544	10 49 878 6	62	3	10217005	145	10 04 853 9	70	1
10179356	711	11 10 294 5	23	8	10217034	510	10 48 808 8	220	1
10179356	793	10 49 866 6	9	3	10217168	73	12 48 693 4	310	1
10179357	193	10 04 853 6	12	4	10217168	138	10 21 717 3	2	1
10179357	194	10 04 853 6	41	4	10217169	64	12 48 693 1	110	1
10179357	194	10 04 853 6	44	1	10217169	67	12 48 693 2	110	1
10179357	194	10 04 853 6	94	1	10217169	70	12 48 693 3	110	1
10179357	195	10 04 853 6	111	1	10217169	71	12 48 693 4	110	1
10179357	445	10 35 865 5	16	2	10217169	138	10 21 717 3	1	1
10179357	457	10 35 822 9	22	7	10217172	137	10 49 819 9	14	2
10179357	462	10 35 826 4	12	5	10217173	137	10 49 819 9	10	1
10179357	462	10 35 826 4	31	2	10217578	161	10 29 197 8	16	1
10179357	629	10 11 656 2	6	2	10217797	137	10 49 819 9	85	1
10179555	298	10 05 879 2	12	1	10217797	793	10 49 866 6	20	1
10179555	313	10 05 879 4	12	1	10218513	193	10 04 853 6	10	1
10179555	469	10 35 387 9	22	2	10218975	412	10 35 863 8	368	3
10181392	514	11 10 255 3	22	4	10219021	286	11 10 016 6	57	1
10190387	45	11 62 627 9	5	1	10219457	650	10 11 646 4	7	2
10190388	45	11 62 627 9	20	1	10219500	52	90 66 466	130	1m
10190389	45	11 62 627 9	210	1l	10220138	505	10 29 026 4	660	5
10190390	45	11 62 627 9	1000	1l	10220139	506	10 29 026 4	810	2
10190391	46	11 62 628 0	5	1	10220397	505	10 29 026 4	550	7
10190392	46	11 62 628 0	20	1	10220417	162	11 34 249 1	6	1
10190393	46	11 62 628 0	210	1l	10220418	162	11 34 249 1	46	1

Item	Page	Assembly	Pos.	Quantity	Item	Page	Assembly	Pos.	Quantity
10220419	162	11 34 249 1	48	1	10222819	629	10 11 656 2	1	1
10220421	163	11 34 249 1	49	1	10222821	632	10 22 281 9	2	1
10220423	163	11 34 249 1	999	1	10228151	278	11 38 340 1	75	1
10220424	162	11 34 249 1	37	1	10228151	301	11 45 228 6	75	1
10220427	399	11 49 189 4	1	1	10228151	305	12 50 731 7	75	1
10220431	399	11 49 189 4	38	1	10228302	471	10 35 796 7	20	1
10220432	399	11 49 189 4	98	1	10228443	248	10 06 750 0	2	1
10220513	249	10 22 844 3	1	1	10280076	359	10 35 862 4	75	1
10220529	161	10 29 197 8	31	2	10280077	357	10 35 862 9	36	1
10220546	172	10 29 197 5	7	2	10280078	353	10 06 379 8	5	1
10220547	172	10 29 197 5	9	2	10280087	344	10 35 862 3	2	1
10220548	172	10 29 197 5	10	2	10280090	359	10 35 862 4	70	1
10220549	172	10 29 197 5	19	1	10280105	358	10 35 862 4	30	1
10220550	172	10 29 197 5	26	2	10280185	632	10 22 281 9	2	1
10220635	398	11 49 189 0	3	1	10280230	351	10 35 862 8	3	2
10220637	170	10 28 264 7	3	1	10280279	346	10 06 379 3	50	1
10220638	398	11 49 189 0	9	1	10280390	514	11 10 255 3	40	1
10220641	398	11 49 189 0	47	2	10280461	362	10 04 272 9	2	1
10220646	174	11 82 151 3	1	1	10282622	565	90 73 083	100	1
10220647	174	11 82 151 3	2	1	10282622	570	90 79 480	110	1
10220648	174	11 82 151 3	3	1	10282622	621	10 11 683 9	100	1
10220649	174	11 82 151 3	4	1	10282622	627	90 75 395	100	1
10220659	168	10 22 063 5	1	1	10282622	643	90 77 279	100	1
10220660	168	10 22 063 5	2	1	10282622	645	10 12 190 9	100	1
10220661	168	10 22 063 5	3	1	10282622	655	10 13 281 7	100	1
10220665	168	10 22 063 5	9	1	10282622	659	90 79 472	100	1
10220668	167	10 21 681 6	3	1	10282622	660	90 79 474	110	1
10220668	170	10 28 264 7	12	1	10282622	661	90 80 280	100	1
10220668	398	11 49 189 0	55	1	10282622	680	10 11 611 4	100	1
10220693	170	10 28 264 7	7	1	10282622	688	12 54 450 5	100	1
10220698	160	10 22 041 7	13	3	10282622	693	90 77 386	100	1
10220702	175	11 82 151 9	2	1	10282622	694	90 77 718	100	1
10220705	64	12 48 693 1	120	1	10282622	695	90 78 962	100	1
10220705	67	12 48 693 2	120	1	10282622	698	90 80 504	100	1
10220705	70	12 48 693 3	120	1	10282622	708	10 28 570 8	10	1
10220705	71	12 48 693 4	120	1	10282647	165	57 17 149	1	1
10220705	175	11 82 151 9	3	1	10282709	525	10 06 559 1	14	1
10220706	175	11 82 151 9	7	1	10285358	407	10 35 863 8	70	1
10220707	64	12 48 693 1	121	1	10285423	760	11 68 144 7	20	9
10220707	67	12 48 693 2	121	1	10285620	181	90 74 893	25	2
10220707	70	12 48 693 3	121	1	10285620	182	92 74 731	27	2
10220707	71	12 48 693 4	121	1	10285639	30	10 35 682 7	5	1
10220707	175	11 82 151 9	10	1	10285640	33	10 35 683 1	5	1
10220774	730	10 39 639 6	8	1	10285702	32	10 35 682 9	210	1
10220816	176	11 82 153 4	2	1	10285708	677	90 76 534	100	1
10220817	169	10 22 081 6	2	1	10286279	26	10 35 679 3	1000	1
10220818	169	10 22 081 6	3	1	10286280	32	10 35 682 9	1000	1
10220819	169	10 22 081 6	4	1	10286434	712	11 10 294 5	49	3
10220821	169	10 22 081 6	5	1	10286515	712	11 10 294 5	50	1
10220950	258	90 64 786	145	1	10286605	356	10 35 862 9	3	1
10220951	260	90 64 786	245	1	10286606	356	10 35 862 9	2	1
10220997	369	10 02 191 5	999	1	10286607	353	10 06 379 8	20	1
10220997	370	10 28 046 1	999	1	10286607	353	10 06 379 8	25	1
10221073	278	11 38 340 1	76	1	10286608	352	10 35 862 8	35	1
10221073	305	12 50 731 7	76	1	10286610	351	10 35 862 8	20	1
10221073	340	10 22 815 1	10	1	10286611	145	10 04 853 9	76	1
10221073	484	70 28 769	275	1	10286612	351	10 35 862 8	2	2
10222393	73	12 48 693 4	320	1	10286619	351	10 35 862 8	21	1
10222393	383	10 04 851 7	28	1	10286627	357	10 35 862 9	35	1
10222393	386	10 35 863 4	28	1	10286636	358	10 35 862 4	10	1

Item	Page	Assembly	Pos.	Quantity	Item	Page	Assembly	Pos.	Quantity
10286643	525	10 06 559 1	16	1	10289795	484	70 28 769	130	6
10286644	517	10 04 553 0	12	1	10289795	505	10 29 026 4	540	2
10286645	525	10 06 559 1	10	1	10289795	505	10 29 026 4	590	1
10286645	525	10 06 559 1	10	1	10289795	506	10 29 026 4	750	2
10286646	525	10 06 559 1	12	1	10289795	521	10 35 866 5	10	5
10286756	350	10 35 862 7	15	1	10289795	529	10 04 852 5	30	2
10286757	350	10 35 862 7	5	1	10289795	530	10 49 836 0	30	2
10286758	350	10 35 862 7	10	1	10289795	531	11 10 262 1	30	2
10287118	296	98 74 988	2	1	10289795	716	11 10 283 6	12	2
10287248	470	10 35 866 0	20	4	10289795	727	11 10 281 7	12	2
10287541	267	11 38 342 7	10	2	10289795	775	11 45 729 6	43	4
10287541	268	11 38 342 9	10	2	10289795	778	11 45 729 7	43	4
10287617	358	10 35 862 4	27	2	10289795	786	10 82 562 1	141	1
10287725	173	10 29 787 5	1	1	10289802	137	10 49 819 9	52	3
10287728	171	10 28 772 5	4	1	10289802	200	10 21 851 3	23	13
10287729	171	10 28 772 5	6	1	10289802	200	10 21 851 3	24	16
10287730	171	10 28 772 5	7	1	10289802	203	11 69 472 6	23	13
10287742	157	10 00 809 5	1	9	10289802	203	11 69 472 6	24	16
10287892	171	10 28 772 5	11	1	10289802	271	10 49 880 5	34	2
10288158	353	10 06 379 8	17	2	10289802	276	11 38 339 7	56	4
10288438	751	10 35 860 1	2	1	10289802	277	11 38 340 1	32	1
10288470	414	10 35 863 8	500	1	10289802	277	11 38 340 1	56	4
10289149	650	10 11 646 4	20	1	10289802	279	11 38 340 1	87	2
10289177	144	10 04 853 9	50	1	10289802	292	10 38 502 8	56	4
10289208	126	10 06 994 0	35	2	10289802	295	97 58 815 01	70	4
10289208	632	10 22 281 9	2	1	10289802	295	97 58 815 01	73	4
10289210	632	10 22 281 9	6	1	10289802	301	11 45 228 6	32	1
10289306	264	10 02 131 0	10	2	10289802	301	11 45 228 6	56	4
10289308	264	10 02 131 0	20	7	10289802	302	11 45 228 6	87	2
10289308	265	10 02 131 1	30	1	10289802	305	12 50 731 7	32	1
10289310	265	10 02 131 1	10	2	10289802	305	12 50 731 7	56	4
10289311	265	10 02 131 1	20	2	10289802	306	12 50 731 7	87	2
10289344	626	10 11 658 7	3	1	10289802	333	10 02 211 7	14	6
10289795	11	12 86 140 4	13	1	10289802	334	10 49 308 7	3	2
10289795	130	10 08 004 4	61	4	10289802	334	10 49 308 7	4	2
10289795	141	10 04 853 9	13	11	10289802	336	11 00 359 4	20	11
10289795	196	10 04 853 6	202	3	10289802	390	56 17 688	17	2
10289795	196	10 04 853 6	222	2	10289802	414	10 35 863 8	479	2
10289795	200	10 21 851 3	36	14	10289802	459	10 06 423 5	17	4
10289795	203	11 69 472 6	36	14	10289802	466	10 35 823 0	11	4
10289795	209	10 04 853 7	35	1	10289802	467	10 02 525 4	10	4
10289795	212	10 04 853 8	13	4	10289802	481	70 28 759	210	2
10289795	271	10 49 880 5	22	4	10289802	484	70 28 769	280	1
10289795	271	10 49 880 5	32	4	10289802	491	10 29 033 7	390	2
10289795	277	11 38 340 1	17	4	10289802	491	10 29 033 7	730	2
10289795	301	11 45 228 6	17	4	10289802	492	10 29 033 7	796	1
10289795	305	12 50 731 7	17	4	10289802	494	10 48 808 7	390	2
10289795	342	98 79 063	21	16	10289802	494	10 48 808 7	730	2
10289795	344	10 35 862 3	23	3	10289802	495	10 48 808 7	796	1
10289795	351	10 35 862 8	30	2	10289802	496	10 29 036 3	580	3
10289795	360	10 06 380 1	17	2	10289802	497	70 28 884	580	3
10289795	423	10 35 863 6	9	6	10289802	504	10 29 026 4	400	8
10289795	445	10 35 865 5	24	6	10289802	504	10 29 026 4	490	4
10289795	448	10 35 865 5	131	2	10289802	509	10 29 035 2	420	6
10289795	451	10 35 865 5	211	4	10289802	511	10 48 808 8	420	6
10289795	457	10 35 822 9	16	1	10289802	514	11 10 255 3	21	4
10289795	459	10 06 423 5	15	2	10289802	519	99 47 695	4	6
10289795	459	10 06 423 5	21	1	10289802	520	99 47 695	32	4
10289795	460	10 49 856 6	21	1	10289802	520	99 47 695	46	1
10289795	466	10 35 823 0	21	1	10289802	525	10 06 559 1	30	1

Item	Page	Assembly	Pos.	Quantity	Item	Page	Assembly	Pos.	Quantity
10289802	526	10 06 559 6	11	4	10289803	529	10 04 852 5	38	6
10289802	529	10 04 852 5	8	6	10289803	530	10 49 836 0	38	6
10289802	530	10 49 836 0	8	6	10289803	531	11 10 262 1	38	12
10289802	531	11 10 262 1	8	6	10289803	534	10 06 759 6	34	6
10289802	684	10 11 599 3	5	4	10289803	535	10 49 835 9	34	6
10289802	687	10 11 799 7	47	1	10289803	751	10 35 860 1	7	8
10289802	717	10 82 841 4	51	4	10289803	756	11 10 281 8	29	2
10289802	786	10 82 562 1	151	1	10289804	11	12 86 140 4	22	1
10289802	791	10 49 833 2	7	2	10289804	11	12 86 140 4	32	1
10289803	11	12 86 140 4	56	7	10289804	129	10 08 004 4	31	8
10289803	62	12 50 640 7	160	2	10289804	139	10 36 573 8	7	6
10289803	198	10 04 853 6	347	1	10289804	139	10 36 573 8	13	4
10289803	200	10 21 851 3	30	31	10289804	140	11 10 293 9	7	6
10289803	203	11 69 472 6	30	17	10289804	140	11 10 293 9	13	4
10289803	205	10 84 460 3	12	6	10289804	144	10 04 853 9	52	2
10289803	209	10 04 853 7	34	1	10289804	194	10 04 853 6	91	2
10289803	212	10 04 853 8	22	2	10289804	205	10 84 460 3	8	4
10289803	212	10 04 853 8	26	4	10289804	273	10 49 880 5	82	1
10289803	214	10 06 363 0	4	8	10289804	321	10 06 017 4	32	2
10289803	217	11 10 291 6	28	1	10289804	322	10 06 017 5	32	2
10289803	248	10 06 750 0	6	2	10289804	328	10 40 689 8	22	4
10289803	253	10 66 472 2	7	4	10289804	344	10 35 862 3	18	4
10289803	274	10 49 880 5	132	1	10289804	353	10 06 379 8	37	2
10289803	274	10 49 880 5	162	3	10289804	383	10 04 851 7	12	4
10289803	274	10 49 880 5	167	1	10289804	383	10 04 851 7	24	6
10289803	284	94 02 247 7	32	4	10289804	386	10 35 863 4	12	4
10289803	284	94 02 247 7	42	4	10289804	386	10 35 863 4	24	6
10289803	295	97 58 815 01	74	2	10289804	406	10 35 863 8	21	6
10289803	320	10 05 981 8	13	4	10289804	446	10 35 865 5	43	2
10289803	320	10 05 981 8	23	4	10289804	450	10 35 865 5	176	2
10289803	320	10 05 981 8	62	6	10289804	450	10 35 865 5	181	3
10289803	320	10 05 981 8	67	4	10289804	503	10 29 026 4	250	4
10289803	321	10 06 017 4	42	1	10289804	504	10 29 026 4	280	1
10289803	322	10 06 017 5	42	1	10289804	505	10 29 026 4	500	2
10289803	328	10 40 689 8	42	1	10289804	506	10 29 026 4	760	1
10289803	328	10 40 689 8	102	1	10289804	513	11 73 376 2	22	4
10289803	385	10 04 851 7	63	6	10289804	513	11 73 376 2	24	6
10289803	445	10 35 865 5	12	8	10289804	542	10 49 878 6	14	4
10289803	446	10 35 865 5	52	4	10289804	542	10 49 878 6	31	4
10289803	448	10 35 865 5	134	1	10289804	680	10 11 611 4	8	17
10289803	449	10 35 865 5	155	2	10289804	711	11 10 294 5	13	22
10289803	450	10 35 865 5	191	2	10289804	721	10 82 841 3	22	2
10289803	453	10 05 816 9	8	8	10289804	726	11 10 280 7	32	4
10289803	456	10 05 183 8	22	4	10289804	739	10 49 877 7	17	4
10289803	463	10 35 826 4	61	2	10289804	752	11 10 291 2	39	8
10289803	463	10 35 826 4	84	2	10289804	758	10 35 857 3	6	2
10289803	481	70 28 759	140	6	10289804	759	10 85 361 0	7	2
10289803	484	70 28 769	180	2	10289804	775	11 45 729 6	42	6
10289803	484	70 28 769	200	2	10289804	778	11 45 729 7	42	6
10289803	491	10 29 033 7	480	3	10289806	100	11 46 393 5	16	3
10289803	492	10 29 033 7	760	3	10289806	105	10 40 383 4	3	3
10289803	494	10 48 808 7	480	3	10289806	200	10 21 851 3	18	2
10289803	494	10 48 808 7	760	3	10289806	203	11 69 472 6	18	2
10289803	496	10 29 036 3	550	1	10289806	407	10 35 863 8	64	3
10289803	497	70 28 884	550	1	10289973	282	10 04 363 2	41	1
10289803	503	10 29 026 4	120	4	10289975	282	10 04 363 2	43	4
10289803	503	10 29 026 4	190	4	10289976	282	10 04 363 2	72	1
10289803	515	11 10 255 3	158	36	10289988	282	10 04 363 2	2	1
10289803	515	11 10 255 3	251	3	10289989	282	10 04 363 2	71	1
10289803	521	10 35 866 5	31	13	10289990	282	10 04 363 2	70	1

Item	Page	Assembly	Pos.	Quantity	Item	Page	Assembly	Pos.	Quantity
10289993	282	10 04 363 2	50	1	10295116	568	90 75 483	2	1
10289994	289	10 28 999 3	55	1	10295718	424	10 11 386 0	25	1
10289996	509	10 29 035 2	510	1	10296477	29	10 35 682 6	1000	1
10289996	511	10 48 808 8	510	1	10296478	16	10 35 682 5	1000	1
10289997	509	10 29 035 2	520	1	10296479	16	10 35 682 5	5	1
10289997	511	10 48 808 8	520	1	10296480	66	10 35 630 3	5	1
10290260	506	10 29 026 4	800	2	10296481	66	10 35 630 3	1000	1
10290261	508	10 29 035 2	230	1	10296482	31	10 35 682 8	1000	1
10290261	510	10 48 808 8	230	1	10296552	249	10 22 844 3	10	1
10290262	491	10 29 033 7	430	1	10296810	36	10 35 894 9	180	1
10290262	494	10 48 808 7	430	1	10296811	36	10 35 894 9	50	1
10290263	496	10 29 036 3	500	1	10296812	36	10 35 894 9	25	1
10290264	472	10 22 830 2	70	1	10296813	36	10 35 894 9	10	1
10290264	474	10 47 616 9	70	1	10296815	36	10 35 894 9	2	1
10290337	472	10 22 830 2	60	1	10296816	36	10 35 894 9	1	1
10290346	496	10 29 036 3	510	1	10296820	34	10 35 894 7	2	1
10290352	472	10 22 830 2	80	1	10296822	35	10 35 894 8	180	1
10290353	490	10 29 033 7	150	1	10296823	35	10 35 894 8	50	1
10290356	496	10 29 036 3	520	1	10296824	35	10 35 894 8	25	1
10290357	491	10 29 033 7	410	1	10296825	35	10 35 894 8	10	1
10290357	494	10 48 808 7	410	1	10296827	35	10 35 894 8	2	1
10290359	508	10 29 035 2	210	1	10296828	35	10 35 894 8	1	1
10290359	510	10 48 808 8	210	1	10296854	427	10 29 999 7	14	1
10290360	501	10 29 036 1	620	1	10296859	424	10 11 386 0	27	1
10290361	499	10 29 035 7	610	1	10296859	424	10 11 386 0	30	1
10290363	491	10 29 033 7	420	1	10296864	424	10 11 386 0	39	1
10290363	494	10 48 808 7	420	1	10296869	425	10 11 386 0	70	1
10290398	496	10 29 036 3	530	1	10296870	425	10 11 386 0	74	1
10290398	497	70 28 884	530	1	10296871	425	10 11 386 0	79	1
10290506	26	10 35 679 3	5	1	10296919	529	10 04 852 5	20	1
10290537	638	10 11 726 8	2	2	10296919	530	10 49 836 0	20	1
10290537	641	10 11 657 6	7	1	10296919	531	11 10 262 1	20	1
10290538	641	10 11 657 6	11	1	10297187	151	10 29 154 4	42	1
10291063	496	10 29 036 3	590	1	10297295	64	12 48 693 1	100	2
10291064	506	10 29 026 4	790	1	10297295	67	12 48 693 2	100	2
10291382	254	10 29 300 1	6	1	10297295	70	12 48 693 3	100	2
10291544	164	11 36 100 1	30	1	10297295	71	12 48 693 4	100	2
10291972	398	11 49 189 0	999	1	10297295	620	90 75 368	8	2
10291975	161	10 29 197 8	1	1	10297782	426	10 28 535 8	13	1
10291976	399	11 49 189 4	2	1	10297782	426	10 28 535 8	14	1
10291978	162	11 34 249 1	2	1	10297782	427	10 29 999 7	13	1
10292128	251	10 66 471 9	10	2	10297867	146	10 28 917 7	1	1
10292129	251	10 66 471 9	12	1	10297873	147	10 29 786 7	2	1
10292130	251	10 66 471 9	13	1	10297874	147	10 29 786 7	3	1
10292139	165	57 17 149	998	1	10297875	400	10 00 807 7	1	1
10292443	310	56 18 923	6	1	10297876	148	10 29 787 3	2	1
10292499	371	10 32 372 8	28	1	10297876	149	10 29 787 4	3	1
10292659	527	10 29 266 0	2	1	10297877	148	10 29 787 3	1	1
10292660	526	10 06 559 6	5	1	10297878	400	10 00 807 7	3	1
10292661	328	10 40 689 8	40	1	10297950	730	10 39 639 6	7	1
10292662	456	10 05 183 8	21	1.25m	10298638	270	10 07 161 1	29	2
10292662	465	10 06 576 2	15	0.88m	10298669	505	10 29 026 4	580	1
10292692	418	10 28 847 0	3	1	10298820	599	12 40 205 5	4	2
10293001	247	12 84 952 6	15	1	10299564	672	90 79 823	2	4
10293003	254	10 29 300 1	1	1	10299574	130	10 08 004 4	71	2
10293026	254	10 29 300 1	9	1	10299574	752	11 10 291 2	29	4
10293028	254	10 29 300 1	8	1	10299578	247	12 84 952 6	41	2
10293029	254	10 29 300 1	7	1	10299578	342	98 79 063	20	16
10293030	254	10 29 300 1	5	2	10299578	445	10 35 865 5	22	4
10293570	237	96 91 056 01	6	1	10299578	448	10 35 865 5	130	2

Item	Page	Assembly	Pos.	Quantity	Item	Page	Assembly	Pos.	Quantity
10299578	451	10 35 865 5	212	4	10301000	202	11 69 472 6	12	6
10299578	756	11 10 281 8	27	2	10301001	199	10 21 851 3	11	1
10299581	542	10 49 878 6	41	2	10301001	202	11 69 472 6	11	1
10299581	542	10 49 878 6	46	2	10301002	199	10 21 851 3	10	1
10299581	542	10 49 878 6	51	2	10301002	202	11 69 472 6	10	1
10299587	570	90 79 480	8	12	10301003	199	10 21 851 3	15	2
10299606	613	90 73 507	5	4	10301003	202	11 69 472 6	15	2
10299630	351	10 35 862 8	29	2	10301004	199	10 21 851 3	13	2
10299649	450	10 35 865 5	192	2	10301004	202	11 69 472 6	13	2
10299659	11	12 86 140 4	12	1	10301005	199	10 21 851 3	14	2
10299666	542	10 49 878 6	21	5	10301005	202	11 69 472 6	14	2
10299666	542	10 49 878 6	26	2	10301006	199	10 21 851 3	16	1
10299666	542	10 49 878 6	54	2	10301006	202	11 69 472 6	16	1
10299668	279	11 38 340 1	86	2	10301009	199	10 21 851 3	17	1
10299668	302	11 45 228 6	86	2	10301009	202	11 69 472 6	17	1
10299668	306	12 50 731 7	86	2	10301011	200	10 21 851 3	19	2
10299668	455	10 06 436 0	10	2	10301011	203	11 69 472 6	19	2
10299668	459	10 06 423 5	18	4	10301014	200	10 21 851 3	20	2
10299668	469	10 35 387 9	12	4	10301014	203	11 69 472 6	20	2
10299668	786	10 82 562 1	152	1	10301015	200	10 21 851 3	43	1
10299669	11	12 86 140 4	57	7	10301015	203	11 69 472 6	47	1
10299669	198	10 04 853 6	349	1	10301270	425	10 11 386 0	190	2
10299669	217	11 10 291 6	29	1	10301270	754	10 85 472 4	16	1
10299669	247	12 84 952 6	6	4	10301271	421	10 30 079 8	400	1
10299669	351	10 35 862 8	18	2	10301271	425	10 11 386 0	192	1
10299669	515	11 10 255 3	208	36	10301272	425	10 11 386 0	191	1
10299669	525	10 06 559 1	27	5	10301680	30	10 35 682 7	210	1
10299669	542	10 49 878 6	43	2	10303335	354	10 06 379 8	50	1
10299988	647	90 78 314	1	1	10323728	367	56 17 123	2	1
10299997	407	10 35 863 8	71	1	10326110	27	10 35 679 7	1000	1
10300205	752	11 10 291 2	9	4	10326111	27	10 35 679 7	210	1
10300384	732	10 66 478 2	3	1	10326112	27	10 35 679 7	20	1
10300384	732	10 66 478 2	7	1	10326113	27	10 35 679 7	5	1
10300385	732	10 66 478 2	4	1	10330239	26	10 35 679 3	20	1
10300387	732	10 66 478 2	8	1	10330246	26	10 35 679 3	210	1
10300389	732	10 66 478 2	5	1	10330255	28	10 35 680 0	5	1
10300389	732	10 66 478 2	9	1	10330258	28	10 35 680 0	20	1
10300390	732	10 66 478 2	6	1	10330259	28	10 35 680 0	210	1
10300390	732	10 66 478 2	10	1	10330260	28	10 35 680 0	1000	1
10300798	413	10 35 863 8	379	1	10330266	25	10 35 679 1	5	1
10300926	138	10 21 717 3	3	1	10330268	25	10 35 679 1	20	1
10300941	425	10 11 386 0	73	1	10330270	25	10 35 679 1	210	1
10300991	199	10 21 851 3	1	1	10330271	25	10 35 679 1	1000	1
10300991	202	11 69 472 6	1	1	10330272	66	10 35 630 3	20	1
10300992	199	10 21 851 3	2	1	10330276	66	10 35 630 3	210	1
10300993	199	10 21 851 3	5	1	10330277	16	10 35 682 5	20	1
10300993	202	11 69 472 6	5	1	10330278	16	10 35 682 5	210	1
10300994	199	10 21 851 3	3	1	10330280	31	10 35 682 8	5	1
10300994	202	11 69 472 6	3	1	10330282	31	10 35 682 8	20	1
10300995	199	10 21 851 3	4	1	10330283	31	10 35 682 8	210	1
10300995	202	11 69 472 6	4	1	10330285	29	10 35 682 6	5	1
10300996	199	10 21 851 3	7	1	10330287	29	10 35 682 6	20	1
10300996	202	11 69 472 6	7	1	10330288	29	10 35 682 6	210	1
10300997	199	10 21 851 3	6	1	10330291	30	10 35 682 7	20	1
10300997	202	11 69 472 6	6	1	10330292	30	10 35 682 7	1000	1
10300998	199	10 21 851 3	8	1	10330294	33	10 35 683 1	20	1
10300998	202	11 69 472 6	8	1	10330295	32	10 35 682 9	5	1
10300999	199	10 21 851 3	9	1	10330296	32	10 35 682 9	20	1
10300999	202	11 69 472 6	9	1	10330306	38	10 35 899 2	2	1
10301000	199	10 21 851 3	12	6	10330308	37	10 35 895 0	1	1

Item	Page	Assembly	Pos.	Quantity	Item	Page	Assembly	Pos.	Quantity
10330310	37	10 35 895 0	2	1	10355921	793	10 49 866 6	21	2
10330311	37	10 35 895 0	5	1	10356228	106	10 35 654 7	3	1
10330614	260	90 64 786	245	1	10356229	106	10 35 654 7	4	1
10330725	377	10 45 471 5	5	1	10356231	106	10 35 654 7	5	2
10330726	377	10 45 471 5	13	1	10356232	106	10 35 654 7	6	2
10330735	424	10 11 386 0	31	1	10356234	106	10 35 654 7	8	1
10330736	424	10 11 386 0	49	1	10356235	104	96 11 367	9	1
10330919	431	10 33 073 6	11	1	10356237	106	10 35 654 7	10	1
10330920	344	10 35 862 3	3	1	10356238	106	10 35 654 7	11	1
10330967	345	10 35 862 3	40	1	10356239	104	96 11 367	12	1
10330968	345	10 35 862 3	50	1	10356303	20	90 70 363	10	1l
10331853	158	10 11 886 0	59	2	10356547	104	96 11 367	999	1
10332542	204	10 06 309 3	10	1	10356789	19	90 70 362	20	1l
10333044	366	56 15 344	2	1	10356791	19	90 70 362	30	1l
10333329	424	10 11 386 0	26	1	10356793	18	90 70 361	20	1l
10333330	424	10 11 386 0	28	1	10356797	18	90 70 361	110	1l
10333331	424	10 11 386 0	29	1	10356800	19	90 70 362	10	1l
10333333	424	10 11 386 0	32	1	10356825	20	90 70 363	20	1l
10333464	630	10 12 500 7	2	2	10356826	22	90 70 365	10	1l
10333554	571	90 79 487	3	34	10356827	22	90 70 365	20	1l
10333666	135	10 36 918 3	10	1	10356828	22	90 70 365	30	1l
10333666	135	10 36 918 3	11	1	10356829	21	90 70 364	10	1l
10333760	421	10 30 079 8	165	1	10356831	21	90 70 364	20	1l
10333763	421	10 30 079 8	81	1	10357967	124	10 35 861 4	8700	1
10333765	421	10 30 079 8	401	1	10357979	471	10 35 796 7	10	1
10333903	383	10 04 851 7	20	1	10358170	457	10 35 822 9	15	1
10333903	386	10 35 863 4	20	1	10358170	466	10 35 823 0	20	1
10335592	392	10 33 390 3	5	1	10358183	386	10 35 863 4	3	1
10335629	578	10 11 903 0	3	1	10358190	542	10 49 878 6	50	1
10335855	151	10 29 154 4	3	1	10358191	406	10 35 863 8	10	1
10335966	138	10 21 717 3	3	1	10358205	133	10 35 862 0	2	6
10336008	698	90 80 504	5	3	10358229	448	10 35 865 5	120	1
10336200	663	10 11 919 9	3	4	10358230	451	10 35 865 5	220	1
10336200	664	10 11 571 8	15	7	10358253	711	11 10 294 5	14	2
10337560	422	10 33 376 3	999	1	10358254	728	10 35 857 7	2	1
10340115	200	10 21 851 3	40	3m	10358258	470	10 35 866 0	8	1
10340115	203	11 69 472 6	40	3m	10358259	470	10 35 866 0	9	1
10340116	200	10 21 851 3	39	1	10358264	451	10 35 865 5	200	1
10340116	203	11 69 472 6	39	1	10358265	463	10 35 826 4	83	1
10340117	200	10 21 851 3	38	1	10358266	463	10 35 826 4	81	2
10340117	203	11 69 472 6	38	1	10358447	217	11 10 291 6	25	1
10340130	403	11 00 605 0	999	1	10358573	725	11 10 280 7	3	1
10342221	258	90 64 786	145	1	10358577	725	11 10 280 7	15	4
10342770	602	10 12 038 4	3	1	10358601	749	10 35 860 2	2	1
10342909	106	10 35 654 7	7	6	10358602	7	.	46	1
10344024	24	10 35 678 9	5	1	10358614	13	10 49 885 1	100	1
10344025	24	10 35 678 9	20	1	10358620	132	10 35 862 2	501	1
10344026	24	10 35 678 9	210	1	10358622	123	10 35 861 4	500	1
10344027	24	10 35 678 9	1000	1	10358623	343	10 35 862 6	7020	1
10346513	151	10 29 154 4	41	1	10358624	343	10 35 862 6	7075	1
10353683	775	11 45 729 6	5	2	10358626	123	10 35 861 4	7000	1
10353683	778	11 45 729 7	5	2	10358627	343	10 35 862 6	7030	1
10353879	460	10 49 856 6	13	1	10358628	343	10 35 862 6	7040	1
10353879	545	10 37 464 5	4	1	10358629	343	10 35 862 6	7070	1
10355107	453	10 05 816 9	19	0.1	10358634	123	10 35 861 4	7100	1
10355861	807	10 11 856 1	25	4	10358635	386	10 35 863 4	4	1
10355861	808	11 37 560 6	25	4	10358636	420	10 35 863 7	30	1
10355894	752	11 10 291 2	10	2	10358637	416	10 35 863 8	7670	1
10355921	137	10 49 819 9	21	1	10358638	124	10 35 861 4	7600	1
10355921	137	10 49 819 9	86	2	10358655	124	10 35 861 4	8500	1

Item	Page	Assembly	Pos.	Quantity	Item	Page	Assembly	Pos.	Quantity
10358659	124	10 35 861 4	8400	1	10412536	454	10 05 823 4	4	31
10358660	124	10 35 861 4	8600	1	10412536	455	10 06 436 0	5	23
10358665	514	11 10 255 3	25	1	10412536	456	10 05 183 8	5	42
10358750	725	11 10 280 7	12	1	10412536	457	10 35 822 9	7	20
10358826	124	10 35 861 4	8200	1	10412536	458	10 05 963 3	4	72
10358890	476	70 28 767	140	1	10412536	459	10 06 423 5	8	45
10358947	23	90 70 366	30	1kg	10412536	460	10 49 856 6	8	42
10358948	23	90 70 366	20	1kg	10412536	461	10 07 033 5	6	12
10358949	23	90 70 366	10	1kg	10412536	463	10 35 826 4	41	3
10358950	23	90 70 366	40	1kg	10412536	464	10 08 276 3	21	6
10358992	23	90 70 366	50	1kg	10412536	465	10 06 576 2	11	10
10359147	540	10 84 856 2	200	1	10412536	466	10 35 823 0	6	13
10359648	13	10 49 885 1	9999	1	10412844	260	90 64 786	215	1
10365738	132	10 35 862 2	540	1	10412844	263	10 01 461 1	115	2
10368556	545	10 37 464 5	5	1	10423838	488	70 29 423	10	1
10369183	132	10 35 862 2	520	1	10423838	489	70 29 424	10	1
10374090	778	11 45 729 7	21	1	10423840	488	70 29 423	20	1
10374095	775	11 45 729 6	21	1	10423840	489	70 29 424	20	1
10374115	778	11 45 729 7	4	1	10425592	388	10 06 112 7	5	1
10374247	775	11 45 729 6	4	1	10425595	388	10 06 112 7	4	1
10374645	542	10 49 878 6	20	1	10425595	533	10 06 181 0	3	1
10376165	86	10 39 262 4	2	1	10425598	388	10 06 112 7	2	1
10379347	358	10 35 862 4	25	1	10425598	533	10 06 181 0	2	2
10379349	358	10 35 862 4	21	2	10425609	761	95 93 026	20	9
10380915	548	10 49 803 0	90	2	10425609	762	96 44 648	20	9
10381173	548	10 49 803 0	70	1	10425625	242	10 04 851 4	13	50
10382585	266	10 49 861 5	5	1	10425651	108	11 10 296 8	11	4
10385028	271	10 49 880 5	20	1	10425656	78	10 49 887 7	3	48
10386773	547	10 49 803 0	35	1	10425656	107	10 83 693 0	3	48
10388068	455	10 06 436 0	14	1	10425656	107	10 83 693 0	6	48
10388069	455	10 06 436 0	15	1	10425656	108	11 10 296 8	3	48
10392317	75	10 49 885 2	40	18	10425656	108	11 10 296 8	6	48
10392320	75	10 49 885 2	50	4	10425665	107	10 83 693 0	11	4
10392624	75	10 49 885 2	15	2	10425665	219	10 06 198 2	16	2
10392932	75	10 49 885 2	35	1	10425669	218	93 60 187	5	12
10396396	726	11 10 280 7	180	1	10425688	786	10 82 562 1	167	1
10399732	729	11 10 280 8	30	2	10425699	97	10 40 373 2	4	4
10399732	729	11 10 280 8	32	2	10425702	243	10 06 198 4	5	60
10399732	740	10 35 875 0	3	2	10425707	537	10 06 391 4	3	4
10400258	453	10 05 816 9	3	1	10425711	18	90 70 361	10	1l
10403732	76	10 49 885 2	80	2	10425712	39	10 42 571 1	5	1
10403732	78	10 49 887 7	8	6	10425713	39	10 42 571 1	20	1
10403834	99	10 40 412 6	20	1	10425715	39	10 42 571 1	210	1
10404126	75	10 49 885 2	8	1	10425719	39	10 42 571 1	1000	1
10404127	99	10 40 412 6	10	1	10425724	88	10 39 231 7	3	4
10404129	75	10 49 885 2	14	1	10428776	493	10 48 808 7	140	1
10405134	210	10 04 853 7	50	1	10428856	170	10 28 264 7	2	1
10405387	752	11 10 291 2	28	2	10429055	477	70 28 788	30	1
10405887	546	10 49 803 0	6	1	10429946	126	10 06 994 0	10	8
10406048	205	10 84 460 3	20	1	10441297	135	10 36 918 3	12	1
10406664	456	10 05 183 8	9	2	10441579	754	10 85 472 4	11	1
10406898	273	10 49 880 5	80	1	10441600	250	10 22 844 3	100	1
10408513	274	10 49 880 5	140	1	10441636	40	10 67 547 4	1000	1
10408898	775	11 45 729 6	8	1	10451129	735	11 10 258 6	20	5
10408898	778	11 45 729 7	8	1	10451129	781	11 10 259 0	3	1
10409866	478	10 35 889 0	30	1	10451130	737	11 10 258 8	12	5
10410125	137	10 49 819 9	48	1	10451131	735	11 10 258 6	40	5
10410335	148	10 29 787 3	999	1	10451131	781	11 10 259 0	6	1
10410790	692	90 80 006	8	2	10451133	735	11 10 258 6	30	5
10412536	453	10 05 816 9	10	25	10451133	781	11 10 259 0	2	1

Item	Page	Assembly	Pos.	Quantity	Item	Page	Assembly	Pos.	Quantity
10451187	735	11 10 258 6	21	5	10488087	474	10 47 616 9	60	1
10451187	781	11 10 259 0	4	1	10488088	474	10 47 616 9	80	1
10451200	735	11 10 258 6	22	5	10489176	91	10 65 167 7	7	1
10451200	781	11 10 259 0	5	1	10490781	121	10 40 412 9	7	8
10451202	538	10 08 428 6	50	1	10490781	344	10 35 862 3	5	2
10454715	372	10 44 157 9	1	1	10490781	350	10 35 862 7	27	3
10454716	377	10 45 471 5	999	1	10490781	351	10 35 862 8	5	4
10454717	378	10 45 471 6	18	1	10490781	351	10 35 862 8	23	4
10454718	378	10 45 471 6	19	1	10490781	354	10 06 379 8	53	1
10454719	378	10 45 471 6	20	1	10490781	407	10 35 863 8	72	2
10455060	510	10 48 808 8	284	1	10490781	407	10 35 863 8	78	2
10467429	286	11 10 016 6	59	1	10490781	413	10 35 863 8	381	1
10467727	360	10 06 380 1	36	1	10490781	420	10 35 863 7	11	3
10468234	136	10 36 918 3	32	3	10490781	713	11 10 294 5	81	3
10468234	247	12 84 952 6	45	4	10490781	725	11 10 280 7	22	1
10468238	211	10 04 853 7	215	1	10490781	752	11 10 291 2	12	8
10468239	383	10 04 851 7	15	4	10490781	758	10 35 857 3	11	2
10468239	386	10 35 863 4	15	4	10490781	777	11 45 729 6	72	8
10468239	777	11 45 729 6	60	4	10490781	780	11 45 729 7	72	8
10468239	780	11 45 729 7	60	4	10490784	350	10 35 862 7	22	3
10468312	244	10 06 198 5	11	1	10490784	351	10 35 862 8	9	4
10468312	244	10 06 198 5	16	2	10490784	358	10 35 862 4	32	1
10468332	198	10 04 853 6	348	1	10490784	359	10 35 862 4	73	2
10468332	328	10 40 689 8	41	2	10490784	408	10 35 863 8	104	2
10468332	356	10 35 862 9	6	8	10490784	420	10 35 863 7	16	2
10468332	356	10 35 862 9	14	4	10490784	777	11 45 729 6	77	1
10468820	351	10 35 862 8	11	16	10490784	780	11 45 729 7	77	1
10468820	359	10 35 862 4	72	8	10490785	356	10 35 862 9	5	2
10468820	420	10 35 863 7	17	8	10490786	353	10 06 379 8	12	1
10468820	777	11 45 729 6	76	4	10490787	353	10 06 379 8	8	1
10468820	780	11 45 729 7	76	4	10490787	357	10 35 862 9	38	2
10469917	299	99 68 625	10	1	10490787	385	10 04 851 7	50	1
10469918	314	99 68 611	10	1	10490787	387	10 35 863 4	50	1
10469932	314	99 68 611	50	1	10490894	505	10 29 026 4	520	1
10469933	299	99 68 625	50	1	10491557	754	10 85 472 4	23	6
10470093	80	10 67 501 0	2	49	10491783	285	11 10 016 6	8	1
10470127	512	10 47 012 8	3	4	10491783	285	11 10 016 6	9	1
10470128	508	10 29 035 2	250	1	10492435	285	11 10 016 6	19	1
10470128	510	10 48 808 8	250	1	10492977	287	11 10 016 7	1	1
10470774	355	10 04 462 4	3	1	10492981	287	11 10 016 7	5	1
10470976	752	11 10 291 2	5	1	10492983	287	11 10 016 7	8	1
10470977	752	11 10 291 2	6	1	10492985	287	11 10 016 7	10	1
10470978	752	11 10 291 2	4	1	10493008	287	11 10 016 7	27	1
10470978	752	11 10 291 2	7	1	10493009	287	11 10 016 7	33	1
10471479	477	70 28 788	10	1	10493010	287	11 10 016 7	6	1
10471490	477	70 28 788	20	1	10493022	287	11 10 016 7	29	1
10472345	589	90 80 686	3	1	10493023	287	11 10 016 7	30	1
10472346	589	90 80 686	4	1	10493024	287	11 10 016 7	31	1
10472347	589	90 80 686	5	1	10493025	287	11 10 016 7	26	1
10472425	344	10 35 862 3	9	4	10493026	287	11 10 016 7	28	1
10472425	345	10 35 862 3	52	2	10493027	287	11 10 016 7	25	1
10472425	357	10 35 862 9	42	1	10493031	287	11 10 016 7	35	1
10472425	358	10 35 862 4	12	1	10493032	287	11 10 016 7	34	1
10472425	420	10 35 863 7	26	4	10493046	285	11 10 016 6	3	1
10472425	712	11 10 294 5	80	9	10493047	285	11 10 016 6	4	1
10472425	725	11 10 280 7	19	1	10493048	286	11 10 016 6	58	1
10472425	759	10 85 361 0	12	3	10493050	285	11 10 016 6	11	1
10472994	268	11 38 342 9	30	1	10493054	285	11 10 016 6	24	1
10475895	177	70 28 075	17	1	10493087	329	11 00 054 6	70	1
10476169	471	10 35 796 7	20	1	10493088	334	10 49 308 7	1	1

Item	Page	Assembly	Pos.	Quantity	Item	Page	Assembly	Pos.	Quantity
10493089	335	11 00 359 4	13	1	10651894	493	10 48 808 7	150	1
10493341	285	11 10 016 6	20	1	10652159	294	10 16 576 6	20	1
10493344	285	11 10 016 6	34	1	10652561	260	90 64 786	245	1
10493345	285	11 10 016 6	55	1	10663450	136	10 36 918 3	31	2
10493348	285	11 10 016 6	54	1	10663450	214	10 06 363 0	3	8
10493351	285	11 10 016 6	10	1	10663450	247	12 84 952 6	7	3
10493369	285	11 10 016 6	16	1	10663450	359	10 35 862 4	64	1
10493397	286	11 10 016 6	56	1	10663450	515	11 10 255 3	250	3
10493469	287	11 10 016 7	11	1	10663450	756	11 10 281 8	28	2
10493984	286	11 10 016 6	62	1	10663523	212	10 04 853 8	21	2
10493986	285	11 10 016 6	13	1	10663523	217	11 10 291 6	27	1
10493994	287	11 10 016 7	17	1	10663523	358	10 35 862 4	29	2
10498002	124	10 35 861 4	9500	1	10663523	445	10 35 865 5	13	8
10498003	536	10 49 800 2	2	1	10663523	525	10 06 559 1	26	10
10498030	125	10 35 861 4	9900	1	10663523	665	90 80 736	14	2
10498199	132	10 35 862 2	530	1	10663931	249	10 22 844 3	7	1
10498223	546	10 49 803 0	4	1	10664719	717	10 82 841 4	50	1
10498331	7	.	50	1	10664722	251	10 66 471 9	1	1
10498332	790	10 49 833 1	10	1	10664755	732	10 66 478 2	1	1
10498359	530	10 49 836 0	3	1	10664782	730	10 39 639 6	4	1
10498360	124	10 35 861 4	9300	1	10664804	720	10 66 482 5	1	1
10498368	7	.	48	1	10664825	721	10 82 841 3	2	1
10498368	129	10 08 004 4	50	1	10664874	40	10 67 547 4	5	1
10498368	452	10 35 865 5	240	1	10664875	40	10 67 547 4	20	1
10498467	7	.	70	1	10664876	40	10 67 547 4	210	1
10498524	737	11 10 258 8	11	1	10664998	182	92 74 731	28	2
10498564	793	10 49 866 6	60	1	10665379	171	10 28 772 5	9	3
10498566	793	10 49 866 6	65	1	10675003	80	10 67 501 0	1	1
10498567	460	10 49 856 6	2	1	10675003	81	11 16 108 1	1	1
10498615	123	10 35 861 4	6000	1	10675010	78	10 49 887 7	202	2
10498646	460	10 49 856 6	5	1	10675474	21	90 70 364	30	1l
10498647	460	10 49 856 6	6	1	10684332	787	10 84 118 4	10	1
10498666	792	10 49 836 8	10	1	10684334	787	10 84 118 4	40	1
10498690	271	10 49 880 5	10	1	10684354	787	10 84 118 4	70	1
10498728	530	10 49 836 0	4	1	10685206	308	11 45 227 1	2	1
10498777	736	11 10 258 7	10	1	10685277	311	11 45 227 4	2	1
10498781	738	11 10 263 6	11	1	10687206	789	11 45 933 4	10	1
10498782	738	11 10 263 6	12	4	10687417	279	11 38 340 1	100	1
10498783	738	11 10 263 6	13	4	10687417	302	11 45 228 6	100	1
10498786	125	10 35 861 4	9700	1	10687417	307	12 50 731 7	100	1
10498786	125	10 35 861 4	9700	1	10800024	139	10 36 573 8	6	6
10498791	738	11 10 263 6	14	2	10800024	139	10 36 573 8	12	4
10498792	738	11 10 263 6	15	4	10800024	383	10 04 851 7	23	6
10498805	266	10 49 861 5	20	1	10800024	386	10 35 863 4	23	6
10498851	7	.	10	1	10800024	443	10 35 865 9	25	1
10498852	13	10 49 885 1	200	1	10800024	447	10 35 865 5	72	6
10498853	75	10 49 885 2	2	1	10800024	447	10 35 865 5	82	3
10498874	76	10 49 885 2	70	2	10800024	448	10 35 865 5	112	6
10498877	77	10 49 887 8	10	1	10800024	448	10 35 865 5	122	5
10498878	7	.	47	1	10800024	448	10 35 865 5	142	5
10498956	411	10 35 863 8	325	1	10800024	450	10 35 865 5	177	2
10541838	786	10 82 562 1	121	1	10800024	450	10 35 865 5	182	3
10650964	542	10 49 878 6	25	1	10800024	451	10 35 865 5	202	4
10651474	771	94 00 688 8	6	1	10800024	451	10 35 865 5	222	5
10651677	90	10 39 232 0	2	1	10800024	712	11 10 294 5	39	2
10651678	75	10 49 885 2	60	2	10800024	752	11 10 291 2	32	4
10651864	9	12 85 910 3	10	11	10802630	258	90 64 786	120	1
10651864	247	12 84 952 6	22	2	10802651	58	96 47 551	100	1
10651864	247	12 84 952 6	27	2	10813329	775	11 45 729 6	25	1
10651864	756	11 10 281 8	22	4	10813329	778	11 45 729 7	25	1

Item	Page	Assembly	Pos.	Quantity	Item	Page	Assembly	Pos.	Quantity
10813960	793	10 49 866 6	6	1	10875645	302	11 45 228 6	84	4
10814706	285	11 10 016 6	39	1	10875645	303	11 45 228 6	106	2
10814718	287	11 10 016 7	23	1	10875645	304	11 45 228 6	122	2
10814799	754	10 85 472 4	22	2	10875645	304	11 45 228 6	123	2
10814800	481	70 28 759	150	2	10875645	306	12 50 731 7	84	4
10815061	205	10 84 460 3	10	1	10875645	307	12 50 731 7	106	2
10816666	328	10 40 689 8	10	1	10875645	307	12 50 731 7	122	2
10816666	329	11 00 054 6	10	1	10875645	307	12 50 731 7	123	2
10820891	740	10 35 875 0	4	2	10875645	751	10 35 860 1	16	2
10820900	729	11 10 280 8	31	2	10876360	107	10 83 693 0	16	2
10822312	544	10 49 878 6	60	1	10876385	571	90 79 487	8	9
10825621	7	.	120	1	10876514	358	10 35 862 4	22	2
10825829	786	10 82 562 1	165	1	10876514	446	10 35 865 5	45	1
10828413	712	11 10 294 5	70	1	10876514	711	11 10 294 5	25	4
10828414	722	10 82 841 3	50	1	10876514	775	11 45 729 6	40	6
10836930	75	10 49 885 2	13	1	10876514	778	11 45 729 7	40	6
10840318	546	10 49 803 0	15	1	10876581	136	10 36 918 3	23	2
10841184	7	.	121	1	10876581	213	10 04 853 8	55	1
10841508	272	10 49 880 5	60	1	10884044	309	11 73 919 5	2	1
10842063	411	10 35 863 8	330	1	10884047	312	11 73 919 4	2	1
10842065	411	10 35 863 8	340	1	10884851	797	12 50 716 3	2	1
10844603	193	10 04 853 6	20	1	10884852	797	12 50 716 3	3	1
10848562	538	10 08 428 6	5	1	10885529	785	10 82 562 1	22	1
10852757	775	11 45 729 6	23	2	10889017	785	10 82 562 1	20	1
10852757	778	11 45 729 7	23	2	11000546	328	10 40 689 8	5	1
10853610	711	11 10 294 5	3	1	11000856	284	94 02 247 7	10	1
10854638	754	10 85 472 4	19	1	11000867	44	11 62 627 8	5	1
10854724	753	11 10 291 2	100	1	11000869	44	11 62 627 8	20	1
10857134	97	10 40 373 2	3	4	11000870	44	11 62 627 8	210	1
10859980	786	10 82 562 1	140	1	11000871	44	11 62 627 8	1000	1
10863490	786	10 82 562 1	130	1	11001492	542	10 49 878 6	24	1
10875563	275	11 38 339 7	27	4	11001492	544	10 49 878 6	61	1
10875583	197	10 04 853 6	321	4	11002474	336	11 00 359 4	35	8
10875586	525	10 06 559 1	31	1	11002713	217	11 10 291 6	21	2
10875586	677	90 76 534	3	1	11002715	130	10 08 004 4	62	4
10875586	688	12 54 450 5	3	1	11002715	786	10 82 562 1	142	1
10875588	249	10 22 844 3	6	1	11002716	194	10 04 853 6	42	2
10875588	276	11 38 339 7	55	1	11002716	196	10 04 853 6	205	3
10875588	277	11 38 340 1	55	4	11002716	196	10 04 853 6	225	3
10875588	292	10 38 502 8	55	4	11002716	445	10 35 865 5	25	6
10875588	301	11 45 228 6	55	4	11002716	529	10 04 852 5	28	1
10875588	305	12 50 731 7	55	4	11002718	217	11 10 291 6	31	2
10875588	336	11 00 359 4	22	3	11002726	129	10 08 004 4	32	8
10875590	244	10 06 198 5	14	2	11002726	130	10 08 004 4	73	2
10875591	717	10 82 841 4	52	4	11002726	448	10 35 865 5	114	2
10875591	776	11 45 729 6	45	2	11002726	451	10 35 865 5	203	1
10875591	779	11 45 729 7	45	2	11002727	205	10 84 460 3	6	2
10875599	160	10 22 041 7	12	4	11002727	351	10 35 862 8	26	8
10875599	284	94 02 247 7	40	4	11002727	775	11 45 729 6	37	2
10875606	217	11 10 291 6	23	4	11002727	775	11 45 729 6	38	2
10875614	448	10 35 865 5	135	1	11002727	778	11 45 729 7	37	2
10875614	449	10 35 865 5	156	2	11002727	778	11 45 729 7	38	2
10875645	275	11 38 339 7	34	26	11002729	446	10 35 865 5	42	1
10875645	276	11 38 339 7	93	4	11002730	129	10 08 004 4	22	4
10875645	279	11 38 340 1	84	4	11002730	775	11 45 729 6	36	2
10875645	280	11 38 340 1	106	2	11002730	778	11 45 729 7	36	2
10875645	281	11 38 340 1	122	2	11002733	358	10 35 862 4	20	4
10875645	281	11 38 340 1	123	2	11002741	195	10 04 853 6	112	1
10875645	291	10 38 502 8	34	26	11002741	209	10 04 853 7	15	1
10875645	292	10 38 502 8	93	4	11002741	212	10 04 853 8	12	4

Item	Page	Assembly	Pos.	Quantity	Item	Page	Assembly	Pos.	Quantity
11002741	716	11 10 283 6	11	2	11003600	336	11 00 359 4	32	1
11002741	727	11 10 281 7	11	2	11003780	89	11 60 010 7	7	2
11002743	357	10 35 862 9	43	4	11003782	89	11 60 010 7	8	2
11002743	358	10 35 862 4	13	4	11003783	89	11 60 010 7	1	1
11002743	358	10 35 862 4	33	4	11004093	91	10 65 167 7	8	1
11002743	445	10 35 865 5	15	2	11004094	91	10 65 167 7	9	1
11002743	484	70 28 769	140	6	11004095	91	10 65 167 7	3	1
11002743	621	10 11 683 9	3	2	11004096	91	10 65 167 7	2	1
11002743	636	90 73 767	6	2	11004098	91	10 65 167 7	6	1
11002743	692	90 80 006	4	4	11004099	91	10 65 167 7	5	3
11002743	775	11 45 729 6	39	2	11004100	91	10 65 167 7	4	3
11002743	778	11 45 729 7	39	2	11004101	91	10 65 167 7	11	1
11002745	193	10 04 853 6	14	2	11004103	92	10 65 167 8	2	1
11002746	328	10 40 689 8	21	4	11004103	93	12 21 972 1	4	1
11002747	11	12 86 140 4	21	1	11004408	547	10 49 803 0	30	1
11002747	11	12 86 140 4	31	1	11005218	73	12 48 693 4	300	1
11002747	452	10 35 865 5	232	5	11006050	398	11 49 189 0	1	2
11002747	452	10 35 865 5	242	3	11006206	793	10 49 866 6	40	1
11002747	777	11 45 729 6	57	4	11007072	284	94 02 247 7	60	1
11002747	780	11 45 729 7	57	4	11007750	768	92 70 390	4	1
11002748	385	10 04 851 7	53	4	11007756	833	11 38 195 4	29	1
11002748	387	10 35 863 4	53	4	11007768	390	56 17 688	16	2
11002748	456	10 05 183 8	8	2	11007770	390	56 17 688	7	1
11002748	513	11 73 376 2	23	6	11008055	643	90 77 279	5	1
11002748	711	11 10 294 5	24	24	11008055	707	10 11 583 8	2211	1
11002748	721	10 82 841 3	21	2	11008141	58	96 47 551	10	1
11002748	759	10 85 361 0	8	2	11008542	156	10 00 808 0	2	1
11002749	121	10 40 412 9	5	20	11008542	173	10 29 787 5	2	1
11002749	351	10 35 862 8	7	16	11009211	165	57 17 149	3	2
11002749	351	10 35 862 8	25	8	11060250	65	12 48 693 1	400	1
11002749	420	10 35 863 7	12	12	11060250	69	12 48 693 2	400	1
11002749	542	10 49 878 6	32	2	11060250	74	12 48 693 4	400	1
11002749	712	11 10 294 5	59	12	11060250	383	10 04 851 7	21	1
11002749	777	11 45 729 6	71	20	11060250	383	10 04 851 7	22	1
11002749	780	11 45 729 7	71	20	11060250	386	10 35 863 4	21	1
11002753	457	10 35 822 9	21	7	11060250	386	10 35 863 4	22	1
11002753	463	10 35 826 4	82	2	11066029	41	11 08 152 2	5	1
11002753	505	10 29 026 4	600	1	11066030	41	11 08 152 2	20	1
11002807	277	11 38 340 1	16	4	11066031	41	11 08 152 2	209	1
11002807	301	11 45 228 6	16	4	11066032	41	11 08 152 2	1045	1
11002807	305	12 50 731 7	16	4	11066525	287	11 10 016 7	2	1
11002807	521	10 35 866 5	8	1	11066526	287	11 10 016 7	3	1
11002807	529	10 04 852 5	29	1	11066527	287	11 10 016 7	4	1
11002808	116	98 82 760	17	1	11066528	287	11 10 016 7	9	1
11002808	130	10 08 004 4	74	2	11066530	287	11 10 016 7	18	1
11002808	205	10 84 460 3	7	2	11066531	287	11 10 016 7	19	1
11002808	321	10 06 017 4	33	1	11066532	288	11 10 016 7	38	1
11002808	322	10 06 017 5	33	1	11066536	288	11 10 016 7	36	1
11002808	357	10 35 862 9	50	2	11067312	685	10 11 724 8	2	14
11002808	443	10 35 865 9	13	8	11067315	685	10 11 724 8	1	1
11002808	443	10 35 865 9	23	4	11081522	18	90 70 361	100	1l
11002808	443	10 35 865 9	33	4	11082671	285	11 10 016 6	1	1
11002808	448	10 35 865 5	113	2	11082672	285	11 10 016 6	2	1
11002808	542	10 49 878 6	33	2	11100087	285	11 10 016 6	26	1
11002808	766	92 65 991	23	1	11100088	285	11 10 016 6	37	1
11002808	810	11 38 131 3	17	1	11100090	287	11 10 016 7	16	1
11003560	155	98 81 609	11	1	11100166	283	11 00 085 6	10	1
11003560	807	10 11 856 1	24	4	11100167	283	11 00 085 6	20	1
11003560	808	11 37 560 6	24	4	11102295	782	10 49 846 7	10	1
11003594	330	10 81 666 6	1	1	11102551	75	10 49 885 2	2	1

Item	Page	Assembly	Pos.	Quantity	Item	Page	Assembly	Pos.	Quantity
11102553	124	10 35 861 4	9000	1	11140469	542	10 49 878 6	22	5
11102585	7	.	232	1	11140469	542	10 49 878 6	42	4
11102586	734	11 10 258 5	10	1	11140469	542	10 49 878 6	45	2
11102587	735	11 10 258 6	2	1	11140469	542	10 49 878 6	52	2
11102588	736	11 10 258 7	9	1	11140469	543	10 49 878 6	55	2
11102590	7	.	233	5	11161081	7	.	20	2
11102602	531	11 10 262 1	4	1	11162097	539	10 84 856 2	60	1
11102616	7	.	300	1	11162099	539	10 84 856 2	64	1
11102620	531	11 10 262 1	3	1	11162100	539	10 84 856 2	70	1
11102621	124	10 35 861 4	9300	1	11162101	539	10 84 856 2	80	1
11102636	736	11 10 258 7	11	1	11162111	539	10 84 856 2	82	1
11102652	7	.	55	1	11162119	539	10 84 856 2	84	1
11102653	784	11 10 265 2	2	1	11162120	539	10 84 856 2	86	1
11102795	716	11 10 283 6	10	1	11162121	539	10 84 856 2	90	1
11102795	727	11 10 281 7	10	1	11162122	539	10 84 856 2	92	1
11102806	7	.	215	1	11162123	539	10 84 856 2	94	1
11102807	723	11 10 280 6	2	1	11162124	539	10 84 856 2	96	1
11102808	725	11 10 280 7	2	1	11162125	539	10 84 856 2	98	1
11102813	7	.	65	1	11162126	540	10 84 856 2	110	1
11102813	123	10 35 861 4	1400	1	11162132	540	10 84 856 2	112	1
11102814	7	.	66	1	11162133	540	10 84 856 2	114	1
11102815	7	.	67	1	11162134	540	10 84 856 2	120	1
11102817	724	11 10 281 5	10	1	11162135	540	10 84 856 2	130	1
11102818	755	11 10 281 3	10	1	11162163	539	10 84 856 2	22	1
11102819	756	11 10 281 8	15	1	11162164	539	10 84 856 2	24	1
11102836	715	11 10 281 4	10	1	11162165	539	10 84 856 2	26	1
11102911	7	.	30	1	11162167	539	10 84 856 2	28	1
11102912	750	11 10 291 1	2	1	11162169	539	10 84 856 2	30	1
11102916	123	10 35 861 4	700	1	11162170	539	10 84 856 2	32	1
11102939	132	10 35 862 2	540	1	11162171	539	10 84 856 2	34	1
11102944	711	11 10 294 5	2	1	11162173	539	10 84 856 2	38	1
11102945	714	11 10 294 6	10	1	11162174	539	10 84 856 2	48	1
11102946	7	.	100	1	11162175	539	10 84 856 2	50	1
11102968	75	10 49 885 2	13	1	11162177	539	10 84 856 2	51	1
11114605	96	10 49 887 4	2	1	11162178	539	10 84 856 2	52	1
11140403	197	10 04 853 6	322	4	11162179	539	10 84 856 2	54	1
11140403	276	11 38 339 7	73	1	11170764	425	10 11 386 0	140	1
11140403	276	11 38 339 7	74	1	11212833	170	10 28 264 7	19	1
11140403	292	10 38 502 8	73	1	11213474	168	10 22 063 5	8	2
11140403	292	10 38 502 8	74	1	11213510	402	10 22 042 7	11	1
11140403	295	97 58 815 01	69	4	11213893	260	90 64 786	266	1
11140403	295	97 58 815 01	72	4	11214366	80	10 67 501 0	3	196
11140403	384	10 04 851 7	33	4	11214366	81	11 16 108 1	3	196
11140403	386	10 35 863 4	33	4	11214375	84	12 22 023 4	10	1
11140403	508	10 29 035 2	110	12	11214376	84	12 22 023 4	20	1
11140403	510	10 48 808 8	110	12	11253803	256	10 01 471 7	10	1
11140403	519	99 47 695	17	4	11261514	168	10 22 063 5	7	1
11140403	786	10 82 562 1	123	4	11314611	95	11 00 410 3	5	1
11140465	249	10 22 844 3	5	2	11320346	208	56 19 045	27	4
11140465	277	11 38 340 1	31	1	11320347	193	10 04 853 6	11	2
11140465	301	11 45 228 6	31	1	11320349	346	10 06 379 3	45	2
11140465	305	12 50 731 7	31	1	11320355	445	10 35 865 5	19	2
11140465	529	10 04 852 5	7	6	11320356	194	10 04 853 6	45	1
11140466	193	10 04 853 6	13	4	11320356	194	10 04 853 6	95	1
11140466	194	10 04 853 6	43	2	11320358	344	10 35 862 3	25	3
11140466	521	10 35 866 5	47	4	11321126	194	10 04 853 6	92	2
11140466	747	92 15 949 16	5	1	11321126	513	11 73 376 2	21	4
11140466	775	11 45 729 6	41	2	11321126	542	10 49 878 6	13	4
11140466	778	11 45 729 7	41	2	11321126	711	11 10 294 5	15	4
11140469	449	10 35 865 5	152	5	11321126	721	10 82 841 3	31	2

Item	Page	Assembly	Pos.	Quantity	Item	Page	Assembly	Pos.	Quantity
11321126	730	10 39 639 6	27	2	11452277	306	12 50 731 7	85	1
11321128	544	10 49 878 6	63	3	11452286	271	10 49 880 5	30	1
11321139	777	11 45 729 6	59	4	11457296	752	11 10 291 2	3	1
11321139	780	11 45 729 7	59	4	11457297	752	11 10 291 2	2	1
11321142	711	11 10 294 5	8	2	11459334	785	10 82 562 1	20	1
11321144	711	11 10 294 5	28	4	11460484	711	11 10 294 5	4	1
11321145	344	10 35 862 3	7	8	11463935	75	10 49 885 2	8	1
11321146	753	11 10 291 2	42	2	11463939	100	11 46 393 5	10	1
11321147	121	10 40 412 9	6	12	11481247	53	90 66 466	302	1
11341352	732	10 66 478 2	2	1	11481248	53	90 66 466	350	1
11342118	64	12 48 693 1	130	1	11481249	53	90 66 466	352	1
11342118	67	12 48 693 2	130	1	11481250	53	90 66 466	300	1
11342118	70	12 48 693 3	130	1	11485237	59	96 47 619	30	1
11342118	71	12 48 693 4	130	1	11485238	59	96 47 619	20	1
11342118	346	10 06 379 3	13	1	11485620	54	94 06 645 8	10	1
11342118	348	56 09 948	10	1	11485621	54	94 06 645 8	210	1
11342491	164	11 36 100 1	20	1	11485622	54	94 06 645 8	1000	1
11346626	7	.	56	1	11485637	350	10 35 862 7	20	6
11347332	541	93 58 137	3	1	11485637	351	10 35 862 8	10	8
11348053	587	11 34 805 4	3	1	11485637	359	10 35 862 4	71	4
11348054	585	90 76 459	1	1	11485637	408	10 35 863 8	100	4
11348674	807	10 11 856 1	10	1	11485637	420	10 35 863 7	15	4
11348674	808	11 37 560 6	10	1	11485637	777	11 45 729 6	75	2
11355616	667	10 11 646 3	5	1	11485637	780	11 45 729 7	75	2
11356724	799	90 73 888	11	2	11485638	121	10 40 412 9	4	16
11357514	591	10 14 155 4	8	8	11485638	344	10 35 862 3	6	4
11357514	597	10 11 942 7	8	8	11485638	350	10 35 862 7	25	6
11357514	598	10 12 036 4	8	8	11485638	351	10 35 862 8	6	8
11359932	546	10 49 803 0	7	1	11485638	351	10 35 862 8	24	8
11361001	145	10 04 853 9	100	1	11485638	354	10 06 379 8	51	2
11363764	7	.	310	1	11485638	407	10 35 863 8	74	4
11363764	7	.	910	1	11485638	420	10 35 863 7	10	6
11363766	794	11 36 376 4	10	1	11485638	712	11 10 294 5	60	6
11363766	794	11 36 376 4	10	1	11485638	725	11 10 280 7	20	2
11371669	669	90 78 384	1	1	11485638	752	11 10 291 2	11	8
11375606	276	11 38 339 7	50	1	11485638	758	10 35 857 3	13	2
11375606	277	11 38 340 1	50	1	11485638	777	11 45 729 6	70	8
11381313	799	90 73 888	5	1	11485638	780	11 45 729 7	70	8
11381954	800	90 73 888	98	1	11485639	344	10 35 862 3	8	4
11383397	271	10 49 880 5	20	1	11485639	345	10 35 862 3	51	4
11383401	271	10 49 880 5	30	1	11485639	420	10 35 863 7	20	6
11383427	10	12 86 140 3	20	1	11485639	712	11 10 294 5	61	18
11383429	10	12 86 140 3	30	1	11485639	725	11 10 280 7	17	2
11387278	799	90 73 888	90	1	11485639	759	10 85 361 0	13	2
11419165	771	94 00 688 8	800	1	11485642	356	10 35 862 9	4	4
11419165	772	94 02 794 9	800	1	11485643	358	10 35 862 4	31	2
11419165	773	95 91 741	800	1	11485645	353	10 06 379 8	11	2
11419175	771	94 00 688 8	801	1	11490402	353	10 06 379 8	7	2
11419175	772	94 02 794 9	801	1	11490402	357	10 35 862 9	37	4
11419175	773	95 91 741	801	1	11490402	385	10 04 851 7	52	2
11440789	54	94 06 645 8	9999	1	11490402	387	10 35 863 4	52	2
11442694	677	90 76 534	1	1	11490403	145	10 04 853 9	63	2
11442694	688	12 54 450 5	1	1	11491889	217	11 10 291 6	22	8
11446109	293	10 05 736 2	30	1	11491889	445	10 35 865 5	18	2
11446526	653	10 11 547 9	1	1	11491889	445	10 35 865 5	21	4
11452271	277	11 38 340 1	30	1	11491890	162	11 34 249 1	3	1
11452271	301	11 45 228 6	30	1	11491891	399	11 49 189 4	17	2
11452274	301	11 45 228 6	40	1	11491892	398	11 49 189 0	5	1
11452277	279	11 38 340 1	85	1	11491894	162	11 34 249 1	1	1
11452277	302	11 45 228 6	85	1	11491899	399	11 49 189 4	12	1

Item	Page	Assembly	Pos.	Quantity
11600107	88	10 39 231 7	2	1
11626278	22	90 70 365	40	1l
11626279	22	90 70 365	50	1l
11626280	22	90 70 365	60	1l
11631816	200	10 21 851 3	34	10
11642261	62	12 50 640 7	150	2
11642261	200	10 21 851 3	26	2
11642261	203	11 69 472 6	26	2
11642261	295	97 58 815 01	62	1
11642261	320	10 05 981 8	11	2
11642261	320	10 05 981 8	21	2
11642261	453	10 05 816 9	18	2
11642261	481	70 28 759	370	2
11642261	484	70 28 769	210	2
11642261	521	10 35 866 5	23	4
11643314	102	11 46 393 9	2	1
11644222	331	10 02 206 9	6	1
11644535	43	11 44 078 9	9997	1Pair
11644899	200	10 21 851 3	41	1
11644899	203	11 69 472 6	41	1
11645490	786	10 82 562 1	160	1
11647393	357	10 35 862 9	41	2
11647393	358	10 35 862 4	11	2
11647553	296	98 74 988	5	2
11647553	519	99 47 695	18	4
11651612	212	10 04 853 8	27	4
11651612	385	10 04 851 7	62	6
11651612	387	10 35 863 4	62	6
11651612	453	10 05 816 9	7	8
11651612	456	10 05 183 8	23	4
11651767	200	10 21 851 3	27	17
11651767	203	11 69 472 6	27	17
11651767	205	10 84 460 3	11	6
11651767	320	10 05 981 8	12	2
11651767	320	10 05 981 8	22	2
11651767	446	10 35 865 5	51	4
11651767	449	10 35 865 5	151	5
11651767	463	10 35 826 4	62	2
11651767	492	10 29 033 7	750	3
11651767	494	10 48 808 7	750	3
11651767	529	10 04 852 5	37	6
11651767	531	11 10 262 1	37	12
11651767	534	10 06 759 6	33	6
11651767	545	10 37 464 5	27	2
11651767	751	10 35 860 1	5	4
11656585	320	10 05 981 8	6	4
11656585	716	11 10 283 6	24	28
11656585	721	10 82 841 3	7	3
11656585	721	10 82 841 3	10	10
11656585	721	10 82 841 3	13	4
11656585	721	10 82 841 3	16	2
11656585	721	10 82 841 3	19	7
11656585	727	11 10 281 7	24	24
11656585	730	10 39 639 6	11	12
11656585	730	10 39 639 6	14	5
11656585	730	10 39 639 6	17	1
11656585	731	10 39 639 6	42	8
11656735	459	10 06 423 5	16	2
11656735	466	10 35 823 0	10	2
11656735	467	10 02 525 4	22	2
11656992	566	10 11 916 7	13	2
11656992	567	90 79 021	13	1
11656992	576	90 79 862	6	3
11656992	681	90 80 653	11	2
11656992	687	10 11 799 7	35	2
11657384	55	94 07 955 7	5	1
11657385	55	94 07 955 7	20	1
11657386	55	94 07 955 7	210	1
11657387	55	94 07 955 7	1000	1
11657389	56	94 07 956 0	5	1
11657390	56	94 07 956 0	20	1
11657391	56	94 07 956 0	210	1
11657392	56	94 07 956 0	1000	1
11659114	383	10 04 851 7	11	4
11659214	287	11 10 016 7	7	1
11659607	756	11 10 281 8	4	2
11659608	727	11 10 281 7	2	1
11659609	727	11 10 281 7	3	1
11659610	727	11 10 281 7	4	2
11659613	727	11 10 281 7	6	2
11659615	756	11 10 281 8	2	2
11659616	716	11 10 283 6	5	1
11659617	716	11 10 283 6	2	1
11659618	756	11 10 281 8	3	2
11659619	727	11 10 281 7	5	2
11659621	716	11 10 283 6	3	1
11659622	716	11 10 283 6	4	2
11659623	756	11 10 281 8	5	1
11659791	756	11 10 281 8	50	1
11680163	760	11 68 144 7	9	1
11681447	759	10 85 361 0	2	1
11690042	383	10 04 851 7	32	4
11690042	386	10 35 863 4	32	4
11690044	291	10 38 502 8	27	4
11690044	455	10 06 436 0	9	2
11690048	320	10 05 981 8	61	6
11690048	320	10 05 981 8	66	4
11690438	649	90 78 356	4	1
11690717	791	10 49 833 2	5	1
11690885	59	96 47 619	10	1
11691100	716	11 10 283 6	50	1
11691205	727	11 10 281 7	50	1
11691206	727	11 10 281 7	51	1
11692624	103	11 64 331 4	999	1
11692824	323	90 79 258	46	3
11692824	325	90 79 259	46	3
11692910	140	11 10 293 9	10	1
11693757	58	96 47 551	20	1
11693875	521	10 35 866 5	30	13
11693876	284	94 02 247 7	61	4
11693878	137	10 49 819 9	54	3
11693878	200	10 21 851 3	42	1
11693878	203	11 69 472 6	42	1
11693878	275	11 38 339 7	28	4
11693878	291	10 38 502 8	28	4
11693878	296	98 74 988	6	2
11693878	320	10 05 981 8	7	4
11693878	455	10 06 436 0	8	2
11693878	463	10 35 826 4	51	6
11693878	509	10 29 035 2	330	4

Item	Page	Assembly	Pos.	Quantity	Item	Page	Assembly	Pos.	Quantity
11693878	509	10 29 035 2	460	2	11830573	43	11 44 078 9	9996	1
11693878	511	10 48 808 8	330	4	11834721	796	11 69 501 2	13	1
11693878	511	10 48 808 8	460	2	11834724	796	11 69 501 2	2	1
11693878	754	10 85 472 4	20	4	11834725	796	11 69 501 2	10	1
11694726	193	10 04 853 6	10	1	11834726	796	11 69 501 2	6	1
11694727	202	11 69 472 6	2	1	11834727	796	11 69 501 2	3	1
11695012	42	11 44 078 9	220	1	11834728	796	11 69 501 2	9	1
11697578	233	90 74 117	41	1	11834729	796	11 69 501 2	4	1
11697578	824	90 74 123	41	1	11834730	796	11 69 501 2	7	1
11698484	43	11 44 078 9	9999	1	11834731	796	11 69 501 2	8	1
11698908	158	10 11 886 0	39	1	11834732	796	11 69 501 2	5	1
11699679	276	11 38 339 7	90	1	11834733	796	11 69 501 2	12	4m
11699679	292	10 38 502 8	90	1	11835019	208	56 19 045	55	1
11730369	513	11 73 376 2	10	1	11835500	796	11 69 501 2	1	1
11730370	513	11 73 376 2	20	1	11836911	276	11 38 339 7	80	1
11733762	124	10 35 861 4	8900	1	11840297	574	12 83 245 4	10	3
11739194	277	11 38 340 1	40	1	11841450	61	11 41 917 5	10	1
11739195	277	11 38 340 1	30	1	11968282	443	10 35 865 9	11	8
11817008	42	11 44 078 9	210	1	11968282	443	10 35 865 9	21	4
11817009	43	11 44 078 9	1000	1	11968282	443	10 35 865 9	31	4
11817818	718	11 10 294 4	10	2	12200110	50	11 82 595 6	11	1
11820284	137	10 49 819 9	51	3	12200111	50	11 82 595 6	12	1
11820284	148	10 29 787 3	3	4	12200137	42	11 44 078 9	10	1
11820284	149	10 29 787 4	2	4	12202784	754	10 85 472 4	21	2
11820388	279	11 38 340 1	81	6	12202976	752	11 10 291 2	18	1
11820388	279	11 38 340 1	102	4	12203070	730	10 39 639 6	5	3
11820388	302	11 45 228 6	81	6	12203658	645	10 12 190 9	7	2
11820388	302	11 45 228 6	102	4	12203968	200	10 21 851 3	31	8
11820388	306	12 50 731 7	81	6	12203968	203	11 69 472 6	31	22
11820388	307	12 50 731 7	102	4	12203968	328	10 40 689 8	43	1
11821513	404	12 24 669 2	999	1	12203968	341	11 00 707 2	20	4
11821519	160	10 22 041 7	2	1	12203968	453	10 05 816 9	17	2
11821521	160	10 22 041 7	999	1	12203968	462	10 35 826 4	8	2
11821534	175	11 82 151 9	1	1	12203968	545	10 37 464 5	26	2
11822439	162	11 34 249 1	13	2	12204614	253	10 66 472 2	13	10
11823089	79	12 22 100 1	2	2	12204614	336	11 00 359 4	25	2
11823200	48	11 81 700 9	10	1	12204614	721	10 82 841 3	3	3
11825269	775	11 45 729 6	10	1	12205993	131	10 06 261 8	3	0.86m
11825272	778	11 45 729 7	10	1	12205993	204	10 06 309 3	20	8.4m
11825923	49	11 82 320 0	10	1	12205993	536	10 49 800 2	15	1.16m
11825924	49	11 82 320 0	20	1	12205993	536	10 49 800 2	16	1.58m
11825926	49	11 82 320 0	40	1	12205993	536	10 49 800 2	17	1.43m
11825935	49	11 82 320 0	60	1	12205993	536	10 49 800 2	18	0.91m
11825936	49	11 82 320 0	50	1	12205993	536	10 49 800 2	19	0.93m
11825937	49	11 82 320 0	70	1	12205993	536	10 49 800 2	20	1.58m
11825938	49	11 82 320 0	30	1	12205993	536	10 49 800 2	21	0.98m
11825956	47	11 81 700 8	10	1	12207548	647	90 78 314	2	4
11826200	795	11 36 376 6	30	1	12207553	571	90 79 487	11	1
11826202	795	11 36 376 6	40	1	12208099	136	10 36 918 3	22	8
11826204	795	11 36 376 6	50	1	12208099	213	10 04 853 8	32	3
11826206	795	11 36 376 6	20	1	12208099	213	10 04 853 8	54	1
11826208	795	11 36 376 6	10	1	12208099	525	10 06 559 1	28	3
11826231	795	11 36 376 6	70	1	12208230	51	90 66 466	50	1
11826232	795	11 36 376 6	80	1	12208231	51	90 66 466	30	1
11826235	795	11 36 376 6	60	1	12209779	560	12 82 483 7	2	6
11826483	50	11 82 595 6	10	1	12209783	560	12 82 483 7	3	12
11827911	376	10 22 099 7	31	1	12210013	634	10 11 628 5	24	4
11827912	376	10 22 099 7	28	1	12210013	635	10 11 628 5	74	1
11827913	376	10 22 099 7	27	1	12210013	637	10 11 559 5	10	1
11827987	571	90 79 487	9	26	12210025	634	10 11 628 5	26	5

Item	Page	Assembly	Pos.	Quantity	Item	Page	Assembly	Pos.	Quantity
12210057	571	90 79 487	6	16	12227356	756	11 10 281 8	16	1
12211807	139	10 36 573 8	23	6	12228961	247	12 84 952 6	16	2
12211807	140	11 10 293 9	23	6	12230797	529	10 04 852 5	15	1
12211820	11	12 86 140 4	55	5	12230847	248	10 06 750 0	5	2
12212107	351	10 35 862 8	12	1	12233288	248	10 06 750 0	11	3
12213966	813	12 87 963 9	125	1	12233290	209	10 04 853 7	33	1
12213966	814	12 88 015 2	125	1	12233290	328	10 40 689 8	101	1
12214496	323	90 79 258	50	1	12233625	112	10 00 201 1	998	2
12214496	325	90 79 259	50	1	12235856	786	10 82 562 1	160	1
12215144	89	11 60 010 7	5	2	12244095	91	10 65 167 7	10	1
12215553	402	10 22 042 7	1	1	12246692	398	11 49 189 0	2	1
12216034	581	90 75 115	5	1	12250858	757	11 10 281 8	51	1
12216149	358	10 35 862 4	18	2	12253954	258	90 64 786	141	1
12216201	411	10 35 863 8	212	4	12253955	258	90 64 786	112	1
12216231	515	11 10 255 3	205	15	12256125	398	11 49 189 0	6	1
12217993	323	90 79 258	47	2	12256127	398	11 49 189 0	44	1
12217993	325	90 79 259	47	2	12262634	501	10 29 036 1	700	1
12219721	75	10 49 885 2	60	2	12400273	600	12 40 205 3	5	1
12219808	536	10 49 800 2	10	4	12402053	599	12 40 205 5	3	2
12220008	205	10 84 460 3	21	1	12402055	601	90 79 861	2	1
12220081	219	10 06 198 2	17	2	12410054	816	90 73 786	1	2
12220084	90	10 39 232 0	4	4	12417487	64	12 48 693 1	101	1
12220087	276	11 38 339 7	71	2	12417487	67	12 48 693 2	101	1
12220087	292	10 38 502 8	71	2	12417487	70	12 48 693 3	101	1
12220234	83	56 17 975	10	1	12417487	71	12 48 693 4	101	1
12220678	276	11 38 339 7	70	1	12417487	568	90 75 483	1	1
12220678	292	10 38 502 8	70	1	12418014	279	11 38 340 1	91	1
12220678	295	97 58 815 01	60	2	12418014	302	11 45 228 6	91	1
12220997	79	12 22 100 1	5	2	12418014	306	12 50 731 7	91	1
12220999	79	12 22 100 1	7	2	12422288	810	11 38 131 3	14	2
12221001	93	12 21 972 1	1	1	12422288	811	11 38 727 8	14	2
12221002	79	12 22 100 1	4	1	12422288	833	11 38 195 4	14	2
12221003	79	12 22 100 1	3	2	12444198	815	90 73 588	20	1
12222582	258	90 64 786	129	1	12451554	700	10 11 801 4	18	1
12222642	275	11 38 339 7	32	28	12455531	631	10 12 580 1	2	1
12222642	279	11 38 340 1	83	4	12475399	665	90 80 736	4	3
12222642	291	10 38 502 8	32	28	12486930	14	10 35 964 8	100	1
12222642	302	11 45 228 6	83	4	12486931	63	12 48 693 0	1	1
12222642	306	12 50 731 7	83	4	12486932	63	12 48 693 0	2	1
12222642	751	10 35 860 1	15	2	12486933	63	12 48 693 0	3	1
12223036	359	10 35 862 4	41	4	12486934	63	12 48 693 0	4	1
12223045	753	11 10 291 2	58	2	12501735	97	10 40 373 2	2	1
12224012	276	11 38 339 7	72	2	12505756	325	90 79 259	3	2
12224012	292	10 38 502 8	72	2	12506407	479	10 03 552 9	999	1
12224012	786	10 82 562 1	124	4	12507163	305	12 50 731 7	40	1
12224463	275	11 38 339 7	33	6	12507317	271	10 49 880 5	30	1
12224463	276	11 38 339 7	92	4	12544180	325	90 79 259	1	1
12224463	280	11 38 340 1	105	2	12544505	674	90 76 551	20	2
12224463	281	11 38 340 1	121	2	12569773	544	10 49 878 6	60	1
12224463	291	10 38 502 8	33	6	12578797	561	10 11 577 8	3	1
12224463	292	10 38 502 8	92	4	12578798	561	10 11 577 8	2	6
12224463	303	11 45 228 6	105	2	12582865	571	90 79 487	2	1
12224463	304	11 45 228 6	121	2	12582865	700	10 11 801 4	15	1
12224463	307	12 50 731 7	105	1	12582865	703	10 11 583 8	15	1
12224463	307	12 50 731 7	121	2	12585058	660	90 79 474	1	1
12224463	751	10 35 860 1	17	2	12593102	233	90 74 117	32	1
12225873	484	70 28 769	120	1	12593102	824	90 74 123	32	1
12225945	204	10 06 309 3	3	3	12691573	655	10 13 281 7	13	5
12226086	516	99 41 040	6	2	12692802	818	98 82 832	19	1
12227355	753	11 10 291 2	54	4	12693519	51	90 66 466	80	1

Item	Page	Assembly	Pos.	Quantity	Item	Page	Assembly	Pos.	Quantity
12802730	235	92 73 163	17	1	262181001	245	93 36 286 01	10	4.11m
12802730	814	12 88 015 2	17	1	262181001	245	93 36 286 01	20	4.15m
12802730	828	92 68 015	17	1	3001445	746	10 08 390 7	3	1
12802738	813	12 87 963 9	17	1	3001446	745	10 06 258 3	3	1
12802738	829	92 68 016	17	1	3001446	747	92 15 949 16	2	1
12819435	655	10 13 281 7	4	1	4000363	112	10 00 201 1	490	2
12819435	699	10 11 801 4	12	1	4000363	347	10 06 379 3	67	2
12819435	702	10 11 583 8	12	1	4000376	337	10 02 207 8	5	3
12820742	64	12 48 693 1	103	1	4000376	668	10 11 871 2	7	1
12820742	67	12 48 693 2	103	1	4000376	786	10 82 562 1	124	4
12820742	70	12 48 693 3	103	1	4000379	112	10 00 201 1	480	2
12820742	71	12 48 693 4	103	1	4000379	137	10 49 819 9	53	3
12820742	631	10 12 580 1	1	1	4000379	158	10 11 886 0	45	2
12824837	557	10 11 682 5	10	1	4000379	200	10 21 851 3	25	4
12832304	571	90 79 487	7	1	4000379	203	11 69 472 6	25	4
12832305	571	90 79 487	10	1	4000379	295	97 58 815 01	64	2
12832453	571	90 79 487	1	1	4000379	334	10 49 308 7	5	2
12832454	571	90 79 487	5	1	4000379	414	10 35 863 8	478	2
12838220	643	90 77 279	1	1	4000379	466	10 35 823 0	12	4
12849525	123	10 35 861 4	1400	1	4000379	467	10 02 525 4	12	4
12849526	246	12 84 952 5	3	1	4000379	481	70 28 759	180	2
12854366	809	10 11 908 9	1	1	4000379	484	70 28 769	300	1
12859103	514	11 10 255 3	15	1	4000379	504	10 29 026 4	450	4
12860504	247	12 84 952 6	39	1	4000379	526	10 06 559 6	12	4
12860504	756	11 10 281 8	39	1	4000379	668	10 11 871 2	3	1
12861403	266	10 49 861 5	10	1	4000379	687	10 11 799 7	42	1
12861404	10	12 86 140 3	50	1	4000379	786	10 82 562 1	152	1
12862561	323	90 79 258	29	1	4000381	200	10 21 851 3	32	10
12862561	325	90 79 259	29	1	4000381	203	11 69 472 6	32	10
12879639	189	98 89 977	3	1	4000381	274	10 49 880 5	131	1
12880152	233	90 74 117	3	1	4000381	274	10 49 880 5	161	3
12880152	824	90 74 123	3	1	4000381	356	10 35 862 9	15	2
12905309	217	11 10 291 6	30	1	4000381	484	70 28 769	170	4
12913919	756	11 10 281 8	10	1	4000381	490	10 29 033 7	160	1
12924708	192	98 89 988	841	1	4000381	493	10 48 808 7	160	1
12925891	180	90 72 998	842	1	4000381	496	10 29 036 3	540	1
12925891	231	90 73 380	842	1	4000381	497	70 28 884	540	1
226016702	131	10 06 261 8	10	0.45m	4000381	503	10 29 026 4	180	4
226016702	131	10 06 261 8	11	0.34m	4000381	668	10 11 871 2	1	1
226016702	131	10 06 261 8	12	0.63m	4000383	200	10 21 851 3	37	2
226016702	273	10 49 880 5	120	1m	4000383	203	11 69 472 6	37	2
226016702	465	10 06 576 2	5	0.57m	4000383	344	10 35 862 3	26	3
226016702	466	10 35 823 0	15	0.13m	4000383	530	10 49 836 0	29	1
226016702	470	10 35 866 0	30	2.1m	4000383	531	11 10 262 1	29	1
240048602	820	90 78 788	52	4	4000417	520	99 47 695	33	2
240049802	617	90 80 278	3	3	4000420	100	11 46 393 5	18	3
240049802	618	90 72 781	14	2	4000420	105	10 40 383 4	4	3
240049802	619	90 80 277	14	2	4000420	158	10 11 886 0	46	4
240050802	616	90 74 796	3	2	4000466	295	97 58 815 01	63	2
240127002	505	10 29 026 4	570	3	4000466	296	98 74 988	8	2
240217402	827	90 77 464	22	6	4000466	520	99 47 695	34	2
241015402	341	11 00 707 2	10	4	4000466	668	10 11 871 2	5	1
247021702	756	11 10 281 8	35	2	4000499	200	10 21 851 3	29	29
247108302	220	90 02 790 3	6	2	4000499	203	11 69 472 6	29	29
247126202	121	10 40 412 9	17	3	4000570	208	56 19 045	35	2
247128502	359	10 35 862 4	49	1	4000577	127	10 08 736 5	6	4
247128502	754	10 85 472 4	17	1	4000577	128	10 04 851 0	4	3
247138602	121	10 40 412 9	18	1	4000577	129	10 08 004 4	12	2
247138602	353	10 06 379 8	18	1	4000577	129	10 08 004 4	52	2
257103802	655	10 13 281 7	15	1	4000577	793	10 49 866 6	62	2

Item	Page	Assembly	Pos.	Quantity	Item	Page	Assembly	Pos.	Quantity
4000613	413	10 35 863 8	389	4	4002401	508	10 29 035 2	180	10
4000619	753	11 10 291 2	43	2	4002401	510	10 48 808 8	180	10
4000619	758	10 35 857 3	7	2	4002417	362	10 04 272 9	10	4
4000688	402	10 22 042 7	41	1	4002418	108	11 10 296 8	16	2
4000716	816	90 73 786	17	4	4002418	177	70 28 075	20	4
4000716	817	90 74 112	17	4	4002418	255	10 29 300 3	10	2
4000746	446	10 35 865 5	31	4	4002456	508	10 29 035 2	175	2
4000746	447	10 35 865 5	91	2	4002456	510	10 48 808 8	175	2
4000746	462	10 35 826 4	21	2	4002477	295	97 58 815 01	67	2
4000746	468	10 03 720 9	10	2	4002534	503	10 29 026 4	130	4
4000828	200	10 21 851 3	33	2	4002612	481	70 28 759	200	2
4000828	203	11 69 472 6	33	12	4002612	494	10 48 808 7	380	2
4000828	629	10 11 656 2	7	2	4002612	504	10 29 026 4	390	4
4000874	109	96 87 443 01	33	3	4002685	752	11 10 291 2	16	1
4000874	222	90 02 197 3	56	3	4002688	351	10 35 862 8	15	1
4000874	227	90 02 790 4	56	3	4002729	162	11 34 249 1	31	2
4000900	390	56 17 688	18	2	4002742	142	10 04 853 9	22	2
4001246	137	10 49 819 9	15	4	4002750	377	10 45 471 5	14	3
4001246	423	10 35 863 6	17	2	4002750	378	10 45 471 6	14	3
4001246	530	10 49 836 0	28	1	4002752	377	10 45 471 5	7	3
4001246	531	11 10 262 1	28	1	4002838	517	10 04 553 0	10	4
4001445	104	96 11 367	13	2	4002850	503	10 29 026 4	200	2
4001446	121	10 40 412 9	16	2	4002887	335	11 00 359 4	3	7
4001446	219	10 06 198 2	20	1	4026006	503	10 29 026 4	240	4
4001521	177	70 28 075	22	8	4041102	249	10 22 844 3	11	1
4001571	178	70 28 075	29	1	4042002	530	10 49 836 0	7	6
4001595	604	90 74 505	4	2	4042002	531	11 10 262 1	7	6
4001596	336	11 00 359 4	23	1	4042002	595	90 79 838	5	3
4001596	520	99 47 695	31	4	4042002	622	90 78 680	3	4
4001596	791	10 49 833 2	6	2	4042014	170	10 28 264 7	10	4
4001606	530	10 49 836 0	37	6	4042014	691	90 78 961	2	3
4001606	531	11 10 262 1	37	12	4042032	110	96 87 443 01	46	12
4001606	535	10 49 835 9	33	6	4042035	158	10 11 886 0	40	4
4001645	333	10 02 211 7	9	6	404204405	616	90 74 796	2	1
4001645	337	10 02 207 8	3	3	404205308	336	11 00 359 4	19	7
4001645	490	10 29 033 7	220	2	404205408	719	10 66 480 4	10	2
4001645	490	10 29 033 7	290	3	404205608	177	70 28 075	21	1
4001645	493	10 48 808 7	220	2	404209808	624	10 11 659 1	4	1
4001645	496	10 29 036 3	595	4	4042109	684	10 11 599 3	6	4
4001645	519	99 47 695	28	4	4042150	635	10 11 628 5	85	2
4001850	668	10 11 871 2	8	1	404221101	227	90 02 790 4	77	2
4001866	295	97 58 815 01	66	2	4043000	272	10 49 880 5	41	1
4001869	760	11 68 144 7	25	1	4043002	793	10 49 866 6	8	3
4001869	769	94 04 038 9	25	1	4043003	226	90 02 790 4	28	6
4001871	353	10 06 379 8	33	1	4043003	350	10 35 862 7	26	12
4001927	299	99 68 625	105	1	4043003	354	10 06 379 8	52	4
4001927	314	99 68 611	105	1	4043003	725	11 10 280 7	21	4
4002017	788	11 10 265 3	6	4	4043003	758	10 35 857 3	14	4
4002079	745	10 06 258 3	5	1	4043050	152	74 05 006	2	2
4002079	746	10 08 390 7	5	1	4043052	346	10 06 379 3	52	2
4002133	141	10 04 853 9	7	12	4043082	116	98 82 760	27	4
4002229	828	92 68 015	44	1	4043122	406	10 35 863 8	34	5
4002259	255	10 29 300 3	9	2	4043124	142	10 04 853 9	32	2
4002259	719	10 66 480 4	9	2	4043124	164	11 36 100 1	32	2
4002259	733	10 66 475 5	9	2	4043124	271	10 49 880 5	21	4
4002279	439	56 02 345	2	1	4043124	360	10 06 380 1	19	2
4002308	492	10 29 033 7	794	1	4043124	443	10 35 865 9	25	1
4002308	494	10 48 808 7	794	1	4043124	690	90 77 719	4	4
4002386	272	10 49 880 5	61	1	4043127	271	10 49 880 5	31	4
4002399	481	70 28 759	240	2	404313108	407	10 35 863 8	80	8

Item	Page	Assembly	Pos.	Quantity	Item	Page	Assembly	Pos.	Quantity
4043136	350	10 35 862 7	23	4	423910801	414	10 35 863 8	507	2
4043163	344	10 35 862 3	17	2	423910801	542	10 49 878 6	27	2
4043163	457	10 35 822 9	10	2	4240000	668	10 11 871 2	6	1
4043163	758	10 35 857 3	10	2	4240002	201	10 21 851 3	46	2
4043164	321	10 06 017 4	31	1	4240002	203	11 69 472 6	46	2
4043164	322	10 06 017 5	31	1	4240007	92	10 65 167 8	4	4
4043164	353	10 06 379 8	9	4	4240007	93	12 21 972 1	3	4
4043164	353	10 06 379 8	13	4	4242024	761	95 93 026	25	1
4043164	357	10 35 862 9	39	8	4242024	762	96 44 648	25	1
404316901	226	90 02 790 4	21	2	4242024	770	96 44 625	25	1
404317901	398	11 49 189 0	7	4	4280008	154	90 73 242	31	4
4061037	817	90 74 112	15	2	4280022	599	12 40 205 5	6	1
4062002	481	70 28 759	380	2	4280022	604	90 74 505	6	1
4062066	134	10 04 853 1	25	16	4280030	399	11 49 189 4	36	1
4065099	200	10 21 851 3	21	8	4280034	189	98 89 977	41	1
4065099	203	11 69 472 6	21	8	4280034	831	98 89 978	41	1
4065099	496	10 29 036 3	570	3	4280089	109	96 87 443 01	6	5
4065099	497	70 28 884	570	3	4280089	227	90 02 790 4	38	4
4065126	200	10 21 851 3	28	12	4280104	228	93 28 018 01	9	1
4065126	203	11 69 472 6	28	12	428012101	109	96 87 443 01	23	3
4066093	462	10 35 826 4	11	5	4281001	425	10 11 386 0	62	4
4066093	462	10 35 826 4	32	2	4281017	233	90 74 117	40	1
4066098	104	96 11 367	14	2	4281018	189	98 89 977	40	1
4066098	505	10 29 026 4	530	2	429610801	831	98 89 978	40	1
4066098	506	10 29 026 4	740	2	429612001	110	96 87 443 01	42	1
4066098	786	10 82 562 1	142	1	431300701	110	96 87 443 01	72	1
4066122	144	10 04 853 9	51	2	4330011	457	10 35 822 9	17	1
4066122	506	10 29 026 4	770	1	4330011	459	10 06 423 5	22	1
4066124	353	10 06 379 8	38	2	4330011	460	10 49 856 6	22	1
4066124	406	10 35 863 8	22	3	4330011	466	10 35 823 0	22	1
4066202	342	98 79 063	10	4	4330015	205	10 84 460 3	23	1
4066202	417	10 06 398 6	2	4	4451001	331	10 02 206 9	4	4
407350208	687	10 11 799 7	31	6	4600009	200	10 21 851 3	35	12
4079160	637	10 11 559 5	8	6	4600009	203	11 69 472 6	35	12
4079160	692	90 80 006	14	2	4600022	801	10 13 303 7	25	16
408252101	505	10 29 026 4	622	4	4600033	272	10 49 880 5	42	3
408286100	497	70 28 884	560	4	4600036	332	10 02 208 3	4	3
408311008	490	10 29 033 7	230	2	4600036	335	11 00 359 4	4	10
408311008	493	10 48 808 7	230	2	4600036	337	10 02 207 8	4	3
409361108	463	10 35 826 4	52	6	4600048	526	10 06 559 6	10	4
409701608	490	10 29 033 7	300	1	4600051	425	10 11 386 0	65	28
4101100	741	90 79 392	12	2	4600068	153	76 16 897	2	4
411508001	295	97 58 815 01	65	1	4600079	341	11 00 707 2	30	4
420001201	645	10 12 190 9	9	2	4600079	491	10 29 033 7	470	3
421802008	333	10 02 211 7	6	12	4600079	494	10 48 808 7	470	3
421802008	336	11 00 359 4	33	4	4600102	200	10 21 851 3	22	4
422001001	599	12 40 205 5	5	1	4600144	579	10 11 630 0	2	1
422001001	604	90 74 505	5	1	4600157	583	90 75 133	4	3
422006601	222	90 02 197 3	48	3	4600169	758	10 35 857 3	12	4
422006601	227	90 02 790 4	48	3	4600180	129	10 08 004 4	11	2
4229913	137	10 49 819 9	16	4	4600180	129	10 08 004 4	51	2
4229913	466	10 35 823 0	9	2	4600180	793	10 49 866 6	61	2
4229913	467	10 02 525 4	20	2	4600184	140	11 10 293 9	6	6
4239009	158	10 11 886 0	50	4	4600184	140	11 10 293 9	12	4
423910501	515	11 10 255 3	260	15	4600184	463	10 35 826 4	72	2
423910601	158	10 11 886 0	49	2	4600184	505	10 29 026 4	510	2
423910601	469	10 35 387 9	10	4	4600184	726	11 10 280 7	33	4
423910801	272	10 49 880 5	53	4	4600184	739	10 49 877 7	16	4
423910801	295	97 58 815 01	71	2	4600188	567	90 79 021	16	4
423910801	387	10 35 863 4	63	6	4600200	296	98 74 988	7	4

Item	Page	Assembly	Pos.	Quantity	Item	Page	Assembly	Pos.	Quantity
4600203	90	10 39 232 0	3	4	4630032	118	94 43 029 03	64	1
4600203	92	10 65 167 8	3	4	463021003	386	10 35 863 4	11	4
4600203	93	12 21 972 1	2	4	4635044	137	10 49 819 9	96	2
4600218	152	74 05 006	4	4	4635197	320	10 05 981 8	30	4
4600218	153	76 16 897	3	4	4635246	170	10 28 264 7	9	1
4600222	533	10 06 181 0	5	3	4635258	508	10 29 035 2	120	12
4600334	463	10 35 826 4	85	2	4635258	508	10 29 035 2	170	10
4600337	332	10 02 208 3	5	3	4635258	510	10 48 808 8	120	12
4600337	335	11 00 359 4	5	10	4635258	510	10 48 808 8	170	10
4600337	337	10 02 207 8	6	3	4635344	509	10 29 035 2	470	2
4600337	519	99 47 695	27	4	4635344	511	10 48 808 8	470	2
4600338	367	56 17 123	15	2	4635455	136	10 36 918 3	33	3
4600338	371	10 32 372 8	15	2	472300414	354	10 06 379 8	45	1
4600341	258	90 64 786	161	1	472300414	413	10 35 863 8	426	1
4600341	262	10 01 461 1	61	10	472330208	142	10 04 853 9	27	1
4600342	258	90 64 786	151	1	472330208	143	10 04 853 9	44	3
4600342	262	10 01 461 1	51	10	472330208	267	11 38 342 7	26	1
4600348	133	10 35 862 0	4	12	472330208	268	11 38 342 9	23	1
4600356	185	98 84 140	40	2	472330208	269	10 06 014 6	11	2
4600377	655	10 13 281 7	14	5	472330208	346	10 06 379 3	27	1
4600385	680	10 11 611 4	7	10	472330208	410	10 35 863 8	144	3
4600518	346	10 06 379 3	22	4	472330208	413	10 35 863 8	385	1
4600544	253	10 66 472 2	11	1	472330208	414	10 35 863 8	486	1
4600552	414	10 35 863 8	471	4	472430408	753	11 10 291 2	51	2
4600579	344	10 35 862 3	29	3	4771000	258	90 64 786	160	1
4600579	360	10 06 380 1	44	1	4771000	262	10 01 461 1	60	10
4600579	360	10 06 380 1	91	1	4771003	135	10 36 918 3	6	2
4600579	361	10 06 380 1	121	1	4771020	260	90 64 786	260	1
4600579	361	10 06 380 1	511	1	4771020	263	10 01 461 1	160	10
4600579	423	10 35 863 6	8	6	4774001	360	10 06 380 1	61	3
4600580	509	10 29 035 2	410	6	4774001	360	10 06 380 1	86	3
4600580	511	10 48 808 8	410	6	4774003	135	10 36 918 3	5	2
4600615	668	10 11 871 2	2	1	4774024	258	90 64 786	150	1
4600625	333	10 02 211 7	10	6	4774024	262	10 01 461 1	50	10
4600706	350	10 35 862 7	31	2	477510401	110	96 87 443 01	48	3
4600723	491	10 29 033 7	380	2	477511301	226	90 02 790 4	6	1
4600723	491	10 29 033 7	720	2	477700408	360	10 06 380 1	60	3
4600723	494	10 48 808 7	720	2	477700408	360	10 06 380 1	85	3
4600723	509	10 29 035 2	320	4	4782008	137	10 49 819 9	92	1
4600723	511	10 48 808 8	320	4	482430314	121	10 40 412 9	13	1
4600728	423	10 35 863 6	7	4	482430314	268	11 38 342 9	22	2
4600783	295	97 58 815 01	68	1	482430314	361	10 06 380 1	180	4
4600783	504	10 29 026 4	430	1	482430314	410	10 35 863 8	148	1
4600791	414	10 35 863 8	505	2	482430314	414	10 35 863 8	520	1
4600805	407	10 35 863 8	62	3	4900053	546	10 49 803 0	3	4
4600814	297	73 73 807	24	2	4900093	357	10 35 862 9	49	2
4600815	297	73 73 807	25	2	4900093	469	10 35 387 9	20	2
4600975	490	10 29 033 7	280	2	4900169	137	10 49 819 9	94	1
4601105	198	10 04 853 6	341	2	4900262	635	10 11 628 5	75	5
4601105	198	10 04 853 6	351	2	4900305	722	10 82 841 3	37	3
4601105	198	10 04 853 6	371	2	4900305	731	10 39 639 6	33	2
4601105	566	10 11 916 7	19	2	4900323	595	90 79 838	4	5
4601290	357	10 35 862 9	48	2	4900323	596	90 79 849	4	5
4601316	748	93 88 597	3	1	4900372	486	70 28 842	630	2
4601376	487	70 28 831	540	4	4900372	504	10 29 026 4	330	1
4601386	490	10 29 033 7	340	8	4900454	644	10 11 570 3	9	3
4601386	493	10 48 808 7	340	8	4900486	145	10 04 853 9	67	1
4601426	650	10 11 646 4	6	1	4900486	353	10 06 379 8	32	1
4601461	733	10 66 475 5	10	2	4900507	260	90 64 786	250	1
4630032	110	96 87 443 01	64	1	4900507	263	10 01 461 1	150	10

Item	Page	Assembly	Pos.	Quantity	Item	Page	Assembly	Pos.	Quantity
4900507	722	10 82 841 3	36	3	4902068	344	10 35 862 3	11	4
4900507	731	10 39 639 6	34	2	4902073	297	73 73 807	15	2
4900531	344	10 35 862 3	28	6	4902191	347	10 06 379 3	67	2
4900539	203	11 69 472 6	22	4	4902229	680	10 11 611 4	13	5
4900539	295	97 58 815 01	61	2	4902231	272	10 49 880 5	52	4
4900546	345	10 35 862 3	59	2	4902231	272	10 49 880 5	54	2
4900546	406	10 35 863 8	23	3	4902231	274	10 49 880 5	166	1
4900641	85	10 07 306 8	25	2	4902252	519	99 47 695	5	6
4900641	86	10 39 262 4	3	4	4902254	321	10 06 017 4	41	1
4900641	87	10 39 293 2	3	3	4902254	322	10 06 017 5	41	1
4900778	197	10 04 853 6	332	1	4902267	271	10 49 880 5	33	2
4900778	566	10 11 916 7	12	6	4902278	360	10 06 380 1	40	1
4900778	567	90 79 021	12	4	4902327	344	10 35 862 3	10	4
4900778	569	10 11 832 9	12	2	4902327	345	10 35 862 3	53	8
4900778	665	90 80 736	25	2	4902327	420	10 35 863 7	21	8
4900855	141	10 04 853 9	12	11	4902327	610	90 80 713	12	12
4900855	350	10 35 862 7	21	8	4902327	712	11 10 294 5	58	36
4900855	408	10 35 863 8	102	8	4902327	725	11 10 280 7	18	4
4900855	433	10 30 094 1	30	4	4902327	759	10 85 361 0	14	4
4901007	170	10 28 264 7	11	6	491035414	258	90 64 786	185	1
4901067	273	10 49 880 5	81	4	4980000	617	90 80 278	5	1
4901089	668	10 11 871 2	4	1	4980012	680	10 11 611 4	6	2
4901096	326	94 76 369	4	2	4980023	158	10 11 886 0	42	3
4901108	807	10 11 856 1	27	5	4980044	824	90 74 123	40	1
4901128	756	11 10 281 8	18	1	4980044	828	92 68 015	40	1
4901138	213	10 04 853 8	51	2	4980057	323	90 79 258	45	1
4901138	328	10 40 689 8	32	4	4980057	325	90 79 259	45	1
4901153	716	11 10 283 6	15	5	4980059	323	90 79 258	51	1
4901153	727	11 10 281 7	15	8	4980059	325	90 79 259	51	1
4901153	756	11 10 281 8	13	6	4980155	567	90 79 021	17	4
4901159	414	10 35 863 8	477	2	4980228	158	10 11 886 0	33	1
4901161	152	74 05 006	3	2	4980245	808	11 37 560 6	27	5
4901161	161	10 29 197 8	17	8	4980363	602	10 12 038 4	10	3
4901241	420	10 35 863 7	22	4	4980377	624	10 11 659 1	5	1
4901253	345	10 35 862 3	58	4	4980388	819	10 13 306 1	20	4
4901269	193	10 04 853 6	14	2	4980434	801	10 13 303 7	23	4
4901294	508	10 29 035 2	260	6	4980478	667	10 11 646 3	8	1
4901294	510	10 48 808 8	260	6	4980548	801	10 13 303 7	26	8
4901365	133	10 35 862 0	3	6	4980663	172	10 29 197 5	15	2
4901382	753	11 10 291 2	52	3	4980671	810	11 38 131 3	27	4
4901395	297	73 73 807	23	2	4980673	400	10 00 807 7	27	4
4901429	139	10 36 573 8	24	6	4980741	635	10 11 628 5	76	1
4901429	140	11 10 293 9	24	6	4980750	825	10 13 975 2	46	1
4901429	745	10 06 258 3	6	1	4980761	201	10 21 851 3	45	2
4901429	746	10 08 390 7	6	1	4980801	520	99 47 695	65	1
4901450	669	90 78 384	4	3	4980805	669	90 78 384	3	3
4901471	344	10 35 862 3	31	4	4980853	610	90 80 713	5	1
4901471	759	10 85 361 0	5	4	4980921	818	98 82 832	16	2
4901473	487	70 28 831	580	2	4980927	610	90 80 713	9	3
4901512	295	97 58 815 01	40	9	4980928	815	90 73 588	28	1
4901513	295	97 58 815 01	41	5	4980935	158	10 11 886 0	41	4
4901513	519	99 47 695	24	5	4980947	801	10 13 303 7	21	12
4901531	362	10 04 272 9	12	4	4981011	815	90 73 588	29	1
4901531	369	10 02 191 5	19	4	4981029	566	10 11 916 7	19	2
4901531	370	10 28 046 1	19	4	4981029	567	90 79 021	19	2
4901573	253	10 66 472 2	8	4	4981042	602	10 12 038 4	12	1
4901651	520	99 47 695	45	1	4981085	820	90 78 788	65	1
4901724	752	11 10 291 2	13	16	4981153	158	10 11 886 0	44	2
4901878	336	11 00 359 4	21	11	4981156	185	98 84 140	39	2
4901893	205	10 84 460 3	22	1	4981172	665	90 80 736	5	1

Item	Page	Assembly	Pos.	Quantity	Item	Page	Assembly	Pos.	Quantity
4981173	665	90 80 736	6	1	5607605	753	11 10 291 2	53	1
4981197	326	94 76 369	3	2	5607889	271	10 49 880 5	38	1
4981202	613	90 73 507	14	2	5608327	362	10 04 272 9	6	1
4981218	181	90 74 893	43	8	5609144	289	10 28 999 3	53	1
4981218	187	98 89 832	43	4	5609948	346	10 06 379 3	11	1
4981218	188	98 89 833	43	4	5610426	353	10 06 379 8	30	1
4981218	232	90 74 113	43	4	5610999	336	11 00 359 4	28	1
4981218	234	90 74 125	43	4	5610999	528	10 28 664 6	20	2
4981218	822	90 74 114	43	4	5611206	361	10 06 380 1	440	1
4981233	691	90 78 961	3	2	5611480	273	10 49 880 5	99	3
4981235	576	90 79 862	3	1	5611480	277	11 38 340 1	25	2
4981235	665	90 80 736	10	1	5611480	301	11 45 228 6	25	2
4981259	333	10 02 211 7	8	6	5611480	305	12 50 731 7	25	2
5003249	424	10 11 386 0	12	6	5611543	725	11 10 280 7	25	1
5004624	8	11 10 260 2	26	1	5611548	94	10 00 454 6	3	2
5004624	159	10 11 886 0	80	1	5611549	94	10 00 454 6	4	1
5004624	219	10 06 198 2	21	1	5611650	112	10 00 201 1	210	2
5004624	394	10 05 182 7	40	2	5611990	527	10 29 266 0	1	1
5004624	395	10 35 818 3	40	2	5612180	168	10 22 063 5	4	1
5004624	531	11 10 262 1	42	1	5612181	168	10 22 063 5	5	1
5004624	534	10 06 759 6	36	1	5612246	178	70 28 075	31	2
5004624	535	10 49 835 9	36	1	5613713	725	11 10 280 7	26	1
5004624	574	12 83 245 4	8	1	5614029	362	10 04 272 9	4	1
5005641	667	10 11 646 3	3	1	5615344	362	10 04 272 9	3	3
5006555	424	10 11 386 0	46	4	5615742	81	11 16 108 1	2	49
5006719	424	10 11 386 0	40	3	5616707	121	10 40 412 9	3	2
5006719	437	50 08 855	7	1	5617102	83	56 17 975	20	2
5006720	424	10 11 386 0	41	2	5617123	347	10 06 379 3	65	1
5007236	424	10 11 386 0	45	9	5617140	121	10 40 412 9	2	2
5008169	426	10 28 535 8	12	2	5617471	421	10 30 079 8	150	1
5008169	427	10 29 999 7	12	2	5617472	421	10 30 079 8	999	1
5008441	431	10 33 073 6	6	1	5617474	421	10 30 079 8	70	1
5008855	424	10 11 386 0	48	1	5617688	383	10 04 851 7	14	1
5009391	368	10 01 872 5	999	1	5617688	386	10 35 863 4	14	1
5009562	362	10 04 272 9	4	1	5617780	346	10 06 379 3	2	1
5009562	363	10 28 027 9	999	1	5617975	82	10 67 500 3	10	1
5009562	366	56 15 344	999	1	5618477	361	10 06 380 1	210	1
5009565	362	10 04 272 9	5	1	5618477	361	10 06 380 1	230	1
5009820	431	10 33 073 6	36	1	5618477	361	10 06 380 1	240	1
510160916	7	.	911	1	5618658	753	11 10 291 2	60	1
5106421	137	10 49 819 9	90	1	5618664	491	10 29 033 7	440	1
511701914	258	90 64 786	127	1	5618664	494	10 48 808 7	440	1
511701914	262	10 01 461 1	27	4	5618922	310	56 18 923	1	1
5209131	84	12 22 023 4	30	1	5618923	277	11 38 340 1	10	1
5209400	96	10 49 887 4	3	1	5618923	301	11 45 228 6	10	1
5209400	756	11 10 281 8	17	1	5618923	305	12 50 731 7	10	1
550838008	273	10 49 880 5	96	4	5619045	205	10 84 460 3	5	1
5601076	712	11 10 294 5	52	2	5619045	205	10 84 460 3	5	1
5602110	95	11 00 410 3	6	1	5700087	613	90 73 507	3	1
5602345	425	10 11 386 0	999	1	571578608	249	10 22 844 3	17	1
5602487	359	10 35 862 4	40	1	5717149	162	11 34 249 1	4	1
5602583	121	10 40 412 9	23	4	5800090	494	10 48 808 7	710	1
5602583	523	10 28 039 0	10	1	6000167	493	10 48 808 7	130	1
5602583	764	73 63 125	1	1	6000578	271	10 49 880 5	37	1
5602645	351	10 35 862 8	16	1	6000783	519	99 47 695	25	2
5604011	413	10 35 863 8	373	1	6001027	297	73 73 807	19	1
5604334	365	56 02 487	999	1	6001418	751	10 35 860 1	11	1
5604525	361	10 06 380 1	460	1	6001471	295	97 58 815 01	42	1
5605365	346	10 06 379 3	12	1	6001472	519	99 47 695	22	1
5605365	348	56 09 948	12	1	6001474	519	99 47 695	29	10

Item	Page	Assembly	Pos.	Quantity	Item	Page	Assembly	Pos.	Quantity
6001556	490	10 29 033 7	180	1	7001338	253	10 66 472 2	15	2
6001556	493	10 48 808 7	180	1	7001386	529	10 04 852 5	6	1
6001593	315	10 05 507 1	3	1	7001386	530	10 49 836 0	6	1
6001681	520	99 47 695	978	4	7001386	531	11 10 262 1	6	1
6001682	317	10 68 741 7	10	2	7001877	274	10 49 880 5	145	10
6001713	315	10 05 507 1	2	1	7001877	279	11 38 340 1	96	10
6001921	520	99 47 695	130	2	7001877	302	11 45 228 6	96	10
6001963	279	11 38 340 1	77	1	7001877	306	12 50 731 7	96	10
6001963	302	11 45 228 6	77	1	7001877	328	10 40 689 8	33	2
6001963	306	12 50 731 7	77	1	7001891	440	70 13 133	3	1
6002381	295	97 58 815 01	32	2	7002008	273	10 49 880 5	91	2
6002816	520	99 47 695	970	4	7002054	772	94 02 794 9	11	2
6002867	667	10 11 646 3	1	1	7002054	773	95 91 741	11	2
602514201	520	99 47 695	50	4	7002062	770	96 44 625	4	1
604521501	295	97 58 815 01	46	15	7002091	440	70 13 133	4	1
613200116	521	10 35 866 5	2	2	7002361	409	10 35 863 8	127	1
6200461	491	10 29 033 7	700	6m	7002458	158	10 11 886 0	54	1
6200461	494	10 48 808 7	700	6m	7002480	298	10 05 879 2	20	1
6200685	9	12 85 910 3	5	1	7002480	313	10 05 879 4	20	1
6200685	516	99 41 040	3	2	7002561	413	10 35 863 8	425	1
6200685	517	10 04 553 0	11	1	7002641	381	70 25 142	14	1
6200685	783	11 10 229 5	3	1	7002760	365	56 02 487	133	1
6202646	295	97 58 815 01	30	2	7002830	754	10 85 472 4	15	3
6202703	275	11 38 339 7	24	2	7002884	432	73 69 779	50	1
6202703	291	10 38 502 8	24	2	7002887	432	73 69 779	33	1
6202944	519	99 47 695	19	1	7002888	432	73 69 779	34	1
6203136	786	10 82 562 1	310	1	7002893	432	73 69 779	38	2
6203433	296	98 74 988	10	1	7002957	515	11 10 255 3	112	1
6203497	248	10 06 750 0	10	3	7003429	769	94 04 038 9	6	3
6203497	515	11 10 255 3	331	14	7003430	770	96 44 625	6	3
6203687	519	99 47 695	21	1	7003533	770	96 44 625	7	2
6204241	519	99 47 695	10	1	7003570	158	10 11 886 0	75	2
6204367	315	10 05 507 1	5	1	7003570	385	10 04 851 7	47	3
6204368	315	10 05 507 1	4	1	7003570	387	10 35 863 4	47	3
6204404	274	10 49 880 5	150	1	7003572	227	90 02 790 4	81	2
6204416	368	10 01 872 5	2	1	7003572	385	10 04 851 7	45	1
6204564	529	10 04 852 5	5	1	7003572	387	10 35 863 4	45	1
6204564	530	10 49 836 0	5	1	7003578	359	10 35 862 4	48	1
6204564	531	11 10 262 1	5	1	7003723	413	10 35 863 8	377	1
6204593	529	10 04 852 5	32	1	7003800	145	10 04 853 9	69	1
6204593	530	10 49 836 0	32	1	7003800	385	10 04 851 7	55	1
6204593	531	11 10 262 1	32	1	7003800	387	10 35 863 4	55	1
6204631	536	10 49 800 2	9	2	7003814	121	10 40 412 9	12	2
6204632	274	10 49 880 5	130	1	7003814	142	10 04 853 9	25	3
6204634	276	11 38 339 7	46	1	7003814	143	10 04 853 9	42	6
6204634	292	10 38 502 8	46	1	7003814	219	10 06 198 2	19	1
6205496	197	10 04 853 6	320	1	7003814	244	10 06 198 5	20	4
6290070	667	10 11 646 3	1	1	7004020	432	73 69 779	51	1
6290073	239	92 78 623	10	1	7005035	361	10 06 380 1	450	1
6290130	673	90 76 551	1	2	7005035	361	10 06 380 1	452	1
634308016	788	11 10 265 3	5	2	7005035	361	10 06 380 1	454	1
635867001	209	10 04 853 7	40	1	7005047	121	10 40 412 9	21	2
635867001	679	98 85 618	1	1	7005047	269	10 06 014 6	30	3
6905277	519	99 47 695	11	1	7005097	351	10 35 862 8	14	1
6905671	515	11 10 255 3	330	1	7005249	772	94 02 794 9	13	3
6905956	148	10 29 787 3	1	1	7005249	773	95 91 741	13	3
691180608	675	90 76 530	1	1	7005587	137	10 49 819 9	95	6
7000290	769	94 04 038 9	3	1	7005587	197	10 04 853 6	326	5
7000293	769	94 04 038 9	4	1	7005665	413	10 35 863 8	420	1
7001072	662	90 79 889	1	2	7005971	441	70 15 341	18	1

Item	Page	Assembly	Pos.	Quantity	Item	Page	Assembly	Pos.	Quantity
7006212	162	11 34 249 1	25	1	7015293	442	70 17 835	2	1
7006216	161	10 29 197 8	20	2	7015341	431	10 33 073 6	999	1
7006451	465	10 06 576 2	6	1.169m	7015407	397	10 22 239 3	10	1
7006870	769	94 04 038 9	7	2	7015815	383	10 04 851 7	16	4
7006889	382	70 30 267	324	1	7015815	386	10 35 863 4	16	4
7007339	382	70 30 267	38	1	7015992	415	10 35 863 8	590	1
7007505	382	70 30 267	35	1	7015994	98	12 23 362 5	220	1
7007543	441	70 15 341	37	1	7015994	112	10 00 201 1	220	2
7007543	441	70 15 341	38	1	7015994	434	50 06 719	2	1
7007733	426	10 28 535 8	16	1	7015994	435	50 06 720	3	1
7007733	427	10 29 999 7	16	1	7015996	435	50 06 720	1	1
7007759	382	70 30 267	7	1	7015997	434	50 06 719	1	1
7007831	441	70 15 341	44	1	7016002	539	10 84 856 2	10	1
7007952	606	10 11 585 1	8	15	7016122	152	74 05 006	1	1
7007952	608	10 11 585 3	8	15	7016412	519	99 47 695	26	4
7007952	637	10 11 559 5	7	15	7016508	361	10 06 380 1	530	1
7007952	692	90 80 006	13	4	7017148	772	94 02 794 9	9	1
7007952	701	10 11 801 4	61	2	7017148	773	95 91 741	9	1
7007952	705	10 11 583 8	61	2	7017199	718	11 10 294 4	11	2
7007952	706	10 11 583 8	74	5	7017201	491	10 29 033 7	710	1
7008157	457	10 35 822 9	9	1.578m	7017668	371	10 32 372 8	25	1
7008157	459	10 06 423 5	10	1m	7017711	772	94 02 794 9	10	1
7008157	460	10 49 856 6	10	1m	7017711	773	95 91 741	10	1
7008622	211	10 04 853 7	125	1	7017729	98	12 23 362 5	200	1
7008622	247	12 84 952 6	4	1	7017729	112	10 00 201 1	230	2
7008622	525	10 06 559 1	25	1	7017729	434	50 06 719	3	1
7009088	298	10 05 879 2	31	1	7017729	435	50 06 720	4	1
7009088	313	10 05 879 4	31	1	7017771	428	10 30 127 0	6	1
7009088	786	10 82 562 1	156	3	7017771	429	10 30 127 1	6	1
7009369	162	11 34 249 1	47	1	7017771	430	10 30 127 2	6	1
7009590	637	10 11 559 5	17	1	7017835	436	50 07 236	999	1
7009933	267	11 38 342 7	5	4	7017836	442	70 17 835	1	2
7009933	268	11 38 342 9	5	4	7017837	442	70 17 835	3	1
7010008	667	10 11 646 3	4	1	7017838	442	70 17 835	4	1
7011131	577	50 04 624	2	1	7017839	442	70 17 835	5	1
7012971	398	11 49 189 0	48	1	7017840	442	70 17 835	6	1
7013032	421	10 30 079 8	370	2	7017841	442	70 17 835	7	1
7013114	184	98 82 875	47	1	7018368	51	90 66 466	12	1
7013114	820	90 78 788	47	1	7018370	409	10 35 863 8	128	3
7013133	438	50 06 555	999	1	7018489	459	10 06 423 5	9	0.71m
7013138	440	70 13 133	2	1	7018495	270	10 07 161 1	4	2
7013139	440	70 13 133	5	1	7018496	270	10 07 161 1	5	2
7013245	379	50 09 391	14	1	7018498	270	10 07 161 1	7	2
7013245	380	50 09 562	10	1	7018499	270	10 07 161 1	10	2
7013456	577	50 04 624	3	1	7018500	270	10 07 161 1	11	2
7013519	382	70 30 267	5	1	7018501	270	10 07 161 1	12	2
7013559	414	10 35 863 8	475	1	7018502	270	10 07 161 1	13	2
7013694	145	10 04 853 9	61	1	7018503	270	10 07 161 1	14	2
7014248	413	10 35 863 8	440	1	7018504	270	10 07 161 1	16	2
7014529	174	11 82 151 3	9	1	7018507	270	10 07 161 1	18	2
7014560	275	11 38 339 7	31	28	7018508	270	10 07 161 1	19	2
7014560	279	11 38 340 1	82	4	7018509	270	10 07 161 1	20	2
7014560	291	10 38 502 8	31	28	7018510	270	10 07 161 1	21	2
7014560	302	11 45 228 6	82	4	7018513	270	10 07 161 1	30	2
7014560	306	12 50 731 7	82	4	7018514	270	10 07 161 1	31	2
7014580	412	10 35 863 8	363	1	7018516	270	10 07 161 1	33	2
7015284	441	70 15 341	17	2	7018517	270	10 07 161 1	34	2
7015290	437	50 08 855	8	1	7018520	270	10 07 161 1	2	10
7015292	433	10 30 094 1	20	1	7018521	270	10 07 161 1	3	10
7015292	437	50 08 855	9	1	7018549	359	10 35 862 4	45	2

Item	Page	Assembly	Pos.	Quantity	Item	Page	Assembly	Pos.	Quantity
7018700	436	50 07 236	10	1	7023396	771	94 00 688 8	13	3
7019068	52	90 66 466	120	1	7023397	771	94 00 688 8	9	1
7019122	504	10 29 026 4	350	2	7023749	399	11 49 189 4	26	1
7019129	504	10 29 026 4	470	1	7023769	174	11 82 151 3	8	1
7019131	505	10 29 026 4	640	1	7023926	379	50 09 391	6	1
7019140	507	10 04 435 3	810	2	7023927	378	10 45 471 6	16	1
7019141	507	10 04 435 3	820	1	7023927	379	50 09 391	7	1
7019142	481	70 28 759	190	1	7023927	380	50 09 562	5	1
7019153	484	70 28 769	260	1	7023928	378	10 45 471 6	17	1
7019154	484	70 28 769	240	1	7023928	379	50 09 391	8	1
7019155	484	70 28 769	250	1	7023928	380	50 09 562	6	1
7019156	484	70 28 769	270	1	7023929	371	10 32 372 8	21	1
7019160	485	70 28 769	360	1	7023929	375	73 71 025	12	2
7019164	504	10 29 026 4	420	1	7023930	371	10 32 372 8	22	1
7019165	504	10 29 026 4	410	1	7023930	379	50 09 391	12	1
7019167	483	70 28 808	110	1	7023930	380	50 09 562	8	1
7019167	504	10 29 026 4	310	1	7023931	379	50 09 391	13	1
7019171	490	10 29 033 7	110	10	7023931	380	50 09 562	9	1
7019171	493	10 48 808 7	110	10	7023934	366	56 15 344	6	1
7019674	441	70 15 341	32	1	7023934	368	10 01 872 5	6	1
7019794	485	70 28 769	350	2	7024438	484	70 28 769	220	2
7019801	484	70 28 769	150	2	7024438	508	10 29 035 2	200	12
7019832	771	94 00 688 8	11	1	7024438	510	10 48 808 8	200	12
7019891	142	10 04 853 9	37	1	7024446	509	10 29 035 2	350	4
7020046	497	70 28 884	600	1	7024446	511	10 48 808 8	350	4
7020568	431	10 33 073 6	30	1	7024447	509	10 29 035 2	360	8
7020571	431	10 33 073 6	35	1	7024447	511	10 48 808 8	360	8
7020573	431	10 33 073 6	39	1	7024455	491	10 29 033 7	460	1
7020574	441	70 15 341	40	1	7024455	494	10 48 808 7	460	1
7020575	441	70 15 341	42	1	7024500	381	70 25 142	13	1
7020576	382	70 30 267	5	1	7024629	369	10 02 191 5	25	1
7020576	441	70 15 341	43	1	7024629	370	10 28 046 1	25	1
7020577	431	10 33 073 6	44	1	7024630	369	10 02 191 5	26	1
7020608	493	10 48 808 7	190	2	7024630	370	10 28 046 1	26	1
7020610	481	70 28 759	220	2	7024631	369	10 02 191 5	27	1
7020610	509	10 29 035 2	340	2	7024631	370	10 28 046 1	27	1
7020610	511	10 48 808 8	340	2	7024733	270	10 07 161 1	8	2
7020611	504	10 29 026 4	360	2	7024734	270	10 07 161 1	9	2
7020612	485	70 28 769	380	2	7024958	425	10 11 386 0	93	2
7020612	504	10 29 026 4	370	4	7024981	282	10 04 363 2	12	1
7020613	485	70 28 769	370	1	7024982	282	10 04 363 2	90	1
7020615	505	10 29 026 4	700	6	7024983	282	10 04 363 2	91	1
7020616	505	10 29 026 4	720	1	7024985	282	10 04 363 2	2	1
7021047	504	10 29 026 4	480	1	7024986	282	10 04 363 2	12	1
7021521	121	10 40 412 9	14	1	7024996	282	10 04 363 2	15	1
7021521	665	90 80 736	19	1	7025004	282	10 04 363 2	40	1
7021762	112	10 00 201 1	100	1	7025005	290	70 24 996	17	1
7021767	112	10 00 201 1	300	1	7025006	290	70 24 996	20	1
7021767	431	10 33 073 6	50	1	7025007	290	70 24 996	23	1
7021769	112	10 00 201 1	410	1	7025009	289	10 28 999 3	59	1
7021783	437	50 08 855	5	1	7025110	336	11 00 359 4	24	1
7021784	437	50 08 855	6	1	7025121	333	10 02 211 7	21	2
7021785	437	50 08 855	10	1	7025142	364	50 09 565	999	1
7022127	162	11 34 249 1	27	1	7025347	297	73 73 807	21	1
7022127	177	70 28 075	26	14	7025644	300	73 69 377	1	1
7022127	398	11 49 189 0	11	2	7025845	498	56 18 664	10	1
7022127	400	10 00 807 7	31	1	7025903	208	56 19 045	16	1
7022687	408	10 35 863 8	92	2	7025903	400	10 00 807 7	16	1
7023359	52	90 66 466	150	1	7025993	282	10 04 363 2	90	1
7023395	771	94 00 688 8	10	1	7025994	282	10 04 363 2	91	1

Item	Page	Assembly	Pos.	Quantity	Item	Page	Assembly	Pos.	Quantity
7026041	379	50 09 391	17	4	7028158	168	10 22 063 5	10	1
7026041	380	50 09 562	7	2	7028159	168	10 22 063 5	15	1
7026088	51	90 66 466	22	1	7028166	170	10 28 264 7	8	1
7026111	772	94 02 794 9	6	1	7028168	177	70 28 075	2	2
7026111	773	95 91 741	6	1	7028169	177	70 28 075	3	2
7026126	112	10 00 201 1	30	1	7028170	177	70 28 075	4	2
7026127	112	10 00 201 1	40	1	7028171	177	70 28 075	5	2
7026129	112	10 00 201 1	70	2	7028172	177	70 28 075	6	2
7026136	112	10 00 201 1	999	1	7028173	177	70 28 075	7	1
7026493	281	11 38 340 1	120	1	7028174	177	70 28 075	8	1
7026493	304	11 45 228 6	120	1	7028175	177	70 28 075	9	1
7026493	307	12 50 731 7	120	1	7028176	177	70 28 075	10	2
7026654	257	90 64 786	80	1	7028177	177	70 28 075	11	2
7026772	519	99 47 695	13	1	7028179	177	70 28 075	13	2
7026817	51	90 66 466	20	1	7028180	177	70 28 075	15	2
7027038	297	73 73 807	22	1	7028181	177	70 28 075	18	2
7027052	178	70 28 075	32	2	7028182	177	70 28 075	19	2
7027401	331	10 02 206 9	5	3	7028183	177	70 28 075	23	1
7027459	744	10 00 348 5	998	1	7028184	177	70 28 075	24	2
7027497	398	11 49 189 0	13	3	7028184	398	11 49 189 0	26	2
7027675	257	90 64 786	20	1	7028185	177	70 28 075	25	2
7027714	257	90 64 786	90	1	7028300	365	56 02 487	120	1
7027714	259	90 64 786	190	1	7028301	374	70 28 300	20	1
7027776	285	11 10 016 6	25	1	7028302	374	70 28 300	40	1
7027783	285	11 10 016 6	12	1	7028303	374	70 28 300	100	1
7027784	285	11 10 016 6	21	1	7028343	390	56 17 688	9	1
7027794	285	11 10 016 6	23	1	7028346	390	56 17 688	8	1
7027816	288	11 10 016 7	37	1	7028347	390	56 17 688	13	1
7027827	718	11 10 294 4	12	2	7028348	390	56 17 688	14	1
7027937	255	10 29 300 3	1	1	7028349	390	56 17 688	12	1
7027937	719	10 66 480 4	1	1	7028351	390	56 17 688	15	1
7027937	733	10 66 475 5	1	1	7028742	753	11 10 291 2	41	2
7027938	719	10 66 480 4	5	1	7028759	472	10 22 830 2	30	1
7027938	733	10 66 475 5	4	1	7028759	474	10 47 616 9	30	1
7027939	255	10 29 300 3	4	1	7028765	473	10 22 830 2	90	3
7027939	733	10 66 475 5	2	1	7028765	475	10 47 616 9	90	3
7027939	733	10 66 475 5	3	1	7028765	491	10 29 033 7	400	2
7027939	733	10 66 475 5	5	1	7028765	494	10 48 808 7	400	2
7027939	733	10 66 475 5	7	1	7028767	472	10 22 830 2	20	1
7027940	255	10 29 300 3	2	1	7028767	474	10 47 616 9	20	1
7027940	255	10 29 300 3	3	1	7028768	490	10 29 033 7	240	9
7027941	719	10 66 480 4	2	1	7028768	493	10 48 808 7	240	9
7027941	719	10 66 480 4	3	1	7028769	472	10 22 830 2	50	1
7027941	719	10 66 480 4	4	1	7028769	474	10 47 616 9	50	1
7027941	733	10 66 475 5	6	1	7028782	486	70 28 842	600	1
7027942	719	10 66 480 4	8	1	7028787	476	70 28 767	160	1
7027943	255	10 29 300 3	8	1	7028788	476	70 28 767	170	1
7027945	733	10 66 475 5	8	1	7028789	476	70 28 767	120	1
7027946	257	90 64 786	21	1	7028790	476	70 28 767	130	1
7028075	162	11 34 249 1	5	1	7028792	478	10 35 889 0	20	1
7028113	172	10 29 197 5	5	2	7028800	480	10 03 553 0	112	1
7028114	172	10 29 197 5	5	2	7028801	480	10 03 553 0	120	2
7028115	172	10 29 197 5	5	2	7028802	62	12 50 640 7	130	2
7028116	172	10 29 197 5	5	2	7028803	480	10 03 553 0	140	2
7028117	172	10 29 197 5	5	2	7028804	481	70 28 759	310	1
7028118	172	10 29 197 5	5	2	7028805	481	70 28 759	320	1
7028119	172	10 29 197 5	5	2	7028806	481	70 28 759	300	1
7028120	172	10 29 197 5	5	2	7028807	481	70 28 759	340	1
7028121	172	10 29 197 5	6	2	7028808	481	70 28 759	350	1
7028155	168	10 22 063 5	6	1	7028809	481	70 28 759	160	4

Item	Page	Assembly	Pos.	Quantity	Item	Page	Assembly	Pos.	Quantity
7028810	481	70 28 759	170	2	7028907	505	10 29 026 4	670	5
7028810	503	10 29 026 4	170	2	7028908	505	10 29 026 4	650	5
7028811	481	70 28 759	230	1	7028909	505	10 29 026 4	620	1
7028812	490	10 29 033 7	250	11	7028910	505	10 29 026 4	560	1
7028812	493	10 48 808 7	250	11	7028919	504	10 29 026 4	320	1
7028814	482	70 28 807	270	1	7028926	374	70 28 300	30	1
7028814	483	70 28 808	270	1	7028940	508	10 29 035 2	130	1
7028815	482	70 28 807	280	1	7028940	510	10 48 808 8	130	1
7028815	483	70 28 808	280	1	7028941	508	10 29 035 2	190	10
7028816	482	70 28 807	290	1	7028941	510	10 48 808 8	190	10
7028816	483	70 28 808	290	1	7028950	509	10 29 035 2	370	2
7028817	482	70 28 807	100	1	7028950	511	10 48 808 8	370	2
7028817	483	70 28 808	100	1	7028951	68	12 48 693 2	210	1
7028818	482	70 28 807	110	1	7028951	72	12 48 693 4	210	1
7028830	485	70 28 769	400	1	7028951	509	10 29 035 2	380	1
7028831	485	70 28 769	420	1	7028951	511	10 48 808 8	380	1
7028832	485	70 28 769	410	1	7028953	509	10 29 035 2	400	2
7028833	484	70 28 769	330	1	7028953	511	10 48 808 8	400	2
7028834	485	70 28 769	340	1	7028963	512	10 47 012 8	2	1
7028835	485	70 28 769	390	1	7029248	390	56 17 688	4	1
7028836	484	70 28 769	230	1	7029301	151	10 29 154 4	999	1
7028837	484	70 28 769	320	1	7029398	112	10 00 201 1	20	1
7028838	484	70 28 769	160	1	7029402	476	70 28 767	180	1
7028839	484	70 28 769	190	1	7029407	482	70 28 807	260	1
7028840	486	70 28 842	620	2	7029407	483	70 28 808	260	1
7028842	484	70 28 769	110	1	7029409	486	70 28 842	640	2
7028855	490	10 29 033 7	170	1	7029418	487	70 28 831	500	2
7028855	493	10 48 808 7	170	1	7029419	487	70 28 831	510	1
7028856	490	10 29 033 7	210	1	7029420	487	70 28 831	520	1
7028856	493	10 48 808 7	210	1	7029421	487	70 28 831	530	2
7028857	490	10 29 033 7	140	1	7029422	487	70 28 831	550	1
7028859	490	10 29 033 7	120	1	7029423	487	70 28 831	560	1
7028864	491	10 29 033 7	740	8	7029424	487	70 28 831	570	1
7028864	494	10 48 808 7	740	8	7029425	487	70 28 831	590	1
7028865	491	10 29 033 7	430	1	7029426	491	10 29 033 7	410	1
7028866	500	70 29 426	610	1	7029427	502	70 28 866	620	1
7028867	501	10 29 036 1	650	1	7029428	502	70 28 866	640	1
7028867	502	70 28 866	650	1	7029433	484	70 28 769	310	6
7028868	502	70 28 866	630	1	7029433	508	10 29 035 2	280	12
7028869	499	10 29 035 7	600	1	7029433	510	10 48 808 8	280	12
7028869	500	70 29 426	600	1	7029979	136	10 36 918 3	20	22
7028870	491	10 29 033 7	370	1	7029979	213	10 04 853 8	52	2
7028870	494	10 48 808 7	370	1	7029979	748	93 88 597	1	2
7028872	491	10 29 033 7	450	1	7030040	480	10 03 553 0	111	1
7028872	494	10 48 808 7	450	1	7030267	365	56 02 487	998	1
7028878	497	70 28 884	520	1	7030267	374	70 28 300	999	1
7028881	497	70 28 884	500	1	7030284	382	70 30 267	5	1
7028883	497	70 28 884	510	1	7030286	382	70 30 267	312	1
7028884	491	10 29 033 7	420	1	7030316	478	10 35 889 0	10	1
7028890	503	10 29 026 4	150	1	7030318	476	70 28 767	110	1
7028891	503	10 29 026 4	140	1	7041345	391	74 14 913	1	1
7028892	503	10 29 026 4	160	1	710030801	226	90 02 790 4	11	2
7028893	503	10 29 026 4	110	1	710030801	241	94 44 522 03	11	2
7028894	503	10 29 026 4	100	1	7101001	637	10 11 559 5	18	1
7028895	503	10 29 026 4	260	1	7101003	253	10 66 472 2	16	2
7028896	504	10 29 026 4	300	1	7101007	635	10 11 628 5	77	2
7028898	504	10 29 026 4	270	1	7101008	244	10 06 198 5	23	4
7028899	504	10 29 026 4	380	1	7101008	574	12 83 245 4	4	1
7028901	504	10 29 026 4	340	1	7101008	702	10 11 583 8	9	2
7028906	505	10 29 026 4	680	5	7101008	703	10 11 583 8	21	2

Item	Page	Assembly	Pos.	Quantity	Item	Page	Assembly	Pos.	Quantity
7101010	635	10 11 628 5	73	2	7360171	462	10 35 826 4	3	0.85m
7101015	158	10 11 886 0	51	3	7360171	462	10 35 826 4	4	0.28m
7101015	365	56 02 487	134	1	7360446	382	70 30 267	8	1
7101021	8	11 10 260 2	25	1	7360563	116	98 82 760	14	2
7101021	158	10 11 886 0	52	1	7360563	350	10 35 862 7	35	2
7101021	531	11 10 262 1	41	1	7360563	409	10 35 863 8	126	1
7101021	534	10 06 759 6	35	1	7361276	540	10 84 856 2	175	1
7101021	535	10 49 835 9	35	1	7361329	385	10 04 851 7	42	1
7101021	563	10 11 795 1	4	1	7361329	387	10 35 863 4	42	1
7101021	564	90 75 134	4	1	7361391	425	10 11 386 0	60	7
7101021	574	12 83 245 4	7	1	7361456	435	50 06 720	2	1
7101021	577	50 04 624	10	1	7361498	247	12 84 952 6	29	1
7101021	692	90 80 006	12	1	7361498	786	10 82 562 1	150	1
7101021	699	10 11 801 4	8	4	7361513	351	10 35 862 8	17	2
7101021	701	10 11 801 4	60	3	7361553	346	10 06 379 3	38	3
7101021	702	10 11 583 8	8	1	7361553	413	10 35 863 8	387	1
7101021	703	10 11 583 8	20	1	7361553	414	10 35 863 8	487	1
7101021	704	10 11 583 8	41	2	7361600	178	70 28 075	30	2
7101021	705	10 11 583 8	60	2	7361600	184	98 82 875	57	2
7101039	394	10 05 182 7	42	2	7361601	168	10 22 063 5	14	1
7101039	395	10 35 818 3	42	2	7361601	364	50 09 565	8	1
7101040	425	10 11 386 0	61	7	7361678	198	10 04 853 6	340	0.9m
710925401	110	96 87 443 01	70	1	7361678	198	10 04 853 6	350	0.9m
7264024	425	10 11 386 0	68	14	7361678	198	10 04 853 6	370	0.7m
7264024	439	56 02 345	1	2	7361679	215	10 06 371 2	10	3.9m
7264028	64	12 48 693 1	131	1	7361679	273	10 49 880 5	85	0.1m
7264028	67	12 48 693 2	131	1	7361960	385	10 04 851 7	44	5
7264028	70	12 48 693 3	131	1	7361960	387	10 35 863 4	44	5
7264028	71	12 48 693 4	131	1	7361960	674	90 76 551	51	1
7264028	346	10 06 379 3	14	1	7361961	535	10 49 835 9	48	1
7264028	348	56 09 948	14	1	7362091	269	10 06 014 6	10	6
7264035	770	96 44 625	8	1	7362091	346	10 06 379 3	25	6
7264087	769	94 04 038 9	8	1	7362091	347	10 06 379 3	66	1
7264098	771	94 00 688 8	7	1	7362091	410	10 35 863 8	146	2
7264113	771	94 00 688 8	12	1	7362091	410	10 35 863 8	150	2
726433101	228	93 28 018 01	3	1	7362091	414	10 35 863 8	485	3
726433101	241	94 44 522 03	67	1	7362091	754	10 85 472 4	12	1
7264365	654	90 80 301	2	1	7362091	808	11 37 560 6	31	4
7264365	699	10 11 801 4	10	1	7362109	135	10 36 918 3	7	2
7264365	702	10 11 583 8	10	1	7362109	753	11 10 291 2	45	4
7264404	380	50 09 562	20	1	7362117	777	11 45 729 6	52	2
7264419	728	10 35 857 7	3	1	7362117	780	11 45 729 7	52	2
7264423	728	10 35 857 7	4	1	7362117	808	11 37 560 6	30	2
7264423	770	96 44 625	3	1	7362169	716	11 10 283 6	13	7
7264508	112	10 00 201 1	400	2	7362169	722	10 82 841 3	38	2
7264508	767	92 65 299	3	1	7362169	727	11 10 281 7	13	8
7264625	577	50 04 624	1	1	7362169	756	11 10 281 8	11	6
7264687	441	70 15 341	15	2	7362180	729	11 10 280 8	42	2
7264687	768	92 70 390	3	1	7362182	729	11 10 280 8	41	2
7274384	440	70 13 133	1	1	7362182	760	11 68 144 7	15	4
7360048	441	70 15 341	16	1	7362182	761	95 93 026	15	4
7360075	137	10 49 819 9	93	1.5m	7362182	762	96 44 648	14	2
7360171	276	11 38 339 7	82	1.38m	7362183	740	10 35 875 0	5	4
7360171	292	10 38 502 8	82	1.38m	7362183	762	96 44 648	15	2
7360171	456	10 05 183 8	4	0.7m	7362507	279	11 38 340 1	97	4
7360171	457	10 35 822 9	8	1.475m	7362507	302	11 45 228 6	97	4
7360171	459	10 06 423 5	11	0.93m	7362507	306	12 50 731 7	97	4
7360171	459	10 06 423 5	12	1.24m	7362515	101	10 40 412 7	4	1
7360171	460	10 49 856 6	11	0.93m	7362515	102	11 46 393 9	4	1
7360171	460	10 49 856 6	12	1.24m	7362515	121	10 40 412 9	19	1

Item	Page	Assembly	Pos.	Quantity	Item	Page	Assembly	Pos.	Quantity
7362515	142	10 04 853 9	26	1	7363276	752	11 10 291 2	17	2
7362515	142	10 04 853 9	36	1	7363334	345	10 35 862 3	55	2
7362515	143	10 04 853 9	40	1	7363717	8	11 10 260 2	23	1
7362515	385	10 04 851 7	48	1	7363717	531	11 10 262 1	39	1
7362515	387	10 35 863 4	48	1	7363717	534	10 06 759 6	21	1
7362515	569	10 11 832 9	8	1	7363717	535	10 49 835 9	21	1
7362545	211	10 04 853 7	122	3	7363743	456	10 05 183 8	10	2
7362545	356	10 35 862 9	13	6	7363743	457	10 35 822 9	12	2
7362546	210	10 04 853 7	112	4	7363930	448	10 35 865 5	133	1
7362547	136	10 36 918 3	30	2	7363930	461	10 07 033 5	10	4
7362547	515	11 10 255 3	124	3	7363930	462	10 35 826 4	7	2
7362547	525	10 06 559 1	22	3	7363930	464	10 08 276 3	25	1
7362551	515	11 10 255 3	138	1	7363930	545	10 37 464 5	17	1
7362583	326	94 76 369	5	2	7364350	753	11 10 291 2	50	2
7362583	741	90 79 392	10	2	7364696	267	11 38 342 7	27	1
7362602	136	10 36 918 3	34	2	7364696	268	11 38 342 9	26	2
7362602	198	10 04 853 6	346	2	7364696	361	10 06 380 1	204	1
7362602	515	11 10 255 3	118	1	7364696	754	10 85 472 4	13	1
7362602	525	10 06 559 1	21	8	7364901	244	10 06 198 5	12	4
7362603	11	12 86 140 4	53	1	7364904	244	10 06 198 5	13	2
7362603	521	10 35 866 5	27	11	7364904	775	11 45 729 6	44	2
7362603	525	10 06 559 1	20	8	7364904	778	11 45 729 7	44	2
7362606	244	10 06 198 5	10	1	7364949	470	10 35 866 0	12	14
7362606	752	11 10 291 2	15	1	7365069	244	10 06 198 5	9	2
7362665	515	11 10 255 3	120	1	7365080	11	12 86 140 4	52	1
7362674	178	70 28 075	28	2	7365080	217	11 10 291 6	26	1
7362689	162	11 34 249 1	26	1	7365080	358	10 35 862 4	28	2
7362698	145	10 04 853 9	64	2	7365090	775	11 45 729 6	32	4
7362698	385	10 04 851 7	43	1	7365090	778	11 45 729 7	32	4
7362698	387	10 35 863 4	43	1	7365293	455	10 06 436 0	6	1
7362734	515	11 10 255 3	113	6	7365430	470	10 35 866 0	14	5
7362752	272	10 49 880 5	62	1	7365626	391	74 14 913	2	1
7362752	279	11 38 340 1	103	4	7365626	445	10 35 865 5	5	1
7362752	302	11 45 228 6	103	4	7365704	328	10 40 689 8	35	1
7362752	307	12 50 731 7	103	4	7366049	95	11 00 410 3	7	1
7362816	360	10 06 380 1	37	1	7366260	247	12 84 952 6	5	6
7362946	411	10 35 863 8	210	4	7366260	274	10 49 880 5	165	1
7362949	411	10 35 863 8	211	2	7366260	515	11 10 255 3	134	6
7362986	275	11 38 339 7	25	7	7366558	134	10 04 853 1	30	6
7362986	291	10 38 502 8	25	7	7366620	282	10 04 363 2	42	1
7363004	274	10 49 880 5	160	3	7366731	276	11 38 339 7	81	1
7363004	515	11 10 255 3	110	8	7366731	292	10 38 502 8	81	1
7363004	521	10 35 866 5	26	2	7366794	546	10 49 803 0	20	4
7363060	197	10 04 853 6	325	2m	7366804	271	10 49 880 5	36	1
7363073	145	10 04 853 9	65	1	7366851	470	10 35 866 0	13	28
7363073	385	10 04 851 7	41	2	7366862	294	10 16 576 6	10	1
7363073	387	10 35 863 4	41	2	7366885	431	10 33 073 6	13	1
7363073	394	10 05 182 7	44	1	7366888	431	10 33 073 6	7	2
7363073	395	10 35 818 3	44	1	7366889	431	10 33 073 6	9	1
7363125	385	10 04 851 7	46	2	7367106	145	10 04 853 9	81	2
7363125	387	10 35 863 4	46	2	7367106	145	10 04 853 9	82	2
7363177	8	11 10 260 2	27	1	7367135	360	10 06 380 1	90	1
7363177	385	10 04 851 7	40	3	7367211	345	10 35 862 3	57	4
7363177	387	10 35 863 4	40	3	7367211	357	10 35 862 9	52	4
7363177	531	11 10 262 1	43	1	7367211	358	10 35 862 4	19	6
7363177	534	10 06 759 6	46	1	7367212	351	10 35 862 8	31	4
7363177	535	10 49 835 9	46	1	7367226	382	70 30 267	5	1
7363178	178	70 28 075	27	1	7367236	345	10 35 862 3	54	4
7363247	361	10 06 380 1	120	1	7367236	357	10 35 862 9	45	4
7363247	406	10 35 863 8	38	2	7367236	358	10 35 862 4	15	6

Item	Page	Assembly	Pos.	Quantity	Item	Page	Assembly	Pos.	Quantity
7367237	351	10 35 862 8	27	4	7370837	157	10 00 809 5	6	1
7367448	775	11 45 729 6	33	2	7370837	206	10 00 840 5	6	1
7367448	778	11 45 729 7	33	2	7370843	208	56 19 045	30	1
7367691	328	10 40 689 8	100	1	7370883	294	10 16 576 6	13	7
7367745	777	11 45 729 6	53	2	7370883	310	56 18 923	12	11
7367745	780	11 45 729 7	53	2	7370888	294	10 16 576 6	9	4
7367749	359	10 35 862 4	65	1	7370889	294	10 16 576 6	8	2
7368081	385	10 04 851 7	70	1	7370889	310	56 18 923	13	4
7368081	387	10 35 863 4	70	1	7370890	310	56 18 923	5	3
7368096	385	10 04 851 7	49	1	7370891	310	56 18 923	3	1
7368096	387	10 35 863 4	49	1	7370892	310	56 18 923	4	1
7368106	722	10 82 841 3	35	2	7370893	310	56 18 923	14	1
7368106	730	10 39 639 6	23	2	7370894	310	56 18 923	2	1
7368115	721	10 82 841 3	26	3	7370895	294	10 16 576 6	3	1
7368115	730	10 39 639 6	18	1	7370896	294	10 16 576 6	2	1
7368253	786	10 82 562 1	374	4	7370897	294	10 16 576 6	4	1
7368426	716	11 10 283 6	30	3	7370899	294	10 16 576 6	6	1
7368426	722	10 82 841 3	39	3	7370924	392	10 33 390 3	1	1
7368426	727	11 10 281 7	30	8	7371025	362	10 04 272 9	8	1
7368426	730	10 39 639 6	19	8	7371141	281	11 38 340 1	135	1
7368426	756	11 10 281 8	40	2	7371141	304	11 45 228 6	135	1
7368426	777	11 45 729 6	54	1	7371141	307	12 50 731 7	135	1
7368426	780	11 45 729 7	54	1	7371142	281	11 38 340 1	138	3
7368478	135	10 36 918 3	16	2	7371142	304	11 45 228 6	138	3
7368531	410	10 35 863 8	140	1	7371142	307	12 50 731 7	138	3
7368534	151	10 29 154 4	5	1	7371258	431	10 33 073 6	51	1
7368545	244	10 06 198 5	21	4	7371577	294	10 16 576 6	7	10
7368904	396	10 02 217 5	10	1	7371577	310	56 18 923	10	9
7368993	65	12 48 693 1	401	1	7371590	362	10 04 272 9	6	1
7368993	69	12 48 693 2	401	1	7371590	373	56 08 327	10	1
7368993	74	12 48 693 4	401	1	7371651	349	93 99 179	4	1
7368993	392	10 33 390 3	2	1	7371654	349	93 99 179	3	1
7368994	392	10 33 390 3	4	1	7371654	419	10 07 619 5	10	1
7368996	392	10 33 390 3	3	6	7371746	282	10 04 363 2	80	1
7369103	80	10 67 501 0	4	196	7371875	197	10 04 853 6	331	1
7369103	81	11 16 108 1	4	196	7372158	310	56 18 923	11	2
7369169	95	11 00 410 3	8	1	7372237	362	10 04 272 9	7	1
7369266	393	73 73 881	1	1	7372252	371	10 32 372 8	11	1
7369271	139	10 36 573 8	17	1	7372353	297	73 73 807	16	1
7369271	140	11 10 293 9	17	1	7372354	297	73 73 807	17	1
7369286	393	73 73 881	2	1	7372355	297	73 73 807	18	1
7369377	292	10 38 502 8	80	1	7372624	162	11 34 249 1	22	4
7369456	389	73 68 081	1	4	7372624	398	11 49 189 0	35	2
7369476	112	10 00 201 1	170	1	7372626	162	11 34 249 1	32	2
7369481	98	12 23 362 5	250	1	7372626	398	11 49 189 0	12	1
7369483	112	10 00 201 1	110	1	7373031	83	56 17 975	40	4
7369754	331	10 02 206 9	2	2	7373042	360	10 06 380 1	10	1
7369776	519	99 47 695	12	1	7373200	421	10 30 079 8	55	1
7369779	425	10 11 386 0	53	6	7373201	421	10 30 079 8	230	1
7369780	425	10 11 386 0	55	2	7373202	421	10 30 079 8	380	1
7369781	424	10 11 386 0	22	8	7373203	421	10 30 079 8	390	1
7370096	277	11 38 340 1	42	1	7373268	310	56 18 923	20	1
7370096	301	11 45 228 6	42	1	7373403	139	10 36 573 8	15	1
7370096	305	12 50 731 7	42	1	7373403	140	11 10 293 9	15	1
7370423	357	10 35 862 9	46	2	7373405	446	10 35 865 5	41	1
7370423	358	10 35 862 4	17	3	7373592	512	10 47 012 8	1	4
7370432	112	10 00 201 1	310	4	7373742	89	11 60 010 7	4	2
7370581	282	10 04 363 2	73	1	7373747	89	11 60 010 7	6	2
7370689	272	10 49 880 5	44	2	7373748	89	11 60 010 7	3	1
7370835	157	10 00 809 5	7	1	7373807	294	10 16 576 6	14	1

Item	Page	Assembly	Pos.	Quantity	Item	Page	Assembly	Pos.	Quantity
7373825	297	73 73 807	20	1	7380470	158	10 11 886 0	32	1
7373873	542	10 49 878 6	35	2	7380480	227	90 02 790 4	97	1
7373874	711	11 10 294 5	22	6	7380512	230	90 74 075	25	1
7373874	758	10 35 857 3	4	2	7380512	235	92 73 163	25	1
7373874	775	11 45 729 6	31	4	7380512	833	11 38 195 4	25	1
7373874	778	11 45 729 7	31	4	7380520	693	90 77 386	4	1
7373875	711	11 10 294 5	19	6	7380520	701	10 11 801 4	38	1
7373875	759	10 85 361 0	6	2	7380520	704	10 11 583 8	38	1
7373881	383	10 04 851 7	22	1	7380520	705	10 11 583 8	57	2
7373881	386	10 35 863 4	22	1	7380531	829	92 68 016	44	1
7373978	711	11 10 294 5	10	4	7380566	560	12 82 483 7	6	3
7380070	233	90 74 117	33	1	7380566	572	12 83 230 4	2	1
7380070	824	90 74 123	33	1	7380566	573	12 83 230 5	2	1
7380071	73	12 48 693 4	331	1	7380566	642	10 11 707 3	11	1
7380071	355	10 04 462 4	2	1	7380566	643	90 77 279	6	1
7380073	385	10 04 851 7	61	1	7380566	658	10 11 550 3	5	1
7380073	387	10 35 863 4	61	1	7380566	674	90 76 551	50	1
7380073	529	10 04 852 5	36	1	7380577	837	92 66 231	18	1
7380073	530	10 49 836 0	36	1	7380596	116	98 82 760	20	1
7380073	531	11 10 262 1	36	2	7380596	810	11 38 131 3	20	1
7380073	534	10 06 759 6	32	1	7380596	833	11 38 195 4	20	1
7380073	535	10 49 835 9	32	1	7380598	704	10 11 583 8	39	1
7380074	766	92 65 991	17	1	7380600	216	90 80 194	62	2
7380074	767	92 65 299	1	1	7380600	821	10 11 909 3	62	1
7380075	766	92 65 991	18	1	7380617	119	92 66 232	19	1
7380075	767	92 65 299	2	1	7380618	119	92 66 232	20	1
7380075	768	92 70 390	2	1	7380619	119	92 66 232	22	1
7380077	768	92 70 390	1	1	7380620	837	92 66 231	19	1
7380106	189	98 89 977	33	1	7380621	837	92 66 231	20	1
7380106	831	98 89 978	33	1	7380648	182	92 74 731	32	10
7380133	323	90 79 258	35	2	7380648	184	98 82 875	68	8
7380133	820	90 78 788	66	2	7380648	816	90 73 786	22	1
7380134	318	90 74 482	3	1	7380648	819	10 13 306 1	68	5
7380134	319	92 69 690	46	4	7380648	820	90 78 788	68	1
7380134	743	90 79 277	3	1	7380648	833	11 38 195 4	22	1
7380135	318	90 74 482	4	1	7380653	570	90 79 480	11	2
7380135	319	92 69 690	47	4	7380653	680	10 11 611 4	9	1
7380135	743	90 79 277	4	1	7380653	699	10 11 801 4	7	2
7380136	323	90 79 258	40	1	7380653	702	10 11 583 8	7	2
7380136	325	90 79 259	40	1	7380653	704	10 11 583 8	37	1
7380137	323	90 79 258	41	2	7380656	827	90 77 464	18	1
7380137	742	90 79 264	49	2	7380656	835	92 65 808	18	4
7380138	323	90 79 258	42	2	7380657	698	90 80 504	2	1
7380138	742	90 79 264	50	2	7380657	704	10 11 583 8	40	1
7380138	807	10 11 856 1	50	8	7380657	813	12 87 963 9	42	1
7380138	808	11 37 560 6	50	8	7380657	829	92 68 016	36	1
7380165	834	98 85 928	11	1	7380658	235	92 73 163	18	1
7380177	560	12 82 483 7	4	2	7380658	816	90 73 786	18	1
7380177	681	90 80 653	14	1	7380658	817	90 74 112	18	1
7380180	766	92 65 991	21	1	7380658	833	11 38 195 4	18	1
7380253	441	70 15 341	41	1	7380659	182	92 74 731	23	2
7380274	834	98 85 928	13	1	7380684	184	98 82 875	16	1
7380275	834	98 85 928	12	1	7380691	216	90 80 194	63	2
7380276	834	98 85 928	10	1	7380695	405	98 89 196	10	1
7380297	814	12 88 015 2	42	1	7380696	405	98 89 196	10	1
7380297	828	92 68 015	36	1	7380697	405	98 89 196	10	1
7380348	182	92 74 731	24	2	7380698	405	98 89 196	10	1
7380401	693	90 77 386	5	1	7380719	116	98 82 760	22	1
7380401	704	10 11 583 8	48	1	7380719	810	11 38 131 3	22	1
7380441	441	70 15 341	14	2	7380719	833	11 38 195 4	21	1

Item	Page	Assembly	Pos.	Quantity	Item	Page	Assembly	Pos.	Quantity
7380721	821	10 11 909 3	30	1	7381415	184	98 82 875	73	1
7380730	116	98 82 760	30	1	7381415	635	10 11 628 5	83	1
7380797	821	10 11 909 3	31	1	7381415	706	10 11 583 8	72	1
7380824	818	98 82 832	20	1	7381415	820	90 78 788	73	1
7380833	656	10 11 983 0	2	2	7381442	184	98 82 875	15	1
7380833	657	90 75 678	2	2	7381457	662	90 79 889	10	1
7380868	183	92 75 443	70	1	7381457	698	90 80 504	3	1
7380883	119	92 66 232	21	1	7381476	833	11 38 195 4	19	1
7380884	119	92 66 232	23	1	7381534	817	90 74 112	24	1
7380888	182	92 74 731	56	2	7381562	184	98 82 875	43	2
7380888	184	98 82 875	69	1	7381565	515	11 10 255 3	106	11
7380888	819	10 13 306 1	69	1	7381593	655	10 13 281 7	3	2
7380905	836	92 66 089	28	2	7381593	699	10 11 801 4	11	2
7380919	607	10 11 585 1	14	1	7381593	702	10 11 583 8	11	2
7380919	609	10 11 585 3	14	1	7381615	182	92 74 731	22	2
7380935	116	98 82 760	23	2	7381628	575	90 79 978	4	1
7380935	646	10 29 998 8	2	1	7381628	576	90 79 862	4	1
7380935	810	11 38 131 3	23	2	7381628	635	10 11 628 5	81	1
7380935	833	11 38 195 4	23	2	7381628	687	10 11 799 7	24	1
7380955	615	10 11 585 0	2	2	7381629	641	10 11 657 6	8	1
7380970	607	10 11 585 1	13	1	7381630	359	10 35 862 4	63	1
7380970	609	10 11 585 3	13	1	7381630	566	10 11 916 7	7	2
7380970	644	10 11 570 3	8	1	7381630	567	90 79 021	7	1
7380970	645	10 12 190 9	8	1	7381630	756	11 10 281 8	30	2
7380986	184	98 82 875	17	1	7381635	576	90 79 862	8	1
7380987	184	98 82 875	71	2	7381635	687	10 11 799 7	27	2
7380991	836	92 66 089	25	2	7381638	680	10 11 611 4	12	1
7380992	836	92 66 089	24	1	7381638	698	90 80 504	8	1
7381018	235	92 73 163	16	1	7381685	610	90 80 713	14	1
7381018	239	92 78 623	11	1	7381685	617	90 80 278	4	1
7381018	240	62 90 073	10	1	7381685	705	10 11 583 8	50	2
7381018	817	90 74 112	16	1	7381758	116	98 82 760	29	1
7381103	688	12 54 450 5	2	1	7381758	810	11 38 131 3	29	1
7381124	116	98 82 760	21	1	7381763	116	98 82 760	15	1
7381124	810	11 38 131 3	21	1	7381763	810	11 38 131 3	15	1
7381124	833	11 38 195 4	27	1	7381770	687	10 11 799 7	18	1
7381131	216	90 80 194	60	1	7381771	687	10 11 799 7	17	4
7381131	821	10 11 909 3	60	1	7381779	570	90 79 480	10	2
7381154	767	92 65 299	4	1	7381779	654	90 80 301	3	2
7381225	614	90 78 233	2	1	7381779	659	90 79 472	2	1
7381226	563	10 11 795 1	6	1	7381779	660	90 79 474	2	1
7381226	564	90 75 134	6	1	7381779	661	90 80 280	2	1
7381226	699	10 11 801 4	3	1	7381779	699	10 11 801 4	6	7
7381226	702	10 11 583 8	3	1	7381779	702	10 11 583 8	6	6
7381270	595	90 79 838	6	1	7381781	605	90 74 507	6	1
7381270	606	10 11 585 1	6	1	7381807	323	90 79 258	26	2
7381270	608	10 11 585 3	6	1	7381807	742	90 79 264	26	2
7381292	574	12 83 245 4	11	1	7381809	116	98 82 760	19	1
7381302	618	90 72 781	10	1	7381809	810	11 38 131 3	19	1
7381354	817	90 74 112	22	1	7381809	833	11 38 195 4	30	1
7381361	636	90 73 767	5	2	7381812	616	90 74 796	4	1
7381361	694	90 77 718	4	2	7381812	705	10 11 583 8	54	1
7381361	705	10 11 583 8	56	6	7381855	185	98 84 140	15	4
7381398	818	98 82 832	15	1	7381861	185	98 84 140	61	2
7381413	116	98 82 760	24	2	7381861	832	10 11 948 2	61	2
7381413	810	11 38 131 3	24	2	7381903	185	98 84 140	60	1
7381413	833	11 38 195 4	24	2	7381903	832	10 11 948 2	60	1
7381414	116	98 82 760	25	1	7381925	634	10 11 628 5	28	2
7381414	810	11 38 131 3	25	1	7381925	635	10 11 628 5	78	1
7381414	833	11 38 195 4	26	1	7381986	655	10 13 281 7	9	1

Item	Page	Assembly	Pos.	Quantity	Item	Page	Assembly	Pos.	Quantity
7381994	613	90 73 507	15	2	7404186	780	11 45 729 7	51	1
7382059	616	90 74 796	5	1	7405006	142	10 04 853 9	33	1
7382059	705	10 11 583 8	55	1	7405120	361	10 06 380 1	510	1
7382069	560	12 82 483 7	8	2	7405120	406	10 35 863 8	30	2
7382081	638	10 11 726 8	3	2	7406028	758	10 35 857 3	5	2
7382087	687	10 11 799 7	40	1	7406682	361	10 06 380 1	200	1
7382090	654	90 80 301	6	2	7406682	412	10 35 863 8	360	1
7382092	575	90 79 978	2	2	7406699	354	10 06 379 8	47	1
7382149	827	90 77 464	34	1	7406699	753	11 10 291 2	62	1
7382158	695	90 78 962	7	1	7406864	142	10 04 853 9	24	1
7382158	705	10 11 583 8	58	3	7406864	346	10 06 379 3	32	1
7382167	190	98 89 983	31	24	7407071	142	10 04 853 9	23	2
7382167	191	98 89 984	31	24	7407098	359	10 35 862 4	47	1
7382167	192	98 89 988	30	24	7408829	208	56 19 045	33	1
7382188	180	90 72 998	30	22	7408829	401	10 00 807 7	33	1
7382188	231	90 73 380	30	21	7409720	345	10 35 862 3	65	2
7382188	234	90 74 125	30	21	7409720	346	10 06 379 3	41	1
7382188	823	90 74 122	30	22	7409720	347	10 06 379 3	61	1
7382202	689	90 79 893	5	2	7409720	408	10 35 863 8	93	2
7382202	701	10 11 801 4	23	2	7409923	359	10 35 862 4	46	1
7382203	560	12 82 483 7	5	2	7410211	267	11 38 342 7	24	1
7382203	631	10 12 580 1	8	1	7410211	268	11 38 342 9	25	1
7382203	634	10 11 628 5	47	2	7410211	268	11 38 342 9	32	2
7382204	570	90 79 480	14	3	7410211	361	10 06 380 1	184	3
7382204	574	12 83 245 4	6	3	7410211	410	10 35 863 8	142	1
7382204	613	90 73 507	23	2	7410211	754	10 85 472 4	14	1
7382204	658	10 11 550 3	6	1	7410268	353	10 06 379 8	40	1
7382204	701	10 11 801 4	22	2	7410457	359	10 35 862 4	61	1
7382216	641	10 11 657 6	5	1	7410773	348	56 09 948	15	1
7401007	415	10 35 863 8	585	1	7411823	336	11 00 359 4	29	1
7401007	415	10 35 863 8	600	1	7412159	777	11 45 729 6	50	1
7401288	333	10 02 211 7	17	4	7412159	780	11 45 729 7	50	1
7401349	136	10 36 918 3	21	11	7412734	253	10 66 472 2	9	1
7401349	213	10 04 853 8	53	1	7412943	11	12 86 140 4	51	3
7401349	748	93 88 597	2	1	7413402	400	10 00 807 7	20	1
7401756	413	10 35 863 8	384	1	7413407	171	10 28 772 5	1	9
7401757	143	10 04 853 9	45	3	7413408	171	10 28 772 5	2	1
7401757	412	10 35 863 8	366	1	7413414	171	10 28 772 5	10	1
7401772	754	10 85 472 4	31	1	7414232	11	12 86 140 4	50	3
7402273	121	10 40 412 9	10	2	7414522	112	10 00 201 1	50	2
7402440	413	10 35 863 8	378	1	7414913	530	10 49 836 0	15	1
7402483	415	10 35 863 8	610	1	7414913	531	11 10 262 1	15	1
7402576	361	10 06 380 1	520	1	746231601	226	90 02 790 4	12	1
7402657	541	93 58 137	1	1	7469905	181	90 74 893	64	2
7402658	541	93 58 137	2	1m	7469905	189	98 89 977	32	1
7402833	413	10 35 863 8	371	1	7469905	831	98 89 978	32	1
7402835	269	10 06 014 6	20	7	747002001	109	96 87 443 01	11	26
7403083	356	10 35 862 9	9	1	7471662	109	96 87 443 01	36	1
7403175	346	10 06 379 3	55	1	7610001	224	93 27 778 01	5	1
7403175	754	10 85 472 4	32	1	761003303	114	94 43 010 03	5	1
7403569	267	11 38 342 7	28	1	761003403	113	94 43 004 03	5	1
7403569	361	10 06 380 1	186	1	761003403	225	94 43 563 03	5	1
7403569	410	10 35 863 8	143	1	7610100	110	96 87 443 01	61	20
7403972	268	11 38 342 9	24	1	7610100	118	94 43 029 03	61	20
7403972	269	10 06 014 6	14	1	7610101	110	96 87 443 01	62	20
7403972	361	10 06 380 1	182	4	7610101	118	94 43 029 03	62	20
7403972	361	10 06 380 1	525	1	7610107	228	93 28 018 01	6	23
7403972	410	10 35 863 8	145	1	7610108	228	93 28 018 01	7	23
7403978	412	10 35 863 8	364	1	7610188	110	96 87 443 01	76	1
7404186	777	11 45 729 6	51	1	7610203	110	96 87 443 01	45	1

Item	Page	Assembly	Pos.	Quantity	Item	Page	Assembly	Pos.	Quantity
7610203	120	94 43 027	45	1	7621247	139	10 36 573 8	18	1
7610210	110	96 87 443 01	71	1	7621247	140	11 10 293 9	18	1
7610210	120	94 43 027	71	1	7621324	249	10 22 844 3	14	1
7610335	227	90 02 790 4	74	1	7621780	121	10 40 412 9	35	4
7610335	241	94 44 522 03	74	1	7621780	361	10 06 380 1	495	3
7610343	226	90 02 790 4	26	1	7622803	255	10 29 300 3	30	6
7610343	241	94 44 522 03	26	1	7622803	719	10 66 480 4	30	5
761050303	228	93 28 018 01	2	1	7622803	733	10 66 475 5	30	8
761050303	241	94 44 522 03	66	1	7623106	258	90 64 786	180	1
761050403	228	93 28 018 01	8	1	7623221	210	10 04 853 7	60	1
761050403	241	94 44 522 03	72	1	7623222	209	10 04 853 7	20	1
761050503	110	96 87 443 01	56	1	7623704	258	90 64 786	125	1
761050503	118	94 43 029 03	56	1	7623704	262	10 01 461 1	25	4
761050503	120	94 43 027	56	1	7623705	258	90 64 786	121	1
761050603	110	96 87 443 01	57	1	7623705	262	10 01 461 1	20	6
761050603	118	94 43 029 03	57	1	7623707	258	90 64 786	128	1
761050603	120	94 43 027	57	1	7623707	262	10 01 461 1	28	2
7610819	109	96 87 443 01	7	1	7624176	258	90 64 786	180	1
7610826	237	96 91 056 01	20	1	7624177	258	90 64 786	111	1
7615379	135	10 36 918 3	15	2	7624177	262	10 01 461 1	11	5
7615379	159	10 11 886 0	76	1	7624268	744	10 00 348 5	999	1
7615379	354	10 06 379 8	43	1	7624285	256	10 01 471 7	30	1
7615522	406	10 35 863 8	31	1	7624322	209	10 04 853 7	30	4
7615522	406	10 35 863 8	36	1	7738704	446	10 35 865 5	32	4
7615603	177	70 28 075	14	2	7738704	447	10 35 865 5	92	2
7615604	177	70 28 075	16	2	7738704	462	10 35 826 4	22	2
7615629	145	10 04 853 9	75	2	7738704	468	10 03 720 9	20	2
7615767	137	10 49 819 9	50	2	774217008	196	10 04 853 6	211	2
7616897	142	10 04 853 9	34	1	774217008	196	10 04 853 6	231	2
7616913	354	10 06 379 8	46	1	774252314	137	10 49 819 9	22	1
7616915	413	10 35 863 8	427	1	7743245	486	70 28 842	610	2
7616916	754	10 85 472 4	18	1	774371808	258	90 64 786	110	1
7616949	364	50 09 565	9	1	774371808	262	10 01 461 1	10	10
7617261	269	10 06 014 6	12	3	774373408	257	90 64 786	90	1
7617261	346	10 06 379 3	26	1	774373408	259	90 64 786	190	1
7617261	410	10 35 863 8	141	13	774373408	260	90 64 786	290	1
7617261	413	10 35 863 8	383	1	774373608	257	90 64 786	30	1
7617261	414	10 35 863 8	515	4	774373708	257	90 64 786	70	1m
7617262	269	10 06 014 6	13	1	774374208	257	90 64 786	40	1
7617262	347	10 06 379 3	62	1	774374208	258	90 64 786	140	1
7617262	413	10 35 863 8	388	1	774374208	262	10 01 461 1	40	6
7617460	409	10 35 863 8	132	4	774376008	258	90 64 786	100	1
7617460	410	10 35 863 8	176	2	774376008	262	10 01 461 1	1	31
7617485	356	10 35 862 9	10	1	774376108	258	90 64 786	170	1m
7617520	289	10 28 999 3	51	2	774376108	262	10 01 461 1	70	15m
7617714	143	10 04 853 9	43	1	774376508	258	90 64 786	185	1
7617714	244	10 06 198 5	22	4	774378008	719	10 66 480 4	32	2
7617743	346	10 06 379 3	21	2	774378008	733	10 66 475 5	32	2
7618290	412	10 35 863 8	369	3	774378208	255	10 29 300 3	31	2
7618380	101	10 40 412 7	3	1	774378208	719	10 66 480 4	31	1
7618380	102	11 46 393 9	3	1	774378208	733	10 66 475 5	31	2
7618568	176	11 82 153 4	7	1	774383508	198	10 04 853 6	372	0.6m
7618568	178	70 28 075	34	6	774383508	211	10 04 853 7	210	1.4m
7618605	399	11 49 189 4	31	1	774383508	258	90 64 786	165	1m
7618883	510	10 48 808 8	285	1	774383508	260	90 64 786	265	1m
7619197	219	10 06 198 2	22	1	774383508	751	10 35 860 1	20	0.5m
7619197	756	11 10 281 8	19	1	7890017	110	96 87 443 01	80	1
7620786	359	10 35 862 4	60	1	7900280	540	10 84 856 2	140	1
7621058	250	10 22 844 3	24	1	7900836	540	10 84 856 2	150	1
7621217	754	10 85 472 4	30	1	8100714	807	10 11 856 1	127	1

Item	Page	Assembly	Pos.	Quantity	Item	Page	Assembly	Pos.	Quantity
8100714	808	11 37 560 6	127	1	8700039	822	90 74 114	106	1
811205101	662	90 79 889	120	1	90008633	226	90 02 790 4	1	1
811205708	159	10 11 886 0	103	1	90008634	226	90 02 790 4	5	1
811205708	618	90 72 781	109	1	90014538	220	90 02 790 3	800	1
811205708	655	10 13 281 7	109	1	90014539	221	90 01 453 8	55	1
811205708	669	90 78 384	109	1	90014540	221	90 01 453 8	61	2
811205708	672	90 79 823	109	1	90018066	242	10 04 851 4	16	1
811205708	690	90 77 719	109	1	90021973	220	90 02 790 3	700	1
811205708	691	90 78 961	105	1	90027903	219	10 06 198 2	10	1
811205708	692	90 80 006	109	1	90027904	223	90 02 790 5	1	1
811205708	809	10 11 908 9	103	1	90027905	220	90 02 790 3	1	1
811205708	825	10 13 975 2	104	1	90028782	226	90 02 790 4	20	1
811208201	602	10 12 038 4	104	1	9006346	521	10 35 866 5	46	4
811208201	807	10 11 856 1	118	1	9007585	520	99 47 695	60	1
811208201	808	11 37 560 6	118	1	9008100	775	11 45 729 6	30	1
811208201	816	90 73 786	118	1	9008100	778	11 45 729 7	30	1
8145660	51	90 66 466	10	1	9008530	328	10 40 689 8	30	2
8145666	52	90 66 466	100	1	9010347	271	10 49 880 5	10	1
8500251	722	10 82 841 3	34	1	9013811	280	11 38 340 1	104	1
8500251	727	11 10 281 7	17	5	9013811	302	11 45 228 6	104	1
8500251	731	10 39 639 6	32	5	9013811	307	12 50 731 7	104	1
8501565	538	10 08 428 6	20	1	9014773	127	10 08 736 5	4	1
8563210	786	10 82 562 1	155	3	90200992	226	90 02 790 4	10	1
8593004	43	11 44 078 9	9998	1Pair	9063688	773	95 91 741	999	1
8610025	60	11 41 916 5	10	1	9064786	720	10 66 482 5	998	1
8610230	38	10 35 899 2	1	1	9066460	14	10 35 964 8	500	1
8611031	61	11 41 917 5	20	1kg	9066465	15	90 66 460	70	1
861303608	34	10 35 894 7	25	1	9066466	15	90 66 460	100	1
861304208	34	10 35 894 7	10	1	9070361	15	90 66 460	10	1
861305508	34	10 35 894 7	1	1	9070362	15	90 66 460	20	1
861305608	34	10 35 894 7	50	1kg	9070363	15	90 66 460	30	1
8620769	807	10 11 856 1	130	1kg	9070364	15	90 66 460	40	1
8620769	808	11 37 560 6	130	1kg	9070365	15	90 66 460	50	1
8622905	693	90 77 386	108	1	9070366	15	90 66 460	60	1
8627609	216	90 80 194	123	1	9070532	261	90 64 786	300	1
8627609	574	12 83 245 4	112	1	9072086	188	98 89 833	1	1
8627609	821	10 11 909 3	123	1	9072294	180	90 72 998	13	1
8628192	154	90 73 242	104	1	9072295	180	90 72 998	14	1
8628192	567	90 79 021	109	1	9072435	827	90 77 464	12	1
8628192	635	10 11 628 5	109	1	9072436	827	90 77 464	70	1
8628192	650	10 11 646 4	109	1	9072437	826	90 72 436	10	1
8628192	684	10 11 599 3	109	1	9072438	826	90 72 436	10	1
8629969	213	10 04 853 8	33	0.001	9072439	826	90 72 436	10	1
8655008	216	90 80 194	126	1	9072440	826	90 72 436	10	1
8655008	821	10 11 909 3	126	1	9072592	181	90 74 893	11	2
8655016	182	92 74 731	105	1	9072633	618	90 72 781	7	1
8655016	620	90 75 368	105	1	9072633	619	90 80 277	7	1
8655016	671	90 79 468	109	1	9072692	179	90 72 997	1	9
8655023	560	12 82 483 7	104	1	9072751	231	90 73 380	13	1
8655030	654	90 80 301	110	1	9072751	234	90 74 125	13	1
8700011	595	90 79 838	102	1	9072781	616	90 74 796	1	1
8700012	181	90 74 893	106	1	9072834	581	90 75 115	3	1
8700012	187	98 89 832	106	1	9072908	649	90 78 356	3	1
8700012	188	98 89 833	106	1	9072997	799	90 73 888	77	1
8700012	232	90 74 113	106	1	9072997	823	90 74 122	77	1
8700014	325	90 79 259	111	1	9072998	799	90 73 888	78	1
8700039	234	90 74 125	106	1	9072998	823	90 74 122	78	1
8700039	574	12 83 245 4	106	1	9073083	560	12 82 483 7	80	6
8700039	619	90 80 277	100	1	9073098	610	90 80 713	3	1
8700039	810	11 38 131 3	106	1	9073100	610	90 80 713	13	1

Item	Page	Assembly	Pos.	Quantity	Item	Page	Assembly	Pos.	Quantity
9073163	610	90 80 713	8	1	9074507	604	90 74 505	3	2
9073188	610	90 80 713	6	2	9074508	600	12 40 205 3	1	1
9073190	641	10 11 657 6	6	1	9074510	600	12 40 205 3	3	1
9073242	801	10 13 303 7	3	1	9074513	596	90 79 849	1	1
9073342	655	10 13 281 7	6	1	9074628	621	10 11 683 9	2	1
9073380	230	90 74 075	78	1	9074677	627	90 75 395	1	1
9073505	613	90 73 507	1	1	9074796	558	10 11 682 5	140	1
9073506	612	90 73 508	2	1	9074798	560	12 82 483 7	9	12
9073507	612	90 73 508	1	1	9074876	181	90 74 893	10	1
9073508	558	10 11 682 5	130	1	9074893	803	10 13 303 7	90	1
9073551	822	90 74 114	2	1	9074935	655	10 13 281 7	5	1
9073554	232	90 74 113	2	1	9074936	655	10 13 281 7	10	1
9073554	234	90 74 125	12	1	9074969	655	10 13 281 7	2	2
9073572	232	90 74 113	1	1	9074977	670	10 11 548 0	4	12
9073572	234	90 74 125	2	1	9075115	557	10 11 682 5	50	1
9073574	822	90 74 114	1	1	9075128	665	90 80 736	26	1
9073588	799	90 73 888	1	1	9075133	557	10 11 682 5	52	1
9073639	185	98 84 140	20	1	9075134	557	10 11 682 5	14	1
9073678	562	90 73 795	5	1	9075361	563	10 11 795 1	1	1
9073725	602	10 12 038 4	6	2	9075361	564	90 75 134	1	1
9073726	602	10 12 038 4	7	2	9075368	558	10 11 682 5	150	1
9073745	561	10 11 577 8	10	7	9075372	624	10 11 659 1	3	1
9073767	559	10 11 682 5	210	1	9075395	559	10 11 682 5	191	6
9073783	816	90 73 786	11	1	9075395	625	10 11 709 3	191	1
9073786	799	90 73 888	3	1	9075395	628	10 11 585 4	191	1
9073795	557	10 11 682 5	15	6	9075483	566	10 11 916 7	1	1
9073796	562	90 73 795	1	1	9075483	567	90 79 021	1	1
9073827	181	90 74 893	15	1	9075642	564	90 75 134	5	1
9073888	107	10 83 693 0	10	2	9075678	552	10 11 714 5	380	1
9073888	108	11 10 296 8	10	2	9075763	627	90 75 395	2	1
9074075	219	10 06 198 2	13	1	9075894	187	98 89 832	1	1
9074077	233	90 74 117	10	1	9076414	651	10 11 555 9	1	1
9074112	230	90 74 075	3	1	9076458	557	10 11 682 5	51	1
9074113	230	90 74 075	79	1	9076459	557	10 11 682 5	60	6
9074114	799	90 73 888	79	1	9076530	673	90 76 551	2	1
9074114	823	90 74 122	79	1	9076531	674	90 76 551	11	1
9074117	230	90 74 075	95	1	9076534	674	90 76 551	21	1
9074121	824	90 74 123	10	1	9076550	673	90 76 551	10	1
9074122	799	90 73 888	94	1	9076551	555	10 11 714 5	581	1
9074123	799	90 73 888	95	1	9076621	637	10 11 559 5	1	1
9074125	230	90 74 075	94	1	9076638	665	90 80 736	2	3
9074307	826	90 72 436	10	1	9077172	563	10 11 795 1	3	1
9074308	826	90 72 436	10	1	9077172	564	90 75 134	3	1
9074332	826	90 72 436	10	1	9077279	552	10 11 714 5	221	1
9074450	597	10 11 942 7	2	2	9077327	693	90 77 386	1	1
9074450	598	10 12 036 4	2	2	9077328	696	90 77 384	1	1
9074451	597	10 11 942 7	4	2	9077329	704	10 11 583 8	35	3
9074451	598	10 12 036 4	4	2	9077384	693	90 77 386	2	1
9074480	591	10 14 155 4	7	4	9077386	692	90 80 006	1	1
9074480	597	10 11 942 7	7	4	9077464	825	10 13 975 2	1	2
9074480	598	10 12 036 4	7	4	9077515	799	90 73 888	10	1
9074481	591	10 14 155 4	9	4	9077612	693	90 77 386	3	1
9074481	597	10 11 942 7	9	4	9077708	650	10 11 646 4	4	2
9074481	598	10 12 036 4	9	4	9077710	697	90 77 717	1	1
9074482	807	10 11 856 1	98	1	9077713	694	90 77 718	1	1
9074482	808	11 37 560 6	98	1	9077714	694	90 77 718	3	1
9074504	599	12 40 205 5	1	1	9077717	694	90 77 718	2	1
9074504	604	90 74 505	1	1	9077718	690	90 77 719	1	1
9074505	601	90 79 861	2	1	9077719	555	10 11 714 5	650	1
9074506	604	90 74 505	2	1	9077777	580	91 47 512	1	1

Item	Page	Assembly	Pos.	Quantity	Item	Page	Assembly	Pos.	Quantity
9078233	560	12 82 483 7	13	1	9079849	549	10 11 714 5	82	5
9078314	552	10 11 714 5	260	1	9079850	558	10 11 682 5	80	6
9078356	552	10 11 714 5	331	1	9079861	549	10 11 714 5	81	6
9078384	554	10 11 714 5	450	1	9079862	549	10 11 714 5	21	1
9078680	559	10 11 682 5	211	1	9079867	576	90 79 862	2	1
9078681	622	90 78 680	1	1	9079870	558	10 11 682 5	110	6
9078685	635	10 11 628 5	92	1	9079889	554	10 11 714 5	386	1
9078701	741	90 79 392	11	2	9079893	555	10 11 714 5	630	1
9078788	803	10 13 303 7	86	2	9079936	644	10 11 570 3	4	1
9078849	672	90 79 823	1	1	9079936	645	10 12 190 9	4	1
9078961	556	10 11 714 5	654	1	9079952	602	10 12 038 4	1	1
9078962	691	90 78 961	1	1	9079957	644	10 11 570 3	6	1
9078963	695	90 78 962	1	1	9079957	645	10 12 190 9	6	1
9078964	695	90 78 962	2	1	9079972	575	90 79 978	1	1
9078984	691	90 78 961	4	1	9079978	549	10 11 714 5	25	1
9079001	695	90 78 962	3	1	9079996	587	11 34 805 4	1	1
9079009	567	90 79 021	2	1	9080006	555	10 11 714 5	652	1
9079021	549	10 11 714 5	16	1	9080009	692	90 80 006	15	1
9079064	677	90 76 534	30	1	9080013	692	90 80 006	11	1
9079078	602	10 12 038 4	9	1	9080027	605	90 74 507	2	1
9079082	639	90 79 083	1	1	9080038	687	10 11 799 7	9	1
9079083	559	10 11 682 5	381	1	9080084	565	90 73 083	1	1
9079124	700	10 11 801 4	14	3	9080174	158	10 11 886 0	12	1
9079124	703	10 11 583 8	18	3	9080191	158	10 11 886 0	5	1
9079125	703	10 11 583 8	19	1	9080194	159	10 11 886 0	98	1
9079130	567	90 79 021	5	1	9080209	158	10 11 886 0	4	1
9079130	682	10 11 912 8	2	1	9080212	158	10 11 886 0	2	1
9079130	704	10 11 583 8	33	1	9080277	617	90 80 278	1	1
9079131	611	90 79 870	3	2	9080278	551	10 11 714 5	141	1
9079258	322	10 06 017 5	10	1	9080279	656	10 11 983 0	4	1
9079259	321	10 06 017 4	10	1	9080279	657	90 75 678	4	1
9079261	323	90 79 258	15	2	9080279	699	10 11 801 4	4	1
9079261	742	90 79 264	15	2	9080279	702	10 11 583 8	4	1
9079264	325	90 79 259	97	1	9080280	553	10 11 714 5	384	1
9079277	324	90 79 258	998	1	9080280	699	10 11 801 4	5	1
9079277	325	90 79 259	98	1	9080280	702	10 11 583 8	5	2
9079302	741	90 79 392	1	1	9080301	559	10 11 682 5	370	1
9079392	325	90 79 259	2	1	9080360	640	90 79 580	8	2
9079468	554	10 11 714 5	481	1	9080380	584	10 11 617 5	8	1
9079472	552	10 11 714 5	382	1	9080410	559	10 11 682 5	215	6
9079474	552	10 11 714 5	383	1	9080410	625	10 11 709 3	215	1
9079480	557	10 11 682 5	12	1	9080466	639	90 79 083	3	5
9079487	549	10 11 714 5	20	1	9080504	556	10 11 714 5	656	1
9079494	574	12 83 245 4	2	1	9080653	555	10 11 714 5	521	1
9079580	551	10 11 714 5	217	1	9080684	665	90 80 736	17	1
9079582	644	10 11 570 3	1	1	9080685	589	90 80 686	1	1
9079582	645	10 12 190 9	1	1	9080686	588	90 80 687	1	1
9079591	650	10 11 646 4	11	1	9080687	557	10 11 682 5	70	6
9079603	566	10 11 916 7	18	1	9080713	558	10 11 682 5	100	1
9079603	567	90 79 021	18	1	9080736	554	10 11 714 5	430	1
9079603	704	10 11 583 8	43	1	9080803	158	10 11 886 0	7	1
9079608	617	90 80 278	6	2	9080876	653	10 11 547 9	1	1
9079608	701	10 11 801 4	53	2	9080911	647	90 78 314	4	1
9079608	705	10 11 583 8	53	2	9080922	635	10 11 628 5	58	1
9079756	820	90 78 788	61	1	9080925	683	10 11 586 2	4	10
9079823	554	10 11 714 5	480	1	9103255	540	10 84 856 2	170	1
9079838	549	10 11 714 5	83	1	9107931	769	94 04 038 9	990	1
9079839	595	90 79 838	1	1	9110411	770	96 44 625	991	1
9079844	574	12 83 245 4	9	1	9110412	769	94 04 038 9	991	1
9079845	574	12 83 245 4	5	1	9123332	417	10 06 398 6	3	4

Item	Page	Assembly	Pos.	Quantity	Item	Page	Assembly	Pos.	Quantity
9132577	567	90 79 021	14	4	9265400	323	90 79 258	20	1
9132577	663	10 11 919 9	2	4	9265400	325	90 79 259	20	1
9132577	664	10 11 571 8	20	7	9265402	323	90 79 258	23	4
9132577	687	10 11 799 7	72	1	9265402	742	90 79 264	23	4
9133637	563	10 11 795 1	11	1	9265402	807	10 11 856 1	23	8
9133637	564	90 75 134	11	1	9265402	808	11 37 560 6	23	8
9140351	566	10 11 916 7	8	1	9265410	323	90 79 258	24	1
9140351	569	10 11 832 9	21	1	9265410	325	90 79 259	24	1
9140351	665	90 80 736	26	1	9265414	323	90 79 258	30	2
9144757	578	10 11 903 0	2	1	9265414	743	90 79 277	5	1
9144757	595	90 79 838	10	1	9265521	807	10 11 856 1	28	4
9144761	648	91 44 757	1	1	9265521	808	11 37 560 6	28	4
9144762	648	91 44 757	3	1	9265808	805	10 13 303 7	98	1
9145973	564	90 75 134	12	1	9265991	765	92 65 178	998	1
9147512	549	10 11 714 5	24	2	9266063	818	98 82 832	13	1
9154141	770	96 44 625	999	1	9266089	812	12 41 005 4	98	1
9169653	769	94 04 038 9	999	1	9266231	230	90 74 075	97	1
9170985	760	11 68 144 7	1	2	9266231	806	92 67 037	98	1
9170985	761	95 93 026	1	2	9266232	230	90 74 075	93	1
9171589	320	10 05 981 8	60	2	9266232	236	10 11 950 3	98	1
9174981	585	90 76 459	1	2	9266680	181	90 74 893	18	2
9174981	587	11 34 805 4	2	2	9266836	817	90 74 112	12	1
9177636	561	10 11 577 8	6	14	9267037	817	90 74 112	2	1
9177676	683	10 11 586 2	1	1	9267183	618	90 72 781	7	1
9177716	770	96 44 625	2	2	9267183	619	90 80 277	7	1
9177717	769	94 04 038 9	2	2	9267273	618	90 72 781	13	1
9177948	704	10 11 583 8	45	2	9267273	619	90 80 277	13	1
9178294	690	90 77 719	3	1	9267472	613	90 73 507	4	2
9178294	695	90 78 962	5	1	9268015	230	90 74 075	96	1
9202120	751	10 35 860 1	10	1	9268015	799	90 73 888	96	1
921594916	712	11 10 294 5	35	1	9268015	833	11 38 195 4	6	1
921596716	713	11 10 294 5	90	2	9268016	805	10 13 303 7	96	1
9229473	746	10 08 390 7	4	1	9268016	835	92 65 808	96	1
9231952	410	10 35 863 8	147	1	9268054	323	90 79 258	25	2
9240322	745	10 06 258 3	4	1	9268129	607	10 11 585 1	16	1
9240322	747	92 15 949 16	3	1	9268129	609	10 11 585 3	16	1
9245586	761	95 93 026	9	1	9268131	665	90 80 736	18	1
9245586	762	96 44 648	9	1	9268131	706	10 11 583 8	71	1
9265178	758	10 35 857 3	9	1	9268423	801	10 13 303 7	13	1
9265200	231	90 73 380	14	1	9268441	184	98 82 875	5	4
9265200	234	90 74 125	14	1	9268441	816	90 73 786	7	2
9265263	766	92 65 991	11	1	9268441	833	11 38 195 4	7	4
9265264	766	92 65 991	12	1	9268725	158	10 11 886 0	19	1
9265265	766	92 65 991	13	1	9269690	323	90 79 258	96	1
9265265	767	92 65 299	13	1	9269690	325	90 79 259	96	1
9265265	768	92 70 390	13	1	9269690	807	10 11 856 1	96	1
9265266	766	92 65 991	15	1	9269690	808	11 37 560 6	96	1
9265279	116	98 82 760	16	1	9270109	607	10 11 585 1	15	1
9265299	765	92 65 178	997	1	9270109	609	10 11 585 3	15	1
9265392	323	90 79 258	12	2	9270109	665	90 80 736	3	1
9265392	742	90 79 264	12	2	9270109	707	10 11 583 8	4301	1
9265394	318	90 74 482	2	1	9270390	763	10 11 671 7	999	1
9265394	323	90 79 258	14	2	9270475	807	10 11 856 1	17	1
9265394	743	90 79 277	2	1	9270475	808	11 37 560 6	17	1
9265395	807	10 11 856 1	15	4	9270598	816	90 73 786	6	2
9265395	808	11 37 560 6	15	4	9270846	595	90 79 838	2	1
9265396	807	10 11 856 1	16	1	9271340	566	10 11 916 7	6	2
9265396	808	11 37 560 6	16	1	9271340	567	90 79 021	6	2
9265398	807	10 11 856 1	18	1	9271340	704	10 11 583 8	44	2
9265398	808	11 37 560 6	18	1	9271963	607	10 11 585 1	10	2

Item	Page	Assembly	Pos.	Quantity	Item	Page	Assembly	Pos.	Quantity
9271963	609	10 11 585 3	10	2	932777901	222	90 02 197 3	47	3
9271963	642	10 11 707 3	10	1	932777901	224	93 27 778 01	1	1
9271963	644	10 11 570 3	10	1	932778001	222	90 02 197 3	55	1
9271963	645	10 12 190 9	10	1	932778001	227	90 02 790 4	55	1
9271963	701	10 11 801 4	20	2	932778101	227	90 02 790 4	60	1
9273161	566	10 11 916 7	10	1	932801801	227	90 02 790 4	70	1
9273161	569	10 11 832 9	20	1	932801901	228	93 28 018 01	1	1
9273161	707	10 11 583 8	161	1	932814201	226	90 02 790 4	13	1
9273163	230	90 74 075	98	1	932855901	227	90 02 790 4	61	2
9273271	620	90 75 368	2	2	933628601	242	10 04 851 4	10	1
9273690	692	90 80 006	6	1	9344777	247	12 84 952 6	30	2
9273691	692	90 80 006	5	1	9349698	127	10 08 736 5	8	4
9273691	705	10 11 583 8	52	1	9349698	134	10 04 853 1	20	16
9274060	638	10 11 726 8	4	2	9350400	547	10 49 803 0	24	2
9274285	234	90 74 125	1	9	9354303	546	10 49 803 0	5	1
9274285	830	98 80 608	1	9	9354695	712	11 10 294 5	37	1
9274672	154	90 73 242	16	2	9354695	725	11 10 280 7	30	1
9274720	567	90 79 021	10	2	9354707	747	92 15 949 16	1	1
9274731	804	10 13 303 7	91	1	9355505	350	10 35 862 7	30	1
9274974	704	10 11 583 8	36	1	9356574	455	10 06 436 0	7	1
9275003	181	90 74 893	20	8	9358137	540	10 84 856 2	180	1
9275161	213	10 04 853 8	31	3	9360187	217	11 10 291 6	10	1
9275428	183	92 75 443	76	1	9361518	137	10 49 819 9	49	1
9275429	183	92 75 443	72	1	9364507	774	92 15 967 16	2	4
9275443	803	10 13 303 7	85	2	9364508	774	92 15 967 16	3	2
9275590	618	90 72 781	11	1	9371217	320	10 05 981 8	65	1
9275735	656	10 11 983 0	3	2	9375276	244	10 06 198 5	15	1
9275735	657	90 75 678	3	2	9376917	463	10 35 826 4	80	1
9275736	817	90 74 112	13	2	9388597	213	10 04 853 8	60	6
9275738	817	90 74 112	14	1	9388848	277	11 38 340 1	41	1
9275766	580	91 47 512	2	1	9388848	301	11 45 228 6	41	1
9275766	700	10 11 801 4	16	1	9388848	305	12 50 731 7	41	1
9275766	703	10 11 583 8	16	3	9391227	107	10 83 693 0	2	2
9276767	818	98 82 832	10	1	9391227	108	11 10 296 8	2	2
9276784	662	90 79 889	2	2	9391363	78	10 49 887 7	2	2
9276860	835	92 65 808	20	2	9392646	277	11 38 340 1	15	1
9276880	318	90 74 482	35	1	9392646	301	11 45 228 6	15	1
9276880	807	10 11 856 1	35	4	9392646	305	12 50 731 7	15	1
9276880	808	11 37 560 6	35	4	9392651	275	11 38 339 7	26	1
9276979	815	90 73 588	16	1	9392651	291	10 38 502 8	26	1
9276983	116	98 82 760	10	1	9392835	548	10 49 803 0	65	1
9276983	810	11 38 131 3	10	1	9399179	346	10 06 379 3	3	1
9276984	116	98 82 760	11	2	9399606	548	10 49 803 0	97	1
9276984	810	11 38 131 3	11	2	9399607	548	10 49 803 0	98	1
9276985	116	98 82 760	12	1	9399608	548	10 49 803 0	99	1
9276985	810	11 38 131 3	12	1	9399769	753	11 10 291 2	49	1
9277556	116	98 82 760	18	2	9399770	753	11 10 291 2	47	1
9277556	810	11 38 131 3	18	2	9399771	753	11 10 291 2	48	1
9277898	815	90 73 588	27	1	9399772	753	11 10 291 2	46	1
9278153	216	90 80 194	500	1	94006888	760	11 68 144 7	13	1
9278153	807	10 11 856 1	500	1	94006889	771	94 00 688 8	999	1
9278153	808	11 37 560 6	500	1	94007477	771	94 00 688 8	1	1
9278153	817	90 74 112	500	1	94022280	284	94 02 247 7	44	4
9278623	817	90 74 112	9	1	94022477	272	10 49 880 5	50	1
9279157	818	98 82 832	11	1	9402376	547	10 49 803 0	40	4
9327516	128	10 04 851 0	3	3	9402377	547	10 49 803 0	45	2
932777601	226	90 02 790 4	25	1	94025779	284	94 02 247 7	20	1
932777701	222	90 02 197 3	45	1	94027947	772	94 02 794 9	999	1
932777701	227	90 02 790 4	45	1	94027949	761	95 93 026	13	1
932777801	227	90 02 790 4	47	3	94040389	760	11 68 144 7	12	1

Item	Page	Assembly	Pos.	Quantity	Item	Page	Assembly	Pos.	Quantity
94040390	769	94 04 038 9	1	1	9476369	323	90 79 258	2	1
94046929	760	11 68 144 7	8	1	9476442	326	94 76 369	1	1
94066458	15	90 66 460	110	1l	9476811	345	10 35 862 3	56	2
94079557	57	94 08 205 8	10	1l	9476811	357	10 35 862 9	47	2
94079560	57	94 08 205 8	20	1l	9476811	358	10 35 862 4	16	1
94082058	17	90 66 465	100	1l	9477429	825	10 13 975 2	18	1
9408711	504	10 29 026 4	290	1	9477439	154	90 73 242	13	2
9429964	712	11 10 294 5	55	1	9480295	321	10 06 017 4	11	1
9429965	712	11 10 294 5	54	1	9480295	322	10 06 017 5	11	1
9429977	408	10 35 863 8	106	2	9480295	326	94 76 369	2	1
9434249	752	11 10 291 2	26	2	9480525	272	10 49 880 5	43	2
9441122	222	90 02 197 3	46	1	9483466	351	10 35 862 8	28	2
9441122	227	90 02 790 4	46	1	9486090	712	11 10 294 5	36	1
944121703	228	93 28 018 01	10	1	9560855	521	10 35 866 5	45	2
944122003	221	90 01 453 8	62	6	9566165	385	10 04 851 7	51	1
944122003	227	90 02 790 4	62	6	9566165	387	10 35 863 4	51	1
944122003	229	94 42 180 03	62	6	9581113	548	10 49 803 0	54	1
944142303	228	93 28 018 01	5	1	9586495	242	10 04 851 4	14	50
9441716	226	90 02 790 4	36	1	9591327	361	10 06 380 1	490	1
944217103	227	90 02 790 4	40	1	9591741	762	96 44 648	13	1
944218003	227	90 02 790 4	960	1	9591742	772	94 02 794 9	1	1
944250503	221	90 01 453 8	63	7	9591742	773	95 91 741	1	1
944250503	227	90 02 790 4	63	5	9593026	775	11 45 729 6	2	1
944250503	229	94 42 180 03	63	5	9593026	778	11 45 729 7	2	1
9443002	109	96 87 443 01	1	1	9593363	762	96 44 648	1	1
9443003	109	96 87 443 01	3	1	9594127	762	96 44 648	8	1
944300403	109	96 87 443 01	5	5	9594128	762	96 44 648	10	1
9443005	113	94 43 004 03	1	1	9594190	761	95 93 026	8	1
9443007	109	96 87 443 01	15	1	9594191	761	95 93 026	10	1
944300803	109	96 87 443 01	20	1	9594224	760	11 68 144 7	10	1
9443009	109	96 87 443 01	21	1	9600769	769	94 04 038 9	985	1
944301003	109	96 87 443 01	22	3	9600928	770	96 44 625	985	1
9443011	114	94 43 010 03	1	1	9611367	101	10 40 412 7	2	1
9443012	109	96 87 443 01	25	1	9613673	548	10 49 803 0	71	1
9443013	109	96 87 443 01	30	1	9619934	548	10 49 803 0	52	1
9443014	109	96 87 443 01	31	1	9622842	443	10 35 865 9	40	2
9443016	115	96 86 142 01	1	1	9622843	443	10 35 865 9	41	2
944301703	109	96 87 443 01	35	1	9622844	443	10 35 865 9	42	2
9443019	110	96 87 443 01	50	2	9634109	460	10 49 856 6	14	1
9443019	118	94 43 029 03	50	2	9644623	770	96 44 625	1	1
944302003	110	96 87 443 01	51	5	9644625	761	95 93 026	12	1
944302003	117	94 43 028 03	51	5	9644625	762	96 44 648	12	1
9443021	110	96 87 443 01	52	6	9644648	758	10 35 857 3	2	1
9443021	117	94 43 028 03	52	6	9647551	23	90 70 366	100	1
944302203	110	96 87 443 01	55	1	9647619	15	90 66 460	120	1
9443023	110	96 87 443 01	60	1	968461801	237	96 91 056 01	25	1
9443023	118	94 43 029 03	60	1	9685685	716	11 10 283 6	14	5
9443024	110	96 87 443 01	63	1	9685685	727	11 10 281 7	14	8
9443024	118	94 43 029 03	63	1	9685685	756	11 10 281 8	12	6
9443025	110	96 87 443 01	75	1	968610601	109	96 87 443 01	40	1
9443027	110	96 87 443 01	900	1	968614201	109	96 87 443 01	32	3
944302803	110	96 87 443 01	920	1	9686191	521	10 35 866 5	21	1
944302903	111	96 87 443 01	940	1	968744301	107	10 83 693 0	5	2
9443033	109	96 87 443 01	41	1	968744301	108	11 10 296 8	5	2
944315903	109	96 87 443 01	10	1	968868001	237	96 91 056 01	1	1
9443217	109	96 87 443 01	38	13	9689583	279	11 38 340 1	98	1
944356303	226	90 02 790 4	37	4	9689583	302	11 45 228 6	98	1
944356403	225	94 43 563 03	1	1	9689583	306	12 50 731 7	98	1
9444501	226	90 02 790 4	35	1	9690616	279	11 38 340 1	80	1
944452203	227	90 02 790 4	910	1	9690616	302	11 45 228 6	80	1

Item	Page	Assembly	Pos.	Quantity	Item	Page	Assembly	Pos.	Quantity
9690616	306	12 50 731 7	80	1	9884136	185	98 84 140	2	1
969105601	220	90 02 790 3	5	1	9884137	185	98 84 140	3	1
9698698	537	10 06 391 4	2	2	9884138	185	98 84 140	10	1
9699174	514	11 10 255 3	8	1	9884139	185	98 84 140	11	1
9699736	751	10 35 860 1	55	1	9884140	159	10 11 886 0	81	1
9753989	453	10 05 816 9	16	2	9884464	159	10 11 886 0	85	1
9757423	121	10 40 412 9	22	4	9885351	318	90 74 482	1	1
9757779	271	10 49 880 5	35	1	9885351	323	90 79 258	13	2
9758230	279	11 38 340 1	101	1	9885351	743	90 79 277	1	1
9758230	302	11 45 228 6	101	1	9885529	690	90 77 719	2	1
9758230	307	12 50 731 7	101	1	9885529	695	90 78 962	4	1
975857901	514	11 10 255 3	7	1	9885529	704	10 11 583 8	34	1
975881501	276	11 38 339 7	40	1	9885529	705	10 11 583 8	51	2
975881501	292	10 38 502 8	40	1	9885618	674	90 76 551	22	1
9767890	385	10 04 851 7	60	1	9885924	191	98 89 984	39	1
9767890	387	10 35 863 4	60	1	9885924	192	98 89 988	39	1
9767890	529	10 04 852 5	35	1	9885928	231	90 73 380	29	1
9767890	530	10 49 836 0	35	1	9885928	234	90 74 125	39	1
9767890	531	11 10 262 1	35	1	9885929	180	90 72 998	29	1
9768247	277	11 38 340 1	38	1	9885929	823	90 74 122	39	1
9768247	301	11 45 228 6	38	1	9886591	613	90 73 507	20	1
9768247	305	12 50 731 7	38	1	9886591	618	90 72 781	9	1
9768248	277	11 38 340 1	27	1	9886756	613	90 73 507	21	1
9768248	301	11 45 228 6	27	1	9887034	187	98 89 832	2	1
9768248	305	12 50 731 7	27	1	9887035	188	98 89 833	2	1
9808806	721	10 82 841 3	30	1	9887036	186	98 89 831	1	9
9808806	730	10 39 639 6	25	1	9887461	650	10 11 646 4	3	1
9830148	712	11 10 294 5	38	1	9887828	154	90 73 242	14	2
9830148	726	11 10 280 7	31	2	9888133	825	10 13 975 2	19	1
9830148	739	10 49 877 7	15	2	9888448	696	90 77 384	2	2
9830148	752	11 10 291 2	30	2	9888448	697	90 77 717	2	1
9834805	446	10 35 865 5	50	1	9889196	190	98 89 983	39	1
9837954	446	10 35 865 5	44	2	9889290	697	90 77 717	3	1
9864658	753	11 10 291 2	44	1	9889809	190	98 89 983	15	1
9871977	759	10 85 361 0	4	1	9889809	191	98 89 984	15	1
9874049	712	11 10 294 5	67	2	9889809	825	10 13 975 2	15	1
9874359	548	10 49 803 0	60	1	9889831	190	98 89 983	1	9
9874961	296	98 74 988	3	1	9889831	191	98 89 984	1	9
9874988	276	11 38 339 7	45	1	9889831	802	10 13 303 7	77	2
9874988	292	10 38 502 8	45	1	9889832	190	98 89 983	2	1
9877726	711	11 10 294 5	5	2	9889832	802	10 13 303 7	79	1
9879063	266	10 49 861 5	30	1	9889833	191	98 89 984	2	1
9880132	116	98 82 760	26	2	9889833	802	10 13 303 7	81	1
9880132	810	11 38 131 3	26	2	9889929	192	98 89 988	13	1
9880608	230	90 74 075	77	1	9889930	192	98 89 988	14	1
9881114	181	90 74 893	33	2	9889977	804	10 13 303 7	93	1
9881230	820	90 78 788	18	1	9889978	805	10 13 303 7	95	1
9881231	820	90 78 788	19	1	9889979	189	98 89 977	10	1
9881232	820	90 78 788	20	1	9889980	831	98 89 978	10	1
9881233	820	90 78 788	21	1	9889983	804	10 13 303 7	94	1
9881609	184	98 82 875	8	1	9889984	804	10 13 303 7	92	1
9882207	835	92 65 808	15	2	9889988	190	98 89 983	14	1
9882760	799	90 73 888	5	1	9889988	191	98 89 984	14	1
9882761	116	98 82 760	13	1	9889988	802	10 13 303 7	78	2
9882761	810	11 38 131 3	13	1	9890958	349	93 99 179	2	1
9882832	799	90 73 888	4	1	989165301	276	11 38 339 7	91	1
9882875	803	10 13 303 7	88	1	989165301	292	10 38 502 8	91	1
9882875	819	10 13 306 1	90	1	9892073	536	10 49 800 2	8	2
9883344	810	11 38 131 3	16	1	9893072	275	11 38 339 7	23	1
9884135	185	98 84 140	1	1	9893072	291	10 38 502 8	23	1

Item	Page	Assembly	Pos.	Quantity
9893089	521	10 35 866 5	17	1
9896609	344	10 35 862 3	30	1
9903712	445	10 35 865 5	23	2
9909254	547	10 49 803 0	47	1
9910464	547	10 49 803 0	50	2
9910464	712	11 10 294 5	68	2
9911745	315	10 05 507 1	7	1
9918226	130	10 08 004 4	72	6
9918226	350	10 35 862 7	32	2
9918228	342	98 79 063	11	4
9918229	78	10 49 887 7	4	48
9918229	88	10 39 231 7	4	4
9918229	107	10 83 693 0	4	48
9918229	107	10 83 693 0	7	48
9918229	107	10 83 693 0	12	4
9918229	108	11 10 296 8	4	48
9918229	108	11 10 296 8	7	48
9918229	108	11 10 296 8	12	4
9918229	388	10 06 112 7	3	3
9918230	760	11 68 144 7	33	9
9918230	761	95 93 026	33	9
9918230	762	96 44 648	33	9
9918231	537	10 06 391 4	5	4
9927398	711	11 10 294 5	11	4
9927479	446	10 35 865 5	40	1
9927487	448	10 35 865 5	132	1
9928891	520	99 47 695	61	1
9929151	519	99 47 695	14	1
9937443	320	10 05 981 8	40	2
9939056	445	10 35 865 5	20	2
9939942	777	11 45 729 6	56	1
9939942	780	11 45 729 7	56	1
9941040	514	11 10 255 3	10	1
9941040	514	11 10 255 3	11	1
9942679	459	10 06 423 5	20	1
9942679	460	10 49 856 6	20	1
9943105	320	10 05 981 8	47	1
9943165	321	10 06 017 4	40	1
9943165	322	10 06 017 5	40	1
9943365	320	10 05 981 8	46	1
9946134	321	10 06 017 4	30	1
9946134	322	10 06 017 5	30	1
9946410	244	10 06 198 5	2	1
9946411	244	10 06 198 5	3	1
9946412	244	10 06 198 5	4	1
9946413	244	10 06 198 5	5	1
9946939	320	10 05 981 8	2	1
9947695	518	99 48 254	3	1
9947707	518	99 48 254	2	1
9947713	519	99 47 695	3	1
9948149	520	99 47 695	40	1
9948251	514	11 10 255 3	12	1
9948254	514	11 10 255 3	20	1
9948316	209	10 04 853 7	5	1
9949077	470	10 35 866 0	5	1
9949402	212	10 04 853 8	15	1
9949403	212	10 04 853 8	10	1
9949436	470	10 35 866 0	7	1
9949686	279	11 38 340 1	94	1
9949686	302	11 45 228 6	94	1
9949686	306	12 50 731 7	94	1
9949750	519	99 47 695	15	1
9949751	546	10 49 803 0	13	1
9950357	11	12 86 140 4	30	1
9950358	11	12 86 140 4	11	1
9950385	11	12 86 140 4	10	1
9953691	360	10 06 380 1	45	1
9956949	284	94 02 247 7	70	1
9962061	762	96 44 648	2	1
9968546	299	99 68 625	70	1
9968570	314	99 68 611	70	1
9968578	299	99 68 625	40	1
9968580	314	99 68 611	40	1
9968591	299	99 68 625	80	1
9968591	314	99 68 611	80	1
9968611	313	10 05 879 4	10	1
9968625	298	10 05 879 2	10	1
9989395	521	10 35 866 5	13	1
9989595	211	10 04 853 7	220	2
9989595	525	10 06 559 1	24	3
9998621	770	96 44 625	990	1

Description	Item	Pos.	Quantity	Page	Assembly	Description
	11481247	302	1	53	90 66 466	ACCESSORIES
	11481248	350	1	53	90 66 466	ACCESSORIES
	11481249	352	1	53	90 66 466	ACCESSORIES
	11481250	300	1	53	90 66 466	ACCESSORIES
12-SIDED SCREW M10X25X20,	12475399	4	3	665	90 80 736	EXHAUST TC MOUNTING
2-LUG LOSE CLIP 25 23-27	11347332	3	1	541	93 58 137	OIL DRAIN HOSE
ABSORPTION PANEL	10009181	290	1	509	10 29 035 2	INTERIOR PANELING
ABSORPTION PANEL	10009181	290	1	511	10 48 808 8	INTERIOR PANELING
ABSORPTION PANEL	10290261	230	1	508	10 29 035 2	INTERIOR PANELING
ABSORPTION PANEL	10290261	230	1	510	10 48 808 8	INTERIOR PANELING
ACCESS LADDER	10087659	10	1	542	10 49 878 6	OUTSIDE MIRROR ASSEMBLY
ACCESSORIES	11440789	9999	1	54	94 06 645 8	UREA SOLUTION
ACCESSORIES	9066466	100	1	15	90 66 460	TYPES OF LUBRICANTS
ACCESSORIES 1000L	11817009	1000	1	43	11 44 078 9	ACCESSORIES
ACCESSORIES 210L	11817008	210	1	42	11 44 078 9	ACCESSORIES
ACCU PACK	10885529	22	1	785	10 82 562 1	OPT.DATA CAPTURE-DATA T
ACTUATOR	6204367	5	1	315	10 05 507 1	SWITCH INSTALLATION
ADAPTER CABLE	11100090	16	1	287	11 10 016 7	SUSPENSION
ADAPTOR	10451130	12	5	737	11 10 258 8	BUCKET BIT
ADAPTOR	11006206	40	1	793	10 49 866 6	AIR FILTER INSTALLATION
ADDITIONAL KIT	10498877	10	1	77	10 49 887 8	CHANGE KIT TRACK D7 INTO
ADDITIONAL KIT SIDE PANE	10358890	140	1	476	70 28 767	GLASS PANES
ADDNL. FLOODLIGHT	10498467	70	1	7	.	
ADDNL. FLOODLIGHT	11102295	10	1	782	10 49 846 7	ADDNL. FLOODLIGHT
ADHESIVE 50ML TUBE ROT	8700039	106	1	234	90 74 125	REPAIR KIT DRIVING MECHANI
ADHESIVE 50ML TUBE ROT	8700039	106	1	574	12 83 245 4	OIL SUMP PRE-ASS.
ADHESIVE 50ML TUBE ROT	8700039	100	1	619	90 80 277	SUCTION PUMP PRE-ASS.
ADHESIVE 50ML TUBE ROT	8700039	106	1	810	11 38 131 3	ADJUSTMENT NG 100
ADHESIVE 50ML TUBE ROT	8700039	106	1	822	90 74 114	RK CYLINDER+CONTROL PLAT
ADHESIVE FOIL	9928891	61	1	520	99 47 695	ELECTRICAL SYSTEM E50
ADHESIVE SIGN	11826200	30	1	795	11 36 376 6	LABEL KIT
ADHESIVE SIGN	11826202	40	1	795	11 36 376 6	LABEL KIT
ADHESIVE SIGN	11826204	50	1	795	11 36 376 6	LABEL KIT
ADHESIVE SIGN	11826206	20	1	795	11 36 376 6	LABEL KIT
ADHESIVE SIGN	11826208	10	1	795	11 36 376 6	LABEL KIT
ADHESIVE SIGN	11826231	70	1	795	11 36 376 6	LABEL KIT
ADHESIVE SIGN	11826232	80	1	795	11 36 376 6	LABEL KIT
ADHESIVE SIGN	11826235	60	1	795	11 36 376 6	LABEL KIT
ADJUSTABLE RAIL	11100088	37	1	285	11 10 016 6	SEAT TOP
ADJUSTING LEVER	9276985	12	1	116	98 82 760	ADJUSTMENT NG 100
ADJUSTING LEVER	9276985	12	1	810	11 38 131 3	ADJUSTMENT NG 100
ADJUSTING PISTON	10291975	1	1	161	10 29 197 8	HYDRAULIC ADJUSTMENT
ADJUSTING PISTON	9276984	11	2	116	98 82 760	ADJUSTMENT NG 100
ADJUSTING PISTON	9276984	11	2	810	11 38 131 3	ADJUSTMENT NG 100
ADJUSTING PISTON NG 100	9276983	10	1	116	98 82 760	ADJUSTMENT NG 100
ADJUSTING PISTON NG 100	9276983	10	1	810	11 38 131 3	ADJUSTMENT NG 100
ADJUSTING PISTON NG 125-15	9072592	11	2	181	90 74 893	REPAIR KIT CONNECTION H
ADJUSTING SCREW	10220647	2	1	174	11 82 151 3	SEALING SET VALVE
ADJUSTING SCREW	10220665	9	1	168	10 22 063 5	SHUTDOWN VALVE
ADJUSTING SCREW M10X1	10012225	4	1	600	12 40 205 3	ROCKER ARM PRE-ASSY.
ADJUSTING SCREW M12X36X4	10117949	5	1	563	10 11 795 1	FINAL CONTROL VALVE
ADJUSTING SCREW M12X36X4	9075642	5	1	564	90 75 134	FINAL CONTROL VALVE
ADJUSTING SHIM	10008421	12	1	208	56 19 045	AXIAL PISTON MOTOR
ADJUSTING SHIM	10008421	12	1	400	10 00 807 7	PUMP
ADJUSTING SREW PRE-ASS.	10004419	4	1	605	90 74 507	ROCKER ARM PRE-ASSY.
ADJUSTMENT NG 100	11381313	5	1	799	90 73 888	HYDRAULIC INSTALLATION
ADJUSTMENT NG 100	9882760	5	1	799	90 73 888	HYDRAULIC INSTALLATION
AERATION FILTER 2µm	10222393	320	1	73	12 48 693 4	SERVICE KIT 2000h
AERATION FILTER 2µm	10222393	28	1	383	10 04 851 7	HYDRAULIC TANK INSTALLAT
AERATION FILTER 2µm	10222393	28	1	386	10 35 863 4	HYDRAULIC TANK INSTALLAT

Description	Item	Pos.	Quantity	Page	Assembly	Description
AGITATOR PADDLE	10014712	23	1	250	10 22 844 3	LUBRICATION PUMP
AIR CIRCULATION CASE	10022117	2	1	330	10 81 666 6	EVAPORATOR
AIR CIRCULATION CASE	10022787	1	1	333	10 02 211 7	AIR CIRCULATION CASE
AIR CIRCULATION PART	10005677	1	1	332	10 02 208 3	AIR CONNECTION PART
AIR COND. COMPRESSOR A	10116464	340	1	552	10 11 714 5	DIESEL ENGINE D936 L A6 190
AIR CONDIT.CONDENSER IN	10063630	595	1	132	10 35 862 2	MOTOR INSTALLATION
AIR CONDITION HOSES INSTA	10062725	9200	1	124	10 35 861 4	UPPERCARRIAGE
AIR CONDITION HOSES INSTA	10065591	10	1	524	10 06 272 5	AIR CONDITION HOSES INSTA
AIR CONDITIONER CONDENSE	10005670	2	1	214	10 06 363 0	AIR CONDIT.CONDENSER IN
AIR CONDITIONING	10406898	80	1	273	10 49 880 5	DRIVER STAND BASE SECTIO
AIR CONDITIONING COMPRE	10116769	2	1	650	10 11 646 4	AIR COND. COMPRESSOR A
AIR CONNECTION PART	10022083	14	1	335	11 00 359 4	HOUSING
AIR EJECTION NOZZLE	5611480	99	3	273	10 49 880 5	DRIVER STAND BASE SECTIO
AIR EJECTION NOZZLE	5611480	25	2	277	11 38 340 1	ARM REST RIGHT
AIR EJECTION NOZZLE	5611480	25	2	301	11 45 228 6	ARM REST RIGHT
AIR EJECTION NOZZLE	5611480	25	2	305	12 50 731 7	ARM REST RIGHT
AIR FILTER	10217173	10	1	137	10 49 819 9	AIR FILTER INSTALLATION
AIR FILTER	7028951	210	1	68	12 48 693 2	SERVICE KIT 1000h
AIR FILTER	7028951	210	1	72	12 48 693 4	SERVICE KIT 2000h
AIR FILTER	7028951	380	1	509	10 29 035 2	INTERIOR PANELING
AIR FILTER	7028951	380	1	511	10 48 808 8	INTERIOR PANELING
AIR FILTER CARTRIDGE	10217169	110	1	64	12 48 693 1	SERVICE KIT FIRST 500h
AIR FILTER CARTRIDGE	10217169	110	1	67	12 48 693 2	SERVICE KIT 1000h
AIR FILTER CARTRIDGE	10217169	110	1	70	12 48 693 3	SERVICE KIT 1500-2500h
AIR FILTER CARTRIDGE	10217169	110	1	71	12 48 693 4	SERVICE KIT 2000h
AIR FILTER CARTRIDGE	10217169	1	1	138	10 21 717 3	AIR FILTER
AIR FILTER HOSE	10081376	20	1	137	10 49 819 9	AIR FILTER INSTALLATION
AIR FILTER INSTALLATION	10498199	530	1	132	10 35 862 2	MOTOR INSTALLATION
AIR FILTER INSTALLATION	10498666	10	1	792	10 49 836 8	AIR PREFILTER O4 - KC 111
AIR FLAP	10005674	2	1	332	10 02 208 3	AIR CONNECTION PART
AIR FLAP	10005675	7	1	335	11 00 359 4	HOUSING
AIR FLAP	10022778	18	1	333	10 02 211 7	AIR CIRCULATION CASE
AIR FLAP	10022780	15	1	333	10 02 211 7	AIR CIRCULATION CASE
AIR HOSE	10005859	95	2	273	10 49 880 5	DRIVER STAND BASE SECTIO
AIR HOSE	10005860	90	1	273	10 49 880 5	DRIVER STAND BASE SECTIO
AIR HOSE 180X4X700	10217797	85	1	137	10 49 819 9	AIR FILTER INSTALLATION
AIR HOSE 180X4X700	10217797	20	1	793	10 49 866 6	AIR FILTER INSTALLATION
AIR HOSE CPL.	11066531	19	1	287	11 10 016 7	SUSPENSION
AIR INTAKE PIPE ASS.	10117073	220	1	552	10 11 714 5	DIESEL ENGINE D936 L A6 190
AIR NOZZLE	10016540	5	2	320	10 05 981 8	FOOT PILOT VALVE INSTALL
AIR NOZZLE	7024446	350	4	509	10 29 035 2	INTERIOR PANELING
AIR NOZZLE	7024446	350	4	511	10 48 808 8	INTERIOR PANELING
AIR NOZZLE	7028950	370	2	509	10 29 035 2	INTERIOR PANELING
AIR NOZZLE	7028950	370	2	511	10 48 808 8	INTERIOR PANELING
AIR PIPE	10057778	220	1	196	10 04 853 6	ENGINE COOLING
AIR PIPE	10057779	200	1	196	10 04 853 6	ENGINE COOLING
AIR PREFILTER O4 - KC 111	10498368	48	1	7	.	
AIR PREFILTER O4 - KC 111	10498368	50	1	129	10 08 004 4	FRAME INSTALLATION
AIR PREFILTER O4 - KC 111	10498368	240	1	452	10 35 865 5	COVERS
AIR SUCTION PIPE	10147789	1	1	642	10 11 707 3	AIR INTAKE PIPE ASS.
ANALYSIS SET	10191453	52	1	51	90 66 466	ACCESSORIES
ANALYSIS SET	12208230	50	1	51	90 66 466	ACCESSORIES
ANALYSIS SET	12208231	30	1	51	90 66 466	ACCESSORIES
ANGLE	10063527	345	1	198	10 04 853 6	ENGINE COOLING
ANGLE	10064242	150	1	449	10 35 865 5	COVERS
ANGLE	10064243	153	1	449	10 35 865 5	COVERS
ANGLE	10358447	25	1	217	11 10 291 6	SWING GEAR INSTALLATION
ANGLE	9927487	132	1	448	10 35 865 5	COVERS
ANGLE SCREW DRIVER 10X23	11162122	92	1	539	10 84 856 2	TOOL EQUIPMENT
ANGLE SCREW DRIVER 12X1	11162123	94	1	539	10 84 856 2	TOOL EQUIPMENT

Description	Item	Pos.	Quantity	Page	Assembly	Description
ANGLE SCREW DRIVER 14X1	11162124	96	1	539	10 84 856 2	TOOL EQUIPMENT
ANGLE SCREW DRIVER 17X1	11162125	98	1	539	10 84 856 2	TOOL EQUIPMENT
ANGLE SCREW DRIVER 3X66 I	11162101	80	1	539	10 84 856 2	TOOL EQUIPMENT
ANGLE SCREW DRIVER 4X74 I	11162111	82	1	539	10 84 856 2	TOOL EQUIPMENT
ANGLE SCREW DRIVER 5X85 I	11162119	84	1	539	10 84 856 2	TOOL EQUIPMENT
ANGLE SCREW DRIVER 6X186	11162120	86	1	539	10 84 856 2	TOOL EQUIPMENT
ANGLE SCREW DRIVER 8X208	11162121	90	1	539	10 84 856 2	TOOL EQUIPMENT
ANNULAR PISTON	944142303	5	1	228	93 28 018 01	BRAKE
ANNULAR PISTON	9443023	60	1	110	96 87 443 01	TRACTION DRIVE FAT 400P07
ANNULAR PISTON	9443023	60	1	118	94 43 029 03	BRAKE REPAIR KIT
ANTENNA	11645490	160	1	786	10 82 562 1	OPT.DATA CAPTURE-DATA T
ANTENNA	12235856	160	1	786	10 82 562 1	OPT.DATA CAPTURE-DATA T
ANTENNA	6001556	180	1	490	10 29 033 7	ELECTRICAL INSTALLATION
ANTENNA	6001556	180	1	493	10 48 808 7	ELECTRICAL INSTALLATION
ANTENNA CABLE	6204404	150	1	274	10 49 880 5	DRIVER STAND BASE SECTIO
ANTI-KINK DEVICE SPIRAL	10011996	166	1m	258	90 64 786	CONNECTING ELEMENT
ANTI-KINK DEVICE SPIRAL DN	11213893	266	1	260	90 64 786	CONNECTING ELEMENT
ANTICORROSION ANTIFREEZE	11657384	5	1	55	94 07 955 7	ANTICORROSION ANTIFREEZE
ANTICORROSION ANTIFREEZE	11657385	20	1	55	94 07 955 7	ANTICORROSION ANTIFREEZE
ANTICORROSION ANTIFREEZE	11657386	210	1	55	94 07 955 7	ANTICORROSION ANTIFREEZE
ANTICORROSION ANTIFREEZE	11657387	1000	1	55	94 07 955 7	ANTICORROSION ANTIFREEZE
ANTICORROSION ANTIFREEZE	11657389	5	1	56	94 07 956 0	ANTICORROSION ANTIFREEZE
ANTICORROSION ANTIFREEZE	11657390	20	1	56	94 07 956 0	ANTICORROSION ANTIFREEZE
ANTICORROSION ANTIFREEZE	11657391	210	1	56	94 07 956 0	ANTICORROSION ANTIFREEZE
ANTICORROSION ANTIFREEZE	11657392	1000	1	56	94 07 956 0	ANTICORROSION ANTIFREEZE
ANTICORROSION ANTIFREEZE	94079557	10	1l	57	94 08 205 8	ANTICORROSION ANTIFREEZE
ANTICORROSION ANTIFREEZE	94079560	20	1l	57	94 08 205 8	ANTICORROSION ANTIFREEZE
ANTICORROSION ANTIFREEZE	94082058	100	1l	17	90 66 465	COOLANT
ANTIDRIP NOZZLE	11825924	20	1	49	11 82 320 0	UREA DISPENSER SYSTEM
ANTIDRIP NOZZLE	11834727	3	1	796	11 69 501 2	UREA FILLING KIT
ARM REST LEFT	10113060	15	1	285	11 10 016 6	SEAT TOP
ARM REST LEFT	10385028	20	1	271	10 49 880 5	DRIVER STAND BASE SECTIO
ARM REST LEFT	11383397	20	1	271	10 49 880 5	DRIVER STAND BASE SECTIO
ARM REST LEFT	7024982	90	1	282	10 04 363 2	OPERATOR SEAT
ARM REST RIGHT	10113062	14	1	285	11 10 016 6	SEAT TOP
ARM REST RIGHT	11383401	30	1	271	10 49 880 5	DRIVER STAND BASE SECTIO
ARM REST RIGHT	11452286	30	1	271	10 49 880 5	DRIVER STAND BASE SECTIO
ARM REST RIGHT	12507317	30	1	271	10 49 880 5	DRIVER STAND BASE SECTIO
ARM REST RIGHT	7024983	91	1	282	10 04 363 2	OPERATOR SEAT
ASH TRAY	7366731	81	1	276	11 38 339 7	ARM REST LEFT
ASH TRAY	7366731	81	1	292	10 38 502 8	ARM REST LEFT
ASSEMBLY BRACKET	10022078	6	1	335	11 00 359 4	HOUSING
ASSEMBLY BUSHING 160	9998621	990	1	770	96 44 625	PISTON
ASSEMBLY BUSHING 170	9107931	990	1	769	94 04 038 9	PISTON
ATTACHMENTS MOUNTING PA	10087365	170	1	123	10 35 861 4	UPPERCARRIAGE
AUTOMATIC CENTRALIZED L	10067500	2	1	246	12 84 952 5	CENTRALIZED LUBRICATION
AUXILIARY BOX	10014611	999	1	251	10 66 471 9	DISTRIBUTION BLOCK SXE-2
AUXILIARY BOX	10014611	999	1	254	10 29 300 1	DISTRIBUTION BLOCK MX-F 4/
AUXILIARY BOX	10014611	999	1	720	10 66 482 5	DISTRIBUTION BLOCK MX-F 5/
AUXILIARY BOX	10014611	999	1	732	10 66 478 2	DISTRIBUTION BLOCK MX-F 7/
AUXILIARY DRIVE PRE-ASS.	10117836	1	1	636	90 73 767	POWER TAKE-OFF ADD-ON
AUXILIARY DRIVE PRE-ASS.	9077386	1	1	692	90 80 006	POWER TAKE-OFF ADD-ON
AUXILIARY DRIVE PRE-ASS.	9077718	1	1	690	90 77 719	POWER TAKE-OFF ADD-ON
AUXILIARY DRIVE PRE-ASS.	9078962	1	1	691	90 78 961	POWER TAKE-OFF ADD-ON
AXIAL FACE SEAL	10028993	5	2	94	10 00 454 6	GUIDE WHEEL B6
AXIAL FACE SEAL	12215144	5	2	89	11 60 010 7	TRACK ROLLER D7
AXIAL FACE SEAL	12220997	5	2	79	12 22 100 1	GUIDE WHEEL
AXIAL FACE SEAL	7381986	9	1	655	10 13 281 7	WATER PUMP, PRE-ASSEMB
AXIAL FACE SEAL 366,5X394,5	710925401	70	1	110	96 87 443 01	TRACTION DRIVE FAT 400P07
AXIAL PISTON MOTOR	5619045	5	1	205	10 84 460 3	FAN INSTALLATION

Description	Item	Pos.	Quantity	Page	Assembly	Description
AXIAL PISTON MOTOR	5619045	5	1	205	10 84 460 3	FAN INSTALLATION
AXIAL PISTON PUMP	11342491	20	1	164	11 36 100 1	HYDR.MULTI CIRC.PUMP
AXLE	11004101	11	1	91	10 65 167 7	CARRYING ROLLER D7
AXLE	12221002	4	1	79	12 22 100 1	GUIDE WHEEL
AXLE	5611549	4	1	94	10 00 454 6	GUIDE WHEEL B6
AXLE	7373748	3	1	89	11 60 010 7	TRACK ROLLER D7
AXLE	9265410	24	1	323	90 79 258	PILOT CONTROL UNIT VG7 2-3
AXLE	9265410	24	1	325	90 79 259	PILOT CONTROL UNIT VG7 2-3
AXLE AND GEAR-OIL	9070364	40	1	15	90 66 460	TYPES OF LUBRICANTS
AXLE AND GEAR-OIL LIEBHE	10285702	210	1	32	10 35 682 9	AXLE AND GEAR-OIL LIEBHE
AXLE AND GEAR-OIL LIEBHE	10286280	1000	1	32	10 35 682 9	AXLE AND GEAR-OIL LIEBHE
AXLE AND GEAR-OIL LIEBHE	10330295	5	1	32	10 35 682 9	AXLE AND GEAR-OIL LIEBHE
AXLE AND GEAR-OIL LIEBHE	10330296	20	1	32	10 35 682 9	AXLE AND GEAR-OIL LIEBHE
AXLE AND GEAR-OIL LIEBHE	10356829	10	1l	21	90 70 364	AXLE AND GEAR-OIL
AXLE-OIL LIEBHERR/20W-40	10356831	20	1l	21	90 70 364	AXLE AND GEAR-OIL
AXLE-OIL LIEBHERR/20W-40/20	10330294	20	1	33	10 35 683 1	AXLE-OIL LIEBHERR/20W-40
AXLE-OIL LIEBHERR/20W-40/5	10285640	5	1	33	10 35 683 1	AXLE-OIL LIEBHERR/20W-40
BACK-UP RING CUT 11,7/15X1,	7381809	19	1	116	98 82 760	ADJUSTMENT NG 100
BACK-UP RING CUT 11,7/15X1,	7381809	19	1	810	11 38 131 3	ADJUSTMENT NG 100
BACK-UP RING CUT 11,7/15X1,	7381809	30	1	833	11 38 195 4	SEAL KIT NG 100
BACK-UP RING CUT 14,5/19X1,	7380905	28	2	836	92 66 089	SEALING SET VALVE DBV 22
BACK-UP RING CUT 15,7/20X1	7380884	23	1	119	92 66 232	SEAL KIT SHUTTLE VALVE WV
BACK-UP RING CUT 16,7/21X1	7380883	21	1	119	92 66 232	SEAL KIT SHUTTLE VALVE WV
BACK-UP RING CUT 37,5/42X1,	11007756	29	1	833	11 38 195 4	SEAL KIT NG 100
BACK-UP RING CUT 9,4/14X1,1	11007750	4	1	768	92 70 390	SEAL KIT DRV DRV 1 1/4"
BACK-UP RING UNCUT 37,5/4	7381758	29	1	116	98 82 760	ADJUSTMENT NG 100
BACK-UP RING UNCUT 37,5/4	7381758	29	1	810	11 38 131 3	ADJUSTMENT NG 100
BACK-UP RING UNCUT 8,7/11,7	7380684	16	1	184	98 82 875	SEAL KIT REGULATING VALVE
BACK-UP RING UNCUT 9,4/14X	7381154	4	1	767	92 65 299	SEAL KIT DRV DSRV 1"
BACK-UP RING UNCUT 9,4/2,	7380180	21	1	766	92 65 991	FLOW REGULATING CHECK
BACKHOE BUCKET HD	11102585	232	1	7	.	
BACKHOE BUCKET HD 1800	11102586	10	1	734	11 10 258 5	BACKHOE BUCKET HD
BACKHOE BUCKET HD 1800	11102587	2	1	735	11 10 258 6	BACKHOE BUCKET HD 1800
BALL CAGE	9443217	38	13	109	96 87 443 01	TRACTION DRIVE FAT 400P07
BALL SLEWING RING	933628601	10	1	242	10 04 851 4	FIX.PARTS SWING RING UNDE
BALL STUD 10X25,59X2	10004426	5	1	605	90 74 507	ROCKER ARM PRE-ASSY.
BALL STUD 10X25,59X2	12400273	5	1	600	12 40 205 3	ROCKER ARM PRE-ASSY.
BALL THRUST SCREW M12X16	9277556	18	2	116	98 82 760	ADJUSTMENT NG 100
BALL THRUST SCREW M12X16	9277556	18	2	810	11 38 131 3	ADJUSTMENT NG 100
BALL d=4,5 - G28	10014076	3	1	166	70 28 176	BRAKE PISTON
BANJO COUPLING SWVE 6LL	7624176	180	1	258	90 64 786	CONNECTING ELEMENT
BASE PLATE	10081451	17	1	445	10 35 865 5	COVERS
BASIC BODY	10005863	1	1	294	10 16 576 6	STEERING CONSOLE
BASIC BODY	5618922	1	1	310	56 18 923	CONTROL CONSOLE RIGHT
BASIC ENGINE D936 L HIGH 3	10116825	1	1	549	10 11 714 5	DIESEL ENGINE D936 L A6 190
BASIC MACHINE	10498851	10	1	7	.	
BASIC MACHINE MOUNTING	10854724	100	1	753	11 10 291 2	HOIST CYLINDER INSTALLAT
BATTERY	613200116	2	2	521	10 35 866 5	BATTERY INSTALLATION
BATTERY CONNECTION CABL	9989395	13	1	521	10 35 866 5	BATTERY INSTALLATION
BATTERY INSTALLATION	10358665	25	1	514	11 10 255 3	ELECTRICAL SYSTEM
BATTERY MAIN SWITCH	10012119	20	1	521	10 35 866 5	BATTERY INSTALLATION
BEARING	7025009	59	1	289	10 28 999 3	VIBRATING SYSTEM
BEARING BLOCK	10498777	10	1	736	11 10 258 7	BACKHOE BUCKET HD 1800
BEARING BUSH	10220637	3	1	170	10 28 264 7	GEAR PUMP
BEARING BUSH	12256125	6	1	398	11 49 189 0	CONNECTING PLATE
BEARING BUSH	12256127	44	1	398	11 49 189 0	CONNECTING PLATE
BEARING BUSH 40/44X13	9267183	7	1	618	90 72 781	LUBRICATING OIL PUMP
BEARING BUSH 40/44X13	9267183	7	1	619	90 80 277	SUCTION PUMP PRE-ASS.
BEARING BUSH MB 12/14X10	7381855	15	4	185	98 84 140	COOLING CIRCUIT PUMP
BEARING COVER	9072908	3	1	649	90 78 356	LOCKING PIECES

Description	Item	Pos.	Quantity	Page	Assembly	Description
BEARING COVER	9080191	5	1	158	10 11 886 0	PUMP DISTRIBUTION GEAR
BEARING FLANGE	9080803	7	1	158	10 11 886 0	PUMP DISTRIBUTION GEAR
BEARING FLANGE NG 100	12444198	20	1	815	90 73 588	DRIVING GEAR NG 100
BEARING HEAD	94007477	1	1	771	94 00 688 8	PISTON ROD BEARING
BEARING HEAD	9591742	1	1	772	94 02 794 9	PISTON ROD BEARING
BEARING HEAD	9591742	1	1	773	95 91 741	PISTON ROD BEARING
BEARING HOUSING	9077328	1	1	696	90 77 384	BEARING HOUSING, PRE-AS
BEARING HOUSING	9077710	1	1	697	90 77 717	BEARING HOUSING, PRE-AS
BEARING HOUSING, PRE-AS	9077384	2	1	693	90 77 386	AUXILIARY DRIVE PRE-ASS.
BEARING HOUSING, PRE-AS	9077717	2	1	694	90 77 718	AUXILIARY DRIVE PRE-ASS.
BEARING HOUSING, PRE-AS	9078963	1	1	695	90 78 962	AUXILIARY DRIVE PRE-ASS.
BEARING SHELL	10008090	17	2	400	10 00 807 7	PUMP
BEARING SHELL	7023749	26	1	399	11 49 189 4	DRIVING GEAR
BELT PULLEY 8 PKd=54,5	10116372	5	1	667	10 11 646 3	GENERATOR, PRE-ASSEMBLE
BELT PULLEY 8 PKd=54,5	11355616	5	1	667	10 11 646 3	GENERATOR, PRE-ASSEMBLE
BELT PULLEY 8PKd=186	10116366	1	1	584	10 11 617 5	CRANKSHAFT ADD-ON PARTS
BELT STRIP	10493994	17	1	287	11 10 016 7	SUSPENSION
BIO-OIL-ANALYSIS SET	7026088	22	1	51	90 66 466	ACCESSORIES
BIO-OIL-ANALYSIS SET	7026817	20	1	51	90 66 466	ACCESSORIES
BIODEGRADABLE HYDRAULIC-	9070363	30	1	15	90 66 460	TYPES OF LUBRICANTS
BIT-PASTE LIEBHERR	10358992	50	1kg	23	90 70 366	GREASES
BIT-PASTE LIEBHERR/0,5kg	8610230	1	1	38	10 35 899 2	BIT-PASTE LIEBHERR
BIT-PASTE LIEBHERR/20X0,5k	10330306	2	1	38	10 35 899 2	BIT-PASTE LIEBHERR
BLADE-TYPE ELECT. FUSE S	6000783	25	2	519	99 47 695	ELECTRICAL SYSTEM E50
BLANK LID	7370890	5	3	310	56 18 923	CONTROL CONSOLE RIGHT
BLANK LID	7370899	6	1	294	10 16 576 6	STEERING CONSOLE
BLANK LID	7618883	285	1	510	10 48 808 8	INTERIOR PANELING
BLANKING PLUG	10015404	10	1	528	10 28 664 6	HOSE
BLANKING PLUG	10022774	3	1	331	10 02 206 9	EVAPORATOR HOUSING
BLANKING PLUG	10220421	49	1	163	11 34 249 1	AXIAL PISTON PUMP
BLANKING PLUG GPN 260 Q30	7373405	41	1	446	10 35 865 5	COVERS
BLANKING PLUG PL 10L/S	477700408	60	3	360	10 06 380 1	HYDR.INSTAL.CONTROL TUBE
BLANKING PLUG PL 10L/S	477700408	85	3	360	10 06 380 1	HYDR.INSTAL.CONTROL TUBE
BLIND FLANGE	10296870	74	1	425	10 11 386 0	CONTROL BLOCK
BLIND FLANGE	10296871	79	1	425	10 11 386 0	CONTROL BLOCK
BLIND RIVET	10022656	10	4	335	11 00 359 4	HOUSING
BLIND RIVET	7029433	310	6	484	70 28 769	DRIVER'S CAB DOOR
BLIND RIVET	7029433	280	12	508	10 29 035 2	INTERIOR PANELING
BLIND RIVET	7029433	280	12	510	10 48 808 8	INTERIOR PANELING
BLIND RIVET 4,0X15	4900053	3	4	546	10 49 803 0	SIGNS
BLIND RIVET A 4X8	10040412	8	1	604	90 74 505	ROCKER ARM BRACKET PRE
BLIND RIVET A 4X8	7401288	17	4	333	10 02 211 7	AIR CIRCULATION CASE
BLIND RIVET A3,0 6,0	4451001	4	4	331	10 02 206 9	EVAPORATOR HOUSING
BLOCK	10068108	55	1	753	11 10 291 2	HOIST CYLINDER INSTALLAT
BLOCK	10073399	25	1	420	10 35 863 7	HYDR.TUBES INSTALLATION
BLOCK	10408898	8	1	775	11 45 729 6	HOIST CYLINDER RIGHT
BLOCK	10408898	8	1	778	11 45 729 7	HOIST CYLINDER LEFT
BLOCK	9871977	4	1	759	10 85 361 0	HYDR.CYLINDER W/ADDITION.
BLOCK	9896609	30	1	344	10 35 862 3	HYDR.PUMPS TO SPOOL VALV
BLOCK PART	10451187	21	5	735	11 10 258 6	BACKHOE BUCKET HD 1800
BLOCK PART	10451187	4	1	781	11 10 259 0	TOOTH Z50CL
BODY-BOUND RIVET	7024438	220	2	484	70 28 769	DRIVER'S CAB DOOR
BODY-BOUND RIVET	7024438	200	12	508	10 29 035 2	INTERIOR PANELING
BODY-BOUND RIVET	7024438	200	12	510	10 48 808 8	INTERIOR PANELING
BONNET LEFT	10062629	100	1	448	10 35 865 5	COVERS
BONNET RIGHT	10051838	80	1	447	10 35 865 5	COVERS
BONNET RIGHT	10051842	2	1	456	10 05 183 8	BONNET RIGHT
BOTTOM PLATE MOUNTING	9879063	30	1	266	10 49 861 5	OPERATOR'S PLATFORM
BOW-TYPE CLAMP	7369271	17	1	139	10 36 573 8	EXHAUST SYSTEM
BOW-TYPE CLAMP	7369271	17	1	140	11 10 293 9	EXHAUST SYSTEM

Description	Item	Pos.	Quantity	Page	Assembly	Description
BOW-TYPE CLAMP A 106	7621247	18	1	139	10 36 573 8	EXHAUST SYSTEM
BOW-TYPE CLAMP A 106	7621247	18	1	140	11 10 293 9	EXHAUST SYSTEM
BOX NUT	9075763	2	1	627	90 75 395	HIGH PRESSURE CONNECT
BOX NUT MLL8	10013550	251	1	260	90 64 786	CONNECTING ELEMENT
BOX NUT MLL8	10013550	151	10	263	10 01 461 1	AUXILIARY BOX
BRACKET	10009015	100	1	490	10 29 033 7	ELECTRICAL INSTALLATION
BRACKET	10037722	26	2	247	12 84 952 6	CENTRAL LUBRICATING SYS
BRACKET	10037722	21	14	716	11 10 283 6	KIT GOOSENECK BOOM 6.45M
BRACKET	10037722	6	3	721	10 82 841 3	CENTRAL LUBRICATING SYS
BRACKET	10037722	12	4	721	10 82 841 3	CENTRAL LUBRICATING SYS
BRACKET	10037722	15	2	721	10 82 841 3	CENTRAL LUBRICATING SYS
BRACKET	10037722	21	16	727	11 10 281 7	KIT STICK 2.10M
BRACKET	10037722	10	12	730	10 39 639 6	CENTRAL GREASING
BRACKET	10037722	41	8	731	10 39 639 6	CENTRAL GREASING
BRACKET	10037722	21	4	756	11 10 281 8	KIT IN BASIC MACHINE
BRACKET	10037723	9	11	9	12 85 910 3	FLOODLIGHT INSTALLATION
BRACKET	10037723	21	2	247	12 84 952 6	CENTRAL LUBRICATING SYS
BRACKET	10037723	23	14	716	11 10 283 6	KIT GOOSENECK BOOM 6.45M
BRACKET	10037723	9	10	721	10 82 841 3	CENTRAL LUBRICATING SYS
BRACKET	10037723	18	7	721	10 82 841 3	CENTRAL LUBRICATING SYS
BRACKET	10037723	23	8	727	11 10 281 7	KIT STICK 2.10M
BRACKET	10037723	13	5	730	10 39 639 6	CENTRAL GREASING
BRACKET	10037723	16	1	730	10 39 639 6	CENTRAL GREASING
BRACKET	10289976	72	1	282	10 04 363 2	OPERATOR SEAT
BRACKET	7028838	160	1	484	70 28 769	DRIVER'S CAB DOOR
BRACKET	7028872	450	1	491	10 29 033 7	ELECTRICAL INSTALLATION
BRACKET	7028872	450	1	494	10 48 808 7	ELECTRICAL INSTALLATION
BRACKET	9408711	290	1	504	10 29 026 4	COMPONENTS
BRACKET	9943105	47	1	320	10 05 981 8	FOOT PILOT VALVE INSTALL
BRACKET	9943365	46	1	320	10 05 981 8	FOOT PILOT VALVE INSTALL
BRACKET FRONT LEFT	10048546	11	1	134	10 04 853 1	MOTOR SUPPORT
BRACKET FRONT RIGHT	10048548	12	1	134	10 04 853 1	MOTOR SUPPORT
BRACKET REAR LEFT	10048545	13	1	134	10 04 853 1	MOTOR SUPPORT
BRACKET REAR RIGHT	10048547	14	1	134	10 04 853 1	MOTOR SUPPORT
BRAKE	932801801	70	1	227	90 02 790 4	SLEWING DRIVE SAT 325/254
BRAKE HOUSING	932801901	1	1	228	93 28 018 01	BRAKE
BRAKE MULTI-DISC SET	944218003	960	1	227	90 02 790 4	SLEWING DRIVE SAT 325/254
BRAKE MULTI-DISC SET	944302803	920	1	110	96 87 443 01	TRACTION DRIVE FAT 400P07
BRAKE PISTON	10014067	1	1	166	70 28 176	BRAKE PISTON
BRAKE PISTON	7028176	10	2	177	70 28 075	CONTROL UNIT
BRAKE REPAIR KIT	944302903	940	1	111	96 87 443 01	TRACTION DRIVE FAT 400P07
BRAKE VALVE	10002011	15	2	107	10 83 693 0	TRACTION DRIVE
BRAKE VALVE	10002011	15	2	108	11 10 296 8	TRACTION DRIVE
BREECH PLATE	7371025	8	1	362	10 04 272 9	OIL PILOT VALVE
BUCKET BIT	11102588	9	1	736	11 10 258 7	BACKHOE BUCKET HD 1800
BULKHEAD CONNECTOR	11102819	15	1	756	11 10 281 8	KIT IN BASIC MACHINE
BULKHEAD CONNECTOR M16x	9685685	14	5	716	11 10 283 6	KIT GOOSENECK BOOM 6.45M
BULKHEAD CONNECTOR M16x	9685685	14	8	727	11 10 281 7	KIT STICK 2.10M
BULKHEAD CONNECTOR M16x	9685685	12	6	756	11 10 281 8	KIT IN BASIC MACHINE
BULKHEAD PLATE	9808806	30	1	721	10 82 841 3	CENTRAL LUBRICATING SYS
BULKHEAD PLATE	9808806	25	1	730	10 39 639 6	CENTRAL GREASING
BURR FASTENING TAPE	10022776	20	1	333	10 02 211 7	AIR CIRCULATION CASE
BUSHING	10022782	12	2	333	10 02 211 7	AIR CIRCULATION CASE
BUSHING	10028992	2	2	94	10 00 454 6	GUIDE WHEEL B6
BUSHING	10216741	43	1	398	11 49 189 0	CONNECTING PLATE
BUSHING	11003782	8	2	89	11 60 010 7	TRACK ROLLER D7
BUSHING	11004094	9	1	91	10 65 167 7	CARRYING ROLLER D7
BUSHING	11823089	2	2	79	12 22 100 1	GUIDE WHEEL
BUSHING	12505756	3	2	325	90 79 259	PILOT CONTROL UNIT VG7 2-3
BUSHING	5617471	150	1	421	10 30 079 8	STICK BYPASS VALVE

Description	Item	Pos.	Quantity	Page	Assembly	Description
BUSHING	7019122	350	2	504	10 29 026 4	COMPONENTS
BUSHING	7020573	39	1	431	10 33 073 6	TRAVEL PILOT VALVE
BUSHING	7028816	290	1	482	70 28 807	LOCK RIGHT HAND
BUSHING	7028816	290	1	483	70 28 808	LOCK LEFT HAND
BUSHING	9265394	2	1	318	90 74 482	REPAIR SET PLUNGER
BUSHING	9265394	14	2	323	90 79 258	PILOT CONTROL UNIT VG7 2-3
BUSHING	9265394	2	1	743	90 79 277	REPAIR SET PLUNGER
BUSHING	9277898	27	1	815	90 73 588	DRIVING GEAR NG 100
BUSHING	9962061	2	1	762	96 44 648	HYDRAULIC CYLINDER
BUSHING 14/16X10	7362583	5	2	326	94 76 369	FOOT PEDAL LEFT ASSEMBL
BUSHING 14/16X10	7362583	10	2	741	90 79 392	FOOT PEDAL RIGHT ASSEMBL
BUSHING A1 80/95X80	10820900	31	2	729	11 10 280 8	STICK 2,10M
BUSHING B1 100/120X120	10399732	30	2	729	11 10 280 8	STICK 2,10M
BUSHING B1 100/120X120	10399732	32	2	729	11 10 280 8	STICK 2,10M
BUSHING B1 100/120X120	10399732	3	2	740	10 35 875 0	CONNECTING LINK
BUSHING B1 110/130X135	10820891	4	2	740	10 35 875 0	CONNECTING LINK
BUSHING HOUSING DT 4-POL	6203136	310	1	786	10 82 562 1	OPT.DATA CAPTURE-DATA T
BUSHING RAUTE 110/130X90	9593363	1	1	762	96 44 648	HYDRAULIC CYLINDER
BUSHING SPIRAL 100/120X90	9170985	1	2	760	11 68 144 7	HYDRAULIC CYLINDER
BUSHING SPIRAL 100/120X90	9170985	1	2	761	95 93 026	HYDRAULIC CYLINDER
BUTT STRAP	10429055	30	1	477	70 28 788	SEAL
BUTTON	10289975	43	4	282	10 04 363 2	OPERATOR SEAT
BUZZER	6000578	37	1	271	10 49 880 5	DRIVER STAND BASE SECTIO
CAB BOTTOM PLATE	10498690	10	1	271	10 49 880 5	DRIVER STAND BASE SECTIO
CAB BOTTOM PLATE	9010347	10	1	271	10 49 880 5	DRIVER STAND BASE SECTIO
CAB ROOF	10020982	690	1	505	10 29 026 4	COMPONENTS
CABLE	10493344	34	1	285	11 10 016 6	SEAT TOP
CABLE CHANNEL	10841508	60	1	272	10 49 880 5	DRIVER STAND BASE SECTIO
CABLE CLAMP	10023106	11	2	333	10 02 211 7	AIR CIRCULATION CASE
CABLE CLIP	10044344	792	1	492	10 29 033 7	ELECTRICAL INSTALLATION
CABLE CLIP	10044344	792	1	494	10 48 808 7	ELECTRICAL INSTALLATION
CABLE CLIP d=200-3,6	7362507	97	4	279	11 38 340 1	ARM REST RIGHT
CABLE CLIP d=200-3,6	7362507	97	4	302	11 45 228 6	ARM REST RIGHT
CABLE CLIP d=200-3,6	7362507	97	4	306	12 50 731 7	ARM REST RIGHT
CABLE HARNESS	11066527	4	1	287	11 10 016 7	SUSPENSION
CABLE HARNESS MOUNTING	10117997	580	1	555	10 11 714 5	DIESEL ENGINE D936 L A6 190
CABLE LOOM	10006617	80	1	329	11 00 054 6	DELI.PARTS EVAPORATOR
CABLE LOOM	9768247	38	1	277	11 38 340 1	ARM REST RIGHT
CABLE LOOM	9768247	38	1	301	11 45 228 6	ARM REST RIGHT
CABLE LOOM	9768247	38	1	305	12 50 731 7	ARM REST RIGHT
CABLE LOOM 25 ABGESCHIRM	6204634	46	1	276	11 38 339 7	ARM REST LEFT
CABLE LOOM 25 ABGESCHIRM	6204634	46	1	292	10 38 502 8	ARM REST LEFT
CABLE LOOM A100-A1008	9699736	55	1	751	10 35 860 1	TRAVEL ALARM
CABLE LOOM A1010-A1001	12418014	91	1	279	11 38 340 1	ARM REST RIGHT
CABLE LOOM A1010-A1001	12418014	91	1	302	11 45 228 6	ARM REST RIGHT
CABLE LOOM A1010-A1001	12418014	91	1	306	12 50 731 7	ARM REST RIGHT
CABLE LOOM A1010-A1011	9893072	23	1	275	11 38 339 7	ARM REST LEFT
CABLE LOOM A1010-A1011	9893072	23	1	291	10 38 502 8	ARM REST LEFT
CABLE LOOM A1010-U16	9949686	94	1	279	11 38 340 1	ARM REST RIGHT
CABLE LOOM A1010-U16	9949686	94	1	302	11 45 228 6	ARM REST RIGHT
CABLE LOOM A1010-U16	9949686	94	1	306	12 50 731 7	ARM REST RIGHT
CABLE LOOM MP65 - MP61/1	10066076	20	1	275	11 38 339 7	ARM REST LEFT
CABLE LOOM MP65 - MP61/1	10066076	20	1	291	10 38 502 8	ARM REST LEFT
CABLE LOOM X1/U16-X1/A100	10079010	93	1	279	11 38 340 1	ARM REST RIGHT
CABLE LOOM X1/U16-X1/A100	10079010	93	1	302	11 45 228 6	ARM REST RIGHT
CABLE LOOM X1/U16-X1/A100	10079010	93	1	306	12 50 731 7	ARM REST RIGHT
CABLE LOOM X164-X182	10055095	138	1	274	10 49 880 5	DRIVER STAND BASE SECTIO
CABLE LOOM X182-2/S84-1	10057843	92	1	279	11 38 340 1	ARM REST RIGHT
CABLE LOOM X182-2/S84-1	10057843	92	1	302	11 45 228 6	ARM REST RIGHT
CABLE LOOM X182-2/S84-1	10057843	92	1	306	12 50 731 7	ARM REST RIGHT

Description	Item	Pos.	Quantity	Page	Assembly	Description
CABLE LOOM X66-X734	10079846	95	1	279	11 38 340 1	ARM REST RIGHT
CABLE LOOM X66-X734	10079846	95	1	302	11 45 228 6	ARM REST RIGHT
CABLE LOOM X66-X734	10079846	95	1	306	12 50 731 7	ARM REST RIGHT
CABLE PROTECTION SWITCH	6202944	19	1	519	99 47 695	ELECTRICAL SYSTEM E50
CABLE PROTECTION SWITCH	6203687	21	1	519	99 47 695	ELECTRICAL SYSTEM E50
CABLE SLEEVE 14,0/15,7/19	6202703	24	2	275	11 38 339 7	ARM REST LEFT
CABLE SLEEVE 14,0/15,7/19	6202703	24	2	291	10 38 502 8	ARM REST LEFT
CABLE SLEEVE 8,5/14/20	7362986	25	7	275	11 38 339 7	ARM REST LEFT
CABLE SLEEVE 8,5/14/20	7362986	25	7	291	10 38 502 8	ARM REST LEFT
CABLE TIE	11002474	35	8	336	11 00 359 4	HOUSING
CAGE	10216468	32	1	399	11 49 189 4	DRIVING GEAR
CAMS SHAFT BUSHING	9073745	10	7	561	10 11 577 8	CRANKCASE PRE-ASSY.
CAMSHAFT	10119424	1	1	610	90 80 713	CAMSHAFT CPL.
CAMSHAFT CPL.	9080713	100	1	558	10 11 682 5	BASIC ENGINE D936 L HIGH 3
CAP NUT	7028908	650	5	505	10 29 026 4	COMPONENTS
CAP NUT M10X1	7018700	10	1	436	50 07 236	PRESSURE FEEDER VALVE
CAP NUT M4	10099210	28	4	250	10 22 844 3	LUBRICATION PUMP
CAR RADIO	11346626	56	1	7	.	
CARRIER RAIL	9874961	3	1	296	98 74 988	PLATINES INSTALLATION
CARRIER ROLLER INSTALLATI	10392320	50	4	75	10 49 885 2	UNDERCARRIAGE CPL
CARRYING ROLLER D7	10651677	2	1	90	10 39 232 0	CARRIER ROLLER INSTALLATI
CASE	10022119	3	1	330	10 81 666 6	EVAPORATOR
CASE	11835500	1	1	796	11 69 501 2	UREA FILLING KIT
CASING, CPL	10470128	250	1	508	10 29 035 2	INTERIOR PANELING
CASING, CPL	10470128	250	1	510	10 48 808 8	INTERIOR PANELING
CEILING LAMP	7028857	140	1	490	10 29 033 7	ELECTRICAL INSTALLATION
CENTERING PIN 20X45	90018066	16	1	242	10 04 851 4	FIX.PARTS SWING RING UNDE
CENTERING PIN 35X60X40	9698698	2	2	537	10 06 391 4	FIXING PARTS COUNTERWEI
CENTRAL ELEMENT MX-F 105	7027941	2	1	719	10 66 480 4	DISTRIBUTION BLOCK MX-F 5/
CENTRAL ELEMENT MX-F 105	7027941	3	1	719	10 66 480 4	DISTRIBUTION BLOCK MX-F 5/
CENTRAL ELEMENT MX-F 105	7027941	4	1	719	10 66 480 4	DISTRIBUTION BLOCK MX-F 5/
CENTRAL ELEMENT MX-F 105	7027941	6	1	733	10 66 475 5	DISTRIBUTION BLOCK MX-F 7/
CENTRAL ELEMENT MX-F 25	7027938	5	1	719	10 66 480 4	DISTRIBUTION BLOCK MX-F 5/
CENTRAL ELEMENT MX-F 25	7027938	4	1	733	10 66 475 5	DISTRIBUTION BLOCK MX-F 7/
CENTRAL ELEMENT MX-F 45	7027939	4	1	255	10 29 300 3	DISTRIBUTION BLOCK MX-F 4/
CENTRAL ELEMENT MX-F 45	7027939	2	1	733	10 66 475 5	DISTRIBUTION BLOCK MX-F 7/
CENTRAL ELEMENT MX-F 45	7027939	3	1	733	10 66 475 5	DISTRIBUTION BLOCK MX-F 7/
CENTRAL ELEMENT MX-F 45	7027939	5	1	733	10 66 475 5	DISTRIBUTION BLOCK MX-F 7/
CENTRAL ELEMENT MX-F 45	7027939	7	1	733	10 66 475 5	DISTRIBUTION BLOCK MX-F 7/
CENTRAL ELEMENT MX-F 75	7027940	2	1	255	10 29 300 3	DISTRIBUTION BLOCK MX-F 4/
CENTRAL ELEMENT MX-F 75	7027940	3	1	255	10 29 300 3	DISTRIBUTION BLOCK MX-F 4/
CENTRAL ELEMENT SXE-2	10013837	2	3	253	10 66 472 2	DISTRIBUTION BLOCK SXE-2
CENTRAL GREASING	10396396	180	1	726	11 10 280 7	STICK 2.10M
CENTRAL LUBRICATING SYS	10828413	70	1	712	11 10 294 5	GOOSENECK BOOM 6.45M
CENTRAL LUBRICATING SYS	12849526	3	1	246	12 84 952 5	CENTRALIZED LUBRICATION
CENTRALIZED LUBRICATION	10828414	50	1	722	10 82 841 3	CENTRAL LUBRICATING SYS
CENTRALIZED LUBRICATION	12849525	1400	1	123	10 35 861 4	UPPERCARRIAGE
CHAIN	7024630	26	1	369	10 02 191 5	CONTROL SOLENOID VALVE
CHAIN	7024630	26	1	370	10 28 046 1	CONTROL SOLENOID VALVE
CHAIN END LINK	5617975	10	1	82	10 67 500 3	NAKED CRAWLER CHAIN
CHAIN GUIDE 265X200	12501735	2	1	97	10 40 373 2	TRACK GUIDE INSTALLATION
CHANGE KIT TRACK D7 INTO	10498878	47	1	7	.	
CHANNEL	10024192	500	1	509	10 29 035 2	INTERIOR PANELING
CHANNEL	10024192	500	1	511	10 48 808 8	INTERIOR PANELING
CHANNEL REAR LEFT	10009183	300	1	509	10 29 035 2	INTERIOR PANELING
CHANNEL REAR LEFT	10009183	300	1	511	10 48 808 8	INTERIOR PANELING
CHANNEL REAR RIGHT	10014497	310	1	509	10 29 035 2	INTERIOR PANELING
CHANNEL REAR RIGHT	10014497	310	1	511	10 48 808 8	INTERIOR PANELING
CHARGE AIR COOLER	10300995	4	1	199	10 21 851 3	COMBINATED RADIATOR
CHARGE AIR COOLER	10300995	4	1	202	11 69 472 6	COMBINATED RADIATOR

Description	Item	Pos.	Quantity	Page	Assembly	Description
CHARGE AIR ELBOW	9079936	4	1	644	10 11 570 3	CONNECTING LINE ADD-ON
CHARGE AIR ELBOW	9079936	4	1	645	10 12 190 9	CONNECTING LINE ADD-ON
CIGARETTE LIGHTER	11836911	80	1	276	11 38 339 7	ARM REST LEFT
CIGARETTE LIGHTER	7369377	80	1	292	10 38 502 8	ARM REST LEFT
CIRCULATING AIR GRID	10022771	1	1	339	10 02 277 7	CIRCULATING AIR GRID
CIRCULATING AIR GRID	10022777	19	1	333	10 02 211 7	AIR CIRCULATION CASE
CLAMP	10217172	14	2	137	10 49 819 9	AIR FILTER INSTALLATION
CLAMP	7373592	1	4	512	10 47 012 8	CASING, CPL
CLAMP - ADD-ON UNIT	10116300	27	1	549	10 11 714 5	DIESEL ENGINE D936 L A6 190
CLAMP - ADD-ON UNIT	10117268	218	1	551	10 11 714 5	DIESEL ENGINE D936 L A6 190
CLAMP - ADD-ON UNIT	10119127	2	1	566	10 11 916 7	CRANKCASE BREATHER ASSE
CLAMP FITTING EQUIPM. PRE	9887461	3	1	650	10 11 646 4	AIR COND. COMPRESSOR A
CLAMP HRBGS 0A G 11 TPE73	10037727	8	11	9	12 85 910 3	FLOODLIGHT INSTALLATION
CLAMP HRBGS 0A G 11 TPE73	10037727	22	14	716	11 10 283 6	KIT GOOSENECK BOOM 6.45M
CLAMP HRBGS 0A G 11 TPE73	10037727	17	7	721	10 82 841 3	CENTRAL LUBRICATING SYS
CLAMP HRBGS 0A G 11 TPE73	10037727	22	8	727	11 10 281 7	KIT STICK 2.10M
CLAMP HRBGS 0A G 11 TPE73	10037727	12	5	730	10 39 639 6	CENTRAL GREASING
CLAMP HRBGS 0A G 8 TPE73	10037728	20	2	247	12 84 952 6	CENTRAL LUBRICATING SYS
CLAMP HRBGS 0A G 8 TPE73	10037728	8	10	721	10 82 841 3	CENTRAL LUBRICATING SYS
CLAMP HRBGS 0A G 8 TPE73	10037728	15	1	730	10 39 639 6	CENTRAL GREASING
CLAMP HRBGS 1 G 8 11 TPE7	10037725	14	2	721	10 82 841 3	CENTRAL LUBRICATING SYS
CLAMP HRBGS 1 G 8 11 TPE7	10037725	40	8	731	10 39 639 6	CENTRAL GREASING
CLAMP HRBGS 1 G 8 8	10037726	25	2	247	12 84 952 6	CENTRAL LUBRICATING SYS
CLAMP HRBGS 1 G 8 8	10037726	5	3	721	10 82 841 3	CENTRAL LUBRICATING SYS
CLAMP HRBGS 1 G 8 8	10037726	9	12	730	10 39 639 6	CENTRAL GREASING
CLAMP HRGBS 1 G 11 11 TPE7	10037724	20	14	716	11 10 283 6	KIT GOOSENECK BOOM 6.45M
CLAMP HRGBS 1 G 11 11 TPE7	10037724	11	4	721	10 82 841 3	CENTRAL LUBRICATING SYS
CLAMP HRGBS 1 G 11 11 TPE7	10037724	20	16	727	11 10 281 7	KIT STICK 2.10M
CLAMP HRGBS 1 G 11 11 TPE7	10037724	20	4	756	11 10 281 8	KIT IN BASIC MACHINE
CLAMP-HALF AEHNL.DIN 3015	7367237	27	4	351	10 35 862 8	HYDR.INST.ROTARY CONNE
CLAMP-HALF AEHNL.DIN 3015	7365069	9	2	244	10 06 198 5	GREASE PIPE INSTALLATION
CLAMP-HALF AEHNL.DIN 3015	7367236	54	4	345	10 35 862 3	HYDR.PUMPS TO SPOOL VALV
CLAMP-HALF AEHNL.DIN 3015	7367236	45	4	357	10 35 862 9	HYDR.AND GEAR OIL COOLIN
CLAMP-HALF AEHNL.DIN 3015	7367236	15	6	358	10 35 862 4	HYDR.INSTALLATION FAN DR
CLAMP-HALF AEHNL.DIN 3015	7029979	20	22	136	10 36 918 3	FUEL SYSTEM
CLAMP-HALF AEHNL.DIN 3015	7029979	52	2	213	10 04 853 8	ENGINE ADD-ON PARTS
CLAMP-HALF AEHNL.DIN 3015	7029979	1	2	748	93 88 597	HOSE CLAMP
CLAMPING BRACKET	9388848	41	1	277	11 38 340 1	ARM REST RIGHT
CLAMPING BRACKET	9388848	41	1	301	11 45 228 6	ARM REST RIGHT
CLAMPING BRACKET	9388848	41	1	305	12 50 731 7	ARM REST RIGHT
CLAMPING PROFILE	10332542	10	1	204	10 06 309 3	COOLER SEALING
CLAMPING PROFILE	7018489	9	0.71m	459	10 06 423 5	SIDE DOOR RIGHT
CLAMPING PROFILE	9591327	490	1	361	10 06 380 1	HYDR.INSTAL.CONTROL TUBE
CLAMPING SLEEVE	10017567	7	2	94	10 00 454 6	GUIDE WHEEL B6
CLAMPING SLEEVE	12220999	7	2	79	12 22 100 1	GUIDE WHEEL
CLAMPING STRIP	9903712	23	2	445	10 35 865 5	COVERS
CLIP	10412536	10	25	453	10 05 816 9	ENGINE BONNET
CLIP	10412536	4	31	454	10 05 823 4	SCOOP
CLIP	10412536	5	23	455	10 06 436 0	RADIATOR HOOD
CLIP	10412536	5	42	456	10 05 183 8	BONNET RIGHT
CLIP	10412536	7	20	457	10 35 822 9	SIDE DOOR LEFT
CLIP	10412536	4	72	458	10 05 963 3	SCOOP
CLIP	10412536	8	45	459	10 06 423 5	SIDE DOOR RIGHT
CLIP	10412536	8	42	460	10 49 856 6	SIDE DOOR RIGHT
CLIP	10412536	6	12	461	10 07 033 5	COVER MIDDLE
CLIP	10412536	41	3	463	10 35 826 4	TOOL BOX
CLIP	10412536	21	6	464	10 08 276 3	COVER
CLIP	10412536	11	10	465	10 06 576 2	DIVIDING WALL MIDDLE
CLIP	10412536	6	13	466	10 35 823 0	SIDE DOOR FRONT LEFT
CLOSING PIN	7028896	300	1	504	10 29 026 4	COMPONENTS

Description	Item	Pos.	Quantity	Page	Assembly	Description
CLOSING RING	944121703	10	1	228	93 28 018 01	BRAKE
CLOSING RING NG 090-107	12802730	17	1	235	92 73 163	SEAL KIT NG 090
CLOSING RING NG 090-107	12802730	17	1	814	12 88 015 2	CLOSING RING PRE-ASS. NG
CLOSING RING NG 090-107	12802730	17	1	828	92 68 015	REPAIR KIT LOCK RING NG 09
CLOSING RING NG 125-150	12802738	17	1	813	12 87 963 9	CLOSING RING PRE-ASS. NG
CLOSING RING NG 125-150	12802738	17	1	829	92 68 016	REPAIR KIT LOCK RING NG 12
CLOSING RING PRE-ASS. NG	12880152	3	1	233	90 74 117	REPAIR KIT SHAFT NG 090
CLOSING RING PRE-ASS. NG	12880152	3	1	824	90 74 123	REPAIR KIT SHAFT NG 100
CLOSING RING PRE-ASS. NG	12879639	3	1	189	98 89 977	REPAIR KIT SHAFT NG 140
CLUTCH RING	9073639	20	1	185	98 84 140	COOLING CIRCUIT PUMP
COAT HOOK	7019131	640	1	505	10 29 026 4	COMPONENTS
CODING PLUG	9699174	8	1	514	11 10 255 3	ELECTRICAL SYSTEM
CODING PLUG	975857901	7	1	514	11 10 255 3	ELECTRICAL SYSTEM
COIL	10101523	157	1	744	10 00 348 5	DIRECTIONAL CONTROL VALV
COLD STAR VALVE	10220816	2	1	176	11 82 153 4	FILTER HEAD
COLLAR JOINT	7029248	4	1	390	56 17 688	SHUT OFF DEVICE
COLLER BUSHING	11004093	8	1	91	10 65 167 7	CARRYING ROLLER D7
COMBI PLIERS	11162134	120	1	540	10 84 856 2	TOOL EQUIPMENT
COMBINATED RADIATOR	10218513	10	1	193	10 04 853 6	ENGINE COOLING
COMBINATED RADIATOR	11694726	10	1	193	10 04 853 6	ENGINE COOLING
COMPONENTS	10290264	70	1	472	10 22 830 2	OPERATOR'S CAB
COMPONENTS	10290264	70	1	474	10 47 616 9	OPERATOR'S CAB
COMPRESSION RING	90014540	61	2	221	90 01 453 8	MODIFICATION KIT
COMPRESSION RING	9443019	50	2	110	96 87 443 01	TRACTION DRIVE FAT 400P07
COMPRESSION RING	9443019	50	2	118	94 43 029 03	BRAKE REPAIR KIT
COMPRESSION RING 10X297,	932855901	61	2	227	90 02 790 4	SLEWING DRIVE SAT 325/254
COMPRESSOR CPL.	10492985	10	1	287	11 10 016 7	SUSPENSION
CONNECTING BRANCH ADD-O	9077279	221	1	552	10 11 714 5	DIESEL ENGINE D936 L A6 190
CONNECTING CABLE	9768248	27	1	277	11 38 340 1	ARM REST RIGHT
CONNECTING CABLE	9768248	27	1	301	11 45 228 6	ARM REST RIGHT
CONNECTING CABLE	9768248	27	1	305	12 50 731 7	ARM REST RIGHT
CONNECTING ELEMENT	9064786	998	1	720	10 66 482 5	DISTRIBUTION BLOCK MX-F 5/
CONNECTING HOSE	11825936	50	1	49	11 82 320 0	UREA DISPENSER SYSTEM
CONNECTING LINE	10115705	2	1	644	10 11 570 3	CONNECTING LINE ADD-ON
CONNECTING LINE	10115705	2	1	645	10 12 190 9	CONNECTING LINE ADD-ON
CONNECTING LINE 3X2,5 0,80	10014589	10	1	252	10 00 933 0	PROXIMITY SWITCH
CONNECTING LINE ADD-ON	10115703	230	1	552	10 11 714 5	DIESEL ENGINE D936 L A6 190
CONNECTING LINE ADD-ON	10121909	230	1	552	10 11 714 5	DIESEL ENGINE D936 L A6 190
CONNECTING LINK	10358750	12	1	725	11 10 280 7	STICK 2.10M
CONNECTING LINK NG 150	9887828	14	2	154	90 73 242	CONNECTION HOUSING NG 15
CONNECTING PIECE	10014699	16	1	249	10 22 844 3	LUBRICATION PUMP
CONNECTING PIECE	11826483	10	1	50	11 82 595 6	HAND PUMP
CONNECTING PIECE PRE-ASS	9079580	217	1	551	10 11 714 5	DIESEL ENGINE D936 L A6 190
CONNECTING PLATE	10008084	6	1	400	10 00 807 7	PUMP
CONNECTING PLATE	10008432	6	1	208	56 19 045	AXIAL PISTON MOTOR
CONNECTING PLATE	10296864	39	1	424	10 11 386 0	CONTROL BLOCK
CONNECTING PLATE	11491890	3	1	162	11 34 249 1	AXIAL PISTON PUMP
CONNECTING PLATE	11491892	5	1	398	11 49 189 0	CONNECTING PLATE
CONNECTING PLATE	7013559	475	1	414	10 35 863 8	CONTROL VALVE INSTALLAT
CONNECTING PLATE NG 090	10136746	11	1	817	90 74 112	CONNECTING PLATE NG 090
CONNECTING PLATE NG 090	9074112	3	1	230	90 74 075	HYDRAULIC INSTALLATION
CONNECTING PLATE NG 100	9073783	11	1	816	90 73 786	CONNECTING PLATE NG 100
CONNECTING PLATE NG 100	9073786	3	1	799	90 73 888	HYDRAULIC INSTALLATION
CONNECTING RING	9443025	75	1	110	96 87 443 01	TRACTION DRIVE FAT 400P07
CONNECTING ROD BEARING	10145100	1	1	586	10 11 693 4	RK BIG-END BEARING D930
CONNECTING ROD BEARING	10145101	2	1	586	10 11 693 4	RK BIG-END BEARING D930
CONNECTING ROD BUSHING	11348053	3	1	587	11 34 805 4	CONROD
CONNECTING SLEEVE 3	10015495	100	1	299	99 68 625	LH-JOYSTICK LEFT
CONNECTING SLEEVE 3	10015495	100	1	314	99 68 611	LH-JOYSTICK RIGHT
CONNECTION CARRIER	9443002	1	1	109	96 87 443 01	TRACTION DRIVE FAT 400P07

Description	Item	Pos.	Quantity	Page	Assembly	Description
CONNECTION FLANGE	10300941	73	1	425	10 11 386 0	CONTROL BLOCK
CONNECTION FLANGE	9079582	1	1	644	10 11 570 3	CONNECTING LINE ADD-ON
CONNECTION FLANGE	9079582	1	1	645	10 12 190 9	CONNECTING LINE ADD-ON
CONNECTION FLANGE	9268423	13	1	801	10 13 303 7	HYDR.DOUBLE PUMP
CONNECTION HOUSING	9884135	1	1	185	98 84 140	COOLING CIRCUIT PUMP
CONNECTION HOUSING	9884137	3	1	185	98 84 140	COOLING CIRCUIT PUMP
CONNECTION HOUSING NG 14	9074876	10	1	181	90 74 893	REPAIR KIT CONNECTION H
CONNECTION HOUSING NG 15	9073242	3	1	801	10 13 303 7	HYDR.DOUBLE PUMP
CONNECTION PIECE	10116576	213	1	551	10 11 714 5	DIESEL ENGINE D936 L A6 190
CONNECTION PIECE	7020046	600	1	497	70 28 884	WIPPER MOTOR SET
CONNECTION STUB	12838220	1	1	643	90 77 279	CONNECTING BRANCH ADD-O
CONNECTOR BASE	6001681	978	4	520	99 47 695	ELECTRICAL SYSTEM E50
CONROD	11348054	1	1	585	90 76 459	CONROD
CONROD	9076459	60	6	557	10 11 682 5	BASIC ENGINE D936 L HIGH 3
CONROD	9079996	1	1	587	11 34 805 4	CONROD
CONROD BOLT M14X1,5X65	9174981	1	2	585	90 76 459	CONROD
CONROD BOLT M14X1,5X65	9174981	2	2	587	11 34 805 4	CONROD
CONSOLE	10049073	32	1	514	11 10 255 3	ELECTRICAL SYSTEM
CONSOLE	10061525	3	1	758	10 35 857 3	HYDR.CYLINDER W/ADDITION.
CONSOLE	10070437	200	1	411	10 35 863 8	CONTROL VALVE INSTALLAT
CONSOLE	10074866	40	1	247	12 84 952 6	CENTRAL LUBRICATING SYS
CONSOLE	10074866	26	1	756	11 10 281 8	KIT IN BASIC MACHINE
CONSOLE	10080030	3	1	775	11 45 729 6	HOIST CYLINDER RIGHT
CONSOLE	10080096	25	1	721	10 82 841 3	CENTRAL LUBRICATING SYS
CONSOLE	10080219	3	1	778	11 45 729 7	HOIST CYLINDER LEFT
CONSOLE	10080598	2	1	423	10 35 863 6	PIPE CLAMP
CONSOLE	10116053	9	1	650	10 11 646 4	AIR COND. COMPRESSOR A
CONSOLE	10374115	4	1	778	11 45 729 7	HOIST CYLINDER LEFT
CONSOLE	10374247	4	1	775	11 45 729 6	HOIST CYLINDER RIGHT
CONSOLE	10854638	19	1	754	10 85 472 4	BASIC MACHINE MOUNTING
CONSOLE	10859980	140	1	786	10 82 562 1	OPT.DATA CAPTURE-DATA T
CONSOLE	12860504	39	1	247	12 84 952 6	CENTRAL LUBRICATING SYS
CONSOLE	12860504	39	1	756	11 10 281 8	KIT IN BASIC MACHINE
CONSOLE	7373042	10	1	360	10 06 380 1	HYDR.INSTAL.CONTROL TUBE
CONSOLE	9356574	7	1	455	10 06 436 0	RADIATOR HOOD
CONSOLE	9690616	80	1	279	11 38 340 1	ARM REST RIGHT
CONSOLE	9690616	80	1	302	11 45 228 6	ARM REST RIGHT
CONSOLE	9690616	80	1	306	12 50 731 7	ARM REST RIGHT
CONSOLE	9834805	50	1	446	10 35 865 5	COVERS
CONTAINER COVER	10014717	27	1	250	10 22 844 3	LUBRICATION PUMP
CONTROL	10036533	3	1	316	90 13 811	EMERGENCY CONTROL CPL
CONTROL BLOCK	10113860	60	1	407	10 35 863 8	CONTROL VALVE INSTALLAT
CONTROL BOX ANNEXE	10115993	571	1	555	10 11 714 5	DIESEL ENGINE D936 L A6 190
CONTROL BRACKET LEFT IN	10057362	10	1	275	11 38 339 7	ARM REST LEFT
CONTROL BRACKET LEFT IN	10057362	10	1	291	10 38 502 8	ARM REST LEFT
CONTROL CONSOLE RIGHT	5618923	10	1	277	11 38 340 1	ARM REST RIGHT
CONTROL CONSOLE RIGHT	5618923	10	1	301	11 45 228 6	ARM REST RIGHT
CONTROL CONSOLE RIGHT	5618923	10	1	305	12 50 731 7	ARM REST RIGHT
CONTROL ELEMENT	10493089	13	1	335	11 00 359 4	HOUSING
CONTROL HOSE	7401007	585	1	415	10 35 863 8	CONTROL VALVE INSTALLAT
CONTROL HOSE	7401007	600	1	415	10 35 863 8	CONTROL VALVE INSTALLAT
CONTROL HOSE	7401756	384	1	413	10 35 863 8	CONTROL VALVE INSTALLAT
CONTROL HOSE	7401772	31	1	754	10 85 472 4	BASIC MACHINE MOUNTING
CONTROL HOSE	7402273	10	2	121	10 40 412 9	HYDR.INSTALLATION UNDER
CONTROL HOSE	7402440	378	1	413	10 35 863 8	CONTROL VALVE INSTALLAT
CONTROL HOSE	7402483	610	1	415	10 35 863 8	CONTROL VALVE INSTALLAT
CONTROL HOSE	7402833	371	1	413	10 35 863 8	CONTROL VALVE INSTALLAT
CONTROL HOSE	7402835	20	7	269	10 06 014 6	HYDR.INSTAL.FOOT BOARD
CONTROL HOSE	7403978	364	1	412	10 35 863 8	CONTROL VALVE INSTALLAT
CONTROL HOSE	7406682	200	1	361	10 06 380 1	HYDR.INSTAL.CONTROL TUBE

Description	Item	Pos.	Quantity	Page	Assembly	Description
CONTROL HOSE	7406682	360	1	412	10 35 863 8	CONTROL VALVE INSTALLAT
CONTROL HOSE 8X1300	7002561	425	1	413	10 35 863 8	CONTROL VALVE INSTALLAT
CONTROL HOSE 8X1500	7003723	377	1	413	10 35 863 8	CONTROL VALVE INSTALLAT
CONTROL HOSE 8X1600	7005035	450	1	361	10 06 380 1	HYDR.INSTAL.CONTROL TUBE
CONTROL HOSE 8X1600	7005035	452	1	361	10 06 380 1	HYDR.INSTAL.CONTROL TUBE
CONTROL HOSE 8X1600	7005035	454	1	361	10 06 380 1	HYDR.INSTAL.CONTROL TUBE
CONTROL HOSE 8X1950	5604011	373	1	413	10 35 863 8	CONTROL VALVE INSTALLAT
CONTROL HOSE 8X2000	7009933	5	4	267	11 38 342 7	HYDR.INSTAL.ARM REST LEF
CONTROL HOSE 8X2000	7009933	5	4	268	11 38 342 9	HYDR.INSTAL.ARM REST RIGH
CONTROL HOSE 8X2100	10007230	362	3	412	10 35 863 8	CONTROL VALVE INSTALLAT
CONTROL HOSE 8X2100	7014580	363	1	412	10 35 863 8	CONTROL VALVE INSTALLAT
CONTROL HOSE 8X250	10472994	30	1	268	11 38 342 9	HYDR.INSTAL.ARM REST RIGH
CONTROL HOSE 8X2600	10218975	368	3	412	10 35 863 8	CONTROL VALVE INSTALLAT
CONTROL HOSE 8X2600	7618290	369	3	412	10 35 863 8	CONTROL VALVE INSTALLAT
CONTROL HOSE 8X2800	7014248	440	1	413	10 35 863 8	CONTROL VALVE INSTALLAT
CONTROL HOSE 8X2900	5604525	460	1	361	10 06 380 1	HYDR.INSTAL.CONTROL TUBE
CONTROL HOSE 8X300	7403175	55	1	346	10 06 379 3	OIL PILOT VALVE INSTALLATIO
CONTROL HOSE 8X300	7403175	32	1	754	10 85 472 4	BASIC MACHINE MOUNTING
CONTROL HOSE 8X3200	10015548	100	1	360	10 06 380 1	HYDR.INSTAL.CONTROL TUBE
CONTROL HOSE 8X3200	10015548	110	1	360	10 06 380 1	HYDR.INSTAL.CONTROL TUBE
CONTROL HOSE 8X350	7402576	520	1	361	10 06 380 1	HYDR.INSTAL.CONTROL TUBE
CONTROL HOSE 8X4200	5611206	440	1	361	10 06 380 1	HYDR.INSTAL.CONTROL TUBE
CONTROL HOSE 8X430	7016508	530	1	361	10 06 380 1	HYDR.INSTAL.CONTROL TUBE
CONTROL HOSE 8X480	7401757	45	3	143	10 04 853 9	PUMPS + COUPLING INSTALL
CONTROL HOSE 8X480	7401757	366	1	412	10 35 863 8	CONTROL VALVE INSTALLAT
CONTROL HOSE 8X500	7005047	21	2	121	10 40 412 9	HYDR.INSTALLATION UNDER
CONTROL HOSE 8X500	7005047	30	3	269	10 06 014 6	HYDR.INSTAL.FOOT BOARD
CONTROL HOSE 8X600	7005665	420	1	413	10 35 863 8	CONTROL VALVE INSTALLAT
CONTROL HOSE 8X800	7015992	590	1	415	10 35 863 8	CONTROL VALVE INSTALLAT
CONTROL PARTS	9079870	110	6	558	10 11 682 5	BASIC ENGINE D936 L HIGH 3
CONTROL PLATE	10288470	500	1	414	10 35 863 8	CONTROL VALVE INSTALLAT
CONTROL PLATE 297mmX21	10092123	22	1	547	10 49 803 0	SIGNS
CONTROL PLATE LEFT NG 14	9887035	2	1	188	98 89 833	RK CYLINDER+CONTROL PLA
CONTROL PLATE RIGHT NG 14	9887034	2	1	187	98 89 832	RK CYLINDER+CONTROL PLAT
CONTROL SOLENOID VALVE	10280461	2	1	362	10 04 272 9	OIL PILOT VALVE
CONTROL SOLENOID VALVE	10021915	2	1	238	10 04 048 0	CONTROL VALVE
CONTROL UNIT	7028075	5	1	162	11 34 249 1	AXIAL PISTON PUMP
CONTROL VALVE	10040480	60	1	347	10 06 379 3	OIL PILOT VALVE INSTALLATIO
CONTROL VALVE	10297873	2	1	147	10 29 786 7	HYDRAULIC PUMP
CONTROL VALVE	10297877	1	1	148	10 29 787 3	CONTROL VALVE
CONTROL VALVE INSTALLAT	10358638	7600	1	124	10 35 861 4	UPPERCARRIAGE
CONTROL VALVES BRACKET	10358191	10	1	406	10 35 863 8	CONTROL VALVE INSTALLAT
COOLANT	9066465	70	1	15	90 66 460	TYPES OF LUBRICANTS
COOLANT PIPE BEND	10120000	1	1	659	90 79 472	COOLANT PIPE BEND ADD-ON
COOLANT PIPE BEND	12585058	1	1	660	90 79 474	COOLANT PIPE BEND ADD-ON
COOLANT PIPE BEND ADD-ON	9079472	382	1	552	10 11 714 5	DIESEL ENGINE D936 L A6 190
COOLANT PIPE BEND ADD-ON	9079474	383	1	552	10 11 714 5	DIESEL ENGINE D936 L A6 190
COOLER SEALING	10063093	30	1	193	10 04 853 6	ENGINE COOLING
COOLING CIRCUIT PUMP	9884140	81	1	159	10 11 886 0	PUMP DISTRIBUTION GEAR
COOLING WATER AIR BLEEDI	10115503	387	1	554	10 11 714 5	DIESEL ENGINE D936 L A6 190
COPPER PASTE	10002552	132	1	663	10 11 919 9	HEAT PROTECTION W.FASTE
COPPER PASTE	10002552	132	1	665	90 80 736	EXHAUST TC MOUNTING
CORE PIN 10H11	431300701	72	1	110	96 87 443 01	TRACTION DRIVE FAT 400P07
CORNER PROTECT.PROFILE	7006451	6	1.169m	465	10 06 576 2	DIVIDING WALL MIDDLE
CORNER PROTECT.PROFILE	7008157	9	1.578m	457	10 35 822 9	SIDE DOOR LEFT
CORNER PROTECT.PROFILE	7008157	10	1m	459	10 06 423 5	SIDE DOOR RIGHT
CORNER PROTECT.PROFILE	7008157	10	1m	460	10 49 856 6	SIDE DOOR RIGHT
CORNER PROTECT.PROFILE	7360171	82	1.38m	276	11 38 339 7	ARM REST LEFT
CORNER PROTECT.PROFILE	7360171	82	1.38m	292	10 38 502 8	ARM REST LEFT
CORNER PROTECT.PROFILE	7360171	4	0.7m	456	10 05 183 8	BONNET RIGHT

Description	Item	Pos.	Quantity	Page	Assembly	Description
CORNER PROTECT.PROFILE	7360171	8	1.475m	457	10 35 822 9	SIDE DOOR LEFT
CORNER PROTECT.PROFILE	7360171	11	0.93m	459	10 06 423 5	SIDE DOOR RIGHT
CORNER PROTECT.PROFILE	7360171	12	1.24m	459	10 06 423 5	SIDE DOOR RIGHT
CORNER PROTECT.PROFILE	7360171	11	0.93m	460	10 49 856 6	SIDE DOOR RIGHT
CORNER PROTECT.PROFILE	7360171	12	1.24m	460	10 49 856 6	SIDE DOOR RIGHT
CORNER PROTECT.PROFILE	7360171	3	0.85m	462	10 35 826 4	TOOL BOX
CORNER PROTECT.PROFILE	7360171	4	0.28m	462	10 35 826 4	TOOL BOX
COUNTER BRACKET	9560855	45	2	521	10 35 866 5	BATTERY INSTALLATION
COUNTER NUT UNEF1 11/16X1	6905277	11	1	519	99 47 695	ELECTRICAL SYSTEM E50
COUNTERSUNK SCREW M4X3	10014709	21	4	250	10 22 844 3	LUBRICATION PUMP
COUNTERSUNK SCREW M5X	11067312	2	14	685	10 11 724 8	MOTOR CONTROL DEVICE
COUNTERWEIGHT 7,7T	10498003	2	1	536	10 49 800 2	COUNTERWEIGHT INSTALLAT
COUNTERWEIGHT INSTALLAT	10498002	9500	1	124	10 35 861 4	UPPERCARRIAGE
COUPLING CPL.	10115771	2	1	650	10 11 646 4	AIR COND. COMPRESSOR A
COUPLING FERRULE N32X1,2	9073827	15	1	181	90 74 893	REPAIR KIT CONNECTION H
COVER	10009188	390	1	509	10 29 035 2	INTERIOR PANELING
COVER	10009188	390	1	511	10 48 808 8	INTERIOR PANELING
COVER	10009596	19	1	253	10 66 472 2	DISTRIBUTION BLOCK SXE-2
COVER	10022051	16	1	335	11 00 359 4	HOUSING
COVER	10044360	160	1	508	10 29 035 2	INTERIOR PANELING
COVER	10044360	160	1	510	10 48 808 8	INTERIOR PANELING
COVER	10051238	20	1	85	10 07 306 8	COVER
COVER	10067706	24	1	8	11 10 260 2	FUEL TANK FOR EXCHANGE
COVER	10067706	40	1	531	11 10 262 1	FUEL TANK ASSY.
COVER	10067706	31	1	534	10 06 759 6	FUEL TANK
COVER	10067706	31	1	535	10 49 835 9	FUEL TANK
COVER	10073068	2	1	87	10 39 293 2	LID CPL
COVER	10073069	10	1	85	10 07 306 8	COVER
COVER	10079217	2	1	545	10 37 464 5	COVER
COVER	10082763	10	1	462	10 35 826 4	TOOL BOX
COVER	10082764	2	1	464	10 08 276 3	COVER
COVER	10116015	435	1	554	10 11 714 5	DIESEL ENGINE D936 L A6 190
COVER	10117094	10	1	681	90 80 653	LOCKING PIECES
COVER	10118649	22	1	807	10 11 856 1	PILOT CONTROL UNIT VG6-8
COVER	10118649	22	1	808	11 37 560 6	PILOT CONTROL UNIT VG6-8
COVER	10119485	1	1	651	10 11 555 9	COVERING ASSEMBLY
COVER	10119485	1	1	652	10 11 949 2	COVERING ASSEMBLY
COVER	10120005	1	1	661	90 80 280	LOCKING PIECES
COVER	10122317	1	1	698	90 80 504	LOCKING PIECES
COVER	10216731	3	1	161	10 29 197 8	HYDRAULIC ADJUSTMENT
COVER	10216732	4	1	161	10 29 197 8	HYDRAULIC ADJUSTMENT
COVER	10290262	430	1	491	10 29 033 7	ELECTRICAL INSTALLATION
COVER	10290262	430	1	494	10 48 808 7	ELECTRICAL INSTALLATION
COVER	10290263	500	1	496	10 29 036 3	WIPPER MOTOR SET
COVER	10300926	3	1	138	10 21 717 3	AIR FILTER
COVER	10356235	9	1	104	96 11 367	ROTARY FEED THROUGH
COVER	10374645	20	1	542	10 49 878 6	OUTSIDE MIRROR ASSEMBLY
COVER	10376165	2	1	86	10 39 262 4	LID CPL
COVER	11004096	2	1	91	10 65 167 7	CARRYING ROLLER D7
COVER	5003249	12	6	424	10 11 386 0	CONTROL BLOCK
COVER	604521501	46	15	295	97 58 815 01	E-BOARD
COVER	7020608	190	2	493	10 48 808 7	ELECTRICAL INSTALLATION
COVER	7025845	10	1	498	56 18 664	WATER BASIN
COVER	7027816	37	1	288	11 10 016 7	SUSPENSION
COVER	7028349	12	1	390	56 17 688	SHUT OFF DEVICE
COVER	7028836	230	1	484	70 28 769	DRIVER'S CAB DOOR
COVER	7028865	430	1	491	10 29 033 7	ELECTRICAL INSTALLATION
COVER	7028881	500	1	497	70 28 884	WIPPER MOTOR SET
COVER	7369781	22	8	424	10 11 386 0	CONTROL BLOCK
COVER	7370895	3	1	294	10 16 576 6	STEERING CONSOLE

Description	Item	Pos.	Quantity	Page	Assembly	Description
COVER	7370896	2	1	294	10 16 576 6	STEERING CONSOLE
COVER	7372237	7	1	362	10 04 272 9	OIL PILOT VALVE
COVER	9076414	1	1	651	10 11 555 9	COVERING ASSEMBLY
COVER	9077777	1	1	580	91 47 512	LOCKING PIECES
COVER	9144761	1	1	648	91 44 757	END COVER 60/64
COVER	9171589	60	2	320	10 05 981 8	FOOT PILOT VALVE INSTALL
COVER	9178294	3	1	690	90 77 719	POWER TAKE-OFF ADD-ON
COVER	9178294	5	1	695	90 78 962	AUXILIARY DRIVE PRE-ASS.
COVER	9273690	6	1	692	90 80 006	POWER TAKE-OFF ADD-ON
COVER	9275429	72	1	183	92 75 443	REPAIR SET LID NG 100
COVER	9276767	10	1	818	98 82 832	PILOT VALVE
COVER	9371217	65	1	320	10 05 981 8	FOOT PILOT VALVE INSTALL
COVER	9767890	60	1	385	10 04 851 7	HYDRAULIC TANK INSTALLAT
COVER	9767890	60	1	387	10 35 863 4	HYDRAULIC TANK INSTALLAT
COVER	9767890	35	1	529	10 04 852 5	FUEL TANK ASSY.
COVER	9767890	35	1	530	10 49 836 0	FUEL TANK ASSY.
COVER	9767890	35	1	531	11 10 262 1	FUEL TANK ASSY.
COVER CPL	10492977	1	1	287	11 10 016 7	SUSPENSION
COVER F.LNV	11100087	26	1	285	11 10 016 6	SEAT TOP
COVER FRONT LEFT	10009132	140	1	508	10 29 035 2	INTERIOR PANELING
COVER FRONT LEFT	10009132	140	1	510	10 48 808 8	INTERIOR PANELING
COVER HOOD X753402	7370892	4	1	310	56 18 923	CONTROL CONSOLE RIGHT
COVER LID	11253803	10	1	256	10 01 471 7	CONTAINER COVER
COVER LID	7025005	17	1	290	70 24 996	SEAT FRAME
COVER LID	968461801	25	1	237	96 91 056 01	OIL TANK
COVER MIDDLE	10070335	170	1	450	10 35 865 5	COVERS
COVER MIDDLE	10070336	2	1	461	10 07 033 5	COVER MIDDLE
COVER NG 100	9882761	13	1	116	98 82 760	ADJUSTMENT NG 100
COVER NG 100	9882761	13	1	810	11 38 131 3	ADJUSTMENT NG 100
COVER NG 165	9881230	18	1	820	90 78 788	REGULATOR COVER LR SD D
COVER PLATE	10008444	15	1	328	10 40 689 8	AIR CONDITIONING
COVER PLATE	10116413	2	1	666	10 11 601 5	COVER
COVER PLATE FRONT RIGHT	7028940	130	1	508	10 29 035 2	INTERIOR PANELING
COVER PLATE FRONT RIGHT	7028940	130	1	510	10 48 808 8	INTERIOR PANELING
COVER PRE-ASSY.	12832304	7	1	571	90 79 487	OIL SUMP
COVER PRE-ASSY.	12832305	10	1	571	90 79 487	OIL SUMP
COVER UPPER RIGHT	10009193	150	1	508	10 29 035 2	INTERIOR PANELING
COVER UPPER RIGHT	10009193	150	1	510	10 48 808 8	INTERIOR PANELING
COVERING	7024985	2	1	282	10 04 363 2	OPERATOR SEAT
COVERING	7024986	12	1	282	10 04 363 2	OPERATOR SEAT
COVERING ASSEMBLY	10115559	342	1	552	10 11 714 5	DIESEL ENGINE D936 L A6 190
COVERING ASSEMBLY	10119492	342	1	552	10 11 714 5	DIESEL ENGINE D936 L A6 190
COVERING IN FRONT	10060549	20	1	443	10 35 865 9	COVERING ROTATING DECK
COVERING LEFT	10065493	10	1	443	10 35 865 9	COVERING ROTATING DECK
COVERING LEFT	10493986	13	1	285	11 10 016 6	SEAT TOP
COVERING LEFT	7028963	2	1	512	10 47 012 8	CASING, CPL
COVERING RIGHT	10094135	30	1	443	10 35 865 9	COVERING ROTATING DECK
COVERING RIGHT	10094136	10	1	444	10 09 413 5	COVERING RIGHT
COVERING RIGHT	7027783	12	1	285	11 10 016 6	SEAT TOP
COVERING ROTATING DECK	10358659	8400	1	124	10 35 861 4	UPPERCARRIAGE
COVERS	10013978	220	1	508	10 29 035 2	INTERIOR PANELING
COVERS	10217034	220	1	510	10 48 808 8	INTERIOR PANELING
COVERS	10290359	210	1	508	10 29 035 2	INTERIOR PANELING
COVERS	10290359	210	1	510	10 48 808 8	INTERIOR PANELING
COVERS	10358655	8500	1	124	10 35 861 4	UPPERCARRIAGE
COVERS	10455060	284	1	510	10 48 808 8	INTERIOR PANELING
COVERS	7028837	320	1	484	70 28 769	DRIVER'S CAB DOOR
CRADLE	11491899	12	1	399	11 49 189 4	DRIVING GEAR
CRANKCASE	10115733	1	1	561	10 11 577 8	CRANKCASE PRE-ASSY.
CRANKCASE BREATHER	9075483	1	1	566	10 11 916 7	CRANKCASE BREATHER ASSE

Description	Item	Pos.	Quantity	Page	Assembly	Description
CRANKCASE BREATHER	9075483	1	1	567	90 79 021	CRANKCASE BREATHER ASS
CRANKCASE BREATHER ASS	9079021	16	1	549	10 11 714 5	DIESEL ENGINE D936 L A6 190
CRANKCASE BREATHER ASSE	10119167	16	1	549	10 11 714 5	DIESEL ENGINE D936 L A6 190
CRANKCASE CPL. WITH CYLIN	12824837	10	1	557	10 11 682 5	BASIC ENGINE D936 L HIGH 3
CRANKCASE PRE-ASSY.	10115778	1	1	560	12 82 483 7	CRANKCASE CPL. WITH CYLIN
CRANKSHAFT	10131176	1	1	581	90 75 115	CRANKSHAFT WITH GEAR
CRANKSHAFT ADD-ON PARTS	10116175	53	1	549	10 11 714 5	DIESEL ENGINE D936 L A6 190
CRANKSHAFT SEALING	9075133	52	1	557	10 11 682 5	BASIC ENGINE D936 L HIGH 3
CRANKSHAFT WITH GEAR	9075115	50	1	557	10 11 682 5	BASIC ENGINE D936 L HIGH 3
CROWN GEAR	9177676	1	1	683	10 11 586 2	FLYWHEEL ASSEMBLY SAE 2
CROWN NUT UNF5/8	12220008	21	1	205	10 84 460 3	FAN INSTALLATION
CUP SPRING PILLAR	11213510	11	1	402	10 22 042 7	DRIVING GEAR
CUTTER	10498524	11	1	737	11 10 258 8	BUCKET BIT
CUTTING RING	10013545	261	1	260	90 64 786	CONNECTING ELEMENT
CUTTING RING	10013545	161	10	263	10 01 461 1	AUXILIARY BOX
CYL.NEEDLE BEARING	7469905	64	2	181	90 74 893	REPAIR KIT CONNECTION H
CYL.NEEDLE BEARING	7469905	32	1	189	98 89 977	REPAIR KIT SHAFT NG 140
CYL.NEEDLE BEARING	7469905	32	1	831	98 89 978	REPAIR KIT SHAFT NG 140
CYL.ROLLER	10008299	4	1	166	70 28 176	BRAKE PISTON
CYLINDER	10008431	2	1	206	10 00 840 5	DRIVING GEAR
CYLINDER	10009376	2	1	157	10 00 809 5	DRIVING GEAR
CYLINDER	7413408	2	1	171	10 28 772 5	DRIVING GEAR
CYLINDER	9073083	80	6	560	12 82 483 7	CRANKCASE CPL. WITH CYLIN
CYLINDER	9594128	10	1	762	96 44 648	HYDRAULIC CYLINDER
CYLINDER	9594191	10	1	761	95 93 026	HYDRAULIC CYLINDER
CYLINDER	9594224	10	1	760	11 68 144 7	HYDRAULIC CYLINDER
CYLINDER BUSHING	9080084	1	1	565	90 73 083	CYLINDER
CYLINDER HEAD	10120384	1	1	591	10 14 155 4	CYLINDER HEAD PRE-ASSY.
CYLINDER HEAD	10120384	1	1	597	10 11 942 7	CYLINDER HEAD PRE-ASSY.
CYLINDER HEAD	10120384	1	1	598	10 12 036 4	CYLINDER HEAD PRE-ASSY.
CYLINDER HEAD	9079952	1	1	602	10 12 038 4	CYLINDER HEAD
CYLINDER HEAD ASSEMBLY	9079850	80	6	558	10 11 682 5	BASIC ENGINE D936 L HIGH 3
CYLINDER HEAD COVER	10119011	1	1	594	10 11 963 6	CYLINDER HEAD COVER ASS
CYLINDER HEAD COVER	10127488	1	1	592	10 11 960 9	CYLINDER HEAD COVER ASS
CYLINDER HEAD COVER	10127489	1	1	593	10 11 961 0	CYLINDER HEAD COVER ASS
CYLINDER HEAD COVER	9074513	1	1	596	90 79 849	CYLINDER HEAD COVER
CYLINDER HEAD COVER	9079838	83	1	549	10 11 714 5	DIESEL ENGINE D936 L A6 190
CYLINDER HEAD COVER	9079839	1	1	595	90 79 838	CYLINDER HEAD COVER
CYLINDER HEAD COVER	9079849	82	5	549	10 11 714 5	DIESEL ENGINE D936 L A6 190
CYLINDER HEAD COVER ASS	10119609	83	1	550	10 11 714 5	DIESEL ENGINE D936 L A6 190
CYLINDER HEAD COVER ASS	10119610	82	5	549	10 11 714 5	DIESEL ENGINE D936 L A6 190
CYLINDER HEAD COVER ASS	10119636	84	1	551	10 11 714 5	DIESEL ENGINE D936 L A6 190
CYLINDER HEAD GASKET	10120844	2	1	590	90 79 850	CYLINDER HEAD ASSEMBLY
CYLINDER HEAD GASKET	10120844	1	1	606	10 11 585 1	SEAL KIT CYLINDER HEAD
CYLINDER HEAD GASKET	10120844	1	6	608	10 11 585 3	SEAL KIT ZYLINDER HEAD CPL
CYLINDER HEAD PRE-ASSY.	10119427	1	1	590	90 79 850	CYLINDER HEAD ASSEMBLY
CYLINDER HEAD PRE-ASSY.	10120364	1	1	590	90 79 850	CYLINDER HEAD ASSEMBLY
CYLINDER HEAD PRE-ASSY.	10141554	1	1	590	90 79 850	CYLINDER HEAD ASSEMBLY
CYLINDER W.BUSHING	12215553	1	1	402	10 22 042 7	DRIVING GEAR
CYLINDER WITH BUSHING NG	9073572	1	1	232	90 74 113	RK CYLINDER+CONTROL PLAT
CYLINDER WITH BUSHING NG	9073572	2	1	234	90 74 125	REPAIR KIT DRIVING MECHANI
CYLINDER WITH BUSHING NG	9073574	1	1	822	90 74 114	RK CYLINDER+CONTROL PLAT
CYLINDER WITH BUSHING NG	9075894	1	1	187	98 89 832	RK CYLINDER+CONTROL PLAT
CYLINDER WITH BUSHING NG	9072086	1	1	188	98 89 833	RK CYLINDER+CONTROL PLA
CYLINDRICAL ROLLER BEARIN	10216295	34	1	158	10 11 886 0	PUMP DISTRIBUTION GEAR
CYLINDRICAL ROLLER BEARIN	12593102	32	1	233	90 74 117	REPAIR KIT SHAFT NG 090
CYLINDRICAL ROLLER BEARIN	12593102	32	1	824	90 74 123	REPAIR KIT SHAFT NG 100
CYLINDRICAL ROLLER BEARIN	7380070	33	1	233	90 74 117	REPAIR KIT SHAFT NG 090
CYLINDRICAL ROLLER BEARIN	7380070	33	1	824	90 74 123	REPAIR KIT SHAFT NG 100
CYLINDRICAL ROLLER BEARIN	7380106	33	1	189	98 89 977	REPAIR KIT SHAFT NG 140

Description	Item	Pos.	Quantity	Page	Assembly	Description
CYLINDRICAL ROLLER BEARIN	7380106	33	1	831	98 89 978	REPAIR KIT SHAFT NG 140
CYLINDRICAL ROLLER BEARIN	7380470	32	1	158	10 11 886 0	PUMP DISTRIBUTION GEAR
CYLINDRICAL ROLLER BEARIN	7380721	30	1	821	10 11 909 3	REPAIR KIT DRIVE SHAFT PV
CYLINDRICAL ROLLER BEARIN	7380797	31	1	821	10 11 909 3	REPAIR KIT DRIVE SHAFT PV
CYLINDRICAL ROLLER BEARIN	7382149	34	1	827	90 77 464	RS FLANGE NG 125-140-150
CYLINDRICAL ROLLER BEARIN	7618605	31	1	399	11 49 189 4	DRIVING GEAR
CYLINDRICAL ROLLER BEARI	4980228	33	1	158	10 11 886 0	PUMP DISTRIBUTION GEAR
CYLINDRICAL ROLLER BEARIN	10166804	5	1	115	96 86 142 01	PLANET WHEEL M=4 Z=28
CYLINDRICAL ROLLER BEARIN	10167557	49	3	222	90 02 197 3	MODIFICATION KIT
CYLINDRICAL ROLLER BEARIN	10167557	5	1	224	93 27 778 01	PLANET WHEEL M=3,25 Z=34
CYLINDRICAL ROLLER BEARIN	7610001	5	1	224	93 27 778 01	PLANET WHEEL M=3,25 Z=34
CYLINDRICAL ROLLER BEARIN	761003303	5	1	114	94 43 010 03	PLANET WHEEL M=4 Z=29
CYLINDRICAL ROLLER BEARIN	761003403	5	1	113	94 43 004 03	PLANET WHEEL M=4 Z=27
CYLINDRICAL ROLLER BEARIN	761003403	5	1	225	94 43 563 03	PLANET WHEEL M=3,25 Z=35
DAMPING SLEEVE	11680163	9	1	760	11 68 144 7	HYDRAULIC CYLINDER
DAMPING SLEEVE	9245586	9	1	761	95 93 026	HYDRAULIC CYLINDER
DAMPING SLEEVE	9245586	9	1	762	96 44 648	HYDRAULIC CYLINDER
DANGER SIGN DANGER SPOT	9910464	50	2	547	10 49 803 0	SIGNS
DANGER SIGN DANGER SPOT	9910464	68	2	712	11 10 294 5	GOOSENECK BOOM 6.45M
DELI.PARTS EVAPORATOR	11000546	5	1	328	10 40 689 8	AIR CONDITIONING
DELIVERY PUMP	9078681	1	1	622	90 78 680	FUEL PUMP ASSEMBLY
DIAPHRAGM ACCUMULATOR	5617780	2	1	346	10 06 379 3	OIL PILOT VALVE INSTALLATIO
DIAPHRAGM GROMMET 16/22	5607889	38	1	271	10 49 880 5	DRIVER STAND BASE SECTIO
DIESEL ENGINE D936 L A6 190	10117145	10	1	132	10 35 862 2	MOTOR INSTALLATION
DIRECT-CURRENT MOTOR	10014691	2	1	249	10 22 844 3	LUBRICATION PUMP
DIRECTIONAL CONTROL VALV	10003485	470	1	414	10 35 863 8	CONTROL VALVE INSTALLAT
DIRECTIONAL CONTROL VALV	10018725	2	1	418	10 28 847 0	CONTROL PLATE
DIRECTIONAL CONTROL VALV	10292692	3	1	418	10 28 847 0	CONTROL PLATE
DISC INSIDE TOOTHED	944250503	63	7	221	90 01 453 8	MODIFICATION KIT
DISC INSIDE TOOTHED	944250503	63	5	227	90 02 790 4	SLEWING DRIVE SAT 325/254
DISC INSIDE TOOTHED	944250503	63	5	229	94 42 180 03	BRAKE MULTI-DISC SET
DISC INSIDE TOOTHED	944302003	51	5	110	96 87 443 01	TRACTION DRIVE FAT 400P07
DISC INSIDE TOOTHED	944302003	51	5	117	94 43 028 03	BRAKE MULTI-DISC SET
DISC-REST	10219021	57	1	286	11 10 016 6	SEAT TOP
DISPLACEMENT PISTON	10008081	2	1	400	10 00 807 7	PUMP
DISPLAY CPL. V4.7.7	11452271	30	1	277	11 38 340 1	ARM REST RIGHT
DISPLAY CPL. V4.7.7	11452271	30	1	301	11 45 228 6	ARM REST RIGHT
DISPLAY CPL. V4.7.9	11739195	30	1	277	11 38 340 1	ARM REST RIGHT
DISPLAY SUPPORT	7373268	20	1	310	56 18 923	CONTROL CONSOLE RIGHT
DISTANCE PLATE 1X50X100	9622842	40	2	443	10 35 865 9	COVERING ROTATING DECK
DISTANCE PLATE 2X50X100	9622843	41	2	443	10 35 865 9	COVERING ROTATING DECK
DISTANCE PLATE 3X50X100	9622844	42	2	443	10 35 865 9	COVERING ROTATING DECK
DISTANCE RING 42X51X1,3	9072437	10	1	826	90 72 436	KIT DISTANCE RINGS
DISTANCE RING 42X51X1,4	9072438	10	1	826	90 72 436	KIT DISTANCE RINGS
DISTANCE RING 42X51X1,5	9072439	10	1	826	90 72 436	KIT DISTANCE RINGS
DISTANCE RING 42X51X1,6	9072440	10	1	826	90 72 436	KIT DISTANCE RINGS
DISTANCE RING 42X51X1,7	9074307	10	1	826	90 72 436	KIT DISTANCE RINGS
DISTANCE RING 42X51X1,8	9074308	10	1	826	90 72 436	KIT DISTANCE RINGS
DISTANCE RING 42X51X1,9	9074332	10	1	826	90 72 436	KIT DISTANCE RINGS
DISTANCE SLEEVE 11X21X40	9074977	4	12	670	10 11 548 0	EXHAUST PIPE ASSEMBLY
DISTANCE SLEEVE 15X20X19	9950358	11	1	11	12 86 140 4	FIXING PARTS
DISTANCE SLEEVE 8,5X18X10	9132577	14	4	567	90 79 021	CRANKCASE BREATHER ASS
DISTANCE SLEEVE 8,5X18X10	9132577	2	4	663	10 11 919 9	HEAT PROTECTION W.FASTE
DISTANCE SLEEVE 8,5X18X10	9132577	20	7	664	10 11 571 8	HEAT PROTECTION W.FASTEN
DISTANCE SLEEVE 8,5X18X10	9132577	72	1	687	10 11 799 7	CABLE HARNESS MOUNTING
DISTANCE TUBE	9275736	13	2	817	90 74 112	CONNECTING PLATE NG 090
DISTANCE TUBE	9989595	220	2	211	10 04 853 7	MOTOR-ELEKTRIK
DISTANCE TUBE	9989595	24	3	525	10 06 559 1	AIR CONDITION HOSES INSTA
DISTRIBUTION BLOCK MX-F 4/	10293001	15	1	247	12 84 952 6	CENTRAL LUBRICATING SYS
DISTRIBUTION BLOCK MX-F 4/	10293003	1	1	254	10 29 300 1	DISTRIBUTION BLOCK MX-F 4/

Description	Item	Pos.	Quantity	Page	Assembly	Description
DISTRIBUTION BLOCK MX-F 5/	10664804	1	1	720	10 66 482 5	DISTRIBUTION BLOCK MX-F 5/
DISTRIBUTION BLOCK MX-F 5/	10664825	2	1	721	10 82 841 3	CENTRAL LUBRICATING SYS
DISTRIBUTION BLOCK MX-F 7/	10664755	1	1	732	10 66 478 2	DISTRIBUTION BLOCK MX-F 7/
DISTRIBUTION BLOCK MX-F 7/	10664782	4	1	730	10 39 639 6	CENTRAL GREASING
DISTRIBUTION BLOCK SXE-2	10664719	50	1	717	10 82 841 4	CENTRALIZED LUBRICATION
DISTRIBUTION BLOCK SXE-2	10664722	1	1	251	10 66 471 9	DISTRIBUTION BLOCK SXE-2
DISTRIBUTOR	10009784	17	2	253	10 66 472 2	DISTRIBUTION BLOCK SXE-2
DISTRIBUTOR	10100946	11	1	356	10 35 862 9	HYDR.AND GEAR OIL COOLIN
DISTRIBUTOR	10101615	30	2	360	10 06 380 1	HYDR.INSTAL.CONTROL TUBE
DISTRIBUTOR	10288158	17	2	353	10 06 379 8	HYDR.SUCT.+RETURN OIL HO
DISTRIBUTOR BLOCK	10116036	84	1	635	10 11 628 5	FUEL LINE
DISTRIBUTOR BLOCK	9355505	30	1	350	10 35 862 7	HYDR.INSTAL.VALVES TO ATT
DISTRIBUTOR PLATE	10008404	2	1	207	10 00 843 3	DRIVING GEAR
DISTRIBUTOR PLATE	11008542	2	1	156	10 00 808 0	DRIVING GEAR
DISTRIBUTOR PLATE	11008542	2	1	173	10 29 787 5	DRIVING GEAR
DIVIDING WALL MIDDLE	10057404	2	1	465	10 06 576 2	DIVIDING WALL MIDDLE
DIVIDING WALL MIDDLE	10065762	160	1	450	10 35 865 5	COVERS
DOOR FRAME	7028842	110	1	484	70 28 769	DRIVER'S CAB DOOR
DOOR LOCK	10025254	13	1	459	10 06 423 5	SIDE DOOR RIGHT
DOOR LOCK	10025254	7	1	466	10 35 823 0	SIDE DOOR FRONT LEFT
DOOR LOCK	10353879	13	1	460	10 49 856 6	SIDE DOOR RIGHT
DOOR LOCK	10353879	4	1	545	10 37 464 5	COVER
DOOR STOPPER	7019164	420	1	504	10 29 026 4	COMPONENTS
DOUBLE BANJO BOLT 10X1	10115499	38	1	634	10 11 628 5	FUEL LINE
DOUBLE BANJO BOLT 6-6	10014864	9	1	637	10 11 559 5	LEAK OIL RETURN LINE
DOUBLE BLOWER	10022052	26	1	336	11 00 359 4	HOUSING
DOUBLE PLUG	7012971	48	1	398	11 49 189 0	CONNECTING PLATE
DOUBLE PLUG	7022127	27	1	162	11 34 249 1	AXIAL PISTON PUMP
DOUBLE PLUG	7022127	26	14	177	70 28 075	CONTROL UNIT
DOUBLE PLUG	7022127	11	2	398	11 49 189 0	CONNECTING PLATE
DOUBLE PLUG	7022127	31	1	400	10 00 807 7	PUMP
DOUBLE PLUG	7618568	7	1	176	11 82 153 4	FILTER HEAD
DOUBLE PLUG	7618568	34	6	178	70 28 075	CONTROL UNIT
DOUBLE RING SPANNER SW	11162097	60	1	539	10 84 856 2	TOOL EQUIPMENT
DOUBLE RING SPANNER SW	11162099	64	1	539	10 84 856 2	TOOL EQUIPMENT
DOUBLE RING SPANNER SW	11162100	70	1	539	10 84 856 2	TOOL EQUIPMENT
DOUBLE TAPER RING DKR 6	7027946	21	1	257	90 64 786	CONNECTING ELEMENT
DOUBLE-ENDED STUD M16X1,	9275003	20	8	181	90 74 893	REPAIR KIT CONNECTION H
DOUBLE-ENDED TUBULAR L	7028859	120	1	490	10 29 033 7	ELECTRICAL INSTALLATION
DOUBLE-ENDED TUBULAR LA	10044338	130	1	490	10 29 033 7	ELECTRICAL INSTALLATION
DOUBLE-HEADED SPANNER S	11162164	24	1	539	10 84 856 2	TOOL EQUIPMENT
DOUBLE-HEADED SPANNER S	11162165	26	1	539	10 84 856 2	TOOL EQUIPMENT
DOUBLE-HEADED SPANNER S	11162167	28	1	539	10 84 856 2	TOOL EQUIPMENT
DOUBLE-HEADED SPANNER S	11162169	30	1	539	10 84 856 2	TOOL EQUIPMENT
DOUBLE-HEADED SPANNER S	11162170	32	1	539	10 84 856 2	TOOL EQUIPMENT
DOUBLE-HEADED SPANNER S	11162171	34	1	539	10 84 856 2	TOOL EQUIPMENT
DOUBLE-HEADED SPANNER S	11162173	38	1	539	10 84 856 2	TOOL EQUIPMENT
DOUBLE-HEADED SPANNER S	11162163	22	1	539	10 84 856 2	TOOL EQUIPMENT
DOWEL PIN	7373742	4	2	89	11 60 010 7	TRACK ROLLER D7
DOWEL PIN 13	10004442	7	1	599	12 40 205 5	ROCKER ARM BRACKET PRE
DOWEL PIN 13	10004442	7	1	604	90 74 505	ROCKER ARM BRACKET PRE
DOWEL PIN 3	4002729	31	2	162	11 34 249 1	AXIAL PISTON PUMP
DOWEL PIN 3	4900372	630	2	486	70 28 842	DOOR FRAME
DOWEL PIN 3	4900372	330	1	504	10 29 026 4	COMPONENTS
DRAIN COUPLING	7402657	1	1	541	93 58 137	OIL DRAIN HOSE
DRAIN VALVE	10335966	3	1	138	10 21 717 3	AIR FILTER
DRIER INSTALLATION	10065596	40	1	524	10 06 272 5	AIR CONDITION HOSES INSTA
DRIVE SHAFT	10008086	8	1	400	10 00 807 7	PUMP
DRIVE SHAFT	10008423	8	1	208	56 19 045	AXIAL PISTON MOTOR
DRIVE SHAFT M=4 Z=21	944301703	35	1	109	96 87 443 01	TRACTION DRIVE FAT 400P07

Description	Item	Pos.	Quantity	Page	Assembly	Description
DRIVE SHAFT Z=12 M=1,75	9884138	10	1	185	98 84 140	COOLING CIRCUIT PUMP
DRIVE SHAFT Z=45 M=3,5	12854366	1	1	809	10 11 908 9	PRIMARY SHAFT CPL. Z=45 M=
DRIVE-THROUGH SHAFT	10216824	5	1	170	10 28 264 7	GEAR PUMP
DRIVER	10014729	8	1	249	10 22 844 3	LUBRICATION PUMP
DRIVER	10058096	2	1	128	10 04 851 0	DRIVER INSTALLATION
DRIVER INSTALLATION	10048510	174	1	123	10 35 861 4	UPPERCARRIAGE
DRIVER STAND BASE SECTIO	10498805	20	1	266	10 49 861 5	OPERATOR'S PLATFORM
DRIVER'S CAB DOOR	7028769	50	1	472	10 22 830 2	OPERATOR'S CAB
DRIVER'S CAB DOOR	7028769	50	1	474	10 47 616 9	OPERATOR'S CAB
DRIVER'S SEAT WITH PNEUM.	11000856	10	1	284	94 02 247 7	OPERATOR SEAT
DRIVING GEAR	10008080	1	1	400	10 00 807 7	PUMP
DRIVING GEAR	10008095	1	1	156	10 00 808 0	DRIVING GEAR
DRIVING GEAR	10008405	1	1	207	10 00 843 3	DRIVING GEAR
DRIVING GEAR	10008433	1	1	208	56 19 045	AXIAL PISTON MOTOR
DRIVING GEAR	10220427	1	1	399	11 49 189 4	DRIVING GEAR
DRIVING GEAR	10287725	1	1	173	10 29 787 5	DRIVING GEAR
DRIVING GEAR	10297875	1	1	400	10 00 807 7	PUMP
DRIVING GEAR	11491894	1	1	162	11 34 249 1	AXIAL PISTON PUMP
DRIVING GEAR NG 100	9073588	1	1	799	90 73 888	HYDRAULIC INSTALLATION
DRIVING SHAFT	10216701	14	1	399	11 49 189 4	DRIVING GEAR
DRIVING SHAFT NG 090	9074077	10	1	233	90 74 117	REPAIR KIT SHAFT NG 090
DRIVING SHAFT NG 100	9074121	10	1	824	90 74 123	REPAIR KIT SHAFT NG 100
DRIVING SHAFT NG 140	9889980	10	1	831	98 89 978	REPAIR KIT SHAFT NG 140
DRIVING SHAFT NG 140-150	9889979	10	1	189	98 89 977	REPAIR KIT SHAFT NG 140
DSF RING 122X113,36X4	10472347	5	1	589	90 80 686	PISTON PRE-ASS.
DUST-PROF COVER	10040064	2	1	650	10 11 646 4	AIR COND. COMPRESSOR A
E-BOARD	975881501	40	1	276	11 38 339 7	ARM REST LEFT
E-BOARD	975881501	40	1	292	10 38 502 8	ARM REST LEFT
E-BOARD	989165301	91	1	276	11 38 339 7	ARM REST LEFT
E-BOARD	989165301	91	1	292	10 38 502 8	ARM REST LEFT
EARTH CABLE	10009024	770	1	492	10 29 033 7	ELECTRICAL INSTALLATION
EARTH CABLE	10009024	770	1	494	10 48 808 7	ELECTRICAL INSTALLATION
EARTH CABLE	10064515	10	1	209	10 04 853 7	MOTOR-ELEKTRIK
EARTH CABLE	9689583	98	1	279	11 38 340 1	ARM REST RIGHT
EARTH CABLE	9689583	98	1	302	11 45 228 6	ARM REST RIGHT
EARTH CABLE	9689583	98	1	306	12 50 731 7	ARM REST RIGHT
EARTH CONNECTION PLATE	9080911	4	1	647	90 78 314	HEATING FLANGE ADD-ON
EARTH STRAP	6204632	130	1	274	10 49 880 5	DRIVER STAND BASE SECTIO
EASY-CHANGE FILTER 9µm	10297295	100	2	64	12 48 693 1	SERVICE KIT FIRST 500h
EASY-CHANGE FILTER 9µm	10297295	100	2	67	12 48 693 2	SERVICE KIT 1000h
EASY-CHANGE FILTER 9µm	10297295	100	2	70	12 48 693 3	SERVICE KIT 1500-2500h
EASY-CHANGE FILTER 9µm	10297295	100	2	71	12 48 693 4	SERVICE KIT 2000h
EASY-CHANGE FILTER 9µm	10297295	8	2	620	90 75 368	LUBE OIL FILTER ASSEMBLY
ECCENTRIC SCREW	10220418	46	1	162	11 34 249 1	AXIAL PISTON PUMP
EDGE PROTECTION	10074863	11	2	121	10 40 412 9	HYDR.INSTALLATION UNDER
EDGE PROTECTION	10292662	21	1.25m	456	10 05 183 8	BONNET RIGHT
EDGE PROTECTION	10292662	15	0.88m	465	10 06 576 2	DIVIDING WALL MIDDLE
EEC CERTIFICATE	9399606	97	1	548	10 49 803 0	SIGNS
ELASTOMER INSERT S EL 4 4	7363334	55	2	345	10 35 862 3	HYDR.PUMPS TO SPOOL VALV
ELECTRIC BOX	9392651	26	1	275	11 38 339 7	ARM REST LEFT
ELECTRIC BOX	9392651	26	1	291	10 38 502 8	ARM REST LEFT
ELECTRIC BOX	9947707	2	1	518	99 48 254	ELECTRIC BOX CPL.
ELECTRIC BOX CPL.	9948254	20	1	514	11 10 255 3	ELECTRICAL SYSTEM
ELECTRIC BOX MOUNTING PA	10048398	30	1	520	99 47 695	ELECTRICAL SYSTEM E50
ELECTRIC BOX MOUNTING PA	9948149	40	1	520	99 47 695	ELECTRICAL SYSTEM E50
ELECTRICAL CIRCUIT DIAGRA	10118815	90	1	709	10 11 848 3	ENGINE ELECTRICS D936 L A
ELECTRICAL INSTALLATION	10290337	60	1	472	10 22 830 2	OPERATOR'S CAB
ELECTRICAL INSTALLATION	10488087	60	1	474	10 47 616 9	OPERATOR'S CAB
ELECTRICAL SYSTEM	11102553	9000	1	124	10 35 861 4	UPPERCARRIAGE
ELECTRICAL SYSTEM E50	9947695	3	1	518	99 48 254	ELECTRIC BOX CPL.

Description	Item	Pos.	Quantity	Page	Assembly	Description
ELECTRONIC MODULES	10687206	10	1	789	11 45 933 4	ELECTRONICAL ASSEMBLY
ELECTRONICAL ASSEMBLY	11459334	20	1	785	10 82 562 1	OPT.DATA CAPTURE-DATA T
EMERGENCY CONTROL CPL	9013811	104	1	280	11 38 340 1	ARM REST RIGHT
EMERGENCY CONTROL CPL	9013811	104	1	302	11 45 228 6	ARM REST RIGHT
EMERGENCY CONTROL CPL	9013811	104	1	307	12 50 731 7	ARM REST RIGHT
END BUSHING	5209131	30	1	84	12 22 023 4	MASTER LINK ASSY
END COVER	10012263	12	2	177	70 28 075	CONTROL UNIT
END COVER	10301015	43	1	200	10 21 851 3	COMBINATED RADIATOR
END COVER	10301015	47	1	203	11 69 472 6	COMBINATED RADIATOR
END COVER	968610601	40	1	109	96 87 443 01	TRACTION DRIVE FAT 400P07
END COVER 60/64	9144757	2	1	578	10 11 903 0	OIL FILLER INLET
END COVER 60/64	9144757	10	1	595	90 79 838	CYLINDER HEAD COVER
END COVER B/14	4981042	12	1	602	10 12 038 4	CYLINDER HEAD
END COVER B/32	12209779	2	6	560	12 82 483 7	CRANKCASE CPL. WITH CYLIN
END COVER B/36	4980363	10	3	602	10 12 038 4	CYLINDER HEAD
END COVER B/45	12209783	3	12	560	12 82 483 7	CRANKCASE CPL. WITH CYLIN
END ELEMENT MX-F 105	7027945	8	1	733	10 66 475 5	DISTRIBUTION BLOCK MX-F 7/
END ELEMENT MX-F 25	7027942	8	1	719	10 66 480 4	DISTRIBUTION BLOCK MX-F 5/
END ELEMENT MX-F 45	7027943	8	1	255	10 29 300 3	DISTRIBUTION BLOCK MX-F 4/
END ELEMENT SXE-2	10013839	3	1	253	10 66 472 2	DISTRIBUTION BLOCK SXE-2
END PIECE	10423838	10	1	488	70 29 423	GLASS PANE FRONT
END PIECE	10423838	10	1	489	70 29 424	GLASS PANE BEHIND
END PIECE	10423840	20	1	488	70 29 423	GLASS PANE FRONT
END PIECE	10423840	20	1	489	70 29 424	GLASS PANE BEHIND
END PIECE	11003780	7	2	89	11 60 010 7	TRACK ROLLER D7
END PIECE	11825926	40	1	49	11 82 320 0	UREA DISPENSER SYSTEM
END PIPE	7373403	15	1	139	10 36 573 8	EXHAUST SYSTEM
END PIPE	7373403	15	1	140	11 10 293 9	EXHAUST SYSTEM
ENGINE ADD-ON PARTS	10048538	590	1	132	10 35 862 2	MOTOR INSTALLATION
ENGINE BONNET	10058169	10	1	445	10 35 865 5	COVERS
ENGINE BONNET	10058231	2	1	453	10 05 816 9	ENGINE BONNET
ENGINE CONTROL SENSORS	9076551	581	1	555	10 11 714 5	DIESEL ENGINE D936 L A6 190
ENGINE COOLING	10048536	560	1	132	10 35 862 2	MOTOR INSTALLATION
ENGINE ELECTRICS D936 L A	10118483	992	1	556	10 11 714 5	DIESEL ENGINE D936 L A6 190
ENGINE OIL LIEBHERR LOW A	10356797	110	1l	18	90 70 361	MOTOR OIL
ENGINE OIL LIEBHERR LOW A	10326110	1000	1	27	10 35 679 7	ENGINE OIL LIEBHERR LOW A
ENGINE OIL LIEBHERR LOW A	10326112	20	1	27	10 35 679 7	ENGINE OIL LIEBHERR LOW A
ENGINE OIL LIEBHERR LOW	10326111	210	1	27	10 35 679 7	ENGINE OIL LIEBHERR LOW A
ENGINE OIL LIEBHERR LOW	10326113	5	1	27	10 35 679 7	ENGINE OIL LIEBHERR LOW A
ENGINE OIL LIEBHERR LOW	11081522	100	1l	18	90 70 361	MOTOR OIL
ENGINE OIL LIEBHERR LOW	11066032	1045	1	41	11 08 152 2	ENGINE OIL LIEBHERR LOW
ENGINE OIL LIEBHERR LOW	11066030	20	1	41	11 08 152 2	ENGINE OIL LIEBHERR LOW
ENGINE OIL LIEBHERR LOW	11066031	209	1	41	11 08 152 2	ENGINE OIL LIEBHERR LOW
ENGINE OIL LIEBHERR LOW A	11066029	5	1	41	11 08 152 2	ENGINE OIL LIEBHERR LOW
ENGINE OIL LIEBHERR/10W-4	10356793	20	1l	18	90 70 361	MOTOR OIL
ENGINE OIL LIEBHERR/10W-4	10286279	1000	1	26	10 35 679 3	ENGINE OIL LIEBHERR/10W-4
ENGINE OIL LIEBHERR/10W-4	10330239	20	1	26	10 35 679 3	ENGINE OIL LIEBHERR/10W-4
ENGINE OIL LIEBHERR/10W-40	10330246	210	1	26	10 35 679 3	ENGINE OIL LIEBHERR/10W-4
ENGINE OIL LIEBHERR/10W-40	10290506	5	1	26	10 35 679 3	ENGINE OIL LIEBHERR/10W-4
ENGINE OIL LIEBHERR/5W-30	10425711	10	1l	18	90 70 361	MOTOR OIL
ENGINE OIL LIEBHERR/5W-30/	10425719	1000	1	39	10 42 571 1	ENGINE OIL LIEBHERR/5W-30
ENGINE OIL LIEBHERR/5W-30/	10425713	20	1	39	10 42 571 1	ENGINE OIL LIEBHERR/5W-30
ENGINE OIL LIEBHERR/5W-30	10425715	210	1	39	10 42 571 1	ENGINE OIL LIEBHERR/5W-30
ENGINE OIL LIEBHERR/5W-30	10425712	5	1	39	10 42 571 1	ENGINE OIL LIEBHERR/5W-30
ENGINEER'S HAMMER 1500	11162135	130	1	540	10 84 856 2	TOOL EQUIPMENT
EQUALIZING RESERVOIR	10301001	11	1	199	10 21 851 3	COMBINATED RADIATOR
EQUALIZING RESERVOIR	10301001	11	1	202	11 69 472 6	COMBINATED RADIATOR
ET-CABIN	10216362	10	1	472	10 22 830 2	OPERATOR'S CAB
ET-CABIN	10216362	10	1	474	10 47 616 9	OPERATOR'S CAB
EU CONFORMITY DECLARAT	9399607	98	1	548	10 49 803 0	SIGNS

Description	Item	Pos.	Quantity	Page	Assembly	Description
EU MANUFACTURER DECLAR	9399608	99	1	548	10 49 803 0	SIGNS
EVAPORATOR	10022068	18	1	335	11 00 359 4	HOUSING
EVAPORATOR	10816666	10	1	328	10 40 689 8	AIR CONDITIONING
EVAPORATOR	10816666	10	1	329	11 00 054 6	DELI.PARTS EVAPORATOR
EVAPORATOR HOUSING	10005672	1	1	335	11 00 359 4	HOUSING
EVAPORATOR HOUSING	10005679	8	1	335	11 00 359 4	HOUSING
EVAPORATOR HOUSING	10022069	15	1	335	11 00 359 4	HOUSING
EXCAVATOR DISPLAY	10685206	2	1	308	11 45 227 1	DISPLAY CPL. V4.7.7
EXCAVATOR DISPLAY	10884044	2	1	309	11 73 919 5	DISPLAY CPL. V4.7.9
EXHAUST GAS TURBOCHAR	10139607	1	1	665	90 80 736	EXHAUST TC MOUNTING
EXHAUST PIPE ASSEMBLY	10115480	410	1	554	10 11 714 5	DIESEL ENGINE D936 L A6 190
EXHAUST PIPE LINE	10057780	19	1	139	10 36 573 8	EXHAUST SYSTEM
EXHAUST PIPE LINE	10057780	19	1	140	11 10 293 9	EXHAUST SYSTEM
EXHAUST PIPE PRE-ASS.	10115479	1	1	670	10 11 548 0	EXHAUST PIPE ASSEMBLY
EXHAUST SILENCER	10040818	10	1	139	10 36 573 8	EXHAUST SYSTEM
EXHAUST SILENCER	11692910	10	1	140	11 10 293 9	EXHAUST SYSTEM
EXHAUST SYSTEM	10365738	540	1	132	10 35 862 2	MOTOR INSTALLATION
EXHAUST SYSTEM	11102939	540	1	132	10 35 862 2	MOTOR INSTALLATION
EXHAUST TC MOUNTING	9080736	430	1	554	10 11 714 5	DIESEL ENGINE D936 L A6 190
EXHAUST VALVE SEAT INSER	9073726	7	2	602	10 12 038 4	CYLINDER HEAD
EXPANDED FOAM PLUG	10451200	22	5	735	11 10 258 6	BACKHOE BUCKET HD 1800
EXPANDED FOAM PLUG	10451200	5	1	781	11 10 259 0	TOOTH Z50CL
EXPANDING BUSHING	9110411	991	1	770	96 44 625	PISTON
EXPANDING BUSHING D=170M	9110412	991	1	769	94 04 038 9	PISTON
EXTENSION	10009602	10	1	253	10 66 472 2	DISTRIBUTION BLOCK SXE-2
EXTENSION M10X1K/M10X1	774373408	90	1	257	90 64 786	CONNECTING ELEMENT
EXTENSION M10X1K/M10X1	774373408	190	1	259	90 64 786	CONNECTING ELEMENT
EXTENSION M10X1K/M10X1	774373408	290	1	260	90 64 786	CONNECTING ELEMENT
EXTENSION M6X1K-M10X1-2	7027714	90	1	257	90 64 786	CONNECTING ELEMENT
EXTENSION M6X1K-M10X1-2	7027714	190	1	259	90 64 786	CONNECTING ELEMENT
EXTRACTION VALVE	7019068	120	1	52	90 66 466	ACCESSORIES
EXTRACTOR	10451202	50	1	538	10 08 428 6	TOOL EQUIPMENT
FAN	10815061	10	1	205	10 84 460 3	FAN INSTALLATION
FAN	5005641	3	1	667	10 11 646 3	GENERATOR, PRE-ASSEMBLE
FAN COWL	10300998	8	1	199	10 21 851 3	COMBINATED RADIATOR
FAN COWL	10300998	8	1	202	11 69 472 6	COMBINATED RADIATOR
FAN INSTALLATION	10844603	20	1	193	10 04 853 6	ENGINE COOLING
FASTENER	11834721	13	1	796	11 69 501 2	UREA FILLING KIT
FASTENER F.DT STECKER	6203497	10	3	248	10 06 750 0	AUTOMATIC CENTRALIZED L
FASTENER F.DT STECKER	6203497	331	14	515	11 10 255 3	ELECTRICAL SYSTEM
FASTENERS SET	10289973	41	1	282	10 04 363 2	OPERATOR SEAT
FASTENINGPIECE FRONT WIN	12506407	999	1	479	10 03 552 9	FRONT WINDOW BOTTOM
FIBRE GLASS FILTER INSERT	11060250	400	1	65	12 48 693 1	SERVICE KIT FIRST 500h
FIBRE GLASS FILTER INSERT	11060250	400	1	69	12 48 693 2	SERVICE KIT 1000h
FIBRE GLASS FILTER INSERT	11060250	400	1	74	12 48 693 4	SERVICE KIT 2000h
FIBRE GLASS FILTER INSERT	11060250	21	1	383	10 04 851 7	HYDRAULIC TANK INSTALLAT
FIBRE GLASS FILTER INSERT	11060250	22	1	383	10 04 851 7	HYDRAULIC TANK INSTALLAT
FIBRE GLASS FILTER INSERT	11060250	21	1	386	10 35 863 4	HYDRAULIC TANK INSTALLAT
FIBRE GLASS FILTER INSERT	11060250	22	1	386	10 35 863 4	HYDRAULIC TANK INSTALLAT
FIBRE GLASS FILTER INSERT	7373881	22	1	383	10 04 851 7	HYDRAULIC TANK INSTALLAT
FIBRE GLASS FILTER INSERT	7373881	22	1	386	10 35 863 4	HYDRAULIC TANK INSTALLAT
FILLER NECK	9270846	2	1	595	90 79 838	CYLINDER HEAD COVER
FILLER NECK CPL.	10119031	1	1	578	10 11 903 0	OIL FILLER INLET
FILLER SIEVE	10296919	20	1	529	10 04 852 5	FUEL TANK ASSY.
FILLER SIEVE	10296919	20	1	530	10 49 836 0	FUEL TANK ASSY.
FILLER SIEVE	10296919	20	1	531	11 10 262 1	FUEL TANK ASSY.
FILLING CONNECTION 90°	10296552	10	1	249	10 22 844 3	LUBRICATION PUMP
FILLING PUMP	10009239	10	1	538	10 08 428 6	TOOL EQUIPMENT
FILTER	10220417	6	1	162	11 34 249 1	AXIAL PISTON PUMP
FILTER	11821519	2	1	160	10 22 041 7	FILTER

Description	Item	Pos.	Quantity	Page	Assembly	Description
FILTER	11825923	10	1	49	11 82 320 0	UREA DISPENSER SYSTEM
FILTER ELEMENT	10220705	120	1	64	12 48 693 1	SERVICE KIT FIRST 500h
FILTER ELEMENT	10220705	120	1	67	12 48 693 2	SERVICE KIT 1000h
FILTER ELEMENT	10220705	120	1	70	12 48 693 3	SERVICE KIT 1500-2500h
FILTER ELEMENT	10220705	120	1	71	12 48 693 4	SERVICE KIT 2000h
FILTER ELEMENT	10220705	3	1	175	11 82 151 9	FILTER
FILTER ELEMENT 16µm	11342118	130	1	64	12 48 693 1	SERVICE KIT FIRST 500h
FILTER ELEMENT 16µm	11342118	130	1	67	12 48 693 2	SERVICE KIT 1000h
FILTER ELEMENT 16µm	11342118	130	1	70	12 48 693 3	SERVICE KIT 1500-2500h
FILTER ELEMENT 16µm	11342118	130	1	71	12 48 693 4	SERVICE KIT 2000h
FILTER ELEMENT 16µm	11342118	13	1	346	10 06 379 3	OIL PILOT VALVE INSTALLATIO
FILTER ELEMENT 16µm	11342118	10	1	348	56 09 948	OIL FILTER SET
FILTER HEAD	11821534	1	1	175	11 82 151 9	FILTER
FILTER HOUSING	10220702	2	1	175	11 82 151 9	FILTER
FILTER INSERT 60µm	10115197	330	1	73	12 48 693 4	SERVICE KIT 2000h
FILTER INSERT 60µm	10115197	36	1	353	10 06 379 8	HYDR.SUCT.+RETURN OIL HO
FILTER INSERT 60µm	10115197	4	1	355	10 04 462 4	PRESSURE FILTER
FILTER MAT	10022770	211	1	68	12 48 693 2	SERVICE KIT 1000h
FILTER MAT	10022770	211	1	72	12 48 693 4	SERVICE KIT 2000h
FILTER MAT	10022770	2	1	339	10 02 277 7	CIRCULATING AIR GRID
FINAL CONTROL VALVE	10117951	14	1	557	10 11 682 5	BASIC ENGINE D936 L HIGH 3
FINAL CONTROL VALVE	9075134	14	1	557	10 11 682 5	BASIC ENGINE D936 L HIGH 3
FIRE EXTINGUISHER	10498331	50	1	7	.	
FIRE EXTINGUISHER	10498332	10	1	790	10 49 833 1	FIRE EXTINGUISHER
FIRE EXTINGUISHER ABC PU	11690717	5	1	791	10 49 833 2	FIRE EXTINGUISHER
FITTING	10220951	245	1	260	90 64 786	CONNECTING ELEMENT
FITTING	11834728	9	1	796	11 69 501 2	UREA FILLING KIT
FITTING	11834729	4	1	796	11 69 501 2	UREA FILLING KIT
FITTING 12L	10652561	245	1	260	90 64 786	CONNECTING ELEMENT
FITTING 6L	10220950	145	1	258	90 64 786	CONNECTING ELEMENT
FITTING 6LL	10342221	145	1	258	90 64 786	CONNECTING ELEMENT
FITTING 8LL	10330614	245	1	260	90 64 786	CONNECTING ELEMENT
FITTING EGE 10L	7617262	13	1	269	10 06 014 6	HYDR.INSTAL.FOOT BOARD
FITTING EGE 10L	7617262	62	1	347	10 06 379 3	OIL PILOT VALVE INSTALLATIO
FITTING EGE 10L	7617262	388	1	413	10 35 863 8	CONTROL VALVE INSTALLAT
FITTING EGE 15L	7617485	10	1	356	10 35 862 9	HYDR.AND GEAR OIL COOLIN
FITTING EGE 35L G1 1/4A	7410268	40	1	353	10 06 379 8	HYDR.SUCT.+RETURN OIL HO
FITTING EL 10L	472330208	27	1	142	10 04 853 9	PUMPS + COUPLING INSTALL
FITTING EL 10L	472330208	44	3	143	10 04 853 9	PUMPS + COUPLING INSTALL
FITTING EL 10L	472330208	26	1	267	11 38 342 7	HYDR.INSTAL.ARM REST LEF
FITTING EL 10L	472330208	23	1	268	11 38 342 9	HYDR.INSTAL.ARM REST RIGH
FITTING EL 10L	472330208	11	2	269	10 06 014 6	HYDR.INSTAL.FOOT BOARD
FITTING EL 10L	472330208	27	1	346	10 06 379 3	OIL PILOT VALVE INSTALLATIO
FITTING EL 10L	472330208	144	3	410	10 35 863 8	CONTROL VALVE INSTALLAT
FITTING EL 10L	472330208	385	1	413	10 35 863 8	CONTROL VALVE INSTALLAT
FITTING EL 10L	472330208	486	1	414	10 35 863 8	CONTROL VALVE INSTALLAT
FITTING EL 15L	472300414	45	1	354	10 06 379 8	HYDR.SUCT.+RETURN OIL HO
FITTING EL 15L	472300414	426	1	413	10 35 863 8	CONTROL VALVE INSTALLAT
FITTING EL 16S	7407098	47	1	359	10 35 862 4	HYDR.INSTALLATION FAN DR
FITTING EL 18L	247128502	49	1	359	10 35 862 4	HYDR.INSTALLATION FAN DR
FITTING EL 18L	247128502	17	1	754	10 85 472 4	BASIC MACHINE MOUNTING
FITTING EL 22L	247138602	18	1	121	10 40 412 9	HYDR.INSTALLATION UNDER
FITTING EL 22L	247138602	18	1	353	10 06 379 8	HYDR.SUCT.+RETURN OIL HO
FITTING ET 10L M16X1,5	482430314	13	1	121	10 40 412 9	HYDR.INSTALLATION UNDER
FITTING ET 10L M16X1,5	482430314	22	2	268	11 38 342 9	HYDR.INSTAL.ARM REST RIGH
FITTING ET 10L M16X1,5	482430314	180	4	361	10 06 380 1	HYDR.INSTAL.CONTROL TUBE
FITTING ET 10L M16X1,5	482430314	148	1	410	10 35 863 8	CONTROL VALVE INSTALLAT
FITTING ET 10L M16X1,5	482430314	520	1	414	10 35 863 8	CONTROL VALVE INSTALLAT
FITTING ET 15L M22X1,5	472430408	51	2	753	11 10 291 2	HOIST CYLINDER INSTALLAT
FITTING EW 10L M16X1,5	7403569	28	1	267	11 38 342 7	HYDR.INSTAL.ARM REST LEF

Description	Item	Pos.	Quantity	Page	Assembly	Description
FITTING EW 10L M16X1,5	7403569	186	1	361	10 06 380 1	HYDR.INSTAL.CONTROL TUBE
FITTING EW 10L M16X1,5	7403569	143	1	410	10 35 863 8	CONTROL VALVE INSTALLAT
FITTING EW 15L	7615379	15	2	135	10 36 918 3	FUEL SYSTEM
FITTING EW 15L	7615379	76	1	159	10 11 886 0	PUMP DISTRIBUTION GEAR
FITTING EW 15L	7615379	43	1	354	10 06 379 8	HYDR.SUCT.+RETURN OIL HO
FITTING EW 16S	7617460	132	4	409	10 35 863 8	CONTROL VALVE INSTALLAT
FITTING EW 16S	7617460	176	2	410	10 35 863 8	CONTROL VALVE INSTALLAT
FITTING EW 18L M26X1,5	247108302	6	2	220	90 02 790 3	SLEWING DRIVE SAT 325/254
FITTING EW 22L	247126202	17	3	121	10 40 412 9	HYDR.INSTALLATION UNDER
FITTING EW 6L	247021702	35	2	756	11 10 281 8	KIT IN BASIC MACHINE
FITTING EW 8S M16X1,5	7404186	51	1	777	11 45 729 6	HOIST CYLINDER RIGHT
FITTING EW 8S M16X1,5	7404186	51	1	780	11 45 729 7	HOIST CYLINDER LEFT
FITTING G 6LL	774374208	40	1	257	90 64 786	CONNECTING ELEMENT
FITTING G 6LL	774374208	140	1	258	90 64 786	CONNECTING ELEMENT
FITTING G 6LL	774374208	40	6	262	10 01 461 1	AUXILIARY BOX
FITTING G 8L M14X1,5	10014575	240	1	260	90 64 786	CONNECTING ELEMENT
FITTING G 8L M14X1,5	10014575	140	3	263	10 01 461 1	AUXILIARY BOX
FITTING GE 10 M14X1,5/9/16-1	10021563	40	4	634	10 11 628 5	FUEL LINE
FITTING GE 10 M14X1,5/9/16-1	10021563	90	4	635	10 11 628 5	FUEL LINE
FITTING GE 10L	7021521	14	1	121	10 40 412 9	HYDR.INSTALLATION UNDER
FITTING GE 10L	7021521	19	1	665	90 80 736	EXHAUST TC MOUNTING
FITTING GE 10L G1/4A	7362091	10	6	269	10 06 014 6	HYDR.INSTAL.FOOT BOARD
FITTING GE 10L G1/4A	7362091	25	6	346	10 06 379 3	OIL PILOT VALVE INSTALLATIO
FITTING GE 10L G1/4A	7362091	66	1	347	10 06 379 3	OIL PILOT VALVE INSTALLATIO
FITTING GE 10L G1/4A	7362091	146	2	410	10 35 863 8	CONTROL VALVE INSTALLAT
FITTING GE 10L G1/4A	7362091	150	2	410	10 35 863 8	CONTROL VALVE INSTALLAT
FITTING GE 10L G1/4A	7362091	485	3	414	10 35 863 8	CONTROL VALVE INSTALLAT
FITTING GE 10L G1/4A	7362091	12	1	754	10 85 472 4	BASIC MACHINE MOUNTING
FITTING GE 10L G1/4A	7362091	31	4	808	11 37 560 6	PILOT CONTROL UNIT VG6-8
FITTING GE 10L G3/8A	7002830	15	3	754	10 85 472 4	BASIC MACHINE MOUNTING
FITTING GE 10L M14X1,5	7003814	12	2	121	10 40 412 9	HYDR.INSTALLATION UNDER
FITTING GE 10L M14X1,5	7003814	25	3	142	10 04 853 9	PUMPS + COUPLING INSTALL
FITTING GE 10L M14X1,5	7003814	42	6	143	10 04 853 9	PUMPS + COUPLING INSTALL
FITTING GE 10L M14X1,5	7003814	19	1	219	10 06 198 2	SLEWING GEAR
FITTING GE 10L M14X1,5	7003814	20	4	244	10 06 198 5	GREASE PIPE INSTALLATION
FITTING GE 10L M14X1,5 ED VI	4981235	3	1	576	90 79 862	OIL DIPSTICK WITH PIPE
FITTING GE 10L M14X1,5 ED VI	4981235	10	1	665	90 80 736	EXHAUST TC MOUNTING
FITTING GE 12 M16X1,5/3/4-16	10038568	20	1	641	10 11 657 6	CONNECTION PIECE
FITTING GE 12L G1/4A	7362117	52	2	777	11 45 729 6	HOIST CYLINDER RIGHT
FITTING GE 12L G1/4A	7362117	52	2	780	11 45 729 7	HOIST CYLINDER LEFT
FITTING GE 12L G1/4A	7362117	30	2	808	11 37 560 6	PILOT CONTROL UNIT VG6-8
FITTING GE 15L	7410457	61	1	359	10 35 862 4	HYDR.INSTALLATION FAN DR
FITTING GE 15L G1/2A	4600518	22	4	346	10 06 379 3	OIL PILOT VALVE INSTALLATIO
FITTING GE 15L M18X1,5 ED	7003570	75	2	158	10 11 886 0	PUMP DISTRIBUTION GEAR
FITTING GE 15L M18X1,5 ED	7003570	47	3	385	10 04 851 7	HYDRAULIC TANK INSTALLAT
FITTING GE 15L M18X1,5 ED	7003570	47	3	387	10 35 863 4	HYDRAULIC TANK INSTALLAT
FITTING GE 15L M22X1,5	7403083	9	1	356	10 35 862 9	HYDR.AND GEAR OIL COOLIN
FITTING GE 16S G1/2A	7002361	127	1	409	10 35 863 8	CONTROL VALVE INSTALLAT
FITTING GE 16S M27X2	7018370	128	3	409	10 35 863 8	CONTROL VALVE INSTALLAT
FITTING GE 18L M22X1,5	7003572	81	2	227	90 02 790 4	SLEWING DRIVE SAT 325/254
FITTING GE 18L M22X1,5	7003572	45	1	385	10 04 851 7	HYDRAULIC TANK INSTALLAT
FITTING GE 18L M22X1,5	7003572	45	1	387	10 35 863 4	HYDRAULIC TANK INSTALLAT
FITTING GE 22L G3/4A ED	4001446	16	2	121	10 40 412 9	HYDR.INSTALLATION UNDER
FITTING GE 22L G3/4A ED	4001446	20	1	219	10 06 198 2	SLEWING GEAR
FITTING GE 22L M26X1,5	7362515	4	1	101	10 40 412 7	ROTARY CONNECTION CPL
FITTING GE 22L M26X1,5	7362515	4	1	102	11 46 393 9	ROTARY CONNECTION CPL
FITTING GE 22L M26X1,5	7362515	19	1	121	10 40 412 9	HYDR.INSTALLATION UNDER
FITTING GE 22L M26X1,5	7362515	26	1	142	10 04 853 9	PUMPS + COUPLING INSTALL
FITTING GE 22L M26X1,5	7362515	36	1	142	10 04 853 9	PUMPS + COUPLING INSTALL
FITTING GE 22L M26X1,5	7362515	40	1	143	10 04 853 9	PUMPS + COUPLING INSTALL

Description	Item	Pos.	Quantity	Page	Assembly	Description
FITTING GE 22L M26X1,5	7362515	48	1	385	10 04 851 7	HYDRAULIC TANK INSTALLAT
FITTING GE 22L M26X1,5	7362515	48	1	387	10 35 863 4	HYDRAULIC TANK INSTALLAT
FITTING GE 22L M26X1,5	7362515	8	1	569	10 11 832 9	REPAIR KIT PIPE LINE D936
FITTING GE 28L M30X1,5	7371875	331	1	197	10 04 853 6	ENGINE COOLING
FITTING GE 28L M33X2	7003800	69	1	145	10 04 853 9	PUMPS + COUPLING INSTALL
FITTING GE 28L M33X2	7003800	55	1	385	10 04 851 7	HYDRAULIC TANK INSTALLAT
FITTING GE 28L M33X2	7003800	55	1	387	10 35 863 4	HYDRAULIC TANK INSTALLAT
FITTING GE 28L M42X2	7615629	75	2	145	10 04 853 9	PUMPS + COUPLING INSTALL
FITTING GE 35L G1 1/4A	4001871	33	1	353	10 06 379 8	HYDR.SUCT.+RETURN OIL HO
FITTING GE 35L M42X2	4900486	67	1	145	10 04 853 9	PUMPS + COUPLING INSTALL
FITTING GE 35L M42X2	4900486	32	1	353	10 06 379 8	HYDR.SUCT.+RETURN OIL HO
FITTING GE 42L M48X2 ED	7368096	49	1	385	10 04 851 7	HYDRAULIC TANK INSTALLAT
FITTING GE 42L M48X2 ED	7368096	49	1	387	10 35 863 4	HYDRAULIC TANK INSTALLAT
FITTING GE 6L M10X1	4981233	3	2	691	90 78 961	POWER TAKE-OFF ADD-ON
FITTING GE 6L M10X1	7362169	13	7	716	11 10 283 6	KIT GOOSENECK BOOM 6.45M
FITTING GE 6L M10X1	7362169	38	2	722	10 82 841 3	CENTRAL LUBRICATING SYS
FITTING GE 6L M10X1	7362169	13	8	727	11 10 281 7	KIT STICK 2.10M
FITTING GE 6L M10X1	7362169	11	6	756	11 10 281 8	KIT IN BASIC MACHINE
FITTING GE 6LL M10X1	774376508	185	1	258	90 64 786	CONNECTING ELEMENT
FITTING GE 6LL M6	491035414	185	1	258	90 64 786	CONNECTING ELEMENT
FITTING GE 8L M14X1,5	7619197	22	1	219	10 06 198 2	SLEWING GEAR
FITTING GE 8L M14X1,5	7619197	19	1	756	11 10 281 8	KIT IN BASIC MACHINE
FITTING GE 8LL M10X1	10009053	20	1	733	10 66 475 5	DISTRIBUTION BLOCK MX-F 7/
FITTING GE 8S G1/4A	4901382	52	3	753	11 10 291 2	HOIST CYLINDER INSTALLAT
FITTING GE 8S G3/8A	7412159	50	1	777	11 45 729 6	HOIST CYLINDER RIGHT
FITTING GE 8S G3/8A	7412159	50	1	780	11 45 729 7	HOIST CYLINDER LEFT
FITTING GE SA301 6L M14X1,5	7368545	21	4	244	10 06 198 5	GREASE PIPE INSTALLATION
FITTING GR 15/10L	7406699	47	1	354	10 06 379 8	HYDR.SUCT.+RETURN OIL HO
FITTING GR 15/10L	7406699	62	1	753	11 10 291 2	HOIST CYLINDER INSTALLAT
FITTING GZ 10L	7410211	24	1	267	11 38 342 7	HYDR.INSTAL.ARM REST LEF
FITTING GZ 10L	7410211	25	1	268	11 38 342 9	HYDR.INSTAL.ARM REST RIGH
FITTING GZ 10L	7410211	32	2	268	11 38 342 9	HYDR.INSTAL.ARM REST RIGH
FITTING GZ 10L	7410211	184	3	361	10 06 380 1	HYDR.INSTAL.CONTROL TUBE
FITTING GZ 10L	7410211	142	1	410	10 35 863 8	CONTROL VALVE INSTALLAT
FITTING GZ 10L	7410211	14	1	754	10 85 472 4	BASIC MACHINE MOUNTING
FITTING KEY	10008422	9	1	208	56 19 045	AXIAL PISTON MOTOR
FITTING KEY	7028166	8	1	170	10 28 264 7	GEAR PUMP
FITTING M27X2	7360563	14	2	116	98 82 760	ADJUSTMENT NG 100
FITTING M27X2	7360563	35	2	350	10 35 862 7	HYDR.INSTAL.VALVES TO ATT
FITTING M27X2	7360563	126	1	409	10 35 863 8	CONTROL VALVE INSTALLAT
FITTING RED 15/10L	7616915	427	1	413	10 35 863 8	CONTROL VALVE INSTALLAT
FITTING RED 15/12L	7367745	53	2	777	11 45 729 6	HOIST CYLINDER RIGHT
FITTING RED 15/12L	7367745	53	2	780	11 45 729 7	HOIST CYLINDER LEFT
FITTING RED 18/10L	7616916	18	1	754	10 85 472 4	BASIC MACHINE MOUNTING
FITTING RED 22/15L M30X2/M2	7616913	46	1	354	10 06 379 8	HYDR.SUCT.+RETURN OIL HO
FITTING RED 35/15L	7367749	65	1	359	10 35 862 4	HYDR.INSTALLATION FAN DR
FITTING RI G3/4XG1/2	7617743	21	2	346	10 06 379 3	OIL PILOT VALVE INSTALLATIO
FITTING RI G3/8XG1/4	7022687	92	2	408	10 35 863 8	CONTROL VALVE INSTALLAT
FITTING SV 8L M14X1,5	7368106	35	2	722	10 82 841 3	CENTRAL LUBRICATING SYS
FITTING SV 8L M14X1,5	7368106	23	2	730	10 39 639 6	CENTRAL GREASING
FITTING TH 10L G1/4A	7368531	140	1	410	10 35 863 8	CONTROL VALVE INSTALLAT
FITTING W 15L	7362109	7	2	135	10 36 918 3	FUEL SYSTEM
FITTING W 15L	7362109	45	4	753	11 10 291 2	HOIST CYLINDER INSTALLAT
FITTING WE 6LL M10X1K	774373608	30	1	257	90 64 786	CONNECTING ELEMENT
FITTING WE6LL M8X1	7623106	180	1	258	90 64 786	CONNECTING ELEMENT
FITTING WH 15L G1/2A	7368478	16	2	135	10 36 918 3	FUEL SYSTEM
FITTING WH 6L M10X1 KDS	7368426	30	3	716	11 10 283 6	KIT GOOSENECK BOOM 6.45M
FITTING WH 6L M10X1 KDS	7368426	39	3	722	10 82 841 3	CENTRAL LUBRICATING SYS
FITTING WH 6L M10X1 KDS	7368426	30	8	727	11 10 281 7	KIT STICK 2.10M
FITTING WH 6L M10X1 KDS	7368426	19	8	730	10 39 639 6	CENTRAL GREASING

Description	Item	Pos.	Quantity	Page	Assembly	Description
FITTING WH 6L M10X1 KDS	7368426	40	2	756	11 10 281 8	KIT IN BASIC MACHINE
FITTING WH 6L M10X1 KDS	7368426	54	1	777	11 45 729 6	HOIST CYLINDER RIGHT
FITTING WH 6L M10X1 KDS	7368426	54	1	780	11 45 729 7	HOIST CYLINDER LEFT
FITTING WSV 15L M22X1,5	7364350	50	2	753	11 10 291 2	HOIST CYLINDER INSTALLAT
FITTING WSV 8L M14X1,5	7368115	26	3	721	10 82 841 3	CENTRAL LUBRICATING SYS
FITTING WSV 8L M14X1,5	7368115	18	1	730	10 39 639 6	CENTRAL GREASING
FITTING WSV 8LL M10X1	10009054	21	1	255	10 29 300 3	DISTRIBUTION BLOCK MX-F 4/
FITTING WSV 8LL M10X1	10009054	21	1	719	10 66 480 4	DISTRIBUTION BLOCK MX-F 5/
FITTINGS	10076195	175	2	410	10 35 863 8	CONTROL VALVE INSTALLAT
FITTINGS	9268725	19	1	158	10 11 886 0	PUMP DISTRIBUTION GEAR
FITTINGS	9273271	2	2	620	90 75 368	LUBE OIL FILTER ASSEMBLY
FITTINGS	9757423	22	4	121	10 40 412 9	HYDR.INSTALLATION UNDER
FITTINGS 3/4-16/M22X1,5	9080360	8	2	640	90 79 580	CONNECTING PIECE PRE-ASS
FITTINGS GE 18L G1/2A	7003578	48	1	359	10 35 862 4	HYDR.INSTALLATION FAN DR
FITTINGS M16X1,5/M16X1,5	10115649	46	2	634	10 11 628 5	FUEL LINE
FITTINGS M24X1,5 - G3/8	10076196	5	1	419	10 07 619 5	FITTINGS
FIX.PARTS SWING RING UNDE	10048514	800	1	123	10 35 861 4	UPPERCARRIAGE
FIXING BRACKET	10022049	9	2	335	11 00 359 4	HOUSING
FIXING BRACKET	6203433	10	1	296	98 74 988	PLATINES INSTALLATION
FIXING PARTS	10493025	26	1	287	11 10 016 7	SUSPENSION
FIXING PARTS	10814706	39	1	285	11 10 016 6	SEAT TOP
FIXING PARTS	11066536	36	1	288	11 10 016 7	SUSPENSION
FIXING PARTS	12861404	50	1	10	12 86 140 3	HYDR.INSTALLATION CONTRO
FIXING PARTS CAB	10357979	10	1	471	10 35 796 7	OPERATOR'S CAB
FIXING PARTS CONTROL VALV	10063986	7601	1	416	10 35 863 8	CONTROL VALVE INSTALLAT
FIXING PARTS COUNTERWEI	10063914	5	1	536	10 49 800 2	COUNTERWEIGHT INSTALLAT
FIXING PARTS ENGINE	10358620	501	1	132	10 35 862 2	MOTOR INSTALLATION
FIXING PARTS FUEL TANK	10061810	2	1	529	10 04 852 5	FUEL TANK ASSY.
FIXING PARTS FUEL TANK	10061810	2	1	530	10 49 836 0	FUEL TANK ASSY.
FIXING PARTS FUEL TANK	10061810	2	1	531	11 10 262 1	FUEL TANK ASSY.
FIXING PARTS HYDRAULIC T	10061127	2	1	383	10 04 851 7	HYDRAULIC TANK INSTALLAT
FIXING PARTS HYDRAULIC T	10061127	2	1	386	10 35 863 4	HYDRAULIC TANK INSTALLAT
FIXING PARTS ROTARY CON	10403834	20	1	99	10 40 412 6	ROTARY CONNECTION INSTA
FIXING PARTS SWING	9360187	10	1	217	11 10 291 6	SWING GEAR INSTALLATION
FIXING PARTS SWING RING	10061984	5	1	242	10 04 851 4	FIX.PARTS SWING RING UNDE
FIXING SCREW	10215970	286	4	510	10 48 808 8	INTERIOR PANELING
FLANGE CONNECTION L	7616897	34	1	142	10 04 853 9	PUMPS + COUPLING INSTALL
FLANGE HALF WITH BOSSING	11490402	7	2	353	10 06 379 8	HYDR.SUCT.+RETURN OIL HO
FLANGE HALF WITH BOSSING	11490402	37	4	357	10 35 862 9	HYDR.AND GEAR OIL COOLIN
FLANGE HALF WITH BOSSING	11490402	52	2	385	10 04 851 7	HYDRAULIC TANK INSTALLAT
FLANGE HALF WITH BOSSING	11490402	52	2	387	10 35 863 4	HYDRAULIC TANK INSTALLAT
FLANGE HALF WITH BOSSING	11647393	41	2	357	10 35 862 9	HYDR.AND GEAR OIL COOLIN
FLANGE HALF WITH BOSSING	11647393	11	2	358	10 35 862 4	HYDR.INSTALLATION FAN DR
FLANGE HALF WITH BOSSING	11485638	4	16	121	10 40 412 9	HYDR.INSTALLATION UNDER
FLANGE HALF WITH BOSSING	11485638	6	4	344	10 35 862 3	HYDR.PUMPS TO SPOOL VALV
FLANGE HALF WITH BOSSING	11485638	25	6	350	10 35 862 7	HYDR.INSTAL.VALVES TO ATT
FLANGE HALF WITH BOSSING	11485638	6	8	351	10 35 862 8	HYDR.INST.ROTARY CONNE
FLANGE HALF WITH BOSSING	11485638	24	8	351	10 35 862 8	HYDR.INST.ROTARY CONNE
FLANGE HALF WITH BOSSING	11485638	51	2	354	10 06 379 8	HYDR.SUCT.+RETURN OIL HO
FLANGE HALF WITH BOSSING	11485638	74	4	407	10 35 863 8	CONTROL VALVE INSTALLAT
FLANGE HALF WITH BOSSING	11485638	10	6	420	10 35 863 7	HYDR.TUBES INSTALLATION
FLANGE HALF WITH BOSSING	11485638	60	6	712	11 10 294 5	GOOSENECK BOOM 6.45M
FLANGE HALF WITH BOSSING	11485638	20	2	725	11 10 280 7	STICK 2.10M
FLANGE HALF WITH BOSSING	11485638	11	8	752	11 10 291 2	HOIST CYLINDER INSTALLAT
FLANGE HALF WITH BOSSING	11485638	13	2	758	10 35 857 3	HYDR.CYLINDER W/ADDITION.
FLANGE HALF WITH BOSSING	11485638	70	8	777	11 45 729 6	HOIST CYLINDER RIGHT
FLANGE HALF WITH BOSSING	11485638	70	8	780	11 45 729 7	HOIST CYLINDER LEFT
FLANGE HALF WITH BOSSING	11485639	8	4	344	10 35 862 3	HYDR.PUMPS TO SPOOL VALV
FLANGE HALF WITH BOSSING	11485639	51	4	345	10 35 862 3	HYDR.PUMPS TO SPOOL VALV
FLANGE HALF WITH BOSSING	11485639	20	6	420	10 35 863 7	HYDR.TUBES INSTALLATION

Description	Item	Pos.	Quantity	Page	Assembly	Description
FLANGE HALF WITH BOSSING	11485639	61	18	712	11 10 294 5	GOOSENECK BOOM 6.45M
FLANGE HALF WITH BOSSING	11485639	17	2	725	11 10 280 7	STICK 2.10M
FLANGE HALF WITH BOSSING	11485639	13	2	759	10 85 361 0	HYDR.CYLINDER W/ADDITION.
FLANGE HALF WITH BOSSING	11485642	4	4	356	10 35 862 9	HYDR.AND GEAR OIL COOLIN
FLANGE HALF WITH BOSSING	11485645	11	2	353	10 06 379 8	HYDR.SUCT.+RETURN OIL HO
FLANGE HALF WITH BOSSING	11490403	63	2	145	10 04 853 9	PUMPS + COUPLING INSTALL
FLANGE HALF WITH BOSSING	11485643	31	2	358	10 35 862 4	HYDR.INSTALLATION FAN DR
FLANGE HALF WITH BOSSING	11485637	20	6	350	10 35 862 7	HYDR.INSTAL.VALVES TO ATT
FLANGE HALF WITH BOSSING	11485637	10	8	351	10 35 862 8	HYDR.INST.ROTARY CONNE
FLANGE HALF WITH BOSSING	11485637	71	4	359	10 35 862 4	HYDR.INSTALLATION FAN DR
FLANGE HALF WITH BOSSING	11485637	100	4	408	10 35 863 8	CONTROL VALVE INSTALLAT
FLANGE HALF WITH BOSSING	11485637	15	4	420	10 35 863 7	HYDR.TUBES INSTALLATION
FLANGE HALF WITH BOSSING	11485637	75	2	777	11 45 729 6	HOIST CYLINDER RIGHT
FLANGE HALF WITH BOSSING	11485637	75	2	780	11 45 729 7	HOIST CYLINDER LEFT
FLANGE NG 140-150	9072435	12	1	827	90 77 464	RS FLANGE NG 125-140-150
FLANGE PRE-ASS.	9073163	8	1	610	90 80 713	CAMSHAFT CPL.
FLANGE SLEEVE 45/50X25	9888448	2	2	696	90 77 384	BEARING HOUSING, PRE-AS
FLANGE SLEEVE 45/50X25	9888448	2	1	697	90 77 717	BEARING HOUSING, PRE-AS
FLAT GASKET 0,075	9276860	20	2	835	92 65 808	SEAL KIT DOUBLE PUMP NG
FLOAT SWITCH	6205496	320	1	197	10 04 853 6	ENGINE COOLING
FLOODLIGHT INSTALLATION	12859103	15	1	514	11 10 255 3	ELECTRICAL SYSTEM
FLOODLIGHT INSTALLATION	9941040	10	1	514	11 10 255 3	ELECTRICAL SYSTEM
FLOODLIGHT INSTALLATION	9941040	11	1	514	11 10 255 3	ELECTRICAL SYSTEM
FLOOR COVERING	10382585	5	1	266	10 49 861 5	OPERATOR'S PLATFORM
FLOOR PLATE 500mm	10470093	2	49	80	10 67 501 0	TRACK CHAIN LUBRICATED 50
FLOOR PLATE 500mm	5615742	2	49	81	11 16 108 1	TRACK CHAIN LUBRICATED 50
FLOW REGULATING CHECK	10116717	10	1	759	10 85 361 0	HYDR.CYLINDER W/ADDITION.
FLOW REGULATING CHECK	10301271	400	1	421	10 30 079 8	STICK BYPASS VALVE
FLOW REGULATING CHECK	10301271	192	1	425	10 11 386 0	CONTROL BLOCK
FLOW REGULATING CHECK	10301272	191	1	425	10 11 386 0	CONTROL BLOCK
FLOW REGULATING CHECK	9265178	9	1	758	10 35 857 3	HYDR.CYLINDER W/ADDITION.
FLOW REGULATING CHECK	9265991	998	1	765	92 65 178	FLOW REGULATING CHECK
FLUID BEARING	10013573	5	4	342	98 79 063	BOTTOM PLATE MOUNTING
FLYWHEEL ASSEMBLY SAE 2	10115862	530	1	555	10 11 714 5	DIESEL ENGINE D936 L A6 190
FLYWHEEL ASSEMBLY SAE 2	10115862	530	1	555	10 11 714 5	DIESEL ENGINE D936 L A6 190
FLYWHEEL HOUSING MOUNT	10116114	520	1	555	10 11 714 5	DIESEL ENGINE D936 L A6 190
FLYWHEEL HOUSING PRE-A	10116113	1	1	680	10 11 611 4	FLYWHEEL HOUSING MOUNT
FLYWHEEL PRE-ASS. SAE 2	10115861	1	1	683	10 11 586 2	FLYWHEEL ASSEMBLY SAE 2
FOAM RUBBER INSULATION	10022772	2	1	338	10 02 211 9	CASE
FOLDING LID	7370893	14	1	310	56 18 923	CONTROL CONSOLE RIGHT
FOLDING SHEET	11102795	10	1	716	11 10 283 6	KIT GOOSENECK BOOM 6.45M
FOLDING SHEET	11102795	10	1	727	11 10 281 7	KIT STICK 2.10M
FOLDING SHEET 8X181X390	12913919	10	1	756	11 10 281 8	KIT IN BASIC MACHINE
FOOT BOARD COVERING	9480295	11	1	321	10 06 017 4	FOOT PILOT VALVE LEFT
FOOT BOARD COVERING	9480295	11	1	322	10 06 017 5	FOOT PILOT VALVE RIGHT
FOOT BOARD COVERING	9480295	2	1	326	94 76 369	FOOT PEDAL LEFT ASSEMBL
FOOT PEDAL LEFT ASSEMBL	9476369	2	1	323	90 79 258	PILOT CONTROL UNIT VG7 2-3
FOOT PEDAL RIGHT ASSEMBL	9079392	2	1	325	90 79 259	PILOT CONTROL UNIT VG7 2-3
FOOT PILOT VALVE INSTALL	10059818	40	1	271	10 49 880 5	DRIVER STAND BASE SECTIO
FOOT PILOT VALVE LEFT	10060174	10	1	320	10 05 981 8	FOOT PILOT VALVE INSTALL
FOOT PILOT VALVE RIGHT	10060175	20	1	320	10 05 981 8	FOOT PILOT VALVE INSTALL
FOOTRING	8563210	155	3	786	10 82 562 1	OPT.DATA CAPTURE-DATA T
FRAME	10300991	1	1	199	10 21 851 3	COMBINATED RADIATOR
FRAME	10300991	1	1	202	11 69 472 6	COMBINATED RADIATOR
FRAME	7028782	600	1	486	70 28 842	DOOR FRAME
FRAME	7028804	310	1	481	70 28 759	FRONT PANE TOP
FRAME	7029419	510	1	487	70 28 831	SLIDING WINDOW
FRAME BACKSIDE CENTER IN	10080047	30	1	129	10 08 004 4	FRAME INSTALLATION
FRAME BACKSIDE LEFT INST	10080046	10	1	129	10 08 004 4	FRAME INSTALLATION
FRAME BACKSIDE RIGHT INST	10498564	60	1	793	10 49 866 6	AIR FILTER INSTALLATION

Description	Item	Pos.	Quantity	Page	Assembly	Description
FRAME INSTALLATION	10080044	300	1	123	10 35 861 4	UPPERCARRIAGE
FRONT PANE TOP	7028759	30	1	472	10 22 830 2	OPERATOR'S CAB
FRONT PANE TOP	7028759	30	1	474	10 47 616 9	OPERATOR'S CAB
FRONT WINDOW BOTTOM	10035529	40	1	472	10 22 830 2	OPERATOR'S CAB
FRONT WINDOW BOTTOM	10035529	40	1	474	10 47 616 9	OPERATOR'S CAB
FRONT WINDOW BOTTOM	10035530	110	1	479	10 03 552 9	FRONT WINDOW BOTTOM
FRONT WINDOW BOTTOM	7030040	111	1	480	10 03 553 0	FRONT WINDOW BOTTOM
FUEL COOLER	10300996	7	1	199	10 21 851 3	COMBINATED RADIATOR
FUEL COOLER	10300996	7	1	202	11 69 472 6	COMBINATED RADIATOR
FUEL FILTER HEAD	10046958	4	1	632	10 22 281 9	FUEL PRE-FILTER CPL.
FUEL FILTER HEAD	12455531	2	1	631	10 12 580 1	FUEL FINE FILTER
FUEL FINE FILTER	10125801	1	1	630	10 12 500 7	FUEL FINE-FILTER ASSEMBLY
FUEL FINE FILTER 3-5µm	10429946	10	8	126	10 06 994 0	SERVICE KIT FUEL FILTER
FUEL FINE FILTER 3-5µm	12820742	103	1	64	12 48 693 1	SERVICE KIT FIRST 500h
FUEL FINE FILTER 3-5µm	12820742	103	1	67	12 48 693 2	SERVICE KIT 1000h
FUEL FINE FILTER 3-5µm	12820742	103	1	70	12 48 693 3	SERVICE KIT 1500-2500h
FUEL FINE FILTER 3-5µm	12820742	103	1	71	12 48 693 4	SERVICE KIT 2000h
FUEL FINE FILTER 3-5µm	12820742	1	1	631	10 12 580 1	FUEL FINE FILTER
FUEL FINE-FILTER ASSEMBLY	10125007	201	1	551	10 11 714 5	DIESEL ENGINE D936 L A6 190
FUEL HOSE	10333666	10	1	135	10 36 918 3	FUEL SYSTEM
FUEL HOSE	10333666	11	1	135	10 36 918 3	FUEL SYSTEM
FUEL HOSE	10441297	12	1	135	10 36 918 3	FUEL SYSTEM
FUEL LEVEL INDICATOR	6204564	5	1	529	10 04 852 5	FUEL TANK ASSY.
FUEL LEVEL INDICATOR	6204564	5	1	530	10 49 836 0	FUEL TANK ASSY.
FUEL LEVEL INDICATOR	6204564	5	1	531	11 10 262 1	FUEL TANK ASSY.
FUEL LINE	10116285	212	1	551	10 11 714 5	DIESEL ENGINE D936 L A6 190
FUEL LINE	9076621	1	1	637	10 11 559 5	LEAK OIL RETURN LINE
FUEL PRE-FILTER CPL.	10222819	1	1	629	10 11 656 2	FUEL-PREFILTER ASS.
FUEL PREFILTER	10044302	102	1	64	12 48 693 1	SERVICE KIT FIRST 500h
FUEL PREFILTER	10044302	102	1	67	12 48 693 2	SERVICE KIT 1000h
FUEL PREFILTER	10044302	102	1	70	12 48 693 3	SERVICE KIT 1500-2500h
FUEL PREFILTER	10044302	102	1	71	12 48 693 4	SERVICE KIT 2000h
FUEL PREFILTER	10044302	20	8	126	10 06 994 0	SERVICE KIT FUEL FILTER
FUEL PREFILTER	10044302	1	1	632	10 22 281 9	FUEL PRE-FILTER CPL.
FUEL PUMP ASSEMBLY	9078680	211	1	559	10 11 682 5	BASIC ENGINE D936 L HIGH 3
FUEL SYSTEM	10369183	520	1	132	10 35 862 2	MOTOR INSTALLATION
FUEL TANK	10067596	3	1	529	10 04 852 5	FUEL TANK ASSY.
FUEL TANK	10498359	3	1	530	10 49 836 0	FUEL TANK ASSY.
FUEL TANK	11102620	3	1	531	11 10 262 1	FUEL TANK ASSY.
FUEL TANK ASSY.	10048525	9300	1	124	10 35 861 4	UPPERCARRIAGE
FUEL TANK ASSY.	10498360	9300	1	124	10 35 861 4	UPPERCARRIAGE
FUEL TANK ASSY.	11102621	9300	1	124	10 35 861 4	UPPERCARRIAGE
FUEL TANK FOR EXCHANGE	10067707	4	1	529	10 04 852 5	FUEL TANK ASSY.
FUEL TANK FOR EXCHANGE	10498728	4	1	530	10 49 836 0	FUEL TANK ASSY.
FUEL TANK FOR EXCHANGE	11102602	4	1	531	11 10 262 1	FUEL TANK ASSY.
FUEL-PREFILTER ASS.	10116562	200	1	551	10 11 714 5	DIESEL ENGINE D936 L A6 190
FUSE	7027038	22	1	297	73 73 807	SAFETY LEVER
FUSE CARTRIDGE 20A 32V C	6001472	22	1	519	99 47 695	ELECTRICAL SYSTEM E50
FUSE CARTRIDGE 25A 32V C	6001471	42	1	295	97 58 815 01	E-BOARD
FUSE CARTRIDGE C 15A 32 FK	4901512	40	9	295	97 58 815 01	E-BOARD
FUSE CARTRIDGE C 7,5A 32/5	4901513	41	5	295	97 58 815 01	E-BOARD
FUSE CARTRIDGE C 7,5A 32/5	4901513	24	5	519	99 47 695	ELECTRICAL SYSTEM E50
GANTRY 2 FACH	6001474	29	10	519	99 47 695	ELECTRICAL SYSTEM E50
GAS SPRING	10037196	20	1	462	10 35 826 4	TOOL BOX
GAS SPRING	10037207	15	1	545	10 37 464 5	COVER
GAS SPRING	10037209	30	2	446	10 35 865 5	COVERS
GAS SPRING	10037209	90	1	447	10 35 865 5	COVERS
GAS SPRING	7372354	17	1	297	73 73 807	SAFETY LEVER
GAUGE CONNECTION M16X1,	5607605	53	1	753	11 10 291 2	HOIST CYLINDER INSTALLAT
GAUGE CONNECTION VKA3 10	7406864	24	1	142	10 04 853 9	PUMPS + COUPLING INSTALL

Description	Item	Pos.	Quantity	Page	Assembly	Description
GAUGE CONNECTION VKA3 10	7406864	32	1	346	10 06 379 3	OIL PILOT VALVE INSTALLATIO
GAUGE CONNECTION VKA3 16	7409923	46	1	359	10 35 862 4	HYDR.INSTALLATION FAN DR
GAUGE CONNECTION VKA3 22	7019891	37	1	142	10 04 853 9	PUMPS + COUPLING INSTALL
GEAR OIL	9070365	50	1	15	90 66 460	TYPES OF LUBRICANTS
GEAR OIL LIEBHERR SYNTO	10190394	1000	1l	46	11 62 628 0	GEAR OIL LIEBHERR/ISO VG
GEAR OIL LIEBHERR SYNTO	10190392	20	1	46	11 62 628 0	GEAR OIL LIEBHERR/ISO VG
GEAR OIL LIEBHERR SYNTO	10190393	210	1l	46	11 62 628 0	GEAR OIL LIEBHERR/ISO VG
GEAR OIL LIEBHERR SYNTO	10190391	5	1	46	11 62 628 0	GEAR OIL LIEBHERR/ISO VG
GEAR OIL LIEBHERR SYNTO	10190387	5	1	45	11 62 627 9	GEAR OIL LIEBHERR/ISO VG
GEAR OIL LIEBHERR SYNTO	10190388	20	1	45	11 62 627 9	GEAR OIL LIEBHERR/ISO VG
GEAR OIL LIEBHERR SYNTO	10190389	210	1l	45	11 62 627 9	GEAR OIL LIEBHERR/ISO VG
GEAR OIL LIEBHERR SYNTO	10190390	1000	1l	45	11 62 627 9	GEAR OIL LIEBHERR/ISO VG
GEAR OIL LIEBHERR/75W-90	10356826	10	1l	22	90 70 365	GEAR OIL
GEAR OIL LIEBHERR/75W-90/	10296477	1000	1	29	10 35 682 6	GEAR OIL LIEBHERR/75W-90
GEAR OIL LIEBHERR/75W-90/	10330287	20	1	29	10 35 682 6	GEAR OIL LIEBHERR/75W-90
GEAR OIL LIEBHERR/75W-90/2	10330288	210	1	29	10 35 682 6	GEAR OIL LIEBHERR/75W-90
GEAR OIL LIEBHERR/75W-90/5	10330285	5	1	29	10 35 682 6	GEAR OIL LIEBHERR/75W-90
GEAR OIL LIEBHERR/85W-140	10356827	20	1l	22	90 70 365	GEAR OIL
GEAR OIL LIEBHERR/85W-140/	10330292	1000	1	30	10 35 682 7	GEAR OIL LIEBHERR/85W-140
GEAR OIL LIEBHERR/85W-140/	10330291	20	1	30	10 35 682 7	GEAR OIL LIEBHERR/85W-140
GEAR OIL LIEBHERR/85W-140	10301680	210	1	30	10 35 682 7	GEAR OIL LIEBHERR/85W-140
GEAR OIL LIEBHERR/85W-140	10285639	5	1	30	10 35 682 7	GEAR OIL LIEBHERR/85W-140
GEAR OIL LIEBHERR/ISO VG	11626278	40	1l	22	90 70 365	GEAR OIL
GEAR OIL LIEBHERR/ISO VG	11626279	50	1l	22	90 70 365	GEAR OIL
GEAR OIL LIEBHERR/ISO VG	11626280	60	1l	22	90 70 365	GEAR OIL
GEAR PUMP	10282647	1	1	165	57 17 149	INTERNAL GEAR PUMP SET
GEAR PUMP	10291544	30	1	164	11 36 100 1	HYDR.MULTI CIRC.PUMP
GEAR WHEEL	9079001	3	1	695	90 78 962	AUXILIARY DRIVE PRE-ASS.
GEAR WHEEL Z=100 M=2,5	9073098	3	1	610	90 80 713	CAMSHAFT CPL.
GEAR WHEEL Z=12 M=1,75	9884139	11	1	185	98 84 140	COOLING CIRCUIT PUMP
GEAR WHEEL Z=29 M=2,25	9073342	6	1	655	10 13 281 7	WATER PUMP, PRE-ASSEMB
GEAR WHEEL Z=50 M=2,5	9072834	3	1	581	90 75 115	CRANKSHAFT WITH GEAR
GEAR WHEEL Z=99 M=2,25	9073100	13	1	610	90 80 713	CAMSHAFT CPL.
GEARBOX	10290346	510	1	496	10 29 036 3	WIPPER MOTOR SET
GEARBOX	7028883	510	1	497	70 28 884	WIPPER MOTOR SET
GEARBOX OIL COOLER	10300993	5	1	199	10 21 851 3	COMBINATED RADIATOR
GEARBOX OIL COOLER	10300993	5	1	202	11 69 472 6	COMBINATED RADIATOR
GENERATOR, PRE-ASSEMBLE	10116463	440	1	554	10 11 714 5	DIESEL ENGINE D936 L A6 190
GLASS PANE BEHIND	7029424	570	1	487	70 28 831	SLIDING WINDOW
GLASS PANE FRONT	7029423	560	1	487	70 28 831	SLIDING WINDOW
GLASS PANES	7028767	20	1	472	10 22 830 2	OPERATOR'S CAB
GLASS PANES	7028767	20	1	474	10 47 616 9	OPERATOR'S CAB
GLAZING PROFILE	7028806	300	1	481	70 28 759	FRONT PANE TOP
GLOVE Gr. 10 GELB	8593004	9998	1Pair	43	11 44 078 9	ACCESSORIES
GLOVE Gr. 9 GELB	11644535	9997	1Pair	43	11 44 078 9	ACCESSORIES
GLUE	10355107	19	0.1	453	10 05 816 9	ENGINE BONNET
GLUE	811208201	104	1	602	10 12 038 4	CYLINDER HEAD
GLUE	811208201	118	1	807	10 11 856 1	PILOT CONTROL UNIT VG6-8
GLUE	811208201	118	1	808	11 37 560 6	PILOT CONTROL UNIT VG6-8
GLUE	811208201	118	1	816	90 73 786	CONNECTING PLATE NG 100
GLUE	8655023	104	1	560	12 82 483 7	CRANKCASE CPL. WITH CYLIN
GLUEING SET	7029402	180	1	476	70 28 767	GLASS PANES
GOOSENECK BOOM 6,45M	11102946	100	1	7	.	
GOOSENECK BOOM 6.45M	11102944	2	1	711	11 10 294 5	GOOSENECK BOOM 6.45M
GOOSENECK BOOM 6.45M	11102945	10	1	714	11 10 294 6	GOOSENECK BOOM 6,45M
GREASE /0,4kg	11008141	10	1	58	96 47 551	SPECIAL GREASE ELECTRIC
GREASE /0,4kg	11693757	20	1	58	96 47 551	SPECIAL GREASE ELECTRIC
GREASE ANALYSIS SET	12693519	80	1	51	90 66 466	ACCESSORIES
GREASE HOUSING	90028782	20	1	226	90 02 790 4	SLEWING DRIVE SAT 325/254
GREASE L55/3/0,001kg	8655008	126	1	216	90 80 194	SEAL KIT

Description	Item	Pos.	Quantity	Page	Assembly	Description
GREASE L55/3/0,001kg	8655008	126	1	821	10 11 909 3	REPAIR KIT DRIVE SHAFT PV
GREASE NBU 12/1kg	8655030	110	1	654	90 80 301	WATER PUMP WITH FASTENIN
GREASE NBU 30/1kg	10285708	100	1	677	90 76 534	ROTATIONAL SPEED SENSOR
GREASE NIPPLE	10498874	70	2	76	10 49 885 2	UNDERCARRIAGE CPL
GREASE NIPPLE AEHNL.DIN	10005440	19	2	545	10 37 464 5	COVER
GREASE NIPPLE AEHNL.DIN	10005440	16	5	716	11 10 283 6	KIT GOOSENECK BOOM 6.45M
GREASE NIPPLE AEHNL.DIN	10005440	33	1	722	10 82 841 3	CENTRAL LUBRICATING SYS
GREASE NIPPLE AEHNL.DIN	10005440	16	13	727	11 10 281 7	KIT STICK 2.10M
GREASE NIPPLE AEHNL.DIN	10005440	31	5	731	10 39 639 6	CENTRAL GREASING
GREASE NIPPLE AEHNL.DIN	10005440	30	4	739	10 49 877 7	BEARING BLOCK
GREASE NIPPLE AEHNL.DIN	10005440	14	6	756	11 10 281 8	KIT IN BASIC MACHINE
GREASE NIPPLE CAP	10014701	18	1	249	10 22 844 3	LUBRICATION PUMP
GREASE NIPPLE CAP GPN 985	8500251	34	1	722	10 82 841 3	CENTRAL LUBRICATING SYS
GREASE NIPPLE CAP GPN 985	8500251	17	5	727	11 10 281 7	KIT STICK 2.10M
GREASE NIPPLE CAP GPN 985	8500251	32	5	731	10 39 639 6	CENTRAL GREASING
GREASE NIPPLE TR/A M16x1,5	11114605	2	1	96	10 49 887 4	GREASE NIPPLE
GREASE PIPE	9946410	2	1	244	10 06 198 5	GREASE PIPE INSTALLATION
GREASE PIPE	9946411	3	1	244	10 06 198 5	GREASE PIPE INSTALLATION
GREASE PIPE	9946412	4	1	244	10 06 198 5	GREASE PIPE INSTALLATION
GREASE PIPE	9946413	5	1	244	10 06 198 5	GREASE PIPE INSTALLATION
GREASE PIPE INSTALLATION	10061985	20	1	242	10 04 851 4	FIX.PARTS SWING RING UNDE
GREASE STABURAGS NBU 30/	10282622	100	1	565	90 73 083	CYLINDER
GREASE STABURAGS NBU 30/	10282622	110	1	570	90 79 480	POWER UNIT SUPPORT ATT
GREASE STABURAGS NBU 30/	10282622	100	1	621	10 11 683 9	INJECTION PUMP ASSEMBLY
GREASE STABURAGS NBU 30/	10282622	100	1	627	90 75 395	HIGH PRESSURE CONNECT
GREASE STABURAGS NBU 30/	10282622	100	1	643	90 77 279	CONNECTING BRANCH ADD-O
GREASE STABURAGS NBU 30/	10282622	100	1	645	10 12 190 9	CONNECTING LINE ADD-ON
GREASE STABURAGS NBU 30/	10282622	100	1	655	10 13 281 7	WATER PUMP, PRE-ASSEMB
GREASE STABURAGS NBU 30/	10282622	100	1	659	90 79 472	COOLANT PIPE BEND ADD-ON
GREASE STABURAGS NBU 30/	10282622	110	1	660	90 79 474	COOLANT PIPE BEND ADD-ON
GREASE STABURAGS NBU 30/	10282622	100	1	661	90 80 280	LOCKING PIECES
GREASE STABURAGS NBU 30/	10282622	100	1	680	10 11 611 4	FLYWHEEL HOUSING MOUNT
GREASE STABURAGS NBU 30/	10282622	100	1	688	12 54 450 5	ROTATIONAL SPEED SENSOR
GREASE STABURAGS NBU 30/	10282622	100	1	693	90 77 386	AUXILIARY DRIVE PRE-ASS.
GREASE STABURAGS NBU 30/	10282622	100	1	694	90 77 718	AUXILIARY DRIVE PRE-ASS.
GREASE STABURAGS NBU 30/	10282622	100	1	695	90 78 962	AUXILIARY DRIVE PRE-ASS.
GREASE STABURAGS NBU 30/	10282622	100	1	698	90 80 504	LOCKING PIECES
GREASE STABURAGS NBU 30/	10282622	10	1	708	10 28 570 8	GREASE NBU 30/1kg
GREASES	9070366	60	1	15	90 66 460	TYPES OF LUBRICANTS
GRIP	10029676	36	1	285	11 10 016 6	SEAT TOP
GRIP	10358190	50	1	542	10 49 878 6	OUTSIDE MIRROR ASSEMBLY
GRIP	10467429	59	1	286	11 10 016 6	SEAT TOP
GRIP	10814718	23	1	287	11 10 016 7	SUSPENSION
GRIP	7019153	260	1	484	70 28 769	DRIVER'S CAB DOOR
GRIP	7025006	20	1	290	70 24 996	SEAT FRAME
GRIP	7029421	530	2	487	70 28 831	SLIDING WINDOW
GRIP	7370897	4	1	294	10 16 576 6	STEERING CONSOLE
GRIP SW9,12,14,17 GEKROEPF	10359147	200	1	540	10 84 856 2	TOOL EQUIPMENT
GROMMET NUT M6	7361600	30	2	178	70 28 075	CONTROL UNIT
GROMMET NUT M6	7361600	57	2	184	98 82 875	SEAL KIT REGULATING VALVE
GROMMET NUT M8	7361601	14	1	168	10 22 063 5	SHUTDOWN VALVE
GROMMET NUT M8	7361601	8	1	364	50 09 565	PRESSURE LIMITING CARTRI
GROMMET NUT M8	7372252	11	1	371	10 32 372 8	PRESSURE REDUCTION VALV
GRUB SCREW	7028181	18	2	177	70 28 075	CONTROL UNIT
GRUB SCREW M8X50X5 22H	9078701	11	2	741	90 79 392	FOOT PEDAL RIGHT ASSEMBL
GUARD	10300999	9	1	199	10 21 851 3	COMBINATED RADIATOR
GUARD	10300999	9	1	202	11 69 472 6	COMBINATED RADIATOR
GUARD RAILING FIXTURE	11733762	8900	1	124	10 35 861 4	UPPERCARRIAGE
GUARD RING	10120443	3	1	583	90 75 133	CRANKSHAFT SEALING
GUIDE	10493047	4	1	285	11 10 016 6	SEAT TOP

Description	Item	Pos.	Quantity	Page	Assembly	Description
GUIDE	5611650	210	2	112	10 00 201 1	BRAKE VALVE
GUIDE	7015997	1	1	434	50 06 719	NON-RETURN VALVE
GUIDE	7028893	110	1	503	10 29 026 4	COMPONENTS
GUIDE	7028894	100	1	503	10 29 026 4	COMPONENTS
GUIDE BUSHING	11356724	11	2	799	90 73 888	HYDRAULIC INSTALLATION
GUIDE FOR OIL DIPSTICK CPL	9080212	2	1	158	10 11 886 0	PUMP DISTRIBUTION GEAR
GUIDE FUER SITZTIEFENVERS	10493369	16	1	285	11 10 016 6	SEAT TOP
GUIDE PLATE	10291976	2	1	399	11 49 189 4	DRIVING GEAR
GUIDE PLATE NG 090	9073554	2	1	232	90 74 113	RK CYLINDER+CONTROL PLAT
GUIDE PLATE NG 090	9073554	12	1	234	90 74 125	REPAIR KIT DRIVING MECHANI
GUIDE PLATE NG 100	9073551	2	1	822	90 74 114	RK CYLINDER+CONTROL PLAT
GUIDE PULLEY COMPL.	9077708	4	2	650	10 11 646 4	AIR COND. COMPRESSOR A
GUIDE RING	10216733	30	2	161	10 29 197 8	HYDRAULIC ADJUSTMENT
GUIDE RING	9266680	18	2	181	90 74 893	REPAIR KIT CONNECTION H
GUIDE RING	9881114	33	2	181	90 74 893	REPAIR KIT CONNECTION H
GUIDE RING 110X115X15,00	7005249	13	3	772	94 02 794 9	PISTON ROD BEARING
GUIDE RING 110X115X15,00	7005249	13	3	773	95 91 741	PISTON ROD BEARING
GUIDE RING 115X120X15,00	7023396	13	3	771	94 00 688 8	PISTON ROD BEARING
GUIDE WHEEL	12221001	1	1	93	12 21 972 1	INSTALLATION GUIDING WHE
GUIDE WHEEL B6	10004546	1	1	92	10 65 167 8	INSTALLATION GUIDING WHE
GUIDING PIPE	9079867	2	1	576	90 79 862	OIL DIPSTICK WITH PIPE
HALF CLAMP COLLAR	9877726	5	2	711	11 10 294 5	GOOSENECK BOOM 6.45M
HALF CLAMP COLLAR	9927398	11	4	711	11 10 294 5	GOOSENECK BOOM 6.45M
HALF CLAMP COLLAR HRRL 4	7028742	41	2	753	11 10 291 2	HOIST CYLINDER INSTALLAT
HALF CLAMP COLLAR LH 380-	10061872	9	2	711	11 10 294 5	GOOSENECK BOOM 6.45M
HALF CLAMP COLLAR PE-HD	10087053	20	1	344	10 35 862 3	HYDR.PUMPS TO SPOOL VALV
HALF CLAMP COLLAR d=11	10056981	44	4	247	12 84 952 6	CENTRAL LUBRICATING SYS
HALF CLAMP COLLAR d=15-19	10060190	3	2	423	10 35 863 6	PIPE CLAMP
HALF CLAMP COLLAR d=15-19	10060195	5	2	423	10 35 863 6	PIPE CLAMP
HALF FLANGE	7373873	35	2	542	10 49 878 6	OUTSIDE MIRROR ASSEMBLY
HALF FLANGE d=30--	7373874	22	6	711	11 10 294 5	GOOSENECK BOOM 6.45M
HALF FLANGE d=30--	7373874	4	2	758	10 35 857 3	HYDR.CYLINDER W/ADDITION.
HALF FLANGE d=30--	7373874	31	4	775	11 45 729 6	HOIST CYLINDER RIGHT
HALF FLANGE d=30--	7373874	31	4	778	11 45 729 7	HOIST CYLINDER LEFT
HALF FLANGE d=30-38	7373978	10	4	711	11 10 294 5	GOOSENECK BOOM 6.45M
HALF FLANGE d=38--	7373875	19	6	711	11 10 294 5	GOOSENECK BOOM 6.45M
HALF FLANGE d=38--	7373875	6	2	759	10 85 361 0	HYDR.CYLINDER W/ADDITION.
HAND LEVER	7028347	13	1	390	56 17 688	SHUT OFF DEVICE
HAND PUMP	11825956	10	1	47	11 81 700 8	ACCESSORIES 210L
HAND PUMP	510160916	911	1	7	.	
HAND PUMP	8145666	100	1	52	90 66 466	ACCESSORIES
HANDLE	10009025	730	1	505	10 29 026 4	COMPONENTS
HANDLE	10291064	790	1	506	10 29 026 4	COMPONENTS
HANDLE	10490894	520	1	505	10 29 026 4	COMPONENTS
HANDLE BEHIND	10298669	580	1	505	10 29 026 4	COMPONENTS
HANDLE CAP	7025347	21	1	297	73 73 807	SAFETY LEVER
HANDLE COVER	7370924	1	1	392	10 33 390 3	RETURN FILTER 20/5µm
HANDLES LEFT	10469933	50	1	299	99 68 625	LH-JOYSTICK LEFT
HANDLES RIGHT	10469932	50	1	314	99 68 611	LH-JOYSTICK RIGHT
HANDWHEEL	5609144	53	1	289	10 28 999 3	VIBRATING SYSTEM
HEAD LIGHT INSERT	10286644	12	1	517	10 04 553 0	WORK LIGHT
HEAD REST	10493046	3	1	285	11 10 016 6	SEAT TOP
HEAD-TYPE WASHER 9,5X15X	10022769	2	2	333	10 02 211 7	AIR CIRCULATION CASE
HEAD-TYPE WASHER 9,5X15X	10022769	3	2	339	10 02 277 7	CIRCULATING AIR GRID
HEAT PROTECTION SHEET	10115540	4	1	567	90 79 021	CRANKCASE BREATHER ASS
HEAT PROTECTION SHEET	10115540	1	1	663	10 11 919 9	HEAT PROTECTION W.FASTE
HEAT PROTECTION SHEET	10115717	4	1	664	10 11 571 8	HEAT PROTECTION W.FASTEN
HEAT PROTECTION SHEET	10118257	3	1	664	10 11 571 8	HEAT PROTECTION W.FASTEN
HEAT PROTECTION W.FASTEN	10115718	415	1	554	10 11 714 5	DIESEL ENGINE D936 L A6 190
HEAT PROTECTION W.FASTE	10119199	416	1	554	10 11 714 5	DIESEL ENGINE D936 L A6 190

Description	Item	Pos.	Quantity	Page	Assembly	Description
HEATER CONNECTION	9079889	386	1	554	10 11 714 5	DIESEL ENGINE D936 L A6 190
HEATER STARTER SWITCH	10228151	75	1	278	11 38 340 1	ARM REST RIGHT
HEATER STARTER SWITCH	10228151	75	1	301	11 45 228 6	ARM REST RIGHT
HEATER STARTER SWITCH	10228151	75	1	305	12 50 731 7	ARM REST RIGHT
HEATING BATTERY	10022070	17	1	335	11 00 359 4	HOUSING
HEATING FLANGE ADD-ON	9078314	260	1	552	10 11 714 5	DIESEL ENGINE D936 L A6 190
HEATING FLANGE PRE.ASS.	10299988	1	1	647	90 78 314	HEATING FLANGE ADD-ON
HEATING+AIR-CONDITION.HO	10063712	49	1	213	10 04 853 8	ENGINE ADD-ON PARTS
HEATING+AIR-CONDITION.HO	10063712	50	1	213	10 04 853 8	ENGINE ADD-ON PARTS
HEX NUT M10	10875606	23	4	217	11 10 291 6	SWING GEAR INSTALLATION
HEX NUT M10	11002807	16	4	277	11 38 340 1	ARM REST RIGHT
HEX NUT M10	11002807	16	4	301	11 45 228 6	ARM REST RIGHT
HEX NUT M10	11002807	16	4	305	12 50 731 7	ARM REST RIGHT
HEX NUT M10	11002807	8	1	521	10 35 866 5	BATTERY INSTALLATION
HEX NUT M10	11002807	29	1	529	10 04 852 5	FUEL TANK ASSY.
HEX NUT M10	11140466	13	4	193	10 04 853 6	ENGINE COOLING
HEX NUT M10	11140466	43	2	194	10 04 853 6	ENGINE COOLING
HEX NUT M10	11140466	47	4	521	10 35 866 5	BATTERY INSTALLATION
HEX NUT M10	11140466	5	1	747	92 15 949 16	PIN CPL
HEX NUT M10	11140466	41	2	775	11 45 729 6	HOIST CYLINDER RIGHT
HEX NUT M10	11140466	41	2	778	11 45 729 7	HOIST CYLINDER LEFT
HEX NUT M10	11656735	16	2	459	10 06 423 5	SIDE DOOR RIGHT
HEX NUT M10	11656735	10	2	466	10 35 823 0	SIDE DOOR FRONT LEFT
HEX NUT M10	11656735	22	2	467	10 02 525 4	DOOR LOCK
HEX NUT M10	4000383	37	2	200	10 21 851 3	COMBINATED RADIATOR
HEX NUT M10	4000383	37	2	203	11 69 472 6	COMBINATED RADIATOR
HEX NUT M10	4000383	26	3	344	10 35 862 3	HYDR.PUMPS TO SPOOL VALV
HEX NUT M10	4000383	29	1	530	10 49 836 0	FUEL TANK ASSY.
HEX NUT M10	4000383	29	1	531	11 10 262 1	FUEL TANK ASSY.
HEX NUT M10	4600579	29	3	344	10 35 862 3	HYDR.PUMPS TO SPOOL VALV
HEX NUT M10	4600579	44	1	360	10 06 380 1	HYDR.INSTAL.CONTROL TUBE
HEX NUT M10	4600579	91	1	360	10 06 380 1	HYDR.INSTAL.CONTROL TUBE
HEX NUT M10	4600579	121	1	361	10 06 380 1	HYDR.INSTAL.CONTROL TUBE
HEX NUT M10	4600579	511	1	361	10 06 380 1	HYDR.INSTAL.CONTROL TUBE
HEX NUT M10	4600579	8	6	423	10 35 863 6	PIPE CLAMP
HEX NUT M10	4901429	24	6	139	10 36 573 8	EXHAUST SYSTEM
HEX NUT M10	4901429	24	6	140	11 10 293 9	EXHAUST SYSTEM
HEX NUT M10	4901429	6	1	745	10 06 258 3	PIN CPL
HEX NUT M10	4901429	6	1	746	10 08 390 7	PIN CPL
HEX NUT M10	4980805	3	3	669	90 78 384	STARTER
HEX NUT M10	4981173	6	1	665	90 80 736	EXHAUST TC MOUNTING
HEX NUT M10	7370889	8	2	294	10 16 576 6	STEERING CONSOLE
HEX NUT M10	7370889	13	4	310	56 18 923	CONTROL CONSOLE RIGHT
HEX NUT M10X1	10012557	6	1	600	12 40 205 3	ROCKER ARM PRE-ASSY.
HEX NUT M12	10179555	12	1	298	10 05 879 2	MANIPULATOR LEFT
HEX NUT M12	10179555	12	1	313	10 05 879 4	MANIPULATOR RIGHT
HEX NUT M12	10179555	22	2	469	10 35 387 9	DOOR LOCK
HEX NUT M12	10876514	22	2	358	10 35 862 4	HYDR.INSTALLATION FAN DR
HEX NUT M12	10876514	45	1	446	10 35 865 5	COVERS
HEX NUT M12	10876514	25	4	711	11 10 294 5	GOOSENECK BOOM 6.45M
HEX NUT M12	10876514	40	6	775	11 45 729 6	HOIST CYLINDER RIGHT
HEX NUT M12	10876514	40	6	778	11 45 729 7	HOIST CYLINDER LEFT
HEX NUT M12	11002808	17	1	116	98 82 760	ADJUSTMENT NG 100
HEX NUT M12	11002808	74	2	130	10 08 004 4	FRAME INSTALLATION
HEX NUT M12	11002808	7	2	205	10 84 460 3	FAN INSTALLATION
HEX NUT M12	11002808	33	1	321	10 06 017 4	FOOT PILOT VALVE LEFT
HEX NUT M12	11002808	33	1	322	10 06 017 5	FOOT PILOT VALVE RIGHT
HEX NUT M12	11002808	50	2	357	10 35 862 9	HYDR.AND GEAR OIL COOLIN
HEX NUT M12	11002808	13	8	443	10 35 865 9	COVERING ROTATING DECK
HEX NUT M12	11002808	23	4	443	10 35 865 9	COVERING ROTATING DECK

Description	Item	Pos.	Quantity	Page	Assembly	Description
HEX NUT M12	11002808	33	4	443	10 35 865 9	COVERING ROTATING DECK
HEX NUT M12	11002808	113	2	448	10 35 865 5	COVERS
HEX NUT M12	11002808	33	2	542	10 49 878 6	OUTSIDE MIRROR ASSEMBLY
HEX NUT M12	11002808	23	1	766	92 65 991	FLOW REGULATING CHECK
HEX NUT M12	11002808	17	1	810	11 38 131 3	ADJUSTMENT NG 100
HEX NUT M12	4000619	43	2	753	11 10 291 2	HOIST CYLINDER INSTALLAT
HEX NUT M12	4000619	7	2	758	10 35 857 3	HYDR.CYLINDER W/ADDITION.
HEX NUT M12	4900546	59	2	345	10 35 862 3	HYDR.PUMPS TO SPOOL VALV
HEX NUT M12	4900546	23	3	406	10 35 863 8	CONTROL VALVE INSTALLAT
HEX NUT M12X1,5	10217578	16	1	161	10 29 197 8	HYDRAULIC ADJUSTMENT
HEX NUT M14X1,5	4001927	105	1	299	99 68 625	LH-JOYSTICK LEFT
HEX NUT M14X1,5	4001927	105	1	314	99 68 611	LH-JOYSTICK RIGHT
HEX NUT M16	4000420	18	3	100	11 46 393 5	ROTARY CONNECTION INSTA
HEX NUT M16	4000420	4	3	105	10 40 383 4	FIXING PARTS ROTARY CON
HEX NUT M16	4000420	46	4	158	10 11 886 0	PUMP DISTRIBUTION GEAR
HEX NUT M16X1,5	4980478	8	1	667	10 11 646 3	GENERATOR, PRE-ASSEMBLE
HEX NUT M16X1,5	4980548	26	8	801	10 13 303 7	HYDR.DOUBLE PUMP
HEX NUT M18	4600348	4	12	133	10 35 862 0	FIXING PARTS ENGINE
HEX NUT M22X1,5	12227355	54	4	753	11 10 291 2	HOIST CYLINDER INSTALLAT
HEX NUT M24	10425688	167	1	786	10 82 562 1	OPT.DATA CAPTURE-DATA T
HEX NUT M26X1,5	12227356	16	1	756	11 10 281 8	KIT IN BASIC MACHINE
HEX NUT M3	10003140	26	2	297	73 73 807	SAFETY LEVER
HEX NUT M4	12224463	33	6	275	11 38 339 7	ARM REST LEFT
HEX NUT M4	12224463	92	4	276	11 38 339 7	ARM REST LEFT
HEX NUT M4	12224463	105	2	280	11 38 340 1	ARM REST RIGHT
HEX NUT M4	12224463	121	2	281	11 38 340 1	ARM REST RIGHT
HEX NUT M4	12224463	33	6	291	10 38 502 8	ARM REST LEFT
HEX NUT M4	12224463	92	4	292	10 38 502 8	ARM REST LEFT
HEX NUT M4	12224463	105	2	303	11 45 228 6	ARM REST RIGHT
HEX NUT M4	12224463	121	2	304	11 45 228 6	ARM REST RIGHT
HEX NUT M4	12224463	105	1	307	12 50 731 7	ARM REST RIGHT
HEX NUT M4	12224463	121	2	307	12 50 731 7	ARM REST RIGHT
HEX NUT M4	12224463	17	2	751	10 35 860 1	TRAVEL ALARM
HEX NUT M4	4000376	5	3	337	10 02 207 8	ASSEMBLY BRACKET
HEX NUT M4	4000376	7	1	668	10 11 871 2	SET OF PARTS
HEX NUT M4	4000376	124	4	786	10 82 562 1	OPT.DATA CAPTURE-DATA T
HEX NUT M4	4600625	10	6	333	10 02 211 7	AIR CIRCULATION CASE
HEX NUT M5	12224012	72	2	276	11 38 339 7	ARM REST LEFT
HEX NUT M5	12224012	72	2	292	10 38 502 8	ARM REST LEFT
HEX NUT M5	12224012	124	4	786	10 82 562 1	OPT.DATA CAPTURE-DATA T
HEX NUT M5	4000466	63	2	295	97 58 815 01	E-BOARD
HEX NUT M5	4000466	8	2	296	98 74 988	PLATINES INSTALLATION
HEX NUT M5	4000466	34	2	520	99 47 695	ELECTRICAL SYSTEM E50
HEX NUT M5	4000466	5	1	668	10 11 871 2	SET OF PARTS
HEX NUT M5	4001866	66	2	295	97 58 815 01	E-BOARD
HEX NUT M6	10299668	86	2	279	11 38 340 1	ARM REST RIGHT
HEX NUT M6	10299668	86	2	302	11 45 228 6	ARM REST RIGHT
HEX NUT M6	10299668	86	2	306	12 50 731 7	ARM REST RIGHT
HEX NUT M6	10299668	10	2	455	10 06 436 0	RADIATOR HOOD
HEX NUT M6	10299668	18	4	459	10 06 423 5	SIDE DOOR RIGHT
HEX NUT M6	10299668	12	4	469	10 35 387 9	DOOR LOCK
HEX NUT M6	10299668	152	1	786	10 82 562 1	OPT.DATA CAPTURE-DATA T
HEX NUT M6	10814799	22	2	754	10 85 472 4	BASIC MACHINE MOUNTING
HEX NUT M6	4000379	480	2	112	10 00 201 1	BRAKE VALVE
HEX NUT M6	4000379	53	3	137	10 49 819 9	AIR FILTER INSTALLATION
HEX NUT M6	4000379	45	2	158	10 11 886 0	PUMP DISTRIBUTION GEAR
HEX NUT M6	4000379	25	4	200	10 21 851 3	COMBINATED RADIATOR
HEX NUT M6	4000379	25	4	203	11 69 472 6	COMBINATED RADIATOR
HEX NUT M6	4000379	64	2	295	97 58 815 01	E-BOARD
HEX NUT M6	4000379	5	2	334	10 49 308 7	OPERATING ELEMENT

Description	Item	Pos.	Quantity	Page	Assembly	Description
HEX NUT M6	4000379	478	2	414	10 35 863 8	CONTROL VALVE INSTALLAT
HEX NUT M6	4000379	12	4	466	10 35 823 0	SIDE DOOR FRONT LEFT
HEX NUT M6	4000379	12	4	467	10 02 525 4	DOOR LOCK
HEX NUT M6	4000379	180	2	481	70 28 759	FRONT PANE TOP
HEX NUT M6	4000379	300	1	484	70 28 769	DRIVER'S CAB DOOR
HEX NUT M6	4000379	450	4	504	10 29 026 4	COMPONENTS
HEX NUT M6	4000379	12	4	526	10 06 559 6	DRIER INSTALLATION
HEX NUT M6	4000379	3	1	668	10 11 871 2	SET OF PARTS
HEX NUT M6	4000379	42	1	687	10 11 799 7	CABLE HARNESS MOUNTING
HEX NUT M6	4000379	152	1	786	10 82 562 1	OPT.DATA CAPTURE-DATA T
HEX NUT M6	4000900	18	2	390	56 17 688	SHUT OFF DEVICE
HEX NUT M6	4002477	67	2	295	97 58 815 01	E-BOARD
HEX NUT M6XLH	4901651	45	1	520	99 47 695	ELECTRICAL SYSTEM E50
HEX NUT M8	10299669	57	7	11	12 86 140 4	FIXING PARTS
HEX NUT M8	10299669	349	1	198	10 04 853 6	ENGINE COOLING
HEX NUT M8	10299669	29	1	217	11 10 291 6	SWING GEAR INSTALLATION
HEX NUT M8	10299669	6	4	247	12 84 952 6	CENTRAL LUBRICATING SYS
HEX NUT M8	10299669	18	2	351	10 35 862 8	HYDR.INST.ROTARY CONNE
HEX NUT M8	10299669	208	36	515	11 10 255 3	ELECTRICAL SYSTEM
HEX NUT M8	10299669	27	5	525	10 06 559 1	AIR CONDITION HOSES INSTA
HEX NUT M8	10299669	43	2	542	10 49 878 6	OUTSIDE MIRROR ASSEMBLY
HEX NUT M8	10814800	150	2	481	70 28 759	FRONT PANE TOP
HEX NUT M8	10875614	135	1	448	10 35 865 5	COVERS
HEX NUT M8	10875614	156	2	449	10 35 865 5	COVERS
HEX NUT M8	10876581	23	2	136	10 36 918 3	FUEL SYSTEM
HEX NUT M8	10876581	55	1	213	10 04 853 8	ENGINE ADD-ON PARTS
HEX NUT M8	11693875	30	13	521	10 35 866 5	BATTERY INSTALLATION
HEX NUT M8	241015402	10	4	341	11 00 707 2	SLIDE SEAT GUIDE
HEX NUT M8	4000381	32	10	200	10 21 851 3	COMBINATED RADIATOR
HEX NUT M8	4000381	32	10	203	11 69 472 6	COMBINATED RADIATOR
HEX NUT M8	4000381	131	1	274	10 49 880 5	DRIVER STAND BASE SECTIO
HEX NUT M8	4000381	161	3	274	10 49 880 5	DRIVER STAND BASE SECTIO
HEX NUT M8	4000381	15	2	356	10 35 862 9	HYDR.AND GEAR OIL COOLIN
HEX NUT M8	4000381	170	4	484	70 28 769	DRIVER'S CAB DOOR
HEX NUT M8	4000381	160	1	490	10 29 033 7	ELECTRICAL INSTALLATION
HEX NUT M8	4000381	160	1	493	10 48 808 7	ELECTRICAL INSTALLATION
HEX NUT M8	4000381	540	1	496	10 29 036 3	WIPPER MOTOR SET
HEX NUT M8	4000381	540	1	497	70 28 884	WIPPER MOTOR SET
HEX NUT M8	4000381	180	4	503	10 29 026 4	COMPONENTS
HEX NUT M8	4000381	1	1	668	10 11 871 2	SET OF PARTS
HEX NUT M8	4101100	12	2	741	90 79 392	FOOT PEDAL RIGHT ASSEMBL
HEX NUT M8	411508001	65	1	295	97 58 815 01	E-BOARD
HEX NUT M8	4600783	68	1	295	97 58 815 01	E-BOARD
HEX NUT M8	4600783	430	1	504	10 29 026 4	COMPONENTS
HEX NUT M8	4901096	4	2	326	94 76 369	FOOT PEDAL LEFT ASSEMBL
HEX NUT M8	4901573	8	4	253	10 66 472 2	DISTRIBUTION BLOCK SXE-2
HEX PROTECTING CAP	10292499	28	1	371	10 32 372 8	PRESSURE REDUCTION VALV
HEX SCREW EN 1665 M10X30	10299564	2	4	672	90 79 823	TRANSPORT DEVICE ATTACH
HEX SCREW EN 1665 M10X60	10299587	8	12	570	90 79 480	POWER UNIT SUPPORT ATT
HEX SCREW EN 1665 M6X16 8	11840297	10	3	574	12 83 245 4	OIL SUMP PRE-ASS.
HEX SCREW EN 1665 M6X20 8	12207548	2	4	647	90 78 314	HEATING FLANGE ADD-ON
HEX SCREW EN 1665 M8X120	12207553	11	1	571	90 79 487	OIL SUMP
HEX SCREW EN 1665 M8X16 8	11656992	13	2	566	10 11 916 7	CRANKCASE BREATHER ASSE
HEX SCREW EN 1665 M8X16 8	11656992	13	1	567	90 79 021	CRANKCASE BREATHER ASS
HEX SCREW EN 1665 M8X16 8	11656992	6	3	576	90 79 862	OIL DIPSTICK WITH PIPE
HEX SCREW EN 1665 M8X16 8	11656992	11	2	681	90 80 653	LOCKING PIECES
HEX SCREW EN 1665 M8X16 8	11656992	35	2	687	10 11 799 7	CABLE HARNESS MOUNTING
HEX SCREW EN 1665 M8X35 8	11827987	9	26	571	90 79 487	OIL SUMP
HEX SCREW EN 1665 M8X50	10299606	5	4	613	90 73 507	OIL COOLER, PRE-ASSEMBLE
HEX SCREW EN 1665 M8X65 8	12210057	6	16	571	90 79 487	OIL SUMP

Description	Item	Pos.	Quantity	Page	Assembly	Description
HEX SCREW EN 1665 M8X90 8	10876385	8	9	571	90 79 487	OIL SUMP
HEX SPACER PIN M4X9X40/MX	7016412	26	4	519	99 47 695	ELECTRICAL SYSTEM E50
HEXALOBULAR HEAD SCREW	10118786	10	6	584	10 11 617 5	CRANKSHAFT ADD-ON PARTS
HEXALOBULAR HEAD SCREW	10131573	3	6	590	90 79 850	CYLINDER HEAD ASSEMBLY
HEXALOBULAR HEAD SCREW	10131581	5	14	561	10 11 577 8	CRANKCASE PRE-ASSY.
HIGH PRESSURE CONNECT	9075395	191	6	559	10 11 682 5	BASIC ENGINE D936 L HIGH 3
HIGH PRESSURE CONNECT	9075395	191	1	625	10 11 709 3	RK INJECTION NOZZLE
HIGH PRESSURE CONNECT	9075395	191	1	628	10 11 585 4	SEAL KIT INJECTION NOZZLE
HIGH PRESSURE CONNECTO	9074677	1	1	627	90 75 395	HIGH PRESSURE CONNECT
HIGH PRESSURE HOSE	774376108	170	1m	258	90 64 786	CONNECTING ELEMENT
HIGH PRESSURE HOSE	774376108	70	15m	262	10 01 461 1	AUXILIARY BOX
HINGE	7029409	640	2	486	70 28 842	DOOR FRAME
HINGE	9939056	20	2	445	10 35 865 5	COVERS
HINGED THREADED UNION W	7617261	12	3	269	10 06 014 6	HYDR.INSTAL.FOOT BOARD
HINGED THREADED UNION W	7617261	26	1	346	10 06 379 3	OIL PILOT VALVE INSTALLATIO
HINGED THREADED UNION W	7617261	141	13	410	10 35 863 8	CONTROL VALVE INSTALLAT
HINGED THREADED UNION W	7617261	383	1	413	10 35 863 8	CONTROL VALVE INSTALLAT
HINGED THREADED UNION W	7617261	515	4	414	10 35 863 8	CONTROL VALVE INSTALLAT
HINGED THREADED UNION W	7617714	43	1	143	10 04 853 9	PUMPS + COUPLING INSTALL
HINGED THREADED UNION W	7617714	22	4	244	10 06 198 5	GREASE PIPE INSTALLATION
HINGED THREADED UNION W	7018549	45	2	359	10 35 862 4	HYDR.INSTALLATION FAN DR
HINGED THREADED UNION	7412734	9	1	253	10 66 472 2	DISTRIBUTION BLOCK SXE-2
HIP BELT	10493984	62	1	286	11 10 016 6	SEAT TOP
HIP BELT	7371746	80	1	282	10 04 363 2	OPERATOR SEAT
HOIST CYLINDER INSTALLAT	11102912	2	1	750	11 10 291 1	HOIST CYLINDERS
HOIST CYLINDER LEFT	11457297	2	1	752	11 10 291 2	HOIST CYLINDER INSTALLAT
HOIST CYLINDER RIGHT	11457296	3	1	752	11 10 291 2	HOIST CYLINDER INSTALLAT
HOIST CYLINDERS	11102911	30	1	7	.	
HOISTING DISK	10008424	7	1	208	56 19 045	AXIAL PISTON MOTOR
HOLDER	10009023	270	2	490	10 29 033 7	ELECTRICAL INSTALLATION
HOLDER	10009023	270	2	493	10 48 808 7	ELECTRICAL INSTALLATION
HOLDER	10027438	231	2	481	70 28 759	FRONT PANE TOP
HOLDER	10039678	621	2	505	10 29 026 4	COMPONENTS
HOLDER	10041876	45	1	328	10 40 689 8	AIR CONDITIONING
HOLDER	10041876	280	1	515	11 10 255 3	ELECTRICAL SYSTEM
HOLDER	10041876	17	1	650	10 11 646 4	AIR COND. COMPRESSOR A
HOLDER	10059516	25	2	212	10 04 853 8	ENGINE ADD-ON PARTS
HOLDER	10059947	15	1	344	10 35 862 3	HYDR.PUMPS TO SPOOL VALV
HOLDER	10079307	20	1	11	12 86 140 4	FIXING PARTS
HOLDER	10080886	2	1	139	10 36 573 8	EXHAUST SYSTEM
HOLDER	10080886	2	1	140	11 10 293 9	EXHAUST SYSTEM
HOLDER	10080887	3	1	139	10 36 573 8	EXHAUST SYSTEM
HOLDER	10080887	3	1	140	11 10 293 9	EXHAUST SYSTEM
HOLDER	10116295	1	1	579	10 11 630 0	CLAMP - ADD-ON UNIT
HOLDER	10116522	3	1	641	10 11 657 6	CONNECTION PIECE
HOLDER	10117267	1	1	638	10 11 726 8	CLAMP - ADD-ON UNIT
HOLDER	10119139	25	1	650	10 11 646 4	AIR COND. COMPRESSOR A
HOLDER	10119311	5	1	576	90 79 862	OIL DIPSTICK WITH PIPE
HOLDER	10300997	6	1	199	10 21 851 3	COMBINATED RADIATOR
HOLDER	10300997	6	1	202	11 69 472 6	COMBINATED RADIATOR
HOLDER	10379347	25	1	358	10 35 862 4	HYDR.INSTALLATION FAN DR
HOLDER	10379349	21	2	358	10 35 862 4	HYDR.INSTALLATION FAN DR
HOLDER	10825829	165	1	786	10 82 562 1	OPT.DATA CAPTURE-DATA T
HOLDER	6905671	330	1	515	11 10 255 3	ELECTRICAL SYSTEM
HOLDER	7028768	240	9	490	10 29 033 7	ELECTRICAL INSTALLATION
HOLDER	7028768	240	9	493	10 48 808 7	ELECTRICAL INSTALLATION
HOLDER	7028801	120	2	480	10 03 553 0	FRONT WINDOW BOTTOM
HOLDER	7028812	250	11	490	10 29 033 7	ELECTRICAL INSTALLATION
HOLDER	7028812	250	11	493	10 48 808 7	ELECTRICAL INSTALLATION
HOLDER	7372355	18	1	297	73 73 807	SAFETY LEVER

Description	Item	Pos.	Quantity	Page	Assembly	Description
HOLDER	7373825	20	1	297	73 73 807	SAFETY LEVER
HOLDER	7624322	30	4	209	10 04 853 7	MOTOR-ELEKTRIK
HOLDER	9079591	11	1	650	10 11 646 4	AIR COND. COMPRESSOR A
HOLDER	9079844	9	1	574	12 83 245 4	OIL SUMP PRE-ASS.
HOLDER	9080038	9	1	687	10 11 799 7	CABLE HARNESS MOUNTING
HOLDER	9949402	15	1	212	10 04 853 8	ENGINE ADD-ON PARTS
HOLDER	9949403	10	1	212	10 04 853 8	ENGINE ADD-ON PARTS
HOLDER	9950357	30	1	11	12 86 140 4	FIXING PARTS
HOLDER	9950385	10	1	11	12 86 140 4	FIXING PARTS
HOLLOW SCREW -2	9073678	5	1	562	90 73 795	PISTON COOLING
HOLLOW SCREW 10-1	9080466	3	5	639	90 79 083	PIPELINE INSTALLATION
HOLLOW SCREW 10-3	12210013	24	4	634	10 11 628 5	FUEL LINE
HOLLOW SCREW 10-3	12210013	74	1	635	10 11 628 5	FUEL LINE
HOLLOW SCREW 10-3	12210013	10	1	637	10 11 559 5	LEAK OIL RETURN LINE
HOLLOW SCREW 10-3	9078685	92	1	635	10 11 628 5	FUEL LINE
HOLLOW SCREW 12-3	12210025	26	5	634	10 11 628 5	FUEL LINE
HOLLOW SCREW 12-3	4980741	76	1	635	10 11 628 5	FUEL LINE
HOLLOW SCREW 6-3	4079160	8	6	637	10 11 559 5	LEAK OIL RETURN LINE
HOLLOW SCREW 6-3	4079160	14	2	692	90 80 006	POWER TAKE-OFF ADD-ON
HOLLOW SCREW WITH THROT	7381925	28	2	634	10 11 628 5	FUEL LINE
HOLLOW SCREW WITH THROT	7381925	78	1	635	10 11 628 5	FUEL LINE
HOSE	10009943	5	0.6m	654	90 80 301	WATER PUMP WITH FASTENIN
HOSE	10043525	270	1m	260	90 64 786	CONNECTING ELEMENT
HOSE	10043525	170	10m	263	10 01 461 1	AUXILIARY BOX
HOSE	10282709	14	1	525	10 06 559 1	AIR CONDITION HOSES INSTA
HOSE	10286643	16	1	525	10 06 559 1	AIR CONDITION HOSES INSTA
HOSE	10286646	12	1	525	10 06 559 1	AIR CONDITION HOSES INSTA
HOSE	11341352	2	1	732	10 66 478 2	DISTRIBUTION BLOCK MX-F 7/
HOSE	11834733	12	4m	796	11 69 501 2	UREA FILLING KIT
HOSE	12200110	11	1	50	11 82 595 6	HAND PUMP
HOSE	12262634	700	1	501	10 29 036 1	WIPER ARM
HOSE	6200461	700	6m	491	10 29 033 7	ELECTRICAL INSTALLATION
HOSE	6200461	700	6m	494	10 48 808 7	ELECTRICAL INSTALLATION
HOSE	7029428	640	1	502	70 28 866	WIPER ARM
HOSE	7360075	93	1.5m	137	10 49 819 9	AIR FILTER INSTALLATION
HOSE	7361678	340	0.9m	198	10 04 853 6	ENGINE COOLING
HOSE	7361678	350	0.9m	198	10 04 853 6	ENGINE COOLING
HOSE	7361678	370	0.7m	198	10 04 853 6	ENGINE COOLING
HOSE	7361679	10	3.9m	215	10 06 371 2	HEATING+AIR-CONDITION.HO
HOSE	7361679	85	0.1m	273	10 49 880 5	DRIVER STAND BASE SECTIO
HOSE	7363060	325	2m	197	10 04 853 6	ENGINE COOLING
HOSE 10X2400	10287541	10	2	267	11 38 342 7	HYDR.INSTAL.ARM REST LEF
HOSE 10X2400	10287541	10	2	268	11 38 342 9	HYDR.INSTAL.ARM REST RIGH
HOSE 12X1000	10000437	44	1	354	10 06 379 8	HYDR.SUCT.+RETURN OIL HO
HOSE 12X1450	7620786	60	1	359	10 35 862 4	HYDR.INSTALLATION FAN DR
HOSE 12X2300	5618658	60	1	753	11 10 291 2	HOIST CYLINDER INSTALLAT
HOSE 12X2600	10002465	55	1	360	10 06 380 1	HYDR.INSTAL.CONTROL TUBE
HOSE 12X3000	10000473	61	1	753	11 10 291 2	HOIST CYLINDER INSTALLAT
HOSE 12X3400	10001019	80	1	360	10 06 380 1	HYDR.INSTAL.CONTROL TUBE
HOSE 12X3700	10286605	3	1	356	10 35 862 9	HYDR.AND GEAR OIL COOLIN
HOSE 12X450	10027315	8	1	356	10 35 862 9	HYDR.AND GEAR OIL COOLIN
HOSE 12X450	10280090	70	1	359	10 35 862 4	HYDR.INSTALLATION FAN DR
HOSE 12X4550	10286606	2	1	356	10 35 862 9	HYDR.AND GEAR OIL COOLIN
HOSE 12X600	5618477	210	1	361	10 06 380 1	HYDR.INSTAL.CONTROL TUBE
HOSE 12X600	5618477	230	1	361	10 06 380 1	HYDR.INSTAL.CONTROL TUBE
HOSE 12X600	5618477	240	1	361	10 06 380 1	HYDR.INSTAL.CONTROL TUBE
HOSE 12X780	10300205	9	4	752	11 10 291 2	HOIST CYLINDER INSTALLAT
HOSE 12X850	10280105	30	1	358	10 35 862 4	HYDR.INSTALLATION FAN DR
HOSE 16X1400	10002828	80	1	359	10 35 862 4	HYDR.INSTALLATION FAN DR
HOSE 16X550	10280076	75	1	359	10 35 862 4	HYDR.INSTALLATION FAN DR

Description	Item	Pos.	Quantity	Page	Assembly	Description
HOSE 16X750	10293570	6	1	237	96 91 056 01	OIL TANK
HOSE 20X1000	5602645	16	1	351	10 35 862 8	HYDR.INST.ROTARY CONNE
HOSE 20X1330	10813329	25	1	775	11 45 729 6	HOIST CYLINDER RIGHT
HOSE 20X1330	10813329	25	1	778	11 45 729 7	HOIST CYLINDER LEFT
HOSE 20X1650	10286608	35	1	352	10 35 862 8	HYDR.INST.ROTARY CONNE
HOSE 20X1750	10286610	20	1	351	10 35 862 8	HYDR.INST.ROTARY CONNE
HOSE 20X2100	10286619	21	1	351	10 35 862 8	HYDR.INST.ROTARY CONNE
HOSE 20X2400	10017996	15	2	121	10 40 412 9	HYDR.INSTALLATION UNDER
HOSE 20X930	10286607	20	1	353	10 06 379 8	HYDR.SUCT.+RETURN OIL HO
HOSE 20X930	10286607	25	1	353	10 06 379 8	HYDR.SUCT.+RETURN OIL HO
HOSE 25X1500	10000561	15	1	353	10 06 379 8	HYDR.SUCT.+RETURN OIL HO
HOSE 25X1500	10280230	3	2	351	10 35 862 8	HYDR.INST.ROTARY CONNE
HOSE 25X1560	10286515	50	1	712	11 10 294 5	GOOSENECK BOOM 6.45M
HOSE 25X1600	5613713	26	1	725	11 10 280 7	STICK 2.10M
HOSE 25X1720	10470976	5	1	752	11 10 291 2	HOIST CYLINDER INSTALLAT
HOSE 25X1730	10286612	2	2	351	10 35 862 8	HYDR.INST.ROTARY CONNE
HOSE 25X1780	10470977	6	1	752	11 10 291 2	HOIST CYLINDER INSTALLAT
HOSE 25X1870	10470978	4	1	752	11 10 291 2	HOIST CYLINDER INSTALLAT
HOSE 25X1870	10470978	7	1	752	11 10 291 2	HOIST CYLINDER INSTALLAT
HOSE 25X2250	5617140	2	2	121	10 40 412 9	HYDR.INSTALLATION UNDER
HOSE 25X2350	5616707	3	2	121	10 40 412 9	HYDR.INSTALLATION UNDER
HOSE 25X540	10217005	70	1	145	10 04 853 9	PUMPS + COUPLING INSTALL
HOSE 25X680	10303335	50	1	354	10 06 379 8	HYDR.SUCT.+RETURN OIL HO
HOSE 25X680	10330967	40	1	345	10 35 862 3	HYDR.PUMPS TO SPOOL VALV
HOSE 25X745	10330968	50	1	345	10 35 862 3	HYDR.PUMPS TO SPOOL VALV
HOSE 25X770	10286756	15	1	350	10 35 862 7	HYDR.INSTAL.VALVES TO ATT
HOSE 25X900	10286611	76	1	145	10 04 853 9	PUMPS + COUPLING INSTALL
HOSE 25X950	10286757	5	1	350	10 35 862 7	HYDR.INSTAL.VALVES TO ATT
HOSE 25X970	10286758	10	1	350	10 35 862 7	HYDR.INSTAL.VALVES TO ATT
HOSE 32X1280	5601076	52	2	712	11 10 294 5	GOOSENECK BOOM 6.45M
HOSE 32X1300/1570	10286636	10	1	358	10 35 862 4	HYDR.INSTALLATION FAN DR
HOSE 32X1500	10286434	49	3	712	11 10 294 5	GOOSENECK BOOM 6.45M
HOSE 32X1600	5611543	25	1	725	11 10 280 7	STICK 2.10M
HOSE 32X2200	10330920	3	1	344	10 35 862 3	HYDR.PUMPS TO SPOOL VALV
HOSE 32X2460	10280087	2	1	344	10 35 862 3	HYDR.PUMPS TO SPOOL VALV
HOSE 32X350	5610426	30	1	353	10 06 379 8	HYDR.SUCT.+RETURN OIL HO
HOSE 40X1140	10280077	36	1	357	10 35 862 9	HYDR.AND GEAR OIL COOLIN
HOSE 40X2900	10286627	35	1	357	10 35 862 9	HYDR.AND GEAR OIL COOLIN
HOSE 4X1028	10300385	4	1	732	10 66 478 2	DISTRIBUTION BLOCK MX-F 7/
HOSE 4X1097	10293030	5	2	254	10 29 300 1	DISTRIBUTION BLOCK MX-F 4/
HOSE 4X1672	10300384	3	1	732	10 66 478 2	DISTRIBUTION BLOCK MX-F 7/
HOSE 4X1672	10300384	7	1	732	10 66 478 2	DISTRIBUTION BLOCK MX-F 7/
HOSE 4X2632	10300389	5	1	732	10 66 478 2	DISTRIBUTION BLOCK MX-F 7/
HOSE 4X2632	10300389	9	1	732	10 66 478 2	DISTRIBUTION BLOCK MX-F 7/
HOSE 4X2697	10300390	6	1	732	10 66 478 2	DISTRIBUTION BLOCK MX-F 7/
HOSE 4X2697	10300390	10	1	732	10 66 478 2	DISTRIBUTION BLOCK MX-F 7/
HOSE 4X588	10300387	8	1	732	10 66 478 2	DISTRIBUTION BLOCK MX-F 7/
HOSE 4X690	10293026	9	1	254	10 29 300 1	DISTRIBUTION BLOCK MX-F 4/
HOSE 4X702	10293029	7	1	254	10 29 300 1	DISTRIBUTION BLOCK MX-F 4/
HOSE 4X720	10293028	8	1	254	10 29 300 1	DISTRIBUTION BLOCK MX-F 4/
HOSE 4X732	10291382	6	1	254	10 29 300 1	DISTRIBUTION BLOCK MX-F 4/
HOSE 50X590	10280078	5	1	353	10 06 379 8	HYDR.SUCT.+RETURN OIL HO
HOSE 6,3X355	10037533	20	1	248	10 06 750 0	AUTOMATIC CENTRALIZED L
HOSE 6,3X3775	10292129	12	1	251	10 66 471 9	DISTRIBUTION BLOCK SXE-2
HOSE 6,3X3775	10292130	13	1	251	10 66 471 9	DISTRIBUTION BLOCK SXE-2
HOSE 6,3X3795	10220774	8	1	730	10 39 639 6	CENTRAL GREASING
HOSE 6,3X4925	10292128	10	2	251	10 66 471 9	DISTRIBUTION BLOCK SXE-2
HOSE 6,3X6400	10042817	40	2	722	10 82 841 3	CENTRAL LUBRICATING SYS
HOSE 6,3X755	10297950	7	1	730	10 39 639 6	CENTRAL GREASING
HOSE 6X850	10355894	10	2	752	11 10 291 2	HOIST CYLINDER INSTALLAT

Description	Item	Pos.	Quantity	Page	Assembly	Description
HOSE 8X1100	7621217	30	1	754	10 85 472 4	BASIC MACHINE MOUNTING
HOSE 8X3200	10286645	10	1	525	10 06 559 1	AIR CONDITION HOSES INSTA
HOSE 8X3200	10286645	10	1	525	10 06 559 1	AIR CONDITION HOSES INSTA
HOSE CLAMP	9388597	60	6	213	10 04 853 8	ENGINE ADD-ON PARTS
HOSE CLAMP 100 95-117X15,8	774252314	22	1	137	10 49 819 9	AIR FILTER INSTALLATION
HOSE CLAMP C8/TXWF 100 90-	774217008	211	2	196	10 04 853 6	ENGINE COOLING
HOSE CLAMP C8/TXWF 100 90-	774217008	231	2	196	10 04 853 6	ENGINE COOLING
HOSE CLAMP C8/TXWF 50 40-6	550838008	96	4	273	10 49 880 5	DRIVER STAND BASE SECTIO
HOSE CLAMP HKF 183 172-19	10355921	21	1	137	10 49 819 9	AIR FILTER INSTALLATION
HOSE CLAMP HKF 183 172-19	10355921	86	2	137	10 49 819 9	AIR FILTER INSTALLATION
HOSE CLAMP HKF 183 172-19	10355921	21	2	793	10 49 866 6	AIR FILTER INSTALLATION
HOSE CLAMP HKFK 70 60-80X	10012761	101	2	195	10 04 853 6	ENGINE COOLING
HOSE CLAMP HKFK 70 60-80X	10012761	121	2	195	10 04 853 6	ENGINE COOLING
HOSE CLAMP HKFK 70 60-80X	10012761	141	2	195	10 04 853 6	ENGINE COOLING
HOSE CPL. 4X1100	11659615	2	2	756	11 10 281 8	KIT IN BASIC MACHINE
HOSE CPL. 4X1200	11659618	3	2	756	11 10 281 8	KIT IN BASIC MACHINE
HOSE CPL. 4X1400	11659607	4	2	756	11 10 281 8	KIT IN BASIC MACHINE
HOSE CPL. 4X1900	11659619	5	2	727	11 10 281 7	KIT STICK 2.10M
HOSE CPL. 4X2000	11659608	2	1	727	11 10 281 7	KIT STICK 2.10M
HOSE CPL. 4X2100	11659609	3	1	727	11 10 281 7	KIT STICK 2.10M
HOSE CPL. 4X2200	11659610	4	2	727	11 10 281 7	KIT STICK 2.10M
HOSE CPL. 4X2700	11659613	6	2	727	11 10 281 7	KIT STICK 2.10M
HOSE CPL. 4X4000	11659621	3	1	716	11 10 283 6	KIT GOOSENECK BOOM 6.45M
HOSE CPL. 4X4600	11659616	5	1	716	11 10 283 6	KIT GOOSENECK BOOM 6.45M
HOSE CPL. 4X5000	11659617	2	1	716	11 10 283 6	KIT GOOSENECK BOOM 6.45M
HOSE CPL. 4X6500	11659622	4	2	716	11 10 283 6	KIT GOOSENECK BOOM 6.45M
HOSE CPL. 6X1700	11659623	5	1	756	11 10 281 8	KIT IN BASIC MACHINE
HOSE GUIDE	9344777	30	2	247	12 84 952 6	CENTRAL LUBRICATING SYS
HOSE HOLDER	9361518	49	1	137	10 49 819 9	AIR FILTER INSTALLATION
HOSE NIPPLE 11SMnPb30+C	10115608	2	1	658	10 11 550 3	COOLING WATER AIR BLEEDI
HOSE NIPPLE DN13 11SMn30+	10115523	1	1	658	10 11 550 3	COOLING WATER AIR BLEEDI
HOSE NIPPLE DN23,7	9140351	8	1	566	10 11 916 7	CRANKCASE BREATHER ASSE
HOSE NIPPLE DN23,7	9140351	21	1	569	10 11 832 9	REPAIR KIT PIPE LINE D936
HOSE NIPPLE DN23,7	9140351	26	1	665	90 80 736	EXHAUST TC MOUNTING
HOSE NIPPLE DN25	9274720	10	2	567	90 79 021	CRANKCASE BREATHER ASS
HOSE UNION DN4 STAHL	774371808	110	1	258	90 64 786	CONNECTING ELEMENT
HOSE UNION DN4 STAHL	774371808	10	10	262	10 01 461 1	AUXILIARY BOX
HOUSING	11003594	1	1	330	10 81 666 6	EVAPORATOR
HOUSING	11348674	10	1	807	10 11 856 1	PILOT CONTROL UNIT VG6-8
HOUSING	11348674	10	1	808	11 37 560 6	PILOT CONTROL UNIT VG6-8
HOUSING	5605365	12	1	346	10 06 379 3	OIL PILOT VALVE INSTALLATIO
HOUSING	5605365	12	1	348	56 09 948	OIL FILTER SET
HOUSING	9079009	2	1	567	90 79 021	CRANKCASE BREATHER ASS
HOUSING NG 100	9077515	10	1	799	90 73 888	HYDRAULIC INSTALLATION
HOUSING NG 140	10136171	10	2	801	10 13 303 7	HYDR.DOUBLE PUMP
HOUSING PVG 351 B 382	10117153	1	1	158	10 11 886 0	PUMP DISTRIBUTION GEAR
HOUSING WITH BUSHING	12544180	1	1	325	90 79 259	PILOT CONTROL UNIT VG7 2-3
HUB	10406048	20	1	205	10 84 460 3	FAN INSTALLATION
HUB	9267273	13	1	618	90 72 781	LUBRICATING OIL PUMP
HUB	9267273	13	1	619	90 80 277	SUCTION PUMP PRE-ASS.
HYDR.AND GEAR OIL COOLIN	10358629	7070	1	343	10 35 862 6	HYDRAULIC INSTALLATION UP
HYDR.CYLINDER W/ADDITION.	10358573	3	1	725	11 10 280 7	STICK 2.10M
HYDR.CYLINDER W/ADDITION.	10853610	3	1	711	11 10 294 5	GOOSENECK BOOM 6.45M
HYDR.DOUBLE PUMP	10133037	2	1	150	10 13 461 8	MULTIPLE CIRCUIT AGGREG
HYDR.INST.ROTARY CONNE	10358628	7040	1	343	10 35 862 6	HYDRAULIC INSTALLATION UP
HYDR.INSTAL.ARM REST LEF	11383427	20	1	10	12 86 140 3	HYDR.INSTALLATION CONTRO
HYDR.INSTAL.ARM REST RIGH	11383429	30	1	10	12 86 140 3	HYDR.INSTALLATION CONTRO
HYDR.INSTAL.CONTROL TUBE	10063801	7080	1	343	10 35 862 6	HYDRAULIC INSTALLATION UP
HYDR.INSTAL.FOOT BOARD	10060146	10	1	10	12 86 140 3	HYDR.INSTALLATION CONTRO
HYDR.INSTAL.VALVES TO ATT	10358627	7030	1	343	10 35 862 6	HYDRAULIC INSTALLATION UP

Description	Item	Pos.	Quantity	Page	Assembly	Description
HYDR.INSTALLATION CONTRO	12861403	10	1	266	10 49 861 5	OPERATOR'S PLATFORM
HYDR.INSTALLATION FAN DR	10358624	7075	1	343	10 35 862 6	HYDRAULIC INSTALLATION UP
HYDR.INSTALLATION UNDER	10404129	14	1	75	10 49 885 2	UNDERCARRIAGE CPL
HYDR.MULTI CIRC.PUMP	11361001	100	1	145	10 04 853 9	PUMPS + COUPLING INSTALL
HYDR.PUMPS TO SPOOL VALV	10358623	7020	1	343	10 35 862 6	HYDRAULIC INSTALLATION UP
HYDR.SUCT.+RETURN OIL HO	10063798	7060	1	343	10 35 862 6	HYDRAULIC INSTALLATION UP
HYDR.TUBES INSTALLATION	10358637	7670	1	416	10 35 863 8	CONTROL VALVE INSTALLAT
HYDRAULIC ADJUSTMENT	10291978	2	1	162	11 34 249 1	AXIAL PISTON PUMP
HYDRAULIC CYLINDER	11681447	2	1	759	10 85 361 0	HYDR.CYLINDER W/ADDITION.
HYDRAULIC CYLINDER	9593026	2	1	775	11 45 729 6	HOIST CYLINDER RIGHT
HYDRAULIC CYLINDER	9593026	2	1	778	11 45 729 7	HOIST CYLINDER LEFT
HYDRAULIC CYLINDER	9644648	2	1	758	10 35 857 3	HYDR.CYLINDER W/ADDITION.
HYDRAULIC HOSE 16X670	10167654	5	2	237	96 91 056 01	OIL TANK
HYDRAULIC INSTALLATION	9073888	10	2	107	10 83 693 0	TRACTION DRIVE
HYDRAULIC INSTALLATION	9073888	10	2	108	11 10 296 8	TRACTION DRIVE
HYDRAULIC INSTALLATION	9074075	13	1	219	10 06 198 2	SLEWING GEAR
HYDRAULIC INSTALLATION UP	10358626	7000	1	123	10 35 861 4	UPPERCARRIAGE
HYDRAULIC OIL	9070362	20	1	15	90 66 460	TYPES OF LUBRICANTS
HYDRAULIC OIL LIEBHERR H	10296478	1000	1	16	10 35 682 5	HYDRAULIC OIL LIEBHERR/ISO
HYDRAULIC OIL LIEBHERR H	10296479	5	1	16	10 35 682 5	HYDRAULIC OIL LIEBHERR/ISO
HYDRAULIC OIL LIEBHERR H	10330277	20	1	16	10 35 682 5	HYDRAULIC OIL LIEBHERR/ISO
HYDRAULIC OIL LIEBHERR H	10330278	210	1	16	10 35 682 5	HYDRAULIC OIL LIEBHERR/ISO
HYDRAULIC OIL LIEBHERR/ISO	10356825	20	1l	20	90 70 363	BIODEGRADABLE HYDRAULIC-
HYDRAULIC OIL LIEBHERR/IS	10356791	30	1l	19	90 70 362	HYDRAULIC OIL
HYDRAULIC OIL LIEBHERR/IS	10330271	1000	1	25	10 35 679 1	HYDRAULIC OIL LIEBHERR/IS
HYDRAULIC OIL LIEBHERR/IS	10330268	20	1	25	10 35 679 1	HYDRAULIC OIL LIEBHERR/IS
HYDRAULIC OIL LIEBHERR/ISO	10330270	210	1	25	10 35 679 1	HYDRAULIC OIL LIEBHERR/IS
HYDRAULIC OIL LIEBHERR/ISO	10330266	5	1	25	10 35 679 1	HYDRAULIC OIL LIEBHERR/IS
HYDRAULIC OIL LIEBHERR/IS	10356800	10	1l	19	90 70 362	HYDRAULIC OIL
HYDRAULIC OIL LIEBHERR/IS	10330260	1000	1	28	10 35 680 0	HYDRAULIC OIL LIEBHERR/IS
HYDRAULIC OIL LIEBHERR/IS	10330258	20	1	28	10 35 680 0	HYDRAULIC OIL LIEBHERR/IS
HYDRAULIC OIL LIEBHERR/ISO	10330259	210	1	28	10 35 680 0	HYDRAULIC OIL LIEBHERR/IS
HYDRAULIC OIL LIEBHERR/ISO	10330255	5	1	28	10 35 680 0	HYDRAULIC OIL LIEBHERR/IS
HYDRAULIC OIL LIEBHERR/ISO	10356789	20	1l	19	90 70 362	HYDRAULIC OIL
HYDRAULIC OIL LIEBHERR/ISO	10344027	1000	1	24	10 35 678 9	HYDRAULIC OIL LIEBHERR/ISO
HYDRAULIC OIL LIEBHERR/ISO	10344025	20	1	24	10 35 678 9	HYDRAULIC OIL LIEBHERR/ISO
HYDRAULIC OIL LIEBHERR/IS	10344026	210	1	24	10 35 678 9	HYDRAULIC OIL LIEBHERR/ISO
HYDRAULIC OIL LIEBHERR/IS	10344024	5	1	24	10 35 678 9	HYDRAULIC OIL LIEBHERR/ISO
HYDRAULIC OIL LIEBHERR/IS	10356303	10	1l	20	90 70 363	BIODEGRADABLE HYDRAULIC-
HYDRAULIC OIL LIEBHERR/IS	10296481	1000	1	66	10 35 630 3	HYDRAULIC OIL LIEBHERR/IS
HYDRAULIC OIL LIEBHERR/IS	10330272	20	1	66	10 35 630 3	HYDRAULIC OIL LIEBHERR/IS
HYDRAULIC OIL LIEBHERR/ISO	10330276	210	1	66	10 35 630 3	HYDRAULIC OIL LIEBHERR/IS
HYDRAULIC OIL LIEBHERR/ISO	10296480	5	1	66	10 35 630 3	HYDRAULIC OIL LIEBHERR/IS
HYDRAULIC PUMP	10289177	50	1	144	10 04 853 9	PUMPS + COUPLING INSTALL
HYDRAULIC PUMP	10297867	1	1	146	10 28 917 7	HYDRAULIC PUMP
HYDRAULIC TANK	10051827	3	1	383	10 04 851 7	HYDRAULIC TANK INSTALLAT
HYDRAULIC TANK	10358183	3	1	386	10 35 863 4	HYDRAULIC TANK INSTALLAT
HYDRAULIC TANK FOR EXCHA	10061129	4	1	383	10 04 851 7	HYDRAULIC TANK INSTALLAT
HYDRAULIC TANK FOR EXCHA	10358635	4	1	386	10 35 863 4	HYDRAULIC TANK INSTALLAT
HYDRAULIC TANK INSTALLAT	10048517	7100	1	123	10 35 861 4	UPPERCARRIAGE
HYDRAULIC TANK INSTALLAT	10358634	7100	1	123	10 35 861 4	UPPERCARRIAGE
HYDRAULIC+GEAR-OIL LIEBH	10356828	30	1l	22	90 70 365	GEAR OIL
HYDRAULIC+GEAR-OIL LIEBH	10296482	1000	1	31	10 35 682 8	HYDRAULIC+GEAR-OIL LIEBH
HYDRAULIC+GEAR-OIL LIEBH	10330282	20	1	31	10 35 682 8	HYDRAULIC+GEAR-OIL LIEBH
HYDRAULIC+GEAR-OIL LIEBHE	10330283	210	1	31	10 35 682 8	HYDRAULIC+GEAR-OIL LIEBH
HYDRAULIC+GEAR-OIL LIEBHE	10330280	5	1	31	10 35 682 8	HYDRAULIC+GEAR-OIL LIEBH
IGNITION KEY	10221073	76	1	278	11 38 340 1	ARM REST RIGHT
IGNITION KEY	10221073	76	1	305	12 50 731 7	ARM REST RIGHT
IGNITION KEY	10221073	10	1	340	10 22 815 1	HEATER STARTER SWITCH
IGNITION KEY	10221073	275	1	484	70 28 769	DRIVER'S CAB DOOR

Description	Item	Pos.	Quantity	Page	Assembly	Description
IMPACT SCREW M36X40X28	9103255	170	1	540	10 84 856 2	TOOL EQUIPMENT
INDEXING PLATE	9265398	18	1	807	10 11 856 1	PILOT CONTROL UNIT VG6-8
INDEXING PLATE	9265398	18	1	808	11 37 560 6	PILOT CONTROL UNIT VG6-8
INJECTION LINE	9080410	215	6	559	10 11 682 5	BASIC ENGINE D936 L HIGH 3
INJECTION LINE	9080410	215	1	625	10 11 709 3	RK INJECTION NOZZLE
INJECTION NOZZLE W.FASTEN	10116591	190	6	551	10 11 714 5	DIESEL ENGINE D936 L A6 190
INJECTION PUMP	10116257	1	1	621	10 11 683 9	INJECTION PUMP ASSEMBLY
INJECTION PUMP ASSEMBLY	10116839	170	6	558	10 11 682 5	BASIC ENGINE D936 L HIGH 3
INJECTOR	10116587	1	1	625	10 11 709 3	RK INJECTION NOZZLE
INLET VALVE	10136752	2	2	591	10 14 155 4	CYLINDER HEAD PRE-ASSY.
INLET VALVE	9074450	2	2	597	10 11 942 7	CYLINDER HEAD PRE-ASSY.
INLET VALVE	9074450	2	2	598	10 12 036 4	CYLINDER HEAD PRE-ASSY.
INLET VALVE SEAT INSERT	9073725	6	2	602	10 12 038 4	CYLINDER HEAD
INNER WHEEL M=3,25 Z=90	932777601	25	1	226	90 02 790 4	SLEWING DRIVE SAT 325/254
INNER WHEEL M=4 Z=78	944315903	10	1	109	96 87 443 01	TRACTION DRIVE FAT 400P07
INSCRIPTION TAPE	10071611	60	1	10	12 86 140 3	HYDR.INSTALLATION CONTRO
INSCRIPTION TAPE	10298638	29	2	270	10 07 161 1	INSCRIPTION TAPE
INSCRIPTION TAPE	7018495	4	2	270	10 07 161 1	INSCRIPTION TAPE
INSCRIPTION TAPE	7018496	5	2	270	10 07 161 1	INSCRIPTION TAPE
INSCRIPTION TAPE	7018498	7	2	270	10 07 161 1	INSCRIPTION TAPE
INSCRIPTION TAPE	7018504	16	2	270	10 07 161 1	INSCRIPTION TAPE
INSCRIPTION TAPE	7018507	18	2	270	10 07 161 1	INSCRIPTION TAPE
INSCRIPTION TAPE	7018508	19	2	270	10 07 161 1	INSCRIPTION TAPE
INSCRIPTION TAPE	7018509	20	2	270	10 07 161 1	INSCRIPTION TAPE
INSCRIPTION TAPE	7018510	21	2	270	10 07 161 1	INSCRIPTION TAPE
INSCRIPTION TAPE	7018513	30	2	270	10 07 161 1	INSCRIPTION TAPE
INSCRIPTION TAPE	7018514	31	2	270	10 07 161 1	INSCRIPTION TAPE
INSCRIPTION TAPE	7018516	33	2	270	10 07 161 1	INSCRIPTION TAPE
INSCRIPTION TAPE	7018517	34	2	270	10 07 161 1	INSCRIPTION TAPE
INSCRIPTION TAPE	7018520	2	10	270	10 07 161 1	INSCRIPTION TAPE
INSCRIPTION TAPE	7018521	3	10	270	10 07 161 1	INSCRIPTION TAPE
INSCRIPTION TAPE	7024733	8	2	270	10 07 161 1	INSCRIPTION TAPE
INSCRIPTION TAPE 09	7024734	9	2	270	10 07 161 1	INSCRIPTION TAPE
INSCRIPTION TAPE 10	7018499	10	2	270	10 07 161 1	INSCRIPTION TAPE
INSCRIPTION TAPE 11	7018500	11	2	270	10 07 161 1	INSCRIPTION TAPE
INSCRIPTION TAPE 12	7018501	12	2	270	10 07 161 1	INSCRIPTION TAPE
INSCRIPTION TAPE 13	7018502	13	2	270	10 07 161 1	INSCRIPTION TAPE
INSCRIPTION TAPE 14	7018503	14	2	270	10 07 161 1	INSCRIPTION TAPE
INSIDE DOORS	10082759	30	1	462	10 35 826 4	TOOL BOX
INSTALLATION GUIDING WHE	10651678	60	2	75	10 49 885 2	UNDERCARRIAGE CPL
INSTALLATION GUIDING WHE	12219721	60	2	75	10 49 885 2	UNDERCARRIAGE CPL
INSTALLER SET REGULATION	7028926	30	1	374	70 28 300	PRESSURE LIMITING VALVE
INSULATING MAT	10051825	6	1	459	10 06 423 5	SIDE DOOR RIGHT
INSULATING MAT	10051826	7	1	459	10 06 423 5	SIDE DOOR RIGHT
INSULATING MAT	10051826	7	1	460	10 49 856 6	SIDE DOOR RIGHT
INSULATING MAT	10051839	3	3	456	10 05 183 8	BONNET RIGHT
INSULATING MAT	10051840	6	1	456	10 05 183 8	BONNET RIGHT
INSULATING MAT	10051841	7	1	456	10 05 183 8	BONNET RIGHT
INSULATING MAT	10058253	4	1	453	10 05 816 9	ENGINE BONNET
INSULATING MAT	10058254	5	1	453	10 05 816 9	ENGINE BONNET
INSULATING MAT	10058255	3	2	454	10 05 823 4	SCOOP
INSULATING MAT	10059636	3	6	458	10 05 963 3	SCOOP
INSULATING MAT	10059643	5	1	457	10 35 822 9	SIDE DOOR LEFT
INSULATING MAT	10059644	6	1	457	10 35 822 9	SIDE DOOR LEFT
INSULATING MAT	10064359	25	1	470	10 35 866 0	LOWER COVERING
INSULATING MAT	10064366	4	1	455	10 06 436 0	RADIATOR HOOD
INSULATING MAT	10064412	5	1	459	10 06 423 5	SIDE DOOR RIGHT
INSULATING MAT	10065195	5	1	466	10 35 823 0	SIDE DOOR FRONT LEFT
INSULATING MAT	10065764	10	1	465	10 06 576 2	DIVIDING WALL MIDDLE
INSULATING MAT	10070338	5	1	461	10 07 033 5	COVER MIDDLE

Description	Item	Pos.	Quantity	Page	Assembly	Description
INSULATING MAT	10071145	20	1	464	10 08 276 3	COVER
INSULATING MAT	10071146	40	1	463	10 35 826 4	TOOL BOX
INSULATING MAT	10094702	5	1	459	10 06 423 5	SIDE DOOR RIGHT
INSULATING MAT	10094703	6	1	459	10 06 423 5	SIDE DOOR RIGHT
INSULATING MAT	10094745	3	1	455	10 06 436 0	RADIATOR HOOD
INSULATING MAT	10388068	14	1	455	10 06 436 0	RADIATOR HOOD
INSULATING MAT	10388069	15	1	455	10 06 436 0	RADIATOR HOOD
INSULATING MAT	10400258	3	1	453	10 05 816 9	ENGINE BONNET
INSULATING MAT	10498646	5	1	460	10 49 856 6	SIDE DOOR RIGHT
INSULATING MAT	10498647	6	1	460	10 49 856 6	SIDE DOOR RIGHT
INSULATING SHEET	11644222	6	1	331	10 02 206 9	EVAPORATOR HOUSING
INTAKE STACK	10063835	60	1	145	10 04 853 9	PUMPS + COUPLING INSTALL
INTAKE STACK	10072499	10	1	383	10 04 851 7	HYDRAULIC TANK INSTALLAT
INTAKE STACK	10072499	10	1	386	10 35 863 4	HYDRAULIC TANK INSTALLAT
INTERIOR PANELING	10290352	80	1	472	10 22 830 2	OPERATOR'S CAB
INTERIOR PANELING	10488088	80	1	474	10 47 616 9	OPERATOR'S CAB
INTERMEDIATE COUPLING	9399179	3	1	346	10 06 379 3	OIL PILOT VALVE INSTALLATIO
INTERMEDIATE FITTING	9890958	2	1	349	93 99 179	INTERMEDIATE COUPLING
INTERMEDIATE FLANGE	10014707	20	1	250	10 22 844 3	LUBRICATION PUMP
INTERMEDIATE FLANGE	10216818	1	1	170	10 28 264 7	GEAR PUMP
INTERMEDIATE FLANGE	9939942	56	1	777	11 45 729 6	HOIST CYLINDER RIGHT
INTERMEDIATE FLANGE	9939942	56	1	780	11 45 729 7	HOIST CYLINDER LEFT
INTERMEDIATE GEAR PRE-AS	9072633	7	1	618	90 72 781	LUBRICATING OIL PUMP
INTERMEDIATE GEAR PRE-AS	9072633	7	1	619	90 80 277	SUCTION PUMP PRE-ASS.
INTERMEDIATE PART	10358253	14	2	711	11 10 294 5	GOOSENECK BOOM 6.45M
INTERMEDIATE PART DN15	7365704	35	1	328	10 40 689 8	AIR CONDITIONING
INTERMEDIATE PART H=20	9008100	30	1	775	11 45 729 6	HOIST CYLINDER RIGHT
INTERMEDIATE PART H=20	9008100	30	1	778	11 45 729 7	HOIST CYLINDER LEFT
INTERMEDIATE PLATE	10297874	3	1	147	10 29 786 7	HYDRAULIC PUMP
INTERMEDIATE PLATE	7021785	10	1	437	50 08 855	NON-RETURN VALVE
INTERMEDIATE PLATE	9884136	2	1	185	98 84 140	COOLING CIRCUIT PUMP
INTERMEDIATE RING	10014730	9	1	249	10 22 844 3	LUBRICATION PUMP
INTERNAL GEAR PUMP SET	5717149	4	1	162	11 34 249 1	AXIAL PISTON PUMP
JAW	9075372	3	1	624	10 11 659 1	INJECTION NOZZLE W.FASTEN
KB-RING 122X113,1X3,5	10472345	3	1	589	90 80 686	PISTON PRE-ASS.
KEY	7365626	2	1	391	74 14 913	LOCKABLE TANK CAP d=80
KEY	7365626	5	1	445	10 35 865 5	COVERS
KEYBOARD	10685277	2	1	311	11 45 227 4	KEYBOARD CPL. V4.7.7
KEYBOARD	10884047	2	1	312	11 73 919 4	KEYBOARD CPL. V4.7.9
KEYBOARD	10884851	2	1	797	12 50 716 3	KEYBOARD CPL. V4.7.11
KEYBOARD CPL. V4.7.11	12507163	40	1	305	12 50 731 7	ARM REST RIGHT
KEYBOARD CPL. V4.7.7	11452274	40	1	301	11 45 228 6	ARM REST RIGHT
KEYBOARD CPL. V4.7.9	11739194	40	1	277	11 38 340 1	ARM REST RIGHT
KIT DISTANCE RINGS	9072436	70	1	827	90 77 464	RS FLANGE NG 125-140-150
KIT GOOSENECK BOOM 6.45M	11102814	66	1	7	.	
KIT GOOSENECK BOOM 6.45M	11102836	10	1	715	11 10 281 4	KIT GOOSENECK BOOM 6.45M
KIT IN BASIC MACHINE	11102813	65	1	7	.	
KIT IN BASIC MACHINE	11102813	1400	1	123	10 35 861 4	UPPERCARRIAGE
KIT IN BASIC MACHINE	11102818	10	1	755	11 10 281 3	KIT IN BASIC MACHINE
KIT STICK 2.10M	11102815	67	1	7	.	
KIT STICK 2.10M	11102817	10	1	724	11 10 281 5	KIT STICK 2.10M
L RING JL 50	429612001	42	1	110	96 87 443 01	TRACTION DRIVE FAT 400P07
LABEL 12VDC/8A 30mmX40mm	10086265	78	1	279	11 38 340 1	ARM REST RIGHT
LABEL 12VDC/8A 30mmX40mm	10086265	78	1	302	11 45 228 6	ARM REST RIGHT
LABEL 12VDC/8A 30mmX40mm	10086265	78	1	306	12 50 731 7	ARM REST RIGHT
LABEL E50 24V DC 120mmX6	9007585	60	1	520	99 47 695	ELECTRICAL SYSTEM E50
LABEL EMERGENCY EXIT	10039562	850	1	476	70 28 767	GLASS PANES
LABEL KIT	11363764	310	1	7	.	
LABEL KIT	11363764	910	1	7	.	
LABEL KIT	11363766	10	1	794	11 36 376 4	LABEL KIT

Description	Item	Pos.	Quantity	Page	Assembly	Description
LABEL KIT	11363766	10	1	794	11 36 376 4	LABEL KIT
LABEL S84/1 100mmX39mm	10076837	6	1	315	10 05 507 1	SWITCH INSTALLATION
LABEL SAFETY BELT Ø65mm	10066101	80	1	548	10 49 803 0	SIGNS
LADDER-TYPE FRAME PRE-A	12832453	1	1	571	90 79 487	OIL SUMP
LAMELLAR DISK KIT 62,0/56,4X	10008448	11	4	607	10 11 585 1	SEAL KIT CYLINDER HEAD
LAMELLAR DISK KIT 62,0/56,4X	10008448	11	4	609	10 11 585 3	SEAL KIT ZYLINDER HEAD CPL
LAMELLAR DISK KIT 62,0/56,4X	10008448	4	4	653	10 11 547 9	EXHAUST PIPE PRE-ASS.
LASHING STRAP 18X0,35m 38	7621780	35	4	121	10 40 412 9	HYDR.INSTALLATION UNDER
LASHING STRAP 18X0,35m 38	7621780	495	3	361	10 06 380 1	HYDR.INSTAL.CONTROL TUBE
LEAK OIL RETURN LINE	10115595	214	1	551	10 11 714 5	DIESEL ENGINE D936 L A6 190
LEVEL INDICATOR	11066525	2	1	287	11 10 016 7	SUSPENSION
LEVEL SENSOR	10022175	30	1	383	10 04 851 7	HYDRAULIC TANK INSTALLAT
LEVEL SENSOR	10022175	30	1	386	10 35 863 4	HYDRAULIC TANK INSTALLAT
LEVER	7027794	23	1	285	11 10 016 6	SEAT TOP
LEVER	7028348	14	1	390	56 17 688	SHUT OFF DEVICE
LEVER	7028919	320	1	504	10 29 026 4	COMPONENTS
LEVER	7372353	16	1	297	73 73 807	SAFETY LEVER
LEVER HANDLE	7370689	44	2	272	10 49 880 5	DRIVER STAND BASE SECTIO
LEVER TYPE HAND GREASE	7900280	140	1	540	10 84 856 2	TOOL EQUIPMENT
LH-JOYSTICK LEFT	9968625	10	1	298	10 05 879 2	MANIPULATOR LEFT
LH-JOYSTICK RIGHT	9968611	10	1	313	10 05 879 4	MANIPULATOR RIGHT
LID CPL	10392624	15	2	75	10 49 885 2	UNDERCARRIAGE CPL
LID CPL	10392932	35	1	75	10 49 885 2	UNDERCARRIAGE CPL
LID PLATE	10087054	27	1	344	10 35 862 3	HYDR.PUMPS TO SPOOL VALV
LID PLATE	12862561	29	1	323	90 79 258	PILOT CONTROL UNIT VG7 2-3
LID PLATE	12862561	29	1	325	90 79 259	PILOT CONTROL UNIT VG7 2-3
LIEBHERR TRANSMISSION OIL	10675474	30	1l	21	90 70 364	AXLE AND GEAR-OIL
LIEBHERR TRANSMISSION OIL	10664875	20	1	40	10 67 547 4	LIEBHERR TRANSMISSION OIL
LIEBHERR TRANSMISSION OI	10664876	210	1	40	10 67 547 4	LIEBHERR TRANSMISSION OIL
LIEBHERR TRANSMISSION OI	10664874	5	1	40	10 67 547 4	LIEBHERR TRANSMISSION OIL
LIEBHERR TRANSMISSION OI	10441636	1000	1	40	10 67 547 4	LIEBHERR TRANSMISSION OIL
LIEBHERR TRANSMISSION OI	11000871	1000	1	44	11 62 627 8	GEAR OIL LIEBHERR/ISO VG
LIEBHERR TRANSMISSION OI	11000869	20	1	44	11 62 627 8	GEAR OIL LIEBHERR/ISO VG
LIEBHERR TRANSMISSION OIL	11000870	210	1	44	11 62 627 8	GEAR OIL LIEBHERR/ISO VG
LIEBHERR TRANSMISSION OIL	11000867	5	1	44	11 62 627 8	GEAR OIL LIEBHERR/ISO VG
LIFETIME SEAL	12244095	10	1	91	10 65 167 7	CARRYING ROLLER D7
LIFETIME SEAL 10	7380136	40	1	323	90 79 258	PILOT CONTROL UNIT VG7 2-3
LIFETIME SEAL 10	7380136	40	1	325	90 79 259	PILOT CONTROL UNIT VG7 2-3
LIFETIME SEAL 21X13,5X3,2	7381413	24	2	116	98 82 760	ADJUSTMENT NG 100
LIFETIME SEAL 21X13,5X3,2	7381413	24	2	810	11 38 131 3	ADJUSTMENT NG 100
LIFETIME SEAL 21X13,5X3,2	7381413	24	2	833	11 38 195 4	SEAL KIT NG 100
LIFETIME SEAL 42X31X4,2	7381414	25	1	116	98 82 760	ADJUSTMENT NG 100
LIFETIME SEAL 42X31X4,2	7381414	25	1	810	11 38 131 3	ADJUSTMENT NG 100
LIFETIME SEAL 42X31X4,2	7381414	26	1	833	11 38 195 4	SEAL KIT NG 100
LIGHT	10428776	140	1	493	10 48 808 7	ELECTRICAL INSTALLATION
LIGHT BULB H3 24V 70W/PK22	6200685	5	1	9	12 85 910 3	FLOODLIGHT INSTALLATION
LIGHT BULB H3 24V 70W/PK22	6200685	3	2	516	99 41 040	FLOODLIGHT INSTALLATION
LIGHT BULB H3 24V 70W/PK22	6200685	11	1	517	10 04 553 0	WORK LIGHT
LIGHT BULB H3 24V 70W/PK22	6200685	3	1	783	11 10 229 5	ADDNL. FLOODLIGHT
LIGHT BULB K 24V 10W	6000167	130	1	493	10 48 808 7	ELECTRICAL INSTALLATION
LIGHT BULB T5 30V 1,2W	6001713	2	1	315	10 05 507 1	SWITCH INSTALLATION
LIMIT STOP	10493050	11	1	285	11 10 016 6	SEAT TOP
LIMIT STOP	9077714	3	1	694	90 77 718	AUXILIARY DRIVE PRE-ASS.
LIMIT STOP BUFFER	10112636	154	2	449	10 35 865 5	COVERS
LIMIT STOP BUFFER	7363930	133	1	448	10 35 865 5	COVERS
LIMIT STOP BUFFER	7363930	10	4	461	10 07 033 5	COVER MIDDLE
LIMIT STOP BUFFER	7363930	7	2	462	10 35 826 4	TOOL BOX
LIMIT STOP BUFFER	7363930	25	1	464	10 08 276 3	COVER
LIMIT STOP BUFFER	7363930	17	1	545	10 37 464 5	COVER
LIMIT STOP RING	10008088	14	1	208	56 19 045	AXIAL PISTON MOTOR

Description	Item	Pos.	Quantity	Page	Assembly	Description
LIMIT STOP RING	10008088	14	1	400	10 00 807 7	PUMP
LIMIT STOP SCREW M12X38X	9265279	16	1	116	98 82 760	ADJUSTMENT NG 100
LIMIT STOP SCREW M12X46,5	9883344	16	1	810	11 38 131 3	ADJUSTMENT NG 100
LINK	10064138	190	1	450	10 35 865 5	COVERS
LINK	10081811	180	1	450	10 35 865 5	COVERS
LIP RING SEALING 48138	7366049	7	1	95	11 00 410 3	SPRING ASSEMBLY CPL
LOAD DIAGRAM CONF.TO ISO	9392835	65	1	548	10 49 803 0	SIGNS
LOADING SHEME UPPERCAR	10386773	35	1	547	10 49 803 0	SIGNS
LOCK	10039590	11	2	445	10 35 865 5	COVERS
LOCK	7028833	330	1	484	70 28 769	DRIVER'S CAB DOOR
LOCK	7365293	6	1	455	10 06 436 0	RADIATOR HOOD
LOCK LEFT HAND	7028808	350	1	481	70 28 759	FRONT PANE TOP
LOCK NUT M48	9229473	4	1	746	10 08 390 7	PIN CPL
LOCK NUT M64	9240322	4	1	745	10 06 258 3	PIN CPL
LOCK NUT M64	9240322	3	1	747	92 15 949 16	PIN CPL
LOCK RIGHT HAND	7028807	340	1	481	70 28 759	FRONT PANE TOP
LOCK WASHER VS 10	4229913	16	4	137	10 49 819 9	AIR FILTER INSTALLATION
LOCK WASHER VS 10	4229913	9	2	466	10 35 823 0	SIDE DOOR FRONT LEFT
LOCK WASHER VS 10	4229913	20	2	467	10 02 525 4	DOOR LOCK
LOCK WASHER VS 12	4900093	49	2	357	10 35 862 9	HYDR.AND GEAR OIL COOLIN
LOCK WASHER VS 12	4900093	20	2	469	10 35 387 9	DOOR LOCK
LOCK WASHER VS 16	10006372	22	2	226	90 02 790 4	SLEWING DRIVE SAT 325/254
LOCK WASHER VS 16	10006372	24	8	801	10 13 303 7	HYDR.DOUBLE PUMP
LOCK WASHER VS 16	4239009	50	4	158	10 11 886 0	PUMP DISTRIBUTION GEAR
LOCK WASHER VS 5	423910501	260	15	515	11 10 255 3	ELECTRICAL SYSTEM
LOCK WASHER VS 6	423910601	49	2	158	10 11 886 0	PUMP DISTRIBUTION GEAR
LOCK WASHER VS 6	423910601	10	4	469	10 35 387 9	DOOR LOCK
LOCK WASHER VS 8	423910801	53	4	272	10 49 880 5	DRIVER STAND BASE SECTIO
LOCK WASHER VS 8	423910801	71	2	295	97 58 815 01	E-BOARD
LOCK WASHER VS 8	423910801	63	6	387	10 35 863 4	HYDRAULIC TANK INSTALLAT
LOCK WASHER VS 8	423910801	507	2	414	10 35 863 8	CONTROL VALVE INSTALLAT
LOCK WASHER VS 8	423910801	27	2	542	10 49 878 6	OUTSIDE MIRROR ASSEMBLY
LOCKABLE TANK CAP d=45	7610826	20	1	237	96 91 056 01	OIL TANK
LOCKABLE TANK CAP d=80	12230797	15	1	529	10 04 852 5	FUEL TANK ASSY.
LOCKABLE TANK CAP d=80	7414913	15	1	530	10 49 836 0	FUEL TANK ASSY.
LOCKABLE TANK CAP d=80	7414913	15	1	531	11 10 262 1	FUEL TANK ASSY.
LOCKING	10358265	83	1	463	10 35 826 4	TOOL BOX
LOCKING	9376917	80	1	463	10 35 826 4	TOOL BOX
LOCKING BAR	10079279	25	1	545	10 37 464 5	COVER
LOCKING BAR	10113250	14	1	459	10 06 423 5	SIDE DOOR RIGHT
LOCKING BAR	10113250	8	1	466	10 35 823 0	SIDE DOOR FRONT LEFT
LOCKING BAR	10368556	5	1	545	10 37 464 5	COVER
LOCKING BAR	7029407	260	1	482	70 28 807	LOCK RIGHT HAND
LOCKING BAR	7029407	260	1	483	70 28 808	LOCK LEFT HAND
LOCKING BAR	9634109	14	1	460	10 49 856 6	SIDE DOOR RIGHT
LOCKING BOLT	10451129	20	5	735	11 10 258 6	BACKHOE BUCKET HD 1800
LOCKING BOLT	10451129	3	1	781	11 10 259 0	TOOTH Z50CL
LOCKING PIECES	10118589	4	2	698	90 80 504	LOCKING PIECES
LOCKING PIECES	10119128	522	1	555	10 11 714 5	DIESEL ENGINE D936 L A6 190
LOCKING PIECES	9078356	331	1	552	10 11 714 5	DIESEL ENGINE D936 L A6 190
LOCKING PIECES	9079893	630	1	555	10 11 714 5	DIESEL ENGINE D936 L A6 190
LOCKING PIECES	9080280	384	1	553	10 11 714 5	DIESEL ENGINE D936 L A6 190
LOCKING PIECES	9080280	5	1	699	10 11 801 4	SEAL KIT AGGREGATE CARR
LOCKING PIECES	9080280	5	2	702	10 11 583 8	SEAL KIT DIESEL ENGINE D9
LOCKING PIECES	9080504	656	1	556	10 11 714 5	DIESEL ENGINE D936 L A6 190
LOCKING PIECES	9080653	521	1	555	10 11 714 5	DIESEL ENGINE D936 L A6 190
LOCKING PIECES	9147512	24	2	549	10 11 714 5	DIESEL ENGINE D936 L A6 190
LOCKING RING	10330726	13	1	377	10 45 471 5	PRESSURE REDUCTION VALV
LOCKING RING	7019794	350	2	485	70 28 769	DRIVER'S CAB DOOR
LOCKING RING	7368534	5	1	151	10 29 154 4	GEAR PUMP

Description	Item	Pos.	Quantity	Page	Assembly	Description
LOCKING SCREW M10X19X15	10153538	2	2	611	90 79 870	CONTROL PARTS
LOCKING SCREW M10X19X15	10153538	4	1	621	10 11 683 9	INJECTION PUMP ASSEMBLY
LOCKING SCREW M10X20 FLZ	7366851	13	28	470	10 35 866 0	LOWER COVERING
LOCKING SCREW M12X20 100	7365430	14	5	470	10 35 866 0	LOWER COVERING
LOCKING SCREW M12X30 FLZ	4900641	25	2	85	10 07 306 8	COVER
LOCKING SCREW M12X30 FLZ	4900641	3	4	86	10 39 262 4	LID CPL
LOCKING SCREW M12X30 FLZ	4900641	3	3	87	10 39 293 2	LID CPL
LOCKING SCREW M16X35 FLZ	7364949	12	14	470	10 35 866 0	LOWER COVERING
LOCKING SCREW M5X6X4,2	9880132	26	2	116	98 82 760	ADJUSTMENT NG 100
LOCKING SCREW M5X6X4,2	9880132	26	2	810	11 38 131 3	ADJUSTMENT NG 100
LOCKING SCREW M8X16 480H	12225945	3	3	204	10 06 309 3	COOLER SEALING
LOCKING SCREW M8X20 A2E	7366804	36	1	271	10 49 880 5	DRIVER STAND BASE SECTIO
LOCKING SCREW M8X40 12.9	7368996	3	6	392	10 33 390 3	RETURN FILTER 20/5µm
LOUDSPEAKER	634308016	5	2	788	11 10 265 3	PREMOUNTING F.RADIO
LOW TEMPERATURE GREASE	10802651	100	1	58	96 47 551	SPECIAL GREASE ELECTRIC
LOW TEMPERATURE GREASE	10358948	20	1kg	23	90 70 366	GREASES
LOW TEMPERATURE GREASE	10296828	1	1	35	10 35 894 8	LOW TEMPERATURE GREASE
LOW TEMPERATURE GREASE	10296825	10	1	35	10 35 894 8	LOW TEMPERATURE GREASE
LOW TEMPERATURE GREASE	10296822	180	1	35	10 35 894 8	LOW TEMPERATURE GREASE
LOW TEMPERATURE GREASE	10296827	2	1	35	10 35 894 8	LOW TEMPERATURE GREASE
LOW TEMPERATURE GREASE	10296824	25	1	35	10 35 894 8	LOW TEMPERATURE GREASE
LOW TEMPERATURE GREASE	10296823	50	1	35	10 35 894 8	LOW TEMPERATURE GREASE
LOWER COVERING	10063239	11	1	470	10 35 866 0	LOWER COVERING
LOWER COVERING	10358660	8600	1	124	10 35 861 4	UPPERCARRIAGE
LOWER PROTECTIVE SHEET	10060648	3	1	470	10 35 866 0	LOWER COVERING
LOWER PROTECTIVE SHEET	10063237	2	1	470	10 35 866 0	LOWER COVERING
LUBE OIL FILTER ASSEMBLY	9075368	150	1	558	10 11 682 5	BASIC ENGINE D936 L HIGH 3
LUBE OIL PUMP WITH FASTEN	9074796	140	1	558	10 11 682 5	BASIC ENGINE D936 L HIGH 3
LUBRICANT	8610025	10	1	60	11 41 916 5	LUBRICATING PASTE
LUBRICANT NOZZLE	9074510	3	1	600	12 40 205 3	ROCKER ARM PRE-ASSY.
LUBRICATING OIL LINE 10X1	10115521	7	1	665	90 80 736	EXHAUST TC MOUNTING
LUBRICATING OIL PUMP	9072781	1	1	616	90 74 796	LUBE OIL PUMP WITH FASTEN
LUBRICATING PAD	9375276	15	1	244	10 06 198 5	GREASE PIPE INSTALLATION
LUBRICATING PASTE	11419165	800	1	771	94 00 688 8	PISTON ROD BEARING
LUBRICATING PASTE	11419165	800	1	772	94 02 794 9	PISTON ROD BEARING
LUBRICATING PASTE	11419165	800	1	773	95 91 741	PISTON ROD BEARING
LUBRICATION DIAGRAM	10840318	15	1	546	10 49 803 0	SIGNS
LUBRICATION PUMP	10228443	2	1	248	10 06 750 0	AUTOMATIC CENTRALIZED L
LUMINOUS SWITCH CONTACT	6001593	3	1	315	10 05 507 1	SWITCH INSTALLATION
MAGNET	6905956	1	1	148	10 29 787 3	CONTROL VALVE
MAGNET COIL	10333044	2	1	366	56 15 344	SOLENOID VALVE
MAGNET COIL	6204416	2	1	368	10 01 872 5	DIRECTIONAL CONTROL VALV
MAIN BEARING CAP	12578798	2	6	561	10 11 577 8	CRANKCASE PRE-ASSY.
MALE FITTING FOR PIPES M1	7027675	20	1	257	90 64 786	CONNECTING ELEMENT
MANIPULATOR LEFT	10058792	60	1	276	11 38 339 7	ARM REST LEFT
MANIPULATOR LEFT	10058792	60	1	292	10 38 502 8	ARM REST LEFT
MANIPULATOR RIGHT	10058794	60	1	277	11 38 340 1	ARM REST RIGHT
MANIPULATOR RIGHT	10058794	60	1	301	11 45 228 6	ARM REST RIGHT
MANIPULATOR RIGHT	10058794	60	1	305	12 50 731 7	ARM REST RIGHT
MARKING TYPE PLATE	11359932	7	1	546	10 49 803 0	SIGNS
MASTER LINK ASSY	12220234	10	1	83	56 17 975	CHAIN END LINK
MASTER PIN	5617102	20	2	83	56 17 975	CHAIN END LINK
MASTERLINK LEFT	11214375	10	1	84	12 22 023 4	MASTER LINK ASSY
MASTERLINK RIGHT	11214376	20	1	84	12 22 023 4	MASTER LINK ASSY
MAT	10289996	510	1	509	10 29 035 2	INTERIOR PANELING
MAT	10289996	510	1	511	10 48 808 8	INTERIOR PANELING
MAT	10289997	520	1	509	10 29 035 2	INTERIOR PANELING
MAT	10289997	520	1	511	10 48 808 8	INTERIOR PANELING
METALASTIC BUFFER	7019129	470	1	504	10 29 026 4	COMPONENTS
METALASTIC BUFFER	7021047	480	1	504	10 29 026 4	COMPONENTS

Description	Item	Pos.	Quantity	Page	Assembly	Description
METALASTIC BUFFER	7028810	170	2	481	70 28 759	FRONT PANE TOP
METALASTIC BUFFER	7028810	170	2	503	10 29 026 4	COMPONENTS
MIRROR	11001492	24	1	542	10 49 878 6	OUTSIDE MIRROR ASSEMBLY
MIRROR	11001492	61	1	544	10 49 878 6	OUTSIDE MIRROR ASSEMBLY
MIRROR SUPPORT	10650964	25	1	542	10 49 878 6	OUTSIDE MIRROR ASSEMBLY
MIRROR SUPPORT	10822312	60	1	544	10 49 878 6	OUTSIDE MIRROR ASSEMBLY
MIRROR SUPPORT	12569773	60	1	544	10 49 878 6	OUTSIDE MIRROR ASSEMBLY
MIRROR SUPPORT	7019141	820	1	507	10 04 435 3	OUTSIDE MIRROR
MODIF.COMP.ELECTR. V4.58.	10841184	121	1	7	.	
MODIFICAT.CONTROL BRACK	11446109	30	1	293	10 05 736 2	CONTROL BRACKET LEFT IN
MODIFICATION KIT	90014538	800	1	220	90 02 790 3	SLEWING DRIVE SAT 325/254
MODIFICATION KIT	90021973	700	1	220	90 02 790 3	SLEWING DRIVE SAT 325/254
MODIFICATION KIT VG7-2/3	9079264	97	1	325	90 79 259	PILOT CONTROL UNIT VG7 2-3
MODULE	10287118	2	1	296	98 74 988	PLATINES INSTALLATION
MOTOR BRACKET	10056401	30	1	213	10 04 853 8	ENGINE ADD-ON PARTS
MOTOR CONTROL DEVICE	10117248	570	1	555	10 11 714 5	DIESEL ENGINE D936 L A6 190
MOTOR HOUSING	10014692	3	1	249	10 22 844 3	LUBRICATION PUMP
MOTOR HOUSING	10220513	1	1	249	10 22 844 3	LUBRICATION PUMP
MOTOR INSTALLATION	10358622	500	1	123	10 35 861 4	UPPERCARRIAGE
MOTOR MOUNTING	10301002	10	1	199	10 21 851 3	COMBINATED RADIATOR
MOTOR MOUNTING	10301002	10	1	202	11 69 472 6	COMBINATED RADIATOR
MOTOR OIL	9070361	10	1	15	90 66 460	TYPES OF LUBRICANTS
MOTOR SUPPORT	10048531	510	1	132	10 35 862 2	MOTOR INSTALLATION
MOTOR-ELEKTRIK	10048537	580	1	132	10 35 862 2	MOTOR INSTALLATION
MOUNTING BASE	11003600	32	1	336	11 00 359 4	HOUSING
MOUNTING BRACKET	10021823	2	1	334	10 49 308 7	OPERATING ELEMENT
MOUNTING PIN	7361276	175	1	540	10 84 856 2	TOOL EQUIPMENT
MOUNTING REQUIREMENT	12924708	841	1	192	98 89 988	RK PULL-BACK BALL+PULL-B.
MOUNTING REQUIREMENT	12925891	842	1	180	90 72 998	RK PULL-BACK BALL+PULL-B.
MOUNTING REQUIREMENT	12925891	842	1	231	90 73 380	RK PULL-BACK BALL+PULL-B.
MOUNTING ROPE	10409866	30	1	478	10 35 889 0	ADDITIONAL KIT SIDE PANE
MOUNTING SHEET	10082757	70	1	463	10 35 826 4	TOOL BOX
MULTI-DISC CARRIER	90014539	55	1	221	90 01 453 8	MODIFICATION KIT
MULTI-DISC CARRIER	932778001	55	1	222	90 02 197 3	MODIFICATION KIT
MULTI-DISC CARRIER	932778001	55	1	227	90 02 790 4	SLEWING DRIVE SAT 325/254
MULTI-DISC CARRIER	944302203	55	1	110	96 87 443 01	TRACTION DRIVE FAT 400P07
MULTI-PLATE PLUG	10287248	20	4	470	10 35 866 0	LOWER COVERING
MULTIPLE CIRCUIT AGGREG	10134618	10	1	141	10 04 853 9	PUMPS + COUPLING INSTALL
NAKED CRAWLER CHAIN	10675003	1	1	80	10 67 501 0	TRACK CHAIN LUBRICATED 50
NAKED CRAWLER CHAIN	10675003	1	1	81	11 16 108 1	TRACK CHAIN LUBRICATED 50
NAMEPLATE 83mmX152mm	9354303	5	1	546	10 49 803 0	SIGNS
NAMEPLATE REMOTE START	9909254	47	1	547	10 49 803 0	SIGNS
NEEDLE ROLLER d=2X19,8 - G	10122500	21	4	807	10 11 856 1	PILOT CONTROL UNIT VG6-8
NEEDLE ROLLER d=2X19,8 - G	10122500	21	4	808	11 37 560 6	PILOT CONTROL UNIT VG6-8
NETWORK	10492435	19	1	285	11 10 016 6	SEAT TOP
NIPPLE	4782008	92	1	137	10 49 819 9	AIR FILTER INSTALLATION
NIPPLE	4900169	94	1	137	10 49 819 9	AIR FILTER INSTALLATION
NIPPLE	7028868	630	1	502	70 28 866	WIPER ARM
NON-RETURN VALVE	10285358	70	1	407	10 35 863 8	CONTROL VALVE INSTALLAT
NON-RETURN VALVE	10299997	71	1	407	10 35 863 8	CONTROL VALVE INSTALLAT
NON-RETURN VALVE	10330919	11	1	431	10 33 073 6	TRAVEL PILOT VALVE
NON-RETURN VALVE	11170764	140	1	425	10 11 386 0	CONTROL BLOCK
NON-RETURN VALVE	5006555	46	4	424	10 11 386 0	CONTROL BLOCK
NON-RETURN VALVE	5006719	40	3	424	10 11 386 0	CONTROL BLOCK
NON-RETURN VALVE	5006719	7	1	437	50 08 855	NON-RETURN VALVE
NON-RETURN VALVE	5006720	41	2	424	10 11 386 0	CONTROL BLOCK
NON-RETURN VALVE	5008169	12	2	426	10 28 535 8	NON-RETURN VALVE
NON-RETURN VALVE	5008169	12	2	427	10 29 999 7	NON-RETURN VALVE
NON-RETURN VALVE	5008855	48	1	424	10 11 386 0	CONTROL BLOCK
NON-RETURN VALVE	5608327	6	1	362	10 04 272 9	OIL PILOT VALVE

Description	Item	Pos.	Quantity	Page	Assembly	Description
NON-RETURN VALVE	7017201	710	1	491	10 29 033 7	ELECTRICAL INSTALLATION
NON-RETURN VALVE	7622803	30	6	255	10 29 300 3	DISTRIBUTION BLOCK MX-F 4/
NON-RETURN VALVE	7622803	30	5	719	10 66 480 4	DISTRIBUTION BLOCK MX-F 5/
NON-RETURN VALVE	7622803	30	8	733	10 66 475 5	DISTRIBUTION BLOCK MX-F 7/
NON-RETURN VALVE	9270598	6	2	816	90 73 786	CONNECTING PLATE NG 100
NOZZLE	5612246	31	2	178	70 28 075	CONTROL UNIT
NOZZLE	7020577	44	1	431	10 33 073 6	TRAVEL PILOT VALVE
NOZZLE	7380824	20	1	818	98 82 832	PILOT VALVE
NOZZLE DLLA 145 P 1503	10289344	3	1	626	10 11 658 7	INJECTOR
NOZZLE HOLDER	10027735	1	1	626	10 11 658 7	INJECTOR
NOZZLE PIPE	7900836	150	1	540	10 84 856 2	TOOL EQUIPMENT
NUT	7023934	6	1	366	56 15 344	SOLENOID VALVE
NUT	7023934	6	1	368	10 01 872 5	DIRECTIONAL CONTROL VALV
NUT	7027459	998	1	744	10 00 348 5	DIRECTIONAL CONTROL VALV
NUT M10X1	7381781	6	1	605	90 74 507	ROCKER ARM PRE-ASSY.
NUT M14X1,5	9270475	17	1	807	10 11 856 1	PILOT CONTROL UNIT VG6-8
NUT M14X1,5	9270475	17	1	808	11 37 560 6	PILOT CONTROL UNIT VG6-8
NUT M16X1,5	4901153	15	5	716	11 10 283 6	KIT GOOSENECK BOOM 6.45M
NUT M16X1,5	4901153	15	8	727	11 10 281 7	KIT STICK 2.10M
NUT M16X1,5	4901153	13	6	756	11 10 281 8	KIT IN BASIC MACHINE
NUT M8X1	10330725	5	1	377	10 45 471 5	PRESSURE REDUCTION VALV
O-RING	10001112	22	1	400	10 00 807 7	PUMP
O-RING	10021308	999	1	255	10 29 300 3	DISTRIBUTION BLOCK MX-F 4/
O-RING	10021308	999	1	719	10 66 480 4	DISTRIBUTION BLOCK MX-F 5/
O-RING	10021308	999	1	733	10 66 475 5	DISTRIBUTION BLOCK MX-F 7/
O-RING	10028991	6	2	79	12 22 100 1	GUIDE WHEEL
O-RING	10028991	6	2	94	10 00 454 6	GUIDE WHEEL B6
O-RING	10040400	46	1	704	10 11 583 8	SEAL KIT DIESEL ENGINE D9
O-RING	10216826	18	1	170	10 28 264 7	GEAR PUMP
O-RING	10220638	9	1	398	11 49 189 0	CONNECTING PLATE
O-RING	11004095	3	1	91	10 65 167 7	CARRYING ROLLER D7
O-RING	7028346	8	1	390	56 17 688	SHUT OFF DEVICE
O-RING	7264028	131	1	64	12 48 693 1	SERVICE KIT FIRST 500h
O-RING	7264028	131	1	67	12 48 693 2	SERVICE KIT 1000h
O-RING	7264028	131	1	70	12 48 693 3	SERVICE KIT 1500-2500h
O-RING	7264028	131	1	71	12 48 693 4	SERVICE KIT 2000h
O-RING	7264028	14	1	346	10 06 379 3	OIL PILOT VALVE INSTALLATIO
O-RING	7264028	14	1	348	56 09 948	OIL FILTER SET
O-RING	7369456	1	4	389	73 68 081	SIGHT GLASS
O-RING	7411823	29	1	336	11 00 359 4	HOUSING
O-RING 10,82X1,78	10454717	18	1	378	10 45 471 6	SEAL KIT
O-RING 10,82X1,78	11827912	28	1	376	10 22 099 7	SEAL KIT
O-RING 10,82X1,78	5610999	28	1	336	11 00 359 4	HOUSING
O-RING 10,82X1,78	5610999	20	2	528	10 28 664 6	HOSE
O-RING 10,82X1,78	7023930	22	1	371	10 32 372 8	PRESSURE REDUCTION VALV
O-RING 10,82X1,78	7023930	12	1	379	50 09 391	SEAL KIT DIRECTIONAL VALV
O-RING 10,82X1,78	7023930	8	1	380	50 09 562	SEAL KIT DIRECTIONAL VALV
O-RING 100,00X5,34	10356232	6	2	106	10 35 654 7	SEAL KIT
O-RING 100,97X5,33	7264419	3	1	728	10 35 857 7	RING
O-RING 100X5	11008055	5	1	643	90 77 279	CONNECTING BRANCH ADD-O
O-RING 100X5	11008055	2211	1	707	10 11 583 8	SEAL KIT DIESEL ENGINE D9
O-RING 102X2,5	11212833	19	1	170	10 28 264 7	GEAR PUMP
O-RING 10X2	7007505	35	1	382	70 30 267	SEAL KIT LIMIT VALVE
O-RING 11,5X1,5	10289306	10	2	264	10 02 131 0	SEAL KIT
O-RING 110X2,5	10008091	21	1	400	10 00 807 7	PUMP
O-RING 110X2,5	10008418	22	1	208	56 19 045	AXIAL PISTON MOTOR
O-RING 116,84X7	7002054	11	2	772	94 02 794 9	PISTON ROD BEARING
O-RING 116,84X7	7002054	11	2	773	95 91 741	PISTON ROD BEARING
O-RING 11X2	10664998	28	2	182	92 74 731	SEAL KIT CONNECTING HOUSI
O-RING 12,37X2,62	7028158	10	1	168	10 22 063 5	SHUTDOWN VALVE

Description	Item	Pos.	Quantity	Page	Assembly	Description
O-RING 12,42X1,78	10220641	47	2	398	11 49 189 0	CONNECTING PLATE
O-RING 12,42X1,78	10454718	19	1	378	10 45 471 6	SEAL KIT
O-RING 12,42X1,78	7017836	1	2	442	70 17 835	SEALING SET VALVE
O-RING 12,42X1,78	7023931	13	1	379	50 09 391	SEAL KIT DIRECTIONAL VALV
O-RING 12,42X1,78	7023931	9	1	380	50 09 562	SEAL KIT DIRECTIONAL VALV
O-RING 12,60X2,80	10040401	1	1	627	90 75 395	HIGH PRESSURE CONNECT
O-RING 120,02X5,33	7019832	11	1	771	94 00 688 8	PISTON ROD BEARING
O-RING 120,02X7	7264113	12	1	771	94 00 688 8	PISTON ROD BEARING
O-RING 120,50X3,53	12819435	4	1	655	10 13 281 7	WATER PUMP, PRE-ASSEMB
O-RING 120,50X3,53	12819435	12	1	699	10 11 801 4	SEAL KIT AGGREGATE CARR
O-RING 120,50X3,53	12819435	12	1	702	10 11 583 8	SEAL KIT DIESEL ENGINE D9
O-RING 125X2	10002310	47	1	704	10 11 583 8	SEAL KIT DIESEL ENGINE D9
O-RING 139,07X7	7264423	4	1	728	10 35 857 7	RING
O-RING 139,07X7	7264423	3	1	770	96 44 625	PISTON
O-RING 13X2,5	7005971	18	1	441	70 15 341	SEAL KIT STRAI.AHEAD TRAV
O-RING 140	10006499	4	2	565	90 73 083	CYLINDER
O-RING 140	10006499	62	12	705	10 11 583 8	SEAL KIT DIESEL ENGINE D9
O-RING 142X7	7369266	1	1	393	73 73 881	FIBRE GLASS FILTER INSERT
O-RING 148,59X7	7000290	3	1	769	94 04 038 9	PISTON
O-RING 148X6	10008233	7	1	772	94 02 794 9	PISTON ROD BEARING
O-RING 148X6	10008233	7	1	773	95 91 741	PISTON ROD BEARING
O-RING 14x2	10220819	4	1	169	10 22 081 6	COLD STAR VALVE
O-RING 15,50X2,00	10113975	2	1	678	90 76 550	PRESSURE TRANSMITTER C
O-RING 15,50X2,00	10113975	59	1	705	10 11 583 8	SEAL KIT DIESEL ENGINE D9
O-RING 15,54X2,62	7002641	14	1	381	70 25 142	SEAL KIT
O-RING 15,54X2,62	7007831	44	1	441	70 15 341	SEAL KIT STRAI.AHEAD TRAV
O-RING 15,6X1,78	7007543	37	1	441	70 15 341	SEAL KIT STRAI.AHEAD TRAV
O-RING 15,6X1,78	7007543	38	1	441	70 15 341	SEAL KIT STRAI.AHEAD TRAV
O-RING 15,6X1,78	7017771	6	1	428	10 30 127 0	SHUTTLE-VALVE
O-RING 15,6X1,78	7017771	6	1	429	10 30 127 1	FLOW REGULATING CHECK
O-RING 15,6X1,78	7017771	6	1	430	10 30 127 2	FLOW REGULATING CHECK
O-RING 159,3X5,7	7264098	7	1	771	94 00 688 8	PISTON ROD BEARING
O-RING 15X2	7264625	1	1	577	50 04 624	OIL DRAIN PLUG M 30 1,5
O-RING 16,0X1,5	7371590	6	1	362	10 04 272 9	OIL PILOT VALVE
O-RING 16,0X1,5	7371590	10	1	373	56 08 327	NON-RETURN VALVE
O-RING 160X2,5	7624285	30	1	256	10 01 471 7	CONTAINER COVER
O-RING 165X3	10014711	22	1	250	10 22 844 3	LUBRICATION PUMP
O-RING 16X2	7026041	17	4	379	50 09 391	SEAL KIT DIRECTIONAL VALV
O-RING 16X2	7026041	7	2	380	50 09 562	SEAL KIT DIRECTIONAL VALV
O-RING 17,12X2,62	7015293	2	1	442	70 17 835	SEALING SET VALVE
O-RING 17,12X2,62	7028185	25	2	177	70 28 075	CONTROL UNIT
O-RING 17,12X2,62	7274384	1	1	440	70 13 133	SEAL KIT BRAKE VALVE
O-RING 17,17X1,78	10454719	20	1	378	10 45 471 6	SEAL KIT
O-RING 17,17X1,78	7013245	14	1	379	50 09 391	SEAL KIT DIRECTIONAL VALV
O-RING 17,17X1,78	7013245	10	1	380	50 09 562	SEAL KIT DIRECTIONAL VALV
O-RING 18,72X2,62	7002091	4	1	440	70 13 133	SEAL KIT BRAKE VALVE
O-RING 18,72X2,62	7017837	3	1	442	70 17 835	SEALING SET VALVE
O-RING 19,4X2,1	7019674	32	1	441	70 15 341	SEAL KIT STRAI.AHEAD TRAV
O-RING 20,29X2,62	7020576	5	1	382	70 30 267	SEAL KIT LIMIT VALVE
O-RING 20,29X2,62	7020576	43	1	441	70 15 341	SEAL KIT STRAI.AHEAD TRAV
O-RING 20,90X3	10040399	6	1	626	10 11 658 7	INJECTOR
O-RING 20,90X3	10040399	1	1	628	10 11 585 4	SEAL KIT INJECTION NOZZLE
O-RING 200X4	11067315	1	1	685	10 11 724 8	MOTOR CONTROL DEVICE
O-RING 20X2	7007339	38	1	382	70 30 267	SEAL KIT LIMIT VALVE
O-RING 20x2,5	10032888	1	1	153	76 16 897	FLANGE CONNECTION L
O-RING 21,89X2,62	10220698	13	3	160	10 22 041 7	FILTER
O-RING 21,89X2,62	7264404	20	1	380	50 09 562	SEAL KIT DIRECTIONAL VALV
O-RING 21,89X2,62	7367226	5	1	382	70 30 267	SEAL KIT LIMIT VALVE
O-RING 21,95X1,78	7024500	13	1	381	70 25 142	SEAL KIT
O-RING 220X3	726433101	3	1	228	93 28 018 01	BRAKE

Description	Item	Pos.	Quantity	Page	Assembly	Description
O-RING 220X3	726433101	67	1	241	94 44 522 03	SEAL KIT
O-RING 23,00X3	7361456	2	1	435	50 06 720	NON-RETURN VALVE
O-RING 23,47X2,62	7017838	4	1	442	70 17 835	SEALING SET VALVE
O-RING 23,47X2,62	7023769	8	1	174	11 82 151 3	SEALING SET VALVE
O-RING 23,52X1,78	11827911	31	1	376	10 22 099 7	SEAL KIT
O-RING 24X1,5	7030286	312	1	382	70 30 267	SEAL KIT LIMIT VALVE
O-RING 25X3,53	7015407	10	1	397	10 22 239 3	AERATION FILTER 2µm
O-RING 25x3,53	7015292	20	1	433	10 30 094 1	CONNECTION FLANGE
O-RING 25x3,53	7015292	9	1	437	50 08 855	NON-RETURN VALVE
O-RING 26X3	10004261	12	1	570	90 79 480	POWER UNIT SUPPORT ATT
O-RING 26X3	10004261	13	1	699	10 11 801 4	SEAL KIT AGGREGATE CARR
O-RING 26X3	10004261	13	1	702	10 11 583 8	SEAL KIT DIESEL ENGINE D9
O-RING 26X3	7007759	7	1	382	70 30 267	SEAL KIT LIMIT VALVE
O-RING 29,82X2,62	7006212	25	1	162	11 34 249 1	AXIAL PISTON PUMP
O-RING 290X4	7610335	74	1	227	90 02 790 4	SLEWING DRIVE SAT 325/254
O-RING 290X4	7610335	74	1	241	94 44 522 03	SEAL KIT
O-RING 2X1,5	10289308	20	7	264	10 02 131 0	SEAL KIT
O-RING 2X1,5	10289308	30	1	265	10 02 131 1	SEAL KIT
O-RING 30X3	7015284	17	2	441	70 15 341	SEAL KIT STRAI.AHEAD TRAV
O-RING 31,42X2,62	7015290	8	1	437	50 08 855	NON-RETURN VALVE
O-RING 32,92X3,53	7007733	16	1	426	10 28 535 8	NON-RETURN VALVE
O-RING 32,92X3,53	7007733	16	1	427	10 29 999 7	NON-RETURN VALVE
O-RING 320X4	7610343	26	1	226	90 02 790 4	SLEWING DRIVE SAT 325/254
O-RING 320X4	7610343	26	1	241	94 44 522 03	SEAL KIT
O-RING 350X3	7610210	71	1	110	96 87 443 01	TRACTION DRIVE FAT 400P07
O-RING 350X3	7610210	71	1	120	94 43 027	SEAL KIT
O-RING 40X4	10040404	3	1	623	10 11 585 5	SEAL KIT INJECTION PUMP U
O-RING 44,10X1,78	7381861	61	2	185	98 84 140	COOLING CIRCUIT PUMP
O-RING 44,10X1,78	7381861	61	2	832	10 11 948 2	SEAL KIT COOLING PUMP ZPA
O-RING 45X2,50	10040403	2	1	623	10 11 585 5	SEAL KIT INJECTION PUMP U
O-RING 46X3	7368904	10	1	396	10 02 217 5	LEVEL SENSOR
O-RING 47,22X3,53	7360048	16	1	441	70 15 341	SEAL KIT STRAI.AHEAD TRAV
O-RING 47X2,50	10040402	1	1	623	10 11 585 5	SEAL KIT INJECTION PUMP U
O-RING 4X1	7381562	43	2	184	98 82 875	SEAL KIT REGULATING VALVE
O-RING 50X3	7264024	68	14	425	10 11 386 0	CONTROL BLOCK
O-RING 50X3	7264024	1	2	439	56 02 345	SEAL KIT
O-RING 6,02X2,62	7028183	23	1	177	70 28 075	CONTROL UNIT
O-RING 6,07X1,78	7028159	15	1	168	10 22 063 5	SHUTDOWN VALVE
O-RING 6,2X1,5	11003560	11	1	155	98 81 609	SCREW PLUG M8X1
O-RING 6,2X1,5	11003560	24	4	807	10 11 856 1	PILOT CONTROL UNIT VG6-8
O-RING 6,2X1,5	11003560	24	4	808	11 37 560 6	PILOT CONTROL UNIT VG6-8
O-RING 63,17X2,62	7380970	13	1	607	10 11 585 1	SEAL KIT CYLINDER HEAD
O-RING 63,17X2,62	7380970	13	1	609	10 11 585 3	SEAL KIT ZYLINDER HEAD CPL
O-RING 63,17X2,62	7380970	8	1	644	10 11 570 3	CONNECTING LINE ADD-ON
O-RING 63,17X2,62	7380970	8	1	645	10 12 190 9	CONNECTING LINE ADD-ON
O-RING 68,26X3,53	7381593	3	2	655	10 13 281 7	WATER PUMP, PRE-ASSEMB
O-RING 68,26X3,53	7381593	11	2	699	10 11 801 4	SEAL KIT AGGREGATE CARR
O-RING 68,26X3,53	7381593	11	2	702	10 11 583 8	SEAL KIT DIESEL ENGINE D9
O-RING 68X3,50	7373747	6	2	89	11 60 010 7	TRACK ROLLER D7
O-RING 69,52X2,62	7006216	20	2	161	10 29 197 8	HYDRAULIC ADJUSTMENT
O-RING 6X1,5	10289311	20	2	265	10 02 131 1	SEAL KIT
O-RING 7,5X1,5	10289310	10	2	265	10 02 131 1	SEAL KIT
O-RING 7,65X1,78	10024675	3	3	238	10 04 048 0	CONTROL VALVE
O-RING 7,65X1,78	10024675	11	2	362	10 04 272 9	OIL PILOT VALVE
O-RING 7,65X1,78	10024675	3	3	367	56 17 123	PRESSURE REDUCTION VALV
O-RING 78,97X3,53	10220707	121	1	64	12 48 693 1	SERVICE KIT FIRST 500h
O-RING 78,97X3,53	10220707	121	1	67	12 48 693 2	SERVICE KIT 1000h
O-RING 78,97X3,53	10220707	121	1	70	12 48 693 3	SERVICE KIT 1500-2500h
O-RING 78,97X3,53	10220707	121	1	71	12 48 693 4	SERVICE KIT 2000h
O-RING 78,97X3,53	10220707	10	1	175	11 82 151 9	FILTER

Description	Item	Pos.	Quantity	Page	Assembly	Description
O-RING 78,97X353	10356237	10	1	106	10 35 654 7	SEAL KIT
O-RING 79X3	7264035	8	1	770	96 44 625	PISTON
O-RING 80X5,0	10022320	12	2	607	10 11 585 1	SEAL KIT CYLINDER HEAD
O-RING 80X5,0	10022320	12	2	609	10 11 585 3	SEAL KIT ZYLINDER HEAD CPL
O-RING 80X5,0	10022320	5	2	644	10 11 570 3	CONNECTING LINE ADD-ON
O-RING 80X5,0	10022320	5	2	645	10 12 190 9	CONNECTING LINE ADD-ON
O-RING 80X5,0	10022320	21	2	701	10 11 801 4	SEAL KIT AGGREGATE CARR
O-RING 82,22X2,62	10010293	20	1	170	10 28 264 7	GEAR PUMP
O-RING 83X7	7369286	2	1	393	73 73 881	FIBRE GLASS FILTER INSERT
O-RING 88,57X2,62	10220668	3	1	167	10 21 681 6	WEARING PLATE
O-RING 88,57X2,62	10220668	12	1	170	10 28 264 7	GEAR PUMP
O-RING 88,57X2,62	10220668	55	1	398	11 49 189 0	CONNECTING PLATE
O-RING 88X3	7264087	8	1	769	94 04 038 9	PISTON
O-RING 9,25X1,78	10043241	11	1	379	50 09 391	SEAL KIT DIRECTIONAL VALV
O-RING 9,25X1,78	10220549	19	1	172	10 29 197 5	ADJUSTING PISTON
O-RING 9,25X1,78	11827913	27	1	376	10 22 099 7	SEAL KIT
O-RING 9,25X1,78	7023929	21	1	371	10 32 372 8	PRESSURE REDUCTION VALV
O-RING 9,25X1,78	7023929	12	2	375	73 71 025	BREECH PLATE
O-RING 9,25X1,78	7028184	24	2	177	70 28 075	CONTROL UNIT
O-RING 9,25X1,78	7028184	26	2	398	11 49 189 0	CONNECTING PLATE
O-RING 98,02X3,53	7013694	61	1	145	10 04 853 9	PUMPS + COUPLING INSTALL
O-RING 9X2	7021769	410	1	112	10 00 201 1	BRAKE VALVE
O-RING AEHNL.ISO 3601-1 25X	10342770	3	1	602	10 12 038 4	CYLINDER HEAD
O-RING KIT	10018373	998	1	253	10 66 472 2	DISTRIBUTION BLOCK SXE-2
O-RING KIT	10018375	999	1	253	10 66 472 2	DISTRIBUTION BLOCK SXE-2
OIL ACCIDENT CASE ZW	7023359	150	1	52	90 66 466	ACCESSORIES
OIL ANALYSIS SET	7018368	12	1	51	90 66 466	ACCESSORIES
OIL ANALYSIS SET	8145660	10	1	51	90 66 466	ACCESSORIES
OIL COOLER 12 FLACHROHRE	5700087	3	1	613	90 73 507	OIL COOLER, PRE-ASSEMBLE
OIL COOLER ADD-ON D936	9073508	130	1	558	10 11 682 5	BASIC ENGINE D936 L HIGH 3
OIL COOLER HOUSING D936	9073505	1	1	613	90 73 507	OIL COOLER, PRE-ASSEMBLE
OIL COOLER, PRE-ASSEMBLE	9073507	1	1	612	90 73 508	OIL COOLER ADD-ON D936
OIL COOLING SYSTEM	10300992	2	1	199	10 21 851 3	COMBINATED RADIATOR
OIL COOLING SYSTEM	11694727	2	1	202	11 69 472 6	COMBINATED RADIATOR
OIL DIPSTICK	10115740	1	1	576	90 79 862	OIL DIPSTICK WITH PIPE
OIL DIPSTICK	9080209	4	1	158	10 11 886 0	PUMP DISTRIBUTION GEAR
OIL DIPSTICK WITH PIPE	9079862	21	1	549	10 11 714 5	DIESEL ENGINE D936 L A6 190
OIL DRAIN HOSE	9358137	180	1	540	10 84 856 2	TOOL EQUIPMENT
OIL DRAIN HOSE DN18X3	7402658	2	1m	541	93 58 137	OIL DRAIN HOSE
OIL DRAIN PLUG M 30 1,5	5004624	26	1	8	11 10 260 2	FUEL TANK FOR EXCHANGE
OIL DRAIN PLUG M 30 1,5	5004624	80	1	159	10 11 886 0	PUMP DISTRIBUTION GEAR
OIL DRAIN PLUG M 30 1,5	5004624	21	1	219	10 06 198 2	SLEWING GEAR
OIL DRAIN PLUG M 30 1,5	5004624	40	2	394	10 05 182 7	HYDRAULIC TANK
OIL DRAIN PLUG M 30 1,5	5004624	40	2	395	10 35 818 3	HYDRAULIC TANK
OIL DRAIN PLUG M 30 1,5	5004624	42	1	531	11 10 262 1	FUEL TANK ASSY.
OIL DRAIN PLUG M 30 1,5	5004624	36	1	534	10 06 759 6	FUEL TANK
OIL DRAIN PLUG M 30 1,5	5004624	36	1	535	10 49 835 9	FUEL TANK
OIL DRAIN PLUG M 30 1,5	5004624	8	1	574	12 83 245 4	OIL SUMP PRE-ASS.
OIL FILLER INLET	10119030	2	1	592	10 11 960 9	CYLINDER HEAD COVER ASS
OIL FILTER SET	5609948	11	1	346	10 06 379 3	OIL PILOT VALVE INSTALLATIO
OIL LINE PRE-ASSEMBLY 10X	9079978	25	1	549	10 11 714 5	DIESEL ENGINE D936 L A6 190
OIL PILOT VALVE	10042729	10	1	346	10 06 379 3	OIL PILOT VALVE INSTALLATIO
OIL PILOT VALVE INSTALLATIO	10063793	7025	1	343	10 35 862 6	HYDRAULIC INSTALLATION UP
OIL RETURN PIPE	9080684	17	1	665	90 80 736	EXHAUST TC MOUNTING
OIL RETURN PIPE 10X1	9079972	1	1	575	90 79 978	OIL LINE PRE-ASSEMBLY 10X
OIL RETURN PIPE 22X1,5	10118689	17	1	665	90 80 736	EXHAUST TC MOUNTING
OIL SUCTION HOSE 791 7300 3	10060418	80	1	145	10 04 853 9	PUMPS + COUPLING INSTALL
OIL SUMP	10123868	1	1	574	12 83 245 4	OIL SUMP PRE-ASS.
OIL SUMP	9079487	20	1	549	10 11 714 5	DIESEL ENGINE D936 L A6 190
OIL SUMP PRE-ASS.	12832454	5	1	571	90 79 487	OIL SUMP

Description	Item	Pos.	Quantity	Page	Assembly	Description
OIL TANK	968868001	1	1	237	96 91 056 01	OIL TANK
OIL TANK	969105601	5	1	220	90 02 790 3	SLEWING DRIVE SAT 325/254
OPERATING ELEMENT	10493087	70	1	329	11 00 054 6	DELI.PARTS EVAPORATOR
OPERATING ELEMENT	10493088	1	1	334	10 49 308 7	OPERATING ELEMENT
OPERATING HOURS COUNTE	11699679	90	1	276	11 38 339 7	ARM REST LEFT
OPERATING HOURS COUNTE	11699679	90	1	292	10 38 502 8	ARM REST LEFT
OPERATION	10491783	8	1	285	11 10 016 6	SEAT TOP
OPERATION	10491783	9	1	285	11 10 016 6	SEAT TOP
OPERATION	10493048	58	1	286	11 10 016 6	SEAT TOP
OPERATION	10493341	20	1	285	11 10 016 6	SEAT TOP
OPERATION	11066530	18	1	287	11 10 016 7	SUSPENSION
OPERATOR SEAT	10043632	50	1	272	10 49 880 5	DRIVER STAND BASE SECTIO
OPERATOR SEAT	94022477	50	1	272	10 49 880 5	DRIVER STAND BASE SECTIO
OPERATOR'S CAB	10228302	20	1	471	10 35 796 7	OPERATOR'S CAB
OPERATOR'S CAB	10357967	8700	1	124	10 35 861 4	UPPERCARRIAGE
OPERATOR'S CAB	10476169	20	1	471	10 35 796 7	OPERATOR'S CAB
OPERATOR'S PLATFORM	10498615	6000	1	123	10 35 861 4	UPPERCARRIAGE
OPT.DATA CAPTURE-DATA T	10825621	120	1	7	.	
ORIFICE	9266836	12	1	817	90 74 112	CONNECTING PLATE NG 090
ORIFICE NG 1,0MM / 6X6,5	9231952	147	1	410	10 35 863 8	CONTROL VALVE INSTALLAT
OUTER MULTI-DISC	944122003	62	6	221	90 01 453 8	MODIFICATION KIT
OUTER MULTI-DISC	944122003	62	6	227	90 02 790 4	SLEWING DRIVE SAT 325/254
OUTER MULTI-DISC	944122003	62	6	229	94 42 180 03	BRAKE MULTI-DISC SET
OUTER MULTI-DISC	9443021	52	6	110	96 87 443 01	TRACTION DRIVE FAT 400P07
OUTER MULTI-DISC	9443021	52	6	117	94 43 028 03	BRAKE MULTI-DISC SET
OUTLET MANIFOLD	10118611	2	2	653	10 11 547 9	EXHAUST PIPE PRE-ASS.
OUTLET MANIFOLD	11446526	1	1	653	10 11 547 9	EXHAUST PIPE PRE-ASS.
OUTLET MANIFOLD	9080876	1	1	653	10 11 547 9	EXHAUST PIPE PRE-ASS.
OUTLET VALVE	10136753	4	2	591	10 14 155 4	CYLINDER HEAD PRE-ASSY.
OUTLET VALVE	9074451	4	2	597	10 11 942 7	CYLINDER HEAD PRE-ASSY.
OUTLET VALVE	9074451	4	2	598	10 12 036 4	CYLINDER HEAD PRE-ASSY.
OUTPUT SHAFT HOUSING	90008633	1	1	226	90 02 790 4	SLEWING DRIVE SAT 325/254
OUTPUT SHAFT M=12 Z=11	90200992	10	1	226	90 02 790 4	SLEWING DRIVE SAT 325/254
OUTPUT STAGE	10687417	100	1	279	11 38 340 1	ARM REST RIGHT
OUTPUT STAGE	10687417	100	1	302	11 45 228 6	ARM REST RIGHT
OUTPUT STAGE	10687417	100	1	307	12 50 731 7	ARM REST RIGHT
OUTSIDE MIRROR	10044353	610	1	505	10 29 026 4	COMPONENTS
OUTSIDE MIRROR 243X155	7019140	810	2	507	10 04 435 3	OUTSIDE MIRROR
OUTSIDE MIRROR ASSEMBLY	10498786	9700	1	125	10 35 861 4	UPPERCARRIAGE
OUTSIDE MIRROR ASSEMBLY	10498786	9700	1	125	10 35 861 4	UPPERCARRIAGE
OVERFLOW VALVE	10038572	91	1	635	10 11 628 5	FUEL LINE
PACK PIECE LEFT	10289988	2	1	282	10 04 363 2	OPERATOR SEAT
PACKING CORD	10215888	40	0.05	217	11 10 291 6	SWING GEAR INSTALLATION
PAD	11082671	1	1	285	11 10 016 6	SEAT TOP
PAINTING	11102616	300	1	7	.	
PARALLEL PIN 4	7373202	380	1	421	10 30 079 8	STICK BYPASS VALVE
PARALLEL PIN 5h6	4981156	39	2	185	98 84 140	COOLING CIRCUIT PUMP
PARALLEL PIN 6m6	4000570	35	2	208	56 19 045	AXIAL PISTON MOTOR
PARALLEL PIN 6m6	4980000	5	1	617	90 80 278	SUCTION PUMP WITH FASTEN
PARALLEL PIN 6m6	7408829	33	1	208	56 19 045	AXIAL PISTON MOTOR
PARALLEL PIN 6m6	7408829	33	1	401	10 00 807 7	PUMP
PARALLEL PIN 8	7373201	230	1	421	10 30 079 8	STICK BYPASS VALVE
PARALLEL PIN 8m6	4980853	5	1	610	90 80 713	CAMSHAFT CPL.
PARTITION	10009201	490	1	509	10 29 035 2	INTERIOR PANELING
PARTITION	10009201	490	1	511	10 48 808 8	INTERIOR PANELING
PARTITION	10059993	2	1	131	10 06 261 8	PARTITION
PARTITION	10062618	20	1	129	10 08 004 4	FRAME INSTALLATION
PASTE	8100714	127	1	807	10 11 856 1	PILOT CONTROL UNIT VG6-8
PASTE	8100714	127	1	808	11 37 560 6	PILOT CONTROL UNIT VG6-8
PASTE 400G	8501565	20	1	538	10 08 428 6	TOOL EQUIPMENT

Description	Item	Pos.	Quantity	Page	Assembly	Description
PEDAL LEFT	9476442	1	1	326	94 76 369	FOOT PEDAL LEFT ASSEMBL
PEDAL RIGHT	9079302	1	1	741	90 79 392	FOOT PEDAL RIGHT ASSEMBL
PERFORMANCE RELAY	10009888	16	2	519	99 47 695	ELECTRICAL SYSTEM E50
PILOT CONTROL UNIT VG6-8	10118561	50	1	292	10 38 502 8	ARM REST LEFT
PILOT CONTROL UNIT VG6-8	10118561	50	1	301	11 45 228 6	ARM REST RIGHT
PILOT CONTROL UNIT VG6-8	10118561	50	1	305	12 50 731 7	ARM REST RIGHT
PILOT CONTROL UNIT VG6-8	11375606	50	1	276	11 38 339 7	ARM REST LEFT
PILOT CONTROL UNIT VG6-8	11375606	50	1	277	11 38 340 1	ARM REST RIGHT
PILOT CONTROL UNIT VG7 2-3	9079259	10	1	321	10 06 017 4	FOOT PILOT VALVE LEFT
PILOT CONTROL UNIT VG7 2-3	9079258	10	1	322	10 06 017 5	FOOT PILOT VALVE RIGHT
PILOT VALVE	5614029	4	1	362	10 04 272 9	OIL PILOT VALVE
PILOT VALVE	9882832	4	1	799	90 73 888	HYDRAULIC INSTALLATION
PIN	10022781	13	2	333	10 02 211 7	AIR CIRCULATION CASE
PIN	7020571	35	1	431	10 33 073 6	TRAVEL PILOT VALVE
PIN	7026126	30	1	112	10 00 201 1	BRAKE VALVE
PIN	7028351	15	1	390	56 17 688	SHUT OFF DEVICE
PIN	7028840	620	2	486	70 28 842	DOOR FRAME
PIN	9477429	18	1	825	10 13 975 2	REPAIR SET SWIVEL YOKE N
PIN 100X267X217	10056391	27	2	752	11 10 291 2	HOIST CYLINDER INSTALLAT
PIN 100X267X217	10405387	28	2	752	11 10 291 2	HOIST CYLINDER INSTALLAT
PIN 100X682X555	9354707	1	1	747	92 15 949 16	PIN CPL
PIN 100X755X700	10065223	16	2	725	11 10 280 7	STICK 2.10M
PIN 110X703X585	10062584	2	1	745	10 06 258 3	PIN CPL
PIN 12X28X1,5	9477439	13	2	154	90 73 242	CONNECTION HOUSING NG 15
PIN 130X1065X1015	10057907	2	1	127	10 08 736 5	ATTACHMENTS MOUNTING PA
PIN 80X669X588	10082869	2	1	746	10 08 390 7	PIN CPL
PIN 8X16	7738704	32	4	446	10 35 865 5	COVERS
PIN 8X16	7738704	92	2	447	10 35 865 5	COVERS
PIN 8X16	7738704	22	2	462	10 35 826 4	TOOL BOX
PIN 8X16	7738704	20	2	468	10 03 720 9	GAS SPRING
PIN CPL	10062583	14	1	725	11 10 280 7	STICK 2.10M
PIN CPL	10083907	13	1	725	11 10 280 7	STICK 2.10M
PIN CPL	921594916	35	1	712	11 10 294 5	GOOSENECK BOOM 6.45M
PIN CPL 100X380X330	9354695	37	1	712	11 10 294 5	GOOSENECK BOOM 6.45M
PIN CPL 100X380X330	9354695	30	1	725	11 10 280 7	STICK 2.10M
PIN CPL 100X430X380	9486090	36	1	712	11 10 294 5	GOOSENECK BOOM 6.45M
PIN HOUSING HD 9-POL 100A	6204241	10	1	519	99 47 695	ELECTRICAL SYSTEM E50
PIN NG 140-280 (D)	9888133	19	1	825	10 13 975 2	REPAIR SET SWIVEL YOKE N
PIPE CLAMP	10358636	30	1	420	10 35 863 7	HYDR.TUBES INSTALLATION
PIPE CLAMP d=12	7382081	3	2	638	10 11 726 8	CLAMP - ADD-ON UNIT
PIPE CLAMP d=12	7382216	5	1	641	10 11 657 6	CONNECTION PIECE
PIPE CLAMP d=69	9079957	6	1	644	10 11 570 3	CONNECTING LINE ADD-ON
PIPE CLAMP d=69	9079957	6	1	645	10 12 190 9	CONNECTING LINE ADD-ON
PIPE FRACTION SAFETY VALV	11825269	10	1	775	11 45 729 6	HOIST CYLINDER RIGHT
PIPE FRACTION SAFETY VALV	11825272	10	1	778	11 45 729 7	HOIST CYLINDER LEFT
PIPE SOCKET	10011995	210	1	260	90 64 786	CONNECTING ELEMENT
PIPE SOCKET	10011995	110	6	263	10 01 461 1	AUXILIARY BOX
PIPE SOCKET	10802630	120	1	258	90 64 786	CONNECTING ELEMENT
PIPE SOCKET	12222582	129	1	258	90 64 786	CONNECTING ELEMENT
PIPE SOCKET 15° D8	10412844	215	1	260	90 64 786	CONNECTING ELEMENT
PIPE SOCKET 15° D8	10412844	115	2	263	10 01 461 1	AUXILIARY BOX
PIPE SOCKET 90°,H=33MM 6S	10027260	126	1	258	90 64 786	CONNECTING ELEMENT
PIPE SOCKET 90°,H=33MM 6S	10027260	26	4	262	10 01 461 1	AUXILIARY BOX
PIPE SOCKET DN4	511701914	127	1	258	90 64 786	CONNECTING ELEMENT
PIPE SOCKET DN4	511701914	27	4	262	10 01 461 1	AUXILIARY BOX
PIPE SOCKET DN6	7623704	125	1	258	90 64 786	CONNECTING ELEMENT
PIPE SOCKET DN6	7623704	25	4	262	10 01 461 1	AUXILIARY BOX
PIPE SOCKET DN6	7623705	121	1	258	90 64 786	CONNECTING ELEMENT
PIPE SOCKET DN6	7623705	20	6	262	10 01 461 1	AUXILIARY BOX
PIPE SOCKET DN6	7623707	128	1	258	90 64 786	CONNECTING ELEMENT

Description	Item	Pos.	Quantity	Page	Assembly	Description
PIPE SOCKET DN6	7623707	28	2	262	10 01 461 1	AUXILIARY BOX
PIPE SOCKET DN6	7624177	111	1	258	90 64 786	CONNECTING ELEMENT
PIPE SOCKET DN6	7624177	11	5	262	10 01 461 1	AUXILIARY BOX
PIPE SOCKET DN8	10040776	220	1	260	90 64 786	CONNECTING ELEMENT
PIPE SOCKET DN8	10040776	120	2	263	10 01 461 1	AUXILIARY BOX
PIPE SOCKET DN8	10040777	225	1	260	90 64 786	CONNECTING ELEMENT
PIPE SOCKET DN8	10040777	125	2	263	10 01 461 1	AUXILIARY BOX
PIPE SOCKET DN8	10040778	226	1	260	90 64 786	CONNECTING ELEMENT
PIPE SOCKET DN8	10040778	126	2	263	10 01 461 1	AUXILIARY BOX
PIPE SOCKET DN8	10040779	227	1	260	90 64 786	CONNECTING ELEMENT
PIPE SOCKET DN8	10040779	127	2	263	10 01 461 1	AUXILIARY BOX
PIPE SOCKET M10X1-M7X0,75	12253955	112	1	258	90 64 786	CONNECTING ELEMENT
PIPE SOCKET M7X0,75-M7X0,7	12253954	141	1	258	90 64 786	CONNECTING ELEMENT
PIPE SOCKET R1/4"	10014698	15	1	249	10 22 844 3	LUBRICATION PUMP
PIPE UNION GE 8L R 1/4"	10013875	19	1	249	10 22 844 3	LUBRICATION PUMP
PIPELINE	10116499	1	1	634	10 11 628 5	FUEL LINE
PIPELINE	10116572	2	1	641	10 11 657 6	CONNECTION PIECE
PIPELINE	10116573	1	1	641	10 11 657 6	CONNECTION PIECE
PIPELINE	10117950	3	1	569	10 11 832 9	REPAIR KIT PIPE LINE D936
PIPELINE	774378008	32	2	719	10 66 480 4	DISTRIBUTION BLOCK MX-F 5/
PIPELINE	774378008	32	2	733	10 66 475 5	DISTRIBUTION BLOCK MX-F 7/
PIPELINE	9079082	1	1	639	90 79 083	PIPELINE INSTALLATION
PIPELINE 10X1	10115489	3	1	637	10 11 559 5	LEAK OIL RETURN LINE
PIPELINE 10X1	10116287	54	1	635	10 11 628 5	FUEL LINE
PIPELINE 10X1	10116289	53	1	635	10 11 628 5	FUEL LINE
PIPELINE 10X1	10116290	10	1	634	10 11 628 5	FUEL LINE
PIPELINE 10X1	10116453	5	1	634	10 11 628 5	FUEL LINE
PIPELINE 10X1	10116482	11	1	634	10 11 628 5	FUEL LINE
PIPELINE 10X1	9080922	58	1	635	10 11 628 5	FUEL LINE
PIPELINE 12X1	10116467	7	1	634	10 11 628 5	FUEL LINE
PIPELINE 22X1,5	10119168	3	1	566	10 11 916 7	CRANKCASE BREATHER ASSE
PIPELINE 6X1	10115491	2	1	637	10 11 559 5	LEAK OIL RETURN LINE
PIPELINE 6X1	9078984	4	1	691	90 78 961	POWER TAKE-OFF ADD-ON
PIPELINE 6X1	9080009	15	1	692	90 80 006	POWER TAKE-OFF ADD-ON
PIPELINE INSTALLATION	9079083	381	1	559	10 11 682 5	BASIC ENGINE D936 L HIGH 3
PISTON	10008403	1	9	206	10 00 840 5	DRIVING GEAR
PISTON	10122498	12	4	807	10 11 856 1	PILOT CONTROL UNIT VG6-8
PISTON	10122498	12	4	808	11 37 560 6	PILOT CONTROL UNIT VG6-8
PISTON	10216691	2	9	402	10 22 042 7	DRIVING GEAR
PISTON	10287742	1	9	157	10 00 809 5	DRIVING GEAR
PISTON	11314611	5	1	95	11 00 410 3	SPRING ASSEMBLY CPL
PISTON	5008441	6	1	431	10 33 073 6	TRAVEL PILOT VALVE
PISTON	5612180	4	1	168	10 22 063 5	SHUTDOWN VALVE
PISTON	5617474	70	1	421	10 30 079 8	STICK BYPASS VALVE
PISTON	7028169	3	2	177	70 28 075	CONTROL UNIT
PISTON	7029398	20	1	112	10 00 201 1	BRAKE VALVE
PISTON	7413407	1	9	171	10 28 772 5	DRIVING GEAR
PISTON	9075361	1	1	563	10 11 795 1	FINAL CONTROL VALVE
PISTON	9075361	1	1	564	90 75 134	FINAL CONTROL VALVE
PISTON	9079756	61	1	820	90 78 788	REGULATOR COVER LR SD D
PISTON	9265263	11	1	766	92 65 991	FLOW REGULATING CHECK
PISTON	9265392	12	2	323	90 79 258	PILOT CONTROL UNIT VG7 2-3
PISTON	9265392	12	2	742	90 79 264	MODIFICATION KIT VG7-2/3
PISTON	94040389	12	1	760	11 68 144 7	HYDRAULIC CYLINDER
PISTON	94040390	1	1	769	94 04 038 9	PISTON
PISTON	9644623	1	1	770	96 44 625	PISTON
PISTON	9644625	12	1	761	95 93 026	HYDRAULIC CYLINDER
PISTON	9644625	12	1	762	96 44 648	HYDRAULIC CYLINDER
PISTON	9886591	20	1	613	90 73 507	OIL COOLER, PRE-ASSEMBLE
PISTON	9886591	9	1	618	90 72 781	LUBRICATING OIL PUMP

Description	Item	Pos.	Quantity	Page	Assembly	Description
PISTON COOLING	9073795	15	6	557	10 11 682 5	BASIC ENGINE D936 L HIGH 3
PISTON COOLING NOZZLE	9073796	1	1	562	90 73 795	PISTON COOLING
PISTON CPL. d=122	9080687	70	6	557	10 11 682 5	BASIC ENGINE D936 L HIGH 3
PISTON GLR NG 165	9881231	19	1	820	90 78 788	REGULATOR COVER LR SD D
PISTON GUIDE RING 160X152X	9177716	2	2	770	96 44 625	PISTON
PISTON GUIDE RING 160X155X	7003430	6	3	770	96 44 625	PISTON
PISTON GUIDE RING 170X162X	9177717	2	2	769	94 04 038 9	PISTON
PISTON GUIDE RING 170X165X	7003429	6	3	769	94 04 038 9	PISTON
PISTON PRE-ASS.	9080686	1	1	588	90 80 687	PISTON CPL. d=122
PISTON RING MG 122X112,1X	10472346	4	1	589	90 80 686	PISTON PRE-ASS.
PISTON ROD	10008082	3	1	400	10 00 807 7	PUMP
PISTON ROD	10297878	3	1	400	10 00 807 7	PUMP
PISTON ROD	94046929	8	1	760	11 68 144 7	HYDRAULIC CYLINDER
PISTON ROD	9594127	8	1	762	96 44 648	HYDRAULIC CYLINDER
PISTON ROD	9594190	8	1	761	95 93 026	HYDRAULIC CYLINDER
PISTON ROD BEARING	94006888	13	1	760	11 68 144 7	HYDRAULIC CYLINDER
PISTON ROD BEARING	94027949	13	1	761	95 93 026	HYDRAULIC CYLINDER
PISTON ROD BEARING	9591741	13	1	762	96 44 648	HYDRAULIC CYLINDER
PISTON SD NG 165	9881232	20	1	820	90 78 788	REGULATOR COVER LR SD D
PISTON SEAL	7017841	7	1	442	70 17 835	SEALING SET VALVE
PISTON W/ SPRING	10295718	25	1	424	10 11 386 0	CONTROL BLOCK
PISTON W/ SPRING	10296859	27	1	424	10 11 386 0	CONTROL BLOCK
PISTON W/ SPRING	10296859	30	1	424	10 11 386 0	CONTROL BLOCK
PISTON W/ SPRING	10330735	31	1	424	10 11 386 0	CONTROL BLOCK
PISTON W/ SPRING	10333329	26	1	424	10 11 386 0	CONTROL BLOCK
PISTON W/ SPRING	10333330	28	1	424	10 11 386 0	CONTROL BLOCK
PISTON W/ SPRING	10333331	29	1	424	10 11 386 0	CONTROL BLOCK
PISTON W/ SPRING	10333333	32	1	424	10 11 386 0	CONTROL BLOCK
PISTON W/ SPRING	10333760	165	1	421	10 30 079 8	STICK BYPASS VALVE
PISTON WITH GUIDE SHOE N	9274285	1	9	234	90 74 125	REPAIR KIT DRIVING MECHANI
PISTON WITH GUIDE SHOE N	9274285	1	9	830	98 80 608	RK PISTON WITH GUIDE SHOE
PISTON WITH GUIDE SHOE N	9072692	1	9	179	90 72 997	RK PISTON WITH GUIDE SHOE
PISTON WITH GUIDE SHOE N	9887036	1	9	186	98 89 831	RK PISTON WITH GUIDE SHOE
PISTON WRENCH SW 110	9600928	985	1	770	96 44 625	PISTON
PISTON WRENCH SW120	9600769	985	1	769	94 04 038 9	PISTON
PISTON d=122	9080685	1	1	589	90 80 686	PISTON PRE-ASS.
PIVOT PIN	11822439	13	2	162	11 34 249 1	AXIAL PISTON PUMP
PLAIN BEARING BUSHING 20/	9074969	2	2	655	10 13 281 7	WATER PUMP, PRE-ASSEMB
PLAIN BEARING BUSHING 30/	9889290	3	1	697	90 77 717	BEARING HOUSING, PRE-AS
PLANET WHEEL	9443005	1	1	113	94 43 004 03	PLANET WHEEL M=4 Z=27
PLANET WHEEL M=3,25 Z=34	932777801	47	3	227	90 02 790 4	SLEWING DRIVE SAT 325/254
PLANET WHEEL M=3,25 Z=34	932777901	47	3	222	90 02 197 3	MODIFICATION KIT
PLANET WHEEL M=3,25 Z=34	932777901	1	1	224	93 27 778 01	PLANET WHEEL M=3,25 Z=34
PLANET WHEEL M=3,25 Z=35	944356303	37	4	226	90 02 790 4	SLEWING DRIVE SAT 325/254
PLANET WHEEL M=3,25 Z=35	944356403	1	1	225	94 43 563 03	PLANET WHEEL M=3,25 Z=35
PLANET WHEEL M=4 Z=27	944300403	5	5	109	96 87 443 01	TRACTION DRIVE FAT 400P07
PLANET WHEEL M=4 Z=28	9443016	1	1	115	96 86 142 01	PLANET WHEEL M=4 Z=28
PLANET WHEEL M=4 Z=28	968614201	32	3	109	96 87 443 01	TRACTION DRIVE FAT 400P07
PLANET WHEEL M=4 Z=29	944301003	22	3	109	96 87 443 01	TRACTION DRIVE FAT 400P07
PLANET WHEEL M=4 Z=29	9443011	1	1	114	94 43 010 03	PLANET WHEEL M=4 Z=29
PLANETARY CARRIER	932777701	45	1	222	90 02 197 3	MODIFICATION KIT
PLANETARY CARRIER	932777701	45	1	227	90 02 790 4	SLEWING DRIVE SAT 325/254
PLANETARY CARRIER	944300803	20	1	109	96 87 443 01	TRACTION DRIVE FAT 400P07
PLANETARY CARRIER	9443013	30	1	109	96 87 443 01	TRACTION DRIVE FAT 400P07
PLANETARY CARRIER	9444501	35	1	226	90 02 790 4	SLEWING DRIVE SAT 325/254
PLASTIC SPIRAL HOSE DN40X	10410125	48	1	137	10 49 819 9	AIR FILTER INSTALLATION
PLASTIC TUBE	7028899	380	1	504	10 29 026 4	COMPONENTS
PLATE	10060165	90	1	194	10 04 853 6	ENGINE COOLING
PLATE	10060193	4	2	423	10 35 863 6	PIPE CLAMP
PLATE	10060199	6	1	423	10 35 863 6	PIPE CLAMP

Description	Item	Pos.	Quantity	Page	Assembly	Description
PLATE	10060652	4	1	470	10 35 866 0	LOWER COVERING
PLATE	10060668	10	1	470	10 35 866 0	LOWER COVERING
PLATE	10062023	175	1	450	10 35 865 5	COVERS
PLATE	10062655	110	2	448	10 35 865 5	COVERS
PLATE	10062868	230	1	452	10 35 865 5	COVERS
PLATE	10063092	40	1	194	10 04 853 6	ENGINE COOLING
PLATE	10063243	6	1	470	10 35 866 0	LOWER COVERING
PLATE	10063268	2	1	204	10 06 309 3	COOLER SEALING
PLATE	10063654	20	1	212	10 04 853 8	ENGINE ADD-ON PARTS
PLATE	10064302	70	1	447	10 35 865 5	COVERS
PLATE	10066134	20	1	406	10 35 863 8	CONTROL VALVE INSTALLAT
PLATE	10068116	40	1	753	11 10 291 2	HOIST CYLINDER INSTALLAT
PLATE	10071171	50	1	463	10 35 826 4	TOOL BOX
PLATE	10081831	20	1	456	10 05 183 8	BONNET RIGHT
PLATE	10082807	60	1	463	10 35 826 4	TOOL BOX
PLATE	10083050	30	1	542	10 49 878 6	OUTSIDE MIRROR ASSEMBLY
PLATE	10115591	4	1	641	10 11 657 6	CONNECTION PIECE
PLATE	10358258	8	1	470	10 35 866 0	LOWER COVERING
PLATE	10358259	9	1	470	10 35 866 0	LOWER COVERING
PLATE	10406664	9	2	456	10 05 183 8	BONNET RIGHT
PLATE	9758230	101	1	279	11 38 340 1	ARM REST RIGHT
PLATE	9758230	101	1	302	11 45 228 6	ARM REST RIGHT
PLATE	9758230	101	1	307	12 50 731 7	ARM REST RIGHT
PLATE	9892073	8	2	536	10 49 800 2	COUNTERWEIGHT INSTALLAT
PLATE	9943165	40	1	321	10 06 017 4	FOOT PILOT VALVE LEFT
PLATE	9943165	40	1	322	10 06 017 5	FOOT PILOT VALVE RIGHT
PLATE	9946134	30	1	321	10 06 017 4	FOOT PILOT VALVE LEFT
PLATE	9946134	30	1	322	10 06 017 5	FOOT PILOT VALVE RIGHT
PLATE	9949077	5	1	470	10 35 866 0	LOWER COVERING
PLATE	9949436	7	1	470	10 35 866 0	LOWER COVERING
PLATE LEFT	10340116	39	1	200	10 21 851 3	COMBINATED RADIATOR
PLATE LEFT	10340116	39	1	203	11 69 472 6	COMBINATED RADIATOR
PLATE LEFT	7028895	260	1	503	10 29 026 4	COMPONENTS
PLATE RIGHT	10340117	38	1	200	10 21 851 3	COMBINATED RADIATOR
PLATE RIGHT	10340117	38	1	203	11 69 472 6	COMBINATED RADIATOR
PLATINE	9202120	10	1	751	10 35 860 1	TRAVEL ALARM
PLATINES INSTALLATION	9874988	45	1	276	11 38 339 7	ARM REST LEFT
PLATINES INSTALLATION	9874988	45	1	292	10 38 502 8	ARM REST LEFT
PLUG	10012889	20	1	397	10 22 239 3	AERATION FILTER 2µm
PLUG	11834725	10	1	796	11 69 501 2	UREA FILLING KIT
PLUG	7025644	1	1	300	73 69 377	CIGARETTE LIGHTER
PLUG-TYPE SCREW COUPLIN	257103802	15	1	655	10 13 281 7	WATER PUMP, PRE-ASSEMB
PNEUMATIC SPRING	10492981	5	1	287	11 10 016 7	SUSPENSION
POT	10470774	3	1	355	10 04 462 4	PRESSURE FILTER
POWER SAFETY SWITCH	10012172	20	2	519	99 47 695	ELECTRICAL SYSTEM E50
POWER SUPPLY WH	9956949	70	1	284	94 02 247 7	OPERATOR SEAT
POWER TAKE-OFF ADD-ON	9073767	210	1	559	10 11 682 5	BASIC ENGINE D936 L HIGH 3
POWER TAKE-OFF ADD-ON	9077719	650	1	555	10 11 714 5	DIESEL ENGINE D936 L A6 190
POWER TAKE-OFF ADD-ON	9078961	654	1	556	10 11 714 5	DIESEL ENGINE D936 L A6 190
POWER TAKE-OFF ADD-ON	9080006	652	1	555	10 11 714 5	DIESEL ENGINE D936 L A6 190
POWER UNIT SUPPORT	10141908	1	1	570	90 79 480	POWER UNIT SUPPORT ATT
POWER UNIT SUPPORT ATT	9079480	12	1	557	10 11 682 5	BASIC ENGINE D936 L HIGH 3
PRE-SEPARATOR	10813960	6	1	793	10 49 866 6	AIR FILTER INSTALLATION
PREMOUNTING F.RADIO	11102652	55	1	7	.	
PREMOUNTING F.RADIO	11102653	2	1	784	11 10 265 2	PREMOUNTING F.RADIO
PRESSURE FEEDER VALVE	5007236	45	9	424	10 11 386 0	CONTROL BLOCK
PRESSURE FILTER	10044624	35	1	353	10 06 379 8	HYDR.SUCT.+RETURN OIL HO
PRESSURE LIMITING CARTRI	5009565	5	1	362	10 04 272 9	OIL PILOT VALVE
PRESSURE LIMITING VALVE	11006050	1	2	398	11 49 189 0	CONNECTING PLATE
PRESSURE LIMITING VALVE	12246692	2	1	398	11 49 189 0	CONNECTING PLATE

Description	Item	Pos.	Quantity	Page	Assembly	Description
PRESSURE LIMITING VALVE	12410054	1	2	816	90 73 786	CONNECTING PLATE NG 100
PRESSURE LIMITING VALVE	5602487	40	1	359	10 35 862 4	HYDR.INSTALLATION FAN DR
PRESSURE LIMITING VALVE	7028300	120	1	365	56 02 487	PRESSURE LIMITING VALVE
PRESSURE LIMITING VALVE	9267037	2	1	817	90 74 112	CONNECTING PLATE NG 090
PRESSURE LINE CPL	10057720	5	1	420	10 35 863 7	HYDR.TUBES INSTALLATION
PRESSURE LINE CPL	10057721	4	1	420	10 35 863 7	HYDR.TUBES INSTALLATION
PRESSURE LINE CPL	10057722	2	1	420	10 35 863 7	HYDR.TUBES INSTALLATION
PRESSURE LINE CPL	10057723	3	1	420	10 35 863 7	HYDR.TUBES INSTALLATION
PRESSURE LINE CPL	10061561	8	1	758	10 35 857 3	HYDR.CYLINDER W/ADDITION.
PRESSURE LINE CPL	10061574	41	1	712	11 10 294 5	GOOSENECK BOOM 6.45M
PRESSURE LINE CPL	10061575	42	1	712	11 10 294 5	GOOSENECK BOOM 6.45M
PRESSURE LINE CPL	10061576	43	1	712	11 10 294 5	GOOSENECK BOOM 6.45M
PRESSURE LINE CPL	10061577	44	1	712	11 10 294 5	GOOSENECK BOOM 6.45M
PRESSURE LINE CPL	10061580	47	1	712	11 10 294 5	GOOSENECK BOOM 6.45M
PRESSURE LINE CPL	10061581	48	1	712	11 10 294 5	GOOSENECK BOOM 6.45M
PRESSURE LINE CPL	10064402	3	1	759	10 85 361 0	HYDR.CYLINDER W/ADDITION.
PRESSURE LINE CPL	10080548	20	1	775	11 45 729 6	HOIST CYLINDER RIGHT
PRESSURE LINE CPL	10080549	20	1	778	11 45 729 7	HOIST CYLINDER LEFT
PRESSURE LINE CPL	10374090	21	1	778	11 45 729 7	HOIST CYLINDER LEFT
PRESSURE LINE CPL	10374095	21	1	775	11 45 729 6	HOIST CYLINDER RIGHT
PRESSURE LINE CPL	10852757	23	2	775	11 45 729 6	HOIST CYLINDER RIGHT
PRESSURE LINE CPL	10852757	23	2	778	11 45 729 7	HOIST CYLINDER LEFT
PRESSURE LINE CPL	9399769	49	1	753	11 10 291 2	HOIST CYLINDER INSTALLAT
PRESSURE LINE CPL	9399770	47	1	753	11 10 291 2	HOIST CYLINDER INSTALLAT
PRESSURE LINE CPL	9399771	48	1	753	11 10 291 2	HOIST CYLINDER INSTALLAT
PRESSURE LINE CPL	9399772	46	1	753	11 10 291 2	HOIST CYLINDER INSTALLAT
PRESSURE PIN	10008429	9	1	157	10 00 809 5	DRIVING GEAR
PRESSURE PIN	10008429	9	3	206	10 00 840 5	DRIVING GEAR
PRESSURE PIN	10665379	9	3	171	10 28 772 5	DRIVING GEAR
PRESSURE REDUCTION VALV	10323728	2	1	367	56 17 123	PRESSURE REDUCTION VALV
PRESSURE REDUCTION VALV	10454715	1	1	372	10 44 157 9	PRESSURE RELIEF VALVE
PRESSURE REDUCTION VALV	5617123	65	1	347	10 06 379 3	OIL PILOT VALVE INSTALLATIO
PRESSURE RELIEF VALVE	10441579	11	1	754	10 85 472 4	BASIC MACHINE MOUNTING
PRESSURE RELIEF VALVE	7621324	14	1	249	10 22 844 3	LUBRICATION PUMP
PRESSURE SPRING	10008087	10	1	400	10 00 807 7	PUMP
PRESSURE SPRING	10216715	29	1	402	10 22 042 7	DRIVING GEAR
PRESSURE SPRING	10216810	5	1	174	11 82 151 3	SEALING SET VALVE
PRESSURE SPRING	10220547	9	2	172	10 29 197 5	ADJUSTING PISTON
PRESSURE SPRING	10220548	10	2	172	10 29 197 5	ADJUSTING PISTON
PRESSURE SPRING	10220550	26	2	172	10 29 197 5	ADJUSTING PISTON
PRESSURE SPRING	10220821	5	1	169	10 22 081 6	COLD STAR VALVE
PRESSURE SPRING	11261514	7	1	168	10 22 063 5	SHUTDOWN VALVE
PRESSURE SPRING	7028171	5	2	177	70 28 075	CONTROL UNIT
PRESSURE SPRING	7028177	11	2	177	70 28 075	CONTROL UNIT
PRESSURE SPRING	7028302	40	1	374	70 28 300	PRESSURE LIMITING VALVE
PRESSURE SPRING	7028814	270	1	482	70 28 807	LOCK RIGHT HAND
PRESSURE SPRING	7028814	270	1	483	70 28 808	LOCK LEFT HAND
PRESSURE SPRING	7369779	53	6	425	10 11 386 0	CONTROL BLOCK
PRESSURE SPRING	7369780	55	2	425	10 11 386 0	CONTROL BLOCK
PRESSURE SPRING	7610100	61	20	110	96 87 443 01	TRACTION DRIVE FAT 400P07
PRESSURE SPRING	7610100	61	20	118	94 43 029 03	BRAKE REPAIR KIT
PRESSURE SPRING	7610101	62	20	110	96 87 443 01	TRACTION DRIVE FAT 400P07
PRESSURE SPRING	7610101	62	20	118	94 43 029 03	BRAKE REPAIR KIT
PRESSURE SPRING	7610107	6	23	228	93 28 018 01	BRAKE
PRESSURE SPRING	7610108	7	23	228	93 28 018 01	BRAKE
PRESSURE SPRING 0,8X6,8X2	7015994	220	1	98	12 23 362 5	SPARE PARTS KIT
PRESSURE SPRING 0,8X6,8X2	7015994	220	2	112	10 00 201 1	BRAKE VALVE
PRESSURE SPRING 0,8X6,8X2	7015994	2	1	434	50 06 719	NON-RETURN VALVE
PRESSURE SPRING 0,8X6,8X2	7015994	3	1	435	50 06 720	NON-RETURN VALVE
PRESSURE SPRING 1,1X6,5X3	10355861	25	4	807	10 11 856 1	PILOT CONTROL UNIT VG6-8

Description	Item	Pos.	Quantity	Page	Assembly	Description
PRESSURE SPRING 1,1X6,5X3	10355861	25	4	808	11 37 560 6	PILOT CONTROL UNIT VG6-8
PRESSURE SPRING 1,25X11,5	9265521	28	4	807	10 11 856 1	PILOT CONTROL UNIT VG6-8
PRESSURE SPRING 1,25X11,5	9265521	28	4	808	11 37 560 6	PILOT CONTROL UNIT VG6-8
PRESSURE SPRING 1,30X5,2	7382188	30	22	180	90 72 998	RK PULL-BACK BALL+PULL-B.
PRESSURE SPRING 1,30X5,2	7382188	30	21	231	90 73 380	RK PULL-BACK BALL+PULL-B.
PRESSURE SPRING 1,30X5,2	7382188	30	21	234	90 74 125	REPAIR KIT DRIVING MECHANI
PRESSURE SPRING 1,30X5,2	7382188	30	22	823	90 74 122	REPAIR KIT DRIVING MECHANI
PRESSURE SPRING 1,30X5,5	7382167	31	24	190	98 89 983	REPAIR KIT DRIVING MECHAN
PRESSURE SPRING 1,30X5,5	7382167	31	24	191	98 89 984	REPAIR KIT DRIVING MECHANI
PRESSURE SPRING 1,30X5,5	7382167	30	24	192	98 89 988	RK PULL-BACK BALL+PULL-B.
PRESSURE SPRING 1,30X6,1	9268054	25	2	323	90 79 258	PILOT CONTROL UNIT VG7 2-3
PRESSURE SPRING 1,30X7,8	9266063	13	1	818	98 82 832	PILOT VALVE
PRESSURE SPRING 1,40X6,30	10112524	25	2	742	90 79 264	MODIFICATION KIT VG7-2/3
PRESSURE SPRING 1,50X20,0	9265266	15	1	766	92 65 991	FLOW REGULATING CHECK
PRESSURE SPRING 1,8X12,2	7366885	13	1	431	10 33 073 6	TRAVEL PILOT VALVE
PRESSURE SPRING 2,00X10,8	7381807	26	2	323	90 79 258	PILOT CONTROL UNIT VG7 2-3
PRESSURE SPRING 2,00X10,8	7381807	26	2	742	90 79 264	MODIFICATION KIT VG7-2/3
PRESSURE SPRING 2,10X17,8	9886756	21	1	613	90 73 507	OIL COOLER, PRE-ASSEMBLE
PRESSURE SPRING 2,25X18X6	9145973	12	1	564	90 75 134	FINAL CONTROL VALVE
PRESSURE SPRING 2,5X16X6	10120929	12	1	563	10 11 795 1	FINAL CONTROL VALVE
PRESSURE SPRING 3,40X16,6	7381302	10	1	618	90 72 781	LUBRICATING OIL PUMP
PRESSURE SPRING 3,60X28,4	7381763	15	1	116	98 82 760	ADJUSTMENT NG 100
PRESSURE SPRING 3,60X28,4	7381763	15	1	810	11 38 131 3	ADJUSTMENT NG 100
PRESSURE SPRING 4,60X28,4	9074481	9	4	591	10 14 155 4	CYLINDER HEAD PRE-ASSY.
PRESSURE SPRING 4,60X28,4	9074481	9	4	597	10 11 942 7	CYLINDER HEAD PRE-ASSY.
PRESSURE SPRING 4,60X28,4	9074481	9	4	598	10 12 036 4	CYLINDER HEAD PRE-ASSY.
PRESSURE SPRING 5X42,4X12	7004020	51	1	432	73 69 779	PRESSURE SPRING
PRESSURE SPRING 6,3X25X6	7369476	170	1	112	10 00 201 1	BRAKE VALVE
PRESSURE SPRING 6,5X28,1	7002884	50	1	432	73 69 779	PRESSURE SPRING
PRESSURE SWITCH	10100708	65	1	276	11 38 339 7	ARM REST LEFT
PRESSURE SWITCH	10100708	65	2	277	11 38 340 1	ARM REST RIGHT
PRESSURE SWITCH	10100708	65	1	292	10 38 502 8	ARM REST LEFT
PRESSURE SWITCH	10100708	65	2	301	11 45 228 6	ARM REST RIGHT
PRESSURE SWITCH	10100708	65	2	305	12 50 731 7	ARM REST RIGHT
PRESSURE SWITCH	10292659	2	1	527	10 29 266 0	UNIT RECEIVER-DRYER
PRESSURE SWITCH	10467727	36	1	360	10 06 380 1	HYDR.INSTAL.CONTROL TUBE
PRESSURE TRANSMITTER 0,5	10100781	1	1	678	90 76 550	PRESSURE TRANSMITTER C
PRESSURE TRANSMITTER 0-	10025124	1	1	676	90 76 531	PRESSURE TRANSMITTER C
PRESSURE TRANSMITTER 400	10280390	40	1	514	11 10 255 3	ELECTRICAL SYSTEM
PRESSURE TRANSMITTER C	9076550	10	1	673	90 76 551	ENGINE CONTROL SENSORS
PRESSURE TRANSMITTER C	9076531	11	1	674	90 76 551	ENGINE CONTROL SENSORS
PRIMARY SHAFT CPL. Z=45 M=	10119089	10	1	821	10 11 909 3	REPAIR KIT DRIVE SHAFT PV
PROFILE	10002427	15	1m	444	10 09 413 5	COVERING RIGHT
PROFILE	10002427	52	0.1m	793	10 49 866 6	AIR FILTER INSTALLATION
PROFILE	10002427	53	0.1m	793	10 49 866 6	AIR FILTER INSTALLATION
PROFILE	10002428	11	0.35m	455	10 06 436 0	RADIATOR HOOD
PROFILE	10002428	12	0.47m	455	10 06 436 0	RADIATOR HOOD
PROFILE	10022653	31	3	336	11 00 359 4	HOUSING
PROFILE	12205993	3	0.86m	131	10 06 261 8	PARTITION
PROFILE	12205993	20	8.4m	204	10 06 309 3	COOLER SEALING
PROFILE	12205993	15	1.16m	536	10 49 800 2	COUNTERWEIGHT INSTALLAT
PROFILE	12205993	16	1.58m	536	10 49 800 2	COUNTERWEIGHT INSTALLAT
PROFILE	12205993	17	1.43m	536	10 49 800 2	COUNTERWEIGHT INSTALLAT
PROFILE	12205993	18	0.91m	536	10 49 800 2	COUNTERWEIGHT INSTALLAT
PROFILE	12205993	19	0.93m	536	10 49 800 2	COUNTERWEIGHT INSTALLAT
PROFILE	12205993	20	1.58m	536	10 49 800 2	COUNTERWEIGHT INSTALLAT
PROFILE	12205993	21	0.98m	536	10 49 800 2	COUNTERWEIGHT INSTALLAT
PROFILE	7029425	590	1	487	70 28 831	SLIDING WINDOW
PROFILE PACKING 14	10040984	2	1	675	90 76 530	TEMPERATURE PROBE CPL.
PROFILE PACKING 14	10040984	2	1	676	90 76 531	PRESSURE TRANSMITTER C

Description	Item	Pos.	Quantity	Page	Assembly	Description
PROFILE PACKING 33	10335629	3	1	578	10 11 903 0	OIL FILLER INLET
PROHIBITION SIGN	7366794	20	4	546	10 49 803 0	SIGNS
PROPORTIONING ELEMENT	10013840	104	1	253	10 66 472 2	DISTRIBUTION BLOCK SXE-2
PROPORTIONING ELEMENT	10013842	105	1	253	10 66 472 2	DISTRIBUTION BLOCK SXE-2
PROPORTIONING ELEMENT	10013843	101	1	253	10 66 472 2	DISTRIBUTION BLOCK SXE-2
PROPORTIONING ELEMENT	10013851	102	1	253	10 66 472 2	DISTRIBUTION BLOCK SXE-2
PROPORTIONING ELEMENT	10013848	103	1	253	10 66 472 2	DISTRIBUTION BLOCK SXE-2
PROTECTING CAP	7013456	3	1	577	50 04 624	OIL DRAIN PLUG M 30 1,5
PROTECTING CAP	7019165	410	1	504	10 29 026 4	COMPONENTS
PROTECTING CAP	7616949	9	1	364	50 09 565	PRESSURE LIMITING CARTRI
PROTECTING CAP	7623221	60	1	210	10 04 853 7	MOTOR-ELEKTRIK
PROTECTING CAP 16,0X20X8	7623222	20	1	209	10 04 853 7	MOTOR-ELEKTRIK
PROTECTING CAP 19	9276880	35	1	318	90 74 482	REPAIR SET PLUNGER
PROTECTING CAP 19	9276880	35	4	807	10 11 856 1	PILOT CONTROL UNIT VG6-8
PROTECTING CAP 19	9276880	35	4	808	11 37 560 6	PILOT CONTROL UNIT VG6-8
PROTECTING SLEEVE 8/8/2,2	10010154	30	1	298	10 05 879 2	MANIPULATOR LEFT
PROTECTING SLEEVE 8/8/2,2	10010154	30	1	313	10 05 879 4	MANIPULATOR RIGHT
PROTECTION	7028800	112	1	480	10 03 553 0	FRONT WINDOW BOTTOM
PROTECTION AGAINST CORR	11419175	801	1	771	94 00 688 8	PISTON ROD BEARING
PROTECTION AGAINST CORR	11419175	801	1	772	94 02 794 9	PISTON ROD BEARING
PROTECTION AGAINST CORR	11419175	801	1	773	95 91 741	PISTON ROD BEARING
PROTECTION F.STICK 2,10M	10072157	216	1	7	.	
PROTECTION GUARD	10067867	40	1	357	10 35 862 9	HYDR.AND GEAR OIL COOLIN
PROTECTION GUARD	12905309	30	1	217	11 10 291 6	SWING GEAR INSTALLATION
PROTECTION GUARD	7028910	560	1	505	10 29 026 4	COMPONENTS
PROTECTION GUARD	9275738	14	1	817	90 74 112	CONNECTING PLATE NG 090
PROTECTIVE COVER	10356239	12	1	104	96 11 367	ROTARY FEED THROUGH
PROXIMITY SWITCH	10009330	20	1	253	10 66 472 2	DISTRIBUTION BLOCK SXE-2
PROXIMITY SWITCH	10024864	2	1	327	99 37 443	PROXIMITY SWITCH W/ CON
PROXIMITY SWITCH W/ CON	9937443	40	2	320	10 05 981 8	FOOT PILOT VALVE INSTALL
PULL ROD	10014715	25	4	250	10 22 844 3	LUBRICATION PUMP
PULL ROD M8X140	10013857	6	2	253	10 66 472 2	DISTRIBUTION BLOCK SXE-2
PULL-BACK BALL	10216710	25	1	402	10 22 042 7	DRIVING GEAR
PULL-BACK BALL	10287729	6	1	171	10 28 772 5	DRIVING GEAR
PULL-BACK BALL	7370837	6	1	157	10 00 809 5	DRIVING GEAR
PULL-BACK BALL	7370837	6	1	206	10 00 840 5	DRIVING GEAR
PULL-BACK BALL NG 090	9072751	13	1	231	90 73 380	RK PULL-BACK BALL+PULL-B.
PULL-BACK BALL NG 090	9072751	13	1	234	90 74 125	REPAIR KIT DRIVING MECHANI
PULL-BACK BALL NG 100-107	9072294	13	1	180	90 72 998	RK PULL-BACK BALL+PULL-B.
PULL-BACK BALL NG 140-150	9889929	13	1	192	98 89 988	RK PULL-BACK BALL+PULL-B.
PULL-BACK PLATE	10008426	4	1	157	10 00 809 5	DRIVING GEAR
PULL-BACK PLATE	10008426	4	1	206	10 00 840 5	DRIVING GEAR
PULL-BACK PLATE	10216707	24	1	402	10 22 042 7	DRIVING GEAR
PULL-BACK PLATE	10287728	4	1	171	10 28 772 5	DRIVING GEAR
PULL-BACK PLATE NG 090	9265200	14	1	231	90 73 380	RK PULL-BACK BALL+PULL-B.
PULL-BACK PLATE NG 090	9265200	14	1	234	90 74 125	REPAIR KIT DRIVING MECHANI
PULL-BACK PLATE NG 100-10	9072295	14	1	180	90 72 998	RK PULL-BACK BALL+PULL-B.
PULL-BACK PLATE NG 140-15	9889930	14	1	192	98 89 988	RK PULL-BACK BALL+PULL-B.
PUMP	10008077	1	1	147	10 29 786 7	HYDRAULIC PUMP
PUMP	11834731	8	1	796	11 69 501 2	UREA FILLING KIT
PUMP COVER	10428856	2	1	170	10 28 264 7	GEAR PUMP
PUMP DISTRIBUTION GEAR	10118860	1	1	150	10 13 461 8	MULTIPLE CIRCUIT AGGREG
PUMP ELEMENT	10216340	13	1	249	10 22 844 3	LUBRICATION PUMP
PUMP HOUSING	10008083	5	1	400	10 00 807 7	PUMP
PUMP HOUSING	10014693	4	1	249	10 22 844 3	LUBRICATION PUMP
PUMP SHAFT	9078964	2	1	695	90 78 962	AUXILIARY DRIVE PRE-ASS.
PUMP SHAFT Z=33 M=2,5	9077713	1	1	694	90 77 718	AUXILIARY DRIVE PRE-ASS.
PUMP SHAFT Z=40 M=2,25	9077327	1	1	693	90 77 386	AUXILIARY DRIVE PRE-ASS.
PUMPS + COUPLING INSTALL	10048539	7300	1	123	10 35 861 4	UPPERCARRIAGE
PUMPS CONTROL CPL. R5.10	11452277	85	1	279	11 38 340 1	ARM REST RIGHT

Description	Item	Pos.	Quantity	Page	Assembly	Description
PUMPS CONTROL CPL. R5.10	11452277	85	1	302	11 45 228 6	ARM REST RIGHT
PUMPS CONTROL CPL. R5.10	11452277	85	1	306	12 50 731 7	ARM REST RIGHT
PUSH BUTTON	9968578	40	1	299	99 68 625	LH-JOYSTICK LEFT
PUSH BUTTON	9968580	40	1	314	99 68 611	LH-JOYSTICK RIGHT
PUSH-BUTTON COVER LEFT	10469917	10	1	299	99 68 625	LH-JOYSTICK LEFT
PUSH-BUTTON COVER RIGHT	10469918	10	1	314	99 68 611	LH-JOYSTICK RIGHT
PUSHER	7019156	270	1	484	70 28 769	DRIVER'S CAB DOOR
QUICK LOCK	10022768	4	2	339	10 02 277 7	CIRCULATING AIR GRID
QUICK LOCK	10022785	4	2	333	10 02 211 7	AIR CIRCULATION CASE
RADIAL SEAL X100X120X8	7362182	41	2	729	11 10 280 8	STICK 2,10M
RADIAL SEAL X100X120X8	7362182	15	4	760	11 68 144 7	HYDRAULIC CYLINDER
RADIAL SEAL X100X120X8	7362182	15	4	761	95 93 026	HYDRAULIC CYLINDER
RADIAL SEAL X100X120X8	7362182	14	2	762	96 44 648	HYDRAULIC CYLINDER
RADIAL SEAL X110X130X8	7362183	5	4	740	10 35 875 0	CONNECTING LINK
RADIAL SEAL X110X130X8	7362183	15	2	762	96 44 648	HYDRAULIC CYLINDER
RADIAL SEAL X130X160X12	7017199	11	2	718	11 10 294 4	GOOSENECK BOOM 6.45M
RADIAL SEAL X80X95X8	7362180	42	2	729	11 10 280 8	STICK 2,10M
RADIATOR HOOD	10064360	60	1	447	10 35 865 5	COVERS
RADIATOR HOOD	10064361	2	1	455	10 06 436 0	RADIATOR HOOD
RAIL STIRRUP d=26319	7370581	73	1	282	10 04 363 2	OPERATOR SEAT
RAILING LEFT	10065814	210	1	451	10 35 865 5	COVERS
RAILING RIGHT	11730369	10	1	513	11 73 376 2	GUARD RAILING FIXTURE
RAILING RIGHT	11730370	20	1	513	11 73 376 2	GUARD RAILING FIXTURE
RASTER	7027776	25	1	285	11 10 016 6	SEAT TOP
REAR REFLECTOR D196X88	6204631	9	2	536	10 49 800 2	COUNTERWEIGHT INSTALLAT
REAR-VIEW MIRROR	7019142	190	1	481	70 28 759	FRONT PANE TOP
RECEIVER-DRIER	5611990	1	1	527	10 29 266 0	UNIT RECEIVER-DRYER
RECTANGULAR SECTION RI	7030284	5	1	382	70 30 267	SEAL KIT LIMIT VALVE
RECTANGULAR SECTION RIN	10490785	5	2	356	10 35 862 9	HYDR.AND GEAR OIL COOLIN
RECTANGULAR SECTION RIN	10490784	22	3	350	10 35 862 7	HYDR.INSTAL.VALVES TO ATT
RECTANGULAR SECTION RIN	10490784	9	4	351	10 35 862 8	HYDR.INST.ROTARY CONNE
RECTANGULAR SECTION RIN	10490784	32	1	358	10 35 862 4	HYDR.INSTALLATION FAN DR
RECTANGULAR SECTION RIN	10490784	73	2	359	10 35 862 4	HYDR.INSTALLATION FAN DR
RECTANGULAR SECTION RIN	10490784	104	2	408	10 35 863 8	CONTROL VALVE INSTALLAT
RECTANGULAR SECTION RIN	10490784	16	2	420	10 35 863 7	HYDR.TUBES INSTALLATION
RECTANGULAR SECTION RIN	10490784	77	1	777	11 45 729 6	HOIST CYLINDER RIGHT
RECTANGULAR SECTION RIN	10490784	77	1	780	11 45 729 7	HOIST CYLINDER LEFT
RECTANGULAR SECTION RIN	10490781	7	8	121	10 40 412 9	HYDR.INSTALLATION UNDER
RECTANGULAR SECTION RIN	10490781	5	2	344	10 35 862 3	HYDR.PUMPS TO SPOOL VALV
RECTANGULAR SECTION RIN	10490781	27	3	350	10 35 862 7	HYDR.INSTAL.VALVES TO ATT
RECTANGULAR SECTION RIN	10490781	5	4	351	10 35 862 8	HYDR.INST.ROTARY CONNE
RECTANGULAR SECTION RIN	10490781	23	4	351	10 35 862 8	HYDR.INST.ROTARY CONNE
RECTANGULAR SECTION RIN	10490781	53	1	354	10 06 379 8	HYDR.SUCT.+RETURN OIL HO
RECTANGULAR SECTION RIN	10490781	72	2	407	10 35 863 8	CONTROL VALVE INSTALLAT
RECTANGULAR SECTION RIN	10490781	78	2	407	10 35 863 8	CONTROL VALVE INSTALLAT
RECTANGULAR SECTION RIN	10490781	381	1	413	10 35 863 8	CONTROL VALVE INSTALLAT
RECTANGULAR SECTION RIN	10490781	11	3	420	10 35 863 7	HYDR.TUBES INSTALLATION
RECTANGULAR SECTION RIN	10490781	81	3	713	11 10 294 5	GOOSENECK BOOM 6.45M
RECTANGULAR SECTION RIN	10490781	22	1	725	11 10 280 7	STICK 2.10M
RECTANGULAR SECTION RIN	10490781	12	8	752	11 10 291 2	HOIST CYLINDER INSTALLAT
RECTANGULAR SECTION RIN	10490781	11	2	758	10 35 857 3	HYDR.CYLINDER W/ADDITION.
RECTANGULAR SECTION RIN	10490781	72	8	777	11 45 729 6	HOIST CYLINDER RIGHT
RECTANGULAR SECTION RIN	10490781	72	8	780	11 45 729 7	HOIST CYLINDER LEFT
RECTANGULAR SECTION RIN	10472425	9	4	344	10 35 862 3	HYDR.PUMPS TO SPOOL VALV
RECTANGULAR SECTION RIN	10472425	52	2	345	10 35 862 3	HYDR.PUMPS TO SPOOL VALV
RECTANGULAR SECTION RIN	10472425	42	1	357	10 35 862 9	HYDR.AND GEAR OIL COOLIN
RECTANGULAR SECTION RIN	10472425	12	1	358	10 35 862 4	HYDR.INSTALLATION FAN DR
RECTANGULAR SECTION RIN	10472425	26	4	420	10 35 863 7	HYDR.TUBES INSTALLATION
RECTANGULAR SECTION RIN	10472425	80	9	712	11 10 294 5	GOOSENECK BOOM 6.45M
RECTANGULAR SECTION RIN	10472425	19	1	725	11 10 280 7	STICK 2.10M

Description	Item	Pos.	Quantity	Page	Assembly	Description
RECTANGULAR SECTION RIN	10472425	12	3	759	10 85 361 0	HYDR.CYLINDER W/ADDITION.
RECTANGULAR SECTION RIN	10490787	8	1	353	10 06 379 8	HYDR.SUCT.+RETURN OIL HO
RECTANGULAR SECTION RIN	10490787	38	2	357	10 35 862 9	HYDR.AND GEAR OIL COOLIN
RECTANGULAR SECTION RIN	10490787	50	1	385	10 04 851 7	HYDRAULIC TANK INSTALLAT
RECTANGULAR SECTION RIN	10490787	50	1	387	10 35 863 4	HYDRAULIC TANK INSTALLAT
RECTANGULAR SECTION RIN	10490786	12	1	353	10 06 379 8	HYDR.SUCT.+RETURN OIL HO
RECTANGULAR SECTION RIN	10001114	24	1	400	10 00 807 7	PUMP
REDUCING PIECE	10333765	401	1	421	10 30 079 8	STICK BYPASS VALVE
REDUCING PIECE	7373200	55	1	421	10 30 079 8	STICK BYPASS VALVE
REDUCING PIECE M16X1,5/M1	10120066	5	1	631	10 12 580 1	FUEL FINE FILTER
REDUCING STUD M16X1,5/M1	10038817	45	2	634	10 11 628 5	FUEL LINE
REDUCING STUD M16X1,5/M3	9276784	2	2	662	90 79 889	HEATER CONNECTION
REDUCING STUD M30X1,5	9080013	11	1	692	90 80 006	POWER TAKE-OFF ADD-ON
REFERENCE PLATE	9402376	40	4	547	10 49 803 0	SIGNS
REFERENCE PLATE	9402377	45	2	547	10 49 803 0	SIGNS
REFRACTOMETER	11830573	9996	1	43	11 44 078 9	ACCESSORIES
REGULATING VALVE EHR	10133061	4	2	801	10 13 303 7	HYDR.DOUBLE PUMP
REGULATION DEVICE SEAT B	7025007	23	1	290	70 24 996	SEAT FRAME
REGULATOR	6002867	1	1	667	10 11 646 3	GENERATOR, PRE-ASSEMBLE
REGULATOR COVER LR SD D	9078788	86	2	803	10 13 303 7	HYDR.DOUBLE PUMP
REGULATOR EHR	10133062	10	1	819	10 13 306 1	REGULATING VALVE EHR
REINFORCEMENT	10078106	60	1	130	10 08 004 4	FRAME INSTALLATION
REINFORCEMENT	10078120	70	1	130	10 08 004 4	FRAME INSTALLATION
REINFORCEMENT	10087238	40	1	542	10 49 878 6	OUTSIDE MIRROR ASSEMBLY
REINFORCING SECTION	10022779	16	2	333	10 02 211 7	AIR CIRCULATION CASE
RELAY	6001682	10	2	317	10 68 741 7	OUTPUT STAGE
RELAY	6001921	130	2	520	99 47 695	ELECTRICAL SYSTEM E50
RELAY	6002381	32	2	295	97 58 815 01	E-BOARD
RELAY	6202646	30	2	295	97 58 815 01	E-BOARD
RELAY HEADER	6002816	970	4	520	99 47 695	ELECTRICAL SYSTEM E50
REPAIR KIT CONNECTION H	9074893	90	1	803	10 13 303 7	HYDR.DOUBLE PUMP
REPAIR KIT DRIVE SHAFT PV	10119093	97	1	159	10 11 886 0	PUMP DISTRIBUTION GEAR
REPAIR KIT DRIVING MECHANI	9074125	94	1	230	90 74 075	HYDRAULIC INSTALLATION
REPAIR KIT DRIVING MECHANI	9074122	94	1	799	90 73 888	HYDRAULIC INSTALLATION
REPAIR KIT DRIVING MECHANI	9889984	92	1	804	10 13 303 7	HYDR.DOUBLE PUMP
REPAIR KIT DRIVING MECHAN	9889983	94	1	804	10 13 303 7	HYDR.DOUBLE PUMP
REPAIR KIT F.COMPRESSOR	10493026	28	1	287	11 10 016 7	SUSPENSION
REPAIR KIT LOCK RING NG 09	9268015	96	1	230	90 74 075	HYDRAULIC INSTALLATION
REPAIR KIT LOCK RING NG 09	9268015	96	1	799	90 73 888	HYDRAULIC INSTALLATION
REPAIR KIT LOCK RING NG 09	9268015	6	1	833	11 38 195 4	SEAL KIT NG 100
REPAIR KIT LOCK RING NG 12	9268016	96	1	805	10 13 303 7	HYDR.DOUBLE PUMP
REPAIR KIT LOCK RING NG 12	9268016	96	1	835	92 65 808	SEAL KIT DOUBLE PUMP NG
REPAIR KIT PIPE LINE D936	10118329	3	1	567	90 79 021	CRANKCASE BREATHER ASS
REPAIR KIT SHAFT NG 090	9074117	95	1	230	90 74 075	HYDRAULIC INSTALLATION
REPAIR KIT SHAFT NG 100	9074123	95	1	799	90 73 888	HYDRAULIC INSTALLATION
REPAIR KIT SHAFT NG 140	9889977	93	1	804	10 13 303 7	HYDR.DOUBLE PUMP
REPAIR KIT SHAFT NG 140	9889978	95	1	805	10 13 303 7	HYDR.DOUBLE PUMP
REPAIR KIT VALVE	5009820	36	1	431	10 33 073 6	TRAVEL PILOT VALVE
REPAIR KIT, AIR HOSE	10493032	34	1	287	11 10 016 7	SUSPENSION
REPAIR KIT, BELT	10493009	33	1	287	11 10 016 7	SUSPENSION
REPAIR KIT, HEIGHT ADJ MOD	10493031	35	1	287	11 10 016 7	SUSPENSION
REPAIR KIT, PNEUMATIC SPR	10493023	30	1	287	11 10 016 7	SUSPENSION
REPAIR KIT, SHOCK ABSORBE	10493027	25	1	287	11 10 016 7	SUSPENSION
REPAIR KIT, SUSPENSION	10493022	29	1	287	11 10 016 7	SUSPENSION
REPAIR KIT, SUSPENSION	10493024	31	1	287	11 10 016 7	SUSPENSION
REPAIR SET LID NG 100	9275443	85	2	803	10 13 303 7	HYDR.DOUBLE PUMP
REPAIR SET PLUNGER	9074482	98	1	807	10 11 856 1	PILOT CONTROL UNIT VG6-8
REPAIR SET PLUNGER	9074482	98	1	808	11 37 560 6	PILOT CONTROL UNIT VG6-8
REPAIR SET PLUNGER	9079277	998	1	324	90 79 258	PILOT CONTROL UNIT VG7 2-3
REPAIR SET PLUNGER	9079277	98	1	325	90 79 259	PILOT CONTROL UNIT VG7 2-3

Description	Item	Pos.	Quantity	Page	Assembly	Description
REPAIR SET SWIVEL YOKE N	10139752	84	2	802	10 13 303 7	HYDR.DOUBLE PUMP
RESILIENT BASE	10492983	8	1	287	11 10 016 7	SUSPENSION
RESILIENT UPPER PART	11066526	3	1	287	11 10 016 7	SUSPENSION
REST	10043180	20	1	293	10 05 736 2	CONTROL BRACKET LEFT IN
RESTRICTOR PIN 5,4X11,5X2,	10122779	140	2	112	10 00 201 1	BRAKE VALVE
RETAINER CLIP WITH RUBBER	10353683	5	2	775	11 45 729 6	HOIST CYLINDER RIGHT
RETAINER CLIP WITH RUBBER	10353683	5	2	778	11 45 729 7	HOIST CYLINDER LEFT
RETAINER CPL.	10115994	2	1	684	10 11 599 3	CONTROL BOX ANNEXE
RETAINER CPL.	10115996	1	1	684	10 11 599 3	CONTROL BOX ANNEXE
RETAINER CPL.	10119119	1	1	633	10 11 912 7	CLAMP - ADD-ON UNIT
RETAINER CPL.	10121676	3	1	645	10 12 190 9	CONNECTING LINE ADD-ON
RETAINING DISK	9441122	46	1	222	90 02 197 3	MODIFICATION KIT
RETAINING DISK	9441122	46	1	227	90 02 790 4	SLEWING DRIVE SAT 325/254
RETAINING DISK	9441716	36	1	226	90 02 790 4	SLEWING DRIVE SAT 325/254
RETAINING DISK	9443003	3	1	109	96 87 443 01	TRACTION DRIVE FAT 400P07
RETAINING DISK	9443009	21	1	109	96 87 443 01	TRACTION DRIVE FAT 400P07
RETAINING DISK	9443014	31	1	109	96 87 443 01	TRACTION DRIVE FAT 400P07
RETAINING DISK	9443033	41	1	109	96 87 443 01	TRACTION DRIVE FAT 400P07
RETAINING PLUG	11009211	3	2	165	57 17 149	INTERNAL GEAR PUMP SET
RETAINING RING	7028121	6	2	172	10 29 197 5	ADJUSTING PISTON
RETURN FILTER 20/5µm	10333903	20	1	383	10 04 851 7	HYDRAULIC TANK INSTALLAT
RETURN FILTER 20/5µm	10333903	20	1	386	10 35 863 4	HYDRAULIC TANK INSTALLAT
RETURN PIPE	10335592	5	1	392	10 33 390 3	RETURN FILTER 20/5µm
REVERSING WARNER	10288438	2	1	751	10 35 860 1	TRAVEL ALARM
REVERSION KIT SCREW PLUG	11387278	90	1	799	90 73 888	HYDRAULIC INSTALLATION
RIBBED HEX NUT M6	10003366	3	1	647	90 78 314	HEATING FLANGE ADD-ON
RIMSEAL 110X130,5X8,1	7017148	9	1	772	94 02 794 9	PISTON ROD BEARING
RIMSEAL 110X130,5X8,1	7017148	9	1	773	95 91 741	PISTON ROD BEARING
RIMSEAL 115,0X130,1X6,3	7023397	9	1	771	94 00 688 8	PISTON ROD BEARING
RING	10216823	4	1	170	10 28 264 7	GEAR PUMP
RING	10358254	2	1	728	10 35 857 7	RING
RING	10358577	15	4	725	11 10 280 7	STICK 2.10M
RING 21X30X4	7002887	33	1	432	73 69 779	PRESSURE SPRING
RING 5,67	7028119	5	2	172	10 29 197 5	ADJUSTING PISTON
RING 5,72	7028120	5	2	172	10 29 197 5	ADJUSTING PISTON
RING 5,77	7028113	5	2	172	10 29 197 5	ADJUSTING PISTON
RING 5,82	7028114	5	2	172	10 29 197 5	ADJUSTING PISTON
RING 5,87	7028115	5	2	172	10 29 197 5	ADJUSTING PISTON
RING 5,92	7028116	5	2	172	10 29 197 5	ADJUSTING PISTON
RING 5,97	7028117	5	2	172	10 29 197 5	ADJUSTING PISTON
RING 6,02	7028118	5	2	172	10 29 197 5	ADJUSTING PISTON
RIVET	10470127	3	4	512	10 47 012 8	CASING, CPL
RIVET	7020612	380	2	485	70 28 769	DRIVER'S CAB DOOR
RIVET	7020612	370	4	504	10 29 026 4	COMPONENTS
RK BIG-END BEARING D930	10116934	50	1	585	90 76 459	CONROD
RK COVER	10493008	27	1	287	11 10 016 7	SUSPENSION
RK CRANKSHAFT SEAL 110 VO	10121952	1	1	699	10 11 801 4	SEAL KIT AGGREGATE CARR
RK CRANKSHAFT SEAL 110 VO	10121952	1	1	702	10 11 583 8	SEAL KIT DIESEL ENGINE D9
RK CRANKSHAFT SEAL 115 H	10121335	30	1	704	10 11 583 8	SEAL KIT DIESEL ENGINE D9
RK CYLINDER+CONTROL PLAT	9074113	79	1	230	90 74 075	HYDRAULIC INSTALLATION
RK CYLINDER+CONTROL PLAT	9074114	79	1	799	90 73 888	HYDRAULIC INSTALLATION
RK CYLINDER+CONTROL PLAT	9074114	79	1	823	90 74 122	REPAIR KIT DRIVING MECHANI
RK CYLINDER+CONTROL PLA	9889833	2	1	191	98 89 984	REPAIR KIT DRIVING MECHANI
RK CYLINDER+CONTROL PLA	9889833	81	1	802	10 13 303 7	HYDR.DOUBLE PUMP
RK CYLINDER+CONTROL PLAT	9889832	2	1	190	98 89 983	REPAIR KIT DRIVING MECHAN
RK CYLINDER+CONTROL PLAT	9889832	79	1	802	10 13 303 7	HYDR.DOUBLE PUMP
RK INJECTION NOZZLE	10117093	1	1	624	10 11 659 1	INJECTION NOZZLE W.FASTEN
RK OIL DRAIN SCREW D 930	10289208	35	2	126	10 06 994 0	SERVICE KIT FUEL FILTER
RK OIL DRAIN SCREW D 930	10289208	2	1	632	10 22 281 9	FUEL PRE-FILTER CPL.
RK PISTON WITH GUIDE SHOE	9880608	77	1	230	90 74 075	HYDRAULIC INSTALLATION

Description	Item	Pos.	Quantity	Page	Assembly	Description
RK PISTON WITH GUIDE SHOE	9072997	77	1	799	90 73 888	HYDRAULIC INSTALLATION
RK PISTON WITH GUIDE SHOE	9072997	77	1	823	90 74 122	REPAIR KIT DRIVING MECHANI
RK PISTON WITH GUIDE SHOE	9889831	1	9	190	98 89 983	REPAIR KIT DRIVING MECHAN
RK PISTON WITH GUIDE SHOE	9889831	1	9	191	98 89 984	REPAIR KIT DRIVING MECHANI
RK PISTON WITH GUIDE SHOE	9889831	77	2	802	10 13 303 7	HYDR.DOUBLE PUMP
RK PULL-BACK BALL+PULL-B.	9073380	78	1	230	90 74 075	HYDRAULIC INSTALLATION
RK PULL-BACK BALL+PULL-B.	9072998	78	1	799	90 73 888	HYDRAULIC INSTALLATION
RK PULL-BACK BALL+PULL-B.	9072998	78	1	823	90 74 122	REPAIR KIT DRIVING MECHANI
RK PULL-BACK BALL+PULL-B.	9889988	14	1	190	98 89 983	REPAIR KIT DRIVING MECHAN
RK PULL-BACK BALL+PULL-B.	9889988	14	1	191	98 89 984	REPAIR KIT DRIVING MECHANI
RK PULL-BACK BALL+PULL-B.	9889988	78	2	802	10 13 303 7	HYDR.DOUBLE PUMP
RK SPEED SENSOR	9278623	9	1	817	90 74 112	CONNECTING PLATE NG 090
RK1 BIG-END BEARING	10140487	51	1	585	90 76 459	CONROD
RK1 MAIN BEARING CPL.	10140597	51	1	582	90 76 458	SET MAIN BEARINGS
RK2 BIG-END BEARING	10140488	52	1	585	90 76 459	CONROD
RK2 MAIN BEARING CPL.	10140601	52	1	582	90 76 458	SET MAIN BEARINGS
ROCKER ARM	9074508	1	1	600	12 40 205 3	ROCKER ARM PRE-ASSY.
ROCKER ARM BRACKET CPL.	9079861	81	6	549	10 11 714 5	DIESEL ENGINE D936 L A6 190
ROCKER ARM BRACKET PRE	12402055	2	1	601	90 79 861	ROCKER ARM BRACKET CPL.
ROCKER ARM BRACKET PRE	9074505	2	1	601	90 79 861	ROCKER ARM BRACKET CPL.
ROCKER ARM BUSCH	10119562	2	1	600	12 40 205 3	ROCKER ARM PRE-ASSY.
ROCKER ARM BUSCH	9080027	2	1	605	90 74 507	ROCKER ARM PRE-ASSY.
ROCKER ARM PRE-ASSY.	12402053	3	2	599	12 40 205 5	ROCKER ARM BRACKET PRE
ROCKER ARM PRE-ASSY.	9074507	3	2	604	90 74 505	ROCKER ARM BRACKET PRE
ROCKER ARM SUPPORT	9074504	1	1	599	12 40 205 5	ROCKER ARM BRACKET PRE
ROCKER ARM SUPPORT	9074504	1	1	604	90 74 505	ROCKER ARM BRACKET PRE
ROCKER AXLE	9074506	2	1	604	90 74 505	ROCKER ARM BRACKET PRE
ROCKER AXLE PRE-ASS.	10142820	2	1	599	12 40 205 5	ROCKER ARM BRACKET PRE
ROD	10358170	15	1	457	10 35 822 9	SIDE DOOR LEFT
ROD	10358170	20	1	466	10 35 823 0	SIDE DOOR FRONT LEFT
ROD	7028815	280	1	482	70 28 807	LOCK RIGHT HAND
ROD	7028815	280	1	483	70 28 808	LOCK LEFT HAND
ROD	7028834	340	1	485	70 28 769	DRIVER'S CAB DOOR
ROD	9927479	40	1	446	10 35 865 5	COVERS
ROD	9942679	20	1	459	10 06 423 5	SIDE DOOR RIGHT
ROD	9942679	20	1	460	10 49 856 6	SIDE DOOR RIGHT
ROD M10X500X10	9480525	43	2	272	10 49 880 5	DRIVER STAND BASE SECTIO
ROD SEAL 120X110,4X5,5	761050503	56	1	110	96 87 443 01	TRACTION DRIVE FAT 400P07
ROD SEAL 120X110,4X5,5	761050503	56	1	118	94 43 029 03	BRAKE REPAIR KIT
ROD SEAL 120X110,4X5,5	761050503	56	1	120	94 43 027	SEAL KIT
ROD SEAL 184,6X175X5,5	761050603	57	1	110	96 87 443 01	TRACTION DRIVE FAT 400P07
ROD SEAL 184,6X175X5,5	761050603	57	1	118	94 43 029 03	BRAKE REPAIR KIT
ROD SEAL 184,6X175X5,5	761050603	57	1	120	94 43 027	SEAL KIT
ROD SEAL 231,4X241X5,5	761050303	2	1	228	93 28 018 01	BRAKE
ROD SEAL 231,4X241X5,5	761050303	66	1	241	94 44 522 03	SEAL KIT
ROD SEAL 280X270,4X5,5	761050403	8	1	228	93 28 018 01	BRAKE
ROD SEAL 280X270,4X5,5	761050403	72	1	241	94 44 522 03	SEAL KIT
ROLLER	7028809	160	4	481	70 28 759	FRONT PANE TOP
ROLLER TAPPET	10153536	1	2	611	90 79 870	CONTROL PARTS
ROLLER TAPPET D=44	9074628	2	1	621	10 11 683 9	INJECTION PUMP ASSEMBLY
ROSE	10023245	270	6	508	10 29 035 2	INTERIOR PANELING
ROSE	10023245	270	6	510	10 48 808 8	INTERIOR PANELING
ROSE	7362752	62	1	272	10 49 880 5	DRIVER STAND BASE SECTIO
ROSE	7362752	103	4	279	11 38 340 1	ARM REST RIGHT
ROSE	7362752	103	4	302	11 45 228 6	ARM REST RIGHT
ROSE	7362752	103	4	307	12 50 731 7	ARM REST RIGHT
ROTARY CONNECTION CPL	10404127	10	1	99	10 40 412 6	ROTARY CONNECTION INSTA
ROTARY CONNECTION CPL	11463939	10	1	100	11 46 393 5	ROTARY CONNECTION INSTA
ROTARY CONNECTION INSTA	10404126	8	1	75	10 49 885 2	UNDERCARRIAGE CPL
ROTARY CONNECTION INSTA	11463935	8	1	75	10 49 885 2	UNDERCARRIAGE CPL

Description	Item	Pos.	Quantity	Page	Assembly	Description
ROTARY FEED THROUGH	11643314	2	1	102	11 46 393 9	ROTARY CONNECTION CPL
ROTARY FEED THROUGH	9611367	2	1	101	10 40 412 7	ROTARY CONNECTION CPL
ROTARY SHAFT LIP SEAL ASW	10006551	2	1	583	90 75 133	CRANKSHAFT SEALING
ROTARY SHAFT LIP SEAL ASW	10006550	1	1	583	90 75 133	CRANKSHAFT SEALING
ROTARY SHAFT LIP SEAL ASX	10033074	7	1	655	10 13 281 7	WATER PUMP, PRE-ASSEMB
ROTARY SHAFT LIP SEAL ASX	10014507	35	1	814	12 88 015 2	CLOSING RING PRE-ASS. NG
ROTARY SHAFT LIP SEAL ASX	10014507	35	1	828	92 68 015	REPAIR KIT LOCK RING NG 09
ROTARY SHAFT LIP SEAL AX	10172723	4	1	226	90 02 790 4	SLEWING DRIVE SAT 325/254
ROTARY SHAFT LIP SEAL B1	710030801	11	2	226	90 02 790 4	SLEWING DRIVE SAT 325/254
ROTARY SHAFT LIP SEAL B1	710030801	11	2	241	94 44 522 03	SEAL KIT
ROTARY SHAFT LIP SEAL PP	10014510	35	1	813	12 87 963 9	CLOSING RING PRE-ASS. NG
ROTARY SHAFT LIP SEAL PP	10014510	35	1	829	92 68 016	REPAIR KIT LOCK RING NG 12
ROTARY SHAFT LIP SEAL X55	7381131	60	1	216	90 80 194	SEAL KIT
ROTARY SHAFT LIP SEAL X55	7381131	60	1	821	10 11 909 3	REPAIR KIT DRIVE SHAFT PV
ROTATIONAL SPEED SENSOR	11442694	1	1	677	90 76 534	ROTATIONAL SPEED SENSOR
ROTATIONAL SPEED SENSOR	11442694	1	1	688	12 54 450 5	ROTATIONAL SPEED SENSOR
ROTATIONAL SPEED SENSOR	6290073	10	1	239	92 78 623	RK SPEED SENSOR
ROTATIONAL SPEED SENSOR	9885618	22	1	674	90 76 551	ENGINE CONTROL SENSORS
ROTATIONAL SPEED SENSOR	12544505	20	2	674	90 76 551	ENGINE CONTROL SENSORS
ROTATIONAL SPEED SENSOR	9076534	21	1	674	90 76 551	ENGINE CONTROL SENSORS
ROTOR GASKET 10X13,6X2,3	7380134	3	1	318	90 74 482	REPAIR SET PLUNGER
ROTOR GASKET 10X13,6X2,3	7380134	46	4	319	92 69 690	SEAL KIT VG7-4/...
ROTOR GASKET 10X13,6X2,3	7380134	3	1	743	90 79 277	REPAIR SET PLUNGER
RS CRANKSHAFT BEARING KP	10116928	50	1	582	90 76 458	SET MAIN BEARINGS
RS FLANGE NG 125-140-150	9077464	1	2	825	10 13 975 2	REPAIR SET SWIVEL YOKE N
RUBBER BEADING	10471490	20	1	477	70 28 788	SEAL
RUBBER BEARING	10301000	12	6	199	10 21 851 3	COMBINATED RADIATOR
RUBBER BEARING	10301000	12	6	202	11 69 472 6	COMBINATED RADIATOR
RUBBER BELLOWS	10014790	200	1	299	99 68 625	LH-JOYSTICK LEFT
RUBBER BELLOWS	10014790	200	1	314	99 68 611	LH-JOYSTICK RIGHT
RUBBER BELLOWS	11066528	9	1	287	11 10 016 7	SUSPENSION
RUBBER BELLOWS	7025004	40	1	282	10 04 363 2	OPERATOR SEAT
RUBBER BELLOWS	7366620	42	1	282	10 04 363 2	OPERATOR SEAT
RUBBER BUFFER	10040032	3	8	684	10 11 599 3	CONTROL BOX ANNEXE
RUBBER BUFFER	7014560	31	28	275	11 38 339 7	ARM REST LEFT
RUBBER BUFFER	7014560	82	4	279	11 38 340 1	ARM REST RIGHT
RUBBER BUFFER	7014560	31	28	291	10 38 502 8	ARM REST LEFT
RUBBER BUFFER	7014560	82	4	302	11 45 228 6	ARM REST RIGHT
RUBBER BUFFER	7014560	82	4	306	12 50 731 7	ARM REST RIGHT
RUBBER BUFFER	7366558	30	6	134	10 04 853 1	MOTOR SUPPORT
RUBBER CAP	9265414	30	2	323	90 79 258	PILOT CONTROL UNIT VG7 2-3
RUBBER CAP	9265414	5	1	743	90 79 277	REPAIR SET PLUNGER
RUBBER CONNECTION	10116310	24	1	665	90 80 736	EXHAUST TC MOUNTING
RUBBER CONNECTION	10116310	4302	1	707	10 11 583 8	SEAL KIT DIESEL ENGINE D9
RUBBER CONNECTION 12 X 18	9079603	18	1	566	10 11 916 7	CRANKCASE BREATHER ASSE
RUBBER CONNECTION 12 X 18	9079603	18	1	567	90 79 021	CRANKCASE BREATHER ASS
RUBBER CONNECTION 12 X 18	9079603	43	1	704	10 11 583 8	SEAL KIT DIESEL ENGINE D9
RUBBER CONNECTION 22X30	9273161	10	1	566	10 11 916 7	CRANKCASE BREATHER ASSE
RUBBER CONNECTION 22X30	9273161	20	1	569	10 11 832 9	REPAIR KIT PIPE LINE D936
RUBBER CONNECTION 22X30	9273161	161	1	707	10 11 583 8	SEAL KIT DIESEL ENGINE D9
RUBBER CONNECTION 25 X35	9271340	6	2	566	10 11 916 7	CRANKCASE BREATHER ASSE
RUBBER CONNECTION 25 X35	9271340	6	2	567	90 79 021	CRANKCASE BREATHER ASS
RUBBER CONNECTION 25 X35	9271340	44	2	704	10 11 583 8	SEAL KIT DIESEL ENGINE D9
RUBBER GASKET	7001386	6	1	529	10 04 852 5	FUEL TANK ASSY.
RUBBER GASKET	7001386	6	1	530	10 49 836 0	FUEL TANK ASSY.
RUBBER GASKET	7001386	6	1	531	11 10 262 1	FUEL TANK ASSY.
RUBBER MAT	10007928	480	2	361	10 06 380 1	HYDR.INSTAL.CONTROL TUBE
RUBBER PART	10075430	15	1	453	10 05 816 9	ENGINE BONNET
RUSTILO TARP 16KG	8611031	20	1kg	61	11 41 917 5	PROTECTION AGAINST CORR
SAE BLIND FLANGE	9429964	55	1	712	11 10 294 5	GOOSENECK BOOM 6.45M

Description	Item	Pos.	Quantity	Page	Assembly	Description
SAE BLIND FLANGE	9429977	106	2	408	10 35 863 8	CONTROL VALVE INSTALLAT
SAE BLIND FLANGE SAE 1 1/2"	9566165	51	1	385	10 04 851 7	HYDRAULIC TANK INSTALLAT
SAE BLIND FLANGE SAE 1 1/2"	9566165	51	1	387	10 35 863 4	HYDRAULIC TANK INSTALLAT
SAFETY CAP SW19/M12X32X2	7380730	30	1	116	98 82 760	ADJUSTMENT NG 100
SAFETY CARTRIDGE	10217168	310	1	73	12 48 693 4	SERVICE KIT 2000h
SAFETY CARTRIDGE	10217168	2	1	138	10 21 717 3	AIR FILTER
SAFETY LEVER	7373807	14	1	294	10 16 576 6	STEERING CONSOLE
SATACEN DIESEL ADDITIVE	11485237	30	1	59	96 47 619	SATACEN DIESEL ADDITIVE
SATACEN DIESEL ADDITIVE	11485238	20	1	59	96 47 619	SATACEN DIESEL ADDITIVE
SATACEN DIESEL ADDITIVE	9647619	120	1	15	90 66 460	TYPES OF LUBRICANTS
SATACEN DIESEL ADDITIVE 0,	11690885	10	1	59	96 47 619	SATACEN DIESEL ADDITIVE
SCOOP	10058234	6	1	453	10 05 816 9	ENGINE BONNET
SCOOP	10058235	2	1	454	10 05 823 4	SCOOP
SCOOP	10059633	20	1	457	10 35 822 9	SIDE DOOR LEFT
SCOOP	10059635	2	1	458	10 05 963 3	SCOOP
SCRAPER	5602110	6	1	95	11 00 410 3	SPRING ASSEMBLY CPL
SCRAPER RING 110X122,2X8,	7026111	6	1	772	94 02 794 9	PISTON ROD BEARING
SCRAPER RING 110X122,2X8,	7026111	6	1	773	95 91 741	PISTON ROD BEARING
SCRAPER RING 115X127,2X8,	10651474	6	1	771	94 00 688 8	PISTON ROD BEARING
SCREW	7024447	360	8	509	10 29 035 2	INTERIOR PANELING
SCREW	7024447	360	8	511	10 48 808 8	INTERIOR PANELING
SCREW	7370888	9	4	294	10 16 576 6	STEERING CONSOLE
SCREW	7372158	11	2	310	56 18 923	CONTROL CONSOLE RIGHT
SCREW 22X6	10017926	160	2	299	99 68 625	LH-JOYSTICK LEFT
SCREW 22X6	10017926	160	2	314	99 68 611	LH-JOYSTICK RIGHT
SCREW COUPLING	10145171	2	1	809	10 11 908 9	PRIMARY SHAFT CPL. Z=45 M=
SCREW COUPLING	10145171	10	1	821	10 11 909 3	REPAIR KIT DRIVE SHAFT PV
SCREW COUPLING	7026654	80	1	257	90 64 786	CONNECTING ELEMENT
SCREW COUPLING G1/4	7409720	65	2	345	10 35 862 3	HYDR.PUMPS TO SPOOL VALV
SCREW COUPLING G1/4	7409720	41	1	346	10 06 379 3	OIL PILOT VALVE INSTALLATIO
SCREW COUPLING G1/4	7409720	61	1	347	10 06 379 3	OIL PILOT VALVE INSTALLATIO
SCREW COUPLING G1/4	7409720	93	2	408	10 35 863 8	CONTROL VALVE INSTALLAT
SCREW COUPLING M12X1,5	7407071	23	2	142	10 04 853 9	PUMPS + COUPLING INSTALL
SCREW EXTENSION TUBE GAI	7364696	27	1	267	11 38 342 7	HYDR.INSTAL.ARM REST LEF
SCREW EXTENSION TUBE GAI	7364696	26	2	268	11 38 342 9	HYDR.INSTAL.ARM REST RIGH
SCREW EXTENSION TUBE GAI	7364696	204	1	361	10 06 380 1	HYDR.INSTAL.CONTROL TUBE
SCREW EXTENSION TUBE GAI	7364696	13	1	754	10 85 472 4	BASIC MACHINE MOUNTING
SCREW FITTING SIZE	9070532	300	1	261	90 64 786	CONNECTING ELEMENT
SCREW LOCKING	811205708	103	1	159	10 11 886 0	PUMP DISTRIBUTION GEAR
SCREW LOCKING	811205708	109	1	618	90 72 781	LUBRICATING OIL PUMP
SCREW LOCKING	811205708	109	1	655	10 13 281 7	WATER PUMP, PRE-ASSEMB
SCREW LOCKING	811205708	109	1	669	90 78 384	STARTER
SCREW LOCKING	811205708	109	1	672	90 79 823	TRANSPORT DEVICE ATTACH
SCREW LOCKING	811205708	109	1	690	90 77 719	POWER TAKE-OFF ADD-ON
SCREW LOCKING	811205708	105	1	691	90 78 961	POWER TAKE-OFF ADD-ON
SCREW LOCKING	811205708	109	1	692	90 80 006	POWER TAKE-OFF ADD-ON
SCREW LOCKING	811205708	103	1	809	10 11 908 9	PRIMARY SHAFT CPL. Z=45 M=
SCREW LOCKING	811205708	104	1	825	10 13 975 2	REPAIR SET SWIVEL YOKE N
SCREW LOCKING	8628192	104	1	154	90 73 242	CONNECTION HOUSING NG 15
SCREW LOCKING	8628192	109	1	567	90 79 021	CRANKCASE BREATHER ASS
SCREW LOCKING	8628192	109	1	635	10 11 628 5	FUEL LINE
SCREW LOCKING	8628192	109	1	650	10 11 646 4	AIR COND. COMPRESSOR A
SCREW LOCKING	8628192	109	1	684	10 11 599 3	CONTROL BOX ANNEXE
SCREW LOCKING	8629969	33	0.001	213	10 04 853 8	ENGINE ADD-ON PARTS
SCREW LOCKING	8655016	105	1	182	92 74 731	SEAL KIT CONNECTING HOUSI
SCREW LOCKING	8655016	105	1	620	90 75 368	LUBE OIL FILTER ASSEMBLY
SCREW LOCKING	8655016	109	1	671	90 79 468	TRANSPORT DEVICE ATTACH
SCREW LOCKING	8700011	102	1	595	90 79 838	CYLINDER HEAD COVER
SCREW LOCKING	8700012	106	1	181	90 74 893	REPAIR KIT CONNECTION H
SCREW LOCKING	8700012	106	1	187	98 89 832	RK CYLINDER+CONTROL PLAT

Description	Item	Pos.	Quantity	Page	Assembly	Description
SCREW LOCKING	8700012	106	1	188	98 89 833	RK CYLINDER+CONTROL PLA
SCREW LOCKING	8700012	106	1	232	90 74 113	RK CYLINDER+CONTROL PLAT
SCREW PLUG	10001103	9	1	400	10 00 807 7	PUMP
SCREW PLUG	10008093	30	2	400	10 00 807 7	PUMP
SCREW PLUG	10017569	8	2	79	12 22 100 1	GUIDE WHEEL
SCREW PLUG	10017569	8	2	94	10 00 454 6	GUIDE WHEEL B6
SCREW PLUG	10097983	2	1	89	11 60 010 7	TRACK ROLLER D7
SCREW PLUG	10220646	1	1	174	11 82 151 3	SEALING SET VALVE
SCREW PLUG	10220659	1	1	168	10 22 063 5	SHUTDOWN VALVE
SCREW PLUG	10333763	81	1	421	10 30 079 8	STICK BYPASS VALVE
SCREW PLUG	10489176	7	1	91	10 65 167 7	CARRYING ROLLER D7
SCREW PLUG	7015996	1	1	435	50 06 720	NON-RETURN VALVE
SCREW PLUG	7028172	6	2	177	70 28 075	CONTROL UNIT
SCREW PLUG	7366888	7	2	431	10 33 073 6	TRAVEL PILOT VALVE
SCREW PLUG	7369481	250	1	98	12 23 362 5	SPARE PARTS KIT
SCREW PLUG	7370843	30	1	208	56 19 045	AXIAL PISTON MOTOR
SCREW PLUG	774378208	31	2	255	10 29 300 3	DISTRIBUTION BLOCK MX-F 4/
SCREW PLUG	774378208	31	1	719	10 66 480 4	DISTRIBUTION BLOCK MX-F 5/
SCREW PLUG	774378208	31	2	733	10 66 475 5	DISTRIBUTION BLOCK MX-F 7/
SCREW PLUG	9265264	12	1	766	92 65 991	FLOW REGULATING CHECK
SCREW PLUG G 1/2	7002760	133	1	365	56 02 487	PRESSURE LIMITING VALVE
SCREW PLUG G 1/4	7013032	370	2	421	10 30 079 8	STICK BYPASS VALVE
SCREW PLUG G 1/4-19	7024958	93	2	425	10 11 386 0	CONTROL BLOCK
SCREW PLUG G1/4	7361553	38	3	346	10 06 379 3	OIL PILOT VALVE INSTALLATIO
SCREW PLUG G1/4	7361553	387	1	413	10 35 863 8	CONTROL VALVE INSTALLAT
SCREW PLUG G1/4	7361553	487	1	414	10 35 863 8	CONTROL VALVE INSTALLAT
SCREW PLUG G1A	7363717	23	1	8	11 10 260 2	FUEL TANK FOR EXCHANGE
SCREW PLUG G1A	7363717	39	1	531	11 10 262 1	FUEL TANK ASSY.
SCREW PLUG G1A	7363717	21	1	534	10 06 759 6	FUEL TANK
SCREW PLUG G1A	7363717	21	1	535	10 49 835 9	FUEL TANK
SCREW PLUG M10X1 A3C	7370432	310	4	112	10 00 201 1	BRAKE VALVE
SCREW PLUG M10X1 ED	7362674	28	2	178	70 28 075	CONTROL UNIT
SCREW PLUG M10X1 NBR	7372626	32	2	162	11 34 249 1	AXIAL PISTON PUMP
SCREW PLUG M10X1 NBR	7372626	12	1	398	11 49 189 0	CONNECTING PLATE
SCREW PLUG M12X1,5	10100680	27	1	178	70 28 075	CONTROL UNIT
SCREW PLUG M12X1,5	7363178	27	1	178	70 28 075	CONTROL UNIT
SCREW PLUG M12X1,5	7372624	22	4	162	11 34 249 1	AXIAL PISTON PUMP
SCREW PLUG M12X1,5	7372624	35	2	398	11 49 189 0	CONNECTING PLATE
SCREW PLUG M12X1,5 16MnC	9881233	21	1	820	90 78 788	REGULATOR COVER LR SD D
SCREW PLUG M14X1,5 ED	7363125	46	2	385	10 04 851 7	HYDRAULIC TANK INSTALLAT
SCREW PLUG M14X1,5 ED	7363125	46	2	387	10 35 863 4	HYDRAULIC TANK INSTALLAT
SCREW PLUG M16X1,5 ED	477511301	6	1	226	90 02 790 4	SLEWING DRIVE SAT 325/254
SCREW PLUG M16X1,5 ST A3	7373203	390	1	421	10 30 079 8	STICK BYPASS VALVE
SCREW PLUG M18X1,5	10220419	48	1	162	11 34 249 1	AXIAL PISTON PUMP
SCREW PLUG M18X1,5 ED	7361960	44	5	385	10 04 851 7	HYDRAULIC TANK INSTALLAT
SCREW PLUG M18X1,5 ED	7361960	44	5	387	10 35 863 4	HYDRAULIC TANK INSTALLAT
SCREW PLUG M18X1,5 ED	7361960	51	1	674	90 76 551	ENGINE CONTROL SENSORS
SCREW PLUG M20X1,5 ED	11835019	55	1	208	56 19 045	AXIAL PISTON MOTOR
SCREW PLUG M20X1,5X19	10296854	14	1	427	10 29 999 7	NON-RETURN VALVE
SCREW PLUG M22X1,5 ED	7361961	48	1	535	10 49 835 9	FUEL TANK
SCREW PLUG M22X1,5X34	7020568	30	1	431	10 33 073 6	TRAVEL PILOT VALVE
SCREW PLUG M26X1,5 ED	7362698	64	2	145	10 04 853 9	PUMPS + COUPLING INSTALL
SCREW PLUG M26X1,5 ED	7362698	43	1	385	10 04 851 7	HYDRAULIC TANK INSTALLAT
SCREW PLUG M26X1,5 ED	7362698	43	1	387	10 35 863 4	HYDRAULIC TANK INSTALLAT
SCREW PLUG M27X1,5	10296869	70	1	425	10 11 386 0	CONTROL BLOCK
SCREW PLUG M27X2 ED-FKM	12422288	14	2	810	11 38 131 3	ADJUSTMENT NG 100
SCREW PLUG M27X2 ED-FKM	12422288	14	2	811	11 38 727 8	REVERSION KIT SCREW PLUG
SCREW PLUG M27X2 ED-FKM	12422288	14	2	833	11 38 195 4	SEAL KIT NG 100
SCREW PLUG M30X1,5 9SMnP	9077172	3	1	563	10 11 795 1	FINAL CONTROL VALVE
SCREW PLUG M30X1,5 9SMnP	9077172	3	1	564	90 75 134	FINAL CONTROL VALVE

Description	Item	Pos.	Quantity	Page	Assembly	Description
SCREW PLUG M30X1,5 ED-FP	7382204	14	3	570	90 79 480	POWER UNIT SUPPORT ATT
SCREW PLUG M30X1,5 ED-FP	7382204	6	3	574	12 83 245 4	OIL SUMP PRE-ASS.
SCREW PLUG M30X1,5 ED-FP	7382204	23	2	613	90 73 507	OIL COOLER, PRE-ASSEMBLE
SCREW PLUG M30X1,5 ED-FP	7382204	6	1	658	10 11 550 3	COOLING WATER AIR BLEEDI
SCREW PLUG M30X1,5 ED-FP	7382204	22	2	701	10 11 801 4	SEAL KIT AGGREGATE CARR
SCREW PLUG M30X1,5 St Rm>	9275590	11	1	618	90 72 781	LUBRICATING OIL PUMP
SCREW PLUG M33X2 ED	7361329	42	1	385	10 04 851 7	HYDRAULIC TANK INSTALLAT
SCREW PLUG M33X2 ED	7361329	42	1	387	10 35 863 4	HYDRAULIC TANK INSTALLAT
SCREW PLUG M33X2 ED-FPM	10043136	15	1	570	90 79 480	POWER UNIT SUPPORT ATT
SCREW PLUG M34X1,5	7366889	9	1	431	10 33 073 6	TRAVEL PILOT VALVE
SCREW PLUG M42X2 ED	7363073	65	1	145	10 04 853 9	PUMPS + COUPLING INSTALL
SCREW PLUG M42X2 ED	7363073	41	2	385	10 04 851 7	HYDRAULIC TANK INSTALLAT
SCREW PLUG M42X2 ED	7363073	41	2	387	10 35 863 4	HYDRAULIC TANK INSTALLAT
SCREW PLUG M42X2 ED	7363073	44	1	394	10 05 182 7	HYDRAULIC TANK
SCREW PLUG M42X2 ED	7363073	44	1	395	10 35 818 3	HYDRAULIC TANK
SCREW PLUG M45X1	7369483	110	1	112	10 00 201 1	BRAKE VALVE
SCREW PLUG M45X1X78	7021762	100	1	112	10 00 201 1	BRAKE VALVE
SCREW PLUG M48X2 C45E+C	9274672	16	2	154	90 73 242	CONNECTION HOUSING NG 15
SCREW PLUG M48X2 ED	7363177	27	1	8	11 10 260 2	FUEL TANK FOR EXCHANGE
SCREW PLUG M48X2 ED	7363177	40	3	385	10 04 851 7	HYDRAULIC TANK INSTALLAT
SCREW PLUG M48X2 ED	7363177	40	3	387	10 35 863 4	HYDRAULIC TANK INSTALLAT
SCREW PLUG M48X2 ED	7363177	43	1	531	11 10 262 1	FUEL TANK ASSY.
SCREW PLUG M48X2 ED	7363177	46	1	534	10 06 759 6	FUEL TANK
SCREW PLUG M48X2 ED	7363177	46	1	535	10 49 835 9	FUEL TANK
SCREW PLUG M6	9268441	5	4	184	98 82 875	SEAL KIT REGULATING VALVE
SCREW PLUG M6	9268441	7	2	816	90 73 786	CONNECTING PLATE NG 100
SCREW PLUG M6	9268441	7	4	833	11 38 195 4	SEAL KIT NG 100
SCREW PLUG M8X1	9881609	8	1	184	98 82 875	SEAL KIT REGULATING VALVE
SCREW PLUG M8X1 C45Pb+C	10122499	20	4	807	10 11 856 1	PILOT CONTROL UNIT VG6-8
SCREW PLUG M8X1 C45Pb+C	10122499	20	4	808	11 37 560 6	PILOT CONTROL UNIT VG6-8
SCREW PLUG M8X1 ED	7362689	26	1	162	11 34 249 1	AXIAL PISTON PUMP
SCREW PLUG M8X1 NBR	7371258	51	1	431	10 33 073 6	TRAVEL PILOT VALVE
SCREW PLUG M8X1 OR-NBR	7027497	13	3	398	11 49 189 0	CONNECTING PLATE
SCREW PLUG VSTI G1/4A	10137392	33	1	323	90 79 258	PILOT CONTROL UNIT VG7 2-3
SCREW PLUG VSTI G1/4A	10137392	33	1	325	90 79 259	PILOT CONTROL UNIT VG7 2-3
SCREW PLUG VSTI G1/8A	7001338	15	2	253	10 66 472 2	DISTRIBUTION BLOCK SXE-2
SCREW PLUG VSTI G3/4A	10137389	22	1	230	90 74 075	HYDRAULIC INSTALLATION
SCREW PLUG VSTI G3/4A	10137389	15	1	833	11 38 195 4	SEAL KIT NG 100
SCREW PLUG VSTI M10X1	7381638	12	1	680	10 11 611 4	FLYWHEEL HOUSING MOUNT
SCREW PLUG VSTI M10X1	7381638	8	1	698	90 80 504	LOCKING PIECES
SCREW PLUG VSTI M14X1,5	10137113	21	1	162	11 34 249 1	AXIAL PISTON PUMP
SCREW PLUG VSTI M14X1,5	7380566	6	3	560	12 82 483 7	CRANKCASE CPL. WITH CYLIN
SCREW PLUG VSTI M14X1,5	7380566	2	1	572	12 83 230 4	COVER PRE-ASSY.
SCREW PLUG VSTI M14X1,5	7380566	2	1	573	12 83 230 5	COVER PRE-ASSY.
SCREW PLUG VSTI M14X1,5	7380566	11	1	642	10 11 707 3	AIR INTAKE PIPE ASS.
SCREW PLUG VSTI M14X1,5	7380566	6	1	643	90 77 279	CONNECTING BRANCH ADD-O
SCREW PLUG VSTI M14X1,5	7380566	5	1	658	10 11 550 3	COOLING WATER AIR BLEEDI
SCREW PLUG VSTI M14X1,5	7380566	50	1	674	90 76 551	ENGINE CONTROL SENSORS
SCREW PLUG VSTI M16X1,5	7382203	5	2	560	12 82 483 7	CRANKCASE CPL. WITH CYLIN
SCREW PLUG VSTI M16X1,5	7382203	8	1	631	10 12 580 1	FUEL FINE FILTER
SCREW PLUG VSTI M16X1,5	7382203	47	2	634	10 11 628 5	FUEL LINE
SCREW PLUG VSTI M22X1,5	10137075	28	1	8	11 10 260 2	FUEL TANK FOR EXCHANGE
SCREW PLUG VSTI M22X1,5	10137075	420	1	112	10 00 201 1	BRAKE VALVE
SCREW PLUG VSTI M22X1,5	10137075	44	1	532	11 10 262 1	FUEL TANK ASSY.
SCREW PLUG VSTI M22X1,5	10137075	48	1	534	10 06 759 6	FUEL TANK
SCREW PLUG VSTI M22X1,5	477510401	48	3	110	96 87 443 01	TRACTION DRIVE FAT 400P07
SCREW PLUG VSTI M22X1,5	7380177	4	2	560	12 82 483 7	CRANKCASE CPL. WITH CYLIN
SCREW PLUG VSTI M22X1,5	7380177	14	1	681	90 80 653	LOCKING PIECES
SCREW PLUG VSTI M26X1,5	10137108	29	1	154	90 73 242	CONNECTION HOUSING NG 15
SCREW PLUG VSTI M26X1,5	10137108	20	2	162	11 34 249 1	AXIAL PISTON PUMP

Description	Item	Pos.	Quantity	Page	Assembly	Description
SCREW PLUG VSTI M26X1,5	10137108	40	1	827	90 77 464	RS FLANGE NG 125-140-150
SCREW PLUG VSTI M26X1,5	7381457	10	1	662	90 79 889	HEATER CONNECTION
SCREW PLUG VSTI M26X1,5	7381457	3	1	698	90 80 504	LOCKING PIECES
SCREW PLUG VSTI M33X2	10137121	24	1	162	11 34 249 1	AXIAL PISTON PUMP
SCREW PLUG VSTI M33X2	10137121	29	2	835	92 65 808	SEAL KIT DOUBLE PUMP NG
SCREW PLUG VSTI M38X1,5	7382202	5	2	689	90 79 893	LOCKING PIECES
SCREW PLUG VSTI M38X1,5	7382202	23	2	701	10 11 801 4	SEAL KIT AGGREGATE CARR
SCREW SLEEVE DN6	774376008	100	1	258	90 64 786	CONNECTING ELEMENT
SCREW SLEEVE DN6	774376008	1	31	262	10 01 461 1	AUXILIARY BOX
SCREW SLEEVE DN6,5 ST	10012024	200	1	260	90 64 786	CONNECTING ELEMENT
SCREW SLEEVE DN6,5 ST	10012024	100	6	263	10 01 461 1	AUXILIARY BOX
SCREW-ON CONNECTION GE	7618380	3	1	101	10 40 412 7	ROTARY CONNECTION CPL
SCREW-ON CONNECTION GE	7618380	3	1	102	11 46 393 9	ROTARY CONNECTION CPL
SCREW-ON CONNECTION M2	9075128	26	1	665	90 80 736	EXHAUST TC MOUNTING
SCREWDR.F.RECESSED-HEA	11162132	112	1	540	10 84 856 2	TOOL EQUIPMENT
SEAL	10009027	450	2	509	10 29 035 2	INTERIOR PANELING
SEAL	10009027	450	2	511	10 48 808 8	INTERIOR PANELING
SEAL	10117891	1	1	615	10 11 585 0	SEALING SET OIL COOLER D
SEAL	10118550	19	1	700	10 11 801 4	SEAL KIT AGGREGATE CARR
SEAL	10118551	17	3	700	10 11 801 4	SEAL KIT AGGREGATE CARR
SEAL	10118554	200	6	68	12 48 693 2	SERVICE KIT 1000h
SEAL	10118554	200	6	72	12 48 693 4	SERVICE KIT 2000h
SEAL	10118554	7	1	592	10 11 960 9	CYLINDER HEAD COVER ASS
SEAL	10118554	7	1	593	10 11 961 0	CYLINDER HEAD COVER ASS
SEAL	10118554	7	1	594	10 11 963 6	CYLINDER HEAD COVER ASS
SEAL	10118554	7	1	595	90 79 838	CYLINDER HEAD COVER
SEAL	10118554	7	1	596	90 79 849	CYLINDER HEAD COVER
SEAL	10118554	4	1	606	10 11 585 1	SEAL KIT CYLINDER HEAD
SEAL	10118554	4	6	608	10 11 585 3	SEAL KIT ZYLINDER HEAD CPL
SEAL	10118554	7	1	625	10 11 709 3	RK INJECTION NOZZLE
SEAL	10118554	7	1	628	10 11 585 4	SEAL KIT INJECTION NOZZLE
SEAL	10118556	3	6	606	10 11 585 1	SEAL KIT CYLINDER HEAD
SEAL	10118556	3	6	608	10 11 585 3	SEAL KIT ZYLINDER HEAD CPL
SEAL	10118556	6	6	642	10 11 707 3	AIR INTAKE PIPE ASS.
SEAL	10118620	2	1	699	10 11 801 4	SEAL KIT AGGREGATE CARR
SEAL	10119923	3	2	615	10 11 585 0	SEALING SET OIL COOLER D
SEAL	10123735	4	3	571	90 79 487	OIL SUMP
SEAL	10123735	17	3	703	10 11 583 8	SEAL KIT DIESEL ENGINE D9
SEAL	10126304	14	1	703	10 11 583 8	SEAL KIT DIESEL ENGINE D9
SEAL	10126427	22	1	703	10 11 583 8	SEAL KIT DIESEL ENGINE D9
SEAL	10141557	18	6	607	10 11 585 1	SEAL KIT CYLINDER HEAD
SEAL	10141557	18	6	609	10 11 585 3	SEAL KIT ZYLINDER HEAD CPL
SEAL	10141557	6	6	670	10 11 548 0	EXHAUST PIPE ASSEMBLY
SEAL	10297876	2	1	148	10 29 787 3	CONTROL VALVE
SEAL	10297876	3	1	149	10 29 787 4	INTERMEDIATE PLATE
SEAL	10342909	7	6	106	10 35 654 7	SEAL KIT
SEAL	10471479	10	1	477	70 28 788	SEAL
SEAL	10475895	17	1	177	70 28 075	CONTROL UNIT
SEAL	12225873	120	1	484	70 28 769	DRIVER'S CAB DOOR
SEAL	7011131	2	1	577	50 04 624	OIL DRAIN PLUG M 30 1,5
SEAL	7019154	240	1	484	70 28 769	DRIVER'S CAB DOOR
SEAL	7019155	250	1	484	70 28 769	DRIVER'S CAB DOOR
SEAL	7024455	460	1	491	10 29 033 7	ELECTRICAL INSTALLATION
SEAL	7024455	460	1	494	10 48 808 7	ELECTRICAL INSTALLATION
SEAL	7026772	13	1	519	99 47 695	ELECTRICAL SYSTEM E50
SEAL	7028343	9	1	390	56 17 688	SHUT OFF DEVICE
SEAL	7028788	170	1	476	70 28 767	GLASS PANES
SEAL	7028790	130	1	476	70 28 767	GLASS PANES
SEAL	7028792	20	1	478	10 35 889 0	ADDITIONAL KIT SIDE PANE
SEAL	7028803	140	2	480	10 03 553 0	FRONT WINDOW BOTTOM

Description	Item	Pos.	Quantity	Page	Assembly	Description
SEAL	7028832	410	1	485	70 28 769	DRIVER'S CAB DOOR
SEAL	7028890	150	1	503	10 29 026 4	COMPONENTS
SEAL	7028891	140	1	503	10 29 026 4	COMPONENTS
SEAL	7028892	160	1	503	10 29 026 4	COMPONENTS
SEAL	7028953	400	2	509	10 29 035 2	INTERIOR PANELING
SEAL	7028953	400	2	511	10 48 808 8	INTERIOR PANELING
SEAL	7029418	500	2	487	70 28 831	SLIDING WINDOW
SEAL	7368993	401	1	65	12 48 693 1	SERVICE KIT FIRST 500h
SEAL	7368993	401	1	69	12 48 693 2	SERVICE KIT 1000h
SEAL	7368993	401	1	74	12 48 693 4	SERVICE KIT 2000h
SEAL	7368993	2	1	392	10 33 390 3	RETURN FILTER 20/5µm
SEAL	9077329	35	3	704	10 11 583 8	SEAL KIT DIESEL ENGINE D9
SEAL	9079124	14	3	700	10 11 801 4	SEAL KIT AGGREGATE CARR
SEAL	9079124	18	3	703	10 11 583 8	SEAL KIT DIESEL ENGINE D9
SEAL	9079125	19	1	703	10 11 583 8	SEAL KIT DIESEL ENGINE D9
SEAL	9079608	6	2	617	90 80 278	SUCTION PUMP WITH FASTEN
SEAL	9079608	53	2	701	10 11 801 4	SEAL KIT AGGREGATE CARR
SEAL	9079608	53	2	705	10 11 583 8	SEAL KIT DIESEL ENGINE D9
SEAL	9144762	3	1	648	91 44 757	END COVER 60/64
SEAL	9268129	16	1	607	10 11 585 1	SEAL KIT CYLINDER HEAD
SEAL	9268129	16	1	609	10 11 585 3	SEAL KIT ZYLINDER HEAD CPL
SEAL	9270109	15	1	607	10 11 585 1	SEAL KIT CYLINDER HEAD
SEAL	9270109	15	1	609	10 11 585 3	SEAL KIT ZYLINDER HEAD CPL
SEAL	9270109	3	1	665	90 80 736	EXHAUST TC MOUNTING
SEAL	9270109	4301	1	707	10 11 583 8	SEAL KIT DIESEL ENGINE D9
SEAL	9273691	5	1	692	90 80 006	POWER TAKE-OFF ADD-ON
SEAL	9273691	52	1	705	10 11 583 8	SEAL KIT DIESEL ENGINE D9
SEAL	9274974	36	1	704	10 11 583 8	SEAL KIT DIESEL ENGINE D9
SEAL	9275428	76	1	183	92 75 443	REPAIR SET LID NG 100
SEAL	9882207	15	2	835	92 65 808	SEAL KIT DOUBLE PUMP NG
SEAL	9885529	2	1	690	90 77 719	POWER TAKE-OFF ADD-ON
SEAL	9885529	4	1	695	90 78 962	AUXILIARY DRIVE PRE-ASS.
SEAL	9885529	34	1	704	10 11 583 8	SEAL KIT DIESEL ENGINE D9
SEAL	9885529	51	2	705	10 11 583 8	SEAL KIT DIESEL ENGINE D9
SEAL 0,33	10126738	3	1	570	90 79 480	POWER UNIT SUPPORT ATT
SEAL 0,33	10126738	2	1	702	10 11 583 8	SEAL KIT DIESEL ENGINE D9
SEAL 0,33	10137721	5	1	680	10 11 611 4	FLYWHEEL HOUSING MOUNT
SEAL 0,33	10137721	31	1	704	10 11 583 8	SEAL KIT DIESEL ENGINE D9
SEAL 0,5	9267472	4	2	613	90 73 507	OIL COOLER, PRE-ASSEMBLE
SEAL 1	12451554	18	1	700	10 11 801 4	SEAL KIT AGGREGATE CARR
SEAL 1	9079130	5	1	567	90 79 021	CRANKCASE BREATHER ASS
SEAL 1	9079130	2	1	682	10 11 912 8	LOCKING PIECES
SEAL 1	9079130	33	1	704	10 11 583 8	SEAL KIT DIESEL ENGINE D9
SEAL 1,31	10118621	6	6	670	10 11 548 0	EXHAUST PIPE ASSEMBLY
SEAL 1,5	9073506	2	1	612	90 73 508	OIL COOLER ADD-ON D936
SEAL 1,5	9268131	18	1	665	90 80 736	EXHAUST TC MOUNTING
SEAL 1,5	9268131	71	1	706	10 11 583 8	SEAL KIT DIESEL ENGINE D9
SEAL 1,5X128 98/141	9271963	10	2	607	10 11 585 1	SEAL KIT CYLINDER HEAD
SEAL 1,5X128 98/141	9271963	10	2	609	10 11 585 3	SEAL KIT ZYLINDER HEAD CPL
SEAL 1,5X128 98/141	9271963	10	1	642	10 11 707 3	AIR INTAKE PIPE ASS.
SEAL 1,5X128 98/141	9271963	10	1	644	10 11 570 3	CONNECTING LINE ADD-ON
SEAL 1,5X128 98/141	9271963	10	1	645	10 12 190 9	CONNECTING LINE ADD-ON
SEAL 1,5X128 98/141	9271963	20	2	701	10 11 801 4	SEAL KIT AGGREGATE CARR
SEAL 189X22X4	7368994	4	1	392	10 33 390 3	RETURN FILTER 20/5µm
SEAL 1X10	12582865	2	1	571	90 79 487	OIL SUMP
SEAL 1X10	12582865	15	1	700	10 11 801 4	SEAL KIT AGGREGATE CARR
SEAL 1X10	12582865	15	1	703	10 11 583 8	SEAL KIT DIESEL ENGINE D9
SEAL 2	9080279	4	1	656	10 11 983 0	THERMOSTAT HOUSING ASS
SEAL 2	9080279	4	1	657	90 75 678	THERMOSTAT HOUSING ASSE
SEAL 2	9080279	4	1	699	10 11 801 4	SEAL KIT AGGREGATE CARR

Description	Item	Pos.	Quantity	Page	Assembly	Description
SEAL 2	9080279	4	1	702	10 11 583 8	SEAL KIT DIESEL ENGINE D9
SEAL 78,5X105X2,5	7041345	1	1	391	74 14 913	LOCKABLE TANK CAP d=80
SEAL KIT	10021310	998	1	255	10 29 300 3	DISTRIBUTION BLOCK MX-F 4/
SEAL KIT	10021310	998	1	719	10 66 480 4	DISTRIBUTION BLOCK MX-F 5/
SEAL KIT	10021310	998	1	733	10 66 475 5	DISTRIBUTION BLOCK MX-F 7/
SEAL KIT	10021311	997	1	255	10 29 300 3	DISTRIBUTION BLOCK MX-F 4/
SEAL KIT	10021311	997	1	719	10 66 480 4	DISTRIBUTION BLOCK MX-F 5/
SEAL KIT	10021311	997	1	733	10 66 475 5	DISTRIBUTION BLOCK MX-F 7/
SEAL KIT	10220423	999	1	163	11 34 249 1	AXIAL PISTON PUMP
SEAL KIT	10220997	999	1	369	10 02 191 5	CONTROL SOLENOID VALVE
SEAL KIT	10220997	999	1	370	10 28 046 1	CONTROL SOLENOID VALVE
SEAL KIT	10291972	999	1	398	11 49 189 0	CONNECTING PLATE
SEAL KIT	10292139	998	1	165	57 17 149	INTERNAL GEAR PUMP SET
SEAL KIT	10337560	999	1	422	10 33 376 3	SCREW PLUG
SEAL KIT	10356547	999	1	104	96 11 367	ROTARY FEED THROUGH
SEAL KIT	10410335	999	1	148	10 29 787 3	CONTROL VALVE
SEAL KIT	10454716	999	1	377	10 45 471 5	PRESSURE REDUCTION VALV
SEAL KIT	11692624	999	1	103	11 64 331 4	ROTARY FEED THROUGH
SEAL KIT	5602345	999	1	425	10 11 386 0	CONTROL BLOCK
SEAL KIT	7025142	999	1	364	50 09 565	PRESSURE LIMITING CARTRI
SEAL KIT	7026136	999	1	112	10 00 201 1	BRAKE VALVE
SEAL KIT	7029301	999	1	151	10 29 154 4	GEAR PUMP
SEAL KIT	7624268	999	1	744	10 00 348 5	DIRECTIONAL CONTROL VALV
SEAL KIT	9080194	98	1	159	10 11 886 0	PUMP DISTRIBUTION GEAR
SEAL KIT	9443027	900	1	110	96 87 443 01	TRACTION DRIVE FAT 400P07
SEAL KIT	944452203	910	1	227	90 02 790 4	SLEWING DRIVE SAT 325/254
SEAL KIT AGGREGATE CARR	10118014	13	1	557	10 11 682 5	BASIC ENGINE D936 L HIGH 3
SEAL KIT BRAKE VALVE	7013133	999	1	438	50 06 555	NON-RETURN VALVE
SEAL KIT CONNECTING HOUSI	9274731	91	1	804	10 13 303 7	HYDR.DOUBLE PUMP
SEAL KIT COOLING PUMP ZPA	10119482	96	1	159	10 11 886 0	PUMP DISTRIBUTION GEAR
SEAL KIT CYLINDER HEAD	10115851	88	1	558	10 11 682 5	BASIC ENGINE D936 L HIGH 3
SEAL KIT DIESEL ENGINE D9	10115838	939	1	556	10 11 714 5	DIESEL ENGINE D936 L A6 190
SEAL KIT DIRECTIONAL VALV	5009391	999	1	368	10 01 872 5	DIRECTIONAL CONTROL VALV
SEAL KIT DIRECTIONAL VALV	5009562	4	1	362	10 04 272 9	OIL PILOT VALVE
SEAL KIT DIRECTIONAL VALV	5009562	999	1	363	10 28 027 9	VALVE
SEAL KIT DIRECTIONAL VALV	5009562	999	1	366	56 15 344	SOLENOID VALVE
SEAL KIT DOUBLE PUMP NG	9265808	98	1	805	10 13 303 7	HYDR.DOUBLE PUMP
SEAL KIT DRV DRV 1 1/4"	9270390	999	1	763	10 11 671 7	FLOW REGULATING CHECK
SEAL KIT DRV DSRV 1"	9265299	997	1	765	92 65 178	FLOW REGULATING CHECK
SEAL KIT F.PISTON ROD BEAR	9063688	999	1	773	95 91 741	PISTON ROD BEARING
SEAL KIT F.PISTON ROD BEAR	94027947	999	1	772	94 02 794 9	PISTON ROD BEARING
SEAL KIT F.PISTON ROD BEAR	94006889	999	1	771	94 00 688 8	PISTON ROD BEARING
SEAL KIT FILTER	11821521	999	1	160	10 22 041 7	FILTER
SEAL KIT GEAR DRIVE	10220432	98	1	399	11 49 189 4	DRIVING GEAR
SEAL KIT INJECTION NOZZLE	10115854	199	1	551	10 11 714 5	DIESEL ENGINE D936 L A6 190
SEAL KIT INJECTION NOZZLE	10115854	7	1	606	10 11 585 1	SEAL KIT CYLINDER HEAD
SEAL KIT INJECTION NOZZLE	10115854	7	1	608	10 11 585 3	SEAL KIT ZYLINDER HEAD CPL
SEAL KIT INJECTION PUMP U	10115855	179	1	558	10 11 682 5	BASIC ENGINE D936 L HIGH 3
SEAL KIT INJECTION PUMP U	10115855	82	6	706	10 11 583 8	SEAL KIT DIESEL ENGINE D9
SEAL KIT LIMIT VALVE	7030267	998	1	365	56 02 487	PRESSURE LIMITING VALVE
SEAL KIT LIMIT VALVE	7030267	999	1	374	70 28 300	PRESSURE LIMITING VALVE
SEAL KIT LOAD-HOLDING VA	5617472	999	1	421	10 30 079 8	STICK BYPASS VALVE
SEAL KIT NG 090	9273163	98	1	230	90 74 075	HYDRAULIC INSTALLATION
SEAL KIT NG 100	11381954	98	1	800	90 73 888	HYDRAULIC INSTALLATION
SEAL KIT PRESSURE VALVE	10340130	999	1	403	11 00 605 0	PRESSURE LIMITING VALVE
SEAL KIT REGULATING VALVE	9882875	88	1	803	10 13 303 7	HYDR.DOUBLE PUMP
SEAL KIT REGULATING VALVE	9882875	90	1	819	10 13 306 1	REGULATING VALVE EHR
SEAL KIT SHUTTLE VALVE WV	9266232	93	1	230	90 74 075	HYDRAULIC INSTALLATION
SEAL KIT SHUTTLE VALVE WV	9266232	98	1	236	10 11 950 3	SHUTTLE VALVE
SEAL KIT STRAI.AHEAD TRAV	7015341	999	1	431	10 33 073 6	TRAVEL PILOT VALVE

Description	Item	Pos.	Quantity	Page	Assembly	Description
SEAL KIT VG7-4/...	9269690	96	1	323	90 79 258	PILOT CONTROL UNIT VG7 2-3
SEAL KIT VG7-4/...	9269690	96	1	325	90 79 259	PILOT CONTROL UNIT VG7 2-3
SEAL KIT VG7-4/...	9269690	96	1	807	10 11 856 1	PILOT CONTROL UNIT VG6-8
SEAL KIT VG7-4/...	9269690	96	1	808	11 37 560 6	PILOT CONTROL UNIT VG6-8
SEAL KIT ZYLINDER HEAD CPL	10115853	89	1	558	10 11 682 5	BASIC ENGINE D936 L HIGH 3
SEAL KIT ZYLINDER HEAD CPL	10115853	83	1	706	10 11 583 8	SEAL KIT DIESEL ENGINE D9
SEAL TD2	9275766	2	1	580	91 47 512	LOCKING PIECES
SEAL TD2	9275766	16	1	700	10 11 801 4	SEAL KIT AGGREGATE CARR
SEAL TD2	9275766	16	3	703	10 11 583 8	SEAL KIT DIESEL ENGINE D9
SEAL-LOCK-SHOULDER NUT	7009369	47	1	162	11 34 249 1	AXIAL PISTON PUMP
SEAL-LOCK-SHOULDER NUT	7014529	9	1	174	11 82 151 3	SEALING SET VALVE
SEAL-LOCK-SHOULDER NUT M	7027052	32	2	178	70 28 075	CONTROL UNIT
SEALANT	8622905	108	1	693	90 77 386	AUXILIARY DRIVE PRE-ASS.
SEALANT	8627609	123	1	216	90 80 194	SEAL KIT
SEALANT	8627609	112	1	574	12 83 245 4	OIL SUMP PRE-ASS.
SEALANT	8627609	123	1	821	10 11 909 3	REPAIR KIT DRIVE SHAFT PV
SEALING NUT M12	7381226	6	1	563	10 11 795 1	FINAL CONTROL VALVE
SEALING NUT M12	7381226	6	1	564	90 75 134	FINAL CONTROL VALVE
SEALING NUT M12	7381226	3	1	699	10 11 801 4	SEAL KIT AGGREGATE CARR
SEALING NUT M12	7381226	3	1	702	10 11 583 8	SEAL KIT DIESEL ENGINE D9
SEALING PLATE	10301006	16	1	199	10 21 851 3	COMBINATED RADIATOR
SEALING PLATE	10301006	16	1	202	11 69 472 6	COMBINATED RADIATOR
SEALING PLATE	10301009	17	1	199	10 21 851 3	COMBINATED RADIATOR
SEALING PLATE	10301009	17	1	202	11 69 472 6	COMBINATED RADIATOR
SEALING PLUG LK 950/12	10030837	14	12	560	12 82 483 7	CRANKCASE CPL. WITH CYLIN
SEALING PLUG LK 950/6	10036325	2	1	603	10 14 282 0	ROCKER AXLE PRE-ASS.
SEALING PLUG MB 700	7610819	7	1	109	96 87 443 01	TRACTION DRIVE FAT 400P07
SEALING PLUG MB 700/5	7380133	35	2	323	90 79 258	PILOT CONTROL UNIT VG7 2-3
SEALING PLUG MB 700/5	7380133	66	2	820	90 78 788	REGULATOR COVER LR SD D
SEALING PLUG MB 700/7	7380480	97	1	227	90 02 790 4	SLEWING DRIVE SAT 325/254
SEALING PLUG MB 850/12	7382069	8	2	560	12 82 483 7	CRANKCASE CPL. WITH CYLIN
SEALING PROFILE	10008649	16	0.28m	328	10 40 689 8	AIR CONDITIONING
SEALING PROFILE	262181001	10	4.11m	245	93 36 286 01	BALL SLEWING RING
SEALING PROFILE	262181001	20	4.15m	245	93 36 286 01	BALL SLEWING RING
SEALING PUTTY	10022063	30	1	336	11 00 359 4	HOUSING
SEALING RING	10014697	12	2	249	10 22 844 3	LUBRICATION PUMP
SEALING RING 103/114x5	10356238	11	1	106	10 35 654 7	SEAL KIT
SEALING RING 115X135,5X8,1	7023395	10	1	771	94 00 688 8	PISTON ROD BEARING
SEALING RING 12	7013114	47	1	184	98 82 875	SEAL KIT REGULATING VALVE
SEALING RING 12	7013114	47	1	820	90 78 788	REGULATOR COVER LR SD D
SEALING RING 12,7X18X1,5	10011865	27	4	634	10 11 628 5	FUEL LINE
SEALING RING 12,7X18X1,5	10011865	77	4	706	10 11 583 8	SEAL KIT DIESEL ENGINE D9
SEALING RING 14	5602583	23	4	121	10 40 412 9	HYDR.INSTALLATION UNDER
SEALING RING 14	5602583	10	1	523	10 28 039 0	PRESSURE TRANSMITTER 400
SEALING RING 14	5602583	1	1	764	73 63 125	SCREW PLUG M14X1,5 ED
SEALING RING 14,7X22X1,5	10011866	9	12	606	10 11 585 1	SEAL KIT CYLINDER HEAD
SEALING RING 14,7X22X1,5	10011866	9	12	608	10 11 585 3	SEAL KIT ZYLINDER HEAD CPL
SEALING RING 14,7X22X1,5	10011866	25	11	634	10 11 628 5	FUEL LINE
SEALING RING 14,7X22X1,5	10011866	39	3	634	10 11 628 5	FUEL LINE
SEALING RING 14,7X22X1,5	10011866	11	2	637	10 11 559 5	LEAK OIL RETURN LINE
SEALING RING 14,7X22X1,5	10011866	2	12	639	90 79 083	PIPELINE INSTALLATION
SEALING RING 14,7X22X1,5	10011866	3	2	658	10 11 550 3	COOLING WATER AIR BLEEDI
SEALING RING 14,7X22X1,5	10011866	9	2	699	10 11 801 4	SEAL KIT AGGREGATE CARR
SEALING RING 14,7X22X1,5	10011866	75	1	706	10 11 583 8	SEAL KIT DIESEL ENGINE D9
SEALING RING 14,7X22X1,5	10011866	78	26	706	10 11 583 8	SEAL KIT DIESEL ENGINE D9
SEALING RING 16,7X24X1,5	10011867	3	1	631	10 12 580 1	FUEL FINE FILTER
SEALING RING 16,7X24X1,5	10011867	23	12	634	10 11 628 5	FUEL LINE
SEALING RING 16,7X24X1,5	10011867	30	14	634	10 11 628 5	FUEL LINE
SEALING RING 16,7X24X1,5	10011867	79	5	706	10 11 583 8	SEAL KIT DIESEL ENGINE D9
SEALING RING 16,7X24X1,5	10011867	80	7	706	10 11 583 8	SEAL KIT DIESEL ENGINE D9

Description	Item	Pos.	Quantity	Page	Assembly	Description
SEALING RING 17	7371654	3	1	349	93 99 179	INTERMEDIATE COUPLING
SEALING RING 17	7371654	10	1	419	10 07 619 5	FITTINGS
SEALING RING 21	7371651	4	1	349	93 99 179	INTERMEDIATE COUPLING
SEALING RING 26,7X34,93X2	10011870	9	1	566	10 11 916 7	CRANKCASE BREATHER ASSE
SEALING RING 26,7X34,93X2	10011870	9	1	569	10 11 832 9	REPAIR KIT PIPE LINE D936
SEALING RING 26,7X34,93X2	10011870	27	1	665	90 80 736	EXHAUST TC MOUNTING
SEALING RING 26,7X34,93X2	10011870	76	5	706	10 11 583 8	SEAL KIT DIESEL ENGINE D9
SEALING RING 30,7X39X2	10113731	11	2	567	90 79 021	CRANKCASE BREATHER ASS
SEALING RING 30,7X39X2	10113731	3	2	662	90 79 889	HEATER CONNECTION
SEALING RING 30,7X39X2	10113731	42	2	701	10 11 801 4	SEAL KIT AGGREGATE CARR
SEALING RING 30,7X39X2	10113731	42	2	704	10 11 583 8	SEAL KIT DIESEL ENGINE D9
SEALING RING 45X34X4,2	10285620	25	2	181	90 74 893	REPAIR KIT CONNECTION H
SEALING RING 45X34X4,2	10285620	27	2	182	92 74 731	SEAL KIT CONNECTING HOUSI
SEALING RING 8,7X13X1	10044740	15	6	170	10 28 264 7	GEAR PUMP
SEALING SET FOR PISTON d=	9154141	999	1	770	96 44 625	PISTON
SEALING SET FOR PISTON d=	9169653	999	1	769	94 04 038 9	PISTON
SEALING SET OIL COOLER D	10115850	139	1	558	10 11 682 5	BASIC ENGINE D936 L HIGH 3
SEALING SET OIL COOLER D	10115850	81	1	706	10 11 583 8	SEAL KIT DIESEL ENGINE D9
SEALING SET VALVE	11821513	999	1	404	12 24 669 2	PRESSURE LIMITING VALVE
SEALING SET VALVE	5604334	999	1	365	56 02 487	PRESSURE LIMITING VALVE
SEALING SET VALVE	7017835	999	1	436	50 07 236	PRESSURE FEEDER VALVE
SEALING SET VALVE DBE 10	9266231	97	1	230	90 74 075	HYDRAULIC INSTALLATION
SEALING SET VALVE DBE 10	9266231	98	1	806	92 67 037	PRESSURE LIMITING VALVE
SEALING SET VALVE DBV 22	9266089	98	1	812	12 41 005 4	PRESSURE LIMITING VALVE
SEALING STRIP	7027401	5	3	331	10 02 206 9	EVAPORATOR HOUSING
SEALING TAPE	10301003	15	2	199	10 21 851 3	COMBINATED RADIATOR
SEALING TAPE	10301003	15	2	202	11 69 472 6	COMBINATED RADIATOR
SEALING TAPE	10301004	13	2	199	10 21 851 3	COMBINATED RADIATOR
SEALING TAPE	10301004	13	2	202	11 69 472 6	COMBINATED RADIATOR
SEALING TAPE	10301005	14	2	199	10 21 851 3	COMBINATED RADIATOR
SEALING TAPE	10301005	14	2	202	11 69 472 6	COMBINATED RADIATOR
SEALING TAPE	10340115	40	3m	200	10 21 851 3	COMBINATED RADIATOR
SEALING TAPE	10340115	40	3m	203	11 69 472 6	COMBINATED RADIATOR
SEAT FRAME	10029370	10	1	290	70 24 996	SEAT FRAME
SEAT FRAME	7024996	15	1	282	10 04 363 2	OPERATOR SEAT
SEAT PART	7024981	12	1	282	10 04 363 2	OPERATOR SEAT
SEAT TOP	11100166	10	1	283	11 00 085 6	DRIVER'S SEAT WITH PNEUM.
SEAT UPHOLSTERY	11082672	2	1	285	11 10 016 6	SEAT TOP
SEAT VAT	10165637	65	1	282	10 04 363 2	OPERATOR SEAT
SEAT VAT	94025779	20	1	284	94 02 247 7	OPERATOR SEAT
SECTION	10009781	121	1.8m	273	10 49 880 5	DRIVER STAND BASE SECTIO
SECTION	10009781	35	1m	525	10 06 559 1	AIR CONDITION HOSES INSTA
SECTION 1-4/14,5X10 SCHWAR	226016702	10	0.45m	131	10 06 261 8	PARTITION
SECTION 1-4/14,5X10 SCHWAR	226016702	11	0.34m	131	10 06 261 8	PARTITION
SECTION 1-4/14,5X10 SCHWAR	226016702	12	0.63m	131	10 06 261 8	PARTITION
SECTION 1-4/14,5X10 SCHWAR	226016702	120	1m	273	10 49 880 5	DRIVER STAND BASE SECTIO
SECTION 1-4/14,5X10 SCHWAR	226016702	5	0.57m	465	10 06 576 2	DIVIDING WALL MIDDLE
SECTION 1-4/14,5X10 SCHWAR	226016702	15	0.13m	466	10 35 823 0	SIDE DOOR FRONT LEFT
SECTION 1-4/14,5X10 SCHWAR	226016702	30	2.1m	470	10 35 866 0	LOWER COVERING
SELF-TAPPING SCREW AEHN	12226086	6	2	516	99 41 040	FLOODLIGHT INSTALLATION
SENSOR	635867001	40	1	209	10 04 853 7	MOTOR-ELEKTRIK
SENSOR	635867001	1	1	679	98 85 618	ROTATIONAL SPEED SENSOR
SENSORIC	10017824	150	1	299	99 68 625	LH-JOYSTICK LEFT
SENSORIC	10017824	150	1	314	99 68 611	LH-JOYSTICK RIGHT
SERVICE KIT 1000h	12486932	2	1	63	12 48 693 0	SERVICE KITS 0-2000h
SERVICE KIT 1500-2500h	12486933	3	1	63	12 48 693 0	SERVICE KITS 0-2000h
SERVICE KIT 2000h	12486934	4	1	63	12 48 693 0	SERVICE KITS 0-2000h
SERVICE KIT FIRST 500h	12486931	1	1	63	12 48 693 0	SERVICE KITS 0-2000h
SERVICE KIT FUEL FILTER	10069940	110	1	14	10 35 964 8	SERVICE MATERIAL
SERVICE KITS 0-2000h	12486930	100	1	14	10 35 964 8	SERVICE MATERIAL

Description	Item	Pos.	Quantity	Page	Assembly	Description
SERVICE MATERIAL	10359648	9999	1	13	10 49 885 1	BASIC MACHINE
SERVOMOTOR	10022766	3	1	332	10 02 208 3	AIR CONNECTION PART
SERVOMOTOR	10022766	7	2	333	10 02 211 7	AIR CIRCULATION CASE
SERVOMOTOR	10022766	2	1	337	10 02 207 8	ASSEMBLY BRACKET
SET MAIN BEARINGS	9076458	51	1	557	10 11 682 5	BASIC ENGINE D936 L HIGH 3
SET OF FASTENINGS/FASTE	10493351	10	1	285	11 10 016 6	SEAT TOP
SET OF PARTS	10118712	18	1	667	10 11 646 3	GENERATOR, PRE-ASSEMBLE
SHAFT SEAL	10008419	20	1	208	56 19 045	AXIAL PISTON MOTOR
SHAFT SEAL	10220431	38	1	399	11 49 189 4	DRIVING GEAR
SHAFT SEAL	10335855	3	1	151	10 29 154 4	GEAR PUMP
SHAFT SEAL X25X35X6	7413402	20	1	400	10 00 807 7	PUMP
SHEET	10009021	190	2	490	10 29 033 7	ELECTRICAL INSTALLATION
SHEET	10056984	43	2	247	12 84 952 6	CENTRAL LUBRICATING SYS
SHEET	10058949	15	1	298	10 05 879 2	MANIPULATOR LEFT
SHEET	10058949	15	1	313	10 05 879 4	MANIPULATOR RIGHT
SHEET	10061628	6	2	711	11 10 294 5	GOOSENECK BOOM 6.45M
SHEET	10119129	1	1	682	10 11 912 8	LOCKING PIECES
SHEET	10123870	1	1	572	12 83 230 4	COVER PRE-ASSY.
SHEET	10123873	1	1	573	12 83 230 5	COVER PRE-ASSY.
SHEET	10290356	520	1	496	10 29 036 3	WIPPER MOTOR SET
SHEET	10652159	20	1	294	10 16 576 6	STEERING CONSOLE
SHEET	11460484	4	1	711	11 10 294 5	GOOSENECK BOOM 6.45M
SHEET	7028802	130	2	62	12 50 640 7	FASTENINGPIECE FRONT WIN
SHEET	7028839	190	1	484	70 28 769	DRIVER'S CAB DOOR
SHEET	7028870	370	1	491	10 29 033 7	ELECTRICAL INSTALLATION
SHEET	7028870	370	1	494	10 48 808 7	ELECTRICAL INSTALLATION
SHEET	7028878	520	1	497	70 28 884	WIPPER MOTOR SET
SHEET	7029420	520	1	487	70 28 831	SLIDING WINDOW
SHEET	7029422	550	1	487	70 28 831	SLIDING WINDOW
SHEET	9014773	4	1	127	10 08 736 5	ATTACHMENTS MOUNTING PA
SHEET	9079494	2	1	574	12 83 245 4	OIL SUMP PRE-ASS.
SHEET	9392646	15	1	277	11 38 340 1	ARM REST RIGHT
SHEET	9392646	15	1	301	11 45 228 6	ARM REST RIGHT
SHEET	9392646	15	1	305	12 50 731 7	ARM REST RIGHT
SHEET	9434249	26	2	752	11 10 291 2	HOIST CYLINDER INSTALLAT
SHEET	9476811	56	2	345	10 35 862 3	HYDR.PUMPS TO SPOOL VALV
SHEET	9476811	47	2	357	10 35 862 9	HYDR.AND GEAR OIL COOLIN
SHEET	9476811	16	1	358	10 35 862 4	HYDR.INSTALLATION FAN DR
SHEET	9483466	28	2	351	10 35 862 8	HYDR.INST.ROTARY CONNE
SHEET	9757779	35	1	271	10 49 880 5	DRIVER STAND BASE SECTIO
SHEET	9830148	38	1	712	11 10 294 5	GOOSENECK BOOM 6.45M
SHEET	9830148	31	2	726	11 10 280 7	STICK 2.10M
SHEET	9830148	15	2	739	10 49 877 7	BEARING BLOCK
SHEET	9830148	30	2	752	11 10 291 2	HOIST CYLINDER INSTALLAT
SHEET	9864658	44	1	753	11 10 291 2	HOIST CYLINDER INSTALLAT
SHEET 10X20X25	7028898	270	1	504	10 29 026 4	COMPONENTS
SHEET 3X20X37	7020611	360	2	504	10 29 026 4	COMPONENTS
SHEET GASKET	11004098	6	1	91	10 65 167 7	CARRYING ROLLER D7
SHEET GASKET	11007770	7	1	390	56 17 688	SHUT OFF DEVICE
SHEET GASKET 7,03X15,1X1,5	10040406	5	1	626	10 11 658 7	INJECTOR
SHEET GASKET 7,03X15,1X1,5	10040406	2	1	628	10 11 585 4	SEAL KIT INJECTION NOZZLE
SHEET METAL NUT	10044356	100	12	508	10 29 035 2	INTERIOR PANELING
SHEET METAL NUT	10044356	100	12	510	10 48 808 8	INTERIOR PANELING
SHEET METAL NUT	10290260	800	2	506	10 29 026 4	COMPONENTS
SHEET METAL NUT	7366862	10	1	294	10 16 576 6	STEERING CONSOLE
SHEET METAL NUT M6	10009189	440	4	509	10 29 035 2	INTERIOR PANELING
SHEET METAL NUT M6	10009189	440	4	511	10 48 808 8	INTERIOR PANELING
SHEET METAL NUT M6	7370883	13	7	294	10 16 576 6	STEERING CONSOLE
SHEET METAL NUT M6	7370883	12	11	310	56 18 923	CONTROL CONSOLE RIGHT
SHEET METAL NUT ST3,5	10009079	260	8	490	10 29 033 7	ELECTRICAL INSTALLATION

Description	Item	Pos.	Quantity	Page	Assembly	Description
SHEET METAL NUT ST3,5	10009079	260	8	493	10 48 808 7	ELECTRICAL INSTALLATION
SHEET METAL NUT ST4,8	7028941	190	10	508	10 29 035 2	INTERIOR PANELING
SHEET METAL NUT ST4,8	7028941	190	10	510	10 48 808 8	INTERIOR PANELING
SHELL	7370891	3	1	310	56 18 923	CONTROL CONSOLE RIGHT
SHIFT LEVER LEFT	10062471	11	1	725	11 10 280 7	STICK 2.10M
SHIFT LEVER RIGHT	10062497	10	1	725	11 10 280 7	STICK 2.10M
SHIM RING	10216703	20	1	402	10 22 042 7	DRIVING GEAR
SHIM RING	10216704	20	1	402	10 22 042 7	DRIVING GEAR
SHIM RING	10216705	20	1	402	10 22 042 7	DRIVING GEAR
SHIM RING	10216706	20	1	402	10 22 042 7	DRIVING GEAR
SHIM RING	7028182	19	2	177	70 28 075	CONTROL UNIT
SHIM RING 18,5X23X0,2	7381354	22	1	817	90 74 112	CONNECTING PLATE NG 090
SHIM RING 50,15X62X1,5	4002229	44	1	828	92 68 015	REPAIR KIT LOCK RING NG 09
SHIM RING 55X65X1,5	7380531	44	1	829	92 68 016	REPAIR KIT LOCK RING NG 12
SHIM RING 63X70X1	10331853	59	2	158	10 11 886 0	PUMP DISTRIBUTION GEAR
SHIM RING 8	4635197	30	4	320	10 05 981 8	FOOT PILOT VALVE INSTALL
SHOCK ABSORBER	10289994	55	1	289	10 28 999 3	VIBRATING SYSTEM
SHOCK ABSORBER	10493469	11	1	287	11 10 016 7	SUSPENSION
SHUT OFF DEVICE	5617688	14	1	383	10 04 851 7	HYDRAULIC TANK INSTALLAT
SHUT OFF DEVICE	5617688	14	1	386	10 35 863 4	HYDRAULIC TANK INSTALLAT
SHUTDOWN VALVE	10220635	3	1	398	11 49 189 0	CONNECTING PLATE
SHUTTER DISK	9429965	54	1	712	11 10 294 5	GOOSENECK BOOM 6.45M
SHUTTER WASHER	9443024	63	1	110	96 87 443 01	TRACTION DRIVE FAT 400P07
SHUTTER WASHER	9443024	63	1	118	94 43 029 03	BRAKE REPAIR KIT
SHUTTLE VALVE	10119503	1	1	817	90 74 112	CONNECTING PLATE NG 090
SHUTTLE VALVE	7021767	300	1	112	10 00 201 1	BRAKE VALVE
SHUTTLE VALVE	7021767	50	1	431	10 33 073 6	TRAVEL PILOT VALVE
SHUTTLE VALVE	7403972	24	1	268	11 38 342 9	HYDR.INSTAL.ARM REST RIGH
SHUTTLE VALVE	7403972	14	1	269	10 06 014 6	HYDR.INSTAL.FOOT BOARD
SHUTTLE VALVE	7403972	182	4	361	10 06 380 1	HYDR.INSTAL.CONTROL TUBE
SHUTTLE VALVE	7403972	525	1	361	10 06 380 1	HYDR.INSTAL.CONTROL TUBE
SHUTTLE VALVE	7403972	145	1	410	10 35 863 8	CONTROL VALVE INSTALLAT
SHUTTLE-VALVE	10301270	190	2	425	10 11 386 0	CONTROL BLOCK
SHUTTLE-VALVE	10301270	16	1	754	10 85 472 4	BASIC MACHINE MOUNTING
SIDE DOOR FRONT LEFT	10358230	220	1	451	10 35 865 5	COVERS
SIDE DOOR LEFT	10059642	2	1	457	10 35 822 9	SIDE DOOR LEFT
SIDE DOOR LEFT	10358229	120	1	448	10 35 865 5	COVERS
SIDE DOOR LEFT FRONT	10065196	2	1	466	10 35 823 0	SIDE DOOR FRONT LEFT
SIDE DOOR RIGHT	10064235	140	1	448	10 35 865 5	COVERS
SIDE DOOR RIGHT	10064236	2	1	459	10 06 423 5	SIDE DOOR RIGHT
SIDE DOOR RIGHT	10498566	65	1	793	10 49 866 6	AIR FILTER INSTALLATION
SIDE DOOR RIGHT	10498567	2	1	460	10 49 856 6	SIDE DOOR RIGHT
SIGHT GLASS	7368081	70	1	385	10 04 851 7	HYDRAULIC TANK INSTALLAT
SIGHT GLASS	7368081	70	1	387	10 35 863 4	HYDRAULIC TANK INSTALLAT
SIGN	10381173	70	1	548	10 49 803 0	SIGNS
SIGN	11659791	50	1	756	11 10 281 8	KIT IN BASIC MACHINE
SIGN	11691100	50	1	716	11 10 283 6	KIT GOOSENECK BOOM 6.45M
SIGN	11691205	50	1	727	11 10 281 7	KIT STICK 2.10M
SIGN	11691206	51	1	727	11 10 281 7	KIT STICK 2.10M
SIGN MOTORSTILLSTAND 120	9619934	52	1	548	10 49 803 0	SIGNS
SIGN RUECKLAUF	10022635	5	1	330	10 81 666 6	EVAPORATOR
SIGN VORLAUF	10022636	6	1	330	10 81 666 6	EVAPORATOR
SIGNS	10498030	9900	1	125	10 35 861 4	UPPERCARRIAGE
SILICONE HOSE	10082117	210	1	196	10 04 853 6	ENGINE COOLING
SILICONE HOSE	10082117	230	1	196	10 04 853 6	ENGINE COOLING
SINGLE-END SPANNER SW32	11162174	48	1	539	10 84 856 2	TOOL EQUIPMENT
SINGLE-END SPANNER SW36	11162175	50	1	539	10 84 856 2	TOOL EQUIPMENT
SINGLE-END SPANNER SW41	11162177	51	1	539	10 84 856 2	TOOL EQUIPMENT
SINGLE-END SPANNER SW46	11162178	52	1	539	10 84 856 2	TOOL EQUIPMENT
SINGLE-END SPANNER SW50	11162179	54	1	539	10 84 856 2	TOOL EQUIPMENT

Description	Item	Pos.	Quantity	Page	Assembly	Description
SIPHON PIPE	10219500	130	1m	52	90 66 466	ACCESSORIES
SIPHON PIPE	11825935	60	1	49	11 82 320 0	UREA DISPENSER SYSTEM
SIPHON PIPE	11834726	6	1	796	11 69 501 2	UREA FILLING KIT
SIPHON PIPE	11834732	5	1	796	11 69 501 2	UREA FILLING KIT
SIPHON PIPE	12200111	12	1	50	11 82 595 6	HAND PUMP
SLEEVE	10149189	2	1	602	10 12 038 4	CYLINDER HEAD
SLEEVE	10301011	19	2	200	10 21 851 3	COMBINATED RADIATOR
SLEEVE	10301011	19	2	203	11 69 472 6	COMBINATED RADIATOR
SLEEVE	10301014	20	2	200	10 21 851 3	COMBINATED RADIATOR
SLEEVE	10301014	20	2	203	11 69 472 6	COMBINATED RADIATOR
SLEEVE	9837954	44	2	446	10 35 865 5	COVERS
SLEEVE 12,4X25X85	9953691	45	1	360	10 06 380 1	HYDR.INSTAL.CONTROL TUBE
SLEEVE 17X30X30	9123332	3	4	417	10 06 398 6	FIXING PARTS CONTROL VALV
SLEEVE 17X30X40	9349698	8	4	127	10 08 736 5	ATTACHMENTS MOUNTING PA
SLEEVE 17X30X40	9349698	20	16	134	10 04 853 1	MOTOR SUPPORT
SLEEVE 17X40X40	9327516	3	3	128	10 04 851 0	DRIVER INSTALLATION
SLEEVE 20,5X34X45	10857134	3	4	97	10 40 373 2	TRACK GUIDE INSTALLATION
SLEEVE 28X50X15	10062070	6	60	243	10 06 198 4	FIXING PARTS SWING RING
SLEEVE HRS 3 HUE 11X14X58	7367212	31	4	351	10 35 862 8	HYDR.INST.ROTARY CONNE
SLEEVE HRS 4 HUE 12,4X16X8	7367211	57	4	345	10 35 862 3	HYDR.PUMPS TO SPOOL VALV
SLEEVE HRS 4 HUE 12,4X16X8	7367211	52	4	357	10 35 862 9	HYDR.AND GEAR OIL COOLIN
SLEEVE HRS 4 HUE 12,4X16X8	7367211	19	6	358	10 35 862 4	HYDR.INSTALLATION FAN DR
SLEWING DRIVE	90027905	1	1	220	90 02 790 3	SLEWING DRIVE SAT 325/254
SLEWING DRIVE SAT 325/254	90027903	10	1	219	10 06 198 2	SLEWING GEAR
SLEWING DRIVE SAT 325/254	90027904	1	1	223	90 02 790 5	SLEWING DRIVE
SLEWING GEAR	10061982	11	1	217	11 10 291 6	SWING GEAR INSTALLATION
SLEWING PLATFORM	10358826	8200	1	124	10 35 861 4	UPPERCARRIAGE
SLIDE RING 100X109	10356234	8	1	106	10 35 654 7	SEAL KIT
SLIDE RING 100X130	10356229	4	1	106	10 35 654 7	SEAL KIT
SLIDE SEAT GUIDE	10289989	71	1	282	10 04 363 2	OPERATOR SEAT
SLIDE SEAT GUIDE	10289990	70	1	282	10 04 363 2	OPERATOR SEAT
SLIDE SEAT GUIDE	11007072	60	1	284	94 02 247 7	OPERATOR SEAT
SLIDER	12221003	3	2	79	12 22 100 1	GUIDE WHEEL
SLIDER	5611548	3	2	94	10 00 454 6	GUIDE WHEEL B6
SLIDING DISC 62X135X5	10124982	15	1	234	90 74 125	REPAIR KIT DRIVING MECHANI
SLIDING DISC 62X135X5	10124982	15	1	823	90 74 122	REPAIR KIT DRIVING MECHANI
SLIDING DISC 72X152X6	9889809	15	1	190	98 89 983	REPAIR KIT DRIVING MECHAN
SLIDING DISC 72X152X6	9889809	15	1	191	98 89 984	REPAIR KIT DRIVING MECHANI
SLIDING DISC 72X152X6	9889809	15	1	825	10 13 975 2	REPAIR SET SWIVEL YOKE N
SLIDING PAD	10216694	13	1	399	11 49 189 4	DRIVING GEAR
SLIDING WINDOW	7028831	420	1	485	70 28 769	DRIVER'S CAB DOOR
SLOTTE SCREW DRIVER 10X	11162133	114	1	540	10 84 856 2	TOOL EQUIPMENT
SLOTTE SCREW DRIVER 5.5X	11162126	110	1	540	10 84 856 2	TOOL EQUIPMENT
SLOTTED NUT	932814201	13	1	226	90 02 790 4	SLEWING DRIVE SAT 325/254
SMALL PARTS	10493345	55	1	285	11 10 016 6	SEAT TOP
SMALL PARTS SITZPLATZTIEF	10493397	56	1	286	11 10 016 6	SEAT TOP
SNAP RING A 18,7	7002888	34	1	432	73 69 779	PRESSURE SPRING
SNAP RING SB 23	7381534	24	1	817	90 74 112	CONNECTING PLATE NG 090
SNAP RING SB 90	429610801	40	1	831	98 89 978	REPAIR KIT SHAFT NG 140
SNAP RING SW280	7610188	76	1	110	96 87 443 01	TRACTION DRIVE FAT 400P07
SNAP SWITCH	6001027	19	1	297	73 73 807	SAFETY LEVER
SOCKET	6001963	77	1	279	11 38 340 1	ARM REST RIGHT
SOCKET	6001963	77	1	302	11 45 228 6	ARM REST RIGHT
SOCKET	6001963	77	1	306	12 50 731 7	ARM REST RIGHT
SOCKET HEAD SCREW	10297187	42	1	151	10 29 154 4	GEAR PUMP
SOCKET HEAD SCREW M10X1	11004099	5	3	91	10 65 167 7	CARRYING ROLLER D7
SOCKET HEAD SCREW M10X2	11004100	4	3	91	10 65 167 7	CARRYING ROLLER D7
SOCKET HEAD SCREW M16X1	9080925	4	10	683	10 11 586 2	FLYWHEEL ASSEMBLY SAE 2
SOFTWARE	10684332	10	1	787	10 84 118 4	MODIF.COMP.ELECTR. V4.58.
SOFTWARE	10684334	40	1	787	10 84 118 4	MODIF.COMP.ELECTR. V4.58.

Description	Item	Pos.	Quantity	Page	Assembly	Description
SOFTWARE	10684354	70	1	787	10 84 118 4	MODIF.COMP.ELECTR. V4.58.
SOFTWARE	10884852	3	1	797	12 50 716 3	KEYBOARD CPL. V4.7.11
SOLENOID VALVE	5615344	3	3	362	10 04 272 9	OIL PILOT VALVE
SPACER BUSHING	10022783	5	6	333	10 02 211 7	AIR CIRCULATION CASE
SPACER BUSHING	7028907	670	5	505	10 29 026 4	COMPONENTS
SPACER PIECE	9079064	30	1	677	90 76 534	ROTATIONAL SPEED SENSOR
SPACER PIECE 9X18X35	9275161	31	3	213	10 04 853 8	ENGINE ADD-ON PARTS
SPACER SLEEVE ZINCING 9X	94022280	44	4	284	94 02 247 7	OPERATOR SEAT
SPARE ELEMENT OEL	12417487	101	1	64	12 48 693 1	SERVICE KIT FIRST 500h
SPARE ELEMENT OEL	12417487	101	1	67	12 48 693 2	SERVICE KIT 1000h
SPARE ELEMENT OEL	12417487	101	1	70	12 48 693 3	SERVICE KIT 1500-2500h
SPARE ELEMENT OEL	12417487	101	1	71	12 48 693 4	SERVICE KIT 2000h
SPARE ELEMENT OEL	12417487	1	1	568	90 75 483	CRANKCASE BREATHER
SPARE PARTS KIT	12233625	998	2	112	10 00 201 1	BRAKE VALVE
SPECIAL GREASE ELECTRIC	9647551	100	1	23	90 70 366	GREASES
SPECIAL GREASE LIEBHERR	10358947	30	1kg	23	90 70 366	GREASES
SPECIAL GREASE LIEBHERR/	861305508	1	1	34	10 35 894 7	SPECIAL GREASE LIEBHERR
SPECIAL GREASE LIEBHERR/1	861304208	10	1	34	10 35 894 7	SPECIAL GREASE LIEBHERR
SPECIAL GREASE LIEBHERR/2	10296820	2	1	34	10 35 894 7	SPECIAL GREASE LIEBHERR
SPECIAL GREASE LIEBHERR/2	861303608	25	1	34	10 35 894 7	SPECIAL GREASE LIEBHERR
SPECIAL GREASE LIEBHERR/5	861305608	50	1kg	34	10 35 894 7	SPECIAL GREASE LIEBHERR
SPECIAL GREASE POLYLUB	12213966	125	1	813	12 87 963 9	CLOSING RING PRE-ASS. NG
SPECIAL GREASE POLYLUB	12213966	125	1	814	12 88 015 2	CLOSING RING PRE-ASS. NG
SPHERICAL CAP	6204368	4	1	315	10 05 507 1	SWITCH INSTALLATION
SPHERICAL KNOB	7019167	110	1	483	70 28 808	LOCK LEFT HAND
SPHERICAL KNOB	7019167	310	1	504	10 29 026 4	COMPONENTS
SPHERICAL KNOB	7028818	110	1	482	70 28 807	LOCK RIGHT HAND
SPHERICAL WASHER C 10,5X2	4980377	5	1	624	10 11 659 1	INJECTION NOZZLE W.FASTEN
SPIGOT	10081454	14	1	445	10 35 865 5	COVERS
SPINDLE M12	9265265	13	1	766	92 65 991	FLOW REGULATING CHECK
SPINDLE M12	9265265	13	1	767	92 65 299	SEAL KIT DRV DSRV 1"
SPINDLE M12	9265265	13	1	768	92 70 390	SEAL KIT DRV DRV 1 1/4"
SPIRAL RING 27,3/32X1	7360446	8	1	382	70 30 267	SEAL KIT LIMIT VALVE
SPLIT PIN 3,2X25	4330011	17	1	457	10 35 822 9	SIDE DOOR LEFT
SPLIT PIN 3,2X25	4330011	22	1	459	10 06 423 5	SIDE DOOR RIGHT
SPLIT PIN 3,2X25	4330011	22	1	460	10 49 856 6	SIDE DOOR RIGHT
SPLIT PIN 3,2X25	4330011	22	1	466	10 35 823 0	SIDE DOOR FRONT LEFT
SPLIT PIN 4X32	4330015	23	1	205	10 84 460 3	FAN INSTALLATION
SPOOL	10220661	3	1	168	10 22 063 5	SHUTDOWN VALVE
SPOOL SW	9279157	11	1	818	98 82 832	PILOT VALVE
SPOUT	7020613	370	1	485	70 28 769	DRIVER'S CAB DOOR
SPOUT	7028906	680	5	505	10 29 026 4	COMPONENTS
SPOUT 5/16/20	7019171	110	10	490	10 29 033 7	ELECTRICAL INSTALLATION
SPOUT 5/16/20	7019171	110	10	493	10 48 808 7	ELECTRICAL INSTALLATION
SPOUT 6/10/13	7019160	360	1	485	70 28 769	DRIVER'S CAB DOOR
SPRAY NOZZLE	7028867	650	1	501	10 29 036 1	WIPER ARM
SPRAY NOZZLE	7028867	650	1	502	70 28 866	WIPER ARM
SPRAY-PASTE LIEBHERR	10358950	40	1kg	23	90 70 366	GREASES
SPRAY-PASTE LIEBHERR/0,95	10330308	1	1	37	10 35 895 0	SPRAY-PASTE LIEBHERR
SPRAY-PASTE LIEBHERR/10X	10330310	2	1	37	10 35 895 0	SPRAY-PASTE LIEBHERR
SPRAY-PASTE LIEBHERR/5kg	10330311	5	1	37	10 35 895 0	SPRAY-PASTE LIEBHERR
SPRING	10008430	7	1	206	10 00 840 5	DRIVING GEAR
SPRING	10220706	7	1	175	11 82 151 9	FILTER
SPRING	10287730	7	1	171	10 28 772 5	DRIVING GEAR
SPRING	7024629	25	1	369	10 02 191 5	CONTROL SOLENOID VALVE
SPRING	7024629	25	1	370	10 28 046 1	CONTROL SOLENOID VALVE
SPRING	7028835	390	1	485	70 28 769	DRIVER'S CAB DOOR
SPRING	7028901	340	1	504	10 29 026 4	COMPONENTS
SPRING	7370835	7	1	157	10 00 809 5	DRIVING GEAR
SPRING ASSEMBLY CPL	11004103	2	1	92	10 65 167 8	INSTALLATION GUIDING WHE

Description	Item	Pos.	Quantity	Page	Assembly	Description
SPRING ASSEMBLY CPL	11004103	4	1	93	12 21 972 1	INSTALLATION GUIDING WHE
SPRING CLIPS	7369754	2	2	331	10 02 206 9	EVAPORATOR HOUSING
SPRING CUP ABOVE	9074480	7	4	591	10 14 155 4	CYLINDER HEAD PRE-ASSY.
SPRING CUP ABOVE	9074480	7	4	597	10 11 942 7	CYLINDER HEAD PRE-ASSY.
SPRING CUP ABOVE	9074480	7	4	598	10 12 036 4	CYLINDER HEAD PRE-ASSY.
SPRING PLATE	10493054	24	1	285	11 10 016 6	SEAT TOP
SPRING PLATE	7027784	21	1	285	11 10 016 6	SEAT TOP
SPRING SUPPORT	10216737	23	2	172	10 29 197 5	ADJUSTING PISTON
SPRING SUPPORT	10220546	7	2	172	10 29 197 5	ADJUSTING PISTON
SPRING SUPPORT	10220649	4	1	174	11 82 151 3	SEALING SET VALVE
SPRING SUPPORT	11213474	8	2	168	10 22 063 5	SHUTDOWN VALVE
SPRING SUPPORT	7002893	38	2	432	73 69 779	PRESSURE SPRING
SPRING SUPPORT	7026129	70	2	112	10 00 201 1	BRAKE VALVE
SPRING SUPPORT	7028170	4	2	177	70 28 075	CONTROL UNIT
SPRING SUPPORT	7028303	100	1	374	70 28 300	PRESSURE LIMITING VALVE
SPRING SUPPORT	9079261	15	2	323	90 79 258	PILOT CONTROL UNIT VG7 2-3
SPRING SUPPORT	9079261	15	2	742	90 79 264	MODIFICATION KIT VG7-2/3
SPRING SUPPORT	9265395	15	4	807	10 11 856 1	PILOT CONTROL UNIT VG6-8
SPRING SUPPORT	9265395	15	4	808	11 37 560 6	PILOT CONTROL UNIT VG6-8
SPRING WASHER	7025121	21	2	333	10 02 211 7	AIR CIRCULATION CASE
SPRING WASHER B 16	4980761	45	2	201	10 21 851 3	COMBINATED RADIATOR
SPRING WASHER B 6	4901089	4	1	668	10 11 871 2	SET OF PARTS
SPRING WASHER B 8	4600615	2	1	668	10 11 871 2	SET OF PARTS
SPUR WHEEL Z=28 M=3,5	9080174	12	1	158	10 11 886 0	PUMP DISTRIBUTION GEAR
SPUR WHEEL Z=40 M=3,5	10119090	11	1	158	10 11 886 0	PUMP DISTRIBUTION GEAR
STARTER	11371669	1	1	669	90 78 384	STARTER
STARTER	9078384	450	1	554	10 11 714 5	DIESEL ENGINE D936 L A6 190
STARTING ELEMENT MX-F	7027937	1	1	255	10 29 300 3	DISTRIBUTION BLOCK MX-F 4/
STARTING ELEMENT MX-F	7027937	1	1	719	10 66 480 4	DISTRIBUTION BLOCK MX-F 5/
STARTING ELEMENT MX-F	7027937	1	1	733	10 66 475 5	DISTRIBUTION BLOCK MX-F 7/
STARTING ELEMENT SXE-2	10013835	1	1	253	10 66 472 2	DISTRIBUTION BLOCK SXE-2
STEEL BALL d=35 - G40	747002001	11	26	109	96 87 443 01	TRACTION DRIVE FAT 400P07
STEEL BUSHING A1 130/160X	11817818	10	2	718	11 10 294 4	GOOSENECK BOOM 6.45M
STEERING CONSOLE	10165766	10	1	293	10 05 736 2	CONTROL BRACKET LEFT IN
STEP PLATE	9946939	2	1	320	10 05 981 8	FOOT PILOT VALVE INSTALL
STICK 2,10M	11102806	215	1	7	.	
STICK 2,10M	11102808	2	1	725	11 10 280 7	STICK 2.10M
STICK 2.10M	11102807	2	1	723	11 10 280 6	STICK 2,10M
STICK BYPASS VALVE	10300798	379	1	413	10 35 863 8	CONTROL VALVE INSTALLAT
STICKER	10067667	10	1	546	10 49 803 0	SIGNS
STICKER	10074169	11	1	546	10 49 803 0	SIGNS
STICKER	10074171	14	1	546	10 49 803 0	SIGNS
STICKER	10441600	100	1	250	10 22 844 3	LUBRICATION PUMP
STICKER	12250858	51	1	757	11 10 281 8	KIT IN BASIC MACHINE
STICKER 112mmX42mm	9350400	24	2	547	10 49 803 0	SIGNS
STICKER 132mmX115mm	11004408	30	1	547	10 49 803 0	SIGNS
STICKER 698mmX190mm	10067668	12	1	546	10 49 803 0	SIGNS
STICKER 826,08mmX190mm	9949751	13	1	546	10 49 803 0	SIGNS
STICKER 977mmX190mm	10072785	9	1	546	10 49 803 0	SIGNS
STICKER LIDAT 100mmX50mm	10541838	121	1	786	10 82 562 1	OPT.DATA CAPTURE-DATA T
STICKER LIEBHERR 1602mmX	9874049	67	2	712	11 10 294 5	GOOSENECK BOOM 6.45M
STICKER LIEBHERR 1872mmX	9613673	71	1	548	10 49 803 0	SIGNS
STICKER SOUND VOLUME LE	9874359	60	1	548	10 49 803 0	SIGNS
STOP PLUG	10000286	820	2	506	10 29 026 4	COMPONENTS
STOP PLUG	10044354	210	2	503	10 29 026 4	COMPONENTS
STOP PLUG	10291063	590	1	496	10 29 036 3	WIPPER MOTOR SET
STOP PLUG	11834724	2	1	796	11 69 501 2	UREA FILLING KIT
STOP PLUG	7020615	700	6	505	10 29 026 4	COMPONENTS
STOP PLUG	7020616	720	1	505	10 29 026 4	COMPONENTS
STOP PLUG	7890017	80	1	110	96 87 443 01	TRACTION DRIVE FAT 400P07

Description	Item	Pos.	Quantity	Page	Assembly	Description
STOP PLUG GPN 350	10220397	550	7	505	10 29 026 4	COMPONENTS
STOP PLUG Ø18,4-Ø22/Ø25 SC	10292443	6	1	310	56 18 923	CONTROL CONSOLE RIGHT
STOPPER PLUG	602514201	50	4	520	99 47 695	ELECTRICAL SYSTEM E50
STOPPER PLUG	7368253	374	4	786	10 82 562 1	OPT.DATA CAPTURE-DATA T
STOPPER PLUG F.SCHALTER	7371142	138	3	281	11 38 340 1	ARM REST RIGHT
STOPPER PLUG F.SCHALTER	7371142	138	3	304	11 45 228 6	ARM REST RIGHT
STOPPER PLUG F.SCHALTER	7371142	138	3	307	12 50 731 7	ARM REST RIGHT
SUBPLATE	9947713	3	1	519	99 47 695	ELECTRICAL SYSTEM E50
SUCTION CONNECTION	11825937	70	1	49	11 82 320 0	UREA DISPENSER SYSTEM
SUCTION PIPE	9884464	85	1	159	10 11 886 0	PUMP DISTRIBUTION GEAR
SUCTION PUMP PRE-ASS.	9080277	1	1	617	90 80 278	SUCTION PUMP WITH FASTEN
SUCTION PUMP WITH FASTEN	9080278	141	1	551	10 11 714 5	DIESEL ENGINE D936 L A6 190
SUN WHEEL M=3,25 Z=18	944217103	40	1	227	90 02 790 4	SLEWING DRIVE SAT 325/254
SUN WHEEL M=3,25 Z=21	932778101	60	1	227	90 02 790 4	SLEWING DRIVE SAT 325/254
SUN WHEEL M=4 Z=18	9443012	25	1	109	96 87 443 01	TRACTION DRIVE FAT 400P07
SUN WHEEL M=4 Z=22	9443007	15	1	109	96 87 443 01	TRACTION DRIVE FAT 400P07
SUNHALDE SET	7028811	230	1	481	70 28 759	FRONT PANE TOP
SUNHALDE SET	7028909	620	1	505	10 29 026 4	COMPONENTS
SUPERTONE HORN	6204593	32	1	529	10 04 852 5	FUEL TANK ASSY.
SUPERTONE HORN	6204593	32	1	530	10 49 836 0	FUEL TANK ASSY.
SUPERTONE HORN	6204593	32	1	531	11 10 262 1	FUEL TANK ASSY.
SUPPORT LEFT	7025993	90	1	282	10 04 363 2	OPERATOR SEAT
SUPPORT PLATE	9073190	6	1	641	10 11 657 6	CONNECTION PIECE
SUPPORT PLATE	9274060	4	2	638	10 11 726 8	CLAMP - ADD-ON UNIT
SUPPORT RIGHT	7025994	91	1	282	10 04 363 2	OPERATOR SEAT
SUPPORTING RING	7017839	5	1	442	70 17 835	SEALING SET VALVE
SUPPORTING RING	7017840	6	1	442	70 17 835	SEALING SET VALVE
SUPPORTING RING	9275735	3	2	656	10 11 983 0	THERMOSTAT HOUSING ASS
SUPPORTING RING	9275735	3	2	657	90 75 678	THERMOSTAT HOUSING ASSE
SUPPORTING RING /21,11X2,1	7020575	42	1	441	70 15 341	SEAL KIT STRAI.AHEAD TRAV
SUPPORTING RING /25,86X2,1	7020574	40	1	441	70 15 341	SEAL KIT STRAI.AHEAD TRAV
SUPPORTING RING 1/107,9X2	7369169	8	1	95	11 00 410 3	SPRING ASSEMBLY CPL
SUPPORTING RING 10,7/13,6X	7023928	17	1	378	10 45 471 6	SEAL KIT
SUPPORTING RING 10,7/13,6X	7023928	8	1	379	50 09 391	SEAL KIT DIRECTIONAL VALV
SUPPORTING RING 10,7/13,6X	7023928	6	1	380	50 09 562	SEAL KIT DIRECTIONAL VALV
SUPPORTING RING 10/13X1	7006889	324	1	382	70 30 267	SEAL KIT LIMIT VALVE
SUPPORTING RING 100/109,3X	10356231	5	2	106	10 35 654 7	SEAL KIT
SUPPORTING RING 150/160X1,	10028125	8	1	772	94 02 794 9	PISTON ROD BEARING
SUPPORTING RING 150/160X1,	10028125	8	1	773	95 91 741	PISTON ROD BEARING
SUPPORTING RING 160,7/170X	10097243	8	1	771	94 00 688 8	PISTON ROD BEARING
SUPPORTING RING 17,83/22,1	7013139	5	1	440	70 13 133	SEAL KIT BRAKE VALVE
SUPPORTING RING 58,5/63,5X	7410773	15	1	348	56 09 948	OIL FILTER SET
SUPPORTING RING 78/83X1,5	7003533	7	2	770	96 44 625	PISTON
SUPPORTING RING 88/93X1,5	7006870	7	2	769	94 04 038 9	PISTON
SUPPORTING RING 9,4/12,3X1	7023927	16	1	378	10 45 471 6	SEAL KIT
SUPPORTING RING 9,4/12,3X1	7023927	7	1	379	50 09 391	SEAL KIT DIRECTIONAL VALV
SUPPORTING RING 9,4/12,3X1	7023927	5	1	380	50 09 562	SEAL KIT DIRECTIONAL VALV
SUPPORTING RING 9,8/12,7X1	7023926	6	1	379	50 09 391	SEAL KIT DIRECTIONAL VALV
SUPPORTING WASHER	10008425	11	1	157	10 00 809 5	DRIVING GEAR
SUPPORTING WASHER	10008425	11	1	206	10 00 840 5	DRIVING GEAR
SUPPORTING WASHER	10287892	11	1	171	10 28 772 5	DRIVING GEAR
SUPPORTING WASHER 35X4	422006601	48	3	222	90 02 197 3	MODIFICATION KIT
SUPPORTING WASHER 35X4	422006601	48	3	227	90 02 790 4	SLEWING DRIVE SAT 325/254
SUPPORTING WASHER S 17X5	7010008	4	1	667	10 11 646 3	GENERATOR, PRE-ASSEMBLE
SUPPORTING WASHER S 28X4	422001001	5	1	599	12 40 205 5	ROCKER ARM BRACKET PRE
SUPPORTING WASHER S 28X4	422001001	5	1	604	90 74 505	ROCKER ARM BRACKET PRE
SUPPORTING WASHER S 4,9X	7380137	41	2	323	90 79 258	PILOT CONTROL UNIT VG7 2-3
SUPPORTING WASHER S 4,9X	7380137	49	2	742	90 79 264	MODIFICATION KIT VG7-2/3
SUPPORTING WASHER S 4,9X	7380138	42	2	323	90 79 258	PILOT CONTROL UNIT VG7 2-3
SUPPORTING WASHER S 4,9X	7380138	50	2	742	90 79 264	MODIFICATION KIT VG7-2/3

Description	Item	Pos.	Quantity	Page	Assembly	Description
SUPPORTING WASHER S 4,9X	7380138	50	8	807	10 11 856 1	PILOT CONTROL UNIT VG6-8
SUPPORTING WASHER S 4,9X	7380138	50	8	808	11 37 560 6	PILOT CONTROL UNIT VG6-8
SUPPORTING WASHER S 45X6	7380276	10	1	834	98 85 928	WASHER SET
SUPPORTING WASHER S 45X6	7380165	11	1	834	98 85 928	WASHER SET
SUPPORTING WASHER S 45X6	7380275	12	1	834	98 85 928	WASHER SET
SUPPORTING WASHER S 45X6	7380274	13	1	834	98 85 928	WASHER SET
SUPPORTING WASHER S 52X7	7380698	10	1	405	98 89 196	WASHER SET NG 140-150
SUPPORTING WASHER S 52X7	7380697	10	1	405	98 89 196	WASHER SET NG 140-150
SUPPORTING WASHER S 52X7	7380696	10	1	405	98 89 196	WASHER SET NG 140-150
SUPPORTING WASHER S 52X7	7380695	10	1	405	98 89 196	WASHER SET NG 140-150
SUSPENSION	11100167	20	1	283	11 00 085 6	DRIVER'S SEAT WITH PNEUM.
SUSPENSION	11659214	7	1	287	11 10 016 7	SUSPENSION
SWING GEAR INSTALLATION	11102916	700	1	123	10 35 861 4	UPPERCARRIAGE
SWING ROCKER	10008085	7	1	400	10 00 807 7	PUMP
SWING ROCKER	9276979	16	1	815	90 73 588	DRIVING GEAR NG 100
SWITCH	10493348	54	1	285	11 10 016 6	SEAT TOP
SWITCH	7028856	210	1	490	10 29 033 7	ELECTRICAL INSTALLATION
SWITCH	7028856	210	1	493	10 48 808 7	ELECTRICAL INSTALLATION
SWITCH INSTALLATION	10055071	140	1	281	11 38 340 1	ARM REST RIGHT
SWITCH INSTALLATION	10055071	140	1	304	11 45 228 6	ARM REST RIGHT
SWITCH INSTALLATION	10055071	140	1	307	12 50 731 7	ARM REST RIGHT
SWITCH LEVER	10024214	2	1	522	10 01 211 9	BATTERY MAIN SWITCH
SWITCH MODULE	7371141	135	1	281	11 38 340 1	ARM REST RIGHT
SWITCH MODULE	7371141	135	1	304	11 45 228 6	ARM REST RIGHT
SWITCH MODULE	7371141	135	1	307	12 50 731 7	ARM REST RIGHT
SWITCH R-R	9968570	70	1	314	99 68 611	LH-JOYSTICK RIGHT
SWITCH T-0-T	9968546	70	1	299	99 68 625	LH-JOYSTICK LEFT
SYMBOL LUBRICATOR Ø19m	9911745	7	1	315	10 05 507 1	SWITCH INSTALLATION
TABLE ANWEISUNGEN	9278153	500	1	216	90 80 194	SEAL KIT
TABLE ANWEISUNGEN	9278153	500	1	807	10 11 856 1	PILOT CONTROL UNIT VG6-8
TABLE ANWEISUNGEN	9278153	500	1	808	11 37 560 6	PILOT CONTROL UNIT VG6-8
TABLE ANWEISUNGEN	9278153	500	1	817	90 74 112	CONNECTING PLATE NG 090
TAPER	7017729	200	1	98	12 23 362 5	SPARE PARTS KIT
TAPER	7017729	230	2	112	10 00 201 1	BRAKE VALVE
TAPER	7017729	3	1	434	50 06 719	NON-RETURN VALVE
TAPER	7017729	4	1	435	50 06 720	NON-RETURN VALVE
TAPER COLLET VKA 8	4900305	37	3	722	10 82 841 3	CENTRAL LUBRICATING SYS
TAPER COLLET VKA 8	4900305	33	2	731	10 39 639 6	CENTRAL GREASING
TAPERED ROLLER BEARING	10008089	15	1	208	56 19 045	AXIAL PISTON MOTOR
TAPERED ROLLER BEARING	10008089	15	1	400	10 00 807 7	PUMP
TAPERED ROLLER BEARING	10030908	3	1	226	90 02 790 4	SLEWING DRIVE SAT 325/254
TAPERED ROLLER BEARING	7025903	16	1	208	56 19 045	AXIAL PISTON MOTOR
TAPERED ROLLER BEARING	7025903	16	1	400	10 00 807 7	PUMP
TAPERED ROLLER BEARING -	746231601	12	1	226	90 02 790 4	SLEWING DRIVE SAT 325/254
TAPPET	9885351	1	1	318	90 74 482	REPAIR SET PLUNGER
TAPPET	9885351	13	2	323	90 79 258	PILOT CONTROL UNIT VG7 2-3
TAPPET	9885351	1	1	743	90 79 277	REPAIR SET PLUNGER
TAPPET PUSH ROD	9079131	3	2	611	90 79 870	CONTROL PARTS
TELEMATIC-UNIT	10889017	20	1	785	10 82 562 1	OPT.DATA CAPTURE-DATA T
TEMPERATURE PROBE CPL.	9076530	2	1	673	90 76 551	ENGINE CONTROL SENSORS
TEMPERATURE SENSOR	10022067	11	1	335	11 00 359 4	HOUSING
TEMPERATURE SENSOR	10022077	12	1	335	11 00 359 4	HOUSING
TEMPERATURE SENSOR	6290130	1	2	673	90 76 551	ENGINE CONTROL SENSORS
TEMPERATURE SENSOR	691180608	1	1	675	90 76 530	TEMPERATURE PROBE CPL.
TENSION PIN 8	12216034	5	1	581	90 75 115	CRANKSHAFT WITH GEAR
TENSION SPRING	7617520	51	2	289	10 28 999 3	VIBRATING SYSTEM
TENSIONING INSTRUCTION	10123559	602	1	806	92 67 037	PRESSURE LIMITING VALVE
TENSIONING INSTRUCTION	10123559	602	1	812	12 41 005 4	PRESSURE LIMITING VALVE
TENSIONING INSTRUCTION	10151939	625	1	811	11 38 727 8	REVERSION KIT SCREW PLUG
TENSIONING INSTRUCTION	10151939	625	1	833	11 38 195 4	SEAL KIT NG 100

Description	Item	Pos.	Quantity	Page	Assembly	Description
TERMINAL DISK 48,6/71,6X12,	7373031	40	4	83	56 17 975	CHAIN END LINK
TERMINAL FLANGE NG 125-15	10136088	11	1	801	10 13 303 7	HYDR.DOUBLE PUMP
THERMOSTAT	10022048	2	1	335	11 00 359 4	HOUSING
THERMOSTAT	7380833	2	2	656	10 11 983 0	THERMOSTAT HOUSING ASS
THERMOSTAT	7380833	2	2	657	90 75 678	THERMOSTAT HOUSING ASSE
THERMOSTAT HOUSING ASS	10119830	380	1	552	10 11 714 5	DIESEL ENGINE D936 L A6 190
THERMOSTAT HOUSING ASSE	9075678	380	1	552	10 11 714 5	DIESEL ENGINE D936 L A6 190
THERMOSTAT HOUSING PRE	10119984	1	1	656	10 11 983 0	THERMOSTAT HOUSING ASS
THERMOSTAT HOUSING PRE	10119984	1	1	657	90 75 678	THERMOSTAT HOUSING ASSE
THREAD SEAL	8700014	111	1	325	90 79 259	PILOT CONTROL UNIT VG7 2-3
THREADED BUSHING	9079078	9	1	602	10 12 038 4	CYLINDER HEAD
THREADED ELBOW JOINT	11834730	7	1	796	11 69 501 2	UREA FILLING KIT
THREADED INSERT	10044343	490	3	491	10 29 033 7	ELECTRICAL INSTALLATION
THREADED INSERT	10044343	490	3	494	10 48 808 7	ELECTRICAL INSTALLATION
THREADED INSERT	10044359	430	1	509	10 29 035 2	INTERIOR PANELING
THREADED INSERT	10044359	430	1	511	10 48 808 8	INTERIOR PANELING
THREADED INSERT	7028765	90	3	473	10 22 830 2	OPERATOR'S CAB
THREADED INSERT	7028765	90	3	475	10 47 616 9	OPERATOR'S CAB
THREADED INSERT	7028765	400	2	491	10 29 033 7	ELECTRICAL INSTALLATION
THREADED INSERT	7028765	400	2	494	10 48 808 7	ELECTRICAL INSTALLATION
THREADED INSERT M6	7020610	220	2	481	70 28 759	FRONT PANE TOP
THREADED INSERT M6	7020610	340	2	509	10 29 035 2	INTERIOR PANELING
THREADED INSERT M6	7020610	340	2	511	10 48 808 8	INTERIOR PANELING
THREADED PLATE	10063305	46	1	194	10 04 853 6	ENGINE COOLING
THREADED PLATE	10063305	96	1	194	10 04 853 6	ENGINE COOLING
THREADED ROD	7028817	100	1	482	70 28 807	LOCK RIGHT HAND
THREADED ROD	7028817	100	1	483	70 28 808	LOCK LEFT HAND
THREADED ROD M10X245	9006346	46	4	521	10 35 866 5	BATTERY INSTALLATION
THREE PHASE CURRENT GE	6290070	1	1	667	10 11 646 3	GENERATOR, PRE-ASSEMBLE
THROAT SEAL LIQUID	811205101	120	1	662	90 79 889	HEATER CONNECTION
THROTTLE SCREW	7615603	14	2	177	70 28 075	CONTROL UNIT
THROTTLE SCREW	7615604	16	2	177	70 28 075	CONTROL UNIT
THROTTLE SCREW M20X1,5X1	10297782	13	1	426	10 28 535 8	NON-RETURN VALVE
THROTTLE SCREW M20X1,5X1	10297782	14	1	426	10 28 535 8	NON-RETURN VALVE
THROTTLE SCREW M20X1,5X1	10297782	13	1	427	10 29 999 7	NON-RETURN VALVE
THRUST BEARING / FIXED BE	11066532	38	1	288	11 10 016 7	SUSPENSION
TIE WRAP	7028864	740	8	491	10 29 033 7	ELECTRICAL INSTALLATION
TIE WRAP	7028864	740	8	494	10 48 808 7	ELECTRICAL INSTALLATION
TIE WRAP 12,5X720	7002480	20	1	298	10 05 879 2	MANIPULATOR LEFT
TIE WRAP 12,5X720	7002480	20	1	313	10 05 879 4	MANIPULATOR RIGHT
TIE WRAP 2,5X102	7009088	31	1	298	10 05 879 2	MANIPULATOR LEFT
TIE WRAP 2,5X102	7009088	31	1	313	10 05 879 4	MANIPULATOR RIGHT
TIE WRAP 2,5X102	7009088	156	3	786	10 82 562 1	OPT.DATA CAPTURE-DATA T
TIE WRAP 4,8X200	7001877	145	10	274	10 49 880 5	DRIVER STAND BASE SECTIO
TIE WRAP 4,8X200	7001877	96	10	279	11 38 340 1	ARM REST RIGHT
TIE WRAP 4,8X200	7001877	96	10	302	11 45 228 6	ARM REST RIGHT
TIE WRAP 4,8X200	7001877	96	10	306	12 50 731 7	ARM REST RIGHT
TIE WRAP 4,8X200	7001877	33	2	328	10 40 689 8	AIR CONDITIONING
TIE WRAP 7,8X365	7005587	95	6	137	10 49 819 9	AIR FILTER INSTALLATION
TIE WRAP 7,8X365	7005587	326	5	197	10 04 853 6	ENGINE COOLING
TIGHT FIT BEARING COVER	12578797	3	1	561	10 11 577 8	CRANKCASE PRE-ASSY.
TIGHT FIT SLEEVE 15,5X19,5	9177636	6	14	561	10 11 577 8	CRANKCASE PRE-ASSY.
TIGHT FIT SLEEVE 16X20X20	10134348	4	2	570	90 79 480	POWER UNIT SUPPORT ATT
TIGHT FIT SLEEVE 16X20X20	10134348	3	2	680	10 11 611 4	FLYWHEEL HOUSING MOUNT
TIGHT FIT SLEEVE 16X20X20	9074798	9	12	560	12 82 483 7	CRANKCASE CPL. WITH CYLIN
TIME RELAY	6001418	11	1	751	10 35 860 1	TRAVEL ALARM
TOOL BOX	10082767	2	1	462	10 35 826 4	TOOL BOX
TOOL BOX	10358264	200	1	451	10 35 865 5	COVERS
TOOL BOX	7016002	10	1	539	10 84 856 2	TOOL EQUIPMENT
TOOL EQUIPMENT	10084286	9620	1	125	10 35 861 4	UPPERCARRIAGE

Description	Item	Pos.	Quantity	Page	Assembly	Description
TOOL EQUIPMENT	10848562	5	1	538	10 08 428 6	TOOL EQUIPMENT
TOOTH	10451133	30	5	735	11 10 258 6	BACKHOE BUCKET HD 1800
TOOTH	10451133	2	1	781	11 10 259 0	TOOTH Z50CL
TOOTH LOCK WASHER	7028855	170	1	490	10 29 033 7	ELECTRICAL INSTALLATION
TOOTH LOCK WASHER	7028855	170	1	493	10 48 808 7	ELECTRICAL INSTALLATION
TOOTH LOCK WASHER	7363743	10	2	456	10 05 183 8	BONNET RIGHT
TOOTH LOCK WASHER	7363743	12	2	457	10 35 822 9	SIDE DOOR LEFT
TOOTH LOCK WASHER A 6,4	4002259	9	2	255	10 29 300 3	DISTRIBUTION BLOCK MX-F 4/
TOOTH LOCK WASHER A 6,4	4002259	9	2	719	10 66 480 4	DISTRIBUTION BLOCK MX-F 5/
TOOTH LOCK WASHER A 6,4	4002259	9	2	733	10 66 475 5	DISTRIBUTION BLOCK MX-F 7/
TOOTH Z50CL	11102590	233	5	7	.	
TORSIONAL VIBRATION DAM	10003465	5	1	141	10 04 853 9	PUMPS + COUPLING INSTALL
TRACK CHAIN LUBRICATED 50	10675010	202	2	78	10 49 887 7	ADDITIONAL KIT
TRACK CHAIN LUBRICATED 50	11161081	20	2	7	.	
TRACK GUIDE INSTALLATION	10403732	80	2	76	10 49 885 2	UNDERCARRIAGE CPL
TRACK GUIDE INSTALLATION	10403732	8	6	78	10 49 887 7	ADDITIONAL KIT
TRACK PAD NUT M22	7369103	4	196	80	10 67 501 0	TRACK CHAIN LUBRICATED 50
TRACK PAD NUT M22	7369103	4	196	81	11 16 108 1	TRACK CHAIN LUBRICATED 50
TRACK PAD SCREW M22X1,5	11214366	3	196	80	10 67 501 0	TRACK CHAIN LUBRICATED 50
TRACK PAD SCREW M22X1,5	11214366	3	196	81	11 16 108 1	TRACK CHAIN LUBRICATED 50
TRACK ROLLER D7	11600107	2	1	88	10 39 231 7	TRACK ROLLER INSTALLATI
TRACK ROLLER HOUSING	11003783	1	1	89	11 60 010 7	TRACK ROLLER D7
TRACK ROLLER INSTALLATI	10392317	40	18	75	10 49 885 2	UNDERCARRIAGE CPL
TRACTION DRIVE	10836930	13	1	75	10 49 885 2	UNDERCARRIAGE CPL
TRACTION DRIVE	11102968	13	1	75	10 49 885 2	UNDERCARRIAGE CPL
TRACTION DRIVE FAT 400P07	968744301	5	2	107	10 83 693 0	TRACTION DRIVE
TRACTION DRIVE FAT 400P07	968744301	5	2	108	11 10 296 8	TRACTION DRIVE
TRANSPARENT CONTAINER	10222821	2	1	632	10 22 281 9	FUEL PRE-FILTER CPL.
TRANSPARENT CONTAINER	7621058	24	1	250	10 22 844 3	LUBRICATION PUMP
TRANSPORT DEVICE ATTACH	9079468	481	1	554	10 11 714 5	DIESEL ENGINE D936 L A6 190
TRANSPORT DEVICE ATTACH	9079823	480	1	554	10 11 714 5	DIESEL ENGINE D936 L A6 190
TRANSPORTER CONSOLE	10141949	1	1	671	90 79 468	TRANSPORT DEVICE ATTACH
TRANSPORTER CONSOLE	9078849	1	1	672	90 79 823	TRANSPORT DEVICE ATTACH
TRAVEL ALARM	10358601	2	1	749	10 35 860 2	TRAVEL ALARM
TRAVEL ALARM	10358602	46	1	7	.	
TRAVEL PILOT VALVE	10330736	49	1	424	10 11 386 0	CONTROL BLOCK
TRAVEL WHEEL D936	9074936	10	1	655	10 13 281 7	WATER PUMP, PRE-ASSEMB
TUBE	10065976	325	1	411	10 35 863 8	CONTROL VALVE INSTALLAT
TUBE	10070399	340	1	411	10 35 863 8	CONTROL VALVE INSTALLAT
TUBE	10070400	330	1	411	10 35 863 8	CONTROL VALVE INSTALLAT
TUBE	10498956	325	1	411	10 35 863 8	CONTROL VALVE INSTALLAT
TUBE	10842063	330	1	411	10 35 863 8	CONTROL VALVE INSTALLAT
TUBE	10842065	340	1	411	10 35 863 8	CONTROL VALVE INSTALLAT
TUBE	774373708	70	1m	257	90 64 786	CONNECTING ELEMENT
TUBE	9079845	5	1	574	12 83 245 4	OIL SUMP PRE-ASS.
TUBE	9753989	16	2	453	10 05 816 9	ENGINE BONNET
TUBE NOZZLE BFW 28L	7405006	33	1	142	10 04 853 9	PUMPS + COUPLING INSTALL
TUBING COIL	774383508	372	0.6m	198	10 04 853 6	ENGINE COOLING
TUBING COIL	774383508	210	1.4m	211	10 04 853 7	MOTOR-ELEKTRIK
TUBING COIL	774383508	165	1m	258	90 64 786	CONNECTING ELEMENT
TUBING COIL	774383508	265	1m	260	90 64 786	CONNECTING ELEMENT
TUBING COIL	774383508	20	0.5m	751	10 35 860 1	TRAVEL ALARM
TUMBLER WHEEL D7	9391227	2	2	107	10 83 693 0	TRACTION DRIVE
TUMBLER WHEEL D7	9391227	2	2	108	11 10 296 8	TRACTION DRIVE
TUMBLER WHEEL D7E	9391363	2	2	78	10 49 887 7	ADDITIONAL KIT
TURCON GLYD RING 160X13	7002062	4	1	770	96 44 625	PISTON
TURCON GLYD RING 170X14	7000293	4	1	769	94 04 038 9	PISTON
TURCON GLYD RING 77,7X67X	10220529	31	2	161	10 29 197 8	HYDRAULIC ADJUSTMENT
TURCON-STEPSEAL	7013138	2	1	440	70 13 133	SEAL KIT BRAKE VALVE
TURCON-STEPSEAL 110,0X13	7017711	10	1	772	94 02 794 9	PISTON ROD BEARING

Description	Item	Pos.	Quantity	Page	Assembly	Description
TURCON-STEPSEAL 110,0X13	7017711	10	1	773	95 91 741	PISTON ROD BEARING
TWIST HANDLE	7370096	42	1	277	11 38 340 1	ARM REST RIGHT
TWIST HANDLE	7370096	42	1	301	11 45 228 6	ARM REST RIGHT
TWIST HANDLE	7370096	42	1	305	12 50 731 7	ARM REST RIGHT
TYPE PLATE 150mmX100mm	10498223	4	1	546	10 49 803 0	SIGNS
TYPEPLATE LFR 150mmX100m	10405887	6	1	546	10 49 803 0	SIGNS
TYPES OF LUBRICANTS	9066460	500	1	14	10 35 964 8	SERVICE MATERIAL
UNDERCARRIAGE	10498853	2	1	75	10 49 885 2	UNDERCARRIAGE CPL
UNDERCARRIAGE	11102551	2	1	75	10 49 885 2	UNDERCARRIAGE CPL
UNDERCARRIAGE CPL	10498852	200	1	13	10 49 885 1	BASIC MACHINE
UNIT RECEIVER-DRYER	10292660	5	1	526	10 06 559 6	DRIER INSTALLATION
UNIVERSAL GREASE FUCHS	11841450	10	1	61	11 41 917 5	PROTECTION AGAINST CORR
UNIVERSAL GREASE LIEBHER	10358949	10	1kg	23	90 70 366	GREASES
UNIVERSAL GREASE LIEBHER	10296816	1	1	36	10 35 894 9	UNIVERSAL GREASE LIEBHER
UNIVERSAL GREASE LIEBHE	10296813	10	1	36	10 35 894 9	UNIVERSAL GREASE LIEBHER
UNIVERSAL GREASE LIEBHER	10296810	180	1	36	10 35 894 9	UNIVERSAL GREASE LIEBHER
UNIVERSAL GREASE LIEBHE	10296815	2	1	36	10 35 894 9	UNIVERSAL GREASE LIEBHER
UNIVERSAL GREASE LIEBHE	10296812	25	1	36	10 35 894 9	UNIVERSAL GREASE LIEBHER
UNIVERSAL GREASE LIEBHE	10296811	50	1	36	10 35 894 9	UNIVERSAL GREASE LIEBHER
UNIVERSAL GREASE OEST LT	8620769	130	1kg	807	10 11 856 1	PILOT CONTROL UNIT VG6-8
UNIVERSAL GREASE OEST LT	8620769	130	1kg	808	11 37 560 6	PILOT CONTROL UNIT VG6-8
UNIVERSAL PIVOT 20 M. B	9265396	16	1	807	10 11 856 1	PILOT CONTROL UNIT VG6-8
UNIVERSAL PIVOT 20 M. B	9265396	16	1	808	11 37 560 6	PILOT CONTROL UNIT VG6-8
UPPERCARRIAGE	10358614	100	1	13	10 49 885 1	BASIC MACHINE
UREA DISPENSER SYSTEM	11823200	10	1	48	11 81 700 9	ACCESSORIES 1000L
UREA DISPENSER SYSTEM	12200137	10	1	42	11 44 078 9	ACCESSORIES
UREA FILLING KIT	11695012	220	1	42	11 44 078 9	ACCESSORIES
UREA SOLUTION	11485621	210	1	54	94 06 645 8	UREA SOLUTION
UREA SOLUTION	11485622	1000	1	54	94 06 645 8	UREA SOLUTION
UREA SOLUTION	94066458	110	1l	15	90 66 460	TYPES OF LUBRICANTS
UREA SOLUTION 10L KANISTE	11485620	10	1	54	94 06 645 8	UREA SOLUTION
UREA TANK	11825938	30	1	49	11 82 320 0	UREA DISPENSER SYSTEM
UREA TEST KIT	11698484	9999	1	43	11 44 078 9	ACCESSORIES
USIT RING	5209400	3	1	96	10 49 887 4	GREASE NIPPLE
USIT RING	5209400	17	1	756	11 10 281 8	KIT IN BASIC MACHINE
USIT RING 24,7X31X2	7013519	5	1	382	70 30 267	SEAL KIT LIMIT VALVE
V-RING	10008428	10	1	157	10 00 809 5	DRIVING GEAR
V-RING	10008428	10	1	206	10 00 840 5	DRIVING GEAR
V-RING	7413414	10	1	171	10 28 772 5	DRIVING GEAR
V-SEALING	10356228	3	1	106	10 35 654 7	SEAL KIT
VACUUM INDICATOR	5106421	90	1	137	10 49 819 9	AIR FILTER INSTALLATION
VALVE	10011832	1	1	614	90 78 233	VALVE M14X1,5
VALVE	10280279	50	1	346	10 06 379 3	OIL PILOT VALVE INSTALLATIO
VALVE	5800090	710	1	494	10 48 808 7	ELECTRICAL INSTALLATION
VALVE	7025110	24	1	336	11 00 359 4	HOUSING
VALVE BRIDGE	10119695	1	2	601	90 79 861	ROCKER ARM BRACKET CPL.
VALVE BUSHING	10220660	2	1	168	10 22 063 5	SHUTDOWN VALVE
VALVE BUSHING	7028168	2	2	177	70 28 075	CONTROL UNIT
VALVE BUSHING	7414522	50	2	112	10 00 201 1	BRAKE VALVE
VALVE COLLET MK9	11357514	8	8	591	10 14 155 4	CYLINDER HEAD PRE-ASSY.
VALVE COLLET MK9	11357514	8	8	597	10 11 942 7	CYLINDER HEAD PRE-ASSY.
VALVE COLLET MK9	11357514	8	8	598	10 12 036 4	CYLINDER HEAD PRE-ASSY.
VALVE GUIDE	10009606	14	4	253	10 66 472 2	DISTRIBUTION BLOCK SXE-2
VALVE HOUSING	7028173	7	1	177	70 28 075	CONTROL UNIT
VALVE HOUSING	7028175	9	1	177	70 28 075	CONTROL UNIT
VALVE INSERT	10008406	57	1	208	56 19 045	AXIAL PISTON MOTOR
VALVE M14X1,5	9078233	13	1	560	12 82 483 7	CRANKCASE CPL. WITH CYLIN
VALVE PIN	7028174	8	1	177	70 28 075	CONTROL UNIT
VALVE PIN	7028180	15	2	177	70 28 075	CONTROL UNIT
VALVE PISTON	10220648	3	1	174	11 82 151 3	SEALING SET VALVE

Description	Item	Pos.	Quantity	Page	Assembly	Description
VALVE PISTON	10220817	2	1	169	10 22 081 6	COLD STAR VALVE
VALVE PISTON	5612181	5	1	168	10 22 063 5	SHUTDOWN VALVE
VALVE PISTON	7028179	13	2	177	70 28 075	CONTROL UNIT
VALVE SEAT	10220818	3	1	169	10 22 081 6	COLD STAR VALVE
VALVE SEAT	7021783	5	1	437	50 08 855	NON-RETURN VALVE
VALVE SEAT	7021784	6	1	437	50 08 855	NON-RETURN VALVE
VALVE SEAT	7026127	40	1	112	10 00 201 1	BRAKE VALVE
VALVE SEAT	7028155	6	1	168	10 22 063 5	SHUTDOWN VALVE
VALVE SEAT	7028301	20	1	374	70 28 300	PRESSURE LIMITING VALVE
VALVE SEAT	9133637	11	1	563	10 11 795 1	FINAL CONTROL VALVE
VALVE SEAT	9133637	11	1	564	90 75 134	FINAL CONTROL VALVE
VALVE SEAT	9265400	20	1	323	90 79 258	PILOT CONTROL UNIT VG7 2-3
VALVE SEAT	9265400	20	1	325	90 79 259	PILOT CONTROL UNIT VG7 2-3
VALVE SEAT SLEEVE	10008407	56	1	208	56 19 045	AXIAL PISTON MOTOR
VALVE STEM GUIDE	10150204	4	4	602	10 12 038 4	CYLINDER HEAD
VALVE STEM SEAL RING	10119305	5	4	597	10 11 942 7	CYLINDER HEAD PRE-ASSY.
VALVE STEM SEAL RING	10119305	2	4	606	10 11 585 1	SEAL KIT CYLINDER HEAD
VALVE STEM SEAL RING	10119305	2	24	608	10 11 585 3	SEAL KIT ZYLINDER HEAD CPL
VALVE STEM SEAL RING	10120334	5	4	591	10 14 155 4	CYLINDER HEAD PRE-ASSY.
VALVE STEM SEAL RING	10120334	5	4	598	10 12 036 4	CYLINDER HEAD PRE-ASSY.
VALVE STEM SEAL RING	10120334	2	4	606	10 11 585 1	SEAL KIT CYLINDER HEAD
VALVE STEM SEAL RING	10120334	2	24	608	10 11 585 3	SEAL KIT ZYLINDER HEAD CPL
VELCRO TAPE	10491557	23	6	754	10 85 472 4	BASIC MACHINE MOUNTING
VENTILATION SCREW	10101997	3	1	632	10 22 281 9	FUEL PRE-FILTER CPL.
VENTILATION SCREW	7009590	17	1	637	10 11 559 5	LEAK OIL RETURN LINE
VENTILATION SCREW M6X8 8.	7361391	60	7	425	10 11 386 0	CONTROL BLOCK
VENTILATION TUBE	10014718	20	1	256	10 01 471 7	CONTAINER COVER
VENTILATION TUBE	10016664	20	1	256	10 01 471 7	CONTAINER COVER
VENTILATION UNIT	7002458	54	1	158	10 11 886 0	PUMP DISTRIBUTION GEAR
VIBRATING SYSTEM	10289993	50	1	282	10 04 363 2	OPERATOR SEAT
VISCOSE DAMPER	9080380	8	1	584	10 11 617 5	CRANKSHAFT ADD-ON PARTS
VISIT COVER	7370894	2	1	310	56 18 923	CONTROL CONSOLE RIGHT
VOLTAGE TRANSFORMER	7026493	120	1	281	11 38 340 1	ARM REST RIGHT
VOLTAGE TRANSFORMER	7026493	120	1	304	11 45 228 6	ARM REST RIGHT
VOLTAGE TRANSFORMER	7026493	120	1	307	12 50 731 7	ARM REST RIGHT
WARNING SIGN 65mmX285mm	9581113	54	1	548	10 49 803 0	SIGNS
WARNING SIGN 74mmX204mm	10380915	90	2	548	10 49 803 0	SIGNS
WASHER	10013965	460	2	504	10 29 026 4	COMPONENTS
WASHER	10074972	11	2	456	10 05 183 8	BONNET RIGHT
WASHER	10074972	13	2	457	10 35 822 9	SIDE DOOR LEFT
WASHER	10076844	11	2	457	10 35 822 9	SIDE DOOR LEFT
WASHER	10216714	27	2	402	10 22 042 7	DRIVING GEAR
WASHER	10220138	660	5	505	10 29 026 4	COMPONENTS
WASHER	10346513	41	1	151	10 29 154 4	GEAR PUMP
WASHER	3001445	3	1	746	10 08 390 7	PIN CPL
WASHER	3001446	3	1	745	10 06 258 3	PIN CPL
WASHER	3001446	2	1	747	92 15 949 16	PIN CPL
WASHER	7019801	150	2	484	70 28 769	DRIVER'S CAB DOOR
WASHER	7369776	12	1	519	99 47 695	ELECTRICAL SYSTEM E50
WASHER	90008634	5	1	226	90 02 790 4	SLEWING DRIVE SAT 325/254
WASHER 10 200HV	4900531	28	6	344	10 35 862 3	HYDR.PUMPS TO SPOOL VALV
WASHER 10 300HV	10289795	13	1	11	12 86 140 4	FIXING PARTS
WASHER 10 300HV	10289795	61	4	130	10 08 004 4	FRAME INSTALLATION
WASHER 10 300HV	10289795	13	11	141	10 04 853 9	PUMPS + COUPLING INSTALL
WASHER 10 300HV	10289795	202	3	196	10 04 853 6	ENGINE COOLING
WASHER 10 300HV	10289795	222	2	196	10 04 853 6	ENGINE COOLING
WASHER 10 300HV	10289795	36	14	200	10 21 851 3	COMBINATED RADIATOR
WASHER 10 300HV	10289795	36	14	203	11 69 472 6	COMBINATED RADIATOR
WASHER 10 300HV	10289795	35	1	209	10 04 853 7	MOTOR-ELEKTRIK
WASHER 10 300HV	10289795	13	4	212	10 04 853 8	ENGINE ADD-ON PARTS

Description	Item	Pos.	Quantity	Page	Assembly	Description
WASHER 10 300HV	10289795	22	4	271	10 49 880 5	DRIVER STAND BASE SECTIO
WASHER 10 300HV	10289795	32	4	271	10 49 880 5	DRIVER STAND BASE SECTIO
WASHER 10 300HV	10289795	17	4	277	11 38 340 1	ARM REST RIGHT
WASHER 10 300HV	10289795	17	4	301	11 45 228 6	ARM REST RIGHT
WASHER 10 300HV	10289795	17	4	305	12 50 731 7	ARM REST RIGHT
WASHER 10 300HV	10289795	21	16	342	98 79 063	BOTTOM PLATE MOUNTING
WASHER 10 300HV	10289795	23	3	344	10 35 862 3	HYDR.PUMPS TO SPOOL VALV
WASHER 10 300HV	10289795	30	2	351	10 35 862 8	HYDR.INST.ROTARY CONNE
WASHER 10 300HV	10289795	17	2	360	10 06 380 1	HYDR.INSTAL.CONTROL TUBE
WASHER 10 300HV	10289795	9	6	423	10 35 863 6	PIPE CLAMP
WASHER 10 300HV	10289795	24	6	445	10 35 865 5	COVERS
WASHER 10 300HV	10289795	131	2	448	10 35 865 5	COVERS
WASHER 10 300HV	10289795	211	4	451	10 35 865 5	COVERS
WASHER 10 300HV	10289795	16	1	457	10 35 822 9	SIDE DOOR LEFT
WASHER 10 300HV	10289795	15	2	459	10 06 423 5	SIDE DOOR RIGHT
WASHER 10 300HV	10289795	21	1	459	10 06 423 5	SIDE DOOR RIGHT
WASHER 10 300HV	10289795	21	1	460	10 49 856 6	SIDE DOOR RIGHT
WASHER 10 300HV	10289795	21	1	466	10 35 823 0	SIDE DOOR FRONT LEFT
WASHER 10 300HV	10289795	130	6	484	70 28 769	DRIVER'S CAB DOOR
WASHER 10 300HV	10289795	540	2	505	10 29 026 4	COMPONENTS
WASHER 10 300HV	10289795	590	1	505	10 29 026 4	COMPONENTS
WASHER 10 300HV	10289795	750	2	506	10 29 026 4	COMPONENTS
WASHER 10 300HV	10289795	10	5	521	10 35 866 5	BATTERY INSTALLATION
WASHER 10 300HV	10289795	30	2	529	10 04 852 5	FUEL TANK ASSY.
WASHER 10 300HV	10289795	30	2	530	10 49 836 0	FUEL TANK ASSY.
WASHER 10 300HV	10289795	30	2	531	11 10 262 1	FUEL TANK ASSY.
WASHER 10 300HV	10289795	12	2	716	11 10 283 6	KIT GOOSENECK BOOM 6.45M
WASHER 10 300HV	10289795	12	2	727	11 10 281 7	KIT STICK 2.10M
WASHER 10 300HV	10289795	43	4	775	11 45 729 6	HOIST CYLINDER RIGHT
WASHER 10 300HV	10289795	43	4	778	11 45 729 7	HOIST CYLINDER LEFT
WASHER 10 300HV	10289795	141	1	786	10 82 562 1	OPT.DATA CAPTURE-DATA T
WASHER 10 300HV	11491889	22	8	217	11 10 291 6	SWING GEAR INSTALLATION
WASHER 10 300HV	11491889	18	2	445	10 35 865 5	COVERS
WASHER 10 300HV	11491889	21	4	445	10 35 865 5	COVERS
WASHER 10,5	10179357	12	4	193	10 04 853 6	ENGINE COOLING
WASHER 10,5	10179357	41	4	194	10 04 853 6	ENGINE COOLING
WASHER 10,5	10179357	44	1	194	10 04 853 6	ENGINE COOLING
WASHER 10,5	10179357	94	1	194	10 04 853 6	ENGINE COOLING
WASHER 10,5	10179357	111	1	195	10 04 853 6	ENGINE COOLING
WASHER 10,5	10179357	16	2	445	10 35 865 5	COVERS
WASHER 10,5	10179357	22	7	457	10 35 822 9	SIDE DOOR LEFT
WASHER 10,5	10179357	12	5	462	10 35 826 4	TOOL BOX
WASHER 10,5	10179357	31	2	462	10 35 826 4	TOOL BOX
WASHER 10,5	10179357	6	2	629	10 11 656 2	FUEL-PREFILTER ASS.
WASHER 10,5X18,5X2	9076638	2	3	665	90 80 736	EXHAUST TC MOUNTING
WASHER 101X2,00	9364507	2	4	774	92 15 967 16	WASHER KIT FOR D=100
WASHER 101X3,00	9364508	3	2	774	92 15 967 16	WASHER KIT FOR D=100
WASHER 12 300HV	10289804	22	1	11	12 86 140 4	FIXING PARTS
WASHER 12 300HV	10289804	32	1	11	12 86 140 4	FIXING PARTS
WASHER 12 300HV	10289804	31	8	129	10 08 004 4	FRAME INSTALLATION
WASHER 12 300HV	10289804	7	6	139	10 36 573 8	EXHAUST SYSTEM
WASHER 12 300HV	10289804	13	4	139	10 36 573 8	EXHAUST SYSTEM
WASHER 12 300HV	10289804	7	6	140	11 10 293 9	EXHAUST SYSTEM
WASHER 12 300HV	10289804	13	4	140	11 10 293 9	EXHAUST SYSTEM
WASHER 12 300HV	10289804	52	2	144	10 04 853 9	PUMPS + COUPLING INSTALL
WASHER 12 300HV	10289804	91	2	194	10 04 853 6	ENGINE COOLING
WASHER 12 300HV	10289804	8	4	205	10 84 460 3	FAN INSTALLATION
WASHER 12 300HV	10289804	82	1	273	10 49 880 5	DRIVER STAND BASE SECTIO
WASHER 12 300HV	10289804	32	2	321	10 06 017 4	FOOT PILOT VALVE LEFT
WASHER 12 300HV	10289804	32	2	322	10 06 017 5	FOOT PILOT VALVE RIGHT

Description	Item	Pos.	Quantity	Page	Assembly	Description
WASHER 12 300HV	10289804	22	4	328	10 40 689 8	AIR CONDITIONING
WASHER 12 300HV	10289804	18	4	344	10 35 862 3	HYDR.PUMPS TO SPOOL VALV
WASHER 12 300HV	10289804	37	2	353	10 06 379 8	HYDR.SUCT.+RETURN OIL HO
WASHER 12 300HV	10289804	12	4	383	10 04 851 7	HYDRAULIC TANK INSTALLAT
WASHER 12 300HV	10289804	24	6	383	10 04 851 7	HYDRAULIC TANK INSTALLAT
WASHER 12 300HV	10289804	12	4	386	10 35 863 4	HYDRAULIC TANK INSTALLAT
WASHER 12 300HV	10289804	24	6	386	10 35 863 4	HYDRAULIC TANK INSTALLAT
WASHER 12 300HV	10289804	21	6	406	10 35 863 8	CONTROL VALVE INSTALLAT
WASHER 12 300HV	10289804	43	2	446	10 35 865 5	COVERS
WASHER 12 300HV	10289804	176	2	450	10 35 865 5	COVERS
WASHER 12 300HV	10289804	181	3	450	10 35 865 5	COVERS
WASHER 12 300HV	10289804	250	4	503	10 29 026 4	COMPONENTS
WASHER 12 300HV	10289804	280	1	504	10 29 026 4	COMPONENTS
WASHER 12 300HV	10289804	500	2	505	10 29 026 4	COMPONENTS
WASHER 12 300HV	10289804	760	1	506	10 29 026 4	COMPONENTS
WASHER 12 300HV	10289804	22	4	513	11 73 376 2	GUARD RAILING FIXTURE
WASHER 12 300HV	10289804	24	6	513	11 73 376 2	GUARD RAILING FIXTURE
WASHER 12 300HV	10289804	14	4	542	10 49 878 6	OUTSIDE MIRROR ASSEMBLY
WASHER 12 300HV	10289804	31	4	542	10 49 878 6	OUTSIDE MIRROR ASSEMBLY
WASHER 12 300HV	10289804	8	17	680	10 11 611 4	FLYWHEEL HOUSING MOUNT
WASHER 12 300HV	10289804	13	22	711	11 10 294 5	GOOSENECK BOOM 6.45M
WASHER 12 300HV	10289804	22	2	721	10 82 841 3	CENTRAL LUBRICATING SYS
WASHER 12 300HV	10289804	32	4	726	11 10 280 7	STICK 2.10M
WASHER 12 300HV	10289804	17	4	739	10 49 877 7	BEARING BLOCK
WASHER 12 300HV	10289804	39	8	752	11 10 291 2	HOIST CYLINDER INSTALLAT
WASHER 12 300HV	10289804	6	2	758	10 35 857 3	HYDR.CYLINDER W/ADDITION.
WASHER 12 300HV	10289804	7	2	759	10 85 361 0	HYDR.CYLINDER W/ADDITION.
WASHER 12 300HV	10289804	42	6	775	11 45 729 6	HOIST CYLINDER RIGHT
WASHER 12 300HV	10289804	42	6	778	11 45 729 7	HOIST CYLINDER LEFT
WASHER 12,5/21X	9918226	72	6	130	10 08 004 4	FRAME INSTALLATION
WASHER 12,5/21X	9918226	32	2	350	10 35 862 7	HYDR.INSTAL.VALVES TO ATT
WASHER 12/20X10	10358266	81	2	463	10 35 826 4	TOOL BOX
WASHER 13	10179356	21	4	129	10 08 004 4	FRAME INSTALLATION
WASHER 13	10179356	26	2	358	10 35 862 4	HYDR.INSTALLATION FAN DR
WASHER 13	10179356	12	8	443	10 35 865 9	COVERING ROTATING DECK
WASHER 13	10179356	22	4	443	10 35 865 9	COVERING ROTATING DECK
WASHER 13	10179356	26	1	443	10 35 865 9	COVERING ROTATING DECK
WASHER 13	10179356	32	4	443	10 35 865 9	COVERING ROTATING DECK
WASHER 13	10179356	71	6	447	10 35 865 5	COVERS
WASHER 13	10179356	81	3	447	10 35 865 5	COVERS
WASHER 13	10179356	111	10	448	10 35 865 5	COVERS
WASHER 13	10179356	121	5	448	10 35 865 5	COVERS
WASHER 13	10179356	141	5	448	10 35 865 5	COVERS
WASHER 13	10179356	201	5	451	10 35 865 5	COVERS
WASHER 13	10179356	221	5	451	10 35 865 5	COVERS
WASHER 13	10179356	231	5	452	10 35 865 5	COVERS
WASHER 13	10179356	241	3	452	10 35 865 5	COVERS
WASHER 13	10179356	71	2	463	10 35 826 4	TOOL BOX
WASHER 13	10179356	62	3	544	10 49 878 6	OUTSIDE MIRROR ASSEMBLY
WASHER 13	10179356	23	8	711	11 10 294 5	GOOSENECK BOOM 6.45M
WASHER 13	10179356	9	3	793	10 49 866 6	AIR FILTER INSTALLATION
WASHER 13 200HV	10006370	32	2	721	10 82 841 3	CENTRAL LUBRICATING SYS
WASHER 13 200HV	10006370	26	2	730	10 39 639 6	CENTRAL GREASING
WASHER 16 200HV	4901893	22	1	205	10 84 460 3	FAN INSTALLATION
WASHER 16 295-350HV10HV	12220084	4	4	90	10 39 232 0	CARRIER ROLLER INSTALLATI
WASHER 16 295-350HV10HV	4002742	22	2	142	10 04 853 9	PUMPS + COUPLING INSTALL
WASHER 16 300HV	10289806	16	3	100	11 46 393 5	ROTARY CONNECTION INSTA
WASHER 16 300HV	10289806	3	3	105	10 40 383 4	FIXING PARTS ROTARY CON
WASHER 16 300HV	10289806	18	2	200	10 21 851 3	COMBINATED RADIATOR
WASHER 16 300HV	10289806	18	2	203	11 69 472 6	COMBINATED RADIATOR

Description	Item	Pos.	Quantity	Page	Assembly	Description
WASHER 16 300HV	10289806	64	3	407	10 35 863 8	CONTROL VALVE INSTALLAT
WASHER 16,5/28X4	9918228	11	4	342	98 79 063	BOTTOM PLATE MOUNTING
WASHER 17	4600180	11	2	129	10 08 004 4	FRAME INSTALLATION
WASHER 17	4600180	51	2	129	10 08 004 4	FRAME INSTALLATION
WASHER 17	4600180	61	2	793	10 49 866 6	AIR FILTER INSTALLATION
WASHER 19/80X10	10358205	2	6	133	10 35 862 0	FIXING PARTS ENGINE
WASHER 20 295 BIS 350HV	12220081	17	2	219	10 06 198 2	SLEWING GEAR
WASHER 20 300-370HV	4600222	5	3	533	10 06 181 0	FIXING PARTS FUEL TANK
WASHER 20,5/34X5	9918229	4	48	78	10 49 887 7	ADDITIONAL KIT
WASHER 20,5/34X5	9918229	4	4	88	10 39 231 7	TRACK ROLLER INSTALLATI
WASHER 20,5/34X5	9918229	4	48	107	10 83 693 0	TRACTION DRIVE
WASHER 20,5/34X5	9918229	7	48	107	10 83 693 0	TRACTION DRIVE
WASHER 20,5/34X5	9918229	12	4	107	10 83 693 0	TRACTION DRIVE
WASHER 20,5/34X5	9918229	4	48	108	11 10 296 8	TRACTION DRIVE
WASHER 20,5/34X5	9918229	7	48	108	11 10 296 8	TRACTION DRIVE
WASHER 20,5/34X5	9918229	12	4	108	11 10 296 8	TRACTION DRIVE
WASHER 20,5/34X5	9918229	3	3	388	10 06 112 7	FIXING PARTS HYDRAULIC T
WASHER 24,5/40X5	9918230	33	9	760	11 68 144 7	HYDRAULIC CYLINDER
WASHER 24,5/40X5	9918230	33	9	761	95 93 026	HYDRAULIC CYLINDER
WASHER 24,5/40X5	9918230	33	9	762	96 44 648	HYDRAULIC CYLINDER
WASHER 27,5/45X6	9586495	14	50	242	10 04 851 4	FIX.PARTS SWING RING UNDE
WASHER 3 200HV	4600814	24	2	297	73 73 807	SAFETY LEVER
WASHER 3,8X12,5X1	9265402	23	4	323	90 79 258	PILOT CONTROL UNIT VG7 2-3
WASHER 3,8X12,5X1	9265402	23	4	742	90 79 264	MODIFICATION KIT VG7-2/3
WASHER 3,8X12,5X1	9265402	23	8	807	10 11 856 1	PILOT CONTROL UNIT VG6-8
WASHER 3,8X12,5X1	9265402	23	8	808	11 37 560 6	PILOT CONTROL UNIT VG6-8
WASHER 31/52X6	9918231	5	4	537	10 06 391 4	FIXING PARTS COUNTERWEI
WASHER 4	421802008	6	12	333	10 02 211 7	AIR CIRCULATION CASE
WASHER 4	421802008	33	4	336	11 00 359 4	HOUSING
WASHER 4 200HV	10875645	34	26	275	11 38 339 7	ARM REST LEFT
WASHER 4 200HV	10875645	93	4	276	11 38 339 7	ARM REST LEFT
WASHER 4 200HV	10875645	84	4	279	11 38 340 1	ARM REST RIGHT
WASHER 4 200HV	10875645	106	2	280	11 38 340 1	ARM REST RIGHT
WASHER 4 200HV	10875645	122	2	281	11 38 340 1	ARM REST RIGHT
WASHER 4 200HV	10875645	123	2	281	11 38 340 1	ARM REST RIGHT
WASHER 4 200HV	10875645	34	26	291	10 38 502 8	ARM REST LEFT
WASHER 4 200HV	10875645	93	4	292	10 38 502 8	ARM REST LEFT
WASHER 4 200HV	10875645	84	4	302	11 45 228 6	ARM REST RIGHT
WASHER 4 200HV	10875645	106	2	303	11 45 228 6	ARM REST RIGHT
WASHER 4 200HV	10875645	122	2	304	11 45 228 6	ARM REST RIGHT
WASHER 4 200HV	10875645	123	2	304	11 45 228 6	ARM REST RIGHT
WASHER 4 200HV	10875645	84	4	306	12 50 731 7	ARM REST RIGHT
WASHER 4 200HV	10875645	106	2	307	12 50 731 7	ARM REST RIGHT
WASHER 4 200HV	10875645	122	2	307	12 50 731 7	ARM REST RIGHT
WASHER 4 200HV	10875645	123	2	307	12 50 731 7	ARM REST RIGHT
WASHER 4 200HV	10875645	16	2	751	10 35 860 1	TRAVEL ALARM
WASHER 4 200HV	4001645	9	6	333	10 02 211 7	AIR CIRCULATION CASE
WASHER 4 200HV	4001645	3	3	337	10 02 207 8	ASSEMBLY BRACKET
WASHER 4 200HV	4001645	220	2	490	10 29 033 7	ELECTRICAL INSTALLATION
WASHER 4 200HV	4001645	290	3	490	10 29 033 7	ELECTRICAL INSTALLATION
WASHER 4 200HV	4001645	220	2	493	10 48 808 7	ELECTRICAL INSTALLATION
WASHER 4 200HV	4001645	595	4	496	10 29 036 3	WIPPER MOTOR SET
WASHER 4 200HV	4001645	28	4	519	99 47 695	ELECTRICAL SYSTEM E50
WASHER 4 200HV	4001850	8	1	668	10 11 871 2	SET OF PARTS
WASHER 4 200HV	4002887	3	7	335	11 00 359 4	HOUSING
WASHER 5 200HV	11140403	322	4	197	10 04 853 6	ENGINE COOLING
WASHER 5 200HV	11140403	73	1	276	11 38 339 7	ARM REST LEFT
WASHER 5 200HV	11140403	74	1	276	11 38 339 7	ARM REST LEFT
WASHER 5 200HV	11140403	73	1	292	10 38 502 8	ARM REST LEFT
WASHER 5 200HV	11140403	74	1	292	10 38 502 8	ARM REST LEFT

Description	Item	Pos.	Quantity	Page	Assembly	Description
WASHER 5 200HV	11140403	69	4	295	97 58 815 01	E-BOARD
WASHER 5 200HV	11140403	72	4	295	97 58 815 01	E-BOARD
WASHER 5 200HV	11140403	33	4	384	10 04 851 7	HYDRAULIC TANK INSTALLAT
WASHER 5 200HV	11140403	33	4	386	10 35 863 4	HYDRAULIC TANK INSTALLAT
WASHER 5 200HV	11140403	110	12	508	10 29 035 2	INTERIOR PANELING
WASHER 5 200HV	11140403	110	12	510	10 48 808 8	INTERIOR PANELING
WASHER 5 200HV	11140403	17	4	519	99 47 695	ELECTRICAL SYSTEM E50
WASHER 5 200HV	11140403	123	4	786	10 82 562 1	OPT.DATA CAPTURE-DATA T
WASHER 5 200HV	4600200	7	4	296	98 74 988	PLATINES INSTALLATION
WASHER 5,3 200HV	12220087	71	2	276	11 38 339 7	ARM REST LEFT
WASHER 5,3 200HV	12220087	71	2	292	10 38 502 8	ARM REST LEFT
WASHER 6 200HV	4901878	21	11	336	11 00 359 4	HOUSING
WASHER 6 300HV	10289802	52	3	137	10 49 819 9	AIR FILTER INSTALLATION
WASHER 6 300HV	10289802	23	13	200	10 21 851 3	COMBINATED RADIATOR
WASHER 6 300HV	10289802	24	16	200	10 21 851 3	COMBINATED RADIATOR
WASHER 6 300HV	10289802	23	13	203	11 69 472 6	COMBINATED RADIATOR
WASHER 6 300HV	10289802	24	16	203	11 69 472 6	COMBINATED RADIATOR
WASHER 6 300HV	10289802	34	2	271	10 49 880 5	DRIVER STAND BASE SECTIO
WASHER 6 300HV	10289802	56	4	276	11 38 339 7	ARM REST LEFT
WASHER 6 300HV	10289802	32	1	277	11 38 340 1	ARM REST RIGHT
WASHER 6 300HV	10289802	56	4	277	11 38 340 1	ARM REST RIGHT
WASHER 6 300HV	10289802	87	2	279	11 38 340 1	ARM REST RIGHT
WASHER 6 300HV	10289802	56	4	292	10 38 502 8	ARM REST LEFT
WASHER 6 300HV	10289802	70	4	295	97 58 815 01	E-BOARD
WASHER 6 300HV	10289802	73	4	295	97 58 815 01	E-BOARD
WASHER 6 300HV	10289802	32	1	301	11 45 228 6	ARM REST RIGHT
WASHER 6 300HV	10289802	56	4	301	11 45 228 6	ARM REST RIGHT
WASHER 6 300HV	10289802	87	2	302	11 45 228 6	ARM REST RIGHT
WASHER 6 300HV	10289802	32	1	305	12 50 731 7	ARM REST RIGHT
WASHER 6 300HV	10289802	56	4	305	12 50 731 7	ARM REST RIGHT
WASHER 6 300HV	10289802	87	2	306	12 50 731 7	ARM REST RIGHT
WASHER 6 300HV	10289802	14	6	333	10 02 211 7	AIR CIRCULATION CASE
WASHER 6 300HV	10289802	3	2	334	10 49 308 7	OPERATING ELEMENT
WASHER 6 300HV	10289802	4	2	334	10 49 308 7	OPERATING ELEMENT
WASHER 6 300HV	10289802	20	11	336	11 00 359 4	HOUSING
WASHER 6 300HV	10289802	17	2	390	56 17 688	SHUT OFF DEVICE
WASHER 6 300HV	10289802	479	2	414	10 35 863 8	CONTROL VALVE INSTALLAT
WASHER 6 300HV	10289802	17	4	459	10 06 423 5	SIDE DOOR RIGHT
WASHER 6 300HV	10289802	11	4	466	10 35 823 0	SIDE DOOR FRONT LEFT
WASHER 6 300HV	10289802	10	4	467	10 02 525 4	DOOR LOCK
WASHER 6 300HV	10289802	210	2	481	70 28 759	FRONT PANE TOP
WASHER 6 300HV	10289802	280	1	484	70 28 769	DRIVER'S CAB DOOR
WASHER 6 300HV	10289802	390	2	491	10 29 033 7	ELECTRICAL INSTALLATION
WASHER 6 300HV	10289802	730	2	491	10 29 033 7	ELECTRICAL INSTALLATION
WASHER 6 300HV	10289802	796	1	492	10 29 033 7	ELECTRICAL INSTALLATION
WASHER 6 300HV	10289802	390	2	494	10 48 808 7	ELECTRICAL INSTALLATION
WASHER 6 300HV	10289802	730	2	494	10 48 808 7	ELECTRICAL INSTALLATION
WASHER 6 300HV	10289802	796	1	495	10 48 808 7	ELECTRICAL INSTALLATION
WASHER 6 300HV	10289802	580	3	496	10 29 036 3	WIPPER MOTOR SET
WASHER 6 300HV	10289802	580	3	497	70 28 884	WIPPER MOTOR SET
WASHER 6 300HV	10289802	400	8	504	10 29 026 4	COMPONENTS
WASHER 6 300HV	10289802	490	4	504	10 29 026 4	COMPONENTS
WASHER 6 300HV	10289802	420	6	509	10 29 035 2	INTERIOR PANELING
WASHER 6 300HV	10289802	420	6	511	10 48 808 8	INTERIOR PANELING
WASHER 6 300HV	10289802	21	4	514	11 10 255 3	ELECTRICAL SYSTEM
WASHER 6 300HV	10289802	4	6	519	99 47 695	ELECTRICAL SYSTEM E50
WASHER 6 300HV	10289802	32	4	520	99 47 695	ELECTRICAL SYSTEM E50
WASHER 6 300HV	10289802	46	1	520	99 47 695	ELECTRICAL SYSTEM E50
WASHER 6 300HV	10289802	30	1	525	10 06 559 1	AIR CONDITION HOSES INSTA
WASHER 6 300HV	10289802	11	4	526	10 06 559 6	DRIER INSTALLATION

Description	Item	Pos.	Quantity	Page	Assembly	Description
WASHER 6 300HV	10289802	8	6	529	10 04 852 5	FUEL TANK ASSY.
WASHER 6 300HV	10289802	8	6	530	10 49 836 0	FUEL TANK ASSY.
WASHER 6 300HV	10289802	8	6	531	11 10 262 1	FUEL TANK ASSY.
WASHER 6 300HV	10289802	5	4	684	10 11 599 3	CONTROL BOX ANNEXE
WASHER 6 300HV	10289802	47	1	687	10 11 799 7	CABLE HARNESS MOUNTING
WASHER 6 300HV	10289802	51	4	717	10 82 841 4	CENTRALIZED LUBRICATION
WASHER 6 300HV	10289802	151	1	786	10 82 562 1	OPT.DATA CAPTURE-DATA T
WASHER 6 300HV	10289802	7	2	791	10 49 833 2	FIRE EXTINGUISHER
WASHER 6,4 200HV	11693878	54	3	137	10 49 819 9	AIR FILTER INSTALLATION
WASHER 6,4 200HV	11693878	42	1	200	10 21 851 3	COMBINATED RADIATOR
WASHER 6,4 200HV	11693878	42	1	203	11 69 472 6	COMBINATED RADIATOR
WASHER 6,4 200HV	11693878	28	4	275	11 38 339 7	ARM REST LEFT
WASHER 6,4 200HV	11693878	28	4	291	10 38 502 8	ARM REST LEFT
WASHER 6,4 200HV	11693878	6	2	296	98 74 988	PLATINES INSTALLATION
WASHER 6,4 200HV	11693878	7	4	320	10 05 981 8	FOOT PILOT VALVE INSTALL
WASHER 6,4 200HV	11693878	8	2	455	10 06 436 0	RADIATOR HOOD
WASHER 6,4 200HV	11693878	51	6	463	10 35 826 4	TOOL BOX
WASHER 6,4 200HV	11693878	330	4	509	10 29 035 2	INTERIOR PANELING
WASHER 6,4 200HV	11693878	460	2	509	10 29 035 2	INTERIOR PANELING
WASHER 6,4 200HV	11693878	330	4	511	10 48 808 8	INTERIOR PANELING
WASHER 6,4 200HV	11693878	460	2	511	10 48 808 8	INTERIOR PANELING
WASHER 6,4 200HV	11693878	20	4	754	10 85 472 4	BASIC MACHINE MOUNTING
WASHER 8 200HV	11140469	152	5	449	10 35 865 5	COVERS
WASHER 8 200HV	11140469	22	5	542	10 49 878 6	OUTSIDE MIRROR ASSEMBLY
WASHER 8 200HV	11140469	42	4	542	10 49 878 6	OUTSIDE MIRROR ASSEMBLY
WASHER 8 200HV	11140469	45	2	542	10 49 878 6	OUTSIDE MIRROR ASSEMBLY
WASHER 8 200HV	11140469	52	2	542	10 49 878 6	OUTSIDE MIRROR ASSEMBLY
WASHER 8 200HV	11140469	55	2	543	10 49 878 6	OUTSIDE MIRROR ASSEMBLY
WASHER 8 200HV	12691573	13	5	655	10 13 281 7	WATER PUMP, PRE-ASSEMB
WASHER 8 200HV	420001201	9	2	645	10 12 190 9	CONNECTING LINE ADD-ON
WASHER 8 200HV	4980155	17	4	567	90 79 021	CRANKCASE BREATHER ASS
WASHER 8 300HV	10289803	56	7	11	12 86 140 4	FIXING PARTS
WASHER 8 300HV	10289803	160	2	62	12 50 640 7	FASTENINGPIECE FRONT WIN
WASHER 8 300HV	10289803	347	1	198	10 04 853 6	ENGINE COOLING
WASHER 8 300HV	10289803	30	31	200	10 21 851 3	COMBINATED RADIATOR
WASHER 8 300HV	10289803	30	17	203	11 69 472 6	COMBINATED RADIATOR
WASHER 8 300HV	10289803	12	6	205	10 84 460 3	FAN INSTALLATION
WASHER 8 300HV	10289803	34	1	209	10 04 853 7	MOTOR-ELEKTRIK
WASHER 8 300HV	10289803	22	2	212	10 04 853 8	ENGINE ADD-ON PARTS
WASHER 8 300HV	10289803	26	4	212	10 04 853 8	ENGINE ADD-ON PARTS
WASHER 8 300HV	10289803	4	8	214	10 06 363 0	AIR CONDIT.CONDENSER IN
WASHER 8 300HV	10289803	28	1	217	11 10 291 6	SWING GEAR INSTALLATION
WASHER 8 300HV	10289803	6	2	248	10 06 750 0	AUTOMATIC CENTRALIZED L
WASHER 8 300HV	10289803	7	4	253	10 66 472 2	DISTRIBUTION BLOCK SXE-2
WASHER 8 300HV	10289803	132	1	274	10 49 880 5	DRIVER STAND BASE SECTIO
WASHER 8 300HV	10289803	162	3	274	10 49 880 5	DRIVER STAND BASE SECTIO
WASHER 8 300HV	10289803	167	1	274	10 49 880 5	DRIVER STAND BASE SECTIO
WASHER 8 300HV	10289803	32	4	284	94 02 247 7	OPERATOR SEAT
WASHER 8 300HV	10289803	42	4	284	94 02 247 7	OPERATOR SEAT
WASHER 8 300HV	10289803	74	2	295	97 58 815 01	E-BOARD
WASHER 8 300HV	10289803	13	4	320	10 05 981 8	FOOT PILOT VALVE INSTALL
WASHER 8 300HV	10289803	23	4	320	10 05 981 8	FOOT PILOT VALVE INSTALL
WASHER 8 300HV	10289803	62	6	320	10 05 981 8	FOOT PILOT VALVE INSTALL
WASHER 8 300HV	10289803	67	4	320	10 05 981 8	FOOT PILOT VALVE INSTALL
WASHER 8 300HV	10289803	42	1	321	10 06 017 4	FOOT PILOT VALVE LEFT
WASHER 8 300HV	10289803	42	1	322	10 06 017 5	FOOT PILOT VALVE RIGHT
WASHER 8 300HV	10289803	42	1	328	10 40 689 8	AIR CONDITIONING
WASHER 8 300HV	10289803	102	1	328	10 40 689 8	AIR CONDITIONING
WASHER 8 300HV	10289803	63	6	385	10 04 851 7	HYDRAULIC TANK INSTALLAT
WASHER 8 300HV	10289803	12	8	445	10 35 865 5	COVERS

Description	Item	Pos.	Quantity	Page	Assembly	Description
WASHER 8 300HV	10289803	52	4	446	10 35 865 5	COVERS
WASHER 8 300HV	10289803	134	1	448	10 35 865 5	COVERS
WASHER 8 300HV	10289803	155	2	449	10 35 865 5	COVERS
WASHER 8 300HV	10289803	191	2	450	10 35 865 5	COVERS
WASHER 8 300HV	10289803	8	8	453	10 05 816 9	ENGINE BONNET
WASHER 8 300HV	10289803	22	4	456	10 05 183 8	BONNET RIGHT
WASHER 8 300HV	10289803	61	2	463	10 35 826 4	TOOL BOX
WASHER 8 300HV	10289803	84	2	463	10 35 826 4	TOOL BOX
WASHER 8 300HV	10289803	140	6	481	70 28 759	FRONT PANE TOP
WASHER 8 300HV	10289803	180	2	484	70 28 769	DRIVER'S CAB DOOR
WASHER 8 300HV	10289803	200	2	484	70 28 769	DRIVER'S CAB DOOR
WASHER 8 300HV	10289803	480	3	491	10 29 033 7	ELECTRICAL INSTALLATION
WASHER 8 300HV	10289803	760	3	492	10 29 033 7	ELECTRICAL INSTALLATION
WASHER 8 300HV	10289803	480	3	494	10 48 808 7	ELECTRICAL INSTALLATION
WASHER 8 300HV	10289803	760	3	494	10 48 808 7	ELECTRICAL INSTALLATION
WASHER 8 300HV	10289803	550	1	496	10 29 036 3	WIPPER MOTOR SET
WASHER 8 300HV	10289803	550	1	497	70 28 884	WIPPER MOTOR SET
WASHER 8 300HV	10289803	120	4	503	10 29 026 4	COMPONENTS
WASHER 8 300HV	10289803	190	4	503	10 29 026 4	COMPONENTS
WASHER 8 300HV	10289803	158	36	515	11 10 255 3	ELECTRICAL SYSTEM
WASHER 8 300HV	10289803	251	3	515	11 10 255 3	ELECTRICAL SYSTEM
WASHER 8 300HV	10289803	31	13	521	10 35 866 5	BATTERY INSTALLATION
WASHER 8 300HV	10289803	38	6	529	10 04 852 5	FUEL TANK ASSY.
WASHER 8 300HV	10289803	38	6	530	10 49 836 0	FUEL TANK ASSY.
WASHER 8 300HV	10289803	38	12	531	11 10 262 1	FUEL TANK ASSY.
WASHER 8 300HV	10289803	34	6	534	10 06 759 6	FUEL TANK
WASHER 8 300HV	10289803	34	6	535	10 49 835 9	FUEL TANK
WASHER 8 300HV	10289803	7	8	751	10 35 860 1	TRAVEL ALARM
WASHER 8 300HV	10289803	29	2	756	11 10 281 8	KIT IN BASIC MACHINE
WASHER 8 300HV	11693876	61	4	284	94 02 247 7	OPERATOR SEAT
WASHER 8,4 30HV	12203968	31	8	200	10 21 851 3	COMBINATED RADIATOR
WASHER 8,4 30HV	12203968	31	22	203	11 69 472 6	COMBINATED RADIATOR
WASHER 8,4 30HV	12203968	43	1	328	10 40 689 8	AIR CONDITIONING
WASHER 8,4 30HV	12203968	20	4	341	11 00 707 2	SLIDE SEAT GUIDE
WASHER 8,4 30HV	12203968	17	2	453	10 05 816 9	ENGINE BONNET
WASHER 8,4 30HV	12203968	8	2	462	10 35 826 4	TOOL BOX
WASHER 8,4 30HV	12203968	26	2	545	10 37 464 5	COVER
WASHER KIT FOR D=100	921596716	90	2	713	11 10 294 5	GOOSENECK BOOM 6.45M
WASHER SET	9885924	39	1	191	98 89 984	REPAIR KIT DRIVING MECHANI
WASHER SET	9885924	39	1	192	98 89 988	RK PULL-BACK BALL+PULL-B.
WASHER SET	9885928	29	1	231	90 73 380	RK PULL-BACK BALL+PULL-B.
WASHER SET	9885928	39	1	234	90 74 125	REPAIR KIT DRIVING MECHANI
WASHER SET NG 100-107	9885929	29	1	180	90 72 998	RK PULL-BACK BALL+PULL-B.
WASHER SET NG 100-107	9885929	39	1	823	90 74 122	REPAIR KIT DRIVING MECHANI
WASHER SET NG 140-150	9889196	39	1	190	98 89 983	REPAIR KIT DRIVING MECHAN
WASHER SPRING 10	4600009	35	12	200	10 21 851 3	COMBINATED RADIATOR
WASHER SPRING 10	4600009	35	12	203	11 69 472 6	COMBINATED RADIATOR
WASHER SPRING 10	4600033	42	3	272	10 49 880 5	DRIVER STAND BASE SECTIO
WASHER SPRING 12	4600022	25	16	801	10 13 303 7	HYDR.DOUBLE PUMP
WASHER SPRING 4	4600036	4	3	332	10 02 208 3	AIR CONNECTION PART
WASHER SPRING 4	4600036	4	10	335	11 00 359 4	HOUSING
WASHER SPRING 4	4600036	4	3	337	10 02 207 8	ASSEMBLY BRACKET
WASHER SPRING A 16	4240007	4	4	92	10 65 167 8	INSTALLATION GUIDING WHE
WASHER SPRING A 16	4240007	3	4	93	12 21 972 1	INSTALLATION GUIDING WHE
WASHER SPRING A 8	4000499	29	29	200	10 21 851 3	COMBINATED RADIATOR
WASHER SPRING A 8	4000499	29	29	203	11 69 472 6	COMBINATED RADIATOR
WASHER SPRING B 5	4240000	6	1	668	10 11 871 2	SET OF PARTS
WASHER SPRING B 6	4600218	4	4	152	74 05 006	TUBE NOZZLE BFW 28L
WASHER SPRING B 6	4600218	3	4	153	76 16 897	FLANGE CONNECTION L
WASHER SPRING B 8	4240002	46	2	201	10 21 851 3	COMBINATED RADIATOR

Description	Item	Pos.	Quantity	Page	Assembly	Description
WASHER SPRING B 8	4240002	46	2	203	11 69 472 6	COMBINATED RADIATOR
WASHER T 5,5X18X2	10022767	3	2	333	10 02 211 7	AIR CIRCULATION CASE
WASHER T 5,5X18X2	10022767	5	2	339	10 02 277 7	CIRCULATING AIR GRID
WATER BASIN	5618664	440	1	491	10 29 033 7	ELECTRICAL INSTALLATION
WATER BASIN	5618664	440	1	494	10 48 808 7	ELECTRICAL INSTALLATION
WATER COCK	7001072	1	2	662	90 79 889	HEATER CONNECTION
WATER COOLER	10300994	3	1	199	10 21 851 3	COMBINATED RADIATOR
WATER COOLER	10300994	3	1	202	11 69 472 6	COMBINATED RADIATOR
WATER HOSE	10057698	120	1	195	10 04 853 6	ENGINE COOLING
WATER HOSE	10057777	140	1	195	10 04 853 6	ENGINE COOLING
WATER HOSE	10065124	330	1	197	10 04 853 6	ENGINE COOLING
WATER HOSE 918 6280 30-002	9008530	30	2	328	10 40 689 8	AIR CONDITIONING
WATER HOSE 976 0560 24-000	10054704	100	1	195	10 04 853 6	ENGINE COOLING
WATER PIPE	10057921	110	1	195	10 04 853 6	ENGINE COOLING
WATER PUMP HOUSING	10116437	1	1	655	10 13 281 7	WATER PUMP, PRE-ASSEMB
WATER PUMP LID	10134069	12	1	655	10 13 281 7	WATER PUMP, PRE-ASSEMB
WATER PUMP SHAFT	9074935	5	1	655	10 13 281 7	WATER PUMP, PRE-ASSEMB
WATER PUMP WITH FASTENIN	9080301	370	1	559	10 11 682 5	BASIC ENGINE D936 L HIGH 3
WATER PUMP, PRE-ASSEMB	10132817	1	1	654	90 80 301	WATER PUMP WITH FASTENIN
WATER SENSOR	10280185	2	1	632	10 22 281 9	FUEL PRE-FILTER CPL.
WATER VALVE	10292661	40	1	328	10 40 689 8	AIR CONDITIONING
WEAR PLATE	10498792	15	4	738	11 10 263 6	WEARING PARTS SET
WEARING CAP	10451131	40	5	735	11 10 258 6	BACKHOE BUCKET HD 1800
WEARING CAP	10451131	6	1	781	11 10 259 0	TOOTH Z50CL
WEARING PART	10493010	6	1	287	11 10 016 7	SUSPENSION
WEARING PARTS SET	11102636	11	1	736	11 10 258 7	BACKHOE BUCKET HD 1800
WEARING PLATE	10216816	2	1	165	57 17 149	INTERNAL GEAR PUMP SET
WEARING PLATE	10216828	1	1	167	10 21 681 6	WEARING PLATE
WEARING PLATE	10498781	11	1	738	11 10 263 6	WEARING PARTS SET
WEARING PLATE	10498782	12	4	738	11 10 263 6	WEARING PARTS SET
WEARING PLATE	10498783	13	4	738	11 10 263 6	WEARING PARTS SET
WEARING PLATE	10498791	14	2	738	11 10 263 6	WEARING PARTS SET
WEARING RING	9073188	6	2	610	90 80 713	CAMSHAFT CPL.
WEARING RING M 40X1,5	9077612	3	1	693	90 77 386	AUXILIARY DRIVE PRE-ASS.
WEDGE LOCK WASHER 13/19,	7015815	16	4	383	10 04 851 7	HYDRAULIC TANK INSTALLAT
WEDGE LOCK WASHER 13/19,	7015815	16	4	386	10 35 863 4	HYDRAULIC TANK INSTALLAT
WHEEL SET	10220693	7	1	170	10 28 264 7	GEAR PUMP
WHIRL RING	10119136	8	1	655	10 13 281 7	WATER PUMP, PRE-ASSEMB
WINDOW GLASS	7028787	160	1	476	70 28 767	GLASS PANES
WINDOW GLASS	7028789	120	1	476	70 28 767	GLASS PANES
WINDOW GLASS	7028805	320	1	481	70 28 759	FRONT PANE TOP
WINDOW GLASS	7028830	400	1	485	70 28 769	DRIVER'S CAB DOOR
WINDOW GLASS	7030316	10	1	478	10 35 889 0	ADDITIONAL KIT SIDE PANE
WINDOW GLASS	7030318	110	1	476	70 28 767	GLASS PANES
WINDSCREEN WIPER	10290357	410	1	491	10 29 033 7	ELECTRICAL INSTALLATION
WINDSCREEN WIPER	10290357	410	1	494	10 48 808 7	ELECTRICAL INSTALLATION
WINDSCREEN WIPER	7029426	410	1	491	10 29 033 7	ELECTRICAL INSTALLATION
WIPER ARM	10290360	620	1	501	10 29 036 1	WIPER ARM
WIPER ARM	10290361	610	1	499	10 29 035 7	WINDSCREEN WIPER
WIPER ARM	7028866	610	1	500	70 29 426	WINDSCREEN WIPER
WIPER ARM	7029427	620	1	502	70 28 866	WIPER ARM
WIPER BLADE 800mm	7028869	600	1	499	10 29 035 7	WINDSCREEN WIPER
WIPER BLADE 800mm	7028869	600	1	500	70 29 426	WINDSCREEN WIPER
WIPER MOTOR	10290398	530	1	496	10 29 036 3	WIPPER MOTOR SET
WIPER MOTOR	10290398	530	1	497	70 28 884	WIPPER MOTOR SET
WIPPER MOTOR SET	10290363	420	1	491	10 29 033 7	ELECTRICAL INSTALLATION
WIPPER MOTOR SET	10290363	420	1	494	10 48 808 7	ELECTRICAL INSTALLATION
WIPPER MOTOR SET	7028884	420	1	491	10 29 033 7	ELECTRICAL INSTALLATION
WIR.HARNESS UNDER CONT	10408513	140	1	274	10 49 880 5	DRIVER STAND BASE SECTIO
WIRE	11491891	17	2	399	11 49 189 4	DRIVING GEAR

Description	Item	Pos.	Quantity	Page	Assembly	Description
WIRE HARNESS - CABIN	10290353	150	1	490	10 29 033 7	ELECTRICAL INSTALLATION
WIRE HARNESS - CABIN	10651894	150	1	493	10 48 808 7	ELECTRICAL INSTALLATION
WIRE HARNESS HANDLE	9968591	80	1	299	99 68 625	LH-JOYSTICK LEFT
WIRE HARNESS HANDLE	9968591	80	1	314	99 68 611	LH-JOYSTICK RIGHT
WIRING HARN.BATTERY SHU	10064386	15	1	521	10 35 866 5	BATTERY INSTALLATION
WIRING HARN.BATTERY-STAR	9893089	17	1	521	10 35 866 5	BATTERY INSTALLATION
WIRING HARNESS DYNAMO G	10064514	9	1	209	10 04 853 7	MOTOR-ELEKTRIK
WIRING HARNESS ELECTRIC	9929151	14	1	519	99 47 695	ELECTRICAL SYSTEM E50
WIRING HARNESS ELECTRIC	9949750	15	1	519	99 47 695	ELECTRICAL SYSTEM E50
WIRING HARNESS ENGINE	9948316	5	1	209	10 04 853 7	MOTOR-ELEKTRIK
WIRING HARNESS HEAD LIGH	10088051	4	1	783	11 10 229 5	ADDNL. FLOODLIGHT
WIRING HARNESS HEAD LIGH	10075063	7	1	9	12 85 910 3	FLOODLIGHT INSTALLATION
WIRING HARNESS HEAD LIGH	10075063	5	1	783	11 10 229 5	ADDNL. FLOODLIGHT
WIRING HARNESS HYDRAULIC	10051599	27	1	514	11 10 255 3	ELECTRICAL SYSTEM
WIRING HARNESS OPTION	10863490	130	1	786	10 82 562 1	OPT.DATA CAPTURE-DATA T
WIRING HARNESS PRE-ASS.	10115746	1	1	686	10 11 799 7	CABLE HARNESS MOUNTING
WIRING HARNESS ROTATING	9948251	12	1	514	11 10 255 3	ELECTRICAL SYSTEM
WIRING HARNESS S9/S9	9686191	21	1	521	10 35 866 5	BATTERY INSTALLATION
WIRING HARNESS SHUT-OFF	10064398	19	1	521	10 35 866 5	BATTERY INSTALLATION
WIRING HARNESS STARTER D	10064512	70	1	210	10 04 853 7	MOTOR-ELEKTRIK
WIRING HARNESS STARTER M	10405134	50	1	210	10 04 853 7	MOTOR-ELEKTRIK
WORK LIGHT	10007848	2	1	516	99 41 040	FLOODLIGHT INSTALLATION
WORK LIGHT	10045530	2	1	9	12 85 910 3	FLOODLIGHT INSTALLATION
WORK LIGHT	10045530	2	1	783	11 10 229 5	ADDNL. FLOODLIGHT
YOKE G 8X16	4000746	31	4	446	10 35 865 5	COVERS
YOKE G 8X16	4000746	91	2	447	10 35 865 5	COVERS
YOKE G 8X16	4000746	21	2	462	10 35 826 4	TOOL BOX
YOKE G 8X16	4000746	10	2	468	10 03 720 9	GAS SPRING
YOKE NG 140-150	10139588	16	1	825	10 13 975 2	REPAIR SET SWIVEL YOKE N

Designação	Artigo	Item	Quanti	Página	Módulo	Designação
	11446109	30	1	293	10 05 736 2	CONSOLE DE COMANDO
	11481247	302	1	53	90 66 466	ACESSÓRIOS
	11481248	350	1	53	90 66 466	ACESSÓRIOS
	11481249	352	1	53	90 66 466	ACESSÓRIOS
	11481250	300	1	53	90 66 466	ACESSÓRIOS
	11821521	999	1	160	10 22 041 7	FILTRO
	11823200	10	1	48	11 81 700 9	ACESSÓRIOS 1000L
	11825924	20	1	49	11 82 320 0	
	11834727	3	1	796	11 69 501 2	KIT DE ABASTECIMENTO DE U
	12200137	10	1	42	11 44 078 9	ACESSÓRIOS
	12506407	999	1	479	10 03 552 9	PÁRA-BRISA INFERIOR
	12578798	2	6	561	10 11 577 8	BLOCO DO MOTOR
	12693519	80	1	51	90 66 466	ACESSÓRIOS
	7029402	180	1	476	70 28 767	VIDRO FIXO
	811205101	120	1	662	90 79 889	CONEXÃO DE AQUECIMENTO
	9066460	500	1	14	10 35 964 8	MATERIAL DE SERVIÇO
	9647551	100	1	23	90 70 366	LUBRIFICANTES
D936	12832453	1	1	571	90 79 487	CÁRTER DE ÓLEO
NG 090-107	12880152	3	1	233	90 74 117	KIT DE REPARO DO EIXO NG
NG 090-107	12880152	3	1	824	90 74 123	KIT DE REPARO DO EIXO NG
NG 125-150	12879639	3	1	189	98 89 977	KIT DE REPARO DO EIXO NG
NG 165	9881232	20	1	820	90 78 788	KIT REPARO DA TAMPA REG
ABASTECIMENTO DE ÓLEO	10119030	2	1	592	10 11 960 9	INSTALAÇÃO TAMPA DO CAB
ABRACADERIA COM BORRAC	10353683	5	2	775	11 45 729 6	CILINDRO DE ELEVACAO DIRE
ABRACADERIA COM BORRAC	10353683	5	2	778	11 45 729 7	CILINDRO DE ELEVACAO ESQ
ABRAÇADEIRA DE CABO	11002474	35	8	336	11 00 359 4	CARCAÇA
ABRAÇADEIRA DE MANGUEIR	9388597	60	6	213	10 04 853 8	MOTOR - PECAS ANEXAS
ABRAÇADEIRA DE MANGUEIR	774252314	22	1	137	10 49 819 9	FILTRO DE AR - INSTALAÇÃO
ABRAÇADEIRA DE MANGUEI	774217008	211	2	196	10 04 853 6	ARREFECIMENTO DO MOTOR
ABRAÇADEIRA DE MANGUEI	774217008	231	2	196	10 04 853 6	ARREFECIMENTO DO MOTOR
ABRAÇADEIRA DE MANGUEI	550838008	96	4	273	10 49 880 5	POSTO DE COMANDO - PEÇA
ABRAÇADEIRA DE MANGUEIR	10355921	21	1	137	10 49 819 9	FILTRO DE AR - INSTALAÇÃO
ABRAÇADEIRA DE MANGUEIR	10355921	86	2	137	10 49 819 9	FILTRO DE AR - INSTALAÇÃO
ABRAÇADEIRA DE MANGUEIR	10355921	21	2	793	10 49 866 6	FILTRO DE AR - INSTALAÇÃO
ABRAÇADEIRA DE MANGUEIR	10012761	101	2	195	10 04 853 6	ARREFECIMENTO DO MOTOR
ABRAÇADEIRA DE MANGUEIR	10012761	121	2	195	10 04 853 6	ARREFECIMENTO DO MOTOR
ABRAÇADEIRA DE MANGUEIR	10012761	141	2	195	10 04 853 6	ARREFECIMENTO DO MOTOR
ACENDEDOR DE CIGARROS	11836911	80	1	276	11 38 339 7	APOIO DE BRAÇO LADO ESQ
ACENDEDOR DE CIGARROS	7369377	80	1	292	10 38 502 8	APOIO DE BRAÇO LADO ESQ
ACESSÓRIOS	11440789	9999	1	54	94 06 645 8	SOLUÇÃO DE UREIA
ACESSÓRIOS	9066466	100	1	15	90 66 460	
ACESSÓRIOS 1000L	11817009	1000	1	43	11 44 078 9	ACESSÓRIOS
ACESSÓRIOS 210L	11817008	210	1	42	11 44 078 9	ACESSÓRIOS
ACION. DE EMERGÊNCIA COM	9013811	104	1	280	11 38 340 1	APOIO DE BRAÇO LADO DIRE
ACION. DE EMERGÊNCIA COM	9013811	104	1	302	11 45 228 6	APOIO DE BRAÇO LADO DIRE
ACION. DE EMERGÊNCIA COM	9013811	104	1	307	12 50 731 7	APOIO DE BRAÇO LADO DIRE
ACIONAMENTO	10491783	8	1	285	11 10 016 6	PARTE SUPERIOR DE ASSENT
ACIONAMENTO	10491783	9	1	285	11 10 016 6	PARTE SUPERIOR DE ASSENT
ACIONAMENTO	10493048	58	1	286	11 10 016 6	PARTE SUPERIOR DE ASSENT
ACIONAMENTO	10493341	20	1	285	11 10 016 6	PARTE SUPERIOR DE ASSENT
ACIONAMENTO	11066530	18	1	287	11 10 016 7	SUSPENSAO
ACOPLAMENTO COMPLETO	10115771	2	1	650	10 11 646 4	COMPRESSOR DO AR-CONDI
ACOPLAMENTO ROSCADO	10145171	2	1	809	10 11 908 9	EIXO PRIMARIO COMPLETO Z
ACOPLAMENTO ROSCADO	10145171	10	1	821	10 11 909 3	KIT DE REP DO EIXO DE ACIO
ACOPLAMENTO ROSCADO G1/	7409720	65	2	345	10 35 862 3	INSTALACAO HDRAULICA
ACOPLAMENTO ROSCADO G1/	7409720	41	1	346	10 06 379 3	UNIDADE DE COMANDO DE O
ACOPLAMENTO ROSCADO G1/	7409720	61	1	347	10 06 379 3	UNIDADE DE COMANDO DE O
ACOPLAMENTO ROSCADO G1/	7409720	93	2	408	10 35 863 8	INSTALAÇÃO BLOCO DE VÁL
ACOPLAMENTO ROSCADO M1	7407071	23	2	142	10 04 853 9	INSTALACAO BOMBA E EMBR
ACUMULADOR DE PRESSÃO	5617780	2	1	346	10 06 379 3	UNIDADE DE COMANDO DE O

Designação	Artigo	Item	Quanti	Página	Módulo	Designação
ADAPTADOR	10451130	12	5	737	11 10 258 8	LÂMINA RETRO
ADAPTADOR	11006206	40	1	793	10 49 866 6	FILTRO DE AR - INSTALAÇÃO
ADESIVO	11826200	30	1	795	11 36 376 6	KIT DE ADESIVOS
ADESIVO	11826202	40	1	795	11 36 376 6	KIT DE ADESIVOS
ADESIVO	11826204	50	1	795	11 36 376 6	KIT DE ADESIVOS
ADESIVO	11826206	20	1	795	11 36 376 6	KIT DE ADESIVOS
ADESIVO	11826208	10	1	795	11 36 376 6	KIT DE ADESIVOS
ADESIVO	11826231	70	1	795	11 36 376 6	KIT DE ADESIVOS
ADESIVO	11826232	80	1	795	11 36 376 6	KIT DE ADESIVOS
ADESIVO	11826235	60	1	795	11 36 376 6	KIT DE ADESIVOS
ADESIVO	9928891	61	1	520	99 47 695	INSTALAÇÃO ELÉTRICA E50
ADESIVO DE INTENSIDADE S	9874359	60	1	548	10 49 803 0	ADESIVO DE SINALIZAÇÃO
ADESIVO DE SINALIZAÇÃO	10498030	9900	1	125	10 35 861 4	CARRO SUPERIOR
ADITIVO PARA DIESEL	11485237	30	1	59	96 47 619	ADITIVO PARA DIESEL
ADITIVO PARA DIESEL	11485238	20	1	59	96 47 619	ADITIVO PARA DIESEL
ADITIVO PARA DIESEL	9647619	120	1	15	90 66 460	
ADITIVO PARA DIESEL 0,25L	11690885	10	1	59	96 47 619	ADITIVO PARA DIESEL
AGREAGADO CIRCUITOS MU	10134618	10	1	141	10 04 853 9	INSTALACAO BOMBA E EMBR
ALARME DE TRANSLACAO	10358601	2	1	749	10 35 860 2	ALARME DE TRANSLACAO
ALARME DE TRANSLACAO	10358602	46	1	7	.	
ALAVANCA	7027794	23	1	285	11 10 016 6	PARTE SUPERIOR DE ASSENT
ALAVANCA	7028348	14	1	390	56 17 688	VÁLVULA DE FECHAMENTO
ALAVANCA	7028919	320	1	504	10 29 026 4	PEÇAS DE MONTAGEM
ALAVANCA	7370689	44	2	272	10 49 880 5	POSTO DE COMANDO - PEÇA
ALAVANCA	7372353	16	1	297	73 73 807	ALAVANCA DE SEGURANCA
ALAVANCA DE MUDANCAS	10024214	2	1	522	10 01 211 9	INTERRUPTOR PRINCIPAL BA
ALAVANCA DE REGULAGEM	9276985	12	1	116	98 82 760	REGULADOR NG 100
ALAVANCA DE REGULAGEM	9276985	12	1	810	11 38 131 3	REGULADOR NG 100
ALAVANCA DE REVERSÃO DI	10062497	10	1	725	11 10 280 7	BRAÇO DA CAÇAMBA 2.10M
ALAVANCA DE SEGURANCA	7373807	14	1	294	10 16 576 6	CONSOLE DE COMANDO
ALAVANCA MANUAL	7028347	13	1	390	56 17 688	VÁLVULA DE FECHAMENTO
ALAVANCA REVERSORA ESQ	10062471	11	1	725	11 10 280 7	BRAÇO DA CAÇAMBA 2.10M
ALERTA DE MARCHA À RÉ	10288438	2	1	751	10 35 860 1	ALARME DE TRANSLACAO
ALICATE UNIVERSAL	11162134	120	1	540	10 84 856 2	KIT DE FERRAMENTAS
ALIMETAÇÃO DE TENSÃO KS	9956949	70	1	284	94 02 247 7	ASSENTO DO OPERADOR
ALTERNADOR	6290070	1	1	667	10 11 646 3	ALTERNADOR PRE-MONTADO
ALTERNADOR PRE-MONTADO	10116463	440	1	554	10 11 714 5	MOTOR DIESEL D936 L A6 190
ALTO-FALANTE	634308016	5	2	788	11 10 265 3	INSTALAÇÃO P/ RÁDIO
AMARRA PARA CABOS	7028864	740	8	491	10 29 033 7	INSTALACAO ELETRICA
AMARRA PARA CABOS	7028864	740	8	494	10 48 808 7	INSTALACAO ELETRICA
AMARRA PARA CABOS 12,5X	7002480	20	1	298	10 05 879 2	SENSOR DE PRE-COMANDO E
AMARRA PARA CABOS 12,5X	7002480	20	1	313	10 05 879 4	SENSOR DE PRE-COMANDO
AMARRA PARA CABOS 2,5X10	7009088	31	1	298	10 05 879 2	SENSOR DE PRE-COMANDO E
AMARRA PARA CABOS 2,5X10	7009088	31	1	313	10 05 879 4	SENSOR DE PRE-COMANDO
AMARRA PARA CABOS 2,5X10	7009088	156	3	786	10 82 562 1	JC LEVANTAMENTO DADOS-T
AMARRA PARA CABOS 4,8X20	7001877	145	10	274	10 49 880 5	POSTO DE COMANDO - PEÇA
AMARRA PARA CABOS 4,8X20	7001877	96	10	279	11 38 340 1	APOIO DE BRAÇO LADO DIRE
AMARRA PARA CABOS 4,8X20	7001877	96	10	302	11 45 228 6	APOIO DE BRAÇO LADO DIRE
AMARRA PARA CABOS 4,8X20	7001877	96	10	306	12 50 731 7	APOIO DE BRAÇO LADO DIRE
AMARRA PARA CABOS 4,8X20	7001877	33	2	328	10 40 689 8	AR CONDICIONADO
AMARRA PARA CABOS 7,8X36	7005587	95	6	137	10 49 819 9	FILTRO DE AR - INSTALAÇÃO
AMARRA PARA CABOS 7,8X36	7005587	326	5	197	10 04 853 6	ARREFECIMENTO DO MOTOR
AMORTECEDOR	10289994	55	1	289	10 28 999 3	SISTEMA AMORTECIMENTO
AMORTECEDOR	10493469	11	1	287	11 10 016 7	SUSPENSAO
AMORTECEDOR DE BORRACH	10040032	3	8	684	10 11 599 3	DISPOSITIVO COMANDO - M
AMORTECEDOR DE BORRACH	7014560	31	28	275	11 38 339 7	APOIO DE BRAÇO LADO ESQ
AMORTECEDOR DE BORRACH	7014560	82	4	279	11 38 340 1	APOIO DE BRAÇO LADO DIRE
AMORTECEDOR DE BORRACH	7014560	31	28	291	10 38 502 8	APOIO DE BRAÇO LADO ESQ
AMORTECEDOR DE BORRACH	7014560	82	4	302	11 45 228 6	APOIO DE BRAÇO LADO DIRE
AMORTECEDOR DE BORRACH	7014560	82	4	306	12 50 731 7	APOIO DE BRAÇO LADO DIRE

Designação	Artigo	Item	Quanti	Página	Módulo	Designação
AMORTECEDOR DE BORRACH	7366558	30	6	134	10 04 853 1	SUSPENSAO DO MOTOR
AMORTECEDOR DE TORÇÃO	10003465	5	1	141	10 04 853 9	INSTALACAO BOMBA E EMBR
AMORTECEDOR DE VISCOSE	9080380	8	1	584	10 11 617 5	VIRABREQUIM PEÇAS DE AC
ANEL	10119136	8	1	655	10 13 281 7	BOMBA DE ÁGUA PRÉ-MONT
ANEL	10216823	4	1	170	10 28 264 7	BOMBA DE ENGRENAGENS
ANEL	10358254	2	1	728	10 35 857 7	ANEL
ANEL	10358577	15	4	725	11 10 280 7	BRAÇO DA CAÇAMBA 2.10M
ANEL	10470774	3	1	355	10 04 462 4	FILTRO DE PRESSÃO
ANEL 122X112,1X2,5	10472346	4	1	589	90 80 686	PISTÃO PRÉ-MONT.
ANEL 21X30X4	7002887	33	1	432	73 69 779	MOLA DE PRESSÃO
ANEL 5,67	7028119	5	2	172	10 29 197 5	PISTÃO DE AJUSTAMENTO
ANEL 5,72	7028120	5	2	172	10 29 197 5	PISTÃO DE AJUSTAMENTO
ANEL 5,77	7028113	5	2	172	10 29 197 5	PISTÃO DE AJUSTAMENTO
ANEL 5,82	7028114	5	2	172	10 29 197 5	PISTÃO DE AJUSTAMENTO
ANEL 5,87	7028115	5	2	172	10 29 197 5	PISTÃO DE AJUSTAMENTO
ANEL 5,92	7028116	5	2	172	10 29 197 5	PISTÃO DE AJUSTAMENTO
ANEL 5,97	7028117	5	2	172	10 29 197 5	PISTÃO DE AJUSTAMENTO
ANEL 6,02	7028118	5	2	172	10 29 197 5	PISTÃO DE AJUSTAMENTO
ANEL DE ACOPLAMENTO	9073639	20	1	185	98 84 140	BOMBA CIRCUITO ARREFECI
ANEL DE ALOJAMENTO	7028121	6	2	172	10 29 197 5	PISTÃO DE AJUSTAMENTO
ANEL DE APOIO	7017839	5	1	442	70 17 835	KIT DE VEDACAO DA VALVUL
ANEL DE APOIO	7017840	6	1	442	70 17 835	KIT DE VEDACAO DA VALVUL
ANEL DE APOIO	9275735	3	2	656	10 11 983 0	CARCAÇA DO TERMOSTATO
ANEL DE APOIO	9275735	3	2	657	90 75 678	CARCAÇA DO TERMOSTATO 7
ANEL DE APOIO /21,11X2,18	7020575	42	1	441	70 15 341	KIT VEDAÇÃO VÁL.COMPEN.P/
ANEL DE APOIO /25,86X2,18	7020574	40	1	441	70 15 341	KIT VEDAÇÃO VÁL.COMPEN.P/
ANEL DE APOIO 1/107,9X2,00	7369169	8	1	95	11 00 410 3	PACOTE DE MOLAS COMPLET
ANEL DE APOIO 10,7/13,6X1	7023928	17	1	378	10 45 471 6	KIT DE VEDAÇÃO
ANEL DE APOIO 10,7/13,6X1	7023928	8	1	379	50 09 391	KIT VEDAÇÃO VÁLVULA DIREC
ANEL DE APOIO 10,7/13,6X1	7023928	6	1	380	50 09 562	KIT VEDAÇÃO VÁLVULA DIREC
ANEL DE APOIO 10/13X1	7006889	324	1	382	70 30 267	KIT DE VEDAÇÃO
ANEL DE APOIO 100/109,3X1,7	10356231	5	2	106	10 35 654 7	KIT DE VEDAÇÃO
ANEL DE APOIO 150/160X1,7	10028125	8	1	772	94 02 794 9	MANCAL DA HASTE DO PISTÃ
ANEL DE APOIO 150/160X1,7	10028125	8	1	773	95 91 741	MANCAL DA HASTE DO PISTÃ
ANEL DE APOIO 160,7/170X1,7	10097243	8	1	771	94 00 688 8	MANCAL DA HASTE DO PISTÃ
ANEL DE APOIO 17,83/22,18X1,	7013139	5	1	440	70 13 133	KIT DE VEDACAO DO FREIO
ANEL DE APOIO 37,5/42X1,4	7381758	29	1	116	98 82 760	REGULADOR NG 100
ANEL DE APOIO 37,5/42X1,4	7381758	29	1	810	11 38 131 3	REGULADOR NG 100
ANEL DE APOIO 58,5/63,5X1,4	7410773	15	1	348	56 09 948	KIT DE FILTRO DE OLEO
ANEL DE APOIO 78/83X1,5	7003533	7	2	770	96 44 625	PISTÃO
ANEL DE APOIO 8,7/11,75X1	7380684	16	1	184	98 82 875	KIT DE VED DA VÁLVULA RE
ANEL DE APOIO 88/93X1,5	7006870	7	2	769	94 04 038 9	PISTÃO
ANEL DE APOIO 9,4/12,3X1	7023927	16	1	378	10 45 471 6	KIT DE VEDAÇÃO
ANEL DE APOIO 9,4/12,3X1	7023927	7	1	379	50 09 391	KIT VEDAÇÃO VÁLVULA DIREC
ANEL DE APOIO 9,4/12,3X1	7023927	5	1	380	50 09 562	KIT VEDAÇÃO VÁLVULA DIREC
ANEL DE APOIO 9,4/14X1,1	7381154	4	1	767	92 65 299	JG V VÁLVULA RET. DE ESTRA
ANEL DE APOIO 9,4/2,7X1,1	7380180	21	1	766	92 65 991	VÁLVULA REGULADORA DE FL
ANEL DE APOIO 9,8/12,7X1	7023926	6	1	379	50 09 391	KIT VEDAÇÃO VÁLVULA DIREC
ANEL DE ASSENTO DA VÁLV	9073725	6	2	602	10 12 038 4	CABEÇOTE CILÍNDRICO
ANEL DE ASSENTO VÁLVULA	9073726	7	2	602	10 12 038 4	CABEÇOTE CILÍNDRICO
ANEL DE CONEXAO	9443025	75	1	110	96 87 443 01	MECANISMO DE TRANSLAÇÃ
ANEL DE CORTE	10013545	261	1	260	90 64 786	ELEMENTO DE CONEXÃO
ANEL DE CORTE	10013545	161	10	263	10 01 461 1	CAIXA AUXILIAR
ANEL DE ENCOSTO	10008088	14	1	208	56 19 045	MOTOR DE PISTÃO AXIAL
ANEL DE ENCOSTO	10008088	14	1	400	10 00 807 7	BOMBA
ANEL DE ENCOSTO	9073188	6	2	610	90 80 713	EIXO DE EXCÊNTRICOS COM
ANEL DE ENCOSTO 11,7/15X1,	7381809	19	1	116	98 82 760	REGULADOR NG 100
ANEL DE ENCOSTO 11,7/15X1,	7381809	19	1	810	11 38 131 3	REGULADOR NG 100
ANEL DE ENCOSTO 11,7/15X1,	7381809	30	1	833	11 38 195 4	KIT DE VEDAÇÃO NG 100
ANEL DE ENCOSTO 14,5/19X1,	7380905	28	2	836	92 66 089	KIT DE VEDACAO DA VALVULA

Designação	Artigo	Item	Quanti	Página	Módulo	Designação
ANEL DE ENCOSTO 15,7/20X1	7380884	23	1	119	92 66 232	KIT DE VED VÁLVULA DE SUB
ANEL DE ENCOSTO 16,7/21X1	7380883	21	1	119	92 66 232	KIT DE VED VÁLVULA DE SUB
ANEL DE ENCOSTO 37,5/42X1,	11007756	29	1	833	11 38 195 4	KIT DE VEDAÇÃO NG 100
ANEL DE ENCOSTO 9,4/14X1,1	11007750	4	1	768	92 70 390	JG V VÁLVULA RET. DE ESTR
ANEL DE ENCOSTO M 40X1,5	9077612	3	1	693	90 77 386	TOMADA PRÉ MONTADA
ANEL DE FECHAMENTO	944121703	10	1	228	93 28 018 01	FREIO
ANEL DE FECHAMENTO NG 09	12802730	17	1	235	92 73 163	KIT DE VEDAÇÃO NG 090
ANEL DE FECHAMENTO NG 09	12802730	17	1	814	12 88 015 2	NG 090-107
ANEL DE FECHAMENTO NG 09	12802730	17	1	828	92 68 015	KIT DE REPARO NG 090
ANEL DE FECHAMENTO NG 12	12802738	17	1	813	12 87 963 9	NG 125-150
ANEL DE FECHAMENTO NG 12	12802738	17	1	829	92 68 016	KIT DE REPARO NG 125
ANEL DE PISTÃO	944142303	5	1	228	93 28 018 01	FREIO
ANEL DE PISTÃO	9443023	60	1	110	96 87 443 01	MECANISMO DE TRANSLAÇÃ
ANEL DE PISTÃO	9443023	60	1	118	94 43 029 03	KIT DE REPARO DO FREIO
ANEL DE PRESSÃO	90014540	61	2	221	90 01 453 8	KIT DE MODIFICAÇÃO
ANEL DE PRESSÃO	9443019	50	2	110	96 87 443 01	MECANISMO DE TRANSLAÇÃ
ANEL DE PRESSÃO	9443019	50	2	118	94 43 029 03	KIT DE REPARO DO FREIO
ANEL DE PRESSÃO 10X297,5/	932855901	61	2	227	90 02 790 4	REDUTOR DE GIRO SAT 325/
ANEL DE PROTEÇÃO	10120443	3	1	583	90 75 133	VEDAÇÃO DO VIRABREQUIM
ANEL DE RETENÇÃO	10330726	13	1	377	10 45 471 5	VÁLVULA REDUTORA DE PR
ANEL DE RETENÇÃO	7019794	350	2	485	70 28 769	PORTA DA CABINE DO OPERA
ANEL DE RETENÇÃO	7368534	5	1	151	10 29 154 4	BOMBA DE ENGRENAGENS
ANEL DE RETENÇÃO A 18,7	7002888	34	1	432	73 69 779	MOLA DE PRESSÃO
ANEL DE RETENÇÃO SB 23	7381534	24	1	817	90 74 112	PLACA DE LIGAÇÃO NG 090
ANEL DE RETENÇÃO SB 90	429610801	40	1	831	98 89 978	KIT DE REPARO DO EIXO NG
ANEL DE RETENÇÃO SW280	7610188	76	1	110	96 87 443 01	MECANISMO DE TRANSLAÇÃ
ANEL DE SEÇÃO RETANGUL	7030284	5	1	382	70 30 267	KIT DE VEDAÇÃO
ANEL DE SEÇÃO RETANGULA	10490785	5	2	356	10 35 862 9	ARREFECIMENTO DE OLEO
ANEL DE SEÇÃO RETANGULA	10490784	22	3	350	10 35 862 7	INSTALAÇÃO HIDRÁULICA
ANEL DE SEÇÃO RETANGULA	10490784	9	4	351	10 35 862 8	INSTALACAO HIDRAULICA
ANEL DE SEÇÃO RETANGULA	10490784	32	1	358	10 35 862 4	INSTALACAO HIDRAULICA
ANEL DE SEÇÃO RETANGULA	10490784	73	2	359	10 35 862 4	INSTALACAO HIDRAULICA
ANEL DE SEÇÃO RETANGULA	10490784	104	2	408	10 35 863 8	INSTALAÇÃO BLOCO DE VÁL
ANEL DE SEÇÃO RETANGULA	10490784	16	2	420	10 35 863 7	TUBULACOES PRESSAO INS
ANEL DE SEÇÃO RETANGULA	10490784	77	1	777	11 45 729 6	CILINDRO DE ELEVACAO DIRE
ANEL DE SEÇÃO RETANGULA	10490784	77	1	780	11 45 729 7	CILINDRO DE ELEVACAO ESQ
ANEL DE SEÇÃO RETANGULA	10490781	7	8	121	10 40 412 9	INST.HIDR.CARRO INFERIOR
ANEL DE SEÇÃO RETANGULA	10490781	5	2	344	10 35 862 3	INSTALACAO HDRAULICA
ANEL DE SEÇÃO RETANGULA	10490781	27	3	350	10 35 862 7	INSTALAÇÃO HIDRÁULICA
ANEL DE SEÇÃO RETANGULA	10490781	5	4	351	10 35 862 8	INSTALACAO HIDRAULICA
ANEL DE SEÇÃO RETANGULA	10490781	23	4	351	10 35 862 8	INSTALACAO HIDRAULICA
ANEL DE SEÇÃO RETANGULA	10490781	53	1	354	10 06 379 8	MANGUEIRAS HIDRAULICAS
ANEL DE SEÇÃO RETANGULA	10490781	72	2	407	10 35 863 8	INSTALAÇÃO BLOCO DE VÁL
ANEL DE SEÇÃO RETANGULA	10490781	78	2	407	10 35 863 8	INSTALAÇÃO BLOCO DE VÁL
ANEL DE SEÇÃO RETANGULA	10490781	381	1	413	10 35 863 8	INSTALAÇÃO BLOCO DE VÁL
ANEL DE SEÇÃO RETANGULA	10490781	11	3	420	10 35 863 7	TUBULACOES PRESSAO INS
ANEL DE SEÇÃO RETANGULA	10490781	81	3	713	11 10 294 5	LANÇA MONOBLOCO 6.45M
ANEL DE SEÇÃO RETANGULA	10490781	22	1	725	11 10 280 7	BRAÇO DA CAÇAMBA 2.10M
ANEL DE SEÇÃO RETANGULA	10490781	12	8	752	11 10 291 2	MONTAGEM CILINDRO DE ELE
ANEL DE SEÇÃO RETANGULA	10490781	11	2	758	10 35 857 3	CILINDRO HIDR. COM ACESS
ANEL DE SEÇÃO RETANGULA	10490781	72	8	777	11 45 729 6	CILINDRO DE ELEVACAO DIRE
ANEL DE SEÇÃO RETANGULA	10490781	72	8	780	11 45 729 7	CILINDRO DE ELEVACAO ESQ
ANEL DE SEÇÃO RETANGULA	10472425	9	4	344	10 35 862 3	INSTALACAO HDRAULICA
ANEL DE SEÇÃO RETANGULA	10472425	52	2	345	10 35 862 3	INSTALACAO HDRAULICA
ANEL DE SEÇÃO RETANGULA	10472425	42	1	357	10 35 862 9	ARREFECIMENTO DE OLEO
ANEL DE SEÇÃO RETANGULA	10472425	12	1	358	10 35 862 4	INSTALACAO HIDRAULICA
ANEL DE SEÇÃO RETANGULA	10472425	26	4	420	10 35 863 7	TUBULACOES PRESSAO INS
ANEL DE SEÇÃO RETANGULA	10472425	80	9	712	11 10 294 5	LANÇA MONOBLOCO 6.45M
ANEL DE SEÇÃO RETANGULA	10472425	19	1	725	11 10 280 7	BRAÇO DA CAÇAMBA 2.10M
ANEL DE SEÇÃO RETANGULA	10472425	12	3	759	10 85 361 0	CILINDRO HIDR. COM ACESS

Designação	Artigo	Item	Quanti	Página	Módulo	Designação
ANEL DE SEÇÃO RETANGULA	10490787	8	1	353	10 06 379 8	MANGUEIRAS HIDRAULICAS
ANEL DE SEÇÃO RETANGULA	10490787	38	2	357	10 35 862 9	ARREFECIMENTO DE OLEO
ANEL DE SEÇÃO RETANGULA	10490787	50	1	385	10 04 851 7	TANQUE HIDRAULICO INSTA
ANEL DE SEÇÃO RETANGULA	10490787	50	1	387	10 35 863 4	TANQUE HIDRAULICO INSTA
ANEL DE SEÇÃO RETANGULA	10490786	12	1	353	10 06 379 8	MANGUEIRAS HIDRAULICAS
ANEL DE SEÇÃO RETANGULA	10001114	24	1	400	10 00 807 7	BOMBA
ANEL DE VEDACAO - CASSET	7381986	9	1	655	10 13 281 7	BOMBA DE ÁGUA PRÉ-MONT
ANEL DE VEDAÇÃO	10014697	12	2	249	10 22 844 3	BOMBA DE LUBRIFICACAO
ANEL DE VEDAÇÃO 103/114x5	10356238	11	1	106	10 35 654 7	KIT DE VEDAÇÃO
ANEL DE VEDAÇÃO 110X130,	7017148	9	1	772	94 02 794 9	MANCAL DA HASTE DO PISTÃ
ANEL DE VEDAÇÃO 110X130,	7017148	9	1	773	95 91 741	MANCAL DA HASTE DO PISTÃ
ANEL DE VEDAÇÃO 115,0X130,	7023397	9	1	771	94 00 688 8	MANCAL DA HASTE DO PISTÃ
ANEL DE VEDAÇÃO 115X135,	7023395	10	1	771	94 00 688 8	MANCAL DA HASTE DO PISTÃ
ANEL DE VEDAÇÃO 12	7013114	47	1	184	98 82 875	KIT DE VED DA VÁLVULA RE
ANEL DE VEDAÇÃO 12	7013114	47	1	820	90 78 788	KIT REPARO DA TAMPA REG
ANEL DE VEDAÇÃO 12,7X18X1,	10011865	27	4	634	10 11 628 5	TUBULAÇÃO DE COMBUSTÍVE
ANEL DE VEDAÇÃO 12,7X18X1,	10011865	77	4	706	10 11 583 8	JOGO DE VEDAÇÃO MOTOR D
ANEL DE VEDAÇÃO 14	5602583	23	4	121	10 40 412 9	INST.HIDR.CARRO INFERIOR
ANEL DE VEDAÇÃO 14	5602583	10	1	523	10 28 039 0	TRANSDUTOR DE PRESSÃO 4
ANEL DE VEDAÇÃO 14	5602583	1	1	764	73 63 125	PARAFUSO DE FECHAMENTO
ANEL DE VEDAÇÃO 14,7X22X1,	10011866	9	12	606	10 11 585 1	KIT DE VED DO CABEÇOTE CIL
ANEL DE VEDAÇÃO 14,7X22X1,	10011866	9	12	608	10 11 585 3	KIT DE VEDAÇÃO CABEÇOTE
ANEL DE VEDAÇÃO 14,7X22X1,	10011866	25	11	634	10 11 628 5	TUBULAÇÃO DE COMBUSTÍVE
ANEL DE VEDAÇÃO 14,7X22X1,	10011866	39	3	634	10 11 628 5	TUBULAÇÃO DE COMBUSTÍVE
ANEL DE VEDAÇÃO 14,7X22X1,	10011866	11	2	637	10 11 559 5	RETORNO DE OLEO VAZADO
ANEL DE VEDAÇÃO 14,7X22X1,	10011866	2	12	639	90 79 083	TUBULACAO ANEXO
ANEL DE VEDAÇÃO 14,7X22X1,	10011866	3	2	658	10 11 550 3	PURGAMENTO DA ÁGUA REF
ANEL DE VEDAÇÃO 14,7X22X1,	10011866	9	2	699	10 11 801 4	KIT DE VEDACAO
ANEL DE VEDAÇÃO 14,7X22X1,	10011866	75	1	706	10 11 583 8	JOGO DE VEDAÇÃO MOTOR D
ANEL DE VEDAÇÃO 14,7X22X1,	10011866	78	26	706	10 11 583 8	JOGO DE VEDAÇÃO MOTOR D
ANEL DE VEDAÇÃO 16,7X24X1,	10011867	3	1	631	10 12 580 1	FILTRO DE COMBUSTÍVEL
ANEL DE VEDAÇÃO 16,7X24X1,	10011867	23	12	634	10 11 628 5	TUBULAÇÃO DE COMBUSTÍVE
ANEL DE VEDAÇÃO 16,7X24X1,	10011867	30	14	634	10 11 628 5	TUBULAÇÃO DE COMBUSTÍVE
ANEL DE VEDAÇÃO 16,7X24X1,	10011867	79	5	706	10 11 583 8	JOGO DE VEDAÇÃO MOTOR D
ANEL DE VEDAÇÃO 16,7X24X1,	10011867	80	7	706	10 11 583 8	JOGO DE VEDAÇÃO MOTOR D
ANEL DE VEDAÇÃO 17	7371654	3	1	349	93 99 179	CONEXAO P/ ACUMULADOR
ANEL DE VEDAÇÃO 17	7371654	10	1	419	10 07 619 5	CONEXÃO
ANEL DE VEDAÇÃO 21	7371651	4	1	349	93 99 179	CONEXAO P/ ACUMULADOR
ANEL DE VEDAÇÃO 26,7X34,9	10011870	9	1	566	10 11 916 7	CARCAÇA MANIVELA PURGAM
ANEL DE VEDAÇÃO 26,7X34,9	10011870	9	1	569	10 11 832 9	KIT DE REPARO DA TUBULAÇ
ANEL DE VEDAÇÃO 26,7X34,9	10011870	27	1	665	90 80 736	KIT DO TURBO COMPRESSOR
ANEL DE VEDAÇÃO 26,7X34,9	10011870	76	5	706	10 11 583 8	JOGO DE VEDAÇÃO MOTOR D
ANEL DE VEDAÇÃO 30,7X39X2	10113731	11	2	567	90 79 021	CARCAÇA MANIVELA PURGAM
ANEL DE VEDAÇÃO 30,7X39X2	10113731	3	2	662	90 79 889	CONEXÃO DE AQUECIMENTO
ANEL DE VEDAÇÃO 30,7X39X2	10113731	42	2	701	10 11 801 4	KIT DE VEDACAO
ANEL DE VEDAÇÃO 30,7X39X2	10113731	42	2	704	10 11 583 8	JOGO DE VEDAÇÃO MOTOR D
ANEL DE VEDAÇÃO 45X34X4,2	10285620	25	2	181	90 74 893	KIT DE REPARO DA CARCAÇA
ANEL DE VEDAÇÃO 45X34X4,2	10285620	27	2	182	92 74 731	KIT DE VED DA CARCAC DO C
ANEL DE VEDAÇÃO 8,7X13X1	10044740	15	6	170	10 28 264 7	BOMBA DE ENGRENAGENS
ANEL DE VEDAÇÃO DE DESLI	7380136	40	1	323	90 79 258	MANETE DE COMANDO VG7 2-
ANEL DE VEDAÇÃO DE DESLI	7380136	40	1	325	90 79 259	MANETE DE COMANDO VG7 2-
ANEL DE VEDAÇÃO DE DESLIZ	7381413	24	2	116	98 82 760	REGULADOR NG 100
ANEL DE VEDAÇÃO DE DESLIZ	7381413	24	2	810	11 38 131 3	REGULADOR NG 100
ANEL DE VEDAÇÃO DE DESLIZ	7381413	24	2	833	11 38 195 4	KIT DE VEDAÇÃO NG 100
ANEL DE VEDAÇÃO DE DESLIZ	7381414	25	1	116	98 82 760	REGULADOR NG 100
ANEL DE VEDAÇÃO DE DESLIZ	7381414	25	1	810	11 38 131 3	REGULADOR NG 100
ANEL DE VEDAÇÃO DE DESLIZ	7381414	26	1	833	11 38 195 4	KIT DE VEDAÇÃO NG 100
ANEL DE VEDAÇÃO DESLIZA	10028993	5	2	94	10 00 454 6	RODA GUIA B6
ANEL DE VEDAÇÃO DESLIZA	12215144	5	2	89	11 60 010 7	ROLAMENTO DE ESFERA D7
ANEL DE VEDAÇÃO DESLIZA	12220997	5	2	79	12 22 100 1	RODA GUIA

Designação	Artigo	Item	Quanti	Página	Módulo	Designação
ANEL DE VEDAÇÃO DESLIZAN	710925401	70	1	110	96 87 443 01	MECANISMO DE TRANSLAÇÃ
ANEL DE VEDAÇÃO DO EIXO R	10006551	2	1	583	90 75 133	VEDAÇÃO DO VIRABREQUIM
ANEL DE VEDAÇÃO DO EIXO R	10006550	1	1	583	90 75 133	VEDAÇÃO DO VIRABREQUIM
ANEL DE VEDAÇÃO DO EIXO R	10033074	7	1	655	10 13 281 7	BOMBA DE ÁGUA PRÉ-MONT
ANEL DE VEDAÇÃO DO EIXO R	10014507	35	1	814	12 88 015 2	NG 090-107
ANEL DE VEDAÇÃO DO EIXO R	10014507	35	1	828	92 68 015	KIT DE REPARO NG 090
ANEL DE VEDAÇÃO DO EIXO	10172723	4	1	226	90 02 790 4	REDUTOR DE GIRO SAT 325/
ANEL DE VEDAÇÃO DO EIXO	710030801	11	2	226	90 02 790 4	REDUTOR DE GIRO SAT 325/
ANEL DE VEDAÇÃO DO EIXO	710030801	11	2	241	94 44 522 03	KIT DE VEDAÇÃO
ANEL DE VEDAÇÃO DO EIXO	10014510	35	1	813	12 87 963 9	NG 125-150
ANEL DE VEDAÇÃO DO EIXO	10014510	35	1	829	92 68 016	KIT DE REPARO NG 125
ANEL DE VEDAÇÃO DO EIXO R	7381131	60	1	216	90 80 194	KIT DE VEDAÇÃO
ANEL DE VEDAÇÃO DO EIXO R	7381131	60	1	821	10 11 909 3	KIT DE REP DO EIXO DE ACIO
ANEL DE VEDAÇÃO RADIAL X	7362182	41	2	729	11 10 280 8	BRAÇO DA CAÇAMBA 2,10M
ANEL DE VEDAÇÃO RADIAL X	7362182	15	4	760	11 68 144 7	CILINDRO HIDRÁULICO
ANEL DE VEDAÇÃO RADIAL X	7362182	15	4	761	95 93 026	CILINDRO HIDRÁULICO
ANEL DE VEDAÇÃO RADIAL X	7362182	14	2	762	96 44 648	CILINDRO HIDRÁULICO
ANEL DE VEDAÇÃO RADIAL X	7362183	5	4	740	10 35 875 0	PEÇA DE LIGAÇÃO
ANEL DE VEDAÇÃO RADIAL X	7362183	15	2	762	96 44 648	CILINDRO HIDRÁULICO
ANEL DE VEDAÇÃO RADIAL X1	7017199	11	2	718	11 10 294 4	LANÇA MONOBLOCO 6.45M
ANEL DE VEDAÇÃO RADIAL X	7362180	42	2	729	11 10 280 8	BRAÇO DA CAÇAMBA 2,10M
ANEL DE VEDAÇÃO RANHUR	7366049	7	1	95	11 00 410 3	PACOTE DE MOLAS COMPLET
ANEL DE VEDAÇÃO USIT	5209400	3	1	96	10 49 887 4	NIPLE DE LUBRIFICAÇÃO
ANEL DE VEDAÇÃO USIT	5209400	17	1	756	11 10 281 8	KIT MÁQUINA BASE
ANEL DE VEDAÇÃO USIT 24,7	7013519	5	1	382	70 30 267	KIT DE VEDAÇÃO
ANEL DESLIZANTE 100X109	10356234	8	1	106	10 35 654 7	KIT DE VEDAÇÃO
ANEL DESLIZANTE 100X130	10356229	4	1	106	10 35 654 7	KIT DE VEDAÇÃO
ANEL DSF 122X113,36X4	10472347	5	1	589	90 80 686	PISTÃO PRÉ-MONT.
ANEL EM V	10008428	10	1	157	10 00 809 5	MECANISMO DE ACIONAMENT
ANEL EM V	10008428	10	1	206	10 00 840 5	MECANISMO DE ACIONAMENT
ANEL EM V	7413414	10	1	171	10 28 772 5	MECANISMO DE ACIONAMENT
ANEL ESPAÇADOR 42X51X1,3	9072437	10	1	826	90 72 436	KIT DE ANEIS DISTANCIADO
ANEL ESPAÇADOR 42X51X1,4	9072438	10	1	826	90 72 436	KIT DE ANEIS DISTANCIADO
ANEL ESPAÇADOR 42X51X1,5	9072439	10	1	826	90 72 436	KIT DE ANEIS DISTANCIADO
ANEL ESPAÇADOR 42X51X1,6	9072440	10	1	826	90 72 436	KIT DE ANEIS DISTANCIADO
ANEL ESPAÇADOR 42X51X1,7	9074307	10	1	826	90 72 436	KIT DE ANEIS DISTANCIADO
ANEL ESPAÇADOR 42X51X1,8	9074308	10	1	826	90 72 436	KIT DE ANEIS DISTANCIADO
ANEL ESPAÇADOR 42X51X1,9	9074332	10	1	826	90 72 436	KIT DE ANEIS DISTANCIADO
ANEL ESPIRAL 27,3/32X1	7360446	8	1	382	70 30 267	KIT DE VEDAÇÃO
ANEL GUIA	10216733	30	2	161	10 29 197 8	REGULAGEM HIDRAULICA
ANEL GUIA	9266680	18	2	181	90 74 893	KIT DE REPARO DA CARCAÇA
ANEL GUIA	9881114	33	2	181	90 74 893	KIT DE REPARO DA CARCAÇA
ANEL GUIA 110X115X15,00	7005249	13	3	772	94 02 794 9	MANCAL DA HASTE DO PISTÃ
ANEL GUIA 110X115X15,00	7005249	13	3	773	95 91 741	MANCAL DA HASTE DO PISTÃ
ANEL GUIA 115X120X15,00	7023396	13	3	771	94 00 688 8	MANCAL DA HASTE DO PISTÃ
ANEL GUIA DO PISTÃO 160X15	9177716	2	2	770	96 44 625	PISTÃO
ANEL GUIA DO PISTÃO 160X15	7003430	6	3	770	96 44 625	PISTÃO
ANEL GUIA DO PISTÃO 170X16	9177717	2	2	769	94 04 038 9	PISTÃO
ANEL GUIA DO PISTÃO 170X16	7003429	6	3	769	94 04 038 9	PISTÃO
ANEL INTERMEDIÁRIO	10014730	9	1	249	10 22 844 3	BOMBA DE LUBRIFICACAO
ANEL L JL 50	429612001	42	1	110	96 87 443 01	MECANISMO DE TRANSLAÇÃ
ANEL PARA PISTÃO 122X113,	10472345	3	1	589	90 80 686	PISTÃO PRÉ-MONT.
ANEL RANHURADO 120X110,	761050503	56	1	110	96 87 443 01	MECANISMO DE TRANSLAÇÃ
ANEL RANHURADO 120X110,	761050503	56	1	118	94 43 029 03	KIT DE REPARO DO FREIO
ANEL RANHURADO 120X110,	761050503	56	1	120	94 43 027	KIT DE VEDAÇÃO
ANEL RANHURADO 184,6X17	761050603	57	1	110	96 87 443 01	MECANISMO DE TRANSLAÇÃ
ANEL RANHURADO 184,6X17	761050603	57	1	118	94 43 029 03	KIT DE REPARO DO FREIO
ANEL RANHURADO 184,6X17	761050603	57	1	120	94 43 027	KIT DE VEDAÇÃO
ANEL RANHURADO 231,4X24	761050303	2	1	228	93 28 018 01	FREIO
ANEL RANHURADO 231,4X24	761050303	66	1	241	94 44 522 03	KIT DE VEDAÇÃO

Designação	Artigo	Item	Quanti	Página	Módulo	Designação
ANEL RANHURADO 280X270,	761050403	8	1	228	93 28 018 01	FREIO
ANEL RANHURADO 280X270,	761050403	72	1	241	94 44 522 03	KIT DE VEDAÇÃO
ANEL RASPADOR 110X122,2X	7026111	6	1	772	94 02 794 9	MANCAL DA HASTE DO PISTÃ
ANEL RASPADOR 110X122,2X	7026111	6	1	773	95 91 741	MANCAL DA HASTE DO PISTÃ
ANEL RASPADOR 115X127,2X	10651474	6	1	771	94 00 688 8	MANCAL DA HASTE DO PISTÃ
ANEL RETENTOR	10008419	20	1	208	56 19 045	MOTOR DE PISTÃO AXIAL
ANEL RETENTOR	10220431	38	1	399	11 49 189 4	MECANISMO DE ACIONAMENT
ANEL RETENTOR	10335855	3	1	151	10 29 154 4	BOMBA DE ENGRENAGENS
ANEL RETENTOR X25X35X6	7413402	20	1	400	10 00 807 7	BOMBA
ANEL TURCON GLYD 160X13	7002062	4	1	770	96 44 625	PISTÃO
ANEL TURCON GLYD 170X14	7000293	4	1	769	94 04 038 9	PISTÃO
ANEL TURCON GLYD 77,7X67X	10220529	31	2	161	10 29 197 8	REGULAGEM HIDRAULICA
ANEL VEDACAO HASTE VALV	10119305	5	4	597	10 11 942 7	CABEÇOTE - PRÉ MONTADO
ANEL VEDACAO HASTE VALV	10119305	2	4	606	10 11 585 1	KIT DE VED DO CABEÇOTE CIL
ANEL VEDACAO HASTE VALV	10119305	2	24	608	10 11 585 3	KIT DE VEDAÇÃO CABEÇOTE
ANEL VEDACAO HASTE VALV	10120334	5	4	591	10 14 155 4	CABEÇOTE - PRÉ MONTADO
ANEL VEDACAO HASTE VALV	10120334	5	4	598	10 12 036 4	CABEÇOTE - PRÉ MONTADO
ANEL VEDACAO HASTE VALV	10120334	2	4	606	10 11 585 1	KIT DE VED DO CABEÇOTE CIL
ANEL VEDACAO HASTE VALV	10120334	2	24	608	10 11 585 3	KIT DE VEDAÇÃO CABEÇOTE
ANEL-O	10001112	22	1	400	10 00 807 7	BOMBA
ANEL-O	10021308	999	1	255	10 29 300 3	BLOCO DE DISTRIBUIÇÃO MX-
ANEL-O	10021308	999	1	719	10 66 480 4	BLOCO DE DISTRIBUIÇÃO MX-
ANEL-O	10021308	999	1	733	10 66 475 5	BLOCO DE DISTRIBUIÇÃO MX-
ANEL-O	10028991	6	2	79	12 22 100 1	RODA GUIA
ANEL-O	10028991	6	2	94	10 00 454 6	RODA GUIA B6
ANEL-O	10040400	46	1	704	10 11 583 8	JOGO DE VEDAÇÃO MOTOR D
ANEL-O	10216826	18	1	170	10 28 264 7	BOMBA DE ENGRENAGENS
ANEL-O	10220638	9	1	398	11 49 189 0	PLACA DE LIGAÇÃO
ANEL-O	11004095	3	1	91	10 65 167 7	ROLETE SUPERIOR D7
ANEL-O	7028346	8	1	390	56 17 688	VÁLVULA DE FECHAMENTO
ANEL-O	7264028	131	1	64	12 48 693 1	KIT DE MANUTENCAO 500h
ANEL-O	7264028	131	1	67	12 48 693 2	KIT DE MANUTENÇÃO 1000h
ANEL-O	7264028	131	1	70	12 48 693 3	KIT DE MANUTENÇÃO 1500-25
ANEL-O	7264028	131	1	71	12 48 693 4	KIT DE MANUTENÇÃO 2000h
ANEL-O	7264028	14	1	346	10 06 379 3	UNIDADE DE COMANDO DE O
ANEL-O	7264028	14	1	348	56 09 948	KIT DE FILTRO DE OLEO
ANEL-O	7369456	1	4	389	73 68 081	VIDRO DE INSPECAO
ANEL-O	7411823	29	1	336	11 00 359 4	CARCAÇA
ANEL-O 10,82X1,78	10454717	18	1	378	10 45 471 6	KIT DE VEDAÇÃO
ANEL-O 10,82X1,78	11827912	28	1	376	10 22 099 7	KIT DE VEDAÇÃO
ANEL-O 10,82X1,78	5610999	28	1	336	11 00 359 4	CARCAÇA
ANEL-O 10,82X1,78	5610999	20	2	528	10 28 664 6	MANGUEIRA
ANEL-O 10,82X1,78	7023930	22	1	371	10 32 372 8	VÁLVULA REDUTORA DE PR
ANEL-O 10,82X1,78	7023930	12	1	379	50 09 391	KIT VEDAÇÃO VÁLVULA DIREC
ANEL-O 10,82X1,78	7023930	8	1	380	50 09 562	KIT VEDAÇÃO VÁLVULA DIREC
ANEL-O 100,00X5,34	10356232	6	2	106	10 35 654 7	KIT DE VEDAÇÃO
ANEL-O 100,97X5,33	7264419	3	1	728	10 35 857 7	ANEL
ANEL-O 100X5	11008055	5	1	643	90 77 279	LUVA DE CONEXÃO MONTAGE
ANEL-O 100X5	11008055	2211	1	707	10 11 583 8	JOGO DE VEDAÇÃO MOTOR D
ANEL-O 102X2,5	11212833	19	1	170	10 28 264 7	BOMBA DE ENGRENAGENS
ANEL-O 10X2	7007505	35	1	382	70 30 267	KIT DE VEDAÇÃO
ANEL-O 11,5X1,5	10289306	10	2	264	10 02 131 0	KIT DE VEDAÇÃO
ANEL-O 110X2,5	10008091	21	1	400	10 00 807 7	BOMBA
ANEL-O 110X2,5	10008418	22	1	208	56 19 045	MOTOR DE PISTÃO AXIAL
ANEL-O 116,84X7	7002054	11	2	772	94 02 794 9	MANCAL DA HASTE DO PISTÃ
ANEL-O 116,84X7	7002054	11	2	773	95 91 741	MANCAL DA HASTE DO PISTÃ
ANEL-O 11X2	10664998	28	2	182	92 74 731	KIT DE VED DA CARCAC DO C
ANEL-O 12,37X2,62	7028158	10	1	168	10 22 063 5	VALVULA INTERRUPTORA
ANEL-O 12,42X1,78	10220641	47	2	398	11 49 189 0	PLACA DE LIGAÇÃO
ANEL-O 12,42X1,78	10454718	19	1	378	10 45 471 6	KIT DE VEDAÇÃO

Designação	Artigo	Item	Quanti	Página	Módulo	Designação
ANEL-O 12,42X1,78	7017836	1	2	442	70 17 835	KIT DE VEDACAO DA VALVUL
ANEL-O 12,42X1,78	7023931	13	1	379	50 09 391	KIT VEDAÇÃO VÁLVULA DIREC
ANEL-O 12,42X1,78	7023931	9	1	380	50 09 562	KIT VEDAÇÃO VÁLVULA DIREC
ANEL-O 12,60X2,80	10040401	1	1	627	90 75 395	BICO INJ. DE TUBO DE PRES
ANEL-O 120,02X5,33	7019832	11	1	771	94 00 688 8	MANCAL DA HASTE DO PISTÃ
ANEL-O 120,02X7	7264113	12	1	771	94 00 688 8	MANCAL DA HASTE DO PISTÃ
ANEL-O 120,50X3,53	12819435	4	1	655	10 13 281 7	BOMBA DE ÁGUA PRÉ-MONT
ANEL-O 120,50X3,53	12819435	12	1	699	10 11 801 4	KIT DE VEDACAO
ANEL-O 120,50X3,53	12819435	12	1	702	10 11 583 8	JOGO DE VEDAÇÃO MOTOR D
ANEL-O 125X2	10002310	47	1	704	10 11 583 8	JOGO DE VEDAÇÃO MOTOR D
ANEL-O 139,07X7	7264423	4	1	728	10 35 857 7	ANEL
ANEL-O 139,07X7	7264423	3	1	770	96 44 625	PISTÃO
ANEL-O 13X2,5	7005971	18	1	441	70 15 341	KIT VEDAÇÃO VÁL.COMPEN.P/
ANEL-O 140	10006499	4	2	565	90 73 083	CILINDRO
ANEL-O 140	10006499	62	12	705	10 11 583 8	JOGO DE VEDAÇÃO MOTOR D
ANEL-O 142X7	7369266	1	1	393	73 73 881	FILTRO DE FIBRA DE VIDRO 2
ANEL-O 148,59X7	7000290	3	1	769	94 04 038 9	PISTÃO
ANEL-O 148X6	10008233	7	1	772	94 02 794 9	MANCAL DA HASTE DO PISTÃ
ANEL-O 148X6	10008233	7	1	773	95 91 741	MANCAL DA HASTE DO PISTÃ
ANEL-O 14x2	10220819	4	1	169	10 22 081 6	VÁLVULA DE PARTIDA FRIA
ANEL-O 15,50X2,00	10113975	2	1	678	90 76 550	TRANSDUTOR DE PRESSAO C
ANEL-O 15,50X2,00	10113975	59	1	705	10 11 583 8	JOGO DE VEDAÇÃO MOTOR D
ANEL-O 15,54X2,62	7002641	14	1	381	70 25 142	KIT DE VEDAÇÃO
ANEL-O 15,54X2,62	7007831	44	1	441	70 15 341	KIT VEDAÇÃO VÁL.COMPEN.P/
ANEL-O 15,6X1,78	7007543	37	1	441	70 15 341	KIT VEDAÇÃO VÁL.COMPEN.P/
ANEL-O 15,6X1,78	7007543	38	1	441	70 15 341	KIT VEDAÇÃO VÁL.COMPEN.P/
ANEL-O 15,6X1,78	7017771	6	1	428	10 30 127 0	VÁLVULA ALTERNADORA
ANEL-O 15,6X1,78	7017771	6	1	429	10 30 127 1	VÁLVULA REGULADORA DE FL
ANEL-O 15,6X1,78	7017771	6	1	430	10 30 127 2	VÁLVULA REGULADORA DE FL
ANEL-O 159,3X5,7	7264098	7	1	771	94 00 688 8	MANCAL DA HASTE DO PISTÃ
ANEL-O 15X2	7264625	1	1	577	50 04 624	PARAFUSO DE DRENAGEM D
ANEL-O 16,0X1,5	7371590	6	1	362	10 04 272 9	BLOCO DE VÁLVULAS DE CO
ANEL-O 16,0X1,5	7371590	10	1	373	56 08 327	VÁLVULA DE RETORNO
ANEL-O 160X2,5	7624285	30	1	256	10 01 471 7	CAPA COBERTURA DO RECIP
ANEL-O 165X3	10014711	22	1	250	10 22 844 3	BOMBA DE LUBRIFICACAO
ANEL-O 16X2	7026041	17	4	379	50 09 391	KIT VEDAÇÃO VÁLVULA DIREC
ANEL-O 16X2	7026041	7	2	380	50 09 562	KIT VEDAÇÃO VÁLVULA DIREC
ANEL-O 17,12X2,62	7015293	2	1	442	70 17 835	KIT DE VEDACAO DA VALVUL
ANEL-O 17,12X2,62	7028185	25	2	177	70 28 075	UNIDADE DE CONTROLE
ANEL-O 17,12X2,62	7274384	1	1	440	70 13 133	KIT DE VEDACAO DO FREIO
ANEL-O 17,17X1,78	10454719	20	1	378	10 45 471 6	KIT DE VEDAÇÃO
ANEL-O 17,17X1,78	7013245	14	1	379	50 09 391	KIT VEDAÇÃO VÁLVULA DIREC
ANEL-O 17,17X1,78	7013245	10	1	380	50 09 562	KIT VEDAÇÃO VÁLVULA DIREC
ANEL-O 18,72X2,62	7002091	4	1	440	70 13 133	KIT DE VEDACAO DO FREIO
ANEL-O 18,72X2,62	7017837	3	1	442	70 17 835	KIT DE VEDACAO DA VALVUL
ANEL-O 19,4X2,1	7019674	32	1	441	70 15 341	KIT VEDAÇÃO VÁL.COMPEN.P/
ANEL-O 20,29X2,62	7020576	5	1	382	70 30 267	KIT DE VEDAÇÃO
ANEL-O 20,29X2,62	7020576	43	1	441	70 15 341	KIT VEDAÇÃO VÁL.COMPEN.P/
ANEL-O 20,90X3	10040399	6	1	626	10 11 658 7	INJETOR
ANEL-O 20,90X3	10040399	1	1	628	10 11 585 4	KIT DE VEDACAO DO BICO IN
ANEL-O 200X4	11067315	1	1	685	10 11 724 8	UNIDADE DE CONTROLE DO
ANEL-O 20X2	7007339	38	1	382	70 30 267	KIT DE VEDAÇÃO
ANEL-O 20x2,5	10032888	1	1	153	76 16 897	CONEXÃO FLAGEADA L
ANEL-O 21,89X2,62	10220698	13	3	160	10 22 041 7	FILTRO
ANEL-O 21,89X2,62	7264404	20	1	380	50 09 562	KIT VEDAÇÃO VÁLVULA DIREC
ANEL-O 21,89X2,62	7367226	5	1	382	70 30 267	KIT DE VEDAÇÃO
ANEL-O 21,95X1,78	7024500	13	1	381	70 25 142	KIT DE VEDAÇÃO
ANEL-O 220X3	726433101	3	1	228	93 28 018 01	FREIO
ANEL-O 220X3	726433101	67	1	241	94 44 522 03	KIT DE VEDAÇÃO
ANEL-O 23,00X3	7361456	2	1	435	50 06 720	VÁLVULA DE RETORNO

Designação	Artigo	Item	Quanti	Página	Módulo	Designação
ANEL-O 23,47X2,62	7017838	4	1	442	70 17 835	KIT DE VEDACAO DA VALVUL
ANEL-O 23,47X2,62	7023769	8	1	174	11 82 151 3	KIT DE VEDACAO DA VALVUL
ANEL-O 23,52X1,78	11827911	31	1	376	10 22 099 7	KIT DE VEDAÇÃO
ANEL-O 24X1,5	7030286	312	1	382	70 30 267	KIT DE VEDAÇÃO
ANEL-O 25X3,53	7015407	10	1	397	10 22 239 3	FILTRO DE RESPIRO 2µm
ANEL-O 25x3,53	7015292	20	1	433	10 30 094 1	FLANGE DE CONEXAO
ANEL-O 25x3,53	7015292	9	1	437	50 08 855	VÁLVULA DE RETORNO
ANEL-O 26X3	10004261	12	1	570	90 79 480	SUPORTE DOS AGREGADOS
ANEL-O 26X3	10004261	13	1	699	10 11 801 4	KIT DE VEDACAO
ANEL-O 26X3	10004261	13	1	702	10 11 583 8	JOGO DE VEDAÇÃO MOTOR D
ANEL-O 26X3	7007759	7	1	382	70 30 267	KIT DE VEDAÇÃO
ANEL-O 29,82X2,62	7006212	25	1	162	11 34 249 1	BOMBA DE PISTÃO AXIAL
ANEL-O 290X4	7610335	74	1	227	90 02 790 4	REDUTOR DE GIRO SAT 325/
ANEL-O 290X4	7610335	74	1	241	94 44 522 03	KIT DE VEDAÇÃO
ANEL-O 2X1,5	10289308	20	7	264	10 02 131 0	KIT DE VEDAÇÃO
ANEL-O 2X1,5	10289308	30	1	265	10 02 131 1	KIT DE VEDAÇÃO
ANEL-O 30X3	7015284	17	2	441	70 15 341	KIT VEDAÇÃO VÁL.COMPEN.P/
ANEL-O 31,42X2,62	7015290	8	1	437	50 08 855	VÁLVULA DE RETORNO
ANEL-O 32,92X3,53	7007733	16	1	426	10 28 535 8	VÁLVULA DE RETORNO
ANEL-O 32,92X3,53	7007733	16	1	427	10 29 999 7	VÁLVULA DE RETORNO
ANEL-O 320X4	7610343	26	1	226	90 02 790 4	REDUTOR DE GIRO SAT 325/
ANEL-O 320X4	7610343	26	1	241	94 44 522 03	KIT DE VEDAÇÃO
ANEL-O 350X3	7610210	71	1	110	96 87 443 01	MECANISMO DE TRANSLAÇÃ
ANEL-O 350X3	7610210	71	1	120	94 43 027	KIT DE VEDAÇÃO
ANEL-O 40X4	10040404	3	1	623	10 11 585 5	KIT VEDACAO DA BOMBA INJE
ANEL-O 44,10X1,78	7381861	61	2	185	98 84 140	BOMBA CIRCUITO ARREFECI
ANEL-O 44,10X1,78	7381861	61	2	832	10 11 948 2	KIT DE VEDAÇÃO ZPA 5
ANEL-O 45X2,50	10040403	2	1	623	10 11 585 5	KIT VEDACAO DA BOMBA INJE
ANEL-O 46X3	7368904	10	1	396	10 02 217 5	SENSOR DE NÍVEL
ANEL-O 47,22X3,53	7360048	16	1	441	70 15 341	KIT VEDAÇÃO VÁL.COMPEN.P/
ANEL-O 47X2,50	10040402	1	1	623	10 11 585 5	KIT VEDACAO DA BOMBA INJE
ANEL-O 4X1	7381562	43	2	184	98 82 875	KIT DE VED DA VÁLVULA RE
ANEL-O 50X3	7264024	68	14	425	10 11 386 0	BLOCO DE COMANDO
ANEL-O 50X3	7264024	1	2	439	56 02 345	KIT DE VEDAÇÃO
ANEL-O 6,02X2,62	7028183	23	1	177	70 28 075	UNIDADE DE CONTROLE
ANEL-O 6,07X1,78	7028159	15	1	168	10 22 063 5	VALVULA INTERRUPTORA
ANEL-O 6,2X1,5	11003560	11	1	155	98 81 609	PARAFUSO DE FECHAMENTO
ANEL-O 6,2X1,5	11003560	24	4	807	10 11 856 1	MANETE DE COMANDO VG6-8
ANEL-O 6,2X1,5	11003560	24	4	808	11 37 560 6	MANETE DE COMANDO VG6-8
ANEL-O 63,17X2,62	7380970	13	1	607	10 11 585 1	KIT DE VED DO CABEÇOTE CIL
ANEL-O 63,17X2,62	7380970	13	1	609	10 11 585 3	KIT DE VEDAÇÃO CABEÇOTE
ANEL-O 63,17X2,62	7380970	8	1	644	10 11 570 3	LINHA DE CONEXAO
ANEL-O 63,17X2,62	7380970	8	1	645	10 12 190 9	LINHA DE CONEXAO
ANEL-O 68,26X3,53	7381593	3	2	655	10 13 281 7	BOMBA DE ÁGUA PRÉ-MONT
ANEL-O 68,26X3,53	7381593	11	2	699	10 11 801 4	KIT DE VEDACAO
ANEL-O 68,26X3,53	7381593	11	2	702	10 11 583 8	JOGO DE VEDAÇÃO MOTOR D
ANEL-O 68X3,50	7373747	6	2	89	11 60 010 7	ROLAMENTO DE ESFERA D7
ANEL-O 69,52X2,62	7006216	20	2	161	10 29 197 8	REGULAGEM HIDRAULICA
ANEL-O 6X1,5	10289311	20	2	265	10 02 131 1	KIT DE VEDAÇÃO
ANEL-O 7,5X1,5	10289310	10	2	265	10 02 131 1	KIT DE VEDAÇÃO
ANEL-O 7,65X1,78	10024675	3	3	238	10 04 048 0	VÁLVULA DE CONTROLE
ANEL-O 7,65X1,78	10024675	11	2	362	10 04 272 9	BLOCO DE VÁLVULAS DE CO
ANEL-O 7,65X1,78	10024675	3	3	367	56 17 123	VÁLVULA REDUTORA DE PR
ANEL-O 78,97X3,53	10220707	121	1	64	12 48 693 1	KIT DE MANUTENCAO 500h
ANEL-O 78,97X3,53	10220707	121	1	67	12 48 693 2	KIT DE MANUTENÇÃO 1000h
ANEL-O 78,97X3,53	10220707	121	1	70	12 48 693 3	KIT DE MANUTENÇÃO 1500-25
ANEL-O 78,97X3,53	10220707	121	1	71	12 48 693 4	KIT DE MANUTENÇÃO 2000h
ANEL-O 78,97X3,53	10220707	10	1	175	11 82 151 9	FILTRO
ANEL-O 78,97X353	10356237	10	1	106	10 35 654 7	KIT DE VEDAÇÃO
ANEL-O 79X3	7264035	8	1	770	96 44 625	PISTÃO

Designação	Artigo	Item	Quanti	Página	Módulo	Designação
ANEL-O 80X5,0	10022320	12	2	607	10 11 585 1	KIT DE VED DO CABEÇOTE CIL
ANEL-O 80X5,0	10022320	12	2	609	10 11 585 3	KIT DE VEDAÇÃO CABEÇOTE
ANEL-O 80X5,0	10022320	5	2	644	10 11 570 3	LINHA DE CONEXAO
ANEL-O 80X5,0	10022320	5	2	645	10 12 190 9	LINHA DE CONEXAO
ANEL-O 80X5,0	10022320	21	2	701	10 11 801 4	KIT DE VEDACAO
ANEL-O 82,22X2,62	10010293	20	1	170	10 28 264 7	BOMBA DE ENGRENAGENS
ANEL-O 83X7	7369286	2	1	393	73 73 881	FILTRO DE FIBRA DE VIDRO 2
ANEL-O 88,57X2,62	10220668	3	1	167	10 21 681 6	PLACA DE DESGASTE
ANEL-O 88,57X2,62	10220668	12	1	170	10 28 264 7	BOMBA DE ENGRENAGENS
ANEL-O 88,57X2,62	10220668	55	1	398	11 49 189 0	PLACA DE LIGAÇÃO
ANEL-O 88X3	7264087	8	1	769	94 04 038 9	PISTÃO
ANEL-O 9,25X1,78	10043241	11	1	379	50 09 391	KIT VEDAÇÃO VÁLVULA DIREC
ANEL-O 9,25X1,78	10220549	19	1	172	10 29 197 5	PISTÃO DE AJUSTAMENTO
ANEL-O 9,25X1,78	11827913	27	1	376	10 22 099 7	KIT DE VEDAÇÃO
ANEL-O 9,25X1,78	7023929	21	1	371	10 32 372 8	VÁLVULA REDUTORA DE PR
ANEL-O 9,25X1,78	7023929	12	2	375	73 71 025	PLACA DE FECHAMENTO
ANEL-O 9,25X1,78	7028184	24	2	177	70 28 075	UNIDADE DE CONTROLE
ANEL-O 9,25X1,78	7028184	26	2	398	11 49 189 0	PLACA DE LIGAÇÃO
ANEL-O 98,02X3,53	7013694	61	1	145	10 04 853 9	INSTALACAO BOMBA E EMBR
ANEL-O 9X2	7021769	410	1	112	10 00 201 1	VALVULA DE FREIO
ANEL-O AEHNL.ISO 3601-1 25X	10342770	3	1	602	10 12 038 4	CABEÇOTE CILÍNDRICO
ANILHA CÔNICA DKR 6	7027946	21	1	257	90 64 786	ELEMENTO DE CONEXÃO
ANTENA	11645490	160	1	786	10 82 562 1	JC LEVANTAMENTO DADOS-T
ANTENA	12235856	160	1	786	10 82 562 1	JC LEVANTAMENTO DADOS-T
ANTENA	6001556	180	1	490	10 29 033 7	INSTALACAO ELETRICA
ANTENA	6001556	180	1	493	10 48 808 7	INSTALACAO ELETRICA
ANTEPARO	9266836	12	1	817	90 74 112	PLACA DE LIGAÇÃO NG 090
ANTEPARO NG 1,0MM / 6X6,5	9231952	147	1	410	10 35 863 8	INSTALAÇÃO BLOCO DE VÁL
APOIO DA CABEÇA	10493046	3	1	285	11 10 016 6	PARTE SUPERIOR DE ASSENT
APOIO DE BRAÇO LADO DIRE	10113062	14	1	285	11 10 016 6	PARTE SUPERIOR DE ASSENT
APOIO DE BRAÇO LADO DIRE	11383401	30	1	271	10 49 880 5	POSTO DE COMANDO - PEÇA
APOIO DE BRAÇO LADO DIRE	11452286	30	1	271	10 49 880 5	POSTO DE COMANDO - PEÇA
APOIO DE BRAÇO LADO DIRE	12507317	30	1	271	10 49 880 5	POSTO DE COMANDO - PEÇA
APOIO DE BRAÇO LADO DIRE	7024983	91	1	282	10 04 363 2	ASSENTO DO OPERADOR
APOIO DE BRAÇO LADO ESQ	10113060	15	1	285	11 10 016 6	PARTE SUPERIOR DE ASSENT
APOIO DE BRAÇO LADO ESQ	10385028	20	1	271	10 49 880 5	POSTO DE COMANDO - PEÇA
APOIO DE BRAÇO LADO ESQ	11383397	20	1	271	10 49 880 5	POSTO DE COMANDO - PEÇA
APOIO DE BRAÇO LADO ESQ	7024982	90	1	282	10 04 363 2	ASSENTO DO OPERADOR
APOIO DIREITO	7025994	91	1	282	10 04 363 2	ASSENTO DO OPERADOR
APOIO ESQUERDO	7025993	90	1	282	10 04 363 2	ASSENTO DO OPERADOR
APOIO PARA COLUNA	10219021	57	1	286	11 10 016 6	PARTE SUPERIOR DE ASSENT
AR CONDICIONADO	10406898	80	1	273	10 49 880 5	POSTO DE COMANDO - PEÇA
ARAME	11491891	17	2	399	11 49 189 4	MECANISMO DE ACIONAMENT
ARCO DE FIXACAO	10021823	2	1	334	10 49 308 7	PAINEL DE OPERAÇÃO
ARRASTADOR - INSTALACAO	10048510	174	1	123	10 35 861 4	CARRO SUPERIOR
ARREFECIMENTO DE OLEO	10358629	7070	1	343	10 35 862 6	INSTALACAO HIDRAULICA
ARREFECIMENTO DO MOTOR	10048536	560	1	132	10 35 862 2	INSTALAÇÃO DO MOTOR
ARREFECIMENTO DO PISTAO	9073795	15	6	557	10 11 682 5	MOTOR BÁSICO D936 L HIGH 3
ARRUELA	10013965	460	2	504	10 29 026 4	PEÇAS DE MONTAGEM
ARRUELA	10023245	270	6	508	10 29 035 2	REVESTIMENTO INTERNO
ARRUELA	10023245	270	6	510	10 48 808 8	REVESTIMENTO INTERNO
ARRUELA	10074972	11	2	456	10 05 183 8	CAPO DIREITO
ARRUELA	10074972	13	2	457	10 35 822 9	PORTA LATERAL ESQUERDA
ARRUELA	10076844	11	2	457	10 35 822 9	PORTA LATERAL ESQUERDA
ARRUELA	10216714	27	2	402	10 22 042 7	MECANISMO DE ACIONAMENT
ARRUELA	10220138	660	5	505	10 29 026 4	PEÇAS DE MONTAGEM
ARRUELA	10346513	41	1	151	10 29 154 4	BOMBA DE ENGRENAGENS
ARRUELA	3001445	3	1	746	10 08 390 7	PINO COMPLETO
ARRUELA	3001446	3	1	745	10 06 258 3	PINO COMPLETO
ARRUELA	3001446	2	1	747	92 15 949 16	PINO COMPLETO

Designação	Artigo	Item	Quanti	Página	Módulo	Designação
ARRUELA	7019801	150	2	484	70 28 769	PORTA DA CABINE DO OPERA
ARRUELA	7362752	62	1	272	10 49 880 5	POSTO DE COMANDO - PEÇA
ARRUELA	7362752	103	4	279	11 38 340 1	APOIO DE BRAÇO LADO DIRE
ARRUELA	7362752	103	4	302	11 45 228 6	APOIO DE BRAÇO LADO DIRE
ARRUELA	7362752	103	4	307	12 50 731 7	APOIO DE BRAÇO LADO DIRE
ARRUELA	7369776	12	1	519	99 47 695	INSTALAÇÃO ELÉTRICA E50
ARRUELA	90008634	5	1	226	90 02 790 4	REDUTOR DE GIRO SAT 325/
ARRUELA 10 200HV	4900531	28	6	344	10 35 862 3	INSTALACAO HDRAULICA
ARRUELA 10 300HV	10289795	13	1	11	12 86 140 4	PECAS DE FIXACAO
ARRUELA 10 300HV	10289795	61	4	130	10 08 004 4	QUADRO INSTALACAO
ARRUELA 10 300HV	10289795	13	11	141	10 04 853 9	INSTALACAO BOMBA E EMBR
ARRUELA 10 300HV	10289795	202	3	196	10 04 853 6	ARREFECIMENTO DO MOTOR
ARRUELA 10 300HV	10289795	222	2	196	10 04 853 6	ARREFECIMENTO DO MOTOR
ARRUELA 10 300HV	10289795	36	14	200	10 21 851 3	RADIADOR COMBINADO
ARRUELA 10 300HV	10289795	36	14	203	11 69 472 6	RADIADOR COMBINADO
ARRUELA 10 300HV	10289795	35	1	209	10 04 853 7	SISTEMA ELETRICO DO MOTO
ARRUELA 10 300HV	10289795	13	4	212	10 04 853 8	MOTOR - PECAS ANEXAS
ARRUELA 10 300HV	10289795	22	4	271	10 49 880 5	POSTO DE COMANDO - PEÇA
ARRUELA 10 300HV	10289795	32	4	271	10 49 880 5	POSTO DE COMANDO - PEÇA
ARRUELA 10 300HV	10289795	17	4	277	11 38 340 1	APOIO DE BRAÇO LADO DIRE
ARRUELA 10 300HV	10289795	17	4	301	11 45 228 6	APOIO DE BRAÇO LADO DIRE
ARRUELA 10 300HV	10289795	17	4	305	12 50 731 7	APOIO DE BRAÇO LADO DIRE
ARRUELA 10 300HV	10289795	21	16	342	98 79 063	PLACA DO ASSOALHO DA CAB
ARRUELA 10 300HV	10289795	23	3	344	10 35 862 3	INSTALACAO HDRAULICA
ARRUELA 10 300HV	10289795	30	2	351	10 35 862 8	INSTALACAO HIDRAULICA
ARRUELA 10 300HV	10289795	17	2	360	10 06 380 1	INSTALACAO HIDRAULICA
ARRUELA 10 300HV	10289795	9	6	423	10 35 863 6	BRAÇADEIRA DE TUBO
ARRUELA 10 300HV	10289795	24	6	445	10 35 865 5	REVESTIMENTO
ARRUELA 10 300HV	10289795	131	2	448	10 35 865 5	REVESTIMENTO
ARRUELA 10 300HV	10289795	211	4	451	10 35 865 5	REVESTIMENTO
ARRUELA 10 300HV	10289795	16	1	457	10 35 822 9	PORTA LATERAL ESQUERDA
ARRUELA 10 300HV	10289795	15	2	459	10 06 423 5	PORTA LATERAL DIREITA
ARRUELA 10 300HV	10289795	21	1	459	10 06 423 5	PORTA LATERAL DIREITA
ARRUELA 10 300HV	10289795	21	1	460	10 49 856 6	PORTA LATERAL DIREITA
ARRUELA 10 300HV	10289795	21	1	466	10 35 823 0	PORTA LATERAL DIANTEIRA
ARRUELA 10 300HV	10289795	130	6	484	70 28 769	PORTA DA CABINE DO OPERA
ARRUELA 10 300HV	10289795	540	2	505	10 29 026 4	PEÇAS DE MONTAGEM
ARRUELA 10 300HV	10289795	590	1	505	10 29 026 4	PEÇAS DE MONTAGEM
ARRUELA 10 300HV	10289795	750	2	506	10 29 026 4	PEÇAS DE MONTAGEM
ARRUELA 10 300HV	10289795	10	5	521	10 35 866 5	BATERIA - INSTALACAO
ARRUELA 10 300HV	10289795	30	2	529	10 04 852 5	TANQUE COMBUSTIVEL INSTA
ARRUELA 10 300HV	10289795	30	2	530	10 49 836 0	TANQUE COMBUSTIVEL INSTA
ARRUELA 10 300HV	10289795	30	2	531	11 10 262 1	TANQUE COMBUSTIVEL INSTA
ARRUELA 10 300HV	10289795	12	2	716	11 10 283 6	KIT MONOBLOCO 6.45M
ARRUELA 10 300HV	10289795	12	2	727	11 10 281 7	KIT DE ATUALIZAÇÃO 2.10M
ARRUELA 10 300HV	10289795	43	4	775	11 45 729 6	CILINDRO DE ELEVACAO DIRE
ARRUELA 10 300HV	10289795	43	4	778	11 45 729 7	CILINDRO DE ELEVACAO ESQ
ARRUELA 10 300HV	10289795	141	1	786	10 82 562 1	JC LEVANTAMENTO DADOS-T
ARRUELA 10 300HV	11491889	22	8	217	11 10 291 6	INSTALACAO MECANISMO GI
ARRUELA 10 300HV	11491889	18	2	445	10 35 865 5	REVESTIMENTO
ARRUELA 10 300HV	11491889	21	4	445	10 35 865 5	REVESTIMENTO
ARRUELA 10,5	10179357	12	4	193	10 04 853 6	ARREFECIMENTO DO MOTOR
ARRUELA 10,5	10179357	41	4	194	10 04 853 6	ARREFECIMENTO DO MOTOR
ARRUELA 10,5	10179357	44	1	194	10 04 853 6	ARREFECIMENTO DO MOTOR
ARRUELA 10,5	10179357	94	1	194	10 04 853 6	ARREFECIMENTO DO MOTOR
ARRUELA 10,5	10179357	111	1	195	10 04 853 6	ARREFECIMENTO DO MOTOR
ARRUELA 10,5	10179357	16	2	445	10 35 865 5	REVESTIMENTO
ARRUELA 10,5	10179357	22	7	457	10 35 822 9	PORTA LATERAL ESQUERDA
ARRUELA 10,5	10179357	12	5	462	10 35 826 4	CAIXA DE FERRAMENTAS
ARRUELA 10,5	10179357	31	2	462	10 35 826 4	CAIXA DE FERRAMENTAS

Designação	Artigo	Item	Quanti	Página	Módulo	Designação
ARRUELA 10,5	10179357	6	2	629	10 11 656 2	MONT DO PRÉ FILTRO DE CO
ARRUELA 10,5X18,5X2	9076638	2	3	665	90 80 736	KIT DO TURBO COMPRESSOR
ARRUELA 101X2,00	9364507	2	4	774	92 15 967 16	JOGO DE ARRUELAS D=100
ARRUELA 101X3,00	9364508	3	2	774	92 15 967 16	JOGO DE ARRUELAS D=100
ARRUELA 12 300HV	10289804	22	1	11	12 86 140 4	PECAS DE FIXACAO
ARRUELA 12 300HV	10289804	32	1	11	12 86 140 4	PECAS DE FIXACAO
ARRUELA 12 300HV	10289804	31	8	129	10 08 004 4	QUADRO INSTALACAO
ARRUELA 12 300HV	10289804	7	6	139	10 36 573 8	SISTEMA DE ESCAPAMENTO
ARRUELA 12 300HV	10289804	13	4	139	10 36 573 8	SISTEMA DE ESCAPAMENTO
ARRUELA 12 300HV	10289804	7	6	140	11 10 293 9	SISTEMA DE ESCAPAMENTO
ARRUELA 12 300HV	10289804	13	4	140	11 10 293 9	SISTEMA DE ESCAPAMENTO
ARRUELA 12 300HV	10289804	52	2	144	10 04 853 9	INSTALACAO BOMBA E EMBR
ARRUELA 12 300HV	10289804	91	2	194	10 04 853 6	ARREFECIMENTO DO MOTOR
ARRUELA 12 300HV	10289804	8	4	205	10 84 460 3	VENTILADOR - INSTALACAO
ARRUELA 12 300HV	10289804	82	1	273	10 49 880 5	POSTO DE COMANDO - PEÇA
ARRUELA 12 300HV	10289804	32	2	321	10 06 017 4	PEDAL ESQUERDO COMPLET
ARRUELA 12 300HV	10289804	32	2	322	10 06 017 5	PEDAL DIREITO COMPLETO
ARRUELA 12 300HV	10289804	22	4	328	10 40 689 8	AR CONDICIONADO
ARRUELA 12 300HV	10289804	18	4	344	10 35 862 3	INSTALACAO HDRAULICA
ARRUELA 12 300HV	10289804	37	2	353	10 06 379 8	MANGUEIRAS HIDRAULICAS
ARRUELA 12 300HV	10289804	12	4	383	10 04 851 7	TANQUE HIDRAULICO INSTA
ARRUELA 12 300HV	10289804	24	6	383	10 04 851 7	TANQUE HIDRAULICO INSTA
ARRUELA 12 300HV	10289804	12	4	386	10 35 863 4	TANQUE HIDRAULICO INSTA
ARRUELA 12 300HV	10289804	24	6	386	10 35 863 4	TANQUE HIDRAULICO INSTA
ARRUELA 12 300HV	10289804	21	6	406	10 35 863 8	INSTALAÇÃO BLOCO DE VÁL
ARRUELA 12 300HV	10289804	43	2	446	10 35 865 5	REVESTIMENTO
ARRUELA 12 300HV	10289804	176	2	450	10 35 865 5	REVESTIMENTO
ARRUELA 12 300HV	10289804	181	3	450	10 35 865 5	REVESTIMENTO
ARRUELA 12 300HV	10289804	250	4	503	10 29 026 4	PEÇAS DE MONTAGEM
ARRUELA 12 300HV	10289804	280	1	504	10 29 026 4	PEÇAS DE MONTAGEM
ARRUELA 12 300HV	10289804	500	2	505	10 29 026 4	PEÇAS DE MONTAGEM
ARRUELA 12 300HV	10289804	760	1	506	10 29 026 4	PEÇAS DE MONTAGEM
ARRUELA 12 300HV	10289804	22	4	513	11 73 376 2	CORRIMÃO - INSTALAÇÃO
ARRUELA 12 300HV	10289804	24	6	513	11 73 376 2	CORRIMÃO - INSTALAÇÃO
ARRUELA 12 300HV	10289804	14	4	542	10 49 878 6	ESPELHO EXTERNO - INSTALA
ARRUELA 12 300HV	10289804	31	4	542	10 49 878 6	ESPELHO EXTERNO - INSTALA
ARRUELA 12 300HV	10289804	8	17	680	10 11 611 4	CÁRTER VOLANTE MONT. EXT
ARRUELA 12 300HV	10289804	13	22	711	11 10 294 5	LANÇA MONOBLOCO 6.45M
ARRUELA 12 300HV	10289804	22	2	721	10 82 841 3	LUBRIFICAÇÃO CENTRALIZAD
ARRUELA 12 300HV	10289804	32	4	726	11 10 280 7	BRAÇO DA CAÇAMBA 2.10M
ARRUELA 12 300HV	10289804	17	4	739	10 49 877 7	BLOCO DO MANCAL
ARRUELA 12 300HV	10289804	39	8	752	11 10 291 2	MONTAGEM CILINDRO DE ELE
ARRUELA 12 300HV	10289804	6	2	758	10 35 857 3	CILINDRO HIDR. COM ACESS
ARRUELA 12 300HV	10289804	7	2	759	10 85 361 0	CILINDRO HIDR. COM ACESS
ARRUELA 12 300HV	10289804	42	6	775	11 45 729 6	CILINDRO DE ELEVACAO DIRE
ARRUELA 12 300HV	10289804	42	6	778	11 45 729 7	CILINDRO DE ELEVACAO ESQ
ARRUELA 12,5/21X	9918226	72	6	130	10 08 004 4	QUADRO INSTALACAO
ARRUELA 12,5/21X	9918226	32	2	350	10 35 862 7	INSTALAÇÃO HIDRÁULICA
ARRUELA 12/20X10	10358266	81	2	463	10 35 826 4	CAIXA DE FERRAMENTAS
ARRUELA 13	10179356	21	4	129	10 08 004 4	QUADRO INSTALACAO
ARRUELA 13	10179356	26	2	358	10 35 862 4	INSTALACAO HIDRAULICA
ARRUELA 13	10179356	12	8	443	10 35 865 9	REVESTIMENTO DA PLAT.GI
ARRUELA 13	10179356	22	4	443	10 35 865 9	REVESTIMENTO DA PLAT.GI
ARRUELA 13	10179356	26	1	443	10 35 865 9	REVESTIMENTO DA PLAT.GI
ARRUELA 13	10179356	32	4	443	10 35 865 9	REVESTIMENTO DA PLAT.GI
ARRUELA 13	10179356	71	6	447	10 35 865 5	REVESTIMENTO
ARRUELA 13	10179356	81	3	447	10 35 865 5	REVESTIMENTO
ARRUELA 13	10179356	111	10	448	10 35 865 5	REVESTIMENTO
ARRUELA 13	10179356	121	5	448	10 35 865 5	REVESTIMENTO
ARRUELA 13	10179356	141	5	448	10 35 865 5	REVESTIMENTO

Designação	Artigo	Item	Quanti	Página	Módulo	Designação
ARRUELA 13	10179356	201	5	451	10 35 865 5	REVESTIMENTO
ARRUELA 13	10179356	221	5	451	10 35 865 5	REVESTIMENTO
ARRUELA 13	10179356	231	5	452	10 35 865 5	REVESTIMENTO
ARRUELA 13	10179356	241	3	452	10 35 865 5	REVESTIMENTO
ARRUELA 13	10179356	71	2	463	10 35 826 4	CAIXA DE FERRAMENTAS
ARRUELA 13	10179356	62	3	544	10 49 878 6	ESPELHO EXTERNO - INSTALA
ARRUELA 13	10179356	23	8	711	11 10 294 5	LANÇA MONOBLOCO 6.45M
ARRUELA 13	10179356	9	3	793	10 49 866 6	FILTRO DE AR - INSTALAÇÃO
ARRUELA 13 200HV	10006370	32	2	721	10 82 841 3	LUBRIFICAÇÃO CENTRALIZAD
ARRUELA 13 200HV	10006370	26	2	730	10 39 639 6	LUBRIFICAÇÃO CENTRALIZAD
ARRUELA 16 200HV	4901893	22	1	205	10 84 460 3	VENTILADOR - INSTALACAO
ARRUELA 16 295-350HV10HV	12220084	4	4	90	10 39 232 0	ROLETE SUPERIOR - INSTAL
ARRUELA 16 295-350HV10HV	4002742	22	2	142	10 04 853 9	INSTALACAO BOMBA E EMBR
ARRUELA 16 300HV	10289806	16	3	100	11 46 393 5	COLETOR GIRATÓRIO - INSTA
ARRUELA 16 300HV	10289806	3	3	105	10 40 383 4	PEÇAS FIXAÇÃO COLETOR G
ARRUELA 16 300HV	10289806	18	2	200	10 21 851 3	RADIADOR COMBINADO
ARRUELA 16 300HV	10289806	18	2	203	11 69 472 6	RADIADOR COMBINADO
ARRUELA 16 300HV	10289806	64	3	407	10 35 863 8	INSTALAÇÃO BLOCO DE VÁL
ARRUELA 16,5/28X4	9918228	11	4	342	98 79 063	PLACA DO ASSOALHO DA CAB
ARRUELA 17	4600180	11	2	129	10 08 004 4	QUADRO INSTALACAO
ARRUELA 17	4600180	51	2	129	10 08 004 4	QUADRO INSTALACAO
ARRUELA 17	4600180	61	2	793	10 49 866 6	FILTRO DE AR - INSTALAÇÃO
ARRUELA 19/80X10	10358205	2	6	133	10 35 862 0	PECAS DE FIXACAO DO MOTO
ARRUELA 20 295 BIS 350HV	12220081	17	2	219	10 06 198 2	MECANISMO DE GIRO
ARRUELA 20 300-370HV	4600222	5	3	533	10 06 181 0	FIXACAO TANQUE DE COMB
ARRUELA 20,5/34X5	9918229	4	48	78	10 49 887 7	KIT ADICIONAL
ARRUELA 20,5/34X5	9918229	4	4	88	10 39 231 7	ROLDANA MONTAGEM D7
ARRUELA 20,5/34X5	9918229	4	48	107	10 83 693 0	MECANISMO DE TRANSLAÇÃ
ARRUELA 20,5/34X5	9918229	7	48	107	10 83 693 0	MECANISMO DE TRANSLAÇÃ
ARRUELA 20,5/34X5	9918229	12	4	107	10 83 693 0	MECANISMO DE TRANSLAÇÃ
ARRUELA 20,5/34X5	9918229	4	48	108	11 10 296 8	MECANISMO DE TRANSLAÇÃ
ARRUELA 20,5/34X5	9918229	7	48	108	11 10 296 8	MECANISMO DE TRANSLAÇÃ
ARRUELA 20,5/34X5	9918229	12	4	108	11 10 296 8	MECANISMO DE TRANSLAÇÃ
ARRUELA 20,5/34X5	9918229	3	3	388	10 06 112 7	FIXACAO TANQUE HIDRAULIC
ARRUELA 24,5/40X5	9918230	33	9	760	11 68 144 7	CILINDRO HIDRÁULICO
ARRUELA 24,5/40X5	9918230	33	9	761	95 93 026	CILINDRO HIDRÁULICO
ARRUELA 24,5/40X5	9918230	33	9	762	96 44 648	CILINDRO HIDRÁULICO
ARRUELA 27,5/45X6	9586495	14	50	242	10 04 851 4	PEÇAS FIX.COROA GIG.CHA
ARRUELA 3 200HV	4600814	24	2	297	73 73 807	ALAVANCA DE SEGURANCA
ARRUELA 3,8X12,5X1	9265402	23	4	323	90 79 258	MANETE DE COMANDO VG7 2-
ARRUELA 3,8X12,5X1	9265402	23	4	742	90 79 264	KIT DE MODIFICAÇÃO VG7-2/3
ARRUELA 3,8X12,5X1	9265402	23	8	807	10 11 856 1	MANETE DE COMANDO VG6-8
ARRUELA 3,8X12,5X1	9265402	23	8	808	11 37 560 6	MANETE DE COMANDO VG6-8
ARRUELA 31/52X6	9918231	5	4	537	10 06 391 4	PECAS FIXACAO PARA CONTR
ARRUELA 4	421802008	6	12	333	10 02 211 7	CARCACA DE CONDUCAO DE
ARRUELA 4	421802008	33	4	336	11 00 359 4	CARCAÇA
ARRUELA 4 200HV	10875645	34	26	275	11 38 339 7	APOIO DE BRAÇO LADO ESQ
ARRUELA 4 200HV	10875645	93	4	276	11 38 339 7	APOIO DE BRAÇO LADO ESQ
ARRUELA 4 200HV	10875645	84	4	279	11 38 340 1	APOIO DE BRAÇO LADO DIRE
ARRUELA 4 200HV	10875645	106	2	280	11 38 340 1	APOIO DE BRAÇO LADO DIRE
ARRUELA 4 200HV	10875645	122	2	281	11 38 340 1	APOIO DE BRAÇO LADO DIRE
ARRUELA 4 200HV	10875645	123	2	281	11 38 340 1	APOIO DE BRAÇO LADO DIRE
ARRUELA 4 200HV	10875645	34	26	291	10 38 502 8	APOIO DE BRAÇO LADO ESQ
ARRUELA 4 200HV	10875645	93	4	292	10 38 502 8	APOIO DE BRAÇO LADO ESQ
ARRUELA 4 200HV	10875645	84	4	302	11 45 228 6	APOIO DE BRAÇO LADO DIRE
ARRUELA 4 200HV	10875645	106	2	303	11 45 228 6	APOIO DE BRAÇO LADO DIRE
ARRUELA 4 200HV	10875645	122	2	304	11 45 228 6	APOIO DE BRAÇO LADO DIRE
ARRUELA 4 200HV	10875645	123	2	304	11 45 228 6	APOIO DE BRAÇO LADO DIRE
ARRUELA 4 200HV	10875645	84	4	306	12 50 731 7	APOIO DE BRAÇO LADO DIRE
ARRUELA 4 200HV	10875645	106	2	307	12 50 731 7	APOIO DE BRAÇO LADO DIRE

Designação	Artigo	Item	Quanti	Página	Módulo	Designação
ARRUELA 4 200HV	10875645	122	2	307	12 50 731 7	APOIO DE BRAÇO LADO DIRE
ARRUELA 4 200HV	10875645	123	2	307	12 50 731 7	APOIO DE BRAÇO LADO DIRE
ARRUELA 4 200HV	10875645	16	2	751	10 35 860 1	ALARME DE TRANSLACAO
ARRUELA 4 200HV	4001645	9	6	333	10 02 211 7	CARCACA DE CONDUCAO DE
ARRUELA 4 200HV	4001645	3	3	337	10 02 207 8	CANTONEIRA DE MONTAGEM
ARRUELA 4 200HV	4001645	220	2	490	10 29 033 7	INSTALACAO ELETRICA
ARRUELA 4 200HV	4001645	290	3	490	10 29 033 7	INSTALACAO ELETRICA
ARRUELA 4 200HV	4001645	220	2	493	10 48 808 7	INSTALACAO ELETRICA
ARRUELA 4 200HV	4001645	595	4	496	10 29 036 3	KIT DO MOTOR DO LIMPADOR
ARRUELA 4 200HV	4001645	28	4	519	99 47 695	INSTALAÇÃO ELÉTRICA E50
ARRUELA 4 200HV	4001850	8	1	668	10 11 871 2	KIT DE PEÇAS
ARRUELA 4 200HV	4002887	3	7	335	11 00 359 4	CARCAÇA
ARRUELA 5 200HV	11140403	322	4	197	10 04 853 6	ARREFECIMENTO DO MOTOR
ARRUELA 5 200HV	11140403	73	1	276	11 38 339 7	APOIO DE BRAÇO LADO ESQ
ARRUELA 5 200HV	11140403	74	1	276	11 38 339 7	APOIO DE BRAÇO LADO ESQ
ARRUELA 5 200HV	11140403	73	1	292	10 38 502 8	APOIO DE BRAÇO LADO ESQ
ARRUELA 5 200HV	11140403	74	1	292	10 38 502 8	APOIO DE BRAÇO LADO ESQ
ARRUELA 5 200HV	11140403	69	4	295	97 58 815 01	PLACA ELETRÔNICA
ARRUELA 5 200HV	11140403	72	4	295	97 58 815 01	PLACA ELETRÔNICA
ARRUELA 5 200HV	11140403	33	4	384	10 04 851 7	TANQUE HIDRAULICO INSTA
ARRUELA 5 200HV	11140403	33	4	386	10 35 863 4	TANQUE HIDRAULICO INSTA
ARRUELA 5 200HV	11140403	110	12	508	10 29 035 2	REVESTIMENTO INTERNO
ARRUELA 5 200HV	11140403	110	12	510	10 48 808 8	REVESTIMENTO INTERNO
ARRUELA 5 200HV	11140403	17	4	519	99 47 695	INSTALAÇÃO ELÉTRICA E50
ARRUELA 5 200HV	11140403	123	4	786	10 82 562 1	JC LEVANTAMENTO DADOS-T
ARRUELA 5 200HV	4600200	7	4	296	98 74 988	PLACAS - INSTALAÇÃO
ARRUELA 5,3 200HV	12220087	71	2	276	11 38 339 7	APOIO DE BRAÇO LADO ESQ
ARRUELA 5,3 200HV	12220087	71	2	292	10 38 502 8	APOIO DE BRAÇO LADO ESQ
ARRUELA 6 200HV	4901878	21	11	336	11 00 359 4	CARCAÇA
ARRUELA 6 300HV	10289802	52	3	137	10 49 819 9	FILTRO DE AR - INSTALAÇÃO
ARRUELA 6 300HV	10289802	23	13	200	10 21 851 3	RADIADOR COMBINADO
ARRUELA 6 300HV	10289802	24	16	200	10 21 851 3	RADIADOR COMBINADO
ARRUELA 6 300HV	10289802	23	13	203	11 69 472 6	RADIADOR COMBINADO
ARRUELA 6 300HV	10289802	24	16	203	11 69 472 6	RADIADOR COMBINADO
ARRUELA 6 300HV	10289802	34	2	271	10 49 880 5	POSTO DE COMANDO - PEÇA
ARRUELA 6 300HV	10289802	56	4	276	11 38 339 7	APOIO DE BRAÇO LADO ESQ
ARRUELA 6 300HV	10289802	32	1	277	11 38 340 1	APOIO DE BRAÇO LADO DIRE
ARRUELA 6 300HV	10289802	56	4	277	11 38 340 1	APOIO DE BRAÇO LADO DIRE
ARRUELA 6 300HV	10289802	87	2	279	11 38 340 1	APOIO DE BRAÇO LADO DIRE
ARRUELA 6 300HV	10289802	56	4	292	10 38 502 8	APOIO DE BRAÇO LADO ESQ
ARRUELA 6 300HV	10289802	70	4	295	97 58 815 01	PLACA ELETRÔNICA
ARRUELA 6 300HV	10289802	73	4	295	97 58 815 01	PLACA ELETRÔNICA
ARRUELA 6 300HV	10289802	32	1	301	11 45 228 6	APOIO DE BRAÇO LADO DIRE
ARRUELA 6 300HV	10289802	56	4	301	11 45 228 6	APOIO DE BRAÇO LADO DIRE
ARRUELA 6 300HV	10289802	87	2	302	11 45 228 6	APOIO DE BRAÇO LADO DIRE
ARRUELA 6 300HV	10289802	32	1	305	12 50 731 7	APOIO DE BRAÇO LADO DIRE
ARRUELA 6 300HV	10289802	56	4	305	12 50 731 7	APOIO DE BRAÇO LADO DIRE
ARRUELA 6 300HV	10289802	87	2	306	12 50 731 7	APOIO DE BRAÇO LADO DIRE
ARRUELA 6 300HV	10289802	14	6	333	10 02 211 7	CARCACA DE CONDUCAO DE
ARRUELA 6 300HV	10289802	3	2	334	10 49 308 7	PAINEL DE OPERAÇÃO
ARRUELA 6 300HV	10289802	4	2	334	10 49 308 7	PAINEL DE OPERAÇÃO
ARRUELA 6 300HV	10289802	20	11	336	11 00 359 4	CARCAÇA
ARRUELA 6 300HV	10289802	17	2	390	56 17 688	VÁLVULA DE FECHAMENTO
ARRUELA 6 300HV	10289802	479	2	414	10 35 863 8	INSTALAÇÃO BLOCO DE VÁL
ARRUELA 6 300HV	10289802	17	4	459	10 06 423 5	PORTA LATERAL DIREITA
ARRUELA 6 300HV	10289802	11	4	466	10 35 823 0	PORTA LATERAL DIANTEIRA
ARRUELA 6 300HV	10289802	10	4	467	10 02 525 4	FECHO DA PORTA
ARRUELA 6 300HV	10289802	210	2	481	70 28 759	PÁRA-BRISA SUPERIOR
ARRUELA 6 300HV	10289802	280	1	484	70 28 769	PORTA DA CABINE DO OPERA
ARRUELA 6 300HV	10289802	390	2	491	10 29 033 7	INSTALACAO ELETRICA

Designação	Artigo	Item	Quanti	Página	Módulo	Designação
ARRUELA 6 300HV	10289802	730	2	491	10 29 033 7	INSTALACAO ELETRICA
ARRUELA 6 300HV	10289802	796	1	492	10 29 033 7	INSTALACAO ELETRICA
ARRUELA 6 300HV	10289802	390	2	494	10 48 808 7	INSTALACAO ELETRICA
ARRUELA 6 300HV	10289802	730	2	494	10 48 808 7	INSTALACAO ELETRICA
ARRUELA 6 300HV	10289802	796	1	495	10 48 808 7	INSTALACAO ELETRICA
ARRUELA 6 300HV	10289802	580	3	496	10 29 036 3	KIT DO MOTOR DO LIMPADOR
ARRUELA 6 300HV	10289802	580	3	497	70 28 884	KIT DO MOTOR DO LIMPADOR
ARRUELA 6 300HV	10289802	400	8	504	10 29 026 4	PEÇAS DE MONTAGEM
ARRUELA 6 300HV	10289802	490	4	504	10 29 026 4	PEÇAS DE MONTAGEM
ARRUELA 6 300HV	10289802	420	6	509	10 29 035 2	REVESTIMENTO INTERNO
ARRUELA 6 300HV	10289802	420	6	511	10 48 808 8	REVESTIMENTO INTERNO
ARRUELA 6 300HV	10289802	21	4	514	11 10 255 3	INSTALAÇÃO ELÉTRICA
ARRUELA 6 300HV	10289802	4	6	519	99 47 695	INSTALAÇÃO ELÉTRICA E50
ARRUELA 6 300HV	10289802	32	4	520	99 47 695	INSTALAÇÃO ELÉTRICA E50
ARRUELA 6 300HV	10289802	46	1	520	99 47 695	INSTALAÇÃO ELÉTRICA E50
ARRUELA 6 300HV	10289802	30	1	525	10 06 559 1	MAGUEIRAS DO AR-CONDICI
ARRUELA 6 300HV	10289802	11	4	526	10 06 559 6	SECADOR - INSTALACAO
ARRUELA 6 300HV	10289802	8	6	529	10 04 852 5	TANQUE COMBUSTIVEL INSTA
ARRUELA 6 300HV	10289802	8	6	530	10 49 836 0	TANQUE COMBUSTIVEL INSTA
ARRUELA 6 300HV	10289802	8	6	531	11 10 262 1	TANQUE COMBUSTIVEL INSTA
ARRUELA 6 300HV	10289802	5	4	684	10 11 599 3	DISPOSITIVO COMANDO - M
ARRUELA 6 300HV	10289802	47	1	687	10 11 799 7	CHICOTE DE CABOS ACESSÓ
ARRUELA 6 300HV	10289802	51	4	717	10 82 841 4	LUBRIFICACAO CENTRALIZAD
ARRUELA 6 300HV	10289802	151	1	786	10 82 562 1	JC LEVANTAMENTO DADOS-T
ARRUELA 6 300HV	10289802	7	2	791	10 49 833 2	EXTINTOR DE INCÊNDIO
ARRUELA 6,4 200HV	11693878	54	3	137	10 49 819 9	FILTRO DE AR - INSTALAÇÃO
ARRUELA 6,4 200HV	11693878	42	1	200	10 21 851 3	RADIADOR COMBINADO
ARRUELA 6,4 200HV	11693878	42	1	203	11 69 472 6	RADIADOR COMBINADO
ARRUELA 6,4 200HV	11693878	28	4	275	11 38 339 7	APOIO DE BRAÇO LADO ESQ
ARRUELA 6,4 200HV	11693878	28	4	291	10 38 502 8	APOIO DE BRAÇO LADO ESQ
ARRUELA 6,4 200HV	11693878	6	2	296	98 74 988	PLACAS - INSTALAÇÃO
ARRUELA 6,4 200HV	11693878	7	4	320	10 05 981 8	PRÉ-COMANDO DE PEDAL M
ARRUELA 6,4 200HV	11693878	8	2	455	10 06 436 0	CAPO DO RADIADOR
ARRUELA 6,4 200HV	11693878	51	6	463	10 35 826 4	CAIXA DE FERRAMENTAS
ARRUELA 6,4 200HV	11693878	330	4	509	10 29 035 2	REVESTIMENTO INTERNO
ARRUELA 6,4 200HV	11693878	460	2	509	10 29 035 2	REVESTIMENTO INTERNO
ARRUELA 6,4 200HV	11693878	330	4	511	10 48 808 8	REVESTIMENTO INTERNO
ARRUELA 6,4 200HV	11693878	460	2	511	10 48 808 8	REVESTIMENTO INTERNO
ARRUELA 6,4 200HV	11693878	20	4	754	10 85 472 4	PEÇAS MONT.- MÁQUINA BAS
ARRUELA 8 200HV	11140469	152	5	449	10 35 865 5	REVESTIMENTO
ARRUELA 8 200HV	11140469	22	5	542	10 49 878 6	ESPELHO EXTERNO - INSTALA
ARRUELA 8 200HV	11140469	42	4	542	10 49 878 6	ESPELHO EXTERNO - INSTALA
ARRUELA 8 200HV	11140469	45	2	542	10 49 878 6	ESPELHO EXTERNO - INSTALA
ARRUELA 8 200HV	11140469	52	2	542	10 49 878 6	ESPELHO EXTERNO - INSTALA
ARRUELA 8 200HV	11140469	55	2	543	10 49 878 6	ESPELHO EXTERNO - INSTALA
ARRUELA 8 200HV	12691573	13	5	655	10 13 281 7	BOMBA DE ÁGUA PRÉ-MONT
ARRUELA 8 200HV	420001201	9	2	645	10 12 190 9	LINHA DE CONEXAO
ARRUELA 8 200HV	4980155	17	4	567	90 79 021	CARCAÇA MANIVELA PURGAM
ARRUELA 8 300HV	10289803	56	7	11	12 86 140 4	PECAS DE FIXACAO
ARRUELA 8 300HV	10289803	160	2	62	12 50 640 7	
ARRUELA 8 300HV	10289803	347	1	198	10 04 853 6	ARREFECIMENTO DO MOTOR
ARRUELA 8 300HV	10289803	30	31	200	10 21 851 3	RADIADOR COMBINADO
ARRUELA 8 300HV	10289803	30	17	203	11 69 472 6	RADIADOR COMBINADO
ARRUELA 8 300HV	10289803	12	6	205	10 84 460 3	VENTILADOR - INSTALACAO
ARRUELA 8 300HV	10289803	34	1	209	10 04 853 7	SISTEMA ELETRICO DO MOTO
ARRUELA 8 300HV	10289803	22	2	212	10 04 853 8	MOTOR - PECAS ANEXAS
ARRUELA 8 300HV	10289803	26	4	212	10 04 853 8	MOTOR - PECAS ANEXAS
ARRUELA 8 300HV	10289803	4	8	214	10 06 363 0	COMPRESSOR DO AR-CONDI
ARRUELA 8 300HV	10289803	28	1	217	11 10 291 6	INSTALACAO MECANISMO GI
ARRUELA 8 300HV	10289803	6	2	248	10 06 750 0	LUBRIFICAÇÃO CENTR. AUT

Designação	Artigo	Item	Quanti	Página	Módulo	Designação
ARRUELA 8 300HV	10289803	7	4	253	10 66 472 2	BLOCO DE DISTRIBUIÇÃO SX
ARRUELA 8 300HV	10289803	132	1	274	10 49 880 5	POSTO DE COMANDO - PEÇA
ARRUELA 8 300HV	10289803	162	3	274	10 49 880 5	POSTO DE COMANDO - PEÇA
ARRUELA 8 300HV	10289803	167	1	274	10 49 880 5	POSTO DE COMANDO - PEÇA
ARRUELA 8 300HV	10289803	32	4	284	94 02 247 7	ASSENTO DO OPERADOR
ARRUELA 8 300HV	10289803	42	4	284	94 02 247 7	ASSENTO DO OPERADOR
ARRUELA 8 300HV	10289803	74	2	295	97 58 815 01	PLACA ELETRÔNICA
ARRUELA 8 300HV	10289803	13	4	320	10 05 981 8	PRÉ-COMANDO DE PEDAL M
ARRUELA 8 300HV	10289803	23	4	320	10 05 981 8	PRÉ-COMANDO DE PEDAL M
ARRUELA 8 300HV	10289803	62	6	320	10 05 981 8	PRÉ-COMANDO DE PEDAL M
ARRUELA 8 300HV	10289803	67	4	320	10 05 981 8	PRÉ-COMANDO DE PEDAL M
ARRUELA 8 300HV	10289803	42	1	321	10 06 017 4	PEDAL ESQUERDO COMPLET
ARRUELA 8 300HV	10289803	42	1	322	10 06 017 5	PEDAL DIREITO COMPLETO
ARRUELA 8 300HV	10289803	42	1	328	10 40 689 8	AR CONDICIONADO
ARRUELA 8 300HV	10289803	102	1	328	10 40 689 8	AR CONDICIONADO
ARRUELA 8 300HV	10289803	63	6	385	10 04 851 7	TANQUE HIDRAULICO INSTA
ARRUELA 8 300HV	10289803	12	8	445	10 35 865 5	REVESTIMENTO
ARRUELA 8 300HV	10289803	52	4	446	10 35 865 5	REVESTIMENTO
ARRUELA 8 300HV	10289803	134	1	448	10 35 865 5	REVESTIMENTO
ARRUELA 8 300HV	10289803	155	2	449	10 35 865 5	REVESTIMENTO
ARRUELA 8 300HV	10289803	191	2	450	10 35 865 5	REVESTIMENTO
ARRUELA 8 300HV	10289803	8	8	453	10 05 816 9	CAPOTA DO MOTOR
ARRUELA 8 300HV	10289803	22	4	456	10 05 183 8	CAPO DIREITO
ARRUELA 8 300HV	10289803	61	2	463	10 35 826 4	CAIXA DE FERRAMENTAS
ARRUELA 8 300HV	10289803	84	2	463	10 35 826 4	CAIXA DE FERRAMENTAS
ARRUELA 8 300HV	10289803	140	6	481	70 28 759	PÁRA-BRISA SUPERIOR
ARRUELA 8 300HV	10289803	180	2	484	70 28 769	PORTA DA CABINE DO OPERA
ARRUELA 8 300HV	10289803	200	2	484	70 28 769	PORTA DA CABINE DO OPERA
ARRUELA 8 300HV	10289803	480	3	491	10 29 033 7	INSTALACAO ELETRICA
ARRUELA 8 300HV	10289803	760	3	492	10 29 033 7	INSTALACAO ELETRICA
ARRUELA 8 300HV	10289803	480	3	494	10 48 808 7	INSTALACAO ELETRICA
ARRUELA 8 300HV	10289803	760	3	494	10 48 808 7	INSTALACAO ELETRICA
ARRUELA 8 300HV	10289803	550	1	496	10 29 036 3	KIT DO MOTOR DO LIMPADOR
ARRUELA 8 300HV	10289803	550	1	497	70 28 884	KIT DO MOTOR DO LIMPADOR
ARRUELA 8 300HV	10289803	120	4	503	10 29 026 4	PEÇAS DE MONTAGEM
ARRUELA 8 300HV	10289803	190	4	503	10 29 026 4	PEÇAS DE MONTAGEM
ARRUELA 8 300HV	10289803	158	36	515	11 10 255 3	INSTALAÇÃO ELÉTRICA
ARRUELA 8 300HV	10289803	251	3	515	11 10 255 3	INSTALAÇÃO ELÉTRICA
ARRUELA 8 300HV	10289803	31	13	521	10 35 866 5	BATERIA - INSTALACAO
ARRUELA 8 300HV	10289803	38	6	529	10 04 852 5	TANQUE COMBUSTIVEL INSTA
ARRUELA 8 300HV	10289803	38	6	530	10 49 836 0	TANQUE COMBUSTIVEL INSTA
ARRUELA 8 300HV	10289803	38	12	531	11 10 262 1	TANQUE COMBUSTIVEL INSTA
ARRUELA 8 300HV	10289803	34	6	534	10 06 759 6	TANQUE DE COMBUSTÍVEL
ARRUELA 8 300HV	10289803	34	6	535	10 49 835 9	TANQUE DE COMBUSTÍVEL
ARRUELA 8 300HV	10289803	7	8	751	10 35 860 1	ALARME DE TRANSLACAO
ARRUELA 8 300HV	10289803	29	2	756	11 10 281 8	KIT MÁQUINA BASE
ARRUELA 8 300HV	11693876	61	4	284	94 02 247 7	ASSENTO DO OPERADOR
ARRUELA 8,4 30HV	12203968	31	8	200	10 21 851 3	RADIADOR COMBINADO
ARRUELA 8,4 30HV	12203968	31	22	203	11 69 472 6	RADIADOR COMBINADO
ARRUELA 8,4 30HV	12203968	43	1	328	10 40 689 8	AR CONDICIONADO
ARRUELA 8,4 30HV	12203968	20	4	341	11 00 707 2	TRILHO DO BANCO DO OPERA
ARRUELA 8,4 30HV	12203968	17	2	453	10 05 816 9	CAPOTA DO MOTOR
ARRUELA 8,4 30HV	12203968	8	2	462	10 35 826 4	CAIXA DE FERRAMENTAS
ARRUELA 8,4 30HV	12203968	26	2	545	10 37 464 5	TAMPA
ARRUELA 9,5X15X0,2	10022769	2	2	333	10 02 211 7	CARCACA DE CONDUCAO DE
ARRUELA 9,5X15X0,2	10022769	3	2	339	10 02 277 7	GRADE DE CIRCULACAO DE A
ARRUELA DE AJUSTE	10008421	12	1	208	56 19 045	MOTOR DE PISTÃO AXIAL
ARRUELA DE AJUSTE	10008421	12	1	400	10 00 807 7	BOMBA
ARRUELA DE AJUSTE	10216703	20	1	402	10 22 042 7	MECANISMO DE ACIONAMENT
ARRUELA DE AJUSTE	10216704	20	1	402	10 22 042 7	MECANISMO DE ACIONAMENT

Designação	Artigo	Item	Quanti	Página	Módulo	Designação
ARRUELA DE AJUSTE	10216705	20	1	402	10 22 042 7	MECANISMO DE ACIONAMENT
ARRUELA DE AJUSTE	10216706	20	1	402	10 22 042 7	MECANISMO DE ACIONAMENT
ARRUELA DE AJUSTE	7028182	19	2	177	70 28 075	UNIDADE DE CONTROLE
ARRUELA DE AJUSTE 18,5X2	7381354	22	1	817	90 74 112	PLACA DE LIGAÇÃO NG 090
ARRUELA DE AJUSTE 50,15X6	4002229	44	1	828	92 68 015	KIT DE REPARO NG 090
ARRUELA DE AJUSTE 55X65X	7380531	44	1	829	92 68 016	KIT DE REPARO NG 125
ARRUELA DE AJUSTE 63X70X	10331853	59	2	158	10 11 886 0	REDUTOR DISTRIBUICAO BO
ARRUELA DE AJUSTE 8	4635197	30	4	320	10 05 981 8	PRÉ-COMANDO DE PEDAL M
ARRUELA DE APOIO	10008425	11	1	157	10 00 809 5	MECANISMO DE ACIONAMENT
ARRUELA DE APOIO	10008425	11	1	206	10 00 840 5	MECANISMO DE ACIONAMENT
ARRUELA DE APOIO	10287892	11	1	171	10 28 772 5	MECANISMO DE ACIONAMENT
ARRUELA DE APOIO 35X45X2,	422006601	48	3	222	90 02 197 3	KIT DE MODIFICAÇÃO
ARRUELA DE APOIO 35X45X2,	422006601	48	3	227	90 02 790 4	REDUTOR DE GIRO SAT 325/
ARRUELA DE APOIO S 17X55X	7010008	4	1	667	10 11 646 3	ALTERNADOR PRE-MONTADO
ARRUELA DE APOIO S 28X40X	422001001	5	1	599	12 40 205 5	BALANCIM PRÉ MONTADO
ARRUELA DE APOIO S 28X40X	422001001	5	1	604	90 74 505	BALANCIM PRÉ MONTADO
ARRUELA DE APOIO S 4,9X7,	7380137	41	2	323	90 79 258	MANETE DE COMANDO VG7 2-
ARRUELA DE APOIO S 4,9X7,	7380137	49	2	742	90 79 264	KIT DE MODIFICAÇÃO VG7-2/3
ARRUELA DE APOIO S 4,9X7,	7380138	42	2	323	90 79 258	MANETE DE COMANDO VG7 2-
ARRUELA DE APOIO S 4,9X7,	7380138	50	2	742	90 79 264	KIT DE MODIFICAÇÃO VG7-2/3
ARRUELA DE APOIO S 4,9X7,	7380138	50	8	807	10 11 856 1	MANETE DE COMANDO VG6-8
ARRUELA DE APOIO S 4,9X7,	7380138	50	8	808	11 37 560 6	MANETE DE COMANDO VG6-8
ARRUELA DE APOIO S 45X62X	7380276	10	1	834	98 85 928	KIT DE ARRUELAS
ARRUELA DE APOIO S 45X62X	7380165	11	1	834	98 85 928	KIT DE ARRUELAS
ARRUELA DE APOIO S 45X62X	7380275	12	1	834	98 85 928	KIT DE ARRUELAS
ARRUELA DE APOIO S 45X62X	7380274	13	1	834	98 85 928	KIT DE ARRUELAS
ARRUELA DE APOIO S 52X70X	7380698	10	1	405	98 89 196	KIT DE ARRUELAS NG 140-150
ARRUELA DE APOIO S 52X70X	7380697	10	1	405	98 89 196	KIT DE ARRUELAS NG 140-150
ARRUELA DE APOIO S 52X70X	7380696	10	1	405	98 89 196	KIT DE ARRUELAS NG 140-150
ARRUELA DE APOIO S 52X70X	7380695	10	1	405	98 89 196	KIT DE ARRUELAS NG 140-150
ARRUELA DE FECHAMENTO	7015815	16	4	383	10 04 851 7	TANQUE HIDRAULICO INSTA
ARRUELA DE FECHAMENTO	7015815	16	4	386	10 35 863 4	TANQUE HIDRAULICO INSTA
ARRUELA DE PRESSÃO	7025121	21	2	333	10 02 211 7	CARCACA DE CONDUCAO DE
ARRUELA DE PRESSÃO 10	4600009	35	12	200	10 21 851 3	RADIADOR COMBINADO
ARRUELA DE PRESSÃO 10	4600009	35	12	203	11 69 472 6	RADIADOR COMBINADO
ARRUELA DE PRESSÃO 10	4600033	42	3	272	10 49 880 5	POSTO DE COMANDO - PEÇA
ARRUELA DE PRESSÃO 12	4600022	25	16	801	10 13 303 7	BOMBA HIDRÁULICA DUPLA
ARRUELA DE PRESSÃO 4	4600036	4	3	332	10 02 208 3	BOCAL DE AR
ARRUELA DE PRESSÃO 4	4600036	4	10	335	11 00 359 4	CARCAÇA
ARRUELA DE PRESSÃO 4	4600036	4	3	337	10 02 207 8	CANTONEIRA DE MONTAGEM
ARRUELA DE PRESSÃO A 16	4240007	4	4	92	10 65 167 8	RODA GUIA - INSTALAÇÃO D7
ARRUELA DE PRESSÃO A 16	4240007	3	4	93	12 21 972 1	RODA GUIA - INSTALAÇÃO D7
ARRUELA DE PRESSÃO A 8	4000499	29	29	200	10 21 851 3	RADIADOR COMBINADO
ARRUELA DE PRESSÃO A 8	4000499	29	29	203	11 69 472 6	RADIADOR COMBINADO
ARRUELA DE PRESSÃO B 16	4980761	45	2	201	10 21 851 3	RADIADOR COMBINADO
ARRUELA DE PRESSÃO B 5	4240000	6	1	668	10 11 871 2	KIT DE PEÇAS
ARRUELA DE PRESSÃO B 6	4600218	4	4	152	74 05 006	FLANGE BFW 28L
ARRUELA DE PRESSÃO B 6	4600218	3	4	153	76 16 897	CONEXÃO FLAGEADA L
ARRUELA DE PRESSÃO B 6	4901089	4	1	668	10 11 871 2	KIT DE PEÇAS
ARRUELA DE PRESSÃO B 8	4240002	46	2	201	10 21 851 3	RADIADOR COMBINADO
ARRUELA DE PRESSÃO B 8	4240002	46	2	203	11 69 472 6	RADIADOR COMBINADO
ARRUELA DE PRESSÃO B 8	4600615	2	1	668	10 11 871 2	KIT DE PEÇAS
ARRUELA DE PRESSÃO VS 10	4229913	16	4	137	10 49 819 9	FILTRO DE AR - INSTALAÇÃO
ARRUELA DE PRESSÃO VS 10	4229913	9	2	466	10 35 823 0	PORTA LATERAL DIANTEIRA
ARRUELA DE PRESSÃO VS 10	4229913	20	2	467	10 02 525 4	FECHO DA PORTA
ARRUELA DE PRESSÃO VS 12	4900093	49	2	357	10 35 862 9	ARREFECIMENTO DE OLEO
ARRUELA DE PRESSÃO VS 12	4900093	20	2	469	10 35 387 9	FECHADURA DA PORTA
ARRUELA DE PRESSÃO VS 16	10006372	22	2	226	90 02 790 4	REDUTOR DE GIRO SAT 325/
ARRUELA DE PRESSÃO VS 16	10006372	24	8	801	10 13 303 7	BOMBA HIDRÁULICA DUPLA
ARRUELA DE PRESSÃO VS 16	4239009	50	4	158	10 11 886 0	REDUTOR DISTRIBUICAO BO

Designação	Artigo	Item	Quanti	Página	Módulo	Designação
ARRUELA DE PRESSÃO VS 5	423910501	260	15	515	11 10 255 3	INSTALAÇÃO ELÉTRICA
ARRUELA DE PRESSÃO VS 6	423910601	49	2	158	10 11 886 0	REDUTOR DISTRIBUICAO BO
ARRUELA DE PRESSÃO VS 6	423910601	10	4	469	10 35 387 9	FECHADURA DA PORTA
ARRUELA DE PRESSÃO VS 8	423910801	53	4	272	10 49 880 5	POSTO DE COMANDO - PEÇA
ARRUELA DE PRESSÃO VS 8	423910801	71	2	295	97 58 815 01	PLACA ELETRÔNICA
ARRUELA DE PRESSÃO VS 8	423910801	63	6	387	10 35 863 4	TANQUE HIDRAULICO INSTA
ARRUELA DE PRESSÃO VS 8	423910801	507	2	414	10 35 863 8	INSTALAÇÃO BLOCO DE VÁL
ARRUELA DE PRESSÃO VS 8	423910801	27	2	542	10 49 878 6	ESPELHO EXTERNO - INSTALA
ARRUELA DENTADA	7028855	170	1	490	10 29 033 7	INSTALACAO ELETRICA
ARRUELA DENTADA	7028855	170	1	493	10 48 808 7	INSTALACAO ELETRICA
ARRUELA DENTADA	7363743	10	2	456	10 05 183 8	CAPO DIREITO
ARRUELA DENTADA	7363743	12	2	457	10 35 822 9	PORTA LATERAL ESQUERDA
ARRUELA DENTADA A 6,4	4002259	9	2	255	10 29 300 3	BLOCO DE DISTRIBUIÇÃO MX-
ARRUELA DENTADA A 6,4	4002259	9	2	719	10 66 480 4	BLOCO DE DISTRIBUIÇÃO MX-
ARRUELA DENTADA A 6,4	4002259	9	2	733	10 66 475 5	BLOCO DE DISTRIBUIÇÃO MX-
ARRUELA DESLIZANTE 62X13	10124982	15	1	234	90 74 125	KIT DE REPARO NG 090
ARRUELA DESLIZANTE 62X13	10124982	15	1	823	90 74 122	KIT DE REPARO NG 100
ARRUELA DESLIZANTE 72X15	9889809	15	1	190	98 89 983	KIT DE REPARO NG 140 REC
ARRUELA DESLIZANTE 72X15	9889809	15	1	191	98 89 984	KIT DE REPARO NG 140
ARRUELA DESLIZANTE 72X15	9889809	15	1	825	10 13 975 2	KIT DE REPARO NG 140-150
ARRUELA ESFÉRICA C 10,5X2	4980377	5	1	624	10 11 659 1	BICO INJETOR COM ELEMEN
ARRUELA T 5,5X18X2	10022767	3	2	333	10 02 211 7	CARCACA DE CONDUCAO DE
ARRUELA T 5,5X18X2	10022767	5	2	339	10 02 277 7	GRADE DE CIRCULACAO DE A
ASSENTO	11082671	1	1	285	11 10 016 6	PARTE SUPERIOR DE ASSENT
ASSENTO DA VÁLVULA	10220818	3	1	169	10 22 081 6	VÁLVULA DE PARTIDA FRIA
ASSENTO DA VÁLVULA	7021783	5	1	437	50 08 855	VÁLVULA DE RETORNO
ASSENTO DA VÁLVULA	7021784	6	1	437	50 08 855	VÁLVULA DE RETORNO
ASSENTO DA VÁLVULA	7026127	40	1	112	10 00 201 1	VALVULA DE FREIO
ASSENTO DA VÁLVULA	7028155	6	1	168	10 22 063 5	VALVULA INTERRUPTORA
ASSENTO DA VÁLVULA	7028301	20	1	374	70 28 300	VÁLVULA LIMITADORA DE PR
ASSENTO DA VÁLVULA	9133637	11	1	563	10 11 795 1	VALVULA DE REGULAGEM FI
ASSENTO DA VÁLVULA	9133637	11	1	564	90 75 134	VALVULA DE REGULAGEM FI
ASSENTO DA VÁLVULA	9265400	20	1	323	90 79 258	MANETE DE COMANDO VG7 2-
ASSENTO DA VÁLVULA	9265400	20	1	325	90 79 259	MANETE DE COMANDO VG7 2-
ASSENTO DO OPERADOR	10043632	50	1	272	10 49 880 5	POSTO DE COMANDO - PEÇA
ASSENTO DO OPERADOR	94022477	50	1	272	10 49 880 5	POSTO DE COMANDO - PEÇA
ATUADOR	6204367	5	1	315	10 05 507 1	INTERRUPTOR - INSTALAÇÃO
AVANCO DO TETO DA CABINE	10020982	690	1	505	10 29 026 4	PEÇAS DE MONTAGEM
BALANCIM	9074508	1	1	600	12 40 205 3	BALANCIM PRE-MONTAGEM
BALANCIM PRE-MONTAGEM	12402053	3	2	599	12 40 205 5	BALANCIM PRÉ MONTADO
BALANCIM PRE-MONTAGEM	9074507	3	2	604	90 74 505	BALANCIM PRÉ MONTADO
BALANCIM PRÉ MONTADO	12402055	2	1	601	90 79 861	CAVALETE BALANCINS COM
BALANCIM PRÉ MONTADO	9074505	2	1	601	90 79 861	CAVALETE BALANCINS COM
BALANCO GIRATORIO	10008085	7	1	400	10 00 807 7	BOMBA
BALANCO GIRATORIO	9276979	16	1	815	90 73 588	MECANISMO DE ACIONAMEN
BANCO COM SUSP. PNEUMAT	11000856	10	1	284	94 02 247 7	ASSENTO DO OPERADOR
BASE DE FIXACAO	11003600	32	1	336	11 00 359 4	CARCAÇA
BASE DE RELE	6002816	970	4	520	99 47 695	INSTALAÇÃO ELÉTRICA E50
BASE DE SOQUETE	6001681	978	4	520	99 47 695	INSTALAÇÃO ELÉTRICA E50
BASE DO ASSENTO	10165637	65	1	282	10 04 363 2	ASSENTO DO OPERADOR
BASE DO ASSENTO	94025779	20	1	284	94 02 247 7	ASSENTO DO OPERADOR
BASE DO DISPLAY	7373268	20	1	310	56 18 923	CONSOLE DE COMANDO DIRE
BATENTE	10112636	154	2	449	10 35 865 5	REVESTIMENTO
BATENTE	7363930	133	1	448	10 35 865 5	REVESTIMENTO
BATENTE	7363930	10	4	461	10 07 033 5	TAMPA CENTRAL
BATENTE	7363930	7	2	462	10 35 826 4	CAIXA DE FERRAMENTAS
BATENTE	7363930	25	1	464	10 08 276 3	TAMPA
BATENTE	7363930	17	1	545	10 37 464 5	TAMPA
BATERIA	613200116	2	2	521	10 35 866 5	BATERIA - INSTALACAO
BATERIA - INSTALACAO	10358665	25	1	514	11 10 255 3	INSTALAÇÃO ELÉTRICA

Designação	Artigo	Item	Quanti	Página	Módulo	Designação
BATERIA DE AQUECIMENTO	10022070	17	1	335	11 00 359 4	CARCAÇA
BICO DE LUBRIFICACAO DO P	9073796	1	1	562	90 73 795	ARREFECIMENTO DO PISTAO
BICO INJ. DE TUBO DE PRES	9075395	191	6	559	10 11 682 5	MOTOR BÁSICO D936 L HIGH 3
BICO INJ. DE TUBO DE PRES	9075395	191	1	625	10 11 709 3	KIT DE REPARO DO BICO INJE
BICO INJ. DE TUBO DE PRES	9075395	191	1	628	10 11 585 4	KIT DE VEDACAO DO BICO IN
BICO INJETOR	10027735	1	1	626	10 11 658 7	INJETOR
BICO INJETOR COM ELEMEN	10116591	190	6	551	10 11 714 5	MOTOR DIESEL D936 L A6 190
BICO PULVERIZADOR	7028867	650	1	501	10 29 036 1	BRACO DO LIMPADOR
BICO PULVERIZADOR	7028867	650	1	502	70 28 866	BRACO DO LIMPADOR
BIELA	11348054	1	1	585	90 76 459	BIELA
BIELA	9076459	60	6	557	10 11 682 5	MOTOR BÁSICO D936 L HIGH 3
BIELA	9079996	1	1	587	11 34 805 4	BIELA
BLOCO	10068108	55	1	753	11 10 291 2	MONTAGEM CILINDRO DE ELE
BLOCO	10073399	25	1	420	10 35 863 7	TUBULACOES PRESSAO INS
BLOCO	10408898	8	1	775	11 45 729 6	CILINDRO DE ELEVACAO DIRE
BLOCO	10408898	8	1	778	11 45 729 7	CILINDRO DE ELEVACAO ESQ
BLOCO	9871977	4	1	759	10 85 361 0	CILINDRO HIDR. COM ACESS
BLOCO	9896609	30	1	344	10 35 862 3	INSTALACAO HDRAULICA
BLOCO DE COMANDO	10113860	60	1	407	10 35 863 8	INSTALAÇÃO BLOCO DE VÁL
BLOCO DE DISTRIBUICAO	10009784	17	2	253	10 66 472 2	BLOCO DE DISTRIBUIÇÃO SX
BLOCO DE DISTRIBUIÇÃO	10116036	84	1	635	10 11 628 5	TUBULAÇÃO DE COMBUSTÍVE
BLOCO DE DISTRIBUIÇÃO	9355505	30	1	350	10 35 862 7	INSTALAÇÃO HIDRÁULICA
BLOCO DE DISTRIBUIÇÃO MX-	10293001	15	1	247	12 84 952 6	LUBRIFICAÇÃO CENTRALIZAD
BLOCO DE DISTRIBUIÇÃO MX-	10293003	1	1	254	10 29 300 1	BLOCO DE DISTRIBUIÇÃO MX-
BLOCO DE DISTRIBUIÇÃO MX-	10664804	1	1	720	10 66 482 5	BLOCO DE DISTRIBUIÇÃO MX-
BLOCO DE DISTRIBUIÇÃO MX-	10664825	2	1	721	10 82 841 3	LUBRIFICAÇÃO CENTRALIZAD
BLOCO DE DISTRIBUIÇÃO MX-	10664755	1	1	732	10 66 478 2	BLOCO DE DISTRIBUIÇÃO MX-
BLOCO DE DISTRIBUIÇÃO MX-	10664782	4	1	730	10 39 639 6	LUBRIFICAÇÃO CENTRALIZAD
BLOCO DE DISTRIBUIÇÃO SX	10664719	50	1	717	10 82 841 4	LUBRIFICACAO CENTRALIZAD
BLOCO DE DISTRIBUIÇÃO SX	10664722	1	1	251	10 66 471 9	BLOCO DE DISTRIBUIÇÃO SX
BLOCO DE VÁLVULAS DE CO	10042729	10	1	346	10 06 379 3	UNIDADE DE COMANDO DE O
BLOCO DO MANCAL	10498777	10	1	736	11 10 258 7	CAÇAMBA RETRO HD 1800MM
BLOCO DO MOTOR	10115733	1	1	561	10 11 577 8	BLOCO DO MOTOR
BLOCO DO MOTOR	10115778	1	1	560	12 82 483 7	CÁRTER COMPLETO COM CIL
BOBINA MAGNÉTICA	10101523	157	1	744	10 00 348 5	VÁLVULA DIRECIONAL
BOBINA MAGNÉTICA	10333044	2	1	366	56 15 344	VÁLVULA SOLENÓIDE
BOBINA MAGNÉTICA	6204416	2	1	368	10 01 872 5	VÁLVULA DIRECIONAL
BOBINA MAGNÉTICA	6905956	1	1	148	10 29 787 3	VÁLVULA DE CONTROLE
BOCAL	12838220	1	1	643	90 77 279	LUVA DE CONEXÃO MONTAGE
BOCAL	5612246	31	2	178	70 28 075	UNIDADE DE CONTROLE
BOCAL	7020577	44	1	431	10 33 073 6	VÁLVULA DE COMUT.DE MOV
BOCAL	7380824	20	1	818	98 82 832	VÁLVULA DE COMANDO
BOCAL COMPL DE ABASTECI	10119031	1	1	578	10 11 903 0	ABASTECIMENTO DE ÓLEO
BOCAL DE AR	10022083	14	1	335	11 00 359 4	CARCAÇA
BOCAL DE MEDIÇÃO M16X1,5	5607605	53	1	753	11 10 291 2	MONTAGEM CILINDRO DE ELE
BOCAL DE MEDIÇÃO VKA3 10	7406864	24	1	142	10 04 853 9	INSTALACAO BOMBA E EMBR
BOCAL DE MEDIÇÃO VKA3 10	7406864	32	1	346	10 06 379 3	UNIDADE DE COMANDO DE O
BOCAL DE MEDIÇÃO VKA3 16	7409923	46	1	359	10 35 862 4	INSTALACAO HIDRAULICA
BOCAL DE MEDIÇÃO VKA3 22	7019891	37	1	142	10 04 853 9	INSTALACAO BOMBA E EMBR
BOCAL DE SUCÇÃO	10063835	60	1	145	10 04 853 9	INSTALACAO BOMBA E EMBR
BOCAL DE SUCÇÃO	10072499	10	1	383	10 04 851 7	TANQUE HIDRAULICO INSTA
BOCAL DE SUCÇÃO	10072499	10	1	386	10 35 863 4	TANQUE HIDRAULICO INSTA
BOCAL DE TUBO DE PRESSA	9074677	1	1	627	90 75 395	BICO INJ. DE TUBO DE PRES
BOCAL DLLA 145 P 1503	10289344	3	1	626	10 11 658 7	INJETOR
BOCAL INTERMEDIARIO	9890958	2	1	349	93 99 179	CONEXAO P/ ACUMULADOR
BOCAL LUBRIFICANTE	9074510	3	1	600	12 40 205 3	BALANCIM PRE-MONTAGEM
BOCAL ROSCADO GAI 10L G1/	7364696	27	1	267	11 38 342 7	INST. HIDR. MANETE ESQUE
BOCAL ROSCADO GAI 10L G1/	7364696	26	2	268	11 38 342 9	INST. HIDRAULICA DA MANET
BOCAL ROSCADO GAI 10L G1/	7364696	204	1	361	10 06 380 1	INSTALACAO HIDRAULICA
BOCAL ROSCADO GAI 10L G1/	7364696	13	1	754	10 85 472 4	PEÇAS MONT.- MÁQUINA BAS

Designação	Artigo	Item	Quanti	Página	Módulo	Designação
BOMBA	10008077	1	1	147	10 29 786 7	BOMBA HIDRÁULICA
BOMBA	11834731	8	1	796	11 69 501 2	KIT DE ABASTECIMENTO DE U
BOMBA ALIMENTAÇÃO COMB	9078681	1	1	622	90 78 680	BOMBA DE COMBUSTÍVEL AC
BOMBA CIRCUITO ARREFECI	9884140	81	1	159	10 11 886 0	REDUTOR DISTRIBUICAO BO
BOMBA DE COMBUSTÍVEL AC	9078680	211	1	559	10 11 682 5	MOTOR BÁSICO D936 L HIGH 3
BOMBA DE ENCHIMENTO	10009239	10	1	538	10 08 428 6	KIT DE FERRAMENTAS
BOMBA DE ENGRENAGENS	10282647	1	1	165	57 17 149	REPARO DA BOMBA
BOMBA DE ENGRENAGENS	10291544	30	1	164	11 36 100 1	BOMBA HIDR. DE VÁRIAS VIA
BOMBA DE INJECAO - ACESS	10116839	170	6	558	10 11 682 5	MOTOR BÁSICO D936 L HIGH 3
BOMBA DE LUBRIFICACAO	10228443	2	1	248	10 06 750 0	LUBRIFICAÇÃO CENTR. AUT
BOMBA DE PISTÃO AXIAL	11342491	20	1	164	11 36 100 1	BOMBA HIDR. DE VÁRIAS VIA
BOMBA DE SUCÇÃO COM FIXA	9080278	141	1	551	10 11 714 5	MOTOR DIESEL D936 L A6 190
BOMBA DE SUCÇÃO PRÉ-MO	9080277	1	1	617	90 80 278	BOMBA DE SUCÇÃO COM FIXA
BOMBA DE ÁGUA PRÉ-MONT	10132817	1	1	654	90 80 301	KIT MONTAGEM DA BOMBA A
BOMBA DE ÓLEO DE LUBRIFI	9072781	1	1	616	90 74 796	BOMBA ÓLEO LUBR. C/FIX.
BOMBA HIDR. DE VÁRIAS VIA	11361001	100	1	145	10 04 853 9	INSTALACAO BOMBA E EMBR
BOMBA HIDRÁULICA	10289177	50	1	144	10 04 853 9	INSTALACAO BOMBA E EMBR
BOMBA HIDRÁULICA	10297867	1	1	146	10 28 917 7	BOMBA HIDRÁULICA
BOMBA HIDRÁULICA DUPLA	10133037	2	1	150	10 13 461 8	AGREAGADO CIRCUITOS MU
BOMBA INJETORA	10116257	1	1	621	10 11 683 9	BOMBA DE INJECAO - ACESS
BOMBA MANUAL	11825956	10	1	47	11 81 700 8	ACESSÓRIOS 210L
BOMBA MANUAL	510160916	911	1	7	.	
BOMBA MANUAL	8145666	100	1	52	90 66 466	ACESSÓRIOS
BOMBA ÓLEO LUBR. C/FIX.	9074796	140	1	558	10 11 682 5	MOTOR BÁSICO D936 L HIGH 3
BORRACHA SANFONADA	10014790	200	1	299	99 68 625	MANETE - LH ESQUERDA
BORRACHA SANFONADA	10014790	200	1	314	99 68 611	MANETE DIREITA
BORRACHA SANFONADA	11066528	9	1	287	11 10 016 7	SUSPENSAO
BORRACHA SANFONADA	7025004	40	1	282	10 04 363 2	ASSENTO DO OPERADOR
BORRACHA SANFONADA	7366620	42	1	282	10 04 363 2	ASSENTO DO OPERADOR
BOTAO	10289975	43	4	282	10 04 363 2	ASSENTO DO OPERADOR
BOTOES DA MANETE ESQUE	10469917	10	1	299	99 68 625	MANETE - LH ESQUERDA
BOTOES MANETE DIREITA	10469918	10	1	314	99 68 611	MANETE DIREITA
BOTÃO	7019156	270	1	484	70 28 769	PORTA DA CABINE DO OPERA
BOTÃO DE PRESSÃO	9968578	40	1	299	99 68 625	MANETE - LH ESQUERDA
BOTÃO DE PRESSÃO	9968580	40	1	314	99 68 611	MANETE DIREITA
BOTÃO ESFÉRICO	7019167	110	1	483	70 28 808	TRAVA ESQUERDA
BOTÃO ESFÉRICO	7019167	310	1	504	10 29 026 4	PEÇAS DE MONTAGEM
BOTÃO ESFÉRICO	7028818	110	1	482	70 28 807	TRAVA DIREITA
BRACADEIRA DE ARCO	7369271	17	1	139	10 36 573 8	SISTEMA DE ESCAPAMENTO
BRACADEIRA DE ARCO	7369271	17	1	140	11 10 293 9	SISTEMA DE ESCAPAMENTO
BRACADEIRA DE ARCO A 106	7621247	18	1	139	10 36 573 8	SISTEMA DE ESCAPAMENTO
BRACADEIRA DE ARCO A 106	7621247	18	1	140	11 10 293 9	SISTEMA DE ESCAPAMENTO
BRACO DO ESPELHO	7019141	820	1	507	10 04 435 3	ESPELHO EXTERNO
BRACO DO LIMPADOR	10290360	620	1	501	10 29 036 1	BRACO DO LIMPADOR
BRACO DO LIMPADOR	10290361	610	1	499	10 29 035 7	LIMPADOR DE PÁRA-BRISA
BRACO DO LIMPADOR	7028866	610	1	500	70 29 426	LIMPADOR DE PÁRA-BRISA
BRACO DO LIMPADOR	7029427	620	1	502	70 28 866	BRACO DO LIMPADOR
BRAÇADEIRA	10217172	14	2	137	10 49 819 9	FILTRO DE AR - INSTALAÇÃO
BRAÇADEIRA DE CABOS	10044344	792	1	492	10 29 033 7	INSTALACAO ELETRICA
BRAÇADEIRA DE CABOS	10044344	792	1	494	10 48 808 7	INSTALACAO ELETRICA
BRAÇADEIRA DE CABOS d=20	7362507	97	4	279	11 38 340 1	APOIO DE BRAÇO LADO DIRE
BRAÇADEIRA DE CABOS d=20	7362507	97	4	302	11 45 228 6	APOIO DE BRAÇO LADO DIRE
BRAÇADEIRA DE CABOS d=20	7362507	97	4	306	12 50 731 7	APOIO DE BRAÇO LADO DIRE
BRAÇADEIRA DE TUBO	10358636	30	1	420	10 35 863 7	TUBULACOES PRESSAO INS
BRAÇADEIRA DE TUBO d=12	7382081	3	2	638	10 11 726 8	SUPORTE DE MONTAGEM
BRAÇADEIRA DE TUBO d=12	7382216	5	1	641	10 11 657 6	PEÇA DE CONEXÃO
BRAÇADEIRA DE TUBO d=69	9079957	6	1	644	10 11 570 3	LINHA DE CONEXAO
BRAÇADEIRA DE TUBO d=69	9079957	6	1	645	10 12 190 9	LINHA DE CONEXAO
BRAÇADEIRA HRBGS 0A G 11	10037727	8	11	9	12 85 910 3	FAROL CPL - INSTALAÇÃO
BRAÇADEIRA HRBGS 0A G 11	10037727	22	14	716	11 10 283 6	KIT MONOBLOCO 6.45M

Designação	Artigo	Item	Quanti	Página	Módulo	Designação
BRAÇADEIRA HRBGS 0A G 11	10037727	17	7	721	10 82 841 3	LUBRIFICAÇÃO CENTRALIZAD
BRAÇADEIRA HRBGS 0A G 11	10037727	22	8	727	11 10 281 7	KIT DE ATUALIZAÇÃO 2.10M
BRAÇADEIRA HRBGS 0A G 11	10037727	12	5	730	10 39 639 6	LUBRIFICAÇÃO CENTRALIZAD
BRAÇADEIRA HRBGS 0A G 8	10037728	20	2	247	12 84 952 6	LUBRIFICAÇÃO CENTRALIZAD
BRAÇADEIRA HRBGS 0A G 8	10037728	8	10	721	10 82 841 3	LUBRIFICAÇÃO CENTRALIZAD
BRAÇADEIRA HRBGS 0A G 8	10037728	15	1	730	10 39 639 6	LUBRIFICAÇÃO CENTRALIZAD
BRAÇADEIRA HRBGS 1 G 8 11	10037725	14	2	721	10 82 841 3	LUBRIFICAÇÃO CENTRALIZAD
BRAÇADEIRA HRBGS 1 G 8 11	10037725	40	8	731	10 39 639 6	LUBRIFICAÇÃO CENTRALIZAD
BRAÇADEIRA HRBGS 1 G 8 8	10037726	25	2	247	12 84 952 6	LUBRIFICAÇÃO CENTRALIZAD
BRAÇADEIRA HRBGS 1 G 8 8	10037726	5	3	721	10 82 841 3	LUBRIFICAÇÃO CENTRALIZAD
BRAÇADEIRA HRBGS 1 G 8 8	10037726	9	12	730	10 39 639 6	LUBRIFICAÇÃO CENTRALIZAD
BRAÇADEIRA HRGBS 1 G 11 1	10037724	20	14	716	11 10 283 6	KIT MONOBLOCO 6.45M
BRAÇADEIRA HRGBS 1 G 11 1	10037724	11	4	721	10 82 841 3	LUBRIFICAÇÃO CENTRALIZAD
BRAÇADEIRA HRGBS 1 G 11 1	10037724	20	16	727	11 10 281 7	KIT DE ATUALIZAÇÃO 2.10M
BRAÇADEIRA HRGBS 1 G 11 1	10037724	20	4	756	11 10 281 8	KIT MÁQUINA BASE
BRAÇO DA CAÇAMBA 2,10M	11102806	215	1	7	.	
BRAÇO DA CAÇAMBA 2,10M	11102808	2	1	725	11 10 280 7	BRAÇO DA CAÇAMBA 2.10M
BRAÇO DA CAÇAMBA 2.10M	11102807	2	1	723	11 10 280 6	BRAÇO DA CAÇAMBA 2,10M
BUCHA	10022782	12	2	333	10 02 211 7	CARCACA DE CONDUCAO DE
BUCHA	10028992	2	2	94	10 00 454 6	RODA GUIA B6
BUCHA	10216741	43	1	398	11 49 189 0	PLACA DE LIGAÇÃO
BUCHA	11003782	8	2	89	11 60 010 7	ROLAMENTO DE ESFERA D7
BUCHA	11004094	9	1	91	10 65 167 7	ROLETE SUPERIOR D7
BUCHA	11823089	2	2	79	12 22 100 1	RODA GUIA
BUCHA	12505756	3	2	325	90 79 259	MANETE DE COMANDO VG7 2-
BUCHA	5617471	150	1	421	10 30 079 8	VALVULA DE RETENCAO
BUCHA	7019122	350	2	504	10 29 026 4	PEÇAS DE MONTAGEM
BUCHA	7020573	39	1	431	10 33 073 6	VÁLVULA DE COMUT.DE MOV
BUCHA	7028816	290	1	482	70 28 807	TRAVA DIREITA
BUCHA	7028816	290	1	483	70 28 808	TRAVA ESQUERDA
BUCHA	9265394	2	1	318	90 74 482	CR TACO
BUCHA	9265394	14	2	323	90 79 258	MANETE DE COMANDO VG7 2-
BUCHA	9265394	2	1	743	90 79 277	CR TACO
BUCHA	9277898	27	1	815	90 73 588	MECANISMO DE ACIONAMEN
BUCHA	9962061	2	1	762	96 44 648	CILINDRO HIDRÁULICO
BUCHA 14/16X10	7362583	5	2	326	94 76 369	PLACA DE DEGRAU MONT. E
BUCHA 14/16X10	7362583	10	2	741	90 79 392	PLACA DE DEGRAU MONT. D
BUCHA A1 80/95X80	10820900	31	2	729	11 10 280 8	BRAÇO DA CAÇAMBA 2,10M
BUCHA B1 100/120X120	10399732	30	2	729	11 10 280 8	BRAÇO DA CAÇAMBA 2,10M
BUCHA B1 100/120X120	10399732	32	2	729	11 10 280 8	BRAÇO DA CAÇAMBA 2,10M
BUCHA B1 100/120X120	10399732	3	2	740	10 35 875 0	PEÇA DE LIGAÇÃO
BUCHA B1 110/130X135	10820891	4	2	740	10 35 875 0	PEÇA DE LIGAÇÃO
BUCHA CILINDRICA	9080084	1	1	565	90 73 083	CILINDRO
BUCHA COM FLANGE	11004093	8	1	91	10 65 167 7	ROLETE SUPERIOR D7
BUCHA COM FLANGE 45/50X2	9888448	2	2	696	90 77 384	CARCACA DO MANCAL PRE-
BUCHA COM FLANGE 45/50X2	9888448	2	1	697	90 77 717	CARCACA DO MANCAL PRE-
BUCHA DA BIELA	11348053	3	1	587	11 34 805 4	BIELA
BUCHA DE AÇO A1 130/160X14	11817818	10	2	718	11 10 294 4	LANÇA MONOBLOCO 6.45M
BUCHA DE MANCAL DESLIZAN	9074969	2	2	655	10 13 281 7	BOMBA DE ÁGUA PRÉ-MONT
BUCHA DE MANCAL DESLIZAN	9889290	3	1	697	90 77 717	CARCACA DO MANCAL PRE-
BUCHA DE VÁLVULA	10220660	2	1	168	10 22 063 5	VALVULA INTERRUPTORA
BUCHA DE VÁLVULA	7028168	2	2	177	70 28 075	UNIDADE DE CONTROLE
BUCHA DE VÁLVULA	7414522	50	2	112	10 00 201 1	VALVULA DE FREIO
BUCHA DISTANCIADORA	10022783	5	6	333	10 02 211 7	CARCACA DE CONDUCAO DE
BUCHA DISTANCIADORA	7028907	670	5	505	10 29 026 4	PEÇAS DE MONTAGEM
BUCHA DO BALANCIM	10119562	2	1	600	12 40 205 3	BALANCIM PRE-MONTAGEM
BUCHA DO BALANCIM	9080027	2	1	605	90 74 507	BALANCIM PRE-MONTAGEM
BUCHA DO EIXO DE COMAND	9073745	10	7	561	10 11 577 8	BLOCO DO MOTOR
BUCHA EXPANSIVA	9110411	991	1	770	96 44 625	PISTÃO
BUCHA EXPANSIVA D=170MM	9110412	991	1	769	94 04 038 9	PISTÃO

Designação	Artigo	Item	Quanti	Página	Módulo	Designação
BUCHA GUIA	11356724	11	2	799	90 73 888	MOTOR HIDRÁULICO
BUCHA MANCAL	10220637	3	1	170	10 28 264 7	BOMBA DE ENGRENAGENS
BUCHA MANCAL	12256125	6	1	398	11 49 189 0	PLACA DE LIGAÇÃO
BUCHA MANCAL	12256127	44	1	398	11 49 189 0	PLACA DE LIGAÇÃO
BUCHA MANCAL 40/44X13	9267183	7	1	618	90 72 781	BOMBA DE ÓLEO DE LUBRIFI
BUCHA MANCAL 40/44X13	9267183	7	1	619	90 80 277	BOMBA DE SUCÇÃO PRÉ-MO
BUCHA MANCAL MB 12/14X10	7381855	15	4	185	98 84 140	BOMBA CIRCUITO ARREFECI
BUCHA RAUTE 110/130X90	9593363	1	1	762	96 44 648	CILINDRO HIDRÁULICO
BUCHA ROSCADA	9079078	9	1	602	10 12 038 4	CABEÇOTE CILÍNDRICO
BUCHA SPIRAL 100/120X90	9170985	1	2	760	11 68 144 7	CILINDRO HIDRÁULICO
BUCHA SPIRAL 100/120X90	9170985	1	2	761	95 93 026	CILINDRO HIDRÁULICO
BUCHA TERMINAL	5209131	30	1	84	12 22 023 4	ELO MESTRE DA CORRENTE
BUZINA	6204593	32	1	529	10 04 852 5	TANQUE COMBUSTIVEL INSTA
BUZINA	6204593	32	1	530	10 49 836 0	TANQUE COMBUSTIVEL INSTA
BUZINA	6204593	32	1	531	11 10 262 1	TANQUE COMBUSTIVEL INSTA
CABECA DO FILTRO COMBUS	10046958	4	1	632	10 22 281 9	PRÉ-FILTRO COMBUST.COM
CABECA DO FILTRO COMBUS	12455531	2	1	631	10 12 580 1	FILTRO DE COMBUSTÍVEL
CABEÇOTE - PRÉ MONTADO	10119427	1	1	590	90 79 850	MONTAGEM DO CABEÇOTE D
CABEÇOTE - PRÉ MONTADO	10120364	1	1	590	90 79 850	MONTAGEM DO CABEÇOTE D
CABEÇOTE - PRÉ MONTADO	10141554	1	1	590	90 79 850	MONTAGEM DO CABEÇOTE D
CABEÇOTE CILÍNDRICO	10120384	1	1	591	10 14 155 4	CABEÇOTE - PRÉ MONTADO
CABEÇOTE CILÍNDRICO	10120384	1	1	597	10 11 942 7	CABEÇOTE - PRÉ MONTADO
CABEÇOTE CILÍNDRICO	10120384	1	1	598	10 12 036 4	CABEÇOTE - PRÉ MONTADO
CABEÇOTE CILÍNDRICO	9079952	1	1	602	10 12 038 4	CABEÇOTE CILÍNDRICO
CABEÇOTE DO FILTRO	11821534	1	1	175	11 82 151 9	FILTRO
CABEÇOTE DO MANCAL	94007477	1	1	771	94 00 688 8	MANCAL DA HASTE DO PISTÃ
CABEÇOTE DO MANCAL	9591742	1	1	772	94 02 794 9	MANCAL DA HASTE DO PISTÃ
CABEÇOTE DO MANCAL	9591742	1	1	773	95 91 741	MANCAL DA HASTE DO PISTÃ
CABIDE	7019131	640	1	505	10 29 026 4	PEÇAS DE MONTAGEM
CABINE DE OPERADOR	10228302	20	1	471	10 35 796 7	CABINE DE OPERADOR
CABINE DE OPERADOR	10357967	8700	1	124	10 35 861 4	CARRO SUPERIOR
CABINE DE OPERADOR	10476169	20	1	471	10 35 796 7	CABINE DE OPERADOR
CABO DE ANTENA	6204404	150	1	274	10 49 880 5	POSTO DE COMANDO - PEÇA
CABO DE CONEXAO 3X2,5 0,80	10014589	10	1	252	10 00 933 0	SENSOR DE APROXIMAÇÃO
CABO DE LIGACAO DA BATERI	9989395	13	1	521	10 35 866 5	BATERIA - INSTALACAO
CABO DE MONTAGEM	10409866	30	1	478	10 35 889 0	KIT REEQ.DISCO LATERAL
CABO ELETRICO DA BATERIA	10064386	15	1	521	10 35 866 5	BATERIA - INSTALACAO
CABO ELÉTRICO	10493344	34	1	285	11 10 016 6	PARTE SUPERIOR DE ASSENT
CABO ELÉTRICO	9768248	27	1	277	11 38 340 1	APOIO DE BRAÇO LADO DIRE
CABO ELÉTRICO	9768248	27	1	301	11 45 228 6	APOIO DE BRAÇO LADO DIRE
CABO ELÉTRICO	9768248	27	1	305	12 50 731 7	APOIO DE BRAÇO LADO DIRE
CABO ELÉTRICO ADAPTADOR	11100090	16	1	287	11 10 016 7	SUSPENSAO
CABO MASSA	10009024	770	1	492	10 29 033 7	INSTALACAO ELETRICA
CABO MASSA	10009024	770	1	494	10 48 808 7	INSTALACAO ELETRICA
CABO MASSA	10064515	10	1	209	10 04 853 7	SISTEMA ELETRICO DO MOTO
CABO MASSA	9689583	98	1	279	11 38 340 1	APOIO DE BRAÇO LADO DIRE
CABO MASSA	9689583	98	1	302	11 45 228 6	APOIO DE BRAÇO LADO DIRE
CABO MASSA	9689583	98	1	306	12 50 731 7	APOIO DE BRAÇO LADO DIRE
CABO MASSA TRANÇADO	6204632	130	1	274	10 49 880 5	POSTO DE COMANDO - PEÇA
CAIXA	10022119	3	1	330	10 81 666 6	EVAPORADOR
CAIXA	11835500	1	1	796	11 69 501 2	KIT DE ABASTECIMENTO DE U
CAIXA AUXILIAR	10014611	999	1	251	10 66 471 9	BLOCO DE DISTRIBUIÇÃO SX
CAIXA AUXILIAR	10014611	999	1	254	10 29 300 1	BLOCO DE DISTRIBUIÇÃO MX-
CAIXA AUXILIAR	10014611	999	1	720	10 66 482 5	BLOCO DE DISTRIBUIÇÃO MX-
CAIXA AUXILIAR	10014611	999	1	732	10 66 478 2	BLOCO DE DISTRIBUIÇÃO MX-
CAIXA DE FERRAMENTAS	10082767	2	1	462	10 35 826 4	CAIXA DE FERRAMENTAS
CAIXA DE FERRAMENTAS	10358264	200	1	451	10 35 865 5	REVESTIMENTO
CAIXA DE FERRAMENTAS	7016002	10	1	539	10 84 856 2	KIT DE FERRAMENTAS
CAIXA DE FUSIVEIS CHATOS	6000783	25	2	519	99 47 695	INSTALAÇÃO ELÉTRICA E50
CAIXA DE TRANSFERÊNCIA M	7018368	12	1	51	90 66 466	ACESSÓRIOS

Designação	Artigo	Item	Quanti	Página	Módulo	Designação
CAIXA DE TRANSFERÊNCIA M	8145660	10	1	51	90 66 466	ACESSÓRIOS
CAIXA ELETRICA	9392651	26	1	275	11 38 339 7	APOIO DE BRAÇO LADO ESQ
CAIXA ELETRICA	9392651	26	1	291	10 38 502 8	APOIO DE BRAÇO LADO ESQ
CAIXA ELETRICA	9947707	2	1	518	99 48 254	CAIXA ELÉTRICA COMPLETA
CAIXA ELÉTRICA COMPLETA	9948254	20	1	514	11 10 255 3	INSTALAÇÃO ELÉTRICA
CALOTA	6204368	4	1	315	10 05 507 1	INTERRUPTOR - INSTALAÇÃO
CANAL TRASEIRA DIREITA	10014497	310	1	509	10 29 035 2	REVESTIMENTO INTERNO
CANAL TRASEIRA DIREITA	10014497	310	1	511	10 48 808 8	REVESTIMENTO INTERNO
CANAL TRASEIRA ESQUERDA	10009183	300	1	509	10 29 035 2	REVESTIMENTO INTERNO
CANAL TRASEIRA ESQUERDA	10009183	300	1	511	10 48 808 8	REVESTIMENTO INTERNO
CANALETA DE CABOS	10841508	60	1	272	10 49 880 5	POSTO DE COMANDO - PEÇA
CANTONEIRA	10063527	345	1	198	10 04 853 6	ARREFECIMENTO DO MOTOR
CANTONEIRA	10064242	150	1	449	10 35 865 5	REVESTIMENTO
CANTONEIRA	10064243	153	1	449	10 35 865 5	REVESTIMENTO
CANTONEIRA	10358447	25	1	217	11 10 291 6	INSTALACAO MECANISMO GI
CANTONEIRA	9927487	132	1	448	10 35 865 5	REVESTIMENTO
CANTONEIRA DE MONTAGEM	10022078	6	1	335	11 00 359 4	CARCAÇA
CAPA COBERTURA DO RECIP	10014717	27	1	250	10 22 844 3	BOMBA DE LUBRIFICACAO
CAPA DE BORRACHA	9265414	30	2	323	90 79 258	MANETE DE COMANDO VG7 2-
CAPA DE BORRACHA	9265414	5	1	743	90 79 277	CR TACO
CAPA DE COBERTURA	11253803	10	1	256	10 01 471 7	CAPA COBERTURA DO RECIP
CAPA DE COBERTURA	7025005	17	1	290	70 24 996	SUPORTE DO ASSENTO
CAPA DE COBERTURA	968461801	25	1	237	96 91 056 01	RESERVATÓRIO DE ÓLEO
CAPA DE DESGASTE	10451131	40	5	735	11 10 258 6	CAÇAMBA RETRO HD 1800MM
CAPA DE DESGASTE	10451131	6	1	781	11 10 259 0	DENTE Z50CL
CAPA DE LUBRIFICAÇÃO	90028782	20	1	226	90 02 790 4	REDUTOR DE GIRO SAT 325/
CAPA DE PROTECAO SW19/M1	7380730	30	1	116	98 82 760	REGULADOR NG 100
CAPA DE PROTEÇÃO	7013456	3	1	577	50 04 624	PARAFUSO DE DRENAGEM D
CAPA DE PROTEÇÃO	7019165	410	1	504	10 29 026 4	PEÇAS DE MONTAGEM
CAPA DE PROTEÇÃO	7616949	9	1	364	50 09 565	CARTUCHO LIMITADOR DE PR
CAPA DE PROTEÇÃO	7623221	60	1	210	10 04 853 7	SISTEMA ELETRICO DO MOTO
CAPA DE PROTEÇÃO 16,0X20X	7623222	20	1	209	10 04 853 7	SISTEMA ELETRICO DO MOTO
CAPA DE PROTEÇÃO 19	9276880	35	1	318	90 74 482	CR TACO
CAPA DE PROTEÇÃO 19	9276880	35	4	807	10 11 856 1	MANETE DE COMANDO VG6-8
CAPA DE PROTEÇÃO 19	9276880	35	4	808	11 37 560 6	MANETE DE COMANDO VG6-8
CAPA DO NIPLE DE LUBRIFICA	10014701	18	1	249	10 22 844 3	BOMBA DE LUBRIFICACAO
CAPA DO NIPLE DE LUBRIFIC	8500251	34	1	722	10 82 841 3	LUBRIFICAÇÃO CENTRALIZAD
CAPA DO NIPLE DE LUBRIFIC	8500251	17	5	727	11 10 281 7	KIT DE ATUALIZAÇÃO 2.10M
CAPA DO NIPLE DE LUBRIFIC	8500251	32	5	731	10 39 639 6	LUBRIFICAÇÃO CENTRALIZAD
CAPA DO PUNHO	7025347	21	1	297	73 73 807	ALAVANCA DE SEGURANCA
CAPO DIREITO	10051838	80	1	447	10 35 865 5	REVESTIMENTO
CAPO DIREITO	10051842	2	1	456	10 05 183 8	CAPO DIREITO
CAPO DO RADIADOR	10064360	60	1	447	10 35 865 5	REVESTIMENTO
CAPO DO RADIADOR	10064361	2	1	455	10 06 436 0	CAPO DO RADIADOR
CAPO ESQUERDO	10062629	100	1	448	10 35 865 5	REVESTIMENTO
CAPOTA DO MOTOR	10058169	10	1	445	10 35 865 5	REVESTIMENTO
CAPOTA DO MOTOR	10058231	2	1	453	10 05 816 9	CAPOTA DO MOTOR
CARCACA COM BUCHA	12544180	1	1	325	90 79 259	MANETE DE COMANDO VG7 2-
CARCACA DA BOMBA DE AGU	10116437	1	1	655	10 13 281 7	BOMBA DE ÁGUA PRÉ-MONT
CARCACA DE CONDUCAO DE	10022117	2	1	330	10 81 666 6	EVAPORADOR
CARCACA DE CONDUCAO DE	10022787	1	1	333	10 02 211 7	CARCACA DE CONDUCAO DE
CARCACA DO FILTRO	10220702	2	1	175	11 82 151 9	FILTRO
CARCACA DO MANCAL PRE-	9077384	2	1	693	90 77 386	TOMADA PRÉ MONTADA
CARCACA DO MANCAL PRE-	9077717	2	1	694	90 77 718	TOMADA PRÉ MONTADA
CARCACA DO MANCAL PRE-	9078963	1	1	695	90 78 962	TOMADA PRÉ MONTADA
CARCACA DO RADIADOR DE	9073505	1	1	613	90 73 507	RADIADOR DE OLEO PRE-M
CARCACA DO TERMOSTATO	10119984	1	1	656	10 11 983 0	CARCAÇA DO TERMOSTATO
CARCACA DO TERMOSTATO	10119984	1	1	657	90 75 678	CARCAÇA DO TERMOSTATO 7
CARCAÇA	11003594	1	1	330	10 81 666 6	EVAPORADOR
CARCAÇA	11348674	10	1	807	10 11 856 1	MANETE DE COMANDO VG6-8

Designação	Artigo	Item	Quanti	Página	Módulo	Designação
CARCAÇA	11348674	10	1	808	11 37 560 6	MANETE DE COMANDO VG6-8
CARCAÇA	5605365	12	1	346	10 06 379 3	UNIDADE DE COMANDO DE O
CARCAÇA	5605365	12	1	348	56 09 948	KIT DE FILTRO DE OLEO
CARCAÇA	9079009	2	1	567	90 79 021	CARCAÇA MANIVELA PURGAM
CARCAÇA DA BOMBA	10008083	5	1	400	10 00 807 7	BOMBA
CARCAÇA DA BOMBA	10014693	4	1	249	10 22 844 3	BOMBA DE LUBRIFICACAO
CARCAÇA DA MANETE DIREIT	10469932	50	1	314	99 68 611	MANETE DIREITA
CARCAÇA DA MANETE ESQUE	10469933	50	1	299	99 68 625	MANETE - LH ESQUERDA
CARCAÇA DA VÁLVULA	7028173	7	1	177	70 28 075	UNIDADE DE CONTROLE
CARCAÇA DA VÁLVULA	7028175	9	1	177	70 28 075	UNIDADE DE CONTROLE
CARCAÇA DE CONECTOR EL	6203136	310	1	786	10 82 562 1	JC LEVANTAMENTO DADOS-T
CARCAÇA DE CONECTOR ELÉ	6204241	10	1	519	99 47 695	INSTALAÇÃO ELÉTRICA E50
CARCAÇA DE CONEXÕES	9884135	1	1	185	98 84 140	BOMBA CIRCUITO ARREFECI
CARCAÇA DE CONEXÕES	9884137	3	1	185	98 84 140	BOMBA CIRCUITO ARREFECI
CARCAÇA DE CONEXÕES NG	9074876	10	1	181	90 74 893	KIT DE REPARO DA CARCAÇA
CARCAÇA DE CONEXÕES NG	9073242	3	1	801	10 13 303 7	BOMBA HIDRÁULICA DUPLA
CARCAÇA DO EIXO DE SAÍDA	90008633	1	1	226	90 02 790 4	REDUTOR DE GIRO SAT 325/
CARCAÇA DO EVAPORADOR	10005672	1	1	335	11 00 359 4	CARCAÇA
CARCAÇA DO EVAPORADOR	10005679	8	1	335	11 00 359 4	CARCAÇA
CARCAÇA DO EVAPORADOR	10022069	15	1	335	11 00 359 4	CARCAÇA
CARCAÇA DO FREIO	932801901	1	1	228	93 28 018 01	FREIO
CARCAÇA DO MANCAL	9077328	1	1	696	90 77 384	CARCACA DO MANCAL PRE-
CARCAÇA DO MANCAL	9077710	1	1	697	90 77 717	CARCACA DO MANCAL PRE-
CARCAÇA DO MOTOR	10014692	3	1	249	10 22 844 3	BOMBA DE LUBRIFICACAO
CARCAÇA DO MOTOR	10220513	1	1	249	10 22 844 3	BOMBA DE LUBRIFICACAO
CARCAÇA DO TERMOSTATO	10119830	380	1	552	10 11 714 5	MOTOR DIESEL D936 L A6 190
CARCAÇA DO TERMOSTATO 7	9075678	380	1	552	10 11 714 5	MOTOR DIESEL D936 L A6 190
CARCAÇA DO VOLANTE PRÉ-	10116113	1	1	680	10 11 611 4	CÁRTER VOLANTE MONT. EXT
CARCAÇA MANIVELA PURGAM	9079021	16	1	549	10 11 714 5	MOTOR DIESEL D936 L A6 190
CARCAÇA MANIVELA PURGAM	10119167	16	1	549	10 11 714 5	MOTOR DIESEL D936 L A6 190
CARCAÇA NG 100	9077515	10	1	799	90 73 888	MOTOR HIDRÁULICO
CARCAÇA NG 140	10136171	10	2	801	10 13 303 7	BOMBA HIDRÁULICA DUPLA
CARCAÇA PVG 351 B 382	10117153	1	1	158	10 11 886 0	REDUTOR DISTRIBUICAO BO
CARENAGEM	7370891	3	1	310	56 18 923	CONSOLE DE COMANDO DIRE
CARRO INFERIOR	10498853	2	1	75	10 49 885 2	CARRO INFERIOR COMPLETO
CARRO INFERIOR	11102551	2	1	75	10 49 885 2	CARRO INFERIOR COMPLETO
CARRO INFERIOR COMPLETO	10498852	200	1	13	10 49 885 1	MÁQUINA BASE
CARRO SUPERIOR	10358614	100	1	13	10 49 885 1	MÁQUINA BASE
CARTER DE ÓLEO	12832454	5	1	571	90 79 487	CÁRTER DE ÓLEO
CARTUCHO DE FILTRO DE AR	10217169	110	1	64	12 48 693 1	KIT DE MANUTENCAO 500h
CARTUCHO DE FILTRO DE AR	10217169	110	1	67	12 48 693 2	KIT DE MANUTENÇÃO 1000h
CARTUCHO DE FILTRO DE AR	10217169	110	1	70	12 48 693 3	KIT DE MANUTENÇÃO 1500-25
CARTUCHO DE FILTRO DE AR	10217169	110	1	71	12 48 693 4	KIT DE MANUTENÇÃO 2000h
CARTUCHO DE FILTRO DE AR	10217169	1	1	138	10 21 717 3	FILTRO DE AR
CARTUCHO LIMITADOR DE PR	5009565	5	1	362	10 04 272 9	BLOCO DE VÁLVULAS DE CO
CASQUILHO	10140487	51	1	585	90 76 459	BIELA
CASQUILHO	10140488	52	1	585	90 76 459	BIELA
CASQUILHO DA BIELA	10145100	1	1	586	10 11 693 4	KIT REPARO BRONZINA DA B
CASQUILHO DA BIELA	10145101	2	1	586	10 11 693 4	KIT REPARO BRONZINA DA B
CASQUILHO DE MANCAL	10008090	17	2	400	10 00 807 7	BOMBA
CASQUILHO DE MANCAL	7023749	26	1	399	11 49 189 4	MECANISMO DE ACIONAMENT
CAVALETE BALANCINS COM	9079861	81	6	549	10 11 714 5	MOTOR DIESEL D936 L A6 190
CAÇAMBA RETRO HD	11102585	232	1	7	.	
CAÇAMBA RETRO HD 1800MM	11102586	10	1	734	11 10 258 5	CAÇAMBA RETRO HD
CAÇAMBA RETRO HD 1800MM	11102587	2	1	735	11 10 258 6	CAÇAMBA RETRO HD 1800MM
CERTIFICADO EWG	9399606	97	1	548	10 49 803 0	ADESIVO DE SINALIZAÇÃO
CF VAPORIZADOR	11000546	5	1	328	10 40 689 8	AR CONDICIONADO
CHAPA DE COBERTURA	10008444	15	1	328	10 40 689 8	AR CONDICIONADO
CHAPA DE DESGASTE	10498791	14	2	738	11 10 263 6	KIT DE PEÇAS DE DESGASTE
CHAPA DE FIXAÇÃO	10082757	70	1	463	10 35 826 4	CAIXA DE FERRAMENTAS

Designação	Artigo	Item	Quanti	Página	Módulo	Designação
CHAPA DE MOLA	10493054	24	1	285	11 10 016 6	PARTE SUPERIOR DE ASSENT
CHAPA DE MOLA	7027784	21	1	285	11 10 016 6	PARTE SUPERIOR DE ASSENT
CHAPA DE PROTECAO INFER	10060648	3	1	470	10 35 866 0	TAMPAS INFERIORES
CHAPA DE PROTECAO INFER	10063237	2	1	470	10 35 866 0	TAMPAS INFERIORES
CHAPA DE PROTEÇÃO	10067867	40	1	357	10 35 862 9	ARREFECIMENTO DE OLEO
CHAPA DE PROTEÇÃO	12905309	30	1	217	11 10 291 6	INSTALACAO MECANISMO GI
CHAPA DE PROTEÇÃO	7028910	560	1	505	10 29 026 4	PEÇAS DE MONTAGEM
CHAPA DE PROTEÇÃO	9275738	14	1	817	90 74 112	PLACA DE LIGAÇÃO NG 090
CHAPA DE PROTEÇÃO TÉRM	10115540	4	1	567	90 79 021	CARCAÇA MANIVELA PURGAM
CHAPA DE PROTEÇÃO TÉRM	10115540	1	1	663	10 11 919 9	PROT.CONTRA CALOR COM F
CHAPA DE PROTEÇÃO TÉRM	10115717	4	1	664	10 11 571 8	PROT.CONTRA CALOR COM FI
CHAPA DE PROTEÇÃO TÉRM	10118257	3	1	664	10 11 571 8	PROT.CONTRA CALOR COM FI
CHAPA DOBRADA	11102795	10	1	716	11 10 283 6	KIT MONOBLOCO 6.45M
CHAPA DOBRADA	11102795	10	1	727	11 10 281 7	KIT DE ATUALIZAÇÃO 2.10M
CHAPA DOBRADA 8X181X390	12913919	10	1	756	11 10 281 8	KIT MÁQUINA BASE
CHAVE	7365626	2	1	391	74 14 913	FECHO DO TANQUE d=80
CHAVE	7365626	5	1	445	10 35 865 5	REVESTIMENTO
CHAVE ALLEN 10X234	11162122	92	1	539	10 84 856 2	KIT DE FERRAMENTAS
CHAVE ALLEN 12X137 ISO 293	11162123	94	1	539	10 84 856 2	KIT DE FERRAMENTAS
CHAVE ALLEN 14X154 ISO 293	11162124	96	1	539	10 84 856 2	KIT DE FERRAMENTAS
CHAVE ALLEN 17X168 ISO 293	11162125	98	1	539	10 84 856 2	KIT DE FERRAMENTAS
CHAVE ALLEN 3X66 ISO 2936	11162101	80	1	539	10 84 856 2	KIT DE FERRAMENTAS
CHAVE ALLEN 4X74 ISO 2936	11162111	82	1	539	10 84 856 2	KIT DE FERRAMENTAS
CHAVE ALLEN 5X85 ISO 2936	11162119	84	1	539	10 84 856 2	KIT DE FERRAMENTAS
CHAVE ALLEN 6X186	11162120	86	1	539	10 84 856 2	KIT DE FERRAMENTAS
CHAVE ALLEN 8X208	11162121	90	1	539	10 84 856 2	KIT DE FERRAMENTAS
CHAVE DE BOCA SIMPLES S	11162174	48	1	539	10 84 856 2	KIT DE FERRAMENTAS
CHAVE DE BOCA SIMPLES S	11162175	50	1	539	10 84 856 2	KIT DE FERRAMENTAS
CHAVE DE BOCA SIMPLES S	11162177	51	1	539	10 84 856 2	KIT DE FERRAMENTAS
CHAVE DE BOCA SIMPLES S	11162178	52	1	539	10 84 856 2	KIT DE FERRAMENTAS
CHAVE DE BOCA SIMPLES S	11162179	54	1	539	10 84 856 2	KIT DE FERRAMENTAS
CHAVE DE FENDA 10X300	11162133	114	1	540	10 84 856 2	KIT DE FERRAMENTAS
CHAVE DE FENDA 5.5X200	11162126	110	1	540	10 84 856 2	KIT DE FERRAMENTAS
CHAVE DE FENDA PHILLIPS 2X	11162132	112	1	540	10 84 856 2	KIT DE FERRAMENTAS
CHAVE DE IGNICAO	10221073	76	1	278	11 38 340 1	APOIO DE BRAÇO LADO DIRE
CHAVE DE IGNICAO	10221073	76	1	305	12 50 731 7	APOIO DE BRAÇO LADO DIRE
CHAVE DE IGNICAO	10221073	10	1	340	10 22 815 1	CHAVE DE IGNICAO
CHAVE DE IGNICAO	10221073	275	1	484	70 28 769	PORTA DA CABINE DO OPERA
CHAVE DE IGNICAO	10228151	75	1	278	11 38 340 1	APOIO DE BRAÇO LADO DIRE
CHAVE DE IGNICAO	10228151	75	1	301	11 45 228 6	APOIO DE BRAÇO LADO DIRE
CHAVE DE IGNICAO	10228151	75	1	305	12 50 731 7	APOIO DE BRAÇO LADO DIRE
CHAVE ESTRELA DUPLA SW10	11162097	60	1	539	10 84 856 2	KIT DE FERRAMENTAS
CHAVE ESTRELA DUPLA SW16	11162099	64	1	539	10 84 856 2	KIT DE FERRAMENTAS
CHAVE ESTRELA DUPLA SW24	11162100	70	1	539	10 84 856 2	KIT DE FERRAMENTAS
CHAVE FIXA DUPLA SW10 X 11	11162164	24	1	539	10 84 856 2	KIT DE FERRAMENTAS
CHAVE FIXA DUPLA SW12 X 13	11162165	26	1	539	10 84 856 2	KIT DE FERRAMENTAS
CHAVE FIXA DUPLA SW14 X 15	11162167	28	1	539	10 84 856 2	KIT DE FERRAMENTAS
CHAVE FIXA DUPLA SW16 X 17	11162169	30	1	539	10 84 856 2	KIT DE FERRAMENTAS
CHAVE FIXA DUPLA SW18 X 19	11162170	32	1	539	10 84 856 2	KIT DE FERRAMENTAS
CHAVE FIXA DUPLA SW22 X 24	11162171	34	1	539	10 84 856 2	KIT DE FERRAMENTAS
CHAVE FIXA DUPLA SW27 X 30	11162173	38	1	539	10 84 856 2	KIT DE FERRAMENTAS
CHAVE FIXA DUPLA SW8 X 9 D	11162163	22	1	539	10 84 856 2	KIT DE FERRAMENTAS
CHAVE PARA MONTAGEM DO	9600928	985	1	770	96 44 625	PISTÃO
CHAVE PARA MONTAGEM DO	9600769	985	1	769	94 04 038 9	PISTÃO
CHAVETA	10008422	9	1	208	56 19 045	MOTOR DE PISTÃO AXIAL
CHAVETA	7028166	8	1	170	10 28 264 7	BOMBA DE ENGRENAGENS
CHAVETA VÁLVULA MK9	11357514	8	8	591	10 14 155 4	CABEÇOTE - PRÉ MONTADO
CHAVETA VÁLVULA MK9	11357514	8	8	597	10 11 942 7	CABEÇOTE - PRÉ MONTADO
CHAVETA VÁLVULA MK9	11357514	8	8	598	10 12 036 4	CABEÇOTE - PRÉ MONTADO
CHIC ELÉTR DO POSTO DE CO	10408513	140	1	274	10 49 880 5	POSTO DE COMANDO - PEÇA

Designação	Artigo	Item	Quanti	Página	Módulo	Designação
CHICOTE DE CABOS ACESSÓ	10117997	580	1	555	10 11 714 5	MOTOR DIESEL D936 L A6 190
CHICOTE ELETRICO	10051599	27	1	514	11 10 255 3	INSTALAÇÃO ELÉTRICA
CHICOTE ELETRICO	10064512	70	1	210	10 04 853 7	SISTEMA ELETRICO DO MOTO
CHICOTE ELETRICO	10064514	9	1	209	10 04 853 7	SISTEMA ELETRICO DO MOTO
CHICOTE ELETRICO	9893089	17	1	521	10 35 866 5	BATERIA - INSTALACAO
CHICOTE ELETRICO	9948251	12	1	514	11 10 255 3	INSTALAÇÃO ELÉTRICA
CHICOTE ELETRICO CHAVE-	10064398	19	1	521	10 35 866 5	BATERIA - INSTALACAO
CHICOTE ELETRICO DA MAN	9968591	80	1	299	99 68 625	MANETE - LH ESQUERDA
CHICOTE ELETRICO DA MAN	9968591	80	1	314	99 68 611	MANETE DIREITA
CHICOTE ELETRICO DO MOTO	9948316	5	1	209	10 04 853 7	SISTEMA ELETRICO DO MOTO
CHICOTE ELETRICO E50	9929151	14	1	519	99 47 695	INSTALAÇÃO ELÉTRICA E50
CHICOTE ELETRICO E50	9949750	15	1	519	99 47 695	INSTALAÇÃO ELÉTRICA E50
CHICOTE ELETRICO FAROL	10088051	4	1	783	11 10 229 5	FAROL ADICIONAL
CHICOTE ELETRICO FAROL X1	10075063	7	1	9	12 85 910 3	FAROL CPL - INSTALAÇÃO
CHICOTE ELETRICO FAROL X1	10075063	5	1	783	11 10 229 5	FAROL ADICIONAL
CHICOTE ELETRICO S9/S9	9686191	21	1	521	10 35 866 5	BATERIA - INSTALACAO
CHICOTE ELÉTRICO	10006617	80	1	329	11 00 054 6	CF VAPORIZADOR
CHICOTE ELÉTRICO	10405134	50	1	210	10 04 853 7	SISTEMA ELETRICO DO MOTO
CHICOTE ELÉTRICO	11066527	4	1	287	11 10 016 7	SUSPENSAO
CHICOTE ELÉTRICO	9768247	38	1	277	11 38 340 1	APOIO DE BRAÇO LADO DIRE
CHICOTE ELÉTRICO	9768247	38	1	301	11 45 228 6	APOIO DE BRAÇO LADO DIRE
CHICOTE ELÉTRICO	9768247	38	1	305	12 50 731 7	APOIO DE BRAÇO LADO DIRE
CHICOTE ELÉTRICO -KIT MON	10863490	130	1	786	10 82 562 1	JC LEVANTAMENTO DADOS-T
CHICOTE ELÉTRICO 25 ABGE	6204634	46	1	276	11 38 339 7	APOIO DE BRAÇO LADO ESQ
CHICOTE ELÉTRICO 25 ABGE	6204634	46	1	292	10 38 502 8	APOIO DE BRAÇO LADO ESQ
CHICOTE ELÉTRICO A100-A1	9699736	55	1	751	10 35 860 1	ALARME DE TRANSLACAO
CHICOTE ELÉTRICO A1010-A1	12418014	91	1	279	11 38 340 1	APOIO DE BRAÇO LADO DIRE
CHICOTE ELÉTRICO A1010-A1	12418014	91	1	302	11 45 228 6	APOIO DE BRAÇO LADO DIRE
CHICOTE ELÉTRICO A1010-A1	12418014	91	1	306	12 50 731 7	APOIO DE BRAÇO LADO DIRE
CHICOTE ELÉTRICO A1010-A1	9893072	23	1	275	11 38 339 7	APOIO DE BRAÇO LADO ESQ
CHICOTE ELÉTRICO A1010-A1	9893072	23	1	291	10 38 502 8	APOIO DE BRAÇO LADO ESQ
CHICOTE ELÉTRICO A1010-U1	9949686	94	1	279	11 38 340 1	APOIO DE BRAÇO LADO DIRE
CHICOTE ELÉTRICO A1010-U1	9949686	94	1	302	11 45 228 6	APOIO DE BRAÇO LADO DIRE
CHICOTE ELÉTRICO A1010-U1	9949686	94	1	306	12 50 731 7	APOIO DE BRAÇO LADO DIRE
CHICOTE ELÉTRICO DA CABIN	10290353	150	1	490	10 29 033 7	INSTALACAO ELETRICA
CHICOTE ELÉTRICO DA CABIN	10651894	150	1	493	10 48 808 7	INSTALACAO ELETRICA
CHICOTE ELÉTRICO MP65 - M	10066076	20	1	275	11 38 339 7	APOIO DE BRAÇO LADO ESQ
CHICOTE ELÉTRICO MP65 - M	10066076	20	1	291	10 38 502 8	APOIO DE BRAÇO LADO ESQ
CHICOTE ELÉTRICO PRÉ MO	10115746	1	1	686	10 11 799 7	CHICOTE DE CABOS ACESSÓ
CHICOTE ELÉTRICO X1/U16-X	10079010	93	1	279	11 38 340 1	APOIO DE BRAÇO LADO DIRE
CHICOTE ELÉTRICO X1/U16-X	10079010	93	1	302	11 45 228 6	APOIO DE BRAÇO LADO DIRE
CHICOTE ELÉTRICO X1/U16-X	10079010	93	1	306	12 50 731 7	APOIO DE BRAÇO LADO DIRE
CHICOTE ELÉTRICO X164-X18	10055095	138	1	274	10 49 880 5	POSTO DE COMANDO - PEÇA
CHICOTE ELÉTRICO X182-2/S8	10057843	92	1	279	11 38 340 1	APOIO DE BRAÇO LADO DIRE
CHICOTE ELÉTRICO X182-2/S8	10057843	92	1	302	11 45 228 6	APOIO DE BRAÇO LADO DIRE
CHICOTE ELÉTRICO X182-2/S8	10057843	92	1	306	12 50 731 7	APOIO DE BRAÇO LADO DIRE
CHICOTE ELÉTRICO X66-X734	10079846	95	1	279	11 38 340 1	APOIO DE BRAÇO LADO DIRE
CHICOTE ELÉTRICO X66-X734	10079846	95	1	302	11 45 228 6	APOIO DE BRAÇO LADO DIRE
CHICOTE ELÉTRICO X66-X734	10079846	95	1	306	12 50 731 7	APOIO DE BRAÇO LADO DIRE
CILINDRO	10008431	2	1	206	10 00 840 5	MECANISMO DE ACIONAMENT
CILINDRO	10009376	2	1	157	10 00 809 5	MECANISMO DE ACIONAMENT
CILINDRO	7413408	2	1	171	10 28 772 5	MECANISMO DE ACIONAMENT
CILINDRO	9073083	80	6	560	12 82 483 7	CÁRTER COMPLETO COM CIL
CILINDRO	9594128	10	1	762	96 44 648	CILINDRO HIDRÁULICO
CILINDRO	9594191	10	1	761	95 93 026	CILINDRO HIDRÁULICO
CILINDRO	9594224	10	1	760	11 68 144 7	CILINDRO HIDRÁULICO
CILINDRO COM BUCHA	12215553	1	1	402	10 22 042 7	MECANISMO DE ACIONAMENT
CILINDRO COM BUCHA NG 09	9073572	1	1	232	90 74 113	KIT DE REPARO GRUPO ROT
CILINDRO COM BUCHA NG 09	9073572	2	1	234	90 74 125	KIT DE REPARO NG 090
CILINDRO COM BUCHA NG 10	9073574	1	1	822	90 74 114	KIT DE REPARO GRUPO ROT

Designação	Artigo	Item	Quanti	Página	Módulo	Designação
CILINDRO COM BUCHA NG 14	9075894	1	1	187	98 89 832	KIT DE REPARO GRUPO ROT
CILINDRO COM BUCHA NG 14	9072086	1	1	188	98 89 833	KIT DE REPARO GRUPO ROTÓ
CILINDRO DE ELEVACAO	11102911	30	1	7	.	
CILINDRO DE ELEVACAO DIRE	11457296	3	1	752	11 10 291 2	MONTAGEM CILINDRO DE ELE
CILINDRO DE ELEVACAO ESQ	11457297	2	1	752	11 10 291 2	MONTAGEM CILINDRO DE ELE
CILINDRO HIDR. COM ACESS	10358573	3	1	725	11 10 280 7	BRAÇO DA CAÇAMBA 2.10M
CILINDRO HIDR. COM ACESS	10853610	3	1	711	11 10 294 5	LANÇA MONOBLOCO 6.45M
CILINDRO HIDRÁULICO	11681447	2	1	759	10 85 361 0	CILINDRO HIDR. COM ACESS
CILINDRO HIDRÁULICO	9593026	2	1	775	11 45 729 6	CILINDRO DE ELEVACAO DIRE
CILINDRO HIDRÁULICO	9593026	2	1	778	11 45 729 7	CILINDRO DE ELEVACAO ESQ
CILINDRO HIDRÁULICO	9644648	2	1	758	10 35 857 3	CILINDRO HIDR. COM ACESS
CINTA	10493994	17	1	287	11 10 016 7	SUSPENSAO
CINTA DE AMARRACAO 18X0,	7621780	35	4	121	10 40 412 9	INST.HIDR.CARRO INFERIOR
CINTA DE AMARRACAO 18X0,	7621780	495	3	361	10 06 380 1	INSTALACAO HIDRAULICA
CINTO DE SEGURANCA ABDO	10493984	62	1	286	11 10 016 6	PARTE SUPERIOR DE ASSENT
CINTO DE SEGURANCA ABDO	7371746	80	1	282	10 04 363 2	ASSENTO DO OPERADOR
CINZEIRO	7366731	81	1	276	11 38 339 7	APOIO DE BRAÇO LADO ESQ
CINZEIRO	7366731	81	1	292	10 38 502 8	APOIO DE BRAÇO LADO ESQ
CLIPE	10412536	10	25	453	10 05 816 9	CAPOTA DO MOTOR
CLIPE	10412536	4	31	454	10 05 823 4	DEFLETOR
CLIPE	10412536	5	23	455	10 06 436 0	CAPO DO RADIADOR
CLIPE	10412536	5	42	456	10 05 183 8	CAPO DIREITO
CLIPE	10412536	7	20	457	10 35 822 9	PORTA LATERAL ESQUERDA
CLIPE	10412536	4	72	458	10 05 963 3	DEFLETOR
CLIPE	10412536	8	45	459	10 06 423 5	PORTA LATERAL DIREITA
CLIPE	10412536	8	42	460	10 49 856 6	PORTA LATERAL DIREITA
CLIPE	10412536	6	12	461	10 07 033 5	TAMPA CENTRAL
CLIPE	10412536	41	3	463	10 35 826 4	CAIXA DE FERRAMENTAS
CLIPE	10412536	21	6	464	10 08 276 3	TAMPA
CLIPE	10412536	11	10	465	10 06 576 2	DIVISÓRIA CENTRAL
CLIPE	10412536	6	13	466	10 35 823 0	PORTA LATERAL DIANTEIRA
CLIPE DE MOLA	7369754	2	2	331	10 02 206 9	CARCAÇA DO EVAPORADOR
COB. DIANTEIRA NA ESQUERD	10009132	140	1	508	10 29 035 2	REVESTIMENTO INTERNO
COB. DIANTEIRA NA ESQUERD	10009132	140	1	510	10 48 808 8	REVESTIMENTO INTERNO
COBERTURA	10115559	342	1	552	10 11 714 5	MOTOR DIESEL D936 L A6 190
COBERTURA	10119492	342	1	552	10 11 714 5	MOTOR DIESEL D936 L A6 190
COBERTURA DE PROTEÇÃO S	10292499	28	1	371	10 32 372 8	VÁLVULA REDUTORA DE PR
COBERTURA DIANTEIRA DIRE	7028940	130	1	508	10 29 035 2	REVESTIMENTO INTERNO
COBERTURA DIANTEIRA DIRE	7028940	130	1	510	10 48 808 8	REVESTIMENTO INTERNO
COBERTURA DIREITA	7027783	12	1	285	11 10 016 6	PARTE SUPERIOR DE ASSENT
COBERTURA ESQUERDA	10493986	13	1	285	11 10 016 6	PARTE SUPERIOR DE ASSENT
COLA	10355107	19	0.1	453	10 05 816 9	CAPOTA DO MOTOR
COLA	811208201	104	1	602	10 12 038 4	CABEÇOTE CILÍNDRICO
COLA	811208201	118	1	807	10 11 856 1	MANETE DE COMANDO VG6-8
COLA	811208201	118	1	808	11 37 560 6	MANETE DE COMANDO VG6-8
COLA	811208201	118	1	816	90 73 786	PLACA DE LIGAÇÃO NG 100
COLA	8655023	104	1	560	12 82 483 7	CÁRTER COMPLETO COM CIL
COLA 50ML TUBE ROT	8700039	106	1	234	90 74 125	KIT DE REPARO NG 090
COLA 50ML TUBE ROT	8700039	106	1	574	12 83 245 4	CARTER DE ÓLEO
COLA 50ML TUBE ROT	8700039	100	1	619	90 80 277	BOMBA DE SUCÇÃO PRÉ-MO
COLA 50ML TUBE ROT	8700039	106	1	810	11 38 131 3	REGULADOR NG 100
COLA 50ML TUBE ROT	8700039	106	1	822	90 74 114	KIT DE REPARO GRUPO ROT
COLA PARA ELEMENTOS FIXA	811205708	103	1	159	10 11 886 0	REDUTOR DISTRIBUICAO BO
COLA PARA ELEMENTOS FIXA	811205708	109	1	618	90 72 781	BOMBA DE ÓLEO DE LUBRIFI
COLA PARA ELEMENTOS FIXA	811205708	109	1	655	10 13 281 7	BOMBA DE ÁGUA PRÉ-MONT
COLA PARA ELEMENTOS FIXA	811205708	109	1	669	90 78 384	MOTOR DE PARTIDA
COLA PARA ELEMENTOS FIXA	811205708	109	1	672	90 79 823	DISPOSITIVO TRANSP.MONT.E
COLA PARA ELEMENTOS FIXA	811205708	109	1	690	90 77 719	SAIDA AUXILIAR ANEXA
COLA PARA ELEMENTOS FIXA	811205708	105	1	691	90 78 961	SAIDA AUXILIAR ANEXA
COLA PARA ELEMENTOS FIXA	811205708	109	1	692	90 80 006	SAIDA AUXILIAR ANEXA

Designação	Artigo	Item	Quanti	Página	Módulo	Designação
COLA PARA ELEMENTOS FIXA	811205708	103	1	809	10 11 908 9	EIXO PRIMARIO COMPLETO Z
COLA PARA ELEMENTOS FIXA	811205708	104	1	825	10 13 975 2	KIT DE REPARO NG 140-150
COLA PARA ELEMENTOS FIXA	8628192	104	1	154	90 73 242	CARCAÇA DE CONEXÕES NG
COLA PARA ELEMENTOS FIXA	8628192	109	1	567	90 79 021	CARCAÇA MANIVELA PURGAM
COLA PARA ELEMENTOS FIXA	8628192	109	1	635	10 11 628 5	TUBULAÇÃO DE COMBUSTÍVE
COLA PARA ELEMENTOS FIXA	8628192	109	1	650	10 11 646 4	COMPRESSOR DO AR-CONDI
COLA PARA ELEMENTOS FIXA	8628192	109	1	684	10 11 599 3	DISPOSITIVO COMANDO - M
COLA PARA ELEMENTOS FIXA	8629969	33	0.001	213	10 04 853 8	MOTOR - PECAS ANEXAS
COLA PARA ELEMENTOS FIXA	8655016	105	1	182	92 74 731	KIT DE VED DA CARCAC DO C
COLA PARA ELEMENTOS FIXA	8655016	105	1	620	90 75 368	FILTRO ÓLEO LUBRIF. MONT.
COLA PARA ELEMENTOS FIXA	8655016	109	1	671	90 79 468	DISPOSITIVO TRANSP.MONT.E
COLA PARA ELEMENTOS FIXA	8700011	102	1	595	90 79 838	TAMPA DO CABEÇOTE
COLA PARA ELEMENTOS FIXA	8700012	106	1	181	90 74 893	KIT DE REPARO DA CARCAÇA
COLA PARA ELEMENTOS FIXA	8700012	106	1	187	98 89 832	KIT DE REPARO GRUPO ROT
COLA PARA ELEMENTOS FIXA	8700012	106	1	188	98 89 833	KIT DE REPARO GRUPO ROTÓ
COLA PARA ELEMENTOS FIXA	8700012	106	1	232	90 74 113	KIT DE REPARO GRUPO ROT
COLETOR DE ESCAPAMENTO	10118611	2	2	653	10 11 547 9	TUBO ESCAPAMENTO PRE-M
COLETOR DE ESCAPAMENTO	11446526	1	1	653	10 11 547 9	TUBO ESCAPAMENTO PRE-M
COLETOR DE ESCAPAMENTO	9080876	1	1	653	10 11 547 9	TUBO ESCAPAMENTO PRE-M
COLETOR GIRATÓRIO	11643314	2	1	102	11 46 393 9	CONEXÃO GIRATÓRIA COMPL
COLETOR GIRATÓRIO	9611367	2	1	101	10 40 412 7	CONEXÃO GIRATÓRIA COMPL
COLETOR GIRATÓRIO - INSTA	10404126	8	1	75	10 49 885 2	CARRO INFERIOR COMPLETO
COLETOR GIRATÓRIO - INSTA	11463935	8	1	75	10 49 885 2	CARRO INFERIOR COMPLETO
COLETOR-SECADOR	5611990	1	1	527	10 29 266 0	SECADOR COLETOR
COLUNA DE MOLAS-PRATO	11213510	11	1	402	10 22 042 7	MECANISMO DE ACIONAMENT
COMANDO	10036533	3	1	316	90 13 811	ACION. DE EMERGÊNCIA COM
COMPRESSOR COMPL.	10492985	10	1	287	11 10 016 7	SUSPENSAO
COMPRESSOR DO AR-CONDI	10063630	595	1	132	10 35 862 2	INSTALAÇÃO DO MOTOR
COMPRESSOR DO AR-CONDI	10116464	340	1	552	10 11 714 5	MOTOR DIESEL D936 L A6 190
COMPRESSOR DO AR-CONDIC	10116769	2	1	650	10 11 646 4	COMPRESSOR DO AR-CONDI
CONDENSADOR DE AR-COND	10005670	2	1	214	10 06 363 0	COMPRESSOR DO AR-CONDI
CONDUTOR DE AR	10024192	500	1	509	10 29 035 2	REVESTIMENTO INTERNO
CONDUTOR DE AR	10024192	500	1	511	10 48 808 8	REVESTIMENTO INTERNO
CONDUTOR DE LIGAÇÃO	10115705	2	1	644	10 11 570 3	LINHA DE CONEXAO
CONDUTOR DE LIGAÇÃO	10115705	2	1	645	10 12 190 9	LINHA DE CONEXAO
CONE	7017729	200	1	98	12 23 362 5	KIT DE PEÇAS DE REPOSIÇÃ
CONE	7017729	230	2	112	10 00 201 1	VALVULA DE FREIO
CONE	7017729	3	1	434	50 06 719	VÁLVULA DE RETORNO
CONE	7017729	4	1	435	50 06 720	VÁLVULA DE RETORNO
CONE DE FECHAMENTO VKA	4900305	37	3	722	10 82 841 3	LUBRIFICAÇÃO CENTRALIZAD
CONE DE FECHAMENTO VKA	4900305	33	2	731	10 39 639 6	LUBRIFICAÇÃO CENTRALIZAD
CONEX. ROSCA DE ENCAIXE	7026654	80	1	257	90 64 786	ELEMENTO DE CONEXÃO
CONEXAO DE SAIDA	10009606	14	4	253	10 66 472 2	BLOCO DE DISTRIBUIÇÃO SX
CONEXAO P/ ACUMULADOR	9399179	3	1	346	10 06 379 3	UNIDADE DE COMANDO DE O
CONEXÃO	10076195	175	2	410	10 35 863 8	INSTALAÇÃO BLOCO DE VÁL
CONEXÃO	9268725	19	1	158	10 11 886 0	REDUTOR DISTRIBUICAO BO
CONEXÃO	9273271	2	2	620	90 75 368	FILTRO ÓLEO LUBRIF. MONT.
CONEXÃO	9757423	22	4	121	10 40 412 9	INST.HIDR.CARRO INFERIOR
CONEXÃO 3/4-16/M22X1,5	9080360	8	2	640	90 79 580	PEÇA DE FECHO PRÉ-MONT
CONEXÃO DE ABASTECIMENT	10296552	10	1	249	10 22 844 3	BOMBA DE LUBRIFICACAO
CONEXÃO DE AQUECIMENTO	9079889	386	1	554	10 11 714 5	MOTOR DIESEL D936 L A6 190
CONEXÃO DE MANGUEIRA	10011995	210	1	260	90 64 786	ELEMENTO DE CONEXÃO
CONEXÃO DE MANGUEIRA	10011995	110	6	263	10 01 461 1	CAIXA AUXILIAR
CONEXÃO DE MANGUEIRA	10802630	120	1	258	90 64 786	ELEMENTO DE CONEXÃO
CONEXÃO DE MANGUEIRA	12222582	129	1	258	90 64 786	ELEMENTO DE CONEXÃO
CONEXÃO DE MANGUEIRA 15°	10412844	215	1	260	90 64 786	ELEMENTO DE CONEXÃO
CONEXÃO DE MANGUEIRA 15°	10412844	115	2	263	10 01 461 1	CAIXA AUXILIAR
CONEXÃO DE MANGUEIRA 90	10027260	126	1	258	90 64 786	ELEMENTO DE CONEXÃO
CONEXÃO DE MANGUEIRA 90	10027260	26	4	262	10 01 461 1	CAIXA AUXILIAR
CONEXÃO DE MANGUEIRA DN	511701914	127	1	258	90 64 786	ELEMENTO DE CONEXÃO

Designação	Artigo	Item	Quanti	Página	Módulo	Designação
CONEXÃO DE MANGUEIRA DN	511701914	27	4	262	10 01 461 1	CAIXA AUXILIAR
CONEXÃO DE MANGUEIRA DN	774371808	110	1	258	90 64 786	ELEMENTO DE CONEXÃO
CONEXÃO DE MANGUEIRA DN	774371808	10	10	262	10 01 461 1	CAIXA AUXILIAR
CONEXÃO DE MANGUEIRA DN	7623704	125	1	258	90 64 786	ELEMENTO DE CONEXÃO
CONEXÃO DE MANGUEIRA DN	7623704	25	4	262	10 01 461 1	CAIXA AUXILIAR
CONEXÃO DE MANGUEIRA DN	7623705	121	1	258	90 64 786	ELEMENTO DE CONEXÃO
CONEXÃO DE MANGUEIRA DN	7623705	20	6	262	10 01 461 1	CAIXA AUXILIAR
CONEXÃO DE MANGUEIRA DN	7623707	128	1	258	90 64 786	ELEMENTO DE CONEXÃO
CONEXÃO DE MANGUEIRA DN	7623707	28	2	262	10 01 461 1	CAIXA AUXILIAR
CONEXÃO DE MANGUEIRA DN	7624177	111	1	258	90 64 786	ELEMENTO DE CONEXÃO
CONEXÃO DE MANGUEIRA DN	7624177	11	5	262	10 01 461 1	CAIXA AUXILIAR
CONEXÃO DE MANGUEIRA DN	10040776	220	1	260	90 64 786	ELEMENTO DE CONEXÃO
CONEXÃO DE MANGUEIRA DN	10040776	120	2	263	10 01 461 1	CAIXA AUXILIAR
CONEXÃO DE MANGUEIRA DN	10040777	225	1	260	90 64 786	ELEMENTO DE CONEXÃO
CONEXÃO DE MANGUEIRA DN	10040777	125	2	263	10 01 461 1	CAIXA AUXILIAR
CONEXÃO DE MANGUEIRA DN	10040778	226	1	260	90 64 786	ELEMENTO DE CONEXÃO
CONEXÃO DE MANGUEIRA DN	10040778	126	2	263	10 01 461 1	CAIXA AUXILIAR
CONEXÃO DE MANGUEIRA DN	10040779	227	1	260	90 64 786	ELEMENTO DE CONEXÃO
CONEXÃO DE MANGUEIRA DN	10040779	127	2	263	10 01 461 1	CAIXA AUXILIAR
CONEXÃO DE MANGUEIRA M1	12253955	112	1	258	90 64 786	ELEMENTO DE CONEXÃO
CONEXÃO DE MANGUEIRA M7	12253954	141	1	258	90 64 786	ELEMENTO DE CONEXÃO
CONEXÃO DE MANGUEIRA R1	10014698	15	1	249	10 22 844 3	BOMBA DE LUBRIFICACAO
CONEXÃO FLAGEADA L	7616897	34	1	142	10 04 853 9	INSTALACAO BOMBA E EMBR
CONEXÃO GE 18L G1/2A	7003578	48	1	359	10 35 862 4	INSTALACAO HIDRAULICA
CONEXÃO GIRATORIA SWVE	7624176	180	1	258	90 64 786	ELEMENTO DE CONEXÃO
CONEXÃO GIRATÓRIA COMPL	10404127	10	1	99	10 40 412 6	COLETOR GIRATÓRIO - INSTA
CONEXÃO GIRATÓRIA COMPL	11463939	10	1	100	11 46 393 5	COLETOR GIRATÓRIO - INSTA
CONEXÃO M16X1,5/M16X1,5	10115649	46	2	634	10 11 628 5	TUBULAÇÃO DE COMBUSTÍVE
CONEXÃO M24X1,5 - G3/8	10076196	5	1	419	10 07 619 5	CONEXÃO
CONEXÃO ROSCADA 90º	11834730	7	1	796	11 69 501 2	KIT DE ABASTECIMENTO DE U
CONEXÃO ROSCADA GE 10L	7618380	3	1	101	10 40 412 7	CONEXÃO GIRATÓRIA COMPL
CONEXÃO ROSCADA GE 10L	7618380	3	1	102	11 46 393 9	CONEXÃO GIRATÓRIA COMPL
CONEXÃO ROSCADA GE 8L R	10013875	19	1	249	10 22 844 3	BOMBA DE LUBRIFICACAO
CONEXÃO ROSCADA M26X1,5	9075128	26	1	665	90 80 736	KIT DO TURBO COMPRESSOR
CONEXÃO ROSCADA WH 10L	7617261	12	3	269	10 06 014 6	INTALAÇ HIDR PEDAIS DE CO
CONEXÃO ROSCADA WH 10L	7617261	26	1	346	10 06 379 3	UNIDADE DE COMANDO DE O
CONEXÃO ROSCADA WH 10L	7617261	141	13	410	10 35 863 8	INSTALAÇÃO BLOCO DE VÁL
CONEXÃO ROSCADA WH 10L	7617261	383	1	413	10 35 863 8	INSTALAÇÃO BLOCO DE VÁL
CONEXÃO ROSCADA WH 10L	7617261	515	4	414	10 35 863 8	INSTALAÇÃO BLOCO DE VÁL
CONEXÃO ROSCADA WH 10L	7617714	43	1	143	10 04 853 9	INSTALACAO BOMBA E EMBR
CONEXÃO ROSCADA WH 10L	7617714	22	4	244	10 06 198 5	TUBO LUBRIFICAÇÃO - INSTA
CONEXÃO ROSCADA WH 16S	7018549	45	2	359	10 35 862 4	INSTALACAO HIDRAULICA
CONEXÃO ROSCADA WH 8L	7412734	9	1	253	10 66 472 2	BLOCO DE DISTRIBUIÇÃO SX
CONJ. DE ANÁLISE ÓLEO BIOL	7026088	22	1	51	90 66 466	ACESSÓRIOS
CONJ. DE ANÁLISE ÓLEO BIOL	7026817	20	1	51	90 66 466	ACESSÓRIOS
CONJUNTO ACUMULADOR	10885529	22	1	785	10 82 562 1	JC LEVANTAMENTO DADOS-T
CONSOLE	10049073	32	1	514	11 10 255 3	INSTALAÇÃO ELÉTRICA
CONSOLE	10061525	3	1	758	10 35 857 3	CILINDRO HIDR. COM ACESS
CONSOLE	10070437	200	1	411	10 35 863 8	INSTALAÇÃO BLOCO DE VÁL
CONSOLE	10074866	40	1	247	12 84 952 6	LUBRIFICAÇÃO CENTRALIZAD
CONSOLE	10074866	26	1	756	11 10 281 8	KIT MÁQUINA BASE
CONSOLE	10080030	3	1	775	11 45 729 6	CILINDRO DE ELEVACAO DIRE
CONSOLE	10080096	25	1	721	10 82 841 3	LUBRIFICAÇÃO CENTRALIZAD
CONSOLE	10080219	3	1	778	11 45 729 7	CILINDRO DE ELEVACAO ESQ
CONSOLE	10080598	2	1	423	10 35 863 6	BRAÇADEIRA DE TUBO
CONSOLE	10116053	9	1	650	10 11 646 4	COMPRESSOR DO AR-CONDI
CONSOLE	10374115	4	1	778	11 45 729 7	CILINDRO DE ELEVACAO ESQ
CONSOLE	10374247	4	1	775	11 45 729 6	CILINDRO DE ELEVACAO DIRE
CONSOLE	10854638	19	1	754	10 85 472 4	PEÇAS MONT.- MÁQUINA BAS
CONSOLE	10859980	140	1	786	10 82 562 1	JC LEVANTAMENTO DADOS-T

Designação	Artigo	Item	Quanti	Página	Módulo	Designação
CONSOLE	12860504	39	1	247	12 84 952 6	LUBRIFICAÇÃO CENTRALIZAD
CONSOLE	12860504	39	1	756	11 10 281 8	KIT MÁQUINA BASE
CONSOLE	7373042	10	1	360	10 06 380 1	INSTALACAO HIDRAULICA
CONSOLE	9356574	7	1	455	10 06 436 0	CAPO DO RADIADOR
CONSOLE	9690616	80	1	279	11 38 340 1	APOIO DE BRAÇO LADO DIRE
CONSOLE	9690616	80	1	302	11 45 228 6	APOIO DE BRAÇO LADO DIRE
CONSOLE	9690616	80	1	306	12 50 731 7	APOIO DE BRAÇO LADO DIRE
CONSOLE	9834805	50	1	446	10 35 865 5	REVESTIMENTO
CONSOLE DE COMANDO	10057362	10	1	275	11 38 339 7	APOIO DE BRAÇO LADO ESQ
CONSOLE DE COMANDO	10057362	10	1	291	10 38 502 8	APOIO DE BRAÇO LADO ESQ
CONSOLE DE COMANDO	10165766	10	1	293	10 05 736 2	CONSOLE DE COMANDO
CONSOLE DE COMANDO DIRE	5618923	10	1	277	11 38 340 1	APOIO DE BRAÇO LADO DIRE
CONSOLE DE COMANDO DIRE	5618923	10	1	301	11 45 228 6	APOIO DE BRAÇO LADO DIRE
CONSOLE DE COMANDO DIRE	5618923	10	1	305	12 50 731 7	APOIO DE BRAÇO LADO DIRE
CONSOLE DE TRANSPORTE	10141949	1	1	671	90 79 468	DISPOSITIVO TRANSP.MONT.E
CONSOLE DE TRANSPORTE	9078849	1	1	672	90 79 823	DISPOSITIVO TRANSP.MONT.E
CONSOLE DE VÁLVULA DE CO	10358191	10	1	406	10 35 863 8	INSTALAÇÃO BLOCO DE VÁL
CONSOLE DIANTEIRO DIREIT	10048548	12	1	134	10 04 853 1	SUSPENSAO DO MOTOR
CONSOLE DO MOTOR	10056401	30	1	213	10 04 853 8	MOTOR - PECAS ANEXAS
CONSOLE TRASEIRA ESQUE	10048545	13	1	134	10 04 853 1	SUSPENSAO DO MOTOR
CONTATO ELÉTRICO DE ILUMI	6001593	3	1	315	10 05 507 1	INTERRUPTOR - INSTALAÇÃO
CONTRA-PORCA UNEF1 11/16	6905277	11	1	519	99 47 695	INSTALAÇÃO ELÉTRICA E50
CONTRAPESO 7,7T	10498003	2	1	536	10 49 800 2	INSTALAÇÃO DO CONTRAPES
CONTRAPINO 3,2X25	4330011	17	1	457	10 35 822 9	PORTA LATERAL ESQUERDA
CONTRAPINO 3,2X25	4330011	22	1	459	10 06 423 5	PORTA LATERAL DIREITA
CONTRAPINO 3,2X25	4330011	22	1	460	10 49 856 6	PORTA LATERAL DIREITA
CONTRAPINO 3,2X25	4330011	22	1	466	10 35 823 0	PORTA LATERAL DIANTEIRA
CONTRAPINO 4X32	4330015	23	1	205	10 84 460 3	VENTILADOR - INSTALACAO
CORDÃO DE VEDAÇÃO	10215888	40	0.05	217	11 10 291 6	INSTALACAO MECANISMO GI
COROA DENTADA	9177676	1	1	683	10 11 586 2	VOLANTE MONTAGEM EXTER
CORPO BASICO	10005863	1	1	294	10 16 576 6	CONSOLE DE COMANDO
CORPO BASICO	5618922	1	1	310	56 18 923	CONSOLE DE COMANDO DIRE
CORRENTE	7024630	26	1	369	10 02 191 5	VÁLVULA SOLENÓIDE DRUC
CORRENTE	7024630	26	1	370	10 28 046 1	VÁLVULA SOLENÓIDE
CORRENTE DA ESTEIRA	10675003	1	1	80	10 67 501 0	ESTEIRA 500mm
CORRENTE DA ESTEIRA	10675003	1	1	81	11 16 108 1	ESTEIRA 500mm
CORRIMÃO - INSTALAÇÃO	11733762	8900	1	124	10 35 861 4	CARRO SUPERIOR
CORRIMÃO DIREITO	11730369	10	1	513	11 73 376 2	CORRIMÃO - INSTALAÇÃO
CORRIMÃO DIREITO	11730370	20	1	513	11 73 376 2	CORRIMÃO - INSTALAÇÃO
CORRIMÃO ESQUERDO	10065814	210	1	451	10 35 865 5	REVESTIMENTO
CORRIMÃO TRASEIRO	10298669	580	1	505	10 29 026 4	PEÇAS DE MONTAGEM
COXIM	10013573	5	4	342	98 79 063	PLACA DO ASSOALHO DA CAB
COXIM	7019129	470	1	504	10 29 026 4	PEÇAS DE MONTAGEM
COXIM	7021047	480	1	504	10 29 026 4	PEÇAS DE MONTAGEM
COXIM	7028810	170	2	481	70 28 759	PÁRA-BRISA SUPERIOR
COXIM	7028810	170	2	503	10 29 026 4	PEÇAS DE MONTAGEM
CR COMPRESSOR	10493026	28	1	287	11 10 016 7	SUSPENSAO
CR FLANGE NG 125-140-150	9077464	1	2	825	10 13 975 2	KIT DE REPARO NG 140-150
CR TACO	9074482	98	1	807	10 11 856 1	MANETE DE COMANDO VG6-8
CR TACO	9074482	98	1	808	11 37 560 6	MANETE DE COMANDO VG6-8
CR TACO	9079277	998	1	324	90 79 258	MANETE DE COMANDO VG7 2-
CR TACO	9079277	98	1	325	90 79 259	MANETE DE COMANDO VG7 2-
CRUZETA 20 M. B	9265396	16	1	807	10 11 856 1	MANETE DE COMANDO VG6-8
CRUZETA 20 M. B	9265396	16	1	808	11 37 560 6	MANETE DE COMANDO VG6-8
CUBO	10406048	20	1	205	10 84 460 3	VENTILADOR - INSTALACAO
CUBO	9267273	13	1	618	90 72 781	BOMBA DE ÓLEO DE LUBRIFI
CUBO	9267273	13	1	619	90 80 277	BOMBA DE SUCÇÃO PRÉ-MO
CÁRTER COMPLETO COM CIL	12824837	10	1	557	10 11 682 5	MOTOR BÁSICO D936 L HIGH 3
CÁRTER DE ÓLEO	10123868	1	1	574	12 83 245 4	CARTER DE ÓLEO
CÁRTER DE ÓLEO	9079487	20	1	549	10 11 714 5	MOTOR DIESEL D936 L A6 190

Designação	Artigo	Item	Quanti	Página	Módulo	Designação
CÁRTER VOLANTE MONT. EXT	10116114	520	1	555	10 11 714 5	MOTOR DIESEL D936 L A6 190
DECLARACAO DE CONFORMI	9399607	98	1	548	10 49 803 0	ADESIVO DE SINALIZAÇÃO
DECLARACAO DO FABRICAN	9399608	99	1	548	10 49 803 0	ADESIVO DE SINALIZAÇÃO
DEFLETOR	10058234	6	1	453	10 05 816 9	CAPOTA DO MOTOR
DEFLETOR	10058235	2	1	454	10 05 823 4	DEFLETOR
DEFLETOR	10059633	20	1	457	10 35 822 9	PORTA LATERAL ESQUERDA
DEFLETOR	10059635	2	1	458	10 05 963 3	DEFLETOR
DENTE	10451133	30	5	735	11 10 258 6	CAÇAMBA RETRO HD 1800MM
DENTE	10451133	2	1	781	11 10 259 0	DENTE Z50CL
DENTE Z50CL	11102590	233	5	7	.	
DESLIZADOR FUER SITZTIEF	10493369	16	1	285	11 10 016 6	PARTE SUPERIOR DE ASSENT
DIFUSOR DE AR	10016540	5	2	320	10 05 981 8	PRÉ-COMANDO DE PEDAL M
DIFUSOR DE AR	5611480	99	3	273	10 49 880 5	POSTO DE COMANDO - PEÇA
DIFUSOR DE AR	5611480	25	2	277	11 38 340 1	APOIO DE BRAÇO LADO DIRE
DIFUSOR DE AR	5611480	25	2	301	11 45 228 6	APOIO DE BRAÇO LADO DIRE
DIFUSOR DE AR	5611480	25	2	305	12 50 731 7	APOIO DE BRAÇO LADO DIRE
DIFUSOR DE AR	7024446	350	4	509	10 29 035 2	REVESTIMENTO INTERNO
DIFUSOR DE AR	7024446	350	4	511	10 48 808 8	REVESTIMENTO INTERNO
DIFUSOR DE AR	7028950	370	2	509	10 29 035 2	REVESTIMENTO INTERNO
DIFUSOR DE AR	7028950	370	2	511	10 48 808 8	REVESTIMENTO INTERNO
DISCO DE COMUTACAO	9265398	18	1	807	10 11 856 1	MANETE DE COMANDO VG6-8
DISCO DE COMUTACAO	9265398	18	1	808	11 37 560 6	MANETE DE COMANDO VG6-8
DISCO DE ELEVAÇÃO	10008424	7	1	208	56 19 045	MOTOR DE PISTÃO AXIAL
DISCO DE FECHAMENTO	9429965	54	1	712	11 10 294 5	LANÇA MONOBLOCO 6.45M
DISCO DE FECHAMENTO	9443024	63	1	110	96 87 443 01	MECANISMO DE TRANSLAÇÃ
DISCO DE FECHAMENTO	9443024	63	1	118	94 43 029 03	KIT DE REPARO DO FREIO
DISCO DE RETENÇÃO	9441122	46	1	222	90 02 197 3	KIT DE MODIFICAÇÃO
DISCO DE RETENÇÃO	9441122	46	1	227	90 02 790 4	REDUTOR DE GIRO SAT 325/
DISCO DE RETENÇÃO	9441716	36	1	226	90 02 790 4	REDUTOR DE GIRO SAT 325/
DISCO DE RETENÇÃO	9443003	3	1	109	96 87 443 01	MECANISMO DE TRANSLAÇÃ
DISCO DE RETENÇÃO	9443009	21	1	109	96 87 443 01	MECANISMO DE TRANSLAÇÃ
DISCO DE RETENÇÃO	9443014	31	1	109	96 87 443 01	MECANISMO DE TRANSLAÇÃ
DISCO DE RETENÇÃO	9443033	41	1	109	96 87 443 01	MECANISMO DE TRANSLAÇÃ
DISCO DE VEDAÇÃO	11004098	6	1	91	10 65 167 7	ROLETE SUPERIOR D7
DISCO DE VEDAÇÃO	11007770	7	1	390	56 17 688	VÁLVULA DE FECHAMENTO
DISCO DE VEDAÇÃO 7,03X15,	10040406	5	1	626	10 11 658 7	INJETOR
DISCO DE VEDAÇÃO 7,03X15,	10040406	2	1	628	10 11 585 4	KIT DE VEDACAO DO BICO IN
DISCO TERMINAL 48,6/71,6X1	7373031	40	4	83	56 17 975	ELO FINAL DA CORRENTE
DISJUNTOR	10012172	20	2	519	99 47 695	INSTALAÇÃO ELÉTRICA E50
DISJUNTOR ELÉTRICO	6202944	19	1	519	99 47 695	INSTALAÇÃO ELÉTRICA E50
DISJUNTOR ELÉTRICO	6203687	21	1	519	99 47 695	INSTALAÇÃO ELÉTRICA E50
DISPLAY DE ESCAVADEIRA	10685206	2	1	308	11 45 227 1	DISPLAY ESCAVADEIRA COMP
DISPLAY DE ESCAVADEIRA	10884044	2	1	309	11 73 919 5	DISPLAY ESCAVADEIRA COMP
DISPLAY ESCAVADEIRA COMP	11452271	30	1	277	11 38 340 1	APOIO DE BRAÇO LADO DIRE
DISPLAY ESCAVADEIRA COMP	11452271	30	1	301	11 45 228 6	APOIO DE BRAÇO LADO DIRE
DISPLAY ESCAVADEIRA COMP	11739195	30	1	277	11 38 340 1	APOIO DE BRAÇO LADO DIRE
DISPOSITIVO APERTO	9887461	3	1	650	10 11 646 4	COMPRESSOR DO AR-CONDI
DISPOSITIVO COMANDO - M	10115993	571	1	555	10 11 714 5	MOTOR DIESEL D936 L A6 190
DISPOSITIVO TRANSP.MONT.E	9079468	481	1	554	10 11 714 5	MOTOR DIESEL D936 L A6 190
DISPOSITIVO TRANSP.MONT.E	9079823	480	1	554	10 11 714 5	MOTOR DIESEL D936 L A6 190
DISTRIBUIDOR	10100946	11	1	356	10 35 862 9	ARREFECIMENTO DE OLEO
DISTRIBUIDOR	10101615	30	2	360	10 06 380 1	INSTALACAO HIDRAULICA
DISTRIBUIDOR	10288158	17	2	353	10 06 379 8	MANGUEIRAS HIDRAULICAS
DIVISÓRIA CENTRAL	10057404	2	1	465	10 06 576 2	DIVISÓRIA CENTRAL
DIVISÓRIA CENTRAL	10065762	160	1	450	10 35 865 5	REVESTIMENTO
DOBRADIÇA	7029409	640	2	486	70 28 842	MARCO DA PORTA
DOBRADIÇA	9939056	20	2	445	10 35 865 5	REVESTIMENTO
EIXO	11004101	11	1	91	10 65 167 7	ROLETE SUPERIOR D7
EIXO	12221002	4	1	79	12 22 100 1	RODA GUIA
EIXO	5611549	4	1	94	10 00 454 6	RODA GUIA B6

Designação	Artigo	Item	Quanti	Página	Módulo	Designação
EIXO	7373748	3	1	89	11 60 010 7	ROLAMENTO DE ESFERA D7
EIXO	9265410	24	1	323	90 79 258	MANETE DE COMANDO VG7 2-
EIXO	9265410	24	1	325	90 79 259	MANETE DE COMANDO VG7 2-
EIXO DA BOMBA	9078964	2	1	695	90 78 962	TOMADA PRÉ MONTADA
EIXO DA BOMBA DE AGUA	9074935	5	1	655	10 13 281 7	BOMBA DE ÁGUA PRÉ-MONT
EIXO DA BOMBA Z=33 M=2,5	9077713	1	1	694	90 77 718	TOMADA PRÉ MONTADA
EIXO DA BOMBA Z=40 M=2,25	9077327	1	1	693	90 77 386	TOMADA PRÉ MONTADA
EIXO DE ACIONAMENTO	10008086	8	1	400	10 00 807 7	BOMBA
EIXO DE ACIONAMENTO	10008423	8	1	208	56 19 045	MOTOR DE PISTÃO AXIAL
EIXO DE ACIONAMENTO M=4 Z	944301703	35	1	109	96 87 443 01	MECANISMO DE TRANSLAÇÃ
EIXO DE ACIONAMENTO Z=12	9884138	10	1	185	98 84 140	BOMBA CIRCUITO ARREFECI
EIXO DE ACIONAMENTO Z=45	12854366	1	1	809	10 11 908 9	EIXO PRIMARIO COMPLETO Z
EIXO DE COMANDO	10119424	1	1	610	90 80 713	EIXO DE EXCÊNTRICOS COM
EIXO DE EXCÊNTRICOS COM	9080713	100	1	558	10 11 682 5	MOTOR BÁSICO D936 L HIGH 3
EIXO DE SAIDA M=12 Z=11	90200992	10	1	226	90 02 790 4	REDUTOR DE GIRO SAT 325/
EIXO DO BALANCIM PRÉ-MO	10142820	2	1	599	12 40 205 5	BALANCIM PRÉ MONTADO
EIXO DO DIFERENCIAL	10216824	5	1	170	10 28 264 7	BOMBA DE ENGRENAGENS
EIXO DO MOTOR	10216701	14	1	399	11 49 189 4	MECANISMO DE ACIONAMENT
EIXO DO MOTOR NG 090	9074077	10	1	233	90 74 117	KIT DE REPARO DO EIXO NG
EIXO DO MOTOR NG 100	9074121	10	1	824	90 74 123	KIT DE REPARO DO EIXO NG
EIXO DO MOTOR NG 140	9889980	10	1	831	98 89 978	KIT DE REPARO DO EIXO NG
EIXO DO MOTOR NG 140-150	9889979	10	1	189	98 89 977	KIT DE REPARO DO EIXO NG
EIXO DOS BALANCINS	9074506	2	1	604	90 74 505	BALANCIM PRÉ MONTADO
EIXO PRIMARIO COMPLETO Z	10119089	10	1	821	10 11 909 3	KIT DE REP DO EIXO DE ACIO
ELEMENTO CENTRAL MX-F 10	7027941	2	1	719	10 66 480 4	BLOCO DE DISTRIBUIÇÃO MX-
ELEMENTO CENTRAL MX-F 10	7027941	3	1	719	10 66 480 4	BLOCO DE DISTRIBUIÇÃO MX-
ELEMENTO CENTRAL MX-F 10	7027941	4	1	719	10 66 480 4	BLOCO DE DISTRIBUIÇÃO MX-
ELEMENTO CENTRAL MX-F 10	7027941	6	1	733	10 66 475 5	BLOCO DE DISTRIBUIÇÃO MX-
ELEMENTO CENTRAL MX-F 25	7027938	5	1	719	10 66 480 4	BLOCO DE DISTRIBUIÇÃO MX-
ELEMENTO CENTRAL MX-F 25	7027938	4	1	733	10 66 475 5	BLOCO DE DISTRIBUIÇÃO MX-
ELEMENTO CENTRAL MX-F 45	7027939	4	1	255	10 29 300 3	BLOCO DE DISTRIBUIÇÃO MX-
ELEMENTO CENTRAL MX-F 45	7027939	2	1	733	10 66 475 5	BLOCO DE DISTRIBUIÇÃO MX-
ELEMENTO CENTRAL MX-F 45	7027939	3	1	733	10 66 475 5	BLOCO DE DISTRIBUIÇÃO MX-
ELEMENTO CENTRAL MX-F 45	7027939	5	1	733	10 66 475 5	BLOCO DE DISTRIBUIÇÃO MX-
ELEMENTO CENTRAL MX-F 45	7027939	7	1	733	10 66 475 5	BLOCO DE DISTRIBUIÇÃO MX-
ELEMENTO CENTRAL MX-F 75	7027940	2	1	255	10 29 300 3	BLOCO DE DISTRIBUIÇÃO MX-
ELEMENTO CENTRAL MX-F 75	7027940	3	1	255	10 29 300 3	BLOCO DE DISTRIBUIÇÃO MX-
ELEMENTO CENTRAL SXE-2	10013837	2	3	253	10 66 472 2	BLOCO DE DISTRIBUIÇÃO SX
ELEMENTO DA BOMBA	10216340	13	1	249	10 22 844 3	BOMBA DE LUBRIFICACAO
ELEMENTO DE CONEXÃO	9064786	998	1	720	10 66 482 5	BLOCO DE DISTRIBUIÇÃO MX-
ELEMENTO DE CONTROLE	10493089	13	1	335	11 00 359 4	CARCAÇA
ELEMENTO DE DOSAGEM SX	10013840	104	1	253	10 66 472 2	BLOCO DE DISTRIBUIÇÃO SX
ELEMENTO DE DOSAGEM SX	10013842	105	1	253	10 66 472 2	BLOCO DE DISTRIBUIÇÃO SX
ELEMENTO DE DOSAGEM SX	10013843	101	1	253	10 66 472 2	BLOCO DE DISTRIBUIÇÃO SX
ELEMENTO DE DOSAGEM SX	10013851	102	1	253	10 66 472 2	BLOCO DE DISTRIBUIÇÃO SX
ELEMENTO DE DOSAGEM SX	10013848	103	1	253	10 66 472 2	BLOCO DE DISTRIBUIÇÃO SX
ELEMENTO DE FIXACAO F.DT	6203497	10	3	248	10 06 750 0	LUBRIFICAÇÃO CENTR. AUT
ELEMENTO DE FIXACAO F.DT	6203497	331	14	515	11 10 255 3	INSTALAÇÃO ELÉTRICA
ELEMENTO DE SUBST. DO FIL	12417487	101	1	64	12 48 693 1	KIT DE MANUTENCAO 500h
ELEMENTO DE SUBST. DO FIL	12417487	101	1	67	12 48 693 2	KIT DE MANUTENÇÃO 1000h
ELEMENTO DE SUBST. DO FIL	12417487	101	1	70	12 48 693 3	KIT DE MANUTENÇÃO 1500-25
ELEMENTO DE SUBST. DO FIL	12417487	101	1	71	12 48 693 4	KIT DE MANUTENÇÃO 2000h
ELEMENTO DE SUBST. DO FIL	12417487	1	1	568	90 75 483	VENTILACAO DO CARTER
ELEMENTO FILTRANTE	10217168	310	1	73	12 48 693 4	KIT DE MANUTENÇÃO 2000h
ELEMENTO FILTRANTE	10217168	2	1	138	10 21 717 3	FILTRO DE AR
ELEMENTO FILTRANTE	10220705	120	1	64	12 48 693 1	KIT DE MANUTENCAO 500h
ELEMENTO FILTRANTE	10220705	120	1	67	12 48 693 2	KIT DE MANUTENÇÃO 1000h
ELEMENTO FILTRANTE	10220705	120	1	70	12 48 693 3	KIT DE MANUTENÇÃO 1500-25
ELEMENTO FILTRANTE	10220705	120	1	71	12 48 693 4	KIT DE MANUTENÇÃO 2000h
ELEMENTO FILTRANTE	10220705	3	1	175	11 82 151 9	FILTRO

Designação	Artigo	Item	Quanti	Página	Módulo	Designação
ELEMENTO FILTRANTE 16µm	11342118	130	1	64	12 48 693 1	KIT DE MANUTENCAO 500h
ELEMENTO FILTRANTE 16µm	11342118	130	1	67	12 48 693 2	KIT DE MANUTENÇÃO 1000h
ELEMENTO FILTRANTE 16µm	11342118	130	1	70	12 48 693 3	KIT DE MANUTENÇÃO 1500-25
ELEMENTO FILTRANTE 16µm	11342118	130	1	71	12 48 693 4	KIT DE MANUTENÇÃO 2000h
ELEMENTO FILTRANTE 16µm	11342118	13	1	346	10 06 379 3	UNIDADE DE COMANDO DE O
ELEMENTO FILTRANTE 16µm	11342118	10	1	348	56 09 948	KIT DE FILTRO DE OLEO
ELEMENTO FILTRANTE 60µm	10115197	330	1	73	12 48 693 4	KIT DE MANUTENÇÃO 2000h
ELEMENTO FILTRANTE 60µm	10115197	36	1	353	10 06 379 8	MANGUEIRAS HIDRAULICAS
ELEMENTO FILTRANTE 60µm	10115197	4	1	355	10 04 462 4	FILTRO DE PRESSÃO
ELEMENTO FINAL MX-F 105	7027945	8	1	733	10 66 475 5	BLOCO DE DISTRIBUIÇÃO MX-
ELEMENTO FINAL MX-F 25	7027942	8	1	719	10 66 480 4	BLOCO DE DISTRIBUIÇÃO MX-
ELEMENTO FINAL MX-F 45	7027943	8	1	255	10 29 300 3	BLOCO DE DISTRIBUIÇÃO MX-
ELEMENTO FINAL SXE-2	10013839	3	1	253	10 66 472 2	BLOCO DE DISTRIBUIÇÃO SX
ELEMENTO INICIAL MX-F	7027937	1	1	255	10 29 300 3	BLOCO DE DISTRIBUIÇÃO MX-
ELEMENTO INICIAL MX-F	7027937	1	1	719	10 66 480 4	BLOCO DE DISTRIBUIÇÃO MX-
ELEMENTO INICIAL MX-F	7027937	1	1	733	10 66 475 5	BLOCO DE DISTRIBUIÇÃO MX-
ELEMENTO INICIAL SXE-2	10013835	1	1	253	10 66 472 2	BLOCO DE DISTRIBUIÇÃO SX
ELO DE CORRENTE DIREITO	11214376	20	1	84	12 22 023 4	ELO MESTRE DA CORRENTE
ELO DE CORRENTE ESQUERD	11214375	10	1	84	12 22 023 4	ELO MESTRE DA CORRENTE
ELO FINAL DA CORRENTE	5617975	10	1	82	10 67 500 3	CORRENTE DA ESTEIRA
ELO MESTRE DA CORRENTE	12220234	10	1	83	56 17 975	ELO FINAL DA CORRENTE
ENCOSTO DO ASSENTO	11082672	2	1	285	11 10 016 6	PARTE SUPERIOR DE ASSENT
ENGATE	7027776	25	1	285	11 10 016 6	PARTE SUPERIOR DE ASSENT
ENGRENAGEM	9079001	3	1	695	90 78 962	TOMADA PRÉ MONTADA
ENGRENAGEM INTERMEDIARI	9072633	7	1	618	90 72 781	BOMBA DE ÓLEO DE LUBRIFI
ENGRENAGEM INTERMEDIARI	9072633	7	1	619	90 80 277	BOMBA DE SUCÇÃO PRÉ-MO
ENGRENAGEM PLANETÁRIA	9443005	1	1	113	94 43 004 03	ENGRENAGEM PLANETÁRIA M
ENGRENAGEM PLANETÁRIA	932777801	47	3	227	90 02 790 4	REDUTOR DE GIRO SAT 325/
ENGRENAGEM PLANETÁRIA	932777901	47	3	222	90 02 197 3	KIT DE MODIFICAÇÃO
ENGRENAGEM PLANETÁRIA	932777901	1	1	224	93 27 778 01	ENGRENAGEM PLANETÁRIA
ENGRENAGEM PLANETÁRIA	944356303	37	4	226	90 02 790 4	REDUTOR DE GIRO SAT 325/
ENGRENAGEM PLANETÁRIA	944356403	1	1	225	94 43 563 03	ENGRENAGEM PLANETÁRIA
ENGRENAGEM PLANETÁRIA M	944300403	5	5	109	96 87 443 01	MECANISMO DE TRANSLAÇÃ
ENGRENAGEM PLANETÁRIA M	9443016	1	1	115	96 86 142 01	ENGRENAGEM PLANETÁRIA M
ENGRENAGEM PLANETÁRIA M	968614201	32	3	109	96 87 443 01	MECANISMO DE TRANSLAÇÃ
ENGRENAGEM PLANETÁRIA M	944301003	22	3	109	96 87 443 01	MECANISMO DE TRANSLAÇÃ
ENGRENAGEM PLANETÁRIA M	9443011	1	1	114	94 43 010 03	ENGRENAGEM PLANETÁRIA M
ENGRENAGEM SOLAR M=3,25	944217103	40	1	227	90 02 790 4	REDUTOR DE GIRO SAT 325/
ENGRENAGEM SOLAR M=3,25	932778101	60	1	227	90 02 790 4	REDUTOR DE GIRO SAT 325/
ENGRENAGEM SOLAR M=4 Z	9443012	25	1	109	96 87 443 01	MECANISMO DE TRANSLAÇÃ
ENGRENAGEM SOLAR M=4 Z	9443007	15	1	109	96 87 443 01	MECANISMO DE TRANSLAÇÃ
ENGRENAGEM Z=100 M=2,5	9073098	3	1	610	90 80 713	EIXO DE EXCÊNTRICOS COM
ENGRENAGEM Z=12 M=1,75	9884139	11	1	185	98 84 140	BOMBA CIRCUITO ARREFECI
ENGRENAGEM Z=28 M=3,5	9080174	12	1	158	10 11 886 0	REDUTOR DISTRIBUICAO BO
ENGRENAGEM Z=29 M=2,25	9073342	6	1	655	10 13 281 7	BOMBA DE ÁGUA PRÉ-MONT
ENGRENAGEM Z=40 M=3,5	10119090	11	1	158	10 11 886 0	REDUTOR DISTRIBUICAO BO
ENGRENAGEM Z=50 M=2,5	9072834	3	1	581	90 75 115	VIRABREQUIM COM ENGRENA
ENGRENAGEM Z=99 M=2,25	9073100	13	1	610	90 80 713	EIXO DE EXCÊNTRICOS COM
ENTRADA DE AR	10005674	2	1	332	10 02 208 3	BOCAL DE AR
ENTRADA DE AR	10005675	7	1	335	11 00 359 4	CARCAÇA
ENTRADA DE AR	10022778	18	1	333	10 02 211 7	CARCACA DE CONDUCAO DE
ENTRADA DE AR	10022780	15	1	333	10 02 211 7	CARCACA DE CONDUCAO DE
ESCADA DE ACESSO	10087659	10	1	542	10 49 878 6	ESPELHO EXTERNO - INSTALA
ESFERA DE AÇO d=35 - G40	747002001	11	26	109	96 87 443 01	MECANISMO DE TRANSLAÇÃ
ESFERA DE RETORNO	10216710	25	1	402	10 22 042 7	MECANISMO DE ACIONAMENT
ESFERA DE RETORNO	10287729	6	1	171	10 28 772 5	MECANISMO DE ACIONAMENT
ESFERA DE RETORNO	7370837	6	1	157	10 00 809 5	MECANISMO DE ACIONAMENT
ESFERA DE RETORNO	7370837	6	1	206	10 00 840 5	MECANISMO DE ACIONAMENT
ESFERA DE RETORNO NG 090	9072751	13	1	231	90 73 380	KIT REPARO ESF.+PLACA RET
ESFERA DE RETORNO NG 090	9072751	13	1	234	90 74 125	KIT DE REPARO NG 090

Designação	Artigo	Item	Quanti	Página	Módulo	Designação
ESFERA DE RETORNO NG 10	9072294	13	1	180	90 72 998	KIT REPARO ESF.+PLACA RET
ESFERA DE RETORNO NG 14	9889929	13	1	192	98 89 988	KIT REPARO ESF.+PLACA RET
ESFERA d=4,5 - G28	10014076	3	1	166	70 28 176	PISTÃO DE FREIO
ESPAÇADOR	9079064	30	1	677	90 76 534	SENSOR DE ROTACAO
ESPAÇADOR 9X18X35	9275161	31	3	213	10 04 853 8	MOTOR - PECAS ANEXAS
ESPELHO	11001492	24	1	542	10 49 878 6	ESPELHO EXTERNO - INSTALA
ESPELHO	11001492	61	1	544	10 49 878 6	ESPELHO EXTERNO - INSTALA
ESPELHO EXTERNO	10044353	610	1	505	10 29 026 4	PEÇAS DE MONTAGEM
ESPELHO EXTERNO - INSTALA	10498786	9700	1	125	10 35 861 4	CARRO SUPERIOR
ESPELHO EXTERNO - INSTALA	10498786	9700	1	125	10 35 861 4	CARRO SUPERIOR
ESPELHO EXTERNO 243X155	7019140	810	2	507	10 04 435 3	ESPELHO EXTERNO
ESPELHO RETROVISOR	7019142	190	1	481	70 28 759	PÁRA-BRISA SUPERIOR
ESPIRAL DE PROT.CONTRA D	10011996	166	1	258	90 64 786	ELEMENTO DE CONEXÃO
ESPIRAL DE PROT.CONTRA D	11213893	266	1	260	90 64 786	ELEMENTO DE CONEXÃO
ESPUMA DE PE	10022776	20	1	333	10 02 211 7	CARCACA DE CONDUCAO DE
ESQUEMA DE TRANSPORTE	10386773	35	1	547	10 49 803 0	ADESIVO DE SINALIZAÇÃO
ESQUEMA ELETRICO D936 A6	10118815	90	1	709	10 11 848 3	SISTEMA ELETRCO DO MOTO
ESTEIRA	10289996	510	1	509	10 29 035 2	REVESTIMENTO INTERNO
ESTEIRA	10289996	510	1	511	10 48 808 8	REVESTIMENTO INTERNO
ESTEIRA	10289997	520	1	509	10 29 035 2	REVESTIMENTO INTERNO
ESTEIRA	10289997	520	1	511	10 48 808 8	REVESTIMENTO INTERNO
ESTEIRA 500mm	10675010	202	2	78	10 49 887 7	KIT ADICIONAL
ESTEIRA 500mm	11161081	20	2	7	.	
ESTEIRA DE FILTRO	10022770	211	1	68	12 48 693 2	KIT DE MANUTENÇÃO 1000h
ESTEIRA DE FILTRO	10022770	211	1	72	12 48 693 4	KIT DE MANUTENÇÃO 2000h
ESTEIRA DE FILTRO	10022770	2	1	339	10 02 277 7	GRADE DE CIRCULACAO DE A
ESTRIBO	10009015	100	1	490	10 29 033 7	INSTALACAO ELETRICA
ESTRIBO	10037722	26	2	247	12 84 952 6	LUBRIFICAÇÃO CENTRALIZAD
ESTRIBO	10037722	21	14	716	11 10 283 6	KIT MONOBLOCO 6.45M
ESTRIBO	10037722	6	3	721	10 82 841 3	LUBRIFICAÇÃO CENTRALIZAD
ESTRIBO	10037722	12	4	721	10 82 841 3	LUBRIFICAÇÃO CENTRALIZAD
ESTRIBO	10037722	15	2	721	10 82 841 3	LUBRIFICAÇÃO CENTRALIZAD
ESTRIBO	10037722	21	16	727	11 10 281 7	KIT DE ATUALIZAÇÃO 2.10M
ESTRIBO	10037722	10	12	730	10 39 639 6	LUBRIFICAÇÃO CENTRALIZAD
ESTRIBO	10037722	41	8	731	10 39 639 6	LUBRIFICAÇÃO CENTRALIZAD
ESTRIBO	10037722	21	4	756	11 10 281 8	KIT MÁQUINA BASE
ESTRIBO	10037723	9	11	9	12 85 910 3	FAROL CPL - INSTALAÇÃO
ESTRIBO	10037723	21	2	247	12 84 952 6	LUBRIFICAÇÃO CENTRALIZAD
ESTRIBO	10037723	23	14	716	11 10 283 6	KIT MONOBLOCO 6.45M
ESTRIBO	10037723	9	10	721	10 82 841 3	LUBRIFICAÇÃO CENTRALIZAD
ESTRIBO	10037723	18	7	721	10 82 841 3	LUBRIFICAÇÃO CENTRALIZAD
ESTRIBO	10037723	23	8	727	11 10 281 7	KIT DE ATUALIZAÇÃO 2.10M
ESTRIBO	10037723	13	5	730	10 39 639 6	LUBRIFICAÇÃO CENTRALIZAD
ESTRIBO	10037723	16	1	730	10 39 639 6	LUBRIFICAÇÃO CENTRALIZAD
ESTRIBO	10289976	72	1	282	10 04 363 2	ASSENTO DO OPERADOR
ESTRIBO	7028838	160	1	484	70 28 769	PORTA DA CABINE DO OPERA
ESTRIBO	7028872	450	1	491	10 29 033 7	INSTALACAO ELETRICA
ESTRIBO	7028872	450	1	494	10 48 808 7	INSTALACAO ELETRICA
ESTRIBO	9943105	47	1	320	10 05 981 8	PRÉ-COMANDO DE PEDAL M
ESTRIBO	9943365	46	1	320	10 05 981 8	PRÉ-COMANDO DE PEDAL M
ESTRIBO DO TRILHO d=26319	7370581	73	1	282	10 04 363 2	ASSENTO DO OPERADOR
ETIQUETA 12VDC/8A 30mmX4	10086265	78	1	279	11 38 340 1	APOIO DE BRAÇO LADO DIRE
ETIQUETA 12VDC/8A 30mmX4	10086265	78	1	302	11 45 228 6	APOIO DE BRAÇO LADO DIRE
ETIQUETA 12VDC/8A 30mmX4	10086265	78	1	306	12 50 731 7	APOIO DE BRAÇO LADO DIRE
ETIQUETA ADESIVA	10067667	10	1	546	10 49 803 0	ADESIVO DE SINALIZAÇÃO
ETIQUETA ADESIVA	10074169	11	1	546	10 49 803 0	ADESIVO DE SINALIZAÇÃO
ETIQUETA ADESIVA	10074171	14	1	546	10 49 803 0	ADESIVO DE SINALIZAÇÃO
ETIQUETA ADESIVA	10441600	100	1	250	10 22 844 3	BOMBA DE LUBRIFICACAO
ETIQUETA ADESIVA	12250858	51	1	757	11 10 281 8	KIT MÁQUINA BASE
ETIQUETA ADESIVA 112mmX4	9350400	24	2	547	10 49 803 0	ADESIVO DE SINALIZAÇÃO

Designação	Artigo	Item	Quanti	Página	Módulo	Designação
ETIQUETA ADESIVA 132mmX	11004408	30	1	547	10 49 803 0	ADESIVO DE SINALIZAÇÃO
ETIQUETA ADESIVA 698mmX	10067668	12	1	546	10 49 803 0	ADESIVO DE SINALIZAÇÃO
ETIQUETA ADESIVA 826,08m	9949751	13	1	546	10 49 803 0	ADESIVO DE SINALIZAÇÃO
ETIQUETA ADESIVA 977mmX	10072785	9	1	546	10 49 803 0	ADESIVO DE SINALIZAÇÃO
ETIQUETA ADESIVA LIDAT 100	10541838	121	1	786	10 82 562 1	JC LEVANTAMENTO DADOS-T
ETIQUETA ADESIVA LIEBHERR	9874049	67	2	712	11 10 294 5	LANÇA MONOBLOCO 6.45M
ETIQUETA ADESIVA LIEBHERR	9613673	71	1	548	10 49 803 0	ADESIVO DE SINALIZAÇÃO
ETIQUETA E50 24V DC 120mm	9007585	60	1	520	99 47 695	INSTALAÇÃO ELÉTRICA E50
ETIQUETA S84/1 100mmX39m	10076837	6	1	315	10 05 507 1	INTERRUPTOR - INSTALAÇÃO
EVAPORADOR	10022068	18	1	335	11 00 359 4	CARCAÇA
EVAPORADOR	10816666	10	1	328	10 40 689 8	AR CONDICIONADO
EVAPORADOR	10816666	10	1	329	11 00 054 6	CF VAPORIZADOR
EXTENSÃO	10009602	10	1	253	10 66 472 2	BLOCO DE DISTRIBUIÇÃO SX
EXTENSÃO M10X1K/M10X1	774373408	90	1	257	90 64 786	ELEMENTO DE CONEXÃO
EXTENSÃO M10X1K/M10X1	774373408	190	1	259	90 64 786	ELEMENTO DE CONEXÃO
EXTENSÃO M10X1K/M10X1	774373408	290	1	260	90 64 786	ELEMENTO DE CONEXÃO
EXTENSÃO M6X1K-M10X1-24M	7027714	90	1	257	90 64 786	ELEMENTO DE CONEXÃO
EXTENSÃO M6X1K-M10X1-24M	7027714	190	1	259	90 64 786	ELEMENTO DE CONEXÃO
EXTINTOR DE INCÊNDIO	10498331	50	1	7	.	
EXTINTOR DE INCÊNDIO	10498332	10	1	790	10 49 833 1	EXTINTOR DE INCÊNDIO
EXTINTOR DE INCÊNDIO ABC	11690717	5	1	791	10 49 833 2	EXTINTOR DE INCÊNDIO
FAROL	10286644	12	1	517	10 04 553 0	FAROL DE TRABALHO
FAROL ADICIONAL	10498467	70	1	7	.	
FAROL ADICIONAL	11102295	10	1	782	10 49 846 7	FAROL ADICIONAL
FAROL CPL - INSTALAÇÃO	12859103	15	1	514	11 10 255 3	INSTALAÇÃO ELÉTRICA
FAROL CPL - INSTALAÇÃO	9941040	10	1	514	11 10 255 3	INSTALAÇÃO ELÉTRICA
FAROL CPL - INSTALAÇÃO	9941040	11	1	514	11 10 255 3	INSTALAÇÃO ELÉTRICA
FAROL DE TRABALHO	10007848	2	1	516	99 41 040	FAROL CPL - INSTALAÇÃO
FAROL DE TRABALHO	10045530	2	1	9	12 85 910 3	FAROL CPL - INSTALAÇÃO
FAROL DE TRABALHO	10045530	2	1	783	11 10 229 5	FAROL ADICIONAL
FECHADURA	10039590	11	2	445	10 35 865 5	REVESTIMENTO
FECHADURA	7028833	330	1	484	70 28 769	PORTA DA CABINE DO OPERA
FECHADURA	7365293	6	1	455	10 06 436 0	CAPO DO RADIADOR
FECHADURA DA PORTA	10353879	13	1	460	10 49 856 6	PORTA LATERAL DIREITA
FECHADURA DA PORTA	10353879	4	1	545	10 37 464 5	TAMPA
FECHO DA PORTA	10025254	13	1	459	10 06 423 5	PORTA LATERAL DIREITA
FECHO DA PORTA	10025254	7	1	466	10 35 823 0	PORTA LATERAL DIANTEIRA
FECHO DO TANQUE d=45	7610826	20	1	237	96 91 056 01	RESERVATÓRIO DE ÓLEO
FECHO DO TANQUE d=80	12230797	15	1	529	10 04 852 5	TANQUE COMBUSTIVEL INSTA
FECHO DO TANQUE d=80	7414913	15	1	530	10 49 836 0	TANQUE COMBUSTIVEL INSTA
FECHO DO TANQUE d=80	7414913	15	1	531	11 10 262 1	TANQUE COMBUSTIVEL INSTA
FECHO RAPIDO	10022768	4	2	339	10 02 277 7	GRADE DE CIRCULACAO DE A
FECHO RAPIDO	10022785	4	2	333	10 02 211 7	CARCACA DE CONDUCAO DE
FERRAMENTA DE EXTRAÇÃO	10451202	50	1	538	10 08 428 6	KIT DE FERRAMENTAS
FILTRO	10220417	6	1	162	11 34 249 1	BOMBA DE PISTÃO AXIAL
FILTRO	11821519	2	1	160	10 22 041 7	FILTRO
FILTRO	11825923	10	1	49	11 82 320 0	
FILTRO DE AR	10217173	10	1	137	10 49 819 9	FILTRO DE AR - INSTALAÇÃO
FILTRO DE AR	7028951	210	1	68	12 48 693 2	KIT DE MANUTENÇÃO 1000h
FILTRO DE AR	7028951	210	1	72	12 48 693 4	KIT DE MANUTENÇÃO 2000h
FILTRO DE AR	7028951	380	1	509	10 29 035 2	REVESTIMENTO INTERNO
FILTRO DE AR	7028951	380	1	511	10 48 808 8	REVESTIMENTO INTERNO
FILTRO DE AR - INSTALAÇÃO	10498199	530	1	132	10 35 862 2	INSTALAÇÃO DO MOTOR
FILTRO DE AR - INSTALAÇÃO	10498666	10	1	792	10 49 836 8	PRÉ-FILTRO DE AR O4 - KC 11
FILTRO DE COMBUSTÍVEL	10125801	1	1	630	10 12 500 7	FILTRO FINO DE COMBUSTÍVE
FILTRO DE COMBUSTÍVEL 3-5µ	10429946	10	8	126	10 06 994 0	KIT DE FILTRO DE COMBUSTÍ
FILTRO DE COMBUSTÍVEL 3-5µ	12820742	103	1	64	12 48 693 1	KIT DE MANUTENCAO 500h
FILTRO DE COMBUSTÍVEL 3-5µ	12820742	103	1	67	12 48 693 2	KIT DE MANUTENÇÃO 1000h
FILTRO DE COMBUSTÍVEL 3-5µ	12820742	103	1	70	12 48 693 3	KIT DE MANUTENÇÃO 1500-25
FILTRO DE COMBUSTÍVEL 3-5µ	12820742	103	1	71	12 48 693 4	KIT DE MANUTENÇÃO 2000h

Designação	Artigo	Item	Quanti	Página	Módulo	Designação
FILTRO DE COMBUSTÍVEL 3-5µ	12820742	1	1	631	10 12 580 1	FILTRO DE COMBUSTÍVEL
FILTRO DE FIBRA DE VIDRO 1	11060250	400	1	65	12 48 693 1	KIT DE MANUTENCAO 500h
FILTRO DE FIBRA DE VIDRO 1	11060250	400	1	69	12 48 693 2	KIT DE MANUTENÇÃO 1000h
FILTRO DE FIBRA DE VIDRO 1	11060250	400	1	74	12 48 693 4	KIT DE MANUTENÇÃO 2000h
FILTRO DE FIBRA DE VIDRO 1	11060250	21	1	383	10 04 851 7	TANQUE HIDRAULICO INSTA
FILTRO DE FIBRA DE VIDRO 1	11060250	22	1	383	10 04 851 7	TANQUE HIDRAULICO INSTA
FILTRO DE FIBRA DE VIDRO 1	11060250	21	1	386	10 35 863 4	TANQUE HIDRAULICO INSTA
FILTRO DE FIBRA DE VIDRO 1	11060250	22	1	386	10 35 863 4	TANQUE HIDRAULICO INSTA
FILTRO DE FIBRA DE VIDRO 2	7373881	22	1	383	10 04 851 7	TANQUE HIDRAULICO INSTA
FILTRO DE FIBRA DE VIDRO 2	7373881	22	1	386	10 35 863 4	TANQUE HIDRAULICO INSTA
FILTRO DE PRESSÃO	10044624	35	1	353	10 06 379 8	MANGUEIRAS HIDRAULICAS
FILTRO DE RESPIRO 2µm	10222393	320	1	73	12 48 693 4	KIT DE MANUTENÇÃO 2000h
FILTRO DE RESPIRO 2µm	10222393	28	1	383	10 04 851 7	TANQUE HIDRAULICO INSTA
FILTRO DE RESPIRO 2µm	10222393	28	1	386	10 35 863 4	TANQUE HIDRAULICO INSTA
FILTRO DE RETORNO 20/5µm	10333903	20	1	383	10 04 851 7	TANQUE HIDRAULICO INSTA
FILTRO DE RETORNO 20/5µm	10333903	20	1	386	10 35 863 4	TANQUE HIDRAULICO INSTA
FILTRO FINO DE COMBUSTÍVE	10125007	201	1	551	10 11 714 5	MOTOR DIESEL D936 L A6 190
FILTRO INTERCAMBIÁVEL 9µ	10297295	100	2	64	12 48 693 1	KIT DE MANUTENCAO 500h
FILTRO INTERCAMBIÁVEL 9µ	10297295	100	2	67	12 48 693 2	KIT DE MANUTENÇÃO 1000h
FILTRO INTERCAMBIÁVEL 9µ	10297295	100	2	70	12 48 693 3	KIT DE MANUTENÇÃO 1500-25
FILTRO INTERCAMBIÁVEL 9µ	10297295	100	2	71	12 48 693 4	KIT DE MANUTENÇÃO 2000h
FILTRO INTERCAMBIÁVEL 9µ	10297295	8	2	620	90 75 368	FILTRO ÓLEO LUBRIF. MONT.
FILTRO VENTILACAO E EXAUS	7002458	54	1	158	10 11 886 0	REDUTOR DISTRIBUICAO BO
FILTRO ÓLEO LUBRIF. MONT.	9075368	150	1	558	10 11 682 5	MOTOR BÁSICO D936 L HIGH 3
FITA DE IDENTIFICAÇÃO	10071611	60	1	10	12 86 140 3	INSTALACAO HIDRAULICA
FITA DE IDENTIFICAÇÃO	10298638	29	2	270	10 07 161 1	FITA DE IDENTIFICAÇÃO
FITA DE IDENTIFICAÇÃO	7018495	4	2	270	10 07 161 1	FITA DE IDENTIFICAÇÃO
FITA DE IDENTIFICAÇÃO	7018496	5	2	270	10 07 161 1	FITA DE IDENTIFICAÇÃO
FITA DE IDENTIFICAÇÃO	7018498	7	2	270	10 07 161 1	FITA DE IDENTIFICAÇÃO
FITA DE IDENTIFICAÇÃO	7018504	16	2	270	10 07 161 1	FITA DE IDENTIFICAÇÃO
FITA DE IDENTIFICAÇÃO	7018507	18	2	270	10 07 161 1	FITA DE IDENTIFICAÇÃO
FITA DE IDENTIFICAÇÃO	7018508	19	2	270	10 07 161 1	FITA DE IDENTIFICAÇÃO
FITA DE IDENTIFICAÇÃO	7018509	20	2	270	10 07 161 1	FITA DE IDENTIFICAÇÃO
FITA DE IDENTIFICAÇÃO	7018510	21	2	270	10 07 161 1	FITA DE IDENTIFICAÇÃO
FITA DE IDENTIFICAÇÃO	7018513	30	2	270	10 07 161 1	FITA DE IDENTIFICAÇÃO
FITA DE IDENTIFICAÇÃO	7018514	31	2	270	10 07 161 1	FITA DE IDENTIFICAÇÃO
FITA DE IDENTIFICAÇÃO	7018516	33	2	270	10 07 161 1	FITA DE IDENTIFICAÇÃO
FITA DE IDENTIFICAÇÃO	7018517	34	2	270	10 07 161 1	FITA DE IDENTIFICAÇÃO
FITA DE IDENTIFICAÇÃO	7018520	2	10	270	10 07 161 1	FITA DE IDENTIFICAÇÃO
FITA DE IDENTIFICAÇÃO	7018521	3	10	270	10 07 161 1	FITA DE IDENTIFICAÇÃO
FITA DE IDENTIFICAÇÃO	7024733	8	2	270	10 07 161 1	FITA DE IDENTIFICAÇÃO
FITA DE IDENTIFICAÇÃO 09	7024734	9	2	270	10 07 161 1	FITA DE IDENTIFICAÇÃO
FITA DE IDENTIFICAÇÃO 10	7018499	10	2	270	10 07 161 1	FITA DE IDENTIFICAÇÃO
FITA DE IDENTIFICAÇÃO 11	7018500	11	2	270	10 07 161 1	FITA DE IDENTIFICAÇÃO
FITA DE IDENTIFICAÇÃO 12	7018501	12	2	270	10 07 161 1	FITA DE IDENTIFICAÇÃO
FITA DE IDENTIFICAÇÃO 13	7018502	13	2	270	10 07 161 1	FITA DE IDENTIFICAÇÃO
FITA DE IDENTIFICAÇÃO 14	7018503	14	2	270	10 07 161 1	FITA DE IDENTIFICAÇÃO
FITA DE VEDAÇÃO	10301003	15	2	199	10 21 851 3	RADIADOR COMBINADO
FITA DE VEDAÇÃO	10301003	15	2	202	11 69 472 6	RADIADOR COMBINADO
FITA DE VEDAÇÃO	10301004	13	2	199	10 21 851 3	RADIADOR COMBINADO
FITA DE VEDAÇÃO	10301004	13	2	202	11 69 472 6	RADIADOR COMBINADO
FITA DE VEDAÇÃO	10301005	14	2	199	10 21 851 3	RADIADOR COMBINADO
FITA DE VEDAÇÃO	10301005	14	2	202	11 69 472 6	RADIADOR COMBINADO
FITA DE VEDAÇÃO	10340115	40	3	200	10 21 851 3	RADIADOR COMBINADO
FITA DE VEDAÇÃO	10340115	40	3	203	11 69 472 6	RADIADOR COMBINADO
FITA DE VELCRO	10491557	23	6	754	10 85 472 4	PEÇAS MONT.- MÁQUINA BAS
FIXACAO DO MOTOR	10301002	10	1	199	10 21 851 3	RADIADOR COMBINADO
FIXACAO DO MOTOR	10301002	10	1	202	11 69 472 6	RADIADOR COMBINADO
FIXACAO TANQUE DE COMB	10061810	2	1	529	10 04 852 5	TANQUE COMBUSTIVEL INSTA
FIXACAO TANQUE DE COMB	10061810	2	1	530	10 49 836 0	TANQUE COMBUSTIVEL INSTA

Designação	Artigo	Item	Quanti	Página	Módulo	Designação
FIXACAO TANQUE DE COMB	10061810	2	1	531	11 10 262 1	TANQUE COMBUSTIVEL INSTA
FIXACAO TANQUE HIDRAULIC	10061127	2	1	383	10 04 851 7	TANQUE HIDRAULICO INSTA
FIXACAO TANQUE HIDRAULIC	10061127	2	1	386	10 35 863 4	TANQUE HIDRAULICO INSTA
FLANGE BFW 28L	7405006	33	1	142	10 04 853 9	INSTALACAO BOMBA E EMBR
FLANGE CALEFAÇÃO PRÉ-MO	10299988	1	1	647	90 78 314	FLANGE DE AQUECIMENTO
FLANGE CEGO	10296870	74	1	425	10 11 386 0	BLOCO DE COMANDO
FLANGE CEGO	10296871	79	1	425	10 11 386 0	BLOCO DE COMANDO
FLANGE CEGO	9429964	55	1	712	11 10 294 5	LANÇA MONOBLOCO 6.45M
FLANGE CEGO	9429977	106	2	408	10 35 863 8	INSTALAÇÃO BLOCO DE VÁL
FLANGE CEGO SAE 1 1/2" CO	9566165	51	1	385	10 04 851 7	TANQUE HIDRAULICO INSTA
FLANGE CEGO SAE 1 1/2" CO	9566165	51	1	387	10 35 863 4	TANQUE HIDRAULICO INSTA
FLANGE DE AQUECIMENTO	9078314	260	1	552	10 11 714 5	MOTOR DIESEL D936 L A6 190
FLANGE DE CONEXAO	10300941	73	1	425	10 11 386 0	BLOCO DE COMANDO
FLANGE DE CONEXAO	9079582	1	1	644	10 11 570 3	LINHA DE CONEXAO
FLANGE DE CONEXAO	9079582	1	1	645	10 12 190 9	LINHA DE CONEXAO
FLANGE DE CONEXAO	9268423	13	1	801	10 13 303 7	BOMBA HIDRÁULICA DUPLA
FLANGE DE FECHAMENTO N	10136088	11	1	801	10 13 303 7	BOMBA HIDRÁULICA DUPLA
FLANGE INTERMEDIÁRIO	10014707	20	1	250	10 22 844 3	BOMBA DE LUBRIFICACAO
FLANGE INTERMEDIÁRIO	10216818	1	1	170	10 28 264 7	BOMBA DE ENGRENAGENS
FLANGE INTERMEDIÁRIO	9939942	56	1	777	11 45 729 6	CILINDRO DE ELEVACAO DIRE
FLANGE INTERMEDIÁRIO	9939942	56	1	780	11 45 729 7	CILINDRO DE ELEVACAO ESQ
FLANGE MANCAL	9080803	7	1	158	10 11 886 0	REDUTOR DISTRIBUICAO BO
FLANGE MANCAL NG 100	12444198	20	1	815	90 73 588	MECANISMO DE ACIONAMEN
FLANGE NG 140-150	9072435	12	1	827	90 77 464	CR FLANGE NG 125-140-150
FLANGE PRE-MONTAGEM	9073163	8	1	610	90 80 713	EIXO DE EXCÊNTRICOS COM
FREIO	932801801	70	1	227	90 02 790 4	REDUTOR DE GIRO SAT 325/
FUNIL DE PROTEÇÃO 8/8/2,2	10010154	30	1	298	10 05 879 2	SENSOR DE PRE-COMANDO E
FUNIL DE PROTEÇÃO 8/8/2,2	10010154	30	1	313	10 05 879 4	SENSOR DE PRE-COMANDO
FUSO M12	9265265	13	1	766	92 65 991	VÁLVULA REGULADORA DE FL
FUSO M12	9265265	13	1	767	92 65 299	JG V VÁLVULA RET. DE ESTRA
FUSO M12	9265265	13	1	768	92 70 390	JG V VÁLVULA RET. DE ESTR
FUSÍVEL	7027038	22	1	297	73 73 807	ALAVANCA DE SEGURANCA
FUSÍVEL TIPO CARTUCHO 20	6001472	22	1	519	99 47 695	INSTALAÇÃO ELÉTRICA E50
FUSÍVEL TIPO CARTUCHO 25	6001471	42	1	295	97 58 815 01	PLACA ELETRÔNICA
FUSÍVEL TIPO CARTUCHO C 1	4901512	40	9	295	97 58 815 01	PLACA ELETRÔNICA
FUSÍVEL TIPO CARTUCHO C 7	4901513	41	5	295	97 58 815 01	PLACA ELETRÔNICA
FUSÍVEL TIPO CARTUCHO C 7	4901513	24	5	519	99 47 695	INSTALAÇÃO ELÉTRICA E50
GAIOLA DA ESFERA	9443217	38	13	109	96 87 443 01	MECANISMO DE TRANSLAÇÃ
GARRA	9075372	3	1	624	10 11 659 1	BICO INJETOR COM ELEMEN
GRADE DE CIRCULACAO DE A	10022771	1	1	339	10 02 277 7	GRADE DE CIRCULACAO DE A
GRADE DE CIRCULACAO DE A	10022777	19	1	333	10 02 211 7	CARCACA DE CONDUCAO DE
GRADE DE PROTEÇÃO	10300999	9	1	199	10 21 851 3	RADIADOR COMBINADO
GRADE DE PROTEÇÃO	10300999	9	1	202	11 69 472 6	RADIADOR COMBINADO
GRAMPO	7373592	1	4	512	10 47 012 8	REVESTIMENTO COMPLETO
GRAMPO MANGUEIRA DE 2 O	11347332	3	1	541	93 58 137	MANGUEIRA HID. ESCOAMEN
GRAXA /0,4kg	11008141	10	1	58	96 47 551	
GRAXA /0,4kg	11693757	20	1	58	96 47 551	
GRAXA ESPECIAL LIEBHERR	10358947	30	1	23	90 70 366	LUBRIFICANTES
GRAXA ESPECIAL LIEBHERR/	861305508	1	1	34	10 35 894 7	GRAXA ESPECIAL LIEBHERR
GRAXA ESPECIAL LIEBHERR/1	861304208	10	1	34	10 35 894 7	GRAXA ESPECIAL LIEBHERR
GRAXA ESPECIAL LIEBHERR/2	10296820	2	1	34	10 35 894 7	GRAXA ESPECIAL LIEBHERR
GRAXA ESPECIAL LIEBHERR/2	861303608	25	1	34	10 35 894 7	GRAXA ESPECIAL LIEBHERR
GRAXA ESPECIAL LIEBHERR/5	861305608	50	1	34	10 35 894 7	GRAXA ESPECIAL LIEBHERR
GRAXA ESPECIAL POLYLUB	12213966	125	1	813	12 87 963 9	NG 125-150
GRAXA ESPECIAL POLYLUB	12213966	125	1	814	12 88 015 2	NG 090-107
GRAXA L55/3/0,001kg	8655008	126	1	216	90 80 194	KIT DE VEDAÇÃO
GRAXA L55/3/0,001kg	8655008	126	1	821	10 11 909 3	KIT DE REP DO EIXO DE ACIO
GRAXA NBU 12/1kg	8655030	110	1	654	90 80 301	KIT MONTAGEM DA BOMBA A
GRAXA NBU 30/1kg	10285708	100	1	677	90 76 534	SENSOR DE ROTACAO
GRAXA PARA BAIXAS TEMPER	10802651	100	1	58	96 47 551	

Designação	Artigo	Item	Quanti	Página	Módulo	Designação
GRAXA PARA BAIXAS TEMPE	10358948	20	1	23	90 70 366	LUBRIFICANTES
GRAXA PARA BAIXAS TEMPE	10296828	1	1	35	10 35 894 8	GRAXA PARA BAIXAS TEMPE
GRAXA PARA BAIXAS TEMPER	10296825	10	1	35	10 35 894 8	GRAXA PARA BAIXAS TEMPE
GRAXA PARA BAIXAS TEMPE	10296822	180	1	35	10 35 894 8	GRAXA PARA BAIXAS TEMPE
GRAXA PARA BAIXAS TEMPER	10296827	2	1	35	10 35 894 8	GRAXA PARA BAIXAS TEMPE
GRAXA PARA BAIXAS TEMPER	10296824	25	1	35	10 35 894 8	GRAXA PARA BAIXAS TEMPE
GRAXA PARA BAIXAS TEMPER	10296823	50	1	35	10 35 894 8	GRAXA PARA BAIXAS TEMPE
GRAXA STABURAGS NBU 30/0,	10282622	100	1	565	90 73 083	CILINDRO
GRAXA STABURAGS NBU 30/0,	10282622	110	1	570	90 79 480	SUPORTE DOS AGREGADOS
GRAXA STABURAGS NBU 30/0,	10282622	100	1	621	10 11 683 9	BOMBA DE INJECAO - ACESS
GRAXA STABURAGS NBU 30/0,	10282622	100	1	627	90 75 395	BICO INJ. DE TUBO DE PRES
GRAXA STABURAGS NBU 30/0,	10282622	100	1	643	90 77 279	LUVA DE CONEXÃO MONTAGE
GRAXA STABURAGS NBU 30/0,	10282622	100	1	645	10 12 190 9	LINHA DE CONEXAO
GRAXA STABURAGS NBU 30/0,	10282622	100	1	655	10 13 281 7	BOMBA DE ÁGUA PRÉ-MONT
GRAXA STABURAGS NBU 30/0,	10282622	100	1	659	90 79 472	TUBO CURV.PROD.REFRIGER
GRAXA STABURAGS NBU 30/0,	10282622	110	1	660	90 79 474	TUBO CURV.PROD.REFRIGER
GRAXA STABURAGS NBU 30/0,	10282622	100	1	661	90 80 280	PEÇAS DE FECHAMENTO
GRAXA STABURAGS NBU 30/0,	10282622	100	1	680	10 11 611 4	CÁRTER VOLANTE MONT. EXT
GRAXA STABURAGS NBU 30/0,	10282622	100	1	688	12 54 450 5	SENSOR DE ROTACAO
GRAXA STABURAGS NBU 30/0,	10282622	100	1	693	90 77 386	TOMADA PRÉ MONTADA
GRAXA STABURAGS NBU 30/0,	10282622	100	1	694	90 77 718	TOMADA PRÉ MONTADA
GRAXA STABURAGS NBU 30/0,	10282622	100	1	695	90 78 962	TOMADA PRÉ MONTADA
GRAXA STABURAGS NBU 30/0,	10282622	100	1	698	90 80 504	PEÇAS DE FECHAMENTO
GRAXA STABURAGS NBU 30/0,	10282622	10	1	708	10 28 570 8	GRAXA NBU 30/1kg
GRAXA UNIVERSAL FUCHS LU	11841450	10	1	61	11 41 917 5	PROTEÇÃO CONTRA CORRO
GRAXA UNIVERSAL LIEBHER	10358949	10	1	23	90 70 366	LUBRIFICANTES
GRAXA UNIVERSAL LIEBHER	10296816	1	1	36	10 35 894 9	GRAXA UNIVERSAL LIEBHER
GRAXA UNIVERSAL LIEBHERR	10296813	10	1	36	10 35 894 9	GRAXA UNIVERSAL LIEBHER
GRAXA UNIVERSAL LIEBHER	10296810	180	1	36	10 35 894 9	GRAXA UNIVERSAL LIEBHER
GRAXA UNIVERSAL LIEBHERR	10296815	2	1	36	10 35 894 9	GRAXA UNIVERSAL LIEBHER
GRAXA UNIVERSAL LIEBHERR	10296812	25	1	36	10 35 894 9	GRAXA UNIVERSAL LIEBHER
GRAXA UNIVERSAL LIEBHERR	10296811	50	1	36	10 35 894 9	GRAXA UNIVERSAL LIEBHER
GRAXA UNIVERSAL OEST LT	8620769	130	1	807	10 11 856 1	MANETE DE COMANDO VG6-8
GRAXA UNIVERSAL OEST LT	8620769	130	1	808	11 37 560 6	MANETE DE COMANDO VG6-8
GUIA	10014729	8	1	249	10 22 844 3	BOMBA DE LUBRIFICACAO
GUIA	10058096	2	1	128	10 04 851 0	ARRASTADOR - INSTALACAO
GUIA	10493047	4	1	285	11 10 016 6	PARTE SUPERIOR DE ASSENT
GUIA	5611650	210	2	112	10 00 201 1	VALVULA DE FREIO
GUIA	7015997	1	1	434	50 06 719	VÁLVULA DE RETORNO
GUIA	7028893	110	1	503	10 29 026 4	PEÇAS DE MONTAGEM
GUIA	7028894	100	1	503	10 29 026 4	PEÇAS DE MONTAGEM
GUIA DE CORRENTE - INSTA	10403732	80	2	76	10 49 885 2	CARRO INFERIOR COMPLETO
GUIA DE CORRENTE - INSTA	10403732	8	6	78	10 49 887 7	KIT ADICIONAL
GUIA DE CORRENTE 265X200	12501735	2	1	97	10 40 373 2	GUIA DE CORRENTE - INSTA
GUIA DE MANGUEIRA	9344777	30	2	247	12 84 952 6	LUBRIFICAÇÃO CENTRALIZAD
GUIA DE VÁLVULA	10150204	4	4	602	10 12 038 4	CABEÇOTE CILÍNDRICO
GUIA VARETA NÍVEL DE ÓLEO	9080212	2	1	158	10 11 886 0	REDUTOR DISTRIBUICAO BO
HASTE	10358170	15	1	457	10 35 822 9	PORTA LATERAL ESQUERDA
HASTE	10358170	20	1	466	10 35 823 0	PORTA LATERAL DIANTEIRA
HASTE	7028815	280	1	482	70 28 807	TRAVA DIREITA
HASTE	7028815	280	1	483	70 28 808	TRAVA ESQUERDA
HASTE	7028834	340	1	485	70 28 769	PORTA DA CABINE DO OPERA
HASTE	9927479	40	1	446	10 35 865 5	REVESTIMENTO
HASTE	9942679	20	1	459	10 06 423 5	PORTA LATERAL DIREITA
HASTE	9942679	20	1	460	10 49 856 6	PORTA LATERAL DIREITA
HASTE DO CILINDRO	10008082	3	1	400	10 00 807 7	BOMBA
HASTE DO CILINDRO	10297878	3	1	400	10 00 807 7	BOMBA
HASTE DO CILINDRO	94046929	8	1	760	11 68 144 7	CILINDRO HIDRÁULICO
HASTE DO CILINDRO	9594127	8	1	762	96 44 648	CILINDRO HIDRÁULICO
HASTE DO CILINDRO	9594190	8	1	761	95 93 026	CILINDRO HIDRÁULICO

Designação	Artigo	Item	Quanti	Página	Módulo	Designação
HASTE DO TUCHO	9079131	3	2	611	90 79 870	PEÇAS DO COMANDO
HASTE M10X500X10	9480525	43	2	272	10 49 880 5	POSTO DE COMANDO - PEÇA
HASTE ROSCADA	7028817	100	1	482	70 28 807	TRAVA DIREITA
HASTE ROSCADA	7028817	100	1	483	70 28 808	TRAVA ESQUERDA
HASTE ROSCADA M10X245	9006346	46	4	521	10 35 866 5	BATERIA - INSTALACAO
HIDRÁULICA+ÓLEO DE ENGR	10356828	30	1	22	90 70 365	ÓLEO DE TRANSMISSÃO
HIDRÁULICA+ÓLEO DE ENGR	10296482	1000	1	31	10 35 682 8	HIDRÁULICA+ÓLEO DE ENGR
HIDRÁULICA+ÓLEO DE ENGR	10330282	20	1	31	10 35 682 8	HIDRÁULICA+ÓLEO DE ENGR
HIDRÁULICA+ÓLEO DE ENGRE	10330283	210	1	31	10 35 682 8	HIDRÁULICA+ÓLEO DE ENGR
HIDRÁULICA+ÓLEO DE ENGRE	10330280	5	1	31	10 35 682 8	HIDRÁULICA+ÓLEO DE ENGR
HORÍMETRO	11699679	90	1	276	11 38 339 7	APOIO DE BRAÇO LADO ESQ
HORÍMETRO	11699679	90	1	292	10 38 502 8	APOIO DE BRAÇO LADO ESQ
IDENTIFICAÇÃO	10381173	70	1	548	10 49 803 0	ADESIVO DE SINALIZAÇÃO
IDENTIFICAÇÃO	11659791	50	1	756	11 10 281 8	KIT MÁQUINA BASE
IDENTIFICAÇÃO	11691100	50	1	716	11 10 283 6	KIT MONOBLOCO 6.45M
IDENTIFICAÇÃO	11691205	50	1	727	11 10 281 7	KIT DE ATUALIZAÇÃO 2.10M
IDENTIFICAÇÃO	11691206	51	1	727	11 10 281 7	KIT DE ATUALIZAÇÃO 2.10M
IDENTIFICAÇÃO MOTORSTIL	9619934	52	1	548	10 49 803 0	ADESIVO DE SINALIZAÇÃO
IDENTIFICAÇÃO RUECKLAUF	10022635	5	1	330	10 81 666 6	EVAPORADOR
IDENTIFICAÇÃO VORLAUF	10022636	6	1	330	10 81 666 6	EVAPORADOR
INDICADOR DE VACUO	5106421	90	1	137	10 49 819 9	FILTRO DE AR - INSTALAÇÃO
INDICAÇÃO DE NÍVEL	11066525	2	1	287	11 10 016 7	SUSPENSAO
INJETOR	10116587	1	1	625	10 11 709 3	KIT DE REPARO DO BICO INJE
INSERTO DE ELASTOMERO S	7363334	55	2	345	10 35 862 3	INSTALACAO HDRAULICA
INSERTO ROSCADO	10044343	490	3	491	10 29 033 7	INSTALACAO ELETRICA
INSERTO ROSCADO	10044343	490	3	494	10 48 808 7	INSTALACAO ELETRICA
INSERTO ROSCADO	10044359	430	1	509	10 29 035 2	REVESTIMENTO INTERNO
INSERTO ROSCADO	10044359	430	1	511	10 48 808 8	REVESTIMENTO INTERNO
INSERTO ROSCADO	7028765	90	3	473	10 22 830 2	CABINE DE OPERADOR
INSERTO ROSCADO	7028765	90	3	475	10 47 616 9	CABINE DE OPERADOR
INSERTO ROSCADO	7028765	400	2	491	10 29 033 7	INSTALACAO ELETRICA
INSERTO ROSCADO	7028765	400	2	494	10 48 808 7	INSTALACAO ELETRICA
INSERTO ROSCADO M6	7020610	220	2	481	70 28 759	PÁRA-BRISA SUPERIOR
INSERTO ROSCADO M6	7020610	340	2	509	10 29 035 2	REVESTIMENTO INTERNO
INSERTO ROSCADO M6	7020610	340	2	511	10 48 808 8	REVESTIMENTO INTERNO
INST. HIDR. MANETE ESQUE	11383427	20	1	10	12 86 140 3	INSTALACAO HIDRAULICA
INST. HIDRAULICA DA MANET	11383429	30	1	10	12 86 140 3	INSTALACAO HIDRAULICA
INST.HIDR.CARRO INFERIOR	10404129	14	1	75	10 49 885 2	CARRO INFERIOR COMPLETO
INSTALACAO BOMBA E EMBR	10048539	7300	1	123	10 35 861 4	CARRO SUPERIOR
INSTALACAO DE COMBUSTIVE	10369183	520	1	132	10 35 862 2	INSTALAÇÃO DO MOTOR
INSTALACAO ELETRICA	10290337	60	1	472	10 22 830 2	CABINE DE OPERADOR
INSTALACAO ELETRICA	10488087	60	1	474	10 47 616 9	CABINE DE OPERADOR
INSTALACAO HDRAULICA	10358623	7020	1	343	10 35 862 6	INSTALACAO HIDRAULICA
INSTALACAO HIDRAULICA	10063801	7080	1	343	10 35 862 6	INSTALACAO HIDRAULICA
INSTALACAO HIDRAULICA	10358624	7075	1	343	10 35 862 6	INSTALACAO HIDRAULICA
INSTALACAO HIDRAULICA	10358626	7000	1	123	10 35 861 4	CARRO SUPERIOR
INSTALACAO HIDRAULICA	10358628	7040	1	343	10 35 862 6	INSTALACAO HIDRAULICA
INSTALACAO HIDRAULICA	12861403	10	1	266	10 49 861 5	POSTO DE COMANDO
INSTALACAO MECANISMO GI	11102916	700	1	123	10 35 861 4	CARRO SUPERIOR
INSTALAÇÃO BLOCO DE VÁL	10358638	7600	1	124	10 35 861 4	CARRO SUPERIOR
INSTALAÇÃO DO CONTRAPES	10498002	9500	1	124	10 35 861 4	CARRO SUPERIOR
INSTALAÇÃO DO MOTOR	10358622	500	1	123	10 35 861 4	CARRO SUPERIOR
INSTALAÇÃO ELÉTRICA	11102553	9000	1	124	10 35 861 4	CARRO SUPERIOR
INSTALAÇÃO ELÉTRICA E50	9947695	3	1	518	99 48 254	CAIXA ELÉTRICA COMPLETA
INSTALAÇÃO HIDRÁULICA	10358627	7030	1	343	10 35 862 6	INSTALACAO HIDRAULICA
INSTALAÇÃO P/ RÁDIO	11102652	55	1	7	.	
INSTALAÇÃO P/ RÁDIO	11102653	2	1	784	11 10 265 2	INSTALAÇÃO P/ RÁDIO
INSTALAÇÃO TAMPA DO CAB	10119609	83	1	550	10 11 714 5	MOTOR DIESEL D936 L A6 190
INSTALAÇÃO TAMPA DO CAB	10119610	82	5	549	10 11 714 5	MOTOR DIESEL D936 L A6 190
INSTALAÇÃO TAMPA DO CAB	10119636	84	1	551	10 11 714 5	MOTOR DIESEL D936 L A6 190

Designação	Artigo	Item	Quanti	Página	Módulo	Designação
INTALAÇ HIDR PEDAIS DE CO	10060146	10	1	10	12 86 140 3	INSTALACAO HIDRAULICA
INTERRUPTOR	10493348	54	1	285	11 10 016 6	PARTE SUPERIOR DE ASSENT
INTERRUPTOR	7028856	210	1	490	10 29 033 7	INSTALACAO ELETRICA
INTERRUPTOR	7028856	210	1	493	10 48 808 7	INSTALACAO ELETRICA
INTERRUPTOR - INSTALAÇÃO	10055071	140	1	281	11 38 340 1	APOIO DE BRAÇO LADO DIRE
INTERRUPTOR - INSTALAÇÃO	10055071	140	1	304	11 45 228 6	APOIO DE BRAÇO LADO DIRE
INTERRUPTOR - INSTALAÇÃO	10055071	140	1	307	12 50 731 7	APOIO DE BRAÇO LADO DIRE
INTERRUPTOR ELÉTRICO R-R	9968570	70	1	314	99 68 611	MANETE DIREITA
INTERRUPTOR ELÉTRICO T-0-	9968546	70	1	299	99 68 625	MANETE - LH ESQUERDA
INTERRUPTOR INSTANTÂNEO	6001027	19	1	297	73 73 807	ALAVANCA DE SEGURANCA
INTERRUPTOR PRINCIPAL BA	10012119	20	1	521	10 35 866 5	BATERIA - INSTALACAO
JANELA DE CORRER	7028831	420	1	485	70 28 769	PORTA DA CABINE DO OPERA
JC LEVANTAMENTO DADOS-T	10825621	120	1	7	.	
JG V MECANISMO DE TRANSM	10220432	98	1	399	11 49 189 4	MECANISMO DE ACIONAMENT
JG V VÁLVULA RET. DE ESTR	9270390	999	1	763	10 11 671 7	VÁLVULA REGULADORA DE FL
JG V VÁLVULA RET. DE ESTRA	9265299	997	1	765	92 65 178	VÁLVULA REGULADORA DE FL
JOGO DE ANEL O	10018373	998	1	253	10 66 472 2	BLOCO DE DISTRIBUIÇÃO SX
JOGO DE ANEL O	10018375	999	1	253	10 66 472 2	BLOCO DE DISTRIBUIÇÃO SX
JOGO DE ARRUELAS D=100	921596716	90	2	713	11 10 294 5	LANÇA MONOBLOCO 6.45M
JOGO DE LAMELAS DO FREIO	944218003	960	1	227	90 02 790 4	REDUTOR DE GIRO SAT 325/
JOGO DE LAMELAS DO FREIO	944302803	920	1	110	96 87 443 01	MECANISMO DE TRANSLAÇÃ
JOGO DE MANCAIS DO VIRA	9076458	51	1	557	10 11 682 5	MOTOR BÁSICO D936 L HIGH 3
JOGO DE VEDAÇÃO MOTOR D	10115838	939	1	556	10 11 714 5	MOTOR DIESEL D936 L A6 190
JUNTA DO CABEÇOTE	10120844	2	1	590	90 79 850	MONTAGEM DO CABEÇOTE D
JUNTA DO CABEÇOTE	10120844	1	1	606	10 11 585 1	KIT DE VED DO CABEÇOTE CIL
JUNTA DO CABEÇOTE	10120844	1	6	608	10 11 585 3	KIT DE VEDAÇÃO CABEÇOTE
KIT ADICIONAL	10498877	10	1	77	10 49 887 8	KIT MODIF. ESTEIRA D7 PARA
KIT DE ABASTECIMENTO DE U	11695012	220	1	42	11 44 078 9	ACESSÓRIOS
KIT DE ADESIVOS	11363764	310	1	7	.	
KIT DE ADESIVOS	11363764	910	1	7	.	
KIT DE ADESIVOS	11363766	10	1	794	11 36 376 4	KIT DE ADESIVOS
KIT DE ADESIVOS	11363766	10	1	794	11 36 376 4	KIT DE ADESIVOS
KIT DE ANEIS DISTANCIADO	9072436	70	1	827	90 77 464	CR FLANGE NG 125-140-150
KIT DE ANEIS LAMELARES 62	10008448	11	4	607	10 11 585 1	KIT DE VED DO CABEÇOTE CIL
KIT DE ANEIS LAMELARES 62	10008448	11	4	609	10 11 585 3	KIT DE VEDAÇÃO CABEÇOTE
KIT DE ANEIS LAMELARES 62	10008448	4	4	653	10 11 547 9	TUBO ESCAPAMENTO PRE-M
KIT DE ANÁLISE	10191453	52	1	51	90 66 466	ACESSÓRIOS
KIT DE ANÁLISE	12208230	50	1	51	90 66 466	ACESSÓRIOS
KIT DE ANÁLISE	12208231	30	1	51	90 66 466	ACESSÓRIOS
KIT DE ARRUELAS	9885924	39	1	191	98 89 984	KIT DE REPARO NG 140
KIT DE ARRUELAS	9885924	39	1	192	98 89 988	KIT REPARO ESF.+PLACA RET
KIT DE ARRUELAS	9885928	29	1	231	90 73 380	KIT REPARO ESF.+PLACA RET
KIT DE ARRUELAS	9885928	39	1	234	90 74 125	KIT DE REPARO NG 090
KIT DE ARRUELAS NG 100-107	9885929	29	1	180	90 72 998	KIT REPARO ESF.+PLACA RET
KIT DE ARRUELAS NG 100-107	9885929	39	1	823	90 74 122	KIT DE REPARO NG 100
KIT DE ARRUELAS NG 140-150	9889196	39	1	190	98 89 983	KIT DE REPARO NG 140 REC
KIT DE ATUALIZAÇÃO 2.10M	11102815	67	1	7	.	
KIT DE ATUALIZAÇÃO 2.10M	11102817	10	1	724	11 10 281 5	KIT DE ATUALIZAÇÃO 2.10M
KIT DE ENGRENAGENS	10220693	7	1	170	10 28 264 7	BOMBA DE ENGRENAGENS
KIT DE FERRAMENTAS	10084286	9620	1	125	10 35 861 4	CARRO SUPERIOR
KIT DE FERRAMENTAS	10848562	5	1	538	10 08 428 6	KIT DE FERRAMENTAS
KIT DE FILTRO DE COMBUSTÍ	10069940	110	1	14	10 35 964 8	MATERIAL DE SERVIÇO
KIT DE FILTRO DE OLEO	5609948	11	1	346	10 06 379 3	UNIDADE DE COMANDO DE O
KIT DE FIXAÇÃO	10289973	41	1	282	10 04 363 2	ASSENTO DO OPERADOR
KIT DE FIXAÇÃO RECHTS KPL	10493351	10	1	285	11 10 016 6	PARTE SUPERIOR DE ASSENT
KIT DE MANUTENCAO 500h	12486931	1	1	63	12 48 693 0	KIT DE MANUTENÇÃO 0-2000h
KIT DE MANUTENÇÃO 0-2000h	12486930	100	1	14	10 35 964 8	MATERIAL DE SERVIÇO
KIT DE MANUTENÇÃO 1000h	12486932	2	1	63	12 48 693 0	KIT DE MANUTENÇÃO 0-2000h
KIT DE MANUTENÇÃO 1500-25	12486933	3	1	63	12 48 693 0	KIT DE MANUTENÇÃO 0-2000h
KIT DE MANUTENÇÃO 2000h	12486934	4	1	63	12 48 693 0	KIT DE MANUTENÇÃO 0-2000h

Designação	Artigo	Item	Quanti	Página	Módulo	Designação
KIT DE MODIFICAÇÃO	90014538	800	1	220	90 02 790 3	REDUTOR DE GIRO SAT 325/
KIT DE MODIFICAÇÃO	90021973	700	1	220	90 02 790 3	REDUTOR DE GIRO SAT 325/
KIT DE MODIFICAÇÃO VG7-2/3	9079264	97	1	325	90 79 259	MANETE DE COMANDO VG7 2-
KIT DE MONTAGEM DO PARA-	7028811	230	1	481	70 28 759	PÁRA-BRISA SUPERIOR
KIT DE MONTAGEM DO PARA-	7028909	620	1	505	10 29 026 4	PEÇAS DE MONTAGEM
KIT DE MONTAGEM DO REGU	7028926	30	1	374	70 28 300	VÁLVULA LIMITADORA DE PR
KIT DE PEÇAS	10118712	18	1	667	10 11 646 3	ALTERNADOR PRE-MONTADO
KIT DE PEÇAS DE DESGASTE	11102636	11	1	736	11 10 258 7	CAÇAMBA RETRO HD 1800MM
KIT DE PEÇAS DE REPOSIÇÃ	12233625	998	2	112	10 00 201 1	VALVULA DE FREIO
KIT DE REP DO EIXO DE ACIO	10119093	97	1	159	10 11 886 0	REDUTOR DISTRIBUICAO BO
KIT DE REPARO AMORTECE	10493027	25	1	287	11 10 016 7	SUSPENSAO
KIT DE REPARO COBERTURA	10493008	27	1	287	11 10 016 7	SUSPENSAO
KIT DE REPARO CORREIA	10493009	33	1	287	11 10 016 7	SUSPENSAO
KIT DE REPARO DA CARCAÇA	9074893	90	1	803	10 13 303 7	BOMBA HIDRÁULICA DUPLA
KIT DE REPARO DA TAMPA N	9275443	85	2	803	10 13 303 7	BOMBA HIDRÁULICA DUPLA
KIT DE REPARO DA TUBULAÇ	10118329	3	1	567	90 79 021	CARCAÇA MANIVELA PURGAM
KIT DE REPARO DA VALVULA	5009820	36	1	431	10 33 073 6	VÁLVULA DE COMUT.DE MOV
KIT DE REPARO DO BICO INJE	10117093	1	1	624	10 11 659 1	BICO INJETOR COM ELEMEN
KIT DE REPARO DO DRENO D	10289208	35	2	126	10 06 994 0	KIT DE FILTRO DE COMBUSTÍ
KIT DE REPARO DO DRENO D	10289208	2	1	632	10 22 281 9	PRÉ-FILTRO COMBUST.COM
KIT DE REPARO DO EIXO NG	9074117	95	1	230	90 74 075	MOTOR HIDRÁULICO
KIT DE REPARO DO EIXO NG	9074123	95	1	799	90 73 888	MOTOR HIDRÁULICO
KIT DE REPARO DO EIXO NG	9889977	93	1	804	10 13 303 7	BOMBA HIDRÁULICA DUPLA
KIT DE REPARO DO EIXO NG	9889978	95	1	805	10 13 303 7	BOMBA HIDRÁULICA DUPLA
KIT DE REPARO DO FREIO	944302903	940	1	111	96 87 443 01	MECANISMO DE TRANSLAÇÃ
KIT DE REPARO GRUPO ROT	9074113	79	1	230	90 74 075	MOTOR HIDRÁULICO
KIT DE REPARO GRUPO ROT	9074114	79	1	799	90 73 888	MOTOR HIDRÁULICO
KIT DE REPARO GRUPO ROT	9074114	79	1	823	90 74 122	KIT DE REPARO NG 100
KIT DE REPARO GRUPO ROTÓ	9889833	2	1	191	98 89 984	KIT DE REPARO NG 140
KIT DE REPARO GRUPO ROTÓ	9889833	81	1	802	10 13 303 7	BOMBA HIDRÁULICA DUPLA
KIT DE REPARO GRUPO ROT	9889832	2	1	190	98 89 983	KIT DE REPARO NG 140 REC
KIT DE REPARO GRUPO ROT	9889832	79	1	802	10 13 303 7	BOMBA HIDRÁULICA DUPLA
KIT DE REPARO MANGUEIRA	10493032	34	1	287	11 10 016 7	SUSPENSAO
KIT DE REPARO NG 090	9074125	94	1	230	90 74 075	MOTOR HIDRÁULICO
KIT DE REPARO NG 090	9268015	96	1	230	90 74 075	MOTOR HIDRÁULICO
KIT DE REPARO NG 090	9268015	96	1	799	90 73 888	MOTOR HIDRÁULICO
KIT DE REPARO NG 090	9268015	6	1	833	11 38 195 4	KIT DE VEDAÇÃO NG 100
KIT DE REPARO NG 100	9074122	94	1	799	90 73 888	MOTOR HIDRÁULICO
KIT DE REPARO NG 125	9268016	96	1	805	10 13 303 7	BOMBA HIDRÁULICA DUPLA
KIT DE REPARO NG 125	9268016	96	1	835	92 65 808	KIT DE VEDACAO DA BOMBA D
KIT DE REPARO NG 140	9889984	92	1	804	10 13 303 7	BOMBA HIDRÁULICA DUPLA
KIT DE REPARO NG 140 REC	9889983	94	1	804	10 13 303 7	BOMBA HIDRÁULICA DUPLA
KIT DE REPARO NG 140-150	10139752	84	2	802	10 13 303 7	BOMBA HIDRÁULICA DUPLA
KIT DE REPARO PISTÕES AXIA	9880608	77	1	230	90 74 075	MOTOR HIDRÁULICO
KIT DE REPARO PISTÕES AXIA	9072997	77	1	799	90 73 888	MOTOR HIDRÁULICO
KIT DE REPARO PISTÕES AXIA	9072997	77	1	823	90 74 122	KIT DE REPARO NG 100
KIT DE REPARO PISTÕES AXIA	9889831	1	9	190	98 89 983	KIT DE REPARO NG 140 REC
KIT DE REPARO PISTÕES AXIA	9889831	1	9	191	98 89 984	KIT DE REPARO NG 140
KIT DE REPARO PISTÕES AXIA	9889831	77	2	802	10 13 303 7	BOMBA HIDRÁULICA DUPLA
KIT DE REPARO SUSPENSÃO	10493022	29	1	287	11 10 016 7	SUSPENSAO
KIT DE REPARO SUSPENSÃO	10493024	31	1	287	11 10 016 7	SUSPENSAO
KIT DE REPARO SUSPENSÃO	10493023	30	1	287	11 10 016 7	SUSPENSAO
KIT DE TESTE DE UREA	11698484	9999	1	43	11 44 078 9	ACESSÓRIOS
KIT DE VED DA CARCAC DO C	9274731	91	1	804	10 13 303 7	BOMBA HIDRÁULICA DUPLA
KIT DE VED DA VÁLV. DE PR	10340130	999	1	403	11 00 605 0	VÁLVULA LIMITADORA DE PR
KIT DE VED DA VÁLVULA RE	9882875	88	1	803	10 13 303 7	BOMBA HIDRÁULICA DUPLA
KIT DE VED DA VÁLVULA RE	9882875	90	1	819	10 13 306 1	VÁLVULA REGULADORA EHR
KIT DE VED DO CABEÇOTE CIL	10115851	88	1	558	10 11 682 5	MOTOR BÁSICO D936 L HIGH 3
KIT DE VED MANCAL HASTE	9063688	999	1	773	95 91 741	MANCAL DA HASTE DO PISTÃ
KIT DE VED MANCAL HASTE	94027947	999	1	772	94 02 794 9	MANCAL DA HASTE DO PISTÃ

Designação	Artigo	Item	Quanti	Página	Módulo	Designação
KIT DE VED MANCAL HASTE	94006889	999	1	771	94 00 688 8	MANCAL DA HASTE DO PISTÃ
KIT DE VED VÁLVULA DE SUB	9266232	93	1	230	90 74 075	MOTOR HIDRÁULICO
KIT DE VED VÁLVULA DE SUB	9266232	98	1	236	10 11 950 3	VALVULA DIRECIONAL
KIT DE VEDACAO	10118014	13	1	557	10 11 682 5	MOTOR BÁSICO D936 L HIGH 3
KIT DE VEDACAO DA BOMBA D	9265808	98	1	805	10 13 303 7	BOMBA HIDRÁULICA DUPLA
KIT DE VEDACAO DA VALVUL	11821513	999	1	404	12 24 669 2	VÁLVULA LIMITADORA DE PR
KIT DE VEDACAO DA VALVUL	5604334	999	1	365	56 02 487	VÁLVULA LIMITADORA DE PR
KIT DE VEDACAO DA VALVUL	7017835	999	1	436	50 07 236	VALVULA LIMITADORA PRES
KIT DE VEDACAO DA VALVULA	9266231	97	1	230	90 74 075	MOTOR HIDRÁULICO
KIT DE VEDACAO DA VALVULA	9266231	98	1	806	92 67 037	VÁLVULA LIMITADORA DE PR
KIT DE VEDACAO DA VALVULA	9266089	98	1	812	12 41 005 4	VÁLVULA LIMITADORA DE PR
KIT DE VEDACAO DO BICO IN	10115854	199	1	551	10 11 714 5	MOTOR DIESEL D936 L A6 190
KIT DE VEDACAO DO BICO IN	10115854	7	1	606	10 11 585 1	KIT DE VED DO CABEÇOTE CIL
KIT DE VEDACAO DO BICO IN	10115854	7	1	608	10 11 585 3	KIT DE VEDAÇÃO CABEÇOTE
KIT DE VEDACAO DO FREIO	7013133	999	1	438	50 06 555	VÁLVULA DE RETORNO
KIT DE VEDAÇÃO	10021310	998	1	255	10 29 300 3	BLOCO DE DISTRIBUIÇÃO MX-
KIT DE VEDAÇÃO	10021310	998	1	719	10 66 480 4	BLOCO DE DISTRIBUIÇÃO MX-
KIT DE VEDAÇÃO	10021310	998	1	733	10 66 475 5	BLOCO DE DISTRIBUIÇÃO MX-
KIT DE VEDAÇÃO	10021311	997	1	255	10 29 300 3	BLOCO DE DISTRIBUIÇÃO MX-
KIT DE VEDAÇÃO	10021311	997	1	719	10 66 480 4	BLOCO DE DISTRIBUIÇÃO MX-
KIT DE VEDAÇÃO	10021311	997	1	733	10 66 475 5	BLOCO DE DISTRIBUIÇÃO MX-
KIT DE VEDAÇÃO	10022063	30	1	336	11 00 359 4	CARCAÇA
KIT DE VEDAÇÃO	10220423	999	1	163	11 34 249 1	BOMBA DE PISTÃO AXIAL
KIT DE VEDAÇÃO	10220997	999	1	369	10 02 191 5	VÁLVULA SOLENÓIDE DRUC
KIT DE VEDAÇÃO	10220997	999	1	370	10 28 046 1	VÁLVULA SOLENÓIDE
KIT DE VEDAÇÃO	10291972	999	1	398	11 49 189 0	PLACA DE LIGAÇÃO
KIT DE VEDAÇÃO	10292139	998	1	165	57 17 149	REPARO DA BOMBA
KIT DE VEDAÇÃO	10337560	999	1	422	10 33 376 3	PARAFUSO DE FECHAMENTO
KIT DE VEDAÇÃO	10356547	999	1	104	96 11 367	COLETOR GIRATÓRIO
KIT DE VEDAÇÃO	10410335	999	1	148	10 29 787 3	VÁLVULA DE CONTROLE
KIT DE VEDAÇÃO	10454716	999	1	377	10 45 471 5	VÁLVULA REDUTORA DE PR
KIT DE VEDAÇÃO	11692624	999	1	103	11 64 331 4	COLETOR GIRATÓRIO
KIT DE VEDAÇÃO	5602345	999	1	425	10 11 386 0	BLOCO DE COMANDO
KIT DE VEDAÇÃO	7025142	999	1	364	50 09 565	CARTUCHO LIMITADOR DE PR
KIT DE VEDAÇÃO	7026136	999	1	112	10 00 201 1	VALVULA DE FREIO
KIT DE VEDAÇÃO	7029301	999	1	151	10 29 154 4	BOMBA DE ENGRENAGENS
KIT DE VEDAÇÃO	7030267	998	1	365	56 02 487	VÁLVULA LIMITADORA DE PR
KIT DE VEDAÇÃO	7030267	999	1	374	70 28 300	VÁLVULA LIMITADORA DE PR
KIT DE VEDAÇÃO	7624268	999	1	744	10 00 348 5	VÁLVULA DIRECIONAL
KIT DE VEDAÇÃO	9080194	98	1	159	10 11 886 0	REDUTOR DISTRIBUICAO BO
KIT DE VEDAÇÃO	9443027	900	1	110	96 87 443 01	MECANISMO DE TRANSLAÇÃ
KIT DE VEDAÇÃO	944452203	910	1	227	90 02 790 4	REDUTOR DE GIRO SAT 325/
KIT DE VEDAÇÃO CABEÇOTE	10115853	89	1	558	10 11 682 5	MOTOR BÁSICO D936 L HIGH 3
KIT DE VEDAÇÃO CABEÇOTE	10115853	83	1	706	10 11 583 8	JOGO DE VEDAÇÃO MOTOR D
KIT DE VEDAÇÃO D936	10115850	139	1	558	10 11 682 5	MOTOR BÁSICO D936 L HIGH 3
KIT DE VEDAÇÃO D936	10115850	81	1	706	10 11 583 8	JOGO DE VEDAÇÃO MOTOR D
KIT DE VEDAÇÃO DO CILINDR	9154141	999	1	770	96 44 625	PISTÃO
KIT DE VEDAÇÃO DO CILINDR	9169653	999	1	769	94 04 038 9	PISTÃO
KIT DE VEDAÇÃO DO VIRABR	10121952	1	1	699	10 11 801 4	KIT DE VEDACAO
KIT DE VEDAÇÃO DO VIRABR	10121952	1	1	702	10 11 583 8	JOGO DE VEDAÇÃO MOTOR D
KIT DE VEDAÇÃO DO VIRABRE	10121335	30	1	704	10 11 583 8	JOGO DE VEDAÇÃO MOTOR D
KIT DE VEDAÇÃO NG 090	9273163	98	1	230	90 74 075	MOTOR HIDRÁULICO
KIT DE VEDAÇÃO NG 100	11381954	98	1	800	90 73 888	MOTOR HIDRÁULICO
KIT DE VEDAÇÃO VG7-4/...	9269690	96	1	323	90 79 258	MANETE DE COMANDO VG7 2-
KIT DE VEDAÇÃO VG7-4/...	9269690	96	1	325	90 79 259	MANETE DE COMANDO VG7 2-
KIT DE VEDAÇÃO VG7-4/...	9269690	96	1	807	10 11 856 1	MANETE DE COMANDO VG6-8
KIT DE VEDAÇÃO VG7-4/...	9269690	96	1	808	11 37 560 6	MANETE DE COMANDO VG6-8
KIT DE VEDAÇÃO VÁLV. SEGU	5617472	999	1	421	10 30 079 8	VALVULA DE RETENCAO
KIT DE VEDAÇÃO ZPA 5	10119482	96	1	159	10 11 886 0	REDUTOR DISTRIBUICAO BO
KIT DO MOTOR DO LIMPADOR	10290363	420	1	491	10 29 033 7	INSTALACAO ELETRICA

Designação	Artigo	Item	Quanti	Página	Módulo	Designação
KIT DO MOTOR DO LIMPADOR	10290363	420	1	494	10 48 808 7	INSTALACAO ELETRICA
KIT DO MOTOR DO LIMPADOR	7028884	420	1	491	10 29 033 7	INSTALACAO ELETRICA
KIT DO TURBO COMPRESSOR	9080736	430	1	554	10 11 714 5	MOTOR DIESEL D936 L A6 190
KIT MODIF. ESTEIRA D7 PARA	10498878	47	1	7	.	
KIT MONOBLOCO 6.45M	11102814	66	1	7	.	
KIT MONOBLOCO 6.45M	11102836	10	1	715	11 10 281 4	KIT MONOBLOCO 6.45M
KIT MONTAGEM DA BOMBA A	9080301	370	1	559	10 11 682 5	MOTOR BÁSICO D936 L HIGH 3
KIT MÁQUINA BASE	11102813	65	1	7	.	
KIT MÁQUINA BASE	11102813	1400	1	123	10 35 861 4	CARRO SUPERIOR
KIT MÁQUINA BASE	11102818	10	1	755	11 10 281 3	KIT MÁQUINA BASE
KIT PARA ACIDENTE COM ÓL	7023359	150	1	52	90 66 466	ACESSÓRIOS
KIT REEQ.DISCO LATERAL	10358890	140	1	476	70 28 767	VIDRO FIXO
KIT REEQUIP.PARAFUSO VED	11387278	90	1	799	90 73 888	MOTOR HIDRÁULICO
KIT REPAR MÓDUL AJUS DE A	10493031	35	1	287	11 10 016 7	SUSPENSAO
KIT REPARO BRONZINA DA B	10116934	50	1	585	90 76 459	BIELA
KIT REPARO DA TAMPA REG	9078788	86	2	803	10 13 303 7	BOMBA HIDRÁULICA DUPLA
KIT REPARO ESF.+PLACA RET	9073380	78	1	230	90 74 075	MOTOR HIDRÁULICO
KIT REPARO ESF.+PLACA RET	9072998	78	1	799	90 73 888	MOTOR HIDRÁULICO
KIT REPARO ESF.+PLACA RET	9072998	78	1	823	90 74 122	KIT DE REPARO NG 100
KIT REPARO ESF.+PLACA RET	9889988	14	1	190	98 89 983	KIT DE REPARO NG 140 REC
KIT REPARO ESF.+PLACA RET	9889988	14	1	191	98 89 984	KIT DE REPARO NG 140
KIT REPARO ESF.+PLACA RET	9889988	78	2	802	10 13 303 7	BOMBA HIDRÁULICA DUPLA
KIT REPARO MANCAL VIRAB	10116928	50	1	582	90 76 458	JOGO DE MANCAIS DO VIRA
KIT REPARO SENSOR N° ROT	9278623	9	1	817	90 74 112	PLACA DE LIGAÇÃO NG 090
KIT VEDACAO DA BOMBA INJE	10115855	179	1	558	10 11 682 5	MOTOR BÁSICO D936 L HIGH 3
KIT VEDACAO DA BOMBA INJE	10115855	82	6	706	10 11 583 8	JOGO DE VEDAÇÃO MOTOR D
KIT VEDAÇÃO VÁL.COMPEN.P/	7015341	999	1	431	10 33 073 6	VÁLVULA DE COMUT.DE MOV
KIT VEDAÇÃO VÁLVULA DIREC	5009391	999	1	368	10 01 872 5	VÁLVULA DIRECIONAL
KIT VEDAÇÃO VÁLVULA DIREC	5009562	4	1	362	10 04 272 9	BLOCO DE VÁLVULAS DE CO
KIT VEDAÇÃO VÁLVULA DIREC	5009562	999	1	363	10 28 027 9	VÁLVULA
KIT VEDAÇÃO VÁLVULA DIREC	5009562	999	1	366	56 15 344	VÁLVULA SOLENÓIDE
KR1 ROLAMENTO DA CAMBOT	10140597	51	1	582	90 76 458	JOGO DE MANCAIS DO VIRA
KR2 ROLAMENTO DA CAMBOT	10140601	52	1	582	90 76 458	JOGO DE MANCAIS DO VIRA
LAMELA EXTERNA	944122003	62	6	221	90 01 453 8	KIT DE MODIFICAÇÃO
LAMELA EXTERNA	944122003	62	6	227	90 02 790 4	REDUTOR DE GIRO SAT 325/
LAMELA EXTERNA	944122003	62	6	229	94 42 180 03	JOGO DE LAMELAS DO FREIO
LAMELA EXTERNA	9443021	52	6	110	96 87 443 01	MECANISMO DE TRANSLAÇÃ
LAMELA EXTERNA	9443021	52	6	117	94 43 028 03	JOGO DE LAMELAS DO FREIO
LAMELAS INTERNAS	944250503	63	7	221	90 01 453 8	KIT DE MODIFICAÇÃO
LAMELAS INTERNAS	944250503	63	5	227	90 02 790 4	REDUTOR DE GIRO SAT 325/
LAMELAS INTERNAS	944250503	63	5	229	94 42 180 03	JOGO DE LAMELAS DO FREIO
LAMELAS INTERNAS	944302003	51	5	110	96 87 443 01	MECANISMO DE TRANSLAÇÃ
LAMELAS INTERNAS	944302003	51	5	117	94 43 028 03	JOGO DE LAMELAS DO FREIO
LAMPADA TUBULAR	7028859	120	1	490	10 29 033 7	INSTALACAO ELETRICA
LAMPADA TUBULAR 8,5-8 24V	10044338	130	1	490	10 29 033 7	INSTALACAO ELETRICA
LANÇA MONOBLOCO 6,45M	11102946	100	1	7	.	
LANÇA MONOBLOCO 6.45M	11102944	2	1	711	11 10 294 5	LANÇA MONOBLOCO 6.45M
LANÇA MONOBLOCO 6.45M	11102945	10	1	714	11 10 294 6	LANÇA MONOBLOCO 6,45M
LIMITADOR	10493050	11	1	285	11 10 016 6	PARTE SUPERIOR DE ASSENT
LIMITADOR	9077714	3	1	694	90 77 718	TOMADA PRÉ MONTADA
LIMITADOR DA PORTA	7019164	420	1	504	10 29 026 4	PEÇAS DE MONTAGEM
LIMPADOR DE PÁRA-BRISA	10290357	410	1	491	10 29 033 7	INSTALACAO ELETRICA
LIMPADOR DE PÁRA-BRISA	10290357	410	1	494	10 48 808 7	INSTALACAO ELETRICA
LIMPADOR DE PÁRA-BRISA	7029426	410	1	491	10 29 033 7	INSTALACAO ELETRICA
LINHA DE CONEXAO	10115703	230	1	552	10 11 714 5	MOTOR DIESEL D936 L A6 190
LINHA DE CONEXAO	10121909	230	1	552	10 11 714 5	MOTOR DIESEL D936 L A6 190
LINHA DE ÓLEO PRÉ-MONTA	9079978	25	1	549	10 11 714 5	MOTOR DIESEL D936 L A6 190
LIQUIDO DE ARREFECIMENT	11657384	5	1	55	94 07 955 7	LIQUIDO DE ARREFECIMENT
LIQUIDO DE ARREFECIMENT	11657385	20	1	55	94 07 955 7	LIQUIDO DE ARREFECIMENT
LIQUIDO DE ARREFECIMENT	11657386	210	1	55	94 07 955 7	LIQUIDO DE ARREFECIMENT

Designação	Artigo	Item	Quanti	Página	Módulo	Designação
LIQUIDO DE ARREFECIMENT	11657387	1000	1	55	94 07 955 7	LIQUIDO DE ARREFECIMENT
LIQUIDO DE ARREFECIMENT	11657389	5	1	56	94 07 956 0	LIQUIDO DE ARREFECIMENT
LIQUIDO DE ARREFECIMENT	11657390	20	1	56	94 07 956 0	LIQUIDO DE ARREFECIMENT
LIQUIDO DE ARREFECIMENT	11657391	210	1	56	94 07 956 0	LIQUIDO DE ARREFECIMENT
LIQUIDO DE ARREFECIMENT	11657392	1000	1	56	94 07 956 0	LIQUIDO DE ARREFECIMENT
LIQUIDO DE ARREFECIMENT	9066465	70	1	15	90 66 460	
LIQUIDO DE ARREFECIMENT	94079557	10	1	57	94 08 205 8	LIQUIDO DE ARREFECIMENT
LIQUIDO DE ARREFECIMENT	94079560	20	1	57	94 08 205 8	LIQUIDO DE ARREFECIMENT
LIQUIDO DE ARREFECIMENT	94082058	100	1	17	90 66 465	LIQUIDO DE ARREFECIMENT
LUBRIFICACAO CENTRALIZAD	10828414	50	1	722	10 82 841 3	LUBRIFICAÇÃO CENTRALIZAD
LUBRIFICACAO CENTRALIZAD	12849525	1400	1	123	10 35 861 4	CARRO SUPERIOR
LUBRIFICANTE	8610025	10	1	60	11 41 916 5	PASTA DE LUBRIFICAÇÃO
LUBRIFICANTES	9070366	60	1	15	90 66 460	
LUBRIFICAÇÃO CENTR. AUT	10067500	2	1	246	12 84 952 5	LUBRIFICACAO CENTRALIZAD
LUBRIFICAÇÃO CENTRALIZAD	10396396	180	1	726	11 10 280 7	BRAÇO DA CAÇAMBA 2.10M
LUBRIFICAÇÃO CENTRALIZAD	10828413	70	1	712	11 10 294 5	LANÇA MONOBLOCO 6.45M
LUBRIFICAÇÃO CENTRALIZAD	12849526	3	1	246	12 84 952 5	LUBRIFICACAO CENTRALIZAD
LUMINÁRIA	10428776	140	1	493	10 48 808 7	INSTALACAO ELETRICA
LUMINÁRIA DE TETO	7028857	140	1	490	10 29 033 7	INSTALACAO ELETRICA
LUVA	10017567	7	2	94	10 00 454 6	RODA GUIA B6
LUVA	10149189	2	1	602	10 12 038 4	CABEÇOTE CILÍNDRICO
LUVA	10301011	19	2	200	10 21 851 3	RADIADOR COMBINADO
LUVA	10301011	19	2	203	11 69 472 6	RADIADOR COMBINADO
LUVA	10301014	20	2	200	10 21 851 3	RADIADOR COMBINADO
LUVA	10301014	20	2	203	11 69 472 6	RADIADOR COMBINADO
LUVA	12220999	7	2	79	12 22 100 1	RODA GUIA
LUVA	7020613	370	1	485	70 28 769	PORTA DA CABINE DO OPERA
LUVA	7028906	680	5	505	10 29 026 4	PEÇAS DE MONTAGEM
LUVA	9837954	44	2	446	10 35 865 5	REVESTIMENTO
LUVA 12,4X25X85	9953691	45	1	360	10 06 380 1	INSTALACAO HIDRAULICA
LUVA 17X30X30	9123332	3	4	417	10 06 398 6	PECAS DE FIXACAO PARA VA
LUVA 17X30X40	9349698	8	4	127	10 08 736 5	PEÇAS MONT. DE EQUIP
LUVA 17X30X40	9349698	20	16	134	10 04 853 1	SUSPENSAO DO MOTOR
LUVA 17X40X40	9327516	3	3	128	10 04 851 0	ARRASTADOR - INSTALACAO
LUVA 20,5X34X45	10857134	3	4	97	10 40 373 2	GUIA DE CORRENTE - INSTA
LUVA 28X50X15	10062070	6	60	243	10 06 198 4	PEÇAS FIXAÇÃO COROA GIRA
LUVA 5/16/20	7019171	110	10	490	10 29 033 7	INSTALACAO ELETRICA
LUVA 5/16/20	7019171	110	10	493	10 48 808 7	INSTALACAO ELETRICA
LUVA 6/10/13	7019160	360	1	485	70 28 769	PORTA DA CABINE DO OPERA
LUVA DE ACOPLAMENTO N32	9073827	15	1	181	90 74 893	KIT DE REPARO DA CARCAÇA
LUVA DE AJUSTE 15,5X19,5X2	9177636	6	14	561	10 11 577 8	BLOCO DO MOTOR
LUVA DE AJUSTE 16X20X20	10134348	4	2	570	90 79 480	SUPORTE DOS AGREGADOS
LUVA DE AJUSTE 16X20X20	10134348	3	2	680	10 11 611 4	CÁRTER VOLANTE MONT. EXT
LUVA DE AJUSTE 16X20X20	9074798	9	12	560	12 82 483 7	CÁRTER COMPLETO COM CIL
LUVA DE AMORTECIMENTO	11680163	9	1	760	11 68 144 7	CILINDRO HIDRÁULICO
LUVA DE AMORTECIMENTO	9245586	9	1	761	95 93 026	CILINDRO HIDRÁULICO
LUVA DE AMORTECIMENTO	9245586	9	1	762	96 44 648	CILINDRO HIDRÁULICO
LUVA DE ASSENTO DA VALV	10008407	56	1	208	56 19 045	MOTOR DE PISTÃO AXIAL
LUVA DE BORRACHA	10116310	24	1	665	90 80 736	KIT DO TURBO COMPRESSOR
LUVA DE BORRACHA	10116310	4302	1	707	10 11 583 8	JOGO DE VEDAÇÃO MOTOR D
LUVA DE BORRACHA 12 X 18 X	9079603	18	1	566	10 11 916 7	CARCAÇA MANIVELA PURGAM
LUVA DE BORRACHA 12 X 18 X	9079603	18	1	567	90 79 021	CARCAÇA MANIVELA PURGAM
LUVA DE BORRACHA 12 X 18 X	9079603	43	1	704	10 11 583 8	JOGO DE VEDAÇÃO MOTOR D
LUVA DE BORRACHA 22X30X6	9273161	10	1	566	10 11 916 7	CARCAÇA MANIVELA PURGAM
LUVA DE BORRACHA 22X30X6	9273161	20	1	569	10 11 832 9	KIT DE REPARO DA TUBULAÇ
LUVA DE BORRACHA 22X30X6	9273161	161	1	707	10 11 583 8	JOGO DE VEDAÇÃO MOTOR D
LUVA DE BORRACHA 25 X35/3	9271340	6	2	566	10 11 916 7	CARCAÇA MANIVELA PURGAM
LUVA DE BORRACHA 25 X35/3	9271340	6	2	567	90 79 021	CARCAÇA MANIVELA PURGAM
LUVA DE BORRACHA 25 X35/3	9271340	44	2	704	10 11 583 8	JOGO DE VEDAÇÃO MOTOR D
LUVA DE CONEXÃO 3	10015495	100	1	299	99 68 625	MANETE - LH ESQUERDA

Designação	Artigo	Item	Quanti	Página	Módulo	Designação
LUVA DE CONEXÃO 3	10015495	100	1	314	99 68 611	MANETE DIREITA
LUVA DE CONEXÃO M10X1	7027675	20	1	257	90 64 786	ELEMENTO DE CONEXÃO
LUVA DE CONEXÃO MONTAGE	9077279	221	1	552	10 11 714 5	MOTOR DIESEL D936 L A6 190
LUVA DE MONTAGEM 160	9998621	990	1	770	96 44 625	PISTÃO
LUVA DE MONTAGEM 170	9107931	990	1	769	94 04 038 9	PISTÃO
LUVA DE PASSAGEM 16/22,5/2	5607889	38	1	271	10 49 880 5	POSTO DE COMANDO - PEÇA
LUVA DISTANCIADORA 11X21	9074977	4	12	670	10 11 548 0	TUBO DE ESCAPAMENTO M
LUVA DISTANCIADORA 15X20	9950358	11	1	11	12 86 140 4	PECAS DE FIXACAO
LUVA DISTANCIADORA 8,5X18	9132577	14	4	567	90 79 021	CARCAÇA MANIVELA PURGAM
LUVA DISTANCIADORA 8,5X18	9132577	2	4	663	10 11 919 9	PROT.CONTRA CALOR COM F
LUVA DISTANCIADORA 8,5X18	9132577	20	7	664	10 11 571 8	PROT.CONTRA CALOR COM FI
LUVA DISTANCIADORA 8,5X18	9132577	72	1	687	10 11 799 7	CHICOTE DE CABOS ACESSÓ
LUVA DISTANCIADORA GALVA	94022280	44	4	284	94 02 247 7	ASSENTO DO OPERADOR
LUVA Gr. 10 GELB	8593004	9998	1	43	11 44 078 9	ACESSÓRIOS
LUVA Gr. 9 GELB	11644535	9997	1	43	11 44 078 9	ACESSÓRIOS
LUVA HRS 3 HUE 11X14X58	7367212	31	4	351	10 35 862 8	INSTALACAO HIDRAULICA
LUVA HRS 4 HUE 12,4X16X87	7367211	57	4	345	10 35 862 3	INSTALACAO HDRAULICA
LUVA HRS 4 HUE 12,4X16X87	7367211	52	4	357	10 35 862 9	ARREFECIMENTO DE OLEO
LUVA HRS 4 HUE 12,4X16X87	7367211	19	6	358	10 35 862 4	INSTALACAO HIDRAULICA
LUVA PARA CABOS 14,0/15,7/1	6202703	24	2	275	11 38 339 7	APOIO DE BRAÇO LADO ESQ
LUVA PARA CABOS 14,0/15,7/1	6202703	24	2	291	10 38 502 8	APOIO DE BRAÇO LADO ESQ
LUVA PARA CABOS 8,5/14/20	7362986	25	7	275	11 38 339 7	APOIO DE BRAÇO LADO ESQ
LUVA PARA CABOS 8,5/14/20	7362986	25	7	291	10 38 502 8	APOIO DE BRAÇO LADO ESQ
LUVA ROSQUEADA DN6	774376008	100	1	258	90 64 786	ELEMENTO DE CONEXÃO
LUVA ROSQUEADA DN6	774376008	1	31	262	10 01 461 1	CAIXA AUXILIAR
LUVA ROSQUEADA DN6,5 ST	10012024	200	1	260	90 64 786	ELEMENTO DE CONEXÃO
LUVA ROSQUEADA DN6,5 ST	10012024	100	6	263	10 01 461 1	CAIXA AUXILIAR
LÂMINA	10498524	11	1	737	11 10 258 8	LÂMINA RETRO
LÂMINA RETRO	11102588	9	1	736	11 10 258 7	CAÇAMBA RETRO HD 1800MM
LÂMPADA INCANDESCENTE H	6200685	5	1	9	12 85 910 3	FAROL CPL - INSTALAÇÃO
LÂMPADA INCANDESCENTE H	6200685	3	2	516	99 41 040	FAROL CPL - INSTALAÇÃO
LÂMPADA INCANDESCENTE H	6200685	11	1	517	10 04 553 0	FAROL DE TRABALHO
LÂMPADA INCANDESCENTE H	6200685	3	1	783	11 10 229 5	FAROL ADICIONAL
LÂMPADA INCANDESCENTE K	6000167	130	1	493	10 48 808 7	INSTALACAO ELETRICA
LÂMPADA INCANDESCENTE	6001713	2	1	315	10 05 507 1	INTERRUPTOR - INSTALAÇÃO
MAGUEIRAS DO AR-CONDICI	10062725	9200	1	124	10 35 861 4	CARRO SUPERIOR
MAGUEIRAS DO AR-CONDICI	10065591	10	1	524	10 06 272 5	MAGUEIRAS DO AR-CONDICI
MANCAL DA HASTE DO PISTÃ	94006888	13	1	760	11 68 144 7	CILINDRO HIDRÁULICO
MANCAL DA HASTE DO PISTÃ	94027949	13	1	761	95 93 026	CILINDRO HIDRÁULICO
MANCAL DA HASTE DO PISTÃ	9591741	13	1	762	96 44 648	CILINDRO HIDRÁULICO
MANCAL DE BORRACHA	10301000	12	6	199	10 21 851 3	RADIADOR COMBINADO
MANCAL DE BORRACHA	10301000	12	6	202	11 69 472 6	RADIADOR COMBINADO
MANCAL DO BALANCIM	9074504	1	1	599	12 40 205 5	BALANCIM PRÉ MONTADO
MANCAL DO BALANCIM	9074504	1	1	604	90 74 505	BALANCIM PRÉ MONTADO
MANCAL FIXO OT KPL.	11066532	38	1	288	11 10 016 7	SUSPENSAO
MANETE - LH ESQUERDA	9968625	10	1	298	10 05 879 2	SENSOR DE PRE-COMANDO E
MANETE DE COMANDO VG6-8	10118561	50	1	292	10 38 502 8	APOIO DE BRAÇO LADO ESQ
MANETE DE COMANDO VG6-8	10118561	50	1	301	11 45 228 6	APOIO DE BRAÇO LADO DIRE
MANETE DE COMANDO VG6-8	10118561	50	1	305	12 50 731 7	APOIO DE BRAÇO LADO DIRE
MANETE DE COMANDO VG6-8	11375606	50	1	276	11 38 339 7	APOIO DE BRAÇO LADO ESQ
MANETE DE COMANDO VG6-8	11375606	50	1	277	11 38 340 1	APOIO DE BRAÇO LADO DIRE
MANETE DE COMANDO VG7 2-	9079259	10	1	321	10 06 017 4	PEDAL ESQUERDO COMPLET
MANETE DE COMANDO VG7 2-	9079258	10	1	322	10 06 017 5	PEDAL DIREITO COMPLETO
MANETE DIREITA	9968611	10	1	313	10 05 879 4	SENSOR DE PRE-COMANDO
MANGUEIRA	10009943	5	0.6	654	90 80 301	KIT MONTAGEM DA BOMBA A
MANGUEIRA	10043525	270	1	260	90 64 786	ELEMENTO DE CONEXÃO
MANGUEIRA	10043525	170	10	263	10 01 461 1	CAIXA AUXILIAR
MANGUEIRA	10282709	14	1	525	10 06 559 1	MAGUEIRAS DO AR-CONDICI
MANGUEIRA	10286643	16	1	525	10 06 559 1	MAGUEIRAS DO AR-CONDICI
MANGUEIRA	10286646	12	1	525	10 06 559 1	MAGUEIRAS DO AR-CONDICI

Designação	Artigo	Item	Quanti	Página	Módulo	Designação
MANGUEIRA	11341352	2	1	732	10 66 478 2	BLOCO DE DISTRIBUIÇÃO MX-
MANGUEIRA	11834733	12	4	796	11 69 501 2	KIT DE ABASTECIMENTO DE U
MANGUEIRA	12200110	11	1	50	11 82 595 6	BOMBA MANUAL
MANGUEIRA	12262634	700	1	501	10 29 036 1	BRACO DO LIMPADOR
MANGUEIRA	6200461	700	6	491	10 29 033 7	INSTALACAO ELETRICA
MANGUEIRA	6200461	700	6	494	10 48 808 7	INSTALACAO ELETRICA
MANGUEIRA	7029428	640	1	502	70 28 866	BRACO DO LIMPADOR
MANGUEIRA	7360075	93	1.5	137	10 49 819 9	FILTRO DE AR - INSTALAÇÃO
MANGUEIRA	7361678	340	0.9	198	10 04 853 6	ARREFECIMENTO DO MOTOR
MANGUEIRA	7361678	350	0.9	198	10 04 853 6	ARREFECIMENTO DO MOTOR
MANGUEIRA	7361678	370	0.7	198	10 04 853 6	ARREFECIMENTO DO MOTOR
MANGUEIRA	7361679	10	3.9	215	10 06 371 2	MANGUEIRAS AQUEC.E AR-
MANGUEIRA	7361679	85	0.1	273	10 49 880 5	POSTO DE COMANDO - PEÇA
MANGUEIRA	7363060	325	2	197	10 04 853 6	ARREFECIMENTO DO MOTOR
MANGUEIRA 10X2400	10287541	10	2	267	11 38 342 7	INST. HIDR. MANETE ESQUE
MANGUEIRA 10X2400	10287541	10	2	268	11 38 342 9	INST. HIDRAULICA DA MANET
MANGUEIRA 12X1000	10000437	44	1	354	10 06 379 8	MANGUEIRAS HIDRAULICAS
MANGUEIRA 12X1450	7620786	60	1	359	10 35 862 4	INSTALACAO HIDRAULICA
MANGUEIRA 12X2300	5618658	60	1	753	11 10 291 2	MONTAGEM CILINDRO DE ELE
MANGUEIRA 12X2600	10002465	55	1	360	10 06 380 1	INSTALACAO HIDRAULICA
MANGUEIRA 12X3000	10000473	61	1	753	11 10 291 2	MONTAGEM CILINDRO DE ELE
MANGUEIRA 12X3400	10001019	80	1	360	10 06 380 1	INSTALACAO HIDRAULICA
MANGUEIRA 12X3700	10286605	3	1	356	10 35 862 9	ARREFECIMENTO DE OLEO
MANGUEIRA 12X450	10027315	8	1	356	10 35 862 9	ARREFECIMENTO DE OLEO
MANGUEIRA 12X450	10280090	70	1	359	10 35 862 4	INSTALACAO HIDRAULICA
MANGUEIRA 12X4550	10286606	2	1	356	10 35 862 9	ARREFECIMENTO DE OLEO
MANGUEIRA 12X600	5618477	210	1	361	10 06 380 1	INSTALACAO HIDRAULICA
MANGUEIRA 12X600	5618477	230	1	361	10 06 380 1	INSTALACAO HIDRAULICA
MANGUEIRA 12X600	5618477	240	1	361	10 06 380 1	INSTALACAO HIDRAULICA
MANGUEIRA 12X780	10300205	9	4	752	11 10 291 2	MONTAGEM CILINDRO DE ELE
MANGUEIRA 12X850	10280105	30	1	358	10 35 862 4	INSTALACAO HIDRAULICA
MANGUEIRA 16X1400	10002828	80	1	359	10 35 862 4	INSTALACAO HIDRAULICA
MANGUEIRA 16X550	10280076	75	1	359	10 35 862 4	INSTALACAO HIDRAULICA
MANGUEIRA 16X750	10293570	6	1	237	96 91 056 01	RESERVATÓRIO DE ÓLEO
MANGUEIRA 20X1000	5602645	16	1	351	10 35 862 8	INSTALACAO HIDRAULICA
MANGUEIRA 20X1330	10813329	25	1	775	11 45 729 6	CILINDRO DE ELEVACAO DIRE
MANGUEIRA 20X1330	10813329	25	1	778	11 45 729 7	CILINDRO DE ELEVACAO ESQ
MANGUEIRA 20X1650	10286608	35	1	352	10 35 862 8	INSTALACAO HIDRAULICA
MANGUEIRA 20X1750	10286610	20	1	351	10 35 862 8	INSTALACAO HIDRAULICA
MANGUEIRA 20X2100	10286619	21	1	351	10 35 862 8	INSTALACAO HIDRAULICA
MANGUEIRA 20X2400	10017996	15	2	121	10 40 412 9	INST.HIDR.CARRO INFERIOR
MANGUEIRA 20X930	10286607	20	1	353	10 06 379 8	MANGUEIRAS HIDRAULICAS
MANGUEIRA 20X930	10286607	25	1	353	10 06 379 8	MANGUEIRAS HIDRAULICAS
MANGUEIRA 25X1500	10000561	15	1	353	10 06 379 8	MANGUEIRAS HIDRAULICAS
MANGUEIRA 25X1500	10280230	3	2	351	10 35 862 8	INSTALACAO HIDRAULICA
MANGUEIRA 25X1560	10286515	50	1	712	11 10 294 5	LANÇA MONOBLOCO 6.45M
MANGUEIRA 25X1600	5613713	26	1	725	11 10 280 7	BRAÇO DA CAÇAMBA 2.10M
MANGUEIRA 25X1720	10470976	5	1	752	11 10 291 2	MONTAGEM CILINDRO DE ELE
MANGUEIRA 25X1730	10286612	2	2	351	10 35 862 8	INSTALACAO HIDRAULICA
MANGUEIRA 25X1780	10470977	6	1	752	11 10 291 2	MONTAGEM CILINDRO DE ELE
MANGUEIRA 25X1870	10470978	4	1	752	11 10 291 2	MONTAGEM CILINDRO DE ELE
MANGUEIRA 25X1870	10470978	7	1	752	11 10 291 2	MONTAGEM CILINDRO DE ELE
MANGUEIRA 25X2250	5617140	2	2	121	10 40 412 9	INST.HIDR.CARRO INFERIOR
MANGUEIRA 25X2350	5616707	3	2	121	10 40 412 9	INST.HIDR.CARRO INFERIOR
MANGUEIRA 25X540	10217005	70	1	145	10 04 853 9	INSTALACAO BOMBA E EMBR
MANGUEIRA 25X680	10303335	50	1	354	10 06 379 8	MANGUEIRAS HIDRAULICAS
MANGUEIRA 25X680	10330967	40	1	345	10 35 862 3	INSTALACAO HDRAULICA
MANGUEIRA 25X745	10330968	50	1	345	10 35 862 3	INSTALACAO HDRAULICA
MANGUEIRA 25X770	10286756	15	1	350	10 35 862 7	INSTALAÇÃO HIDRÁULICA
MANGUEIRA 25X900	10286611	76	1	145	10 04 853 9	INSTALACAO BOMBA E EMBR

Designação	Artigo	Item	Quanti	Página	Módulo	Designação
MANGUEIRA 25X950	10286757	5	1	350	10 35 862 7	INSTALAÇÃO HIDRÁULICA
MANGUEIRA 25X970	10286758	10	1	350	10 35 862 7	INSTALAÇÃO HIDRÁULICA
MANGUEIRA 32X1280	5601076	52	2	712	11 10 294 5	LANÇA MONOBLOCO 6.45M
MANGUEIRA 32X1300/1570	10286636	10	1	358	10 35 862 4	INSTALACAO HIDRAULICA
MANGUEIRA 32X1500	10286434	49	3	712	11 10 294 5	LANÇA MONOBLOCO 6.45M
MANGUEIRA 32X1600	5611543	25	1	725	11 10 280 7	BRAÇO DA CAÇAMBA 2.10M
MANGUEIRA 32X2200	10330920	3	1	344	10 35 862 3	INSTALACAO HDRAULICA
MANGUEIRA 32X2460	10280087	2	1	344	10 35 862 3	INSTALACAO HDRAULICA
MANGUEIRA 32X350	5610426	30	1	353	10 06 379 8	MANGUEIRAS HIDRAULICAS
MANGUEIRA 40X1140	10280077	36	1	357	10 35 862 9	ARREFECIMENTO DE OLEO
MANGUEIRA 40X2900	10286627	35	1	357	10 35 862 9	ARREFECIMENTO DE OLEO
MANGUEIRA 4X1028	10300385	4	1	732	10 66 478 2	BLOCO DE DISTRIBUIÇÃO MX-
MANGUEIRA 4X1097	10293030	5	2	254	10 29 300 1	BLOCO DE DISTRIBUIÇÃO MX-
MANGUEIRA 4X1672	10300384	3	1	732	10 66 478 2	BLOCO DE DISTRIBUIÇÃO MX-
MANGUEIRA 4X1672	10300384	7	1	732	10 66 478 2	BLOCO DE DISTRIBUIÇÃO MX-
MANGUEIRA 4X2632	10300389	5	1	732	10 66 478 2	BLOCO DE DISTRIBUIÇÃO MX-
MANGUEIRA 4X2632	10300389	9	1	732	10 66 478 2	BLOCO DE DISTRIBUIÇÃO MX-
MANGUEIRA 4X2697	10300390	6	1	732	10 66 478 2	BLOCO DE DISTRIBUIÇÃO MX-
MANGUEIRA 4X2697	10300390	10	1	732	10 66 478 2	BLOCO DE DISTRIBUIÇÃO MX-
MANGUEIRA 4X588	10300387	8	1	732	10 66 478 2	BLOCO DE DISTRIBUIÇÃO MX-
MANGUEIRA 4X690	10293026	9	1	254	10 29 300 1	BLOCO DE DISTRIBUIÇÃO MX-
MANGUEIRA 4X702	10293029	7	1	254	10 29 300 1	BLOCO DE DISTRIBUIÇÃO MX-
MANGUEIRA 4X720	10293028	8	1	254	10 29 300 1	BLOCO DE DISTRIBUIÇÃO MX-
MANGUEIRA 4X732	10291382	6	1	254	10 29 300 1	BLOCO DE DISTRIBUIÇÃO MX-
MANGUEIRA 50X590	10280078	5	1	353	10 06 379 8	MANGUEIRAS HIDRAULICAS
MANGUEIRA 6,3X355	10037533	20	1	248	10 06 750 0	LUBRIFICAÇÃO CENTR. AUT
MANGUEIRA 6,3X3775	10292129	12	1	251	10 66 471 9	BLOCO DE DISTRIBUIÇÃO SX
MANGUEIRA 6,3X3775	10292130	13	1	251	10 66 471 9	BLOCO DE DISTRIBUIÇÃO SX
MANGUEIRA 6,3X3795	10220774	8	1	730	10 39 639 6	LUBRIFICAÇÃO CENTRALIZAD
MANGUEIRA 6,3X4925	10292128	10	2	251	10 66 471 9	BLOCO DE DISTRIBUIÇÃO SX
MANGUEIRA 6,3X6400	10042817	40	2	722	10 82 841 3	LUBRIFICAÇÃO CENTRALIZAD
MANGUEIRA 6,3X755	10297950	7	1	730	10 39 639 6	LUBRIFICAÇÃO CENTRALIZAD
MANGUEIRA 6X850	10355894	10	2	752	11 10 291 2	MONTAGEM CILINDRO DE ELE
MANGUEIRA 8X1100	7621217	30	1	754	10 85 472 4	PEÇAS MONT.- MÁQUINA BAS
MANGUEIRA 8X3200	10286645	10	1	525	10 06 559 1	MAGUEIRAS DO AR-CONDICI
MANGUEIRA 8X3200	10286645	10	1	525	10 06 559 1	MAGUEIRAS DO AR-CONDICI
MANGUEIRA COMPLETA 4X1	11659615	2	2	756	11 10 281 8	KIT MÁQUINA BASE
MANGUEIRA COMPLETA 4X1	11659618	3	2	756	11 10 281 8	KIT MÁQUINA BASE
MANGUEIRA COMPLETA 4X1	11659607	4	2	756	11 10 281 8	KIT MÁQUINA BASE
MANGUEIRA COMPLETA 4X1	11659619	5	2	727	11 10 281 7	KIT DE ATUALIZAÇÃO 2.10M
MANGUEIRA COMPLETA 4X2	11659608	2	1	727	11 10 281 7	KIT DE ATUALIZAÇÃO 2.10M
MANGUEIRA COMPLETA 4X2	11659609	3	1	727	11 10 281 7	KIT DE ATUALIZAÇÃO 2.10M
MANGUEIRA COMPLETA 4X2	11659610	4	2	727	11 10 281 7	KIT DE ATUALIZAÇÃO 2.10M
MANGUEIRA COMPLETA 4X2	11659613	6	2	727	11 10 281 7	KIT DE ATUALIZAÇÃO 2.10M
MANGUEIRA COMPLETA 4X4	11659621	3	1	716	11 10 283 6	KIT MONOBLOCO 6.45M
MANGUEIRA COMPLETA 4X4	11659616	5	1	716	11 10 283 6	KIT MONOBLOCO 6.45M
MANGUEIRA COMPLETA 4X5	11659617	2	1	716	11 10 283 6	KIT MONOBLOCO 6.45M
MANGUEIRA COMPLETA 4X6	11659622	4	2	716	11 10 283 6	KIT MONOBLOCO 6.45M
MANGUEIRA COMPLETA 6X1	11659623	5	1	756	11 10 281 8	KIT MÁQUINA BASE
MANGUEIRA DE ALTA PRESSÃ	774376108	170	1	258	90 64 786	ELEMENTO DE CONEXÃO
MANGUEIRA DE ALTA PRESSÃ	774376108	70	15	262	10 01 461 1	CAIXA AUXILIAR
MANGUEIRA DE AR	10005859	95	2	273	10 49 880 5	POSTO DE COMANDO - PEÇA
MANGUEIRA DE AR	10005860	90	1	273	10 49 880 5	POSTO DE COMANDO - PEÇA
MANGUEIRA DE AR 180X4X70	10217797	85	1	137	10 49 819 9	FILTRO DE AR - INSTALAÇÃO
MANGUEIRA DE AR 180X4X70	10217797	20	1	793	10 49 866 6	FILTRO DE AR - INSTALAÇÃO
MANGUEIRA DE AR COMPL.	11066531	19	1	287	11 10 016 7	SUSPENSAO
MANGUEIRA DE ASPIRACAO D	10060418	80	1	145	10 04 853 9	INSTALACAO BOMBA E EMBR
MANGUEIRA DE COMANDO	7401007	585	1	415	10 35 863 8	INSTALAÇÃO BLOCO DE VÁL
MANGUEIRA DE COMANDO	7401007	600	1	415	10 35 863 8	INSTALAÇÃO BLOCO DE VÁL
MANGUEIRA DE COMANDO	7401756	384	1	413	10 35 863 8	INSTALAÇÃO BLOCO DE VÁL

Designação	Artigo	Item	Quanti	Página	Módulo	Designação
MANGUEIRA DE COMANDO	7401772	31	1	754	10 85 472 4	PEÇAS MONT.- MÁQUINA BAS
MANGUEIRA DE COMANDO	7402273	10	2	121	10 40 412 9	INST.HIDR.CARRO INFERIOR
MANGUEIRA DE COMANDO	7402440	378	1	413	10 35 863 8	INSTALAÇÃO BLOCO DE VÁL
MANGUEIRA DE COMANDO	7402483	610	1	415	10 35 863 8	INSTALAÇÃO BLOCO DE VÁL
MANGUEIRA DE COMANDO	7402833	371	1	413	10 35 863 8	INSTALAÇÃO BLOCO DE VÁL
MANGUEIRA DE COMANDO	7402835	20	7	269	10 06 014 6	INTALAÇ HIDR PEDAIS DE CO
MANGUEIRA DE COMANDO	7403978	364	1	412	10 35 863 8	INSTALAÇÃO BLOCO DE VÁL
MANGUEIRA DE COMANDO	7406682	200	1	361	10 06 380 1	INSTALACAO HIDRAULICA
MANGUEIRA DE COMANDO	7406682	360	1	412	10 35 863 8	INSTALAÇÃO BLOCO DE VÁL
MANGUEIRA DE COMANDO 8	7002561	425	1	413	10 35 863 8	INSTALAÇÃO BLOCO DE VÁL
MANGUEIRA DE COMANDO 8	7003723	377	1	413	10 35 863 8	INSTALAÇÃO BLOCO DE VÁL
MANGUEIRA DE COMANDO 8	7005035	450	1	361	10 06 380 1	INSTALACAO HIDRAULICA
MANGUEIRA DE COMANDO 8	7005035	452	1	361	10 06 380 1	INSTALACAO HIDRAULICA
MANGUEIRA DE COMANDO 8	7005035	454	1	361	10 06 380 1	INSTALACAO HIDRAULICA
MANGUEIRA DE COMANDO 8	5604011	373	1	413	10 35 863 8	INSTALAÇÃO BLOCO DE VÁL
MANGUEIRA DE COMANDO 8	7009933	5	4	267	11 38 342 7	INST. HIDR. MANETE ESQUE
MANGUEIRA DE COMANDO 8	7009933	5	4	268	11 38 342 9	INST. HIDRAULICA DA MANET
MANGUEIRA DE COMANDO 8	10007230	362	3	412	10 35 863 8	INSTALAÇÃO BLOCO DE VÁL
MANGUEIRA DE COMANDO 8	7014580	363	1	412	10 35 863 8	INSTALAÇÃO BLOCO DE VÁL
MANGUEIRA DE COMANDO 8X	10472994	30	1	268	11 38 342 9	INST. HIDRAULICA DA MANET
MANGUEIRA DE COMANDO 8	10218975	368	3	412	10 35 863 8	INSTALAÇÃO BLOCO DE VÁL
MANGUEIRA DE COMANDO 8	7618290	369	3	412	10 35 863 8	INSTALAÇÃO BLOCO DE VÁL
MANGUEIRA DE COMANDO 8	7014248	440	1	413	10 35 863 8	INSTALAÇÃO BLOCO DE VÁL
MANGUEIRA DE COMANDO 8	5604525	460	1	361	10 06 380 1	INSTALACAO HIDRAULICA
MANGUEIRA DE COMANDO 8X	7403175	55	1	346	10 06 379 3	UNIDADE DE COMANDO DE O
MANGUEIRA DE COMANDO 8X	7403175	32	1	754	10 85 472 4	PEÇAS MONT.- MÁQUINA BAS
MANGUEIRA DE COMANDO 8	10015548	100	1	360	10 06 380 1	INSTALACAO HIDRAULICA
MANGUEIRA DE COMANDO 8	10015548	110	1	360	10 06 380 1	INSTALACAO HIDRAULICA
MANGUEIRA DE COMANDO 8X	7402576	520	1	361	10 06 380 1	INSTALACAO HIDRAULICA
MANGUEIRA DE COMANDO 8	5611206	440	1	361	10 06 380 1	INSTALACAO HIDRAULICA
MANGUEIRA DE COMANDO 8X	7016508	530	1	361	10 06 380 1	INSTALACAO HIDRAULICA
MANGUEIRA DE COMANDO 8X	7401757	45	3	143	10 04 853 9	INSTALACAO BOMBA E EMBR
MANGUEIRA DE COMANDO 8X	7401757	366	1	412	10 35 863 8	INSTALAÇÃO BLOCO DE VÁL
MANGUEIRA DE COMANDO 8X	7005047	21	2	121	10 40 412 9	INST.HIDR.CARRO INFERIOR
MANGUEIRA DE COMANDO 8X	7005047	30	3	269	10 06 014 6	INTALAÇ HIDR PEDAIS DE CO
MANGUEIRA DE COMANDO 8X	7005665	420	1	413	10 35 863 8	INSTALAÇÃO BLOCO DE VÁL
MANGUEIRA DE COMANDO 8X	7015992	590	1	415	10 35 863 8	INSTALAÇÃO BLOCO DE VÁL
MANGUEIRA DE COMBUSTÍVE	10333666	10	1	135	10 36 918 3	INSTALACAO DE COMBUSTIVE
MANGUEIRA DE COMBUSTÍVE	10333666	11	1	135	10 36 918 3	INSTALACAO DE COMBUSTIVE
MANGUEIRA DE COMBUSTÍVE	10441297	12	1	135	10 36 918 3	INSTALACAO DE COMBUSTIVE
MANGUEIRA DE LIGAÇÃO	11825936	50	1	49	11 82 320 0	
MANGUEIRA DE SILICONE	10082117	210	1	196	10 04 853 6	ARREFECIMENTO DO MOTOR
MANGUEIRA DE SILICONE	10082117	230	1	196	10 04 853 6	ARREFECIMENTO DO MOTOR
MANGUEIRA DE SUCÇÃO	10219500	130	1	52	90 66 466	ACESSÓRIOS
MANGUEIRA DE SUCÇÃO	11825935	60	1	49	11 82 320 0	
MANGUEIRA DE SUCÇÃO	11834726	6	1	796	11 69 501 2	KIT DE ABASTECIMENTO DE U
MANGUEIRA DE SUCÇÃO	11834732	5	1	796	11 69 501 2	KIT DE ABASTECIMENTO DE U
MANGUEIRA DE SUCÇÃO	12200111	12	1	50	11 82 595 6	BOMBA MANUAL
MANGUEIRA DE ÁGUA	10057698	120	1	195	10 04 853 6	ARREFECIMENTO DO MOTOR
MANGUEIRA DE ÁGUA	10057777	140	1	195	10 04 853 6	ARREFECIMENTO DO MOTOR
MANGUEIRA DE ÁGUA	10065124	330	1	197	10 04 853 6	ARREFECIMENTO DO MOTOR
MANGUEIRA DE ÁGUA 918 62	9008530	30	2	328	10 40 689 8	AR CONDICIONADO
MANGUEIRA DE ÁGUA 976 05	10054704	100	1	195	10 04 853 6	ARREFECIMENTO DO MOTOR
MANGUEIRA DO FILTRO DE A	10081376	20	1	137	10 49 819 9	FILTRO DE AR - INSTALAÇÃO
MANGUEIRA ESPIRAL DN40X	10410125	48	1	137	10 49 819 9	FILTRO DE AR - INSTALAÇÃO
MANGUEIRA HID. ESCOAMEN	9358137	180	1	540	10 84 856 2	KIT DE FERRAMENTAS
MANGUEIRA HID. ESCOAMEN	7402658	2	1	541	93 58 137	MANGUEIRA HID. ESCOAMEN
MANGUEIRA HIDRAULICA 16X	10167654	5	2	237	96 91 056 01	RESERVATÓRIO DE ÓLEO
MANGUEIRAS AQUEC.E AR-	10063712	49	1	213	10 04 853 8	MOTOR - PECAS ANEXAS
MANGUEIRAS AQUEC.E AR-	10063712	50	1	213	10 04 853 8	MOTOR - PECAS ANEXAS

Designação	Artigo	Item	Quanti	Página	Módulo	Designação
MANGUEIRAS HIDRAULICAS	10063798	7060	1	343	10 35 862 6	INSTALACAO HIDRAULICA
MANTA DE ISOLAMENTO ACÚ	10051825	6	1	459	10 06 423 5	PORTA LATERAL DIREITA
MANTA DE ISOLAMENTO ACÚ	10051826	7	1	459	10 06 423 5	PORTA LATERAL DIREITA
MANTA DE ISOLAMENTO ACÚ	10051826	7	1	460	10 49 856 6	PORTA LATERAL DIREITA
MANTA DE ISOLAMENTO ACÚ	10051839	3	3	456	10 05 183 8	CAPO DIREITO
MANTA DE ISOLAMENTO ACÚ	10051840	6	1	456	10 05 183 8	CAPO DIREITO
MANTA DE ISOLAMENTO ACÚ	10051841	7	1	456	10 05 183 8	CAPO DIREITO
MANTA DE ISOLAMENTO ACÚ	10058253	4	1	453	10 05 816 9	CAPOTA DO MOTOR
MANTA DE ISOLAMENTO ACÚ	10058254	5	1	453	10 05 816 9	CAPOTA DO MOTOR
MANTA DE ISOLAMENTO ACÚ	10058255	3	2	454	10 05 823 4	DEFLETOR
MANTA DE ISOLAMENTO ACÚ	10059636	3	6	458	10 05 963 3	DEFLETOR
MANTA DE ISOLAMENTO ACÚ	10059643	5	1	457	10 35 822 9	PORTA LATERAL ESQUERDA
MANTA DE ISOLAMENTO ACÚ	10059644	6	1	457	10 35 822 9	PORTA LATERAL ESQUERDA
MANTA DE ISOLAMENTO ACÚ	10064359	25	1	470	10 35 866 0	TAMPAS INFERIORES
MANTA DE ISOLAMENTO ACÚ	10064366	4	1	455	10 06 436 0	CAPO DO RADIADOR
MANTA DE ISOLAMENTO ACÚ	10064412	5	1	459	10 06 423 5	PORTA LATERAL DIREITA
MANTA DE ISOLAMENTO ACÚ	10065195	5	1	466	10 35 823 0	PORTA LATERAL DIANTEIRA
MANTA DE ISOLAMENTO ACÚ	10065764	10	1	465	10 06 576 2	DIVISÓRIA CENTRAL
MANTA DE ISOLAMENTO ACÚ	10070338	5	1	461	10 07 033 5	TAMPA CENTRAL
MANTA DE ISOLAMENTO ACÚ	10071145	20	1	464	10 08 276 3	TAMPA
MANTA DE ISOLAMENTO ACÚ	10071146	40	1	463	10 35 826 4	CAIXA DE FERRAMENTAS
MANTA DE ISOLAMENTO ACÚ	10094702	5	1	459	10 06 423 5	PORTA LATERAL DIREITA
MANTA DE ISOLAMENTO ACÚ	10094703	6	1	459	10 06 423 5	PORTA LATERAL DIREITA
MANTA DE ISOLAMENTO ACÚ	10094745	3	1	455	10 06 436 0	CAPO DO RADIADOR
MANTA DE ISOLAMENTO ACÚ	10388068	14	1	455	10 06 436 0	CAPO DO RADIADOR
MANTA DE ISOLAMENTO ACÚ	10388069	15	1	455	10 06 436 0	CAPO DO RADIADOR
MANTA DE ISOLAMENTO ACÚ	10400258	3	1	453	10 05 816 9	CAPOTA DO MOTOR
MANTA DE ISOLAMENTO ACÚ	10498646	5	1	460	10 49 856 6	PORTA LATERAL DIREITA
MANTA DE ISOLAMENTO ACÚ	10498647	6	1	460	10 49 856 6	PORTA LATERAL DIREITA
MANÍPULO	7370096	42	1	277	11 38 340 1	APOIO DE BRAÇO LADO DIRE
MANÍPULO	7370096	42	1	301	11 45 228 6	APOIO DE BRAÇO LADO DIRE
MANÍPULO	7370096	42	1	305	12 50 731 7	APOIO DE BRAÇO LADO DIRE
MARCO DA PORTA	7028842	110	1	484	70 28 769	PORTA DA CABINE DO OPERA
MARTELO DE PENA 1500	11162135	130	1	540	10 84 856 2	KIT DE FERRAMENTAS
MATERIAL DE SERVIÇO	10359648	9999	1	13	10 49 885 1	MÁQUINA BASE
MATERIAL VEDANTE	8622905	108	1	693	90 77 386	TOMADA PRÉ MONTADA
MATERIAL VEDANTE	8627609	123	1	216	90 80 194	KIT DE VEDAÇÃO
MATERIAL VEDANTE	8627609	112	1	574	12 83 245 4	CARTER DE ÓLEO
MATERIAL VEDANTE	8627609	123	1	821	10 11 909 3	KIT DE REP DO EIXO DE ACIO
MECANISMO DE ACIONAMENT	10008080	1	1	400	10 00 807 7	BOMBA
MECANISMO DE ACIONAMENT	10008095	1	1	156	10 00 808 0	MECANISMO DE ACIONAMENT
MECANISMO DE ACIONAMENT	10008405	1	1	207	10 00 843 3	MECANISMO DE ACIONAMENT
MECANISMO DE ACIONAMENT	10008433	1	1	208	56 19 045	MOTOR DE PISTÃO AXIAL
MECANISMO DE ACIONAMENT	10220427	1	1	399	11 49 189 4	MECANISMO DE ACIONAMENT
MECANISMO DE ACIONAMENT	10287725	1	1	173	10 29 787 5	MECANISMO DE ACIONAMENT
MECANISMO DE ACIONAMENT	10297875	1	1	400	10 00 807 7	BOMBA
MECANISMO DE ACIONAMENT	11491894	1	1	162	11 34 249 1	BOMBA DE PISTÃO AXIAL
MECANISMO DE ACIONAMEN	9073588	1	1	799	90 73 888	MOTOR HIDRÁULICO
MECANISMO DE GIRO	10061982	11	1	217	11 10 291 6	INSTALACAO MECANISMO GI
MECANISMO DE TRANSLAÇÃ	10836930	13	1	75	10 49 885 2	CARRO INFERIOR COMPLETO
MECANISMO DE TRANSLAÇÃ	11102968	13	1	75	10 49 885 2	CARRO INFERIOR COMPLETO
MECANISMO DE TRANSLAÇÃ	968744301	5	2	107	10 83 693 0	MECANISMO DE TRANSLAÇÃ
MECANISMO DE TRANSLAÇÃ	968744301	5	2	108	11 10 296 8	MECANISMO DE TRANSLAÇÃ
MEIA ABRAÇADEIRA	9877726	5	2	711	11 10 294 5	LANÇA MONOBLOCO 6.45M
MEIA ABRAÇADEIRA	9927398	11	4	711	11 10 294 5	LANÇA MONOBLOCO 6.45M
MEIA ABRAÇADEIRA AEHNL.DI	7367237	27	4	351	10 35 862 8	INSTALACAO HIDRAULICA
MEIA ABRAÇADEIRA AEHNL.DI	7365069	9	2	244	10 06 198 5	TUBO LUBRIFICAÇÃO - INSTA
MEIA ABRAÇADEIRA AEHNL.DI	7367236	54	4	345	10 35 862 3	INSTALACAO HDRAULICA
MEIA ABRAÇADEIRA AEHNL.DI	7367236	45	4	357	10 35 862 9	ARREFECIMENTO DE OLEO
MEIA ABRAÇADEIRA AEHNL.DI	7367236	15	6	358	10 35 862 4	INSTALACAO HIDRAULICA

Designação	Artigo	Item	Quanti	Página	Módulo	Designação
MEIA ABRAÇADEIRA AEHNL.DI	7029979	20	22	136	10 36 918 3	INSTALACAO DE COMBUSTIVE
MEIA ABRAÇADEIRA AEHNL.DI	7029979	52	2	213	10 04 853 8	MOTOR - PECAS ANEXAS
MEIA ABRAÇADEIRA AEHNL.DI	7029979	1	2	748	93 88 597	ABRAÇADEIRA DE MANGUEIR
MEIA ABRAÇADEIRA HRRL 4	7028742	41	2	753	11 10 291 2	MONTAGEM CILINDRO DE ELE
MEIA ABRAÇADEIRA LH 380-	10061872	9	2	711	11 10 294 5	LANÇA MONOBLOCO 6.45M
MEIA ABRAÇADEIRA PE-HD 50	10087053	20	1	344	10 35 862 3	INSTALACAO HDRAULICA
MEIA ABRAÇADEIRA d=11	10056981	44	4	247	12 84 952 6	LUBRIFICAÇÃO CENTRALIZAD
MEIA ABRAÇADEIRA d=15-19	10060190	3	2	423	10 35 863 6	BRAÇADEIRA DE TUBO
MEIA ABRAÇADEIRA d=15-19	10060195	5	2	423	10 35 863 6	BRAÇADEIRA DE TUBO
MEIO FLANGE	7373873	35	2	542	10 49 878 6	ESPELHO EXTERNO - INSTALA
MEIO FLANGE COM RELEVO	11490402	7	2	353	10 06 379 8	MANGUEIRAS HIDRAULICAS
MEIO FLANGE COM RELEVO	11490402	37	4	357	10 35 862 9	ARREFECIMENTO DE OLEO
MEIO FLANGE COM RELEVO	11490402	52	2	385	10 04 851 7	TANQUE HIDRAULICO INSTA
MEIO FLANGE COM RELEVO	11490402	52	2	387	10 35 863 4	TANQUE HIDRAULICO INSTA
MEIO FLANGE COM RELEVO	11647393	41	2	357	10 35 862 9	ARREFECIMENTO DE OLEO
MEIO FLANGE COM RELEVO	11647393	11	2	358	10 35 862 4	INSTALACAO HIDRAULICA
MEIO FLANGE COM RELEVO	11485638	4	16	121	10 40 412 9	INST.HIDR.CARRO INFERIOR
MEIO FLANGE COM RELEVO	11485638	6	4	344	10 35 862 3	INSTALACAO HDRAULICA
MEIO FLANGE COM RELEVO	11485638	25	6	350	10 35 862 7	INSTALAÇÃO HIDRÁULICA
MEIO FLANGE COM RELEVO	11485638	6	8	351	10 35 862 8	INSTALACAO HIDRAULICA
MEIO FLANGE COM RELEVO	11485638	24	8	351	10 35 862 8	INSTALACAO HIDRAULICA
MEIO FLANGE COM RELEVO	11485638	51	2	354	10 06 379 8	MANGUEIRAS HIDRAULICAS
MEIO FLANGE COM RELEVO	11485638	74	4	407	10 35 863 8	INSTALAÇÃO BLOCO DE VÁL
MEIO FLANGE COM RELEVO	11485638	10	6	420	10 35 863 7	TUBULACOES PRESSAO INS
MEIO FLANGE COM RELEVO	11485638	60	6	712	11 10 294 5	LANÇA MONOBLOCO 6.45M
MEIO FLANGE COM RELEVO	11485638	20	2	725	11 10 280 7	BRAÇO DA CAÇAMBA 2.10M
MEIO FLANGE COM RELEVO	11485638	11	8	752	11 10 291 2	MONTAGEM CILINDRO DE ELE
MEIO FLANGE COM RELEVO	11485638	13	2	758	10 35 857 3	CILINDRO HIDR. COM ACESS
MEIO FLANGE COM RELEVO	11485638	70	8	777	11 45 729 6	CILINDRO DE ELEVACAO DIRE
MEIO FLANGE COM RELEVO	11485638	70	8	780	11 45 729 7	CILINDRO DE ELEVACAO ESQ
MEIO FLANGE COM RELEVO S	11485639	8	4	344	10 35 862 3	INSTALACAO HDRAULICA
MEIO FLANGE COM RELEVO S	11485639	51	4	345	10 35 862 3	INSTALACAO HDRAULICA
MEIO FLANGE COM RELEVO S	11485639	20	6	420	10 35 863 7	TUBULACOES PRESSAO INS
MEIO FLANGE COM RELEVO S	11485639	61	18	712	11 10 294 5	LANÇA MONOBLOCO 6.45M
MEIO FLANGE COM RELEVO S	11485639	17	2	725	11 10 280 7	BRAÇO DA CAÇAMBA 2.10M
MEIO FLANGE COM RELEVO S	11485639	13	2	759	10 85 361 0	CILINDRO HIDR. COM ACESS
MEIO FLANGE COM RELEVO	11485642	4	4	356	10 35 862 9	ARREFECIMENTO DE OLEO
MEIO FLANGE COM RELEVO	11485645	11	2	353	10 06 379 8	MANGUEIRAS HIDRAULICAS
MEIO FLANGE COM RELEVO	11490403	63	2	145	10 04 853 9	INSTALACAO BOMBA E EMBR
MEIO FLANGE COM RELEVO	11485643	31	2	358	10 35 862 4	INSTALACAO HIDRAULICA
MEIO FLANGE COM RELEVO	11485637	20	6	350	10 35 862 7	INSTALAÇÃO HIDRÁULICA
MEIO FLANGE COM RELEVO	11485637	10	8	351	10 35 862 8	INSTALACAO HIDRAULICA
MEIO FLANGE COM RELEVO	11485637	71	4	359	10 35 862 4	INSTALACAO HIDRAULICA
MEIO FLANGE COM RELEVO	11485637	100	4	408	10 35 863 8	INSTALAÇÃO BLOCO DE VÁL
MEIO FLANGE COM RELEVO	11485637	15	4	420	10 35 863 7	TUBULACOES PRESSAO INS
MEIO FLANGE COM RELEVO	11485637	75	2	777	11 45 729 6	CILINDRO DE ELEVACAO DIRE
MEIO FLANGE COM RELEVO	11485637	75	2	780	11 45 729 7	CILINDRO DE ELEVACAO ESQ
MEIO FLANGE d=30--	7373874	22	6	711	11 10 294 5	LANÇA MONOBLOCO 6.45M
MEIO FLANGE d=30--	7373874	4	2	758	10 35 857 3	CILINDRO HIDR. COM ACESS
MEIO FLANGE d=30--	7373874	31	4	775	11 45 729 6	CILINDRO DE ELEVACAO DIRE
MEIO FLANGE d=30--	7373874	31	4	778	11 45 729 7	CILINDRO DE ELEVACAO ESQ
MEIO FLANGE d=30-38	7373978	10	4	711	11 10 294 5	LANÇA MONOBLOCO 6.45M
MEIO FLANGE d=38--	7373875	19	6	711	11 10 294 5	LANÇA MONOBLOCO 6.45M
MEIO FLANGE d=38--	7373875	6	2	759	10 85 361 0	CILINDRO HIDR. COM ACESS
MODIF. COMPONENTES ELÉT	10841184	121	1	7	.	
MODULO COMANDO ESCAVA	11452277	85	1	279	11 38 340 1	APOIO DE BRAÇO LADO DIRE
MODULO COMANDO ESCAVA	11452277	85	1	302	11 45 228 6	APOIO DE BRAÇO LADO DIRE
MODULO COMANDO ESCAVA	11452277	85	1	306	12 50 731 7	APOIO DE BRAÇO LADO DIRE
MODULO DA CHAVE	7371141	135	1	281	11 38 340 1	APOIO DE BRAÇO LADO DIRE
MODULO DA CHAVE	7371141	135	1	304	11 45 228 6	APOIO DE BRAÇO LADO DIRE

Designação	Artigo	Item	Quanti	Página	Módulo	Designação
MODULO DA CHAVE	7371141	135	1	307	12 50 731 7	APOIO DE BRAÇO LADO DIRE
MODULO ELETRÔNICO LIDAT/	10889017	20	1	785	10 82 562 1	JC LEVANTAMENTO DADOS-T
MOLA	10008430	7	1	206	10 00 840 5	MECANISMO DE ACIONAMENT
MOLA	10220706	7	1	175	11 82 151 9	FILTRO
MOLA	10287730	7	1	171	10 28 772 5	MECANISMO DE ACIONAMENT
MOLA	7028835	390	1	485	70 28 769	PORTA DA CABINE DO OPERA
MOLA	7028901	340	1	504	10 29 026 4	PEÇAS DE MONTAGEM
MOLA	7370835	7	1	157	10 00 809 5	MECANISMO DE ACIONAMENT
MOLA A GÁS	10037196	20	1	462	10 35 826 4	CAIXA DE FERRAMENTAS
MOLA A GÁS	10037207	15	1	545	10 37 464 5	TAMPA
MOLA A GÁS	10037209	30	2	446	10 35 865 5	REVESTIMENTO
MOLA A GÁS	10037209	90	1	447	10 35 865 5	REVESTIMENTO
MOLA A GÁS	7372354	17	1	297	73 73 807	ALAVANCA DE SEGURANCA
MOLA DE PRESSÃO	10008087	10	1	400	10 00 807 7	BOMBA
MOLA DE PRESSÃO	10216715	29	1	402	10 22 042 7	MECANISMO DE ACIONAMENT
MOLA DE PRESSÃO	10216810	5	1	174	11 82 151 3	KIT DE VEDACAO DA VALVUL
MOLA DE PRESSÃO	10220547	9	2	172	10 29 197 5	PISTÃO DE AJUSTAMENTO
MOLA DE PRESSÃO	10220548	10	2	172	10 29 197 5	PISTÃO DE AJUSTAMENTO
MOLA DE PRESSÃO	10220550	26	2	172	10 29 197 5	PISTÃO DE AJUSTAMENTO
MOLA DE PRESSÃO	10220821	5	1	169	10 22 081 6	VÁLVULA DE PARTIDA FRIA
MOLA DE PRESSÃO	11261514	7	1	168	10 22 063 5	VALVULA INTERRUPTORA
MOLA DE PRESSÃO	7028171	5	2	177	70 28 075	UNIDADE DE CONTROLE
MOLA DE PRESSÃO	7028177	11	2	177	70 28 075	UNIDADE DE CONTROLE
MOLA DE PRESSÃO	7028302	40	1	374	70 28 300	VÁLVULA LIMITADORA DE PR
MOLA DE PRESSÃO	7028814	270	1	482	70 28 807	TRAVA DIREITA
MOLA DE PRESSÃO	7028814	270	1	483	70 28 808	TRAVA ESQUERDA
MOLA DE PRESSÃO	7369779	53	6	425	10 11 386 0	BLOCO DE COMANDO
MOLA DE PRESSÃO	7369780	55	2	425	10 11 386 0	BLOCO DE COMANDO
MOLA DE PRESSÃO	7610100	61	20	110	96 87 443 01	MECANISMO DE TRANSLAÇÃ
MOLA DE PRESSÃO	7610100	61	20	118	94 43 029 03	KIT DE REPARO DO FREIO
MOLA DE PRESSÃO	7610101	62	20	110	96 87 443 01	MECANISMO DE TRANSLAÇÃ
MOLA DE PRESSÃO	7610101	62	20	118	94 43 029 03	KIT DE REPARO DO FREIO
MOLA DE PRESSÃO	7610107	6	23	228	93 28 018 01	FREIO
MOLA DE PRESSÃO	7610108	7	23	228	93 28 018 01	FREIO
MOLA DE PRESSÃO 0,8X6,8X2	7015994	220	1	98	12 23 362 5	KIT DE PEÇAS DE REPOSIÇÃ
MOLA DE PRESSÃO 0,8X6,8X2	7015994	220	2	112	10 00 201 1	VALVULA DE FREIO
MOLA DE PRESSÃO 0,8X6,8X2	7015994	2	1	434	50 06 719	VÁLVULA DE RETORNO
MOLA DE PRESSÃO 0,8X6,8X2	7015994	3	1	435	50 06 720	VÁLVULA DE RETORNO
MOLA DE PRESSÃO 1,1X6,5X3	10355861	25	4	807	10 11 856 1	MANETE DE COMANDO VG6-8
MOLA DE PRESSÃO 1,1X6,5X3	10355861	25	4	808	11 37 560 6	MANETE DE COMANDO VG6-8
MOLA DE PRESSÃO 1,25X11,5	9265521	28	4	807	10 11 856 1	MANETE DE COMANDO VG6-8
MOLA DE PRESSÃO 1,25X11,5	9265521	28	4	808	11 37 560 6	MANETE DE COMANDO VG6-8
MOLA DE PRESSÃO 1,30X5,2	7382188	30	22	180	90 72 998	KIT REPARO ESF.+PLACA RET
MOLA DE PRESSÃO 1,30X5,2	7382188	30	21	231	90 73 380	KIT REPARO ESF.+PLACA RET
MOLA DE PRESSÃO 1,30X5,2	7382188	30	21	234	90 74 125	KIT DE REPARO NG 090
MOLA DE PRESSÃO 1,30X5,2	7382188	30	22	823	90 74 122	KIT DE REPARO NG 100
MOLA DE PRESSÃO 1,30X5,5	7382167	31	24	190	98 89 983	KIT DE REPARO NG 140 REC
MOLA DE PRESSÃO 1,30X5,5	7382167	31	24	191	98 89 984	KIT DE REPARO NG 140
MOLA DE PRESSÃO 1,30X5,5	7382167	30	24	192	98 89 988	KIT REPARO ESF.+PLACA RET
MOLA DE PRESSÃO 1,30X6,1	9268054	25	2	323	90 79 258	MANETE DE COMANDO VG7 2-
MOLA DE PRESSÃO 1,30X7,8	9266063	13	1	818	98 82 832	VÁLVULA DE COMANDO
MOLA DE PRESSÃO 1,40X6,30	10112524	25	2	742	90 79 264	KIT DE MODIFICAÇÃO VG7-2/3
MOLA DE PRESSÃO 1,50X20,0	9265266	15	1	766	92 65 991	VÁLVULA REGULADORA DE FL
MOLA DE PRESSÃO 1,8X12,2	7366885	13	1	431	10 33 073 6	VÁLVULA DE COMUT.DE MOV
MOLA DE PRESSÃO 2,00X10,8	7381807	26	2	323	90 79 258	MANETE DE COMANDO VG7 2-
MOLA DE PRESSÃO 2,00X10,8	7381807	26	2	742	90 79 264	KIT DE MODIFICAÇÃO VG7-2/3
MOLA DE PRESSÃO 2,10X17,8	9886756	21	1	613	90 73 507	RADIADOR DE OLEO PRE-M
MOLA DE PRESSÃO 2,25X18X6	9145973	12	1	564	90 75 134	VALVULA DE REGULAGEM FI
MOLA DE PRESSÃO 2,5X16X6	10120929	12	1	563	10 11 795 1	VALVULA DE REGULAGEM FI
MOLA DE PRESSÃO 3,40X16,6	7381302	10	1	618	90 72 781	BOMBA DE ÓLEO DE LUBRIFI

Designação	Artigo	Item	Quanti	Página	Módulo	Designação
MOLA DE PRESSÃO 3,60X28,4	7381763	15	1	116	98 82 760	REGULADOR NG 100
MOLA DE PRESSÃO 3,60X28,4	7381763	15	1	810	11 38 131 3	REGULADOR NG 100
MOLA DE PRESSÃO 4,60X28,4	9074481	9	4	591	10 14 155 4	CABEÇOTE - PRÉ MONTADO
MOLA DE PRESSÃO 4,60X28,4	9074481	9	4	597	10 11 942 7	CABEÇOTE - PRÉ MONTADO
MOLA DE PRESSÃO 4,60X28,4	9074481	9	4	598	10 12 036 4	CABEÇOTE - PRÉ MONTADO
MOLA DE PRESSÃO 5X42,4X12	7004020	51	1	432	73 69 779	MOLA DE PRESSÃO
MOLA DE PRESSÃO 6,3X25X6	7369476	170	1	112	10 00 201 1	VALVULA DE FREIO
MOLA DE PRESSÃO 6,5X28,1	7002884	50	1	432	73 69 779	MOLA DE PRESSÃO
MOLA DE TRAÇÃO	7617520	51	2	289	10 28 999 3	SISTEMA AMORTECIMENTO
MOLA ENCAIXE PRÉVIO	7024629	25	1	369	10 02 191 5	VÁLVULA SOLENÓIDE DRUC
MOLA ENCAIXE PRÉVIO	7024629	25	1	370	10 28 046 1	VÁLVULA SOLENÓIDE
MOLA PNEUMÁTICA	10492981	5	1	287	11 10 016 7	SUSPENSAO
MOLDURA	10300991	1	1	199	10 21 851 3	RADIADOR COMBINADO
MOLDURA	10300991	1	1	202	11 69 472 6	RADIADOR COMBINADO
MOLDURA	7028782	600	1	486	70 28 842	MARCO DA PORTA
MOLDURA	7028804	310	1	481	70 28 759	PÁRA-BRISA SUPERIOR
MOLDURA	7029419	510	1	487	70 28 831	JANELA DE CORRER
MONT DO PRÉ FILTRO DE CO	10116562	200	1	551	10 11 714 5	MOTOR DIESEL D936 L A6 190
MONT.ESTRUTURA TRASEIRA	10498564	60	1	793	10 49 866 6	FILTRO DE AR - INSTALAÇÃO
MONTAGEM CILINDRO DE ELE	11102912	2	1	750	11 10 291 1	CILINDRO DE ELEVACAO
MONTAGEM DO CABEÇOTE D	9079850	80	6	558	10 11 682 5	MOTOR BÁSICO D936 L HIGH 3
MONTAGEM SENSOR DE VEL	9885618	22	1	674	90 76 551	SENSOR DE CONTROLE DO
MOTOR - PECAS ANEXAS	10048538	590	1	132	10 35 862 2	INSTALAÇÃO DO MOTOR
MOTOR BÁSICO D936 L HIGH 3	10116825	1	1	549	10 11 714 5	MOTOR DIESEL D936 L A6 190
MOTOR DE CORRENTE CONTI	10014691	2	1	249	10 22 844 3	BOMBA DE LUBRIFICACAO
MOTOR DE PARTIDA	11371669	1	1	669	90 78 384	MOTOR DE PARTIDA
MOTOR DE PARTIDA	9078384	450	1	554	10 11 714 5	MOTOR DIESEL D936 L A6 190
MOTOR DE PISTÃO AXIAL	5619045	5	1	205	10 84 460 3	VENTILADOR - INSTALACAO
MOTOR DE PISTÃO AXIAL	5619045	5	1	205	10 84 460 3	VENTILADOR - INSTALACAO
MOTOR DIESEL D936 L A6 190	10117145	10	1	132	10 35 862 2	INSTALAÇÃO DO MOTOR
MOTOR DO LIMPADOR	10290398	530	1	496	10 29 036 3	KIT DO MOTOR DO LIMPADOR
MOTOR DO LIMPADOR	10290398	530	1	497	70 28 884	KIT DO MOTOR DO LIMPADOR
MOTOR HIDRÁULICO	9073888	10	2	107	10 83 693 0	MECANISMO DE TRANSLAÇÃ
MOTOR HIDRÁULICO	9073888	10	2	108	11 10 296 8	MECANISMO DE TRANSLAÇÃ
MOTOR HIDRÁULICO	9074075	13	1	219	10 06 198 2	MECANISMO DE GIRO
MÁQUINA BASE	10498851	10	1	7	.	
MÓDULO	10287118	2	1	296	98 74 988	PLACAS - INSTALAÇÃO
MÓDULO ELETRÔNICO	11459334	20	1	785	10 82 562 1	JC LEVANTAMENTO DADOS-T
MÓDULOS ELETRÔNICOS	10687206	10	1	789	11 45 933 4	MÓDULO ELETRÔNICO
NIPLE	4782008	92	1	137	10 49 819 9	FILTRO DE AR - INSTALAÇÃO
NIPLE	4900169	94	1	137	10 49 819 9	FILTRO DE AR - INSTALAÇÃO
NIPLE	7028868	630	1	502	70 28 866	BRACO DO LIMPADOR
NIPLE DE LUBRIFICAÇÃO	10498874	70	2	76	10 49 885 2	CARRO INFERIOR COMPLETO
NIPLE DE LUBRIFICAÇÃO AE	10005440	19	2	545	10 37 464 5	TAMPA
NIPLE DE LUBRIFICAÇÃO AE	10005440	16	5	716	11 10 283 6	KIT MONOBLOCO 6.45M
NIPLE DE LUBRIFICAÇÃO AE	10005440	33	1	722	10 82 841 3	LUBRIFICAÇÃO CENTRALIZAD
NIPLE DE LUBRIFICAÇÃO AE	10005440	16	13	727	11 10 281 7	KIT DE ATUALIZAÇÃO 2.10M
NIPLE DE LUBRIFICAÇÃO AE	10005440	31	5	731	10 39 639 6	LUBRIFICAÇÃO CENTRALIZAD
NIPLE DE LUBRIFICAÇÃO AE	10005440	30	4	739	10 49 877 7	BLOCO DO MANCAL
NIPLE DE LUBRIFICAÇÃO AE	10005440	14	6	756	11 10 281 8	KIT MÁQUINA BASE
NIPLE DE LUBRIFICAÇÃO TR/	11114605	2	1	96	10 49 887 4	NIPLE DE LUBRIFICAÇÃO
NIPLE DE MANGUEIRA 11SM	10115608	2	1	658	10 11 550 3	PURGAMENTO DA ÁGUA REF
NIPLE DE MANGUEIRA DN13	10115523	1	1	658	10 11 550 3	PURGAMENTO DA ÁGUA REF
NIPLE DE MANGUEIRA DN23,7	9140351	8	1	566	10 11 916 7	CARCAÇA MANIVELA PURGAM
NIPLE DE MANGUEIRA DN23,7	9140351	21	1	569	10 11 832 9	KIT DE REPARO DA TUBULAÇ
NIPLE DE MANGUEIRA DN23,7	9140351	26	1	665	90 80 736	KIT DO TURBO COMPRESSOR
NIPLE DE MANGUEIRA DN25	9274720	10	2	567	90 79 021	CARCAÇA MANIVELA PURGAM
NORMA DE MONTAGEM	12924708	841	1	192	98 89 988	KIT REPARO ESF.+PLACA RET
NORMA DE MONTAGEM	12925891	842	1	180	90 72 998	KIT REPARO ESF.+PLACA RET
NORMA DE MONTAGEM	12925891	842	1	231	90 73 380	KIT REPARO ESF.+PLACA RET

Designação	Artigo	Item	Quanti	Página	Módulo	Designação
OLEO DE MOTOR LIEBHERR L	10356797	110	1	18	90 70 361	ÓLEO DE MOTOR
OLEO DE MOTOR LIEBHERR L	10326110	1000	1	27	10 35 679 7	OLEO DE MOTOR LIEBHERR L
OLEO DE MOTOR LIEBHERR L	10326112	20	1	27	10 35 679 7	OLEO DE MOTOR LIEBHERR L
OLEO DE MOTOR LIEBHERR	10326111	210	1	27	10 35 679 7	OLEO DE MOTOR LIEBHERR L
OLEO DE MOTOR LIEBHERR	10326113	5	1	27	10 35 679 7	OLEO DE MOTOR LIEBHERR L
OLEO DE MOTOR LIEBHERR	11081522	100	1	18	90 70 361	ÓLEO DE MOTOR
OLEO DE MOTOR LIEBHERR	11066032	1045	1	41	11 08 152 2	OLEO DE MOTOR LIEBHERR
OLEO DE MOTOR LIEBHERR	11066030	20	1	41	11 08 152 2	OLEO DE MOTOR LIEBHERR
OLEO DE MOTOR LIEBHERR	11066031	209	1	41	11 08 152 2	OLEO DE MOTOR LIEBHERR
OLEO DE MOTOR LIEBHERR L	11066029	5	1	41	11 08 152 2	OLEO DE MOTOR LIEBHERR
OLEO DE MOTOR LIEBHERR/1	10356793	20	1	18	90 70 361	ÓLEO DE MOTOR
OLEO DE MOTOR LIEBHERR/1	10286279	1000	1	26	10 35 679 3	OLEO DE MOTOR LIEBHERR/1
OLEO DE MOTOR LIEBHERR/1	10330239	20	1	26	10 35 679 3	OLEO DE MOTOR LIEBHERR/1
OLEO DE MOTOR LIEBHERR/	10330246	210	1	26	10 35 679 3	OLEO DE MOTOR LIEBHERR/1
OLEO DE MOTOR LIEBHERR/	10290506	5	1	26	10 35 679 3	OLEO DE MOTOR LIEBHERR/1
OLEO DE MOTOR LIEBHERR/	10425711	10	1	18	90 70 361	ÓLEO DE MOTOR
OLEO DE MOTOR LIEBHERR/	10425719	1000	1	39	10 42 571 1	OLEO DE MOTOR LIEBHERR/
OLEO DE MOTOR LIEBHERR/	10425713	20	1	39	10 42 571 1	OLEO DE MOTOR LIEBHERR/
OLEO DE MOTOR LIEBHERR/5	10425715	210	1	39	10 42 571 1	OLEO DE MOTOR LIEBHERR/
OLEO DE MOTOR LIEBHERR/5	10425712	5	1	39	10 42 571 1	OLEO DE MOTOR LIEBHERR/
OLEO PARA CAMBIO E EIXOS	9070364	40	1	15	90 66 460	
OLEO PARA CAMBIO E EIXOS	10285702	210	1	32	10 35 682 9	OLEO PARA CAMBIO E EIXOS
OLEO PARA CAMBIO E EIXOS	10286280	1000	1	32	10 35 682 9	OLEO PARA CAMBIO E EIXOS
OLEO PARA CAMBIO E EIXOS	10330295	5	1	32	10 35 682 9	OLEO PARA CAMBIO E EIXOS
OLEO PARA CAMBIO E EIXOS	10330296	20	1	32	10 35 682 9	OLEO PARA CAMBIO E EIXOS
OLEO PARA CAMBIO E EIXOS	10356829	10	1	21	90 70 364	OLEO PARA CAMBIO E EIXOS
PACOTE DE MOLAS COMPLET	11004103	2	1	92	10 65 167 8	RODA GUIA - INSTALAÇÃO D7
PACOTE DE MOLAS COMPLET	11004103	4	1	93	12 21 972 1	RODA GUIA - INSTALAÇÃO D7
PAINEL DE OPERAÇÃO	10493087	70	1	329	11 00 054 6	CF VAPORIZADOR
PAINEL DE OPERAÇÃO	10493088	1	1	334	10 49 308 7	PAINEL DE OPERAÇÃO
PAINEL DE UNIÃO DE MASSA	9080911	4	1	647	90 78 314	FLANGE DE AQUECIMENTO
PALHETA DO LIMPADOR 800m	7028869	600	1	499	10 29 035 7	LIMPADOR DE PÁRA-BRISA
PALHETA DO LIMPADOR 800m	7028869	600	1	500	70 29 426	LIMPADOR DE PÁRA-BRISA
PARAFUSO	7024447	360	8	509	10 29 035 2	REVESTIMENTO INTERNO
PARAFUSO	7024447	360	8	511	10 48 808 8	REVESTIMENTO INTERNO
PARAFUSO	7028181	18	2	177	70 28 075	UNIDADE DE CONTROLE
PARAFUSO	7370888	9	4	294	10 16 576 6	CONSOLE DE COMANDO
PARAFUSO	7372158	11	2	310	56 18 923	CONSOLE DE COMANDO DIRE
PARAFUSO 22X6	10017926	160	2	299	99 68 625	MANETE - LH ESQUERDA
PARAFUSO 22X6	10017926	160	2	314	99 68 611	MANETE DIREITA
PARAFUSO AUTO-ATARRAXA	12226086	6	2	516	99 41 040	FAROL CPL - INSTALAÇÃO
PARAFUSO CILÍNDRICO	10297187	42	1	151	10 29 154 4	BOMBA DE ENGRENAGENS
PARAFUSO CILÍNDRICO M10	11004099	5	3	91	10 65 167 7	ROLETE SUPERIOR D7
PARAFUSO CILÍNDRICO M10	11004100	4	3	91	10 65 167 7	ROLETE SUPERIOR D7
PARAFUSO CILÍNDRICO M16	9080925	4	10	683	10 11 586 2	VOLANTE MONTAGEM EXTER
PARAFUSO DA BIELA M14X1,5	9174981	1	2	585	90 76 459	BIELA
PARAFUSO DA BIELA M14X1,5	9174981	2	2	587	11 34 805 4	BIELA
PARAFUSO DE AJUSTE	10220647	2	1	174	11 82 151 3	KIT DE VEDACAO DA VALVUL
PARAFUSO DE AJUSTE	10220665	9	1	168	10 22 063 5	VALVULA INTERRUPTORA
PARAFUSO DE AJUSTE M10X	10012225	4	1	600	12 40 205 3	BALANCIM PRE-MONTAGEM
PARAFUSO DE AJUSTE M12X	10117949	5	1	563	10 11 795 1	VALVULA DE REGULAGEM FI
PARAFUSO DE AJUSTE M12X	9075642	5	1	564	90 75 134	VALVULA DE REGULAGEM FI
PARAFUSO DE AJUSTE PRÉ-	10004419	4	1	605	90 74 507	BALANCIM PRE-MONTAGEM
PARAFUSO DE DRENAGEM D	5004624	26	1	8	11 10 260 2	TANQUE COMBUSTIVEL REPO
PARAFUSO DE DRENAGEM D	5004624	80	1	159	10 11 886 0	REDUTOR DISTRIBUICAO BO
PARAFUSO DE DRENAGEM D	5004624	21	1	219	10 06 198 2	MECANISMO DE GIRO
PARAFUSO DE DRENAGEM D	5004624	40	2	394	10 05 182 7	TANQUE HIDRÁULICO
PARAFUSO DE DRENAGEM D	5004624	40	2	395	10 35 818 3	TANQUE HIDRÁULICO
PARAFUSO DE DRENAGEM D	5004624	42	1	531	11 10 262 1	TANQUE COMBUSTIVEL INSTA
PARAFUSO DE DRENAGEM D	5004624	36	1	534	10 06 759 6	TANQUE DE COMBUSTÍVEL

Designação	Artigo	Item	Quanti	Página	Módulo	Designação
PARAFUSO DE DRENAGEM D	5004624	36	1	535	10 49 835 9	TANQUE DE COMBUSTÍVEL
PARAFUSO DE DRENAGEM D	5004624	8	1	574	12 83 245 4	CARTER DE ÓLEO
PARAFUSO DE ESTRANGULA	7615603	14	2	177	70 28 075	UNIDADE DE CONTROLE
PARAFUSO DE ESTRANGULA	7615604	16	2	177	70 28 075	UNIDADE DE CONTROLE
PARAFUSO DE ESTRANGUL	10297782	13	1	426	10 28 535 8	VÁLVULA DE RETORNO
PARAFUSO DE ESTRANGUL	10297782	14	1	426	10 28 535 8	VÁLVULA DE RETORNO
PARAFUSO DE ESTRANGUL	10297782	13	1	427	10 29 999 7	VÁLVULA DE RETORNO
PARAFUSO DE FECHAMENTO	10001103	9	1	400	10 00 807 7	BOMBA
PARAFUSO DE FECHAMENTO	10008093	30	2	400	10 00 807 7	BOMBA
PARAFUSO DE FECHAMENTO	10017569	8	2	79	12 22 100 1	RODA GUIA
PARAFUSO DE FECHAMENTO	10017569	8	2	94	10 00 454 6	RODA GUIA B6
PARAFUSO DE FECHAMENTO	10097983	2	1	89	11 60 010 7	ROLAMENTO DE ESFERA D7
PARAFUSO DE FECHAMENTO	10220646	1	1	174	11 82 151 3	KIT DE VEDACAO DA VALVUL
PARAFUSO DE FECHAMENTO	10220659	1	1	168	10 22 063 5	VALVULA INTERRUPTORA
PARAFUSO DE FECHAMENTO	10333763	81	1	421	10 30 079 8	VALVULA DE RETENCAO
PARAFUSO DE FECHAMENTO	10489176	7	1	91	10 65 167 7	ROLETE SUPERIOR D7
PARAFUSO DE FECHAMENTO	602514201	50	4	520	99 47 695	INSTALAÇÃO ELÉTRICA E50
PARAFUSO DE FECHAMENTO	7015996	1	1	435	50 06 720	VÁLVULA DE RETORNO
PARAFUSO DE FECHAMENTO	7028172	6	2	177	70 28 075	UNIDADE DE CONTROLE
PARAFUSO DE FECHAMENTO	7366888	7	2	431	10 33 073 6	VÁLVULA DE COMUT.DE MOV
PARAFUSO DE FECHAMENTO	7368253	374	4	786	10 82 562 1	JC LEVANTAMENTO DADOS-T
PARAFUSO DE FECHAMENTO	7369481	250	1	98	12 23 362 5	KIT DE PEÇAS DE REPOSIÇÃ
PARAFUSO DE FECHAMENTO	7370843	30	1	208	56 19 045	MOTOR DE PISTÃO AXIAL
PARAFUSO DE FECHAMENTO	774378208	31	2	255	10 29 300 3	BLOCO DE DISTRIBUIÇÃO MX-
PARAFUSO DE FECHAMENTO	774378208	31	1	719	10 66 480 4	BLOCO DE DISTRIBUIÇÃO MX-
PARAFUSO DE FECHAMENTO	774378208	31	2	733	10 66 475 5	BLOCO DE DISTRIBUIÇÃO MX-
PARAFUSO DE FECHAMENTO	9265264	12	1	766	92 65 991	VÁLVULA REGULADORA DE FL
PARAFUSO DE FECHAMENTO	7371142	138	3	281	11 38 340 1	APOIO DE BRAÇO LADO DIRE
PARAFUSO DE FECHAMENTO	7371142	138	3	304	11 45 228 6	APOIO DE BRAÇO LADO DIRE
PARAFUSO DE FECHAMENTO	7371142	138	3	307	12 50 731 7	APOIO DE BRAÇO LADO DIRE
PARAFUSO DE FECHAMENTO	7002760	133	1	365	56 02 487	VÁLVULA LIMITADORA DE PR
PARAFUSO DE FECHAMENTO	7013032	370	2	421	10 30 079 8	VALVULA DE RETENCAO
PARAFUSO DE FECHAMENTO	7024958	93	2	425	10 11 386 0	BLOCO DE COMANDO
PARAFUSO DE FECHAMENTO	7361553	38	3	346	10 06 379 3	UNIDADE DE COMANDO DE O
PARAFUSO DE FECHAMENTO	7361553	387	1	413	10 35 863 8	INSTALAÇÃO BLOCO DE VÁL
PARAFUSO DE FECHAMENTO	7361553	487	1	414	10 35 863 8	INSTALAÇÃO BLOCO DE VÁL
PARAFUSO DE FECHAMENTO	7363717	23	1	8	11 10 260 2	TANQUE COMBUSTIVEL REPO
PARAFUSO DE FECHAMENTO	7363717	39	1	531	11 10 262 1	TANQUE COMBUSTIVEL INSTA
PARAFUSO DE FECHAMENTO	7363717	21	1	534	10 06 759 6	TANQUE DE COMBUSTÍVEL
PARAFUSO DE FECHAMENTO	7363717	21	1	535	10 49 835 9	TANQUE DE COMBUSTÍVEL
PARAFUSO DE FECHAMENTO	7370432	310	4	112	10 00 201 1	VALVULA DE FREIO
PARAFUSO DE FECHAMENTO	7362674	28	2	178	70 28 075	UNIDADE DE CONTROLE
PARAFUSO DE FECHAMENTO	7372626	32	2	162	11 34 249 1	BOMBA DE PISTÃO AXIAL
PARAFUSO DE FECHAMENTO	7372626	12	1	398	11 49 189 0	PLACA DE LIGAÇÃO
PARAFUSO DE FECHAMENTO	10100680	27	1	178	70 28 075	UNIDADE DE CONTROLE
PARAFUSO DE FECHAMENTO	7363178	27	1	178	70 28 075	UNIDADE DE CONTROLE
PARAFUSO DE FECHAMENTO	7372624	22	4	162	11 34 249 1	BOMBA DE PISTÃO AXIAL
PARAFUSO DE FECHAMENTO	7372624	35	2	398	11 49 189 0	PLACA DE LIGAÇÃO
PARAFUSO DE FECHAMENTO	9881233	21	1	820	90 78 788	KIT REPARO DA TAMPA REG
PARAFUSO DE FECHAMENTO	7363125	46	2	385	10 04 851 7	TANQUE HIDRAULICO INSTA
PARAFUSO DE FECHAMENTO	7363125	46	2	387	10 35 863 4	TANQUE HIDRAULICO INSTA
PARAFUSO DE FECHAMENTO	477511301	6	1	226	90 02 790 4	REDUTOR DE GIRO SAT 325/
PARAFUSO DE FECHAMENTO	7373203	390	1	421	10 30 079 8	VALVULA DE RETENCAO
PARAFUSO DE FECHAMENTO	10220419	48	1	162	11 34 249 1	BOMBA DE PISTÃO AXIAL
PARAFUSO DE FECHAMENTO	7361960	44	5	385	10 04 851 7	TANQUE HIDRAULICO INSTA
PARAFUSO DE FECHAMENTO	7361960	44	5	387	10 35 863 4	TANQUE HIDRAULICO INSTA
PARAFUSO DE FECHAMENTO	7361960	51	1	674	90 76 551	SENSOR DE CONTROLE DO
PARAFUSO DE FECHAMENTO	11835019	55	1	208	56 19 045	MOTOR DE PISTÃO AXIAL
PARAFUSO DE FECHAMENTO	10296854	14	1	427	10 29 999 7	VÁLVULA DE RETORNO
PARAFUSO DE FECHAMENTO	7361961	48	1	535	10 49 835 9	TANQUE DE COMBUSTÍVEL

Designação	Artigo	Item	Quanti	Página	Módulo	Designação
PARAFUSO DE FECHAMENTO	7020568	30	1	431	10 33 073 6	VÁLVULA DE COMUT.DE MOV
PARAFUSO DE FECHAMENTO	7362698	64	2	145	10 04 853 9	INSTALACAO BOMBA E EMBR
PARAFUSO DE FECHAMENTO	7362698	43	1	385	10 04 851 7	TANQUE HIDRAULICO INSTA
PARAFUSO DE FECHAMENTO	7362698	43	1	387	10 35 863 4	TANQUE HIDRAULICO INSTA
PARAFUSO DE FECHAMENTO	10296869	70	1	425	10 11 386 0	BLOCO DE COMANDO
PARAFUSO DE FECHAMENTO	12422288	14	2	810	11 38 131 3	REGULADOR NG 100
PARAFUSO DE FECHAMENTO	12422288	14	2	811	11 38 727 8	KIT REEQUIP.PARAFUSO VED
PARAFUSO DE FECHAMENTO	12422288	14	2	833	11 38 195 4	KIT DE VEDAÇÃO NG 100
PARAFUSO DE FECHAMENTO	9077172	3	1	563	10 11 795 1	VALVULA DE REGULAGEM FI
PARAFUSO DE FECHAMENTO	9077172	3	1	564	90 75 134	VALVULA DE REGULAGEM FI
PARAFUSO DE FECHAMENTO	7382204	14	3	570	90 79 480	SUPORTE DOS AGREGADOS
PARAFUSO DE FECHAMENTO	7382204	6	3	574	12 83 245 4	CARTER DE ÓLEO
PARAFUSO DE FECHAMENTO	7382204	23	2	613	90 73 507	RADIADOR DE OLEO PRE-M
PARAFUSO DE FECHAMENTO	7382204	6	1	658	10 11 550 3	PURGAMENTO DA ÁGUA REF
PARAFUSO DE FECHAMENTO	7382204	22	2	701	10 11 801 4	KIT DE VEDACAO
PARAFUSO DE FECHAMENTO	9275590	11	1	618	90 72 781	BOMBA DE ÓLEO DE LUBRIFI
PARAFUSO DE FECHAMENTO	7361329	42	1	385	10 04 851 7	TANQUE HIDRAULICO INSTA
PARAFUSO DE FECHAMENTO	7361329	42	1	387	10 35 863 4	TANQUE HIDRAULICO INSTA
PARAFUSO DE FECHAMENTO	10043136	15	1	570	90 79 480	SUPORTE DOS AGREGADOS
PARAFUSO DE FECHAMENTO	7366889	9	1	431	10 33 073 6	VÁLVULA DE COMUT.DE MOV
PARAFUSO DE FECHAMENTO	7363073	65	1	145	10 04 853 9	INSTALACAO BOMBA E EMBR
PARAFUSO DE FECHAMENTO	7363073	41	2	385	10 04 851 7	TANQUE HIDRAULICO INSTA
PARAFUSO DE FECHAMENTO	7363073	41	2	387	10 35 863 4	TANQUE HIDRAULICO INSTA
PARAFUSO DE FECHAMENTO	7363073	44	1	394	10 05 182 7	TANQUE HIDRÁULICO
PARAFUSO DE FECHAMENTO	7363073	44	1	395	10 35 818 3	TANQUE HIDRÁULICO
PARAFUSO DE FECHAMENTO	7369483	110	1	112	10 00 201 1	VALVULA DE FREIO
PARAFUSO DE FECHAMENTO	7021762	100	1	112	10 00 201 1	VALVULA DE FREIO
PARAFUSO DE FECHAMENTO	9274672	16	2	154	90 73 242	CARCAÇA DE CONEXÕES NG
PARAFUSO DE FECHAMENTO	7363177	27	1	8	11 10 260 2	TANQUE COMBUSTIVEL REPO
PARAFUSO DE FECHAMENTO	7363177	40	3	385	10 04 851 7	TANQUE HIDRAULICO INSTA
PARAFUSO DE FECHAMENTO	7363177	40	3	387	10 35 863 4	TANQUE HIDRAULICO INSTA
PARAFUSO DE FECHAMENTO	7363177	43	1	531	11 10 262 1	TANQUE COMBUSTIVEL INSTA
PARAFUSO DE FECHAMENTO	7363177	46	1	534	10 06 759 6	TANQUE DE COMBUSTÍVEL
PARAFUSO DE FECHAMENTO	7363177	46	1	535	10 49 835 9	TANQUE DE COMBUSTÍVEL
PARAFUSO DE FECHAMENTO	9268441	5	4	184	98 82 875	KIT DE VED DA VÁLVULA RE
PARAFUSO DE FECHAMENTO	9268441	7	2	816	90 73 786	PLACA DE LIGAÇÃO NG 100
PARAFUSO DE FECHAMENTO	9268441	7	4	833	11 38 195 4	KIT DE VEDAÇÃO NG 100
PARAFUSO DE FECHAMENTO	9881609	8	1	184	98 82 875	KIT DE VED DA VÁLVULA RE
PARAFUSO DE FECHAMENTO	10122499	20	4	807	10 11 856 1	MANETE DE COMANDO VG6-8
PARAFUSO DE FECHAMENTO	10122499	20	4	808	11 37 560 6	MANETE DE COMANDO VG6-8
PARAFUSO DE FECHAMENTO	7362689	26	1	162	11 34 249 1	BOMBA DE PISTÃO AXIAL
PARAFUSO DE FECHAMENTO	7371258	51	1	431	10 33 073 6	VÁLVULA DE COMUT.DE MOV
PARAFUSO DE FECHAMENTO	7027497	13	3	398	11 49 189 0	PLACA DE LIGAÇÃO
PARAFUSO DE FECHAMENTO	10137392	33	1	323	90 79 258	MANETE DE COMANDO VG7 2-
PARAFUSO DE FECHAMENTO	10137392	33	1	325	90 79 259	MANETE DE COMANDO VG7 2-
PARAFUSO DE FECHAMENTO	7001338	15	2	253	10 66 472 2	BLOCO DE DISTRIBUIÇÃO SX
PARAFUSO DE FECHAMENTO	10137389	22	1	230	90 74 075	MOTOR HIDRÁULICO
PARAFUSO DE FECHAMENTO	10137389	15	1	833	11 38 195 4	KIT DE VEDAÇÃO NG 100
PARAFUSO DE FECHAMENTO	7381638	12	1	680	10 11 611 4	CÁRTER VOLANTE MONT. EXT
PARAFUSO DE FECHAMENTO	7381638	8	1	698	90 80 504	PEÇAS DE FECHAMENTO
PARAFUSO DE FECHAMENTO	10137113	21	1	162	11 34 249 1	BOMBA DE PISTÃO AXIAL
PARAFUSO DE FECHAMENTO	7380566	6	3	560	12 82 483 7	CÁRTER COMPLETO COM CIL
PARAFUSO DE FECHAMENTO	7380566	2	1	572	12 83 230 4	TAMPA PRÉ MONTADA
PARAFUSO DE FECHAMENTO	7380566	2	1	573	12 83 230 5	TAMPA PRÉ MONTADA
PARAFUSO DE FECHAMENTO	7380566	11	1	642	10 11 707 3	TUBO DE ADMISSÃO DE AR
PARAFUSO DE FECHAMENTO	7380566	6	1	643	90 77 279	LUVA DE CONEXÃO MONTAGE
PARAFUSO DE FECHAMENTO	7380566	5	1	658	10 11 550 3	PURGAMENTO DA ÁGUA REF
PARAFUSO DE FECHAMENTO	7380566	50	1	674	90 76 551	SENSOR DE CONTROLE DO
PARAFUSO DE FECHAMENTO	7382203	5	2	560	12 82 483 7	CÁRTER COMPLETO COM CIL
PARAFUSO DE FECHAMENTO	7382203	8	1	631	10 12 580 1	FILTRO DE COMBUSTÍVEL

Designação	Artigo	Item	Quanti	Página	Módulo	Designação
PARAFUSO DE FECHAMENTO	7382203	47	2	634	10 11 628 5	TUBULAÇÃO DE COMBUSTÍVE
PARAFUSO DE FECHAMENTO	10137075	28	1	8	11 10 260 2	TANQUE COMBUSTIVEL REPO
PARAFUSO DE FECHAMENTO	10137075	420	1	112	10 00 201 1	VALVULA DE FREIO
PARAFUSO DE FECHAMENTO	10137075	44	1	532	11 10 262 1	TANQUE COMBUSTIVEL INSTA
PARAFUSO DE FECHAMENTO	10137075	48	1	534	10 06 759 6	TANQUE DE COMBUSTÍVEL
PARAFUSO DE FECHAMENTO	477510401	48	3	110	96 87 443 01	MECANISMO DE TRANSLAÇÃ
PARAFUSO DE FECHAMENTO	7380177	4	2	560	12 82 483 7	CÁRTER COMPLETO COM CIL
PARAFUSO DE FECHAMENTO	7380177	14	1	681	90 80 653	PEÇAS DE FECHAMENTO
PARAFUSO DE FECHAMENTO	10137108	29	1	154	90 73 242	CARCAÇA DE CONEXÕES NG
PARAFUSO DE FECHAMENTO	10137108	20	2	162	11 34 249 1	BOMBA DE PISTÃO AXIAL
PARAFUSO DE FECHAMENTO	10137108	40	1	827	90 77 464	CR FLANGE NG 125-140-150
PARAFUSO DE FECHAMENTO	7381457	10	1	662	90 79 889	CONEXÃO DE AQUECIMENTO
PARAFUSO DE FECHAMENTO	7381457	3	1	698	90 80 504	PEÇAS DE FECHAMENTO
PARAFUSO DE FECHAMENTO	10137121	24	1	162	11 34 249 1	BOMBA DE PISTÃO AXIAL
PARAFUSO DE FECHAMENTO	10137121	29	2	835	92 65 808	KIT DE VEDACAO DA BOMBA D
PARAFUSO DE FECHAMENTO	7382202	5	2	689	90 79 893	PEÇAS DE FECHAMENTO
PARAFUSO DE FECHAMENTO	7382202	23	2	701	10 11 801 4	KIT DE VEDACAO
PARAFUSO DE FIXACAO	10215970	286	4	510	10 48 808 8	REVESTIMENTO INTERNO
PARAFUSO DE IMPACTO M36X	9103255	170	1	540	10 84 856 2	KIT DE FERRAMENTAS
PARAFUSO DE RESPIRO	10101997	3	1	632	10 22 281 9	PRÉ-FILTRO COMBUST.COM
PARAFUSO DE RESPIRO	7009590	17	1	637	10 11 559 5	RETORNO DE OLEO VAZADO
PARAFUSO DE RESPIRO M6X	7361391	60	7	425	10 11 386 0	BLOCO DE COMANDO
PARAFUSO DODECAGONAL	12475399	4	3	665	90 80 736	KIT DO TURBO COMPRESSOR
PARAFUSO ESCAREADO M4X3	10014709	21	4	250	10 22 844 3	BOMBA DE LUBRIFICACAO
PARAFUSO ESCAREADO M5X	11067312	2	14	685	10 11 724 8	UNIDADE DE CONTROLE DO
PARAFUSO ESFERICO DE PR	9277556	18	2	116	98 82 760	REGULADOR NG 100
PARAFUSO ESFERICO DE PR	9277556	18	2	810	11 38 131 3	REGULADOR NG 100
PARAFUSO EXCÊNTRICO	10220418	46	1	162	11 34 249 1	BOMBA DE PISTÃO AXIAL
PARAFUSO FECH. DE FILETE	7012971	48	1	398	11 49 189 0	PLACA DE LIGAÇÃO
PARAFUSO FECH. DE FILETE	7022127	27	1	162	11 34 249 1	BOMBA DE PISTÃO AXIAL
PARAFUSO FECH. DE FILETE	7022127	26	14	177	70 28 075	UNIDADE DE CONTROLE
PARAFUSO FECH. DE FILETE	7022127	11	2	398	11 49 189 0	PLACA DE LIGAÇÃO
PARAFUSO FECH. DE FILETE	7022127	31	1	400	10 00 807 7	BOMBA
PARAFUSO FECH. DE FILETE	7618568	7	1	176	11 82 153 4	CABEÇOTE DO FILTRO
PARAFUSO FECH. DE FILETE	7618568	34	6	178	70 28 075	UNIDADE DE CONTROLE
PARAFUSO HEXAGONAL RE	10118786	10	6	584	10 11 617 5	VIRABREQUIM PEÇAS DE AC
PARAFUSO HEXAGONAL RED	10131573	3	6	590	90 79 850	MONTAGEM DO CABEÇOTE D
PARAFUSO HEXAGONAL RE	10131581	5	14	561	10 11 577 8	BLOCO DO MOTOR
PARAFUSO LIMITADOR M12X3	9265279	16	1	116	98 82 760	REGULADOR NG 100
PARAFUSO LIMITADOR M12X	9883344	16	1	810	11 38 131 3	REGULADOR NG 100
PARAFUSO M8X50X5 22H DAC	9078701	11	2	741	90 79 392	PLACA DE DEGRAU MONT. D
PARAFUSO OCO -2	9073678	5	1	562	90 73 795	ARREFECIMENTO DO PISTAO
PARAFUSO OCO 10-1	9080466	3	5	639	90 79 083	TUBULACAO ANEXO
PARAFUSO OCO 10-3	12210013	24	4	634	10 11 628 5	TUBULAÇÃO DE COMBUSTÍVE
PARAFUSO OCO 10-3	12210013	74	1	635	10 11 628 5	TUBULAÇÃO DE COMBUSTÍVE
PARAFUSO OCO 10-3	12210013	10	1	637	10 11 559 5	RETORNO DE OLEO VAZADO
PARAFUSO OCO 10-3	9078685	92	1	635	10 11 628 5	TUBULAÇÃO DE COMBUSTÍVE
PARAFUSO OCO 12-3	12210025	26	5	634	10 11 628 5	TUBULAÇÃO DE COMBUSTÍVE
PARAFUSO OCO 12-3	4980741	76	1	635	10 11 628 5	TUBULAÇÃO DE COMBUSTÍVE
PARAFUSO OCO 6-3	4079160	8	6	637	10 11 559 5	RETORNO DE OLEO VAZADO
PARAFUSO OCO 6-3	4079160	14	2	692	90 80 006	SAIDA AUXILIAR ANEXA
PARAFUSO OCO COM ESTR	7381925	28	2	634	10 11 628 5	TUBULAÇÃO DE COMBUSTÍVE
PARAFUSO OCO COM ESTR	7381925	78	1	635	10 11 628 5	TUBULAÇÃO DE COMBUSTÍVE
PARAFUSO OCO DUPLO 10X1	10115499	38	1	634	10 11 628 5	TUBULAÇÃO DE COMBUSTÍVE
PARAFUSO OCO DUPLO 6-6	10014864	9	1	637	10 11 559 5	RETORNO DE OLEO VAZADO
PARAFUSO PARA SAPATA M22	11214366	3	196	80	10 67 501 0	ESTEIRA 500mm
PARAFUSO PARA SAPATA M22	11214366	3	196	81	11 16 108 1	ESTEIRA 500mm
PARAFUSO PRISIONEIRO M1	9275003	20	8	181	90 74 893	KIT DE REPARO DA CARCAÇA
PARAFUSO SEXTAVADO EN 16	10299564	2	4	672	90 79 823	DISPOSITIVO TRANSP.MONT.E
PARAFUSO SEXTAVADO EN 16	10299587	8	12	570	90 79 480	SUPORTE DOS AGREGADOS

Designação	Artigo	Item	Quanti	Página	Módulo	Designação
PARAFUSO SEXTAVADO EN 16	11840297	10	3	574	12 83 245 4	CARTER DE ÓLEO
PARAFUSO SEXTAVADO EN 16	12207548	2	4	647	90 78 314	FLANGE DE AQUECIMENTO
PARAFUSO SEXTAVADO EN 1	12207553	11	1	571	90 79 487	CÁRTER DE ÓLEO
PARAFUSO SEXTAVADO EN 16	11656992	13	2	566	10 11 916 7	CARCAÇA MANIVELA PURGAM
PARAFUSO SEXTAVADO EN 16	11656992	13	1	567	90 79 021	CARCAÇA MANIVELA PURGAM
PARAFUSO SEXTAVADO EN 16	11656992	6	3	576	90 79 862	VARETA MEDIÇ.NÍVEL ÓLEO C
PARAFUSO SEXTAVADO EN 16	11656992	11	2	681	90 80 653	PEÇAS DE FECHAMENTO
PARAFUSO SEXTAVADO EN 16	11656992	35	2	687	10 11 799 7	CHICOTE DE CABOS ACESSÓ
PARAFUSO SEXTAVADO EN 16	11827987	9	26	571	90 79 487	CÁRTER DE ÓLEO
PARAFUSO SEXTAVADO EN 1	10299606	5	4	613	90 73 507	RADIADOR DE OLEO PRE-M
PARAFUSO SEXTAVADO EN 16	12210057	6	16	571	90 79 487	CÁRTER DE ÓLEO
PARAFUSO SEXTAVADO EN 16	10876385	8	9	571	90 79 487	CÁRTER DE ÓLEO
PARAFUSO TRAVA M10X19X15	10153538	2	2	611	90 79 870	PEÇAS DO COMANDO
PARAFUSO TRAVA M10X19X15	10153538	4	1	621	10 11 683 9	BOMBA DE INJECAO - ACESS
PARAFUSO TRAVA M10X20 F	7366851	13	28	470	10 35 866 0	TAMPAS INFERIORES
PARAFUSO TRAVA M12X20 1	7365430	14	5	470	10 35 866 0	TAMPAS INFERIORES
PARAFUSO TRAVA M12X30 F	4900641	25	2	85	10 07 306 8	TAMPA
PARAFUSO TRAVA M12X30 F	4900641	3	4	86	10 39 262 4	TAMPA COMPLETA
PARAFUSO TRAVA M12X30 F	4900641	3	3	87	10 39 293 2	TAMPA COMPLETA
PARAFUSO TRAVA M16X35 F	7364949	12	14	470	10 35 866 0	TAMPAS INFERIORES
PARAFUSO TRAVA M5X6X4,2	9880132	26	2	116	98 82 760	REGULADOR NG 100
PARAFUSO TRAVA M5X6X4,2	9880132	26	2	810	11 38 131 3	REGULADOR NG 100
PARAFUSO TRAVA M8X16 480	12225945	3	3	204	10 06 309 3	VEDACAO DO RADIADOR
PARAFUSO TRAVA M8X20 A2	7366804	36	1	271	10 49 880 5	POSTO DE COMANDO - PEÇA
PARAFUSO TRAVA M8X40 12.	7368996	3	6	392	10 33 390 3	FILTRO DE RETORNO 20/5µm
PAREDE DIVISÓRIA	10009201	490	1	509	10 29 035 2	REVESTIMENTO INTERNO
PAREDE DIVISÓRIA	10009201	490	1	511	10 48 808 8	REVESTIMENTO INTERNO
PAREDE DIVISÓRIA	10059993	2	1	131	10 06 261 8	PAREDE DIVISÓRIA
PAREDE DIVISÓRIA	10062618	20	1	129	10 08 004 4	QUADRO INSTALACAO
PARTE SUPERIOR DA SUSPEN	11066526	3	1	287	11 10 016 7	SUSPENSAO
PARTE SUPERIOR DE ASSENT	11100166	10	1	283	11 00 085 6	BANCO COM SUSP. PNEUMAT
PASTA	8100714	127	1	807	10 11 856 1	MANETE DE COMANDO VG6-8
PASTA	8100714	127	1	808	11 37 560 6	MANETE DE COMANDO VG6-8
PASTA 400G	8501565	20	1	538	10 08 428 6	KIT DE FERRAMENTAS
PASTA DE CINZEL LIEBHERR	10358992	50	1	23	90 70 366	LUBRIFICANTES
PASTA DE CINZEL LIEBHERR/	8610230	1	1	38	10 35 899 2	PASTA DE CINZEL LIEBHERR
PASTA DE CINZEL LIEBHERR/2	10330306	2	1	38	10 35 899 2	PASTA DE CINZEL LIEBHERR
PASTA DE COBRE	10002552	132	1	663	10 11 919 9	PROT.CONTRA CALOR COM F
PASTA DE COBRE	10002552	132	1	665	90 80 736	KIT DO TURBO COMPRESSOR
PASTA DE LUBRIFICAÇÃO	11419165	800	1	771	94 00 688 8	MANCAL DA HASTE DO PISTÃ
PASTA DE LUBRIFICAÇÃO	11419165	800	1	772	94 02 794 9	MANCAL DA HASTE DO PISTÃ
PASTA DE LUBRIFICAÇÃO	11419165	800	1	773	95 91 741	MANCAL DA HASTE DO PISTÃ
PASTA EM PULVERIZADOR LIE	10358950	40	1	23	90 70 366	LUBRIFICANTES
PASTA EM PULVERIZADOR LIE	10330308	1	1	37	10 35 895 0	PASTA EM PULVERIZADOR LIE
PASTA EM PULVERIZADOR LI	10330310	2	1	37	10 35 895 0	PASTA EM PULVERIZADOR LIE
PASTA EM PULVERIZADOR LIE	10330311	5	1	37	10 35 895 0	PASTA EM PULVERIZADOR LIE
PECA DE DESGASTE	10493010	6	1	287	11 10 016 7	SUSPENSAO
PECA DO ASSENTO	7024981	12	1	282	10 04 363 2	ASSENTO DO OPERADOR
PECAS DE FIXACAO	10493025	26	1	287	11 10 016 7	SUSPENSAO
PECAS DE FIXACAO	10814706	39	1	285	11 10 016 6	PARTE SUPERIOR DE ASSENT
PECAS DE FIXACAO	11066536	36	1	288	11 10 016 7	SUSPENSAO
PECAS DE FIXACAO	12861404	50	1	10	12 86 140 3	INSTALACAO HIDRAULICA
PECAS DE FIXACAO DO MOTO	10358620	501	1	132	10 35 862 2	INSTALAÇÃO DO MOTOR
PECAS DE FIXACAO PARA A C	10357979	10	1	471	10 35 796 7	CABINE DE OPERADOR
PECAS DE FIXACAO PARA VA	10063986	7601	1	416	10 35 863 8	INSTALAÇÃO BLOCO DE VÁL
PECAS FIXACAO	9360187	10	1	217	11 10 291 6	INSTALACAO MECANISMO GI
PECAS FIXACAO PARA CONTR	10063914	5	1	536	10 49 800 2	INSTALAÇÃO DO CONTRAPES
PEDAL DIREITO	9079302	1	1	741	90 79 392	PLACA DE DEGRAU MONT. D
PEDAL DIREITO COMPLETO	10060175	20	1	320	10 05 981 8	PRÉ-COMANDO DE PEDAL M
PEDAL ESQUERDO	9476442	1	1	326	94 76 369	PLACA DE DEGRAU MONT. E

Designação	Artigo	Item	Quanti	Página	Módulo	Designação
PEDAL ESQUERDO COMPLET	10060174	10	1	320	10 05 981 8	PRÉ-COMANDO DE PEDAL M
PENEIRA	10296919	20	1	529	10 04 852 5	TANQUE COMBUSTIVEL INSTA
PENEIRA	10296919	20	1	530	10 49 836 0	TANQUE COMBUSTIVEL INSTA
PENEIRA	10296919	20	1	531	11 10 262 1	TANQUE COMBUSTIVEL INSTA
PERFIL	10002427	15	1	444	10 09 413 5	REVESTIMENTO DIREITO
PERFIL	10002427	52	0.1	793	10 49 866 6	FILTRO DE AR - INSTALAÇÃO
PERFIL	10002427	53	0.1	793	10 49 866 6	FILTRO DE AR - INSTALAÇÃO
PERFIL	10002428	11	0.35	455	10 06 436 0	CAPO DO RADIADOR
PERFIL	10002428	12	0.47	455	10 06 436 0	CAPO DO RADIADOR
PERFIL	10022653	31	3	336	11 00 359 4	CARCAÇA
PERFIL	12205993	3	0.86	131	10 06 261 8	PAREDE DIVISÓRIA
PERFIL	12205993	20	8.4	204	10 06 309 3	VEDACAO DO RADIADOR
PERFIL	12205993	15	1.16	536	10 49 800 2	INSTALAÇÃO DO CONTRAPES
PERFIL	12205993	16	1.58	536	10 49 800 2	INSTALAÇÃO DO CONTRAPES
PERFIL	12205993	17	1.43	536	10 49 800 2	INSTALAÇÃO DO CONTRAPES
PERFIL	12205993	18	0.91	536	10 49 800 2	INSTALAÇÃO DO CONTRAPES
PERFIL	12205993	19	0.93	536	10 49 800 2	INSTALAÇÃO DO CONTRAPES
PERFIL	12205993	20	1.58	536	10 49 800 2	INSTALAÇÃO DO CONTRAPES
PERFIL	12205993	21	0.98	536	10 49 800 2	INSTALAÇÃO DO CONTRAPES
PERFIL	7029425	590	1	487	70 28 831	JANELA DE CORRER
PERFIL DE ENCHIMENTO	10471490	20	1	477	70 28 788	VEDAÇÃO
PERFIL DE ENVIDRACAMENT	7028806	300	1	481	70 28 759	PÁRA-BRISA SUPERIOR
PERFIL DE FIXAÇÃO	10332542	10	1	204	10 06 309 3	VEDACAO DO RADIADOR
PERFIL DE FIXAÇÃO	7018489	9	0.71	459	10 06 423 5	PORTA LATERAL DIREITA
PERFIL DE FIXAÇÃO	9591327	490	1	361	10 06 380 1	INSTALACAO HIDRAULICA
PERFIL DE PROTECAO DE CA	10009781	121	1.8	273	10 49 880 5	POSTO DE COMANDO - PEÇA
PERFIL DE PROTECAO DE CA	10009781	35	1	525	10 06 559 1	MAGUEIRAS DO AR-CONDICI
PERFIL DE PROTECAO DE CA	226016702	10	0.45	131	10 06 261 8	PAREDE DIVISÓRIA
PERFIL DE PROTECAO DE CA	226016702	11	0.34	131	10 06 261 8	PAREDE DIVISÓRIA
PERFIL DE PROTECAO DE CA	226016702	12	0.63	131	10 06 261 8	PAREDE DIVISÓRIA
PERFIL DE PROTECAO DE CA	226016702	120	1	273	10 49 880 5	POSTO DE COMANDO - PEÇA
PERFIL DE PROTECAO DE CA	226016702	5	0.57	465	10 06 576 2	DIVISÓRIA CENTRAL
PERFIL DE PROTECAO DE CA	226016702	15	0.13	466	10 35 823 0	PORTA LATERAL DIANTEIRA
PERFIL DE PROTECAO DE CA	226016702	30	2.1	470	10 35 866 0	TAMPAS INFERIORES
PERFIL DE REFORÇO	10022779	16	2	333	10 02 211 7	CARCACA DE CONDUCAO DE
PERFIL DE VEDACAO	7006451	6	1.169	465	10 06 576 2	DIVISÓRIA CENTRAL
PERFIL DE VEDACAO	7008157	9	1.578	457	10 35 822 9	PORTA LATERAL ESQUERDA
PERFIL DE VEDACAO	7008157	10	1	459	10 06 423 5	PORTA LATERAL DIREITA
PERFIL DE VEDACAO	7008157	10	1	460	10 49 856 6	PORTA LATERAL DIREITA
PERFIL DE VEDACAO	7360171	82	1.38	276	11 38 339 7	APOIO DE BRAÇO LADO ESQ
PERFIL DE VEDACAO	7360171	82	1.38	292	10 38 502 8	APOIO DE BRAÇO LADO ESQ
PERFIL DE VEDACAO	7360171	4	0.7	456	10 05 183 8	CAPO DIREITO
PERFIL DE VEDACAO	7360171	8	1.475	457	10 35 822 9	PORTA LATERAL ESQUERDA
PERFIL DE VEDACAO	7360171	11	0.93	459	10 06 423 5	PORTA LATERAL DIREITA
PERFIL DE VEDACAO	7360171	12	1.24	459	10 06 423 5	PORTA LATERAL DIREITA
PERFIL DE VEDACAO	7360171	11	0.93	460	10 49 856 6	PORTA LATERAL DIREITA
PERFIL DE VEDACAO	7360171	12	1.24	460	10 49 856 6	PORTA LATERAL DIREITA
PERFIL DE VEDACAO	7360171	3	0.85	462	10 35 826 4	CAIXA DE FERRAMENTAS
PERFIL DE VEDACAO	7360171	4	0.28	462	10 35 826 4	CAIXA DE FERRAMENTAS
PERFIL DE VEDAÇÃO	10008649	16	0.28	328	10 40 689 8	AR CONDICIONADO
PERFIL DE VEDAÇÃO	262181001	10	4.11	245	93 36 286 01	ROLAMENTO DE ESFERAS
PERFIL DE VEDAÇÃO	262181001	20	4.15	245	93 36 286 01	ROLAMENTO DE ESFERAS
PERFIL DE VEDAÇÃO 14	10040984	2	1	675	90 76 530	SENSOR DE TEMPERATURA C
PERFIL DE VEDAÇÃO 14	10040984	2	1	676	90 76 531	TRANSDUTOR DE PRESSAO
PERFIL DE VEDAÇÃO 33	10335629	3	1	578	10 11 903 0	ABASTECIMENTO DE ÓLEO
PEÇA DE BLOQUEIO	10451187	21	5	735	11 10 258 6	CAÇAMBA RETRO HD 1800MM
PEÇA DE BLOQUEIO	10451187	4	1	781	11 10 259 0	DENTE Z50CL
PEÇA DE CONEXÃO	10116576	213	1	551	10 11 714 5	MOTOR DIESEL D936 L A6 190
PEÇA DE CONEXÃO	11825937	70	1	49	11 82 320 0	
PEÇA DE CONEXÃO	7020046	600	1	497	70 28 884	KIT DO MOTOR DO LIMPADOR

Designação	Artigo	Item	Quanti	Página	Módulo	Designação
PEÇA DE FECHO PRÉ-MONT	9079580	217	1	551	10 11 714 5	MOTOR DIESEL D936 L A6 190
PEÇA DE FIXAÇÃO	10022049	9	2	335	11 00 359 4	CARCAÇA
PEÇA DE FIXAÇÃO	6203433	10	1	296	98 74 988	PLACAS - INSTALAÇÃO
PEÇA DE LIGAÇÃO	10358750	12	1	725	11 10 280 7	BRAÇO DA CAÇAMBA 2.10M
PEÇA DE LIGAÇÃO NG 150	9887828	14	2	154	90 73 242	CARCAÇA DE CONEXÕES NG
PEÇA DE REDUÇÃO	10333765	401	1	421	10 30 079 8	VALVULA DE RETENCAO
PEÇA DE REDUÇÃO	7373200	55	1	421	10 30 079 8	VALVULA DE RETENCAO
PEÇA DE REDUÇÃO M16X1,5/	10120066	5	1	631	10 12 580 1	FILTRO DE COMBUSTÍVEL
PEÇA DE UNIÃO	10014699	16	1	249	10 22 844 3	BOMBA DE LUBRIFICACAO
PEÇA DE UNIÃO	11826483	10	1	50	11 82 595 6	BOMBA MANUAL
PEÇA DE UNIÃO (MACHO)	10081454	14	1	445	10 35 865 5	REVESTIMENTO
PEÇA DESLIZANTE	10216694	13	1	399	11 49 189 4	MECANISMO DE ACIONAMENT
PEÇA DESLIZANTE	12221003	3	2	79	12 22 100 1	RODA GUIA
PEÇA DESLIZANTE	5611548	3	2	94	10 00 454 6	RODA GUIA B6
PEÇA FINAL	10423838	10	1	488	70 29 423	VIDRO DIANTEIRO
PEÇA FINAL	10423838	10	1	489	70 29 424	VIDRO TRASEIRO
PEÇA FINAL	10423840	20	1	488	70 29 423	VIDRO DIANTEIRO
PEÇA FINAL	10423840	20	1	489	70 29 424	VIDRO TRASEIRO
PEÇA FINAL	11003780	7	2	89	11 60 010 7	ROLAMENTO DE ESFERA D7
PEÇA FINAL	11825926	40	1	49	11 82 320 0	
PEÇA GUIA DE AR	10005677	1	1	332	10 02 208 3	BOCAL DE AR
PEÇA INFERIOR DE MOLA	10492983	8	1	287	11 10 016 7	SUSPENSAO
PEÇA INTEMEDIÁRIA	10358253	14	2	711	11 10 294 5	LANÇA MONOBLOCO 6.45M
PEÇA INTEMEDIÁRIA DN15	7365704	35	1	328	10 40 689 8	AR CONDICIONADO
PEÇA INTEMEDIÁRIA H=20	9008100	30	1	775	11 45 729 6	CILINDRO DE ELEVACAO DIRE
PEÇA INTEMEDIÁRIA H=20	9008100	30	1	778	11 45 729 7	CILINDRO DE ELEVACAO ESQ
PEÇA REP.CABINE	10216362	10	1	472	10 22 830 2	CABINE DE OPERADOR
PEÇA REP.CABINE	10216362	10	1	474	10 47 616 9	CABINE DE OPERADOR
PEÇA TRASEIRA ESQUERDA	10289988	2	1	282	10 04 363 2	ASSENTO DO OPERADOR
PEÇAS DE BORRACHA	10075430	15	1	453	10 05 816 9	CAPOTA DO MOTOR
PEÇAS DE FECHAMENTO	10118589	4	2	698	90 80 504	PEÇAS DE FECHAMENTO
PEÇAS DE FECHAMENTO	10119128	522	1	555	10 11 714 5	MOTOR DIESEL D936 L A6 190
PEÇAS DE FECHAMENTO	9078356	331	1	552	10 11 714 5	MOTOR DIESEL D936 L A6 190
PEÇAS DE FECHAMENTO	9079893	630	1	555	10 11 714 5	MOTOR DIESEL D936 L A6 190
PEÇAS DE FECHAMENTO	9080280	384	1	553	10 11 714 5	MOTOR DIESEL D936 L A6 190
PEÇAS DE FECHAMENTO	9080280	5	1	699	10 11 801 4	KIT DE VEDACAO
PEÇAS DE FECHAMENTO	9080280	5	2	702	10 11 583 8	JOGO DE VEDAÇÃO MOTOR D
PEÇAS DE FECHAMENTO	9080504	656	1	556	10 11 714 5	MOTOR DIESEL D936 L A6 190
PEÇAS DE FECHAMENTO	9080653	521	1	555	10 11 714 5	MOTOR DIESEL D936 L A6 190
PEÇAS DE FECHAMENTO	9147512	24	2	549	10 11 714 5	MOTOR DIESEL D936 L A6 190
PEÇAS DE MONTAGEM	10290264	70	1	472	10 22 830 2	CABINE DE OPERADOR
PEÇAS DE MONTAGEM	10290264	70	1	474	10 47 616 9	CABINE DE OPERADOR
PEÇAS DO COMANDO	9079870	110	6	558	10 11 682 5	MOTOR BÁSICO D936 L HIGH 3
PEÇAS FIX.COROA GIG.CHA	10048514	800	1	123	10 35 861 4	CARRO SUPERIOR
PEÇAS FIXAÇÃO COLETOR G	10403834	20	1	99	10 40 412 6	COLETOR GIRATÓRIO - INSTA
PEÇAS FIXAÇÃO COROA GIRA	10061984	5	1	242	10 04 851 4	PEÇAS FIX.COROA GIG.CHA
PEÇAS MONT. DE EQUIP	10087365	170	1	123	10 35 861 4	CARRO SUPERIOR
PEÇAS MONT.- MÁQUINA BAS	10854724	100	1	753	11 10 291 2	MONTAGEM CILINDRO DE ELE
PEÇAS MONTAGEM QUADRO	10048398	30	1	520	99 47 695	INSTALAÇÃO ELÉTRICA E50
PEÇAS MONTAGEM QUADRO	9948149	40	1	520	99 47 695	INSTALAÇÃO ELÉTRICA E50
PEÇAS PEQUENAS	10493345	55	1	285	11 10 016 6	PARTE SUPERIOR DE ASSENT
PEÇAS PEQUENAS SITZPLATZ	10493397	56	1	286	11 10 016 6	PARTE SUPERIOR DE ASSENT
PINO	10022781	13	2	333	10 02 211 7	CARCACA DE CONDUCAO DE
PINO	7020571	35	1	431	10 33 073 6	VÁLVULA DE COMUT.DE MOV
PINO	7026126	30	1	112	10 00 201 1	VALVULA DE FREIO
PINO	7028351	15	1	390	56 17 688	VÁLVULA DE FECHAMENTO
PINO	7028840	620	2	486	70 28 842	MARCO DA PORTA
PINO	9477429	18	1	825	10 13 975 2	KIT DE REPARO NG 140-150
PINO 100X267X217	10056391	27	2	752	11 10 291 2	MONTAGEM CILINDRO DE ELE
PINO 100X267X217	10405387	28	2	752	11 10 291 2	MONTAGEM CILINDRO DE ELE

Designação	Artigo	Item	Quanti	Página	Módulo	Designação
PINO 100X682X555	9354707	1	1	747	92 15 949 16	PINO COMPLETO
PINO 100X755X700	10065223	16	2	725	11 10 280 7	BRAÇO DA CAÇAMBA 2.10M
PINO 110X703X585	10062584	2	1	745	10 06 258 3	PINO COMPLETO
PINO 12X28X1,5	9477439	13	2	154	90 73 242	CARCAÇA DE CONEXÕES NG
PINO 130X1065X1015	10057907	2	1	127	10 08 736 5	PEÇAS MONT. DE EQUIP
PINO 80X669X588	10082869	2	1	746	10 08 390 7	PINO COMPLETO
PINO 8X16	7738704	32	4	446	10 35 865 5	REVESTIMENTO
PINO 8X16	7738704	92	2	447	10 35 865 5	REVESTIMENTO
PINO 8X16	7738704	22	2	462	10 35 826 4	CAIXA DE FERRAMENTAS
PINO 8X16	7738704	20	2	468	10 03 720 9	MOLA A GÁS
PINO ARTICULADO	11822439	13	2	162	11 34 249 1	BOMBA DE PISTÃO AXIAL
PINO CILÍNDRICO 4	7373202	380	1	421	10 30 079 8	VALVULA DE RETENCAO
PINO CILÍNDRICO 5h6	4981156	39	2	185	98 84 140	BOMBA CIRCUITO ARREFECI
PINO CILÍNDRICO 6m6	4000570	35	2	208	56 19 045	MOTOR DE PISTÃO AXIAL
PINO CILÍNDRICO 6m6	4980000	5	1	617	90 80 278	BOMBA DE SUCÇÃO COM FIXA
PINO CILÍNDRICO 6m6	7408829	33	1	208	56 19 045	MOTOR DE PISTÃO AXIAL
PINO CILÍNDRICO 6m6	7408829	33	1	401	10 00 807 7	BOMBA
PINO CILÍNDRICO 8	7373201	230	1	421	10 30 079 8	VALVULA DE RETENCAO
PINO CILÍNDRICO 8m6	4980853	5	1	610	90 80 713	EIXO DE EXCÊNTRICOS COM
PINO COM ENTALHE 10H11	431300701	72	1	110	96 87 443 01	MECANISMO DE TRANSLAÇÃ
PINO COMPLETO	10062583	14	1	725	11 10 280 7	BRAÇO DA CAÇAMBA 2.10M
PINO COMPLETO	10083907	13	1	725	11 10 280 7	BRAÇO DA CAÇAMBA 2.10M
PINO COMPLETO	921594916	35	1	712	11 10 294 5	LANÇA MONOBLOCO 6.45M
PINO COMPLETO 100X380X33	9354695	37	1	712	11 10 294 5	LANÇA MONOBLOCO 6.45M
PINO COMPLETO 100X380X33	9354695	30	1	725	11 10 280 7	BRAÇO DA CAÇAMBA 2.10M
PINO COMPLETO 100X430X38	9486090	36	1	712	11 10 294 5	LANÇA MONOBLOCO 6.45M
PINO DA VALVULA	7028174	8	1	177	70 28 075	UNIDADE DE CONTROLE
PINO DA VALVULA	7028180	15	2	177	70 28 075	UNIDADE DE CONTROLE
PINO DE CENTRAGEM 20X45	90018066	16	1	242	10 04 851 4	PEÇAS FIX.COROA GIG.CHA
PINO DE CENTRAGEM 35X60	9698698	2	2	537	10 06 391 4	PECAS FIXACAO PARA CONTR
PINO DE FECHAMENTO	7028896	300	1	504	10 29 026 4	PEÇAS DE MONTAGEM
PINO DE PRESSAO	10008429	9	1	157	10 00 809 5	MECANISMO DE ACIONAMENT
PINO DE PRESSAO	10008429	9	3	206	10 00 840 5	MECANISMO DE ACIONAMENT
PINO DE PRESSAO	10665379	9	3	171	10 28 772 5	MECANISMO DE ACIONAMENT
PINO DE RESTRICAO 5,4X11,	10122779	140	2	112	10 00 201 1	VALVULA DE FREIO
PINO DE TRAVAMENTO	10451129	20	5	735	11 10 258 6	CAÇAMBA RETRO HD 1800MM
PINO DE TRAVAMENTO	10451129	3	1	781	11 10 259 0	DENTE Z50CL
PINO DISTANCIADOR HEXAGO	7016412	26	4	519	99 47 695	INSTALAÇÃO ELÉTRICA E50
PINO ELÁSTICO	7373742	4	2	89	11 60 010 7	ROLAMENTO DE ESFERA D7
PINO ELÁSTICO 13	10004442	7	1	599	12 40 205 5	BALANCIM PRÉ MONTADO
PINO ELÁSTICO 13	10004442	7	1	604	90 74 505	BALANCIM PRÉ MONTADO
PINO ELÁSTICO 3	4002729	31	2	162	11 34 249 1	BOMBA DE PISTÃO AXIAL
PINO ELÁSTICO 3	4900372	630	2	486	70 28 842	MARCO DA PORTA
PINO ELÁSTICO 3	4900372	330	1	504	10 29 026 4	PEÇAS DE MONTAGEM
PINO ELÁSTICO 8	12216034	5	1	581	90 75 115	VIRABREQUIM COM ENGRENA
PINO ESFERICO 10X25,59X2	10004426	5	1	605	90 74 507	BALANCIM PRE-MONTAGEM
PINO ESFERICO 10X25,59X2	12400273	5	1	600	12 40 205 3	BALANCIM PRE-MONTAGEM
PINO MESTRE	5617102	20	2	83	56 17 975	ELO FINAL DA CORRENTE
PINO NG 140-280 (D)	9888133	19	1	825	10 13 975 2	KIT DE REPARO NG 140-150
PINTURA	11102616	300	1	7	.	
PISTAO DA VALVULA	10220648	3	1	174	11 82 151 3	KIT DE VEDACAO DA VALVUL
PISTAO DA VALVULA	10220817	2	1	169	10 22 081 6	VÁLVULA DE PARTIDA FRIA
PISTAO DA VALVULA	5612181	5	1	168	10 22 063 5	VALVULA INTERRUPTORA
PISTAO DA VALVULA	7028179	13	2	177	70 28 075	UNIDADE DE CONTROLE
PISTAO DE COMANDO	10220661	3	1	168	10 22 063 5	VALVULA INTERRUPTORA
PISTAO DE COMANDO SW	9279157	11	1	818	98 82 832	VÁLVULA DE COMANDO
PISTAO DE REGULAGEM	10008081	2	1	400	10 00 807 7	BOMBA
PISTAO GLR NG 165	9881231	19	1	820	90 78 788	KIT REPARO DA TAMPA REG
PISTOLA GRAXA MANUAL CO	7900280	140	1	540	10 84 856 2	KIT DE FERRAMENTAS
PISTÃO	10008403	1	9	206	10 00 840 5	MECANISMO DE ACIONAMENT

Designação	Artigo	Item	Quanti	Página	Módulo	Designação
PISTÃO	10122498	12	4	807	10 11 856 1	MANETE DE COMANDO VG6-8
PISTÃO	10122498	12	4	808	11 37 560 6	MANETE DE COMANDO VG6-8
PISTÃO	10216691	2	9	402	10 22 042 7	MECANISMO DE ACIONAMENT
PISTÃO	10287742	1	9	157	10 00 809 5	MECANISMO DE ACIONAMENT
PISTÃO	11314611	5	1	95	11 00 410 3	PACOTE DE MOLAS COMPLET
PISTÃO	5008441	6	1	431	10 33 073 6	VÁLVULA DE COMUT.DE MOV
PISTÃO	5612180	4	1	168	10 22 063 5	VALVULA INTERRUPTORA
PISTÃO	5617474	70	1	421	10 30 079 8	VALVULA DE RETENCAO
PISTÃO	7028169	3	2	177	70 28 075	UNIDADE DE CONTROLE
PISTÃO	7029398	20	1	112	10 00 201 1	VALVULA DE FREIO
PISTÃO	7413407	1	9	171	10 28 772 5	MECANISMO DE ACIONAMENT
PISTÃO	9075361	1	1	563	10 11 795 1	VALVULA DE REGULAGEM FI
PISTÃO	9075361	1	1	564	90 75 134	VALVULA DE REGULAGEM FI
PISTÃO	9079756	61	1	820	90 78 788	KIT REPARO DA TAMPA REG
PISTÃO	9265263	11	1	766	92 65 991	VÁLVULA REGULADORA DE FL
PISTÃO	9265392	12	2	323	90 79 258	MANETE DE COMANDO VG7 2-
PISTÃO	9265392	12	2	742	90 79 264	KIT DE MODIFICAÇÃO VG7-2/3
PISTÃO	94040389	12	1	760	11 68 144 7	CILINDRO HIDRÁULICO
PISTÃO	94040390	1	1	769	94 04 038 9	PISTÃO
PISTÃO	9644623	1	1	770	96 44 625	PISTÃO
PISTÃO	9644625	12	1	761	95 93 026	CILINDRO HIDRÁULICO
PISTÃO	9644625	12	1	762	96 44 648	CILINDRO HIDRÁULICO
PISTÃO	9886591	20	1	613	90 73 507	RADIADOR DE OLEO PRE-M
PISTÃO	9886591	9	1	618	90 72 781	BOMBA DE ÓLEO DE LUBRIFI
PISTÃO COM PACOTE DE MOL	10295718	25	1	424	10 11 386 0	BLOCO DE COMANDO
PISTÃO COM PACOTE DE MOL	10296859	27	1	424	10 11 386 0	BLOCO DE COMANDO
PISTÃO COM PACOTE DE MOL	10296859	30	1	424	10 11 386 0	BLOCO DE COMANDO
PISTÃO COM PACOTE DE MOL	10330735	31	1	424	10 11 386 0	BLOCO DE COMANDO
PISTÃO COM PACOTE DE MOL	10333329	26	1	424	10 11 386 0	BLOCO DE COMANDO
PISTÃO COM PACOTE DE MOL	10333330	28	1	424	10 11 386 0	BLOCO DE COMANDO
PISTÃO COM PACOTE DE MOL	10333331	29	1	424	10 11 386 0	BLOCO DE COMANDO
PISTÃO COM PACOTE DE MOL	10333333	32	1	424	10 11 386 0	BLOCO DE COMANDO
PISTÃO COM PACOTE DE MOL	10333760	165	1	421	10 30 079 8	VALVULA DE RETENCAO
PISTÃO COMPLETO d=122	9080687	70	6	557	10 11 682 5	MOTOR BÁSICO D936 L HIGH 3
PISTÃO DE AJUSTAMENTO	10291975	1	1	161	10 29 197 8	REGULAGEM HIDRAULICA
PISTÃO DE AJUSTAMENTO	9276984	11	2	116	98 82 760	REGULADOR NG 100
PISTÃO DE AJUSTAMENTO	9276984	11	2	810	11 38 131 3	REGULADOR NG 100
PISTÃO DE AJUSTAMENTO N	9276983	10	1	116	98 82 760	REGULADOR NG 100
PISTÃO DE AJUSTAMENTO N	9276983	10	1	810	11 38 131 3	REGULADOR NG 100
PISTÃO DE AJUSTAMENTO N	9072592	11	2	181	90 74 893	KIT DE REPARO DA CARCAÇA
PISTÃO DE FREIO	10014067	1	1	166	70 28 176	PISTÃO DE FREIO
PISTÃO DE FREIO	7028176	10	2	177	70 28 075	UNIDADE DE CONTROLE
PISTÃO PATIM NG 090	9274285	1	9	234	90 74 125	KIT DE REPARO NG 090
PISTÃO PATIM NG 090	9274285	1	9	830	98 80 608	KIT DE REPARO PISTÕES AXIA
PISTÃO PATIM NG 100	9072692	1	9	179	90 72 997	KIT DE REPARO PISTÕES AXIA
PISTÃO PATIM NG 140	9887036	1	9	186	98 89 831	KIT DE REPARO PISTÕES AXIA
PISTÃO PRÉ-MONT.	9080686	1	1	588	90 80 687	PISTÃO COMPLETO d=122
PISTÃO d=122	9080685	1	1	589	90 80 686	PISTÃO PRÉ-MONT.
PLACA	10060165	90	1	194	10 04 853 6	ARREFECIMENTO DO MOTOR
PLACA	10060193	4	2	423	10 35 863 6	BRAÇADEIRA DE TUBO
PLACA	10060199	6	1	423	10 35 863 6	BRAÇADEIRA DE TUBO
PLACA	10060652	4	1	470	10 35 866 0	TAMPAS INFERIORES
PLACA	10060668	10	1	470	10 35 866 0	TAMPAS INFERIORES
PLACA	10062023	175	1	450	10 35 865 5	REVESTIMENTO
PLACA	10062655	110	2	448	10 35 865 5	REVESTIMENTO
PLACA	10062868	230	1	452	10 35 865 5	REVESTIMENTO
PLACA	10063092	40	1	194	10 04 853 6	ARREFECIMENTO DO MOTOR
PLACA	10063243	6	1	470	10 35 866 0	TAMPAS INFERIORES
PLACA	10063268	2	1	204	10 06 309 3	VEDACAO DO RADIADOR
PLACA	10063654	20	1	212	10 04 853 8	MOTOR - PECAS ANEXAS

Designação	Artigo	Item	Quanti	Página	Módulo	Designação
PLACA	10064302	70	1	447	10 35 865 5	REVESTIMENTO
PLACA	10066134	20	1	406	10 35 863 8	INSTALAÇÃO BLOCO DE VÁL
PLACA	10068116	40	1	753	11 10 291 2	MONTAGEM CILINDRO DE ELE
PLACA	10071171	50	1	463	10 35 826 4	CAIXA DE FERRAMENTAS
PLACA	10081831	20	1	456	10 05 183 8	CAPO DIREITO
PLACA	10082807	60	1	463	10 35 826 4	CAIXA DE FERRAMENTAS
PLACA	10083050	30	1	542	10 49 878 6	ESPELHO EXTERNO - INSTALA
PLACA	10087054	27	1	344	10 35 862 3	INSTALACAO HDRAULICA
PLACA	10115591	4	1	641	10 11 657 6	PEÇA DE CONEXÃO
PLACA	10358258	8	1	470	10 35 866 0	TAMPAS INFERIORES
PLACA	10358259	9	1	470	10 35 866 0	TAMPAS INFERIORES
PLACA	10406664	9	2	456	10 05 183 8	CAPO DIREITO
PLACA	12862561	29	1	323	90 79 258	MANETE DE COMANDO VG7 2-
PLACA	12862561	29	1	325	90 79 259	MANETE DE COMANDO VG7 2-
PLACA	9758230	101	1	279	11 38 340 1	APOIO DE BRAÇO LADO DIRE
PLACA	9758230	101	1	302	11 45 228 6	APOIO DE BRAÇO LADO DIRE
PLACA	9758230	101	1	307	12 50 731 7	APOIO DE BRAÇO LADO DIRE
PLACA	9892073	8	2	536	10 49 800 2	INSTALAÇÃO DO CONTRAPES
PLACA	9943165	40	1	321	10 06 017 4	PEDAL ESQUERDO COMPLET
PLACA	9943165	40	1	322	10 06 017 5	PEDAL DIREITO COMPLETO
PLACA	9946134	30	1	321	10 06 017 4	PEDAL ESQUERDO COMPLET
PLACA	9946134	30	1	322	10 06 017 5	PEDAL DIREITO COMPLETO
PLACA	9949077	5	1	470	10 35 866 0	TAMPAS INFERIORES
PLACA	9949436	7	1	470	10 35 866 0	TAMPAS INFERIORES
PLACA ADESIVA 297mmX210m	10092123	22	1	547	10 49 803 0	ADESIVO DE SINALIZAÇÃO
PLACA DE ADVERTÊNCIA/ AVI	9581113	54	1	548	10 49 803 0	ADESIVO DE SINALIZAÇÃO
PLACA DE ADVERTÊNCIA/ AVI	10380915	90	2	548	10 49 803 0	ADESIVO DE SINALIZAÇÃO
PLACA DE ANGULACAO NG 14	10139588	16	1	825	10 13 975 2	KIT DE REPARO NG 140-150
PLACA DE ANGULAÇÃO	11491899	12	1	399	11 49 189 4	MECANISMO DE ACIONAMENT
PLACA DE ANTEPARO	9808806	30	1	721	10 82 841 3	LUBRIFICAÇÃO CENTRALIZAD
PLACA DE ANTEPARO	9808806	25	1	730	10 39 639 6	LUBRIFICAÇÃO CENTRALIZAD
PLACA DE APOIO	10009021	190	2	490	10 29 033 7	INSTALACAO ELETRICA
PLACA DE APOIO	10056984	43	2	247	12 84 952 6	LUBRIFICAÇÃO CENTRALIZAD
PLACA DE APOIO	10058949	15	1	298	10 05 879 2	SENSOR DE PRE-COMANDO E
PLACA DE APOIO	10058949	15	1	313	10 05 879 4	SENSOR DE PRE-COMANDO
PLACA DE APOIO	10061628	6	2	711	11 10 294 5	LANÇA MONOBLOCO 6.45M
PLACA DE APOIO	10081451	17	1	445	10 35 865 5	REVESTIMENTO
PLACA DE APOIO	10119129	1	1	682	10 11 912 8	PEÇAS DE FECHAMENTO
PLACA DE APOIO	10123870	1	1	572	12 83 230 4	TAMPA PRÉ MONTADA
PLACA DE APOIO	10123873	1	1	573	12 83 230 5	TAMPA PRÉ MONTADA
PLACA DE APOIO	10290356	520	1	496	10 29 036 3	KIT DO MOTOR DO LIMPADOR
PLACA DE APOIO	10652159	20	1	294	10 16 576 6	CONSOLE DE COMANDO
PLACA DE APOIO	11460484	4	1	711	11 10 294 5	LANÇA MONOBLOCO 6.45M
PLACA DE APOIO	7028802	130	2	62	12 50 640 7	
PLACA DE APOIO	7028839	190	1	484	70 28 769	PORTA DA CABINE DO OPERA
PLACA DE APOIO	7028870	370	1	491	10 29 033 7	INSTALACAO ELETRICA
PLACA DE APOIO	7028870	370	1	494	10 48 808 7	INSTALACAO ELETRICA
PLACA DE APOIO	7028878	520	1	497	70 28 884	KIT DO MOTOR DO LIMPADOR
PLACA DE APOIO	7029420	520	1	487	70 28 831	JANELA DE CORRER
PLACA DE APOIO	7029422	550	1	487	70 28 831	JANELA DE CORRER
PLACA DE APOIO	9014773	4	1	127	10 08 736 5	PEÇAS MONT. DE EQUIP
PLACA DE APOIO	9073190	6	1	641	10 11 657 6	PEÇA DE CONEXÃO
PLACA DE APOIO	9079494	2	1	574	12 83 245 4	CARTER DE ÓLEO
PLACA DE APOIO	9274060	4	2	638	10 11 726 8	SUPORTE DE MONTAGEM
PLACA DE APOIO	9392646	15	1	277	11 38 340 1	APOIO DE BRAÇO LADO DIRE
PLACA DE APOIO	9392646	15	1	301	11 45 228 6	APOIO DE BRAÇO LADO DIRE
PLACA DE APOIO	9392646	15	1	305	12 50 731 7	APOIO DE BRAÇO LADO DIRE
PLACA DE APOIO	9434249	26	2	752	11 10 291 2	MONTAGEM CILINDRO DE ELE
PLACA DE APOIO	9476811	56	2	345	10 35 862 3	INSTALACAO HDRAULICA
PLACA DE APOIO	9476811	47	2	357	10 35 862 9	ARREFECIMENTO DE OLEO

Designação	Artigo	Item	Quanti	Página	Módulo	Designação
PLACA DE APOIO	9476811	16	1	358	10 35 862 4	INSTALACAO HIDRAULICA
PLACA DE APOIO	9483466	28	2	351	10 35 862 8	INSTALACAO HIDRAULICA
PLACA DE APOIO	9757779	35	1	271	10 49 880 5	POSTO DE COMANDO - PEÇA
PLACA DE APOIO	9830148	38	1	712	11 10 294 5	LANÇA MONOBLOCO 6.45M
PLACA DE APOIO	9830148	31	2	726	11 10 280 7	BRAÇO DA CAÇAMBA 2.10M
PLACA DE APOIO	9830148	15	2	739	10 49 877 7	BLOCO DO MANCAL
PLACA DE APOIO	9830148	30	2	752	11 10 291 2	MONTAGEM CILINDRO DE ELE
PLACA DE APOIO	9864658	44	1	753	11 10 291 2	MONTAGEM CILINDRO DE ELE
PLACA DE APOIO 10X20X25	7028898	270	1	504	10 29 026 4	PEÇAS DE MONTAGEM
PLACA DE APOIO 3X20X37	7020611	360	2	504	10 29 026 4	PEÇAS DE MONTAGEM
PLACA DE COBERTURA	10116413	2	1	666	10 11 601 5	TAMPA
PLACA DE COMANDO DIREITA	9887034	2	1	187	98 89 832	KIT DE REPARO GRUPO ROT
PLACA DE COMANDO ESQUER	9887035	2	1	188	98 89 833	KIT DE REPARO GRUPO ROTÓ
PLACA DE DEGRAU MONT. D	9079392	2	1	325	90 79 259	MANETE DE COMANDO VG7 2-
PLACA DE DEGRAU MONT. E	9476369	2	1	323	90 79 258	MANETE DE COMANDO VG7 2-
PLACA DE DESGASTE	10216816	2	1	165	57 17 149	REPARO DA BOMBA
PLACA DE DESGASTE	10216828	1	1	167	10 21 681 6	PLACA DE DESGASTE
PLACA DE DESGASTE	10498781	11	1	738	11 10 263 6	KIT DE PEÇAS DE DESGASTE
PLACA DE DESGASTE	10498782	12	4	738	11 10 263 6	KIT DE PEÇAS DE DESGASTE
PLACA DE DESGASTE	10498783	13	4	738	11 10 263 6	KIT DE PEÇAS DE DESGASTE
PLACA DE DESGASTE	10498792	15	4	738	11 10 263 6	KIT DE PEÇAS DE DESGASTE
PLACA DE DISTRIBUIÇÃO	10008404	2	1	207	10 00 843 3	MECANISMO DE ACIONAMENT
PLACA DE DISTRIBUIÇÃO	11008542	2	1	156	10 00 808 0	MECANISMO DE ACIONAMENT
PLACA DE DISTRIBUIÇÃO	11008542	2	1	173	10 29 787 5	MECANISMO DE ACIONAMENT
PLACA DE ESTRIBO	9946939	2	1	320	10 05 981 8	PRÉ-COMANDO DE PEDAL M
PLACA DE FECHAMENTO	7371025	8	1	362	10 04 272 9	BLOCO DE VÁLVULAS DE CO
PLACA DE IDENTIFICAÇÃO	11359932	7	1	546	10 49 803 0	ADESIVO DE SINALIZAÇÃO
PLACA DE IDENTIFICAÇÃO 15	10498223	4	1	546	10 49 803 0	ADESIVO DE SINALIZAÇÃO
PLACA DE ISOLAMENTO	10009181	290	1	509	10 29 035 2	REVESTIMENTO INTERNO
PLACA DE ISOLAMENTO	10009181	290	1	511	10 48 808 8	REVESTIMENTO INTERNO
PLACA DE ISOLAMENTO	10290261	230	1	508	10 29 035 2	REVESTIMENTO INTERNO
PLACA DE ISOLAMENTO	10290261	230	1	510	10 48 808 8	REVESTIMENTO INTERNO
PLACA DE LIGAÇÃO	10008084	6	1	400	10 00 807 7	BOMBA
PLACA DE LIGAÇÃO	10008432	6	1	208	56 19 045	MOTOR DE PISTÃO AXIAL
PLACA DE LIGAÇÃO	10296864	39	1	424	10 11 386 0	BLOCO DE COMANDO
PLACA DE LIGAÇÃO	11491890	3	1	162	11 34 249 1	BOMBA DE PISTÃO AXIAL
PLACA DE LIGAÇÃO	11491892	5	1	398	11 49 189 0	PLACA DE LIGAÇÃO
PLACA DE LIGAÇÃO	7013559	475	1	414	10 35 863 8	INSTALAÇÃO BLOCO DE VÁL
PLACA DE LIGAÇÃO NG 090	10136746	11	1	817	90 74 112	PLACA DE LIGAÇÃO NG 090
PLACA DE LIGAÇÃO NG 090	9074112	3	1	230	90 74 075	MOTOR HIDRÁULICO
PLACA DE LIGAÇÃO NG 100	9073783	11	1	816	90 73 786	PLACA DE LIGAÇÃO NG 100
PLACA DE LIGAÇÃO NG 100	9073786	3	1	799	90 73 888	MOTOR HIDRÁULICO
PLACA DE LUBRIFICACAO	9375276	15	1	244	10 06 198 5	TUBO LUBRIFICAÇÃO - INSTA
PLACA DE MONTAGEM	9947713	3	1	519	99 47 695	INSTALAÇÃO ELÉTRICA E50
PLACA DE PROIBICAO	7366794	20	4	546	10 49 803 0	ADESIVO DE SINALIZAÇÃO
PLACA DE RETORNO	10008426	4	1	157	10 00 809 5	MECANISMO DE ACIONAMENT
PLACA DE RETORNO	10008426	4	1	206	10 00 840 5	MECANISMO DE ACIONAMENT
PLACA DE RETORNO	10216707	24	1	402	10 22 042 7	MECANISMO DE ACIONAMENT
PLACA DE RETORNO	10287728	4	1	171	10 28 772 5	MECANISMO DE ACIONAMENT
PLACA DE RETORNO NG 090	9265200	14	1	231	90 73 380	KIT REPARO ESF.+PLACA RET
PLACA DE RETORNO NG 090	9265200	14	1	234	90 74 125	KIT DE REPARO NG 090
PLACA DE RETORNO NG 100-	9072295	14	1	180	90 72 998	KIT REPARO ESF.+PLACA RET
PLACA DE RETORNO NG 140-	9889930	14	1	192	98 89 988	KIT REPARO ESF.+PLACA RET
PLACA DE VEDACAO	10301006	16	1	199	10 21 851 3	RADIADOR COMBINADO
PLACA DE VEDACAO	10301006	16	1	202	11 69 472 6	RADIADOR COMBINADO
PLACA DE VEDACAO	10301009	17	1	199	10 21 851 3	RADIADOR COMBINADO
PLACA DE VEDACAO	10301009	17	1	202	11 69 472 6	RADIADOR COMBINADO
PLACA DIREITA	10340117	38	1	200	10 21 851 3	RADIADOR COMBINADO
PLACA DIREITA	10340117	38	1	203	11 69 472 6	RADIADOR COMBINADO
PLACA DISTANCIADORA 1X5	9622842	40	2	443	10 35 865 9	REVESTIMENTO DA PLAT.GI

Designação	Artigo	Item	Quanti	Página	Módulo	Designação
PLACA DISTANCIADORA 2X5	9622843	41	2	443	10 35 865 9	REVESTIMENTO DA PLAT.GI
PLACA DISTANCIADORA 3X5	9622844	42	2	443	10 35 865 9	REVESTIMENTO DA PLAT.GI
PLACA DO ASSOALHO DA CAB	10498690	10	1	271	10 49 880 5	POSTO DE COMANDO - PEÇA
PLACA DO ASSOALHO DA CAB	9010347	10	1	271	10 49 880 5	POSTO DE COMANDO - PEÇA
PLACA DO ASSOALHO DA CAB	9879063	30	1	266	10 49 861 5	POSTO DE COMANDO
PLACA ELETRONICA	9202120	10	1	751	10 35 860 1	ALARME DE TRANSLACAO
PLACA ELETRÔNICA	10687417	100	1	279	11 38 340 1	APOIO DE BRAÇO LADO DIRE
PLACA ELETRÔNICA	10687417	100	1	302	11 45 228 6	APOIO DE BRAÇO LADO DIRE
PLACA ELETRÔNICA	10687417	100	1	307	12 50 731 7	APOIO DE BRAÇO LADO DIRE
PLACA ELETRÔNICA	975881501	40	1	276	11 38 339 7	APOIO DE BRAÇO LADO ESQ
PLACA ELETRÔNICA	975881501	40	1	292	10 38 502 8	APOIO DE BRAÇO LADO ESQ
PLACA ELETRÔNICA	989165301	91	1	276	11 38 339 7	APOIO DE BRAÇO LADO ESQ
PLACA ELETRÔNICA	989165301	91	1	292	10 38 502 8	APOIO DE BRAÇO LADO ESQ
PLACA ESQUERDA	10340116	39	1	200	10 21 851 3	RADIADOR COMBINADO
PLACA ESQUERDA	10340116	39	1	203	11 69 472 6	RADIADOR COMBINADO
PLACA ESQUERDA	7028895	260	1	503	10 29 026 4	PEÇAS DE MONTAGEM
PLACA GUIA	10291976	2	1	399	11 49 189 4	MECANISMO DE ACIONAMENT
PLACA GUIA NG 090	9073554	2	1	232	90 74 113	KIT DE REPARO GRUPO ROT
PLACA GUIA NG 090	9073554	12	1	234	90 74 125	KIT DE REPARO NG 090
PLACA GUIA NG 100	9073551	2	1	822	90 74 114	KIT DE REPARO GRUPO ROT
PLACA INDICAÇ PONTO DE AM	9402376	40	4	547	10 49 803 0	ADESIVO DE SINALIZAÇÃO
PLACA INDICAÇÃO-PONTO IÇA	9402377	45	2	547	10 49 803 0	ADESIVO DE SINALIZAÇÃO
PLACA INTERMEDIÁRIA	10297874	3	1	147	10 29 786 7	BOMBA HIDRÁULICA
PLACA INTERMEDIÁRIA	7021785	10	1	437	50 08 855	VÁLVULA DE RETORNO
PLACA INTERMEDIÁRIA	9884136	2	1	185	98 84 140	BOMBA CIRCUITO ARREFECI
PLACA ISOLANTE	11644222	6	1	331	10 02 206 9	CARCAÇA DO EVAPORADOR
PLACA ROSCADA	10063305	46	1	194	10 04 853 6	ARREFECIMENTO DO MOTOR
PLACA ROSCADA	10063305	96	1	194	10 04 853 6	ARREFECIMENTO DO MOTOR
PLACAS - INSTALAÇÃO	9874988	45	1	276	11 38 339 7	APOIO DE BRAÇO LADO ESQ
PLACAS - INSTALAÇÃO	9874988	45	1	292	10 38 502 8	APOIO DE BRAÇO LADO ESQ
PLANO DE LUBRIFICACAO	10840318	15	1	546	10 49 803 0	ADESIVO DE SINALIZAÇÃO
PLAQUETA - CINTO DE SEGU	10066101	80	1	548	10 49 803 0	ADESIVO DE SINALIZAÇÃO
PLAQUETA DE ADVERTENCIA	9910464	50	2	547	10 49 803 0	ADESIVO DE SINALIZAÇÃO
PLAQUETA DE ADVERTENCIA	9910464	68	2	712	11 10 294 5	LANÇA MONOBLOCO 6.45M
PLAQUETA DE TIPO LAM 83m	9354303	5	1	546	10 49 803 0	ADESIVO DE SINALIZAÇÃO
PLAQUETA DE TIPO LFR 150m	10405887	6	1	546	10 49 803 0	ADESIVO DE SINALIZAÇÃO
PLAQUETA PARTIDA EXTERNA	9909254	47	1	547	10 49 803 0	ADESIVO DE SINALIZAÇÃO
PLAQUETA SAIDA DE EMERG	10039562	850	1	476	70 28 767	VIDRO FIXO
PLATAFORMA GIRATÓRIA	10358826	8200	1	124	10 35 861 4	CARRO SUPERIOR
PLUG DE FECHAMENTO	10000286	820	2	506	10 29 026 4	PEÇAS DE MONTAGEM
PLUG DE FECHAMENTO	10044354	210	2	503	10 29 026 4	PEÇAS DE MONTAGEM
PLUG DE FECHAMENTO	10291063	590	1	496	10 29 036 3	KIT DO MOTOR DO LIMPADOR
PLUG DE FECHAMENTO	11834724	2	1	796	11 69 501 2	KIT DE ABASTECIMENTO DE U
PLUG DE FECHAMENTO	7020615	700	6	505	10 29 026 4	PEÇAS DE MONTAGEM
PLUG DE FECHAMENTO	7020616	720	1	505	10 29 026 4	PEÇAS DE MONTAGEM
PLUG DE FECHAMENTO	7890017	80	1	110	96 87 443 01	MECANISMO DE TRANSLAÇÃ
PLUG DE FECHAMENTO GPN	10220397	550	7	505	10 29 026 4	PEÇAS DE MONTAGEM
PLUG DE FECHAMENTO Ø18,	10292443	6	1	310	56 18 923	CONSOLE DE COMANDO DIRE
PLUG DE RETENÇÃO	11009211	3	2	165	57 17 149	REPARO DA BOMBA
PLUGUE	10012889	20	1	397	10 22 239 3	FILTRO DE RESPIRO 2µm
PLUGUE	11834725	10	1	796	11 69 501 2	KIT DE ABASTECIMENTO DE U
PLUGUE	7025644	1	1	300	73 69 377	ACENDEDOR DE CIGARROS
PLUGUE ELÉTRICO	6001963	77	1	279	11 38 340 1	APOIO DE BRAÇO LADO DIRE
PLUGUE ELÉTRICO	6001963	77	1	302	11 45 228 6	APOIO DE BRAÇO LADO DIRE
PLUGUE ELÉTRICO	6001963	77	1	306	12 50 731 7	APOIO DE BRAÇO LADO DIRE
PLUGUE ELÉTRICO CODIFIC	9699174	8	1	514	11 10 255 3	INSTALAÇÃO ELÉTRICA
PLUGUE ELÉTRICO CODIFIC	975857901	7	1	514	11 10 255 3	INSTALAÇÃO ELÉTRICA
POLIA 8 PKd=54,5	10116372	5	1	667	10 11 646 3	ALTERNADOR PRE-MONTADO
POLIA 8 PKd=54,5	11355616	5	1	667	10 11 646 3	ALTERNADOR PRE-MONTADO
POLIA 8PKd=186	10116366	1	1	584	10 11 617 5	VIRABREQUIM PEÇAS DE AC

Designação	Artigo	Item	Quanti	Página	Módulo	Designação
PONTE (JUMPER) 2 FACH	6001474	29	10	519	99 47 695	INSTALAÇÃO ELÉTRICA E50
PONTE DE VÁLVULAS	10119695	1	2	601	90 79 861	CAVALETE BALANCINS COM
PORCA	7009369	47	1	162	11 34 249 1	BOMBA DE PISTÃO AXIAL
PORCA	7027459	998	1	744	10 00 348 5	VÁLVULA DIRECIONAL
PORCA	7028908	650	5	505	10 29 026 4	PEÇAS DE MONTAGEM
PORCA DE APERTO M48	9229473	4	1	746	10 08 390 7	PINO COMPLETO
PORCA DE APERTO M64	9240322	4	1	745	10 06 258 3	PINO COMPLETO
PORCA DE APERTO M64	9240322	3	1	747	92 15 949 16	PINO COMPLETO
PORCA DE CHAPA	10044356	100	12	508	10 29 035 2	REVESTIMENTO INTERNO
PORCA DE CHAPA	10044356	100	12	510	10 48 808 8	REVESTIMENTO INTERNO
PORCA DE CHAPA	10290260	800	2	506	10 29 026 4	PEÇAS DE MONTAGEM
PORCA DE CHAPA	7366862	10	1	294	10 16 576 6	CONSOLE DE COMANDO
PORCA DE CHAPA M6	10009189	440	4	509	10 29 035 2	REVESTIMENTO INTERNO
PORCA DE CHAPA M6	10009189	440	4	511	10 48 808 8	REVESTIMENTO INTERNO
PORCA DE CHAPA M6	7370883	13	7	294	10 16 576 6	CONSOLE DE COMANDO
PORCA DE CHAPA M6	7370883	12	11	310	56 18 923	CONSOLE DE COMANDO DIRE
PORCA DE CHAPA ST3,5	10009079	260	8	490	10 29 033 7	INSTALACAO ELETRICA
PORCA DE CHAPA ST3,5	10009079	260	8	493	10 48 808 7	INSTALACAO ELETRICA
PORCA DE CHAPA ST4,8	7028941	190	10	508	10 29 035 2	REVESTIMENTO INTERNO
PORCA DE CHAPA ST4,8	7028941	190	10	510	10 48 808 8	REVESTIMENTO INTERNO
PORCA DE CONEXÃO	9075763	2	1	627	90 75 395	BICO INJ. DE TUBO DE PRES
PORCA DE CONEXÃO MLL8	10013550	251	1	260	90 64 786	ELEMENTO DE CONEXÃO
PORCA DE CONEXÃO MLL8	10013550	151	10	263	10 01 461 1	CAIXA AUXILIAR
PORCA DE VEDACAO M12	7381226	6	1	563	10 11 795 1	VALVULA DE REGULAGEM FI
PORCA DE VEDACAO M12	7381226	6	1	564	90 75 134	VALVULA DE REGULAGEM FI
PORCA DE VEDACAO M12	7381226	3	1	699	10 11 801 4	KIT DE VEDACAO
PORCA DE VEDACAO M12	7381226	3	1	702	10 11 583 8	JOGO DE VEDAÇÃO MOTOR D
PORCA DE VEDAÇÃO M6	7361600	30	2	178	70 28 075	UNIDADE DE CONTROLE
PORCA DE VEDAÇÃO M6	7361600	57	2	184	98 82 875	KIT DE VED DA VÁLVULA RE
PORCA DE VEDAÇÃO M8	7361601	14	1	168	10 22 063 5	VALVULA INTERRUPTORA
PORCA DE VEDAÇÃO M8	7361601	8	1	364	50 09 565	CARTUCHO LIMITADOR DE PR
PORCA DE VEDAÇÃO M8	7372252	11	1	371	10 32 372 8	VÁLVULA REDUTORA DE PR
PORCA M10X1	7014529	9	1	174	11 82 151 3	KIT DE VEDACAO DA VALVUL
PORCA M10X1	7018700	10	1	436	50 07 236	VALVULA LIMITADORA PRES
PORCA M10X1	7381781	6	1	605	90 74 507	BALANCIM PRE-MONTAGEM
PORCA M14X1,5	9270475	17	1	807	10 11 856 1	MANETE DE COMANDO VG6-8
PORCA M14X1,5	9270475	17	1	808	11 37 560 6	MANETE DE COMANDO VG6-8
PORCA M16X1,5	4901153	15	5	716	11 10 283 6	KIT MONOBLOCO 6.45M
PORCA M16X1,5	4901153	15	8	727	11 10 281 7	KIT DE ATUALIZAÇÃO 2.10M
PORCA M16X1,5	4901153	13	6	756	11 10 281 8	KIT MÁQUINA BASE
PORCA M22	7369103	4	196	80	10 67 501 0	ESTEIRA 500mm
PORCA M22	7369103	4	196	81	11 16 108 1	ESTEIRA 500mm
PORCA M4	10099210	28	4	250	10 22 844 3	BOMBA DE LUBRIFICACAO
PORCA M6X0,5	7027052	32	2	178	70 28 075	UNIDADE DE CONTROLE
PORCA M8X1	10330725	5	1	377	10 45 471 5	VÁLVULA REDUTORA DE PR
PORCA RANHURADA (CASTE	932814201	13	1	226	90 02 790 4	REDUTOR DE GIRO SAT 325/
PORCA SERRILHADA	7023934	6	1	366	56 15 344	VÁLVULA SOLENÓIDE
PORCA SERRILHADA	7023934	6	1	368	10 01 872 5	VÁLVULA DIRECIONAL
PORCA SEXTAVADA M10	10875606	23	4	217	11 10 291 6	INSTALACAO MECANISMO GI
PORCA SEXTAVADA M10	11002807	16	4	277	11 38 340 1	APOIO DE BRAÇO LADO DIRE
PORCA SEXTAVADA M10	11002807	16	4	301	11 45 228 6	APOIO DE BRAÇO LADO DIRE
PORCA SEXTAVADA M10	11002807	16	4	305	12 50 731 7	APOIO DE BRAÇO LADO DIRE
PORCA SEXTAVADA M10	11002807	8	1	521	10 35 866 5	BATERIA - INSTALACAO
PORCA SEXTAVADA M10	11002807	29	1	529	10 04 852 5	TANQUE COMBUSTIVEL INSTA
PORCA SEXTAVADA M10	11140466	13	4	193	10 04 853 6	ARREFECIMENTO DO MOTOR
PORCA SEXTAVADA M10	11140466	43	2	194	10 04 853 6	ARREFECIMENTO DO MOTOR
PORCA SEXTAVADA M10	11140466	47	4	521	10 35 866 5	BATERIA - INSTALACAO
PORCA SEXTAVADA M10	11140466	5	1	747	92 15 949 16	PINO COMPLETO
PORCA SEXTAVADA M10	11140466	41	2	775	11 45 729 6	CILINDRO DE ELEVACAO DIRE
PORCA SEXTAVADA M10	11140466	41	2	778	11 45 729 7	CILINDRO DE ELEVACAO ESQ

Designação	Artigo	Item	Quanti	Página	Módulo	Designação
PORCA SEXTAVADA M10	11656735	16	2	459	10 06 423 5	PORTA LATERAL DIREITA
PORCA SEXTAVADA M10	11656735	10	2	466	10 35 823 0	PORTA LATERAL DIANTEIRA
PORCA SEXTAVADA M10	11656735	22	2	467	10 02 525 4	FECHO DA PORTA
PORCA SEXTAVADA M10	4000383	37	2	200	10 21 851 3	RADIADOR COMBINADO
PORCA SEXTAVADA M10	4000383	37	2	203	11 69 472 6	RADIADOR COMBINADO
PORCA SEXTAVADA M10	4000383	26	3	344	10 35 862 3	INSTALACAO HDRAULICA
PORCA SEXTAVADA M10	4000383	29	1	530	10 49 836 0	TANQUE COMBUSTIVEL INSTA
PORCA SEXTAVADA M10	4000383	29	1	531	11 10 262 1	TANQUE COMBUSTIVEL INSTA
PORCA SEXTAVADA M10	4600579	29	3	344	10 35 862 3	INSTALACAO HDRAULICA
PORCA SEXTAVADA M10	4600579	44	1	360	10 06 380 1	INSTALACAO HIDRAULICA
PORCA SEXTAVADA M10	4600579	91	1	360	10 06 380 1	INSTALACAO HIDRAULICA
PORCA SEXTAVADA M10	4600579	121	1	361	10 06 380 1	INSTALACAO HIDRAULICA
PORCA SEXTAVADA M10	4600579	511	1	361	10 06 380 1	INSTALACAO HIDRAULICA
PORCA SEXTAVADA M10	4600579	8	6	423	10 35 863 6	BRAÇADEIRA DE TUBO
PORCA SEXTAVADA M10	4901429	24	6	139	10 36 573 8	SISTEMA DE ESCAPAMENTO
PORCA SEXTAVADA M10	4901429	24	6	140	11 10 293 9	SISTEMA DE ESCAPAMENTO
PORCA SEXTAVADA M10	4901429	6	1	745	10 06 258 3	PINO COMPLETO
PORCA SEXTAVADA M10	4901429	6	1	746	10 08 390 7	PINO COMPLETO
PORCA SEXTAVADA M10	4980805	3	3	669	90 78 384	MOTOR DE PARTIDA
PORCA SEXTAVADA M10	4981173	6	1	665	90 80 736	KIT DO TURBO COMPRESSOR
PORCA SEXTAVADA M10	7370889	8	2	294	10 16 576 6	CONSOLE DE COMANDO
PORCA SEXTAVADA M10	7370889	13	4	310	56 18 923	CONSOLE DE COMANDO DIRE
PORCA SEXTAVADA M10X1	10012557	6	1	600	12 40 205 3	BALANCIM PRE-MONTAGEM
PORCA SEXTAVADA M12	10179555	12	1	298	10 05 879 2	SENSOR DE PRE-COMANDO E
PORCA SEXTAVADA M12	10179555	12	1	313	10 05 879 4	SENSOR DE PRE-COMANDO
PORCA SEXTAVADA M12	10179555	22	2	469	10 35 387 9	FECHADURA DA PORTA
PORCA SEXTAVADA M12	10876514	22	2	358	10 35 862 4	INSTALACAO HIDRAULICA
PORCA SEXTAVADA M12	10876514	45	1	446	10 35 865 5	REVESTIMENTO
PORCA SEXTAVADA M12	10876514	25	4	711	11 10 294 5	LANÇA MONOBLOCO 6.45M
PORCA SEXTAVADA M12	10876514	40	6	775	11 45 729 6	CILINDRO DE ELEVACAO DIRE
PORCA SEXTAVADA M12	10876514	40	6	778	11 45 729 7	CILINDRO DE ELEVACAO ESQ
PORCA SEXTAVADA M12	11002808	17	1	116	98 82 760	REGULADOR NG 100
PORCA SEXTAVADA M12	11002808	74	2	130	10 08 004 4	QUADRO INSTALACAO
PORCA SEXTAVADA M12	11002808	7	2	205	10 84 460 3	VENTILADOR - INSTALACAO
PORCA SEXTAVADA M12	11002808	33	1	321	10 06 017 4	PEDAL ESQUERDO COMPLET
PORCA SEXTAVADA M12	11002808	33	1	322	10 06 017 5	PEDAL DIREITO COMPLETO
PORCA SEXTAVADA M12	11002808	50	2	357	10 35 862 9	ARREFECIMENTO DE OLEO
PORCA SEXTAVADA M12	11002808	13	8	443	10 35 865 9	REVESTIMENTO DA PLAT.GI
PORCA SEXTAVADA M12	11002808	23	4	443	10 35 865 9	REVESTIMENTO DA PLAT.GI
PORCA SEXTAVADA M12	11002808	33	4	443	10 35 865 9	REVESTIMENTO DA PLAT.GI
PORCA SEXTAVADA M12	11002808	113	2	448	10 35 865 5	REVESTIMENTO
PORCA SEXTAVADA M12	11002808	33	2	542	10 49 878 6	ESPELHO EXTERNO - INSTALA
PORCA SEXTAVADA M12	11002808	23	1	766	92 65 991	VÁLVULA REGULADORA DE FL
PORCA SEXTAVADA M12	11002808	17	1	810	11 38 131 3	REGULADOR NG 100
PORCA SEXTAVADA M12	4000619	43	2	753	11 10 291 2	MONTAGEM CILINDRO DE ELE
PORCA SEXTAVADA M12	4000619	7	2	758	10 35 857 3	CILINDRO HIDR. COM ACESS
PORCA SEXTAVADA M12	4900546	59	2	345	10 35 862 3	INSTALACAO HDRAULICA
PORCA SEXTAVADA M12	4900546	23	3	406	10 35 863 8	INSTALAÇÃO BLOCO DE VÁL
PORCA SEXTAVADA M12X1,5	10217578	16	1	161	10 29 197 8	REGULAGEM HIDRAULICA
PORCA SEXTAVADA M14X1,5	4001927	105	1	299	99 68 625	MANETE - LH ESQUERDA
PORCA SEXTAVADA M14X1,5	4001927	105	1	314	99 68 611	MANETE DIREITA
PORCA SEXTAVADA M16	4000420	18	3	100	11 46 393 5	COLETOR GIRATÓRIO - INSTA
PORCA SEXTAVADA M16	4000420	4	3	105	10 40 383 4	PEÇAS FIXAÇÃO COLETOR G
PORCA SEXTAVADA M16	4000420	46	4	158	10 11 886 0	REDUTOR DISTRIBUICAO BO
PORCA SEXTAVADA M16X1,5	4980478	8	1	667	10 11 646 3	ALTERNADOR PRE-MONTADO
PORCA SEXTAVADA M16X1,5	4980548	26	8	801	10 13 303 7	BOMBA HIDRÁULICA DUPLA
PORCA SEXTAVADA M18	4600348	4	12	133	10 35 862 0	PECAS DE FIXACAO DO MOTO
PORCA SEXTAVADA M22X1,5	12227355	54	4	753	11 10 291 2	MONTAGEM CILINDRO DE ELE
PORCA SEXTAVADA M24	10425688	167	1	786	10 82 562 1	JC LEVANTAMENTO DADOS-T
PORCA SEXTAVADA M26X1,5	12227356	16	1	756	11 10 281 8	KIT MÁQUINA BASE

Designação	Artigo	Item	Quanti	Página	Módulo	Designação
PORCA SEXTAVADA M3	10003140	26	2	297	73 73 807	ALAVANCA DE SEGURANCA
PORCA SEXTAVADA M4	12224463	33	6	275	11 38 339 7	APOIO DE BRAÇO LADO ESQ
PORCA SEXTAVADA M4	12224463	92	4	276	11 38 339 7	APOIO DE BRAÇO LADO ESQ
PORCA SEXTAVADA M4	12224463	105	2	280	11 38 340 1	APOIO DE BRAÇO LADO DIRE
PORCA SEXTAVADA M4	12224463	121	2	281	11 38 340 1	APOIO DE BRAÇO LADO DIRE
PORCA SEXTAVADA M4	12224463	33	6	291	10 38 502 8	APOIO DE BRAÇO LADO ESQ
PORCA SEXTAVADA M4	12224463	92	4	292	10 38 502 8	APOIO DE BRAÇO LADO ESQ
PORCA SEXTAVADA M4	12224463	105	2	303	11 45 228 6	APOIO DE BRAÇO LADO DIRE
PORCA SEXTAVADA M4	12224463	121	2	304	11 45 228 6	APOIO DE BRAÇO LADO DIRE
PORCA SEXTAVADA M4	12224463	105	1	307	12 50 731 7	APOIO DE BRAÇO LADO DIRE
PORCA SEXTAVADA M4	12224463	121	2	307	12 50 731 7	APOIO DE BRAÇO LADO DIRE
PORCA SEXTAVADA M4	12224463	17	2	751	10 35 860 1	ALARME DE TRANSLACAO
PORCA SEXTAVADA M4	4000376	5	3	337	10 02 207 8	CANTONEIRA DE MONTAGEM
PORCA SEXTAVADA M4	4000376	7	1	668	10 11 871 2	KIT DE PEÇAS
PORCA SEXTAVADA M4	4000376	124	4	786	10 82 562 1	JC LEVANTAMENTO DADOS-T
PORCA SEXTAVADA M4	4600625	10	6	333	10 02 211 7	CARCACA DE CONDUCAO DE
PORCA SEXTAVADA M5	12224012	72	2	276	11 38 339 7	APOIO DE BRAÇO LADO ESQ
PORCA SEXTAVADA M5	12224012	72	2	292	10 38 502 8	APOIO DE BRAÇO LADO ESQ
PORCA SEXTAVADA M5	12224012	124	4	786	10 82 562 1	JC LEVANTAMENTO DADOS-T
PORCA SEXTAVADA M5	4000466	63	2	295	97 58 815 01	PLACA ELETRÔNICA
PORCA SEXTAVADA M5	4000466	8	2	296	98 74 988	PLACAS - INSTALAÇÃO
PORCA SEXTAVADA M5	4000466	34	2	520	99 47 695	INSTALAÇÃO ELÉTRICA E50
PORCA SEXTAVADA M5	4000466	5	1	668	10 11 871 2	KIT DE PEÇAS
PORCA SEXTAVADA M5	4001866	66	2	295	97 58 815 01	PLACA ELETRÔNICA
PORCA SEXTAVADA M6	10003366	3	1	647	90 78 314	FLANGE DE AQUECIMENTO
PORCA SEXTAVADA M6	10299668	86	2	279	11 38 340 1	APOIO DE BRAÇO LADO DIRE
PORCA SEXTAVADA M6	10299668	86	2	302	11 45 228 6	APOIO DE BRAÇO LADO DIRE
PORCA SEXTAVADA M6	10299668	86	2	306	12 50 731 7	APOIO DE BRAÇO LADO DIRE
PORCA SEXTAVADA M6	10299668	10	2	455	10 06 436 0	CAPO DO RADIADOR
PORCA SEXTAVADA M6	10299668	18	4	459	10 06 423 5	PORTA LATERAL DIREITA
PORCA SEXTAVADA M6	10299668	12	4	469	10 35 387 9	FECHADURA DA PORTA
PORCA SEXTAVADA M6	10299668	152	1	786	10 82 562 1	JC LEVANTAMENTO DADOS-T
PORCA SEXTAVADA M6	10814799	22	2	754	10 85 472 4	PEÇAS MONT.- MÁQUINA BAS
PORCA SEXTAVADA M6	4000379	480	2	112	10 00 201 1	VALVULA DE FREIO
PORCA SEXTAVADA M6	4000379	53	3	137	10 49 819 9	FILTRO DE AR - INSTALAÇÃO
PORCA SEXTAVADA M6	4000379	45	2	158	10 11 886 0	REDUTOR DISTRIBUICAO BO
PORCA SEXTAVADA M6	4000379	25	4	200	10 21 851 3	RADIADOR COMBINADO
PORCA SEXTAVADA M6	4000379	25	4	203	11 69 472 6	RADIADOR COMBINADO
PORCA SEXTAVADA M6	4000379	64	2	295	97 58 815 01	PLACA ELETRÔNICA
PORCA SEXTAVADA M6	4000379	5	2	334	10 49 308 7	PAINEL DE OPERAÇÃO
PORCA SEXTAVADA M6	4000379	478	2	414	10 35 863 8	INSTALAÇÃO BLOCO DE VÁL
PORCA SEXTAVADA M6	4000379	12	4	466	10 35 823 0	PORTA LATERAL DIANTEIRA
PORCA SEXTAVADA M6	4000379	12	4	467	10 02 525 4	FECHO DA PORTA
PORCA SEXTAVADA M6	4000379	180	2	481	70 28 759	PÁRA-BRISA SUPERIOR
PORCA SEXTAVADA M6	4000379	300	1	484	70 28 769	PORTA DA CABINE DO OPERA
PORCA SEXTAVADA M6	4000379	450	4	504	10 29 026 4	PEÇAS DE MONTAGEM
PORCA SEXTAVADA M6	4000379	12	4	526	10 06 559 6	SECADOR - INSTALACAO
PORCA SEXTAVADA M6	4000379	3	1	668	10 11 871 2	KIT DE PEÇAS
PORCA SEXTAVADA M6	4000379	42	1	687	10 11 799 7	CHICOTE DE CABOS ACESSÓ
PORCA SEXTAVADA M6	4000379	152	1	786	10 82 562 1	JC LEVANTAMENTO DADOS-T
PORCA SEXTAVADA M6	4000900	18	2	390	56 17 688	VÁLVULA DE FECHAMENTO
PORCA SEXTAVADA M6	4002477	67	2	295	97 58 815 01	PLACA ELETRÔNICA
PORCA SEXTAVADA M6XLH	4901651	45	1	520	99 47 695	INSTALAÇÃO ELÉTRICA E50
PORCA SEXTAVADA M8	10299669	57	7	11	12 86 140 4	PECAS DE FIXACAO
PORCA SEXTAVADA M8	10299669	349	1	198	10 04 853 6	ARREFECIMENTO DO MOTOR
PORCA SEXTAVADA M8	10299669	29	1	217	11 10 291 6	INSTALACAO MECANISMO GI
PORCA SEXTAVADA M8	10299669	6	4	247	12 84 952 6	LUBRIFICAÇÃO CENTRALIZAD
PORCA SEXTAVADA M8	10299669	18	2	351	10 35 862 8	INSTALACAO HIDRAULICA
PORCA SEXTAVADA M8	10299669	208	36	515	11 10 255 3	INSTALAÇÃO ELÉTRICA
PORCA SEXTAVADA M8	10299669	27	5	525	10 06 559 1	MAGUEIRAS DO AR-CONDICI

Designação	Artigo	Item	Quanti	Página	Módulo	Designação
PORCA SEXTAVADA M8	10299669	43	2	542	10 49 878 6	ESPELHO EXTERNO - INSTALA
PORCA SEXTAVADA M8	10814800	150	2	481	70 28 759	PÁRA-BRISA SUPERIOR
PORCA SEXTAVADA M8	10875614	135	1	448	10 35 865 5	REVESTIMENTO
PORCA SEXTAVADA M8	10875614	156	2	449	10 35 865 5	REVESTIMENTO
PORCA SEXTAVADA M8	10876581	23	2	136	10 36 918 3	INSTALACAO DE COMBUSTIVE
PORCA SEXTAVADA M8	10876581	55	1	213	10 04 853 8	MOTOR - PECAS ANEXAS
PORCA SEXTAVADA M8	11693875	30	13	521	10 35 866 5	BATERIA - INSTALACAO
PORCA SEXTAVADA M8	241015402	10	4	341	11 00 707 2	TRILHO DO BANCO DO OPERA
PORCA SEXTAVADA M8	4000381	32	10	200	10 21 851 3	RADIADOR COMBINADO
PORCA SEXTAVADA M8	4000381	32	10	203	11 69 472 6	RADIADOR COMBINADO
PORCA SEXTAVADA M8	4000381	131	1	274	10 49 880 5	POSTO DE COMANDO - PEÇA
PORCA SEXTAVADA M8	4000381	161	3	274	10 49 880 5	POSTO DE COMANDO - PEÇA
PORCA SEXTAVADA M8	4000381	15	2	356	10 35 862 9	ARREFECIMENTO DE OLEO
PORCA SEXTAVADA M8	4000381	170	4	484	70 28 769	PORTA DA CABINE DO OPERA
PORCA SEXTAVADA M8	4000381	160	1	490	10 29 033 7	INSTALACAO ELETRICA
PORCA SEXTAVADA M8	4000381	160	1	493	10 48 808 7	INSTALACAO ELETRICA
PORCA SEXTAVADA M8	4000381	540	1	496	10 29 036 3	KIT DO MOTOR DO LIMPADOR
PORCA SEXTAVADA M8	4000381	540	1	497	70 28 884	KIT DO MOTOR DO LIMPADOR
PORCA SEXTAVADA M8	4000381	180	4	503	10 29 026 4	PEÇAS DE MONTAGEM
PORCA SEXTAVADA M8	4000381	1	1	668	10 11 871 2	KIT DE PEÇAS
PORCA SEXTAVADA M8	4101100	12	2	741	90 79 392	PLACA DE DEGRAU MONT. D
PORCA SEXTAVADA M8	411508001	65	1	295	97 58 815 01	PLACA ELETRÔNICA
PORCA SEXTAVADA M8	4600783	68	1	295	97 58 815 01	PLACA ELETRÔNICA
PORCA SEXTAVADA M8	4600783	430	1	504	10 29 026 4	PEÇAS DE MONTAGEM
PORCA SEXTAVADA M8	4901096	4	2	326	94 76 369	PLACA DE DEGRAU MONT. E
PORCA SEXTAVADA M8	4901573	8	4	253	10 66 472 2	BLOCO DE DISTRIBUIÇÃO SX
PORCA-CASTELO UNF5/8	12220008	21	1	205	10 84 460 3	VENTILADOR - INSTALACAO
PORTA DA CABINE DO OPERA	7028769	50	1	472	10 22 830 2	CABINE DE OPERADOR
PORTA DA CABINE DO OPERA	7028769	50	1	474	10 47 616 9	CABINE DE OPERADOR
PORTA LATERAL DIANTEIRA	10065196	2	1	466	10 35 823 0	PORTA LATERAL DIANTEIRA
PORTA LATERAL DIANTEIRA	10358230	220	1	451	10 35 865 5	REVESTIMENTO
PORTA LATERAL DIREITA	10064235	140	1	448	10 35 865 5	REVESTIMENTO
PORTA LATERAL DIREITA	10064236	2	1	459	10 06 423 5	PORTA LATERAL DIREITA
PORTA LATERAL DIREITA	10498566	65	1	793	10 49 866 6	FILTRO DE AR - INSTALAÇÃO
PORTA LATERAL DIREITA	10498567	2	1	460	10 49 856 6	PORTA LATERAL DIREITA
PORTA LATERAL ESQUERDA	10059642	2	1	457	10 35 822 9	PORTA LATERAL ESQUERDA
PORTA LATERAL ESQUERDA	10358229	120	1	448	10 35 865 5	REVESTIMENTO
PORTAS INTERNAS	10082759	30	1	462	10 35 826 4	CAIXA DE FERRAMENTAS
POSTO DE COMANDO	10498615	6000	1	123	10 35 861 4	CARRO SUPERIOR
POSTO DE COMANDO - PEÇA	10498805	20	1	266	10 49 861 5	POSTO DE COMANDO
PRATO DA MOLA	10216737	23	2	172	10 29 197 5	PISTÃO DE AJUSTAMENTO
PRATO DA MOLA	10220546	7	2	172	10 29 197 5	PISTÃO DE AJUSTAMENTO
PRATO DA MOLA	10220649	4	1	174	11 82 151 3	KIT DE VEDACAO DA VALVUL
PRATO DA MOLA	11213474	8	2	168	10 22 063 5	VALVULA INTERRUPTORA
PRATO DA MOLA	7002893	38	2	432	73 69 779	MOLA DE PRESSÃO
PRATO DA MOLA	7026129	70	2	112	10 00 201 1	VALVULA DE FREIO
PRATO DA MOLA	7028170	4	2	177	70 28 075	UNIDADE DE CONTROLE
PRATO DA MOLA	7028303	100	1	374	70 28 300	VÁLVULA LIMITADORA DE PR
PRATO DA MOLA	9079261	15	2	323	90 79 258	MANETE DE COMANDO VG7 2-
PRATO DA MOLA	9079261	15	2	742	90 79 264	KIT DE MODIFICAÇÃO VG7-2/3
PRATO DA MOLA	9265395	15	4	807	10 11 856 1	MANETE DE COMANDO VG6-8
PRATO DA MOLA	9265395	15	4	808	11 37 560 6	MANETE DE COMANDO VG6-8
PRATO MOLA SUPERIOR	9074480	7	4	591	10 14 155 4	CABEÇOTE - PRÉ MONTADO
PRATO MOLA SUPERIOR	9074480	7	4	597	10 11 942 7	CABEÇOTE - PRÉ MONTADO
PRATO MOLA SUPERIOR	9074480	7	4	598	10 12 036 4	CABEÇOTE - PRÉ MONTADO
PRE-FILTRO	10813960	6	1	793	10 49 866 6	FILTRO DE AR - INSTALAÇÃO
PRE-FILTRO DE COMBUSTÍVE	10044302	102	1	64	12 48 693 1	KIT DE MANUTENCAO 500h
PRE-FILTRO DE COMBUSTÍVE	10044302	102	1	67	12 48 693 2	KIT DE MANUTENÇÃO 1000h
PRE-FILTRO DE COMBUSTÍVE	10044302	102	1	70	12 48 693 3	KIT DE MANUTENÇÃO 1500-25
PRE-FILTRO DE COMBUSTÍVE	10044302	102	1	71	12 48 693 4	KIT DE MANUTENÇÃO 2000h

Designação	Artigo	Item	Quanti	Página	Módulo	Designação
PRE-FILTRO DE COMBUSTÍVE	10044302	20	8	126	10 06 994 0	KIT DE FILTRO DE COMBUSTÍ
PRE-FILTRO DE COMBUSTÍVE	10044302	1	1	632	10 22 281 9	PRÉ-FILTRO COMBUST.COM
PRESCRICAO DE APERTO	10123559	602	1	806	92 67 037	VÁLVULA LIMITADORA DE PR
PRESCRICAO DE APERTO	10123559	602	1	812	12 41 005 4	VÁLVULA LIMITADORA DE PR
PRESCRICAO DE APERTO FM	10151939	625	1	811	11 38 727 8	KIT REEQUIP.PARAFUSO VED
PRESCRICAO DE APERTO FM	10151939	625	1	833	11 38 195 4	KIT DE VEDAÇÃO NG 100
PRESSOSTATO	10100708	65	1	276	11 38 339 7	APOIO DE BRAÇO LADO ESQ
PRESSOSTATO	10100708	65	2	277	11 38 340 1	APOIO DE BRAÇO LADO DIRE
PRESSOSTATO	10100708	65	1	292	10 38 502 8	APOIO DE BRAÇO LADO ESQ
PRESSOSTATO	10100708	65	2	301	11 45 228 6	APOIO DE BRAÇO LADO DIRE
PRESSOSTATO	10100708	65	2	305	12 50 731 7	APOIO DE BRAÇO LADO DIRE
PRESSOSTATO	10292659	2	1	527	10 29 266 0	SECADOR COLETOR
PRESSOSTATO	10467727	36	1	360	10 06 380 1	INSTALACAO HIDRAULICA
PROT.CONTRA CALOR COM FI	10115718	415	1	554	10 11 714 5	MOTOR DIESEL D936 L A6 190
PROT.CONTRA CALOR COM F	10119199	416	1	554	10 11 714 5	MOTOR DIESEL D936 L A6 190
PROTECAO CINTA INFERIOR	10072157	216	1	7	.	
PROTEÇÃO	7028800	112	1	480	10 03 553 0	PÁRA-BRISA INFERIOR
PROTEÇÃO CONTRA CORRO	11419175	801	1	771	94 00 688 8	MANCAL DA HASTE DO PISTÃ
PROTEÇÃO CONTRA CORRO	11419175	801	1	772	94 02 794 9	MANCAL DA HASTE DO PISTÃ
PROTEÇÃO CONTRA CORRO	11419175	801	1	773	95 91 741	MANCAL DA HASTE DO PISTÃ
PROTEÇÃO DA BORDA	10074863	11	2	121	10 40 412 9	INST.HIDR.CARRO INFERIOR
PROTEÇÃO DA BORDA	10292662	21	1.25	456	10 05 183 8	CAPO DIREITO
PROTEÇÃO DA BORDA	10292662	15	0.88	465	10 06 576 2	DIVISÓRIA CENTRAL
PRÉ-COMANDO DE PEDAL M	10059818	40	1	271	10 49 880 5	POSTO DE COMANDO - PEÇA
PRÉ-FILTRO COMBUST.COM	10222819	1	1	629	10 11 656 2	MONT DO PRÉ FILTRO DE CO
PRÉ-FILTRO DE AR O4 - KC 11	10498368	48	1	7	.	
PRÉ-FILTRO DE AR O4 - KC 11	10498368	50	1	129	10 08 004 4	QUADRO INSTALACAO
PRÉ-FILTRO DE AR O4 - KC 11	10498368	240	1	452	10 35 865 5	REVESTIMENTO
PURGAMENTO DA ÁGUA REF	10115503	387	1	554	10 11 714 5	MOTOR DIESEL D936 L A6 190
PUXADOR	10009025	730	1	505	10 29 026 4	PEÇAS DE MONTAGEM
PUXADOR	10029676	36	1	285	11 10 016 6	PARTE SUPERIOR DE ASSENT
PUXADOR	10291064	790	1	506	10 29 026 4	PEÇAS DE MONTAGEM
PUXADOR	10358190	50	1	542	10 49 878 6	ESPELHO EXTERNO - INSTALA
PUXADOR	10467429	59	1	286	11 10 016 6	PARTE SUPERIOR DE ASSENT
PUXADOR	10490894	520	1	505	10 29 026 4	PEÇAS DE MONTAGEM
PUXADOR	10814718	23	1	287	11 10 016 7	SUSPENSAO
PUXADOR	7019153	260	1	484	70 28 769	PORTA DA CABINE DO OPERA
PUXADOR	7025006	20	1	290	70 24 996	SUPORTE DO ASSENTO
PUXADOR	7029421	530	2	487	70 28 831	JANELA DE CORRER
PUXADOR	7370897	4	1	294	10 16 576 6	CONSOLE DE COMANDO
PUXADOR SW9,12,14,17 GEKR	10359147	200	1	540	10 84 856 2	KIT DE FERRAMENTAS
PÁ AGITADORA	10014712	23	1	250	10 22 844 3	BOMBA DE LUBRIFICACAO
PÁRA-BRISA INFERIOR	10035529	40	1	472	10 22 830 2	CABINE DE OPERADOR
PÁRA-BRISA INFERIOR	10035529	40	1	474	10 47 616 9	CABINE DE OPERADOR
PÁRA-BRISA INFERIOR	10035530	110	1	479	10 03 552 9	PÁRA-BRISA INFERIOR
PÁRA-BRISA INFERIOR	7030040	111	1	480	10 03 553 0	PÁRA-BRISA INFERIOR
PÁRA-BRISA SUPERIOR	7028759	30	1	472	10 22 830 2	CABINE DE OPERADOR
PÁRA-BRISA SUPERIOR	7028759	30	1	474	10 47 616 9	CABINE DE OPERADOR
QUADRO INSTALACAO	10080044	300	1	123	10 35 861 4	CARRO SUPERIOR
QUADRO TRASEIRO CENTRA	10080047	30	1	129	10 08 004 4	QUADRO INSTALACAO
QUADRO TRASEIRO ESQUE	10080046	10	1	129	10 08 004 4	QUADRO INSTALACAO
RADIADOR COMBINADO	10218513	10	1	193	10 04 853 6	ARREFECIMENTO DO MOTOR
RADIADOR COMBINADO	11694726	10	1	193	10 04 853 6	ARREFECIMENTO DO MOTOR
RADIADOR DE AR	10300995	4	1	199	10 21 851 3	RADIADOR COMBINADO
RADIADOR DE AR	10300995	4	1	202	11 69 472 6	RADIADOR COMBINADO
RADIADOR DE COMBUSTIVEL	10300996	7	1	199	10 21 851 3	RADIADOR COMBINADO
RADIADOR DE COMBUSTIVEL	10300996	7	1	202	11 69 472 6	RADIADOR COMBINADO
RADIADOR DE OLEO PRE-M	9073507	1	1	612	90 73 508	RADIADOR DE ÓLEO - ACESS
RADIADOR DE ÁGUA	10300994	3	1	199	10 21 851 3	RADIADOR COMBINADO
RADIADOR DE ÁGUA	10300994	3	1	202	11 69 472 6	RADIADOR COMBINADO

Designação	Artigo	Item	Quanti	Página	Módulo	Designação
RADIADOR DE ÓLEO - ACESS	9073508	130	1	558	10 11 682 5	MOTOR BÁSICO D936 L HIGH 3
RADIADOR DE ÓLEO 12 FLACH	5700087	3	1	613	90 73 507	RADIADOR DE OLEO PRE-M
RADIADOR DE ÓLEO HIDRÁUL	10300992	2	1	199	10 21 851 3	RADIADOR COMBINADO
RADIADOR DE ÓLEO HIDRÁUL	11694727	2	1	202	11 69 472 6	RADIADOR COMBINADO
RADIADOR OLEO DA TRANSM	10300993	5	1	199	10 21 851 3	RADIADOR COMBINADO
RADIADOR OLEO DA TRANSM	10300993	5	1	202	11 69 472 6	RADIADOR COMBINADO
RASPADOR	5602110	6	1	95	11 00 410 3	PACOTE DE MOLAS COMPLET
REBITE	10470127	3	4	512	10 47 012 8	REVESTIMENTO COMPLETO
REBITE	7020612	380	2	485	70 28 769	PORTA DA CABINE DO OPERA
REBITE	7020612	370	4	504	10 29 026 4	PEÇAS DE MONTAGEM
REBITE	7024438	220	2	484	70 28 769	PORTA DA CABINE DO OPERA
REBITE	7024438	200	12	508	10 29 035 2	REVESTIMENTO INTERNO
REBITE	7024438	200	12	510	10 48 808 8	REVESTIMENTO INTERNO
REBITE CEGO	10022656	10	4	335	11 00 359 4	CARCAÇA
REBITE CEGO	7029433	310	6	484	70 28 769	PORTA DA CABINE DO OPERA
REBITE CEGO	7029433	280	12	508	10 29 035 2	REVESTIMENTO INTERNO
REBITE CEGO	7029433	280	12	510	10 48 808 8	REVESTIMENTO INTERNO
REBITE CEGO 4,0X15	4900053	3	4	546	10 49 803 0	ADESIVO DE SINALIZAÇÃO
REBITE CEGO A 4X8	10040412	8	1	604	90 74 505	BALANCIM PRÉ MONTADO
REBITE CEGO A 4X8	7401288	17	4	333	10 02 211 7	CARCACA DE CONDUCAO DE
REBITE CEGO A3,0 6,0	4451001	4	4	331	10 02 206 9	CARCAÇA DO EVAPORADOR
RECIPIENTE TRANSPARENTE	10222821	2	1	632	10 22 281 9	PRÉ-FILTRO COMBUST.COM
RECIPIENTE TRANSPARENTE	7621058	24	1	250	10 22 844 3	BOMBA DE LUBRIFICACAO
REDE	10492435	19	1	285	11 10 016 6	PARTE SUPERIOR DE ASSENT
REDUTOR	10290346	510	1	496	10 29 036 3	KIT DO MOTOR DO LIMPADOR
REDUTOR	7028883	510	1	497	70 28 884	KIT DO MOTOR DO LIMPADOR
REDUTOR DE GIRO	90027905	1	1	220	90 02 790 3	REDUTOR DE GIRO SAT 325/
REDUTOR DE GIRO SAT 325/	90027903	10	1	219	10 06 198 2	MECANISMO DE GIRO
REDUTOR DE GIRO SAT 325/	90027904	1	1	223	90 02 790 5	REDUTOR DE GIRO
REDUTOR DISTRIBUICAO BO	10118860	1	1	150	10 13 461 8	AGREAGADO CIRCUITOS MU
REDUÇÃO M16X1,5/M14X1,5	10038817	45	2	634	10 11 628 5	TUBULAÇÃO DE COMBUSTÍVE
REDUÇÃO M16X1,5/M30X1,5	9276784	2	2	662	90 79 889	CONEXÃO DE AQUECIMENTO
REDUÇÃO M30X1,5	9080013	11	1	692	90 80 006	SAIDA AUXILIAR ANEXA
REFLETOR LUMINOSO D196X8	6204631	9	2	536	10 49 800 2	INSTALAÇÃO DO CONTRAPES
REFORÇO	10078106	60	1	130	10 08 004 4	QUADRO INSTALACAO
REFORÇO	10078120	70	1	130	10 08 004 4	QUADRO INSTALACAO
REFORÇO	10087238	40	1	542	10 49 878 6	ESPELHO EXTERNO - INSTALA
REFRATÔMETRO	11830573	9996	1	43	11 44 078 9	ACESSÓRIOS
REGUA DE COMANDO	10288470	500	1	414	10 35 863 8	INSTALAÇÃO BLOCO DE VÁL
REGULADOR	6002867	1	1	667	10 11 646 3	ALTERNADOR PRE-MONTADO
REGULADOR EHR	10133062	10	1	819	10 13 306 1	VÁLVULA REGULADORA EHR
REGULADOR NG 100	11381313	5	1	799	90 73 888	MOTOR HIDRÁULICO
REGULADOR NG 100	9882760	5	1	799	90 73 888	MOTOR HIDRÁULICO
REGULAGEM DO ENCOSTO	7025007	23	1	290	70 24 996	SUPORTE DO ASSENTO
REGULAGEM HIDRAULICA	10291978	2	1	162	11 34 249 1	BOMBA DE PISTÃO AXIAL
RELE	6001682	10	2	317	10 68 741 7	PLACA ELETRÔNICA
RELE	6001921	130	2	520	99 47 695	INSTALAÇÃO ELÉTRICA E50
RELE	6002381	32	2	295	97 58 815 01	PLACA ELETRÔNICA
RELE	6202646	30	2	295	97 58 815 01	PLACA ELETRÔNICA
RELE DE POTENCIA	10009888	16	2	519	99 47 695	INSTALAÇÃO ELÉTRICA E50
RELE TEMPORIZADOR	6001418	11	1	751	10 35 860 1	ALARME DE TRANSLACAO
REPARO DA BOMBA	5717149	4	1	162	11 34 249 1	BOMBA DE PISTÃO AXIAL
RESERVATÓRIO DE ÁGUA	5618664	440	1	491	10 29 033 7	INSTALACAO ELETRICA
RESERVATÓRIO DE ÁGUA	5618664	440	1	494	10 48 808 7	INSTALACAO ELETRICA
RESERVATÓRIO DE ÓLEO	968868001	1	1	237	96 91 056 01	RESERVATÓRIO DE ÓLEO
RESERVATÓRIO DE ÓLEO	969105601	5	1	220	90 02 790 3	REDUTOR DE GIRO SAT 325/
RETORNO DE OLEO VAZADO	10115595	214	1	551	10 11 714 5	MOTOR DIESEL D936 L A6 190
REVESTIMENTO	10013978	220	1	508	10 29 035 2	REVESTIMENTO INTERNO
REVESTIMENTO	10217034	220	1	510	10 48 808 8	REVESTIMENTO INTERNO
REVESTIMENTO	10290359	210	1	508	10 29 035 2	REVESTIMENTO INTERNO

Designação	Artigo	Item	Quanti	Página	Módulo	Designação
REVESTIMENTO	10290359	210	1	510	10 48 808 8	REVESTIMENTO INTERNO
REVESTIMENTO	10358655	8500	1	124	10 35 861 4	CARRO SUPERIOR
REVESTIMENTO	10455060	284	1	510	10 48 808 8	REVESTIMENTO INTERNO
REVESTIMENTO	7028837	320	1	484	70 28 769	PORTA DA CABINE DO OPERA
REVESTIMENTO COMPLETO	10470128	250	1	508	10 29 035 2	REVESTIMENTO INTERNO
REVESTIMENTO COMPLETO	10470128	250	1	510	10 48 808 8	REVESTIMENTO INTERNO
REVESTIMENTO DA PLAT.GI	10358659	8400	1	124	10 35 861 4	CARRO SUPERIOR
REVESTIMENTO DIANTEIRO	10060549	20	1	443	10 35 865 9	REVESTIMENTO DA PLAT.GI
REVESTIMENTO DIREITO	10094135	30	1	443	10 35 865 9	REVESTIMENTO DA PLAT.GI
REVESTIMENTO DIREITO	10094136	10	1	444	10 09 413 5	REVESTIMENTO DIREITO
REVESTIMENTO DO ASSENT	7024985	2	1	282	10 04 363 2	ASSENTO DO OPERADOR
REVESTIMENTO DO ASSENT	7024986	12	1	282	10 04 363 2	ASSENTO DO OPERADOR
REVESTIMENTO DO PISO (C	10382585	5	1	266	10 49 861 5	POSTO DE COMANDO
REVESTIMENTO ESQUERDO	10065493	10	1	443	10 35 865 9	REVESTIMENTO DA PLAT.GI
REVESTIMENTO ESQUERDO	7028963	2	1	512	10 47 012 8	REVESTIMENTO COMPLETO
REVESTIMENTO INTERNO	10290352	80	1	472	10 22 830 2	CABINE DE OPERADOR
REVESTIMENTO INTERNO	10488088	80	1	474	10 47 616 9	CABINE DE OPERADOR
REVESTIMENTO PLACA DE ES	9480295	11	1	321	10 06 017 4	PEDAL ESQUERDO COMPLET
REVESTIMENTO PLACA DE ES	9480295	11	1	322	10 06 017 5	PEDAL DIREITO COMPLETO
REVESTIMENTO PLACA DE ES	9480295	2	1	326	94 76 369	PLACA DE DEGRAU MONT. E
RODA GUIA	12221001	1	1	93	12 21 972 1	RODA GUIA - INSTALAÇÃO D7
RODA GUIA - INSTALAÇÃO D7	10651678	60	2	75	10 49 885 2	CARRO INFERIOR COMPLETO
RODA GUIA - INSTALAÇÃO D7	12219721	60	2	75	10 49 885 2	CARRO INFERIOR COMPLETO
RODA GUIA B6	10004546	1	1	92	10 65 167 8	RODA GUIA - INSTALAÇÃO D7
RODA INTERNA M=3,25 Z=90	932777601	25	1	226	90 02 790 4	REDUTOR DE GIRO SAT 325/
RODA INTERNA M=4 Z=78	944315903	10	1	109	96 87 443 01	MECANISMO DE TRANSLAÇÃ
RODA LIVRE D936	9074936	10	1	655	10 13 281 7	BOMBA DE ÁGUA PRÉ-MONT
RODA MOTRIZ D7	9391227	2	2	107	10 83 693 0	MECANISMO DE TRANSLAÇÃ
RODA MOTRIZ D7	9391227	2	2	108	11 10 296 8	MECANISMO DE TRANSLAÇÃ
RODA MOTRIZ D7E	9391363	2	2	78	10 49 887 7	KIT ADICIONAL
ROLAMENTO	7469905	64	2	181	90 74 893	KIT DE REPARO DA CARCAÇA
ROLAMENTO	7469905	32	1	189	98 89 977	KIT DE REPARO DO EIXO NG
ROLAMENTO	7469905	32	1	831	98 89 978	KIT DE REPARO DO EIXO NG
ROLAMENTO DE AGULHAS d=	10122500	21	4	807	10 11 856 1	MANETE DE COMANDO VG6-8
ROLAMENTO DE AGULHAS d=	10122500	21	4	808	11 37 560 6	MANETE DE COMANDO VG6-8
ROLAMENTO DE ESFERA D7	11600107	2	1	88	10 39 231 7	ROLDANA MONTAGEM D7
ROLAMENTO DE ESFERAS	933628601	10	1	242	10 04 851 4	PEÇAS FIX.COROA GIG.CHA
ROLAMENTO DE ROLETES CÔ	10008089	15	1	208	56 19 045	MOTOR DE PISTÃO AXIAL
ROLAMENTO DE ROLETES CÔ	10008089	15	1	400	10 00 807 7	BOMBA
ROLAMENTO DE ROLETES CÔ	10030908	3	1	226	90 02 790 4	REDUTOR DE GIRO SAT 325/
ROLAMENTO DE ROLETES CÔ	7025903	16	1	208	56 19 045	MOTOR DE PISTÃO AXIAL
ROLAMENTO DE ROLETES CÔ	7025903	16	1	400	10 00 807 7	BOMBA
ROLAMENTO DE ROLETES C	746231601	12	1	226	90 02 790 4	REDUTOR DE GIRO SAT 325/
ROLAMENTO DE ROLOS CILÍ	10216295	34	1	158	10 11 886 0	REDUTOR DISTRIBUICAO BO
ROLAMENTO DE ROLOS CILÍ	12593102	32	1	233	90 74 117	KIT DE REPARO DO EIXO NG
ROLAMENTO DE ROLOS CILÍ	12593102	32	1	824	90 74 123	KIT DE REPARO DO EIXO NG
ROLAMENTO DE ROLOS CILÍ	7380070	33	1	233	90 74 117	KIT DE REPARO DO EIXO NG
ROLAMENTO DE ROLOS CILÍ	7380070	33	1	824	90 74 123	KIT DE REPARO DO EIXO NG
ROLAMENTO DE ROLOS CILÍ	7380106	33	1	189	98 89 977	KIT DE REPARO DO EIXO NG
ROLAMENTO DE ROLOS CILÍ	7380106	33	1	831	98 89 978	KIT DE REPARO DO EIXO NG
ROLAMENTO DE ROLOS CILÍ	7380470	32	1	158	10 11 886 0	REDUTOR DISTRIBUICAO BO
ROLAMENTO DE ROLOS CILÍ	7380721	30	1	821	10 11 909 3	KIT DE REP DO EIXO DE ACIO
ROLAMENTO DE ROLOS CILÍ	7380797	31	1	821	10 11 909 3	KIT DE REP DO EIXO DE ACIO
ROLAMENTO DE ROLOS CILÍ	7382149	34	1	827	90 77 464	CR FLANGE NG 125-140-150
ROLAMENTO DE ROLOS CILÍ	7618605	31	1	399	11 49 189 4	MECANISMO DE ACIONAMENT
ROLAMENTO DE ROLOS CILÍ	4980228	33	1	158	10 11 886 0	REDUTOR DISTRIBUICAO BO
ROLAMENTO DE ROLOS CILÍN	10166804	5	1	115	96 86 142 01	ENGRENAGEM PLANETÁRIA M
ROLAMENTO DE ROLOS CILÍN	10167557	49	3	222	90 02 197 3	KIT DE MODIFICAÇÃO
ROLAMENTO DE ROLOS CILÍN	10167557	5	1	224	93 27 778 01	ENGRENAGEM PLANETÁRIA
ROLAMENTO DE ROLOS CILÍN	7610001	5	1	224	93 27 778 01	ENGRENAGEM PLANETÁRIA

Designação	Artigo	Item	Quanti	Página	Módulo	Designação
ROLAMENTO DE ROLOS CILÍN	761003303	5	1	114	94 43 010 03	ENGRENAGEM PLANETÁRIA M
ROLAMENTO DE ROLOS CILÍN	761003403	5	1	113	94 43 004 03	ENGRENAGEM PLANETÁRIA M
ROLAMENTO DE ROLOS CILÍN	761003403	5	1	225	94 43 563 03	ENGRENAGEM PLANETÁRIA
ROLAMENTO DO MECANISMO	7025009	59	1	289	10 28 999 3	SISTEMA AMORTECIMENTO
ROLDANA	11003783	1	1	89	11 60 010 7	ROLAMENTO DE ESFERA D7
ROLDANA DE DESVIO PRÉ-MO	9077708	4	2	650	10 11 646 4	COMPRESSOR DO AR-CONDI
ROLDANA MONTAGEM D7	10392317	40	18	75	10 49 885 2	CARRO INFERIOR COMPLETO
ROLETE	7028809	160	4	481	70 28 759	PÁRA-BRISA SUPERIOR
ROLETE CILÍNDRICO	10008299	4	1	166	70 28 176	PISTÃO DE FREIO
ROLETE SUPERIOR - INSTAL	10392320	50	4	75	10 49 885 2	CARRO INFERIOR COMPLETO
ROLETE SUPERIOR D7	10651677	2	1	90	10 39 232 0	ROLETE SUPERIOR - INSTAL
RUSTILO TARP 16KG	8611031	20	1	61	11 41 917 5	PROTEÇÃO CONTRA CORRO
RÁDIO	11346626	56	1	7	.	
RÉGUA DE FIXAÇÃO	9903712	23	2	445	10 35 865 5	REVESTIMENTO
SACA PINO	7361276	175	1	540	10 84 856 2	KIT DE FERRAMENTAS
SAIDA AUXILIAR ANEXA	9073767	210	1	559	10 11 682 5	MOTOR BÁSICO D936 L HIGH 3
SAIDA AUXILIAR ANEXA	9077719	650	1	555	10 11 714 5	MOTOR DIESEL D936 L A6 190
SAIDA AUXILIAR ANEXA	9078961	654	1	556	10 11 714 5	MOTOR DIESEL D936 L A6 190
SAIDA AUXILIAR ANEXA	9080006	652	1	555	10 11 714 5	MOTOR DIESEL D936 L A6 190
SAPATA 500mm	10470093	2	49	80	10 67 501 0	ESTEIRA 500mm
SAPATA 500mm	5615742	2	49	81	11 16 108 1	ESTEIRA 500mm
SECADOR - INSTALACAO	10065596	40	1	524	10 06 272 5	MAGUEIRAS DO AR-CONDICI
SECADOR COLETOR	10292660	5	1	526	10 06 559 6	SECADOR - INSTALACAO
SENSOR	635867001	40	1	209	10 04 853 7	SISTEMA ELETRICO DO MOTO
SENSOR	635867001	1	1	679	98 85 618	MONTAGEM SENSOR DE VEL
SENSOR DE APROXIMACAO	10017824	150	1	299	99 68 625	MANETE - LH ESQUERDA
SENSOR DE APROXIMACAO	10017824	150	1	314	99 68 611	MANETE DIREITA
SENSOR DE APROXIMAÇÃO	10009330	20	1	253	10 66 472 2	BLOCO DE DISTRIBUIÇÃO SX
SENSOR DE APROXIMAÇÃO	10024864	2	1	327	99 37 443	SENSOR DE APROXIMAÇÃO
SENSOR DE APROXIMAÇÃO	9937443	40	2	320	10 05 981 8	PRÉ-COMANDO DE PEDAL M
SENSOR DE CONTROLE DO	9076551	581	1	555	10 11 714 5	MOTOR DIESEL D936 L A6 190
SENSOR DE NÍVEL	10022175	30	1	383	10 04 851 7	TANQUE HIDRAULICO INSTA
SENSOR DE NÍVEL	10022175	30	1	386	10 35 863 4	TANQUE HIDRAULICO INSTA
SENSOR DE NÍVEL	6205496	320	1	197	10 04 853 6	ARREFECIMENTO DO MOTOR
SENSOR DE PRE-COMANDO	10058794	60	1	277	11 38 340 1	APOIO DE BRAÇO LADO DIRE
SENSOR DE PRE-COMANDO	10058794	60	1	301	11 45 228 6	APOIO DE BRAÇO LADO DIRE
SENSOR DE PRE-COMANDO	10058794	60	1	305	12 50 731 7	APOIO DE BRAÇO LADO DIRE
SENSOR DE PRE-COMANDO E	10058792	60	1	276	11 38 339 7	APOIO DE BRAÇO LADO ESQ
SENSOR DE PRE-COMANDO E	10058792	60	1	292	10 38 502 8	APOIO DE BRAÇO LADO ESQ
SENSOR DE ROTACAO	12544505	20	2	674	90 76 551	SENSOR DE CONTROLE DO
SENSOR DE ROTACAO	9076534	21	1	674	90 76 551	SENSOR DE CONTROLE DO
SENSOR DE ROTAÇAO	11442694	1	1	677	90 76 534	SENSOR DE ROTACAO
SENSOR DE ROTAÇAO	11442694	1	1	688	12 54 450 5	SENSOR DE ROTACAO
SENSOR DE TEMPERATURA	10022067	11	1	335	11 00 359 4	CARCAÇA
SENSOR DE TEMPERATURA	10022077	12	1	335	11 00 359 4	CARCAÇA
SENSOR DE TEMPERATURA	6290130	1	2	673	90 76 551	SENSOR DE CONTROLE DO
SENSOR DE TEMPERATURA	691180608	1	1	675	90 76 530	SENSOR DE TEMPERATURA C
SENSOR DE TEMPERATURA C	9076530	2	1	673	90 76 551	SENSOR DE CONTROLE DO
SENSOR DE VELOCIDADE	6290073	10	1	239	92 78 623	KIT REPARO SENSOR N° ROT
SENSOR DE ÁGUA	10280185	2	1	632	10 22 281 9	PRÉ-FILTRO COMBUST.COM
SENSOR DO NÍVEL DO COMB	6204564	5	1	529	10 04 852 5	TANQUE COMBUSTIVEL INSTA
SENSOR DO NÍVEL DO COMB	6204564	5	1	530	10 49 836 0	TANQUE COMBUSTIVEL INSTA
SENSOR DO NÍVEL DO COMB	6204564	5	1	531	11 10 262 1	TANQUE COMBUSTIVEL INSTA
SERPENTINA DE TUBO	774383508	372	0.6	198	10 04 853 6	ARREFECIMENTO DO MOTOR
SERPENTINA DE TUBO	774383508	210	1.4	211	10 04 853 7	SISTEMA ELETRICO DO MOTO
SERPENTINA DE TUBO	774383508	165	1	258	90 64 786	ELEMENTO DE CONEXÃO
SERPENTINA DE TUBO	774383508	265	1	260	90 64 786	ELEMENTO DE CONEXÃO
SERPENTINA DE TUBO	774383508	20	0.5	751	10 35 860 1	ALARME DE TRANSLACAO
SERVOMOTOR	10022766	3	1	332	10 02 208 3	BOCAL DE AR
SERVOMOTOR	10022766	7	2	333	10 02 211 7	CARCACA DE CONDUCAO DE

Designação	Artigo	Item	Quanti	Página	Módulo	Designação
SERVOMOTOR	10022766	2	1	337	10 02 207 8	CANTONEIRA DE MONTAGEM
SILENCIADOR	10040818	10	1	139	10 36 573 8	SISTEMA DE ESCAPAMENTO
SILENCIADOR	11692910	10	1	140	11 10 293 9	SISTEMA DE ESCAPAMENTO
SIMBOLO LUBRIFICACAO Ø1	9911745	7	1	315	10 05 507 1	INTERRUPTOR - INSTALAÇÃO
SIRENE	6000578	37	1	271	10 49 880 5	POSTO DE COMANDO - PEÇA
SISTEMA AMORTECIMENTO	10289993	50	1	282	10 04 363 2	ASSENTO DO OPERADOR
SISTEMA DE ESCAPAMENTO	10365738	540	1	132	10 35 862 2	INSTALAÇÃO DO MOTOR
SISTEMA DE ESCAPAMENTO	11102939	540	1	132	10 35 862 2	INSTALAÇÃO DO MOTOR
SISTEMA ELETRCO DO MOTO	10118483	992	1	556	10 11 714 5	MOTOR DIESEL D936 L A6 190
SISTEMA ELETRICO DO MOTO	10048537	580	1	132	10 35 862 2	INSTALAÇÃO DO MOTOR
SOFTWARE	10684332	10	1	787	10 84 118 4	MODIF. COMPONENTES ELÉT
SOFTWARE	10684334	40	1	787	10 84 118 4	MODIF. COMPONENTES ELÉT
SOFTWARE	10684354	70	1	787	10 84 118 4	MODIF. COMPONENTES ELÉT
SOFTWARE	10884852	3	1	797	12 50 716 3	TECLADO ESCAVADEIRA COM
SOLUÇÃO DE UREIA	11485621	210	1	54	94 06 645 8	SOLUÇÃO DE UREIA
SOLUÇÃO DE UREIA	11485622	1000	1	54	94 06 645 8	SOLUÇÃO DE UREIA
SOLUÇÃO DE UREIA	94066458	110	1	15	90 66 460	
SOLUÇÃO DE UREIA 10L KAN	11485620	10	1	54	94 06 645 8	SOLUÇÃO DE UREIA
SUPORTE	10009023	270	2	490	10 29 033 7	INSTALACAO ELETRICA
SUPORTE	10009023	270	2	493	10 48 808 7	INSTALACAO ELETRICA
SUPORTE	10027438	231	2	481	70 28 759	PÁRA-BRISA SUPERIOR
SUPORTE	10039678	621	2	505	10 29 026 4	PEÇAS DE MONTAGEM
SUPORTE	10041876	45	1	328	10 40 689 8	AR CONDICIONADO
SUPORTE	10041876	280	1	515	11 10 255 3	INSTALAÇÃO ELÉTRICA
SUPORTE	10041876	17	1	650	10 11 646 4	COMPRESSOR DO AR-CONDI
SUPORTE	10043180	20	1	293	10 05 736 2	CONSOLE DE COMANDO
SUPORTE	10059516	25	2	212	10 04 853 8	MOTOR - PECAS ANEXAS
SUPORTE	10059947	15	1	344	10 35 862 3	INSTALACAO HDRAULICA
SUPORTE	10079307	20	1	11	12 86 140 4	PECAS DE FIXACAO
SUPORTE	10080886	2	1	139	10 36 573 8	SISTEMA DE ESCAPAMENTO
SUPORTE	10080886	2	1	140	11 10 293 9	SISTEMA DE ESCAPAMENTO
SUPORTE	10080887	3	1	139	10 36 573 8	SISTEMA DE ESCAPAMENTO
SUPORTE	10080887	3	1	140	11 10 293 9	SISTEMA DE ESCAPAMENTO
SUPORTE	10116295	1	1	579	10 11 630 0	SUPORTE DE MONTAGEM
SUPORTE	10116522	3	1	641	10 11 657 6	PEÇA DE CONEXÃO
SUPORTE	10117267	1	1	638	10 11 726 8	SUPORTE DE MONTAGEM
SUPORTE	10119139	25	1	650	10 11 646 4	COMPRESSOR DO AR-CONDI
SUPORTE	10119311	5	1	576	90 79 862	VARETA MEDIÇ.NÍVEL ÓLEO C
SUPORTE	10216468	32	1	399	11 49 189 4	MECANISMO DE ACIONAMENT
SUPORTE	10300997	6	1	199	10 21 851 3	RADIADOR COMBINADO
SUPORTE	10300997	6	1	202	11 69 472 6	RADIADOR COMBINADO
SUPORTE	10379347	25	1	358	10 35 862 4	INSTALACAO HIDRAULICA
SUPORTE	10379349	21	2	358	10 35 862 4	INSTALACAO HIDRAULICA
SUPORTE	10825829	165	1	786	10 82 562 1	JC LEVANTAMENTO DADOS-T
SUPORTE	11834721	13	1	796	11 69 501 2	KIT DE ABASTECIMENTO DE U
SUPORTE	6905671	330	1	515	11 10 255 3	INSTALAÇÃO ELÉTRICA
SUPORTE	7028768	240	9	490	10 29 033 7	INSTALACAO ELETRICA
SUPORTE	7028768	240	9	493	10 48 808 7	INSTALACAO ELETRICA
SUPORTE	7028801	120	2	480	10 03 553 0	PÁRA-BRISA INFERIOR
SUPORTE	7028812	250	11	490	10 29 033 7	INSTALACAO ELETRICA
SUPORTE	7028812	250	11	493	10 48 808 7	INSTALACAO ELETRICA
SUPORTE	7372355	18	1	297	73 73 807	ALAVANCA DE SEGURANCA
SUPORTE	7373825	20	1	297	73 73 807	ALAVANCA DE SEGURANCA
SUPORTE	7624322	30	4	209	10 04 853 7	SISTEMA ELETRICO DO MOTO
SUPORTE	8563210	155	3	786	10 82 562 1	JC LEVANTAMENTO DADOS-T
SUPORTE	9079591	11	1	650	10 11 646 4	COMPRESSOR DO AR-CONDI
SUPORTE	9079844	9	1	574	12 83 245 4	CARTER DE ÓLEO
SUPORTE	9080038	9	1	687	10 11 799 7	CHICOTE DE CABOS ACESSÓ
SUPORTE	9408711	290	1	504	10 29 026 4	PEÇAS DE MONTAGEM
SUPORTE	9949402	15	1	212	10 04 853 8	MOTOR - PECAS ANEXAS

Designação	Artigo	Item	Quanti	Página	Módulo	Designação
SUPORTE	9949403	10	1	212	10 04 853 8	MOTOR - PECAS ANEXAS
SUPORTE	9950357	30	1	11	12 86 140 4	PECAS DE FIXACAO
SUPORTE	9950385	10	1	11	12 86 140 4	PECAS DE FIXACAO
SUPORTE CPL	10115994	2	1	684	10 11 599 3	DISPOSITIVO COMANDO - M
SUPORTE CPL	10115996	1	1	684	10 11 599 3	DISPOSITIVO COMANDO - M
SUPORTE CPL	10119119	1	1	633	10 11 912 7	SUPORTE DE MONTAGEM
SUPORTE CPL	10121676	3	1	645	10 12 190 9	LINHA DE CONEXAO
SUPORTE DAS LAMELAS	90014539	55	1	221	90 01 453 8	KIT DE MODIFICAÇÃO
SUPORTE DAS LAMELAS	932778001	55	1	222	90 02 197 3	KIT DE MODIFICAÇÃO
SUPORTE DAS LAMELAS	932778001	55	1	227	90 02 790 4	REDUTOR DE GIRO SAT 325/
SUPORTE DAS LAMELAS	944302203	55	1	110	96 87 443 01	MECANISMO DE TRANSLAÇÃ
SUPORTE DE CABOS	10023106	11	2	333	10 02 211 7	CARCACA DE CONDUCAO DE
SUPORTE DE CONEXAO	9443002	1	1	109	96 87 443 01	MECANISMO DE TRANSLAÇÃ
SUPORTE DE ENCAIXE	10064138	190	1	450	10 35 865 5	REVESTIMENTO
SUPORTE DE ENCAIXE	10081811	180	1	450	10 35 865 5	REVESTIMENTO
SUPORTE DE FIXAÇÃO	9388848	41	1	277	11 38 340 1	APOIO DE BRAÇO LADO DIRE
SUPORTE DE FIXAÇÃO	9388848	41	1	301	11 45 228 6	APOIO DE BRAÇO LADO DIRE
SUPORTE DE FIXAÇÃO	9388848	41	1	305	12 50 731 7	APOIO DE BRAÇO LADO DIRE
SUPORTE DE FIXAÇÃO	9560855	45	2	521	10 35 866 5	BATERIA - INSTALACAO
SUPORTE DE MANGUEIRA	9361518	49	1	137	10 49 819 9	FILTRO DE AR - INSTALAÇÃO
SUPORTE DE MONTAGEM	10116300	27	1	549	10 11 714 5	MOTOR DIESEL D936 L A6 190
SUPORTE DE MONTAGEM	10117268	218	1	551	10 11 714 5	MOTOR DIESEL D936 L A6 190
SUPORTE DE MONTAGEM	10119127	2	1	566	10 11 916 7	CARCAÇA MANIVELA PURGAM
SUPORTE DIANTEIRO ESQUE	10048546	11	1	134	10 04 853 1	SUSPENSAO DO MOTOR
SUPORTE DO ASSENTO	10029370	10	1	290	70 24 996	SUPORTE DO ASSENTO
SUPORTE DO ASSENTO	7024996	15	1	282	10 04 363 2	ASSENTO DO OPERADOR
SUPORTE DO ESPELHO	10650964	25	1	542	10 49 878 6	ESPELHO EXTERNO - INSTALA
SUPORTE DO ESPELHO	10822312	60	1	544	10 49 878 6	ESPELHO EXTERNO - INSTALA
SUPORTE DO ESPELHO	12569773	60	1	544	10 49 878 6	ESPELHO EXTERNO - INSTALA
SUPORTE DOS AGREGADOS	10141908	1	1	570	90 79 480	SUPORTE DOS AGREGADOS
SUPORTE DOS AGREGADOS	9079480	12	1	557	10 11 682 5	MOTOR BÁSICO D936 L HIGH 3
SUPORTE PLANETÁRIO	932777701	45	1	222	90 02 197 3	KIT DE MODIFICAÇÃO
SUPORTE PLANETÁRIO	932777701	45	1	227	90 02 790 4	REDUTOR DE GIRO SAT 325/
SUPORTE PLANETÁRIO	944300803	20	1	109	96 87 443 01	MECANISMO DE TRANSLAÇÃ
SUPORTE PLANETÁRIO	9443013	30	1	109	96 87 443 01	MECANISMO DE TRANSLAÇÃ
SUPORTE PLANETÁRIO	9444501	35	1	226	90 02 790 4	REDUTOR DE GIRO SAT 325/
SUPORTE TRASEIRO DIREITO	10048547	14	1	134	10 04 853 1	SUSPENSAO DO MOTOR
SUSPENSAO	11100167	20	1	283	11 00 085 6	BANCO COM SUSP. PNEUMAT
SUSPENSAO	11659214	7	1	287	11 10 016 7	SUSPENSAO
SUSPENSAO DO MOTOR	10048531	510	1	132	10 35 862 2	INSTALAÇÃO DO MOTOR
TABELA ANWEISUNGEN	9278153	500	1	216	90 80 194	KIT DE VEDAÇÃO
TABELA ANWEISUNGEN	9278153	500	1	807	10 11 856 1	MANETE DE COMANDO VG6-8
TABELA ANWEISUNGEN	9278153	500	1	808	11 37 560 6	MANETE DE COMANDO VG6-8
TABELA ANWEISUNGEN	9278153	500	1	817	90 74 112	PLACA DE LIGAÇÃO NG 090
TABELA DE CAPACIDADE DE	9392835	65	1	548	10 49 803 0	ADESIVO DE SINALIZAÇÃO
TALA	10429055	30	1	477	70 28 788	VEDAÇÃO
TAMANHO DA UNIÃO ROSQUE	9070532	300	1	261	90 64 786	ELEMENTO DE CONEXÃO
TAMPA	10009188	390	1	509	10 29 035 2	REVESTIMENTO INTERNO
TAMPA	10009188	390	1	511	10 48 808 8	REVESTIMENTO INTERNO
TAMPA	10009596	19	1	253	10 66 472 2	BLOCO DE DISTRIBUIÇÃO SX
TAMPA	10022051	16	1	335	11 00 359 4	CARCAÇA
TAMPA	10044360	160	1	508	10 29 035 2	REVESTIMENTO INTERNO
TAMPA	10044360	160	1	510	10 48 808 8	REVESTIMENTO INTERNO
TAMPA	10051238	20	1	85	10 07 306 8	TAMPA
TAMPA	10067706	24	1	8	11 10 260 2	TANQUE COMBUSTIVEL REPO
TAMPA	10067706	40	1	531	11 10 262 1	TANQUE COMBUSTIVEL INSTA
TAMPA	10067706	31	1	534	10 06 759 6	TANQUE DE COMBUSTÍVEL
TAMPA	10067706	31	1	535	10 49 835 9	TANQUE DE COMBUSTÍVEL
TAMPA	10073068	2	1	87	10 39 293 2	TAMPA COMPLETA
TAMPA	10073069	10	1	85	10 07 306 8	TAMPA

Designação	Artigo	Item	Quanti	Página	Módulo	Designação
TAMPA	10079217	2	1	545	10 37 464 5	TAMPA
TAMPA	10082763	10	1	462	10 35 826 4	CAIXA DE FERRAMENTAS
TAMPA	10082764	2	1	464	10 08 276 3	TAMPA
TAMPA	10116015	435	1	554	10 11 714 5	MOTOR DIESEL D936 L A6 190
TAMPA	10117094	10	1	681	90 80 653	PEÇAS DE FECHAMENTO
TAMPA	10118649	22	1	807	10 11 856 1	MANETE DE COMANDO VG6-8
TAMPA	10118649	22	1	808	11 37 560 6	MANETE DE COMANDO VG6-8
TAMPA	10119485	1	1	651	10 11 555 9	COBERTURA
TAMPA	10119485	1	1	652	10 11 949 2	COBERTURA
TAMPA	10120005	1	1	661	90 80 280	PEÇAS DE FECHAMENTO
TAMPA	10122317	1	1	698	90 80 504	PEÇAS DE FECHAMENTO
TAMPA	10216731	3	1	161	10 29 197 8	REGULAGEM HIDRAULICA
TAMPA	10216732	4	1	161	10 29 197 8	REGULAGEM HIDRAULICA
TAMPA	10290262	430	1	491	10 29 033 7	INSTALACAO ELETRICA
TAMPA	10290262	430	1	494	10 48 808 7	INSTALACAO ELETRICA
TAMPA	10290263	500	1	496	10 29 036 3	KIT DO MOTOR DO LIMPADOR
TAMPA	10300926	3	1	138	10 21 717 3	FILTRO DE AR
TAMPA	10356235	9	1	104	96 11 367	COLETOR GIRATÓRIO
TAMPA	10374645	20	1	542	10 49 878 6	ESPELHO EXTERNO - INSTALA
TAMPA	10376165	2	1	86	10 39 262 4	TAMPA COMPLETA
TAMPA	11004096	2	1	91	10 65 167 7	ROLETE SUPERIOR D7
TAMPA	5003249	12	6	424	10 11 386 0	BLOCO DE COMANDO
TAMPA	604521501	46	15	295	97 58 815 01	PLACA ELETRÔNICA
TAMPA	7020608	190	2	493	10 48 808 7	INSTALACAO ELETRICA
TAMPA	7025845	10	1	498	56 18 664	RESERVATÓRIO DE ÁGUA
TAMPA	7027816	37	1	288	11 10 016 7	SUSPENSAO
TAMPA	7028349	12	1	390	56 17 688	VÁLVULA DE FECHAMENTO
TAMPA	7028836	230	1	484	70 28 769	PORTA DA CABINE DO OPERA
TAMPA	7028865	430	1	491	10 29 033 7	INSTALACAO ELETRICA
TAMPA	7028881	500	1	497	70 28 884	KIT DO MOTOR DO LIMPADOR
TAMPA	7369781	22	8	424	10 11 386 0	BLOCO DE COMANDO
TAMPA	7370893	14	1	310	56 18 923	CONSOLE DE COMANDO DIRE
TAMPA	7370895	3	1	294	10 16 576 6	CONSOLE DE COMANDO
TAMPA	7370896	2	1	294	10 16 576 6	CONSOLE DE COMANDO
TAMPA	7372237	7	1	362	10 04 272 9	BLOCO DE VÁLVULAS DE CO
TAMPA	9076414	1	1	651	10 11 555 9	COBERTURA
TAMPA	9077777	1	1	580	91 47 512	PEÇAS DE FECHAMENTO
TAMPA	9144761	1	1	648	91 44 757	TAMPA DE FECHAMENTO 60/6
TAMPA	9171589	60	2	320	10 05 981 8	PRÉ-COMANDO DE PEDAL M
TAMPA	9178294	3	1	690	90 77 719	SAIDA AUXILIAR ANEXA
TAMPA	9178294	5	1	695	90 78 962	TOMADA PRÉ MONTADA
TAMPA	9273690	6	1	692	90 80 006	SAIDA AUXILIAR ANEXA
TAMPA	9275429	72	1	183	92 75 443	KIT DE REPARO DA TAMPA N
TAMPA	9276767	10	1	818	98 82 832	VÁLVULA DE COMANDO
TAMPA	9371217	65	1	320	10 05 981 8	PRÉ-COMANDO DE PEDAL M
TAMPA	9767890	60	1	385	10 04 851 7	TANQUE HIDRAULICO INSTA
TAMPA	9767890	60	1	387	10 35 863 4	TANQUE HIDRAULICO INSTA
TAMPA	9767890	35	1	529	10 04 852 5	TANQUE COMBUSTIVEL INSTA
TAMPA	9767890	35	1	530	10 49 836 0	TANQUE COMBUSTIVEL INSTA
TAMPA	9767890	35	1	531	11 10 262 1	TANQUE COMBUSTIVEL INSTA
TAMPA CENTRAL	10070335	170	1	450	10 35 865 5	REVESTIMENTO
TAMPA CENTRAL	10070336	2	1	461	10 07 033 5	TAMPA CENTRAL
TAMPA COM ALÇA	7370924	1	1	392	10 33 390 3	FILTRO DE RETORNO 20/5µm
TAMPA COMPLETA	10392624	15	2	75	10 49 885 2	CARRO INFERIOR COMPLETO
TAMPA COMPLETA	10392932	35	1	75	10 49 885 2	CARRO INFERIOR COMPLETO
TAMPA COMPLETA	10492977	1	1	287	11 10 016 7	SUSPENSAO
TAMPA DA BOMBA	10428856	2	1	170	10 28 264 7	BOMBA DE ENGRENAGENS
TAMPA DA BOMBA DE ÁGUA	10134069	12	1	655	10 13 281 7	BOMBA DE ÁGUA PRÉ-MONT
TAMPA DE COBERTURA X753	7370892	4	1	310	56 18 923	CONSOLE DE COMANDO DIRE
TAMPA DE FECHAMENTO	10012263	12	2	177	70 28 075	UNIDADE DE CONTROLE

Designação	Artigo	Item	Quanti	Página	Módulo	Designação
TAMPA DE FECHAMENTO	10301015	43	1	200	10 21 851 3	RADIADOR COMBINADO
TAMPA DE FECHAMENTO	10301015	47	1	203	11 69 472 6	RADIADOR COMBINADO
TAMPA DE FECHAMENTO	968610601	40	1	109	96 87 443 01	MECANISMO DE TRANSLAÇÃ
TAMPA DE FECHAMENTO 60/6	9144757	2	1	578	10 11 903 0	ABASTECIMENTO DE ÓLEO
TAMPA DE FECHAMENTO 60/6	9144757	10	1	595	90 79 838	TAMPA DO CABEÇOTE
TAMPA DE FECHAMENTO B/1	4981042	12	1	602	10 12 038 4	CABEÇOTE CILÍNDRICO
TAMPA DE FECHAMENTO B/3	12209779	2	6	560	12 82 483 7	CÁRTER COMPLETO COM CIL
TAMPA DE FECHAMENTO B/3	4980363	10	3	602	10 12 038 4	CABEÇOTE CILÍNDRICO
TAMPA DE FECHAMENTO B/4	12209783	3	12	560	12 82 483 7	CÁRTER COMPLETO COM CIL
TAMPA DE MANCAL DE AJUST	12578797	3	1	561	10 11 577 8	BLOCO DO MOTOR
TAMPA DE MANUTENCAO	7370894	2	1	310	56 18 923	CONSOLE DE COMANDO DIRE
TAMPA DE PROTEÇÃO	10356239	12	1	104	96 11 367	COLETOR GIRATÓRIO
TAMPA DE PROTEÇÃO	7370890	5	3	310	56 18 923	CONSOLE DE COMANDO DIRE
TAMPA DE PROTEÇÃO	7370899	6	1	294	10 16 576 6	CONSOLE DE COMANDO
TAMPA DE PROTEÇÃO	7618883	285	1	510	10 48 808 8	REVESTIMENTO INTERNO
TAMPA DIREITA SUPERIOR	10009193	150	1	508	10 29 035 2	REVESTIMENTO INTERNO
TAMPA DIREITA SUPERIOR	10009193	150	1	510	10 48 808 8	REVESTIMENTO INTERNO
TAMPA DO CABEÇOTE	10119011	1	1	594	10 11 963 6	INSTALAÇÃO TAMPA DO CAB
TAMPA DO CABEÇOTE	10127488	1	1	592	10 11 960 9	INSTALAÇÃO TAMPA DO CAB
TAMPA DO CABEÇOTE	10127489	1	1	593	10 11 961 0	INSTALAÇÃO TAMPA DO CAB
TAMPA DO CABEÇOTE	9074513	1	1	596	90 79 849	TAMPA DO CABEÇOTE
TAMPA DO CABEÇOTE	9079838	83	1	549	10 11 714 5	MOTOR DIESEL D936 L A6 190
TAMPA DO CABEÇOTE	9079839	1	1	595	90 79 838	TAMPA DO CABEÇOTE
TAMPA DO CABEÇOTE	9079849	82	5	549	10 11 714 5	MOTOR DIESEL D936 L A6 190
TAMPA DO MANCAL	9072908	3	1	649	90 78 356	PEÇAS DE FECHAMENTO
TAMPA DO MANCAL	9080191	5	1	158	10 11 886 0	REDUTOR DISTRIBUICAO BO
TAMPA DO VENTILADOR	10300998	8	1	199	10 21 851 3	RADIADOR COMBINADO
TAMPA DO VENTILADOR	10300998	8	1	202	11 69 472 6	RADIADOR COMBINADO
TAMPA F.LNV	11100087	26	1	285	11 10 016 6	PARTE SUPERIOR DE ASSENT
TAMPA NG 100	9882761	13	1	116	98 82 760	REGULADOR NG 100
TAMPA NG 100	9882761	13	1	810	11 38 131 3	REGULADOR NG 100
TAMPA NG 165	9881230	18	1	820	90 78 788	KIT REPARO DA TAMPA REG
TAMPA PRÉ MONTADA	12832304	7	1	571	90 79 487	CÁRTER DE ÓLEO
TAMPA PRÉ MONTADA	12832305	10	1	571	90 79 487	CÁRTER DE ÓLEO
TAMPA VEDAÇÃO	10040064	2	1	650	10 11 646 4	COMPRESSOR DO AR-CONDI
TAMPAS INFERIORES	10063239	11	1	470	10 35 866 0	TAMPAS INFERIORES
TAMPAS INFERIORES	10358660	8600	1	124	10 35 861 4	CARRO SUPERIOR
TAMPÃO	10015404	10	1	528	10 28 664 6	MANGUEIRA
TAMPÃO	10022774	3	1	331	10 02 206 9	CARCAÇA DO EVAPORADOR
TAMPÃO	10220421	49	1	163	11 34 249 1	BOMBA DE PISTÃO AXIAL
TAMPÃO	10287248	20	4	470	10 35 866 0	TAMPAS INFERIORES
TAMPÃO - MATERIAL ESPUMA	10451200	22	5	735	11 10 258 6	CAÇAMBA RETRO HD 1800MM
TAMPÃO - MATERIAL ESPUMA	10451200	5	1	781	11 10 259 0	DENTE Z50CL
TAMPÃO DE VEDAÇÃO LK 950	10030837	14	12	560	12 82 483 7	CÁRTER COMPLETO COM CIL
TAMPÃO DE VEDAÇÃO LK 950/	10036325	2	1	603	10 14 282 0	EIXO DO BALANCIM PRÉ-MO
TAMPÃO DE VEDAÇÃO MB 70	7610819	7	1	109	96 87 443 01	MECANISMO DE TRANSLAÇÃ
TAMPÃO DE VEDAÇÃO MB 70	7380133	35	2	323	90 79 258	MANETE DE COMANDO VG7 2-
TAMPÃO DE VEDAÇÃO MB 70	7380133	66	2	820	90 78 788	KIT REPARO DA TAMPA REG
TAMPÃO DE VEDAÇÃO MB 70	7380480	97	1	227	90 02 790 4	REDUTOR DE GIRO SAT 325/
TAMPÃO DE VEDAÇÃO MB 850	7382069	8	2	560	12 82 483 7	CÁRTER COMPLETO COM CIL
TAMPÃO GPN 260 Q30303	7373405	41	1	446	10 35 865 5	REVESTIMENTO
TAMPÃO PL 10L/S	477700408	60	3	360	10 06 380 1	INSTALACAO HIDRAULICA
TAMPÃO PL 10L/S	477700408	85	3	360	10 06 380 1	INSTALACAO HIDRAULICA
TANQUE COMBUSTIVEL INSTA	10048525	9300	1	124	10 35 861 4	CARRO SUPERIOR
TANQUE COMBUSTIVEL INSTA	10498360	9300	1	124	10 35 861 4	CARRO SUPERIOR
TANQUE COMBUSTIVEL INSTA	11102621	9300	1	124	10 35 861 4	CARRO SUPERIOR
TANQUE COMBUSTIVEL REPO	10067707	4	1	529	10 04 852 5	TANQUE COMBUSTIVEL INSTA
TANQUE COMBUSTIVEL REPO	10498728	4	1	530	10 49 836 0	TANQUE COMBUSTIVEL INSTA
TANQUE COMBUSTIVEL REPO	11102602	4	1	531	11 10 262 1	TANQUE COMBUSTIVEL INSTA
TANQUE DE COMBUSTÍVEL	10067596	3	1	529	10 04 852 5	TANQUE COMBUSTIVEL INSTA

Designação	Artigo	Item	Quanti	Página	Módulo	Designação
TANQUE DE COMBUSTÍVEL	10498359	3	1	530	10 49 836 0	TANQUE COMBUSTIVEL INSTA
TANQUE DE COMBUSTÍVEL	11102620	3	1	531	11 10 262 1	TANQUE COMBUSTIVEL INSTA
TANQUE DE EXPANSÃO	10301001	11	1	199	10 21 851 3	RADIADOR COMBINADO
TANQUE DE EXPANSÃO	10301001	11	1	202	11 69 472 6	RADIADOR COMBINADO
TANQUE DE URÉIA	11825938	30	1	49	11 82 320 0	
TANQUE HIDRAULICO INSTA	10048517	7100	1	123	10 35 861 4	CARRO SUPERIOR
TANQUE HIDRAULICO INSTA	10358634	7100	1	123	10 35 861 4	CARRO SUPERIOR
TANQUE HIDRÁULICO	10051827	3	1	383	10 04 851 7	TANQUE HIDRAULICO INSTA
TANQUE HIDRÁULICO	10061129	4	1	383	10 04 851 7	TANQUE HIDRAULICO INSTA
TANQUE HIDRÁULICO	10358183	3	1	386	10 35 863 4	TANQUE HIDRAULICO INSTA
TANQUE HIDRÁULICO	10358635	4	1	386	10 35 863 4	TANQUE HIDRAULICO INSTA
TAPETE DE BORRACHA	10007928	480	2	361	10 06 380 1	INSTALACAO HIDRAULICA
TECLADO	10685277	2	1	311	11 45 227 4	TECLADO ESCAVADEIRA CO
TECLADO	10884047	2	1	312	11 73 919 4	TECLADO ESCAVADEIRA CO
TECLADO	10884851	2	1	797	12 50 716 3	TECLADO ESCAVADEIRA COM
TECLADO ESCAVADEIRA COM	12507163	40	1	305	12 50 731 7	APOIO DE BRAÇO LADO DIRE
TECLADO ESCAVADEIRA CO	11452274	40	1	301	11 45 228 6	APOIO DE BRAÇO LADO DIRE
TECLADO ESCAVADEIRA CO	11739194	40	1	277	11 38 340 1	APOIO DE BRAÇO LADO DIRE
TERMINAL DE DRENAGEM	7402657	1	1	541	93 58 137	MANGUEIRA HID. ESCOAMEN
TERMINAL GARFO G 8X16	4000746	31	4	446	10 35 865 5	REVESTIMENTO
TERMINAL GARFO G 8X16	4000746	91	2	447	10 35 865 5	REVESTIMENTO
TERMINAL GARFO G 8X16	4000746	21	2	462	10 35 826 4	CAIXA DE FERRAMENTAS
TERMINAL GARFO G 8X16	4000746	10	2	468	10 03 720 9	MOLA A GÁS
TERMOSTATO	10022048	2	1	335	11 00 359 4	CARCAÇA
TERMOSTATO	7380833	2	2	656	10 11 983 0	CARCAÇA DO TERMOSTATO
TERMOSTATO	7380833	2	2	657	90 75 678	CARCAÇA DO TERMOSTATO 7
TIRA DE ESPUMA	10022772	2	1	338	10 02 211 9	CAIXA
TIRANTE DE TRAÇÃO	10014715	25	4	250	10 22 844 3	BOMBA DE LUBRIFICACAO
TIRANTE DE TRAÇÃO M8X140	10013857	6	2	253	10 66 472 2	BLOCO DE DISTRIBUIÇÃO SX
TOMADA PRÉ MONTADA	10117836	1	1	636	90 73 767	SAIDA AUXILIAR ANEXA
TOMADA PRÉ MONTADA	9077386	1	1	692	90 80 006	SAIDA AUXILIAR ANEXA
TOMADA PRÉ MONTADA	9077718	1	1	690	90 77 719	SAIDA AUXILIAR ANEXA
TOMADA PRÉ MONTADA	9078962	1	1	691	90 78 961	SAIDA AUXILIAR ANEXA
TORNEIRA	7001072	1	2	662	90 79 889	CONEXÃO DE AQUECIMENTO
TRANSDUTOR DE PRESSAO C	9076550	10	1	673	90 76 551	SENSOR DE CONTROLE DO
TRANSDUTOR DE PRESSAO	9076531	11	1	674	90 76 551	SENSOR DE CONTROLE DO
TRANSDUTOR DE PRESSÃO 0	10100781	1	1	678	90 76 550	TRANSDUTOR DE PRESSAO C
TRANSDUTOR DE PRESSÃO 0-	10025124	1	1	676	90 76 531	TRANSDUTOR DE PRESSAO
TRANSDUTOR DE PRESSÃO 4	10280390	40	1	514	11 10 255 3	INSTALAÇÃO ELÉTRICA
TRANSFORMADOR	7026493	120	1	281	11 38 340 1	APOIO DE BRAÇO LADO DIRE
TRANSFORMADOR	7026493	120	1	304	11 45 228 6	APOIO DE BRAÇO LADO DIRE
TRANSFORMADOR	7026493	120	1	307	12 50 731 7	APOIO DE BRAÇO LADO DIRE
TRAVA	10079279	25	1	545	10 37 464 5	TAMPA
TRAVA	10113250	14	1	459	10 06 423 5	PORTA LATERAL DIREITA
TRAVA	10113250	8	1	466	10 35 823 0	PORTA LATERAL DIANTEIRA
TRAVA	10358265	83	1	463	10 35 826 4	CAIXA DE FERRAMENTAS
TRAVA	10368556	5	1	545	10 37 464 5	TAMPA
TRAVA	7029407	260	1	482	70 28 807	TRAVA DIREITA
TRAVA	7029407	260	1	483	70 28 808	TRAVA ESQUERDA
TRAVA	9376917	80	1	463	10 35 826 4	CAIXA DE FERRAMENTAS
TRAVA	9634109	14	1	460	10 49 856 6	PORTA LATERAL DIREITA
TRAVA DIREITA	7028807	340	1	481	70 28 759	PÁRA-BRISA SUPERIOR
TRAVA ESQUERDA	7028808	350	1	481	70 28 759	PÁRA-BRISA SUPERIOR
TRILHO DO BANCO DO OPERA	10289989	71	1	282	10 04 363 2	ASSENTO DO OPERADOR
TRILHO DO BANCO DO OPERA	10289990	70	1	282	10 04 363 2	ASSENTO DO OPERADOR
TRILHO DO BANCO DO OPERA	11007072	60	1	284	94 02 247 7	ASSENTO DO OPERADOR
TRILHO SUPORTE	9874961	3	1	296	98 74 988	PLACAS - INSTALAÇÃO
TRILHOS DE AJUSTE	11100088	37	1	285	11 10 016 6	PARTE SUPERIOR DE ASSENT
TUBO	10065976	325	1	411	10 35 863 8	INSTALAÇÃO BLOCO DE VÁL
TUBO	10070399	340	1	411	10 35 863 8	INSTALAÇÃO BLOCO DE VÁL

Designação	Artigo	Item	Quanti	Página	Módulo	Designação
TUBO	10070400	330	1	411	10 35 863 8	INSTALAÇÃO BLOCO DE VÁL
TUBO	10498956	325	1	411	10 35 863 8	INSTALAÇÃO BLOCO DE VÁL
TUBO	10842063	330	1	411	10 35 863 8	INSTALAÇÃO BLOCO DE VÁL
TUBO	10842065	340	1	411	10 35 863 8	INSTALAÇÃO BLOCO DE VÁL
TUBO	774373708	70	1	257	90 64 786	ELEMENTO DE CONEXÃO
TUBO	9079845	5	1	574	12 83 245 4	CARTER DE ÓLEO
TUBO	9753989	16	2	453	10 05 816 9	CAPOTA DO MOTOR
TUBO CURV.PROD.REFRIGER	9079472	382	1	552	10 11 714 5	MOTOR DIESEL D936 L A6 190
TUBO CURV.PROD.REFRIGER	9079474	383	1	552	10 11 714 5	MOTOR DIESEL D936 L A6 190
TUBO CURVADO	10120000	1	1	659	90 79 472	TUBO CURV.PROD.REFRIGER
TUBO CURVADO	12585058	1	1	660	90 79 474	TUBO CURV.PROD.REFRIGER
TUBO CURVADO DE AR DE A	9079936	4	1	644	10 11 570 3	LINHA DE CONEXAO
TUBO CURVADO DE AR DE A	9079936	4	1	645	10 12 190 9	LINHA DE CONEXAO
TUBO DE ABASTECIMENTO	9270846	2	1	595	90 79 838	TAMPA DO CABEÇOTE
TUBO DE ADMISSÃO DE AR	10117073	220	1	552	10 11 714 5	MOTOR DIESEL D936 L A6 190
TUBO DE AGUA	10057921	110	1	195	10 04 853 6	ARREFECIMENTO DO MOTOR
TUBO DE AR	10057778	220	1	196	10 04 853 6	ARREFECIMENTO DO MOTOR
TUBO DE AR	10057779	200	1	196	10 04 853 6	ARREFECIMENTO DO MOTOR
TUBO DE ASPIRAÇÃO DE AR	10147789	1	1	642	10 11 707 3	TUBO DE ADMISSÃO DE AR
TUBO DE ESCAPAMENTO M	10115480	410	1	554	10 11 714 5	MOTOR DIESEL D936 L A6 190
TUBO DE ESCAPE	10057780	19	1	139	10 36 573 8	SISTEMA DE ESCAPAMENTO
TUBO DE ESCAPE	10057780	19	1	140	11 10 293 9	SISTEMA DE ESCAPAMENTO
TUBO DE INJEÇÃO	9080410	215	6	559	10 11 682 5	MOTOR BÁSICO D936 L HIGH 3
TUBO DE INJEÇÃO	9080410	215	1	625	10 11 709 3	KIT DE REPARO DO BICO INJE
TUBO DE LUBRIFICAÇÃO	9946410	2	1	244	10 06 198 5	TUBO LUBRIFICAÇÃO - INSTA
TUBO DE LUBRIFICAÇÃO	9946411	3	1	244	10 06 198 5	TUBO LUBRIFICAÇÃO - INSTA
TUBO DE LUBRIFICAÇÃO	9946412	4	1	244	10 06 198 5	TUBO LUBRIFICAÇÃO - INSTA
TUBO DE LUBRIFICAÇÃO	9946413	5	1	244	10 06 198 5	TUBO LUBRIFICAÇÃO - INSTA
TUBO DE PLÁSTICO	7028899	380	1	504	10 29 026 4	PEÇAS DE MONTAGEM
TUBO DE RETORNO	10335592	5	1	392	10 33 390 3	FILTRO DE RETORNO 20/5µm
TUBO DE RETORNO DE ÓLEO	9080684	17	1	665	90 80 736	KIT DO TURBO COMPRESSOR
TUBO DE RETORNO DE ÓLEO	9079972	1	1	575	90 79 978	LINHA DE ÓLEO PRÉ-MONTA
TUBO DE RETORNO DE ÓLEO	10118689	17	1	665	90 80 736	KIT DO TURBO COMPRESSOR
TUBO DE SUCÇÃO	9884464	85	1	159	10 11 886 0	REDUTOR DISTRIBUICAO BO
TUBO DE VENTILAÇÃO	10014718	20	1	256	10 01 471 7	CAPA COBERTURA DO RECIP
TUBO DE VENTILAÇÃO	10016664	20	1	256	10 01 471 7	CAPA COBERTURA DO RECIP
TUBO DISTANCIADOR	9275736	13	2	817	90 74 112	PLACA DE LIGAÇÃO NG 090
TUBO DISTANCIADOR	9989595	220	2	211	10 04 853 7	SISTEMA ELETRICO DO MOTO
TUBO DISTANCIADOR	9989595	24	3	525	10 06 559 1	MAGUEIRAS DO AR-CONDICI
TUBO ESCAPAMENTO PRE-M	10115479	1	1	670	10 11 548 0	TUBO DE ESCAPAMENTO M
TUBO GUIA	9079867	2	1	576	90 79 862	VARETA MEDIÇ.NÍVEL ÓLEO C
TUBO INJETOR	7900836	150	1	540	10 84 856 2	KIT DE FERRAMENTAS
TUBO LUBRIFICAÇÃO - INSTA	10061985	20	1	242	10 04 851 4	PEÇAS FIX.COROA GIG.CHA
TUBULACAO ANEXO	9079083	381	1	559	10 11 682 5	MOTOR BÁSICO D936 L HIGH 3
TUBULACOES PRESSAO INS	10358637	7670	1	416	10 35 863 8	INSTALAÇÃO BLOCO DE VÁL
TUBULAÇÃO	10116499	1	1	634	10 11 628 5	TUBULAÇÃO DE COMBUSTÍVE
TUBULAÇÃO	10116572	2	1	641	10 11 657 6	PEÇA DE CONEXÃO
TUBULAÇÃO	10116573	1	1	641	10 11 657 6	PEÇA DE CONEXÃO
TUBULAÇÃO	10117950	3	1	569	10 11 832 9	KIT DE REPARO DA TUBULAÇ
TUBULAÇÃO	774378008	32	2	719	10 66 480 4	BLOCO DE DISTRIBUIÇÃO MX-
TUBULAÇÃO	774378008	32	2	733	10 66 475 5	BLOCO DE DISTRIBUIÇÃO MX-
TUBULAÇÃO	9079082	1	1	639	90 79 083	TUBULACAO ANEXO
TUBULAÇÃO 10X1	10115489	3	1	637	10 11 559 5	RETORNO DE OLEO VAZADO
TUBULAÇÃO 10X1	10116287	54	1	635	10 11 628 5	TUBULAÇÃO DE COMBUSTÍVE
TUBULAÇÃO 10X1	10116289	53	1	635	10 11 628 5	TUBULAÇÃO DE COMBUSTÍVE
TUBULAÇÃO 10X1	10116290	10	1	634	10 11 628 5	TUBULAÇÃO DE COMBUSTÍVE
TUBULAÇÃO 10X1	10116453	5	1	634	10 11 628 5	TUBULAÇÃO DE COMBUSTÍVE
TUBULAÇÃO 10X1	10116482	11	1	634	10 11 628 5	TUBULAÇÃO DE COMBUSTÍVE
TUBULAÇÃO 10X1	9080922	58	1	635	10 11 628 5	TUBULAÇÃO DE COMBUSTÍVE
TUBULAÇÃO 12X1	10116467	7	1	634	10 11 628 5	TUBULAÇÃO DE COMBUSTÍVE

Designação	Artigo	Item	Quanti	Página	Módulo	Designação
TUBULAÇÃO 22X1,5	10119168	3	1	566	10 11 916 7	CARCAÇA MANIVELA PURGAM
TUBULAÇÃO 6X1	10115491	2	1	637	10 11 559 5	RETORNO DE OLEO VAZADO
TUBULAÇÃO 6X1	9078984	4	1	691	90 78 961	SAIDA AUXILIAR ANEXA
TUBULAÇÃO 6X1	9080009	15	1	692	90 80 006	SAIDA AUXILIAR ANEXA
TUBULAÇÃO DE COMBUSTÍVE	10116285	212	1	551	10 11 714 5	MOTOR DIESEL D936 L A6 190
TUBULAÇÃO DE COMBUSTÍVE	9076621	1	1	637	10 11 559 5	RETORNO DE OLEO VAZADO
TUBULAÇÃO DE PRESSÃO C	10057720	5	1	420	10 35 863 7	TUBULACOES PRESSAO INS
TUBULAÇÃO DE PRESSÃO C	10057721	4	1	420	10 35 863 7	TUBULACOES PRESSAO INS
TUBULAÇÃO DE PRESSÃO C	10057722	2	1	420	10 35 863 7	TUBULACOES PRESSAO INS
TUBULAÇÃO DE PRESSÃO C	10057723	3	1	420	10 35 863 7	TUBULACOES PRESSAO INS
TUBULAÇÃO DE PRESSÃO C	10061561	8	1	758	10 35 857 3	CILINDRO HIDR. COM ACESS
TUBULAÇÃO DE PRESSÃO C	10061574	41	1	712	11 10 294 5	LANÇA MONOBLOCO 6.45M
TUBULAÇÃO DE PRESSÃO C	10061575	42	1	712	11 10 294 5	LANÇA MONOBLOCO 6.45M
TUBULAÇÃO DE PRESSÃO C	10061576	43	1	712	11 10 294 5	LANÇA MONOBLOCO 6.45M
TUBULAÇÃO DE PRESSÃO C	10061577	44	1	712	11 10 294 5	LANÇA MONOBLOCO 6.45M
TUBULAÇÃO DE PRESSÃO C	10061580	47	1	712	11 10 294 5	LANÇA MONOBLOCO 6.45M
TUBULAÇÃO DE PRESSÃO C	10061581	48	1	712	11 10 294 5	LANÇA MONOBLOCO 6.45M
TUBULAÇÃO DE PRESSÃO C	10064402	3	1	759	10 85 361 0	CILINDRO HIDR. COM ACESS
TUBULAÇÃO DE PRESSÃO C	10080548	20	1	775	11 45 729 6	CILINDRO DE ELEVACAO DIRE
TUBULAÇÃO DE PRESSÃO C	10080549	20	1	778	11 45 729 7	CILINDRO DE ELEVACAO ESQ
TUBULAÇÃO DE PRESSÃO C	10374090	21	1	778	11 45 729 7	CILINDRO DE ELEVACAO ESQ
TUBULAÇÃO DE PRESSÃO C	10374095	21	1	775	11 45 729 6	CILINDRO DE ELEVACAO DIRE
TUBULAÇÃO DE PRESSÃO C	10852757	23	2	775	11 45 729 6	CILINDRO DE ELEVACAO DIRE
TUBULAÇÃO DE PRESSÃO C	10852757	23	2	778	11 45 729 7	CILINDRO DE ELEVACAO ESQ
TUBULAÇÃO DE PRESSÃO C	9399769	49	1	753	11 10 291 2	MONTAGEM CILINDRO DE ELE
TUBULAÇÃO DE PRESSÃO C	9399770	47	1	753	11 10 291 2	MONTAGEM CILINDRO DE ELE
TUBULAÇÃO DE PRESSÃO C	9399771	48	1	753	11 10 291 2	MONTAGEM CILINDRO DE ELE
TUBULAÇÃO DE PRESSÃO C	9399772	46	1	753	11 10 291 2	MONTAGEM CILINDRO DE ELE
TUBULAÇÃO DE ÓLEO LUBRIFI	10115521	7	1	665	90 80 736	KIT DO TURBO COMPRESSOR
TUBULAÇÃO TERMINAL	7373403	15	1	139	10 36 573 8	SISTEMA DE ESCAPAMENTO
TUBULAÇÃO TERMINAL	7373403	15	1	140	11 10 293 9	SISTEMA DE ESCAPAMENTO
TUCHO	9885351	1	1	318	90 74 482	CR TACO
TUCHO	9885351	13	2	323	90 79 258	MANETE DE COMANDO VG7 2-
TUCHO	9885351	1	1	743	90 79 277	CR TACO
TUCHO DE ROLETE	10153536	1	2	611	90 79 870	PEÇAS DO COMANDO
TUCHO DE ROLETE D=44	9074628	2	1	621	10 11 683 9	BOMBA DE INJECAO - ACESS
TURBOCOMPRESSOR K29	10139607	1	1	665	90 80 736	KIT DO TURBO COMPRESSOR
UNIDADE DE COMANDO DE O	10063793	7025	1	343	10 35 862 6	INSTALACAO HIDRAULICA
UNIDADE DE CONTROLE	7028075	5	1	162	11 34 249 1	BOMBA DE PISTÃO AXIAL
UNIDADE DE CONTROLE DO	10117248	570	1	555	10 11 714 5	MOTOR DIESEL D936 L A6 190
UNIÃO ROSCADA	10220951	245	1	260	90 64 786	ELEMENTO DE CONEXÃO
UNIÃO ROSCADA	11834728	9	1	796	11 69 501 2	KIT DE ABASTECIMENTO DE U
UNIÃO ROSCADA	11834729	4	1	796	11 69 501 2	KIT DE ABASTECIMENTO DE U
UNIÃO ROSCADA 12L	10652561	245	1	260	90 64 786	ELEMENTO DE CONEXÃO
UNIÃO ROSCADA 6L	10220950	145	1	258	90 64 786	ELEMENTO DE CONEXÃO
UNIÃO ROSCADA 6LL	10342221	145	1	258	90 64 786	ELEMENTO DE CONEXÃO
UNIÃO ROSCADA 8LL	10330614	245	1	260	90 64 786	ELEMENTO DE CONEXÃO
UNIÃO ROSCADA DE ANTEP	11102819	15	1	756	11 10 281 8	KIT MÁQUINA BASE
UNIÃO ROSCADA DE ANTEP	9685685	14	5	716	11 10 283 6	KIT MONOBLOCO 6.45M
UNIÃO ROSCADA DE ANTEP	9685685	14	8	727	11 10 281 7	KIT DE ATUALIZAÇÃO 2.10M
UNIÃO ROSCADA DE ANTEP	9685685	12	6	756	11 10 281 8	KIT MÁQUINA BASE
UNIÃO ROSCADA DE ENCAIX	257103802	15	1	655	10 13 281 7	BOMBA DE ÁGUA PRÉ-MONT
UNIÃO ROSCADA EGE 10L	7617262	13	1	269	10 06 014 6	INTALAÇ HIDR PEDAIS DE CO
UNIÃO ROSCADA EGE 10L	7617262	62	1	347	10 06 379 3	UNIDADE DE COMANDO DE O
UNIÃO ROSCADA EGE 10L	7617262	388	1	413	10 35 863 8	INSTALAÇÃO BLOCO DE VÁL
UNIÃO ROSCADA EGE 15L	7617485	10	1	356	10 35 862 9	ARREFECIMENTO DE OLEO
UNIÃO ROSCADA EGE 35L G1	7410268	40	1	353	10 06 379 8	MANGUEIRAS HIDRAULICAS
UNIÃO ROSCADA EL 10L	472330208	27	1	142	10 04 853 9	INSTALACAO BOMBA E EMBR
UNIÃO ROSCADA EL 10L	472330208	44	3	143	10 04 853 9	INSTALACAO BOMBA E EMBR
UNIÃO ROSCADA EL 10L	472330208	26	1	267	11 38 342 7	INST. HIDR. MANETE ESQUE

Designação	Artigo	Item	Quanti	Página	Módulo	Designação
UNIÃO ROSCADA EL 10L	472330208	23	1	268	11 38 342 9	INST. HIDRAULICA DA MANET
UNIÃO ROSCADA EL 10L	472330208	11	2	269	10 06 014 6	INTALAÇ HIDR PEDAIS DE CO
UNIÃO ROSCADA EL 10L	472330208	27	1	346	10 06 379 3	UNIDADE DE COMANDO DE O
UNIÃO ROSCADA EL 10L	472330208	144	3	410	10 35 863 8	INSTALAÇÃO BLOCO DE VÁL
UNIÃO ROSCADA EL 10L	472330208	385	1	413	10 35 863 8	INSTALAÇÃO BLOCO DE VÁL
UNIÃO ROSCADA EL 10L	472330208	486	1	414	10 35 863 8	INSTALAÇÃO BLOCO DE VÁL
UNIÃO ROSCADA EL 15L	472300414	45	1	354	10 06 379 8	MANGUEIRAS HIDRAULICAS
UNIÃO ROSCADA EL 15L	472300414	426	1	413	10 35 863 8	INSTALAÇÃO BLOCO DE VÁL
UNIÃO ROSCADA EL 16S	7407098	47	1	359	10 35 862 4	INSTALACAO HIDRAULICA
UNIÃO ROSCADA EL 18L	247128502	49	1	359	10 35 862 4	INSTALACAO HIDRAULICA
UNIÃO ROSCADA EL 18L	247128502	17	1	754	10 85 472 4	PEÇAS MONT.- MÁQUINA BAS
UNIÃO ROSCADA EL 22L	247138602	18	1	121	10 40 412 9	INST.HIDR.CARRO INFERIOR
UNIÃO ROSCADA EL 22L	247138602	18	1	353	10 06 379 8	MANGUEIRAS HIDRAULICAS
UNIÃO ROSCADA ET 10L M16X	482430314	13	1	121	10 40 412 9	INST.HIDR.CARRO INFERIOR
UNIÃO ROSCADA ET 10L M16X	482430314	22	2	268	11 38 342 9	INST. HIDRAULICA DA MANET
UNIÃO ROSCADA ET 10L M16X	482430314	180	4	361	10 06 380 1	INSTALACAO HIDRAULICA
UNIÃO ROSCADA ET 10L M16X	482430314	148	1	410	10 35 863 8	INSTALAÇÃO BLOCO DE VÁL
UNIÃO ROSCADA ET 10L M16X	482430314	520	1	414	10 35 863 8	INSTALAÇÃO BLOCO DE VÁL
UNIÃO ROSCADA ET 15L M22X	472430408	51	2	753	11 10 291 2	MONTAGEM CILINDRO DE ELE
UNIÃO ROSCADA EW 10L M1	7403569	28	1	267	11 38 342 7	INST. HIDR. MANETE ESQUE
UNIÃO ROSCADA EW 10L M1	7403569	186	1	361	10 06 380 1	INSTALACAO HIDRAULICA
UNIÃO ROSCADA EW 10L M1	7403569	143	1	410	10 35 863 8	INSTALAÇÃO BLOCO DE VÁL
UNIÃO ROSCADA EW 15L	7615379	15	2	135	10 36 918 3	INSTALACAO DE COMBUSTIVE
UNIÃO ROSCADA EW 15L	7615379	76	1	159	10 11 886 0	REDUTOR DISTRIBUICAO BO
UNIÃO ROSCADA EW 15L	7615379	43	1	354	10 06 379 8	MANGUEIRAS HIDRAULICAS
UNIÃO ROSCADA EW 16S	7617460	132	4	409	10 35 863 8	INSTALAÇÃO BLOCO DE VÁL
UNIÃO ROSCADA EW 16S	7617460	176	2	410	10 35 863 8	INSTALAÇÃO BLOCO DE VÁL
UNIÃO ROSCADA EW 18L M2	247108302	6	2	220	90 02 790 3	REDUTOR DE GIRO SAT 325/
UNIÃO ROSCADA EW 22L	247126202	17	3	121	10 40 412 9	INST.HIDR.CARRO INFERIOR
UNIÃO ROSCADA EW 6L	247021702	35	2	756	11 10 281 8	KIT MÁQUINA BASE
UNIÃO ROSCADA EW 8S M16X	7404186	51	1	777	11 45 729 6	CILINDRO DE ELEVACAO DIRE
UNIÃO ROSCADA EW 8S M16X	7404186	51	1	780	11 45 729 7	CILINDRO DE ELEVACAO ESQ
UNIÃO ROSCADA G 6LL	774374208	40	1	257	90 64 786	ELEMENTO DE CONEXÃO
UNIÃO ROSCADA G 6LL	774374208	140	1	258	90 64 786	ELEMENTO DE CONEXÃO
UNIÃO ROSCADA G 6LL	774374208	40	6	262	10 01 461 1	CAIXA AUXILIAR
UNIÃO ROSCADA G 8L M14X1,	10014575	240	1	260	90 64 786	ELEMENTO DE CONEXÃO
UNIÃO ROSCADA G 8L M14X1,	10014575	140	3	263	10 01 461 1	CAIXA AUXILIAR
UNIÃO ROSCADA GE 10 M14X	10021563	40	4	634	10 11 628 5	TUBULAÇÃO DE COMBUSTÍVE
UNIÃO ROSCADA GE 10 M14X	10021563	90	4	635	10 11 628 5	TUBULAÇÃO DE COMBUSTÍVE
UNIÃO ROSCADA GE 10L	7021521	14	1	121	10 40 412 9	INST.HIDR.CARRO INFERIOR
UNIÃO ROSCADA GE 10L	7021521	19	1	665	90 80 736	KIT DO TURBO COMPRESSOR
UNIÃO ROSCADA GE 10L G1/4	7362091	10	6	269	10 06 014 6	INTALAÇ HIDR PEDAIS DE CO
UNIÃO ROSCADA GE 10L G1/4	7362091	25	6	346	10 06 379 3	UNIDADE DE COMANDO DE O
UNIÃO ROSCADA GE 10L G1/4	7362091	66	1	347	10 06 379 3	UNIDADE DE COMANDO DE O
UNIÃO ROSCADA GE 10L G1/4	7362091	146	2	410	10 35 863 8	INSTALAÇÃO BLOCO DE VÁL
UNIÃO ROSCADA GE 10L G1/4	7362091	150	2	410	10 35 863 8	INSTALAÇÃO BLOCO DE VÁL
UNIÃO ROSCADA GE 10L G1/4	7362091	485	3	414	10 35 863 8	INSTALAÇÃO BLOCO DE VÁL
UNIÃO ROSCADA GE 10L G1/4	7362091	12	1	754	10 85 472 4	PEÇAS MONT.- MÁQUINA BAS
UNIÃO ROSCADA GE 10L G1/4	7362091	31	4	808	11 37 560 6	MANETE DE COMANDO VG6-8
UNIÃO ROSCADA GE 10L G3/8	7002830	15	3	754	10 85 472 4	PEÇAS MONT.- MÁQUINA BAS
UNIÃO ROSCADA GE 10L M14X	7003814	12	2	121	10 40 412 9	INST.HIDR.CARRO INFERIOR
UNIÃO ROSCADA GE 10L M14X	7003814	25	3	142	10 04 853 9	INSTALACAO BOMBA E EMBR
UNIÃO ROSCADA GE 10L M14X	7003814	42	6	143	10 04 853 9	INSTALACAO BOMBA E EMBR
UNIÃO ROSCADA GE 10L M14X	7003814	19	1	219	10 06 198 2	MECANISMO DE GIRO
UNIÃO ROSCADA GE 10L M14X	7003814	20	4	244	10 06 198 5	TUBO LUBRIFICAÇÃO - INSTA
UNIÃO ROSCADA GE 10L M14	4981235	3	1	576	90 79 862	VARETA MEDIÇ.NÍVEL ÓLEO C
UNIÃO ROSCADA GE 10L M14	4981235	10	1	665	90 80 736	KIT DO TURBO COMPRESSOR
UNIÃO ROSCADA GE 12 M16X1	10038568	20	1	641	10 11 657 6	PEÇA DE CONEXÃO
UNIÃO ROSCADA GE 12L G1/4	7362117	52	2	777	11 45 729 6	CILINDRO DE ELEVACAO DIRE
UNIÃO ROSCADA GE 12L G1/4	7362117	52	2	780	11 45 729 7	CILINDRO DE ELEVACAO ESQ

Designação	Artigo	Item	Quanti	Página	Módulo	Designação
UNIÃO ROSCADA GE 12L G1/4	7362117	30	2	808	11 37 560 6	MANETE DE COMANDO VG6-8
UNIÃO ROSCADA GE 15L	7410457	61	1	359	10 35 862 4	INSTALACAO HIDRAULICA
UNIÃO ROSCADA GE 15L G1/2	4600518	22	4	346	10 06 379 3	UNIDADE DE COMANDO DE O
UNIÃO ROSCADA GE 15L M18	7003570	75	2	158	10 11 886 0	REDUTOR DISTRIBUICAO BO
UNIÃO ROSCADA GE 15L M18	7003570	47	3	385	10 04 851 7	TANQUE HIDRAULICO INSTA
UNIÃO ROSCADA GE 15L M18	7003570	47	3	387	10 35 863 4	TANQUE HIDRAULICO INSTA
UNIÃO ROSCADA GE 15L M22X	7403083	9	1	356	10 35 862 9	ARREFECIMENTO DE OLEO
UNIÃO ROSCADA GE 16S G1/2	7002361	127	1	409	10 35 863 8	INSTALAÇÃO BLOCO DE VÁL
UNIÃO ROSCADA GE 16S M2	7018370	128	3	409	10 35 863 8	INSTALAÇÃO BLOCO DE VÁL
UNIÃO ROSCADA GE 18L M22X	7003572	81	2	227	90 02 790 4	REDUTOR DE GIRO SAT 325/
UNIÃO ROSCADA GE 18L M22X	7003572	45	1	385	10 04 851 7	TANQUE HIDRAULICO INSTA
UNIÃO ROSCADA GE 18L M22X	7003572	45	1	387	10 35 863 4	TANQUE HIDRAULICO INSTA
UNIÃO ROSCADA GE 22L G3/	4001446	16	2	121	10 40 412 9	INST.HIDR.CARRO INFERIOR
UNIÃO ROSCADA GE 22L G3/	4001446	20	1	219	10 06 198 2	MECANISMO DE GIRO
UNIÃO ROSCADA GE 22L M26X	7362515	4	1	101	10 40 412 7	CONEXÃO GIRATÓRIA COMPL
UNIÃO ROSCADA GE 22L M26X	7362515	4	1	102	11 46 393 9	CONEXÃO GIRATÓRIA COMPL
UNIÃO ROSCADA GE 22L M26X	7362515	19	1	121	10 40 412 9	INST.HIDR.CARRO INFERIOR
UNIÃO ROSCADA GE 22L M26X	7362515	26	1	142	10 04 853 9	INSTALACAO BOMBA E EMBR
UNIÃO ROSCADA GE 22L M26X	7362515	36	1	142	10 04 853 9	INSTALACAO BOMBA E EMBR
UNIÃO ROSCADA GE 22L M26X	7362515	40	1	143	10 04 853 9	INSTALACAO BOMBA E EMBR
UNIÃO ROSCADA GE 22L M26X	7362515	48	1	385	10 04 851 7	TANQUE HIDRAULICO INSTA
UNIÃO ROSCADA GE 22L M26X	7362515	48	1	387	10 35 863 4	TANQUE HIDRAULICO INSTA
UNIÃO ROSCADA GE 22L M26X	7362515	8	1	569	10 11 832 9	KIT DE REPARO DA TUBULAÇ
UNIÃO ROSCADA GE 28L M30X	7371875	331	1	197	10 04 853 6	ARREFECIMENTO DO MOTOR
UNIÃO ROSCADA GE 28L M33X	7003800	69	1	145	10 04 853 9	INSTALACAO BOMBA E EMBR
UNIÃO ROSCADA GE 28L M33X	7003800	55	1	385	10 04 851 7	TANQUE HIDRAULICO INSTA
UNIÃO ROSCADA GE 28L M33X	7003800	55	1	387	10 35 863 4	TANQUE HIDRAULICO INSTA
UNIÃO ROSCADA GE 28L M42X	7615629	75	2	145	10 04 853 9	INSTALACAO BOMBA E EMBR
UNIÃO ROSCADA GE 35L G1 1	4001871	33	1	353	10 06 379 8	MANGUEIRAS HIDRAULICAS
UNIÃO ROSCADA GE 35L M42X	4900486	67	1	145	10 04 853 9	INSTALACAO BOMBA E EMBR
UNIÃO ROSCADA GE 35L M42X	4900486	32	1	353	10 06 379 8	MANGUEIRAS HIDRAULICAS
UNIÃO ROSCADA GE 42L M48	7368096	49	1	385	10 04 851 7	TANQUE HIDRAULICO INSTA
UNIÃO ROSCADA GE 42L M48	7368096	49	1	387	10 35 863 4	TANQUE HIDRAULICO INSTA
UNIÃO ROSCADA GE 6L M10X	4981233	3	2	691	90 78 961	SAIDA AUXILIAR ANEXA
UNIÃO ROSCADA GE 6L M10X	7362169	13	7	716	11 10 283 6	KIT MONOBLOCO 6.45M
UNIÃO ROSCADA GE 6L M10X	7362169	38	2	722	10 82 841 3	LUBRIFICAÇÃO CENTRALIZAD
UNIÃO ROSCADA GE 6L M10X	7362169	13	8	727	11 10 281 7	KIT DE ATUALIZAÇÃO 2.10M
UNIÃO ROSCADA GE 6L M10X	7362169	11	6	756	11 10 281 8	KIT MÁQUINA BASE
UNIÃO ROSCADA GE 6LL M10X	774376508	185	1	258	90 64 786	ELEMENTO DE CONEXÃO
UNIÃO ROSCADA GE 6LL M6	491035414	185	1	258	90 64 786	ELEMENTO DE CONEXÃO
UNIÃO ROSCADA GE 8L M14X	7619197	22	1	219	10 06 198 2	MECANISMO DE GIRO
UNIÃO ROSCADA GE 8L M14X	7619197	19	1	756	11 10 281 8	KIT MÁQUINA BASE
UNIÃO ROSCADA GE 8LL M10X	10009053	20	1	733	10 66 475 5	BLOCO DE DISTRIBUIÇÃO MX-
UNIÃO ROSCADA GE 8S G1/4	4901382	52	3	753	11 10 291 2	MONTAGEM CILINDRO DE ELE
UNIÃO ROSCADA GE 8S G3/8	7412159	50	1	777	11 45 729 6	CILINDRO DE ELEVACAO DIRE
UNIÃO ROSCADA GE 8S G3/8	7412159	50	1	780	11 45 729 7	CILINDRO DE ELEVACAO ESQ
UNIÃO ROSCADA GE SA301 6	7368545	21	4	244	10 06 198 5	TUBO LUBRIFICAÇÃO - INSTA
UNIÃO ROSCADA GR 15/10L	7406699	47	1	354	10 06 379 8	MANGUEIRAS HIDRAULICAS
UNIÃO ROSCADA GR 15/10L	7406699	62	1	753	11 10 291 2	MONTAGEM CILINDRO DE ELE
UNIÃO ROSCADA GZ 10L	7410211	24	1	267	11 38 342 7	INST. HIDR. MANETE ESQUE
UNIÃO ROSCADA GZ 10L	7410211	25	1	268	11 38 342 9	INST. HIDRAULICA DA MANET
UNIÃO ROSCADA GZ 10L	7410211	32	2	268	11 38 342 9	INST. HIDRAULICA DA MANET
UNIÃO ROSCADA GZ 10L	7410211	184	3	361	10 06 380 1	INSTALACAO HIDRAULICA
UNIÃO ROSCADA GZ 10L	7410211	142	1	410	10 35 863 8	INSTALAÇÃO BLOCO DE VÁL
UNIÃO ROSCADA GZ 10L	7410211	14	1	754	10 85 472 4	PEÇAS MONT.- MÁQUINA BAS
UNIÃO ROSCADA M27X2	7360563	14	2	116	98 82 760	REGULADOR NG 100
UNIÃO ROSCADA M27X2	7360563	35	2	350	10 35 862 7	INSTALAÇÃO HIDRÁULICA
UNIÃO ROSCADA M27X2	7360563	126	1	409	10 35 863 8	INSTALAÇÃO BLOCO DE VÁL
UNIÃO ROSCADA RED 15/10L	7616915	427	1	413	10 35 863 8	INSTALAÇÃO BLOCO DE VÁL
UNIÃO ROSCADA RED 15/12L	7367745	53	2	777	11 45 729 6	CILINDRO DE ELEVACAO DIRE

Designação	Artigo	Item	Quanti	Página	Módulo	Designação
UNIÃO ROSCADA RED 15/12L	7367745	53	2	780	11 45 729 7	CILINDRO DE ELEVACAO ESQ
UNIÃO ROSCADA RED 18/10L	7616916	18	1	754	10 85 472 4	PEÇAS MONT.- MÁQUINA BAS
UNIÃO ROSCADA RED 22/15L	7616913	46	1	354	10 06 379 8	MANGUEIRAS HIDRAULICAS
UNIÃO ROSCADA RED 35/15L	7367749	65	1	359	10 35 862 4	INSTALACAO HIDRAULICA
UNIÃO ROSCADA RI G3/4XG1/	7617743	21	2	346	10 06 379 3	UNIDADE DE COMANDO DE O
UNIÃO ROSCADA RI G3/8XG1/	7022687	92	2	408	10 35 863 8	INSTALAÇÃO BLOCO DE VÁL
UNIÃO ROSCADA SV 8L M14X	7368106	35	2	722	10 82 841 3	LUBRIFICAÇÃO CENTRALIZAD
UNIÃO ROSCADA SV 8L M14X	7368106	23	2	730	10 39 639 6	LUBRIFICAÇÃO CENTRALIZAD
UNIÃO ROSCADA TH 10L G1/4	7368531	140	1	410	10 35 863 8	INSTALAÇÃO BLOCO DE VÁL
UNIÃO ROSCADA W 15L	7362109	7	2	135	10 36 918 3	INSTALACAO DE COMBUSTIVE
UNIÃO ROSCADA W 15L	7362109	45	4	753	11 10 291 2	MONTAGEM CILINDRO DE ELE
UNIÃO ROSCADA WE 6LL M10	774373608	30	1	257	90 64 786	ELEMENTO DE CONEXÃO
UNIÃO ROSCADA WE6LL M8X	7623106	180	1	258	90 64 786	ELEMENTO DE CONEXÃO
UNIÃO ROSCADA WH 15L G1/2	7368478	16	2	135	10 36 918 3	INSTALACAO DE COMBUSTIVE
UNIÃO ROSCADA WH 6L M10X	7368426	30	3	716	11 10 283 6	KIT MONOBLOCO 6.45M
UNIÃO ROSCADA WH 6L M10X	7368426	39	3	722	10 82 841 3	LUBRIFICAÇÃO CENTRALIZAD
UNIÃO ROSCADA WH 6L M10X	7368426	30	8	727	11 10 281 7	KIT DE ATUALIZAÇÃO 2.10M
UNIÃO ROSCADA WH 6L M10X	7368426	19	8	730	10 39 639 6	LUBRIFICAÇÃO CENTRALIZAD
UNIÃO ROSCADA WH 6L M10X	7368426	40	2	756	11 10 281 8	KIT MÁQUINA BASE
UNIÃO ROSCADA WH 6L M10X	7368426	54	1	777	11 45 729 6	CILINDRO DE ELEVACAO DIRE
UNIÃO ROSCADA WH 6L M10X	7368426	54	1	780	11 45 729 7	CILINDRO DE ELEVACAO ESQ
UNIÃO ROSCADA WSV 15L M2	7364350	50	2	753	11 10 291 2	MONTAGEM CILINDRO DE ELE
UNIÃO ROSCADA WSV 8L M1	7368115	26	3	721	10 82 841 3	LUBRIFICAÇÃO CENTRALIZAD
UNIÃO ROSCADA WSV 8L M1	7368115	18	1	730	10 39 639 6	LUBRIFICAÇÃO CENTRALIZAD
UNIÃO ROSCADA WSV 8LL M1	10009054	21	1	255	10 29 300 3	BLOCO DE DISTRIBUIÇÃO MX-
UNIÃO ROSCADA WSV 8LL M1	10009054	21	1	719	10 66 480 4	BLOCO DE DISTRIBUIÇÃO MX-
VALVULA DE ALÍVIO	10038572	91	1	635	10 11 628 5	TUBULAÇÃO DE COMBUSTÍVE
VALVULA DE FREIO	10002011	15	2	107	10 83 693 0	MECANISMO DE TRANSLAÇÃ
VALVULA DE FREIO	10002011	15	2	108	11 10 296 8	MECANISMO DE TRANSLAÇÃ
VALVULA DE REGULAGEM FI	10117951	14	1	557	10 11 682 5	MOTOR BÁSICO D936 L HIGH 3
VALVULA DE REGULAGEM FI	9075134	14	1	557	10 11 682 5	MOTOR BÁSICO D936 L HIGH 3
VALVULA DE RETENCAO	10300798	379	1	413	10 35 863 8	INSTALAÇÃO BLOCO DE VÁL
VALVULA DIRECIONAL	10119503	1	1	817	90 74 112	PLACA DE LIGAÇÃO NG 090
VALVULA DIRECIONAL	7021767	300	1	112	10 00 201 1	VALVULA DE FREIO
VALVULA DIRECIONAL	7021767	50	1	431	10 33 073 6	VÁLVULA DE COMUT.DE MOV
VALVULA DIRECIONAL	7403972	24	1	268	11 38 342 9	INST. HIDRAULICA DA MANET
VALVULA DIRECIONAL	7403972	14	1	269	10 06 014 6	INTALAÇ HIDR PEDAIS DE CO
VALVULA DIRECIONAL	7403972	182	4	361	10 06 380 1	INSTALACAO HIDRAULICA
VALVULA DIRECIONAL	7403972	525	1	361	10 06 380 1	INSTALACAO HIDRAULICA
VALVULA DIRECIONAL	7403972	145	1	410	10 35 863 8	INSTALAÇÃO BLOCO DE VÁL
VALVULA INTERRUPTORA	10220635	3	1	398	11 49 189 0	PLACA DE LIGAÇÃO
VALVULA LIMITADORA PRES	5007236	45	9	424	10 11 386 0	BLOCO DE COMANDO
VARETA DE NÍVEL DE ÓLEO C	10115740	1	1	576	90 79 862	VARETA MEDIÇ.NÍVEL ÓLEO C
VARETA DE NÍVEL DE ÓLEO C	9080209	4	1	158	10 11 886 0	REDUTOR DISTRIBUICAO BO
VARETA MEDIÇ.NÍVEL ÓLEO C	9079862	21	1	549	10 11 714 5	MOTOR DIESEL D936 L A6 190
VEDACAO	7029248	4	1	390	56 17 688	VÁLVULA DE FECHAMENTO
VEDACAO DO PISTAO	7017841	7	1	442	70 17 835	KIT DE VEDACAO DA VALVUL
VEDACAO DO RADIADOR	10063093	30	1	193	10 04 853 6	ARREFECIMENTO DO MOTOR
VEDACAO LIFETIME	12244095	10	1	91	10 65 167 7	ROLETE SUPERIOR D7
VEDACÃO EM TIRA	7027401	5	3	331	10 02 206 9	CARCAÇA DO EVAPORADOR
VEDAÇÃO	10009027	450	2	509	10 29 035 2	REVESTIMENTO INTERNO
VEDAÇÃO	10009027	450	2	511	10 48 808 8	REVESTIMENTO INTERNO
VEDAÇÃO	10117891	1	1	615	10 11 585 0	KIT DE VEDAÇÃO D936
VEDAÇÃO	10118550	19	1	700	10 11 801 4	KIT DE VEDACAO
VEDAÇÃO	10118551	17	3	700	10 11 801 4	KIT DE VEDACAO
VEDAÇÃO	10118554	200	6	68	12 48 693 2	KIT DE MANUTENÇÃO 1000h
VEDAÇÃO	10118554	200	6	72	12 48 693 4	KIT DE MANUTENÇÃO 2000h
VEDAÇÃO	10118554	7	1	592	10 11 960 9	INSTALAÇÃO TAMPA DO CAB
VEDAÇÃO	10118554	7	1	593	10 11 961 0	INSTALAÇÃO TAMPA DO CAB
VEDAÇÃO	10118554	7	1	594	10 11 963 6	INSTALAÇÃO TAMPA DO CAB

Designação	Artigo	Item	Quanti	Página	Módulo	Designação
VEDAÇÃO	10118554	7	1	595	90 79 838	TAMPA DO CABEÇOTE
VEDAÇÃO	10118554	7	1	596	90 79 849	TAMPA DO CABEÇOTE
VEDAÇÃO	10118554	4	1	606	10 11 585 1	KIT DE VED DO CABEÇOTE CIL
VEDAÇÃO	10118554	4	6	608	10 11 585 3	KIT DE VEDAÇÃO CABEÇOTE
VEDAÇÃO	10118554	7	1	625	10 11 709 3	KIT DE REPARO DO BICO INJE
VEDAÇÃO	10118554	7	1	628	10 11 585 4	KIT DE VEDACAO DO BICO IN
VEDAÇÃO	10118556	3	6	606	10 11 585 1	KIT DE VED DO CABEÇOTE CIL
VEDAÇÃO	10118556	3	6	608	10 11 585 3	KIT DE VEDAÇÃO CABEÇOTE
VEDAÇÃO	10118556	6	6	642	10 11 707 3	TUBO DE ADMISSÃO DE AR
VEDAÇÃO	10118620	2	1	699	10 11 801 4	KIT DE VEDACAO
VEDAÇÃO	10119923	3	2	615	10 11 585 0	KIT DE VEDAÇÃO D936
VEDAÇÃO	10123735	4	3	571	90 79 487	CÁRTER DE ÓLEO
VEDAÇÃO	10123735	17	3	703	10 11 583 8	JOGO DE VEDAÇÃO MOTOR D
VEDAÇÃO	10126304	14	1	703	10 11 583 8	JOGO DE VEDAÇÃO MOTOR D
VEDAÇÃO	10126427	22	1	703	10 11 583 8	JOGO DE VEDAÇÃO MOTOR D
VEDAÇÃO	10141557	18	6	607	10 11 585 1	KIT DE VED DO CABEÇOTE CIL
VEDAÇÃO	10141557	18	6	609	10 11 585 3	KIT DE VEDAÇÃO CABEÇOTE
VEDAÇÃO	10141557	6	6	670	10 11 548 0	TUBO DE ESCAPAMENTO M
VEDAÇÃO	10297876	2	1	148	10 29 787 3	VÁLVULA DE CONTROLE
VEDAÇÃO	10297876	3	1	149	10 29 787 4	PLACA INTERMEDIÁRIA
VEDAÇÃO	10342909	7	6	106	10 35 654 7	KIT DE VEDAÇÃO
VEDAÇÃO	10471479	10	1	477	70 28 788	VEDAÇÃO
VEDAÇÃO	10475895	17	1	177	70 28 075	UNIDADE DE CONTROLE
VEDAÇÃO	12225873	120	1	484	70 28 769	PORTA DA CABINE DO OPERA
VEDAÇÃO	7011131	2	1	577	50 04 624	PARAFUSO DE DRENAGEM D
VEDAÇÃO	7019154	240	1	484	70 28 769	PORTA DA CABINE DO OPERA
VEDAÇÃO	7019155	250	1	484	70 28 769	PORTA DA CABINE DO OPERA
VEDAÇÃO	7024455	460	1	491	10 29 033 7	INSTALACAO ELETRICA
VEDAÇÃO	7024455	460	1	494	10 48 808 7	INSTALACAO ELETRICA
VEDAÇÃO	7026772	13	1	519	99 47 695	INSTALAÇÃO ELÉTRICA E50
VEDAÇÃO	7028343	9	1	390	56 17 688	VÁLVULA DE FECHAMENTO
VEDAÇÃO	7028788	170	1	476	70 28 767	VIDRO FIXO
VEDAÇÃO	7028790	130	1	476	70 28 767	VIDRO FIXO
VEDAÇÃO	7028792	20	1	478	10 35 889 0	KIT REEQ.DISCO LATERAL
VEDAÇÃO	7028803	140	2	480	10 03 553 0	PÁRA-BRISA INFERIOR
VEDAÇÃO	7028832	410	1	485	70 28 769	PORTA DA CABINE DO OPERA
VEDAÇÃO	7028890	150	1	503	10 29 026 4	PEÇAS DE MONTAGEM
VEDAÇÃO	7028891	140	1	503	10 29 026 4	PEÇAS DE MONTAGEM
VEDAÇÃO	7028892	160	1	503	10 29 026 4	PEÇAS DE MONTAGEM
VEDAÇÃO	7028953	400	2	509	10 29 035 2	REVESTIMENTO INTERNO
VEDAÇÃO	7028953	400	2	511	10 48 808 8	REVESTIMENTO INTERNO
VEDAÇÃO	7029418	500	2	487	70 28 831	JANELA DE CORRER
VEDAÇÃO	7368993	401	1	65	12 48 693 1	KIT DE MANUTENCAO 500h
VEDAÇÃO	7368993	401	1	69	12 48 693 2	KIT DE MANUTENÇÃO 1000h
VEDAÇÃO	7368993	401	1	74	12 48 693 4	KIT DE MANUTENÇÃO 2000h
VEDAÇÃO	7368993	2	1	392	10 33 390 3	FILTRO DE RETORNO 20/5µm
VEDAÇÃO	9077329	35	3	704	10 11 583 8	JOGO DE VEDAÇÃO MOTOR D
VEDAÇÃO	9079124	14	3	700	10 11 801 4	KIT DE VEDACAO
VEDAÇÃO	9079124	18	3	703	10 11 583 8	JOGO DE VEDAÇÃO MOTOR D
VEDAÇÃO	9079125	19	1	703	10 11 583 8	JOGO DE VEDAÇÃO MOTOR D
VEDAÇÃO	9079608	6	2	617	90 80 278	BOMBA DE SUCÇÃO COM FIXA
VEDAÇÃO	9079608	53	2	701	10 11 801 4	KIT DE VEDACAO
VEDAÇÃO	9079608	53	2	705	10 11 583 8	JOGO DE VEDAÇÃO MOTOR D
VEDAÇÃO	9144762	3	1	648	91 44 757	TAMPA DE FECHAMENTO 60/6
VEDAÇÃO	9268129	16	1	607	10 11 585 1	KIT DE VED DO CABEÇOTE CIL
VEDAÇÃO	9268129	16	1	609	10 11 585 3	KIT DE VEDAÇÃO CABEÇOTE
VEDAÇÃO	9270109	15	1	607	10 11 585 1	KIT DE VED DO CABEÇOTE CIL
VEDAÇÃO	9270109	15	1	609	10 11 585 3	KIT DE VEDAÇÃO CABEÇOTE
VEDAÇÃO	9270109	3	1	665	90 80 736	KIT DO TURBO COMPRESSOR
VEDAÇÃO	9270109	4301	1	707	10 11 583 8	JOGO DE VEDAÇÃO MOTOR D

Designação	Artigo	Item	Quanti	Página	Módulo	Designação
VEDAÇÃO	9273691	5	1	692	90 80 006	SAIDA AUXILIAR ANEXA
VEDAÇÃO	9273691	52	1	705	10 11 583 8	JOGO DE VEDAÇÃO MOTOR D
VEDAÇÃO	9274974	36	1	704	10 11 583 8	JOGO DE VEDAÇÃO MOTOR D
VEDAÇÃO	9275428	76	1	183	92 75 443	KIT DE REPARO DA TAMPA N
VEDAÇÃO	9882207	15	2	835	92 65 808	KIT DE VEDACAO DA BOMBA D
VEDAÇÃO	9885529	2	1	690	90 77 719	SAIDA AUXILIAR ANEXA
VEDAÇÃO	9885529	4	1	695	90 78 962	TOMADA PRÉ MONTADA
VEDAÇÃO	9885529	34	1	704	10 11 583 8	JOGO DE VEDAÇÃO MOTOR D
VEDAÇÃO	9885529	51	2	705	10 11 583 8	JOGO DE VEDAÇÃO MOTOR D
VEDAÇÃO 0,33	10126738	3	1	570	90 79 480	SUPORTE DOS AGREGADOS
VEDAÇÃO 0,33	10126738	2	1	702	10 11 583 8	JOGO DE VEDAÇÃO MOTOR D
VEDAÇÃO 0,33	10137721	5	1	680	10 11 611 4	CÁRTER VOLANTE MONT. EXT
VEDAÇÃO 0,33	10137721	31	1	704	10 11 583 8	JOGO DE VEDAÇÃO MOTOR D
VEDAÇÃO 0,5	9267472	4	2	613	90 73 507	RADIADOR DE OLEO PRE-M
VEDAÇÃO 1	12451554	18	1	700	10 11 801 4	KIT DE VEDACAO
VEDAÇÃO 1	9079130	5	1	567	90 79 021	CARCAÇA MANIVELA PURGAM
VEDAÇÃO 1	9079130	2	1	682	10 11 912 8	PEÇAS DE FECHAMENTO
VEDAÇÃO 1	9079130	33	1	704	10 11 583 8	JOGO DE VEDAÇÃO MOTOR D
VEDAÇÃO 1,31	10118621	6	6	670	10 11 548 0	TUBO DE ESCAPAMENTO M
VEDAÇÃO 1,5	9073506	2	1	612	90 73 508	RADIADOR DE ÓLEO - ACESS
VEDAÇÃO 1,5	9268131	18	1	665	90 80 736	KIT DO TURBO COMPRESSOR
VEDAÇÃO 1,5	9268131	71	1	706	10 11 583 8	JOGO DE VEDAÇÃO MOTOR D
VEDAÇÃO 1,5X128 98/141	9271963	10	2	607	10 11 585 1	KIT DE VED DO CABEÇOTE CIL
VEDAÇÃO 1,5X128 98/141	9271963	10	2	609	10 11 585 3	KIT DE VEDAÇÃO CABEÇOTE
VEDAÇÃO 1,5X128 98/141	9271963	10	1	642	10 11 707 3	TUBO DE ADMISSÃO DE AR
VEDAÇÃO 1,5X128 98/141	9271963	10	1	644	10 11 570 3	LINHA DE CONEXAO
VEDAÇÃO 1,5X128 98/141	9271963	10	1	645	10 12 190 9	LINHA DE CONEXAO
VEDAÇÃO 1,5X128 98/141	9271963	20	2	701	10 11 801 4	KIT DE VEDACAO
VEDAÇÃO 189X22X4	7368994	4	1	392	10 33 390 3	FILTRO DE RETORNO 20/5µm
VEDAÇÃO 1X10	12582865	2	1	571	90 79 487	CÁRTER DE ÓLEO
VEDAÇÃO 1X10	12582865	15	1	700	10 11 801 4	KIT DE VEDACAO
VEDAÇÃO 1X10	12582865	15	1	703	10 11 583 8	JOGO DE VEDAÇÃO MOTOR D
VEDAÇÃO 2	9080279	4	1	656	10 11 983 0	CARCAÇA DO TERMOSTATO
VEDAÇÃO 2	9080279	4	1	657	90 75 678	CARCAÇA DO TERMOSTATO 7
VEDAÇÃO 2	9080279	4	1	699	10 11 801 4	KIT DE VEDACAO
VEDAÇÃO 2	9080279	4	1	702	10 11 583 8	JOGO DE VEDAÇÃO MOTOR D
VEDAÇÃO 78,5X105X2,5	7041345	1	1	391	74 14 913	FECHO DO TANQUE d=80
VEDAÇÃO DE BORRACHA	7001386	6	1	529	10 04 852 5	TANQUE COMBUSTIVEL INSTA
VEDAÇÃO DE BORRACHA	7001386	6	1	530	10 49 836 0	TANQUE COMBUSTIVEL INSTA
VEDAÇÃO DE BORRACHA	7001386	6	1	531	11 10 262 1	TANQUE COMBUSTIVEL INSTA
VEDAÇÃO DO ROTOR 10X13,	7380134	3	1	318	90 74 482	CR TACO
VEDAÇÃO DO ROTOR 10X13,	7380134	46	4	319	92 69 690	KIT DE VEDAÇÃO VG7-4/...
VEDAÇÃO DO ROTOR 10X13,	7380134	3	1	743	90 79 277	CR TACO
VEDAÇÃO DO VIRABREQUIM	9075133	52	1	557	10 11 682 5	MOTOR BÁSICO D936 L HIGH 3
VEDAÇÃO EM V	10356228	3	1	106	10 35 654 7	KIT DE VEDAÇÃO
VEDAÇÃO PARA ROSCA	8700014	111	1	325	90 79 259	MANETE DE COMANDO VG7 2-
VEDAÇÃO PLANA 0,075	9276860	20	2	835	92 65 808	KIT DE VEDACAO DA BOMBA D
VEDAÇÃO TD2	9275766	2	1	580	91 47 512	PEÇAS DE FECHAMENTO
VEDAÇÃO TD2	9275766	16	1	700	10 11 801 4	KIT DE VEDACAO
VEDAÇÃO TD2	9275766	16	3	703	10 11 583 8	JOGO DE VEDAÇÃO MOTOR D
VEDAÇÃO TURCON	7013138	2	1	440	70 13 133	KIT DE VEDACAO DO FREIO
VEDAÇÃO TURCON 110,0X130,	7017711	10	1	772	94 02 794 9	MANCAL DA HASTE DO PISTÃ
VEDAÇÃO TURCON 110,0X130,	7017711	10	1	773	95 91 741	MANCAL DA HASTE DO PISTÃ
VENTILACAO DO CARTER	9075483	1	1	566	10 11 916 7	CARCAÇA MANIVELA PURGAM
VENTILACAO DO CARTER	9075483	1	1	567	90 79 021	CARCAÇA MANIVELA PURGAM
VENTILADOR	10815061	10	1	205	10 84 460 3	VENTILADOR - INSTALACAO
VENTILADOR	5005641	3	1	667	10 11 646 3	ALTERNADOR PRE-MONTADO
VENTILADOR - INSTALACAO	10844603	20	1	193	10 04 853 6	ARREFECIMENTO DO MOTOR
VENTILADOR DUPLO	10022052	26	1	336	11 00 359 4	CARCAÇA
VIDRO	7028787	160	1	476	70 28 767	VIDRO FIXO

Designação	Artigo	Item	Quanti	Página	Módulo	Designação
VIDRO	7028789	120	1	476	70 28 767	VIDRO FIXO
VIDRO	7028805	320	1	481	70 28 759	PÁRA-BRISA SUPERIOR
VIDRO	7028830	400	1	485	70 28 769	PORTA DA CABINE DO OPERA
VIDRO	7030316	10	1	478	10 35 889 0	KIT REEQ.DISCO LATERAL
VIDRO	7030318	110	1	476	70 28 767	VIDRO FIXO
VIDRO DE INSPECAO	7368081	70	1	385	10 04 851 7	TANQUE HIDRAULICO INSTA
VIDRO DE INSPECAO	7368081	70	1	387	10 35 863 4	TANQUE HIDRAULICO INSTA
VIDRO DIANTEIRO	7029423	560	1	487	70 28 831	JANELA DE CORRER
VIDRO FIXO	7028767	20	1	472	10 22 830 2	CABINE DE OPERADOR
VIDRO FIXO	7028767	20	1	474	10 47 616 9	CABINE DE OPERADOR
VIDRO TRASEIRO	7029424	570	1	487	70 28 831	JANELA DE CORRER
VIRABREQUIM	10131176	1	1	581	90 75 115	VIRABREQUIM COM ENGRENA
VIRABREQUIM COM ENGRENA	9075115	50	1	557	10 11 682 5	MOTOR BÁSICO D936 L HIGH 3
VIRABREQUIM PEÇAS DE AC	10116175	53	1	549	10 11 714 5	MOTOR DIESEL D936 L A6 190
VOLANTE	5609144	53	1	289	10 28 999 3	SISTEMA AMORTECIMENTO
VOLANTE DO MOTOR - PRÉ-M	10115861	1	1	683	10 11 586 2	VOLANTE MONTAGEM EXTER
VOLANTE MONTAGEM EXTER	10115862	530	1	555	10 11 714 5	MOTOR DIESEL D936 L A6 190
VOLANTE MONTAGEM EXTER	10115862	530	1	555	10 11 714 5	MOTOR DIESEL D936 L A6 190
VÁLVULA	10011832	1	1	614	90 78 233	VÁLVULA M14X1,5
VÁLVULA	10280279	50	1	346	10 06 379 3	UNIDADE DE COMANDO DE O
VÁLVULA	5800090	710	1	494	10 48 808 7	INSTALACAO ELETRICA
VÁLVULA	7025110	24	1	336	11 00 359 4	CARCAÇA
VÁLVULA ALTERNADORA	10301270	190	2	425	10 11 386 0	BLOCO DE COMANDO
VÁLVULA ALTERNADORA	10301270	16	1	754	10 85 472 4	PEÇAS MONT.- MÁQUINA BAS
VÁLVULA DE ADMISSÃO	10136752	2	2	591	10 14 155 4	CABEÇOTE - PRÉ MONTADO
VÁLVULA DE ADMISSÃO	9074450	2	2	597	10 11 942 7	CABEÇOTE - PRÉ MONTADO
VÁLVULA DE ADMISSÃO	9074450	2	2	598	10 12 036 4	CABEÇOTE - PRÉ MONTADO
VÁLVULA DE COMANDO	5614029	4	1	362	10 04 272 9	BLOCO DE VÁLVULAS DE CO
VÁLVULA DE COMANDO	9882832	4	1	799	90 73 888	MOTOR HIDRÁULICO
VÁLVULA DE COMUT.DE MOV	10330736	49	1	424	10 11 386 0	BLOCO DE COMANDO
VÁLVULA DE CONTROLE	10040480	60	1	347	10 06 379 3	UNIDADE DE COMANDO DE O
VÁLVULA DE CONTROLE	10297873	2	1	147	10 29 786 7	BOMBA HIDRÁULICA
VÁLVULA DE CONTROLE	10297877	1	1	148	10 29 787 3	VÁLVULA DE CONTROLE
VÁLVULA DE DRENAGEM	10335966	3	1	138	10 21 717 3	FILTRO DE AR
VÁLVULA DE ESCAPE	10136753	4	2	591	10 14 155 4	CABEÇOTE - PRÉ MONTADO
VÁLVULA DE ESCAPE	9074451	4	2	597	10 11 942 7	CABEÇOTE - PRÉ MONTADO
VÁLVULA DE ESCAPE	9074451	4	2	598	10 12 036 4	CABEÇOTE - PRÉ MONTADO
VÁLVULA DE EXTRAÇÃO	7019068	120	1	52	90 66 466	ACESSÓRIOS
VÁLVULA DE FECHAMENTO	5617688	14	1	383	10 04 851 7	TANQUE HIDRAULICO INSTA
VÁLVULA DE FECHAMENTO	5617688	14	1	386	10 35 863 4	TANQUE HIDRAULICO INSTA
VÁLVULA DE PARTIDA FRIA	10220816	2	1	176	11 82 153 4	CABEÇOTE DO FILTRO
VÁLVULA DE RESTRIÇÃO	10008406	57	1	208	56 19 045	MOTOR DE PISTÃO AXIAL
VÁLVULA DE RETORNO	10285358	70	1	407	10 35 863 8	INSTALAÇÃO BLOCO DE VÁL
VÁLVULA DE RETORNO	10299997	71	1	407	10 35 863 8	INSTALAÇÃO BLOCO DE VÁL
VÁLVULA DE RETORNO	10330919	11	1	431	10 33 073 6	VÁLVULA DE COMUT.DE MOV
VÁLVULA DE RETORNO	11170764	140	1	425	10 11 386 0	BLOCO DE COMANDO
VÁLVULA DE RETORNO	5006555	46	4	424	10 11 386 0	BLOCO DE COMANDO
VÁLVULA DE RETORNO	5006719	40	3	424	10 11 386 0	BLOCO DE COMANDO
VÁLVULA DE RETORNO	5006719	7	1	437	50 08 855	VÁLVULA DE RETORNO
VÁLVULA DE RETORNO	5006720	41	2	424	10 11 386 0	BLOCO DE COMANDO
VÁLVULA DE RETORNO	5008169	12	2	426	10 28 535 8	VÁLVULA DE RETORNO
VÁLVULA DE RETORNO	5008169	12	2	427	10 29 999 7	VÁLVULA DE RETORNO
VÁLVULA DE RETORNO	5008855	48	1	424	10 11 386 0	BLOCO DE COMANDO
VÁLVULA DE RETORNO	5608327	6	1	362	10 04 272 9	BLOCO DE VÁLVULAS DE CO
VÁLVULA DE RETORNO	7017201	710	1	491	10 29 033 7	INSTALACAO ELETRICA
VÁLVULA DE RETORNO	7622803	30	6	255	10 29 300 3	BLOCO DE DISTRIBUIÇÃO MX-
VÁLVULA DE RETORNO	7622803	30	5	719	10 66 480 4	BLOCO DE DISTRIBUIÇÃO MX-
VÁLVULA DE RETORNO	7622803	30	8	733	10 66 475 5	BLOCO DE DISTRIBUIÇÃO MX-
VÁLVULA DE RETORNO	9270598	6	2	816	90 73 786	PLACA DE LIGAÇÃO NG 100
VÁLVULA DE SEGURANÇA RU	11825269	10	1	775	11 45 729 6	CILINDRO DE ELEVACAO DIRE

Designação	Artigo	Item	Quanti	Página	Módulo	Designação
VÁLVULA DE SEGURANÇA RU	11825272	10	1	778	11 45 729 7	CILINDRO DE ELEVACAO ESQ
VÁLVULA DE ÁGUA	10292661	40	1	328	10 40 689 8	AR CONDICIONADO
VÁLVULA DIRECIONAL	10003485	470	1	414	10 35 863 8	INSTALAÇÃO BLOCO DE VÁL
VÁLVULA DIRECIONAL	10018725	2	1	418	10 28 847 0	REGUA DE COMANDO
VÁLVULA DIRECIONAL	10292692	3	1	418	10 28 847 0	REGUA DE COMANDO
VÁLVULA LIMITADORA DE PR	11006050	1	2	398	11 49 189 0	PLACA DE LIGAÇÃO
VÁLVULA LIMITADORA DE PR	12246692	2	1	398	11 49 189 0	PLACA DE LIGAÇÃO
VÁLVULA LIMITADORA DE PR	12410054	1	2	816	90 73 786	PLACA DE LIGAÇÃO NG 100
VÁLVULA LIMITADORA DE PR	5602487	40	1	359	10 35 862 4	INSTALACAO HIDRAULICA
VÁLVULA LIMITADORA DE PR	7028300	120	1	365	56 02 487	VÁLVULA LIMITADORA DE PR
VÁLVULA LIMITADORA DE PR	9267037	2	1	817	90 74 112	PLACA DE LIGAÇÃO NG 090
VÁLVULA M14X1,5	9078233	13	1	560	12 82 483 7	CÁRTER COMPLETO COM CIL
VÁLVULA REDUTORA DE PR	10323728	2	1	367	56 17 123	VÁLVULA REDUTORA DE PR
VÁLVULA REDUTORA DE PR	10441579	11	1	754	10 85 472 4	PEÇAS MONT.- MÁQUINA BAS
VÁLVULA REDUTORA DE PR	10454715	1	1	372	10 44 157 9	VÁLVULA REDUTORA DE PR
VÁLVULA REDUTORA DE PR	5617123	65	1	347	10 06 379 3	UNIDADE DE COMANDO DE O
VÁLVULA REGULADORA DE FL	10116717	10	1	759	10 85 361 0	CILINDRO HIDR. COM ACESS
VÁLVULA REGULADORA DE FL	10301271	400	1	421	10 30 079 8	VALVULA DE RETENCAO
VÁLVULA REGULADORA DE FL	10301271	192	1	425	10 11 386 0	BLOCO DE COMANDO
VÁLVULA REGULADORA DE FL	10301272	191	1	425	10 11 386 0	BLOCO DE COMANDO
VÁLVULA REGULADORA DE FL	9265178	9	1	758	10 35 857 3	CILINDRO HIDR. COM ACESS
VÁLVULA REGULADORA DE FL	9265991	998	1	765	92 65 178	VÁLVULA REGULADORA DE FL
VÁLVULA REGULADORA EHR	10133061	4	2	801	10 13 303 7	BOMBA HIDRÁULICA DUPLA
VÁLVULA SOBRE PRESSÃO	7621324	14	1	249	10 22 844 3	BOMBA DE LUBRIFICACAO
VÁLVULA SOLENÓIDE	10280461	2	1	362	10 04 272 9	BLOCO DE VÁLVULAS DE CO
VÁLVULA SOLENÓIDE	5615344	3	3	362	10 04 272 9	BLOCO DE VÁLVULAS DE CO
VÁLVULA SOLENÓIDE DRUC	10021915	2	1	238	10 04 048 0	VÁLVULA DE CONTROLE
ÓLEO DE MOTOR	9070361	10	1	15	90 66 460	
ÓLEO DE TRANSMISSÃO	9070365	50	1	15	90 66 460	
ÓLEO DE TRANSMISSÃO LIEB	10664875	20	1	40	10 67 547 4	ÓLEO TRANSMISSÃO LIEBHE
ÓLEO DE TRANSMISSÃO LIE	10664876	210	1	40	10 67 547 4	ÓLEO TRANSMISSÃO LIEBHE
ÓLEO DE TRANSMISSÃO LIE	10664874	5	1	40	10 67 547 4	ÓLEO TRANSMISSÃO LIEBHE
ÓLEO DE TRANSMISSÃO LIE	10441636	1000	1	40	10 67 547 4	ÓLEO TRANSMISSÃO LIEBHE
ÓLEO DE TRANSMISSÃO LIE	11000871	1000	1	44	11 62 627 8	ÓLEO DE TRANSMISSÃO LIEB
ÓLEO DE TRANSMISSÃO LIE	11000869	20	1	44	11 62 627 8	ÓLEO DE TRANSMISSÃO LIEB
ÓLEO DE TRANSMISSÃO LIEB	11000870	210	1	44	11 62 627 8	ÓLEO DE TRANSMISSÃO LIEB
ÓLEO DE TRANSMISSÃO LIEB	11000867	5	1	44	11 62 627 8	ÓLEO DE TRANSMISSÃO LIEB
ÓLEO DE TRANSMISSÃO LIEB	10190394	1000	1	46	11 62 628 0	ÓLEO DE TRANSMISSÃO LIEB
ÓLEO DE TRANSMISSÃO LIEB	10190392	20	1	46	11 62 628 0	ÓLEO DE TRANSMISSÃO LIEB
ÓLEO DE TRANSMISSÃO LIEB	10190393	210	1	46	11 62 628 0	ÓLEO DE TRANSMISSÃO LIEB
ÓLEO DE TRANSMISSÃO LIEB	10190391	5	1	46	11 62 628 0	ÓLEO DE TRANSMISSÃO LIEB
ÓLEO DE TRANSMISSÃO LIEB	10190387	5	1	45	11 62 627 9	ÓLEO DE TRANSMISSÃO LIEB
ÓLEO DE TRANSMISSÃO LIEB	10190388	20	1	45	11 62 627 9	ÓLEO DE TRANSMISSÃO LIEB
ÓLEO DE TRANSMISSÃO LIEB	10190389	210	1	45	11 62 627 9	ÓLEO DE TRANSMISSÃO LIEB
ÓLEO DE TRANSMISSÃO LIEB	10190390	1000	1	45	11 62 627 9	ÓLEO DE TRANSMISSÃO LIEB
ÓLEO DE TRANSMISSÃO LIEB	10356826	10	1	22	90 70 365	ÓLEO DE TRANSMISSÃO
ÓLEO DE TRANSMISSÃO LIEB	10296477	1000	1	29	10 35 682 6	ÓLEO DE TRANSMISSÃO LIEB
ÓLEO DE TRANSMISSÃO LIEB	10330287	20	1	29	10 35 682 6	ÓLEO DE TRANSMISSÃO LIEB
ÓLEO DE TRANSMISSÃO LIE	10330288	210	1	29	10 35 682 6	ÓLEO DE TRANSMISSÃO LIEB
ÓLEO DE TRANSMISSÃO LIE	10330285	5	1	29	10 35 682 6	ÓLEO DE TRANSMISSÃO LIEB
ÓLEO DE TRANSMISSÃO LIE	10356827	20	1	22	90 70 365	ÓLEO DE TRANSMISSÃO
ÓLEO DE TRANSMISSÃO LIE	10330292	1000	1	30	10 35 682 7	ÓLEO DE TRANSMISSÃO LIE
ÓLEO DE TRANSMISSÃO LIE	10330291	20	1	30	10 35 682 7	ÓLEO DE TRANSMISSÃO LIE
ÓLEO DE TRANSMISSÃO LIEB	10301680	210	1	30	10 35 682 7	ÓLEO DE TRANSMISSÃO LIE
ÓLEO DE TRANSMISSÃO LIEB	10285639	5	1	30	10 35 682 7	ÓLEO DE TRANSMISSÃO LIE
ÓLEO DE TRANSMISSÃO LIEB	11626278	40	1	22	90 70 365	ÓLEO DE TRANSMISSÃO
ÓLEO DE TRANSMISSÃO LIEB	11626279	50	1	22	90 70 365	ÓLEO DE TRANSMISSÃO
ÓLEO DE TRANSMISSÃO LIEB	11626280	60	1	22	90 70 365	ÓLEO DE TRANSMISSÃO
ÓLEO DO EIXO LIEBHERR/20W	10356831	20	1	21	90 70 364	OLEO PARA CAMBIO E EIXOS
ÓLEO DO EIXO LIEBHERR/20W	10330294	20	1	33	10 35 683 1	ÓLEO DO EIXO LIEBHERR/20W

Designação	Artigo	Item	Quanti	Página	Módulo	Designação
ÓLEO DO EIXO LIEBHERR/20	10285640	5	1	33	10 35 683 1	ÓLEO DO EIXO LIEBHERR/20W
ÓLEO HIDRÁULICO	9070362	20	1	15	90 66 460	
ÓLEO HIDRÁULICO LIEBHERR	10296478	1000	1	16	10 35 682 5	ÓLEO HIDRÁULICO LIEBHERR
ÓLEO HIDRÁULICO LIEBHERR	10296479	5	1	16	10 35 682 5	ÓLEO HIDRÁULICO LIEBHERR
ÓLEO HIDRÁULICO LIEBHERR	10330277	20	1	16	10 35 682 5	ÓLEO HIDRÁULICO LIEBHERR
ÓLEO HIDRÁULICO LIEBHERR	10330278	210	1	16	10 35 682 5	ÓLEO HIDRÁULICO LIEBHERR
ÓLEO HIDRÁULICO LIEBHERR	10356825	20	1	20	90 70 363	ÓLEO HIDRÁULICO SUSTENTÁ
ÓLEO HIDRÁULICO LIEBHERR/	10356791	30	1	19	90 70 362	ÓLEO HIDRÁULICO
ÓLEO HIDRÁULICO LIEBHERR/	10330271	1000	1	25	10 35 679 1	ÓLEO HIDRÁULICO LIEBHERR/
ÓLEO HIDRÁULICO LIEBHERR/	10330268	20	1	25	10 35 679 1	ÓLEO HIDRÁULICO LIEBHERR/
ÓLEO HIDRÁULICO LIEBHERR	10330270	210	1	25	10 35 679 1	ÓLEO HIDRÁULICO LIEBHERR/
ÓLEO HIDRÁULICO LIEBHERR	10330266	5	1	25	10 35 679 1	ÓLEO HIDRÁULICO LIEBHERR/
ÓLEO HIDRÁULICO LIEBHERR/	10356800	10	1	19	90 70 362	ÓLEO HIDRÁULICO
ÓLEO HIDRÁULICO LIEBHERR/	10330260	1000	1	28	10 35 680 0	ÓLEO HIDRÁULICO LIEBHERR/
ÓLEO HIDRÁULICO LIEBHERR/	10330258	20	1	28	10 35 680 0	ÓLEO HIDRÁULICO LIEBHERR/
ÓLEO HIDRÁULICO LIEBHERR	10330259	210	1	28	10 35 680 0	ÓLEO HIDRÁULICO LIEBHERR/
ÓLEO HIDRÁULICO LIEBHERR	10330255	5	1	28	10 35 680 0	ÓLEO HIDRÁULICO LIEBHERR/
ÓLEO HIDRÁULICO LIEBHERR	10356789	20	1	19	90 70 362	ÓLEO HIDRÁULICO
ÓLEO HIDRÁULICO LIEBHERR	10344027	1000	1	24	10 35 678 9	ÓLEO HIDRÁULICO LIEBHERR
ÓLEO HIDRÁULICO LIEBHERR	10344025	20	1	24	10 35 678 9	ÓLEO HIDRÁULICO LIEBHERR
ÓLEO HIDRÁULICO LIEBHERR/	10344026	210	1	24	10 35 678 9	ÓLEO HIDRÁULICO LIEBHERR
ÓLEO HIDRÁULICO LIEBHERR/	10344024	5	1	24	10 35 678 9	ÓLEO HIDRÁULICO LIEBHERR
ÓLEO HIDRÁULICO LIEBHERR/	10356303	10	1	20	90 70 363	ÓLEO HIDRÁULICO SUSTENTÁ
ÓLEO HIDRÁULICO LIEBHERR/	10296481	1000	1	66	10 35 630 3	ÓLEO HIDRÁULICO LIEBHERR/
ÓLEO HIDRÁULICO LIEBHERR/	10330272	20	1	66	10 35 630 3	ÓLEO HIDRÁULICO LIEBHERR/
ÓLEO HIDRÁULICO LIEBHERR	10330276	210	1	66	10 35 630 3	ÓLEO HIDRÁULICO LIEBHERR/
ÓLEO HIDRÁULICO LIEBHERR	10296480	5	1	66	10 35 630 3	ÓLEO HIDRÁULICO LIEBHERR/
ÓLEO HIDRÁULICO SUSTENTÁ	9070363	30	1	15	90 66 460	
ÓLEO TRANSMISSÃO LIEBHE	10675474	30	1	21	90 70 364	OLEO PARA CAMBIO E EIXOS