# LIEBHERR

**Catalog**
**Catálogo**

R 954 C-HD 1128 37541

# Important for spare parts orders!

Check delivery documentation for machine details.

**Required information for spare parts orders:**
Spare parts orders can only be completed quickly and correctly if the order contains the following data.

- Type (see data tag)
- Machine S/N (see data tag)
- Article number, description and quantity of the desired part.
  - If a manufacturer's number for the part is entered in your spare parts list, for example [2003 28 0481], then it must be noted on the order.
  - When ordering spare parts for engines, the Diesel engine serial number must be noted. This serial number can be found on the data tag of the Diesel engine.
- Type of delivery and exact delivery address.
  - Please confirm phone orders in writing.

**Note**
- Technical detail changes compared to the data and illustrations in available documentation are reserved.
- Parts not listed are not spare parts!

# Information for spare parts page

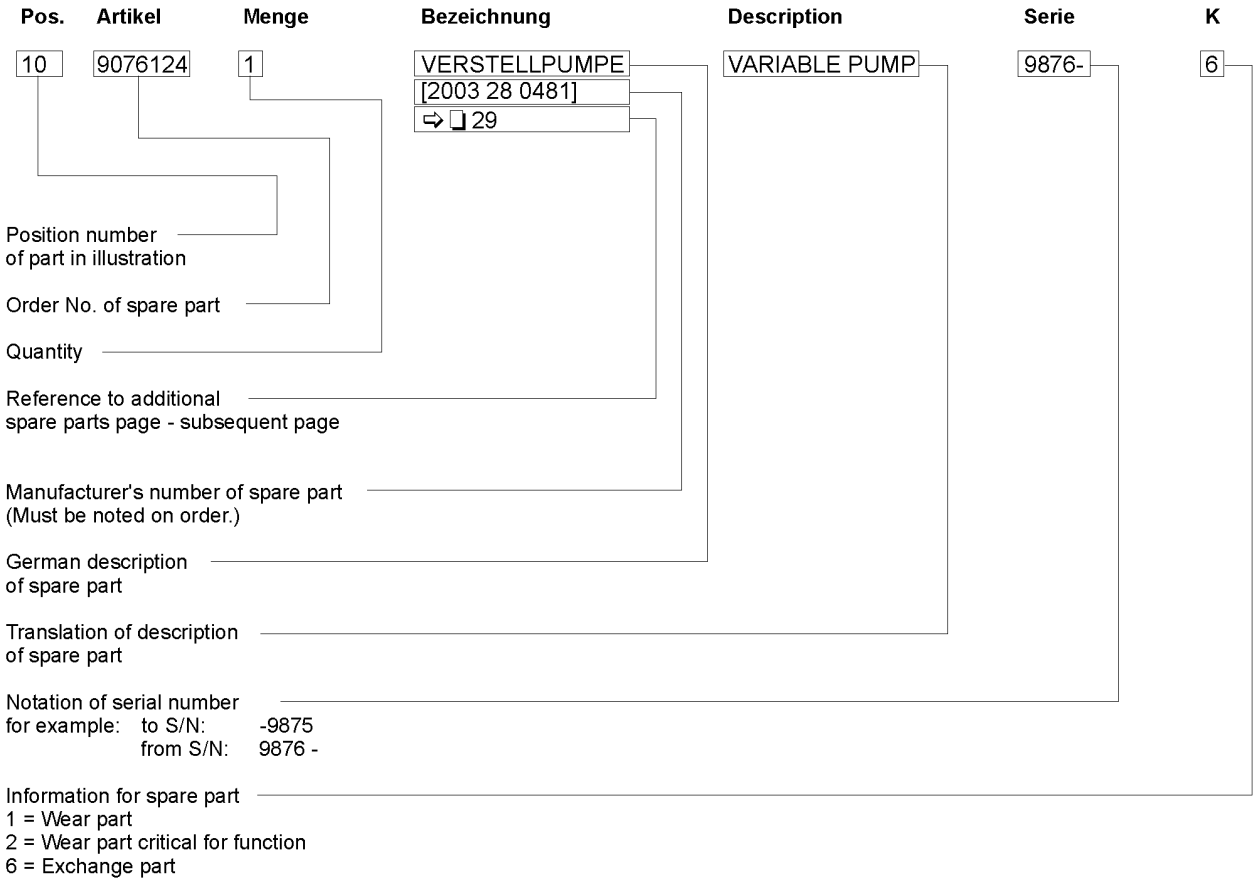


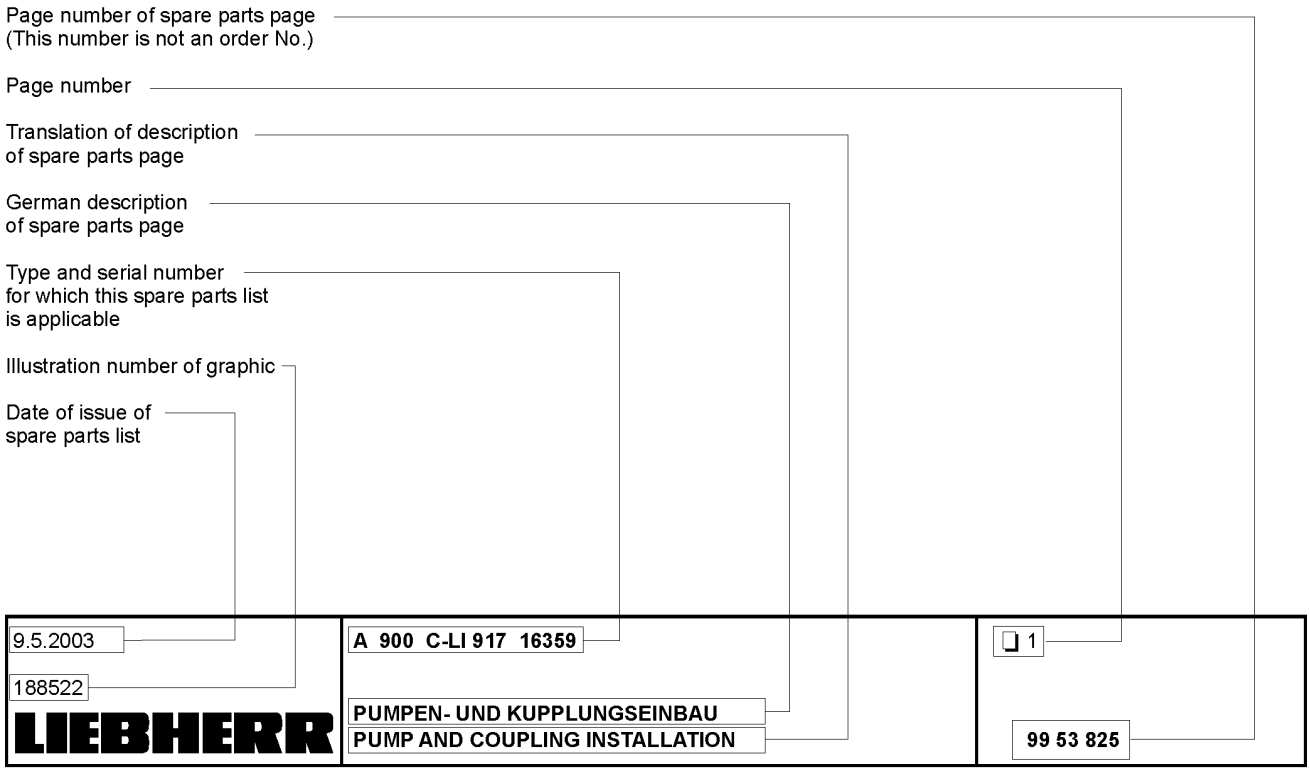

| Pos. | Item | Quantity | Description | Designação | Serie | K |
|---|---|---|---|---|---|---|
| 1 | 10498836 | 1 | BASIC MACHINE<br>⇨ ❑ 9 | MÁQUINA BASE | | |
| 2 | 10470092 | 2 | CRAWLER CHAIN 500mm<br>⇨ ❑ 52 | ESTEIRA | | 1 |
| 3 | 10498159 | 1 | HOIST CYLINDERS DIA.180<br>⇨ ❑ 670 | CILINDRO DE ELEVACAO | | |
| 4 | 10089014 | 1 | TROPICAL EXECUTION | VERSAO TROPICALIZADA | | |
| 5 | 10358602 | 1 | TRAVEL ALARM<br>⇨ ❑ 651 | ALARME DE TRANSLACAO | | |
| 6 | 11102313 | 1 | TRACK GUIDES FOUR TIMES<br>⇨ ❑ 673 | GUIA DE CORRENTE QUADRUPL | | |
| 7 | 11102652 | 1 | PREMOUNTING F.RADIO<br>⇨ ❑ 674 | INSTALAÇÃO P/RÁDIO | | |
| 8 | 10498163 | 1 | FULL AUTOMAT.CENTRAL.LUBRICAT.<br>⇨ ❑ 679 | LUBRIFICAÇÃO CENTR.TOTAL.A | | |
| 9 | 10498299 | 1 | GOOSENECK BOOM 6,70M<br>⇨ ❑ 615 | LANÇA MONOBLOCO | | |
| 10 | 10498234 | 1 | STICK 2,35M<br>⇨ ❑ 627 | BRACO DA CACAMBA | | |
| 11 | 10058279 | 1 | PROTECTION F.STICK 2,35M | PROTECAO CINTA INFERIOR P/ | | |
| 12 | 11102829 | 1 | BACKHOE BUCKET HD 1950mm 3,3m³<br>⇨ ❑ 633 | CAÇAMBA RETRO HD | | |
| 13 | 10498177 | 2 | PISTON ROD COVER BUCKET CYL<br>⇨ ❑ 639 | PROTEÇÃO DA HASTE DO CILIN | | |
| 14 | 10451146 | 10 | TOOTH | DENTE | | 1 |
| 15 | 726450116 | 1 | KANTSIL SEAL KIT<br>⇨ ❑ 675 | JOGO DE VEDAÇÃO KANTSIL | | |
| 16 | 510160916 | 1 | HAND PUMP | BOMBA MANUAL | | 1 |
| 17 | 510363416 | 1 | BIO-OIL-ANALYSIS SET | CONJ. DE ANÁLISE ÓLEO BIOL. | | 1 |

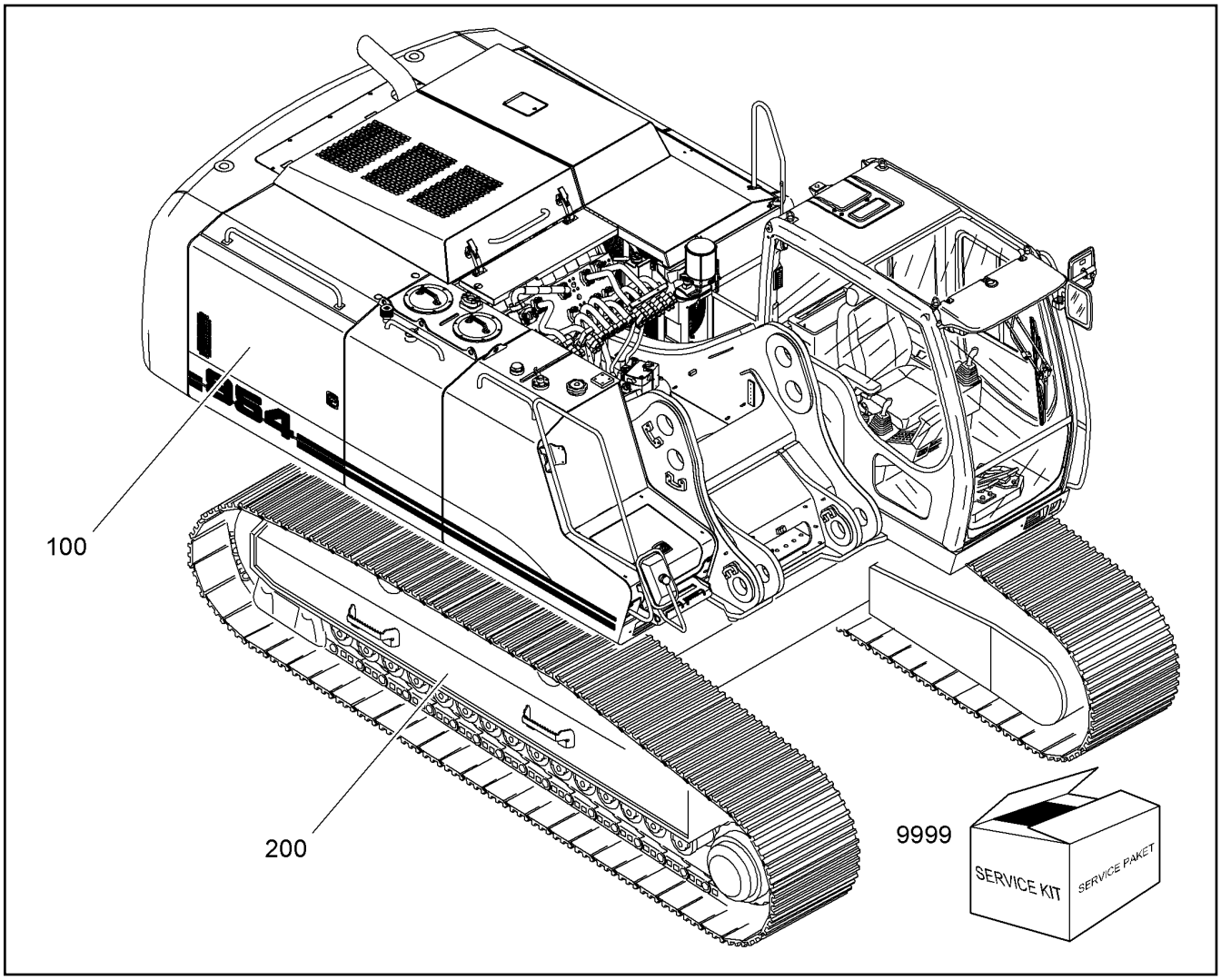


| Pos. | Item | Quantity | Description | Designação | Serie | K |
|---|---|---|---|---|---|---|
| 100 | | 1 | UPPERCARRIAGE<br>⇨ ❑ 85 | CARRO SUPERIOR | | |
| 200 | | 1 | UNDERCARRIAGE CPL<br>⇨ ❑ 49 | CARRO INFERIOR COMPLETO | | |
| 9999 | | 1 | SERVICE MATERIAL<br>⇨ ❑ 46 | MATERIAL DE MANUTENÇÃO | | |

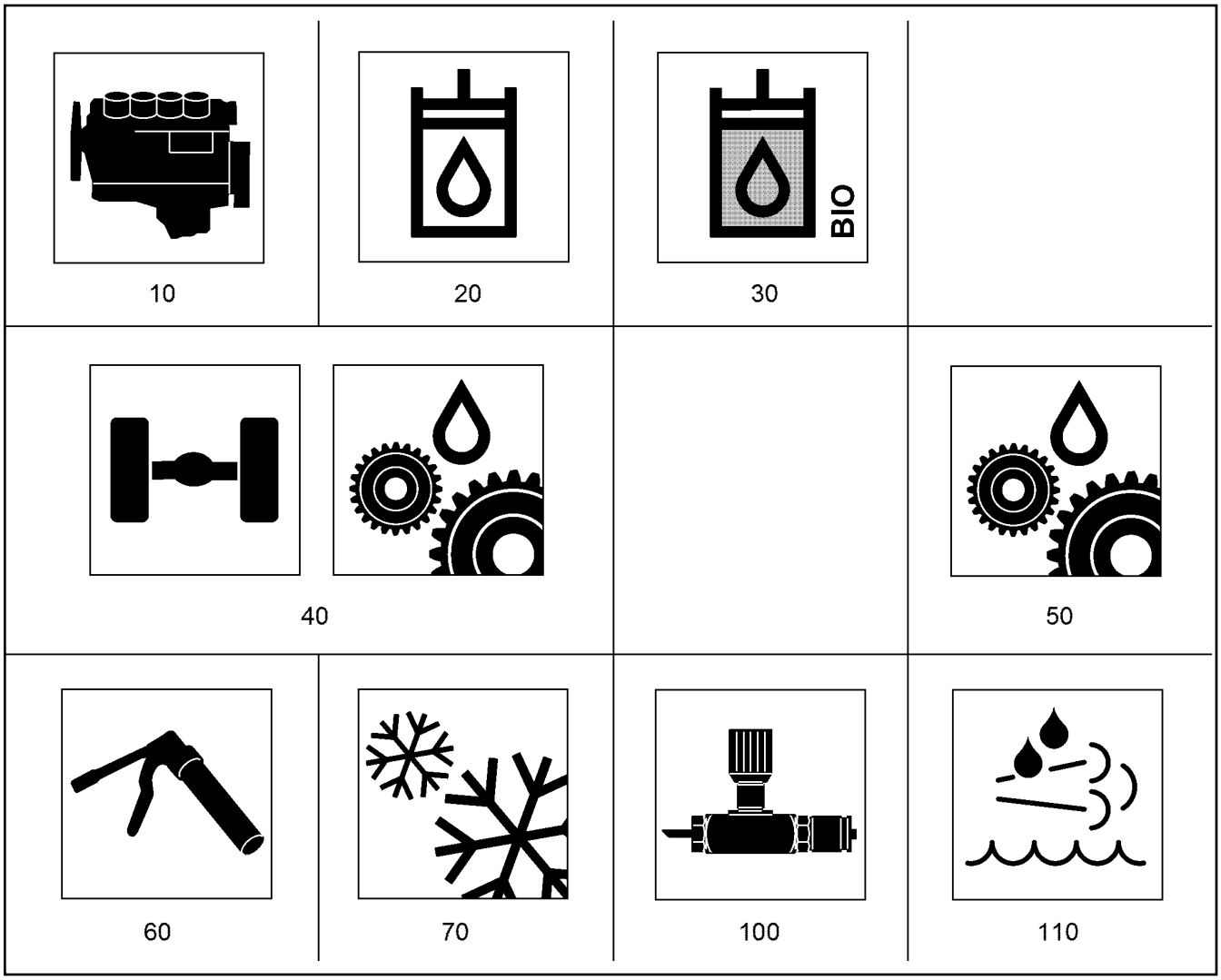


| Pos. | Item | Quantity | Description | Designação | Serie | K |
|---|---|---|---|---|---|---|
| 10 | | 1 | MOTOR OIL<br>⇨ ❑ 13 | ÓLEO DE MOTOR | | |
| 20 | | 1 | HYDRAULIC OIL<br>⇨ ❑ 14 | ÓLEO HIDRÁULICO | | |
| 30 | | 1 | BIODEGRADABLE HYDRAULIC-OIL<br>⇨ ❑ 15 | | | |
| 40 | | 1 | AXLE AND GEAR-OIL<br>⇨ ❑ 16 | OLEO PARA CAMBIO E EIXOS | | |
| 50 | | 1 | GEAR OIL<br>⇨ ❑ 17 | ÓLEO DE TRANSMISSÃO | | |
| 60 | | 1 | GREASES<br>⇨ ❑ 18 | | | |
| 70 | | 1 | COOLANT<br>⇨ ❑ 12 | LIQUIDO DE ARREFECIMENTO | | |
| 100 | | 1 | ACCESSORIES<br>⇨ ❑ 38 | ACESSORIOS | | |
| 110 | | 1l | UREA SOLUTION<br>⇨ ❑ 41 | SOLUÇÃO DE UREIA | | |

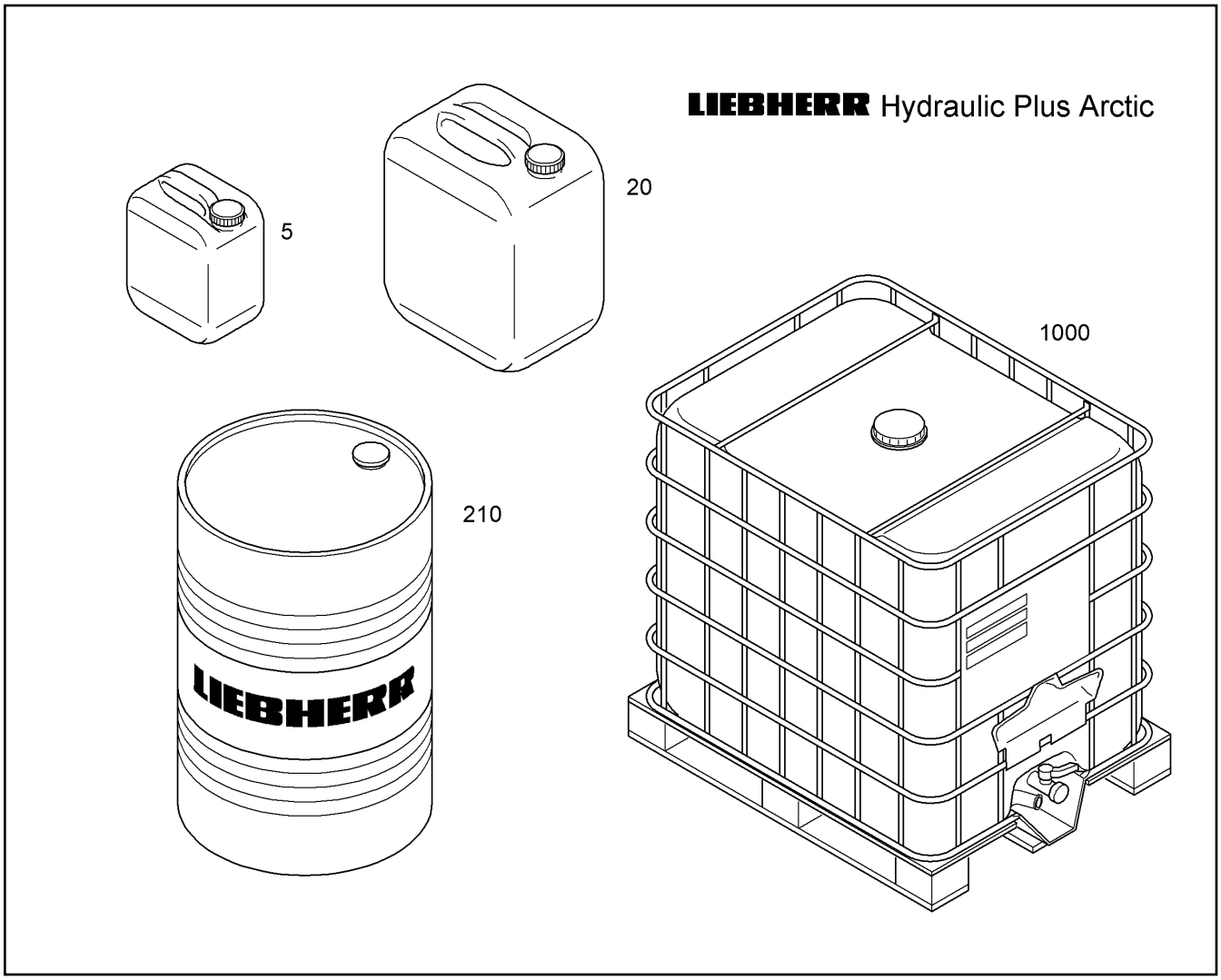


| Pos. | Item | Quantity | Description | Designação | Serie | K |
|---|---|---|---|---|---|---|
| 5 | 10296479 | 1 | HYDRAULIC OIL LIEBHERR/ISO VG 15-46/5L | ÓLEO HIDRÁULICO | | |
| 20 | 10330277 | 1 | HYDRAULIC OIL LIEBHERR/ISO VG 15-46/20 | ÓLEO HIDRÁULICO | | |
| 210 | 10330278 | 1 | HYDRAULIC OIL LIEBHERR/ISO VG 15-46/2 | ÓLEO HIDRÁULICO | | |
| 1000 | 10296478 | 1 | HYDRAULIC OIL LIEBHERR/ISO VG 15-46/10 | ÓLEO HIDRÁULICO | | |



10



100

| Pos. | Item | Quantity | Description | Designação | Serie | K |
|---|---|---|---|---|---|---|
| 10 | | 1l | ANTICORROSION ANTIFREEZER<br>⇨ ❑ 45 | LIQUIDO DE ARREFECIMENTO | | |
| 100 | | 1l | ANTICORROSION ANTIFREEZER<br>⇨ ❑ 44 | LIQUIDO DE ARREFECIMENTO | | |

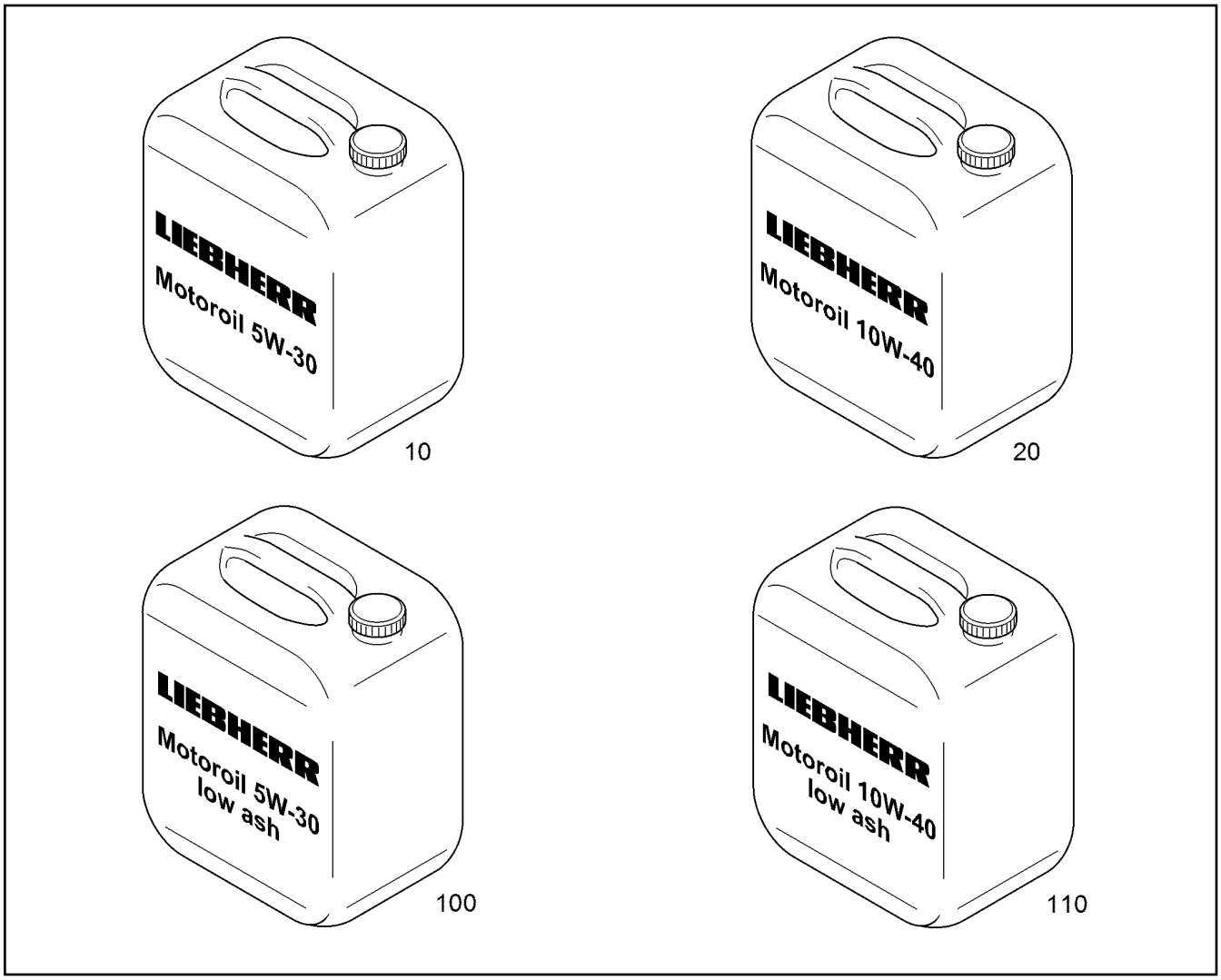


| Pos. | Item | Quantity | Description | Designação | Serie | K |
|---|---|---|---|---|---|---|
| 10 | | 1l | ENGINE OIL LIEBHERR/5W-30<br>⇨ ❑ 36 | OLEO DE MOTOR | | |
| 20 | | 1l | ENGINE OIL LIEBHERR/10W-40<br>⇨ ❑ 21 | OLEO DE MOTOR | | |
| 100 | | 1l | ENGINE OIL LIEBHERR LOW ASH/5W-30<br>⇨ ❑ 37 | OLEO DE MOTOR | | |
| 110 | | 1l | ENGINE OIL LIEBHERR LOW ASH/10W-40<br>⇨ ❑ 22 | OLEO DE MOTOR | | |

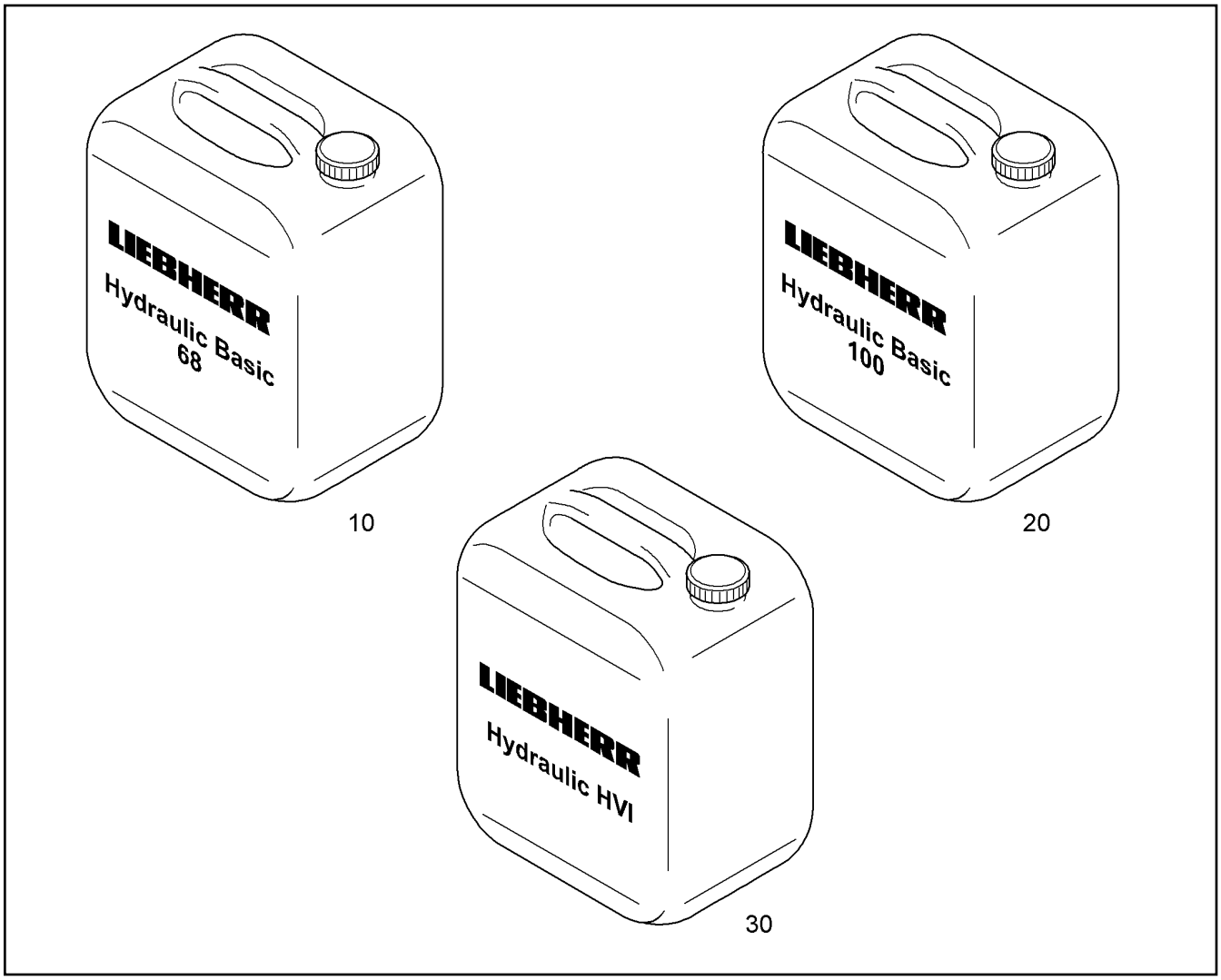


| Pos. | Item | Quantity | Description | Designação | Serie | K |
|---|---|---|---|---|---|---|
| 10 | | 1l | HYDRAULIC OIL LIEBHERR/ISO VG 68<br>⇨ ❑ 23 | ÓLEO HIDRÁULICO | | |
| 20 | | 1l | HYDRAULIC OIL LIEBHERR/ISO-VG 100<br>⇨ ❑ 19 | ÓLEO HIDRÁULICO | | |
| 30 | | 1l | HYDRAULIC OIL LIEBHERR/ISO VG 46<br>⇨ ❑ 20 | ÓLEO HIDRÁULICO | | |

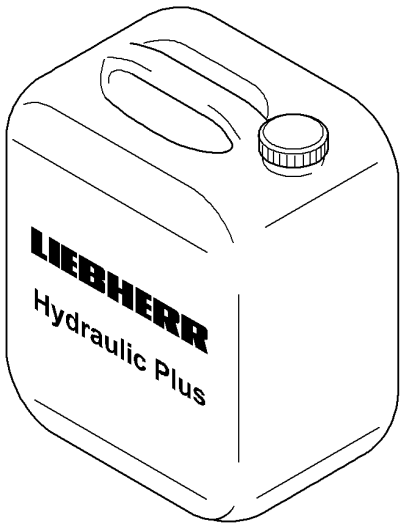


10

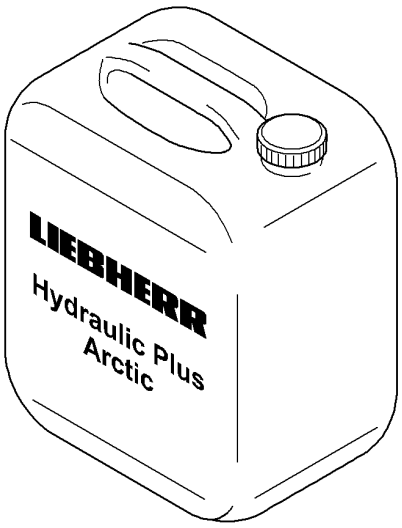


20

| Pos. | Item | Quantity | Description | Designação | Serie | K |
|---|---|---|---|---|---|---|
| 10 | | 1l | HYDRAULIC OIL LIEBHERR/ISO-VG 46<br>⇨ ❑ 47 | ÓLEO HIDRÁULICO | | |
| 20 | | 1l | HYDRAULIC OIL LIEBHERR/ISO VG 15-46<br>⇨ ❑ 11 | ÓLEO HIDRÁULICO | | |




10

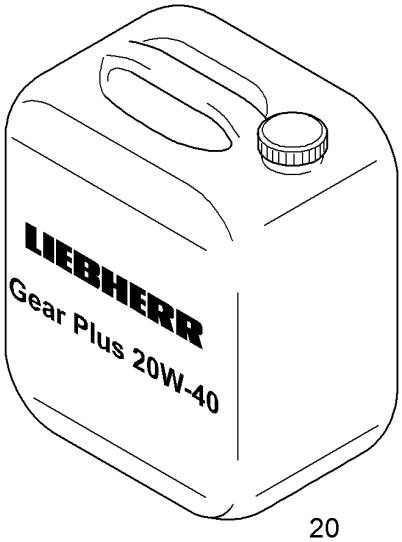


20

| Pos. | Item | Quantity | Description | Designação | Serie | K |
|---|---|---|---|---|---|---|
| 10 | | 1l | AXLE AND GEAR-OIL LIEBHERR/85W-90<br>⇨ ❑ 27 | OLEO PARA CAMBIO E EIXOS | | |
| 20 | | 1l | AXLE-OIL LIEBHERR/20W-40<br>⇨ ❑ 28 | ÓLEO DO EIXO | | |

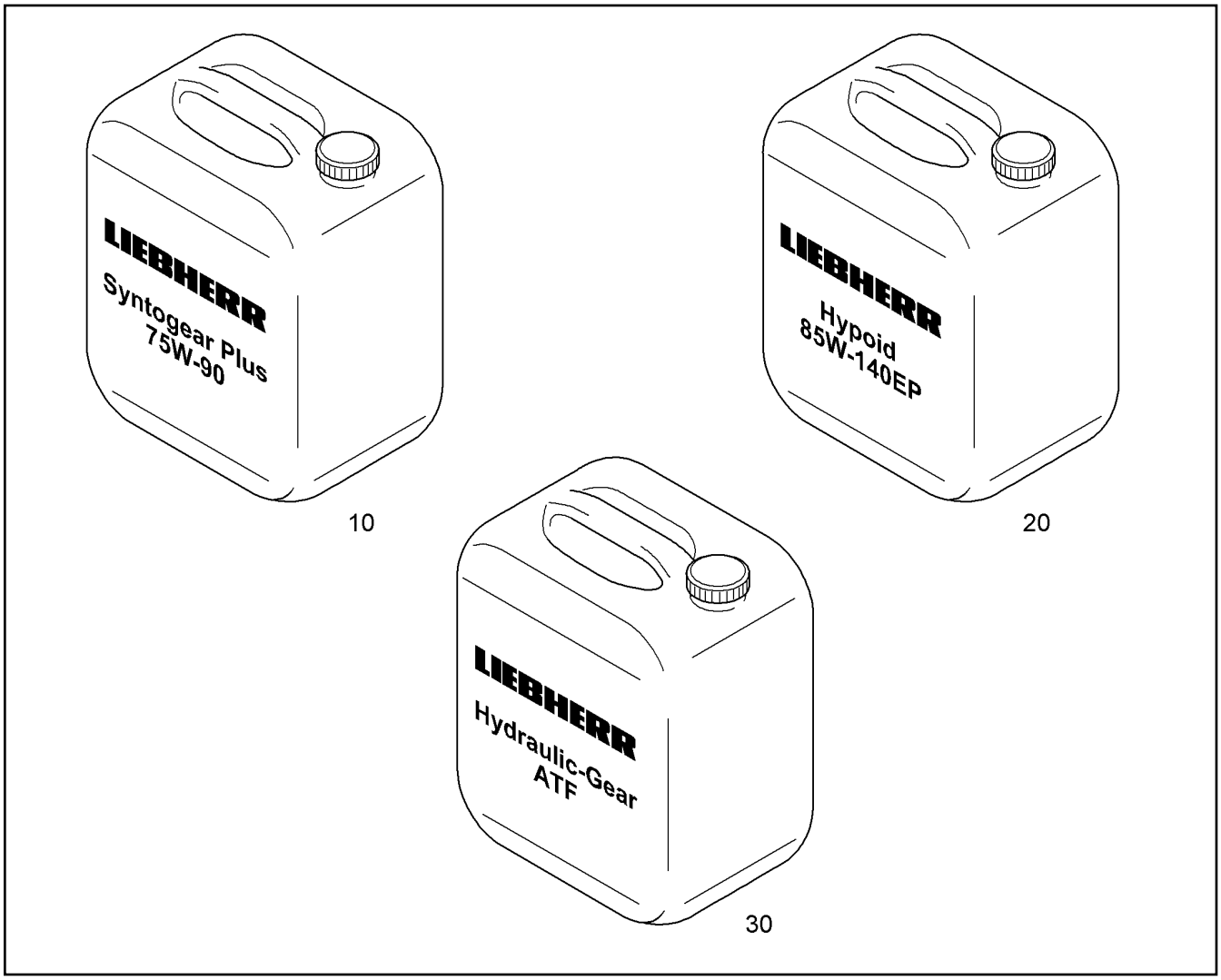


| Pos. | Item | Quantity | Description | Designação | Serie | K |
|---|---|---|---|---|---|---|
| 10 | | 1l | GEAR OIL LIEBHERR/75W-90<br>⇨ ❑ 24 | ÓLEO DE TRANSMISSÃO | | |
| 20 | | 1l | GEAR OIL LIEBHERR/85W-140<br>⇨ ❑ 25 | ÓLEO DE TRANSMISSÃO | | |
| 30 | | 1l | HYDRAULIC+GEAR-OIL LIEBHERR/5W-20<br>⇨ ❑ 26 | HIDRÁULICA+ÓLEO DE ENGRE | | |

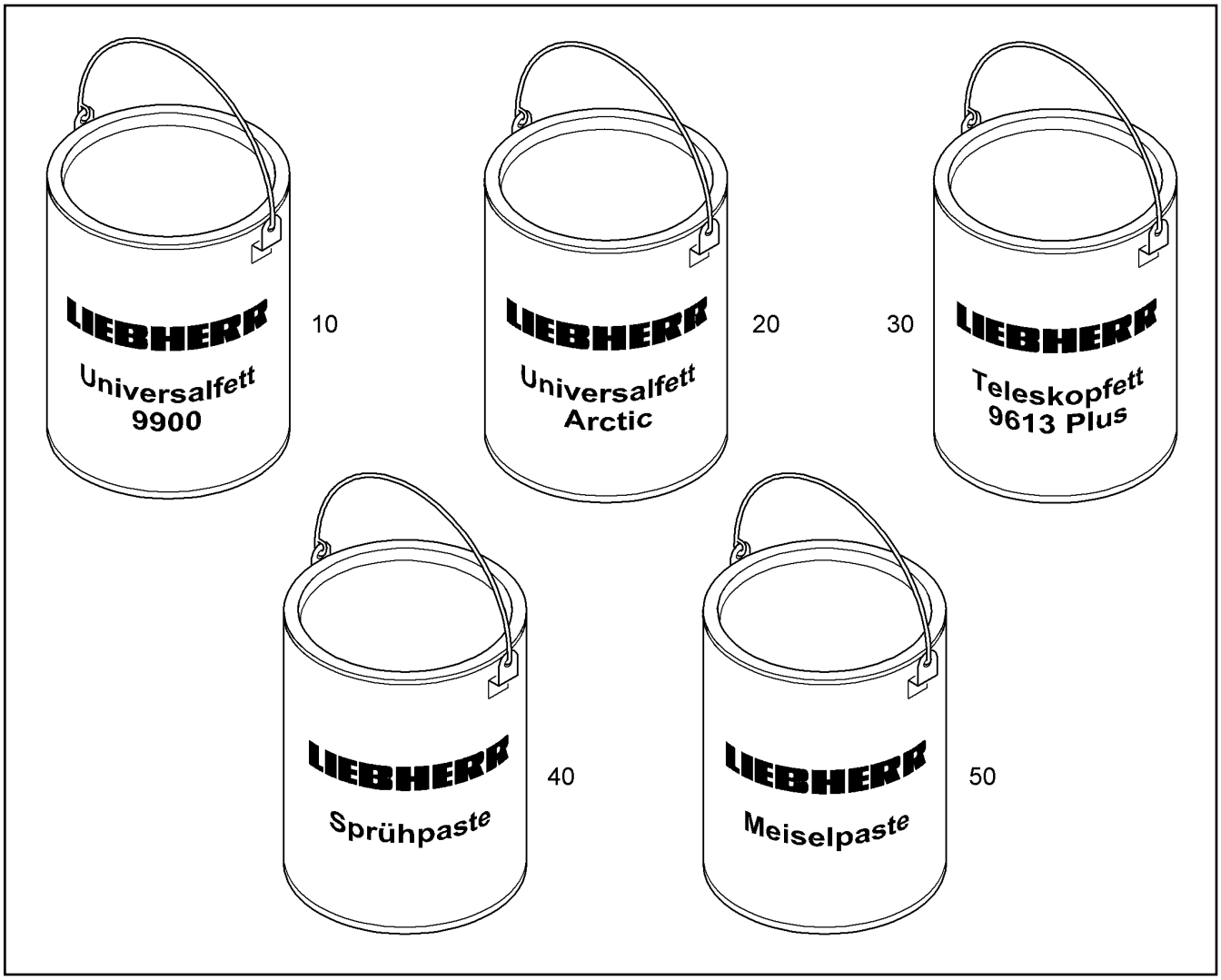


| Pos. | Item | Quantity | Description | Designação | Serie | K |
|---|---|---|---|---|---|---|
| 10 | | 1kg | UNIVERSAL GREASE LIEBHERR<br>⇨ ❑ 32 | GRAXA UNIVESAL | | |
| 20 | | 1kg | LOW TEMPERATURE GREASE LIEBHERR<br>⇨ ❑ 31 | GRAXA PARA BAIXAS TEMPER | | |
| 30 | | 1kg | SPECIAL GREASE LIEBHERR<br>⇨ ❑ 30 | GRAXA ESPECIAL | | |
| 40 | | 1kg | SPRAY-PASTE LIEBHERR<br>⇨ ❑ 33 | PASTA EM PULVERIZADOR | | |
| 50 | | 1kg | BIT-PASTE LIEBHERR<br>⇨ ❑ 34 | PASTA DE CINZEL | | |

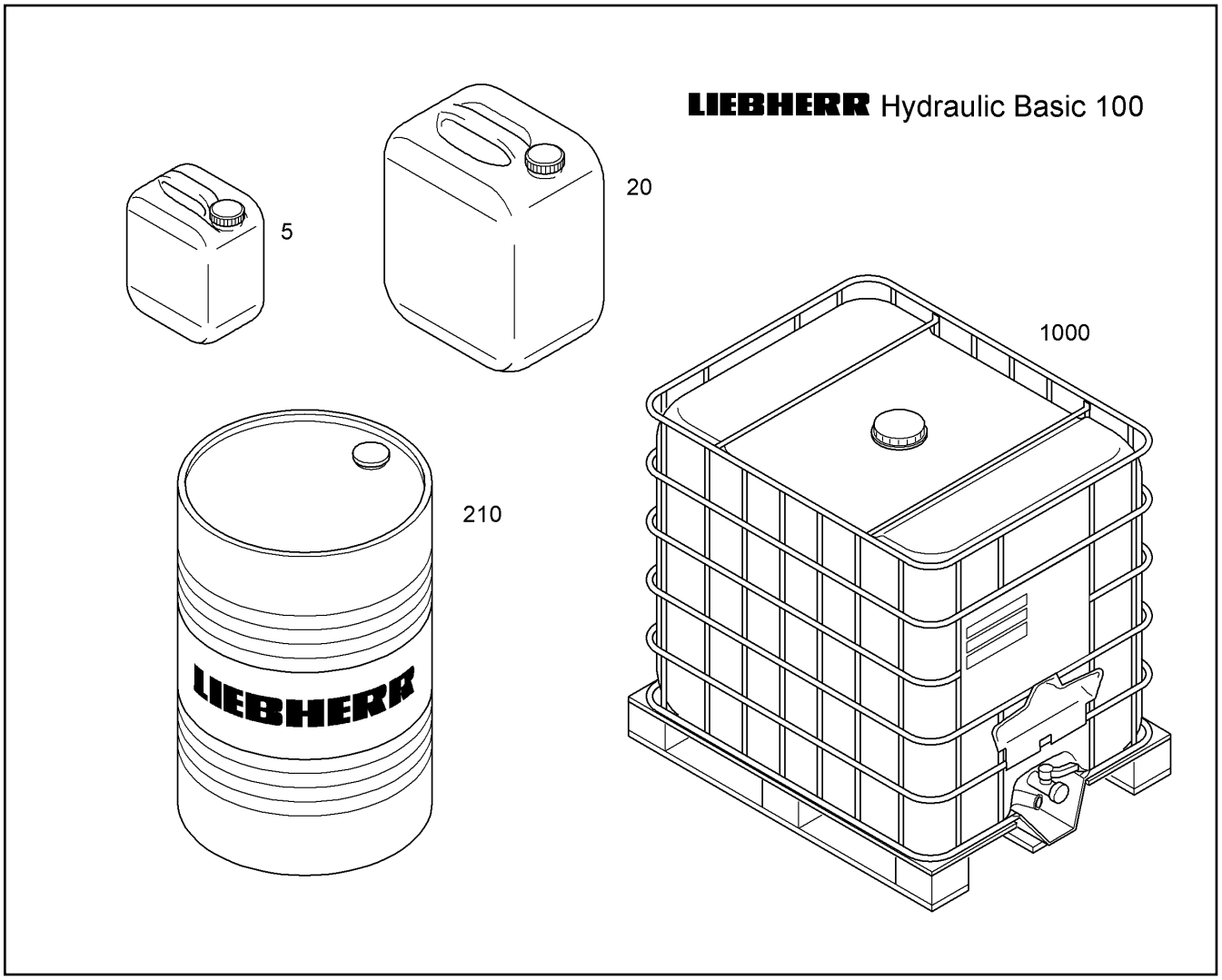


| Pos. | Item | Quantity | Description | Designação | Serie | K |
|---|---|---|---|---|---|---|
| 5 | 10344024 | 1 | HYDRAULIC OIL LIEBHERR/ISO-VG 100/5L | ÓLEO HIDRÁULICO | | |
| 20 | 10344025 | 1 | HYDRAULIC OIL LIEBHERR/ISO-VG 100/20L | ÓLEO HIDRÁULICO | | |
| 210 | 10344026 | 1 | HYDRAULIC OIL LIEBHERR/ISO-VG 100/210 | ÓLEO HIDRÁULICO | | |
| 1000 | 10344027 | 1 | HYDRAULIC OIL LIEBHERR/ISO-VG 100/1000 | ÓLEO HIDRÁULICO | | |

LIEBHERR Hydraulic HVI

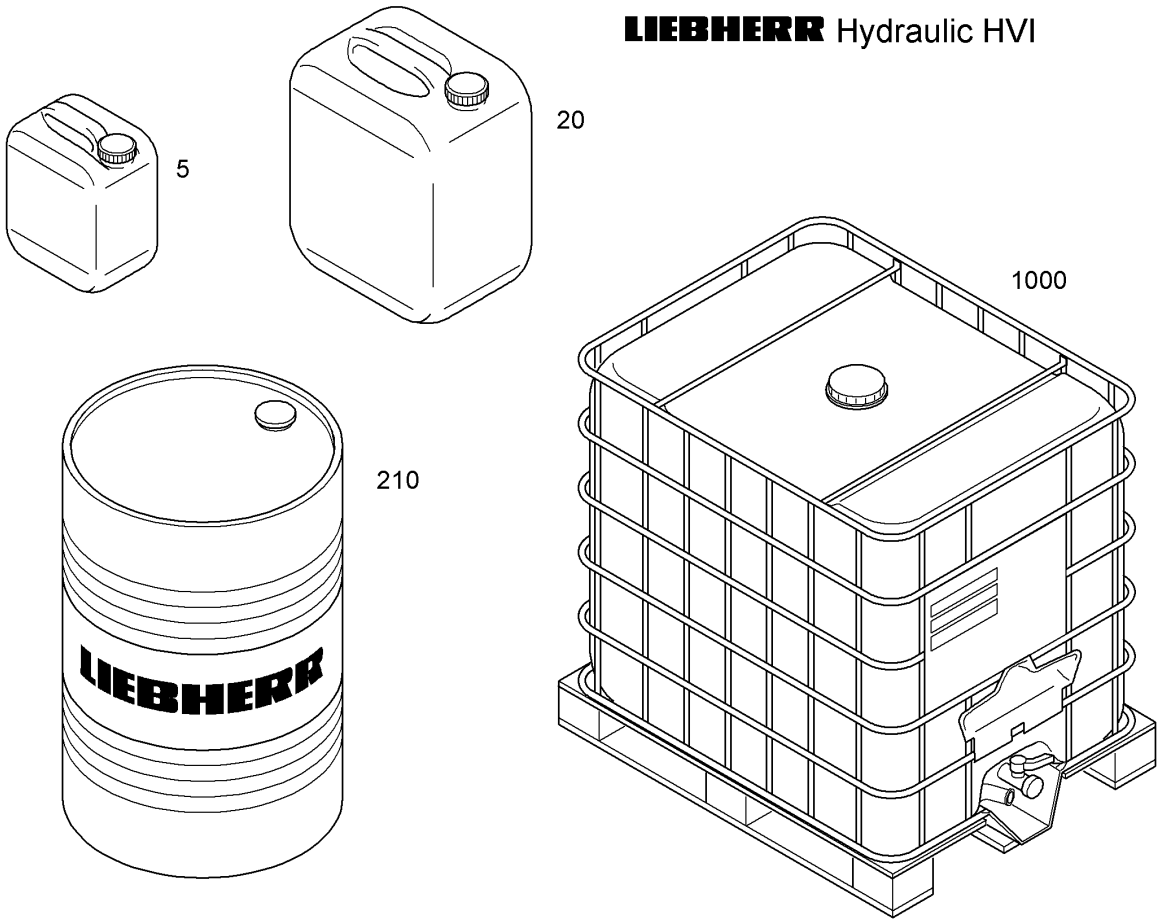


| Pos. | Item | Quantity | Description | Designação | Serie | K |
|---|---|---|---|---|---|---|
| 5 | 10330266 | 1 | HYDRAULIC OIL LIEBHERR/ISO VG 46/5L | ÓLEO HIDRÁULICO | | |
| 20 | 10330268 | 1 | HYDRAULIC OIL LIEBHERR/ISO VG 46/20L | ÓLEO HIDRÁULICO | | |
| 210 | 10330270 | 1 | HYDRAULIC OIL LIEBHERR/ISO VG 46/210L | ÓLEO HIDRÁULICO | | |
| 1000 | 10330271 | 1 | HYDRAULIC OIL LIEBHERR/ISO VG 46/1000 | ÓLEO HIDRÁULICO | | |

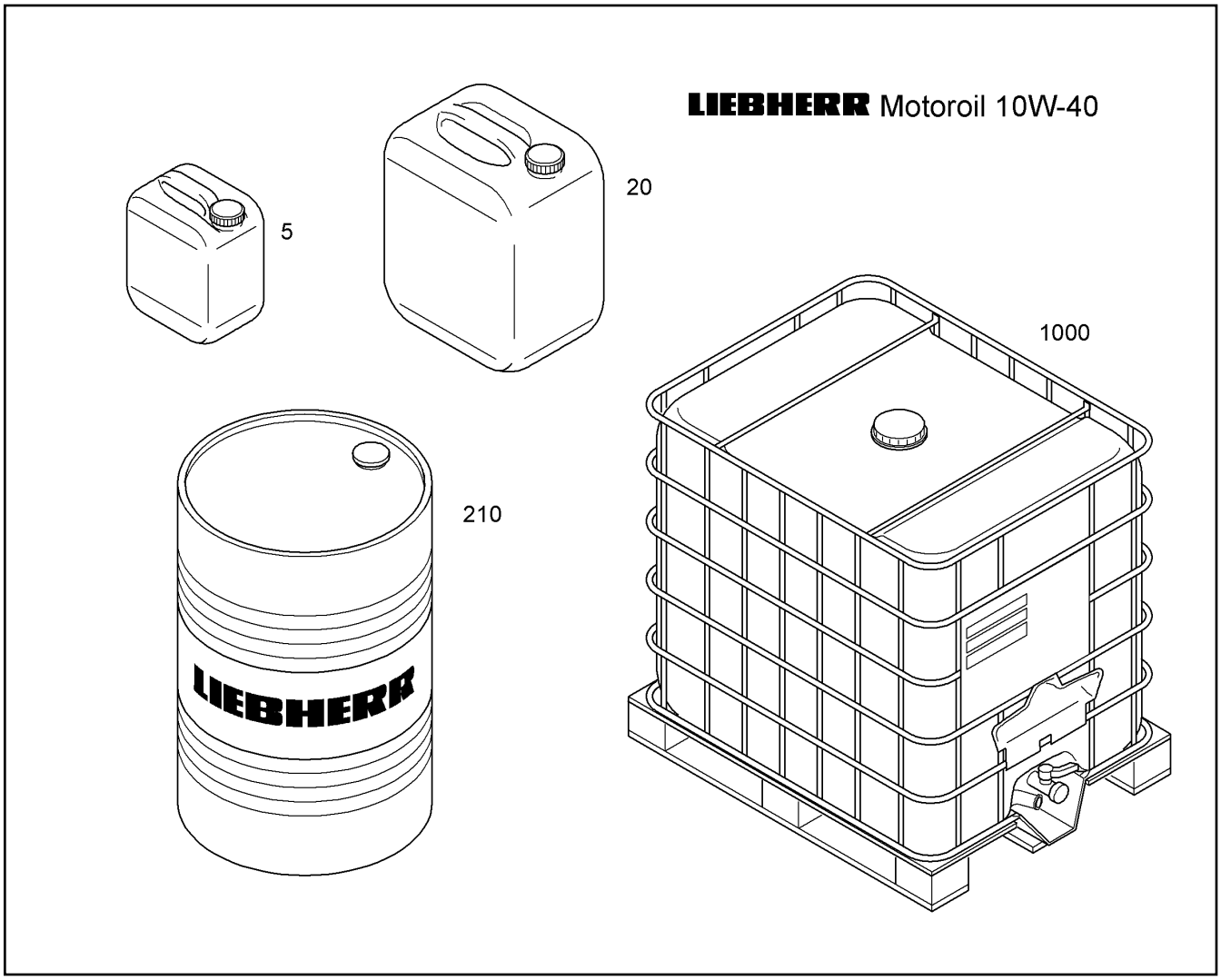


| Pos. | Item | Quantity | Description | Designação | Serie | K |
|---|---|---|---|---|---|---|
| 5 | 10290506 | 1 | ENGINE OIL LIEBHERR/10W-40/5L | OLEO DE MOTOR | | |
| 20 | 10330239 | 1 | ENGINE OIL LIEBHERR/10W-40/20L | OLEO DE MOTOR | | |
| 210 | 10330246 | 1 | ENGINE OIL LIEBHERR/10W-40/210L | OLEO DE MOTOR | | |
| 1000 | 10286279 | 1 | ENGINE OIL LIEBHERR/10W-40/1000L | OLEO DE MOTOR | | |

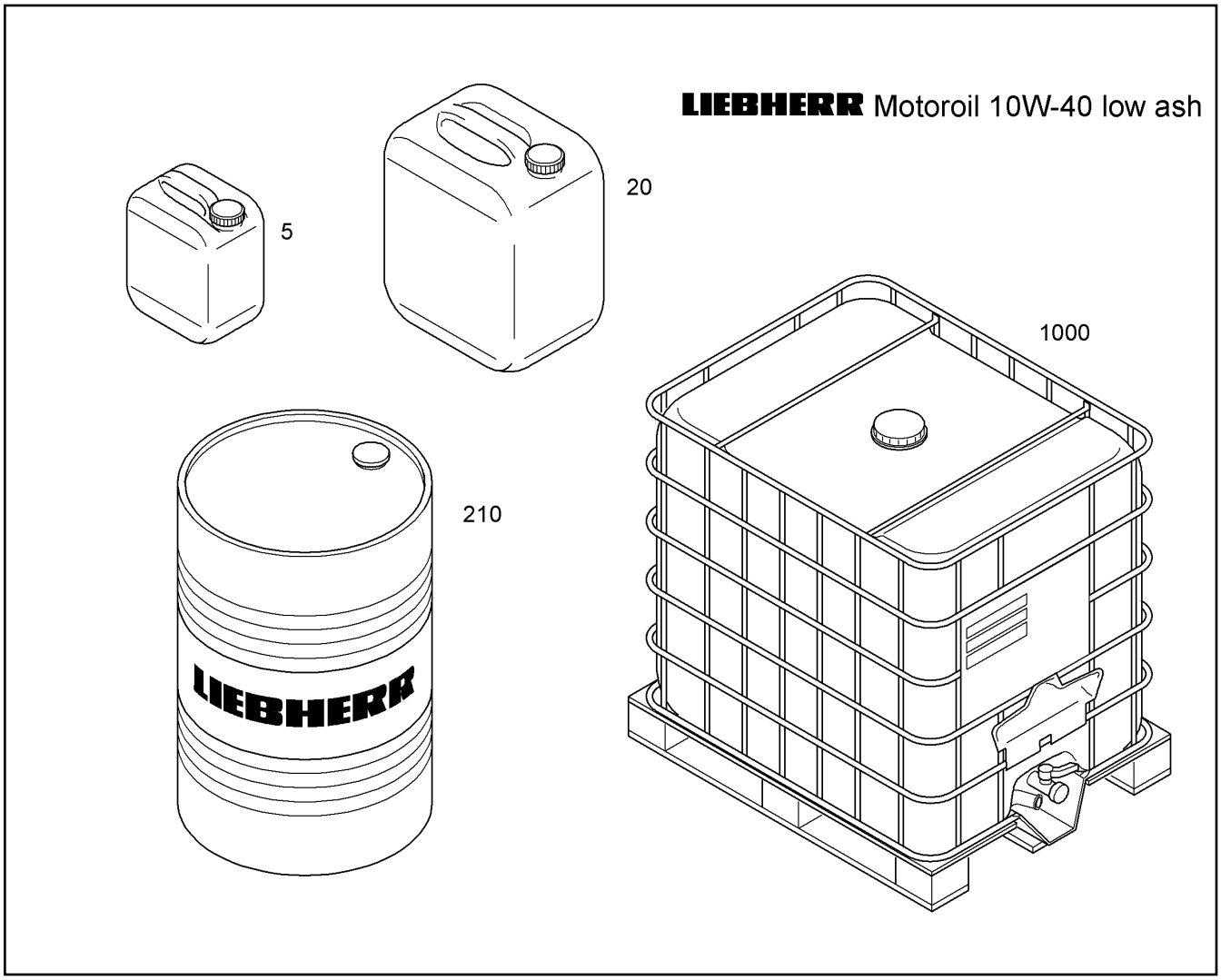


| Pos. | Item | Quantity | Description | Designação | Serie | K |
|---|---|---|---|---|---|---|
| 5 | 10326113 | 1 | ENGINE OIL LIEBHERR LOW ASH/10W-40/5 | OLEO DE MOTOR | | |
| 20 | 10326112 | 1 | ENGINE OIL LIEBHERR LOW ASH/10W-40/20 | OLEO DE MOTOR | | |
| 210 | 10326111 | 1 | ENGINE OIL LIEBHERR LOW ASH/10W-40/2 | OLEO DE MOTOR | | |
| 1000 | 10326110 | 1 | ENGINE OIL LIEBHERR LOW ASH/10W-40/10 | OLEO DE MOTOR | | |

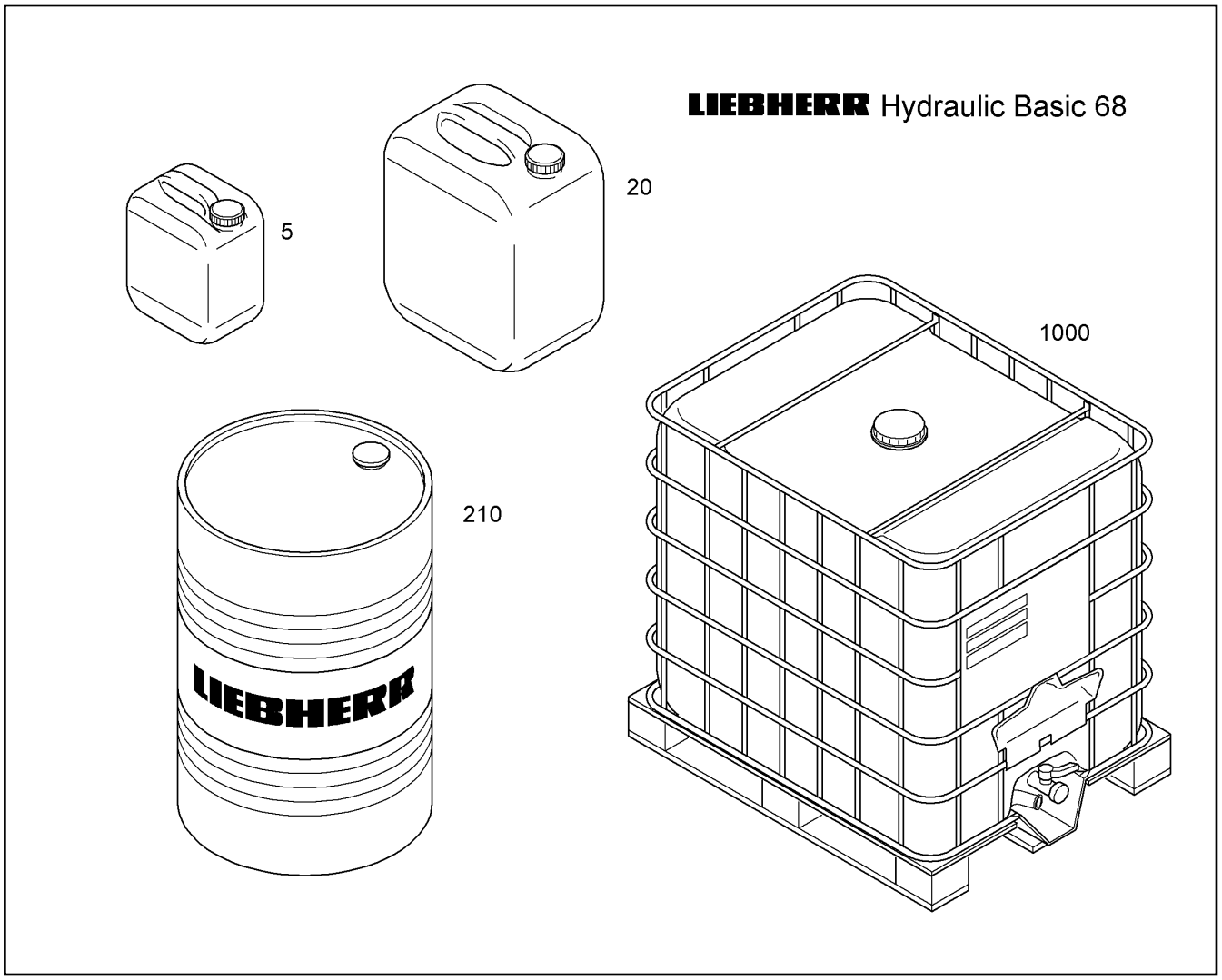


| Pos. | Item | Quantity | Description | Designação | Serie | K |
|---|---|---|---|---|---|---|
| 5 | 10330255 | 1 | HYDRAULIC OIL LIEBHERR/ISO VG 68/5L | ÓLEO HIDRÁULICO | | |
| 20 | 10330258 | 1 | HYDRAULIC OIL LIEBHERR/ISO VG 68/20L | ÓLEO HIDRÁULICO | | |
| 210 | 10330259 | 1 | HYDRAULIC OIL LIEBHERR/ISO VG 68/210L | ÓLEO HIDRÁULICO | | |
| 1000 | 10330260 | 1 | HYDRAULIC OIL LIEBHERR/ISO VG 68/1000 | ÓLEO HIDRÁULICO | | |

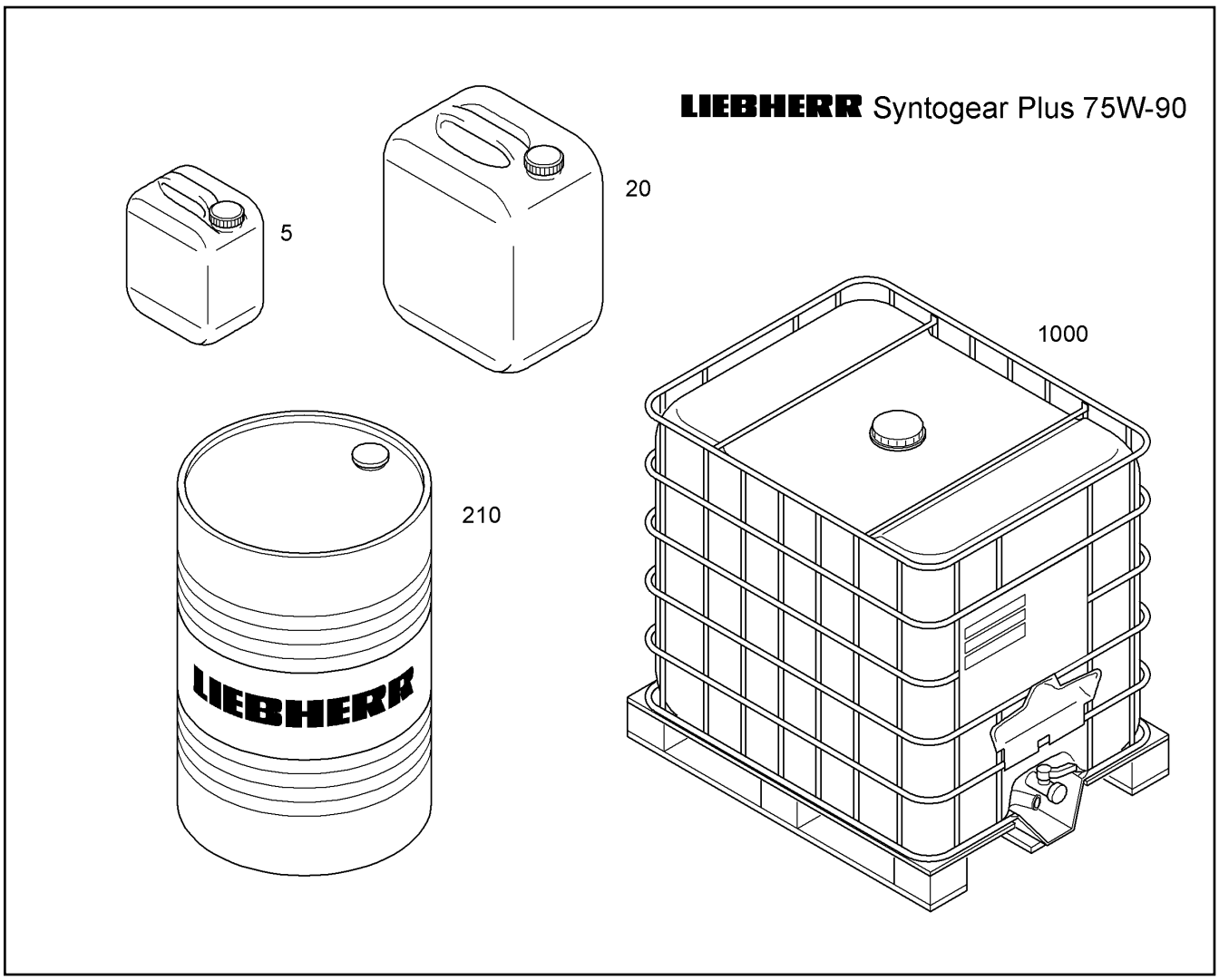


| Pos. | Item | Quantity | Description | Designação | Serie | K |
|---|---|---|---|---|---|---|
| 5 | 10330285 | 1 | GEAR OIL LIEBHERR/75W-90/5L | ÓLEO DE TRANSMISSÃO | | |
| 20 | 10330287 | 1 | GEAR OIL LIEBHERR/75W-90/20L | ÓLEO DE TRANSMISSÃO | | |
| 210 | 10330288 | 1 | GEAR OIL LIEBHERR/75W-90/210L | ÓLEO DE TRANSMISSÃO | | |
| 1000 | 10296477 | 1 | GEAR OIL LIEBHERR/75W-90/1000L | ÓLEO DE TRANSMISSÃO | | |

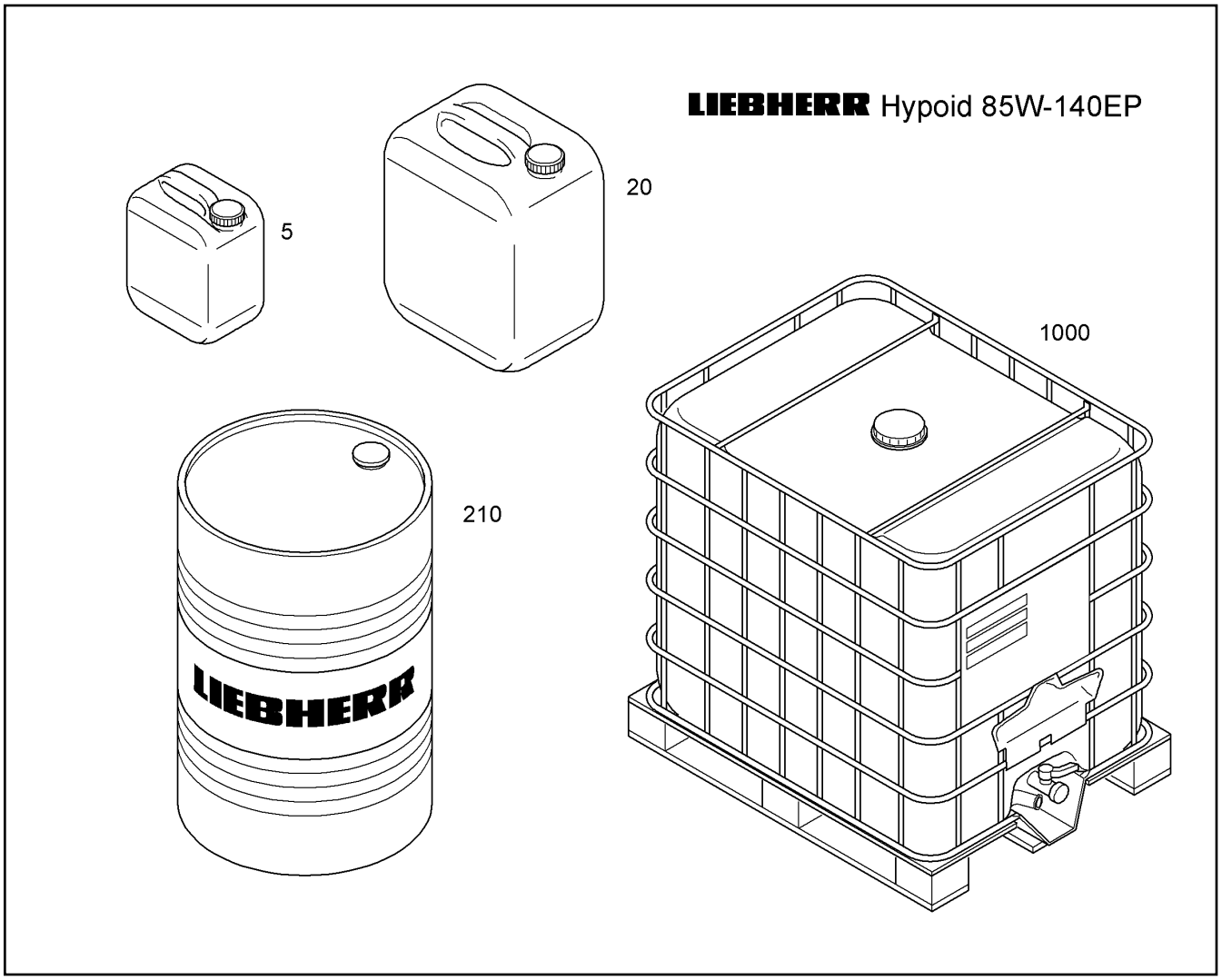


| Pos. | Item | Quantity | Description | Designação | Serie | K |
|---|---|---|---|---|---|---|
| 5 | 10285639 | 1 | GEAR OIL LIEBHERR/85W-140/5L | ÓLEO DE TRANSMISSÃO | | |
| 20 | 10330291 | 1 | GEAR OIL LIEBHERR/85W-140/20L | ÓLEO DE TRANSMISSÃO | | |
| 210 | 10301680 | 1 | GEAR OIL LIEBHERR/85W-140/210L | ÓLEO DE TRANSMISSÃO | | |
| 1000 | 10330292 | 1 | GEAR OIL LIEBHERR/85W-140/1000L | ÓLEO DE TRANSMISSÃO | | |

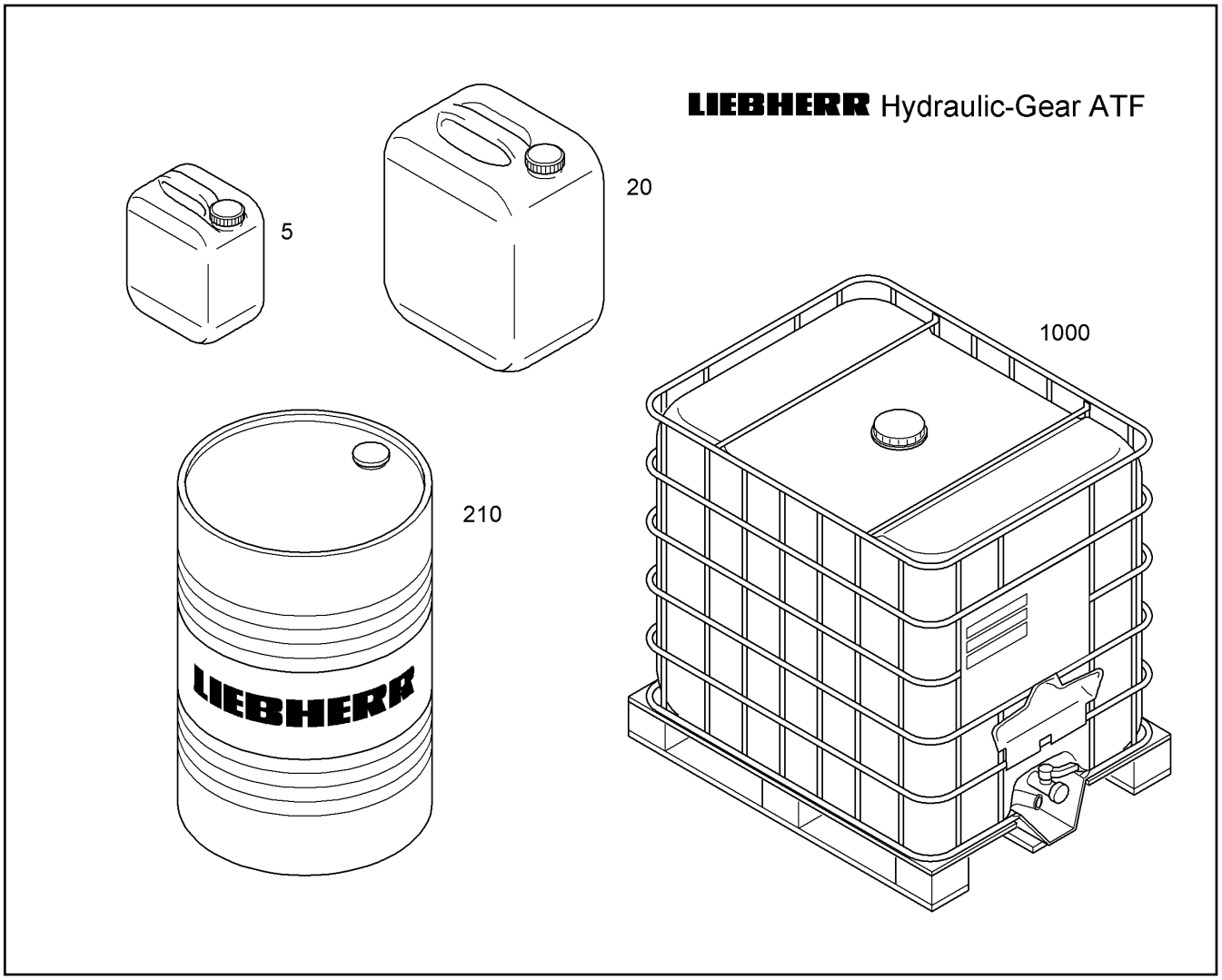


| Pos. | Item | Quantity | Description | Designação | Serie | K |
|---|---|---|---|---|---|---|
| 5 | 10330280 | 1 | HYDRAULIC+GEAR-OIL LIEBHERR/5W-20/5 | HIDRÁULICA+ÓLEO DE ENGRE | | |
| 20 | 10330282 | 1 | HYDRAULIC+GEAR-OIL LIEBHERR/5W-20/20 | HIDRÁULICA+ÓLEO DE ENGRE | | |
| 210 | 10330283 | 1 | HYDRAULIC+GEAR-OIL LIEBHERR/5W-20/2 | HIDRÁULICA+ÓLEO DE ENGRE | | |
| 1000 | 10296482 | 1 | HYDRAULIC+GEAR-OIL LIEBHERR/5W-20/10 | HIDRÁULICA+ÓLEO DE ENGRE | | |

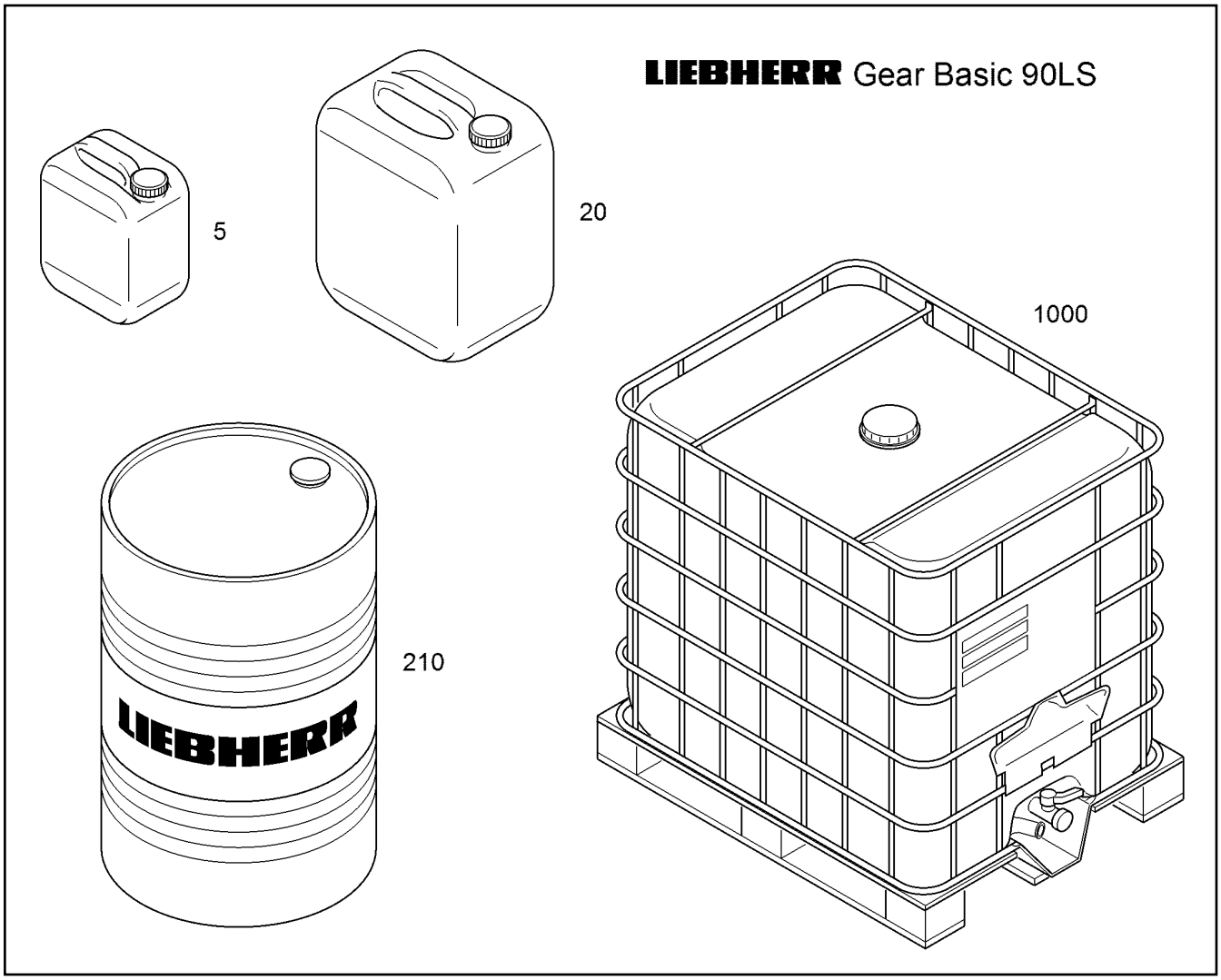


| Pos. | Item | Quantity | Description | Designação | Serie | K |
|---|---|---|---|---|---|---|
| 5 | 10330295 | 1 | AXLE AND GEAR-OIL LIEBHERR/85W-90/5L | OLEO PARA CAMBIO E EIXOS | | |
| 20 | 10330296 | 1 | AXLE AND GEAR-OIL LIEBHERR/85W-90/20 | OLEO PARA CAMBIO E EIXOS | | |
| 210 | 10285702 | 1 | AXLE AND GEAR-OIL LIEBHERR/85W-90/210 | OLEO PARA CAMBIO E EIXOS | | |
| 1000 | 10286280 | 1 | AXLE AND GEAR-OIL LIEBHERR/85W-90/10 | OLEO PARA CAMBIO E EIXOS | | |

LIEBHERR Gear Plus 20W-40

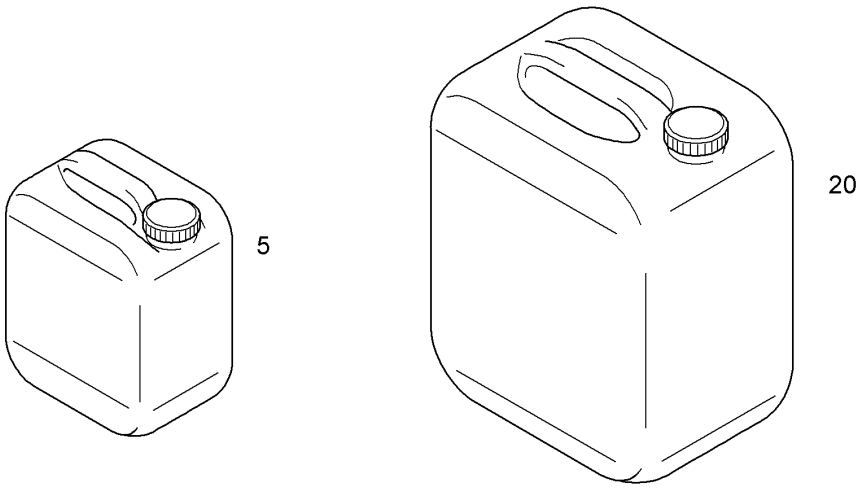


| Pos. | Item | Quantity | Description | Designação | Serie | K |
|---|---|---|---|---|---|---|
| 5 | 10285640 | 1 | AXLE-OIL LIEBHERR/20W-40/5L | ÓLEO DO EIXO | | |
| 20 | 10330294 | 1 | AXLE-OIL LIEBHERR/20W-40/20L | ÓLEO DO EIXO | | |

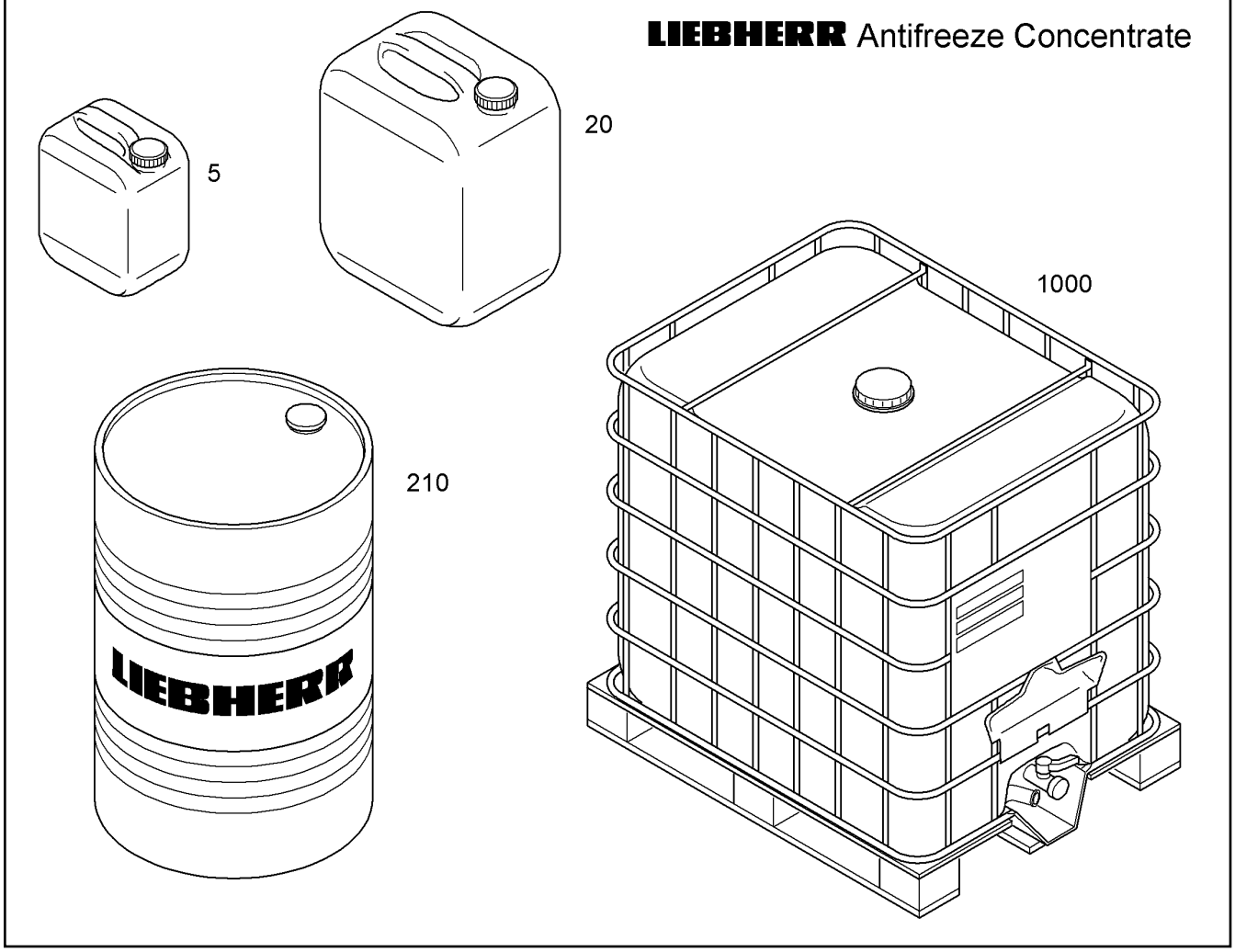


| Pos. | Item | Quantity | Description | Designação | Serie | K |
|---|---|---|---|---|---|---|
| 5 | 10301215 | 1 | ANTICORROSION ANTIFREEZER | LIQUIDO DE ARREFECIMENTO | | |
| 20 | 10428410 | 1 | ANTICORROSION ANTIFREEZER | LIQUIDO DE ARREFECIMENTO | | |
| 210 | 10428411 | 1 | ANTICORROSION ANTIFREEZER | LIQUIDO DE ARREFECIMENTO | | |
| 1000 | 10356833 | 1 | ANTICORROSION ANTIFREEZER | LIQUIDO DE ARREFECIMENTO | | |

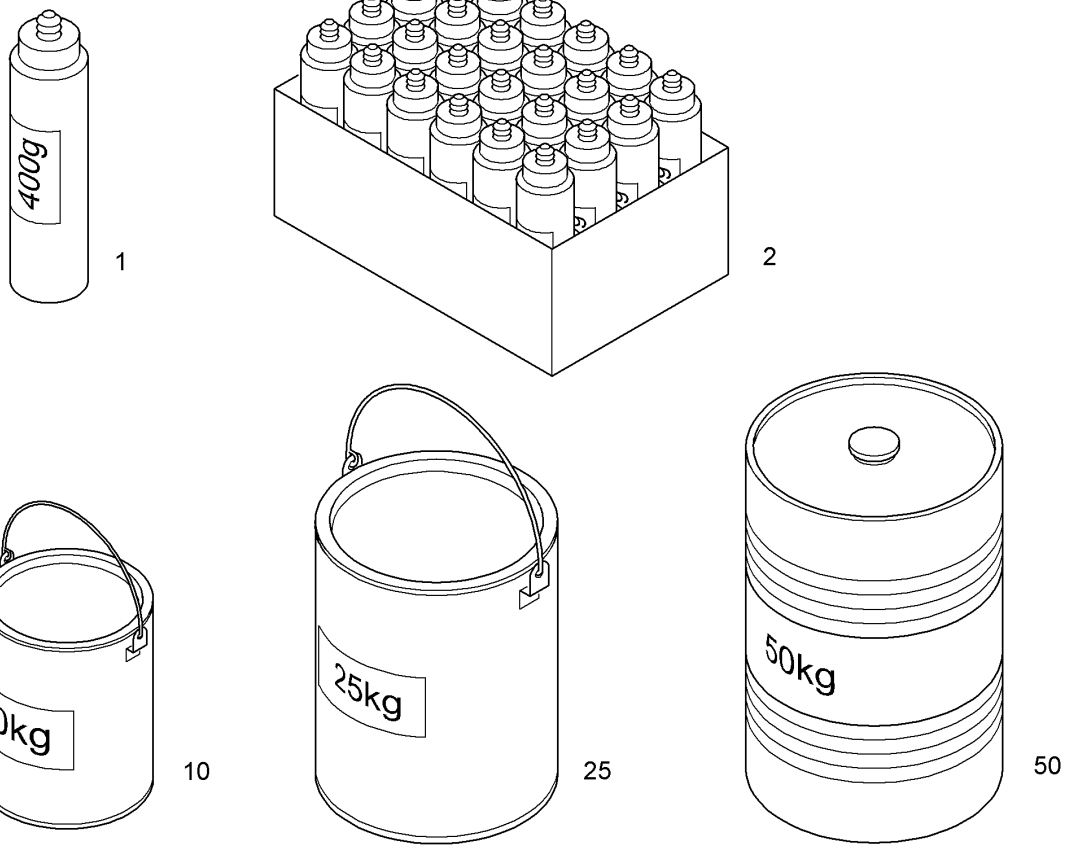


| Pos. | Item | Quantity | Description | Designação | Serie | K |
|---|---|---|---|---|---|---|
| 1 | 861305508 | 1 | SPECIAL GREASE LIEBHERR/0,4kg | GRAXA ESPECIAL | | |
| 2 | 10296820 | 1 | SPECIAL GREASE LIEBHERR/24X0,4kg | GRAXA ESPECIAL | | |
| 10 | 861304208 | 1 | SPECIAL GREASE LIEBHERR/10kg | GRAXA ESPECIAL | | |
| 25 | 861303608 | 1 | SPECIAL GREASE LIEBHERR/25kg | GRAXA ESPECIAL | | |
| 50 | 861305608 | 1 | SPECIAL GREASE LIEBHERR/50kg | GRAXA ESPECIAL | | |

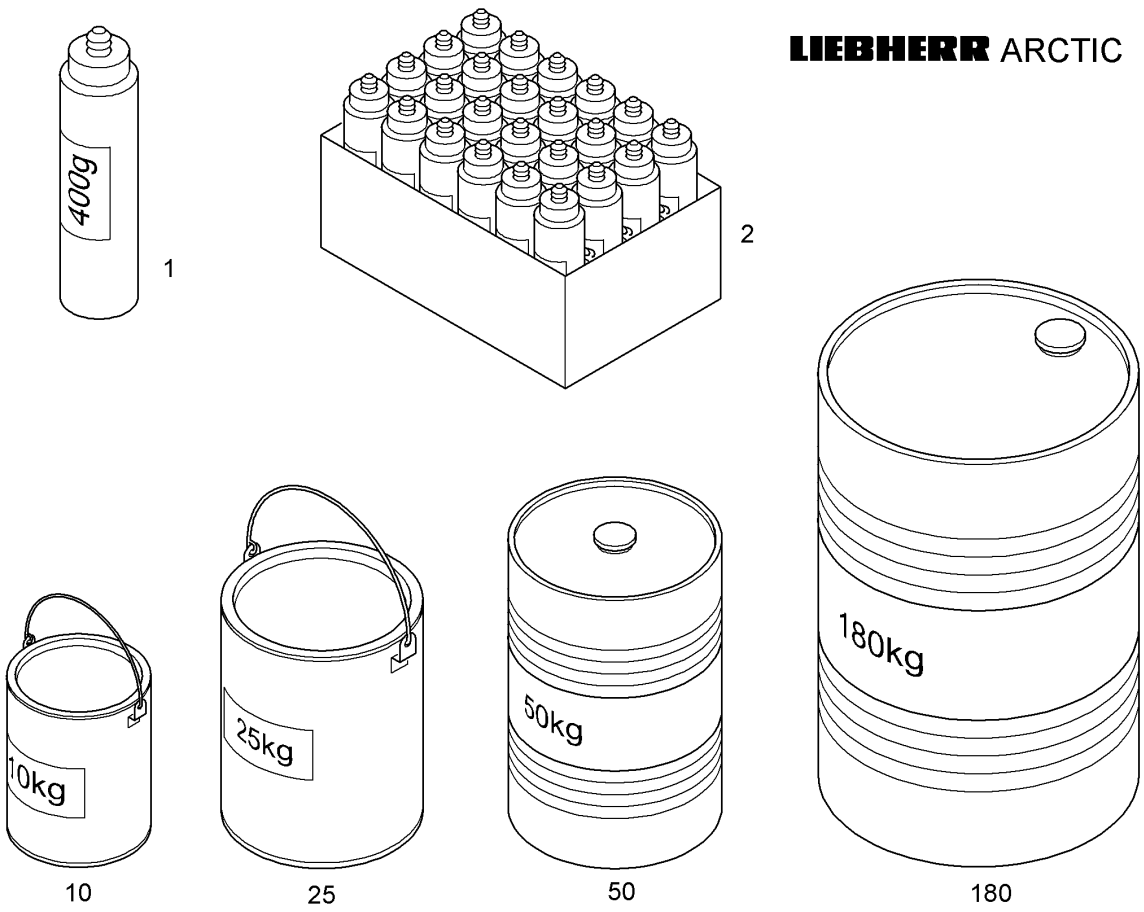


| Pos. | Item | Quantity | Description | Designação | Serie | K |
|---|---|---|---|---|---|---|
| 1 | 10296828 | 1 | LOW TEMPERATURE GREASE LIEBHERR/0, | GRAXA PARA BAIXAS TEMPER | | |
| 2 | 10296827 | 1 | LOW TEMPERATURE GREASE LIEBHERR/2 | GRAXA PARA BAIXAS TEMPER | | |
| 10 | 10296825 | 1 | LOW TEMPERATURE GREASE LIEBHERR/1 | GRAXA PARA BAIXAS TEMPER | | |
| 25 | 10296824 | 1 | LOW TEMPERATURE GREASE LIEBHERR/2 | GRAXA PARA BAIXAS TEMPER | | |
| 50 | 10296823 | 1 | LOW TEMPERATURE GREASE LIEBHERR/5 | GRAXA PARA BAIXAS TEMPER | | |
| 180 | 10296822 | 1 | LOW TEMPERATURE GREASE LIEBHERR/18 | GRAXA PARA BAIXAS TEMPER | | |

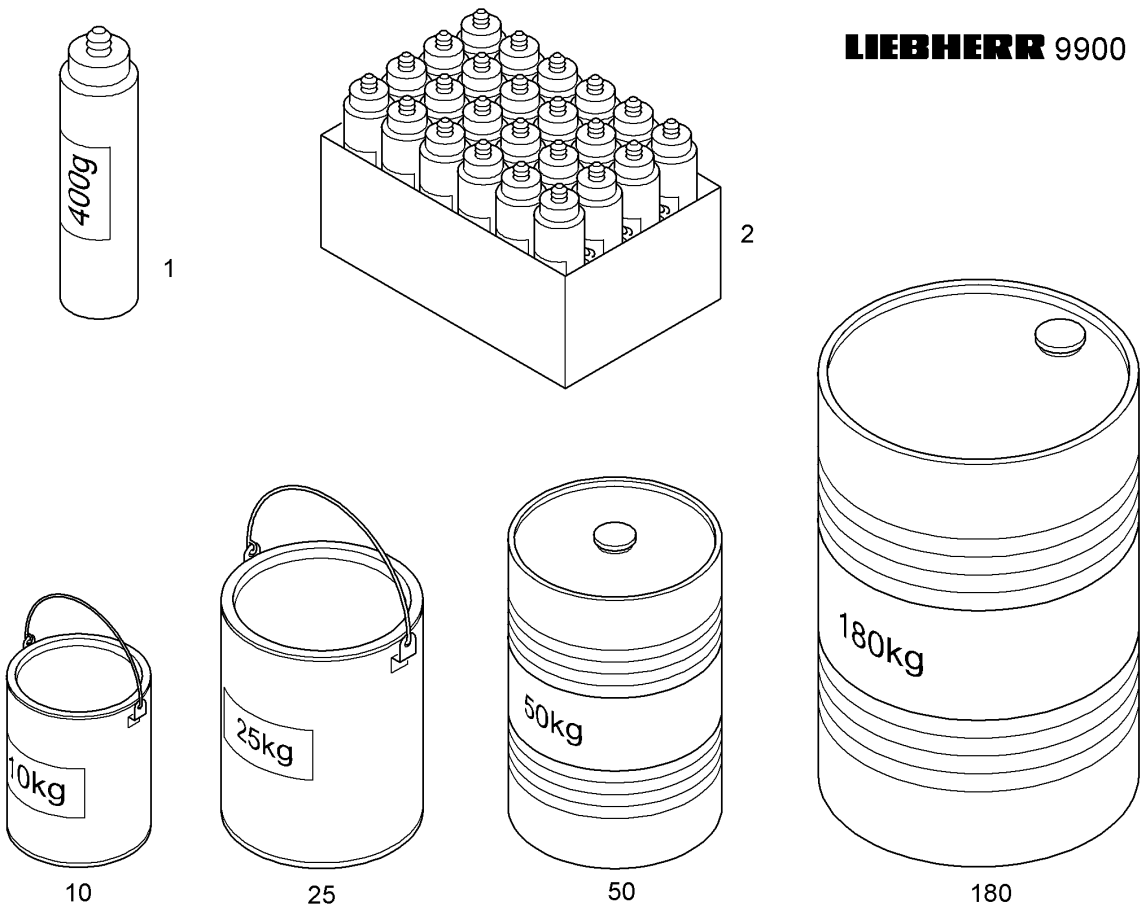


| Pos. | Item | Quantity | Description | Designação | Serie | K |
|---|---|---|---|---|---|---|
| 1 | 10296816 | 1 | UNIVERSAL GREASE LIEBHERR/0,4kg | GRAXA UNIVESAL | | |
| 2 | 10296815 | 1 | UNIVERSAL GREASE LIEBHERR/24X0,4kg | GRAXA UNIVESAL | | |
| 10 | 10296813 | 1 | UNIVERSAL GREASE LIEBHERR/10kg | GRAXA UNIVESAL | | |
| 25 | 10296812 | 1 | UNIVERSAL GREASE LIEBHERR/25kg | GRAXA UNIVESAL | | |
| 50 | 10296811 | 1 | UNIVERSAL GREASE LIEBHERR/50kg | GRAXA UNIVESAL | | |
| 180 | 10296810 | 1 | UNIVERSAL GREASE LIEBHERR/180kg | GRAXA UNIVESAL | | |

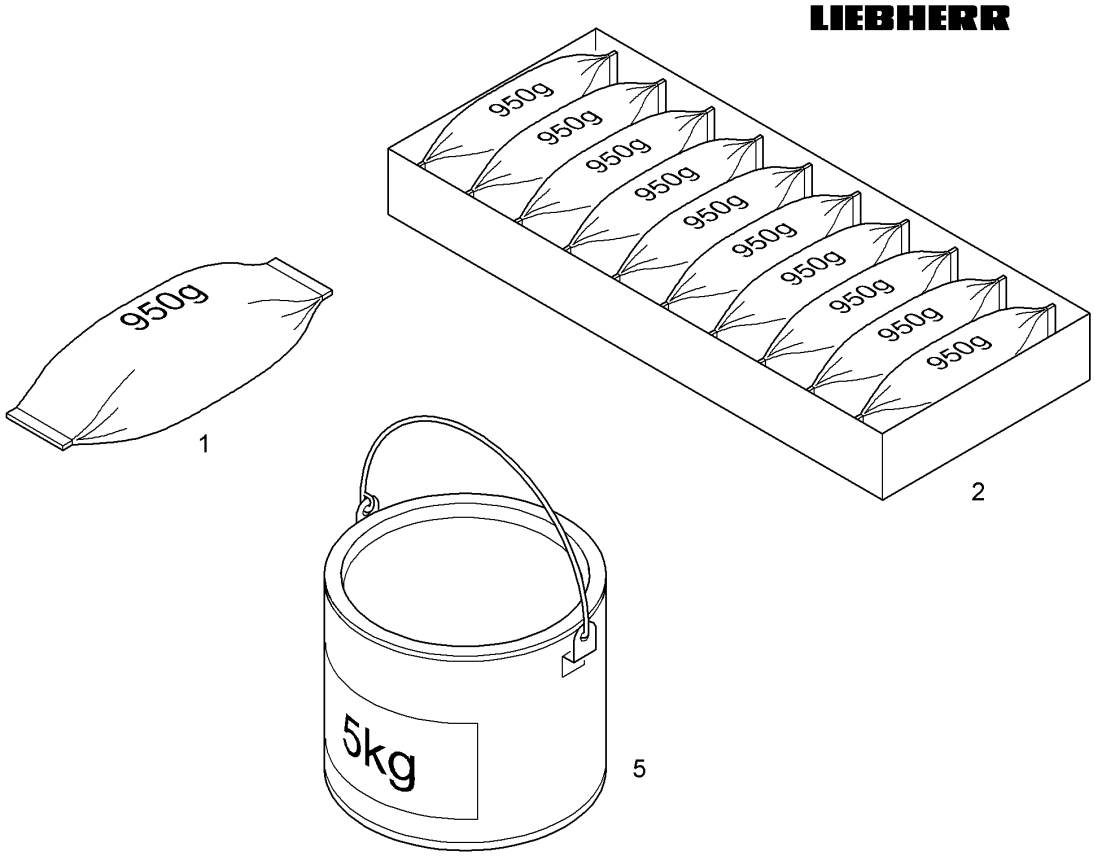


| Pos. | Item | Quantity | Description | Designação | Serie | K |
|---|---|---|---|---|---|---|
| 1 | 10330308 | 1 | SPRAY-PASTE LIEBHERR/0,950kg | PASTA EM PULVERIZADOR | | |
| 2 | 10330310 | 1 | SPRAY-PASTE LIEBHERR/10X0,950kg | PASTA EM PULVERIZADOR | | |
| 5 | 10330311 | 1 | SPRAY-PASTE LIEBHERR/5kg | PASTA EM PULVERIZADOR | | |

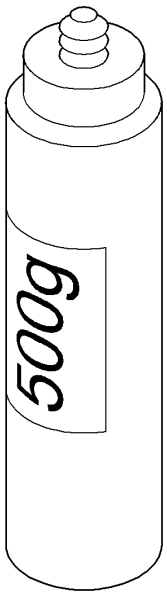


1

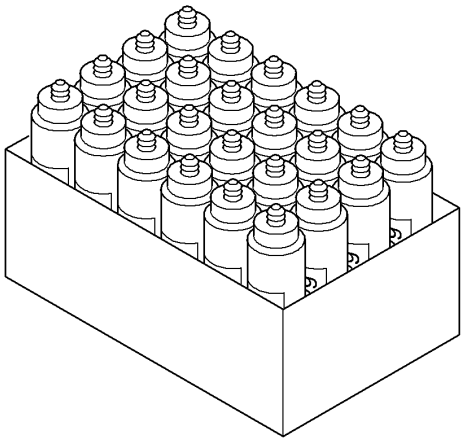

2

| Pos. | Item | Quantity | Description | Designação | Serie | K |
|---|---|---|---|---|---|---|
| 1 | 8610230 | 1 | BIT-PASTE LIEBHERR/0,5kg | PASTA DE CINZEL | | |
| 2 | 10330306 | 1 | BIT-PASTE LIEBHERR/20X0,5kg | PASTA DE CINZEL | | |

**LIEBHERR** Antifreeze Mix

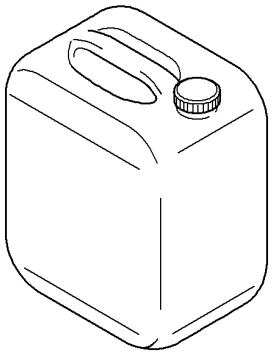


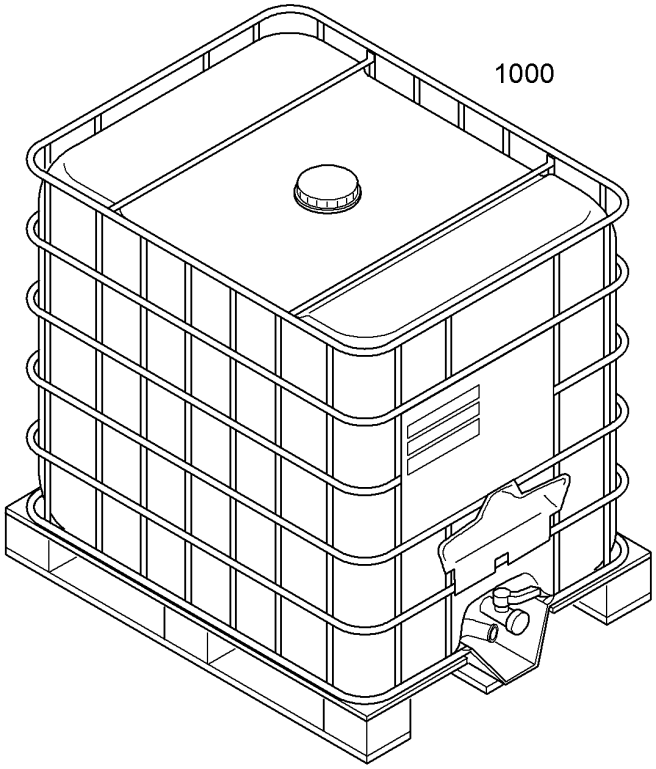


| Pos. | Item | Quantity | Description | Designação | Serie | K |
|---|---|---|---|---|---|---|
| 20 | 10301213 | 1 | ANTICORROSION ANTIFREEZER | LIQUIDO DE ARREFECIMENTO | | |
| 1000 | | 1 | NO LONGER AVAILABLE | NÃO PODE SER MAIS FORNECID | | |

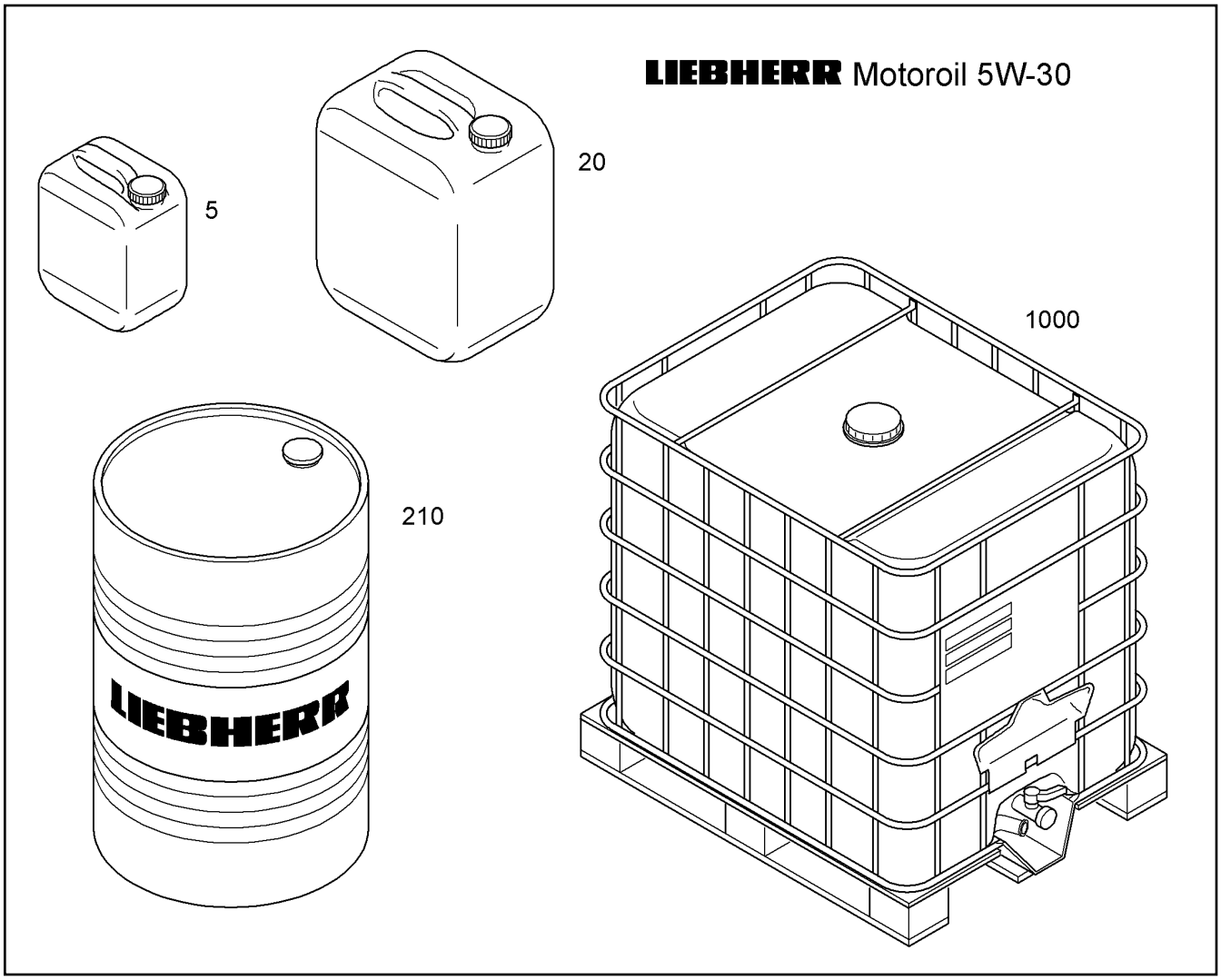


| Pos. | Item | Quantity | Description | Designação | Serie | K |
|---|---|---|---|---|---|---|
| 5 | 10425712 | 1 | ENGINE OIL LIEBHERR/5W-30/5L | OLEO DE MOTOR | | |
| 20 | 10425713 | 1 | ENGINE OIL LIEBHERR/5W-30/20L | OLEO DE MOTOR | | |
| 210 | 10425715 | 1 | ENGINE OIL LIEBHERR/5W-30/210L | OLEO DE MOTOR | | |
| 1000 | 10425719 | 1 | ENGINE OIL LIEBHERR/5W-30/1000L | OLEO DE MOTOR | | |

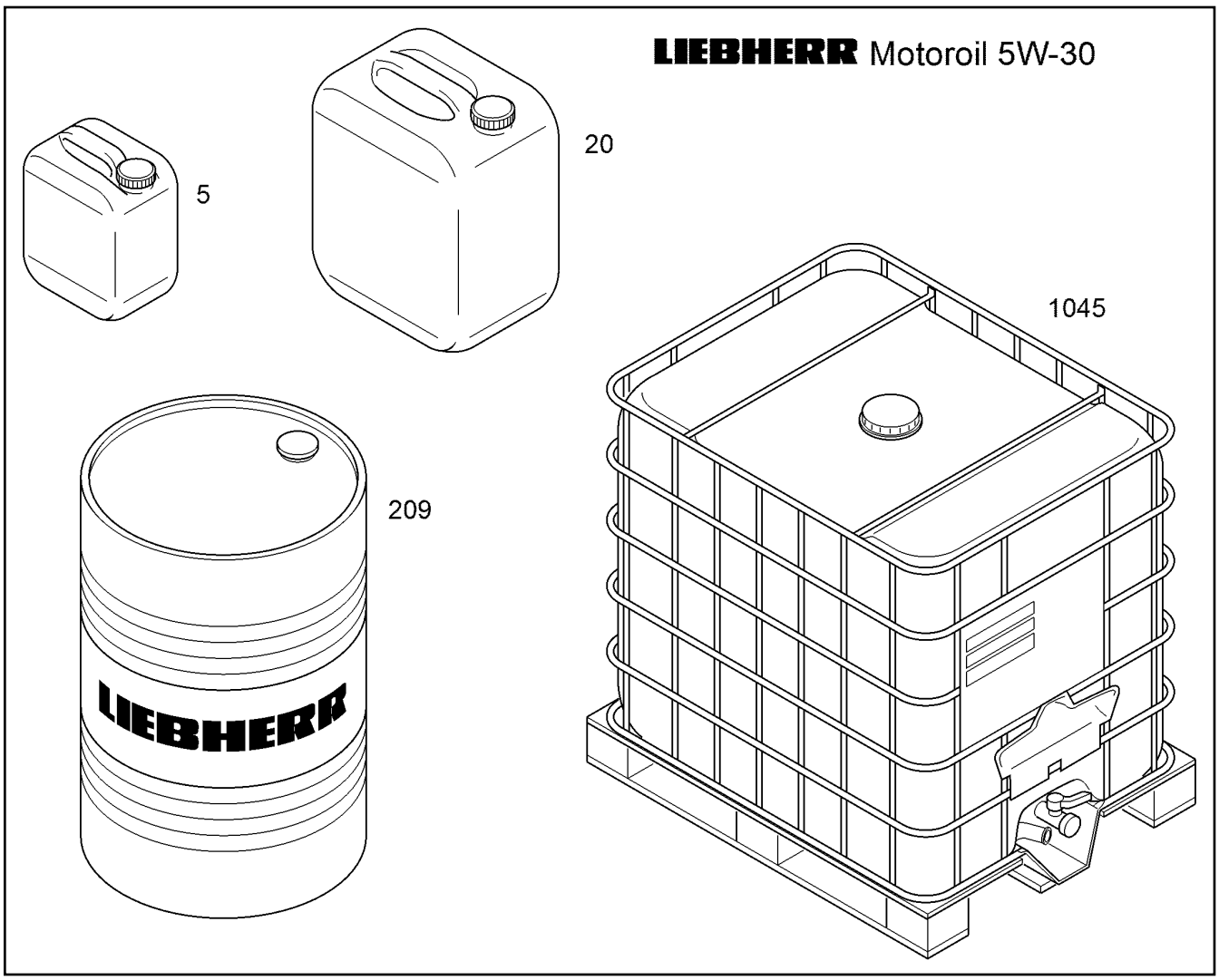


| Pos. | Item | Quantity | Description | Designação | Serie | K |
|---|---|---|---|---|---|---|
| 5 | 11066029 | 1 | ENGINE OIL LIEBHERR LOW ASH/5W-30/5L | OLEO DE MOTOR | | |
| 20 | 11066030 | 1 | ENGINE OIL LIEBHERR LOW ASH/5W-30/20 | OLEO DE MOTOR | | |
| 209 | 11066031 | 1 | ENGINE OIL LIEBHERR LOW ASH/5W-30/209 | OLEO DE MOTOR | | |
| 1045 | 11066032 | 1 | ENGINE OIL LIEBHERR LOW ASH/5W-30/10 | OLEO DE MOTOR | | |




10




12

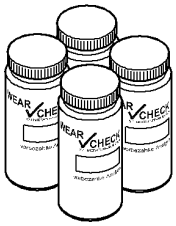


11

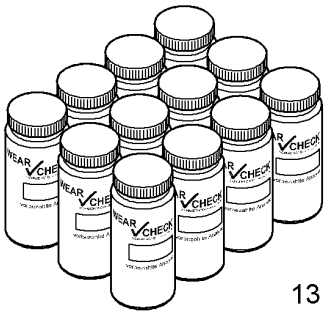


13




20




22

| Pos. | Item | Quantity | Description | Designação | Serie | K |
|---|---|---|---|---|---|---|
| 10 | 8145660 | 1 | OIL ANALYSIS SET | | | |
| 11 | 10029626 | 1 | OIL ANALYSIS SET | | | |
| 12 | 7018368 | 1 | OIL ANALYSIS SET | | | |
| 13 | 7018369 | 1 | MINERAL-OIL-ANALYSIS SET | CJ. DE ANÁLISE ÓLEO MINERAL | | |
| 20 | 7026817 | 1 | BIO-OIL-ANALYSIS SET | CONJ. DE ANÁLISE ÓLEO BIOL. | | |
| 22 | 7026088 | 1 | BIO-OIL-ANALYSIS SET | CONJ. DE ANÁLISE ÓLEO BIOL. | | |

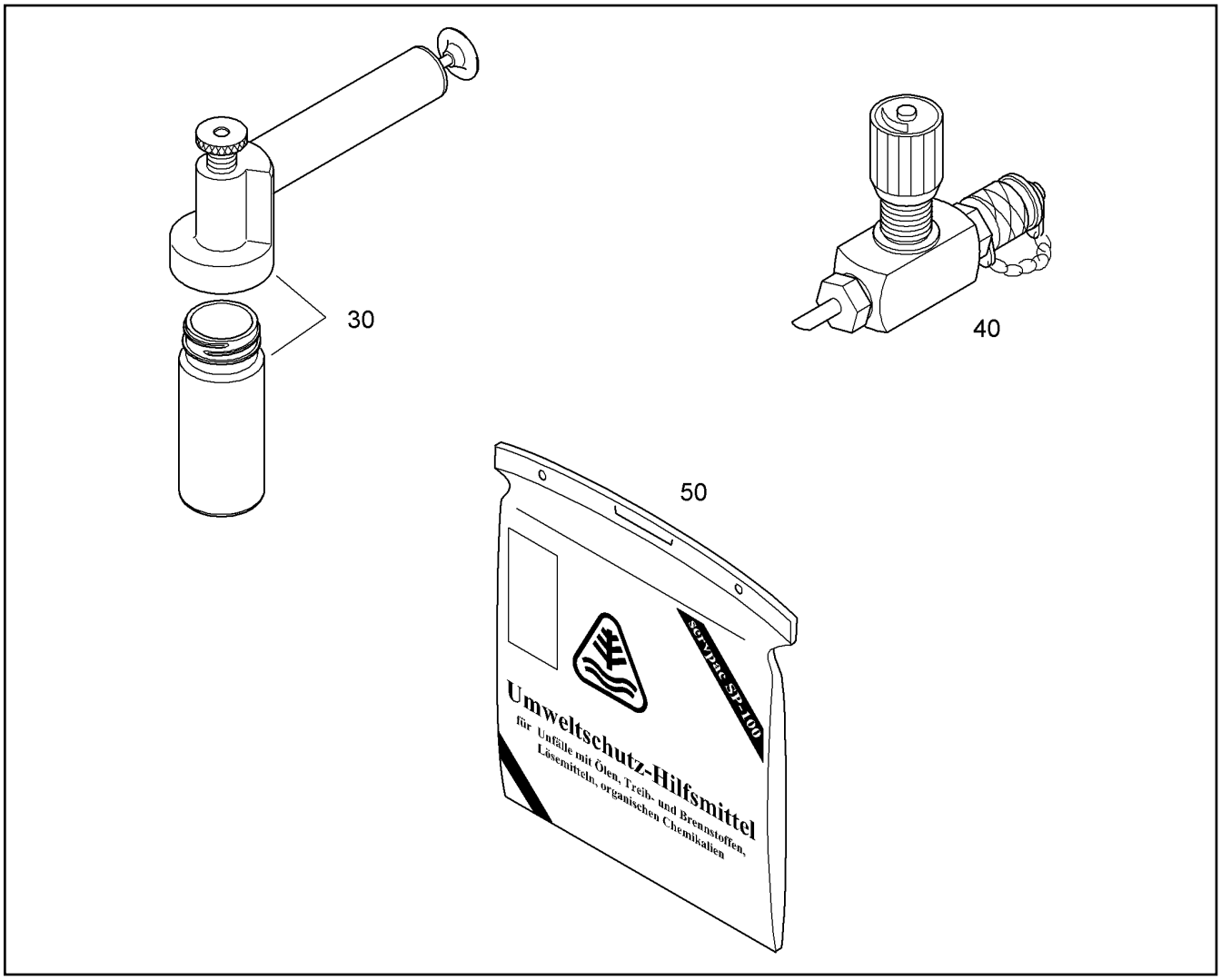


| Pos. | Item | Quantity | Description | Designação | Serie | K |
|---|---|---|---|---|---|---|
| 30 | 8145666 | 1 | HAND PUMP | BOMBA MANUAL | | |
| 40 | 7019068 | 1 | EXTRACTION VALVE | VÁLVULA DE EXTRAÇÃO | | |
| 50 | 7023359 | 1 | OIL ACCIDENT CASE ZW | KIT PARA ACIDENTE COM ÓLEO | | |

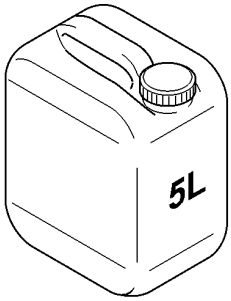


200
300

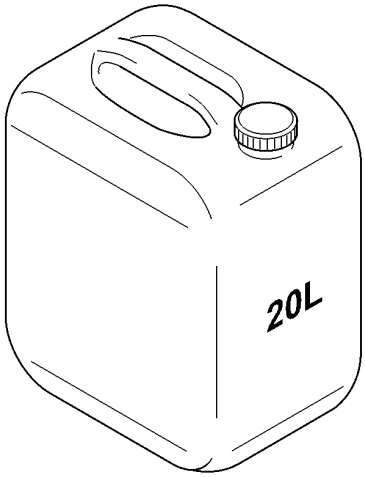


210
310

| | |
|---|---|
| **200 + 210** | **blau**<br>**blue**<br>**bleu** |
| **300 + 310** | **weiss**<br>**white**<br>**blanc** |

| Pos. | Item | Quantity | Description | Designação | Serie | K |
|---|---|---|---|---|---|---|
| 200 | 11481247 | 1 | | | | |
| 210 | 11481249 | 1 | | | | |
| 300 | 11481250 | 1 | | | | |
| 310 | 11481248 | 1 | | | | |

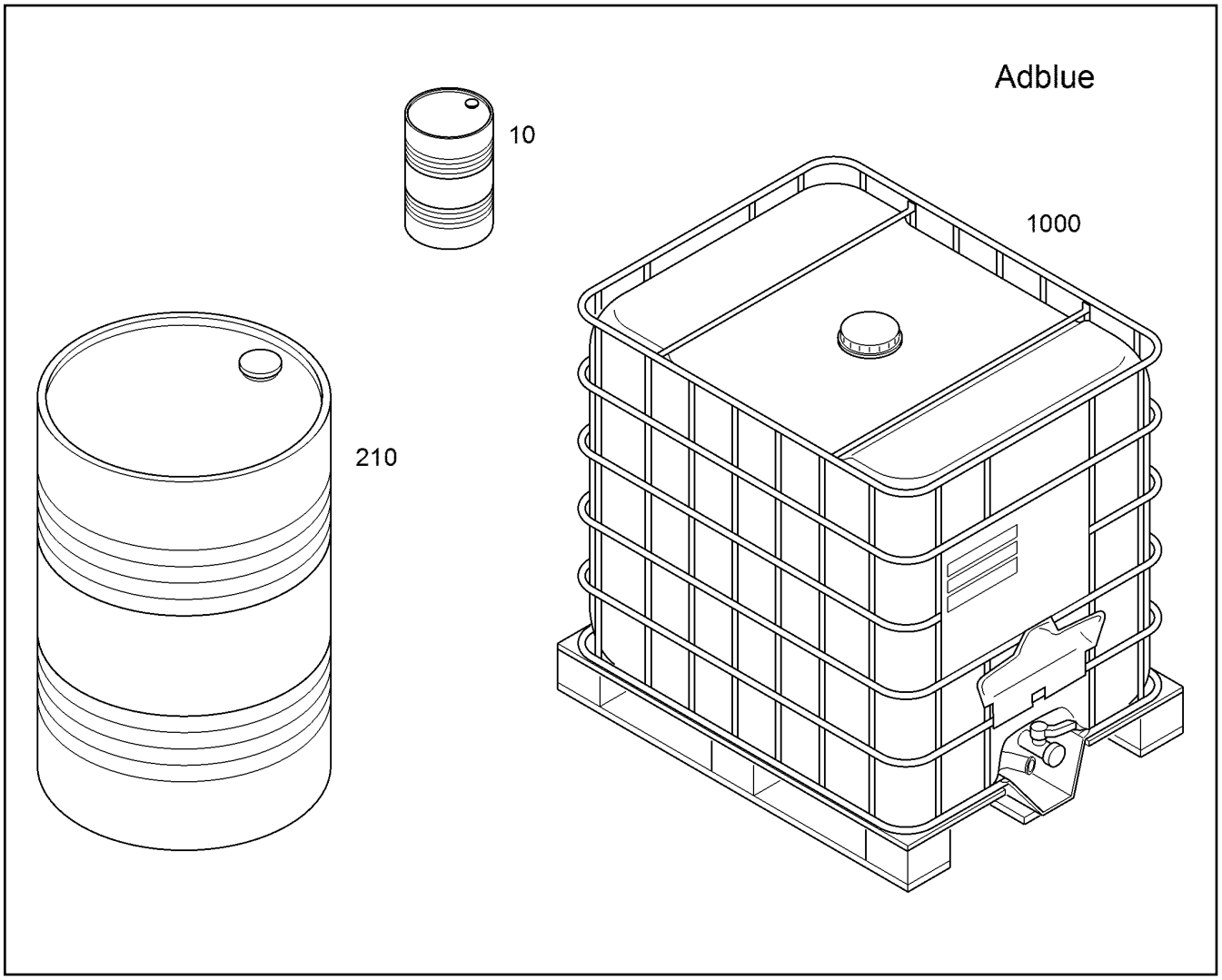


| Pos. | Item | Quantity | Description | Designação | Serie | K |
|---|---|---|---|---|---|---|
| 10 | 11485620 | 1 | UREA SOLUTION | SOLUÇÃO DE UREIA | | |
| 210 | 11485621 | 1 | UREA SOLUTION | SOLUÇÃO DE UREIA | | |
| 1000 | 11485622 | 1 | UREA SOLUTION | SOLUÇÃO DE UREIA | | |

LIEBHERR Antifreeze OS Concentrate

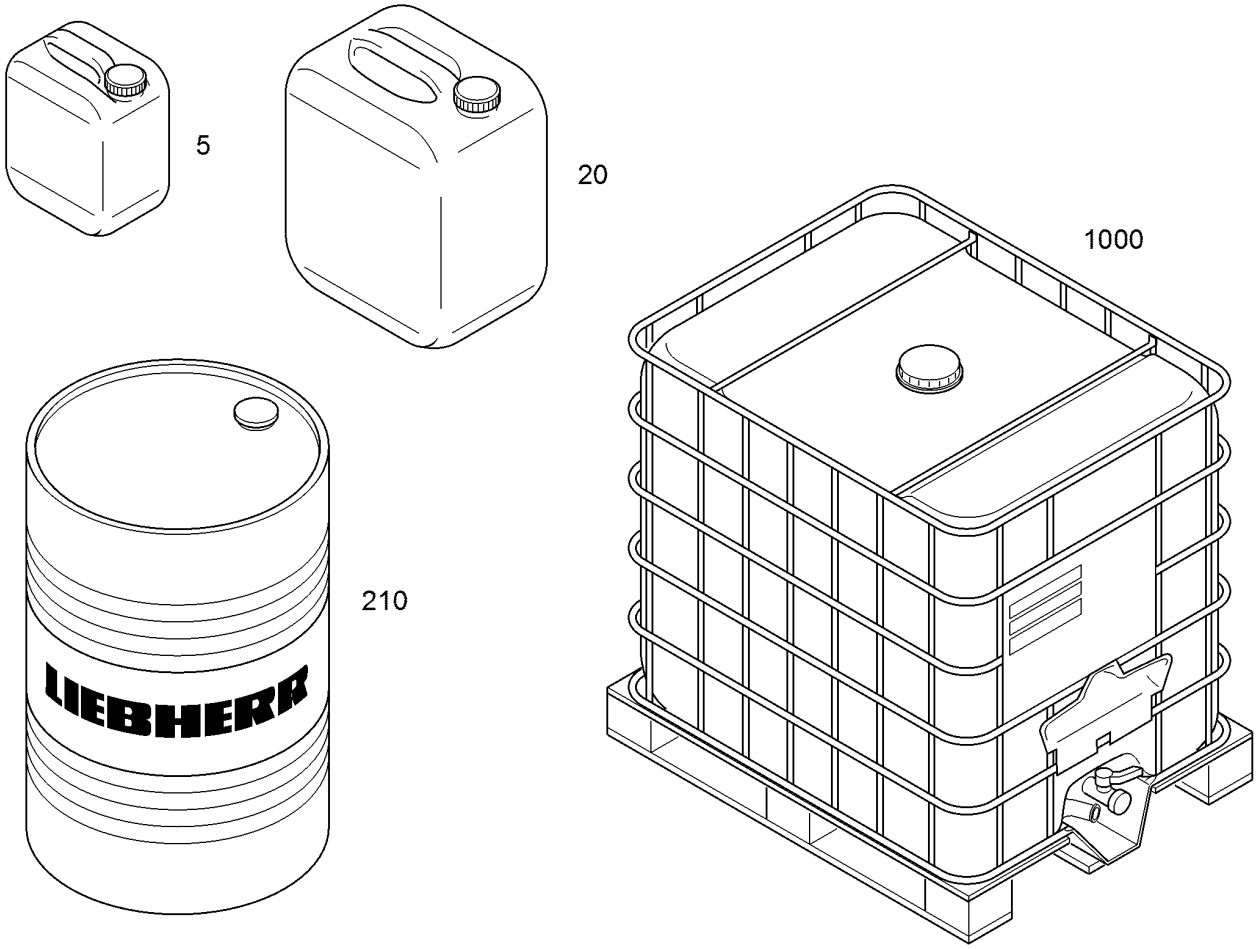


| Pos. | Item | Quantity | Description | Designação | Serie | K |
|---|---|---|---|---|---|---|
| 5 | 11657384 | 1 | ANTICORROSION ANTIFREEZER | LIQUIDO DE ARREFECIMENTO | | |
| 20 | 11657385 | 1 | ANTICORROSION ANTIFREEZER | LIQUIDO DE ARREFECIMENTO | | |
| 210 | 11657386 | 1 | ANTICORROSION ANTIFREEZER | LIQUIDO DE ARREFECIMENTO | | |
| 1000 | 11657387 | 1 | ANTICORROSION ANTIFREEZER | LIQUIDO DE ARREFECIMENTO | | |

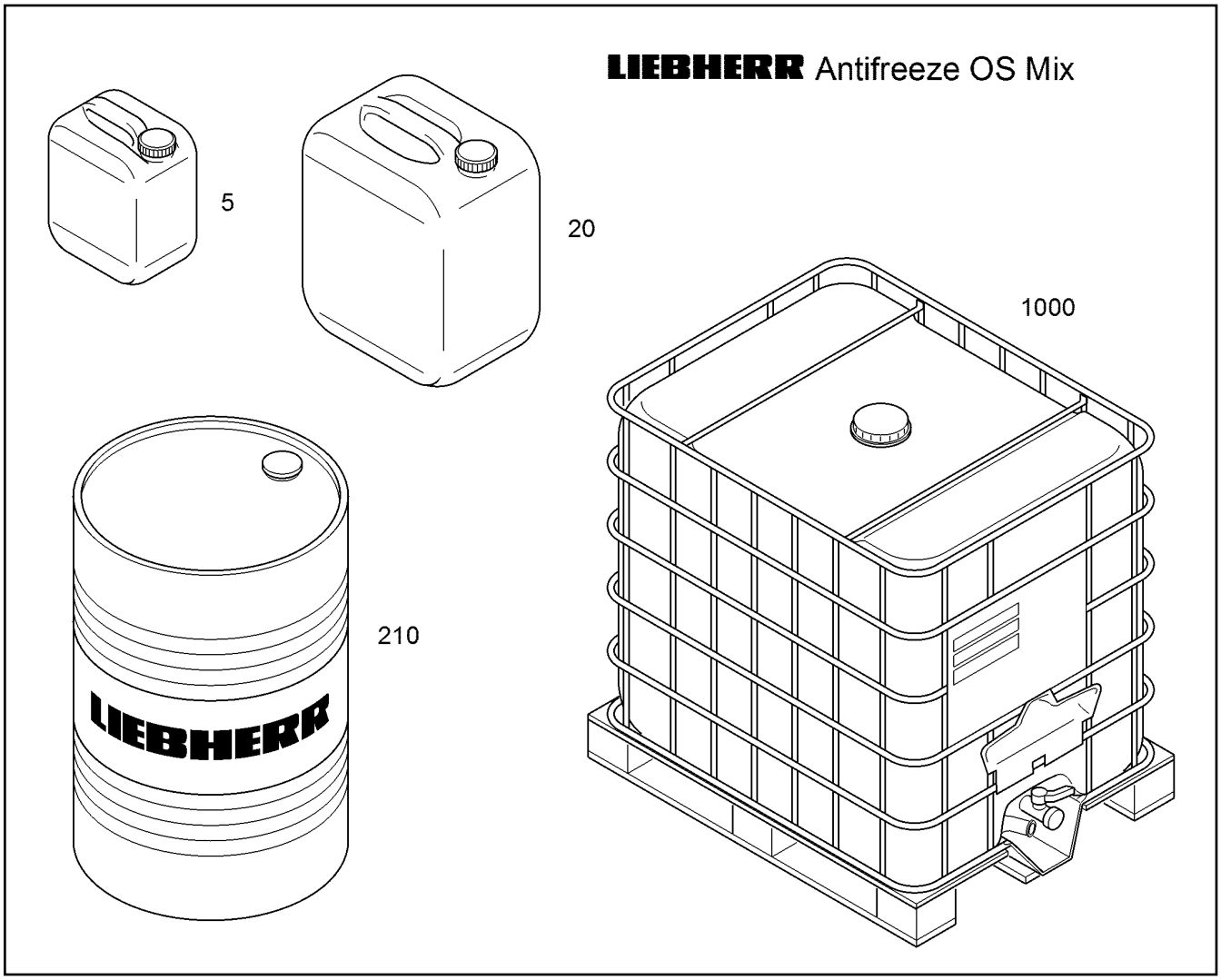


| Pos. | Item | Quantity | Description | Designação | Serie | K |
|---|---|---|---|---|---|---|
| 5 | 11657389 | 1 | ANTICORROSION ANTIFREEZER | LIQUIDO DE ARREFECIMENTO | | |
| 20 | 11657390 | 1 | ANTICORROSION ANTIFREEZER | LIQUIDO DE ARREFECIMENTO | | |
| 210 | 11657391 | 1 | ANTICORROSION ANTIFREEZER | LIQUIDO DE ARREFECIMENTO | | |
| 1000 | 11657392 | 1 | ANTICORROSION ANTIFREEZER | LIQUIDO DE ARREFECIMENTO | | |



10



20

| Pos. | Item | Quantity | Description | Designação | Serie | K |
|---|---|---|---|---|---|---|
| 10 | | 1l | ANTICORROSION ANTIFREEZER<br>⇨ ❑ 42 | LIQUIDO DE ARREFECIMENTO | | |
| 20 | | 1l | ANTICORROSION ANTIFREEZER<br>⇨ ❑ 43 | LIQUIDO DE ARREFECIMENTO | | |




10




20

| Pos. | Item | Quantity | Description | Designação | Serie | K |
|---|---|---|---|---|---|---|
| 10 | | 1l | ANTICORROSION ANTIFREEZER<br>⇨ ❑ 29 | LIQUIDO DE ARREFECIMENTO | | |
| 20 | | 1l | ANTICORROSION ANTIFREEZER<br>⇨ ❑ 35 | LIQUIDO DE ARREFECIMENTO | | |

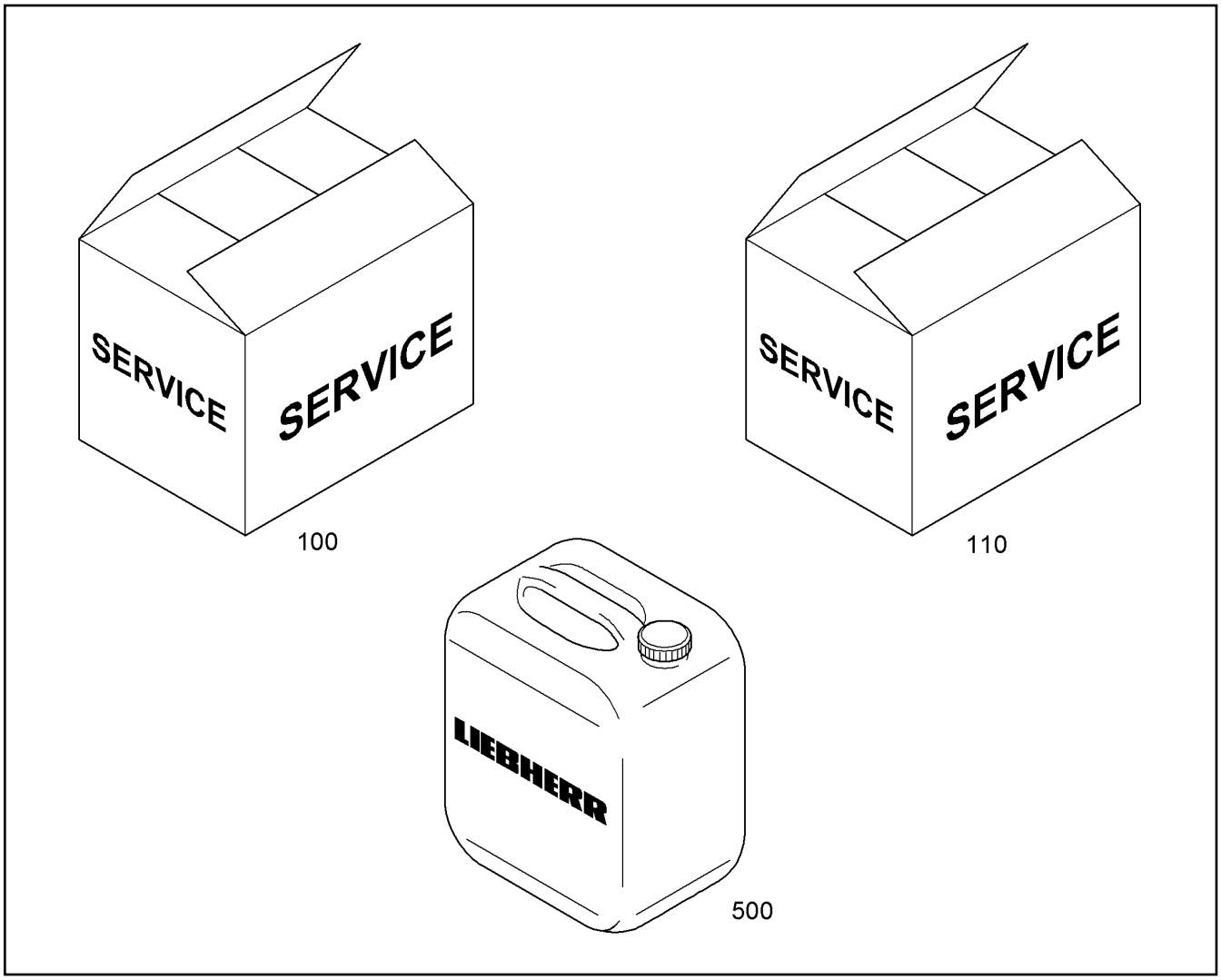


| Pos. | Item | Quantity | Description | Designação | Serie | K |
|---|---|---|---|---|---|---|
| 100 | | 1 | SERVICE KIT 0-2000 H<br>⇨ ❑ 88 | KIT DE MANUTENÇÃO | 16773- | |
| 110 | 10069940 | 1 | SERVICE KIT FUEL FILTER<br>⇨ ❑ 92 | KIT DE FILTROS DE COMBUSTÍ | | |
| 500 | | 1 | <br>⇨ ❑ 10 | | | |

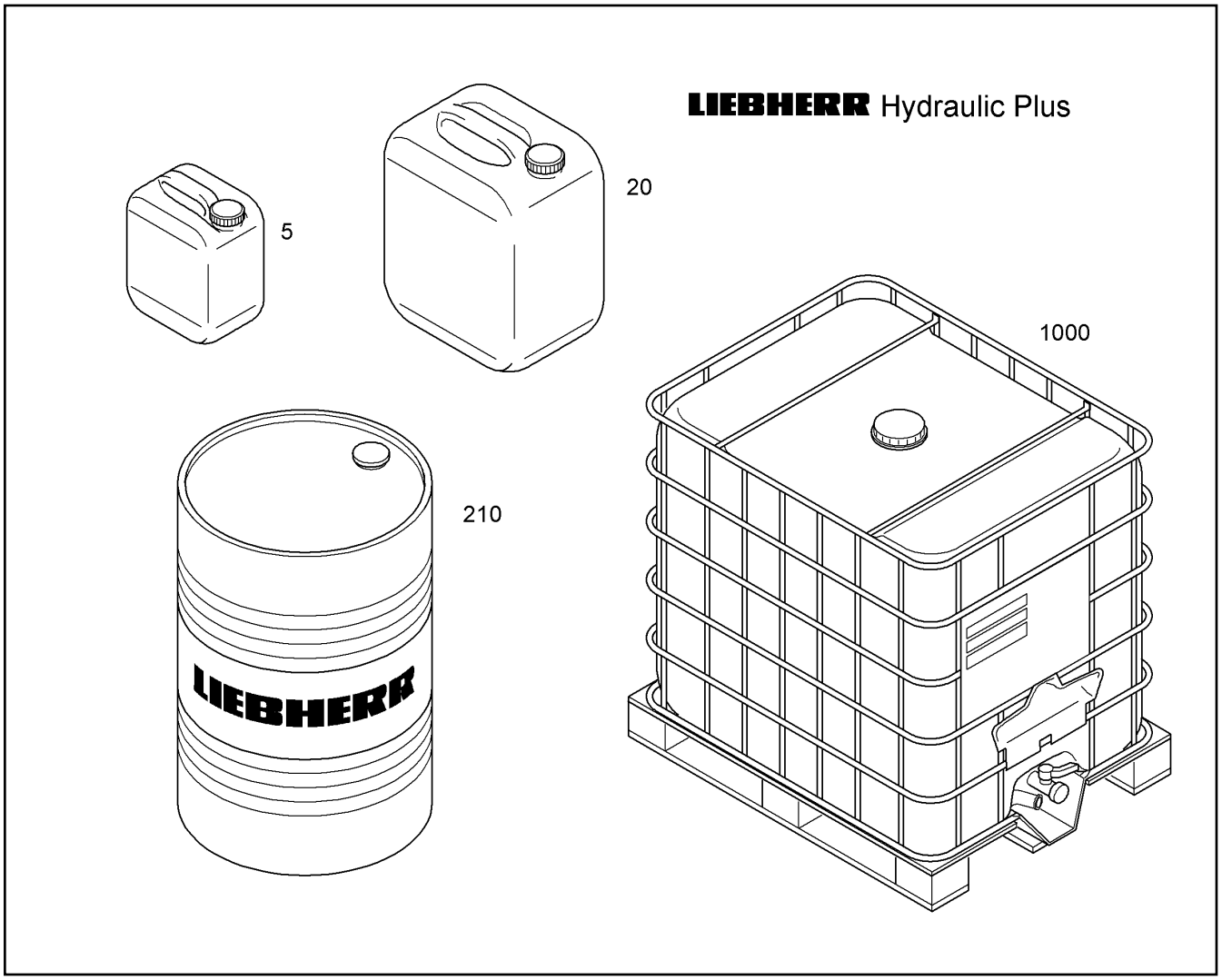


| Pos. | Item | Quantity | Description | Designação | Serie | K |
|---|---|---|---|---|---|---|
| 5 | 10296480 | 1 | HYDRAULIC OIL LIEBHERR/ISO-VG 46/5L | ÓLEO HIDRÁULICO | | |
| 20 | 10330272 | 1 | HYDRAULIC OIL LIEBHERR/ISO-VG 46/20L | ÓLEO HIDRÁULICO | | |
| 210 | 10330276 | 1 | HYDRAULIC OIL LIEBHERR/ISO-VG 46/210L | ÓLEO HIDRÁULICO | | |
| 1000 | 10296481 | 1 | HYDRAULIC OIL LIEBHERR/ISO-VG 46/1000 | ÓLEO HIDRÁULICO | | |

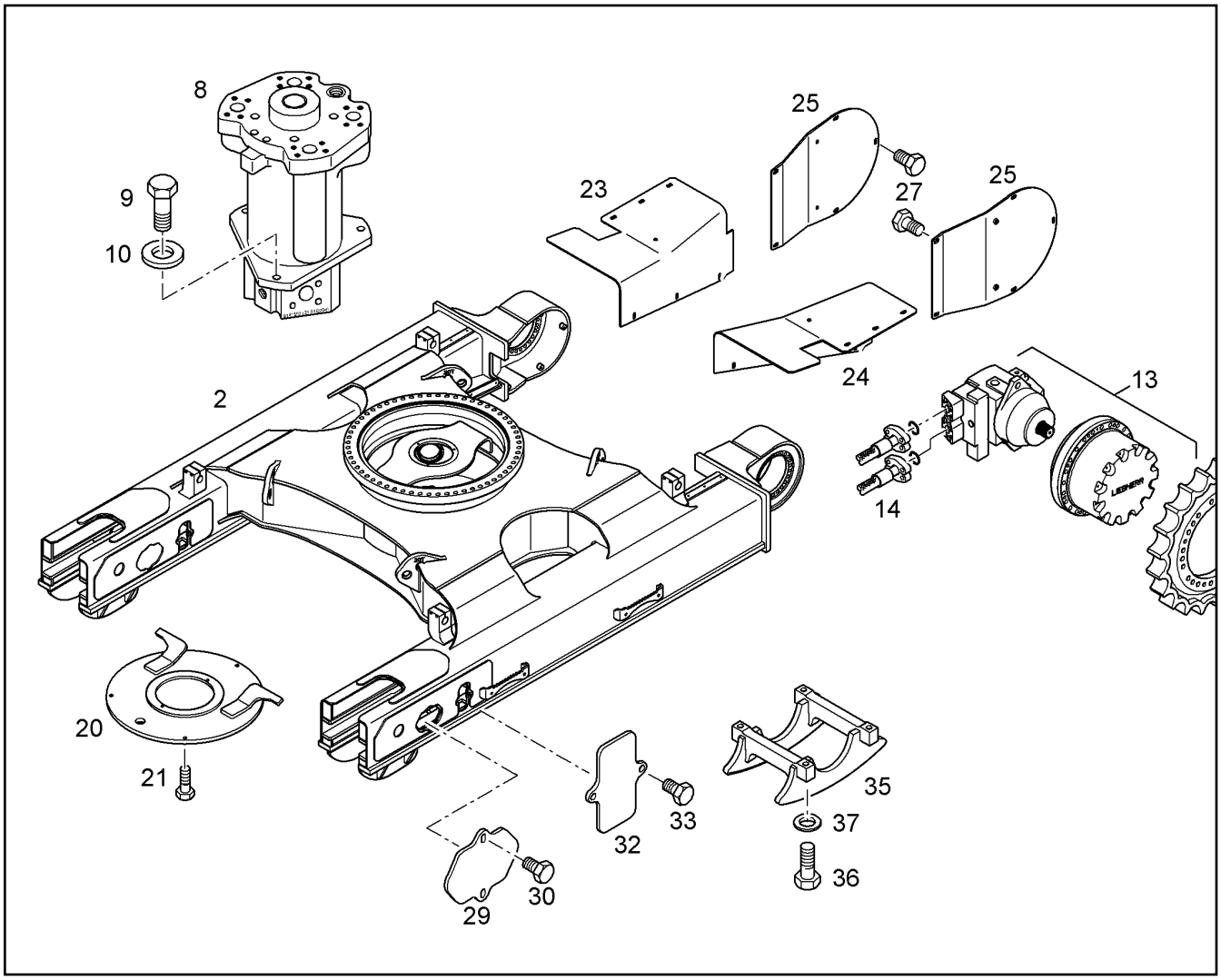


| Pos. | Item | Quantity | Description | Designação | Serie | K |
|---|---|---|---|---|---|---|
| 2 | 10358490 | 1 | UNDERCARRIAGE<br>[MO 300 2438 ] | CARRO INFERIOR | | |
| 8 | 9345153 | 1 | ROTARY CONNECTION INSTALLATION<br>⇨ ❑ 62 | COLETOR GIRATÓRIO - INSTAL | | |
| 9 | 10001073 | 3 | HEX BOLT ISO 4017 M16X40 10.9 FLZN | PARAFUSO SEXTAVADO | | |
| 10 | 10289806 | 3 | WASHER ISO 7089 16 300HV | ARRUELA | | |
| 13 | 10077137 | 1 | TRAVEL DRIVE<br>⇨ ❑ 67 | MECANISMO DE TRANSLAÇÃO | | |
| 14 | 10077135 | 1 | HYDR.INSTALLATION UNDERCARR.<br>⇨ ❑ 84 | INST.HIDR.CARRO INFERIOR | | |
| 20 | | 1 | LID<br>⇨ ❑ 57 | TAMPA | | |
| 21 | 10001473 | 3 | HEX HEAD SCREW | PARAFUSO SEXTAVADO | | |
| 23 | 9946250 | 1 | COVER RIGHT | TAMPA DIREITA | | |
| 24 | 9947170 | 1 | COVER LEFT | TAMPA ESQUERDA | | |
| 25 | 9949673 | 2 | LID CPL | TAMPA COMPLETA | | |
| 27 | 7365430 | 28 | BLANKING END M12X20 DAC | PARAFUSO | | |
| 29 | 9697975 | 2 | LID | TAMPA | | |
| 30 | 7365430 | 4 | BLANKING END M12X20 DAC | PARAFUSO | | |
| 32 | 9697976 | 4 | LID | TAMPA | | |
| 33 | 7365430 | 8 | BLANKING END M12X20 DAC | PARAFUSO | | |
| 35 | 11102313 | 1 | TRACK GUIDES FOUR TIMES<br>⇨ ❑ 673 | GUIA DE CORRENTE QUADRUPL | | |
| 36 | 11102313 | 1 | TRACK GUIDES FOUR TIMES<br>⇨ ❑ 673 | GUIA DE CORRENTE QUADRUPL | | |

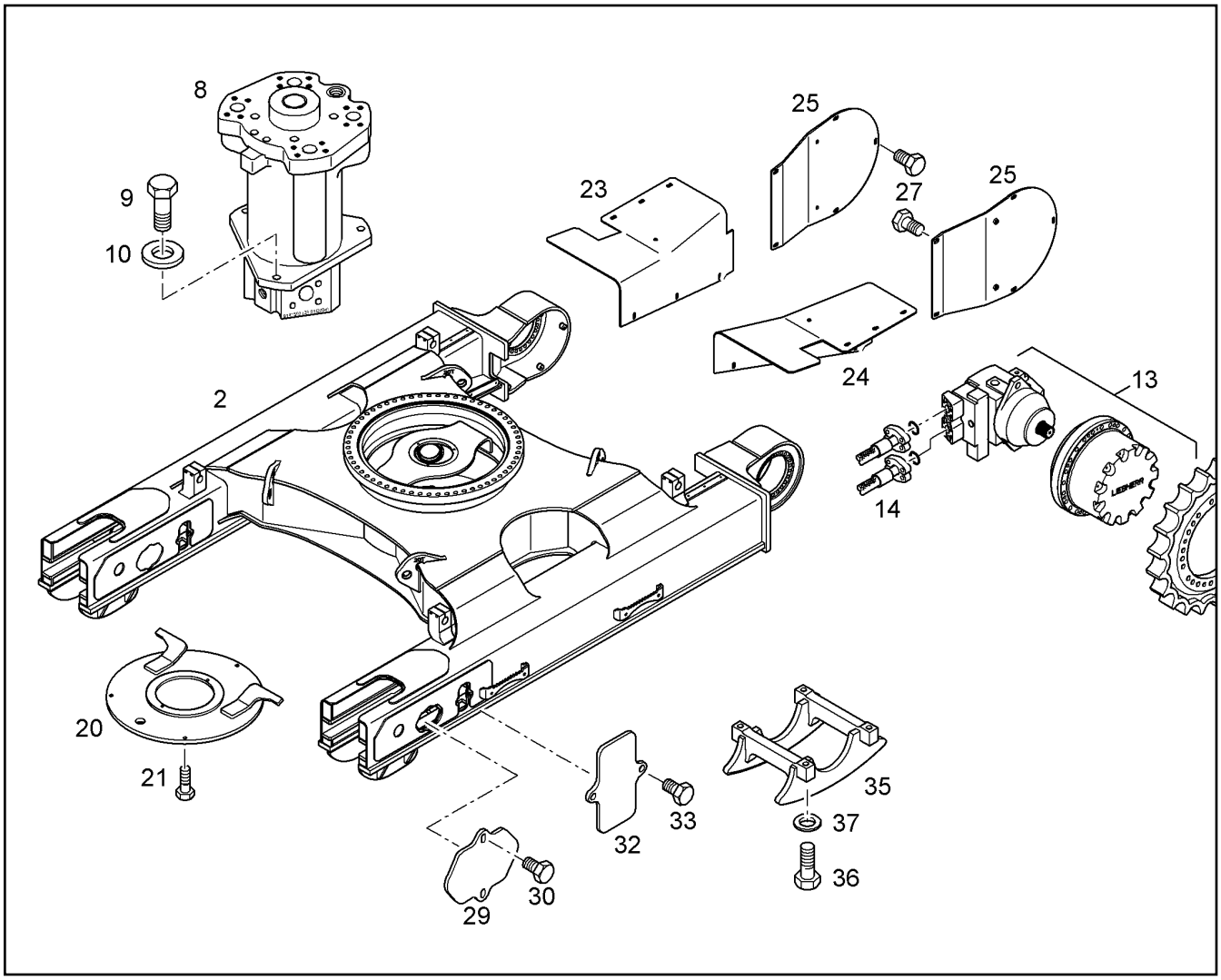


| Pos. | Item | Quantity | Description | Designação | Serie | K |
|---|---|---|---|---|---|---|
| 37 | 11102313 | 1 | TRACK GUIDES FOUR TIMES<br>⇨ ❑ 673 | GUIA DE CORRENTE QUADRUPL | | |

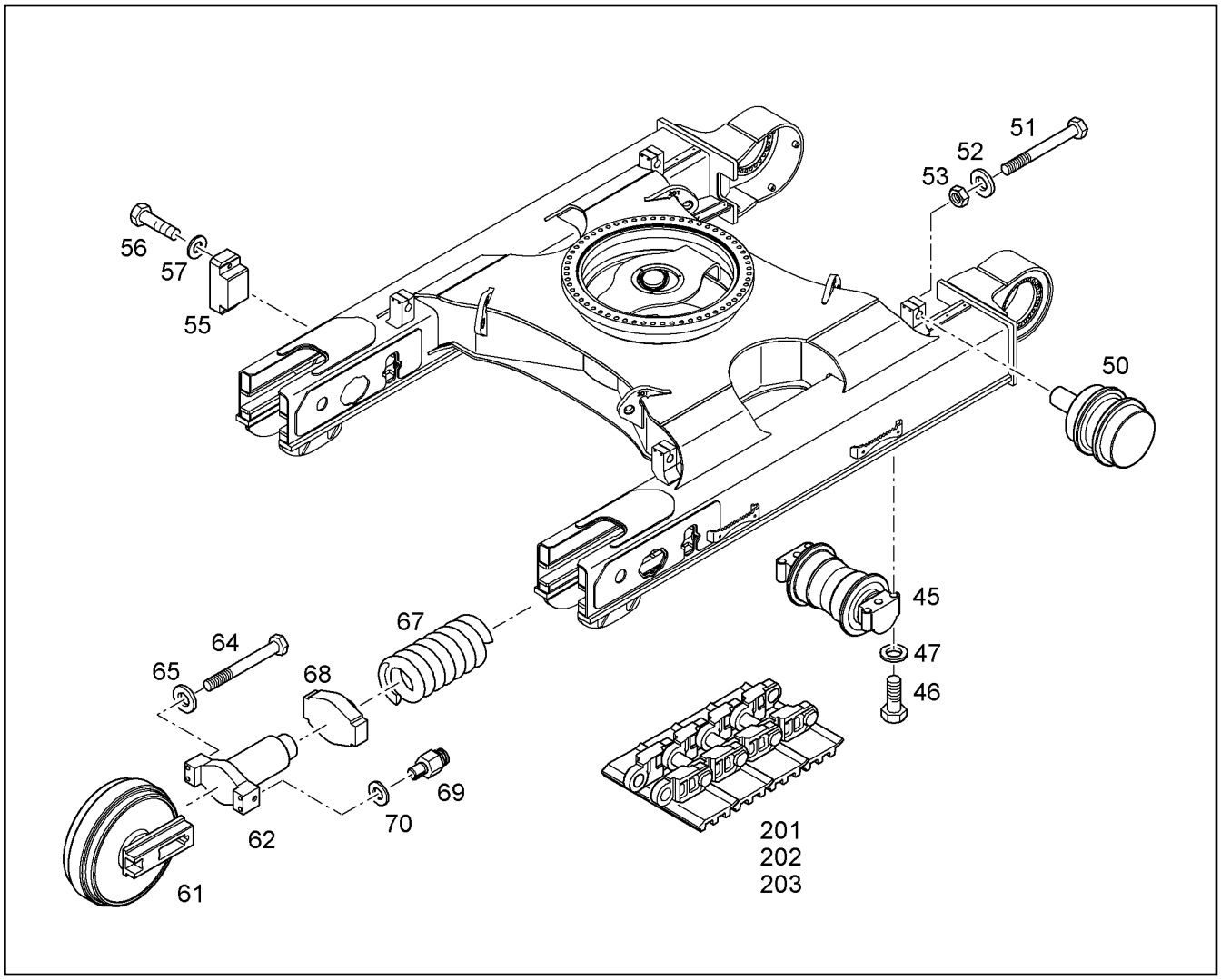


| Pos. | Item | Quantity | Description | Designação | Serie | K |
|---|---|---|---|---|---|---|
| 45 | 10651680 | 20 | TRACK ROLLER D7<br>⇨ ❑ 58 | ROLETE INFERIOR | -99998 | 1 |
| 45 | 11600107 | 20 | TRACK ROLLER D7<br>⇨ ❑ 59 | ROLETE INFERIOR | 99999- | 1 |
| 46 | 10425724 | 80 | HEX BOLT ISO 4014 M20X100 10.9 FLZN | PARAFUSO SEXTAVADO | | |
| 47 | 9918229 | 80 | WASHER 20,5/34X5 | ARRUELA | | |
| 50 | 721005616 | 4 | CARRYING ROLLER<br>⇨ ❑ 6 | ROLETE SUPERIOR | | 1 |
| 51 | 4600668 | 8 | HEX BOLT ISO 4014 M16X140 10.9 DAC | PARAFUSO SEXTAVADO | | |
| 52 | 9918228 | 8 | WASHER 16,5/28X4 | ARRUELA | | |
| 53 | 4000420 | 8 | HEX NUT M16 | PORCA SEXTAVADA | | |
| 55 | 9697977 | 4 | LOCKING | TRAVA | | |
| 56 | 4901216 | 8 | HEX BOLT ISO 4017 M12X60 10.9 A3C | PARAFUSO SEXTAVADO | | |
| 57 | 9918226 | 8 | WASHER 12,5/21X3,5 | ARRUELA | | |
| 61 | 10009662 | 2 | GUIDE WHEEL D7G/B7B<br>⇨ ❑ 60 | RODA GUIA | | 1 |
| 62 | 9015155 | 2 | GREASE TENSIONER<br>⇨ ❑ 53 | TENSIONADOR DE GRAXA | | |
| 64 | 4600668 | 8 | HEX BOLT ISO 4014 M16X140 10.9 DAC | PARAFUSO SEXTAVADO | | |
| 65 | 9918228 | 8 | WASHER 16,5/28X4 | ARRUELA | | |
| 67 | 721005816 | 2 | SPRING | MOLA | | |
| 68 | 721005916 | 2 | SPRING SUPPORT | PRATO DA MOLA | | |
| 69 | 5209372 | 2 | GREASE NIPPLE GERADE M16X1,5 | NIPLE DE GRAXA | | |
| 70 | 5209400 | 2 | USIT RING | ANEL DE VEDAÇÃO USIT | | |

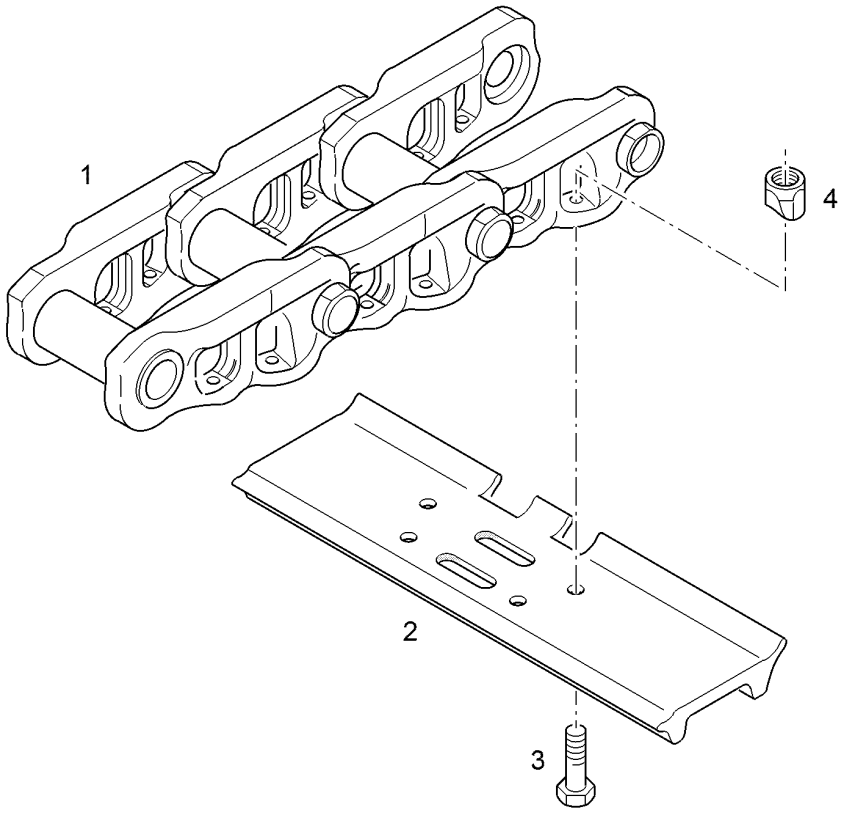


| Pos. | Item | Quantity | Description | Designação | Serie | K |
|---|---|---|---|---|---|---|
| 1 | 10037739 | 1 | NAKED CRAWLER CHAIN<br>⇨ ❑ 54 | CORRENTE DA ESTEIRA | | 1 |
| 2 | 10470093 | 52 | TRACK PAD 500mm | PLACA DE PISO | | 1 |
| 3 | 11214366 | 208 | TRACK PAD SCREW M22X1,5X70X35 13.9 | PARAFUSO PARA SAPATA | | |
| 4 | 7369103 | 208 | FLOOR PLATE NUT M22 | PORCA | | |

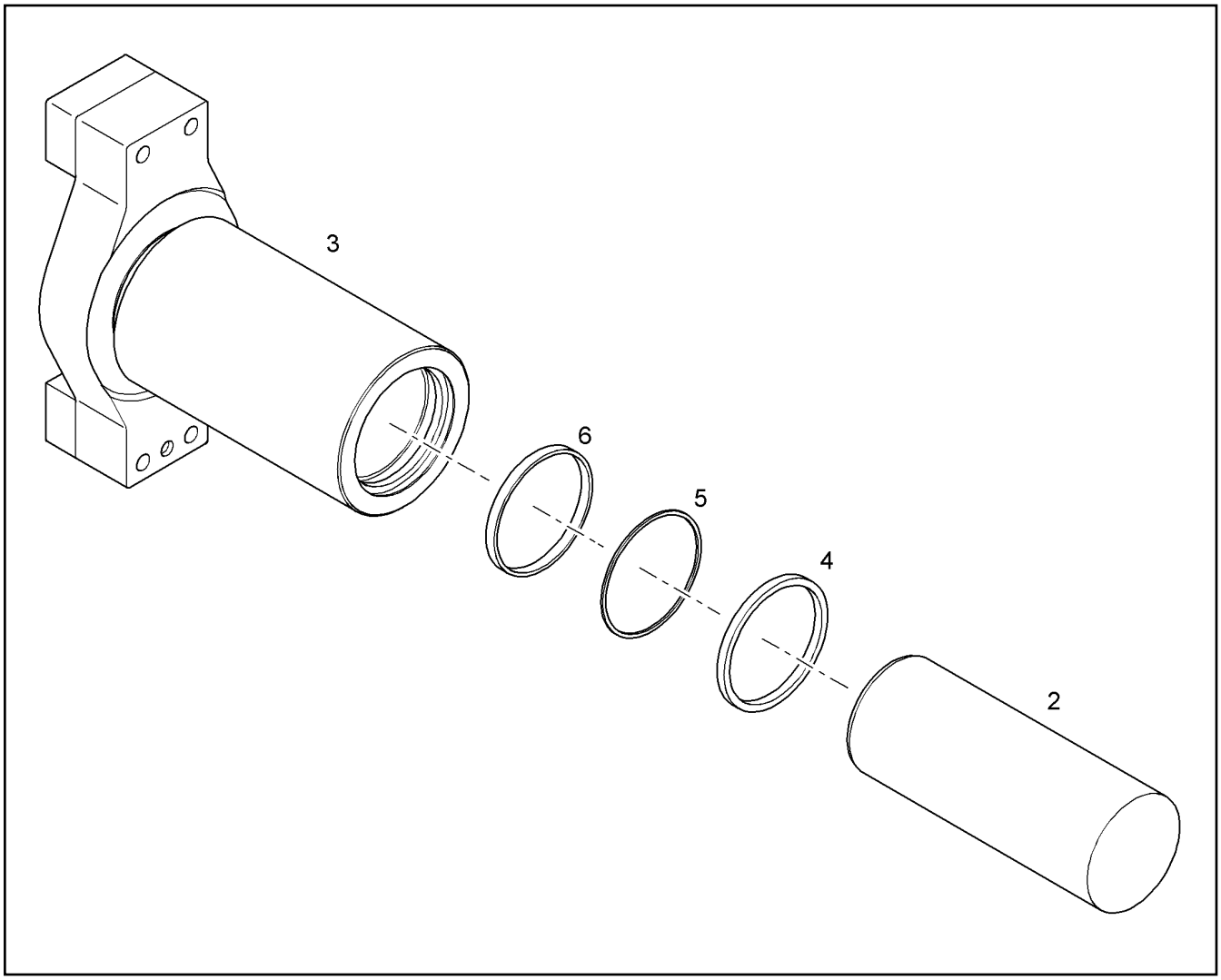


| Pos. | Item | Quantity | Description | Designação | Serie | K |
|---|---|---|---|---|---|---|
| 2 | 9015158 | 1 | PISTON | PISTÃO | | |
| 3 | 9015190 | 1 | BODY | CORPO | | |
| 4 | 10016714 | 1 | SCRAPER 125X140X9,5 | RASPADOR | | |
| 5 | 10016716 | 1 | SUPPORTING RING | ANEL DE APOIO | | |
| 6 | 10016715 | 1 | LIP SEAL RING 125X133X11 | ANEL RANHURADO | | |

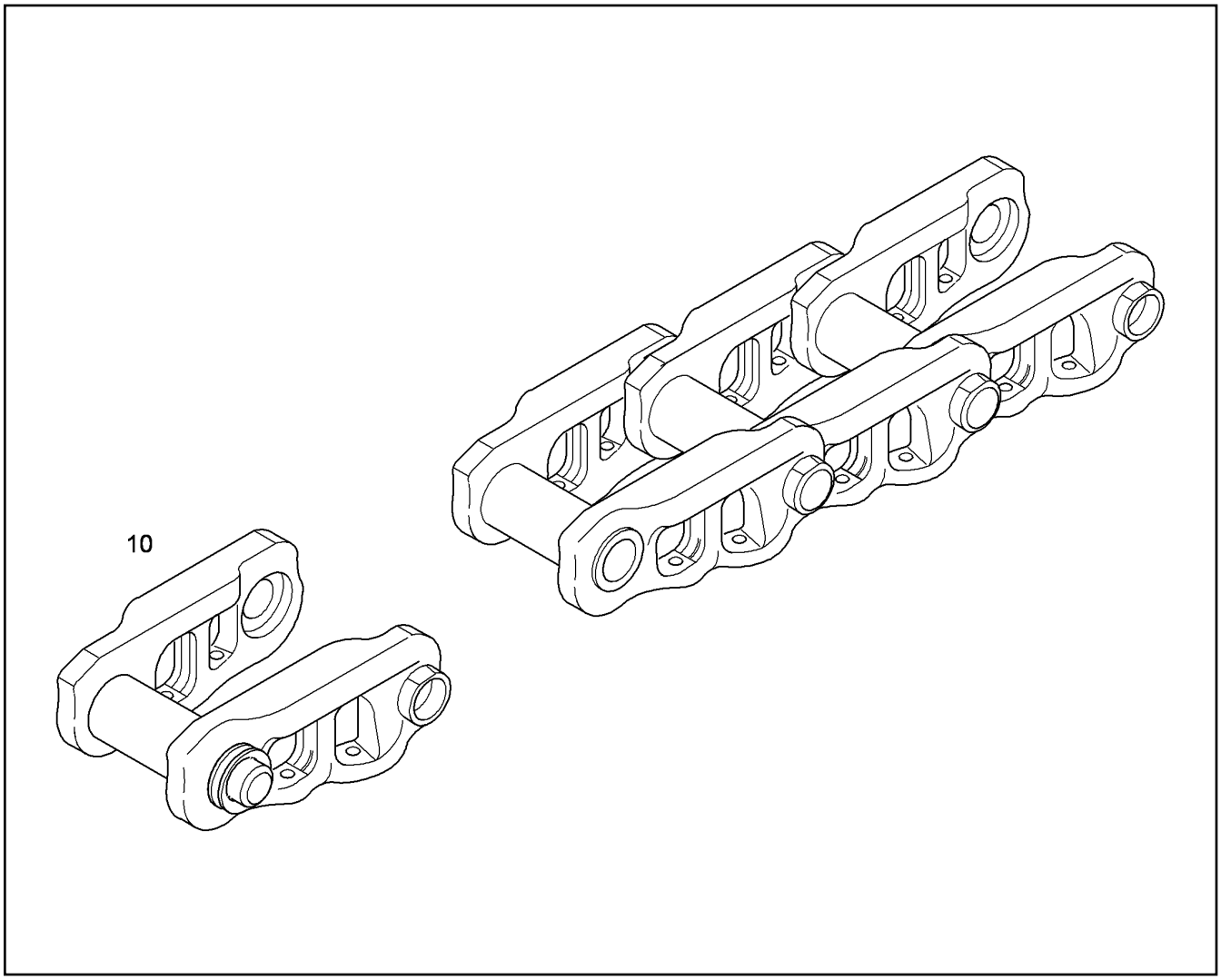


| Pos. | Item | Quantity | Description | Designação | Serie | K |
|---|---|---|---|---|---|---|
| 10 | 5617975 | 1 | CHAIN END LINK<br>⇨ ❑ 55 | ELO FINAL DA CORRENTE | | |

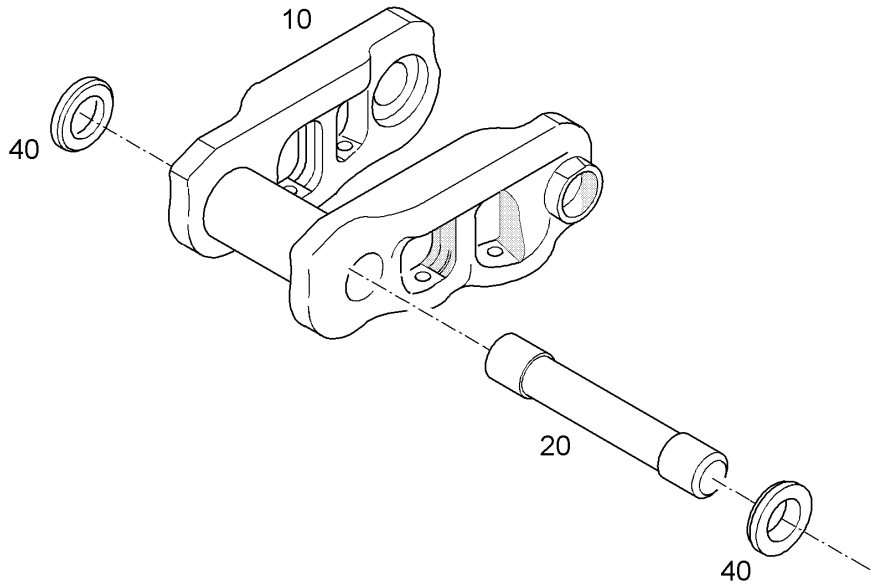


| Pos. | Item | Quantity | Description | Designação | Serie | K |
|---|---|---|---|---|---|---|
| 10 | | 1 | MASTER LINK ASSY<br>⇨ ❑ 56 | ELO MESTRE DA CORRENTE | | |
| 20 | 5617102 | 2 | MASTER PIN | PINO MESTRE | | |
| 40 | 7373031 | 4 | TERMINAL DISK 48,6/71,6X12,7 | VIDRO TRASEIRO | | |

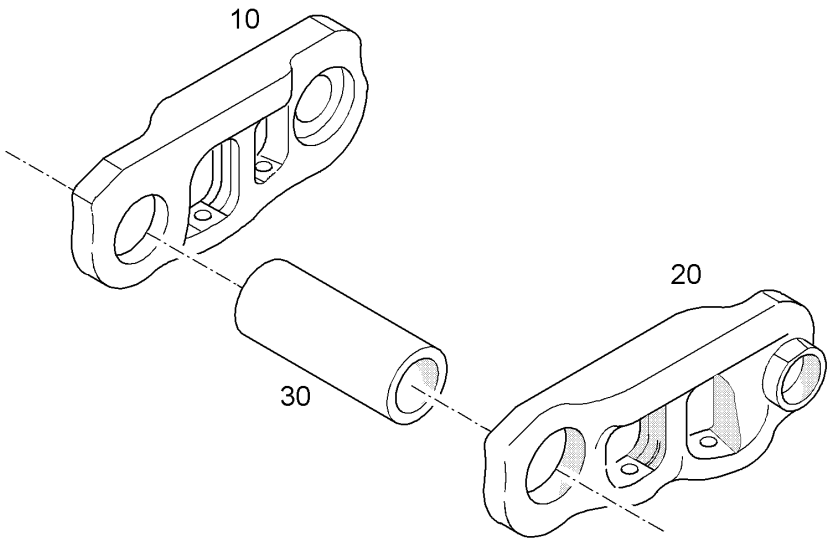


| Pos. | Item | Quantity | Description | Designação | Serie | K |
|---|---|---|---|---|---|---|
| 10 | | 1 | CHAIN LINK | ELO DA CORRENTE | | |
| 20 | | 1 | CHAIN LINK | ELO DA CORRENTE | | |
| 30 | | 1 | END BUSHING | BUCHA TERMINAL | | 1 |

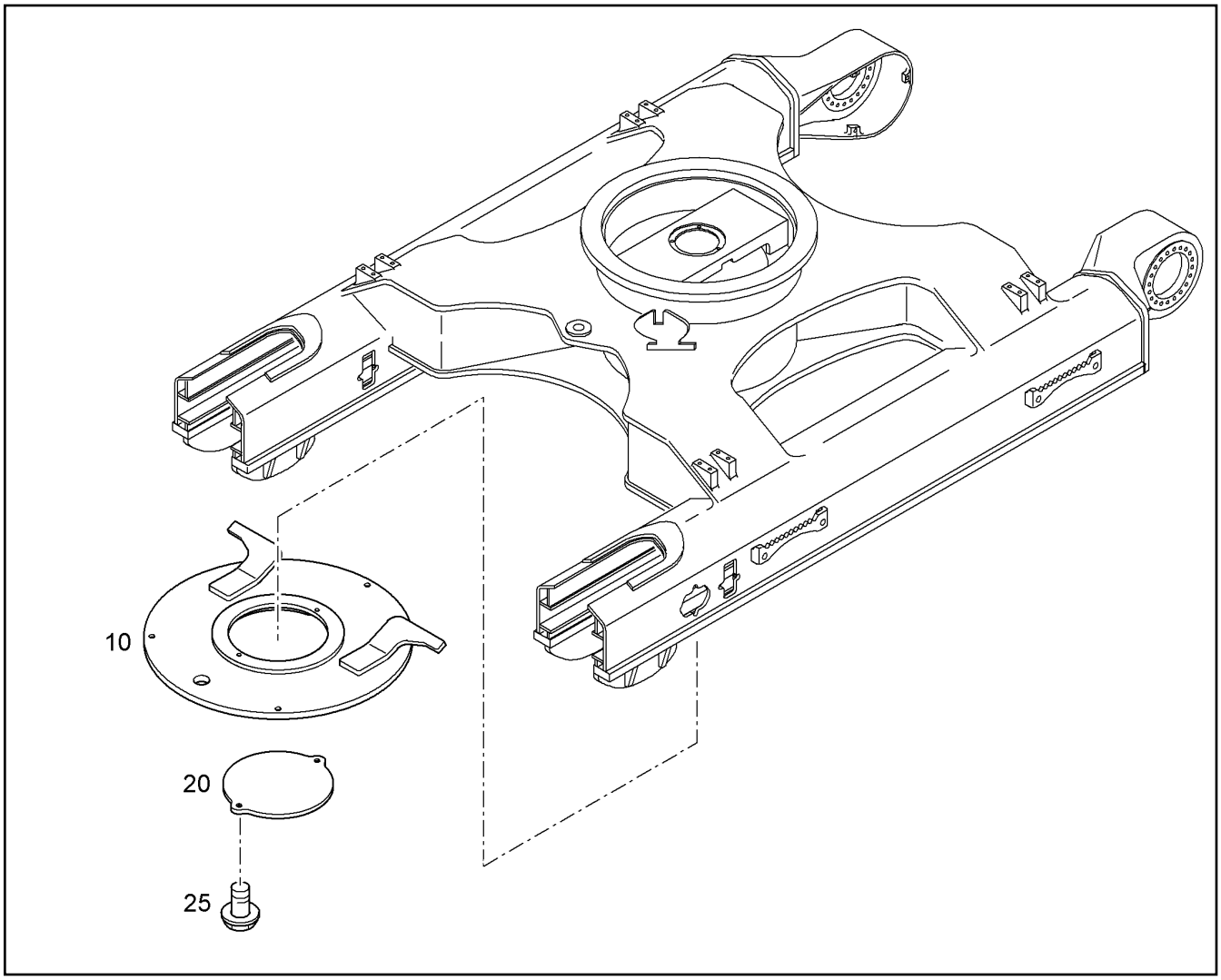


| Pos. | Item | Quantity | Description | Designação | Serie | K |
|---|---|---|---|---|---|---|
| 10 | 10051492 | 1 | LID | TAMPA | | |
| 20 | 10051238 | 1 | LID | TAMPA | | |
| 25 | 10001473 | 2 | HEX HEAD SCREW | PARAFUSO SEXTAVADO | | |

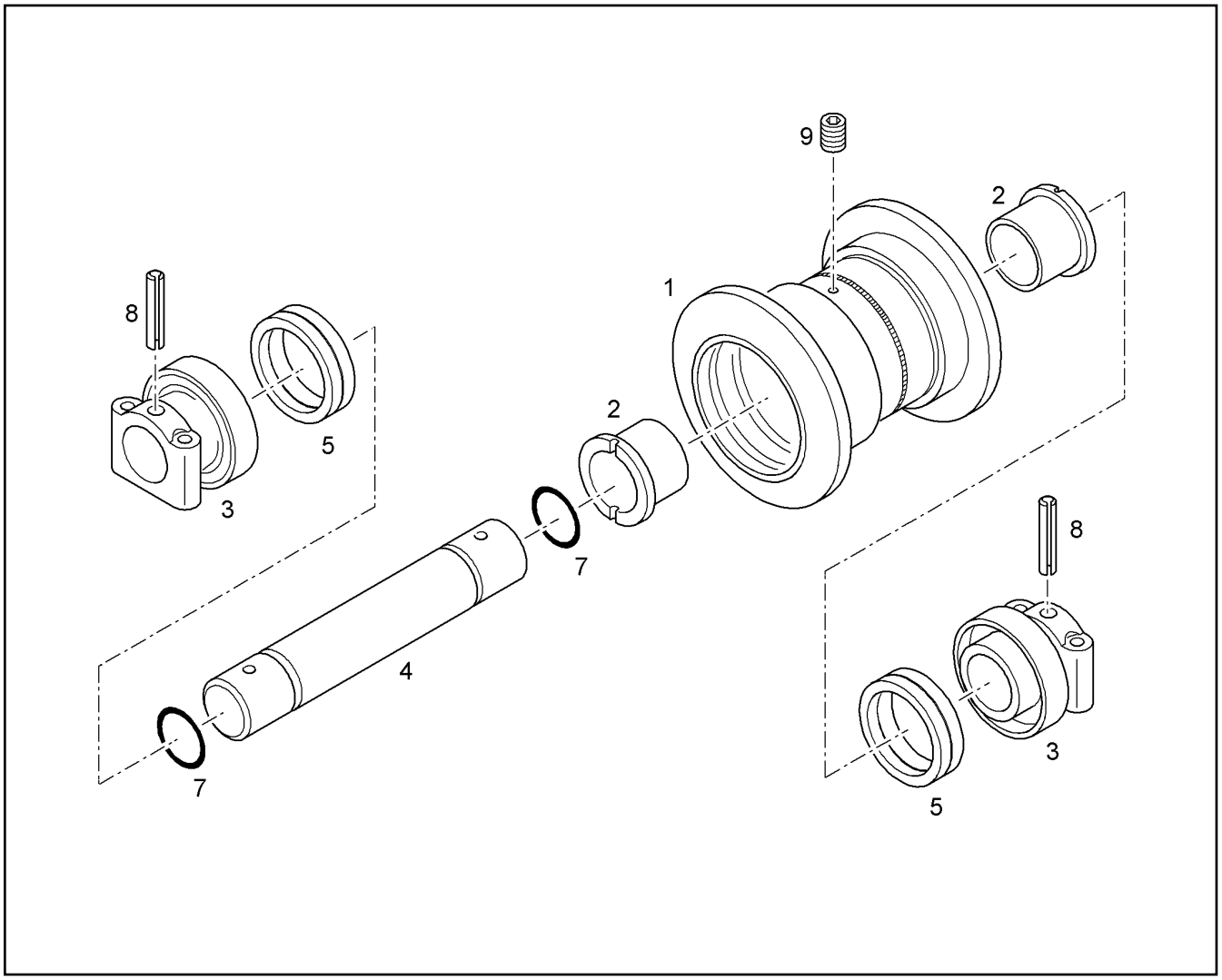


| Pos. | Item | Quantity | Description | Designação | Serie | K |
|---|---|---|---|---|---|---|
| 1 | | 1 | TRACK ROLLER HOUSING | ROLDANA | | |
| 2 | 11003782 | 2 | BUSHING | BUCHA | | 1 |
| 3 | 11003780 | 2 | END PIECE | PECA FINAL | | |
| 4 | 11003779 | 1 | AXLE | EIXO | | 1 |
| 5 | 11003781 | 2 | LIFETIME SEAL | VEDACAO LIFETIME | | |
| 7 | 7373747 | 2 | O-RING | ANEL-O | | |
| 8 | 7373742 | 2 | DOWEL PIN | PINO ELÁSTICO | | |
| 9 | 10097983 | 1 | SCREW PLUG | PARAFUSO DE FECHAMENTO | | |

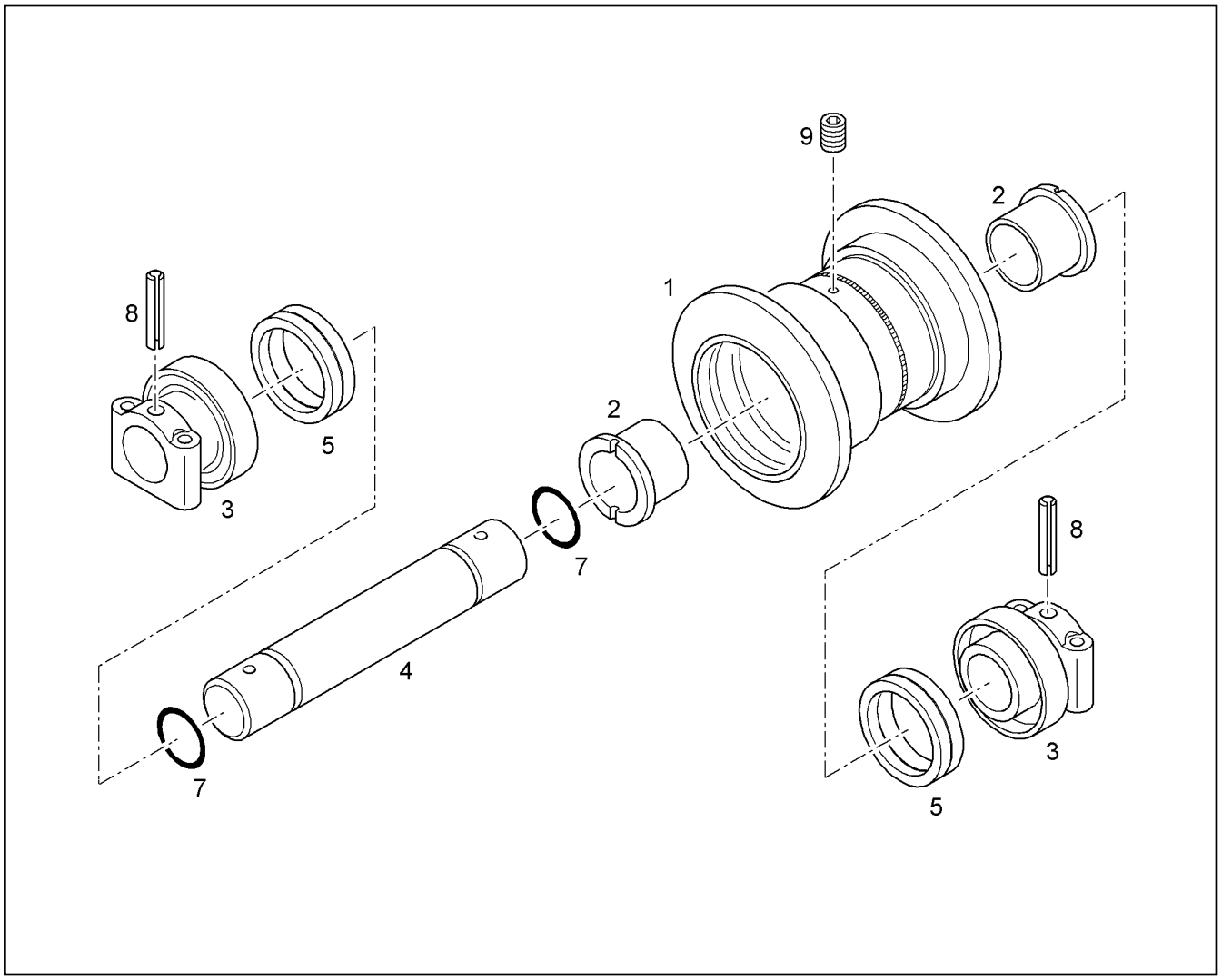


| Pos. | Item | Quantity | Description | Designação | Serie | K |
|---|---|---|---|---|---|---|
| 1 | | 1 | TRACK ROLLER HOUSING | ROLDANA | | |
| 2 | 11003782 | 2 | BUSHING | BUCHA | | 1 |
| 3 | 11003780 | 2 | END PIECE | PECA FINAL | | |
| 4 | 11003779 | 1 | AXLE | EIXO | | 1 |
| 5 | 11601136 | 2 | LIFETIME SEAL | VEDACAO LIFETIME | | |
| 7 | 7373747 | 2 | O-RING | ANEL-O | | |
| 8 | 7373742 | 2 | DOWEL PIN | PINO ELÁSTICO | | |
| 9 | 10097983 | 1 | SCREW PLUG | PARAFUSO DE FECHAMENTO | | |

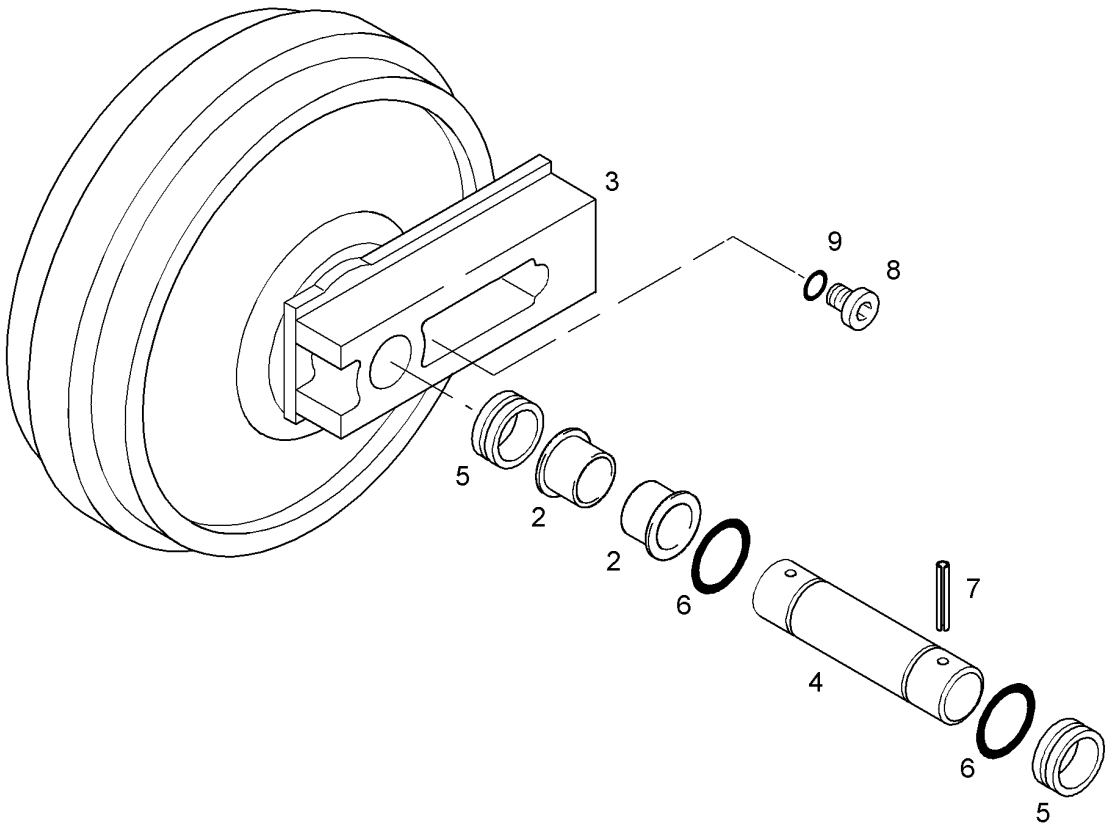


| Pos. | Item | Quantity | Description | Designação | Serie | K |
|---|---|---|---|---|---|---|
| 2 | 10031949 | 2 | BUSHING | BUCHA | | 1 |
| 3 | 10031946 | 2 | SLIDER | PEÇA DESLIZANTE | | |
| 4 | 10031944 | 1 | AXLE | EIXO | | 1 |
| 5 | 10031921 | 2 | AXIAL FACE SEAL | ANEL DE VEDAÇÃO | | |
| 6 | 7361548 | 2 | O-RING 78X3 | ANEL-O | | |
| 7 | 10031950 | 2 | CLAMPING SLEEVE | LUVA DE APERTO | | 1 |
| 8 | 7001454 | 1 | SCREW PLUG | PARAFUSO DE FECHAMENTO | | |
| 9 | 7264360 | 1 | O-RING 7,65X1,78 | ANEL-O | | |

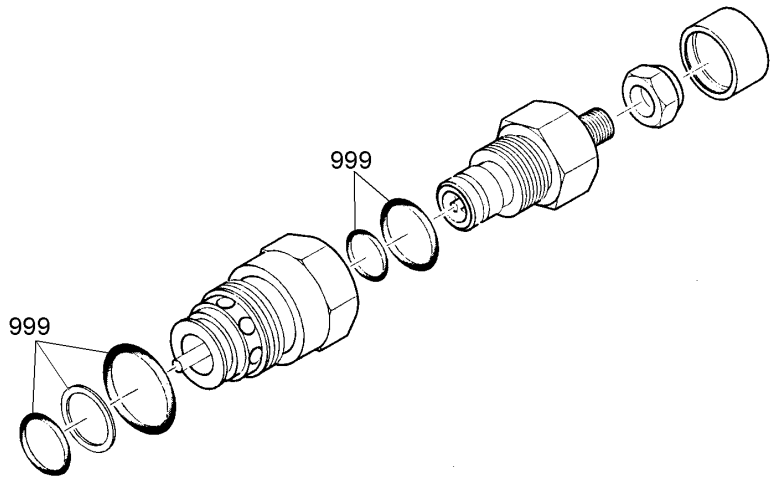


| Pos. | Item | Quantity | Description | Designação | Serie | K |
|---|---|---|---|---|---|---|
| 999 | 5616901 | 1 | SEAL KIT PRESSURE VALVE | KIT JUNTAS VALVULA PRESSAO | | |

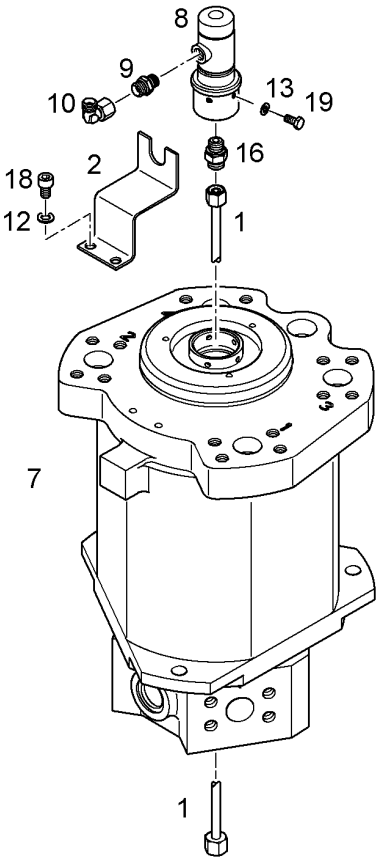


| Pos. | Item | Quantity | Description | Designação | Serie | K |
|---|---|---|---|---|---|---|
| 1 | 9490631 | 1 | PRESSURE LINE CPL | TUBULAÇÃO DE PRESSÃO COM | | |
| 2 | 9485739 | 1 | LIMIT STOP | CHAPA LIMITADORA | | |
| 7 | 9141597 | 1 | ROTARY FEED THROUGH<br>[221 09/11/2012 ]<br>⇨ ❑ 64 | COLETOR GIRATÓRIO | | 2 |
| 8 | 10009630 | 1 | ROTARY FEED THROUGH<br>⇨ ❑ 63 | COLETOR GIRATÓRIO | 24403- | 2 |
| 9 | 7003814 | 1 | SCREW FITTING GE 10L M14X1,5 | REDUÇÃO | | |
| 10 | 7403569 | 1 | SCREW FITTING EW 10L | REDUÇÃO | | |
| 12 | 4229913 | 2 | LOCK WASHER 10,5/16X2 VS 10 | ARRUELA DE SEGURANÇA | | |
| 13 | 7361965 | 4 | LOCK WASHER | ARRUELA DE SEGURANÇA | | |
| 16 | 7362103 | 1 | SCREW FITTING GE 10S | REDUÇÃO | | |
| 18 | 4901606 | 2 | CYLINDER SCREW ISO 4762 M10X16 10.9 | PARAFUSO CILÍNDRICO | | |
| 19 | 4065060 | 4 | HEX BOLT ISO 4017 M5X10 8.8 A2C | PARAFUSO SEXTAVADO | | |

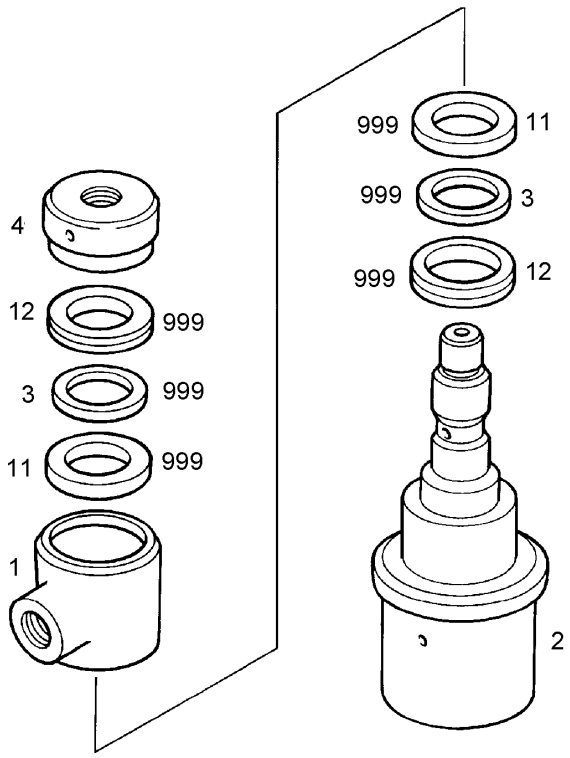


| Pos. | Item | Quantity | Description | Designação | Serie | K |
|---|---|---|---|---|---|---|
| 1 | | 1 | ROTOR | ROTOR | | 1 |
| 2 | | 1 | STATOR | ESTATOR | | 1 |
| 3 | 7017685 | 2 | THRUST WASHER | ARRUELA DE ENCOSTO | | |
| 4 | 10011397 | 1 | NUT | PORCA | | |
| 11 | 10011398 | 2 | ROTOR GASKET | VEDAÇÃO DO ROTOR | | |
| 12 | 7017682 | 2 | V-SEALING | VEDAÇÃO EM V | | |
| 999 | 10009676 | 1 | SEALINGSET ROTARY TRANSMISSION<br>⇨ ❑ 65 | KIT VEDAÇÃO COLETOR GIRATÓ | | |

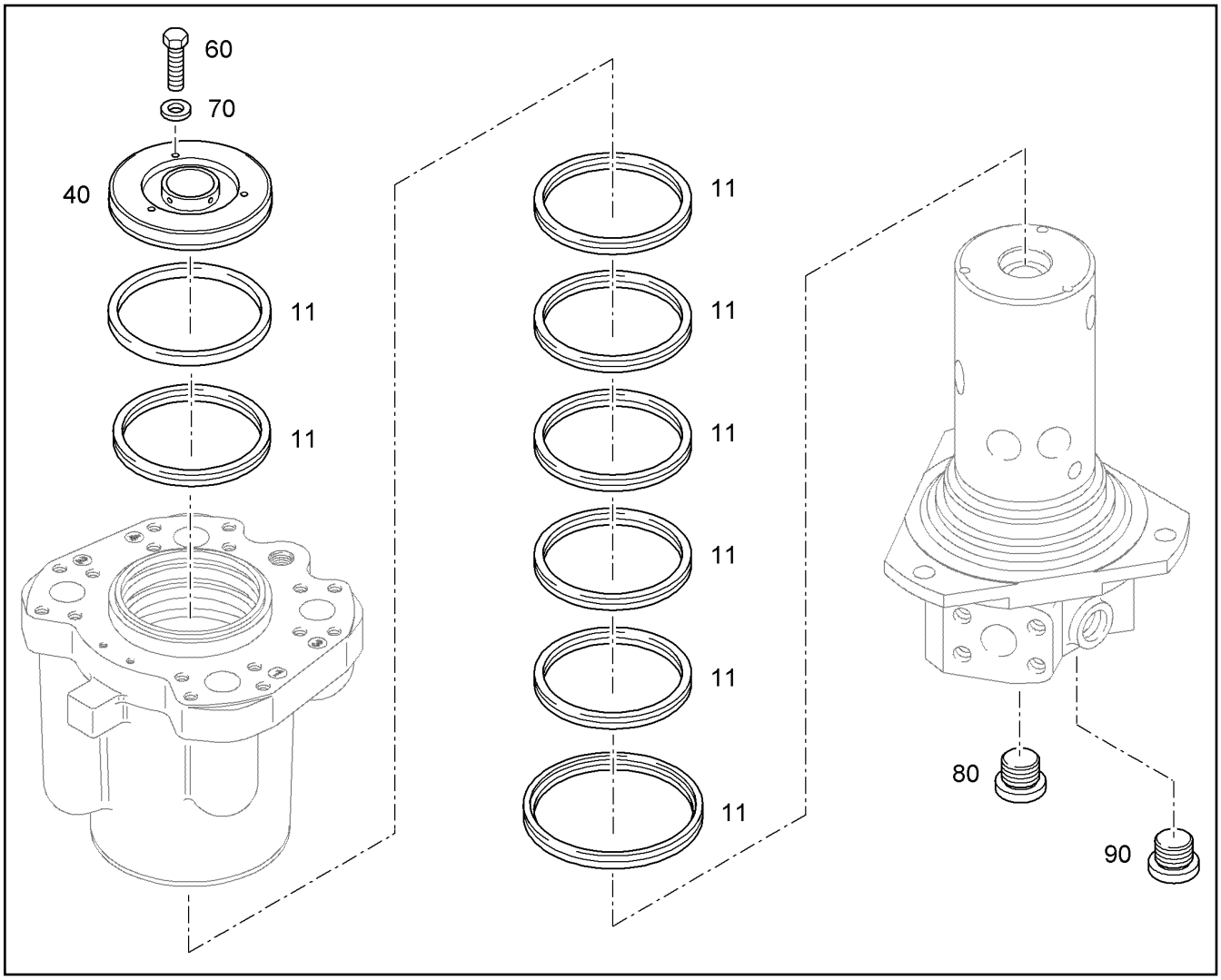


| Pos. | Item | Quantity | Description | Designação | Serie | K |
|---|---|---|---|---|---|---|
| 11 | 9265064 | 1 | -SEALINGSET ROTARY TRANSMISSIONDD<br>⇨ ❑ 66 | -KIT VEDAÇÃO COLETOR GIRA | | |
| 40 | 9141600 | 1 | LID | TAMPA | | |
| 60 | 4065099 | 3 | HEX BOLT ISO 4017 M6x16 8.8 A2C | PARAFUSO SEXTAVADO | | |
| 70 | 4600031 | 3 | CIRCLIP 6 | ARRUELA DE PRESSÃO | | |
| 80 | 7004296 | 8 | SCREW PLUG VSTI | PARAFUSO DE FECHAMENTO | | |
| 90 | 7361961 | 1 | SCREW PLUG VSTI M22X1,5 | PARAFUSO DE FECHAMENTO | | |

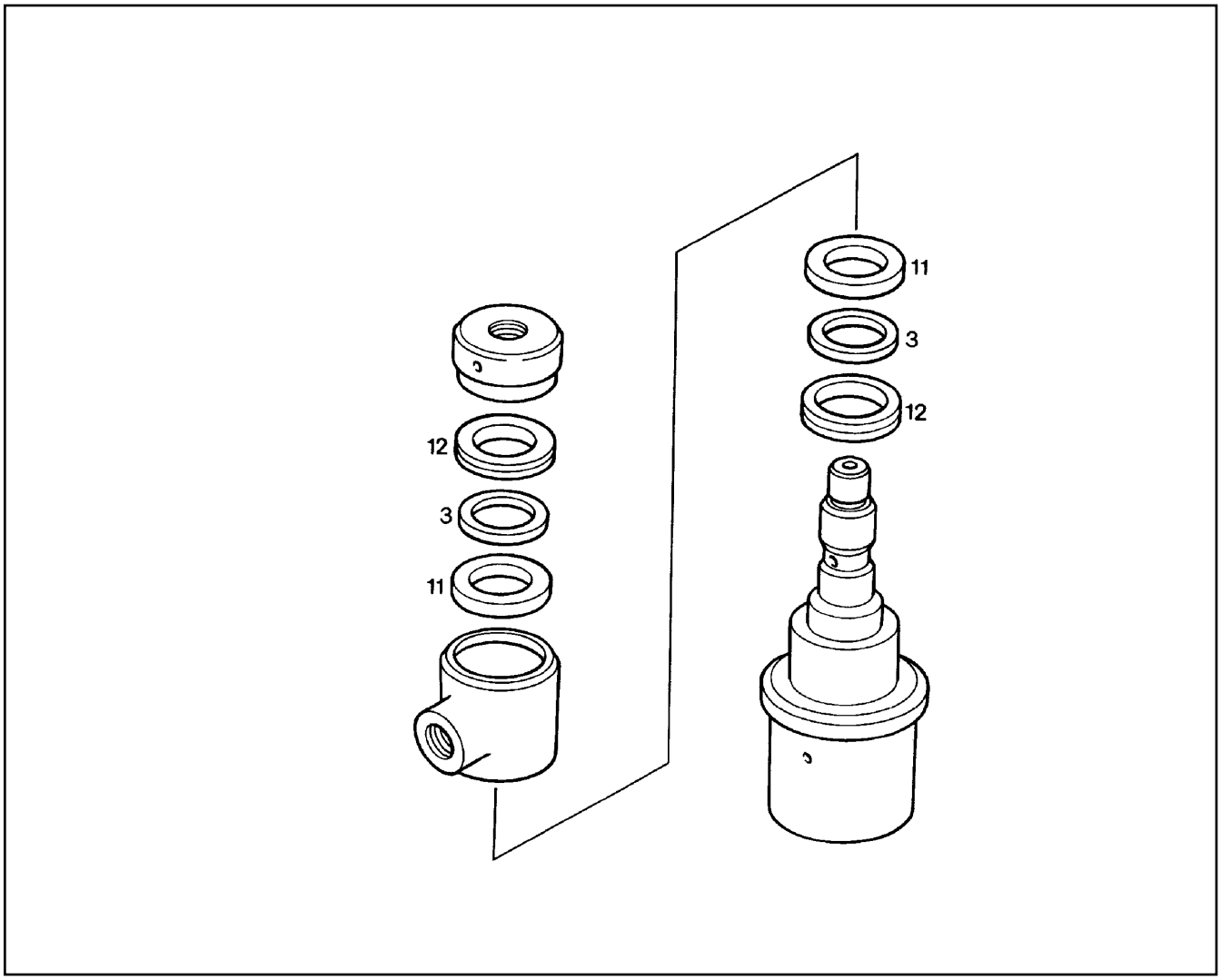


| Pos. | Item | Quantity | Description | Designação | Serie | K |
|---|---|---|---|---|---|---|
| 3 | | 2 | THRUST WASHER | ARRUELA DE ENCOSTO | | |
| 11 | | 2 | ROTOR GASKET | VEDAÇÃO DO ROTOR | | |
| 12 | | 2 | V-SEALING | VEDAÇÃO EM V | | |

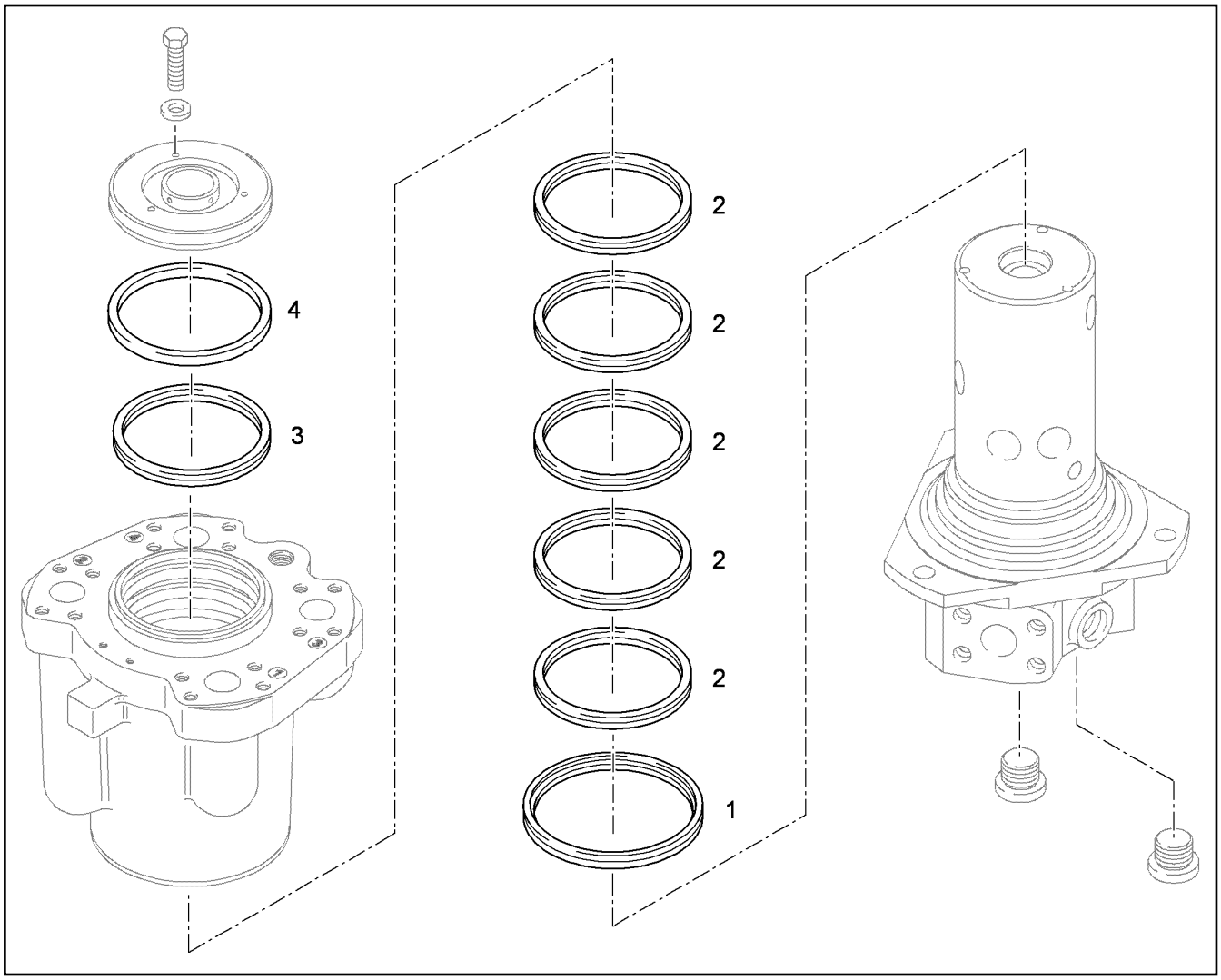


| Pos. | Item | Quantity | Description | Designação | Serie | K |
|---|---|---|---|---|---|---|
| 1 | | 1 | ROTOR GASKET | VEDAÇÃO DO ROTOR | | |
| 2 | | 5 | ROTOR GASKET | VEDAÇÃO DO ROTOR | | |
| 3 | | 1 | ROTOR GASKET | VEDAÇÃO DO ROTOR | | |
| 4 | | 1 | FELT RING | ANEL DE FELTRO | | |

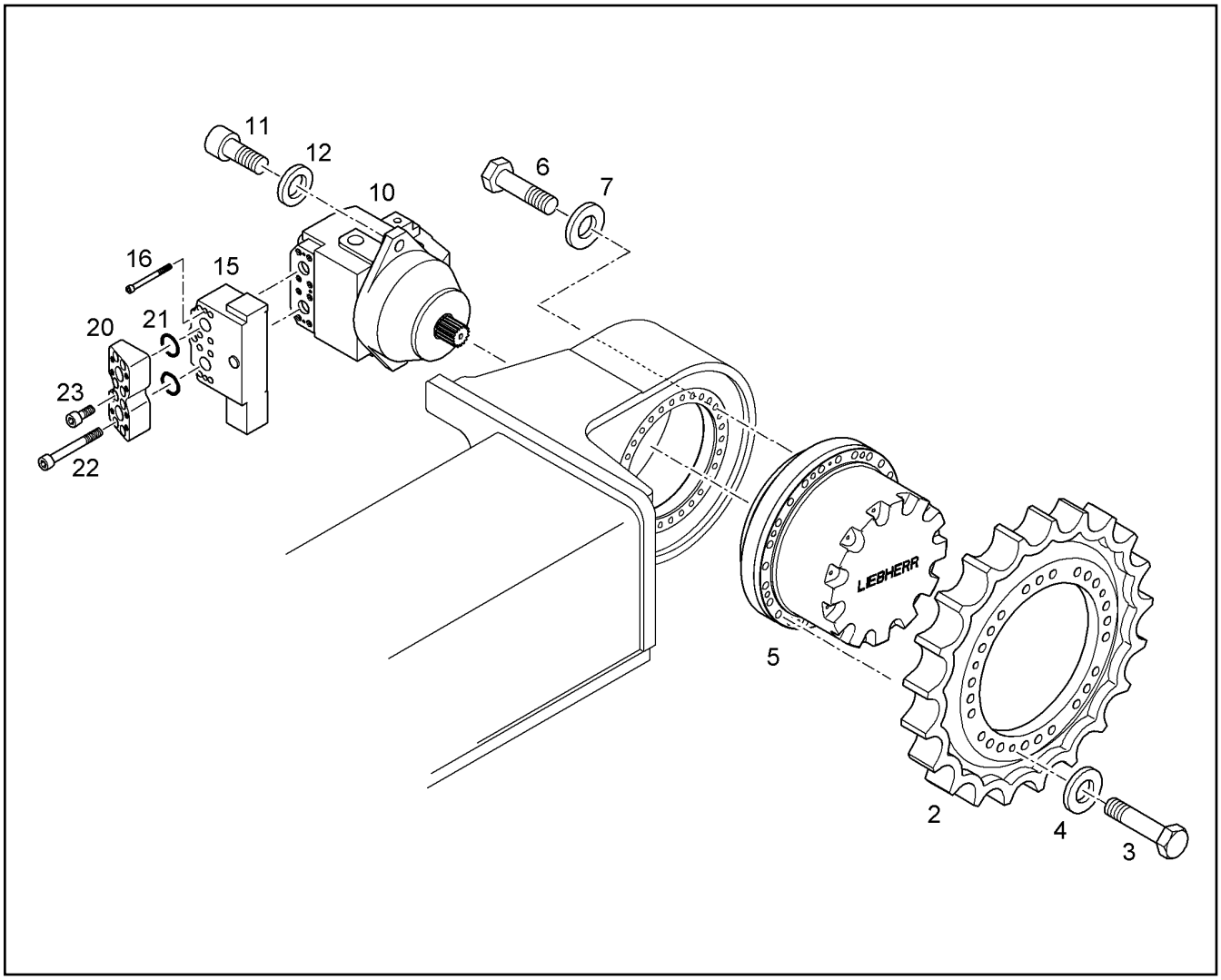


| Pos. | Item | Quantity | Description | Designação | Serie | K |
|---|---|---|---|---|---|---|
| 2 | 9373095 | 2 | TUMBLER WHEEL D7E | RODA MOTRIZ | | 1 |
| 3 | 10425592 | 48 | HEX BOLT ISO 4014 M20X110 10.9 FLZN | PARAFUSO SEXTAVADO | | |
| 4 | 9918229 | 48 | WASHER 20,5/34X5 | ARRUELA | | |
| 5 | 9443840 | 2 | TRAVEL DRIVE FAT 450 P 004<br>[1646 16/04/13 ]<br>[1647 16/04/13 ]<br>⇨ ❑ 68 | MECANISMO DE TRANSLAÇÃO | | 6 |
| 6 | 10425661 | 48 | HEX BOLT ISO 4017 M24X70 10.9 FLZN | PARAFUSO SEXTAVADO | | |
| 7 | 9918230 | 48 | WASHER 24,5/40X5 | ARRUELA | | |
| 10 | 9889775 | 2 | HYDRAULIC INSTALLATION MOTOR<br>[13 18 01730 ]<br>[13 18 03092 ]<br>⇨ ❑ 73 | MOTOR HIDRÁULICO | 24403- | 6 |
| 11 | 10425667 | 4 | CYLINDER SCREW ISO 4762 M20X55 10.9 F | PARAFUSO CILÍNDRICO | | |
| 12 | 10332154 | 4 | WASHER DIN 7989B 22 | ARRUELA | | |
| 15 | 5616688 | 2 | WHEEL BRAKE VALVE<br>[1676 12W49 ]<br>[1683 12W49 ]<br>⇨ ❑ 75 | VALVULA FRENAGEM DA TRAN | | |
| 16 | 4000362 | 4 | CYLINDER SCREW ISO 4762 M6X70 10.9 A2 | PARAFUSO CILÍNDRICO | | |
| 20 | 9684904 | 2 | INTERMEDIATE FLANGE | FLANGE INTERMEDIARIO | | |
| 21 | 10472425 | 4 | PLAIN COMPRESSION RING 45,05X3,40X2,8 | ANEL DE SEÇÃO RETANGULAR | | |
| 22 | 4900973 | 12 | CYLINDER SCREW ISO 4762 M14X120 10.9 F | PARAFUSO CILÍNDRICO | | |
| 23 | 4601243 | 4 | CYLINDER SCREW ISO 4762 M14X35 10.9 F | PARAFUSO CILÍNDRICO | | |

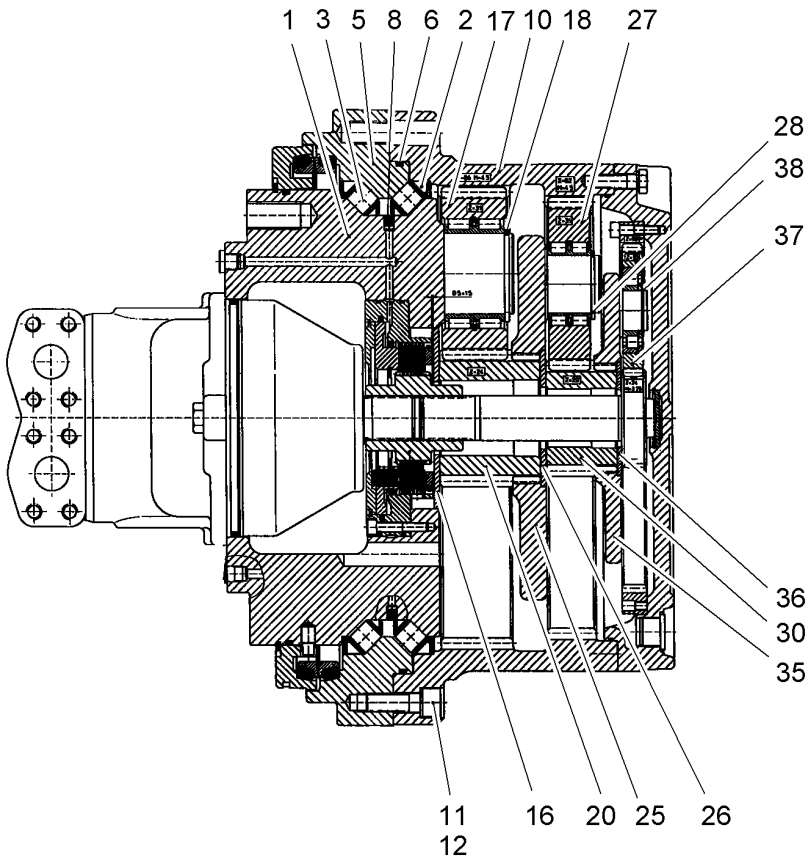


| Pos. | Item | Quantity | Description | Designação | Serie | K |
|---|---|---|---|---|---|---|
| 1 | 9443842 | 1 | CONNECTION CARRIER | SUPORTE DE CONEXAO | | |
| 2 | 9442138 | 32 | ROLLER CAGE | GAIOLA DE ROLETES | | 1 |
| 3 | 7610054 | 96 | CYL.ROLLER DIN 5402 20 X 20 | ROLAMENTO DE AGULHA | | |
| 5 | 9442307 | 1 | BEARING RING | ANEL MANCAL | | |
| 6 | 7610361 | 1 | O-RING | ANEL-O | | |
| 8 | 7610819 | 2 | SEALING PLUG MB 700 | TAMPAO DE VEDACAO | | |
| 10 | 9443843 | 1 | INTERNAL GEAR WHEEL M=4,5 Z=82/86 | ENGRENAGEM INTERNA | | |
| 11 | 10001077 | 8 | CYLINDER SCREW ISO 4762 M16X50 10.9 | PARAFUSO CILÍNDRICO | | |
| 12 | 4239020 | 8 | LOCK WASHER | ARRUELA DE SEGURANÇA | | |
| 16 | 9443297 | 1 | RETAINING DISK | ARRUELA DE RETENÇÃO | | |
| 17 | 9443844 | 5 | PLANET WHEEL M=4,5 Z=31 | ENGRENAGEM PLANETÁRIA | | |
| 18 | 4001447 | 5 | LOCKING RING DIN 471 70 X4 | ANEL DE RETENÇÃO | | |
| 20 | 9443846 | 1 | SUN WHEEL M=4,5 Z=24 | ENGRENAGEM SOLAR | | |
| 25 | 9443847 | 1 | PLANETARY CARRIER | SUPORTE PLANETARIO | | |
| 26 | 9443707 | 1 | RETAINING DISK 120X 55X 5 | ARRUELA DE RETENÇÃO | | |
| 27 | 9443848 | 3 | PLANET WHEEL M=4,5 Z=31 | ENGRENAGEM PLANETÁRIA | | |
| 28 | 4000859 | 3 | LOCKING RING DIN 47150 | ANEL DE RETENÇÃO | | |
| 30 | 9443857 | 1 | SUN WHEEL M=4,5 Z=20 | ENGRENAGEM SOLAR | | |
| 35 | 9443858 | 1 | PLANETARY CARRIER | SUPORTE PLANETARIO | | |
| 36 | 9443483 | 1 | RETAINING DISK | ARRUELA DE RETENÇÃO | | |
| 37 | 9443904 | 3 | PLANET WHEEL M=3,25 Z=33 | ENGRENAGEM PLANETÁRIA | | |
| 38 | 4280029 | 3 | LOCKING RING DIN 47138 | ANEL DE RETENÇÃO | | |

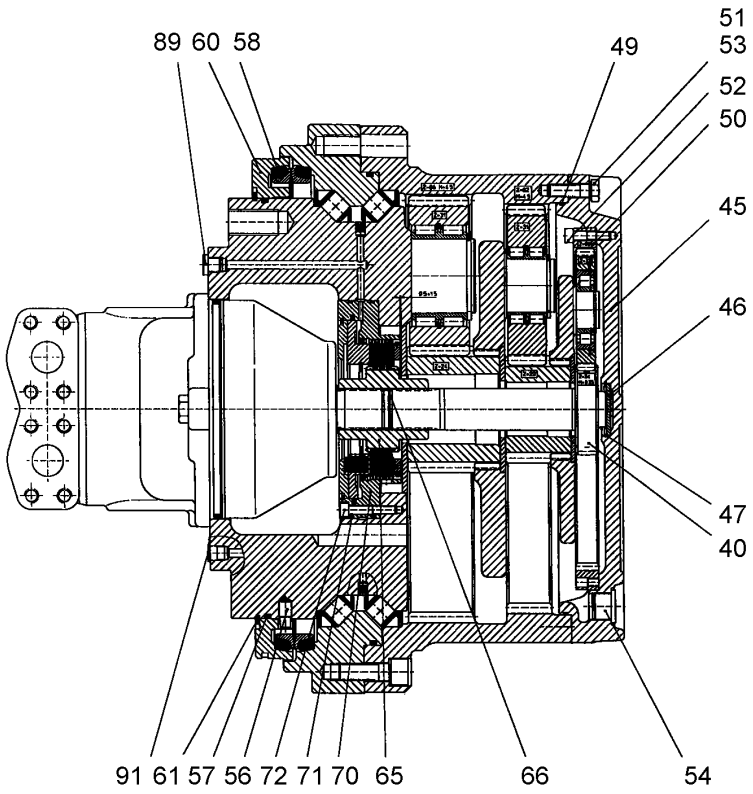


| Pos. | Item | Quantity | Description | Designação | Serie | K |
|---|---|---|---|---|---|---|
| 40 | 9443859 | 1 | DRIVE SHAFT | EIXO DE ACIONAMENTO | | |
| 45 | 9443906 | 1 | END COVER | TAMPA DE FECHAMENTO | | |
| 46 | 9443033 | 1 | RETAINING DISK | ARRUELA DE RETENÇÃO | | |
| 47 | 429612001 | 1 | L RING JL50 | ANEL L | | |
| 49 | 726458601 | 1 | O-RING | ANEL-O | | |
| 50 | 9443907 | 1 | INTERNAL GEAR WHEEL M=3,25 Z=90 | ENGRENAGEM INTERNA | | |
| 51 | 4900100 | 12 | HEX HEAD SCREW ISO 4017 M 12 X 40 8.8 | PARAFUSO SEXTAVADO | | |
| 52 | 404306801 | 20 | CYLINDER SCREW ISO 4762 M8X35 10.9 V | PARAFUSO CILÍNDRICO | | |
| 53 | 4239019 | 12 | LOCK WASHER /45X3,5 VS | ARRUELA DE SEGURANÇA | | |
| 54 | 409710701 | 3 | SCREW PLUG DIN 908 M26X1,5 ST PM A3C | PARAFUSO DE FECHAMENTO | | |
| 56 | 9442284 | 1 | PIN | PINO | | |
| 57 | 7610367 | 1 | O-RING DIN 3771 380,00X5,00 | ANEL-O | | |
| 58 | 7610243 | 1 | AXIAL FACE SEAL 429X457X38 | ANEL DE VEDAÇÃO | | |
| 60 | 9442308 | 1 | TERMINAL RING | ANEL DE FECHAMENTO | | |
| 61 | 7610187 | 1 | SNAP RING DIN 5417 SW400 X4,0 | ANEL DE RETENÇÃO | | |
| 65 | 9443908 | 1 | MULTI-DISC CARRIER | SUPORTE DAS LAMELAS | | |
| 66 | 428109501 | 1 | LOCKING RING DIN 472 36 X1,5 | ANEL DE RETENÇÃO | | |
| 70 | 502036101 | 1 | SPRING LOADED MULTI-DISC BRAKE | FREIO DE LAMELAS | | 1 |
| 71 | 7610217 | 2 | O-RING 195X3 | ANEL-O | | |
| 72 | 404339601 | 12 | CYLINDER SCREW ISO 4762 M8X45 10.9 | PARAFUSO CILÍNDRICO | | |
| 89 | 7363125 | 1 | SCREW FITTING VSTI M14X1,5<br>⇨ ❑ 661 | REDUÇÃO | | |
| 91 | 7004246 | 1 | BLANKING PLUG GPN 300 F | TAMPÃO | | |

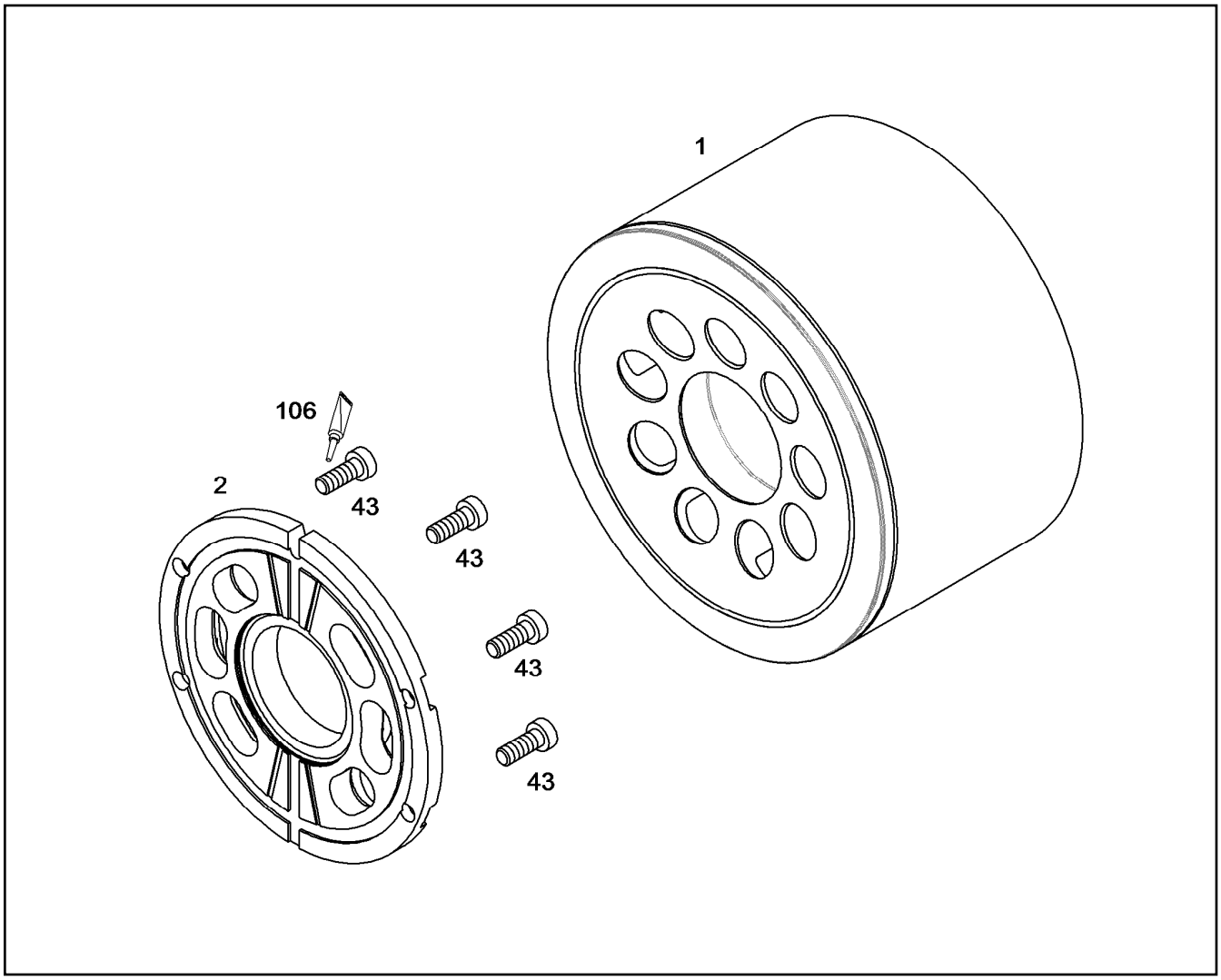


| Pos. | Item | Quantity | Description | Designação | Serie | K |
|---|---|---|---|---|---|---|
| 1 | | 1 | CYLINDER WITH BUSH | CILINDRO COM BUCHA | | |
| 2 | | 1 | GUIDE PLATE | PLACA DE CONTROLE | | |
| 43 | 4981218 | 4 | CYLINDER SCREW ISO 14580 M6X16 10.9 | PARAFUSO CILÍNDRICO | | |
| 106 | 8700039 | 1 | LOCTITE | LOCTITE | | |

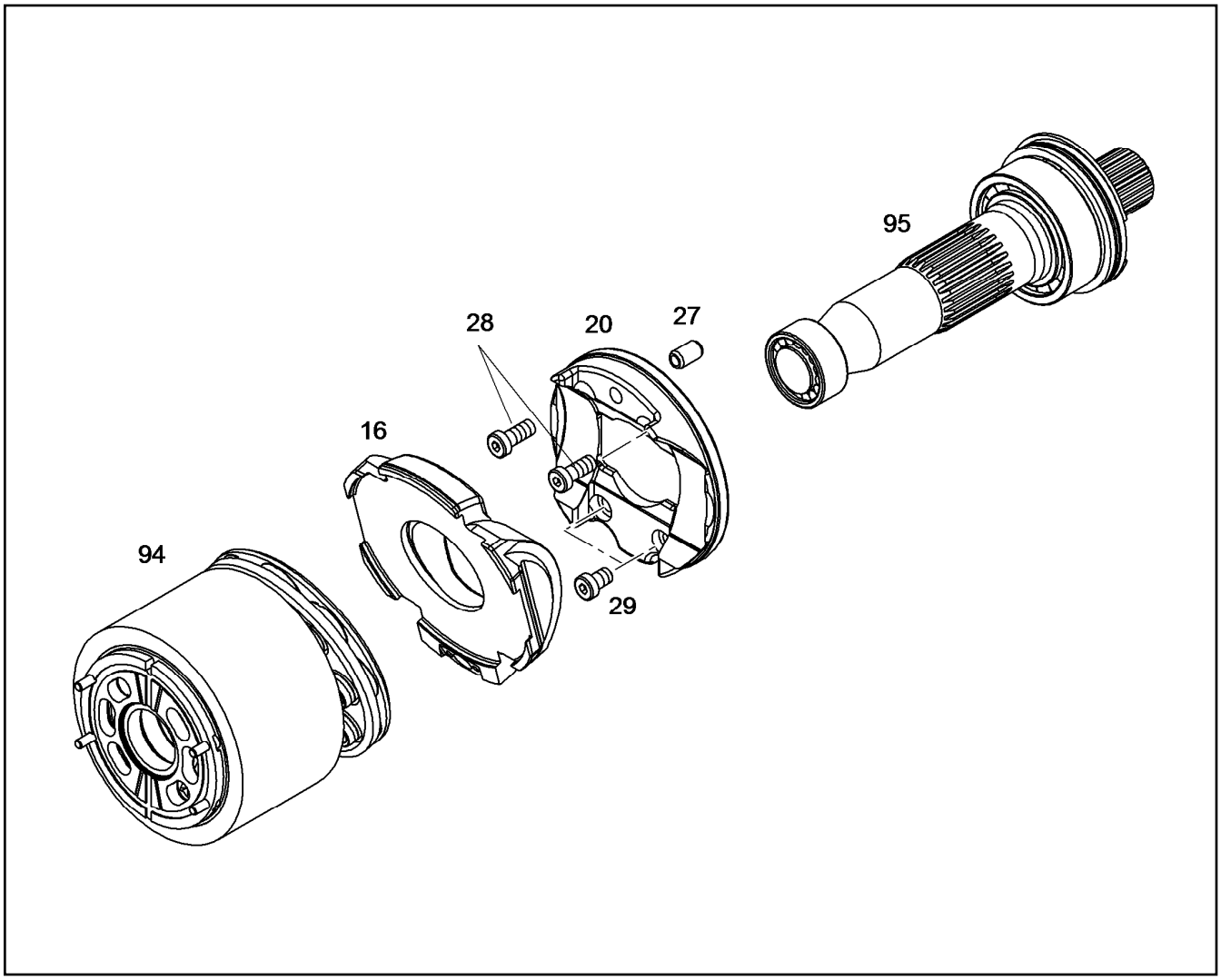


| Pos. | Item | Quantity | Description | Designação | Serie | K |
|---|---|---|---|---|---|---|
| 16 | 9880284 | 1 | SWING ROCKER | BALANCO GIRATORIO | | |
| 20 | 9277872 | 1 | BEARING FLANGE | FLANGE MANCAL | | |
| 27 | 7381641 | 1 | TENSION PIN 12 | PINO ELÁSTICO | | |
| 28 | 407208301 | 2 | CYLINDER SCREW DIN 6912 M20X70 8.8 A3 | PARAFUSO CILÍNDRICO | | |
| 29 | 4000508 | 2 | CYLINDER SCREW DIN 7984 M10X16 8.8 A3 | PARAFUSO CILÍNDRICO | | |
| 94 | 9073357 | 1 | REPAIR KIT (POWER TRAIN) FMF 140<br>⇨ ❑ 79 | CONJ REP (ACION.) | | |
| 95 | 9073158 | 1 | REPAIR KIT SHAFT<br>⇨ ❑ 149 | KIT DE REPARO | | |

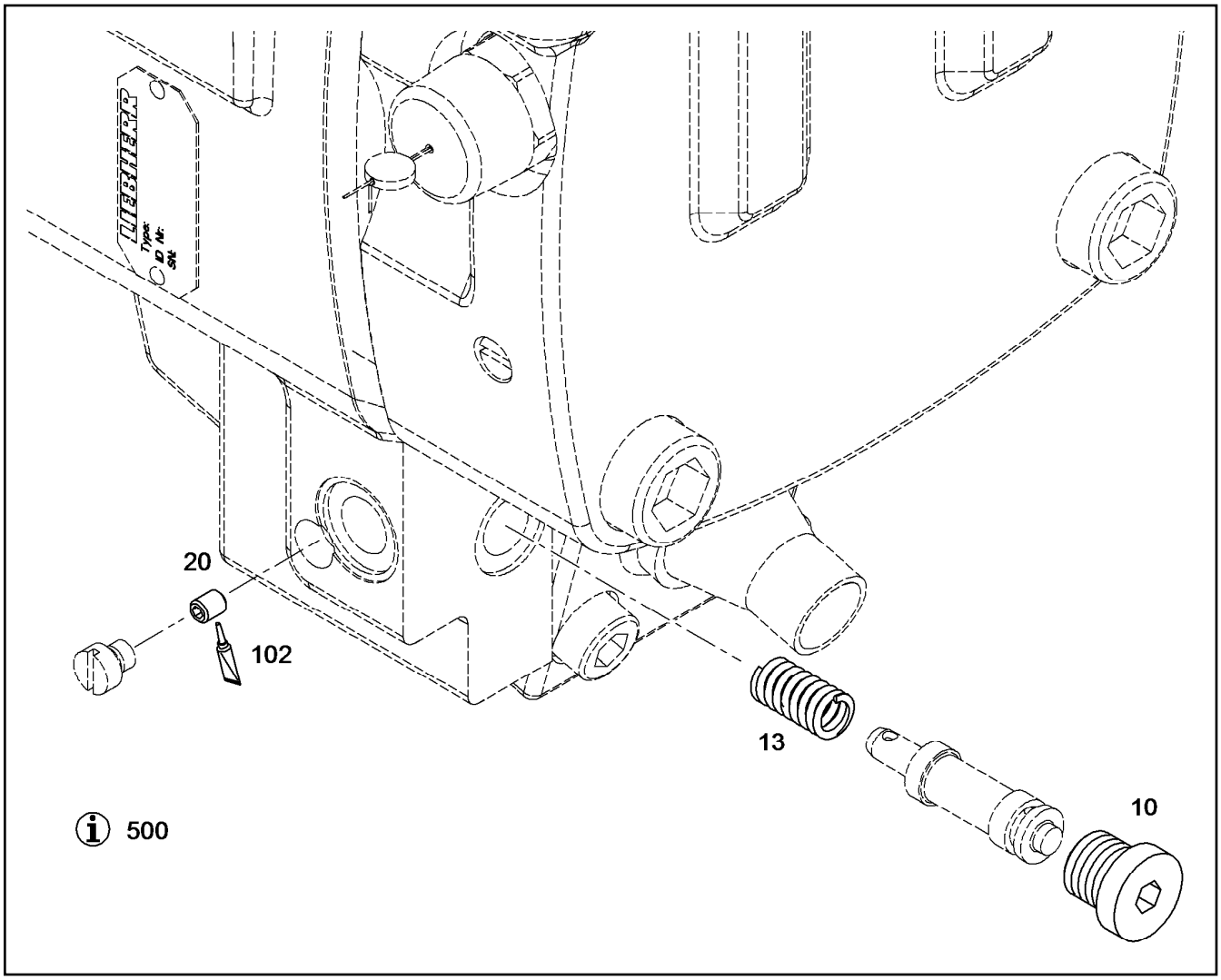


| Pos. | Item | Quantity | Description | Designação | Serie | K |
|---|---|---|---|---|---|---|
| 10 | | 1 | SCREW FITTING VSTI M14X1,5<br>⇨ ❑ 661 | REDUÇÃO | | |
| 13 | 9265659 | 1 | PRESSURE SPRING 1,6/8,4X24,2/6,5 | MOLA DE PRESSÃO | | |
| 20 | 7380824 | 1 | NOZZLE | BICO | | |
| 102 | 8622897 | 1 | SCREW LOCKING | COLA PARA ELEMENTOS FIXA | | |
| 500 | 9278153 | 1 | TABLE ORDER | TABELA | | |

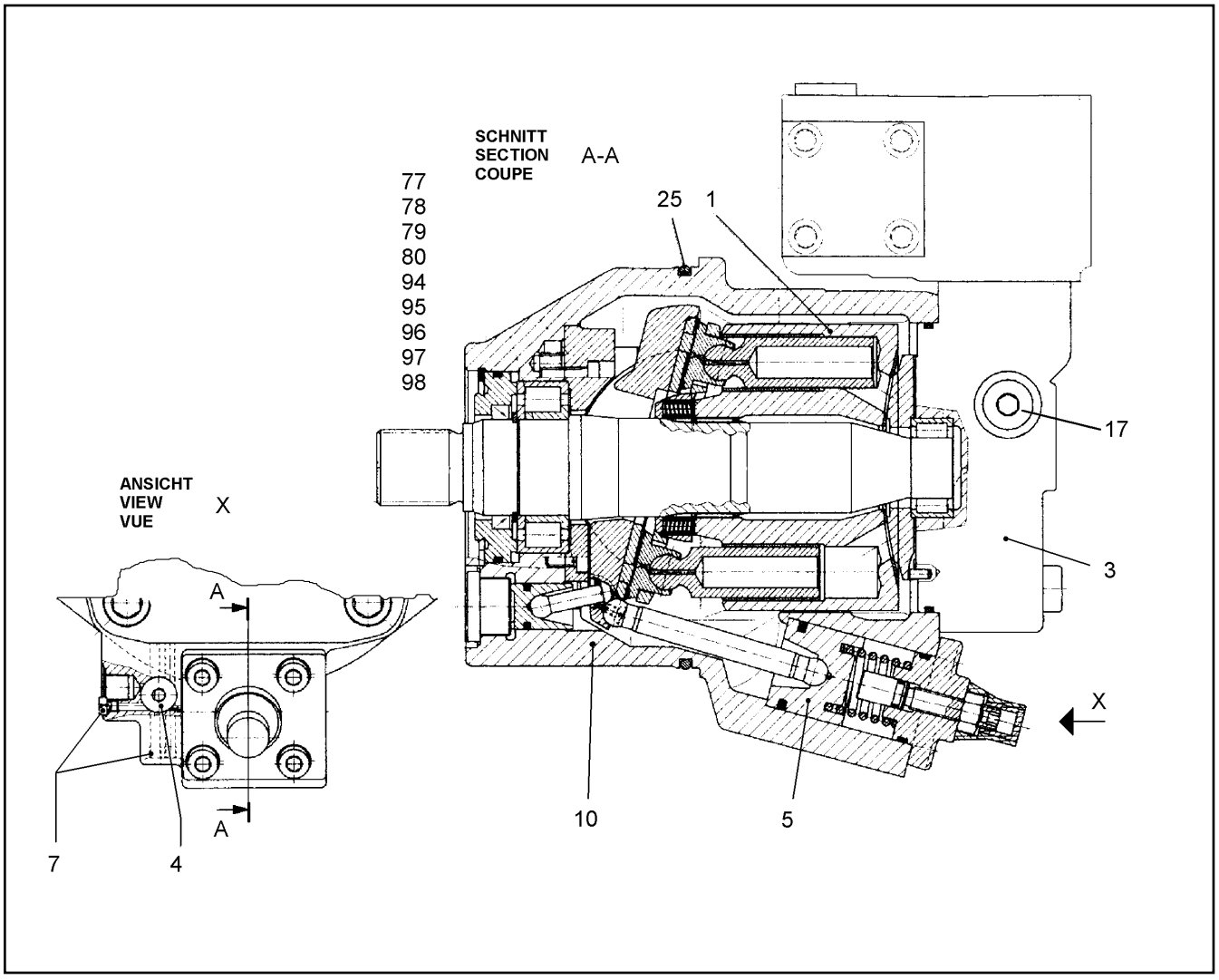


| Pos. | Item | Quantity | Description | Designação | Serie | K |
|---|---|---|---|---|---|---|
| 1 | | 1 | DRIVING GEAR<br>⇨ ❑ 71 | MECANISMO DE ACIONAMENTO | | |
| 3 | 9073355 | 1 | CONNECTING PLATE FMV 140<br>⇨ ❑ 689 | PLACA DE CONEXAO | | |
| 4 | 9882833 | 1 | CONTROL VALVE NG 140 140<br>⇨ ❑ 72 | VÁLVULA DE COMANDO NG | | |
| 5 | 9882766 | 1 | ADJUSTMENT<br>⇨ ❑ 690 | DISPOSITIVO DE REGULAGEM | | |
| 7 | 9268441 | 4 | SCREW PLUG M6<br>⇨ ❑ 112 | PARAFUSO DE FECHAMENTO | | |
| 10 | 9882768 | 1 | HOUSING | CARCAÇA | | |
| 17 | 7002771 | 1 | SCREW PLUG VSTI G3/4A | PARAFUSO DE FECHAMENTO | | |
| 25 | 7380613 | 1 | O-RING ISO 3601-1 196,22X5,33 | ANEL-O | | |
| 77 | 9889831 | 1 | RK PISTON WITH GUIDE SHOE NG 140<br>⇨ ❑ 157 | KIT DE REPARO PISTÕES AXIAI | | |
| 78 | 9889988 | 1 | REPAIR KIT NG 140<br>⇨ ❑ 158 | CONJ REP (ESFERA RZ+PL) | | |
| 79 | 9073155 | 1 | RK CYLINDER+CONTROL PLATE<br>⇨ ❑ 70 | KIT DE REPARO GRUPO ROTÓR | | |
| 80 | 9883173 | 1 | REPAIR KIT<br>⇨ ❑ 80 | KIT DE REPARO | | |
| 94 | 9073357 | 1 | REPAIR KIT (POWER TRAIN) FMF 140<br>⇨ ❑ 79 | CONJ REP (ACION.) | | |
| 95 | 9073158 | 1 | REPAIR KIT SHAFT<br>⇨ ❑ 149 | KIT DE REPARO | | |

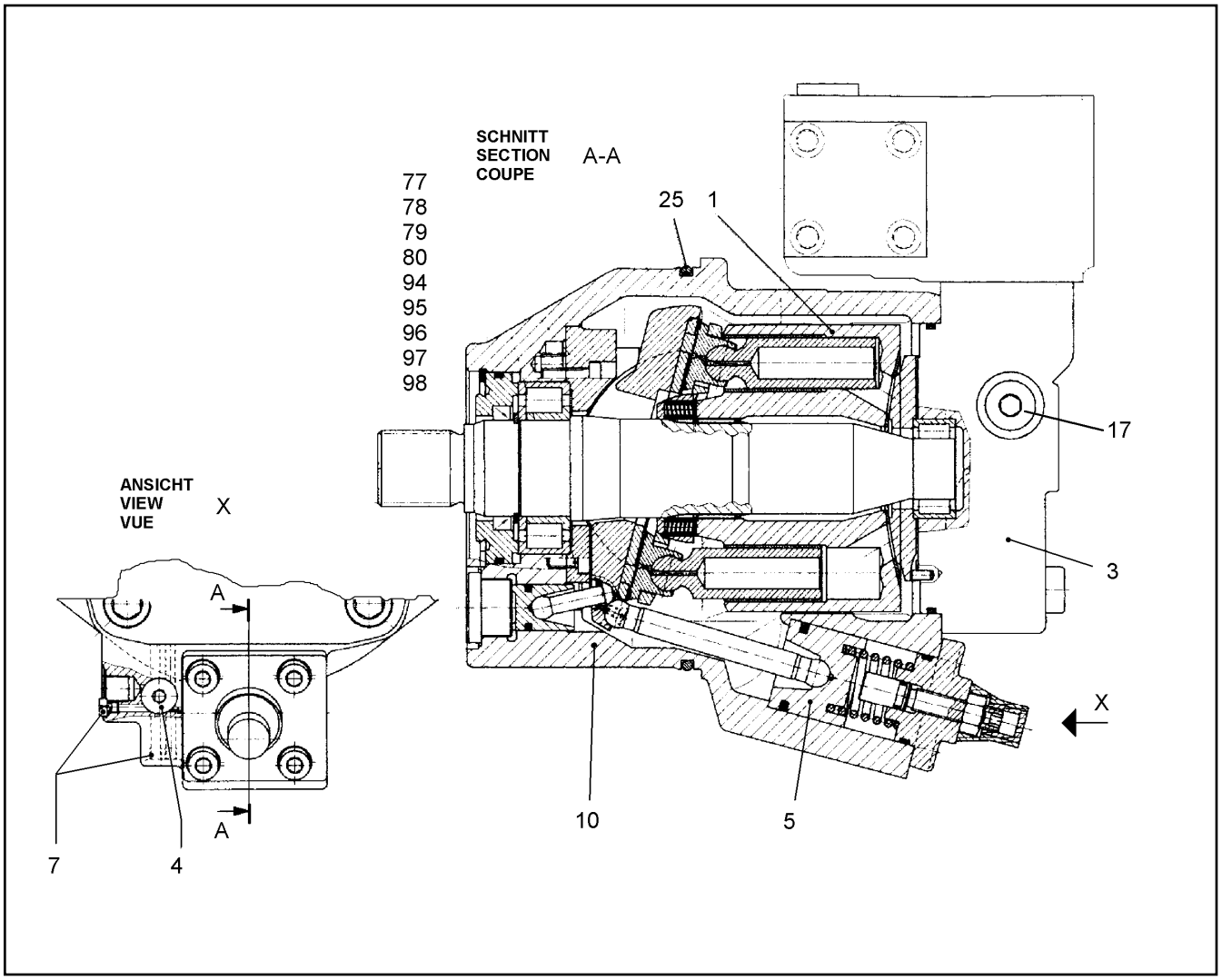


| Pos. | Item | Quantity | Description | Designação | Serie | K |
|---|---|---|---|---|---|---|
| 96 | 9268016 | 1 | REPAIR KIT LOCK RING<br>⇨ ❑ 697 | KIT DE REPARO | | |
| 97 | 9884000 | 1 | REPAIR SET PRESSURE CONTROL VA<br>⇨ ❑ 81 | KIT DE REPARO | | |
| 98 | 9882771 | 1 | SEAL KIT<br>⇨ ❑ 699 | KIT DE VEDAÇÃO | | |

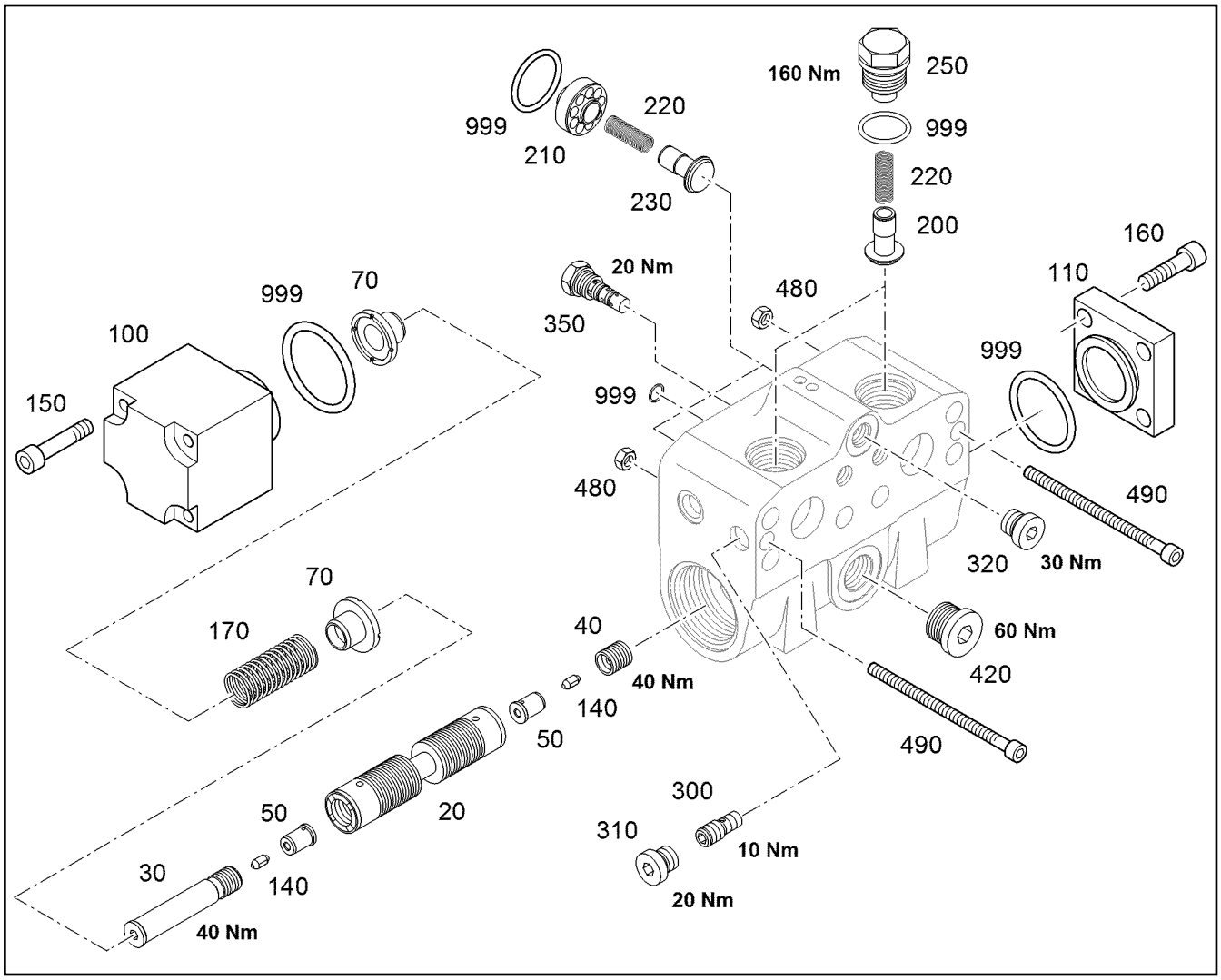


| Pos. | Item | Quantity | Description | Designação | Serie | K |
|---|---|---|---|---|---|---|
| 20 | 5616689 | 1 | PISTON | PISTÃO | | |
| 30 | 10015475 | 1 | PIN | PINO | | 1 |
| 40 | 7026127 | 1 | VALVE SEAT | ASSENTO DA VALVULA | | |
| 50 | 7414522 | 2 | VALVE BUSH | BUCHA DE VÁLVULA | | 1 |
| 70 | 7021980 | 2 | SPRING SUPPORT | PRATO DA MOLA | | |
| 100 | 7021981 | 1 | LID | TAMPA | | |
| 110 | 7021982 | 1 | LID | TAMPA | | |
| 140 | 10015533 | 2 | RESTRICTOR PIN | PINO DE RESTRICAO | | 1 |
| 150 | 4600169 | 4 | CYLINDER SCREW ISO 4762 M12X90 10.9 | PARAFUSO CILÍNDRICO | | |
| 160 | 4043164 | 4 | CYLINDER SCREW ISO 4762 M12X35 10.9 | PARAFUSO CILÍNDRICO | | |
| 170 | 749072914 | 1 | PRESSURE SPRING | MOLA DE PRESSÃO | | |
| 200 | 7021984 | 2 | TAPER | CONE | | |
| 210 | 10015472 | 2 | GUIDE | GUIA | | |
| 220 | 5616117 | 4 | PRESSURE SPRING | MOLA DE PRESSÃO | | |
| 230 | 7021984 | 2 | TAPER | CONE | | |
| 250 | 10015471 | 2 | SCREW PLUG M30X1X47 | PARAFUSO DE FECHAMENTO | | |
| 300 | 7021767 | 1 | SHUTTLE VALVE | VALVULA INTERCAMBIAVEL | | |
| 310 | 7370432 | 1 | SCREW PLUG M10X1 A3C | PARAFUSO DE FECHAMENTO | | |
| 320 | | 1 | SCREW FITTING VSTI M14X1,5<br>⇨ ❑ 661 | REDUÇÃO | | |
| 350 | 5611648 | 1 | VALVE | VÁLVULA | | |
| 420 | 7368507 | 1 | SCREW PLUG M22X1,5 | PARAFUSO DE FECHAMENTO | | |
| 480 | 4000379 | 2 | HEX NUT M6 | PORCA SEXTAVADA | | |
| 490 | 4000363 | 2 | CYLINDER SCREW ISO 4762 M6X100 10.9 | PARAFUSO CILÍNDRICO | | |
| 999 | 10015470 | 1 | SEAL KIT | KIT DE VEDAÇÃO | | |

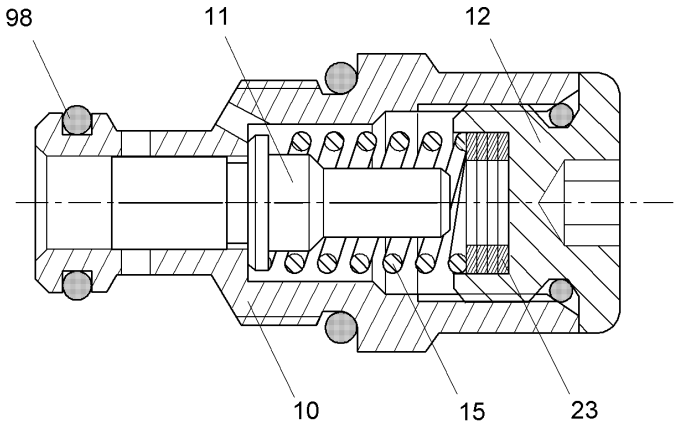


| Pos. | Item | Quantity | Description | Designação | Serie | K |
|---|---|---|---|---|---|---|
| 10 | | 1 | BUSHING | BUCHA | | |
| 11 | | 1 | PISTON | PISTÃO | | |
| 12 | | 1 | SCREW PLUG M18X1,5 | PARAFUSO DE FECHAMENTO | | |
| 15 | | 1 | PRESSURE SPRING 1,25X11,50X53,00 | MOLA DE PRESSÃO | | |
| 23 | | 5 | WASHER 9,3X13X0,5 | ARRUELA | | |
| 98 | 9266231 | 1 | SEALING SET VALVE<br>⇨ ❑ 82 | KIT DE VEDACAO DA VALVULA | | |

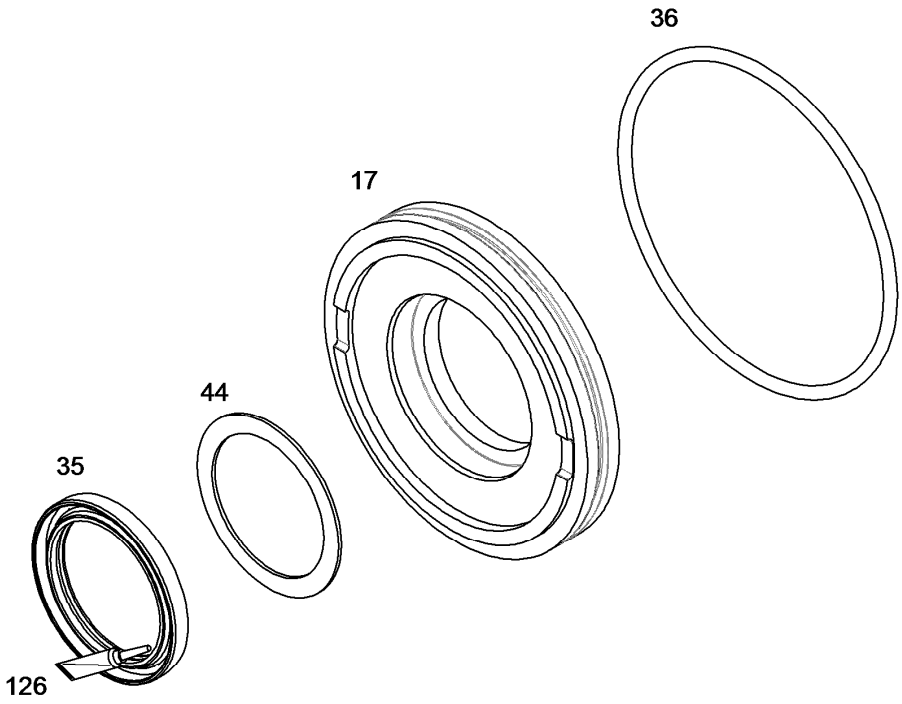


| Pos. | Item | Quantity | Description | Designação | Serie | K |
|---|---|---|---|---|---|---|
| 17 | | 1 | CLOSING RING | ANEL DE FECHAMENTO | | |
| 35 | | 1 | ROTARY SHAFT LIP SEAL ASX50X65X7 | ANEL DE VEDÇÃO DO EIXO RAD | | |
| 36 | | 1 | O-RING DIN 3771 113,89X3,53 | ANEL-O | | |
| 44 | | 1 | SHIM RING 55X65X1,5 | ARRUELA DE AJUSTE | | |
| 126 | 8655008 | 1 | GREASE | GRAXA | | |

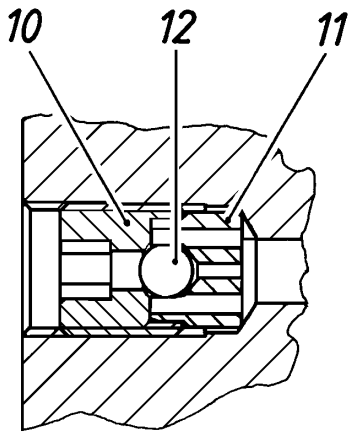


| Pos. | Item | Quantity | Description | Designação | Serie | K |
|---|---|---|---|---|---|---|
| 10 | 9269686 | 1 | VALVE SLEEVE | BUCHA DA VALVULA | | |
| 11 | 9270599 | 1 | VALVE COVER | TAMPA DO RESERVATÓRIO | | |
| 12 | 4980490 | 1 | BALL DIN 5401 3,96 III | ESFERA | | |

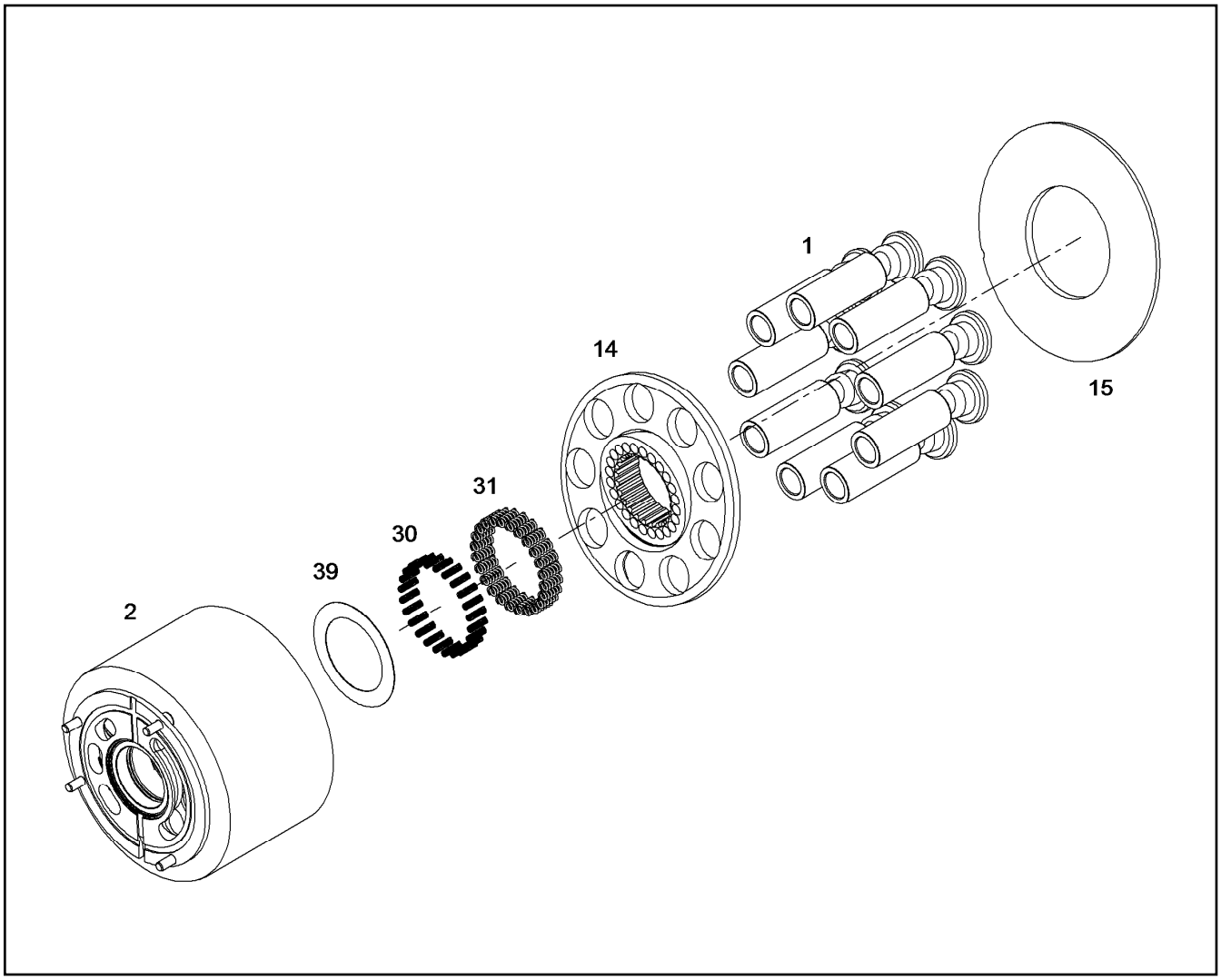


| Pos. | Item | Quantity | Description | Designação | Serie | K |
|---|---|---|---|---|---|---|
| 1 | 9889831 | 9 | RK PISTON WITH GUIDE SHOE NG 140<br>⇨ ❑ 157 | KIT DE REPARO PISTÕES AXIAI | | |
| 2 | 9073155 | 1 | RK CYLINDER+CONTROL PLATE<br>⇨ ❑ 70 | KIT DE REPARO GRUPO ROTÓR | | |
| 14 | 9889988 | 1 | REPAIR KIT NG 140<br>⇨ ❑ 158 | CONJ REP (ESFERA RZ+PL) | | |
| 15 | 9269613 | 1 | SLIDING DISC 72X152X6 | ARRUELA DESLIZANTE | | |
| 30 | 10003855 | 24 | PRESSURE SPRING 0,70/ 3,30X24,20 | MOLA DE PRESSÃO | | |
| 31 | 7382167 | 24 | PRESSURE SPRING 1,30/ 5,50X18,10 | MOLA DE PRESSÃO | | |
| 39 | 9885924 | 1 | WASHER SET | KIT DE ARRUELAS | | |

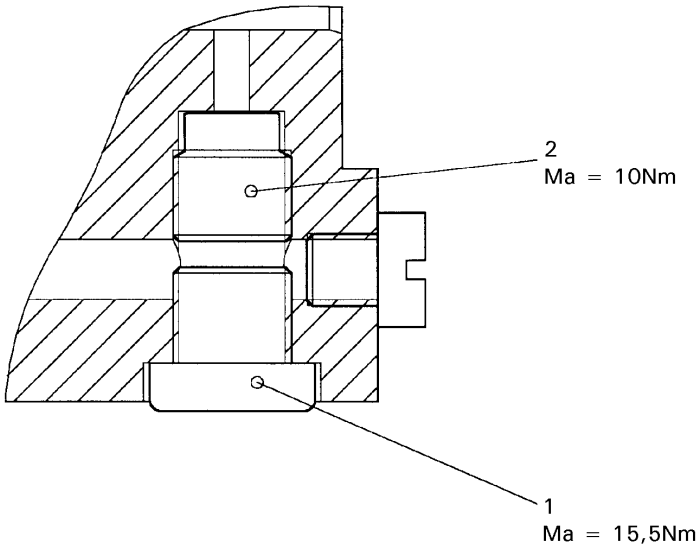


| Pos. | Item | Quantity | Description | Designação | Serie | K |
|---|---|---|---|---|---|---|
| 1 | | 1 | SCREW PLUG VSTI M10X1 | PARAFUSO DE FECHAMENTO | | |
| 2 | | 1 | SCREW PLUG M10X1 | PARAFUSO DE FECHAMENTO | | |

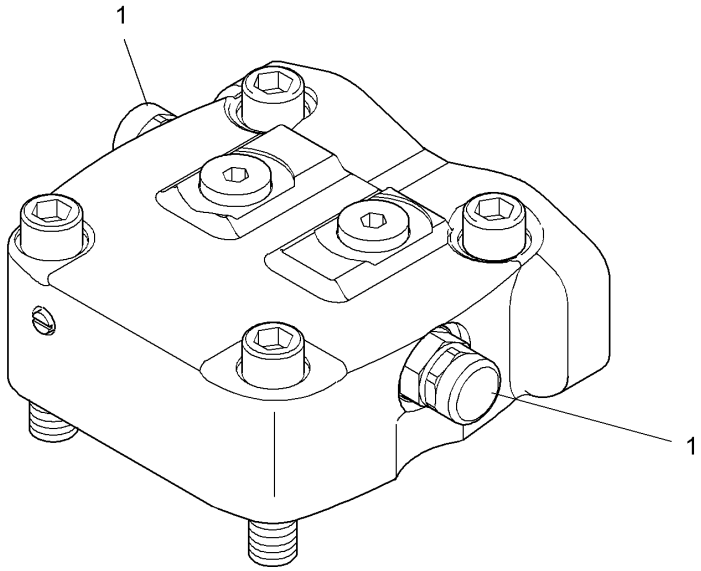


| Pos. | Item | Quantity | Description | Designação | Serie | K |
|---|---|---|---|---|---|---|
| 1 | 9267554 | 1 | PRESSURE LIMITING VALVE<br>⇨ ❑ 693 | VÁLVULA LIMITADORA DE PRES | | |

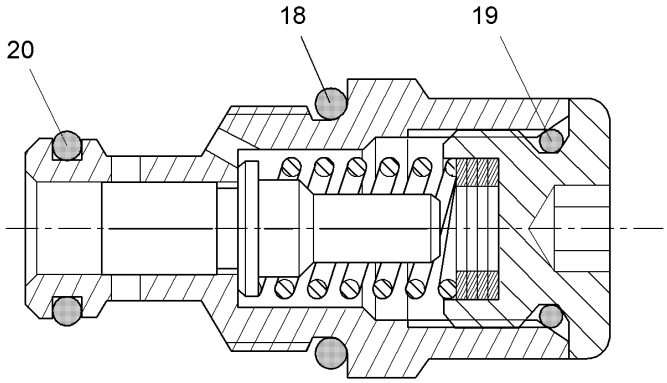


| Pos. | Item | Quantity | Description | Designação | Serie | K |
|---|---|---|---|---|---|---|
| 18 | | 1 | O-RING DIN 3771 19,30X2,40 | ANEL-O | | |
| 19 | | 1 | O-RING DIN 3771 15,30X2,40 | ANEL-O | | |
| 20 | | 1 | O-RING DIN 3771 12,00X2,00 | ANEL-O | | |

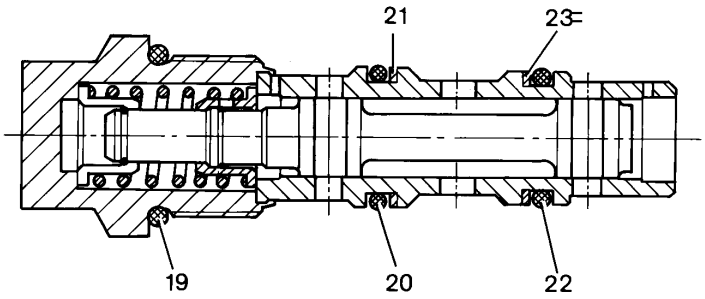


| Pos. | Item | Quantity | Description | Designação | Serie | K |
|---|---|---|---|---|---|---|
| 19 | | 1 | O-RING DIN 3771 21,30X2,40 | ANEL-O | | |
| 20 | | 1 | O-RING DIN 3771 16,00X2,50 | ANEL-O | | |
| 21 | | 1 | SUPPORTING RING | ANEL DE APOIO | | |
| 22 | | 1 | O-RING DIN 3771 15,00X2,50 | ANEL-O | | |
| 23 | | 1 | BACK-UP RING CUT 15,7/20X1 | ANEL DE ENCOSTO | | |

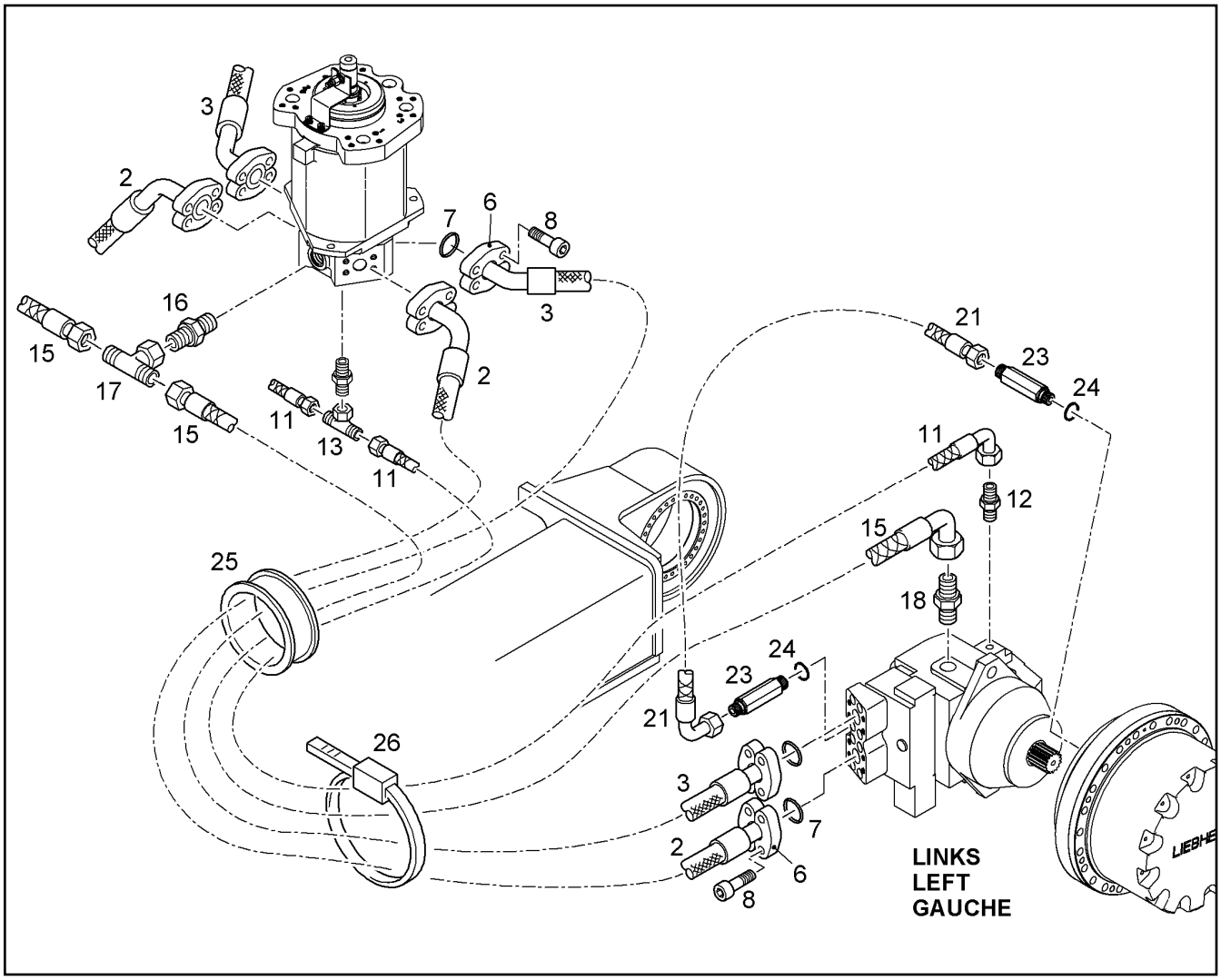


| Pos. | Item | Quantity | Description | Designação | Serie | K |
|---|---|---|---|---|---|---|
| 2 | 10291285 | 2 | HOSE 32X2600 | MANGUEIRA | | 1 |
| 3 | 10220597 | 2 | HOSE | MANGUEIRA | | 1 |
| 6 | 11485639 | 16 | FLANGE HALF WITH BOSSING SAE J518 SA | MEIO FLANGE COM RELEVO | | |
| 7 | 10472425 | 8 | PLAIN COMPRESSION RING 45,05X3,40X2,8 | ANEL DE SEÇÃO RETANGULAR | | |
| 8 | 4902327 | 32 | CYLINDER SCREW ISO 4762 M14X45 10.9 | PARAFUSO CILÍNDRICO | | |
| 11 | 6718632 | 2 | CONTROL HOSE | MANGUEIRA DE COMANDO | | 1 |
| 12 | 7003814 | 2 | SCREW FITTING GE 10L M14X1,5 | REDUÇÃO | | |
| 13 | 7362101 | 1 | SCREW FITTING T 10L | REDUÇÃO | | |
| 15 | 5610202 | 2 | HOSE | MANGUEIRA | | 1 |
| 16 | 7003800 | 1 | SCREW FITTING GE 28L M33X2 | REDUÇÃO | | |
| 17 | 7407122 | 1 | SCREW FITTING ET 28L | REDUÇÃO | | |
| 18 | 4001446 | 2 | LUG GE 22L G3/4A | CONEXÃO | | |
| 21 | 7005047 | 2 | CONTROL HOSE 8X500 | MANGUEIRA DE COMANDO | | 1 |
| 23 | 9757423 | 4 | LUG | CONEXÃO | | |
| 24 | 5602583 | 4 | SEALING RING DIN 3869 11,6X16,5X 1,5 -14- | ANEL DE VEDAÇÃO | | |
| 25 | 9344777 | 4 | HOSE GUIDE | GUIA DE MANGUEIRA | | |
| 26 | 7001877 | 4 | TIE WRAP | AMARRA PARA CABOS | | |

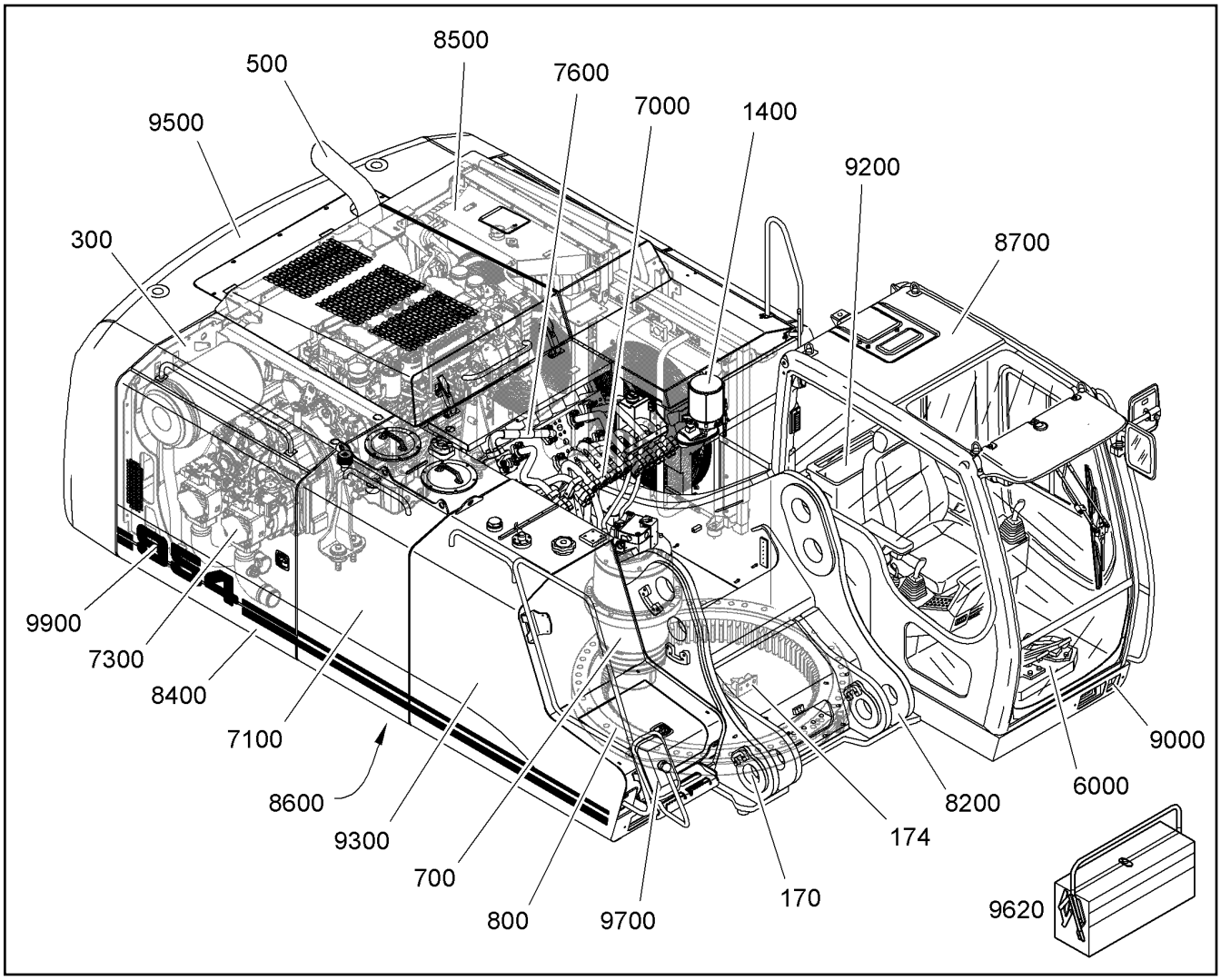


| Pos. | Item | Quantity | Description | Designação | Serie | K |
|---|---|---|---|---|---|---|
| 170 | | 1 | ATTACHMENTS MOUNTING PARTS<br>⇨ ❑ 93 | PEÇAS MONTAGEM DE IMPLE | 28398- | |
| 174 | | 1 | DRIVER INSTALLATION<br>⇨ ❑ 94 | ARRASTADOR - INSTALACAO | | |
| 300 | | 1 | FRAME INSTALLATION<br>⇨ ❑ 95 | QUADRO INSTALACAO | 18695- | |
| 500 | | 1 | MOTOR INSTALLATION<br>⇨ ❑ 96 | INSTALAÇÃO DO MOTOR | 22725- | |
| 700 | | 1 | SWING GEAR INSTALLATION<br>⇨ ❑ 181 | INSTALACAO MECANISMO GIR | | |
| 800 | | 1 | BALL SLEWING RING INSTALLATION<br>⇨ ❑ 205 | COROA GIRATÓRIA - INSTALAÇÃ | 31505- | |
| 1400 | | 1 | CENTRALIZED LUBRICATION UPPER<br>⇨ ❑ 208 | LUBRIFICACAO CENTRALIZADA | | |
| 6000 | | 1 | DRIVER STAND<br>⇨ ❑ 223 | POSTO DE COMANDO | 32769- | |
| 7000 | | 1 | HYDRAULIC INSTALLATION UPPER<br>⇨ ❑ 294 | INSTALACAO HIDRAULICA | 22118- | |
| 7100 | | 1 | HYDRAULIC TANK INSTALLATION<br>⇨ ❑ 329 | TANQUE HIDRAULICO INSTALA | | |
| 7300 | | 1 | PUMPS + COUPLING INSTALLATION<br>⇨ ❑ 341 | INSTALACAO BOMBA E EMBREA | 32769- | |
| 7600 | | 1 | CONTROL VALVE INSTALLATION<br>⇨ ❑ 346 | INSTALAÇÃO BLOCO DE VÁLVU | 12773- | |
| 8200 | | 1 | SLEWING PLATFORM | PLATAFORMA GIRATÓRIA | | |

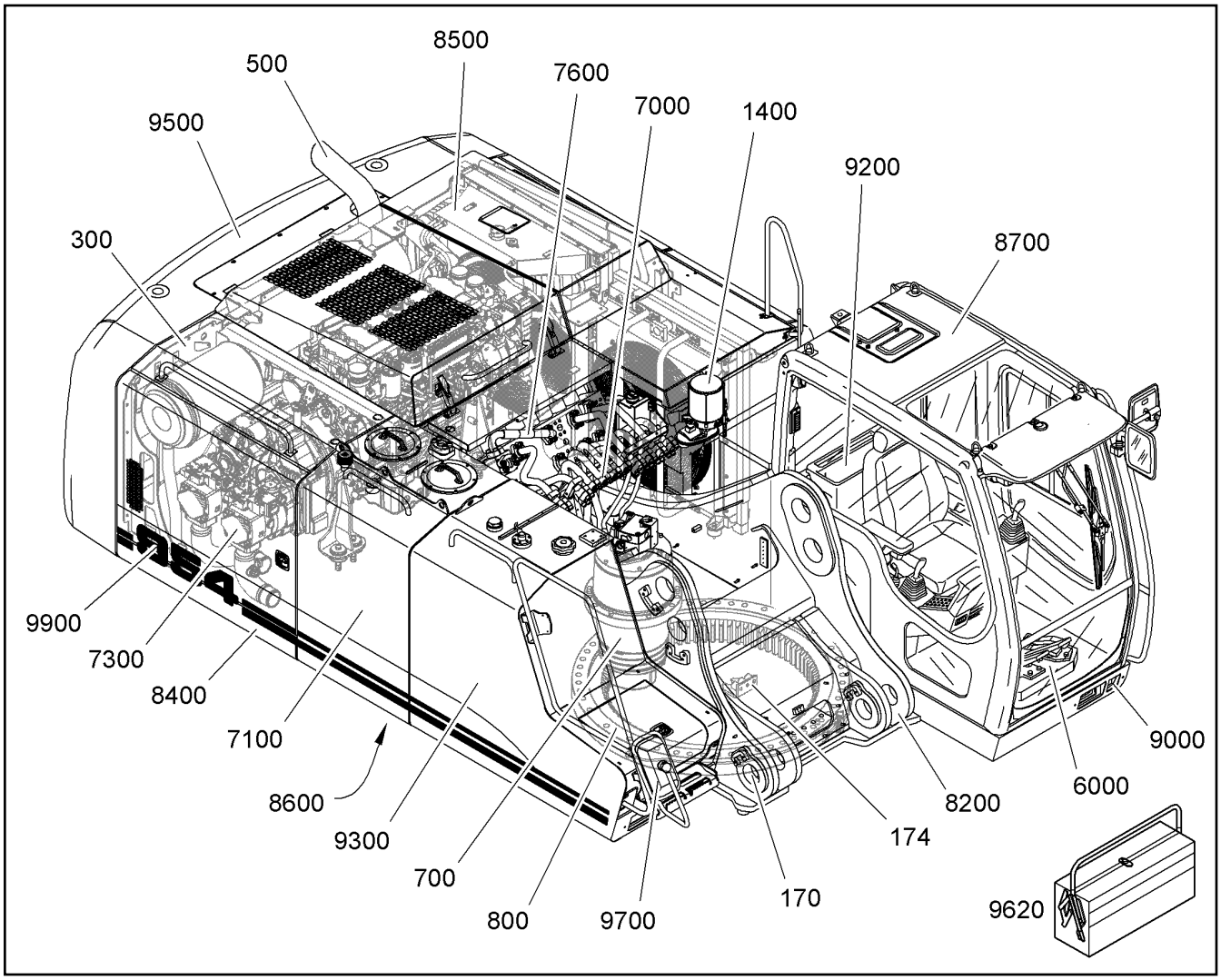


| Pos. | Item | Quantity | Description | Designação | Serie | K |
|---|---|---|---|---|---|---|
| 8200 | | 1 | SLEWING PLATFORM<br>[MO 300 2441 ] | PLATAFORMA GIRATÓRIA | | |
| 8400 | | 1 | COVERING ROTATING DECK<br>⇨ ❑ 371 | REVESTIMENTO DA PLAT.GIRAT | 18695- | |
| 8500 | | 1 | PANELLING<br>⇨ ❑ 372 | REVESTIMENTO | 18695- | |
| 8600 | | 1 | LOWER COVERING<br>⇨ ❑ 403 | TAMPAS INFERIORES | 12773- | |
| 8700 | | 1 | OPERATOR'S CAB<br>⇨ ❑ 404 | CABINE DE OPERADOR | | |
| 9000 | | 1 | ELECTRICAL SYSTEM<br>⇨ ❑ 435 | INSTALAÇÃO ELÉTRICA | | |
| 9200 | | 1 | AIR CONDITION HOSES INSTALLAT.<br>⇨ ❑ 446 | MAGUEIRAS DO AR-CONDICION | | |
| 9300 | | 1 | FUEL TANK ASSY.<br>⇨ ❑ 451 | TANQUE COMBUSTIVEL INSTA | -99998 | |
| 9500 | | 1 | COUNTERWEIGHT INSTALLATION<br>⇨ ❑ 455 | INSTALAÇÃO DO CONTRAPESO | 99999- | |
| 9620 | 10084286 | 1 | TOOL EQUIPMENT<br>⇨ ❑ 457 | KIT DE FERRAMENTAS | 24270- | |
| 9700 | | 1 | OUTSIDE MIRROR ASSEMBLY<br>⇨ ❑ 461 | ESPELHO EXTERNO - INSTALA | 25598- | |
| 9900 | | 1 | SIGNS<br>⇨ ❑ 463 | PLAQUETAS | -99998 | |
| 9900 | | 1 | SIGNS<br>⇨ ❑ 466 | PLAQUETAS | 99999- | |

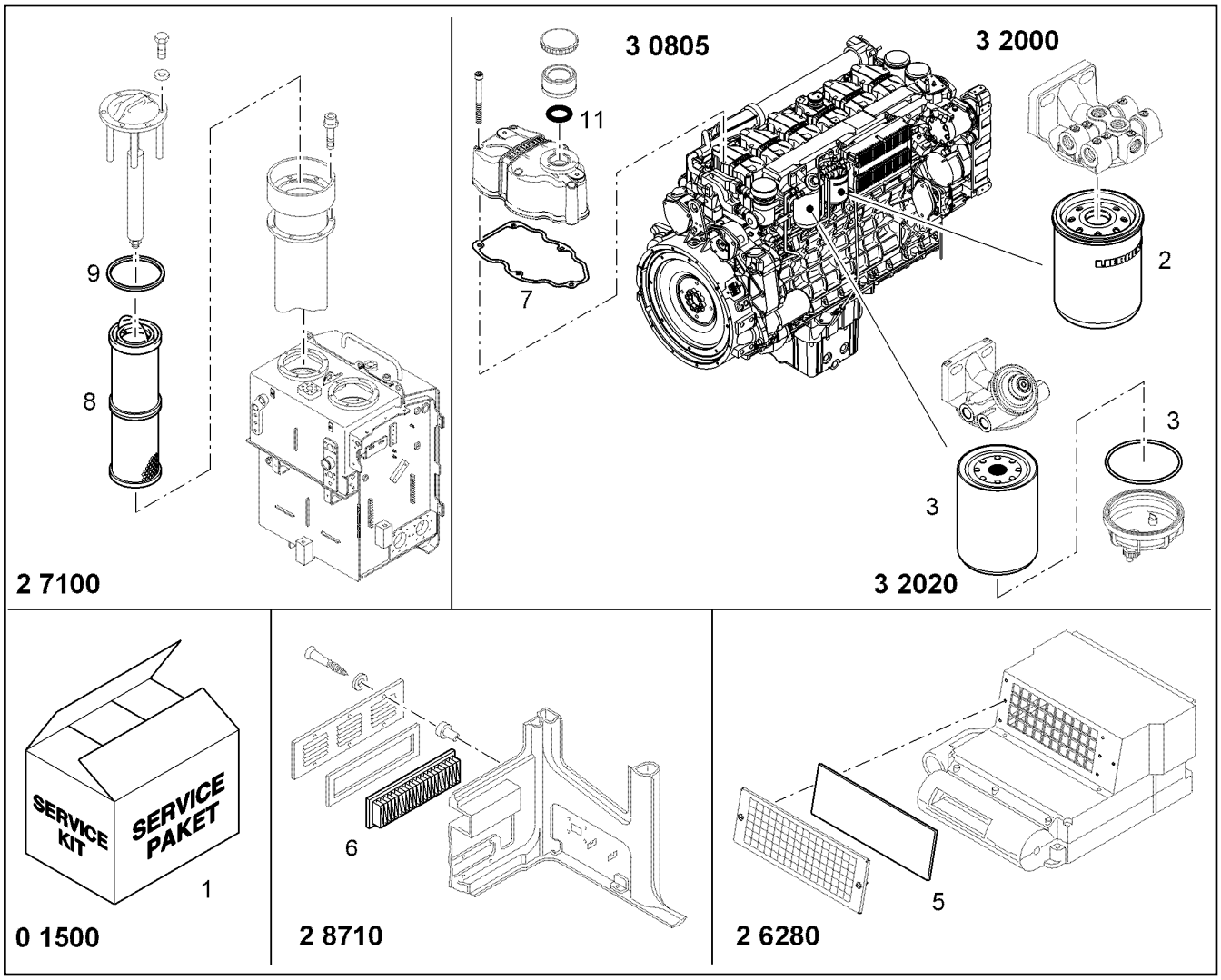


| Pos. | Item | Quantity | Description | Designação | Serie | K |
|---|---|---|---|---|---|---|
| 1 | 10069481 | 1 | SERVICE KITS 1500/2500h<br>⇨ ❑ 90 | KIT DE MANUTENÇÃO | | |
| 2 | 10429946 | 1 | FUEL FINE FILTER 3-5µm | FILTRO DE COMBUSTÍVEL | | |
| 3 | 10044302 | 1 | FUEL PREFILTER | PRE-FILTRO DE COMBUSTÍVEL | | |
| 5 | 10022770 | 1 | FILTER MAT | ESTEIRA FILTRANTE | | |
| 6 | 7028951 | 1 | AIR FILTER | FILTRO DE AR | | |
| 7 | 10118554 | 6 | SEAL | VEDAÇÃO | | |
| 8 | 7373878 | 2 | FIBRE GLASS FILTER INSERT 20/5µm | ELEMENTO FILTRANTE | -99998 | |
| 8 | 11065673 | 2 | FIBRE GLASS FILTER INSERT 15/5µm | ELEMENTO FILTRANTE | 99999- | |
| 9 | 7368993 | 2 | SEAL | VEDAÇÃO | | |
| 11 | 7381270 | 1 | O-RING DIN 3771 34,65X1,78 | ANEL-O | | |

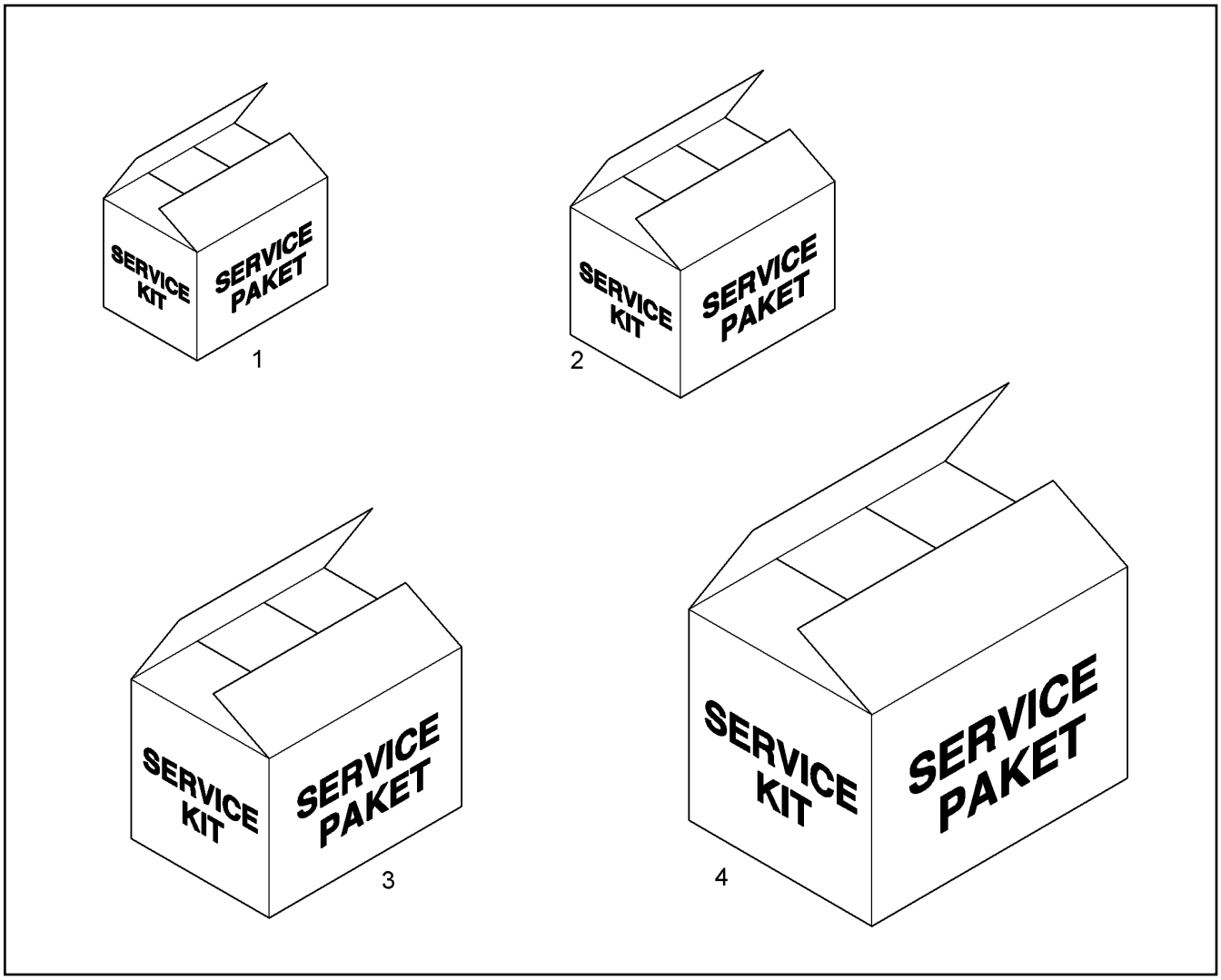


| Pos. | Item | Quantity | Description | Designação | Serie | K |
|---|---|---|---|---|---|---|
| 1 | 10069486 | 1 | SERVICE KIT ERSTE 500H<br>⇨ ❑ 89 | KIT DE MANUTENÇÃO | | |
| 2 | 10069476 | 1 | SERVICE KIT<br>⇨ ❑ 87 | KIT DE MANUTENÇÃO | | |
| 3 | 10069481 | 1 | SERVICE KITS 1500/2500h<br>⇨ ❑ 90 | KIT DE MANUTENÇÃO | | |
| 4 | 10091215 | 1 | SERVICE KIT ALLE 2000 H<br>⇨ ❑ 91 | KIT DE MANUTENÇÃO | | |

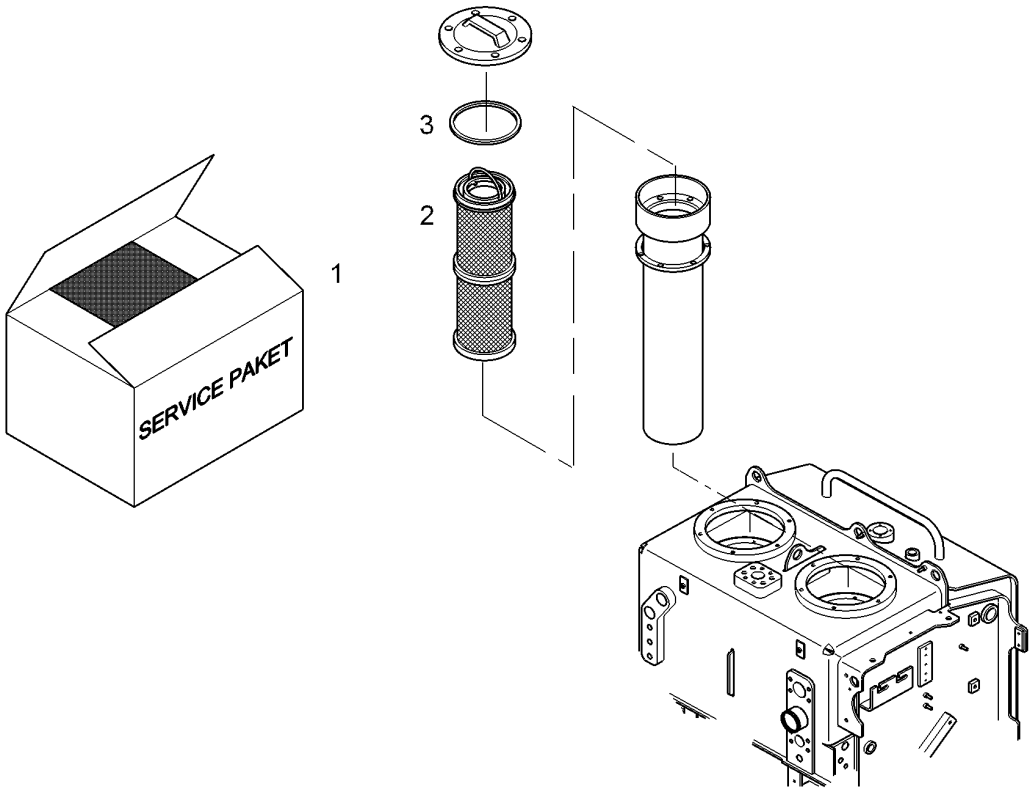


| Pos. | Item | Quantity | Description | Designação | Serie | K |
|---|---|---|---|---|---|---|
| 1 | 10069481 | 1 | SERVICE KITS 1500/2500h<br>⇨ ❑ 90 | KIT DE MANUTENÇÃO | | |
| 2 | 7373878 | 2 | FIBRE GLASS FILTER INSERT 20/5µm | ELEMENTO FILTRANTE | -99998 | |
| 2 | 11065673 | 2 | FIBRE GLASS FILTER INSERT 15/5µm | ELEMENTO FILTRANTE | 99999- | |
| 3 | 7368993 | 2 | SEAL | VEDAÇÃO | | |

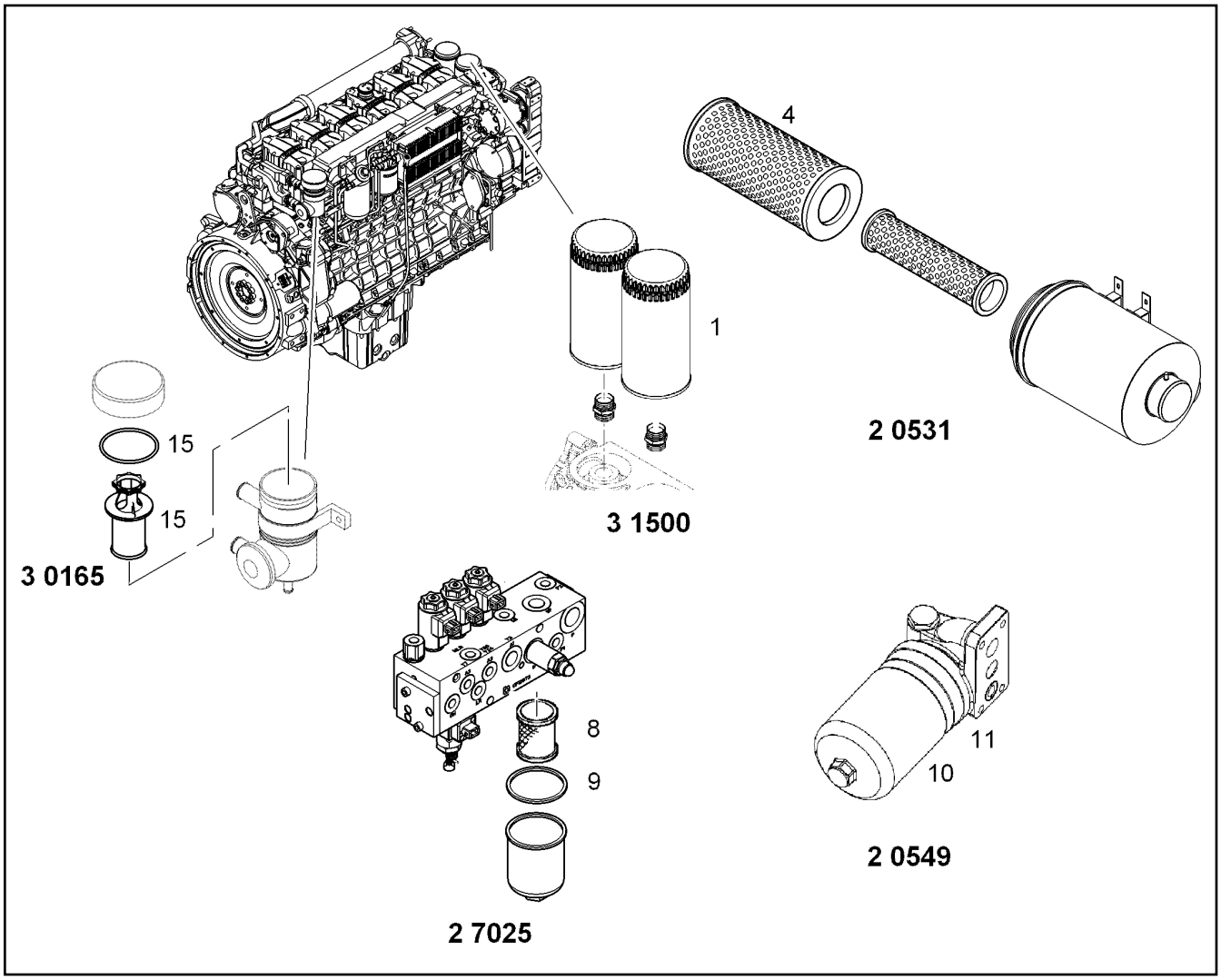


| Pos. | Item | Quantity | Description | Designação | Serie | K |
|---|---|---|---|---|---|---|
| 1 | 10297295 | 2 | EASY-CHANGE FILTER 9µm | FILTRO INTERCAMBIÁVEL | | |
| 4 | 10044851 | 1 | AIR FILTER CARTRIDGE | CARTUCHO DE FILTRO DE AR | | |
| 8 | 11342118 | 1 | FILTER ELEMENT 16µm | ELEMENTO FILTRANTE | | |
| 9 | 7264028 | 1 | O-RING | ANEL-O | | |
| 10 | 10220705 | 1 | FILTER ELEMENT | ELEMENTO FILTRANTE | | |
| 11 | 10220707 | 1 | O-RING 78,97X3,53 | ANEL-O | | |
| 15 | 10032835 | 1 | SPARE ELEMENT OEL | ELEMENTO DE SUBST. DO FILTR | | |

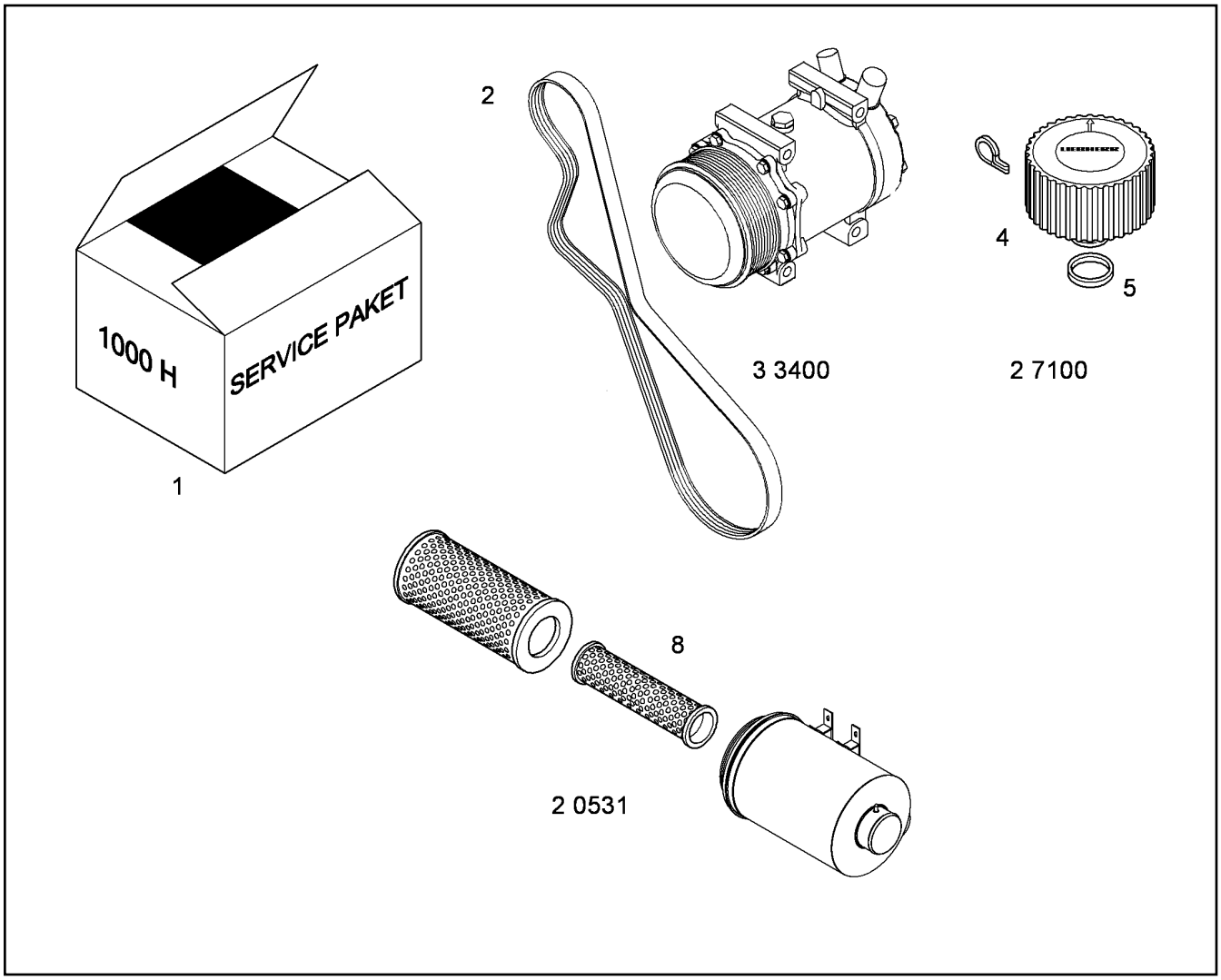


| Pos. | Item | Quantity | Description | Designação | Serie | K |
|---|---|---|---|---|---|---|
| 1 | 10069476 | 1 | SERVICE KIT<br>⇨ ❑ 87 | KIT DE MANUTENÇÃO | | |
| 2 | 11005218 | 1 | V-RIPPED BELT DIN 7867 8XPK 1755 HP | CORREIA DENTADA EM V | | |
| 4 | 10222393 | 1 | AERATION FILTER<br>⇨ ❑ 339 | FILTRO DE VENTILACAO | | |
| 5 | 7101034 | 1 | SEALING RING DIN 7603 A 27 X 32 CU | ANEL DE VEDAÇÃO | | |
| 8 | 10044849 | 1 | SAFETY CARTRIDGE | ELEMENTO FILTRANTE | | |

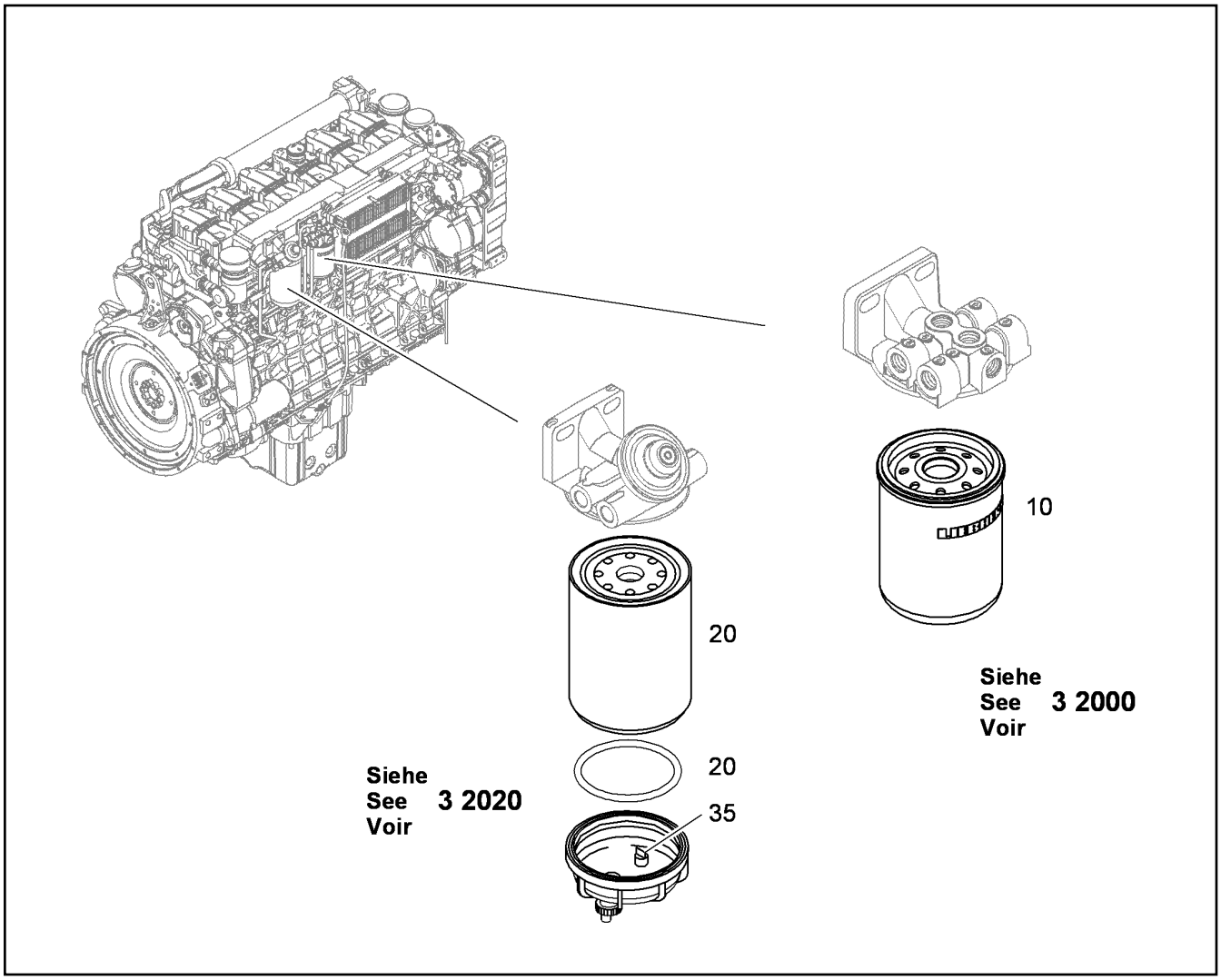


| Pos. | Item | Quantity | Description | Designação | Serie | K |
|---|---|---|---|---|---|---|
| 10 | 10429946 | 8 | FUEL FINE FILTER 3-5µm | FILTRO DE COMBUSTÍVEL | | |
| 20 | 10044302 | 8 | FUEL PREFILTER | PRE-FILTRO DE COMBUSTÍVEL | | |
| 35 | 10289208 | 2 | RK OIL DRAIN SCREW | KIT DE REPARO DO DRENO DE | | |

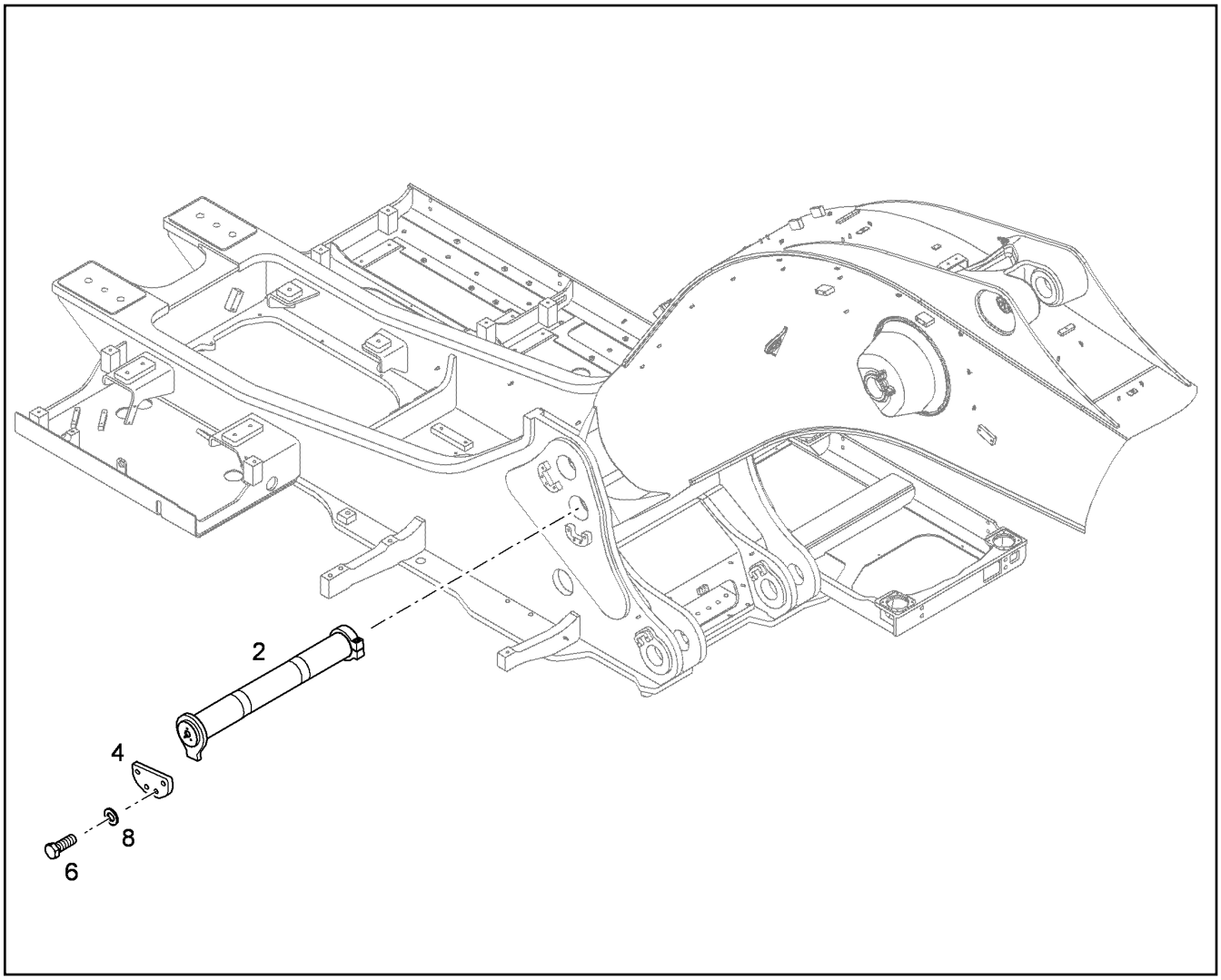


| Pos. | Item | Quantity | Description | Designação | Serie | K |
|---|---|---|---|---|---|---|
| 2 | 9641061 | 1 | PIN | PINO | | 1 |
| 4 | 10397442 | 1 | SHEET | PLACA | | |
| 6 | 4902331 | 4 | HEX BOLT ISO 4017 M16X45 10.9 DAC | PARAFUSO SEXTAVADO | | |
| 8 | 10289806 | 4 | WASHER ISO 7089 16 300HV | ARRUELA | | |

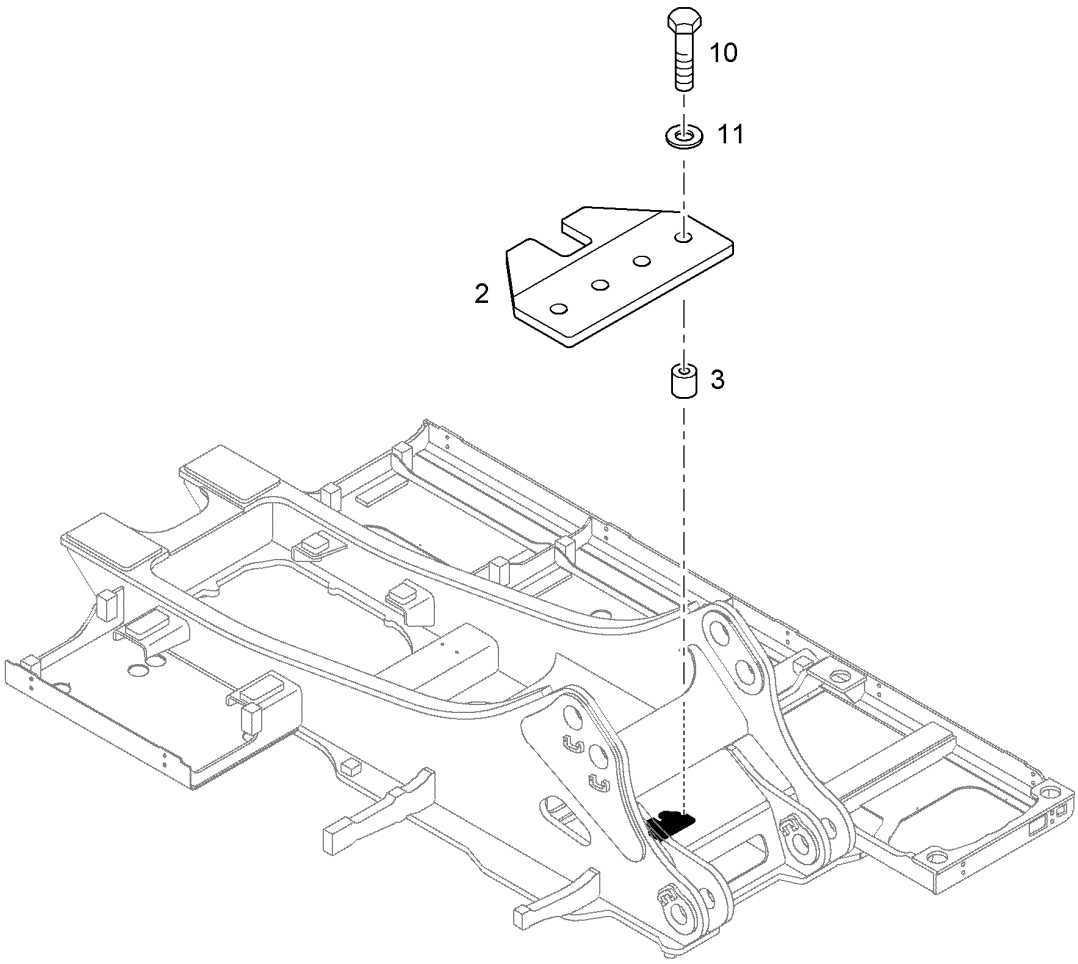


| Pos. | Item | Quantity | Description | Designação | Serie | K |
|---|---|---|---|---|---|---|
| 2 | 9948083 | 1 | DRIVER | ARRASTADOR | | |
| 3 | 9327516 | 4 | SLEEVE | LUVA | | 1 |
| 10 | 4600149 | 4 | HEX BOLT ISO 4014 M16X85 10.9 DAC | PARAFUSO SEXTAVADO | | |
| 11 | 4600021 | 4 | WASHER DIN 7349 17 | ARRUELA | | |

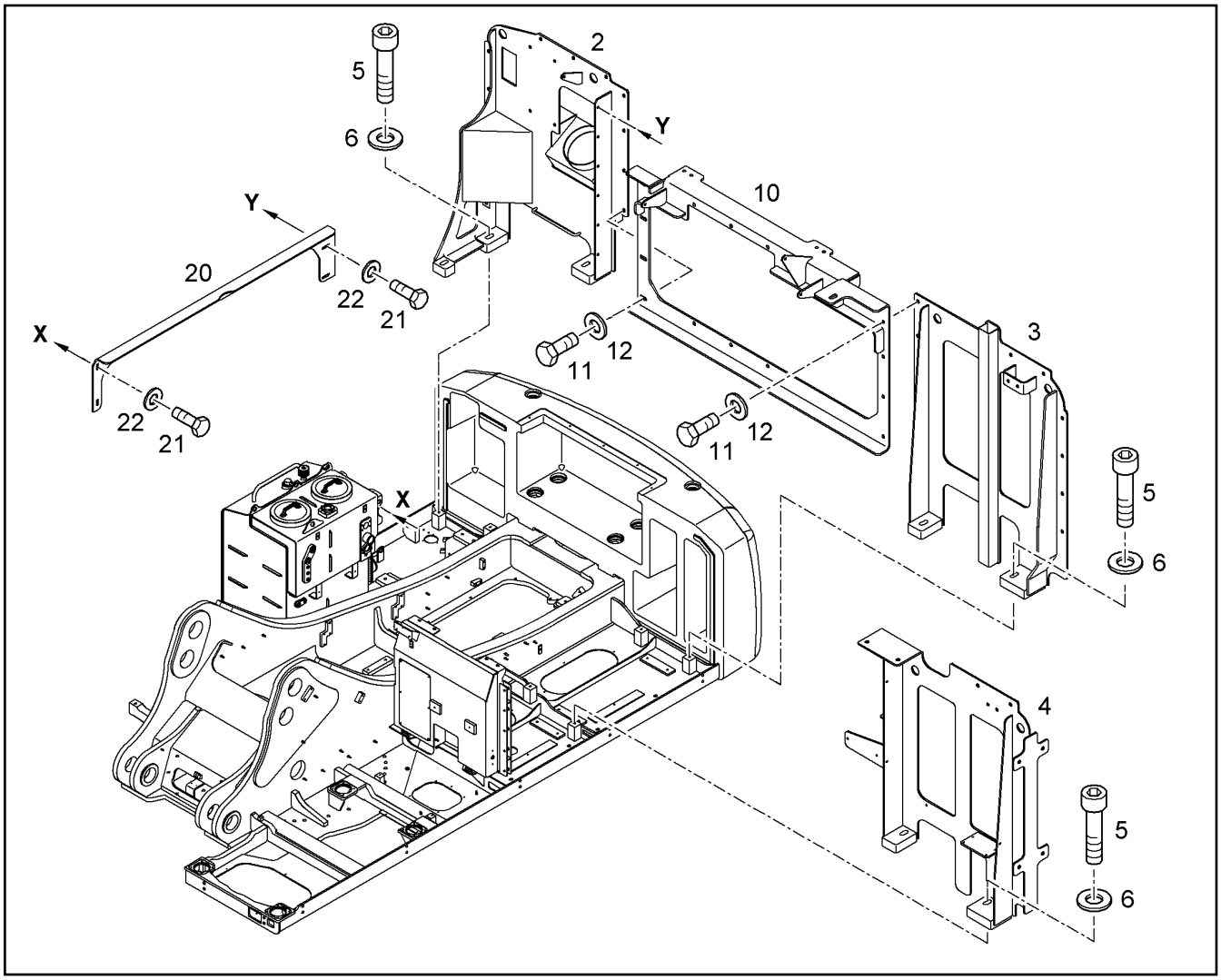


| Pos. | Item | Quantity | Description | Designação | Serie | K |
|---|---|---|---|---|---|---|
| 2 | 10072999 | 1 | FRAME BACKSIDE RIGHT INSTAL. | MONT.ESTRUTURA TRASEIRA D | | |
| 3 | 9018743 | 1 | FRAME BACKSIDE LEFT INSTAL. | QUADRO TRASEIRO ESQUERD | | |
| 4 | 9018745 | 1 | FRAME INSTALLATION | QUADRO INSTALACAO | | |
| 5 | 4002918 | 7 | CYLINDER SCREW ISO 4762 M16X65 10.9 | PARAFUSO CILÍNDRICO | | |
| 6 | 4600021 | 7 | WASHER DIN 7349 17 | ARRUELA | | |
| 10 | 9018749 | 1 | FRAME BACKSIDE CENTER INSTAL. | QUADRO TRASEIRO CENTRAL | | |
| 11 | 4066122 | 8 | HEX BOLT ISO 4017 M12X35 10.9 A3C | PARAFUSO SEXTAVADO | | |
| 12 | 4635283 | 8 | WASHER 13X35X5 | ARRUELA | | |
| 20 | 9929459 | 1 | PLATE | PLACA | | |
| 21 | 4066042 | 4 | HEX BOLT ISO 4017 M8X25 10.9 A2C | PARAFUSO SEXTAVADO | | |
| 22 | 10289803 | 4 | WASHER ISO 7089 8 300HV | ARRUELA | | |

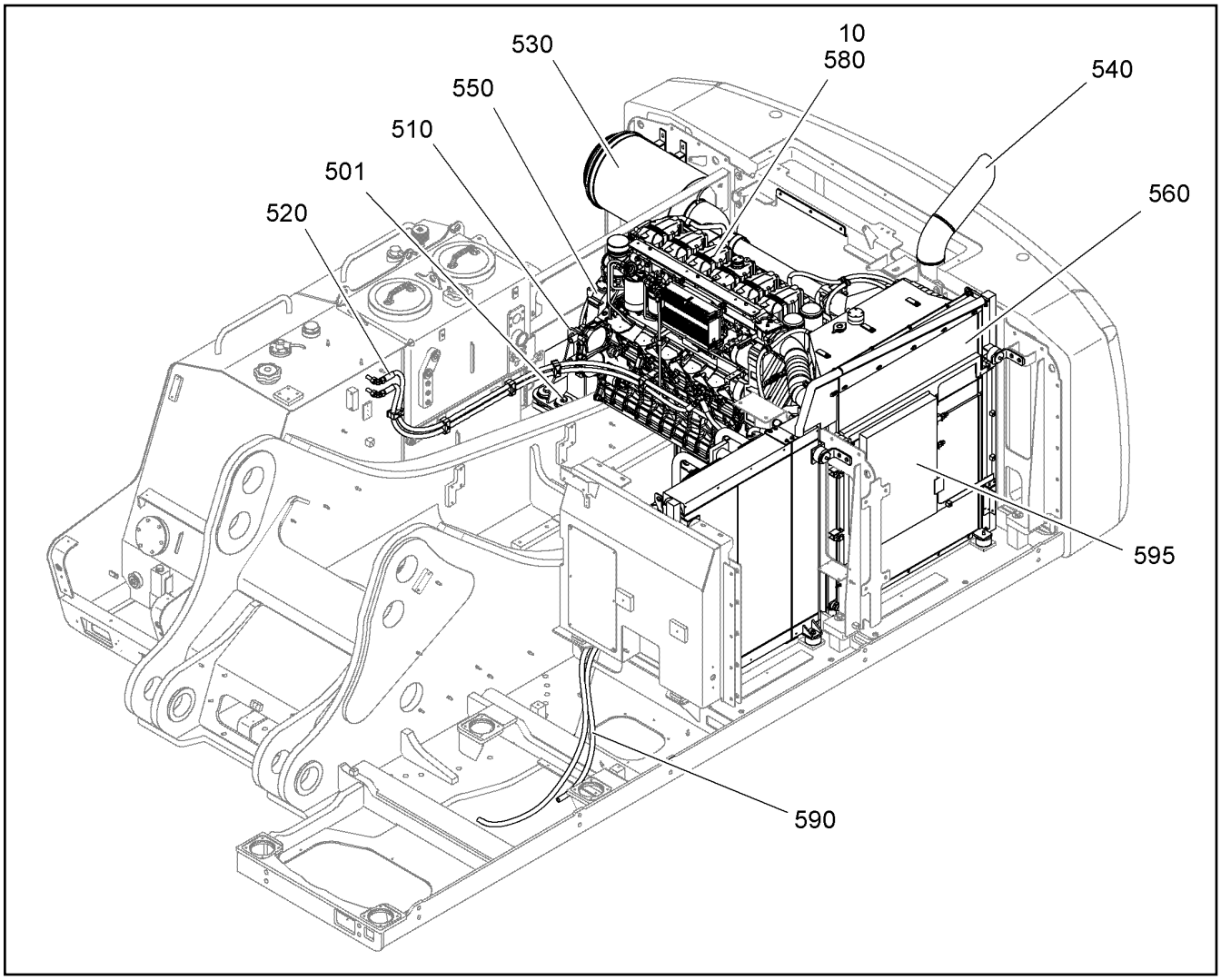


| Pos. | Item | Quantity | Description | Designação | Serie | K |
|---|---|---|---|---|---|---|
| 10 | 10116685 | 1 | DIESEL ENGINE D936 L A6 240 kW [2013 040 630 ]<br>⇨ ❑ 469 | MOTOR DIESEL | | 6 |
| 501 | 10358007 | 1 | ENGINE FIXING PARTS<br>⇨ ❑ 97 | PECAS DE FIXACAO DO MOTOR | | |
| 510 | 10049426 | 1 | MOTOR SUPPORT<br>⇨ ❑ 98 | SUSPENSAO DO MOTOR | | |
| 520 | 9946045 | 1 | FUEL SYSTEM<br>⇨ ❑ 100 | INSTALACAO DE COMBUSTIVEL | | |
| 530 | 9937298 | 1 | AIR FILTER INSTALLATION<br>⇨ ❑ 102 | INSTALAÇÃO DO FILTRO DE AR | | |
| 540 | 10358006 | 1 | EXHAUST GAS SYSTEM<br>⇨ ❑ 104 | SISTEMA DE ESPACAMENTO | | |
| 550 | 9929814 | 1 | PUMPS INSTALLATION<br>⇨ ❑ 159 | INSTALAÇÃO DA BOMBA | | |
| 560 | 10358092 | 1 | ENGINE COOLING<br>⇨ ❑ 160 | ARREFECIMENTO DO MOTOR | | |
| 580 | 10498581 | 1 | MOTOR-ELEKTRIK<br>⇨ ❑ 169 | SISTEMA ELETRICO DO MOTOR | | |
| 590 | 10358009 | 1 | ENGINE ADD-ON PARTS<br>⇨ ❑ 178 | MOTOR - PECAS ANEXAS | | |
| 595 | 10048713 | 1 | AIR CONDIT.CONDENSER INSTAL.<br>⇨ ❑ 180 | COMPRESSOR DO AR-CONDICI | | |

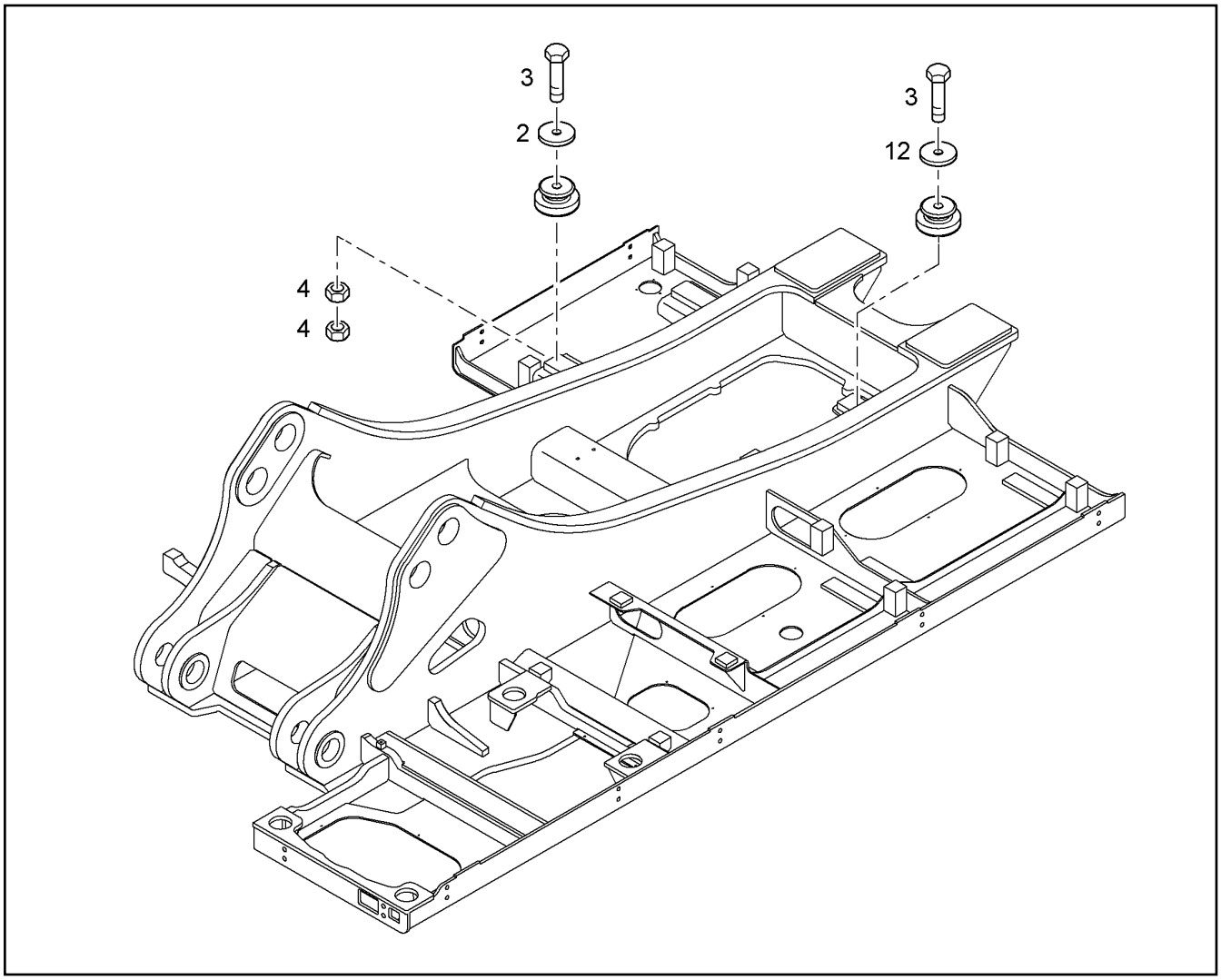


| Pos. | Item | Quantity | Description | Designação | Serie | K |
|---|---|---|---|---|---|---|
| 2 | 9461178 | 2 | WASHER | ARRUELA | | |
| 3 | 4901267 | 6 | HEX BOLT ISO 4014 M18X140 10.9 DAC | PARAFUSO SEXTAVADO | | |
| 4 | 4600348 | 12 | HEX NUT ISO 4032 M 18 -10 DAC | PORCA SEXTAVADA | | |
| 12 | 9461178 | 4 | WASHER | ARRUELA | | |

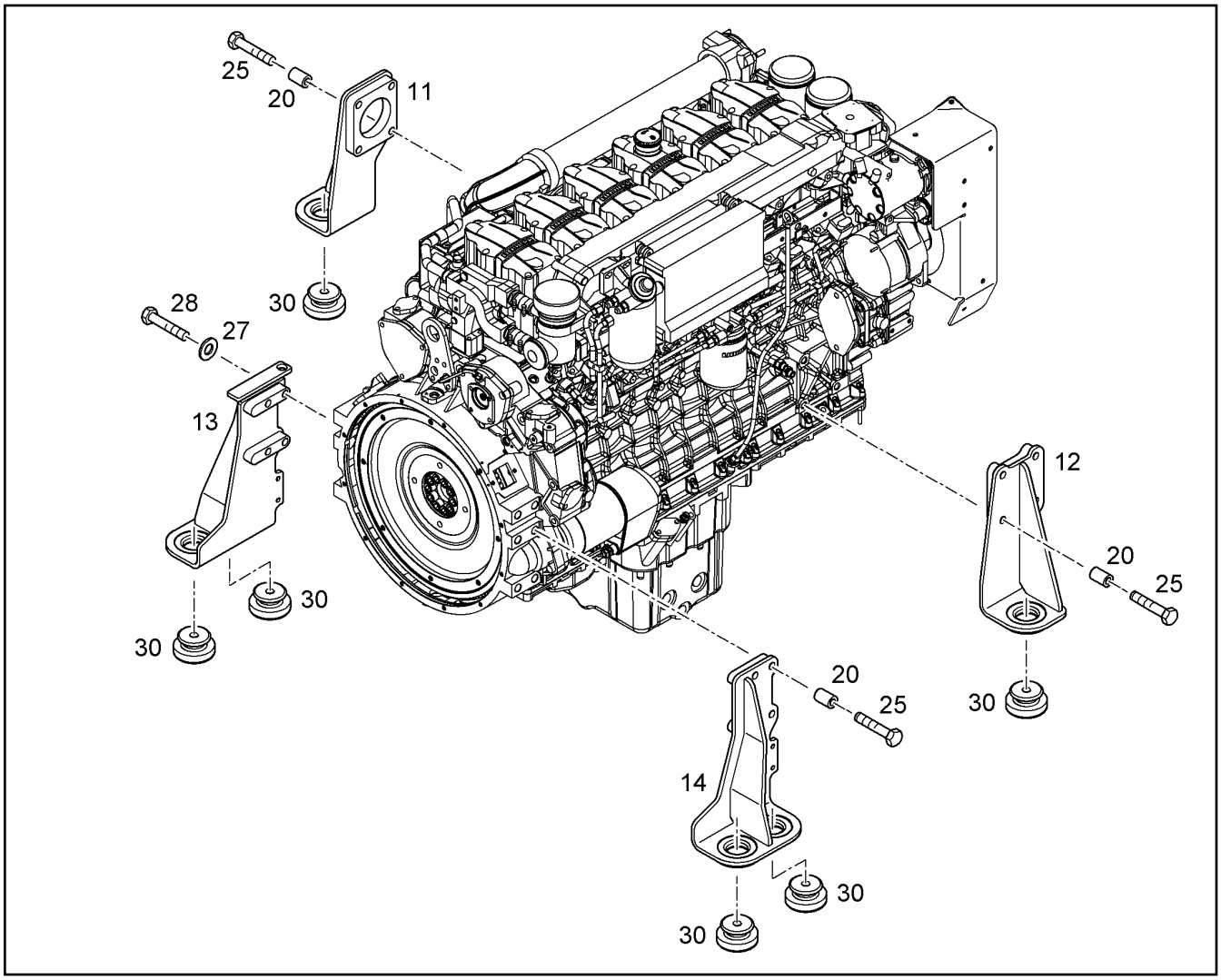


| Pos. | Item | Quantity | Description | Designação | Serie | K |
|---|---|---|---|---|---|---|
| 11 | 10049422 | 1 | BRACKET FRONT LEFT | SUPORTE DIANTEIRO ESQUERD | | |
| 12 | 10049423 | 1 | BRACKET FRONT RIGHT | CONSOLE DIANTEIRO DIREITO | | |
| 13 | 9937293 | 1 | BRACKET REAR LEFT | CONSOLE TRASEIRA ESQUERD | | |
| 14 | 9937294 | 1 | BRACKET REAR RIGHT | CONSOLE TRASEIRA DIREITA | | |
| 20 | 9349698 | 15 | SLEEVE | LUVA | 19747- | 1 |
| 25 | 4062066 | 15 | HEX BOLT ISO 4014 M16X100 10.9 FLZN | PARAFUSO SEXTAVADO | 19747- | |
| 27 | 9918228 | 1 | WASHER 16,5/28X4 | ARRUELA | | |
| 28 | 4600203 | 1 | HEX BOLT ISO 4014 M16X65 10.9 DAC | PARAFUSO SEXTAVADO | | |
| 30 | 7366558 | 6 | RUBBER BUMPER | BATENTE DE BORRACHA | | |

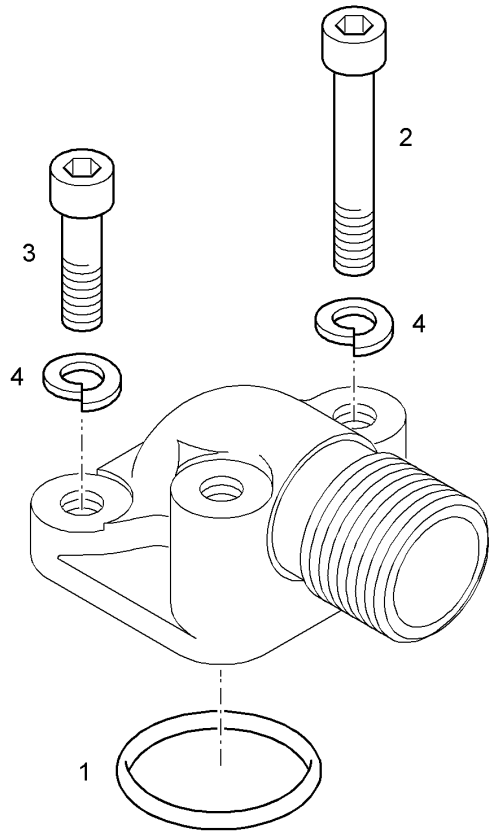


| Pos. | Item | Quantity | Description | Designação | Serie | K |
|---|---|---|---|---|---|---|
| 1 | 7361549 | 1 | O-RING 24X2,5 | ANEL-O | | |
| 2 | 4043052 | 2 | CYLINDER SCREW ISO 4762 M6X60 10.9 A2 | PARAFUSO CILÍNDRICO | | |
| 3 | 4600068 | 2 | CYLINDER SCREW ISO 4762 M6X22 10.9 A2 | PARAFUSO CILÍNDRICO | | |
| 4 | 4600218 | 4 | CIRCLIP B 6 | ARRUELA DE PRESSÃO | | |

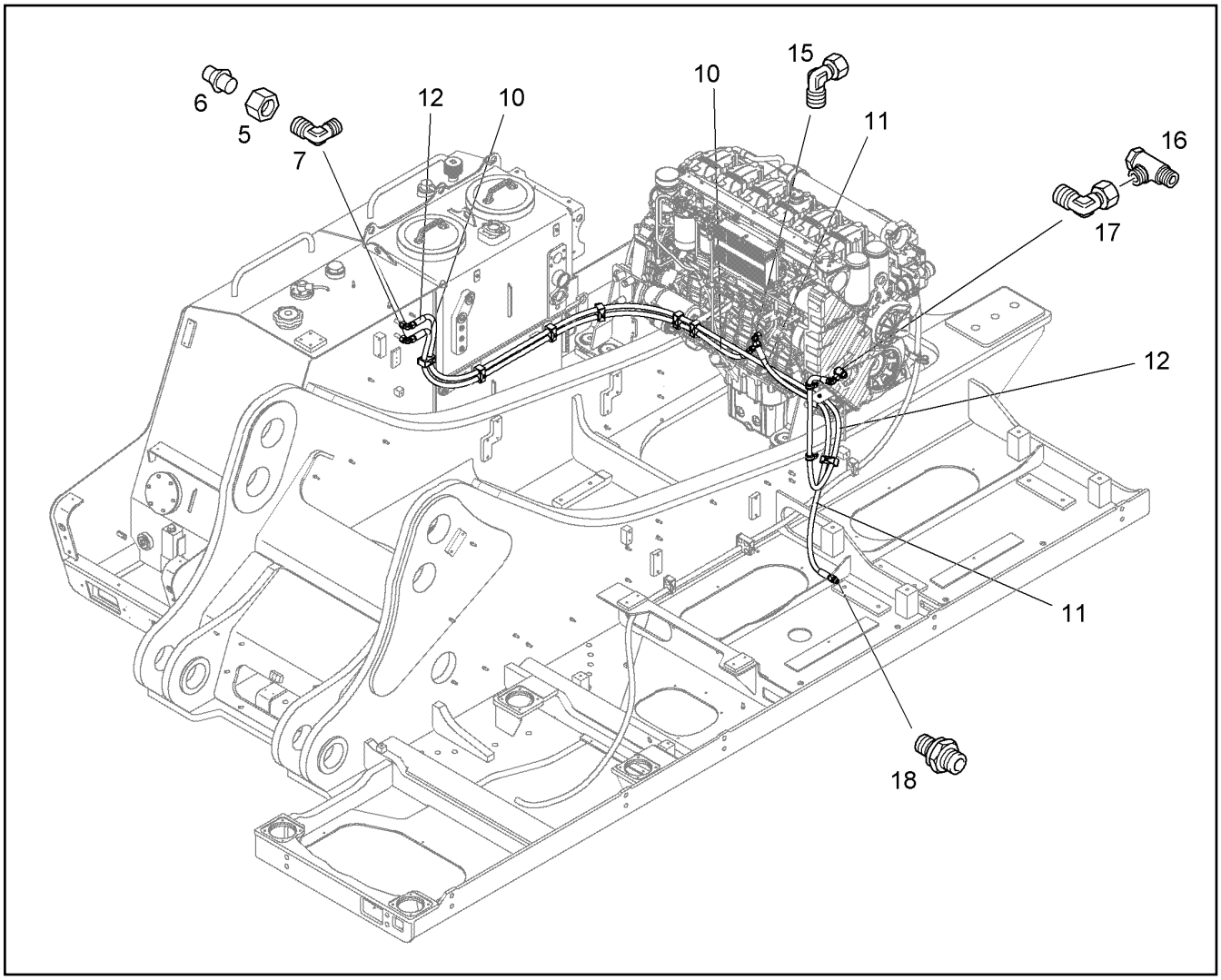


| Pos. | Item | Quantity | Description | Designação | Serie | K |
|---|---|---|---|---|---|---|
| 5 | 4774003 | 2 | BOX NUT DIN 3870 A 15L | PORCA DE CONEXAO | | |
| 6 | 4771003 | 2 | CUTTING RING DIN 3861 L 15 ST | ANEL DE CORTE | | |
| 7 | 7362109 | 2 | SCREW FITTING W 15L | REDUÇÃO | | |
| 10 | 10333667 | 1 | FUEL HOSE | MANGUEIRA DE COMBUSTIVEL | | 1 |
| 11 | 10333663 | 1 | FUEL HOSE | MANGUEIRA DE COMBUSTIVEL | | 1 |
| 12 | 10333670 | 1 | FUEL HOSE | MANGUEIRA DE COMBUSTIVEL | | 1 |
| 15 | 7615379 | 2 | SCREW FITTING EW 15L | REDUÇÃO | | |
| 16 | 7368478 | 1 | SCREW FITTING WH 15L | REDUÇÃO | | |
| 17 | 7615379 | 1 | SCREW FITTING EW 15L | REDUÇÃO | | |
| 18 | 4600518 | 1 | SCREW FITTING GE 15L | REDUÇÃO | | |

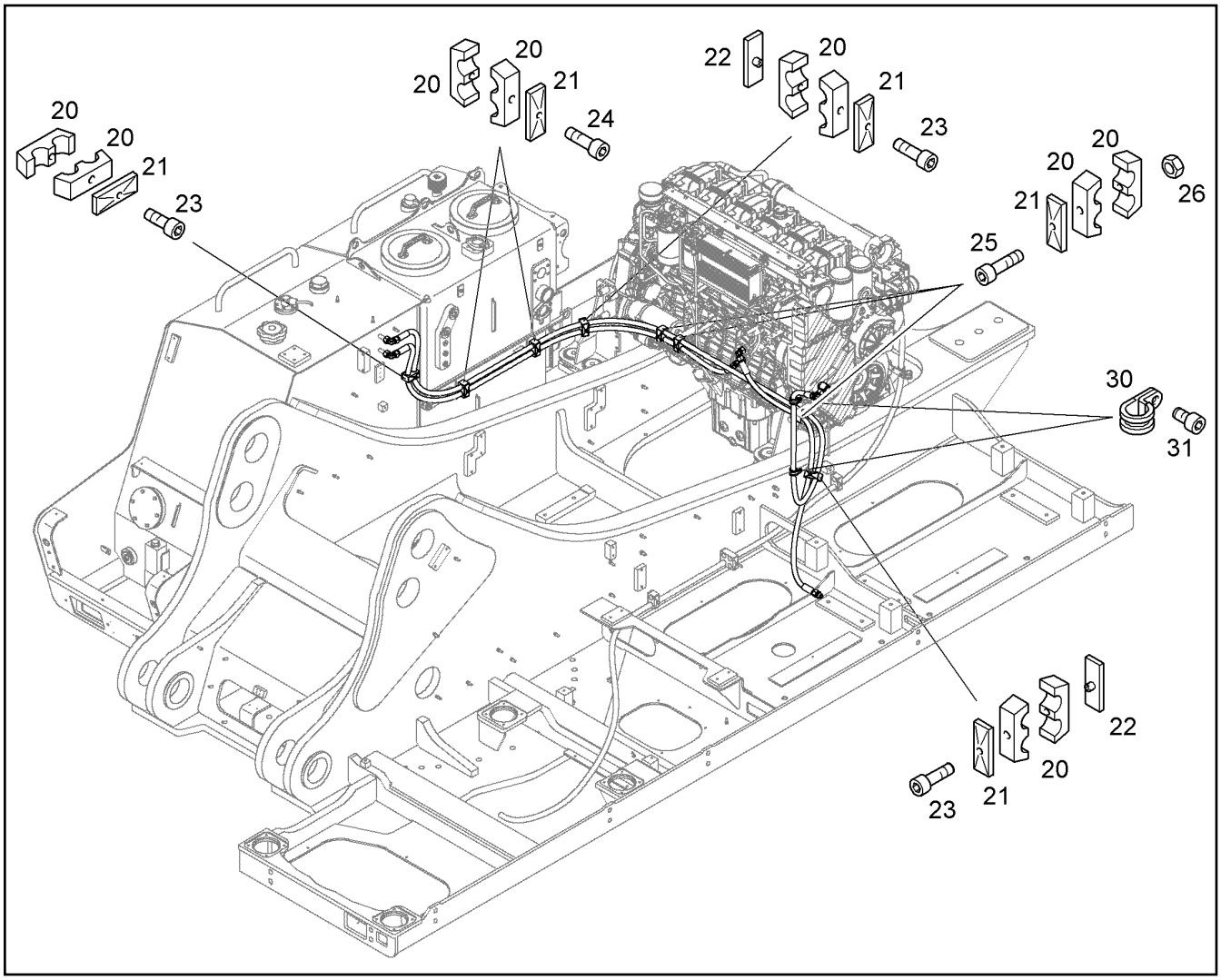


| Pos. | Item | Quantity | Description | Designação | Serie | K |
|---|---|---|---|---|---|---|
| 20 | 7029979 | 16 | CLAMP-HALF DIN 3015-3 Z 3 G 23 23 PP SW | MEIA ABRAÇADEIRA | | |
| 21 | 7401349 | 8 | LID PLATE DIN 3015-3 Z-DP 3 W1-ZN | PLACA | | |
| 22 | 4635455 | 2 | WELD PLATE DIN 3015-3 Z-AP 3 W1-ZN | PLACA PARA SOLDAR | | |
| 23 | 4600335 | 3 | CYLINDER SCREW ISO 4762 M8X45 10.9 A2 | PARAFUSO CILÍNDRICO | | |
| 24 | 4043089 | 2 | CYLINDER SCREW ISO 4762 M8X50 10.9 A2 | PARAFUSO CILÍNDRICO | | |
| 25 | 4043090 | 3 | CYLINDER SCREW ISO 4762 M8X60 10.9 A2 | PARAFUSO CILÍNDRICO | | |
| 26 | 4600783 | 3 | HEX NUT M8 | PORCA SEXTAVADA | | |
| 30 | 7362547 | 2 | CLAMP DIN 3016 D1- 24 X 20 W1-2-CR | BRAÇADEIRA | | |
| 31 | 4902231 | 2 | CYLINDER SCREW ISO 4762 M8X16 10.9 A2 | PARAFUSO CILÍNDRICO | | |

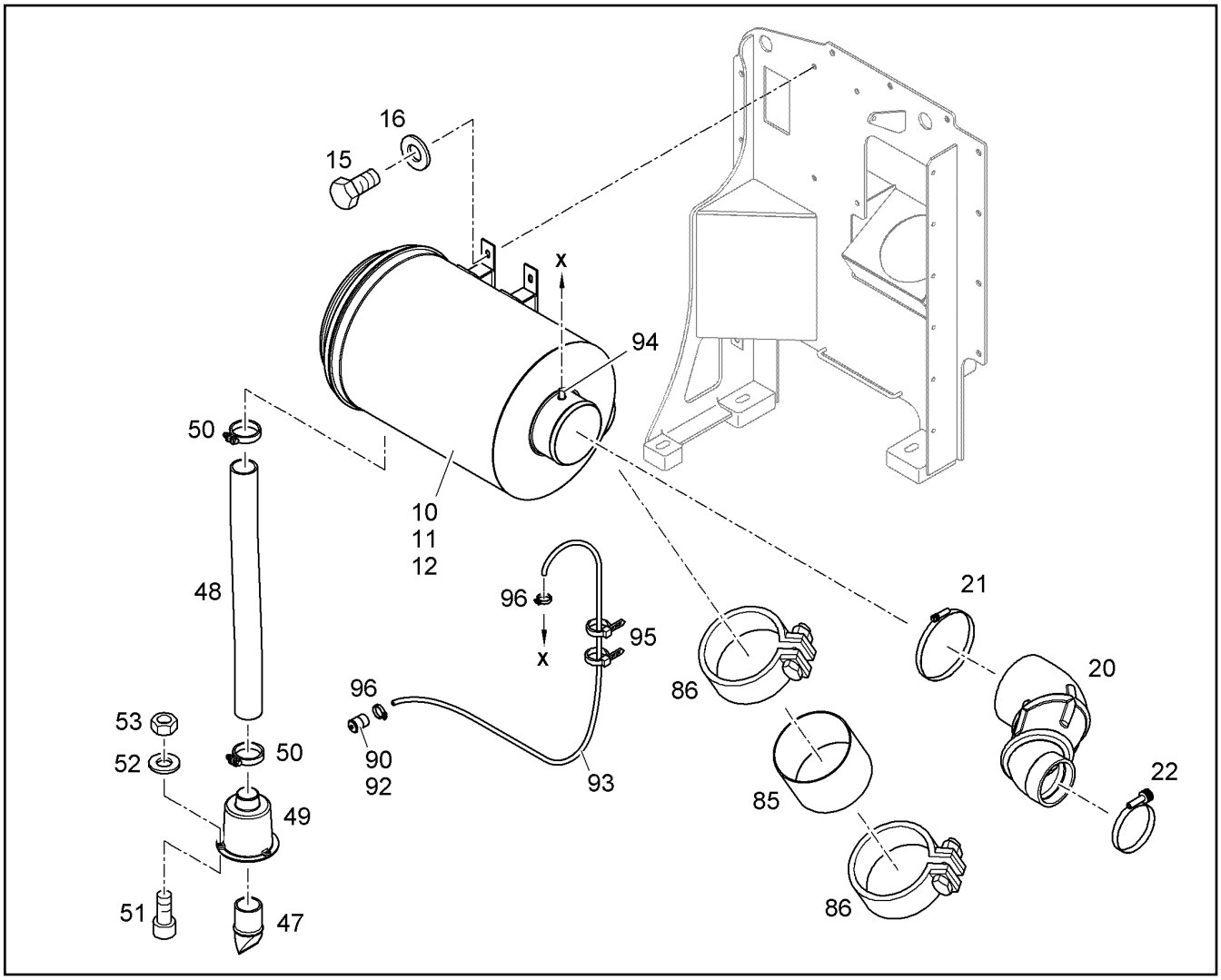


| Pos. | Item | Quantity | Description | Designação | Serie | K |
|---|---|---|---|---|---|---|
| 10 | | 1 | AIR FILTER<br>⇨ ❑ 103 | FILTRO DE AR | | |
| 11 | 10044851 | 1 | AIR FILTER CARTRIDGE | CARTUCHO DE FILTRO DE AR | | |
| 12 | 10044849 | 1 | SAFETY CARTRIDGE | ELEMENTO FILTRANTE | | |
| 15 | 4065164 | 4 | HEX BOLT ISO 4017 M10X25 8.8 A3C | PARAFUSO SEXTAVADO | | |
| 16 | 10289795 | 4 | WASHER ISO 7089 10 300HV | ARRUELA | | |
| 20 | 10080310 | 1 | AIR FILTER HOSE | MANGUEIRA DO FILTRO DE AR | 19037- | |
| 21 | 10356035 | 1 | HOSE CLAMP HKFK 160 150-170x14,3 W4 | ABRAÇADEIRA DE MANGUEIRA | | |
| 22 | 774252314 | 1 | HOSE CLAMP | ABRAÇADEIRA DE MANGUEIRA | | |
| 47 | 5613730 | 1 | DISCHARGE VALVE | VALVULA DE SAIDA | | |
| 48 | 10049520 | 1 | AIR HOSE | MANGUEIRA DE AR | | |
| 49 | 9691678 | 1 | HOSE HOLDER | SUPORTE DE MANGUEIRA | | |
| 50 | 5700024 | 2 | HOSE CLAMP DIN 3017-1 A 50 40-60X13 W2- | ABRAÇADEIRA DE MANGUEIRA | | |
| 51 | 4902267 | 3 | CYLINDER SCREW ISO 4762 M6X25 10.9 A2 | PARAFUSO CILÍNDRICO | | |
| 52 | 10289802 | 3 | WASHER ISO 7089 6 300HV | ARRUELA | | |
| 53 | 4000379 | 3 | HEX NUT M6 | PORCA SEXTAVADA | | |
| 85 | 10101747 | 1 | AIR SUCTION HOSE | MANGUEIRA DE ASPIRACAO DE | | 1 |
| 86 | 4901968 | 2 | HOSE CLAMP DIN 3017-3 C1 181 177-185X30 | ABRAÇADEIRA DE MANGUEIRA | | |
| 90 | 5106421 | 1 | VACUUM INDICATOR | INDICADOR DE VACUO | | |
| 92 | 4782008 | 1 | NIPPLE | NIPLE | | |
| 93 | 9937092 | 1 | HOSE | MANGUEIRA | | |
| 94 | 4900169 | 1 | NIPPLE | NIPLE | | |
| 95 | 7005587 | 4 | CABLE TIE | AMARRA PARA CABOS | | |
| 96 | 4635044 | 2 | HOSE CLAMP DIN 3017-1 A 12 8-16X9 W2-2 | ABRAÇADEIRA DE MANGUEIRA | | |

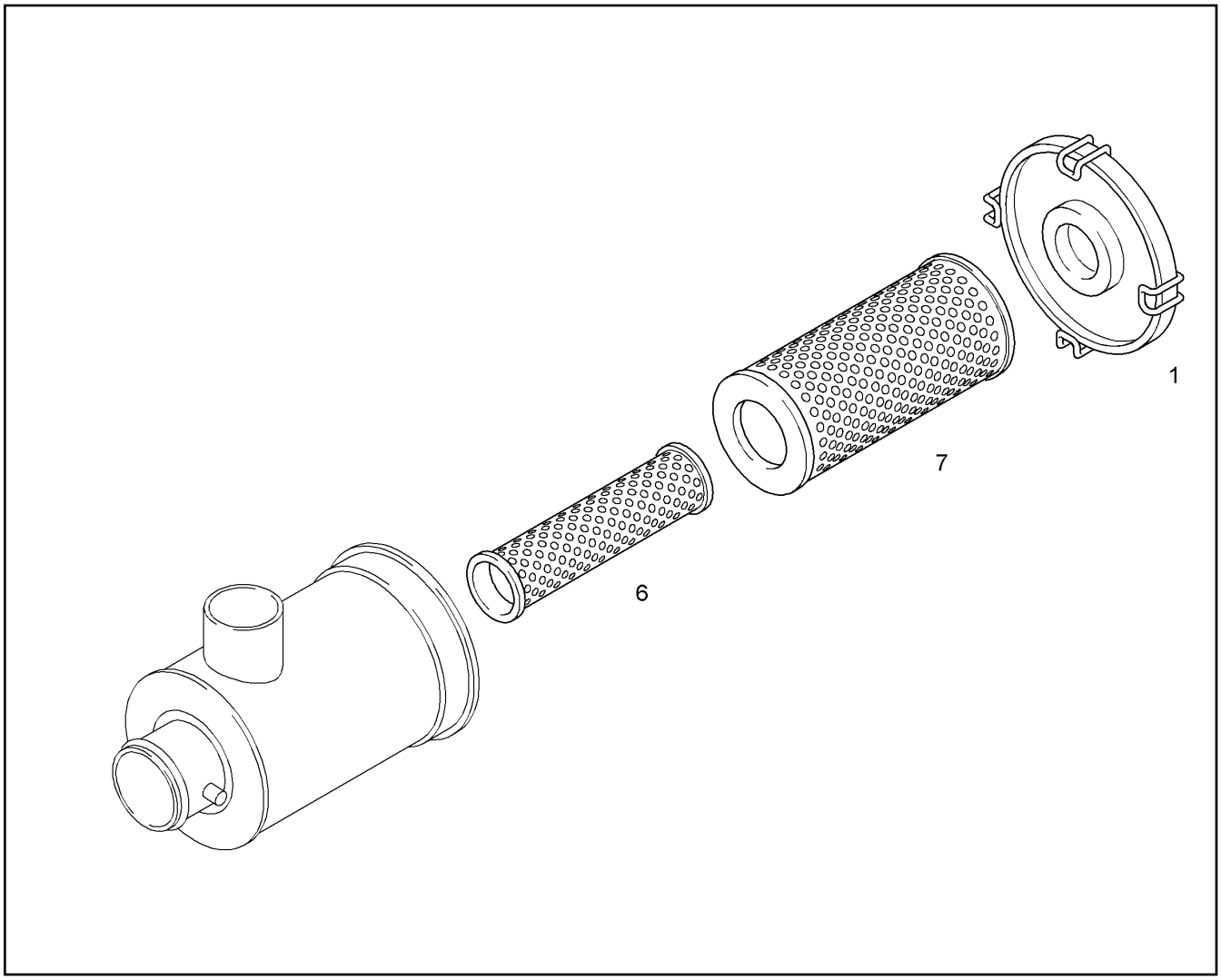


| Pos. | Item | Quantity | Description | Designação | Serie | K |
|---|---|---|---|---|---|---|
| 1 | 7622321 | 1 | LID | TAMPA | | |
| 1 | 10287276 | 4 | -CLAMP | -GRAMPO | | |
| 6 | 10044849 | 1 | SAFETY CARTRIDGE | ELEMENTO FILTRANTE | | |
| 7 | 10044851 | 1 | AIR FILTER CARTRIDGE | CARTUCHO DE FILTRO DE AR | | |

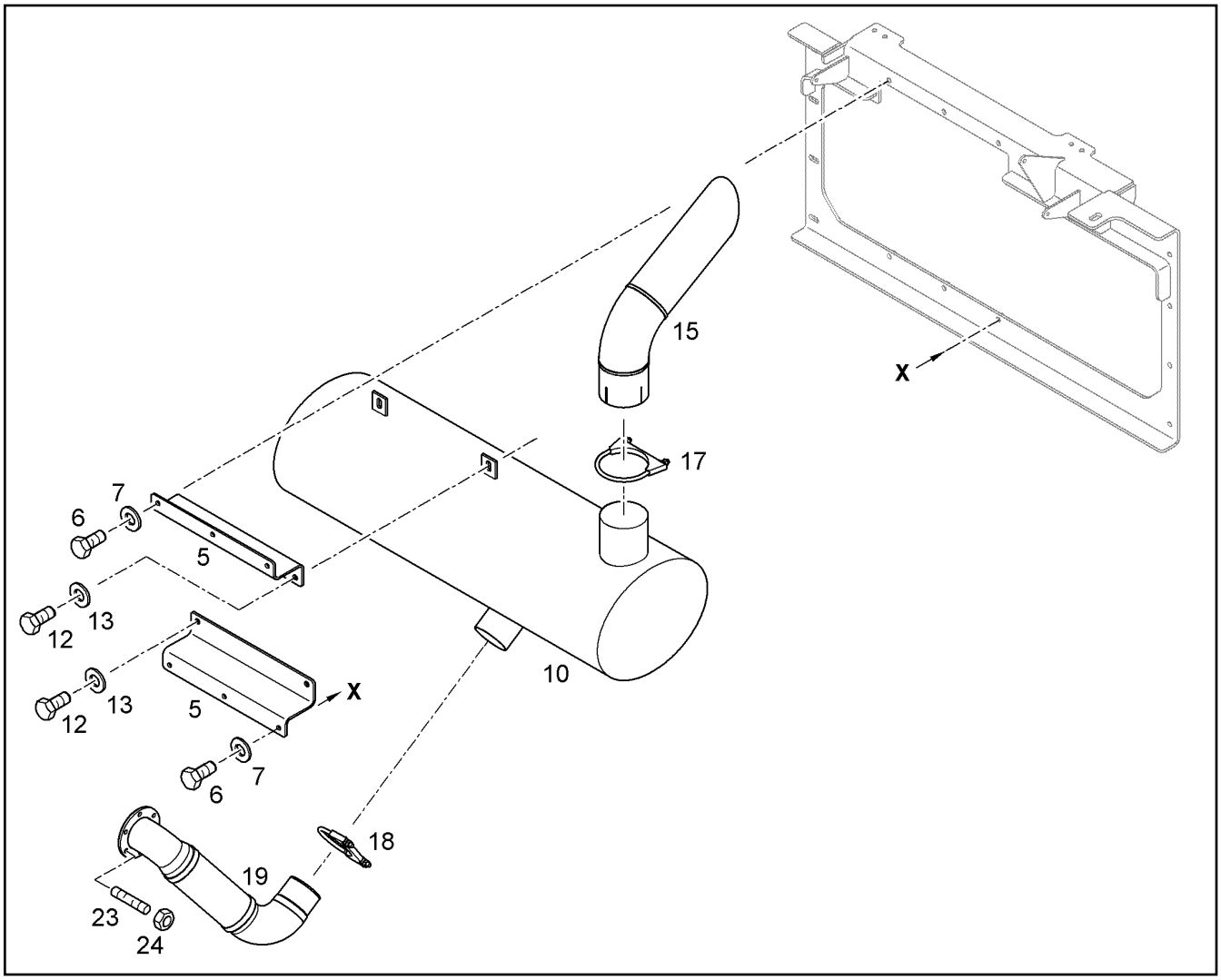


| Pos. | Item | Quantity | Description | Designação | Serie | K |
|---|---|---|---|---|---|---|
| 5 | 9937326 | 2 | HOLDER | SUPORTE | | |
| 6 | 4066124 | 6 | HEX BOLT ISO 4017 M12X30 10.9 A3C | PARAFUSO SEXTAVADO | | |
| 7 | 10006370 | 6 | WASHER DIN 7349 13 | ARRUELA | | |
| 10 | 10040818 | 1 | EXHAUST SILENCER | SILENCIOSO | | |
| 12 | 4066124 | 4 | HEX BOLT ISO 4017 M12X30 10.9 A3C | PARAFUSO SEXTAVADO | | |
| 13 | 10006370 | 4 | WASHER DIN 7349 13 | ARRUELA | | |
| 15 | 7373403 | 1 | END PIPE | TUBO TERMINAL | | |
| 17 | 7369271 | 1 | BOW-TYPE CLAMP | BRACADEIRA DE ARCO | | |
| 18 | 7621247 | 1 | BOW-TYPE CLAMP A 106 A3C | BRACADEIRA DE ARCO | | |
| 19 | 9937309 | 1 | EXHAUST PIPE LINE | TUBULACAO DE ESCAPAMENT | | |
| 23 | 4001854 | 6 | DOUBLE-ENDED STUD DIN 939 M 10 X 30 1 | PINO ROSCADO | | |
| 24 | 4901429 | 6 | HEX NUT M10 | PORCA SEXTAVADA | | |

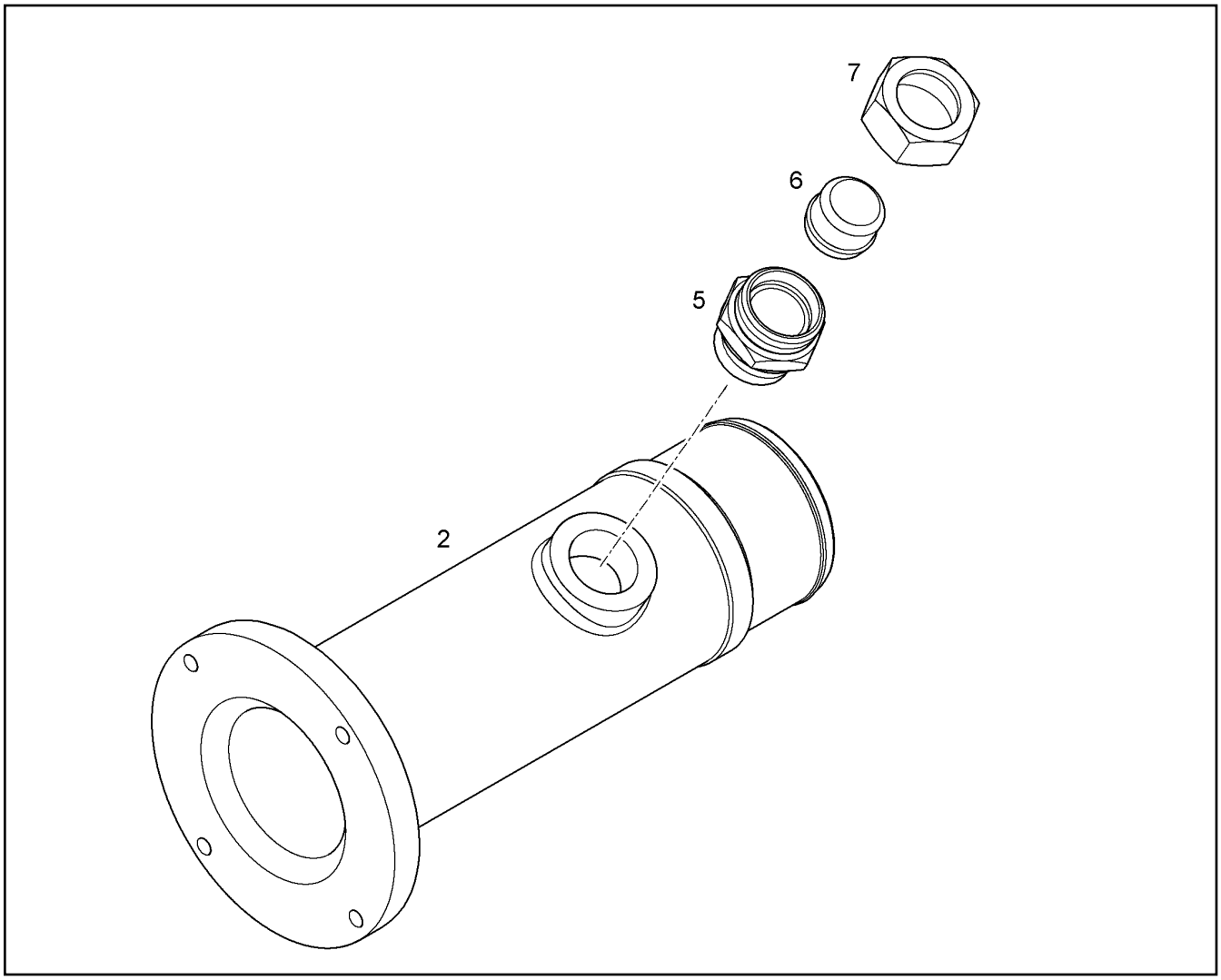


| Pos. | Item | Quantity | Description | Designação | Serie | K |
|---|---|---|---|---|---|---|
| 2 | 10066591 | 1 | INTAKE | BOCAL DE SUCCAO | | |
| 5 | 4900486 | 1 | SCREW FITTING GE 35L M42X2 | REDUÇÃO | | |
| 6 | 4900704 | 1 | TAPER COLLET VKA 35 | CONE DE FECHAMENTO | | |
| 7 | 4774012 | 1 | BOX NUT DIN 3870 A 35L | PORCA DE CONEXAO | | |

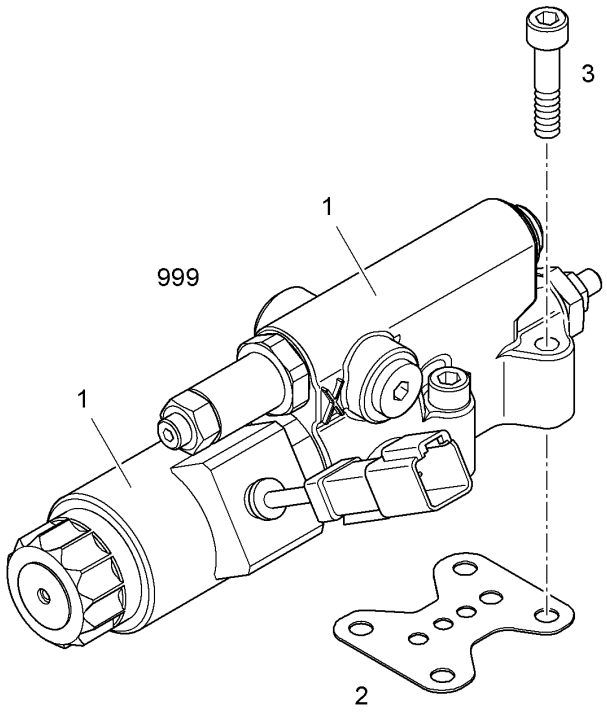


| Pos. | Item | Quantity | Description | Designação | Serie | K |
|---|---|---|---|---|---|---|
| 1 | 10297877 | 1 | CONTROL VALVE | VÁLVULA DE COMANDO | | |
| 1 | 6905956 | 1 | -MAGNET | -BOBINA MAGNÉTICA | | |
| 2 | 10297876 | 1 | SEAL | VEDAÇÃO | | |
| 3 | 4901159 | 4 | CYLINDER SCREW ISO 4762 M6X30 10.9 A2 | PARAFUSO CILÍNDRICO | | |
| 999 | 10410335 | 1 | SEAL KIT | KIT DE VEDAÇÃO | | |

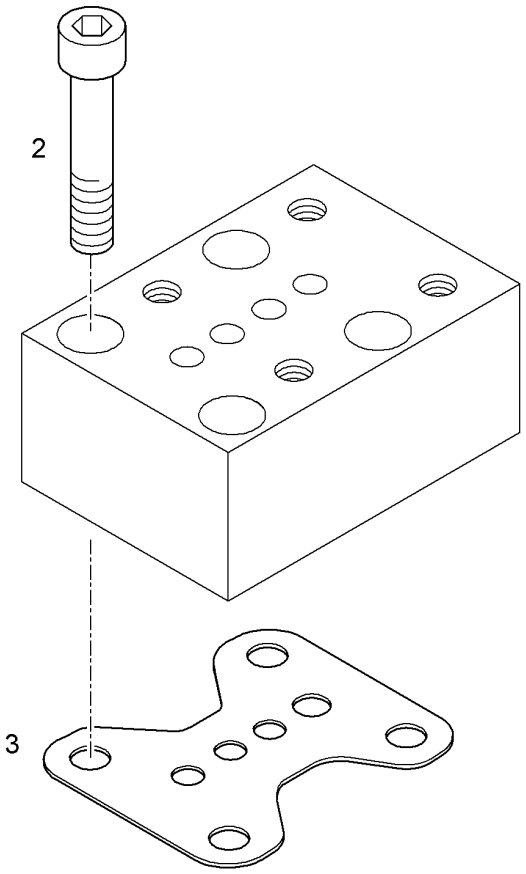


| Pos. | Item | Quantity | Description | Designação | Serie | K |
|---|---|---|---|---|---|---|
| 2 | 4901159 | 4 | CYLINDER SCREW ISO 4762 M6X30 10.9 A2 | PARAFUSO CILÍNDRICO | | |
| 3 | 10297876 | 1 | SEAL | VEDAÇÃO | | |

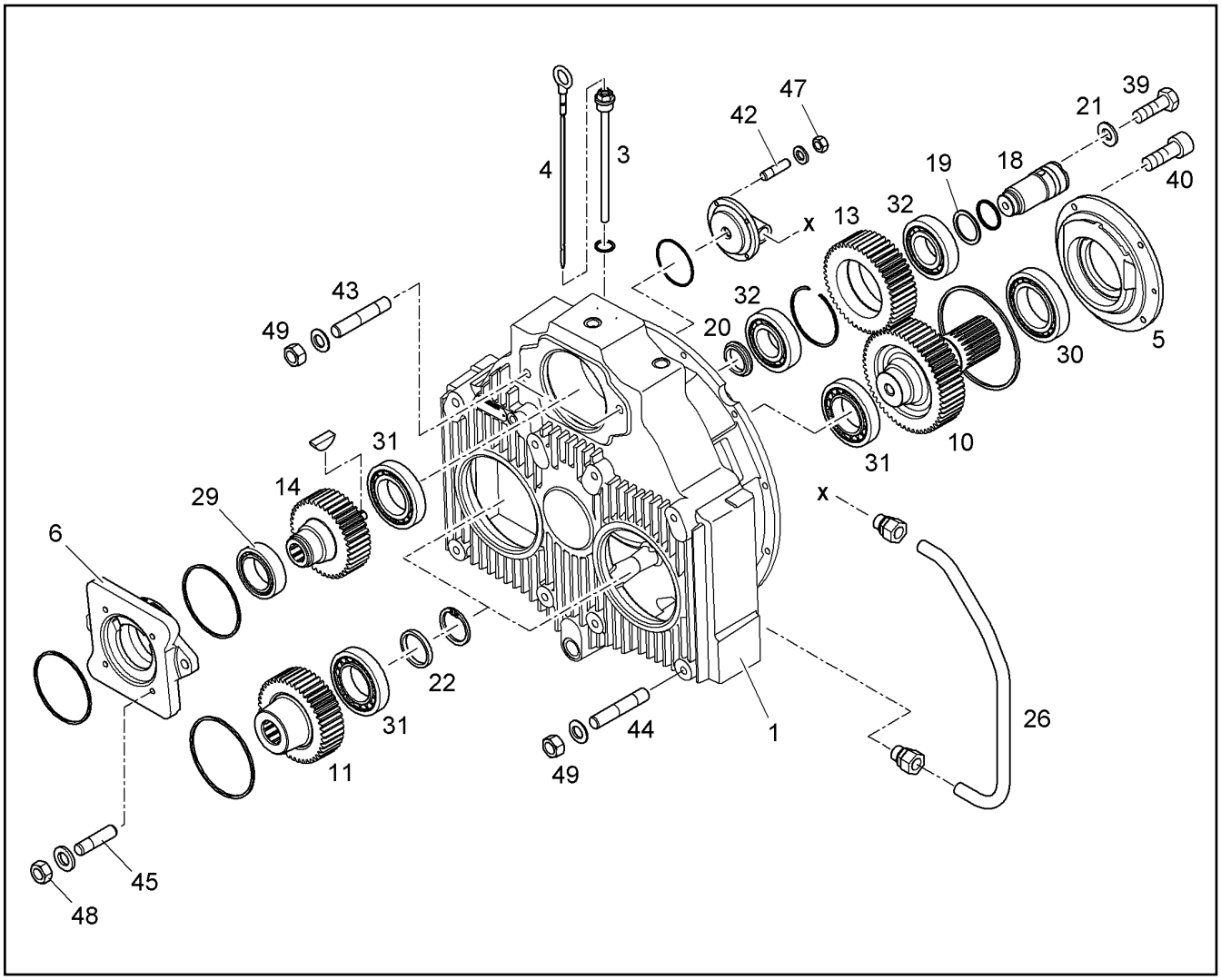


| Pos. | Item | Quantity | Description | Designação | Serie | K |
|---|---|---|---|---|---|---|
| 1 | 9273649 | 1 | HOUSING PVG 350 C 393 | CARCAÇA | | |
| 3 | 9266775 | 1 | GUIDE FOR OIL DIPSTICK CPL. | PAS.VARETA IND.NÍV.ÓLEO CO | | |
| 4 | 9274863 | 1 | OIL DIPSTICK | VARETA DE NÍVEL DE ÓLEO C/ | | |
| 5 | 9271434 | 1 | BEARING COVER | TAMPA DO MANCAL | | |
| 6 | 9073359 | 1 | BEARING FLANGE | FLANGE MANCAL | | |
| 10 | 9273036 | 1 | DRIVE SHAFT Z=53 M=3,5 | EIXO DE ACIONAMENTO | | |
| 11 | 9273037 | 2 | SPUR WHEEL Z=44 M=3,5 | ENGRENAGEM CILINDRICA | | |
| 13 | 9273038 | 1 | INTERMEDIATE WHEEL Z=48 M=3,5 | ENGRENAGEM INTERMEDIARIA | | |
| 14 | 9273118 | 1 | SPUR WHEEL Z=38 M=3,5 | ENGRENAGEM CILINDRICA | | |
| 18 | 9072996 | 1 | INTERMEDIATE WHEEL AXLE | EIXO ENGRENAGEM INTERMEDI | | |
| 19 | 4981277 | 1 | SHIM RING 50X63X3 | ARRUELA DE AJUSTE | | |
| 20 | 9073074 | 1 | WASHER 44X63X10 | ARRUELA | | |
| 21 | 9271441 | 2 | WASHER 9X25X6 | ARRUELA | | |
| 22 | 9273116 | 2 | WASHER 29X47X5 | ARRUELA | | |
| 26 | 9274099 | 1 | TUBE | TUBO | | |
| 29 | 7380470 | 1 | CYLINDRICAL ROLLER BEARING | ROLAMENTO ROLOS CILINDRI | | |
| 30 | 4980223 | 1 | ROLLER BEARING DIN 5412 NJ 215 ECP C3 | ROLAMENTO DE ROLOS CILÍN | | |
| 31 | 4980291 | 4 | ROLLER BEARING DIN 5412 NJ 213 ECJ C3 | ROLAMENTO DE ROLOS CILÍN | | |
| 32 | 4980687 | 2 | CYLINDRICAL ROLLER BEARING NJ-310ECP | ROLAMENTO ROLOS CILINDRI | | |
| 39 | 4900089 | 2 | HEX BOLT ISO 4017 M8x20 8.8 A2C | PARAFUSO SEXTAVADO | | |
| 40 | 4980965 | 4 | CYLINDER SCREW DIN 6912 M10X25 8.8 | PARAFUSO CILÍNDRICO | | |
| 42 | 4980272 | 4 | DOUBLE-ENDED STUD DIN 939 M 6 X 16 8.8 | PINO ROSCADO | | |
| 43 | 4980713 | 2 | DOUBLE-ENDED STUD DIN 939 M16X40 8.8 | PINO ROSCADO | | |
| 44 | 4068556 | 8 | DOUBLE-ENDED STUD DIN 939 M16X70 8.8 | PINO ROSCADO | | |
| 45 | 4980268 | 4 | DOUBLE-ENDED STUD DIN 939 M16X45 10.9 | PINO ROSCADO | | |
| 47 | 4000379 | 4 | HEX NUT M6 | PORCA SEXTAVADA | | |

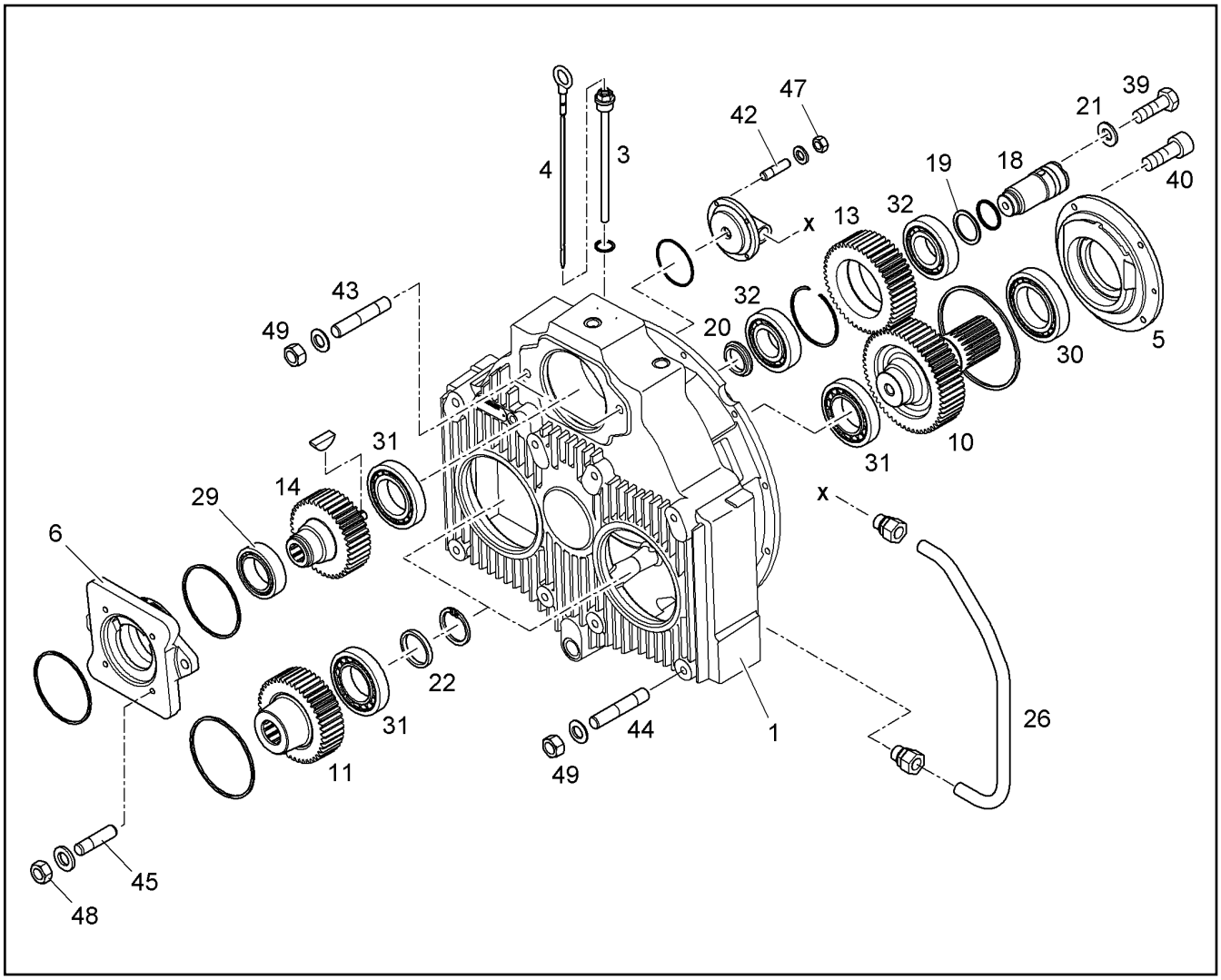


| Pos. | Item | Quantity | Description | Designação | Serie | K |
|---|---|---|---|---|---|---|
| 48 | 4900546 | 4 | HEX NUT M12 | PORCA SEXTAVADA | | |
| 49 | 4000420 | 12 | HEX NUT M16 | PORCA SEXTAVADA | | |

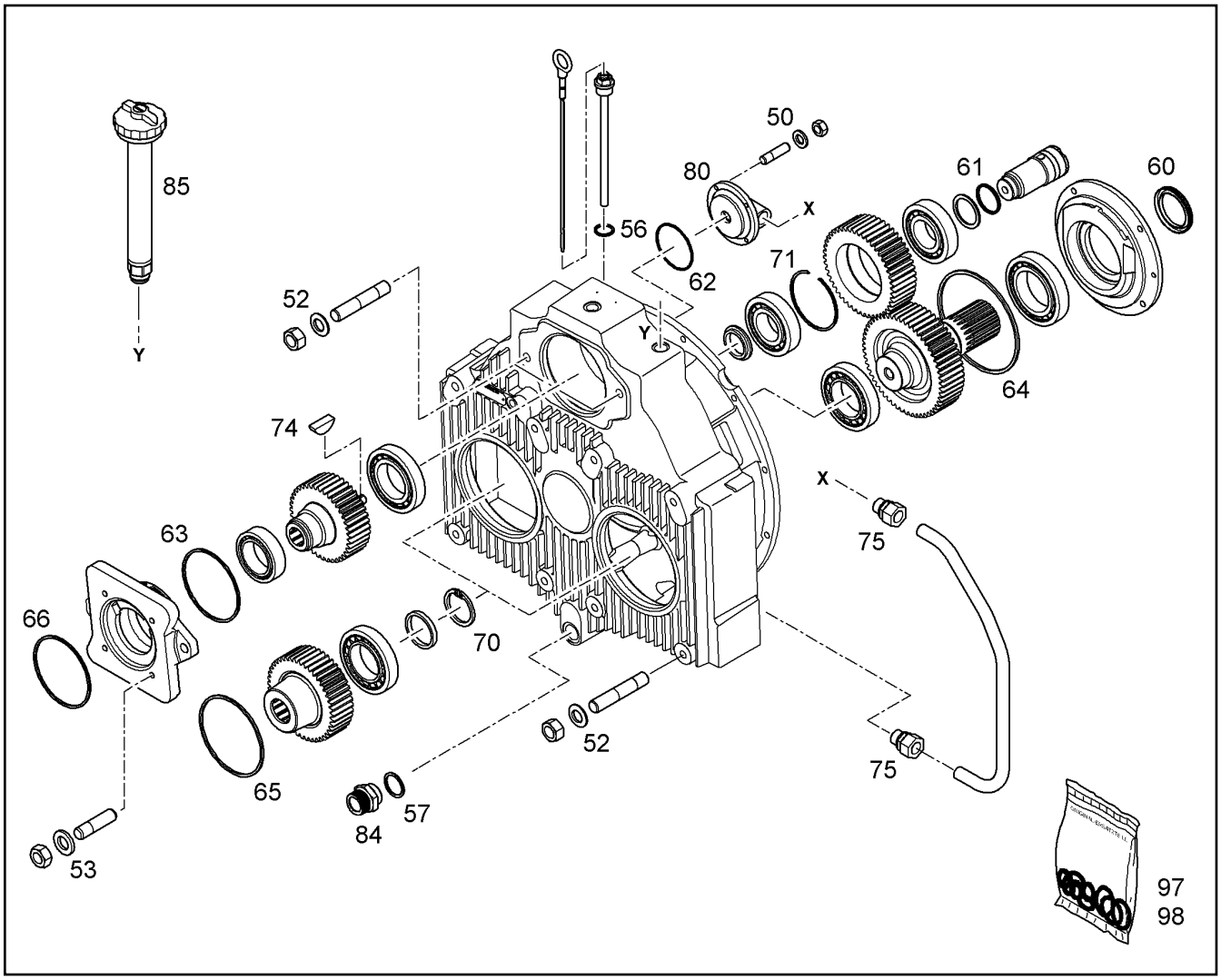


| Pos. | Item | Quantity | Description | Designação | Serie | K |
|---|---|---|---|---|---|---|
| 50 | 4229911 | 4 | LOCK WASHER 6,4/10X1,2 VS 6 | ARRUELA DE SEGURANÇA | | |
| 52 | 10289806 | 10 | WASHER ISO 7089 16 300HV | ARRUELA | | |
| 53 | 9075249 | 2 | WASHER 16,5X32X8 | ARRUELA | | |
| 56 | 7101015 | 1 | SEALING RING DIN 7603 A 22X27X1,5 | ANEL DE VEDAÇÃO | | |
| 57 | 7101021 | 1 | SEALING RING DIN 7603 A 30 X 36 CU | ANEL DE VEDAÇÃO | | |
| 60 | 7381204 | 1 | ROTARY SHAFT LIP SEAL X75X100X10 | ANEL DE VEDÇÃO DO EIXO RAD | | |
| 61 | 7380955 | 1 | O-RING DIN 3771 47,22X3,53 | ANEL-O | | |
| 62 | 7380297 | 1 | O-RING DIN 3771 88,57X2,62 | ANEL-O | | |
| 63 | 7380602 | 1 | O-RING ISO 3601-1 142,47X3,53 | ANEL-O | | |
| 64 | 7380302 | 1 | O-RING DIN 3771 196,44X3,53 | ANEL-O | | |
| 65 | 7380512 | 2 | O-RING DIN 3771 177,39X3,53 | ANEL-O | | |
| 66 | 7380691 | 1 | O-RING ISO 3601-1 126,59X3,53 | ANEL-O | | |
| 70 | 4900268 | 2 | LOCKING RING DIN 47247 | ANEL DE RETENÇÃO | | |
| 71 | 7380954 | 1 | SNAP RING SB 110 | ANEL DE RETENÇÃO | | |
| 74 | 4351002 | 1 | WOODRUFF KEY DIN 6888 5x6,5x15,72 C45 | CHAVETA MEIA-LUA | | |
| 75 | 7380956 | 2 | SCREW FITTING GE 22L | REDUÇÃO | | |
| 80 | 5700007 | 1 | COOLING CIRCUIT PUMP | BOMBA CIRCUITO ARREFECIME | | |
| 84 | | 1 | OIL DRAIN PLUG M 30 1,5<br>⇨ ❑ 491 | VÁLVULA DE DRENAGEM | | |
| 85 | | 1 | OIL FILLER NECK<br>⇨ ❑ 192 | BOCAL DE ENCHIMENTO DE O | | |
| 97 | 9273200 | 1 | SEAL KIT<br>⇨ ❑ 127 | KIT DE VEDAÇÃO | | |
| 98 | | 1 | REPAIR KIT DRIVE SHAFT<br>⇨ ❑ 111 | KIT DE REPARO | | |

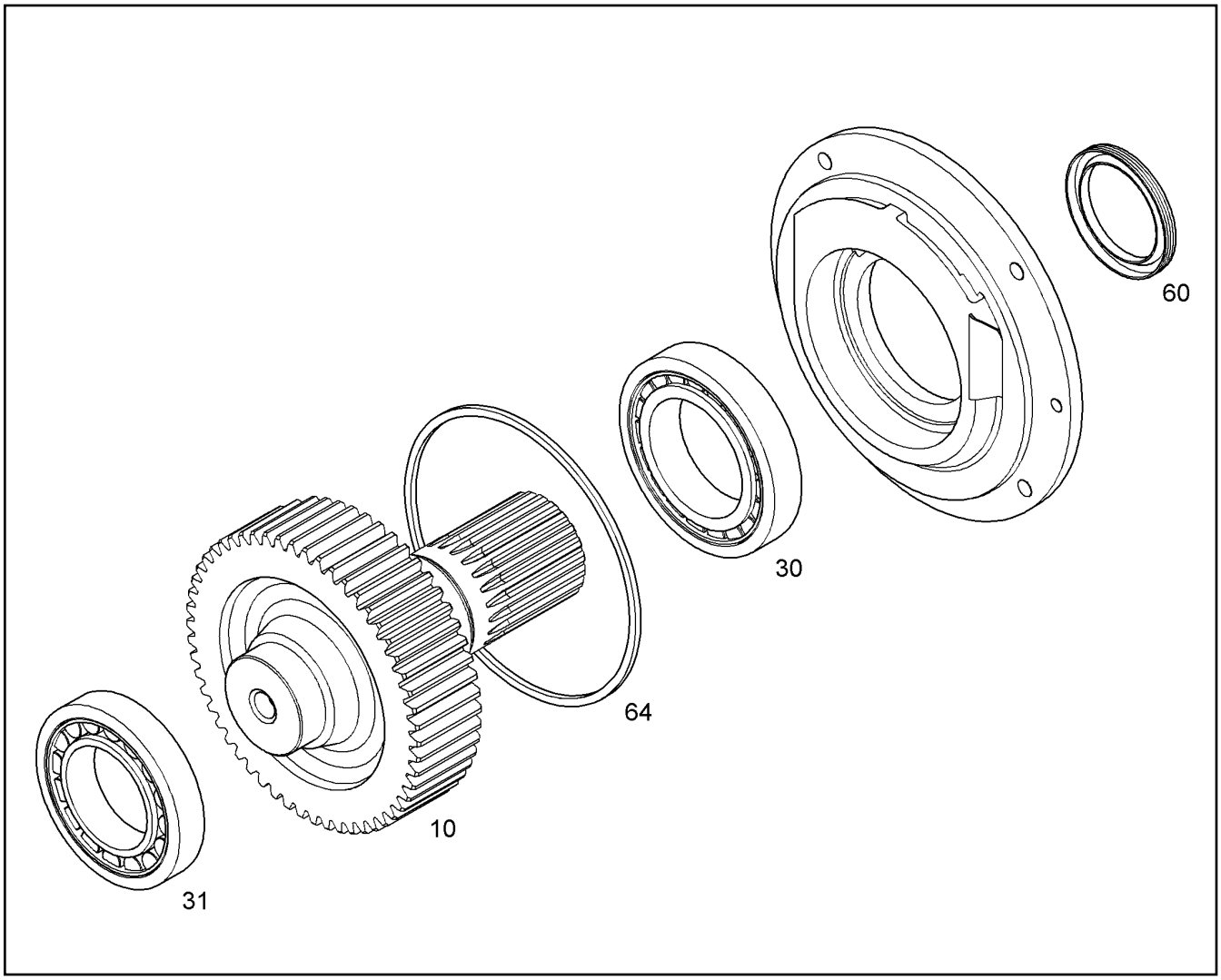


| Pos. | Item | Quantity | Description | Designação | Serie | K |
|---|---|---|---|---|---|---|
| 10 | | 1 | DRIVE SHAFT Z=53 M=3,5 | EIXO DE ACIONAMENTO | | |
| 30 | | 1 | ROLLER BEARING DIN 5412 NJ 215 ECP C3 | ROLAMENTO DE ROLOS CILÍN | | |
| 31 | | 1 | ROLLER BEARING DIN 5412 NJ 213 ECJ C3 | ROLAMENTO DE ROLOS CILÍN | | |
| 60 | | 1 | ROTARY SHAFT LIP SEAL X75X100X10 | ANEL DE VEDÇÃO DO EIXO RAD | | |
| 64 | | 1 | O-RING DIN 3771 196,44X3,53 | ANEL-O | | |

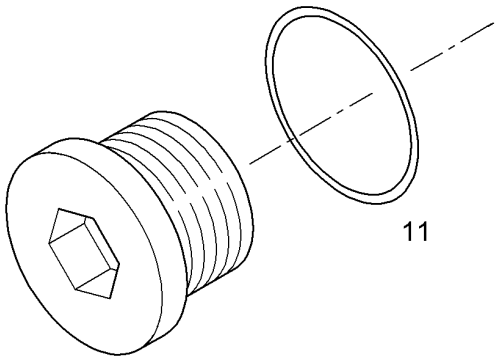


| Pos. | Item | Quantity | Description | Designação | Serie | K |
|---|---|---|---|---|---|---|
| 11 | 7380647 | 1 | O-RING DIN 3771 4,10X1,60 | ANEL-O | | |

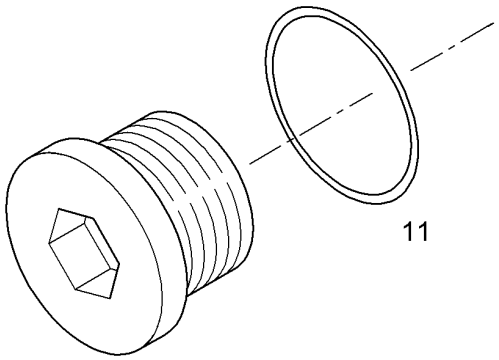


| Pos. | Item | Quantity | Description | Designação | Serie | K |
|---|---|---|---|---|---|---|
| 11 | 7381448 | 1 | O-RING DIN 3771 6,20X1,5 | ANEL-O | | |

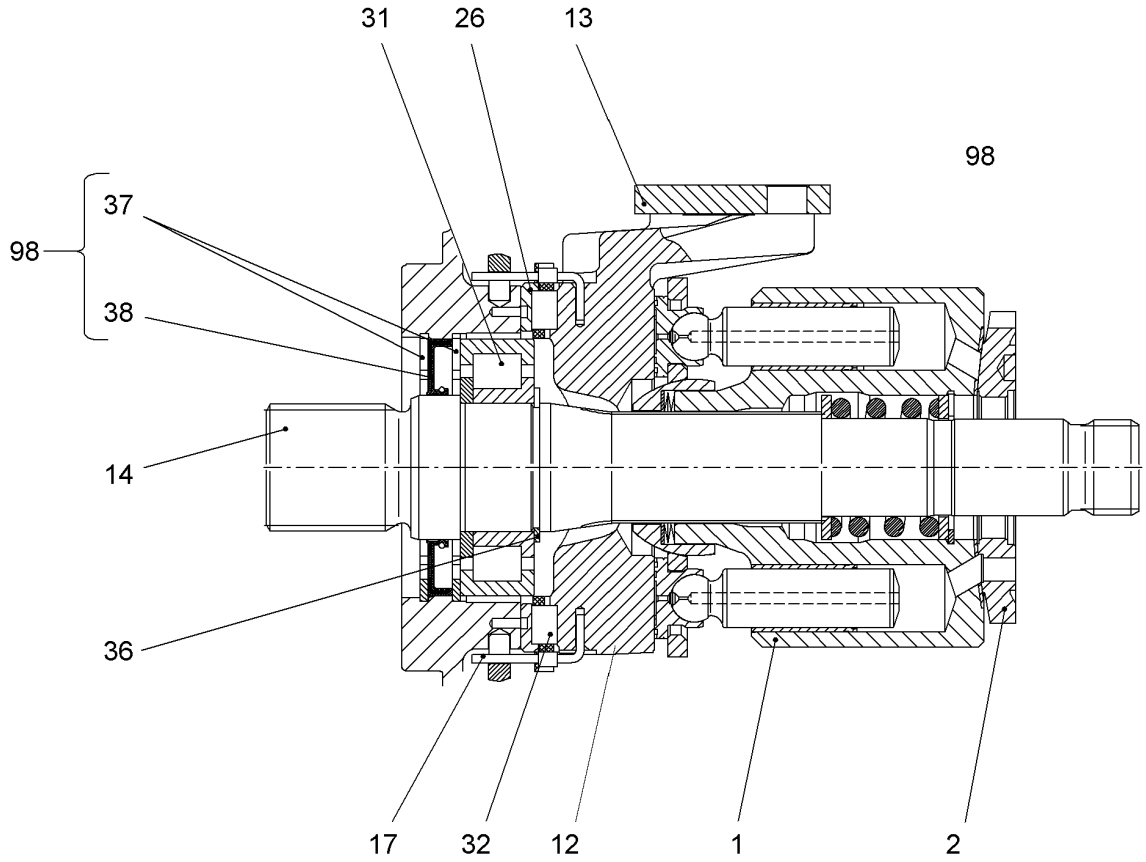


| Pos. | Item | Quantity | Description | Designação | Serie | K |
|---|---|---|---|---|---|---|
| 1 | 10220427 | 1 | DRIVING GEAR<br>⇨ ❑ 345 | MECANISMO DE ACIONAMENTO | | |
| 2 | 10220428 | 1 | GUIDE PLATE | PLACA DE CONTROLE | | |
| 12 | 10216693 | 1 | CRADLE | PLACA DE ANGULACAO | | |
| 13 | 10216694 | 1 | SLIDING PAD | CASTANHA DESLIZANTE | | |
| 14 | 10216701 | 1 | DRIVING SHAFT | EIXO MOTOR | | |
| 17 | 7367367 | 2 | FIL | FIL | | |
| 26 | 7023749 | 1 | BEARING SHELL | CASQUILHO DE MANCAL | | 1 |
| 31 | 10220430 | 1 | CYLINDRICAL ROLLER BEARING | ROLAMENTO ROLOS CILINDRI | | |
| 32 | 10216468 | 1 | CAGE | GAIOLA | | 1 |
| 36 | 4280030 | 1 | LOCKING RING DIN 47140 | ANEL DE RETENÇÃO | | |
| 37 | 10010138 | 2 | LOCKING RING DIN 984 80 X2,5 | ANEL DE RETENÇÃO | | |
| 38 | 10220431 | 1 | SHAFT SEAL | RETENTOR | | |
| 98 | 10220432 | 1 | SEAL KIT GEAR DRIVE | JG V MECANISMO DE TRANSMIS | | |

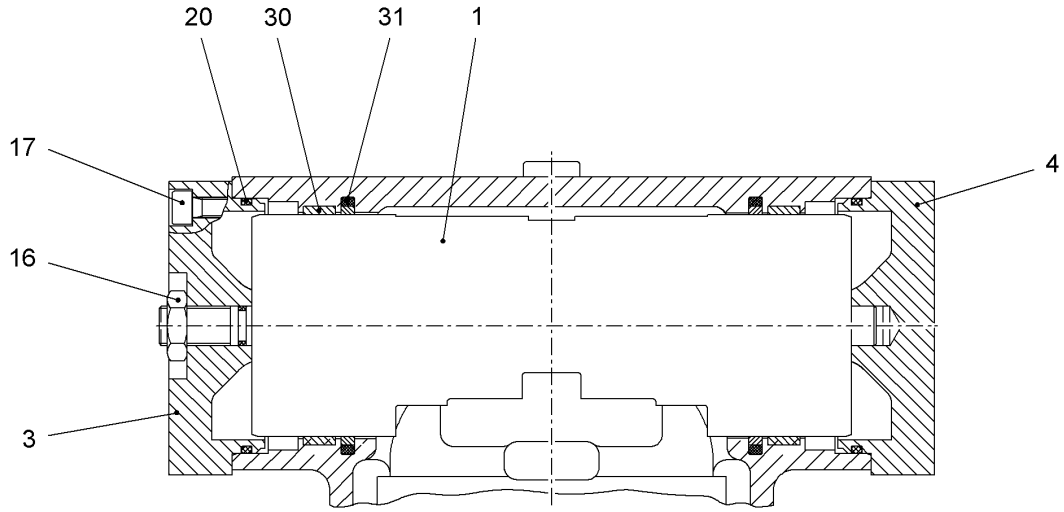


| Pos. | Item | Quantity | Description | Designação | Serie | K |
|---|---|---|---|---|---|---|
| 1 | | 1 | ADJUSTING PISTON<br>⇨ ❑ 131 | PISTAO ATUADOR | | |
| 3 | 10216731 | 1 | LID | TAMPA | | |
| 4 | 10216732 | 1 | LID | TAMPA | | |
| 16 | 10217578 | 1 | HEX NUT M12X1,5 | PORCA SEXTAVADA | | |
| 17 | 4901161 | 8 | CYLINDER SCREW ISO 4762 M6X20 10.9 A2 | PARAFUSO CILÍNDRICO | | |
| 20 | 7006216 | 2 | O-RING 69,52X2,62 | ANEL-O | | |
| 30 | 10216733 | 2 | GUIDE RING | ANEL GUIA | | |
| 31 | 10220529 | 2 | TURCON GLYD RING 77,7X67X4,1 | ANEL TURCON GLYD | | |

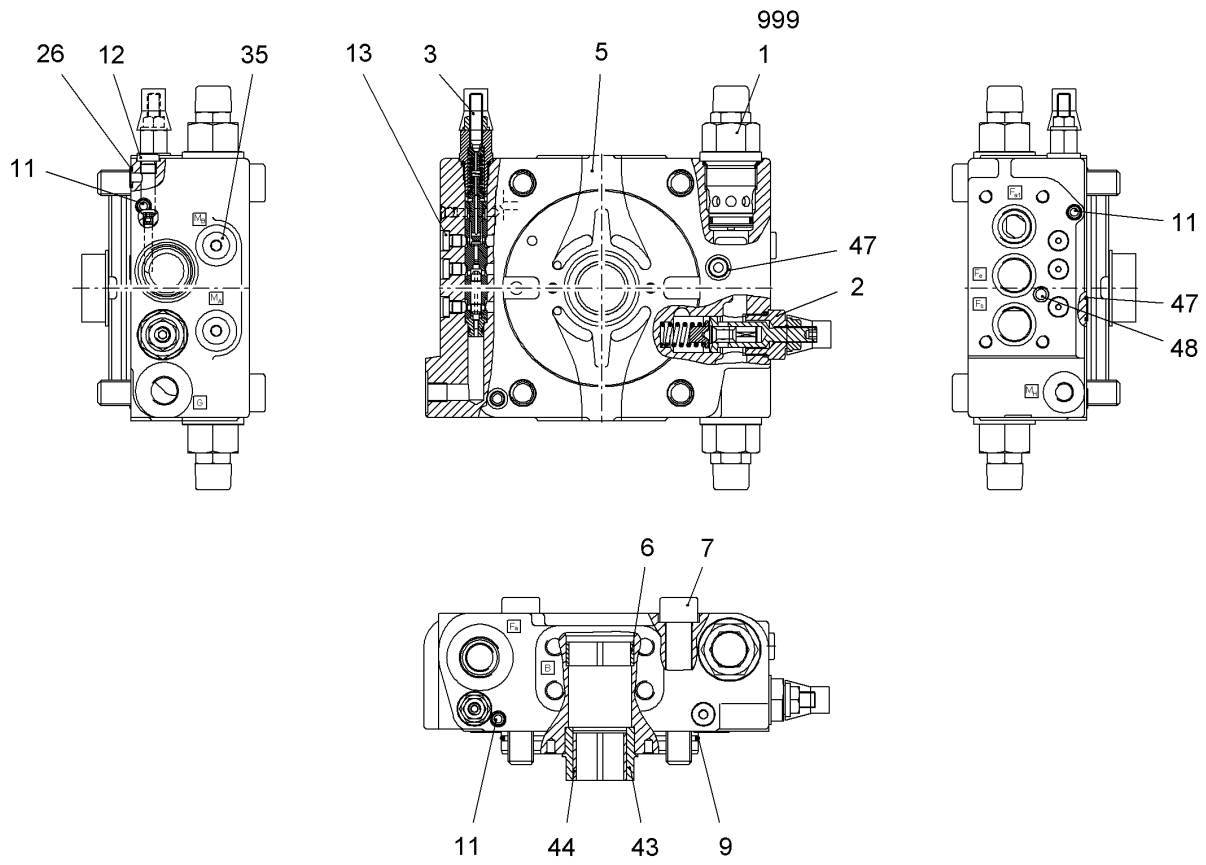


| Pos. | Item | Quantity | Description | Designação | Serie | K |
|---|---|---|---|---|---|---|
| 1 | 10289146 | 2 | PRESSURE LIMITING VALVE<br>⇨ ❑ 138 | VÁLVULA LIMITADORA DE PRES | -99998 | |
| 1 | 11006050 | 1 | PRESSURE LIMITING VALVE | VÁLVULA LIMITADORA DE PRES | 99999- | |
| 2 | 5715963 | 1 | PRESSURE LIMITING VALVE<br>⇨ ❑ 146 | VÁLVULA LIMITADORA DE PRES | | |
| 3 | 10220635 | 1 | SHUTDOWN VALVE<br>⇨ ❑ 132 | VALVULA INTERRUPTORA | | |
| 5 | 10220636 | 1 | CONNECTING PLATE<br>⇨ ❑ 6 | PLACA DE CONEXAO | | |
| 6 | 10220637 | 1 | BEARING BUSH | BUCHA MANCAL | | 1 |
| 7 | 4902030 | 4 | CYLINDER SCREW ISO 4762 M16X90 10.9 | PARAFUSO CILÍNDRICO | | |
| 9 | 10220638 | 1 | O-RING | ANEL-O | | |
| 11 | 7022127 | 2 | PLUG | BUJÃO DE RUPTURA DUPLA | | |
| 12 | 7372626 | 1 | SCREW PLUG M10X1 | PARAFUSO DE FECHAMENTO | | |
| 13 | 7027497 | 3 | SCREW PLUG M8X1 | PARAFUSO DE FECHAMENTO | | |
| 26 | 10220640 | 2 | O-RING 9,25X1,78 | ANEL-O | | |
| 35 | 10100680 | 2 | SCREW PLUG M12X1,5 | PARAFUSO DE FECHAMENTO | | |
| 43 | 10216741 | 1 | BUSHING | BUCHA | | 1 |
| 44 | 10216806 | 1 | BEARING BUSH | BUCHA MANCAL | | 1 |
| 47 | 10220641 | 2 | O-RING 12,42X1,78 | ANEL-O | | |
| 48 | 7012971 | 1 | PLUG | BUJÃO DE RUPTURA DUPLA | | |
| 999 | 10291972 | 1 | SEAL KIT | KIT DE VEDAÇÃO | | |

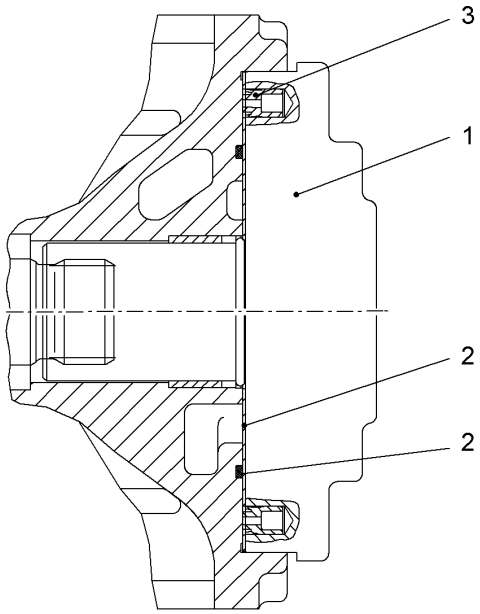


| Pos. | Item | Quantity | Description | Designação | Serie | K |
|---|---|---|---|---|---|---|
| 1 | 10220667 | 1 | GEAR PUMP<br>⇨ ❑ 133 | BOMBA DE ENGRENAGENS | | 2 |
| 2 | 10216816 | 1 | WEARING PLATE<br>⇨ ❑ 130 | PLACA DE DESGASTE | | |
| 2 | 10220668 | 1 | -O-RING 88,57X2,62 | -ANEL-O | | |
| 3 | 10220669 | 1 | RETAINING PLUG | BUJÃO DE FIXAÇÃO | | |

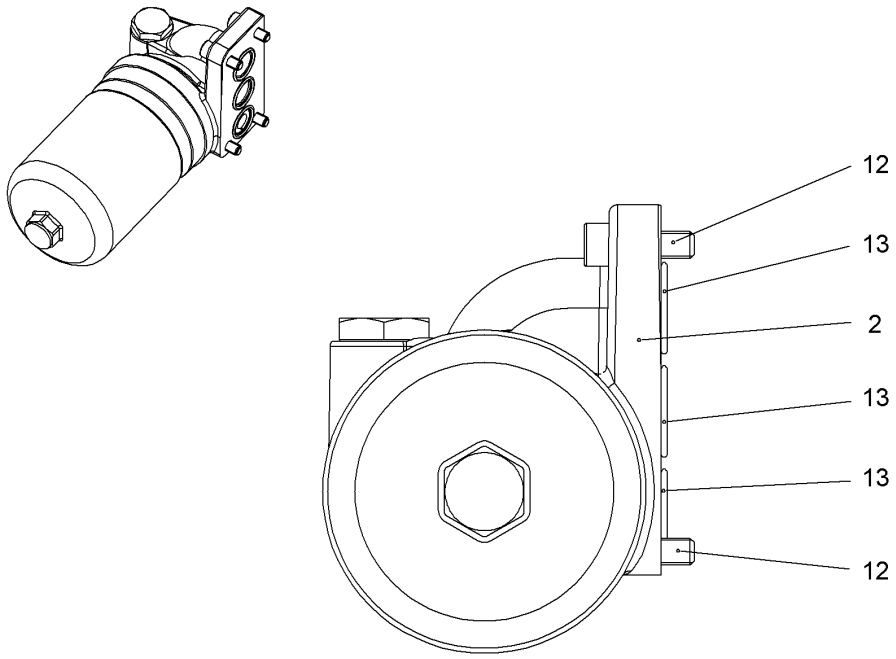


| Pos. | Item | Quantity | Description | Designação | Serie | K |
|---|---|---|---|---|---|---|
| 2 | 10220697 | 1 | FILTER<br>⇨ ❑ 134 | FILTRO | | |
| 12 | 4600175 | 4 | CYLINDER SCREW ISO 4762 M8x25 8.8 A2C | PARAFUSO CILÍNDRICO | | |
| 13 | 10220698 | 3 | O-RING 21,89X2,62 | ANEL-O | | |

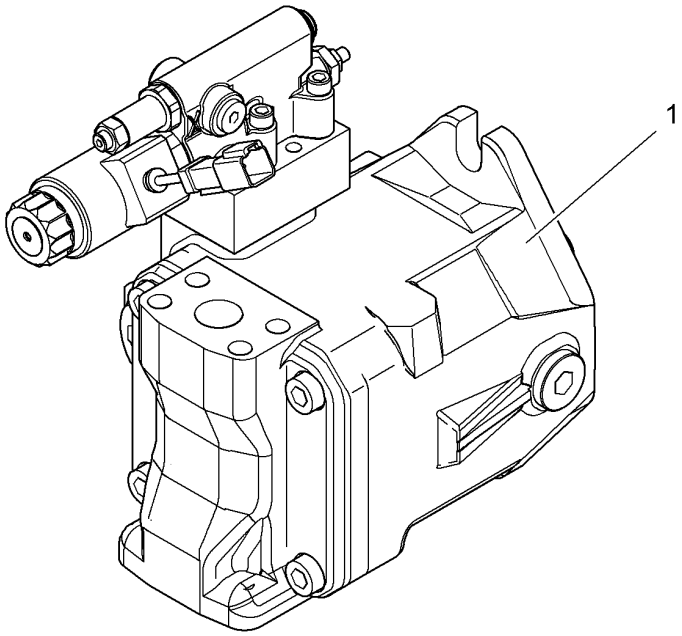


| Pos. | Item | Quantity | Description | Designação | Serie | K |
|---|---|---|---|---|---|---|
| 1 | | 1 | HYDRAULIC PUMP<br>⇨ ❑ 142 | BOMBA HIDRÁULICA | | 2 |

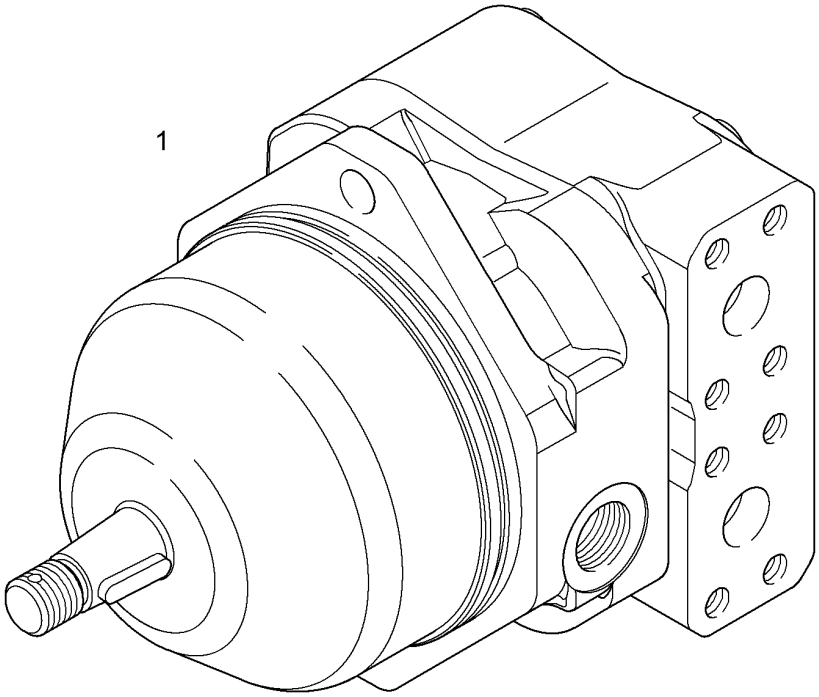


| Pos. | Item | Quantity | Description | Designação | Serie | K |
|---|---|---|---|---|---|---|
| 1 | | 1 | HYDRAULIC PUMP<br>⇨ ❑ 121 | BOMBA HIDRÁULICA | | |

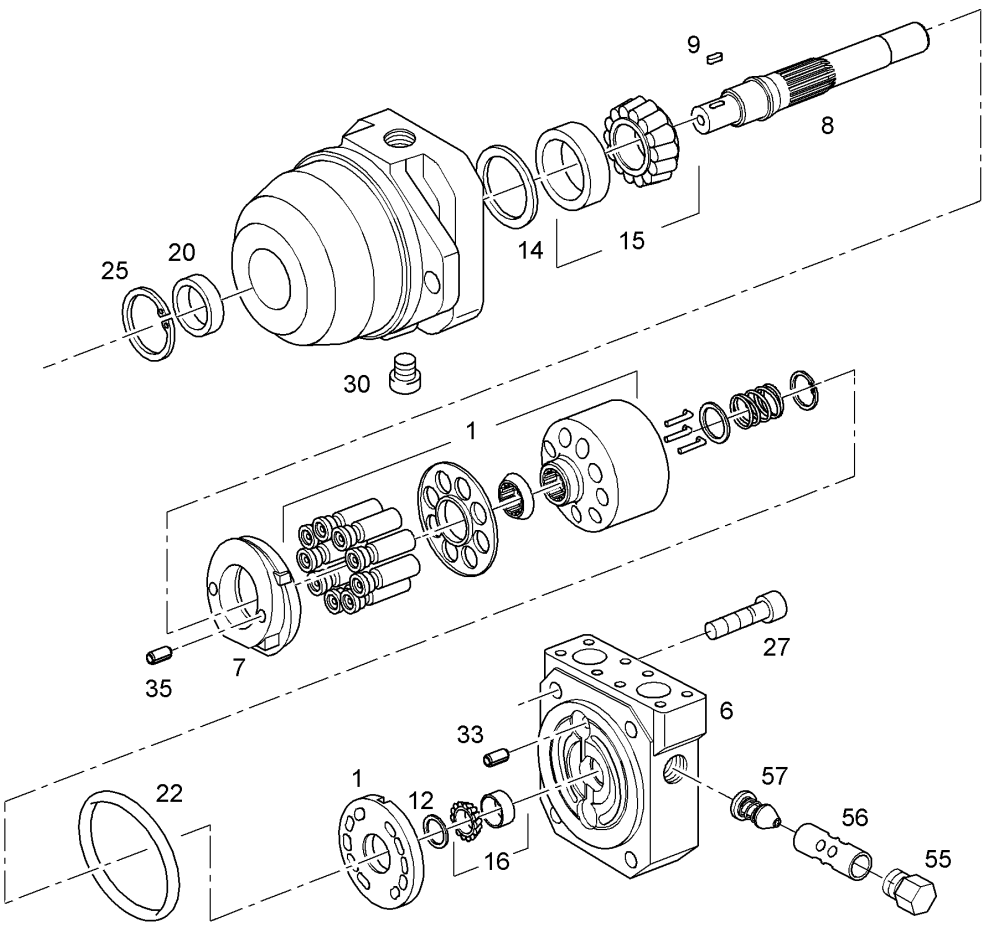


| Pos. | Item | Quantity | Description | Designação | Serie | K |
|---|---|---|---|---|---|---|
| 1 | 10413014 | 1 | DRIVING GEAR<br>⇨ ❑ 143 | MECANISMO DE ACIONAMENTO | | |
| 6 | 10413015 | 1 | CONNECTING PLATE | PLACA DE CONEXAO | | |
| 7 | 10413016 | 1 | SWING ROCKER | BALANCO GIRATORIO | | |
| 8 | 10413017 | 1 | DRIVE SHAFT | EIXO DE ACIONAMENTO | | |
| 9 | 10008422 | 1 | FITTING KEY | CHAVETA | | |
| 12 | 7023472 | 1 | ADJUSTING SHIM | ARRUELA DE AJUSTE | | |
| 14 | 10413020 | 1 | ADJUSTING SHIM | ARRUELA DE AJUSTE | | |
| 15 | 7408797 | 1 | TAPERED ROLLER BEARING | ROLAMENTO DE ROLETES CÔNI | | |
| 16 | 7408798 | 1 | TAPERED ROLLER BEARING | ROLAMENTO DE ROLETES CÔNI | | |
| 20 | 10220348 | 1 | SHAFT SEAL X28X40X6 | RETENTOR | | |
| 22 | 10101449 | 1 | O-RING 120X2,5 | ANEL-O | | |
| 25 | 10220937 | 1 | LOCKING RING AEHNL.DIN 98440 | ANEL DE RETENÇÃO | | |
| 27 | 4000613 | 4 | CYLINDER SCREW ISO 4762 M12X60 10.9 | PARAFUSO CILÍNDRICO | | |
| 30 | 7022278 | 1 | SCREW PLUG | PARAFUSO DE FECHAMENTO | | |
| 33 | 570948608 | 1 | PARALLEL PIN 6M6 | PINO | | |
| 35 | 10413021 | 2 | PARALLEL PIN | PINO | | |
| 55 | 10008415 | 1 | SCREW PLUG | PARAFUSO DE FECHAMENTO | | |
| 56 | 10413023 | 1 | VALVE SEAT SLEEVE | BUCHA DE ASSENTO DA VALV | | |
| 57 | 10008406 | 1 | VALVE INSERT | INSERTO DE VALVULA | | |

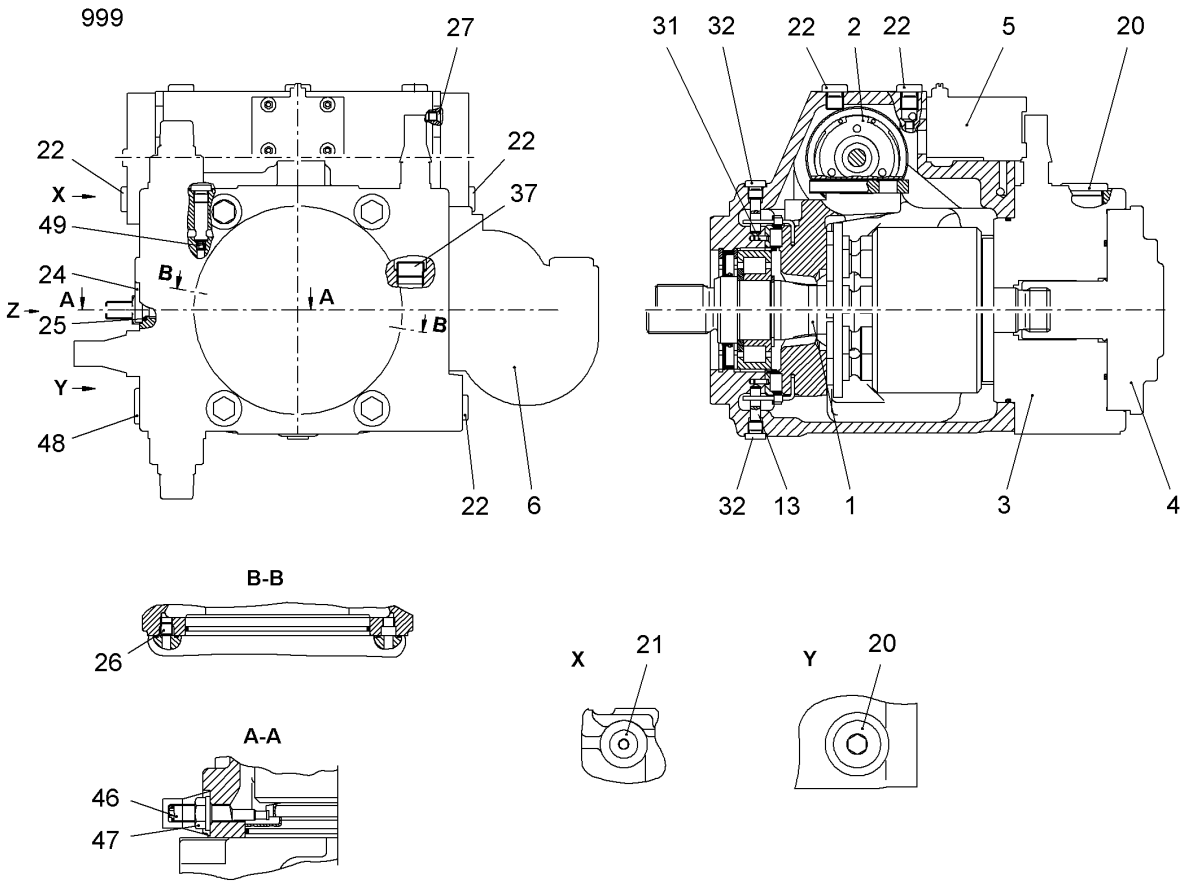


| Pos. | Item | Quantity | Description | Designação | Serie | K |
|---|---|---|---|---|---|---|
| 1 | 10220409 | 1 | DRIVING GEAR<br>⇨ ❑ 114 | MECANISMO DE ACIONAMENTO | | |
| 2 | 10220410 | 1 | ADJUSTMENT<br>⇨ ❑ 115 | DISPOSITIVO DE REGULAGEM | | |
| 3 | 10220411 | 1 | CONNECTING PLATE<br>⇨ ❑ 116 | PLACA DE CONEXAO | | |
| 4 | 10220415 | 1 | INTERNAL GEAR PUMP SET<br>⇨ ❑ 117 | REPARO DA BOMBA | | |
| 5 | 7028075 | 1 | CONTROL UNIT<br>⇨ ❑ 147 | UNIDADE DE CONTROLE | | |
| 6 | 10220417 | 1 | FILTER<br>⇨ ❑ 118 | FILTRO | | |
| 13 | 10216667 | 2 | PIVOT PIN | PINO DA ARTICULACAO | | |
| 20 | 7362698 | 2 | SCREW PLUG VSTI M26X1,5 | PARAFUSO DE FECHAMENTO | | |
| 21 | 7363125 | 1 | SCREW FITTING VSTI M14X1,5<br>⇨ ❑ 661 | REDUÇÃO | | |
| 22 | 7372624 | 4 | SCREW PLUG M12X1,5 | PARAFUSO DE FECHAMENTO | | |
| 24 | 7361329 | 1 | SCREW PLUG VSTI M33X2 | PARAFUSO DE FECHAMENTO | | |
| 25 | 7006212 | 1 | O-RING 29,82X2,62 | ANEL-O | | |
| 26 | 7362689 | 1 | SCREW PLUG VSTI M8X1 | PARAFUSO DE FECHAMENTO | | |
| 27 | 7022127 | 1 | PLUG | BUJÃO DE RUPTURA DUPLA | | |
| 31 | 4002729 | 2 | DOWEL PIN 3 | PINO ELÁSTICO | | |
| 32 | 7372626 | 2 | SCREW PLUG M10X1 | PARAFUSO DE FECHAMENTO | | |
| 37 | 10220424 | 1 | SCREW PLUG DIN 906 M18X1,5 5.8 PHR | PARAFUSO DE FECHAMENTO | | |
| 46 | 10220418 | 1 | ECCENTRIC SCREW | PARAFUSO DO EXCENTRICO | | |
| 47 | 7009369 | 1 | SEAL-LOCK-SHOULDER NUT | PORCA SEAL-LOCK | | |

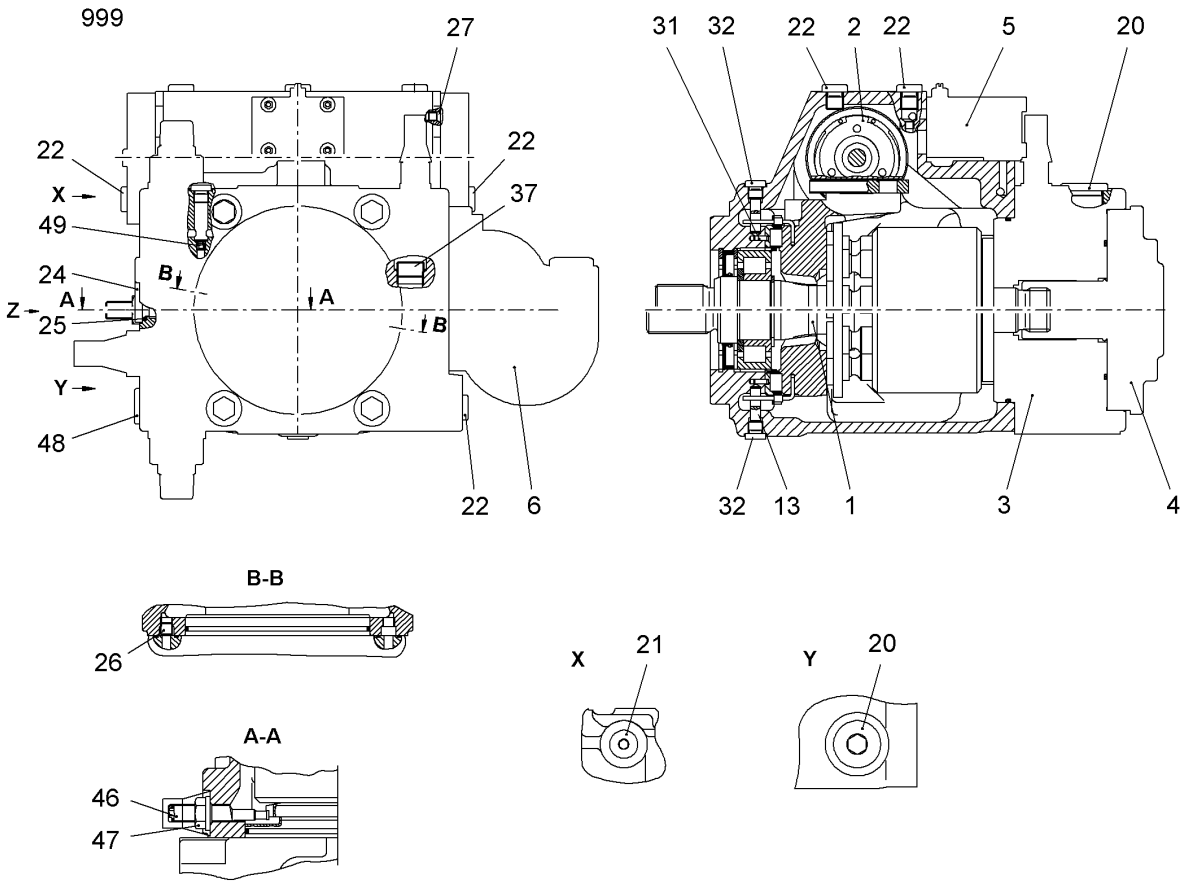


| Pos. | Item | Quantity | Description | Designação | Serie | K |
|---|---|---|---|---|---|---|
| 48 | 10220419 | 1 | SCREW PLUG M18X1,5 | PARAFUSO DE FECHAMENTO | | |
| 49 | 10220421 | 1 | BLANKING PLUG | TAMPÃO | | |
| 999 | 10220423 | 1 | SEAL KIT | KIT DE VEDAÇÃO | | |

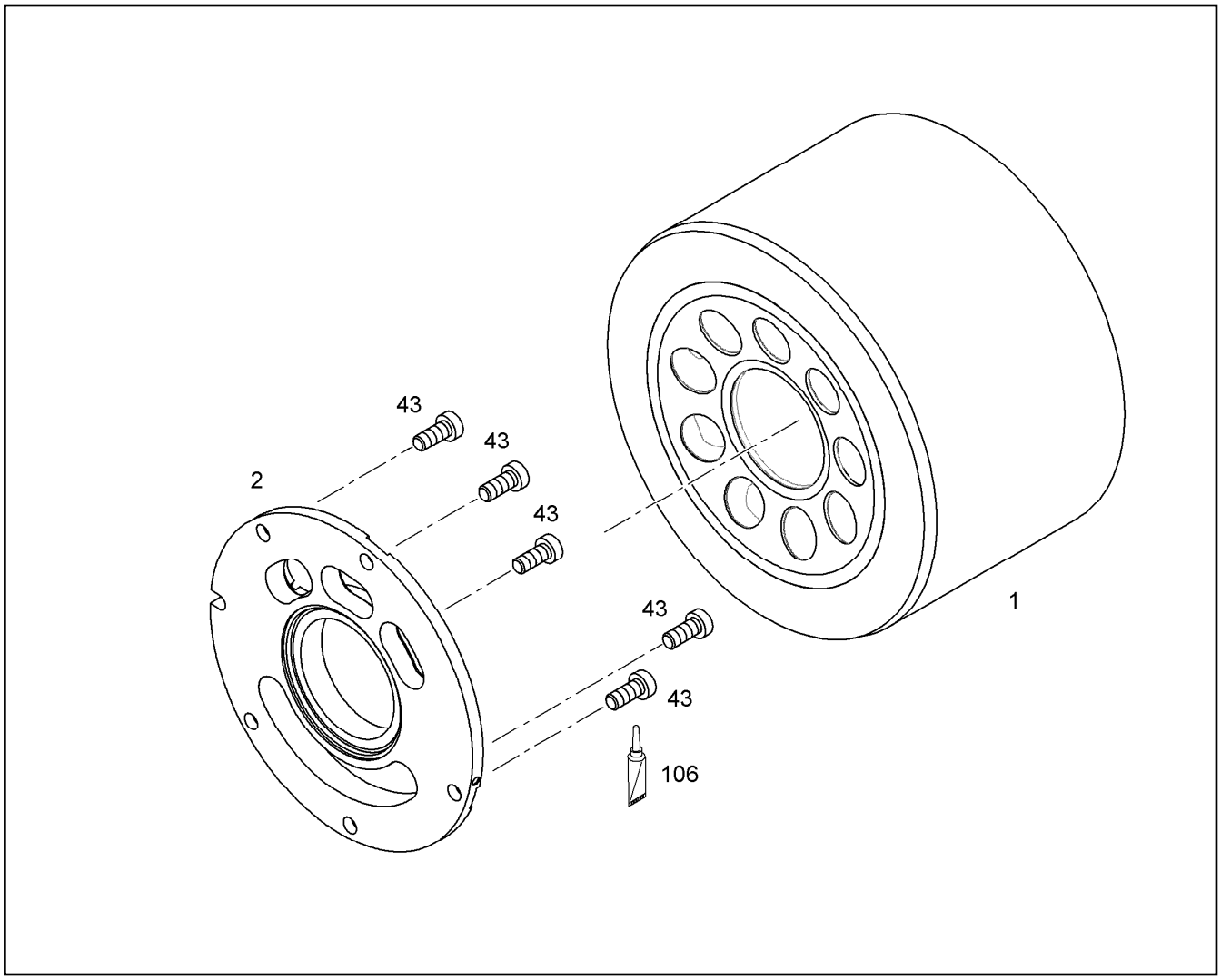


| Pos. | Item | Quantity | Description | Designação | Serie | K |
|---|---|---|---|---|---|---|
| 1 | | 1 | CYLINDER WITH BUSH | CILINDRO COM BUCHA | | |
| 2 | | 1 | GUIDE PLATE | PLACA DE CONTROLE | | |
| 43 | 4981218 | 5 | CYLINDER SCREW ISO 14580 M6X16 10.9 | PARAFUSO CILÍNDRICO | | |
| 106 | 8700012 | 1 | SCREW LOCKING | COLA PARA ELEMENTOS FIXA | | |

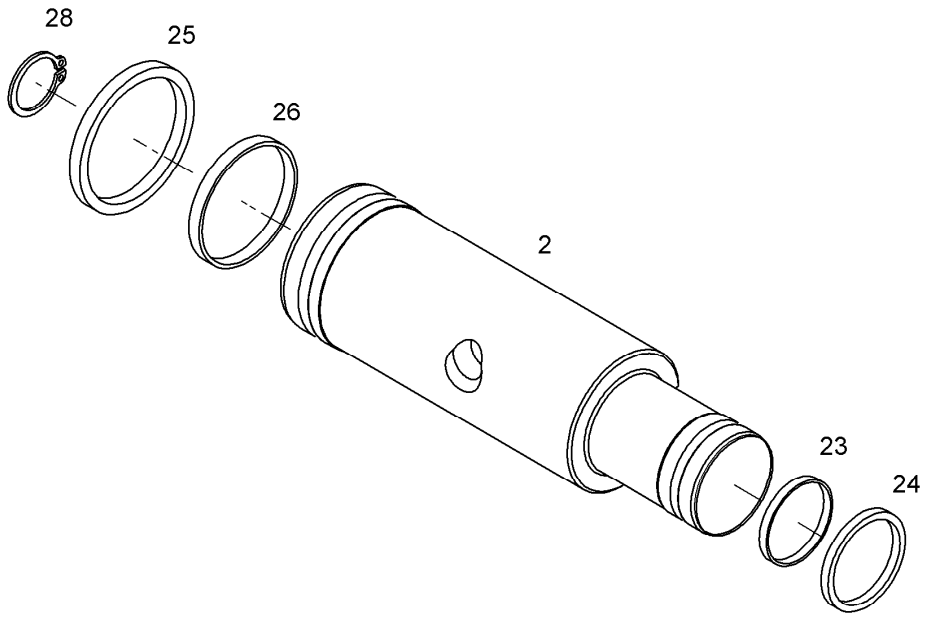


| Pos. | Item | Quantity | Description | Designação | Serie | K |
|---|---|---|---|---|---|---|
| 2 | | 1 | REGEL PISTON PRE-ASS. | PISTAO REGUL. COM BUCHA-G | | |
| 23 | | 1 | O-RING DIN 3771 26,64X2,62 | ANEL-O | | |
| 24 | | 1 | TURCON GLYD RING 35X27,5X3,2 | ANEL TURCON GLYD | | |
| 25 | | 1 | TURCON GLYD RING 52X41X4,2 | ANEL TURCON GLYD | | |
| 26 | | 1 | O-RING ISO 3601-1 40,87X3,53 | ANEL-O | | |
| 28 | | 1 | L RING AL 20 | ANEL L | | |

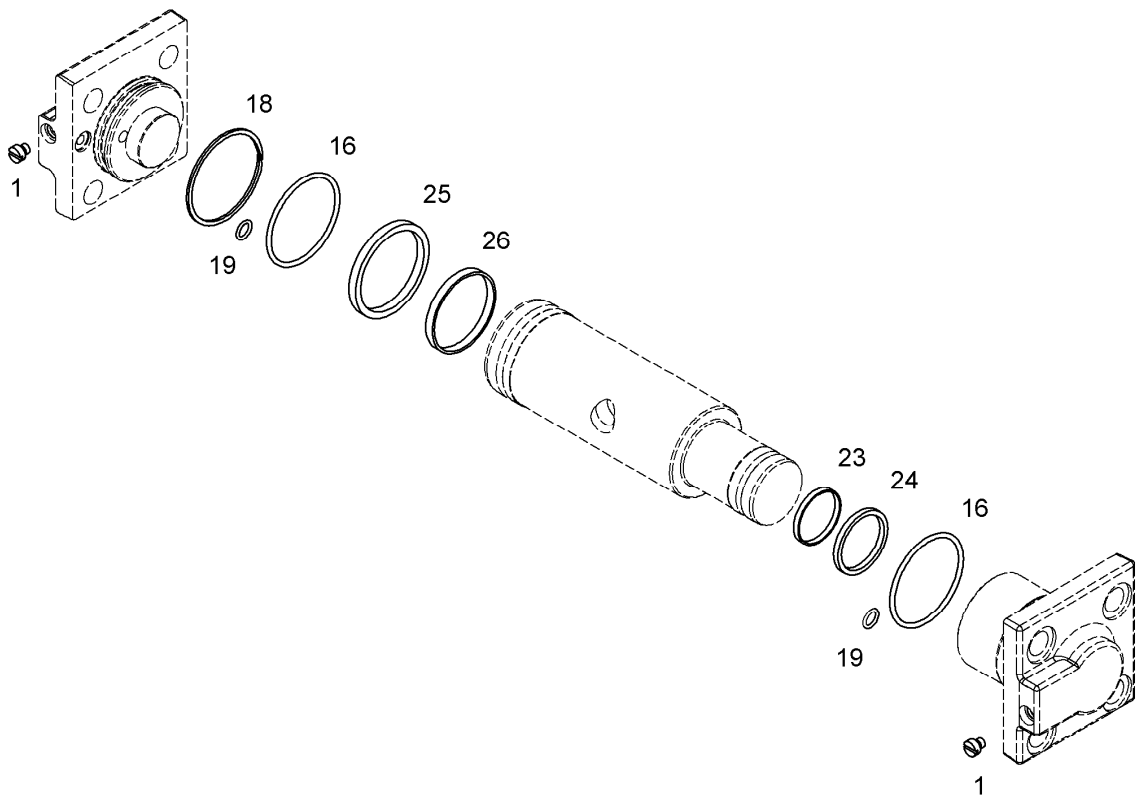


| Pos. | Item | Quantity | Description | Designação | Serie | K |
|---|---|---|---|---|---|---|
| 1 | | 2 | SCREW PLUG M6<br>⇨ ❑ 152 | PARAFUSO DE FECHAMENTO | | |
| 16 | | 2 | O-RING DIN 3771 47,29X2,62 | ANEL-O | | |
| 18 | | 1 | SUPPORTING RING | ANEL DE APOIO | | |
| 19 | | 2 | O-RING DIN 3771 6,02X2,62 | ANEL-O | | |
| 23 | | 1 | O-RING DIN 3771 26,64X2,62 | ANEL-O | | |
| 24 | | 1 | TURCON GLYD RING 35X27,5X3,2 | ANEL TURCON GLYD | | |
| 25 | | 1 | TURCON GLYD RING 52X41X4,2 | ANEL TURCON GLYD | | |
| 26 | | 1 | O-RING ISO 3601-1 40,87X3,53 | ANEL-O | | |

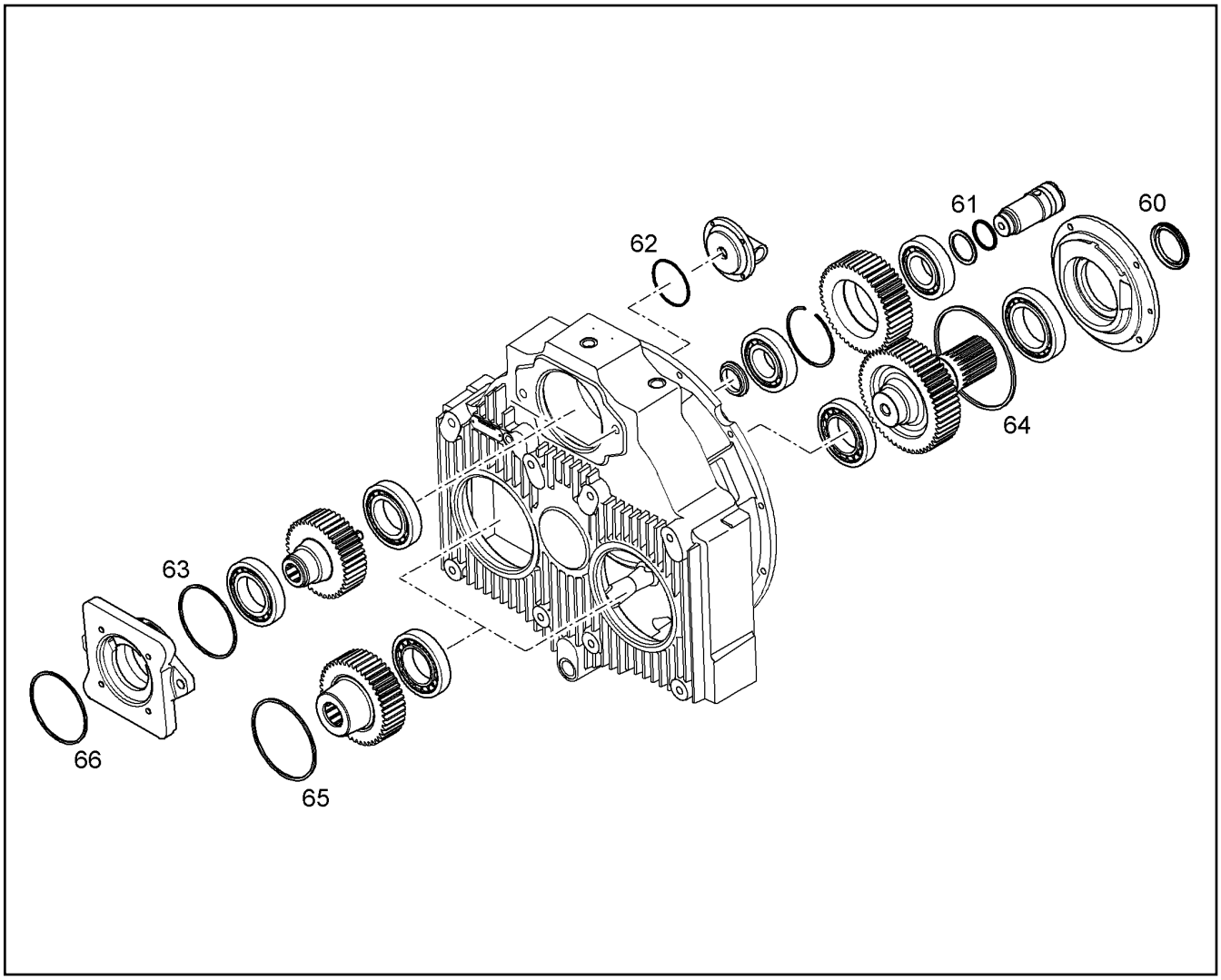


| Pos. | Item | Quantity | Description | Designação | Serie | K |
|---|---|---|---|---|---|---|
| 60 | | 1 | ROTARY SHAFT LIP SEAL X75X100X10 | ANEL DE VEDÇÃO DO EIXO RAD | | |
| 61 | | 1 | O-RING DIN 3771 47,22X3,53 | ANEL-O | | |
| 62 | | 1 | O-RING DIN 3771 88,57X2,62 | ANEL-O | | |
| 63 | | 1 | O-RING ISO 3601-1 142,47X3,53 | ANEL-O | | |
| 64 | | 1 | O-RING DIN 3771 196,44X3,53 | ANEL-O | | |
| 65 | | 2 | O-RING DIN 3771 177,39X3,53 | ANEL-O | | |
| 66 | | 1 | O-RING ISO 3601-1 126,59X3,53 | ANEL-O | | |

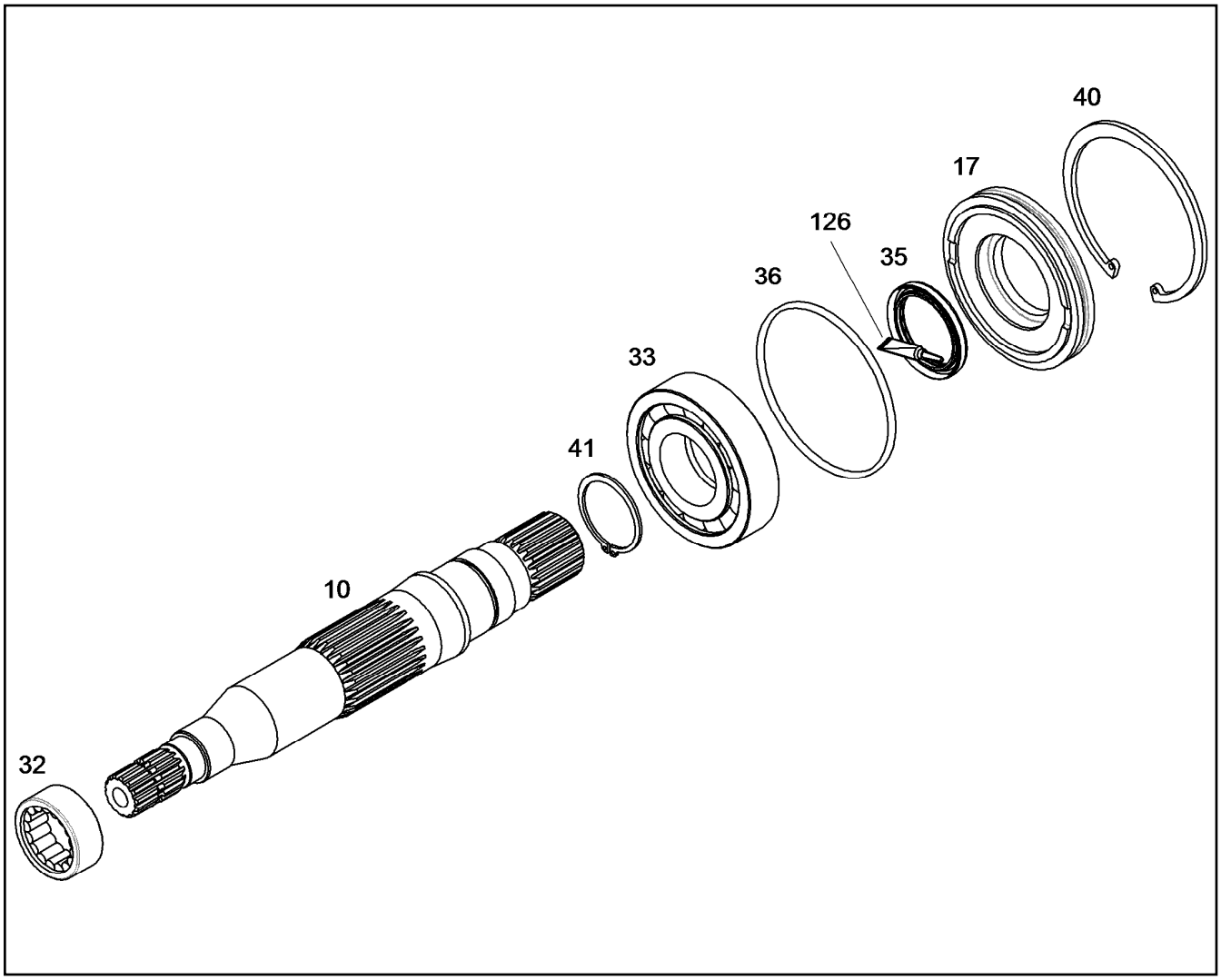


| Pos. | Item | Quantity | Description | Designação | Serie | K |
|---|---|---|---|---|---|---|
| 10 | | 1 | DRIVING SHAFT | EIXO MOTOR | | |
| 17 | | 1 | CLOSING RING | ANEL DE FECHAMENTO | | |
| 32 | | 1 | CYLINDRICAL ROLLER BEARING | ROLAMENTO ROLOS CILINDRI | | |
| 33 | | 1 | CYLINDRICAL ROLLER BEARING | ROLAMENTO ROLOS CILINDRI | | |
| 35 | | 1 | ROTARY SHAFT LIP SEAL ASX50X65X7 | ANEL DE VEDÇÃO DO EIXO RAD | | |
| 36 | | 1 | O-RING DIN 3771 113,89X3,53 | ANEL-O | | |
| 40 | | 1 | LOCKING RING DIN 472120 | ANEL DE RETENÇÃO | | |
| 41 | | 1 | LOCKING RING DIN 471 50 X2 | ANEL DE RETENÇÃO | | |
| 126 | | 1 | GREASE | GRAXA | | |

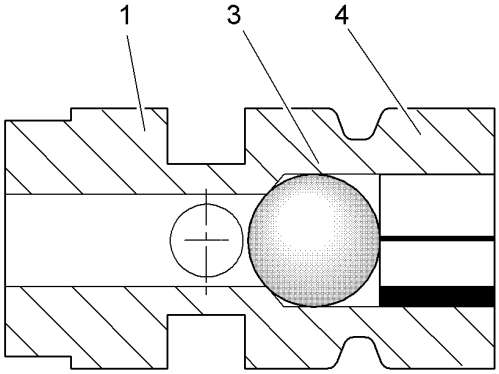


| Pos. | Item | Quantity | Description | Designação | Serie | K |
|---|---|---|---|---|---|---|
| 1 | 10014067 | 1 | BRAKE PISTON | PISTAO DE FREIO | | 1 |
| 3 | 10014076 | 1 | BALL | ESFERA | | |
| 4 | 10008299 | 1 | CYL.ROLLER | ROLAMENTO DE AGULHA | | |

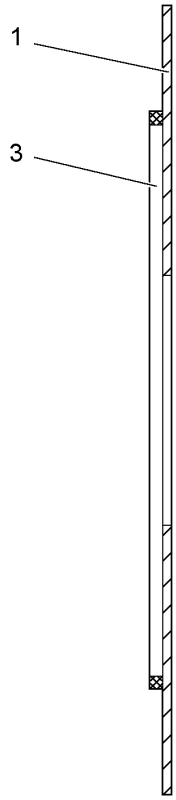


| Pos. | Item | Quantity | Description | Designação | Serie | K |
|---|---|---|---|---|---|---|
| 1 | 10216828 | 1 | WEARING PLATE | PLACA DE DESGASTE | | |
| 3 | 10220668 | 1 | O-RING 88,57X2,62 | ANEL-O | | |

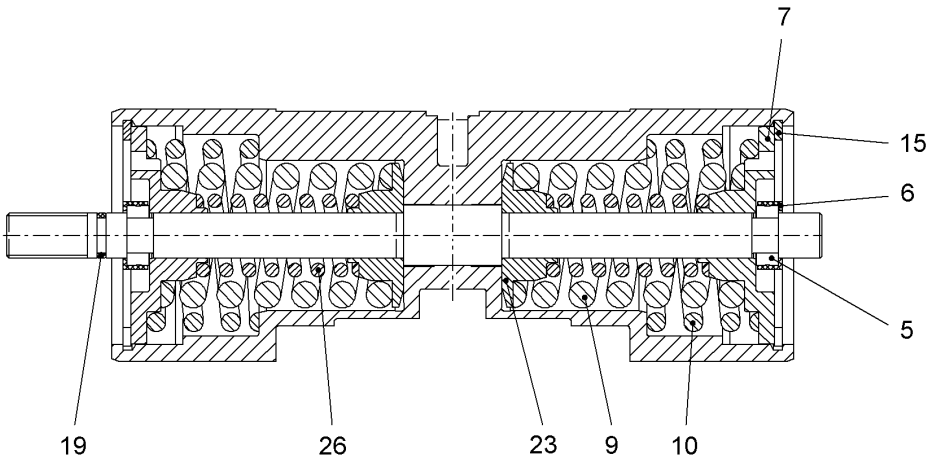


| Pos. | Item | Quantity | Description | Designação | Serie | K |
|---|---|---|---|---|---|---|
| 5 | 10220537 | 2 | RING S=5,82 | ANEL | | |
| 5 | 10220538 | 2 | RING S=5,77 | ANEL | | |
| 5 | 10220539 | 2 | RING S=5,87 | ANEL | | |
| 5 | 10220540 | 2 | RING S=5,92 | ANEL | | |
| 5 | 10220541 | 2 | RING S=5,97 | ANEL | | |
| 5 | 10220542 | 2 | RING S=6,02 | ANEL | | |
| 5 | 10220543 | 2 | RING S=5,67 | ANEL | | |
| 5 | 10220544 | 2 | RING S=5,72 | ANEL | | |
| 6 | 10220545 | 2 | RETAINING RING | ANEL DE ALOJAMENTO | | |
| 7 | 10220546 | 2 | SPRING SUPPORT | PRATO DA MOLA | | |
| 9 | 10220547 | 2 | PRESSURE SPRING | MOLA DE PRESSÃO | | |
| 10 | 10220548 | 2 | PRESSURE SPRING | MOLA DE PRESSÃO | | |
| 15 | 4980663 | 2 | LOCKING RING DIN 47258 | ANEL DE RETENÇÃO | | |
| 19 | 10220549 | 1 | O-RING 9,25X1,78 | ANEL-O | | |
| 23 | 10216737 | 2 | SPRING SUPPORT | PRATO DA MOLA | | |
| 26 | 10220550 | 2 | PRESSURE SPRING | MOLA DE PRESSÃO | | |

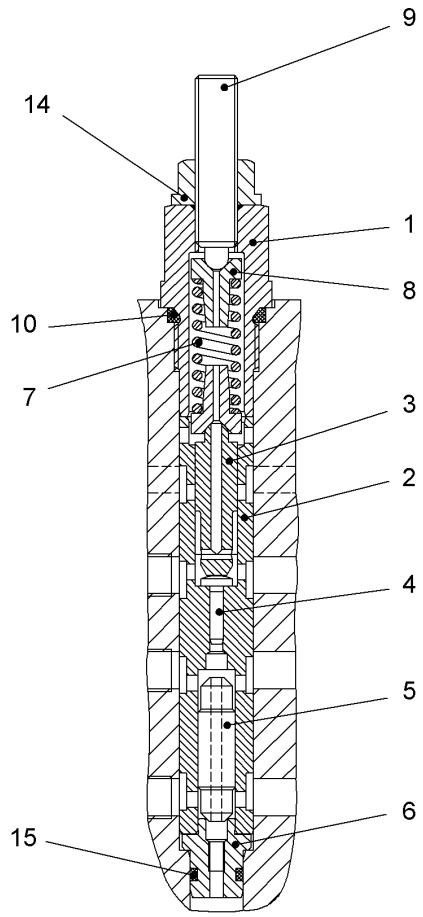


| Pos. | Item | Quantity | Description | Designação | Serie | K |
|---|---|---|---|---|---|---|
| 1 | 10220659 | 1 | SCREW PLUG | PARAFUSO DE FECHAMENTO | | |
| 2 | | 1 | VALVE BUSH | BUCHA DE VÁLVULA | | 1 |
| 3 | | 1 | SPOOL | PISTAO DE COMANDO | | |
| 4 | | 1 | PISTON | PISTÃO | | |
| 5 | | 1 | VALVE PISTON | PISTAO DA VALVULA | | |
| 6 | | 1 | VALVE SEAT | ASSENTO DA VALVULA | | |
| 7 | 10220663 | 1 | PRESSURE SPRING | MOLA DE PRESSÃO | | |
| 8 | | 2 | SPRING SUPPORT | PRATO DA MOLA | | |
| 9 | 10220665 | 1 | ADJUSTING SCREW | PARAFUSO DE AJUSTE | | |
| 10 | 7028158 | 1 | O-RING 12,37X2,62 | ANEL-O | | |
| 14 | 7361601 | 1 | SEAL-LOCK-SHOULDER NUT | PORCA SEAL-LOCK | | |
| 15 | 10220666 | 1 | O-RING 6,07X1,78 | ANEL-O | | |

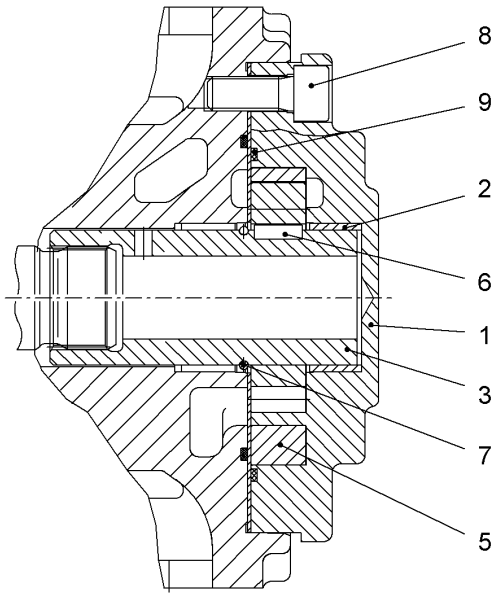


| Pos. | Item | Quantity | Description | Designação | Serie | K |
|---|---|---|---|---|---|---|
| 1 | 10220677 | 1 | PUMP COVER | TAMPA DA BOMBA | | |
| 2 | 10220637 | 1 | BEARING BUSH | BUCHA MANCAL | | 1 |
| 3 | 10220691 | 1 | STUB SHAFT | EIXO DE ENCAIXE | | |
| 5 | 10220693 | 1 | WHEEL SET | KIT DE ENGRENAGENS | | |
| 6 | 10220694 | 1 | FITTING KEY | CHAVETA | | |
| 7 | 4635246 | 1 | SNAP RING DIN 7993 A 38 | ANEL DE RETENÇÃO | | |
| 8 | 4042014 | 4 | CYLINDER SCREW ISO 4762 M10x25 8.8 A3 | PARAFUSO CILÍNDRICO | | |
| 9 | 10220668 | 1 | O-RING 88,57X2,62 | ANEL-O | | |

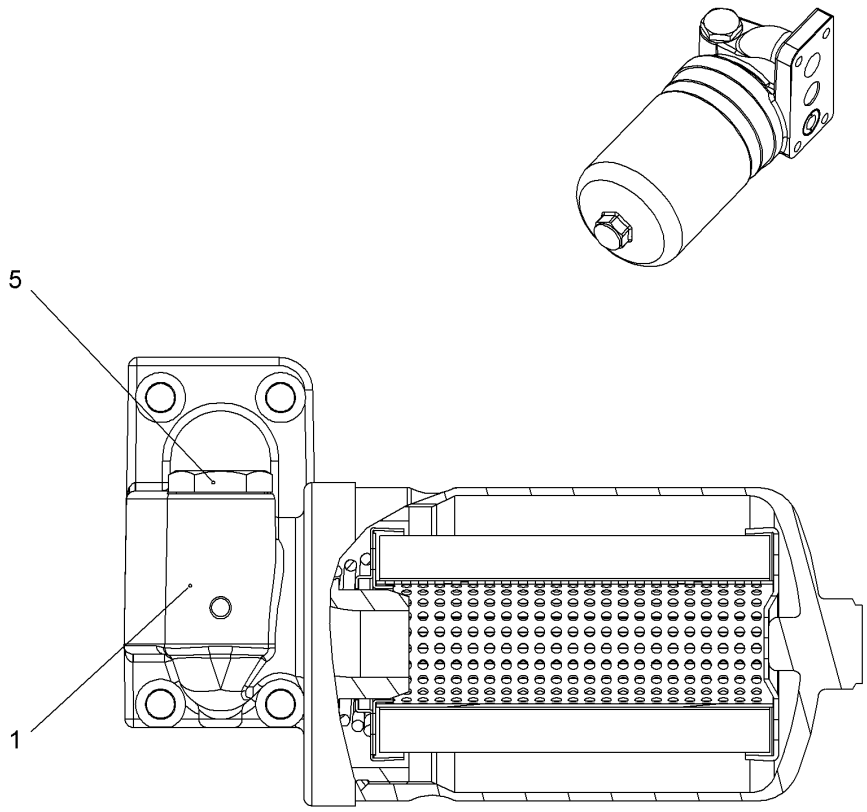


| Pos. | Item | Quantity | Description | Designação | Serie | K |
|---|---|---|---|---|---|---|
| 1 | 10220699 | 1 | FILTER<br>⇨ ❑ 135 | FILTRO | | |
| 5 | 10220700 | 1 | SCREW PLUG<br>⇨ ❑ 6 | PARAFUSO DE FECHAMENTO | | |

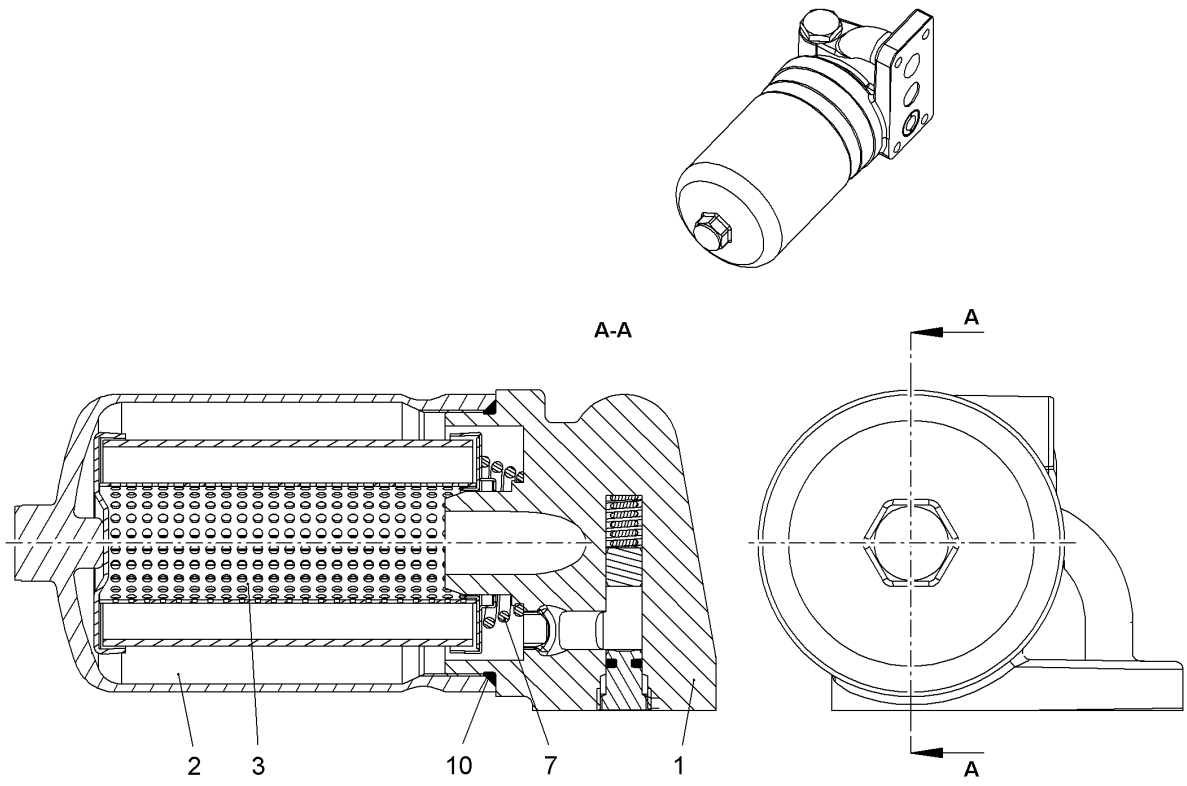


| Pos. | Item | Quantity | Description | Designação | Serie | K |
|---|---|---|---|---|---|---|
| 1 | 10220701 | 1 | FILTER HEAD<br>⇨ ❑ 136 | CABECOTE DO FILTRO | | |
| 2 | 10220702 | 1 | FILTER HOUSING | CARCACA DO FILTRO | | |
| 3 | 10220705 | 1 | FILTER ELEMENT | ELEMENTO FILTRANTE | | |
| 7 | 10220706 | 1 | SPRING | MOLA | | |
| 10 | 10220707 | 1 | O-RING 78,97X3,53 | ANEL-O | | |

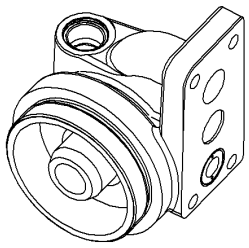

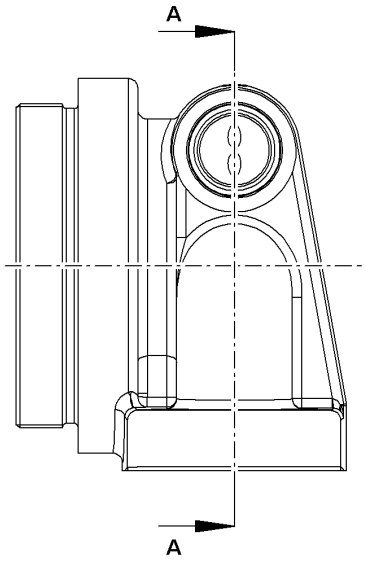


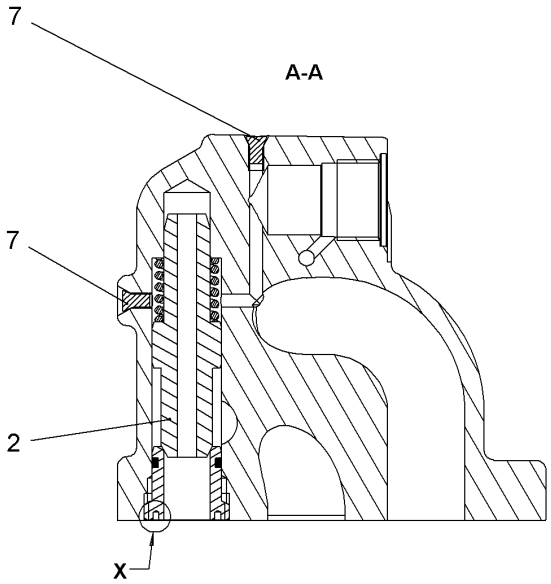


| Pos. | Item | Quantity | Description | Designação | Serie | K |
|---|---|---|---|---|---|---|
| 2 | 10220816 | 1 | COLD STAR VALVE<br>⇨ ❑ 137 | VÁLVULA DE PARTIDA FRIA | | |
| 7 | 7618568 | 2 | DOUBLE PLUG | TAMPAO DE RUPTURA DUPLO | | |

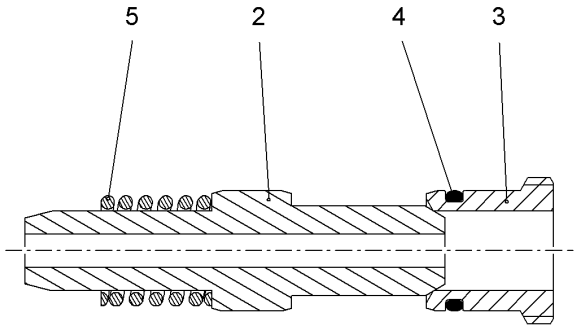


| Pos. | Item | Quantity | Description | Designação | Serie | K |
|---|---|---|---|---|---|---|
| 2 | | 1 | VALVE PISTON | PISTAO DA VALVULA | | |
| 3 | | 1 | VALVE SEAT | ASSENTO DA VALVULA | | |
| 4 | 10220819 | 1 | O-RING 14x2 | ANEL-O | | |
| 5 | | 1 | PRESSURE SPRING | MOLA DE PRESSÃO | | |

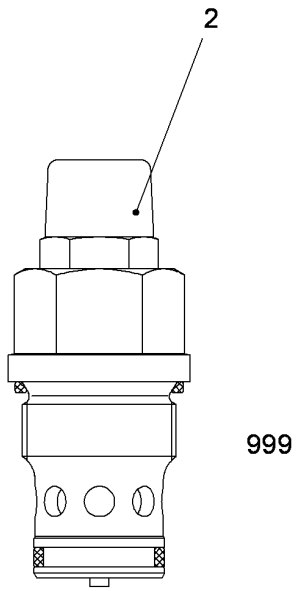


| Pos. | Item | Quantity | Description | Designação | Serie | K |
|---|---|---|---|---|---|---|
| 2 | 10291971 | 1 | CAP | CAPA | | |
| 999 | 10410659 | 1 | SEAL KIT | KIT DE VEDAÇÃO | | |

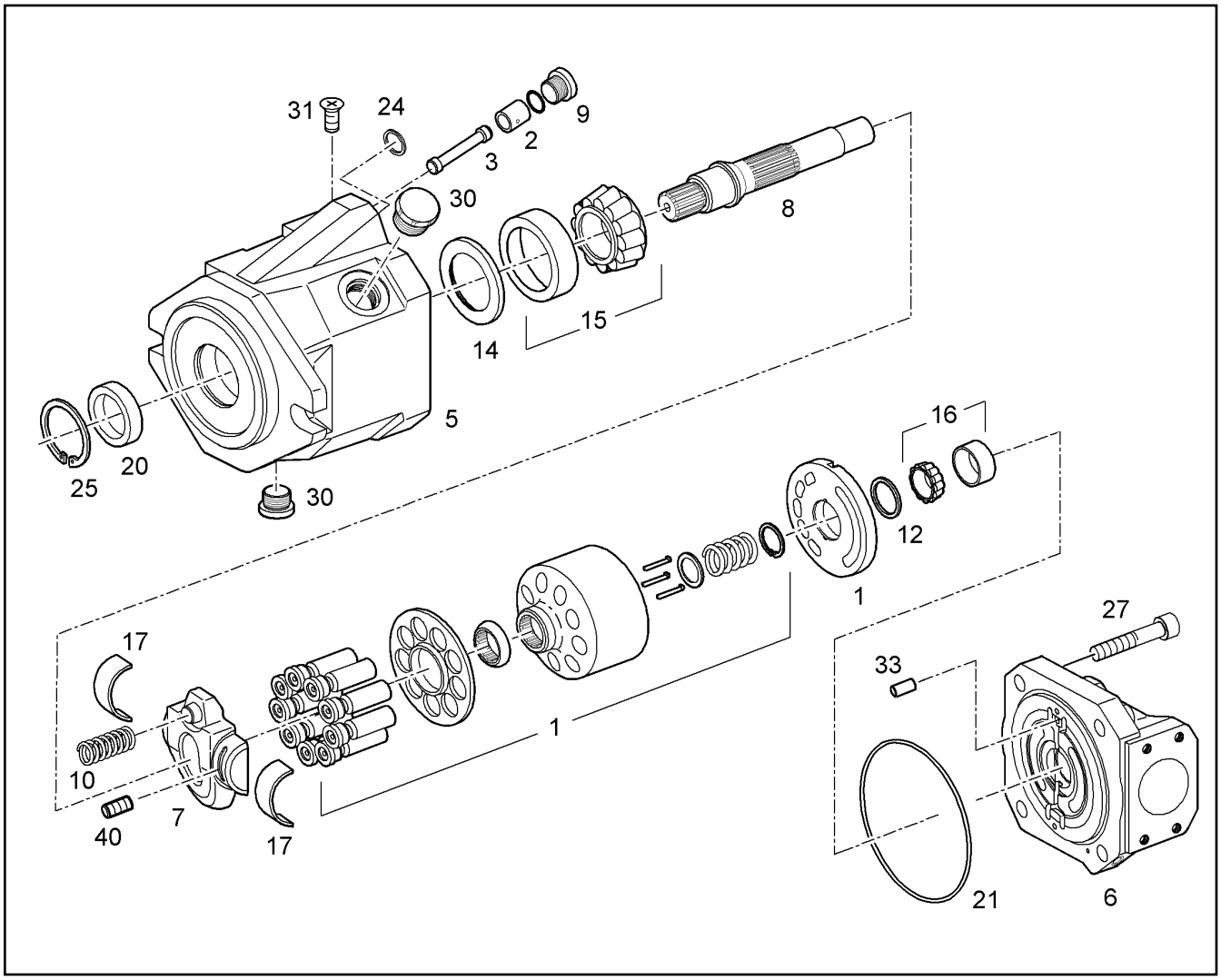


| Pos. | Item | Quantity | Description | Designação | Serie | K |
|---|---|---|---|---|---|---|
| 1 | 10355725 | 1 | DRIVING GEAR<br>⇨ ❑ 140 | MECANISMO DE ACIONAMENTO | | |
| 2 | 10355826 | 1 | DISPLACEMENT PISTON | PISTAO DE REGULAGEM | | |
| 3 | 10297878 | 1 | PISTON ROD | HASTE DO CILINDRO | | |
| 5 | 10355726 | 1 | PUMP HOUSING | CARCACA DA BOMBA | | |
| 6 | 10008084 | 1 | CONNECTING PLATE | PLACA DE CONEXAO | | |
| 7 | 10355728 | 1 | SWING ROCKER | BALANCO GIRATORIO | | |
| 8 | 10343074 | 1 | DRIVE SHAFT | EIXO DE ACIONAMENTO | | |
| 9 | 10355729 | 1 | SCREW PLUG | PARAFUSO DE FECHAMENTO | | |
| 10 | 10008087 | 1 | PRESSURE SPRING | MOLA DE PRESSÃO | | |
| 12 | 10008421 | 1 | ADJUSTING SHIM | ARRUELA DE AJUSTE | | |
| 14 | 10008088 | 1 | LIMIT STOP RING | ANEL DE ENCOSTO | | |
| 15 | 10355730 | 1 | TAPERED ROLLER BEARING | ROLAMENTO DE ROLETES CÔNI | | |
| 16 | 10355731 | 1 | TAPERED ROLLER BEARING | ROLAMENTO DE ROLETES CÔNI | | |
| 17 | 10355733 | 2 | BEARING SHELL | CASQUILHO DE MANCAL | | 1 |
| 20 | 7413402 | 1 | SHAFT SEAL X25X35X6 | RETENTOR | | |
| 21 | 10008091 | 1 | O-RING 110X2,5 | ANEL-O | | |
| 24 | 10001114 | 1 | KANTSIL 7,65X1,68 | ANEL DE VEDACAO KANTSIL | | |
| 25 | 10008092 | 1 | LOCKING RING DIN 98435 | ANEL DE RETENÇÃO | | |
| 27 | 10355735 | 4 | CYLINDER SCREW | PARAFUSO CILÍNDRICO | | |
| 30 | 10008093 | 2 | SCREW PLUG | PARAFUSO DE FECHAMENTO | | |
| 31 | 514585108 | 1 | PLUG M6 | BUJÃO DE RUPTURA | | |
| 33 | 570948608 | 1 | PARALLEL PIN 6M6 | PINO | | |
| 40 | 10355737 | 2 | COUNTERSUNK SCREW | PARAFUSO ESCAREADO | | |

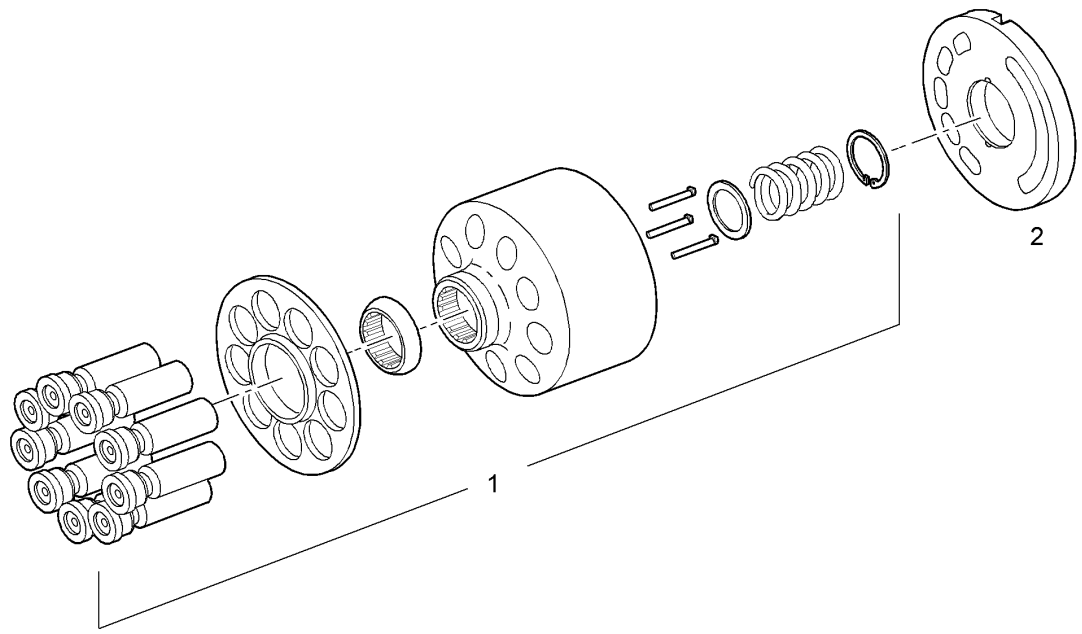


| Pos. | Item | Quantity | Description | Designação | Serie | K |
|---|---|---|---|---|---|---|
| 1 | 10355738 | 1 | DRIVING GEAR<br>⇨ ❑ 141 | MECANISMO DE ACIONAMENTO | | |
| 2 | 10355739 | 1 | DISTRIBUTOR PLATE | PLACA DE DISTRIBUICAO | | |

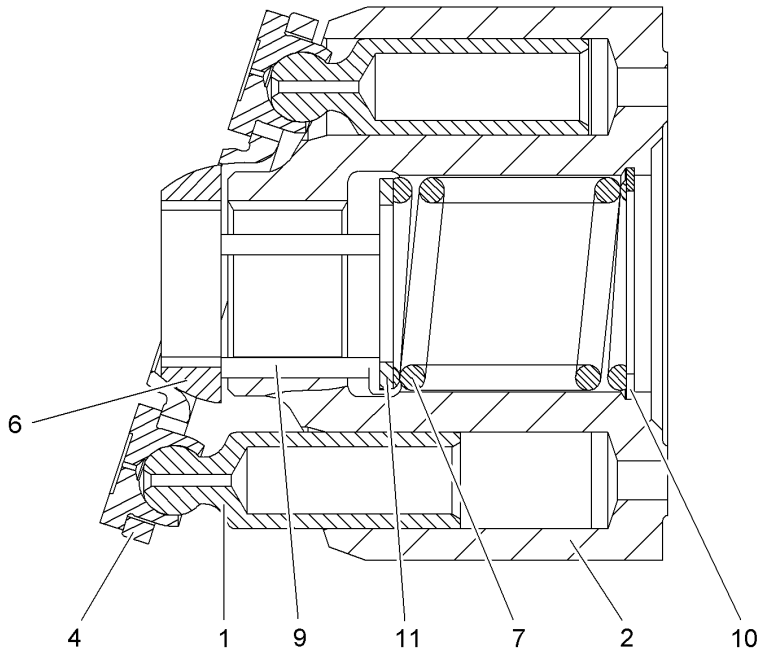


| Pos. | Item | Quantity | Description | Designação | Serie | K |
|---|---|---|---|---|---|---|
| 1 | 10355740 | 9 | PISTON | PISTÃO | | |
| 2 | 10355741 | 1 | CYLINDER | CILINDRO | | |
| 4 | 10355743 | 1 | PULL-BACK PLATE | PLACA DE RETORNO | | |
| 6 | 10355745 | 1 | PULL-BACK BALL | ESFERA DE RETORNO | | |
| 7 | 10355746 | 1 | SPRING | MOLA | | |
| 9 | 10287731 | 3 | PRESSURE PIN | PINO DE PRESSAO | | |
| 10 | 10008428 | 1 | V-RING | ANEL EM V | | |
| 11 | 10287892 | 1 | SUPPORTING WASHER | ANEL DE APOIO | | |

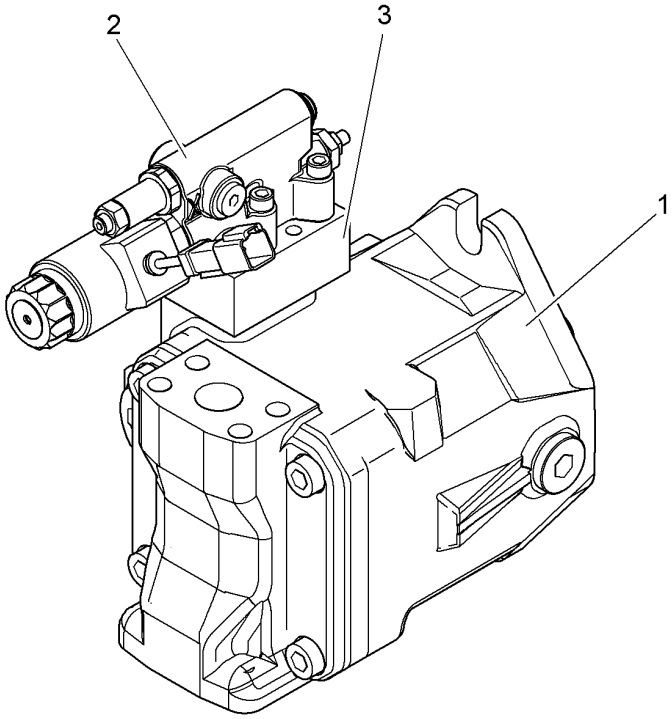


| Pos. | Item | Quantity | Description | Designação | Serie | K |
|---|---|---|---|---|---|---|
| 1 | | 1 | HYDRAULIC PUMP<br>⇨ ❑ 139 | BOMBA HIDRÁULICA | | 2 |
| 2 | 10297873 | 1 | CONTROL VALVE<br>⇨ ❑ 106 | VÁLVULA DE COMANDO | | |
| 3 | 10297874 | 1 | INTERMEDIATE PLATE<br>⇨ ❑ 107 | PLACA INTERMEDIARIA | | |

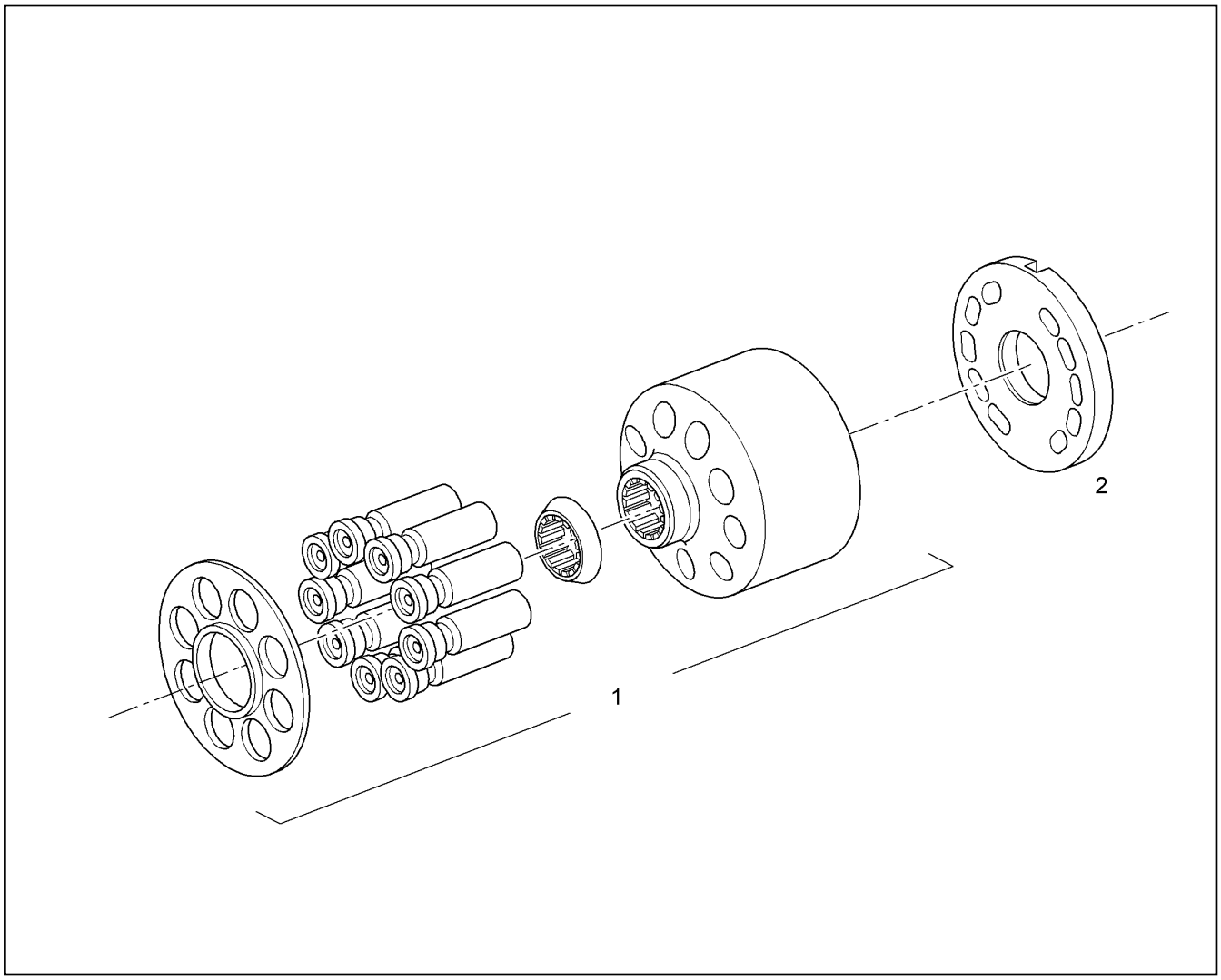


| Pos. | Item | Quantity | Description | Designação | Serie | K |
|---|---|---|---|---|---|---|
| 1 | 10413024 | 1 | DRIVING GEAR<br>⇨ ❑ 144 | MECANISMO DE ACIONAMENTO | | |
| 2 | 10413025 | 1 | DISTRIBUTOR PLATE | PLACA DE DISTRIBUICAO | | |

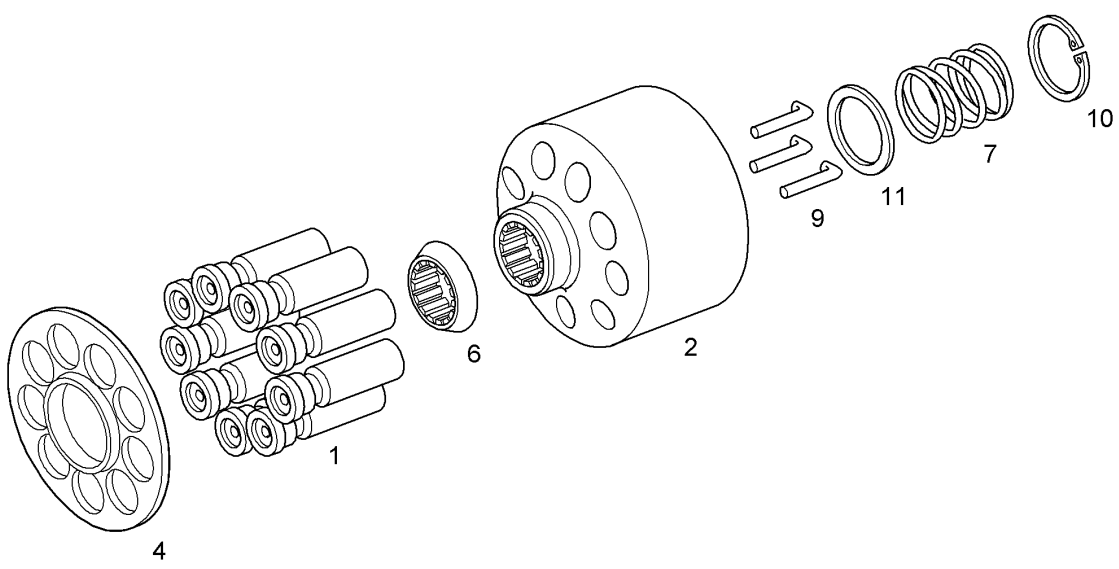


| Pos. | Item | Quantity | Description | Designação | Serie | K |
|---|---|---|---|---|---|---|
| 1 | 10101453 | 9 | PISTON | PISTÃO | | |
| 2 | 10413026 | 1 | CYLINDER | CILINDRO | | |
| 4 | 7023459 | 1 | PULL-BACK PLATE | PLACA DE RETORNO | | |
| 6 | 10324872 | 1 | PULL-BACK BALL | ESFERA DE RETORNO | | |
| 7 | 10101457 | 1 | PRESSURE SPRING | MOLA DE PRESSÃO | | |
| 9 | 10101458 | 3 | PRESSURE PIN | PINO DE PRESSAO | | |
| 10 | 10101459 | 1 | V-RING 381,5 | ANEL EM V | | |
| 11 | 10101460 | 1 | SUPPORTING WASHER | ANEL DE APOIO | | |

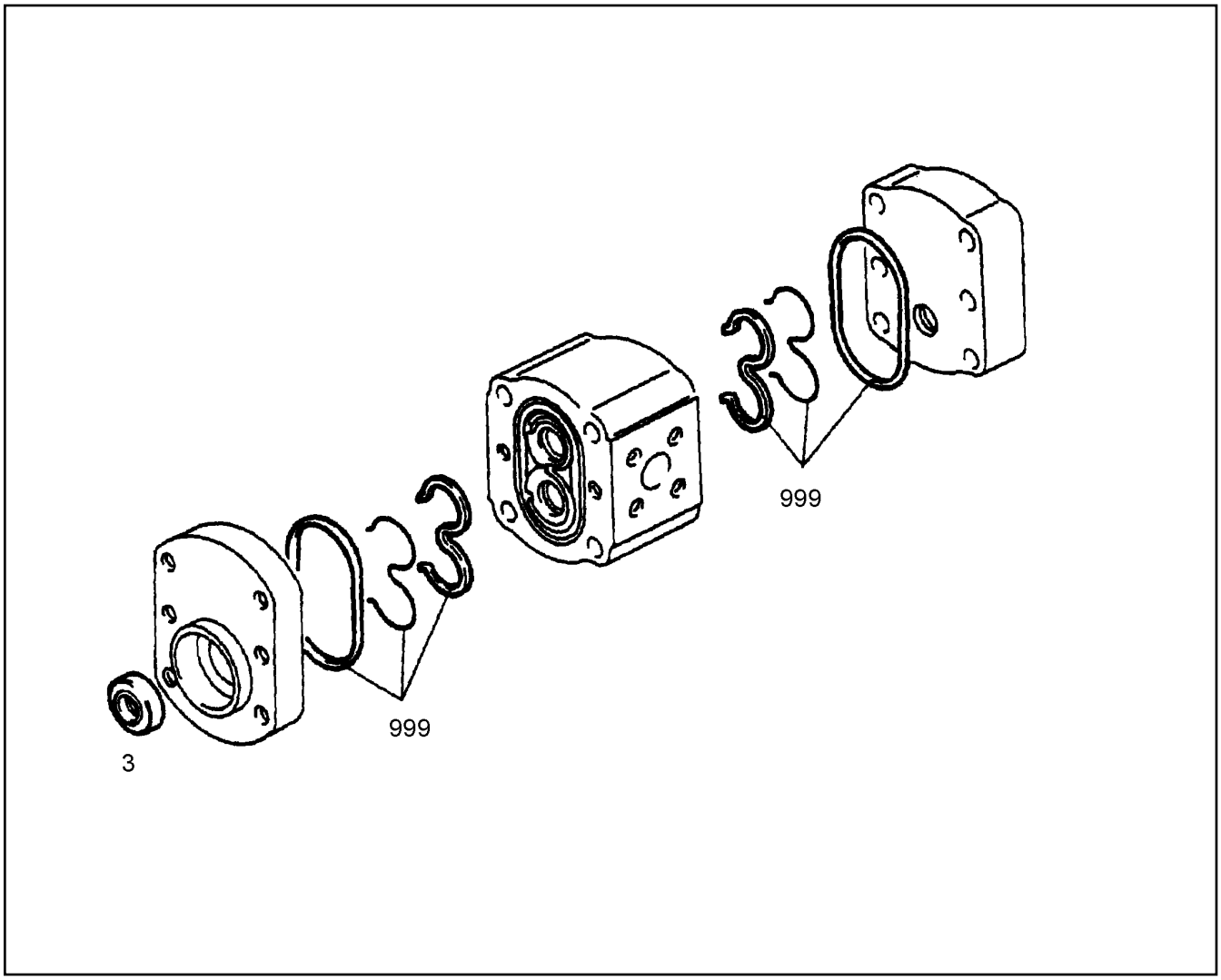


| Pos. | Item | Quantity | Description | Designação | Serie | K |
|---|---|---|---|---|---|---|
| 3 | 7010597 | 1 | SHAFT SEAL | RETENTOR | | |
| 999 | 7010596 | 1 | SEAL KIT F.PUMP<br>⇨ ❑ 454 | KIT DE VEDACAO DA BOMBA | | |

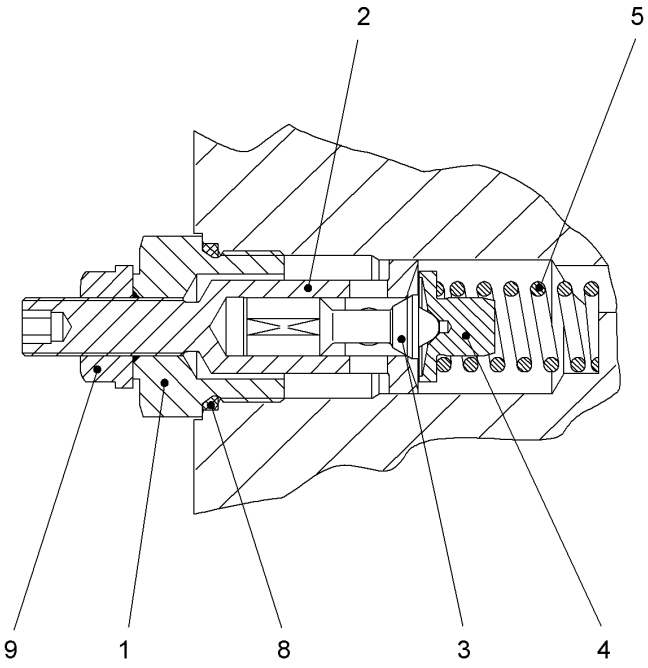


| Pos. | Item | Quantity | Description | Designação | Serie | K |
|---|---|---|---|---|---|---|
| 1 | | 1 | SCREW PLUG | PARAFUSO DE FECHAMENTO | | |
| 2 | | 1 | ADJUSTING SCREW | PARAFUSO DE AJUSTE | | |
| 3 | | 1 | VALVE PISTON | PISTAO DA VALVULA | | |
| 4 | | 1 | SPRING SUPPORT | PRATO DA MOLA | | |
| 5 | | 1 | PRESSURE SPRING | MOLA DE PRESSÃO | | |
| 8 | 7023769 | 1 | O-RING 23,47X2,62 | ANEL-O | | |
| 9 | 11213009 | 1 | SEALING NUT M10X1 | PORCA DE VEDACAO | | |

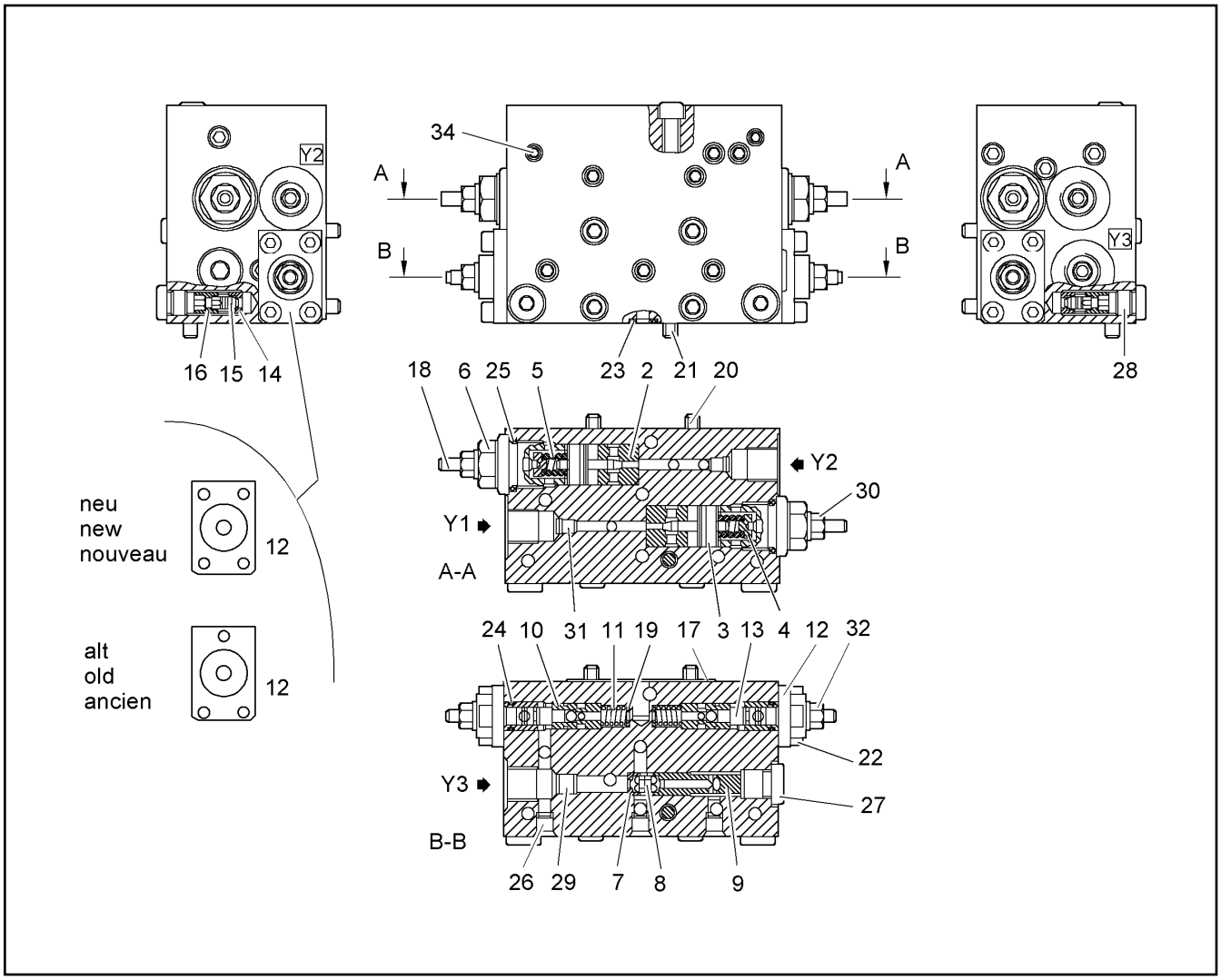


| Pos. | Item | Quantity | Description | Designação | Serie | K |
|---|---|---|---|---|---|---|
| 2 | 7028168 | 2 | VALVE BUSH | BUCHA DE VÁLVULA | | 1 |
| 3 | 7028169 | 2 | PISTON | PISTÃO | | |
| 4 | 7028170 | 2 | SPRING SUPPORT | PRATO DA MOLA | | 1 |
| 5 | 7028171 | 2 | PRESSURE SPRING | MOLA DE PRESSÃO | | |
| 6 | 7028172 | 2 | SCREW PLUG | PARAFUSO DE FECHAMENTO | | |
| 7 | 7028173 | 1 | VALVE HOUSING | CÂMARA DA VÁLVULA | | |
| 8 | 7028174 | 1 | VALVE PIN | PINO DA VALVULA | | |
| 9 | 7028175 | 1 | VALVE HOUSING | CÂMARA DA VÁLVULA | | |
| 10 | 7028176 | 2 | BRAKE PISTON<br>⇨ ❑ 129 | PISTAO DE FREIO | | 1 |
| 11 | 7028177 | 2 | PRESSURE SPRING | MOLA DE PRESSÃO | | |
| 12 | 7028178 | 2 | END COVER | TAMPA DE FECHAMENTO | -99999 | |
| 12 | 10012263 | 2 | END COVER | TAMPA DE FECHAMENTO | -99999 | |
| 13 | 7028179 | 2 | VALVE PISTON | PISTAO DA VALVULA | | |
| 14 | 7615603 | 2 | THROTTLE SCREW | PARAFUSO ESTRANGULADOR | | |
| 15 | 7028180 | 2 | VALVE PIN | PINO DA VALVULA | | |
| 16 | 7615604 | 2 | THROTTLE SCREW | PARAFUSO ESTRANGULADOR | | |
| 17 | 10475895 | 1 | SEAL | VEDAÇÃO | | |
| 18 | 7028181 | 2 | GRUB SCREW | PINO ROSCADO | | |
| 19 | 7028182 | 2 | SHIM RING | ARRUELA DE AJUSTE | | |
| 20 | 4002418 | 4 | CYLINDER SCREW ISO 4762 M6x65 8.8 A2C | PARAFUSO CILÍNDRICO | | |
| 21 | 404205608 | 1 | CYLINDER SCREW ISO 4762 M6x90 8.8 A2C | PARAFUSO CILÍNDRICO | | |
| 22 | 4001521 | 8 | CYLINDER SCREW ISO 4762 M5x10 8.8 A2C | PARAFUSO CILÍNDRICO | | |
| 23 | 7028183 | 1 | O-RING 6,02X2,62 | ANEL-O | | |
| 24 | 7028184 | 2 | O-RING 9,25X1,78 | ANEL-O | | |
| 25 | 7028185 | 2 | O-RING 17,12X2,62 | ANEL-O | | |

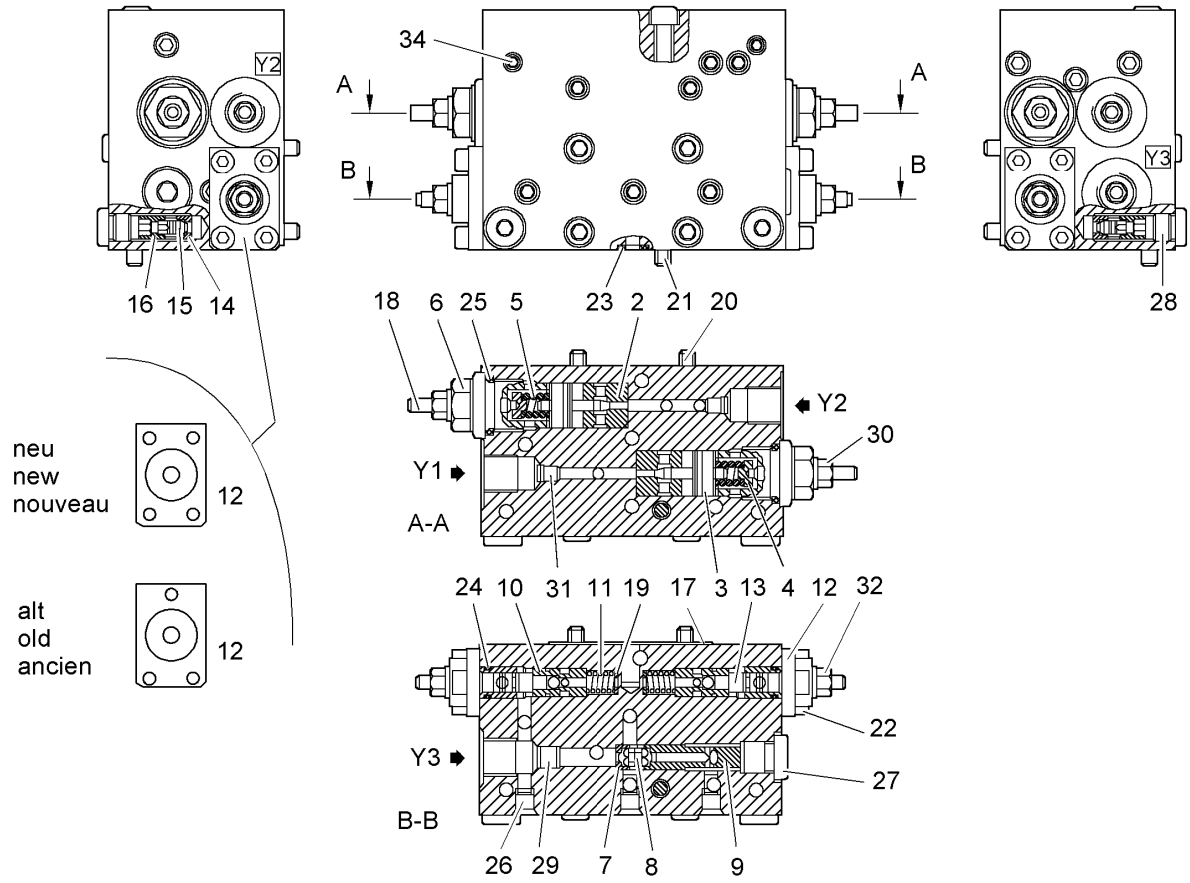


| Pos. | Item | Quantity | Description | Designação | Serie | K |
|---|---|---|---|---|---|---|
| 26 | 7022127 | 14 | PLUG | BUJÃO DE RUPTURA DUPLA | | |
| 27 | 7363178 | 1 | SCREW PLUG | PARAFUSO DE FECHAMENTO | | |
| 27 | 10100680 | 1 | SCREW PLUG M12X1,5 | PARAFUSO DE FECHAMENTO | | |
| 28 | 7362674 | 2 | SCREW PLUG VSTI M10X1 | PARAFUSO DE FECHAMENTO | | |
| 29 | 4001571 | 1 | GRUB SCREW DIN 913 M8X8 45H | PINO ROSCADO | | |
| 30 | 7361600 | 2 | SEAL-LOCK-SHOULDER NUT M6 | PORCA SEAL-LOCK | | |
| 31 | 5612246 | 2 | NOZZLE | BICO | | |
| 32 | 7027052 | 2 | SEAL-LOCK-SHOULDER NUT M6X0,5 | PORCA SEAL-LOCK | | |
| 34 | 7618568 | 6 | DOUBLE PLUG | TAMPAO DE RUPTURA DUPLO | | |

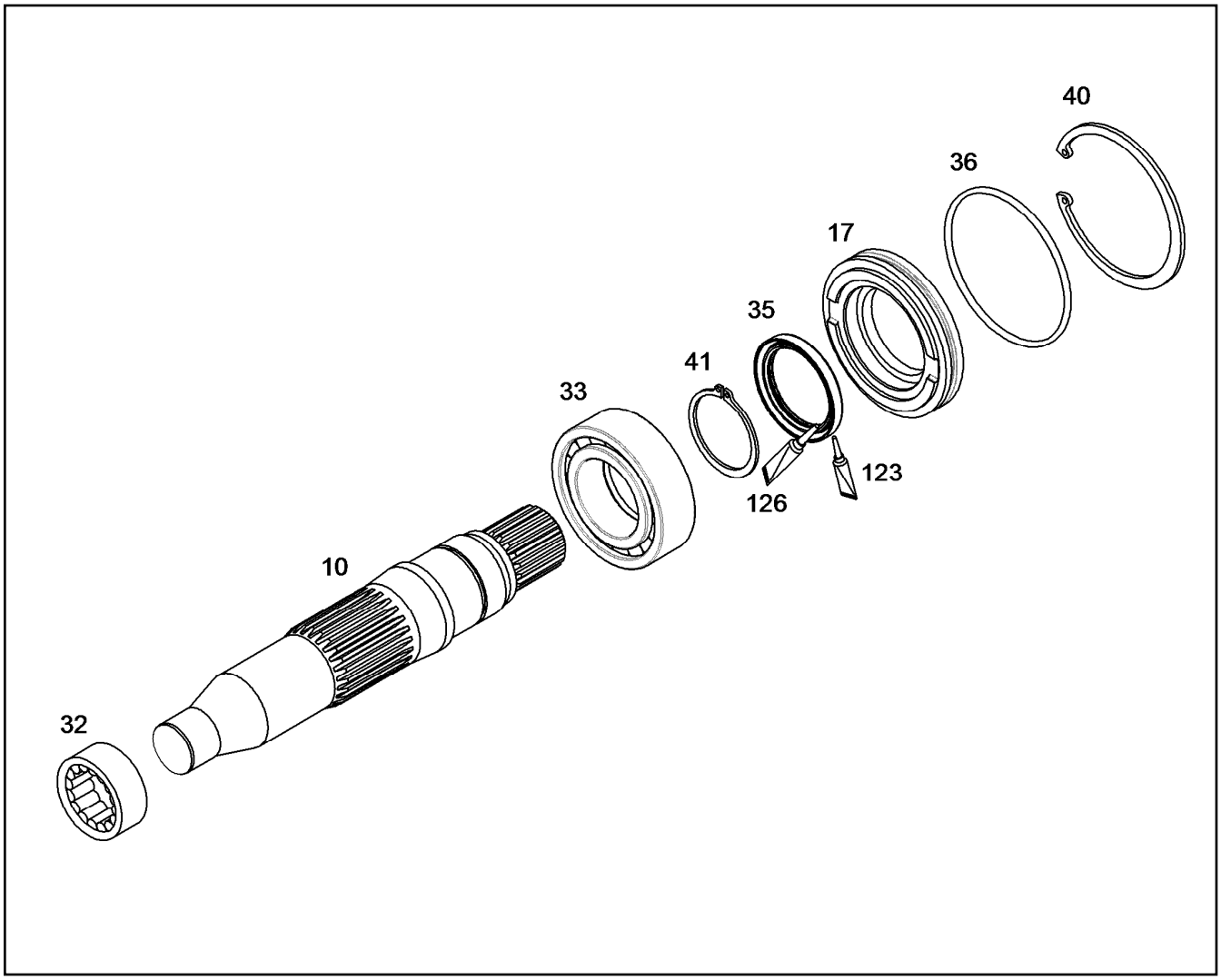


| Pos. | Item | Quantity | Description | Designação | Serie | K |
|---|---|---|---|---|---|---|
| 10 | | 1 | DRIVING SHAFT | EIXO MOTOR | | |
| 17 | | 1 | CLOSING RING | ANEL DE FECHAMENTO | | |
| 32 | 7469905 | 1 | CYL.NEEDLE BEARING | ROLAMENTO | | 1 |
| 33 | 7380106 | 1 | CYLINDRICAL ROLLER BEARING | ROLAMENTO ROLOS CILINDRI | | |
| 35 | | 1 | ROTARY SHAFT LIP SEAL ASX50X65X7 | ANEL DE VEDÇÃO DO EIXO RAD | | |
| 36 | 7380657 | 1 | O-RING DIN 3771 91,67X3,53 | ANEL-O | | |
| 40 | 4281018 | 1 | LOCKING RING DIN 472100 | ANEL DE RETENÇÃO | | |
| 41 | 4280034 | 1 | LOCKING RING DIN 471 50 X2 | ANEL DE RETENÇÃO | | |
| 126 | 8655008 | 1 | GREASE | GRAXA | | |

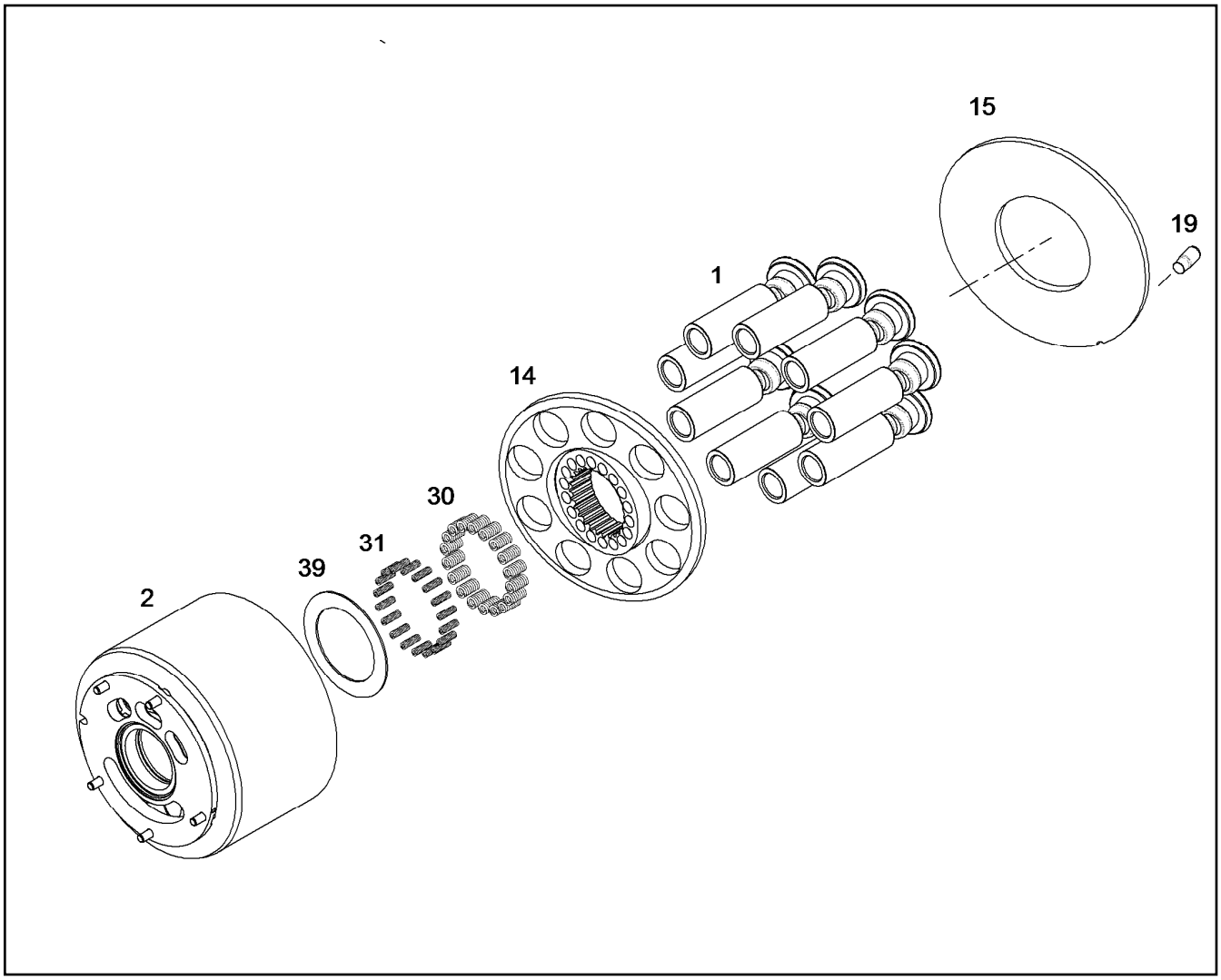


| Pos. | Item | Quantity | Description | Designação | Serie | K |
|---|---|---|---|---|---|---|
| 1 | 9880604 | 9 | RK PISTON WITH GUIDE SHOE NG 165<br>⇨ ❑ 153 | KIT DE REPARO PISTÕES AXIAI | | |
| 2 | 9073751 | 1 | RK CYLINDER+CONTROL PLATE<br>⇨ ❑ 124 | KIT DE REPARO GRUPO ROTÓR | | |
| 14 | 9888119 | 1 | REPAIR KIT NG 165<br>⇨ ❑ 156 | CONJ REP (ESFERA RZ+PL) | | |
| 15 | 9888536 | 1 | SLIDING DISC 77X167X7,2 | ARRUELA DESLIZANTE | | |
| 19 | 9888133 | 1 | PIN | PINO | | |
| 30 | 9268776 | 26 | PRESSURE SPRING 5,6/1,4X192/8 | MOLA DE PRESSÃO | | |
| 31 | 10011098 | 26 | PRESSURE SPRING 0,80X3,06X20,33 | MOLA DE PRESSÃO | | |
| 39 | 9885920 | 1 | WASHER SET | KIT DE ARRUELAS | | |

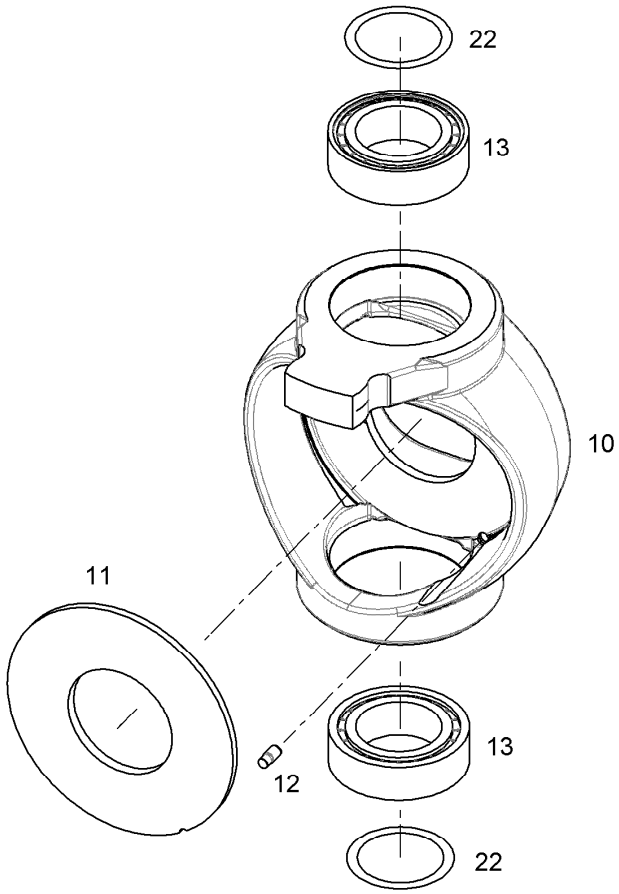


| Pos. | Item | Quantity | Description | Designação | Serie | K |
|---|---|---|---|---|---|---|
| 10 | | 1 | YOKE | PLACA DE ANGULACAO | | |
| 11 | | 1 | SLIDING DISC 77X167X7,2 | ARRUELA DESLIZANTE | | |
| 12 | | 1 | PIN | PINO | | |
| 13 | | 2 | CYLINDRICAL ROLLER BEARING | ROLAMENTO ROLOS CILINDRI | | |
| 22 | | 2 | KIT DISTANCE RINGS<br>⇨ ❑ 155 | KIT DE ANEIS DISTANCIADORES | | |

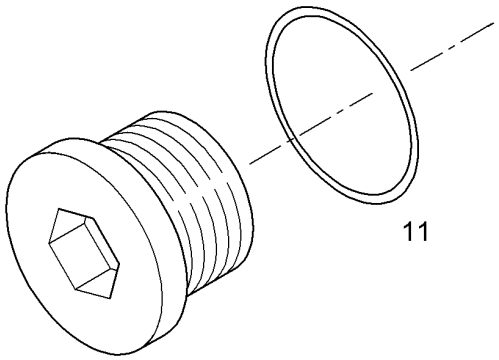


| Pos. | Item | Quantity | Description | Designação | Serie | K |
|---|---|---|---|---|---|---|
| 11 | 7264906 | 1 | SEAL | VEDAÇÃO | | |

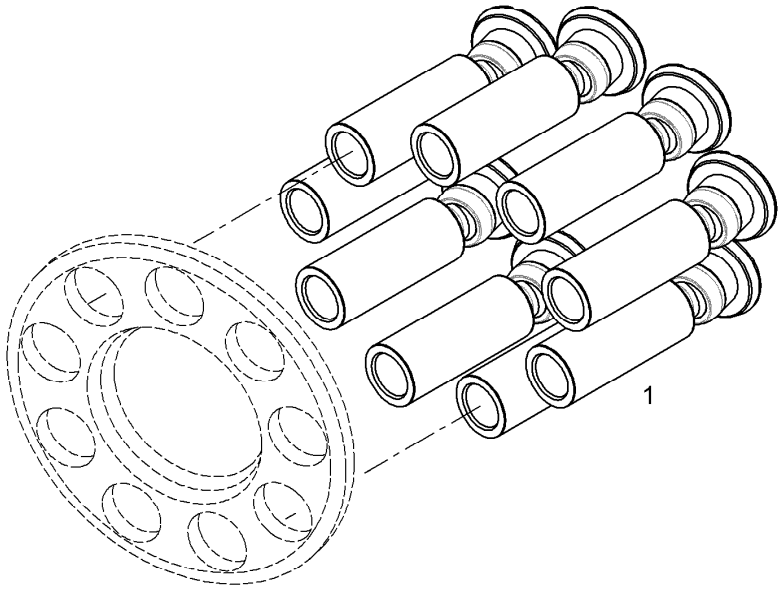


| Pos. | Item | Quantity | Description | Designação | Serie | K |
|---|---|---|---|---|---|---|
| 1 | | 9 | PISTON WITH GUIDE SHOE | PISTÃO COM SAPATA DESLIZA | | |

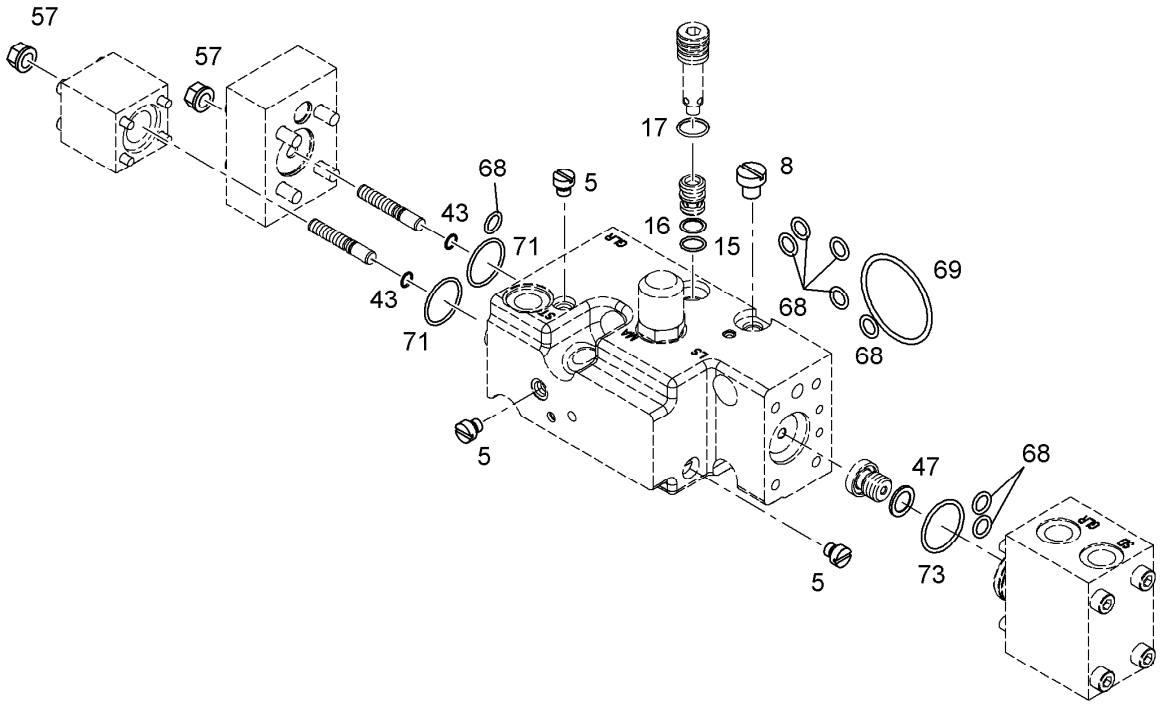


| Pos. | Item | Quantity | Description | Designação | Serie | K |
|---|---|---|---|---|---|---|
| 5 | | 4 | SCREW PLUG M6<br>⇨ ❑ 112 | PARAFUSO DE FECHAMENTO | | |
| 8 | | 1 | SCREW PLUG M8X1<br>⇨ ❑ 113 | PARAFUSO DE FECHAMENTO | | |
| 15 | | 1 | O-RING | ANEL-O | | |
| 16 | | 1 | SUPPORTING RING | ANEL DE APOIO | | |
| 17 | | 1 | O-RING DIN 3771 10,82X1,78 | ANEL-O | | |
| 43 | | 2 | O-RING 4,00X1,00 | ANEL-O | | |
| 47 | | 1 | GLYD RING 12 | ANEL GLYD | | |
| 57 | | 2 | SEAL-LOCK-SHOULDER NUT M6 | PORCA SEAL-LOCK | | |
| 68 | | 8 | O-RING DIN 3771 6,02X2,62 | ANEL-O | | |
| 69 | | 1 | O-RING 41X1,78 | ANEL-O | | |
| 71 | | 2 | O-RING DIN 3771 18,72X2,62 | ANEL-O | | |
| 73 | | 1 | O-RING DIN 3771 21,95X1,78 | ANEL-O | | |

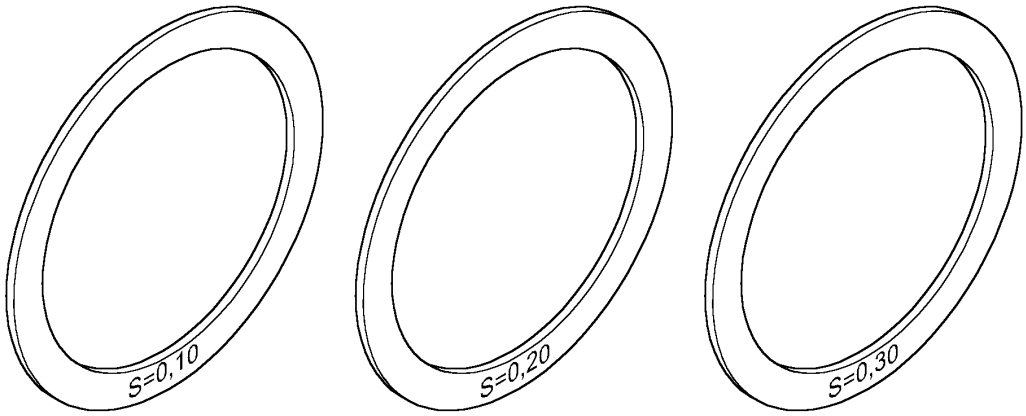


10 20 30

| Pos. | Item | Quantity | Description | Designação | Serie | K |
|---|---|---|---|---|---|---|
| 10 | 7380974 | 1 | SUPPORTING WASHER S 55,3X63,7X0,1 | ANEL DE APOIO | | |
| 20 | 7380975 | 1 | SUPPORTING WASHER S 55,3X63,7X0,2 | ANEL DE APOIO | | |
| 30 | 7380976 | 1 | SUPPORTING WASHER S 55,3X63,7X0,3 | ANEL DE APOIO | | |

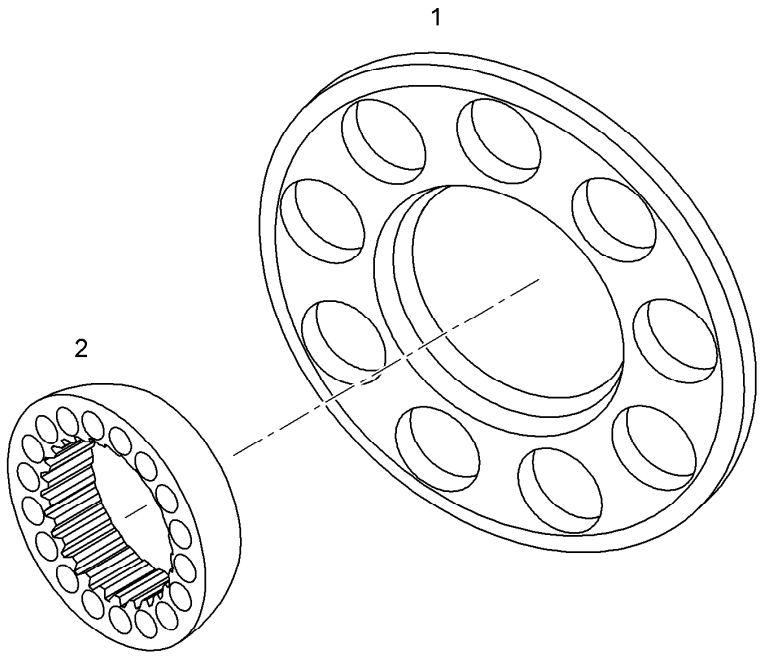


| Pos. | Item | Quantity | Description | Designação | Serie | K |
|---|---|---|---|---|---|---|
| 1 | | 1 | PULL-BACK BALL NG 165 | ESFERA DE RETORNO | | |
| 2 | | 1 | PULL-BACK PLATE | PLACA DE RETORNO | | |

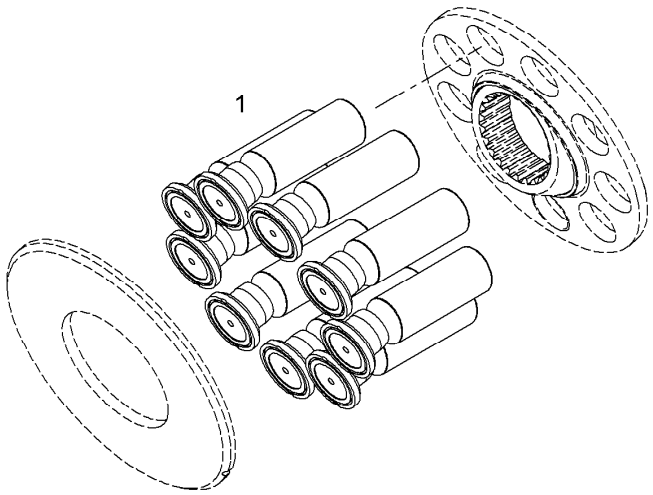


| Pos. | Item | Quantity | Description | Designação | Serie | K |
|---|---|---|---|---|---|---|
| 1 | | 9 | PISTON WITH GUIDE SHOE | PISTÃO COM SAPATA DESLIZA | | |

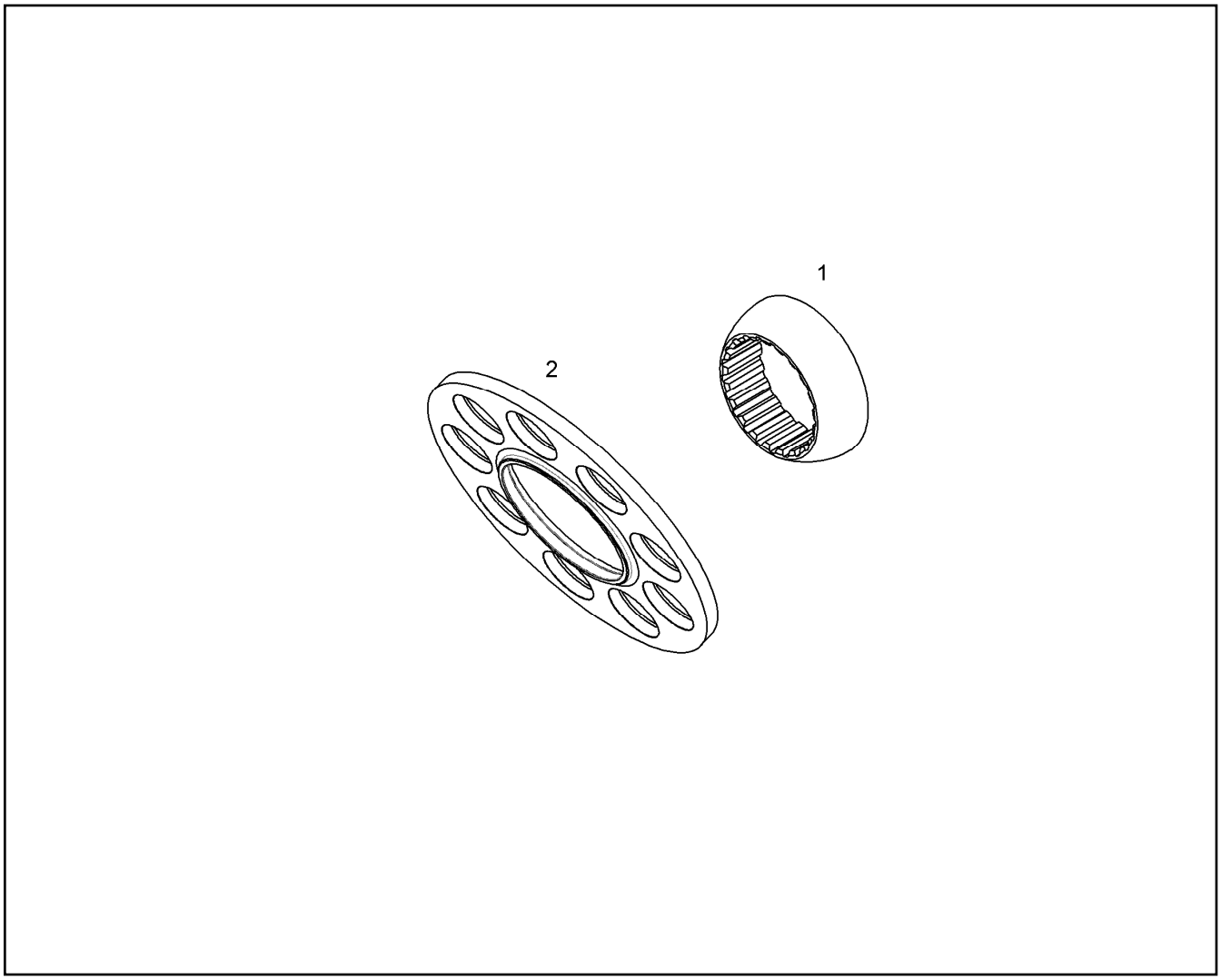


| Pos. | Item | Quantity | Description | Designação | Serie | K |
|---|---|---|---|---|---|---|
| 1 | | 1 | PULL-BACK BALL | ESFERA DE RETORNO | | |
| 2 | | 1 | PULL-BACK PLATE | PLACA DE RETORNO | | |

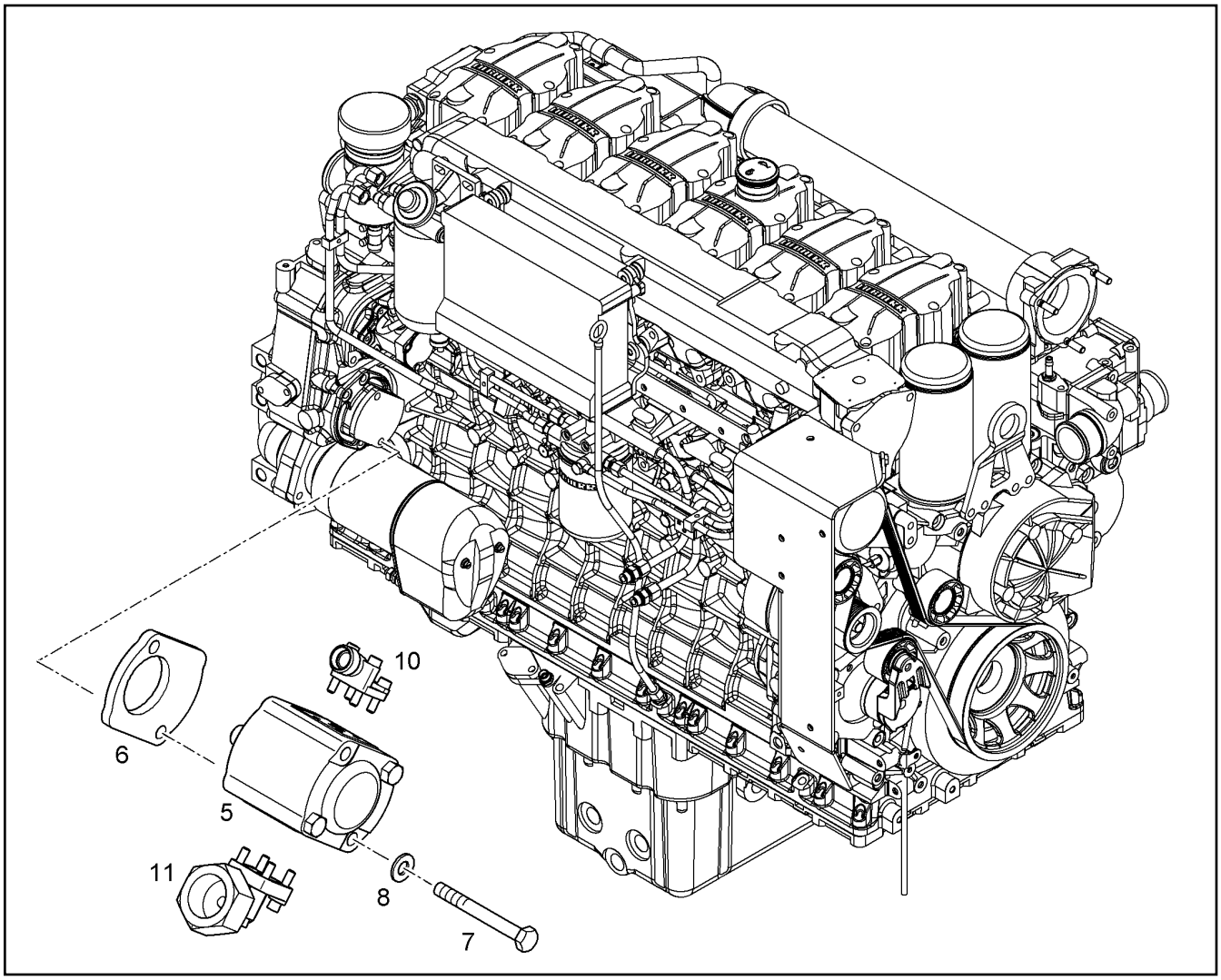


| Pos. | Item | Quantity | Description | Designação | Serie | K |
|---|---|---|---|---|---|---|
| 5 | 5609979 | 1 | GEAR PUMP<br>⇨ ❑ 145 | BOMBA DE ENGRENAGENS | | 2 |
| 6 | 9885529 | 1 | SEAL | VEDAÇÃO | | |
| 7 | 4002195 | 2 | HEX BOLT ISO 4014 M10X100 10.9 A3C | PARAFUSO SEXTAVADO | | |
| 8 | 4229913 | 2 | LOCK WASHER 10,5/16X2 VS 10 | ARRUELA DE SEGURANÇA | | |
| 10 | 5211460 | 1 | ANGLE FLANGE SCREWED UNION BFW 15<br>⇨ ❑ 168 | UNIAO ROSCADA FLANGE EM | | |
| 11 | 7367136 | 1 | SCREW FITTING BFW 35L<br>⇨ ❑ 99 | REDUÇÃO | | |

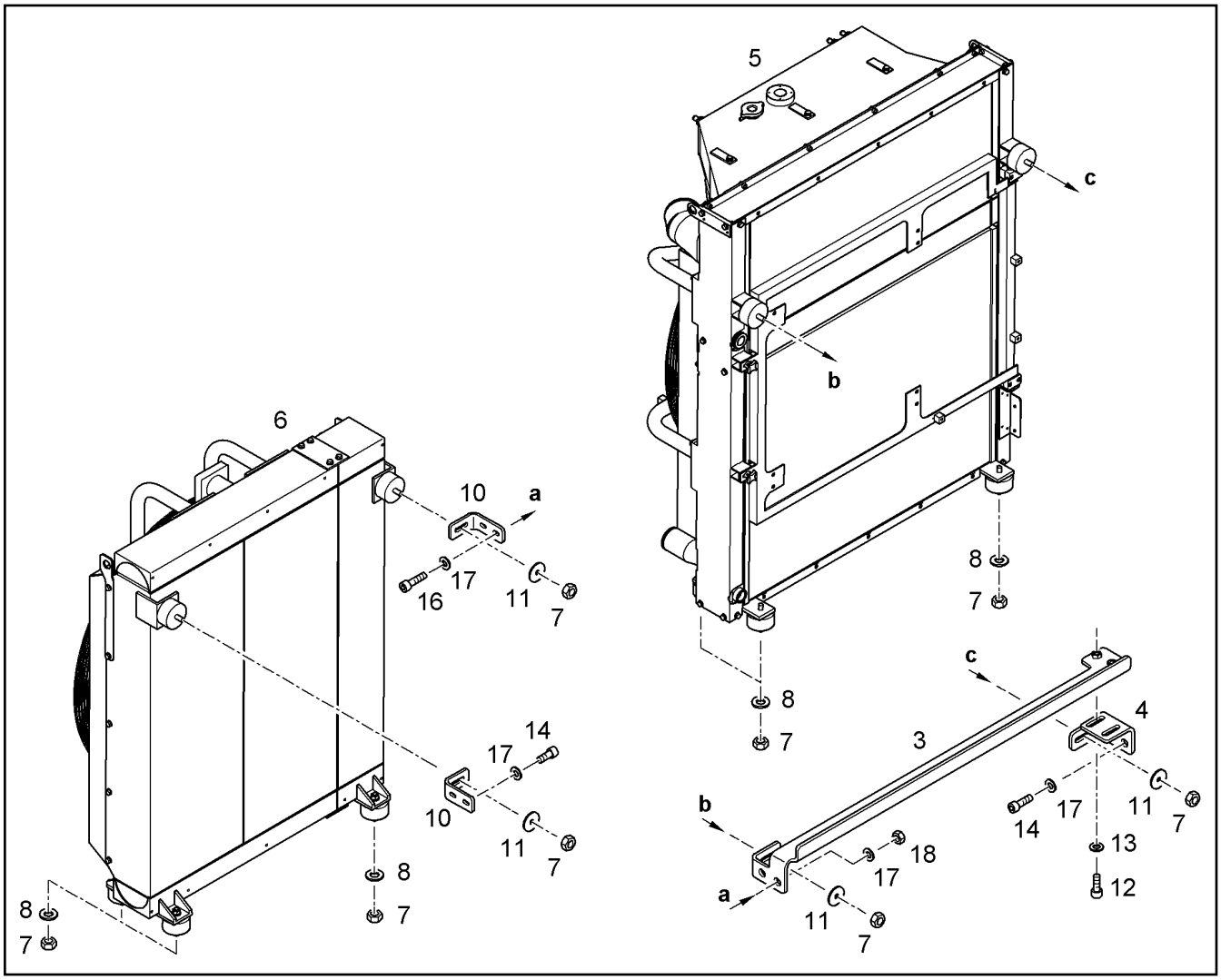


| Pos. | Item | Quantity | Description | Designação | Serie | K |
|---|---|---|---|---|---|---|
| 3 | 10377687 | 1 | HOLDER | SUPORTE | | |
| 4 | 10377689 | 1 | HOLDER | SUPORTE | | |
| 5 | 10454752 | 1 | COMBINATED RADIATOR<br>[278803004314 ]<br>⇨ ❑ 164 | RADIADOR COMBINADO | | |
| 6 | 10355084 | 1 | OIL COOLER<br>[434523004453 ]<br>⇨ ❑ 167 | RADIADOR DE ÓLEO | | |
| 7 | 4119106 | 12 | HEX NUT M12 | PORCA SEXTAVADA | | |
| 8 | 10289804 | 8 | WASHER ISO 7089 12 300HV | ARRUELA | | |
| 10 | 9947234 | 2 | ANGLE | CANTONEIRA | | |
| 11 | 9380109 | 4 | WASHER 12,5/55X5 | ARRUELA | | |
| 12 | 4043163 | 2 | CYLINDER SCREW ISO 4762 M12X30 10.9 | PARAFUSO CILÍNDRICO | | |
| 13 | 10289804 | 2 | WASHER ISO 7089 12 300HV | ARRUELA | | |
| 14 | 4043000 | 4 | CYLINDER SCREW ISO 4762 M10X30 10.9 | PARAFUSO CILÍNDRICO | | |
| 16 | 4900981 | 2 | CYLINDER SCREW ISO 4762 M10X45 10.9 | PARAFUSO CILÍNDRICO | | |
| 17 | 4601173 | 8 | WASHER 10,5 | ARRUELA | | |
| 18 | 4000913 | 2 | HEX NUT M10 | PORCA SEXTAVADA | | |

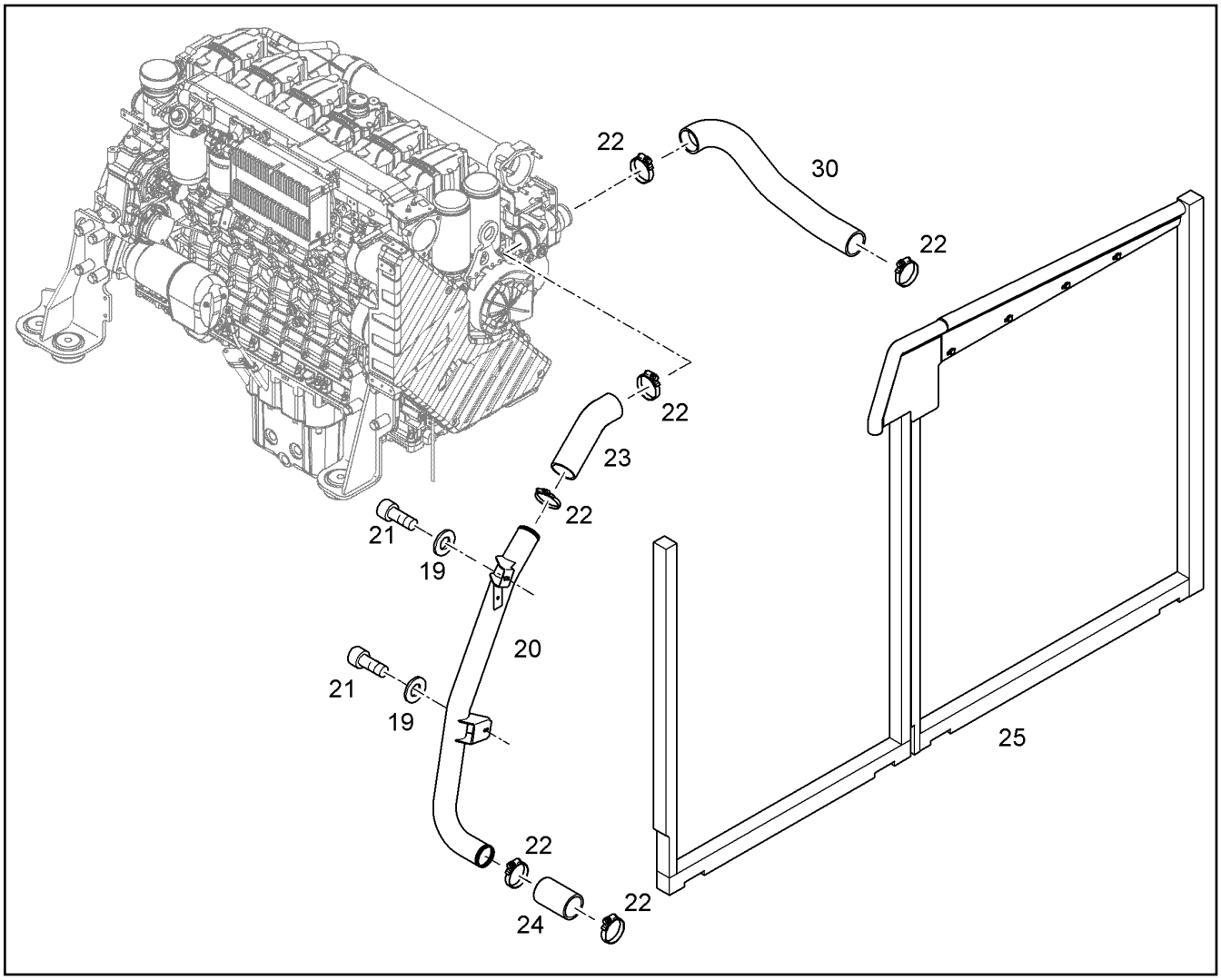


| Pos. | Item | Quantity | Description | Designação | Serie | K |
|---|---|---|---|---|---|---|
| 19 | 10289795 | 2 | WASHER ISO 7089 10 300HV | ARRUELA | | |
| 20 | 10054654 | 1 | WATER PIPE | TUBO DE AGUA | -99998 | |
| 20 | 10371175 | 1 | WATER PIPE | TUBO DE AGUA | 99999- | |
| 21 | 4901606 | 2 | CYLINDER SCREW ISO 4762 M10X16 10.9 | PARAFUSO CILÍNDRICO | | |
| 22 | 10012761 | 6 | HOSE CLAMP HKFK 70 60-80x14,3 W2-2 | ABRAÇADEIRA DE MANGUEIRA | | |
| 23 | 10054703 | 1 | WATER HOSE | MANGUEIRA DE AGUA | | |
| 24 | 10054704 | 1 | WATER HOSE | MANGUEIRA DE AGUA | | |
| 25 | | 1 | COOLER SEALING<br>⇨ ❑ 166 | VEDACAO DO RADIADOR | | |
| 30 | 10049420 | 1 | WATER HOSE | MANGUEIRA DE AGUA | | |

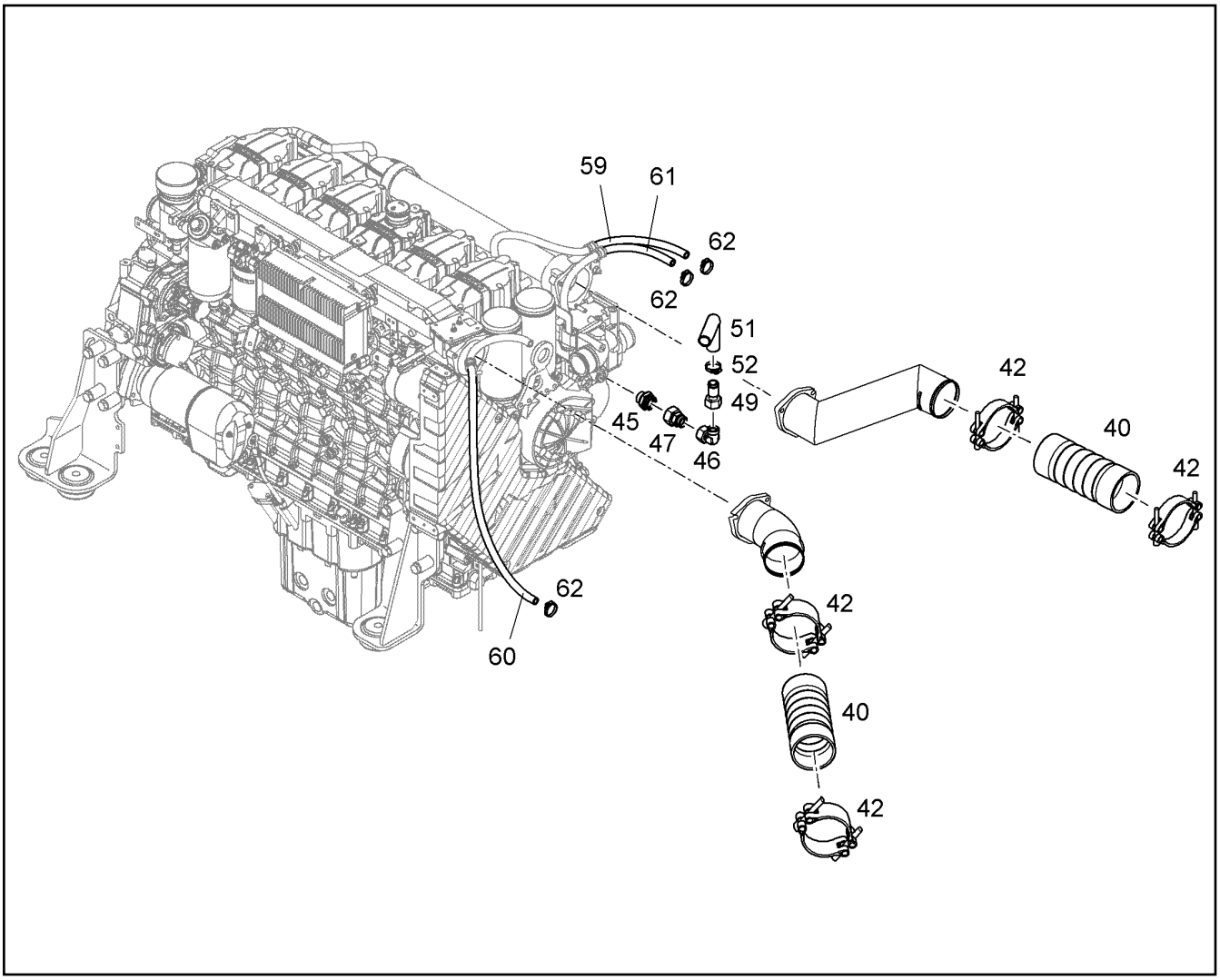


| Pos. | Item | Quantity | Description | Designação | Serie | K |
|---|---|---|---|---|---|---|
| 40 | 10082117 | 2 | SILICONE HOSE | MANGUEIRA DE SILICONE | | |
| 42 | 774252314 | 4 | HOSE CLAMP | ABRAÇADEIRA DE MANGUEIRA | | |
| 45 | 7371875 | 1 | SCREW FITTING GE 28L M30X1,5 | REDUÇÃO | | |
| 46 | 247126202 | 1 | SCREW FITTING EW 22L | REDUÇÃO | | |
| 47 | 7616910 | 1 | SCREW FITTING RED 28/22L | REDUÇÃO | | |
| 49 | 9809629 | 1 | HOSE CONNECTION DN25 | CONEXÃO DE MANGUEIRA | | |
| 51 | 9384970 | 1 | WATER HOSE | MANGUEIRA DE AGUA | | |
| 52 | 5004927 | 2 | HOSE CLAMP DIN 3017-1 A 32 25-40x13 W2- | ABRAÇADEIRA DE MANGUEIRA | | |
| 59 | 9363435 | 1 | WATER HOSE | MANGUEIRA DE AGUA | | |
| 60 | 9380097 | 1 | WATER HOSE | MANGUEIRA DE AGUA | | 1 |
| 61 | 9467682 | 1 | WATER HOSE | MANGUEIRA DE AGUA | | |
| 62 | 4601105 | 6 | HOSE CLAMP DIN 3017 A 12 - 20 X 9 W2-2 | ABRAÇADEIRA DE MANGUEIRA | | |

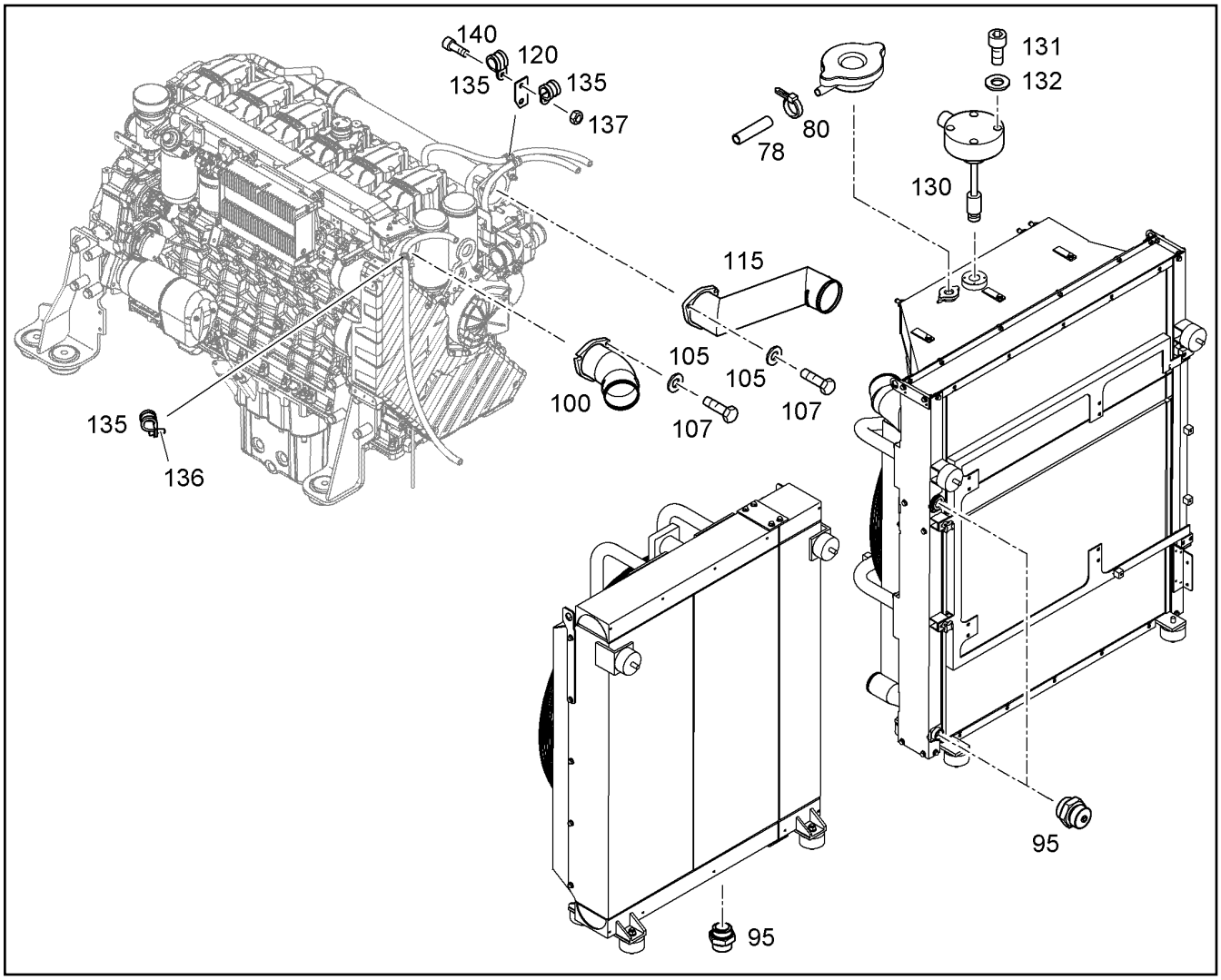


| Pos. | Item | Quantity | Description | Designação | Serie | K |
|---|---|---|---|---|---|---|
| 78 | 7363060 | 2m | SYNTHETIC HOSE | MANGUEIRA DE PLASTICO | | 1 |
| 80 | 7005587 | 5 | CABLE TIE | AMARRA PARA CABOS | | |
| 95 | 5004624 | 3 | OIL DRAIN PLUG M 30 1,5<br>⇨ ❑ 491 | VÁLVULA DE DRENAGEM | | |
| 100 | 9937302 | 1 | AIR PIPE | TUBO DE AR | | |
| 105 | 10289795 | 5 | WASHER ISO 7089 10 300HV | ARRUELA | | |
| 107 | 4001246 | 6 | HEX BOLT ISO 4017 M10X35 10.9 A3C | PARAFUSO SEXTAVADO | | |
| 115 | 9937303 | 1 | AIR PIPE | TUBO DE AR | | |
| 120 | 10056858 | 1 | ORIFICE PLATE | CHAPA PERFURADA | | |
| 130 | 6205496 | 1 | FLOAT SWITCH | SENSOR DE NÍVEL | | |
| 131 | 4635142 | 4 | CYLINDER SCREW ISO 4762 M5x20 8.8 A2C | PARAFUSO CILÍNDRICO | | |
| 132 | 7361965 | 4 | LOCK WASHER | ARRUELA DE SEGURANÇA | | |
| 135 | 7362665 | 3 | CLAMP DIN 3016 D1- 20 X 20 W1-2-CR | BRAÇADEIRA | | |
| 136 | 4043082 | 1 | CYLINDER SCREW ISO 4762 M8X20 10.9 A2 | PARAFUSO CILÍNDRICO | | |
| 137 | 4000381 | 1 | HEX NUT M8 | PORCA SEXTAVADA | | |
| 140 | 4901217 | 1 | CYLINDER SCREW ISO 4762 M8X25 10.9 A2 | PARAFUSO CILÍNDRICO | | |

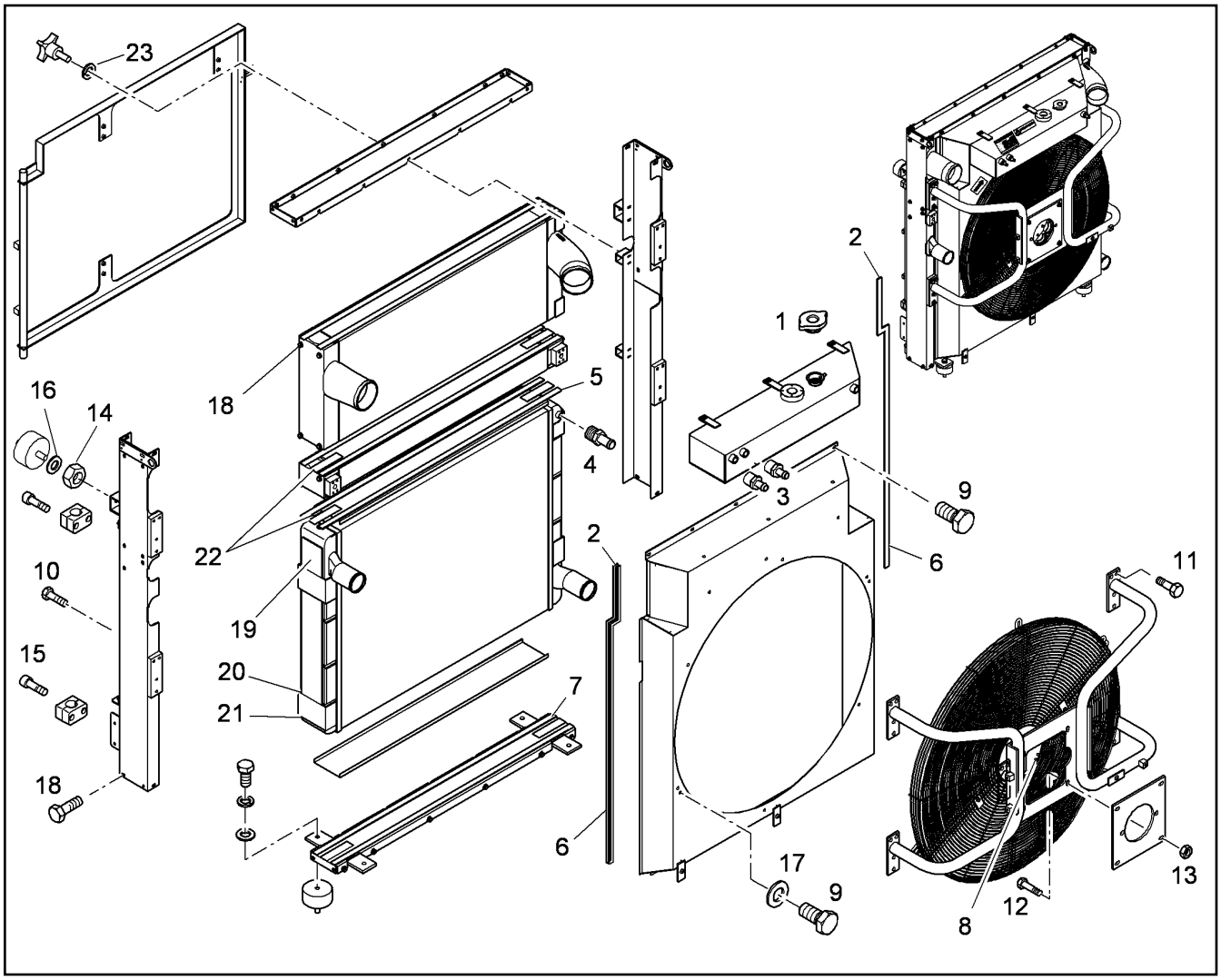


| Pos. | Item | Quantity | Description | Designação | Serie | K |
|---|---|---|---|---|---|---|
| 1 | 10331664 | 1 | VALVE COVER | TAMPA DO RESERVATÓRIO | | |
| 2 | 10467569 | 0.52m | SEALING TAPE | FITA DE VEDACAO | | 2 |
| 3 | 10331639 | 3 | HOSE NIPPLE | NIPLE DE MANGUEIRA | | |
| 4 | 10467241 | 1 | HOSE NIPPLE | NIPLE DE MANGUEIRA | | |
| 5 | 10412177 | 2.058m | SEALING PROFILE | PERFIL DE VEDACAO | | |
| 6 | 10412177 | 4.28m | SEALING PROFILE | PERFIL DE VEDACAO | | |
| 7 | 10471192 | 2 | RUBBER BAND | TIRA DE BORRACHA | | |
| 8 | 10331667 | 2 | LOCKING SCREW M6X20 | PARAFUSO TRAVA | | |
| 9 | 10331668 | 15 | LOCKING SCREW M8X12 | PARAFUSO TRAVA | | |
| 10 | 10327102 | 8 | LOCKING SCREW M8X16 | PARAFUSO TRAVA | | |
| 11 | 10335969 | 16 | LOCKING SCREW M10X20 | PARAFUSO TRAVA | | |
| 12 | 10327110 | 4 | LOCKING SCREW M10X30 | PARAFUSO TRAVA | | |
| 13 | 10335968 | 4 | HEX NUT M10 | PORCA SEXTAVADA | | |
| 14 | 4980150 | 2 | HEX NUT M12 | PORCA SEXTAVADA | | |
| 15 | 4042106 | 4 | CYLINDER SCREW ISO 4762 M6x30 8.8 A2C | PARAFUSO CILÍNDRICO | | |
| 16 | 10289804 | 6 | WASHER ISO 7089 12 300HV | ARRUELA | | |
| 17 | 10326997 | 8 | WASHER | ARRUELA | | |
| 18 | 10327103 | 24 | LOCKING SCREW M8X25 | PARAFUSO TRAVA | | |
| 19 | 10467242 | 2 | RUBBER INSERT 4/90X115 | REVESTIMENTO DE BORRACHA | | |
| 20 | 10467244 | 4 | RUBBER INSERT 4/90X200 | REVESTIMENTO DE BORRACHA | | |
| 21 | 10467243 | 2 | RUBBER INSERT 4/90X400 | REVESTIMENTO DE BORRACHA | | |
| 22 | 10467245 | 6 | RUBBER INSERT 4/30X170 | REVESTIMENTO DE BORRACHA | | |
| 23 | 4900457 | 2 | CIRCLIP DIN 127 B 12 A3C | ARRUELA DE PRESSÃO | | |

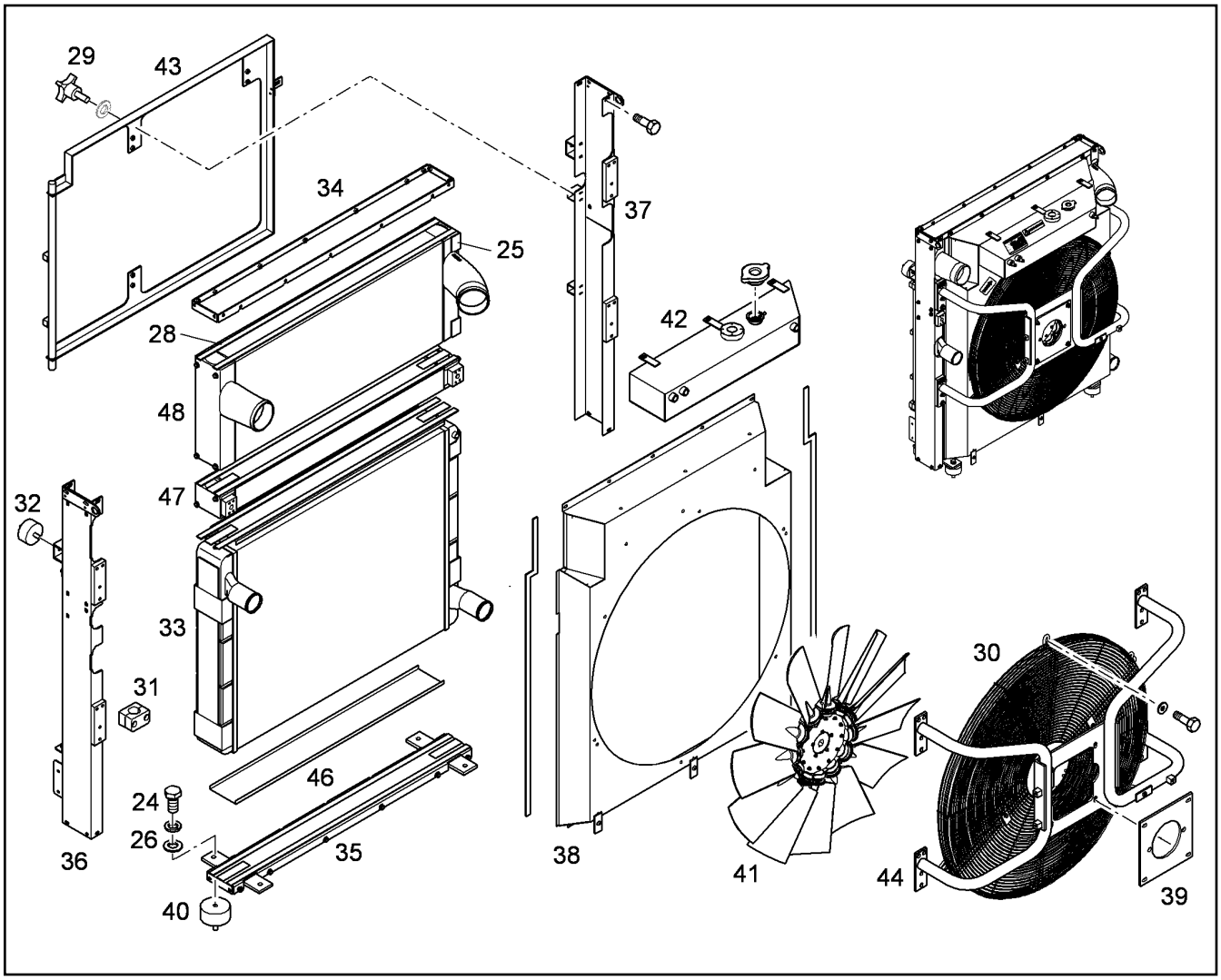


| Pos. | Item | Quantity | Description | Designação | Serie | K |
|---|---|---|---|---|---|---|
| 24 | 4600184 | 4 | HEX BOLT ISO 4017 M12X25 10.9 A3C | PARAFUSO SEXTAVADO | | |
| 25 | 10467246 | 2 | RUBBER INSERT | REVESTIMENTO DE BORRACHA | | |
| 26 | 10289804 | 6 | WASHER ISO 7089 12 300HV | ARRUELA | | |
| 28 | 10467247 | 2 | SEALING PROFILE | PERFIL DE VEDACAO | | |
| 29 | 10331680 | 2 | TWIST HANDLE | PARAFUSO BORBOLETA | | |
| 30 | 10331666 | 2 | PROTECTIVE GRID | GRADE DE PROTECÇÃO | | |
| 31 | 10331643 | 4 | PIPE CLAMP | BRAÇADEIRA DE TUBO | | |
| 32 | 10331669 | 2 | RUBBER BEARING | MANCAL DE BORRACHA | | |
| 33 | 10491376 | 1 | WATER COOLER | RADIADOR DE AGUA | | |
| 34 | 10331673 | 1 | FRAME PIECE | PARTE QUADRO | | |
| 35 | 10331674 | 1 | FRAME PIECE | PARTE QUADRO | | |
| 36 | 10331675 | 1 | FRAME PIECE | PARTE QUADRO | | |
| 37 | 10331677 | 1 | FRAME PIECE | PARTE QUADRO | | |
| 38 | 10331641 | 1 | FAN COWL | COBERTURA DO VENTLADOR | | |
| 39 | 10331672 | 1 | MOTOR SUPPORT | APOIO DO MOTOR | | |
| 40 | 10290395 | 4 | RUBBER BUMPER | BATENTE DE BORRACHA | | |
| 41 | 10331665 | 1 | FAN / BLOWER | VENTILADOR | | |
| 42 | 10451292 | 1 | EQUALIZING RESERVOIR | TANQUE DE EXPANSÃO | | |
| 43 | 10467239 | 1 | CONDENSER FRAME | ESTRUTURA DO CONDENSADO | | |
| 44 | 10467159 | 1 | MOTOR MOUNTING | FIXACAO DO MOTOR | | |
| 46 | 10467240 | 2 | FLOOR SHEET | CHAPA DO ASSOALHO | | |
| 47 | 10331660 | 1 | GEARBOX OIL COOLER | RADIADOR OLEO DA TRANSMIS | | |
| 48 | 10331661 | 1 | CHARGE AIR COOLER | RADIADOR DO AR DE ADMISSA | | |

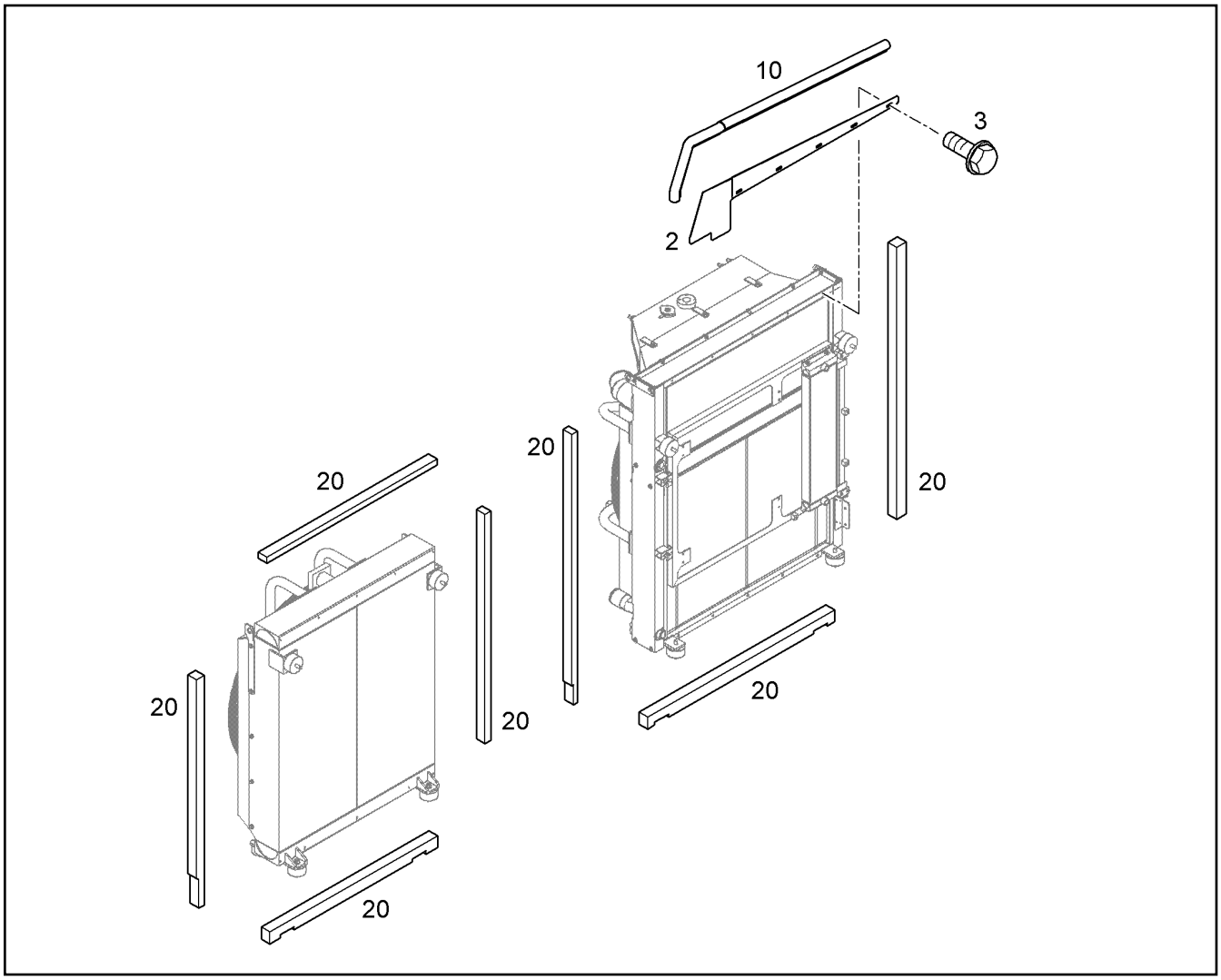


| Pos. | Item | Quantity | Description | Designação | Serie | K |
|---|---|---|---|---|---|---|
| 2 | 9929460 | 1 | PLATE | PLACA | | |
| 3 | 7366804 | 5 | BLANKING END M8X20 A2E | PARAFUSO | | |
| 10 | 7027986 | 1 | CLAMPING PROFILE | PERFIL DE FIXAÇÃO | | |
| 20 | 7030263 | 13 | PROFILE | PERFIL | | |

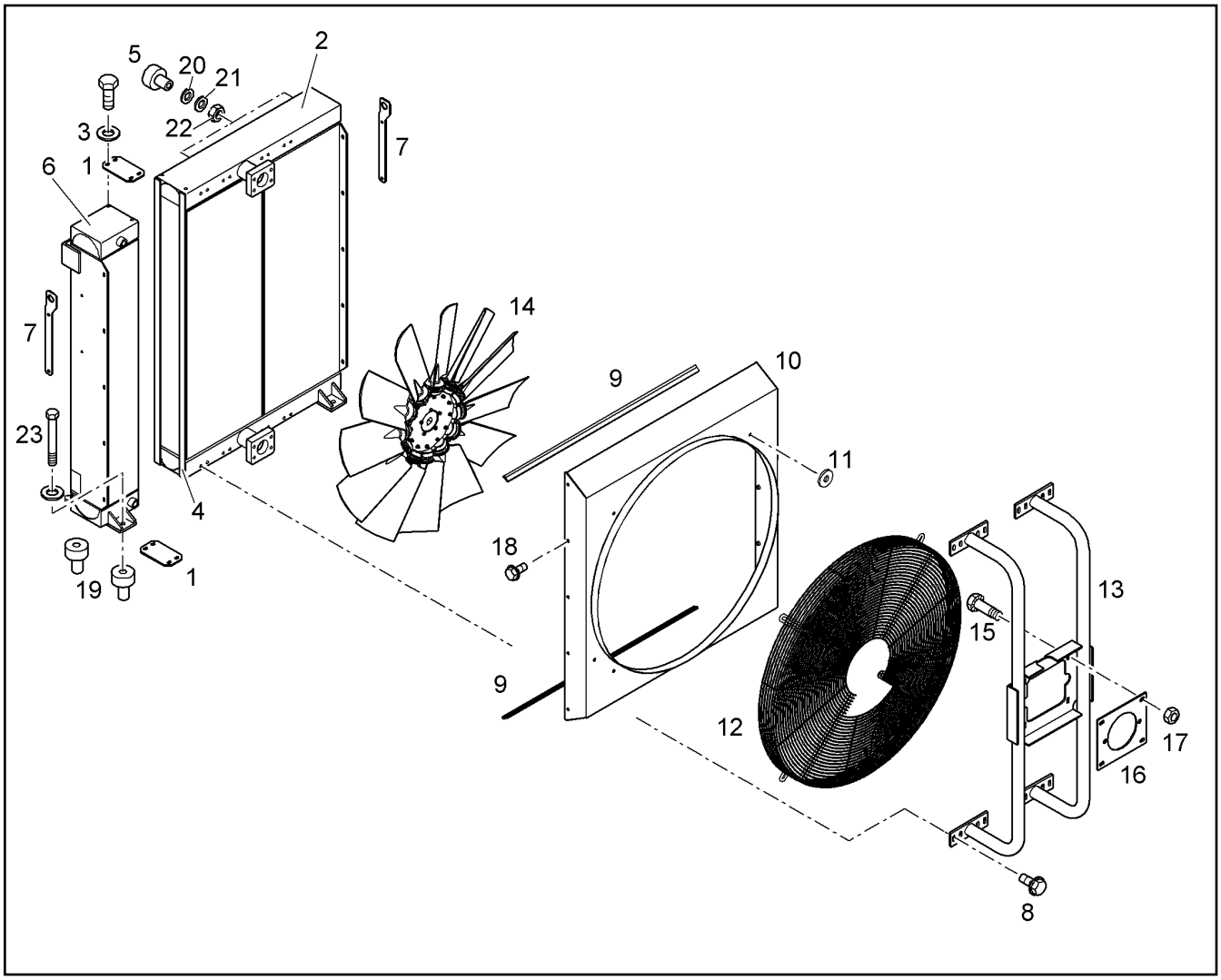


| Pos. | Item | Quantity | Description | Designação | Serie | K |
|---|---|---|---|---|---|---|
| 1 | 10331635 | 2 | ATTACHMENT PLATE | PLACA DE FIXACAO | | |
| 2 | 10331626 | 1 | OIL COOLING SYSTEM | RADIADOR DE FLUIDO HIDRAUL | | |
| 3 | 10331670 | 16 | LOCKING SCREW M8X20 | PARAFUSO TRAVA | | |
| 4 | 10412177 | 2.28m | SEALING PROFILE | PERFIL DE VEDACAO | | |
| 5 | 10331669 | 2 | RUBBER BEARING | MANCAL DE BORRACHA | | |
| 6 | 10331627 | 1 | FUEL COOLER | RADIADOR DE COMBUSTIVEL | | |
| 7 | 10331636 | 2 | SIDE PLATE | CHAPA LATERAL | | |
| 8 | 10335969 | 16 | LOCKING SCREW M10X20 | PARAFUSO TRAVA | | |
| 9 | 10331637 | 1.77m | PROFILE | PERFIL | | |
| 10 | 10331630 | 1 | FAN COWL | COBERTURA DO VENTLADOR | | |
| 11 | 10326997 | 4 | WASHER | ARRUELA | | |
| 12 | 10412499 | 1 | PROTECTIVE GRID | GRADE DE PROTECÇÃO | | |
| 13 | 10411919 | 1 | MOTOR MOUNTING | FIXACAO DO MOTOR | | |
| 14 | 10331629 | 1 | FAN / BLOWER | VENTILADOR | | |
| 15 | 10327106 | 4 | LOCKING SCREW M10X25 | PARAFUSO TRAVA | | |
| 16 | 10331634 | 1 | MOTOR SUPPORT | APOIO DO MOTOR | | |
| 17 | 10335968 | 4 | HEX NUT M10 | PORCA SEXTAVADA | | |
| 18 | 10327102 | 6 | LOCKING SCREW M8X16 | PARAFUSO TRAVA | | |
| 19 | 10290395 | 4 | RUBBER BUMPER | BATENTE DE BORRACHA | | |
| 20 | 10289804 | 2 | WASHER ISO 7089 12 300HV | ARRUELA | | |
| 21 | 4900457 | 6 | CIRCLIP DIN 127 B 12 A3C | ARRUELA DE PRESSÃO | | |
| 22 | 10336052 | 2 | HEX NUT M12 | PORCA SEXTAVADA | | |
| 23 | 4901675 | 4 | HEX HEAD SCREW ISO 4017 M 12 X 20 10.9 | PARAFUSO SEXTAVADO | | |

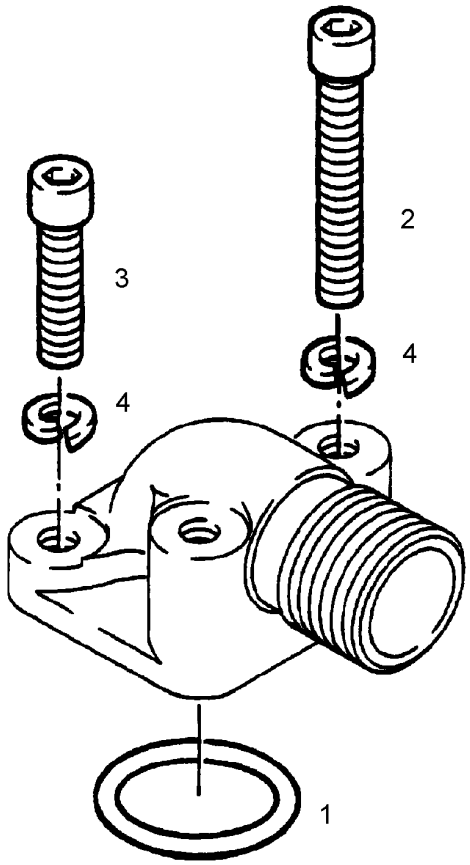


| Pos. | Item | Quantity | Description | Designação | Serie | K |
|---|---|---|---|---|---|---|
| 1 | 7264642 | 1 | O-RING 18X2,5 | ANEL-O | | |
| 2 | 4600067 | 2 | CYLINDER SCREW ISO 4762 M6X35 10.9 A2 | PARAFUSO CILÍNDRICO | | |
| 3 | 4600068 | 2 | CYLINDER SCREW ISO 4762 M6X22 10.9 A2 | PARAFUSO CILÍNDRICO | | |
| 4 | 4600218 | 4 | CIRCLIP B 6 | ARRUELA DE PRESSÃO | | |

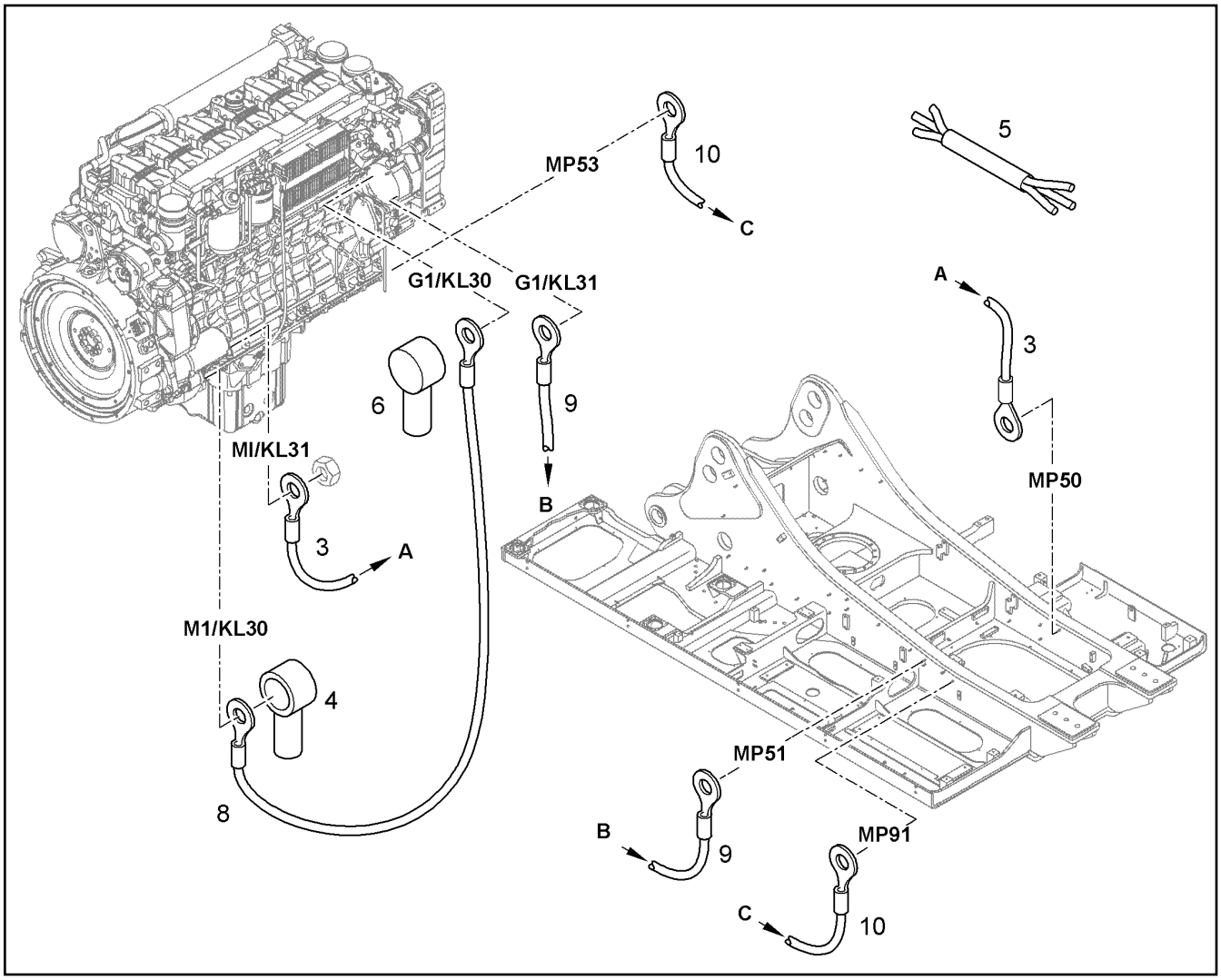


| Pos. | Item | Quantity | Description | Designação | Serie | K |
|---|---|---|---|---|---|---|
| 3 | 10405134 | 1 | WIRING HARNESS STARTER MASS | CHICOTE ELETRICO | | |
| 4 | 7623221 | 1 | PROTECTING CAP | CAPA DE PROTECAO | | |
| 5 | 9948316 | 1 | WIRING HARNESS ENGINE | CHICOTE ELETRICO MOTOR | | |
| 6 | 7623222 | 1 | PROTECTING CAP | CAPA DE PROTECAO | | |
| 8 | 9928529 | 1 | WIRING HARNESS STARTER DYNAMO | CHICOTE ELETRICO | | |
| 9 | 9928530 | 1 | WIRING HARNESS DYNAMO GROUND | CHICOTE ELETRICO | | |
| 10 | 9927329 | 1 | EARTH CABLE | CABO MASSA | | |

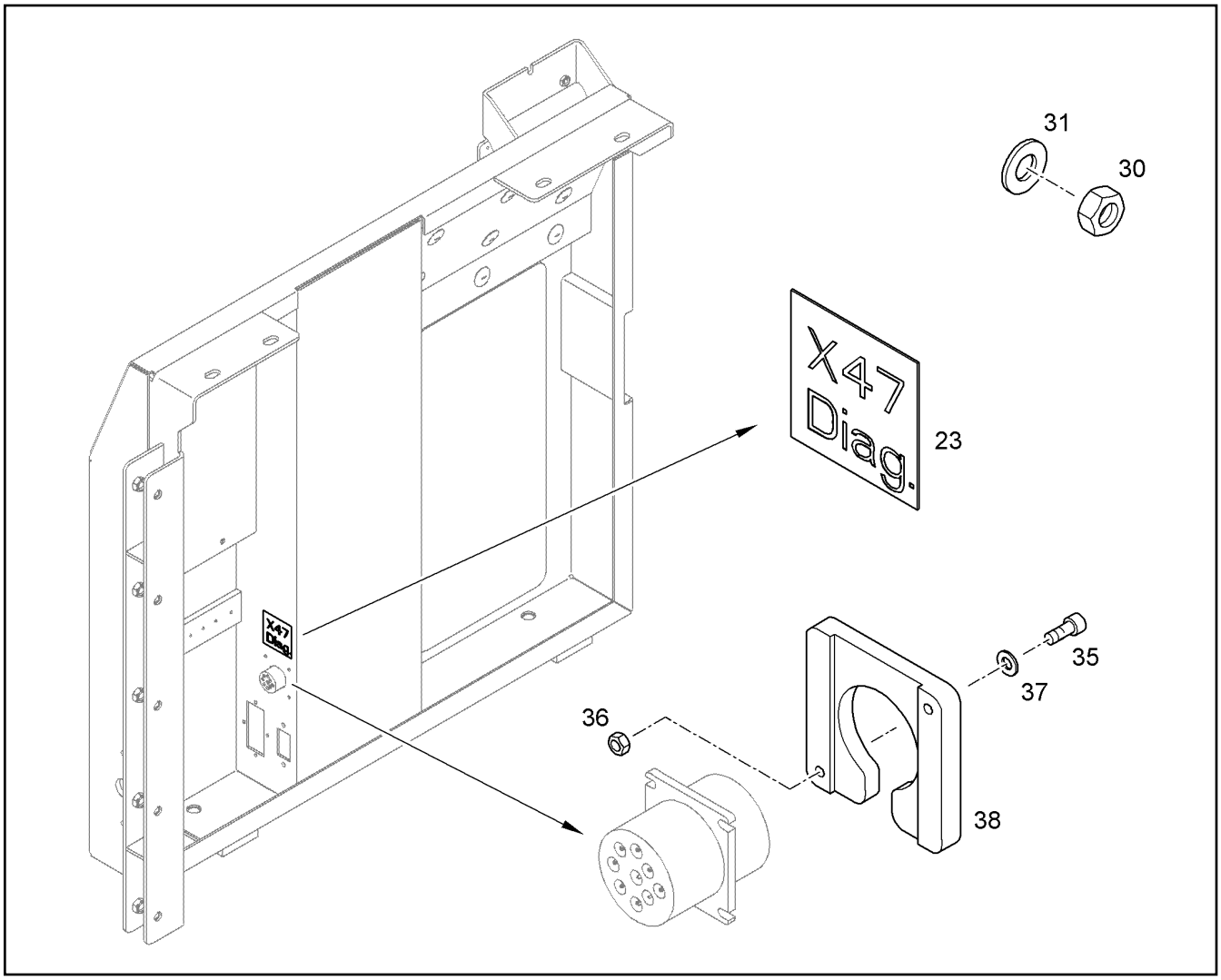


| Pos. | Item | Quantity | Description | Designação | Serie | K |
|---|---|---|---|---|---|---|
| 23 | 9014598 | 1 | LABEL | ETIQUETA | | |
| 30 | 4000381 | 33 | HEX NUT M8 | PORCA SEXTAVADA | | |
| 31 | 10289803 | 33 | WASHER ISO 7089 8 300HV | ARRUELA | | |
| 35 | 404200701 | 2 | CYLINDER SCREW ISO 4762 M4x20 8.8 A2C | PARAFUSO CILÍNDRICO | | |
| 36 | 4000376 | 2 | HEX NUT M4 | PORCA SEXTAVADA | | |
| 37 | 4239000 | 2 | LOCK WASHER | ARRUELA DE SEGURANÇA | | |
| 38 | 10066863 | 1 | CONSOLE | SUPORTE | | |

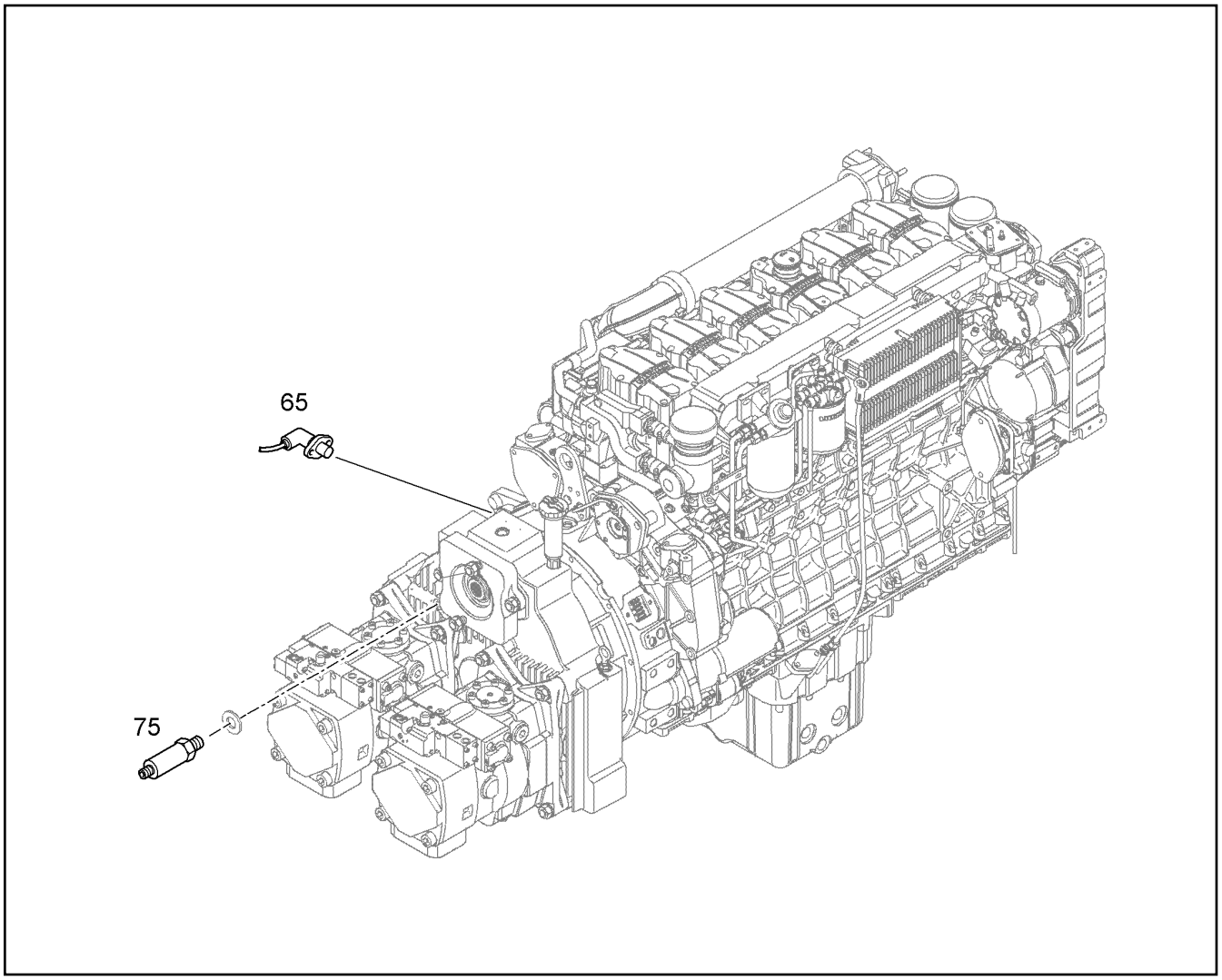


| Pos. | Item | Quantity | Description | Designação | Serie | K |
|---|---|---|---|---|---|---|
| 65 | 635867001 | 1 | SENSOR | SENSOR | | |
| 75 | 6204186 | 1 | TEMPERATURE SWITCH | TERMOSTATO | | |

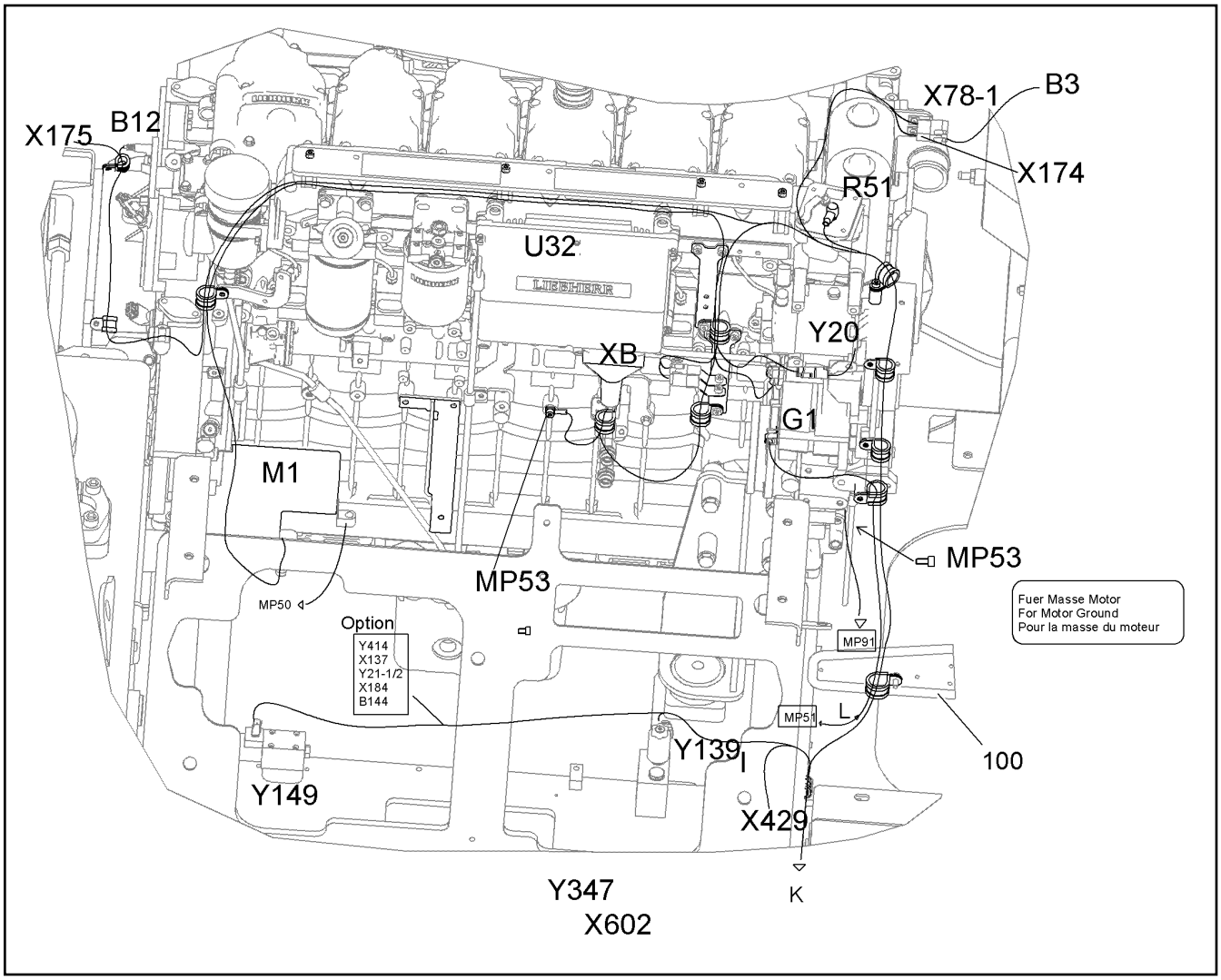


| Pos. | Item | Quantity | Description | Designação | Serie | K |
|---|---|---|---|---|---|---|
| 100 | 226016702 | 0.57m | SECTION | PERFIL DE PROTECAO DE CANT | | |

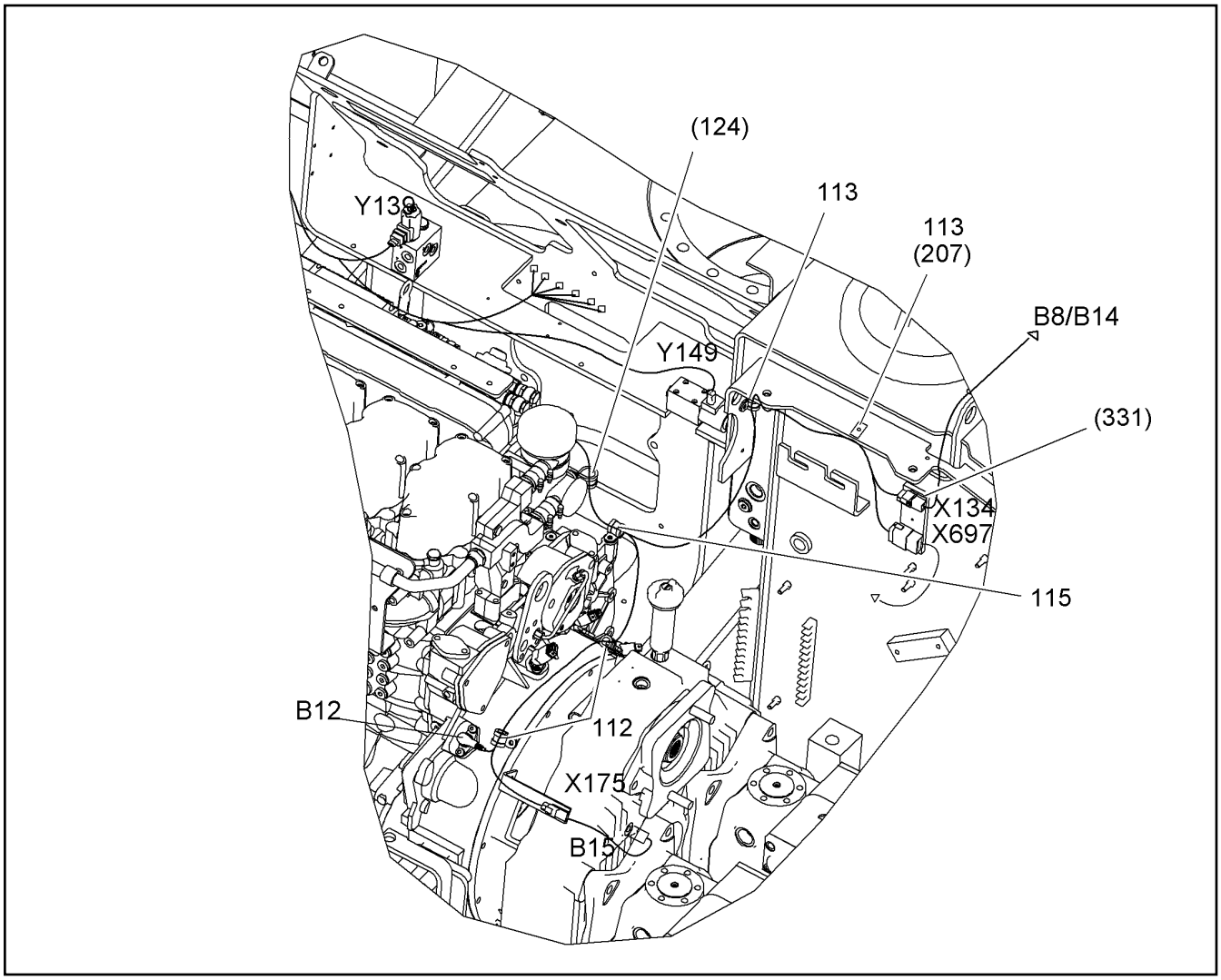


| Pos. | Item | Quantity | Description | Designação | Serie | K |
|---|---|---|---|---|---|---|
| 112 | 7002957 | 3 | CLAMP DIN 3016-1 D1 12X20 W1-2-CR | BRAÇADEIRA | | |
| 113 | 7362734 | 3 | CLAMP DIN 3016 D1- 13 X 20 W1-2-CR | BRAÇADEIRA | | |
| 115 | 7362603 | 1 | CLAMP DIN 3016-1 D1 15X20 W1-2-CR | BRAÇADEIRA | | |

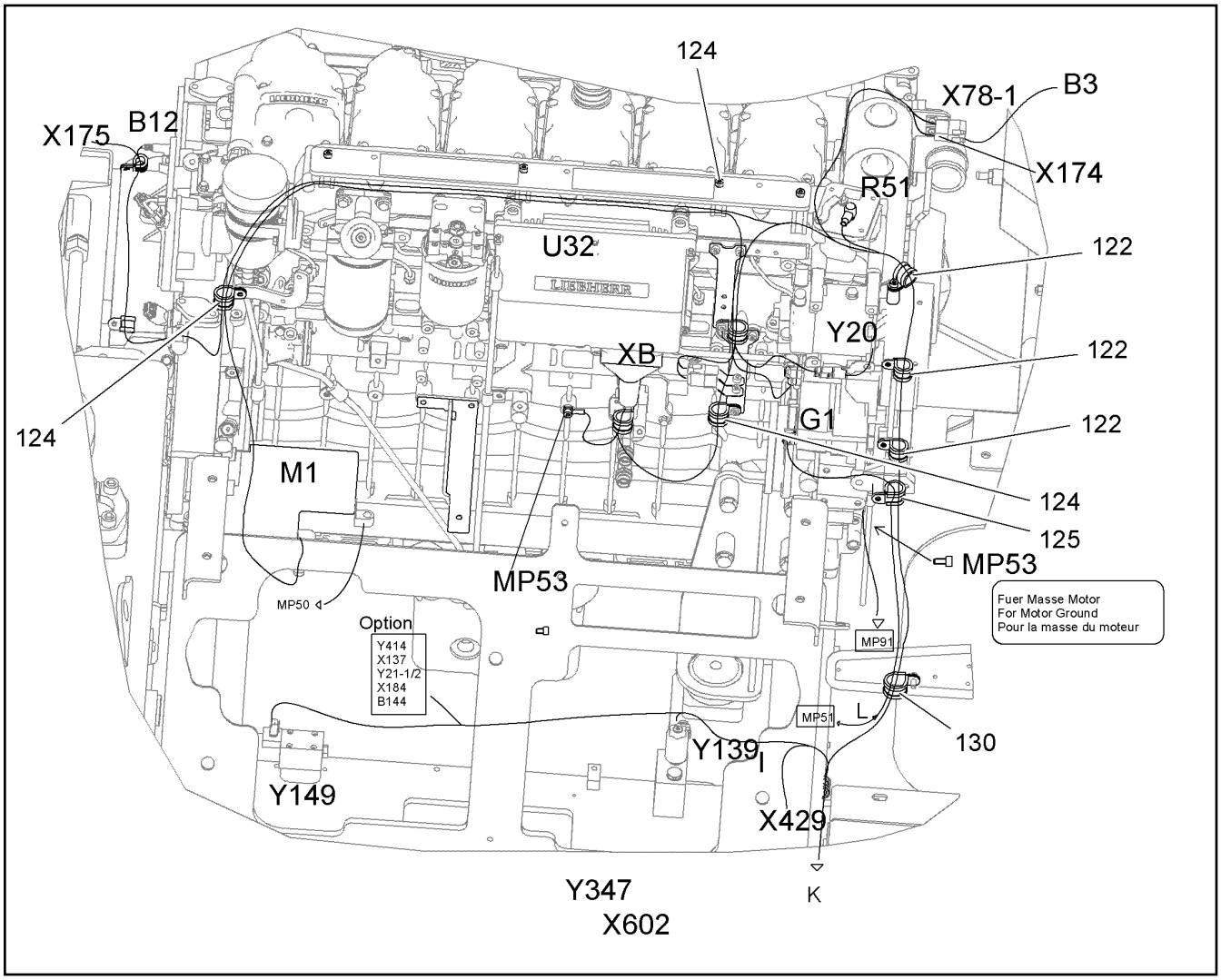


| Pos. | Item | Quantity | Description | Designação | Serie | K |
|---|---|---|---|---|---|---|
| 122 | 7362545 | 8 | CLAMP DIN 3016-1 D1 22X20 W1-2-CR | BRAÇADEIRA | | |
| 124 | 7362547 | 8 | CLAMP DIN 3016 D1- 24 X 20 W1-2-CR | BRAÇADEIRA | | |
| 125 | 7008622 | 1 | CLAMP DIN 3016 D1- 25 X 20 W1-2-CR | BRAÇADEIRA | | |
| 130 | 7364299 | 2 | CLAMP DIN 3016-1 D1 30X20 W1-2-CR | BRAÇADEIRA | | |

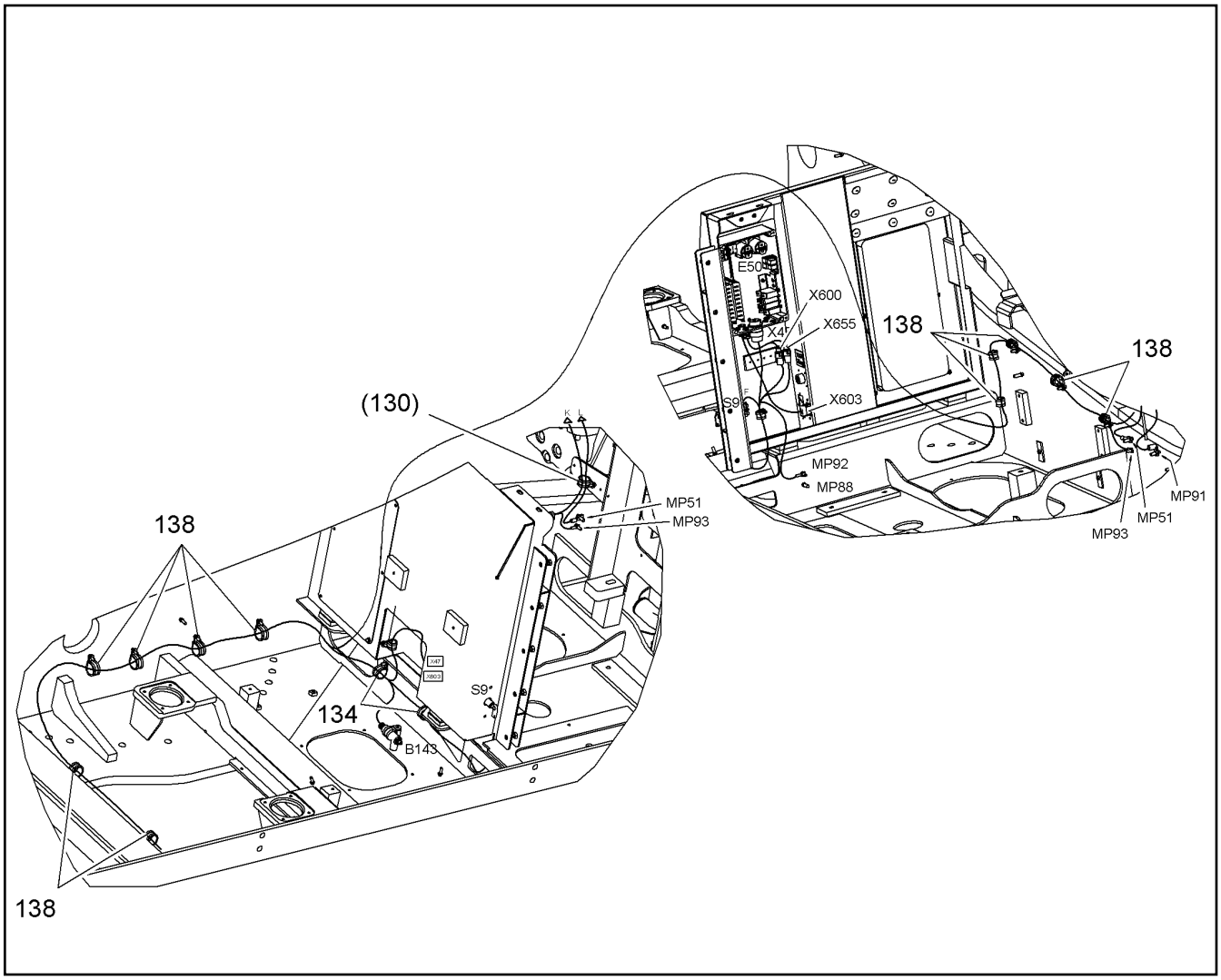


| Pos. | Item | Quantity | Description | Designação | Serie | K |
|---|---|---|---|---|---|---|
| 134 | 7366260 | 3 | CLAMP DIN 3016 D1- 34 X 20 W1-2-CR | BRAÇADEIRA | | |
| 138 | 7362551 | 6 | CLAMP DIN 3016 D1- 38 X 20 W1-2-CR | BRAÇADEIRA | | |

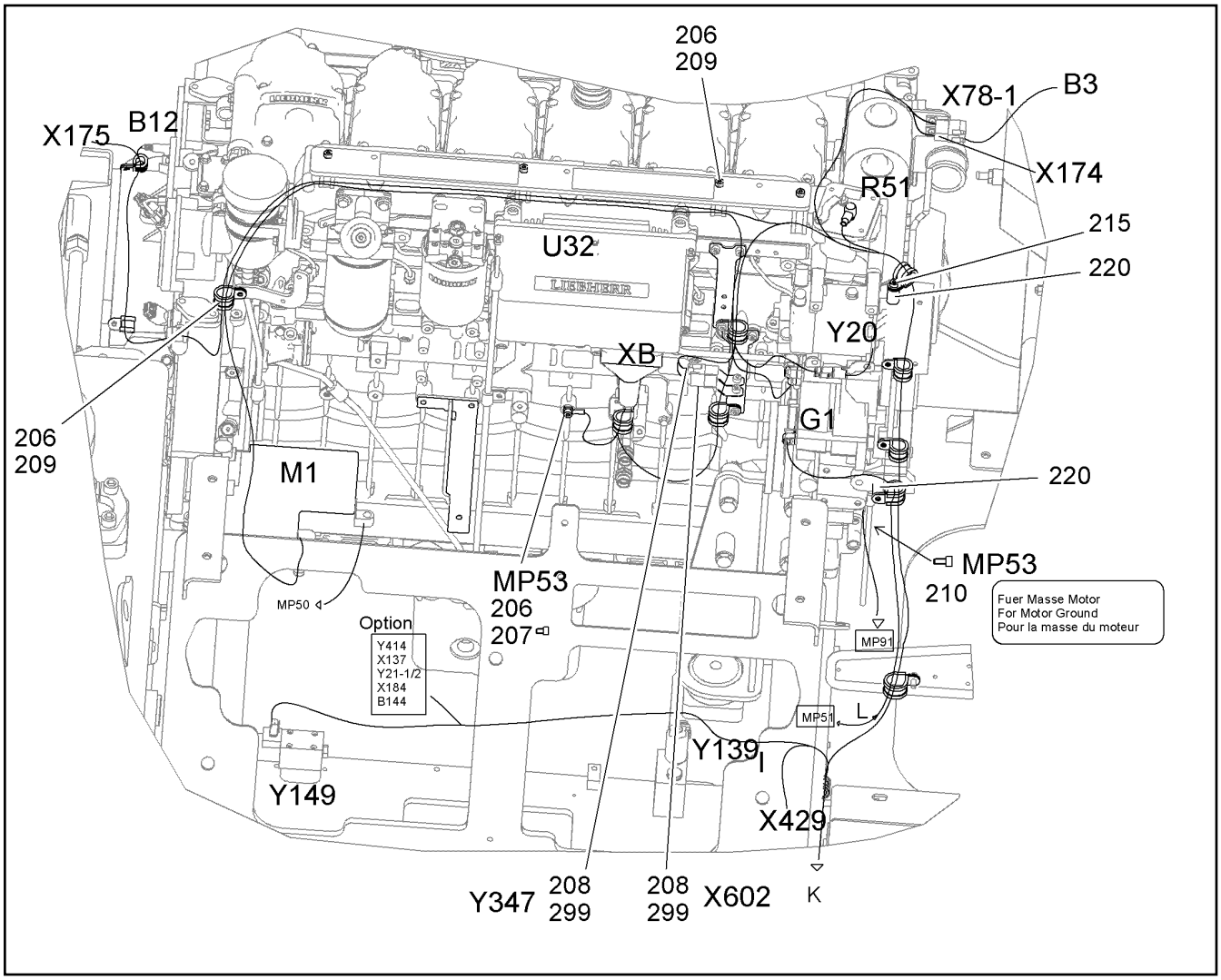


| Pos. | Item | Quantity | Description | Designação | Serie | K |
|---|---|---|---|---|---|---|
| 206 | 423910801 | 6 | LOCK WASHER 8,4/13X1,7 VS 8 | ARRUELA DE SEGURANÇA | | |
| 207 | 4902254 | 2 | CYLINDER SCREW ISO 4762 M8X12 10.9 A2 | PARAFUSO CILÍNDRICO | | |
| 208 | 4902231 | 2 | CYLINDER SCREW ISO 4762 M8X16 10.9 A2 | PARAFUSO CILÍNDRICO | | |
| 209 | 4043082 | 6 | CYLINDER SCREW ISO 4762 M8X20 10.9 A2 | PARAFUSO CILÍNDRICO | | |
| 210 | 4043122 | 1 | CYLINDER SCREW ISO 4762 M10X20 10.9 | PARAFUSO CILÍNDRICO | | |
| 215 | 4043090 | 1 | CYLINDER SCREW ISO 4762 M8X60 10.9 A2 | PARAFUSO CILÍNDRICO | | |
| 220 | 9989595 | 2 | DISTANCE TUBE | TUBO DISTANCIADOR | | |
| 299 | 10041876 | 3 | HOLDER | SUPORTE | | |

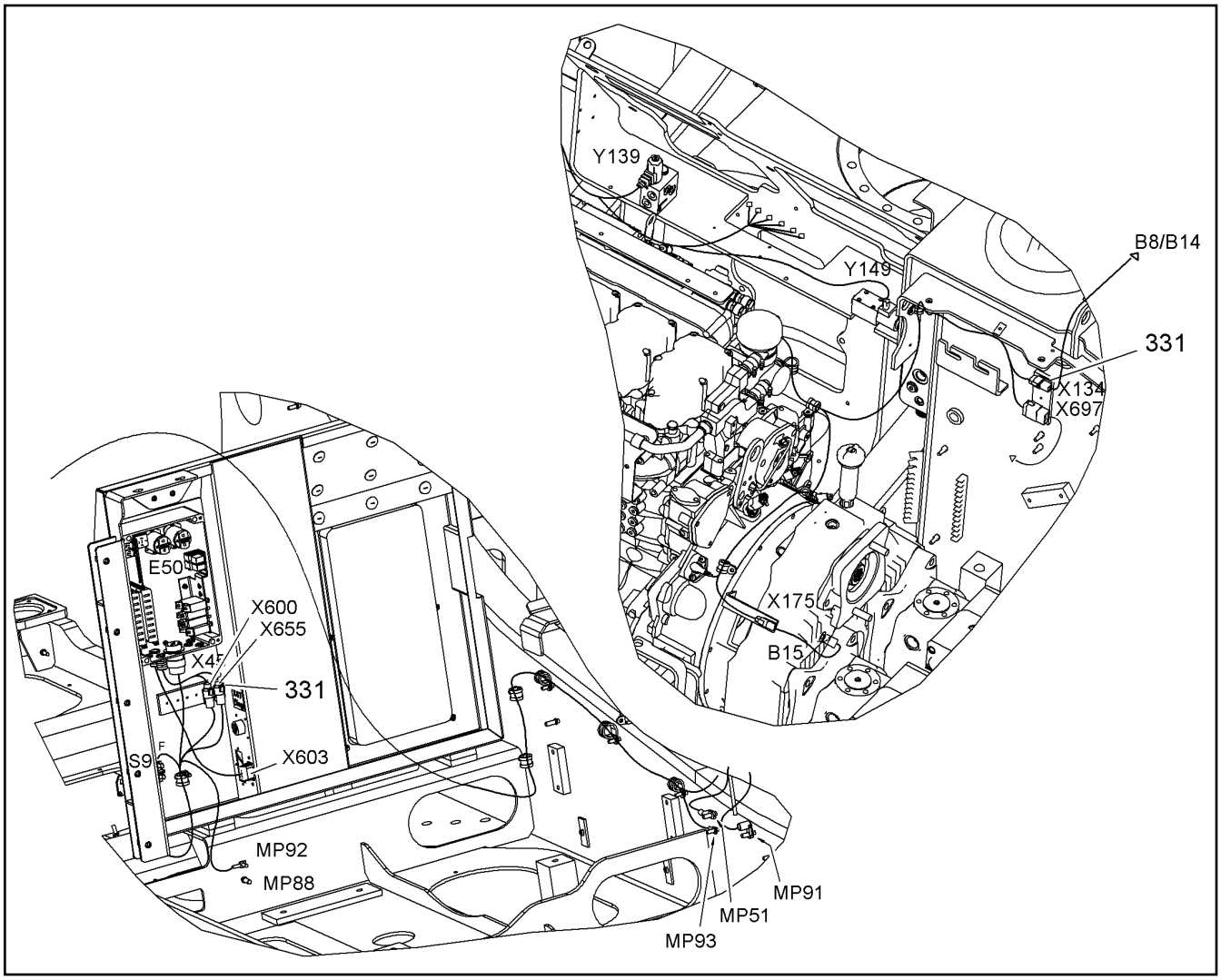


| Pos. | Item | Quantity | Description | Designação | Serie | K |
|---|---|---|---|---|---|---|
| 331 | 6203497 | 3 | FASTENER F.DT STECKER | ELEMENTO DE FIXACAO | | |

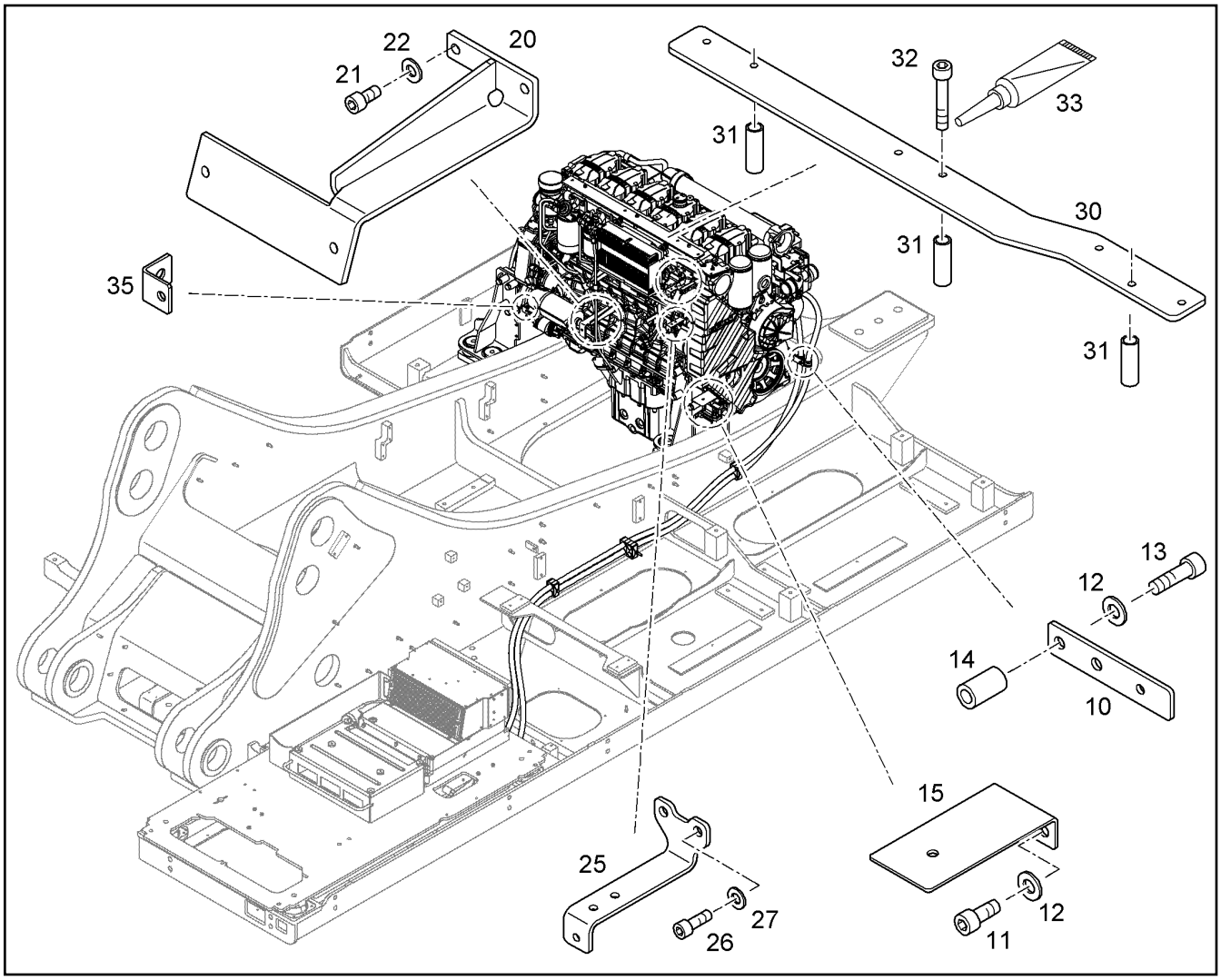


| Pos. | Item | Quantity | Description | Designação | Serie | K |
|---|---|---|---|---|---|---|
| 10 | 9949403 | 1 | HOLDER | SUPORTE | | |
| 11 | 4043122 | 2 | CYLINDER SCREW ISO 4762 M10X20 10.9 | PARAFUSO CILÍNDRICO | | |
| 12 | 10289795 | 4 | WASHER ISO 7089 10 300HV | ARRUELA | | |
| 13 | 4043127 | 2 | CYLINDER SCREW ISO 4762 M10X40 10.9 | PARAFUSO CILÍNDRICO | | |
| 14 | 9390503 | 2 | BUSHING | BUCHA | | |
| 15 | 9949402 | 1 | HOLDER | SUPORTE | | |
| 20 | 10367055 | 1 | HOLDER | SUPORTE | 21437- | |
| 21 | 4902231 | 2 | CYLINDER SCREW ISO 4762 M8X16 10.9 A2 | PARAFUSO CILÍNDRICO | | |
| 22 | 10289803 | 2 | WASHER ISO 7089 8 300HV | ARRUELA | | |
| 25 | 10059516 | 2 | HOLDER | SUPORTE | | |
| 26 | 4001606 | 4 | HEX BOLT ISO 4017 M8X16 10.9 A2C | PARAFUSO SEXTAVADO | | |
| 27 | 10289803 | 4 | WASHER ISO 7089 8 300HV | ARRUELA | | |
| 30 | 10056401 | 1 | MOTOR BRACKET | CONSOLE DO MOTOR | | |
| 31 | 9361887 | 3 | SPACER PIECE | ESPAÇADOR | | |
| 32 | 4980783 | 3 | CYLINDER SCREW ISO 4762 M8X55 10.9 A2 | PARAFUSO CILÍNDRICO | | |
| 35 | 9573442 | 1 | ANGLE | CANTONEIRA | | |

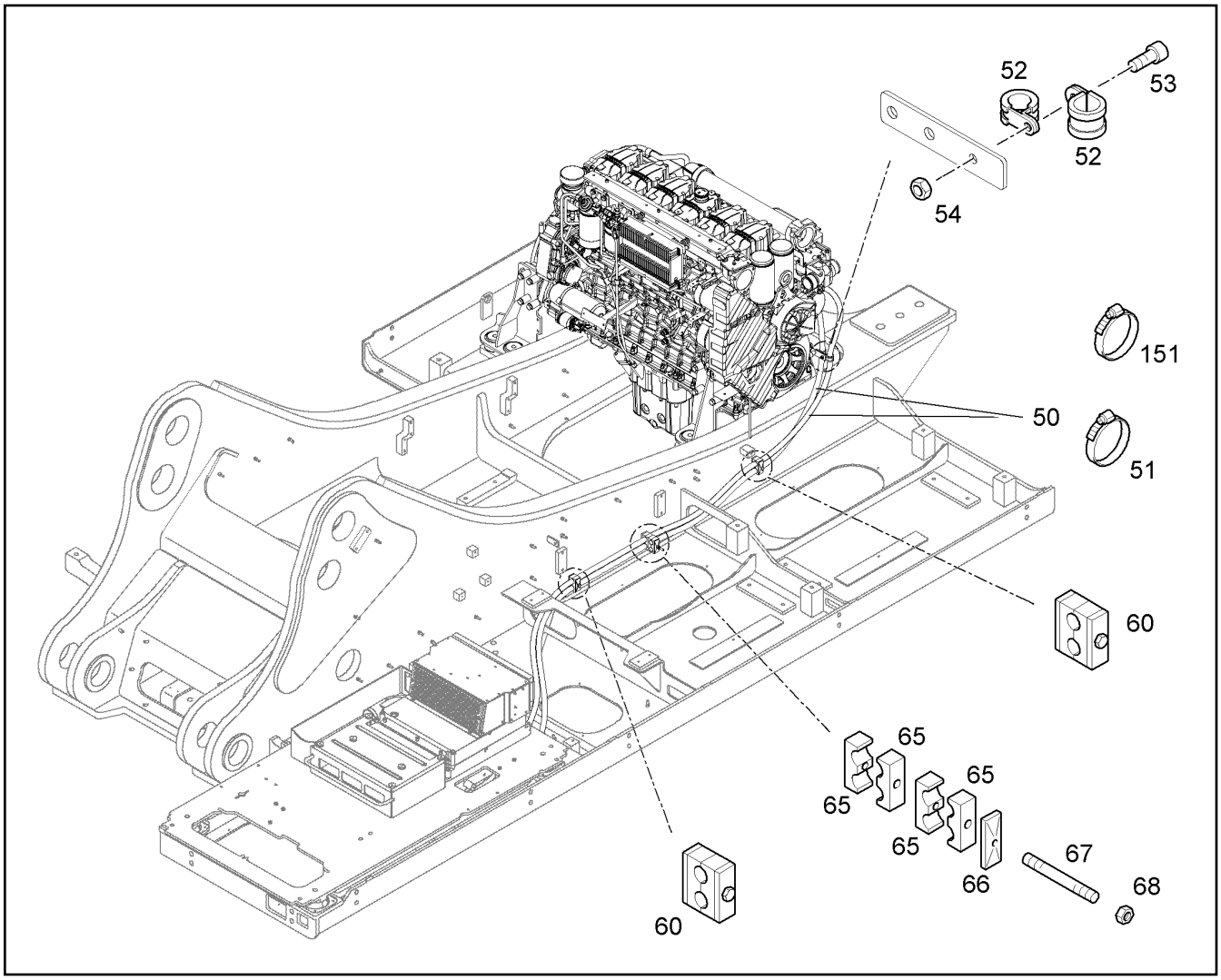


| Pos. | Item | Quantity | Description | Designação | Serie | K |
|---|---|---|---|---|---|---|
| 50 | 10049473 | 2 | WATER HOSE | MANGUEIRA DE AGUA | | 1 |
| 51 | 4901138 | 2 | HOSE CLAMP DIN 3017 A 16 - 27 X 9 W2-2 | ABRAÇADEIRA DE MANGUEIRA | | |
| 52 | 7362545 | 2 | CLAMP DIN 3016-1 D1 22X20 W1-2-CR | BRAÇADEIRA | | |
| 53 | 4043082 | 1 | CYLINDER SCREW ISO 4762 M8X20 10.9 A2 | PARAFUSO CILÍNDRICO | | |
| 54 | 4600783 | 1 | HEX NUT M8 | PORCA SEXTAVADA | | |
| 60 | 9388597 | 2 | HOSE CLAMP<br>⇨ ❑ 650 | ABRAÇADEIRA DE MANGUEIRA | | |
| 65 | 7029979 | 4 | CLAMP-HALF DIN 3015-3 Z 3 G 23 23 PP SW | MEIA ABRAÇADEIRA | | |
| 66 | 7401349 | 1 | LID PLATE DIN 3015-3 Z-DP 3 W1-ZN | PLACA | | |
| 67 | 4635302 | 1 | DOUBLE-ENDED STUD DIN 939 M 8 X 90 8.8 | PINO ROSCADO | | |
| 68 | 4000381 | 1 | HEX NUT M8 | PORCA SEXTAVADA | | |
| 151 | 4901138 | 2 | HOSE CLAMP DIN 3017 A 16 - 27 X 9 W2-2 | ABRAÇADEIRA DE MANGUEIRA | | |

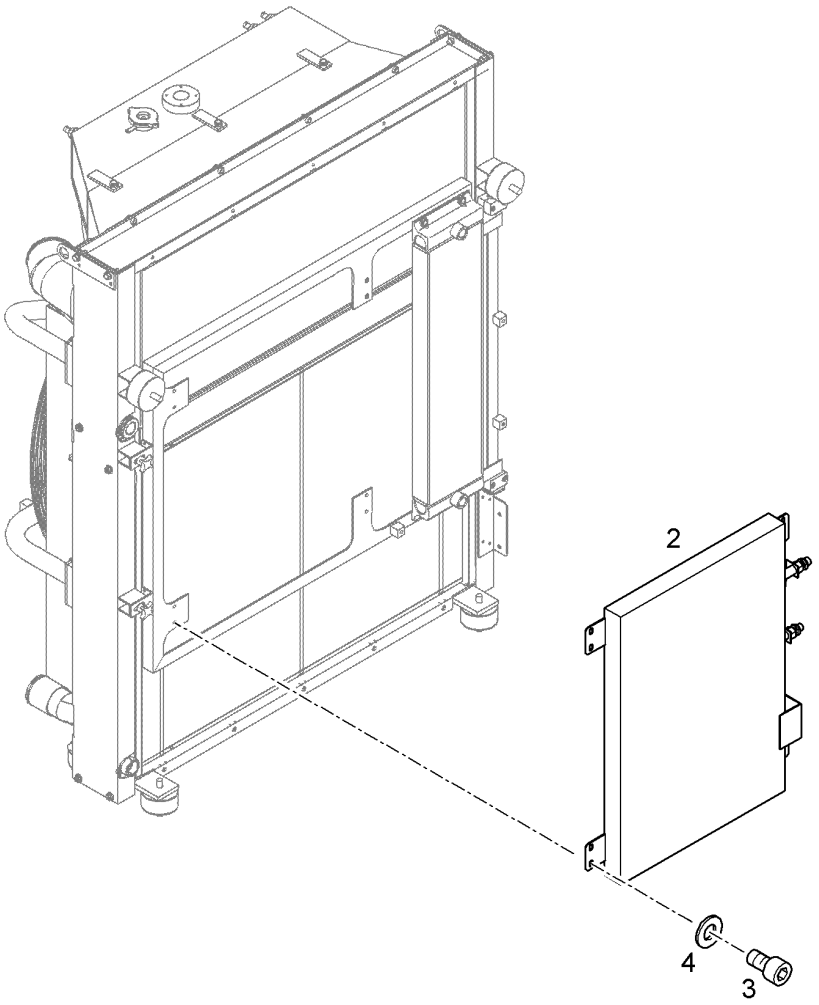


| Pos. | Item | Quantity | Description | Designação | Serie | K |
|---|---|---|---|---|---|---|
| 2 | 10005670 | 1 | CLIMATIC CAPCAITOR UKD 215/4 [900308 0418 ] | CONDENSADOR DE AR-CONDIC | | |
| 3 | 4902231 | 8 | CYLINDER SCREW ISO 4762 M8X16 10.9 A2 | PARAFUSO CILÍNDRICO | | |
| 4 | 10289803 | 8 | WASHER ISO 7089 8 300HV | ARRUELA | | |

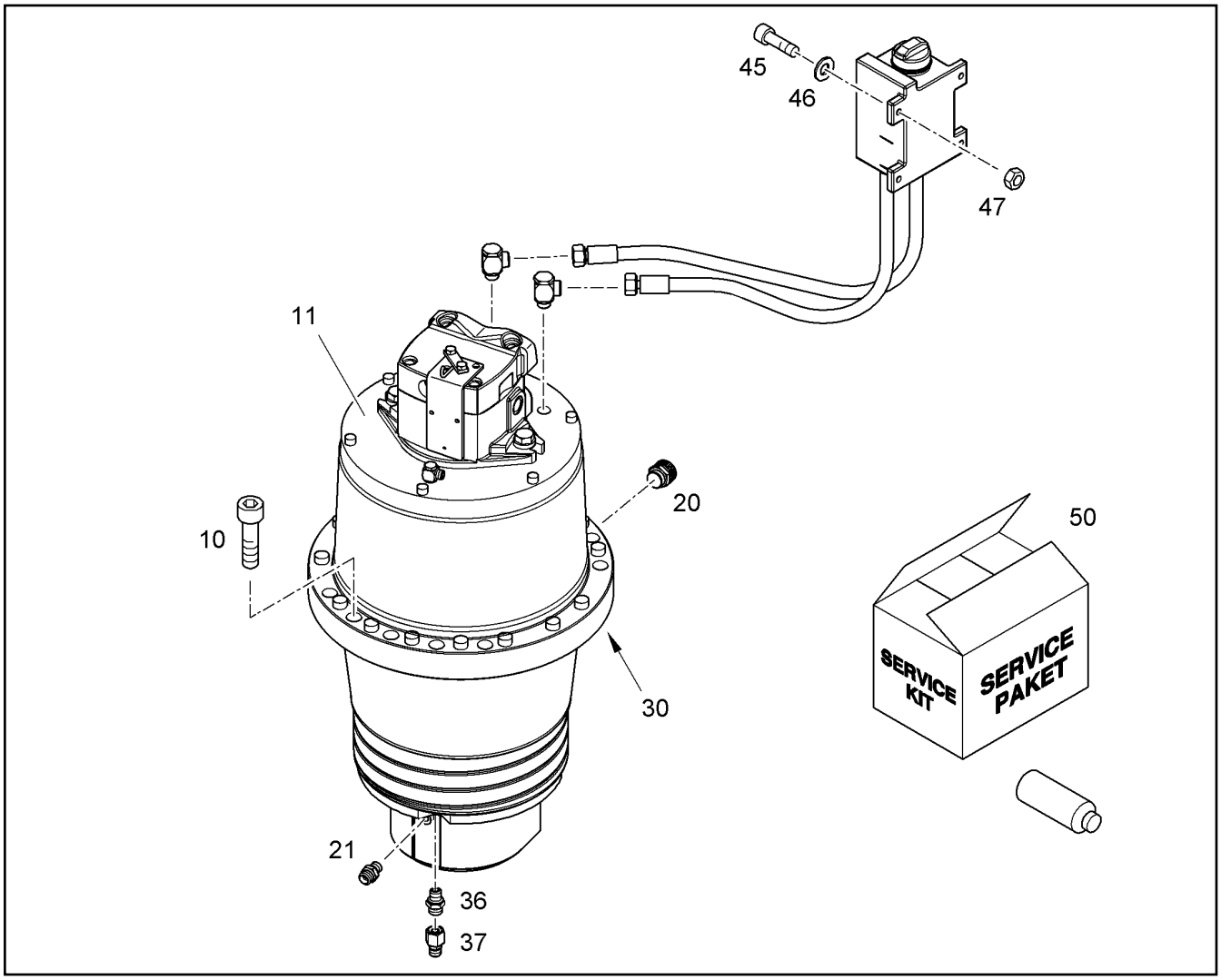


| Pos. | Item | Quantity | Description | Designação | Serie | K |
|---|---|---|---|---|---|---|
| 10 | | 1 | FIXING PARTS SWING<br>⇨ ❑ 182 | PECAS FIXACAO | | |
| 11 | 9946389 | 1 | SLEWING GEAR<br>⇨ ❑ 183 | MECANISMO GIRATORIO | | |
| 20 | 5004624 | 1 | OIL DRAIN PLUG M 30 1,5<br>⇨ ❑ 491 | VÁLVULA DE DRENAGEM | | |
| 21 | 7619197 | 1 | SCREW FITTING GE 8L | REDUÇÃO | | |
| 30 | 10215888 | 0.07 | PACKING CORD | CORDÃO DE VEDAÇÃO | | |
| 36 | 4001938 | 1 | SCREW FITTING GE 8L M12X1,5 | REDUÇÃO | | |
| 37 | 7367743 | 1 | SCREW FITTING RED 8/6L | REDUÇÃO | | |
| 45 | 4043127 | 4 | CYLINDER SCREW ISO 4762 M10X40 10.9 | PARAFUSO CILÍNDRICO | | |
| 46 | 10289795 | 4 | WASHER ISO 7089 10 300HV | ARRUELA | | |
| 47 | 4000913 | 4 | HEX NUT M10 | PORCA SEXTAVADA | | |
| 50 | 8503279 | 1 | SPECIAL COMPOUND CRL/5x0,4kg | PASTA ESPECIAL | | |

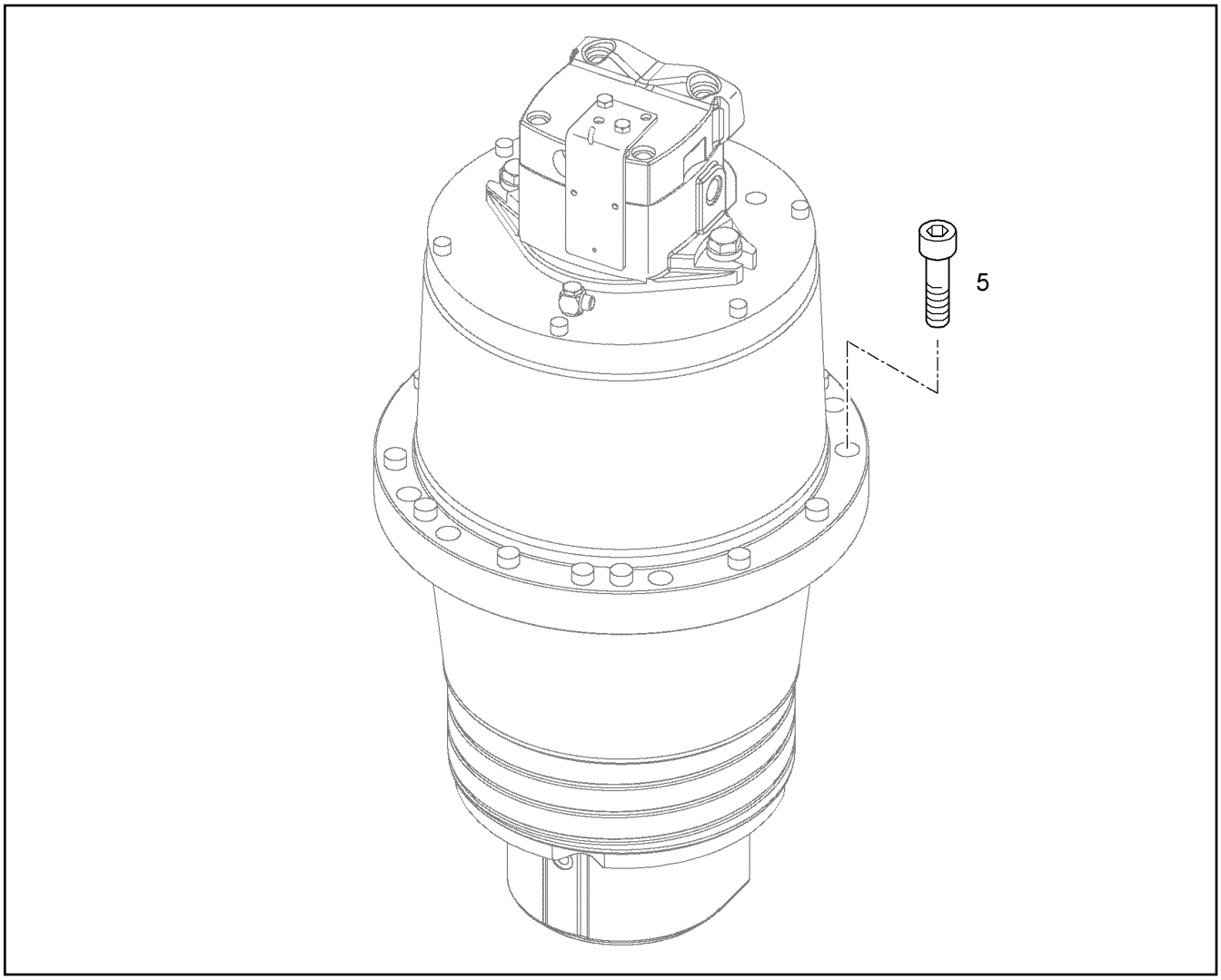


| Pos. | Item | Quantity | Description | Designação | Serie | K |
|---|---|---|---|---|---|---|
| 5 | 10425682 | 18 | CYLINDER SCREW ISO 4762 M24X90 10.9 F | PARAFUSO CILÍNDRICO | 21899- | |

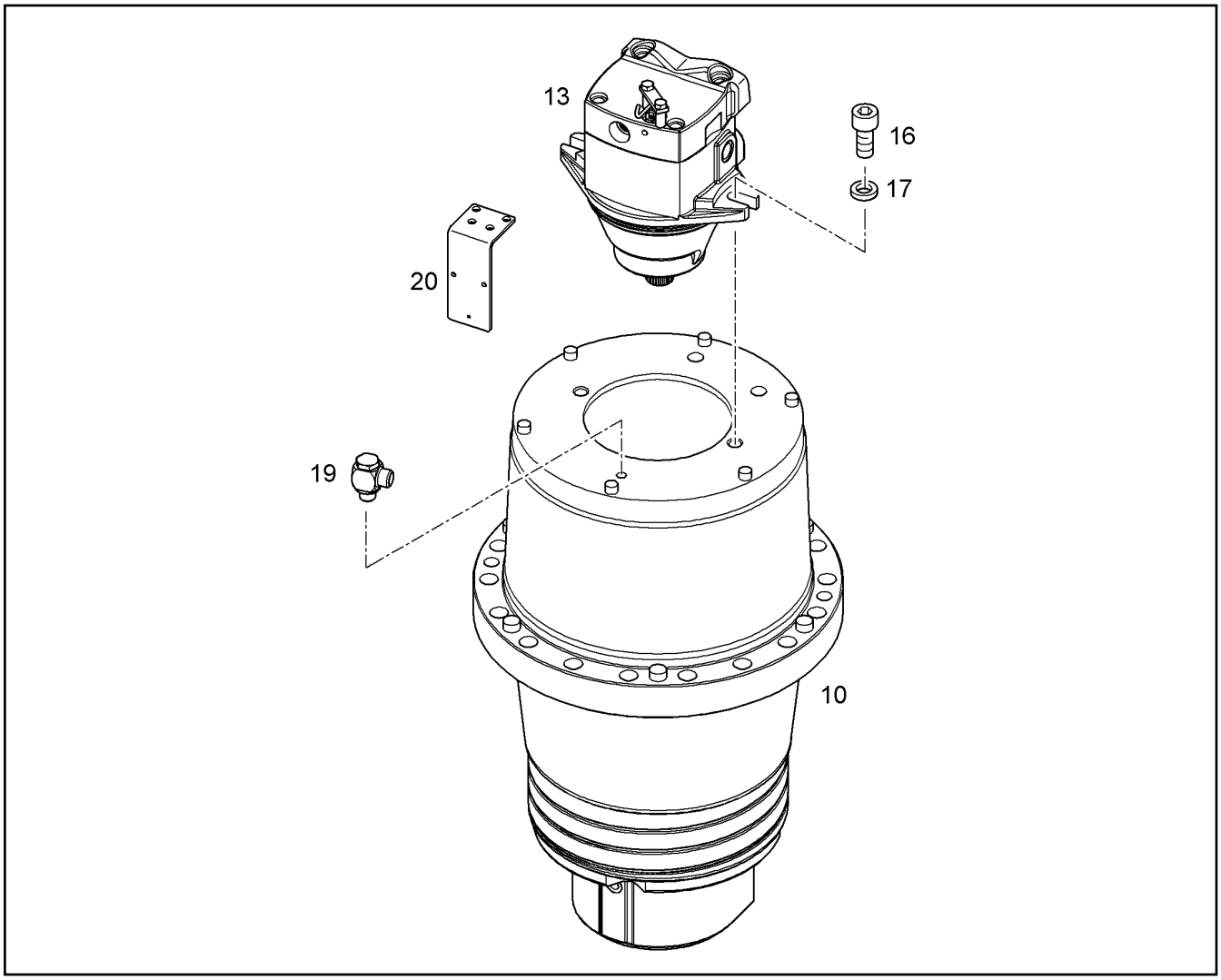


| Pos. | Item | Quantity | Description | Designação | Serie | K |
|---|---|---|---|---|---|---|
| 10 | | 1 | SLEWING DRIVE SAT 375/250<br>[348 21/01/2013 ]<br>⇨ ❑ 184 | REDUTOR DE GIRO | 31029- | 6 |
| 13 | 9072100 | 1 | HYDRAULIC INSTALLATION MOTOR<br>[12 17 44690 ]<br>⇨ ❑ 188 | MOTOR HIDRÁULICO | 24403- | 6 |
| 16 | 10425667 | 2 | CYLINDER SCREW ISO 4762 M20X55 10.9 F | PARAFUSO CILÍNDRICO | | |
| 17 | 10332154 | 2 | WASHER DIN 7989B 22 | ARRUELA | | |
| 19 | 7617714 | 1 | HINGED THREADED UNION WH 10L M14X1, | CONEXÃO ROSCADA | | |
| 20 | 10049544 | 1 | ANGLE | CANTONEIRA | | |

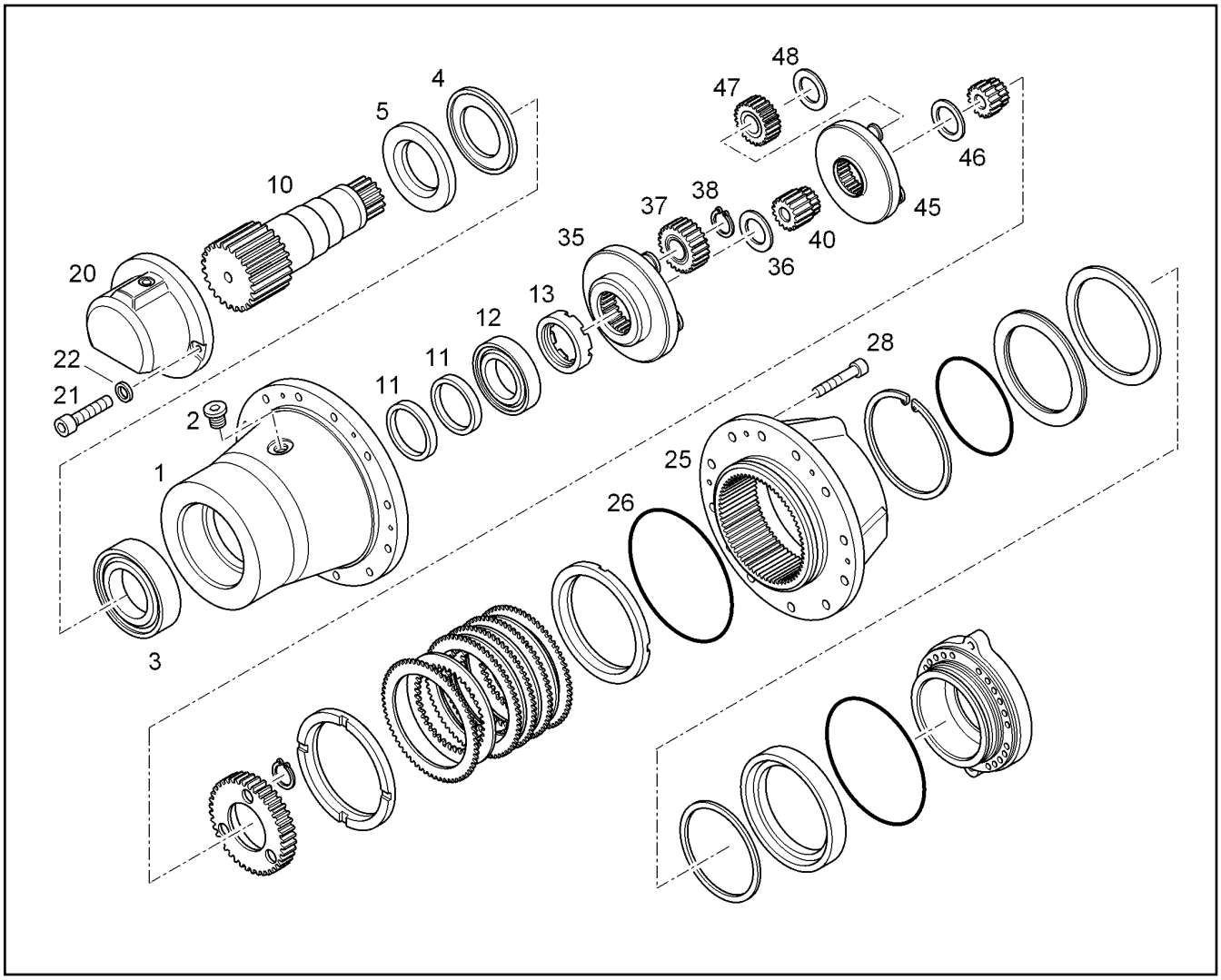


| Pos. | Item | Quantity | Description | Designação | Serie | K |
|---|---|---|---|---|---|---|
| 1 | | 1 | OUTPUT SHAFT HOUSING | CARCAÇA DO EIXO DE SAÍDA | | |
| 2 | 4097530 | 1 | BLANKING PLUG GPN 300 F | TAMPÃO | | |
| 3 | 10030592 | 1 | TAPERED ROLLER BEARING | ROLAMENTO DE ROLETES CÔNI | | |
| 4 | 10030593 | 1 | NILOS RING AV | ANEL NILOS | | |
| 5 | 932719401 | 1 | WASHER | ARRUELA | | |
| 10 | 90018382 | 1 | OUTPUT SHAFT | EIXO DE SAIDA | | |
| 11 | 7610289 | 2 | SHAFT SEAL DIN 3760 A 140 X160X 13 NB | WDR | | |
| 12 | 10030591 | 1 | BEARING | ROLAMENTO | | 1 |
| 13 | 932719601 | 1 | SLOTTED NUT | PORCA RANHURADA | | |
| 20 | 932858901 | 1 | GREASE HOUSING | TAMPA DE GRAXA | | |
| 21 | 404316901 | 2 | CYLINDER SCREW ISO 4762 M16X40 10.9 | PARAFUSO CILÍNDRICO | | |
| 22 | 10006372 | 2 | LOCK WASHER VS 16 | ARRUELA DE SEGURANÇA | | |
| 25 | 970643201 | 1 | INTERNAL GEAR WHEEL | ENGRENAGEM INTERNA | | |
| 26 | 726457301 | 1 | O-RING AEHNL.DIN 3771 380X4 | ANEL-O | | |
| 28 | 10001077 | 6 | CYLINDER SCREW ISO 4762 M16X50 10.9 | PARAFUSO CILÍNDRICO | | |
| 35 | 933330801 | 1 | PLANETARY CARRIER | SUPORTE PLANETARIO | | |
| 36 | 9442198 | 1 | RETAINING DISK 125X6 | ARRUELA DE RETENÇÃO | | |
| 37 | 933332901 | 4 | PLANET WHEEL<br>⇨ ❑ 190 | ENGRENAGEM PLANETÁRIA | | |
| 38 | 4001447 | 4 | LOCKING RING DIN 471 70 X4 | ANEL DE RETENÇÃO | | |
| 40 | 933333101 | 1 | SUN WHEEL | ENGRENAGEM SOLAR | | |
| 45 | 90011490 | 1 | PLANETARY CARRIER | SUPORTE PLANETARIO | | |
| 46 | 9441557 | 1 | RETAINING DISK | ARRUELA DE RETENÇÃO | | |
| 47 | 90011580 | 3 | PLANET WHEEL | ENGRENAGEM PLANETÁRIA | | |
| 48 | 90011582 | 3 | SHIM RING | ARRUELA DE AJUSTE | | |

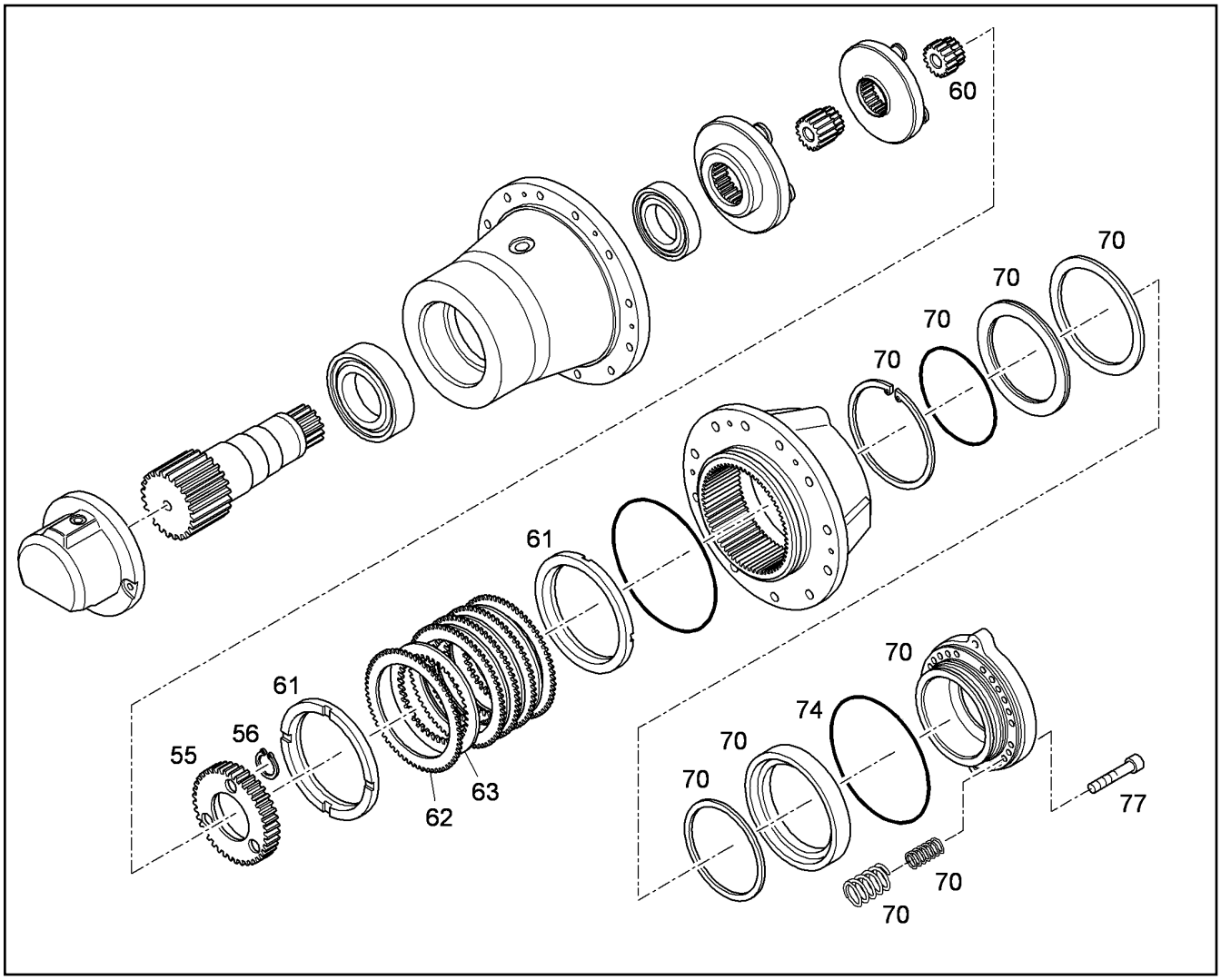


| Pos. | Item | Quantity | Description | Designação | Serie | K |
|---|---|---|---|---|---|---|
| 55 | 932720701 | 1 | MULTI-DISC CARRIER | SUPORTE DAS LAMELAS | | |
| 56 | 4002080 | 3 | LOCKING RING DIN 47140 | ANEL DE RETENÇÃO | | |
| 60 | 932720801 | 1 | SUN WHEEL | ENGRENAGEM SOLAR | | |
| 61 | 932856101 | 2 | COMPRESSION RING 10X343/295RD | ANEL DE PRESSÃO | | |
| 62 | | 7 | OUTER MULTI-DISC | LAMELA EXTERNA | | 1 |
| 63 | | 6 | DISC INSIDE TOOTHED | LAMELAS INTERNAS | | 1 |
| 70 | 933333301 | 1 | BRAKE<br>⇨ ❑ 191 | FREIO | | 1 |
| 74 | 7610341 | 1 | O-RING 340X4 | ANEL-O | | |
| 77 | 4000613 | 6 | CYLINDER SCREW ISO 4762 M12X60 10.9 | PARAFUSO CILÍNDRICO | | |

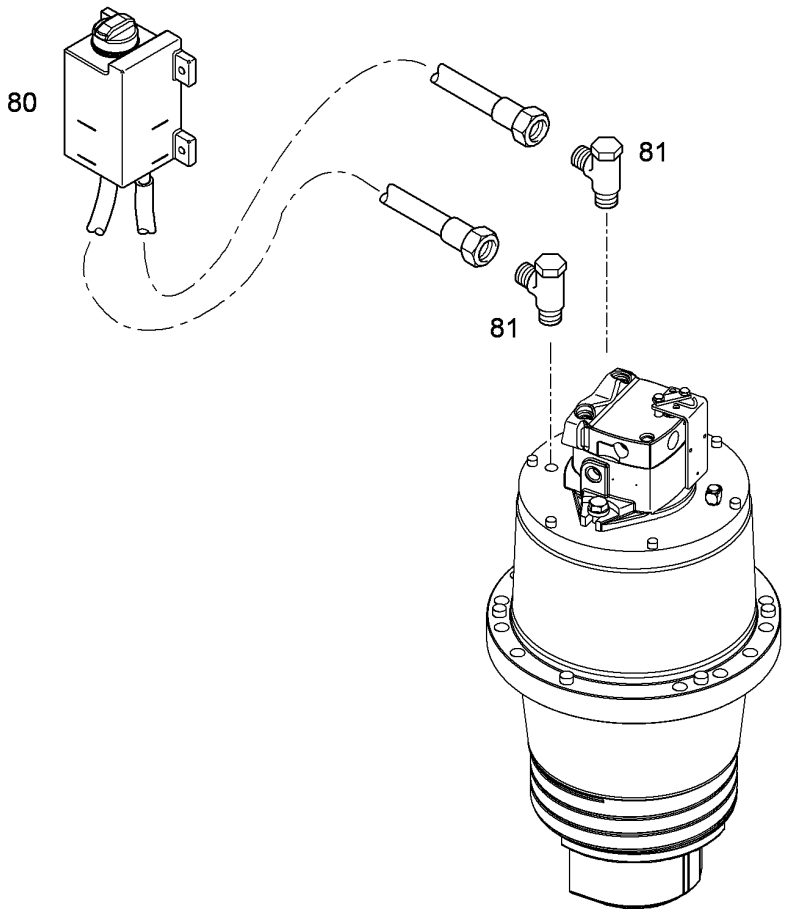


| Pos. | Item | Quantity | Description | Designação | Serie | K |
|---|---|---|---|---|---|---|
| 80 | 969021301 | 1 | OIL TANK<br>⇨ ❑ 195 | RESERVATÓRIO DE ÓLEO | | |
| 81 | 7617351 | 2 | SCREW FITTING WH 18L M22X1,5 | REDUÇÃO | | |

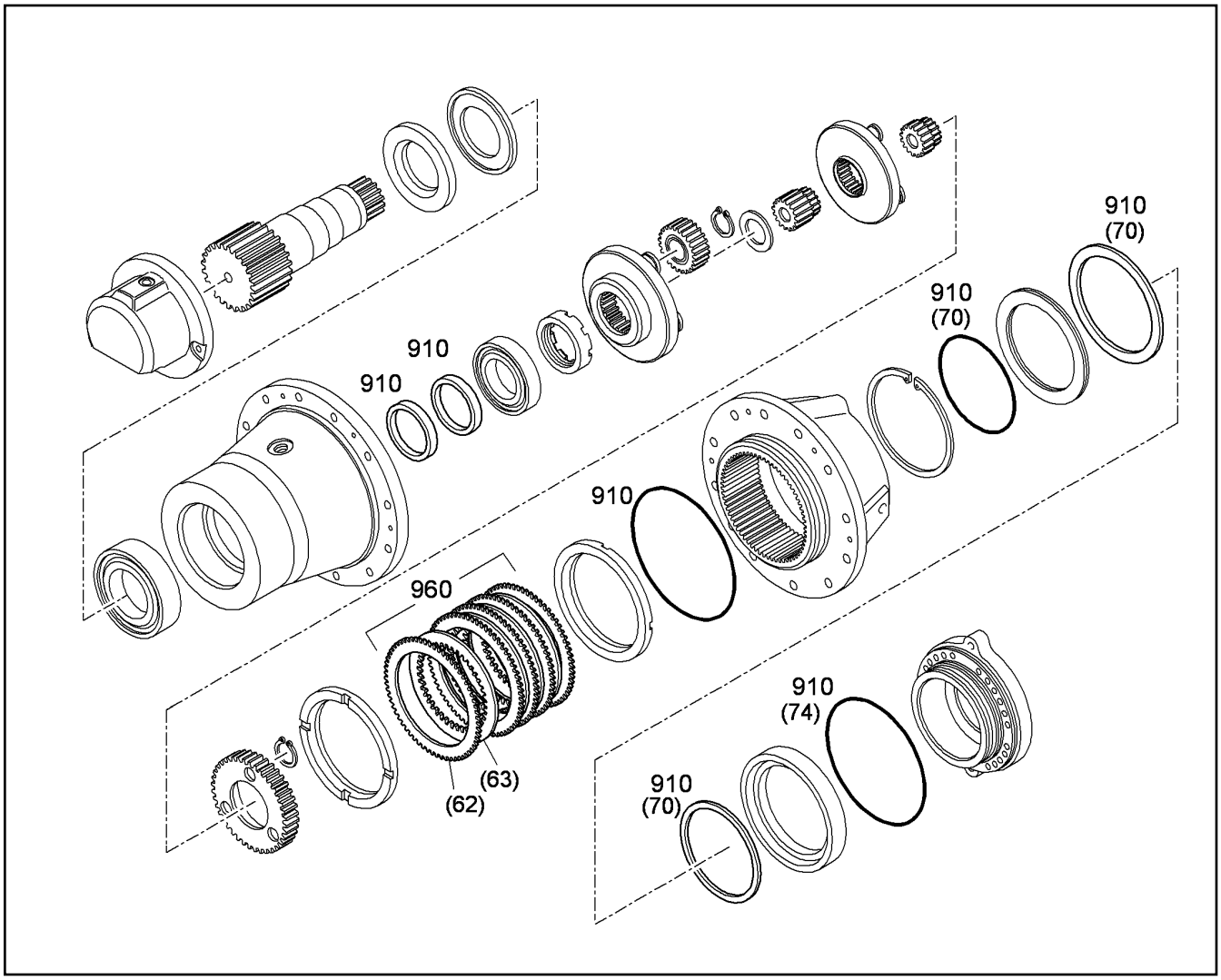


| Pos. | Item | Quantity | Description | Designação | Serie | K |
|---|---|---|---|---|---|---|
| 910 | 90200890 | 1 | SEAL KIT | KIT DE VEDAÇÃO | | |
| 960 | 968580201 | 1 | BRAKE MULTI-DISC SET<br>⇨ ❑ 193 | JOGO DE LAMELAS DO FREIO | | 1 |

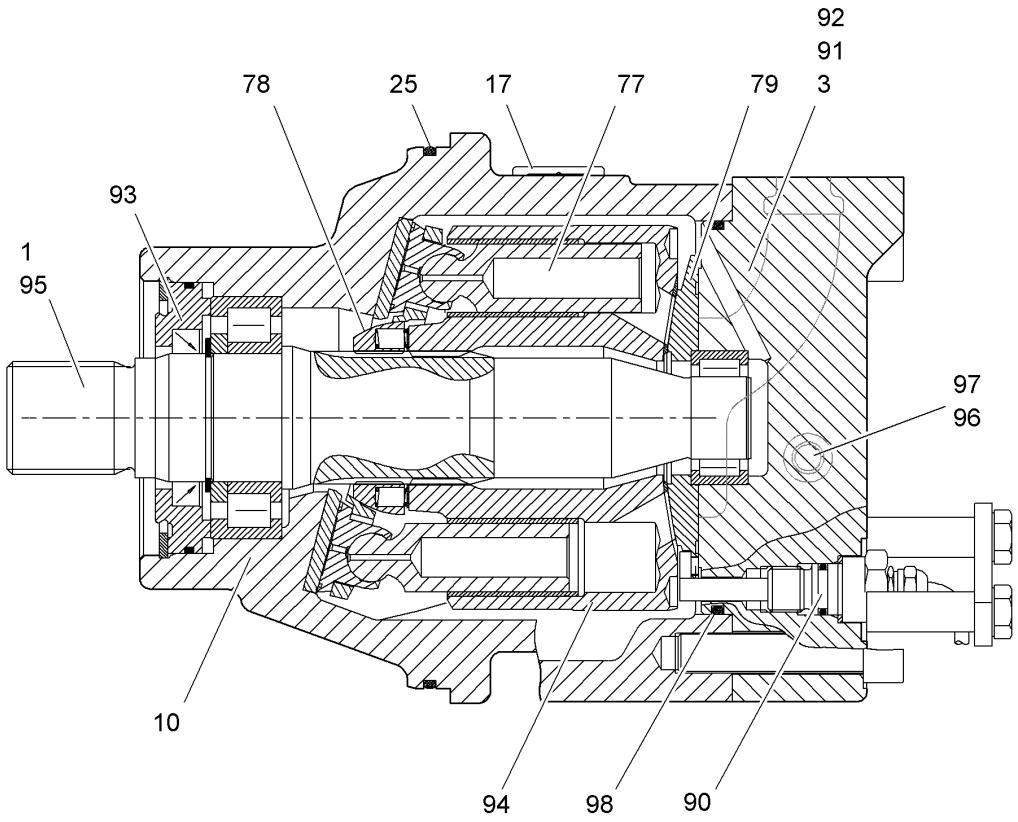


| Pos. | Item | Quantity | Description | Designação | Serie | K |
|---|---|---|---|---|---|---|
| 1 | | 1 | DRIVING GEAR NG 125 | MECANISMO DE ACIONAMENTO | | |
| 3 | 9072990 | 1 | CONNECTING PLATE<br>⇨ ❑ 196 | PLACA DE CONEXAO | | |
| 10 | | 1 | HOUSING | CARCAÇA | | |
| 17 | 7002771 | 1 | SCREW PLUG VSTI G3/4A | PARAFUSO DE FECHAMENTO | | |
| 25 | 7380613 | 1 | O-RING ISO 3601-1 196,22X5,33 | ANEL-O | | |
| 77 | 9073393 | 1 | REPAIR KIT SLIDING SHOE<br>⇨ ❑ 696 | KIT DE REPARO | | |
| 78 | 9073389 | 1 | REPAIR KIT NG 125<br>⇨ ❑ 695 | CONJ REP (ESFERA RZ+PL) | | |
| 79 | 9074415 | 1 | RK CYLINDER+CONTROL PLATE<br>⇨ ❑ 198 | KIT DE REPARO GRUPO ROTÓR | | |
| 90 | 9278623 | 1 | RK SPEED SENSOR<br>⇨ ❑ 201 | | | |
| 91 | 9883996 | 1 | REPAIR SET PRESSURE CONTROL VA<br>⇨ ❑ 202 | KIT DE REPARO | | |
| 92 | 9077087 | 1 | SHUTTLE VALVE WV 10<br>⇨ ❑ 200 | VALVULA INTERCAMBIAVEL | | |
| 93 | 9268016 | 1 | REPAIR KIT LOCK RING<br>⇨ ❑ 697 | KIT DE REPARO | | |
| 94 | 9074416 | 1 | REPAIR KIT DRIVING MECHANISM<br>⇨ ❑ 199 | KIT DE REPARO | | |
| 95 | 9074285 | 1 | REPAIR KIT SHAFT<br>⇨ ❑ 197 | KIT DE REPARO | | |
| 96 | 9266232 | 1 | SEAL KIT SHUTTLE VALVE<br>⇨ ❑ 83 | KIT VEDACAO VAVLULA DUAS V | | |

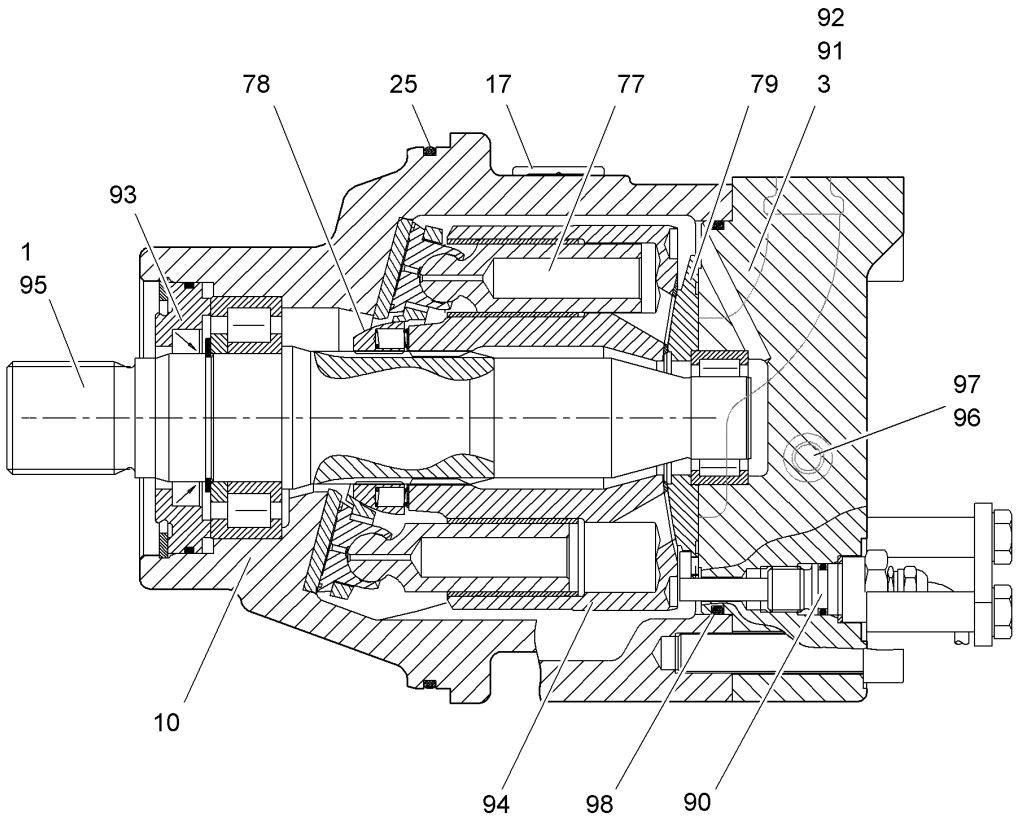


| Pos. | Item | Quantity | Description | Designação | Serie | K |
|---|---|---|---|---|---|---|
| 97 | 9266231 | 1 | SEALING SET VALVE<br>⇨ ❑ 82 | KIT DE VEDACAO DA VALVULA | | |
| 98 | 9273048 | 1 | SEAL KIT<br>⇨ ❑ 204 | KIT DE VEDAÇÃO | | |

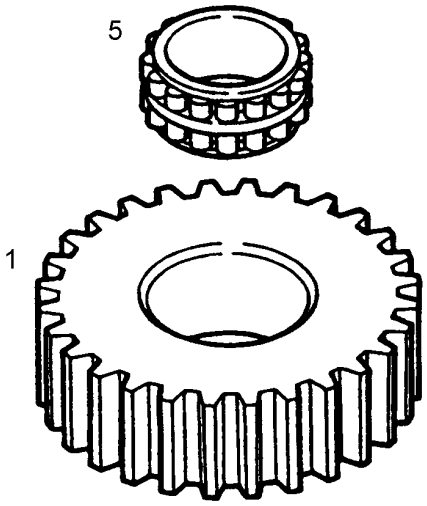


| Pos. | Item | Quantity | Description | Designação | Serie | K |
|---|---|---|---|---|---|---|
| 1 | | 1 | PLANET WHEEL | ENGRENAGEM PLANETÁRIA | | |
| 5 | 7610037 | 1 | CYLINDRICAL ROLLER BEARING | ROLAMENTO ROLOS CILINDRI | | |

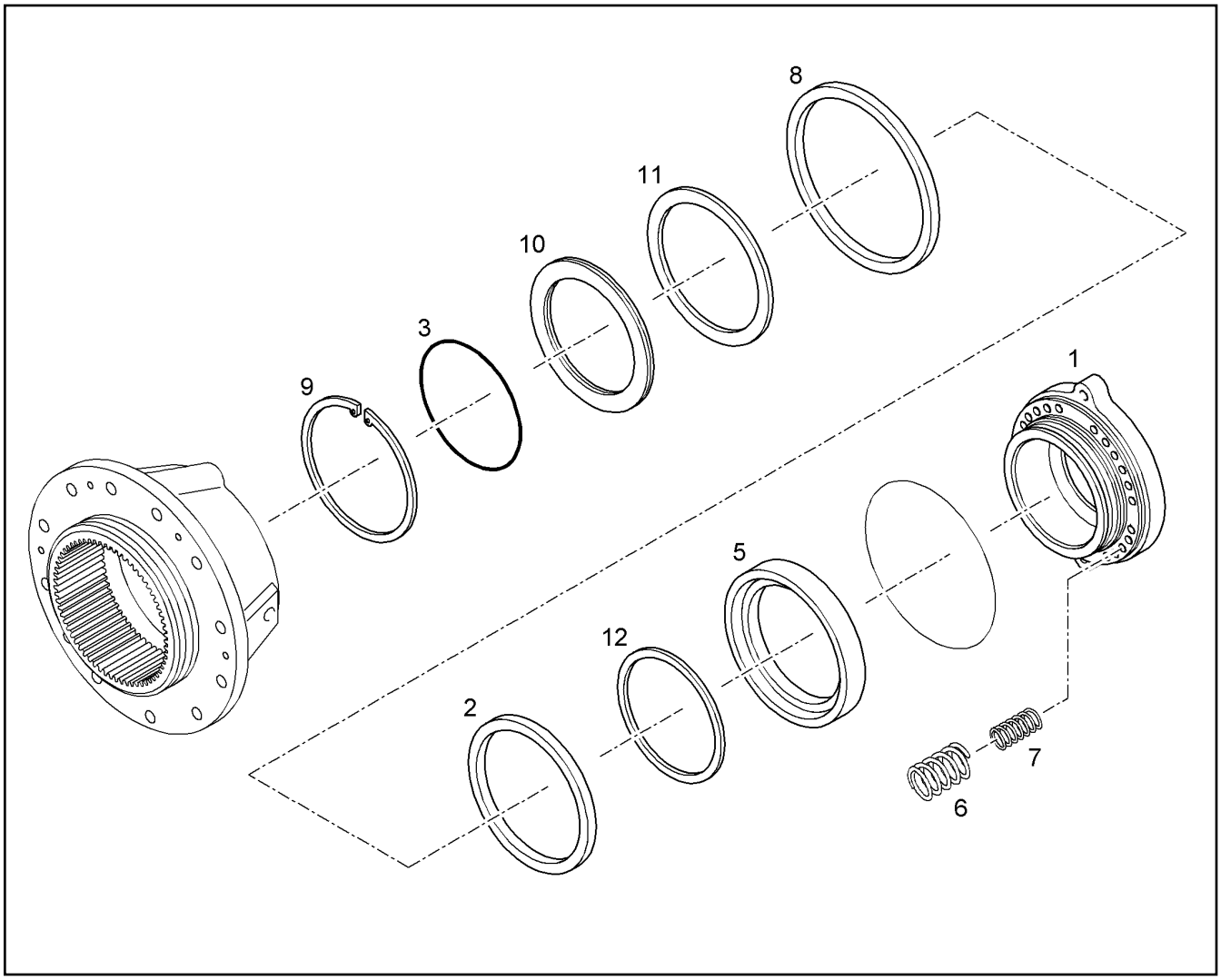


| Pos. | Item | Quantity | Description | Designação | Serie | K |
|---|---|---|---|---|---|---|
| 1 | 933333401 | 1 | BRAKE HOUSING | CARCAÇA DO FREIO | | 1 |
| 2 | 7610521 | 1 | LIP SEAL RING 291X281,4X5,5 | ANEL RANHURADO | | |
| 3 | 7610202 | 1 | O-RING 260X3 | ANEL-O | | |
| 5 | 9441436 | 1 | ANNULAR PISTON | PISTAO ANELAR | | |
| 6 | 7610107 | 26 | PRESSURE SPRING | MOLA DE PRESSÃO | | |
| 7 | 7610108 | 26 | PRESSURE SPRING | MOLA DE PRESSÃO | | |
| 8 | 7610523 | 1 | LIP SEAL RING | ANEL RANHURADO | | |
| 9 | 4600856 | 1 | LOCKING RING DIN 471280 | ANEL DE RETENÇÃO | | |
| 10 | 9443229 | 1 | CLOSING RING | ANEL DE FECHAMENTO | | |
| 11 | 7610551 | 1 | DIRT SCRAPER | ANEL RASPADOR | | |
| 12 | 7610552 | 1 | DIRT SCRAPER 274X285X3,5 | ANEL RASPADOR | | |

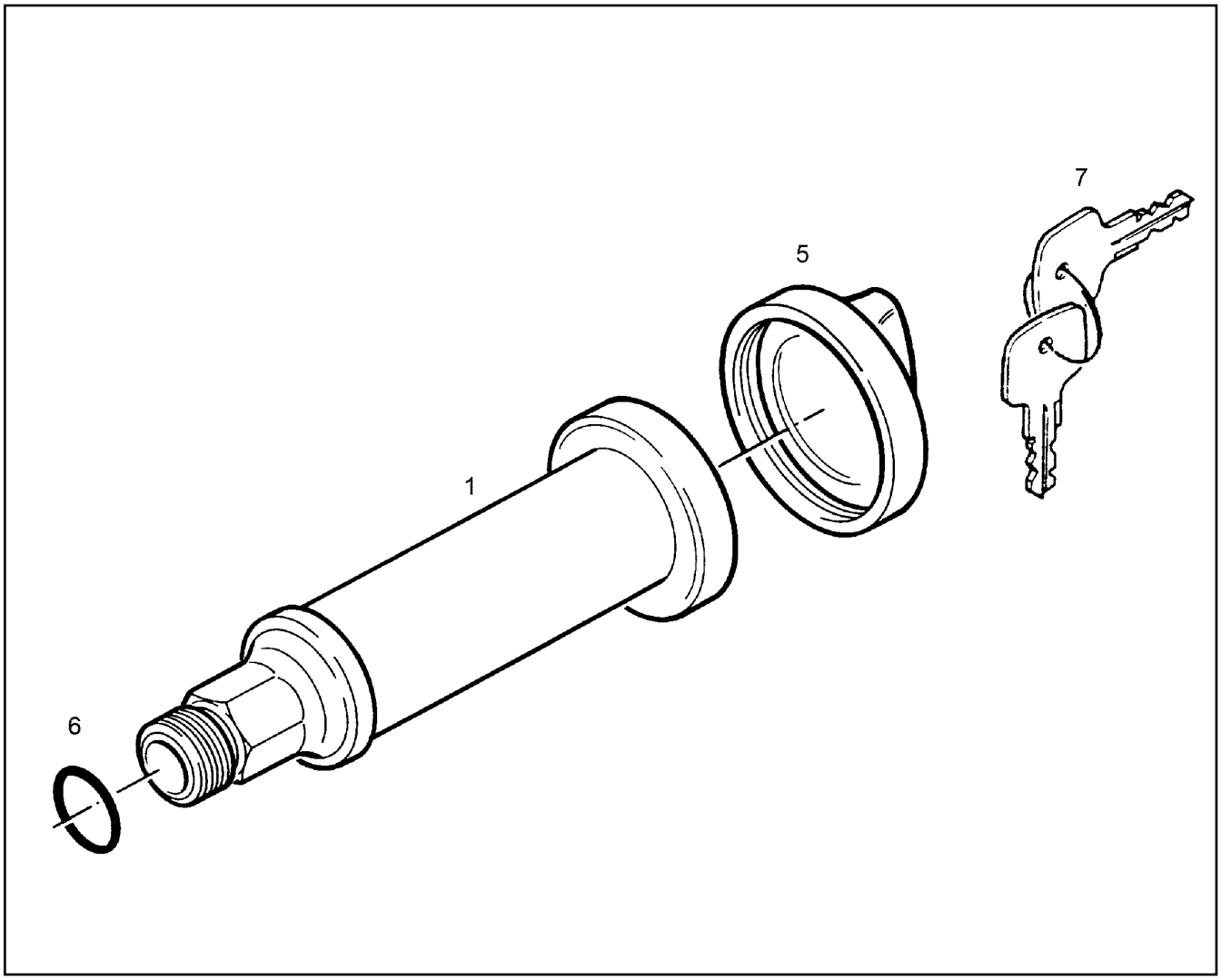


| Pos. | Item | Quantity | Description | Designação | Serie | K |
|---|---|---|---|---|---|---|
| 1 | | 1 | FILLER NECK | CONEXÃO DE ABASTECIMENTO | | |
| 5 | 7610825 | 1 | LOCKABLE TANK CAP | FECHO DO TANQUE | | |
| 6 | 7610225 | 1 | SEALING RING | ANEL DE VEDAÇÃO | | |
| 7 | 7365626 | 1 | KEY | CHAVE | | |

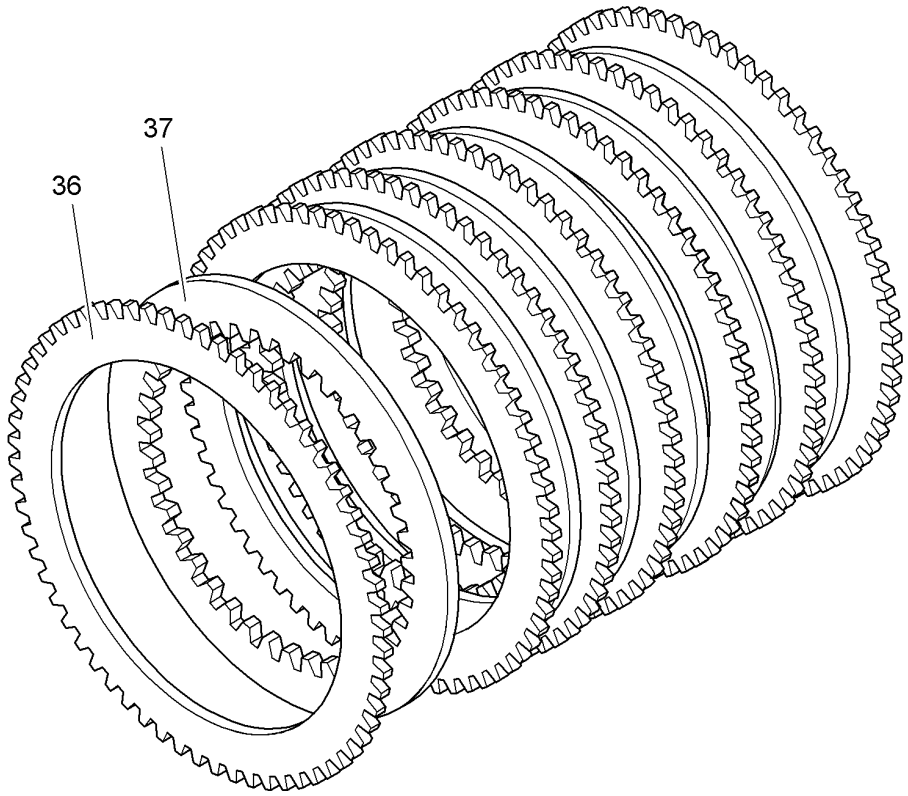


| Pos. | Item | Quantity | Description | Designação | Serie | K |
|---|---|---|---|---|---|---|
| 36 | | 6 | DISC INSIDE TOOTHED | LAMELAS INTERNAS | | 1 |
| 37 | | 7 | OUTER MULTI-DISC | LAMELA EXTERNA | | 1 |

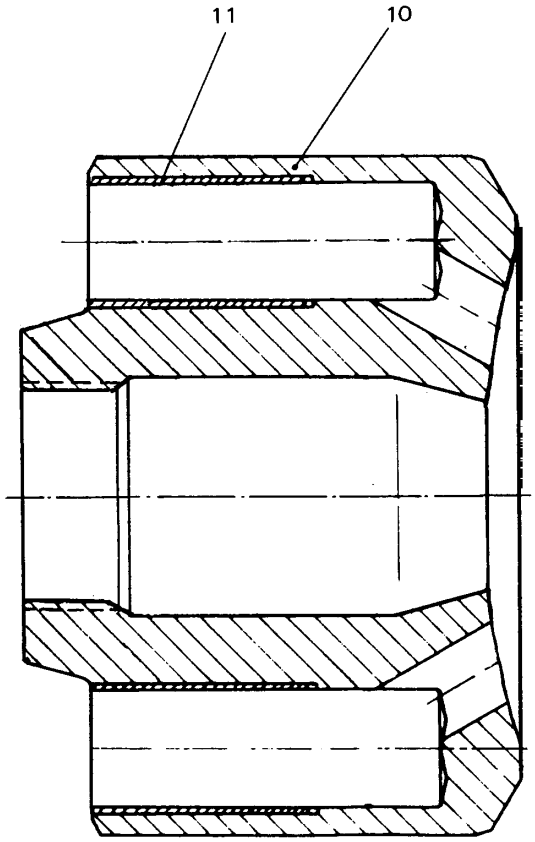


| Pos. | Item | Quantity | Description | Designação | Serie | K |
|---|---|---|---|---|---|---|
| 10 | 9273051 | 1 | CYLINDER | CILINDRO | | |
| 11 | 9266524 | 9 | BUSHING | BUCHA | | |

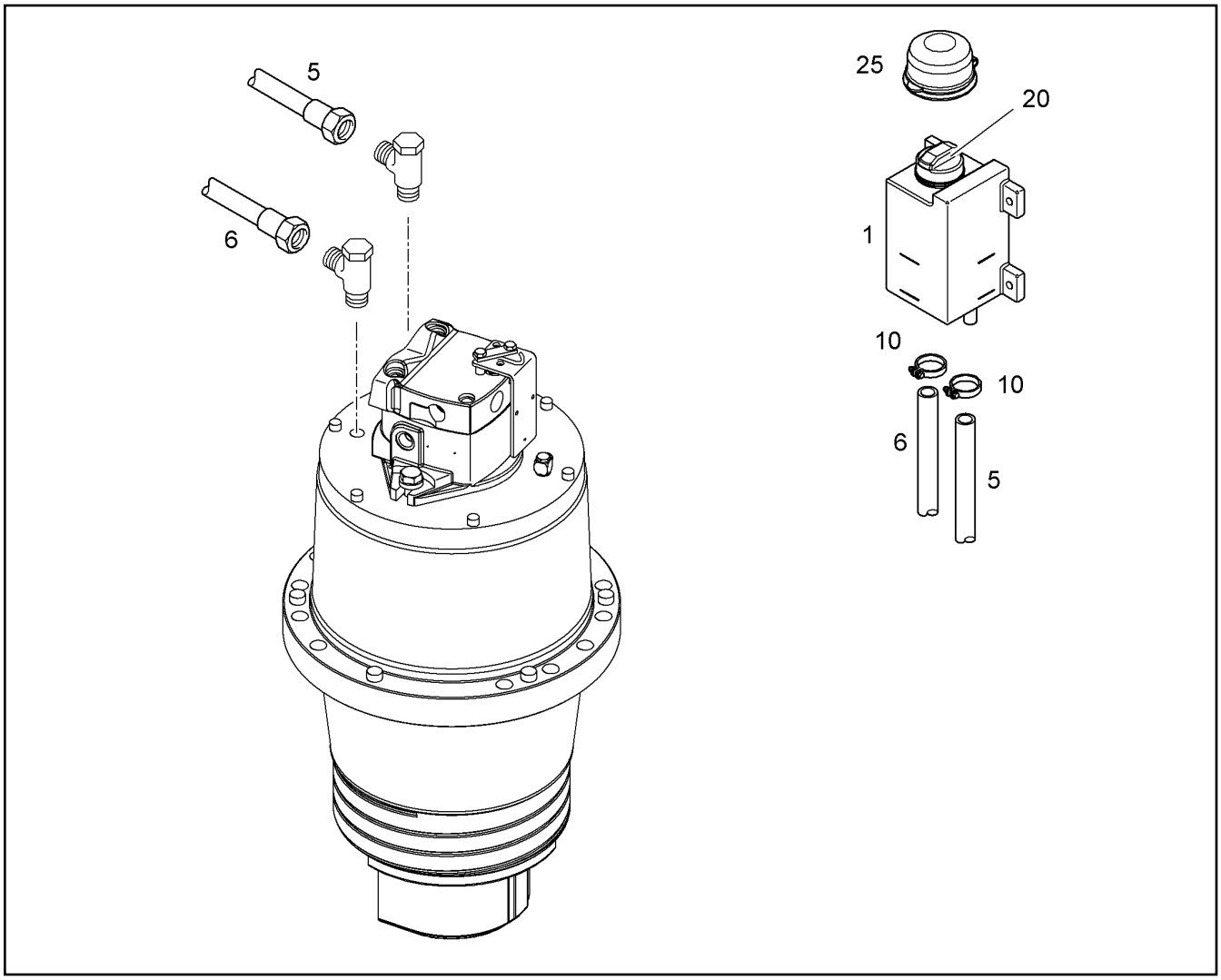


| Pos. | Item | Quantity | Description | Designação | Serie | K |
|---|---|---|---|---|---|---|
| 1 | 968868001 | 1 | OIL TANK | RESERVATÓRIO DE ÓLEO | | |
| 5 | 10167652 | 1 | HYDRAULIC HOSE 16X700 | MANGUEIRA HIDRAULICA | | 1 |
| 6 | 10167653 | 1 | HYDRAULIC HOSE 16X800 | MANGUEIRA HIDRAULICA | | 1 |
| 10 | 10170796 | 2 | HOSE CLAMP DIN 3017-2 B1 23 21,5-24,5X1 | ABRAÇADEIRA DE MANGUEIRA | | |
| 20 | 7610826 | 1 | LOCKABLE TANK CAP d=45 | FECHO DO TANQUE | | |
| 25 | 968461801 | 1 | COVER LID | CAPA DE COBERTURA | | |

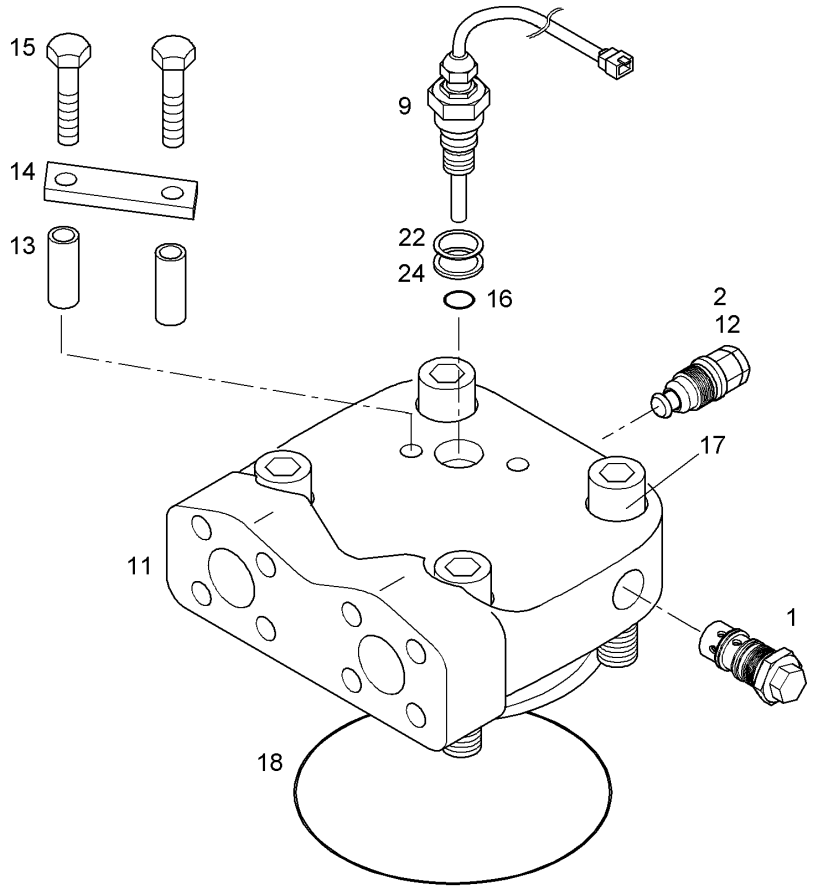


| Pos. | Item | Quantity | Description | Designação | Serie | K |
|---|---|---|---|---|---|---|
| 1 | 9077087 | 1 | SHUTTLE VALVE WV 10<br>⇨ ❑ 200 | VALVULA INTERCAMBIAVEL | | |
| 2 | 9267037 | 1 | PRESSURE LIMITING VALVE<br>⇨ ❑ 76 | VÁLVULA LIMITADORA DE PRES | | |
| 9 | 6290073 | 1 | SPEED SENSOR<br>⇨ ❑ 203 | SENSOR DE ROTAÇÃO | | |
| 11 | | 1 | CONNECTING PLATE | PLACA DE CONEXAO | | |
| 12 | 9266836 | 1 | SCREEN | PROTEÇÃO | | |
| 13 | 9275737 | 2 | DISTANCE TUBE | TUBO DISTANCIADOR | | |
| 14 | 9275738 | 1 | PROTECTION GUARD | CHAPA DE PROTECAO | | |
| 15 | 4901218 | 2 | HEX BOLT ISO 4014 M10X45 8.8 A3C | PARAFUSO SEXTAVADO | | |
| 16 | 7381018 | 1 | O-RING DIN 3771 13,10X2,62 | ANEL-O | | |
| 17 | 4902329 | 4 | CYLINDER SCREW ISO 4762 M16X70 10.9 F | PARAFUSO CILÍNDRICO | | |
| 18 | 7380659 | 1 | O-RING DIN 3771 145,64X3,53 | ANEL-O | | |
| 22 | 7381354 | 2 | SHIM RING 18,5X23X0,2 | ARRUELA DE AJUSTE | | |
| 24 | 7381534 | 1 | SNAP RING SB 23 | ANEL DE RETENÇÃO | | |

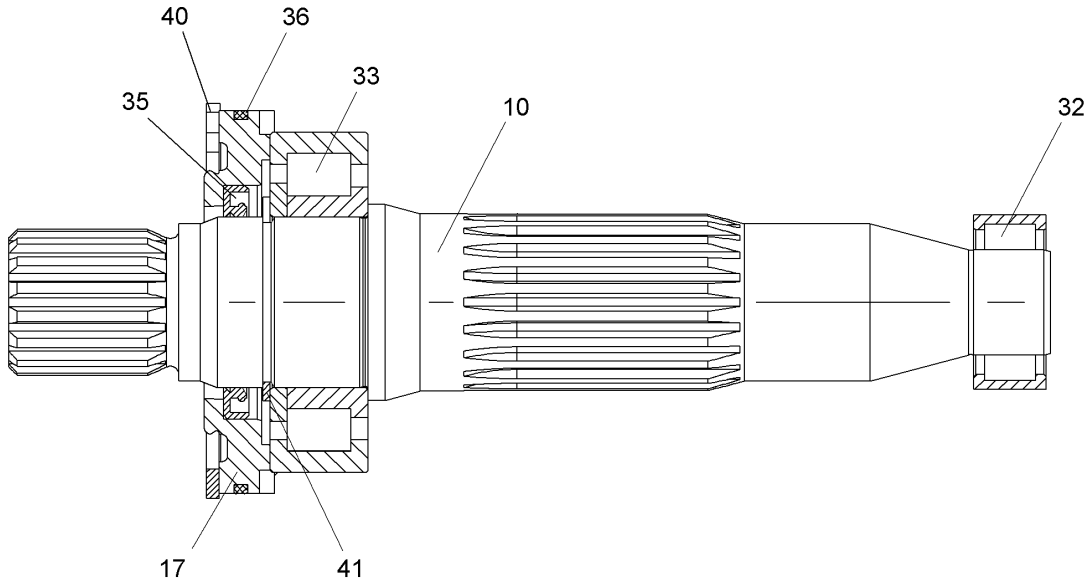


| Pos. | Item | Quantity | Description | Designação | Serie | K |
|---|---|---|---|---|---|---|
| 10 | | 1 | DRIVING SHAFT | EIXO MOTOR | | |
| 17 | | 1 | CLOSING RING | ANEL DE FECHAMENTO | | |
| 32 | | 1 | CYL.NEEDLE BEARING | ROLAMENTO | | 1 |
| 33 | | 1 | CYLINDRICAL ROLLER BEARING | ROLAMENTO ROLOS CILINDRI | | |
| 35 | | 1 | ROTARY SHAFT LIP SEAL ASX50X65X7 | ANEL DE VEDÇÃO DO EIXO RAD | | |
| 36 | | 1 | O-RING DIN 3771 91,67X3,53 | ANEL-O | | |
| 40 | | 1 | LOCKING RING DIN 472100 | ANEL DE RETENÇÃO | | |
| 41 | | 1 | LOCKING RING DIN 471 50 X2 | ANEL DE RETENÇÃO | | |

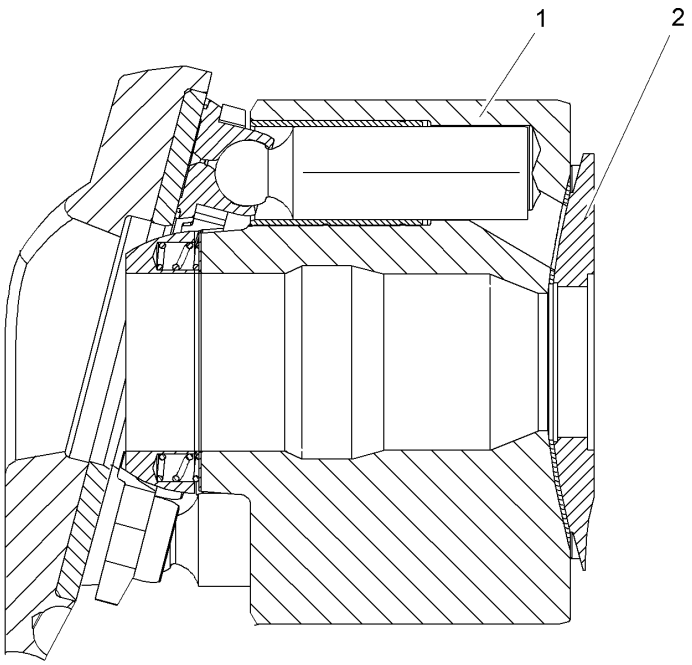


| Pos. | Item | Quantity | Description | Designação | Serie | K |
|---|---|---|---|---|---|---|
| 1 | | 1 | CYLINDER WITH BUSH<br>⇨ ❑ 194 | CILINDRO COM BUCHA | | |
| 2 | | 1 | GUIDE PLATE | PLACA DE CONTROLE | | |

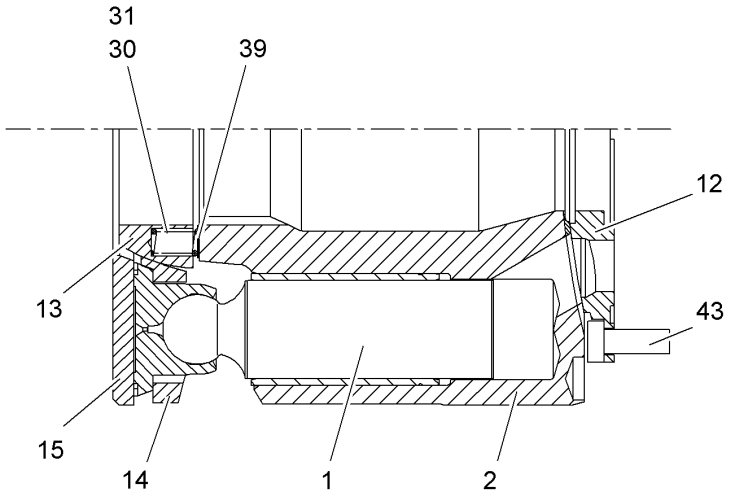


| Pos. | Item | Quantity | Description | Designação | Serie | K |
|---|---|---|---|---|---|---|
| 1 | | 9 | PISTON WITH GUIDE SHOE | PISTÃO COM SAPATA DESLIZA | | |
| 2 | | 1 | CYLINDER WITH BUSH<br>⇨ ❑ 194 | CILINDRO COM BUCHA | | |
| 12 | | 1 | GUIDE PLATE | PLACA DE CONTROLE | | |
| 13 | | 1 | PULL-BACK BALL NG 125-130 | ESFERA DE RETORNO | | |
| 14 | | 1 | PULL-BACK PLATE | PLACA DE RETORNO | | |
| 15 | | 1 | SLIDING DISC 72X152X6 | ARRUELA DESLIZANTE | | |
| 30 | | 24 | PRESSURE SPRING 1,30/ 5,50X18,10 | MOLA DE PRESSÃO | | |
| 31 | | 24 | PRESSURE SPRING 0,70/ 3,30X24,20 | MOLA DE PRESSÃO | | |
| 39 | | 1 | WASHER SET<br>⇨ ❑ 698 | KIT DE ARRUELAS | | |
| 43 | | 4 | CYLINDER SCREW ISO 14580 M6X16 10.9 | PARAFUSO CILÍNDRICO | | |

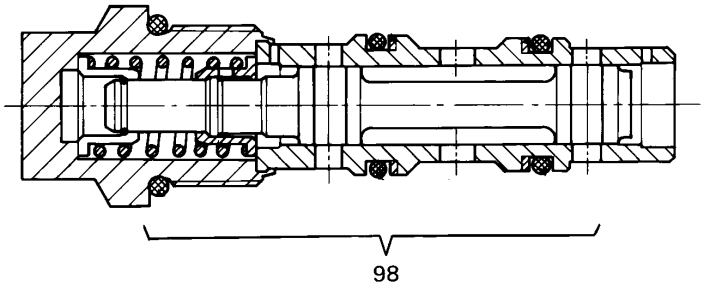


| Pos. | Item | Quantity | Description | Designação | Serie | K |
|---|---|---|---|---|---|---|
| 98 | 9266232 | 1 | SEAL KIT SHUTTLE VALVE<br>⇨ ❑ 83 | KIT VEDACAO VAVLULA DUAS V | | |

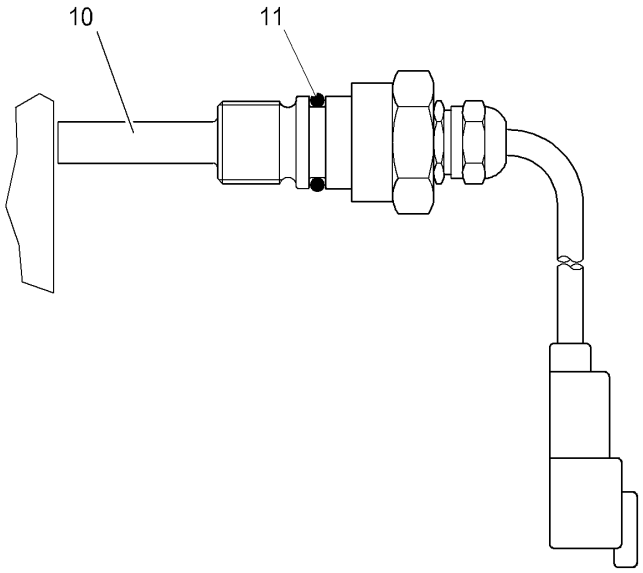


| Pos. | Item | Quantity | Description | Designação | Serie | K |
|---|---|---|---|---|---|---|
| 10 | 6290073 | 1 | SPEED SENSOR<br>⇨ ❑ 203 | SENSOR DE ROTAÇÃO | | |
| 11 | 7381018 | 1 | O-RING DIN 3771 13,10X2,62 | ANEL-O | | |

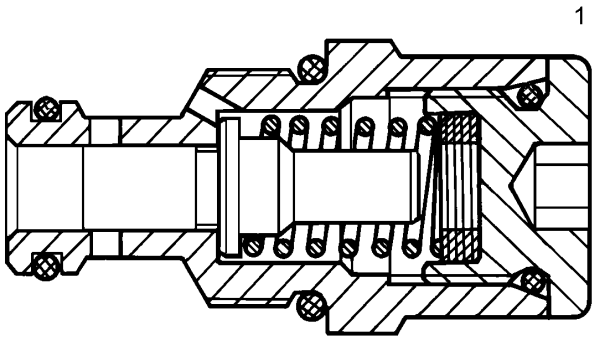


| Pos. | Item | Quantity | Description | Designação | Serie | K |
|---|---|---|---|---|---|---|
| 1 | 9267037 | 1 | PRESSURE LIMITING VALVE<br>⇨ ❑ 76 | VÁLVULA LIMITADORA DE PRES | | |

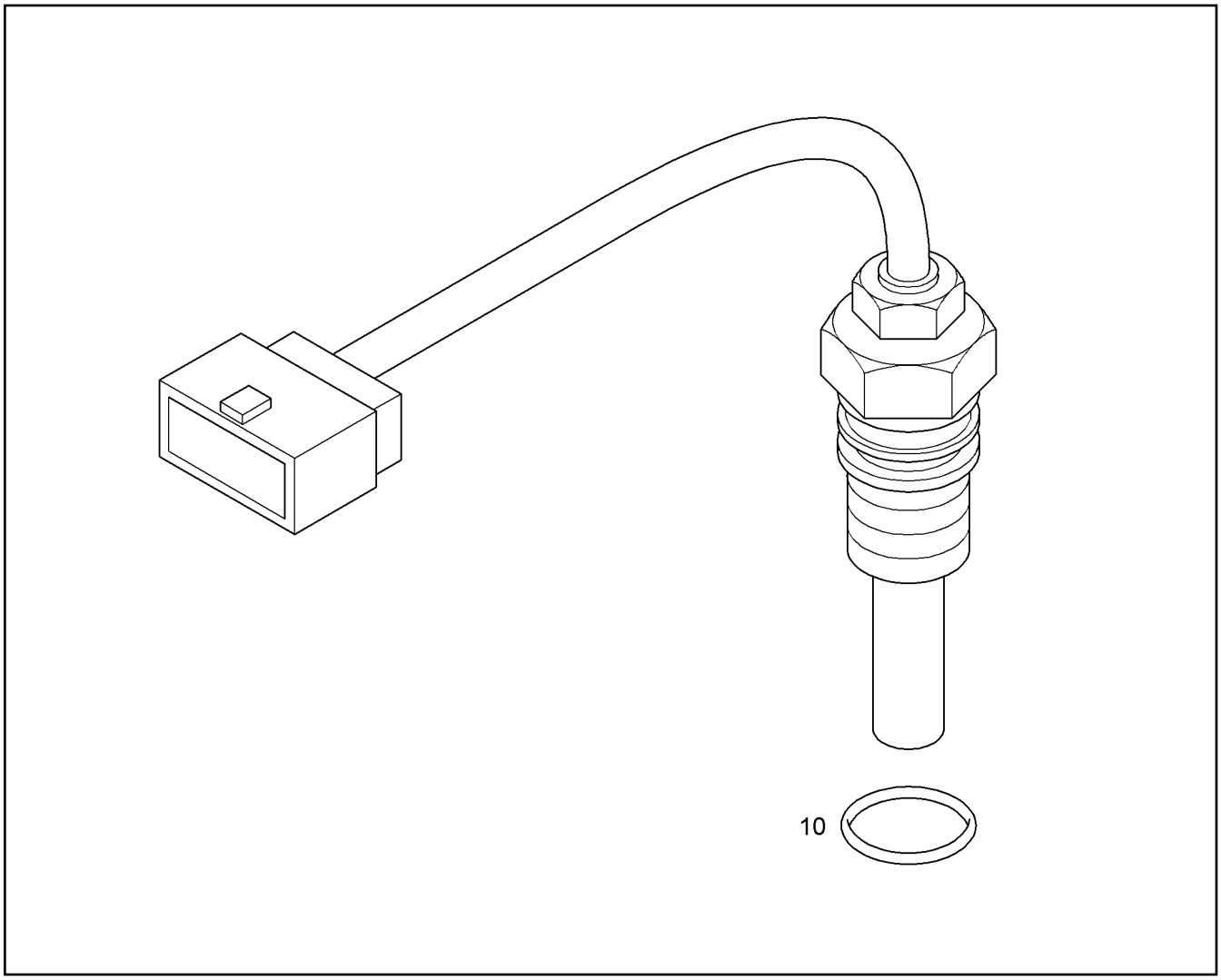


| Pos. | Item | Quantity | Description | Designação | Serie | K |
|---|---|---|---|---|---|---|
| 10 | 7381018 | 1 | O-RING DIN 3771 13,10X2,62 | ANEL-O | | |

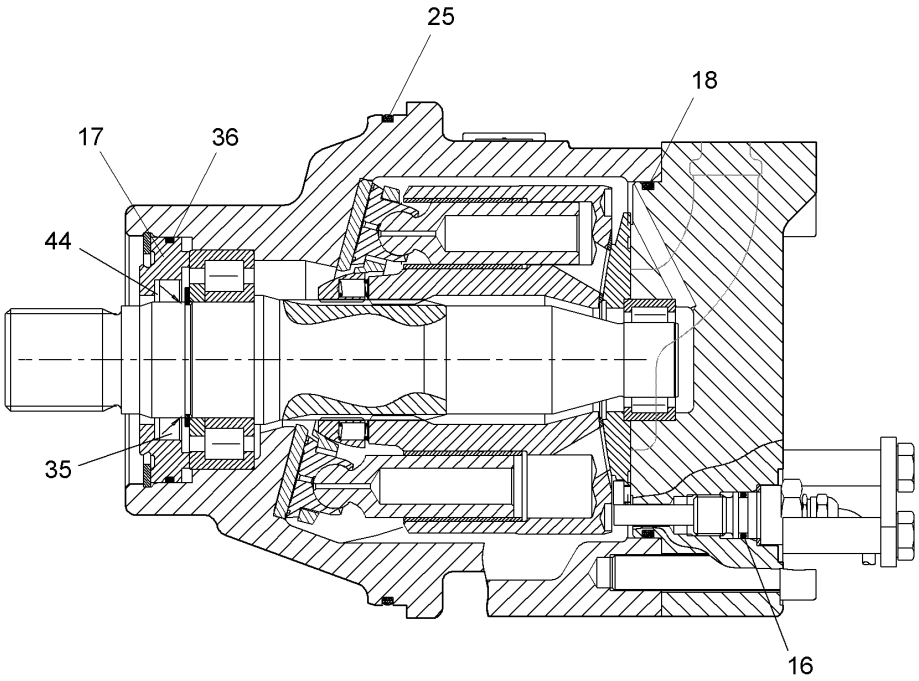


| Pos. | Item | Quantity | Description | Designação | Serie | K |
|---|---|---|---|---|---|---|
| 16 | | 1 | O-RING DIN 3771 13,10X2,62 | ANEL-O | | |
| 17 | | 1 | CLOSING RING | ANEL DE FECHAMENTO | | |
| 18 | | 1 | O-RING DIN 3771 145,64X3,53 | ANEL-O | | |
| 25 | 7380613 | 1 | O-RING ISO 3601-1 196,22X5,33 | ANEL-O | | |
| 35 | | 1 | ROTARY SHAFT LIP SEAL ASX50X65X7 | ANEL DE VEDÇÃO DO EIXO RAD | | |
| 36 | | 1 | O-RING DIN 3771 91,67X3,53 | ANEL-O | | |
| 44 | | 1 | SHIM RING 55X65X1,5 | ARRUELA DE AJUSTE | | |

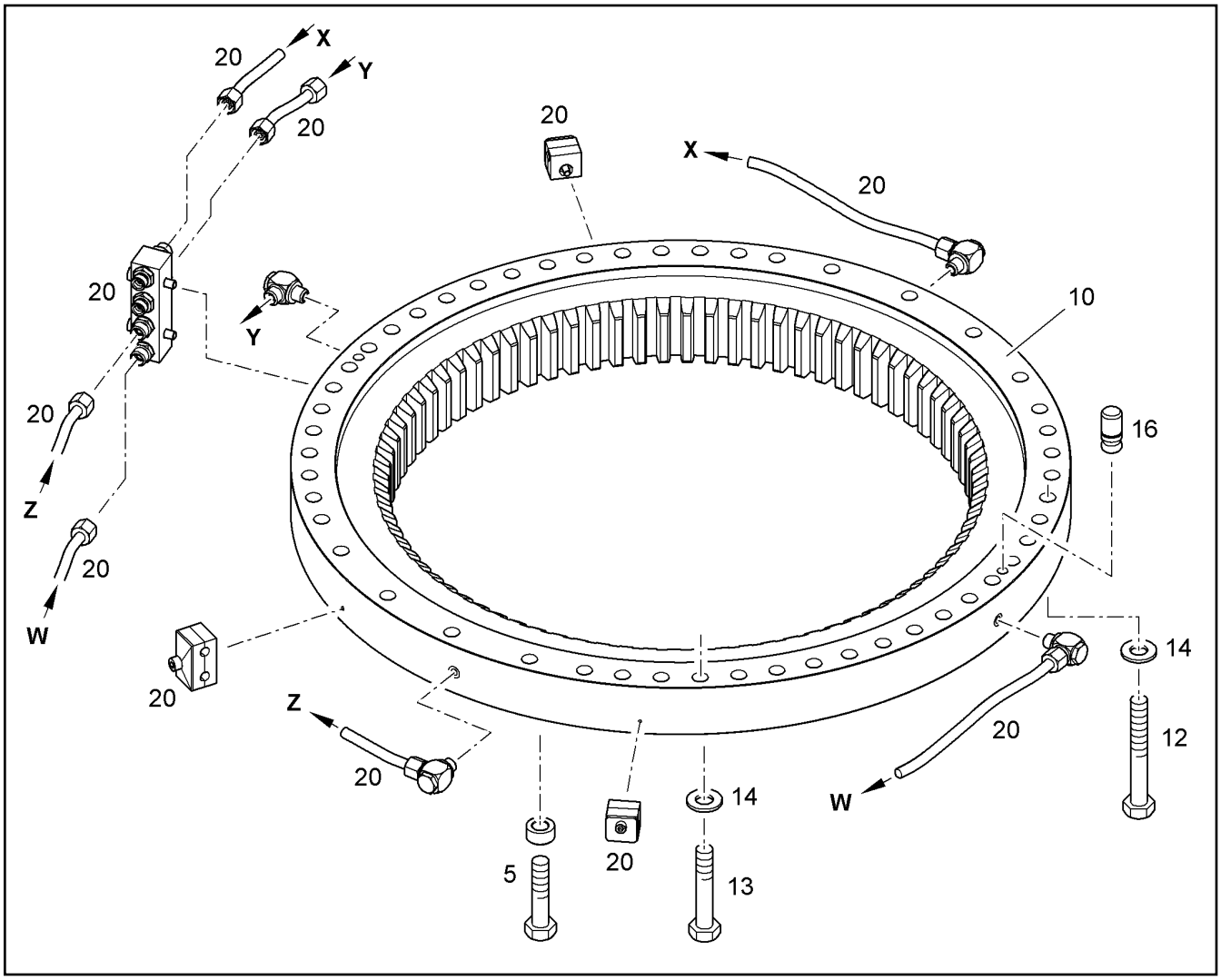


| Pos. | Item | Quantity | Description | Designação | Serie | K |
|---|---|---|---|---|---|---|
| 5 | 9946390 | 1 | FIXING PARTS SWING RING<br>⇨ ❑ 206 | PEÇAS FIXAÇÃO COROA GIRA | | |
| 10 | 932178201 | 1 | BALL SLEWING RING<br>[50011 26/12/12 ] | COROA GIRATÓRIA | | |
| 12 | 10425629 | 14 | HEX BOLT ISO 4014 M27X180 10.9 FLZN | PARAFUSO SEXTAVADO | | |
| 13 | 10425625 | 36 | HEX BOLT ISO 4014 M27X150 10.9 FLZN | PARAFUSO SEXTAVADO | | |
| 14 | 9586495 | 50 | WASHER 27,5/45X6 | ARRUELA | | |
| 16 | 90018066 | 1 | CENTERING PIN | PINO DE CENTRAGEM | | |
| 20 | 9946408 | 1 | GREASE PIPE INSTALLATION<br>⇨ ❑ 207 | TUBO LUBRIFICAÇÃO - INSTAL | | |

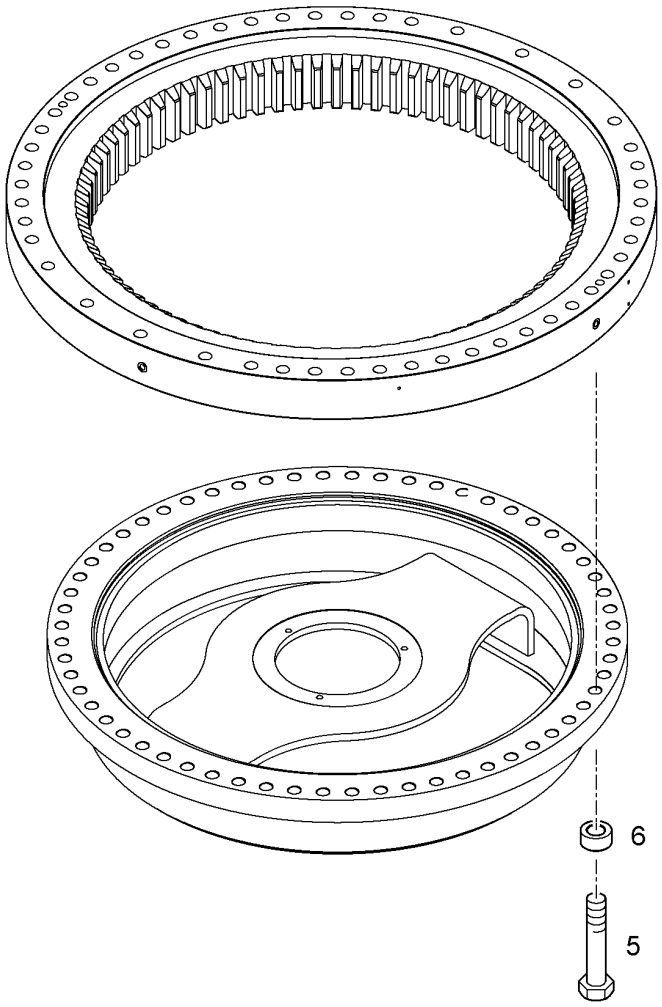


| Pos. | Item | Quantity | Description | Designação | Serie | K |
|---|---|---|---|---|---|---|
| 5 | 10425733 | 60 | HEX BOLT ISO 4014 M27X130 10.9 FLZN | PARAFUSO SEXTAVADO | | |
| 6 | 9563951 | 60 | SLEEVE 28X50X25 | LUVA | | 1 |

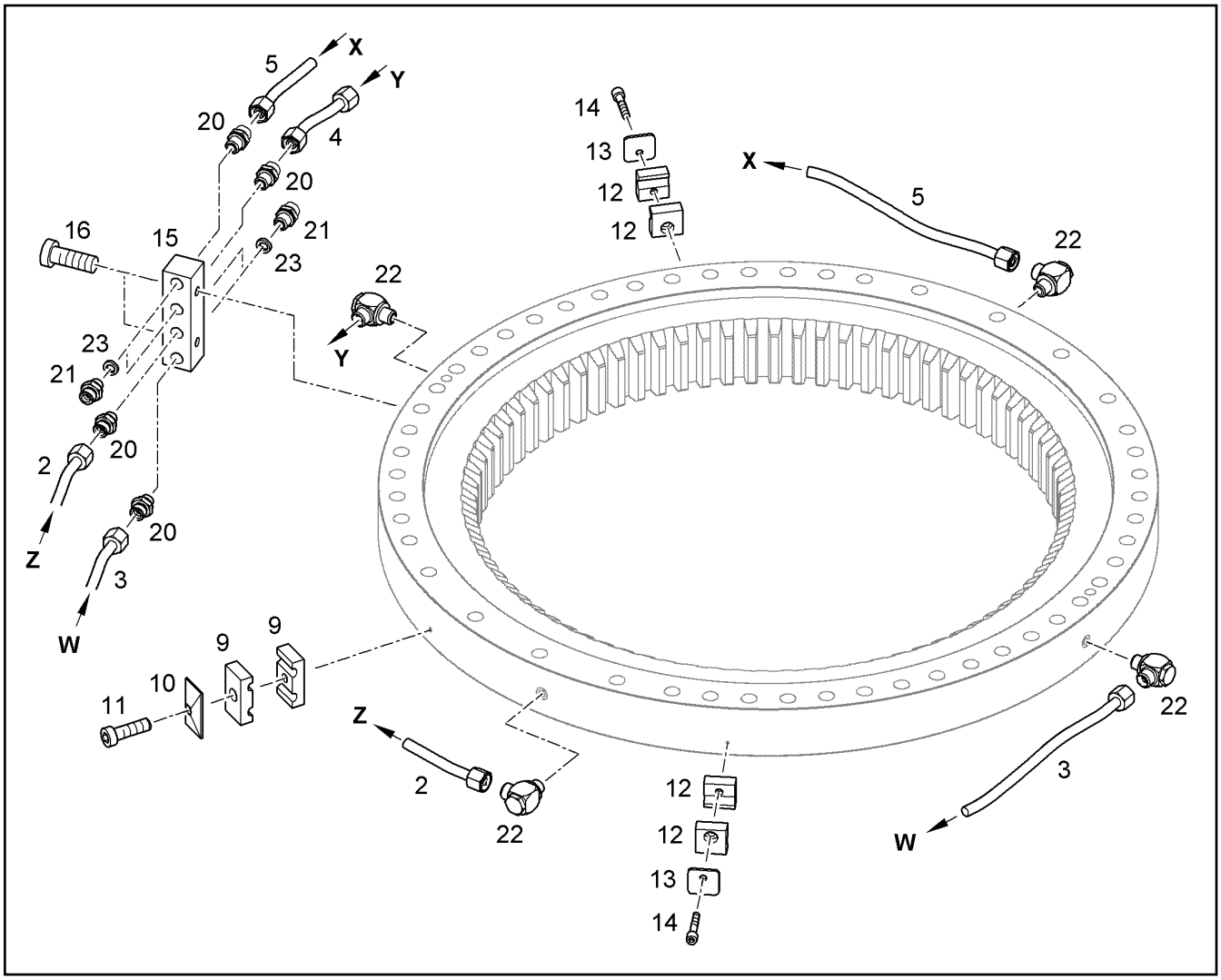


| Pos. | Item | Quantity | Description | Designação | Serie | K |
|---|---|---|---|---|---|---|
| 2 | 9946410 | 1 | GREASE PIPE | TUBO DE LUBRIFICAÇÃO | | |
| 3 | 9946411 | 1 | GREASE PIPE | TUBO DE LUBRIFICAÇÃO | | |
| 4 | 9946412 | 1 | GREASE PIPE | TUBO DE LUBRIFICAÇÃO | | |
| 5 | 9946413 | 1 | GREASE PIPE | TUBO DE LUBRIFICAÇÃO | | |
| 9 | 7365069 | 2 | CLAMP-HALF AEHNL.DIN 3015 Z 2 R 10 10 P | MEIA ABRAÇADEIRA | | |
| 10 | 7362606 | 1 | LID PLATE DIN 3015 Z-DP 2 W1-ZN | PLACA | | |
| 11 | 4600516 | 1 | CYLINDER SCREW ISO 4762 M8X40 10.9 A2 | PARAFUSO CILÍNDRICO | | |
| 12 | 7364901 | 4 | CLAMP-HALF DIN 3015-1 L 0 R 10 PP SW | MEIA ABRAÇADEIRA | | |
| 13 | 7364904 | 2 | LID PLATE DIN 3015 L-DP 0 W1-ZN | PLACA | | |
| 14 | 4600067 | 2 | CYLINDER SCREW ISO 4762 M6X35 10.9 A2 | PARAFUSO CILÍNDRICO | | |
| 15 | 9375276 | 1 | LUBRICATING PAD | PLACA DE LUBRIFICACAO | | |
| 16 | 4600516 | 2 | CYLINDER SCREW ISO 4762 M8X40 10.9 A2 | PARAFUSO CILÍNDRICO | | |
| 20 | 7003814 | 4 | SCREW FITTING GE 10L M14X1,5 | REDUÇÃO | | |
| 21 | 7368545 | 4 | SCREW-ON CONNECTION | CONEXÃO ROSCADA | | |
| 22 | 7617714 | 4 | HINGED THREADED UNION WH 10L M14X1, | CONEXÃO ROSCADA | | |
| 23 | 7101008 | 4 | SEALING RING DIN 7603 A 14X18 | ANEL DE VEDAÇÃO | | |

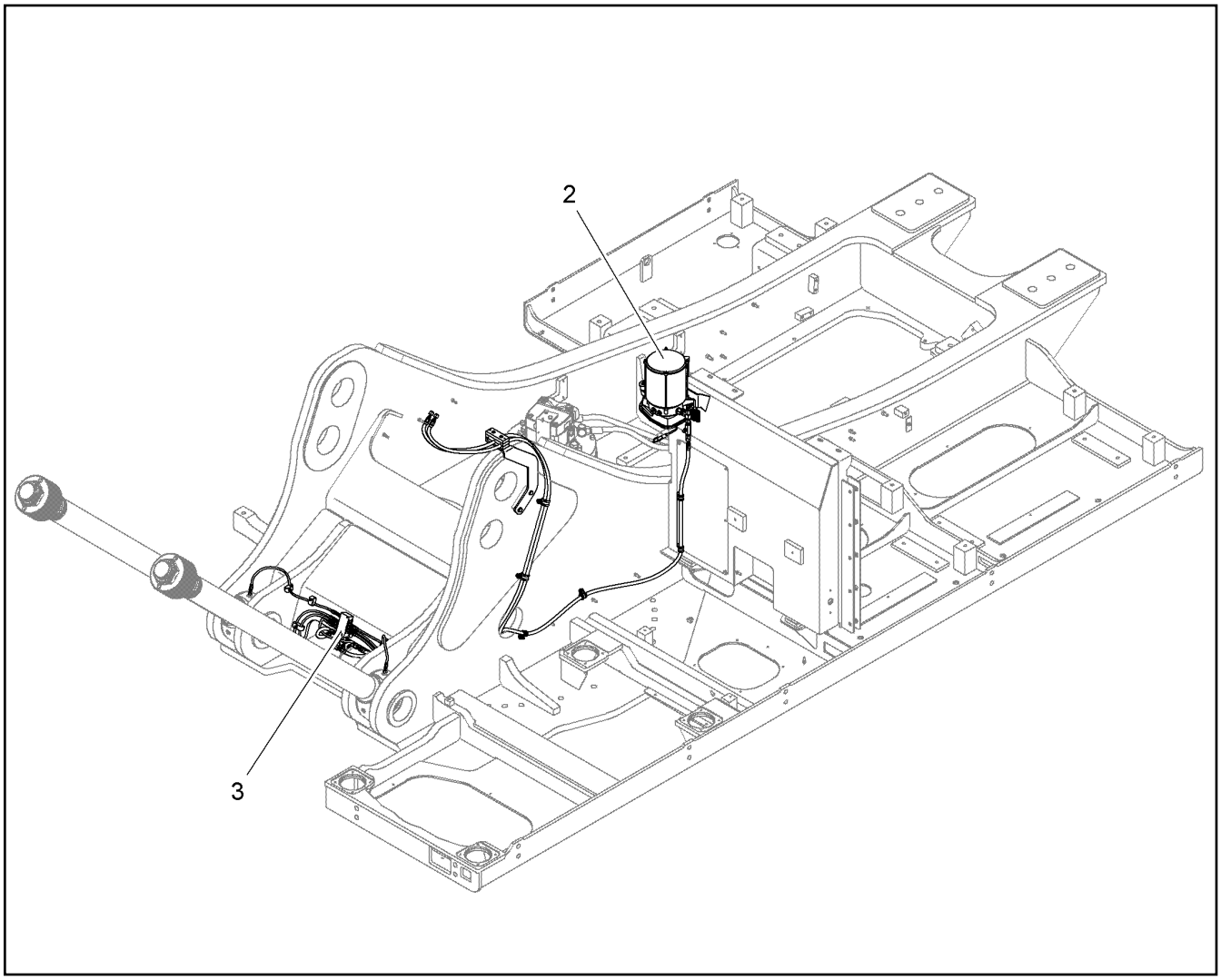


| Pos. | Item | Quantity | Description | Designação | Serie | K |
|---|---|---|---|---|---|---|
| 2 | | 1 | AUTOMATIC CENTRALIZED LUBRICA.<br>⇨ ❑ 209 | LUBRIFICAÇÃO CENTR. AUTOMÁ | | |
| 3 | | 1 | CENTRAL LUBRICATING SYSTEM<br>⇨ ❑ 214 | LUBRIFICAÇÃO CENTRALIZADA | | |

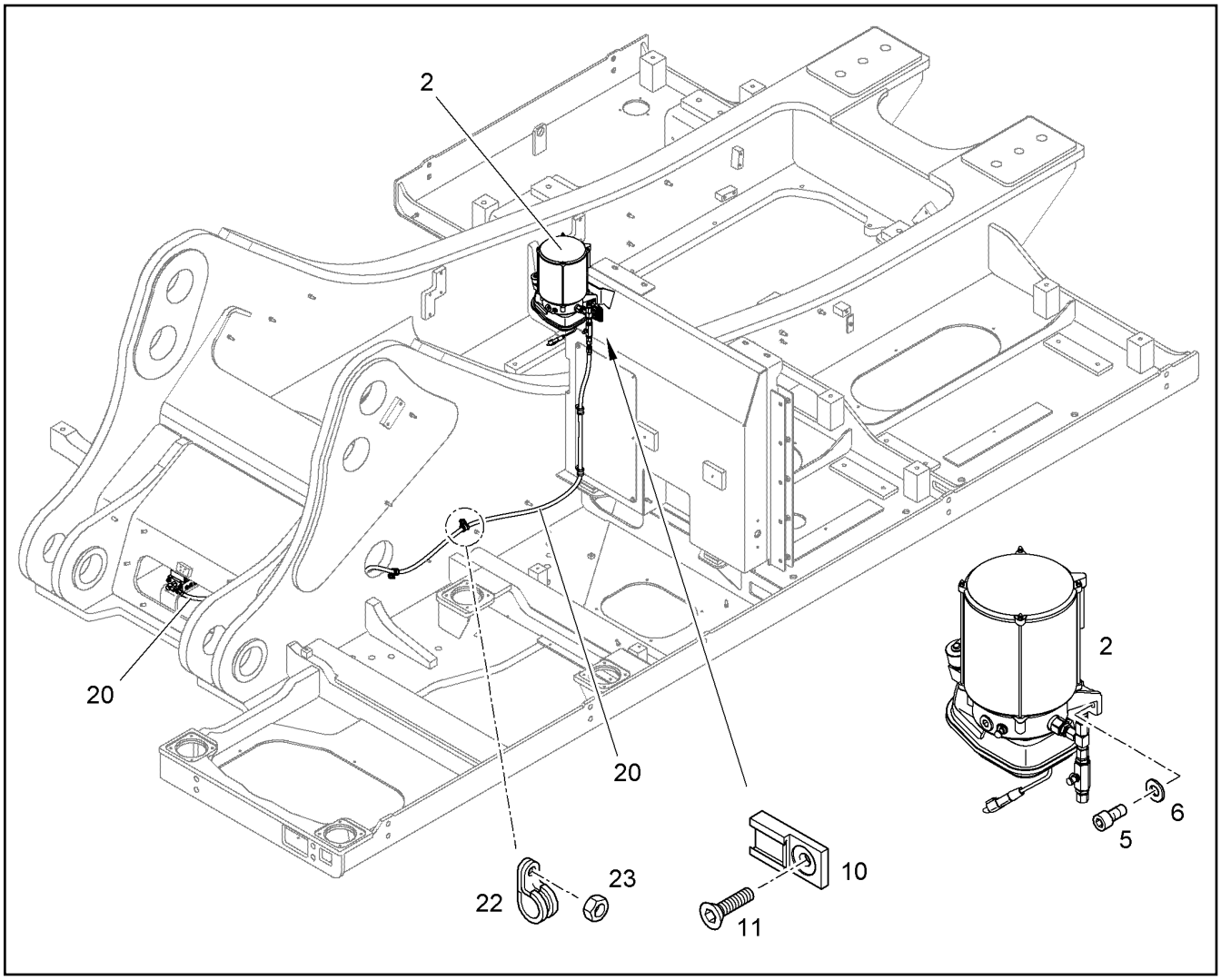


| Pos. | Item | Quantity | Description | Designação | Serie | K |
|---|---|---|---|---|---|---|
| 2 | 10498163 | 1 | FULL AUTOMAT.CENTRAL.LUBRICAT.<br>⇨ ❑ 679 | LUBRIFICAÇÃO CENTR.TOTAL.A | | |
| 5 | 4600791 | 2 | CYLINDER SCREW ISO 4762 M8X30 10.9 A2 | PARAFUSO CILÍNDRICO | | |
| 6 | 10289803 | 2 | WASHER ISO 7089 8 300HV | ARRUELA | | |
| 10 | 6203497 | 3 | FASTENER F.DT STECKER | ELEMENTO DE FIXACAO | | |
| 11 | 4601375 | 3 | COUNTERSUNK SCREW ISO 7047 M5X10 4. | PARAFUSO ESCAREADO | | |
| 20 | 10007025 | 1 | HOSE | MANGUEIRA | | 1 |
| 22 | 7362603 | 4 | CLAMP DIN 3016-1 D1 15X20 W1-2-CR | BRAÇADEIRA | | |
| 23 | 4000381 | 2 | HEX NUT M8 | PORCA SEXTAVADA | | |

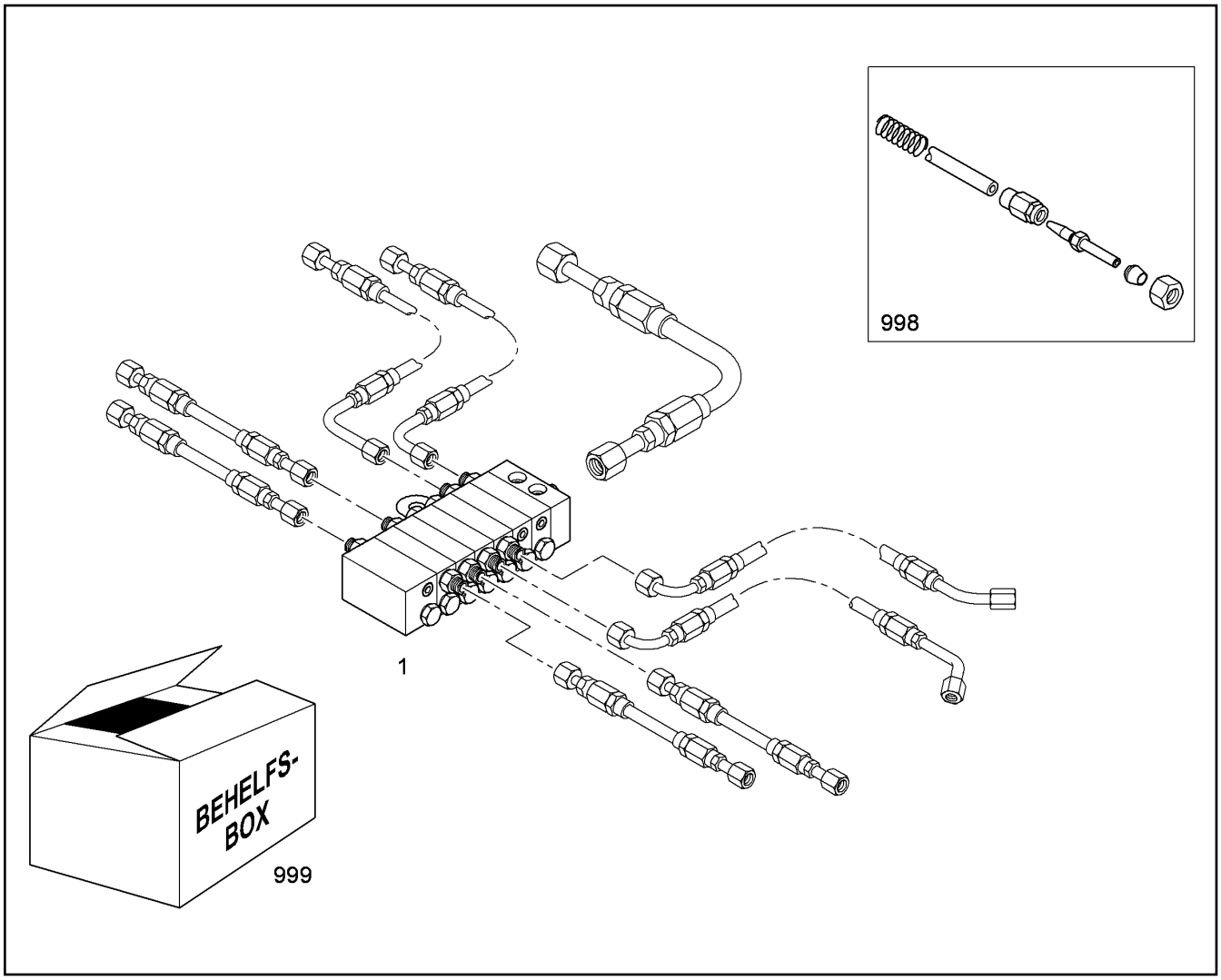


| Pos. | Item | Quantity | Description | Designação | Serie | K |
|---|---|---|---|---|---|---|
| 1 | 10488416 | 1 | DISTRIBUTION BLOCK MX-F 7/8<br>⇨ ❑ 213 | BLOCO DE DISTRIBUIÇÃO | | |
| 998 | | 1 | CONNECTING ELEMENT<br>⇨ ❑ 217 | ELEMENTO DE CONEXÃO | | |
| 999 | 10014611 | 1 | AUXILIARY BOX<br>⇨ ❑ 219 | CAIXA AUXILIAR | | |

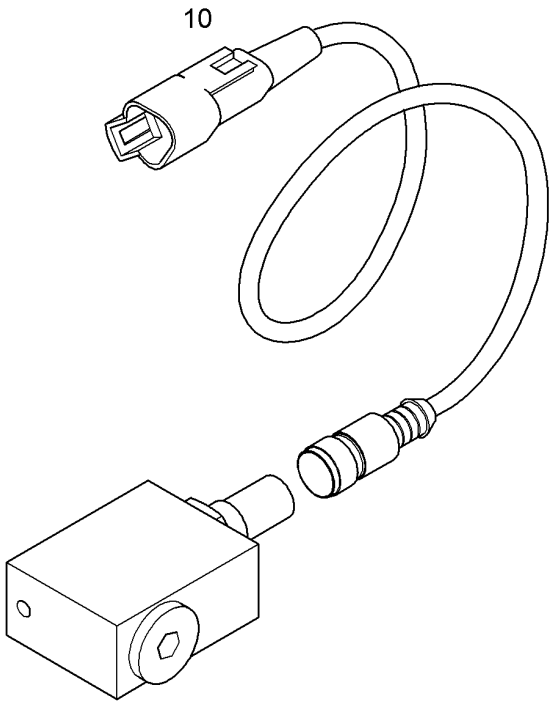


| Pos. | Item | Quantity | Description | Designação | Serie | K |
|---|---|---|---|---|---|---|
| 10 | 10014589 | 1 | CONNECTING LINE 3X2,5 0,80m DT04-3P | CABO DE CONEXAO | | |

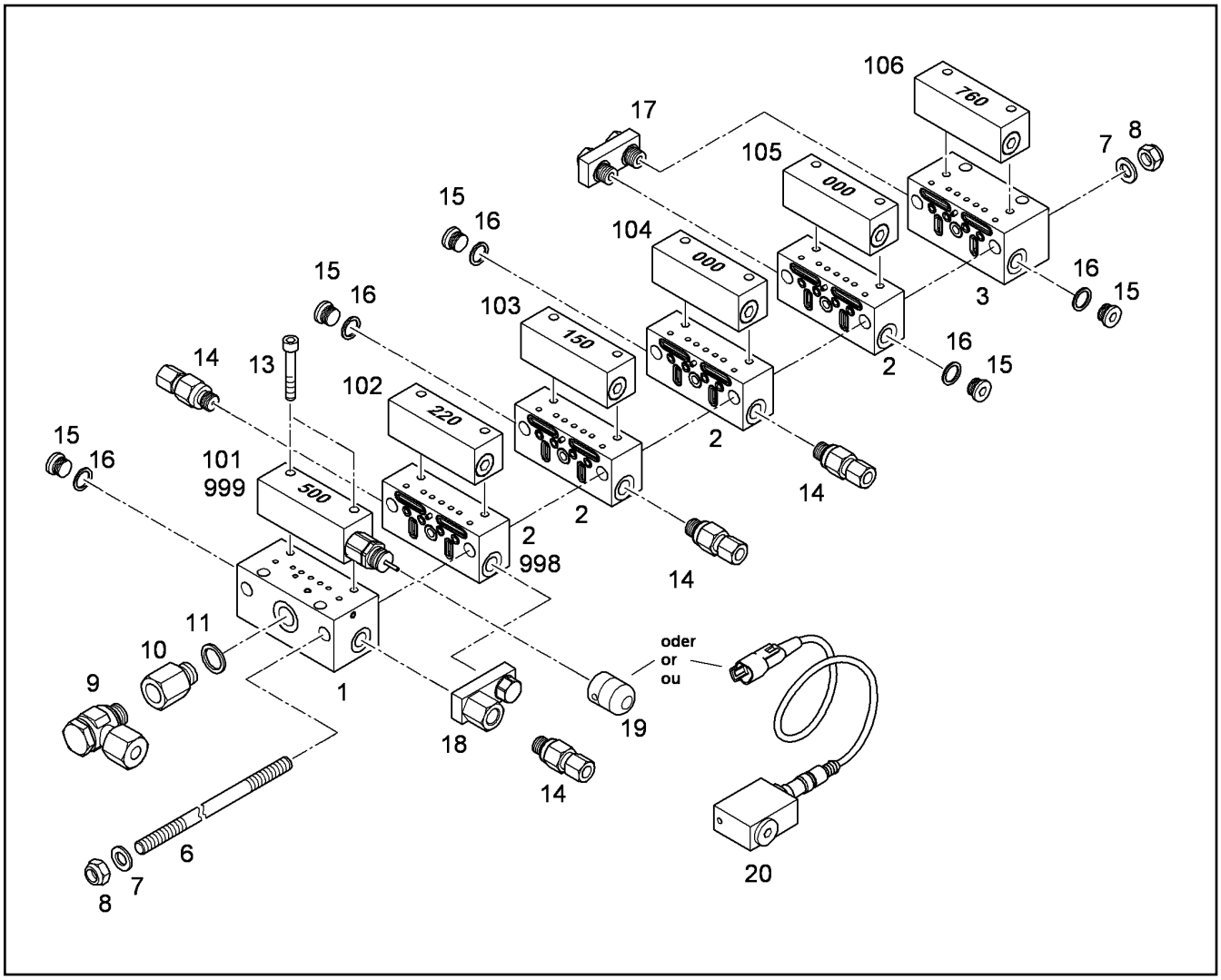


| Pos. | Item | Quantity | Description | Designação | Serie | K |
|---|---|---|---|---|---|---|
| 1 | 10013835 | 1 | STARTING ELEMENT SXE-2 | ELEMENTO INICIAL | | |
| 2 | 10013837 | 4 | CENTRAL ELEMENT SXE-2 | ELEMENTO CENTRAL | | |
| 3 | 10013839 | 1 | END ELEMENT SXE-2 | ELEMENTO FINAL | | |
| 6 | 10013859 | 2 | PULL ROD M8X187 | TIRANTE DE TRAÇÃO | | |
| 7 | 10289803 | 4 | WASHER ISO 7089 8 300HV | ARRUELA | | |
| 8 | 4901573 | 4 | HEX NUT M8 | PORCA SEXTAVADA | | |
| 9 | 7412734 | 1 | HINGED THREADED UNION WH 8L G1/4A | CONEXÃO ROSCADA | | |
| 10 | 10009602 | 1 | EXTENSION | EXTENSÃO | | |
| 11 | 4600544 | 1 | SEALING RING DIN 7603 A 13 X 17 CU | ANEL DE VEDAÇÃO | | |
| 13 | 404202508 | 12 | CYLINDER SCREW ISO 4762 M5X35 8.8 A2C | PARAFUSO CILÍNDRICO | | |
| 14 | 10009606 | 4 | VALVE GUIDE | CONEXAO DE SAIDA | | |
| 15 | 7001338 | 5 | SCREW PLUG VSTI G1/8A | PARAFUSO DE FECHAMENTO | | |
| 16 | 7101003 | 5 | SEALING RING DIN 7603 A 10X13,5 | ANEL DE VEDAÇÃO | | |
| 17 | 10009784 | 1 | DISTRIBUTOR | BLOCO DE DISTRIBUICAO | | |
| 18 | 10013881 | 1 | DISTRIBUTOR BRIDGE WITH OUTLET | PONTO DISTRIBUICAO COM ESC | | |
| 19 | 10009596 | 1 | COVER | TAMPA | | |
| 20 | | 1 | PROXIMITY SWITCH<br>⇨ ❑ 211 | SENSOR DE APROXIMAÇÃO | | |
| 101 | 10013851 | 1 | PROPORTIONING ELEMENT SXE-2 500 | ELEMENTO DE DOSAGEM | | |
| 102 | 10013843 | 1 | PROPORTIONING ELEMENT SXE-2 220 | ELEMENTO DE DOSAGEM | | |
| 103 | 10013842 | 1 | PROPORTIONING ELEMENT SXE-2 150 | ELEMENTO DE DOSAGEM | | |
| 104 | 10013840 | 1 | PROPORTIONING ELEMENT SXE-2 000 | ELEMENTO DE DOSAGEM | | |
| 105 | 10013840 | 1 | PROPORTIONING ELEMENT SXE-2 000 | ELEMENTO DE DOSAGEM | | |
| 106 | 10013848 | 1 | PROPORTIONING ELEMENT SXE-2 760 | ELEMENTO DE DOSAGEM | | |
| 998 | 10018373 | 1 | O-RING | JOGO DE ANEL O | | |
| 999 | 10018375 | 1 | O-RING | JOGO DE ANEL O | | |

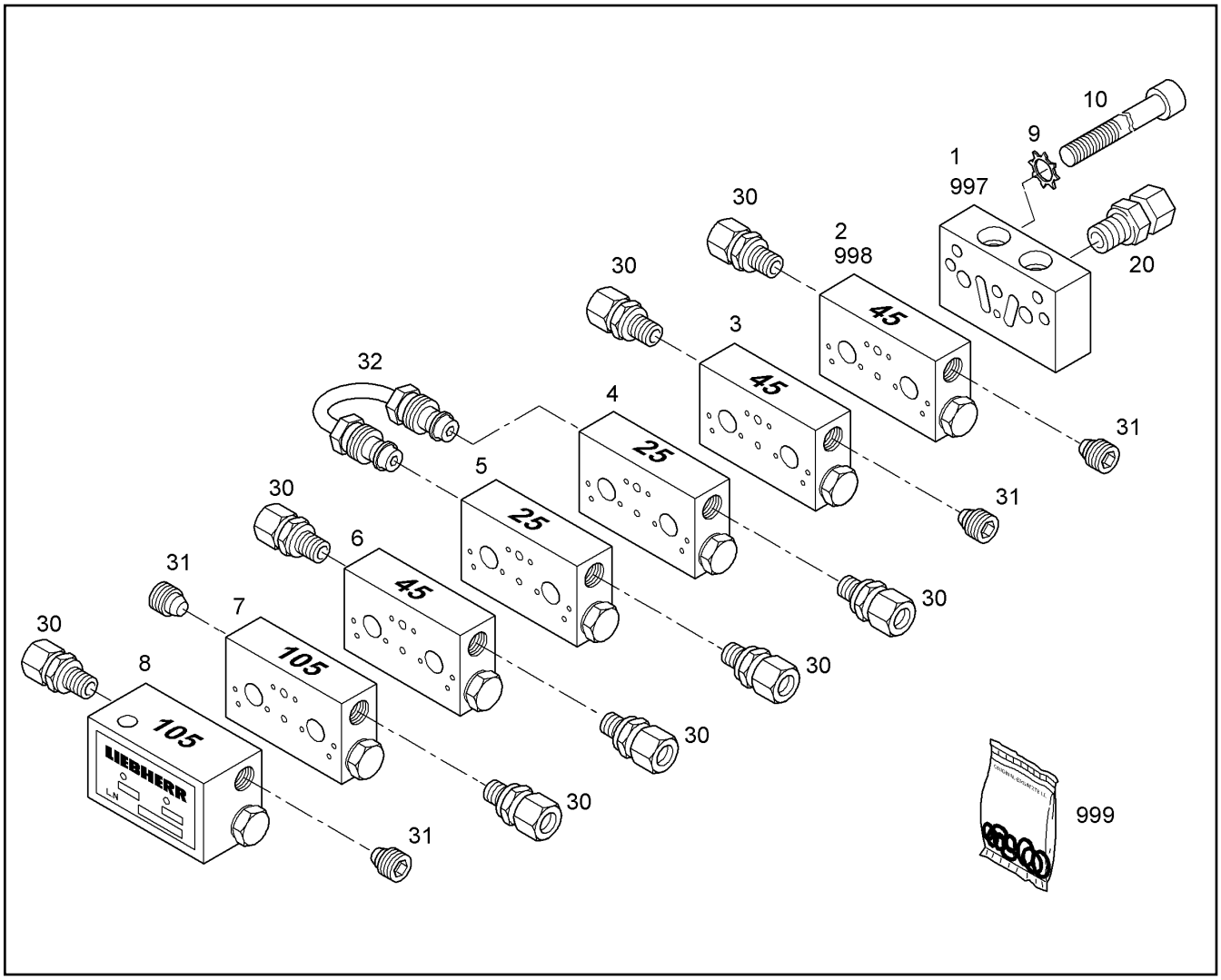


| Pos. | Item | Quantity | Description | Designação | Serie | K |
|---|---|---|---|---|---|---|
| 1 | 7027937 | 1 | STARTING ELEMENT MX-F | ELEMENTO INICIAL | | |
| 2 | 7027939 | 1 | CENTRAL ELEMENT MX-F 45 | ELEMENTO CENTRAL | | |
| 3 | 7027939 | 1 | CENTRAL ELEMENT MX-F 45 | ELEMENTO CENTRAL | | |
| 4 | 7027938 | 1 | CENTRAL ELEMENT MX-F 25 | ELEMENTO CENTRAL | | |
| 5 | 7027938 | 1 | CENTRAL ELEMENT MX-F 25 | ELEMENTO CENTRAL | | |
| 6 | 7027939 | 1 | CENTRAL ELEMENT MX-F 45 | ELEMENTO CENTRAL | | |
| 7 | 7027941 | 1 | CENTRAL ELEMENT MX-F 105 | ELEMENTO CENTRAL | | |
| 8 | 7027945 | 1 | END ELEMENT MX-F 105 | ELEMENTO FINAL | | |
| 9 | 4002259 | 2 | TOOTH LOCK WASHER A 6,4 | ARRUELA DENTADA | | |
| 10 | 4601461 | 2 | CYLINDER SCREW ISO 4762 M6X110 10.9 | PARAFUSO CILÍNDRICO | | |
| 20 | 10009053 | 1 | PIPE UNION GE8 10X1 | CONEXÃO ROSCADA | | |
| 30 | 7622803 | 8 | NON-RETURN VALVE | VALVULA DE RETENCAO | | |
| 31 | 774378208 | 4 | SCREW PLUG | PARAFUSO DE FECHAMENTO | | |
| 32 | 774378008 | 1 | PIPE BRIDGE | TUBO DE CONEXÃO | | |
| 997 | 10021311 | 1 | SEAL KIT<br>⇨ ❑ 222 | KIT DE VEDAÇÃO | | |
| 998 | 10021310 | 1 | SEAL KIT<br>⇨ ❑ 221 | KIT DE VEDAÇÃO | | |
| 999 | 10021308 | 1 | O-RING | ANEL-O | | |

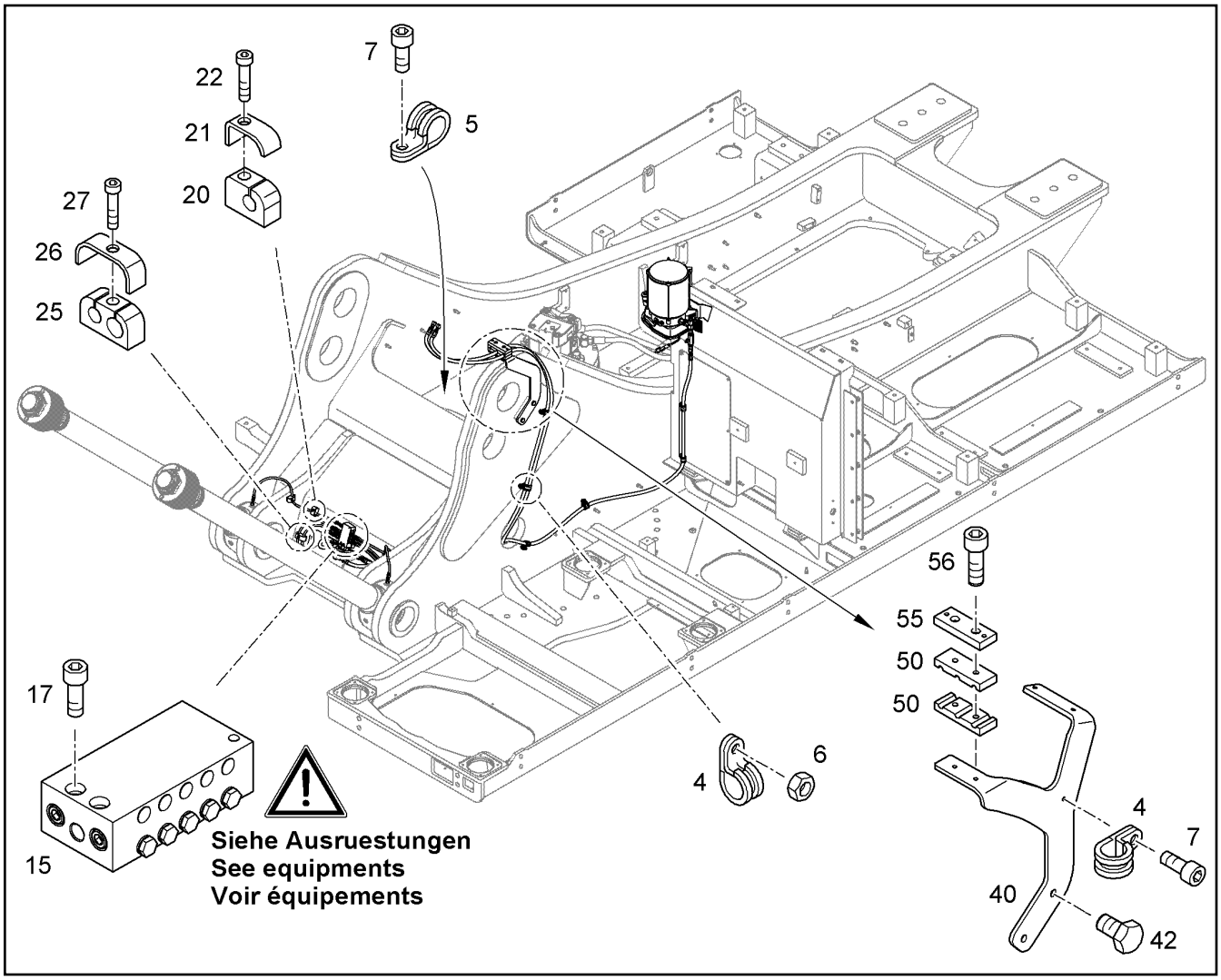


| Pos. | Item | Quantity | Description | Designação | Serie | K |
|---|---|---|---|---|---|---|
| 4 | 7008622 | 5 | CLAMP DIN 3016 D1- 25 X 20 W1-2-CR | BRAÇADEIRA | | |
| 5 | 7366260 | 3 | CLAMP DIN 3016 D1- 34 X 20 W1-2-CR | BRAÇADEIRA | | |
| 6 | 4000381 | 6 | HEX NUT M8 | PORCA SEXTAVADA | | |
| 7 | 4902231 | 2 | CYLINDER SCREW ISO 4762 M8X16 10.9 A2 | PARAFUSO CILÍNDRICO | | |
| 15 | 10101693 | 1 | DISTRIBUTION BLOCK MX-F 5/7<br>⇨ ❑ 215 | BLOCO DE DISTRIBUIÇÃO | | |
| 17 | 4002299 | 2 | CYLINDER SCREW ISO 4762 M5X30 10.9 A2 | PARAFUSO CILÍNDRICO | | |
| 20 | 10037728 | 4 | CLAMP | BRAÇADEIRA | | |
| 21 | 10037723 | 4 | BRACKET | ESTRIBO | | |
| 22 | 4902250 | 4 | CYLINDER SCREW ISO 4762 M6X10 10.9 A2 | PARAFUSO CILÍNDRICO | | |
| 25 | 10037726 | 8 | CLAMP HRBGS 1 G 8 8 | BRAÇADEIRA | | |
| 26 | 10037722 | 8 | BRACKET | ESTRIBO | | |
| 27 | 4902250 | 8 | CYLINDER SCREW ISO 4762 M6X10 10.9 A2 | PARAFUSO CILÍNDRICO | | |
| 40 | 10842060 | 1 | CONSOLE | SUPORTE | 34097- | |
| 42 | 4600184 | 2 | HEX BOLT ISO 4017 M12X25 10.9 A3C | PARAFUSO SEXTAVADO | | |
| 50 | 10056981 | 2 | HALF CLAMP COLLAR | MEIA ABRAÇADEIRA | | |
| 55 | 10056984 | 1 | SHEET | PLACA | | |
| 56 | 4043089 | 2 | CYLINDER SCREW ISO 4762 M8X50 10.9 A2 | PARAFUSO CILÍNDRICO | | |

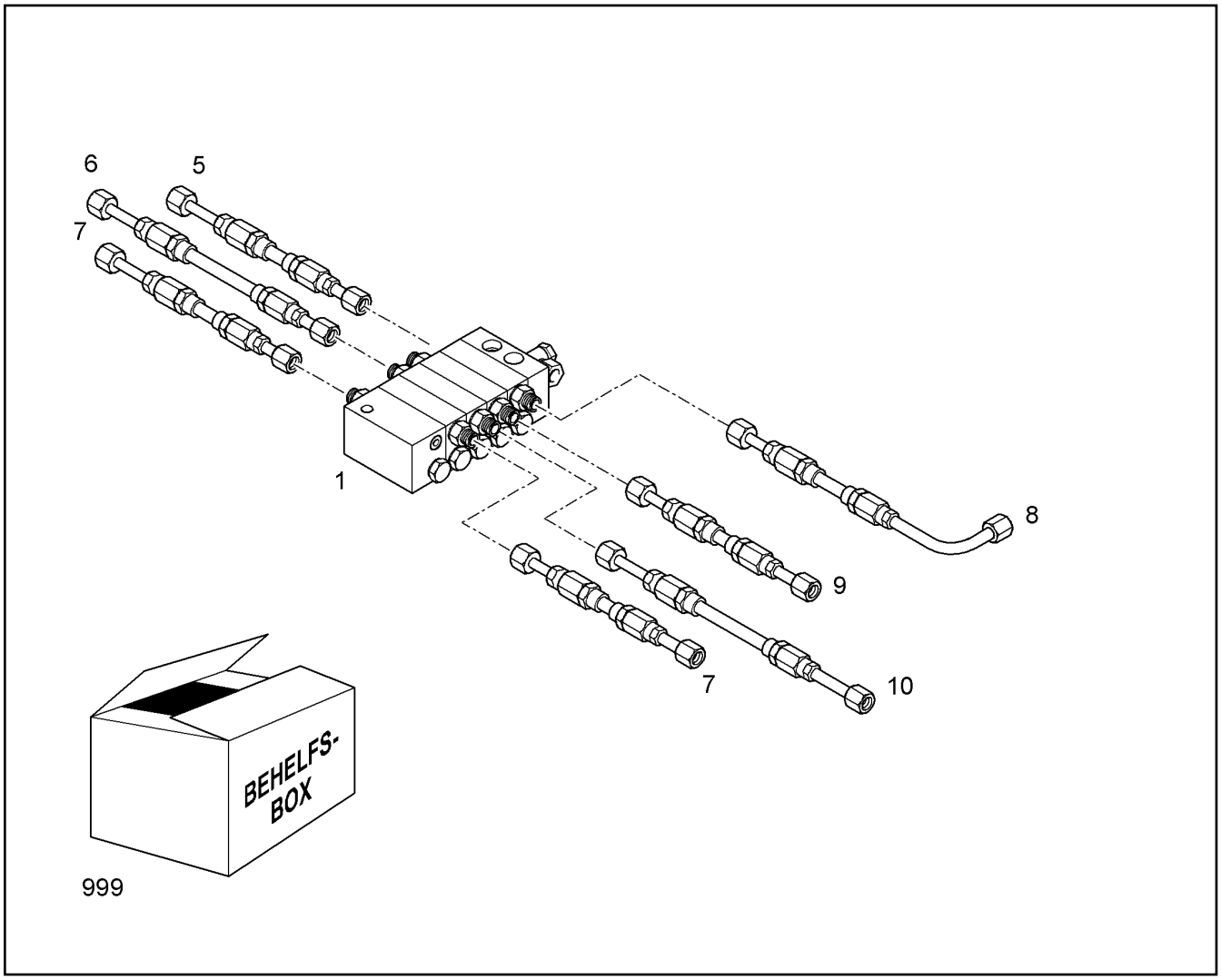


| Pos. | Item | Quantity | Description | Designação | Serie | K |
|---|---|---|---|---|---|---|
| 1 | 10101711 | 1 | DISTRIBUTION BLOCK MX-F 5/7<br>⇨ ❑ 216 | BLOCO DE DISTRIBUIÇÃO | | |
| 5 | 10101722 | 1 | HOSE | MANGUEIRA | | 1 |
| 6 | 10101721 | 1 | HOSE | MANGUEIRA | | 1 |
| 7 | 10101723 | 2 | HOSE 4X1012 | MANGUEIRA | | 1 |
| 8 | 10101724 | 1 | HOSE | MANGUEIRA | | 1 |
| 9 | 10101726 | 1 | HOSE | MANGUEIRA | | 1 |
| 10 | 10012162 | 1 | HOSE | MANGUEIRA | | 1 |
| 999 | 10014611 | 1 | AUXILIARY BOX<br>⇨ ❑ 219 | CAIXA AUXILIAR | | |

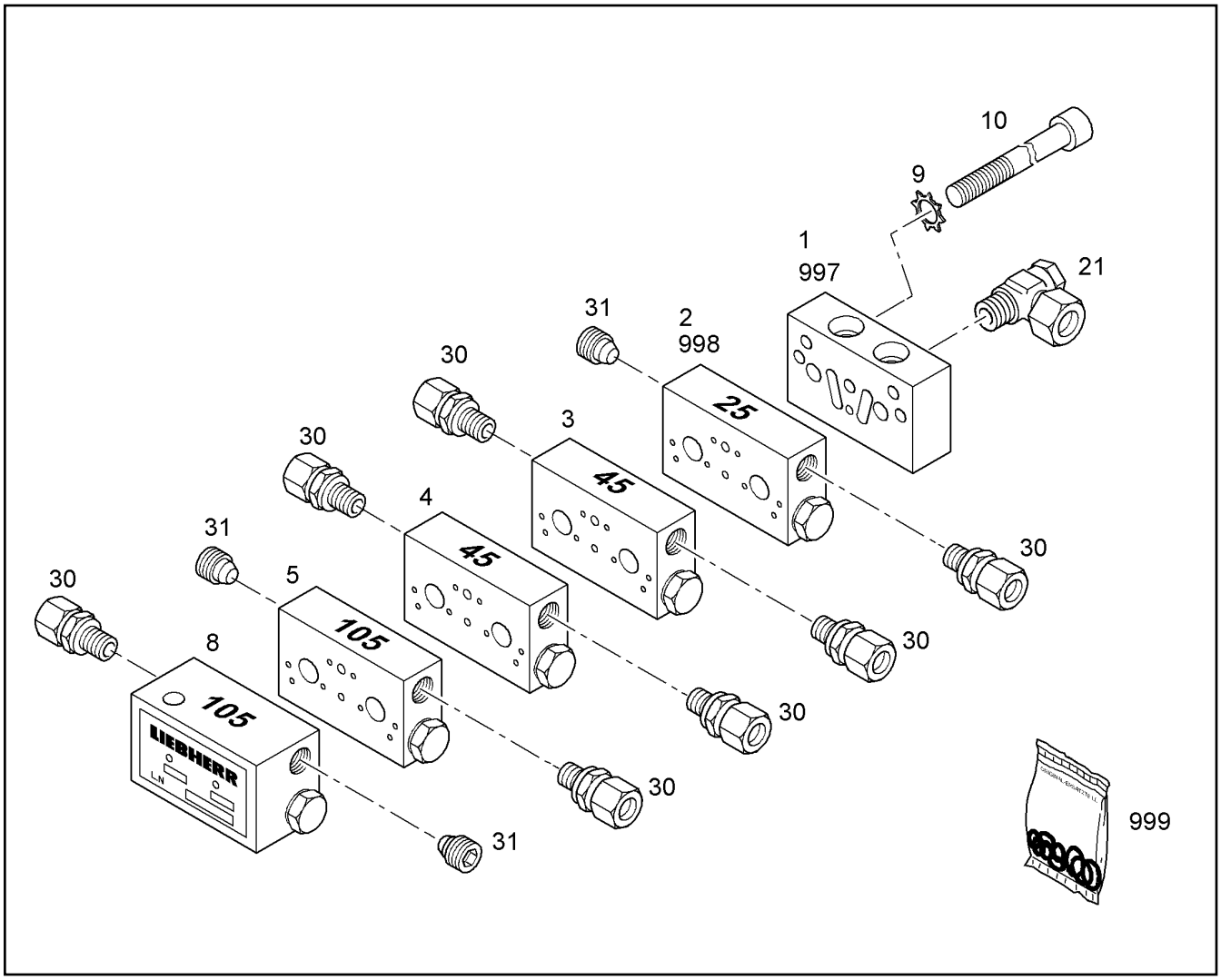


| Pos. | Item | Quantity | Description | Designação | Serie | K |
|---|---|---|---|---|---|---|
| 1 | 7027937 | 1 | STARTING ELEMENT MX-F | ELEMENTO INICIAL | | |
| 2 | 7027938 | 1 | CENTRAL ELEMENT MX-F 25 | ELEMENTO CENTRAL | | |
| 3 | 7027939 | 1 | CENTRAL ELEMENT MX-F 45 | ELEMENTO CENTRAL | | |
| 4 | 7027939 | 1 | CENTRAL ELEMENT MX-F 45 | ELEMENTO CENTRAL | | |
| 5 | 7027941 | 1 | CENTRAL ELEMENT MX-F 105 | ELEMENTO CENTRAL | | |
| 8 | 7027945 | 1 | END ELEMENT MX-F 105 | ELEMENTO FINAL | | |
| 9 | 4002259 | 2 | TOOTH LOCK WASHER A 6,4 | ARRUELA DENTADA | | |
| 10 | 404205408 | 2 | CYLINDER SCREW ISO 4762 M6x80 8.8 A2C | PARAFUSO CILÍNDRICO | | |
| 21 | 10009054 | 1 | BANJO COUPLING WSV 8LL M10X1 | CONEXÃO GIRATORIA | | |
| 30 | 7622803 | 7 | NON-RETURN VALVE | VALVULA DE RETENCAO | | |
| 31 | 774378208 | 3 | SCREW PLUG | PARAFUSO DE FECHAMENTO | | |
| 997 | 10021311 | 1 | SEAL KIT<br>⇨ ❑ 222 | KIT DE VEDAÇÃO | | |
| 998 | 10021310 | 1 | SEAL KIT<br>⇨ ❑ 221 | KIT DE VEDAÇÃO | | |
| 999 | 10021308 | 1 | O-RING | ANEL-O | | |

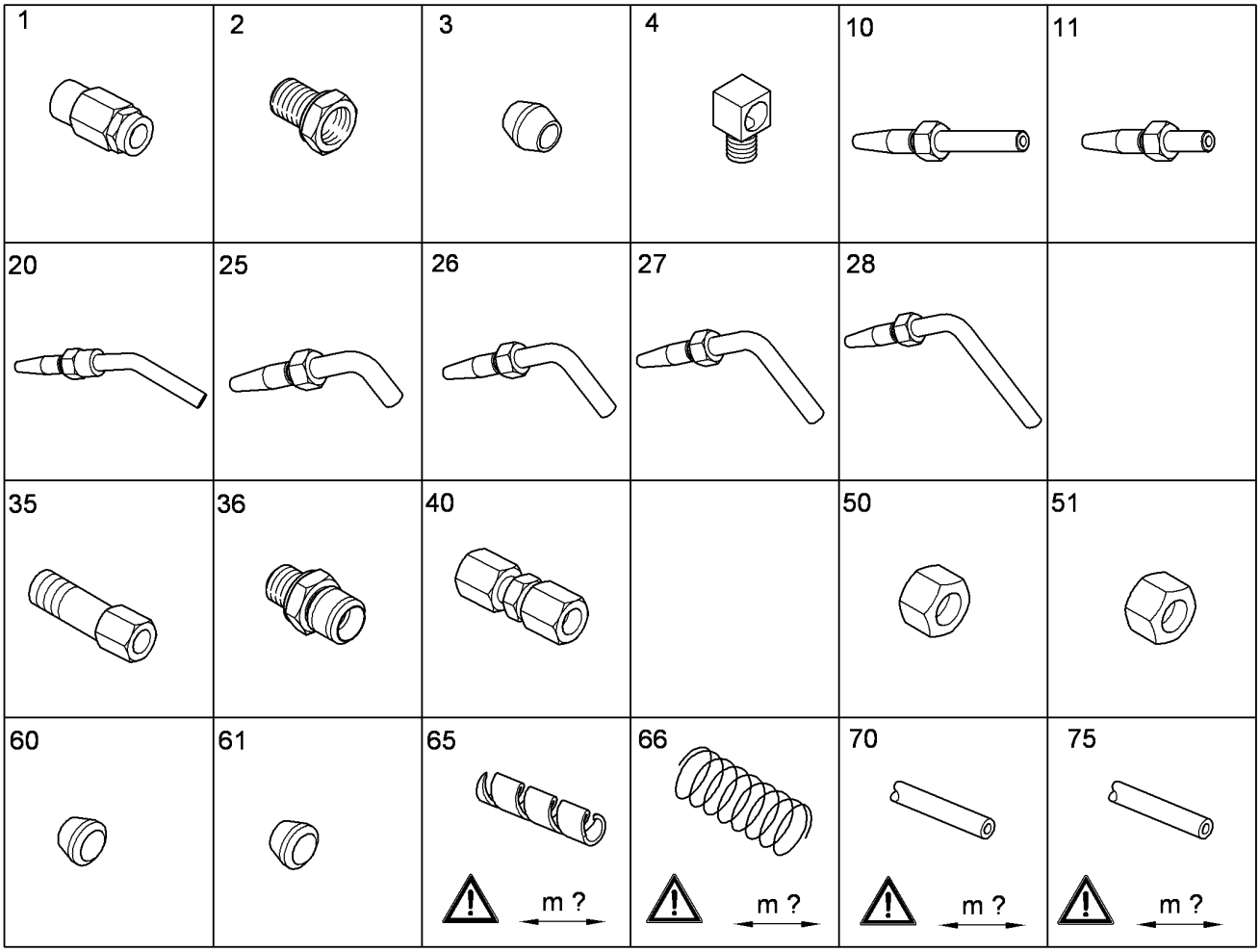


| Pos. | Item | Quantity | Description | Designação | Serie | K |
|---|---|---|---|---|---|---|
| 1 | 774376008 | 1 | SCREW SLEEVE DN6 | LUVA ROSQUEADA | | |
| 2 | 7027675 | 1 | MALE FITTING FOR PIPES M10X1 | LUVA DE CONEXÃO | | |
| 3 | 7027946 | 1 | DOUBLE TAPER RING DKR 6 | ANILHA CÔNICA | | |
| 4 | 774373608 | 1 | SCREW FITTING M10X1K-M10X1 | REDUÇÃO | | |
| 10 | 774371808 | 1 | HOSE UNION DN6 STAHL | CONEXÃO DE MANGUEIRA | | |
| 11 | 7624177 | 1 | PIPE SOCKET DN6 | BOCAL DE TUBO | | |
| 20 | 7623705 | 1 | PIPE SOCKET DN6 | BOCAL DE TUBO | | |
| 25 | 7623704 | 1 | PIPE SOCKET DN6 | BOCAL DE TUBO | | |
| 26 | 10027260 | 1 | PIPE SOCKET DN6 | BOCAL DE TUBO | | |
| 27 | 511701914 | 1 | PIPE SOCKET | BOCAL DE TUBO | | |
| 28 | 7623707 | 1 | PIPE SOCKET DN6 | BOCAL DE TUBO | | |
| 35 | 774373408 | 1 | EXTENSION | EXTENSÃO | | |
| 35 | 7027714 | 1 | EXTENSION | EXTENSÃO | | |
| 36 | 7026654 | 1 | SCREW COUPLING | CONEX. ROSCA DE ENCAIXE R | | |
| 40 | 774374208 | 1 | SCREW FITTING G 6LL | REDUÇÃO | | |
| 50 | 4774024 | 1 | BOX NUT DIN 3870 A 6L | PORCA DE CONEXAO | | |
| 51 | 4600342 | 1 | BOX NUT DIN 3870 A 6LL | PORCA DE CONEXAO | | |
| 60 | 4771000 | 1 | CUTTING RING DIN 3861 S 6 | ANEL DE CORTE | | |
| 61 | 4600341 | 1 | CUTTING RING DIN 3861 LL 6 | ANEL DE CORTE | | |
| 65 | 774383508 | 1m | TUBING COIL | SERPENTINA DE TUBO | | |
| 66 | 10011996 | 1m | ANTI-KINK DEVICE SPIRAL | ESPIRAL DE PROT.CONTRA DOB | | 1 |
| 70 | 774376108 | 1m | HIGH PRESSURE HOSE | MANGUEIRA DE ALTA PRESSAO | | 1 |
| 75 | 774373708 | 1m | TUBE | TUBO | | |

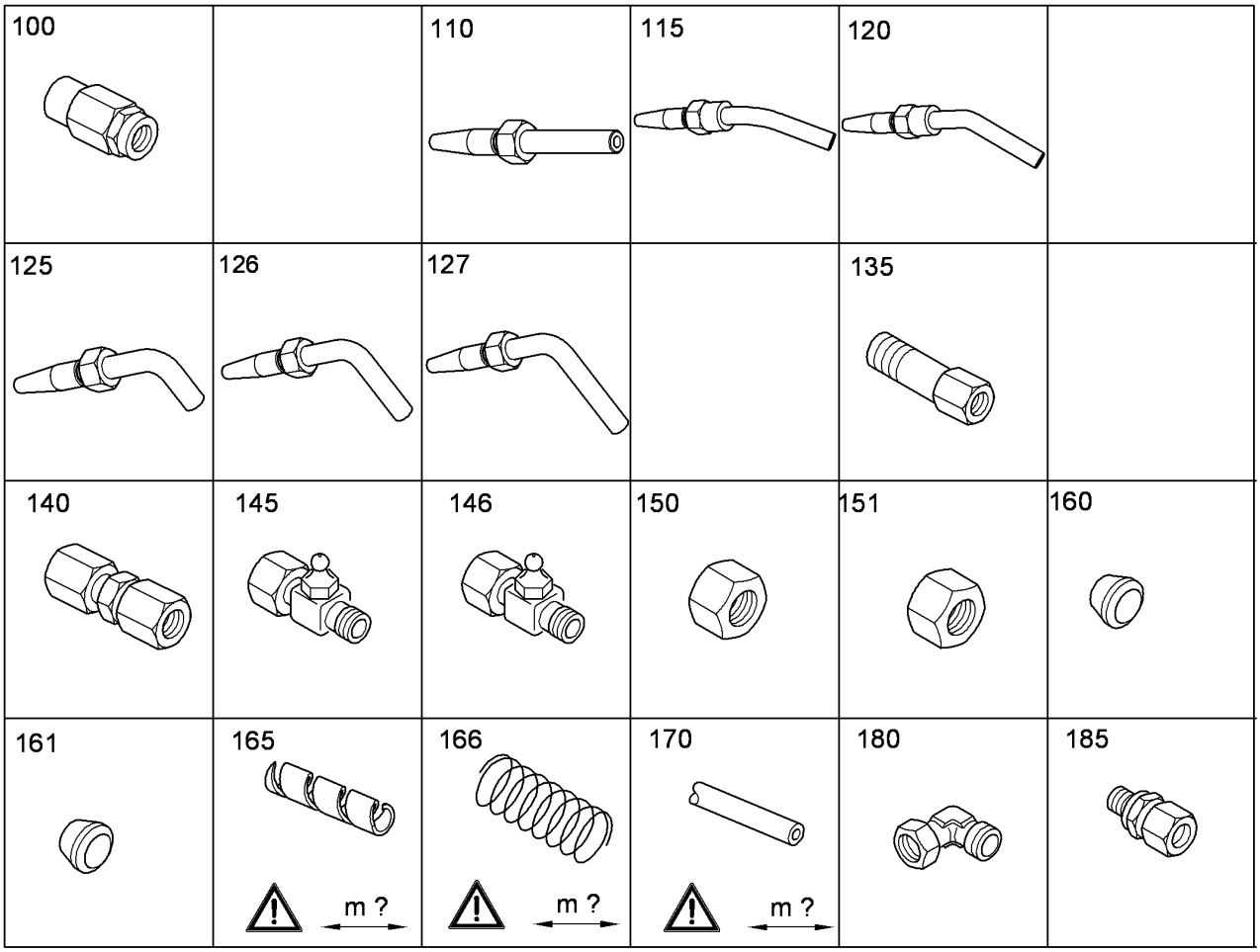


| Pos. | Item | Quantity | Description | Designação | Serie | K |
|---|---|---|---|---|---|---|
| 100 | 10012024 | 1 | SCREW SLEEVE DN6,5 ST | LUVA ROSQUEADA | | |
| 110 | 10011995 | 1 | PIPE SOCKET DN8 | BOCAL DE TUBO | | |
| 115 | 10412844 | 1 | PIPE SOCKET 15° D8 | BOCAL DE TUBO | | |
| 120 | 10040776 | 1 | PIPE SOCKET DN8 | BOCAL DE TUBO | | |
| 125 | 10040777 | 1 | PIPE SOCKET DN8 | BOCAL DE TUBO | | |
| 126 | 10040778 | 1 | PIPE SOCKET DN8 | BOCAL DE TUBO | | |
| 127 | 10040779 | 1 | PIPE SOCKET DN8 | BOCAL DE TUBO | | |
| 135 | 774373408 | 1 | EXTENSION | EXTENSÃO | | |
| 140 | 10014575 | 1 | STRAIGHT COUPLING G8 L | UNIÃO ROSCADA | | |
| 145 | 10220950 | 1 | SCREW FITTING 6L | REDUÇÃO | | |
| 145 | 10342221 | 1 | SCREW FITTING 6LL | REDUÇÃO | | |
| 146 | 10220951 | 1 | SCREW FITTING 8L | REDUÇÃO | | |
| 146 | 10330614 | 1 | SCREW FITTING 8LL | REDUÇÃO | | |
| 150 | 4900507 | 1 | UNION NUT DIN 3870 A L 8 A3C | PORCA | | |
| 151 | 10013550 | 1 | UNION NUT | PORCA | | |
| 160 | 4771020 | 1 | CUTTING RING DIN 3861 L 8 ST | ANEL DE CORTE | | |
| 161 | 10013545 | 1 | CUTTING RING | ANEL DE CORTE | | |
| 165 | 774383508 | 1m | TUBING COIL | SERPENTINA DE TUBO | | |
| 166 | 10011996 | 1m | ANTI-KINK DEVICE SPIRAL | ESPIRAL DE PROT.CONTRA DOB | | 1 |
| 170 | 10043525 | 1m | HOSE | MANGUEIRA | | 1 |
| 180 | 774373808 | 1 | SCREW FITTING WE 6LL M10x1 | REDUÇÃO | | |
| 185 | 491035414 | 1 | SCREW FITTING GE 6LL M6 | REDUÇÃO | | |
| 185 | 774376508 | 1 | SCREW FITTING GE 6LL M10X1 | REDUÇÃO | | |

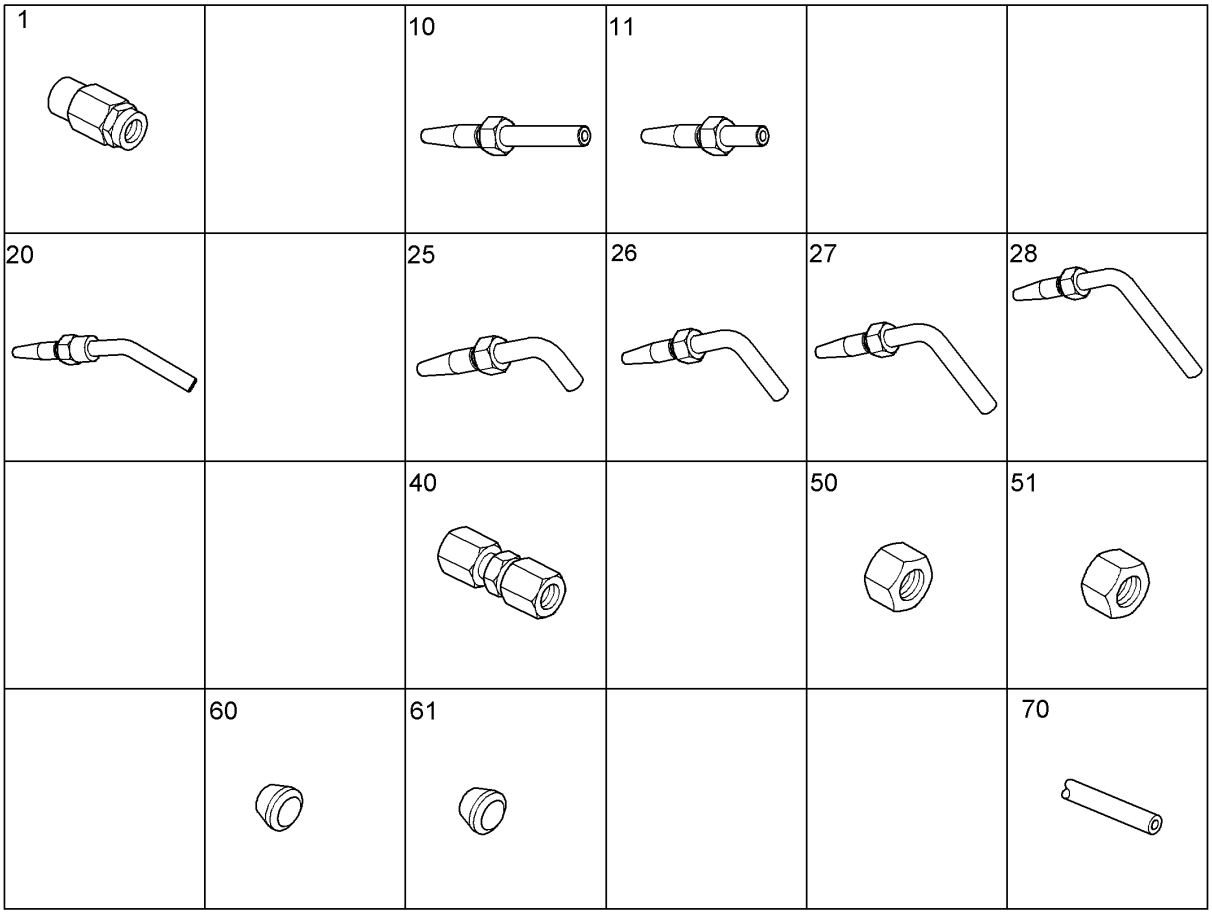


| Pos. | Item | Quantity | Description | Designação | Serie | K |
|---|---|---|---|---|---|---|
| 1 | 774376008 | 31 | SCREW SLEEVE DN6 | LUVA ROSQUEADA | | |
| 10 | 774371808 | 10 | HOSE UNION DN6 STAHL | CONEXÃO DE MANGUEIRA | | |
| 11 | 7624177 | 5 | PIPE SOCKET DN6 | BOCAL DE TUBO | | |
| 20 | 7623705 | 6 | PIPE SOCKET DN6 | BOCAL DE TUBO | | |
| 25 | 7623704 | 4 | PIPE SOCKET DN6 | BOCAL DE TUBO | | |
| 26 | 10027260 | 4 | PIPE SOCKET DN6 | BOCAL DE TUBO | | |
| 27 | 511701914 | 4 | PIPE SOCKET | BOCAL DE TUBO | | |
| 28 | 7623707 | 2 | PIPE SOCKET DN6 | BOCAL DE TUBO | | |
| 40 | 774374208 | 6 | SCREW FITTING G 6LL | REDUÇÃO | | |
| 50 | 4774024 | 10 | BOX NUT DIN 3870 A 6L | PORCA DE CONEXAO | | |
| 51 | 4600342 | 10 | BOX NUT DIN 3870 A 6LL | PORCA DE CONEXAO | | |
| 60 | 4771000 | 10 | CUTTING RING DIN 3861 S 6 | ANEL DE CORTE | | |
| 61 | 4600341 | 10 | CUTTING RING DIN 3861 LL 6 | ANEL DE CORTE | | |
| 70 | 774376108 | 15m | HIGH PRESSURE HOSE | MANGUEIRA DE ALTA PRESSAO | | 1 |

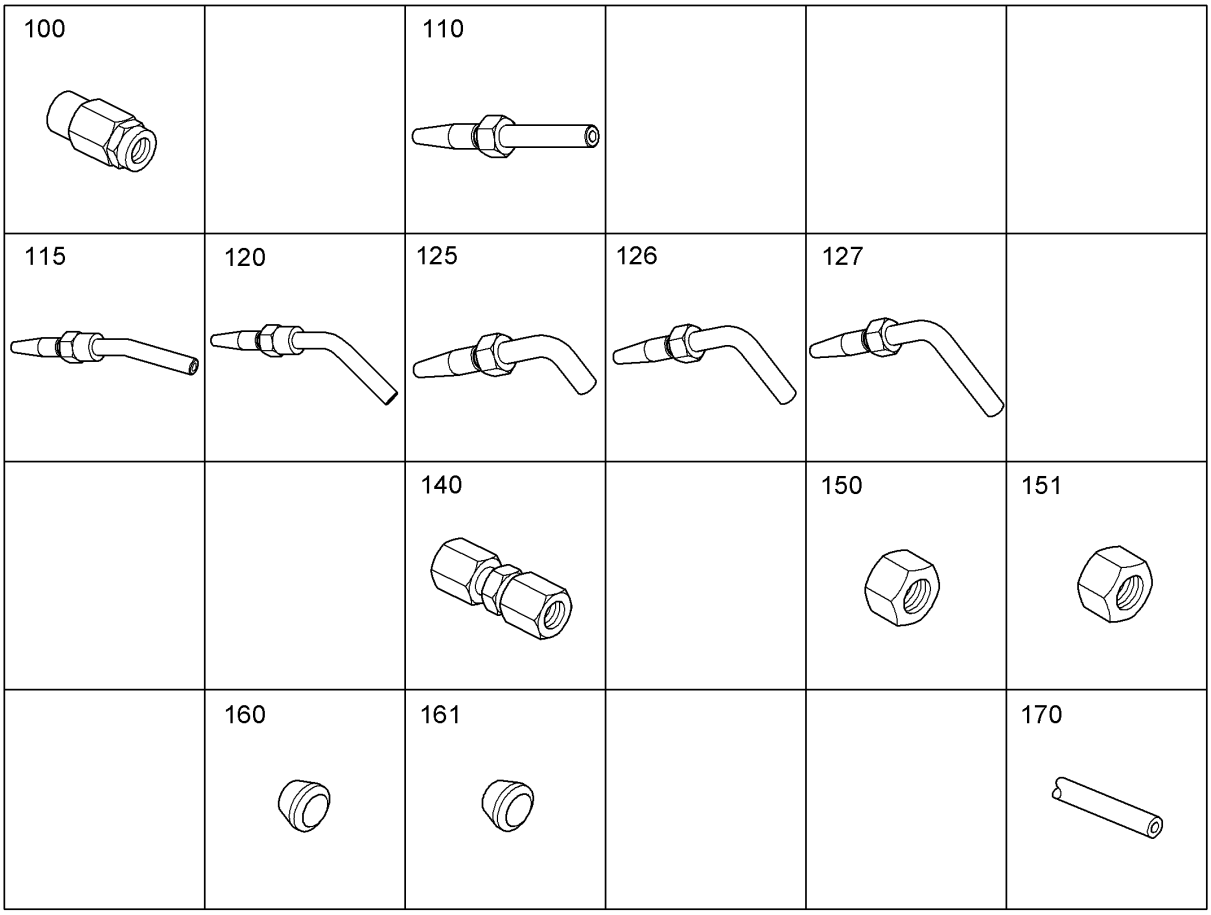


| Pos. | Item | Quantity | Description | Designação | Serie | K |
|---|---|---|---|---|---|---|
| 100 | 10012024 | 6 | SCREW SLEEVE DN6,5 ST | LUVA ROSQUEADA | | |
| 110 | 10011995 | 6 | PIPE SOCKET DN8 | BOCAL DE TUBO | | |
| 115 | 10412844 | 2 | PIPE SOCKET 15° D8 | BOCAL DE TUBO | | |
| 120 | 10040776 | 2 | PIPE SOCKET DN8 | BOCAL DE TUBO | | |
| 125 | 10040777 | 2 | PIPE SOCKET DN8 | BOCAL DE TUBO | | |
| 126 | 10040778 | 2 | PIPE SOCKET DN8 | BOCAL DE TUBO | | |
| 127 | 10040779 | 2 | PIPE SOCKET DN8 | BOCAL DE TUBO | | |
| 140 | 10014575 | 3 | STRAIGHT COUPLING G8 L | UNIÃO ROSCADA | | |
| 150 | 4900507 | 10 | UNION NUT DIN 3870 A L 8 A3C | PORCA | | |
| 151 | 10013550 | 10 | UNION NUT | PORCA | | |
| 160 | 4771020 | 10 | CUTTING RING DIN 3861 L 8 ST | ANEL DE CORTE | | |
| 161 | 10013545 | 10 | CUTTING RING | ANEL DE CORTE | | |
| 170 | 10043525 | 10m | HOSE | MANGUEIRA | | 1 |

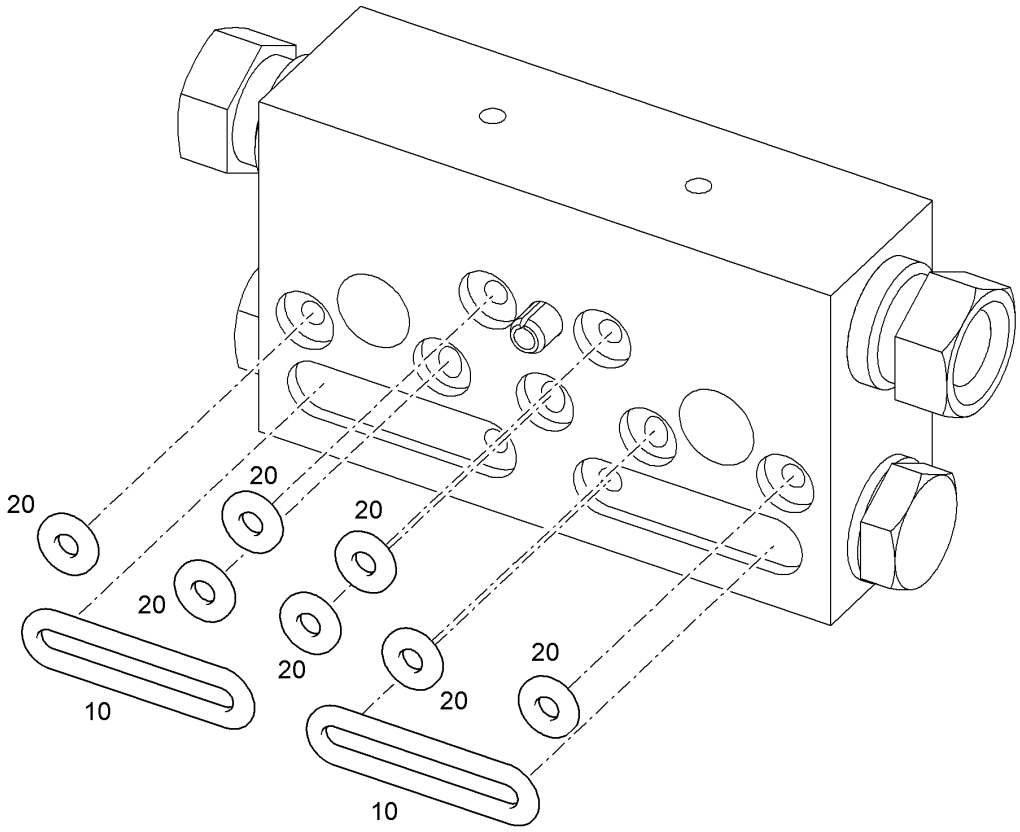


| Pos. | Item | Quantity | Description | Designação | Serie | K |
|---|---|---|---|---|---|---|
| 10 | | 2 | O-RING 11,5X1,5 | ANEL-O | | |
| 20 | | 7 | O-RING 2X1,5 | ANEL-O | | |

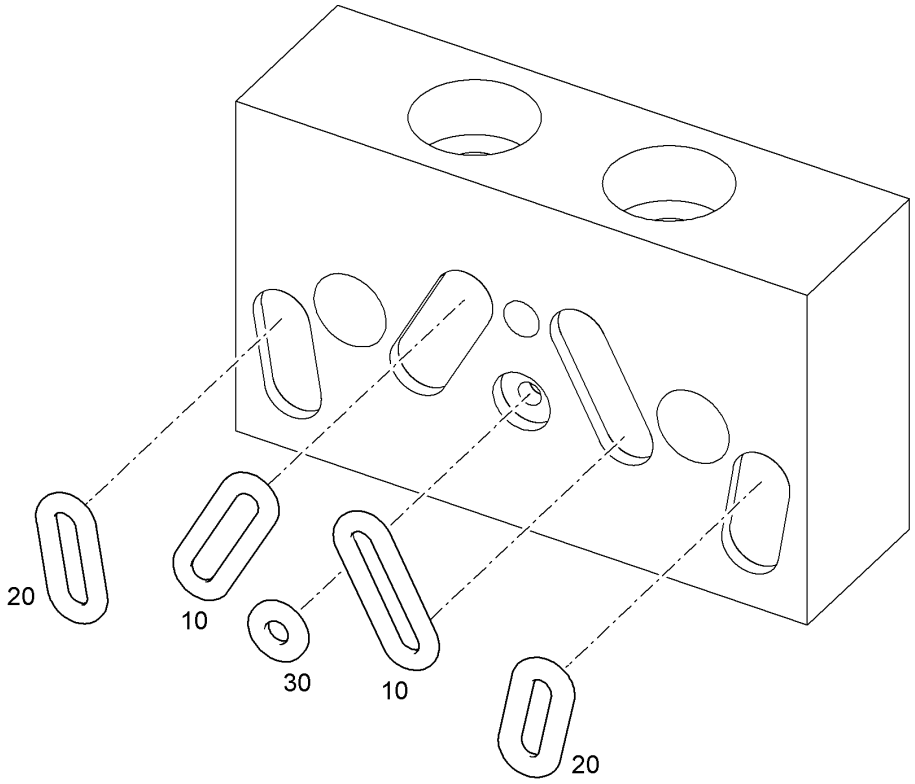


| Pos. | Item | Quantity | Description | Designação | Serie | K |
|---|---|---|---|---|---|---|
| 10 | | 2 | O-RING 7,5X1,5 | ANEL-O | | |
| 20 | | 2 | O-RING 6X1,5 | ANEL-O | | |
| 30 | | 1 | O-RING 2X1,5 | ANEL-O | | |

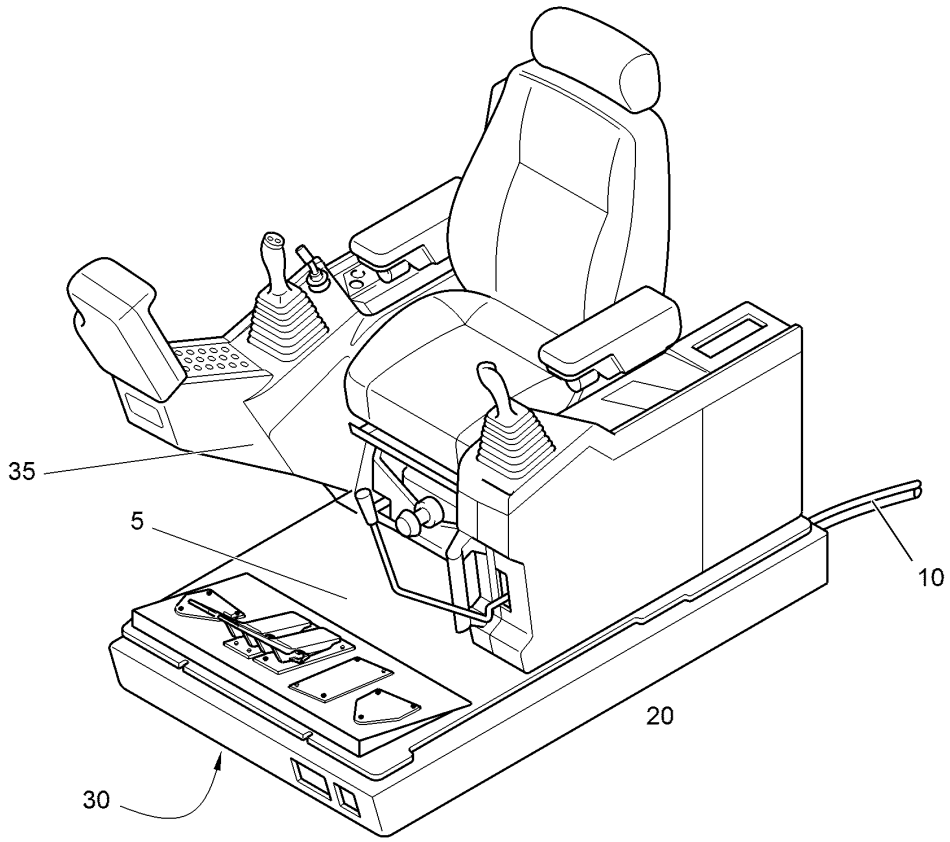


| Pos. | Item | Quantity | Description | Designação | Serie | K |
|---|---|---|---|---|---|---|
| 5 | 10382585 | 1 | FLOOR COVERING | REVESTIMENTO DO PISO | | |
| 10 | | 1 | HYDR.INSTALLATION CONTROL CAB<br>⇨ ❑ 224 | INSTALACAO HIDRAULICA | | |
| 20 | | 1 | DRIVER STAND BASE SECTION<br>⇨ ❑ 229 | POSTO DE COMANDO - PEÇA B | 32396- | |
| 30 | | 1 | BOTTOM PLATE MOUNTING<br>⇨ ❑ 293 | PLACA DO ASSOALHO DA CABIN | | |
| 35 | 10362013 | 1 | PREMONT.ARMREST RIGHT R954C R1 | PRÉ-MONT. APOIO BRAÇO DIR. | 31797- | |

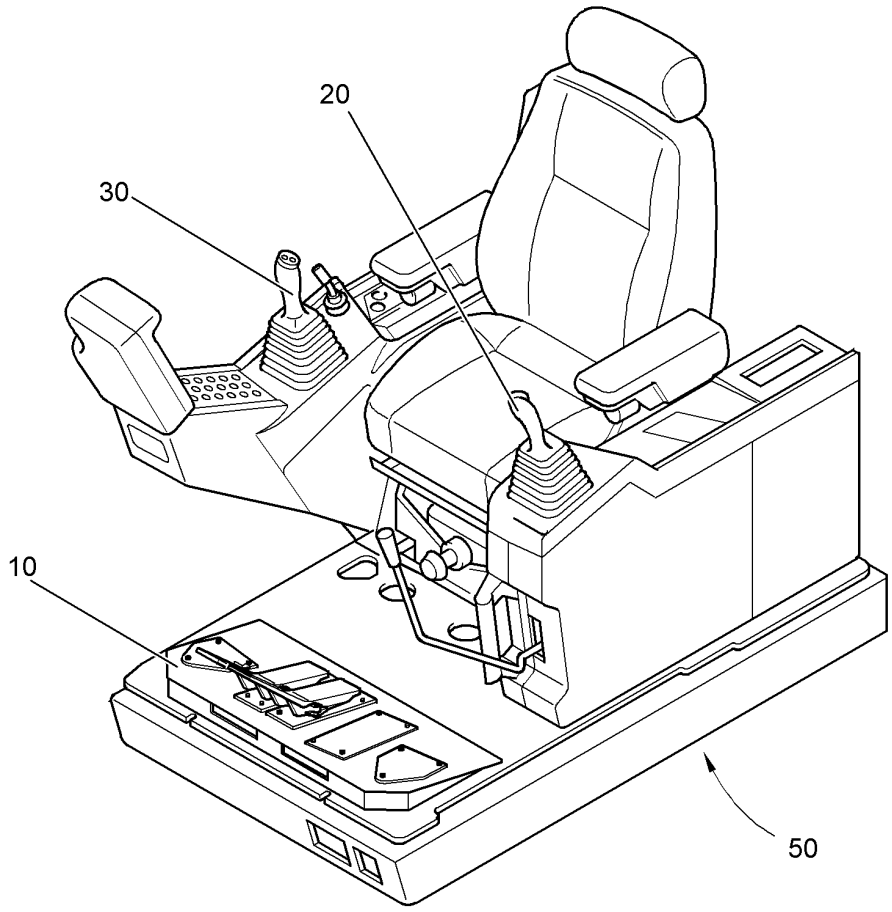


| Pos. | Item | Quantity | Description | Designação | Serie | K |
|---|---|---|---|---|---|---|
| 10 | 10060146 | 1 | HYDR.INSTAL.FOOT BOARD<br>⇨ ❑ 225 | INSTALACAO HIDRAULICA | | |
| 20 | 9944515 | 1 | HYDR.INSTAL.ARM REST LEFT<br>⇨ ❑ 226 | INST. HIDR. MANETE ESQUERD | | |
| 30 | 9944516 | 1 | HYDR.INSTAL.ARM REST RIGHT<br>⇨ ❑ 227 | INST. HIDRAULICA DA MANETE | | |
| 50 | 9939322 | 1 | FIXING PARTS<br>⇨ ❑ 228 | PECAS DE FIXACAO | | |

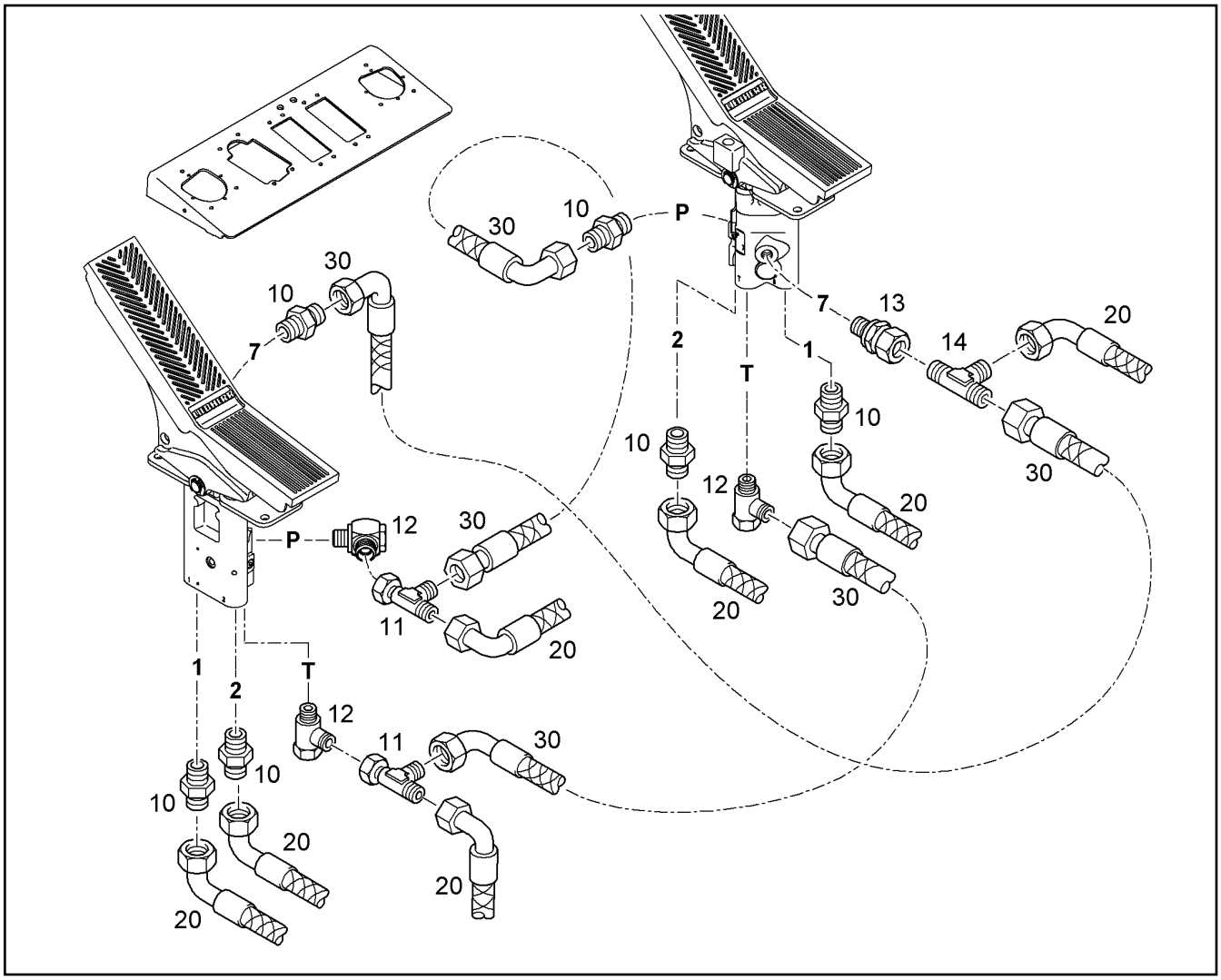


| Pos. | Item | Quantity | Description | Designação | Serie | K |
|---|---|---|---|---|---|---|
| 10 | 7362091 | 6 | SCREW FITTING GE 10L | REDUÇÃO | | |
| 11 | 472330208 | 2 | SCREW FITTING EL 10L | REDUÇÃO | | |
| 12 | 7617261 | 3 | HINGED THREADED UNION WH 10L G1/4A | CONEXÃO ROSCADA | | |
| 13 | 7617262 | 1 | SCREW FITTING EGE 10L | REDUÇÃO | | |
| 14 | 7403972 | 1 | SHUTTLE VALVE | VALVULA INTERCAMBIAVEL | | |
| 20 | 7402835 | 7 | CONTROL HOSE | MANGUEIRA DE COMANDO | | 1 |
| 30 | 7005047 | 3 | CONTROL HOSE 8X500 | MANGUEIRA DE COMANDO | | 1 |

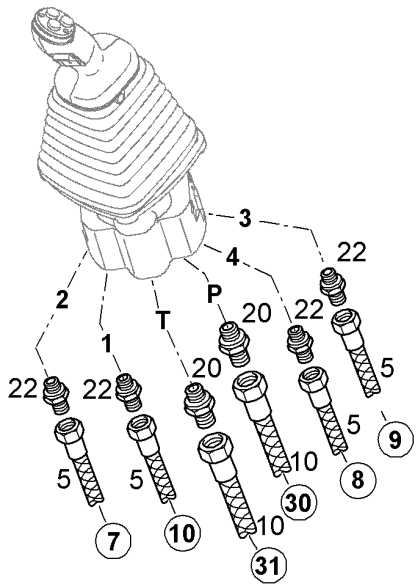


| Pos. | Item | Quantity | Description | Designação | Serie | K |
|---|---|---|---|---|---|---|
| 5 | 7009933 | 4 | CONTROL HOSE 8X2000 | MANGUEIRA DE COMANDO | | 1 |
| 10 | 10287541 | 2 | HOSE | MANGUEIRA | | 1 |
| 20 | 7362117 | 2 | SCREW FITTING GE 12L G1/4A | REDUÇÃO | | |
| 22 | 7362091 | 4 | SCREW FITTING GE 10L | REDUÇÃO | | |

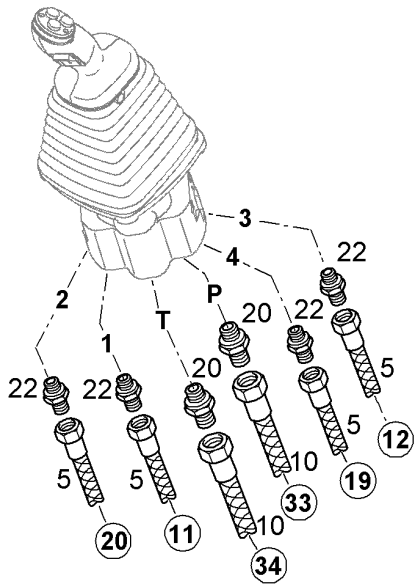


| Pos. | Item | Quantity | Description | Designação | Serie | K |
|---|---|---|---|---|---|---|
| 5 | 7009933 | 4 | CONTROL HOSE 8X2000 | MANGUEIRA DE COMANDO | | 1 |
| 10 | 10287541 | 2 | HOSE | MANGUEIRA | | 1 |
| 20 | 7362117 | 2 | SCREW FITTING GE 12L G1/4A | REDUÇÃO | | |
| 22 | 7362091 | 4 | SCREW FITTING GE 10L | REDUÇÃO | | |

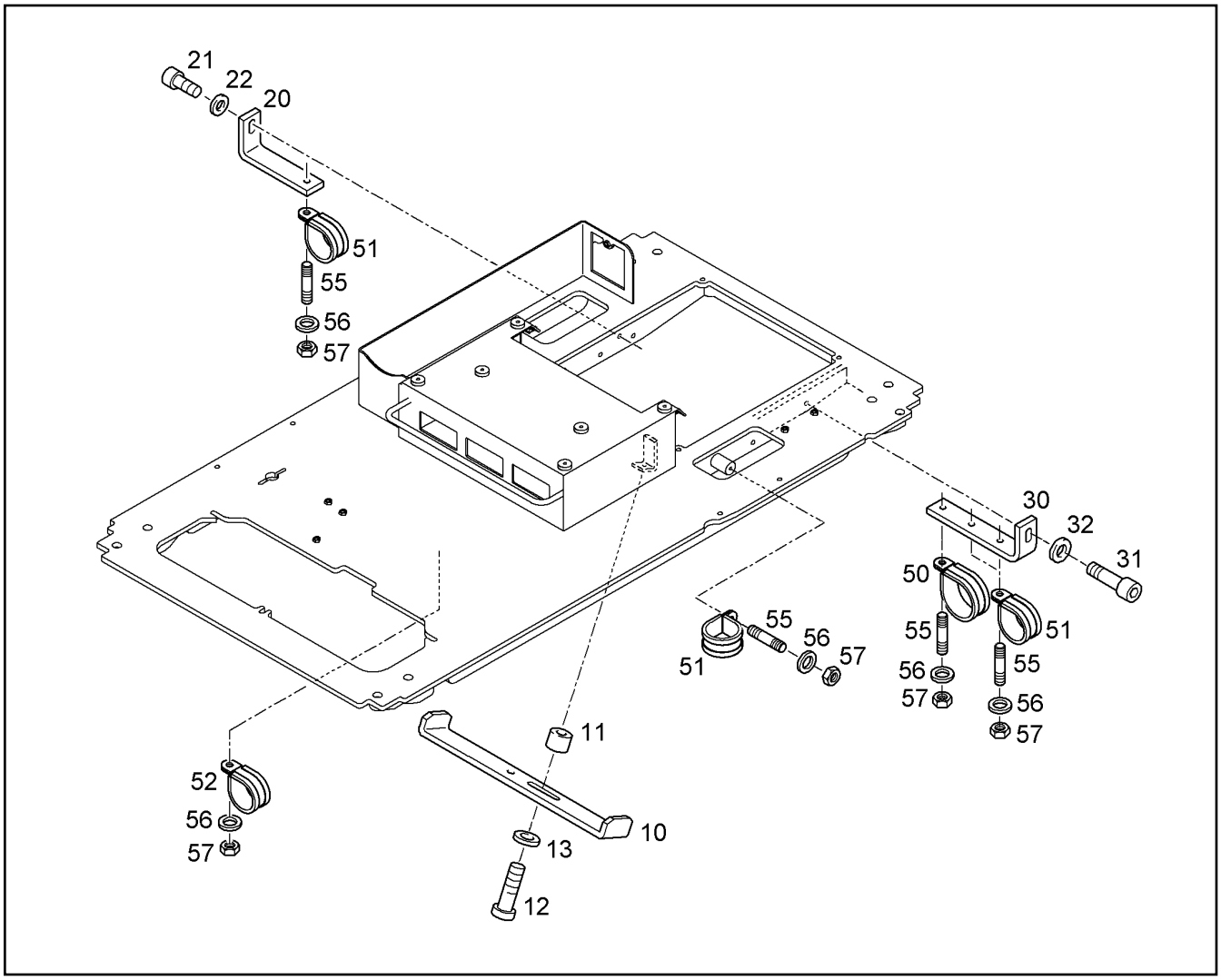


| Pos. | Item | Quantity | Description | Designação | Serie | K |
|---|---|---|---|---|---|---|
| 10 | 9950385 | 1 | HOLDER | SUPORTE | | |
| 11 | 9950358 | 1 | DISTANCE SLEEVE 15X20X19 | LUVA DISTANCIADORA | | 1 |
| 12 | 4043127 | 1 | CYLINDER SCREW ISO 4762 M10X40 10.9 | PARAFUSO CILÍNDRICO | | |
| 13 | 10289795 | 1 | WASHER ISO 7089 10 300HV | ARRUELA | | |
| 20 | 10079307 | 1 | HOLDER | SUPORTE | | |
| 21 | 4043002 | 1 | CYLINDER SCREW ISO 4762 M12X25 10.9 | PARAFUSO CILÍNDRICO | | |
| 22 | 10289804 | 1 | WASHER ISO 7089 12 300HV | ARRUELA | | |
| 30 | 9950357 | 1 | HOLDER | SUPORTE | | |
| 31 | 4043002 | 1 | CYLINDER SCREW ISO 4762 M12X25 10.9 | PARAFUSO CILÍNDRICO | | |
| 32 | 10289804 | 1 | WASHER ISO 7089 12 300HV | ARRUELA | | |
| 50 | 7414232 | 1 | CLAMP DIN 3016 D1- 50 X 20 W1-2-CR | BRAÇADEIRA | | |
| 51 | 7412943 | 4 | CLAMP DIN 3016 D1- 40 X 20 W1-2-CR | BRAÇADEIRA | | |
| 52 | 7365080 | 1 | CLAMP DIN 3016 D1- 45 X 20 W1-2-CR | BRAÇADEIRA | | |
| 55 | 4068019 | 5 | DOUBLE-ENDED STUD DIN 939 M 8 X 20 8.8 | PINO ROSCADO | | |
| 56 | 10289803 | 6 | WASHER ISO 7089 8 300HV | ARRUELA | | |
| 57 | 4000381 | 6 | HEX NUT M8 | PORCA SEXTAVADA | | |

OHNE BILD

WITHOUT DRAWING

SANS DESSIN

| Pos. | Item | Quantity | Description | Designação | Serie | K |
|---|---|---|---|---|---|---|
| 10 | 9010347 | 1 | CAB BOTTOM PLATE<br>[026 P01 ] | PLACA DO ASSOALHO DA CABIN | -99998 | |
| 20 | 10385024 | 1 | ARM REST LEFT<br>⇨ ❑ 237 | APOIO ESQUERDO PARA BRAÇ | | |
| 21 | 4043124 | 4 | CYLINDER SCREW ISO 4762 M10X25 10.9 | PARAFUSO CILÍNDRICO | | |
| 22 | 10289795 | 4 | WASHER ISO 7089 10 300HV | ARRUELA | | |
| 30 | 10840866 | 1 | ARM REST RIGHT<br>⇨ ❑ 249 | APOIO DIREITO PARA BRAÇO | 31797- | |
| 31 | 4043127 | 4 | CYLINDER SCREW ISO 4762 M10X40 10.9 | PARAFUSO CILÍNDRICO | | |
| 32 | 10289795 | 4 | WASHER ISO 7089 10 300HV | ARRUELA | | |
| 33 | 4902267 | 2 | CYLINDER SCREW ISO 4762 M6X25 10.9 A2 | PARAFUSO CILÍNDRICO | | |
| 34 | 10289802 | 2 | WASHER ISO 7089 6 300HV | ARRUELA | | |
| 35 | 9757779 | 1 | SHEET | PLACA | | |
| 36 | 7366804 | 1 | BLANKING END M8X20 A2E | PARAFUSO | | |
| 37 | 6000578 | 1 | BUZZER | CIRENE | | |
| 38 | 5607889 | 1 | DIAPHRAGM GROMMET 16/22,5/27,5 | LUVA DE PASSAGEM | | |
| 40 | 10059818 | 1 | FOOT PILOT VALVE INSTALLATION<br>⇨ ❑ 268 | PRÉ-COMANDO DE PEDAL MON | | |
| 41 | 4043000 | 3 | CYLINDER SCREW ISO 4762 M10X30 10.9 | PARAFUSO CILÍNDRICO | | |
| 42 | 4600033 | 3 | CIRCLIP 10 | ARRUELA DE PRESSÃO | | |
| 43 | 9480525 | 2 | ROD | HASTE | | |
| 44 | 7370689 | 2 | LEVER HANDLE | ALAVANCA | | |
| 50 | 94022477 | 1 | DRIVERS SEAT<br>⇨ ❑ 279 | BANCO DO MOTORISTA | 99999- | |
| 52 | 4902231 | 4 | CYLINDER SCREW ISO 4762 M8X16 10.9 A2 | PARAFUSO CILÍNDRICO | | |
| 53 | 423910801 | 4 | LOCK WASHER 8,4/13X1,7 VS 8 | ARRUELA DE SEGURANÇA | | |

OHNE BILD

WITHOUT DRAWING

SANS DESSIN

| Pos. | Item | Quantity | Description | Designação | Serie | K |
|---|---|---|---|---|---|---|
| 54 | 4902231 | 2 | CYLINDER SCREW ISO 4762 M8X16 10.9 A2 | PARAFUSO CILÍNDRICO | | |
| 60 | 10841508 | 1 | CABLE CHANNEL | CANALETA DE CABOS | | |
| 61 | 4002386 | 1 | SHEET-METAL SCREW ISO 7051 ST5,5X19 S | PARAFUSO | | |
| 62 | 7362752 | 1 | ROSE | ARRUELA | | |
| 80 | 10406898 | 1 | AIR CONDITIONING UNIT<br>⇨ ❑ 280 | SISTEMA DE AR CONDICIONAD | 99999- | |
| 81 | 4901067 | 4 | CYLINDER SCREW ISO 4762 M12X65 10.9 | PARAFUSO CILÍNDRICO | | |
| 82 | 10289804 | 4 | WASHER ISO 7089 12 300HV | ARRUELA | | |
| 85 | 7361679 | 0.1m | HOSE DIN 73411 A 15 X3,5 | MANGUEIRA | | 1 |
| 90 | 10005860 | 1 | AIR HOSE | MANGUEIRA DE AR | | 1 |
| 91 | 7002008 | 2 | HOSE CLAMP DIN 3017-1 A 80 70-90X13 W2- | ABRAÇADEIRA DE MANGUEIRA | | |
| 95 | 10005859 | 2 | AIR HOSE | MANGUEIRA DE AR | | 1 |
| 96 | 5700024 | 4 | HOSE CLAMP DIN 3017-1 A 50 40-60X13 W2- | ABRAÇADEIRA DE MANGUEIRA | | |
| 99 | 5611480 | 3 | AIR EJECTION NOZZLE | DIFUSOR DE AR | | |
| 120 | 226016702 | 1m | SECTION | PERFIL DE PROTECAO DE CANT | | |
| 121 | 10009781 | 1.8m | SECTION | PERFIL DE PROTECAO DE CANT | | |
| 130 | 6204632 | 1 | EARTH STRAP | CABO MASSA TRANÇADO | | |
| 131 | 4000381 | 2 | HEX NUT M8 | PORCA SEXTAVADA | | |
| 132 | 10289803 | 2 | WASHER ISO 7089 8 300HV | ARRUELA | | |
| 138 | 10055095 | 1 | CABLE LOOM X164-X182 | CHICOTE ELÉTRICO | | |
| 140 | 10408513 | 1 | WIR.HARNESS UNDER CONTROL CAB | CHICOTE ELÉTRICO POSTO C | | |
| 145 | 7001877 | 10 | TIE WRAP | AMARRA PARA CABOS | | |
| 150 | 6204404 | 1 | CABLE ANTENNA EXTENSION | CABO DA ANTENA | | |
| 160 | 7363004 | 3 | CLAMP DIN 3016-1 D1 10X20 W1-2-CR | BRAÇADEIRA | | |
| 161 | 4000381 | 3 | HEX NUT M8 | PORCA SEXTAVADA | | |
| 162 | 10289803 | 3 | WASHER ISO 7089 8 300HV | ARRUELA | | |

OHNE BILD

WITHOUT DRAWING

SANS DESSIN

| Pos. | Item | Quantity | Description | Designação | Serie | K |
|---|---|---|---|---|---|---|
| 165 | 7366260 | 1 | CLAMP DIN 3016 D1- 34 X 20 W1-2-CR | BRAÇADEIRA | | |
| 166 | 4902231 | 1 | CYLINDER SCREW ISO 4762 M8X16 10.9 A2 | PARAFUSO CILÍNDRICO | | |
| 167 | 10289803 | 1 | WASHER ISO 7089 8 300HV | ARRUELA | | |

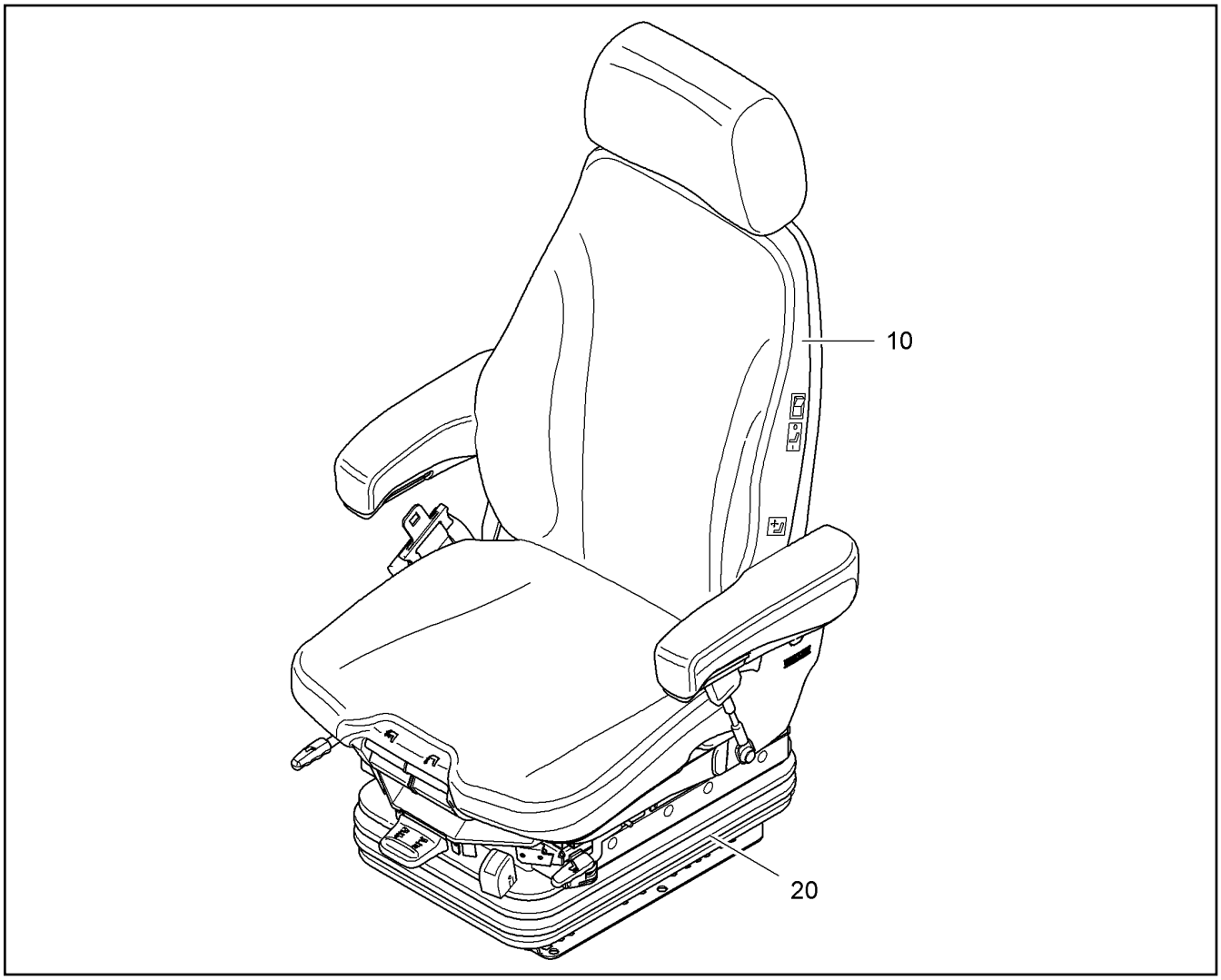


| Pos. | Item | Quantity | Description | Designação | Serie | K |
|---|---|---|---|---|---|---|
| 10 | | 1 | SEAT TOP<br>⇨ ❑ 233 | PARTE SUPERIOR DE ASSENTO | | |
| 20 | | 1 | SUSPENSION<br>⇨ ❑ 235 | SUSPENSAO | | |

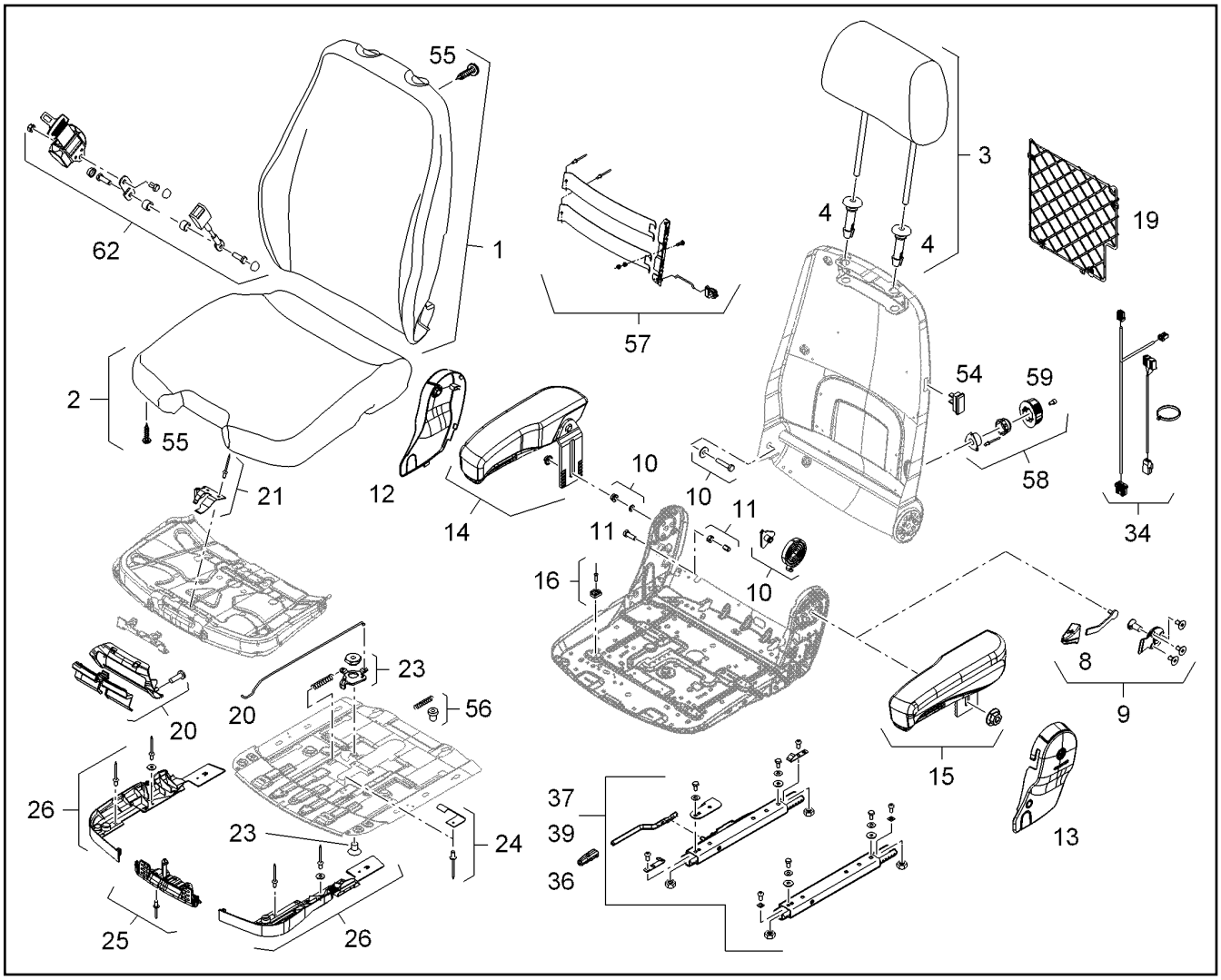


| Pos. | Item | Quantity | Description | Designação | Serie | K |
|---|---|---|---|---|---|---|
| 1 | 11082671 | 1 | PAD | ASSENTO | | |
| 2 | 11082672 | 1 | SEAT UPHOLSTERY | ENCOSTO DO ASSENTO | | |
| 3 | 10493046 | 1 | HEAD REST | APOIO DE CABECA | | |
| 4 | 10493047 | 1 | GUIDE | GUIA | | |
| 8 | 10491783 | 1 | OPERATION | ACIONAMENTO | | |
| 9 | 10491783 | 1 | OPERATION | ACIONAMENTO | | |
| 10 | 10493351 | 1 | BACK REST BEARING | | | |
| 11 | 10493050 | 1 | LIMIT STOP | CHAPA LIMITADORA | | |
| 12 | 10814727 | 1 | COVER | TAMPA | | |
| 13 | 10493986 | 1 | COVERING LEFT | COBERTURA ESQUERDA | | |
| 14 | 10113062 | 1 | ARM REST RIGHT | APOIO DIREITO PARA BRAÇO | | |
| 15 | 10113060 | 1 | ARM REST LEFT | APOIO ESQUERDO PARA BRAÇ | | |
| 16 | 10493369 | 1 | GUIDE FUER SITZTIEFENVERSTELLUNG KP | | | |
| 19 | 10492435 | 1 | NETWORK | | | |
| 20 | 10493341 | 1 | OPERATION | ACIONAMENTO | | |
| 21 | 7027784 | 1 | SPRING PLATE | CHAPA DE MOLA | | |
| 23 | 7027794 | 1 | LEVER | ALAVANCA | | |
| 24 | 10493054 | 1 | SPRING PLATE | CHAPA DE MOLA | | |
| 25 | 7027776 | 1 | RASTER | ENGATE | | |
| 26 | 11100087 | 1 | COVER F.LNV | TAMPA | | |
| 34 | 10493344 | 1 | CABLE | CABO | | |
| 36 | 10029676 | 1 | GRIP | MAÇANETA | | |
| 37 | 11100088 | 1 | ADJUSTABLE RAIL | TRILHOS DE AJUSTE | | |
| 39 | 10814706 | 1 | FIXING PARTS | PECAS DE FIXACAO | | |
| 54 | 10493348 | 1 | SWITCH | INTERRUPTOR | | |
| 55 | 10493345 | 1 | SMALL PARTS | PEÇAS PEQUENAS | | |

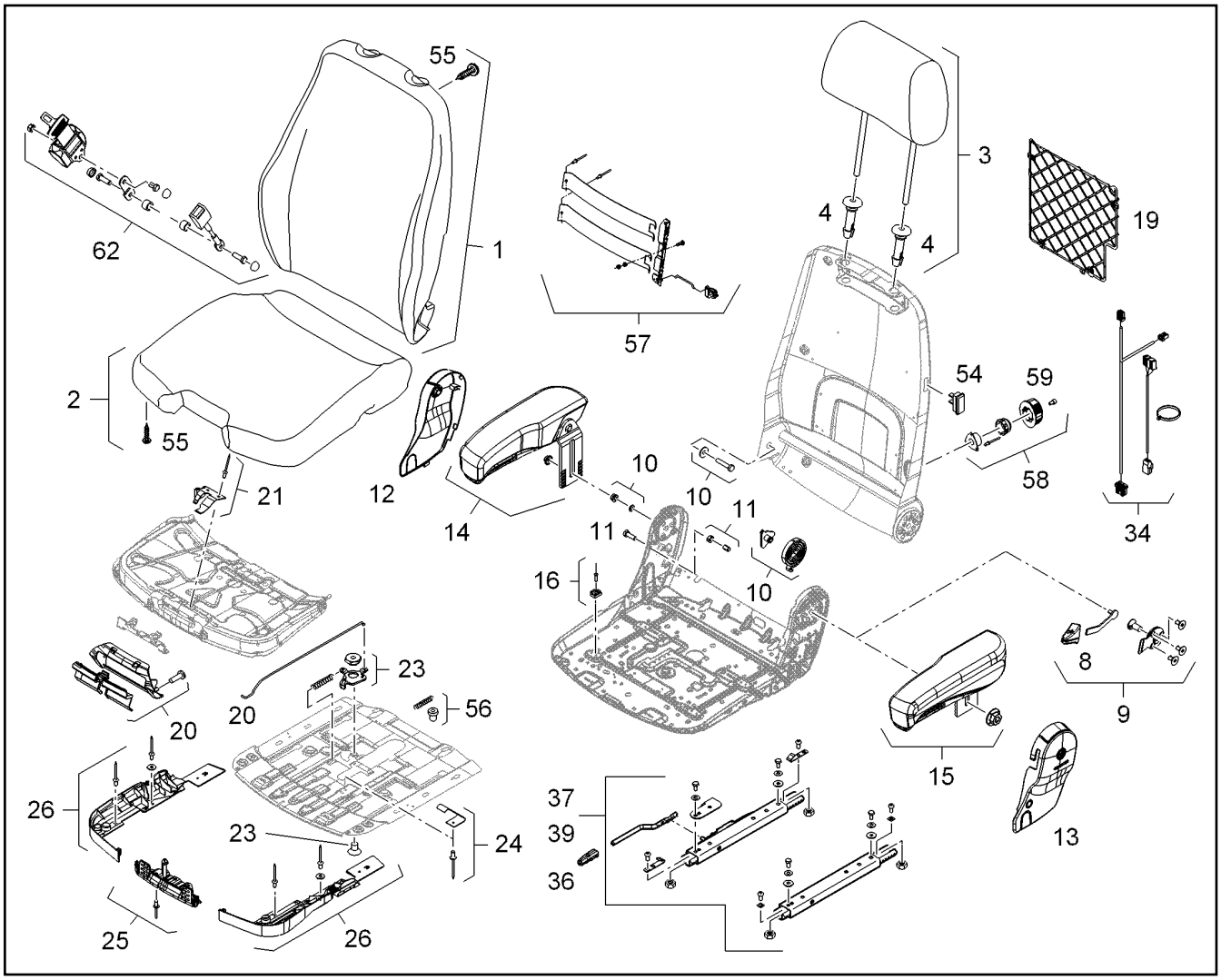


| Pos. | Item | Quantity | Description | Designação | Serie | K |
|---|---|---|---|---|---|---|
| 56 | 10493397 | 1 | SMALL PARTS | PEÇAS PEQUENAS | | |
| 57 | 10219021 | 1 | DISC-REST | APOIO PARA COLUNA | | |
| 58 | 10493048 | 1 | OPERATION | ACIONAMENTO | | |
| 59 | 10467429 | 1 | GRIP | MAÇANETA | | |
| 62 | 10493984 | 1 | HIP BELT | CINTO DE SEGURANCA ABDOMI | | |

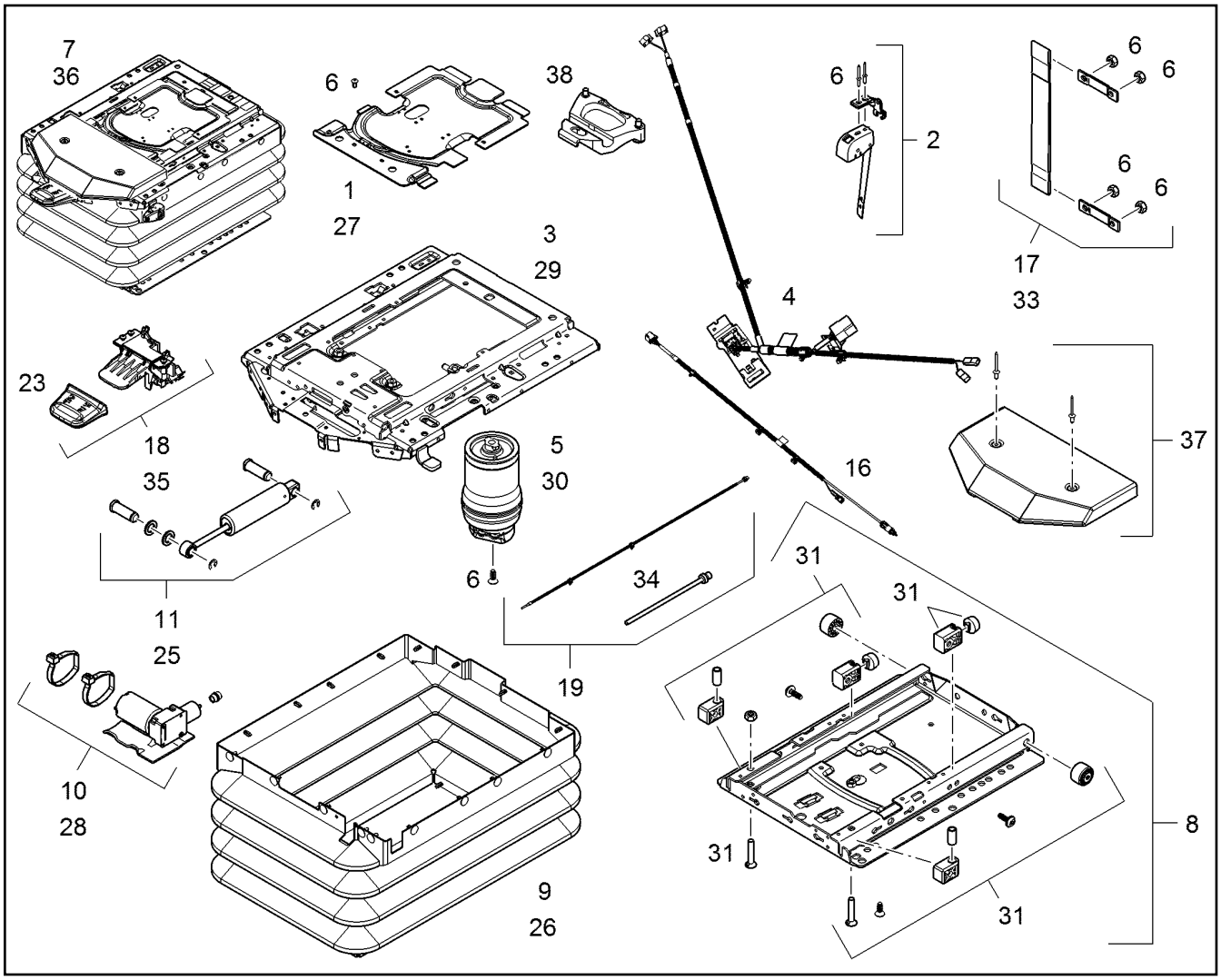


| Pos. | Item | Quantity | Description | Designação | Serie | K |
|---|---|---|---|---|---|---|
| 1 | 10492977 | 1 | COVER CPL | TAMPA COMPLETA | | |
| 2 | 11066525 | 1 | LEVEL INDICATOR | | | |
| 3 | 11066526 | 1 | RESILIENT UPPER PART | PARTE SUPERIOR DA SUSPEN | | |
| 4 | 11066527 | 1 | LOOM | CHICOTE | | |
| 5 | 10492981 | 1 | PNEUMATIC SPRING | MOLA PNEUMATICA | | |
| 6 | 10493010 | 1 | WEARING PART | PECA DE DESGASTE | | |
| 7 | 11659214 | 1 | SUSPENSION | SUSPENSAO | | |
| 8 | 10492983 | 1 | RESILIENT BASE | PEÇA INFERIOR DE SUSPENSÃ | | |
| 9 | 11066528 | 1 | RUBBER BELLOWS | BORRACHA SANFONADA | | |
| 10 | 10492985 | 1 | COMPRESSOR CPL. | COMPRESSOR COMPL. | | |
| 11 | 10493469 | 1 | SHOCK ABSORBER | AMORTECEDOR | | |
| 16 | 11100090 | 1 | ADAPTER CABLE | CABO ADAPTADOR | | |
| 17 | 10493994 | 1 | BELT STRIP | | | |
| 18 | 11066530 | 1 | OPERATION | ACIONAMENTO | | |
| 19 | 11066531 | 1 | AIR HOSE CPL. | MANGUEIRA DE AR COMPL. | | |
| 23 | 10814718 | 1 | GRIP | MAÇANETA | | |
| 25 | 10493027 | 1 | REPAIR KIT, SHOCK ABSORBER | KIT DE REPARO AMORTECEDO | | |
| 26 | 10493025 | 1 | FIXING PARTS | PECAS DE FIXACAO | | |
| 27 | 10493008 | 1 | RK COVER | KIT DE REPARO COBERTURA | | |
| 28 | 10493026 | 1 | REPAIR KIT F.COMPRESSOR | CR COMPRESSOR | | |
| 29 | 10493022 | 1 | REPAIR KIT, SUSPENSION | KIT DE REPARO SUSPENSÃO | | |
| 30 | 10493023 | 1 | REPAIR KIT, PNEUMATIC SPRING | KIT DE REPARO SUSPENSÃO PN | | |
| 31 | 10493024 | 1 | REPAIR KIT, SUSPENSION | KIT DE REPARO SUSPENSÃO | | |
| 33 | 10493009 | 1 | REPAIR KIT, BELT | KIT DE REPARO CORREIA | | |
| 34 | 10493032 | 1 | REPAIR KIT, AIR HOSE | KIT DE REPARO MANGUEIRA DE | | |
| 35 | 10493031 | 1 | REPAIR KIT, HEIGHT ADJ MODULE | KIT REPAR MÓDUL AJUS DE AL | | |

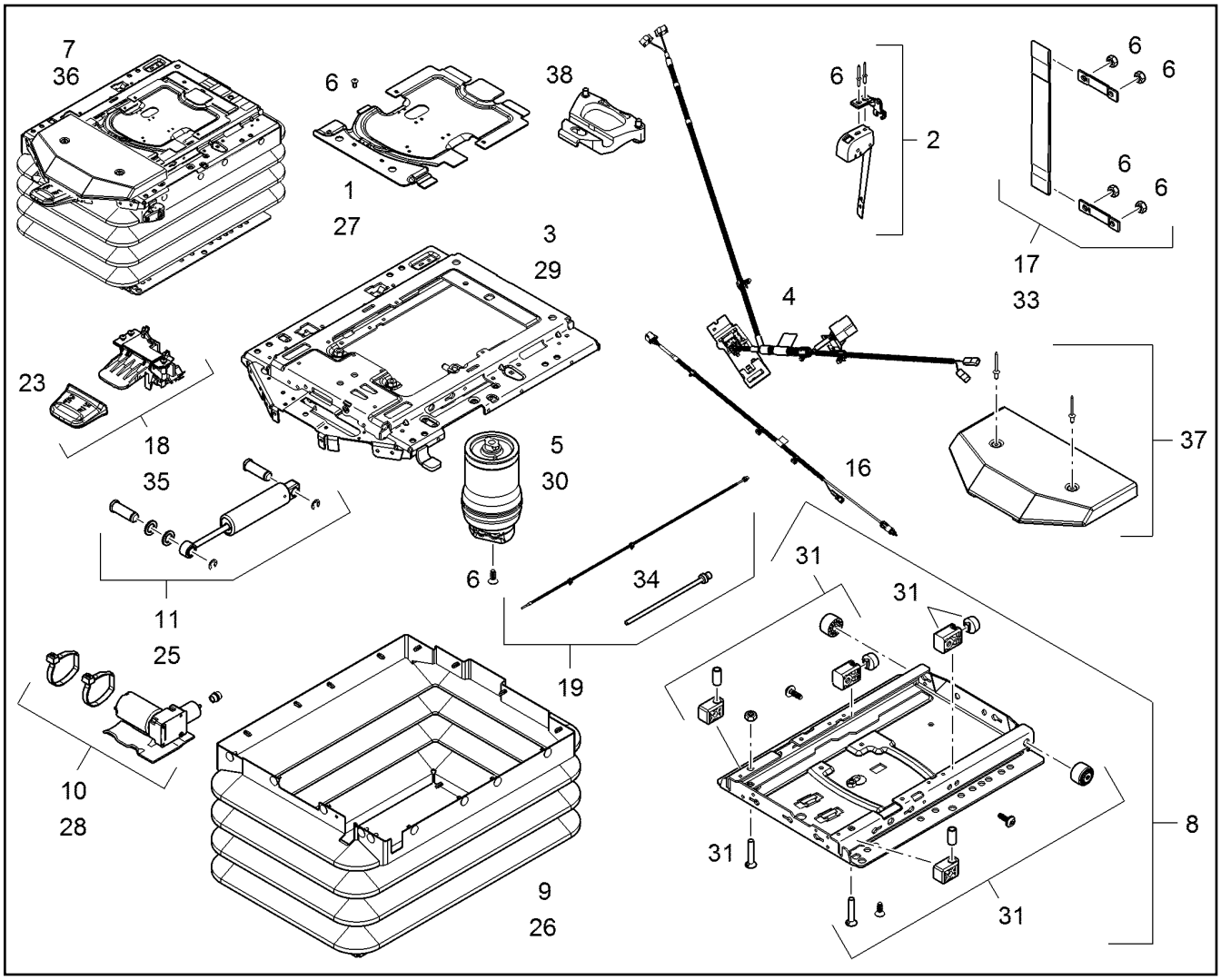


| Pos. | Item | Quantity | Description | Designação | Serie | K |
|---|---|---|---|---|---|---|
| 36 | 11066536 | 1 | FIXING PARTS | PECAS DE FIXACAO | | |
| 37 | 7027816 | 1 | COVER | TAMPA | | |
| 38 | 11066532 | 1 | THRUST BEARING / FIXED BEARING OT KPL | | | |

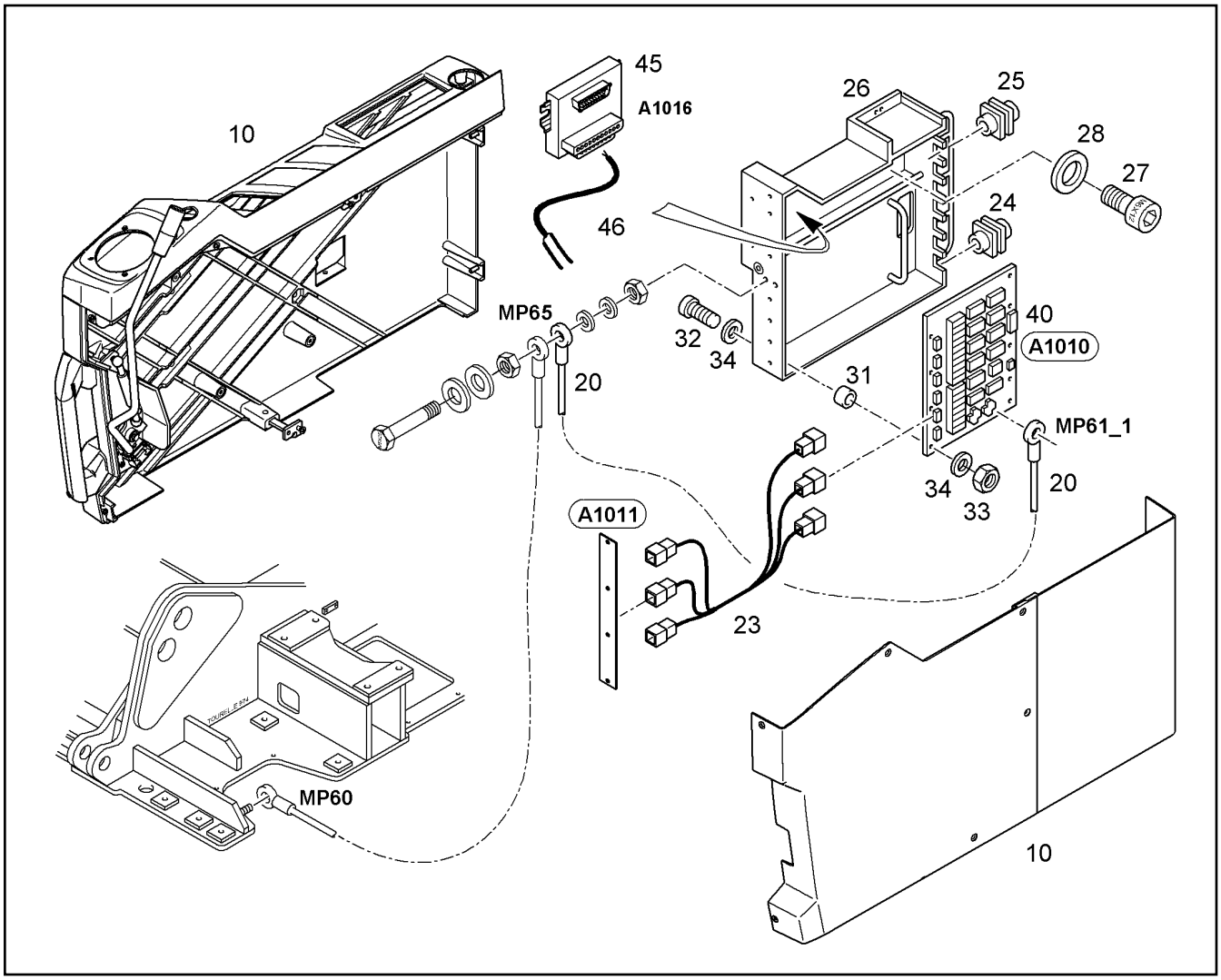


| Pos. | Item | Quantity | Description | Designação | Serie | K |
|---|---|---|---|---|---|---|
| 10 | 10057362 | 1 | CONTROL BRACKET LEFT INST.<br>⇨ ❑ 239 | CONSOLE DE COMANDO | | |
| 20 | 10066076 | 1 | CABLE LOOM MP65 - MP61/1 | CHICOTE ELÉTRICO | | |
| 23 | 9893072 | 1 | CABLE LOOM A1010-A1011 | CHICOTE ELÉTRICO | | |
| 24 | 6202703 | 2 | CABLE SLEEVE 14,0/15,7/19 | LUVA PARA CABOS | | |
| 25 | 7362986 | 7 | CABLE SLEEVE 8,5/14/20 | LUVA PARA CABOS | | |
| 26 | 9392651 | 1 | ELECTRIC BOX | CAIXA ELETRICA | | |
| 27 | 4902252 | 4 | CYLINDER SCREW ISO 4762 M6X12 10.9 A2 | PARAFUSO CILÍNDRICO | | |
| 28 | 4600198 | 4 | WASHER 6 200HV | ARRUELA | | |
| 31 | 7014560 | 26 | RUBBER BUMPER | BATENTE DE BORRACHA | | |
| 32 | 4901886 | 26 | PAN-HEAD SCREW ISO 7045 M4X6 4.8 H A2 | PARAFUSO | | |
| 33 | 4000376 | 6 | HEX NUT M4 | PORCA SEXTAVADA | | |
| 34 | 4001645 | 26 | WASHER ISO 7089 4 200HV | ARRUELA | | |
| 40 | 975881501 | 1 | E-BOARD<br>[025877 ]<br>⇨ ❑ 241 | PLACA ELETRÔNICA | | |
| 45 | 9874988 | 1 | PLATINES INSTALLATION A1016<br>⇨ ❑ 242 | PLACAS INSTALACAO | | |
| 46 | 6204634 | 1 | CABLE LOOM | CHICOTE ELÉTRICO | | |

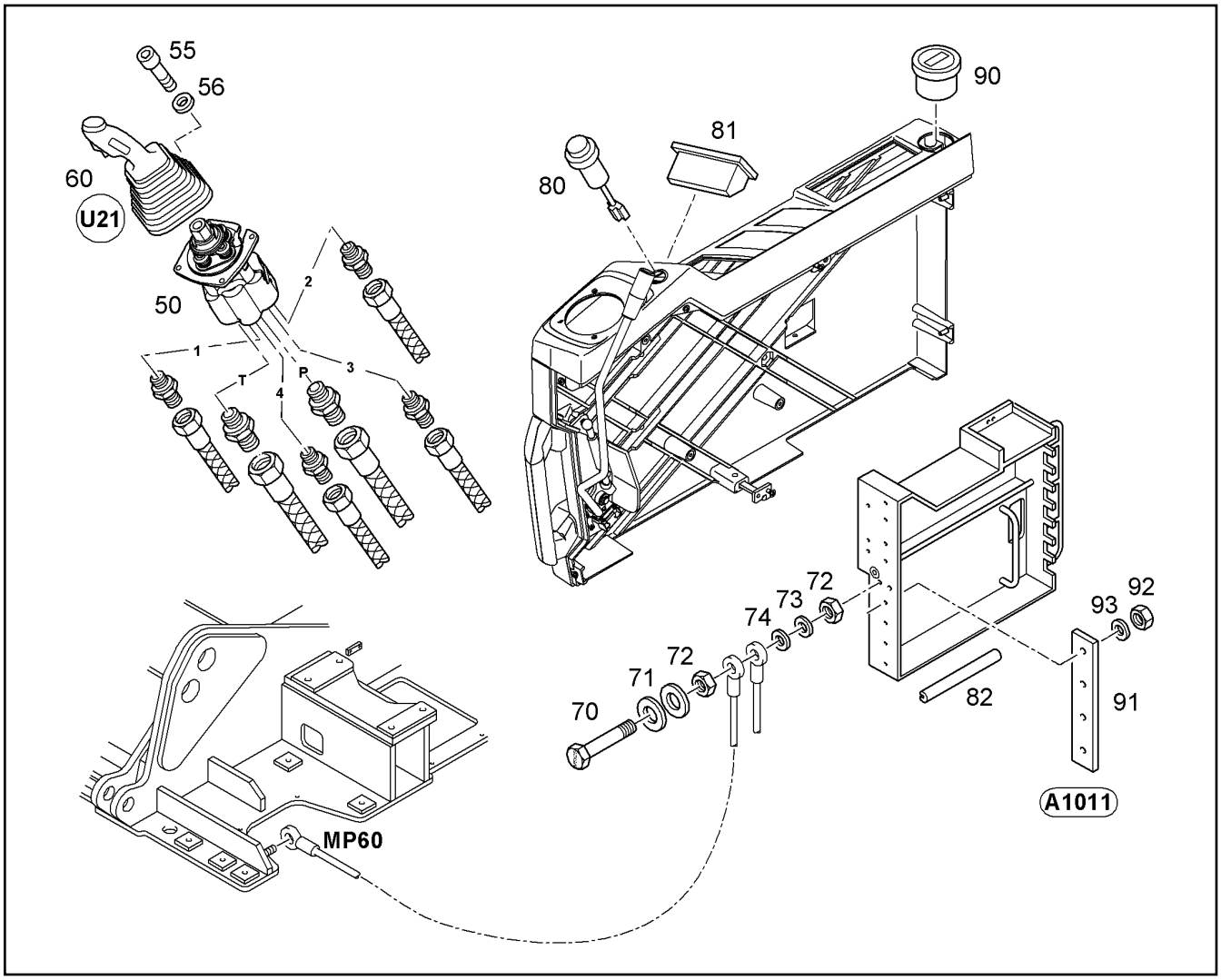


| Pos. | Item | Quantity | Description | Designação | Serie | K |
|---|---|---|---|---|---|---|
| 50 | 10118561 | 1 | PILOT CONTROL UNIT VG6-8 4-4 Z11 000 [12 44 36179 ] ⇨ ❑ 688 | MODULO DE COMANDO | | |
| 55 | 4902267 | 4 | CYLINDER SCREW ISO 4762 M6X25 10.9 A2 | PARAFUSO CILÍNDRICO | | |
| 56 | 4229911 | 4 | LOCK WASHER 6,4/10X1,2 VS 6 | ARRUELA DE SEGURANÇA | | |
| 60 | 10058792 | 1 | MANIPULATOR LEFT ⇨ ❑ 244 | SENSOR DE PRE-COMANDO ES | | |
| 70 | 4900336 | 1 | HEX BOLT ISO 4017 M5x25 8.8 A2C | PARAFUSO SEXTAVADO | | |
| 71 | 4600200 | 2 | WASHER DIN 9021 5,3 ST A3C | ARRUELA | | |
| 72 | 4000466 | 2 | HEX NUT M5 | PORCA SEXTAVADA | | |
| 73 | 7361965 | 1 | LOCK WASHER | ARRUELA DE SEGURANÇA | | |
| 74 | 4600305 | 1 | WASHER 5 200HV | ARRUELA | | |
| 80 | 7369377 | 1 | CIGAR LIGHTER ⇨ ❑ 248 | ACENDEDOR DE CIGARROS | | |
| 81 | 7366731 | 1 | ASH TRAY | CINZEIRO | | |
| 82 | 7360171 | 1.38m | CORNER PROTECT.PROFILE | PERFIL DE VEDACAO | | |
| 90 | 6201379 | 1 | SERVICE HOUR METER | HORIMETRO | | |
| 91 | 989165301 | 1 | E-BOARD | PLACA ELETRÔNICA | | |
| 92 | 4000376 | 4 | HEX NUT M4 | PORCA SEXTAVADA | | |
| 93 | 4001645 | 4 | WASHER ISO 7089 4 200HV | ARRUELA | | |

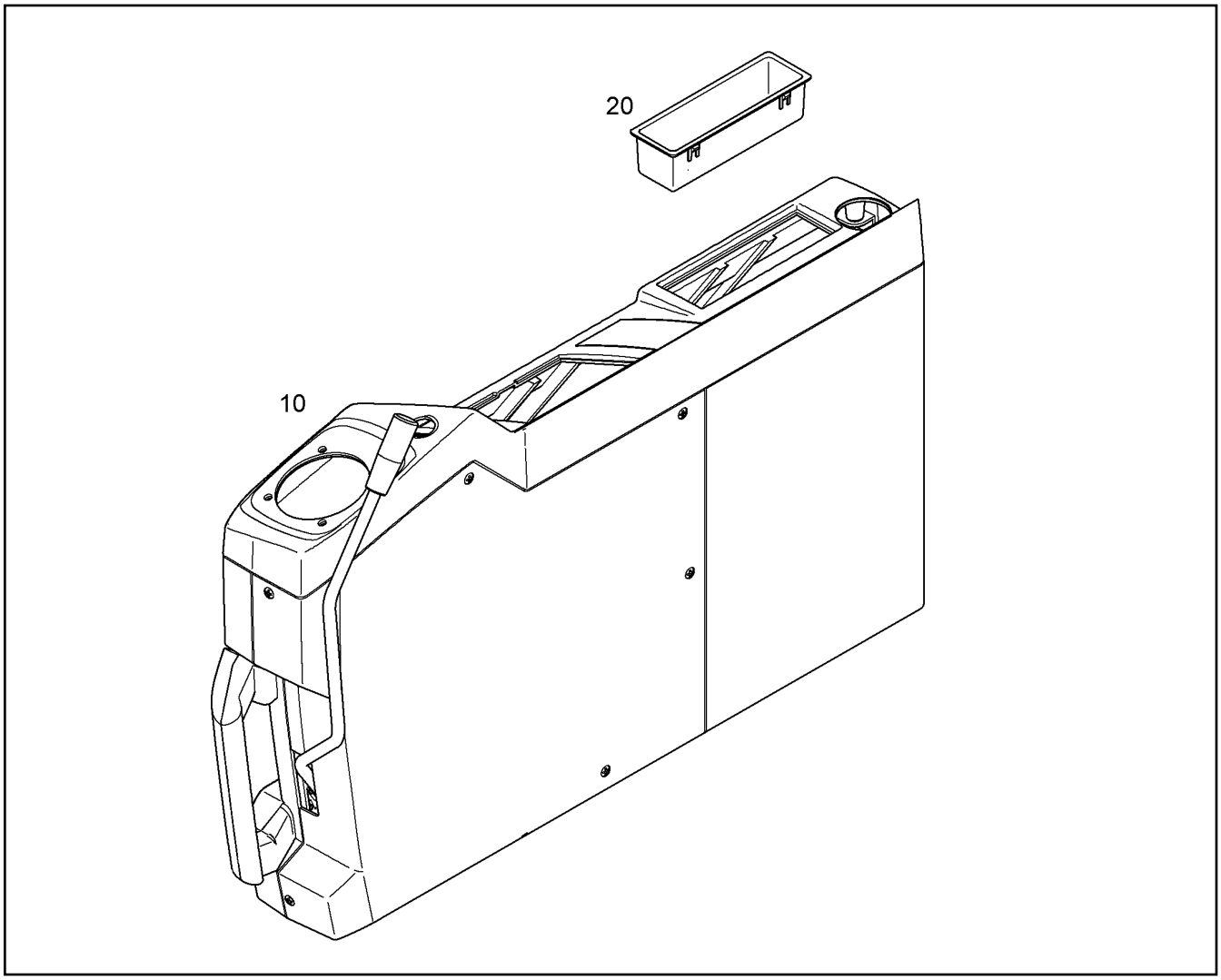


| Pos. | Item | Quantity | Description | Designação | Serie | K |
|---|---|---|---|---|---|---|
| 10 | | 1 | STEERING CONSOLE<br>⇨ ❑ 240 | CONSOLE DE COMANDO | | |
| 20 | 10043180 | 1 | REST | SUPORTE | | |

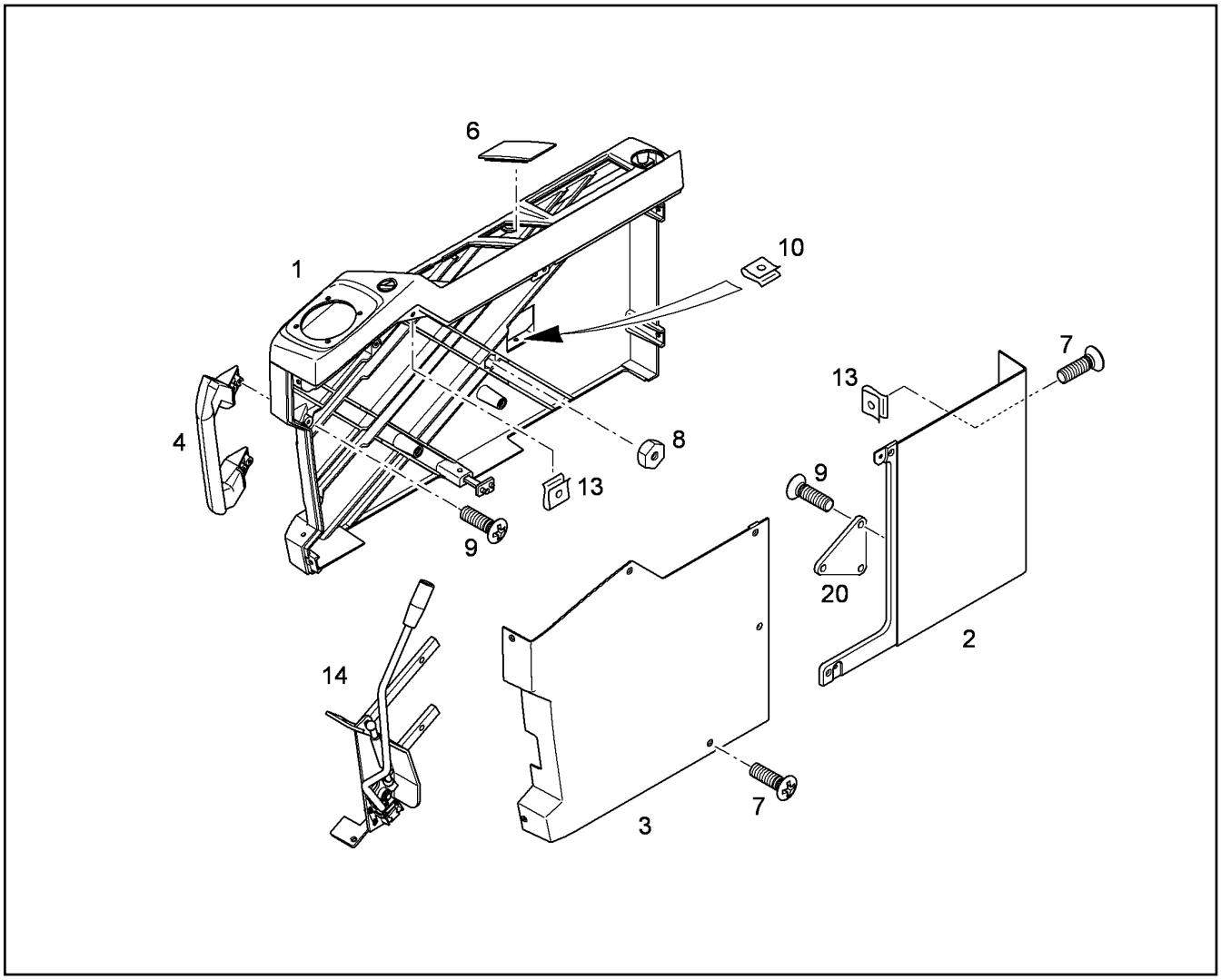


| Pos. | Item | Quantity | Description | Designação | Serie | K |
|---|---|---|---|---|---|---|
| 1 | 10005863 | 1 | BASIC BODY | CORPO BASICO | | |
| 2 | 7370896 | 1 | LID | TAMPA | | |
| 3 | 7370895 | 1 | LID | TAMPA | | |
| 4 | 7370897 | 1 | GRIP | MAÇANETA | | |
| 6 | 7370899 | 1 | BLANK LID | TAMPA CEGA | | |
| 7 | 7371577 | 10 | COUNTERSUNK SCREW ISO 7047 M6X20 4 | PARAFUSO ESCAREADO | | |
| 8 | 7370889 | 2 | HEX NUT M10 | PORCA SEXTAVADA | | |
| 9 | 7370888 | 4 | SCREW | PARAFUSO | | |
| 10 | 7366862 | 1 | SHEET METAL NUT | PORCA DE CHAPA | | |
| 13 | 7370883 | 7 | SHEET METAL NUT M6 | PORCA DE CHAPA | | |
| 14 | | 1 | SAFETY LEVER<br>⇨ ❑ 243 | ALAVANCA DE SEGURANCA | | |
| 20 | 10652159 | 1 | SHEET | PLACA | | |

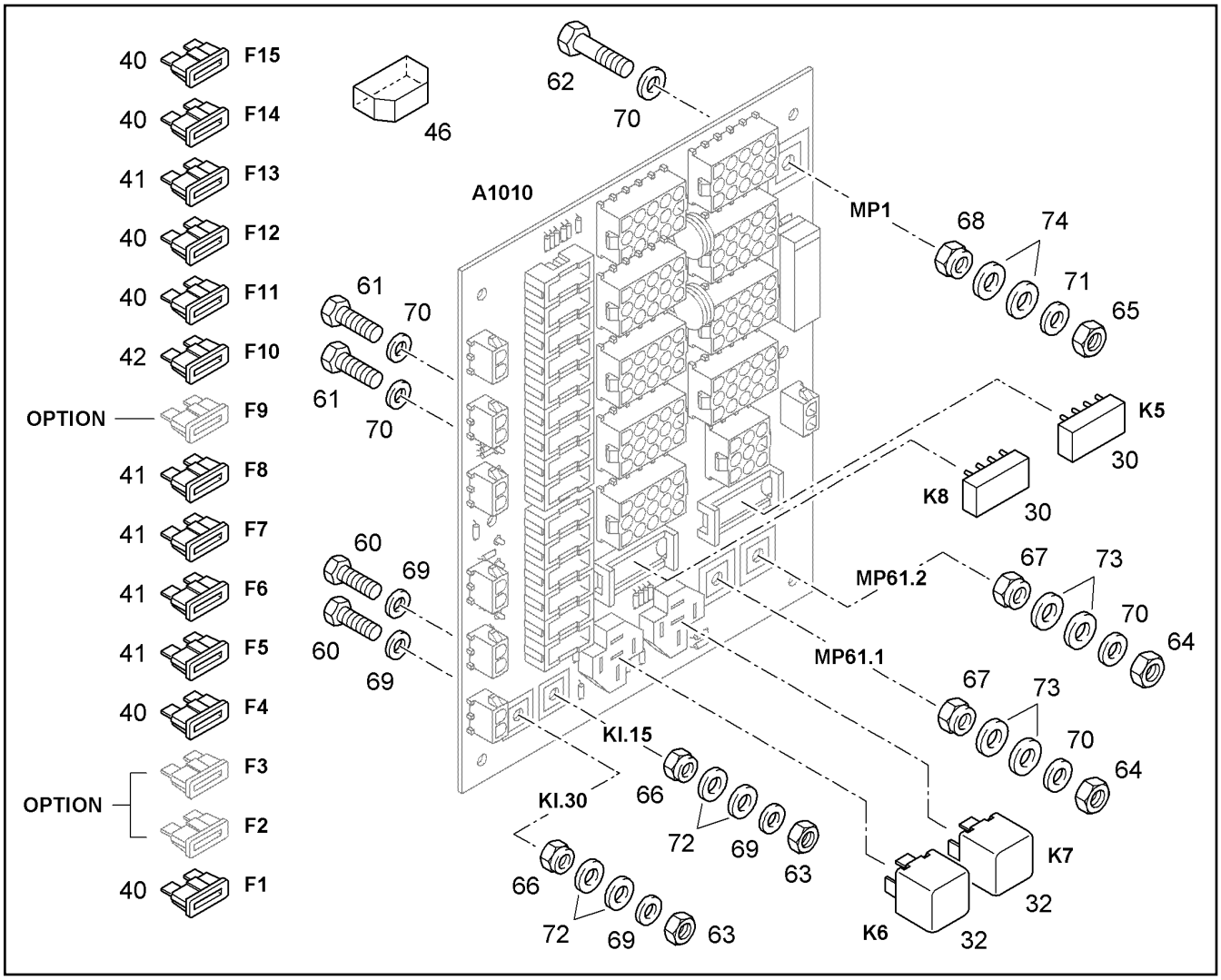


| Pos. | Item | Quantity | Description | Designação | Serie | K |
|---|---|---|---|---|---|---|
| 30 | 6202646 | 2 | RELAY | RELE | | |
| 32 | 6002381 | 2 | RELAY | RELE | | |
| 40 | 4901512 | 9 | FUSE CARTRIDGE C 15A 32 FKS | FUSÍVEL TIPO CARTUCHO | | |
| 41 | 4901513 | 5 | FUSE CARTRIDGE C 7,5A 32/56 FKS | FUSÍVEL TIPO CARTUCHO | | |
| 42 | 6040008 | 1 | FUSE 25A 32V | FUSIVEL | | |
| 46 | 604521501 | 15 | COVER | TAMPA | | |
| 60 | 4900336 | 2 | HEX BOLT ISO 4017 M5x25 8.8 A2C | PARAFUSO SEXTAVADO | | |
| 61 | 4900539 | 2 | HEX BOLT ISO 4017 M6x25 8.8 A2C | PARAFUSO SEXTAVADO | | |
| 62 | 4900128 | 1 | HEX BOLT ISO 4017 M8x25 8.8 A2C | PARAFUSO SEXTAVADO | | |
| 63 | 4000466 | 2 | HEX NUT M5 | PORCA SEXTAVADA | | |
| 64 | 4000379 | 2 | HEX NUT M6 | PORCA SEXTAVADA | | |
| 65 | 411508001 | 1 | HEX NUT M8 | PORCA SEXTAVADA | | |
| 66 | 4001866 | 2 | HEX NUT M5 | PORCA SEXTAVADA | | |
| 67 | 4002477 | 2 | HEX NUT M6 | PORCA SEXTAVADA | | |
| 68 | 4600783 | 1 | HEX NUT M8 | PORCA SEXTAVADA | | |
| 69 | 7361965 | 4 | LOCK WASHER | ARRUELA DE SEGURANÇA | | |
| 70 | 4229911 | 4 | LOCK WASHER 6,4/10X1,2 VS 6 | ARRUELA DE SEGURANÇA | | |
| 71 | 423910801 | 2 | LOCK WASHER 8,4/13X1,7 VS 8 | ARRUELA DE SEGURANÇA | | |
| 72 | 4980230 | 4 | WASHER | ARRUELA | | |
| 73 | 10289802 | 4 | WASHER ISO 7089 6 300HV | ARRUELA | | |
| 74 | 10289803 | 2 | WASHER ISO 7089 8 300HV | ARRUELA | | |

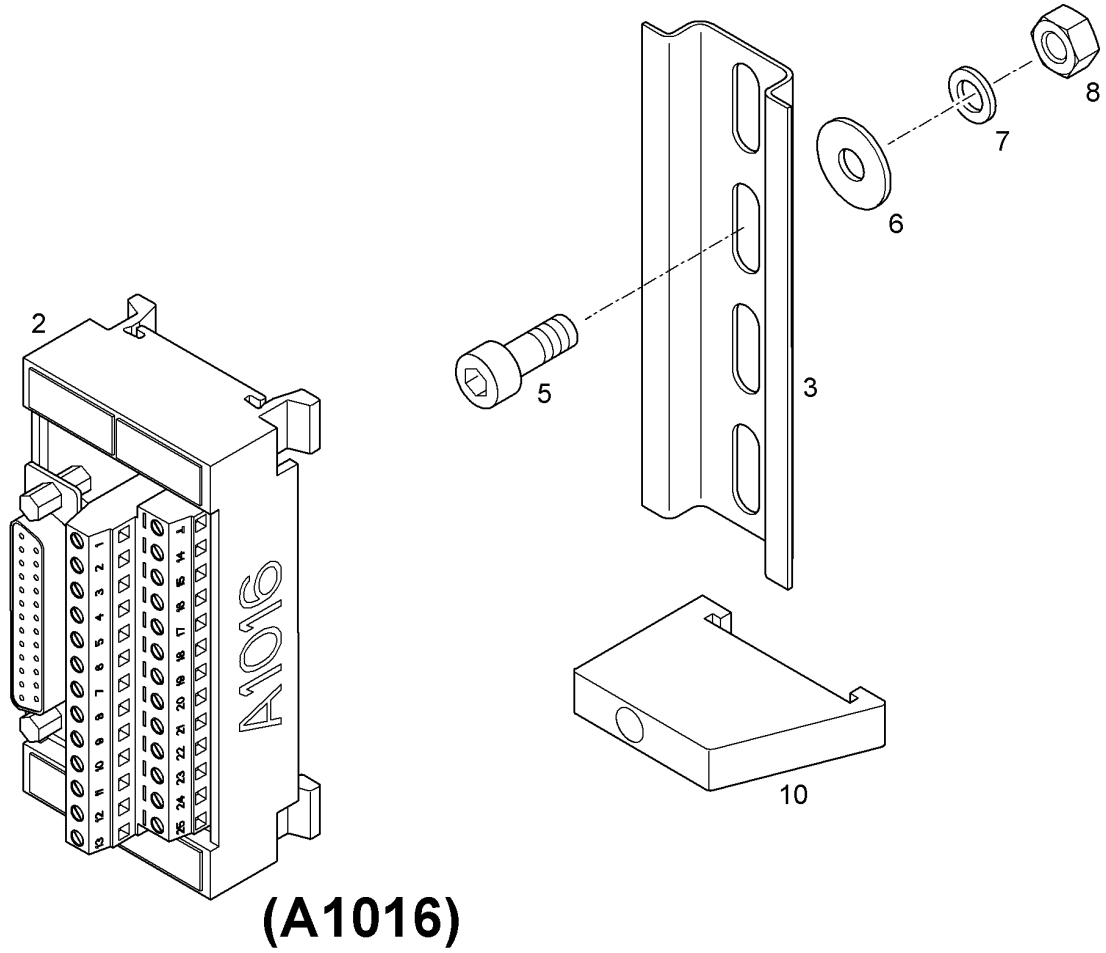


(A1016)

| Pos. | Item | Quantity | Description | Designação | Serie | K |
|---|---|---|---|---|---|---|
| 2 | 10287118 | 1 | MODULE | MÓDULO | | |
| 3 | 9874961 | 1 | CARRIER RAIL | TRILHO SUPORTE | | |
| 5 | 4601513 | 2 | CYLINDER SCREW ISO 4762 M5X16 10.9 A2 | PARAFUSO CILÍNDRICO | | |
| 6 | 4000648 | 2 | WASHER DIN 7349 6,4 A3C | ARRUELA | | |
| 7 | 4600200 | 4 | WASHER DIN 9021 5,3 ST A3C | ARRUELA | | |
| 8 | 4000466 | 2 | HEX NUT M5 | PORCA SEXTAVADA | | |
| 10 | 6203433 | 1 | FIXING BRACKET | CANTONEIRA DE FIXACAO | | |

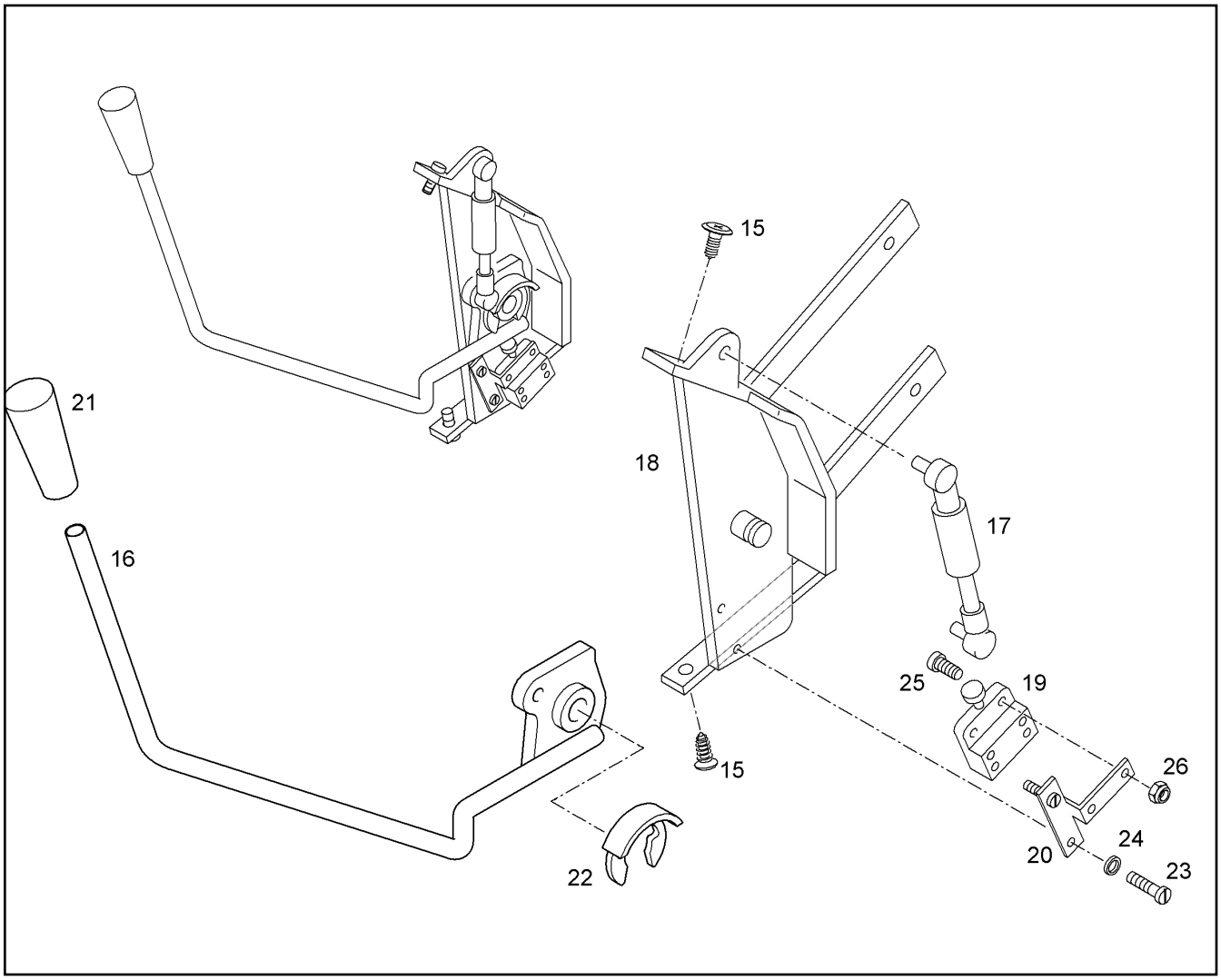


| Pos. | Item | Quantity | Description | Designação | Serie | K |
|---|---|---|---|---|---|---|
| 15 | 4902073 | 2 | SHEET-METAL SCREW ISO 1479 ST6,3X38 S | PARAFUSO | | |
| 16 | 7372353 | 1 | LEVER | ALAVANCA | | |
| 17 | 7372354 | 1 | GAS SPRING | MOLA A GÁS | | |
| 18 | 7372355 | 1 | HOLDER | SUPORTE | | |
| 19 | 6001027 | 1 | SNAP SWITCH | INTERRUPTOR DE RUPTURA B | | 2 |
| 20 | 7373825 | 1 | HOLDER | SUPORTE | | |
| 21 | 7025347 | 1 | HANDLE CAP | CAPA DO PUNHO | | |
| 22 | 7027038 | 1 | FUSE | FUSIVEL | | |
| 23 | 4901395 | 2 | CYLINDER SCREW ISO 1207 M3X10 MS | PARAFUSO CILÍNDRICO | | |
| 24 | 4600814 | 2 | WASHER ISO 7089 3 200HV | ARRUELA | | |
| 25 | 4600815 | 2 | CYLINDER SCREW ISO 1207 M3X20 4.8 A2C | PARAFUSO CILÍNDRICO | | |
| 26 | 10003140 | 2 | HEX NUT M3 | PORCA SEXTAVADA | | |

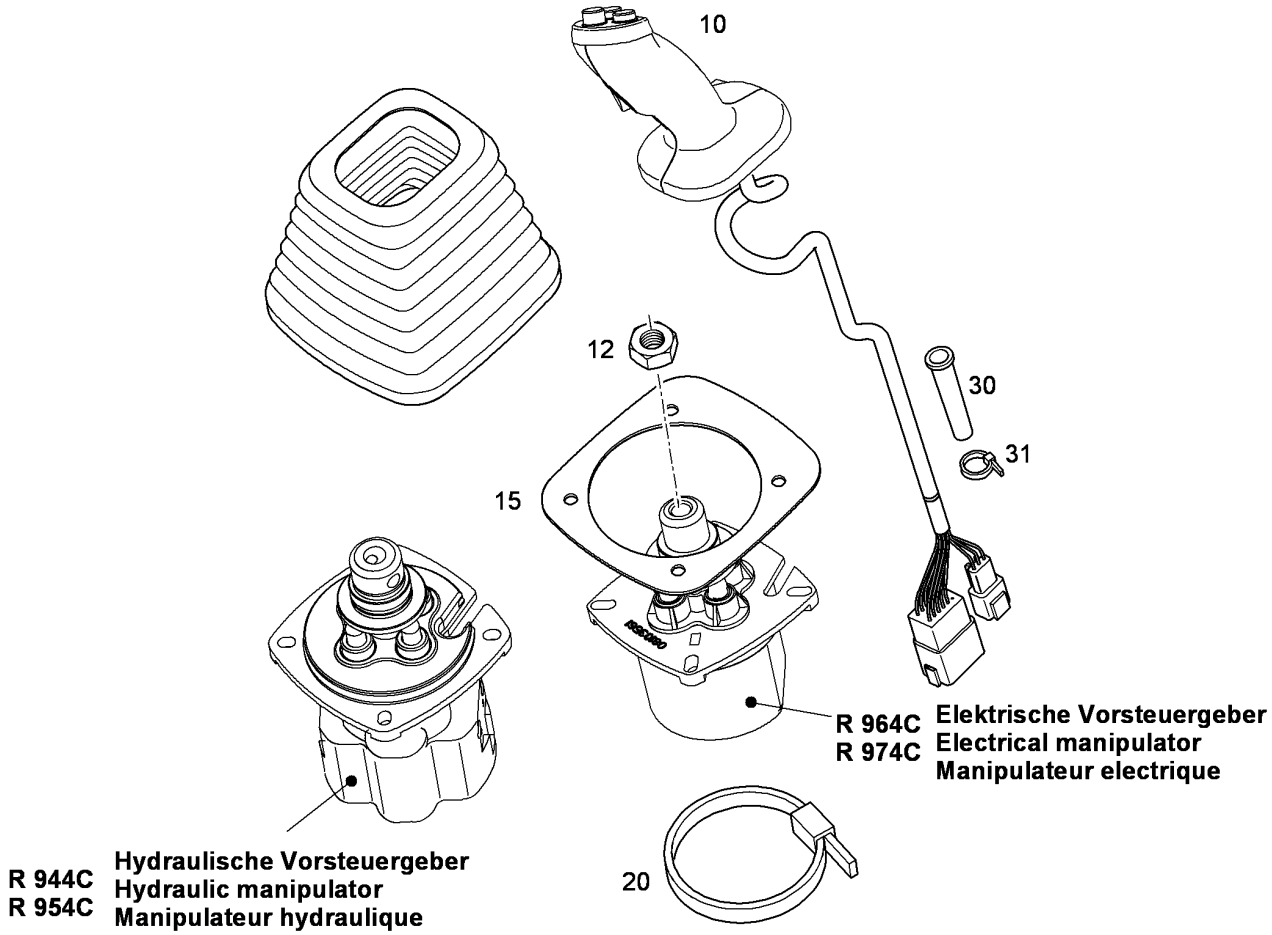


| Pos. | Item | Quantity | Description | Designação | Serie | K |
|---|---|---|---|---|---|---|
| 10 | 9968625 | 1 | LH-JOYSTICK LEFT<br>⇨ ❑ 247 | ALÇA DE TRANSMISSÃO-LH ESQ | | |
| 12 | 4900125 | 1 | HEX NUT M12 | PORCA SEXTAVADA | | |
| 15 | 10058949 | 1 | SHEET | PLACA | | |
| 20 | 7002480 | 1 | CABLE TIE | AMARRA PARA CABOS | | |
| 30 | 10010154 | 1 | PROTECTING SLEEVE 8/8/2,2 | FUNIL DE PROTEÇÃO | | |
| 31 | 7009088 | 1 | CABLE TIE | AMARRA PARA CABOS | | |

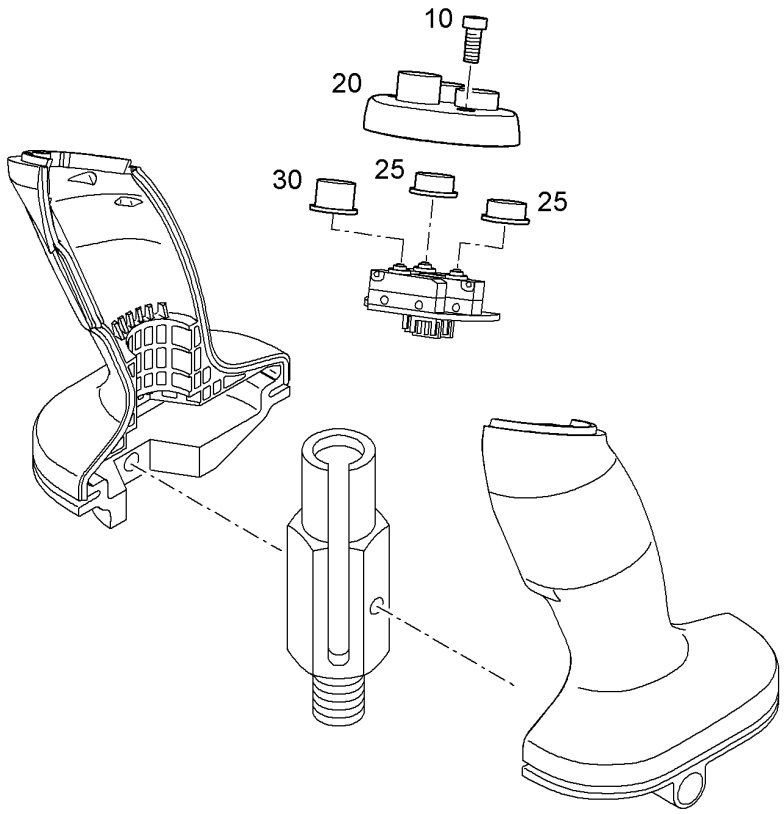


| Pos. | Item | Quantity | Description | Designação | Serie | K |
|---|---|---|---|---|---|---|
| 10 | 10015712 | 2 | TALLOW-DROP SCREW 2,5X12 10.9 P3E | PARAFUSO COM CABEÇA SALIE | | |
| 20 | 10040327 | 1 | CAP LH-SCHALTHEBEL | CAPA | | |
| 25 | 10040322 | 2 | BUTTON 1 | BOTAO | | |
| 30 | 10040324 | 1 | BUTTON 2 | BOTAO | | |

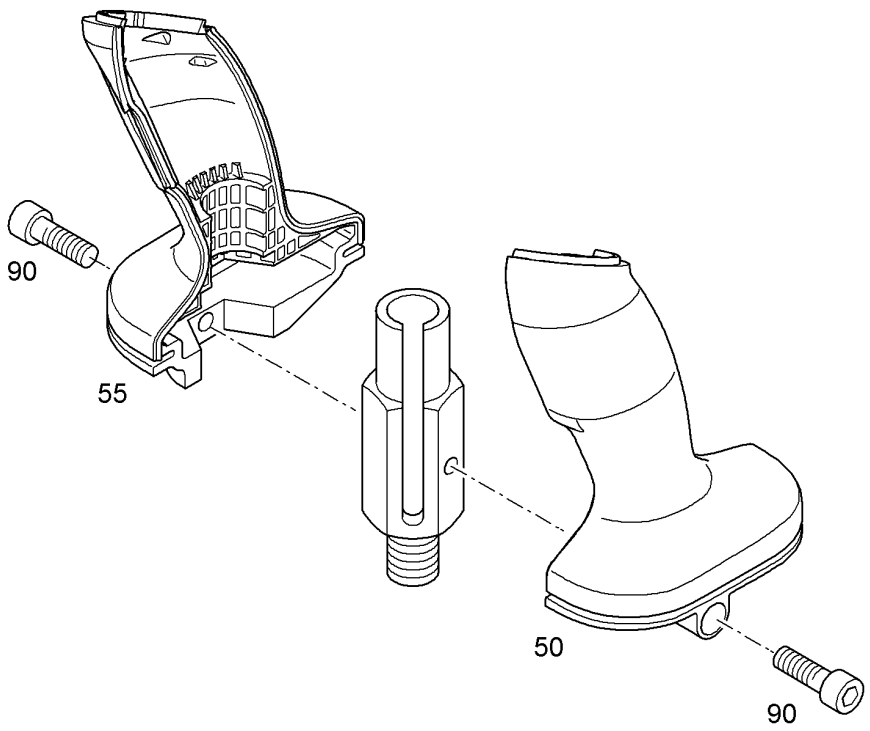


| Pos. | Item | Quantity | Description | Designação | Serie | K |
|---|---|---|---|---|---|---|
| 50 | 10014778 | 1 | GRIP SHELL | CONCHA DO PUNHO | | |
| 55 | 10014777 | 1 | GRIP SHELL | CONCHA DO PUNHO | | |
| 90 | 4042062 | 2 | CYLINDER SCREW ISO 4762 M5x16 8.8 A2C | PARAFUSO CILÍNDRICO | | |

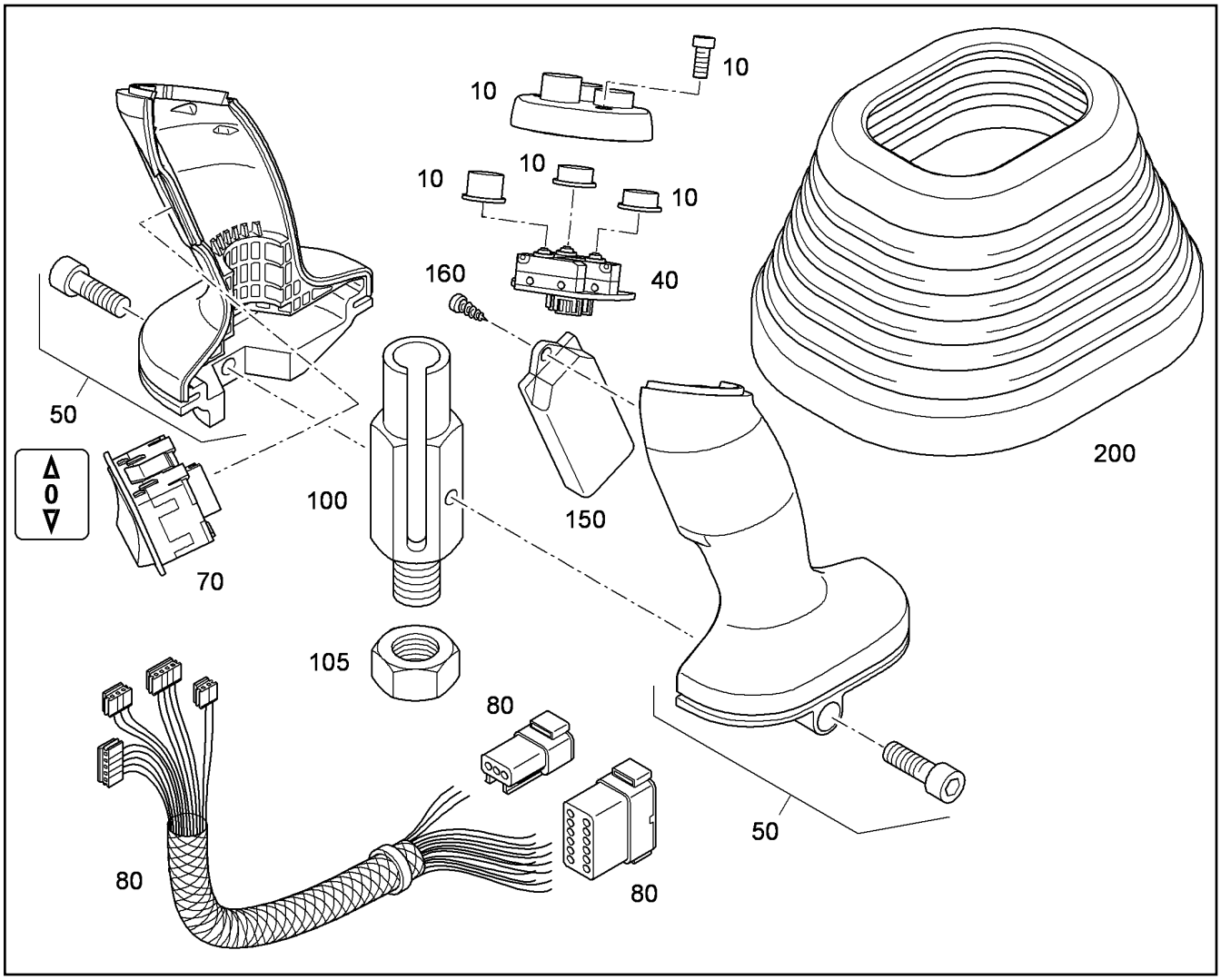


| Pos. | Item | Quantity | Description | Designação | Serie | K |
|---|---|---|---|---|---|---|
| 10 | | 1 | PUSH-BUTTON COVER LEFT<br>⇨ ❑ 245 | BOTOES DA MANETE ESQUERD | | |
| 40 | 9968578 | 1 | PUSH BUTTON LINKS | BOTÃO DE PRESSÃO | | |
| 50 | 10469933 | 1 | HANDLES LEFT<br>⇨ ❑ 246 | CARCAÇA DA MANETE ESQUE | | |
| 70 | 9968546 | 1 | SWITCH T-0-T | INTERRUPTOR | | 2 |
| 80 | 9968591 | 1 | WIRE HARNESS HANDLE | CHICOTE ELETRICO DA MANET | | |
| 100 | 10015495 | 1 | CONNECTING SLEEVE 3 | LUVA DE CONEXÃO | | 1 |
| 105 | 4001927 | 1 | HEX NUT M14X1,5 | PORCA SEXTAVADA | | |
| 150 | 10017824 | 1 | SENSORIC | SENSOR DE APROXIMACAO | | |
| 160 | 10017926 | 2 | SCREW 22X6 | PARAFUSO | | |
| 200 | 10014790 | 1 | RUBBER BELLOWS | BORRACHA SANFONADA | | |

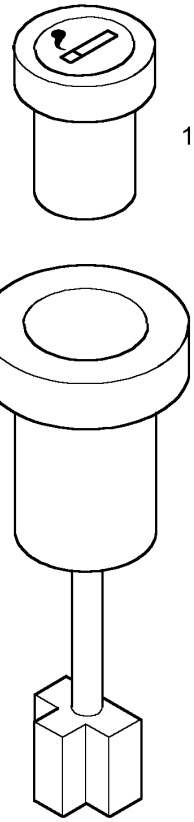


| Pos. | Item | Quantity | Description | Designação | Serie | K |
|---|---|---|---|---|---|---|
| 1 | 7025644 | 1 | PLUG | PLUGUE | | |

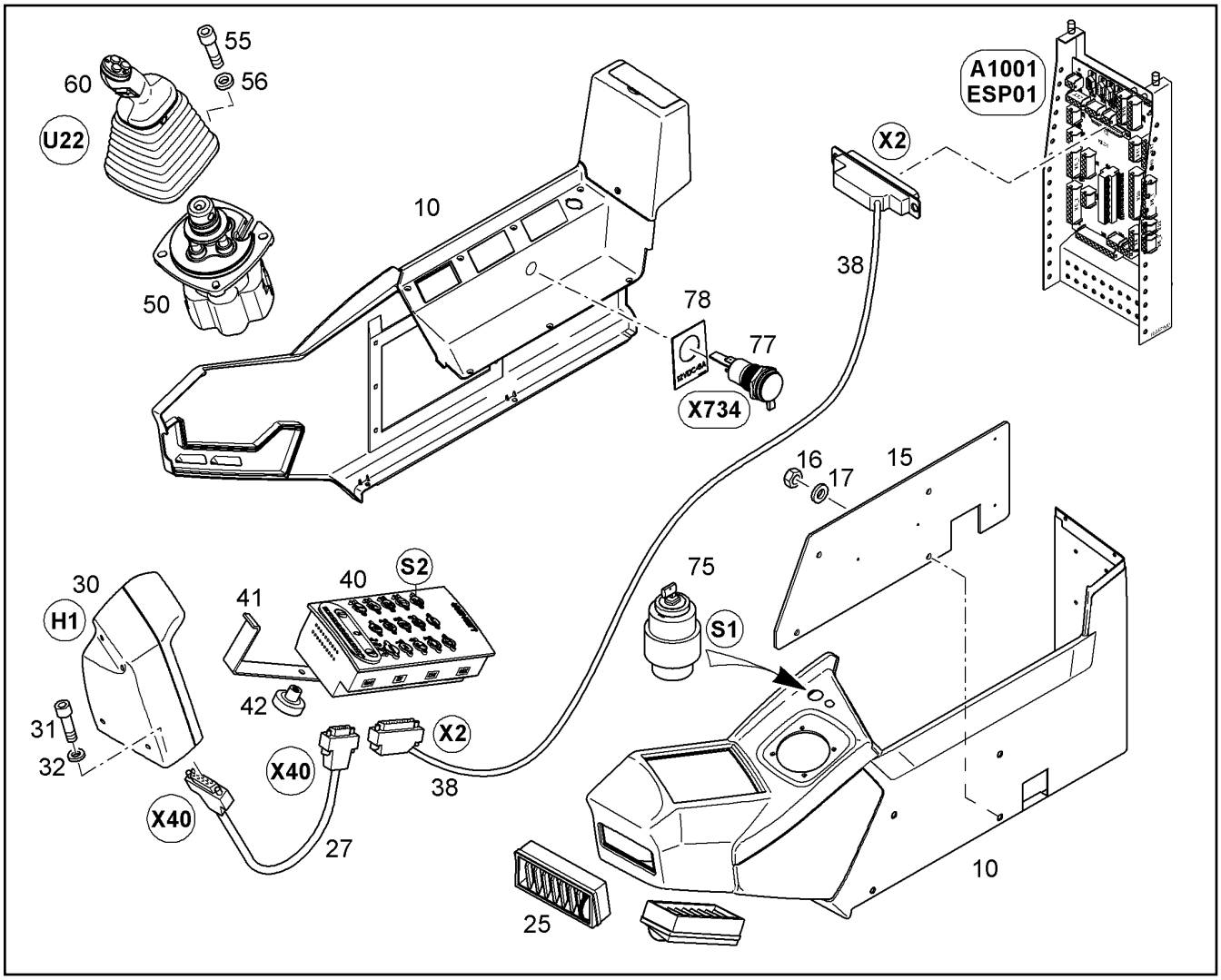


| Pos. | Item | Quantity | Description | Designação | Serie | K |
|---|---|---|---|---|---|---|
| 10 | 5618923 | 1 | CONTROL CONSOLE RIGHT<br>⇨ ❑ 255 | CONSOLE DE COMANDO DIREIT | | |
| 15 | 9392646 | 1 | SHEET | PLACA | | |
| 16 | 4000383 | 4 | HEX NUT M10 | PORCA SEXTAVADA | | |
| 17 | 10289795 | 4 | WASHER ISO 7089 10 300HV | ARRUELA | | |
| 25 | 5611480 | 2 | AIR EJECTION NOZZLE | DIFUSOR DE AR | | |
| 27 | 9768248 | 1 | CONNECTION CABLE | CABO DE LIGACAO BBT/DISP | | |
| 30 | 10840803 | 1 | DISPLAY CPL. V4.6.9<br>⇨ ❑ 254 | DISPLAY ESCAVADEIRA COMPL | | |
| 31 | 4901161 | 1 | CYLINDER SCREW ISO 4762 M6X20 10.9 A2 | PARAFUSO CILÍNDRICO | | |
| 32 | 10289802 | 1 | WASHER ISO 7089 6 300HV | ARRUELA | | |
| 38 | 9768247 | 1 | CABLE LOOM ESP01-BBT | CHICOTE ELÉTRICO | | |
| 40 | 10840801 | 1 | KEYBOARD CPL. V4.6.9<br>⇨ ❑ 256 | TECLADO ESCAVADEIRA COMPL | | |
| 41 | 9388848 | 1 | CLAMPING BRACKET | GRAMPO DE FIXAÇÃO | | |
| 42 | 7370096 | 1 | TWIST HANDLE | PARAFUSO BORBOLETA | | |
| 50 | 10118561 | 1 | PILOT CONTROL UNIT VG6-8 4-4 Z11 000 [12 44 36156 ]<br>⇨ ❑ 688 | MODULO DE COMANDO | | |
| 55 | 4902267 | 4 | CYLINDER SCREW ISO 4762 M6X25 10.9 A2 | PARAFUSO CILÍNDRICO | | |
| 56 | 4229911 | 4 | LOCK WASHER 6,4/10X1,2 VS 6 | ARRUELA DE SEGURANÇA | | |
| 60 | 10058794 | 1 | MANIPULATOR RIGHT<br>⇨ ❑ 259 | SENSOR DE PRE-COMANDO DI | | |
| 75 | 10228151 | 1 | HEATER STARTER SWITCH<br>⇨ ❑ 291 | CHAVE DE IGNICAO | | |
| 77 | 6001963 | 1 | SOCKET | PLUGUE ELÉTRICO | | |

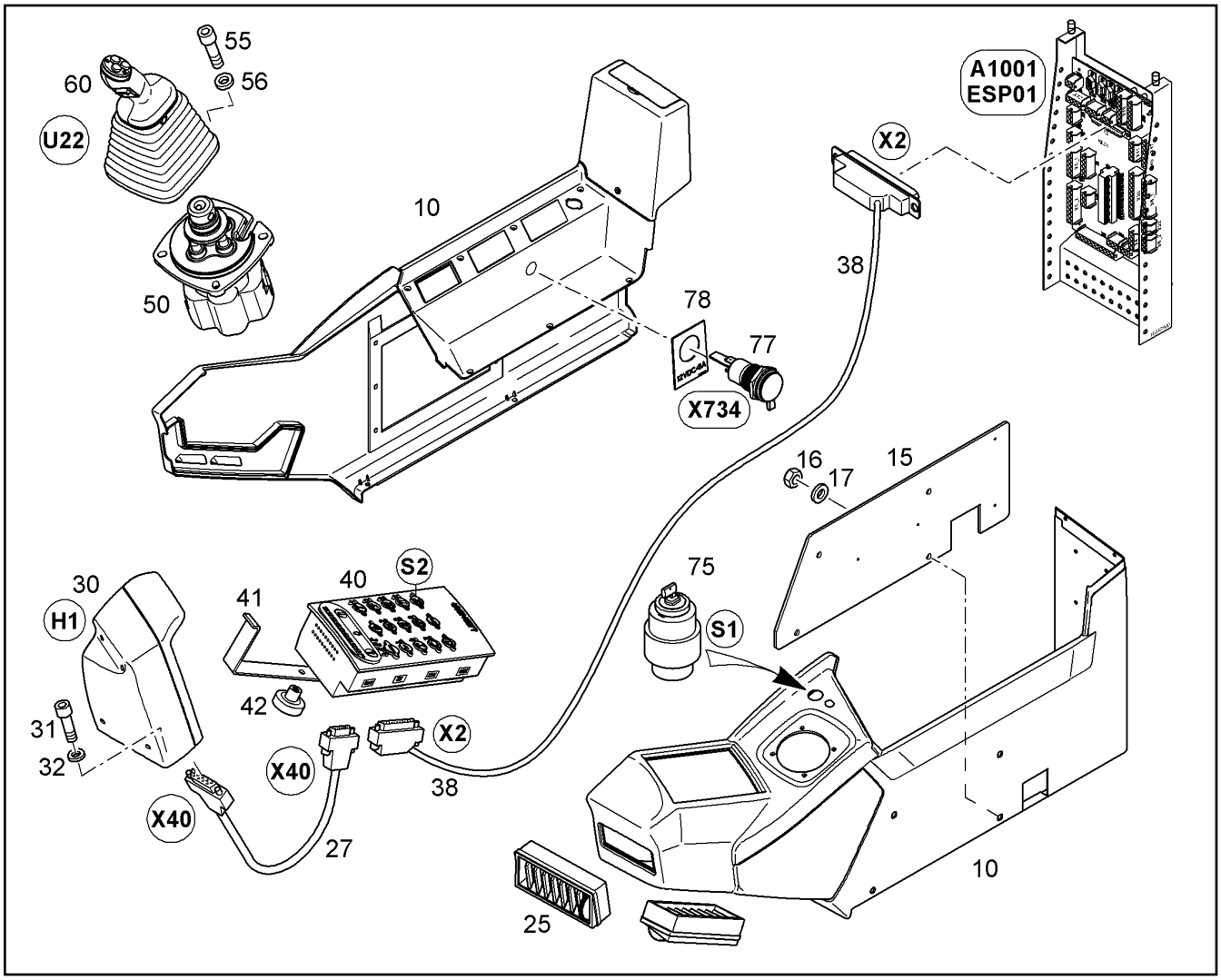


| Pos. | Item | Quantity | Description | Designação | Serie | K |
|---|---|---|---|---|---|---|
| 78 | 10086265 | 1 | LABEL | ETIQUETA | | |

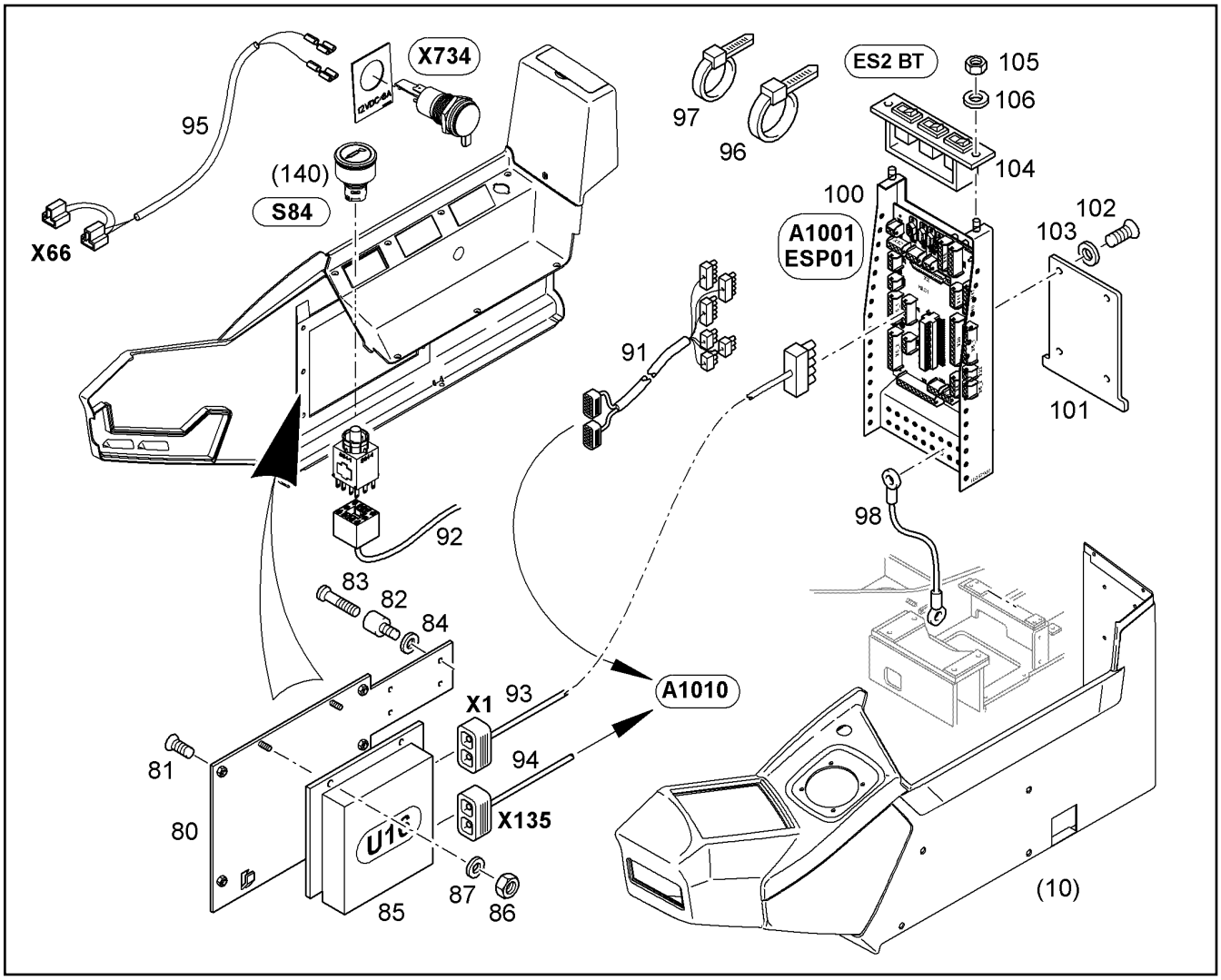


| Pos. | Item | Quantity | Description | Designação | Serie | K |
|---|---|---|---|---|---|---|
| 80 | 9690616 | 1 | CONSOLE | CONSOLE | | |
| 81 | 4002613 | 6 | COUNTERSUNK SCREW ISO 7046 M6X20 4. | PARAFUSO ESCAREADO | | |
| 82 | 7014560 | 4 | RUBBER BUMPER | BATENTE DE BORRACHA | | |
| 83 | 4901886 | 4 | PAN-HEAD SCREW ISO 7045 M4X6 4.8 H A2 | PARAFUSO | | |
| 84 | 4001645 | 4 | WASHER ISO 7089 4 200HV | ARRUELA | | |
| 85 | 10840802 | 1 | PUMPS CONTROL CPL. V4.6.9<br>⇨ ❑ 257 | MODULO COMANDO ESCAVADEI | | |
| 86 | 4000379 | 2 | HEX NUT M6 | PORCA SEXTAVADA | | |
| 87 | 4229911 | 2 | LOCK WASHER 6,4/10X1,2 VS 6 | ARRUELA DE SEGURANÇA | | |
| 91 | 10822179 | 1 | CABLE LOOM A1010-A1001 | CHICOTE ELÉTRICO | | |
| 92 | 10057843 | 1 | CABLE LOOM X182-2/S84-1 | CHICOTE ELÉTRICO | | |
| 93 | 10079010 | 1 | CABLE LOOM X1/U16-X1/A1001 | CHICOTE ELÉTRICO | | |
| 94 | 9949686 | 1 | CABLE LOOM A1010-U16 | CHICOTE ELÉTRICO | | |
| 95 | 10079846 | 1 | CABLE LOOM X66-X734 | CHICOTE ELÉTRICO | | |
| 96 | 7001877 | 10 | TIE WRAP | AMARRA PARA CABOS | | |
| 97 | 7362507 | 4 | CABLE CLIP | BRAÇADEIRA DE CABOS | | |
| 98 | 9689583 | 1 | EARTH CABLE | CABO MASSA | | |
| 100 | 10687417 | 1 | OUTPUT STAGE<br>[02155 ]<br>⇨ ❑ 265 | PLACA ELETRÔNICA | 35937- | |
| 101 | 9758230 | 1 | PLATE | PLACA | | |
| 102 | 4901870 | 4 | COUNTERSUNK SCREW ISO 7046 M6X20 4. | PARAFUSO ESCAREADO | | |
| 103 | 7362752 | 4 | ROSE | ARRUELA | | |
| 104 | 9013811 | 1 | EMERGENCY CONTROL CPL<br>⇨ ❑ 264 | ACION. DE EMERGÊNCIA COMPL | | |
| 105 | 4000376 | 2 | HEX NUT M4 | PORCA SEXTAVADA | | |

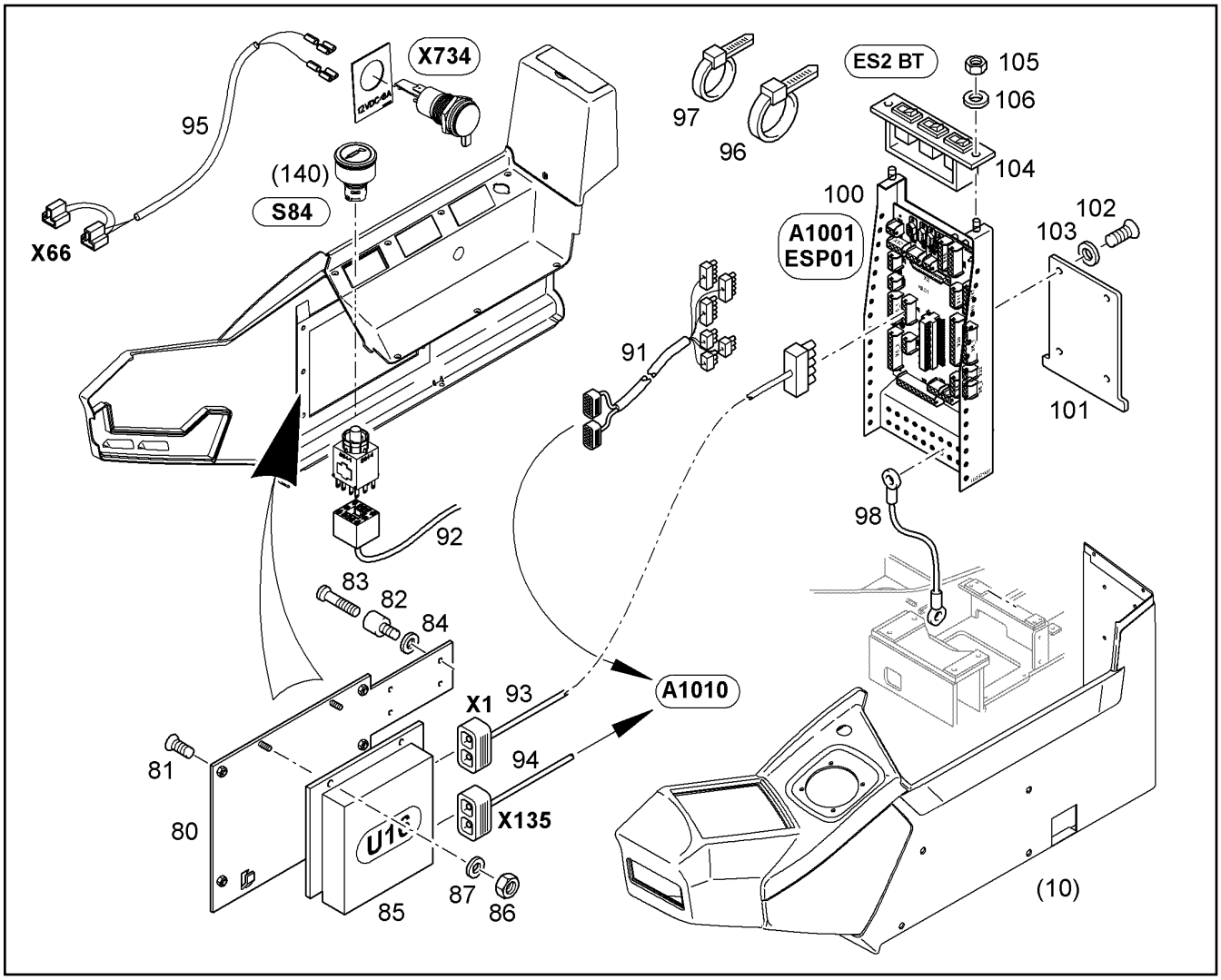


| Pos. | Item | Quantity | Description | Designação | Serie | K |
|---|---|---|---|---|---|---|
| 106 | 4001645 | 2 | WASHER ISO 7089 4 200HV | ARRUELA | | |

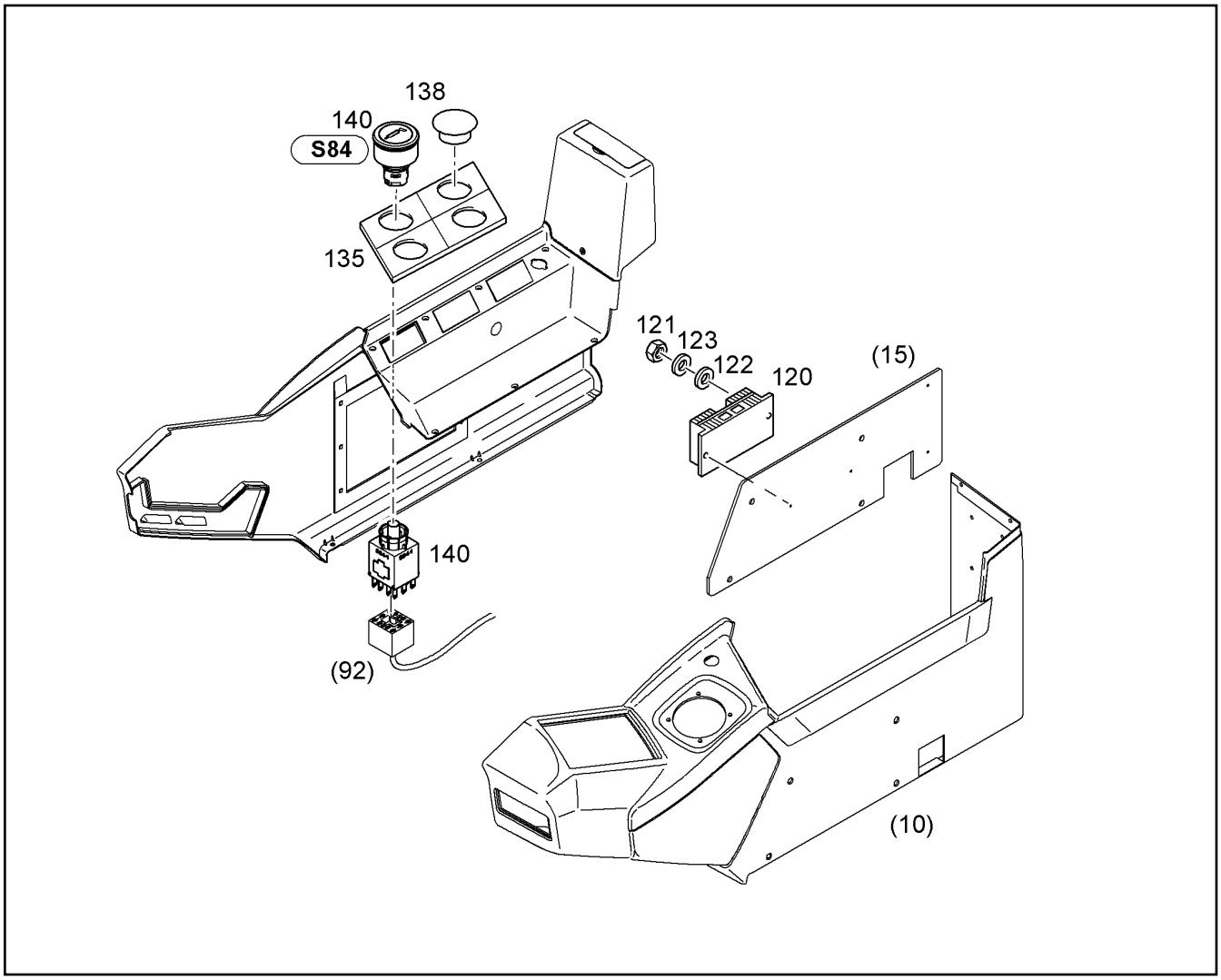


| Pos. | Item | Quantity | Description | Designação | Serie | K |
|---|---|---|---|---|---|---|
| 120 | 7026493 | 1 | VOLTAGE TRANSFORMER | TRANSFORMADOR | | |
| 121 | 4000376 | 2 | HEX NUT M4 | PORCA SEXTAVADA | | |
| 122 | 4001645 | 2 | WASHER ISO 7089 4 200HV | ARRUELA | | |
| 123 | 4239000 | 2 | LOCK WASHER | ARRUELA DE SEGURANÇA | | |
| 135 | 7371141 | 1 | SWITCH MODULE | MODULO DA CHAVE | | 2 |
| 138 | 7371142 | 3 | STOPPER PLUG | PARAFUSO DE FECHAMENTO | | |
| 140 | 10055071 | 1 | SWITCH INSTALLATION S84-1<br>⇨ ❑ 263 | INTERRUPTOR - INSTALAÇÃO | | |

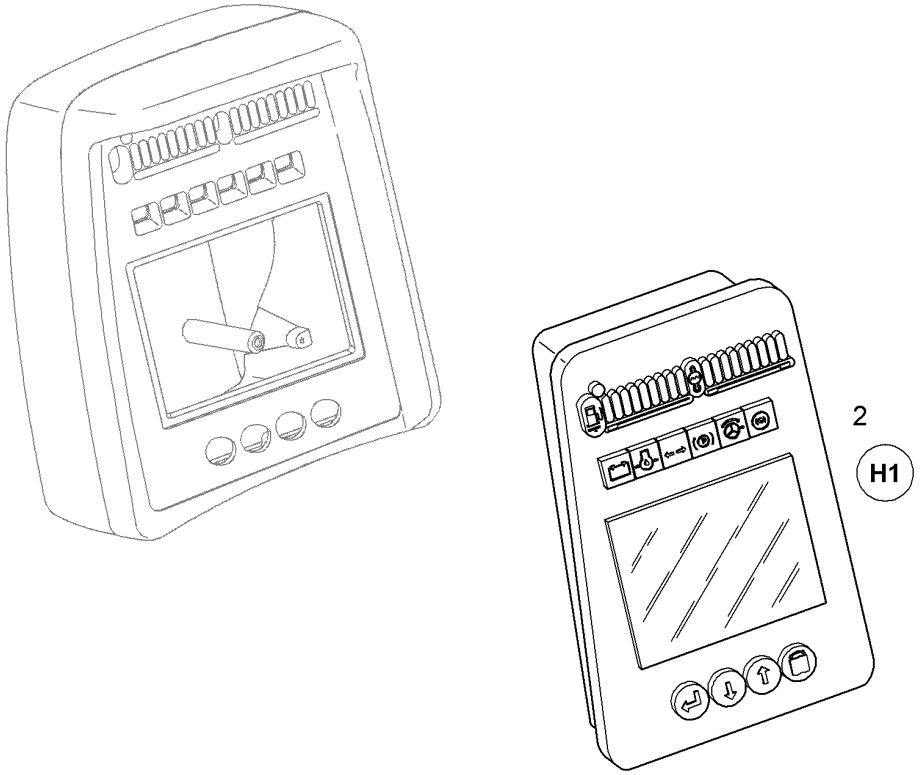


| Pos. | Item | Quantity | Description | Designação | Serie | K |
|---|---|---|---|---|---|---|
| 2 | 10684424 | 1 | EXCAVATOR DISPLAY<br>[050225 12/2012 ] | DISPLAY DE ESCAVADEIRA | | 6 |

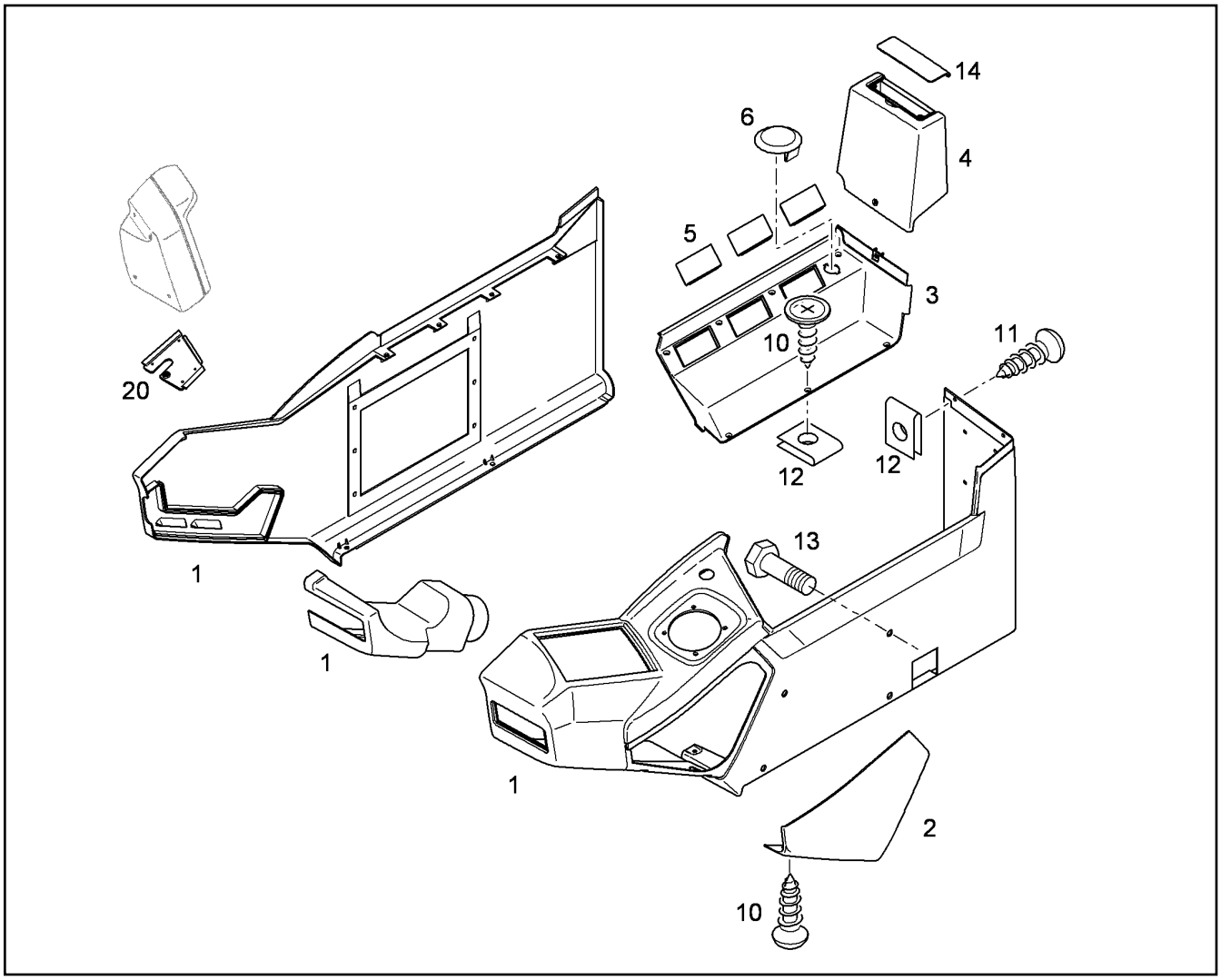


| Pos. | Item | Quantity | Description | Designação | Serie | K |
|---|---|---|---|---|---|---|
| 1 | 5618922 | 1 | BASIC BODY | CORPO BASICO | | |
| 2 | 7370894 | 1 | VISIT COVER | TAMPA DE MANUTENCAO | | |
| 3 | 7370891 | 1 | SHELL | CONCHA | | |
| 4 | 7370892 | 1 | COVER HOOD | TAMPA DE COBERTURA | | |
| 5 | 7370890 | 3 | BLANK LID | TAMPA CEGA | | |
| 6 | 10292443 | 1 | STOP PLUG | PLUGUE DE FECHAMENTO | | |
| 10 | 7371577 | 9 | COUNTERSUNK SCREW ISO 7047 M6X20 4 | PARAFUSO ESCAREADO | | |
| 11 | 7372158 | 2 | SCREW | PARAFUSO | | |
| 12 | 7370883 | 11 | SHEET METAL NUT M6 | PORCA DE CHAPA | | |
| 13 | 7370889 | 4 | HEX NUT M10 | PORCA SEXTAVADA | | |
| 14 | 7370893 | 1 | FOLDING LID | TAMPA BASCULANTE | | |
| 20 | 7373268 | 1 | DISPLAY SUPPORT | BASE DO DISPLAY | | |

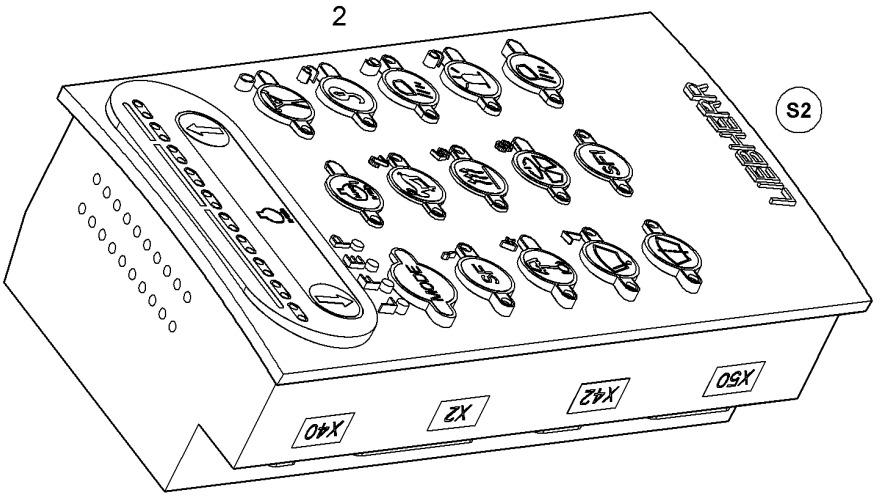


| Pos. | Item | Quantity | Description | Designação | Serie | K |
|---|---|---|---|---|---|---|
| 2 | 10684595 | 1 | KEYBOARD<br>[052527 11/2012 ] | TECLADO | | |

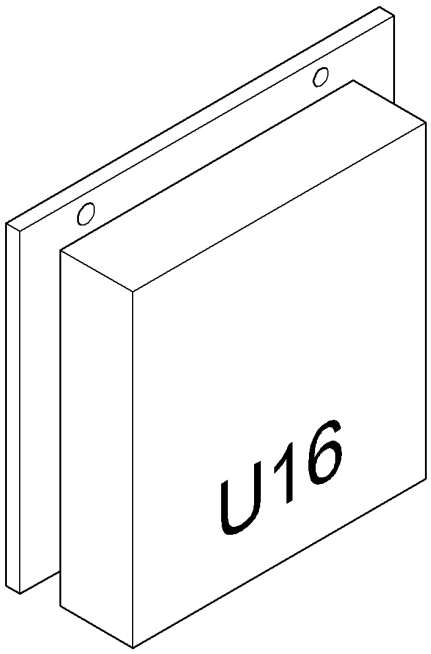


| Pos. | Item | Quantity | Description | Designação | Serie | K |
|---|---|---|---|---|---|---|
| 2 | 10684598 | 1 | EXCAVATOR CONTROL<br>[046482 11/2012 ] | MÓDULO ELETRÔNICO DE CO | | |

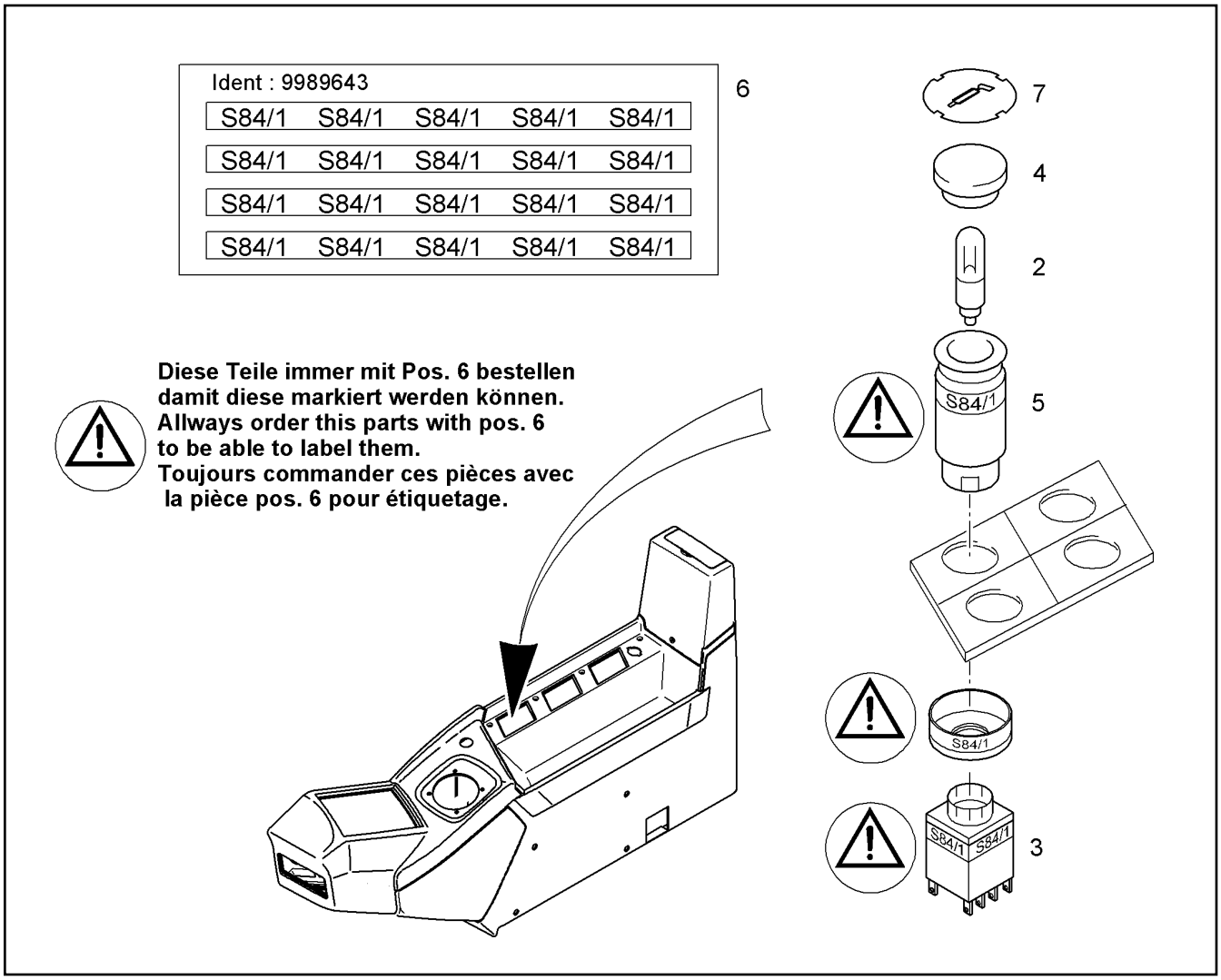


| Pos. | Item | Quantity | Description | Designação | Serie | K |
|---|---|---|---|---|---|---|
| 2 | 6001713 | 1 | LIGHT BULB 30V/1,2W/T3 | LÂMPADA INCANDESCENTE | | |
| 3 | 6204372 | 1 | LUMINOUS PUSH BUTTON CONTACTOR | BOTAO DE CONTATO LUMINOS | | |
| 4 | 6204368 | 1 | SPHERICAL CAP | CALOTA | | |
| 5 | 6204367 | 1 | ACTUATOR | ACIONADOR | | |
| 6 | 9989643 | 1 | LABEL | ETIQUETA | | |
| 7 | 9911745 | 1 | SYMBOL LUBRICATOR Ø19mm | SIMBOLO LUBRIFICACAO | | |

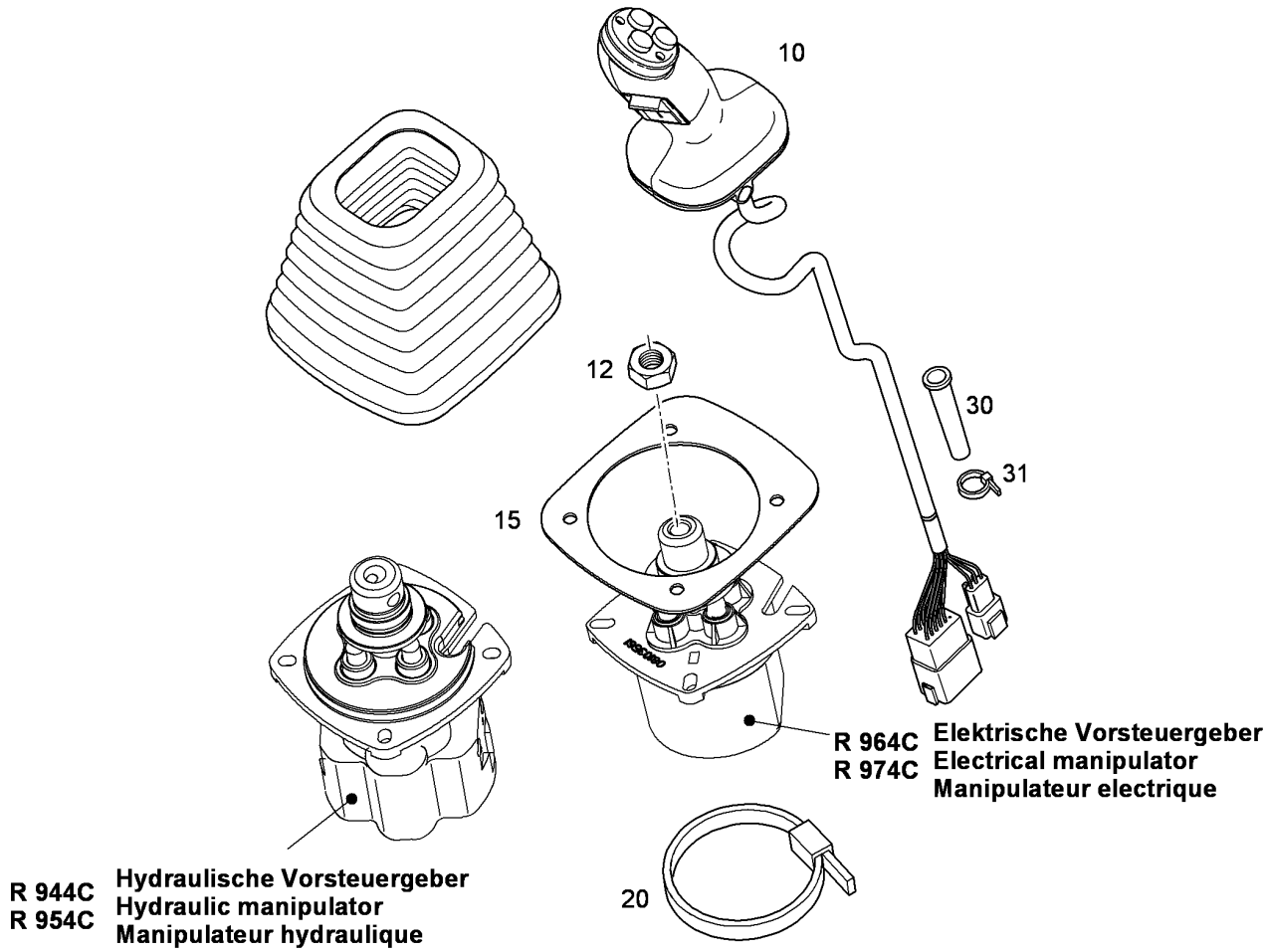


| Pos. | Item | Quantity | Description | Designação | Serie | K |
|---|---|---|---|---|---|---|
| 10 | 9968611 | 1 | LH-JOYSTICK RIGHT<br>⇨ ❑ 262 | MANETE DIREITA | | |
| 12 | 4900125 | 1 | HEX NUT M12 | PORCA SEXTAVADA | | |
| 15 | 10058949 | 1 | SHEET | PLACA | | |
| 20 | 7002480 | 1 | CABLE TIE | AMARRA PARA CABOS | | |
| 30 | 10010154 | 1 | PROTECTING SLEEVE 8/8/2,2 | FUNIL DE PROTEÇÃO | | |
| 31 | 7009088 | 1 | CABLE TIE | AMARRA PARA CABOS | | |

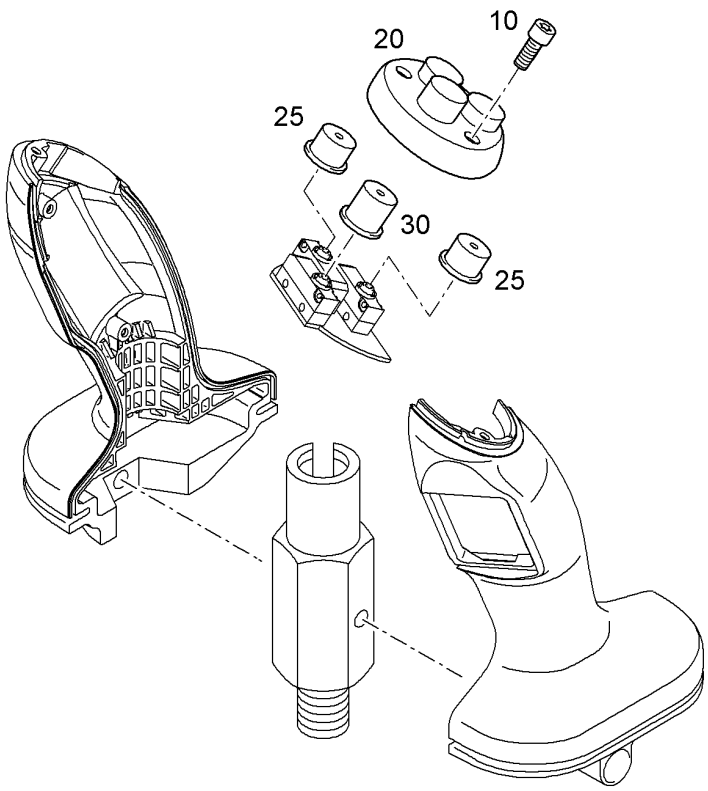


| Pos. | Item | Quantity | Description | Designação | Serie | K |
|---|---|---|---|---|---|---|
| 10 | | 2 | TALLOW-DROP SCREW 2,5X12 10.9 P3E | PARAFUSO COM CABEÇA SALIE | | |
| 20 | | 1 | CAP LH-SCHALTHEBEL | CAPA | | |
| 25 | | 2 | BUTTON 1 | BOTAO | | |
| 30 | | 1 | BUTTON 2 | BOTAO | | |

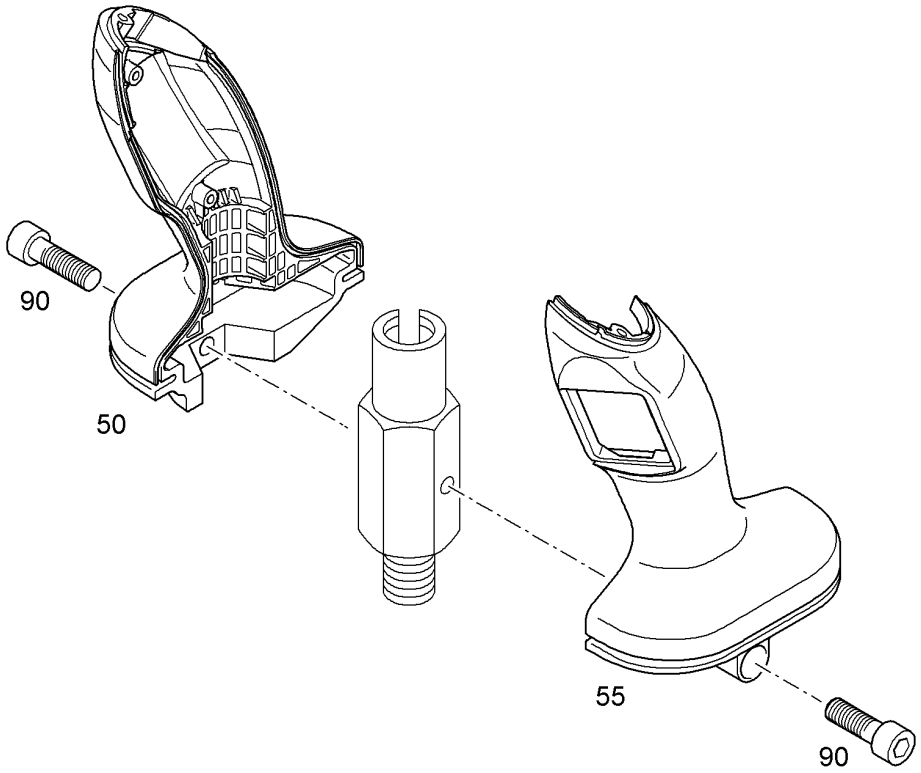


| Pos. | Item | Quantity | Description | Designação | Serie | K |
|---|---|---|---|---|---|---|
| 50 | | 1 | GRIP SHELL | CONCHA DO PUNHO | | |
| 55 | | 1 | GRIP SHELL | CONCHA DO PUNHO | | |
| 90 | | 2 | CYLINDER SCREW ISO 4762 M5x16 8.8 A2C | PARAFUSO CILÍNDRICO | | |

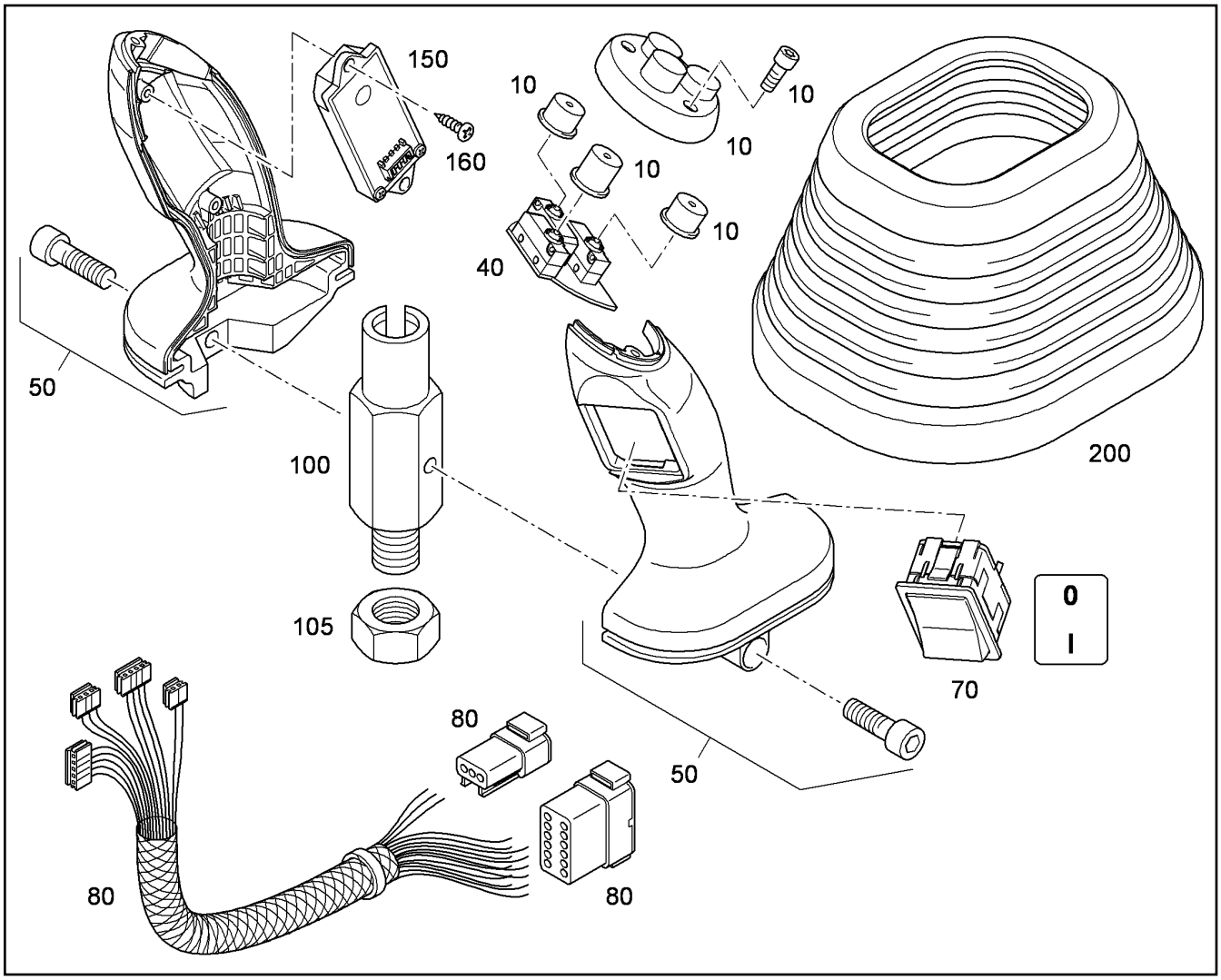


| Pos. | Item | Quantity | Description | Designação | Serie | K |
|---|---|---|---|---|---|---|
| 10 | | 1 | PUSH-BUTTON COVER RIGHT<br>⇨ ❑ 260 | BOTOES MANETE DIREITA | | |
| 40 | 9968580 | 1 | PUSH BUTTON RECHTS | BOTÃO DE PRESSÃO | | |
| 50 | 10469932 | 1 | HANDLES RIGHT<br>⇨ ❑ 261 | CARCAÇA DA MANETE DIREITA | | |
| 70 | 9968570 | 1 | SWITCH R-R | INTERRUPTOR | | 2 |
| 80 | 9968591 | 1 | WIRE HARNESS HANDLE | CHICOTE ELETRICO DA MANET | | |
| 100 | 10015495 | 1 | CONNECTING SLEEVE 3 | LUVA DE CONEXÃO | | 1 |
| 105 | 4001927 | 1 | HEX NUT M14X1,5 | PORCA SEXTAVADA | | |
| 150 | 10017824 | 1 | SENSORIC | SENSOR DE APROXIMACAO | | |
| 160 | 10017926 | 2 | SCREW 22X6 | PARAFUSO | | |
| 200 | 10014790 | 1 | RUBBER BELLOWS | BORRACHA SANFONADA | | |

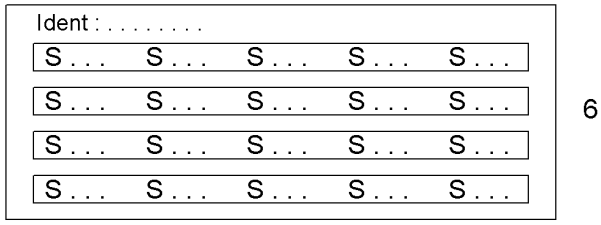


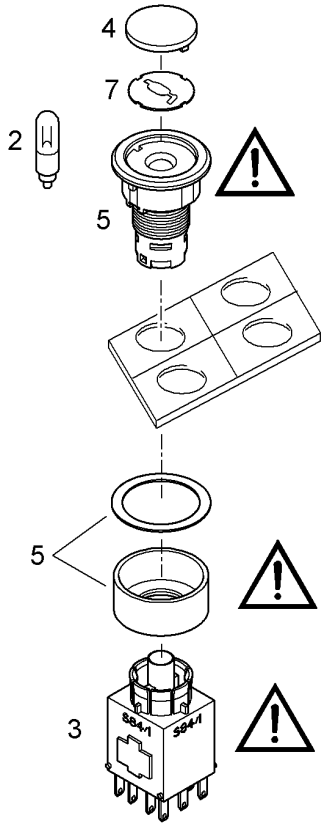


**Diese Teile immer mit Pos. 6 bestellen damit diese markiert werden können.**
**Allways order this parts with pos. 6 to be able to label them.**
**Toujours commander ces pièces avec la pièce pos. 6 pour étiquetage.**

| Pos. | Item | Quantity | Description | Designação | Serie | K |
|---|---|---|---|---|---|---|
| 2 | 6001713 | 1 | LIGHT BULB 30V/1,2W/T3 | LÂMPADA INCANDESCENTE | | |
| 3 | 6001593 | 1 | TOUCH CONTACT TRANSMITTER | CONTATOR ELÉTRICO | | |
| 4 | 6204368 | 1 | SPHERICAL CAP | CALOTA | | |
| 5 | 6204367 | 1 | ACTUATOR | ACIONADOR | | |
| 6 | 10076837 | 1 | LABEL | ETIQUETA | | |
| 7 | 9911745 | 1 | SYMBOL LUBRICATOR Ø19mm | SIMBOLO LUBRIFICACAO | | |

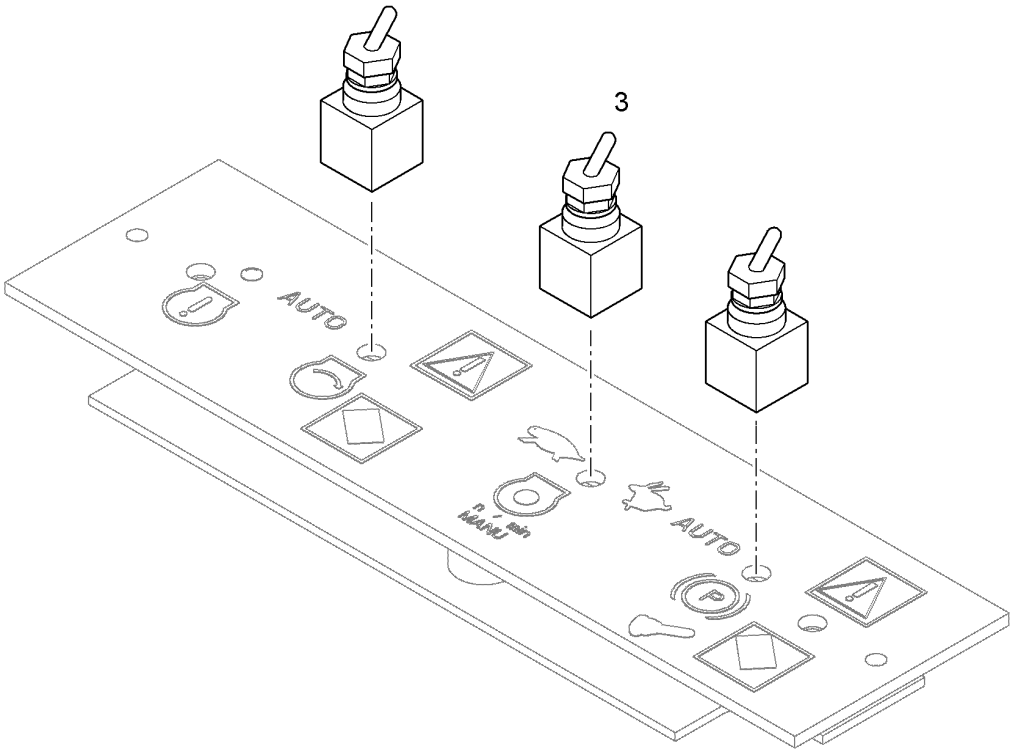


| Pos. | Item | Quantity | Description | Designação | Serie | K |
|---|---|---|---|---|---|---|
| 3 | 10036533 | 1 | CONTROL | COMANDO | | |

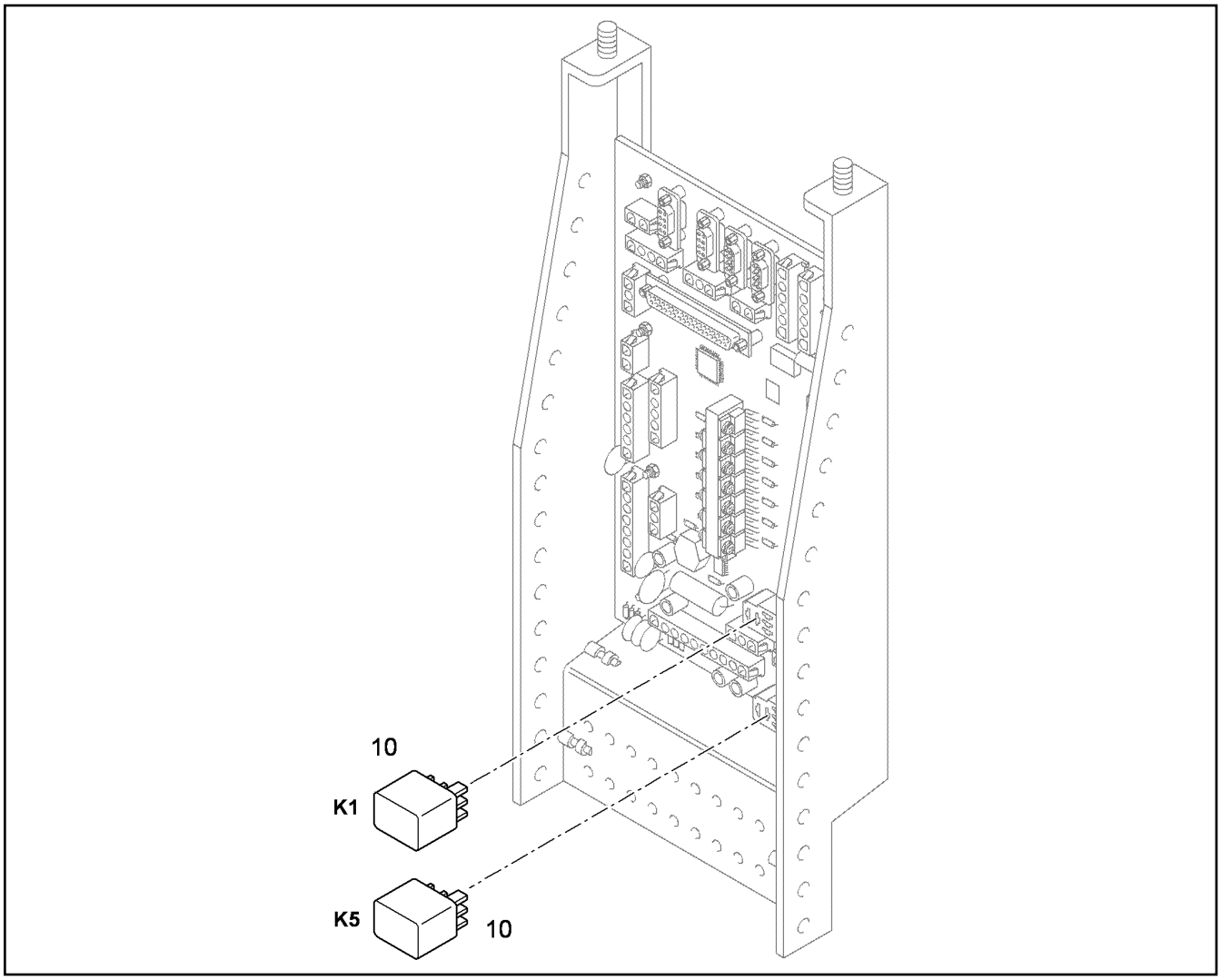


| Pos. | Item | Quantity | Description | Designação | Serie | K |
|---|---|---|---|---|---|---|
| 10 | 6001682 | 2 | RELAY | RELE | | |

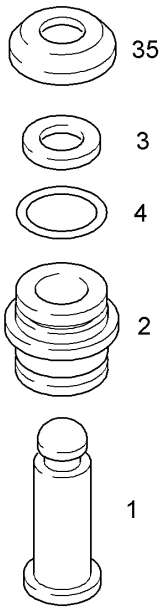


| Pos. | Item | Quantity | Description | Designação | Serie | K |
|---|---|---|---|---|---|---|
| 1 | | 1 | TAPPET | TUCHO | | |
| 2 | | 1 | BUSHING | BUCHA | | |
| 3 | | 1 | ROTOR GASKET 10X13,6X2,3 | VEDAÇÃO DO ROTOR | | |
| 4 | | 1 | O-RING DIN 3771 14,00X1,78 | ANEL-O | | |
| 35 | | 1 | PROTECTING CAP | CAPA DE PROTECAO | | |

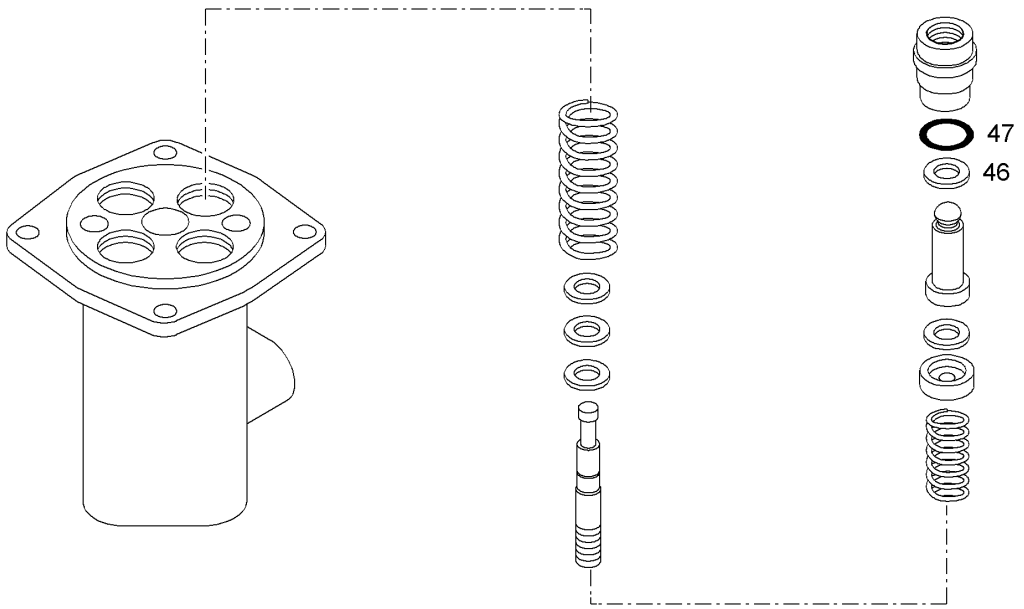


| Pos. | Item | Quantity | Description | Designação | Serie | K |
|---|---|---|---|---|---|---|
| 46 | | 4 | ROTOR GASKET 10X13,6X2,3 | VEDAÇÃO DO ROTOR | | |
| 47 | | 4 | O-RING DIN 3771 14,00X1,78 | ANEL-O | | |

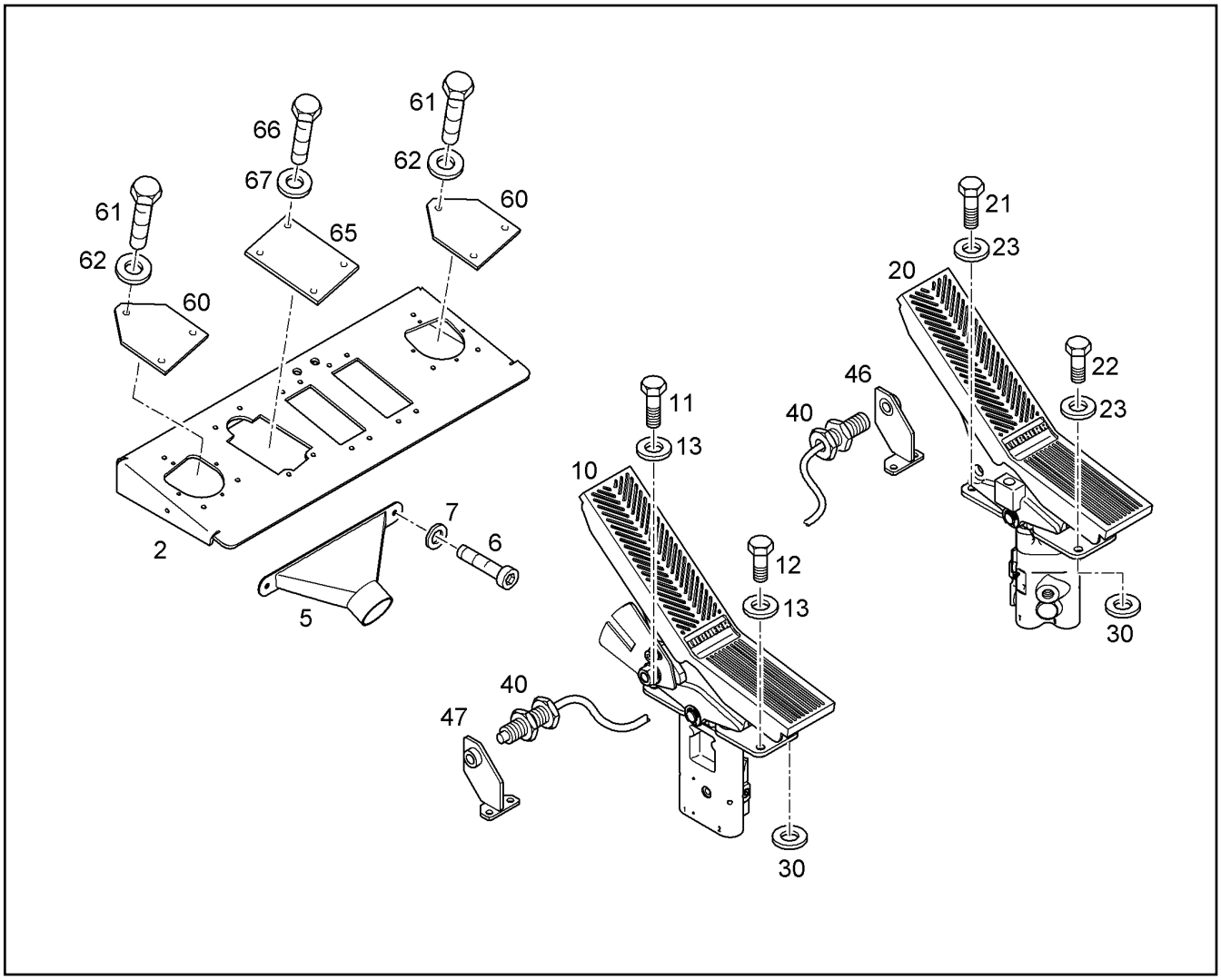


| Pos. | Item | Quantity | Description | Designação | Serie | K |
|---|---|---|---|---|---|---|
| 2 | 9946939 | 1 | STEP PLATE | PLACA DE ESTRIBO | | |
| 5 | 10016540 | 2 | AIR NOZZLE | INJETOR DE AR | | |
| 6 | 4902250 | 4 | CYLINDER SCREW ISO 4762 M6X10 10.9 A2 | PARAFUSO CILÍNDRICO | | |
| 7 | 4600198 | 4 | WASHER 6 200HV | ARRUELA | | |
| 10 | 10060174 | 1 | FOOT PILOT VALVE LEFT<br>⇨ ❑ 269 | PEDAL ESQUERDO COMPLETO | | |
| 11 | 4066042 | 2 | HEX BOLT ISO 4017 M8X25 10.9 A2C | PARAFUSO SEXTAVADO | | |
| 12 | 4000704 | 2 | HEX BOLT ISO 4017 M8X20 10.9 A2C | PARAFUSO SEXTAVADO | | |
| 13 | 423910801 | 4 | LOCK WASHER 8,4/13X1,7 VS 8 | ARRUELA DE SEGURANÇA | | |
| 20 | 10060175 | 1 | FOOT PILOT VALVE RIGHT<br>⇨ ❑ 270 | PEDAL DIREITO COMPLETO | | |
| 21 | 4066042 | 2 | HEX BOLT ISO 4017 M8X25 10.9 A2C | PARAFUSO SEXTAVADO | | |
| 22 | 4000704 | 2 | HEX BOLT ISO 4017 M8X20 10.9 A2C | PARAFUSO SEXTAVADO | | |
| 23 | 423910801 | 4 | LOCK WASHER 8,4/13X1,7 VS 8 | ARRUELA DE SEGURANÇA | | |
| 30 | 4635197 | 4 | SHIM RING DIN 9888X14X1 | ARRUELA DE AJUSTE | | |
| 40 | | 2 | PROXIMITY SWITCH W/ CONNECT.<br>⇨ ❑ 277 | SENSOR DE APROXIMAÇÃO | | |
| 46 | 9943365 | 1 | BRACKET | ESTRIBO | | |
| 47 | 9943105 | 1 | BRACKET | ESTRIBO | | |
| 60 | 9171589 | 2 | LID | TAMPA | | |
| 61 | 4901362 | 6 | HEX BOLT ISO 4017 M8X12 10.9 A2C | PARAFUSO SEXTAVADO | | |
| 62 | 423910801 | 6 | LOCK WASHER 8,4/13X1,7 VS 8 | ARRUELA DE SEGURANÇA | | |
| 65 | 9371217 | 1 | LID | TAMPA | | |
| 66 | 4901362 | 4 | HEX BOLT ISO 4017 M8X12 10.9 A2C | PARAFUSO SEXTAVADO | | |
| 67 | 423910801 | 4 | LOCK WASHER 8,4/13X1,7 VS 8 | ARRUELA DE SEGURANÇA | | |

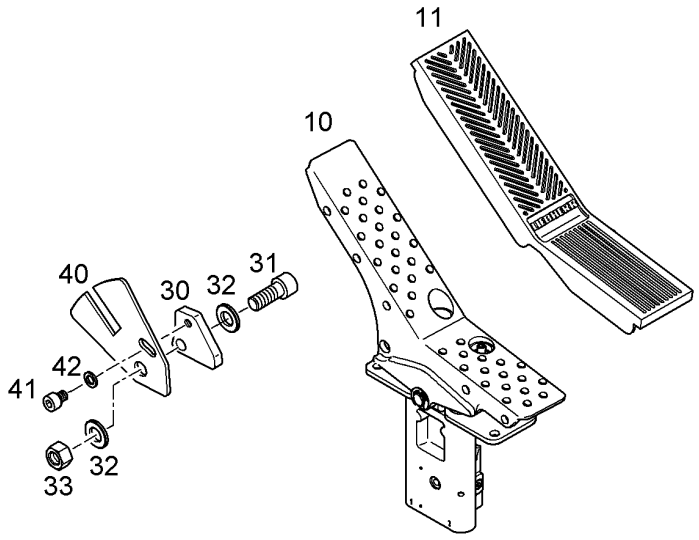


| Pos. | Item | Quantity | Description | Designação | Serie | K |
|---|---|---|---|---|---|---|
| 10 | 9079259 | 1 | PILOT CONTROL UNIT VG7 2-3 L07 000 B ⇨ ❑ 273 | MODULO DE COMANDO | | |
| 11 | 9480295 | 1 | FOOT BOARD COVERING | REVESTIMENTO PLACA DE ES | | |
| 30 | 9946134 | 1 | PLATE | PLACA | | |
| 31 | 4043164 | 1 | CYLINDER SCREW ISO 4762 M12X35 10.9 | PARAFUSO CILÍNDRICO | | |
| 32 | 10289804 | 2 | WASHER ISO 7089 12 300HV | ARRUELA | | |
| 33 | 4900546 | 1 | HEX NUT M12 | PORCA SEXTAVADA | | |
| 40 | 9943165 | 1 | PLATE | PLACA | | |
| 41 | 4902254 | 1 | CYLINDER SCREW ISO 4762 M8X12 10.9 A2 | PARAFUSO CILÍNDRICO | | |
| 42 | 10289803 | 1 | WASHER ISO 7089 8 300HV | ARRUELA | | |

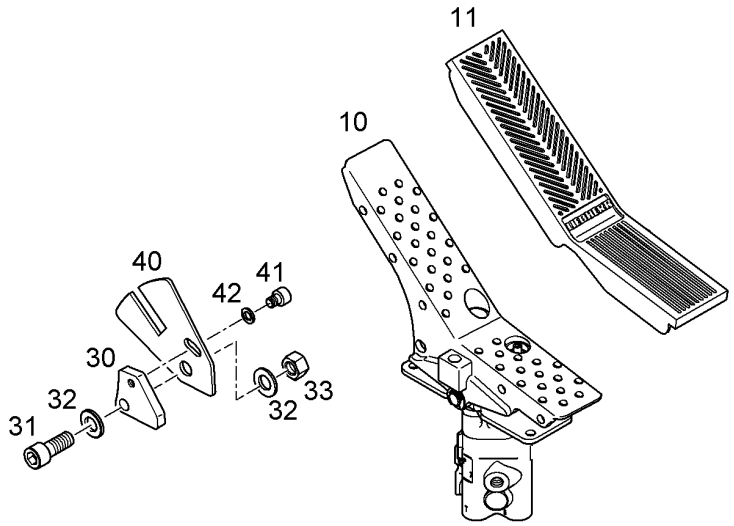


| Pos. | Item | Quantity | Description | Designação | Serie | K |
|---|---|---|---|---|---|---|
| 10 | 9079258 | 1 | PILOT CONTROL UNIT VG7 2-3 R07 000 B ⇨ ❑ 271 | MODULO DE COMANDO | | |
| 11 | 9480295 | 1 | FOOT BOARD COVERING | REVESTIMENTO PLACA DE ES | | |
| 30 | 9946134 | 1 | PLATE | PLACA | | |
| 31 | 4043164 | 1 | CYLINDER SCREW ISO 4762 M12X35 10.9 | PARAFUSO CILÍNDRICO | | |
| 32 | 10289804 | 2 | WASHER ISO 7089 12 300HV | ARRUELA | | |
| 33 | 4900546 | 1 | HEX NUT M12 | PORCA SEXTAVADA | | |
| 40 | 9943165 | 1 | PLATE | PLACA | | |
| 41 | 4902254 | 1 | CYLINDER SCREW ISO 4762 M8X12 10.9 A2 | PARAFUSO CILÍNDRICO | | |
| 42 | 10289803 | 1 | WASHER ISO 7089 8 300HV | ARRUELA | | |

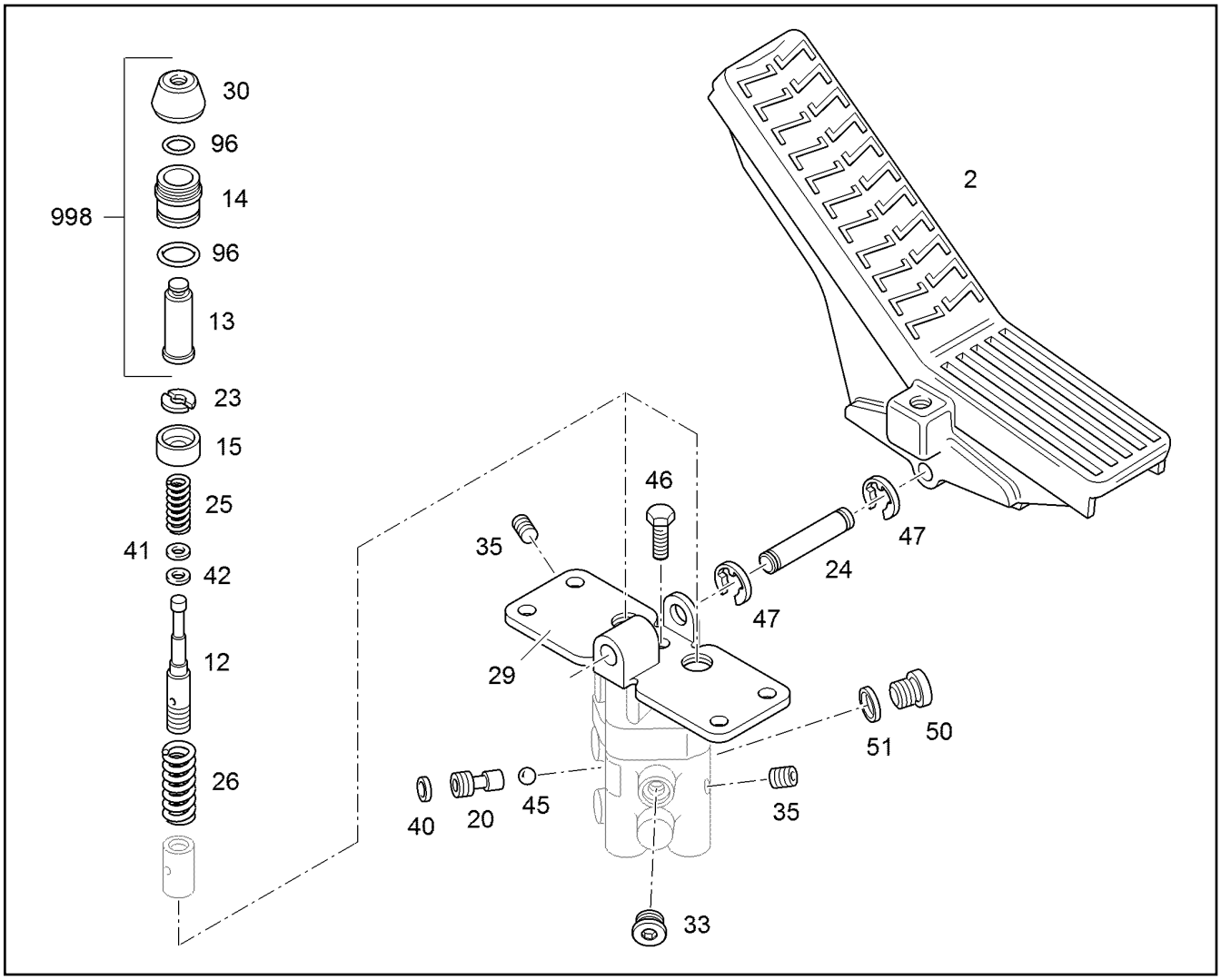


| Pos. | Item | Quantity | Description | Designação | Serie | K |
|---|---|---|---|---|---|---|
| 2 | | 1 | FOOT PEDAL LEFT ASSEMBLY<br>⇨ ❑ 275 | PLACA DE DEGRAU MONT. ESQ. | | |
| 12 | 9265392 | 2 | PISTON | PISTÃO | | |
| 13 | 9885351 | 2 | TAPPET | TUCHO | | |
| 14 | 9265394 | 2 | BUSHING | BUCHA | | |
| 15 | 9079261 | 2 | SPRING SUPPORT | PRATO DA MOLA | | |
| 20 | 9265400 | 1 | VALVE SEAT | ASSENTO DA VALVULA | | |
| 23 | 9265402 | 4 | WASHER 3,8X12,5X1 | ARRUELA | | |
| 24 | 9265410 | 1 | AXLE | EIXO | | |
| 25 | 9268054 | 2 | PRESSURE SPRING 1,30X6,10X30,30 | MOLA DE PRESSÃO | | |
| 26 | 7381807 | 2 | PRESSURE SPRING | MOLA DE PRESSÃO | | |
| 29 | 9265413 | 1 | LID PLATE | PLACA | | |
| 30 | 9265414 | 2 | RUBBER CAP | CAPA DE BORRACHA | | |
| 33 | 7380145 | 1 | SCREW PLUG VSTI G1/4A | PARAFUSO DE FECHAMENTO | | |
| 35 | 7380133 | 2 | SEALING PLUG MB 700 | TAMPAO DE VEDACAO | | |
| 40 | 7380136 | 1 | GLYD RING 10 | ANEL GLYD | | |
| 41 | 7380137 | 2 | SUPPORTING WASHER S 4,9X7,5X0,1 | ANEL DE APOIO | | |
| 42 | 7380138 | 2 | SUPPORTING WASHER S 4,9X7,5X0,3 | ANEL DE APOIO | | |
| 45 | 4980057 | 1 | BALL DIN 5401 d=5 - III | ESFERA | | |
| 46 | 4900605 | 3 | HEX BOLT ISO 4017 M6x12 8.8 A2C | PARAFUSO SEXTAVADO | | |
| 47 | 4980070 | 2 | LOCK WASHER DIN 679912 | ARRUELA DE SEGURANÇA | | |
| 50 | 4980071 | 1 | SCREW PLUG DIN 908 M8X1 St A2K | PARAFUSO DE FECHAMENTO | | |
| 51 | 4980059 | 1 | SEALING RING DIN 7603 A 8X13X1 | ANEL DE VEDAÇÃO | | |
| 96 | 9269690 | 1 | SEAL KIT<br>⇨ ❑ 267 | KIT DE VEDAÇÃO | | |

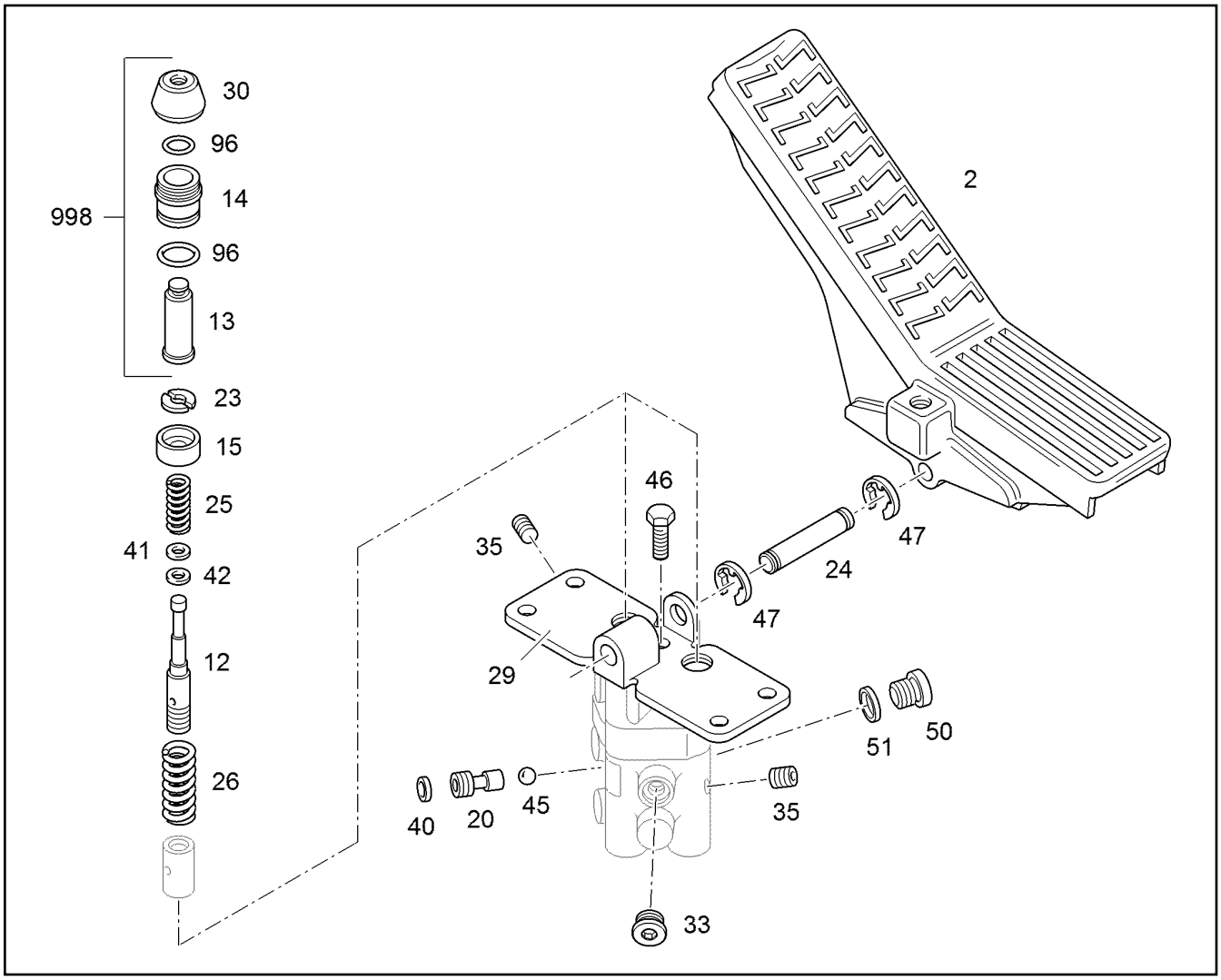


| Pos. | Item | Quantity | Description | Designação | Serie | K |
|---|---|---|---|---|---|---|
| 998 | 9265665 | 1 | REPAIR SET PLUNGER<br>⇨ ❑ 278 | CR TACO | | |

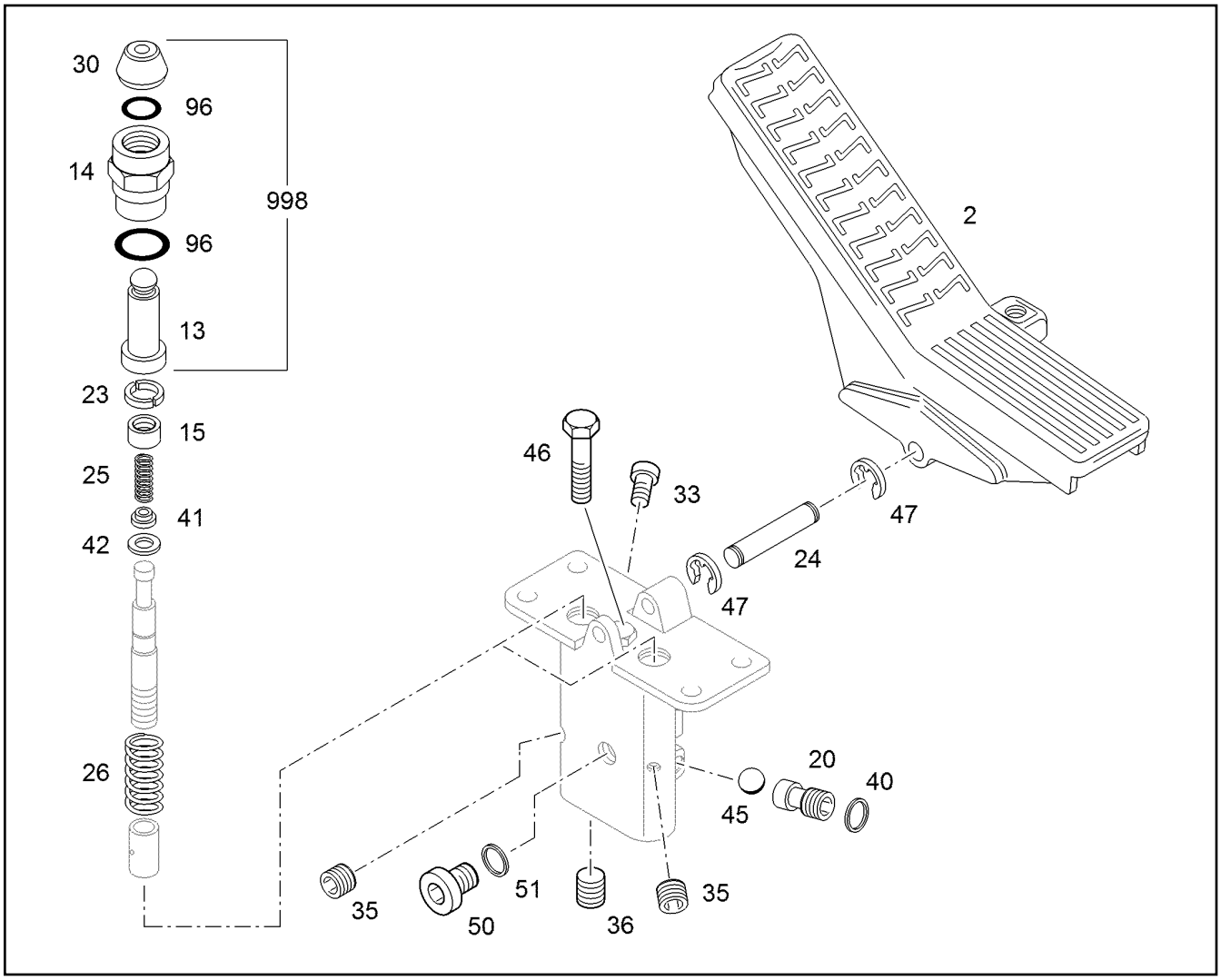


| Pos. | Item | Quantity | Description | Designação | Serie | K |
|---|---|---|---|---|---|---|
| 2 | | 1 | FOOT PEDAL RIGHT ASSEMBLY<br>⇨ ❑ 276 | PLACA DE DEGRAU MONT. DIR. | | |
| 12 | 9265392 | 2 | PISTON | PISTÃO | | |
| 13 | 9885351 | 2 | TAPPET | TUCHO | | |
| 14 | 9265394 | 2 | BUSHING | BUCHA | | |
| 15 | 9079261 | 2 | SPRING SUPPORT | PRATO DA MOLA | | |
| 20 | 9265400 | 1 | VALVE SEAT | ASSENTO DA VALVULA | | |
| 23 | 9265402 | 4 | WASHER 3,8X12,5X1 | ARRUELA | | |
| 24 | 9265410 | 1 | AXLE | EIXO | | |
| 25 | 9268054 | 2 | PRESSURE SPRING 1,30X6,10X30,30 | MOLA DE PRESSÃO | | |
| 26 | 7381807 | 2 | PRESSURE SPRING | MOLA DE PRESSÃO | | |
| 30 | 9265414 | 2 | RUBBER CAP | CAPA DE BORRACHA | | |
| 33 | 7380145 | 1 | SCREW PLUG VSTI G1/4A | PARAFUSO DE FECHAMENTO | | |
| 35 | 7380133 | 2 | SEALING PLUG MB 700 | TAMPAO DE VEDACAO | | |
| 36 | 7380051 | 1 | SEALING PLUG MB 850 | TAMPAO DE VEDACAO | | |
| 40 | 7380136 | 1 | GLYD RING 10 | ANEL GLYD | | |
| 41 | 7380137 | 2 | SUPPORTING WASHER S 4,9X7,5X0,1 | ANEL DE APOIO | | |
| 42 | 7380138 | 2 | SUPPORTING WASHER S 4,9X7,5X0,3 | ANEL DE APOIO | | |
| 45 | 4980057 | 1 | BALL DIN 5401 d=5 - III | ESFERA | | |
| 46 | 4900605 | 3 | HEX BOLT ISO 4017 M6x12 8.8 A2C | PARAFUSO SEXTAVADO | | |
| 47 | 4900130 | 2 | WASHER DIN 6799 12 A3C | ARRUELA | | |
| 50 | 4001958 | 1 | SCREW PLUG DIN 908 M8X1 ST A3C | PARAFUSO DE FECHAMENTO | | |
| 51 | 4980059 | 1 | SEALING RING DIN 7603 A 8X13X1 | ANEL DE VEDAÇÃO | | |
| 96 | 9269690 | 1 | SEAL KIT<br>⇨ ❑ 267 | KIT DE VEDAÇÃO | | |

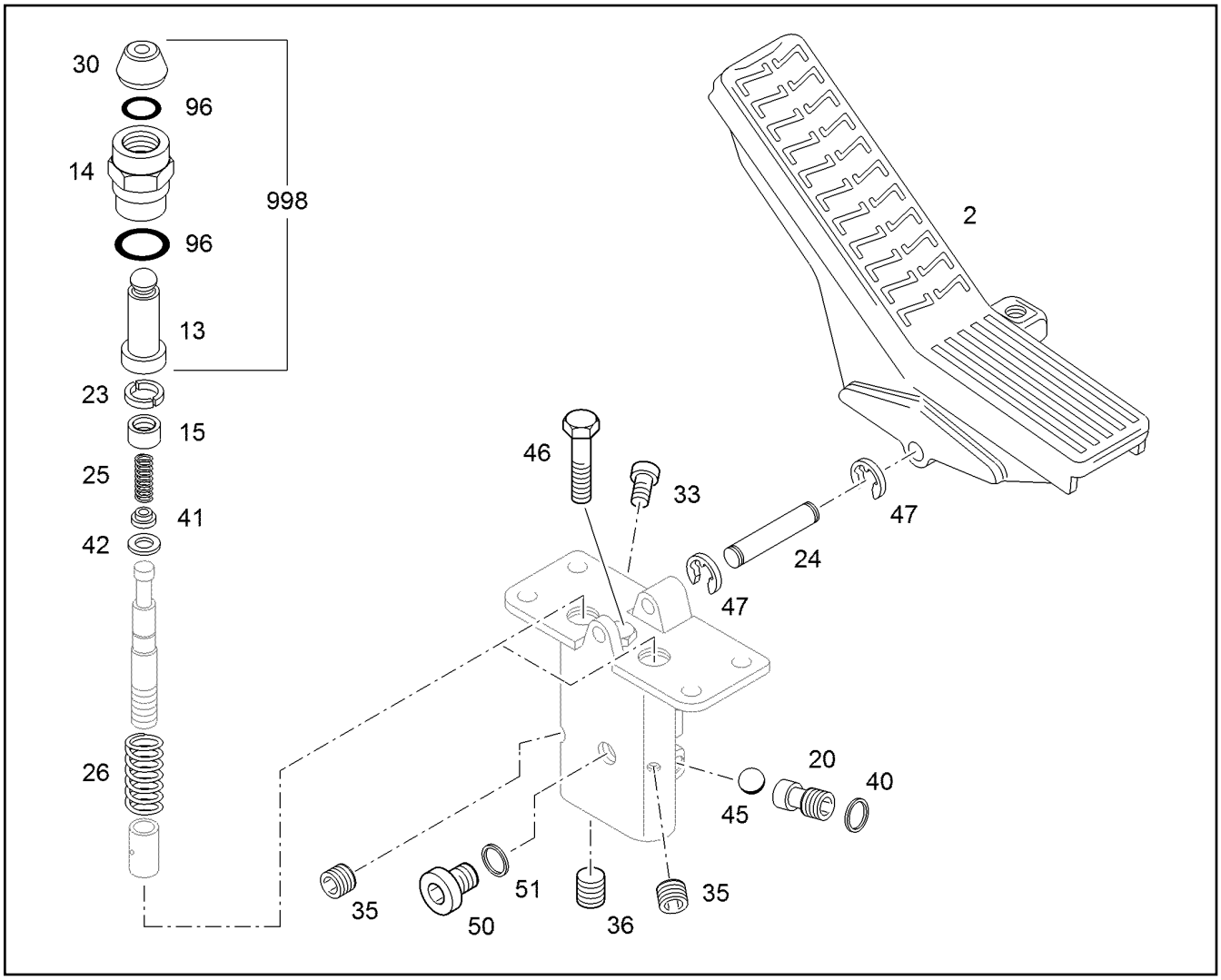


| Pos. | Item | Quantity | Description | Designação | Serie | K |
|---|---|---|---|---|---|---|
| 998 | 9265665 | 1 | REPAIR SET PLUNGER<br>⇨ ❑ 278 | CR TACO | | |

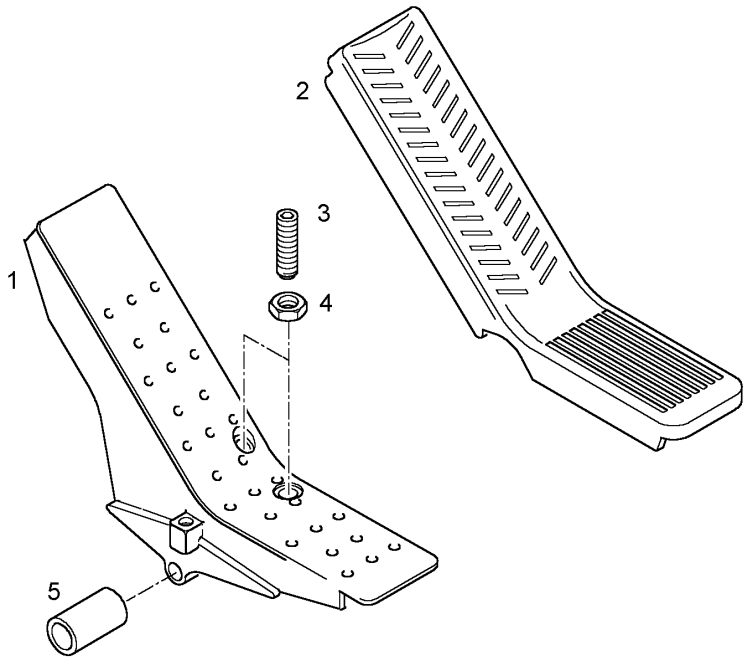


| Pos. | Item | Quantity | Description | Designação | Serie | K |
|---|---|---|---|---|---|---|
| 1 | 9476442 | 1 | FOOT BOARD LEFT | PLACA DE ESTRIBO ESQUERDA | | |
| 2 | 9480295 | 1 | FOOT BOARD COVERING | REVESTIMENTO PLACA DE ES | | |
| 3 | 4981197 | 2 | GRUB SCREW DIN 915 M8X50 45H A2B | PINO ROSCADO | | |
| 4 | 4901096 | 2 | HEX NUT M8 | PORCA SEXTAVADA | | |
| 5 | 7362583 | 2 | BUSHING | BUCHA | | 1 |

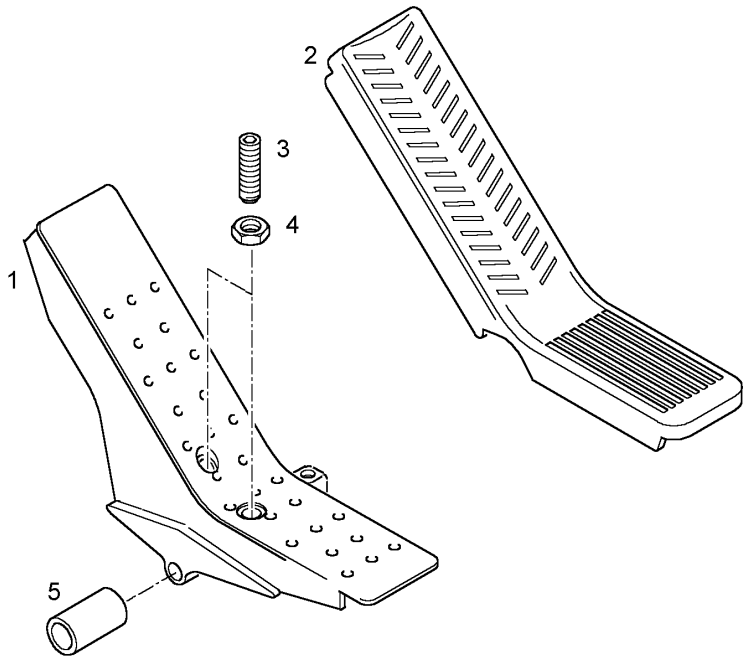


| Pos. | Item | Quantity | Description | Designação | Serie | K |
|---|---|---|---|---|---|---|
| 1 | 9476440 | 1 | FOOT BOARD RIGHT | PLACA DE ESTRIBO DIREITA | | |
| 2 | 9480295 | 1 | FOOT BOARD COVERING | REVESTIMENTO PLACA DE ES | | |
| 3 | 4981197 | 2 | GRUB SCREW DIN 915 M8X50 45H A2B | PINO ROSCADO | | |
| 4 | 4901096 | 2 | HEX NUT M8 | PORCA SEXTAVADA | | |
| 5 | 7362583 | 2 | BUSHING | BUCHA | | 1 |

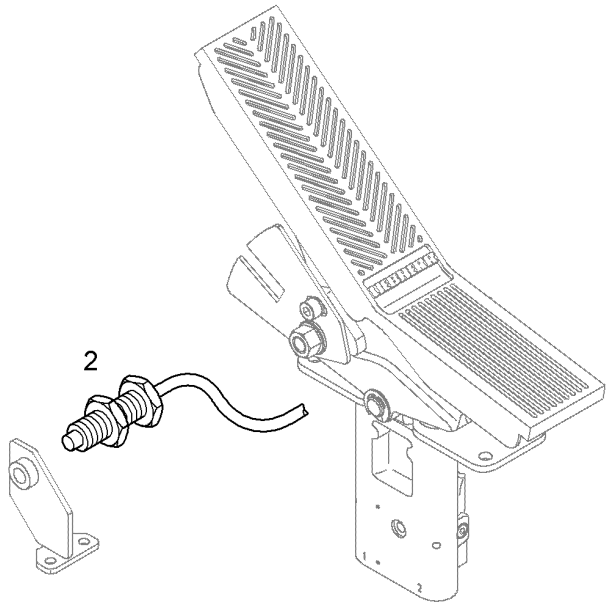


| Pos. | Item | Quantity | Description | Designação | Serie | K |
|---|---|---|---|---|---|---|
| 2 | 10024864 | 1 | PROXIMITY SWITCH | SENSOR DE APROXIMAÇÃO | | |

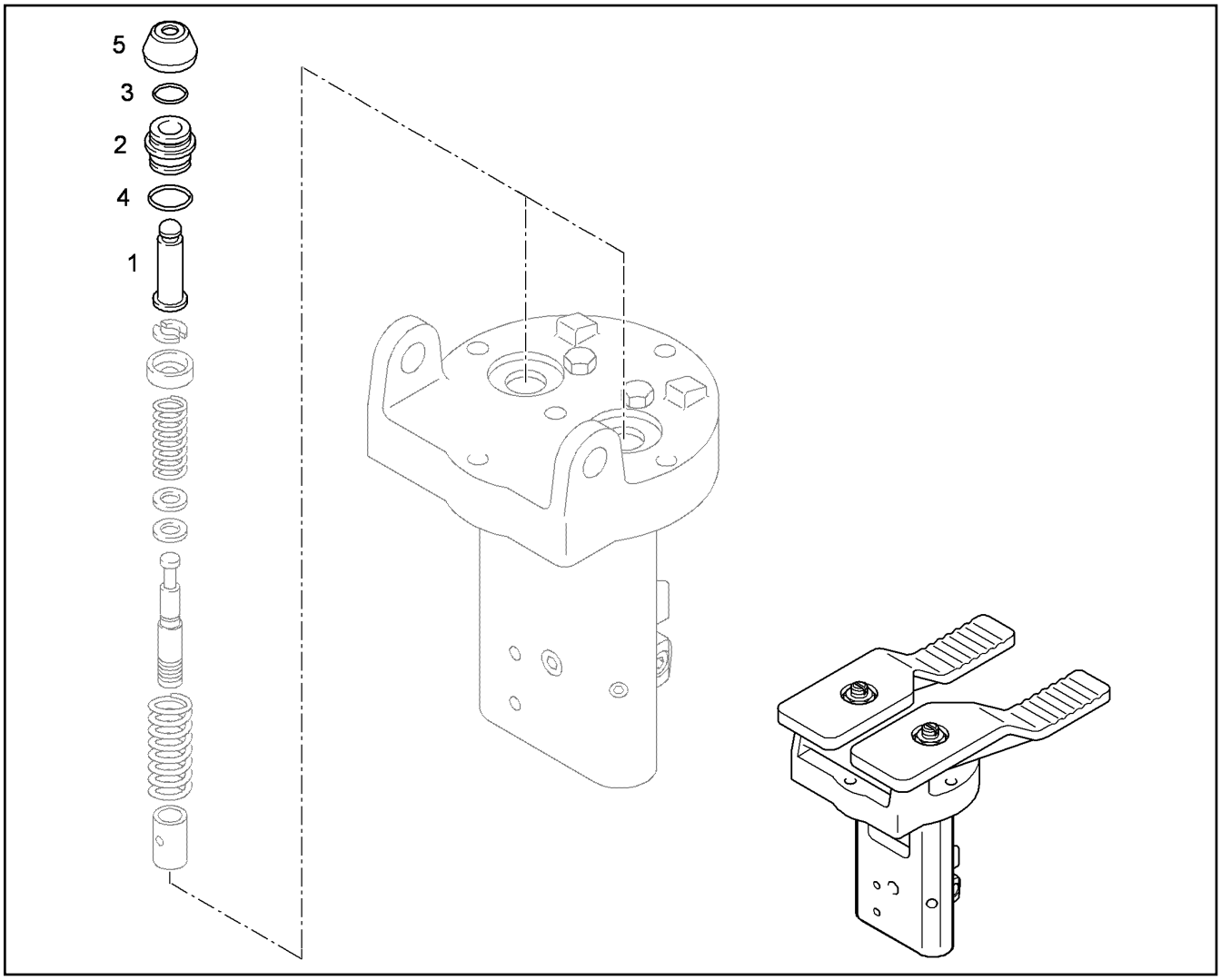


| Pos. | Item | Quantity | Description | Designação | Serie | K |
|---|---|---|---|---|---|---|
| 1 | | 1 | TAPPET | TUCHO | | |
| 2 | | 1 | BUSHING | BUCHA | | |
| 3 | | 1 | ROTOR GASKET 10X13,6X2,3 | VEDAÇÃO DO ROTOR | | |
| 4 | | 1 | O-RING DIN 3771 14,00X1,78 | ANEL-O | | |
| 5 | | 1 | RUBBER CAP | CAPA DE BORRACHA | | |

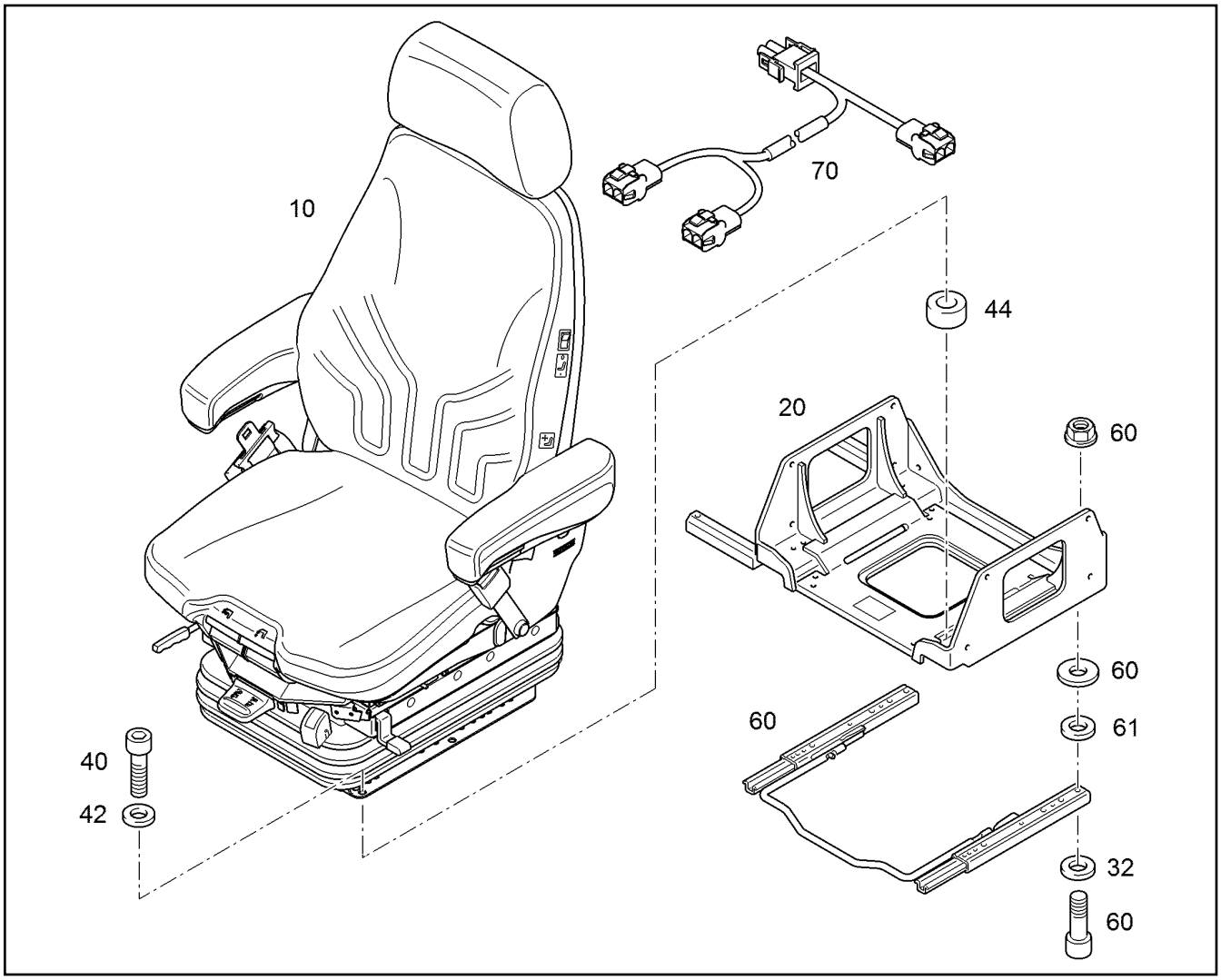


| Pos. | Item | Quantity | Description | Designação | Serie | K |
|---|---|---|---|---|---|---|
| 10 | 11000856 | 1 | DRIVER'S SEAT WITH PNEUM.SUSP. [103402370014 ] ⇨ ❑ 232 | BANCO COM SUSP. PENUMATIC | | |
| 20 | 94025779 | 1 | SEAT VAT | BASE DO ASSENTO | | |
| 32 | 10289803 | 4 | WASHER ISO 7089 8 300HV | ARRUELA | | |
| 40 | 4901217 | 4 | CYLINDER SCREW ISO 4762 M8X25 10.9 A2 | PARAFUSO CILÍNDRICO | | |
| 42 | 10289803 | 4 | WASHER ISO 7089 8 300HV | ARRUELA | | |
| 44 | 94022280 | 4 | SPACER SLEEVE ZINCING 9X20X10 | LUVA DISTANCIADORA GALVANI | | 1 |
| 60 | 11007072 | 1 | SLIDE SEAT GUIDE ⇨ ❑ 292 | TRILHO DO BANCO DO OPERA | | |
| 61 | 4000779 | 4 | WASHER A 8 200HV | ARRUELA | | |
| 70 | 9956949 | 1 | POWER SUPPLY WH | ALIMETAÇÃO DE TENSÃO KS | | |

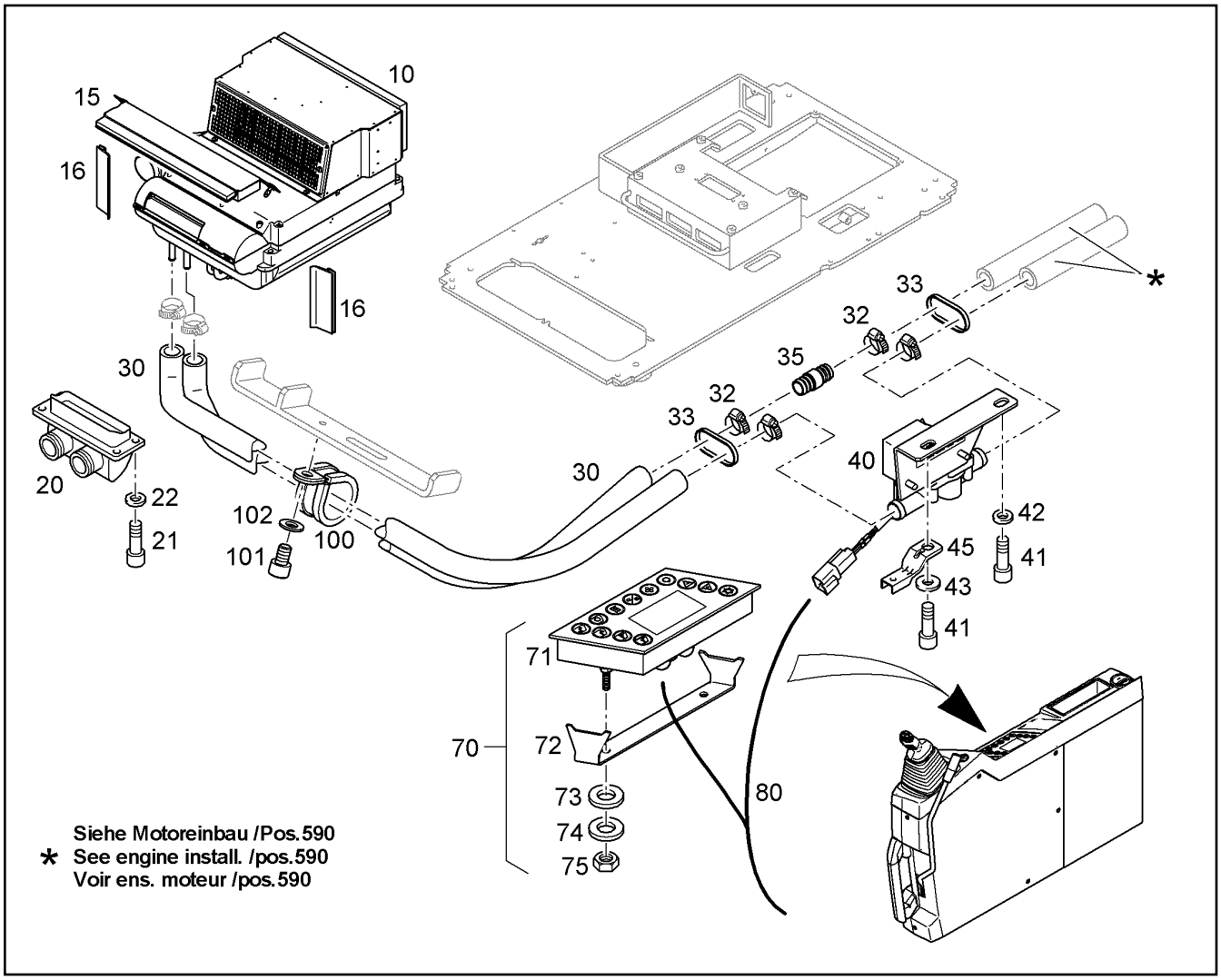


| Pos. | Item | Quantity | Description | Designação | Serie | K |
|---|---|---|---|---|---|---|
| 10 | | 1 | EVAPORATOR<br>[809465 0041 ]<br>⇨ ❑ 282 | EVAPORADOR | | |
| 15 | | 1 | COVER PLATE | CHAPA DE COBERTURA | | |
| 16 | 10008649 | 0.28m | SEALING PROFILE | PERFIL DE VEDACAO | | |
| 20 | | 1 | CASE<br>⇨ ❑ 289 | CAIXA | | |
| 21 | 4043160 | 4 | CYLINDER SCREW ISO 4762 M12X20 10.9 | PARAFUSO CILÍNDRICO | | |
| 22 | 10289804 | 4 | WASHER ISO 7089 12 300HV | ARRUELA | | |
| 30 | 9008530 | 2 | WATER HOSE | MANGUEIRA DE AGUA | | |
| 32 | 4901138 | 4 | HOSE CLAMP DIN 3017 A 16 - 27 X 9 W2-2 | ABRAÇADEIRA DE MANGUEIRA | | |
| 33 | 7001877 | 2 | TIE WRAP | AMARRA PARA CABOS | | |
| 35 | 7365704 | 1 | INTERMEDIATE PIECE | PECA INTERMEDIARIA | | |
| 40 | 10292661 | 1 | WATER VALVE | VALVULA DE AGUA | | |
| 41 | 4901217 | 2 | CYLINDER SCREW ISO 4762 M8X25 10.9 A2 | PARAFUSO CILÍNDRICO | | |
| 42 | 10289803 | 1 | WASHER ISO 7089 8 300HV | ARRUELA | | |
| 43 | 4000779 | 1 | WASHER A 8 200HV | ARRUELA | | |
| 45 | 10041876 | 1 | HOLDER | SUPORTE | | |
| 70 | 10493087 | 1 | OPERATING ELEMENT | PAINEL DE OPERAÇÃO | | |
| 71 | 10493088 | 1 | OPERATING ELEMENT | PAINEL DE OPERAÇÃO | | |
| 72 | 10021823 | 1 | MOUNTING BRACKET | ARCO DE FIXACAO | | |
| 73 | 10289802 | 1 | WASHER ISO 7089 6 300HV | ARRUELA | | |
| 74 | 4000498 | 1 | CIRCLIP DIN 127 A 6 A3C | ARRUELA DE PRESSÃO | | |
| 75 | 4000379 | 1 | HEX NUT M6 | PORCA SEXTAVADA | | |
| 80 | | 1 | CABLE LOOM | CHICOTE ELÉTRICO | | |
| 100 | 7367691 | 1 | CLAMP DIN 3016-1 D1 40X25 W1-2-CR | BRAÇADEIRA | | |

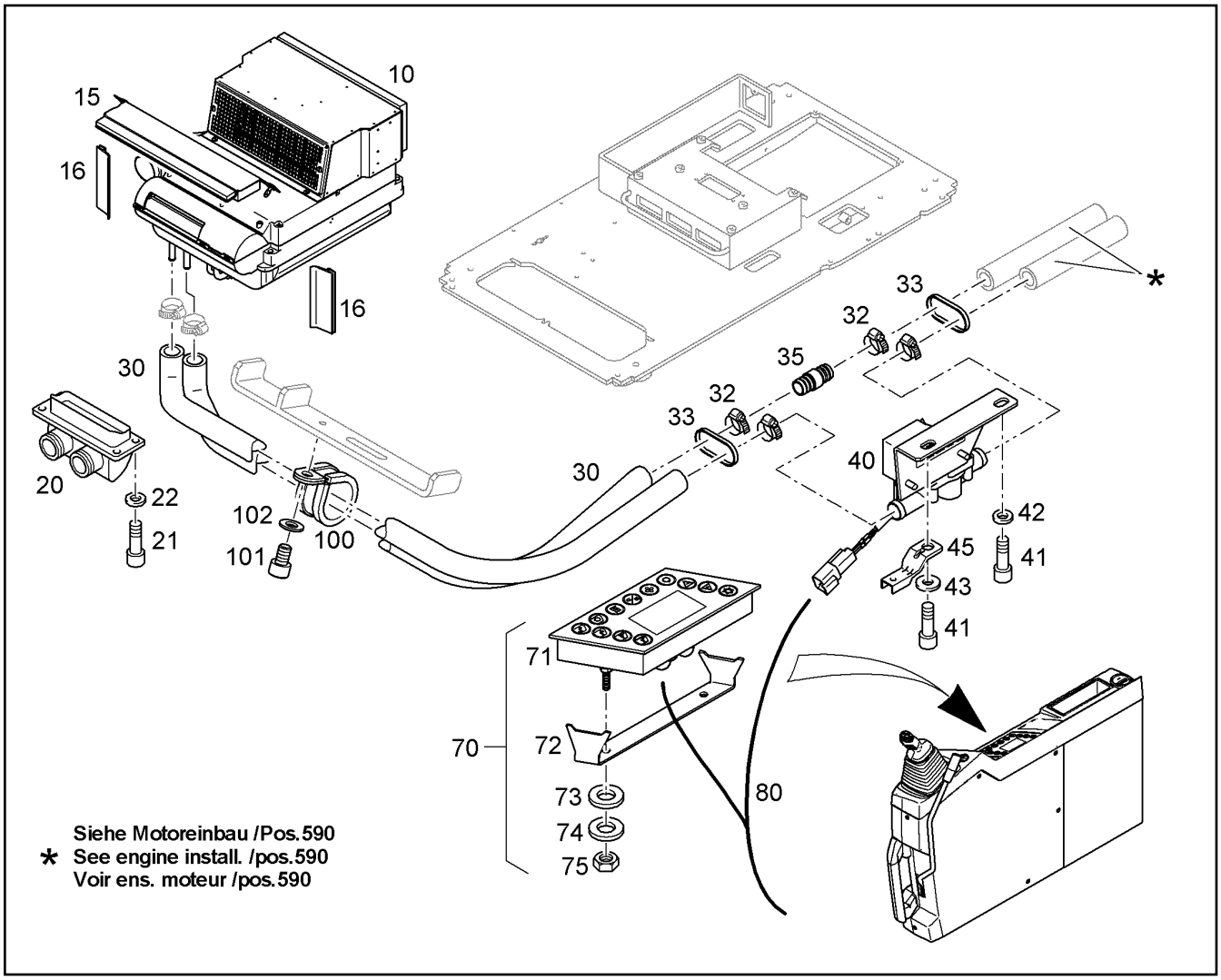


| Pos. | Item | Quantity | Description | Designação | Serie | K |
|---|---|---|---|---|---|---|
| 101 | 4902254 | 1 | CYLINDER SCREW ISO 4762 M8X12 10.9 A2 | PARAFUSO CILÍNDRICO | | |
| 102 | 10289803 | 1 | WASHER ISO 7089 8 300HV | ARRUELA | | |

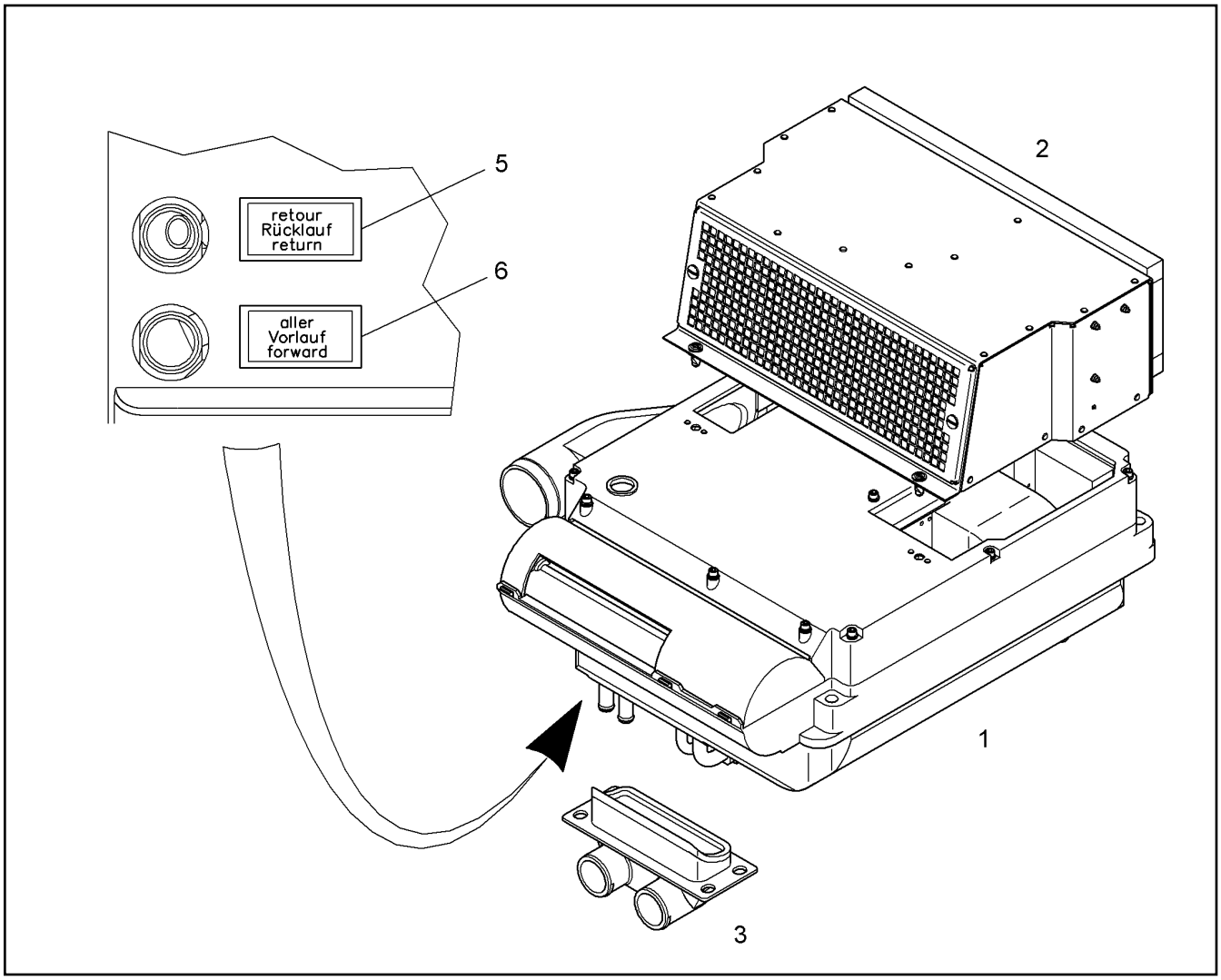


| Pos. | Item | Quantity | Description | Designação | Serie | K |
|---|---|---|---|---|---|---|
| 1 | 11003594 | 1 | HOUSING<br>⇨ ❑ 286 | CARCAÇA | | |
| 2 | 10022117 | 1 | AIR CIRCULATION CASE<br>⇨ ❑ 285 | CARCACA DE CONDUCAO DE A | | |
| 3 | 10022119 | 1 | CASE<br>⇨ ❑ 289 | CAIXA | | |
| 5 | 10022635 | 1 | SIGN RUECKLAUF | PLACA | | |
| 6 | 10022636 | 1 | SIGN | PLACA | | |

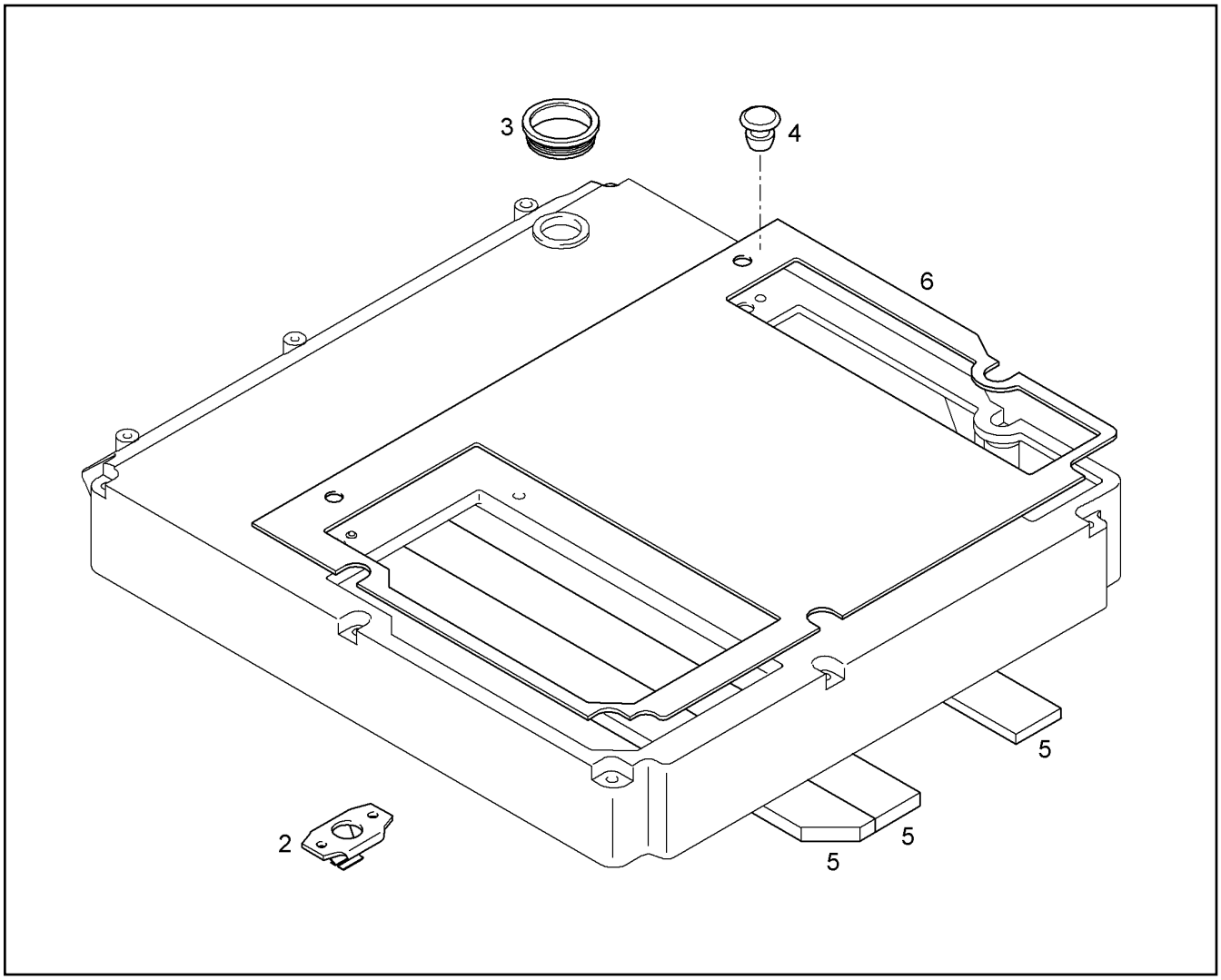


| Pos. | Item | Quantity | Description | Designação | Serie | K |
|---|---|---|---|---|---|---|
| 2 | 7369754 | 2 | CLIPS | CLIP DE MOLA | | |
| 3 | 10022774 | 1 | BLANKING PLUG | TAMPÃO | | |
| 4 | 4451001 | 4 | BLIND RIVET A3,0 6,0 | REBITE CEGO | | |
| 5 | 7027401 | 3 | SEALING STRIP | TIRA DE VEDACAO | | |
| 6 | 11644222 | 1 | INSULATING SHEET | PLACA ISOLANTE | | |

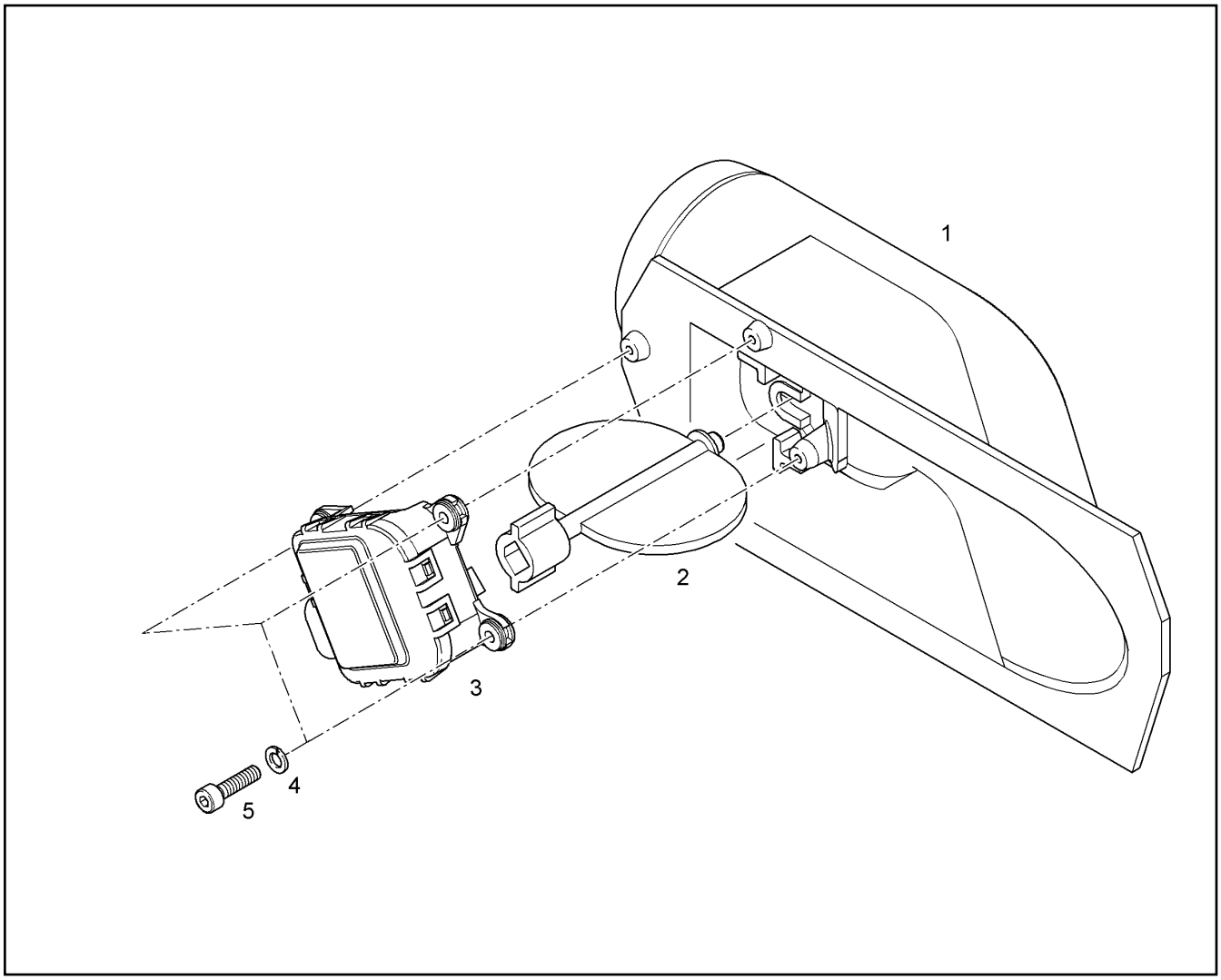


| Pos. | Item | Quantity | Description | Designação | Serie | K |
|---|---|---|---|---|---|---|
| 1 | 10005677 | 1 | AIR CIRCULATION PART | PEÇA P/CIRCULAÇÃO DE AR | | |
| 2 | 10005674 | 1 | AIR FLAP | VALVULA DE VENTILACAO | | |
| 3 | 10022766 | 1 | SERVOMOTOR | SERVOMOTOR | | |
| 4 | 4600036 | 3 | CIRCLIP DIN 127 A 4 A3C | ARRUELA DE PRESSÃO | | |
| 5 | 4600337 | 3 | CYLINDER SCREW ISO 4762 M4x16 8.8 A2C | PARAFUSO CILÍNDRICO | | |

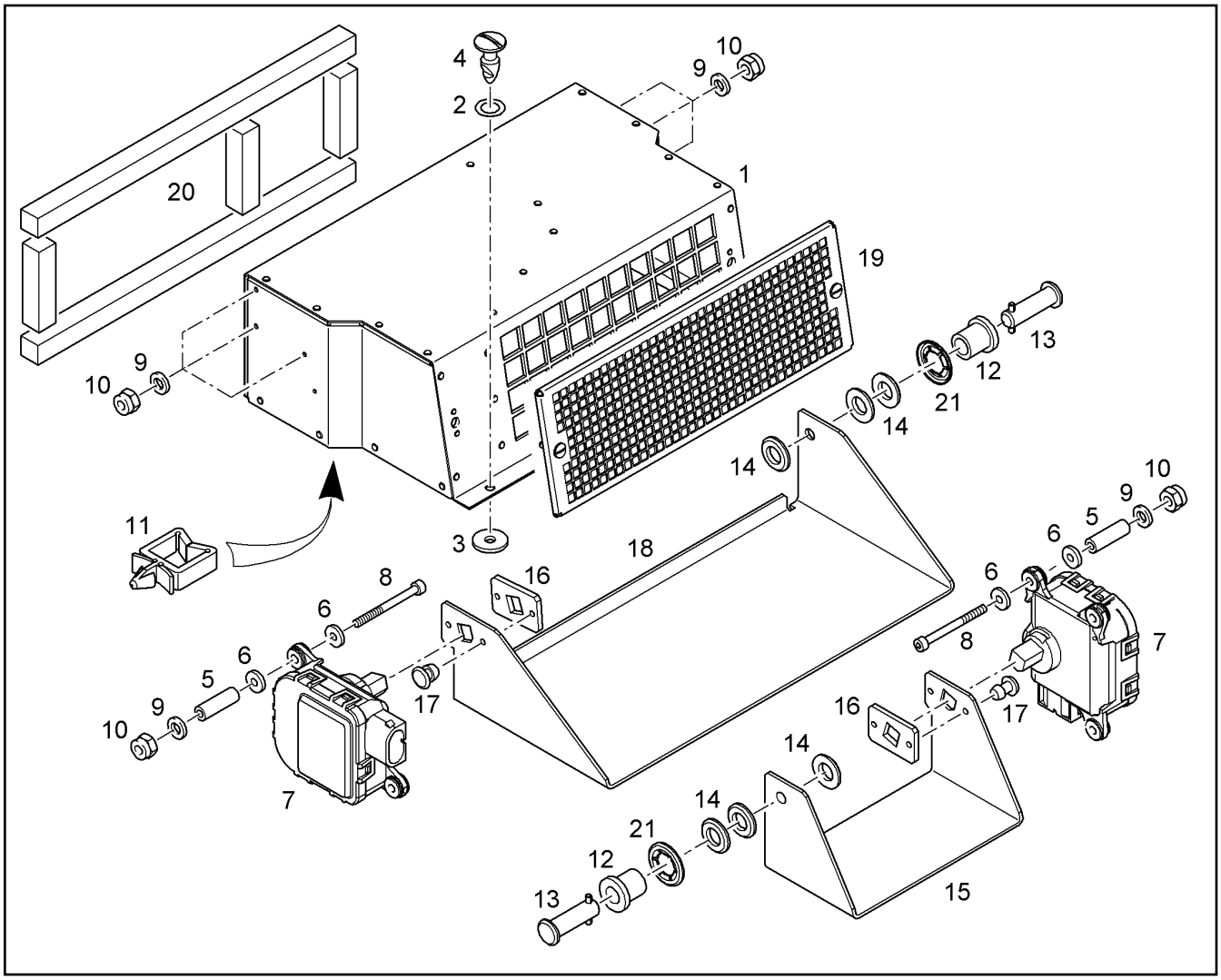


| Pos. | Item | Quantity | Description | Designação | Serie | K |
|---|---|---|---|---|---|---|
| 1 | 10022787 | 1 | AIR CIRCULATION CASE | CARCACA DE CONDUCAO DE A | | |
| 2 | 10022769 | 2 | HEAD-TYPE WASHER 9,5X15X0,2 | ARRUELA | | |
| 3 | 10022767 | 2 | WASHER T 5,5X18X2 | ARRUELA | | |
| 4 | 10022785 | 2 | QUICK LOCK | FECHO RAPIDO | | |
| 5 | 10022783 | 6 | SPACER BUSH | BUCHA DISTANCIADORA | | 1 |
| 6 | 421802008 | 12 | WASHER 4 | ARRUELA | | |
| 7 | 10022766 | 2 | SERVOMOTOR | SERVOMOTOR | | |
| 8 | 4981259 | 6 | CYLINDER SCREW ISO 4762 M4X45 10.9 | PARAFUSO CILÍNDRICO | | |
| 9 | 4001645 | 6 | WASHER ISO 7089 4 200HV | ARRUELA | | |
| 10 | 4600625 | 6 | HEX NUT M4 | PORCA SEXTAVADA | | |
| 11 | 10023106 | 2 | CABLE CLAMP M.STECKFUSS | SUPORTE DE CABOS | | |
| 12 | 10022782 | 2 | BUSHING | BUCHA | | 1 |
| 13 | 10022781 | 2 | PIN | PINO | | 1 |
| 14 | 10289802 | 6 | WASHER ISO 7089 6 300HV | ARRUELA | | |
| 15 | 10022780 | 1 | AIR FLAP | VALVULA DE VENTILACAO | | |
| 16 | 10022779 | 2 | REINFORCING SECTION | PERFIL DE REFORÇO | | |
| 17 | 7401288 | 4 | BLIND RIVET DIN 7337 A 4,0X 8,0 AL/ST | REBITE CEGO | | |
| 18 | 10022778 | 1 | AIR FLAP | VALVULA DE VENTILACAO | | |
| 19 | 10022777 | 1 | CIRCULATING AIR GRID<br>⇨ ❑ 290 | GRADE DE CIRCULACAO DE AR | | |
| 20 | 10022776 | 1 | BURR FASTENING TAPE | ESPUMA DE PE | | |
| 21 | 7025121 | 2 | SPRING WASHER | ARRUELA DE PRESSÃO | | |

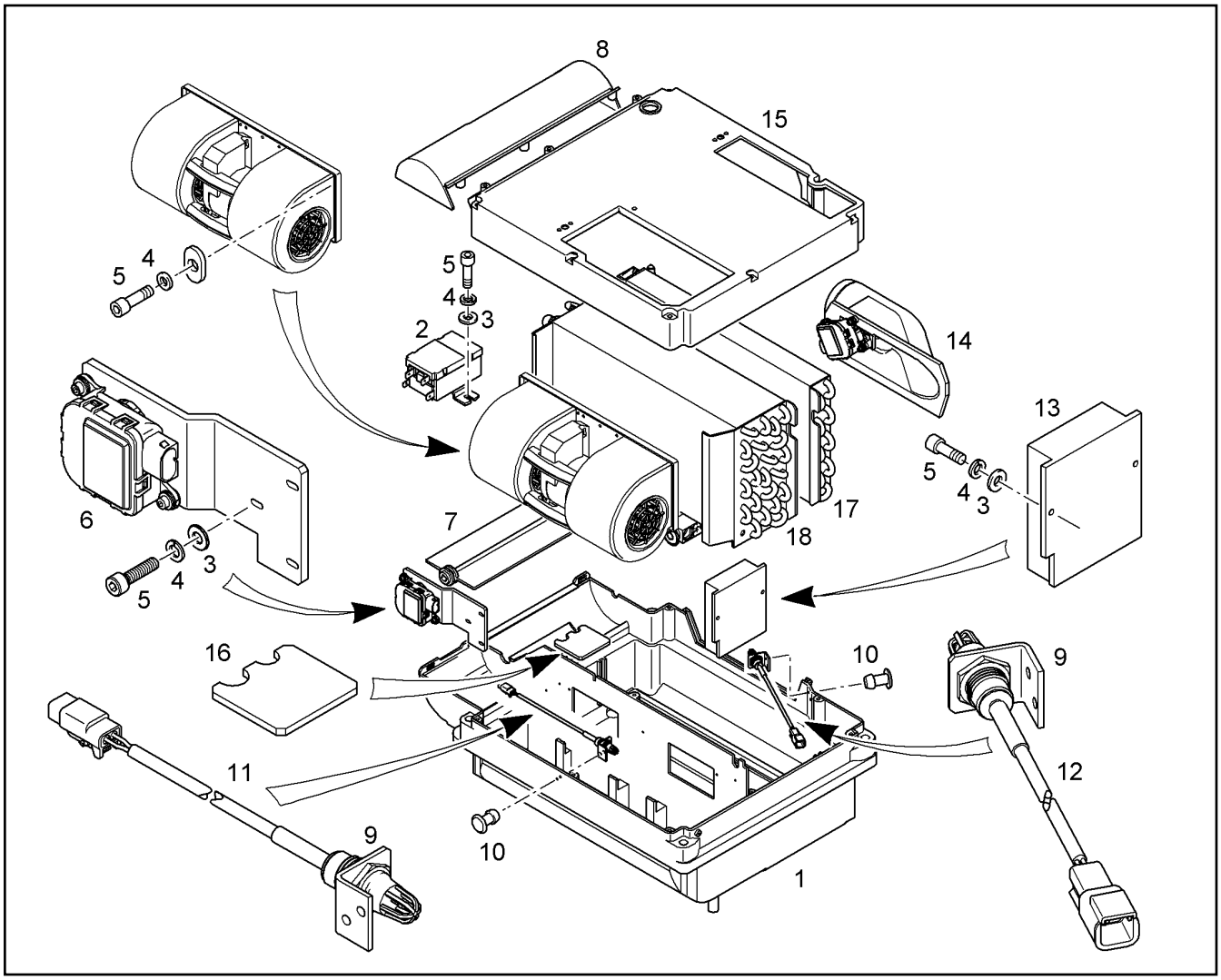


| Pos. | Item | Quantity | Description | Designação | Serie | K |
|---|---|---|---|---|---|---|
| 1 | 10005672 | 1 | EVAPORATOR HOUSING | CARCACA DO EVAPORADOR | | |
| 2 | 10022048 | 1 | THERMOSTAT | TERMOSTATO | | |
| 3 | 4002887 | 7 | WASHER ISO 7090 4 -200HV A2 | ARRUELA | | |
| 4 | 4600036 | 10 | CIRCLIP DIN 127 A 4 A3C | ARRUELA DE PRESSÃO | | |
| 5 | 4600337 | 10 | CYLINDER SCREW ISO 4762 M4x16 8.8 A2C | PARAFUSO CILÍNDRICO | | |
| 6 | 10022078 | 1 | ASSEMBLY BRACKET<br>⇨ ❑ 288 | CANTONEIRA DE MONTAGEM | | |
| 7 | 10005675 | 1 | AIR FLAP | VALVULA DE VENTILACAO | | |
| 8 | 10005679 | 1 | EVAPORATOR HOUSING | CARCACA DO EVAPORADOR | | |
| 9 | 10022049 | 2 | FIXING BRACKET | CANTONEIRA DE FIXACAO | | |
| 10 | 10022656 | 4 | BLIND RIVET | REBITE CEGO | | |
| 11 | 10022067 | 1 | TEMPERATURE SENSOR | SENSOR DE TEMPERATURA | | |
| 12 | 10022077 | 1 | TEMPERATURE SENSOR | SENSOR DE TEMPERATURA | | |
| 13 | 10493089 | 1 | CONTROL ELEMENT | PECA DE COMANDO | | |
| 14 | 10022083 | 1 | AIR CONNECTION PART<br>⇨ ❑ 284 | BOCAL DE AR | | |
| 15 | 10022069 | 1 | EVAPORATOR HOUSING<br>⇨ ❑ 283 | CARCACA DO EVAPORADOR | | |
| 16 | 10022051 | 1 | COVER | TAMPA | | |
| 17 | 10022070 | 1 | HEATING BATTERY | BATERIA DE AQUECIMENTO | | |
| 18 | 10022068 | 1 | HEAT EXCHANGER | TROCADOR DE CALOR | | |

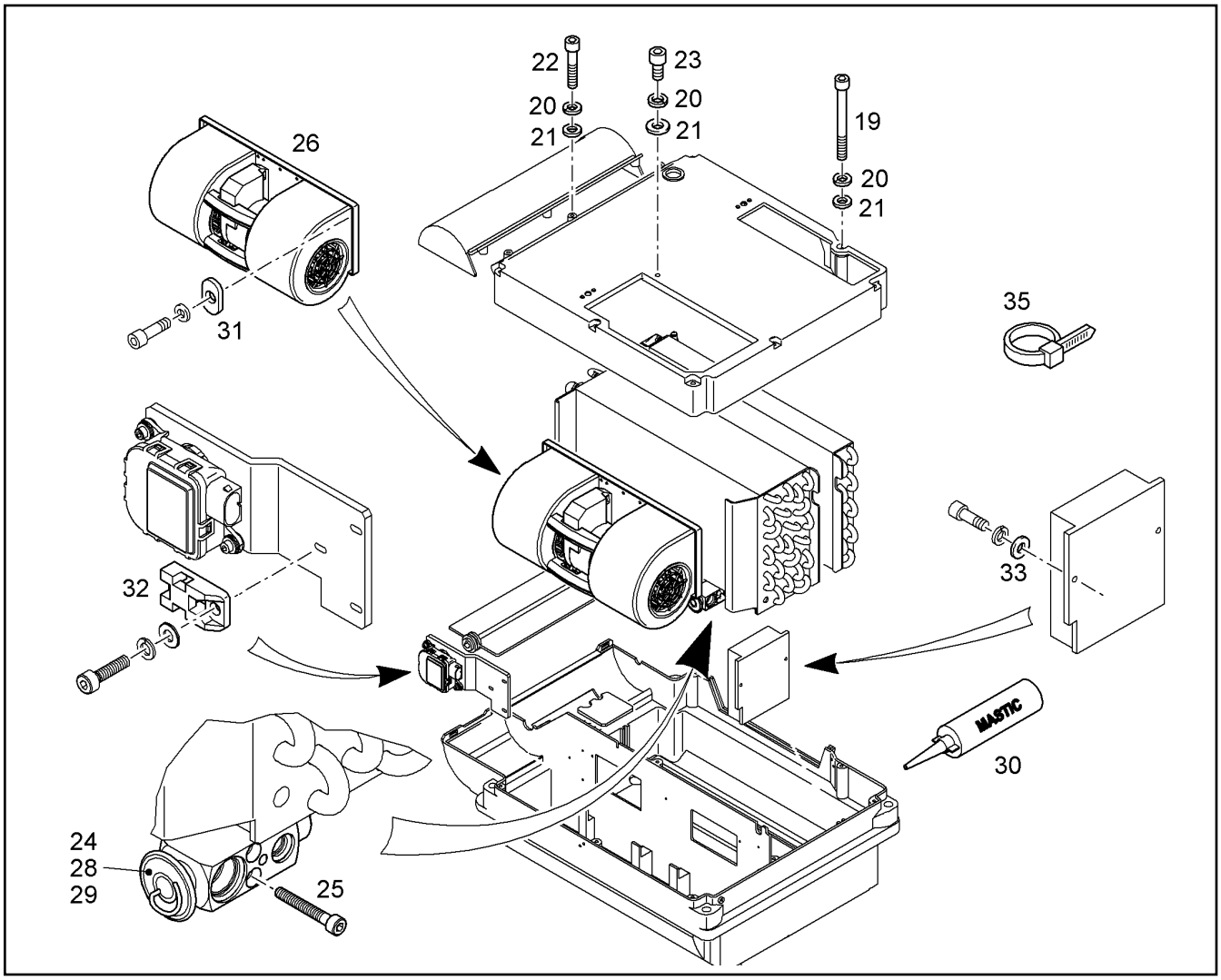


| Pos. | Item | Quantity | Description | Designação | Serie | K |
|---|---|---|---|---|---|---|
| 19 | 404205308 | 7 | CYLINDER SCREW ISO 4762 M6X75 8.8 A2C | PARAFUSO CILÍNDRICO | | |
| 20 | 4000498 | 11 | CIRCLIP DIN 127 A 6 A3C | ARRUELA DE PRESSÃO | | |
| 21 | 4901878 | 11 | WASHER ISO 7090 6 - 200HV A4 | ARRUELA | | |
| 22 | 4042003 | 3 | CYLINDER SCREW ISO 4762 M6x25 8.8 A2C | PARAFUSO CILÍNDRICO | | |
| 23 | 4001596 | 1 | CYLINDER SCREW ISO 4762 M6X16 10.9 A2 | PARAFUSO CILÍNDRICO | | |
| 24 | 7025110 | 1 | VALVE | VÁLVULA | | |
| 25 | 4902262 | 2 | CYLINDER SCREW ISO 4762 M5X35 10.9 A2 | PARAFUSO CILÍNDRICO | | |
| 26 | 10022052 | 1 | DOUBLE BLOWER | VENTILADOR DUPLO | | |
| 28 | 5610999 | 1 | O-RING 10,82X1,78 | ANEL-O | | |
| 29 | 7411823 | 1 | O-RING 14,00X1,78 | ANEL-O | | |
| 30 | 10022063 | 1 | SEALING PUTTY | KIT DE VEDAÇÃO | | |
| 31 | 10022653 | 3 | PROFILE | PERFIL | | |
| 32 | 11003600 | 1 | MOUNTING BASE | BASE DE FIXACAO | | |
| 33 | 421802008 | 4 | WASHER 4 | ARRUELA | | |
| 35 | 11002474 | 8 | CABLE TIE | AMARRA PARA CABOS | | |

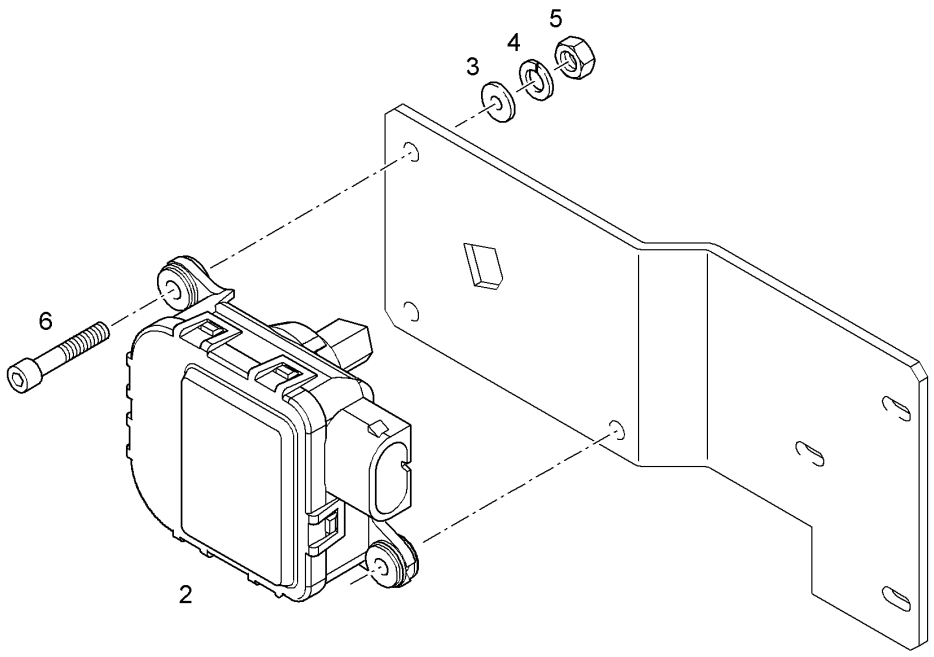


| Pos. | Item | Quantity | Description | Designação | Serie | K |
|---|---|---|---|---|---|---|
| 2 | 10022766 | 1 | SERVOMOTOR | SERVOMOTOR | | |
| 3 | 4001645 | 3 | WASHER ISO 7089 4 200HV | ARRUELA | | |
| 4 | 4600036 | 3 | CIRCLIP DIN 127 A 4 A3C | ARRUELA DE PRESSÃO | | |
| 5 | 4000376 | 3 | HEX NUT M4 | PORCA SEXTAVADA | | |
| 6 | 4600337 | 3 | CYLINDER SCREW ISO 4762 M4x16 8.8 A2C | PARAFUSO CILÍNDRICO | | |

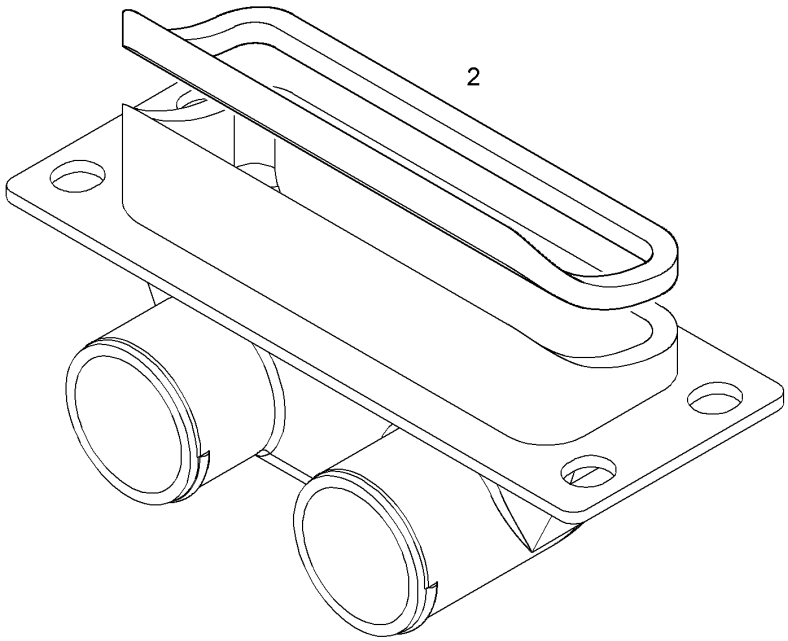


| Pos. | Item | Quantity | Description | Designação | Serie | K |
|---|---|---|---|---|---|---|
| 2 | 10022772 | 1 | FOAM RUBBER INSULATION | TIRA DE ESPUMA | | |

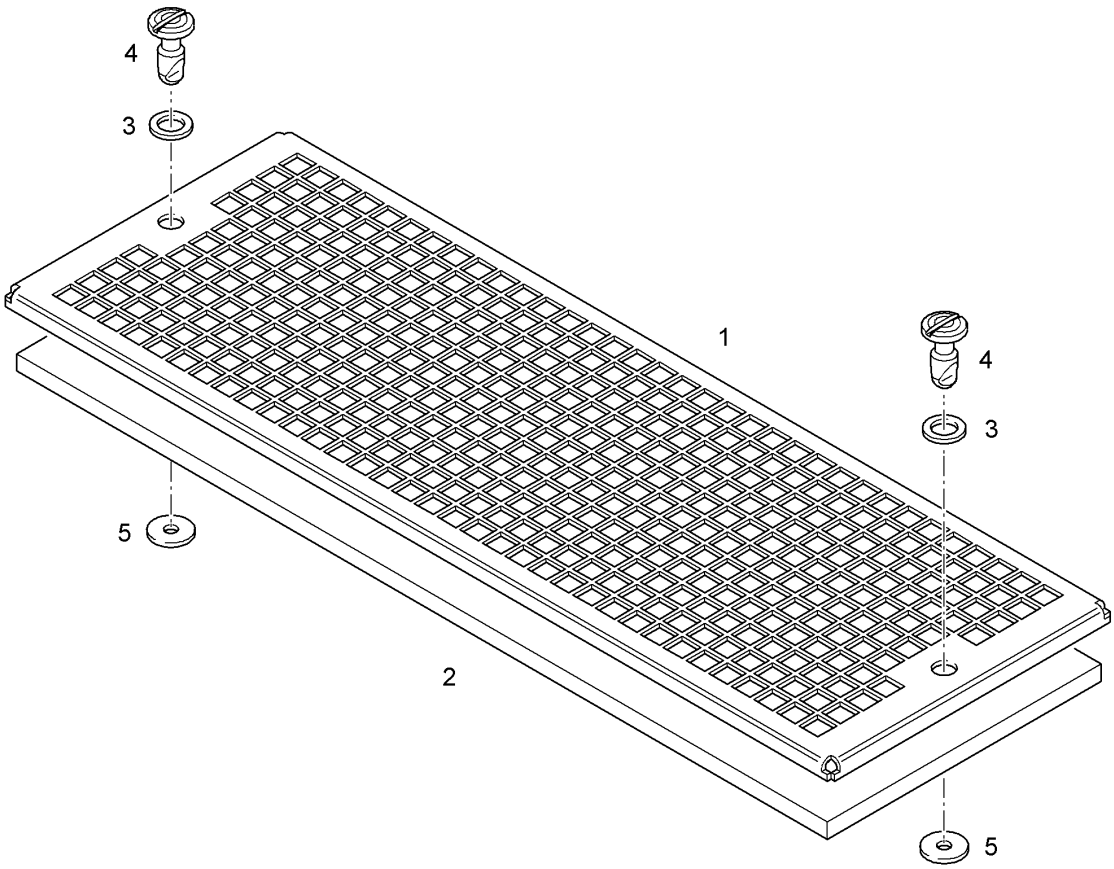


| Pos. | Item | Quantity | Description | Designação | Serie | K |
|---|---|---|---|---|---|---|
| 1 | 10022771 | 1 | CIRCULATING AIR GRID | GRADE DE CIRCULACAO DE AR | | |
| 2 | 10022770 | 1 | FILTER MAT | ESTEIRA FILTRANTE | | |
| 3 | 10022769 | 2 | HEAD-TYPE WASHER 9,5X15X0,2 | ARRUELA | | |
| 4 | 10022768 | 2 | QUICK LOCK | FECHO RAPIDO | | |
| 5 | 10022767 | 2 | WASHER T 5,5X18X2 | ARRUELA | | |

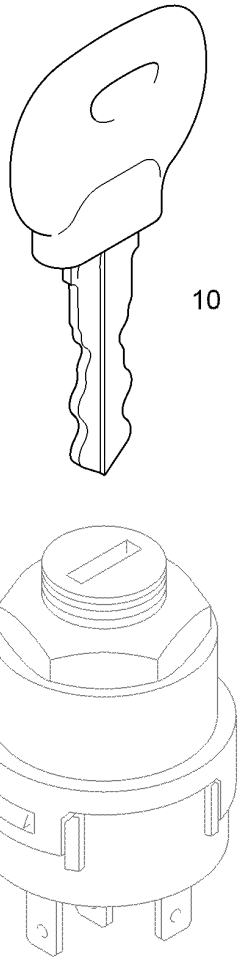


| Pos. | Item | Quantity | Description | Designação | Serie | K |
|---|---|---|---|---|---|---|
| 10 | 10221073 | 1 | IGNITION KEY | CHAVE DE IGNICAO | | |

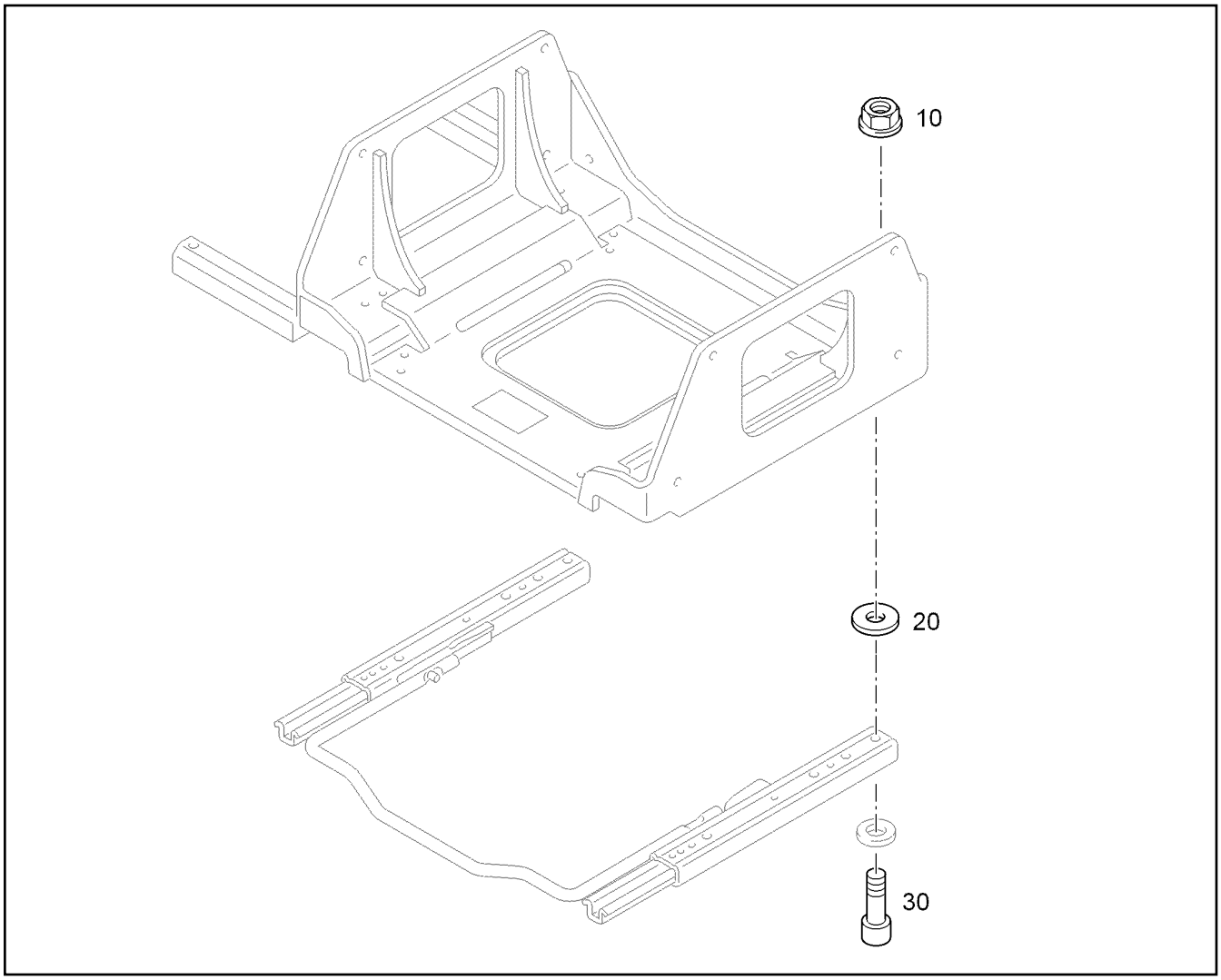


| Pos. | Item | Quantity | Description | Designação | Serie | K |
|---|---|---|---|---|---|---|
| 10 | 241015402 | 4 | HEX NUT M 8 | PORCA SEXTAVADA | | |
| 20 | 4000779 | 4 | WASHER A 8 200HV | ARRUELA | | |
| 30 | 4600079 | 4 | CYLINDER SCREW ISO 4762 M8x20 8.8 A2C | PARAFUSO CILÍNDRICO | | |

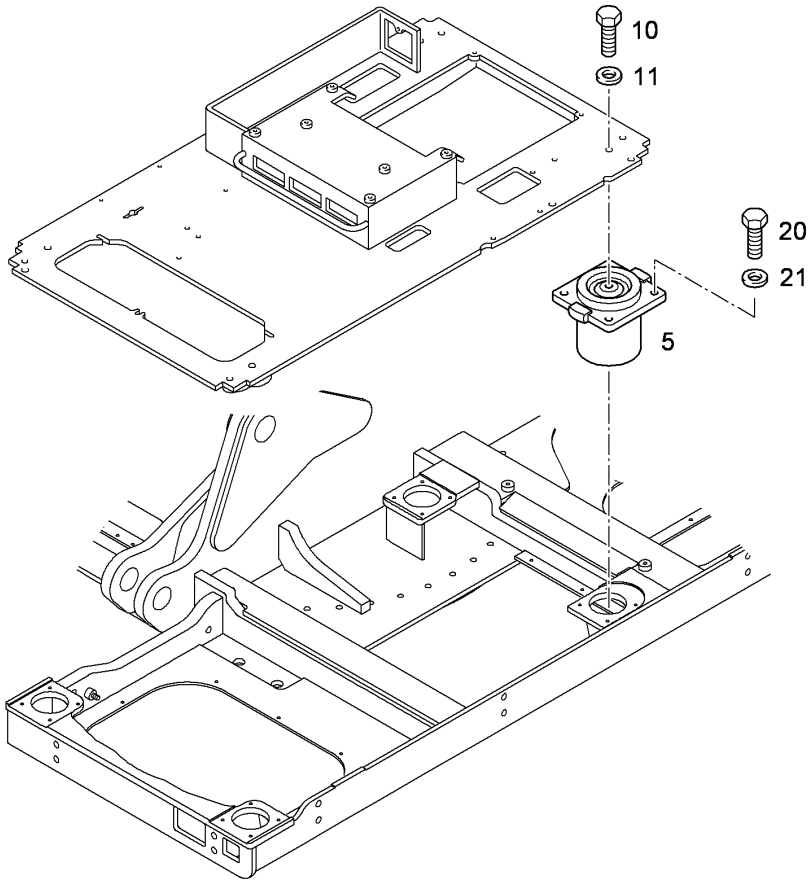


| Pos. | Item | Quantity | Description | Designação | Serie | K |
|---|---|---|---|---|---|---|
| 5 | 10013573 | 4 | FLUID BEARING | COXIM | 9848- | 1 |
| 10 | 4066202 | 4 | HEX BOLT ISO 4017 M16X60 10.9 DAC | PARAFUSO SEXTAVADO | | |
| 11 | 9918228 | 4 | WASHER 16,5/28X4 | ARRUELA | | |
| 20 | 4066093 | 16 | HEX BOLT ISO 4017 M10X25 10.9 A3C | PARAFUSO SEXTAVADO | | |
| 21 | 10289795 | 16 | WASHER ISO 7089 10 300HV | ARRUELA | | |

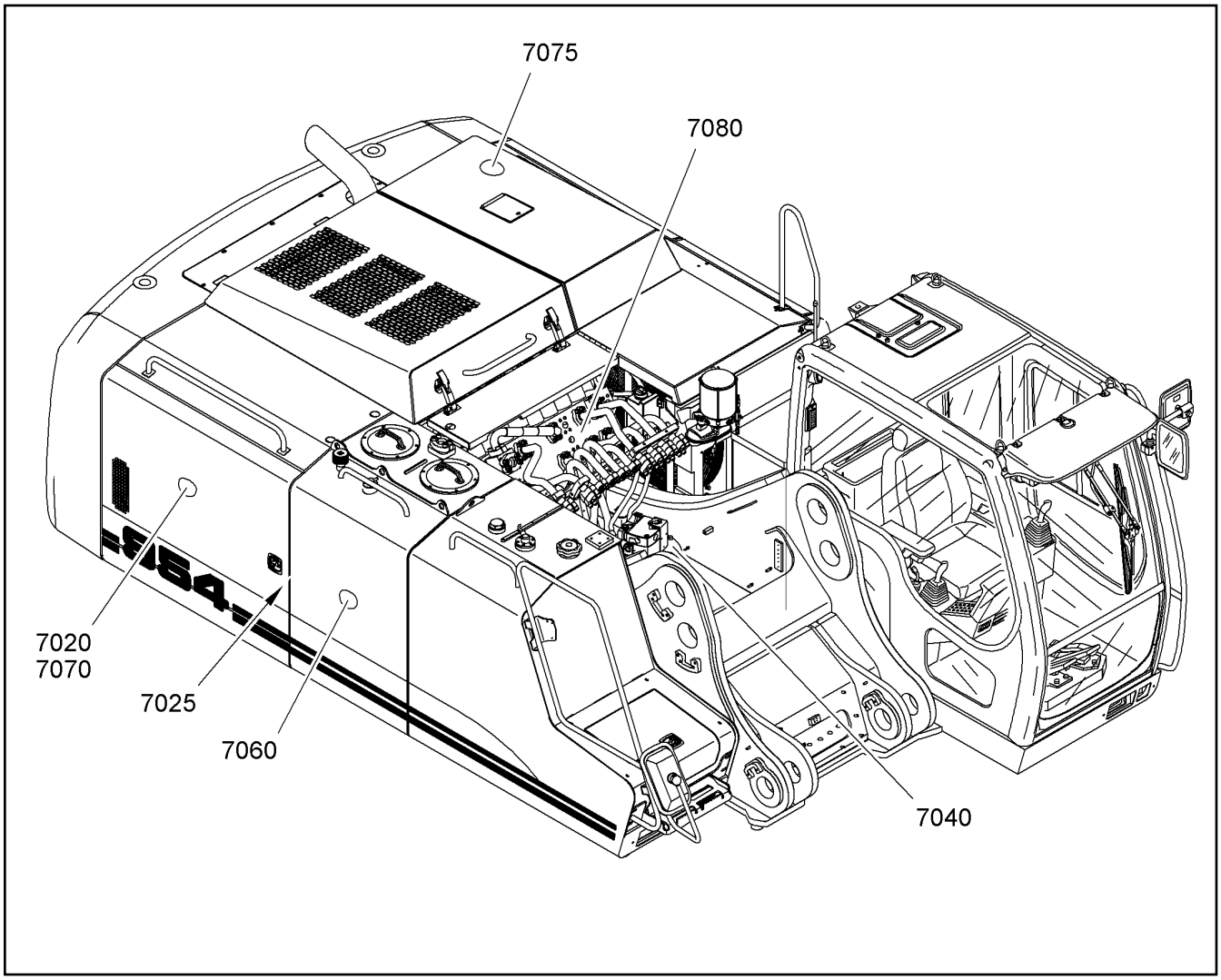


| Pos. | Item | Quantity | Description | Designação | Serie | K |
|---|---|---|---|---|---|---|
| 7020 | 10358012 | 1 | HYDR.PUMPS TO SPOOL VALVE<br>⇨ ❑ 295 | INSTALACAO HDRAULICA | | |
| 7025 | 9937312 | 1 | OIL PILOT VALVE INSTALLATION<br>⇨ ❑ 297 | UNIDADE DE COMANDO DE OLE | | |
| 7040 | 10358015 | 1 | HYDR.ROTARY CONNEC.+SWING GEAR<br>⇨ ❑ 300 | PASSAGEM HIDRAULICA | | |
| 7060 | 10358014 | 1 | HYDR.SUCT.+RETURN OIL HOSES<br>⇨ ❑ 304 | MANGUEIRAS HIDRAULICAS | | |
| 7070 | 10358013 | 1 | HYDR.AND GEAR OIL COOLING<br>⇨ ❑ 308 | ARREFECIMENTO DE OLEO | | |
| 7075 | 10358093 | 1 | HYDR.INSTALLATION FAN DRIVE<br>⇨ ❑ 310 | INSTALACAO HIDRAULICA | | |
| 7080 | 10358017 | 1 | HYDR.INSTAL.CONTROL TUBES<br>⇨ ❑ 313 | INSTALACAO HIDRAULICA | | |

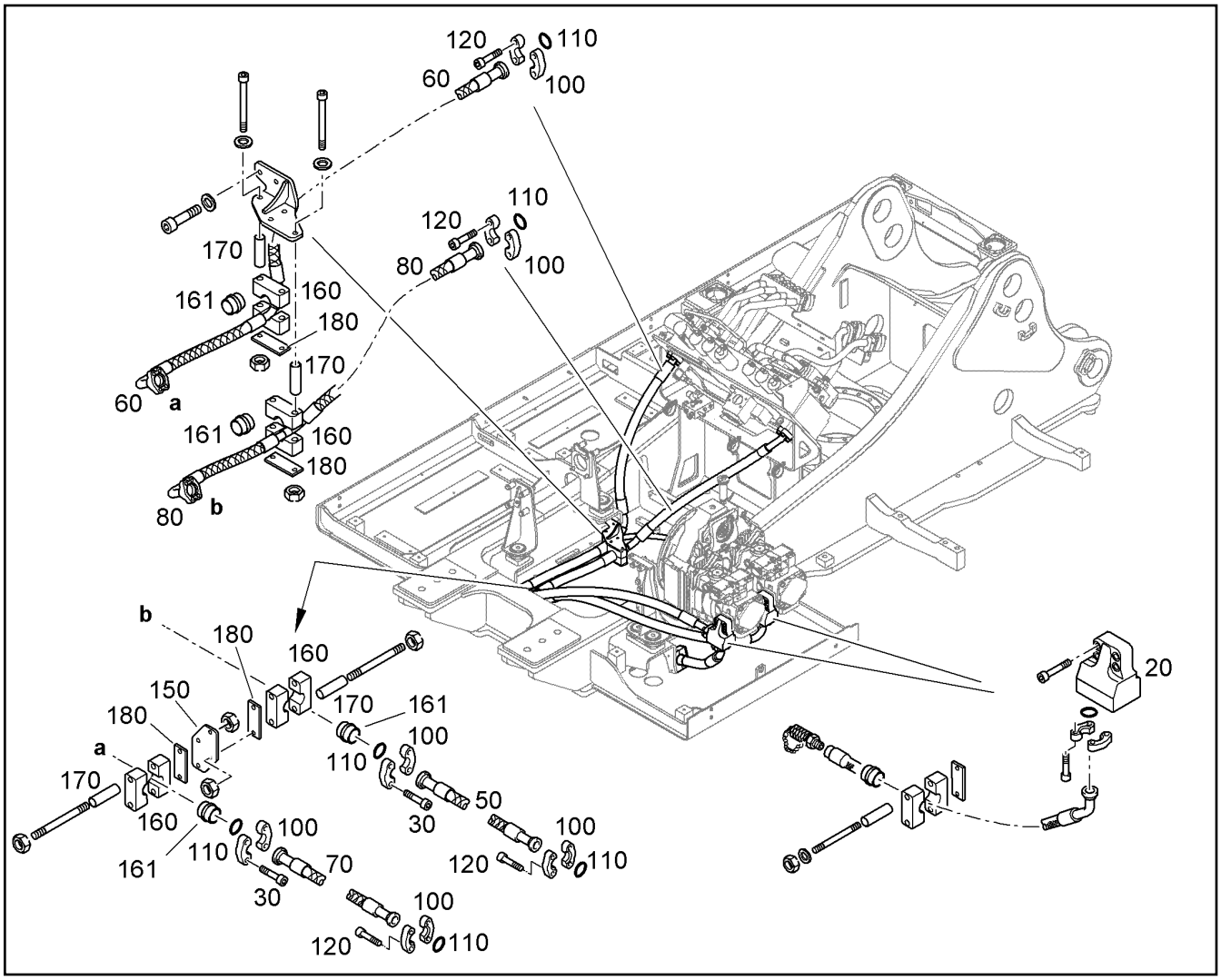


| Pos. | Item | Quantity | Description | Designação | Serie | K |
|---|---|---|---|---|---|---|
| 20 | 9681272 | 2 | DISTRIBUTOR BLOCK | BLOCO DE DISTRIBUIÇÃO | | |
| 30 | 10001466 | 8 | CYLINDER SCREW ISO 4762 M14X60 10.9 | PARAFUSO CILÍNDRICO | | |
| 50 | 10097259 | 1 | HOSE | MANGUEIRA | | 1 |
| 60 | 10101365 | 1 | HOSE | MANGUEIRA | | 1 |
| 70 | 10097258 | 1 | HOSE | MANGUEIRA | | 1 |
| 80 | 10101362 | 1 | HOSE | MANGUEIRA | | 1 |
| 100 | 11485639 | 12 | FLANGE HALF WITH BOSSING SAE J518 SA | MEIO FLANGE COM RELEVO | | |
| 110 | 10472425 | 6 | PLAIN COMPRESSION RING 45,05X3,40X2,8 | ANEL DE SEÇÃO RETANGULAR | | |
| 120 | 4902327 | 16 | CYLINDER SCREW ISO 4762 M14X45 10.9 | PARAFUSO CILÍNDRICO | | |
| 150 | 9949069 | 1 | PLATE | PLACA | | |
| 160 | 7367236 | 8 | CLAMP-HALF AEHNL.DIN 3015 S 4 E 65 PP H | MEIA ABRAÇADEIRA | | |
| 161 | 7363283 | 4 | ELASTOMER INSERT S EL 4 38,7/64X45 TP | INSERTO DE ELASTOMERO | | |
| 170 | 7367211 | 8 | SLEEVE 12,4x16x87 | LUVA | | 1 |
| 180 | 9476811 | 4 | SHEET | PLACA | | |

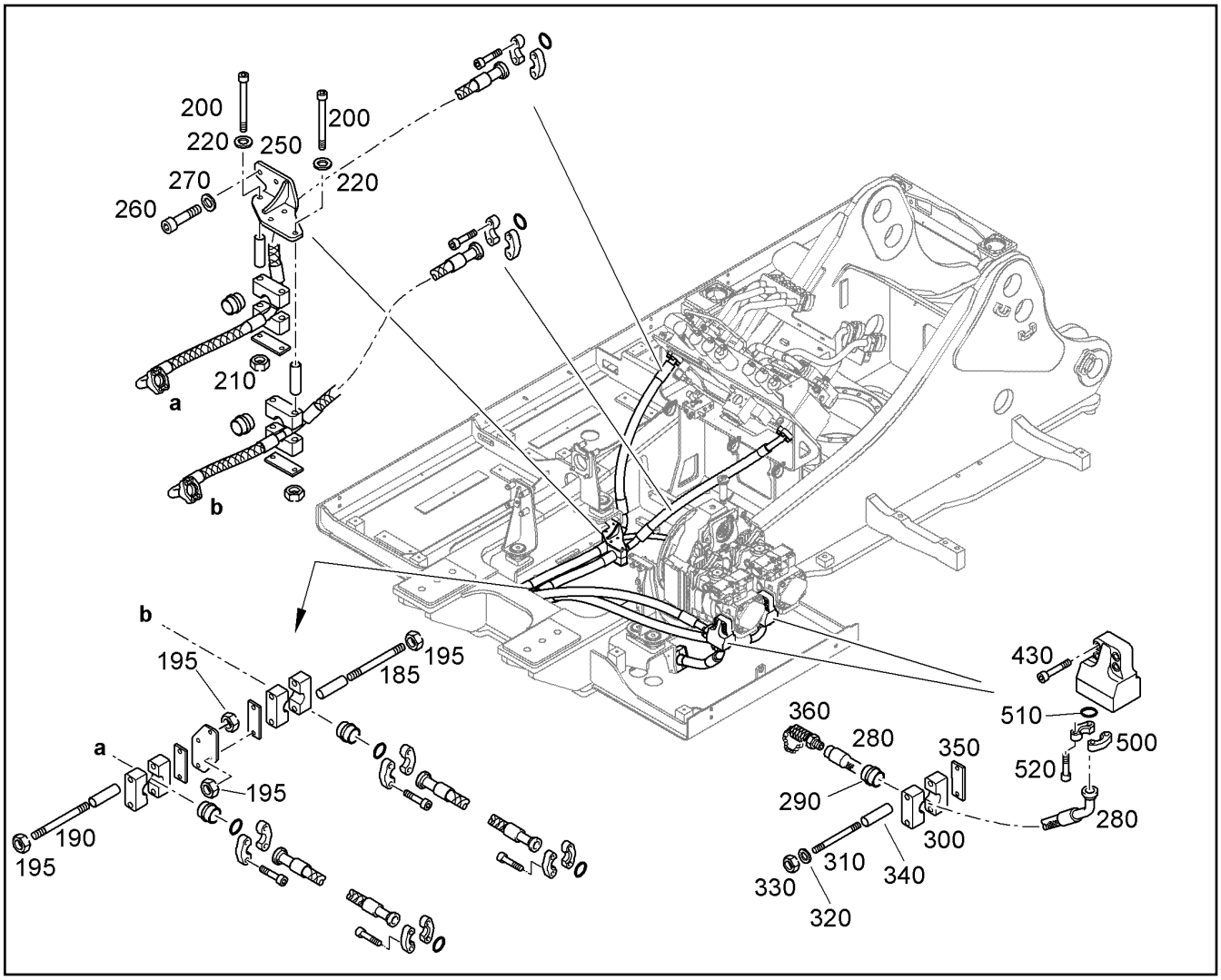


| Pos. | Item | Quantity | Description | Designação | Serie | K |
|---|---|---|---|---|---|---|
| 185 | 10002832 | 2 | DOUBLE-ENDED STUD DIN 939 M 12 X 120 1 | PINO ROSCADO | | |
| 190 | 4900582 | 2 | DOUBLE-ENDED STUD DIN 939 M 12 X 130 1 | PINO ROSCADO | | |
| 195 | 4119106 | 4 | HEX NUT M12 | PORCA SEXTAVADA | | |
| 200 | 404313301 | 4 | CYLINDER SCREW ISO 4762 M12X130 10.9 | PARAFUSO CILÍNDRICO | | |
| 210 | 4119106 | 4 | HEX NUT M12 | PORCA SEXTAVADA | | |
| 220 | 10289804 | 4 | WASHER ISO 7089 12 300HV | ARRUELA | | |
| 250 | 9928413 | 1 | CONSOLE | SUPORTE | | |
| 260 | 4043163 | 2 | CYLINDER SCREW ISO 4762 M12X30 10.9 | PARAFUSO CILÍNDRICO | | |
| 270 | 10289804 | 2 | WASHER ISO 7089 12 300HV | ARRUELA | | |
| 280 | 5614248 | 2 | HOSE 32X650 | MANGUEIRA | | 1 |
| 290 | 7365434 | 2 | ELASTOMER INSERT DIN 3015 S EL 4 56,4/6 | INSERTO DE ELASTOMERO | | |
| 300 | 7367236 | 4 | CLAMP-HALF AEHNL.DIN 3015 S 4 E 65 PP H | MEIA ABRAÇADEIRA | | |
| 310 | 4900990 | 4 | DOUBLE-ENDED STUD DIN 938 M 12 X 110 | PINO ROSCADO | | |
| 320 | 4900093 | 4 | LOCK WASHER 13/18X2,1 VS 12 | ARRUELA DE SEGURANÇA | | |
| 330 | 4119106 | 4 | HEX NUT M12 | PORCA SEXTAVADA | | |
| 340 | 7367211 | 4 | SLEEVE 12,4x16x87 | LUVA | | 1 |
| 350 | 9476811 | 2 | SHEET | PLACA | | |
| 360 | 7409720 | 2 | SCREW COUPLING G1/4 | ACOPLAMENTO ROSCADO | | |
| 430 | 10001466 | 8 | CYLINDER SCREW ISO 4762 M14X60 10.9 | PARAFUSO CILÍNDRICO | | |
| 500 | 11485639 | 4 | FLANGE HALF WITH BOSSING SAE J518 SA | MEIO FLANGE COM RELEVO | | |
| 510 | 10472425 | 4 | PLAIN COMPRESSION RING 45,05X3,40X2,8 | ANEL DE SEÇÃO RETANGULAR | | |
| 520 | 4902327 | 8 | CYLINDER SCREW ISO 4762 M14X45 10.9 | PARAFUSO CILÍNDRICO | | |

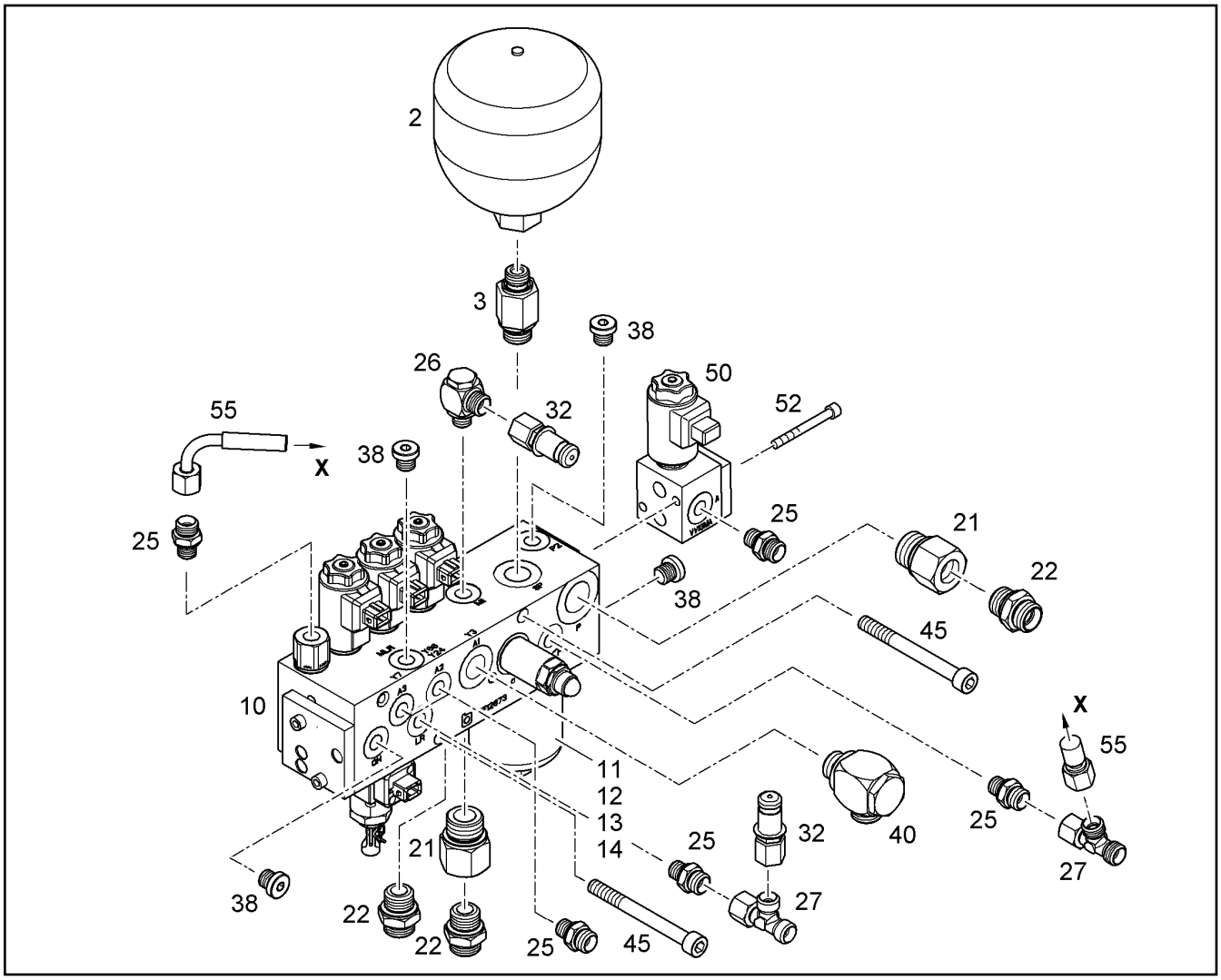


| Pos. | Item | Quantity | Description | Designação | Serie | K |
|---|---|---|---|---|---|---|
| 2 | 5617780 | 1 | DIAPHRAGM ACCUMULATOR [184318 ] | ACUMULADOR DE PRESSÃO | | |
| 3 | 9399179 | 1 | INTERMEDIATE COUPLING ⇨ ❑ 299 | CONEXAO P/ ACUMULADOR PR | | |
| 10 | 10042729 | 1 | OIL PILOT VALVE ⇨ ❑ 315 | BLOCO DE VÁLVULAS DE COMA | | |
| 11 | 5609948 | 1 | OIL FILTER SET ⇨ ❑ 298 | KIT DE FILTRO DE OLEO | | |
| 12 | 5605365 | 1 | HOUSING | CARCAÇA | | |
| 13 | 11342118 | 1 | FILTER ELEMENT 16µm | ELEMENTO FILTRANTE | | |
| 14 | 7264028 | 1 | O-RING | ANEL-O | | |
| 21 | 4755005 | 2 | REDUCING STUD RI 3/4X1/2 | BOCAL REDUTOR | | |
| 22 | 4600518 | 3 | SCREW FITTING GE 15L | REDUÇÃO | | |
| 25 | 7362091 | 6 | SCREW FITTING GE 10L | REDUÇÃO | | |
| 26 | 7617261 | 1 | HINGED THREADED UNION WH 10L G1/4A | CONEXÃO ROSCADA | | |
| 27 | 472330208 | 2 | SCREW FITTING EL 10L | REDUÇÃO | | |
| 32 | 7406864 | 2 | GAUGE CONNECTION VKA3 10L M16X1,5 | BOCAL DE MEDICAO | | |
| 38 | 7361553 | 4 | SCREW PLUG VSTI | PARAFUSO DE FECHAMENTO | | |
| 40 | 7368478 | 1 | SCREW FITTING WH 15L | REDUÇÃO | | |
| 45 | 4042197 | 2 | CYL HEAD STUD ISO 4762 M 10 X 100 8.8 A3 | PARAFUSO CILINDRICO | | |
| 50 | 10280279 | 1 | VALVE ⇨ ❑ 316 | VÁLVULA | | |
| 52 | 4043052 | 2 | CYLINDER SCREW ISO 4762 M6X60 10.9 A2 | PARAFUSO CILÍNDRICO | | |
| 55 | 7403175 | 1 | CONTROL HOSE 8X300 | MANGUEIRA DE COMANDO | | 1 |

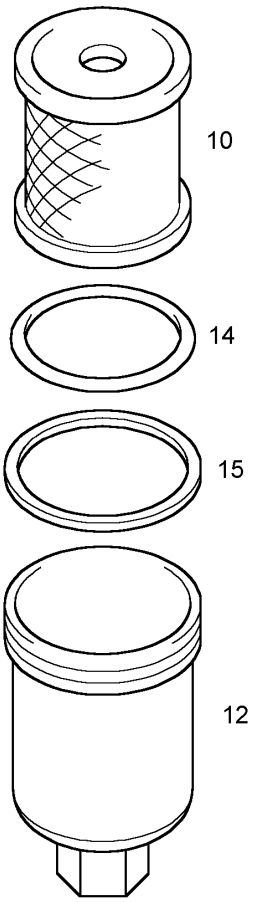


| Pos. | Item | Quantity | Description | Designação | Serie | K |
|---|---|---|---|---|---|---|
| 10 | 11342118 | 1 | FILTER ELEMENT 16µm | ELEMENTO FILTRANTE | | |
| 12 | 5605365 | 1 | HOUSING | CARCAÇA | | |
| 14 | 7264028 | 1 | O-RING | ANEL-O | | |
| 15 | 7410773 | 1 | SUPPORTING RING 58,5/63,5X1,4 | ANEL DE APOIO | | |

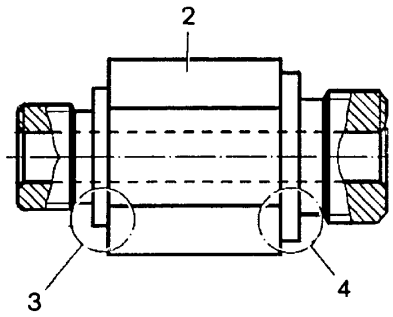


| Pos. | Item | Quantity | Description | Designação | Serie | K |
|---|---|---|---|---|---|---|
| 2 | | 1 | INTERMEDIATE FITTING | BOCAL INTERMEDIARIO | | |
| 3 | 7371654 | 1 | SEALING RING DIN 3869 14,7X18,9X 1,5 -17- | ANEL DE VEDAÇÃO | | |
| 4 | 7371651 | 1 | SEALING RING 21 | ANEL DE VEDAÇÃO | | |

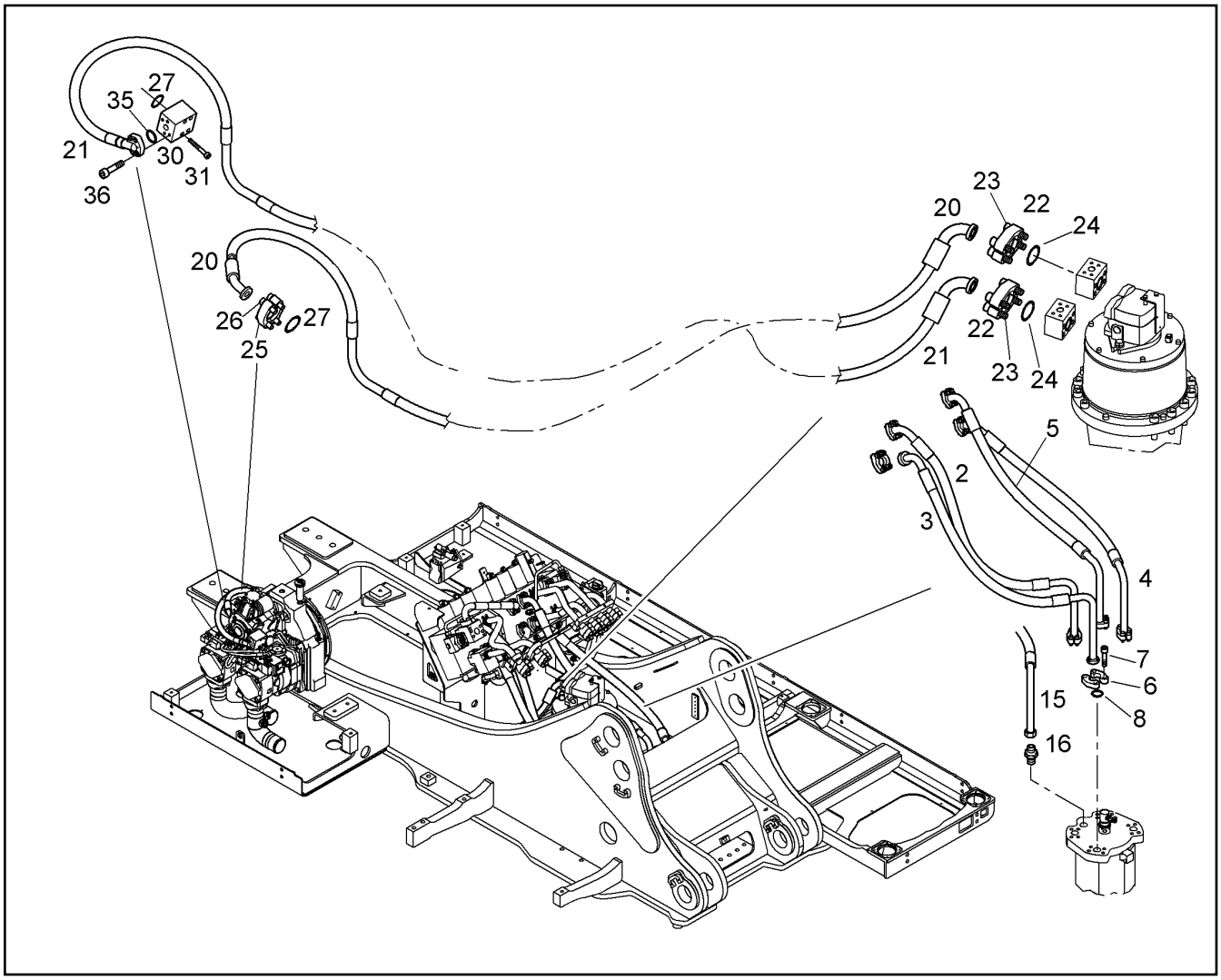


| Pos. | Item | Quantity | Description | Designação | Serie | K |
|---|---|---|---|---|---|---|
| 2 | 10043518 | 1 | HOSE | MANGUEIRA | | 1 |
| 3 | 10043521 | 1 | HOSE | MANGUEIRA | | 1 |
| 4 | 10043519 | 1 | HOSE | MANGUEIRA | | 1 |
| 5 | 10043520 | 1 | HOSE | MANGUEIRA | | 1 |
| 6 | 11485639 | 16 | FLANGE HALF WITH BOSSING SAE J518 SA | MEIO FLANGE COM RELEVO | | |
| 7 | 10472425 | 8 | PLAIN COMPRESSION RING 45,05X3,40X2,8 | ANEL DE SEÇÃO RETANGULAR | | |
| 8 | 4902327 | 32 | CYLINDER SCREW ISO 4762 M14X45 10.9 | PARAFUSO CILÍNDRICO | | |
| 15 | 10043999 | 1 | HOSE | MANGUEIRA | | 1 |
| 16 | 7003800 | 1 | SCREW FITTING GE 28L M33X2 | REDUÇÃO | | |
| 20 | 10101257 | 1 | HOSE | MANGUEIRA | | 1 |
| 21 | 10101342 | 1 | HOSE | MANGUEIRA | | 1 |
| 22 | 11485639 | 4 | FLANGE HALF WITH BOSSING SAE J518 SA | MEIO FLANGE COM RELEVO | | |
| 23 | 4901241 | 8 | CYLINDER SCREW ISO 4762 M14X100 10.9 F | PARAFUSO CILÍNDRICO | | |
| 24 | 10472425 | 2 | PLAIN COMPRESSION RING 45,05X3,40X2,8 | ANEL DE SEÇÃO RETANGULAR | | |
| 25 | 11485638 | 2 | FLANGE HALF WITH BOSSING SAE J518 S | MEIO FLANGE COM RELEVO | | |
| 26 | 4043164 | 4 | CYLINDER SCREW ISO 4762 M12X35 10.9 | PARAFUSO CILÍNDRICO | | |
| 27 | 10490781 | 1 | PLAIN COMPRESSION RING 40,15X3,40X2,8 | ANEL DE SEÇÃO RETANGULAR | | |
| 30 | 10053858 | 1 | BLOCK | BLOCO | | |
| 31 | 4600169 | 4 | CYLINDER SCREW ISO 4762 M12X90 10.9 | PARAFUSO CILÍNDRICO | | |
| 35 | 10490784 | 1 | PLAIN COMPRESSION RING 32,30X3,40X2,8 | ANEL DE SEÇÃO RETANGULAR | | |
| 36 | 4043127 | 4 | CYLINDER SCREW ISO 4762 M10X40 10.9 | PARAFUSO CILÍNDRICO | | |

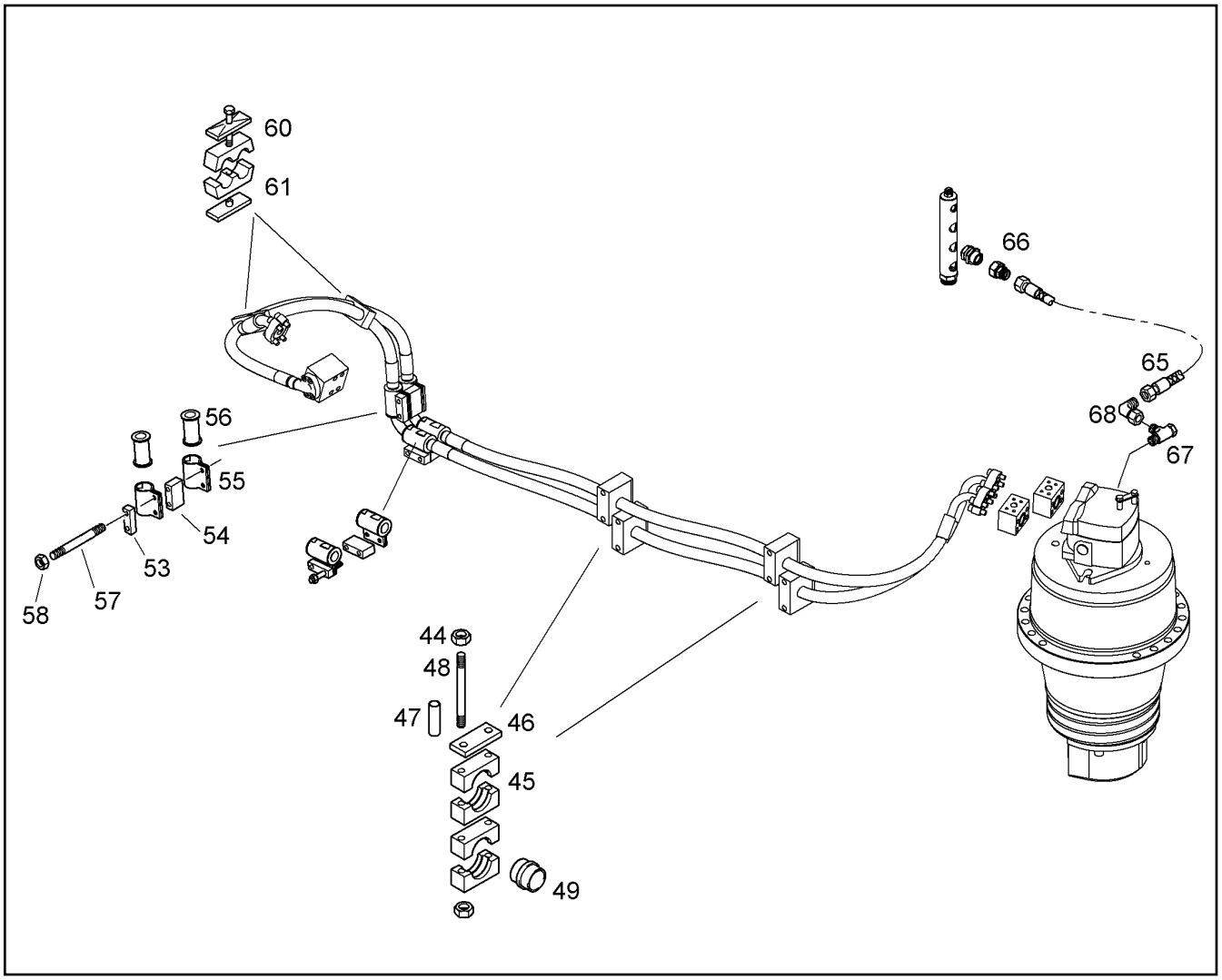


| Pos. | Item | Quantity | Description | Designação | Serie | K |
|---|---|---|---|---|---|---|
| 44 | 4000619 | 8 | HEX NUT M12 | PORCA SEXTAVADA | | |
| 45 | 7367236 | 8 | CLAMP-HALF AEHNL.DIN 3015 S 4 E 65 PP H | MEIA ABRAÇADEIRA | | |
| 46 | 9476811 | 4 | SHEET | PLACA | | |
| 47 | 7367211 | 8 | SLEEVE 12,4x16x87 | LUVA | | 1 |
| 48 | 4068085 | 8 | DOUBLE-ENDED STUD DIN 939 M 12 X 110 | PINO ROSCADO | | |
| 49 | 7365473 | 4 | ELASTOMER INSERT DIN 3015 S EL 4 32/64 | INSERTO DE ELASTOMERO | | |
| 53 | 9008100 | 2 | INTERMEDIATE PIECE H=20 | PECA INTERMEDIARIA | | |
| 54 | 10063258 | 2 | INTERMEDIATE PIECE | PECA INTERMEDIARIA | | |
| 55 | 10287499 | 4Pair | PIPE CLAMP HSRS 42X80 W1-ZN | BRAÇADEIRA DE TUBO | | |
| 56 | 10287498 | 4Pair | RUBBER INSERT 30/42X88 | INSERTO DE BORRACHA | | |
| 57 | 4068085 | 4 | DOUBLE-ENDED STUD DIN 939 M 12 X 110 | PINO ROSCADO | | |
| 58 | 4000619 | 4 | HEX NUT M12 | PORCA SEXTAVADA | | |
| 60 | 9387822 | 2 | HOSE CLAMP CPL<br>⇨ ❑ 649 | BRACADEIRA MANGUEIRA COM | | |
| 61 | 4002688 | 2 | WELD PLATE DIN 3015-3 Z-AP 5 W1-ZN | PLACA PARA SOLDAR | | |
| 65 | 5612035 | 1 | HOSE | MANGUEIRA | | 1 |
| 66 | 7616910 | 1 | SCREW FITTING RED 28/22L | REDUÇÃO | | |
| 67 | 7617386 | 1 | HINGED THREADED UNION | CONEXÃO ROSCADA | | |
| 68 | 247126202 | 1 | SCREW FITTING EW 22L | REDUÇÃO | | |

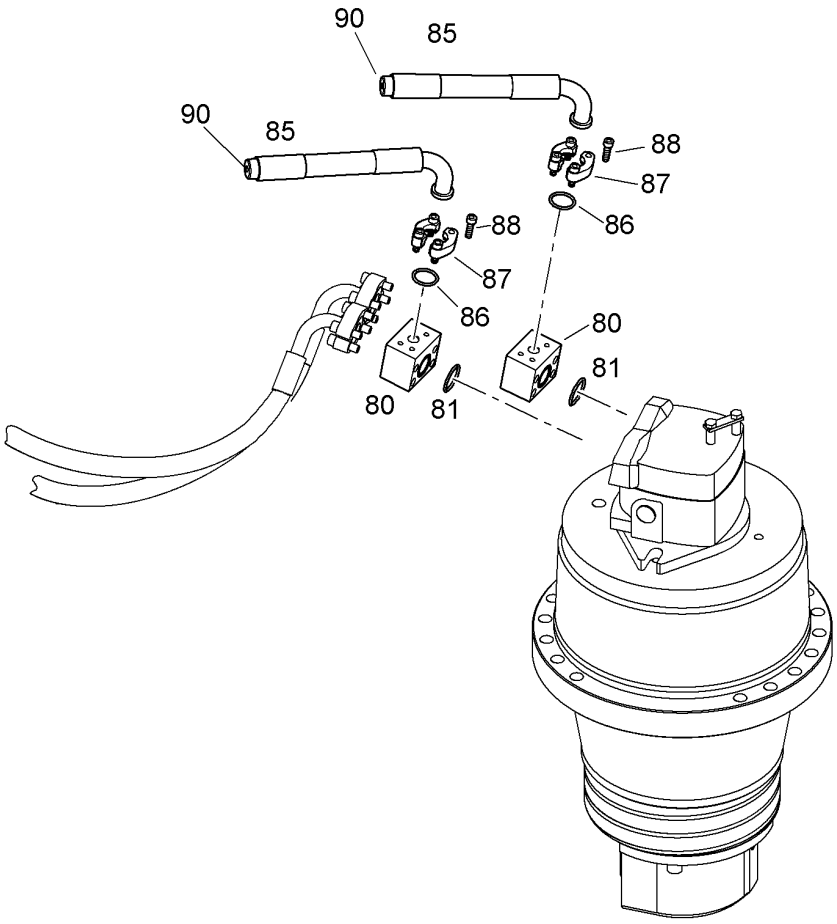


| Pos. | Item | Quantity | Description | Designação | Serie | K |
|---|---|---|---|---|---|---|
| 80 | 10064927 | 2 | BLOCK | BLOCO | | |
| 81 | 10472425 | 2 | PLAIN COMPRESSION RING 45,05X3,40X2,8 | ANEL DE SEÇÃO RETANGULAR | | |
| 85 | 10290607 | 2 | HOSE | MANGUEIRA | | 1 |
| 86 | 10490784 | 2 | PLAIN COMPRESSION RING 32,30X3,40X2,8 | ANEL DE SEÇÃO RETANGULAR | | |
| 87 | 11485637 | 4 | FLANGE HALF WITH BOSSING SAE J518 S | MEIO FLANGE COM RELEVO | | |
| 88 | 4900855 | 8 | CYLINDER SCREW ISO 4762 M10X35 10.9 | PARAFUSO CILÍNDRICO | | |
| 90 | 7409720 | 2 | SCREW COUPLING G1/4 | ACOPLAMENTO ROSCADO | | |

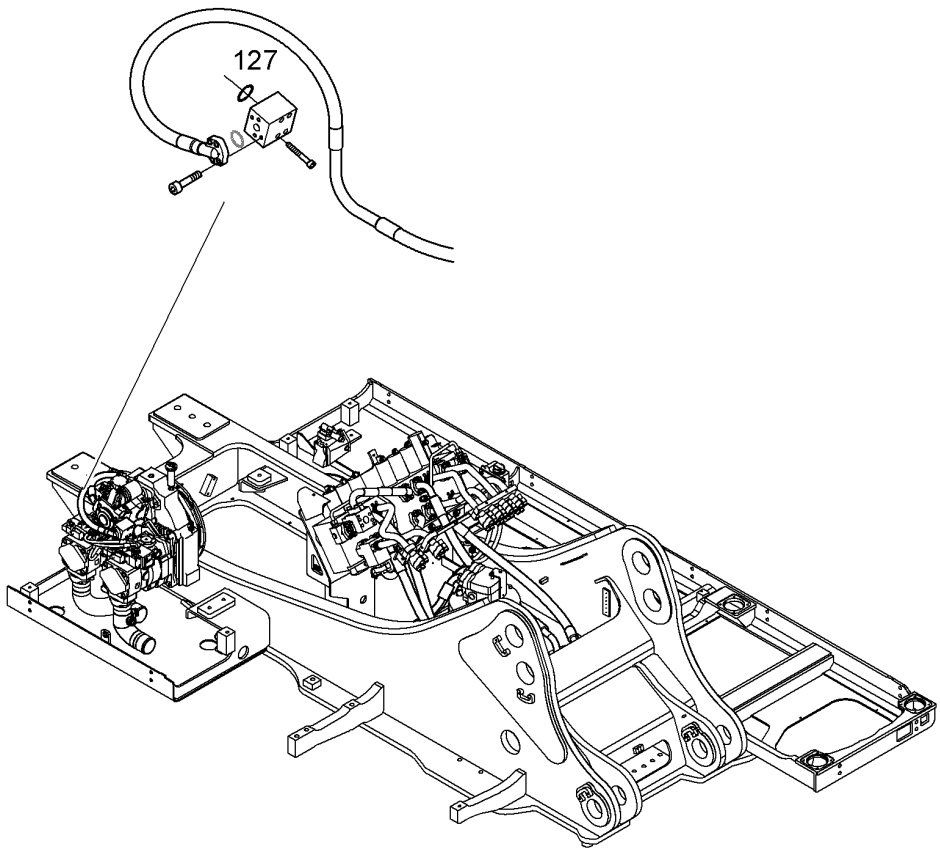


| Pos. | Item | Quantity | Description | Designação | Serie | K |
|---|---|---|---|---|---|---|
| 127 | 10490781 | 1 | PLAIN COMPRESSION RING 40,15X3,40X2,8 | ANEL DE SEÇÃO RETANGULAR | | |

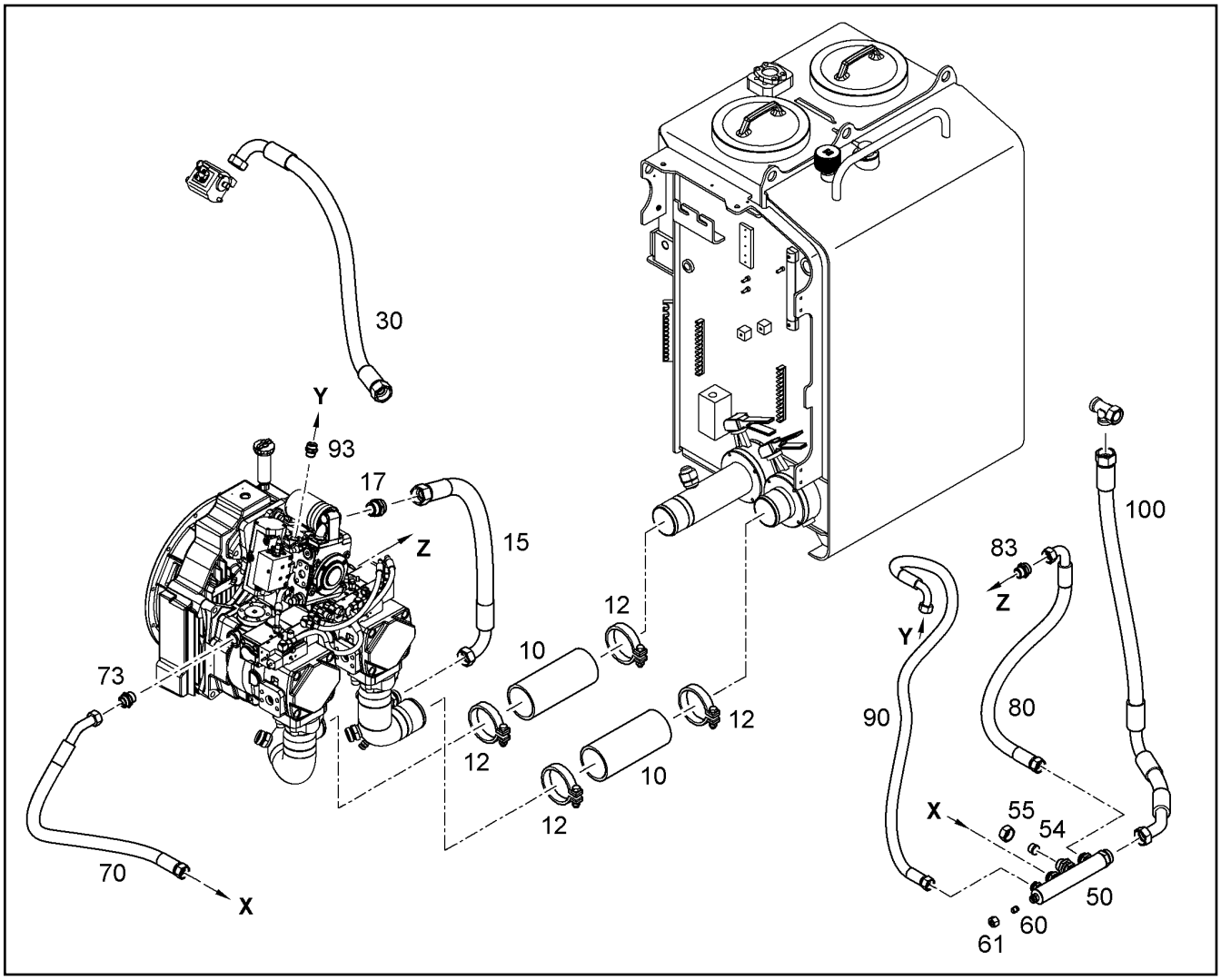


| Pos. | Item | Quantity | Description | Designação | Serie | K |
|---|---|---|---|---|---|---|
| 10 | 9368512 | 2 | OIL SUCTION HOSE | MANGUEIRA | | 1 |
| 12 | 4820018 | 4 | HOSE CLAMP DIN 3017 B2-116 X 30 W1-2 | ABRAÇADEIRA DE MANGUEIRA | | |
| 15 | 10044073 | 1 | HOSE 32X780 | MANGUEIRA | | 1 |
| 17 | 4900486 | 1 | SCREW FITTING GE 35L M42X2 | REDUÇÃO | | |
| 30 | 5600245 | 1 | HOSE | MANGUEIRA | | 1 |
| 50 | 10100944 | 1 | DISTRIBUTOR | DISTRIBUIDOR | | |
| 54 | 4900027 | 1 | TAPER COLLET | CONE DE FECHAMENTO | | |
| 55 | 4774006 | 1 | BOX NUT DIN 3870 A 28L | PORCA DE CONEXAO | | |
| 60 | 4772024 | 1 | TAPER COLLET VKA 15L | CONE DE FECHAMENTO | | |
| 61 | 4774003 | 1 | BOX NUT DIN 3870 A 15L | PORCA DE CONEXAO | | |
| 70 | 5612128 | 1 | HOSE | MANGUEIRA | | 1 |
| 73 | 7003800 | 1 | SCREW FITTING GE 28L M33X2 | REDUÇÃO | | |
| 80 | 10002636 | 1 | HOSE | MANGUEIRA | | 1 |
| 83 | 7003800 | 1 | SCREW FITTING GE 28L M33X2 | REDUÇÃO | | |
| 90 | 7404503 | 1 | HOSE | MANGUEIRA | | 1 |
| 93 | 7362515 | 1 | SCREW FITTING GE 22L | REDUÇÃO | | |
| 100 | 10101261 | 1 | HOSE | MANGUEIRA | | 1 |

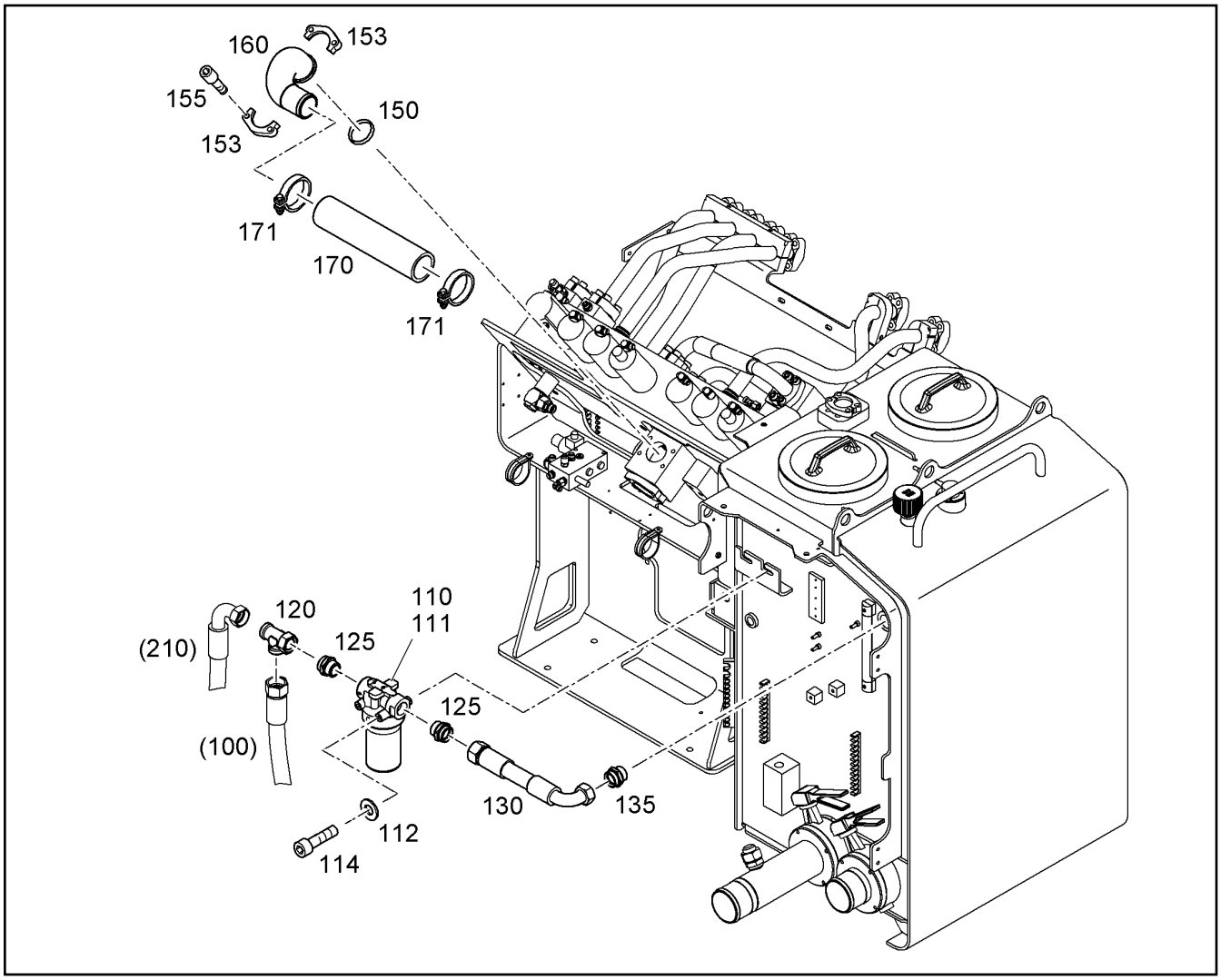


| Pos. | Item | Quantity | Description | Designação | Serie | K |
|---|---|---|---|---|---|---|
| 110 | 10044624 | 1 | PRESSURE FILTER<br>⇨ ❑ 307 | FILTRO DE PRESSAO | | |
| 111 | 10115197 | 1 | FILTER INSERT 60µm | ELEMENTO FILTRANTE | | |
| 112 | 10289804 | 2 | WASHER ISO 7089 12 300HV | ARRUELA | | |
| 114 | 4600184 | 2 | HEX BOLT ISO 4017 M12X25 10.9 A3C | PARAFUSO SEXTAVADO | | |
| 120 | 482330814 | 1 | SCREW FITTING EL 35L | REDUÇÃO | | |
| 125 | 4001871 | 2 | SCREW FITTING GE 35L | REDUÇÃO | | |
| 130 | 5610426 | 1 | HOSE | MANGUEIRA | | 1 |
| 135 | 4900486 | 1 | SCREW FITTING GE 35L M42X2 | REDUÇÃO | | |
| 150 | 7410480 | 1 | O-RING | ANEL-O | | |
| 153 | 11485646 | 2 | FLANGE HALF WITH BOSSING SAE J518 SA | MEIO FLANGE COM RELEVO | | |
| 155 | 4043164 | 4 | CYLINDER SCREW ISO 4762 M12X35 10.9 | PARAFUSO CILÍNDRICO | | |
| 160 | 9683060 | 1 | SUPPORT | MANGUEIRA TUBULADURA | | 1 |
| 170 | 9332139 | 1 | BACK FLOW HOSE HYDR.OIL | MANGUEIRA DE RETORNO DE Ó | | 1 |
| 171 | 7363754 | 2 | HOSE CLAMP DIN 3017 C1- 88 X 25 W2-2 | ABRAÇADEIRA DE MANGUEIRA | | |

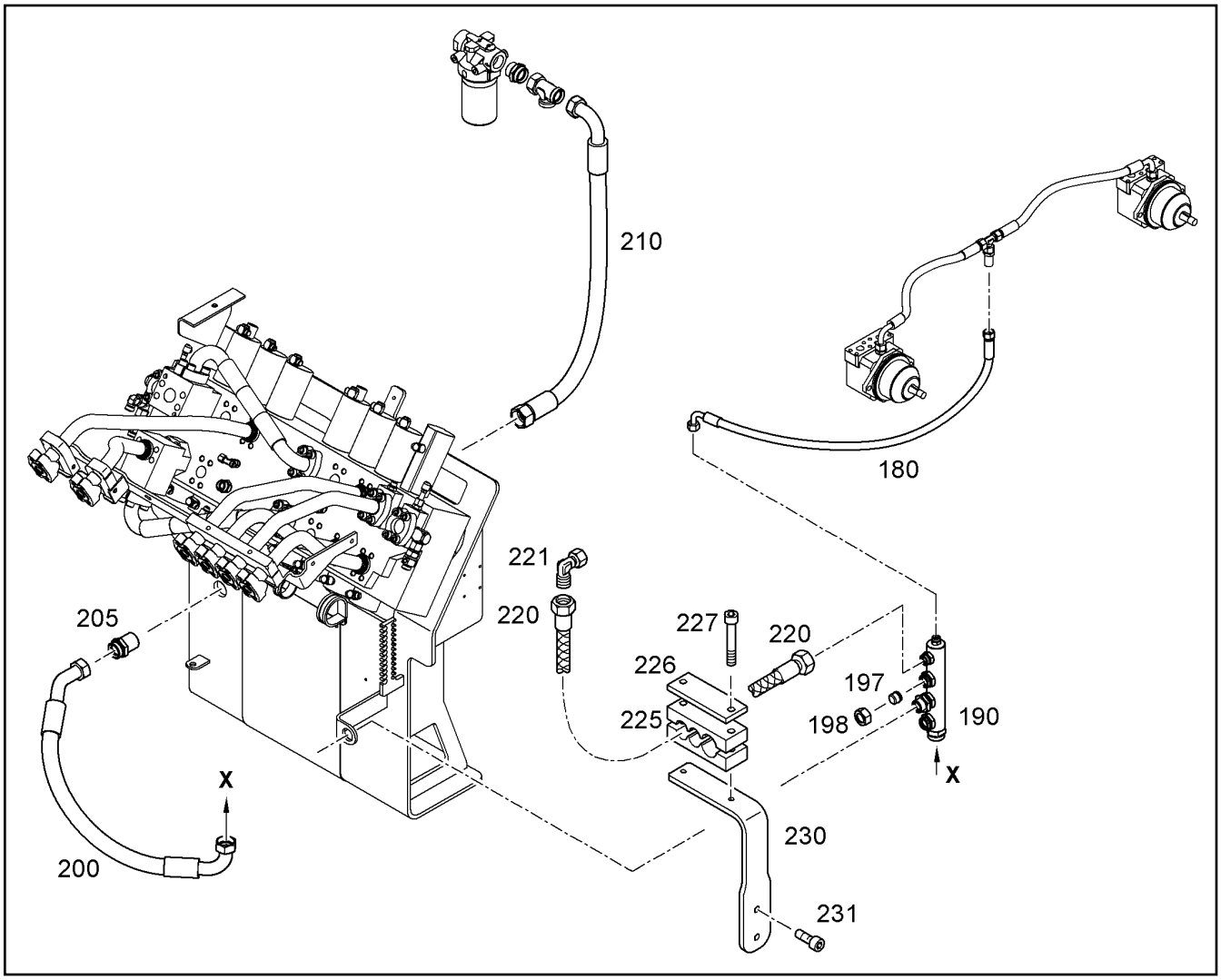


| Pos. | Item | Quantity | Description | Designação | Serie | K |
|---|---|---|---|---|---|---|
| 180 | 7021504 | 1 | HOSE | MANGUEIRA | | 1 |
| 190 | 10100944 | 1 | DISTRIBUTOR | DISTRIBUIDOR | | |
| 197 | 4900027 | 1 | TAPER COLLET | CONE DE FECHAMENTO | | |
| 198 | 4774006 | 1 | BOX NUT DIN 3870 A 28L | PORCA DE CONEXAO | | |
| 200 | 10043931 | 1 | HOSE | MANGUEIRA | | 1 |
| 205 | 7368109 | 1 | BULKHEAD STUD SV 35L M45X2 | CONEXÃO | | |
| 210 | 5611887 | 1 | HOSE | MANGUEIRA | | 1 |
| 220 | 10019230 | 1 | HOSE | MANGUEIRA | | 1 |
| 221 | 247126202 | 1 | SCREW FITTING EW 22L | REDUÇÃO | | |
| 225 | 9368525 | 6 | CLAMP | BRAÇADEIRA | | |
| 226 | 9368526 | 3 | SHEET | PLACA | | |
| 227 | 4043090 | 6 | CYLINDER SCREW ISO 4762 M8X60 10.9 A2 | PARAFUSO CILÍNDRICO | | |
| 230 | 10072512 | 1 | CONSOLE | SUPORTE | | |
| 231 | 4043124 | 2 | CYLINDER SCREW ISO 4762 M10X25 10.9 | PARAFUSO CILÍNDRICO | | |

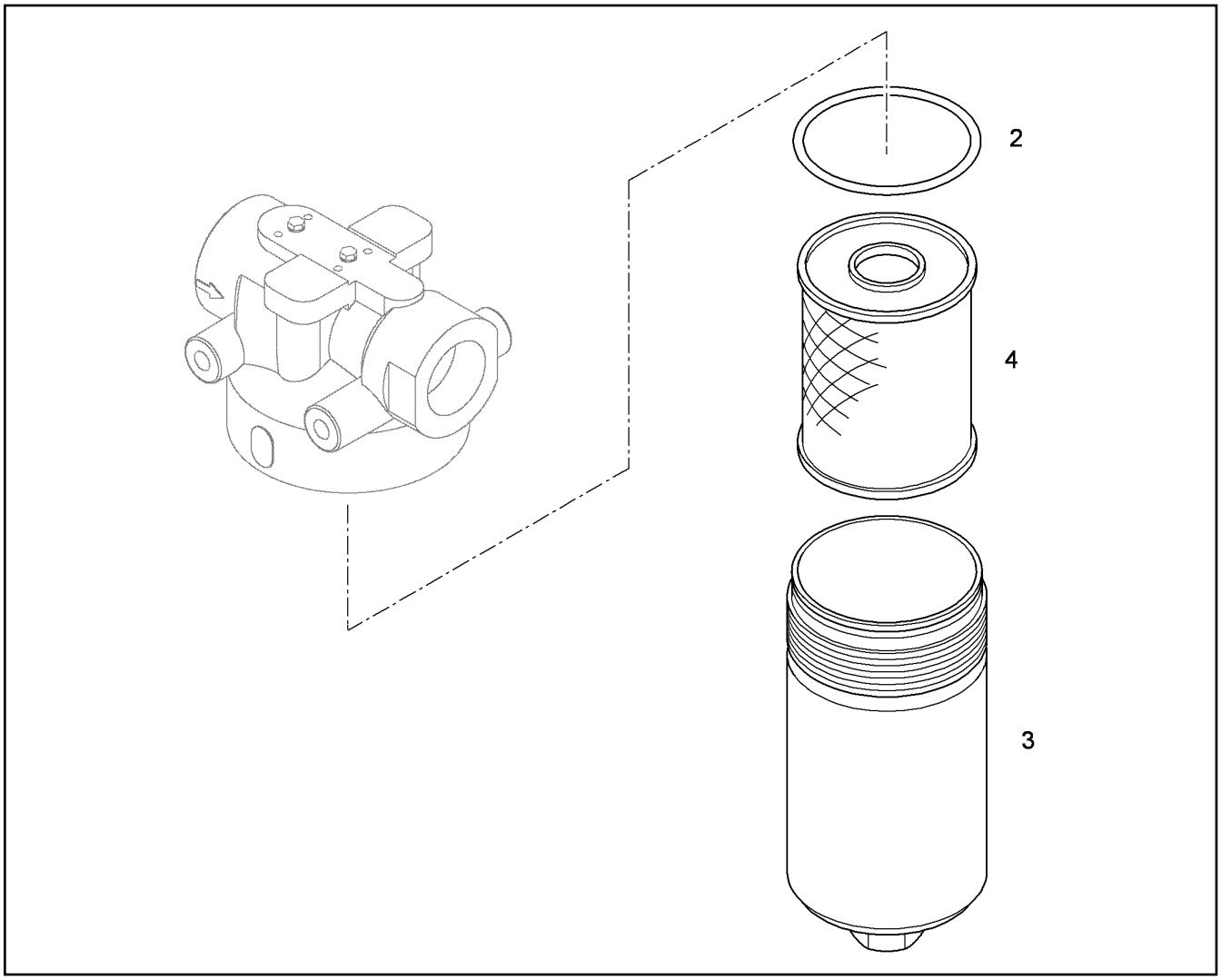


| Pos. | Item | Quantity | Description | Designação | Serie | K |
|---|---|---|---|---|---|---|
| 2 | 7380071 | 1 | O-RING DIN 3771 88,57X2,62 | ANEL-O | | |
| 3 | | 1 | POT | TAMPA PLASTICA | | |
| 4 | 10115197 | 1 | FILTER INSERT 60µm | ELEMENTO FILTRANTE | | |

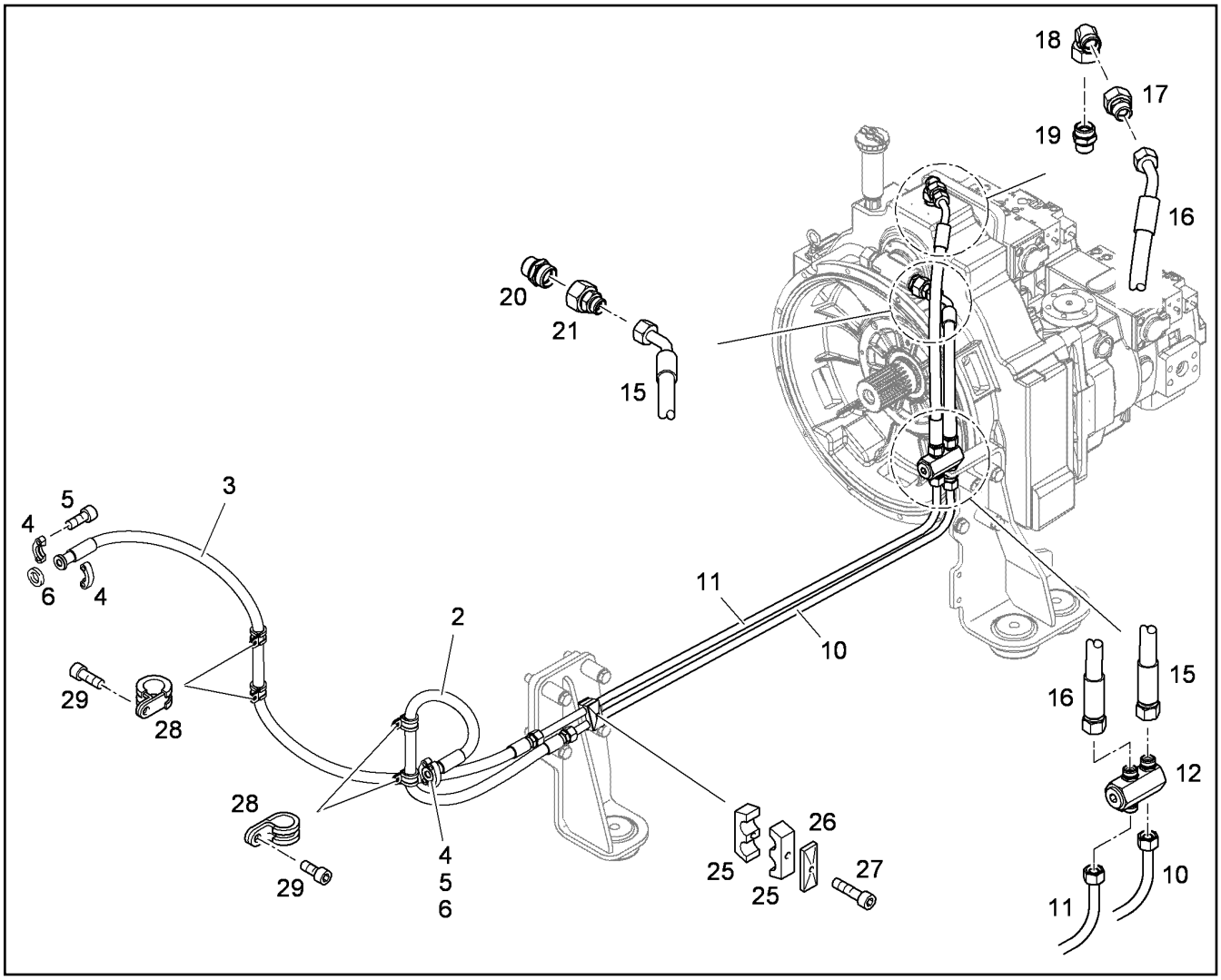


| Pos. | Item | Quantity | Description | Designação | Serie | K |
|---|---|---|---|---|---|---|
| 2 | 10042726 | 1 | HOSE | MANGUEIRA | | 1 |
| 3 | 10097282 | 1 | HOSE | MANGUEIRA | | 1 |
| 4 | 11485642 | 4 | FLANGE HALF WITH BOSSING SAE J518 S | MEIO FLANGE COM RELEVO | | |
| 5 | 4901217 | 8 | CYLINDER SCREW ISO 4762 M8X25 10.9 A2 | PARAFUSO CILÍNDRICO | | |
| 6 | 10490785 | 2 | PLAIN COMPRESSION RING 25,85X3,40X2,8 | ANEL DE SEÇÃO RETANGULAR | | |
| 10 | 9949218 | 1 | TUBE | TUBO | | |
| 11 | 9949217 | 1 | TUBE | TUBO | | |
| 12 | 10100946 | 1 | DISTRIBUTOR | DISTRIBUIDOR | | |
| 15 | 10043139 | 1 | HOSE | MANGUEIRA | | 1 |
| 16 | 10219333 | 1 | HOSE | MANGUEIRA | | 1 |
| 17 | 7367746 | 1 | SCREW FITTING RED 18/15L | REDUÇÃO | | |
| 18 | 247108302 | 1 | SCREW FITTING EW 18L | REDUÇÃO | | |
| 19 | 7003572 | 1 | SCREW FITTING GE 18L M22X1,5 | REDUÇÃO | | |
| 20 | 7362515 | 1 | SCREW FITTING GE 22L | REDUÇÃO | | |
| 21 | 7616913 | 1 | SCREW FITTING RED 22/15L | REDUÇÃO | | |
| 25 | 7364899 | 2 | CLAMP-HALF DIN 3015-3 Z 2 R 15 15 PP SW | MEIA ABRAÇADEIRA | | |
| 26 | 7362606 | 1 | LID PLATE DIN 3015 Z-DP 2 W1-ZN | PLACA | | |
| 27 | 4635318 | 1 | CYLINDER SCREW ISO 4762 M8X35 10.9 A2 | PARAFUSO CILÍNDRICO | | |
| 28 | 7362545 | 4 | CLAMP DIN 3016-1 D1 22X20 W1-2-CR | BRAÇADEIRA | | |
| 29 | 4902231 | 4 | CYLINDER SCREW ISO 4762 M8X16 10.9 A2 | PARAFUSO CILÍNDRICO | | |

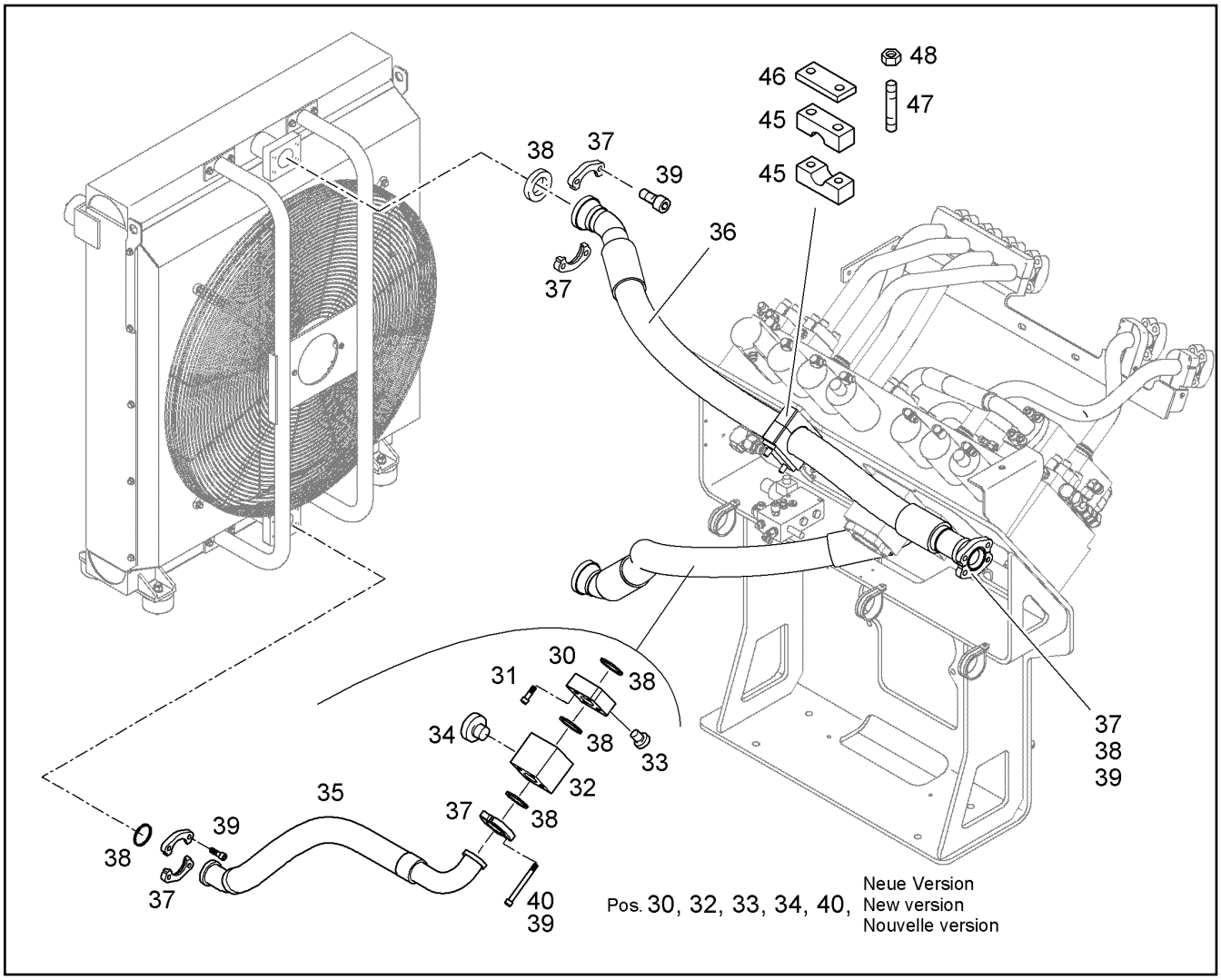


| Pos. | Item | Quantity | Description | Designação | Serie | K |
|---|---|---|---|---|---|---|
| 30 | 10080802 | 1 | INTERMEDIATE FLANGE | FLANGE INTERMEDIARIO | | |
| 31 | 4043003 | 4 | CYLINDER SCREW ISO 4762 M12X40 10.9 | PARAFUSO CILÍNDRICO | | |
| 32 | 10080803 | 1 | BLOCK | BLOCO | | |
| 33 | 7361553 | 1 | SCREW PLUG VSTI | PARAFUSO DE FECHAMENTO | | |
| 34 | 7363073 | 1 | SCREW PLUG VSTI M42X2 | PARAFUSO DE FECHAMENTO | | |
| 35 | 10217669 | 1 | HOSE | MANGUEIRA | -99998 | 1 |
| 35 | 10340145 | 1 | HOSE | MANGUEIRA | 99999- | 1 |
| 36 | 10042728 | 1 | HOSE | MANGUEIRA | | 1 |
| 37 | 11485645 | 8 | FLANGE HALF WITH BOSSING SAE J518 S | MEIO FLANGE COM RELEVO | | |
| 38 | 10490786 | 6 | PLAIN COMPRESSION RING 63,90X3,40X2,8 | ANEL DE SEÇÃO RETANGULAR | | |
| 39 | 4043163 | 12 | CYLINDER SCREW ISO 4762 M12X30 10.9 | PARAFUSO CILÍNDRICO | | |
| 40 | 404313401 | 4 | CYLINDER SCREW ISO 4762 M12X140 10.9 | PARAFUSO CILÍNDRICO | | |
| 45 | 9490869 | 2 | CLAMP | BRAÇADEIRA | | |
| 46 | 9830148 | 1 | SHEET | PLACA | | |
| 47 | 4900582 | 2 | DOUBLE-ENDED STUD DIN 939 M 12 X 130 1 | PINO ROSCADO | | |
| 48 | 4900546 | 2 | HEX NUT M12 | PORCA SEXTAVADA | | |

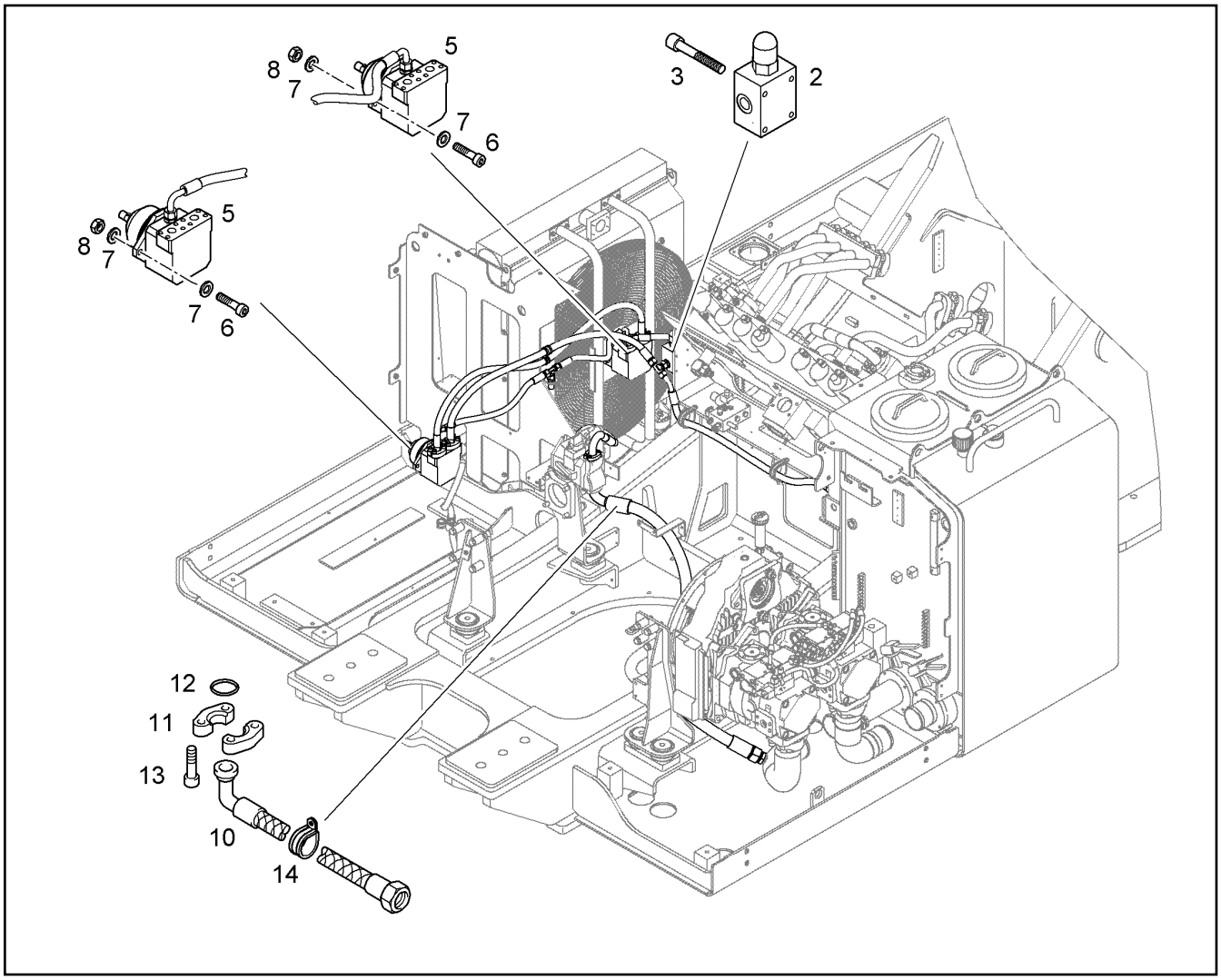


| Pos. | Item | Quantity | Description | Designação | Serie | K |
|---|---|---|---|---|---|---|
| 2 | 5602487 | 1 | PRESSURE LIMITING VALVE<br>⇨ ❑ 318 | VÁLVULA LIMITADORA DE PRES | | |
| 3 | 4000574 | 4 | CYLINDER SCREW ISO 4762 M8X70 10.9 A2 | PARAFUSO CILÍNDRICO | | |
| 5 | 10332890 | 2 | AXIAL PISTON MOTOR<br>[33429411 12W35 ]<br>[33429412 12W35 ]<br>⇨ ❑ 120 | MOTOR DE PISTAO AXIAL | | 2 |
| 6 | 4043003 | 4 | CYLINDER SCREW ISO 4762 M12X40 10.9 | PARAFUSO CILÍNDRICO | | |
| 7 | 10289804 | 8 | WASHER ISO 7089 12 300HV | ARRUELA | | |
| 8 | 4119106 | 4 | HEX NUT M12 | PORCA SEXTAVADA | | |
| 10 | 10043160 | 1 | HOSE | MANGUEIRA | | 1 |
| 11 | 11647393 | 2 | FLANGE HALF WITH BOSSING SAE J518 S | MEIO FLANGE COM RELEVO | | |
| 12 | 10472425 | 1 | PLAIN COMPRESSION RING 45,05X3,40X2,8 | ANEL DE SEÇÃO RETANGULAR | | |
| 13 | 4043000 | 4 | CYLINDER SCREW ISO 4762 M10X30 10.9 | PARAFUSO CILÍNDRICO | | |
| 14 | 7365080 | 1 | CLAMP DIN 3016 D1- 45 X 20 W1-2-CR | BRAÇADEIRA | | |

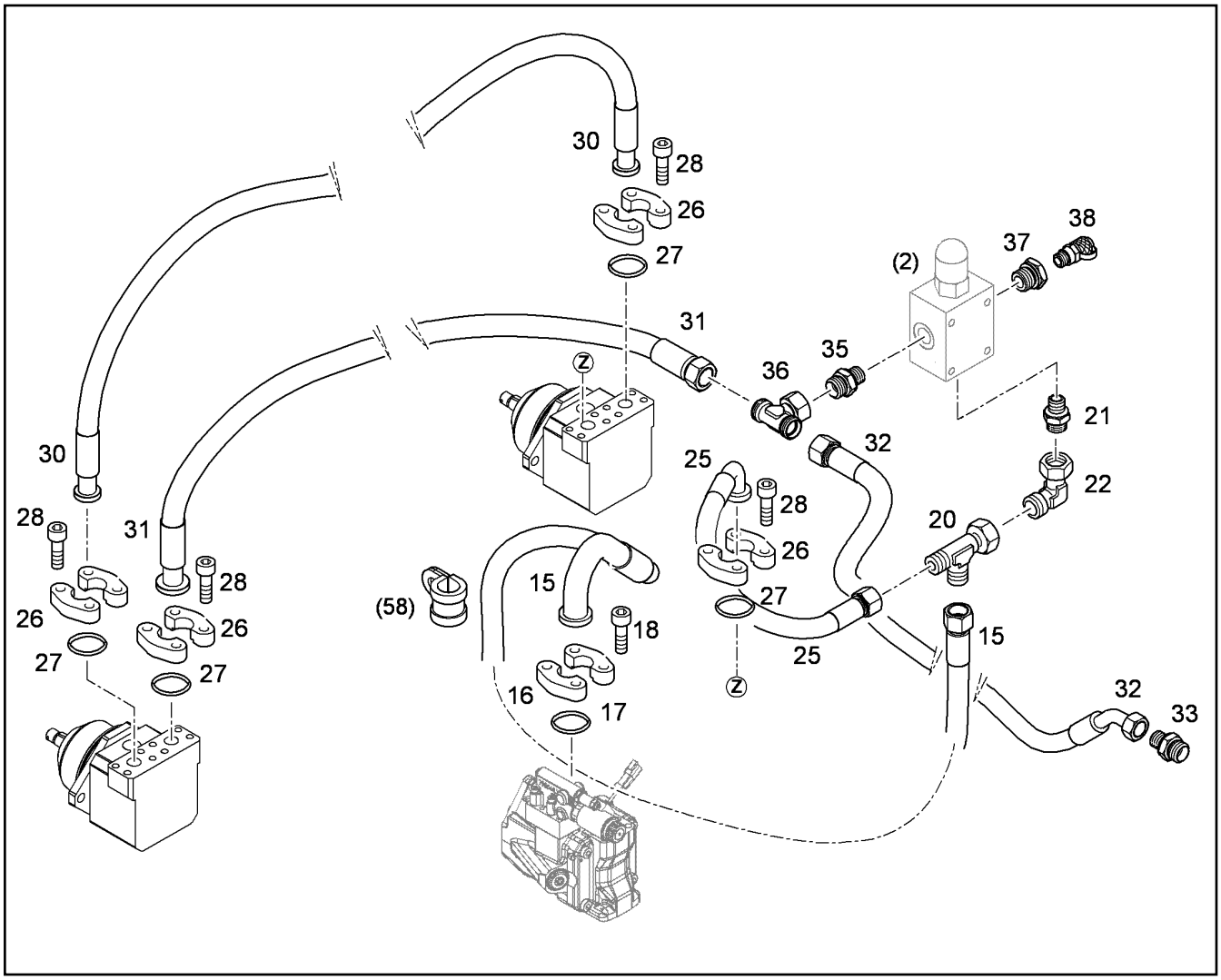


| Pos. | Item | Quantity | Description | Designação | Serie | K |
|---|---|---|---|---|---|---|
| 15 | 10332717 | 1 | HOSE | MANGUEIRA | | 1 |
| 16 | 11485643 | 2 | FLANGE HALF WITH BOSSING SAE J518 S | MEIO FLANGE COM RELEVO | | |
| 17 | 10490784 | 1 | PLAIN COMPRESSION RING 32,30X3,40X2,8 | ANEL DE SEÇÃO RETANGULAR | | |
| 18 | 4043000 | 4 | CYLINDER SCREW ISO 4762 M10X30 10.9 | PARAFUSO CILÍNDRICO | | |
| 20 | 7407107 | 1 | SCREW FITTING EL 20S | REDUÇÃO | | |
| 21 | 7410451 | 1 | SCREW FITTING GE 20S G1/2A | REDUÇÃO | | |
| 22 | 7407108 | 1 | SCREW FITTING EW 20S M30X2 | REDUÇÃO | | |
| 25 | 10332716 | 1 | HOSE | MANGUEIRA | | 1 |
| 26 | 11485637 | 8 | FLANGE HALF WITH BOSSING SAE J518 S | MEIO FLANGE COM RELEVO | | |
| 27 | 10490784 | 4 | PLAIN COMPRESSION RING 32,30X3,40X2,8 | ANEL DE SEÇÃO RETANGULAR | | |
| 28 | 4900855 | 16 | CYLINDER SCREW ISO 4762 M10X35 10.9 | PARAFUSO CILÍNDRICO | | |
| 30 | 10044235 | 1 | HOSE | MANGUEIRA | | 1 |
| 31 | 10044236 | 1 | HOSE | MANGUEIRA | | 1 |
| 32 | 10002803 | 1 | HOSE | MANGUEIRA | | 1 |
| 33 | 7003572 | 1 | SCREW FITTING GE 18L M22X1,5 | REDUÇÃO | | |
| 35 | 7003578 | 1 | LUG GE 18L | CONEXÃO | | |
| 36 | 247108402 | 1 | SCREW FITTING ET 18L | REDUÇÃO | | |
| 37 | 7361488 | 1 | REDUCING STUD | BOCAL REDUTOR | | |
| 38 | 7409720 | 1 | SCREW COUPLING G1/4 | ACOPLAMENTO ROSCADO | | |

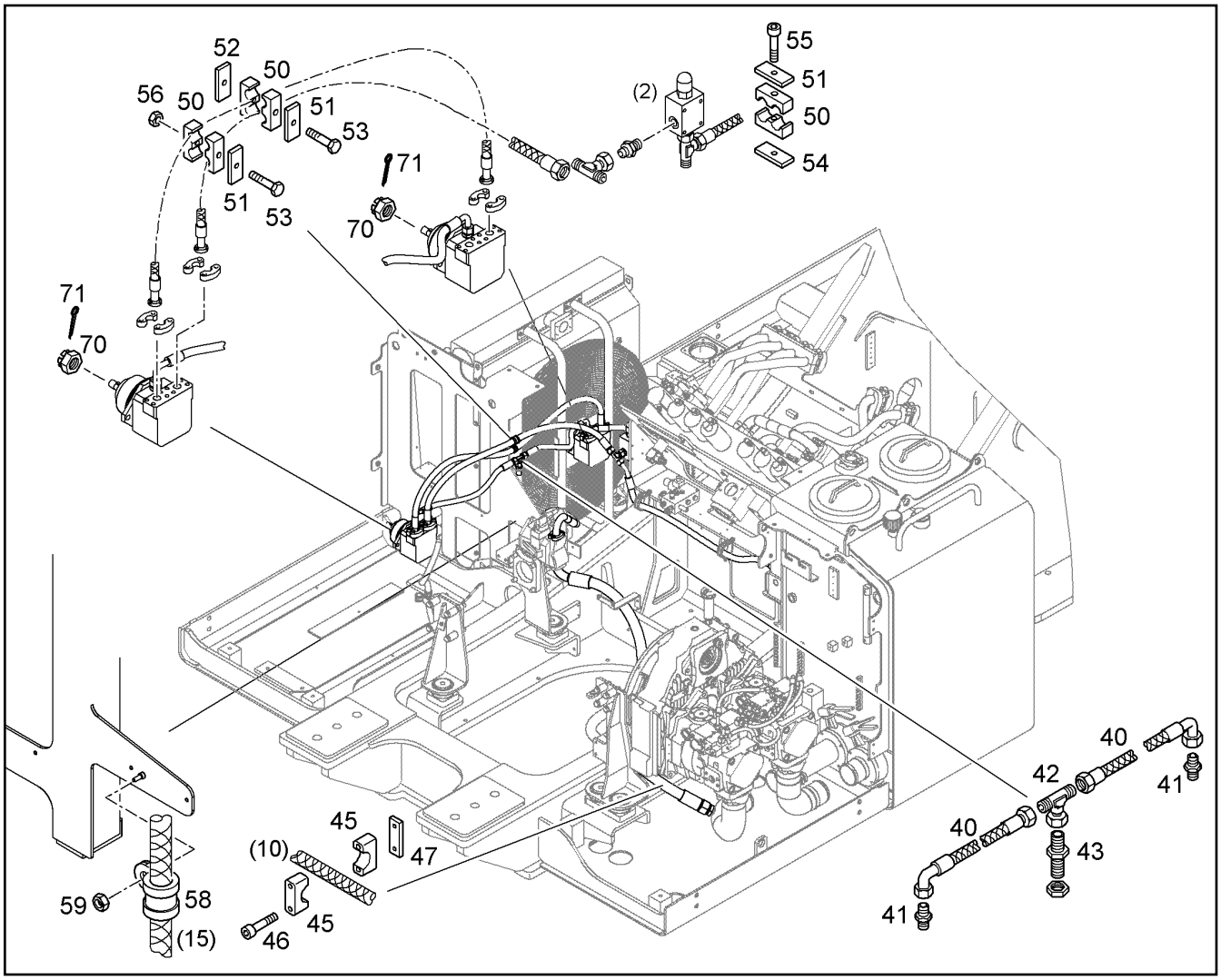


| Pos. | Item | Quantity | Description | Designação | Serie | K |
|---|---|---|---|---|---|---|
| 40 | 5618477 | 2 | HOSE | MANGUEIRA | | 1 |
| 41 | 7015482 | 2 | SCREW-ON CONNECTION GE 15L 7/8-14U | CONEXÃO ROSCADA | | |
| 42 | 472430408 | 1 | SCREW FITTING ET 15L | REDUÇÃO | | |
| 43 | 4901130 | 1 | SCREW FITTING SV 15L M22X1,5 | REDUÇÃO | | |
| 45 | 9492506 | 2 | HALF CLAMP COLLAR | MEIA ABRAÇADEIRA | | |
| 46 | 4600507 | 2 | CYLINDER SCREW ISO 4762 M10X105 8.8 | PARAFUSO CILÍNDRICO | | |
| 47 | 9010820 | 1 | THREADED PLATE | PLACA ROSCADA | | |
| 50 | 248017802 | 6 | CLAMP-HALF DIN 3015-3 Z 3 G 25 25 PP SW | MEIA ABRAÇADEIRA | | |
| 51 | 7401349 | 3 | LID PLATE DIN 3015-3 Z-DP 3 W1-ZN | PLACA | | |
| 52 | 9938039 | 1 | SHEET | PLACA | | |
| 53 | 4002689 | 2 | HEX BOLT ISO 4014 M8X60 10.9 A2C | PARAFUSO SEXTAVADO | | |
| 54 | 4635455 | 1 | WELD PLATE DIN 3015-3 Z-AP 3 W1-ZN | PLACA PARA SOLDAR | | |
| 55 | 4600335 | 1 | CYLINDER SCREW ISO 4762 M8X45 10.9 A2 | PARAFUSO CILÍNDRICO | | |
| 56 | 4901573 | 1 | HEX NUT M8 | PORCA SEXTAVADA | | |
| 58 | 7008622 | 1 | CLAMP DIN 3016 D1- 25 X 20 W1-2-CR | BRAÇADEIRA | | |
| 59 | 4000381 | 1 | HEX NUT M8 | PORCA SEXTAVADA | | |
| 70 | 10040410 | 2 | CROWN NUT UNF5/8 | PORCA-CASTELO | | |
| 71 | 4330015 | 2 | SPLIT PIN | CONTRAPINO | | |

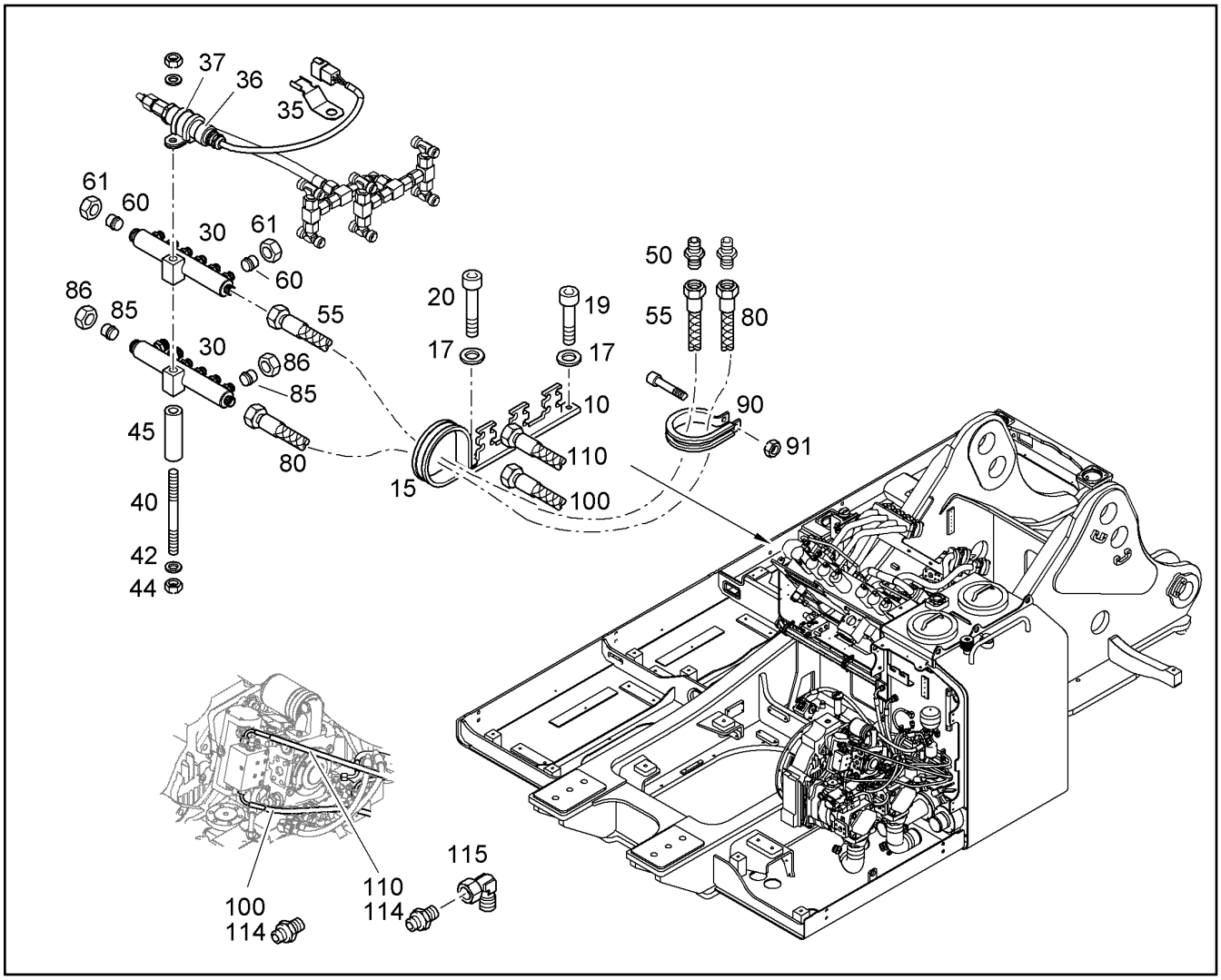


| Pos. | Item | Quantity | Description | Designação | Serie | K |
|---|---|---|---|---|---|---|
| 10 | 9967032 | 1 | HOSE CLIP | ABRAÇADEIRA DE MANGUEIRA | | |
| 15 | 7367135 | 1 | CLAMP DIN 3016 D1-100 X 25 W1-2-CR | BRAÇADEIRA | | |
| 17 | 10289795 | 2 | WASHER ISO 7089 10 300HV | ARRUELA | | |
| 19 | 4043122 | 1 | CYLINDER SCREW ISO 4762 M10X20 10.9 | PARAFUSO CILÍNDRICO | | |
| 20 | 4043124 | 1 | CYLINDER SCREW ISO 4762 M10X25 10.9 | PARAFUSO CILÍNDRICO | | |
| 30 | 10101615 | 2 | DISTRIBUTOR | DISTRIBUIDOR | | |
| 35 | 10041876 | 1 | HOLDER | SUPORTE | | |
| 36 | 10467727 | 1 | PRESSURE SWITCH | INTERRUPTOR DE PRESSAO | | |
| 37 | 7362816 | 1 | CLAMP DIN 3016 D1- 25 X 25 W1-2-CR | BRAÇADEIRA | | |
| 40 | 4002873 | 1 | DOUBLE-ENDED STUD DIN 939 M10X165 10. | PINO ROSCADO | | |
| 42 | 10289795 | 1 | WASHER ISO 7089 10 300HV | ARRUELA | | |
| 44 | 4600579 | 1 | HEX NUT M10 | PORCA SEXTAVADA | | |
| 45 | 9809191 | 1 | INTERMEDIATE TUBE | ANEL INTERMEDIARIO | | |
| 50 | 7003570 | 1 | SCREW FITTING GE 15L M18X1,5 | REDUÇÃO | | |
| 55 | 10006338 | 1 | HOSE | MANGUEIRA | | 1 |
| 60 | 4900038 | 3 | TAPER COLLET | CONE DE FECHAMENTO | | |
| 61 | 4774001 | 3 | BOX NUT DIN 3870 A 10L | PORCA DE CONEXAO | | |
| 80 | 10003704 | 1 | HOSE | MANGUEIRA | | 1 |
| 85 | 4900038 | 3 | TAPER COLLET | CONE DE FECHAMENTO | | |
| 86 | 4774001 | 3 | BOX NUT DIN 3870 A 10L | PORCA DE CONEXAO | | |
| 90 | 7017506 | 1 | CLAMP DIN 3016 D1- 92 X 25 W1-2-CR | BRAÇADEIRA | | |
| 91 | 4600579 | 1 | HEX NUT M10 | PORCA SEXTAVADA | | |
| 100 | 5611207 | 1 | CONTROL HOSE | MANGUEIRA DE COMANDO | | 1 |
| 110 | 5611207 | 1 | CONTROL HOSE | MANGUEIRA DE COMANDO | | 1 |
| 114 | 7003814 | 2 | SCREW FITTING GE 10L M14X1,5 | REDUÇÃO | | |
| 115 | 7403569 | 1 | SCREW FITTING EW 10L | REDUÇÃO | | |

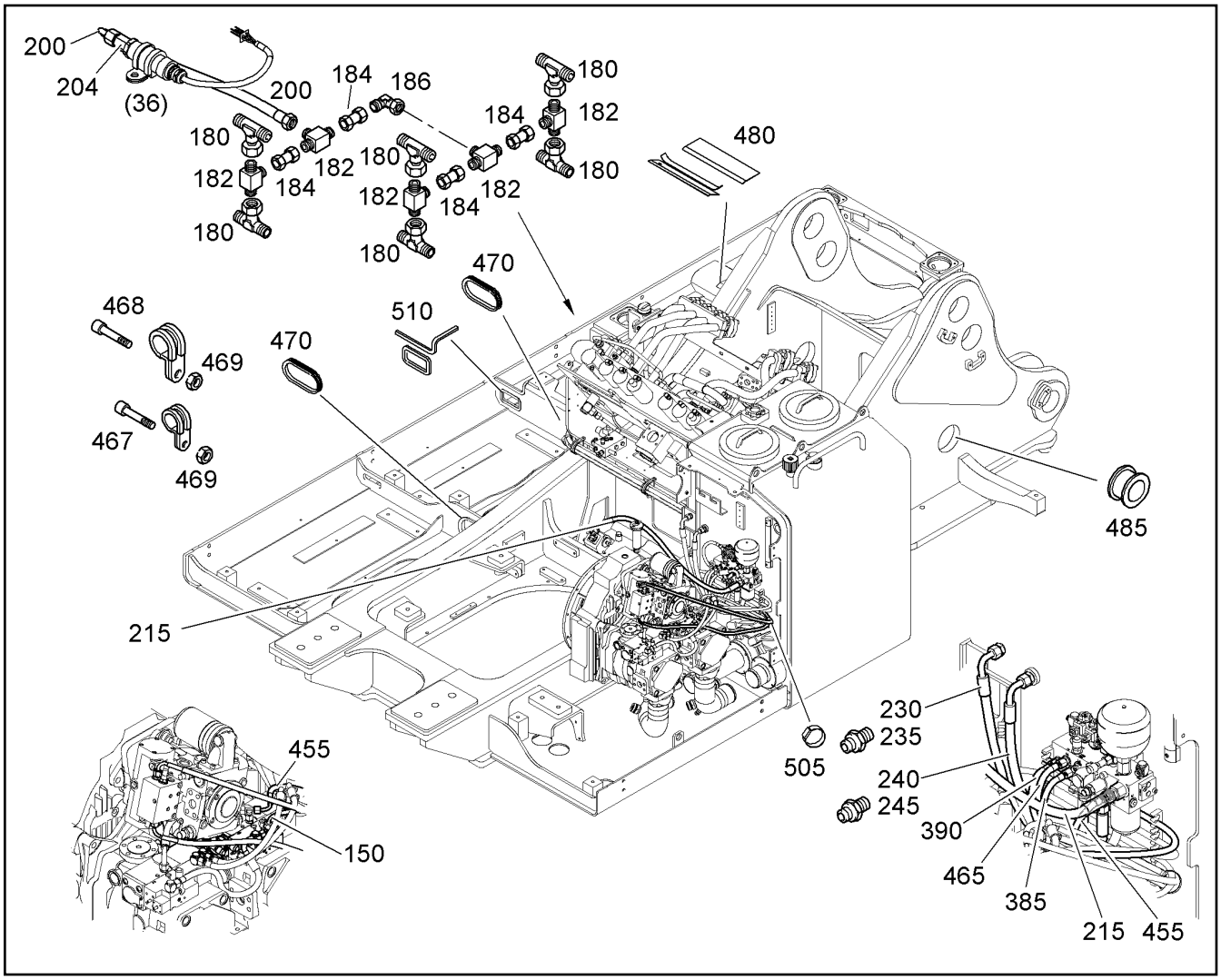


| Pos. | Item | Quantity | Description | Designação | Serie | K |
|---|---|---|---|---|---|---|
| 150 | 5611206 | 1 | CONTROL HOSE | MANGUEIRA DE COMANDO | | 1 |
| 180 | 482430314 | 6 | SCREW FITTING ET 10L | REDUÇÃO | | |
| 182 | 7403972 | 5 | SHUTTLE VALVE | VALVULA INTERCAMBIAVEL | | |
| 184 | 7410211 | 4 | SCREW FITTING GZ 10L | REDUÇÃO | | |
| 186 | 7403569 | 1 | SCREW FITTING EW 10L | REDUÇÃO | | |
| 200 | 7402576 | 1 | CONTROL HOSE | MANGUEIRA DE COMANDO | | 1 |
| 204 | 7364696 | 1 | SCREW EXTENSION TUBE | BOCAL ROSCADO | | |
| 215 | 10218792 | 1 | HOSE | MANGUEIRA | | 1 |
| 230 | 5619111 | 1 | HOSE | MANGUEIRA | | 1 |
| 235 | 7021805 | 1 | SCREW FITTING GE 15L | REDUÇÃO | | |
| 240 | 5619111 | 1 | HOSE | MANGUEIRA | | 1 |
| 245 | 7021805 | 1 | SCREW FITTING GE 15L | REDUÇÃO | | |
| 385 | 7002561 | 1 | CONTROL HOSE | MANGUEIRA DE COMANDO | | 1 |
| 390 | 7002561 | 1 | CONTROL HOSE | MANGUEIRA DE COMANDO | | 1 |
| 455 | 7002561 | 1 | CONTROL HOSE | MANGUEIRA DE COMANDO | | 1 |
| 465 | 7016608 | 1 | CONTROL HOSE | MANGUEIRA DE COMANDO | | 1 |
| 467 | 7362603 | 6 | CLAMP DIN 3016-1 D1 15X20 W1-2-CR | BRAÇADEIRA | | |
| 468 | 7364299 | 1 | CLAMP DIN 3016-1 D1 30X20 W1-2-CR | BRAÇADEIRA | | |
| 469 | 4901573 | 7 | HEX NUT M8 | PORCA SEXTAVADA | | |
| 470 | 9368060 | 2 | EDGE PROTECTION | PROTEÇÃO DE CANTO | | |
| 480 | 10007928 | 2 | RUBBER MAT | TAPETE DE BORRACHA | | |
| 485 | 9344777 | 2 | HOSE GUIDE | GUIA DE MANGUEIRA | | |
| 505 | 7621780 | 5 | LASHING STRAP 18X0,35m 380daN TEXTILG | CINTA DE AMARRACAO | | |
| 510 | 226017802 | 0.75m | SECTION | PERFIL DE PROTECAO DE CANT | | |

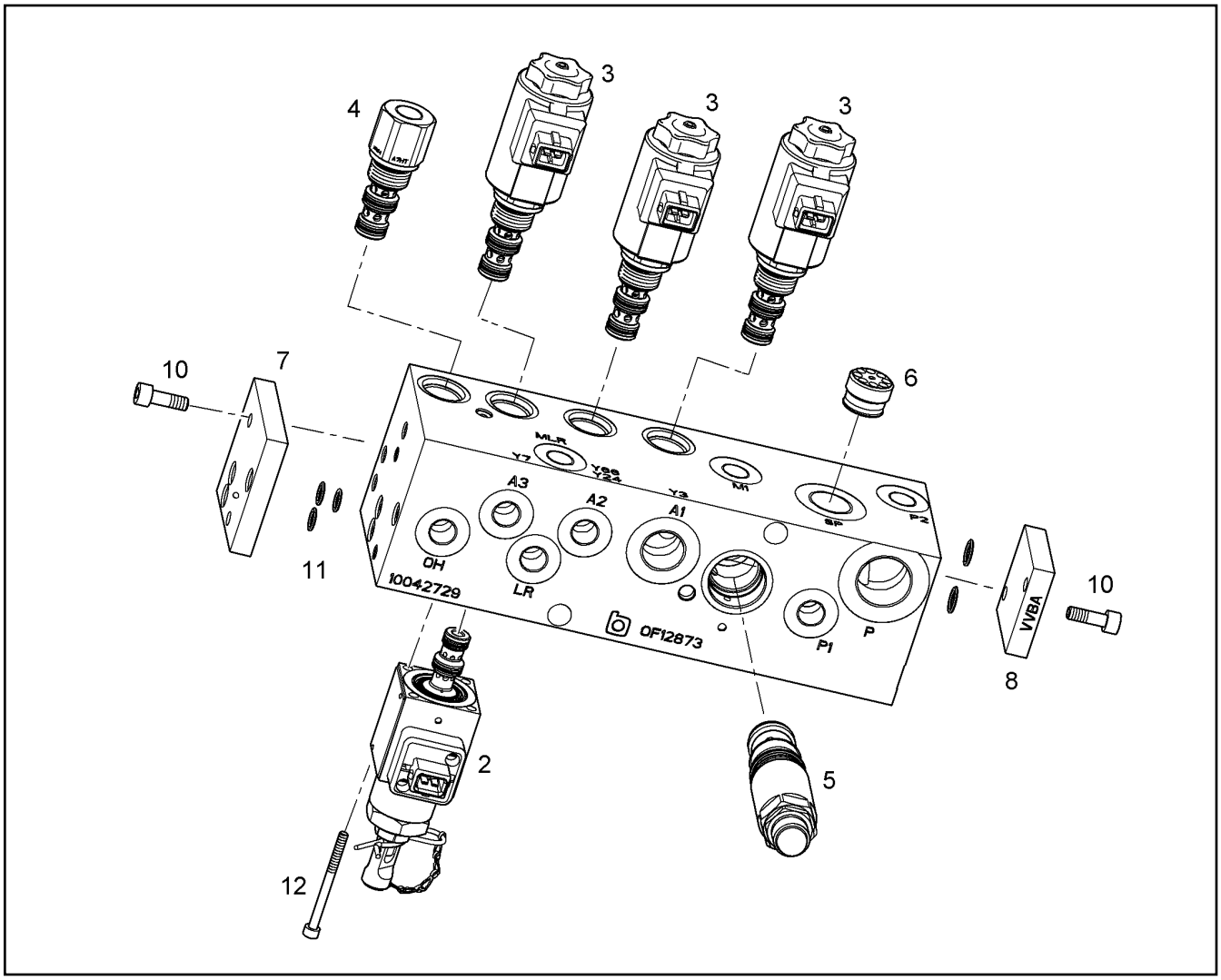


| Pos. | Item | Quantity | Description | Designação | Serie | K |
|---|---|---|---|---|---|---|
| 2 | 10280461 | 1 | CONTROL SOLENOID VALVE<br>⇨ ❑ 321 | VALVULA MAGNETICA DE REG | | |
| 3 | 5615344 | 3 | SOLENOID VALVE<br>⇨ ❑ 319 | VÁLVULA SOLENÓIDE | | |
| 4 | 5614029 | 1 | PILOT VALVE | VALVULA DE COMUTACAO | | |
| 4 | 5009562 | 1 | SEAL KIT DIRECTIONAL VALVE<br>⇨ ❑ 326 | KIT VEDAÇÃO VÁLVULA DIRECI | | |
| 5 | 5009565 | 1 | PRESSURE LIMITING CARTRIDGE<br>⇨ ❑ 317 | CARTUCHO LIMITADOR DE PR | | |
| 6 | 5608327 | 1 | NON-RETURN VALVE | VALVULA DE RETENCAO | | |
| 6 | 7371590 | 1 | -O-RING 16,0X1,5 | -ANEL-O | | |
| 7 | 7372237 | 1 | LID | TAMPA | | |
| 8 | 7371025 | 1 | BREECH PLATE<br>⇨ ❑ 323 | PLACA DE FECHAMENTO | | |
| 10 | 4002417 | 4 | CYLINDER SCREW ISO 4762 M6x18 8.8 A2C | PARAFUSO CILÍNDRICO | | |
| 11 | 10024675 | 2 | O-RING 7,65x1,78 | ANEL-O | | |
| 12 | 4901531 | 4 | CYLINDER SCREW ISO 4762 M4x50 8.8 A2C | PARAFUSO CILÍNDRICO | | |

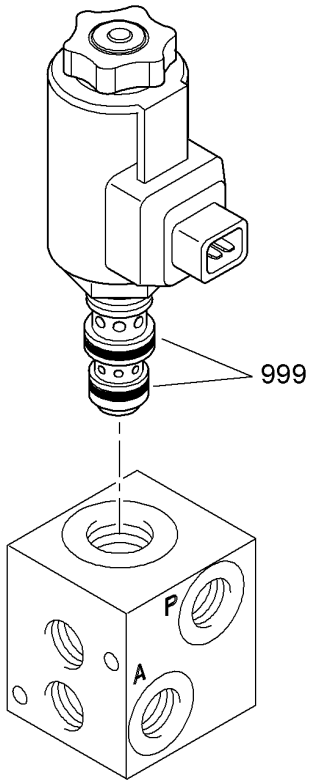


| Pos. | Item | Quantity | Description | Designação | Serie | K |
|---|---|---|---|---|---|---|
| 999 | 5009562 | 1 | SEAL KIT DIRECTIONAL VALVE<br>⇨ ❑ 326 | KIT VEDAÇÃO VÁLVULA DIRECI | | |

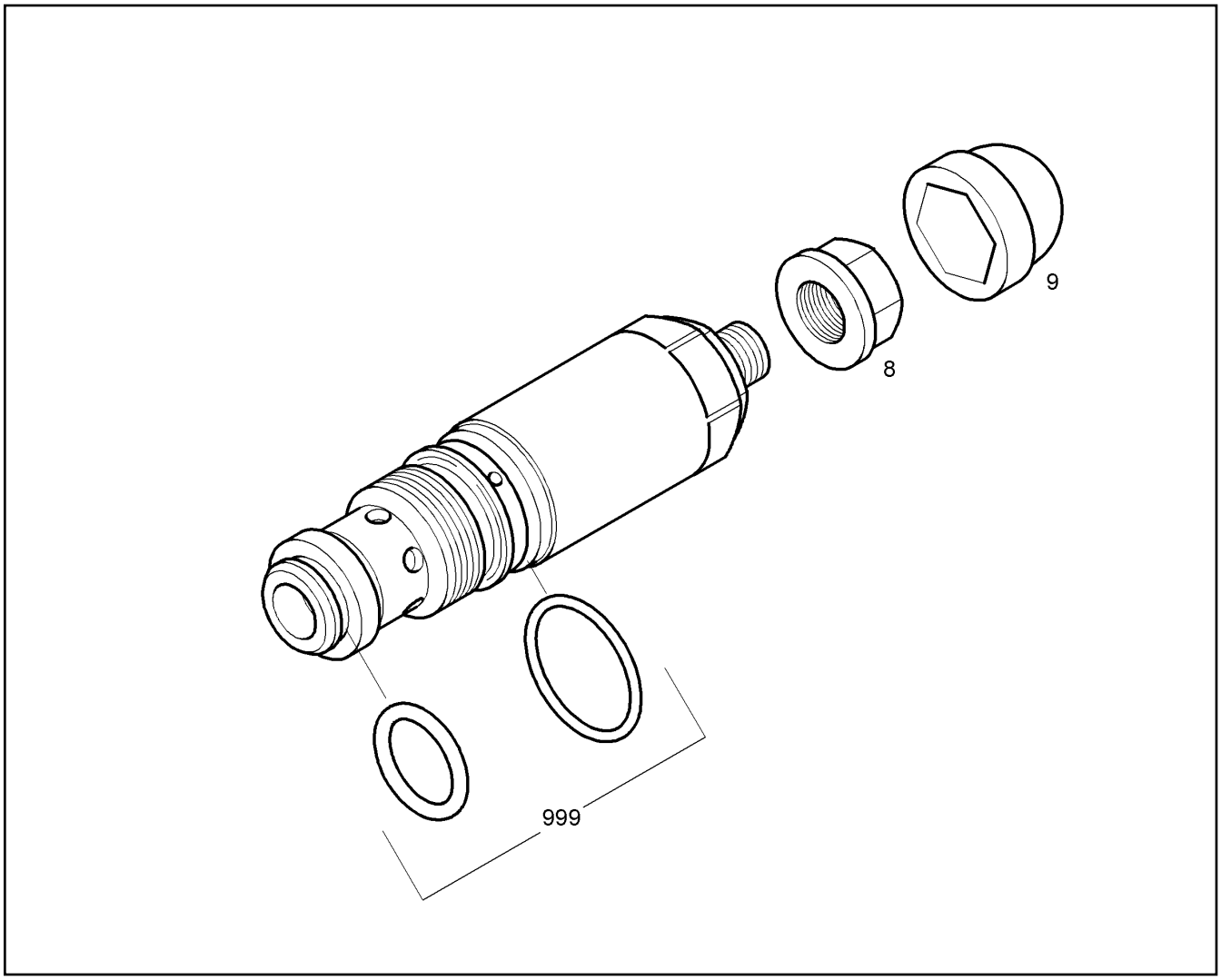


| Pos. | Item | Quantity | Description | Designação | Serie | K |
|---|---|---|---|---|---|---|
| 8 | 7361601 | 1 | SEAL-LOCK-SHOULDER NUT | PORCA SEAL-LOCK | | |
| 9 | 7616949 | 1 | PROTECTING CAP | CAPA DE PROTECAO | | |
| 999 | 7025142 | 1 | SEAL KIT<br>⇨ ❑ 327 | KIT DE VEDAÇÃO | | |

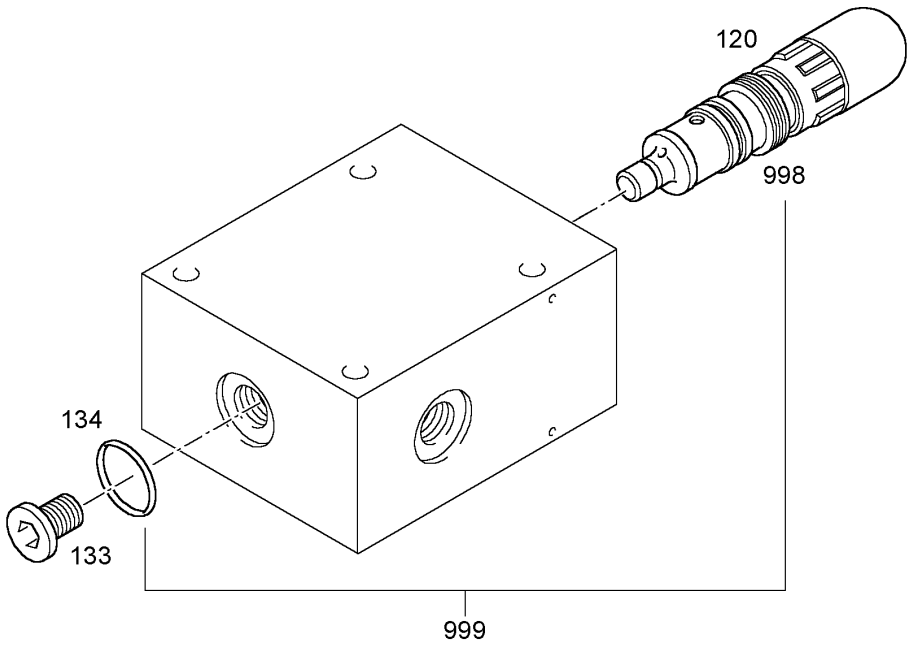


| Pos. | Item | Quantity | Description | Designação | Serie | K |
|---|---|---|---|---|---|---|
| 120 | | 1 | PRESSURE LIMITING VALVE<br>⇨ ❑ 322 | VÁLVULA LIMITADORA DE PRES | | |
| 133 | 7002760 | 1 | SCREW PLUG | PARAFUSO DE FECHAMENTO | | |
| 134 | 7101015 | 1 | SEALING RING DIN 7603 A 22X27X1,5 | ANEL DE VEDAÇÃO | | |
| 998 | 7030267 | 1 | SEAL KIT LIMIT VALVE<br>⇨ ❑ 328 | KIT DE VEDACAO | | |
| 999 | 5604334 | 1 | SEALING SET VALVE | KIT DE VEDACAO DA VALVULA | | |

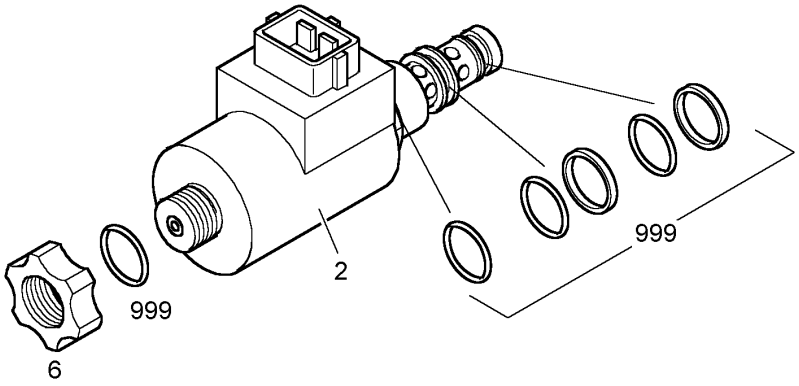


| Pos. | Item | Quantity | Description | Designação | Serie | K |
|---|---|---|---|---|---|---|
| 2 | 10333044 | 1 | MAGNET COIL | BOBINA MAGNÉTICA | | |
| 6 | 7023934 | 1 | NUT | PORCA SERRILHADA | | |
| 999 | 5009562 | 1 | SEAL KIT DIRECTIONAL VALVE<br>⇨ ❑ 326 | KIT VEDAÇÃO VÁLVULA DIRECI | | |

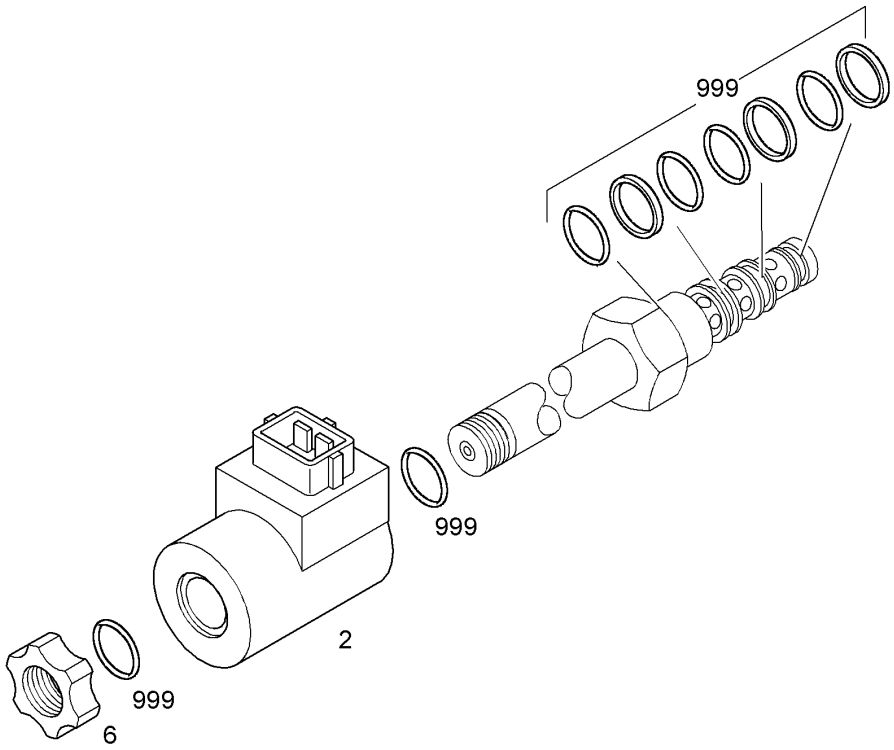


| Pos. | Item | Quantity | Description | Designação | Serie | K |
|---|---|---|---|---|---|---|
| 2 | 6204416 | 1 | MAGNET COIL | BOBINA MAGNÉTICA | | |
| 6 | 7023934 | 1 | NUT | PORCA SERRILHADA | | |
| 999 | 5009391 | 1 | SEAL KIT DIRECTIONAL VALVE<br>⇨ ❑ 325 | KIT VEDAÇÃO VÁLVULA DIRECI | | |

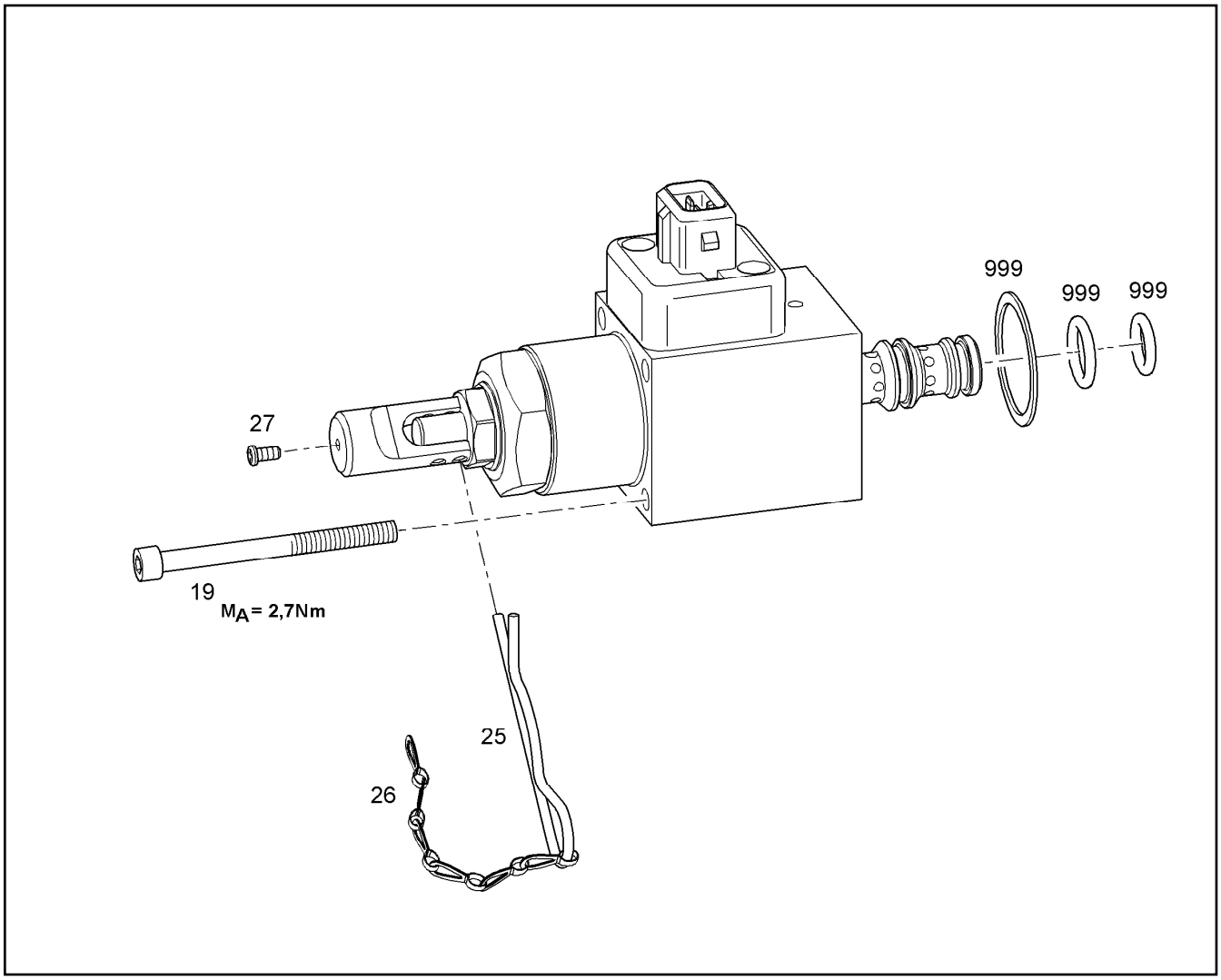


| Pos. | Item | Quantity | Description | Designação | Serie | K |
|---|---|---|---|---|---|---|
| 19 | 4901531 | 4 | CYLINDER SCREW ISO 4762 M4x50 8.8 A2C | PARAFUSO CILÍNDRICO | | |
| 25 | 7024629 | 1 | SPRING | MOLA ENCAIXE PRÉVIO | | |
| 26 | 7024630 | 1 | CHAIN | CORRENTE | | |
| 27 | 7024631 | 1 | SCREW DIN 7500C M2,5X5,3 | PARAFUSO | | |
| 999 | 10220997 | 1 | SEAL KIT<br>⇨ ❑ 324 | KIT DE VEDAÇÃO | | |

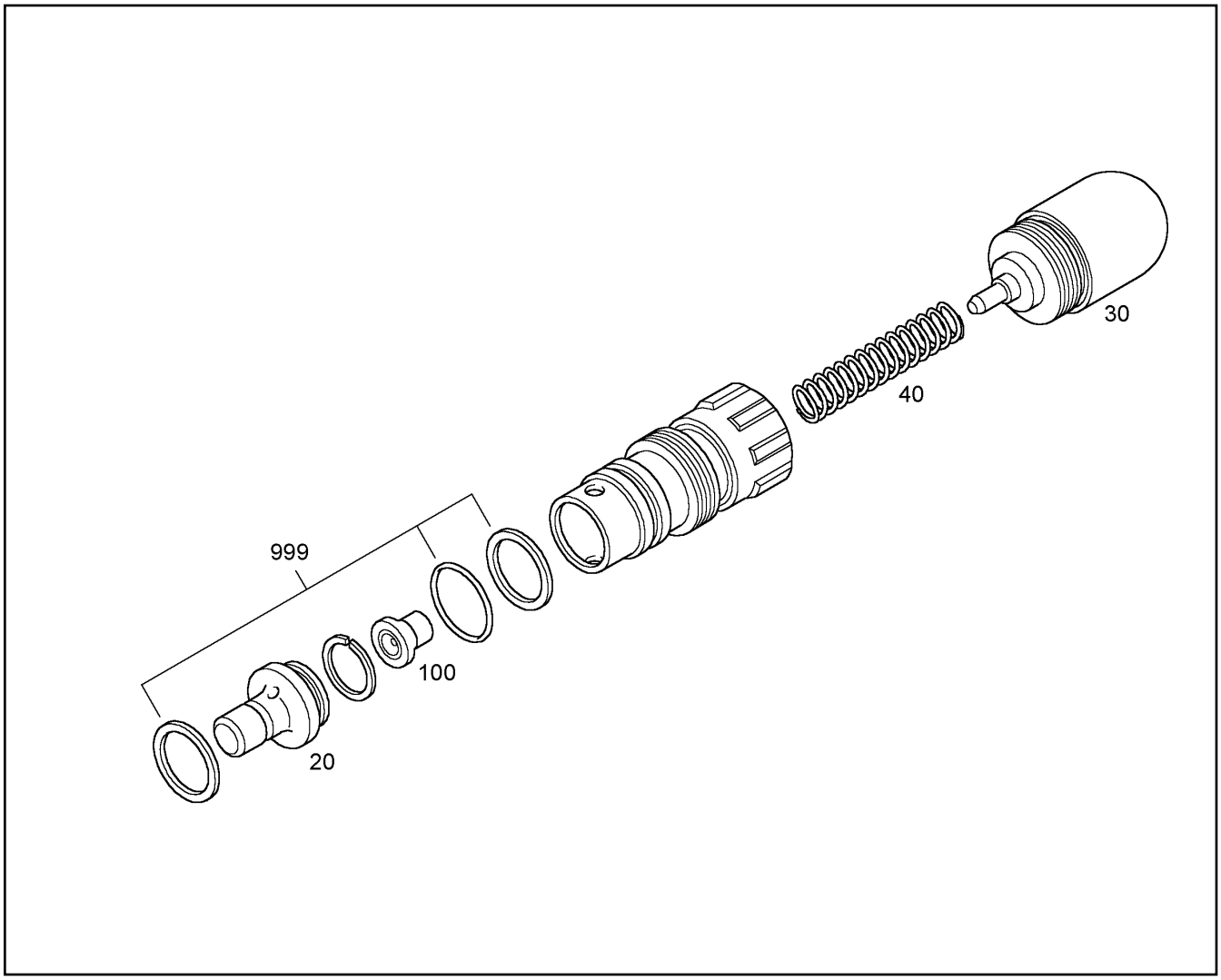


| Pos. | Item | Quantity | Description | Designação | Serie | K |
|---|---|---|---|---|---|---|
| 20 | | 1 | VALVE SEAT<br>⇨ ❑ 6 | ASSENTO DA VALVULA | | |
| 30 | 7028926 | 1 | INSTALLER SET REGULATION | JOGO DE MONTAGEM AJUSTE | | |
| 40 | 7028302 | 1 | PRESSURE SPRING | MOLA DE PRESSÃO | | |
| 100 | 7028303 | 1 | SPRING SUPPORT | PRATO DA MOLA | | 1 |
| 999 | 7030267 | 1 | SEAL KIT LIMIT VALVE<br>⇨ ❑ 328 | KIT DE VEDACAO | | |

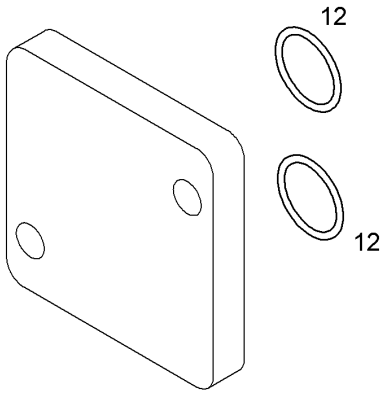


| Pos. | Item | Quantity | Description | Designação | Serie | K |
|---|---|---|---|---|---|---|
| 12 | 7023929 | 2 | O-RING 9,25X1,78 | ANEL-O | | |

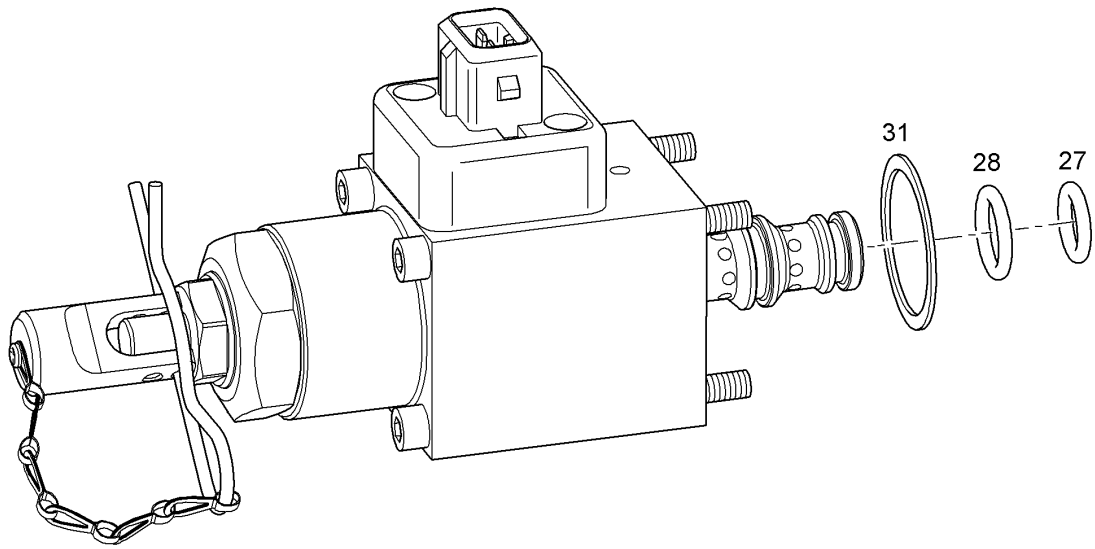


| Pos. | Item | Quantity | Description | Designação | Serie | K |
|---|---|---|---|---|---|---|
| 27 | | 1 | O-RING 9,25x1,78 | ANEL-O | | |
| 28 | | 1 | O-RING 10,82X1,78 | ANEL-O | | |
| 31 | | 1 | O-RING 23,52X1,78 | ANEL-O | | |

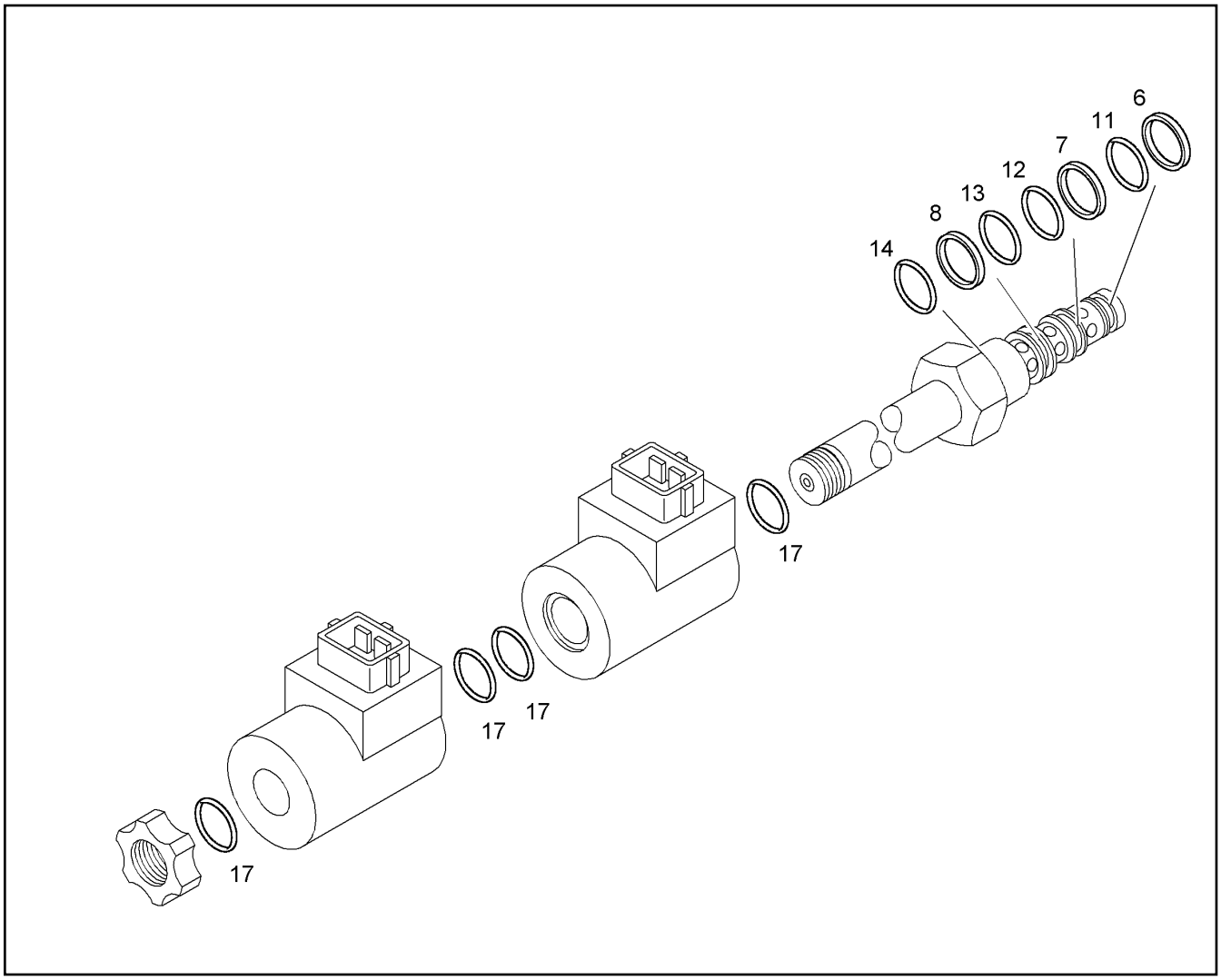


| Pos. | Item | Quantity | Description | Designação | Serie | K |
|---|---|---|---|---|---|---|
| 6 | | 1 | SUPPORTING RING 9,8X12,7X1 | ANEL DE APOIO | | |
| 7 | | 1 | SUPPORTING RING 9,4X1,45X1,0 | ANEL DE APOIO | | |
| 8 | | 1 | SUPPORTING RING 10,7X1,45X1,0 | ANEL DE APOIO | | |
| 11 | | 1 | O-RING 9,25x1,78 | ANEL-O | | |
| 12 | | 1 | O-RING 10,82X1,78 | ANEL-O | | |
| 13 | | 1 | O-RING 12,42X1,78 | ANEL-O | | |
| 14 | | 1 | O-RING 17,17X1,78 | ANEL-O | | |
| 17 | | 4 | O-RING 16x2 | ANEL-O | | |

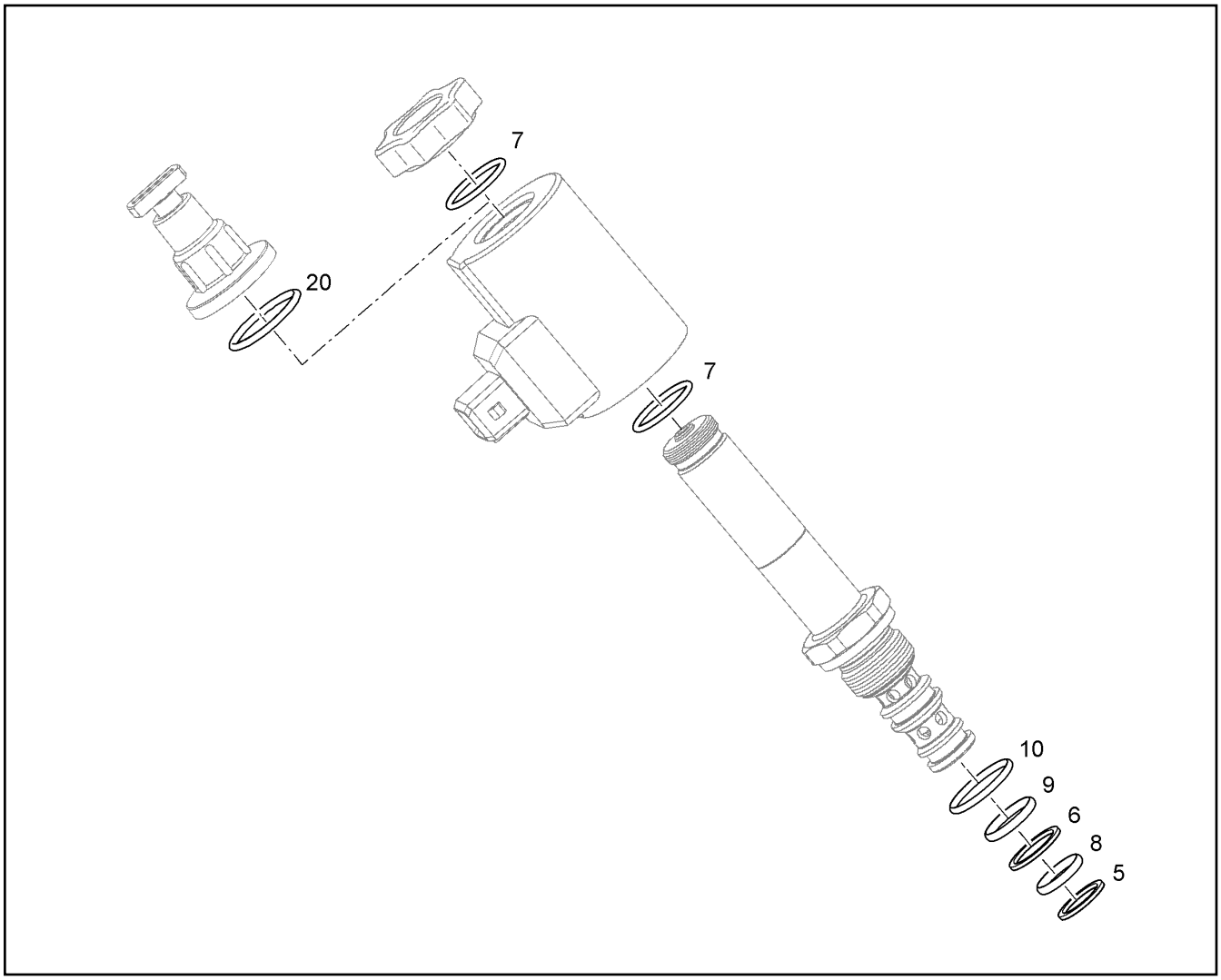


| Pos. | Item | Quantity | Description | Designação | Serie | K |
|---|---|---|---|---|---|---|
| 5 | | 1 | SUPPORTING RING 9,4X1,45X1,0 | ANEL DE APOIO | | |
| 6 | | 1 | SUPPORTING RING 10,7X1,45X1,0 | ANEL DE APOIO | | |
| 7 | | 2 | O-RING 16x2 | ANEL-O | | |
| 8 | | 1 | O-RING 10,82X1,78 | ANEL-O | | |
| 9 | | 1 | O-RING 12,42X1,78 | ANEL-O | | |
| 10 | | 1 | O-RING 17,17X1,78 | ANEL-O | | |
| 20 | | 1 | O-RING 21,89X2,62 | ANEL-O | | |

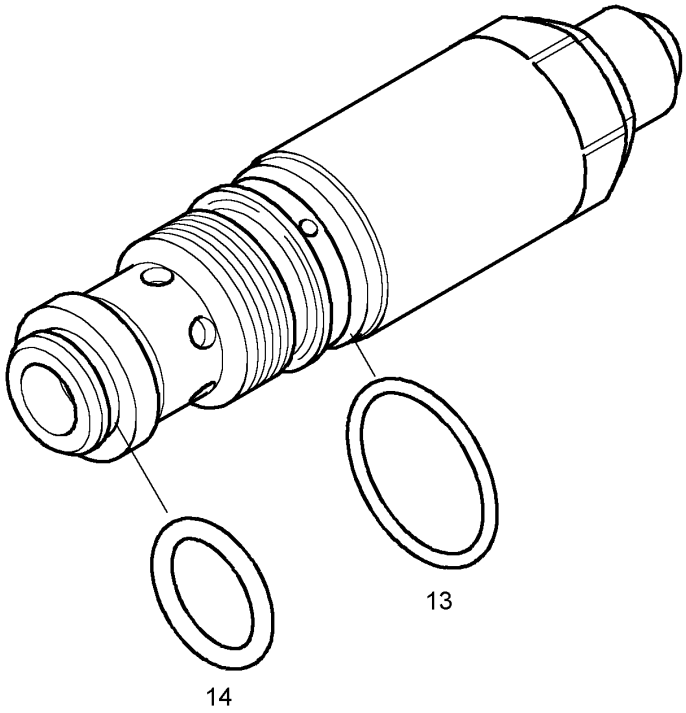


| Pos. | Item | Quantity | Description | Designação | Serie | K |
|---|---|---|---|---|---|---|
| 13 | | 1 | O-RING 21,95X1,78 | ANEL-O | | |
| 14 | | 1 | O-RING 15,54X2,62 | ANEL-O | | |

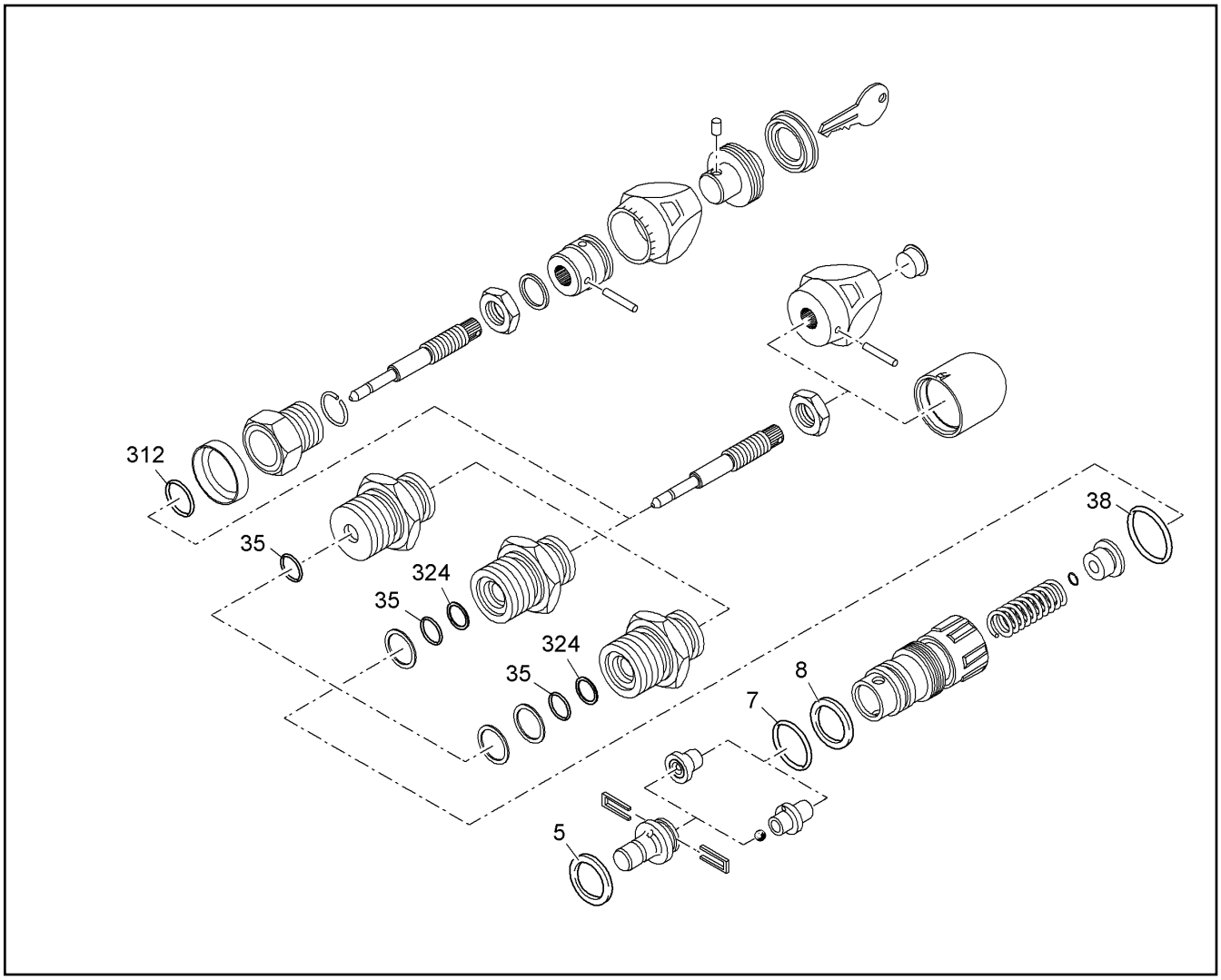


| Pos. | Item | Quantity | Description | Designação | Serie | K |
|---|---|---|---|---|---|---|
| 5 | | 1 | O-RING | ANEL-O | | |
| 5 | | 1 | PLAIN COMPRESSION RING | ANEL DE SEÇÃO RETANGULAR | | |
| 5 | | 1 | USIT RING 24,7X31X2 | ANEL DE VEDAÇÃO USIT | | |
| 5 | | 1 | O-RING 20,29X2,62 | ANEL-O | | |
| 7 | | 1 | O-RING 26X3 | ANEL-O | | |
| 8 | | 1 | SUPPORT RING | ANEL ESPIRAL DE TEFLON | | |
| 35 | | 1 | O-RING 10X2 | ANEL-O | | |
| 38 | | 1 | O-RING 20X2 | ANEL-O | | |
| 312 | | 1 | O-RING 24X1,5 | ANEL-O | | |
| 324 | | 1 | SUPPORTING RING 10/13X1 | ANEL DE APOIO | | |

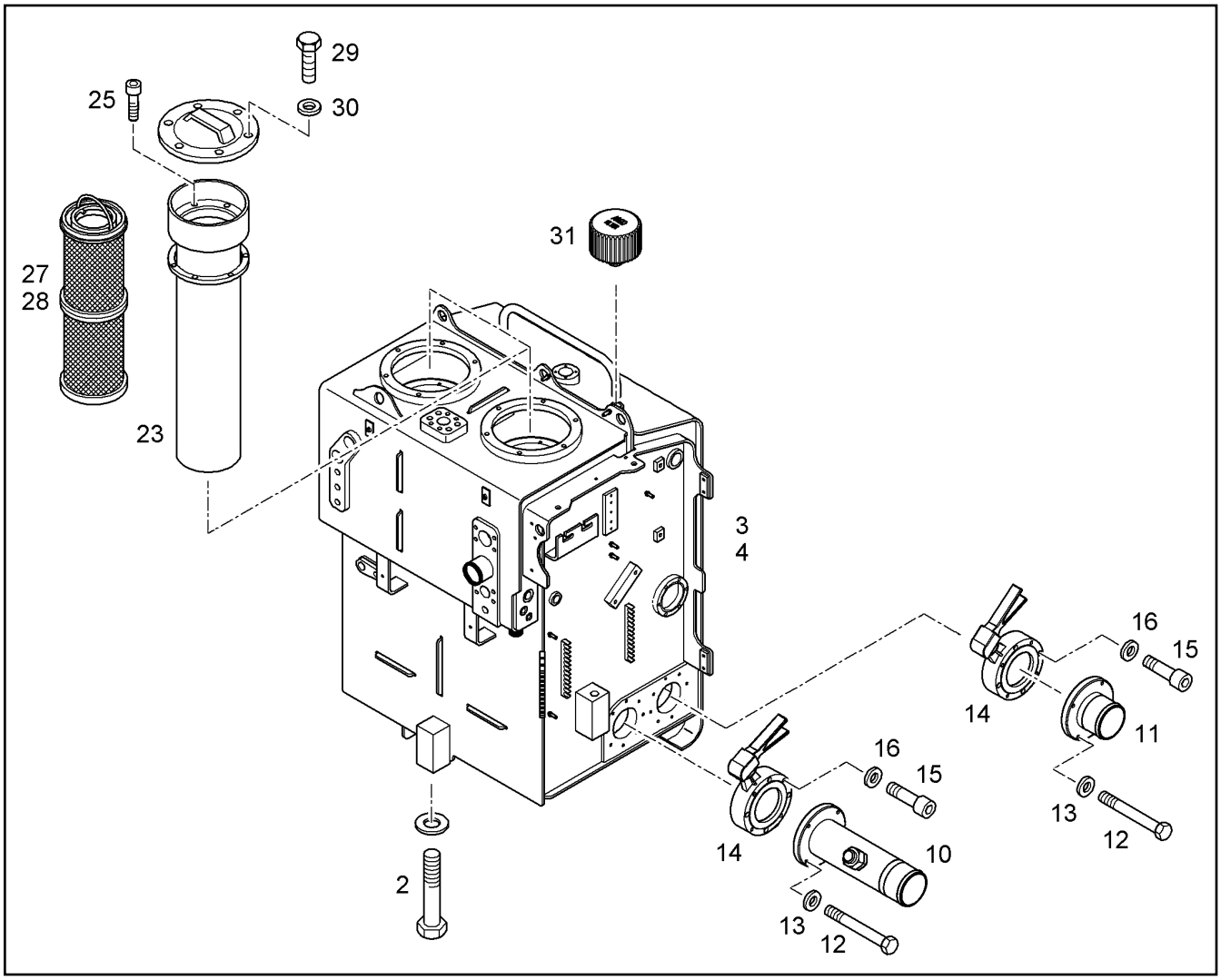


| Pos. | Item | Quantity | Description | Designação | Serie | K |
|---|---|---|---|---|---|---|
| 2 | 9946056 | 1 | FIXING PARTS HYDRAULIC TANK<br>⇨ ❑ 333 | FIXACAO TANQUE HIDRAULICO | -99998 | |
| 2 | 10371303 | 1 | FIXING PARTS HYDRAULIC TANK<br>⇨ ❑ 332 | FIXACAO TANQUE HIDRAULICO | 99999- | |
| 3 | | 1 | HYDRAULIC TANK<br>[04 ]<br>⇨ ❑ 337 | TANQUE HIDRÁULICO | 99999- | |
| 4 | 10358025 | 1 | HYDRAULIC TANK FOR EXCHANGE | TANQUE HIDRÁULICO | -99998 | |
| 4 | 10358194 | 1 | HYDRAULIC TANK FOR EXCHANGE | TANQUE HIDRÁULICO | 99999- | |
| 10 | 10066588 | 1 | INTAKE NOZZLE<br>⇨ ❑ 105 | BOCAL DE SUCÇÃO | 32767- | |
| 11 | 9962503 | 1 | INTAKE NOZZLE | BOCAL DE SUCÇÃO | | |
| 12 | 4001464 | 8 | HEX BOLT ISO 4017 M8X90 8.8 A2C | PARAFUSO SEXTAVADO | | |
| 13 | 10289803 | 8 | WASHER ISO 7089 8 300HV | ARRUELA | | |
| 14 | 5617689 | 2 | SHUT OFF DEVICE DN 100<br>⇨ ❑ 338 | VÁLVULA DE FECHAMENTO | | |
| 15 | 4042150 | 8 | CYLINDER SCREW ISO 4762 M8x55 8.8 A2C | PARAFUSO CILÍNDRICO | | |
| 16 | 423910801 | 8 | LOCK WASHER 8,4/13X1,7 VS 8 | ARRUELA DE SEGURANÇA | | |
| 23 | 7369257 | 2 | RETURN FILTER<br>⇨ ❑ 336 | FILTRO DE FLUXO DE RETORN | | |
| 25 | 7368996 | 12 | SCREW M8X40 12.9 | PARAFUSO | | |
| 27 | 7373877 | 2 | FIBRE GLASS FILTER INSERT 10µm | ELEMENTO FILTRANTE | | |
| 28 | 7373878 | 2 | FIBRE GLASS FILTER INSERT 20/5µm | ELEMENTO FILTRANTE | -99998 | |
| 28 | 11065673 | 2 | FIBRE GLASS FILTER INSERT 15/5µm | ELEMENTO FILTRANTE | 99999- | |
| 29 | 4600184 | 12 | HEX BOLT ISO 4017 M12X25 10.9 A3C | PARAFUSO SEXTAVADO | | |
| 30 | 10289804 | 12 | WASHER ISO 7089 12 300HV | ARRUELA | | |

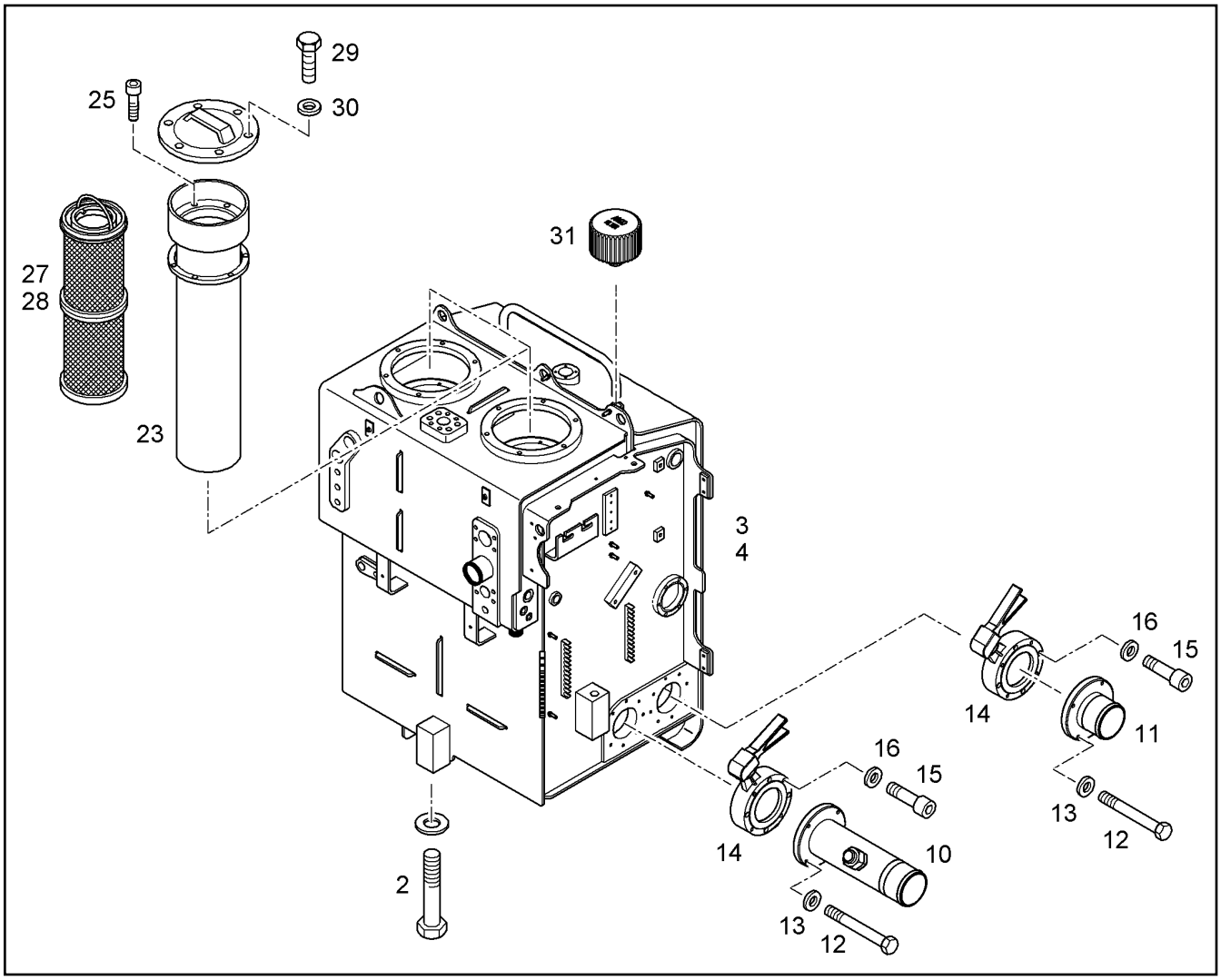


| Pos. | Item | Quantity | Description | Designação | Serie | K |
|---|---|---|---|---|---|---|
| 31 | 10222393 | 1 | AERATION FILTER<br>⇨ ❑ 339 | FILTRO DE VENTILACAO | | |

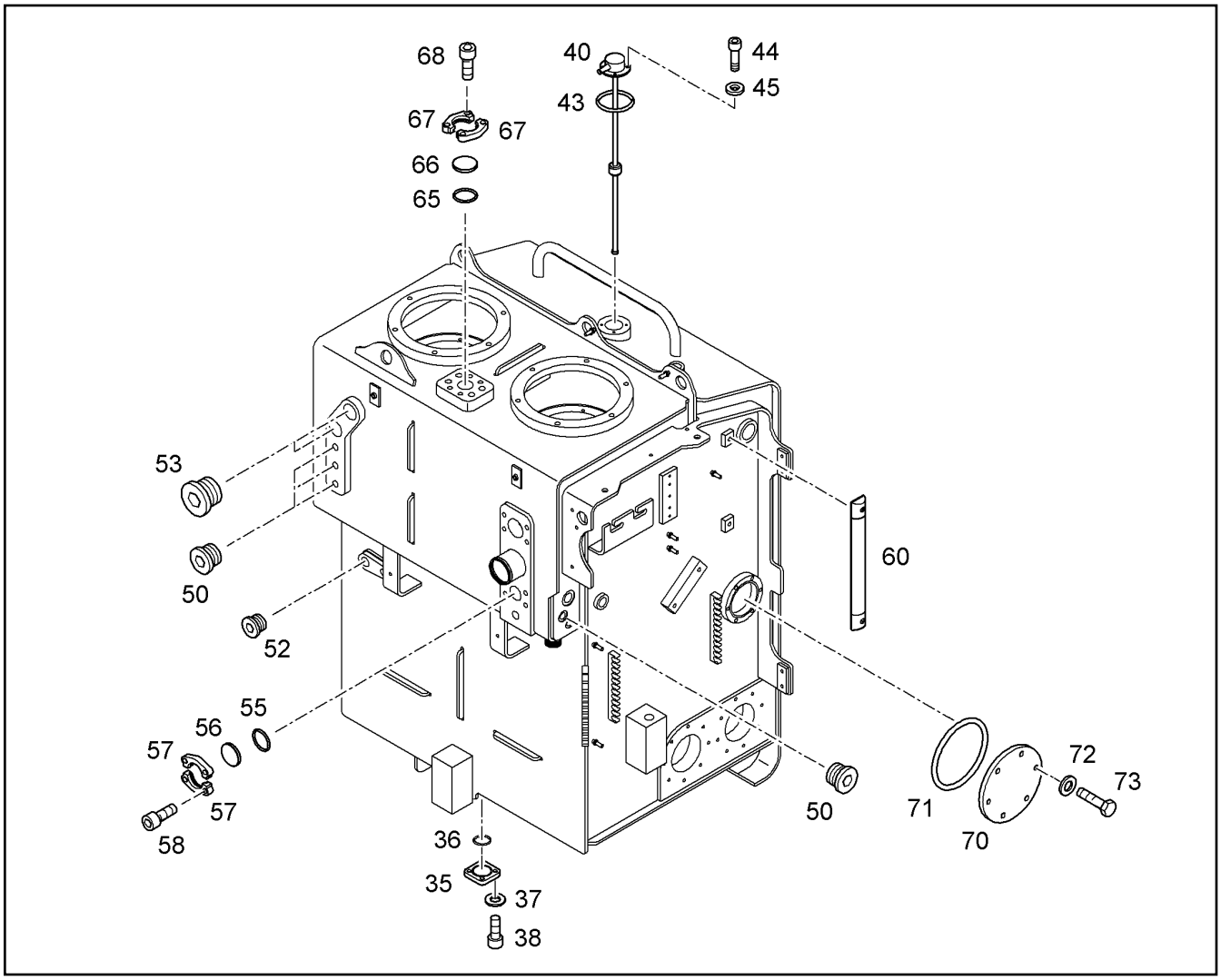


| Pos. | Item | Quantity | Description | Designação | Serie | K |
|---|---|---|---|---|---|---|
| 35 | 10055216 | 1 | LID | TAMPA | | |
| 36 | 7367426 | 1 | O-RING | ANEL-O | | |
| 37 | 10289803 | 4 | WASHER ISO 7089 8 300HV | ARRUELA | | |
| 38 | 4901217 | 4 | CYLINDER SCREW ISO 4762 M8X25 10.9 A2 | PARAFUSO CILÍNDRICO | | |
| 40 | 10022175 | 1 | LEVEL SENSOR<br>⇨ ❑ 340 | SENSOR DE NÍVEL | | |
| 43 | 7366427 | 1 | O-RING | ANEL-O | | |
| 44 | 4001308 | 4 | CYLINDER SCREW ISO 4762 M5x12 8.8 A2C | PARAFUSO CILÍNDRICO | | |
| 45 | 4600305 | 4 | WASHER 5 200HV | ARRUELA | | |
| 50 | 7361960 | 4 | SCREW PLUG VSTI M18X1,5 | PARAFUSO DE FECHAMENTO | | |
| 52 | 7362698 | 1 | SCREW PLUG VSTI M26X1,5 | PARAFUSO DE FECHAMENTO | | |
| 53 | 7363073 | 2 | SCREW PLUG VSTI M42X2 | PARAFUSO DE FECHAMENTO | | |
| 55 | 10490787 | 1 | PLAIN COMPRESSION RING 54,40X3,40X2,8 | ANEL DE SEÇÃO RETANGULAR | | |
| 56 | 9566165 | 1 | SAE BLIND FLANGE | FLANGE CEGO | | |
| 57 | 11490402 | 2 | FLANGE HALF WITH BOSSING SAE J518 S | MEIO FLANGE COM RELEVO | | |
| 58 | 4043164 | 4 | CYLINDER SCREW ISO 4762 M12X35 10.9 | PARAFUSO CILÍNDRICO | | |
| 60 | 7368081 | 1 | SIGHT GLASS<br>⇨ ❑ 334 | VIDRO DE INSPECAO | | |
| 65 | 10490787 | 1 | PLAIN COMPRESSION RING 54,40X3,40X2,8 | ANEL DE SEÇÃO RETANGULAR | | |
| 66 | 9491026 | 1 | SAE BLIND FLANGE SAE 1 1/2" CODE 62 | FLANGE CEGO | | |
| 67 | 11485640 | 2 | FLANGE HALF WITH BOSSING SAE J518 SA | MEIO FLANGE COM RELEVO | | |
| 68 | 10001077 | 4 | CYLINDER SCREW ISO 4762 M16X50 10.9 | PARAFUSO CILÍNDRICO | | |
| 70 | 9767890 | 1 | LID | TAMPA | | |
| 71 | 7380073 | 1 | O-RING DIN 3771 129,77X3,53 | ANEL-O | | |
| 72 | 423910801 | 6 | LOCK WASHER 8,4/13X1,7 VS 8 | ARRUELA DE SEGURANÇA | | |
| 73 | 4900188 | 6 | HEX BOLT ISO 4017 M8x16 8.8 A2C | PARAFUSO SEXTAVADO | | |

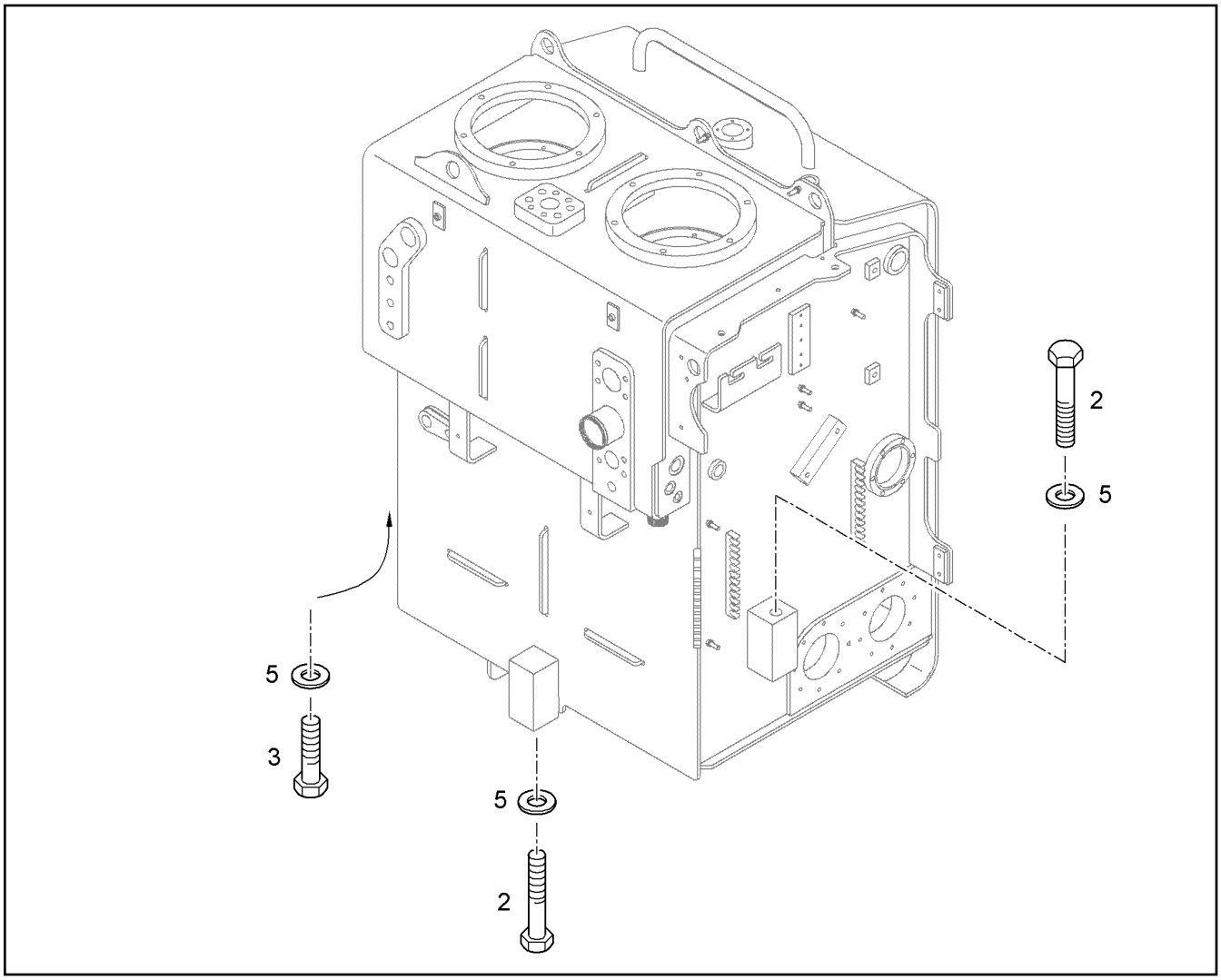


| Pos. | Item | Quantity | Description | Designação | Serie | K |
|---|---|---|---|---|---|---|
| 2 | 10425597 | 2 | HEX BOLT ISO 4014 M20X180 10.9 FLZN | PARAFUSO SEXTAVADO | | |
| 3 | 10425595 | 1 | HEX BOLT ISO 4014 M20X150 10.9 FLZN | PARAFUSO SEXTAVADO | | |
| 5 | 9918229 | 3 | WASHER 20,5/34X5 | ARRUELA | | |

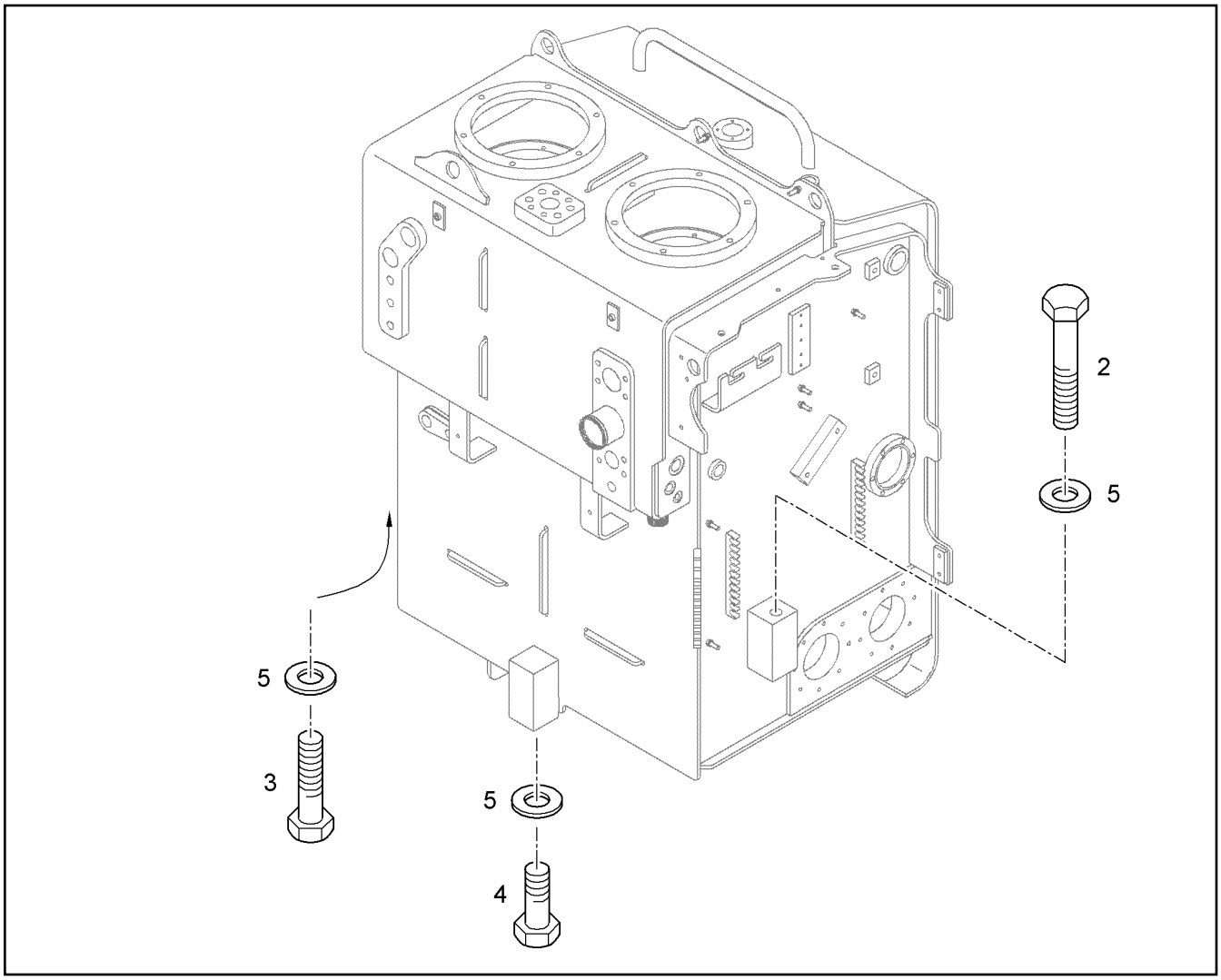


| Pos. | Item | Quantity | Description | Designação | Serie | K |
|---|---|---|---|---|---|---|
| 2 | 10425597 | 1 | HEX BOLT ISO 4014 M20X180 10.9 FLZN | PARAFUSO SEXTAVADO | | |
| 3 | 10425595 | 1 | HEX BOLT ISO 4014 M20X150 10.9 FLZN | PARAFUSO SEXTAVADO | | |
| 4 | 10425592 | 1 | HEX BOLT ISO 4014 M20X110 10.9 FLZN | PARAFUSO SEXTAVADO | | |
| 5 | 9918229 | 3 | WASHER 20,5/34X5 | ARRUELA | | |

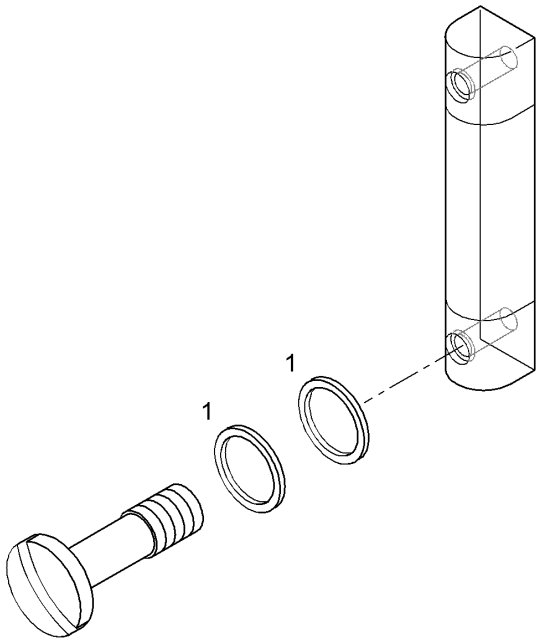


| Pos. | Item | Quantity | Description | Designação | Serie | K |
|---|---|---|---|---|---|---|
| 1 | 7369456 | 4 | O-RING | ANEL-O | | |

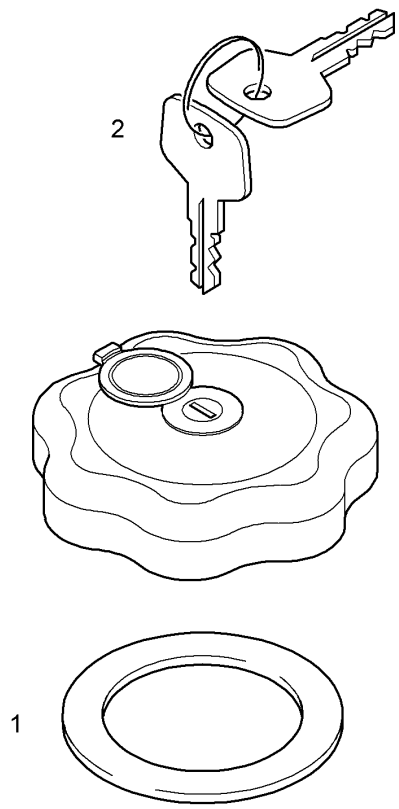


| Pos. | Item | Quantity | Description | Designação | Serie | K |
|---|---|---|---|---|---|---|
| 1 | 7041345 | 1 | SEAL | VEDAÇÃO | | |
| 2 | 7365626 | 1 | KEY | CHAVE | | |

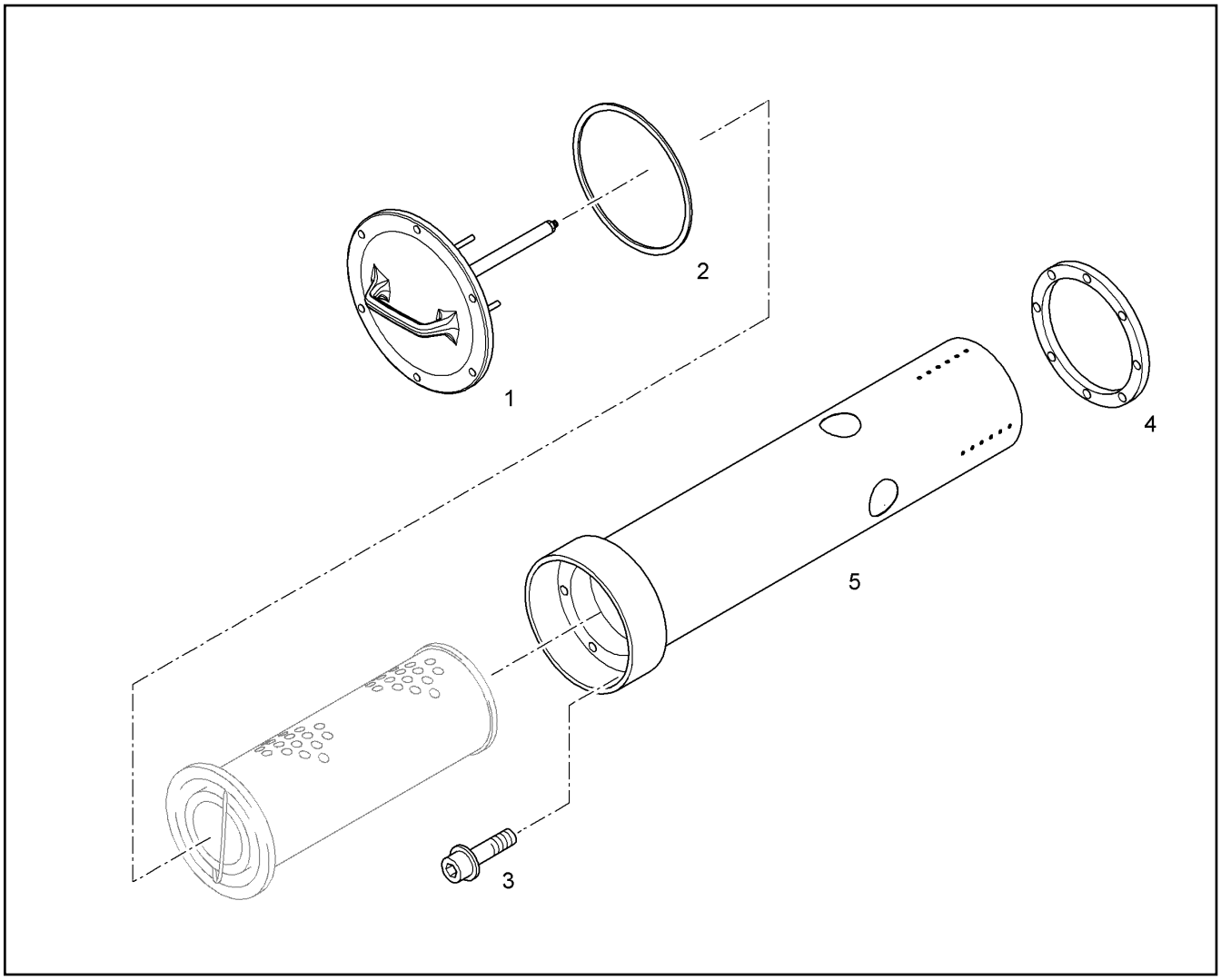


| Pos. | Item | Quantity | Description | Designação | Serie | K |
|---|---|---|---|---|---|---|
| 1 | 7370924 | 1 | HANDLE COVER | TAMPA COM ALÇA | | |
| 2 | 7368993 | 1 | SEAL | VEDAÇÃO | | |
| 3 | 7368996 | 6 | SCREW M8X40 12.9 | PARAFUSO | | |
| 4 | 7368994 | 1 | SEAL | VEDAÇÃO | | |
| 5 | 7370225 | 1 | RETURN PIPE | TUBO DE RETORNO | | |

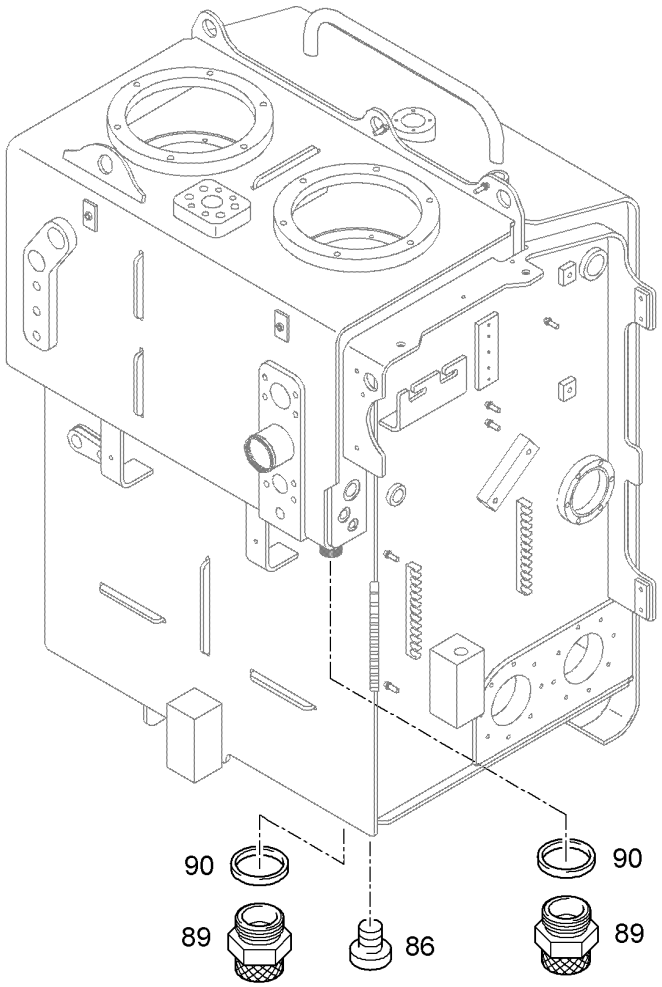


| Pos. | Item | Quantity | Description | Designação | Serie | K |
|---|---|---|---|---|---|---|
| 86 | 7363237 | 1 | SCREW PLUG VSTI M20X1,5 | PARAFUSO DE FECHAMENTO | | |
| 89 | 5004624 | 2 | OIL DRAIN PLUG M 30 1,5<br>⇨ ❑ 491 | VÁLVULA DE DRENAGEM | | |
| 90 | 7101039 | 2 | SEALING RING DIN 7603 A 30 X 38 CU | ANEL DE VEDAÇÃO | | |

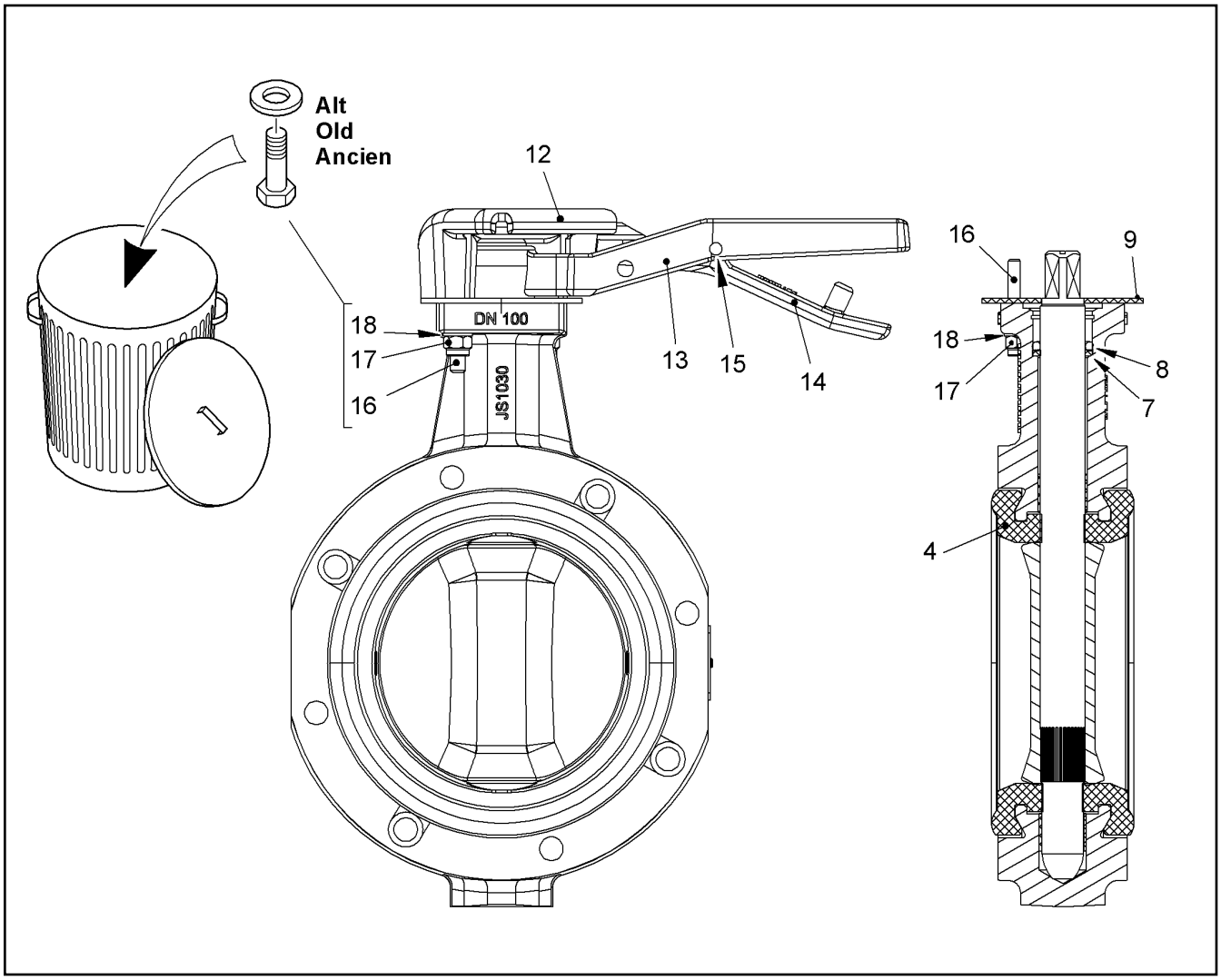


| Pos. | Item | Quantity | Description | Designação | Serie | K |
|---|---|---|---|---|---|---|
| 4 | 7028342 | 1 | COLLAR JOINT | VEDACAO | | |
| 7 | 11007770 | 1 | SHEET GASKET | ARRUELA DE VEDACAO | | |
| 8 | 7028346 | 1 | O-RING | ANEL-O | | |
| 9 | 7028343 | 1 | SEAL | VEDAÇÃO | | |
| 12 | 7028349 | 1 | LID | TAMPA | | |
| 13 | 7028347 | 1 | HAND LEVER | ALAVANCA MANUAL | | |
| 14 | 7028348 | 1 | LEVER | ALAVANCA | | |
| 15 | 7028351 | 1 | PIN | PINO | | |
| 16 | 11007768 | 2 | GRUB SCREW DIN 913 M6X45 45H A2 | PINO ROSCADO | | |
| 17 | 4000900 | 2 | HEX NUT M6 | PORCA SEXTAVADA | | |
| 18 | 10289802 | 2 | WASHER ISO 7089 6 300HV | ARRUELA | | |

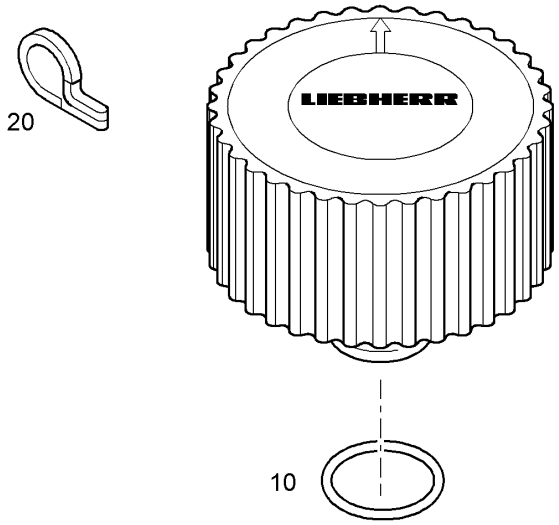


| Pos. | Item | Quantity | Description | Designação | Serie | K |
|---|---|---|---|---|---|---|
| 10 | 7015407 | 1 | O-RING 25X3,53 | ANEL-O | | |
| 20 | 10012889 | 1 | PLUG | PLUGUE | | |

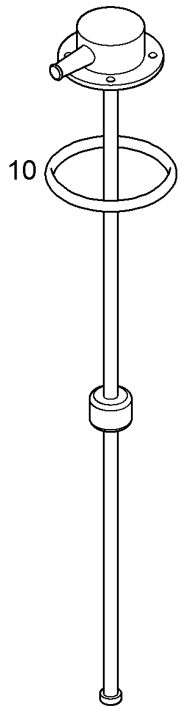


| Pos. | Item | Quantity | Description | Designação | Serie | K |
|---|---|---|---|---|---|---|
| 10 | 7368904 | 1 | O-RING 46X3 | ANEL-O | | |

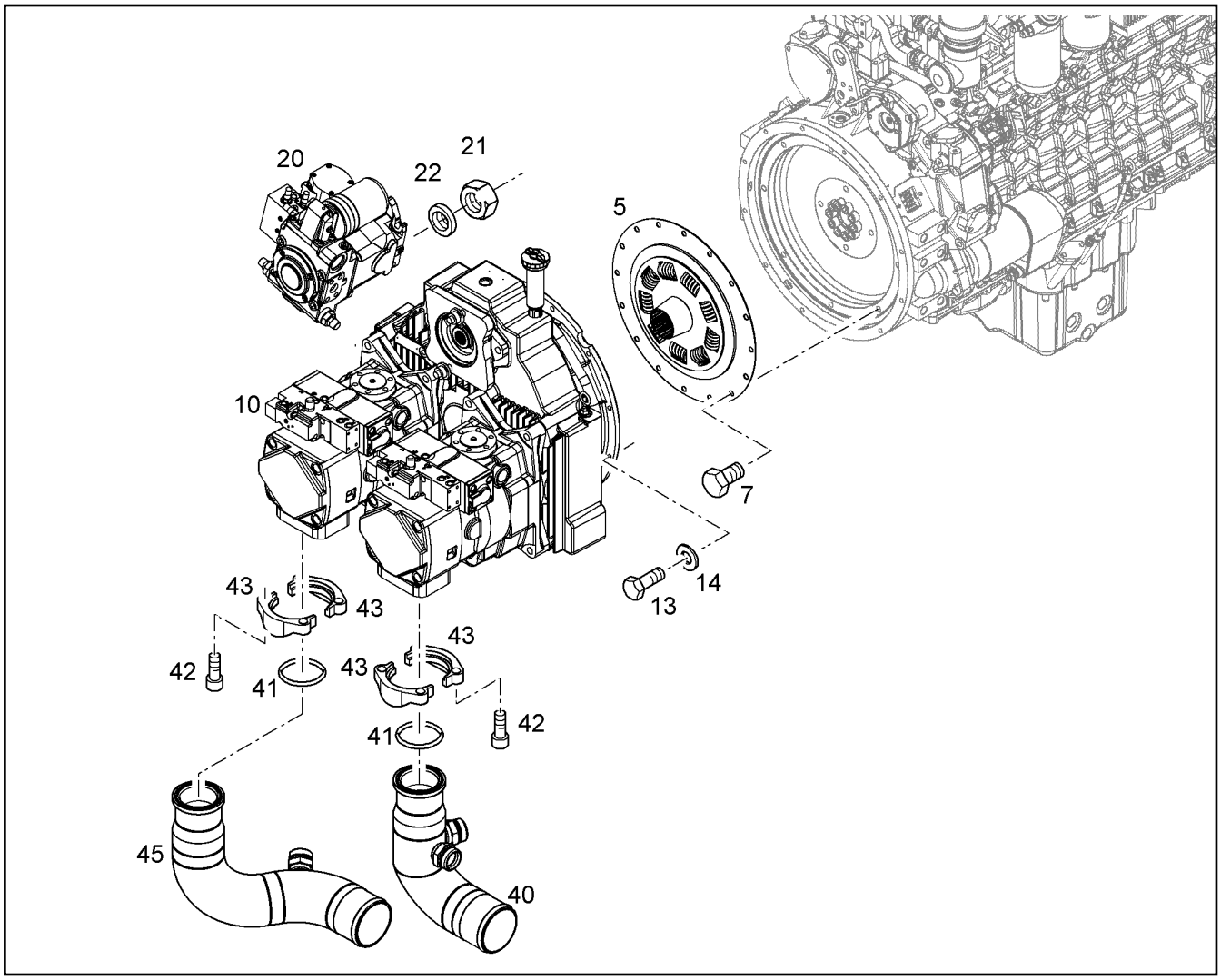


| Pos. | Item | Quantity | Description | Designação | Serie | K |
|---|---|---|---|---|---|---|
| 5 | 5610755 | 1 | TORSIONAL VIBRATION DAMPER | AMORTECEDOR DE TORÇÃO | | |
| 7 | 4066120 | 8 | HEX BOLT ISO 4017 M12X20 10.9 A3C | PARAFUSO SEXTAVADO | | |
| 10 | 10134620 | 1 | MULTIPLE CIRCUIT AGGREGATE MKA 350 [13 62 03658 ] ⇨ ❑ 685 | AGREAGADO CIRCUITOS MULT | | 2 |
| 13 | 4001246 | 12 | HEX BOLT ISO 4017 M10X35 10.9 A3C | PARAFUSO SEXTAVADO | | |
| 14 | 10289795 | 12 | WASHER ISO 7089 10 300HV | ARRUELA | | |
| 20 | 5616530 | 1 | AXIAL PISTON PUMP [27189938 2012/10 ] ⇨ ❑ 122 | BOMBA DE PISTÃO AXIAL | -99998 | 6 |
| 21 | 4000420 | 2 | HEX NUT M16 | PORCA SEXTAVADA | | |
| 22 | 4002742 | 2 | WASHER DIN 7989 B 18 C45 A3C | ARRUELA | | |
| 40 | 10066586 | 1 | INTAKE NOZZLE | BOCAL DE SUCÇÃO | | |
| 41 | 7363759 | 2 | O-RING | ANEL-O | | |
| 42 | 10001075 | 8 | CYLINDER SCREW ISO 4762 M16X40 10.9 F | PARAFUSO CILÍNDRICO | | |
| 43 | 11485647 | 4 | FLANGE HALF WITH BOSSING SAE J518 S | MEIO FLANGE COM RELEVO | | |
| 45 | 10066587 | 1 | INTAKE NOZZLE | BOCAL DE SUCÇÃO | | |

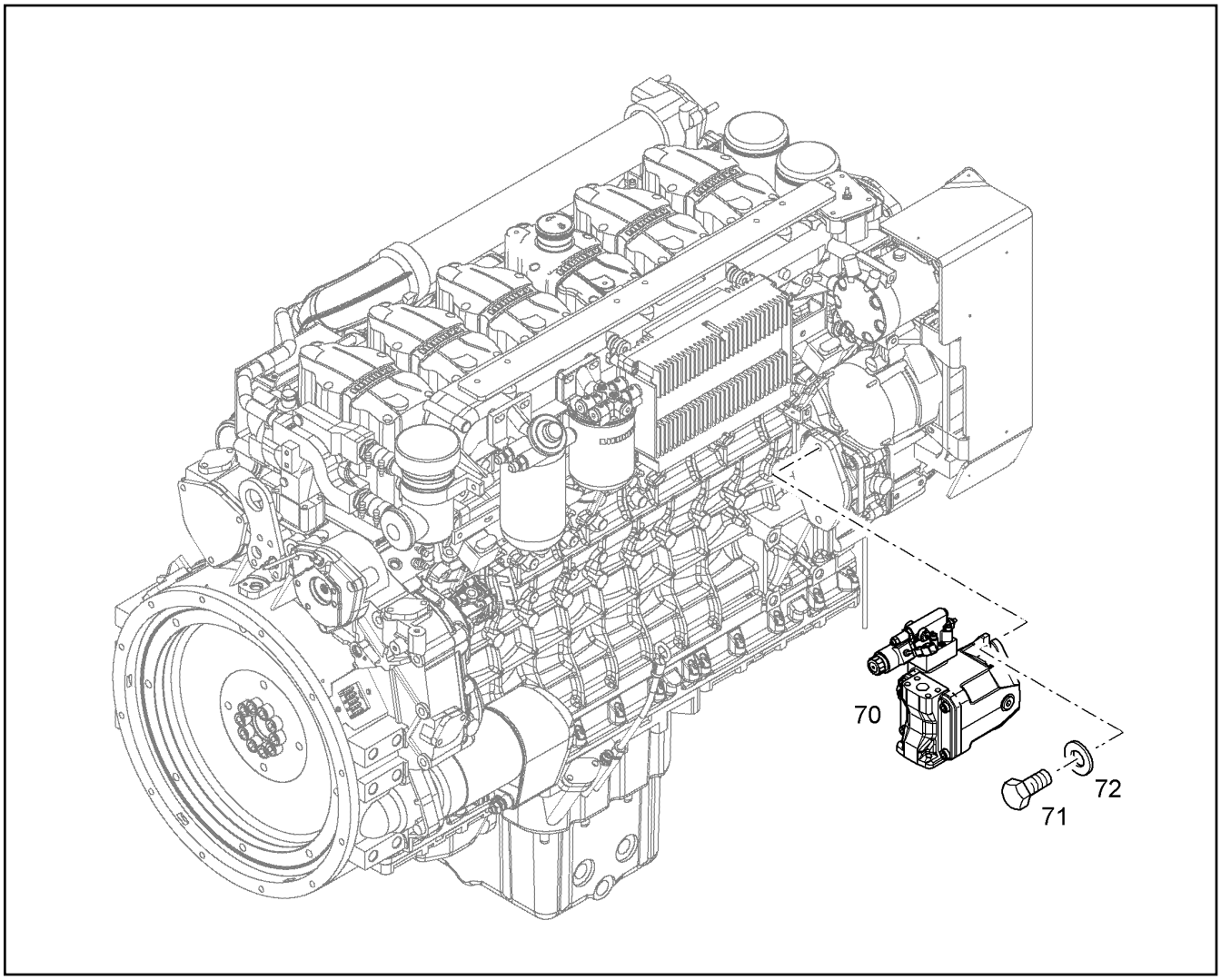


| Pos. | Item | Quantity | Description | Designação | Serie | K |
|---|---|---|---|---|---|---|
| 70 | 10332889 | 1 | HYDRAULIC PUMP<br>[33482453 2012W43 ]<br>⇨ ❑ 119 | BOMBA HIDRÁULICA | | 2 |
| 71 | 4066122 | 2 | HEX BOLT ISO 4017 M12X35 10.9 A3C | PARAFUSO SEXTAVADO | | |
| 72 | 10006370 | 2 | WASHER DIN 7349 13 | ARRUELA | | |

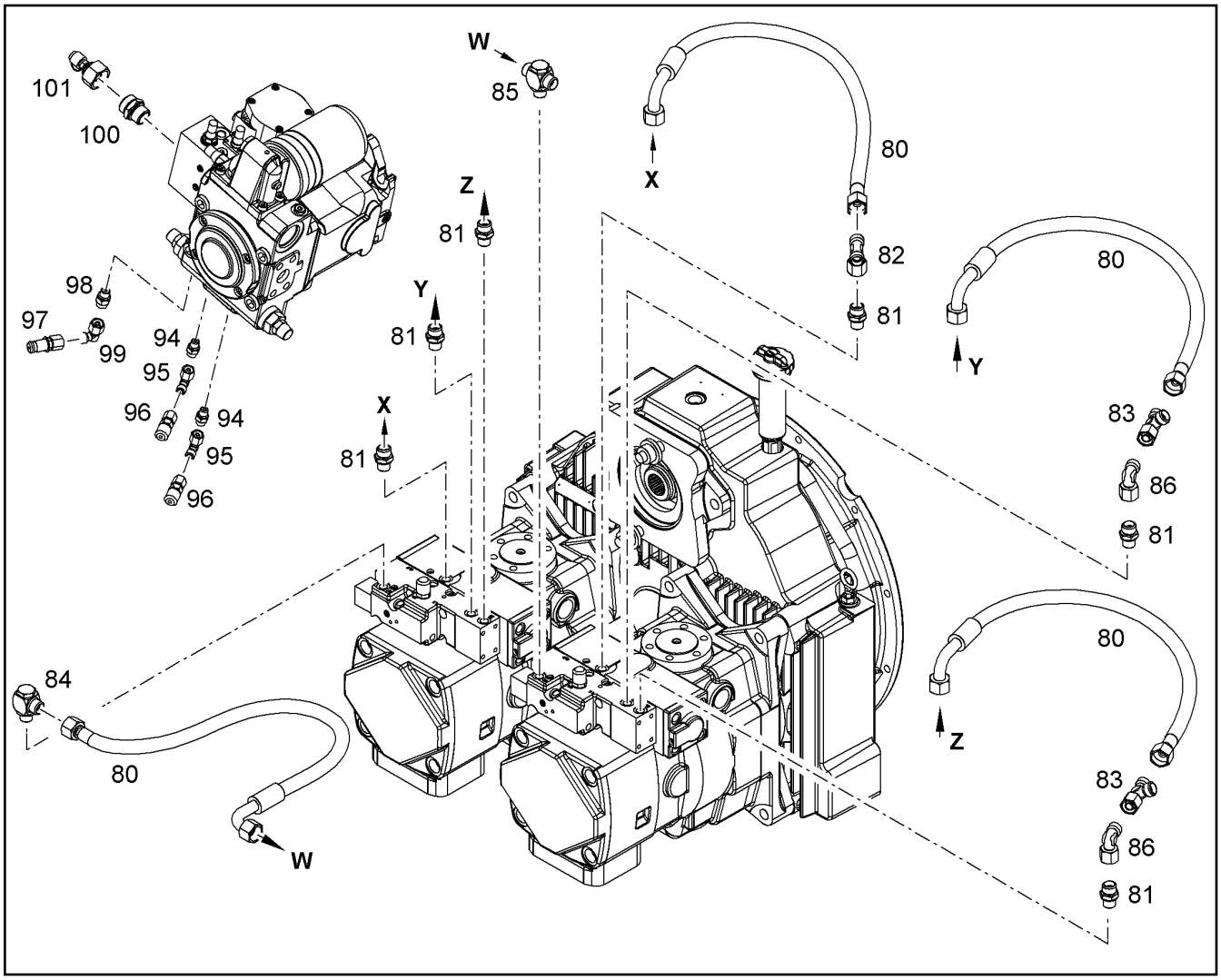


| Pos. | Item | Quantity | Description | Designação | Serie | K |
|---|---|---|---|---|---|---|
| 80 | 7005665 | 4 | CONTROL HOSE | MANGUEIRA DE COMANDO | | 1 |
| 81 | 7003814 | 6 | SCREW FITTING GE 10L M14X1,5 | REDUÇÃO | | |
| 82 | 482430314 | 1 | SCREW FITTING ET 10L | REDUÇÃO | | |
| 83 | 472330208 | 2 | SCREW FITTING EL 10L | REDUÇÃO | | |
| 84 | 7617714 | 1 | HINGED THREADED UNION WH 10L M14X1, | CONEXÃO ROSCADA | | |
| 85 | 7617248 | 1 | SCREW FITTING TH 10L | REDUÇÃO | | |
| 86 | 7403569 | 2 | SCREW FITTING EW 10L | REDUÇÃO | | |
| 94 | 4901166 | 2 | LUG GE 6S | CONEXÃO | | |
| 95 | 472531508 | 2 | SCREW FITTING EW 6S | REDUÇÃO | | |
| 96 | 5607616 | 2 | GAUGE CONNECTION | BOCAL DE MEDICAO | | |
| 97 | 7404619 | 1 | LUG GE 8S M14X1,5 | CONEXÃO | | |
| 98 | 5607605 | 1 | GAUGE CONNECTION | BOCAL DE MEDICAO | | |
| 99 | 7404186 | 1 | SCREW FITTING EW 8S M16X1,5 | REDUÇÃO | | |
| 100 | 7362515 | 1 | SCREW FITTING GE 22L | REDUÇÃO | | |
| 101 | 7019891 | 1 | GAUGE CONNECTION VKA3 22L M30X2 | BOCAL DE MEDICAO | | |

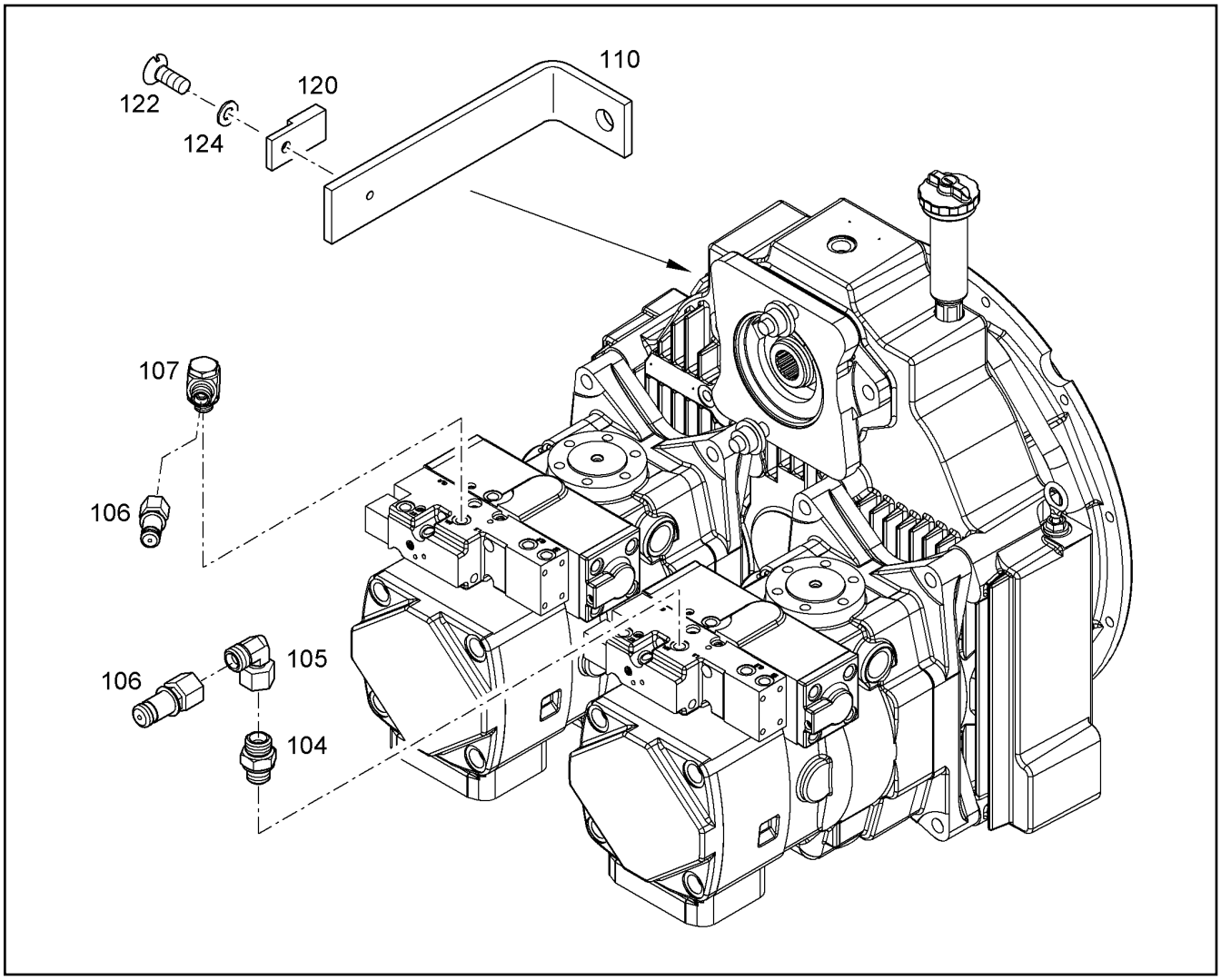


| Pos. | Item | Quantity | Description | Designação | Serie | K |
|---|---|---|---|---|---|---|
| 104 | 7362103 | 1 | SCREW FITTING GE 10S | REDUÇÃO | | |
| 105 | 7617268 | 1 | SCREW FITTING EW 10S | REDUÇÃO | | |
| 106 | 5607617 | 2 | GAUGE CONNECTION DKO 10S | BOCAL DE MEDICAO | | |
| 107 | 7370799 | 1 | HINGED THREADED UNION | CONEXÃO ROSCADA | | |
| 110 | 9008517 | 1 | PLATE | PLACA | | |
| 120 | 6203497 | 1 | FASTENER F.DT STECKER | ELEMENTO DE FIXACAO | | |
| 122 | 11000900 | 1 | PAN-HEAD SCREW ISO 7380 M5X10 10.9 IN | PARAFUSO | | |
| 124 | 4600305 | 1 | WASHER 5 200HV | ARRUELA | | |

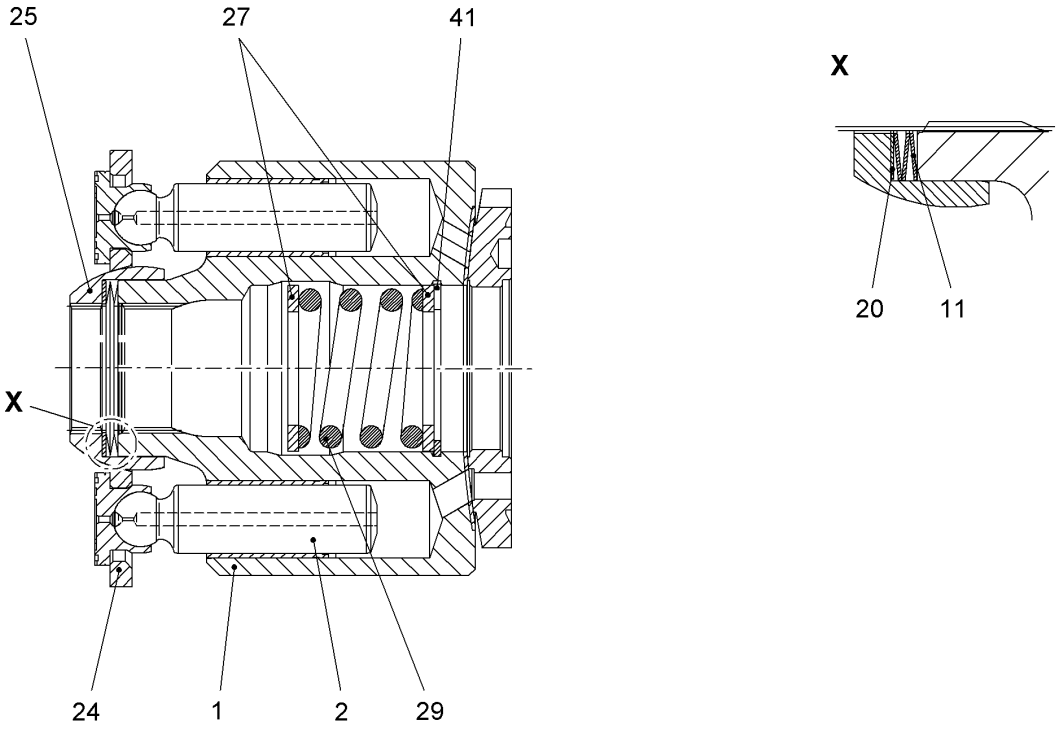


| Pos. | Item | Quantity | Description | Designação | Serie | K |
|---|---|---|---|---|---|---|
| 1 | 10220455 | 1 | CYLINDER | CILINDRO | | |
| 2 | 10216691 | 9 | PISTON | PISTÃO | | |
| 11 | 11213510 | 1 | CUP SPRING PILLAR | COLUNA DE MOLAS-PRATO | | |
| 20 | 10216704 | 1 | SHIM RING | ARRUELA DE AJUSTE | | |
| 20 | 10216705 | 1 | SHIM RING | ARRUELA DE AJUSTE | | |
| 20 | 10216703 | 1 | SHIM RING | ARRUELA DE AJUSTE | | |
| 20 | 10216706 | 1 | SHIM RING | ARRUELA DE AJUSTE | | |
| 24 | 10216707 | 1 | PULL-BACK PLATE | PLACA DE RETORNO | | |
| 25 | 10216710 | 1 | PULL-BACK BALL | ESFERA DE RETORNO | | |
| 27 | 10216714 | 2 | WASHER | ARRUELA | | |
| 29 | 10216715 | 1 | PRESSURE SPRING | MOLA DE PRESSÃO | | |
| 41 | 4000688 | 1 | LOCKING RING DIN 472 45 X1,75 | ANEL DE RETENÇÃO | | |

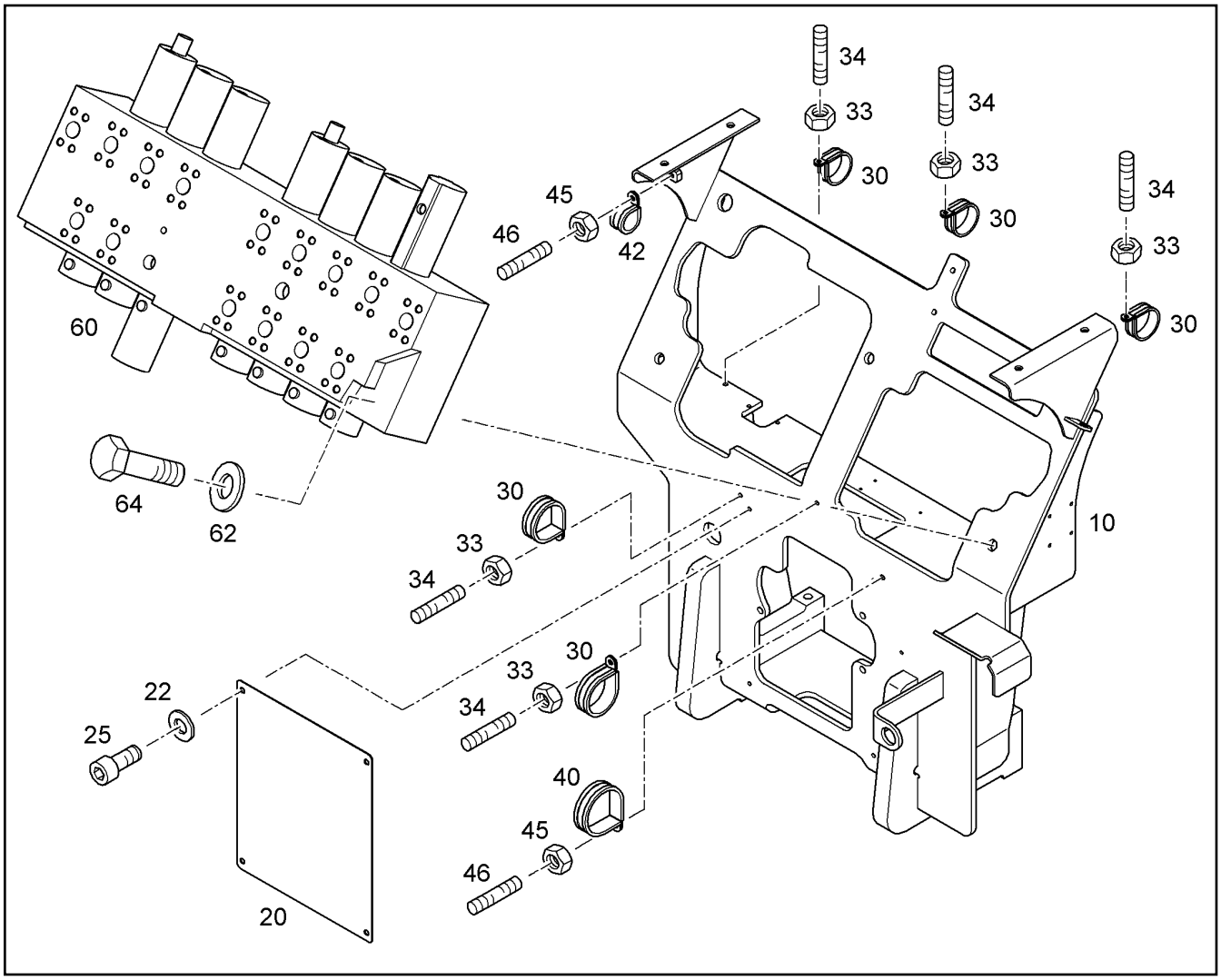


| Pos. | Item | Quantity | Description | Designação | Serie | K |
|---|---|---|---|---|---|---|
| 10 | 10087016 | 1 | CONTROL VALVES BRACKET | SUPORTE DO BLOCO DE VÁLVU | 20000- | |
| 20 | 9380962 | 1 | SHEET | TAMPA | 20000- | |
| 22 | 10289795 | 4 | WASHER ISO 7089 10 300HV | ARRUELA | | |
| 25 | 4043122 | 4 | CYLINDER SCREW ISO 4762 M10X20 10.9 | PARAFUSO CILÍNDRICO | | |
| 30 | 7363247 | 5 | CLAMP DIN 3016 D1- 74 X 25 W1-2-CR | BRAÇADEIRA | | |
| 33 | 4000383 | 4 | HEX NUT M10 | PORCA SEXTAVADA | | |
| 34 | 4002200 | 4 | DOUBLE-ENDED STUD DIN 939 M10X20 8.8 | PINO ROSCADO | | |
| 40 | 7017506 | 1 | CLAMP DIN 3016 D1- 92 X 25 W1-2-CR | BRAÇADEIRA | | |
| 42 | 7367691 | 1 | CLAMP DIN 3016-1 D1 40X25 W1-2-CR | BRAÇADEIRA | | |
| 45 | 4000383 | 3 | HEX NUT M10 | PORCA SEXTAVADA | | |
| 46 | 4002200 | 3 | DOUBLE-ENDED STUD DIN 939 M10X20 8.8 | PINO ROSCADO | | |
| 60 | 10032452 | 1 | CONTROL BLOCK<br>[540 13W04 ]<br>⇨ ❑ 365 | BLOCO DE COMANDO | | |
| 62 | 9822707 | 3 | SLEEVE | LUVA | | 1 |
| 64 | 10425590 | 3 | HEX BOLT ISO 4014 M20X80 10.9 FLZN | PARAFUSO SEXTAVADO | | |

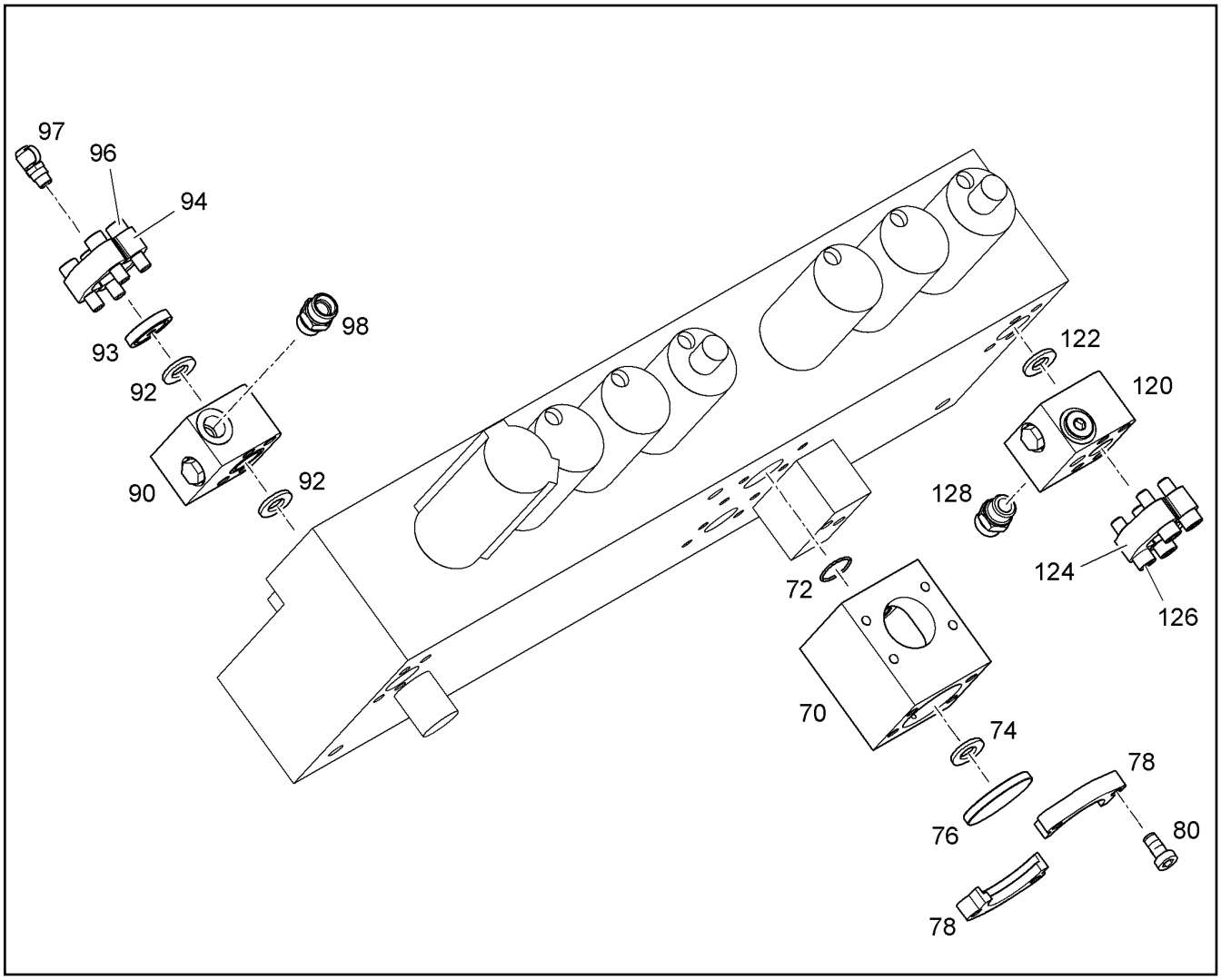


| Pos. | Item | Quantity | Description | Designação | Serie | K |
|---|---|---|---|---|---|---|
| 70 | 9370592 | 1 | NON-RETURN VALVE<br>⇨ ❑ 357 | VALVULA DE RETENCAO | | |
| 72 | 7410480 | 1 | O-RING | ANEL-O | | |
| 74 | 10490786 | 1 | PLAIN COMPRESSION RING 63,90X3,40X2,8 | ANEL DE SEÇÃO RETANGULAR | | |
| 76 | 9576071 | 1 | BLIND FLANGE | FLANGE CEGO | | |
| 78 | 11485646 | 2 | FLANGE HALF WITH BOSSING SAE J518 SA | MEIO FLANGE COM RELEVO | | |
| 80 | 4042241 | 4 | CYLINDER SCREW ISO 4762 M12X170 8.8 | PARAFUSO CILÍNDRICO | | |
| 90 | 10219863 | 1 | NON-RETURN VALVE<br>⇨ ❑ 364 | VALVULA DE RETENCAO | | |
| 92 | 10472425 | 2 | PLAIN COMPRESSION RING 45,05X3,40X2,8 | ANEL DE SEÇÃO RETANGULAR | | |
| 93 | 9369710 | 1 | INTERMEDIATE FLANGE | FLANGE INTERMEDIARIO | | |
| 94 | 11485639 | 2 | FLANGE HALF WITH BOSSING SAE J518 SA | MEIO FLANGE COM RELEVO | | |
| 96 | 4002185 | 4 | CYLINDER SCREW ISO 4762 M14X110 10.9 F | PARAFUSO CILÍNDRICO | | |
| 97 | 7409720 | 1 | SCREW COUPLING G1/4 | ACOPLAMENTO ROSCADO | | |
| 98 | 7018370 | 1 | SCREW FITTING GE 16S M27X2 | REDUÇÃO | | |
| 120 | 10219863 | 1 | NON-RETURN VALVE<br>⇨ ❑ 364 | VALVULA DE RETENCAO | | |
| 122 | 10472425 | 1 | PLAIN COMPRESSION RING 45,05X3,40X2,8 | ANEL DE SEÇÃO RETANGULAR | | |
| 124 | 11485639 | 2 | FLANGE HALF WITH BOSSING SAE J518 SA | MEIO FLANGE COM RELEVO | | |
| 126 | 4002185 | 4 | CYLINDER SCREW ISO 4762 M14X110 10.9 F | PARAFUSO CILÍNDRICO | | |
| 128 | 7018370 | 1 | SCREW FITTING GE 16S M27X2 | REDUÇÃO | | |

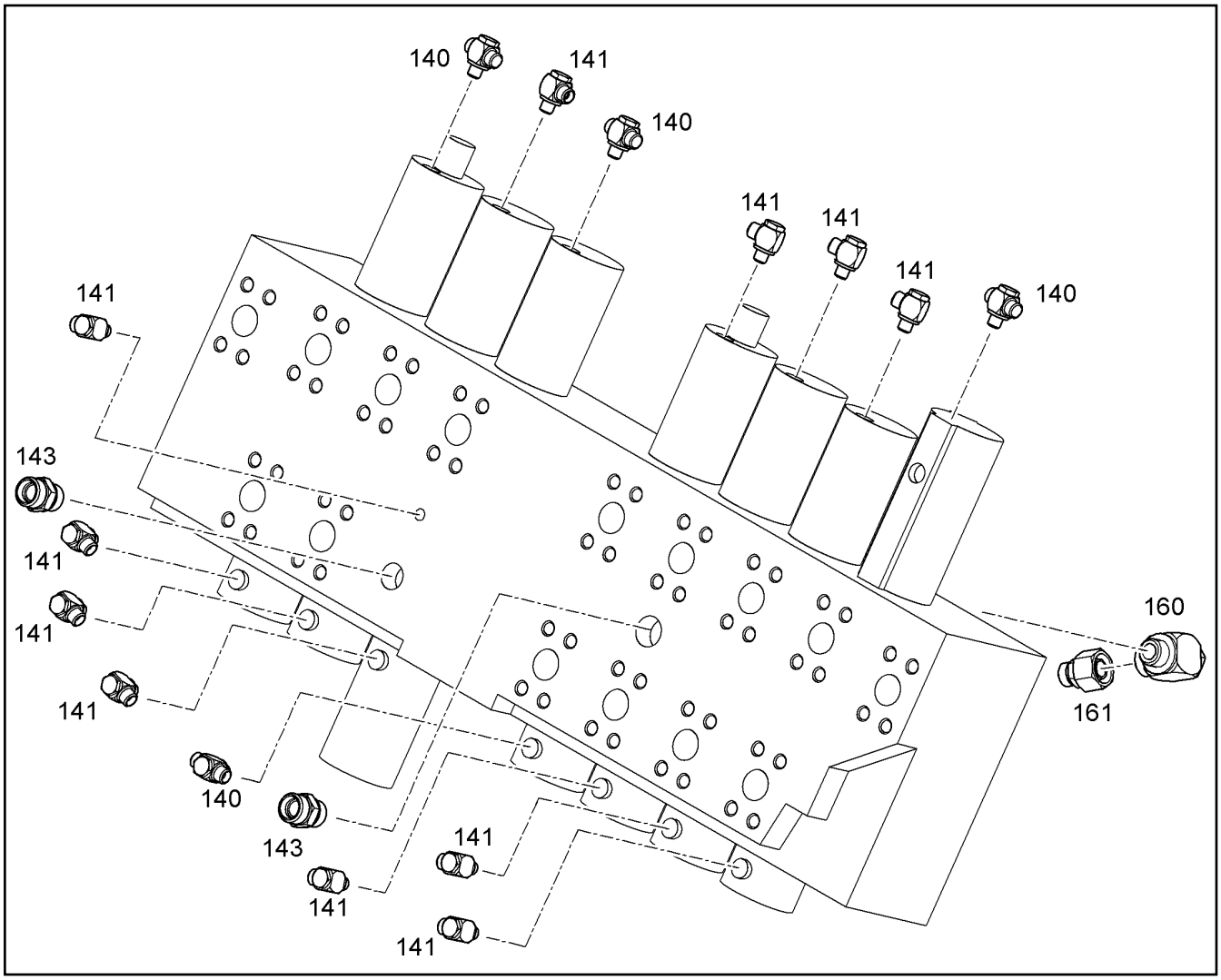


| Pos. | Item | Quantity | Description | Designação | Serie | K |
|---|---|---|---|---|---|---|
| 140 | 7368531 | 4 | SCREW FITTING TH 10L | REDUÇÃO | | |
| 141 | 7617261 | 11 | HINGED THREADED UNION WH 10L G1/4A | CONEXÃO ROSCADA | | |
| 143 | 7018370 | 2 | SCREW FITTING GE 16S M27X2 | REDUÇÃO | | |
| 160 | 7617359 | 1 | HINGED THREADED UNION WH 20S M27X2 | CONEXÃO ROSCADA | | |
| 161 | 7407161 | 1 | SCREW FITTING RED 20/16S | REDUÇÃO | | |

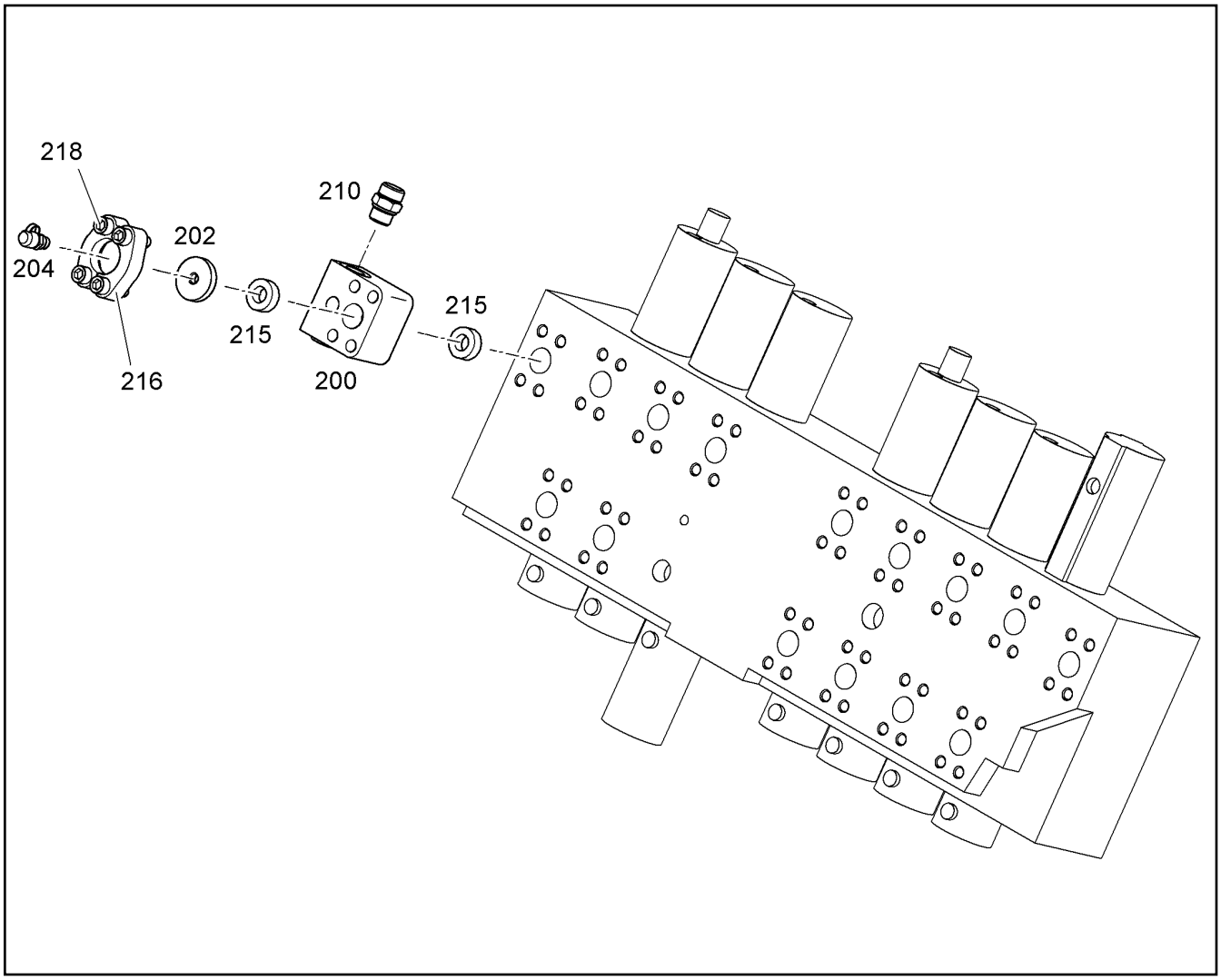


| Pos. | Item | Quantity | Description | Designação | Serie | K |
|---|---|---|---|---|---|---|
| 200 | 10218215 | 1 | NON-RETURN VALVE<br>⇨ ❑ 363 | VALVULA DE RETENCAO | | |
| 202 | 9369710 | 1 | INTERMEDIATE FLANGE | FLANGE INTERMEDIARIO | | |
| 204 | 7409720 | 1 | SCREW COUPLING G1/4 | ACOPLAMENTO ROSCADO | | |
| 210 | 7018370 | 1 | SCREW FITTING GE 16S M27X2 | REDUÇÃO | | |
| 215 | 10472425 | 2 | PLAIN COMPRESSION RING 45,05X3,40X2,8 | ANEL DE SEÇÃO RETANGULAR | | |
| 216 | 11485639 | 2 | FLANGE HALF WITH BOSSING SAE J518 SA | MEIO FLANGE COM RELEVO | | |
| 218 | 4002185 | 4 | CYLINDER SCREW ISO 4762 M14X110 10.9 F | PARAFUSO CILÍNDRICO | | |

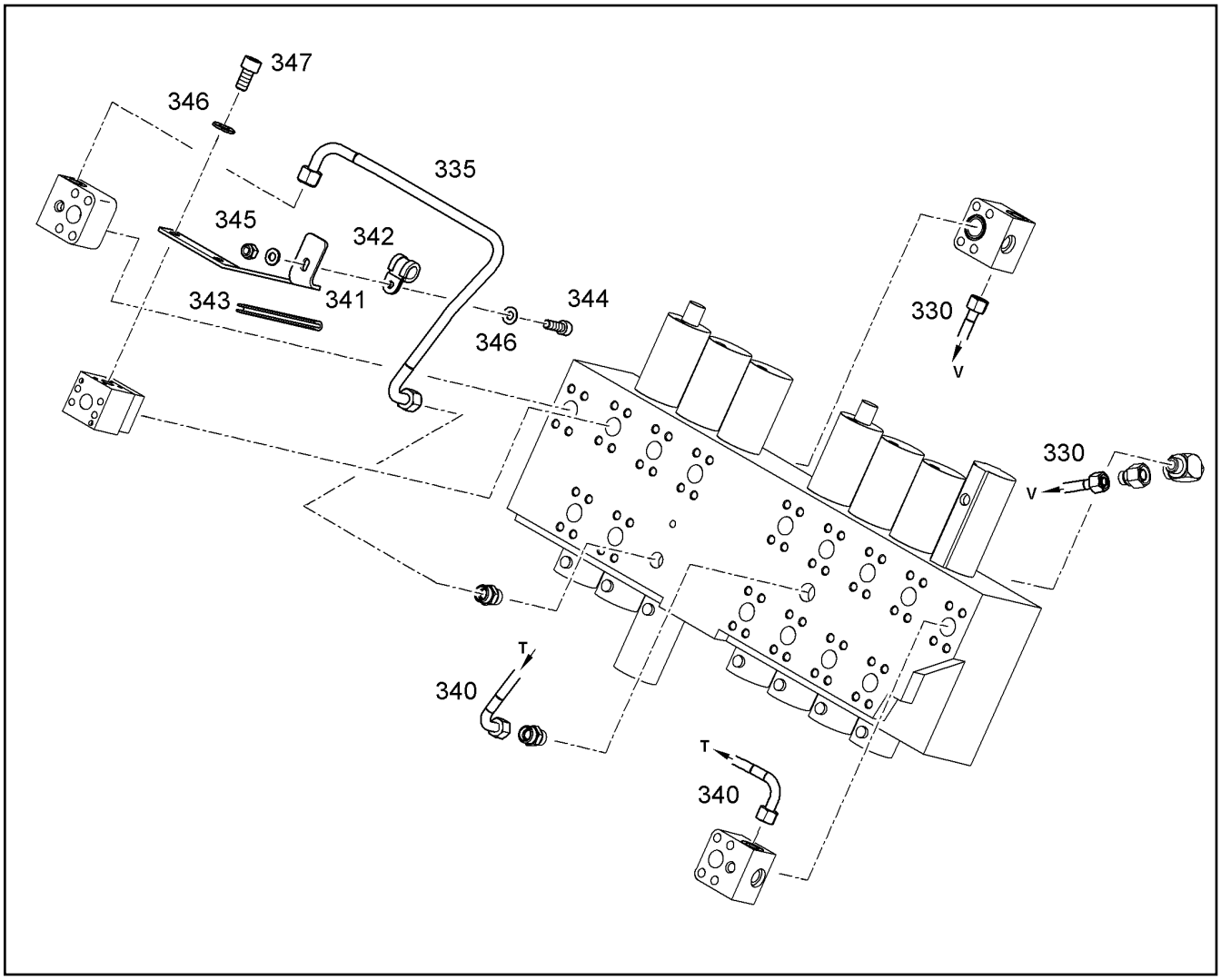


| Pos. | Item | Quantity | Description | Designação | Serie | K |
|---|---|---|---|---|---|---|
| 330 | 10056237 | 1 | TUBE | TUBO | -99998 | |
| 330 | 10842035 | 1 | TUBE | TUBO | 99999- | |
| 335 | 10056235 | 1 | TUBE | TUBO | -99998 | |
| 335 | 10842046 | 1 | TUBE | TUBO | 99999- | |
| 340 | 10056233 | 1 | TUBE | TUBO | -99998 | |
| 340 | 10842056 | 1 | TUBE | TUBO | 99999- | |
| 341 | 10836599 | 1 | PLATE | PLACA | | |
| 342 | 7362603 | 1 | CLAMP DIN 3016-1 D1 15X20 W1-2-CR | BRAÇADEIRA | | |
| 343 | 226016702 | 0.11m | SECTION | PERFIL DE PROTECAO DE CANT | | |
| 344 | 4901217 | 1 | CYLINDER SCREW ISO 4762 M8X25 10.9 A2 | PARAFUSO CILÍNDRICO | | |
| 345 | 4901573 | 1 | HEX NUT M8 | PORCA SEXTAVADA | | |
| 346 | 10289803 | 4 | WASHER ISO 7089 8 300HV | ARRUELA | | |
| 347 | 4043082 | 2 | CYLINDER SCREW ISO 4762 M8X20 10.9 A2 | PARAFUSO CILÍNDRICO | | |

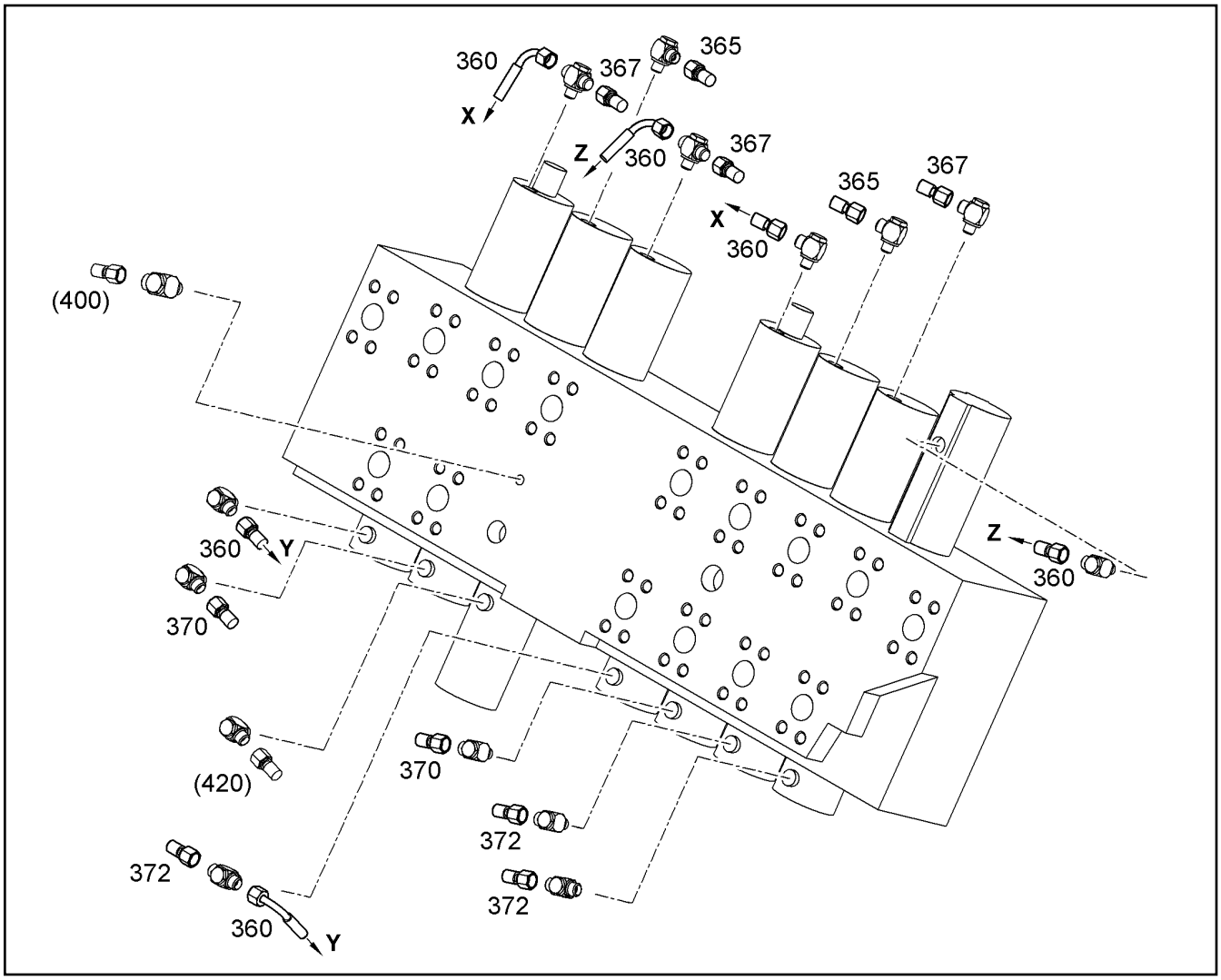


| Pos. | Item | Quantity | Description | Designação | Serie | K |
|---|---|---|---|---|---|---|
| 360 | 7005314 | 3 | CONTROL HOSE | MANGUEIRA DE COMANDO | | 1 |
| 365 | 7006644 | 2 | CONTROL HOSE 8X4000 | MANGUEIRA DE COMANDO | | 1 |
| 367 | 5608732 | 3 | CONTROL HOSE | MANGUEIRA DE COMANDO | | 1 |
| 370 | 10218975 | 2 | CONTROL HOSE 8X2600 | MANGUEIRA DE COMANDO | | 1 |
| 372 | 7618290 | 2 | CONTROL HOSE 8X2600 | MANGUEIRA DE COMANDO | | 1 |

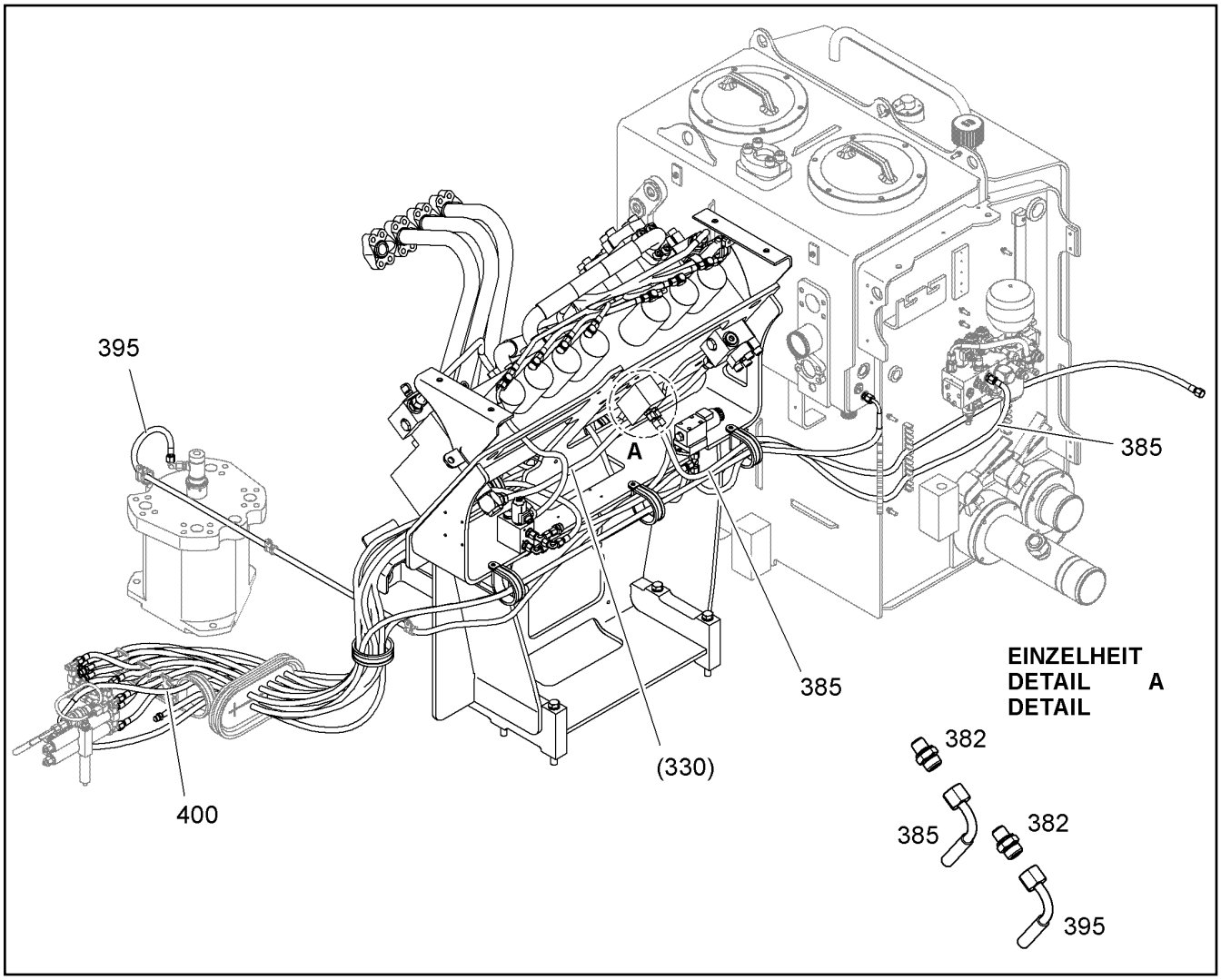


| Pos. | Item | Quantity | Description | Designação | Serie | K |
|---|---|---|---|---|---|---|
| 382 | 7362091 | 2 | SCREW FITTING GE 10L | REDUÇÃO | | |
| 385 | 7009933 | 1 | CONTROL HOSE 8X2000 | MANGUEIRA DE COMANDO | | 1 |
| 395 | 7012436 | 1 | CONTROL HOSE | MANGUEIRA DE COMANDO | | 1 |
| 400 | 7407224 | 1 | CONTROL HOSE | MANGUEIRA DE COMANDO | | 1 |

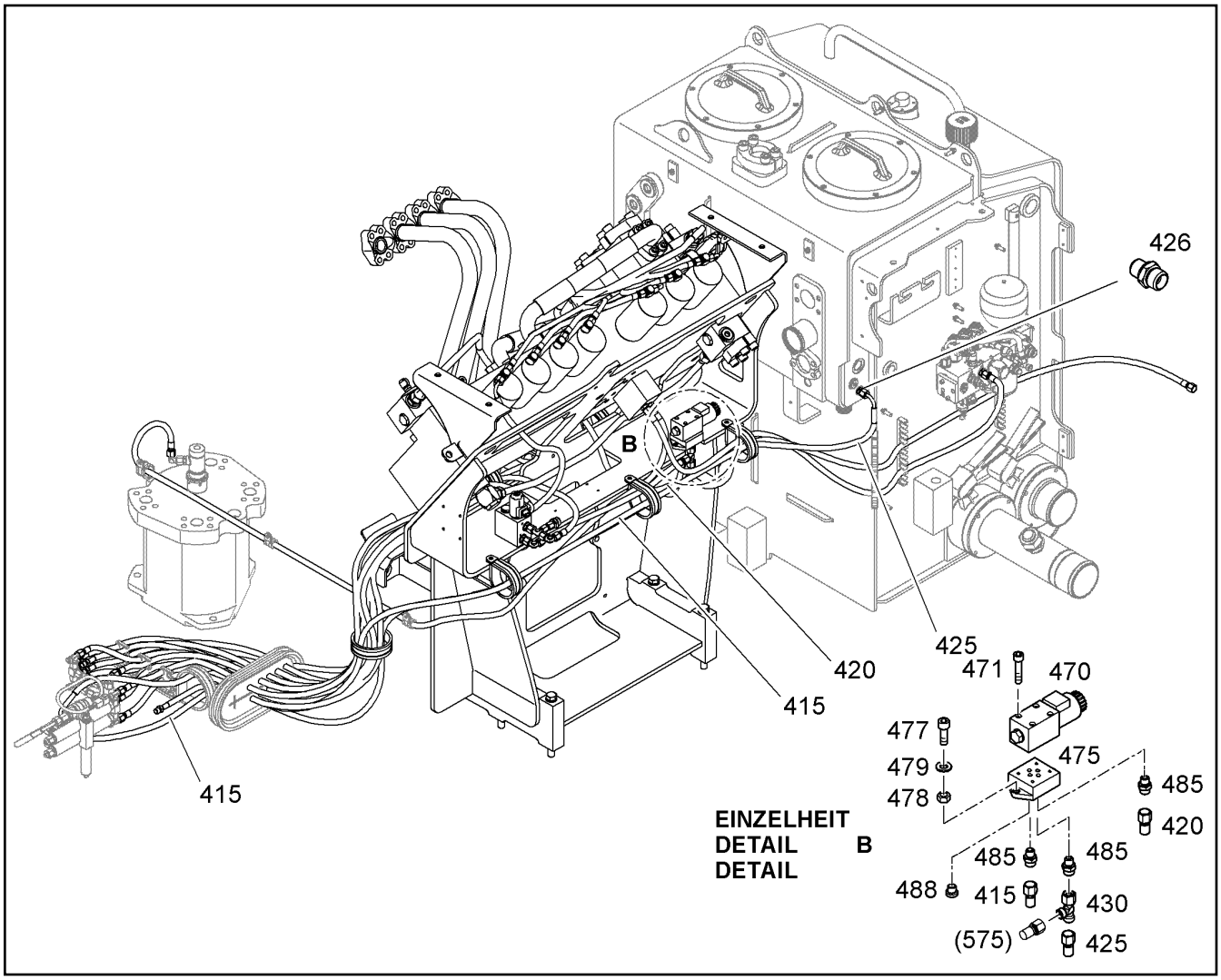


| Pos. | Item | Quantity | Description | Designação | Serie | K |
|---|---|---|---|---|---|---|
| 415 | 7402273 | 1 | CONTROL HOSE | MANGUEIRA DE COMANDO | | 1 |
| 420 | 7005314 | 1 | CONTROL HOSE | MANGUEIRA DE COMANDO | | 1 |
| 425 | 7003684 | 1 | CONTROL HOSE | MANGUEIRA DE COMANDO | | 1 |
| 426 | 7003814 | 1 | SCREW FITTING GE 10L M14X1,5 | REDUÇÃO | | |
| 430 | 472330208 | 1 | SCREW FITTING EL 10L | REDUÇÃO | | |
| 470 | 10003485 | 1 | DIRECTIONAL CONTROL VALVE<br>⇨ ❑ 642 | VÁLVULA DIRECIONAL | | |
| 471 | 4600552 | 4 | CYLINDER SCREW ISO 4762 M5X50 10.9 A2 | PARAFUSO CILÍNDRICO | | |
| 475 | 7013559 | 1 | CONNECTING PLATE | PLACA DE CONEXAO | | |
| 477 | 4901159 | 2 | CYLINDER SCREW ISO 4762 M6X30 10.9 A2 | PARAFUSO CILÍNDRICO | | |
| 478 | 4000379 | 2 | HEX NUT M6 | PORCA SEXTAVADA | | |
| 479 | 10289802 | 2 | WASHER ISO 7089 6 300HV | ARRUELA | | |
| 485 | 7362091 | 3 | SCREW FITTING GE 10L | REDUÇÃO | | |
| 488 | 7361553 | 1 | SCREW PLUG VSTI | PARAFUSO DE FECHAMENTO | | |

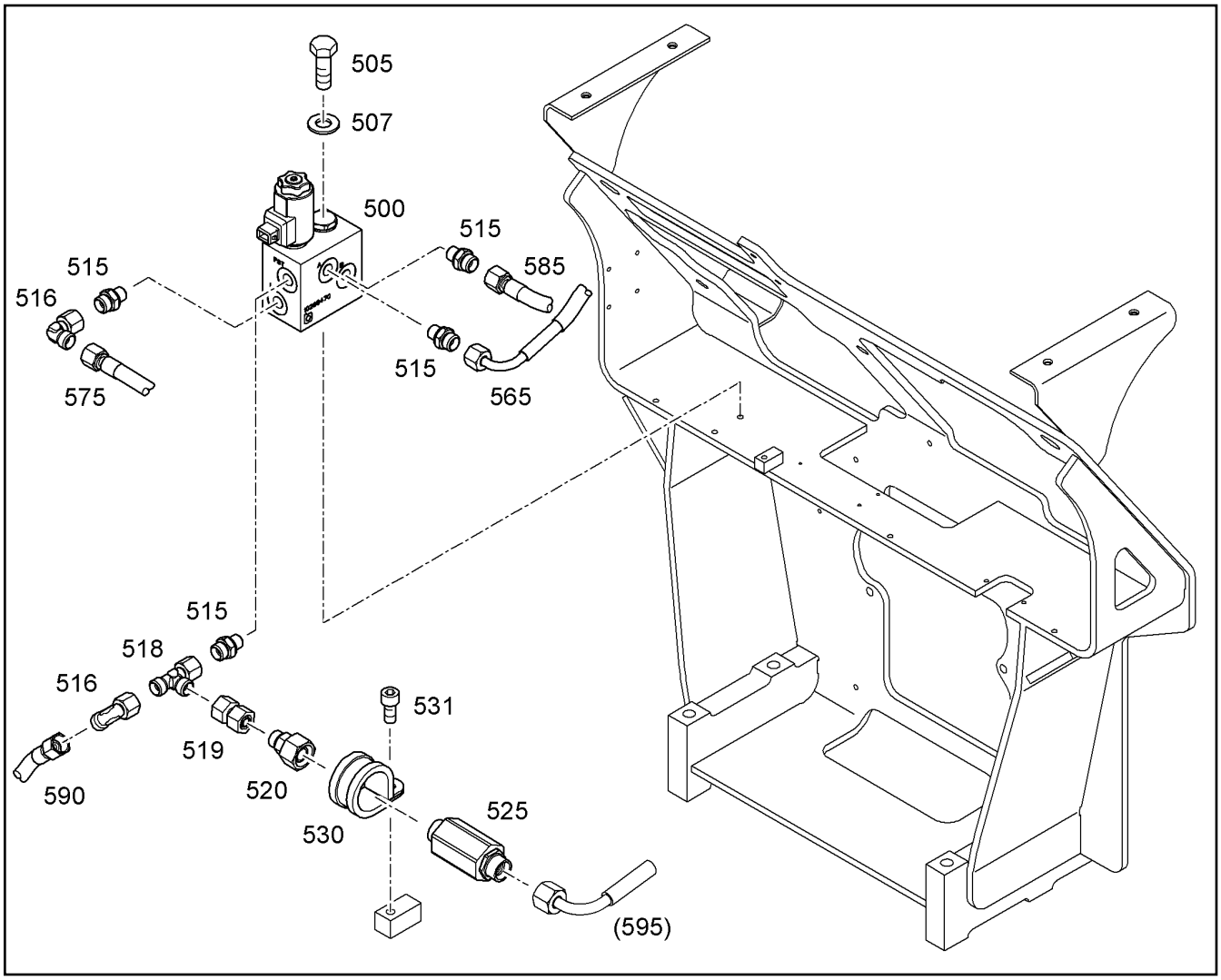


| Pos. | Item | Quantity | Description | Designação | Serie | K |
|---|---|---|---|---|---|---|
| 500 | 10288470 | 1 | CONTROL PLATE<br>⇨ ❑ 358 | REGUA DE COMANDO | | |
| 505 | 4066042 | 2 | HEX BOLT ISO 4017 M8X25 10.9 A2C | PARAFUSO SEXTAVADO | | |
| 507 | 423910801 | 2 | LOCK WASHER 8,4/13X1,7 VS 8 | ARRUELA DE SEGURANÇA | | |
| 515 | 7362091 | 4 | SCREW FITTING GE 10L | REDUÇÃO | | |
| 516 | 7403569 | 2 | SCREW FITTING EW 10L | REDUÇÃO | | |
| 518 | 472330208 | 1 | SCREW FITTING EL 10L | REDUÇÃO | | |
| 519 | 7410211 | 1 | SCREW FITTING GZ 10L | REDUÇÃO | | |
| 520 | 7616915 | 1 | SCREW FITTING RED 15/10L | REDUÇÃO | | |
| 525 | 10342884 | 1 | DOUBLE NON-RETURN VALVE | VALVULA DE RETENCAO DUPLA | | |
| 530 | 7367691 | 1 | CLAMP DIN 3016-1 D1 40X25 W1-2-CR | BRAÇADEIRA | | |
| 531 | 4043122 | 1 | CYLINDER SCREW ISO 4762 M10X20 10.9 | PARAFUSO CILÍNDRICO | | |
| 565 | 7005047 | 1 | CONTROL HOSE 8X500 | MANGUEIRA DE COMANDO | | 1 |
| 575 | 7404256 | 1 | CONTROL HOSE | MANGUEIRA DE COMANDO | | 1 |
| 585 | 7005314 | 1 | CONTROL HOSE | MANGUEIRA DE COMANDO | | 1 |
| 590 | 7618290 | 1 | CONTROL HOSE 8X2600 | MANGUEIRA DE COMANDO | | 1 |

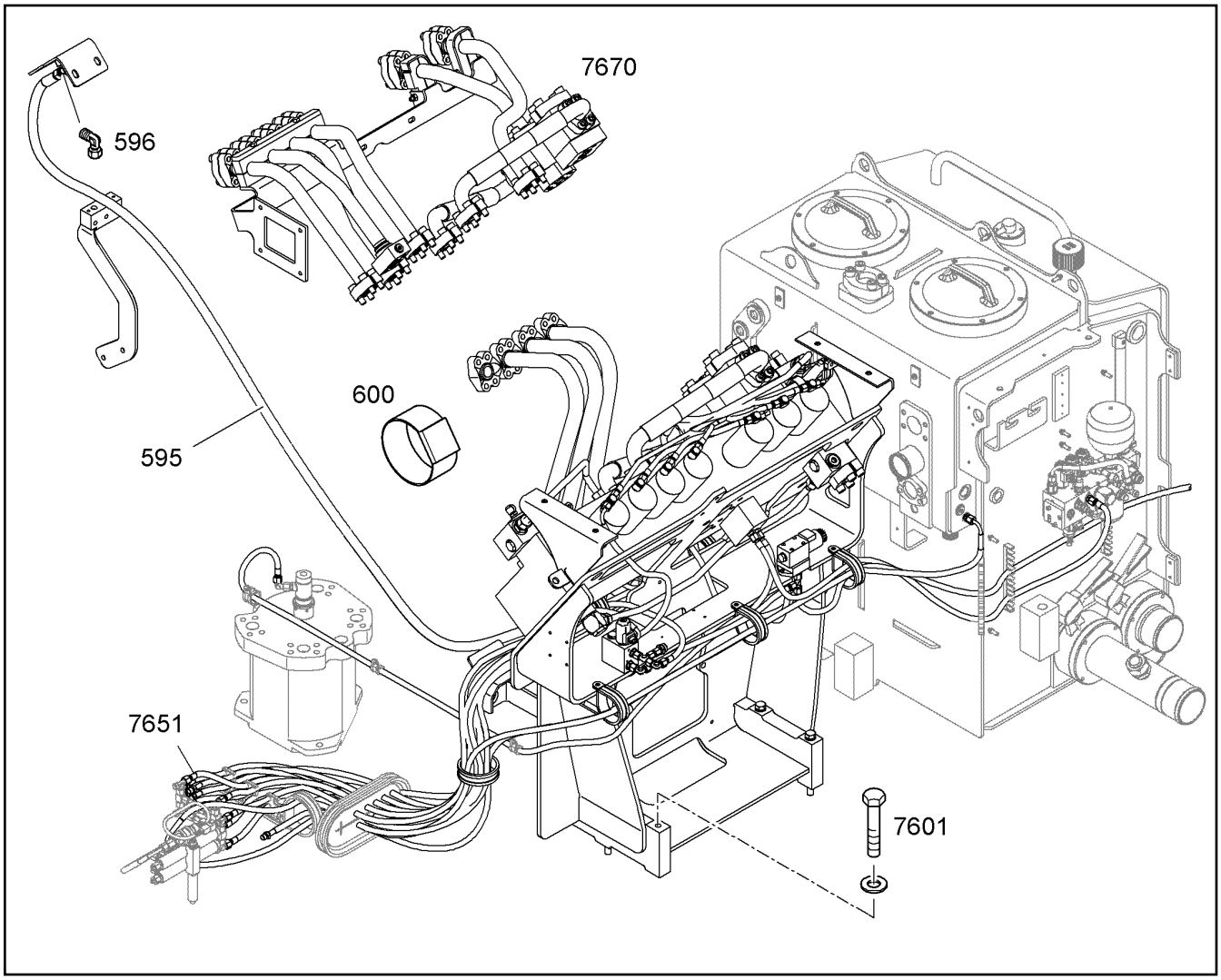


| Pos. | Item | Quantity | Description | Designação | Serie | K |
|---|---|---|---|---|---|---|
| 595 | 10020719 | 1 | HOSE | MANGUEIRA | | 1 |
| 596 | 7615379 | 1 | SCREW FITTING EW 15L | REDUÇÃO | | |
| 600 | 7621780 | 4 | LASHING STRAP 18X0,35m 380daN TEXTILG | CINTA DE AMARRACAO | | |
| 7601 | 10087437 | 1 | FIXING PARTS CONTROL VALVE<br>⇨ ❑ 356 | PECAS DE FIXACAO PARA VALV | 20000- | |
| 7651 | 10070970 | 1 | INSCRIPTION TAPE | FITA DE IDENTIFICAÇÃO | | |
| 7670 | 10498225 | 1 | HYDR.TUBES INSTALLATION<br>⇨ ❑ 359 | TUBULACOES PRESSAO INSTA | | |

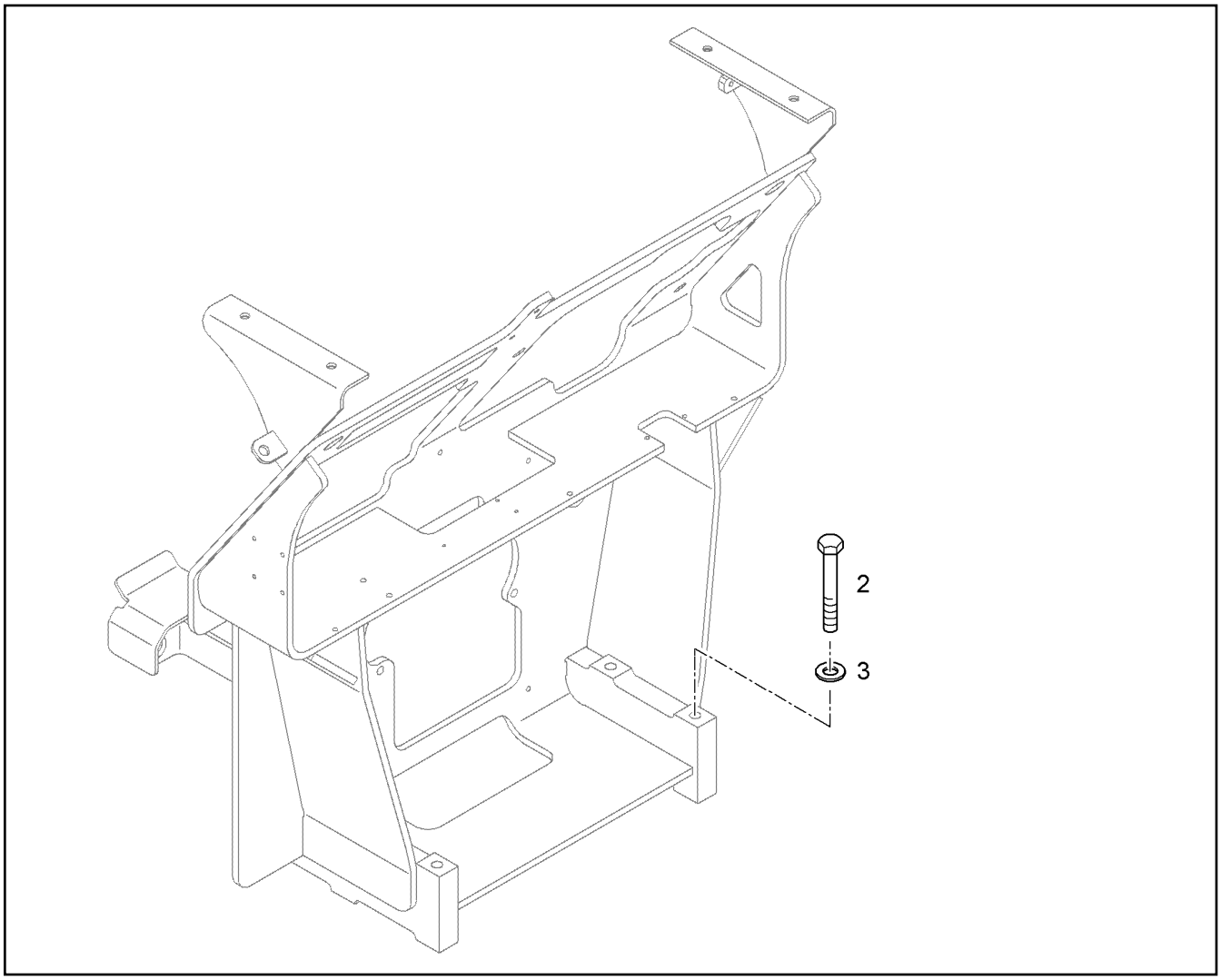


| Pos. | Item | Quantity | Description | Designação | Serie | K |
|---|---|---|---|---|---|---|
| 2 | 4600947 | 4 | HEX BOLT ISO 4014 M16X180 10.9 DAC | PARAFUSO SEXTAVADO | | |
| 3 | 9918228 | 4 | WASHER 16,5/28X4 | ARRUELA | | |

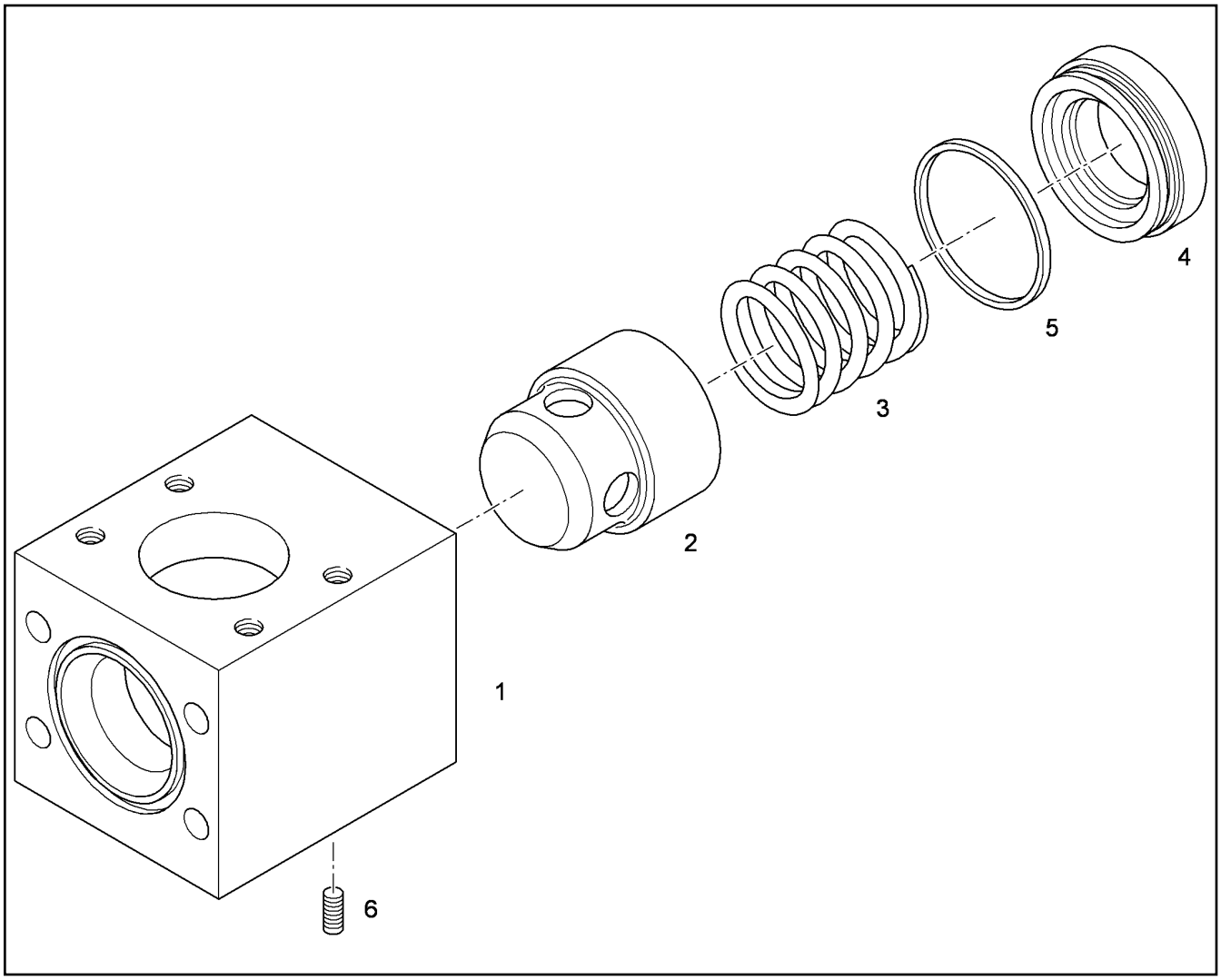


| Pos. | Item | Quantity | Description | Designação | Serie | K |
|---|---|---|---|---|---|---|
| 1 | 9370414 | 1 | BLOCK | BLOCO | | |
| 2 | 7367730 | 1 | TAPER | CONE | | |
| 3 | 7365026 | 1 | PRESSURE SPRING 5,3X51,7X95 | MOLA DE PRESSÃO | | |
| 4 | 7367729 | 1 | REPLACEMENT PART | PEÇA DE REPOSIÇÃO | | 1 |
| 5 | 7008755 | 1 | O-RING 66,00X3,00 | ANEL-O | | |
| 6 | 4981019 | 1 | GRUB SCREW DIN 915 M6X20 45H | PINO ROSCADO | | |

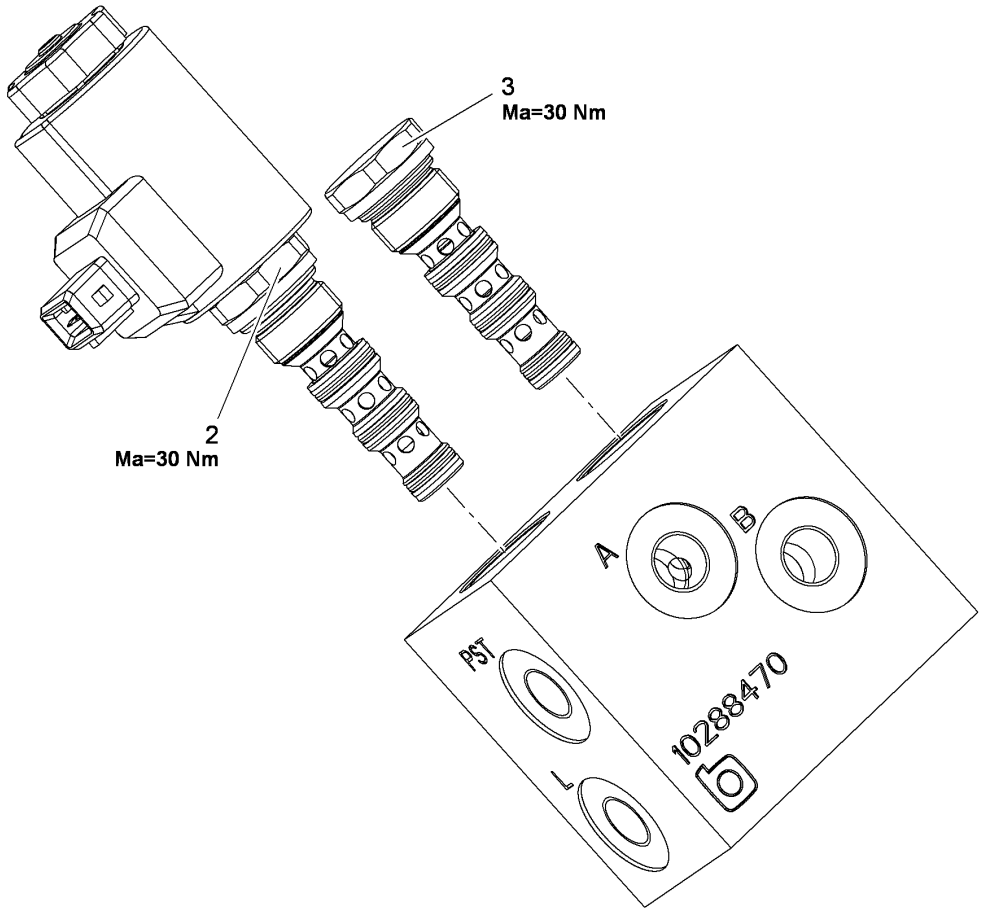


| Pos. | Item | Quantity | Description | Designação | Serie | K |
|---|---|---|---|---|---|---|
| 2 | 10018725 | 1 | DIRECTIONAL CONTROL VALVE<br>⇨ ❑ 320 | VÁLVULA DIRECIONAL | | |
| 3 | 10292692 | 1 | DIRECTIONAL CONTROL VALVE | VÁLVULA DIRECIONAL | | |

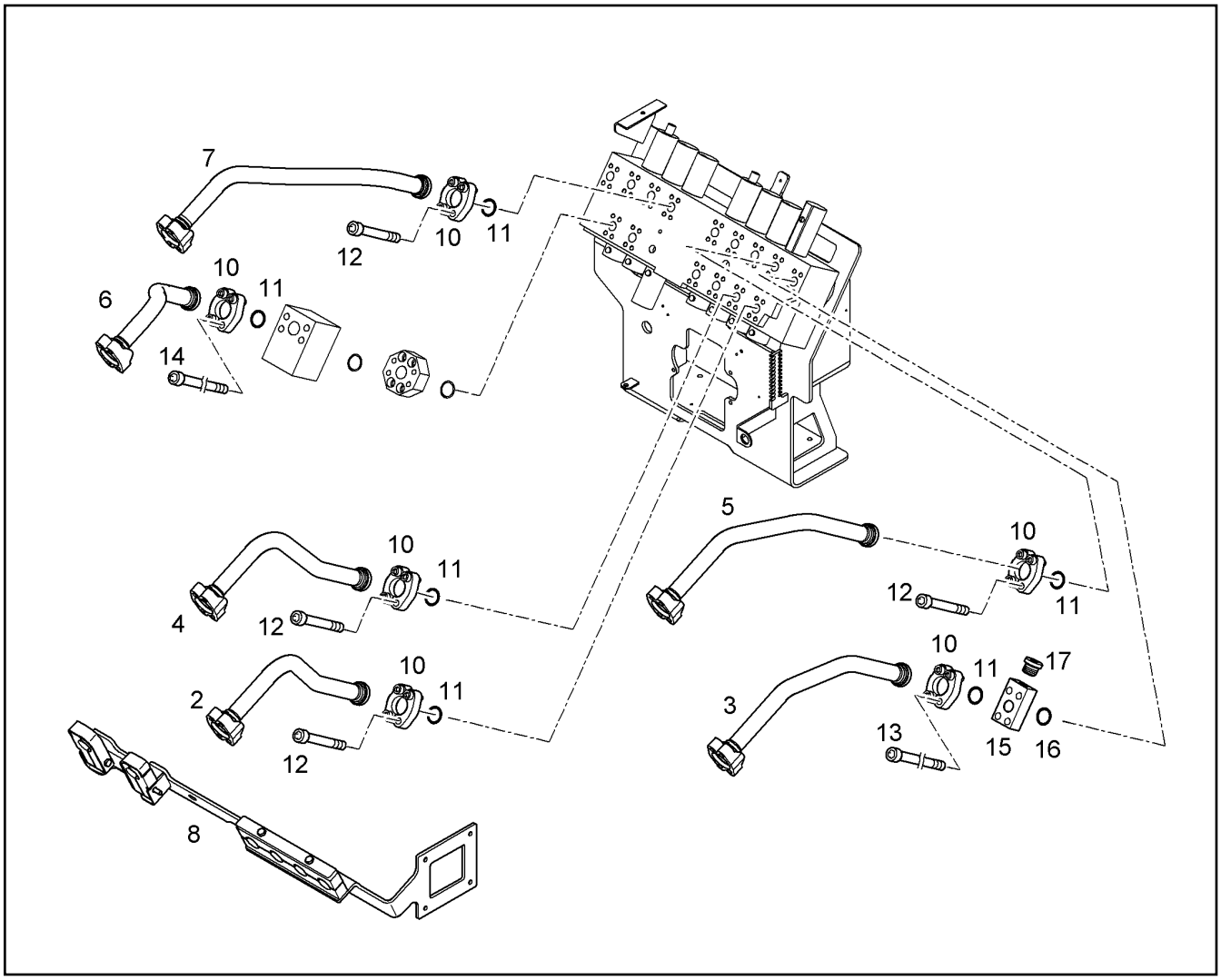


| Pos. | Item | Quantity | Description | Designação | Serie | K |
|---|---|---|---|---|---|---|
| 2 | 9947847 | 1 | PRESSURE LINE CPL | TUBULAÇÃO DE PRESSÃO COM | | |
| 3 | 9947845 | 1 | PRESSURE LINE CPL | TUBULAÇÃO DE PRESSÃO COM | | |
| 4 | 9947849 | 1 | PRESSURE LINE CPL | TUBULAÇÃO DE PRESSÃO COM | | |
| 5 | 9947851 | 1 | PRESSURE LINE CPL | TUBULAÇÃO DE PRESSÃO COM | | |
| 6 | 9947863 | 1 | PRESSURE LINE CPL | TUBULAÇÃO DE PRESSÃO COM | | |
| 7 | 9947861 | 1 | PRESSURE LINE CPL | TUBULAÇÃO DE PRESSÃO COM | | |
| 8 | 9945116 | 1 | PIPE CLAMP<br>⇨ ❑ 362 | BRAÇADEIRA DE TUBO | | |
| 10 | 11485639 | 12 | FLANGE HALF WITH BOSSING SAE J518 SA | MEIO FLANGE COM RELEVO | | |
| 11 | 10472425 | 6 | PLAIN COMPRESSION RING 45,05X3,40X2,8 | ANEL DE SEÇÃO RETANGULAR | | |
| 12 | 4902327 | 16 | CYLINDER SCREW ISO 4762 M14X45 10.9 | PARAFUSO CILÍNDRICO | | |
| 13 | 10544052 | 4 | CYLINDER SCREW ISO 4762 M14X85 10.9 F | PARAFUSO CILÍNDRICO | | |
| 14 | 10016122 | 4 | CYLINDER SCREW ISO 4762 M14X150 10.9 F | PARAFUSO CILÍNDRICO | | |
| 15 | 9331403 | 1 | INTERMEDIATE PIECE | PECA INTERMEDIARIA | | |
| 16 | 10472425 | 1 | PLAIN COMPRESSION RING 45,05X3,40X2,8 | ANEL DE SEÇÃO RETANGULAR | | |
| 17 | 4900609 | 1 | SCREW PLUG VSTI G3/8 | PARAFUSO DE FECHAMENTO | | |

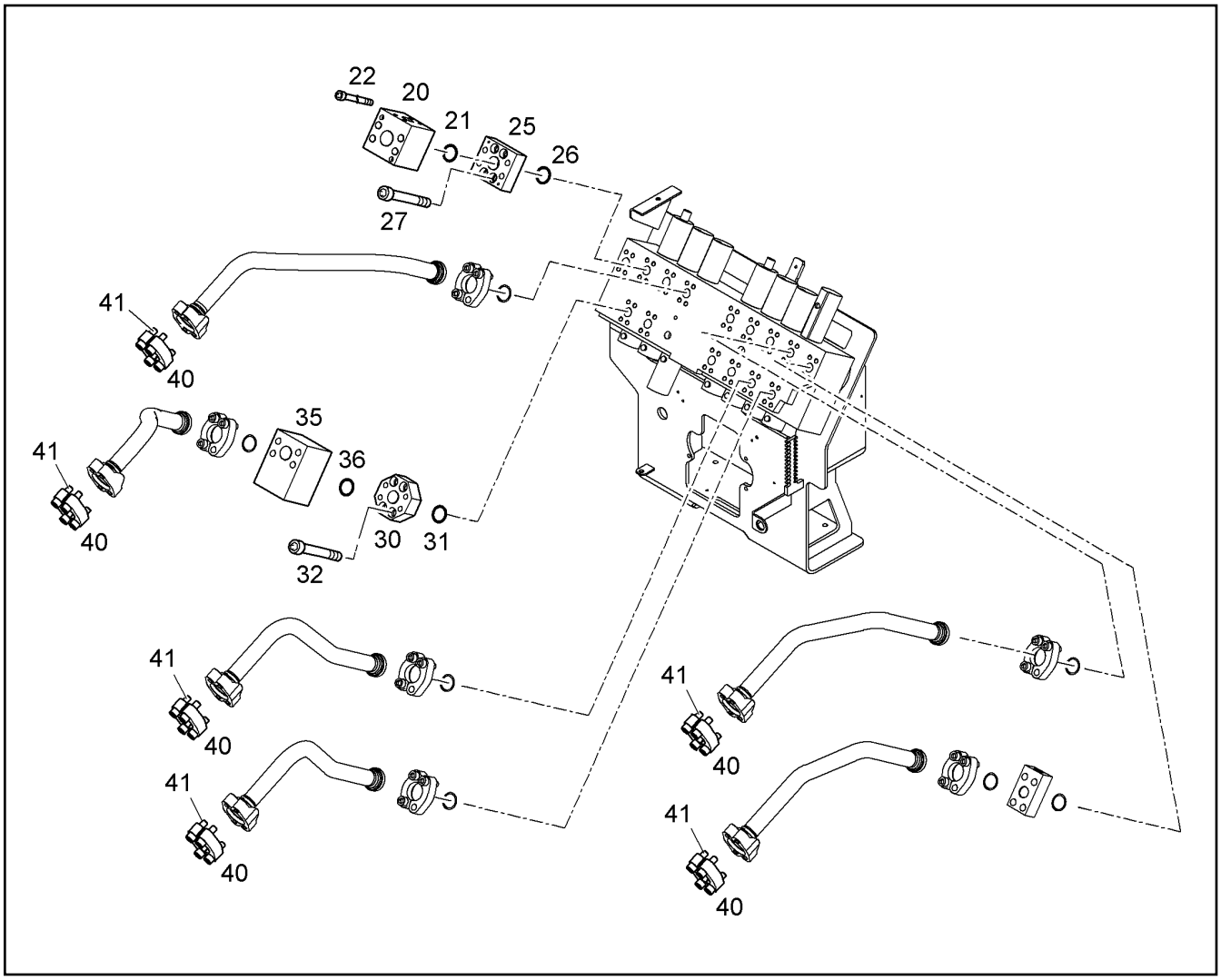


| Pos. | Item | Quantity | Description | Designação | Serie | K |
|---|---|---|---|---|---|---|
| 20 | 9948134 | 1 | BLOCK | BLOCO | | |
| 21 | 10472425 | 1 | PLAIN COMPRESSION RING 45,05X3,40X2,8 | ANEL DE SEÇÃO RETANGULAR | | |
| 22 | 4000363 | 2 | CYLINDER SCREW ISO 4762 M6X100 10.9 | PARAFUSO CILÍNDRICO | | |
| 25 | 9948115 | 1 | FLANGE CONNECTION | CONEXÃO FLAGEADA | | |
| 26 | 10472425 | 1 | PLAIN COMPRESSION RING 45,05X3,40X2,8 | ANEL DE SEÇÃO RETANGULAR | | |
| 27 | 11320176 | 4 | CYLINDER SCREW ISO 4762 M14X40 10.9 F | PARAFUSO CILÍNDRICO | | |
| 30 | 9346433 | 1 | BLOCK | BLOCO | | |
| 31 | 10472425 | 1 | PLAIN COMPRESSION RING 45,05X3,40X2,8 | ANEL DE SEÇÃO RETANGULAR | | |
| 32 | 11320176 | 4 | CYLINDER SCREW ISO 4762 M14X40 10.9 F | PARAFUSO CILÍNDRICO | | |
| 35 | 10065162 | 1 | BLOCK | BLOCO | | |
| 36 | 10472425 | 1 | PLAIN COMPRESSION RING 45,05X3,40X2,8 | ANEL DE SEÇÃO RETANGULAR | | |
| 40 | 11485639 | 12 | FLANGE HALF WITH BOSSING SAE J518 SA | MEIO FLANGE COM RELEVO | | |
| 41 | 4601191 | 24 | CYLINDER SCREW ISO 4762 M14X55 10.9 | PARAFUSO CILÍNDRICO | | |

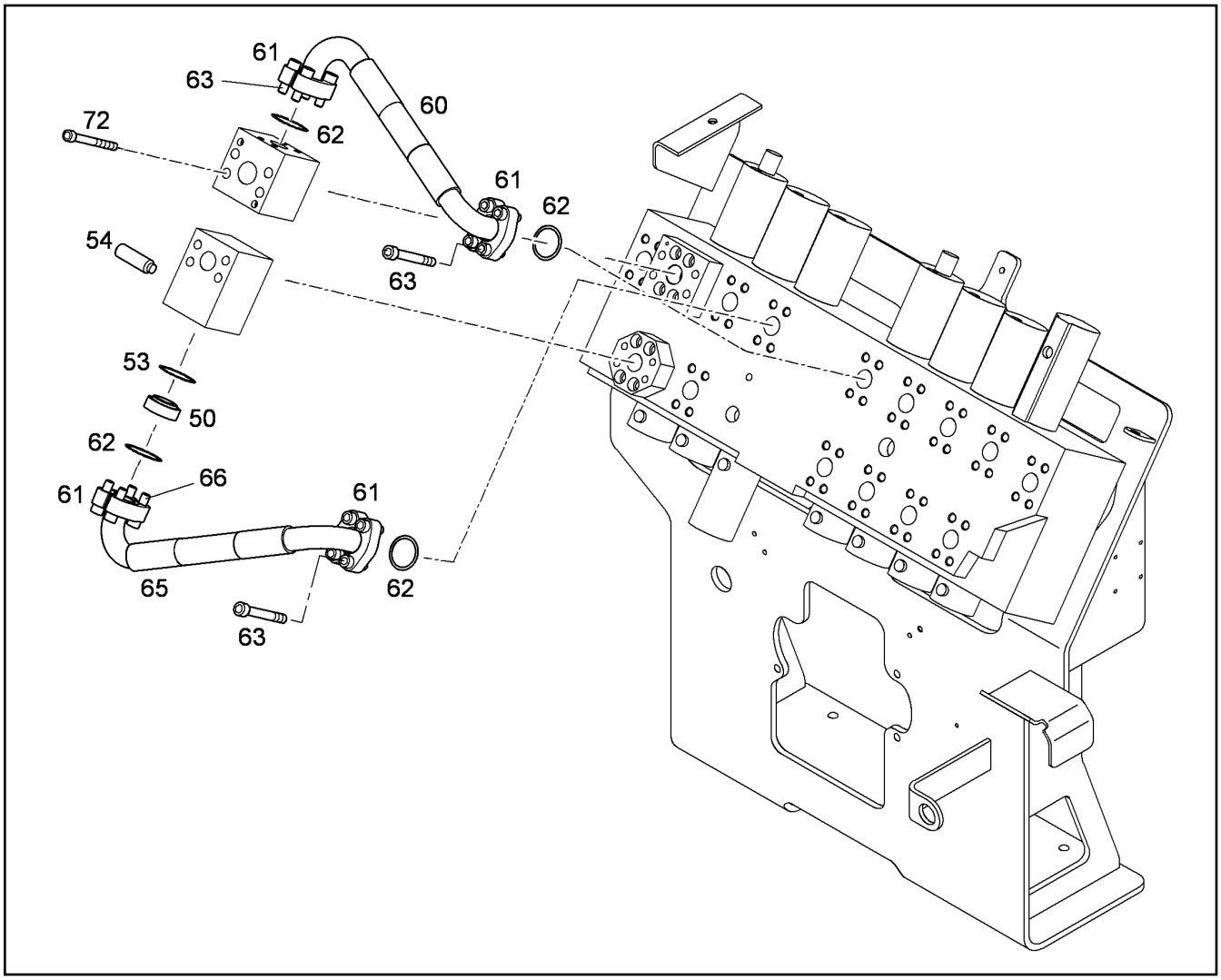


| Pos. | Item | Quantity | Description | Designação | Serie | K |
|---|---|---|---|---|---|---|
| 50 | 10065165 | 1 | LID | TAMPA | | |
| 53 | 10490787 | 1 | PLAIN COMPRESSION RING 54,40X3,40X2,8 | ANEL DE SEÇÃO RETANGULAR | | |
| 54 | 4981019 | 1 | GRUB SCREW DIN 915 M6X20 45H | PINO ROSCADO | | |
| 60 | 10043476 | 1 | HOSE | MANGUEIRA | | 1 |
| 61 | 11485639 | 8 | FLANGE HALF WITH BOSSING SAE J518 SA | MEIO FLANGE COM RELEVO | | |
| 62 | 10472425 | 4 | PLAIN COMPRESSION RING 45,05X3,40X2,8 | ANEL DE SEÇÃO RETANGULAR | | |
| 63 | 4902327 | 12 | CYLINDER SCREW ISO 4762 M14X45 10.9 | PARAFUSO CILÍNDRICO | | |
| 65 | 10043478 | 1 | HOSE | MANGUEIRA | | 1 |
| 66 | 4600741 | 4 | CYLINDER SCREW ISO 4762 M14X65 10.9 F | PARAFUSO CILÍNDRICO | | |
| 72 | 4600947 | 4 | HEX BOLT ISO 4014 M16X180 10.9 DAC | PARAFUSO SEXTAVADO | | |

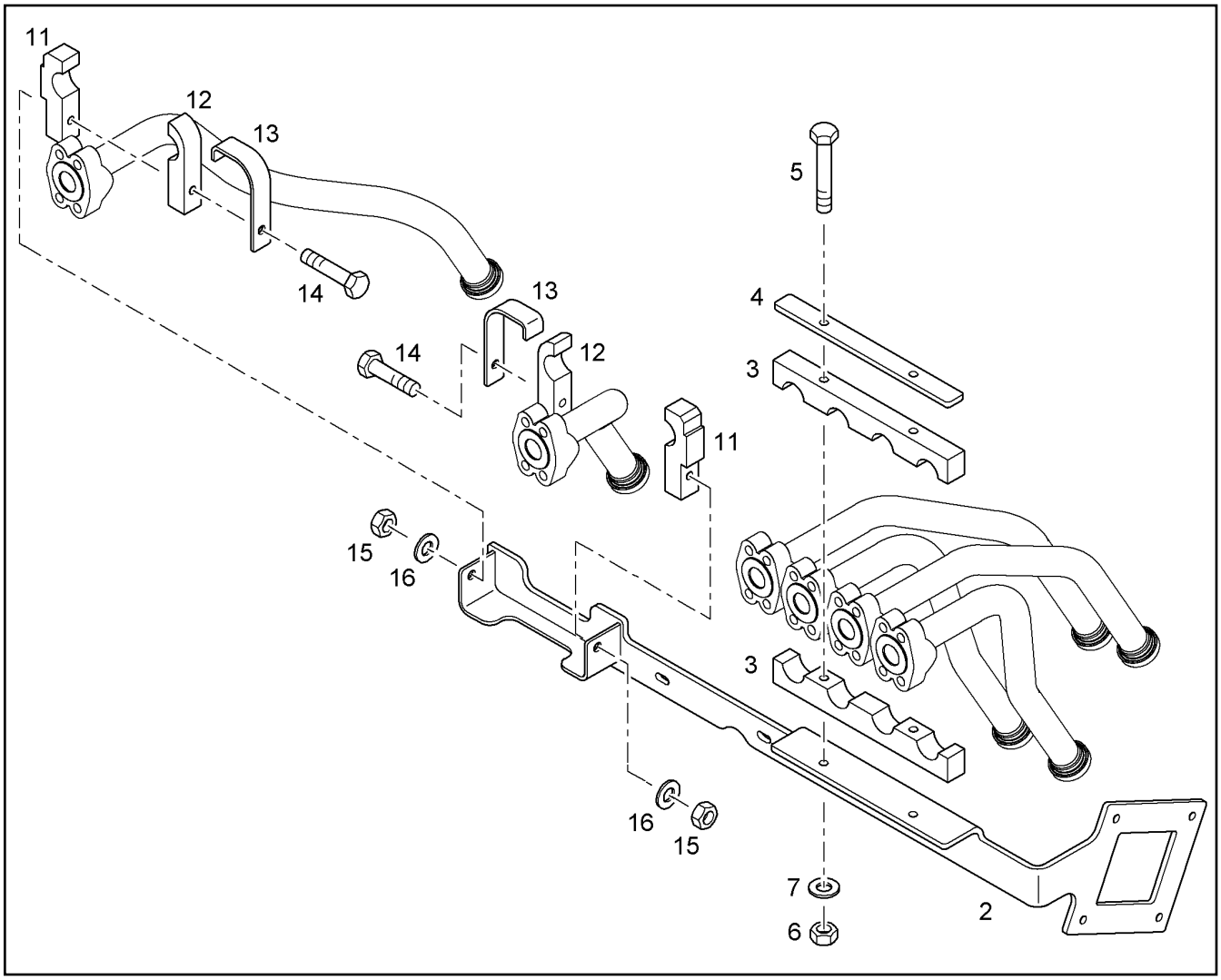


| Pos. | Item | Quantity | Description | Designação | Serie | K |
|---|---|---|---|---|---|---|
| 2 | 9945118 | 1 | CONSOLE | SUPORTE | | |
| 3 | 9945121 | 2 | HALF CLAMP COLLAR | MEIA ABRAÇADEIRA | | |
| 4 | 9945122 | 1 | PLATE | PLACA | | |
| 5 | 4600728 | 2 | HEX BOLT ISO 4014 M10X110 10.9 A3C | PARAFUSO SEXTAVADO | | |
| 6 | 4600579 | 2 | HEX NUT M10 | PORCA SEXTAVADA | | |
| 7 | 10289795 | 2 | WASHER ISO 7089 10 300HV | ARRUELA | | |
| 11 | 9927570 | 2 | HALF CLAMP COLLAR | MEIA ABRAÇADEIRA | | |
| 12 | 9927569 | 2 | HALF CLAMP COLLAR | MEIA ABRAÇADEIRA | | |
| 13 | 9945124 | 2 | PLATE | PLACA | | |
| 14 | 4002164 | 2 | HEX BOLT ISO 4014 M10X90 10.9 A3C | PARAFUSO SEXTAVADO | | |
| 15 | 4600579 | 2 | HEX NUT M10 | PORCA SEXTAVADA | | |
| 16 | 10289795 | 2 | WASHER ISO 7089 10 300HV | ARRUELA | | |

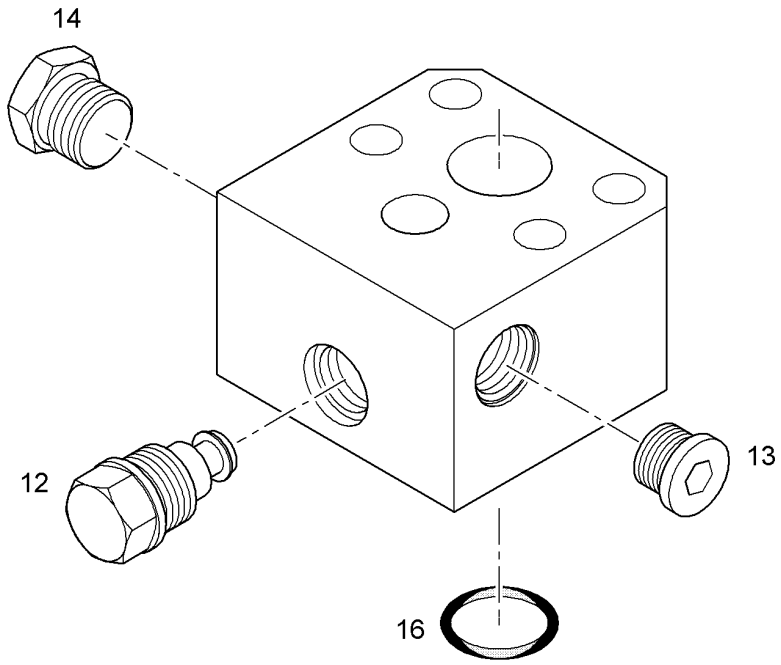


| Pos. | Item | Quantity | Description | Designação | Serie | K |
|---|---|---|---|---|---|---|
| 12 | 5008169 | 1 | NON-RETURN VALVE | VALVULA DE RETENCAO | | |
| 13 | 10296854 | 1 | SCREW PLUG M20X1,5X19 | PARAFUSO DE FECHAMENTO | | |
| 14 | 7360563 | 1 | SCREW PLUG VSTI M27X2 | PARAFUSO DE FECHAMENTO | | |
| 16 | 7022120 | 1 | O-RING 37,69X3,53 | ANEL-O | | |

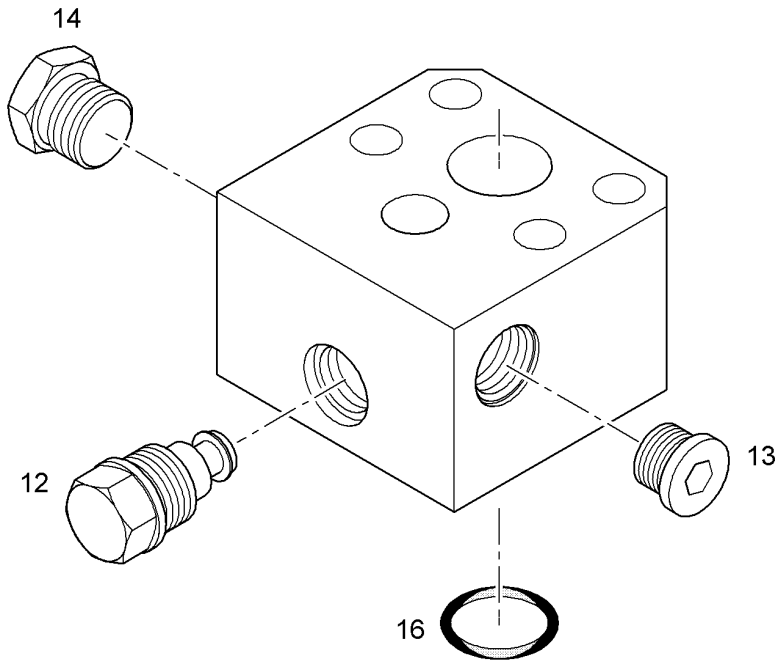


| Pos. | Item | Quantity | Description | Designação | Serie | K |
|---|---|---|---|---|---|---|
| 12 | 5008169 | 1 | NON-RETURN VALVE | VALVULA DE RETENCAO | | |
| 13 | 10296854 | 1 | SCREW PLUG M20X1,5X19 | PARAFUSO DE FECHAMENTO | | |
| 14 | 7360563 | 1 | SCREW PLUG VSTI M27X2 | PARAFUSO DE FECHAMENTO | | |
| 16 | 7022120 | 1 | O-RING 37,69X3,53 | ANEL-O | | |

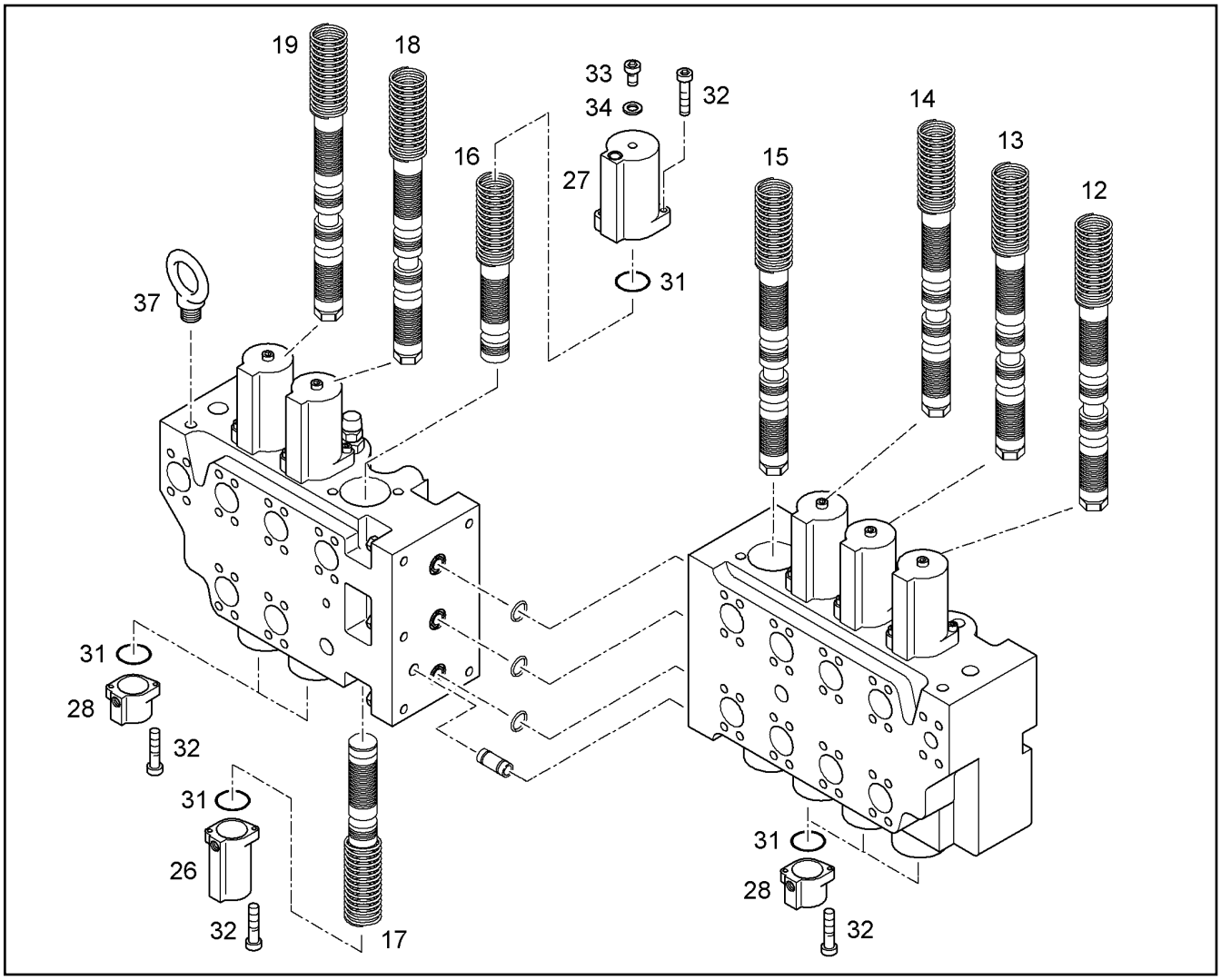


| Pos. | Item | Quantity | Description | Designação | Serie | K |
|---|---|---|---|---|---|---|
| 12 | 10330922 | 1 | PISTON W/ SPRING | PISTÃO COM PACOTE DE MOLA | | |
| 13 | 10330927 | 1 | PISTON W/ SPRING | PISTÃO COM PACOTE DE MOLA | | |
| 14 | 10287695 | 1 | PISTON W/ SPRING | PISTÃO COM PACOTE DE MOLA | | |
| 15 | 10330928 | 1 | PISTON W/ SPRING | PISTÃO COM PACOTE DE MOLA | | |
| 16 | 10333291 | 1 | PISTON W/ SPRING | PISTÃO COM PACOTE DE MOLA | | |
| 17 | 5613604 | 1 | PISTON W/ SPRING | PISTÃO COM PACOTE DE MOLA | | |
| 18 | 10287695 | 1 | PISTON W/ SPRING | PISTÃO COM PACOTE DE MOLA | | |
| 19 | 10330931 | 1 | PISTON W/ SPRING | PISTÃO COM PACOTE DE MOLA | | |
| 26 | 7368488 | 1 | LID | TAMPA | | |
| 27 | 7369129 | 7 | LID | TAMPA | | |
| 28 | 5604338 | 5 | LID | TAMPA | | |
| 31 | 7369130 | 14 | O-RING 63,17X2,62 | ANEL-O | | |
| 32 | 4600079 | 28 | CYLINDER SCREW ISO 4762 M8x20 8.8 A2C | PARAFUSO CILÍNDRICO | | |
| 33 | 7361391 | 7 | VENTILATION SCREW M6X8 8.8 A2A | PARAFUSO DE RESPIRO | | |
| 34 | 7101040 | 7 | SEALING RING DIN 7603 A 6X10 | ANEL DE VEDAÇÃO | | |
| 37 | 4900313 | 2 | RING BOLT DIN 580 M 20 C15E A3C | PARAFUSO COM OLHAL | | |

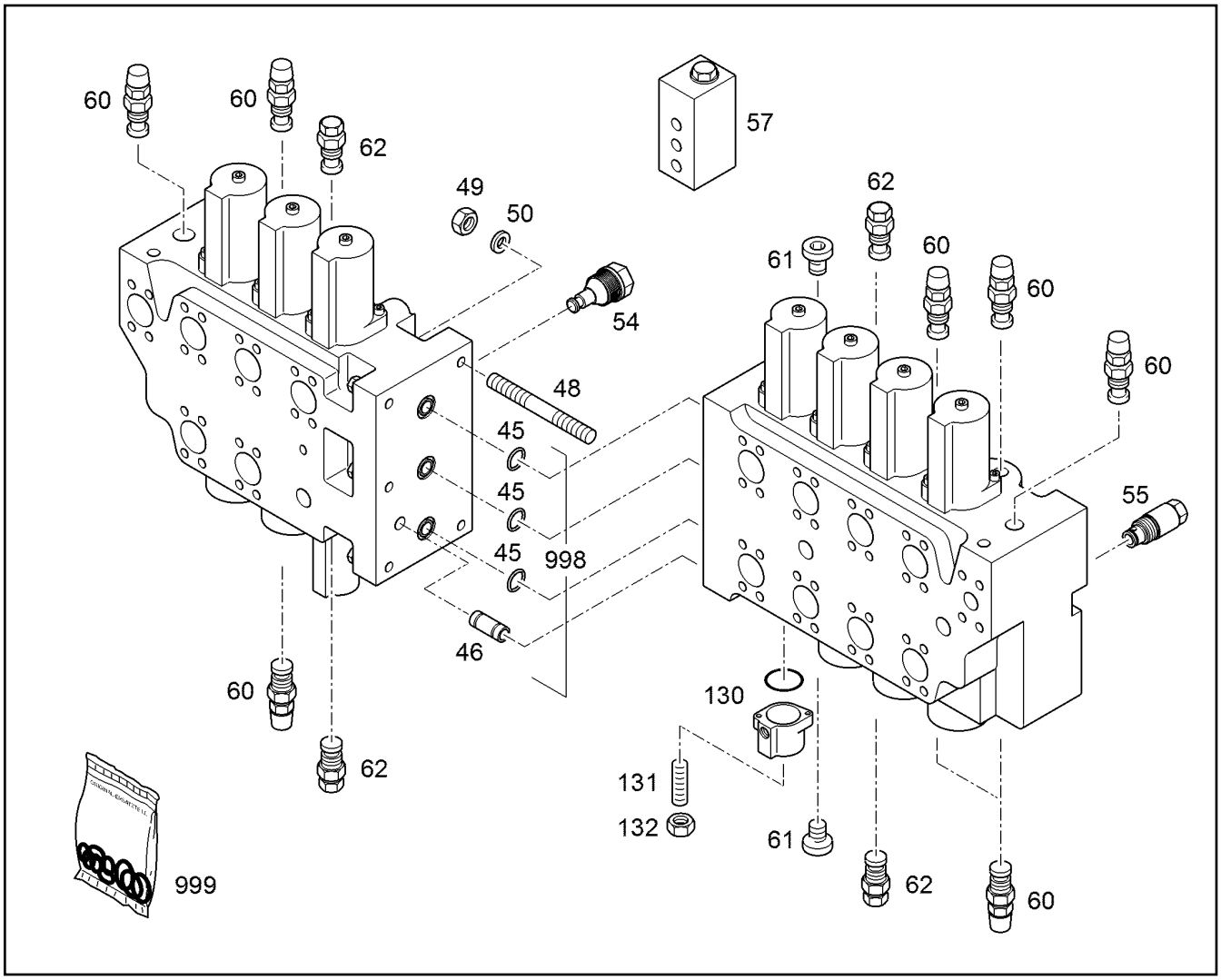


| Pos. | Item | Quantity | Description | Designação | Serie | K |
|---|---|---|---|---|---|---|
| 45 | 7360048 | 3 | O-RING 47,22X3,53 | ANEL-O | | |
| 46 | 7369135 | 1 | BUSHING | BUCHA | | 1 |
| 48 | 4901690 | 5 | DOUBLE-ENDED STUD DIN 939 M16X80 10.9 | PINO ROSCADO | | |
| 49 | 4000420 | 5 | HEX NUT M16 | PORCA SEXTAVADA | | |
| 50 | 7369134 | 5 | RING 17X25X5 | ANEL | | |
| 54 | 5610135 | 6 | SUPPLY VALVE<br>⇨ ❑ 369 | VALVULA DE ALIMENTACAO | | |
| 55 | 10287691 | 1 | NON-RETURN VALVE | VALVULA DE RETENCAO | | |
| 57 | 10289629 | 1 | VALVE<br>⇨ ❑ 367 | VÁLVULA | | |
| 60 | 5616231 | 8 | PRESSURE FEEDER VALVE<br>⇨ ❑ 61 | VALVULA LIMITADORA PRESSA | | |
| 61 | 10024583 | 2 | SCREW PLUG | PARAFUSO DE FECHAMENTO | | |
| 62 | 5616232 | 4 | NON-RETURN VALVE<br>⇨ ❑ 370 | VALVULA DE RETENCAO | | |
| 130 | 7368489 | 1 | LID | TAMPA | | |
| 131 | 5609333 | 1 | CHECK SCREW M12X1,5 | PARAFUSO DE AJUSTE | | |
| 132 | 7009369 | 1 | SEAL-LOCK-SHOULDER NUT | PORCA SEAL-LOCK | | |
| 998 | 10289630 | 1 | SEAL KIT | KIT DE VEDAÇÃO | | |
| 999 | 5604335 | 1 | SEALING KIT<br>⇨ ❑ 368 | JOGO VEDAÇÃO EIXO DO PISTÃ | | |

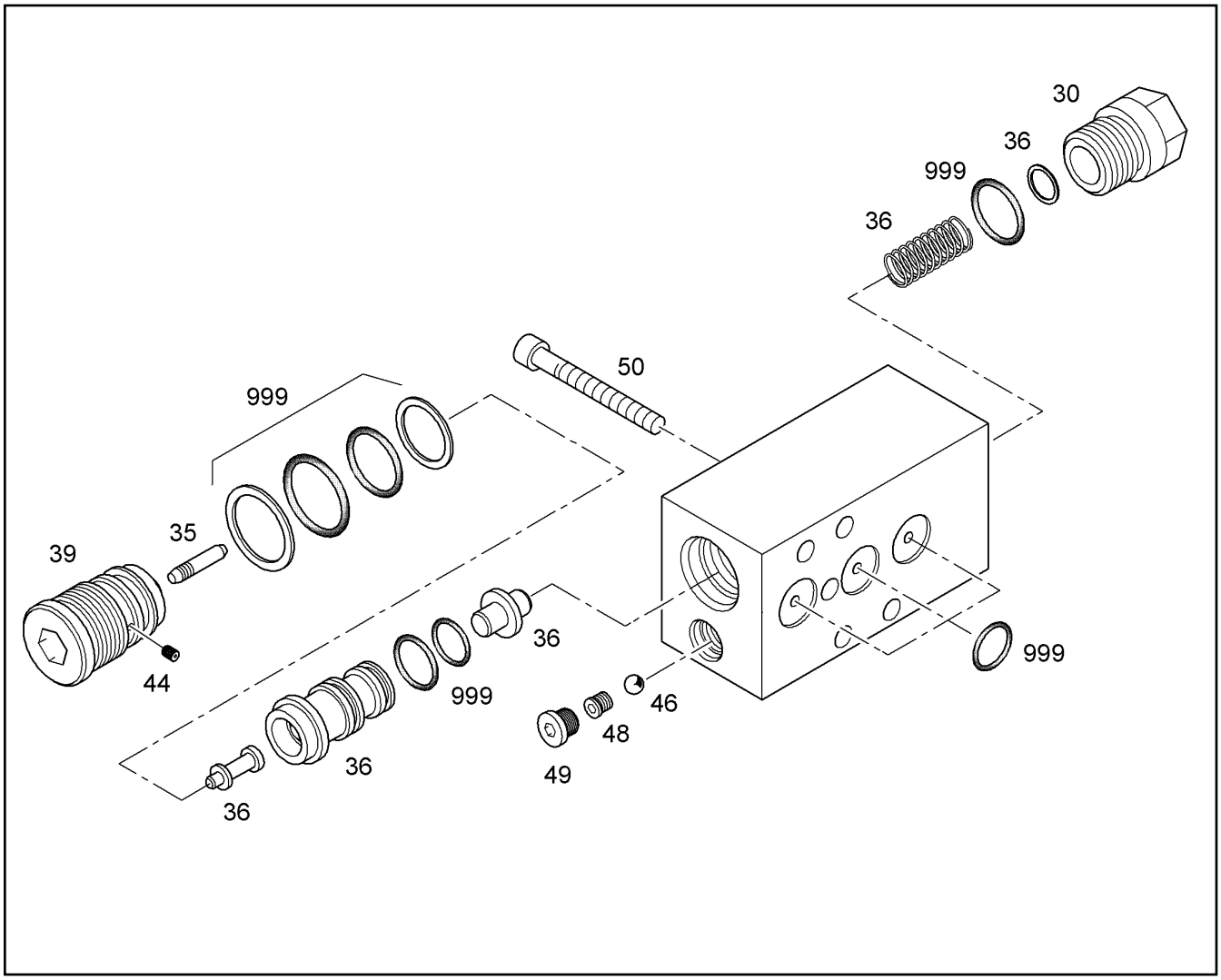


| Pos. | Item | Quantity | Description | Designação | Serie | K |
|---|---|---|---|---|---|---|
| 30 | 7020568 | 1 | SCREW PLUG | PARAFUSO DE FECHAMENTO | | |
| 35 | 7020571 | 1 | PIN | PINO | | |
| 36 | 5614346 | 1 | REPLACEMENT PISTON | PISTÃO DE SUBSTITUIÇÃO | | |
| 39 | 7020573 | 1 | BUSHING | BUCHA | | 1 |
| 44 | 7020577 | 1 | NOZZLE | BICO | | |
| 46 | 4002875 | 1 | BALL DIN 5401 8,3 G 20 | ESFERA | | |
| 48 | 7029459 | 1 | VALVE SEAT | ASSENTO DA VALVULA | | |
| 49 | 7024958 | 1 | SCREW PLUG G 1/4 | PARAFUSO DE FECHAMENTO | | |
| 50 | 404205208 | 4 | CYLINDER SCREW ISO 4762 M6X70 8.8 A2C | PARAFUSO CILÍNDRICO | | |
| 999 | 7029460 | 1 | SEAL KIT | KIT DE VEDAÇÃO | | |

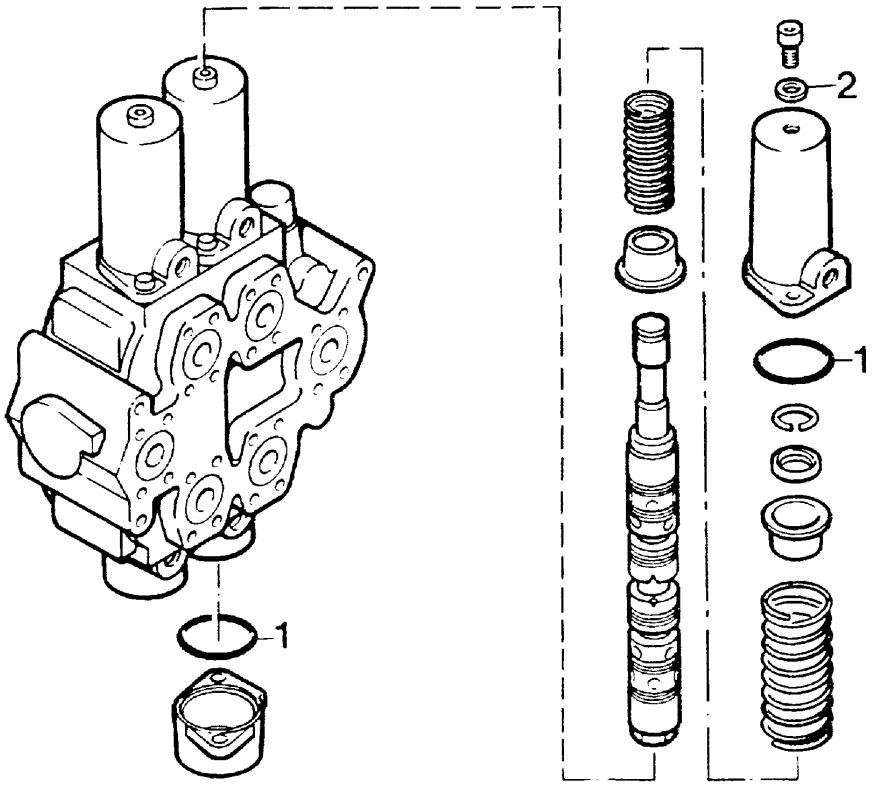


| Pos. | Item | Quantity | Description | Designação | Serie | K |
|---|---|---|---|---|---|---|
| 1 | | 2 | O-RING 63,17X2,62 | ANEL-O | | |
| 2 | | 1 | SEALING RING DIN 7603 A 6 X 10 ST | ANEL DE VEDAÇÃO | | |

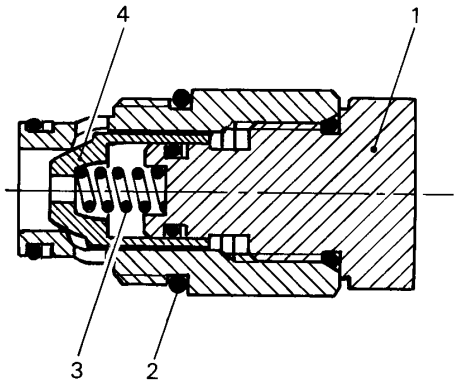


| Pos. | Item | Quantity | Description | Designação | Serie | K |
|---|---|---|---|---|---|---|
| 1 | | 1 | SCREW PLUG | PARAFUSO DE FECHAMENTO | | |
| 2 | 7007476 | 1 | O-RING 34,59X2,62 | ANEL-O | | |
| 3 | | 1 | PRESSURE SPRING | MOLA DE PRESSÃO | | |
| 4 | | 1 | TAPER | CONE | | |

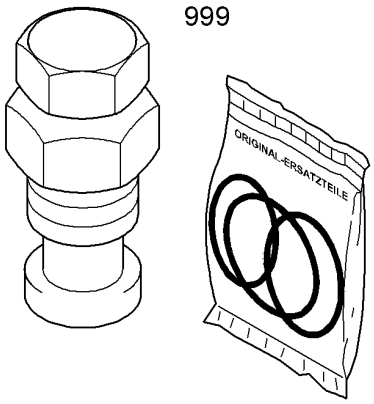


| Pos. | Item | Quantity | Description | Designação | Serie | K |
|---|---|---|---|---|---|---|
| 999 | 5616900 | 1 | SEAL KIT PRESSURE VALVE | KIT JUNTAS VALVULA PRESSAO | | |

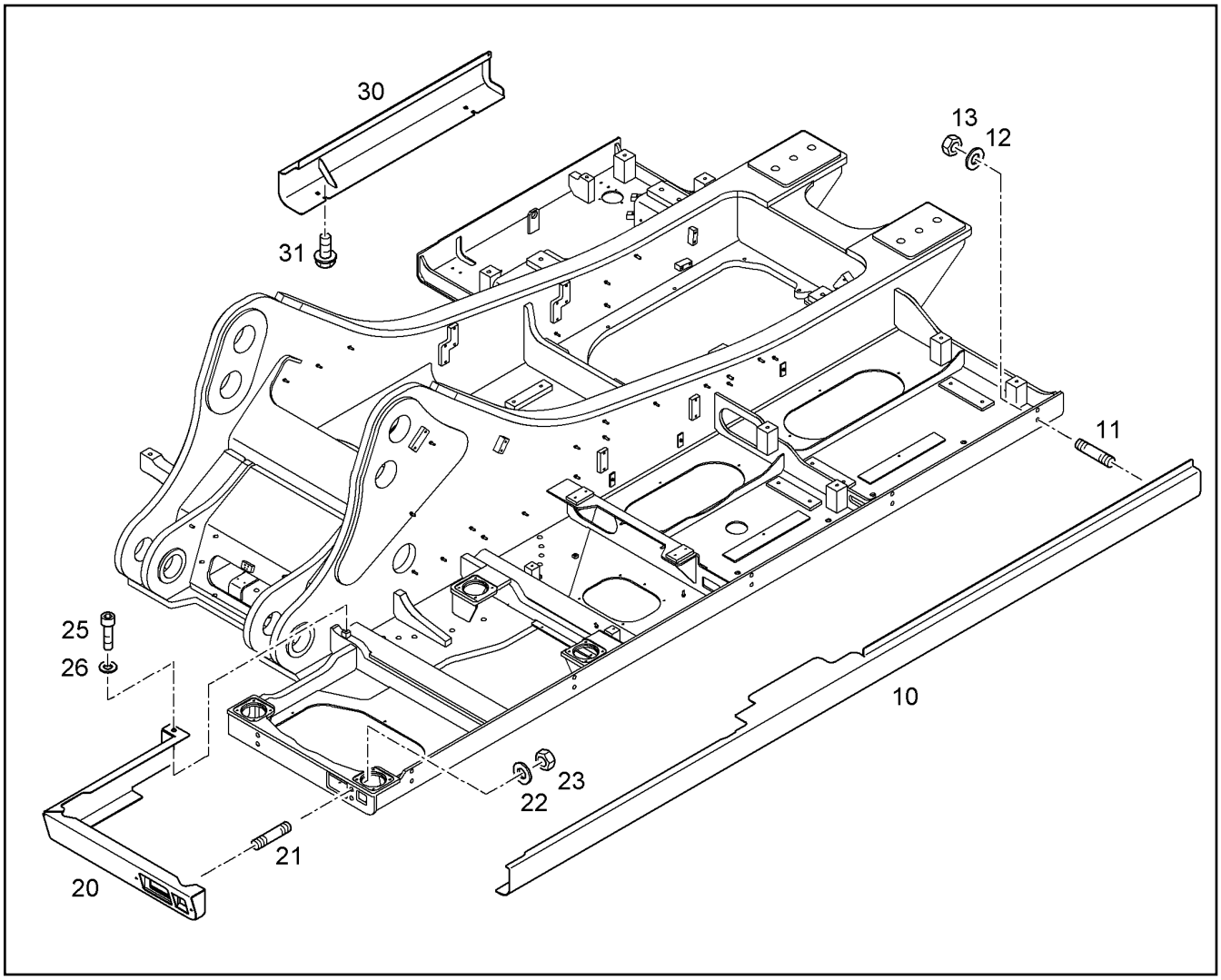


| Pos. | Item | Quantity | Description | Designação | Serie | K |
|---|---|---|---|---|---|---|
| 10 | 10073750 | 1 | COVERING LEFT | REVESTIMENTO ESQUERDO | | |
| 11 | 4001704 | 10 | DOUBLE-ENDED STUD DIN 939 M 12 X 35 1 | PINO ROSCADO | | |
| 12 | 4635283 | 10 | WASHER 13X35X5 | ARRUELA | | |
| 13 | 4900546 | 10 | HEX NUT M12 | PORCA SEXTAVADA | | |
| 20 | 10060549 | 1 | COVERING IN FRONT | REVESTIMENTO DIANTEIRO | | |
| 21 | 4001704 | 4 | DOUBLE-ENDED STUD DIN 939 M 12 X 35 1 | PINO ROSCADO | | |
| 22 | 4635283 | 4 | WASHER 13X35X5 | ARRUELA | | |
| 23 | 4900546 | 4 | HEX NUT M12 | PORCA SEXTAVADA | | |
| 25 | 4043124 | 1 | CYLINDER SCREW ISO 4762 M10X25 10.9 | PARAFUSO CILÍNDRICO | | |
| 26 | 4900531 | 1 | WASHER 10 200HV | ARRUELA | | |
| 30 | 10073785 | 1 | COVERING RIGHT | REVESTIMENTO DIREITO | | |
| 31 | 7365430 | 4 | BLANKING END M12X20 DAC | PARAFUSO | | |

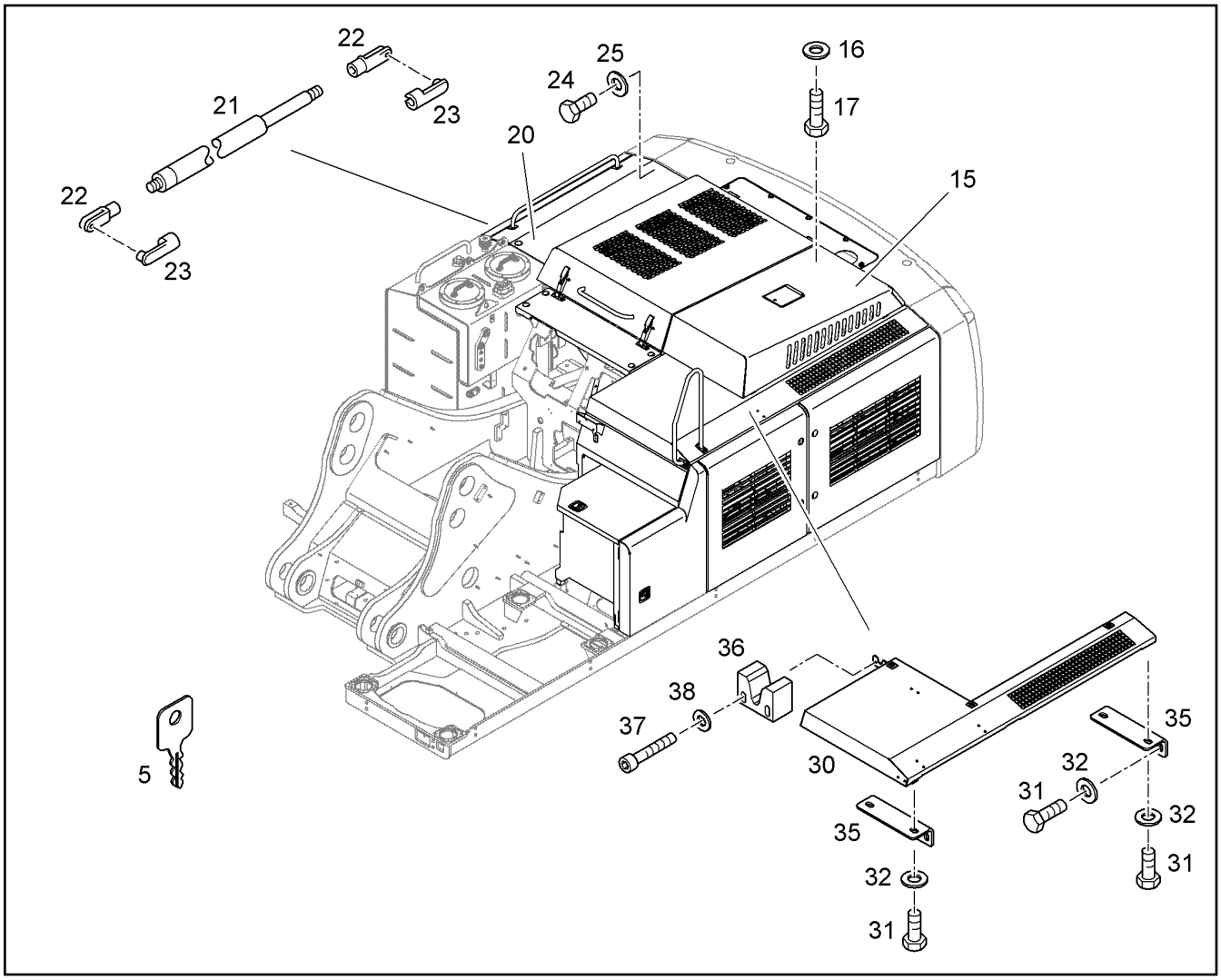


| Pos. | Item | Quantity | Description | Designação | Serie | K |
|---|---|---|---|---|---|---|
| 5 | 7365626 | 1 | KEY | CHAVE | | |
| 15 | 9949428 | 1 | COOLER COWL<br>⇨ ❑ 381 | CAPO DO RADIADOR | | |
| 16 | 4635283 | 4 | WASHER 13X35X5 | ARRUELA | | |
| 17 | 4600366 | 4 | HEX BOLT ISO 4017 M12X40 10.9 A3C | PARAFUSO SEXTAVADO | | |
| 20 | 9929189 | 1 | BONNET RIGHT<br>⇨ ❑ 382 | CAPO DIREITO | | |
| 21 | 10037209 | 1 | GAS SPRING<br>⇨ ❑ 401 | MOLA A GÁS | | |
| 22 | 4000746 | 2 | YOKE G 8X16 | TERMINAL GARFO | | |
| 23 | 7738704 | 2 | PIN 8X16 | PINO | | 1 |
| 24 | 4066124 | 3 | HEX BOLT ISO 4017 M12X30 10.9 A3C | PARAFUSO SEXTAVADO | | |
| 25 | 4635283 | 3 | WASHER 13X35X5 | ARRUELA | | |
| 30 | 10081683 | 1 | BONNET LEFT<br>⇨ ❑ 383 | CAPO ESQUERDO | | |
| 31 | 4066124 | 16 | HEX BOLT ISO 4017 M12X30 10.9 A3C | PARAFUSO SEXTAVADO | | |
| 32 | 4635283 | 16 | WASHER 13X35X5 | ARRUELA | | |
| 35 | 9949414 | 3 | ANGLE | CANTONEIRA | | |
| 36 | 10081451 | 1 | BASE PLATE | PLACA DE APOIO | | |
| 37 | 4001595 | 2 | CYLINDER SCREW ISO 4762 M10X80 10.9 | PARAFUSO CILÍNDRICO | | |
| 38 | 4000505 | 2 | WASHER DIN 7349 10,5 | ARRUELA | | |

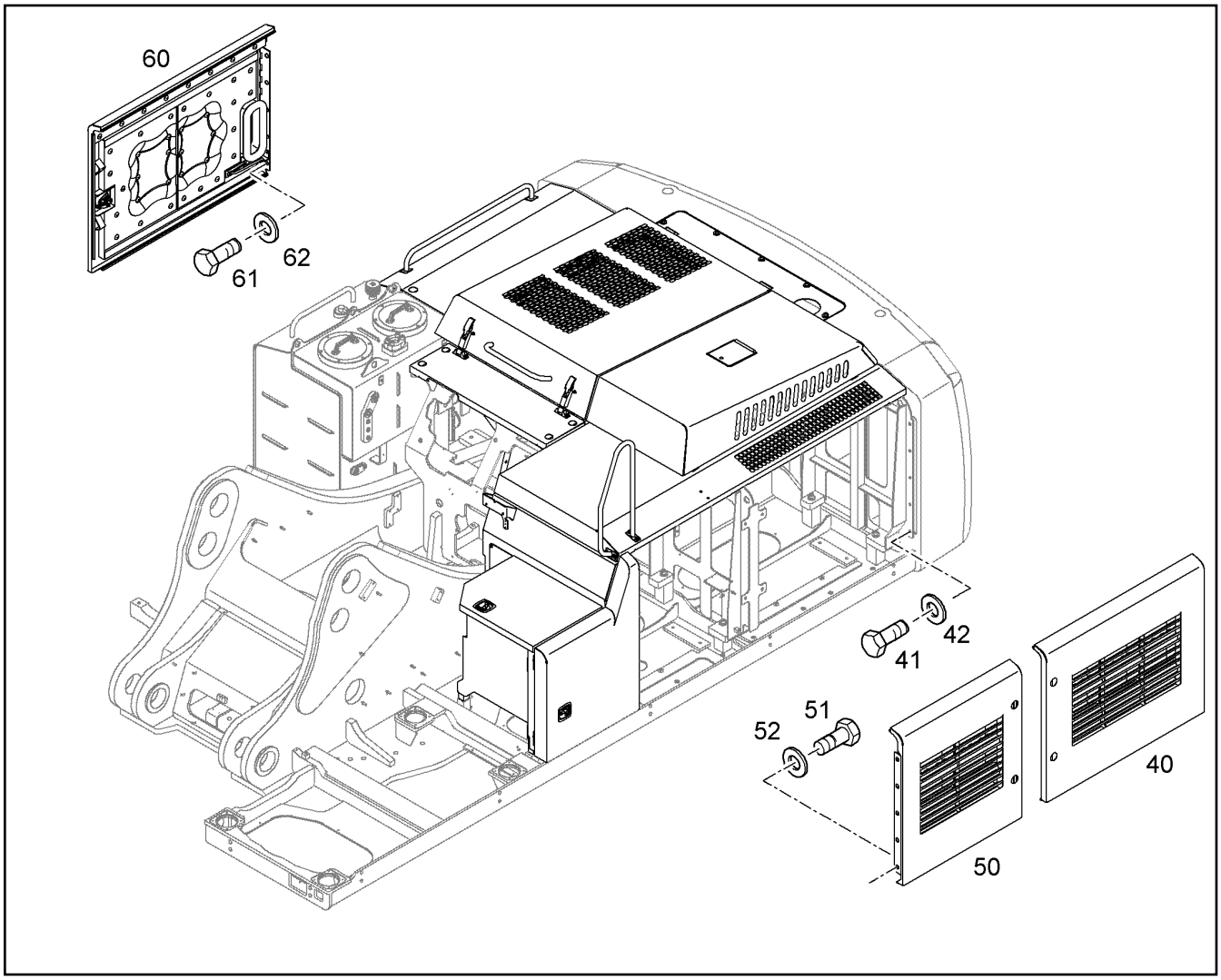


| Pos. | Item | Quantity | Description | Designação | Serie | K |
|---|---|---|---|---|---|---|
| 40 | 10358172 | 1 | SIDE DOOR BACK LEFT<br>⇨ ❑ 384 | PORTA LATERAL TRASEIRA | | |
| 41 | 4066124 | 5 | HEX BOLT ISO 4017 M12X30 10.9 A3C | PARAFUSO SEXTAVADO | | |
| 42 | 4635283 | 5 | WASHER 13X35X5 | ARRUELA | | |
| 50 | 10357926 | 1 | SIDE DOOR MIDDLE LEFT<br>⇨ ❑ 386 | PORTA LATERAL CENTRAL ES | | |
| 51 | 4066124 | 5 | HEX BOLT ISO 4017 M12X30 10.9 A3C | PARAFUSO SEXTAVADO | | |
| 52 | 4635283 | 5 | WASHER 13X35X5 | ARRUELA | | |
| 60 | 10073073 | 1 | SIDE DOOR RIGHT<br>⇨ ❑ 388 | PORTA LATERAL DIREITA | -99998 | |
| 60 | 10372839 | 1 | SIDE DOOR RIGHT<br>⇨ ❑ 389 | PORTA LATERAL DIREITA | 99999- | |
| 61 | 4066124 | 5 | HEX BOLT ISO 4017 M12X30 10.9 A3C | PARAFUSO SEXTAVADO | | |
| 62 | 4635283 | 5 | WASHER 13X35X5 | ARRUELA | | |

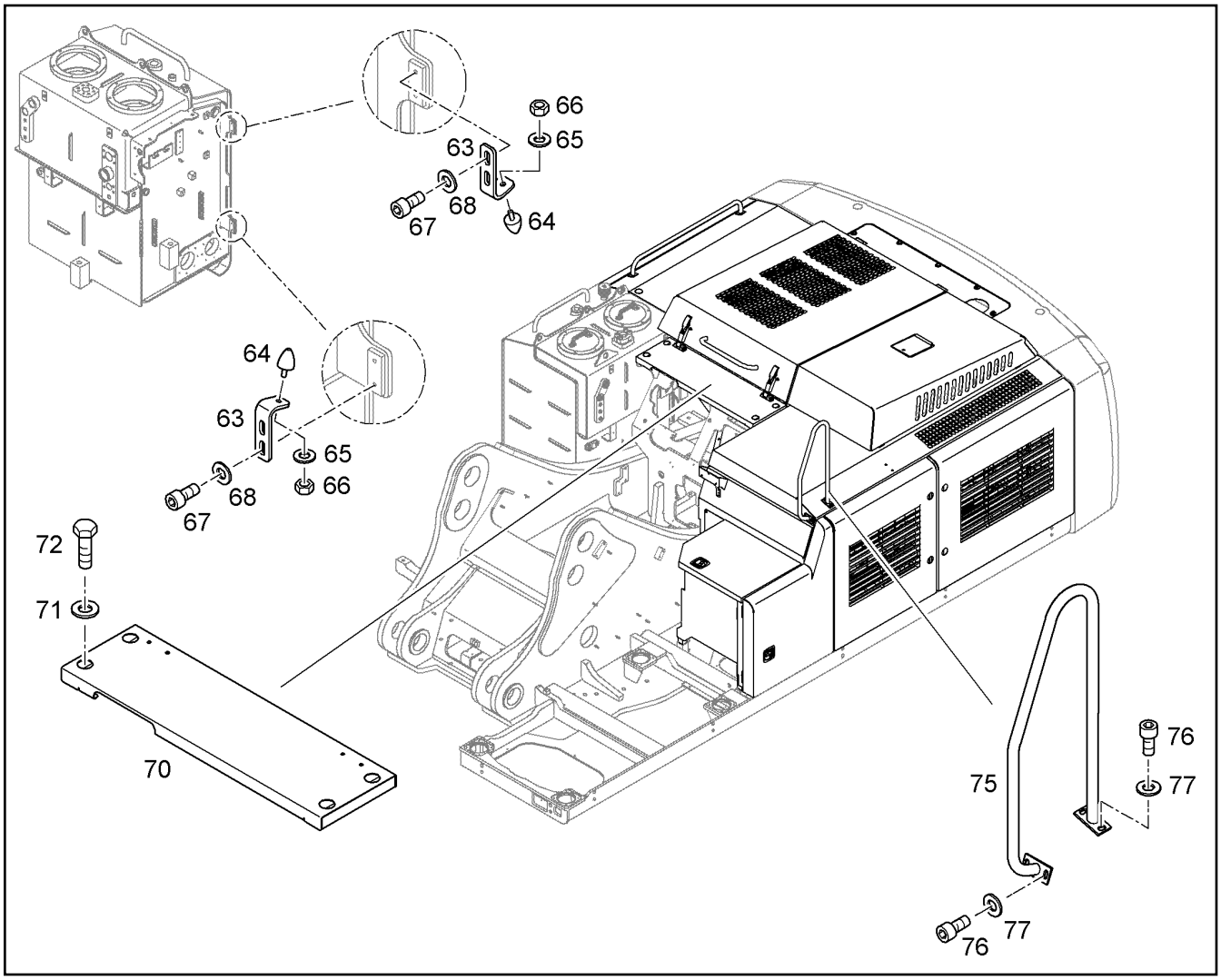


| Pos. | Item | Quantity | Description | Designação | Serie | K |
|---|---|---|---|---|---|---|
| 63 | 10066929 | 2 | PLATE | PLACA | | |
| 64 | 10112636 | 2 | LIMIT STOP BUFFER | BATENTE DE BORRACHA | | |
| 65 | 10289803 | 2 | WASHER ISO 7089 8 300HV | ARRUELA | | |
| 66 | 4600783 | 2 | HEX NUT M8 | PORCA SEXTAVADA | | |
| 67 | 4043082 | 4 | CYLINDER SCREW ISO 4762 M8X20 10.9 A2 | PARAFUSO CILÍNDRICO | | |
| 68 | 10289803 | 4 | WASHER ISO 7089 8 300HV | ARRUELA | | |
| 70 | 10087133 | 1 | LID CPL | TAMPA COMPLETA | | |
| 71 | 4635283 | 4 | WASHER 13X35X5 | ARRUELA | | |
| 72 | 4066124 | 4 | HEX BOLT ISO 4017 M12X30 10.9 A3C | PARAFUSO SEXTAVADO | | |
| 75 | 9929456 | 1 | RAILING | CORRIMÃO | | |
| 76 | 4043122 | 4 | CYLINDER SCREW ISO 4762 M10X20 10.9 | PARAFUSO CILÍNDRICO | | |
| 77 | 10289795 | 4 | WASHER ISO 7089 10 300HV | ARRUELA | | |

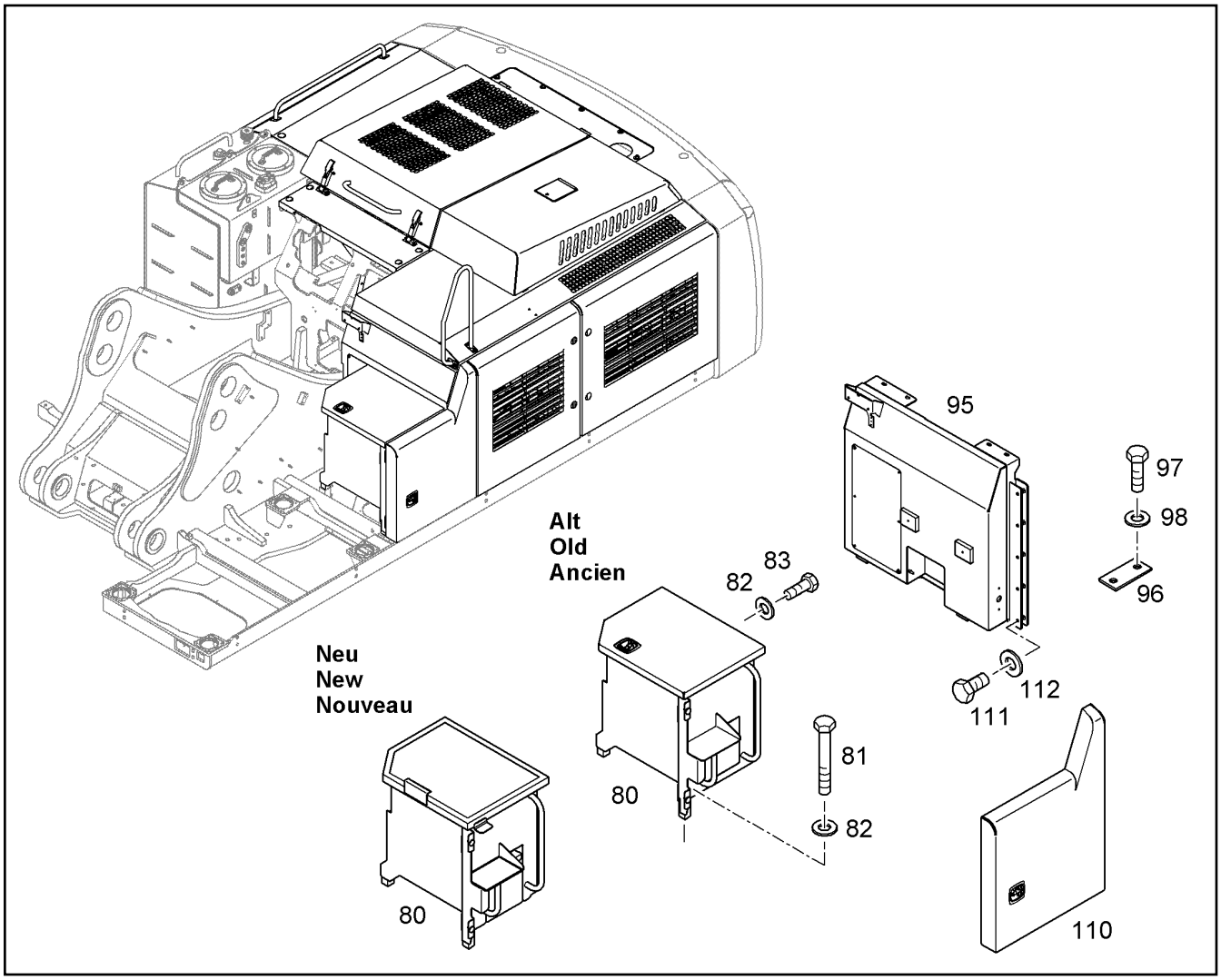


| Pos. | Item | Quantity | Description | Designação | Serie | K |
|---|---|---|---|---|---|---|
| 80 | 10066920 | 1 | TOOL BOX<br>⇨ ❑ 390 | CAIXA DE FERRAMENTAS | -99998 | |
| 80 | 10379386 | 1 | TOOL BOX<br>⇨ ❑ 392 | CAIXA DE FERRAMENTAS | 99999- | |
| 81 | 4601015 | 2 | HEX BOLT ISO 4017 M10X120 8.8 A3C | PARAFUSO SEXTAVADO | | |
| 82 | 4900531 | 4 | WASHER 10 200HV | ARRUELA | | |
| 83 | 4066093 | 2 | HEX BOLT ISO 4017 M10X25 10.9 A3C | PARAFUSO SEXTAVADO | | |
| 95 | 9947957 | 1 | PARTITION<br>⇨ ❑ 396 | PAREDE DIVISÓRIA | | |
| 96 | 9945324 | 2 | SHEET | PLACA | | |
| 97 | 4043127 | 4 | CYLINDER SCREW ISO 4762 M10X40 10.9 | PARAFUSO CILÍNDRICO | | |
| 98 | 10289795 | 4 | WASHER ISO 7089 10 300HV | ARRUELA | | |
| 110 | 9947961 | 1 | SIDE DOOR FRONT LEFT<br>⇨ ❑ 399 | PORTA LATERAL DIANTEIRA | -99998 | |
| 110 | 10358531 | 1 | SIDE DOOR FRONT LEFT<br>⇨ ❑ 398 | PORTA LATERAL DIANTEIRA | 99999- | |
| 111 | 4066124 | 5 | HEX BOLT ISO 4017 M12X30 10.9 A3C | PARAFUSO SEXTAVADO | | |
| 112 | 4635283 | 5 | WASHER 13X35X5 | ARRUELA | | |

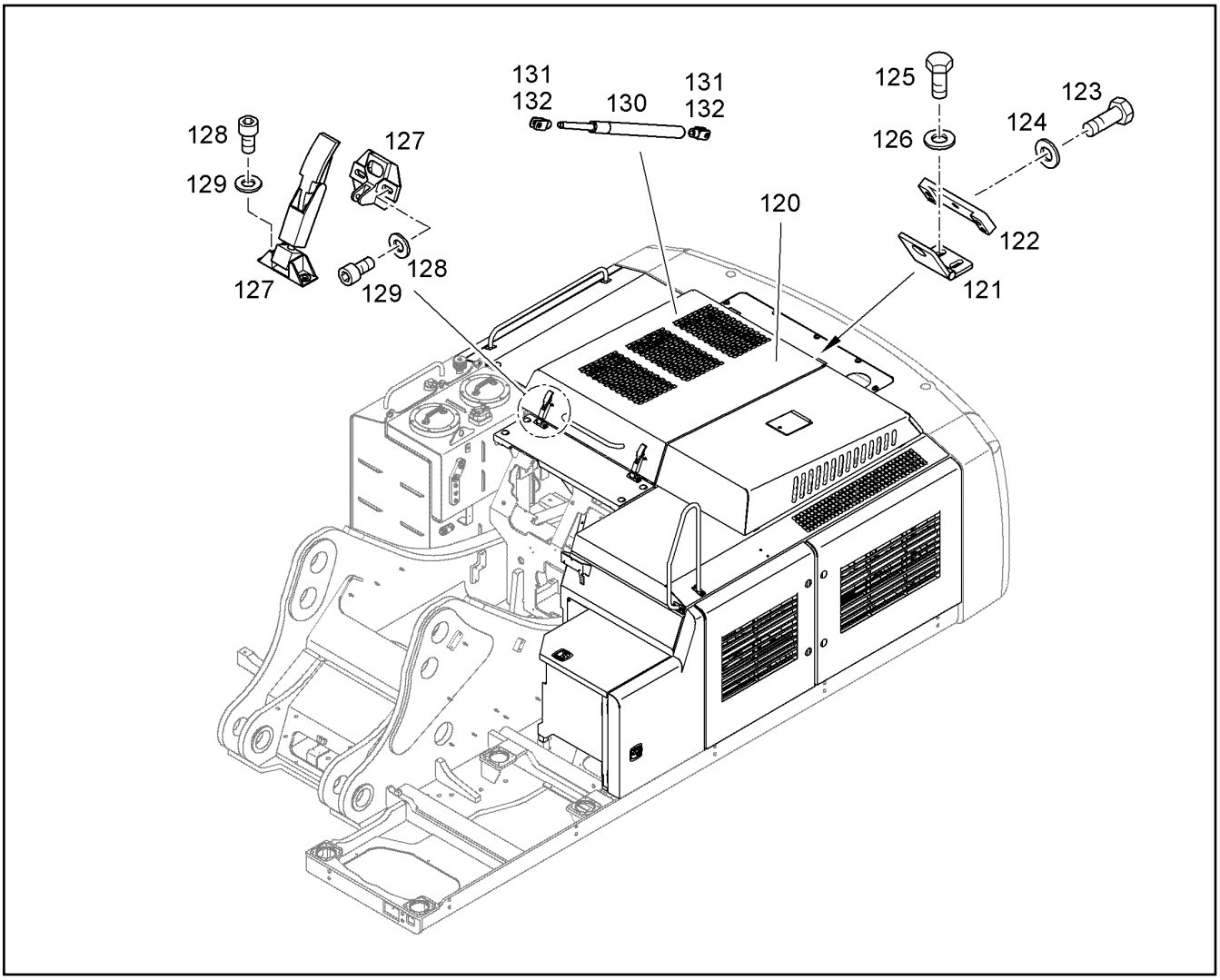


| Pos. | Item | Quantity | Description | Designação | Serie | K |
|---|---|---|---|---|---|---|
| 120 | 10081673 | 1 | ENGINE BONNET<br>⇨ ❑ 379 | CAPO DO MOTOR | | |
| 121 | 9939056 | 2 | HINGE | DOBRADICA | | |
| 122 | 9903712 | 2 | CLAMPING STRIP | RÉGUA DE BORNES | | |
| 123 | 4066098 | 6 | HEX BOLT ISO 4017 M10X30 10.9 A3C | PARAFUSO SEXTAVADO | | |
| 124 | 10289795 | 6 | WASHER ISO 7089 10 300HV | ARRUELA | | |
| 125 | 4901287 | 4 | HEX BOLT ISO 4017 M10X40 10.9 A3C | PARAFUSO SEXTAVADO | | |
| 126 | 9686917 | 4 | WASHER | ARRUELA | | |
| 127 | 10039590 | 2 | LOCK | FECHADURA | | |
| 128 | 4043082 | 8 | CYLINDER SCREW ISO 4762 M8X20 10.9 A2 | PARAFUSO CILÍNDRICO | | |
| 129 | 10289803 | 8 | WASHER ISO 7089 8 300HV | ARRUELA | | |
| 130 | 10037209 | 2 | GAS SPRING<br>⇨ ❑ 401 | MOLA A GÁS | | |
| 131 | 4000746 | 4 | YOKE G 8X16 | TERMINAL GARFO | | |
| 132 | 7738704 | 4 | PIN 8X16 | PINO | | 1 |

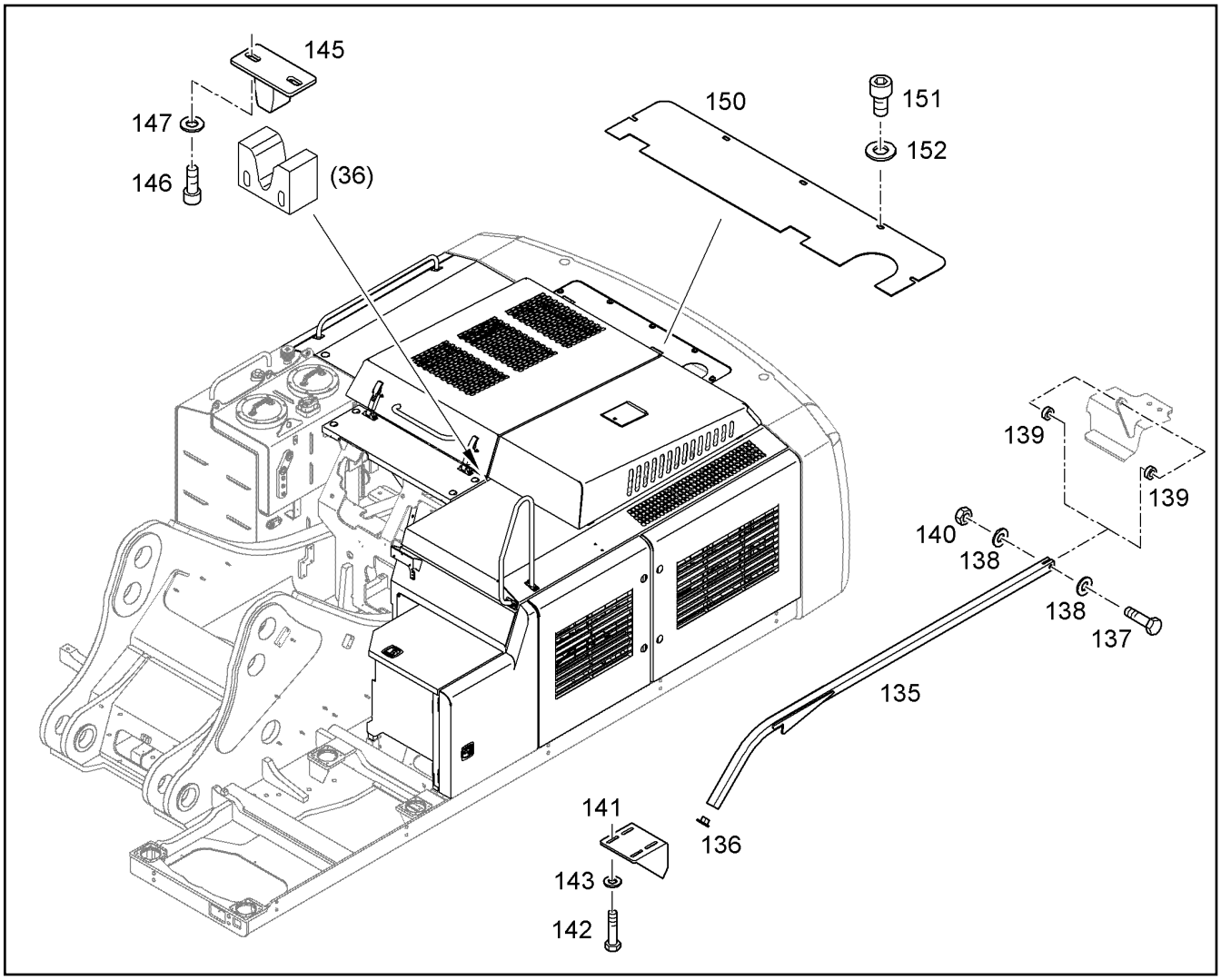


| Pos. | Item | Quantity | Description | Designação | Serie | K |
|---|---|---|---|---|---|---|
| 135 | 9927479 | 1 | ROD | HASTE | | |
| 136 | 7373405 | 1 | LOCKING PLUG | TAMPÃO DE FECHAMENTO | | |
| 137 | 4902260 | 1 | HEX BOLT ISO 4017 M12X55 10.9 A3C | PARAFUSO SEXTAVADO | | |
| 138 | 10289804 | 2 | WASHER ISO 7089 12 300HV | ARRUELA | | |
| 139 | 9837954 | 2 | SLEEVE | LUVA | | 1 |
| 140 | 4000619 | 1 | HEX NUT M12 | PORCA SEXTAVADA | | |
| 141 | 9834805 | 1 | CONSOLE | SUPORTE | | |
| 142 | 4000704 | 4 | HEX BOLT ISO 4017 M8X20 10.9 A2C | PARAFUSO SEXTAVADO | | |
| 143 | 10289803 | 4 | WASHER ISO 7089 8 300HV | ARRUELA | | |
| 145 | 10081454 | 1 | SPIGOT | PRISIONEIRO | | |
| 146 | 4043000 | 2 | CYLINDER SCREW ISO 4762 M10X30 10.9 | PARAFUSO CILÍNDRICO | | |
| 147 | 4000505 | 2 | WASHER DIN 7349 10,5 | ARRUELA | | |
| 150 | 9929455 | 1 | PLATE | PLACA | | |
| 151 | 4043160 | 5 | CYLINDER SCREW ISO 4762 M12X20 10.9 | PARAFUSO CILÍNDRICO | | |
| 152 | 4635283 | 5 | WASHER 13X35X5 | ARRUELA | | |

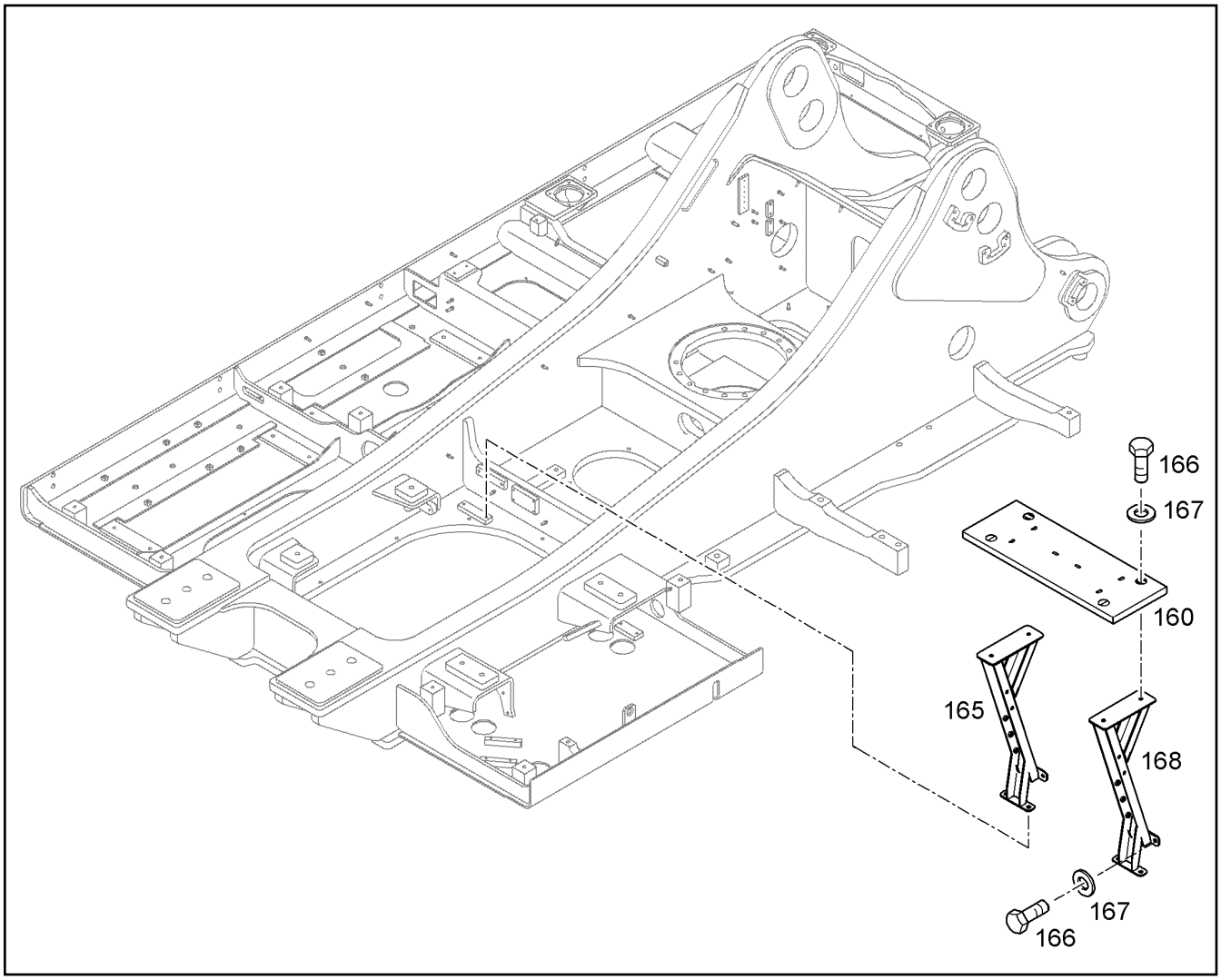


| Pos. | Item | Quantity | Description | Designação | Serie | K |
|---|---|---|---|---|---|---|
| 160 | 10055251 | 1 | BASE PLATE | PLACA DE APOIO | | |
| 165 | 10357928 | 1 | SUPPORT LEG | PATOLA | | |
| 166 | 4600184 | 12 | HEX BOLT ISO 4017 M12X25 10.9 A3C | PARAFUSO SEXTAVADO | | |
| 167 | 4635283 | 12 | WASHER 13X35X5 | ARRUELA | | |
| 168 | 10357928 | 1 | SUPPORT LEG | PATOLA | | |

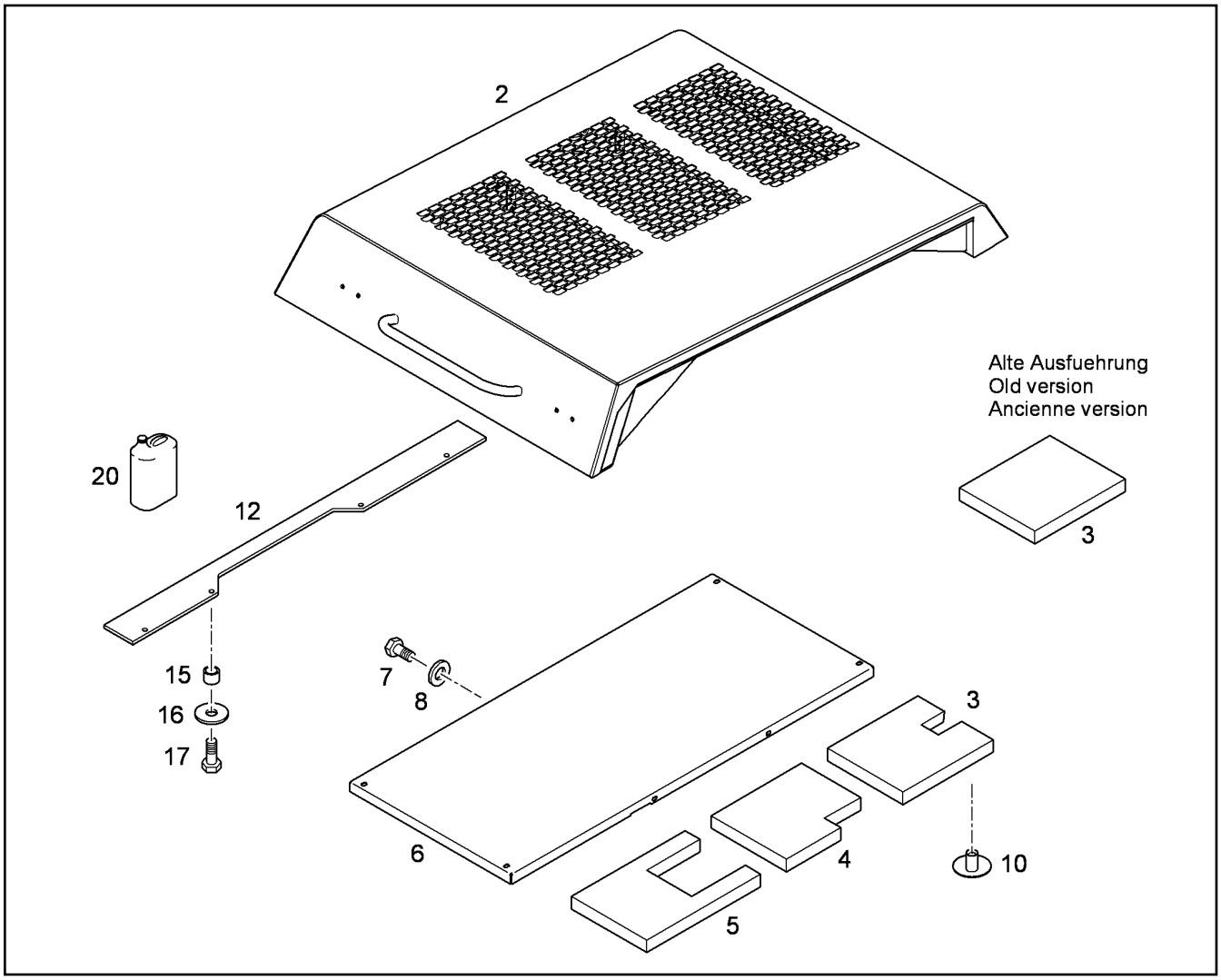


| Pos. | Item | Quantity | Description | Designação | Serie | K |
|---|---|---|---|---|---|---|
| 2 | | 1 | ENGINE BONNET | CAPO DO MOTOR | | |
| 3 | 9927482 | 1 | INSULATING MAT | MANTA DE ISOLAMENTO ACÚST | -99998 | |
| 3 | 10400600 | 1 | INSULATING MAT | MANTA DE ISOLAMENTO ACÚST | 99999- | |
| 4 | 9927483 | 1 | INSULATING MAT | MANTA DE ISOLAMENTO ACÚST | | |
| 5 | 9927484 | 1 | INSULATING MAT | MANTA DE ISOLAMENTO ACÚST | | |
| 6 | 9927477 | 1 | SOUND PROOFING<br>⇨ ❑ 380 | ISOLAÇÃO ACÚSTICA | | |
| 7 | 4000704 | 8 | HEX BOLT ISO 4017 M8X20 10.9 A2C | PARAFUSO SEXTAVADO | | |
| 8 | 4216025 | 8 | WASHER 8,4 200HV | ARRUELA | | |
| 10 | 10412536 | 27 | CLIP | CLIPE | | |
| 12 | 10081994 | 1 | RUBBER PART | PEÇAS DE BORRACHA | | |
| 15 | 9753989 | 4 | TUBE | TUBO | | |
| 16 | 4000779 | 4 | WASHER A 8 200HV | ARRUELA | | |
| 17 | 4066042 | 4 | HEX BOLT ISO 4017 M8X25 10.9 A2C | PARAFUSO SEXTAVADO | | |
| 20 | 10355107 | 0.3 | GLUE | COLA | | |

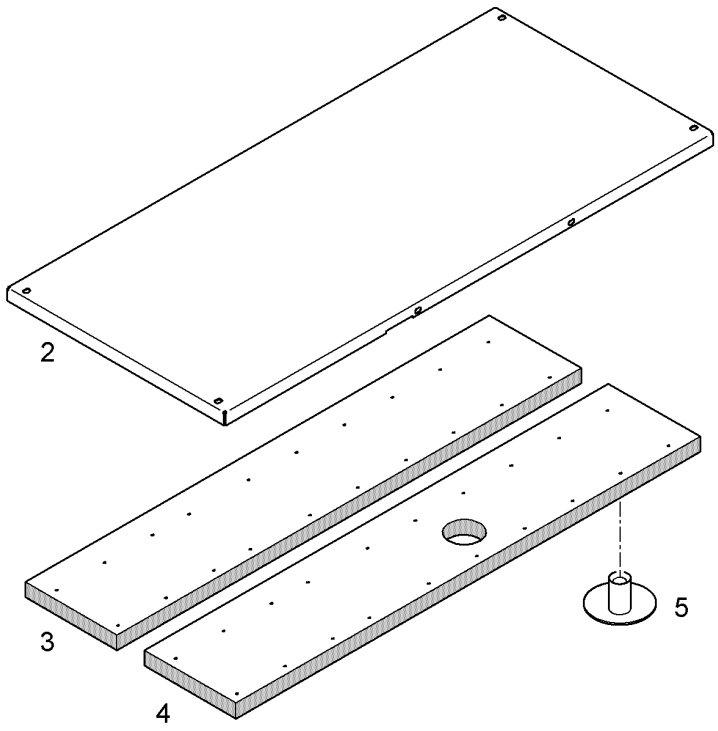


| Pos. | Item | Quantity | Description | Designação | Serie | K |
|---|---|---|---|---|---|---|
| 2 | | 1 | SOUND PROOFING | ISOLAÇÃO ACÚSTICA | | |
| 3 | 9927485 | 1 | INSULATING MAT | MANTA DE ISOLAMENTO ACÚST | | |
| 4 | 10056741 | 1 | INSULATING MAT | MANTA DE ISOLAMENTO ACÚST | | |
| 5 | 10412536 | 40 | CLIP | CLIPE | | |

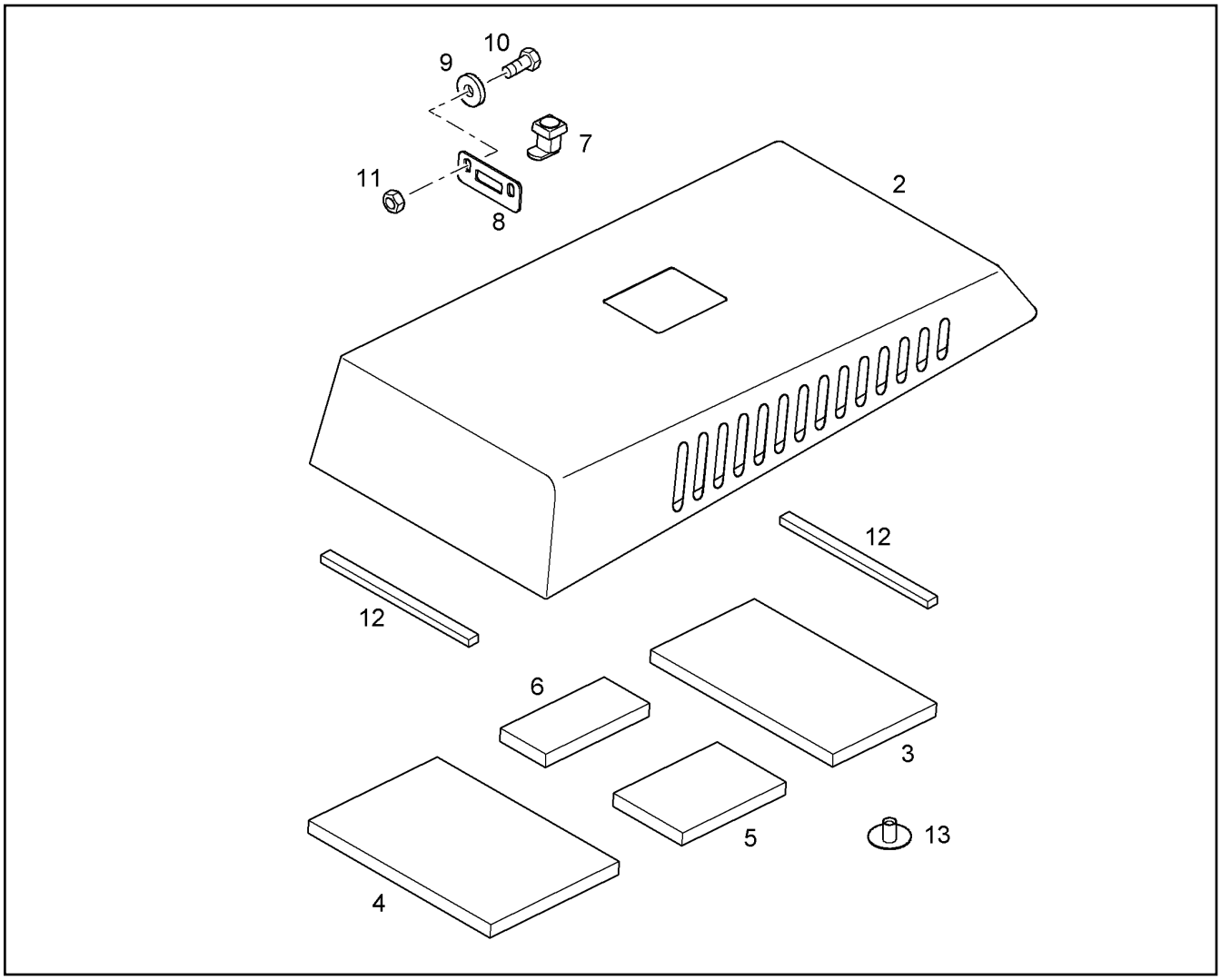


| Pos. | Item | Quantity | Description | Designação | Serie | K |
|---|---|---|---|---|---|---|
| 2 | | 1 | COOLER COWL | CAPO DO RADIADOR | | |
| 3 | 9949323 | 1 | INSULATING MAT | MANTA DE ISOLAMENTO ACÚST | | |
| 4 | 9949324 | 1 | INSULATING MAT | MANTA DE ISOLAMENTO ACÚST | | |
| 5 | 9949325 | 1 | INSULATING MAT | MANTA DE ISOLAMENTO ACÚST | | |
| 6 | 9949328 | 1 | INSULATING MAT | MANTA DE ISOLAMENTO ACÚST | | |
| 7 | 7365293 | 1 | LOCK | FECHADURA | | |
| 8 | 9356574 | 1 | CONSOLE | SUPORTE | | |
| 9 | 4000648 | 2 | WASHER DIN 7349 6,4 A3C | ARRUELA | | |
| 10 | 4900605 | 2 | HEX BOLT ISO 4017 M6x12 8.8 A2C | PARAFUSO SEXTAVADO | | |
| 11 | 4000379 | 2 | HEX NUT M6 | PORCA SEXTAVADA | | |
| 12 | 10002428 | 0.94m | PROFILE | PERFIL | | |
| 13 | 10412536 | 40 | CLIP | CLIPE | | |

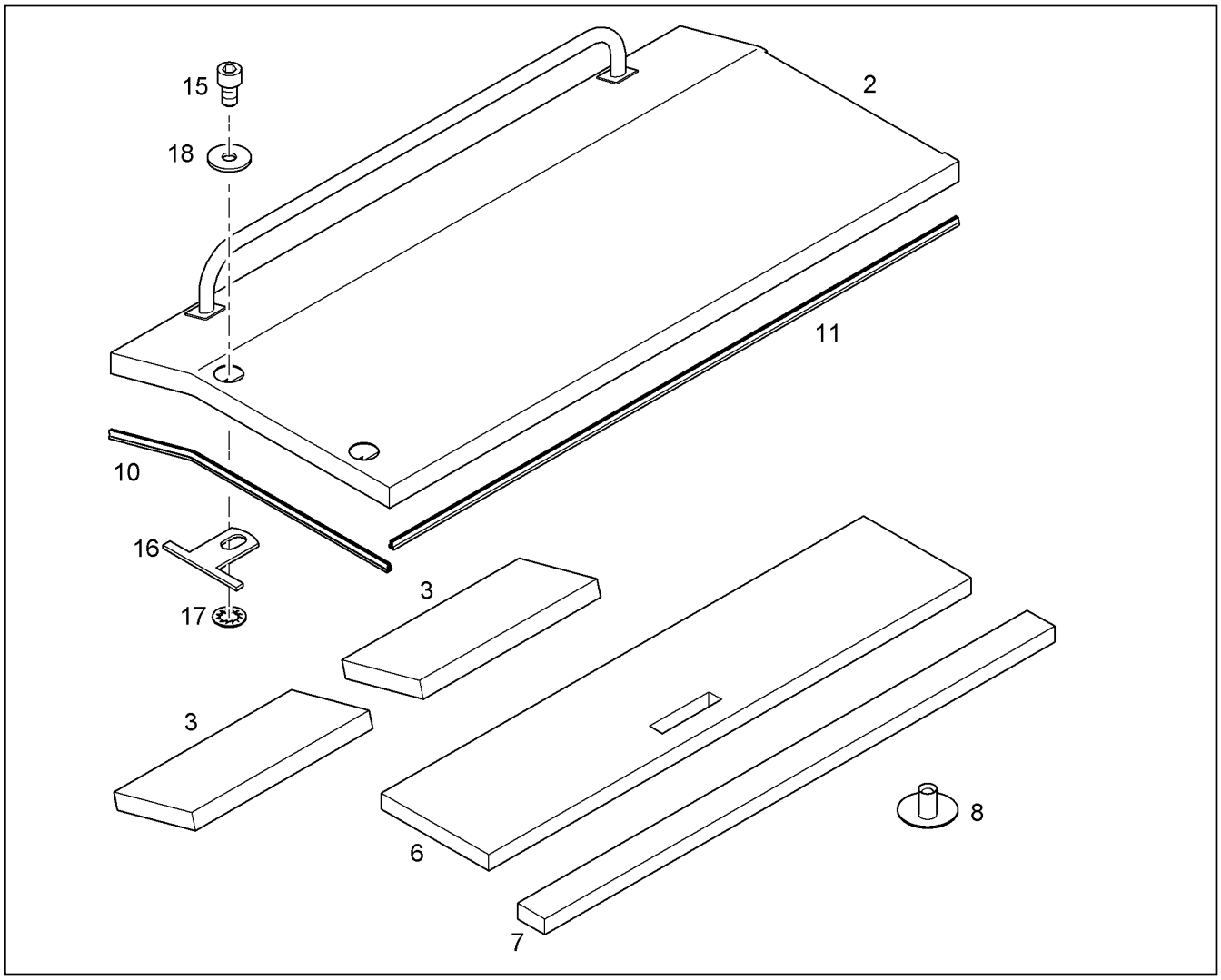


| Pos. | Item | Quantity | Description | Designação | Serie | K |
|---|---|---|---|---|---|---|
| 2 | | 1 | BONNET RIGHT | CAPO DIREITO | | |
| 3 | 9929193 | 2 | INSULATING MAT | MANTA DE ISOLAMENTO ACÚST | | |
| 6 | 9929194 | 1 | INSULATING MAT | MANTA DE ISOLAMENTO ACÚST | | |
| 7 | 9929195 | 1 | INSULATING MAT | MANTA DE ISOLAMENTO ACÚST | | |
| 8 | 10412536 | 40 | CLIP | CLIPE | | |
| 10 | 7360171 | 0.66m | CORNER PROTECT.PROFILE | PERFIL DE VEDACAO | | |
| 11 | 7360171 | 1.3m | CORNER PROTECT.PROFILE | PERFIL DE VEDACAO | | |
| 15 | 4043164 | 2 | CYLINDER SCREW ISO 4762 M12X35 10.9 | PARAFUSO CILÍNDRICO | | |
| 16 | 10406664 | 2 | PLATE | PLACA | | |
| 17 | 7363743 | 2 | TOOTH LOCK WASHER | ARRUELA DENTADA | | |
| 18 | 10074972 | 2 | WASHER | ARRUELA | | |

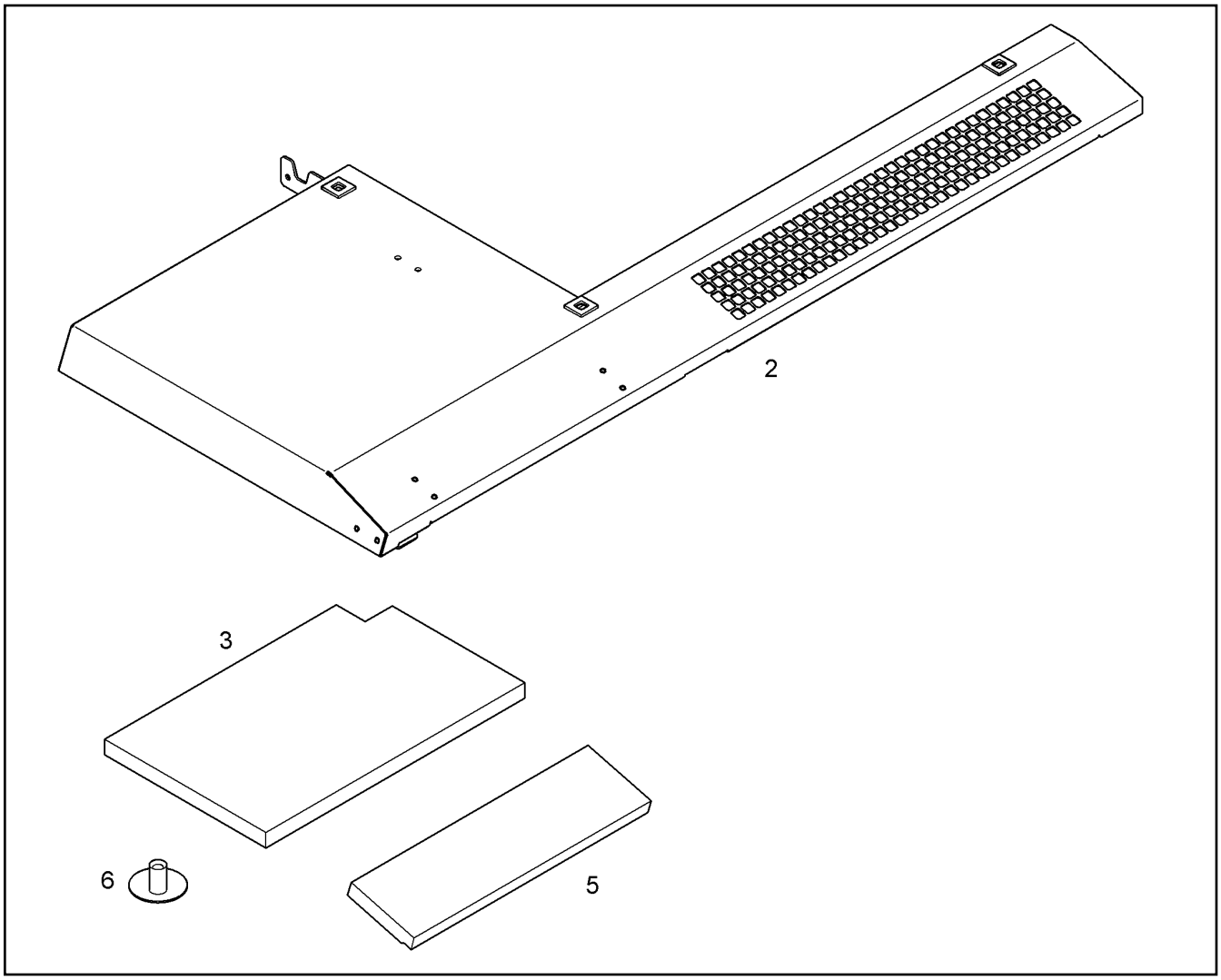


| Pos. | Item | Quantity | Description | Designação | Serie | K |
|---|---|---|---|---|---|---|
| 2 | | 1 | BONNET LEFT | CAPO ESQUERDO | | |
| 3 | 9949411 | 1 | INSULATING MAT | MANTA DE ISOLAMENTO ACÚST | | |
| 5 | 9949413 | 1 | INSULATING MAT | MANTA DE ISOLAMENTO ACÚST | | |
| 6 | 10412536 | 26 | CLIP | CLIPE | | |

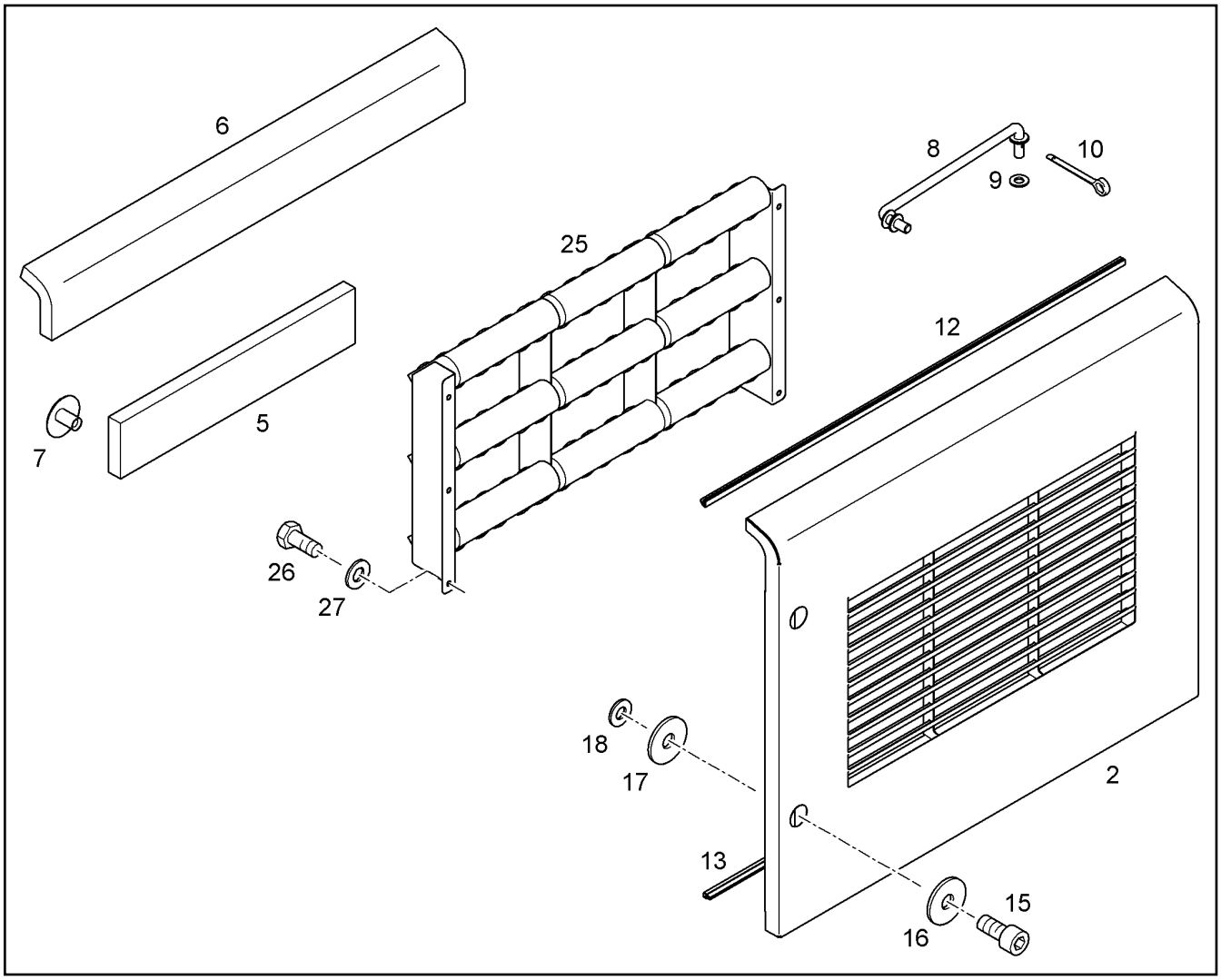


| Pos. | Item | Quantity | Description | Designação | Serie | K |
|---|---|---|---|---|---|---|
| 2 | | 1 | SIDE DOOR BACK LEFT | PORTA LATERAL TRASEIRA | | |
| 5 | 9929357 | 1 | INSULATING MAT | MANTA DE ISOLAMENTO ACÚST | | |
| 6 | 9929358 | 1 | INSULATING MAT | MANTA DE ISOLAMENTO ACÚST | | |
| 7 | 10412536 | 28 | CLIP | CLIPE | | |
| 8 | 10358170 | 1 | ROD | HASTE | | |
| 9 | 10289795 | 1 | WASHER ISO 7089 10 300HV | ARRUELA | | |
| 10 | 4330011 | 1 | SPLIT PIN ISO 1234 3,2X 25 ST | CONTRAPINO | | |
| 12 | 7008157 | 1.225m | CORNER PROTECT.PROFILE | PERFIL DE VEDACAO | | |
| 13 | 7360171 | 1.225m | CORNER PROTECT.PROFILE | PERFIL DE VEDACAO | | |
| 15 | 4043163 | 2 | CYLINDER SCREW ISO 4762 M12X30 10.9 | PARAFUSO CILÍNDRICO | | |
| 16 | 10357911 | 2 | WASHER | ARRUELA | | |
| 17 | 7363743 | 2 | TOOTH LOCK WASHER | ARRUELA DENTADA | | |
| 18 | 10357913 | 2 | WASHER | ARRUELA | | |
| 25 | 9945269 | 1 | SCOOP<br>⇨ ❑ 385 | DEFLETOR | | |
| 26 | 4001696 | 6 | HEX BOLT ISO 4017 M10X20 10.9 A3C | PARAFUSO SEXTAVADO | | |
| 27 | 10289795 | 6 | WASHER ISO 7089 10 300HV | ARRUELA | | |

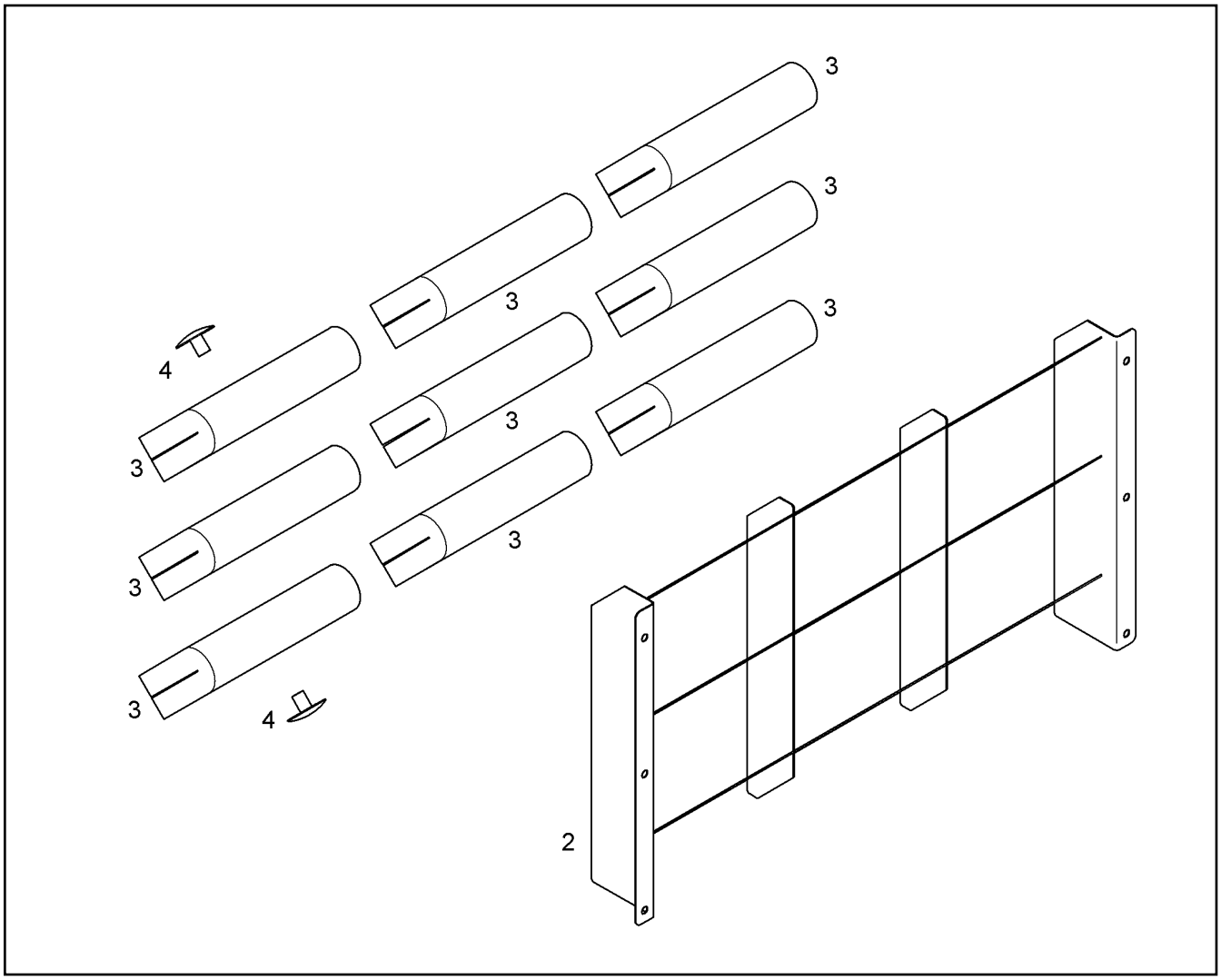


| Pos. | Item | Quantity | Description | Designação | Serie | K |
|---|---|---|---|---|---|---|
| 2 | | 1 | SCOOP | DEFLETOR | | |
| 3 | 9945013 | 9 | INSULATING MAT | MANTA DE ISOLAMENTO ACÚST | | |
| 4 | 10412536 | 108 | CLIP | CLIPE | | |

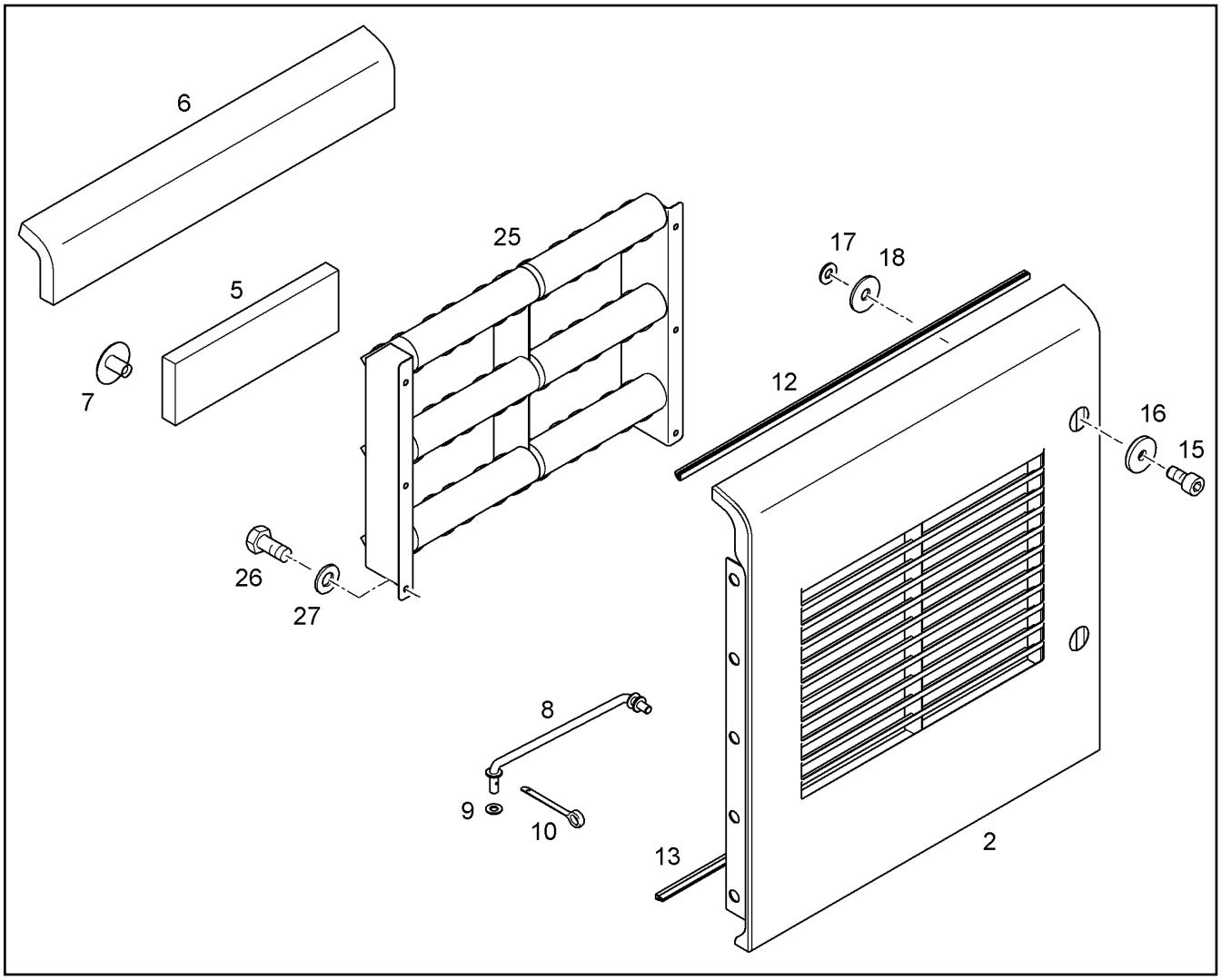


| Pos. | Item | Quantity | Description | Designação | Serie | K |
|---|---|---|---|---|---|---|
| 2 | | 1 | SIDE DOOR MIDDLE LEFT | PORTA LATERAL CENTRAL ES | | |
| 5 | 9945101 | 1 | INSULATING MAT | MANTA DE ISOLAMENTO ACÚST | | |
| 6 | 9945102 | 1 | INSULATING MAT | MANTA DE ISOLAMENTO ACÚST | | |
| 7 | 10412536 | 20 | CLIP | CLIPE | | |
| 8 | 9942679 | 1 | ROD | HASTE | | |
| 9 | 10289795 | 1 | WASHER ISO 7089 10 300HV | ARRUELA | | |
| 10 | 4330011 | 1 | SPLIT PIN ISO 1234 3,2X 25 ST | CONTRAPINO | | |
| 12 | 7008157 | 0.92m | CORNER PROTECT.PROFILE | PERFIL DE VEDACAO | | |
| 13 | 7360171 | 0.92m | CORNER PROTECT.PROFILE | PERFIL DE VEDACAO | | |
| 15 | 4043163 | 2 | CYLINDER SCREW ISO 4762 M12X30 10.9 | PARAFUSO CILÍNDRICO | | |
| 16 | 10076844 | 2 | WASHER | ARRUELA | | |
| 17 | 7363743 | 2 | TOOTH LOCK WASHER | ARRUELA DENTADA | | |
| 18 | 10074972 | 2 | WASHER | ARRUELA | | |
| 25 | 9927471 | 1 | SCOOP | DEFLETOR | | |
| | | | ⇨ ❑ 387 | | | |
| 26 | 4901606 | 6 | CYLINDER SCREW ISO 4762 M10X16 10.9 | PARAFUSO CILÍNDRICO | | |
| 27 | 10289795 | 6 | WASHER ISO 7089 10 300HV | ARRUELA | | |

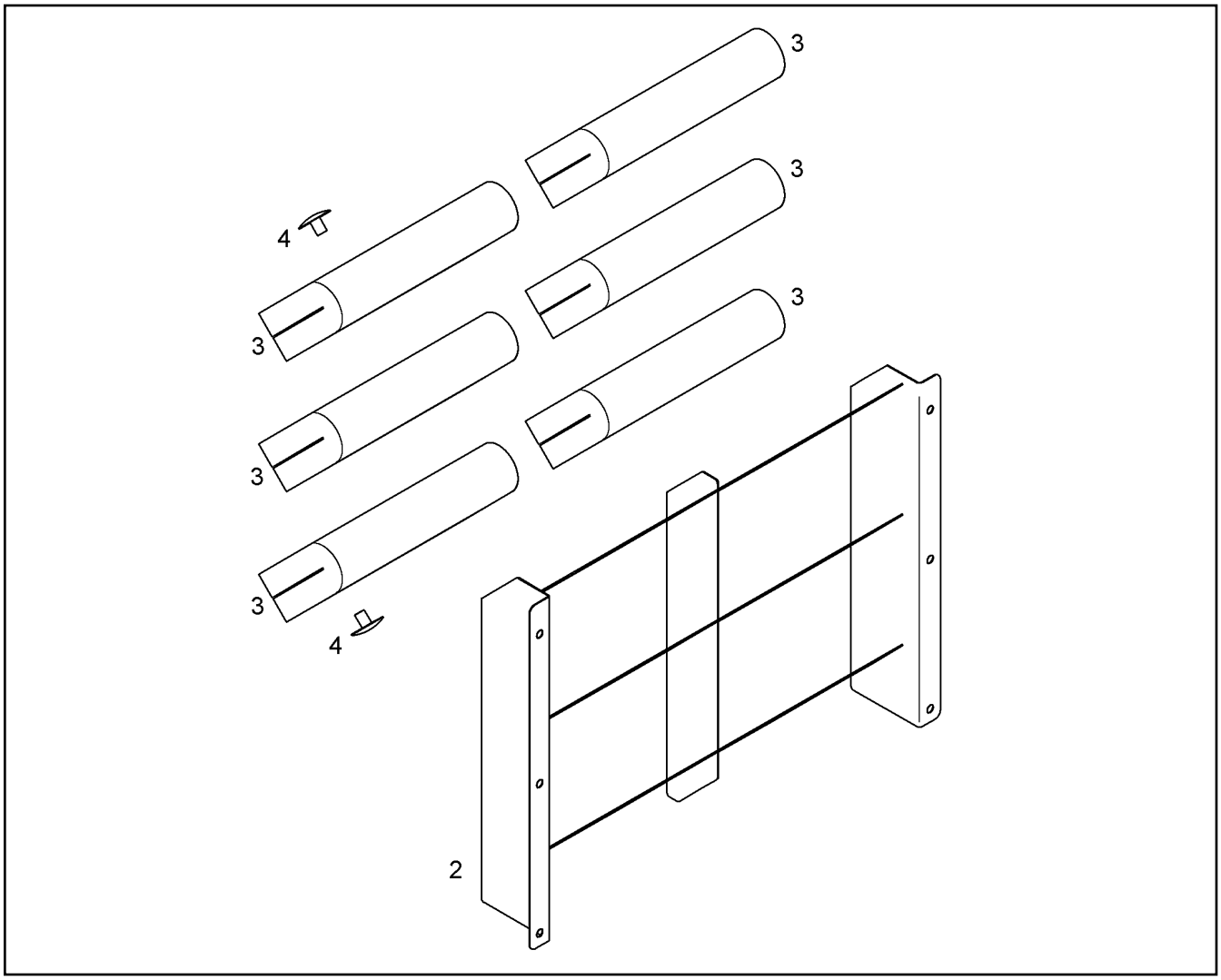


| Pos. | Item | Quantity | Description | Designação | Serie | K |
|---|---|---|---|---|---|---|
| 2 | | 1 | SCOOP | DEFLETOR | | |
| 3 | 9927463 | 6 | INSULATING MAT | MANTA DE ISOLAMENTO ACÚST | | |
| 4 | 10412536 | 72 | CLIP | CLIPE | | |

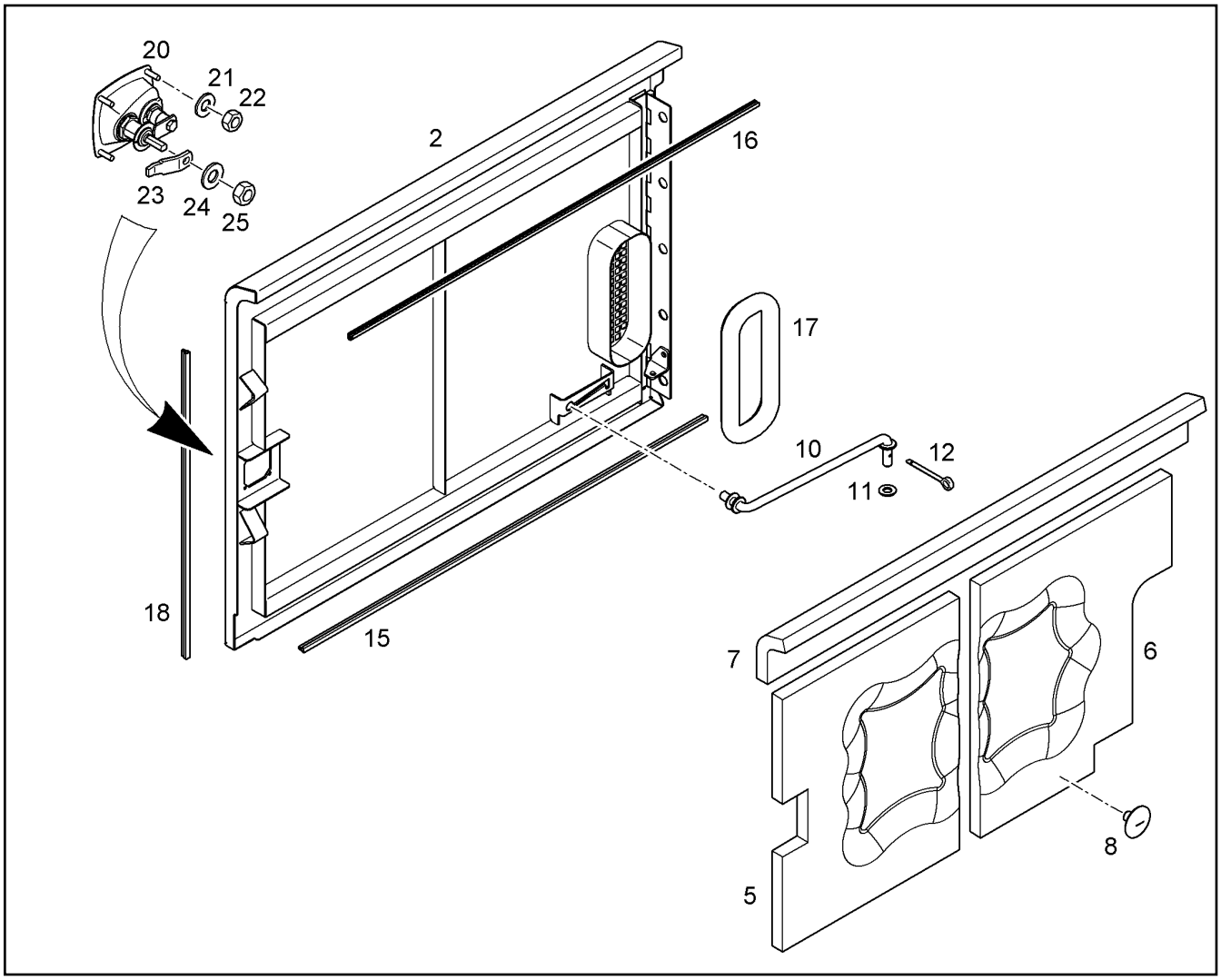


| Pos. | Item | Quantity | Description | Designação | Serie | K |
|---|---|---|---|---|---|---|
| 2 | | 1 | SIDE DOOR RIGHT | PORTA LATERAL DIREITA | | |
| 5 | 9929376 | 1 | INSULATING MAT | MANTA DE ISOLAMENTO ACÚST | | |
| 6 | 10073074 | 1 | INSULATING MAT | MANTA DE ISOLAMENTO ACÚST | | |
| 7 | 9929378 | 1 | INSULATING MAT | MANTA DE ISOLAMENTO ACÚST | | |
| 8 | 10412536 | 48 | CLIP | CLIPE | | |
| 10 | 9942679 | 1 | ROD | HASTE | | |
| 11 | 10289795 | 1 | WASHER ISO 7089 10 300HV | ARRUELA | | |
| 12 | 4330011 | 1 | SPLIT PIN ISO 1234 3,2X 25 ST | CONTRAPINO | | |
| 15 | 7360171 | 1.28m | CORNER PROTECT.PROFILE | PERFIL DE VEDACAO | | |
| 16 | 7008157 | 1.34m | CORNER PROTECT.PROFILE | PERFIL DE VEDACAO | | |
| 17 | 7014524 | 1 | CLAMPING PROFILE | PERFIL DE FIXAÇÃO | | |
| 18 | 7360171 | 0.835m | CORNER PROTECT.PROFILE | PERFIL DE VEDACAO | | |
| 20 | 10025254 | 1 | DOOR LOCK<br>⇨ ❑ 400 | FECHO DA PORTA | | |
| 21 | 4229911 | 4 | LOCK WASHER 6,4/10X1,2 VS 6 | ARRUELA DE SEGURANÇA | | |
| 22 | 4000379 | 4 | HEX NUT M6 | PORCA SEXTAVADA | | |
| 23 | 10113250 | 1 | LOCKING BAR | TRAVA | | |
| 24 | 4229913 | 2 | LOCK WASHER 10,5/16X2 VS 10 | ARRUELA DE SEGURANÇA | | |
| 25 | 4600567 | 2 | HEX NUT M10 | PORCA SEXTAVADA | | |

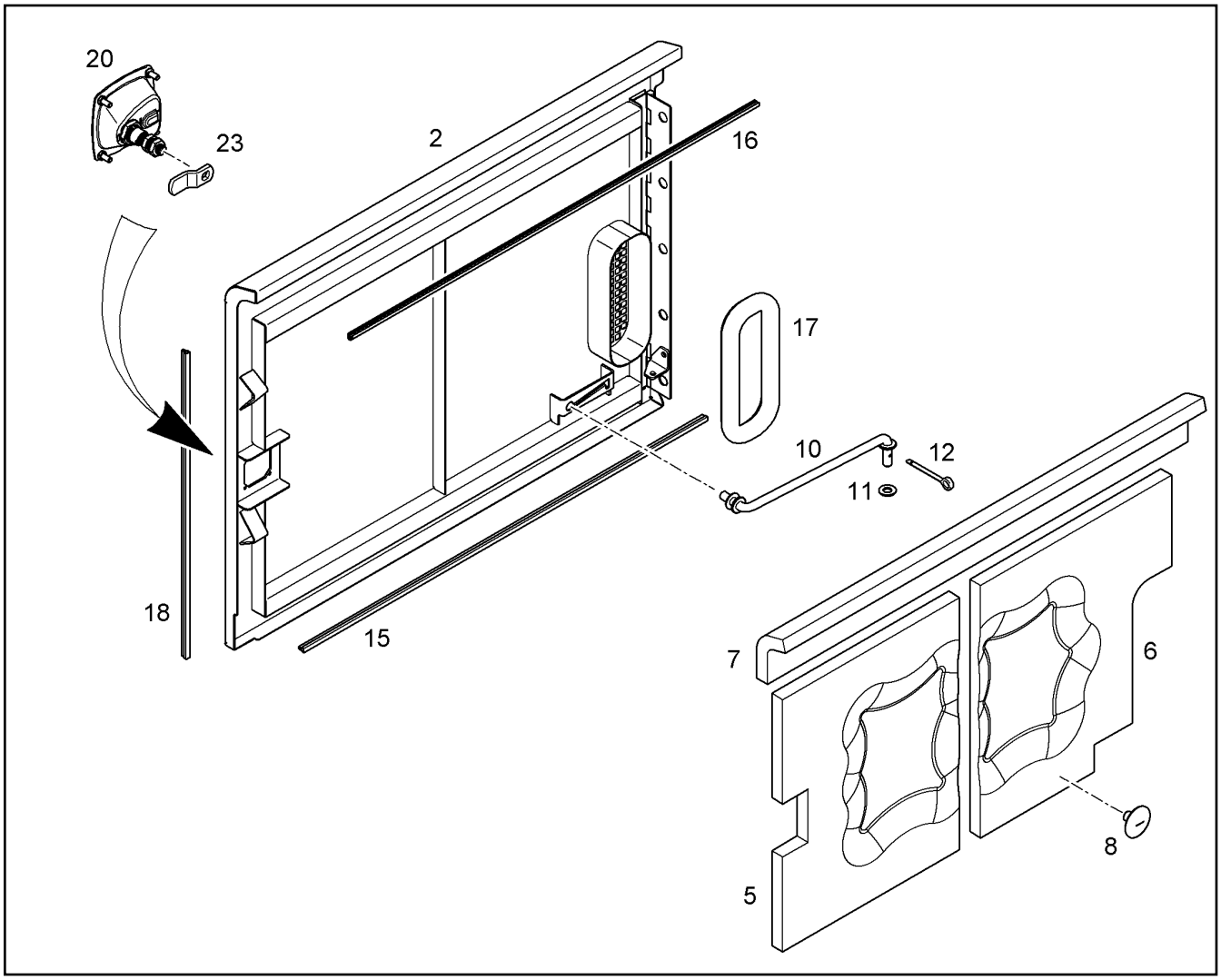


| Pos. | Item | Quantity | Description | Designação | Serie | K |
|---|---|---|---|---|---|---|
| 2 | | 1 | SIDE DOOR RIGHT | PORTA LATERAL DIREITA | | |
| 5 | 9929376 | 1 | INSULATING MAT | MANTA DE ISOLAMENTO ACÚST | | |
| 6 | 10073074 | 1 | INSULATING MAT | MANTA DE ISOLAMENTO ACÚST | | |
| 7 | 9929378 | 1 | INSULATING MAT | MANTA DE ISOLAMENTO ACÚST | | |
| 8 | 10412536 | 48 | CLIP | CLIPE | | |
| 10 | 9942679 | 1 | ROD | HASTE | | |
| 11 | 10289795 | 1 | WASHER ISO 7089 10 300HV | ARRUELA | | |
| 12 | 4330011 | 1 | SPLIT PIN ISO 1234 3,2X 25 ST | CONTRAPINO | | |
| 15 | 7360171 | 1.28m | CORNER PROTECT.PROFILE | PERFIL DE VEDACAO | | |
| 16 | 7008157 | 1.34m | CORNER PROTECT.PROFILE | PERFIL DE VEDACAO | | |
| 17 | 7014524 | 1 | CLAMPING PROFILE | PERFIL DE FIXAÇÃO | | |
| 18 | 7360171 | 0.835m | CORNER PROTECT.PROFILE | PERFIL DE VEDACAO | | |
| 20 | 10353879 | 1 | DOOR LOCK<br>⇨ ❑ 402 | FECHADURA DA PORTA | | |
| 23 | 9634109 | 1 | LOCKING BAR | TRAVA | | |

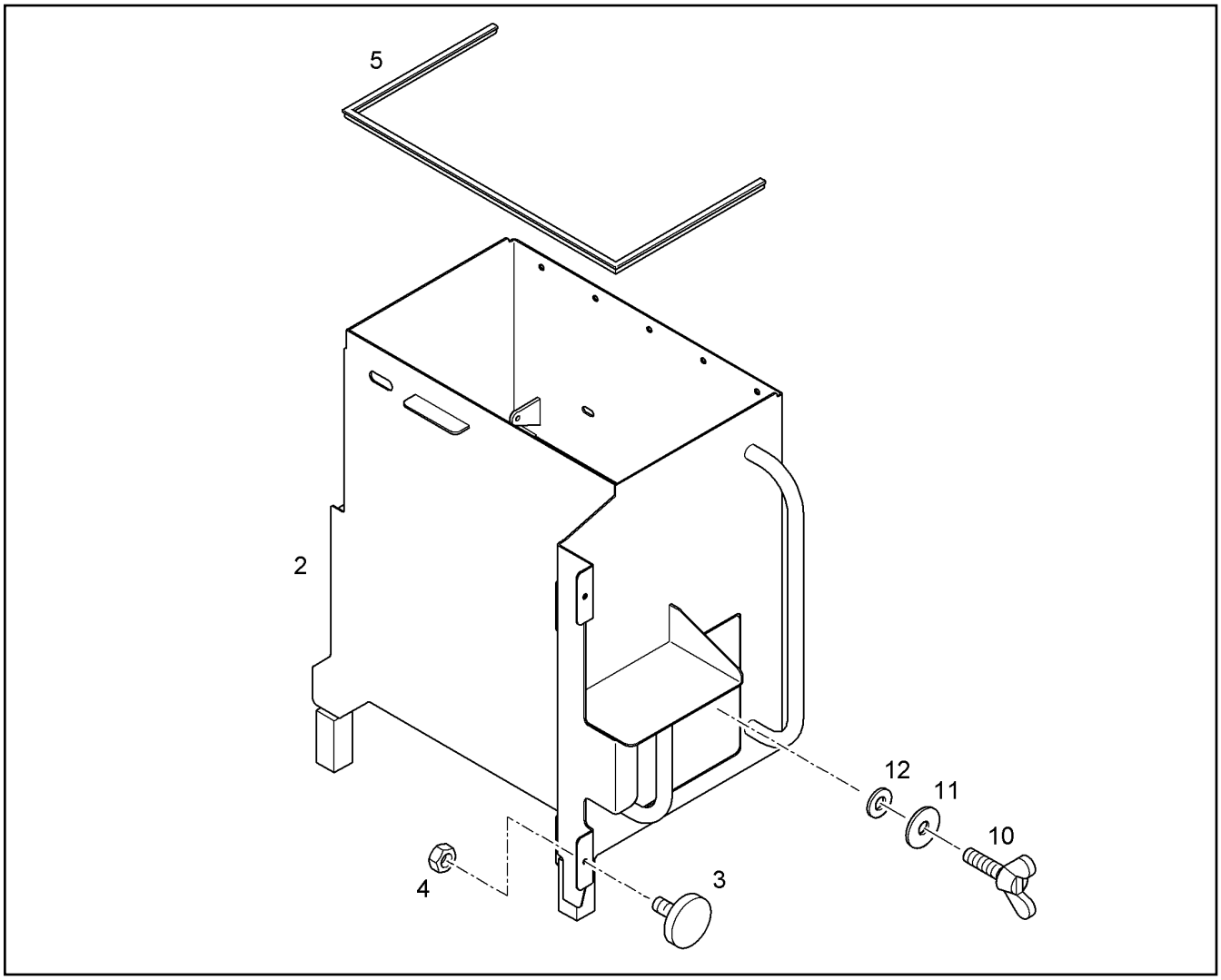


| Pos. | Item | Quantity | Description | Designação | Serie | K |
|---|---|---|---|---|---|---|
| 2 | 10066919 | 1 | TOOL BOX | CAIXA DE FERRAMENTAS | | |
| 3 | 7363930 | 2 | LIMIT STOP BUFFER | BATENTE DE BORRACHA | | |
| 4 | 4000381 | 2 | HEX NUT M8 | PORCA SEXTAVADA | | |
| 5 | 7360171 | 1.25m | CORNER PROTECT.PROFILE | PERFIL DE VEDACAO | | |
| 10 | 4000905 | 1 | WING SCREW DIN 316 M8X16 4.6 A3C | PARAFUSO BORBOLETA | | |
| 11 | 4000779 | 1 | WASHER A 8 200HV | ARRUELA | | |
| 12 | 10113833 | 1 | TOOTH LOCK WASHER | ARRUELA DENTADA | | |

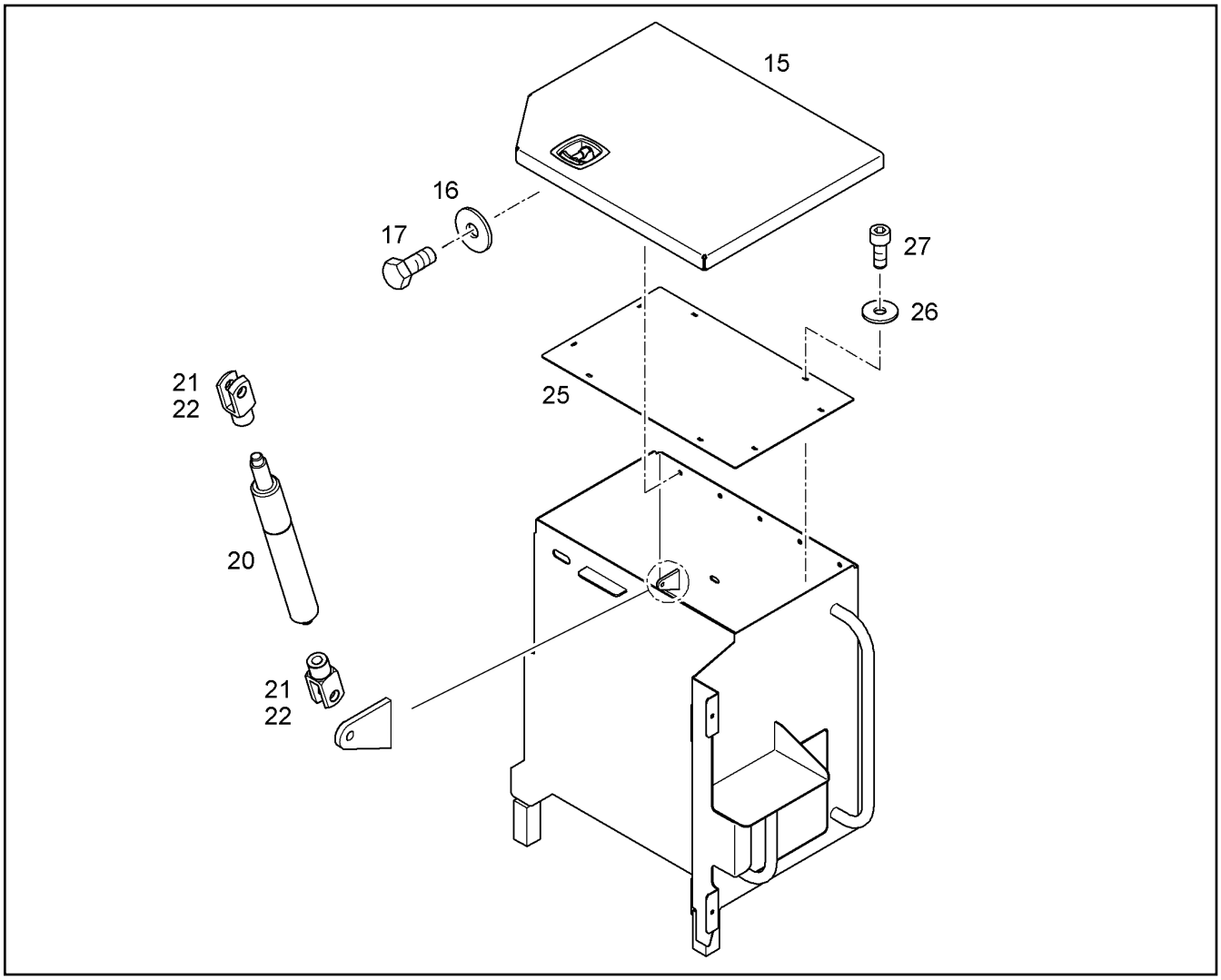


| Pos. | Item | Quantity | Description | Designação | Serie | K |
|---|---|---|---|---|---|---|
| 15 | 10066918 | 1 | LID<br>⇨ ❑ 394 | TAMPA | | |
| 16 | 4000779 | 5 | WASHER A 8 200HV | ARRUELA | | |
| 17 | 4001606 | 5 | HEX BOLT ISO 4017 M8X16 10.9 A2C | PARAFUSO SEXTAVADO | | |
| 20 | 10037196 | 1 | GAS SPRING | MOLA A GÁS | | |
| 21 | 4000746 | 2 | YOKE G 8X16 | TERMINAL GARFO | | |
| 22 | 7738704 | 2 | PIN 8X16 | PINO | | 1 |
| 25 | 10067004 | 1 | PLATE | PLACA | | |
| 26 | 4600198 | 8 | WASHER 6 200HV | ARRUELA | | |
| 27 | 409361108 | 8 | CYLINDER SCREW DIN 7984 M6X16 8.8 A2C | PARAFUSO CILÍNDRICO | | |

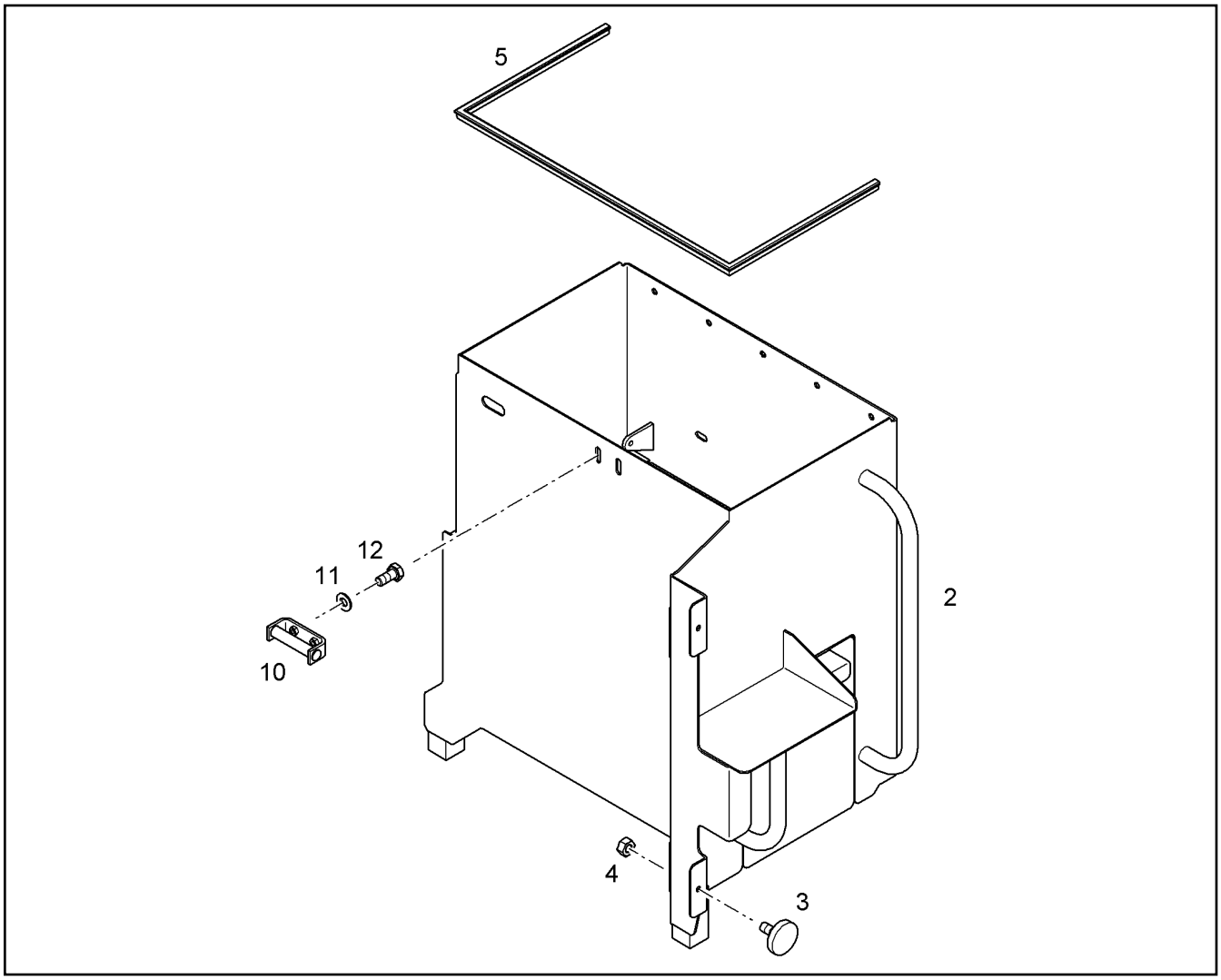


| Pos. | Item | Quantity | Description | Designação | Serie | K |
|---|---|---|---|---|---|---|
| 2 | 10379371 | 1 | TOOL BOX | CAIXA DE FERRAMENTAS | | |
| 3 | 7363930 | 2 | LIMIT STOP BUFFER | BATENTE DE BORRACHA | | |
| 4 | 4000381 | 2 | HEX NUT M8 | PORCA SEXTAVADA | | |
| 5 | 7360171 | 1.25m | CORNER PROTECT.PROFILE | PERFIL DE VEDACAO | | |
| 10 | 9376918 | 1 | LOCKING | TRAVA | | |
| 11 | 10289803 | 2 | WASHER ISO 7089 8 300HV | ARRUELA | | |
| 12 | 4600334 | 2 | HEX BOLT ISO 4017 M8X18 8.8 A2C | PARAFUSO SEXTAVADO | | |

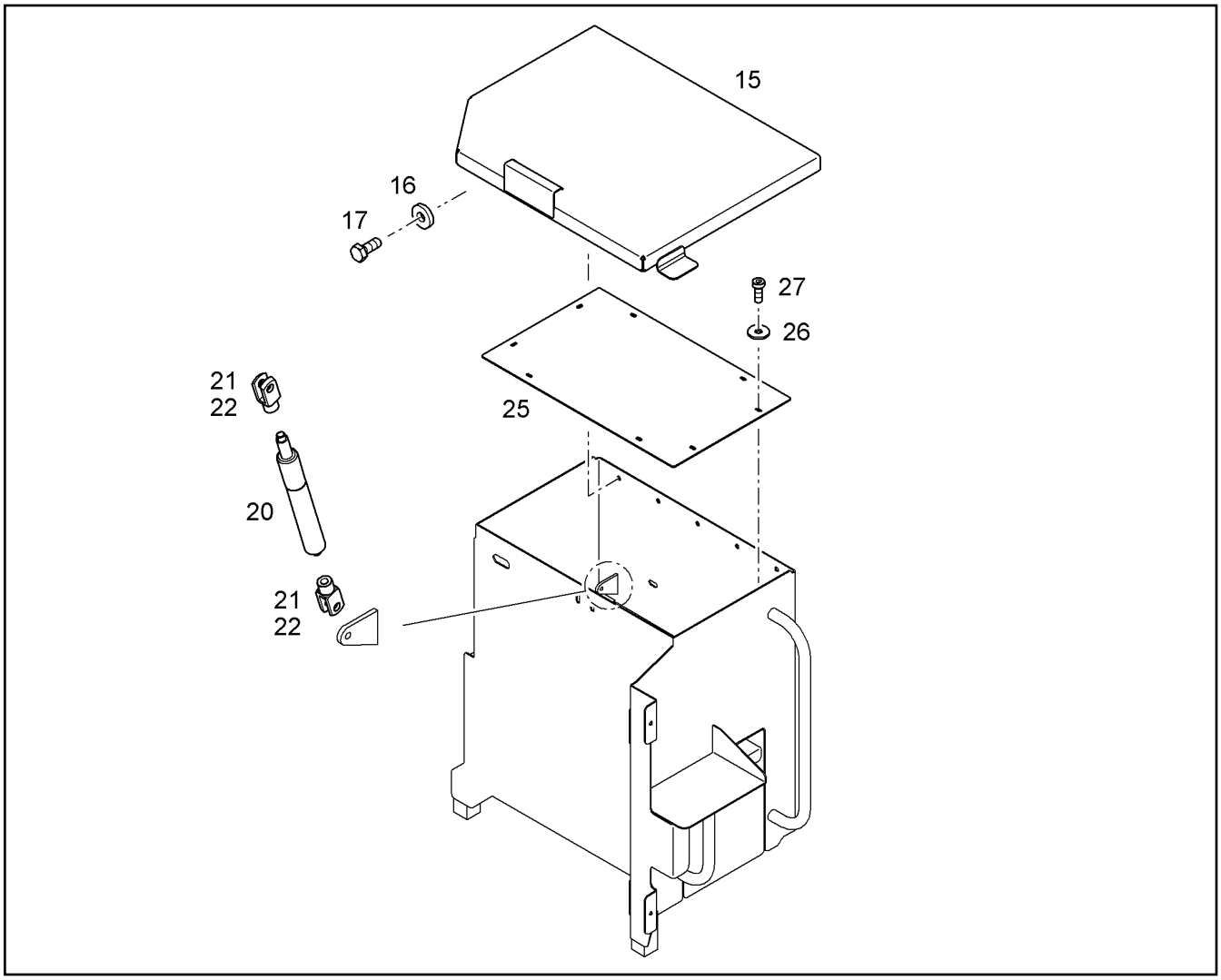


| Pos. | Item | Quantity | Description | Designação | Serie | K |
|---|---|---|---|---|---|---|
| 15 | 10379363 | 1 | LID<br>⇨ ❑ 395 | TAMPA | | |
| 16 | 4000779 | 5 | WASHER A 8 200HV | ARRUELA | | |
| 17 | 4900089 | 5 | HEX BOLT ISO 4017 M8x20 8.8 A2C | PARAFUSO SEXTAVADO | | |
| 20 | 10037196 | 1 | GAS SPRING | MOLA A GÁS | | |
| 21 | 4000746 | 2 | YOKE G 8X16 | TERMINAL GARFO | | |
| 22 | 7738704 | 2 | PIN 8X16 | PINO | | 1 |
| 25 | 10374410 | 1 | CONSOLE | SUPORTE | | |
| 26 | 4600198 | 8 | WASHER 6 200HV | ARRUELA | | |
| 27 | 409361108 | 8 | CYLINDER SCREW DIN 7984 M6X16 8.8 A2C | PARAFUSO CILÍNDRICO | | |

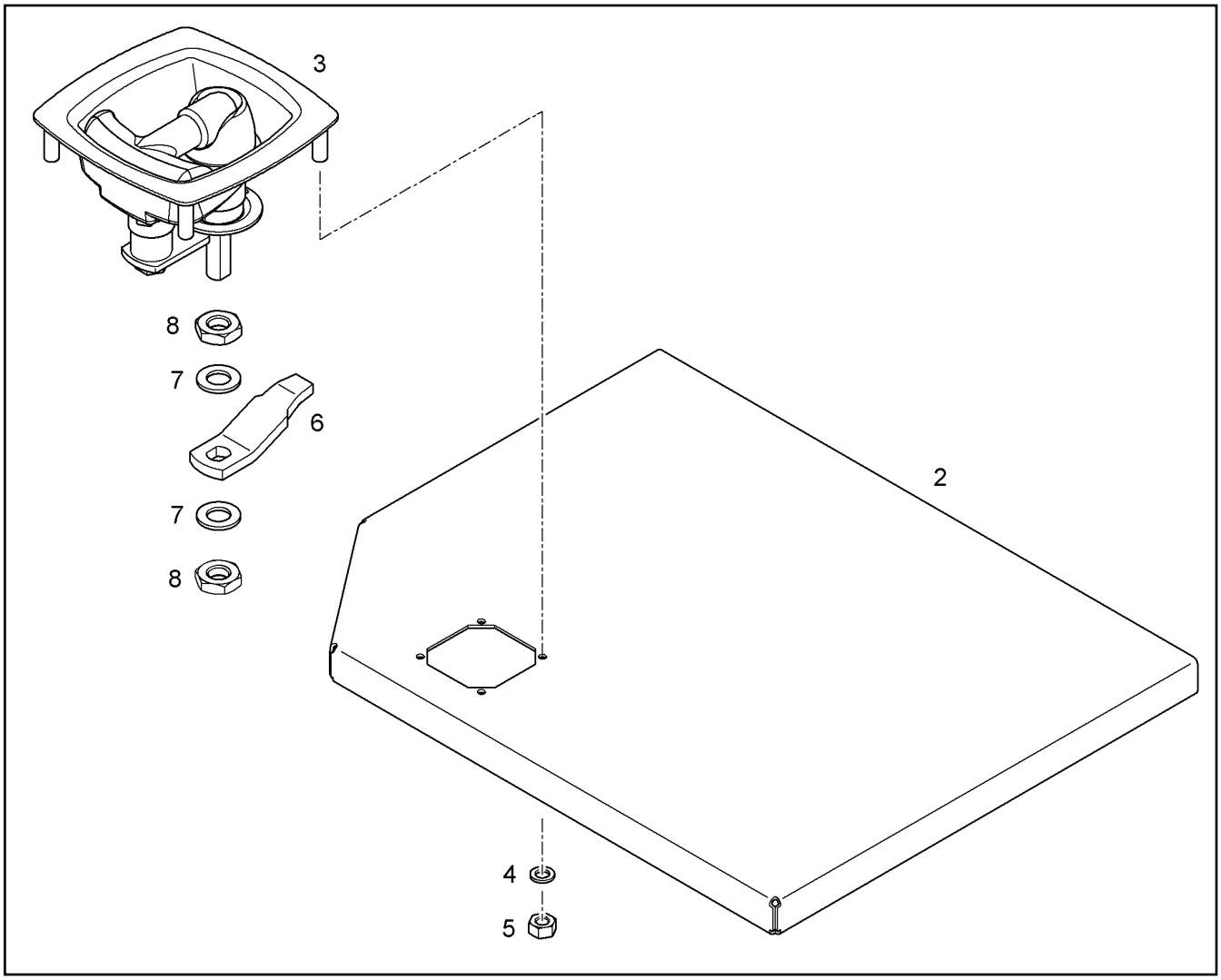


| Pos. | Item | Quantity | Description | Designação | Serie | K |
|---|---|---|---|---|---|---|
| 2 | | 1 | LID | TAMPA | | |
| 3 | 10025254 | 1 | DOOR LOCK<br>⇨ ❑ 400 | FECHO DA PORTA | | |
| 4 | 4229911 | 4 | LOCK WASHER 6,4/10X1,2 VS 6 | ARRUELA DE SEGURANÇA | | |
| 5 | 4000379 | 4 | HEX NUT M6 | PORCA SEXTAVADA | | |
| 6 | 10113250 | 1 | LOCKING BAR | TRAVA | | |
| 7 | 4229913 | 2 | LOCK WASHER 10,5/16X2 VS 10 | ARRUELA DE SEGURANÇA | | |
| 8 | 4600567 | 2 | HEX NUT M10 | PORCA SEXTAVADA | | |

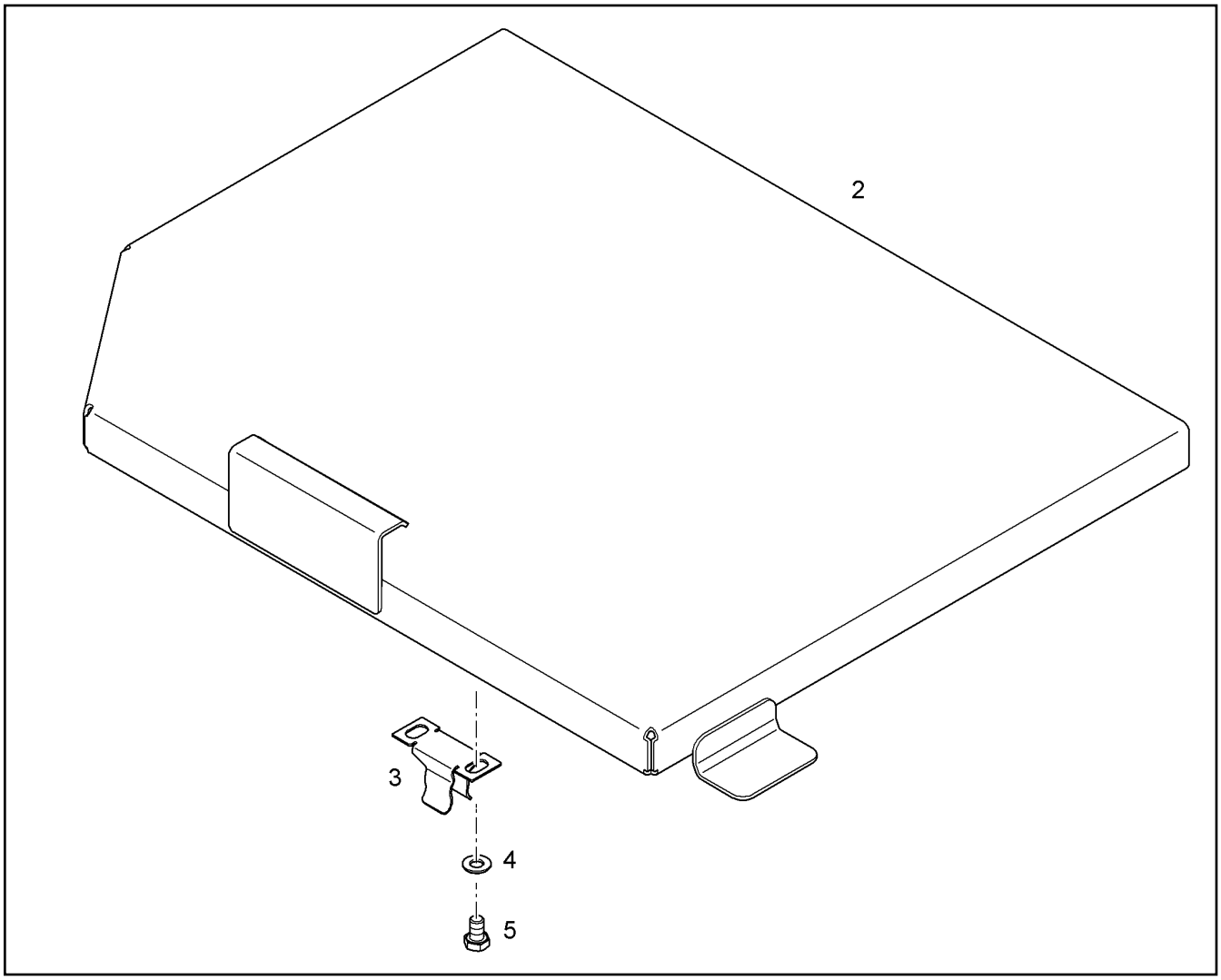


| Pos. | Item | Quantity | Description | Designação | Serie | K |
|---|---|---|---|---|---|---|
| 2 | 10379354 | 1 | LID | TAMPA | | |
| 3 | 9376917 | 1 | LOCKING | TRAVA | | |
| 4 | 9686917 | 2 | WASHER | ARRUELA | | |
| 5 | 4001696 | 2 | HEX BOLT ISO 4017 M10X20 10.9 A3C | PARAFUSO SEXTAVADO | | |

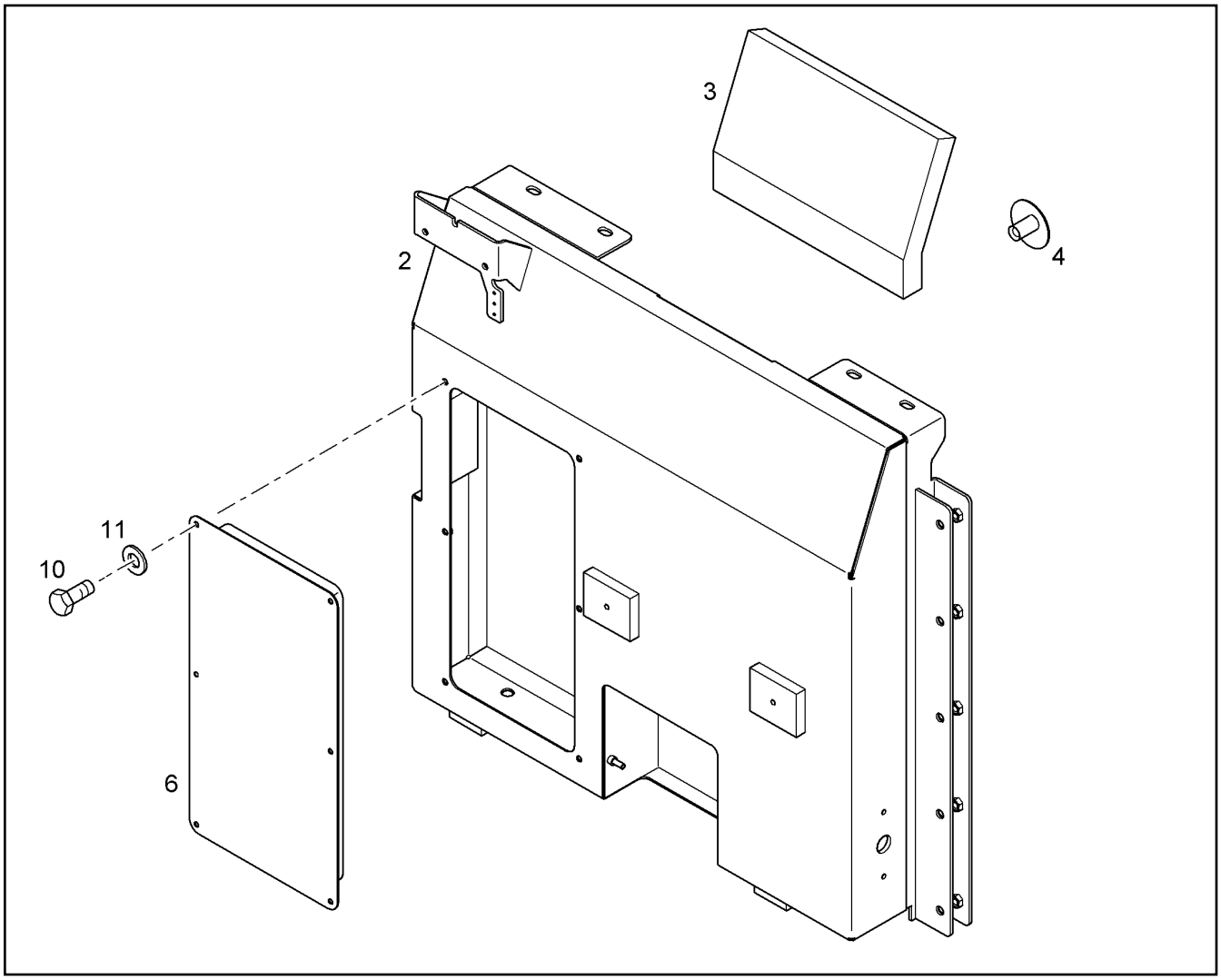


| Pos. | Item | Quantity | Description | Designação | Serie | K |
|---|---|---|---|---|---|---|
| 2 | | 1 | PARTITION | PAREDE DIVISÓRIA | | |
| 3 | 9949384 | 1 | INSULATING MAT | MANTA DE ISOLAMENTO ACÚST | | |
| 4 | 10412536 | 9 | CLIP | CLIPE | | |
| 6 | 10051537 | 1 | LID<br>⇨ ❑ 397 | TAMPA | | |
| 10 | 4001606 | 6 | HEX BOLT ISO 4017 M8X16 10.9 A2C | PARAFUSO SEXTAVADO | | |
| 11 | 10289803 | 6 | WASHER ISO 7089 8 300HV | ARRUELA | | |

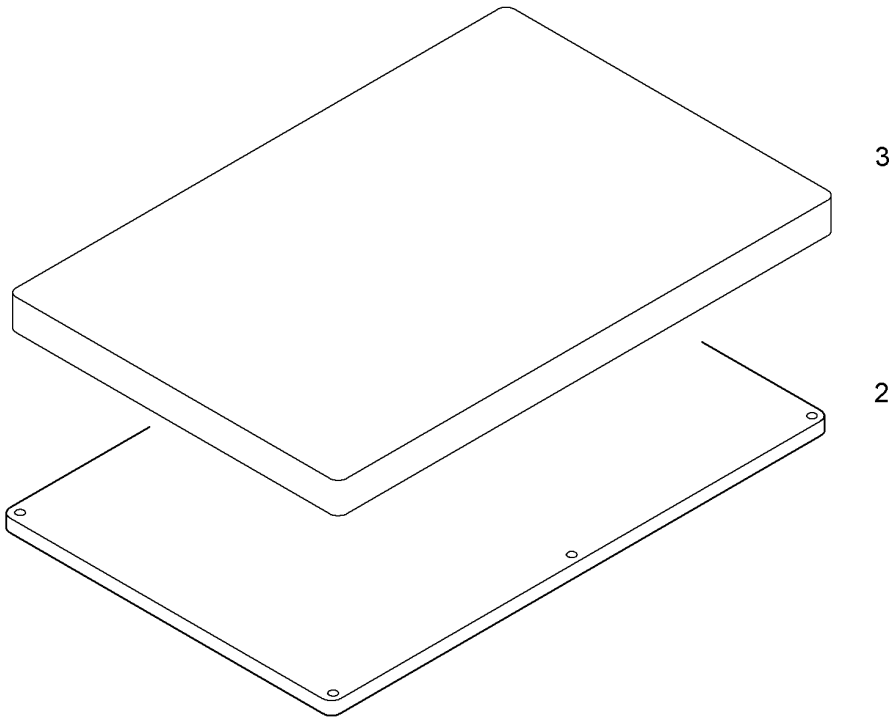


| Pos. | Item | Quantity | Description | Designação | Serie | K |
|---|---|---|---|---|---|---|
| 2 | | 1 | LID | TAMPA | | |
| 3 | 10051539 | 1 | INSULATING MAT | MANTA DE ISOLAMENTO ACÚST | | |

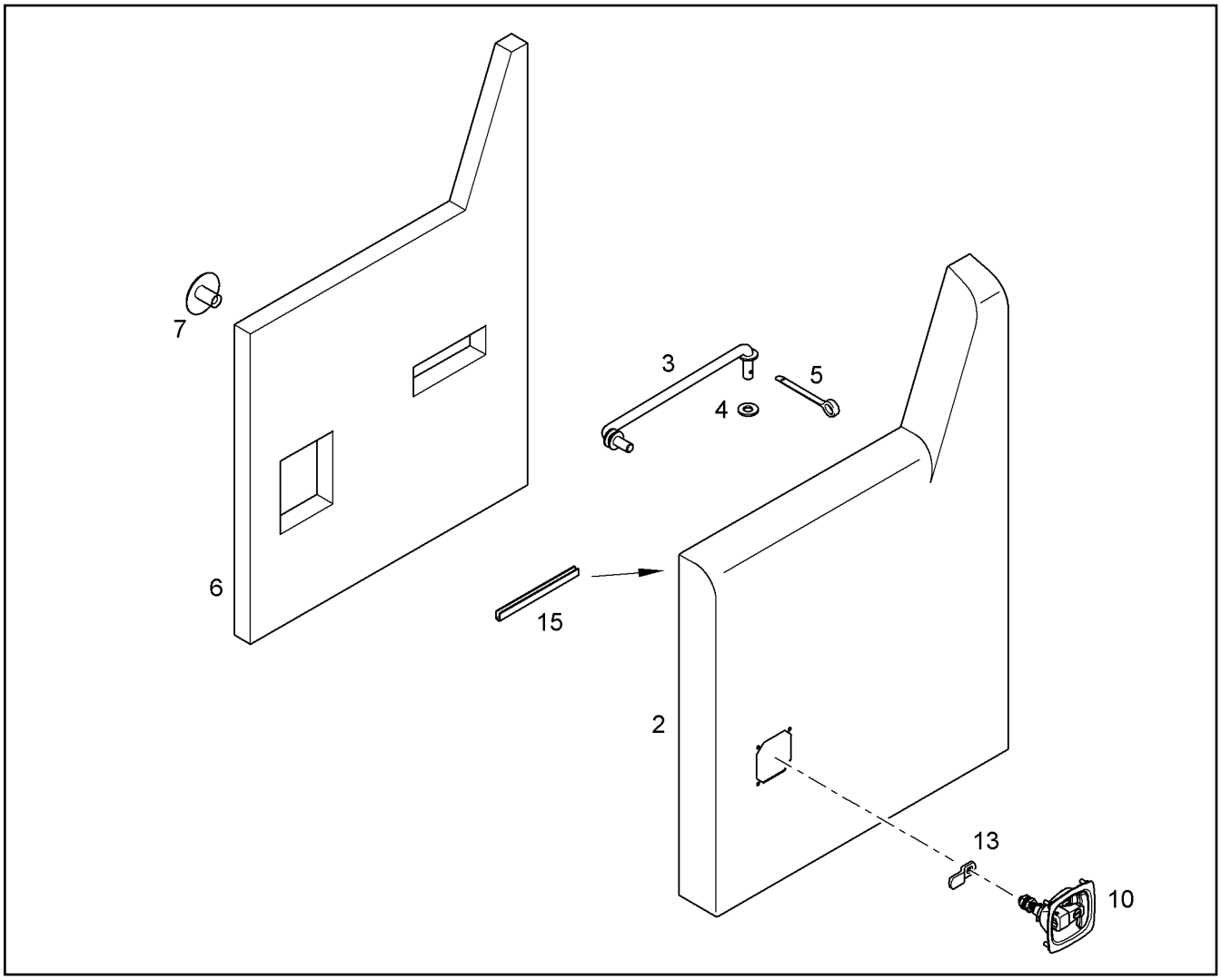


| Pos. | Item | Quantity | Description | Designação | Serie | K |
|---|---|---|---|---|---|---|
| 2 | | 1 | SIDE DOOR FRONT LEFT | PORTA LATERAL DIANTEIRA | | |
| 3 | 10358170 | 1 | ROD | HASTE | | |
| 4 | 10289795 | 1 | WASHER ISO 7089 10 300HV | ARRUELA | | |
| 5 | 4330011 | 1 | SPLIT PIN ISO 1234 3,2X 25 ST | CONTRAPINO | | |
| 6 | 9949383 | 1 | INSULATING MAT | MANTA DE ISOLAMENTO ACÚST | | |
| 7 | 10412536 | 13 | CLIP | CLIPE | | |
| 10 | 10353879 | 1 | DOOR LOCK<br>⇨ ❑ 402 | FECHADURA DA PORTA | | |
| 13 | 9634109 | 1 | LOCKING BAR | TRAVA | | |
| 15 | 226016702 | 0.15m | SECTION | PERFIL DE PROTECAO DE CANT | | |

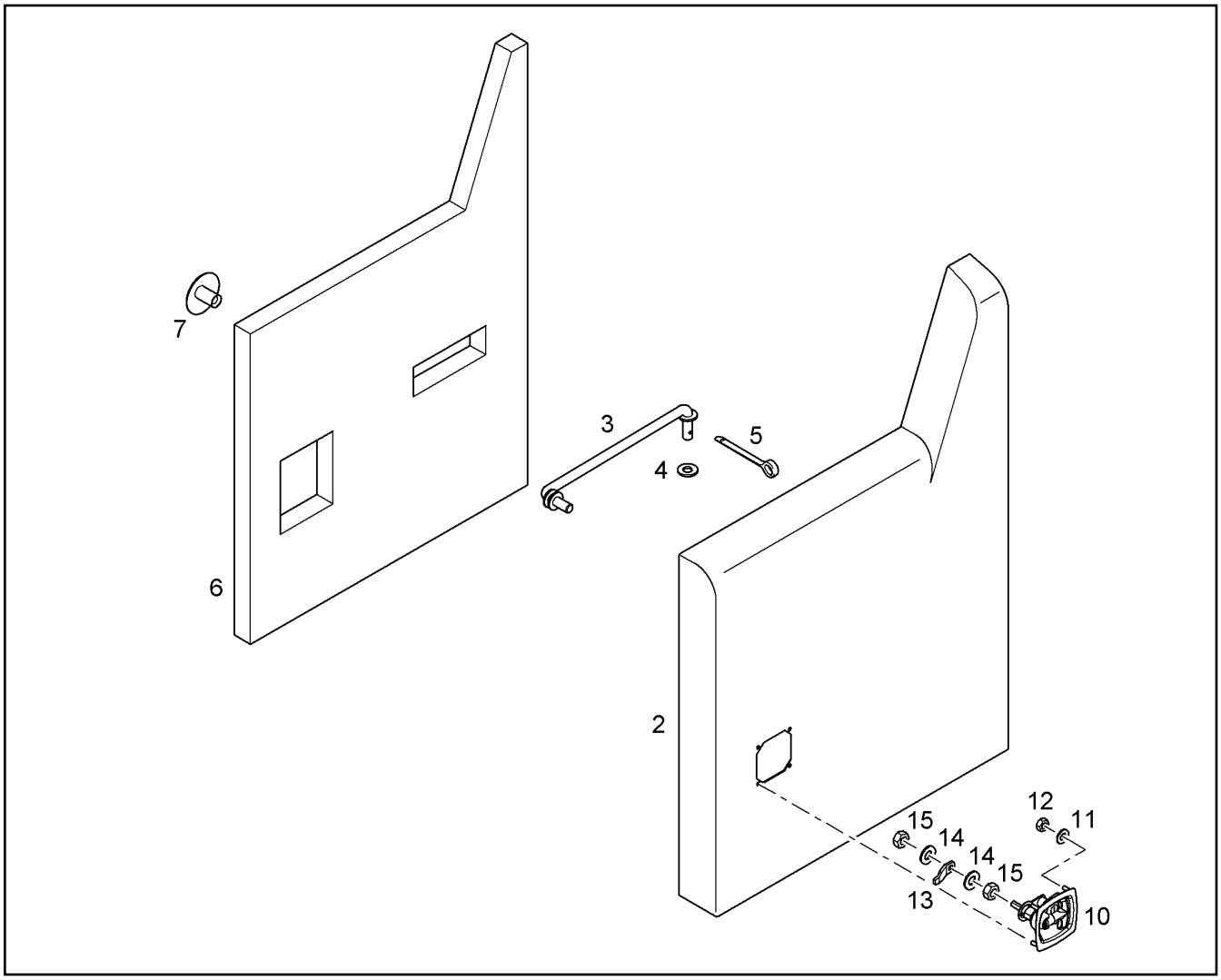


| Pos. | Item | Quantity | Description | Designação | Serie | K |
|---|---|---|---|---|---|---|
| 2 | | 1 | SIDE DOOR FRONT LEFT | PORTA LATERAL DIANTEIRA | | |
| 3 | 9942678 | 1 | ROD | HASTE | | |
| 4 | 10289795 | 1 | WASHER ISO 7089 10 300HV | ARRUELA | | |
| 5 | 4330011 | 1 | SPLIT PIN ISO 1234 3,2X 25 ST | CONTRAPINO | | |
| 6 | 9949383 | 1 | INSULATING MAT | MANTA DE ISOLAMENTO ACÚST | | |
| 7 | 10412536 | 13 | CLIP | CLIPE | | |
| 10 | 10025254 | 1 | DOOR LOCK<br>⇨ ❑ 400 | FECHO DA PORTA | | |
| 11 | 4229911 | 4 | LOCK WASHER 6,4/10X1,2 VS 6 | ARRUELA DE SEGURANÇA | | |
| 12 | 4000379 | 4 | HEX NUT M6 | PORCA SEXTAVADA | | |
| 13 | 10113250 | 1 | LOCKING BAR | TRAVA | | |
| 14 | 4229913 | 2 | LOCK WASHER 10,5/16X2 VS 10 | ARRUELA DE SEGURANÇA | | |
| 15 | 4600567 | 2 | HEX NUT M10 | PORCA SEXTAVADA | | |

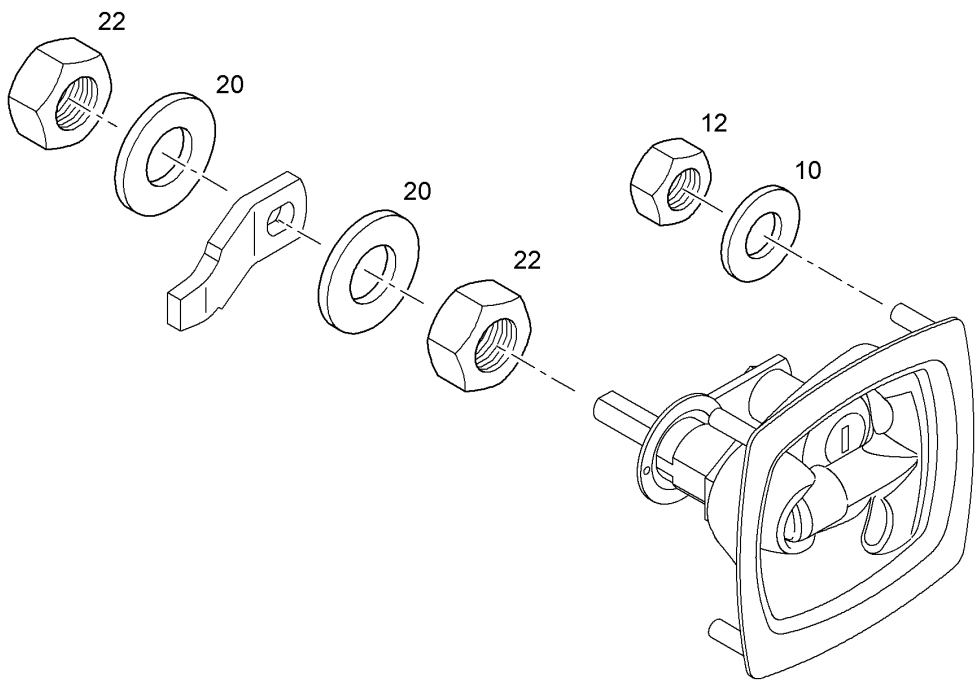


| Pos. | Item | Quantity | Description | Designação | Serie | K |
|---|---|---|---|---|---|---|
| 10 | 4229911 | 4 | LOCK WASHER 6,4/10X1,2 VS 6 | ARRUELA DE SEGURANÇA | | |
| 12 | 4000379 | 4 | HEX NUT M6 | PORCA SEXTAVADA | | |
| 20 | 4229913 | 2 | LOCK WASHER 10,5/16X2 VS 10 | ARRUELA DE SEGURANÇA | | |
| 22 | 4600567 | 2 | HEX NUT M10 | PORCA SEXTAVADA | | |

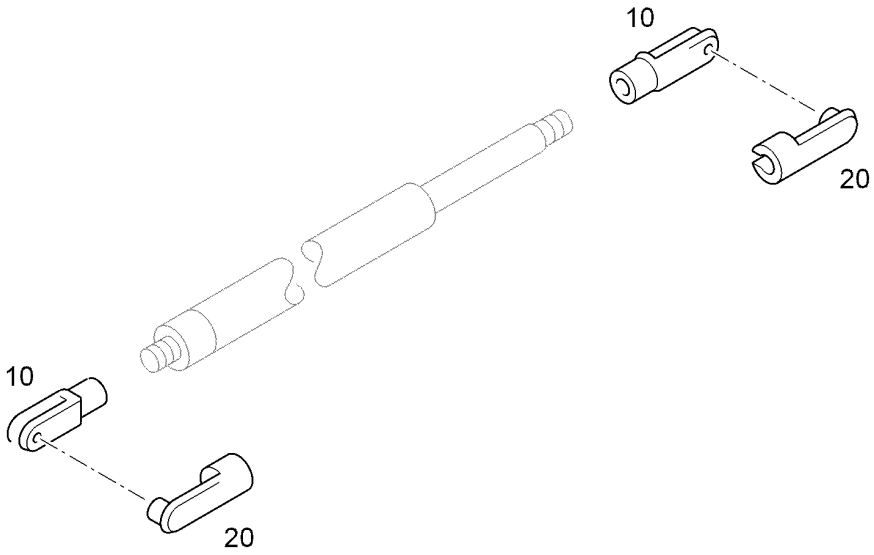


| Pos. | Item | Quantity | Description | Designação | Serie | K |
|---|---|---|---|---|---|---|
| 10 | 4000746 | 2 | YOKE G 8X16 | TERMINAL GARFO | | |
| 20 | 7738704 | 2 | PIN 8X16 | PINO | | 1 |

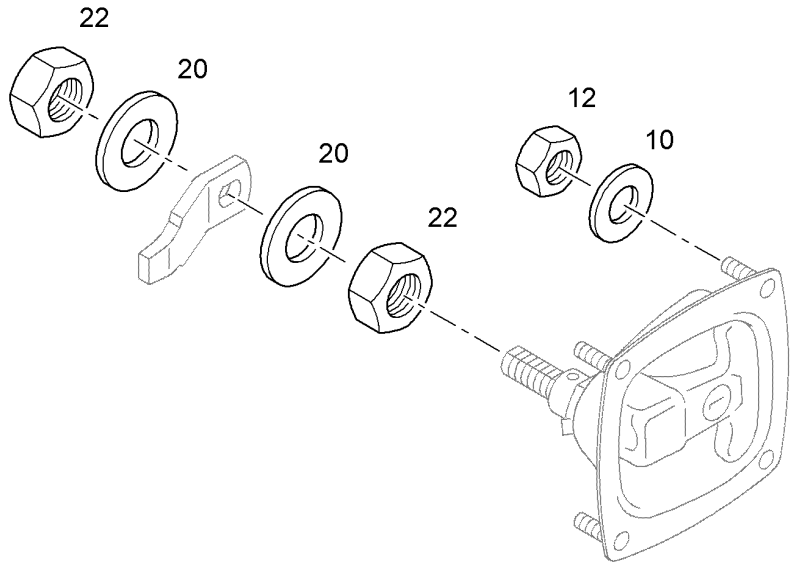


| Pos. | Item | Quantity | Description | Designação | Serie | K |
|---|---|---|---|---|---|---|
| 10 | 4229911 | 4 | LOCK WASHER 6,4/10X1,2 VS 6 | ARRUELA DE SEGURANÇA | | |
| 12 | 4000379 | 4 | HEX NUT M6 | PORCA SEXTAVADA | | |
| 20 | 4900093 | 2 | LOCK WASHER 13/18X2,1 VS 12 | ARRUELA DE SEGURANÇA | | |
| 22 | 4900125 | 2 | HEX NUT M12 | PORCA SEXTAVADA | | |

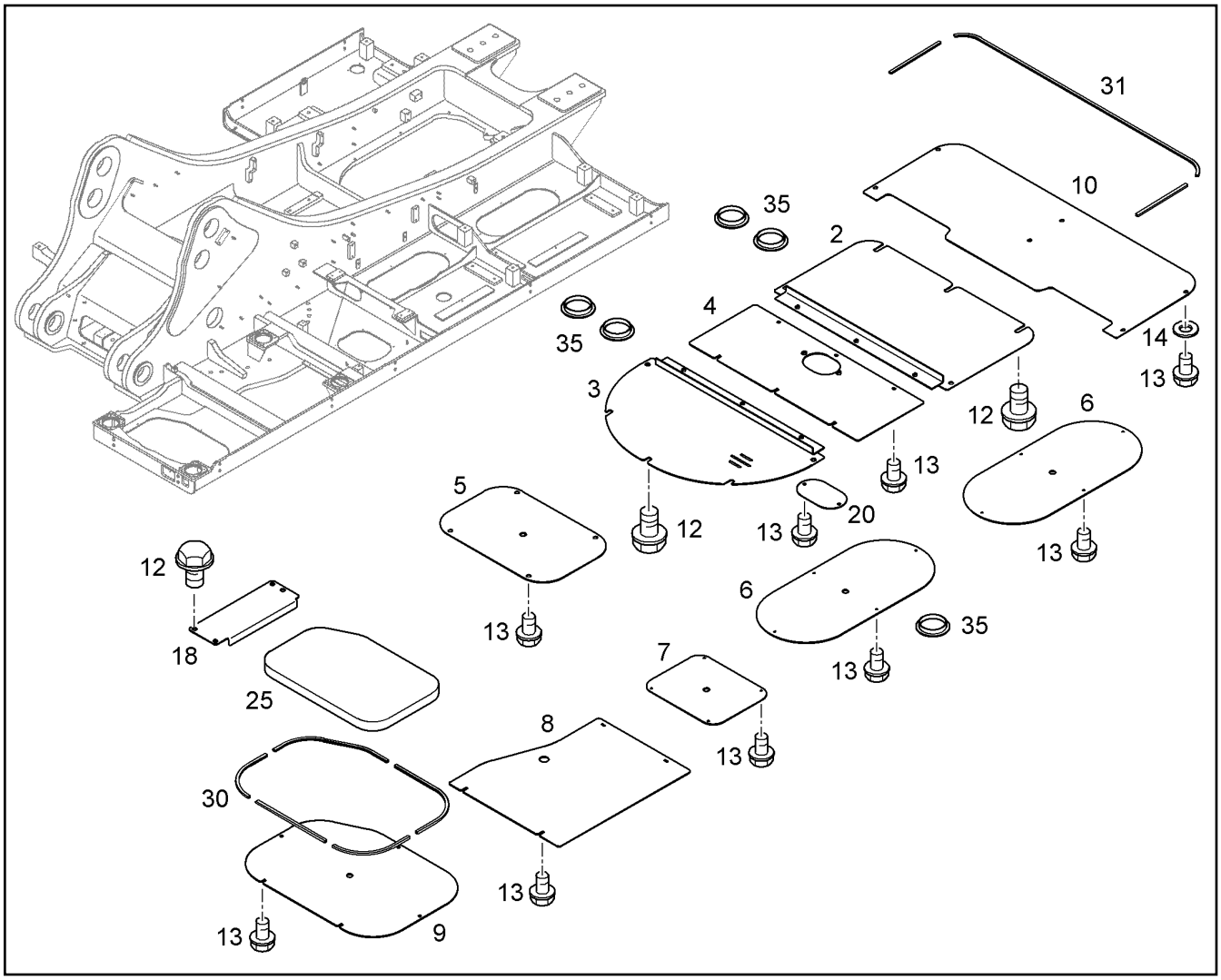


| Pos. | Item | Quantity | Description | Designação | Serie | K |
|---|---|---|---|---|---|---|
| 2 | 10050113 | 1 | LOWER PROTECTIVE SHEET | CHAPA DE PROTECAO INFERIO | | |
| 3 | 10050115 | 1 | LOWER PROTECTIVE SHEET | CHAPA DE PROTECAO INFERIO | | |
| 4 | 10064339 | 1 | LOWER PROTECTIVE SHEET | CHAPA DE PROTECAO INFERIO | | |
| 5 | 9949077 | 1 | PLATE | PLACA | | |
| 6 | 9949078 | 2 | PLATE | PLACA | | |
| 7 | 9949436 | 1 | PLATE | PLACA | | |
| 8 | 10050119 | 1 | PLATE | PLACA | | |
| 9 | 10050121 | 1 | PLATE | PLACA | | |
| 10 | 9588724 | 1 | PLATE 4 | PLACA | | |
| 12 | 7364949 | 18 | BLANKING END M16X35 DAC | PARAFUSO | | |
| 13 | 7366851 | 29 | BLANKING END M10X20 DAC | PARAFUSO | | |
| 14 | 7365430 | 6 | BLANKING END M12X20 DAC | PARAFUSO | | |
| 18 | 10079761 | 1 | PLATE | PLACA | 18268- | |
| 20 | 10064353 | 1 | PLATE | PLACA | | |
| 25 | 10064359 | 1 | INSULATING MAT | MANTA DE ISOLAMENTO ACÚST | | |
| 30 | 226016702 | 2.1m | SECTION | PERFIL DE PROTECAO DE CANT | | |
| 31 | 226016702 | 1.9m | SECTION | PERFIL DE PROTECAO DE CANT | | |
| 35 | 10287248 | 5 | MULTI-PLATE PLUG | TAMPÃO | | |

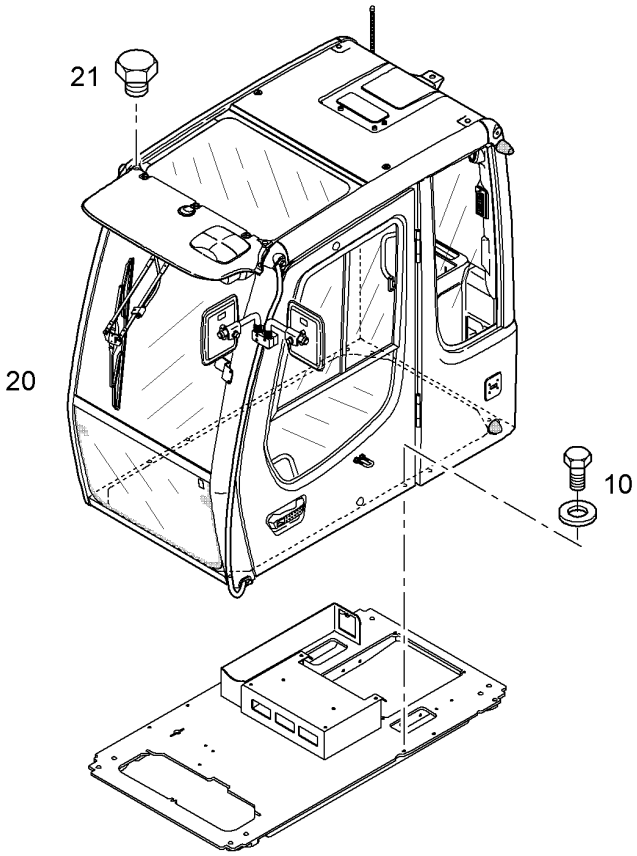


| Pos. | Item | Quantity | Description | Designação | Serie | K |
|---|---|---|---|---|---|---|
| 10 | 10357979 | 1 | FIXING PARTS CAB<br>⇨ ❑ 6 | PECAS DE FIXACAO PARA A CA | | |
| 20 | 10476169 | 1 | OPERATOR'S CAB<br>[GD 28722 ]<br>⇨ ❑ 405 | CABINE DE OPERADOR | 99999- | |
| 21 | 10028013 | 4 | HEX BOLT ISO 4017 M12X12 10.9 A3C | PARAFUSO SEXTAVADO | | |

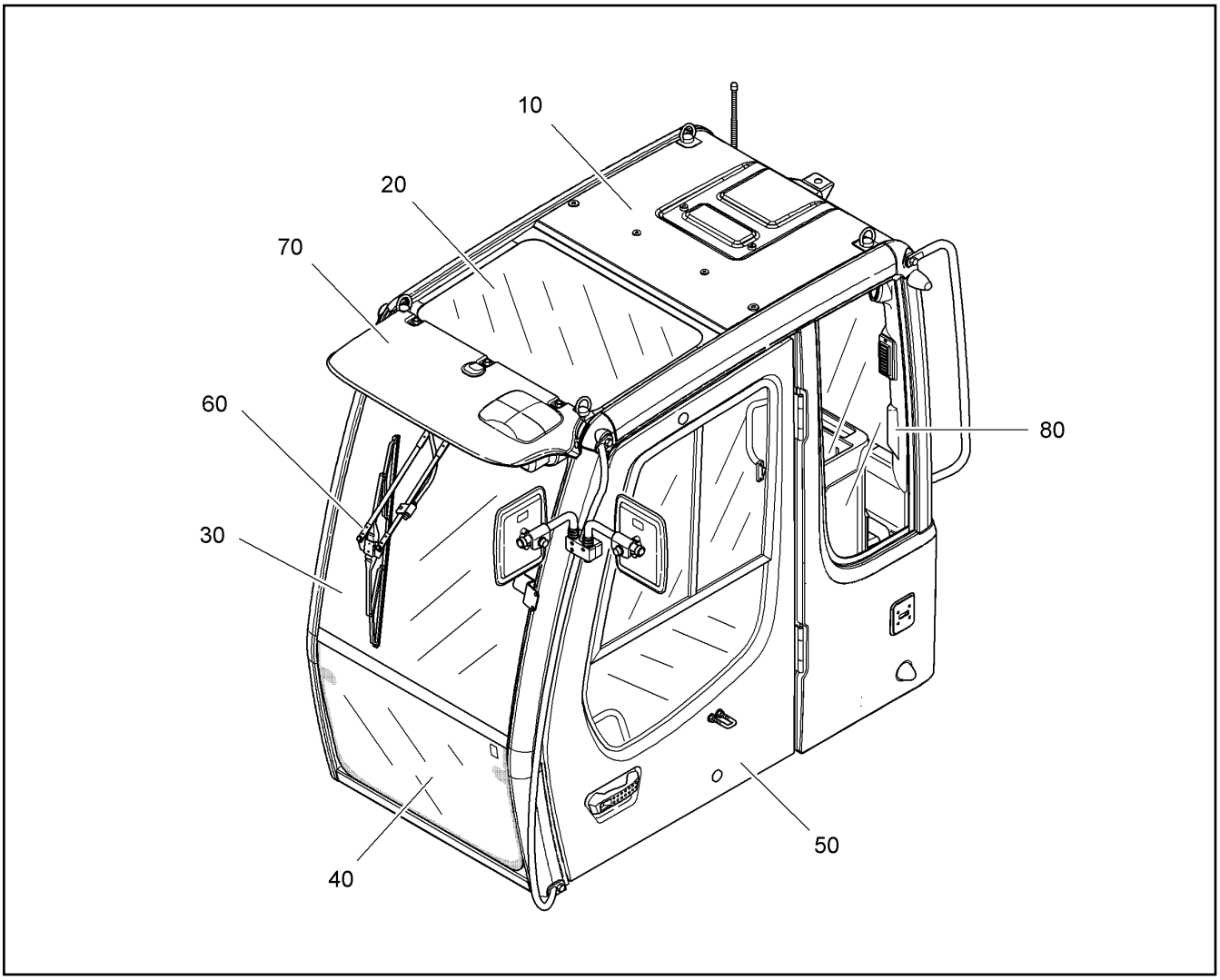


| Pos. | Item | Quantity | Description | Designação | Serie | K |
|---|---|---|---|---|---|---|
| 10 | 10216362 | 1 | ET-CABIN | PEÇA REP.CABINE | | |
| 20 | | 1 | GLASS PANES<br>⇨ ❑ 407 | VIDRO FIXO | | |
| 30 | | 1 | FRONT PANE TOP<br>⇨ ❑ 411 | PÁRA-BRISA SUPERIOR | | |
| 40 | | 1 | FRONT WINDOW BOTTOM<br>⇨ ❑ 409 | PÁRA-BRISA INFERIOR | | |
| 50 | | 1 | DRIVER'S CAB DOOR<br>⇨ ❑ 414 | PORTA DA CABINE DO MOTORI | | |
| 60 | | 1 | ELECTRICAL INSTALLATION<br>⇨ ❑ 420 | INSTALACAO ELETRICA | | |
| 70 | | 1 | ASSY. PARTS<br>⇨ ❑ 427 | PEÇAS DE MONTAGEM | | |
| 80 | | 1 | INTERNAL LINING<br>⇨ ❑ 432 | REVESTIMENTO INTERNO | | |

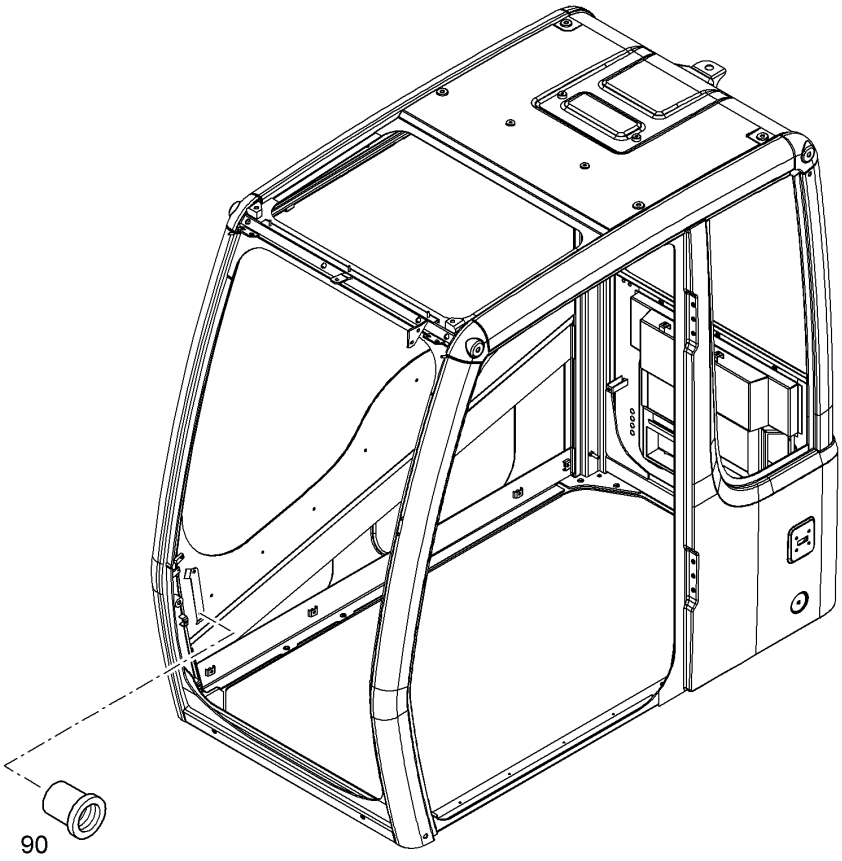


| Pos. | Item | Quantity | Description | Designação | Serie | K |
|---|---|---|---|---|---|---|
| 90 | 7028765 | 3 | THREADED INSERT | INSERTO DE ROSCA | | |

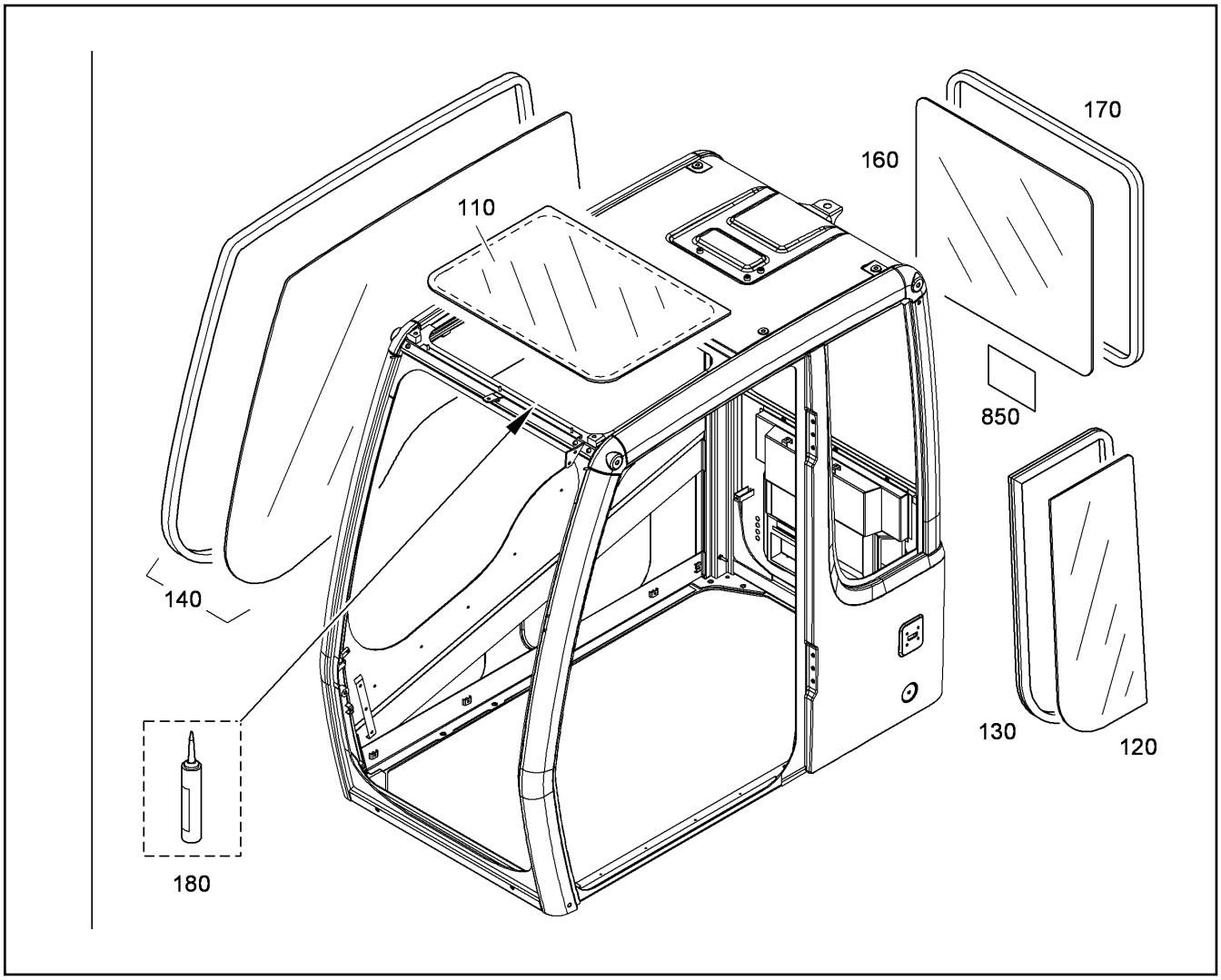


| Pos. | Item | Quantity | Description | Designação | Serie | K |
|---|---|---|---|---|---|---|
| 110 | 7030318 | 1 | WINDOW GLASS | VIDRO | | |
| 120 | 7028789 | 1 | WINDOW GLASS | VIDRO | | |
| 130 | 7028790 | 1 | SEAL | VEDAÇÃO | | |
| 140 | 10358890 | 1 | ADDITIONAL KIT SIDE PANE | | | |
| 160 | 7028787 | 1 | WINDOW GLASS | VIDRO | | |
| 170 | 7028788 | 1 | SEAL<br>⇨ ❑ 408 | VEDAÇÃO | | |
| 180 | 7029402 | 1 | GLUEING SET | | | |
| 850 | 10039562 | 1 | LABEL EMERGENCY EXIT | PLAQUETA SAIDA DE EMERGEN | | |

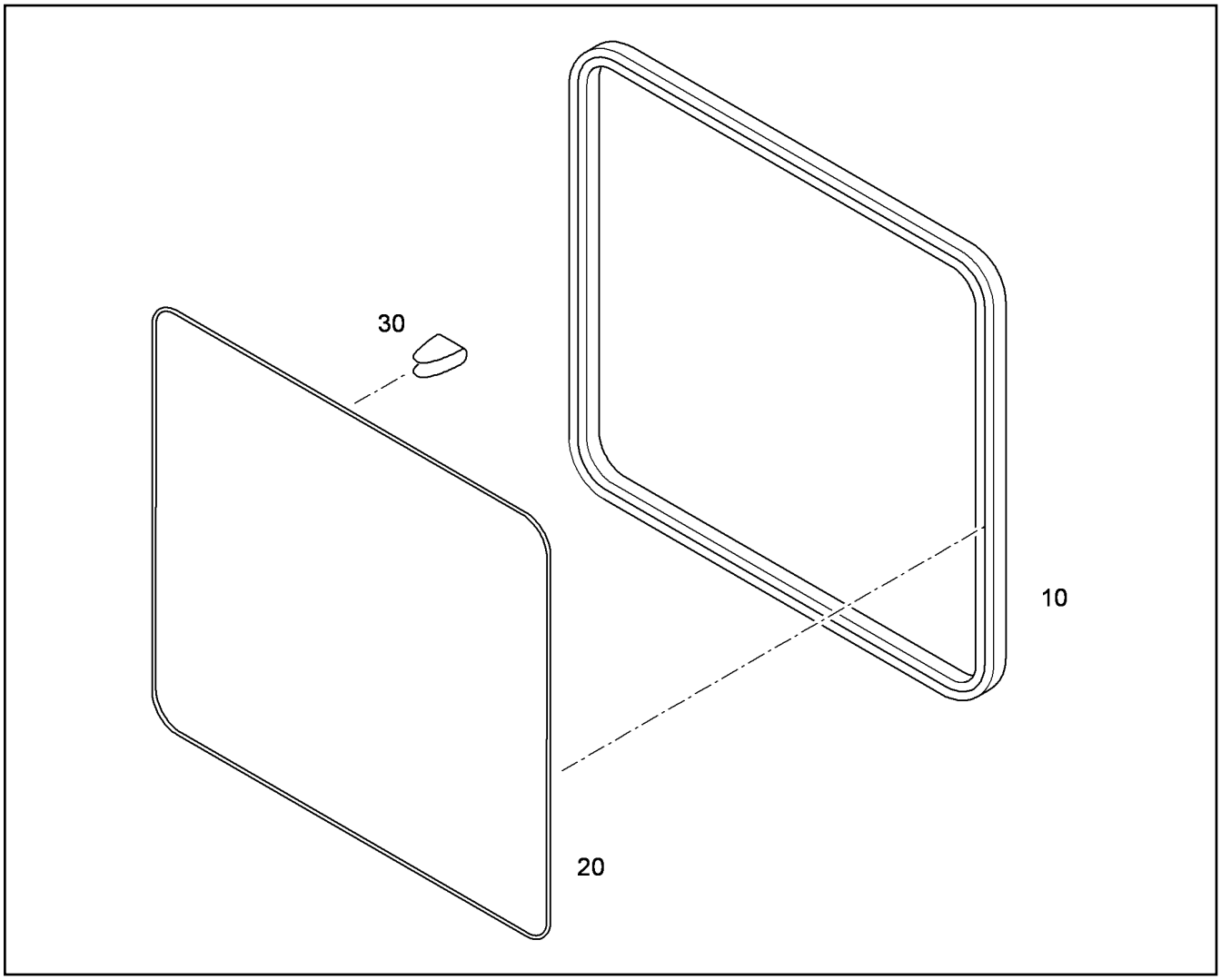


| Pos. | Item | Quantity | Description | Designação | Serie | K |
|---|---|---|---|---|---|---|
| 10 | 10471479 | 1 | SEAL | VEDAÇÃO | | |
| 20 | 10471490 | 1 | RUBBER BEADING | PERFIL DE ENCHIMENTO | | |
| 30 | 10429055 | 1 | BUTT STRAP | TALA | | |

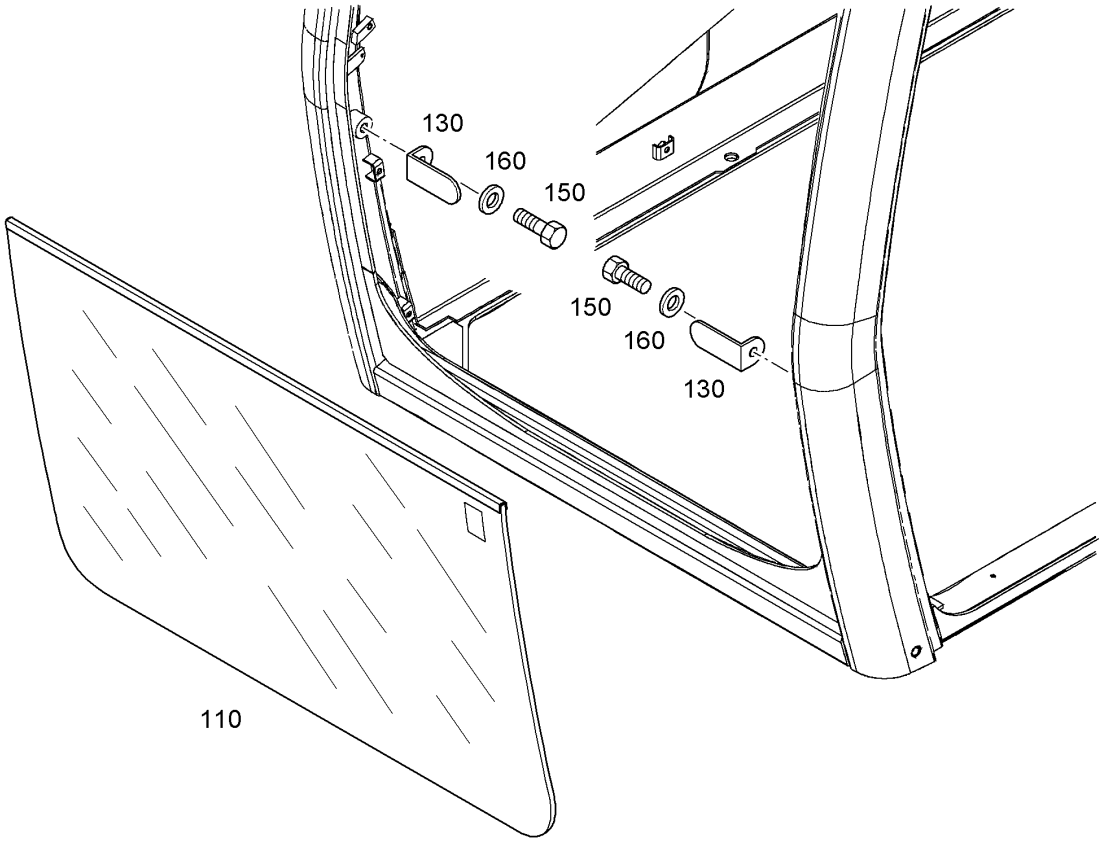


| Pos. | Item | Quantity | Description | Designação | Serie | K |
|---|---|---|---|---|---|---|
| 110 | 10035530 | 1 | FRONT WINDOW BOTTOM<br>⇨ ❑ 410 | PÁRA-BRISA INFERIOR | | |
| 130 | 7028802 | 2 | SHEET | PLACA | | |
| 150 | 4066042 | 2 | HEX BOLT ISO 4017 M8X25 10.9 A2C | PARAFUSO SEXTAVADO | | |
| 160 | 10289803 | 2 | WASHER ISO 7089 8 300HV | ARRUELA | | |

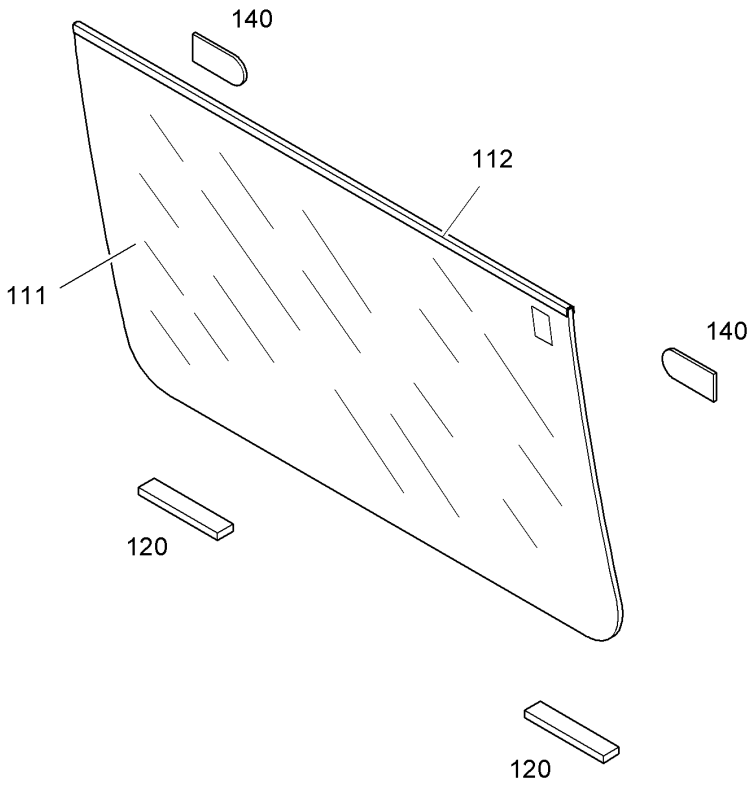


| Pos. | Item | Quantity | Description | Designação | Serie | K |
|---|---|---|---|---|---|---|
| 111 | 7030040 | 1 | FRONT WINDOW BOTTOM | PÁRA-BRISA INFERIOR | | |
| 112 | 7028800 | 1 | PROTECTION | PROTEÇÃO | | |
| 120 | 7028801 | 2 | HOLDER | SUPORTE | | |
| 140 | 7028803 | 2 | SEAL | VEDAÇÃO | | |

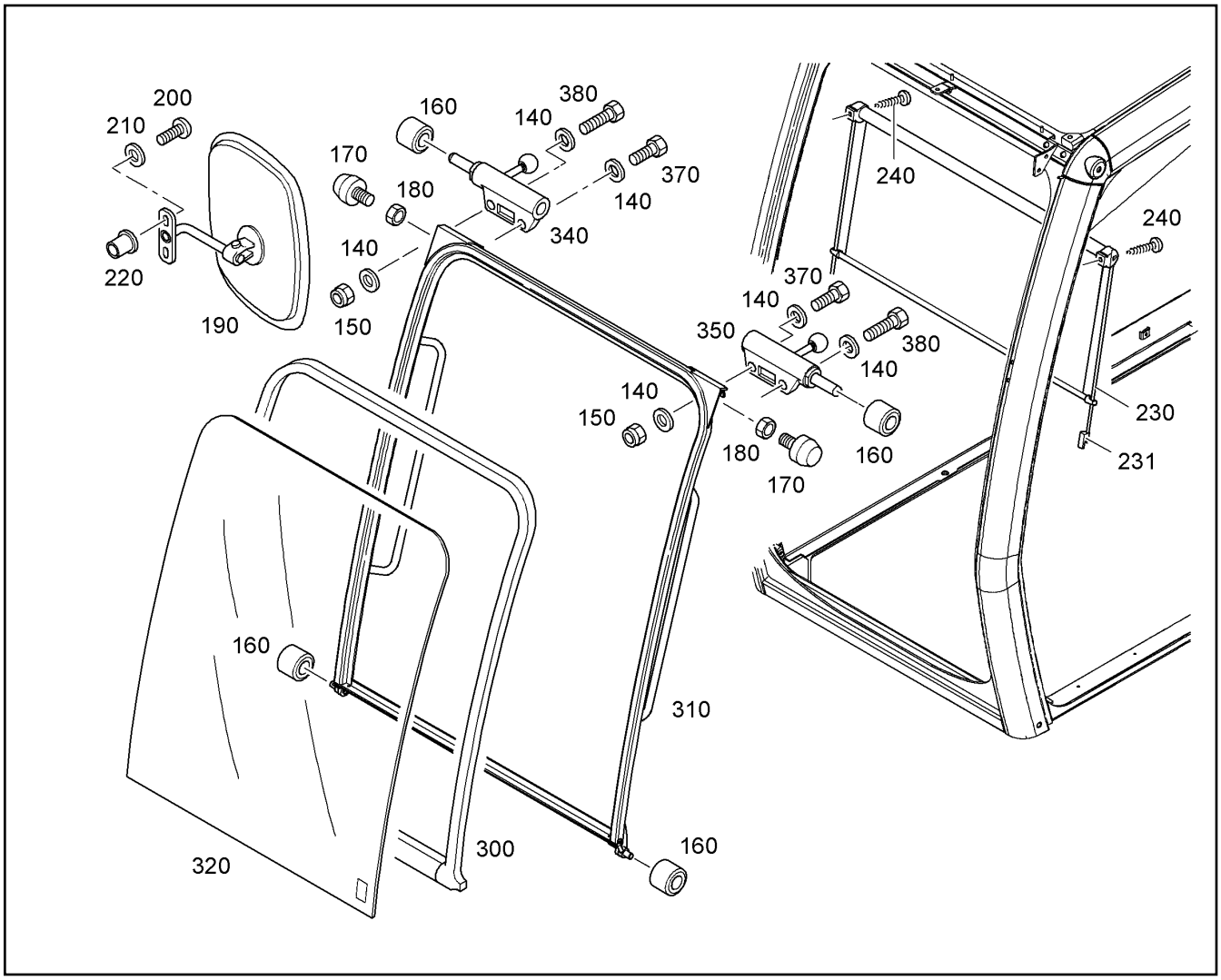


| Pos. | Item | Quantity | Description | Designação | Serie | K |
|---|---|---|---|---|---|---|
| 140 | 10289803 | 6 | WASHER ISO 7089 8 300HV | ARRUELA | | |
| 150 | 4119030 | 2 | HEX NUT M8X1 | PORCA SEXTAVADA | | |
| 160 | 7028809 | 4 | ROLLER | ROLETE | | |
| 170 | 7028810 | 2 | METALASTIC BUFFER | COXIM | | |
| 180 | 4000379 | 2 | HEX NUT M6 | PORCA SEXTAVADA | | |
| 190 | 7019142 | 1 | REAR-VIEW MIRROR | ESPELHO RETROVISOR | | |
| 200 | 4002612 | 2 | PAN-HEAD SCREW ISO 7045 M6X20 4.8 H | PARAFUSO | | |
| 210 | 10289802 | 2 | WASHER ISO 7089 6 300HV | ARRUELA | | |
| 220 | 7020610 | 2 | THREADED INSERT M6 | INSERTO DE ROSCA | | |
| 230 | 7028811 | 1 | SUNHALDE SET | KIT DE MONTAGEM DO PARA-SO | | |
| 231 | 10027438 | 2 | -HOLDER | -SUPORTE | | |
| 240 | 4002399 | 2 | SHEET-METAL SCREW ISO 7049 ST3,5X16 | PARAFUSO | | |
| 300 | 7028806 | 1 | GLAZING PROFILE | PERFIL DE ENVIDRACAMENTO | | |
| 310 | 7028804 | 1 | FRAME | MOLDURA | | |
| 320 | 7028805 | 1 | WINDOW GLASS | VIDRO | | |
| 340 | 7028807 | 1 | LOCK,RIGHT HAND<br>⇨ ❑ 412 | TRAVA DIREITA | | |
| 350 | 7028808 | 1 | LOCK,LEFT HAND<br>⇨ ❑ 413 | TRAVA ESQUERDA | | |
| 370 | 4066042 | 2 | HEX BOLT ISO 4017 M8X25 10.9 A2C | PARAFUSO SEXTAVADO | | |
| 380 | 4062002 | 2 | HEX BOLT ISO 4017 M8X30 10.9 A2C | PARAFUSO SEXTAVADO | | |

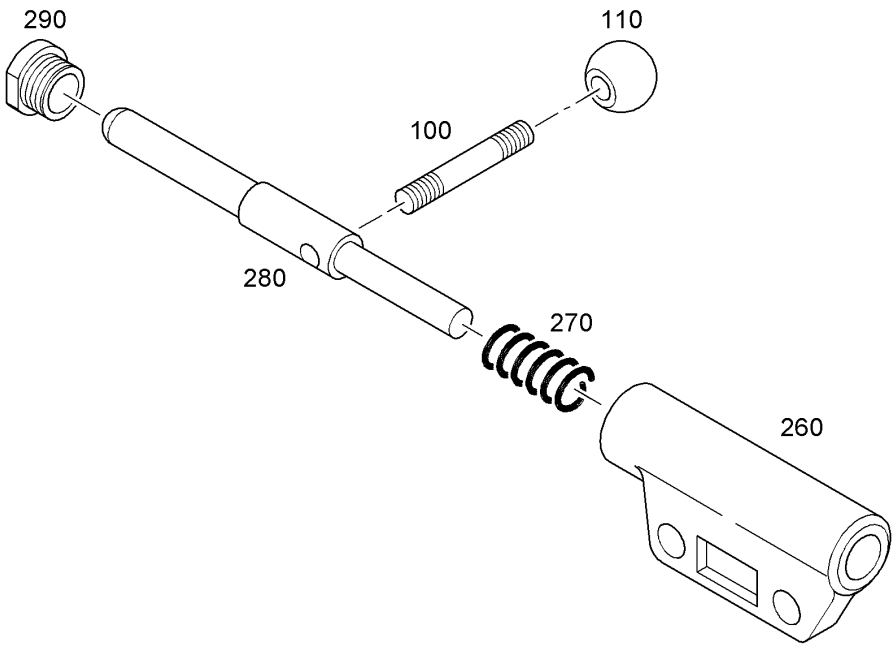


| Pos. | Item | Quantity | Description | Designação | Serie | K |
|---|---|---|---|---|---|---|
| 100 | | 1 | THREADED BAR | HASTE ROSCADA | | |
| 110 | 7028818 | 1 | SPHERICAL KNOB | BOTAO ESFERICO | | |
| 260 | | 1 | LOCKING BAR | TRAVA | | |
| 270 | | 1 | PRESSURE SPRING | MOLA DE PRESSÃO | | |
| 280 | | 1 | ROD | HASTE | | |
| 290 | | 1 | BUSHING | BUCHA | | 1 |

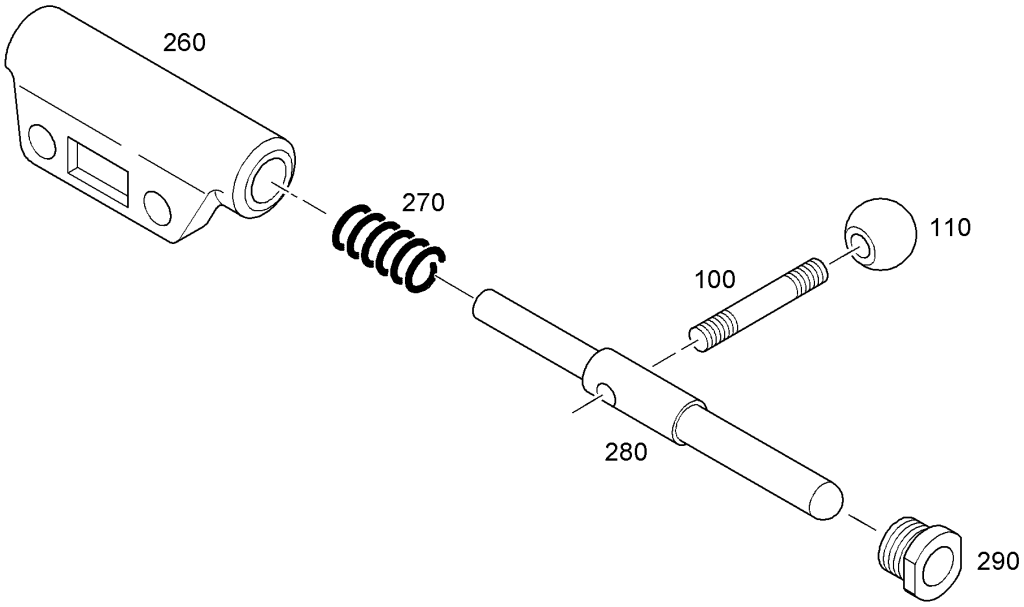


| Pos. | Item | Quantity | Description | Designação | Serie | K |
|---|---|---|---|---|---|---|
| 100 | | 1 | THREADED BAR | HASTE ROSCADA | | |
| 110 | 7019167 | 1 | SPHERICAL KNOB | BOTAO ESFERICO | | |
| 260 | | 1 | LOCKING BAR | TRAVA | | |
| 270 | | 1 | PRESSURE SPRING | MOLA DE PRESSÃO | | |
| 280 | | 1 | ROD | HASTE | | |
| 290 | | 1 | BUSHING | BUCHA | | 1 |

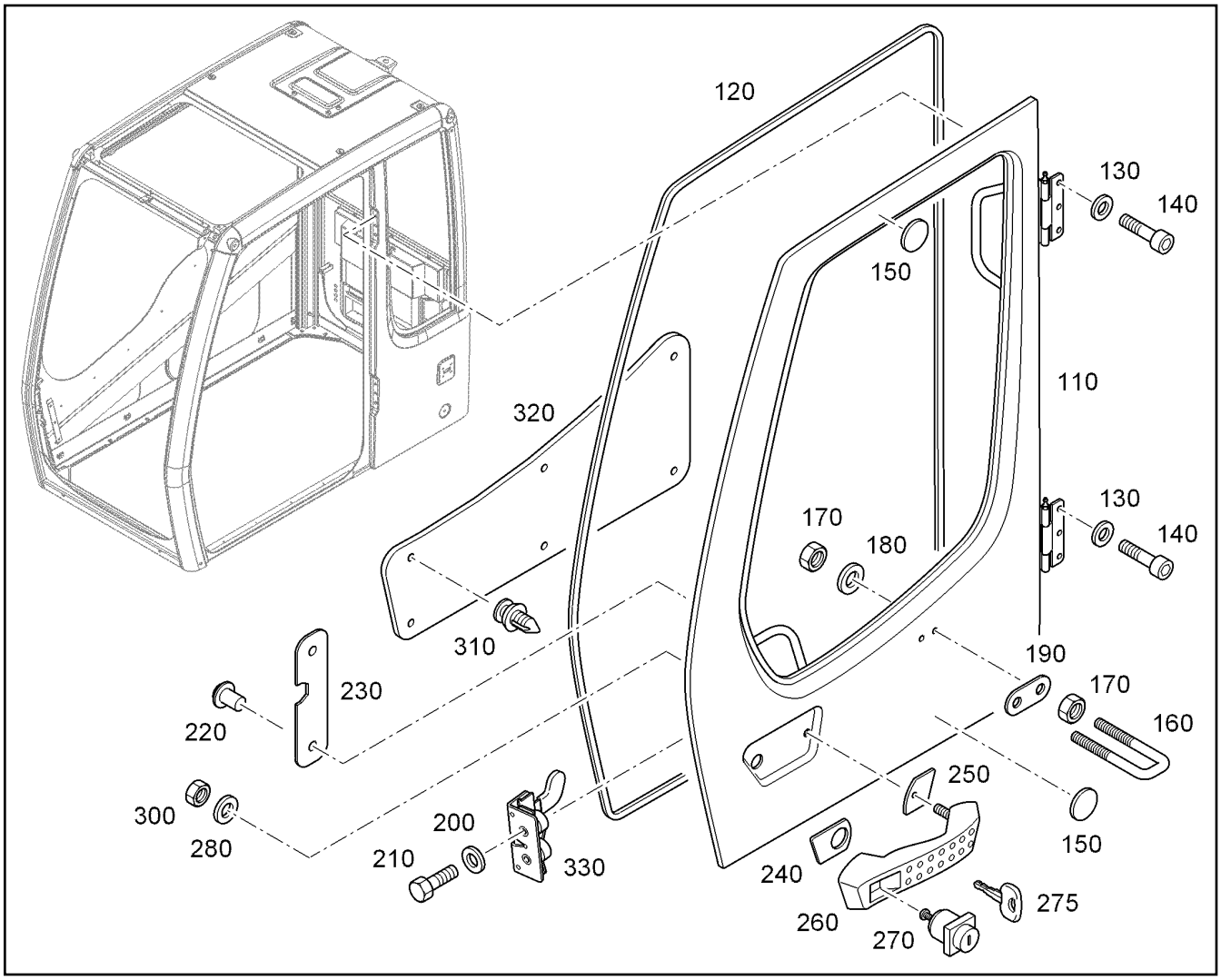


| Pos. | Item | Quantity | Description | Designação | Serie | K |
|---|---|---|---|---|---|---|
| 110 | 7028842 | 1 | DOOR FRAME<br>⇨ ❑ 416 | MARCO DA PORTA | | |
| 120 | 10009014 | 1 | SEAL | VEDAÇÃO | | |
| 130 | 10289795 | 6 | WASHER ISO 7089 10 300HV | ARRUELA | | |
| 140 | 4043000 | 6 | CYLINDER SCREW ISO 4762 M10X30 10.9 | PARAFUSO CILÍNDRICO | | |
| 150 | 7019801 | 2 | WASHER | ARRUELA | | |
| 160 | 7028838 | 1 | BRACKET | ESTRIBO | | |
| 170 | 4000381 | 4 | HEX NUT M8 | PORCA SEXTAVADA | | |
| 180 | 10289803 | 2 | WASHER ISO 7089 8 300HV | ARRUELA | | |
| 190 | 7028839 | 1 | SHEET | PLACA | | |
| 200 | 10289803 | 2 | WASHER ISO 7089 8 300HV | ARRUELA | | |
| 210 | 4066042 | 2 | HEX BOLT ISO 4017 M8X25 10.9 A2C | PARAFUSO SEXTAVADO | | |
| 220 | 7024438 | 2 | BODY-BOUND RIVET | REBITE EXPANSIVO | | |
| 230 | 7028836 | 1 | LID | TAMPA | | |
| 240 | 7019154 | 1 | SEAL | VEDAÇÃO | | |
| 250 | 7019155 | 1 | SEAL | VEDAÇÃO | | |
| 260 | 7019153 | 1 | GRIP | MAÇANETA | | |
| 270 | 7019156 | 1 | PUSHER | BOTÃO | | |
| 275 | 10221073 | 1 | IGNITION KEY | CHAVE DE IGNICAO | | |
| 280 | 10289802 | 1 | WASHER ISO 7089 6 300HV | ARRUELA | | |
| 300 | 4000379 | 1 | HEX NUT M6 | PORCA SEXTAVADA | | |
| 310 | 7029433 | 6 | BLIND RIVET | REBITE CEGO | | |
| 320 | 7028837 | 1 | PANELLING | REVESTIMENTO | | |
| 330 | 7028833 | 1 | LOCK | FECHADURA | | |

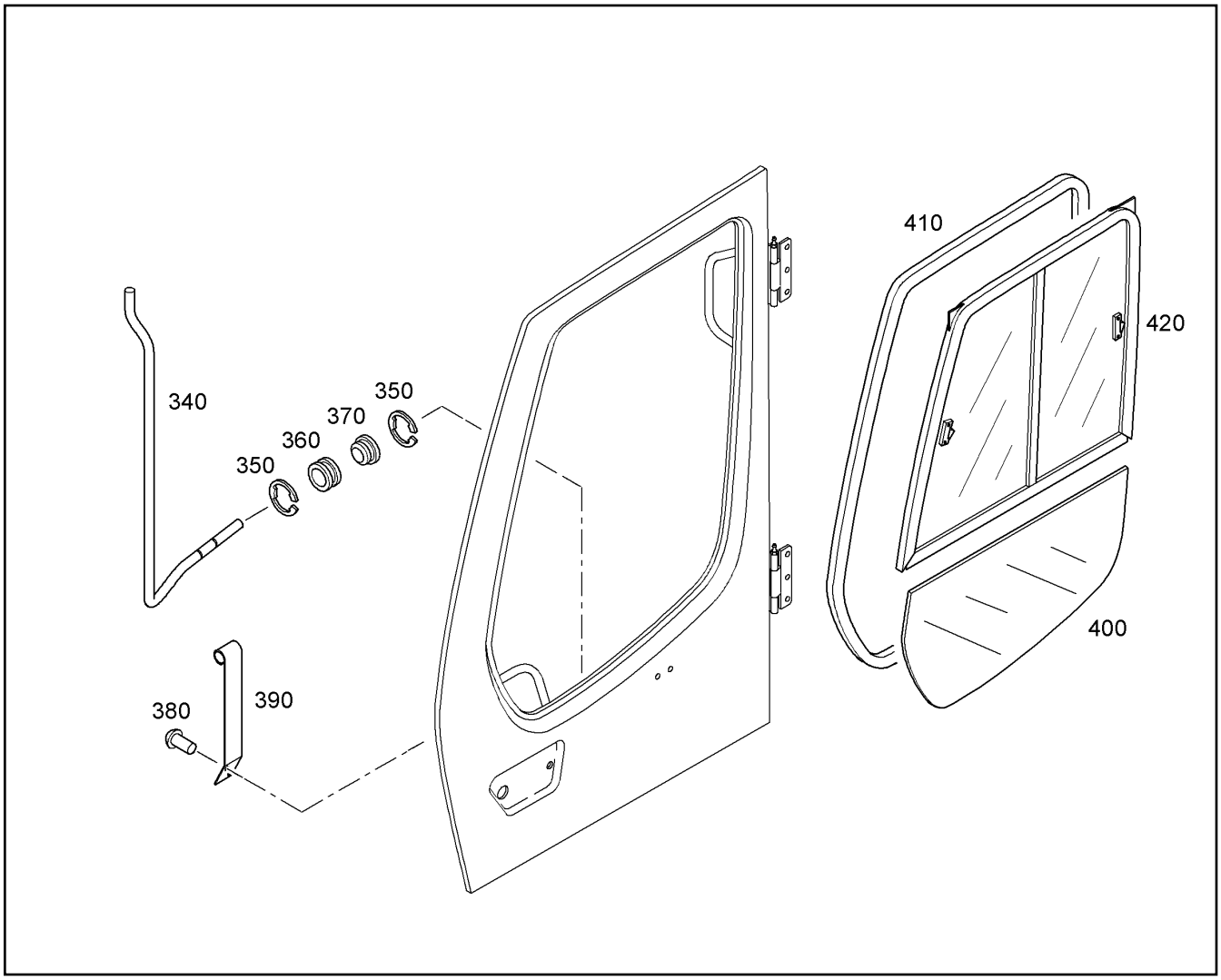


| Pos. | Item | Quantity | Description | Designação | Serie | K |
|---|---|---|---|---|---|---|
| 340 | 7028834 | 1 | ROD | HASTE | | |
| 350 | 7019794 | 2 | LOCKING RING | ANEL DE RETENÇÃO | | |
| 360 | 7019160 | 1 | SPOUT 6/10/13 | LUVA | | |
| 370 | 7020613 | 1 | SPOUT | LUVA | | |
| 380 | 7020612 | 2 | RIVET | REBITE | | |
| 390 | 7028835 | 1 | SPRING | MOLA | | |
| 400 | 7028830 | 1 | WINDOW GLASS | VIDRO | | |
| 410 | 7028832 | 1 | SEAL | VEDAÇÃO | | |
| 420 | 7028831 | 1 | SLIDING WINDOW | VIDRO CORREDICO | | |
| | | | ⇨ ❑ 417 | | | |

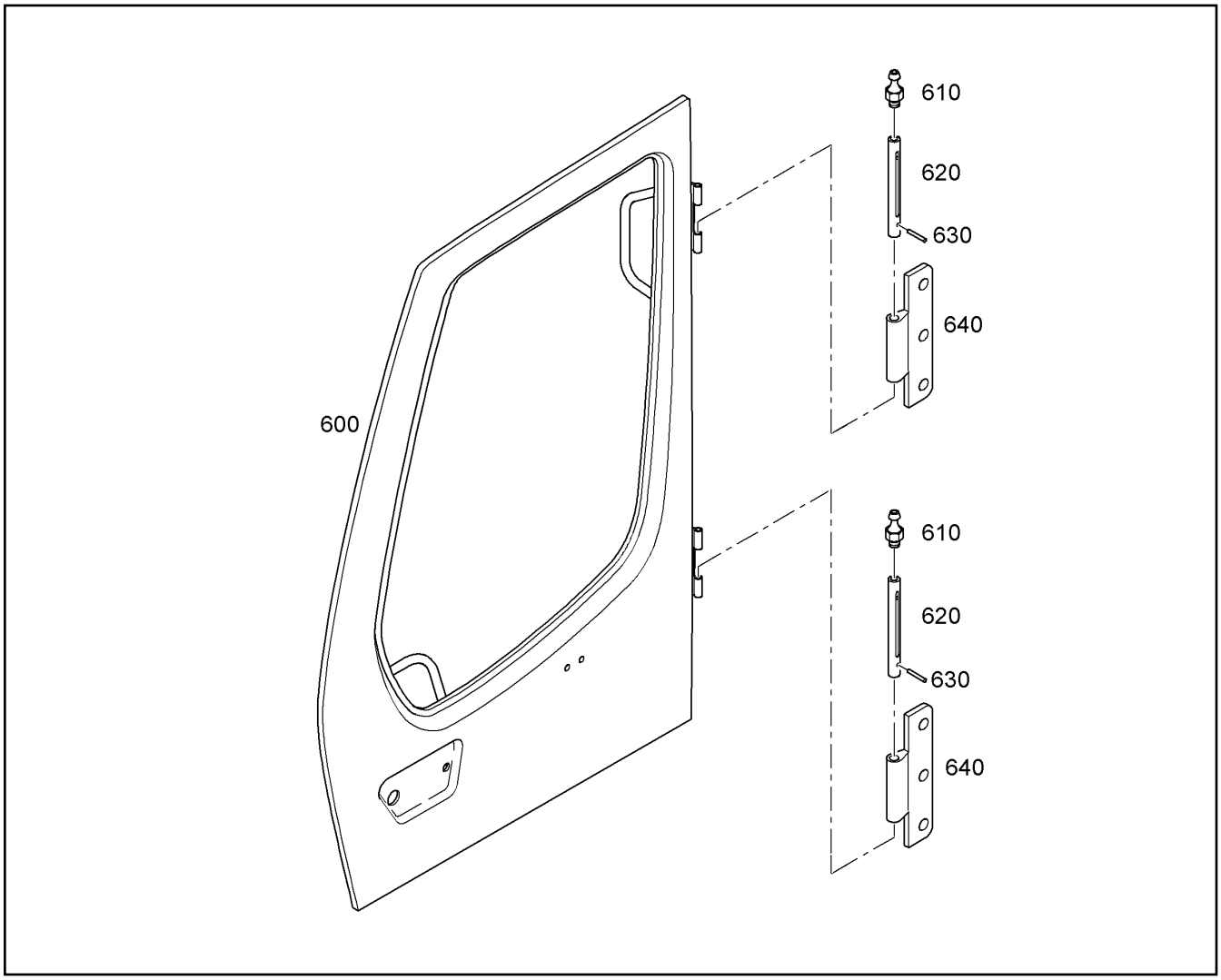


| Pos. | Item | Quantity | Description | Designação | Serie | K |
|---|---|---|---|---|---|---|
| 600 | 7028782 | 1 | FRAME | MOLDURA | | |
| 610 | 7743245 | 2 | HYDRAULIC-TYPE LUBRICATING NIPDIN 7 | NIPLE DE LUBRIFICACAO CONIC | | |
| 620 | 7028840 | 2 | PIN | PINO | | 1 |
| 630 | 4900372 | 2 | DOWEL PIN ISO 8752 A 3 X 20 ST | PINO ELÁSTICO | | |
| 640 | 7029409 | 2 | HINGE | DOBRADICA | | |

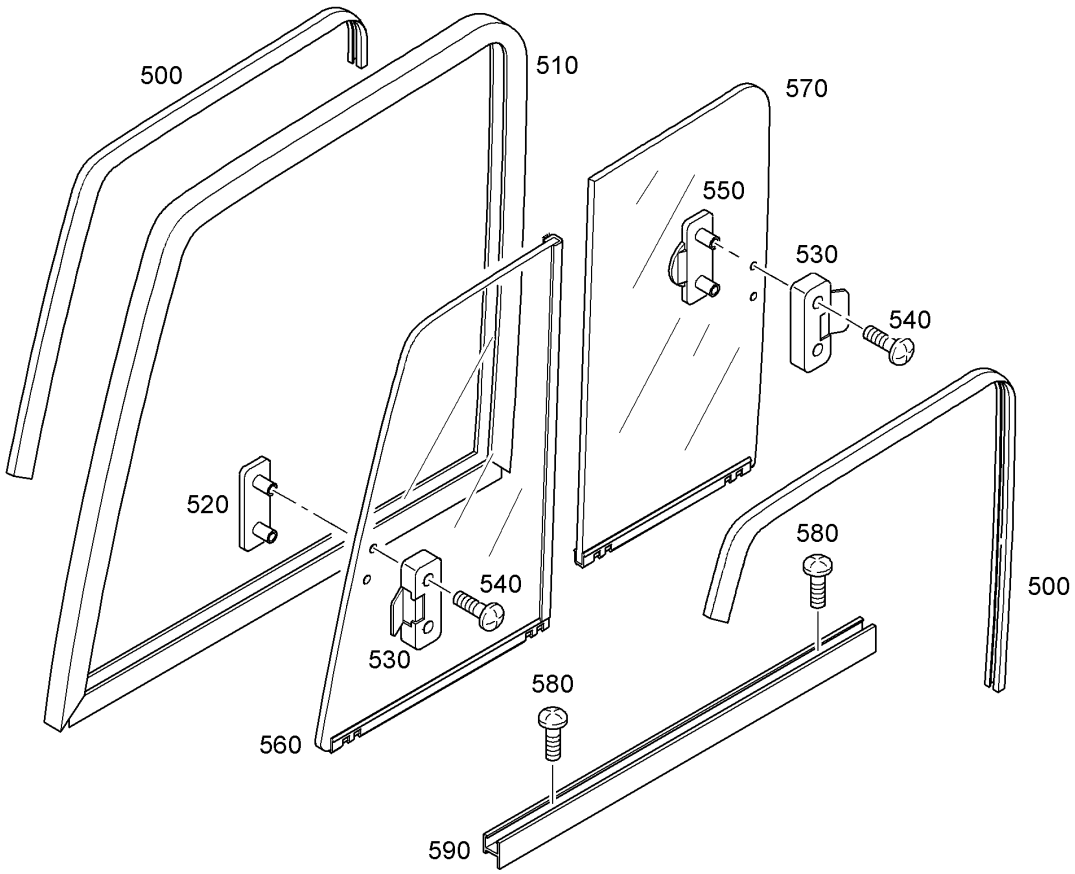


| Pos. | Item | Quantity | Description | Designação | Serie | K |
|---|---|---|---|---|---|---|
| 500 | 7029418 | 2 | SEAL | VEDAÇÃO | | |
| 510 | | 1 | FRAME | MOLDURA | | |
| 520 | 7029420 | 1 | SHEET | PLACA | | |
| 530 | 7029421 | 2 | GRIP | MAÇANETA | | |
| 540 | 4601376 | 4 | COUNTERSUNK SCREW ISO 7047 M5X30 4. | PARAFUSO ESCAREADO | | |
| 550 | 7029422 | 1 | SHEET | PLACA | | |
| 560 | 7029423 | 1 | GLASS PANE FRONT<br>⇨ ❑ 418 | VIDRO DIANTEIRO | | |
| 570 | 7029424 | 1 | GLASS PANE BEHIND<br>⇨ ❑ 419 | VIDRO TRASEIRO | | |
| 580 | 4901473 | 2 | COUNTERSUNK SCREW ISO 7047 M4X6 4.8 | PARAFUSO ESCAREADO | | |
| 590 | 7029425 | 1 | PROFILE | PERFIL | | |

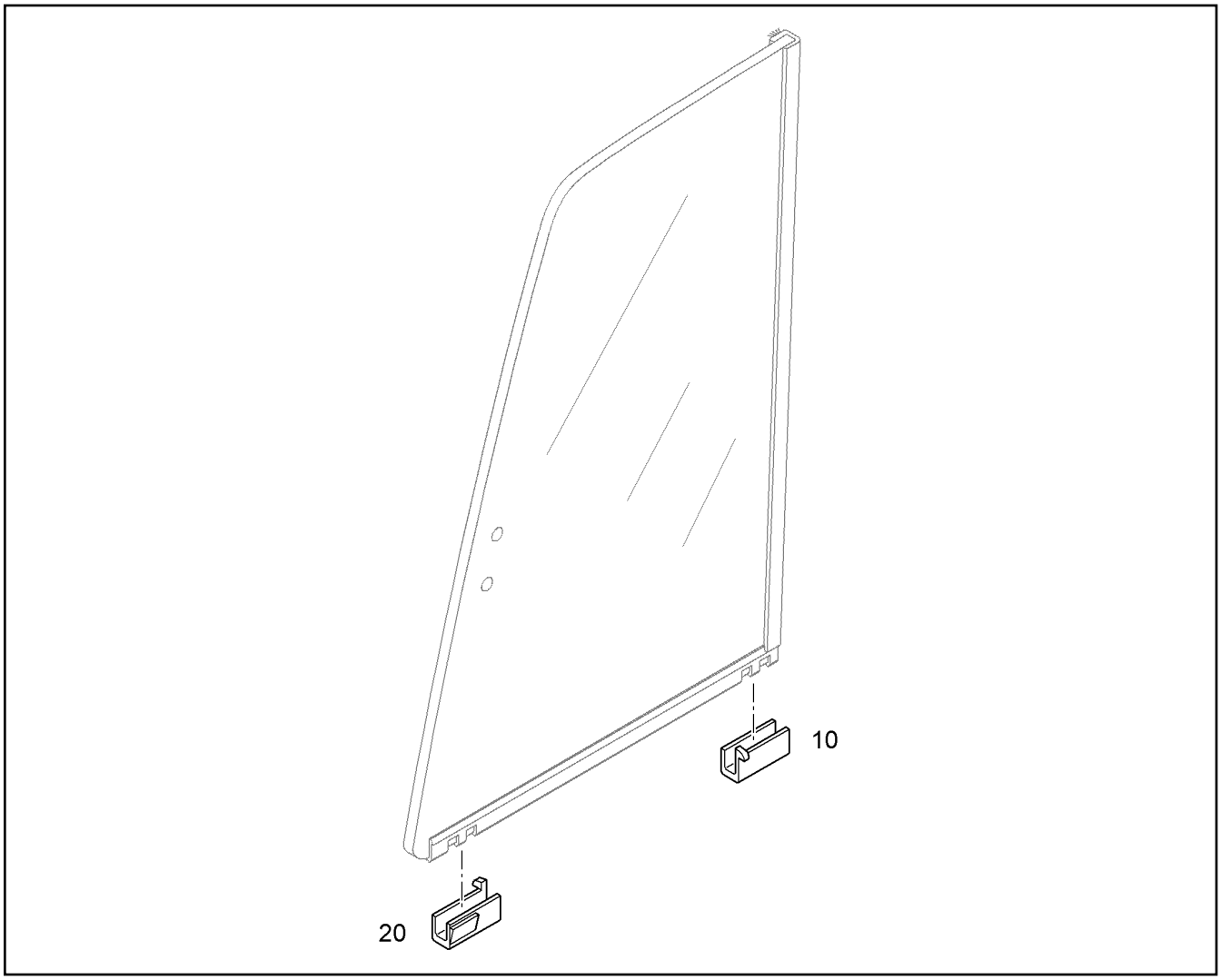


| Pos. | Item | Quantity | Description | Designação | Serie | K |
|---|---|---|---|---|---|---|
| 10 | 10423838 | 1 | END PIECE | PECA FINAL | | |
| 20 | 10423840 | 1 | END PIECE | PECA FINAL | | |

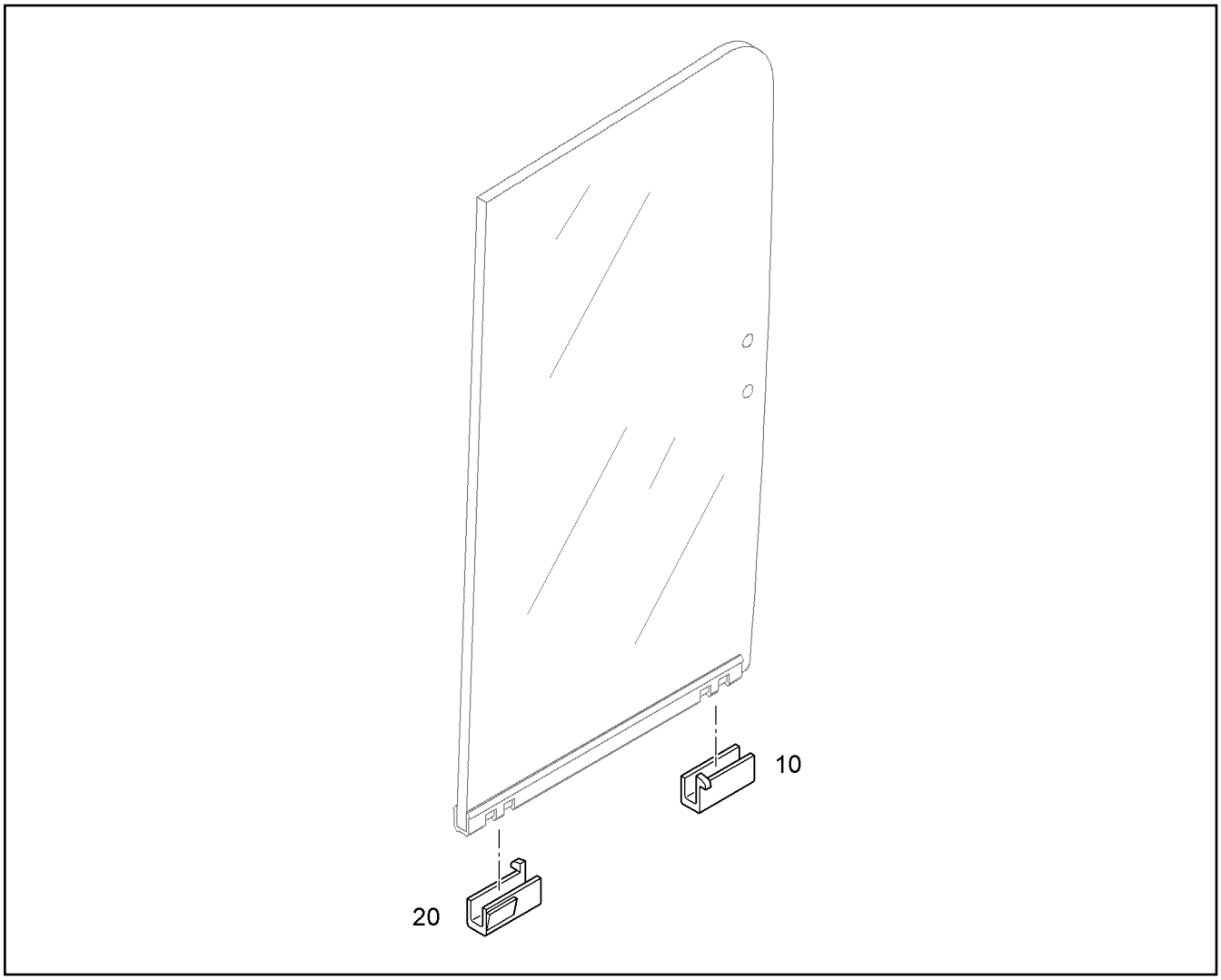


| Pos. | Item | Quantity | Description | Designação | Serie | K |
|---|---|---|---|---|---|---|
| 10 | 10423838 | 1 | END PIECE | PECA FINAL | | |
| 20 | 10423840 | 1 | END PIECE | PECA FINAL | | |

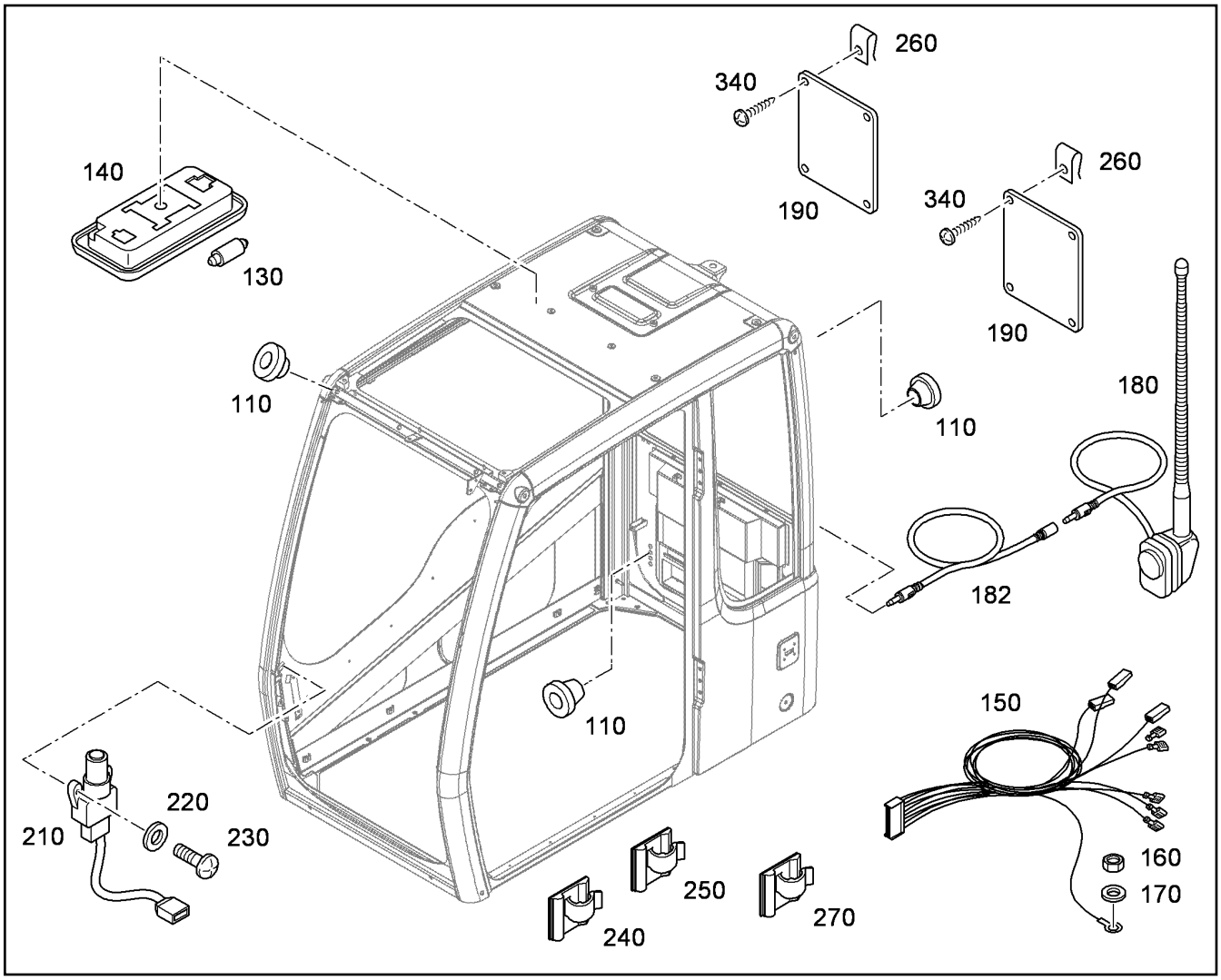


| Pos. | Item | Quantity | Description | Designação | Serie | K |
|---|---|---|---|---|---|---|
| 110 | 7019171 | 10 | SPOUT 5/16/20 | LUVA | | |
| 130 | 6000167 | 1 | LIGHT BULB DIN 72601 K 24V 10 W | LÂMPADA INCANDESCENTE | | |
| 140 | 10428776 | 1 | LIGHT | LUMINÁRIA | | |
| 150 | 10488089 | 1 | WIRE HARNESS - CABIN | CHICOTE ELETRICO DA CABINE | | |
| 160 | 4000381 | 1 | HEX NUT M8 | PORCA SEXTAVADA | | |
| 170 | 7028855 | 1 | TOOTH LOCK WASHER | ARRUELA DENTADA | | |
| 180 | 6001556 | 1 | ANTENNA | ANTENA | | |
| 182 | 10488090 | 1 | ANTENNA CABLE | CABO DE ANTENA | | |
| 190 | 7020608 | 2 | LID | TAMPA | | |
| 210 | 7028856 | 1 | SWITCH | INTERRUPTOR | | |
| 220 | 4001645 | 2 | WASHER ISO 7089 4 200HV | ARRUELA | | |
| 230 | 408311008 | 2 | PAN-HEAD SCREW ISO 7045 M4X14 4.8 H | PARAFUSO | | |
| 240 | 7028768 | 9 | HOLDER | SUPORTE | | |
| 250 | 7028812 | 11 | HOLDER | SUPORTE | | |
| 260 | 10009079 | 8 | SHEET METAL NUT | PORCA DE CHAPA | | |
| 270 | 10009023 | 2 | HOLDER | SUPORTE | | |
| 340 | 4601386 | 8 | SHEET-METAL SCREW ISO 7049 ST3,5X16 | PARAFUSO | | |

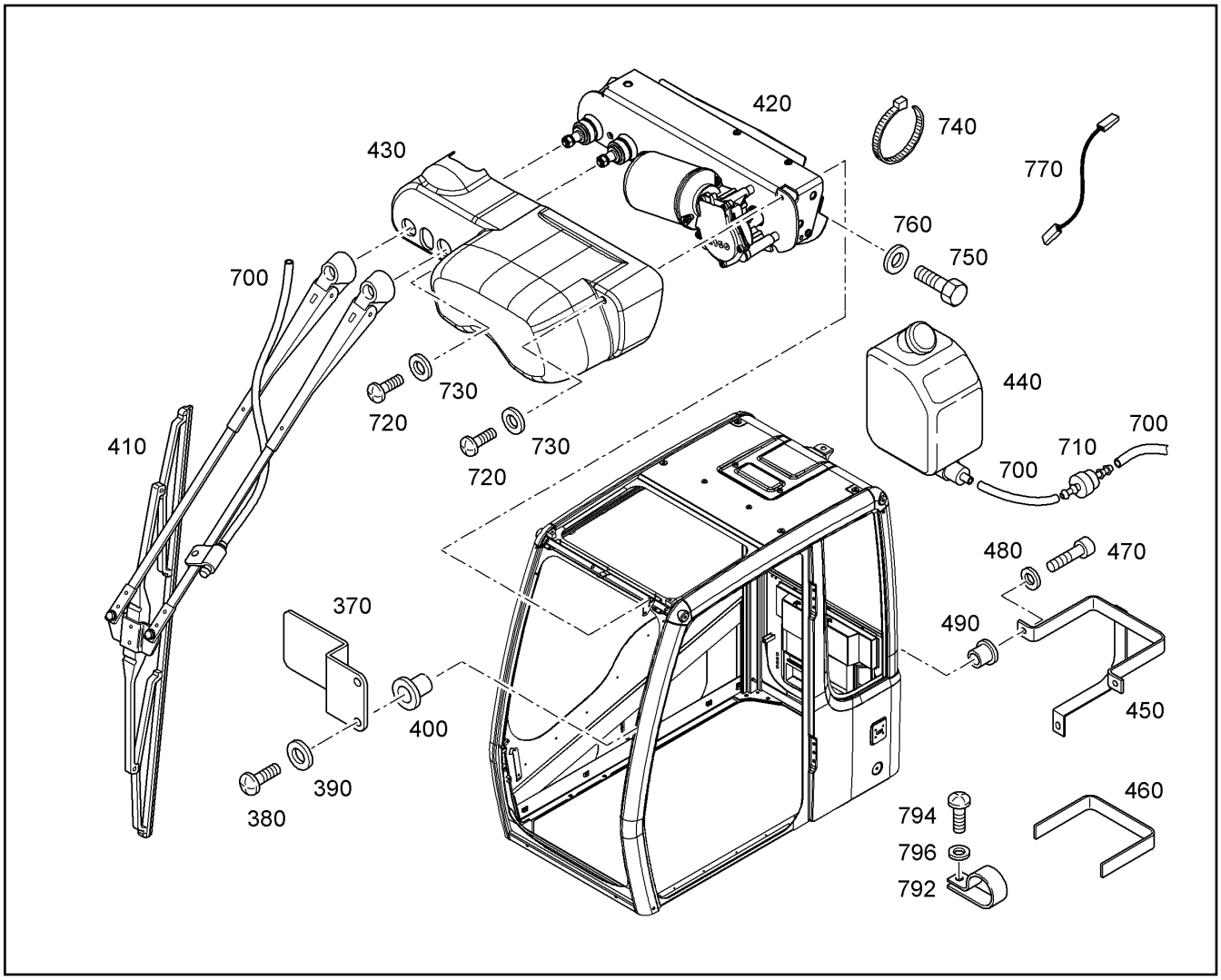


| Pos. | Item | Quantity | Description | Designação | Serie | K |
|---|---|---|---|---|---|---|
| 370 | 7028870 | 1 | SHEET | PLACA | | |
| 380 | 4002612 | 2 | PAN-HEAD SCREW ISO 7045 M6X20 4.8 H | PARAFUSO | | |
| 390 | 10289802 | 2 | WASHER ISO 7089 6 300HV | ARRUELA | | |
| 400 | 7028765 | 2 | THREADED INSERT | INSERTO DE ROSCA | | |
| 410 | | 1 | WINDSHIELD WIPER<br>⇨ ❑ 425 | LIMPADOR DE PÁRA-BRISA | | 1 |
| 420 | | 1 | WIPPER MOTOR SET<br>⇨ ❑ 423 | KIT DO MOTOR DO LIMPADOR | | |
| 430 | 10290262 | 1 | LID | TAMPA | | |
| 440 | 5618664 | 1 | WATER BASIN<br>⇨ ❑ 424 | RESERVATORIO DE AGUA | | |
| 450 | 7028872 | 1 | BRACKET | ESTRIBO | | |
| 460 | 7024455 | 1 | SEAL | VEDAÇÃO | | |
| 470 | 4600079 | 3 | CYLINDER SCREW ISO 4762 M8x20 8.8 A2C | PARAFUSO CILÍNDRICO | | |
| 480 | 10289803 | 3 | WASHER ISO 7089 8 300HV | ARRUELA | | |
| 490 | 10044343 | 3 | THREADED INSERT | INSERTO DE ROSCA | | |
| 700 | 6200461 | 6m | HOSE | MANGUEIRA | | 1 |
| 710 | 7017201 | 1 | NON-RETURN VALVE | VALVULA DE RETENCAO | | |
| 720 | 4600723 | 2 | PAN-HEAD SCREW ISO 7045 M6X16 4.8 H | PARAFUSO | | |
| 730 | 10289802 | 2 | WASHER ISO 7089 6 300HV | ARRUELA | | |
| 740 | 7028864 | 8 | TIE WRAP | AMARRA PARA CABOS | | |
| 750 | 4000704 | 3 | HEX BOLT ISO 4017 M8X20 10.9 A2C | PARAFUSO SEXTAVADO | | |
| 760 | 10289803 | 3 | WASHER ISO 7089 8 300HV | ARRUELA | | |
| 770 | 10009024 | 1 | EARTH CABLE | CABO MASSA | | |
| 792 | 10044344 | 1 | CABLE CLIP | BRAÇADEIRA DE CABOS | | |
| 794 | 4002308 | 1 | PAN-HEAD SCREW ISO 7045 M6X12 4.8 H | PARAFUSO | | |

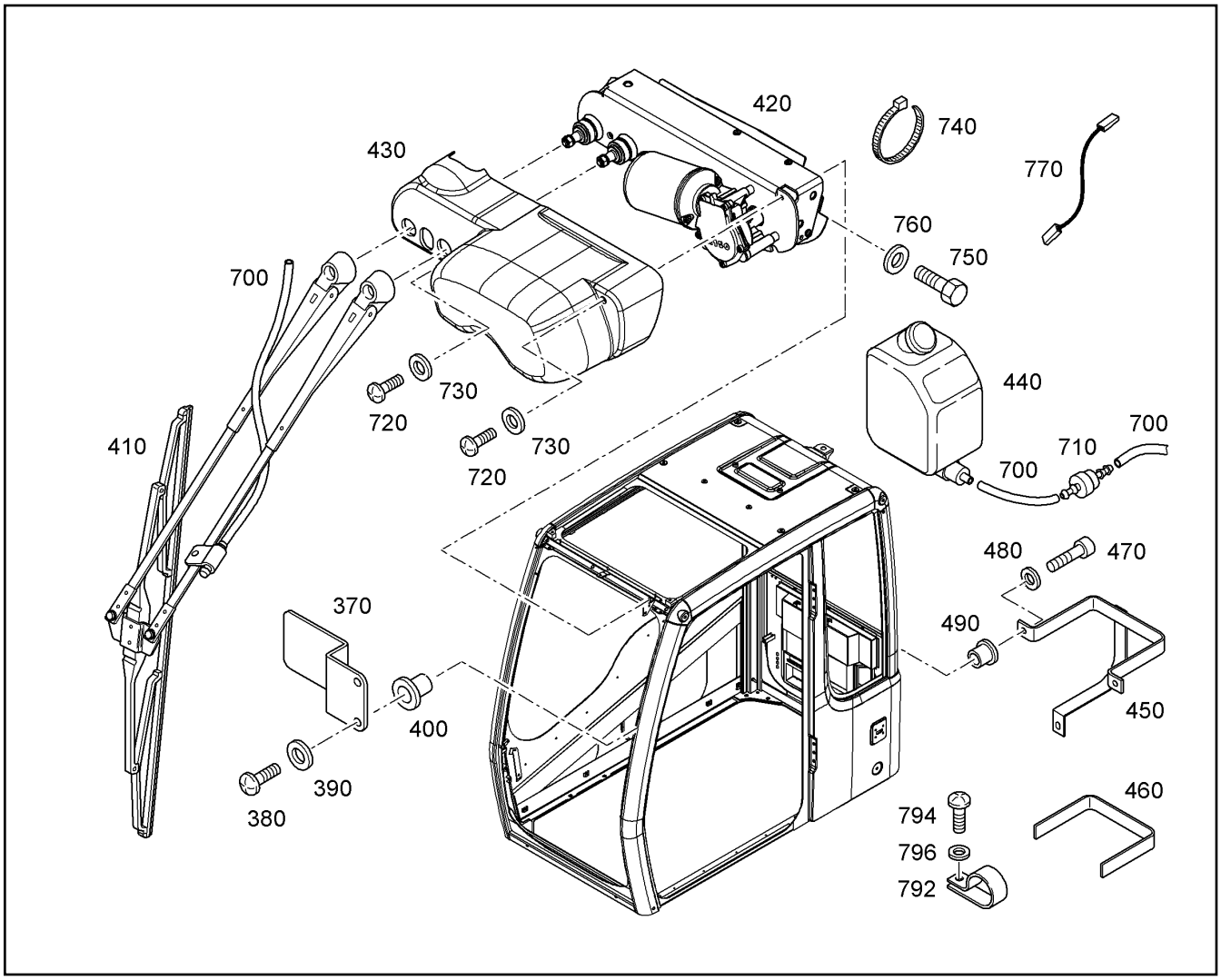


| Pos. | Item | Quantity | Description | Designação | Serie | K |
|---|---|---|---|---|---|---|
| 796 | 10289802 | 1 | WASHER ISO 7089 6 300HV | ARRUELA | | |

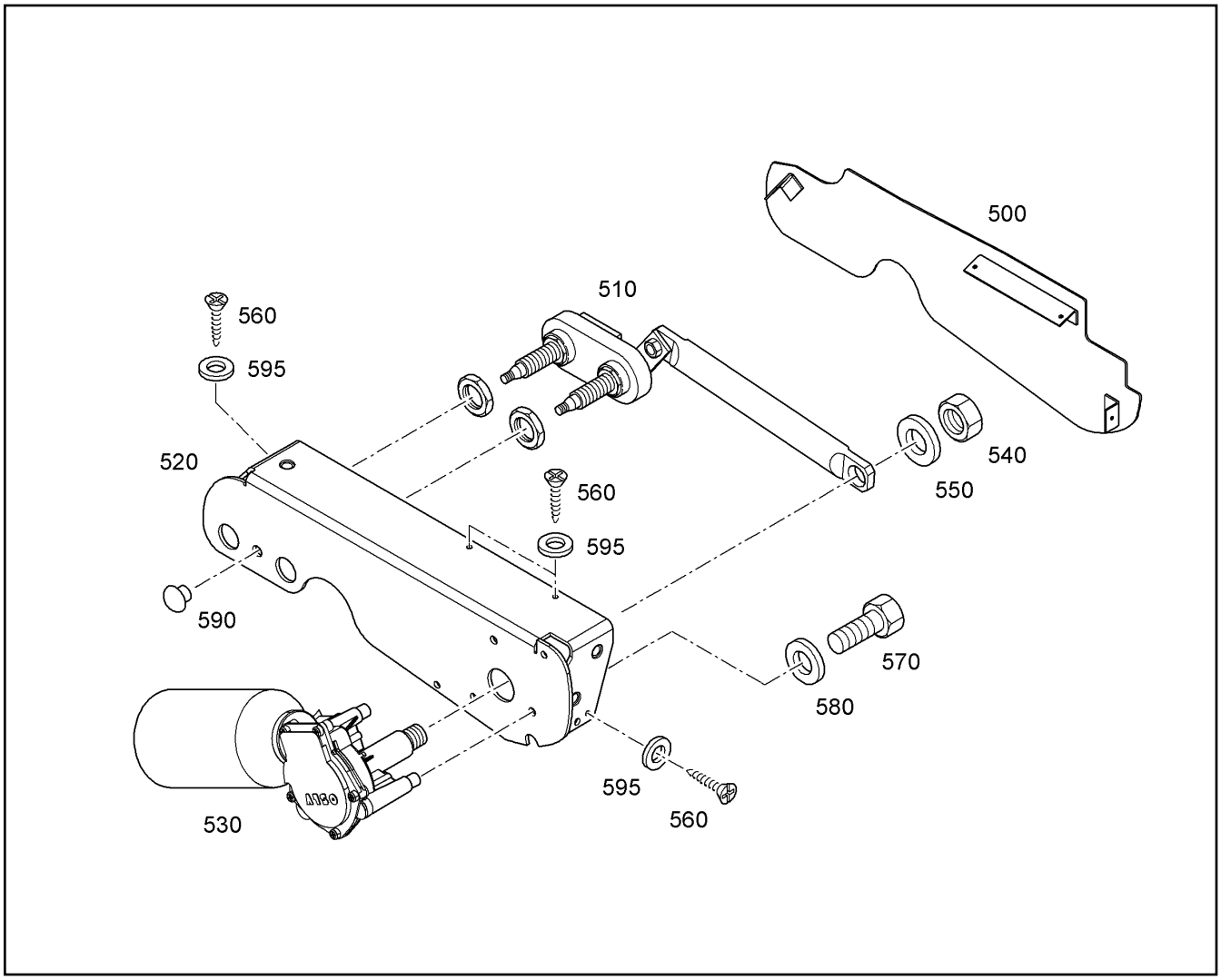


| Pos. | Item | Quantity | Description | Designação | Serie | K |
|---|---|---|---|---|---|---|
| 500 | 10290263 | 1 | LID | TAMPA | | |
| 510 | 10290346 | 1 | GEARBOX | REDUTOR | | 2 |
| 520 | 10290356 | 1 | SHEET | PLACA | | |
| 530 | 10290398 | 1 | WIPER MOTOR | MOTOR DO LIMPADOR | | |
| 540 | 4000381 | 1 | HEX NUT M8 | PORCA SEXTAVADA | | |
| 550 | 10289803 | 1 | WASHER ISO 7089 8 300HV | ARRUELA | | |
| 560 | 10216104 | 4 | SHEET-METAL SCREW ISO 7050 ST3,5X9,5 | PARAFUSO | | |
| 570 | 4065099 | 3 | HEX BOLT ISO 4017 M6x16 8.8 A2C | PARAFUSO SEXTAVADO | | |
| 580 | 10289802 | 3 | WASHER ISO 7089 6 300HV | ARRUELA | | |
| 590 | 10291063 | 1 | STOP PLUG | PLUGUE DE FECHAMENTO | | |
| 595 | 4001645 | 4 | WASHER ISO 7089 4 200HV | ARRUELA | | |

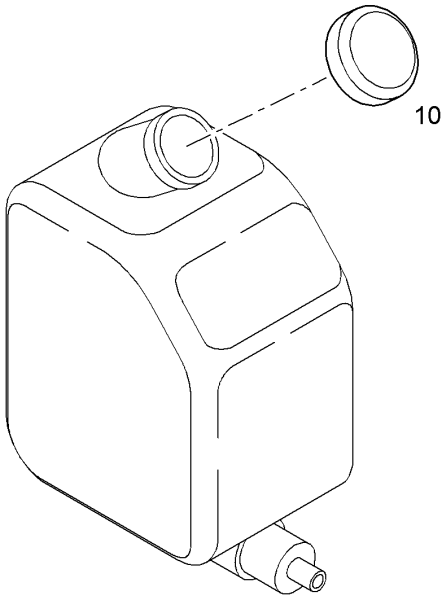


| Pos. | Item | Quantity | Description | Designação | Serie | K |
|---|---|---|---|---|---|---|
| 10 | 7025845 | 1 | LID | TAMPA | | |

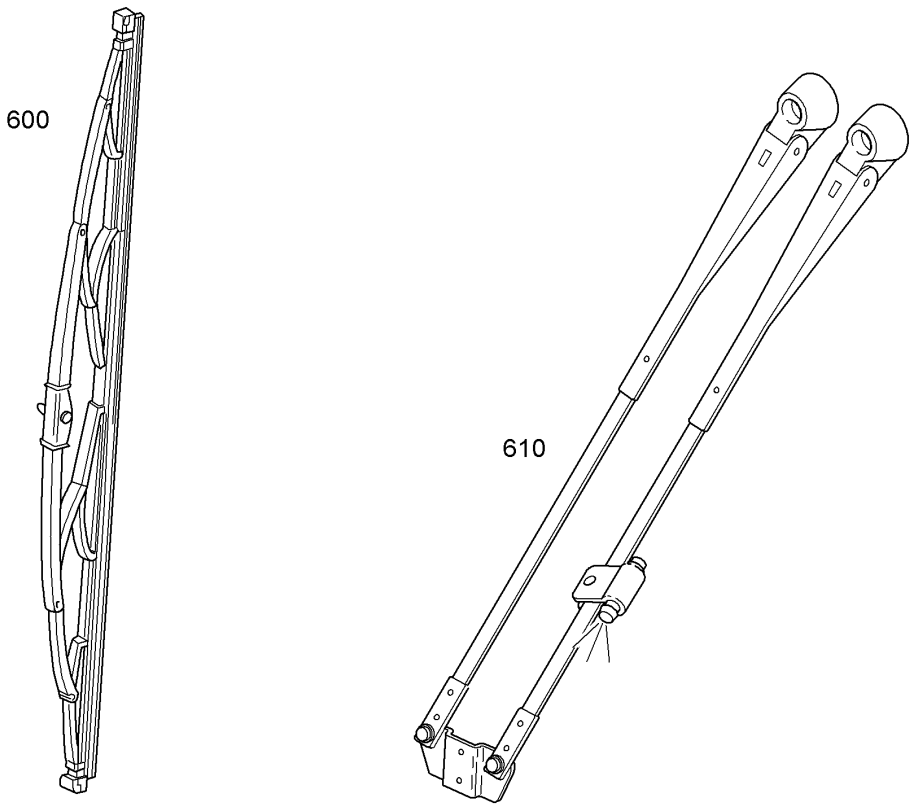


| Pos. | Item | Quantity | Description | Designação | Serie | K |
|---|---|---|---|---|---|---|
| 600 | 7028869 | 1 | WIPER BLADE 800 | PALHETA DO LIMPADOR | | 1 |
| 610 | 10290361 | 1 | WIPER ARM<br>⇨ ❑ 426 | BRACO DO LIMPADOR | | |

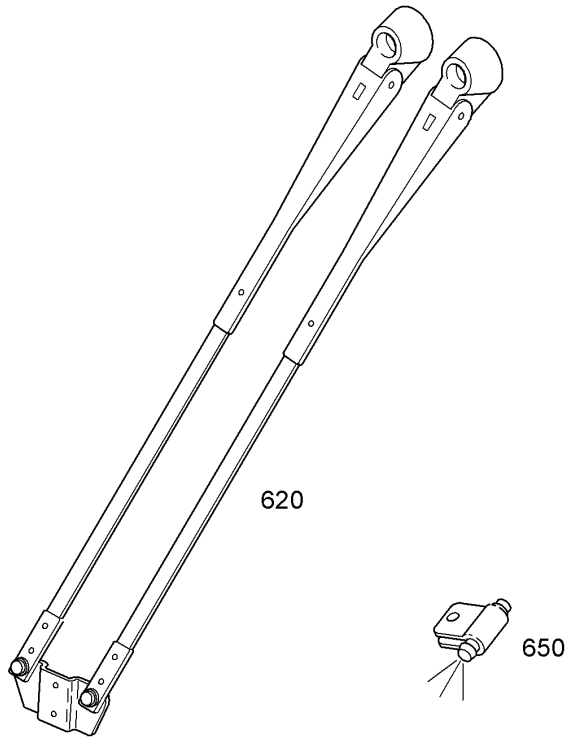


| Pos. | Item | Quantity | Description | Designação | Serie | K |
|---|---|---|---|---|---|---|
| 620 | 10290360 | 1 | WIPER ARM | BRACO DO LIMPADOR | | |
| 650 | 7028867 | 1 | SPRAY NOZZLE | ESGUICHO DO LIMPADOR | | |

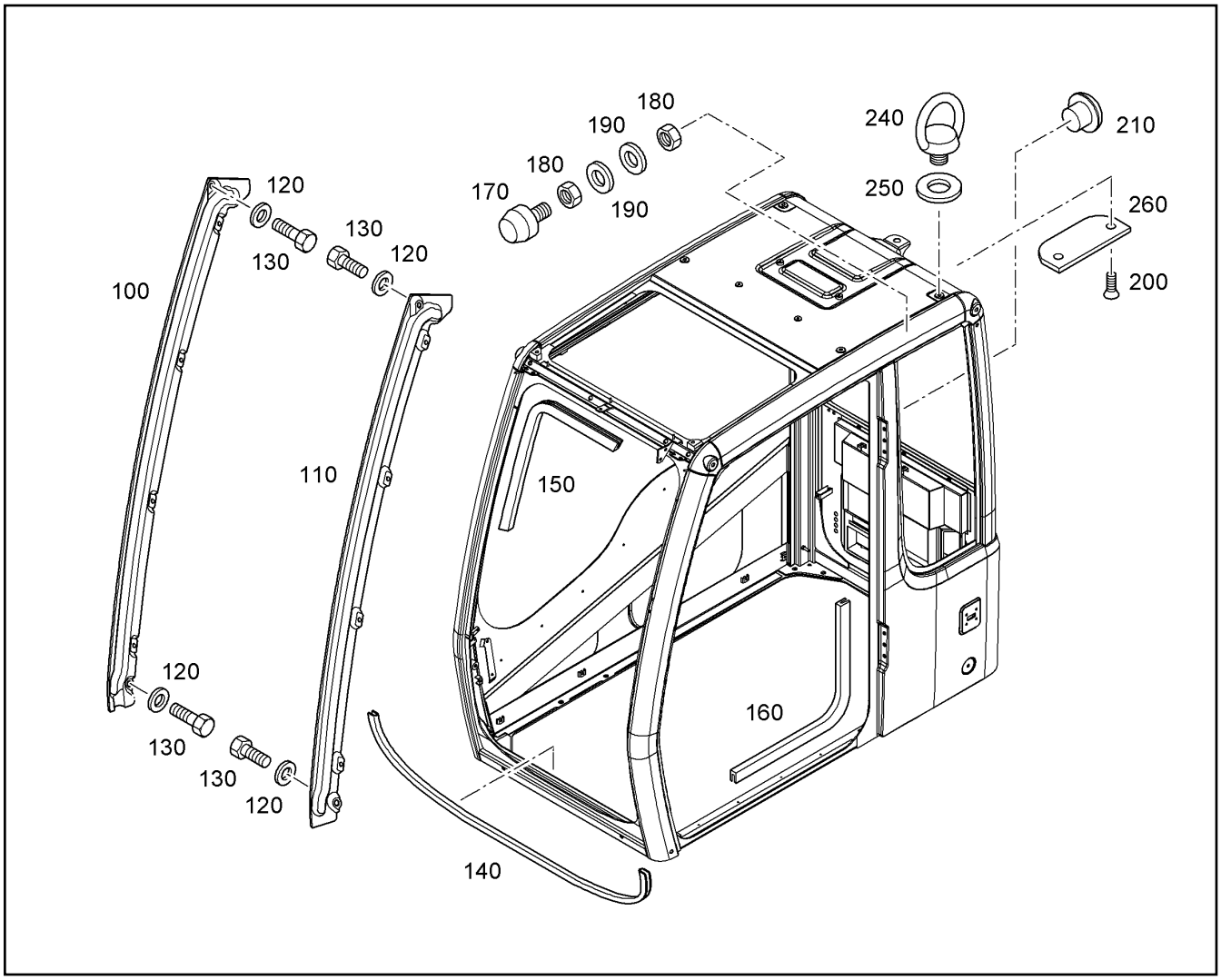


| Pos. | Item | Quantity | Description | Designação | Serie | K |
|---|---|---|---|---|---|---|
| 100 | 7028894 | 1 | GUIDE | GUIA | | |
| 110 | 7028893 | 1 | GUIDE | GUIA | | |
| 120 | 10289803 | 4 | WASHER ISO 7089 8 300HV | ARRUELA | | |
| 130 | 4002534 | 4 | HEX BOLT ISO 4017 M8X14 8.8 A2C | PARAFUSO SEXTAVADO | | |
| 140 | 7028891 | 1 | SEAL | VEDAÇÃO | | |
| 150 | 7028890 | 1 | SEAL | VEDAÇÃO | | |
| 160 | 7028892 | 1 | SEAL | VEDAÇÃO | | |
| 170 | 7028810 | 2 | METALASTIC BUFFER | COXIM | | |
| 180 | 4000381 | 4 | HEX NUT M8 | PORCA SEXTAVADA | | |
| 190 | 10289803 | 4 | WASHER ISO 7089 8 300HV | ARRUELA | | |
| 200 | 4002850 | 2 | COUNTERSUNK SCREW DIN 7991 M5X8 8.8 | PARAFUSO ESCAREADO | | |
| 210 | 10044354 | 2 | STOP PLUG | PLUGUE DE FECHAMENTO | | |
| 240 | 7028912 | 4 | EYELET | OLHAL | | |
| 250 | 10289804 | 4 | WASHER ISO 7089 12 300HV | ARRUELA | | |
| 260 | 7028895 | 1 | SHEET | PLACA | | |

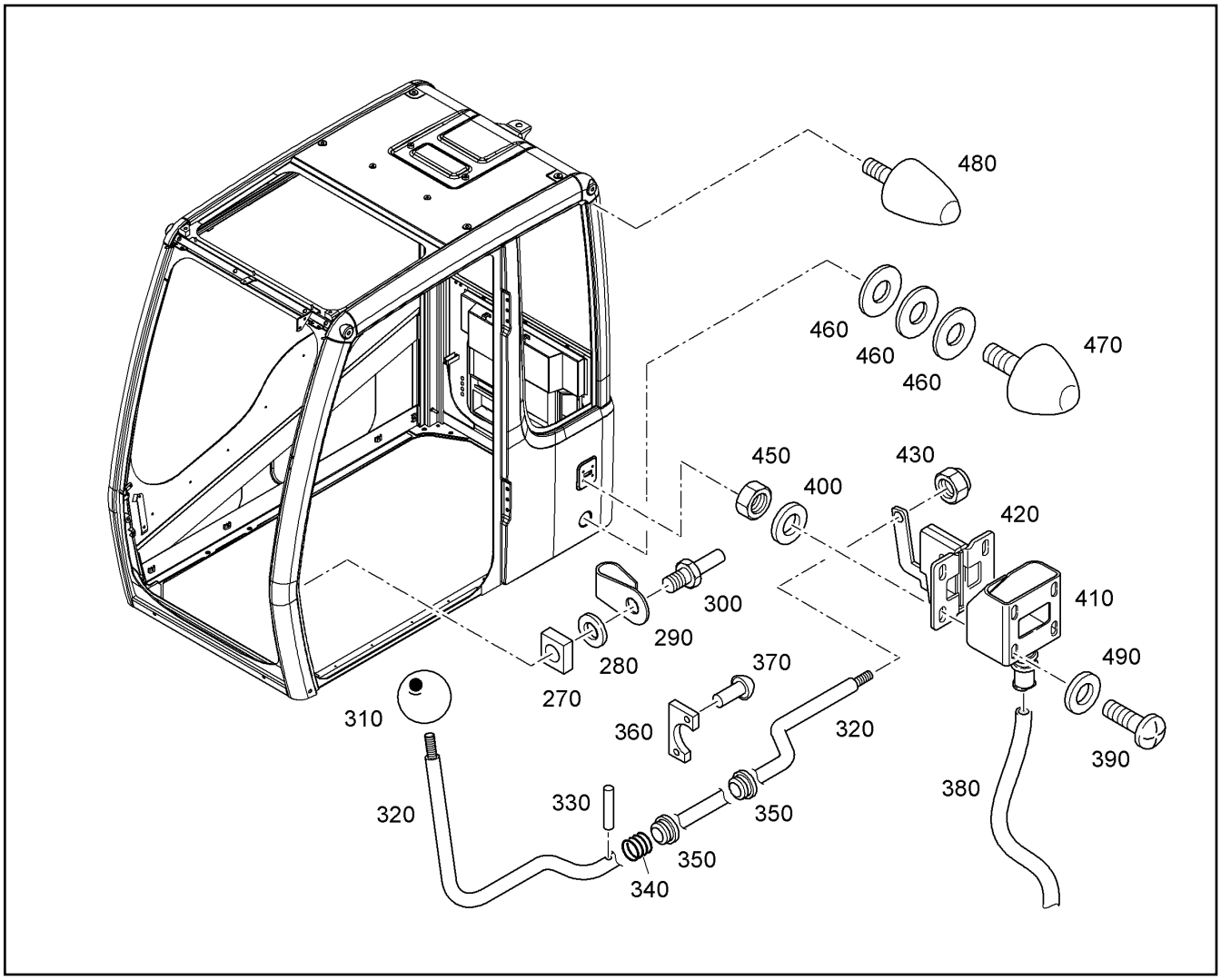


| Pos. | Item | Quantity | Description | Designação | Serie | K |
|---|---|---|---|---|---|---|
| 270 | 7028898 | 1 | SHEET 10X20X25 | PLACA | | |
| 280 | 10289804 | 1 | WASHER ISO 7089 12 300HV | ARRUELA | | |
| 290 | 9408711 | 1 | BRACKET | PROTECAO | | |
| 300 | 7028896 | 1 | CLOSING PIN | PINO DE FECHAMENTO | | 1 |
| 310 | 7019167 | 1 | SPHERICAL KNOB | BOTAO ESFERICO | | |
| 320 | 7028919 | 1 | LEVER | ALAVANCA | | |
| 330 | 4900372 | 1 | DOWEL PIN ISO 8752 A 3 X 20 ST | PINO ELÁSTICO | | |
| 340 | 7028901 | 1 | SPRING | MOLA | | |
| 350 | 7019122 | 2 | BUSHING | BUCHA | | 1 |
| 360 | 7020611 | 2 | SHEET 3X20X37 | PLACA | | |
| 370 | 7020612 | 4 | RIVET | REBITE | | |
| 380 | 7028899 | 1 | PLASTIC TUBE | TUBO DE PLASTICO | | |
| 390 | 4002612 | 4 | PAN-HEAD SCREW ISO 7045 M6X20 4.8 H | PARAFUSO | | |
| 400 | 10289802 | 8 | WASHER ISO 7089 6 300HV | ARRUELA | | |
| 410 | 7019165 | 1 | PROTECTING CAP | CAPA DE PROTECAO | | |
| 420 | 7019164 | 1 | DOOR STOPPER | LIMITADOR DA PORTA | | |
| 430 | 4600783 | 1 | HEX NUT M8 | PORCA SEXTAVADA | | |
| 450 | 4000379 | 4 | HEX NUT M6 | PORCA SEXTAVADA | | |
| 460 | 10013965 | 2 | WASHER | ARRUELA | | |
| 470 | 7019129 | 1 | METALASTIC BUFFER | COXIM | | |
| 480 | 7021047 | 1 | METALASTIC BUFFER | COXIM | | |
| 490 | 10289802 | 4 | WASHER ISO 7089 6 300HV | ARRUELA | | |

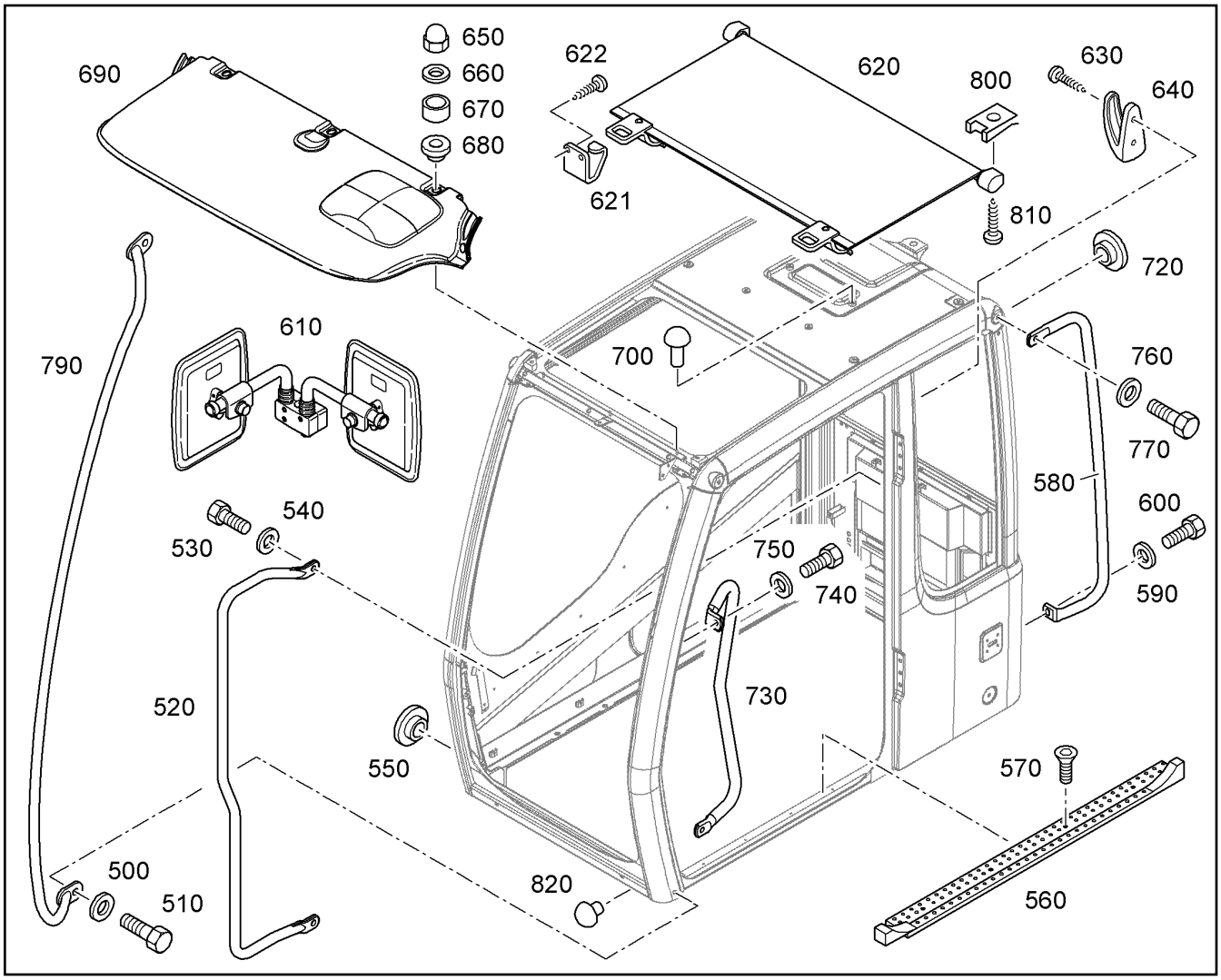


| Pos. | Item | Quantity | Description | Designação | Serie | K |
|---|---|---|---|---|---|---|
| 500 | 10289804 | 2 | WASHER ISO 7089 12 300HV | ARRUELA | | |
| 510 | 4600184 | 2 | HEX BOLT ISO 4017 M12X25 10.9 A3C | PARAFUSO SEXTAVADO | | |
| 520 | 10490894 | 1 | HANDLE | MAÇANETA | | |
| 530 | 4066098 | 2 | HEX BOLT ISO 4017 M10X30 10.9 A3C | PARAFUSO SEXTAVADO | | |
| 540 | 10289795 | 2 | WASHER ISO 7089 10 300HV | ARRUELA | | |
| 550 | 10220397 | 7 | STOP PLUG GPN 350 | PLUGUE DE FECHAMENTO | | |
| 560 | 7028910 | 1 | PROTECTION GUARD | CHAPA DE PROTECAO | | |
| 570 | 240127002 | 3 | COUNTERSUNK SCREW DIN 7991 M6X12 8. | PARAFUSO ESCAREADO | | |
| 580 | 10298669 | 1 | HANDLE BEHIND | MACANETA TRAZEIRA | | |
| 590 | 10289795 | 1 | WASHER ISO 7089 10 300HV | ARRUELA | | |
| 600 | 4001696 | 1 | HEX BOLT ISO 4017 M10X20 10.9 A3C | PARAFUSO SEXTAVADO | | |
| 610 | 10044353 | 1 | OUTSIDE MIRROR<br>⇨ ❑ 431 | ESPELHO EXTERNO | | |
| 620 | 7028909 | 1 | SUNHALDE SET | KIT DE MONTAGEM DO PARA-SO | | |
| 621 | 10039678 | 2 | HOLDER | SUPORTE | | |
| 622 | 408252101 | 4 | SHEET-METAL SCREW ISO 7049 ST2,9X6,5 | PARAFUSO | | |
| 630 | 10035322 | 2 | SHEET-METAL SCREW ISO 7050 ST3,5X13 S | PARAFUSO | | |
| 640 | 7019131 | 1 | COAT HOOK | CABIDE | | |
| 650 | 7028908 | 5 | CAP NUT | PORCA DE COBERTURA | | |
| 660 | 10220138 | 5 | WASHER | ARRUELA | | |
| 670 | 7028907 | 5 | SPACER BUSH | BUCHA DISTANCIADORA | | 1 |
| 680 | 7028906 | 5 | SPOUT | LUVA | | |
| 690 | 10020982 | 1 | CAB ROOF | AVANCO DO TETO DA CABINE | | |
| 700 | 7020615 | 6 | STOP PLUG | PLUGUE DE FECHAMENTO | | |
| 720 | 7020616 | 1 | STOP PLUG | PLUGUE DE FECHAMENTO | | |
| 730 | 10009025 | 1 | HANDLE | MAÇANETA | | |

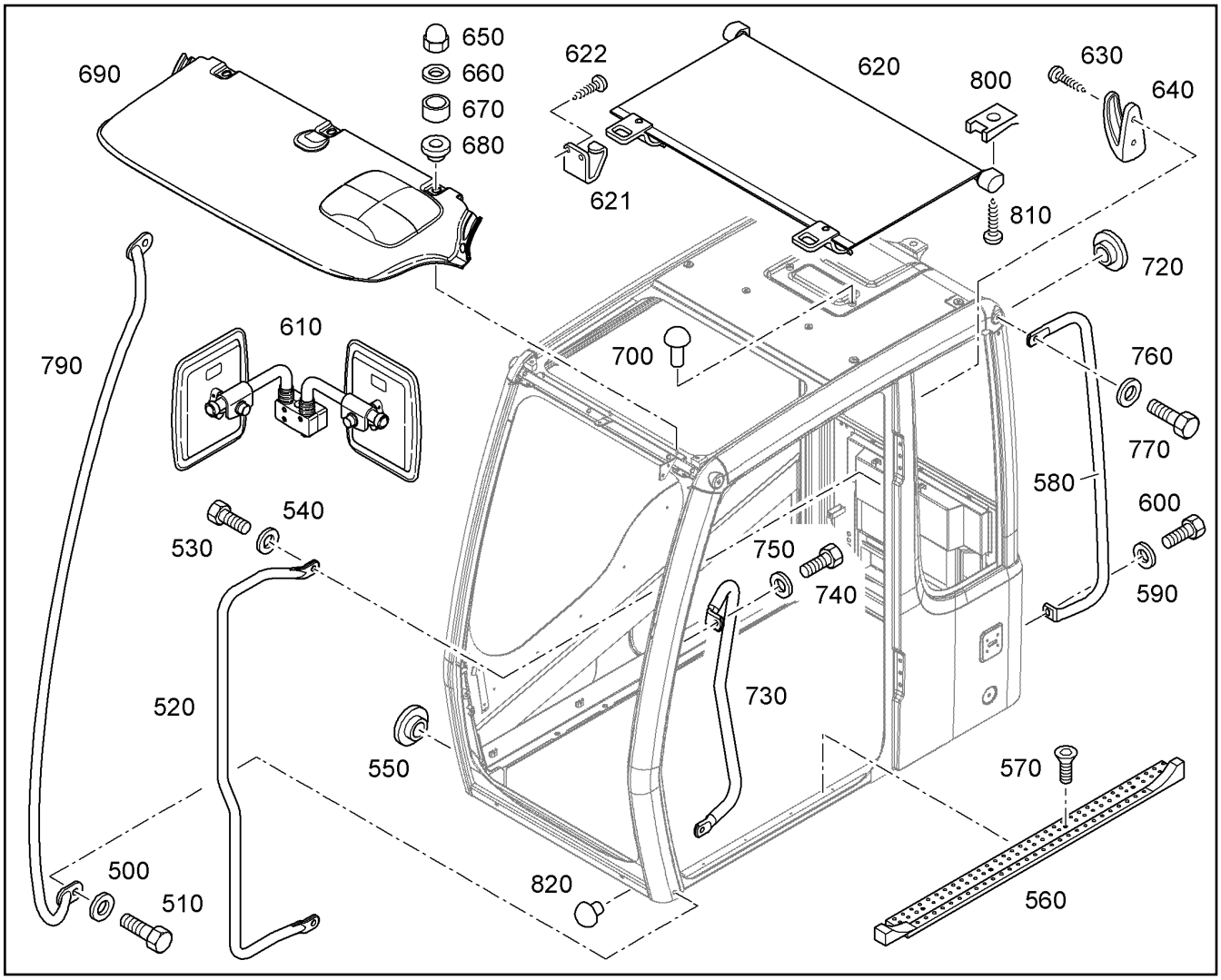


| Pos. | Item | Quantity | Description | Designação | Serie | K |
|---|---|---|---|---|---|---|
| 740 | 4066098 | 2 | HEX BOLT ISO 4017 M10X30 10.9 A3C | PARAFUSO SEXTAVADO | | |
| 750 | 10289795 | 2 | WASHER ISO 7089 10 300HV | ARRUELA | | |
| 760 | 10289804 | 1 | WASHER ISO 7089 12 300HV | ARRUELA | | |
| 770 | 4066122 | 1 | HEX BOLT ISO 4017 M12X35 10.9 A3C | PARAFUSO SEXTAVADO | | |
| 790 | 10291064 | 1 | HANDLE | MAÇANETA | | |
| 800 | 10290260 | 2 | SHEET METAL NUT | PORCA DE CHAPA | | |
| 810 | 10220139 | 2 | SHEET-METAL SCREW ISO 7049 ST4,2X22 | PARAFUSO | | |
| 820 | 10000286 | 2 | STOP PLUG | PLUGUE DE FECHAMENTO | | |

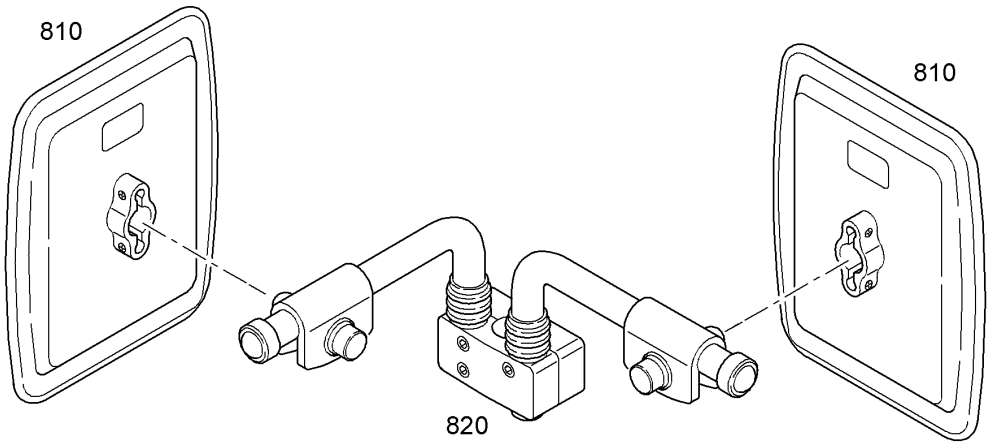


| Pos. | Item | Quantity | Description | Designação | Serie | K |
|---|---|---|---|---|---|---|
| 810 | 7019140 | 2 | OUTSIDE MIRROR 243X155 | ESPELHO EXTERNO | | |
| 820 | 7019141 | 1 | MIRROR SUPPORT | BRACO DO ESPELHO | | |

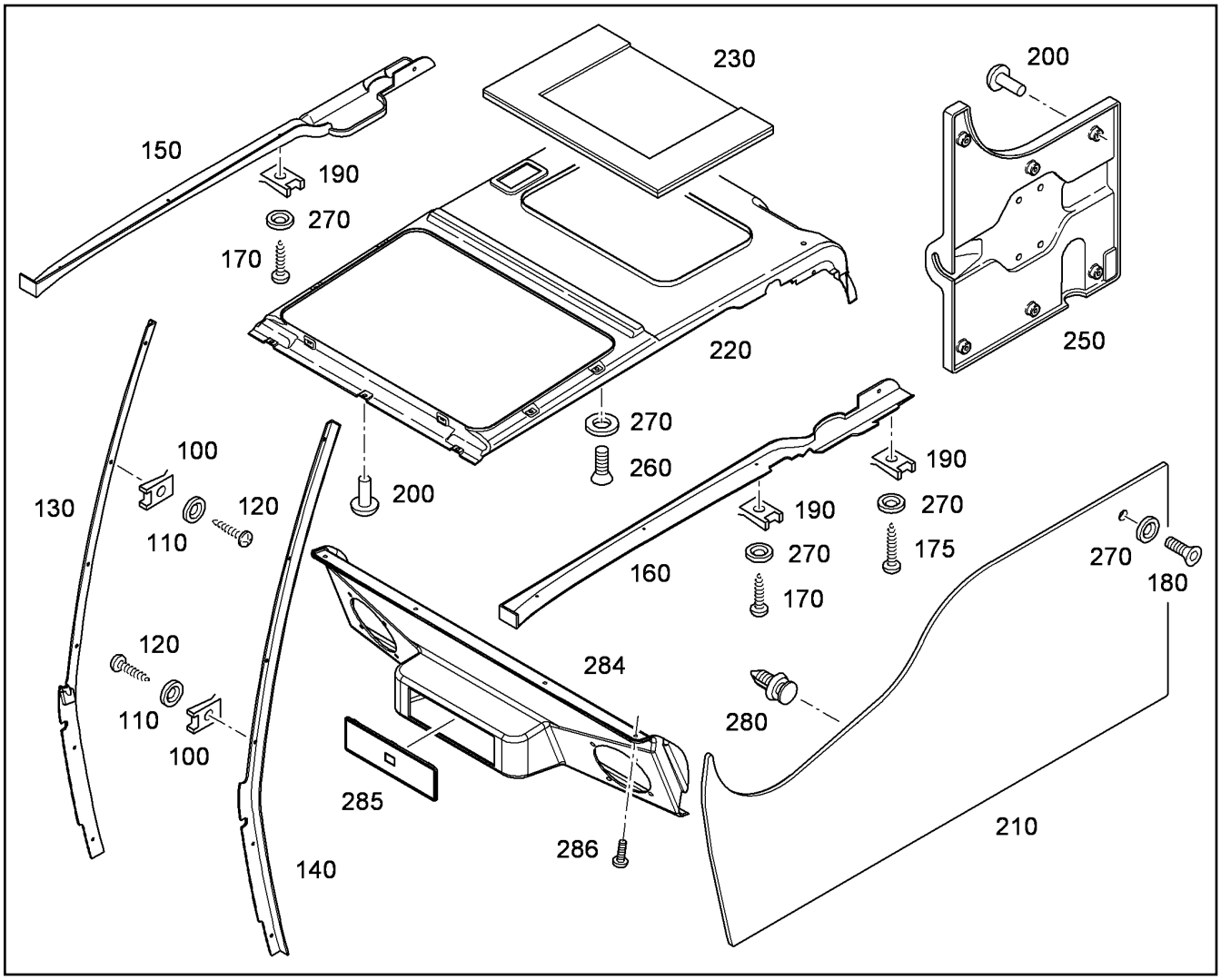


| Pos. | Item | Quantity | Description | Designação | Serie | K |
|---|---|---|---|---|---|---|
| 100 | 10044356 | 12 | SHEET METAL NUT | PORCA DE CHAPA | | |
| 110 | 4600305 | 12 | WASHER 5 200HV | ARRUELA | | |
| 120 | 4635258 | 12 | SHEET-METAL SCREW ISO 7049 ST4,8X16 | PARAFUSO | | |
| 130 | 7028940 | 1 | COVER | TAMPA | | |
| 140 | 10009132 | 1 | COVER | TAMPA | | |
| 150 | 10009193 | 1 | COVER UPPER RIGHT | TAMPA DIREITA SUPERIOR | | |
| 160 | 10044360 | 1 | LID | TAMPA | | |
| 170 | 4635258 | 10 | SHEET-METAL SCREW ISO 7049 ST4,8X16 | PARAFUSO | | |
| 175 | 4002456 | 2 | SHEET-METAL SCREW ISO 7049 ST4,8X25 | PARAFUSO | | |
| 180 | 4002401 | 10 | COUNTERSUNK SCREW ISO 7047 M6X12 4. | PARAFUSO ESCAREADO | | |
| 190 | 7028941 | 10 | SHEET METAL NUT ST4,8 | PORCA DE CHAPA | | |
| 200 | 7024438 | 12 | BODY-BOUND RIVET | REBITE EXPANSIVO | | |
| 210 | 10290359 | 1 | COVERS | REVESTIMENTO | | |
| 220 | 10217034 | 1 | COVERS | REVESTIMENTO | | |
| 230 | 10290261 | 1 | ABSORPTION PANEL | PLACA DE ISOLAMENTO | | |
| 250 | 10470128 | 1 | CASING, CPL<br>⇨ ❑ 434 | | | |
| 260 | 4901294 | 6 | COUNTERSUNK SCREW ISO 7047 M6X16 4. | PARAFUSO ESCAREADO | | |
| 270 | 10023245 | 6 | ROSE | ARRUELA | | |
| 280 | 7029433 | 12 | BLIND RIVET | REBITE CEGO | | |
| 284 | 10455060 | 1 | COVERS | REVESTIMENTO | | |
| 285 | 7618883 | 1 | BLANK LID | TAMPA CEGA | | |
| 286 | 10215970 | 4 | FIXING SCREW | PARAFUSO DE FIXACAO | | |

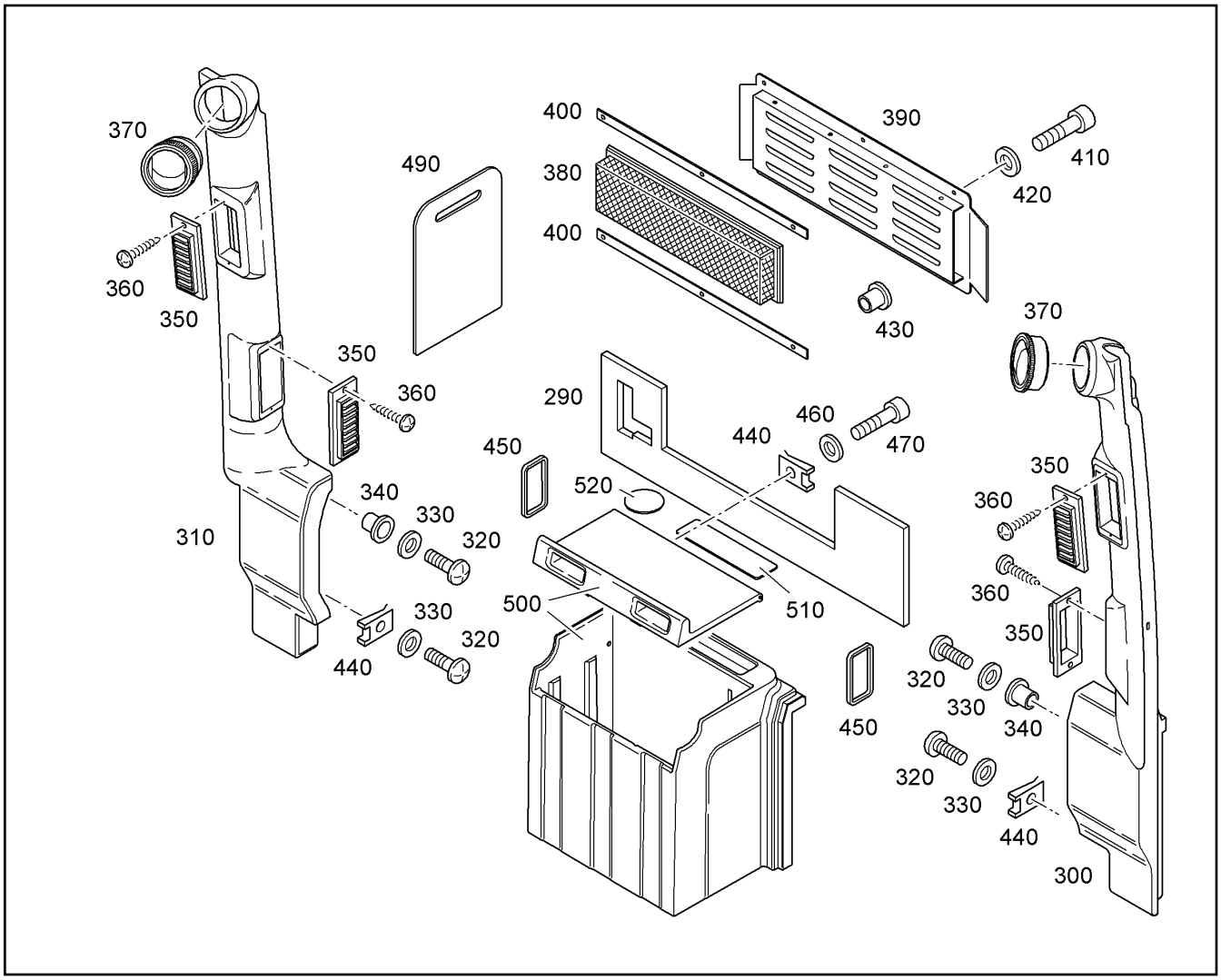


| Pos. | Item | Quantity | Description | Designação | Serie | K |
|---|---|---|---|---|---|---|
| 290 | 10009181 | 1 | ABSORPTION PANEL | PLACA DE ISOLAMENTO | | |
| 300 | 10009183 | 1 | CHANNEL REAR LEFT | | | |
| 310 | 10014497 | 1 | CHANNEL REAR RIGHT | | | |
| 320 | 4600723 | 4 | PAN-HEAD SCREW ISO 7045 M6X16 4.8 H | PARAFUSO | | |
| 330 | 4600198 | 4 | WASHER 6 200HV | ARRUELA | | |
| 340 | 7020610 | 2 | THREADED INSERT M6 | INSERTO DE ROSCA | | |
| 350 | 7024446 | 4 | AIR FEED-THROUGH | PASSAGEM DE AR | | |
| 360 | 7024447 | 8 | SCREW | PARAFUSO | | |
| 370 | 7028950 | 2 | AIR NOZZLE | INJETOR DE AR | | |
| 380 | 7028951 | 1 | AIR FILTER | FILTRO DE AR | | |
| 390 | 10009188 | 1 | LID | TAMPA | | |
| 400 | 7028953 | 2 | SEAL | VEDAÇÃO | | |
| 410 | 4600580 | 6 | PAN-HEAD SCREW ISO 7045 M6X25 4.8 H | PARAFUSO | | |
| 420 | 10289802 | 6 | WASHER ISO 7089 6 300HV | ARRUELA | | |
| 430 | 10044359 | 1 | THREADED INSERT | INSERTO DE ROSCA | | |
| 440 | 10009189 | 4 | SHEET METAL NUT | PORCA DE CHAPA | | |
| 450 | 10009027 | 2 | SEAL | VEDAÇÃO | | |
| 460 | 4600198 | 2 | WASHER 6 200HV | ARRUELA | | |
| 470 | 4635344 | 2 | PAN-HEAD SCREW DIN 7985 M6X25 8.8 H | PARAFUSO | | |
| 490 | 10009201 | 1 | PARTITION | PAREDE DIVISÓRIA | | |
| 500 | 10024192 | 1 | CHANNEL | CONDUTOR DE AR | | |
| 510 | 10289996 | 1 | MAT | ESTEIRA | | |
| 520 | 10289997 | 1 | MAT | ESTEIRA | | |

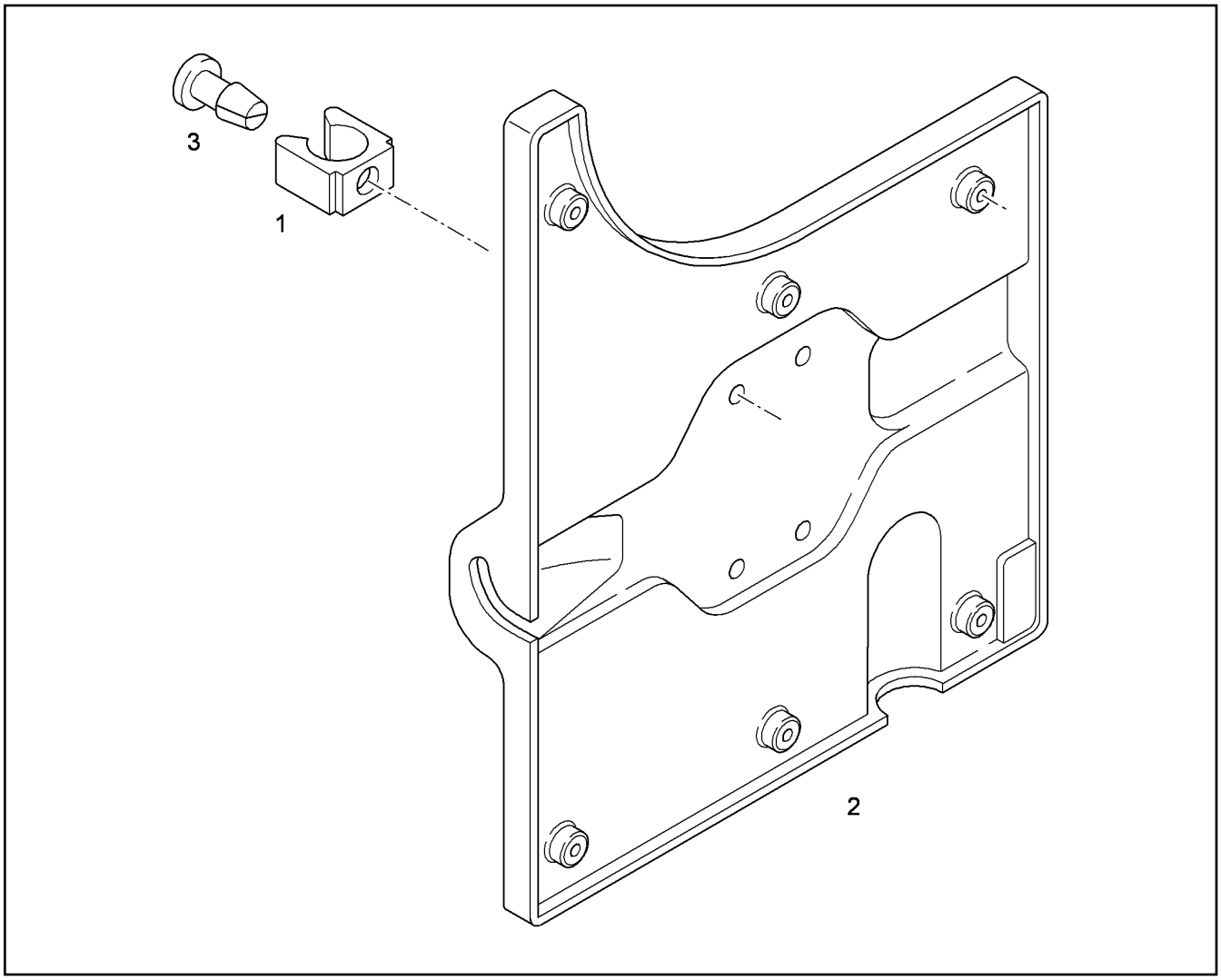


| Pos. | Item | Quantity | Description | Designação | Serie | K |
|---|---|---|---|---|---|---|
| 1 | 7373592 | 4 | CLAMP | GRAMPO | | |
| 2 | | 1 | PANELLING | REVESTIMENTO | | |
| 3 | 10470127 | 4 | RIVET | REBITE | | |

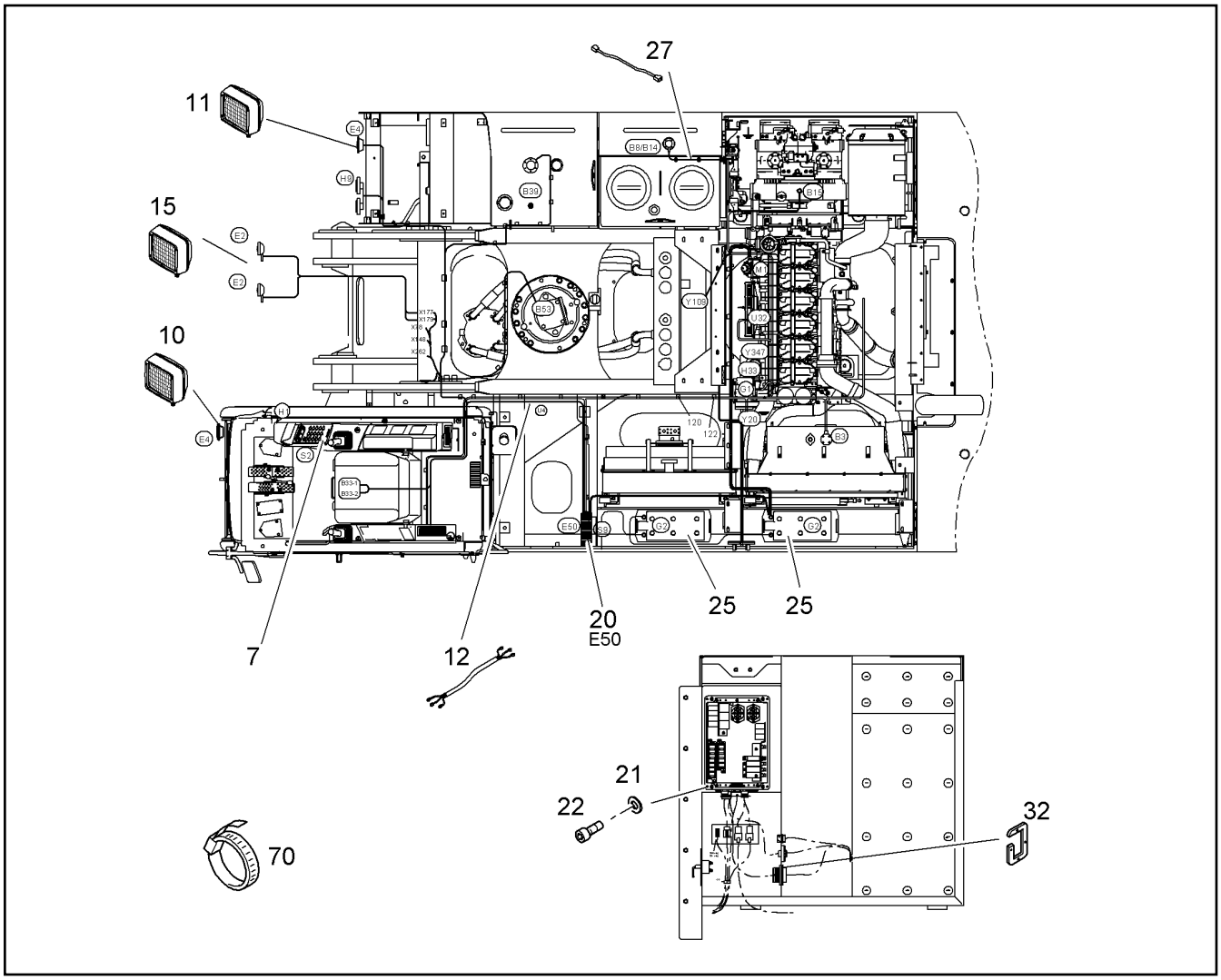


| Pos. | Item | Quantity | Description | Designação | Serie | K |
|---|---|---|---|---|---|---|
| 7 | 989150801 | 1 | CODING PLUG | PLUG ELETRICO CODIFICADO | | |
| 10 | 9941040 | 1 | FLOODLIGHT INSTALLATION<br>⇨ ❑ 437 | FAROL CPL - INSTALAÇÃO | | 2 |
| 11 | 9941040 | 1 | FLOODLIGHT INSTALLATION<br>⇨ ❑ 437 | FAROL CPL - INSTALAÇÃO | | 2 |
| 12 | 9948251 | 1 | WIRING HARNESS ROTATING DECK | CHICOTE ELETRICO | | |
| 15 | 10048246 | 1 | HEAD LIGHT + HORN INSTALLATION<br>⇨ ❑ 438 | FAROL E BUZINA INSTALACAO | -99998 | |
| 15 | 11102786 | 1 | HEAD LIGHT + HORN INSTALLATION<br>⇨ ❑ 439 | FAROL E BUZINA INSTALACAO | 99999- | |
| 20 | 9948254 | 1 | ELECTRIC BOX CPL.<br>⇨ ❑ 441 | CAIXA ELÉTRICA COMPLETA | | |
| 21 | 10289802 | 4 | WASHER ISO 7089 6 300HV | ARRUELA | | |
| 22 | 4901159 | 4 | CYLINDER SCREW ISO 4762 M6X30 10.9 A2 | PARAFUSO CILÍNDRICO | | |
| 25 | 11102662 | 1 | BATTERY INSTALLATION<br>⇨ ❑ 444 | BATERIA - INSTALACAO | | |
| 27 | 10051599 | 1 | WIRING HARNESS HYDRAULIC TANK | CHICOTE ELETRICO | | |
| 32 | 10049073 | 1 | CONSOLE | SUPORTE | | |
| 70 | 7001877 | 75 | TIE WRAP | AMARRA PARA CABOS | | |

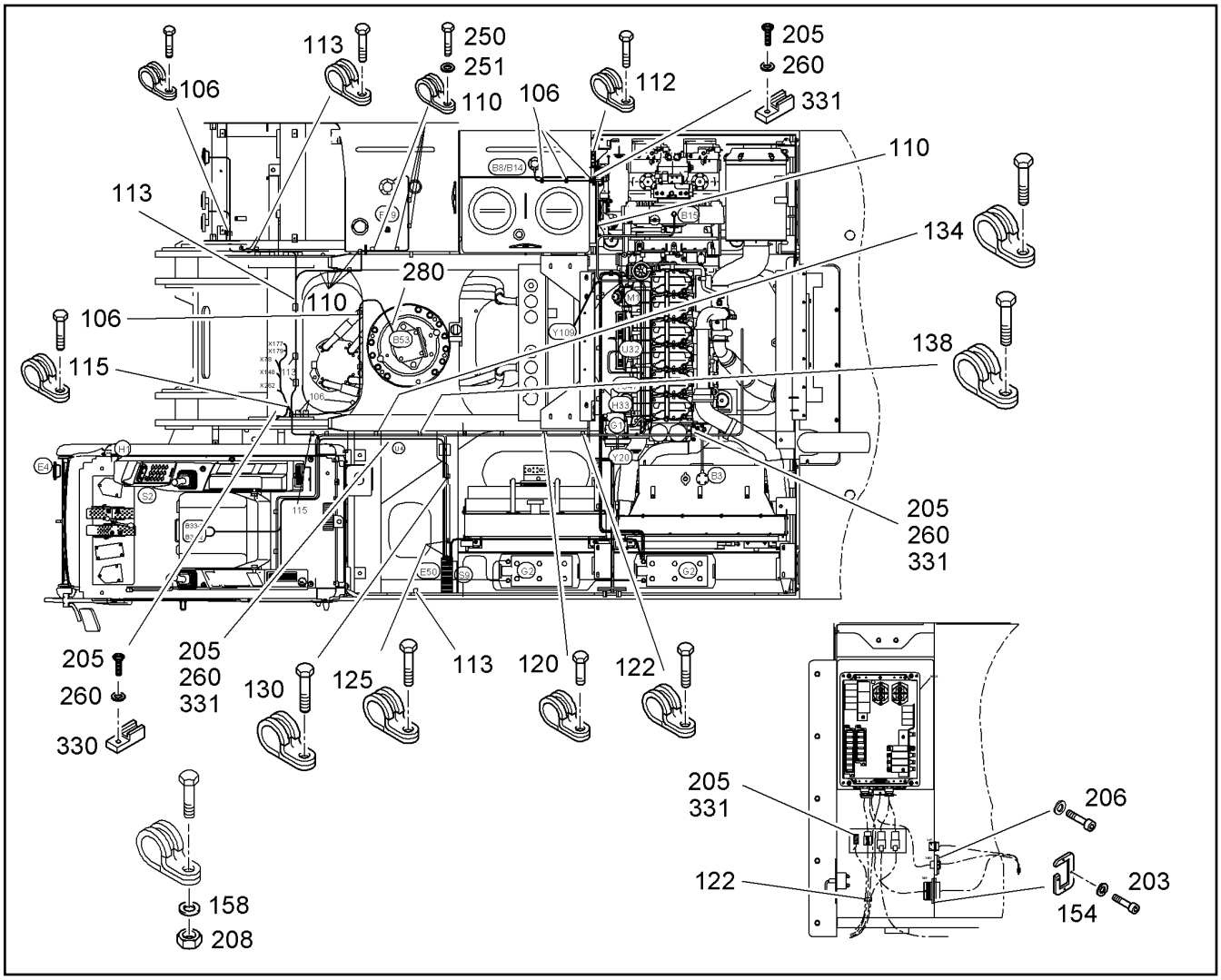


| Pos. | Item | Quantity | Description | Designação | Serie | K |
|---|---|---|---|---|---|---|
| 106 | 7381565 | 9 | CLAMP DIN 3016 D1- 6 X 20 W1-2-CR | BRAÇADEIRA | | |
| 110 | 7381628 | 14 | CLAMP DIN 3016-1 D1 10X20 W1-2-MVQ | BRAÇADEIRA | | |
| 112 | 7002957 | 1 | CLAMP DIN 3016-1 D1 12X20 W1-2-CR | BRAÇADEIRA | | |
| 113 | 7362734 | 6 | CLAMP DIN 3016 D1- 13 X 20 W1-2-CR | BRAÇADEIRA | | |
| 115 | 7362603 | 3 | CLAMP DIN 3016-1 D1 15X20 W1-2-CR | BRAÇADEIRA | | |
| 120 | 7362665 | 5 | CLAMP DIN 3016 D1- 20 X 20 W1-2-CR | BRAÇADEIRA | | |
| 122 | 7381630 | 3 | CLAMP DIN 3016-1 D1 22X20 W1-2-MVQ | BRAÇADEIRA | | |
| 125 | 7008622 | 2 | CLAMP DIN 3016 D1- 25 X 20 W1-2-CR | BRAÇADEIRA | | |
| 130 | 7364299 | 4 | CLAMP DIN 3016-1 D1 30X20 W1-2-CR | BRAÇADEIRA | | |
| 134 | 7366260 | 1 | CLAMP DIN 3016 D1- 34 X 20 W1-2-CR | BRAÇADEIRA | | |
| 138 | 7362551 | 1 | CLAMP DIN 3016 D1- 38 X 20 W1-2-CR | BRAÇADEIRA | | |
| 154 | 4001645 | 4 | WASHER ISO 7089 4 200HV | ARRUELA | | |
| 158 | 10289803 | 51 | WASHER ISO 7089 8 300HV | ARRUELA | | |
| 203 | 404200701 | 4 | CYLINDER SCREW ISO 4762 M4x20 8.8 A2C | PARAFUSO CILÍNDRICO | | |
| 205 | 4601375 | 17 | COUNTERSUNK SCREW ISO 7047 M5X10 4. | PARAFUSO ESCAREADO | | |
| 206 | 4600048 | 2 | CYLINDER SCREW ISO 4762 M6X16 8.8 A2C | PARAFUSO CILÍNDRICO | | |
| 208 | 4000381 | 50 | HEX NUT M8 | PORCA SEXTAVADA | | |
| 250 | 4902231 | 3 | CYLINDER SCREW ISO 4762 M8X16 10.9 A2 | PARAFUSO CILÍNDRICO | | |
| 251 | 10289803 | 3 | WASHER ISO 7089 8 300HV | ARRUELA | | |
| 260 | 7361965 | 17 | LOCK WASHER | ARRUELA DE SEGURANÇA | | |
| 280 | 10041876 | 1 | HOLDER | SUPORTE | | |
| 330 | 6905671 | 1 | HOLDER | SUPORTE | | |
| 331 | 6203497 | 16 | FASTENER F.DT STECKER | ELEMENTO DE FIXACAO | | |

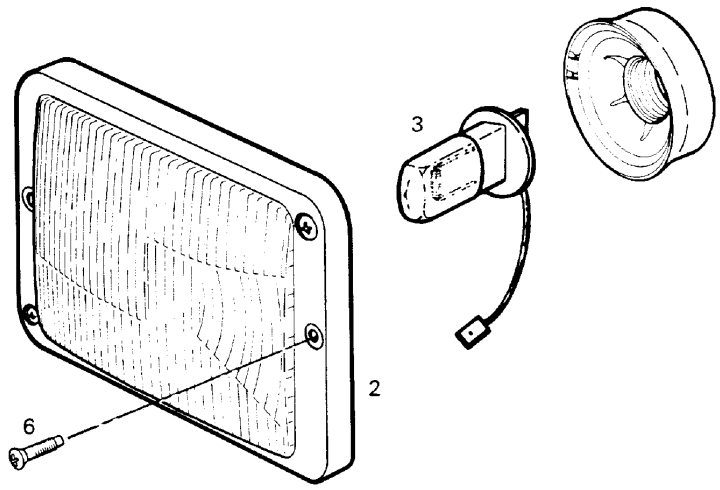


| Pos. | Item | Quantity | Description | Designação | Serie | K |
|---|---|---|---|---|---|---|
| 2 | 10007848 | 1 | WORK LIGHT | FAROL DE TRABALHO | | |
| 3 | 6200685 | 2 | LIGHT BULB | LÂMPADA INCANDESCENTE | | |
| 6 | 4901530 | 2 | SELF-TAPPING SCREW AEHNL.DIN 7516 AE | PARAFUSO AUTO-ATARRAXANT | | |

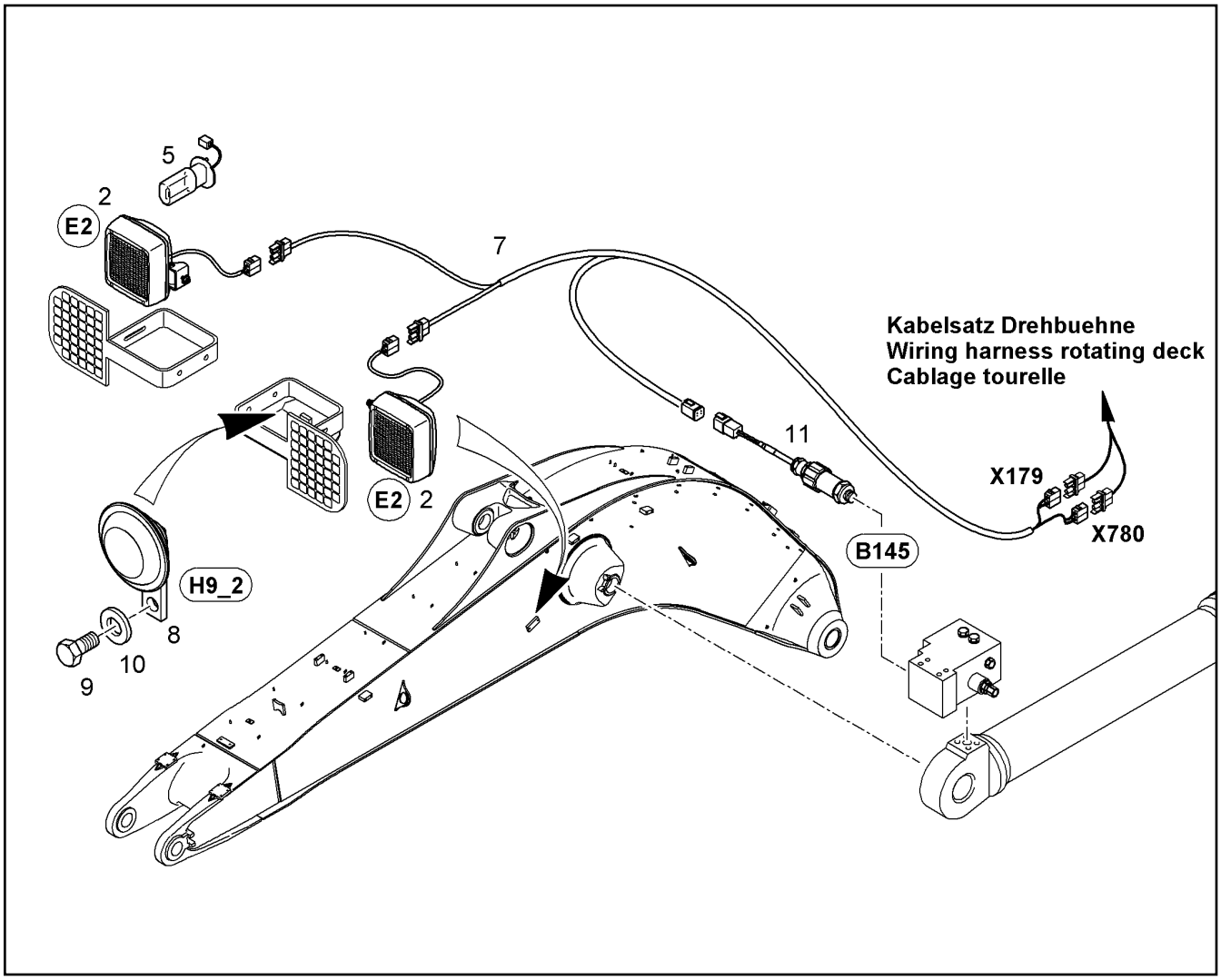


| Pos. | Item | Quantity | Description | Designação | Serie | K |
|---|---|---|---|---|---|---|
| 2 | 10045530 | 2 | WORK LIGHT<br>⇨ ❑ 440 | FAROL DE TRABALHO | | |
| 5 | 6200685 | 2 | LIGHT BULB | LÂMPADA INCANDESCENTE | | |
| 7 | 10048247 | 1 | WIRING HARNESS HEAD LIGHT | CHICOTE ELETRICO FAROL | | |
| 8 | 6205045 | 1 | SUPERTONE HORN | BUZINA | | |
| 9 | 4001696 | 1 | HEX BOLT ISO 4017 M10X20 10.9 A3C | PARAFUSO SEXTAVADO | | |
| 10 | 4229913 | 1 | LOCK WASHER 10,5/16X2 VS 10 | ARRUELA DE SEGURANÇA | | |
| 11 | 10280390 | 1 | PRESSURE TRANSMITTER | TRANSDUTOR DE PRESSÃO | | |

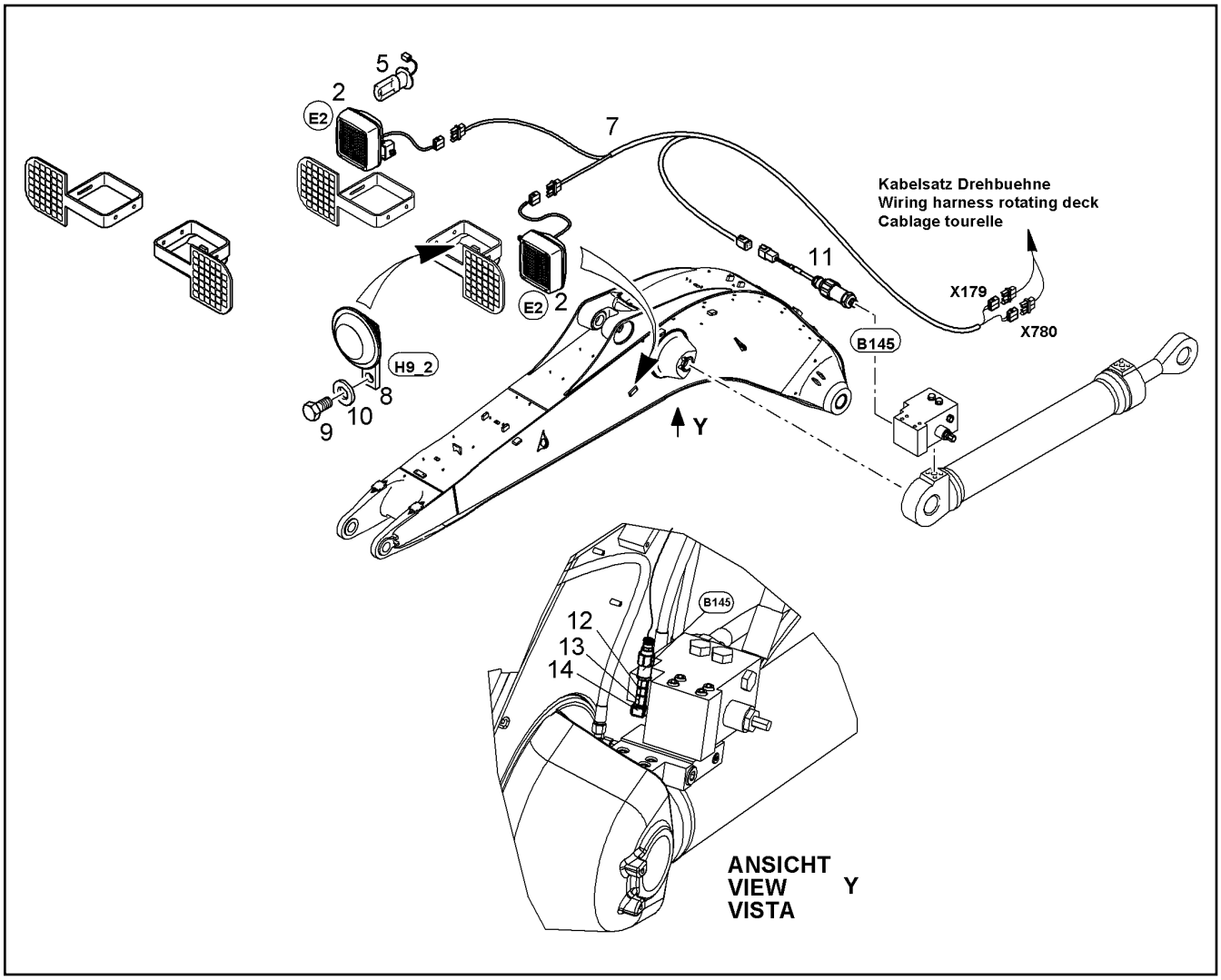


| Pos. | Item | Quantity | Description | Designação | Serie | K |
|---|---|---|---|---|---|---|
| 2 | 10045530 | 2 | WORK LIGHT<br>⇨ ❑ 440 | FAROL DE TRABALHO | | |
| 5 | 6200685 | 2 | LIGHT BULB | LÂMPADA INCANDESCENTE | | |
| 7 | 10048247 | 1 | WIRING HARNESS HEAD LIGHT | CHICOTE ELETRICO FAROL | | |
| 8 | 6205045 | 1 | SUPERTONE HORN | BUZINA | | |
| 9 | 4001696 | 1 | HEX BOLT ISO 4017 M10X20 10.9 A3C | PARAFUSO SEXTAVADO | | |
| 10 | 4229913 | 1 | LOCK WASHER 10,5/16X2 VS 10 | ARRUELA DE SEGURANÇA | | |
| 11 | 10280390 | 1 | PRESSURE TRANSMITTER | TRANSDUTOR DE PRESSÃO | | |
| 12 | 7372371 | 1 | SCREW FITTING GZ 8S | REDUÇÃO | | |
| 13 | 7410555 | 1 | SCREW EXTENSION TUBE | BOCAL ROSCADO | | |
| 14 | 7368171 | 1 | SCREW FITTING WH 8S | REDUÇÃO | | |

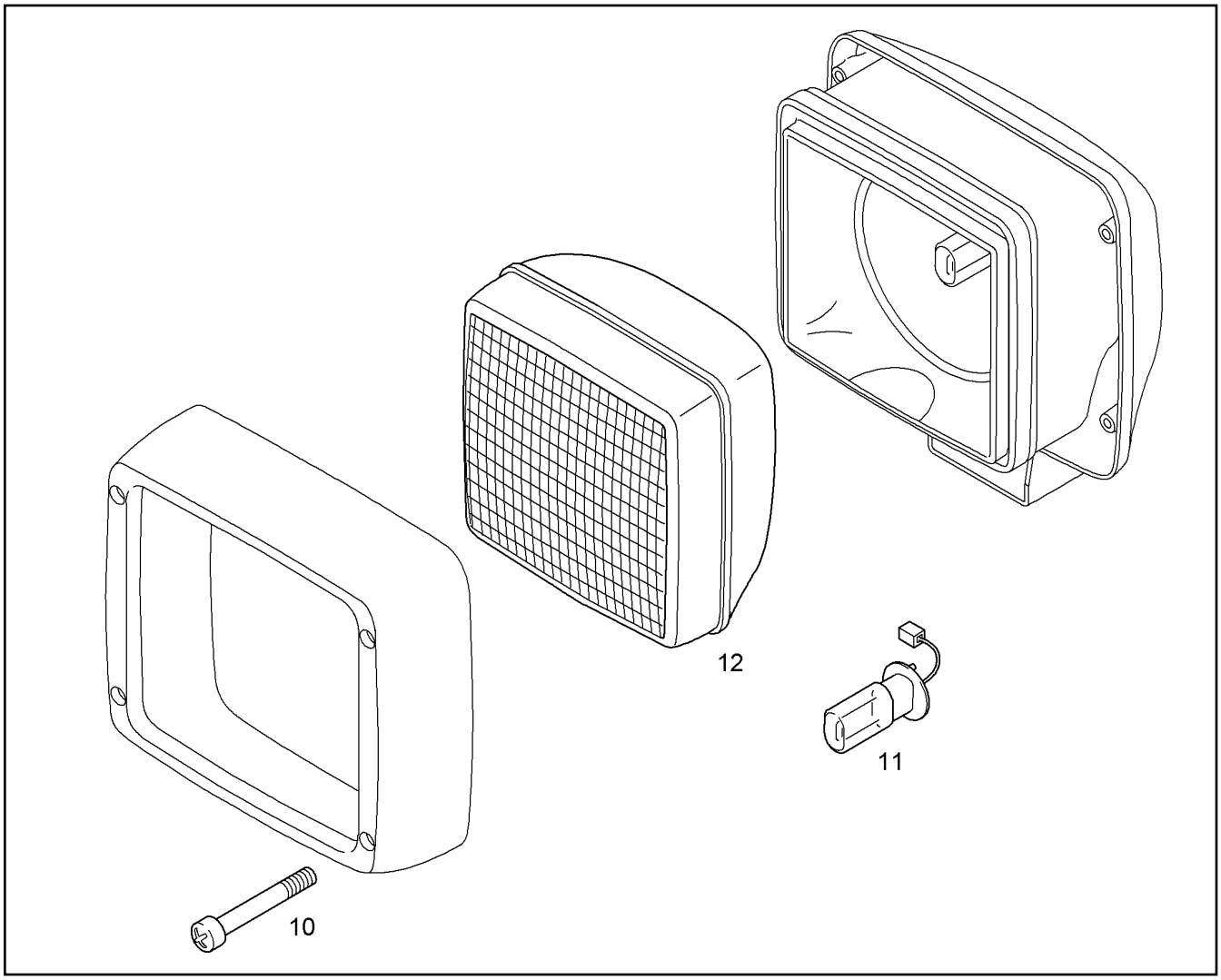


| Pos. | Item | Quantity | Description | Designação | Serie | K |
|---|---|---|---|---|---|---|
| 10 | 4002838 | 4 | SHEET-METAL SCREW DIN 7981 ST3,9X50 | PARAFUSO | | |
| 11 | 6200685 | 1 | LIGHT BULB | LÂMPADA INCANDESCENTE | | |
| 12 | 10286644 | 1 | HEAD LIGHT INSERT | FAROL | | |

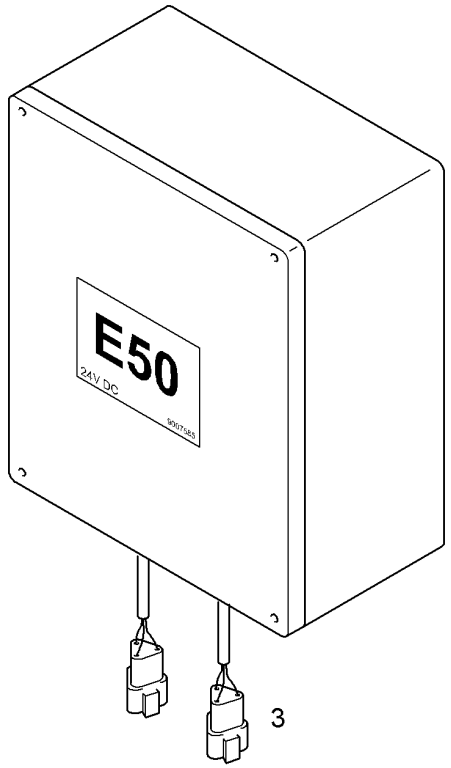


Im Batteriekasten
In battery box
Dans le caisson batteries

| Pos. | Item | Quantity | Description | Designação | Serie | K |
|---|---|---|---|---|---|---|
| 2 | 9947707 | 1 | ELECTRIC BOX E50 | CAIXA ELETRICA | | |
| 3 | | 1 | ELECTRICAL SYSTEM E50<br>⇨ ❑ 442 | INSTALAÇÃO ELÉTRICA | | |

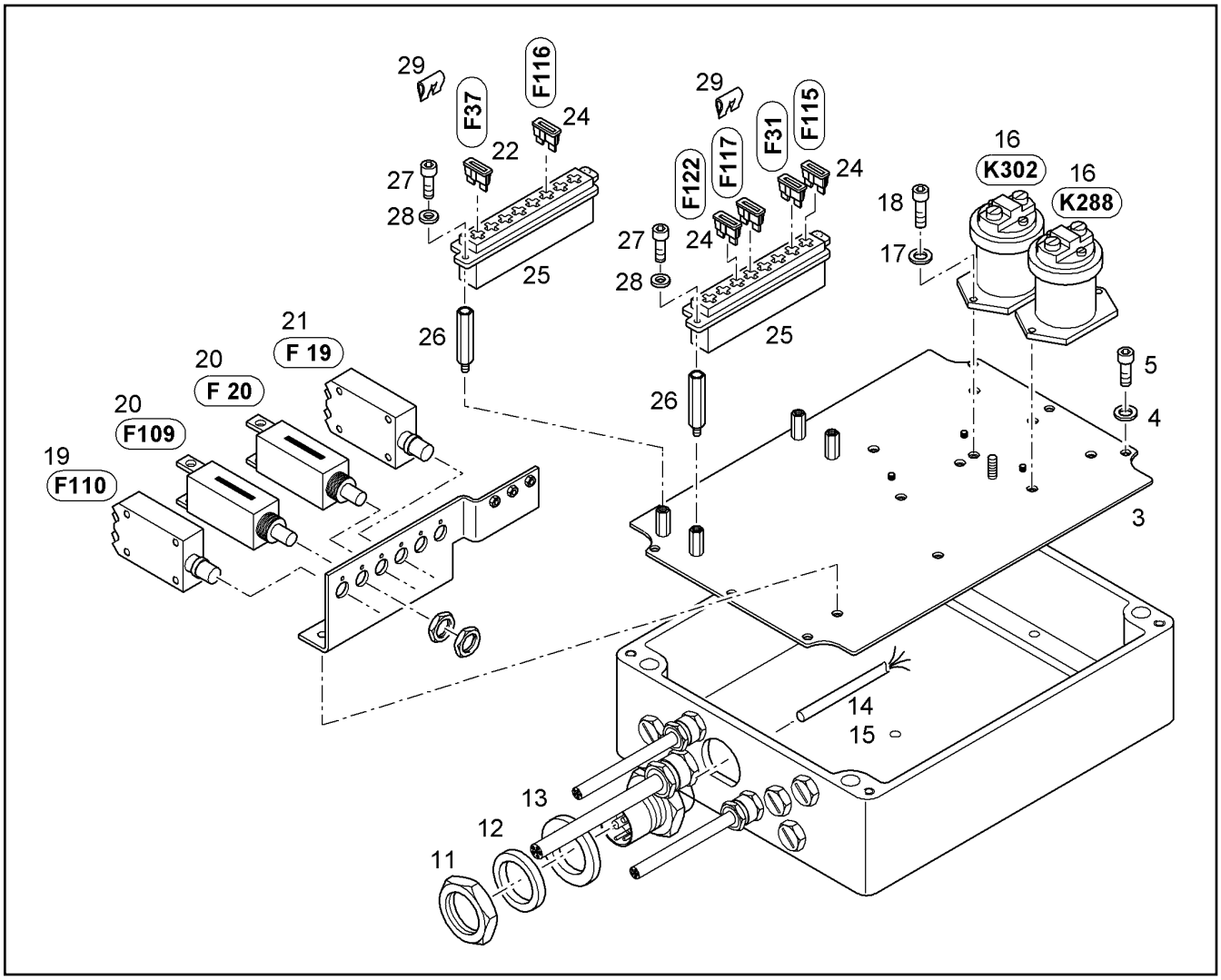


| Pos. | Item | Quantity | Description | Designação | Serie | K |
|---|---|---|---|---|---|---|
| 3 | 9947713 | 1 | SUBPLATE | PLACA DE MONTAGEM | | |
| 4 | 4229911 | 6 | LOCK WASHER 6,4/10X1,2 VS 6 | ARRUELA DE SEGURANÇA | | |
| 5 | 4902252 | 6 | CYLINDER SCREW ISO 4762 M6X12 10.9 A2 | PARAFUSO CILÍNDRICO | | |
| 10 | 6204241 | 1 | PIN HOUSING HD 9-POL 100/60/25A 1500V | CARCAÇA DE CONECTOR ELÉ | | |
| 11 | 6905277 | 1 | COUNTER NUT UNEF1 11/16X18 | CONTRA-PORCA | | |
| 12 | 7369776 | 1 | WASHER | ARRUELA | | |
| 13 | 7026772 | 1 | SEAL | VEDAÇÃO | | |
| 14 | 9929151 | 1 | WIRING HARNESS ELECTRIC BOX E50 | CHICOTE ELETRICO | | |
| 15 | 9949750 | 1 | WIRING HARNESS ELECTRIC BOX E50 | CHICOTE ELETRICO | | |
| 16 | 10009888 | 2 | PERFORMANCE RELAY | RELE DE POTENCIA | | |
| 17 | 4600305 | 4 | WASHER 5 200HV | ARRUELA | | |
| 18 | 4042062 | 4 | CYLINDER SCREW ISO 4762 M5x16 8.8 A2C | PARAFUSO CILÍNDRICO | | |
| 19 | 6202944 | 1 | CABLE PROTECTION SWITCH | DISJUNTOR ELÉTRICO | | |
| 20 | 10012172 | 2 | POWER SAFETY SWITCH | DISJUNTOR | | |
| 21 | 6203687 | 1 | CABLE PROTECTION SWITCH | DISJUNTOR ELÉTRICO | | |
| 22 | 6001472 | 1 | FUSE CARTRIDGE 20A 32 C | FUSÍVEL TIPO CARTUCHO | | |
| 24 | 4901513 | 5 | FUSE CARTRIDGE C 7,5A 32/56 FKS | FUSÍVEL TIPO CARTUCHO | | |
| 25 | 6000783 | 2 | BLADE-TYPE ELECT. FUSE SOCKET | CAIXA DE FUSIVEIS CHATOS | | |
| 26 | 7016412 | 4 | HEX SPACER PIN M4X8 | PINO DISTANCIADOR HEXAGO | | |
| 27 | 4600337 | 4 | CYLINDER SCREW ISO 4762 M4x16 8.8 A2C | PARAFUSO CILÍNDRICO | | |
| 28 | 4001645 | 4 | WASHER ISO 7089 4 200HV | ARRUELA | | |
| 29 | 6001474 | 10 | GANTRY 2 FACH | PONTE (JUMPER) | | |

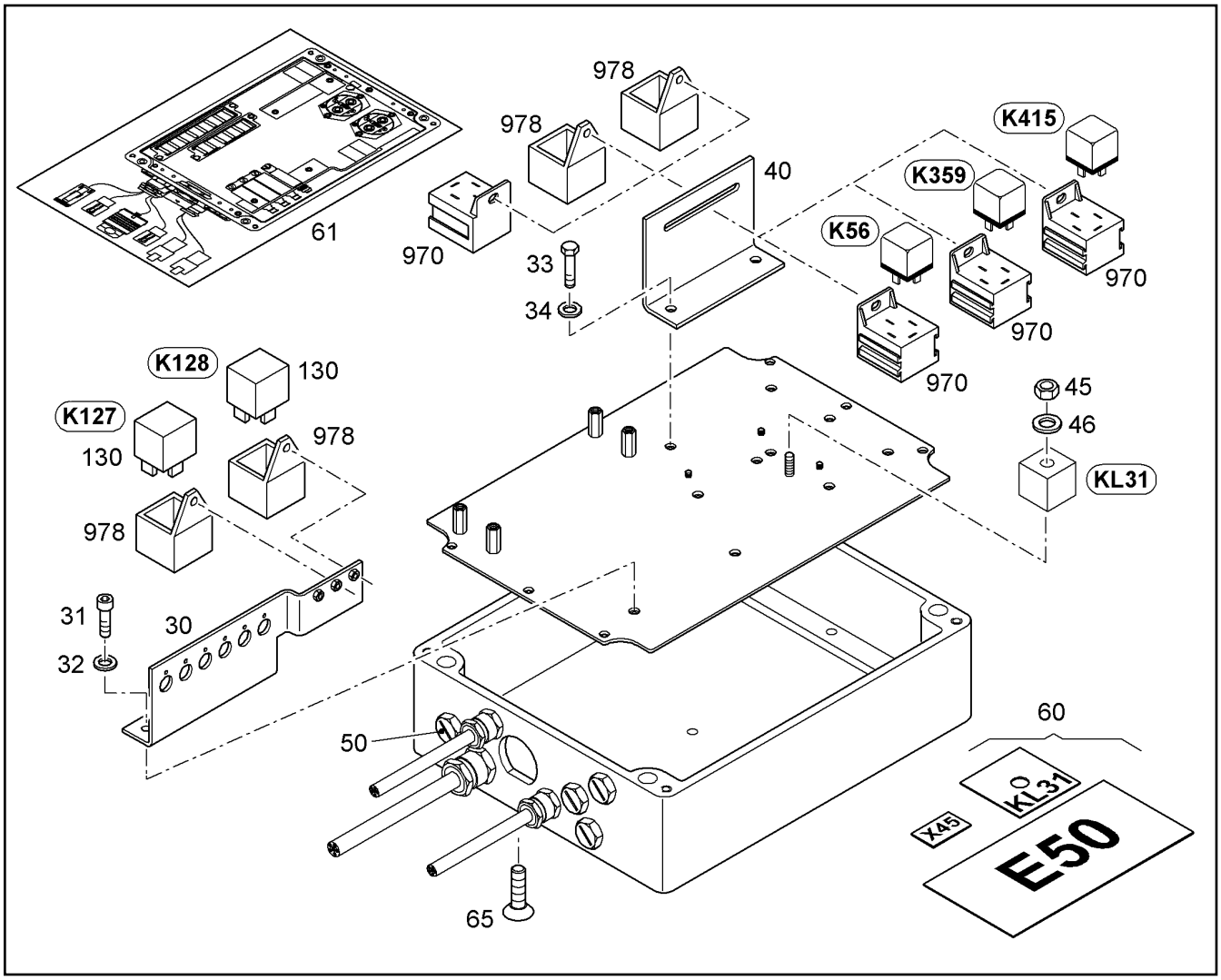


| Pos. | Item | Quantity | Description | Designação | Serie | K |
|---|---|---|---|---|---|---|
| 30 | 10048398 | 1 | ELECTRIC BOX MOUNTING PARTS | PEÇAS MONTAGEM QUADRO EL | | |
| 31 | 4001596 | 4 | CYLINDER SCREW ISO 4762 M6X16 10.9 A2 | PARAFUSO CILÍNDRICO | | |
| 32 | 10289802 | 4 | WASHER ISO 7089 6 300HV | ARRUELA | | |
| 33 | 4000417 | 2 | HEX BOLT ISO 4017 M5x12 8.8 A2C | PARAFUSO SEXTAVADO | | |
| 34 | 4000466 | 2 | HEX NUT M5 | PORCA SEXTAVADA | | |
| 40 | 9948149 | 1 | ELECTRIC BOX MOUNTING PARTS | PEÇAS MONTAGEM QUADRO EL | | |
| 45 | 4901651 | 1 | HEX NUT M6 | PORCA SEXTAVADA | | |
| 46 | 4229911 | 1 | LOCK WASHER 6,4/10X1,2 VS 6 | ARRUELA DE SEGURANÇA | | |
| 50 | 602514201 | 4 | STOPPER PLUG M20X1,5 | PARAFUSO DE FECHAMENTO | | |
| 60 | 9007585 | 1 | LABEL | ETIQUETA | | |
| 61 | 9928891 | 1 | ADHESIVE FOIL | ADESIVO | | |
| 65 | 4980801 | 1 | COUNTERSUNK SCREW DIN 7991 M5X12 1 | PARAFUSO ESCAREADO | | |
| 130 | 6001921 | 2 | RELAY | RELE | | |
| 970 | 6002816 | 4 | RELAY HEADER | BASE DE RELE | | |
| 978 | 6001681 | 4 | CONNECTOR BASE | BASE DE SOQUETE | | |

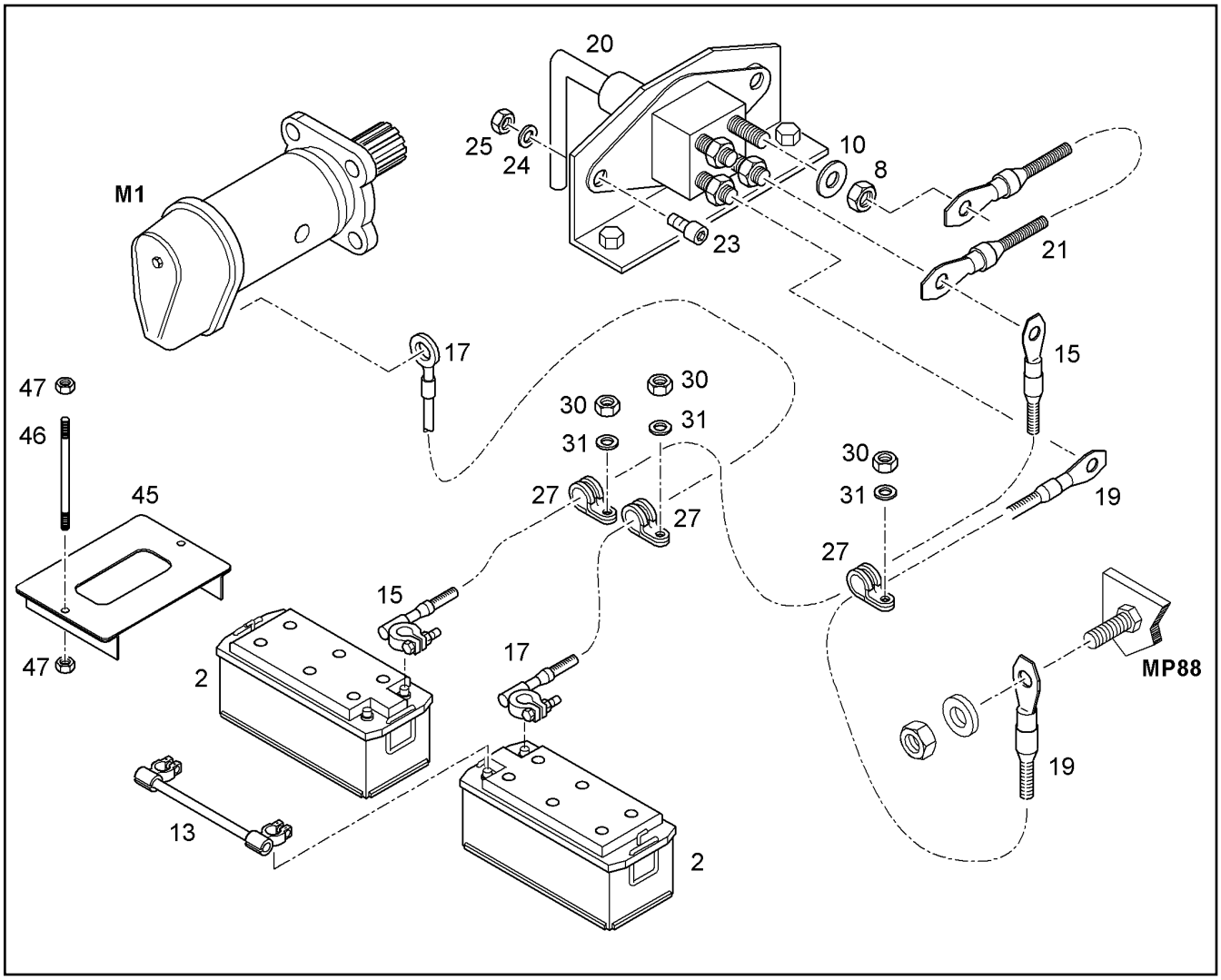


| Pos. | Item | Quantity | Description | Designação | Serie | K |
|---|---|---|---|---|---|---|
| 2 | 613200116 | 2 | BATTERY DRY CHARGED | BATERIA SECA | | 1 |
| 8 | 4000383 | 8 | HEX NUT M10 | PORCA SEXTAVADA | | |
| 10 | 10289795 | 12 | WASHER ISO 7089 10 300HV | ARRUELA | | |
| 13 | 9949978 | 1 | BATTERY CONNECTION CABLE | CABO DE LIGACAO DA BATERIA | | |
| 15 | 9927341 | 1 | WIRING HARN.BATTERY SHUT-OFF | CHICOTE ELETRICO DA BATERI | | |
| 17 | 9948824 | 1 | WIRING HARN.BATTERY-STARTER | CHICOTE ELETRICO | | |
| 19 | 10052700 | 1 | WIRING HARNESS SHUT-OFF/MASS | CHICOTE ELETRICO CHAVE-TE | | |
| 20 | 10012119 | 1 | BATTERY MAIN SWITCH<br>⇨ ❑ 445 | INTERRUPTOR PRINCIPAL BATE | | |
| 21 | 9686191 | 1 | WIRING HARNESS S9/S9 | CHICOTE ELETRICO S9/S9 | | |
| 23 | 4901217 | 2 | CYLINDER SCREW ISO 4762 M8X25 10.9 A2 | PARAFUSO CILÍNDRICO | | |
| 24 | 10289803 | 2 | WASHER ISO 7089 8 300HV | ARRUELA | | |
| 25 | 4000381 | 4 | HEX NUT M8 | PORCA SEXTAVADA | | |
| 27 | 7362602 | 14 | CLAMP DIN 3016 D1- 18 X 20 W1-2-CR | BRAÇADEIRA | | |
| 30 | 4000381 | 14 | HEX NUT M8 | PORCA SEXTAVADA | | |
| 31 | 10289803 | 14 | WASHER ISO 7089 8 300HV | ARRUELA | | |
| 45 | 9560855 | 2 | COUNTER BRACKET | CONTRA-APOIO | | |
| 46 | 9006346 | 4 | THREADED BAR | HASTE ROSCADA | | |
| 47 | 4600579 | 4 | HEX NUT M10 | PORCA SEXTAVADA | | |

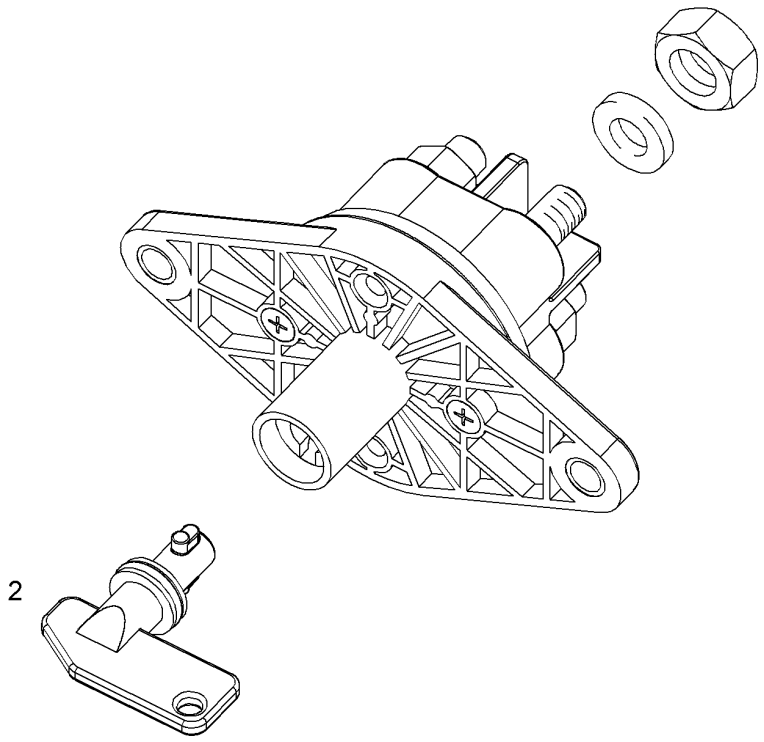


| Pos. | Item | Quantity | Description | Designação | Serie | K |
|---|---|---|---|---|---|---|
| 2 | 10024214 | 1 | SWITCH LEVER | ALAVANCA DE MUDANCAS | | |

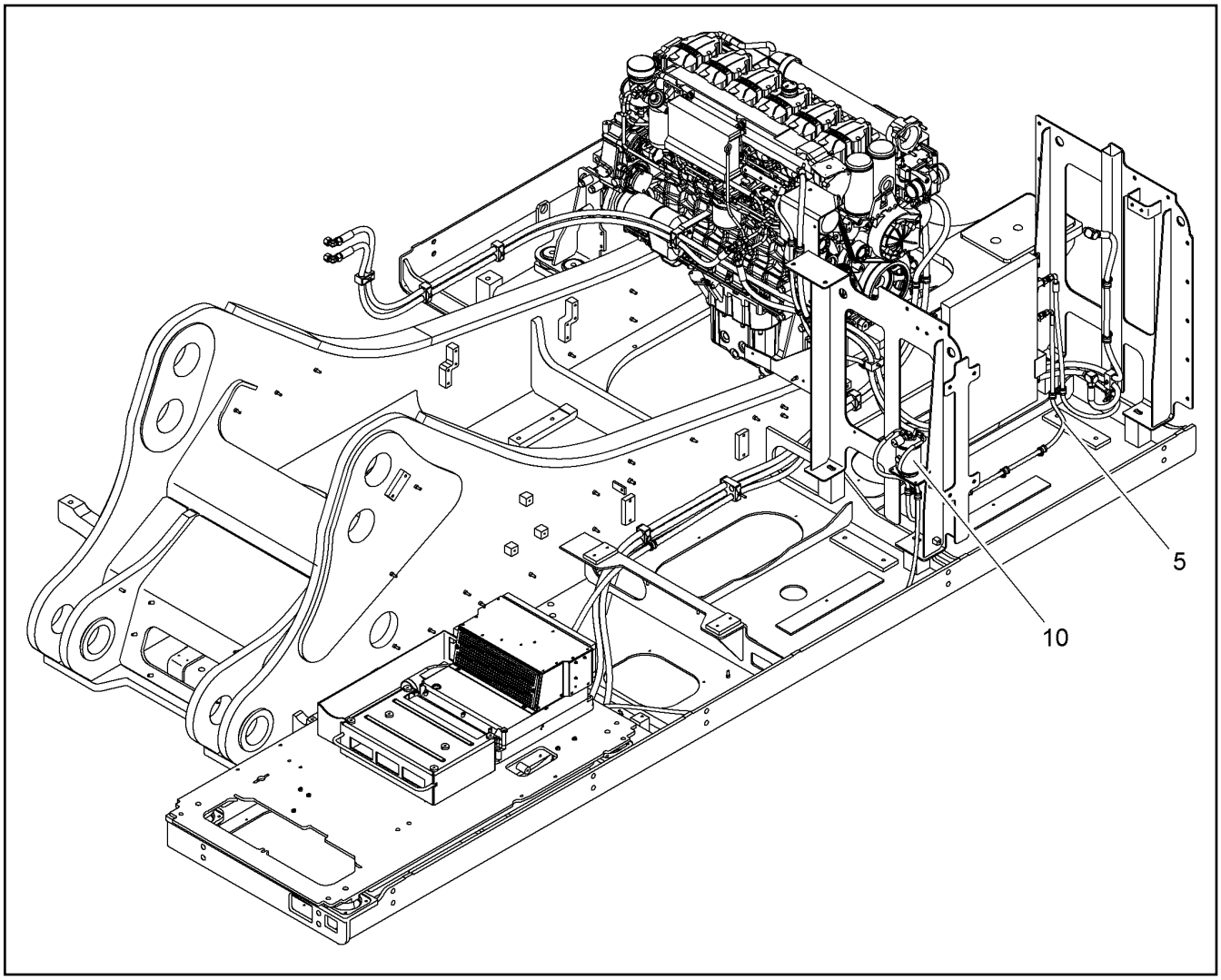


| Pos. | Item | Quantity | Description | Designação | Serie | K |
|---|---|---|---|---|---|---|
| 5 | 10358143 | 1 | AIR CONDITION HOSES INSTALLAT.<br>⇨ ❑ 447 | MAGUEIRAS DO AR-CONDICION | | |
| 10 | 10049616 | 1 | DRIER INSTALLATION<br>⇨ ❑ 448 | SECADOR - INSTALACAO | | |

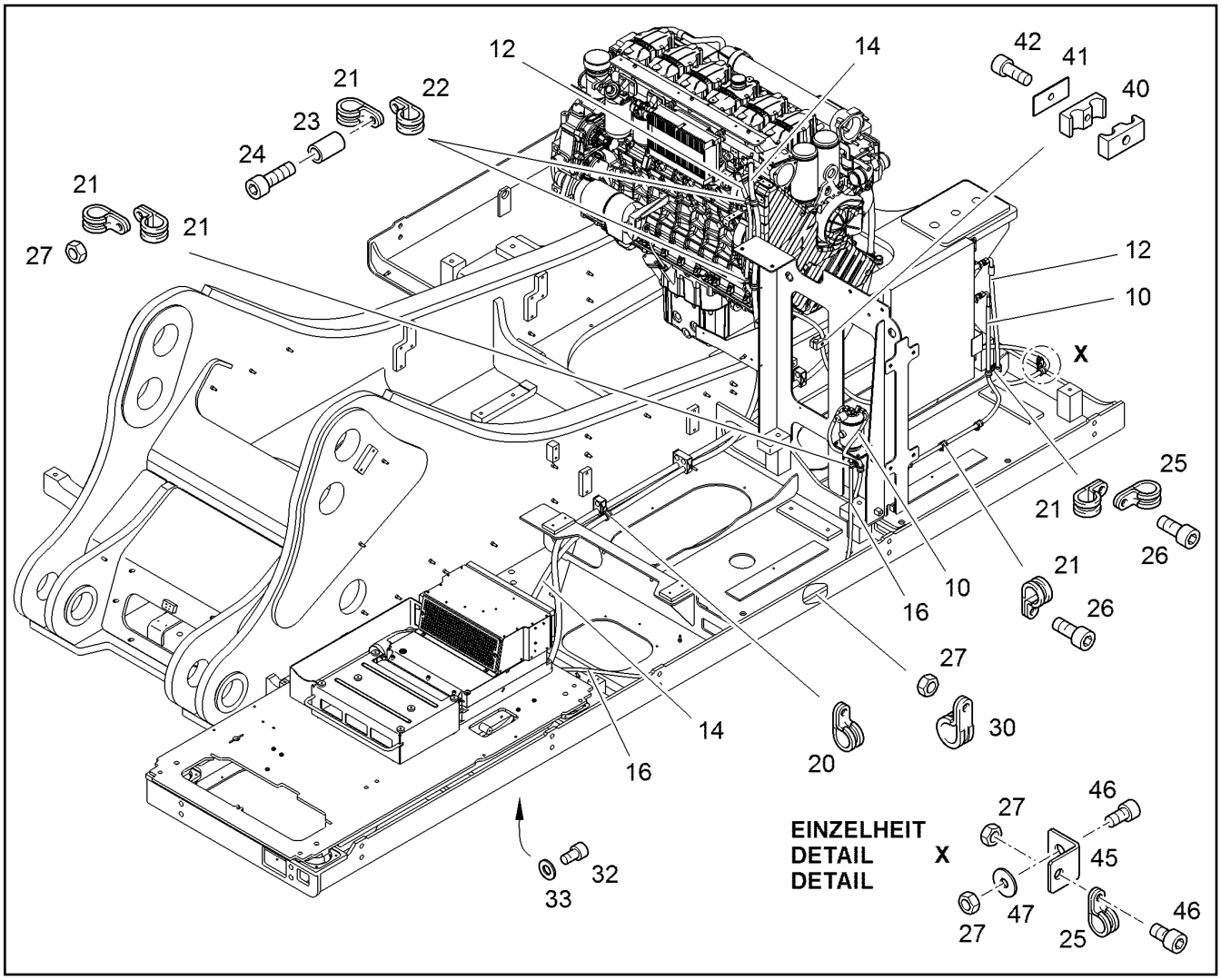


| Pos. | Item | Quantity | Description | Designação | Serie | K |
|---|---|---|---|---|---|---|
| 10 | 10101305 | 1 | HOSE | MANGUEIRA | | 1 |
| 12 | 10101313 | 1 | HOSE<br>⇨ ❑ 450 | MANGUEIRA | | 1 |
| 14 | 10101314 | 1 | HOSE | MANGUEIRA | | 1 |
| 16 | 10101307 | 1 | HOSE | MANGUEIRA | | 1 |
| 20 | 7362547 | 1 | CLAMP DIN 3016 D1- 24 X 20 W1-2-CR | BRAÇADEIRA | | |
| 21 | 7362602 | 10 | CLAMP DIN 3016 D1- 18 X 20 W1-2-CR | BRAÇADEIRA | | |
| 22 | 7362665 | 3 | CLAMP DIN 3016 D1- 20 X 20 W1-2-CR | BRAÇADEIRA | | |
| 23 | 9989595 | 2 | DISTANCE TUBE | TUBO DISTANCIADOR | | |
| 24 | 4043090 | 3 | CYLINDER SCREW ISO 4762 M8X60 10.9 A2 | PARAFUSO CILÍNDRICO | | |
| 25 | 7362665 | 4 | CLAMP DIN 3016 D1- 20 X 20 W1-2-CR | BRAÇADEIRA | | |
| 26 | 4901217 | 7 | CYLINDER SCREW ISO 4762 M8X25 10.9 A2 | PARAFUSO CILÍNDRICO | | |
| 27 | 4000381 | 6 | HEX NUT M8 | PORCA SEXTAVADA | | |
| 30 | 7366260 | 3 | CLAMP DIN 3016 D1- 34 X 20 W1-2-CR | BRAÇADEIRA | | |
| 32 | 4600048 | 1 | CYLINDER SCREW ISO 4762 M6X16 8.8 A2C | PARAFUSO CILÍNDRICO | | |
| 33 | 4229911 | 1 | LOCK WASHER 6,4/10X1,2 VS 6 | ARRUELA DE SEGURANÇA | | |
| 40 | 248016802 | 6 | CLAMP-HALF DIN 3015-3 Z 3 G 20 20 PP SW | MEIA ABRAÇADEIRA | | |
| 41 | 7401349 | 3 | LID PLATE DIN 3015-3 Z-DP 3 W1-ZN | PLACA | | |
| 42 | 4600335 | 3 | CYLINDER SCREW ISO 4762 M8X45 10.9 A2 | PARAFUSO CILÍNDRICO | | |
| 45 | 9573442 | 1 | ANGLE | CANTONEIRA | | |
| 46 | 4043082 | 2 | CYLINDER SCREW ISO 4762 M8X20 10.9 A2 | PARAFUSO CILÍNDRICO | | |
| 47 | 4000779 | 1 | WASHER A 8 200HV | ARRUELA | | |

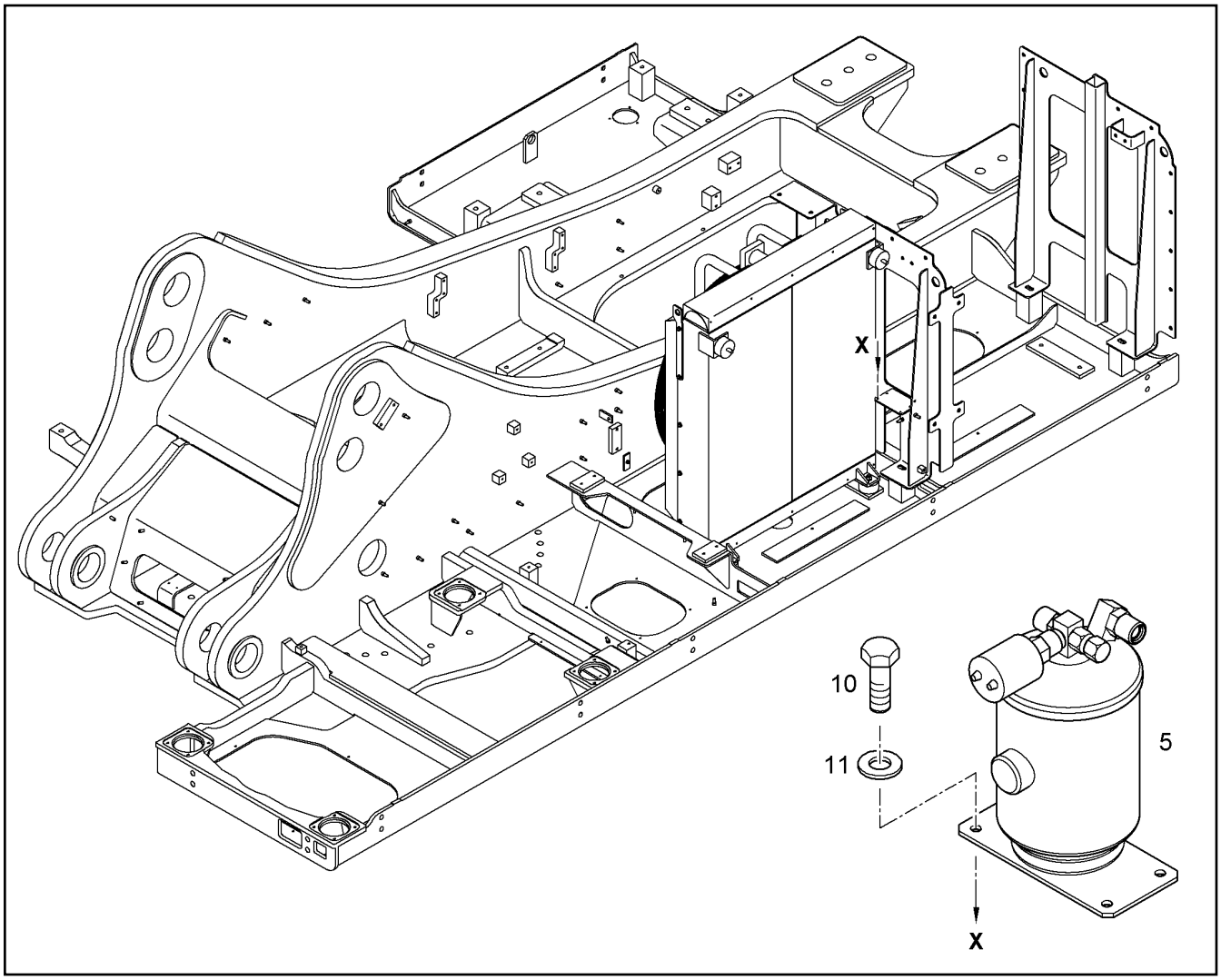


| Pos. | Item | Quantity | Description | Designação | Serie | K |
|---|---|---|---|---|---|---|
| 5 | 10292660 | 1 | UNIT RECEIVER-DRYER<br>[810035 0009 ]<br>⇨ ❑ 449 | SECADOR COLETOR | | |
| 10 | 4900605 | 4 | HEX BOLT ISO 4017 M6x12 8.8 A2C | PARAFUSO SEXTAVADO | | |
| 11 | 4229911 | 4 | LOCK WASHER 6,4/10X1,2 VS 6 | ARRUELA DE SEGURANÇA | | |

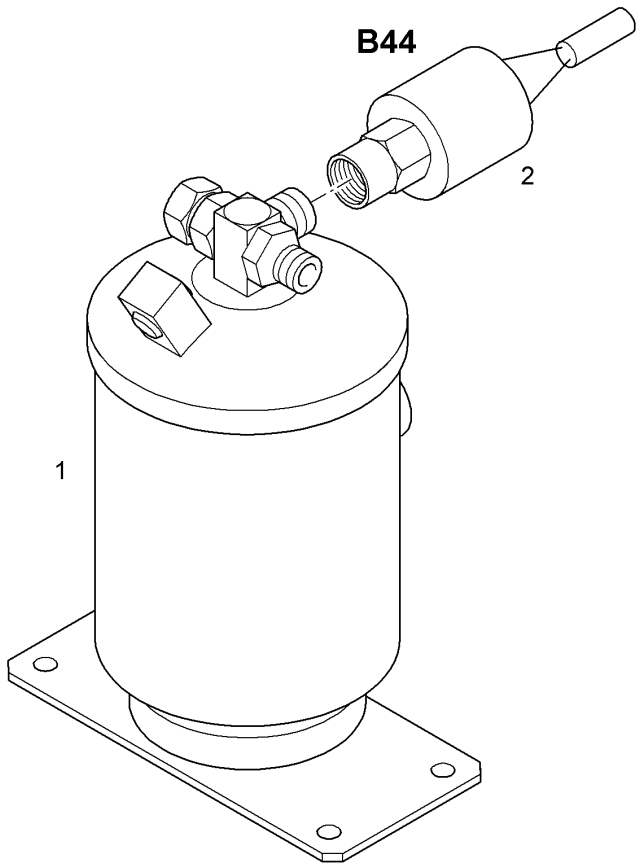


| Pos. | Item | Quantity | Description | Designação | Serie | K |
|---|---|---|---|---|---|---|
| 1 | 5611990 | 1 | RECEIVER-DRIER | COLETOR-SECADOR | | |
| 2 | 10292659 | 1 | PRESSURE SWITCH | INTERRUPTOR DE PRESSAO | | |

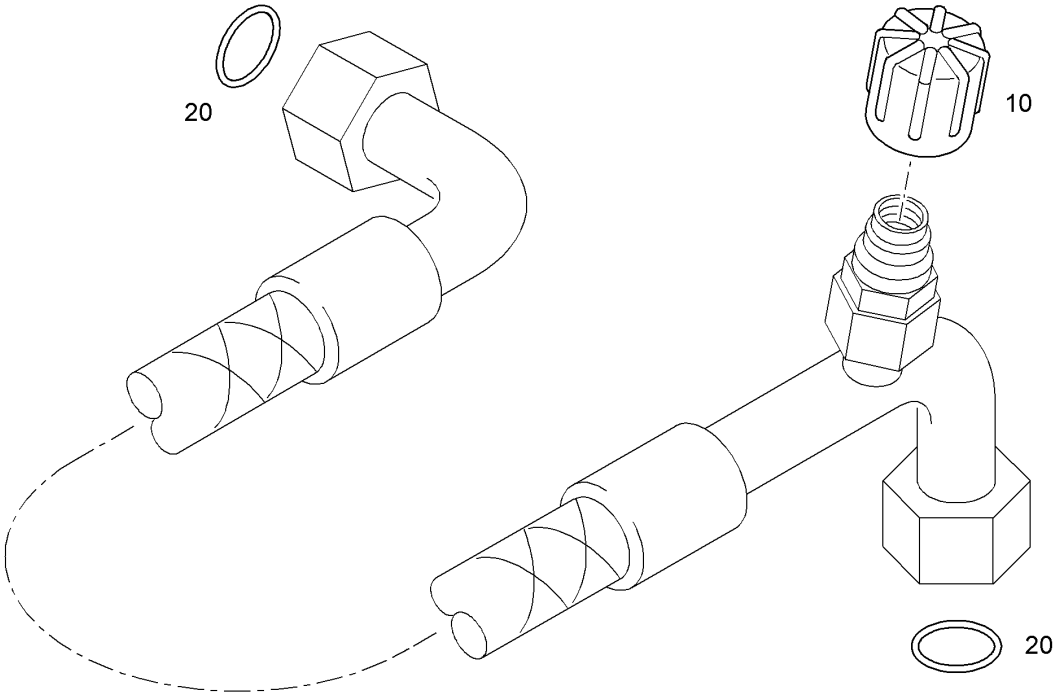


| Pos. | Item | Quantity | Description | Designação | Serie | K |
|---|---|---|---|---|---|---|
| 10 | 10015404 | 1 | BLANKING PLUG | TAMPÃO | | |
| 20 | 5610999 | 2 | O-RING 10,82X1,78 | ANEL-O | | |

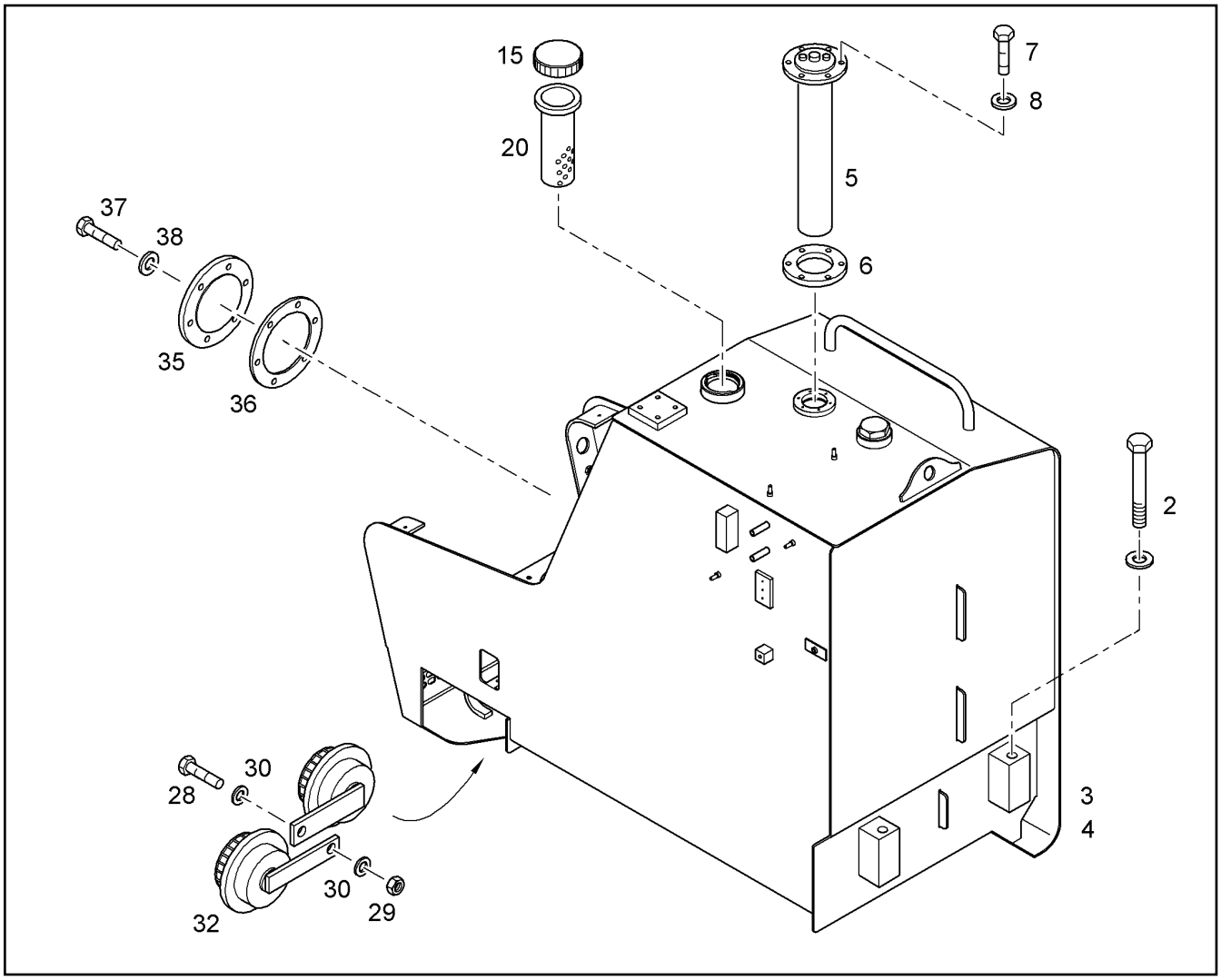


| Pos. | Item | Quantity | Description | Designação | Serie | K |
|---|---|---|---|---|---|---|
| 2 | | 1 | FIXING PARTS FUEL TANK<br>⇨ ❑ 453 | FIXACAO TANQUE DE COMBUS | | |
| 3 | | 1 | FUEL TANK<br>[04 ] | TANQUE DE COMBUSTÍVEL | 17393- | |
| 4 | 10071085 | 1 | FUEL TANK FOR EXCHANGE | TANQUE COMBUSTIVEL REPOSI | 17393- | |
| 5 | 10285669 | 1 | FUEL LEVEL TRANSMITTER | SENSOR NÍVEL DE COMBUSTÍVE | | |
| 6 | 7001386 | 1 | RUBBER GASKET | VEDAÇÃO DE BORRACHA | | |
| 7 | 4901607 | 6 | HEX BOLT ISO 4017 M6X16 10.9 A2C | PARAFUSO SEXTAVADO | | |
| 8 | 10289802 | 6 | WASHER ISO 7089 6 300HV | ARRUELA | | |
| 15 | 7414913 | 1 | LOCKABLE TANK CAP<br>⇨ ❑ 335 | FECHO DO TANQUE | | |
| 20 | 10296919 | 1 | FILLER SIEVE | FILTRO TIPO PENEIRA | | |
| 28 | 4001246 | 1 | HEX BOLT ISO 4017 M10X35 10.9 A3C | PARAFUSO SEXTAVADO | | |
| 29 | 4000383 | 1 | HEX NUT M10 | PORCA SEXTAVADA | | |
| 30 | 10289795 | 2 | WASHER ISO 7089 10 300HV | ARRUELA | | |
| 32 | 6204593 | 1 | SUPERTONE HORN | BUZINA | | |
| 35 | 9767890 | 1 | LID | TAMPA | | |
| 36 | 7380073 | 1 | O-RING DIN 3771 129,77X3,53 | ANEL-O | | |
| 37 | 4900188 | 6 | HEX BOLT ISO 4017 M8x16 8.8 A2C | PARAFUSO SEXTAVADO | | |
| 38 | 423910801 | 6 | LOCK WASHER 8,4/13X1,7 VS 8 | ARRUELA DE SEGURANÇA | | |

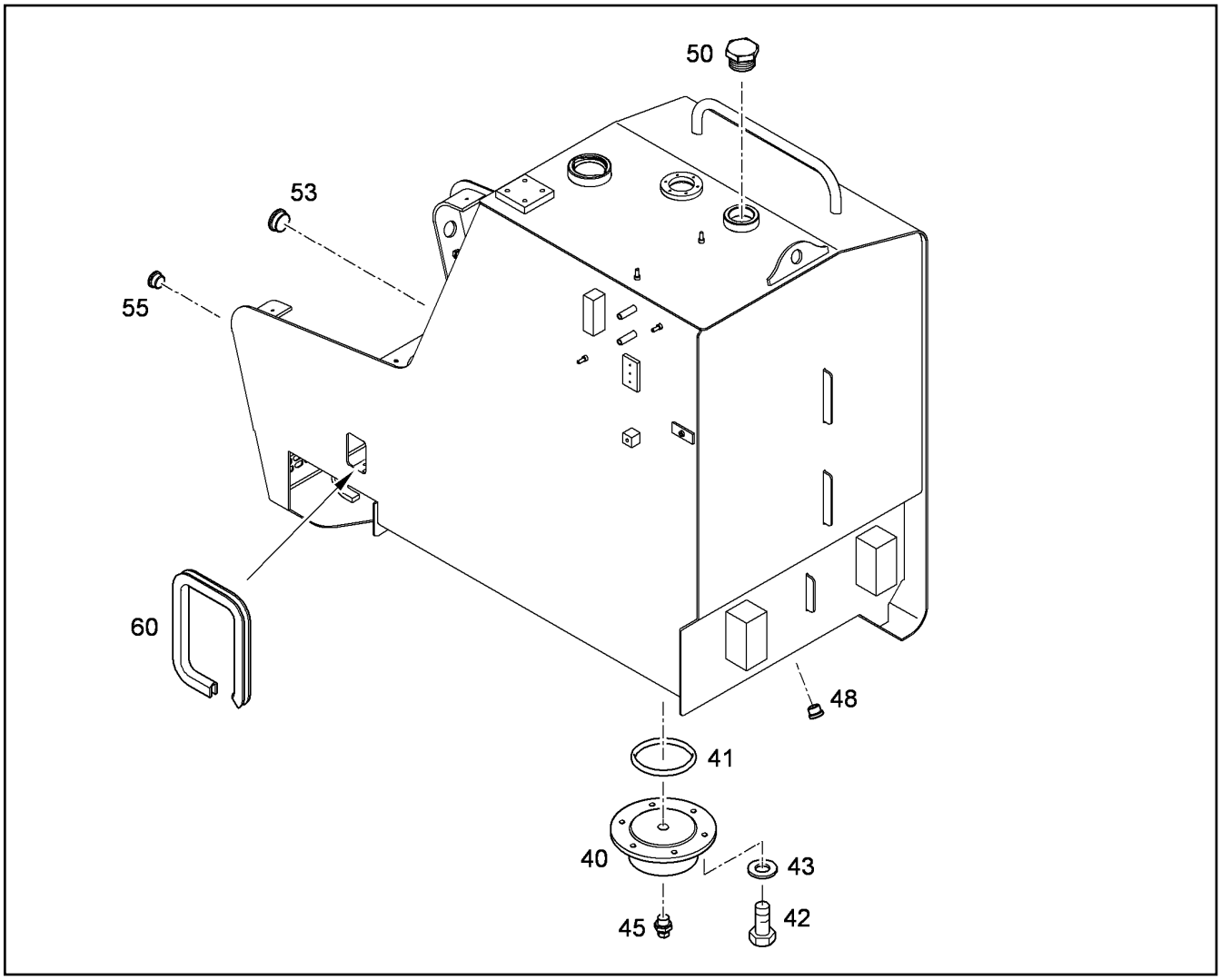


| Pos. | Item | Quantity | Description | Designação | Serie | K |
|---|---|---|---|---|---|---|
| 40 | 10067706 | 1 | LID | TAMPA | | |
| 41 | 7380073 | 1 | O-RING DIN 3771 129,77X3,53 | ANEL-O | | |
| 42 | 4900188 | 6 | HEX BOLT ISO 4017 M8x16 8.8 A2C | PARAFUSO SEXTAVADO | | |
| 43 | 423910801 | 6 | LOCK WASHER 8,4/13X1,7 VS 8 | ARRUELA DE SEGURANÇA | | |
| 45 | 5004624 | 1 | OIL DRAIN PLUG M 30 1,5<br>⇨ ❑ 491 | VÁLVULA DE DRENAGEM | | |
| 48 | 7361961 | 1 | SCREW PLUG VSTI M22X1,5 | PARAFUSO DE FECHAMENTO | | |
| 50 | 7363408 | 1 | STOP PLUG | PLUGUE DE FECHAMENTO | | |
| 53 | 7363177 | 1 | SCREW PLUG VSTI | PARAFUSO DE FECHAMENTO | | |
| 55 | 7363717 | 1 | SCREW PLUG | PARAFUSO DE FECHAMENTO | | |
| 60 | 226016702 | 0.3m | SECTION | PERFIL DE PROTECAO DE CANT | | |

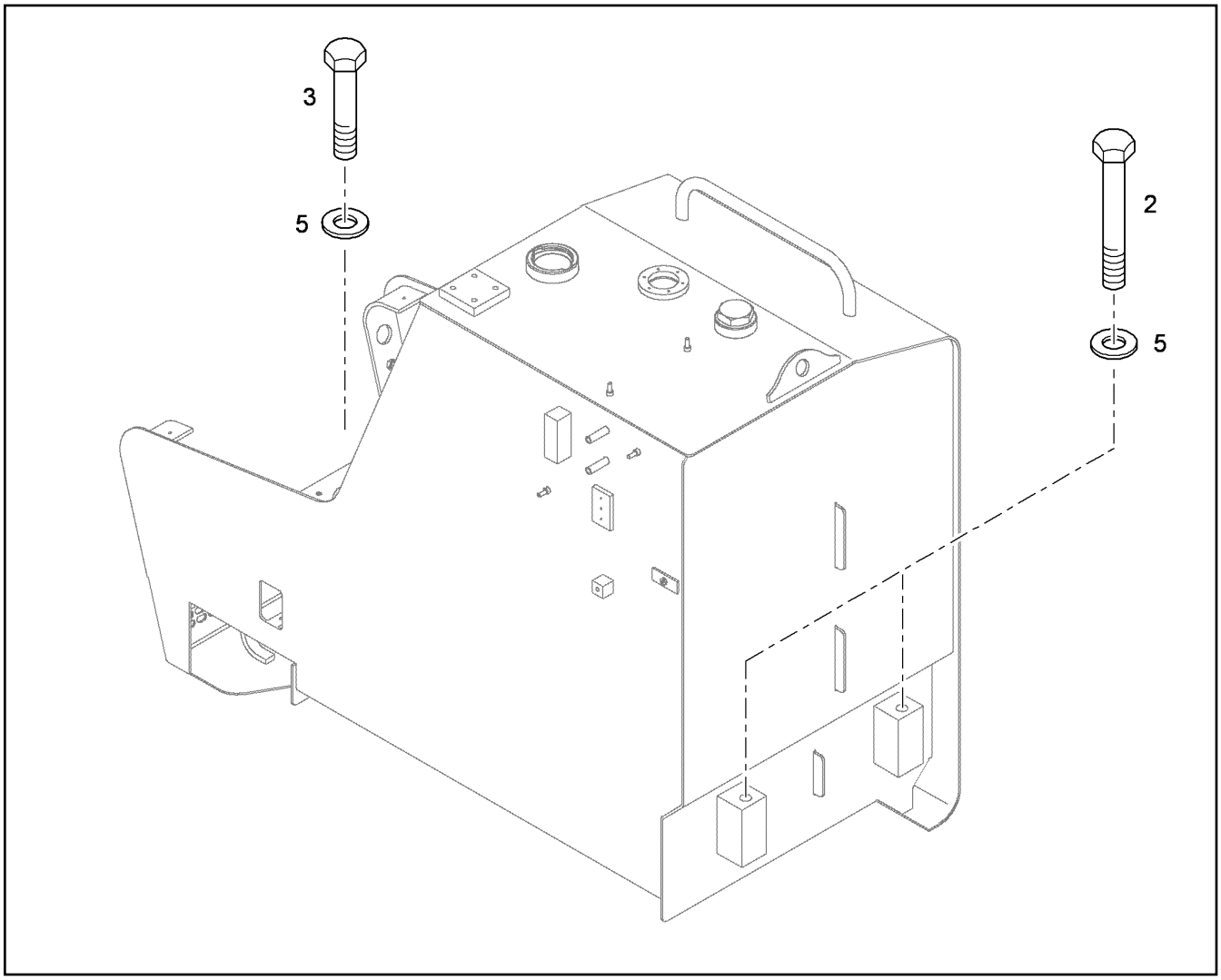


| Pos. | Item | Quantity | Description | Designação | Serie | K |
|---|---|---|---|---|---|---|
| 2 | 10425597 | 2 | HEX BOLT ISO 4014 M20X180 10.9 FLZN | PARAFUSO SEXTAVADO | | |
| 3 | 10425595 | 1 | HEX BOLT ISO 4014 M20X150 10.9 FLZN | PARAFUSO SEXTAVADO | | |
| 5 | 4600222 | 3 | WASHER 20 300-370HV | ARRUELA | | |

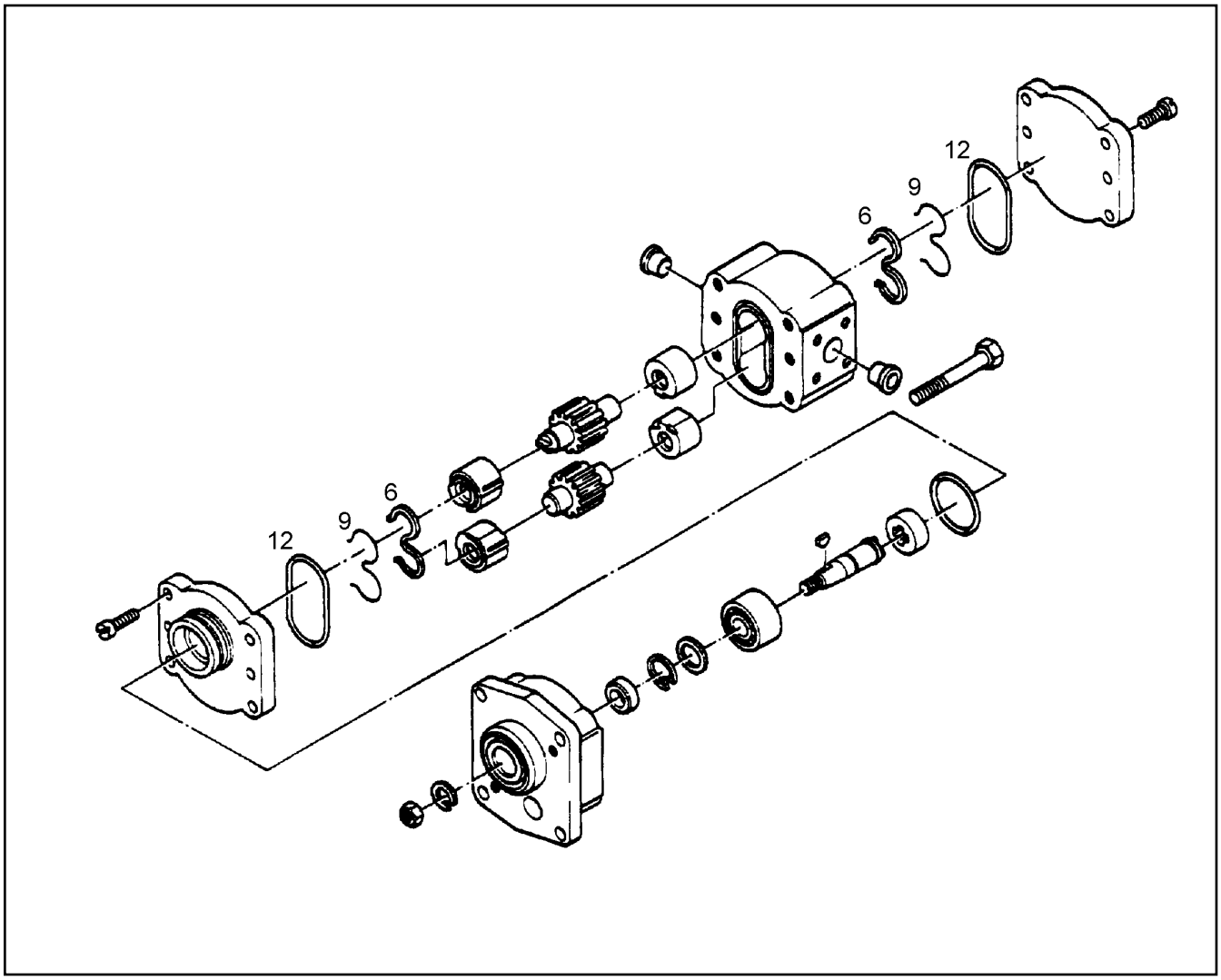


| Pos. | Item | Quantity | Description | Designação | Serie | K |
|---|---|---|---|---|---|---|
| 6 | | 2 | SEALING RING | ANEL DE VEDAÇÃO | | |
| 9 | | 2 | SUPPORTING RING | ANEL DE APOIO | | |
| 12 | | 2 | SEALING RING | ANEL DE VEDAÇÃO | | |

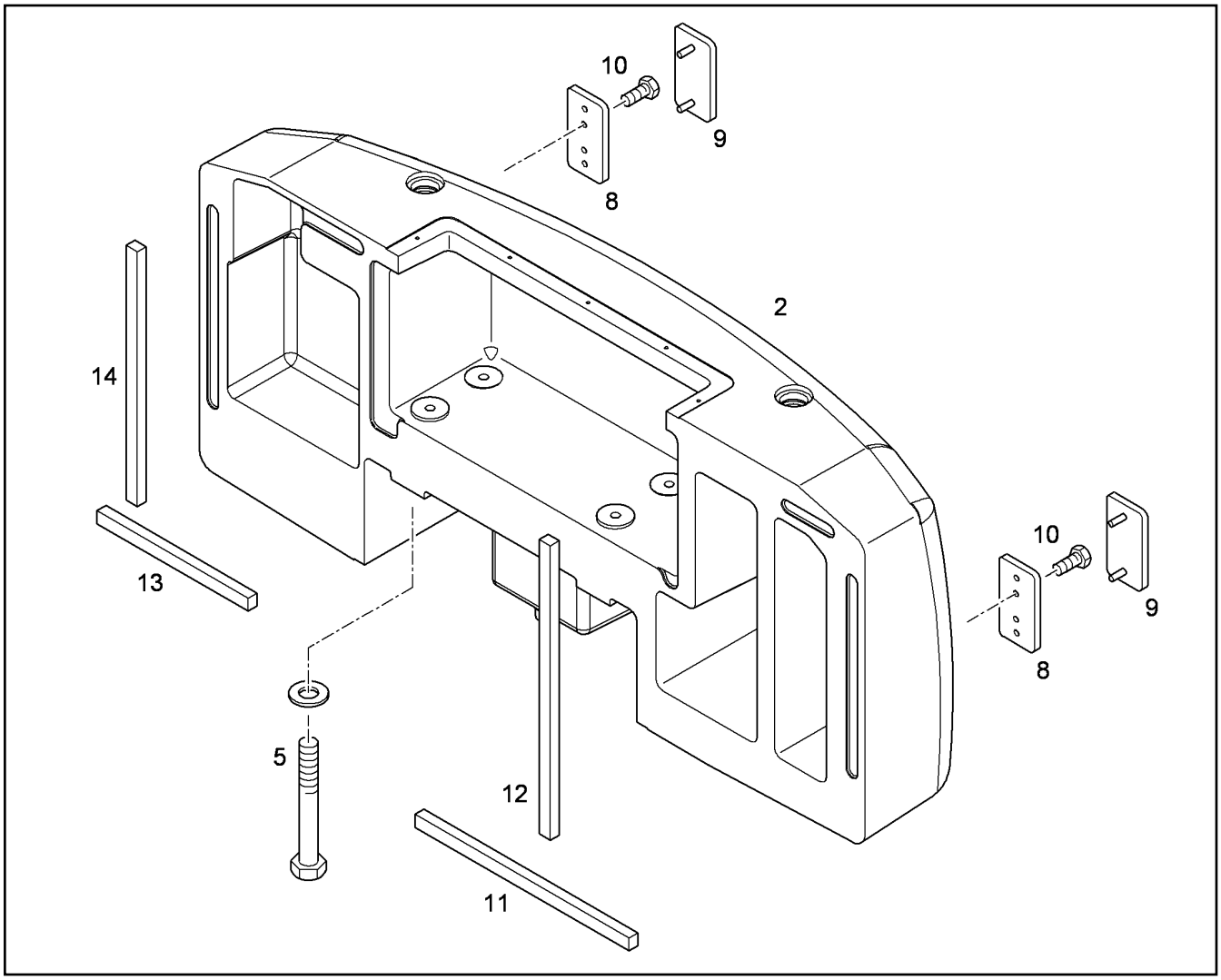


| Pos. | Item | Quantity | Description | Designação | Serie | K |
|---|---|---|---|---|---|---|
| 2 | 10498023 | 1 | COUNTERWEIGHT 9T<br>[LS068/ML05/13 ] | CONTRAPESO | | |
| 5 | 9937333 | 1 | FIXING PARTS<br>⇨ ❑ 456 | PECAS FIXACAO PARA CONTR | | |
| 8 | 9892073 | 2 | PLATE | PLACA | | |
| 9 | 6204631 | 2 | REAR REFLECTOR D196X88 ROT | REFLETOR LUMINOSO | | |
| 10 | 4001907 | 4 | SELF-TAPPING SCREW DIN 7516 AE M5X16 | PARAFUSO AUTO-ATARRAXANT | | |
| 11 | 7030263 | 1 | PROFILE | PERFIL | | |
| 12 | 7030263 | 1 | PROFILE | PERFIL | | |
| 13 | 7030263 | 1 | PROFILE | PERFIL | | |
| 14 | 7030263 | 1 | PROFILE | PERFIL | | |

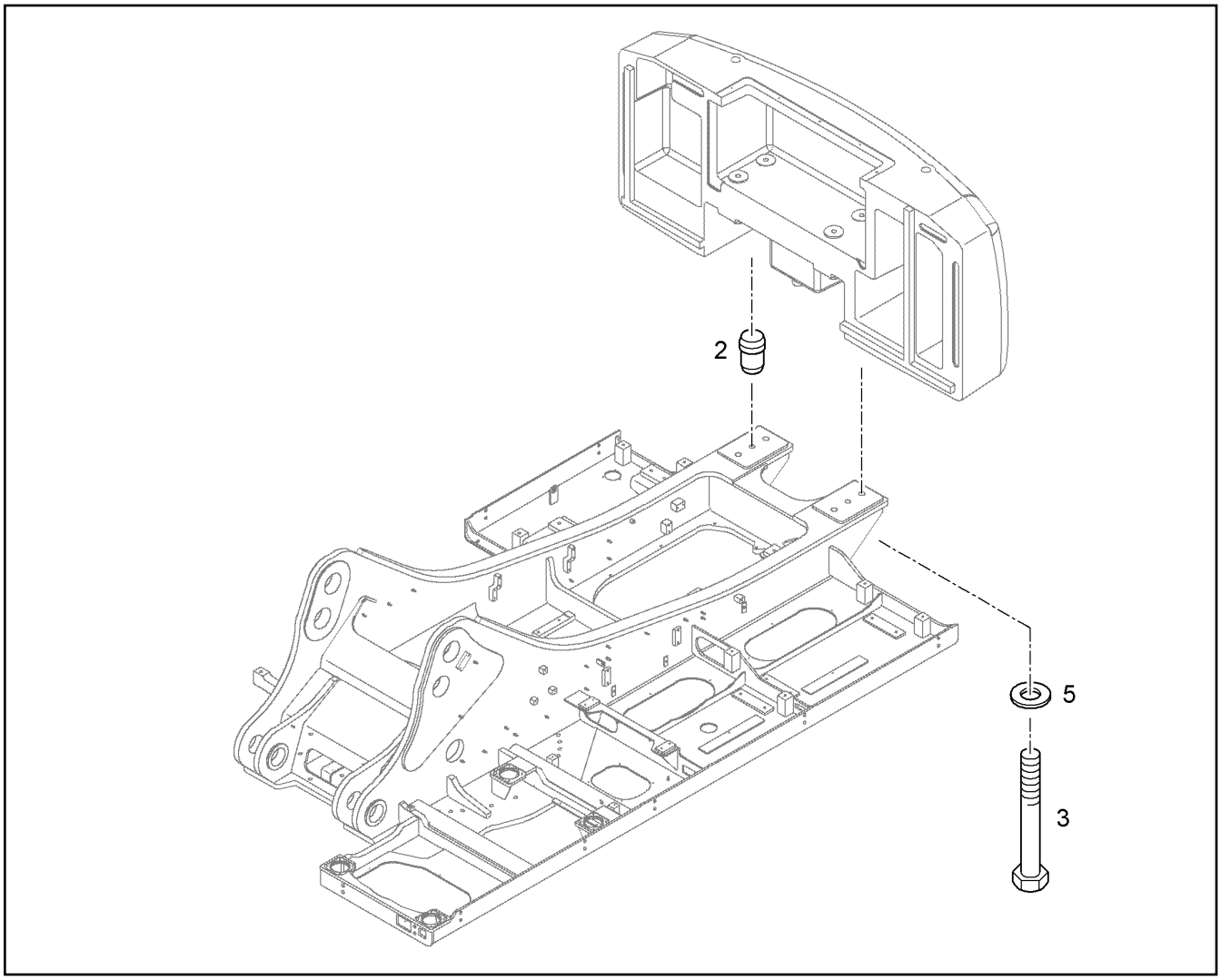


| Pos. | Item | Quantity | Description | Designação | Serie | K |
|---|---|---|---|---|---|---|
| 2 | 9698698 | 2 | CENTERING PIN | PINO DE CENTRAGEM | | 1 |
| 3 | 10425709 | 4 | HEX BOLT ISO 4014 M36X320 10.9 FLZN | PARAFUSO SEXTAVADO | | |
| 5 | 4900581 | 4 | WASHER DIN 6916 37 DAC | ARRUELA | | |

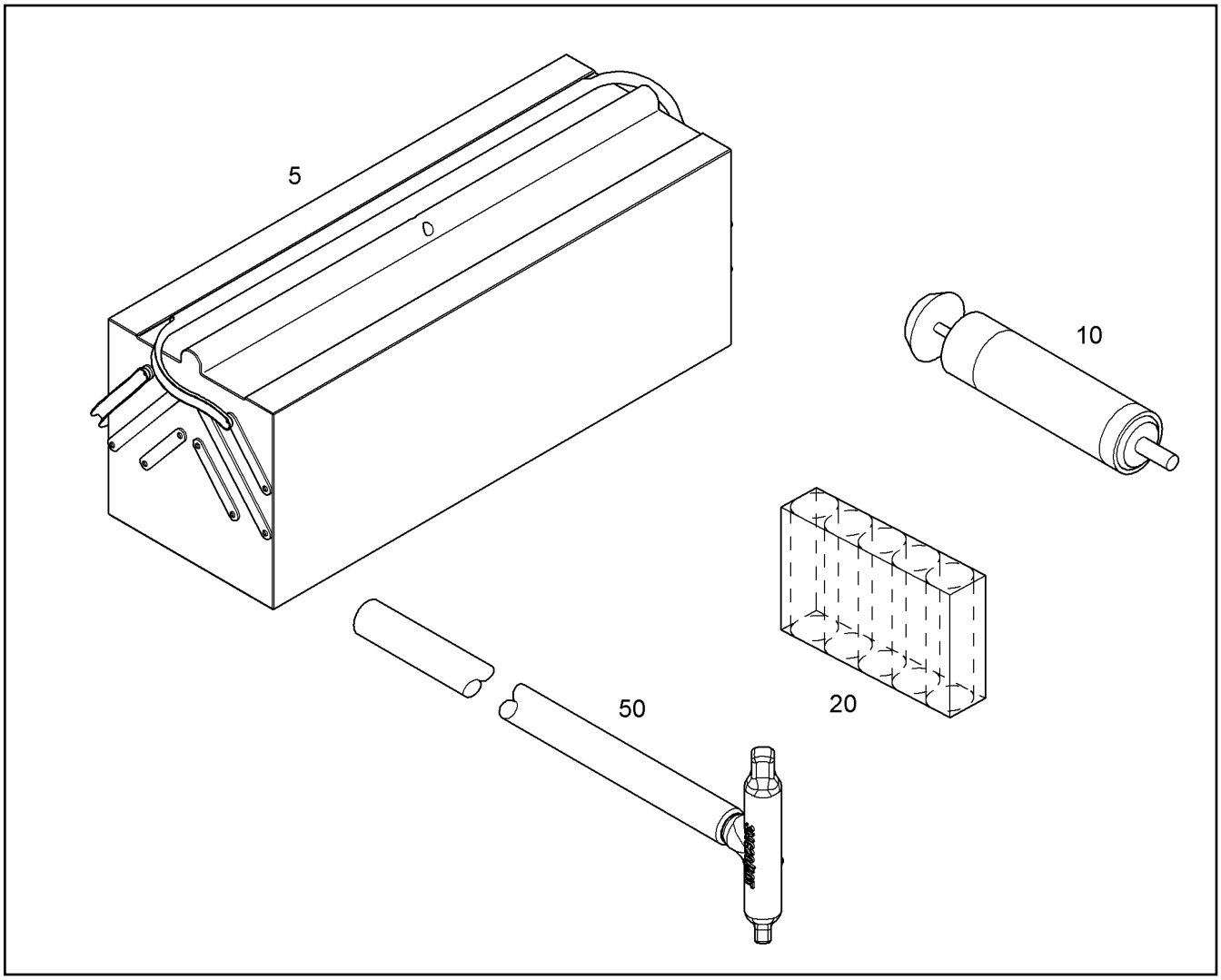


| Pos. | Item | Quantity | Description | Designação | Serie | K |
|---|---|---|---|---|---|---|
| 5 | 10848562 | 1 | TOOL EQUIPMENT<br>⇨ ❑ 458 | KIT DE FERRAMENTAS | | |
| 10 | 10009239 | 1 | FILLING PUMP | BOMBA DE ENCHIMENTO | | |
| 20 | 8501565 | 1 | PASTE | PASTA | | |
| 50 | 10451202 | 1 | EXTRACTOR | FERRAMENTA DE EXTRAÇÃO | | 1 |

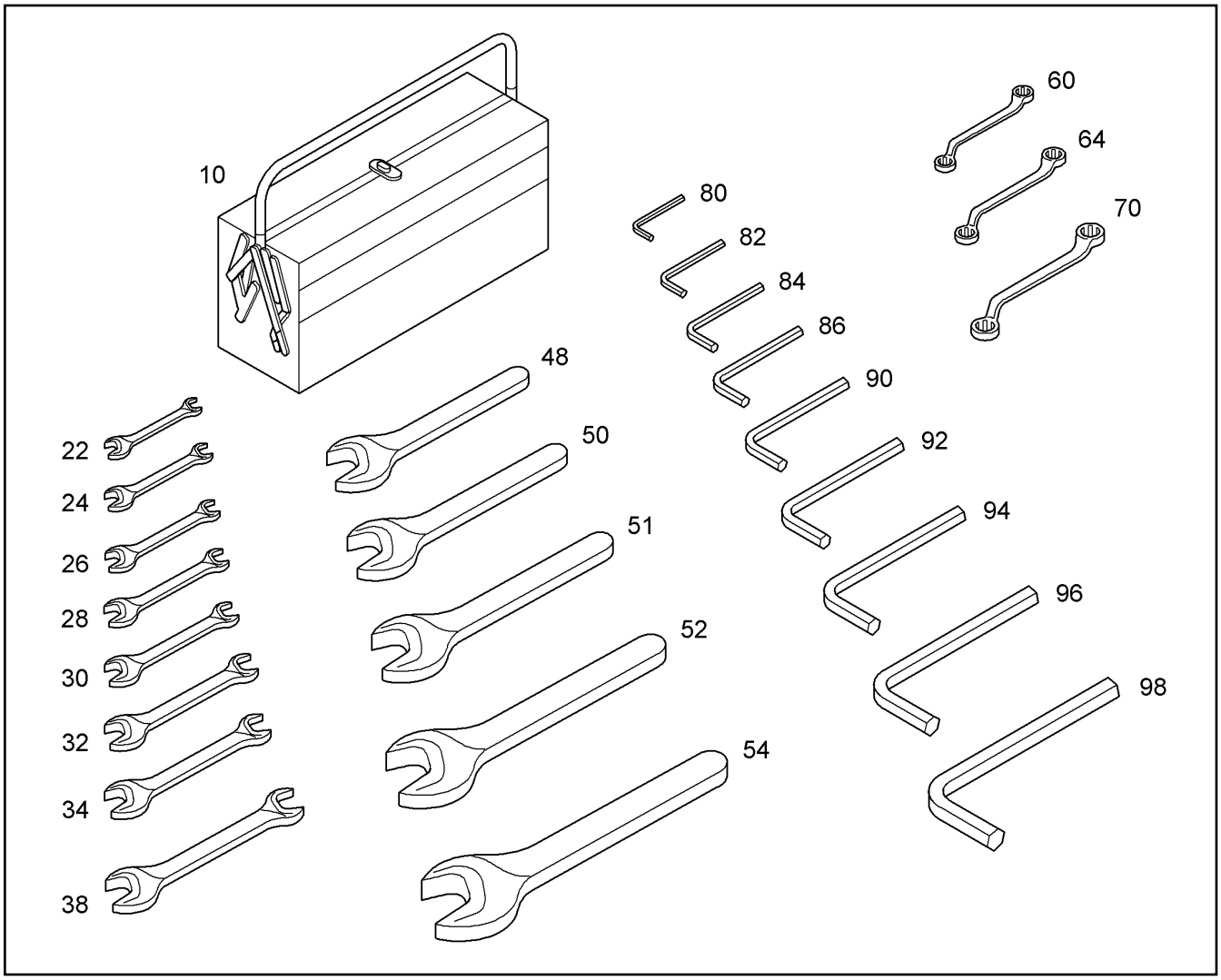


| Pos. | Item | Quantity | Description | Designação | Serie | K |
|---|---|---|---|---|---|---|
| 10 | 7016002 | 1 | TOOL BOX | CAIXA DE FERRAMENTAS | | |
| 22 | 11162163 | 1 | DOUBLE-HEADED SPANNER SW8 X 9 DIN 3 | CHAVE FIXA DUPLA | | |
| 24 | 11162164 | 1 | DOUBLE-HEADED SPANNER SW10 X 11 DIN | CHAVE FIXA DUPLA | | |
| 26 | 11162165 | 1 | DOUBLE-HEADED SPANNER SW12 X 13 DIN | CHAVE FIXA DUPLA | | |
| 28 | 11162167 | 1 | DOUBLE-HEADED SPANNER SW14 X 15 DIN | CHAVE FIXA DUPLA | | |
| 30 | 11162169 | 1 | DOUBLE-HEADED SPANNER SW16 X 17 DIN | CHAVE FIXA DUPLA | | |
| 32 | 11162170 | 1 | DOUBLE-HEADED SPANNER SW18 X 19 DIN | CHAVE FIXA DUPLA | | |
| 34 | 11162171 | 1 | DOUBLE-HEADED SPANNER SW22 X 24 DIN | CHAVE FIXA DUPLA | | |
| 38 | 11162173 | 1 | DOUBLE-HEADED SPANNER SW27 X 30 DIN | CHAVE FIXA DUPLA | | |
| 48 | 11162174 | 1 | SINGLE-END SPANNER SW32 DIN 894 | CHAVE DE BOCA SIMPLES | | |
| 50 | 11162175 | 1 | SINGLE-END SPANNER SW36 DIN 894 | CHAVE DE BOCA SIMPLES | | |
| 51 | 11162177 | 1 | SINGLE-END SPANNER SW41 DIN 894 | CHAVE DE BOCA SIMPLES | | |
| 52 | 11162178 | 1 | SINGLE-END SPANNER SW46 DIN 894 | CHAVE DE BOCA SIMPLES | | |
| 54 | 11162179 | 1 | SINGLE-END SPANNER SW50 DIN 894 | CHAVE DE BOCA SIMPLES | | |
| 60 | 11162097 | 1 | DOUBLE RING SPANNER SW10X13 DIN 838 | CHAVE ESTRELA DUPLA | | |
| 64 | 11162099 | 1 | DOUBLE RING SPANNER SW16X18 DIN 838 | CHAVE ESTRELA DUPLA | | |
| 70 | 11162100 | 1 | DOUBLE RING SPANNER SW24X30 DIN 838 | CHAVE ESTRELA DUPLA | | |
| 80 | 11162101 | 1 | ANGLE SCREW DRIVER 3X66 ISO 2936 | CHAVE ALLEN | | |
| 82 | 11162111 | 1 | ANGLE SCREW DRIVER 4X74 ISO 2936 | CHAVE ALLEN | | |
| 84 | 11162119 | 1 | ANGLE SCREW DRIVER 5X85 ISO 2936 | CHAVE ALLEN | | |
| 86 | 11162120 | 1 | ANGLE SCREW DRIVER 6X186 | CHAVE ALLEN | | |
| 90 | 11162121 | 1 | ANGLE SCREW DRIVER 8X208 | CHAVE ALLEN | | |
| 92 | 11162122 | 1 | ANGLE SCREW DRIVER 10X234 | CHAVE ALLEN | | |
| 94 | 11162123 | 1 | ANGLE SCREW DRIVER 12X137 ISO 2936 | CHAVE ALLEN | | |
| 96 | 11162124 | 1 | ANGLE SCREW DRIVER 14X154 ISO 2936 | CHAVE ALLEN | | |
| 98 | 11162125 | 1 | ANGLE SCREW DRIVER 17X168 ISO 2936 | CHAVE ALLEN | | |

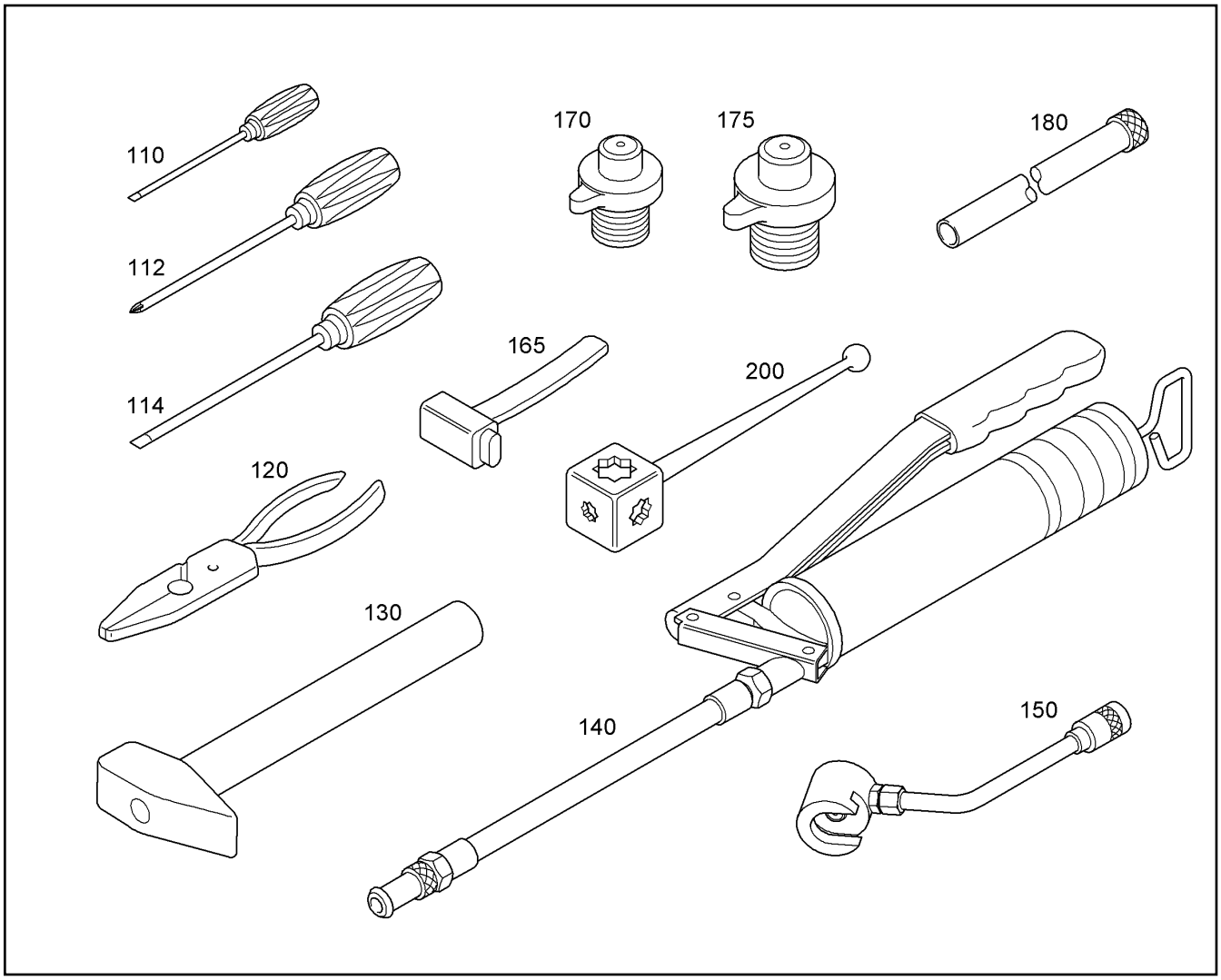


| Pos. | Item | Quantity | Description | Designação | Serie | K |
|---|---|---|---|---|---|---|
| 110 | 11162126 | 1 | SLOTTE SCREW DRIVER 5.5X200 | | | |
| 112 | 11162132 | 1 | SCREWDRIVER 2X210 | CHAVE DE FENDAS PHILLIPS | | |
| 114 | 11162133 | 1 | SLOTTE SCREW DRIVER 10X300 | | | |
| 120 | 11162134 | 1 | COMBI PLIERS | ALICATE UNIVERSAL | | |
| 130 | 11162135 | 1 | ENGINEER'S HAMMER 1500 | MARTELO DE PENA | | |
| 140 | 7900280 | 1 | LEVER TYPE HAND GREASE GUN | PISTOLA GRAXA MANUAL COM | | |
| 150 | 7900836 | 1 | NOZZLE PIPE | TUBO INJETOR | | |
| 165 | 3001289 | 1 | WEDGE DRIVE OUT | SACA-PINOS CONICO | | |
| 170 | 9103255 | 1 | DRIVE-SCREW M36 | PARAFUSO DE PERCUSSÃO M3 | | |
| 175 | 7361276 | 1 | MOUNTING PIN | SACA PINO | | |
| 180 | 9358137 | 1 | OIL DRAIN HOSE<br>⇨ ❑ 460 | MANGUEIRA ESCOAMENTO OLE | | 1 |
| 200 | 10359147 | 1 | GRIP SW9,12,14,17 GEKROEPFT | MAÇANETA | | |

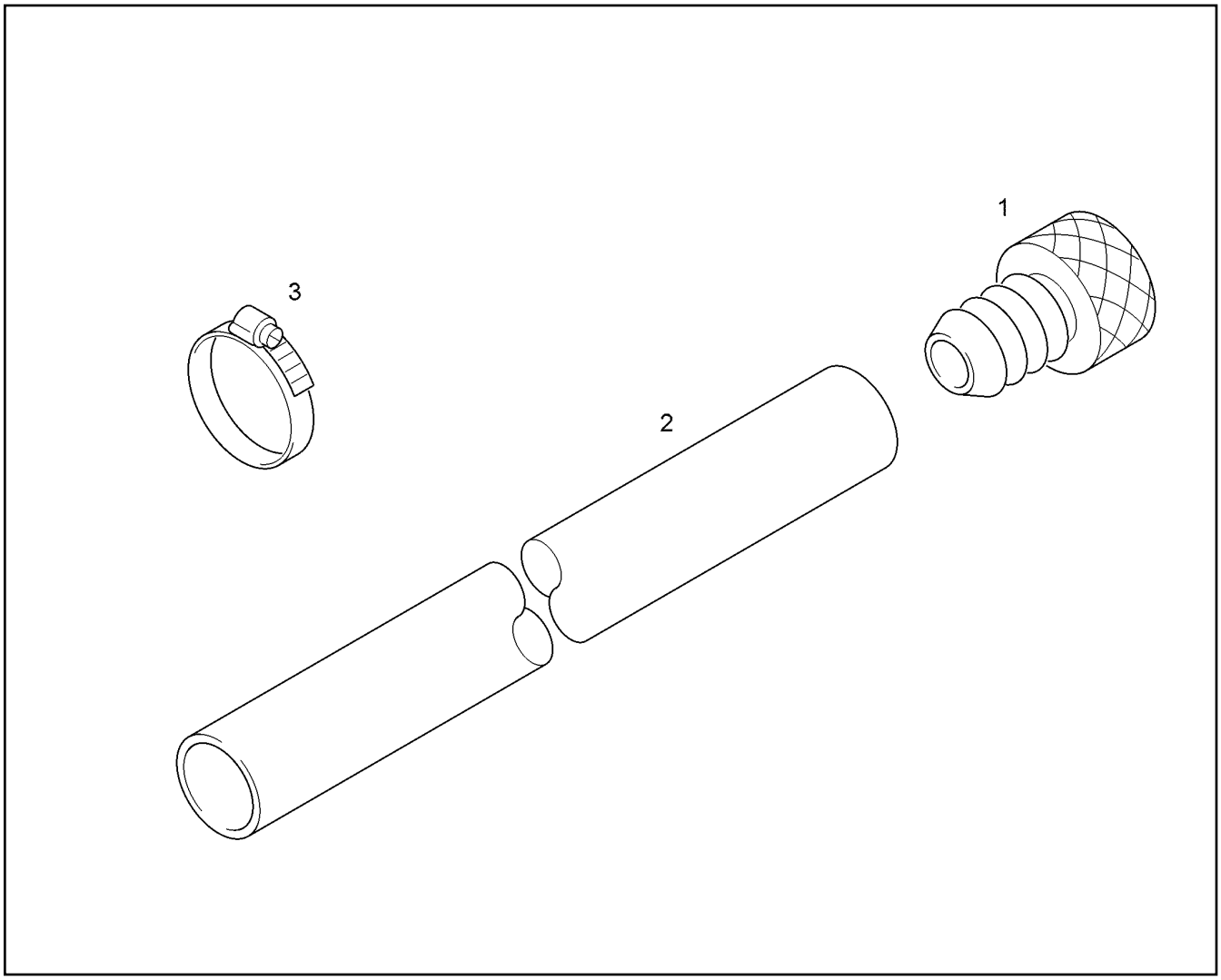


| Pos. | Item | Quantity | Description | Designação | Serie | K |
|---|---|---|---|---|---|---|
| 1 | 7402657 | 1 | HOSE SECTION | TERMINAL PARA MANGUEIRA | | |
| 2 | 7402658 | 1m | OIL DRAIN HOSE DN18X3 | MANGUEIRA ESCOAMENTO OLE | | 1 |
| 3 | 11347332 | 1 | 2-LUG LOSE CLIP 25 23-27 | BRAÇADEIRA ROSCADA C/2OR | | |

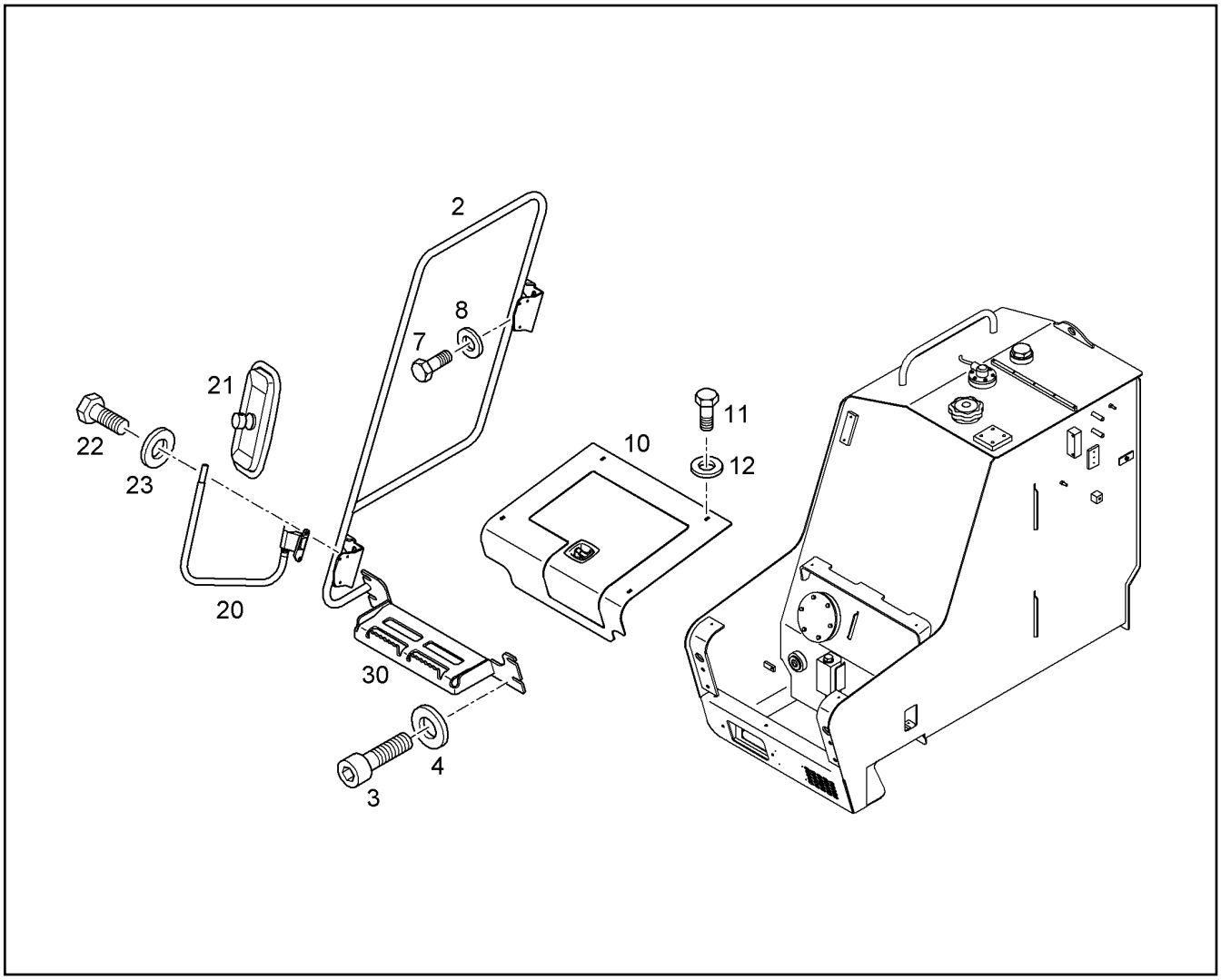


| Pos. | Item | Quantity | Description | Designação | Serie | K |
|---|---|---|---|---|---|---|
| 2 | 10358526 | 1 | HANDLE | MAÇANETA | | |
| 3 | 4042035 | 4 | CYL HEAD STUD ISO 4762 M 12 X 45 8.8 A3 | PARAFUSO CILINDRICO | | |
| 4 | 10289804 | 4 | WASHER ISO 7089 12 300HV | ARRUELA | | |
| 7 | 4000704 | 2 | HEX BOLT ISO 4017 M8X20 10.9 A2C | PARAFUSO SEXTAVADO | | |
| 8 | 4000779 | 2 | WASHER A 8 200HV | ARRUELA | | |
| 10 | 10372836 | 1 | LID<br>⇨ ❑ 462 | TAMPA | | |
| 11 | 4000704 | 4 | HEX BOLT ISO 4017 M8X20 10.9 A2C | PARAFUSO SEXTAVADO | | |
| 12 | 423910801 | 4 | LOCK WASHER 8,4/13X1,7 VS 8 | ARRUELA DE SEGURANÇA | | |
| 20 | 7371845 | 1 | MIRROR SUPPORT | SUPORTE DO ESPELHO | | |
| 21 | 7005028 | 1 | MIRROR TOP PART | PARTE SUPERIOR DO ESPELHO | | |
| 22 | 4000704 | 2 | HEX BOLT ISO 4017 M8X20 10.9 A2C | PARAFUSO SEXTAVADO | | |
| 23 | 423910801 | 2 | LOCK WASHER 8,4/13X1,7 VS 8 | ARRUELA DE SEGURANÇA | | |
| 30 | 10070633 | 1 | PLATE | PLACA | | |

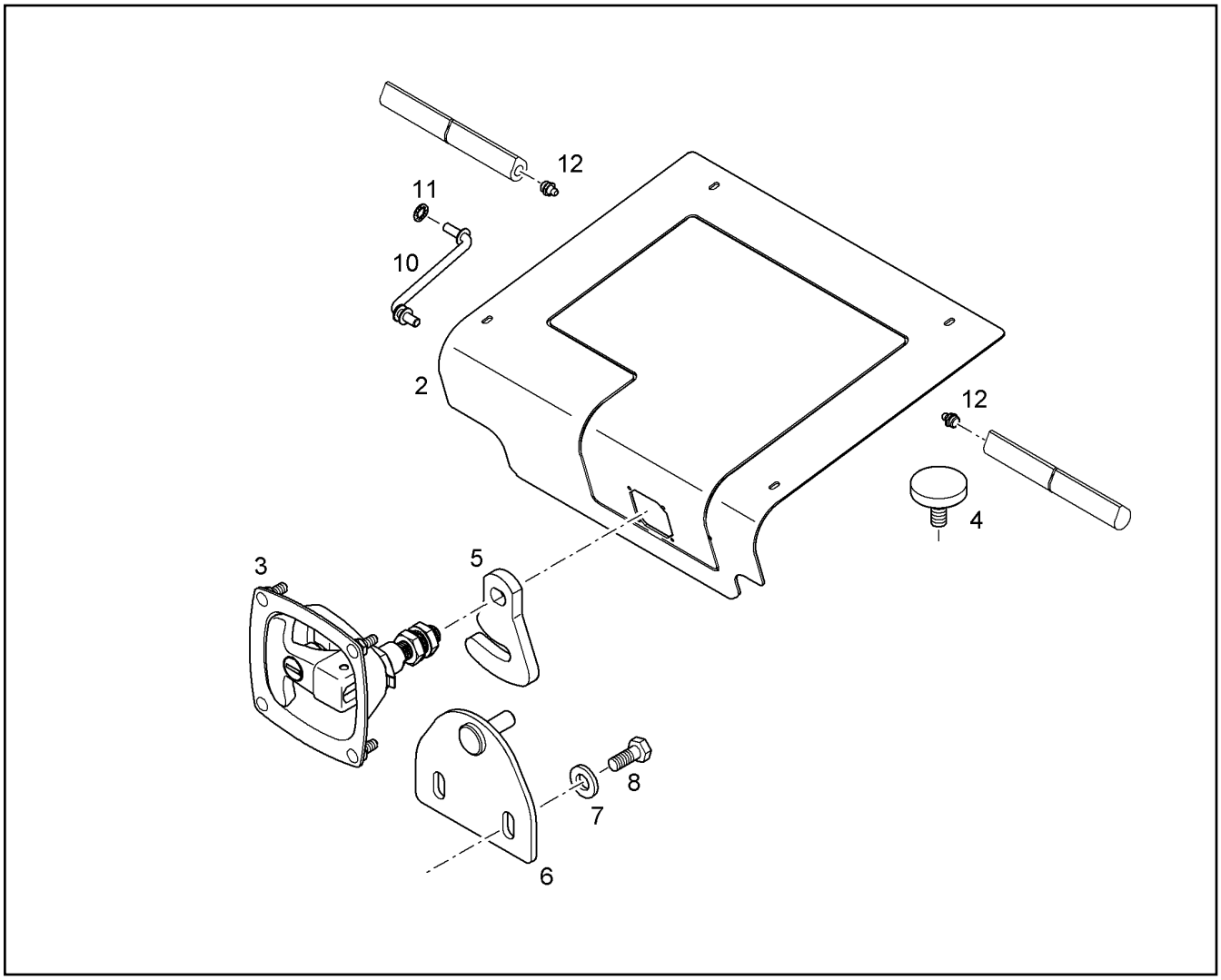


| Pos. | Item | Quantity | Description | Designação | Serie | K |
|---|---|---|---|---|---|---|
| 2 | | 1 | LID | TAMPA | | |
| 3 | 10353879 | 1 | DOOR LOCK<br>⇨ ❑ 402 | FECHADURA DA PORTA | | |
| 4 | 5004748 | 2 | BUFFER | COXIM GMT | | |
| 5 | 10368556 | 1 | LOCKING BAR | TRAVA | | |
| 6 | 10079279 | 1 | LOCKING BAR | TRAVA | | |
| 7 | 4000779 | 2 | WASHER A 8 200HV | ARRUELA | | |
| 8 | 4000704 | 2 | HEX BOLT ISO 4017 M8X20 10.9 A2C | PARAFUSO SEXTAVADO | | |
| 10 | 9945189 | 1 | ROD | HASTE | | |
| 11 | 7363743 | 1 | TOOTH LOCK WASHER | ARRUELA DENTADA | | |
| 12 | 10005440 | 2 | GREASE NIPPLE AEHNL.DIN 71412 A M10X | NIPLE DE GRAXA | | |

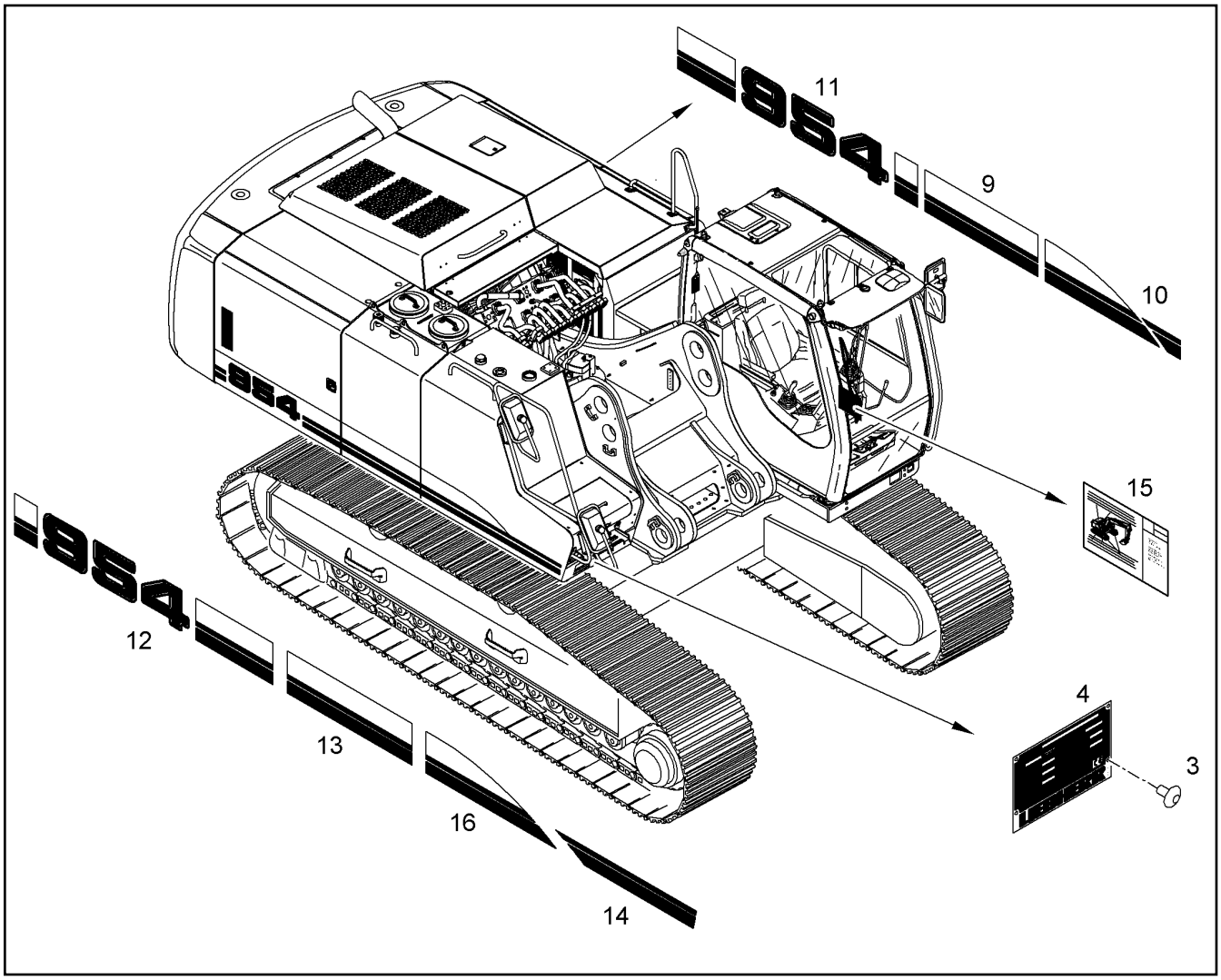


| Pos. | Item | Quantity | Description | Designação | Serie | K |
|---|---|---|---|---|---|---|
| 3 | 4900053 | 4 | BLIND RIVET | REBITE CEGO | | |
| 4 | 934430516 | 1 | TYPEPLATE LFR (PORT) | PLAQUETA DE TIPO LFR | | |
| 9 | 10080119 | 1 | STICKER | ETIQUETA ADESIVA | | |
| 10 | 10080120 | 1 | STICKER | ETIQUETA ADESIVA | | |
| 11 | 10080121 | 1 | STICKER | ETIQUETA ADESIVA | | |
| 12 | 10080122 | 1 | STICKER | ETIQUETA ADESIVA | | |
| 13 | 9949756 | 1 | STICKER | ETIQUETA ADESIVA | | |
| 14 | 10080123 | 1 | STICKER | ETIQUETA ADESIVA | | |
| 15 | 10070309 | 1 | LUBRICATION DIAGRAM | PLANO DE LUBRIFICACAO | | |
| 16 | 9949751 | 1 | STICKER | ETIQUETA ADESIVA | | |

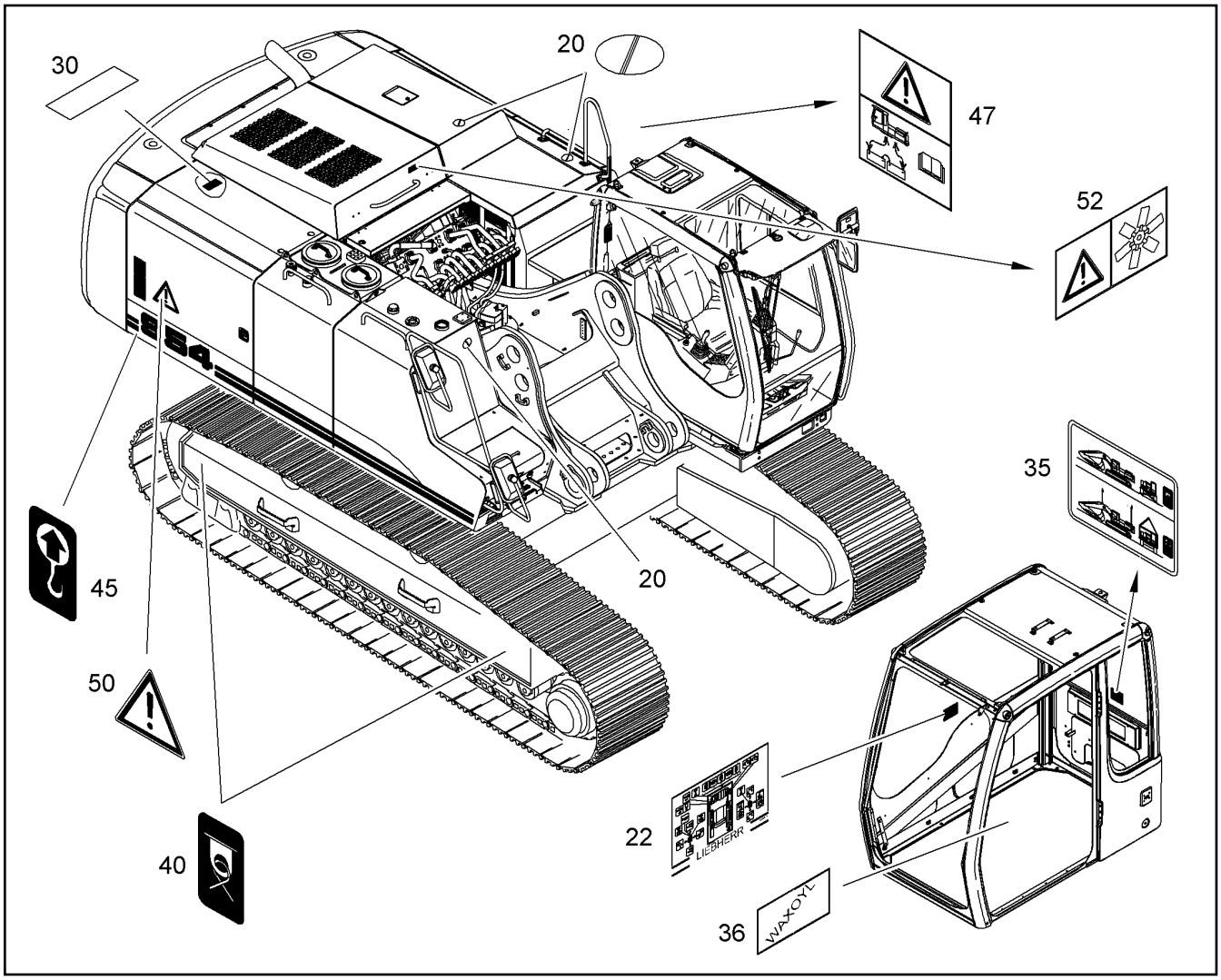


| Pos. | Item | Quantity | Description | Designação | Serie | K |
|---|---|---|---|---|---|---|
| 20 | 7366794 | 5 | PROHIBITION SIGN | PLACA DE PROIBICAO | | |
| 22 | 10092123 | 1 | CONTROL PLATE | PLACA ADESIVA | | |
| 30 | 11004408 | 1 | STICKER 132mmX115mm | ETIQUETA ADESIVA | | |
| 35 | 10386774 | 1 | LOADING SHEME UPPERCARRIAGE | ESQUEMA DE TRANSPORTE | | |
| 36 | 10015928 | 1 | SIGN WAXOYL | PLACA | | |
| 40 | 9402376 | 4 | REFERENCE PLATE | PLACA INDICAÇÃO-PONTO AM | | |
| 45 | 9402377 | 2 | REFERENCE PLATE | PLACA INDICAÇÃO-PONTO IÇAM | | |
| 47 | 9909254 | 1 | NAMEPLATE REMOTE START 80mmX120m | PLAQUETA PARTIDA EXTERNA | | |
| 50 | 9910464 | 2 | DANGER SIGN DANGER SPOT 200mmX17 | PLAQUETA DE ADVERTENCIA | | |
| 52 | 9619934 | 1 | SIGN MOTORSTILLSTAND 120mmX60mm | PLACA | | |

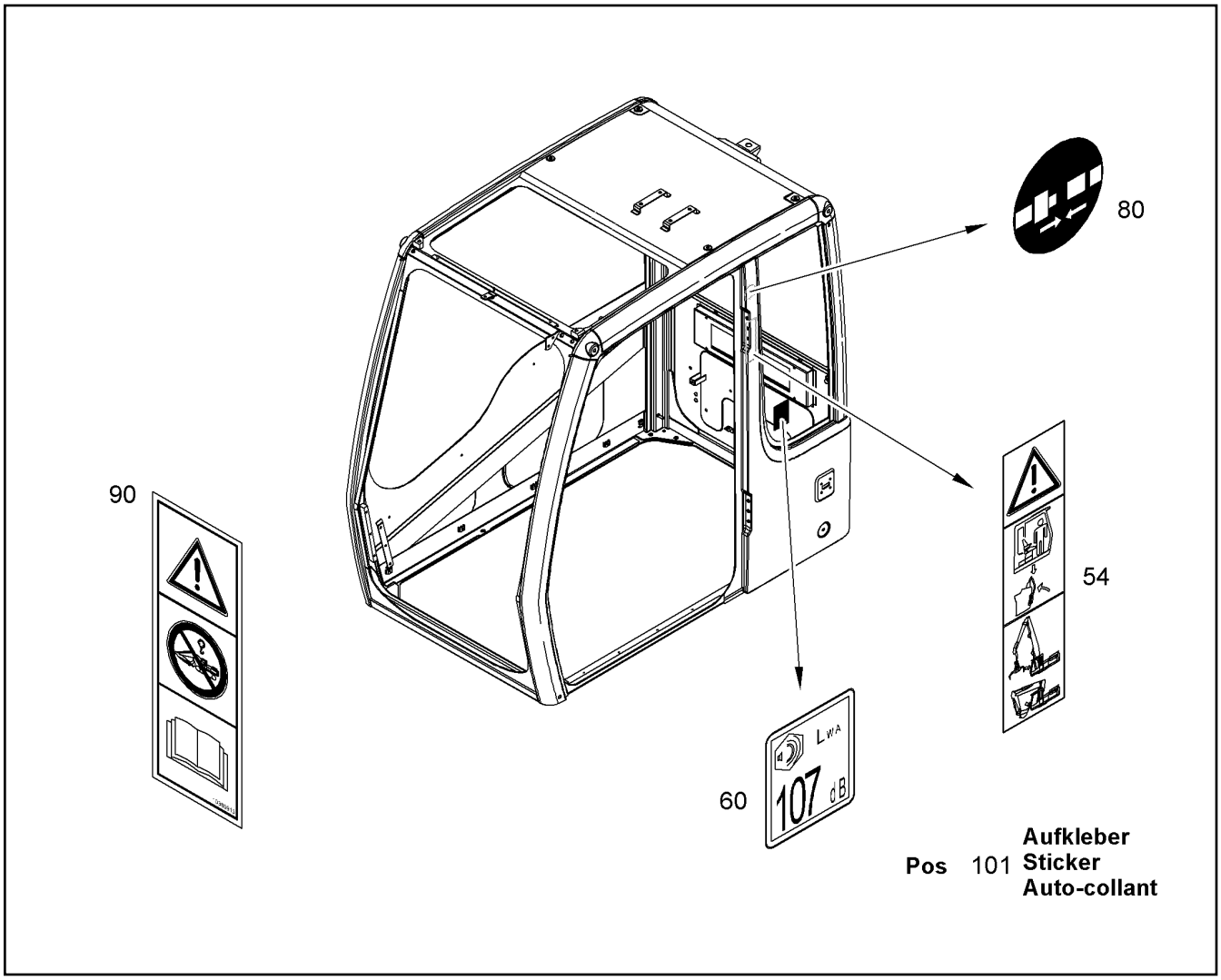


| Pos. | Item | Quantity | Description | Designação | Serie | K |
|---|---|---|---|---|---|---|
| 54 | 9581113 | 1 | WARNING SIGN | PLACA DE ADVERTÊNCIA | | |
| 60 | 9874359 | 1 | STICKER SOUND VOLUME LEVEL LWA 105 | ADESIVO NÍVEL SONORO | | |
| 80 | 10066101 | 1 | LABEL SAFETY BELT Ø65mm | PLAQUETA CINTO DE SEGURA | | |
| 90 | 10380915 | 2 | WARNING SIGN | PLACA DE ADVERTÊNCIA | | |
| 101 | 773150416 | 1 | STICKER | ETIQUETA ADESIVA | | |

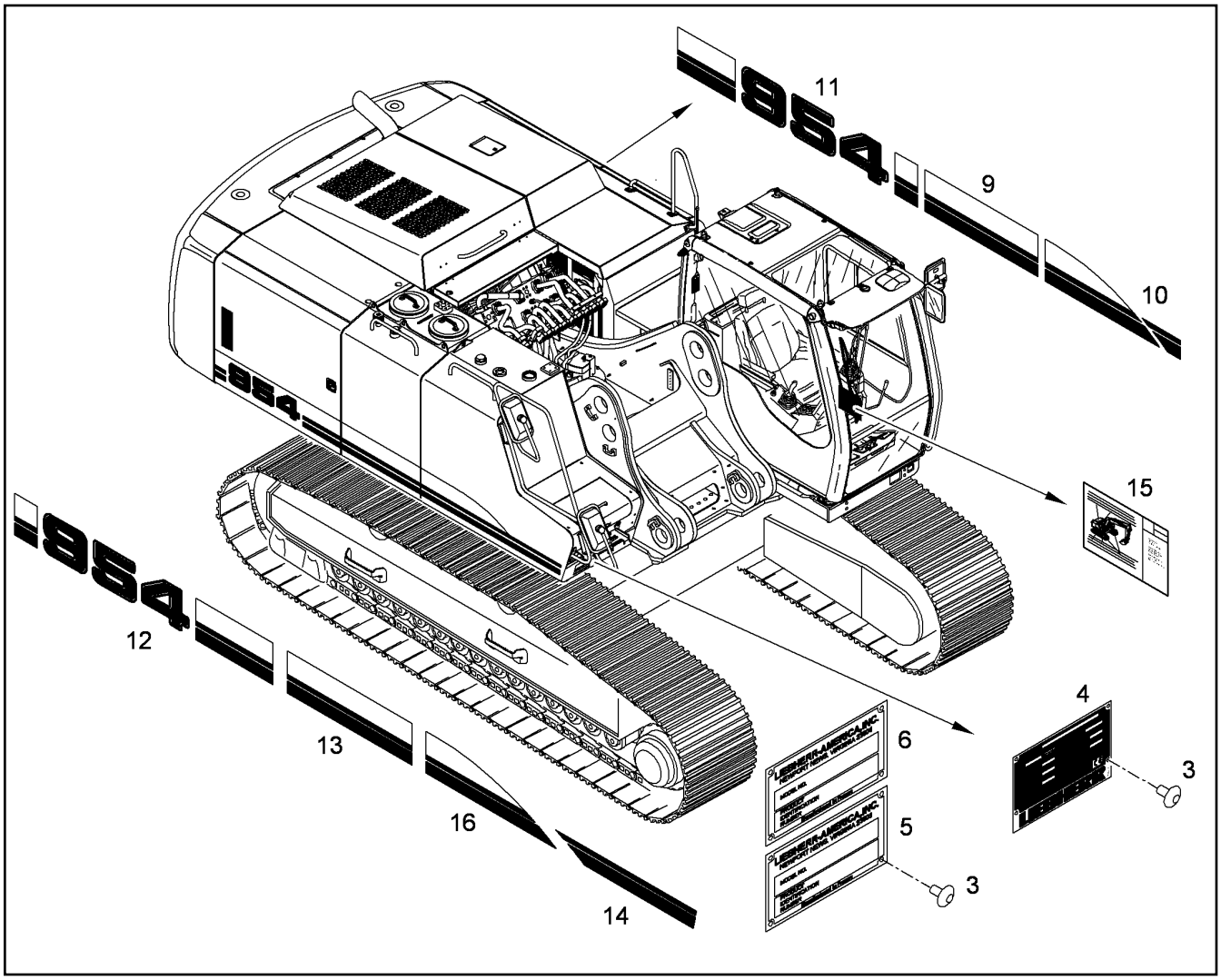


| Pos. | Item | Quantity | Description | Designação | Serie | K |
|---|---|---|---|---|---|---|
| 3 | 4900053 | 4 | BLIND RIVET | REBITE CEGO | | |
| 4 | 10498223 | 1 | TYPE PLATE LBR | PLACA DE IDENTIFICAÇÃO | | |
| 5 | 9354303 | 1 | NAMEPLATE 83mmX152mm | PLAQUETA DE TIPO LAM | | |
| 6 | 10405887 | 1 | TYPEPLATE LFR 150mmX100mm | PLAQUETA DE TIPO LFR | | |
| 9 | 10080119 | 1 | STICKER | ETIQUETA ADESIVA | | |
| 10 | 10080120 | 1 | STICKER | ETIQUETA ADESIVA | | |
| 11 | 10080121 | 1 | STICKER | ETIQUETA ADESIVA | | |
| 12 | 10080122 | 1 | STICKER | ETIQUETA ADESIVA | | |
| 13 | 9949756 | 1 | STICKER | ETIQUETA ADESIVA | | |
| 14 | 10080123 | 1 | STICKER | ETIQUETA ADESIVA | | |
| 15 | 10840318 | 1 | LUBRICATION DIAGRAM | PLANO DE LUBRIFICACAO | | |
| 16 | 9949751 | 1 | STICKER | ETIQUETA ADESIVA | | |

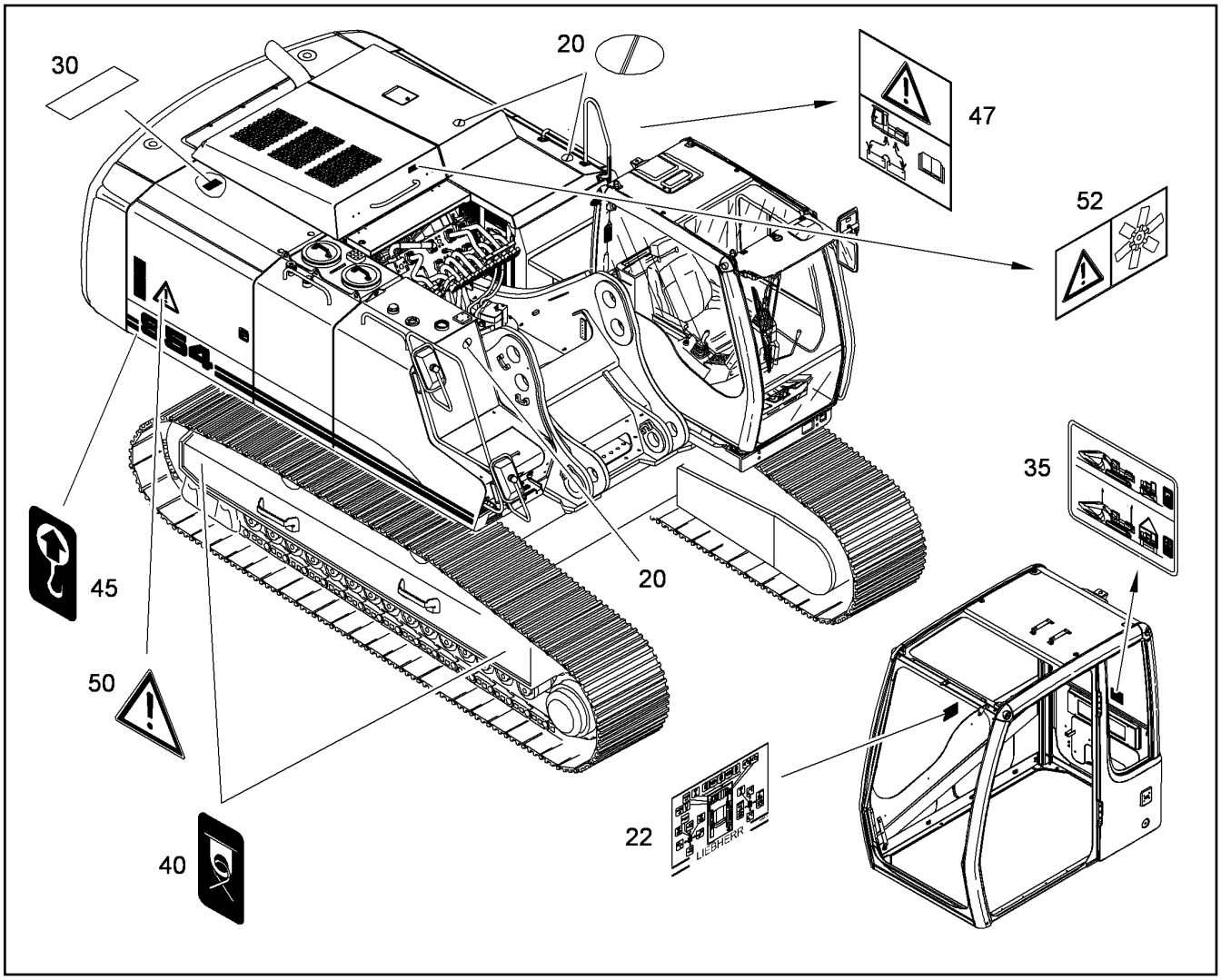


| Pos. | Item | Quantity | Description | Designação | Serie | K |
|---|---|---|---|---|---|---|
| 20 | 7366794 | 5 | PROHIBITION SIGN | PLACA DE PROIBICAO | | |
| 22 | 10092123 | 1 | CONTROL PLATE | PLACA ADESIVA | | |
| 30 | 11004408 | 1 | STICKER 132mmX115mm | ETIQUETA ADESIVA | | |
| 35 | 10386774 | 1 | LOADING SHEME UPPERCARRIAGE | ESQUEMA DE TRANSPORTE | | |
| 40 | 9402376 | 4 | REFERENCE PLATE | PLACA INDICAÇÃO-PONTO AM | | |
| 45 | 9402377 | 2 | REFERENCE PLATE | PLACA INDICAÇÃO-PONTO IÇAM | | |
| 47 | 9909254 | 1 | NAMEPLATE REMOTE START 80mmX120m | PLAQUETA PARTIDA EXTERNA | | |
| 50 | 9910464 | 2 | DANGER SIGN DANGER SPOT 200mmX17 | PLAQUETA DE ADVERTENCIA | | |
| 52 | 9619934 | 1 | SIGN MOTORSTILLSTAND 120mmX60mm | PLACA | | |

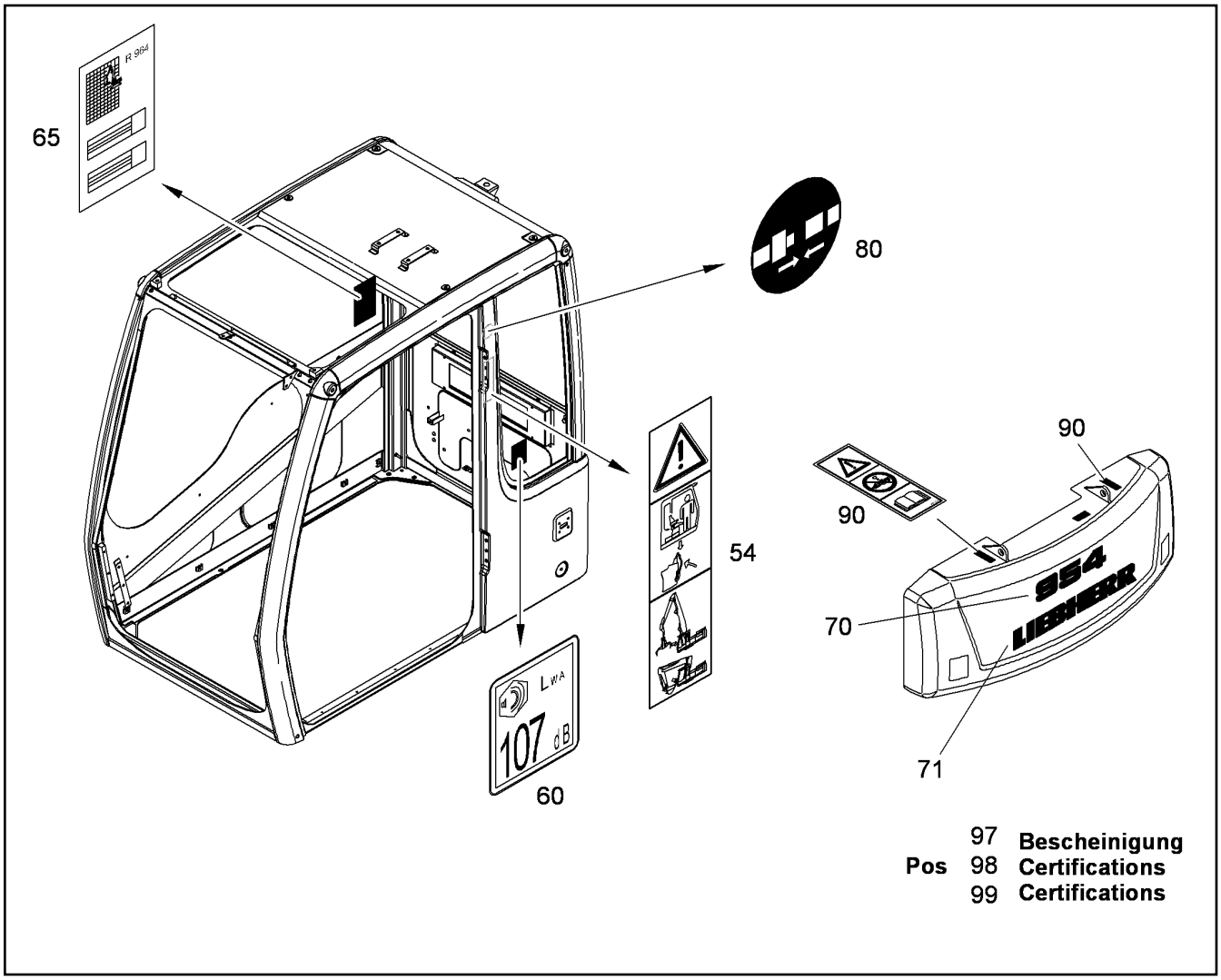


| Pos. | Item | Quantity | Description | Designação | Serie | K |
|---|---|---|---|---|---|---|
| 54 | 9581113 | 1 | WARNING SIGN | PLACA DE ADVERTÊNCIA | | |
| 60 | 9874359 | 1 | STICKER SOUND VOLUME LEVEL LWA 105 | ADESIVO NÍVEL SONORO | | |
| 65 | 9392835 | 1 | LOAD DIAGRAM CONF.TO ISO 1056710567 | TABELA DE CAPACIDADE DE CA | | |
| 70 | 10381258 | 1 | SIGN 954 | PLACA | | |
| 71 | 9613673 | 1 | STICKER LIEBHERR 1872mmX250mm | ETIQUETA ADESIVA | | |
| 80 | 10066101 | 1 | LABEL SAFETY BELT Ø65mm | PLAQUETA CINTO DE SEGURA | | |
| 90 | 10380915 | 2 | WARNING SIGN | PLACA DE ADVERTÊNCIA | | |
| 97 | 9399606 | 1 | EEC CERTIFICATE | CERTIFICADO EWG | | |
| 98 | 9399607 | 1 | EU CONFORMITY DECLARATION | DECLARACAO DE CONFORMIDA | | |
| 99 | 9399608 | 1 | EU MANUFACTURER DECLARATION | DECLARACAO DO FABRICANTE | | |

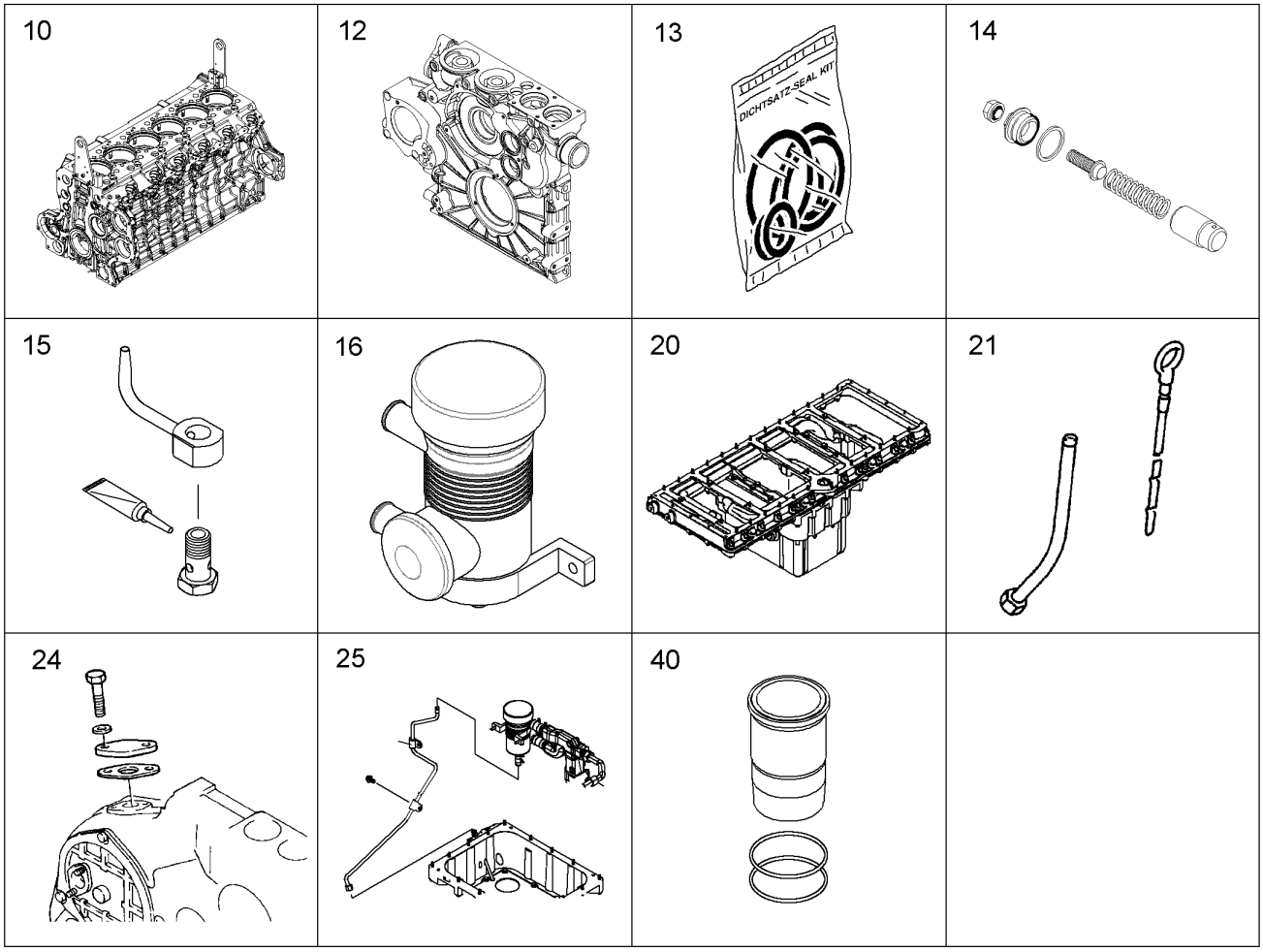


| Pos. | Item | Quantity | Description | Designação | Serie | K |
|---|---|---|---|---|---|---|
| 10 | 10115779 | 1 | CRANKCASE CPL.<br>⇨ ❑ 477 | BLOCO DO MOTOR COMPLETO | | |
| 12 | | 1 | POWER UNIT SUPPORT ATTACHMENT<br>⇨ ❑ 484 | SUPORTE DOS AGREGADOS | | |
| 13 | 10118014 | 1 | SEAL KIT AGGREGATE CARRIER<br>⇨ ❑ 605 | KIT DE VEDACAO | | |
| 14 | | 1 | FINAL CONTROL VALVE<br>⇨ ❑ 480 | VALVULA DE REGULAGEM FINA | | |
| 15 | | 6 | PISTON COOLING<br>⇨ ❑ 479 | ARREFECIMENTO DO PISTAO | | |
| 16 | | 1 | CRANKCASE BREATHER ASSEMBLY D936<br>⇨ ❑ 482 | CARCAÇA MANIVELA PURGAM. | 20060- | |
| 20 | | 1 | OIL SUMP<br>⇨ ❑ 485 | CARTER | | |
| 21 | | 1 | DIPSTICK W.TUBE<br>⇨ ❑ 489 | VARETA DE NÍVEL DE ÓLEO C/ | | |
| 24 | | 2 | LOCKING PIECES<br>⇨ ❑ 495 | PECAS DE FECHAMENTO | | |
| 25 | | 1 | OIL LINE PRE-ASSEMBLY 10X1<br>⇨ ❑ 488 | LINHA DE ÓLEO PRÉ-MONTADA | -99998 | |
| 25 | | 1 | OIL LINE PRE-ASSEMBLY 12X1<br>⇨ ❑ 487 | LINHA DE ÓLEO PRÉ-MONTADA | 99999- | |
| 40 | | 6 | CYLINDER<br>⇨ ❑ 481 | CILINDRO | | |

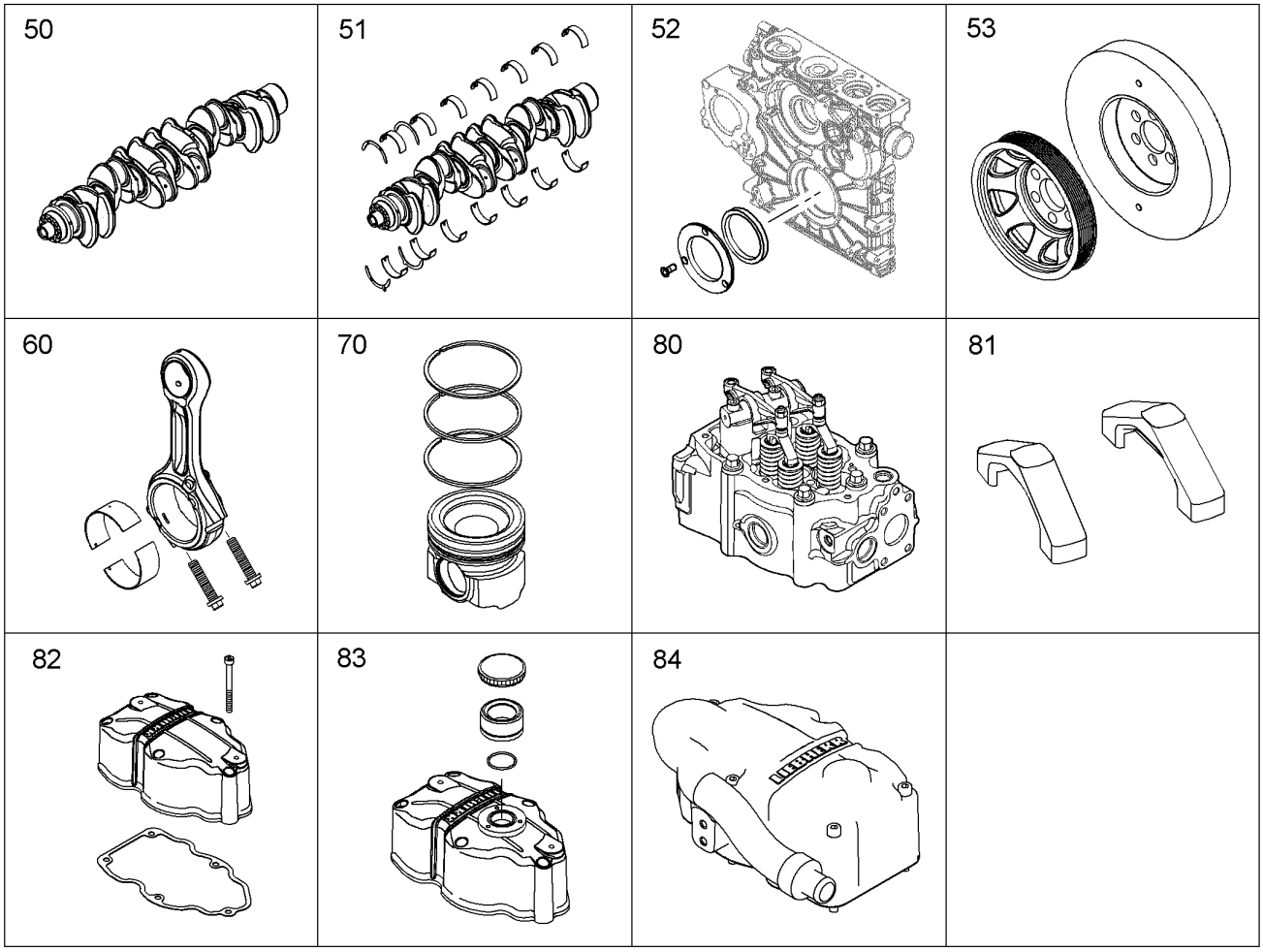


| Pos. | Item | Quantity | Description | Designação | Serie | K |
|---|---|---|---|---|---|---|
| 50 | 9075115 | 1 | CRANKSHAFT WITH GEAR<br>⇨ ❑ 496 | VIRABREQUIM COM ENGRENA | | |
| 51 | | 1 | SET MAIN BEARINGS<br>⇨ ❑ 497 | JOGO DE MANCAIS DO VIRABRE | | |
| 52 | 10121345 | 1 | RK CRANKSHAFT SEAL D930<br>⇨ ❑ 498 | KIT DE REPARO RETENTOR | | |
| 53 | | 1 | CRANKSHAFT ADD-ON PARTS<br>⇨ ❑ 499 | VIRABREQUIM PEÇAS DE ACE | | |
| 60 | | 6 | MAIN ROD<br>⇨ ❑ 500 | BIELA | | |
| 70 | 9080687 | 6 | PISTON CPL. MONOTHERM D=122<br>⇨ ❑ 501 | PISTÃO COMPLETO | | |
| 80 | | 6 | CYLINDER HEAD ASSEMBLY<br>⇨ ❑ 503 | MONTAGEM DO CABEÇOTE DO | | |
| 81 | | 6 | ROCKER ARM BRACKET CPL.<br>⇨ ❑ 509 | CAVALETE BALANCINS COMPL | | |
| 82 | | 5 | CYLINDER HEAD COVER ASSEMBLY<br>⇨ ❑ 506 | COB.CABEÇA CILINDRO INSTAL | | |
| 83 | | 1 | CYLINDER HEAD COVER ASSEMBLY<br>⇨ ❑ 505 | COB.CABEÇA CILINDRO INSTAL | | |
| 84 | | 1 | CYLINDER HEAD COVER ASSEMBLY<br>⇨ ❑ 507 | COB.CABEÇA CILINDRO INSTAL | 20060- | |

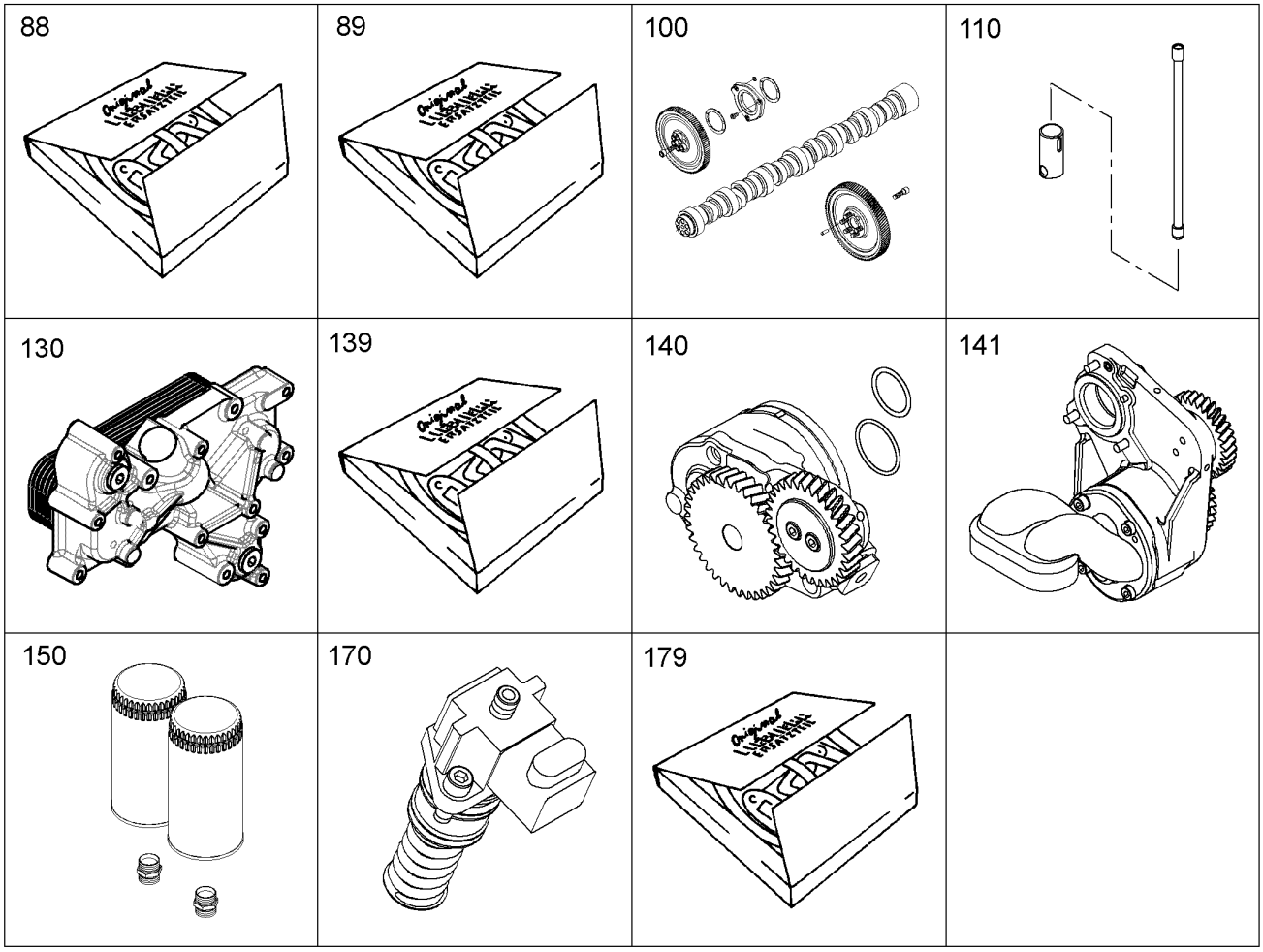


| Pos. | Item | Quantity | Description | Designação | Serie | K |
|---|---|---|---|---|---|---|
| 88 | 10115851 | 1 | SEAL KIT CYLINDER HEAD<br>⇨ ❑ 513 | KIT DE VED DO CABEÇOTE CILÍN | | |
| 89 | 10115853 | 1 | SEAL KIT ZYLINDER HEAD CPL.<br>⇨ ❑ 515 | KIT DE VEDAÇÃO CABEÇOTE CO | | |
| 100 | | 1 | CAMSHAFT CPL.<br>⇨ ❑ 517 | EIXO DE EXCÊNTRICOS COMPL | | |
| 110 | | 6 | CONTROL PARTS<br>⇨ ❑ 518 | PEÇAS DO COMANDO | | |
| 130 | | 1 | OIL COOLER ADD-ON<br>⇨ ❑ 519 | RADIADOR DE ÓLEO - ACESSÓ | | |
| 139 | 10115850 | 1 | SEALING SET OIL COOLER<br>⇨ ❑ 522 | KIT DE VEDAÇÃO | | |
| 140 | | 1 | LUBE OIL PUMP WITH FASTENING<br>⇨ ❑ 523 | BOMBA ÓLEO LUBR. C/FIX. | | 2 |
| 141 | | 1 | SUCTION PUMP WITH FASTENING<br>⇨ ❑ 524 | BOMBA DE SUCÇÃO COM FIXA | | |
| 150 | | 1 | LUBE OIL FILTER ASSEMBLY<br>⇨ ❑ 527 | FILTRO ÓLEO LUBRIF. MONT. EX | | |
| 170 | | 6 | INJECTION PUMP ASSEMBLY<br>⇨ ❑ 528 | BOMBA DE INJECAO - ACESSOR | | |
| 179 | | 1 | SEAL KIT INJECTION NOZZLE<br>⇨ ❑ 530 | KIT DE VEDACAO DO BICO INJET | | |

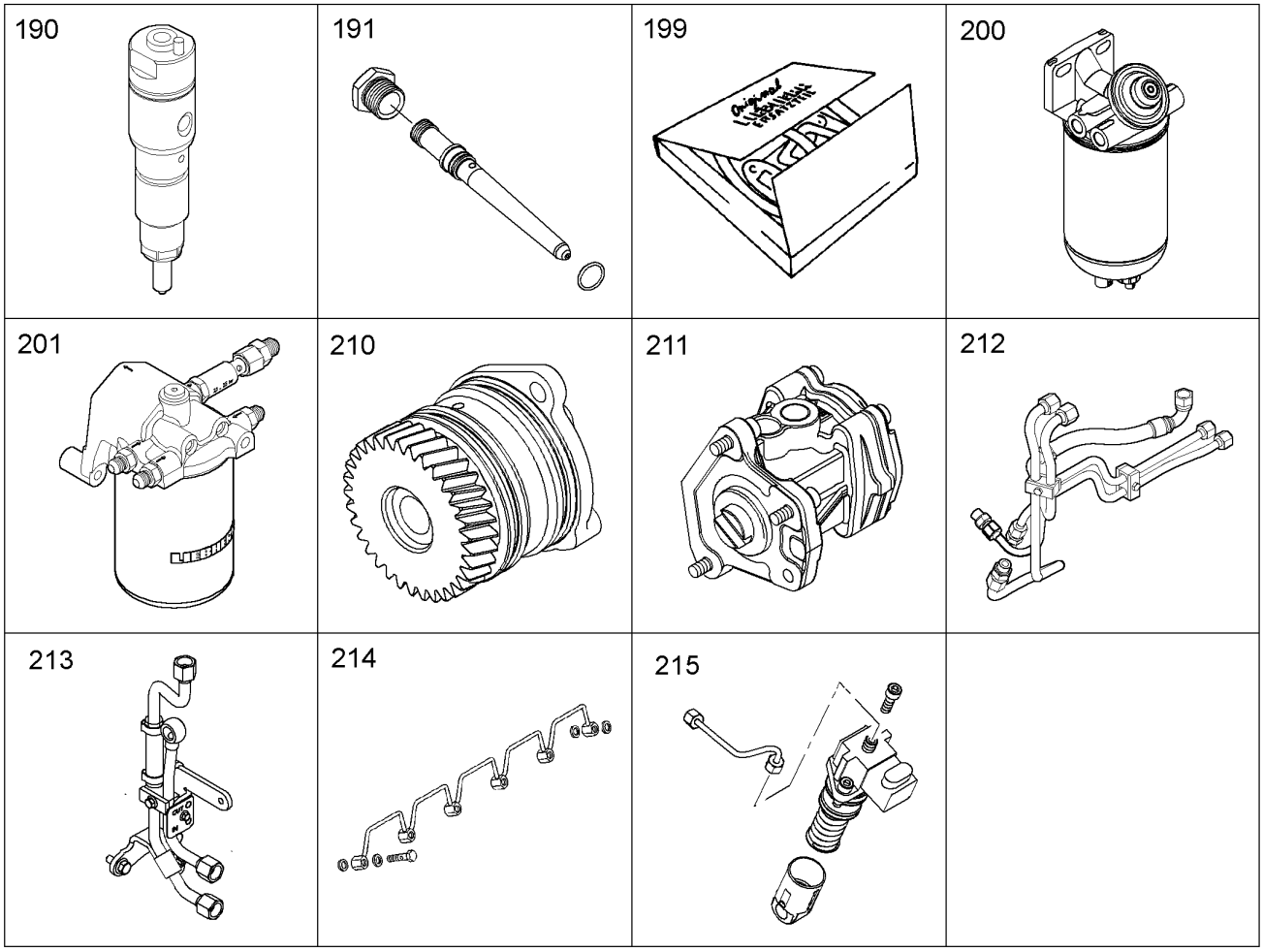


| Pos. | Item | Quantity | Description | Designação | Serie | K |
|---|---|---|---|---|---|---|
| 190 | | 6 | INJECTION NOZZLE W.FASTENING<br>⇨ ❑ 531 | BICO INJETOR COM ELEMENTO | | |
| 191 | | 6 | PRESSURE ADAPTER ASS.<br>⇨ ❑ 534 | BOCAL DE TUBO DE PRESSAO | | |
| 199 | 10115854 | 1 | SEAL KIT INJECTION NOZZLE<br>⇨ ❑ 535 | KIT DE VEDACAO DO BICO INJET | | |
| 200 | | 1 | FUEL PREFILTER<br>⇨ ❑ 537 | PRE-FILTRO DE COMBUSTÍVEL | | |
| 201 | | 1 | FUEL FINE-FILTER ASSEMBLY<br>⇨ ❑ 536 | FILTRO FINO DE COMBUSTÍVEL | | |
| 210 | | 1 | POWER TAKE-OFF ADD-ON<br>⇨ ❑ 544 | SAIDA AUXILIAR ANEXA | | |
| 211 | | 1 | FUEL PUMP ASSEMBLY<br>⇨ ❑ 529 | BOMBA DE COMBUSTÍVEL ACE | | |
| 212 | | 1 | FUEL LINE<br>⇨ ❑ 542 | TUBULACAO DE COMBUSTIVEL | | |
| 213 | | 1 | CONNECTION PIECE<br>⇨ ❑ 549 | PEÇA DE CONEXÃO | | |
| 214 | | 1 | LEAK OIL RETURN LINE<br>⇨ ❑ 545 | RETORNO DE OLEO VAZADO | | |
| 215 | 9080410 | 6 | INJECTION LINE | TUBO DE INJEÇÃO | | |

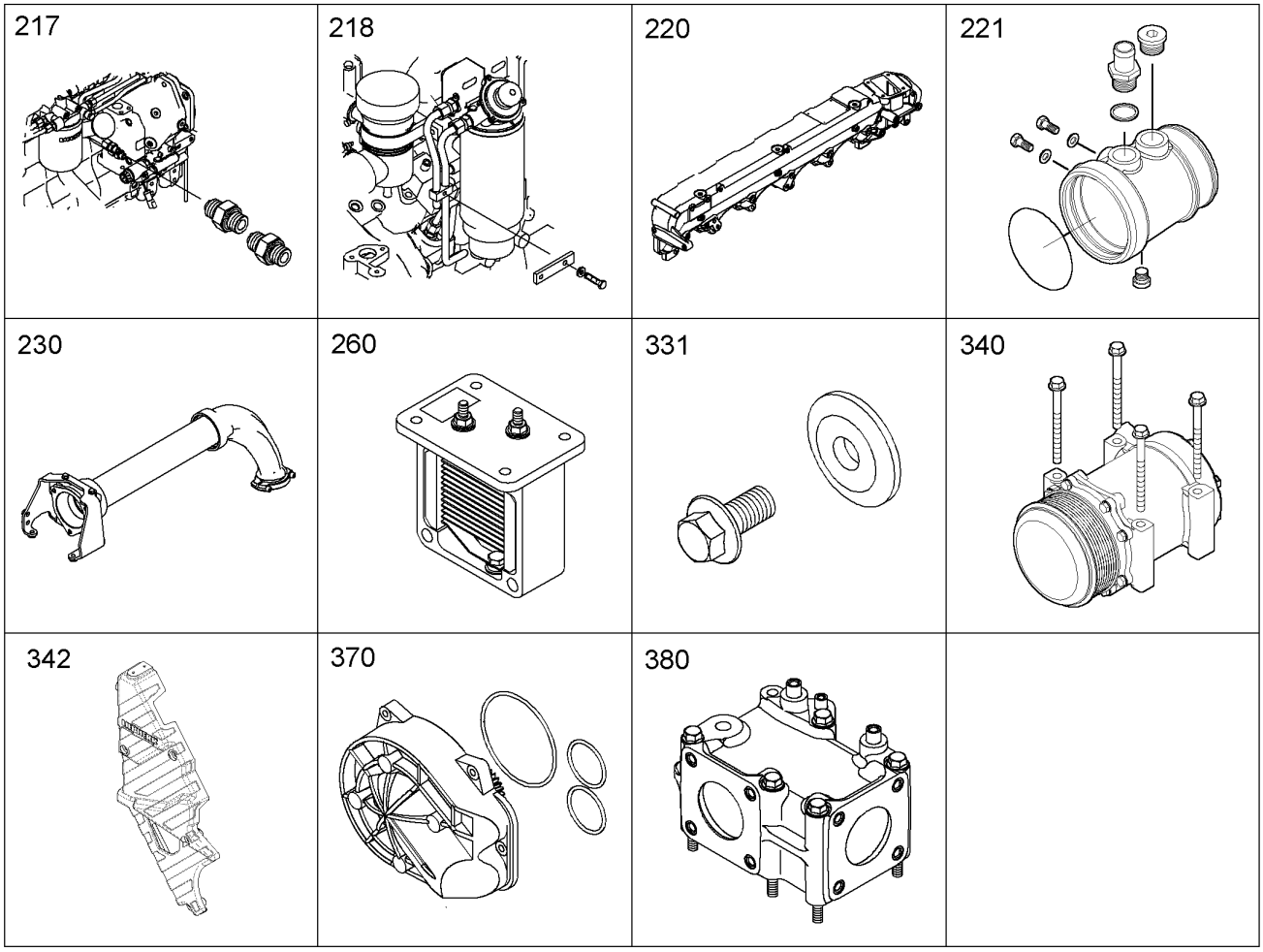


| Pos. | Item | Quantity | Description | Designação | Serie | K |
|---|---|---|---|---|---|---|
| 217 | | 1 | CONNECTING PIECE PRE-ASS.<br>⇨ ❑ 548 | PEÇA DE FECHO PRÉ-MONTAD | | |
| 218 | 10117268 | 1 | CLAMP - ADD-ON UNIT<br>⇨ ❑ 546 | SUPORTE - MONTAGEM | | |
| 220 | | 1 | AIR INTAKE PIPE ASS.<br>⇨ ❑ 550 | TUBO DE ADMISSÃO DE AR | | |
| 221 | | 1 | CONNECTING BRANCH ADD-ON<br>⇨ ❑ 551 | LUVA DE CONEXÃO MONTAGE | | |
| 230 | | 1 | CONNECTING LINE ADD-ON<br>⇨ ❑ 553 | LINHA DE CONEXAO | -2008040016 | |
| 230 | 10121908 | 1 | CONNECTING LINE ADD-ON<br>⇨ ❑ 552 | LINHA DE CONEXAO | -2008040017 | |
| 260 | | 1 | HEATING FLANGE ADD-ON<br>⇨ ❑ 554 | FLANGE DE AQUECIMENTO | | |
| 331 | | 1 | LOCKING PIECES<br>⇨ ❑ 557 | PECAS DE FECHAMENTO | | |
| 340 | | 1 | AIR COND. COMPRESSOR ADD-ON<br>⇨ ❑ 559 | COMPRESSOR DO AR-CONDICI | | |
| 342 | | 1 | COVERING ASSEMBLY<br>⇨ ❑ 560 | COBERTURA | 20070- | |
| 370 | | 1 | AT-WATER PUMP WITH FASTENING R-MO<br>⇨ ❑ 562 | KIT MONTAGEM DA BOMBA AGU | | 6 |
| 380 | | 1 | THERMOSTAT HOUSING ASSEMBLY<br>⇨ ❑ 565 | INVÓLUCRO TERMOSTATO MO | -2008040016 | |
| 380 | 10119830 | 1 | THERMOSTAT HOUSING ASSEMBLY<br>⇨ ❑ 564 | INVÓLUCRO TERMOSTATO MO | -2008040017 | |

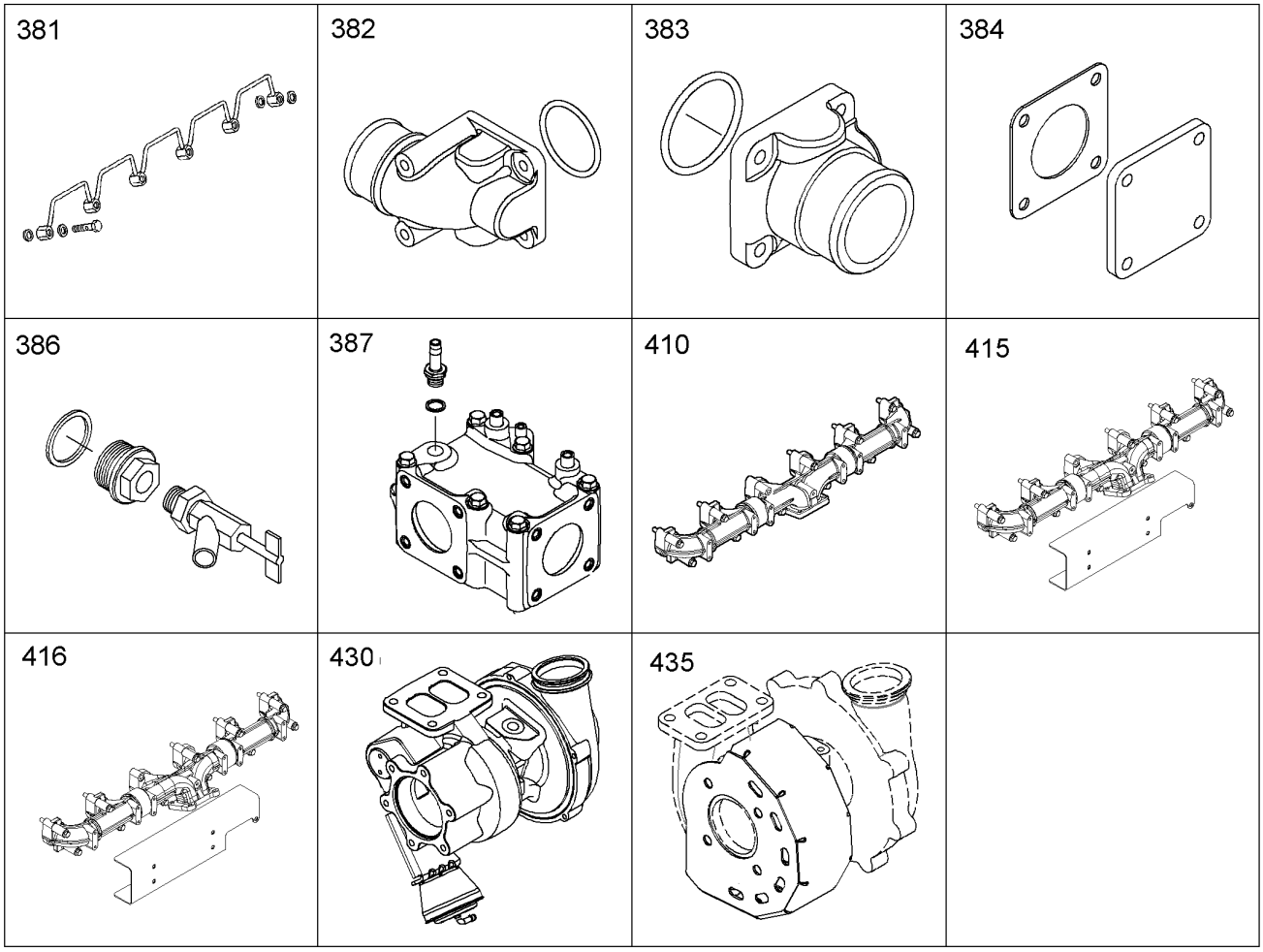


| Pos. | Item | Quantity | Description | Designação | Serie | K |
|---|---|---|---|---|---|---|
| 381 | | 1 | PIPELINE INSTALLATION<br>⇨ ❑ 547 | TUBULACAO ANEXO | | |
| 382 | | 1 | COOLANT PIPE BEND ADD-ON<br>⇨ ❑ 566 | TUBO CURV.PROD.REFRIGER-A | | |
| 383 | | 1 | COOLANT PIPE BEND ADD-ON<br>⇨ ❑ 567 | TUBO CURV.PROD.REFRIGER-A | | |
| 384 | | 1 | LOCKING PIECES<br>⇨ ❑ 568 | PECAS DE FECHAMENTO | | |
| 386 | | 1 | HEATER CONNECTION<br>⇨ ❑ 569 | CONEXÃO DE AQUECIMENTO | | |
| 387 | | 1 | COOLING WATER AIR BLEEDING<br>⇨ ❑ 555 | PURGAMENTO DA ÁGUA REFR | | |
| 410 | | 1 | EXHAUST PIPE ASSEMBLY<br>⇨ ❑ 578 | TUBO DE ESCAPAMENTO MON | | |
| 415 | | 1 | HEAT PROTECTION W.FASTENING<br>⇨ ❑ 572 | PROTECAO TERMICA COM FIXA | | |
| 416 | | 1 | HEAT PROTECTION W.FASTENING<br>⇨ ❑ 571 | PROTECAO TERMICA COM FIXA | | |
| 430 | 9080735 | 1 | EXHAUST TC MOUNTING<br>⇨ ❑ 573 | KIT DO TURBO COMPRESSOR | | |
| 435 | 10116027 | 1 | COVER | TAMPA | | |

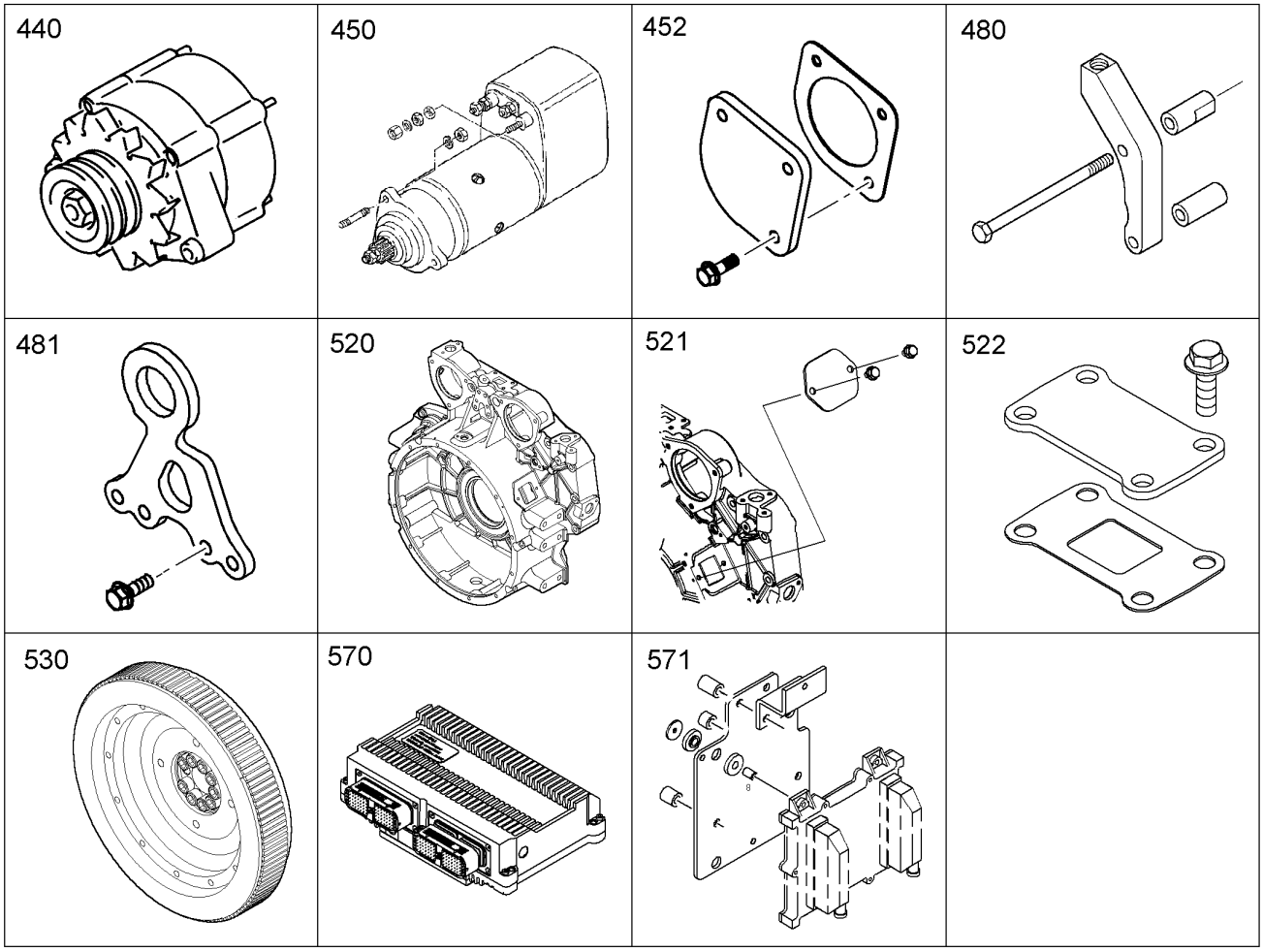


| Pos. | Item | Quantity | Description | Designação | Serie | K |
|---|---|---|---|---|---|---|
| 440 | | 1 | GENERATOR, PRE-ASSEMBLED<br>⇨ ❑ 574 | GERADOR PRE-MONTAGEM | | |
| 450 | | 1 | STARTER INSTALLATION<br>⇨ ❑ 575 | MOTOR DE PARTIDA - MONTAGE | | |
| 452 | | 1 | LOCKING PIECES<br>⇨ ❑ 576 | PECAS DE FECHAMENTO | | |
| 480 | | 1 | TRANSPORT DEVICE ATTACHEMENT<br>⇨ ❑ 580 | DISPOSITIVO TRANSP.MONT.E | | |
| 481 | | 1 | TRANSPORT DEVICE ATTACHEMENT<br>⇨ ❑ 579 | DISPOSITIVO TRANSP.MONT.E | | |
| 520 | | 1 | FLYWHEEL HOUSING MOUNTING SAE 1<br>⇨ ❑ 581 | CÁRTER VOLANTE MONT. EXT. | | |
| 521 | | 1 | LOCKING PIECES<br>⇨ ❑ 590 | PECAS DE FECHAMENTO | | |
| 522 | | 1 | LOCKING PIECES<br>⇨ ❑ 591 | PECAS DE FECHAMENTO | 20060- | |
| 530 | | 1 | FLYWHEEL ASSEMBLY SAE 1<br>⇨ ❑ 683 | VOLANTE MONTAGEM EXTERIO | | |
| 570 | 10117900 | 1 | MOTOR CONTROL DEVICE<br>[211 300 127 ]<br>⇨ ❑ 593 | MÓDULO DE CONTROLE DO MO | | |
| 571 | | 1 | CONTROL BOX ANNEXE<br>⇨ ❑ 592 | DISPOSITIVO COMANDO - MONT | | |

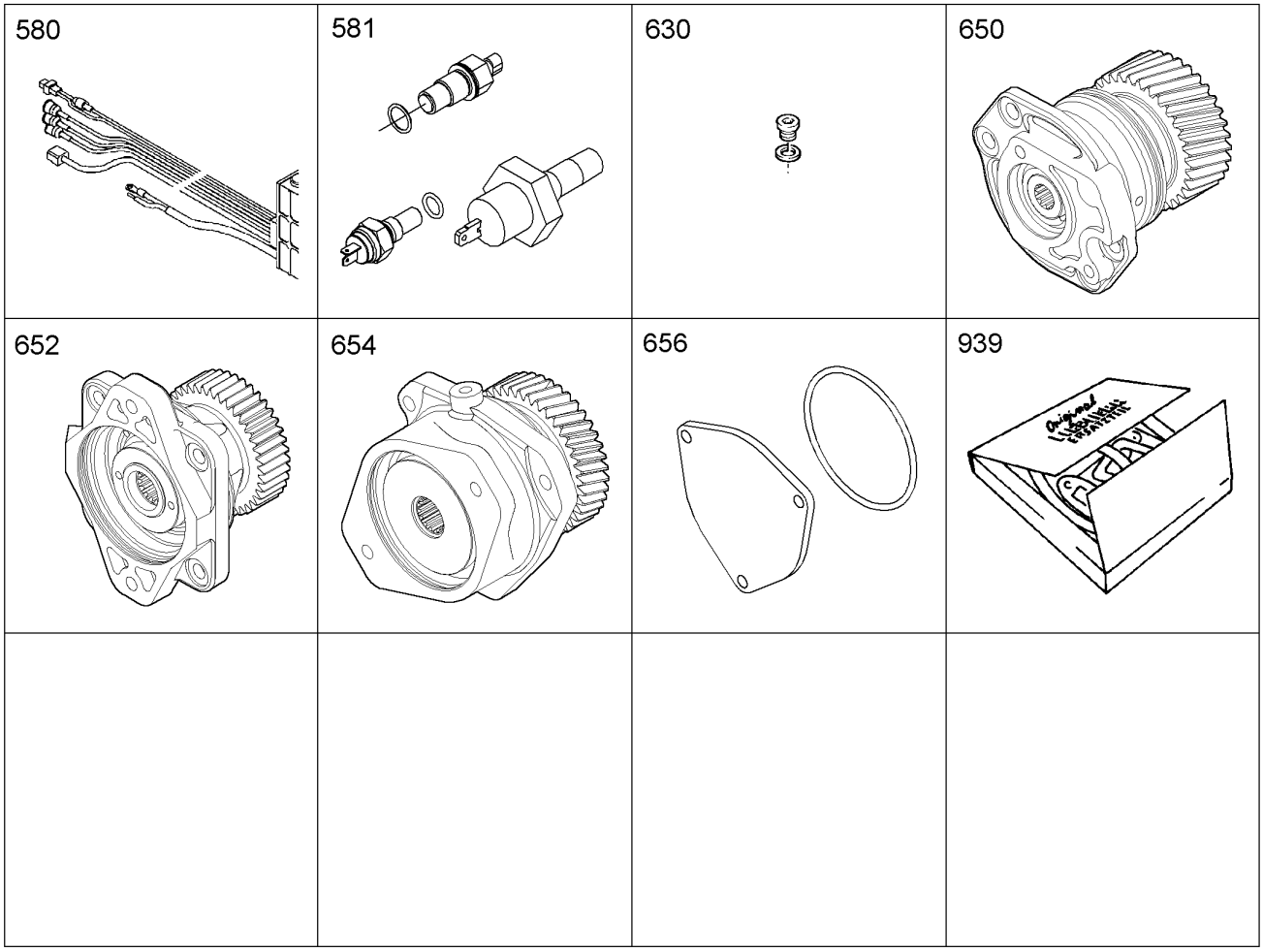


| Pos. | Item | Quantity | Description | Designação | Serie | K |
|---|---|---|---|---|---|---|
| 580 | | 1 | CABLE BOOM MOUNTING<br>⇨ ❑ 595 | CHICOTE DE CABOS ACESSÓRI | | |
| 581 | | 1 | ENGINE CONTROL SENSORS<br>⇨ ❑ 582 | SENSORAMENTO AJUSTE DO | | |
| 630 | | 1 | LOCKING PIECES<br>⇨ ❑ 596 | PECAS DE FECHAMENTO | | |
| 650 | | 1 | POWER TAKE-OFF ADD-ON<br>⇨ ❑ 597 | SAIDA AUXILIAR ANEXA | | |
| 652 | | 1 | POWER TAKE-OFF ADD-ON<br>⇨ ❑ 599 | SAIDA AUXILIAR ANEXA | | |
| 654 | | 1 | POWER TAKE-OFF ADD-ON<br>⇨ ❑ 598 | SAIDA AUXILIAR ANEXA | | |
| 656 | | 1 | LOCKING PIECES<br>⇨ ❑ 604 | PECAS DE FECHAMENTO | | |
| 939 | 10115838 | 1 | SEAL KIT DIESEL ENGINE<br>⇨ ❑ 608 | JOGO DE VEDAÇÃO MOTOR DIE | | |

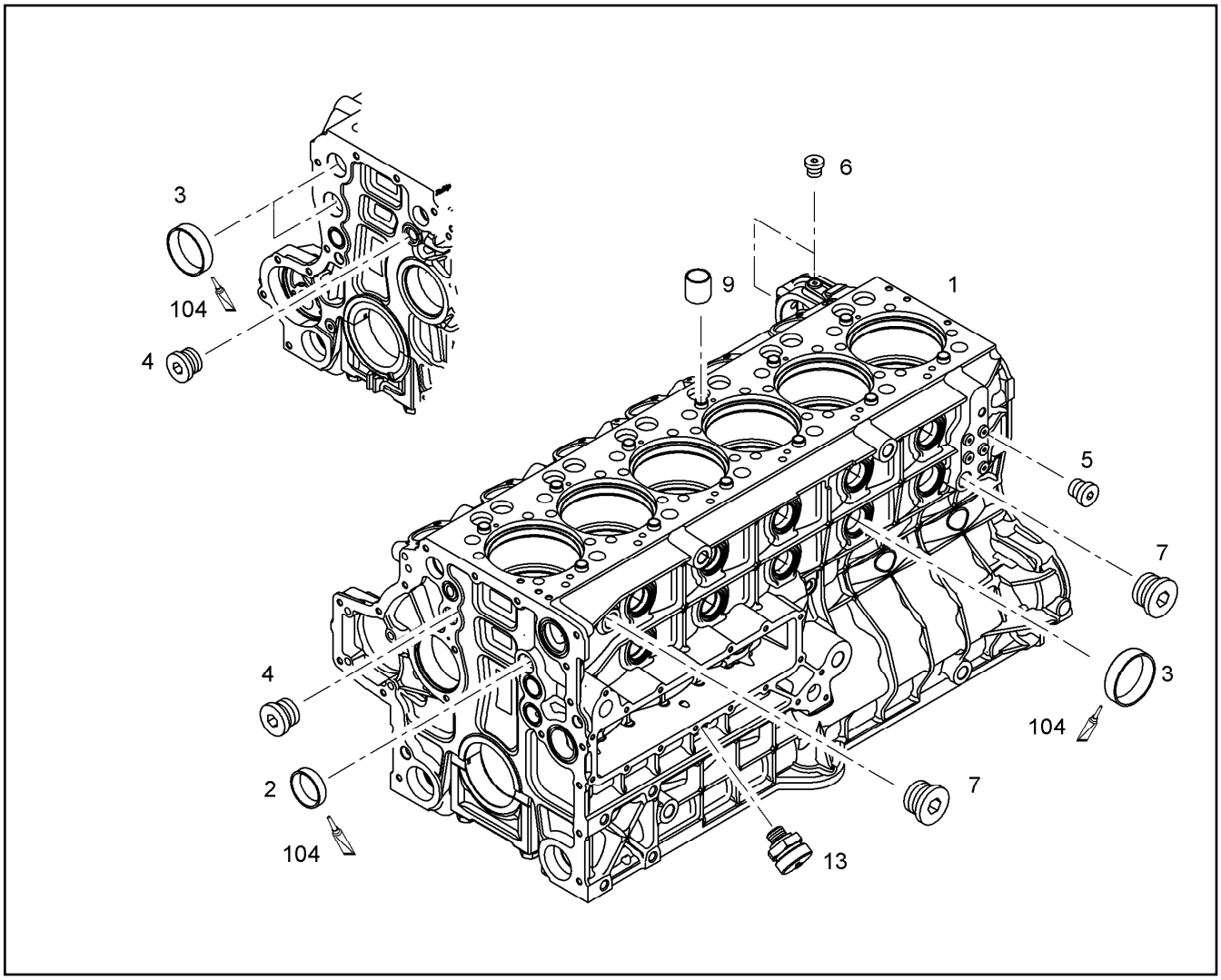


| Pos. | Item | Quantity | Description | Designação | Serie | K |
|---|---|---|---|---|---|---|
| 1 | 10115778 | 1 | CRANKCASE<br>⇨ ❑ 478 | BLOCO DO MOTOR | | |
| 2 | 4980362 | 5 | END COVER B | TAMPA DE FECHAMENTO | | |
| 3 | 4001664 | 12 | END COVER B | TAMPA DE FECHAMENTO | | |
| 4 | 7380177 | 2 | SCREW PLUG VSTI M22X1,5 | PARAFUSO DE FECHAMENTO | | |
| 5 | 7382203 | 2 | SCREW PLUG VSTI M16X1,5 | PARAFUSO DE FECHAMENTO | | |
| 6 | 7380566 | 3 | SCREW PLUG VSTI M14X1,5 | PARAFUSO DE FECHAMENTO | | |
| 7 | 7381457 | 2 | SCREW PLUG VSTI M26X1,5 | PARAFUSO DE FECHAMENTO | | |
| 9 | 9074798 | 12 | TIGHT FIT SLEEVE 16X20X20 | LUVA DE AJUSTE | | 1 |
| 13 | 9078233 | 1 | VALVE M 14X1,5<br>⇨ ❑ 521 | VÁLVULA | | |
| 104 | 8655023 | 1 | GLUE | COLA | | |

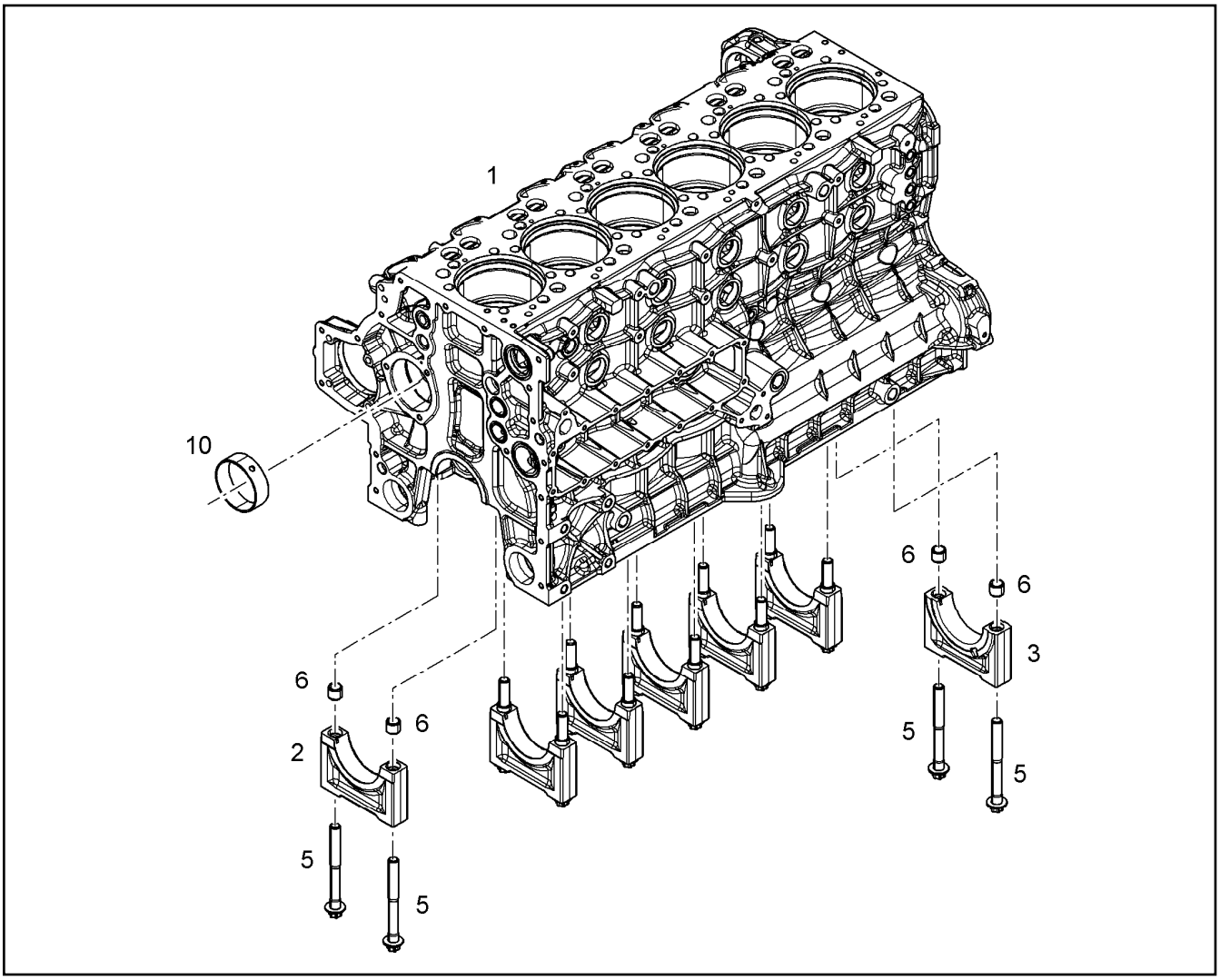


| Pos. | Item | Quantity | Description | Designação | Serie | K |
|---|---|---|---|---|---|---|
| 1 | 10115733 | 1 | CRANKCASE | BLOCO DO MOTOR | | |
| 2 | 10120829 | 6 | MAIN BEARING CAP | | | |
| 3 | 9073728 | 1 | TIGHT FIT BEARING COVER | TAMPA DE MANCAL DE AJUSTE | | |
| 5 | 10131581 | 14 | HEXALOBULAR HEAD SCREW M18X170 32 | PARAFUSO HEXAGONAL REDO | | |
| 6 | 9177636 | 14 | TIGHT FIT SLEEVE 15,5X19,5X24 | LUVA DE AJUSTE | | 1 |
| 10 | 9073745 | 7 | CAMS SHAFT BUSH | BUCHA DO EIXO DE COMANDO | | |

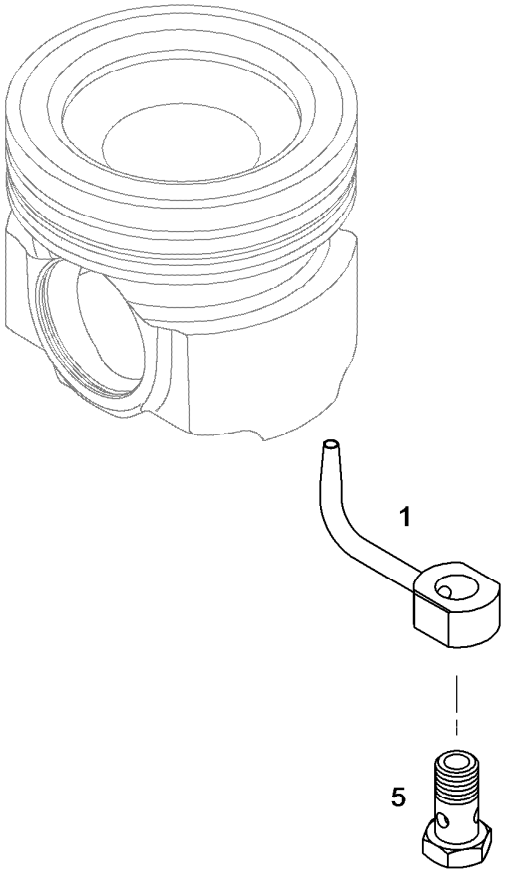


| Pos. | Item | Quantity | Description | Designação | Serie | K |
|---|---|---|---|---|---|---|
| 1 | 9073796 | 1 | PISTON COOLING NOZZLE ST-KOLBEN | BICO DE LUBRIFICACAO DO PI | | |
| 5 | 9073678 | 1 | HOLLOW SCREW X2 | PARAFUSO OCO | | |

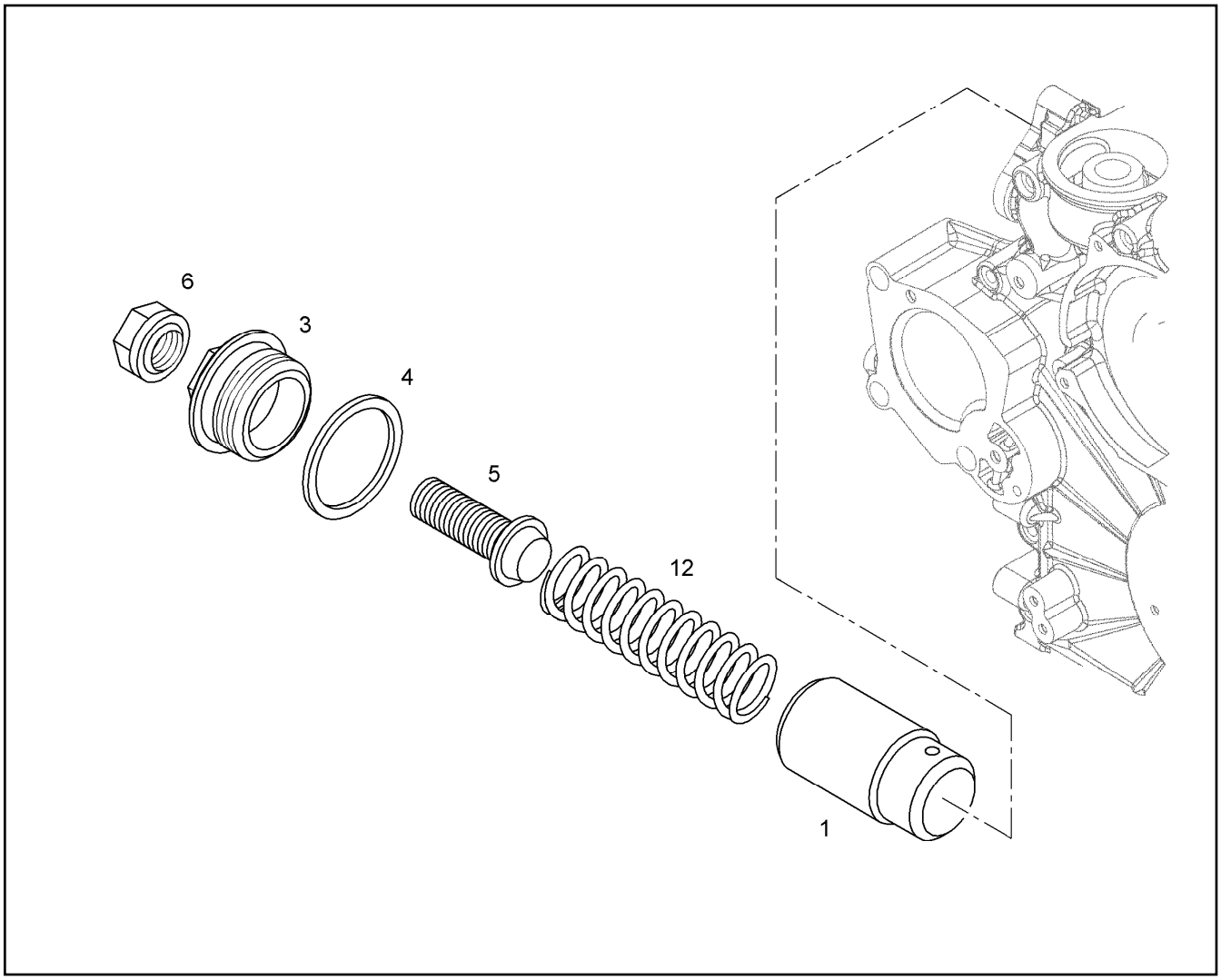


| Pos. | Item | Quantity | Description | Designação | Serie | K |
|---|---|---|---|---|---|---|
| 1 | 9075361 | 1 | PISTON | PISTÃO | | |
| 3 | 9077172 | 1 | SCREW PLUG M30X1,5 9SMnPb28K FE/ZN 5 | PARAFUSO DE FECHAMENTO | | |
| 4 | 7101021 | 1 | SEALING RING DIN 7603 A 30 X 36 CU | ANEL DE VEDAÇÃO | | |
| 5 | 10117949 | 1 | ADJUSTING SCREW M12X36X4 8.8 FE/ZN 5 | PARAFUSO DE AJUSTE | | |
| 6 | 7381226 | 1 | SEALING NUT M12 | PORCA DE VEDACAO | | |
| 12 | 10120929 | 1 | PRESSURE SPRING 2,5/16X61/8,38 | MOLA DE PRESSÃO | | |

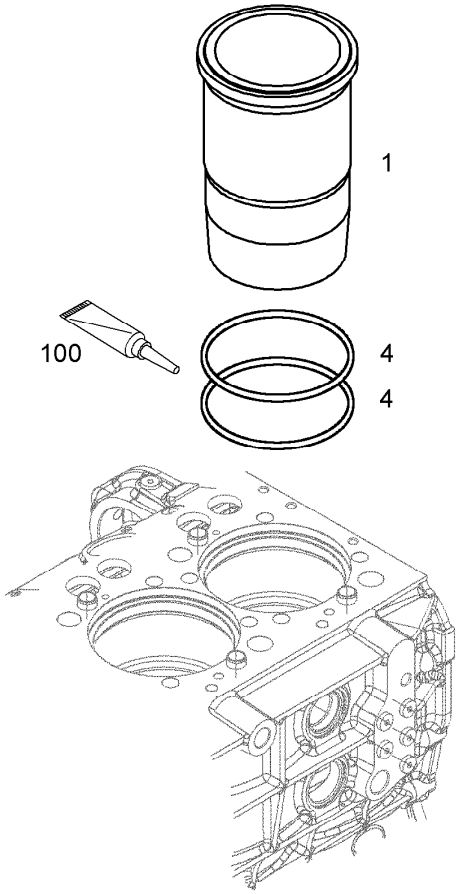


| Pos. | Item | Quantity | Description | Designação | Serie | K |
|---|---|---|---|---|---|---|
| 1 | 9080084 | 1 | CYLINDER BUSH | BUCHA CILINDRICA | | |
| 4 | 10006499 | 2 | O-RING 140 | ANEL-O | | |
| 100 | 10282622 | 1 | GREASE | GRAXA | | |

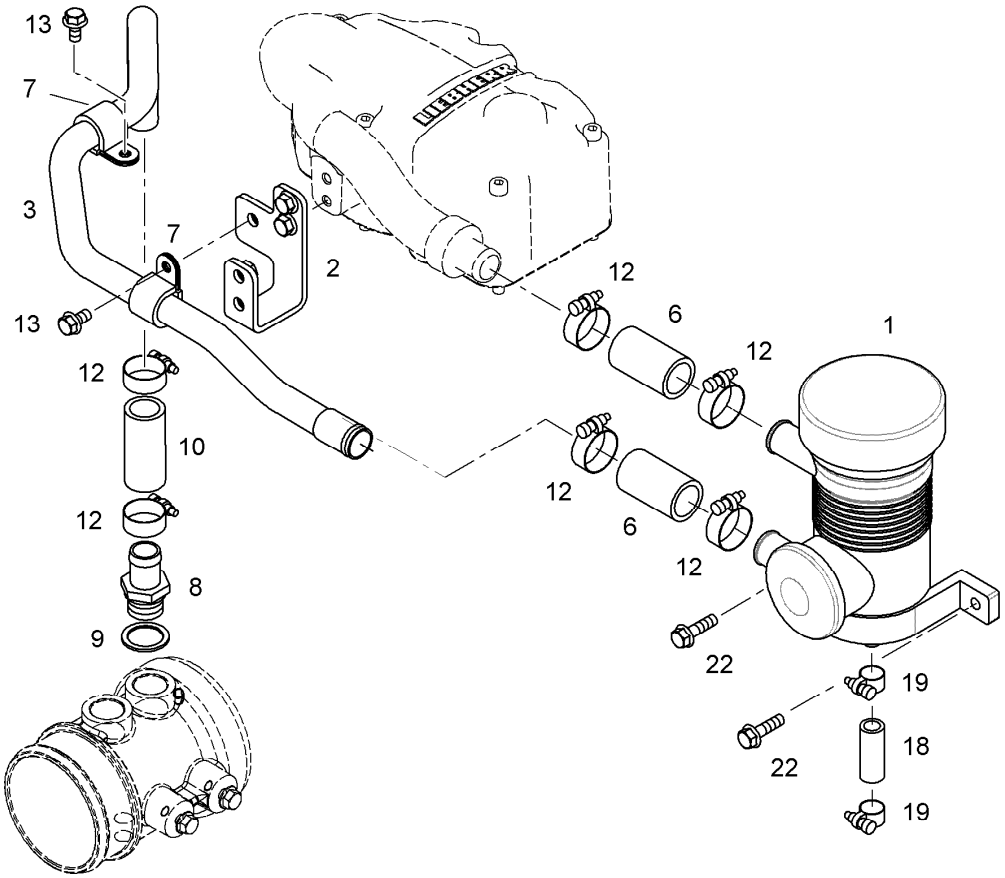


| Pos. | Item | Quantity | Description | Designação | Serie | K |
|---|---|---|---|---|---|---|
| 1 | 9075483 | 1 | CRANKCASE BREATHER<br>⇨ ❑ 483 | CARCACA DO SEPARADOR DE O | | |
| 2 | 10119127 | 1 | CLAMP - ADD-ON UNIT<br>⇨ ❑ 541 | SUPORTE - MONTAGEM | | |
| 3 | 10119168 | 1 | PIPELINE 22X1,5 | TUBULACAO | | |
| 6 | 9271340 | 2 | RUBBER CONNECTION | CONEXÃO DE BORRACHA | | |
| 7 | 7381630 | 2 | CLAMP DIN 3016-1 D1 22X20 W1-2-MVQ | BRAÇADEIRA | | |
| 8 | 9140351 | 1 | HOSE NIPPLE | NIPLE DE MANGUEIRA | | |
| 9 | 10011870 | 1 | SEALING RING 26,7X34,93X2 | ANEL DE VEDAÇÃO | | |
| 10 | 9273161 | 1 | RUBBER CONNECTION | CONEXÃO DE BORRACHA | | |
| 12 | 4900778 | 6 | HOSE CLAMP DIN 3017-1 A 26 20-32X13 W2- | ABRAÇADEIRA DE MANGUEIRA | | |
| 13 | 10005078 | 2 | HEX BOLT DIN 6921 M8X16 8.8 A2C | PARAFUSO SEXTAVADO | | |
| 18 | 9079603 | 1 | RUBBER CONNECTION | CONEXÃO DE BORRACHA | | |
| 19 | 4981029 | 2 | CLAMP DIN 3017 B1- 17 X 12 W1-2 | BRAÇADEIRA | | |
| 22 | 10007782 | 2 | HEX BOLT EN 1665 M8x30 8.8 A3C | PARAFUSO SEXTAVADO | | |

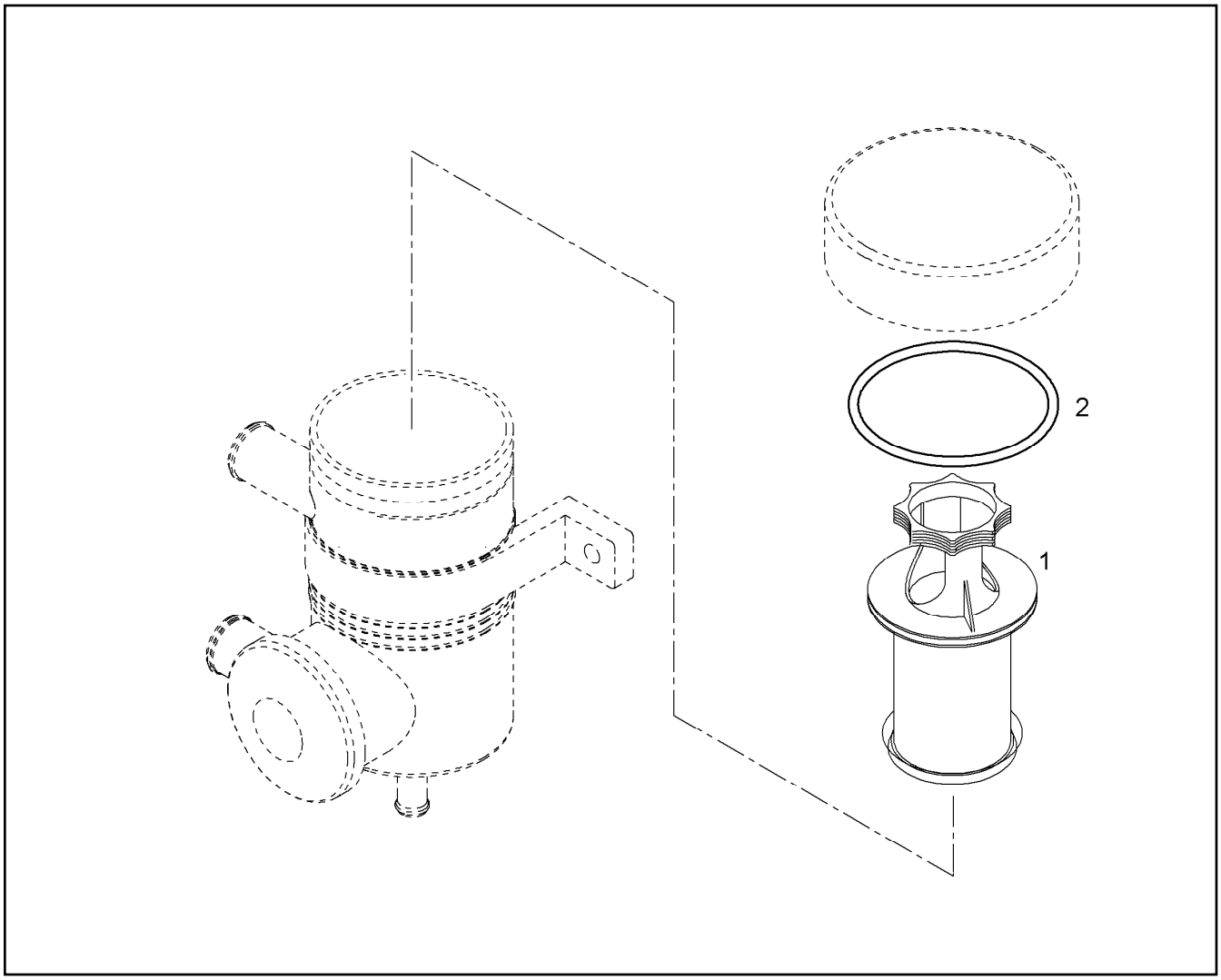


| Pos. | Item | Quantity | Description | Designação | Serie | K |
|---|---|---|---|---|---|---|
| 1 | 10032835 | 1 | SPARE ELEMENT OEL | ELEMENTO DE SUBST. DO FILTR | | |
| 2 | 10295116 | 1 | O-RING DIN 3771 79,00X4,00 | ANEL-O | | |

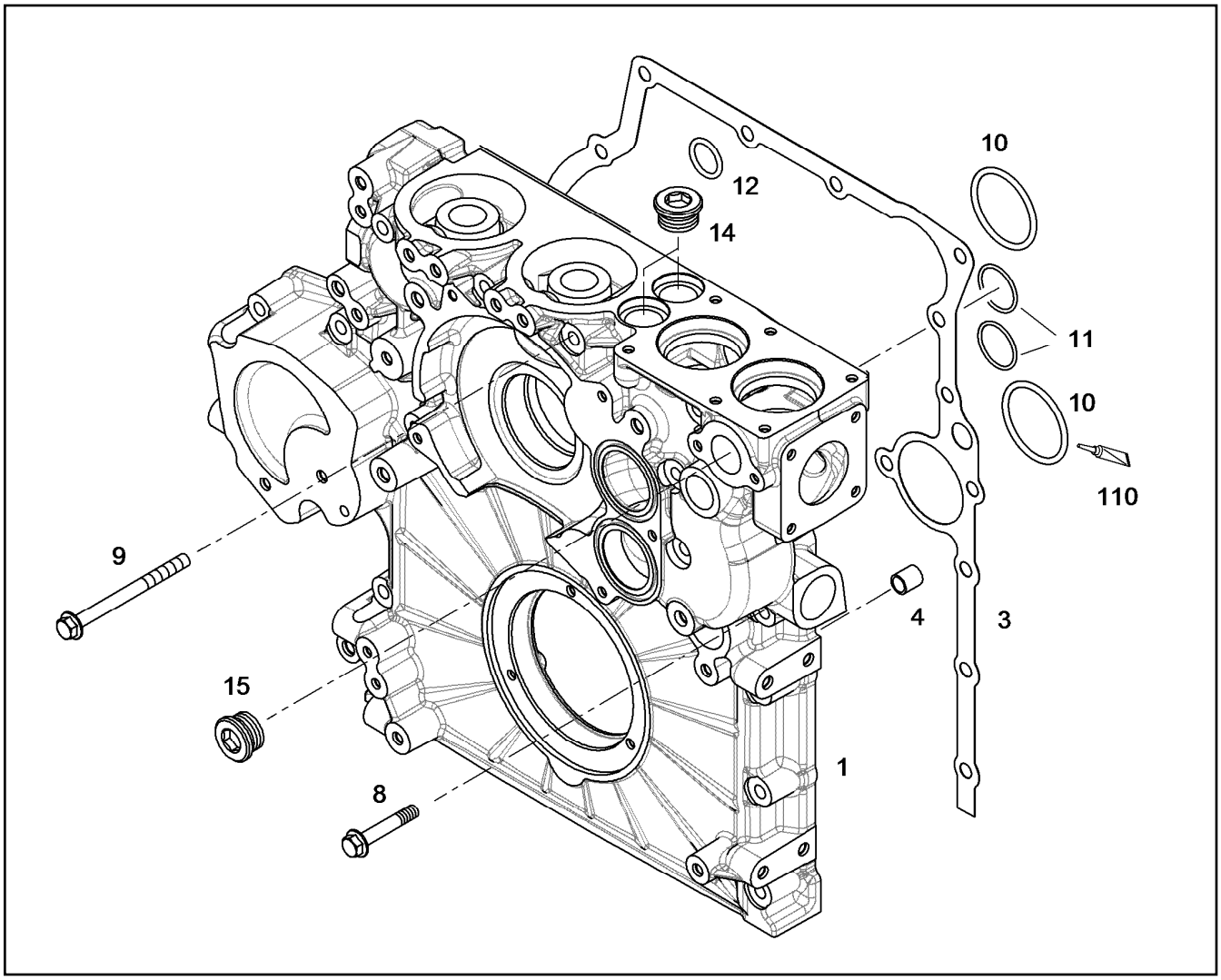


| Pos. | Item | Quantity | Description | Designação | Serie | K |
|---|---|---|---|---|---|---|
| 1 | 10141908 | 1 | POWER UNIT SUPPORT | SUPORTE DOS AGREGADOS | | |
| 3 | 10126738 | 1 | SEAL | VEDAÇÃO | | |
| 4 | 10134348 | 2 | TIGHT FIT SLEEVE 16X20X20 | LUVA DE AJUSTE | | 1 |
| 8 | 10039660 | 12 | HEX BOLT DIN 6921 M10X60 10.9 A3C | PARAFUSO SEXTAVADO | | |
| 9 | 10037312 | 6 | HEX BOLT DIN 6921 M10X120 10.9 A3C | PARAFUSO SEXTAVADO | | |
| 10 | 7381779 | 2 | O-RING DIN 3771 59,92X3,53 | ANEL-O | | |
| 11 | 7380653 | 2 | O-RING DIN 3771 34,59X2,62 | ANEL-O | | |
| 12 | 10004261 | 1 | O-RING 26,00X3,00 | ANEL-O | | |
| 14 | 7382204 | 3 | SCREW PLUG VSTI M30X1,5 | PARAFUSO DE FECHAMENTO | | |
| 15 | 10043136 | 1 | SCREW PLUG VSTI M33X2 | PARAFUSO DE FECHAMENTO | | |
| 110 | 10285708 | 1 | GREASE NBU 30/1kg | GRAXA | | |

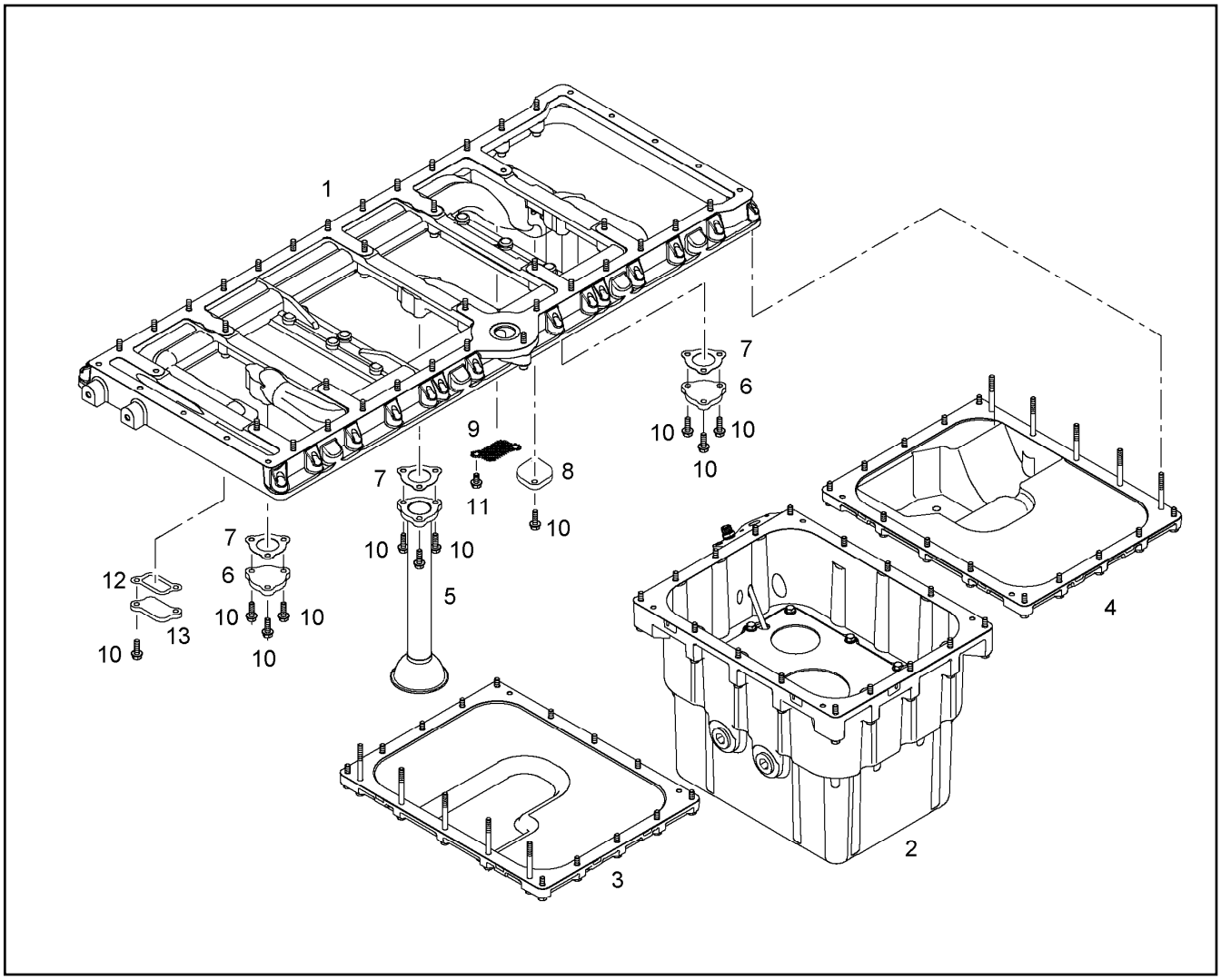


| Pos. | Item | Quantity | Description | Designação | Serie | K |
|---|---|---|---|---|---|---|
| 1 | 10118702 | 1 | LADDER-TYPE FRAME<br>⇨ ❑ 490 | SUPORTE TIPO ESCADA | | |
| 2 | 9079483 | 1 | OIL SUMP<br>⇨ ❑ 486 | CARTER | | |
| 3 | 9079492 | 2 | SHEET<br>⇨ ❑ 493 | PLACA | | |
| 4 | 9079958 | 1 | SHEET<br>⇨ ❑ 494 | PLACA | | |
| 5 | 9079128 | 1 | SUCTION PIPE | TUBO DE SUCCAO DE OLEO | | |
| 6 | 9079122 | 2 | LID | TAMPA | | |
| 7 | 9079124 | 3 | SEAL | VEDAÇÃO | | |
| 8 | 9077777 | 1 | LID | TAMPA | | |
| 9 | 9079126 | 1 | PERFORATED PLATE | CHAPA PERFURADA | | |
| 10 | 10009007 | 13 | HEX HEAD SCREW WITH FLANGE EN 1665 | PARAFUSO SEXTAVADO COM F | | |
| 11 | 10024115 | 2 | HEX BOLT DIN 6921 M8X12 8.8 A2C | PARAFUSO SEXTAVADO | | |
| 12 | 9079125 | 1 | SEAL | VEDAÇÃO | | |
| 13 | 9079123 | 1 | LID | TAMPA | | |

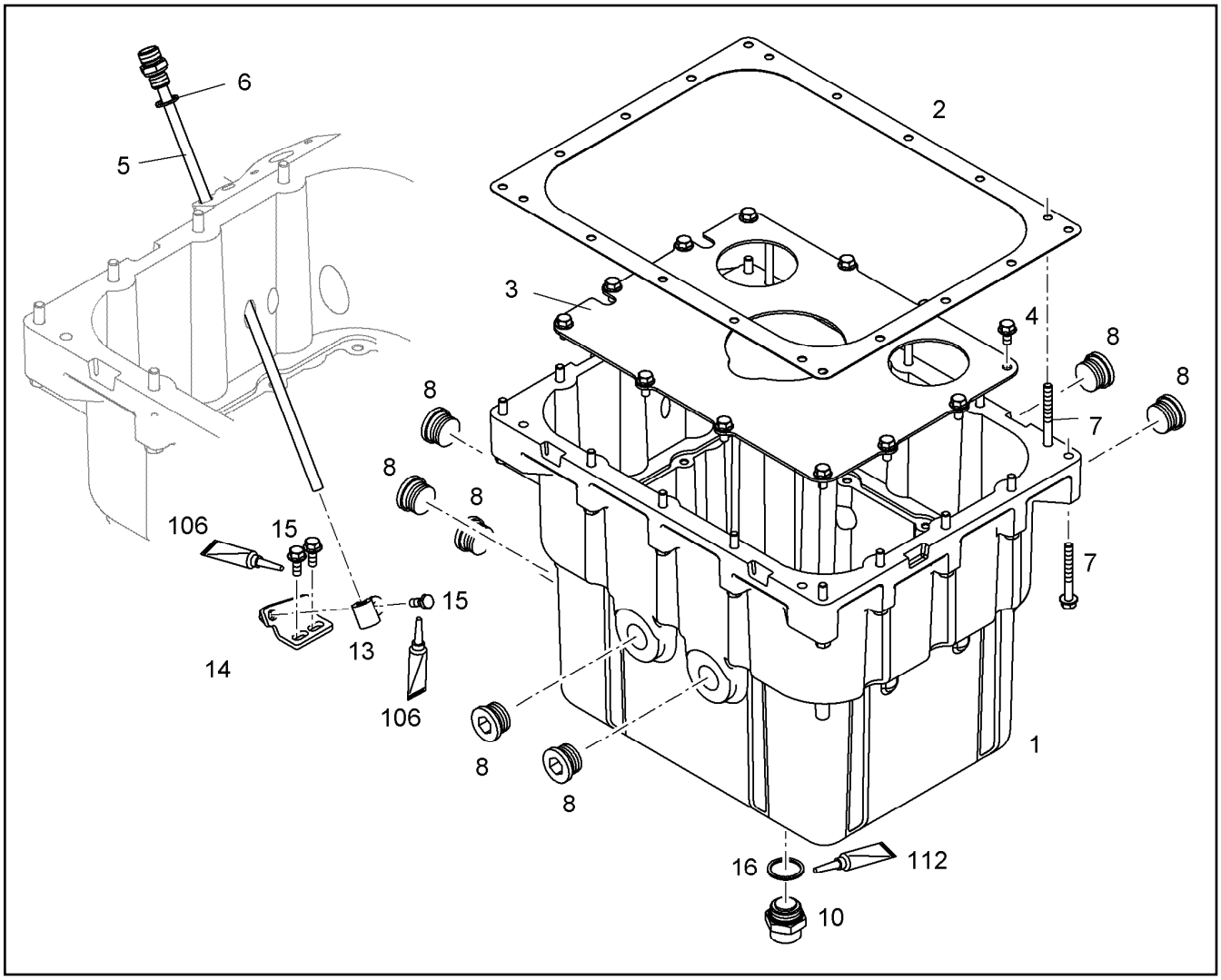


| Pos. | Item | Quantity | Description | Designação | Serie | K |
|---|---|---|---|---|---|---|
| 1 | 10123868 | 1 | OIL SUMP | CARTER | | |
| 2 | 10118551 | 1 | SEAL | VEDAÇÃO | | |
| 3 | 9079494 | 1 | SHEET | PLACA | | |
| 4 | 10005511 | 12 | HEX HEAD SCREW EN 1665 M 8 X 16 8.8 | PARAFUSO SEXTAVADO | | |
| 5 | 9079845 | 1 | TUBE | TUBO | | |
| 6 | 7101008 | 1 | SEALING RING DIN 7603 A 14X18 | ANEL DE VEDAÇÃO | | |
| 7 | 10100304 | 16 | HEX HEAD SCREW EN 1665 M 8 X 65 8.8 A3 | PARAFUSO SEXTAVADO | | |
| 8 | 7382204 | 7 | SCREW PLUG VSTI M30X1,5 | PARAFUSO DE FECHAMENTO | | |
| 10 | 5004624 | 1 | OIL DRAIN PLUG M 30 1,5<br>⇨ ❑ 491 | VÁLVULA DE DRENAGEM | | |
| 13 | 7381292 | 1 | CLAMP DIN 3016-1 D1 6X15 W1-2-MVQ | BRAÇADEIRA | | |
| 14 | 9079844 | 1 | HOLDER | SUPORTE | | |
| 15 | 407350208 | 3 | HEX BOLT DIN 6921 M6X16 8.8 A2C | PARAFUSO SEXTAVADO | | |
| 16 | 7101021 | 1 | SEALING RING DIN 7603 A 30 X 36 CU | ANEL DE VEDAÇÃO | | |
| 106 | 8700039 | 1 | LOCTITE | LOCTITE | | |
| 112 | 8627609 | 1 | SEALANT | VEDACAO | | |

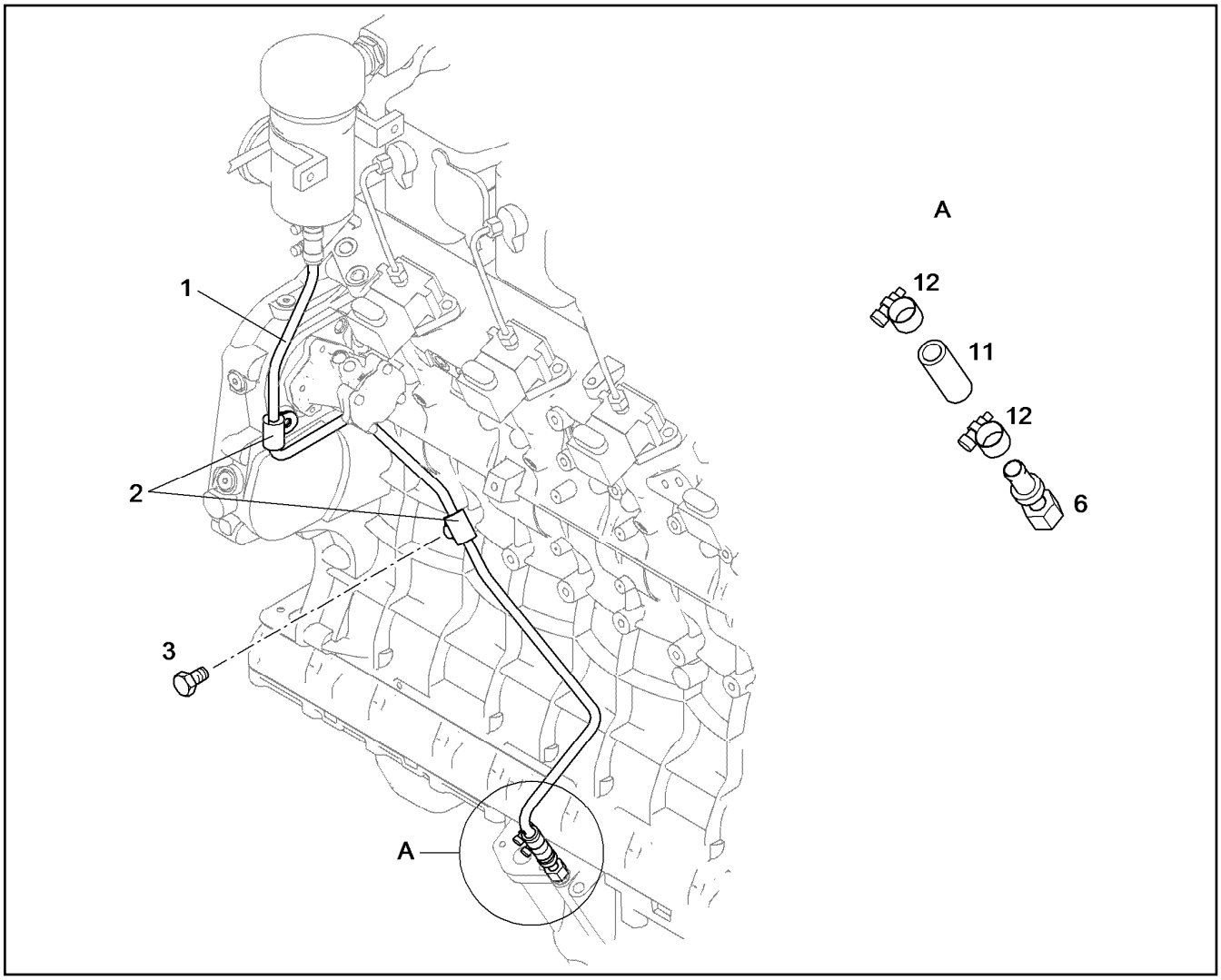


| Pos. | Item | Quantity | Description | Designação | Serie | K |
|---|---|---|---|---|---|---|
| 1 | 10120264 | 1 | HYDT.TUBE 10X1 | TUBULACAO DE RETORNO DE O | | |
| 2 | 7382092 | 2 | CLAMP DIN 3016-1 D1 10X25 W1-2-VMQ | BRAÇADEIRA | | |
| 3 | 10016906 | 1 | HEX BOLT DIN 6921 M8X20 8.8 A2C | PARAFUSO SEXTAVADO | | |
| 6 | 10119971 | 1 | NON-RETURN VALVE | VALVULA DE RETENCAO | | |
| 11 | 9079603 | 1 | RUBBER CONNECTION | CONEXÃO DE BORRACHA | | |
| 12 | 4981029 | 2 | CLAMP DIN 3017 B1- 17 X 12 W1-2 | BRAÇADEIRA | | |

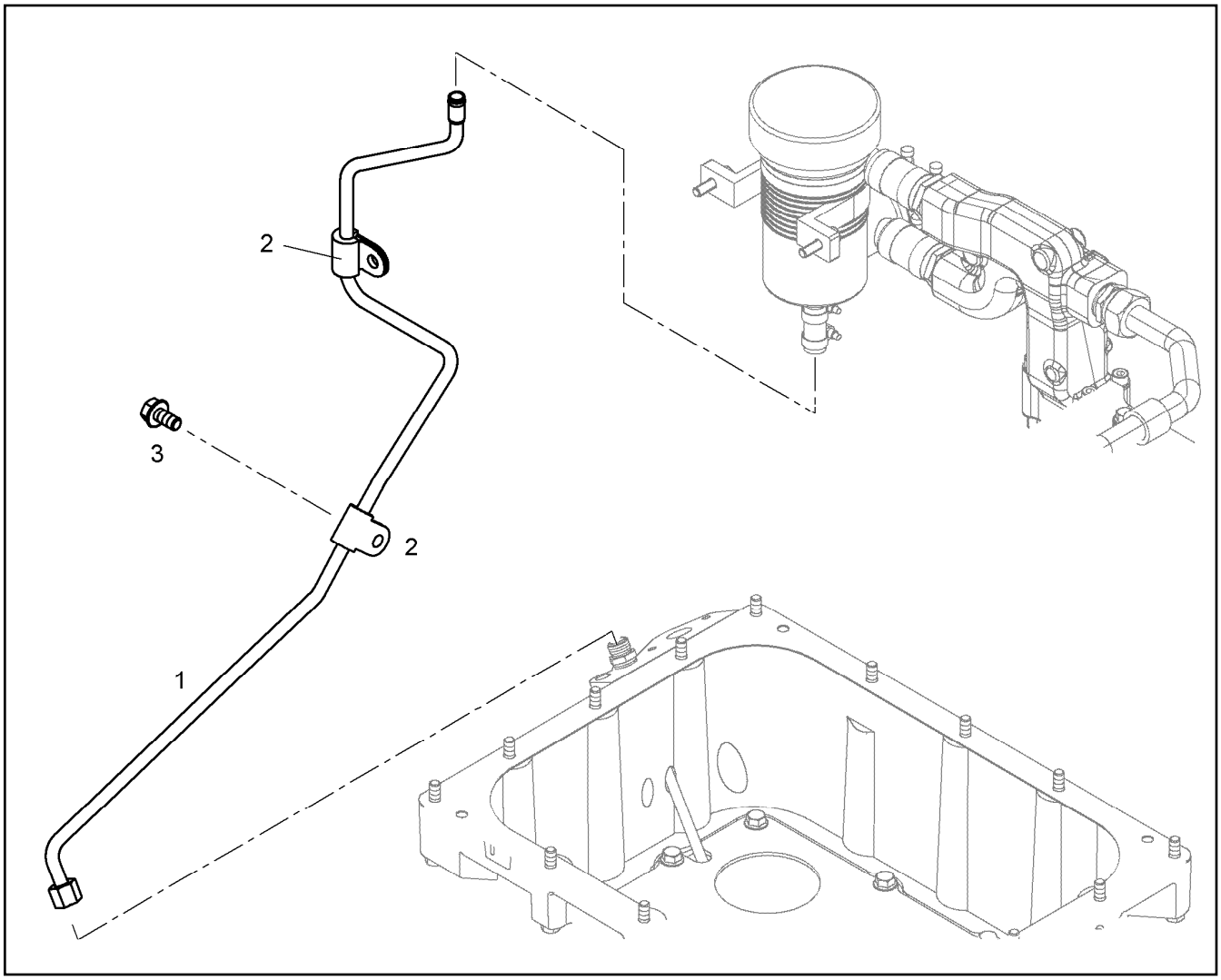


| Pos. | Item | Quantity | Description | Designação | Serie | K |
|---|---|---|---|---|---|---|
| 1 | 9079972 | 1 | HYDT.TUBE 10X1 | TUBULACAO DE RETORNO DE O | | |
| 2 | 7382092 | 2 | CLAMP DIN 3016-1 D1 10X25 W1-2-VMQ | BRAÇADEIRA | | |
| 3 | 10016906 | 1 | HEX BOLT DIN 6921 M8X20 8.8 A2C | PARAFUSO SEXTAVADO | | |

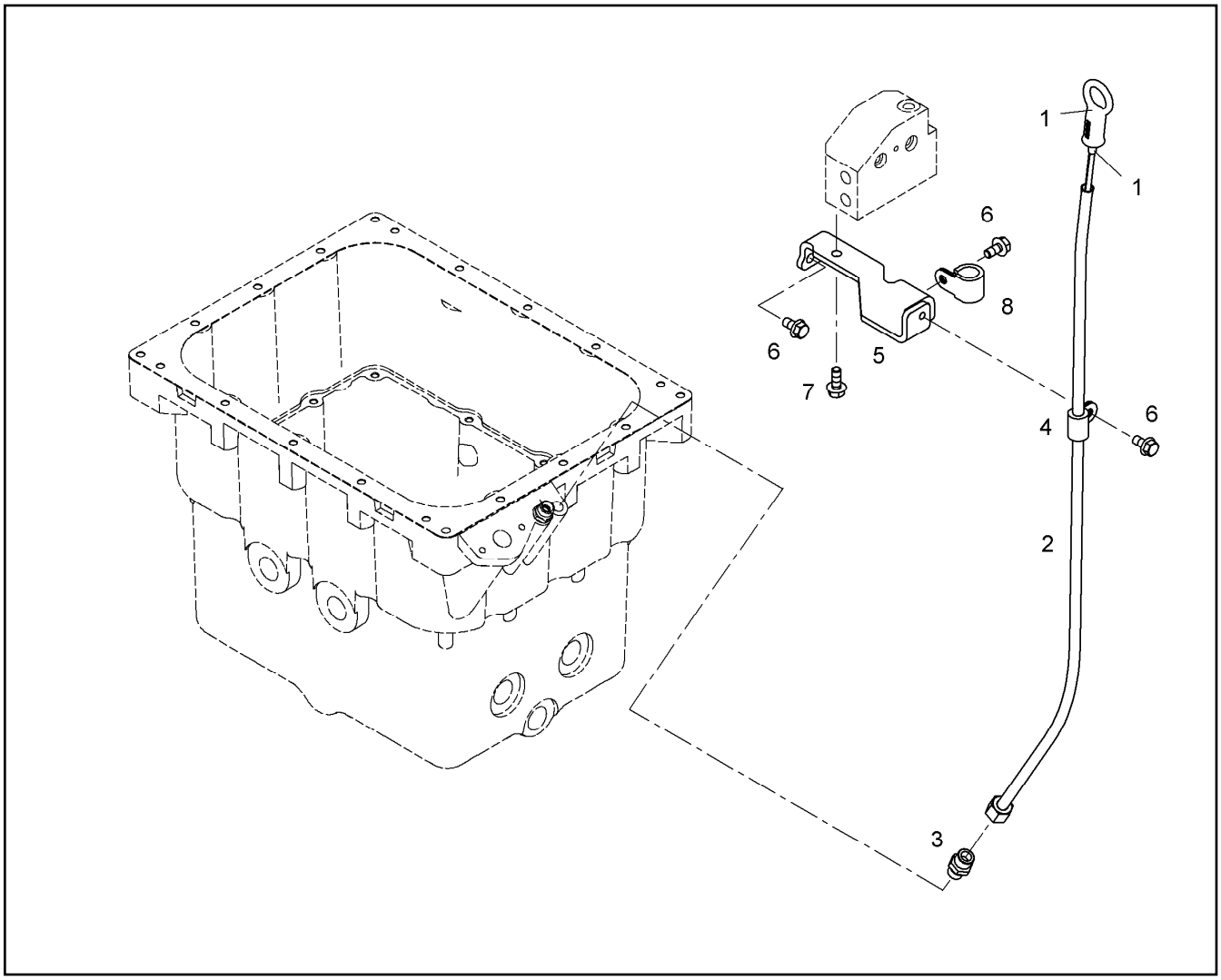


| Pos. | Item | Quantity | Description | Designação | Serie | K |
|---|---|---|---|---|---|---|
| 1 | 10115740 | 1 | OIL DIPSTICK | VARETA DE NÍVEL DE ÓLEO C/ | | |
| 1 | 10215824 | 1 | O-RING 5,10X1,60 | ANEL-O | | |
| 2 | 9079867 | 1 | GUIDING PIPE | TUBO GUIA | | |
| 3 | 4981235 | 1 | SCREW FITTING GE 10L M14X1,5 | REDUÇÃO | | |
| 4 | 7381628 | 1 | CLAMP DIN 3016-1 D1 10X20 W1-2-MVQ | BRAÇADEIRA | | |
| 5 | 10115691 | 1 | SHEET | PLACA | | |
| 6 | 10005078 | 3 | HEX BOLT DIN 6921 M8X16 8.8 A2C | PARAFUSO SEXTAVADO | | |
| 7 | 9358590 | 1 | SLEEVE | LUVA | | 1 |

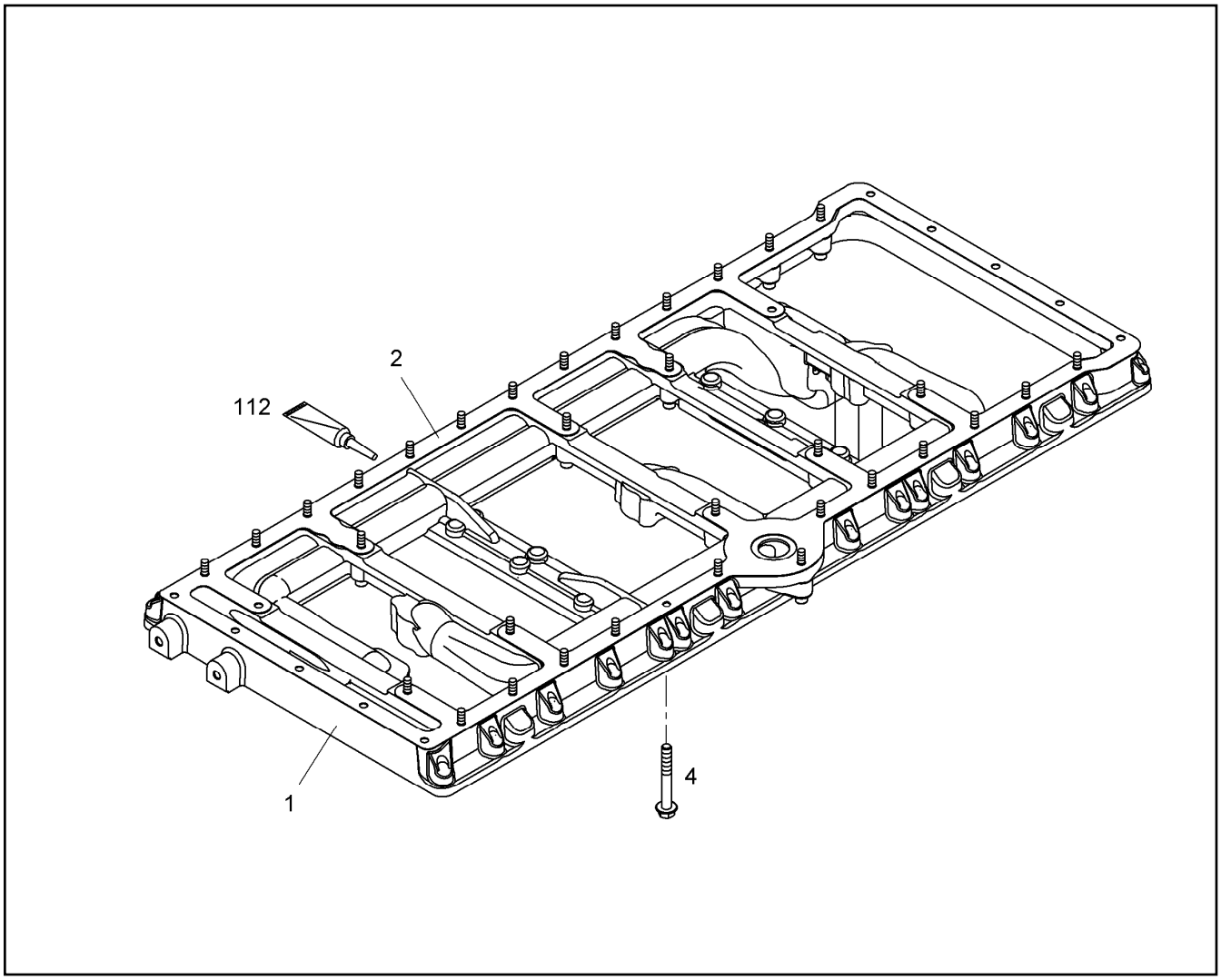


| Pos. | Item | Quantity | Description | Designação | Serie | K |
|---|---|---|---|---|---|---|
| 1 | 10118656 | 1 | LADDER-TYPE FRAME | SUPORTE TIPO ESCADA | | |
| 2 | 10118549 | 1 | SEAL | VEDAÇÃO | | |
| 4 | 10333554 | 34 | HEX BOLT EN 1665 M8X55 8.8 | PARAFUSO SEXTAVADO | | |
| 112 | 8627609 | 1 | SEALANT | VEDACAO | | |

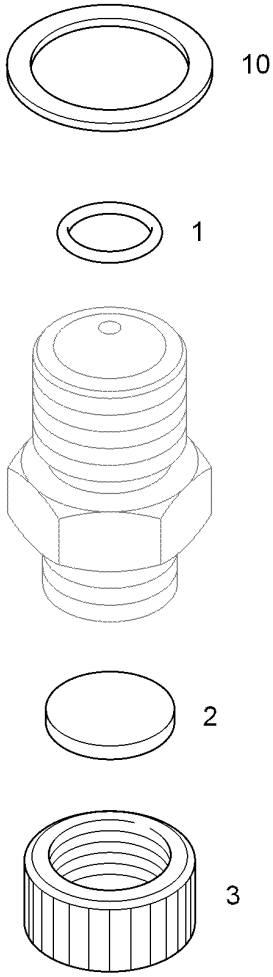


| Pos. | Item | Quantity | Description | Designação | Serie | K |
|---|---|---|---|---|---|---|
| 1 | 7264625 | 1 | O-RING 15X2 | ANEL-O | | |
| 2 | 7011131 | 1 | SEAL | VEDAÇÃO | | |
| 3 | 7013456 | 1 | PROTECTING CAP | CAPA DE PROTECAO | | |
| 10 | 7101021 | 1 | SEALING RING DIN 7603 A 30 X 36 CU | ANEL DE VEDAÇÃO | | |

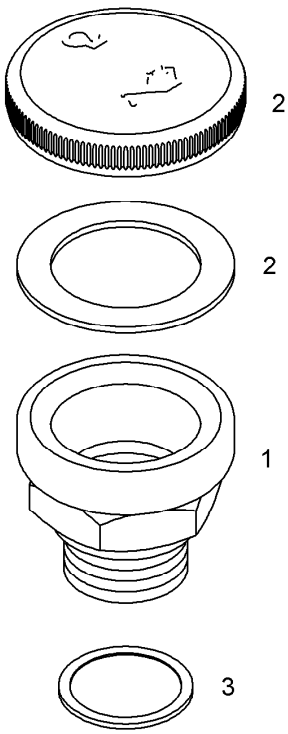


| Pos. | Item | Quantity | Description | Designação | Serie | K |
|---|---|---|---|---|---|---|
| 1 | 10119031 | 1 | FILLER NECK CPL. | BOCAL COMPL. DE ABASTECIME | | |
| 2 | 9144757 | 1 | END COVER<br>⇨ ❑ 556 | TAMPA DE FECHAMENTO | | |
| 2 | 9144762 | 1 | -SEAL | -VEDAÇÃO | | |
| 3 | 10335629 | 1 | PROFILE PACKING 33 | PERFIL DE VEDACAO | | |

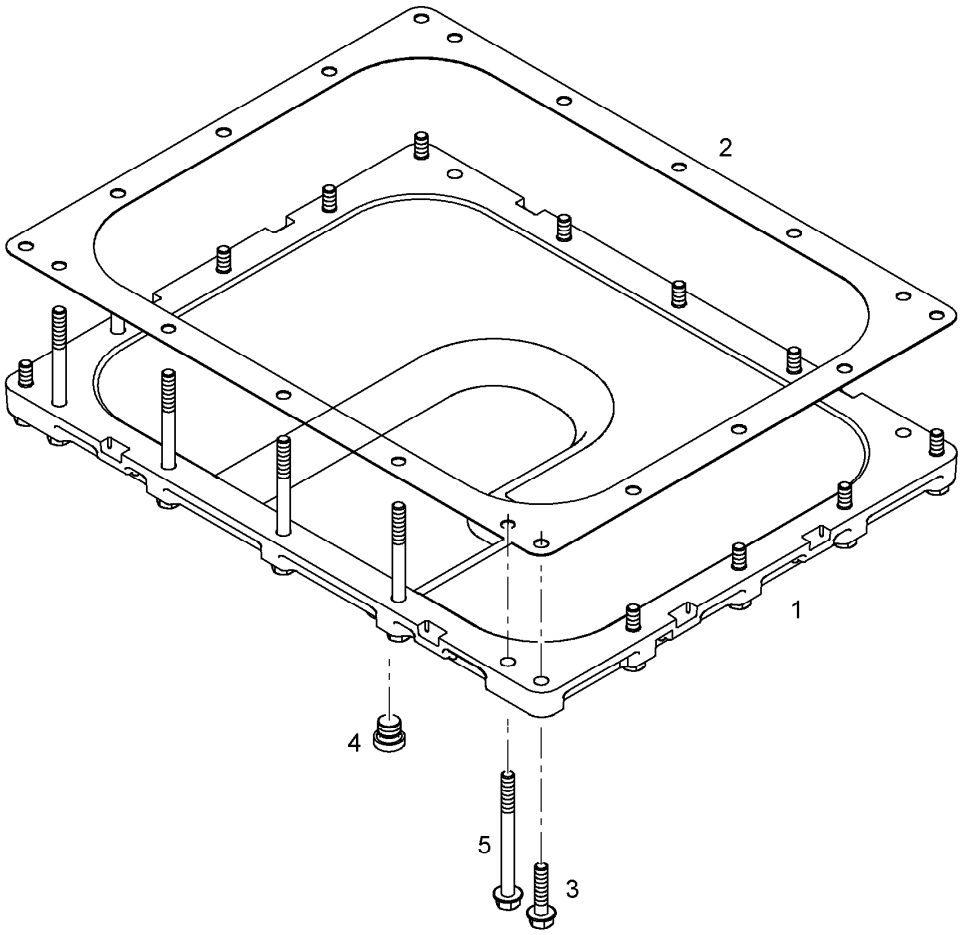


| Pos. | Item | Quantity | Description | Designação | Serie | K |
|---|---|---|---|---|---|---|
| 1 | 9079555 | 1 | SHEET | PLACA | | |
| 2 | 9079556 | 1 | SEAL | VEDAÇÃO | | |
| 3 | 10037518 | 13 | HEX BOLT DIN 6921 M8X35 10.9 A2C | PARAFUSO SEXTAVADO | | |
| 4 | 7380566 | 1 | SCREW PLUG VSTI M14X1,5 | PARAFUSO DE FECHAMENTO | | |
| 5 | 10100303 | 5 | HEX BOLT DIN 6921 M8X90 8.8 A2C | PARAFUSO SEXTAVADO | | |

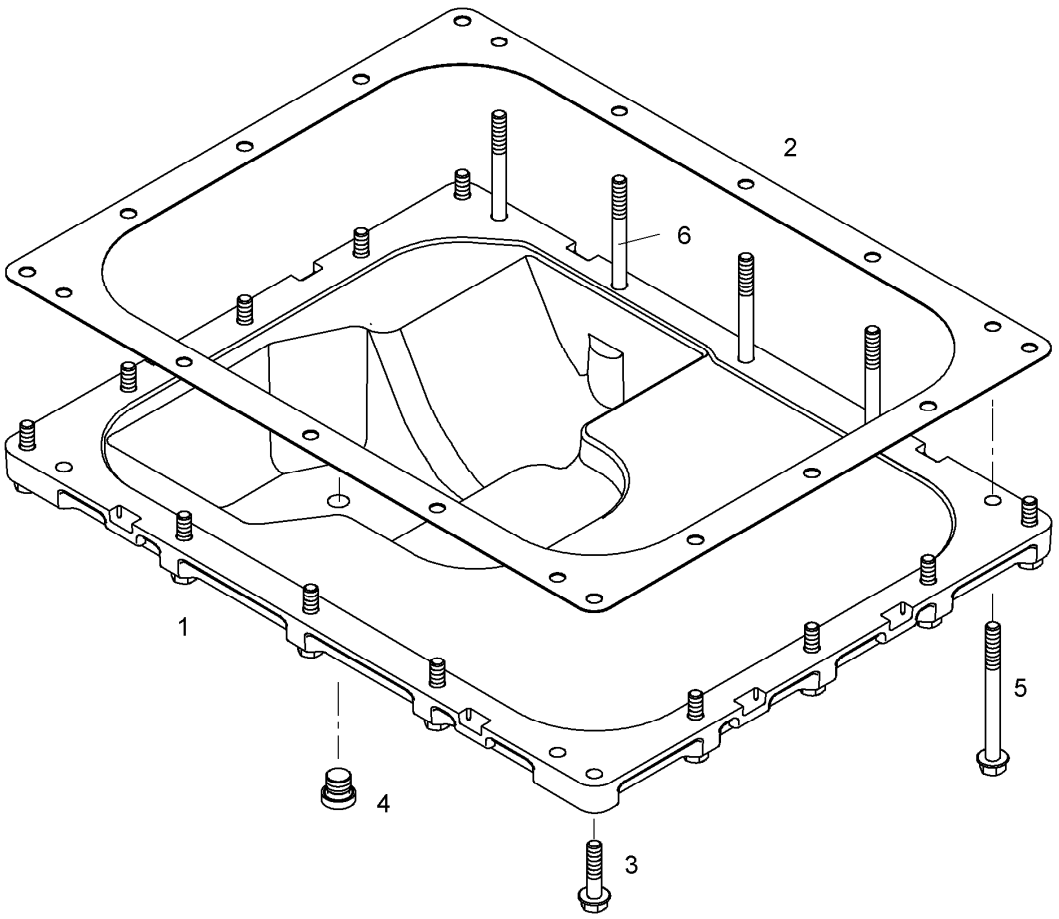


| Pos. | Item | Quantity | Description | Designação | Serie | K |
|---|---|---|---|---|---|---|
| 1 | 9079959 | 1 | SHEET | PLACA | | |
| 2 | 9079556 | 1 | SEAL | VEDAÇÃO | | |
| 3 | 10037518 | 13 | HEX BOLT DIN 6921 M8X35 10.9 A2C | PARAFUSO SEXTAVADO | | |
| 4 | 7380566 | 1 | SCREW PLUG VSTI M14X1,5 | PARAFUSO DE FECHAMENTO | | |
| 5 | 10100303 | 5 | HEX BOLT DIN 6921 M8X90 8.8 A2C | PARAFUSO SEXTAVADO | | |
| 6 | 10017158 | 1 | HEX BOLT DIN 6921 M8X120 8.8 A2C | PARAFUSO SEXTAVADO | | |

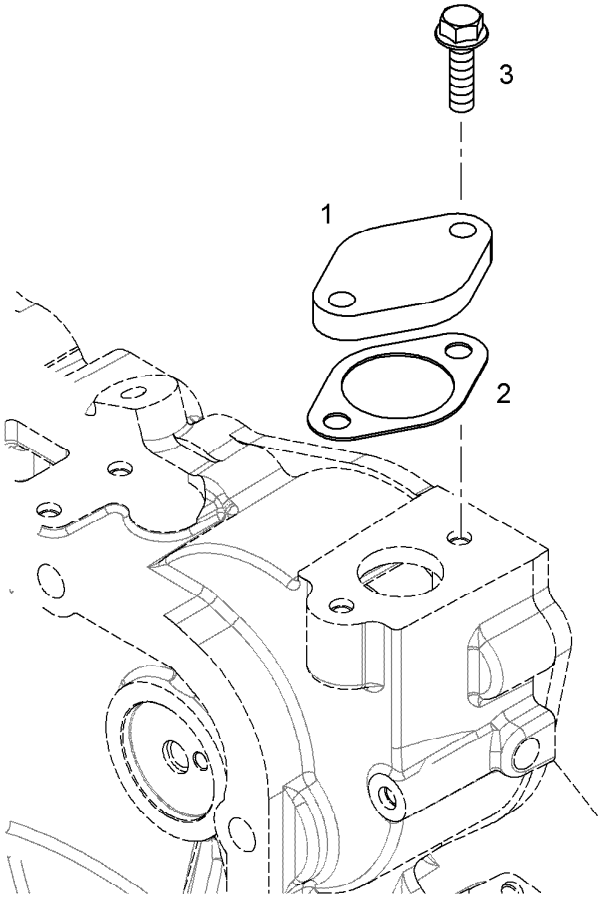


| Pos. | Item | Quantity | Description | Designação | Serie | K |
|---|---|---|---|---|---|---|
| 1 | 9077777 | 1 | LID | TAMPA | | |
| 2 | 9275766 | 1 | SEAL | VEDAÇÃO | | |
| 3 | 10009007 | 2 | HEX HEAD SCREW WITH FLANGE EN 1665 | PARAFUSO SEXTAVADO COM F | | |

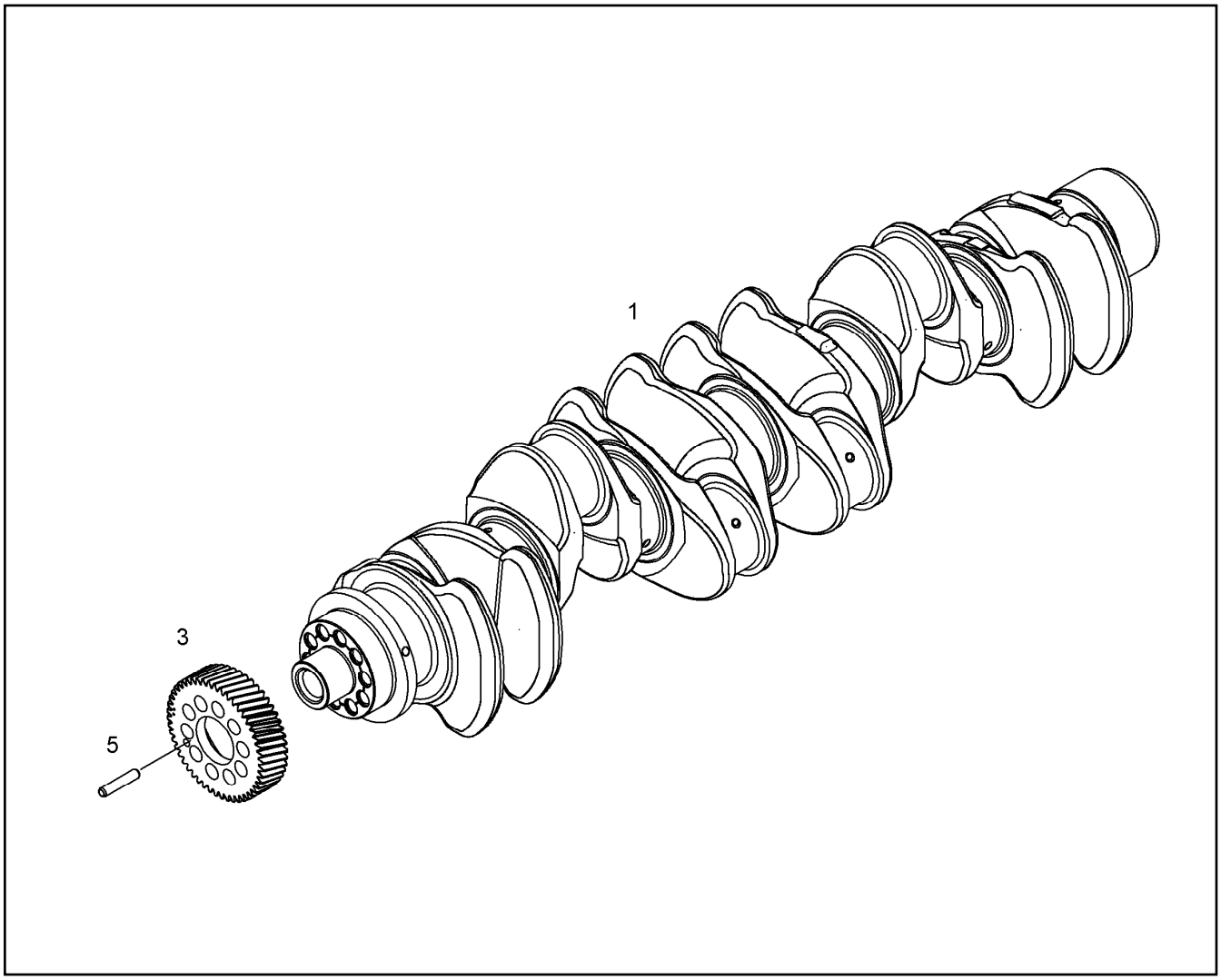


| Pos. | Item | Quantity | Description | Designação | Serie | K |
|---|---|---|---|---|---|---|
| 1 | | 1 | CRANKSHAFT | VIRABREQUIM | | |
| 3 | 9072834 | 1 | GEAR WHEEL Z=50 M=2.5 | ENGRENAGEM | | |
| 5 | 4980376 | 1 | DOWEL PIN 8 | PINO ELÁSTICO | | |

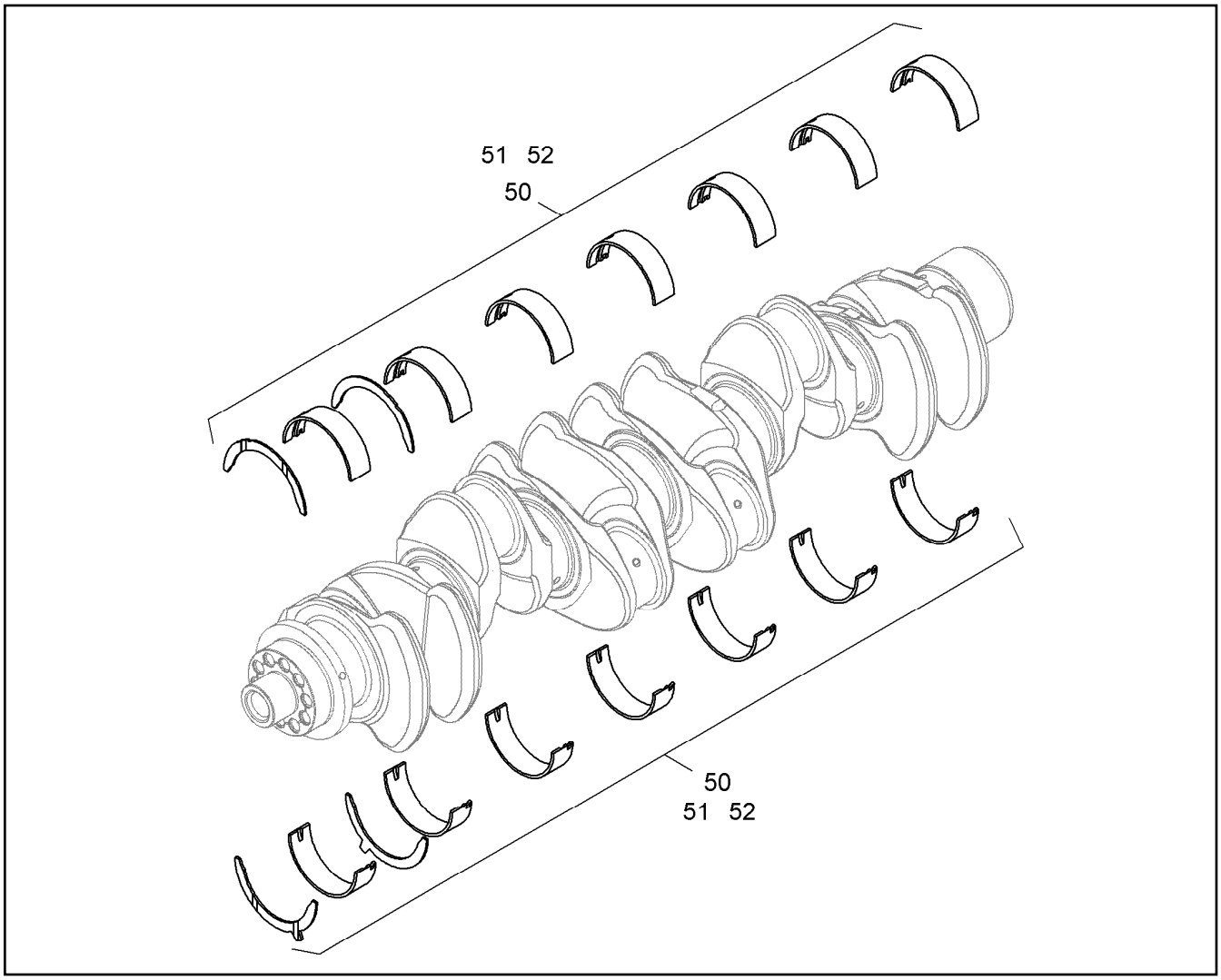


| Pos. | Item | Quantity | Description | Designação | Serie | K |
|---|---|---|---|---|---|---|
| 50 | 10116928 | 1 | RS CRANKSHAFT BEARING KPL. | KIT DE REPARO | | |
| 51 | 10140597 | 1 | RK1 MAIN BEARING CPL. | KIT DE REPARO | | |
| 52 | 10140601 | 1 | RK2 MAIN BEARING CPL. | KIT DE REPARO | | |

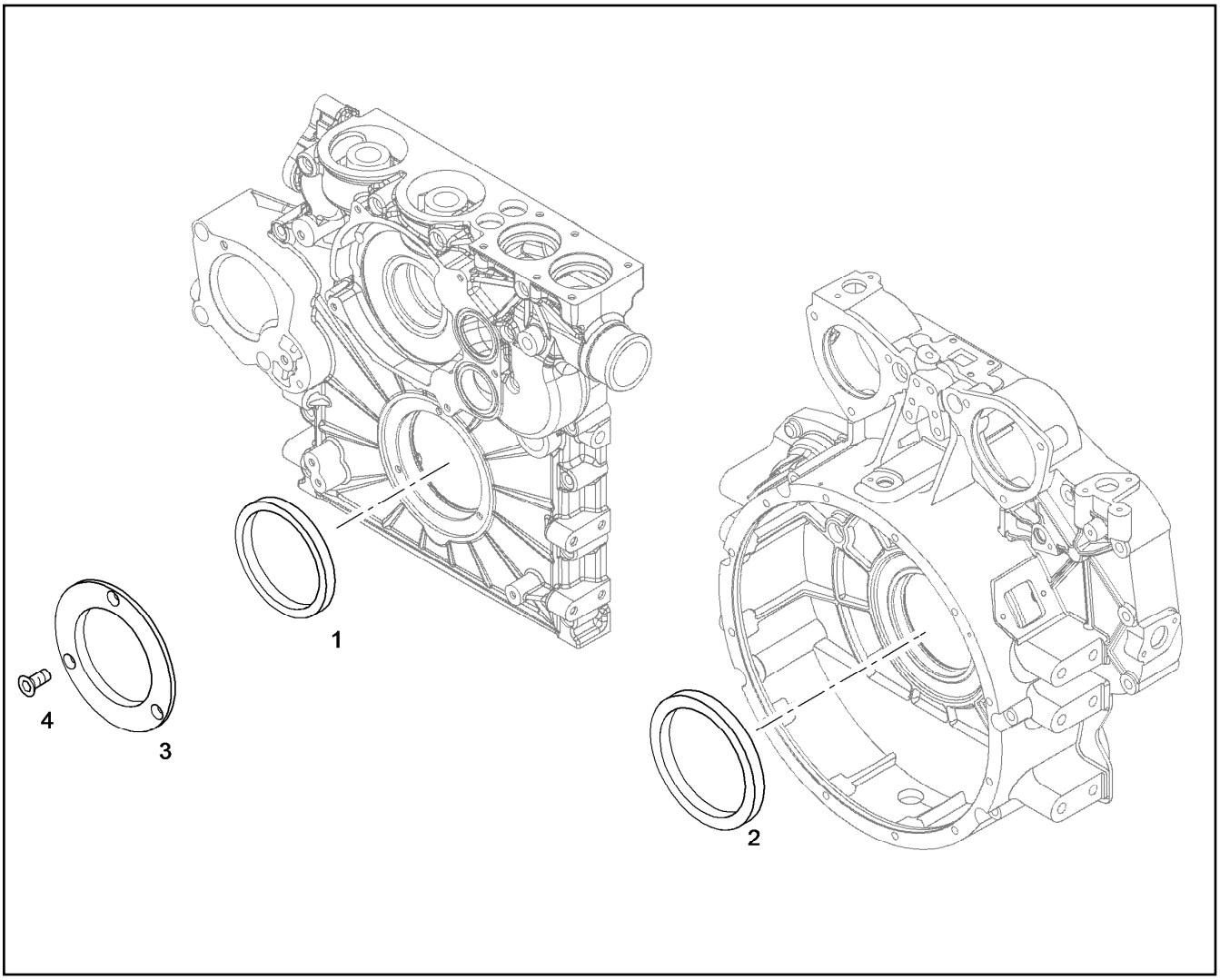


| Pos. | Item | Quantity | Description | Designação | Serie | K |
|---|---|---|---|---|---|---|
| 1 | | 1 | ROTARY SHAFT LIP SEAL 110X130X12,0 | ANEL DE VEDÇÃO DO EIXO RAD | | |
| 2 | | 1 | ROTARY SHAFT LIP SEAL 115X140X12,0 | ANEL DE VEDÇÃO DO EIXO RAD | | |
| 3 | | 1 | GUARD RING | ANEL DE PROTECAO | | |
| 4 | | 3 | COUNTERSUNK SCREW BN 4851 M8x20 8.8 | PARAFUSO ESCAREADO | | |

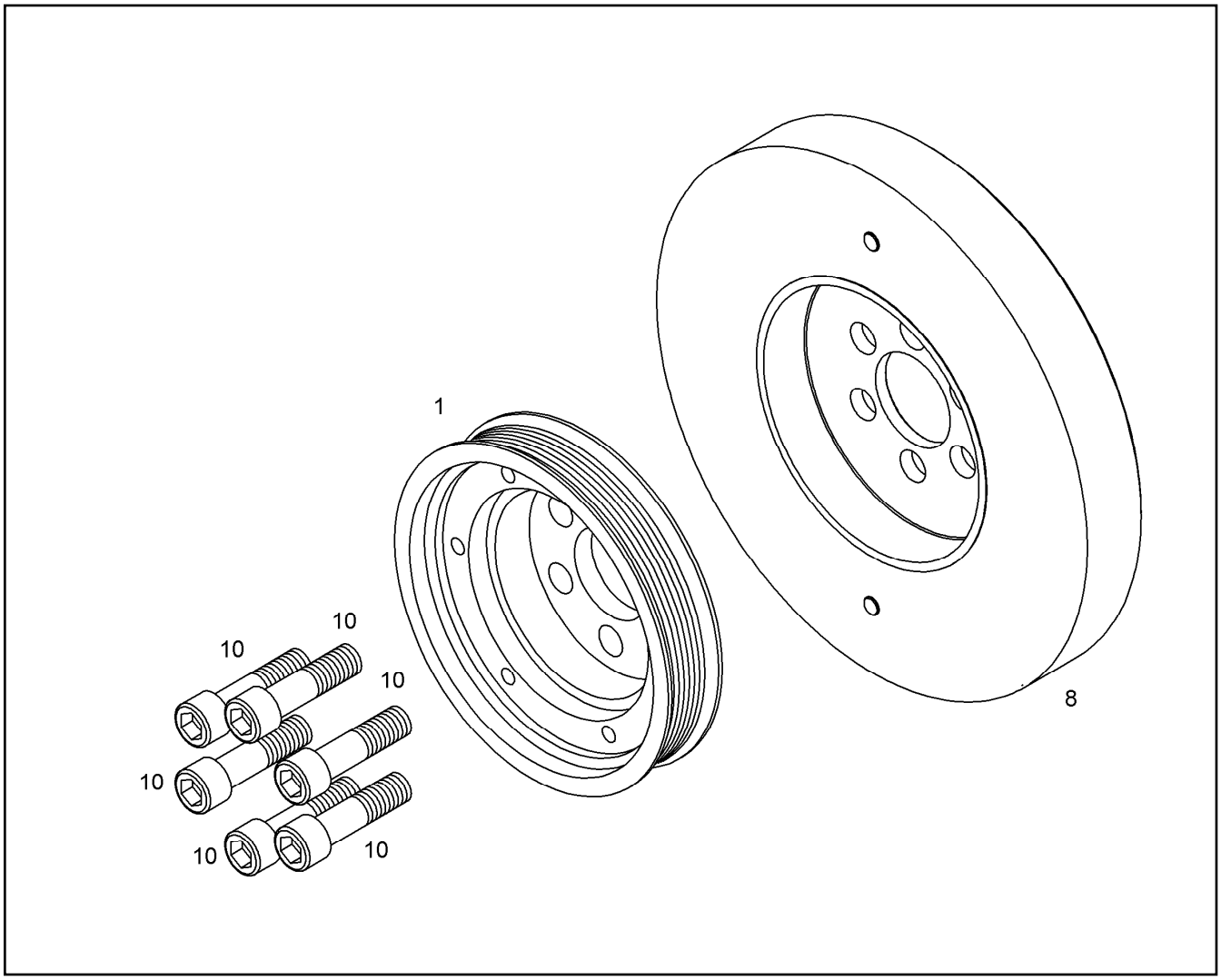


| Pos. | Item | Quantity | Description | Designação | Serie | K |
|---|---|---|---|---|---|---|
| 1 | 10116366 | 1 | BELT PULLEY | POLIA | | |
| 8 | 9080380 | 1 | VISCOSE DAMPER | AMORTECEDOR DE VISCOSE | | |
| 10 | 10118786 | 6 | HEXALOBULAR HEAD SCREW M16X1,5X60 | PARAFUSO HEXAGONAL REDO | | |

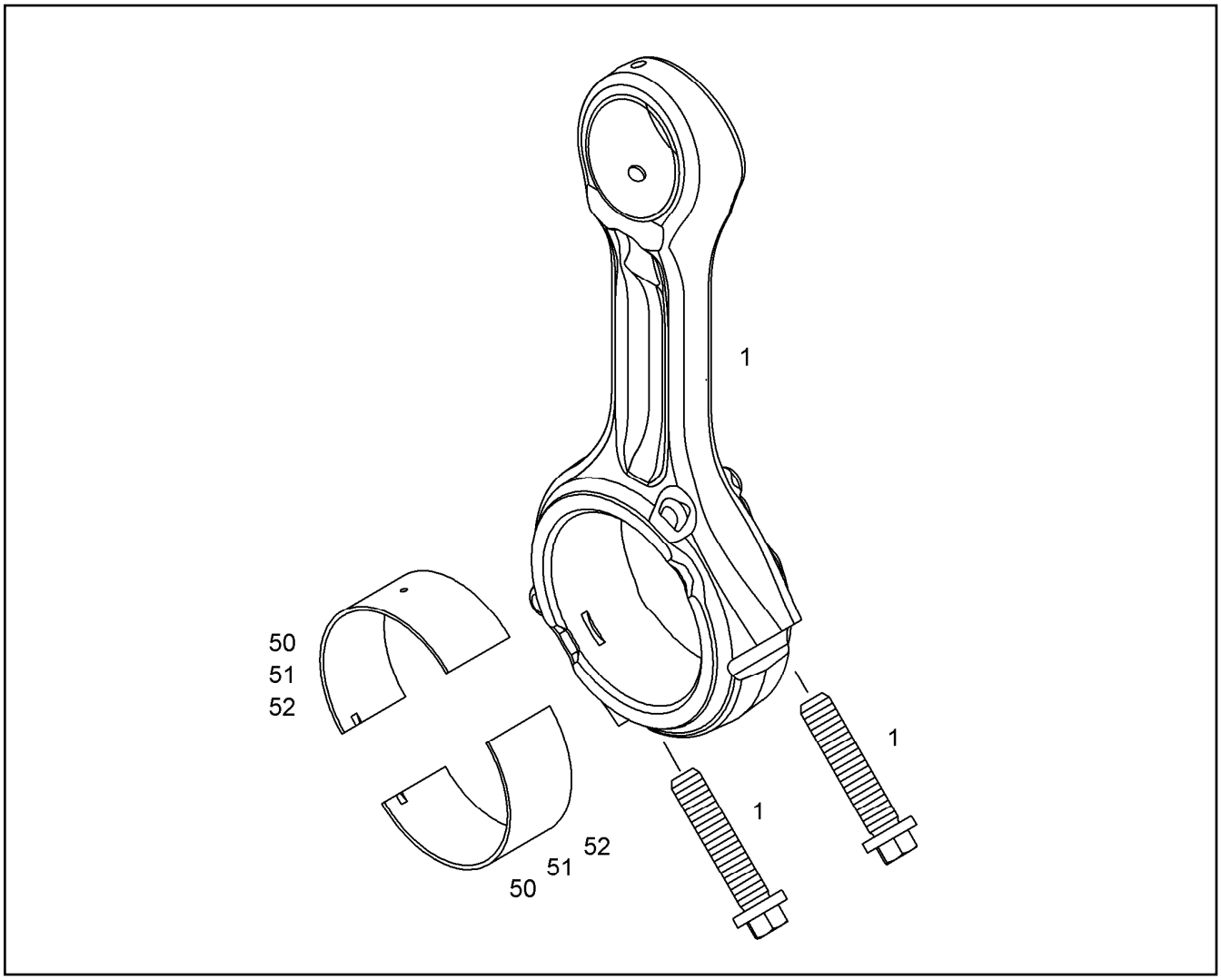


| Pos. | Item | Quantity | Description | Designação | Serie | K |
|---|---|---|---|---|---|---|
| 1 | 9079997 | 1 | MAIN ROD | BIELA | | |
| 1 | 9174981 | 2 | -BEARING CAP BOLT M14X1,5X65 | -PARAFUSO DA BIELA | | |
| 50 | 10116934 | 1 | RK BIG-END BEARING | KIT REPARO DO MANCAL BIELA | | |
| 51 | 10140487 | 1 | -RK1 BIG-END BEARING | -CASQUILHO | | |
| 52 | 10140488 | 1 | -RK2 BIG-END BEARING | -CASQUILHO | | |

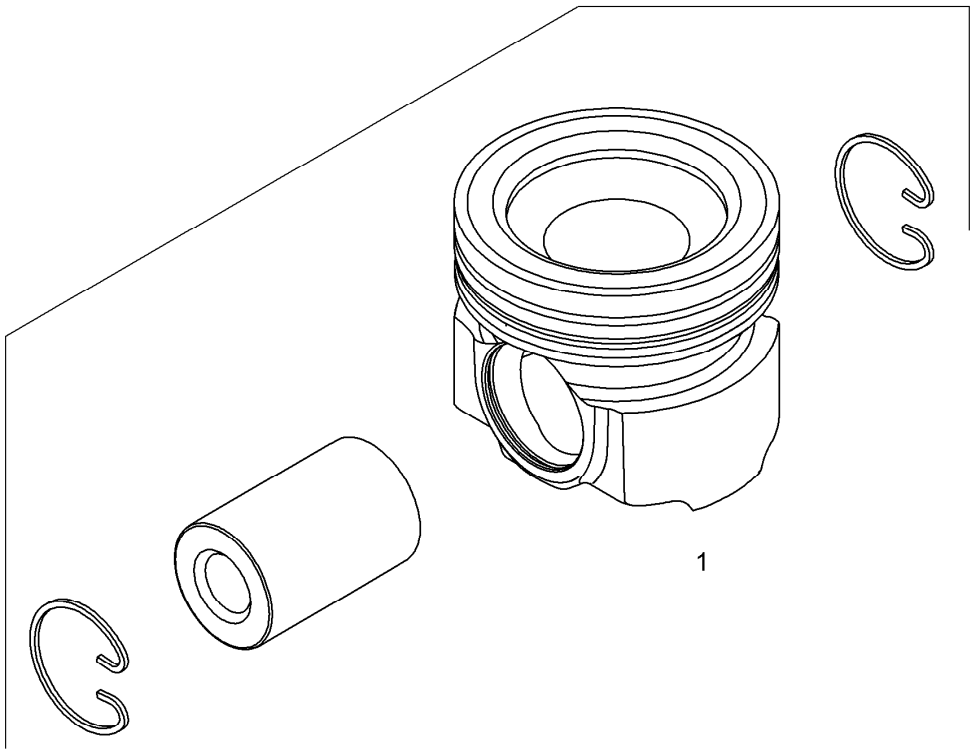


| Pos. | Item | Quantity | Description | Designação | Serie | K |
|---|---|---|---|---|---|---|
| 1 | 9080686 | 1 | PISTON PRE-ASS. MONOTHERM D=122<br>⇨ ❑ 502 | PISTÃO PRÉ-MONT. | | |

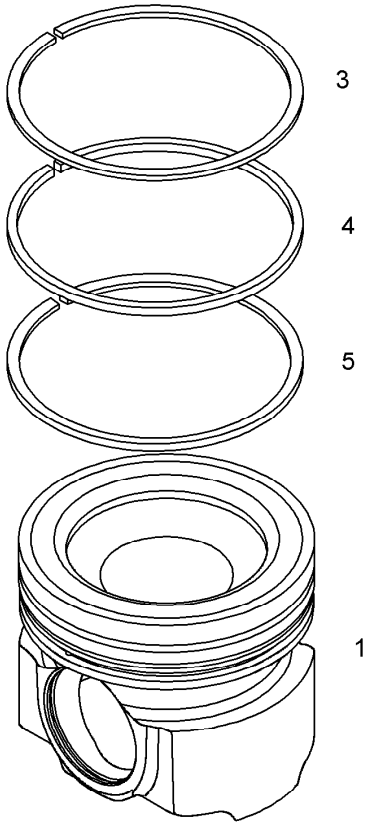


| Pos. | Item | Quantity | Description | Designação | Serie | K |
|---|---|---|---|---|---|---|
| 1 | | 1 | PISTON | PISTÃO | | |
| 3 | 10472345 | 1 | KB-RING 122X113,1X3,5 | ANEL PARA PISTAO | | |
| 4 | 10472346 | 1 | PISTON RING MG 122X112,1X2,5 | ANEL | | |
| 5 | 10472347 | 1 | DSF RING 122X113,36X4 | ANEL DSF | | |

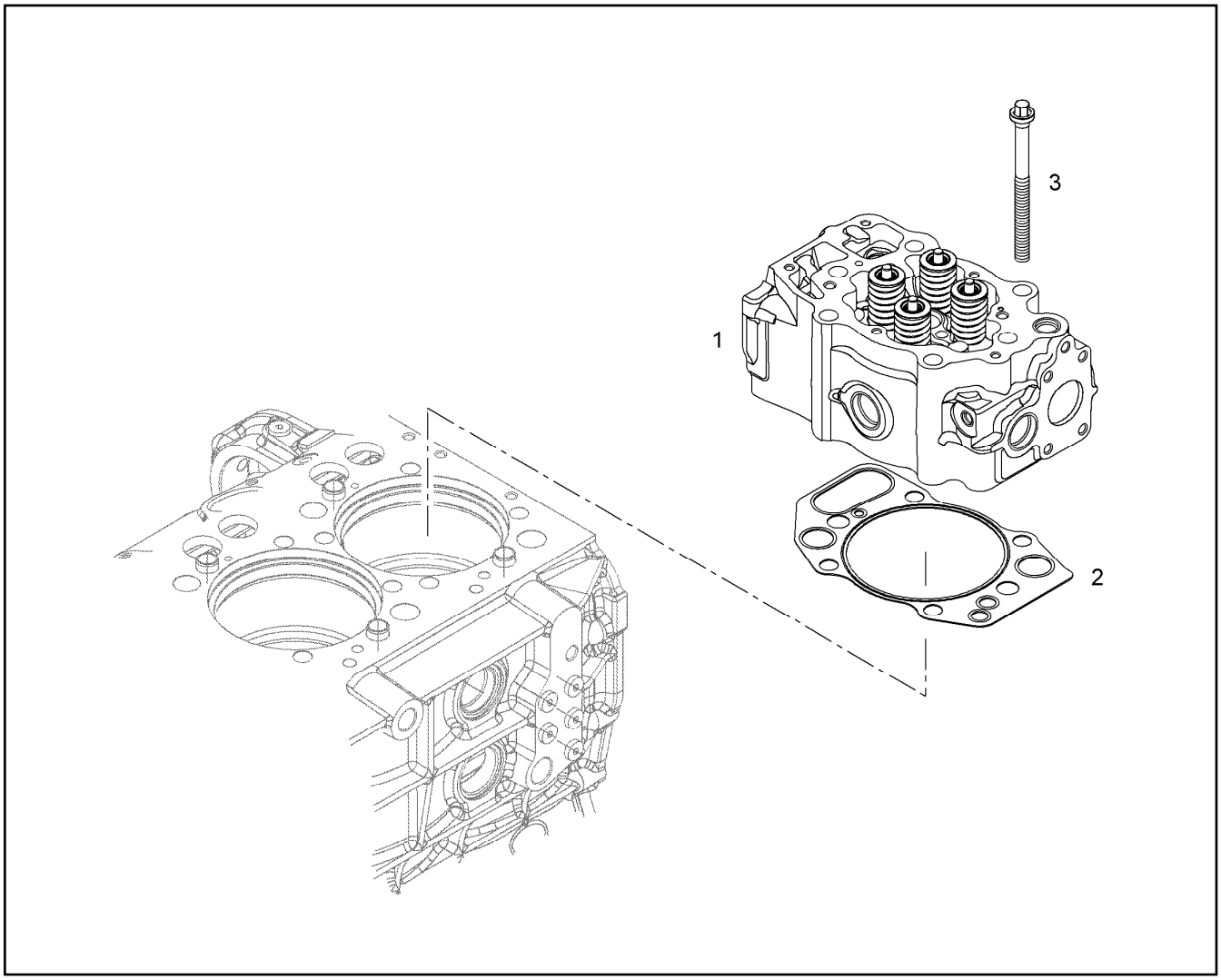


| Pos. | Item | Quantity | Description | Designação | Serie | K |
|---|---|---|---|---|---|---|
| 1 | 10119427 | 1 | CYLINDER HEAD PRE-ASS. | CABEÇOTE PRÉ-MONTADO | -2007043839 | |
| 1 | 10120364 | 1 | CYLINDER HEAD PRE-ASS.<br>⇨ ❑ 508 | CABEÇOTE PRÉ-MONTADO | -2011044974 | |
| 1 | 10141554 | 1 | CYLINDER HEAD PRE-ASS.<br>⇨ ❑ 504 | CABEÇOTE PRÉ-MONTADO | 2011044975- | |
| 2 | 10120844 | 1 | CYLINDER HEAD GASKET | JUNTA DO CABECOTE | | |
| 3 | 10131573 | 6 | HEXALOBULAR HEAD SCREW M16X195 32C | PARAFUSO HEXAGONAL REDO | | |

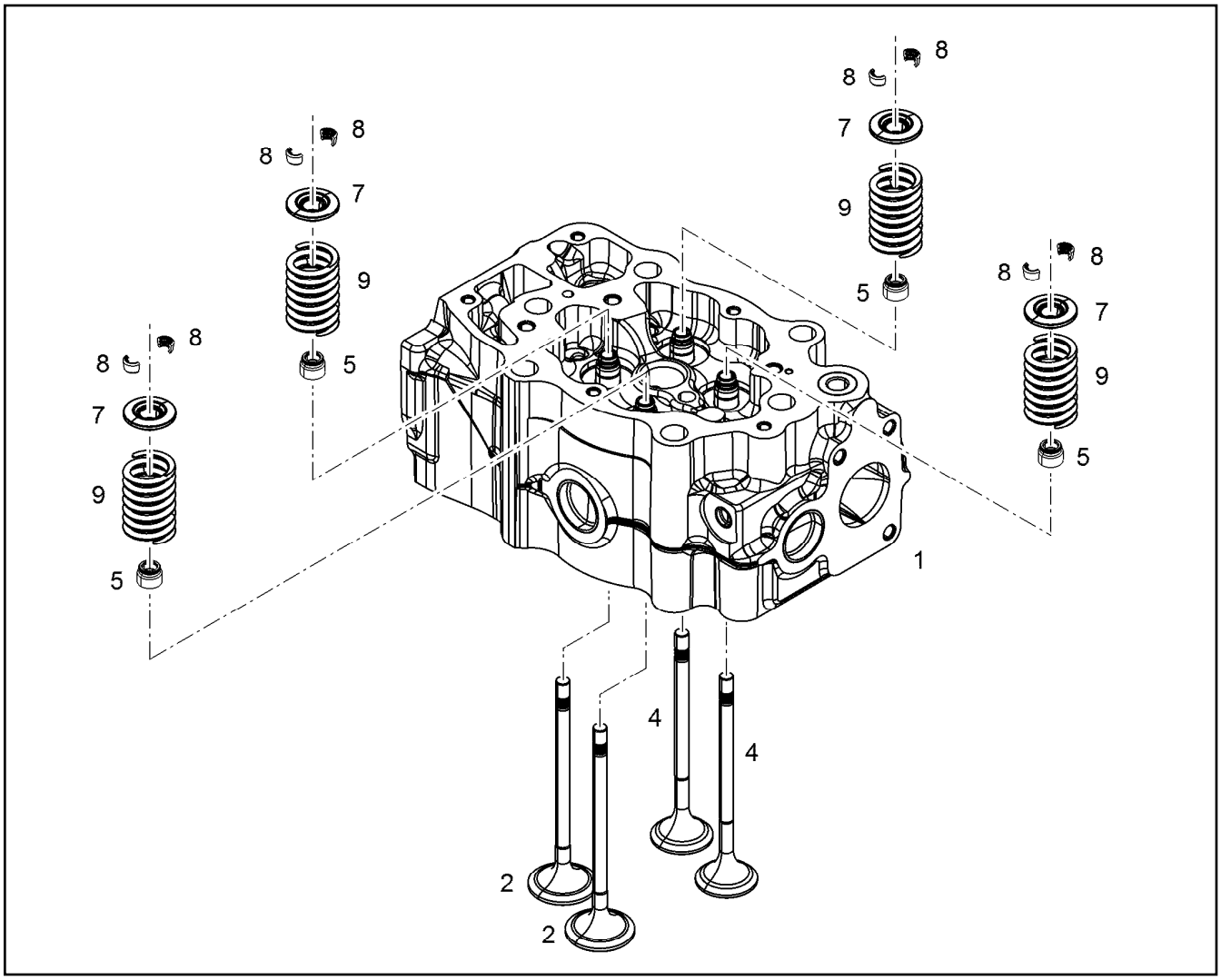


| Pos. | Item | Quantity | Description | Designação | Serie | K |
|---|---|---|---|---|---|---|
| 1 | 10120384 | 1 | ZYLINDER HEAD<br>⇨ ❑ 510 | CABECOTE | | |
| 2 | 10136752 | 2 | INLET VALVE | VALVULA DE ADMISSAO | | |
| 4 | 10136753 | 2 | OUTLET VALVE | VALVULA DE ESCAPE | | |
| 5 | 10120334 | 4 | VALVE STEM SEAL RING | ANEL VEDACAO HASTE VALVUL | | |
| 7 | 9074480 | 4 | SPRING CUP ABOVE | PRATO MOLA SUPERIOR | | |
| 8 | 10004331 | 8 | VALVE COLLET MK9 | TRAVA DA VALVULA | | |
| 9 | 9074481 | 4 | PRESSURE SPRING 4,60X28,40X62,70 | MOLA DE PRESSÃO | | |

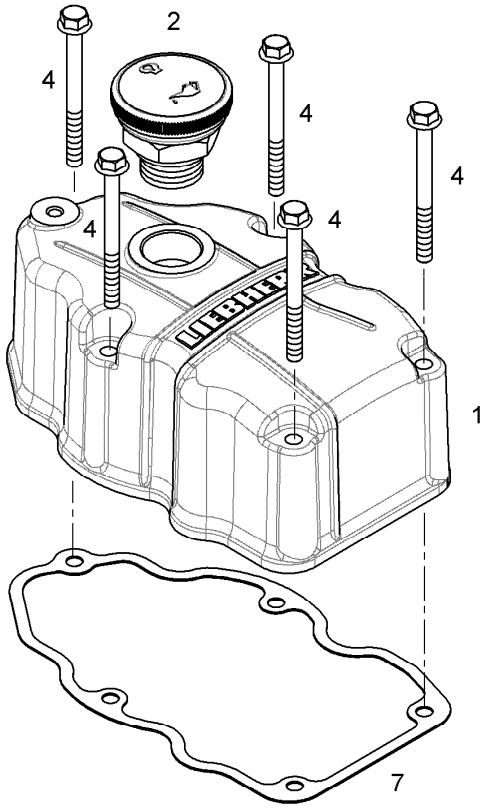


| Pos. | Item | Quantity | Description | Designação | Serie | K |
|---|---|---|---|---|---|---|
| 1 | 10127488 | 1 | CYLINDER HEAD COVER | TAMPA DO CABECOTE | | |
| 2 | 10119030 | 1 | OIL FILLER INLET D930<br>⇨ ❑ 492 | ENCHIMENTO DE OLEO | | |
| 4 | 10100303 | 5 | HEX BOLT DIN 6921 M8X90 8.8 A2C | PARAFUSO SEXTAVADO | | |
| 7 | 10118554 | 1 | SEAL | VEDAÇÃO | | |

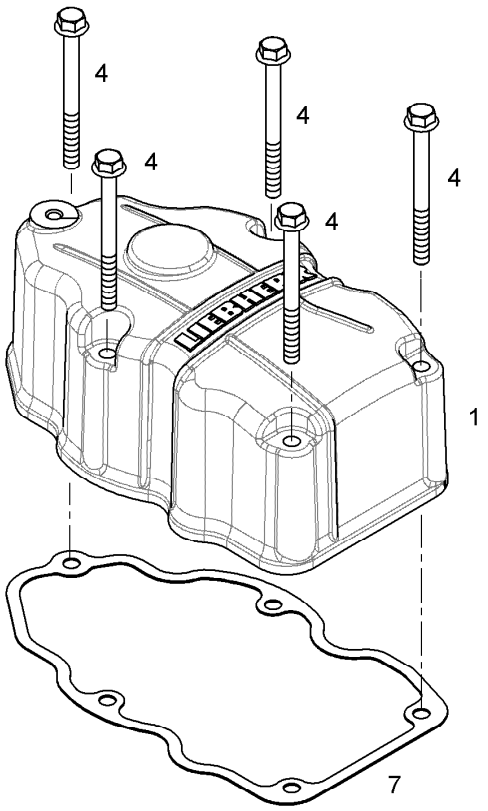


| Pos. | Item | Quantity | Description | Designação | Serie | K |
|---|---|---|---|---|---|---|
| 1 | 10127489 | 1 | CYLINDER HEAD COVER | TAMPA DO CABECOTE | | |
| 4 | 10100303 | 5 | HEX BOLT DIN 6921 M8X90 8.8 A2C | PARAFUSO SEXTAVADO | | |
| 7 | 10118554 | 1 | SEAL | VEDAÇÃO | | |

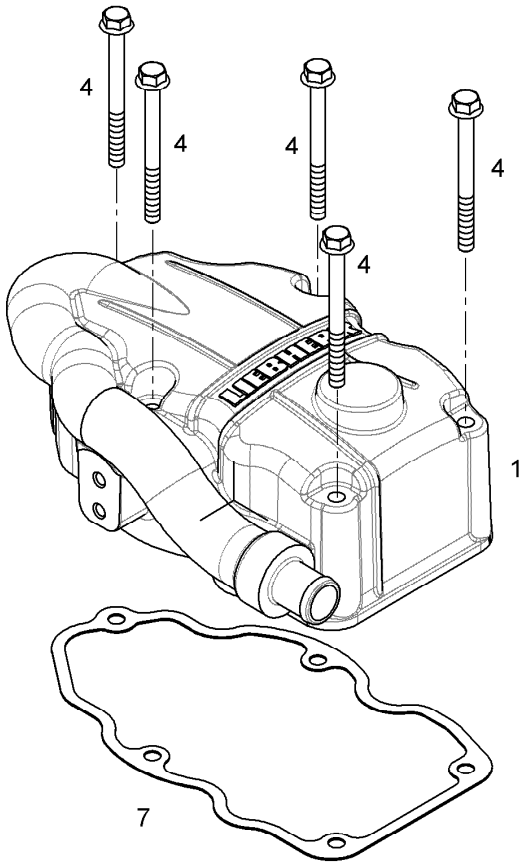


| Pos. | Item | Quantity | Description | Designação | Serie | K |
|---|---|---|---|---|---|---|
| 1 | 10119011 | 1 | CYLINDER HEAD COVER | TAMPA DO CABECOTE | | |
| 4 | 10100303 | 5 | HEX BOLT DIN 6921 M8X90 8.8 A2C | PARAFUSO SEXTAVADO | | |
| 7 | 10118554 | 1 | SEAL | VEDAÇÃO | | |

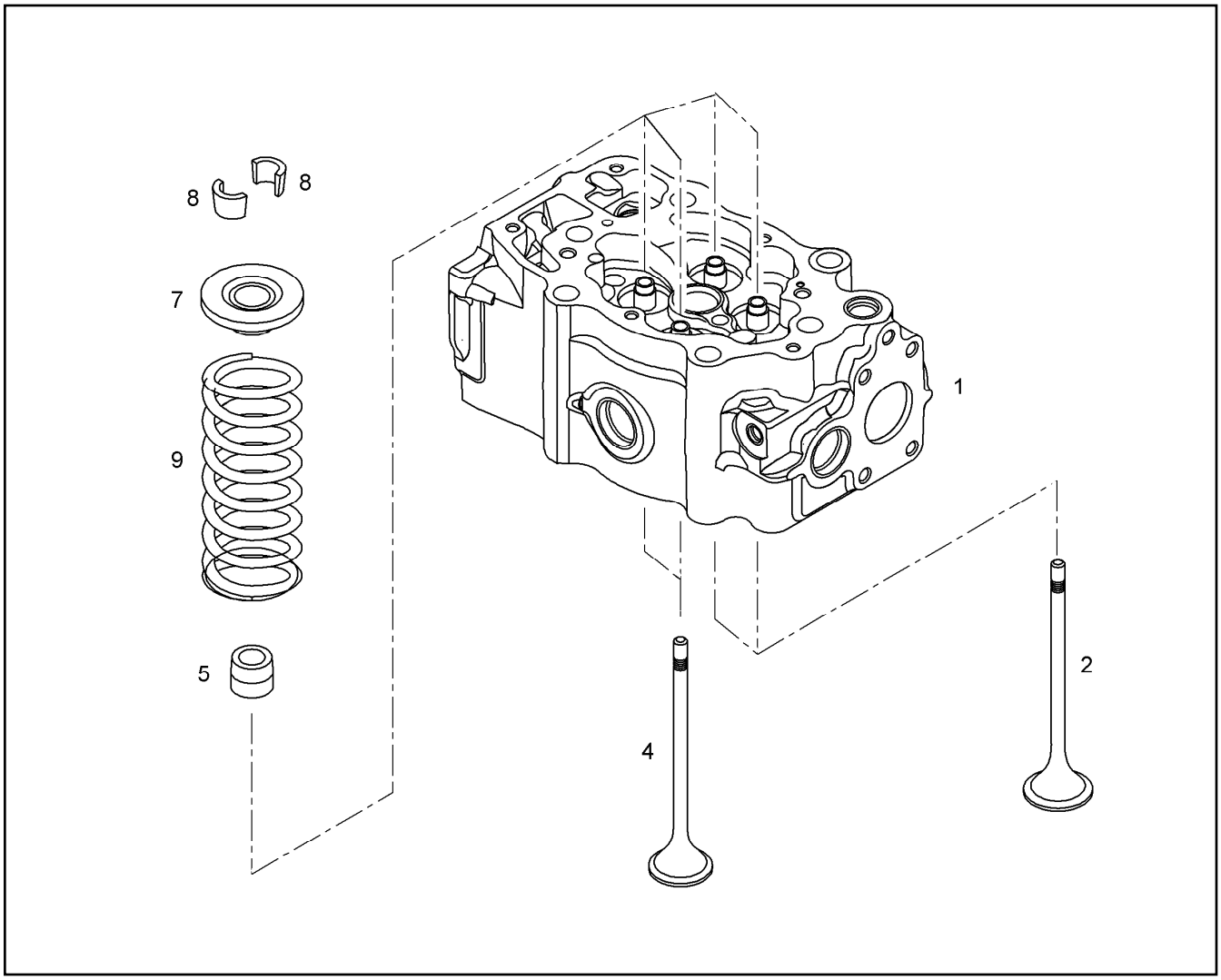


| Pos. | Item | Quantity | Description | Designação | Serie | K |
|---|---|---|---|---|---|---|
| 1 | 10120384 | 1 | ZYLINDER HEAD<br>⇨ ❑ 510 | CABECOTE | | |
| 2 | 9074450 | 2 | INLET VALVE | VALVULA DE ADMISSAO | | |
| 4 | 9074451 | 2 | OUTLET VALVE | VALVULA DE ESCAPE | | |
| 5 | 10120334 | 4 | VALVE STEM SEAL RING | ANEL VEDACAO HASTE VALVUL | | |
| 7 | 9074480 | 4 | SPRING CUP ABOVE | PRATO MOLA SUPERIOR | | |
| 8 | 10004331 | 8 | VALVE COLLET MK9 | TRAVA DA VALVULA | | |
| 9 | 9074481 | 4 | PRESSURE SPRING 4,60X28,40X62,70 | MOLA DE PRESSÃO | | |

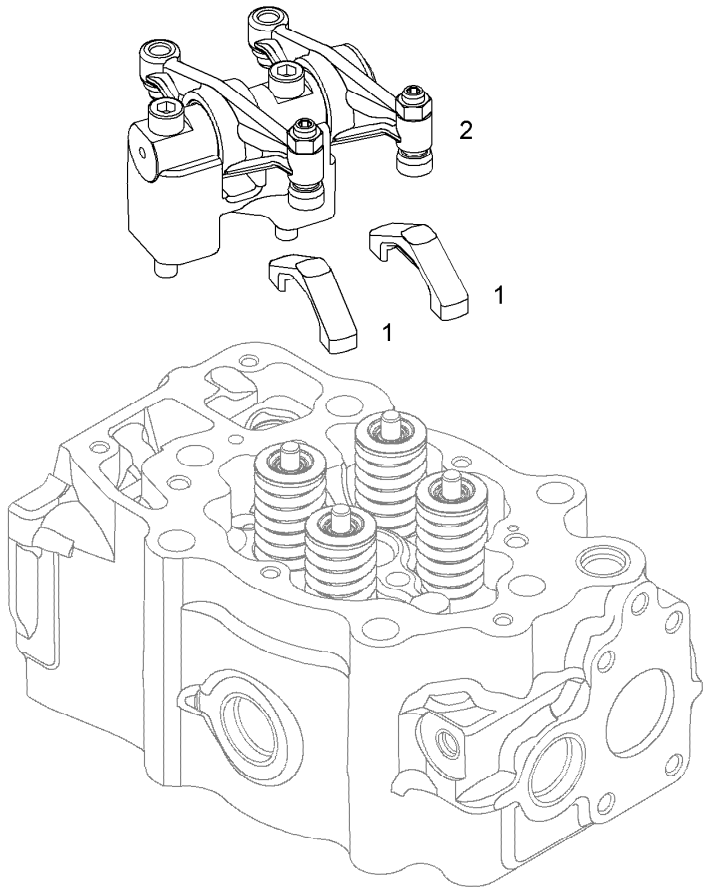


| Pos. | Item | Quantity | Description | Designação | Serie | K |
|---|---|---|---|---|---|---|
| 1 | 9074503 | 2 | VALVE BRIDGE | INDICADOR DE PRESSÃO | | |
| 2 | 9074505 | 1 | ROCKER ARM BRACKET PRE-ASS.<br>⇨ ❑ 511 | BALANCIM PRE-MONTADO | | |

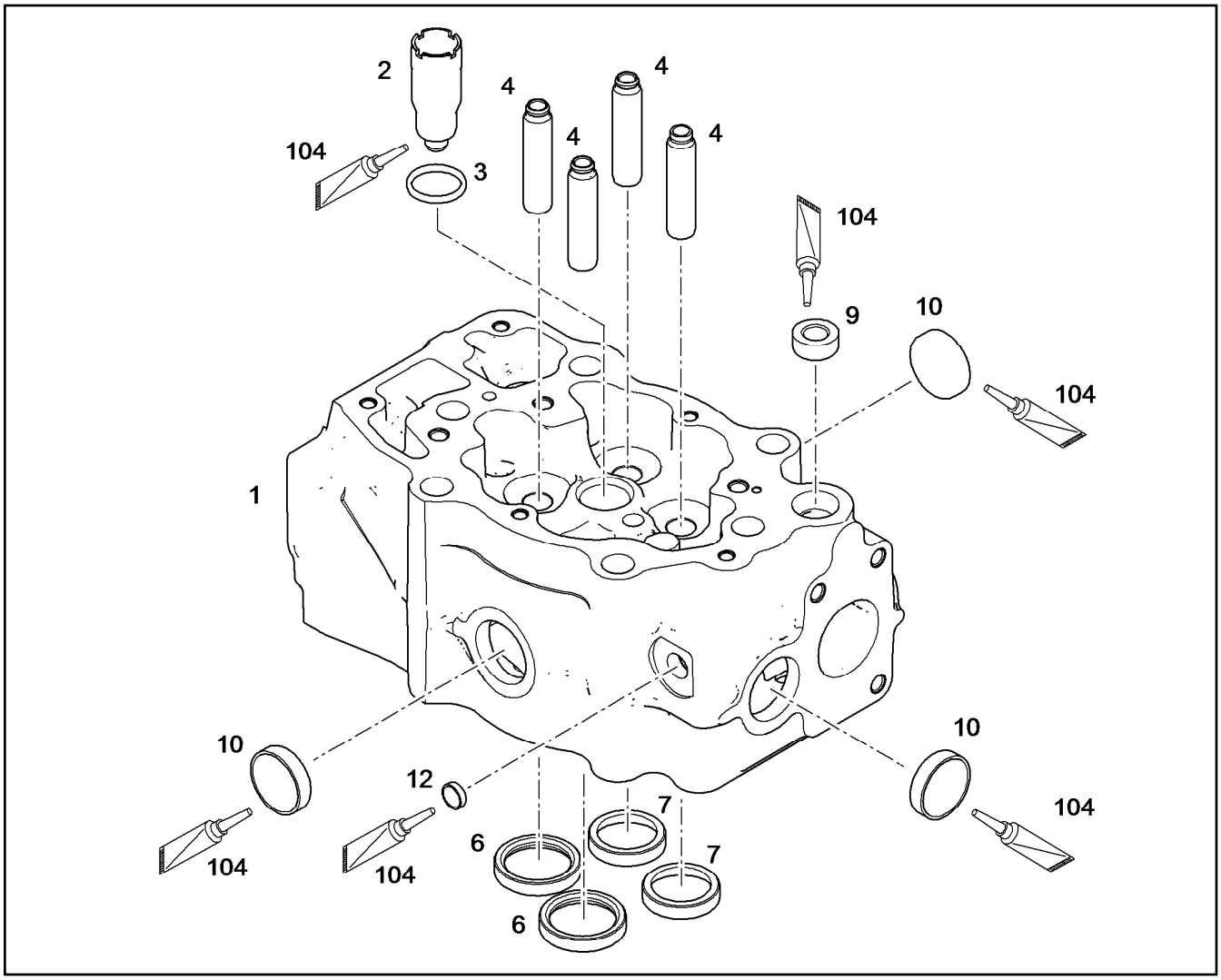


| Pos. | Item | Quantity | Description | Designação | Serie | K |
|---|---|---|---|---|---|---|
| 1 | | 1 | ZYLINDER HEAD | CABECOTE | | |
| 2 | 10146030 | 1 | SLEEVE | LUVA | | |
| 3 | 10342770 | 1 | O-RING DIN 3771 25X3 | ANEL-O | | |
| 4 | 10127538 | 4 | VALVE STEM GUIDE | GUIA DA VALVULA | | |
| 6 | | 2 | SEAT INSERT RING INLET | ANEL DE ASSENTO DA VALVUL | | |
| 7 | | 2 | SEAT INSERT RING EXHAUST | ANEL DE ASSENTO VÁLVULA ES | | |
| 9 | 9079078 | 1 | THREADED BUSH | BUCHA ROSCADA | | |
| 10 | 4980363 | 3 | END COVER | TAMPA DE FECHAMENTO | | |
| 12 | 4981042 | 1 | END COVER B | TAMPA DE FECHAMENTO | | |
| 104 | 811208201 | 1 | LOCTITE | LOCTITE | | |

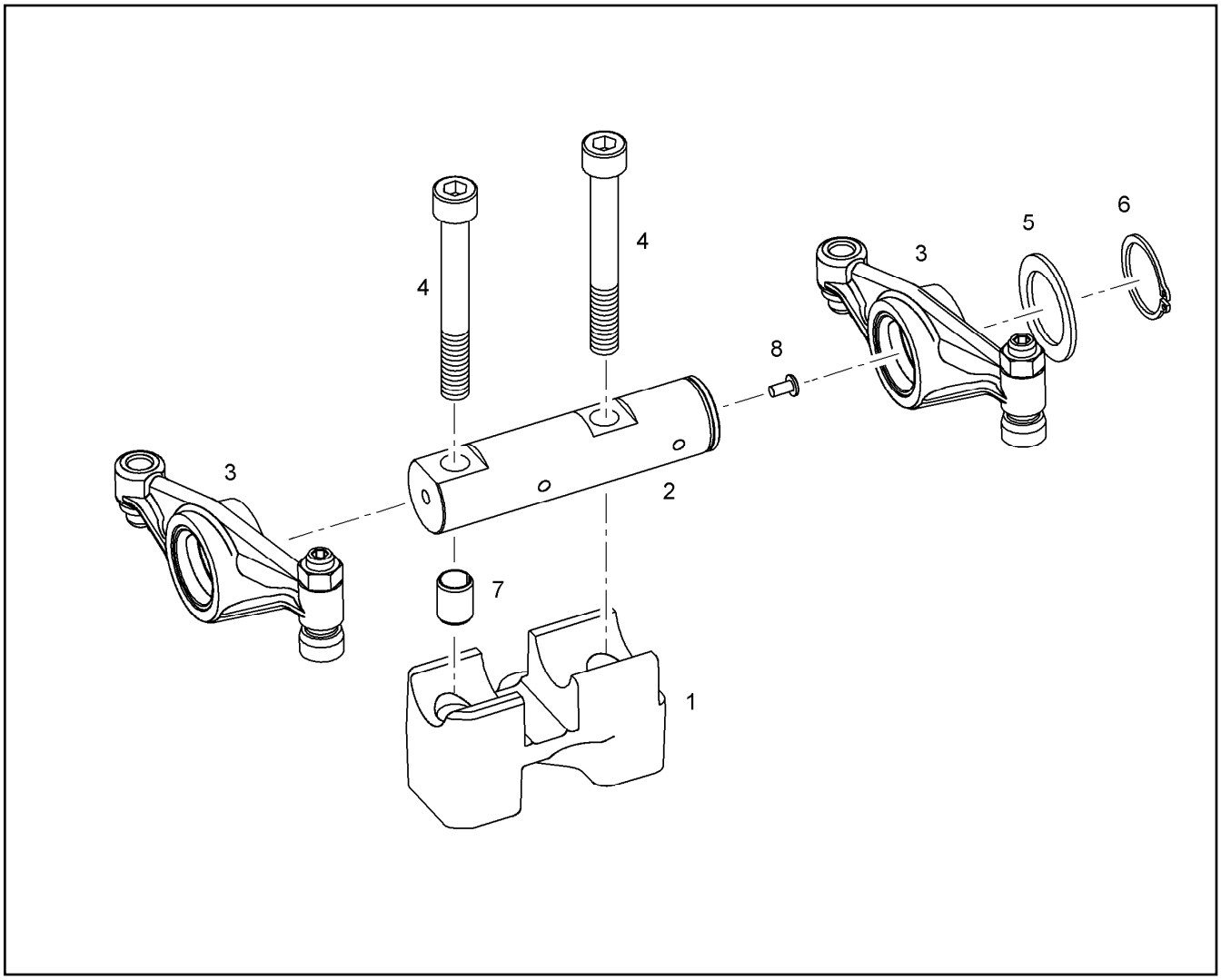


| Pos. | Item | Quantity | Description | Designação | Serie | K |
|---|---|---|---|---|---|---|
| 1 | 9074504 | 1 | ROCKER LEVER BLOCK | CAVALETE DOS BALANCINS | | |
| 2 | 9074506 | 1 | ROCKER AXLE | EIXO DOS BALANCINS | | |
| 3 | 9074507 | 2 | ROCKER ARM PRE-ASS.<br>⇨ ❑ 512 | BALANCIM PRE-MONTAGEM | | |
| 4 | 4001595 | 2 | CYLINDER SCREW ISO 4762 M10X80 10.9 | PARAFUSO CILÍNDRICO | | |
| 5 | 422001001 | 1 | SUPPORTING WASHER 28X40X2 440-500H | ANEL DE APOIO | | |
| 6 | 4280022 | 1 | LOCKING RING DIN 47128 | ANEL DE RETENÇÃO | | |
| 7 | 10004442 | 1 | DOWEL PIN 13 | PINO ELÁSTICO | | |
| 8 | 10040412 | 1 | BLIND RIVET A 4X8 | REBITE CEGO | | |

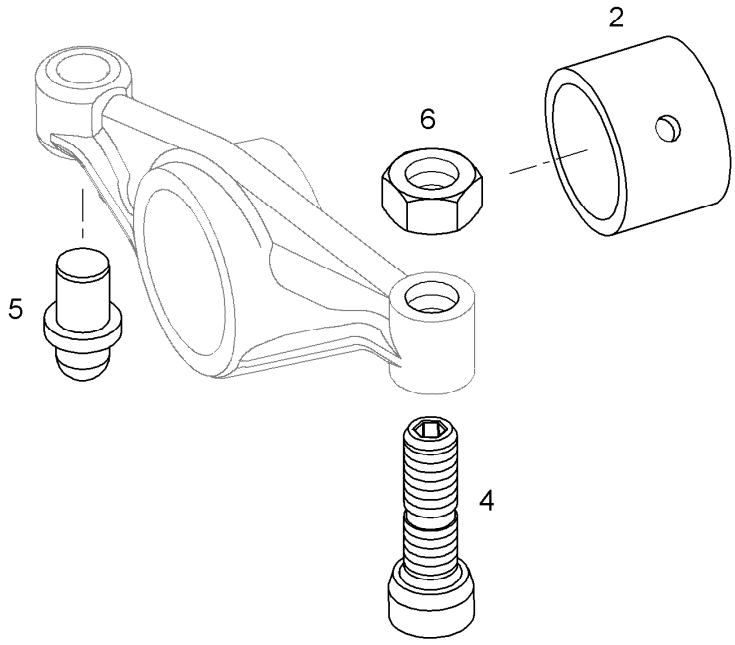


| Pos. | Item | Quantity | Description | Designação | Serie | K |
|---|---|---|---|---|---|---|
| 2 | 9080027 | 1 | ROCKER ARM BUSCH | BUCHA DO BALANCIM | | |
| 4 | 10004419 | 1 | ADJUSTING SREW PRE-ASS. M10X1X27,8X | PARAFUSO DE AJUSTE PRÉ-M | | |
| 5 | 10004426 | 1 | BALL PIN | PINO ESFERICO | | 1 |
| 6 | 7381781 | 1 | NUT M10X1 | PORCA | | |

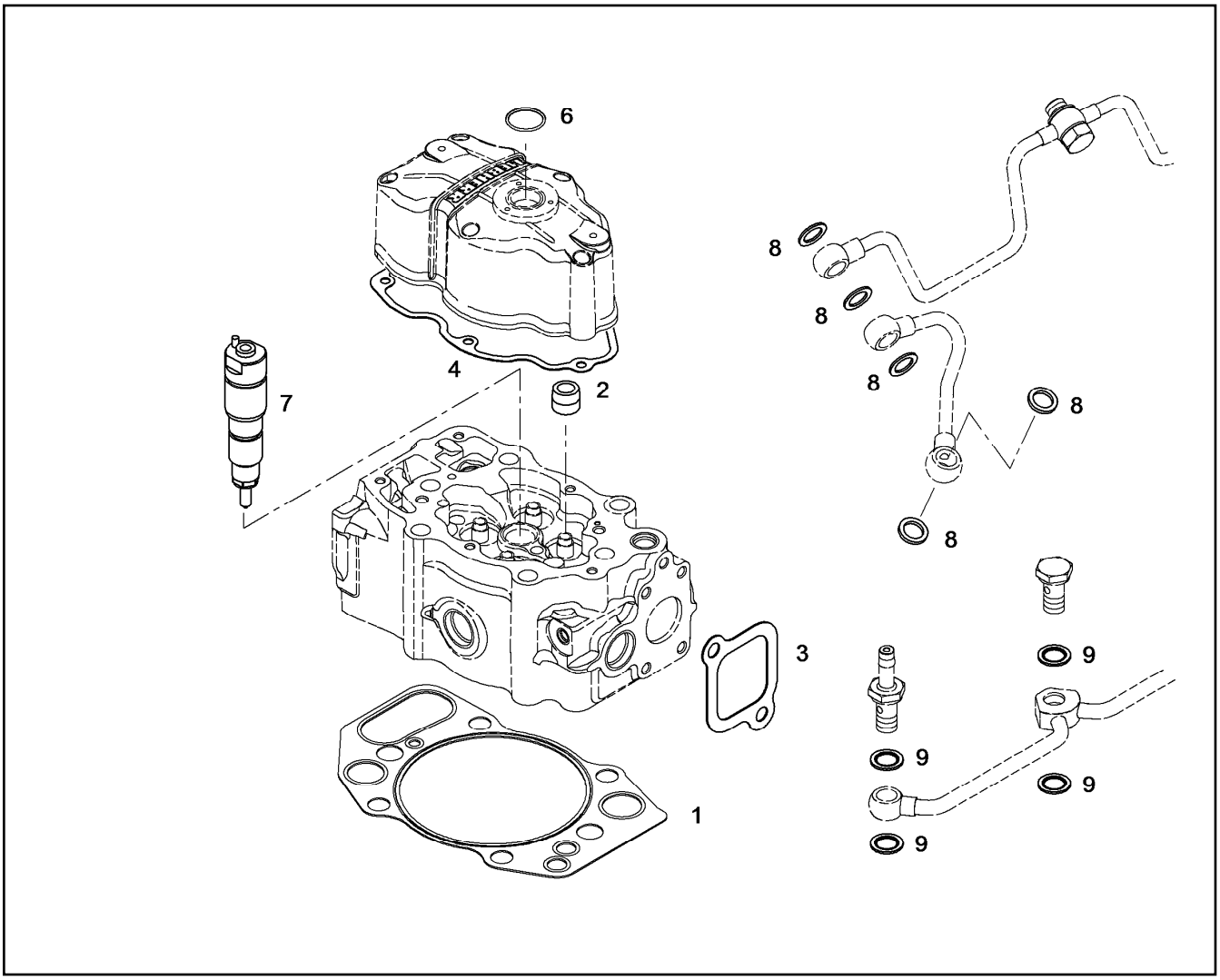


| Pos. | Item | Quantity | Description | Designação | Serie | K |
|---|---|---|---|---|---|---|
| 1 | 10120844 | 1 | CYLINDER HEAD GASKET | JUNTA DO CABECOTE | | |
| 2 | 10119305 | 4 | VALVE STEM SEAL RING | ANEL VEDACAO HASTE VALVUL | -2007043839 | |
| 2 | 10120334 | 4 | VALVE STEM SEAL RING | ANEL VEDACAO HASTE VALVUL | 2007043840- | |
| 3 | 10118556 | 6 | SEAL | VEDAÇÃO | | |
| 4 | 10118554 | 1 | SEAL | VEDAÇÃO | | |
| 6 | 7381270 | 1 | O-RING DIN 3771 34,65X1,78 | ANEL-O | | |
| 7 | 10115854 | 1 | SEAL KIT INJECTION NOZZLE<br>⇨ ❑ 535 | KIT DE VEDACAO DO BICO INJET | | |
| 8 | 7007952 | 15 | SEALING RING DIN 7603 A 10X15X1 | ANEL DE VEDAÇÃO | | |
| 9 | 10011866 | 12 | SEALING RING 14,7X22,00X1,5 | ANEL DE VEDAÇÃO | | |

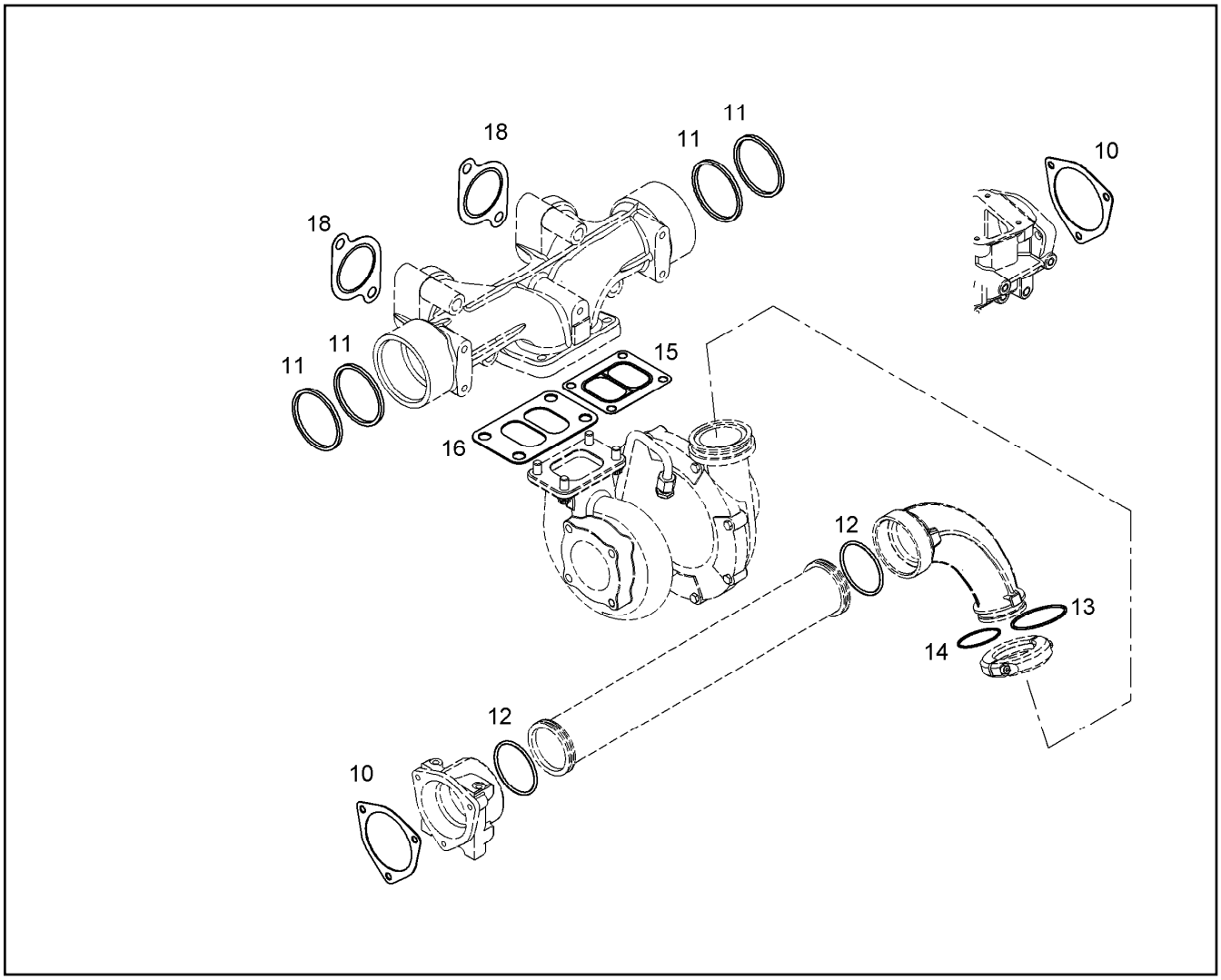


| Pos. | Item | Quantity | Description | Designação | Serie | K |
|---|---|---|---|---|---|---|
| 10 | 9271963 | 2 | SEAL | VEDAÇÃO | | |
| 11 | 10008448 | 4 | LAMELLAR DISK KIT | KIT DE ANEIS LAMELARES | | |
| 12 | 10022320 | 2 | O-RING 80X5,0 | ANEL-O | | |
| 13 | 7380970 | 1 | O-RING 63,17X2,62 | ANEL-O | | |
| 14 | 7380919 | 1 | O-RING DIN 3771 52,07X2,62 | ANEL-O | | |
| 15 | 9270109 | 1 | SEAL | VEDAÇÃO | | |
| 16 | 9268129 | 1 | SEAL | VEDAÇÃO | | |
| 18 | 10118621 | 6 | SEAL | VEDAÇÃO | | |

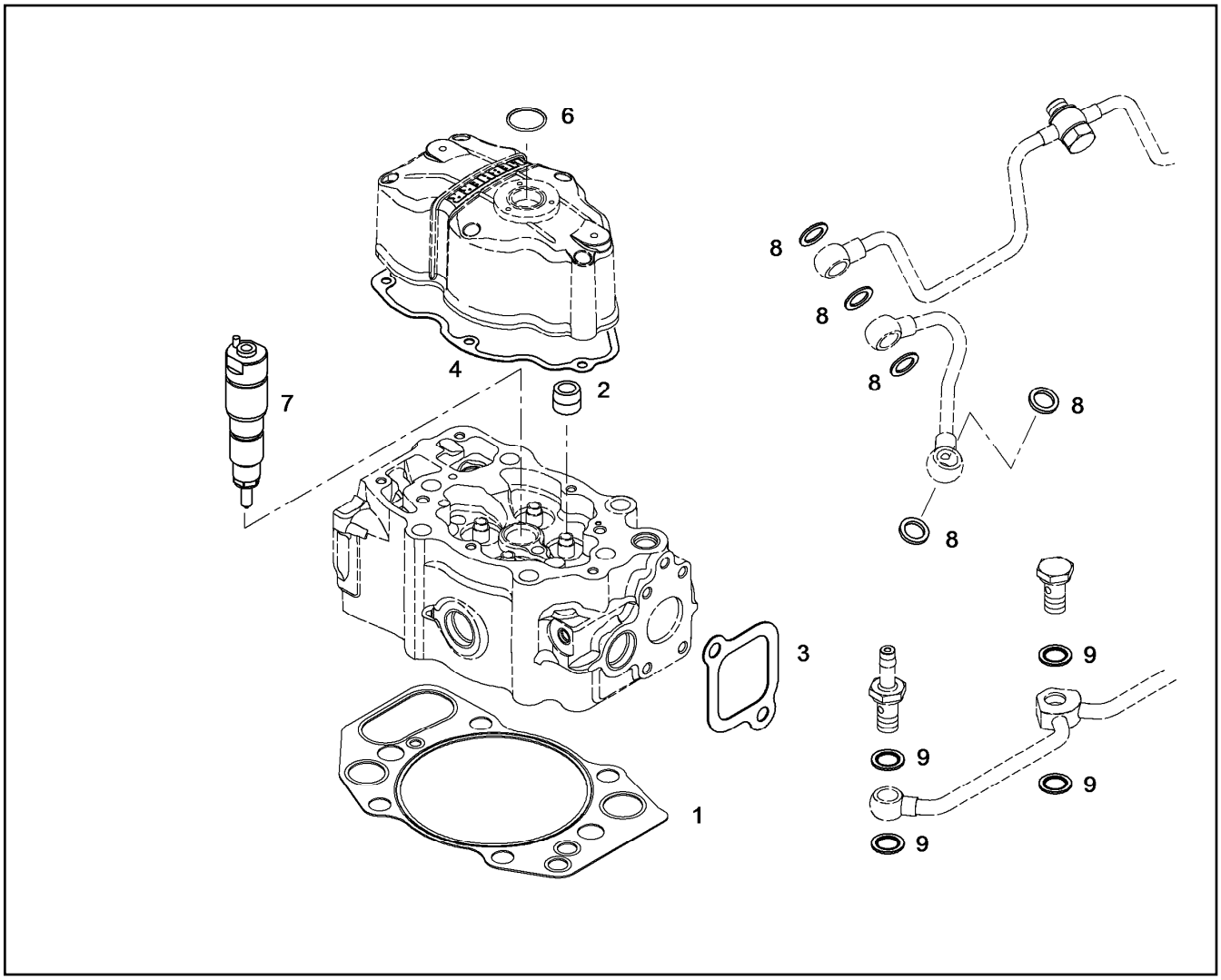


| Pos. | Item | Quantity | Description | Designação | Serie | K |
|---|---|---|---|---|---|---|
| 1 | 10120844 | 6 | CYLINDER HEAD GASKET | JUNTA DO CABECOTE | | |
| 2 | 10119305 | 24 | VALVE STEM SEAL RING | ANEL VEDACAO HASTE VALVUL | -2007043839 | |
| 2 | 10120334 | 24 | VALVE STEM SEAL RING | ANEL VEDACAO HASTE VALVUL | 2007043840- | |
| 3 | | 6 | SEAL | VEDAÇÃO | | |
| 4 | 10118554 | 6 | SEAL | VEDAÇÃO | | |
| 6 | | 1 | O-RING DIN 3771 34,65X1,78 | ANEL-O | | |
| 7 | 10115854 | 1 | SEAL KIT INJECTION NOZZLE<br>⇨ ❑ 535 | KIT DE VEDACAO DO BICO INJET | | |
| 8 | | 15 | SEALING RING DIN 7603 A 10X15X1 | ANEL DE VEDAÇÃO | | |
| 9 | | 12 | SEALING RING 14,7X22,00X1,5 | ANEL DE VEDAÇÃO | | |

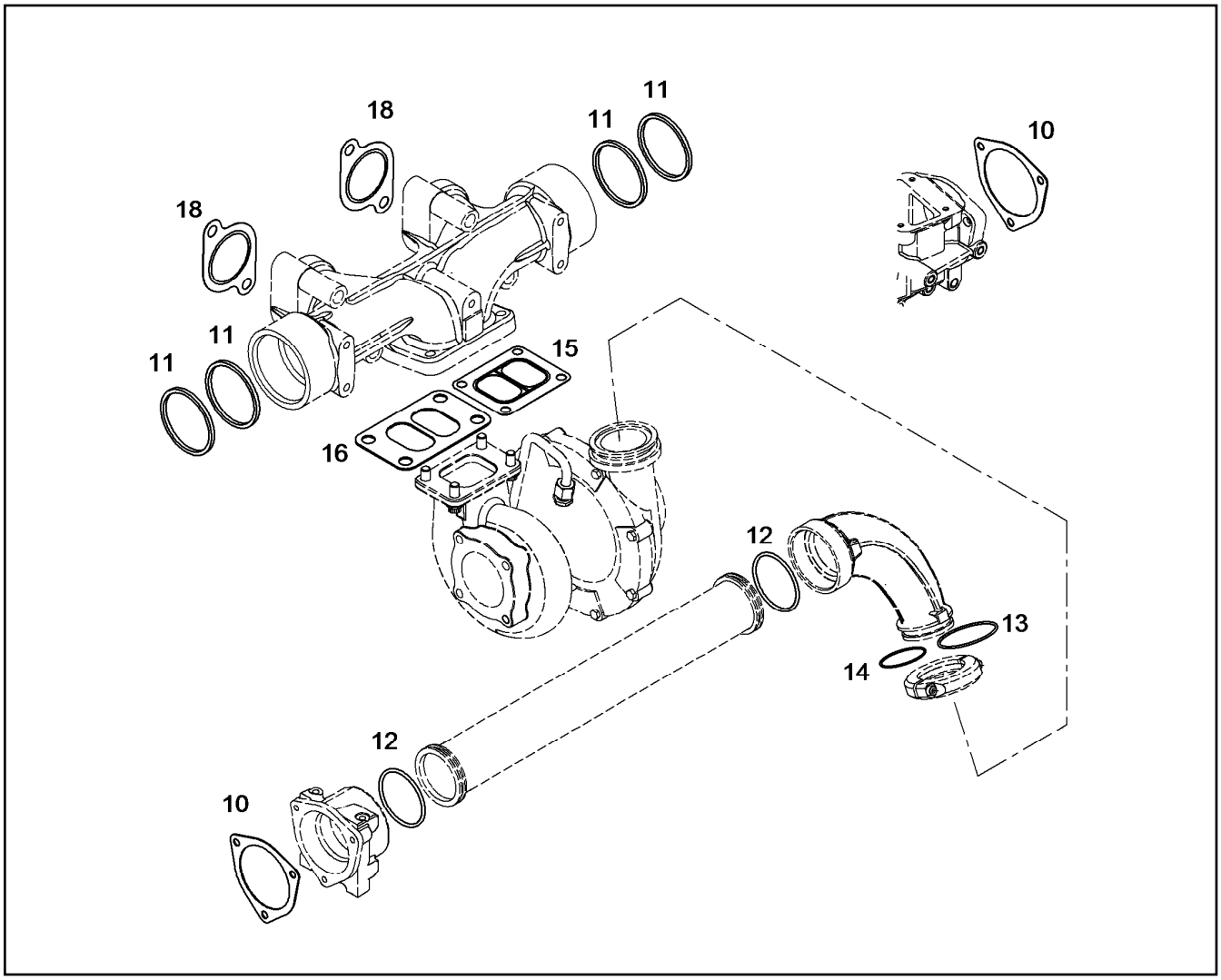


| Pos. | Item | Quantity | Description | Designação | Serie | K |
|---|---|---|---|---|---|---|
| 10 | | 2 | SEAL | VEDAÇÃO | | |
| 11 | 10008448 | 4 | LAMELLAR DISK KIT | KIT DE ANEIS LAMELARES | | |
| 12 | | 2 | O-RING 80X5,0 | ANEL-O | | |
| 13 | | 1 | O-RING 63,17X2,62 | ANEL-O | | |
| 14 | | 1 | O-RING DIN 3771 52,07X2,62 | ANEL-O | | |
| 15 | | 1 | SEAL | VEDAÇÃO | | |
| 16 | | 1 | SEAL | VEDAÇÃO | | |
| 18 | | 6 | SEAL | VEDAÇÃO | | |

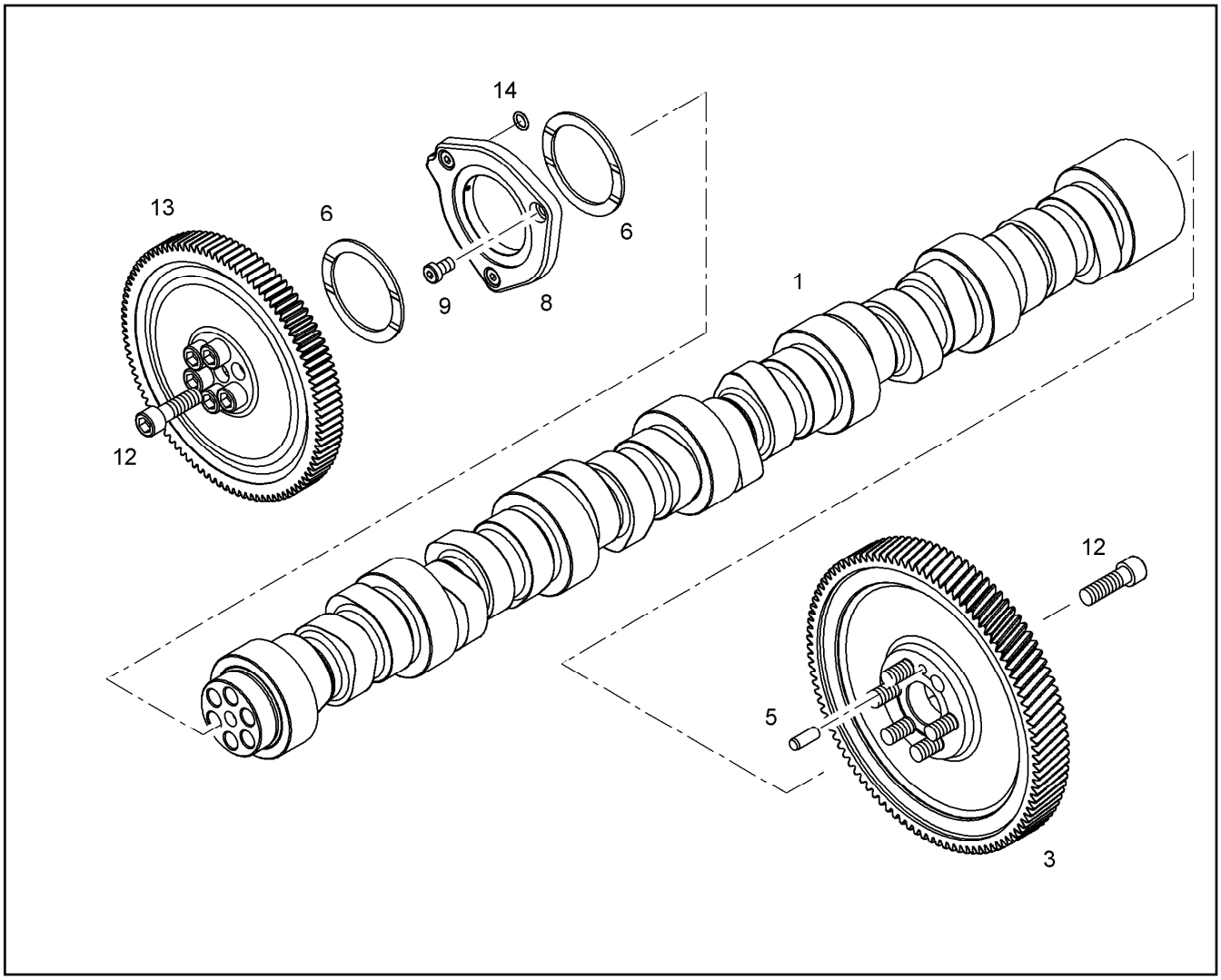


| Pos. | Item | Quantity | Description | Designação | Serie | K |
|---|---|---|---|---|---|---|
| 1 | 10119424 | 1 | CAMS SHAFT | EIXO DE COMANDO | | |
| 3 | 9073098 | 1 | GEAR WHEEL | ENGRENAGEM | | |
| 5 | 4980853 | 1 | PARALLEL PIN 8m6 | PINO | | |
| 6 | 9073188 | 2 | WEARING RING | ANEL DE ENCOSTO | | |
| 8 | 9073163 | 1 | FLANGE PRE-ASS. | FLANGE PRE-MONTAGEM | | |
| 9 | 4980927 | 3 | CYLINDER SCREW DIN 7984 M10X18 8.8 | PARAFUSO CILÍNDRICO | | |
| 12 | 4902327 | 12 | CYLINDER SCREW ISO 4762 M14X45 10.9 | PARAFUSO CILÍNDRICO | | |
| 13 | 9073100 | 1 | GEAR WHEEL | ENGRENAGEM | | |
| 14 | 7381685 | 1 | O-RING DIN 3771 7,00X1,5 | ANEL-O | | |

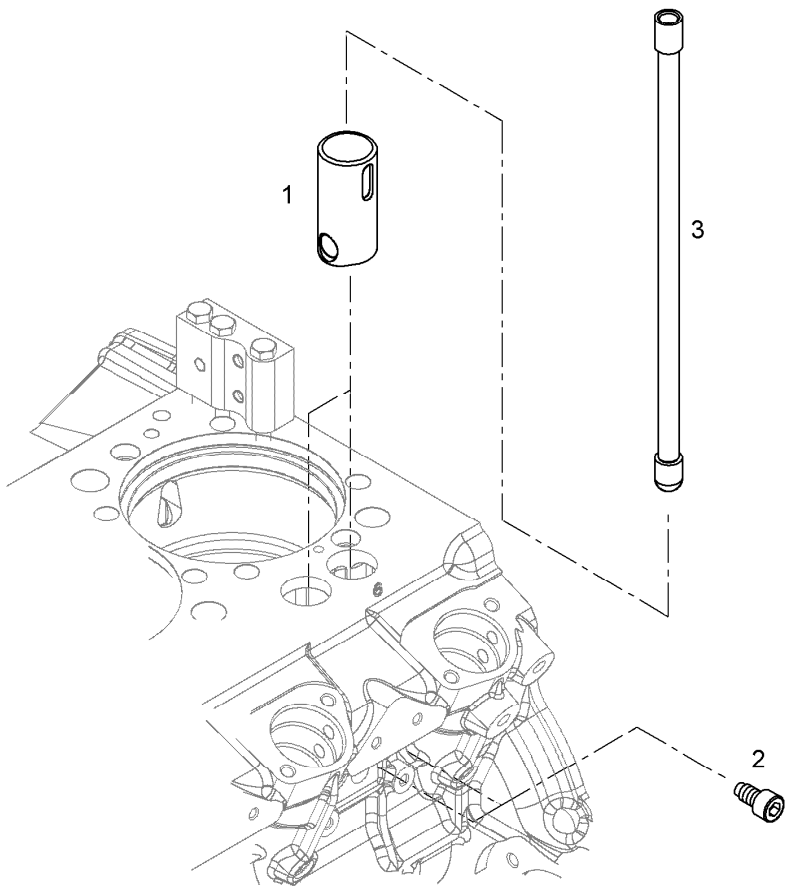


| Pos. | Item | Quantity | Description | Designação | Serie | K |
|---|---|---|---|---|---|---|
| 1 | 9074455 | 2 | ROLLER TAPPET | TUCHO DE ROLETE | | |
| 2 | 9074456 | 2 | LOCKING SCREW M10X20X19 8.8 KLR | PARAFUSO TRAVA | | |
| 3 | 9079131 | 2 | TAPPET PUSH ROD | HASTE DO TUCHO | | |

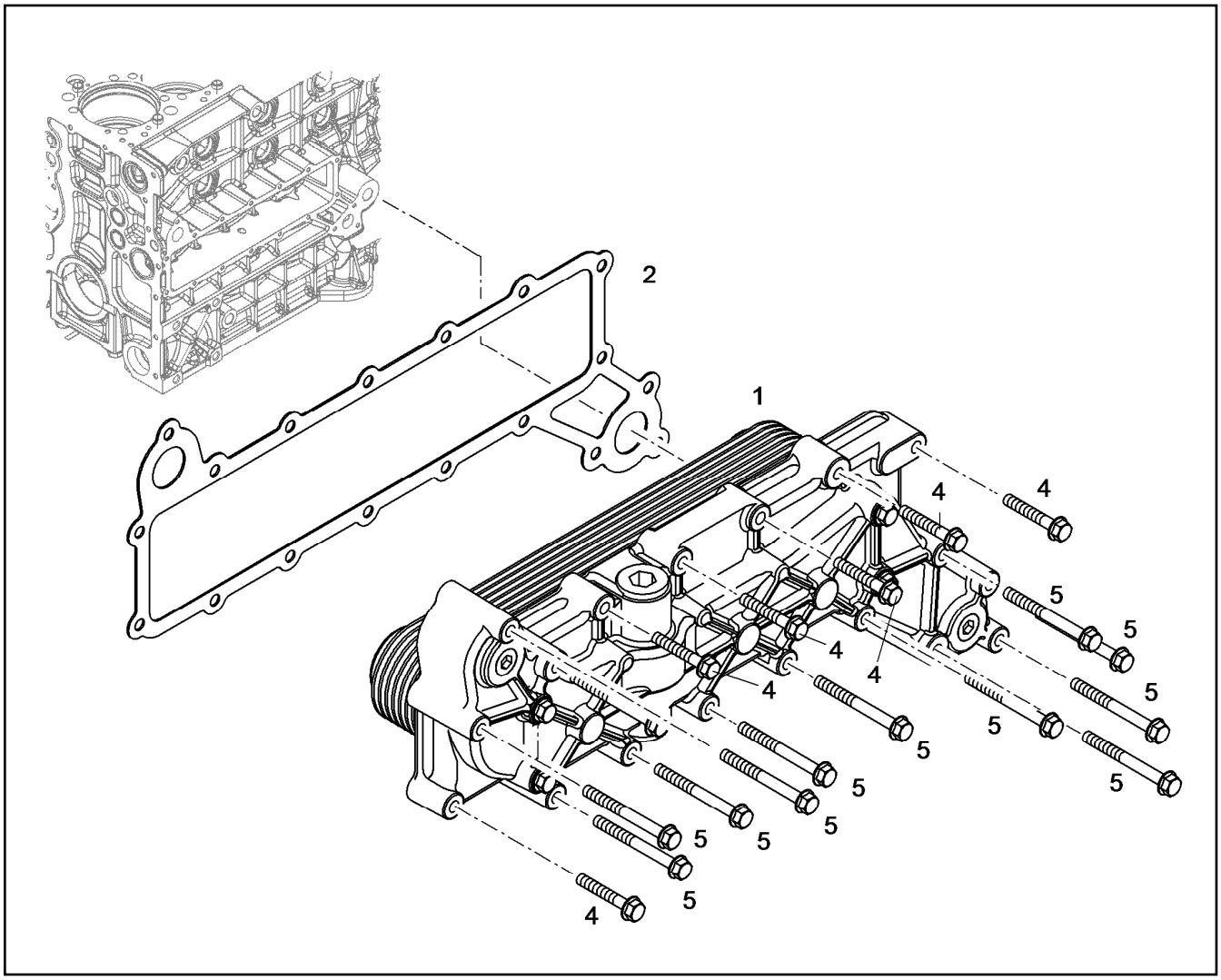


| Pos. | Item | Quantity | Description | Designação | Serie | K |
|---|---|---|---|---|---|---|
| 1 | 10121438 | 1 | OIL COOLER, PRE-ASSEMBLED<br>⇨ ❑ 520 | RADIADOR DE OLEO PRE-MON | | |
| 2 | 10117891 | 1 | SEAL | VEDAÇÃO | | |
| 4 | 10005073 | 6 | HEX HEAD SCREW EN 1665 M 8 X 50 8.8 A3 | PARAFUSO SEXTAVADO | | |
| 5 | 10005074 | 12 | HEX BOLT DIN 6921 M8X80 8.8 A2C | PARAFUSO SEXTAVADO | | |

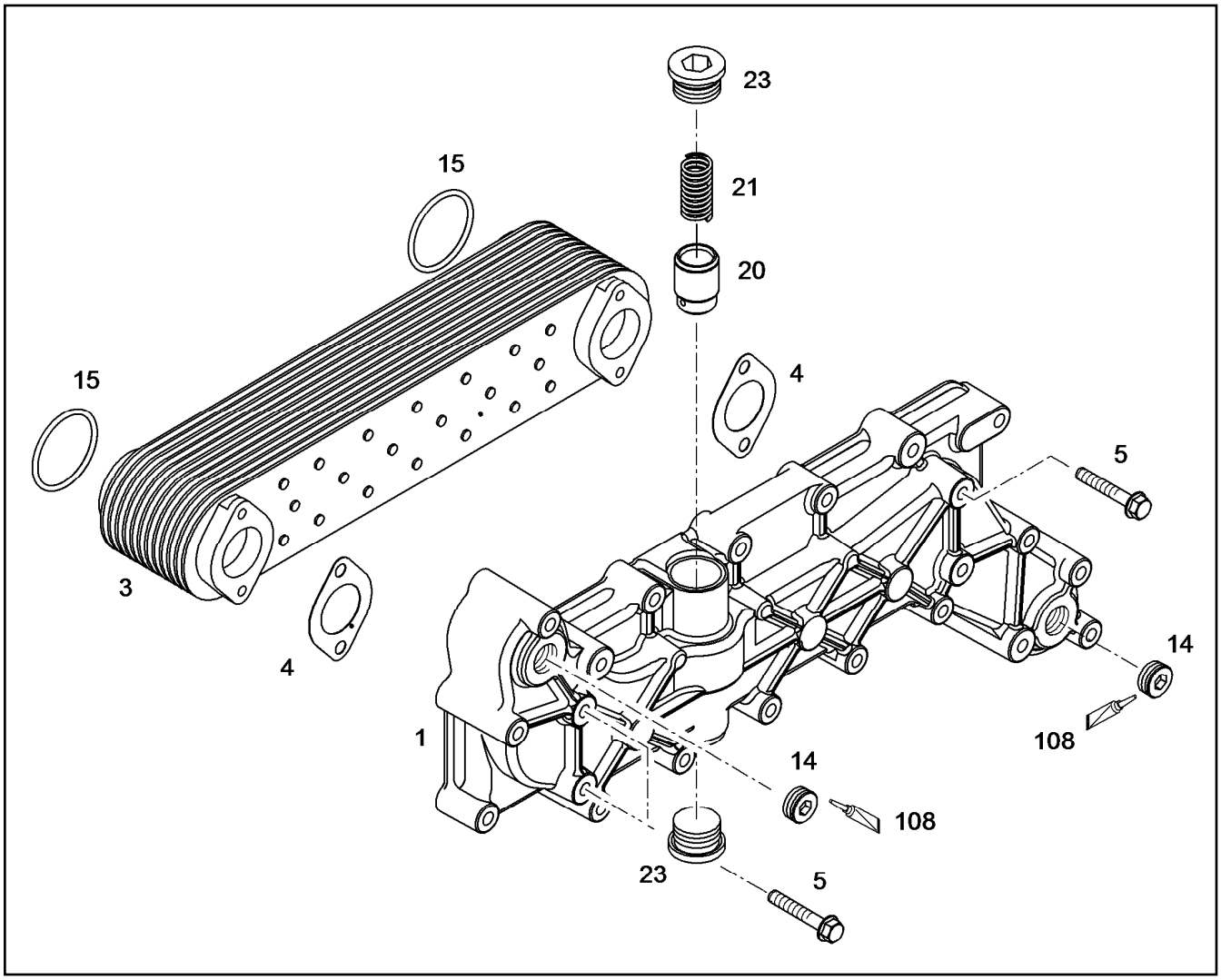


| Pos. | Item | Quantity | Description | Designação | Serie | K |
|---|---|---|---|---|---|---|
| 1 | 9073505 | 1 | OIL COOLER HOUSING D936 | CARCACA DO RADIADOR DE O | | |
| 3 | 10325002 | 1 | OIL COOLER | RADIADOR DE ÓLEO | | |
| 4 | 10119923 | 2 | SEAL | VEDAÇÃO | | |
| 5 | 10005073 | 4 | HEX HEAD SCREW EN 1665 M 8 X 50 8.8 A3 | PARAFUSO SEXTAVADO | | |
| 14 | 7380177 | 2 | SCREW PLUG VSTI M22X1,5 | PARAFUSO DE FECHAMENTO | | |
| 15 | 7380955 | 2 | O-RING DIN 3771 47,22X3,53 | ANEL-O | | |
| 20 | 9886591 | 1 | PISTON | PISTÃO | | |
| 21 | 9886756 | 1 | PRESSURE SPRING | MOLA DE PRESSÃO | | |
| 23 | 7382204 | 2 | SCREW PLUG VSTI M30X1,5 | PARAFUSO DE FECHAMENTO | | |
| 108 | 8622905 | 1 | SEALANT | VEDACAO | | |

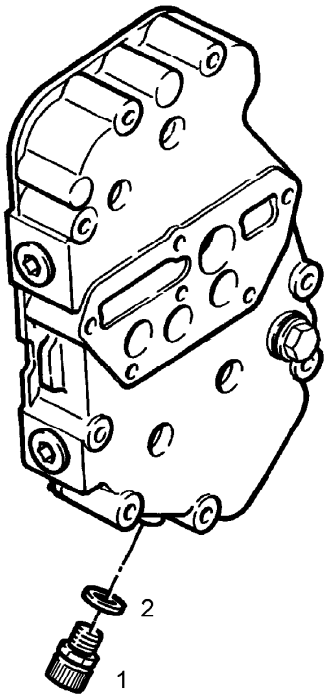


| Pos. | Item | Quantity | Description | Designação | Serie | K |
|---|---|---|---|---|---|---|
| 1 | 10011832 | 1 | VALVE M14X1,5 | VÁLVULA | | |
| 2 | 7381225 | 1 | SEALING RING DIN 7603 A 14X20X2,5 | ANEL DE VEDAÇÃO | | |

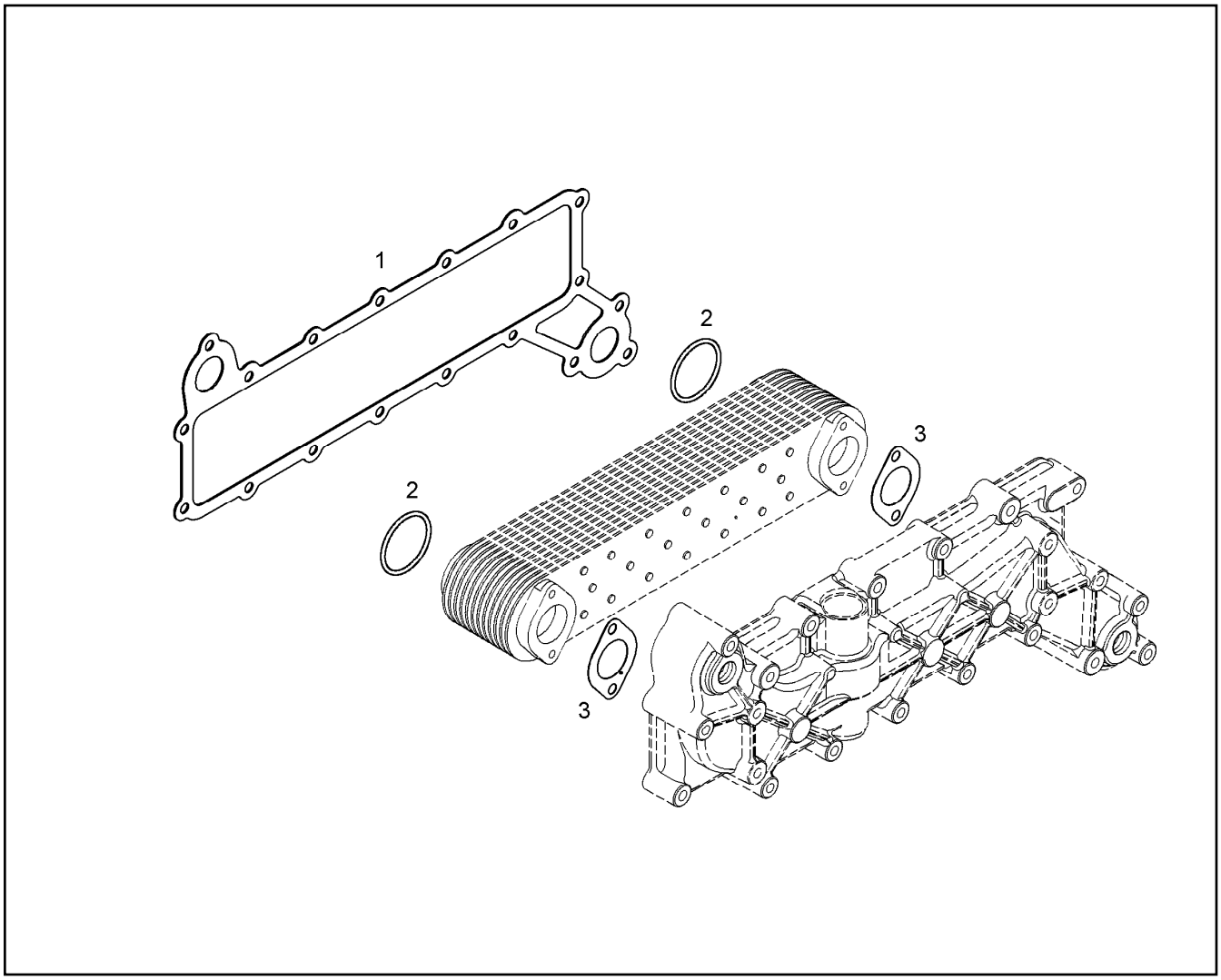


| Pos. | Item | Quantity | Description | Designação | Serie | K |
|---|---|---|---|---|---|---|
| 1 | | 1 | SEAL | VEDAÇÃO | | |
| 2 | | 2 | O-RING DIN 3771 47,22X3,53 | ANEL-O | | |
| 3 | | 2 | SEAL | VEDAÇÃO | | |

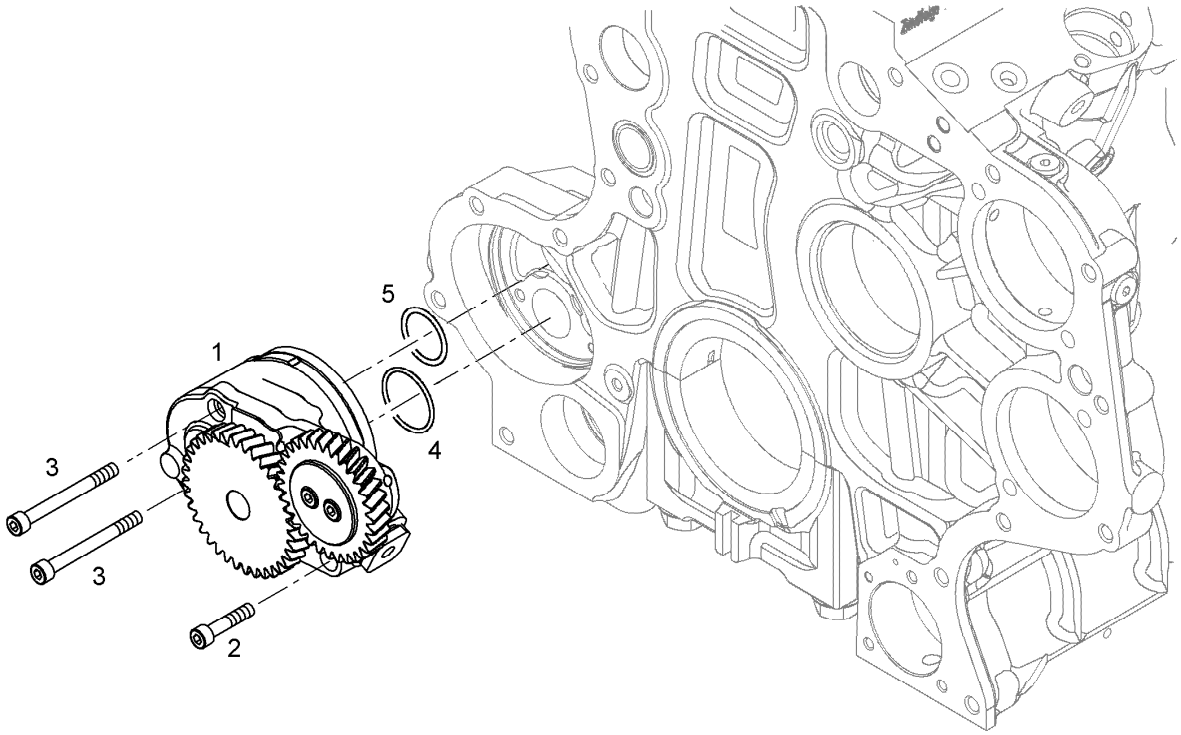


| Pos. | Item | Quantity | Description | Designação | Serie | K |
|---|---|---|---|---|---|---|
| 1 | 9072781 | 1 | LUBRICATING OIL PUMP<br>⇨ ❑ 525 | BOMBA DE ÓLEO DE LUBRIFICA | | 6 |
| 2 | 404204405 | 1 | CYLINDER SCREW ISO 4762 M8x45 8.8 A2C | PARAFUSO CILÍNDRICO | | |
| 3 | 240050802 | 2 | CYLINDER SCREW ISO 4762 M8x80 8.8 | PARAFUSO CILÍNDRICO | | |
| 4 | 7381812 | 1 | O-RING 39,34X2,62 | ANEL-O | | |
| 5 | 7382059 | 1 | O-RING DIN 3771 34,59X2,62 | ANEL-O | | |

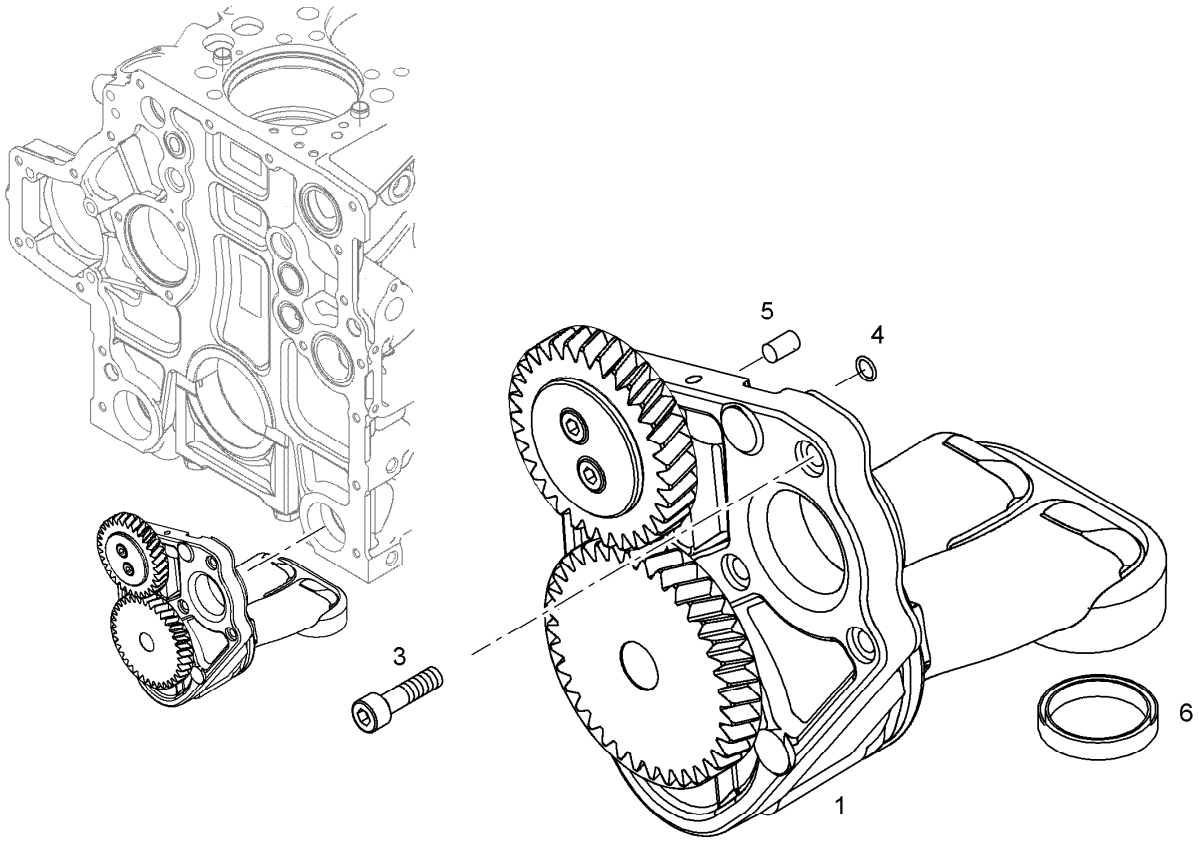


| Pos. | Item | Quantity | Description | Designação | Serie | K |
|---|---|---|---|---|---|---|
| 1 | 9080277 | 1 | SUCTION PUMP PRE-ASS.<br>⇨ ❑ 526 | PLACA DE COBERTURA PRÉ-M | | |
| 3 | 240049802 | 3 | CYLINDER SCREW ISO 4762 M8X30 8.8 | PARAFUSO CILÍNDRICO | | |
| 4 | 7381685 | 1 | O-RING DIN 3771 7,00X1,5 | ANEL-O | | |
| 5 | 4980000 | 1 | PARALLEL PIN 6m6 | PINO | | |
| 6 | 9079608 | 2 | SEAL | VEDAÇÃO | | |

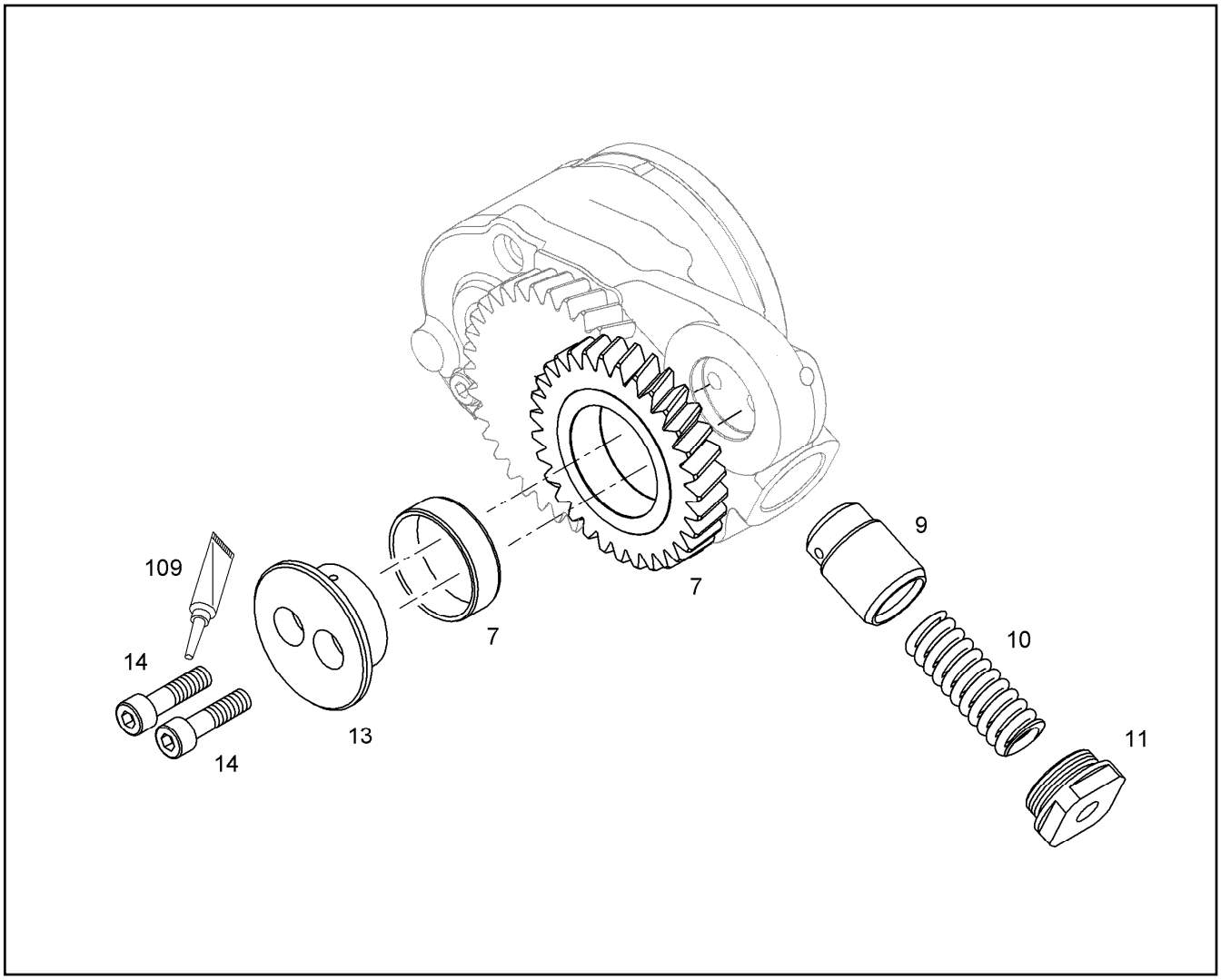


| Pos. | Item | Quantity | Description | Designação | Serie | K |
|---|---|---|---|---|---|---|
| 7 | 9072633 | 1 | INTERMEDIATE GEAR PRE-ASS. | ENGRENAGEM INTERMEDIARIA | | |
| 7 | 9267183 | 1 | -BEARING BUSH 40/44X13 | -BUCHA MANCAL | | 1 |
| 9 | 9886591 | 1 | PISTON | PISTÃO | | |
| 10 | 7381302 | 1 | PRESSURE SPRING | MOLA DE PRESSÃO | | |
| 11 | 9275590 | 1 | SCREW PLUG M30X1,5 St Rm>450N/mm² FE/ | PARAFUSO DE FECHAMENTO | | |
| 13 | 9267273 | 1 | HUB | CUBO | | |
| 14 | 240049802 | 2 | CYLINDER SCREW ISO 4762 M8X30 8.8 | PARAFUSO CILÍNDRICO | | |
| 109 | 811205708 | 1 | SCREW LOCKING | COLA PARA ELEMENTOS FIXA | | |

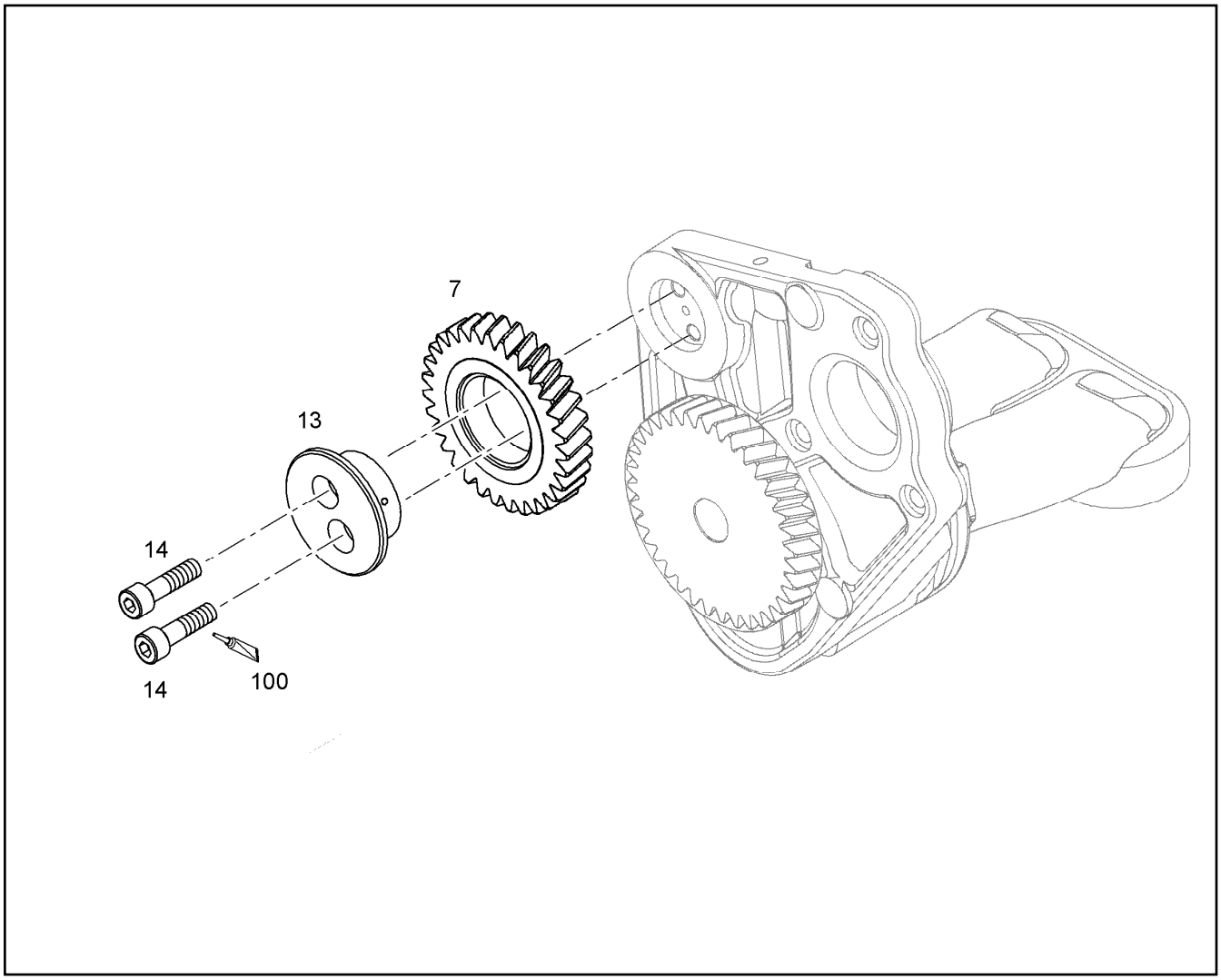


| Pos. | Item | Quantity | Description | Designação | Serie | K |
|---|---|---|---|---|---|---|
| 7 | 9072633 | 1 | INTERMEDIATE GEAR PRE-ASS. | ENGRENAGEM INTERMEDIARIA | | |
| 7 | 9267183 | 1 | -BEARING BUSH 40/44X13 | -BUCHA MANCAL | | 1 |
| 13 | 9267273 | 1 | HUB | CUBO | | |
| 14 | 240049802 | 2 | CYLINDER SCREW ISO 4762 M8X30 8.8 | PARAFUSO CILÍNDRICO | | |
| 100 | 8700039 | 1 | LOCTITE | LOCTITE | | |

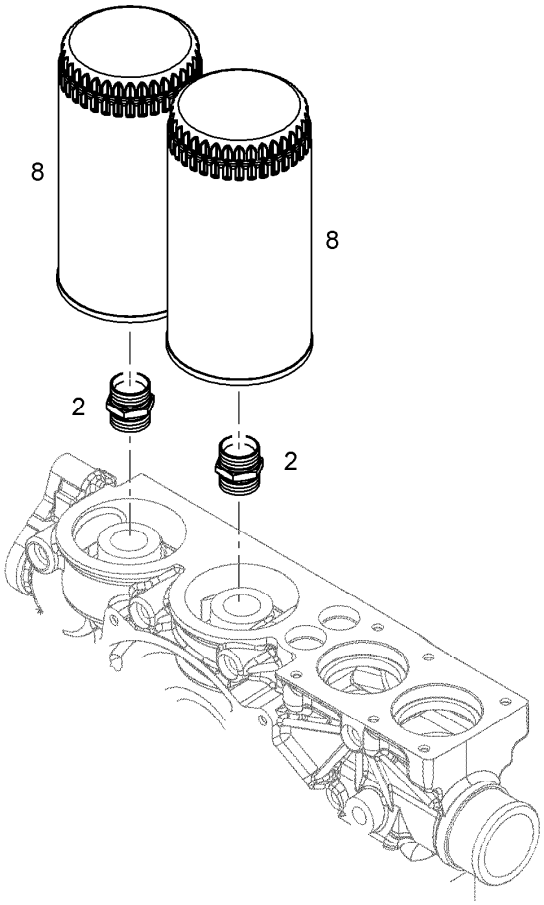


| Pos. | Item | Quantity | Description | Designação | Serie | K |
|---|---|---|---|---|---|---|
| 2 | 9273271 | 2 | LUG | CONEXÃO | | |
| 8 | 10297295 | 2 | EASY-CHANGE FILTER 9µm | FILTRO INTERCAMBIÁVEL | | |

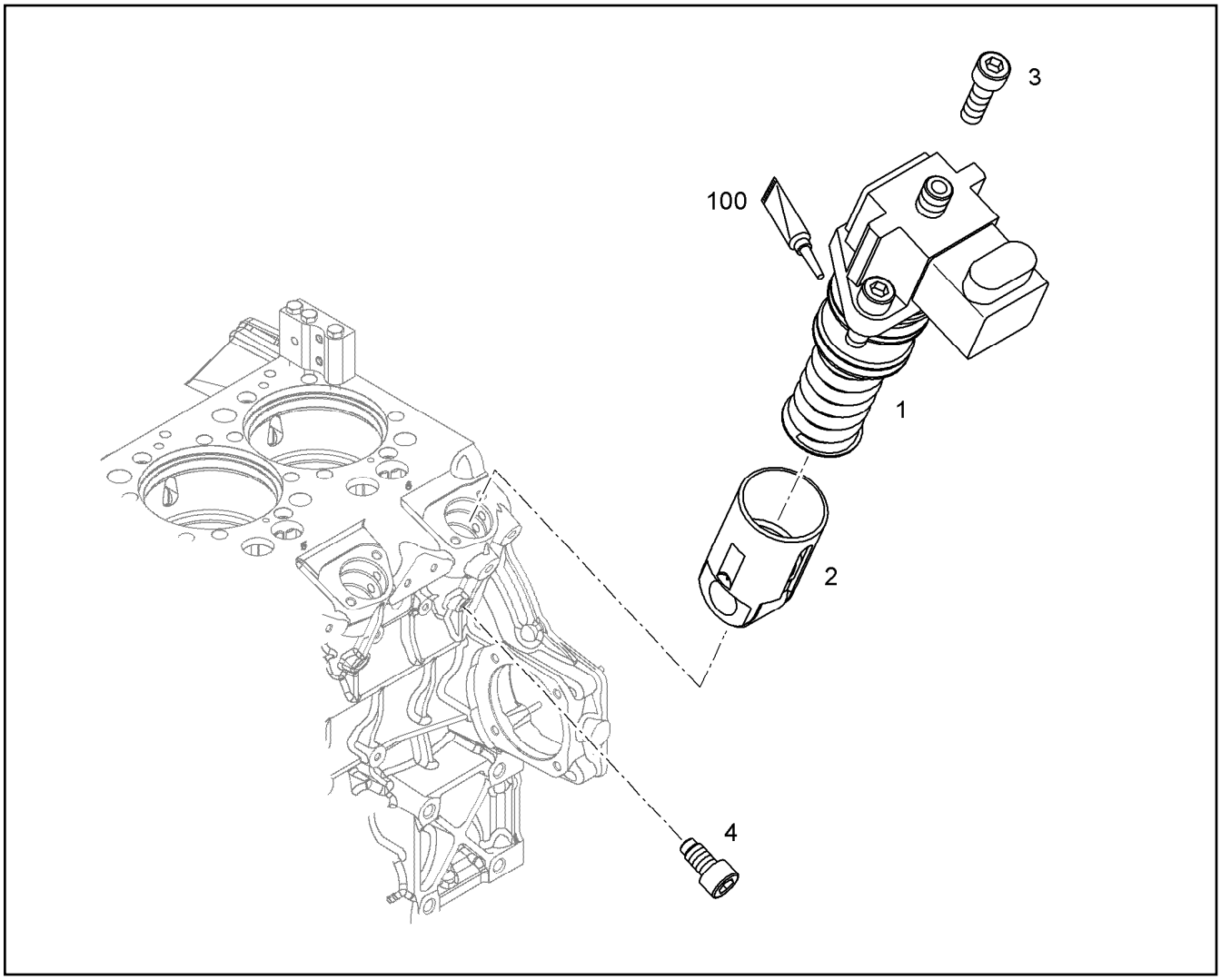


| Pos. | Item | Quantity | Description | Designação | Serie | K |
|---|---|---|---|---|---|---|
| 1 | 10116257 | 1 | INJECTION PUMP | BOMBA INJETORA | | 6 |
| 2 | 9074628 | 1 | ROLLER TAPPET | TUCHO DE ROLETE | | |
| 3 | 4043000 | 2 | CYLINDER SCREW ISO 4762 M10X30 10.9 | PARAFUSO CILÍNDRICO | | |
| 4 | 9074456 | 1 | LOCKING SCREW M10X20X19 8.8 KLR | PARAFUSO TRAVA | | |
| 100 | 10285708 | 1 | GREASE NBU 30/1kg | GRAXA | | |

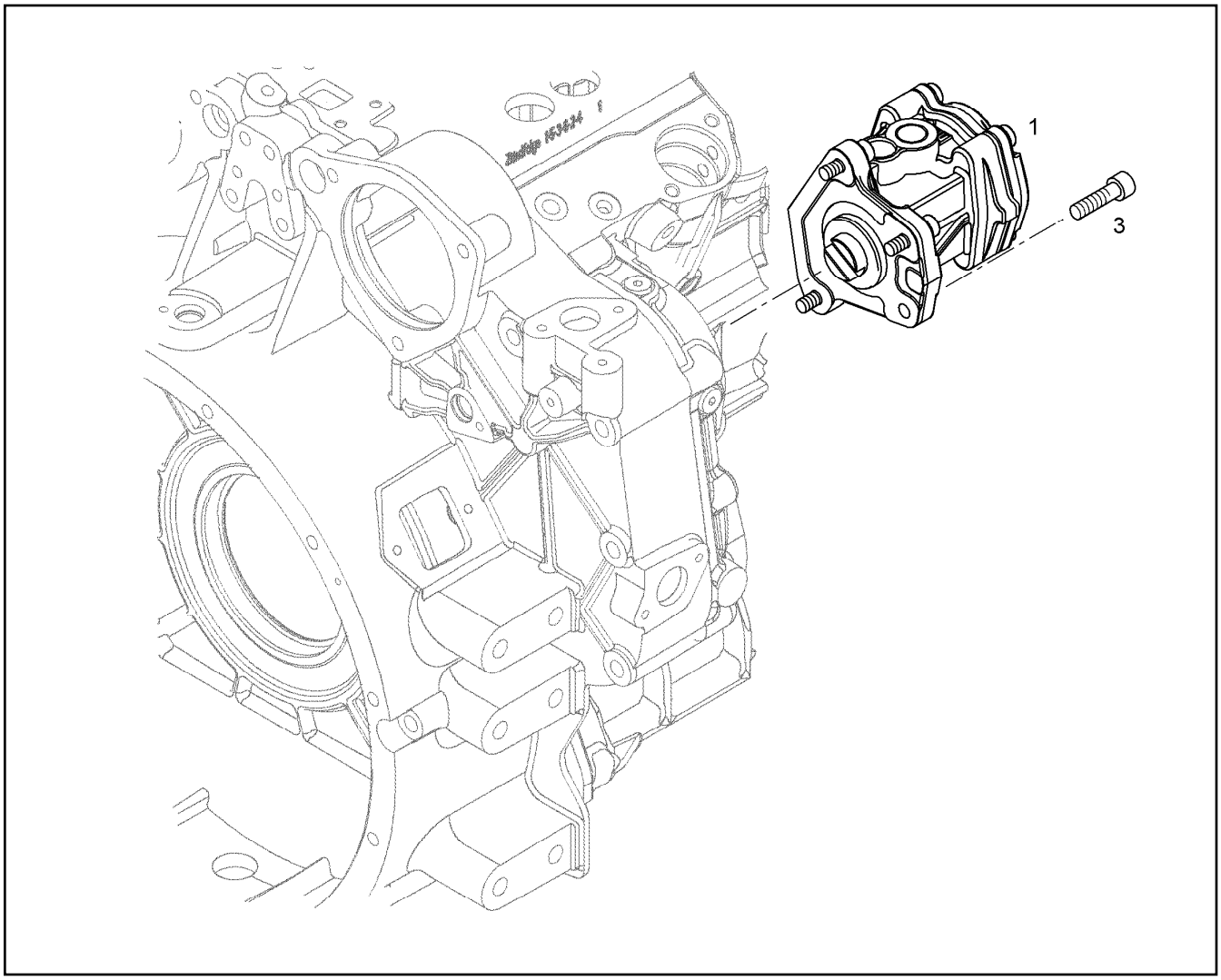


| Pos. | Item | Quantity | Description | Designação | Serie | K |
|---|---|---|---|---|---|---|
| 1 | 9078681 | 1 | DELIVERY PUMP | BOMBA ALIMENTAÇÃO COMBUS | | |
| 3 | 4042002 | 4 | CYLINDER SCREW ISO 4762 M6x20 8.8 A2C | PARAFUSO CILÍNDRICO | | |

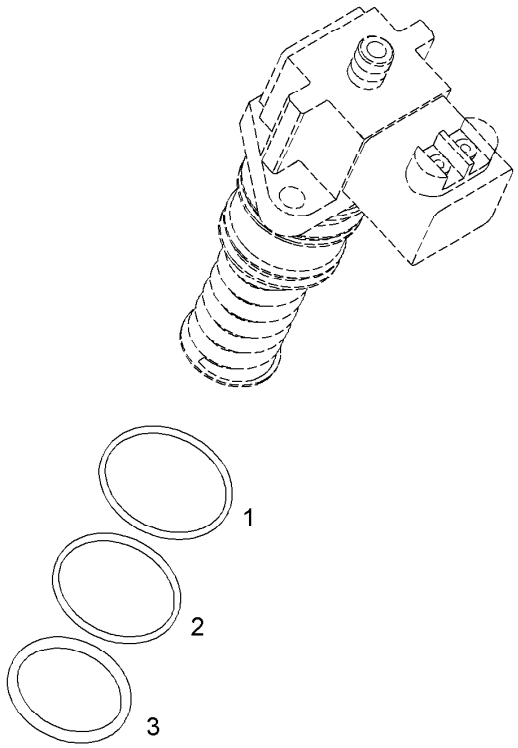


| Pos. | Item | Quantity | Description | Designação | Serie | K |
|---|---|---|---|---|---|---|
| 1 | | 1 | O-RING 47,00X2,50 | ANEL-O | | |
| 2 | | 1 | O-RING 45,00X2,50 | ANEL-O | | |
| 3 | | 1 | O-RING 40,00X4,00 | ANEL-O | | |

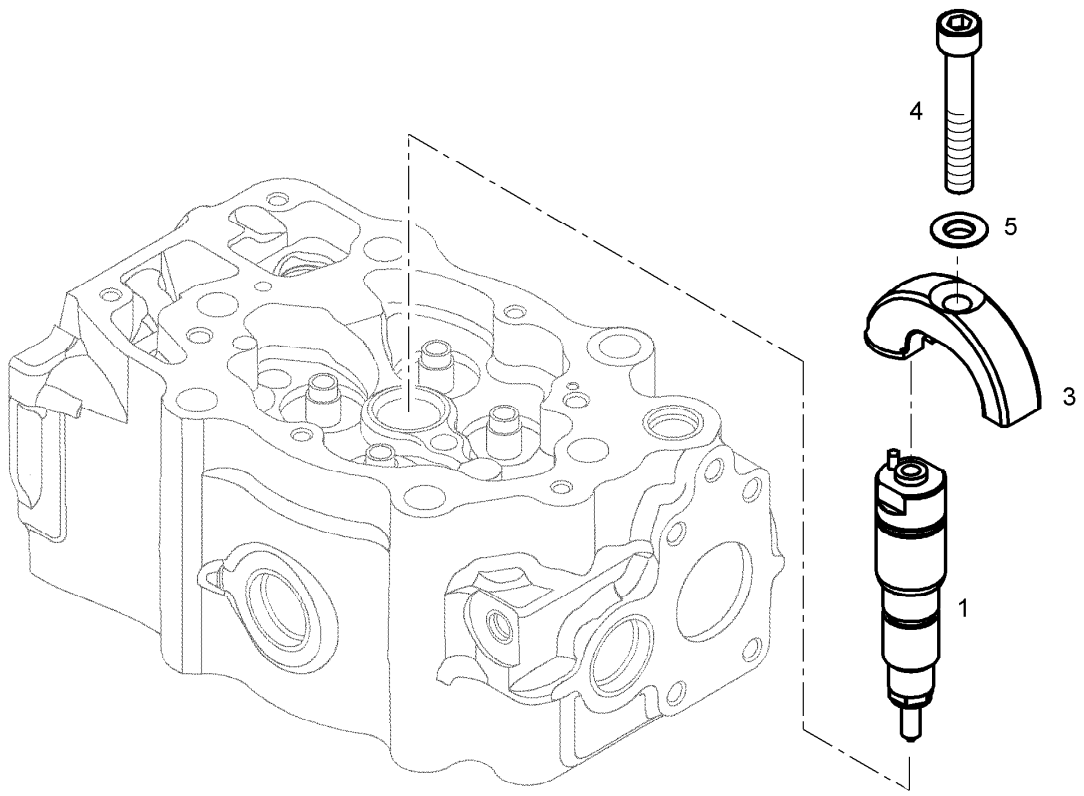


| Pos. | Item | Quantity | Description | Designação | Serie | K |
|---|---|---|---|---|---|---|
| 1 | 10117093 | 1 | RK INJECTION NOZZLE<br>⇨ ❑ 532 | KIT REPARO DA VALVULA INJE | | |
| 3 | 9075372 | 1 | JAW | GARRA | | |
| 4 | 404209808 | 1 | CYLINDER SCREW ISO 4762 M10X65 8.8 A3 | PARAFUSO CILÍNDRICO | | |
| 5 | 4980377 | 1 | SPHERICAL WASHER C 10,5X21X4 | ARRUELA ESFERICA | | |

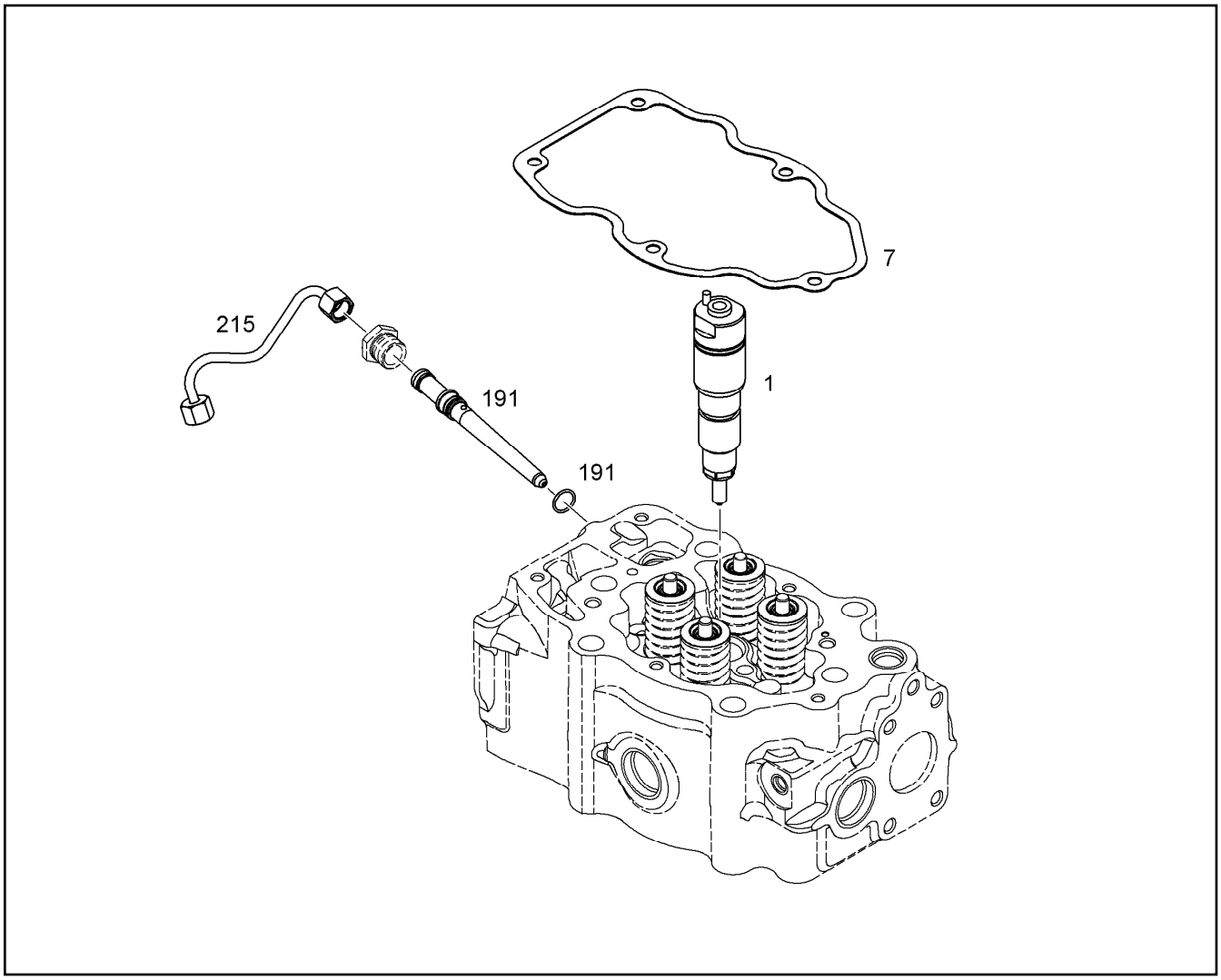


| Pos. | Item | Quantity | Description | Designação | Serie | K |
|---|---|---|---|---|---|---|
| 1 | 10116587 | 1 | INJECTOR<br>⇨ ❑ 533 | VALVULA INJETORA | | |
| 7 | 10118554 | 1 | SEAL | VEDAÇÃO | | |
| 191 | 9075395 | 1 | PRESSURE ADAPTER ASS.<br>⇨ ❑ 534 | BOCAL DE TUBO DE PRESSAO | | |
| 215 | 9080410 | 1 | INJECTION LINE | TUBO DE INJEÇÃO | | |

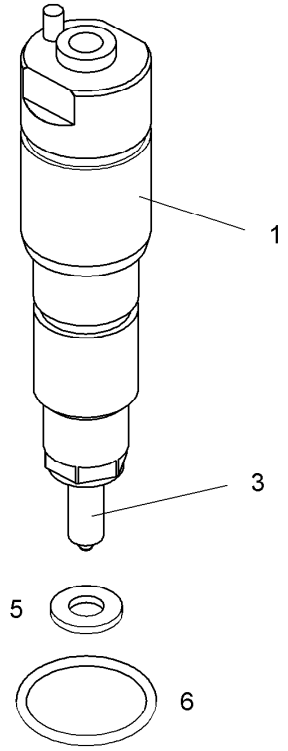


| Pos. | Item | Quantity | Description | Designação | Serie | K |
|---|---|---|---|---|---|---|
| 1 | 10027735 | 1 | NOZZLE HOLDER | PORTA-INJETOR | | |
| 3 | 10289344 | 1 | NOZZLE | BICO | | |
| 5 | 10040406 | 1 | SHEET GASKET 7,03X15,1X1,5 | ARRUELA DE VEDACAO | | |
| 6 | 10040399 | 1 | O-RING 20,90X3,00 | ANEL-O | | |

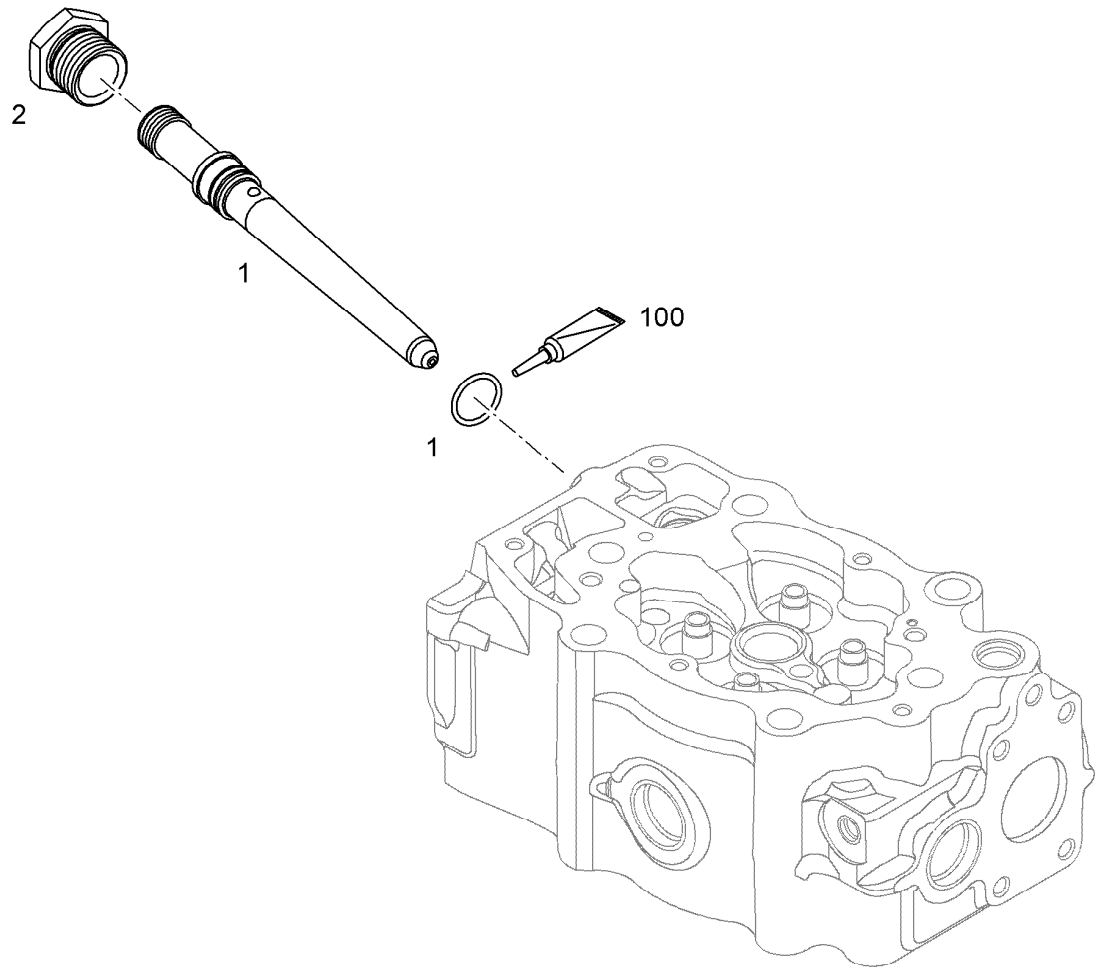


| Pos. | Item | Quantity | Description | Designação | Serie | K |
|---|---|---|---|---|---|---|
| 1 | 9074677 | 1 | PRESSURE ADAPTER | BOCAL DE TUBO DE PRESSAO | | |
| 1 | 10040401 | 1 | -O-RING 12,60X2,80 | -ANEL-O | | |
| 2 | 9075763 | 1 | BOX NUT M 22X1,5 | PORCA DE CONEXAO | | |
| 100 | 10285708 | 1 | GREASE NBU 30/1kg | GRAXA | | |

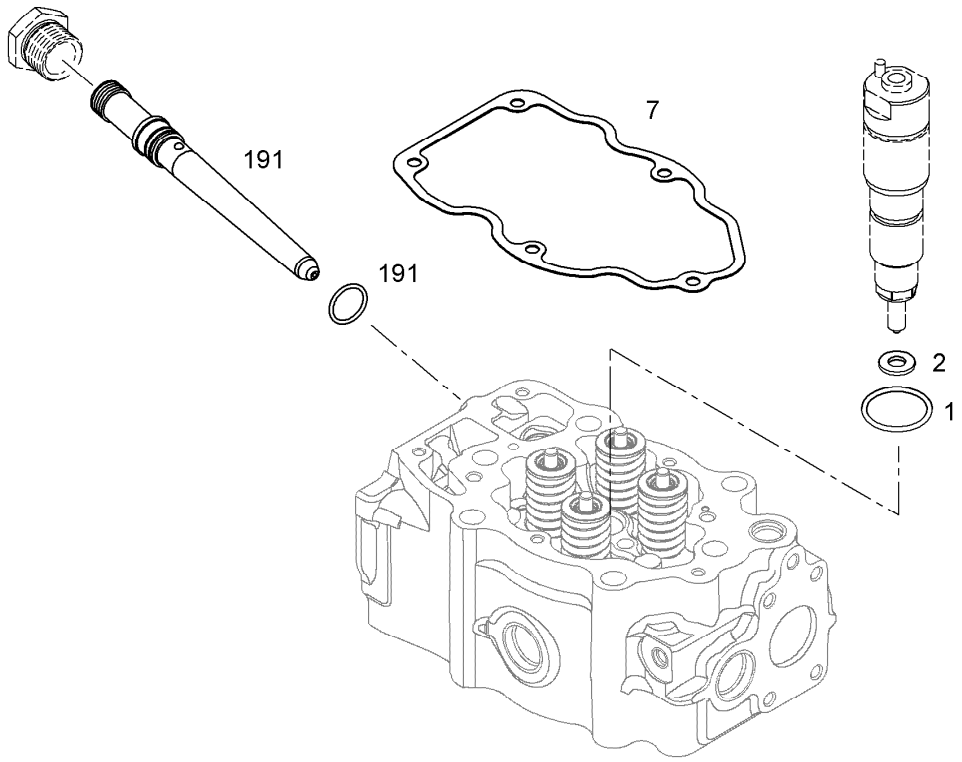


| Pos. | Item | Quantity | Description | Designação | Serie | K |
|---|---|---|---|---|---|---|
| 1 | | 1 | O-RING 20,90X3,00 | ANEL-O | | |
| 2 | | 1 | SHEET GASKET 7,03X15,1X1,5 | ARRUELA DE VEDACAO | | |
| 7 | | 1 | SEAL | VEDAÇÃO | | |
| 191 | 9075395 | 1 | PRESSURE ADAPTER ASS. | BOCAL DE TUBO DE PRESSAO | | |
| | | | ⇨ ❑ 534 | | | |

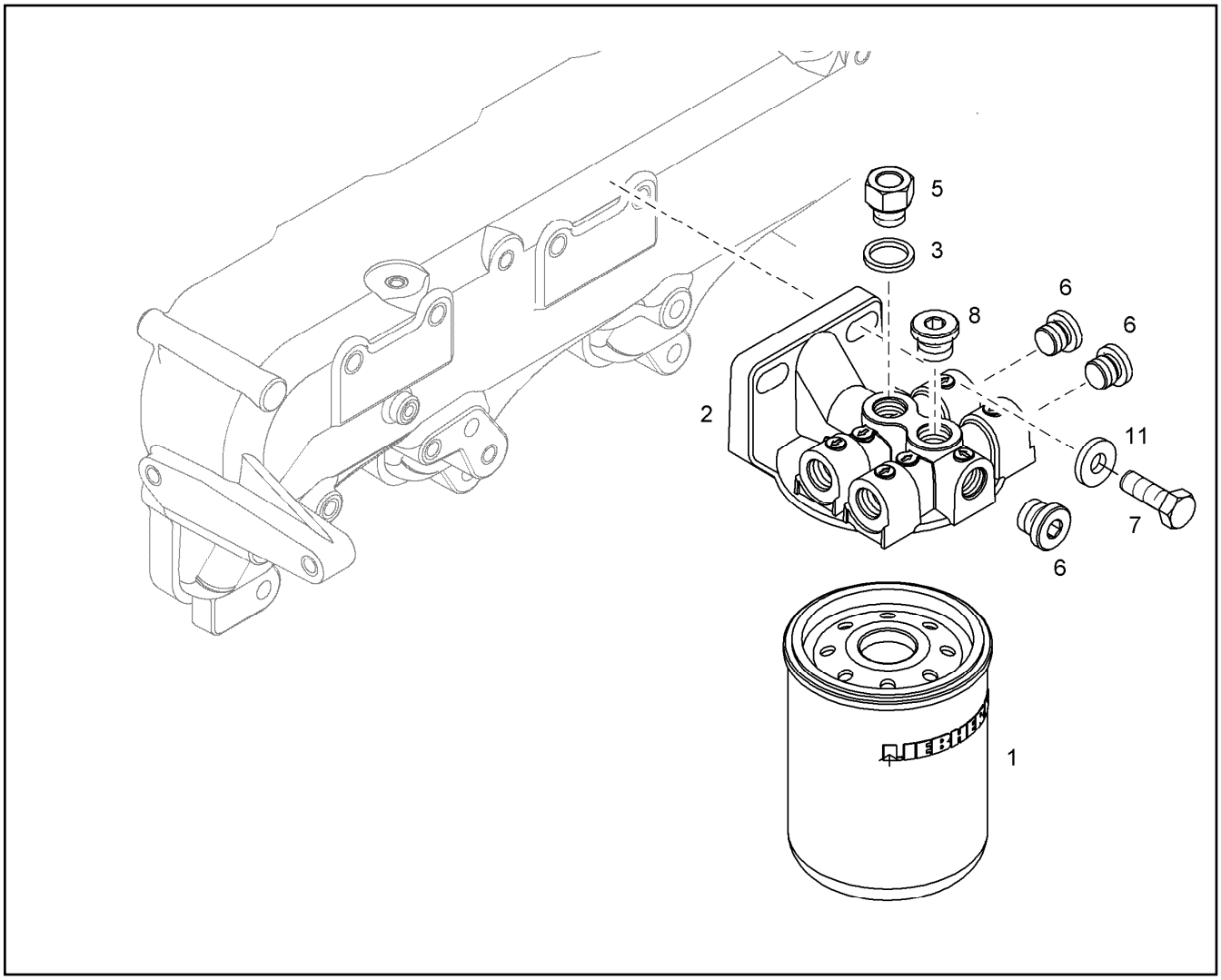


| Pos. | Item | Quantity | Description | Designação | Serie | K |
|---|---|---|---|---|---|---|
| 1 | 10332278 | 1 | FUEL FINE FILTER<br>⇨ ❑ 540 | FILTRO DE COMBUSTÍVEL | -99998 | |
| 1 | 10125801 | 1 | FUEL FINE FILTER<br>⇨ ❑ 538 | FILTRO DE COMBUSTÍVEL | 99999- | |
| 2 | 10219624 | 1 | FUEL FILTER HEAD | CABECA DO FILTRO COMBUSTI | | |
| 3 | 10011867 | 1 | SEALING RING 16,7X24,00X1,5 | ANEL DE VEDAÇÃO | | |
| 5 | 10120066 | 1 | REDUCING PIECE | PEÇA DE REDUÇÃO | | |
| 6 | 7382203 | 3 | SCREW PLUG VSTI M16X1,5 | PARAFUSO DE FECHAMENTO | | |
| 7 | 4600122 | 2 | HEX BOLT ISO 4017 M10x40 8.8 A3C | PARAFUSO SEXTAVADO | | |
| 8 | 10116078 | 1 | SCREW PLUG VSTI M16X1,5 | PARAFUSO DE FECHAMENTO | | |
| 11 | 4000505 | 2 | WASHER DIN 7349 10,5 | ARRUELA | | |

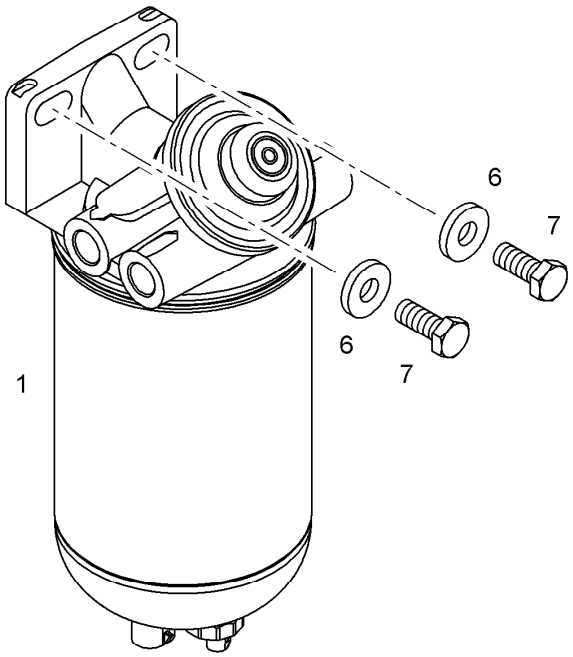


| Pos. | Item | Quantity | Description | Designação | Serie | K |
|---|---|---|---|---|---|---|
| 1 | 10222819 | 1 | FUEL PRE-FILTER CPL.<br>⇨ ❑ 539 | PRÉ-FILTRO COMBUST.COMPL. | | |
| 6 | 4000505 | 2 | WASHER DIN 7349 10,5 | ARRUELA | | |
| 7 | 4000828 | 2 | HEX BOLT ISO 4017 M10X30 8.8 A3C | PARAFUSO SEXTAVADO | | |

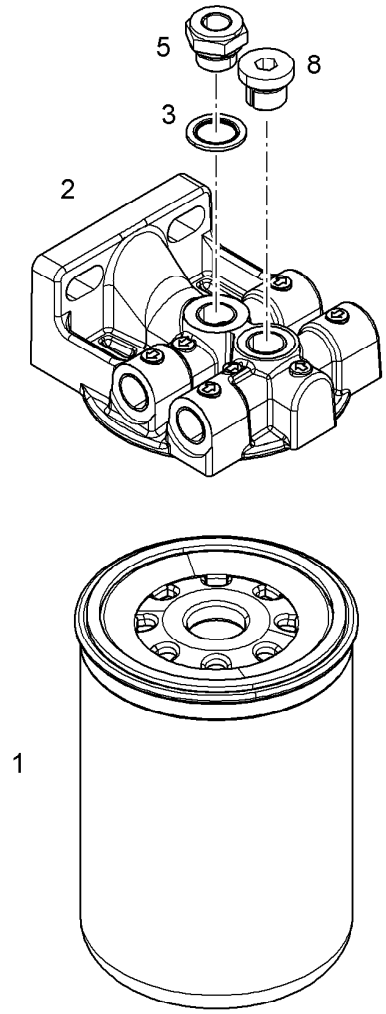


| Pos. | Item | Quantity | Description | Designação | Serie | K |
|---|---|---|---|---|---|---|
| 1 | 10429946 | 1 | FUEL FINE FILTER 3-5µm | FILTRO DE COMBUSTÍVEL | | |
| 2 | 10120518 | 1 | FUEL FILTER HEAD | CABECA DO FILTRO COMBUSTI | | |
| 3 | 10011867 | 1 | SEALING RING 16,7X24,00X1,5 | ANEL DE VEDAÇÃO | | |
| 5 | 10120066 | 1 | REDUCING PIECE | PEÇA DE REDUÇÃO | | |
| 8 | 10116078 | 1 | SCREW PLUG VSTI M16X1,5 | PARAFUSO DE FECHAMENTO | | |

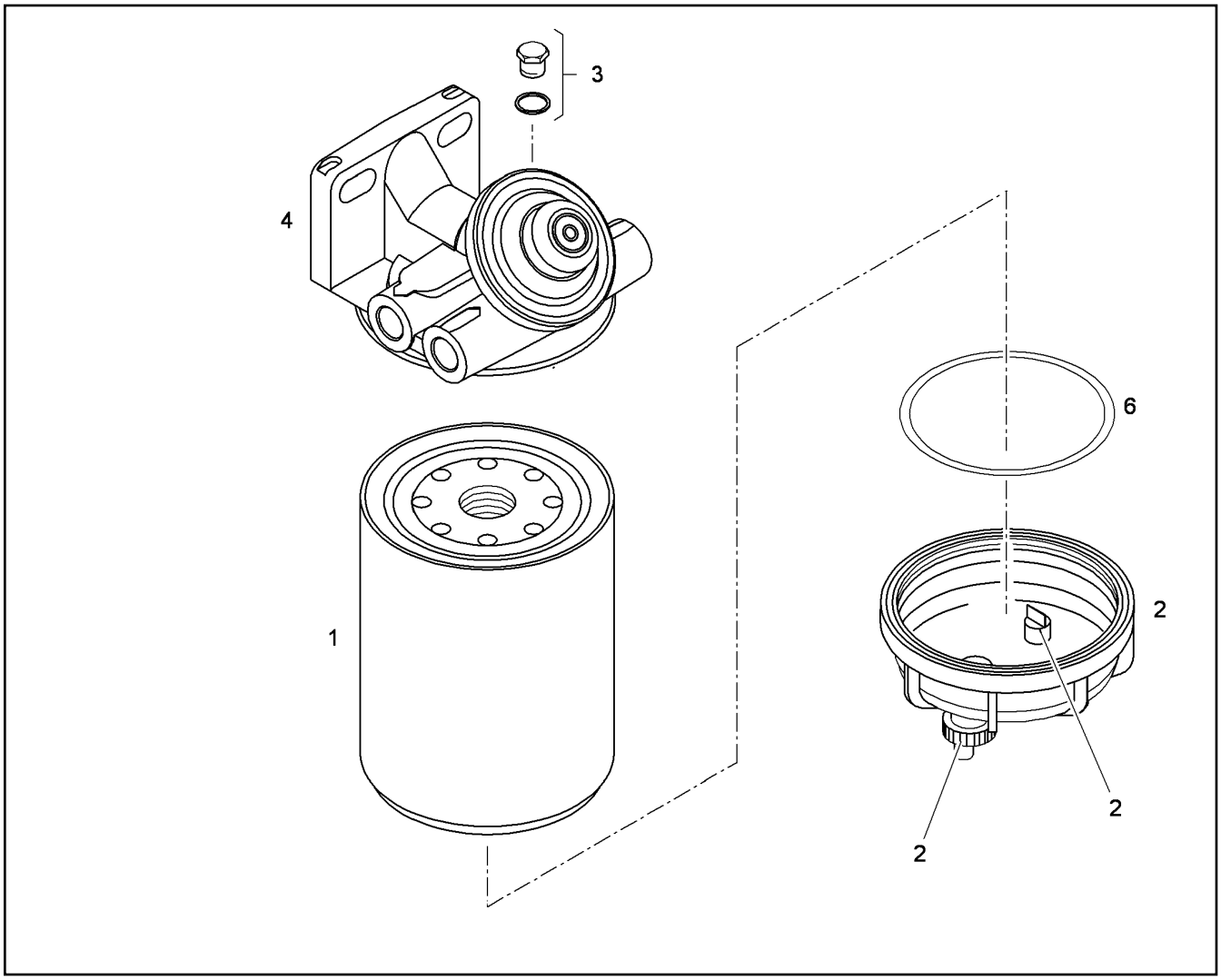


| Pos. | Item | Quantity | Description | Designação | Serie | K |
|---|---|---|---|---|---|---|
| 1 | 10044302 | 1 | FUEL PREFILTER | PRE-FILTRO DE COMBUSTÍVEL | | |
| 2 | 10222821 | 1 | TRANSPARENT CONTAINER WASSER | RECIPEINTE TRANSPARENTE | | |
| 2 | 10280185 | 1 | -WATER SOUND | -SENSOR DE ÁGUA | | |
| 2 | 10289208 | 1 | -RK OIL DRAIN SCREW | -KIT DE REPARO DO DRENO DE | | |
| 3 | 10101997 | 1 | VENTILATION SCREW | PARAFUSO DE RESPIRO | | |
| 4 | 10046958 | 1 | FUEL FILTER HEAD | CABECA DO FILTRO COMBUSTI | | |
| 6 | 10289210 | 1 | O-RING 101,19X3,53 | ANEL-O | | |

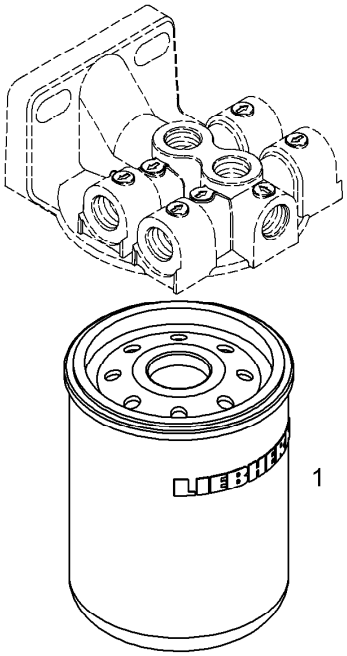


| Pos. | Item | Quantity | Description | Designação | Serie | K |
|---|---|---|---|---|---|---|
| 1 | 10429946 | 1 | FUEL FINE FILTER 3-5µm | FILTRO DE COMBUSTÍVEL | | |

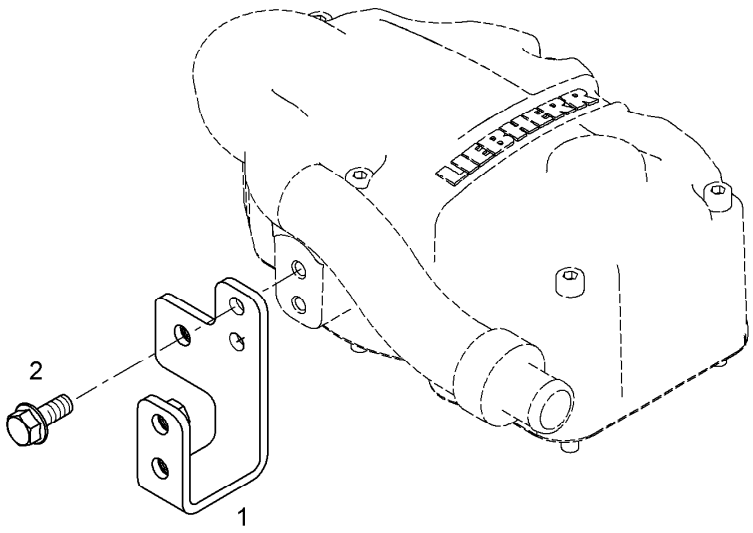


| Pos. | Item | Quantity | Description | Designação | Serie | K |
|---|---|---|---|---|---|---|
| 1 | 10119119 | 1 | RETAINER CPL. | SUPORTE COMPL. | | |
| 2 | 10016906 | 2 | HEX BOLT DIN 6921 M8X20 8.8 A2C | PARAFUSO SEXTAVADO | | |

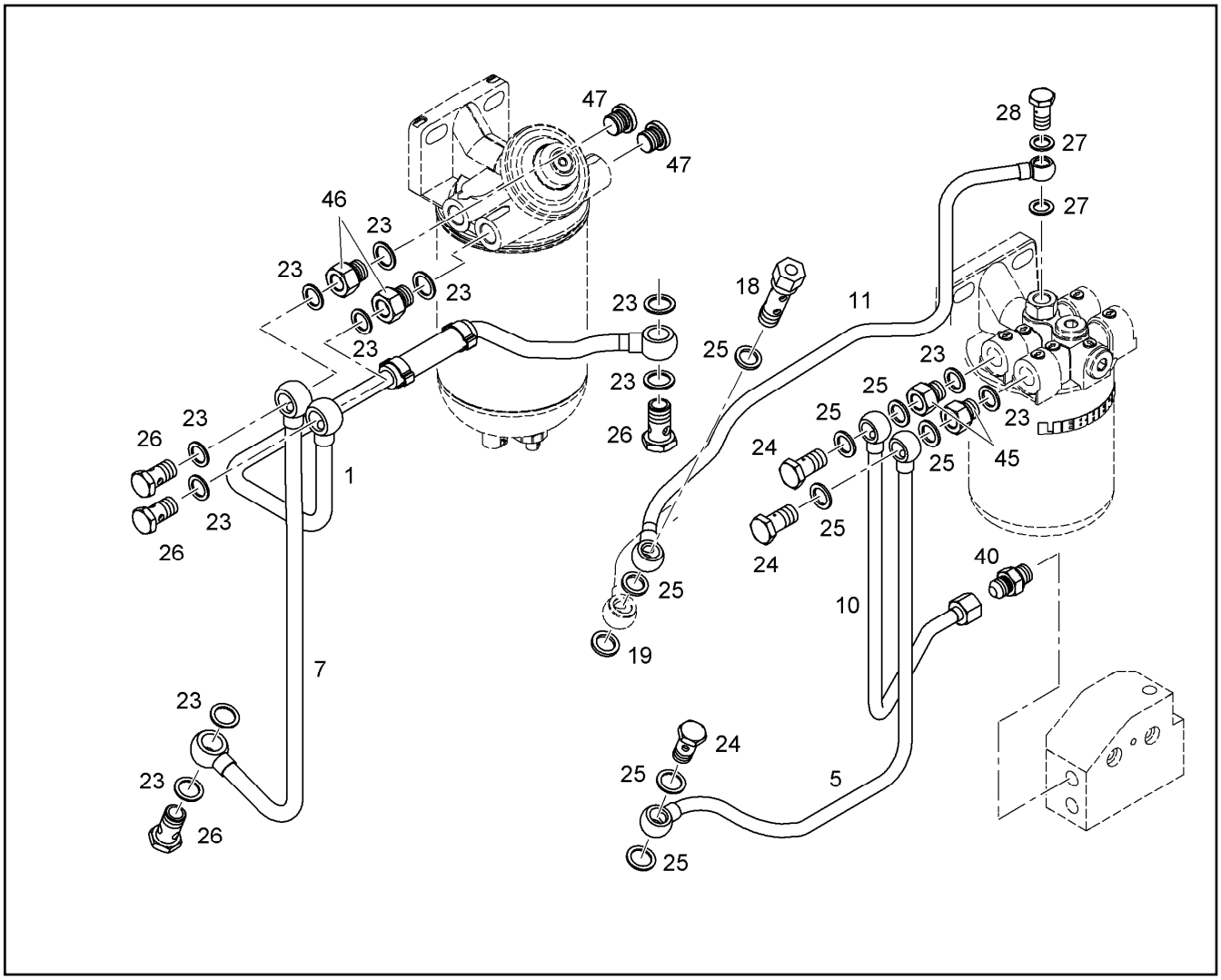


| Pos. | Item | Quantity | Description | Designação | Serie | K |
|---|---|---|---|---|---|---|
| 1 | 10116499 | 1 | PIPELINE | TUBULACAO | | |
| 5 | 10116453 | 1 | PIPELINE 10X1 | TUBULACAO | | |
| 7 | 10116467 | 1 | PIPELINE 12X1 | TUBULACAO | | |
| 10 | 10116290 | 1 | PIPELINE 10X1 | TUBULACAO | | |
| 11 | 10116482 | 1 | PIPELINE 10X1<br>⇨ ❑ 6 | TUBULACAO | | |
| 18 | 10115499 | 1 | DOUBLE BANJO BOLT 10X1 | PARAFUSO OCO DUPLO | | |
| 19 | 7381225 | 1 | SEALING RING DIN 7603 A 14X20X2,5 | ANEL DE VEDAÇÃO | | |
| 23 | 7101010 | 10 | SEALING RING DIN 7603 A 16 X 22 CU | ANEL DE VEDAÇÃO | | |
| 24 | 4079240 | 3 | HOLLOW SCREW 10X3 DIN 7643 | PARAFUSO OCO | | |
| 25 | 4900262 | 8 | SEALING RING DIN 7603 A 14 X 20 CU | ANEL DE VEDAÇÃO | | |
| 26 | 4980741 | 4 | HOLLOW SCREW 12X3 DIN 7643 | PARAFUSO OCO | | |
| 27 | 7101007 | 2 | SEALING RING DIN 7603 A 12 X 18 CU | ANEL DE VEDAÇÃO | | |
| 28 | 7381925 | 1 | HOLLOW SCREW WITH THROTTLE | PARAFUSO OCO COM ESTRANG | | |
| 40 | 10021563 | 4 | SCREW FITTING GE 10 M14x1,5/9/16-18 | REDUÇÃO | | |
| 45 | 10038817 | 2 | REDUCING STUD | BOCAL REDUTOR | | |
| 46 | 10115649 | 2 | LUG | CONEXÃO | | |
| 47 | 7382203 | 2 | SCREW PLUG VSTI M16X1,5 | PARAFUSO DE FECHAMENTO | | |

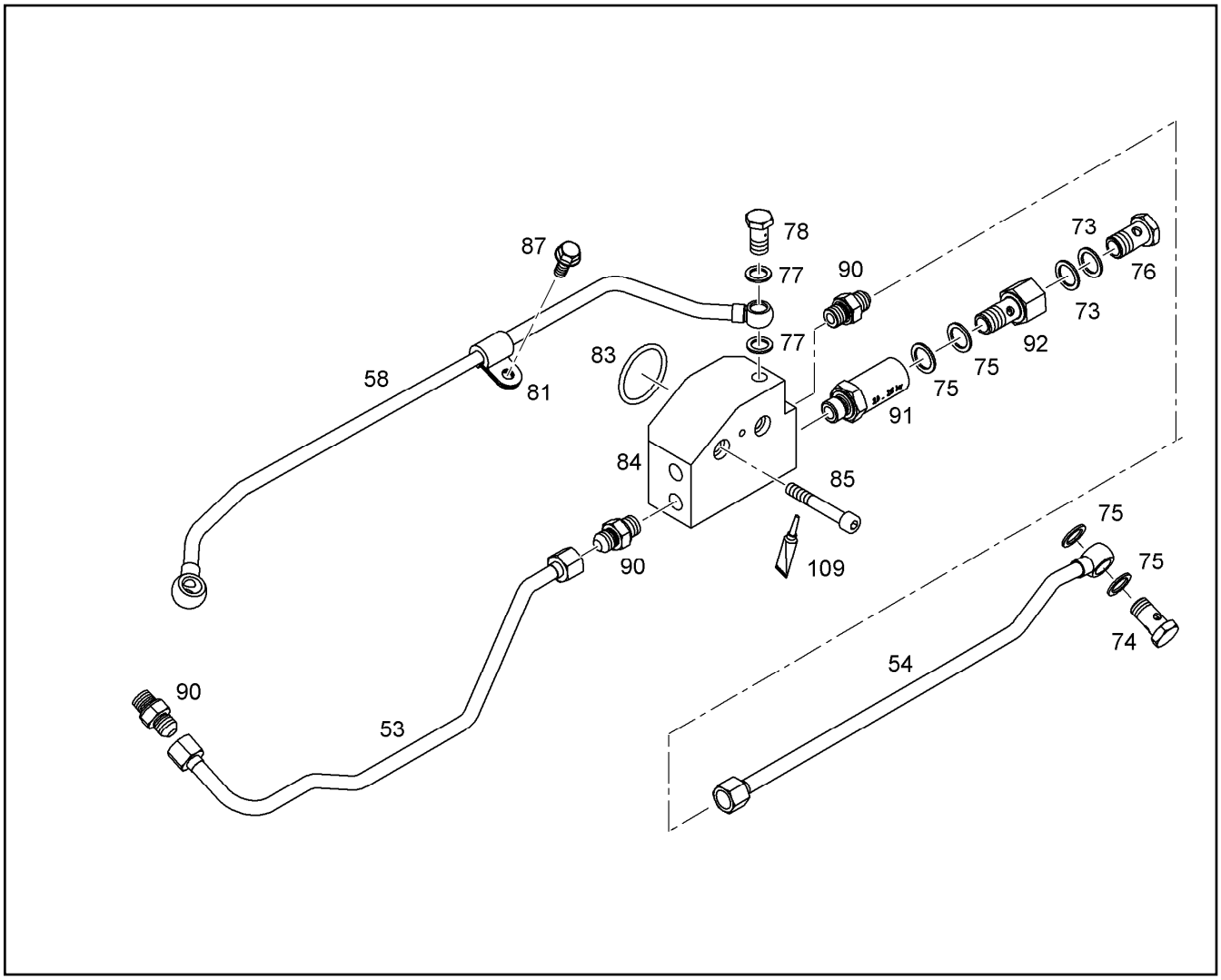


| Pos. | Item | Quantity | Description | Designação | Serie | K |
|---|---|---|---|---|---|---|
| 53 | 10116289 | 1 | PIPELINE 10X1 | TUBULACAO | | |
| 54 | 10116287 | 1 | PIPELINE | TUBULACAO | | |
| 58 | 9080922 | 1 | PIPELINE 10X1 | TUBULACAO | | |
| 73 | 7101010 | 2 | SEALING RING DIN 7603 A 16 X 22 CU | ANEL DE VEDAÇÃO | | |
| 74 | 4079240 | 1 | HOLLOW SCREW 10X3 DIN 7643 | PARAFUSO OCO | | |
| 75 | 4900262 | 5 | SEALING RING DIN 7603 A 14 X 20 CU | ANEL DE VEDAÇÃO | | |
| 76 | 4980741 | 1 | HOLLOW SCREW 12X3 DIN 7643 | PARAFUSO OCO | | |
| 77 | 7101007 | 2 | SEALING RING DIN 7603 A 12 X 18 CU | ANEL DE VEDAÇÃO | | |
| 78 | 7381925 | 1 | HOLLOW SCREW WITH THROTTLE | PARAFUSO OCO COM ESTRANG | | |
| 81 | 7381628 | 1 | CLAMP DIN 3016-1 D1 10X20 W1-2-MVQ | BRAÇADEIRA | | |
| 83 | 7381415 | 1 | O-RING DIN 3771 21,95X1,78 | ANEL-O | | |
| 84 | 10116036 | 1 | DISTRIBUTOR BLOCK | BLOCO DE DISTRIBUIÇÃO | | |
| 85 | 4042150 | 2 | CYLINDER SCREW ISO 4762 M8x55 8.8 A2C | PARAFUSO CILÍNDRICO | | |
| 87 | 10016906 | 1 | HEX BOLT DIN 6921 M8X20 8.8 A2C | PARAFUSO SEXTAVADO | | |
| 90 | 10021563 | 4 | SCREW FITTING GE 10 M14x1,5/9/16-18 | REDUÇÃO | | |
| 91 | 10038572 | 1 | OVERFLOW VALVE | VALVULA DE ALÍVIO | | |
| 92 | 9078685 | 1 | HOLLOW SCREW 10X3 | PARAFUSO OCO | | |
| 109 | 8628192 | 1 | SCREW LOCKING | COLA PARA ELEMENTOS FIXA | | |

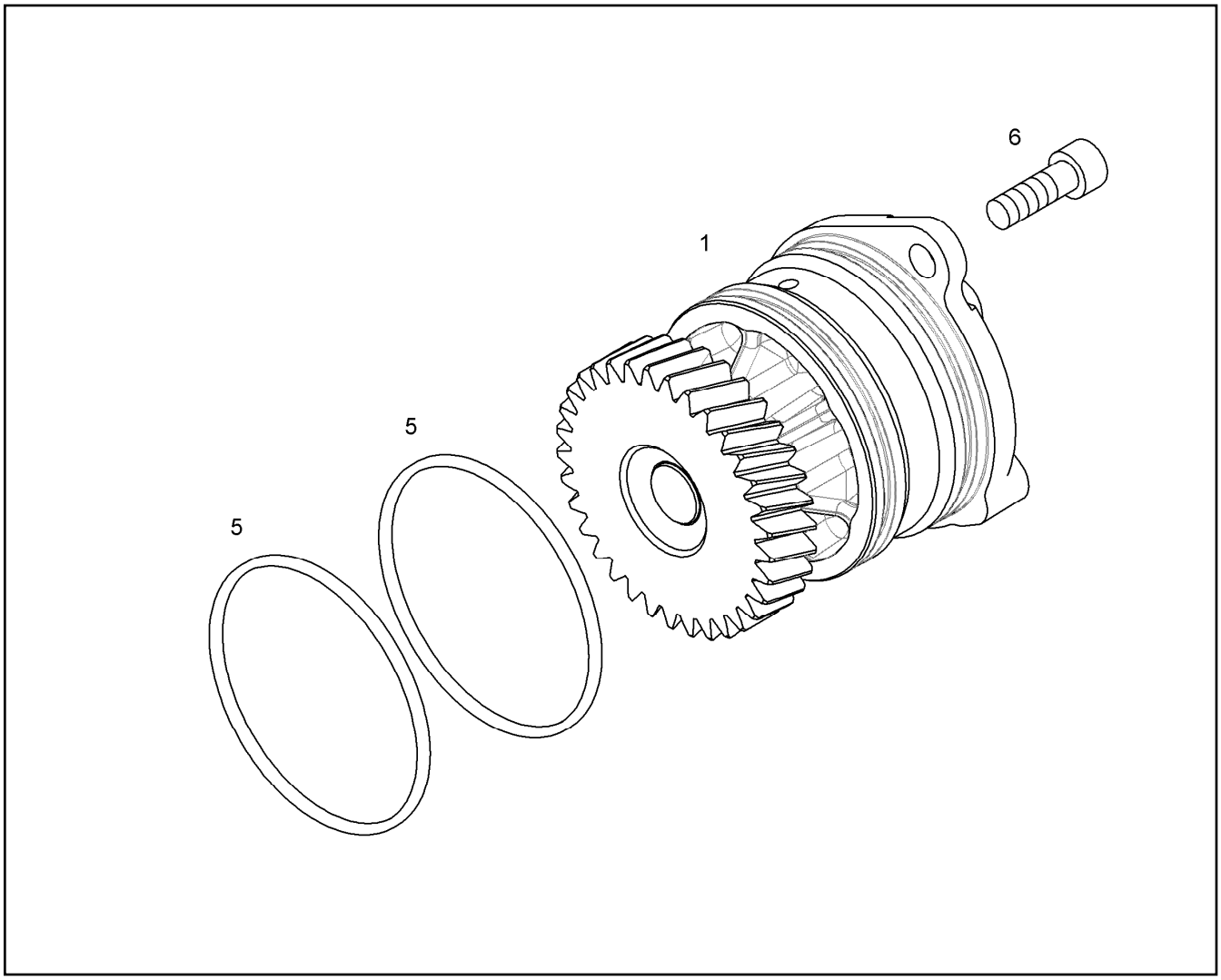


| Pos. | Item | Quantity | Description | Designação | Serie | K |
|---|---|---|---|---|---|---|
| 1 | 10117836 | 1 | AUXILIARY DRIVE PRE-ASS. | SAIDA AUXILIAR P´RE-MONTAGE | | |
| 5 | 7381361 | 2 | O-RING DIN 3771 85,32X3,53 | ANEL-O | | |
| 6 | 4043000 | 2 | CYLINDER SCREW ISO 4762 M10X30 10.9 | PARAFUSO CILÍNDRICO | | |

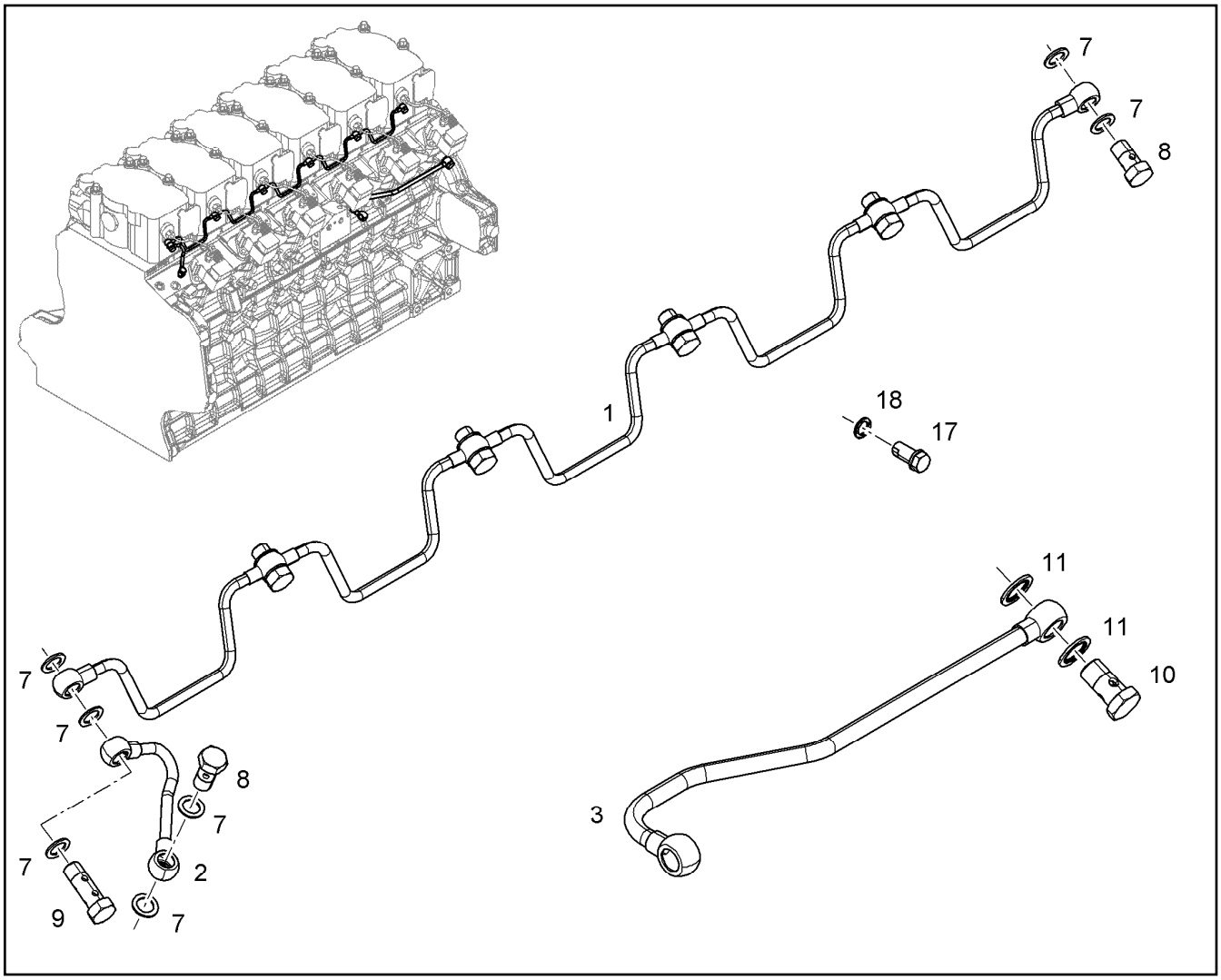


| Pos. | Item | Quantity | Description | Designação | Serie | K |
|---|---|---|---|---|---|---|
| 1 | 9076621 | 1 | FUEL LINE | TUBULACAO DE COMBUSTIVEL | | |
| 2 | 10115491 | 1 | PIPELINE | TUBULACAO | | |
| 3 | 10115489 | 1 | PIPELINE 10X1 | TUBULACAO | | |
| 7 | 7007952 | 15 | SEALING RING DIN 7603 A 10X15X1 | ANEL DE VEDAÇÃO | | |
| 8 | 4079160 | 6 | HOLLOW SCREW 6X3 DIN 7643 | PARAFUSO OCO | | |
| 9 | 10014864 | 1 | DOUBLE BANJO BOLT 6X6 | PARAFUSO OCO DUPLO | | |
| 10 | 4001439 | 1 | HOLLOW SCREW 10X3 DIN 7643 | PARAFUSO OCO | | |
| 11 | 10011866 | 2 | SEALING RING 14,7X22,00X1,5 | ANEL DE VEDAÇÃO | | |
| 17 | 7009590 | 1 | VENTILATION SCREW | PARAFUSO DE RESPIRO | | |
| 18 | 7101001 | 1 | SEALING RING DIN 7603 A 8X12 | ANEL DE VEDAÇÃO | | |

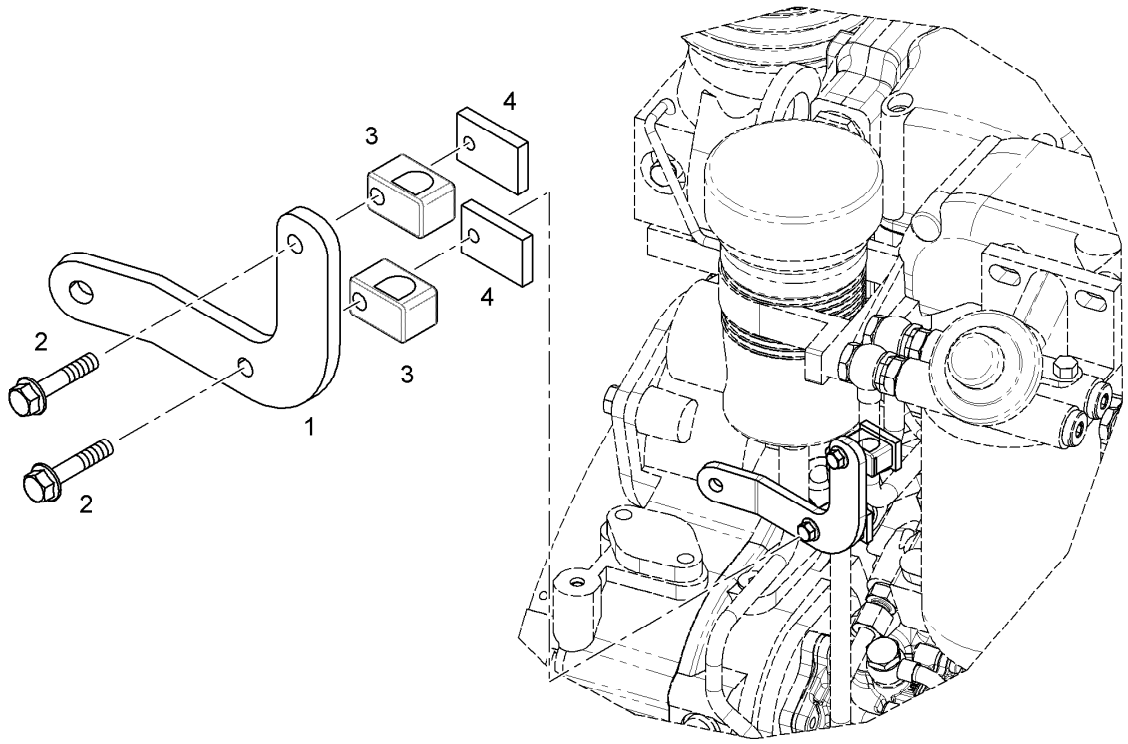


| Pos. | Item | Quantity | Description | Designação | Serie | K |
|---|---|---|---|---|---|---|
| 1 | 10117267 | 1 | HOLDER | SUPORTE | | |
| 2 | 10290537 | 2 | HEX BOLT DIN 6921 M6X30 8.8 A2C | PARAFUSO SEXTAVADO | | |
| 3 | 7382081 | 2 | PIPE CLAMP d=12 | BRAÇADEIRA DE TUBO | | |
| 4 | 9274060 | 2 | SUPPORT PLATE | CHAPA DE APOIO | | |

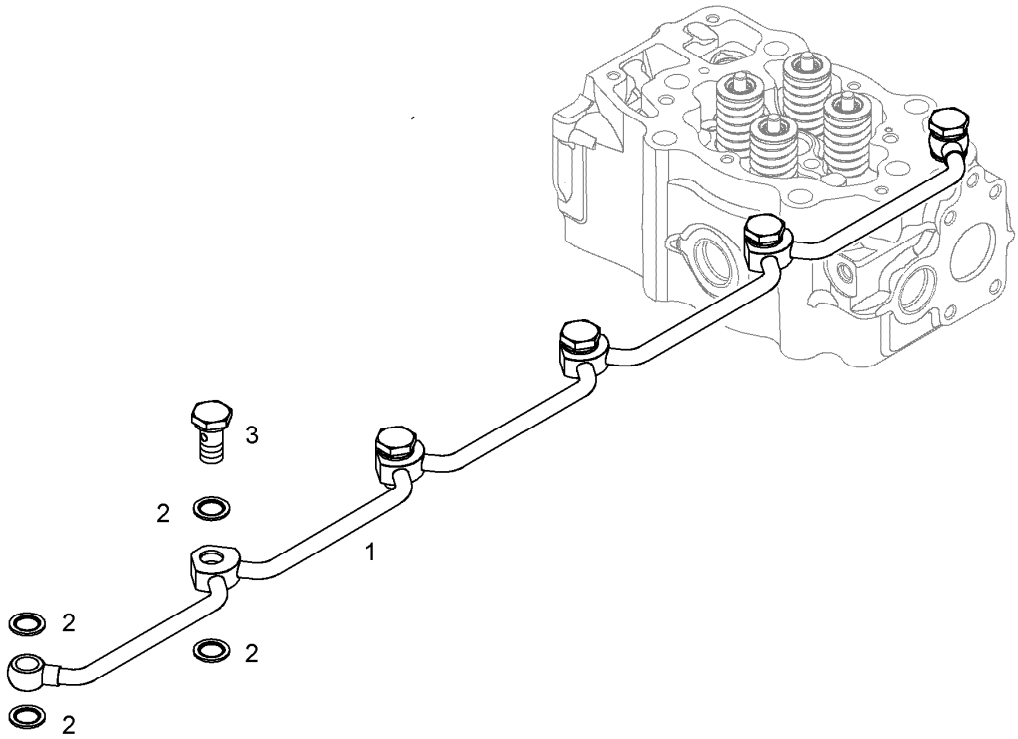


| Pos. | Item | Quantity | Description | Designação | Serie | K |
|---|---|---|---|---|---|---|
| 1 | 9079082 | 1 | PIPELINE D936 | TUBULACAO | | |
| 2 | 10011866 | 12 | SEALING RING 14,7X22,00X1,5 | ANEL DE VEDAÇÃO | | |
| 3 | 9080466 | 5 | HOLLOW SCREW 10X1 | PARAFUSO OCO | | |

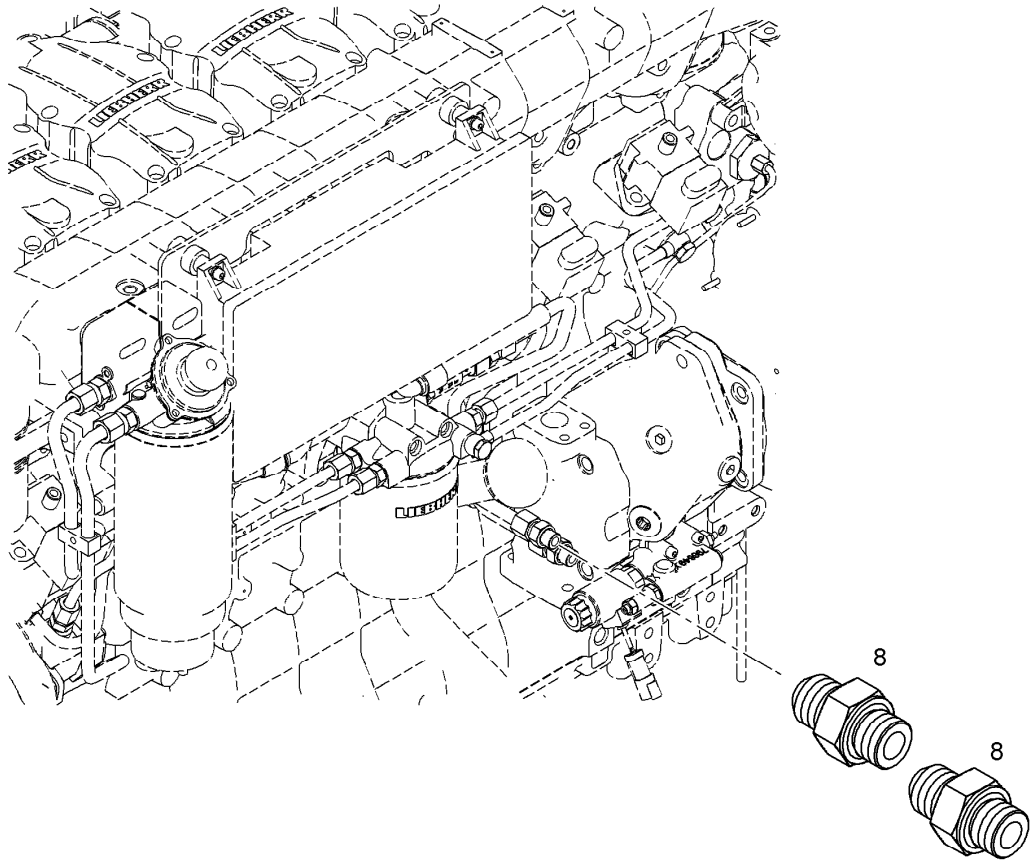


| Pos. | Item | Quantity | Description | Designação | Serie | K |
|---|---|---|---|---|---|---|
| 8 | 9080360 | 2 | LUG | CONEXÃO | | |

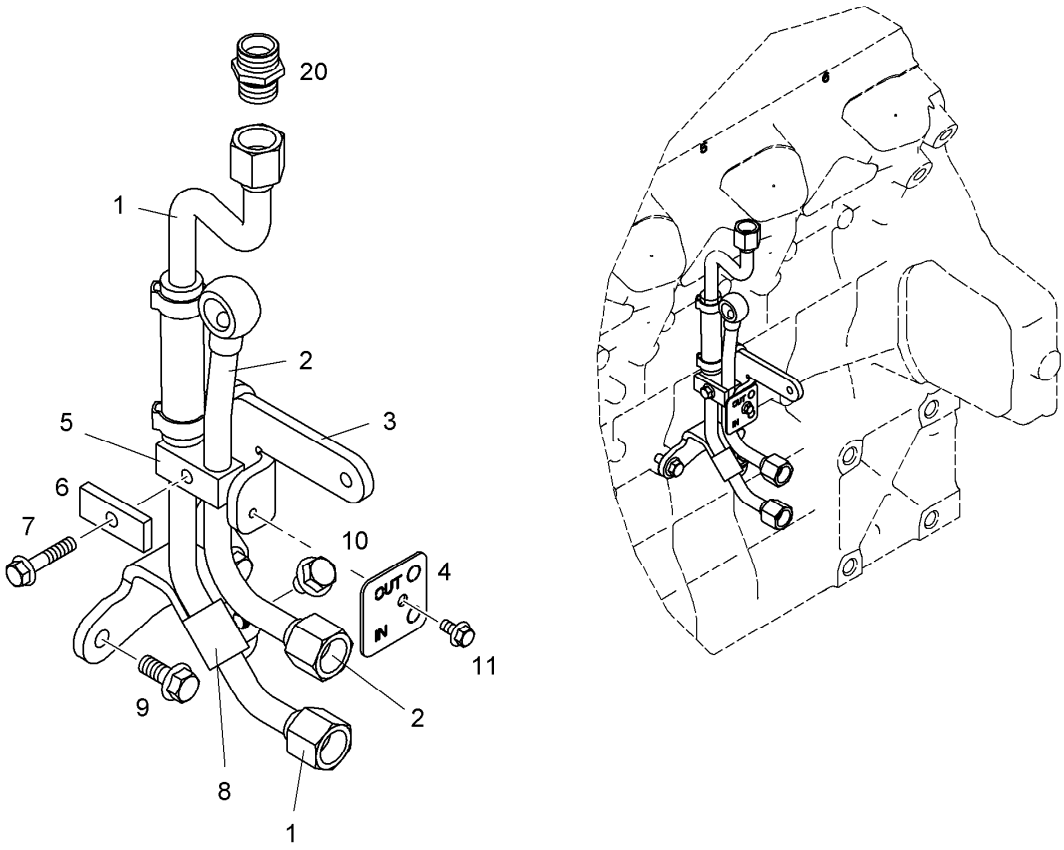


| Pos. | Item | Quantity | Description | Designação | Serie | K |
|---|---|---|---|---|---|---|
| 1 | 10116573 | 1 | PIPELINE | TUBULACAO | | |
| 2 | 10116572 | 1 | PIPELINE | TUBULACAO | | |
| 3 | 10116522 | 1 | HOLDER | SUPORTE | | |
| 4 | 10115591 | 1 | PLATE | PLACA | | |
| 5 | 7382216 | 1 | PIPE CLAMP | BRAÇADEIRA DE TUBO | | |
| 6 | 9073190 | 1 | SUPPORT PLATE | CHAPA DE APOIO | | |
| 7 | 10290537 | 1 | HEX BOLT DIN 6921 M6X30 8.8 A2C | PARAFUSO SEXTAVADO | | |
| 8 | 7381629 | 1 | CLAMP DIN 3016-1 D1 12X20 W1-2-MVQ | BRAÇADEIRA | | |
| 9 | 10016906 | 2 | HEX BOLT DIN 6921 M8X20 8.8 A2C | PARAFUSO SEXTAVADO | | |
| 10 | 10024115 | 1 | HEX BOLT DIN 6921 M8X12 8.8 A2C | PARAFUSO SEXTAVADO | | |
| 11 | 10290538 | 1 | HEX HEAD SCREW EN 1665 M 5 X 10 8.8 A2 | PARAFUSO SEXTAVADO | | |
| 20 | 10038568 | 1 | SCREW FITTING GE 12 M16x1,5/3/4-16 | REDUÇÃO | | |

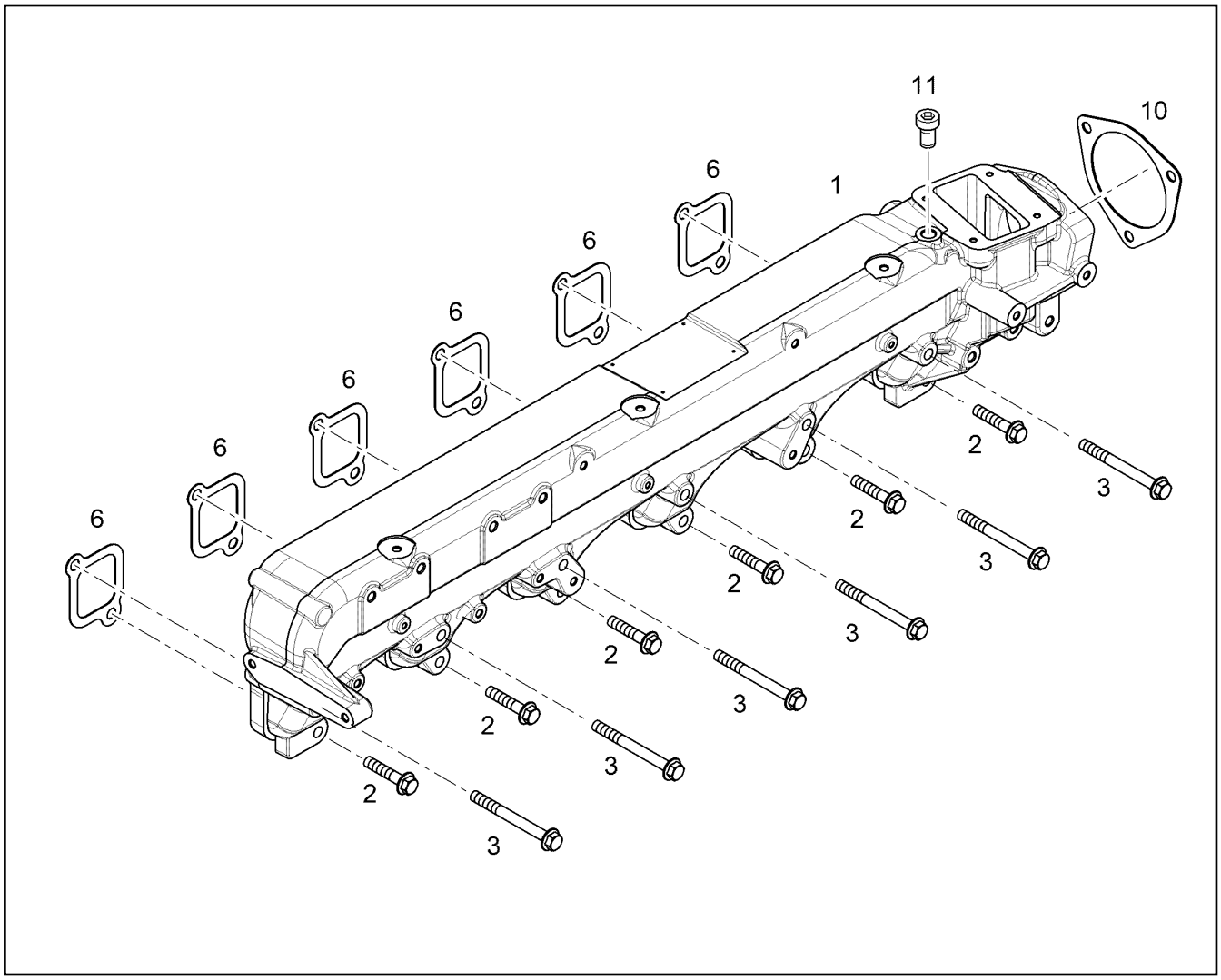


| Pos. | Item | Quantity | Description | Designação | Serie | K |
|---|---|---|---|---|---|---|
| 1 | 10147789 | 1 | AIR SUCTION PIPE | TUBO DE ASPIRAÇÃO DE AR | | |
| 2 | 10005461 | 6 | HEX BOLT EN 1665 M10x50 8.8 A3C | PARAFUSO SEXTAVADO | | |
| 3 | 10005462 | 6 | HEX HEAD SCREW WITH FLANGE EN 1665 | PARAFUSO SEXTAVADO COM F | | |
| 6 | 10118556 | 6 | SEAL | VEDAÇÃO | | |
| 10 | 9271963 | 1 | SEAL | VEDAÇÃO | | |
| 11 | 7380566 | 1 | SCREW PLUG VSTI M14X1,5 | PARAFUSO DE FECHAMENTO | | |

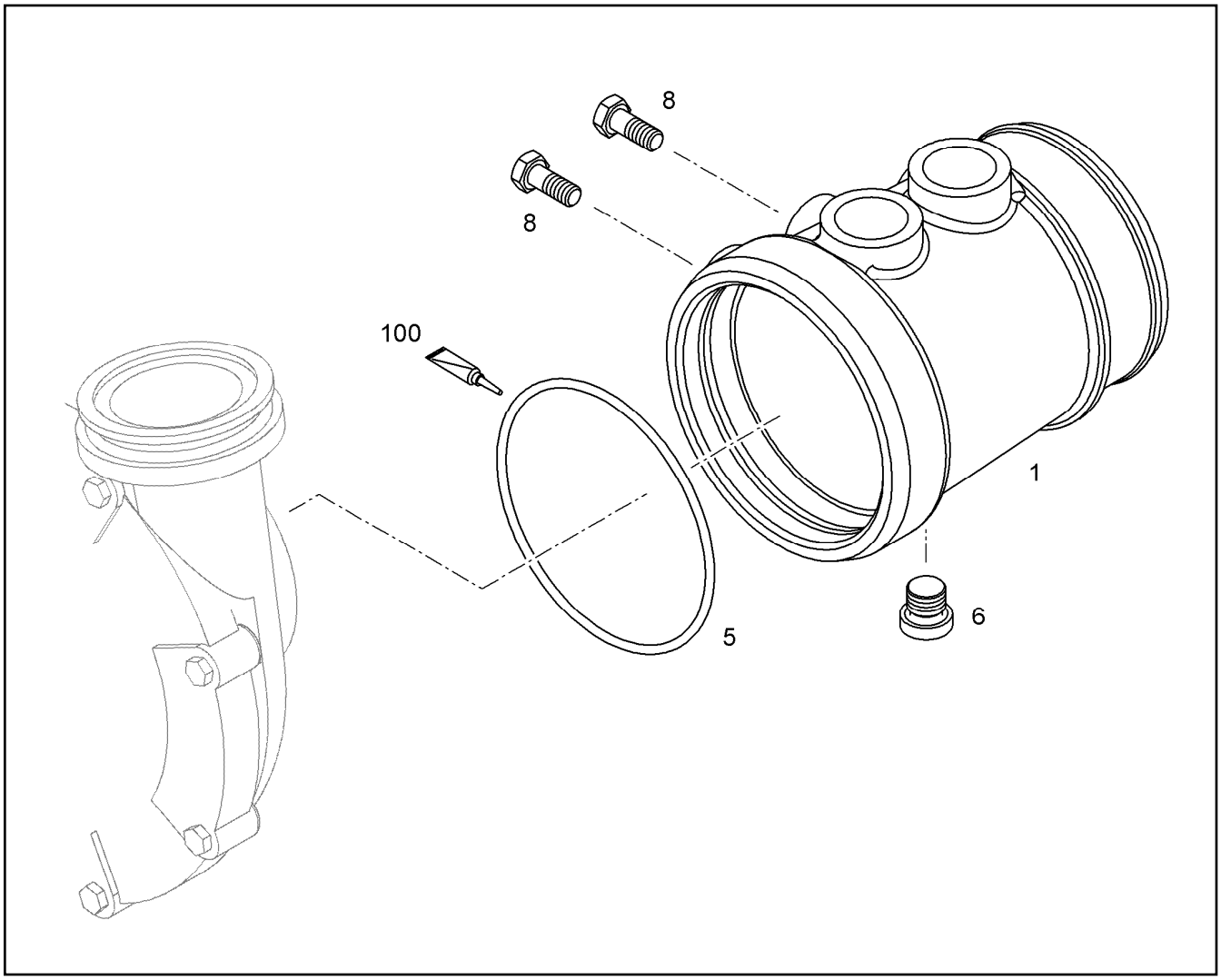


| Pos. | Item | Quantity | Description | Designação | Serie | K |
|---|---|---|---|---|---|---|
| 1 | 10120009 | 1 | CONNECTION STUB | BOCAL DE ACOPLAMENTO | | |
| 5 | 11008055 | 1 | O-RING 100X5 | ANEL-O | | |
| 6 | 7380566 | 1 | SCREW PLUG VSTI M14X1,5 | PARAFUSO DE FECHAMENTO | | |
| 8 | 10016906 | 2 | HEX BOLT DIN 6921 M8X20 8.8 A2C | PARAFUSO SEXTAVADO | | |
| 100 | 10282622 | 1 | GREASE | GRAXA | | |

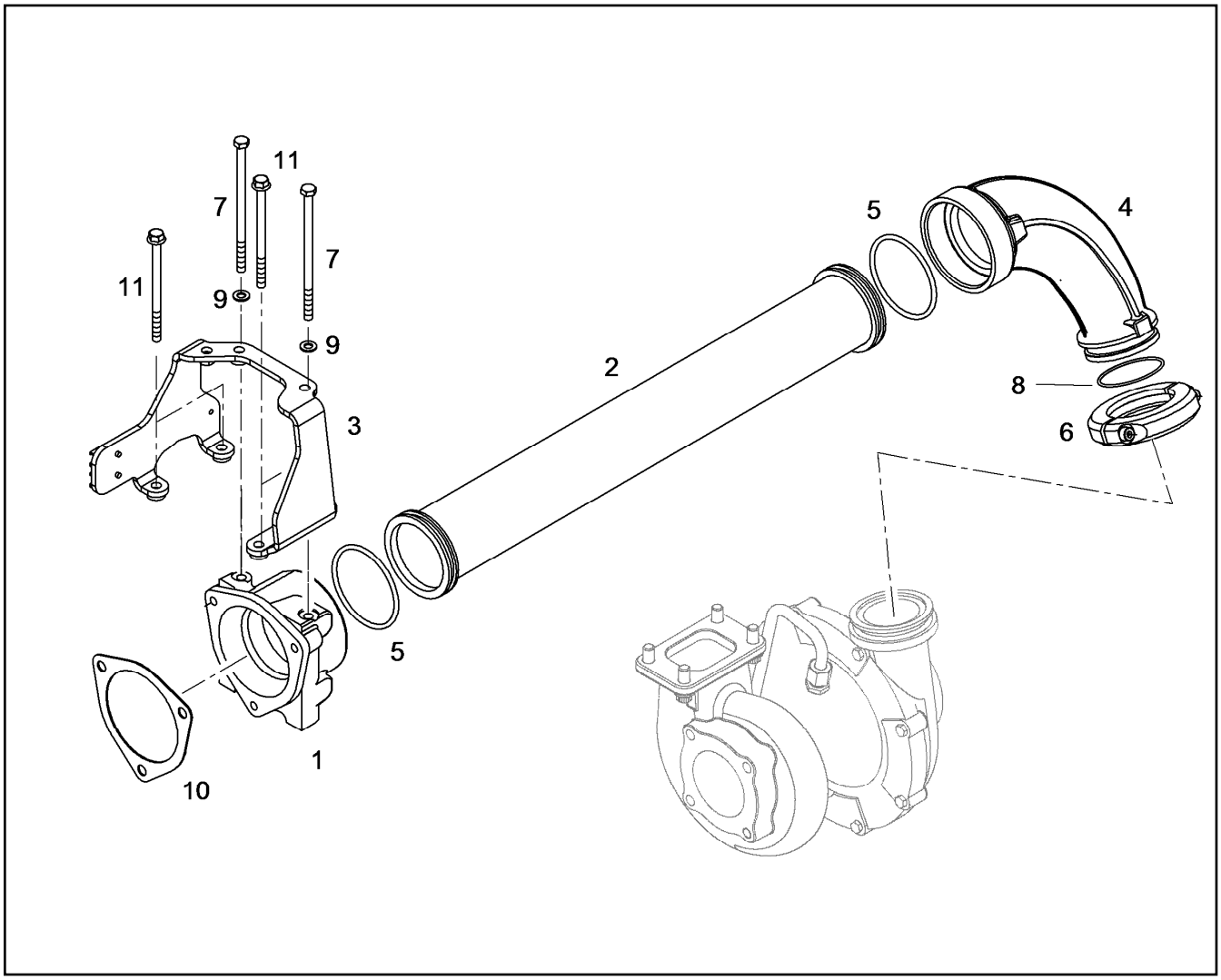


| Pos. | Item | Quantity | Description | Designação | Serie | K |
|---|---|---|---|---|---|---|
| 1 | 9079582 | 1 | CONNECTION FLANGE D930 | FLANGE DE CONEXAO | | |
| 2 | 9079963 | 1 | CONNECTING LINE | TUBO DE LIGACAO | | |
| 3 | 10121676 | 1 | RETAINER CPL. | SUPORTE COMPL. | | |
| 4 | 9079936 | 1 | AIR ELBOW | COLETOR DE ADMISSAO | | |
| 5 | 10022320 | 2 | O-RING 80X5,0 | ANEL-O | | |
| 6 | 9079957 | 1 | PIPE CLAMP D=69 | BRAÇADEIRA DE TUBO | | |
| 7 | 406143508 | 2 | HEX BOLT ISO 4014 M8X150 8.8 A2C | PARAFUSO SEXTAVADO | | |
| 8 | 7380970 | 1 | O-RING 63,17X2,62 | ANEL-O | | |
| 9 | 10289803 | 2 | WASHER ISO 7089 8 300HV | ARRUELA | | |
| 10 | 9271963 | 1 | SEAL | VEDAÇÃO | | |
| 11 | 10017158 | 4 | HEX BOLT DIN 6921 M8X120 8.8 A2C | PARAFUSO SEXTAVADO | | |

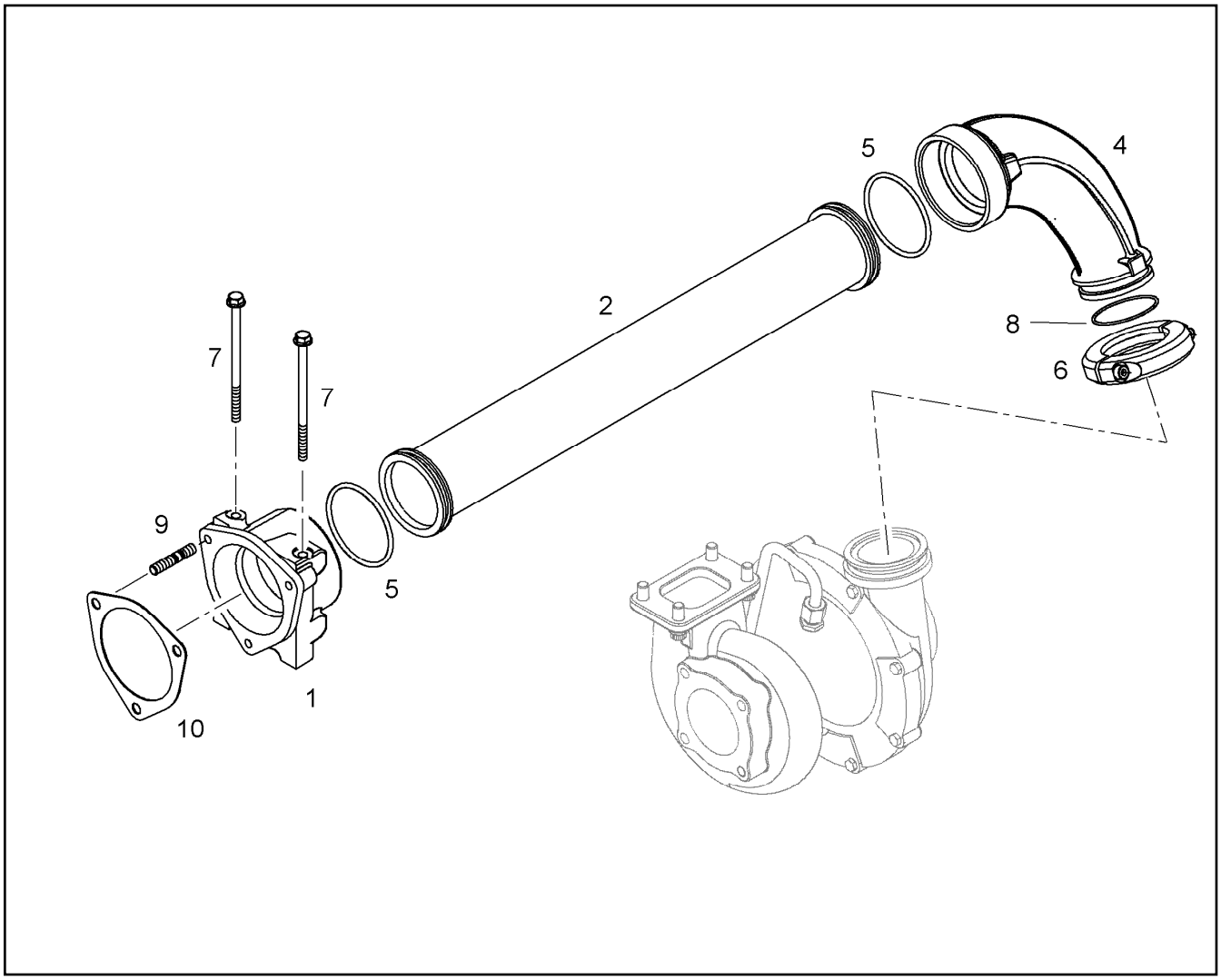


| Pos. | Item | Quantity | Description | Designação | Serie | K |
|---|---|---|---|---|---|---|
| 1 | 9079582 | 1 | CONNECTION FLANGE D930 | FLANGE DE CONEXAO | | |
| 2 | 9079963 | 1 | CONNECTING LINE | TUBO DE LIGACAO | | |
| 4 | 9079936 | 1 | AIR ELBOW | COLETOR DE ADMISSAO | | |
| 5 | 10022320 | 2 | O-RING 80X5,0 | ANEL-O | | |
| 6 | 9079957 | 1 | PIPE CLAMP D=69 | BRAÇADEIRA DE TUBO | | |
| 7 | 10101543 | 2 | HEX BOLT DIN 6921 M8X140 8.8 A2C | PARAFUSO SEXTAVADO | | |
| 8 | 7380970 | 1 | O-RING 63,17X2,62 | ANEL-O | | |
| 9 | 4900454 | 3 | DOUBLE-ENDED STUD DIN 835 M 10 X 35 8. | PINO ROSCADO | | |
| 10 | 9271963 | 1 | SEAL | VEDAÇÃO | | |

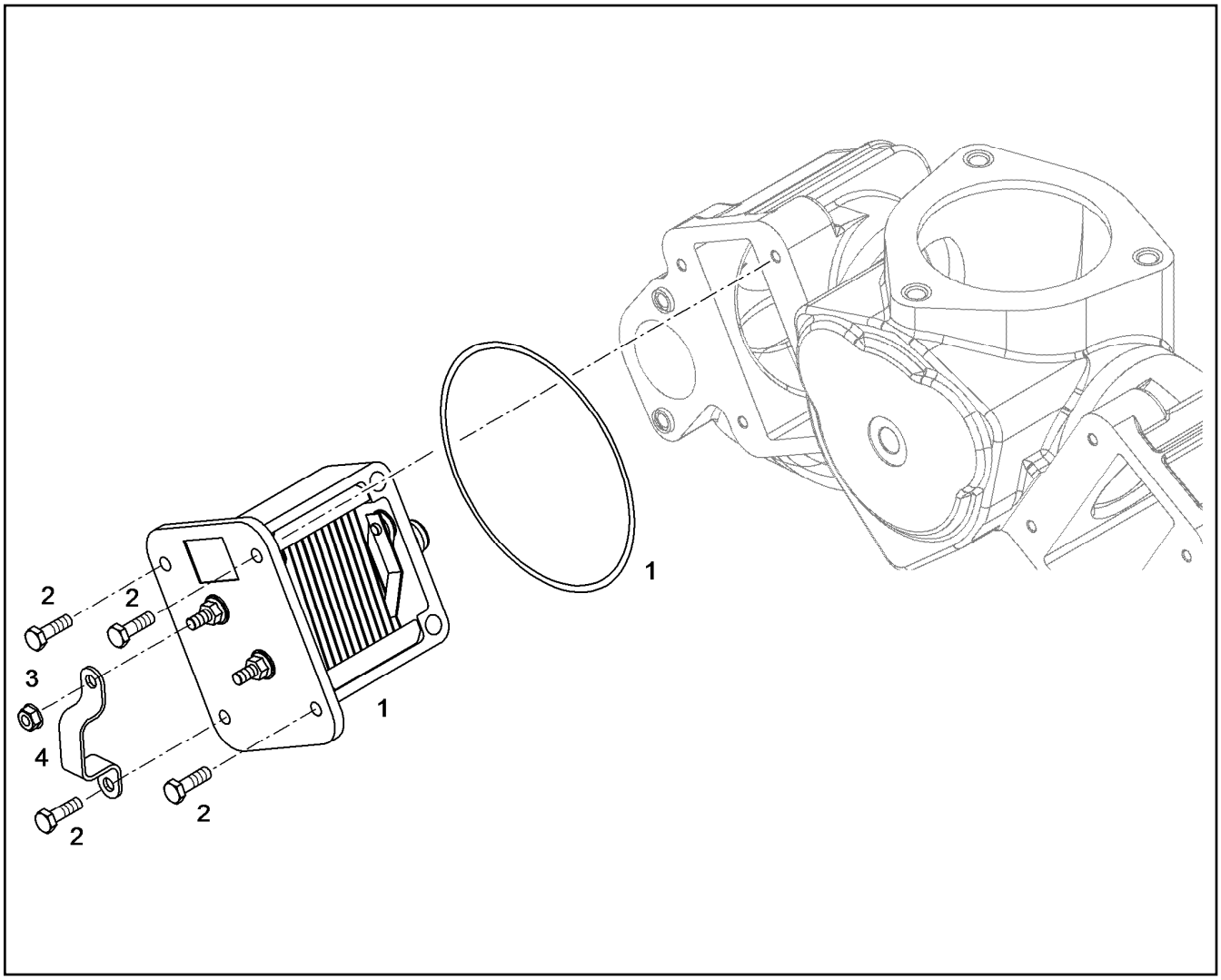


| Pos. | Item | Quantity | Description | Designação | Serie | K |
|---|---|---|---|---|---|---|
| 1 | 10299988 | 1 | HEATING FLANGE PRE.ASS. | FLANGE CALEFAÇÃO PRÉ-MONT | | |
| 1 | 10116255 | 1 | -O-RING DIN 3771 94,50X3,00 | -ANEL-O | | |
| 2 | 10018711 | 4 | HEX BOLT DIN 6921 M6X20 8.8 A2C | PARAFUSO SEXTAVADO | | |
| 3 | 10003366 | 1 | RIBBED HEX NUT M6 | PORCA SEXTAVADA | | |
| 4 | 9080911 | 1 | STRIP | MASSA | | |

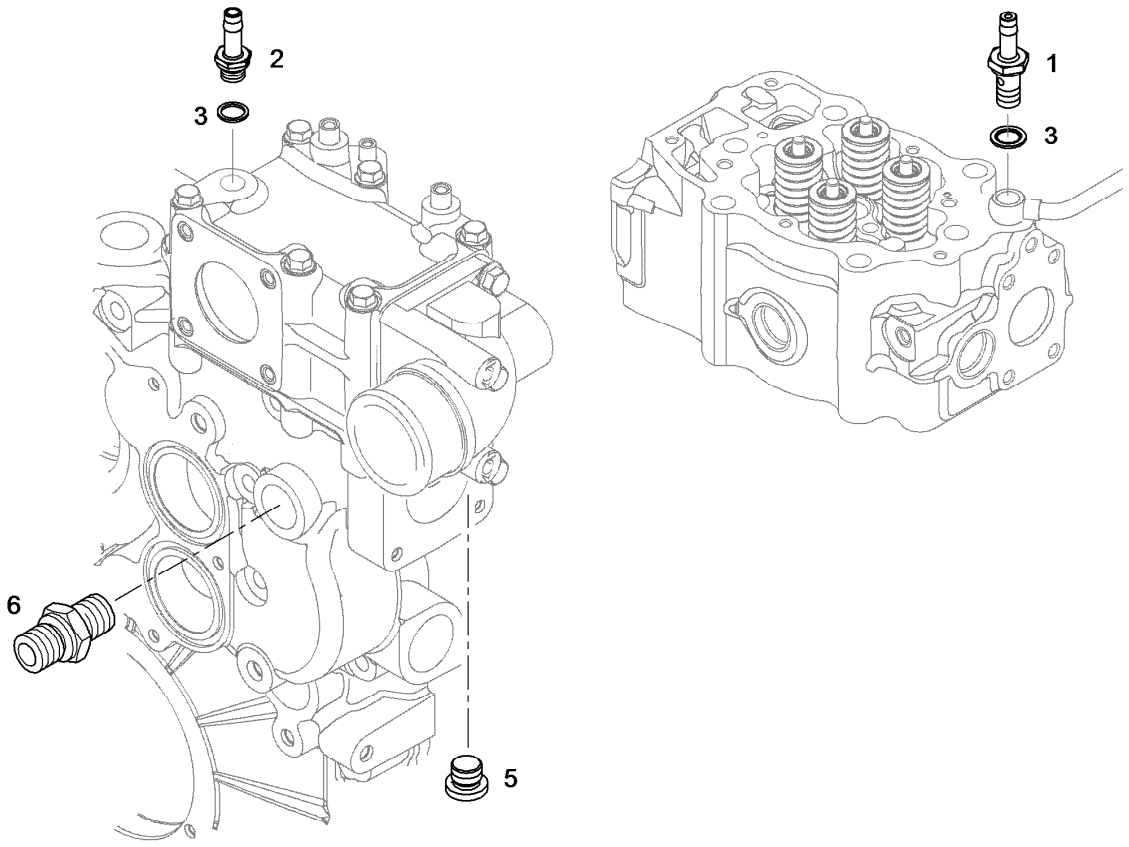


| Pos. | Item | Quantity | Description | Designação | Serie | K |
|---|---|---|---|---|---|---|
| 1 | 10115523 | 1 | HOSE NIPPLE DN12 9SMn28K | NIPLE DE MANGUEIRA | | |
| 2 | 10115608 | 1 | HOSE NIPPLE 9SMnPb28K | NIPLE DE MANGUEIRA | | |
| 3 | 10011866 | 2 | SEALING RING 14,7X22,00X1,5 | ANEL DE VEDAÇÃO | | |
| 5 | 7380566 | 1 | SCREW PLUG VSTI M14X1,5 | PARAFUSO DE FECHAMENTO | | |
| 6 | 7371875 | 1 | SCREW FITTING GE 28L M30X1,5 | REDUÇÃO | | |

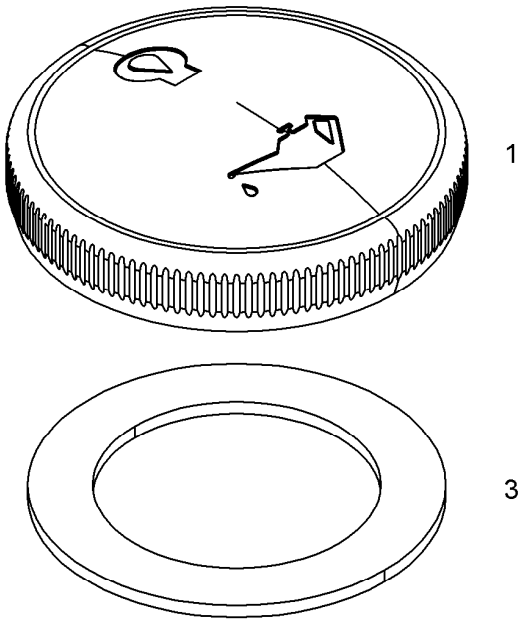


| Pos. | Item | Quantity | Description | Designação | Serie | K |
|---|---|---|---|---|---|---|
| 1 | 9144761 | 1 | LID | TAMPA | | |
| 3 | 9144762 | 1 | SEAL | VEDAÇÃO | | |

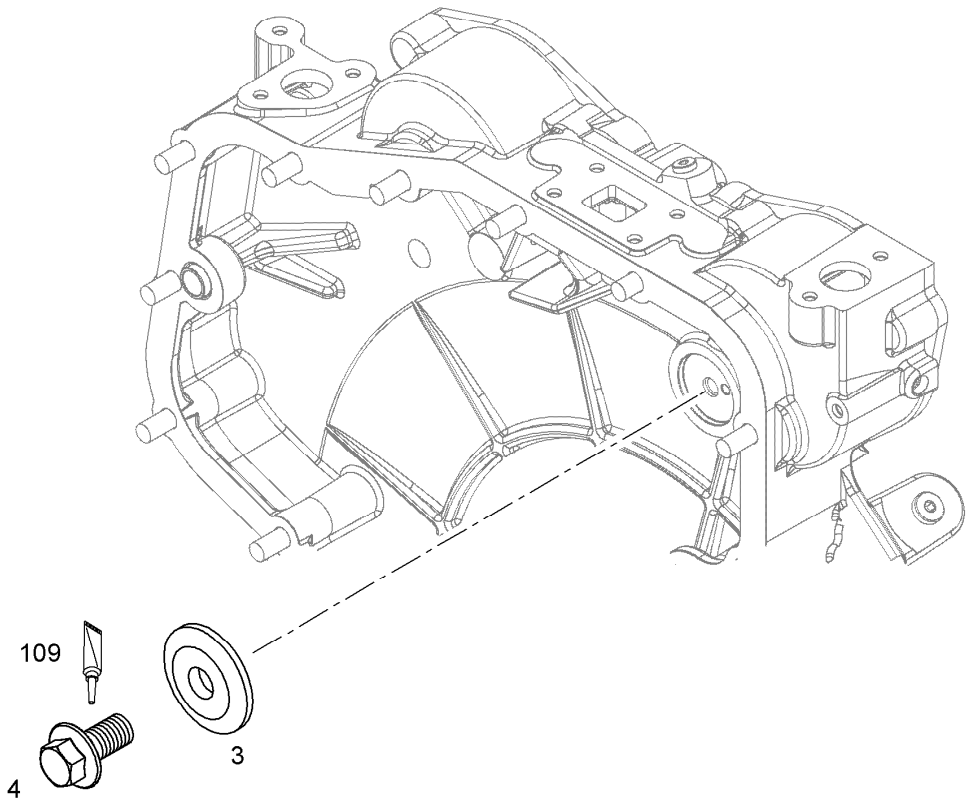


| Pos. | Item | Quantity | Description | Designação | Serie | K |
|---|---|---|---|---|---|---|
| 3 | 9072908 | 1 | BEARING COVER | TAMPA DO MANCAL | | |
| 4 | 10032039 | 1 | HEX HEAD SCREW EN 1665 M 12 X 25 8.8 | PARAFUSO SEXTAVADO | | |
| 109 | 8628192 | 1 | SCREW LOCKING | COLA PARA ELEMENTOS FIXA | | |

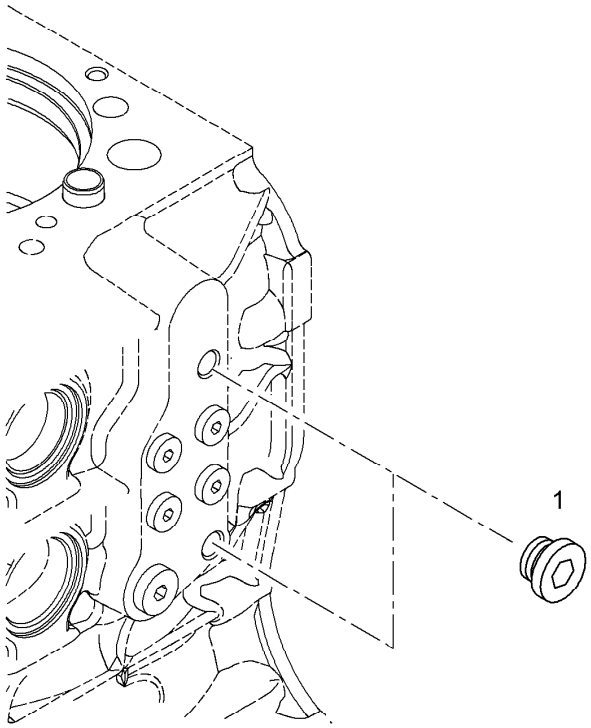


| Pos. | Item | Quantity | Description | Designação | Serie | K |
|---|---|---|---|---|---|---|
| 1 | 7382203 | 2 | SCREW PLUG VSTI M16X1,5 | PARAFUSO DE FECHAMENTO | | |

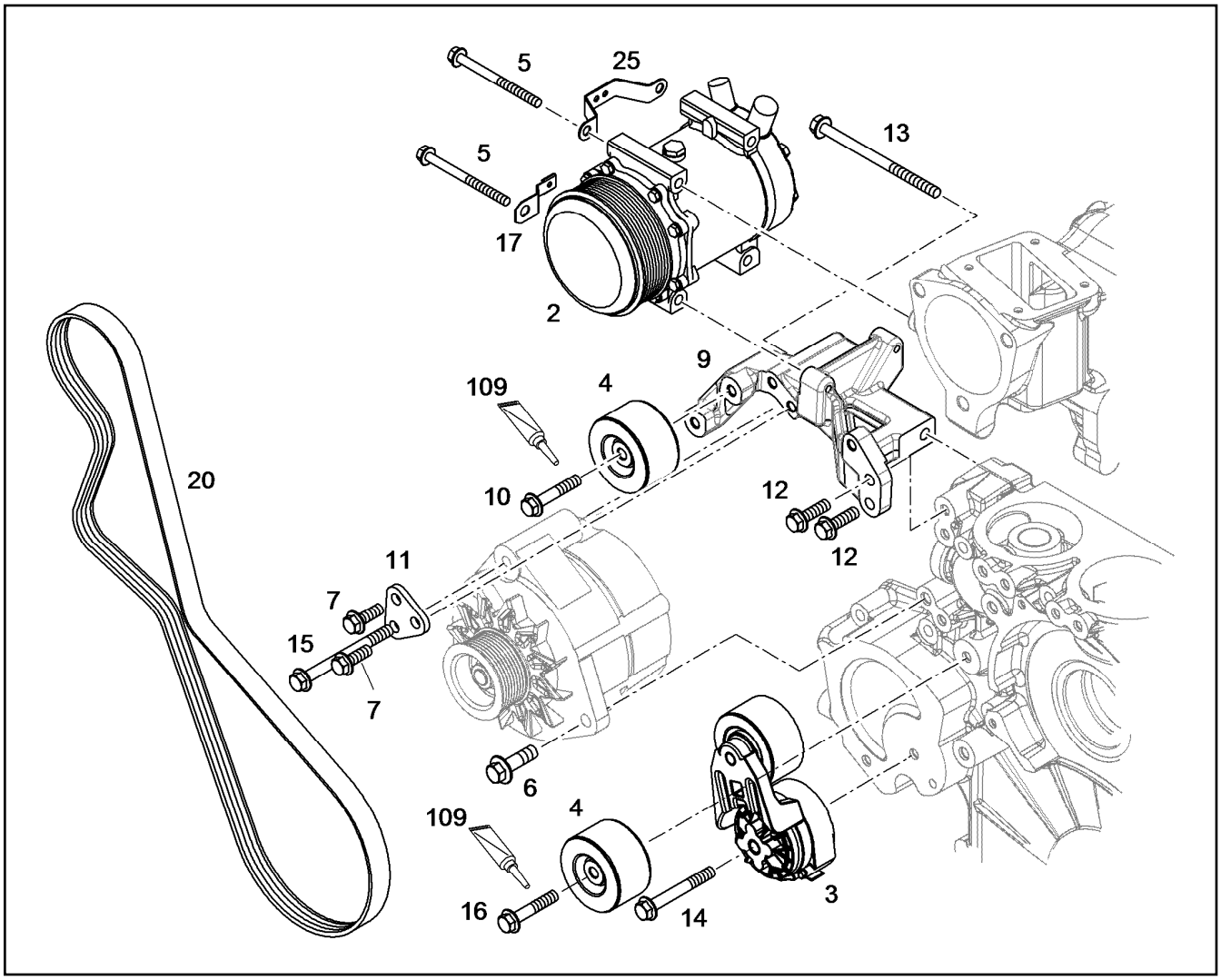


| Pos. | Item | Quantity | Description | Designação | Serie | K |
|---|---|---|---|---|---|---|
| 2 | 10116769 | 1 | AIR CONDITIONING COMPRESSOR [3183009234 ] | COMPRESSOR DO AR-CONDICI | 17243- | |
| 2 | 10115771 | 1 | -COUPLING CPL. | -ACOPLAMENTO COMPLETO | 17243- | |
| 2 | 10040064 | 1 | -DUST-PROF COVER | -PROTECAO ANTI-PO | | |
| 3 | 9887461 | 1 | CLAMP FITTING EQUIPM. PRE-ASS. ⇨ ❑ 570 | DISPOSITIVO APERTO | | |
| 4 | 9077708 | 2 | GUIDE PULLEY COMPL. | ROLDANA DE DESVIO PRÉ-MO | | |
| 5 | 10014042 | 4 | HEX BOLT EN 1665 M8X100 8.8 A2C | PARAFUSO SEXTAVADO | | |
| 6 | 4601426 | 1 | HEX HEAD SCREW EN 1665 M 12 X 40 8.8 | PARAFUSO SEXTAVADO | | |
| 7 | 10219457 | 2 | HEX BOLT DIN 6921 M10X25 10.9 A3C | PARAFUSO SEXTAVADO | | |
| 9 | 10116053 | 1 | CONSOLE | CONSOLE | | |
| 10 | 10024139 | 1 | HEX BOLT DIN 6921 M10X55 8.8 A3C | PARAFUSO SEXTAVADO | | |
| 11 | 9079591 | 1 | HOLDER | SUPORTE | | |
| 12 | 10023049 | 2 | HEX HEAD SCREW EN 1665 M 10 X 35 8.8 | PARAFUSO SEXTAVADO | | |
| 13 | 10113710 | 1 | HEX BOLT DIN 6921 M10X120 8.8 A3C | PARAFUSO SEXTAVADO | | |
| 14 | 10101657 | 1 | HEX HEAD SCREW WITH FLANGE EN 1665 | PARAFUSO SEXTAVADO COM F | | |
| 15 | 10005462 | 1 | HEX HEAD SCREW WITH FLANGE EN 1665 | PARAFUSO SEXTAVADO COM F | | |
| 16 | 10014638 | 1 | HEX BOLT DIN 6921 M10X60 8.8 A3C | PARAFUSO SEXTAVADO | | |
| 17 | 10041876 | 1 | HOLDER | SUPORTE | | |
| 20 | 10289149 | 1 | V-RIPPED BELT DIN 7867 8XPK 1755 | CORREIA DENTADA EM V | | |
| 25 | 10119139 | 1 | HOLDER | SUPORTE | | |
| 109 | 8628192 | 1 | SCREW LOCKING | COLA PARA ELEMENTOS FIXA | | |

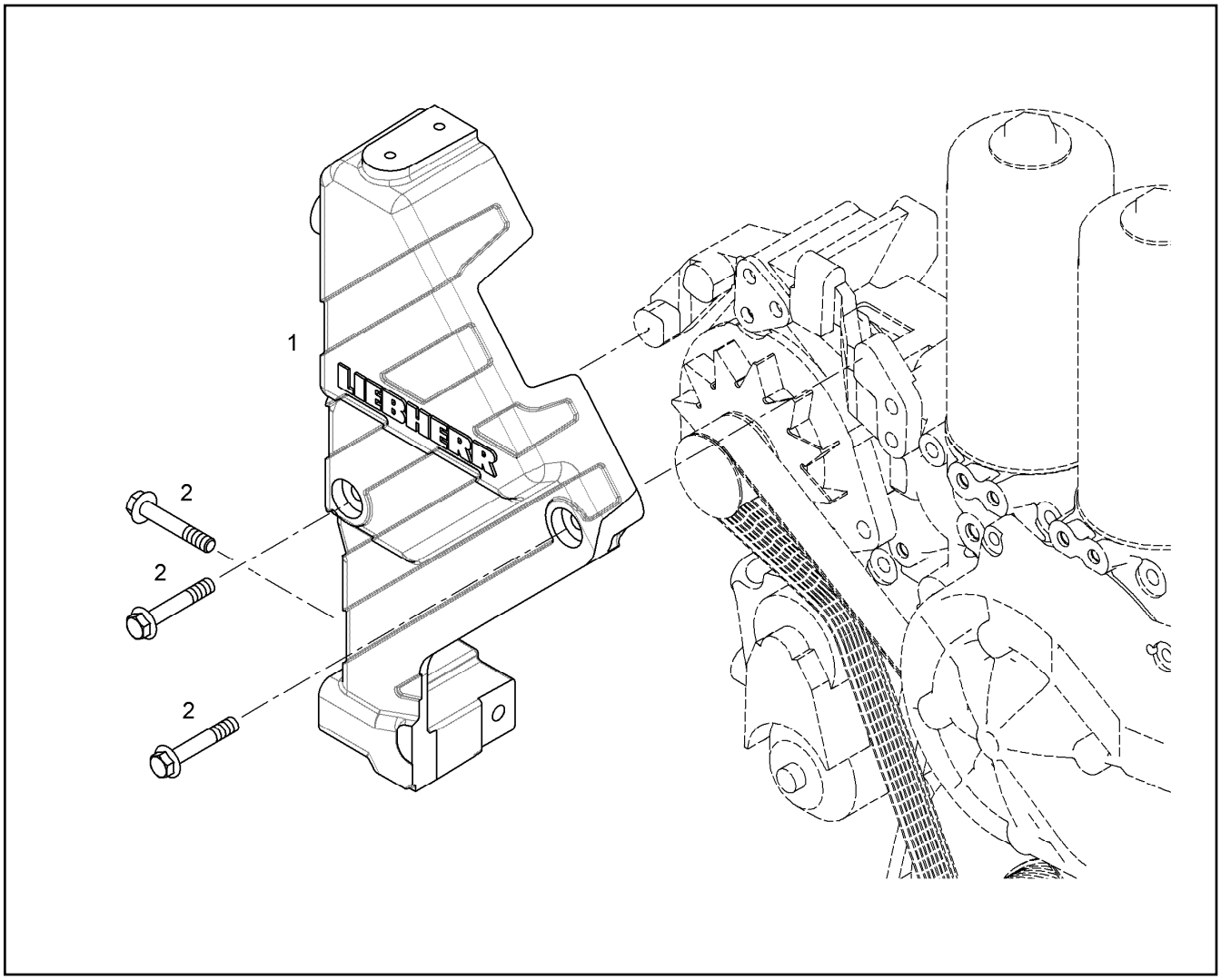


| Pos. | Item | Quantity | Description | Designação | Serie | K |
|---|---|---|---|---|---|---|
| 1 | 10119485 | 1 | COVER | TAMPA | | |
| 2 | 10014638 | 3 | HEX BOLT DIN 6921 M10X60 8.8 A3C | PARAFUSO SEXTAVADO | | |

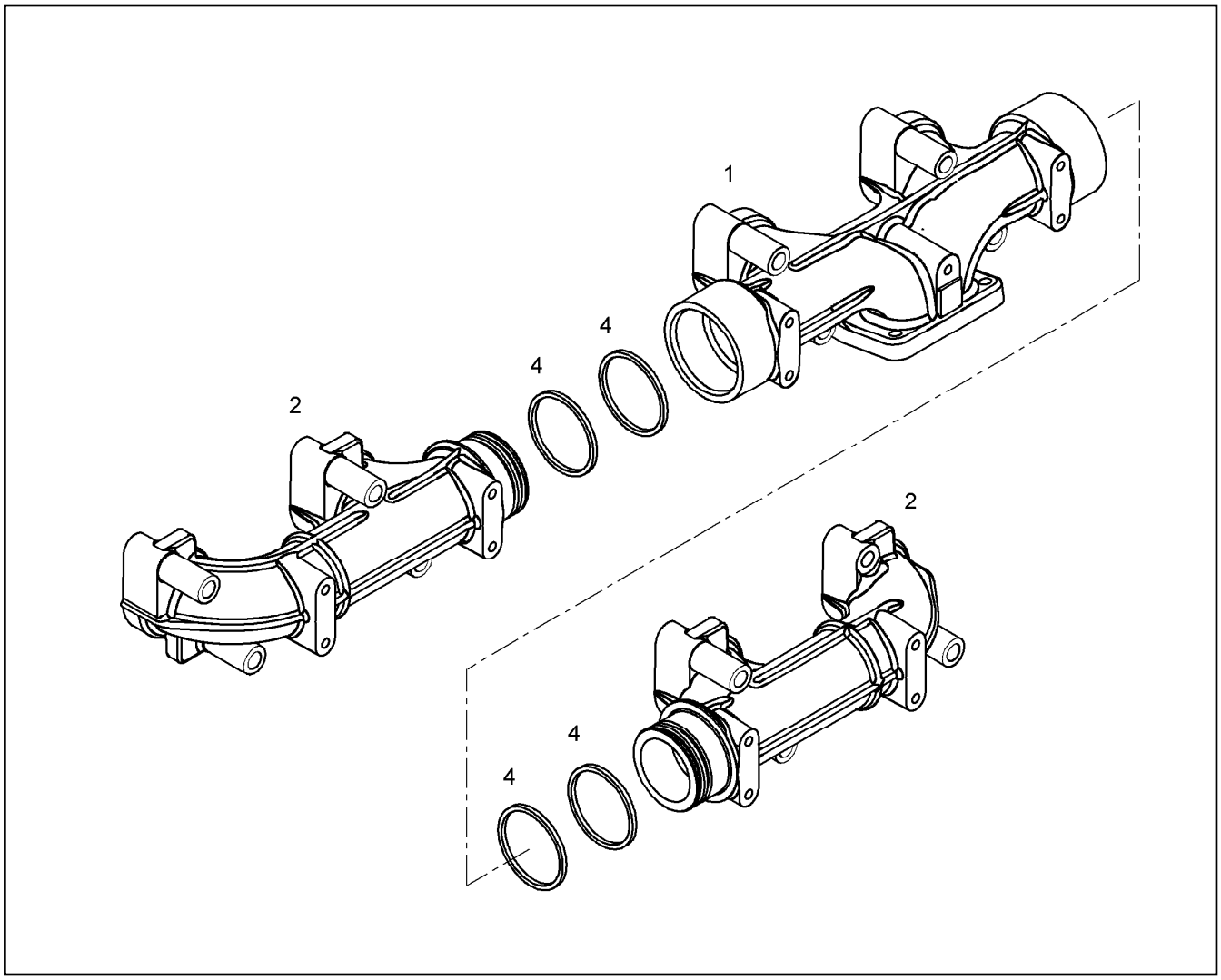


| Pos. | Item | Quantity | Description | Designação | Serie | K |
|---|---|---|---|---|---|---|
| 1 | 9080876 | 1 | OUTLET MANIFOLD | COLETOR DE ESCAPAMENTO | | |
| 2 | 10118611 | 2 | OUTLET MANIFOLD | COLETOR DE ESCAPAMENTO | | |
| 4 | 10008448 | 4 | LAMELLAR DISK KIT | KIT DE ANEIS LAMELARES | | |

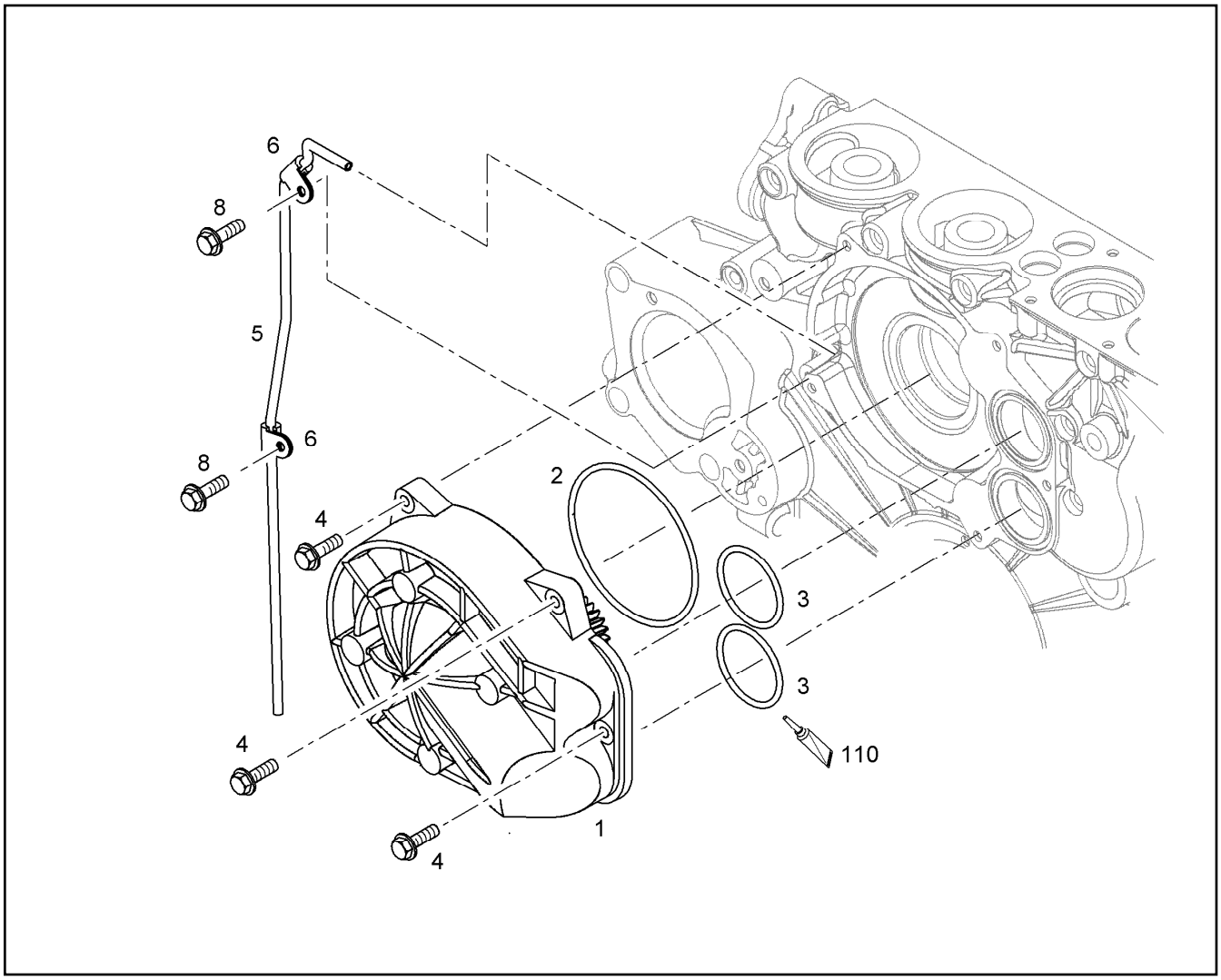


| Pos. | Item | Quantity | Description | Designação | Serie | K |
|---|---|---|---|---|---|---|
| 1 | 10132817 | 1 | WATER PUMP, PRE-ASSEMBLED R-MOTOR ⇨ ❑ 563 | BOMBA DE ÁGUA PRÉ-MONTAD | | 6 |
| 2 | 7264365 | 1 | O-RING DIN 3771 113,89X3,53 | ANEL-O | | |
| 3 | 7381779 | 2 | O-RING DIN 3771 59,92X3,53 | ANEL-O | | |
| 4 | 10113711 | 5 | HEX BOLT EN 1665 M8X35 8.8 A2C | PARAFUSO SEXTAVADO | | |
| 5 | 10009943 | 0.6m | HOSE | MANGUEIRA | | 1 |
| 6 | 7382090 | 2 | CLAMP DIN 3016-1 D1 8X20 W1-2-MVQ | BRAÇADEIRA | | |
| 8 | 10016906 | 2 | HEX BOLT DIN 6921 M8X20 8.8 A2C | PARAFUSO SEXTAVADO | | |
| 110 | 8655030 | 1 | GREASE STABURAGS | GRAXA STABURAGS | | |

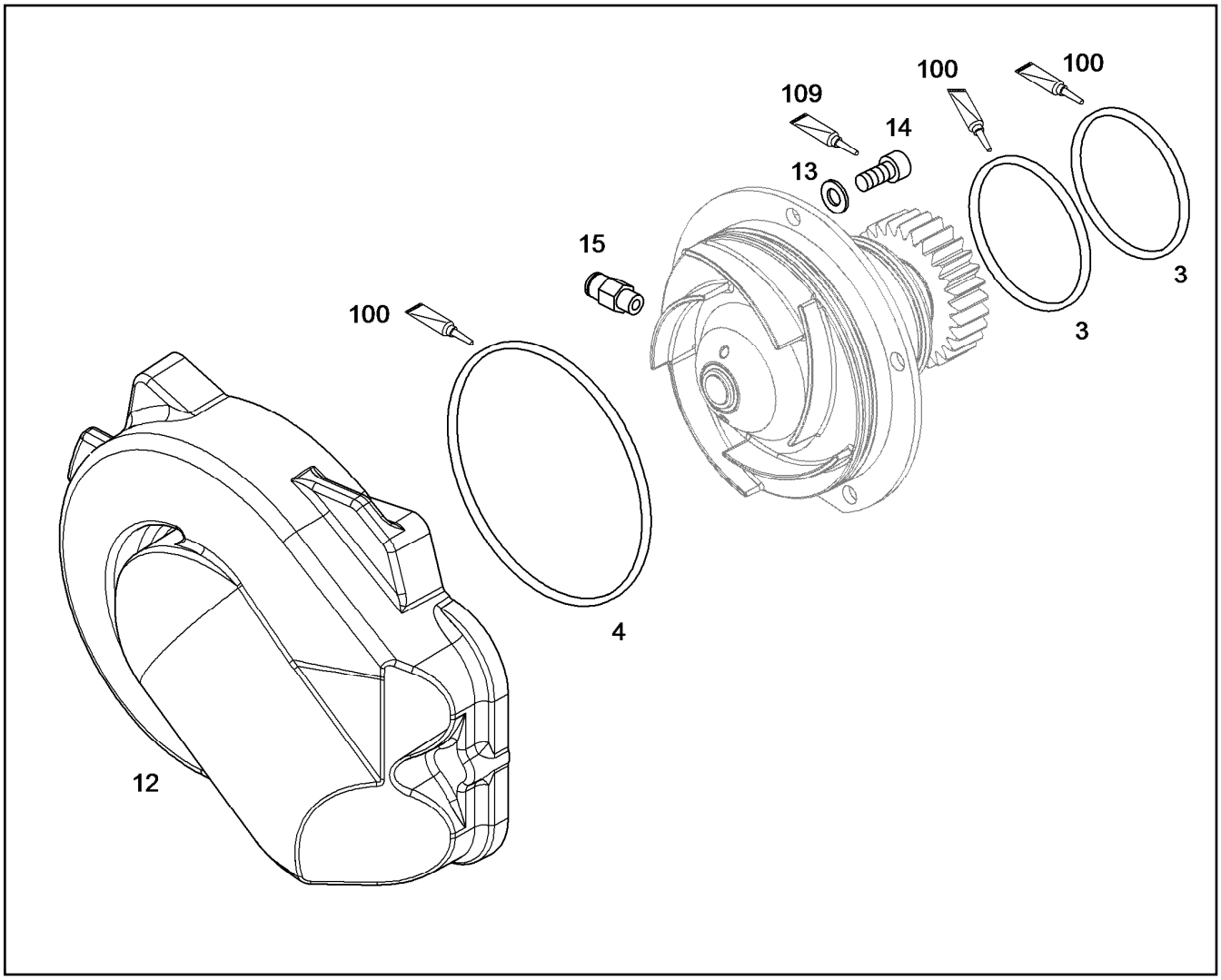


| Pos. | Item | Quantity | Description | Designação | Serie | K |
|---|---|---|---|---|---|---|
| 3 | 7381593 | 2 | O-RING 68,26X3,53 | ANEL-O | | |
| 4 | 7381912 | 1 | O-RING 120,50X3,53 | ANEL-O | | |
| 12 | 10134069 | 1 | WATER PUMP LID | TAMPA DA BOMBA DE ÁGUA | | |
| 13 | 420001201 | 5 | WASHER 8 200HV | ARRUELA | | |
| 14 | 4600377 | 5 | CYLINDER SCREW ISO 4762 M8x18 8.8 A2C | PARAFUSO CILÍNDRICO | | |
| 15 | 257103802 | 1 | PLUG-TYPE SCREW COUPLING QS 8 R1/8 | UNIÃO ROSCADA DE ENCAIXE | | |
| 100 | 8655018 | 1 | GREASE-STABURAGS | MASSA LUBRIFICANTE STABUR | | |
| 109 | 811205708 | 1 | SCREW LOCKING | COLA PARA ELEMENTOS FIXA | | |

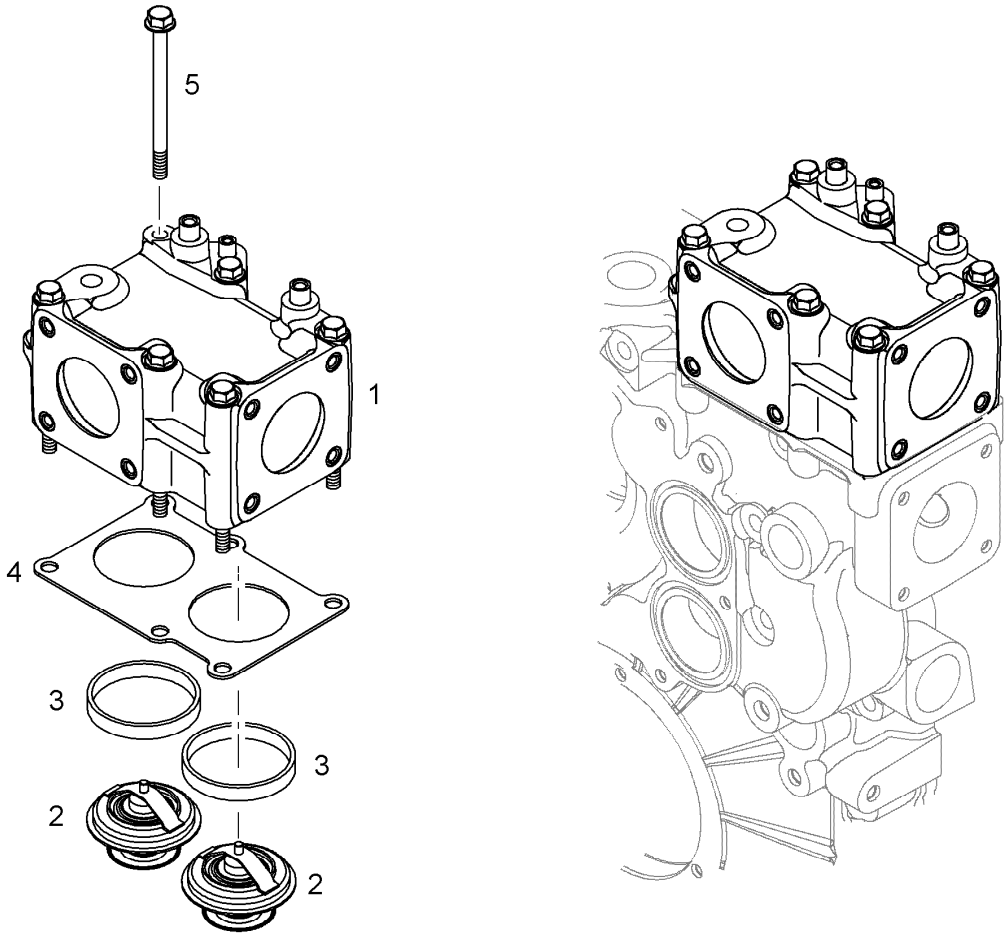


| Pos. | Item | Quantity | Description | Designação | Serie | K |
|---|---|---|---|---|---|---|
| 1 | 10119984 | 1 | THERMOSTAT HOUSING PRE-ASS. | CARCACA DO TERMOSTATO | | |
| 2 | 7380833 | 2 | THERMOSTAT | TERMOSTATO | | |
| 3 | 9275735 | 2 | SUPPORTING RING | ANEL DE APOIO | | |
| 4 | 9080279 | 1 | SEAL | VEDAÇÃO | | |
| 5 | 10112929 | 2 | HEX BOLT EN 1665 M8x110 8.8 A3C | PARAFUSO SEXTAVADO | | |

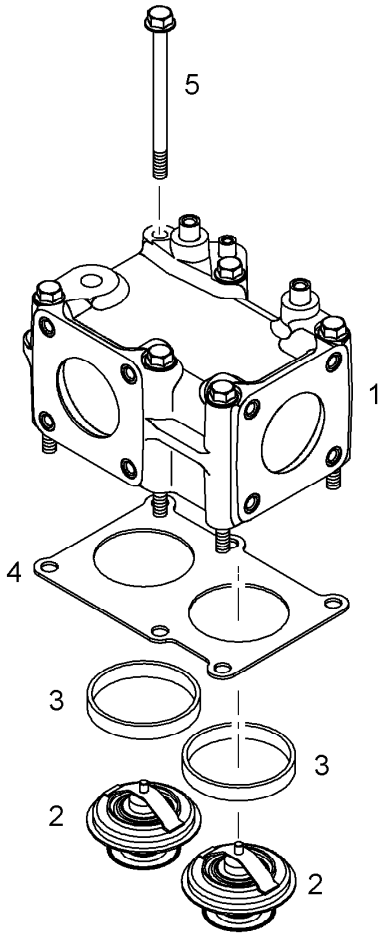


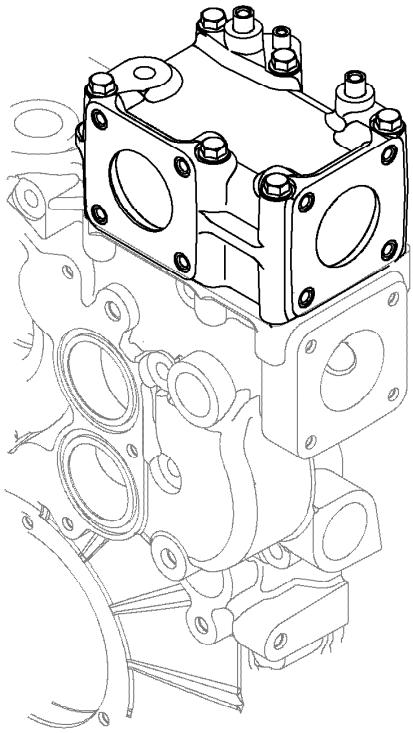

| Pos. | Item | Quantity | Description | Designação | Serie | K |
|---|---|---|---|---|---|---|
| 1 | 10119984 | 1 | THERMOSTAT HOUSING PRE-ASS. | CARCACA DO TERMOSTATO | | |
| 2 | 7380833 | 2 | THERMOSTAT | TERMOSTATO | | |
| 3 | 9275735 | 2 | SUPPORTING RING | ANEL DE APOIO | | |
| 4 | 9080279 | 1 | SEAL | VEDAÇÃO | | |
| 5 | 10112929 | 6 | HEX BOLT EN 1665 M8x110 8.8 A3C | PARAFUSO SEXTAVADO | | |

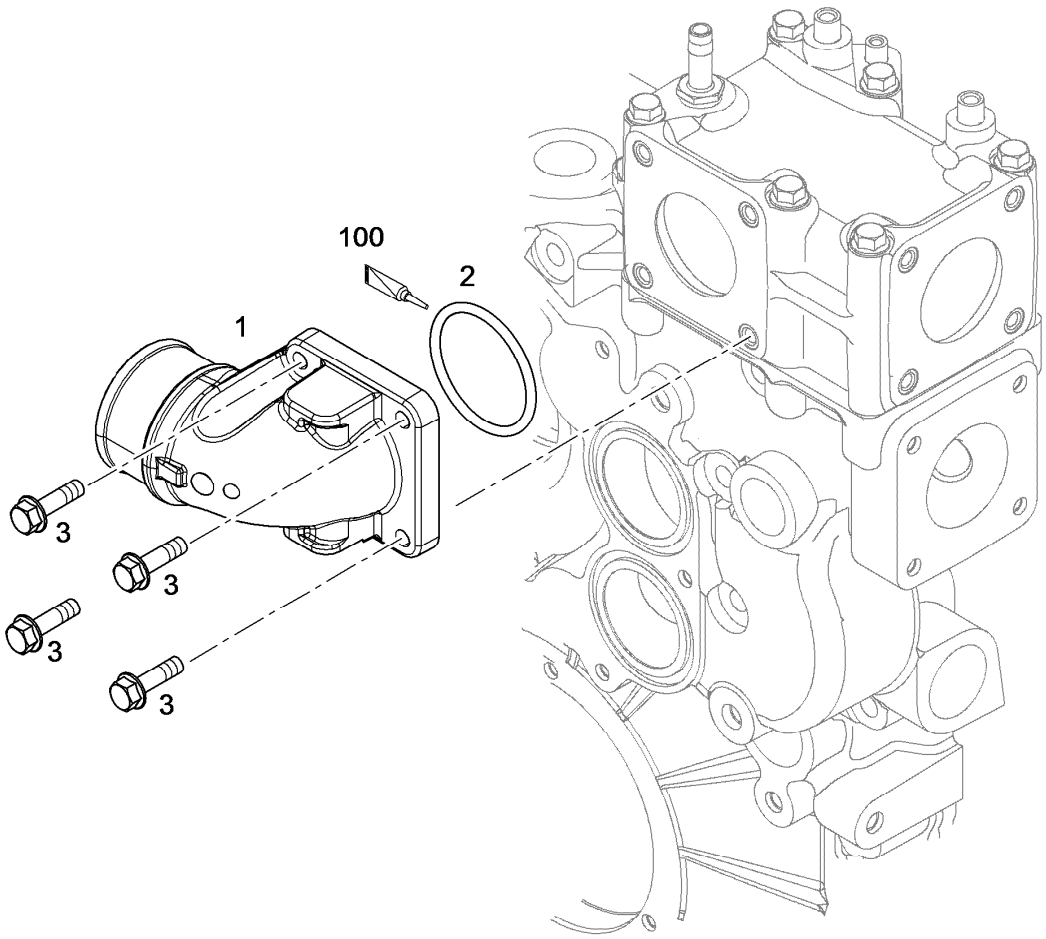


| Pos. | Item | Quantity | Description | Designação | Serie | K |
|---|---|---|---|---|---|---|
| 1 | 10120000 | 1 | COOLANT PIPE BEND | TUBO DO FLUIDO ARREFECIME | | |
| 2 | 7381779 | 1 | O-RING DIN 3771 59,92X3,53 | ANEL-O | | |
| 3 | 10007782 | 4 | HEX BOLT EN 1665 M8x30 8.8 A3C | PARAFUSO SEXTAVADO | | |
| 100 | 10282622 | 1 | GREASE | GRAXA | | |

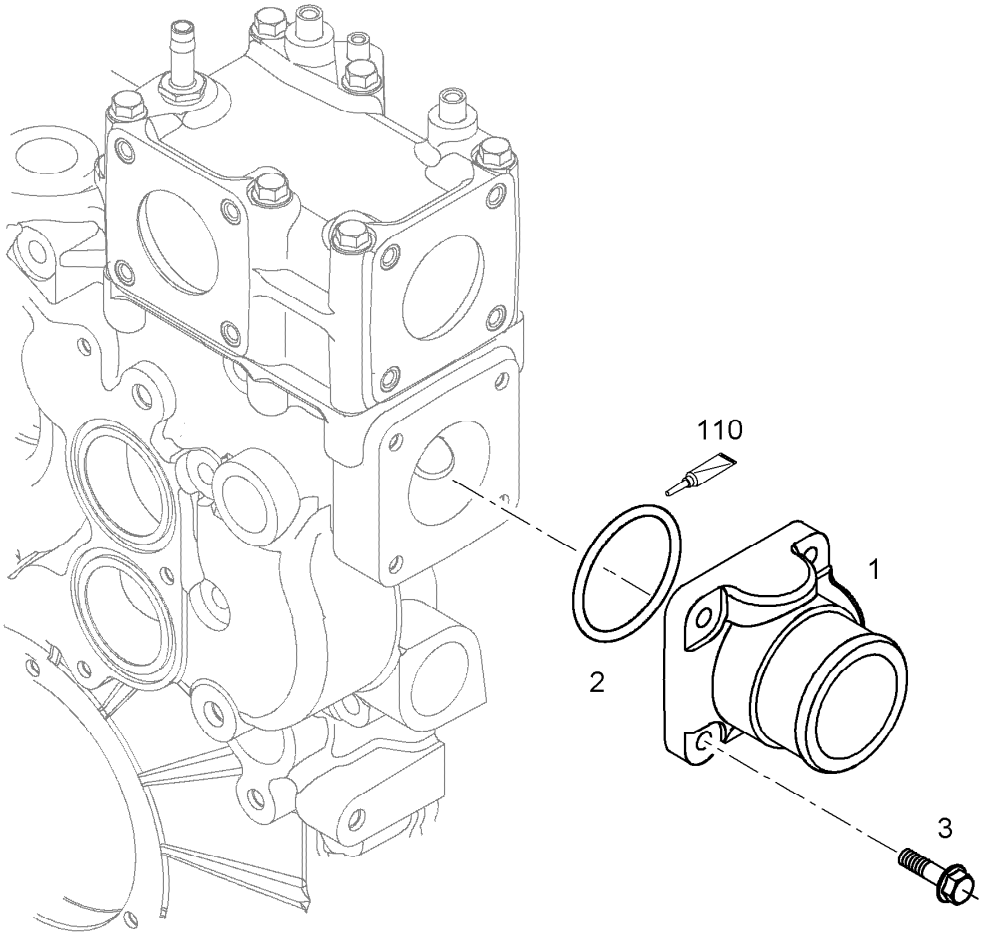


| Pos. | Item | Quantity | Description | Designação | Serie | K |
|---|---|---|---|---|---|---|
| 1 | 9079473 | 1 | COOLANT PIPE BEND | TUBO DO FLUIDO ARREFECIME | | |
| 2 | 7381779 | 1 | O-RING DIN 3771 59,92X3,53 | ANEL-O | | |
| 3 | 10007782 | 4 | HEX BOLT EN 1665 M8x30 8.8 A3C | PARAFUSO SEXTAVADO | | |
| 110 | 8655030 | 1 | GREASE STABURAGS | GRAXA STABURAGS | | |

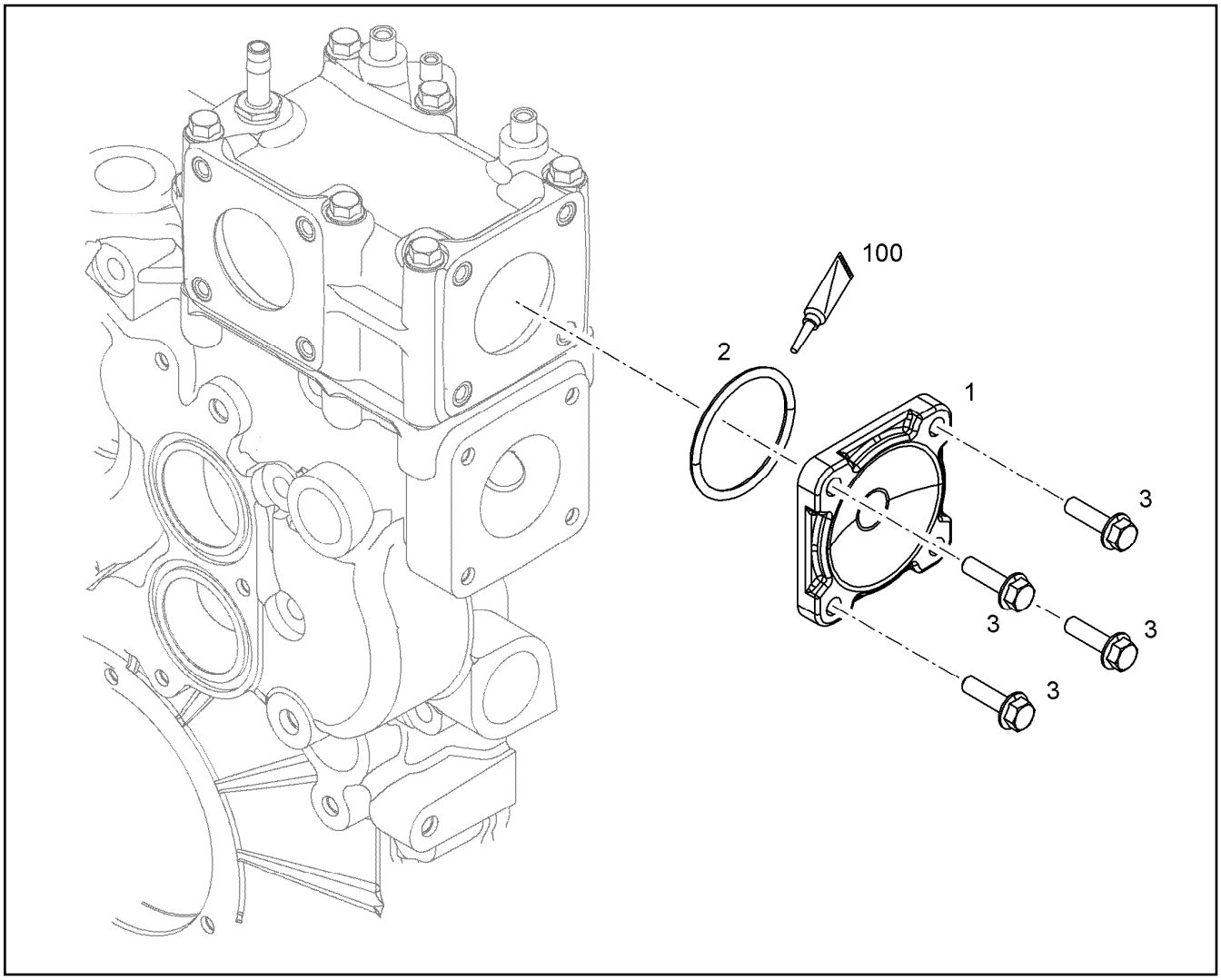


| Pos. | Item | Quantity | Description | Designação | Serie | K |
|---|---|---|---|---|---|---|
| 1 | | 1 | LID | TAMPA | | |
| 2 | 7381779 | 1 | O-RING DIN 3771 59,92X3,53 | ANEL-O | | |
| 3 | 10007782 | 4 | HEX BOLT EN 1665 M8x30 8.8 A3C | PARAFUSO SEXTAVADO | | |
| 100 | 10282622 | 1 | GREASE | GRAXA | | |

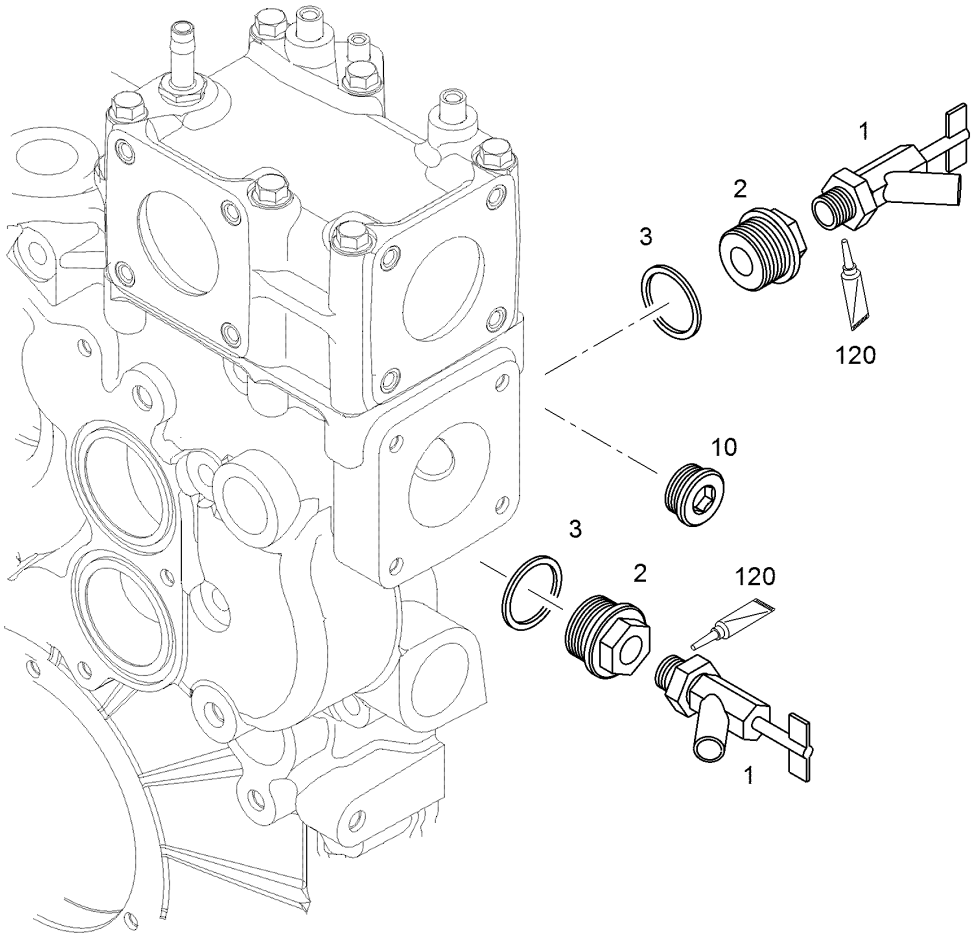


| Pos. | Item | Quantity | Description | Designação | Serie | K |
|---|---|---|---|---|---|---|
| 1 | 7001072 | 2 | WATER COCK | TORNEIRA | | |
| 2 | 9276784 | 2 | REDUCING STUD | BOCAL REDUTOR | | |
| 3 | 10113731 | 2 | SEALING RING 30,7X39X2 | ANEL DE VEDAÇÃO | | |
| 10 | 7381457 | 1 | SCREW PLUG VSTI M26X1,5 | PARAFUSO DE FECHAMENTO | | |
| 120 | 811205101 | 1 | LOCTITE | LOCTITE | | |

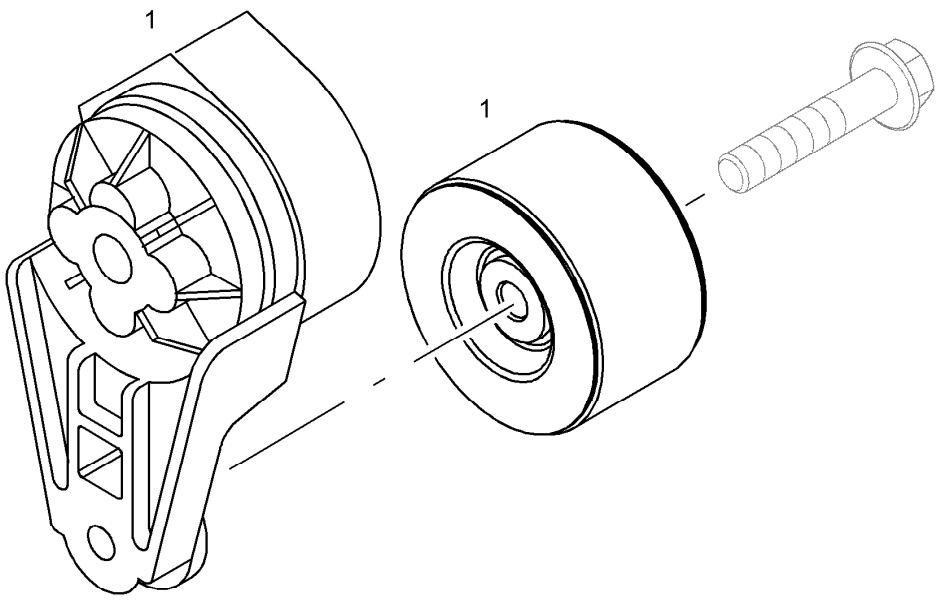


| Pos. | Item | Quantity | Description | Designação | Serie | K |
|---|---|---|---|---|---|---|
| 1 | | 1 | FASTENING DEVICE | DISPOSITIVO TENSIONADOR | | |

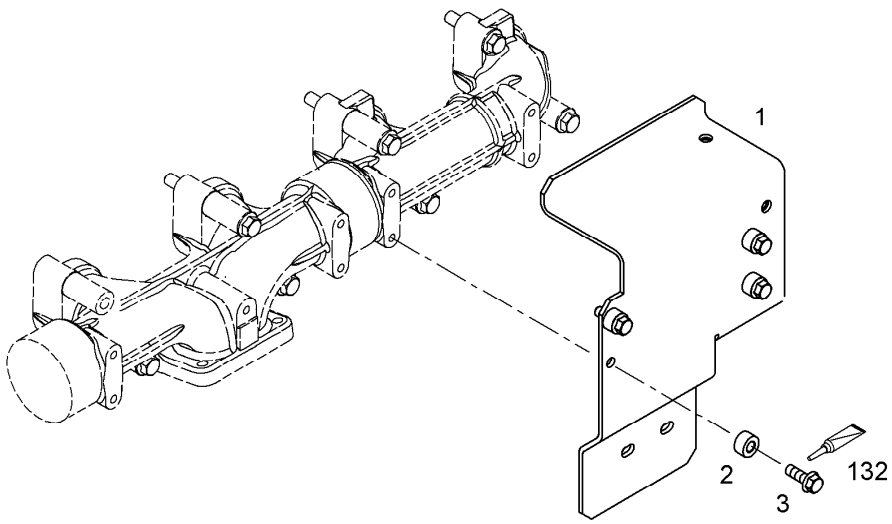


| Pos. | Item | Quantity | Description | Designação | Serie | K |
|---|---|---|---|---|---|---|
| 1 | 10115540 | 1 | HEAT PROTECTION SHEET | CHAPA DE PROTEÇÃO TÉRMIC | | |
| 2 | 9132577 | 4 | DISTANCE SLEEVE 8,5X18X10 | LUVA DISTANCIADORA | | 1 |
| 3 | 10336200 | 4 | HEX BOLT DIN 6921 M8X25 X5NiCrTi26-15 C | PARAFUSO SEXTAVADO | | |
| 132 | 10002552 | 1 | COPPER PASTE | PASTA DE COBRE | | |

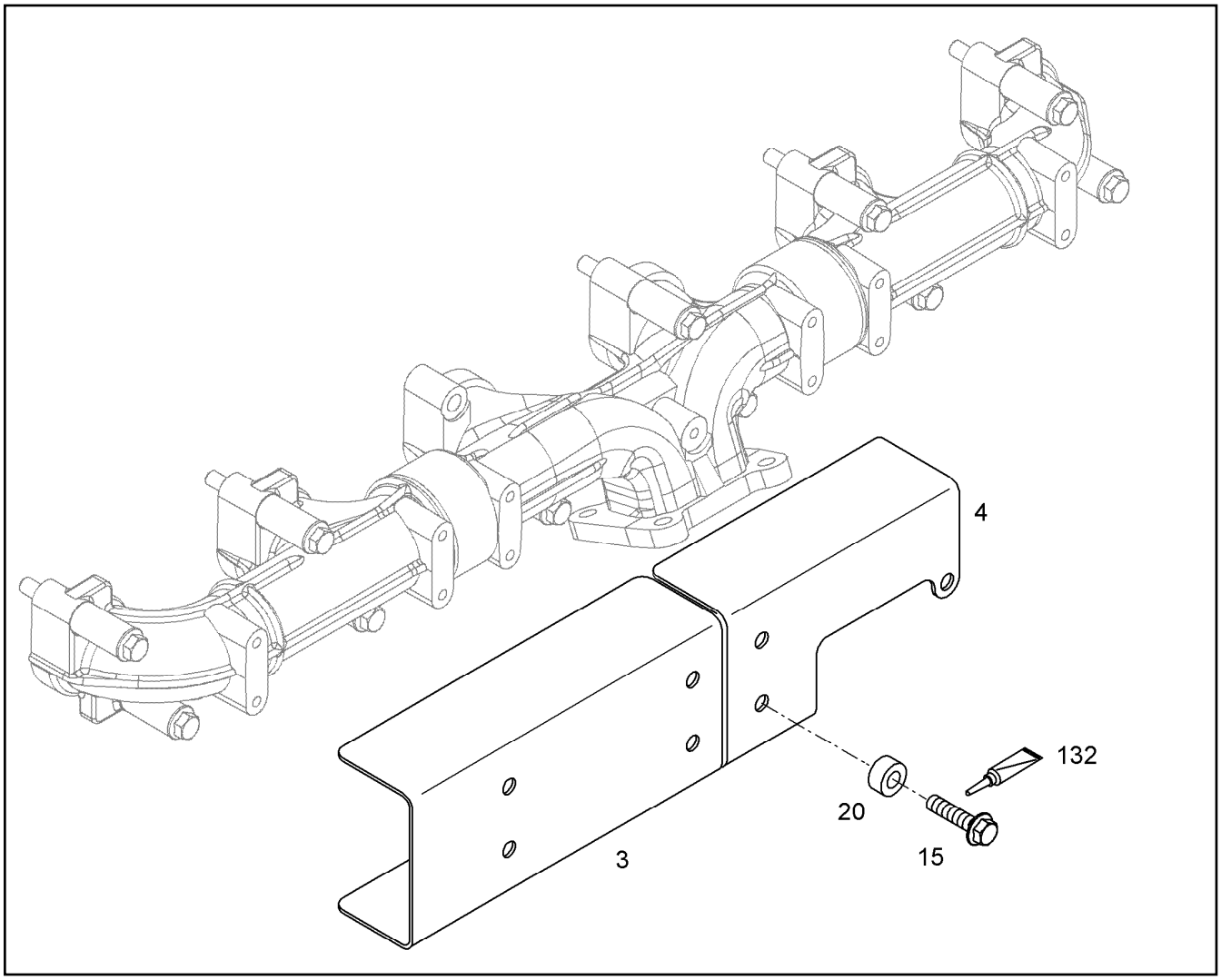


| Pos. | Item | Quantity | Description | Designação | Serie | K |
|---|---|---|---|---|---|---|
| 3 | 10118257 | 1 | HEAT PROTECTION SHEET | CHAPA DE PROTEÇÃO TÉRMIC | | |
| 4 | 10115717 | 1 | HEAT PROTECTION SHEET | CHAPA DE PROTEÇÃO TÉRMIC | | |
| 15 | 10336200 | 7 | HEX BOLT DIN 6921 M8X25 X5NiCrTi26-15 C | PARAFUSO SEXTAVADO | | |
| 20 | 9132577 | 7 | DISTANCE SLEEVE 8,5X18X10 | LUVA DISTANCIADORA | | 1 |
| 132 | 10002552 | 1 | COPPER PASTE | PASTA DE COBRE | | |

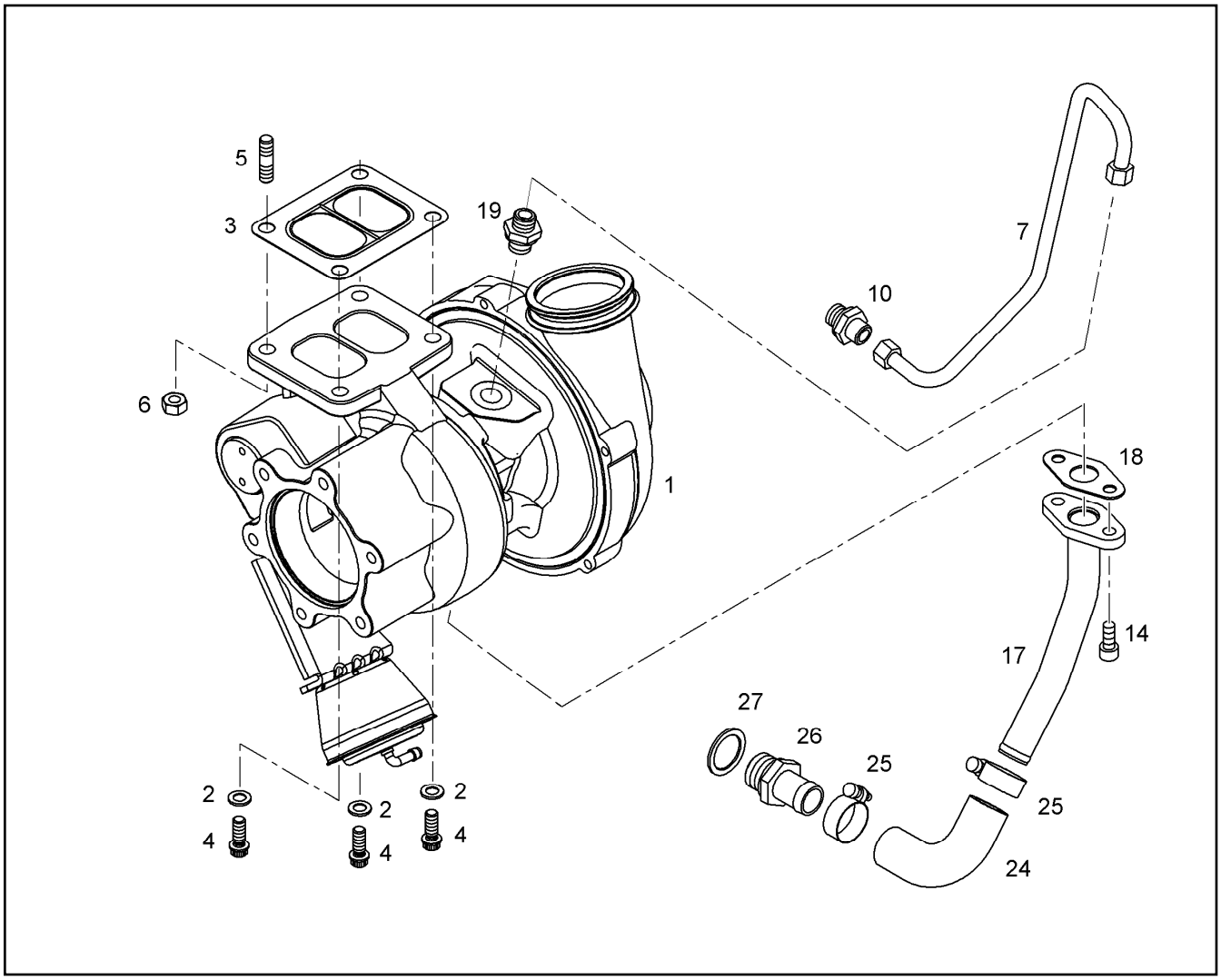


| Pos. | Item | Quantity | Description | Designação | Serie | K |
|---|---|---|---|---|---|---|
| 1 | 10123120 | 1 | TURBOCHARGER [OK521751700004 ] | TURBOCOMPRESSOR | | 6 |
| 2 | 9076638 | 3 | WASHER 10,5X18,5X2 | ARRUELA | | |
| 3 | 9270109 | 1 | SEAL | VEDAÇÃO | | |
| 4 | 9076639 | 3 | 12-SIDED SCREW M10X25X20,5 X5NiCrTi26 | PARAFUSO DODECAGONAL | | |
| 5 | 4981172 | 1 | DOUBLE-ENDED STUD DIN 939 M10X25 X5N | PINO ROSCADO | | |
| 6 | 4981173 | 1 | HEX NUT M10 | PORCA SEXTAVADA | | |
| 7 | 10115525 | 1 | LUBRICATING OIL LINE 10X1 | TUBULAÇÃO DE ÓLEO LUBRIFIC | | |
| 10 | 4981235 | 2 | SCREW FITTING GE 10L M14X1,5 | REDUÇÃO | | |
| 14 | 4043082 | 2 | CYLINDER SCREW ISO 4762 M8X20 10.9 A2 | PARAFUSO CILÍNDRICO | | |
| 17 | 9080684 | 1 | HYDT.TUBE | TUBULACAO DE RETORNO DE O | -2006035495 | |
| 17 | 10119021 | 1 | HYDT.TUBE 22X1,5 | TUBULACAO DE RETORNO DE O | 2006035496- | |
| 18 | 9268131 | 1 | SEAL | VEDAÇÃO | | |
| 19 | 7402493 | 1 | SCREW-ON CONNECTION GE 10L M16X1,5 | CONEXÃO ROSCADA | | |
| 24 | 10116310 | 1 | RUBBER CONNECTION 90GRAD | CONEXÃO DE BORRACHA | | |
| 25 | 4900778 | 2 | HOSE CLAMP DIN 3017-1 A 26 20-32X13 W2- | ABRAÇADEIRA DE MANGUEIRA | | |
| 26 | 9075128 | 1 | SCREW-ON CONNECTION | CONEXÃO ROSCADA | -2006035495 | |
| 26 | 9140351 | 1 | HOSE NIPPLE | NIPLE DE MANGUEIRA | 2006035496- | |
| 27 | 7101019 | 1 | SEALING RING DIN 7603 A 26 X 31 CU | ANEL DE VEDAÇÃO | | |

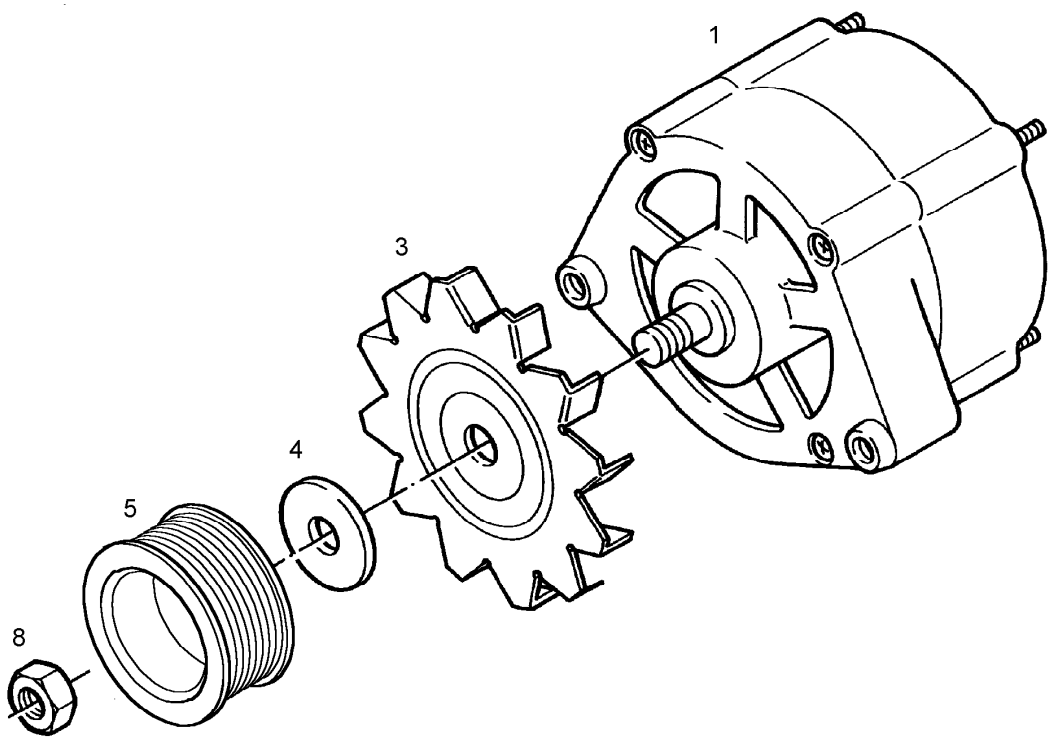


| Pos. | Item | Quantity | Description | Designação | Serie | K |
|---|---|---|---|---|---|---|
| 1 | 6290070 | 1 | THREE PHASE CURRENT GENERATOR | ALTERNADOR TRIFASICO | | 6 |
| 3 | 5005641 | 1 | FAN / BLOWER | VENTILADOR | | |
| 4 | 7010008 | 1 | SUPPORTING WASHER S 17X55X2,5 | ANEL DE APOIO | | |
| 5 | 10116372 | 1 | BELT PULLEY 8 PKd=54,5 | POLIA | | |
| 8 | 4980478 | 1 | HEX NUT M16X1,5 | PORCA SEXTAVADA | | |

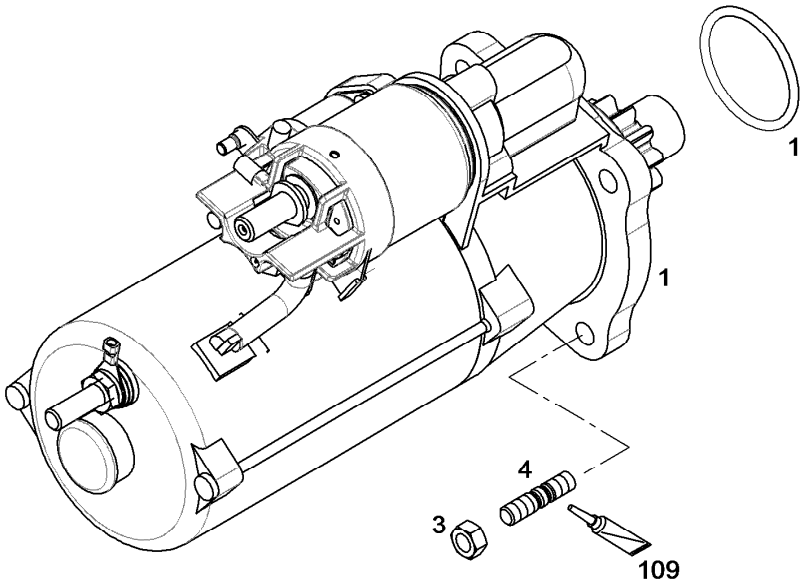


| Pos. | Item | Quantity | Description | Designação | Serie | K |
|---|---|---|---|---|---|---|
| 1 | 10219978 | 1 | STARTER<br>⇨ ❑ 577 | MOTOR DE PARTIDA | | 6 |
| 1 | 10218370 | 1 | -O-RING 85,00X2,00 | -ANEL-O | | |
| 3 | 4980805 | 3 | HEX NUT M10 | PORCA SEXTAVADA | | |
| 4 | 4901450 | 3 | DOUBLE-ENDED STUD DIN 835 M 10 X 30 8. | PINO ROSCADO | | |
| 109 | 8655016 | 1 | SCREW LOCKING | COLA PARA ELEMENTOS FIXA | | |

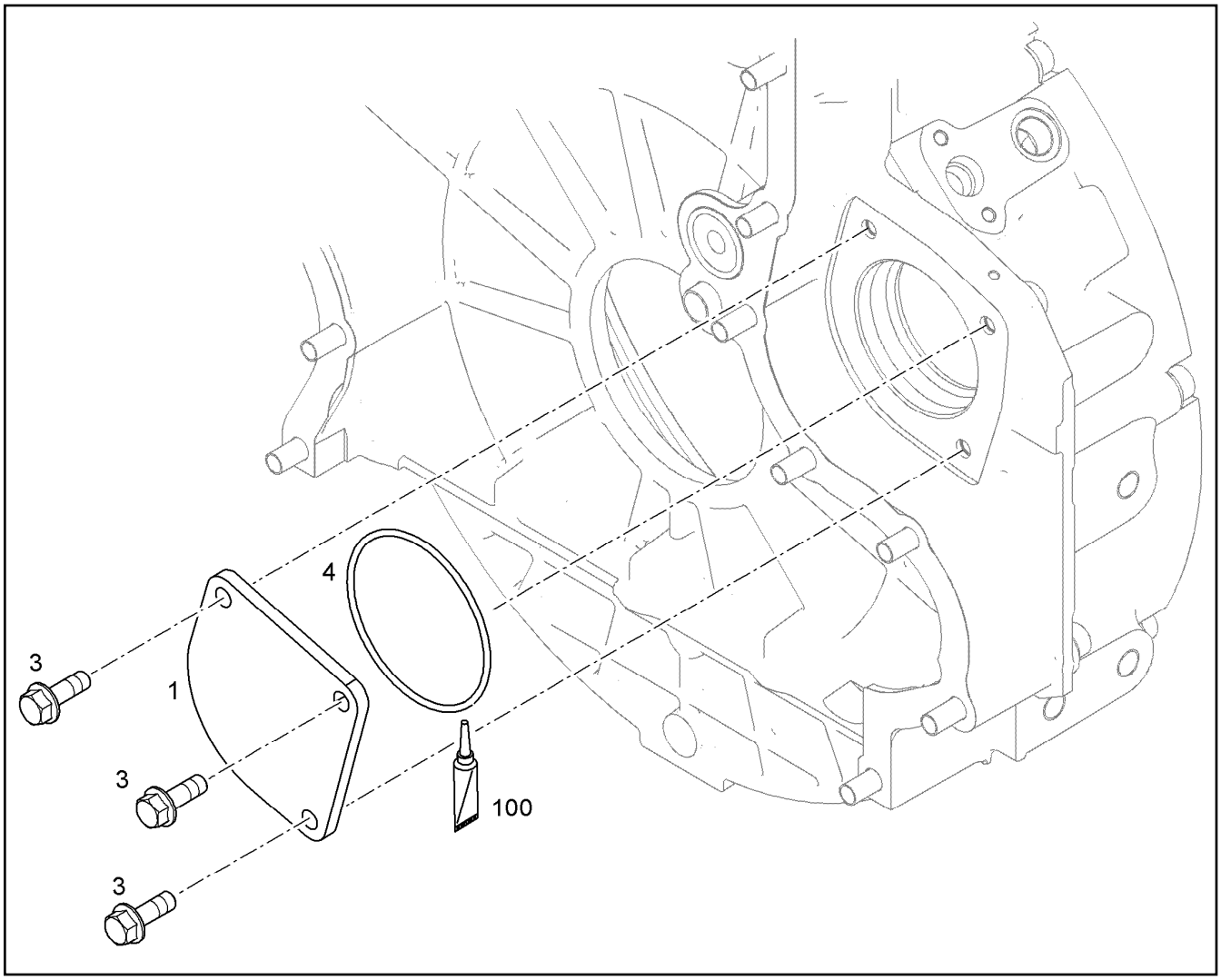


| Pos. | Item | Quantity | Description | Designação | Serie | K |
|---|---|---|---|---|---|---|
| 1 | 10149619 | 1 | LID | TAMPA | | |
| 3 | 10016908 | 3 | HEX BOLT DIN 6921 M10X30 8.8 A3C | PARAFUSO SEXTAVADO | | |
| 4 | 7381995 | 1 | O-RING DIN 3771 98,02X3,53 | ANEL-O | | |
| 100 | 10282622 | 1 | GREASE | GRAXA | | |

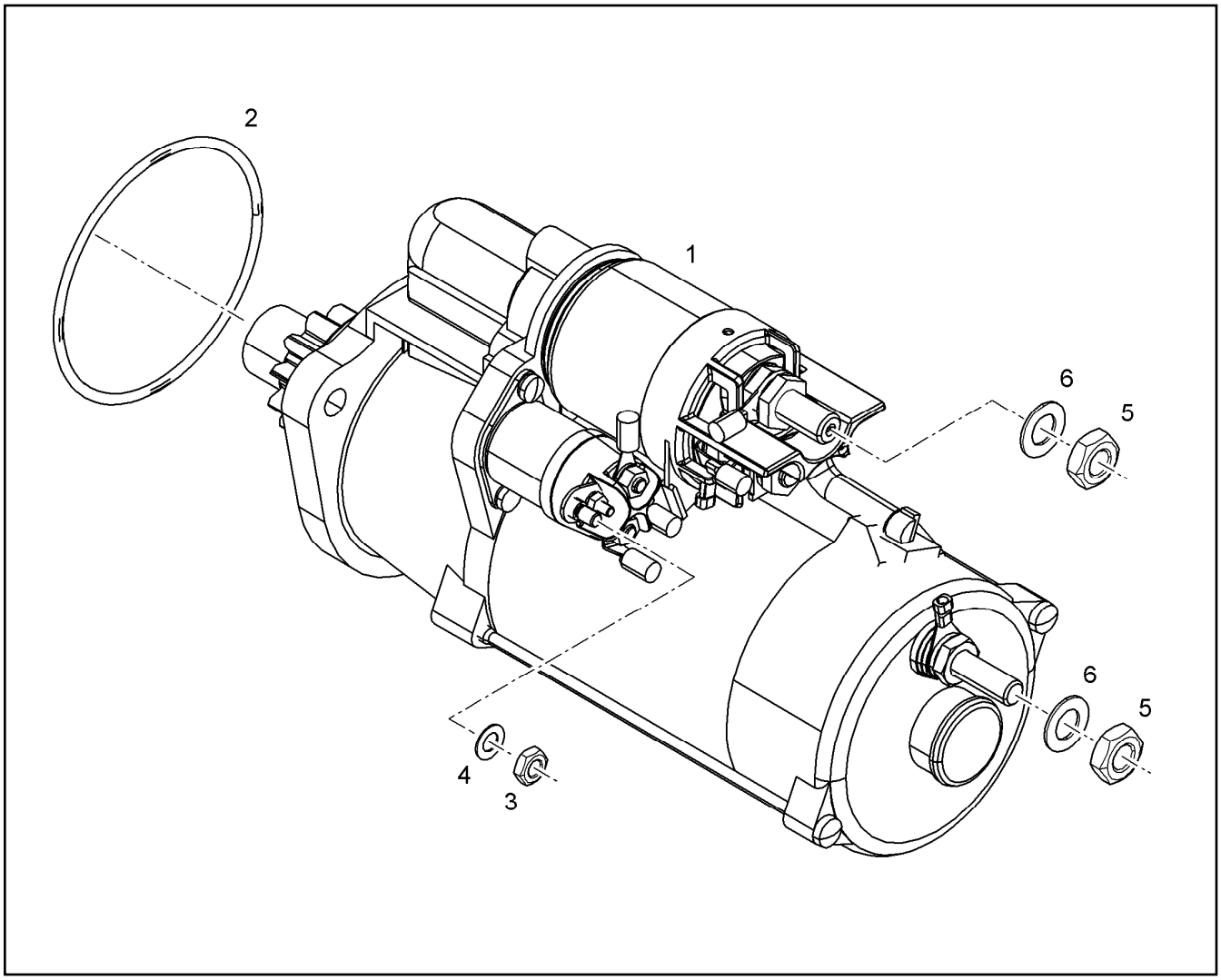


| Pos. | Item | Quantity | Description | Designação | Serie | K |
|---|---|---|---|---|---|---|
| 1 | | 1 | STARTER | MOTOR DE PARTIDA | | |
| 2 | 10218370 | 1 | O-RING 85,00X2,00 | ANEL-O | | |
| 3 | 10411094 | 1 | HEX NUT M6 | PORCA SEXTAVADA | | |
| 4 | 10411092 | 1 | SPRING WASHER 6 | ARRUELA DE PRESSÃO | | |
| 5 | 10411095 | 2 | HEX NUT M10 | PORCA SEXTAVADA | | |
| 6 | 10411093 | 2 | SPRING WASHER 10 | ARRUELA DE PRESSÃO | | |

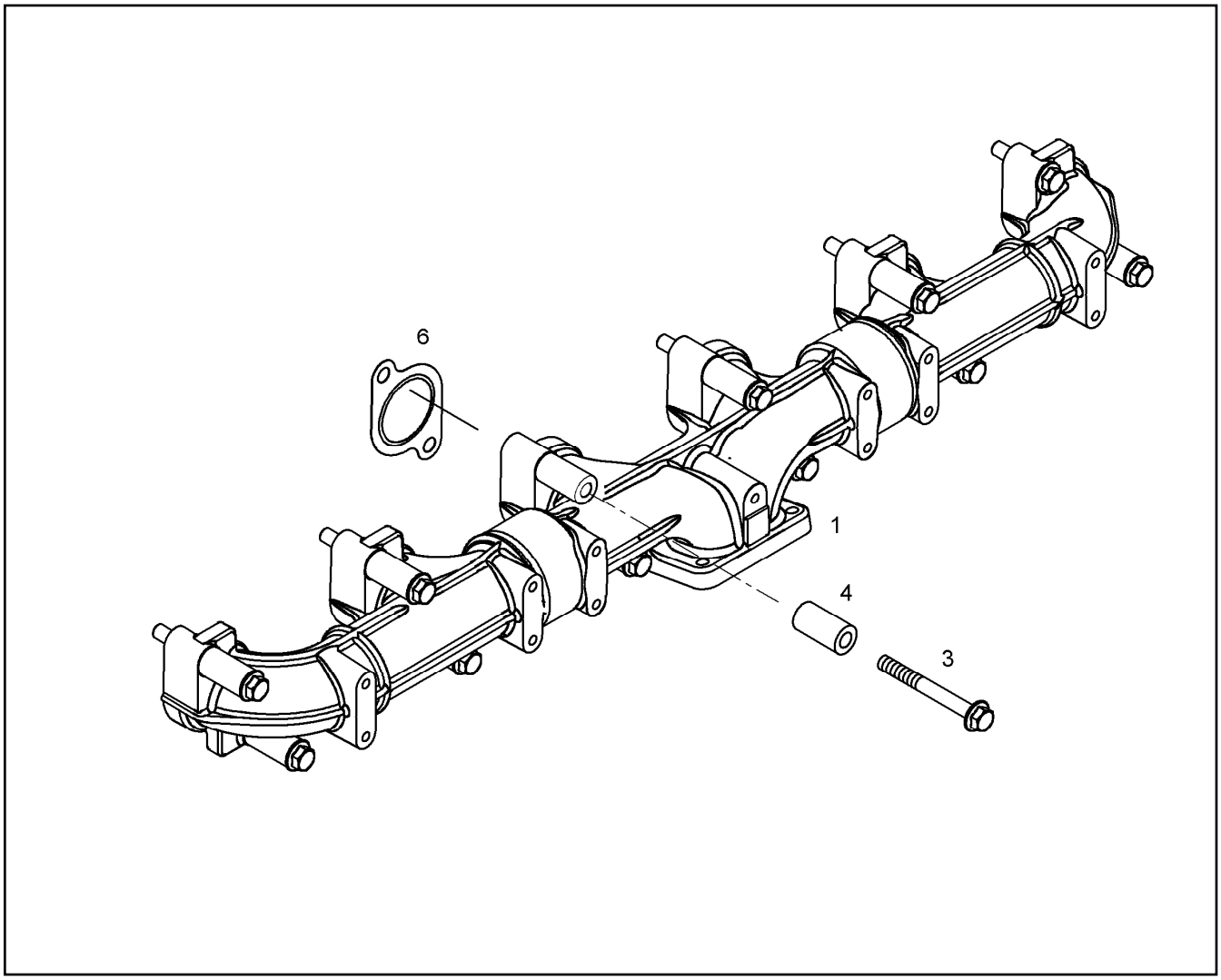


| Pos. | Item | Quantity | Description | Designação | Serie | K |
|---|---|---|---|---|---|---|
| 1 | 10115479 | 1 | EXHAUST PIPE PRE-ASS.<br>⇨ ❑ 561 | TUBO ESCAPAMENTO PRE-MON | | |
| 3 | 10006131 | 12 | HEX BOLT DIN 6921 M10X90 10.9 | PARAFUSO SEXTAVADO | | |
| 4 | 9074977 | 12 | DISTANCE SLEEVE | LUVA DISTANCIADORA | | |
| 6 | 9074975 | 6 | SEAL | VEDAÇÃO | | |

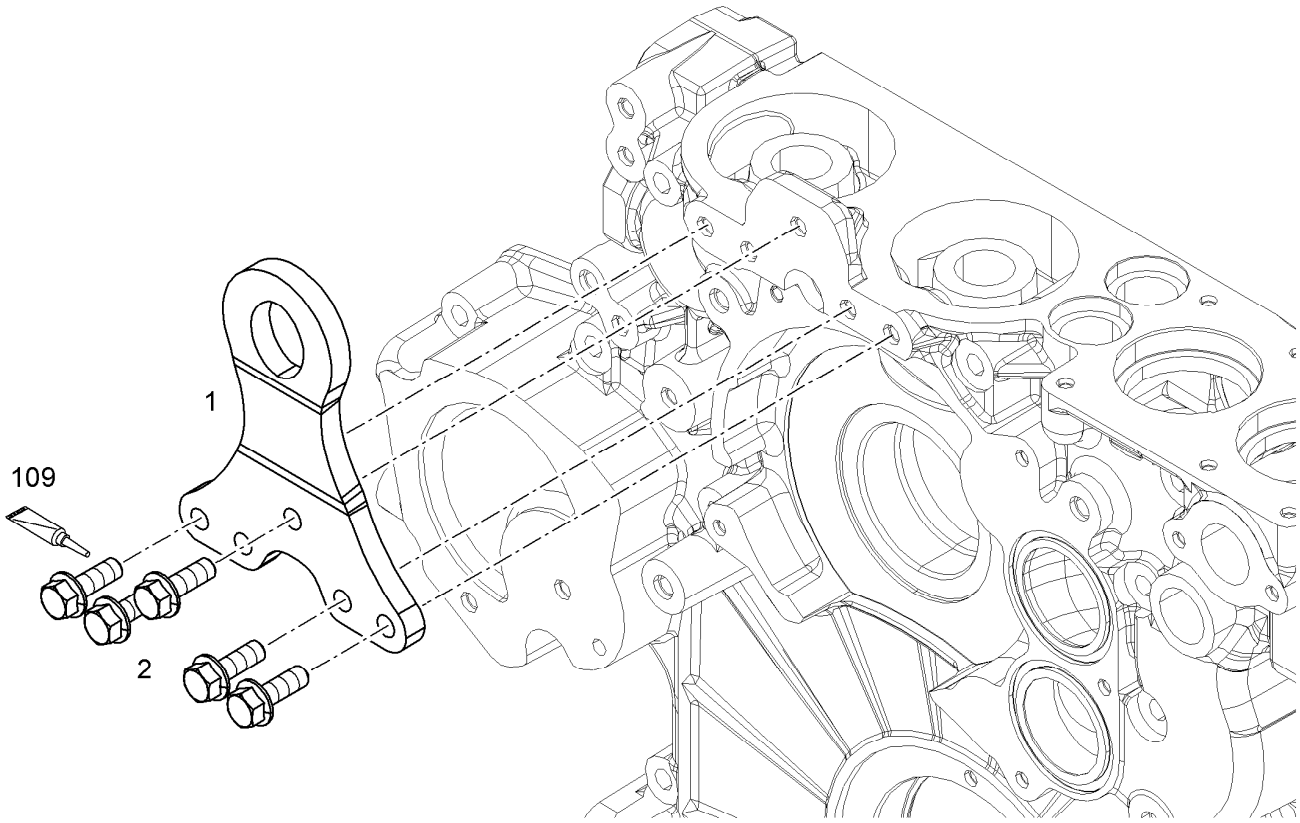


| Pos. | Item | Quantity | Description | Designação | Serie | K |
|---|---|---|---|---|---|---|
| 1 | 10141949 | 1 | TRANSPORTER CONSOLE | CONSOLE DE TRANSPORTE | | |
| 2 | 10016908 | 4 | HEX BOLT DIN 6921 M10X30 8.8 A3C | PARAFUSO SEXTAVADO | | |
| 109 | 8655016 | 1 | SCREW LOCKING | COLA PARA ELEMENTOS FIXA | | |

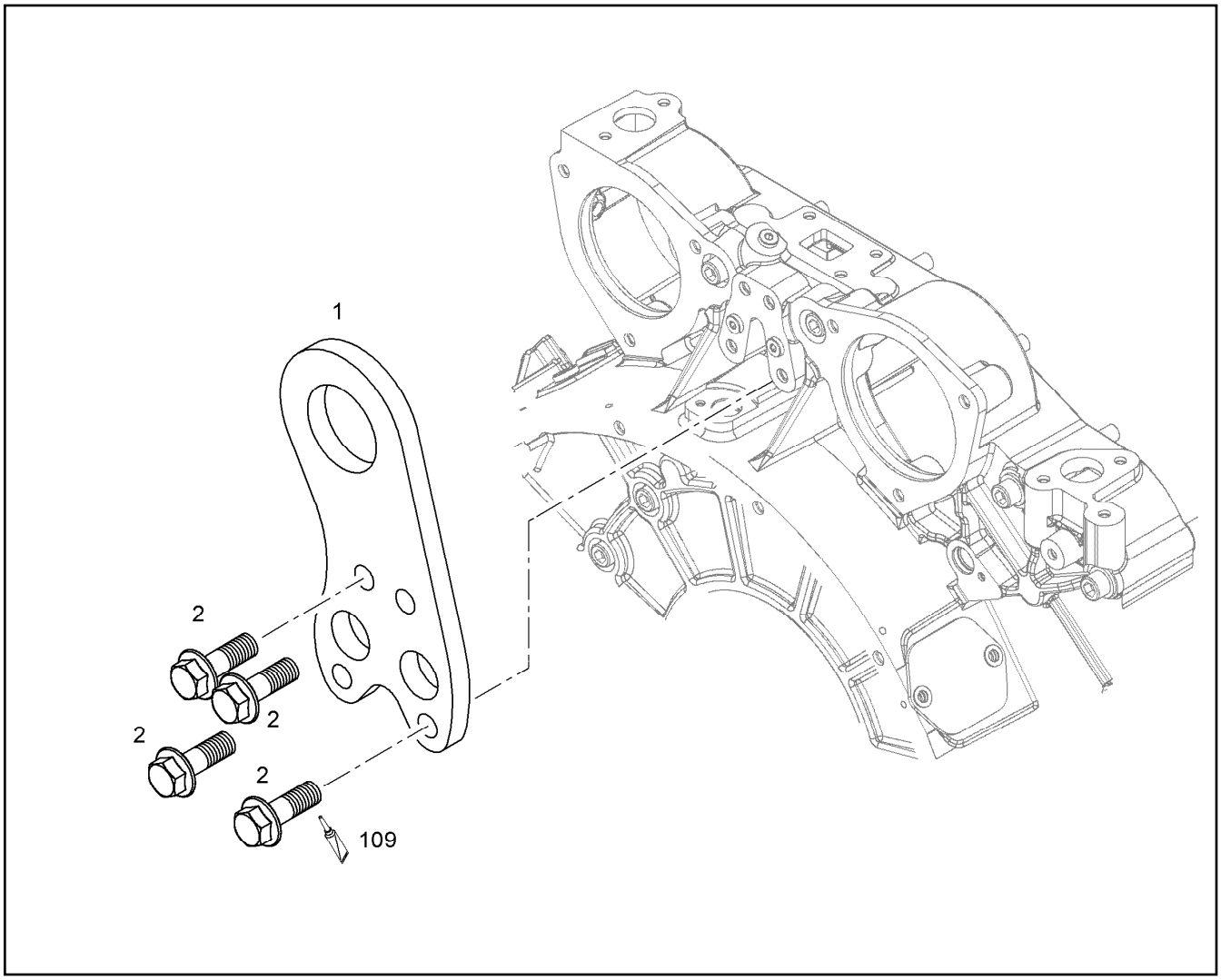


| Pos. | Item | Quantity | Description | Designação | Serie | K |
|---|---|---|---|---|---|---|
| 1 | 9078849 | 1 | TRANSPORTER CONSOLE | CONSOLE DE TRANSPORTE | | |
| 2 | 10016908 | 4 | HEX BOLT DIN 6921 M10X30 8.8 A3C | PARAFUSO SEXTAVADO | | |
| 109 | 8628192 | 1 | SCREW LOCKING | COLA PARA ELEMENTOS FIXA | | |

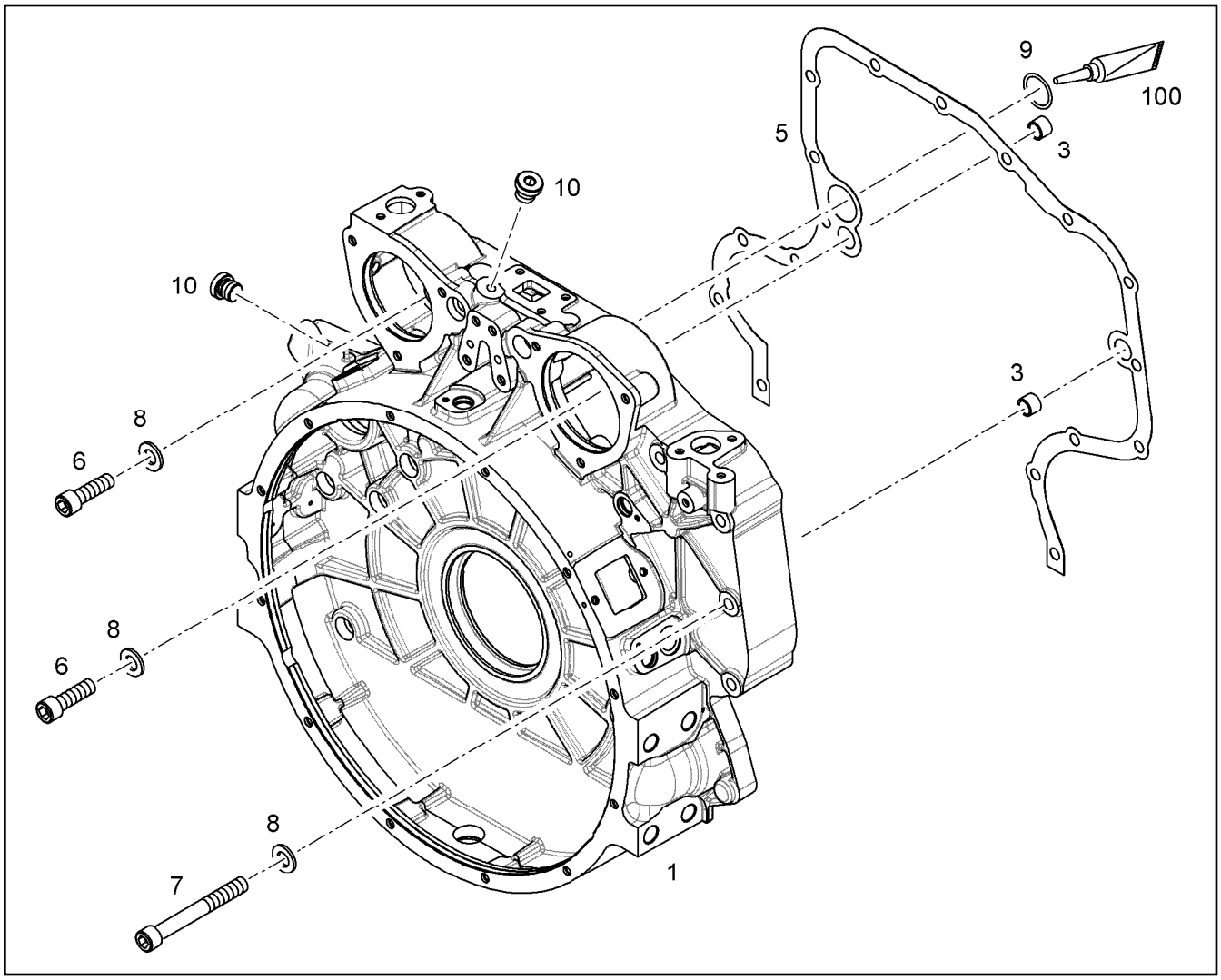


| Pos. | Item | Quantity | Description | Designação | Serie | K |
|---|---|---|---|---|---|---|
| 1 | 10115576 | 1 | FLYWHEEL HOUSING PRE-ASS. SAE 1 | CARCACA VOLANTE PRE-MON | | |
| 3 | 10134348 | 2 | TIGHT FIT SLEEVE 16X20X20 | LUVA DE AJUSTE | | 1 |
| 5 | 10137721 | 1 | SEAL | VEDAÇÃO | | |
| 6 | 4980012 | 2 | CYLINDER SCREW ISO 4762 M12X40 10.9 | PARAFUSO CILÍNDRICO | | |
| 7 | 4600385 | 15 | CYLINDER SCREW ISO 4762 M12X100 10.9 | PARAFUSO CILÍNDRICO | | |
| 8 | 10358988 | 17 | WASHER 12 300HV | ARRUELA | | |
| 9 | 7380653 | 1 | O-RING DIN 3771 34,59X2,62 | ANEL-O | | |
| 10 | 7381638 | 2 | SCREW PLUG VSTI M10X1 | PARAFUSO DE FECHAMENTO | | |
| 100 | 10282622 | 1 | GREASE | GRAXA | | |

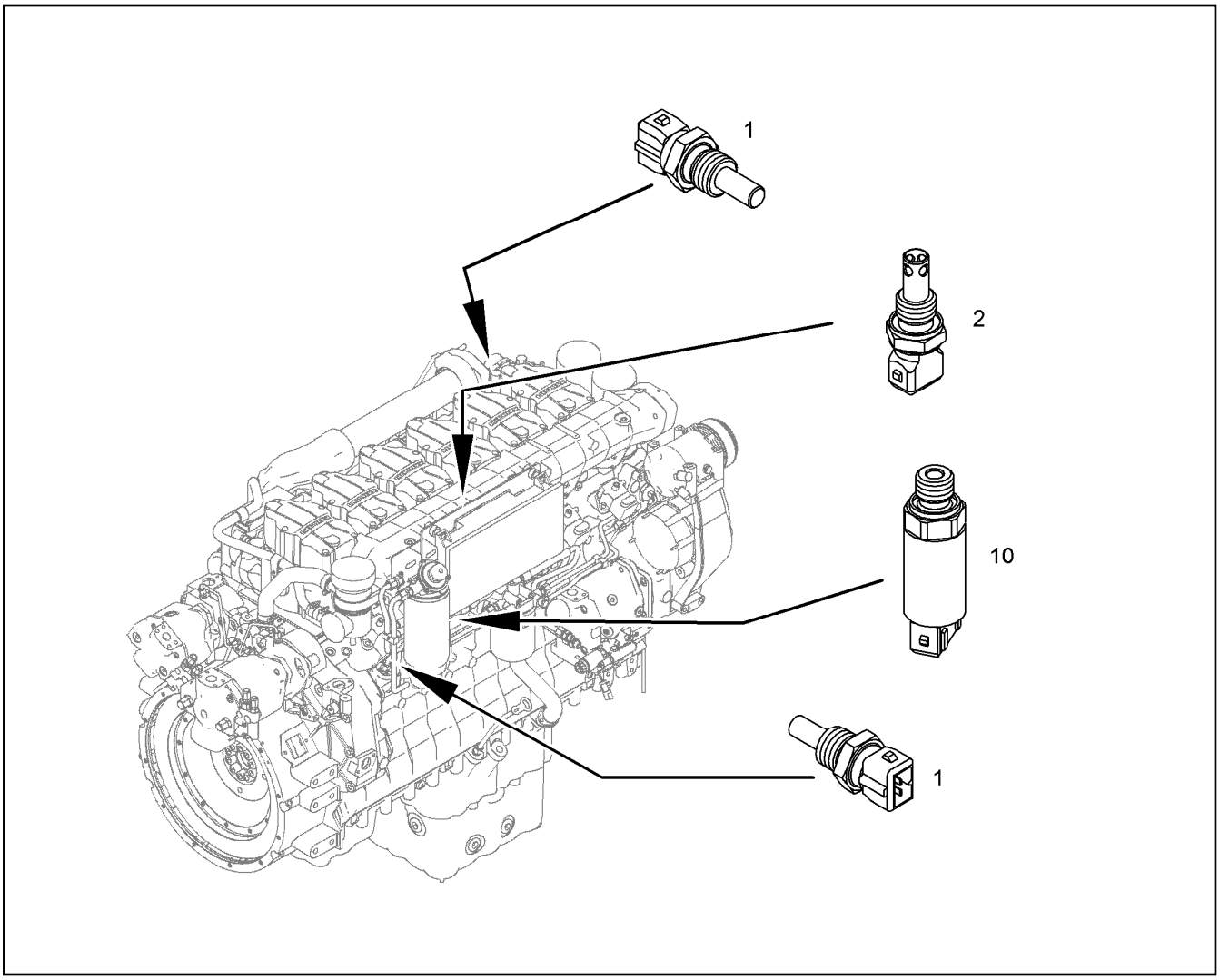


| Pos. | Item | Quantity | Description | Designação | Serie | K |
|---|---|---|---|---|---|---|
| 1 | 6290130 | 2 | TEMPERATURE TEST | SENSOR DE TEMPERATURA | | |
| 2 | 9076530 | 1 | TEMPERATURE PROBE CPL.<br>⇨ ❑ 584 | | | |
| 10 | 9076550 | 1 | PRESSURE TRANSMITTER CPL.<br>⇨ ❑ 587 | TRANSDUTOR DE PRESSAO CO | | |

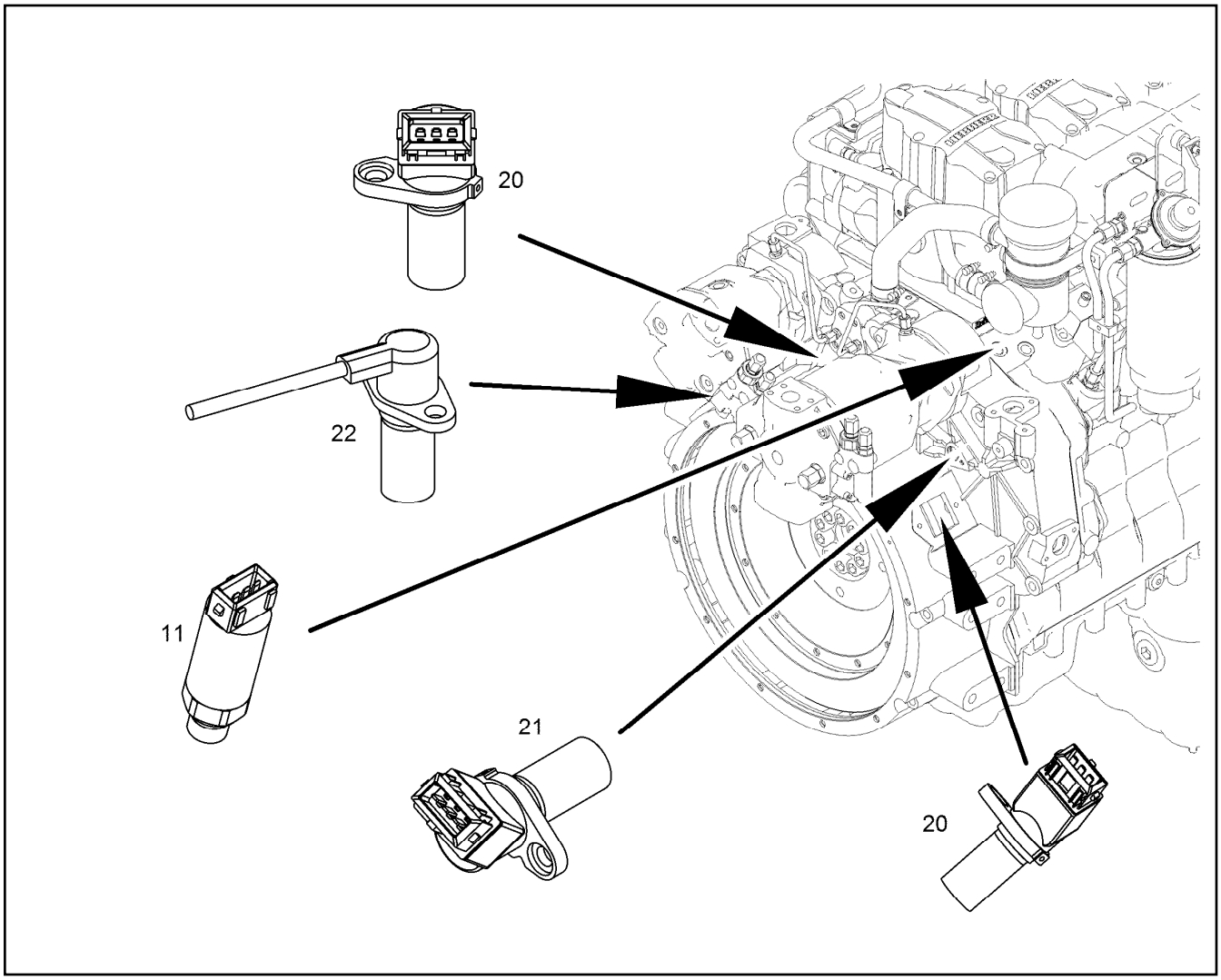


| Pos. | Item | Quantity | Description | Designação | Serie | K |
|---|---|---|---|---|---|---|
| 11 | 9076531 | 1 | PRESSURE TRANSMITTER CPL. 0-10bar<br>⇨ ❑ 585 | TRANSDUTOR DE PRESSAO CO | | 2 |
| 20 | 9079206 | 2 | ROTATIONAL SPEED SENSOR CPL.<br>⇨ ❑ 588 | SENSOR DE ROTACAO | | |
| 21 | 9076534 | 1 | ROTATIONAL SPEED SENSOR CPL.<br>⇨ ❑ 586 | SENSOR DE ROTACAO | | |
| 22 | 9885618 | 1 | ROTATIONAL SPEED SENSOR ATTACH<br>⇨ ❑ 589 | TACOMETRO - MONTAGEM | | |

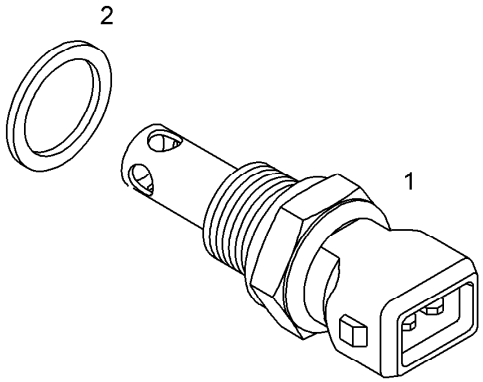


| Pos. | Item | Quantity | Description | Designação | Serie | K |
|---|---|---|---|---|---|---|
| 1 | 691180608 | 1 | TEMPERATURE SENSOR | SENSOR DE TEMPERATURA | | |
| 2 | 10040984 | 1 | PROFILE PACKING 14 | PERFIL DE VEDACAO | | |

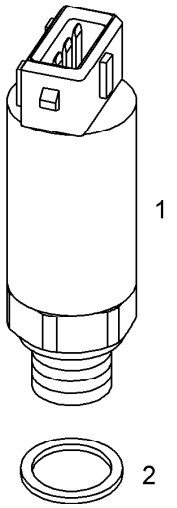


| Pos. | Item | Quantity | Description | Designação | Serie | K |
|---|---|---|---|---|---|---|
| 1 | 10025124 | 1 | PRESSURE TRANSMITTER 0-10bar | TRANSDUTOR DE PRESSÃO | | |
| 2 | 10040984 | 1 | PROFILE PACKING 14 | PERFIL DE VEDACAO | | |

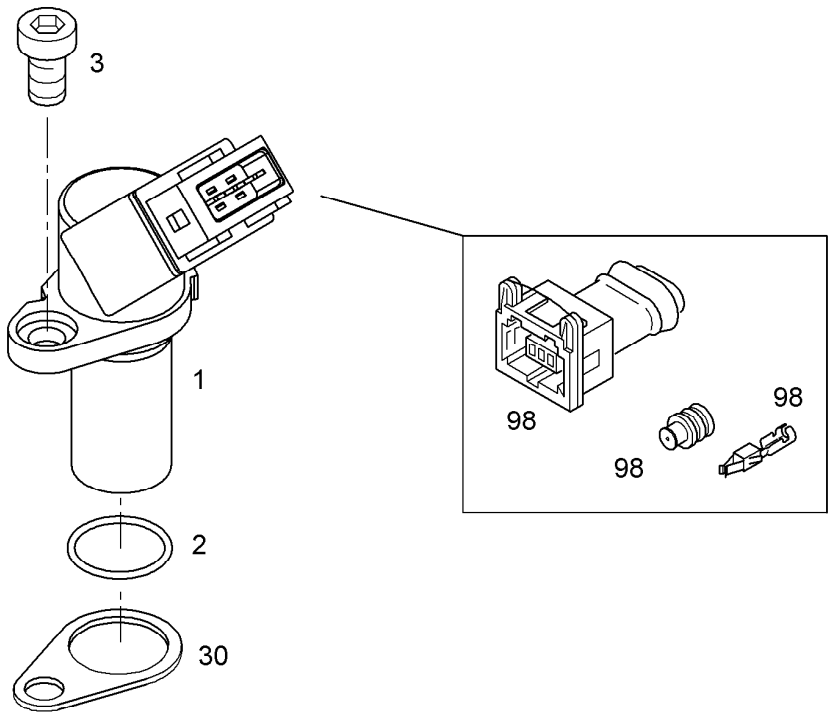


| Pos. | Item | Quantity | Description | Designação | Serie | K |
|---|---|---|---|---|---|---|
| 1 | 10800265 | 1 | ROTATIONAL SPEED SENSOR | SENSOR DE ROTAÇAO | | |
| 2 | 7381103 | 1 | O-RING DIN 3771 17,17X1,78 | ANEL-O | | |
| 3 | 4600048 | 1 | CYLINDER SCREW ISO 4762 M6X16 8.8 A2C | PARAFUSO CILÍNDRICO | | |
| 30 | 9079064 | 1 | SPACER PIECE | ESPAÇADOR | | |
| 98 | 9064882 | 1 | SOCKET JPT 3POL. | PLUGUE ELÉTRICO | | |

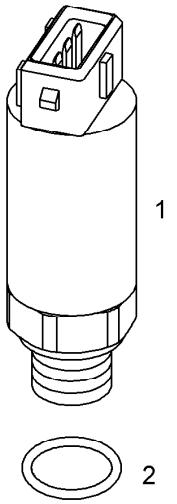


| Pos. | Item | Quantity | Description | Designação | Serie | K |
|---|---|---|---|---|---|---|
| 1 | 10100781 | 1 | PRESSURE TRANSMITTER | TRANSDUTOR DE PRESSÃO | | |
| 2 | 10113975 | 1 | O-RING 15,50X2,00 | ANEL-O | | |

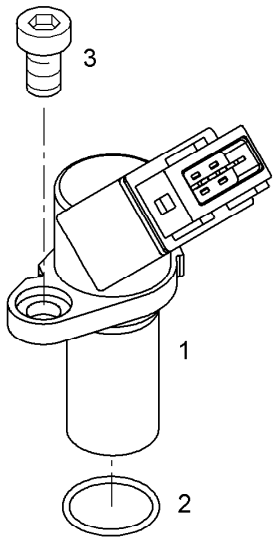


| Pos. | Item | Quantity | Description | Designação | Serie | K |
|---|---|---|---|---|---|---|
| 1 | 10800265 | 1 | ROTATIONAL SPEED SENSOR | SENSOR DE ROTAÇAO | | |
| 2 | 7381103 | 1 | O-RING DIN 3771 17,17X1,78 | ANEL-O | | |
| 3 | 4600048 | 1 | CYLINDER SCREW ISO 4762 M6X16 8.8 A2C | PARAFUSO CILÍNDRICO | | |

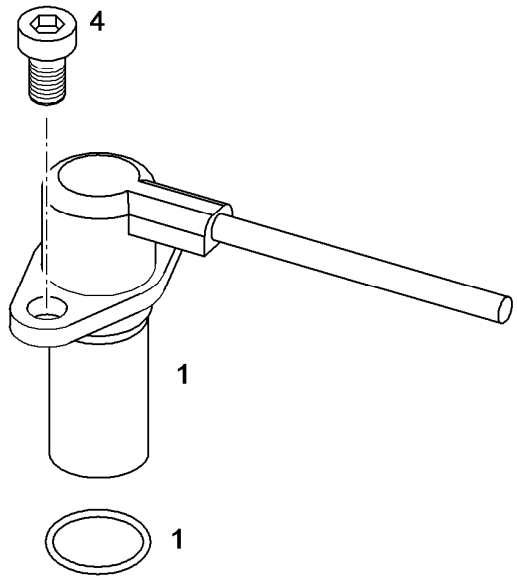


| Pos. | Item | Quantity | Description | Designação | Serie | K |
|---|---|---|---|---|---|---|
| 1 | 635867001 | 1 | SENSOR | SENSOR | | |
| 4 | 10024115 | 2 | HEX BOLT DIN 6921 M8X12 8.8 A2C | PARAFUSO SEXTAVADO | | |

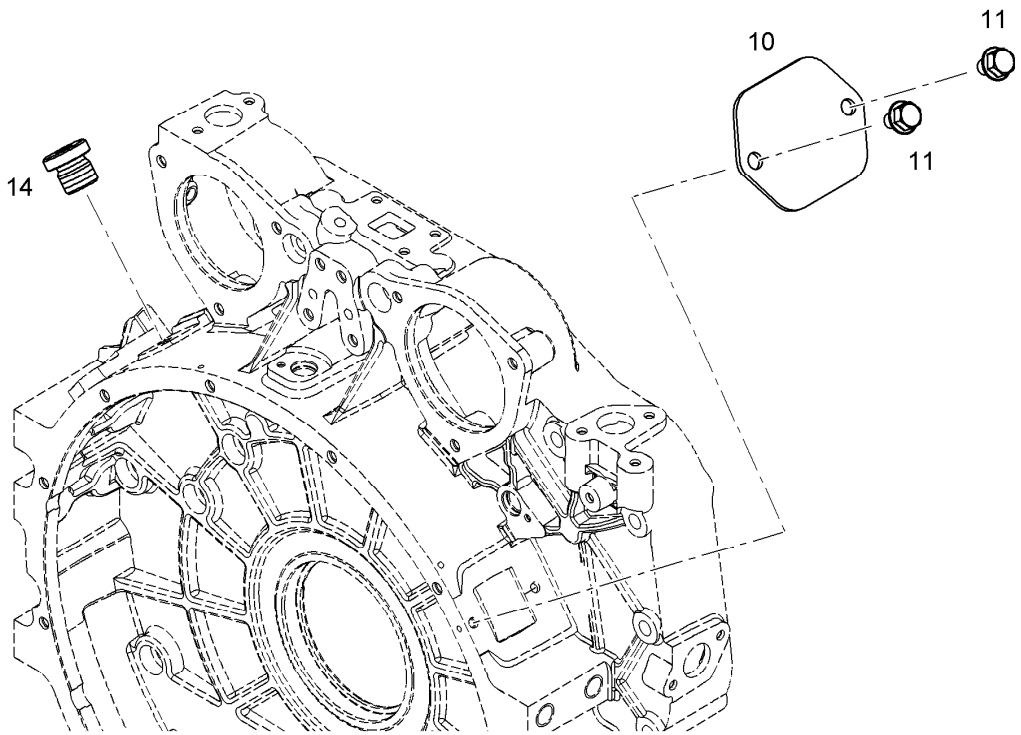


| Pos. | Item | Quantity | Description | Designação | Serie | K |
|---|---|---|---|---|---|---|
| 10 | 10117094 | 1 | LID | TAMPA | | |
| 11 | 10005078 | 2 | HEX BOLT DIN 6921 M8X16 8.8 A2C | PARAFUSO SEXTAVADO | | |
| 14 | 7380177 | 1 | SCREW PLUG VSTI M22X1,5 | PARAFUSO DE FECHAMENTO | | |

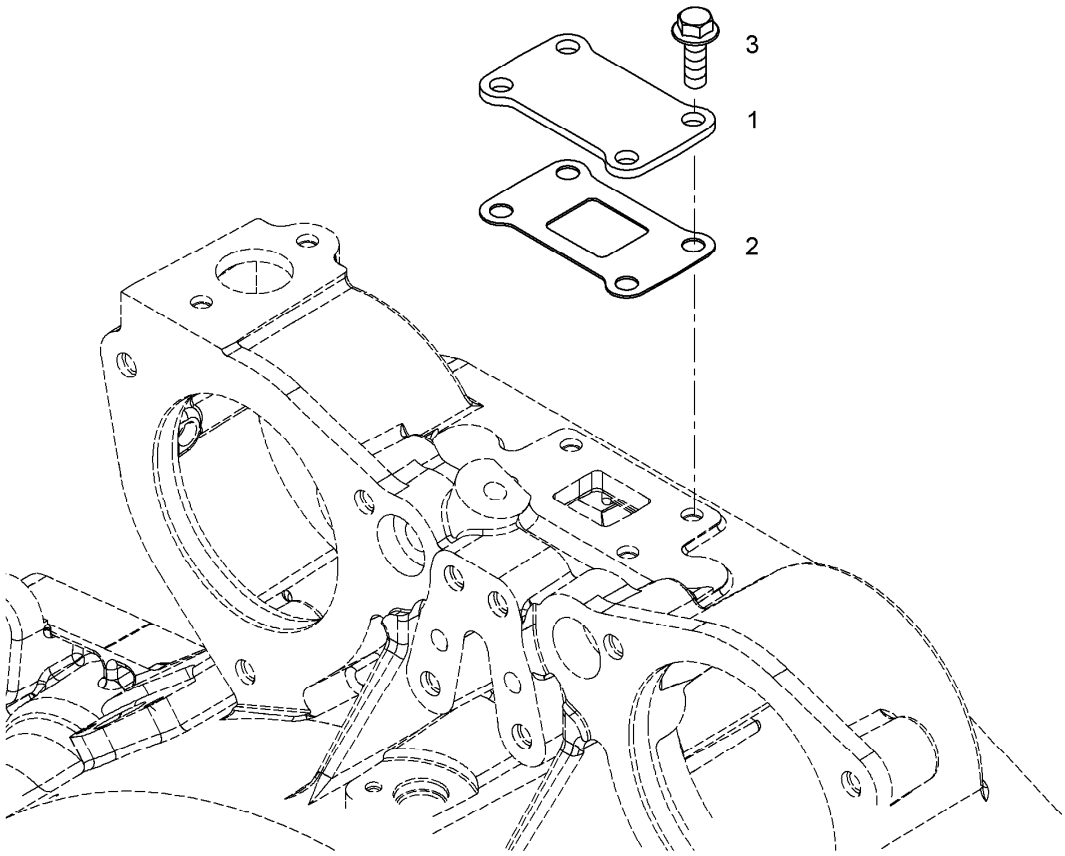


| Pos. | Item | Quantity | Description | Designação | Serie | K |
|---|---|---|---|---|---|---|
| 1 | 10119129 | 1 | SHEET | PLACA | | |
| 2 | 9079130 | 1 | SEAL 1MM | VEDAÇÃO | | |
| 3 | 10016906 | 4 | HEX BOLT DIN 6921 M8X20 8.8 A2C | PARAFUSO SEXTAVADO | | |

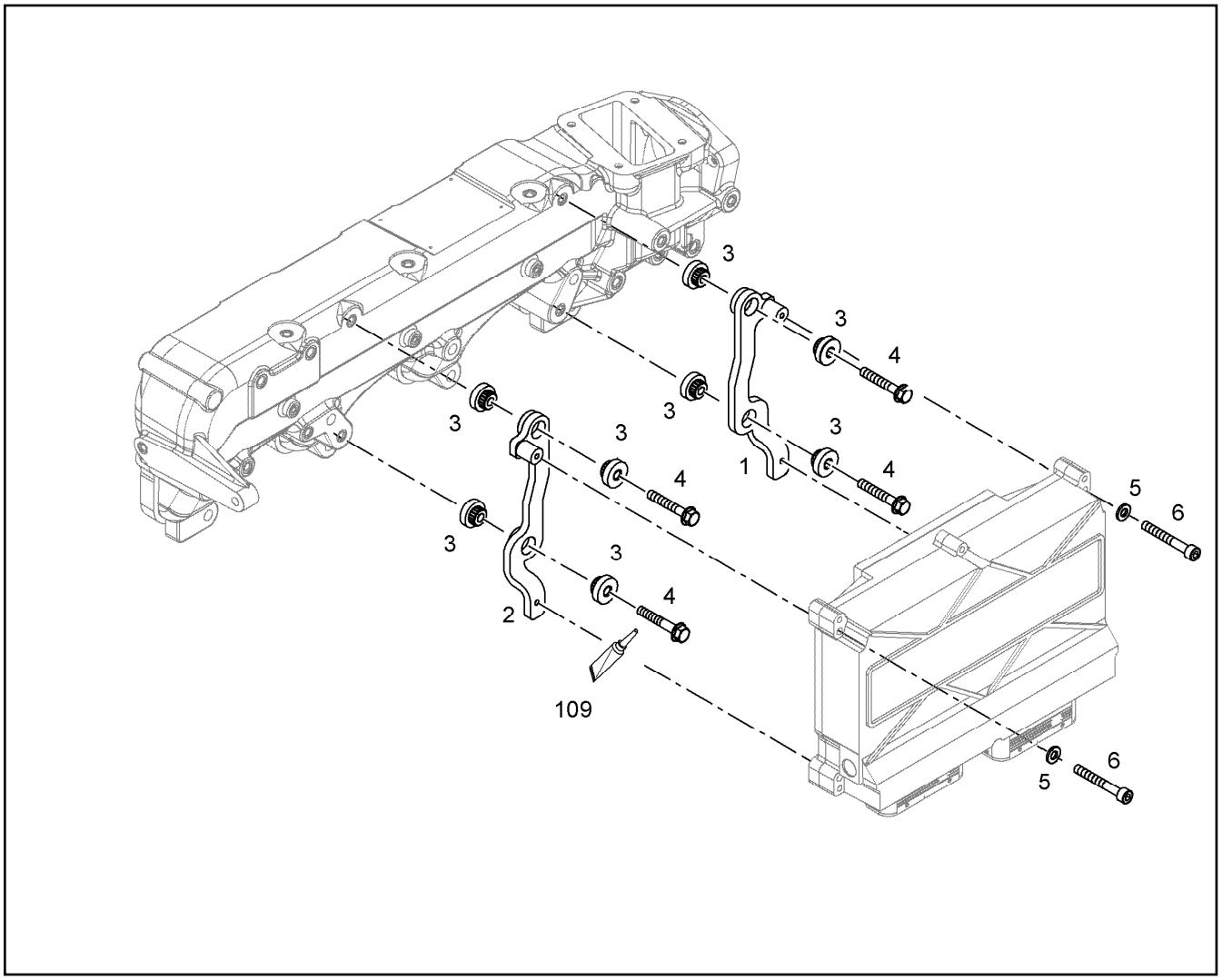


| Pos. | Item | Quantity | Description | Designação | Serie | K |
|---|---|---|---|---|---|---|
| 1 | 10115996 | 1 | RETAINER CPL. | SUPORTE COMPL. | | |
| 2 | 10115994 | 1 | RETAINER CPL. | SUPORTE COMPL. | | |
| 3 | 10040032 | 8 | RUBBER BUMPER | BATENTE DE BORRACHA | | |
| 4 | 10035575 | 4 | HEX BOLT DIN 6921 M8X40 10.9 A2C | PARAFUSO SEXTAVADO | | |
| 5 | 10289802 | 4 | WASHER ISO 7089 6 300HV | ARRUELA | | |
| 6 | 4042109 | 4 | CYLINDER SCREW ISO 4762 M6x45 8.8 A2C | PARAFUSO CILÍNDRICO | | |
| 109 | 8628192 | 1 | SCREW LOCKING | COLA PARA ELEMENTOS FIXA | | |

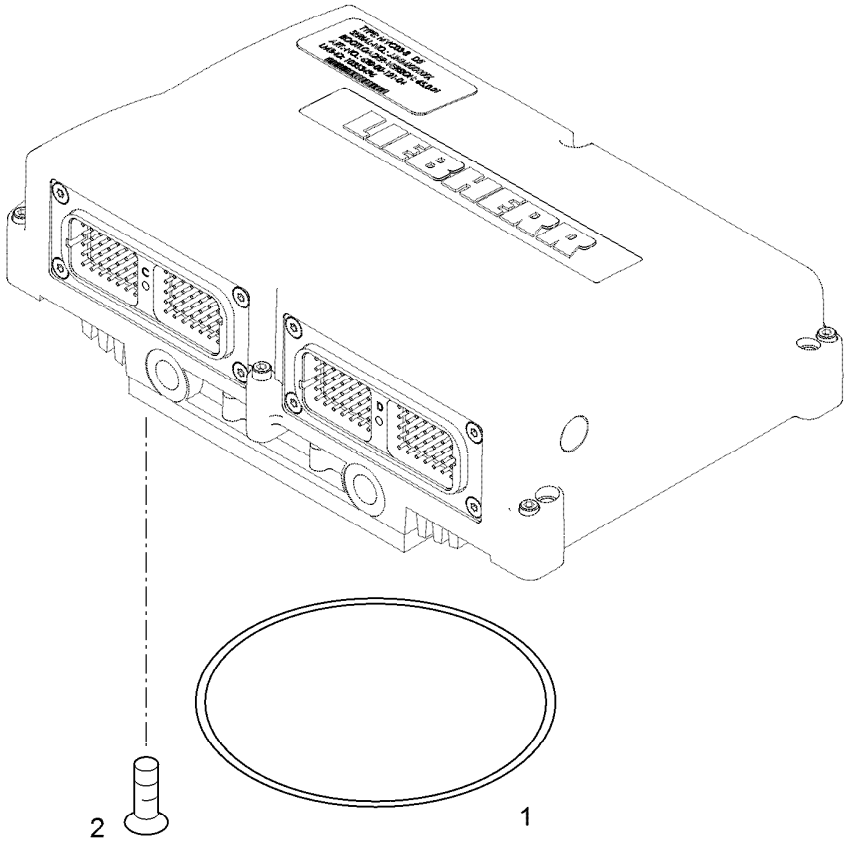


| Pos. | Item | Quantity | Description | Designação | Serie | K |
|---|---|---|---|---|---|---|
| 1 | 11067315 | 1 | O-RING 200X4 | ANEL-O | | |
| 2 | 11067312 | 14 | COUNTERSUNK SCREW M5X20 8.8 A2B | PARAFUSO ESCAREADO | | |

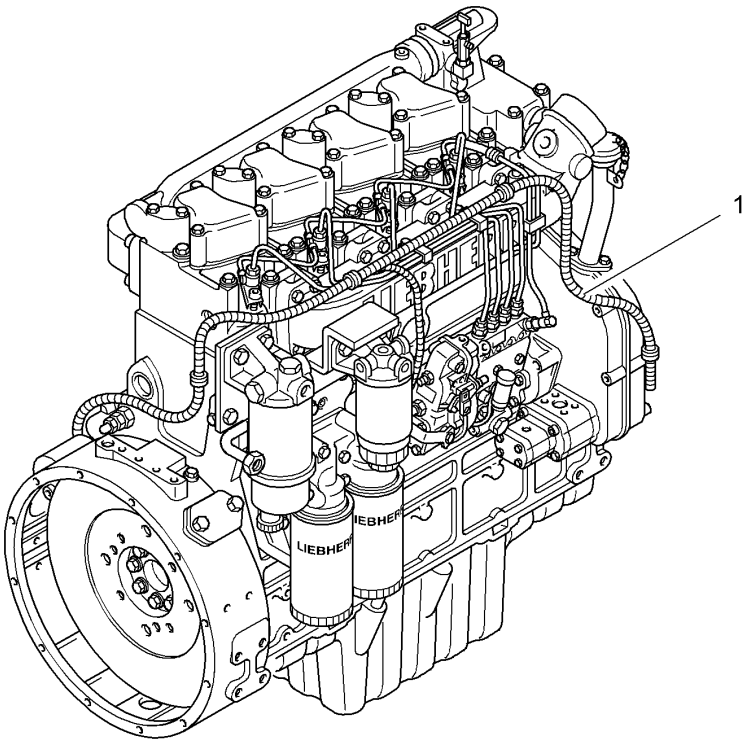


| Pos. | Item | Quantity | Description | Designação | Serie | K |
|---|---|---|---|---|---|---|
| 1 | 10222315 | 1 | LOOM | CHICOTE | | |

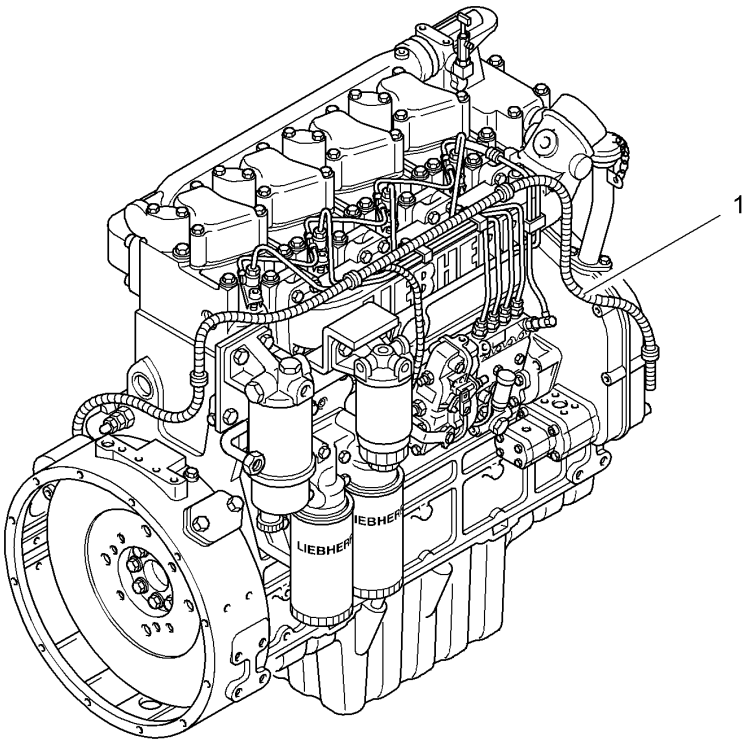


| Pos. | Item | Quantity | Description | Designação | Serie | K |
|---|---|---|---|---|---|---|
| 1 | 10115744 | 1 | WIRING HARNESS PRE-ASS.<br>⇨ ❑ 594 | CHICOTE ELETRICO | | |

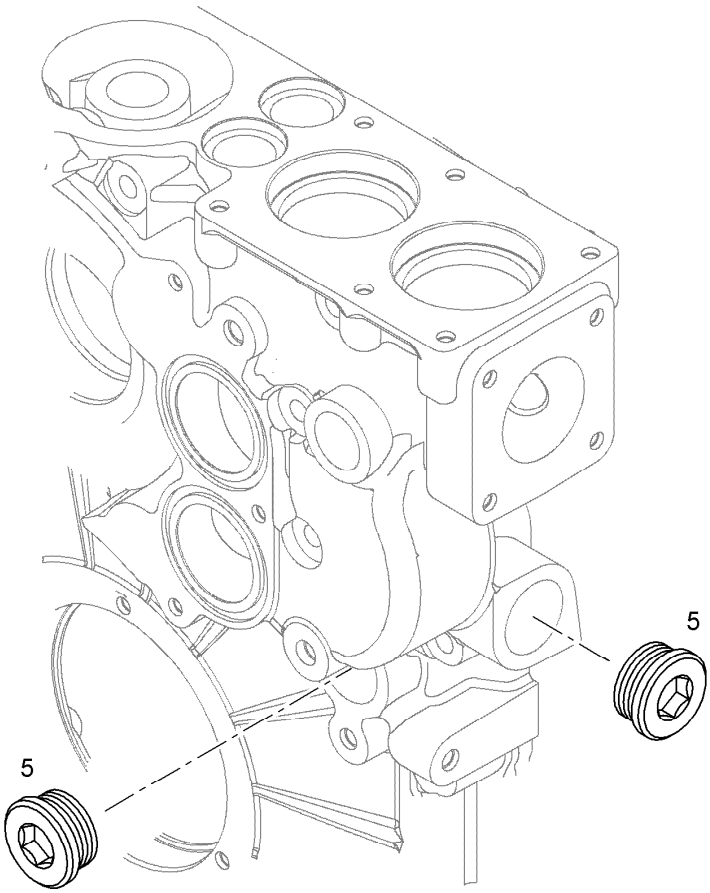


| Pos. | Item | Quantity | Description | Designação | Serie | K |
|---|---|---|---|---|---|---|
| 5 | 7382202 | 2 | SCREW PLUG VSTI M38X1,5 | PARAFUSO DE FECHAMENTO | | |

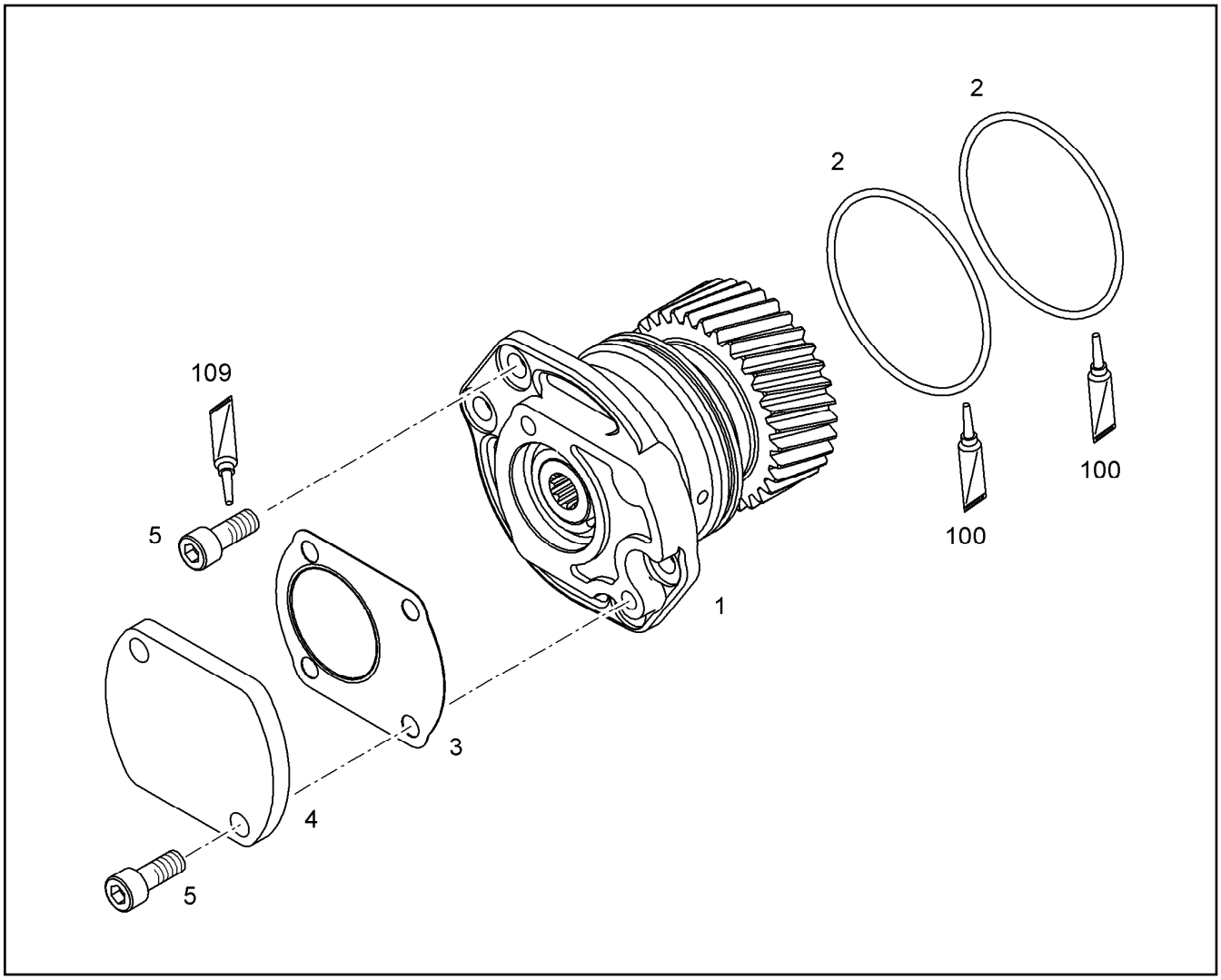


| Pos. | Item | Quantity | Description | Designação | Serie | K |
|---|---|---|---|---|---|---|
| 1 | 9077718 | 1 | AUXILIARY DRIVE PRE-ASS.<br>⇨ ❑ 601 | SAIDA AUXILIAR P´RE-MONTAGE | | |
| 2 | 7381361 | 2 | O-RING DIN 3771 85,32X3,53 | ANEL-O | | |
| 3 | 9885529 | 1 | SEAL | VEDAÇÃO | | |
| 4 | 9178294 | 1 | LID | TAMPA | | |
| 5 | 4980011 | 4 | CYL HEAD STUD ISO 4762 M 10 X 25 8.8 | PARAFUSO CILINDRICO | | |
| 100 | 10285708 | 1 | GREASE NBU 30/1kg | GRAXA | | |
| 108 | 8622905 | 1 | SEALANT | VEDACAO | | |

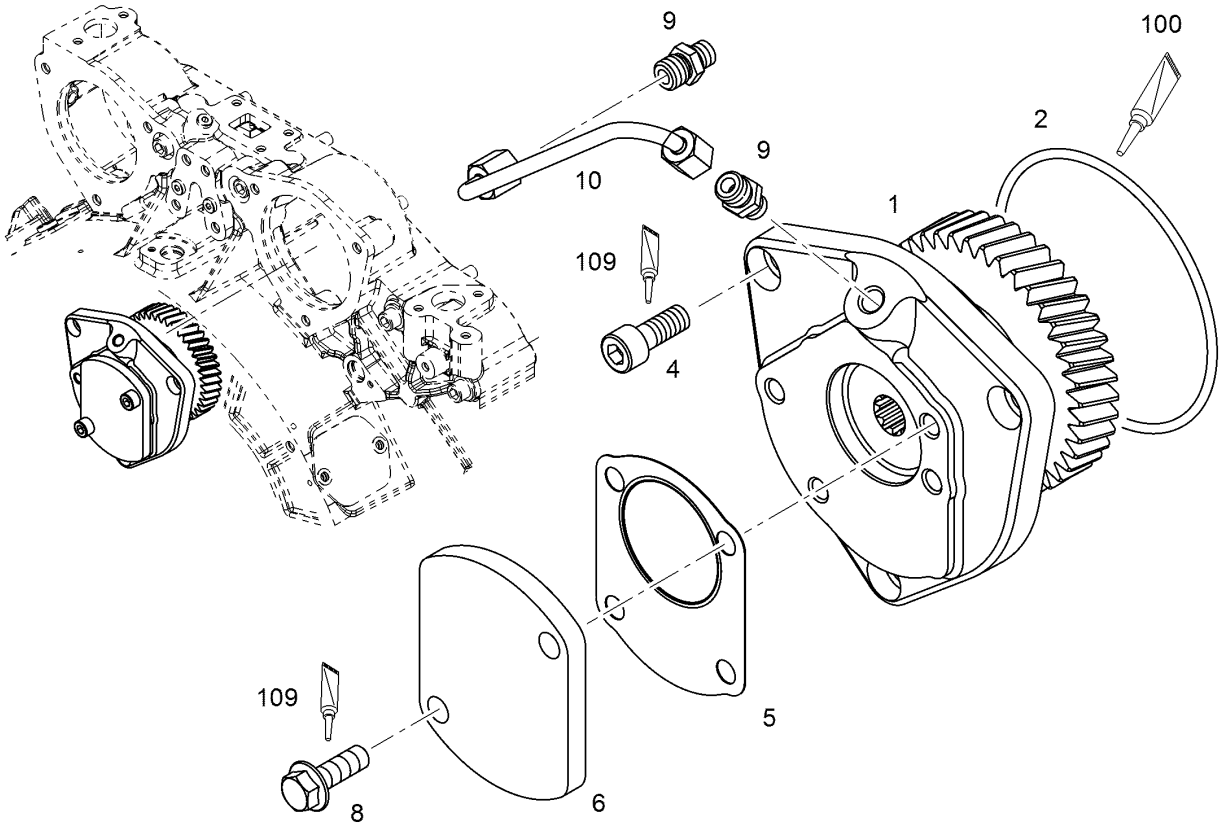


| Pos. | Item | Quantity | Description | Designação | Serie | K |
|---|---|---|---|---|---|---|
| 1 | 9078962 | 1 | AUXILIARY DRIVE PRE-ASS. | SAIDA AUXILIAR P´RE-MONTAGE | | |
| 2 | 7380520 | 1 | O-RING DIN 3771 104,37X3,53 | ANEL-O | | |
| 4 | 4042014 | 3 | CYLINDER SCREW ISO 4762 M10x25 8.8 A3 | PARAFUSO CILÍNDRICO | | |
| 5 | 9885529 | 1 | SEAL | VEDAÇÃO | | |
| 6 | 9178294 | 1 | LID | TAMPA | | |
| 8 | 10030518 | 2 | HEX BOLT EN 1665 M10X20 8.8 A3C | PARAFUSO SEXTAVADO | | |
| 9 | 4981233 | 2 | SCREW FITTING GE 6L M10X1 | REDUÇÃO | | |
| 10 | 9078984 | 1 | PIPELINE 6X1 | TUBULACAO | | |
| 10 | 9078983 | 1 | -TUBE | -TUBO | | |
| 10 | 4774024 | 2 | -BOX NUT DIN 3870 A 6L | -PORCA DE CONEXAO | | |
| 10 | 4771000 | 2 | -CUTTING RING DIN 3861 S 6 | -ANEL DE CORTE | | |
| 100 | 10282622 | 1 | GREASE | GRAXA | | |
| 109 | 811205708 | 1 | SCREW LOCKING | COLA PARA ELEMENTOS FIXA | | |

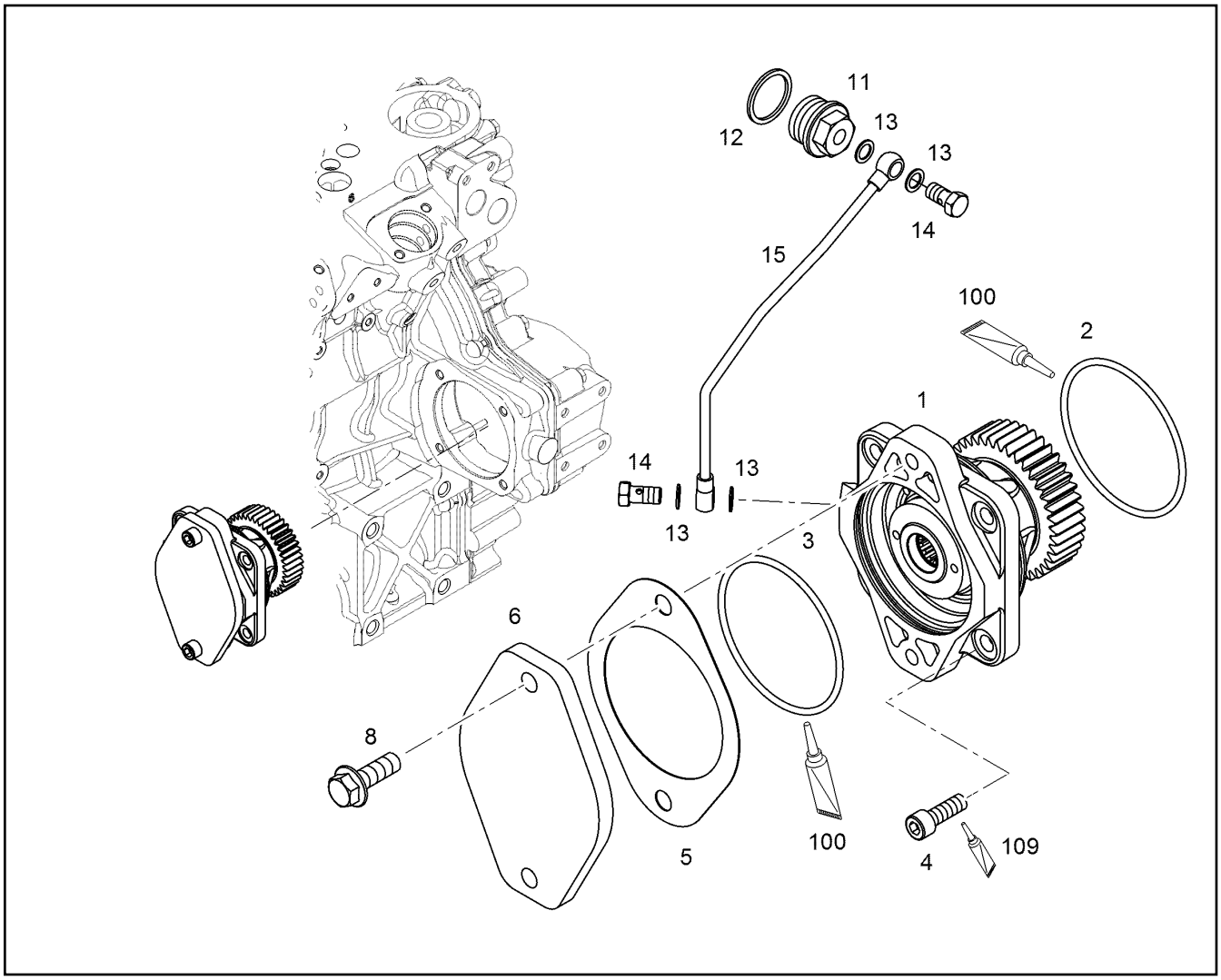


| Pos. | Item | Quantity | Description | Designação | Serie | K |
|---|---|---|---|---|---|---|
| 1 | 9077386 | 1 | AUXILIARY DRIVE PRE-ASS.<br>⇨ ❑ 600 | SAIDA AUXILIAR P´RE-MONTAGE | | |
| 2 | 7380520 | 1 | O-RING DIN 3771 104,37X3,53 | ANEL-O | | |
| 3 | 7380401 | 1 | O-RING DIN 3771 101,20X3,53 | ANEL-O | | |
| 4 | 4043000 | 4 | CYLINDER SCREW ISO 4762 M10X30 10.9 | PARAFUSO CILÍNDRICO | | |
| 5 | 9273691 | 1 | SEAL | VEDAÇÃO | | |
| 6 | 9273690 | 1 | LID | TAMPA | | |
| 8 | 10410790 | 2 | HEX BOLT DIN 6921 M12X30 8.8 A3C | PARAFUSO SEXTAVADO | | |
| 11 | 9080013 | 1 | REDUCING STUD | BOCAL REDUTOR | | |
| 12 | 7101021 | 1 | SEALING RING DIN 7603 A 30 X 36 CU | ANEL DE VEDAÇÃO | | |
| 13 | 7007952 | 4 | SEALING RING DIN 7603 A 10X15X1 | ANEL DE VEDAÇÃO | | |
| 14 | 4079160 | 2 | HOLLOW SCREW 6X3 DIN 7643 | PARAFUSO OCO | | |
| 15 | 9080009 | 1 | PIPELINE 6X1 | TUBULACAO | | |
| 100 | 10282622 | 1 | GREASE | GRAXA | | |
| 109 | 8655016 | 1 | SCREW LOCKING | COLA PARA ELEMENTOS FIXA | | |

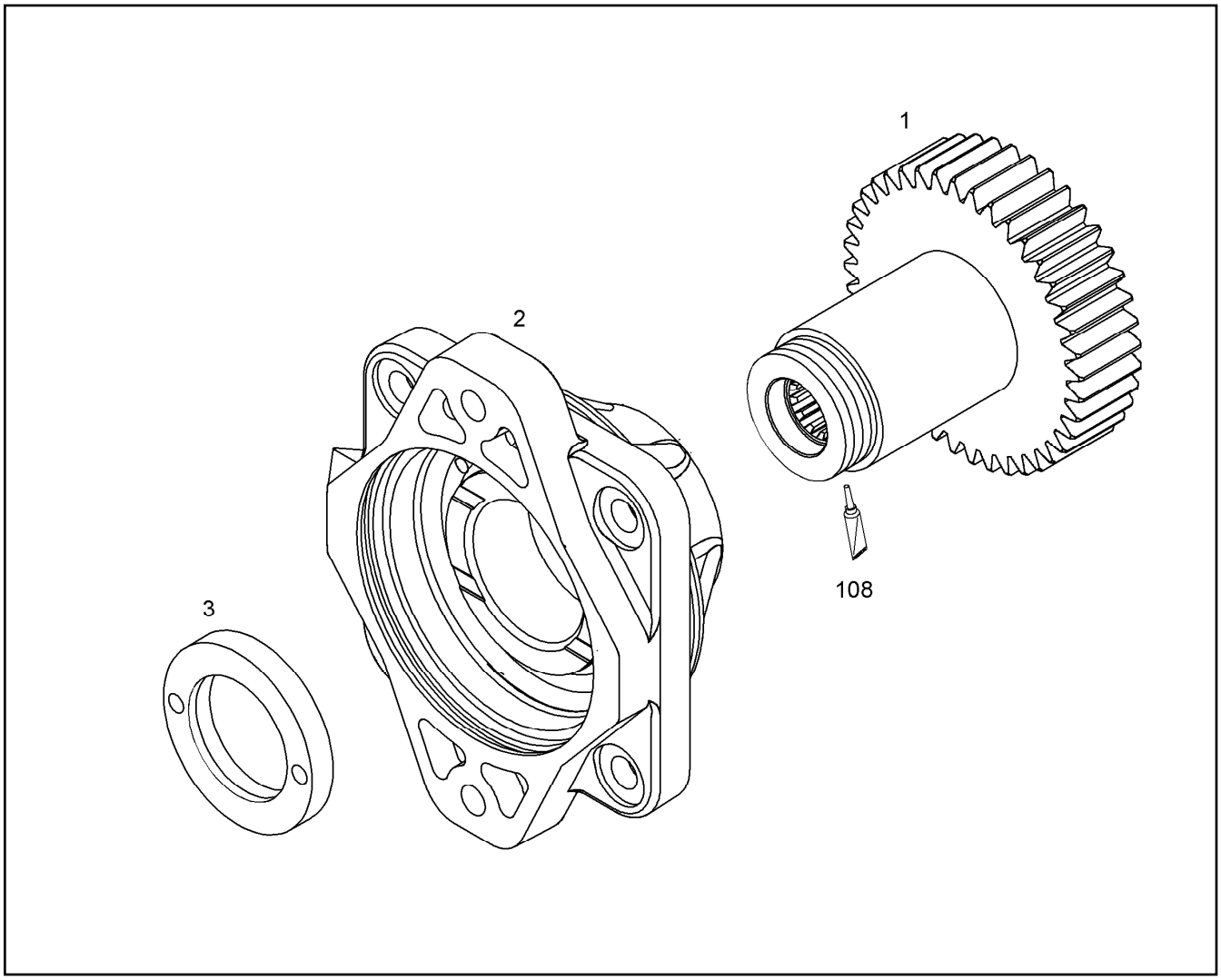


| Pos. | Item | Quantity | Description | Designação | Serie | K |
|---|---|---|---|---|---|---|
| 1 | 9077327 | 1 | PUMP SHAFT Z=40 M=2.25 | EIXO DA BOMBA | | |
| 2 | 9077384 | 1 | BEARING HOUSING, PRE-ASSEMBLED<br>⇨ ❑ 602 | CARCACA DO MANCAL PRE-MO | | |
| 3 | 9077612 | 1 | WEARING RING M 40X1,5 | ANEL DE ENCOSTO | | |
| 108 | 8622905 | 1 | SEALANT | VEDACAO | | |

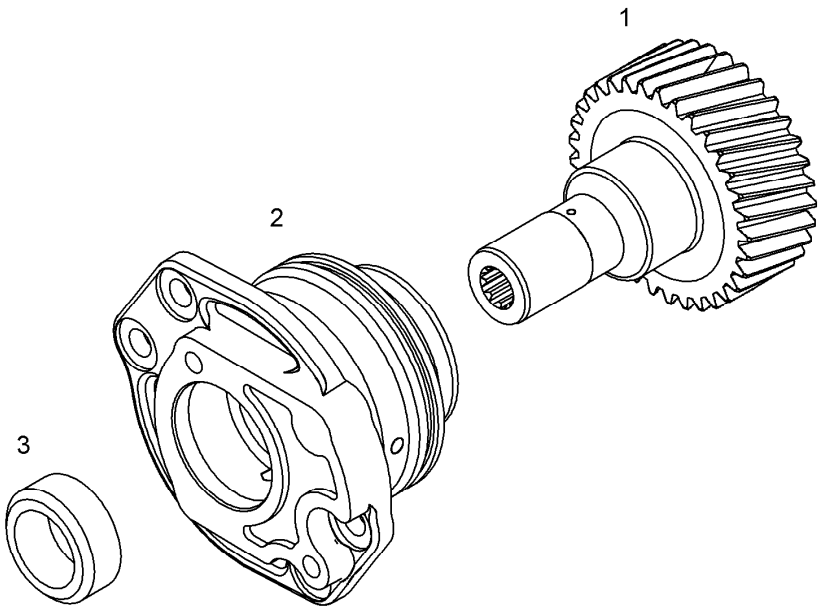


| Pos. | Item | Quantity | Description | Designação | Serie | K |
|---|---|---|---|---|---|---|
| 1 | 9077713 | 1 | PUMP SHAFT | EIXO DA BOMBA | | |
| 2 | 9077717 | 1 | BEARING HOUSING, PRE-ASSEMBLED<br>⇨ ❑ 603 | CARCACA DO MANCAL PRE-MO | | |
| 3 | 9077714 | 1 | LIMIT STOP | CHAPA LIMITADORA | | |

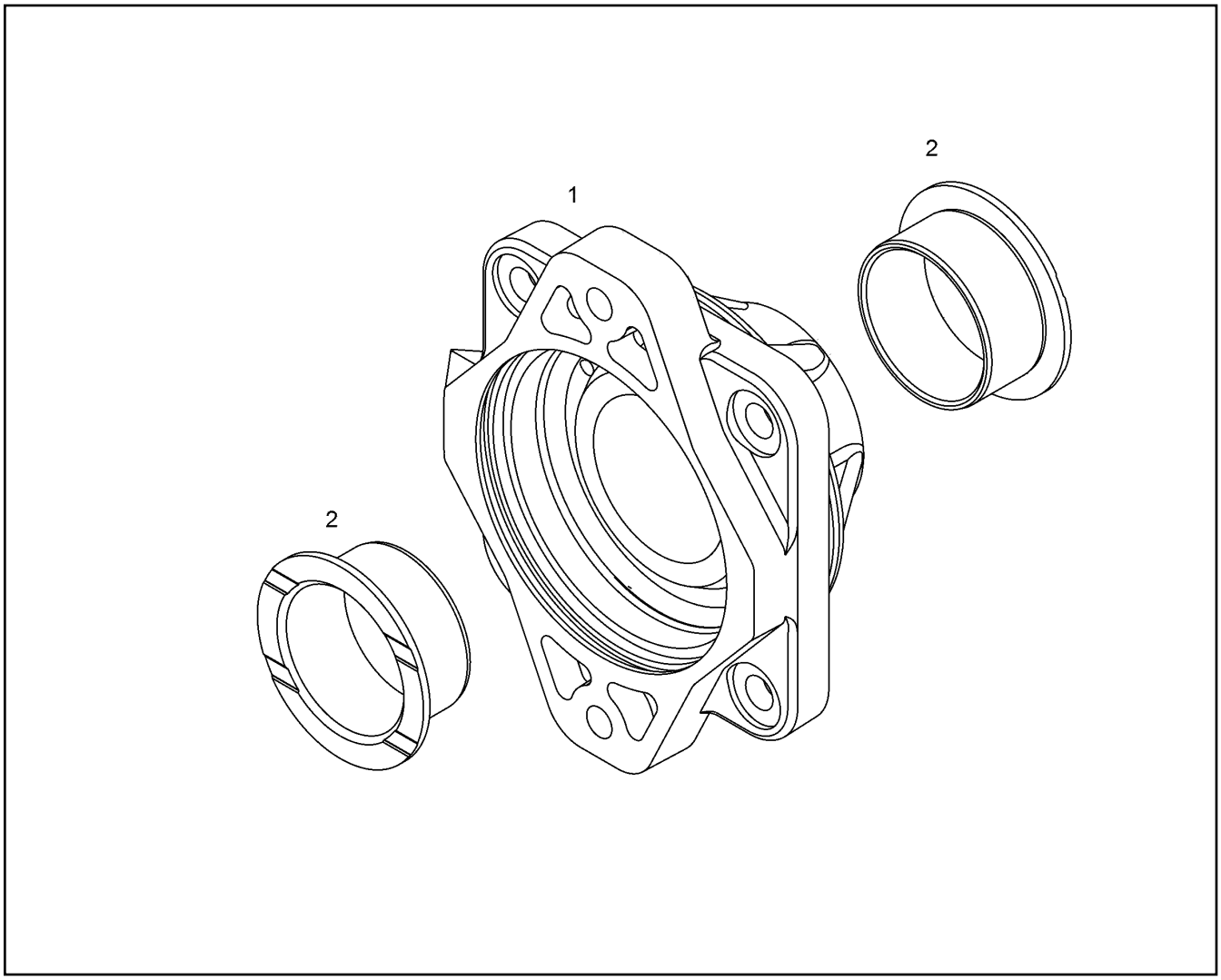


| Pos. | Item | Quantity | Description | Designação | Serie | K |
|---|---|---|---|---|---|---|
| 1 | | 1 | BEARING HOUSING | CARCACA DO MANCAL | | |
| 1 | | 1 | BEARING HOUSING | CARCACA DO MANCAL | | |
| 2 | 9888448 | 2 | FLANGE SLEEVE 45/50X25 | BUCHA COM FLANGE | | 1 |

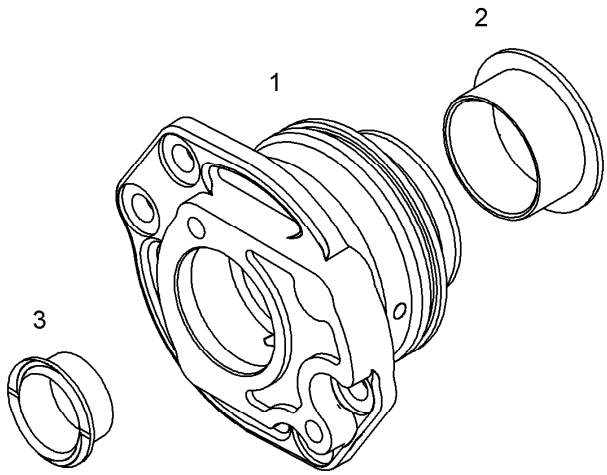


| Pos. | Item | Quantity | Description | Designação | Serie | K |
|---|---|---|---|---|---|---|
| 1 | 9077710 | 1 | BEARING HOUSING | CARCACA DO MANCAL | | |
| 2 | 9888448 | 1 | FLANGE SLEEVE 45/50X25 | BUCHA COM FLANGE | | 1 |
| 3 | 9889290 | 1 | PLAIN BEARING BUSH 30/34X16 | BUCHA DE MANCA,L DESLIZANT | | 1 |

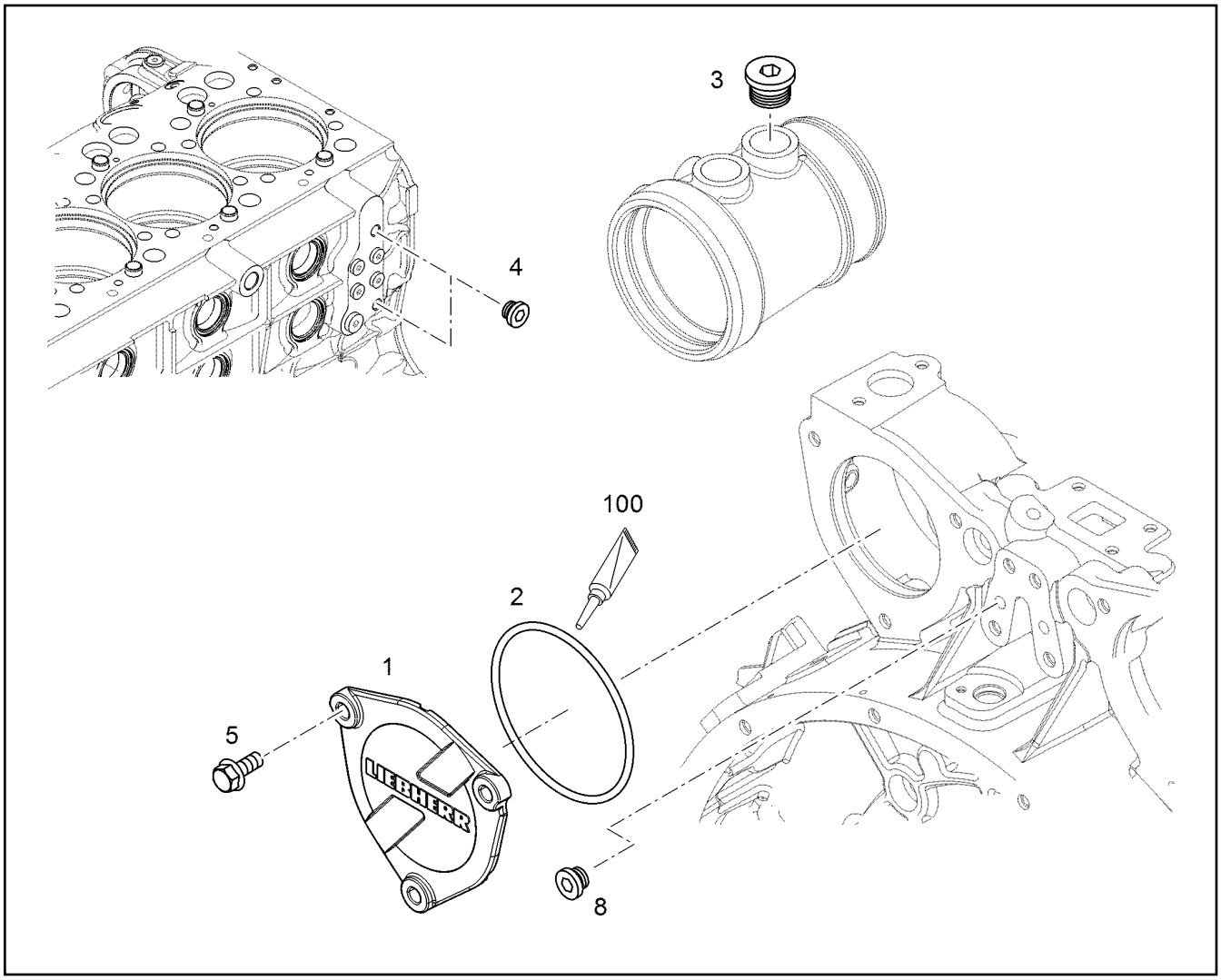


| Pos. | Item | Quantity | Description | Designação | Serie | K |
|---|---|---|---|---|---|---|
| 1 | 10122317 | 1 | LID | TAMPA | | |
| 1 | 10122316 | 1 | -LID | -TAMPA | | |
| 2 | 7380657 | 1 | O-RING DIN 3771 91,67X3,53 | ANEL-O | | |
| 3 | 7381457 | 1 | SCREW PLUG VSTI M26X1,5 | PARAFUSO DE FECHAMENTO | | |
| 4 | 10118589 | 2 | LOCKING PIECES<br>⇨ ❑ 558 | PECAS DE FECHAMENTO | | |
| 4 | 7382203 | 2 | -SCREW PLUG VSTI M16X1,5 | -PARAFUSO DE FECHAMENTO | | |
| 5 | 10336008 | 3 | HEX BOLT EN 1665 M10X25 8.8 A3C | PARAFUSO SEXTAVADO | | |
| 8 | 7381638 | 1 | SCREW PLUG VSTI M10X1 | PARAFUSO DE FECHAMENTO | | |
| 100 | 10282622 | 1 | GREASE | GRAXA | | |

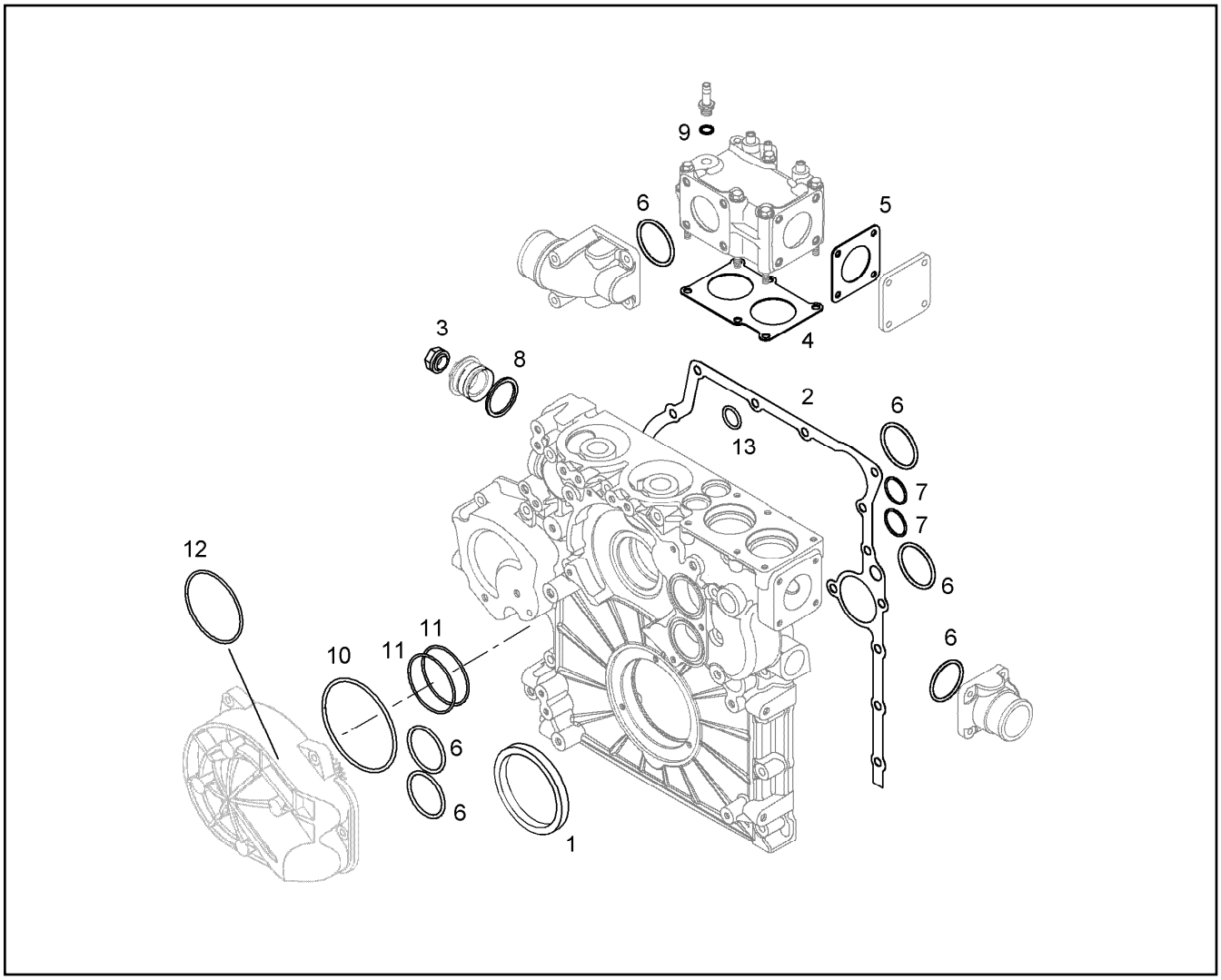


| Pos. | Item | Quantity | Description | Designação | Serie | K |
|---|---|---|---|---|---|---|
| 1 | 10121952 | 1 | RK CRANKSHAFT SEAL | KIT DE REPARO RETENTOR | | |
| 2 | 10118620 | 1 | SEAL | VEDAÇÃO | | |
| 3 | 7381226 | 1 | SEALING NUT M12 | PORCA DE VEDACAO | | |
| 4 | 9080279 | 1 | SEAL | VEDAÇÃO | | |
| 5 | 9080280 | 1 | LOCKING PIECES<br>⇨ ❑ 568 | PECAS DE FECHAMENTO | | |
| 6 | 7381779 | 7 | O-RING DIN 3771 59,92X3,53 | ANEL-O | | |
| 7 | 7380653 | 2 | O-RING DIN 3771 34,59X2,62 | ANEL-O | | |
| 8 | 7101021 | 4 | SEALING RING DIN 7603 A 30 X 36 CU | ANEL DE VEDAÇÃO | | |
| 9 | 10011866 | 2 | SEALING RING 14,7X22,00X1,5 | ANEL DE VEDAÇÃO | | |
| 10 | 7264365 | 1 | O-RING DIN 3771 113,89X3,53 | ANEL-O | | |
| 11 | 7381593 | 2 | O-RING 68,26X3,53 | ANEL-O | | |
| 12 | 7381912 | 1 | O-RING 120,50X3,53 | ANEL-O | | |
| 13 | 10004261 | 1 | O-RING 26,00X3,00 | ANEL-O | | |

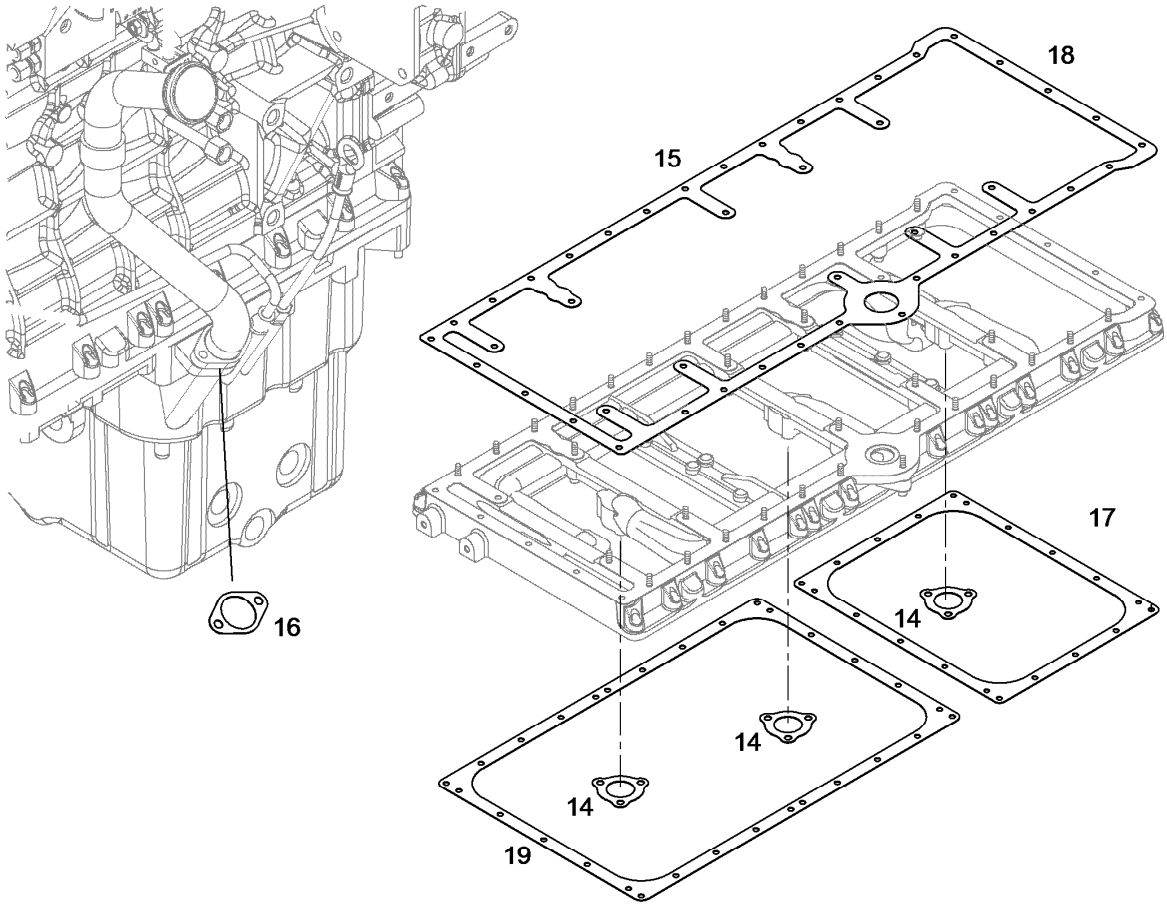


| Pos. | Item | Quantity | Description | Designação | Serie | K |
|---|---|---|---|---|---|---|
| 14 | 9079124 | 3 | SEAL | VEDAÇÃO | | |
| 15 | 10118549 | 1 | SEAL | VEDAÇÃO | | |
| 16 | 9275766 | 1 | SEAL | VEDAÇÃO | | |
| 17 | 10118551 | 3 | SEAL | VEDAÇÃO | | |
| 18 | 10120640 | 1 | SEAL | VEDAÇÃO | | |
| 19 | 10118550 | 1 | SEAL | VEDAÇÃO | | |

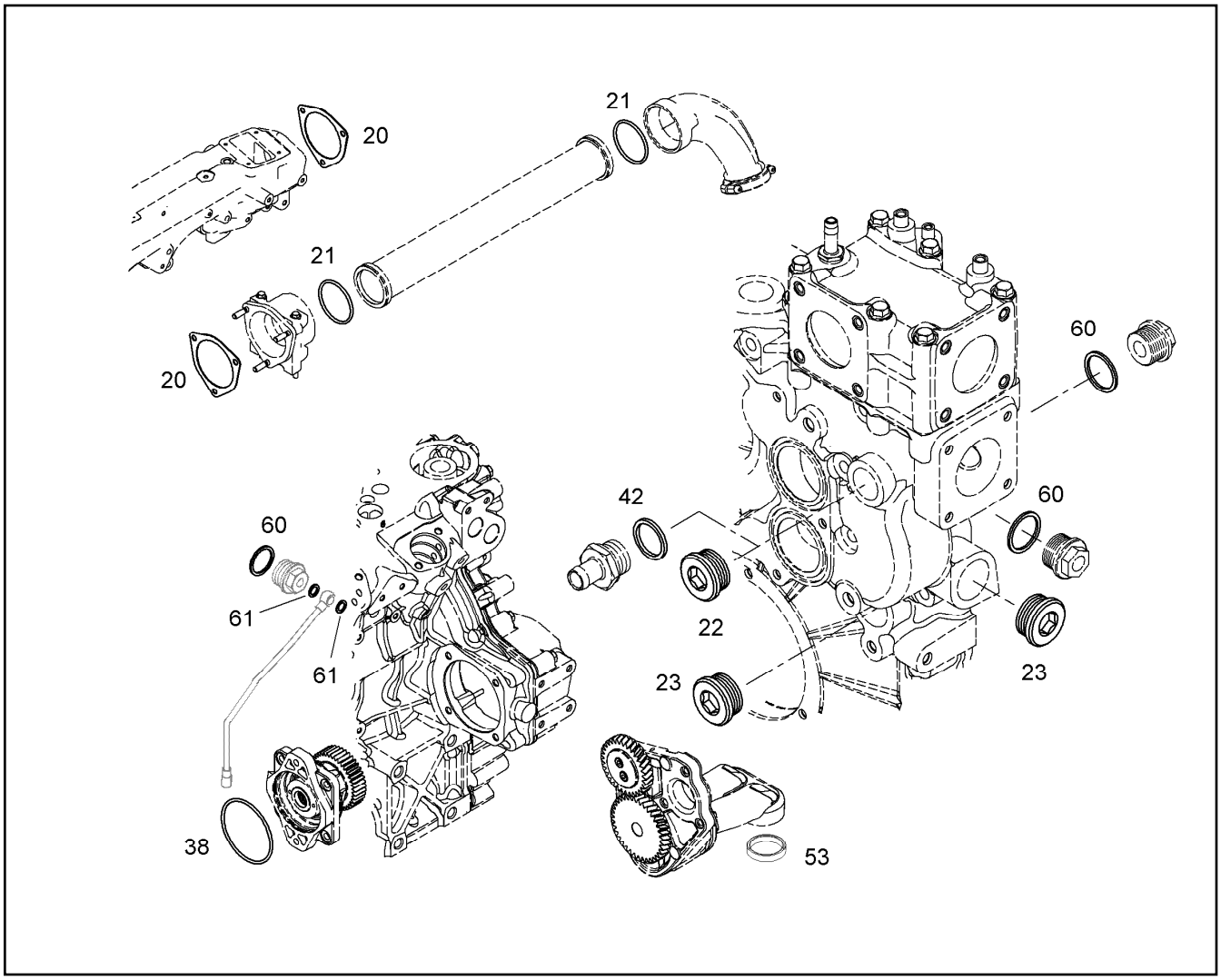


| Pos. | Item | Quantity | Description | Designação | Serie | K |
|---|---|---|---|---|---|---|
| 20 | 9271963 | 2 | SEAL | VEDAÇÃO | | |
| 21 | 10022320 | 2 | O-RING 80X5,0 | ANEL-O | | |
| 22 | 7382204 | 2 | SCREW PLUG VSTI M30X1,5 | PARAFUSO DE FECHAMENTO | | |
| 23 | 7382202 | 2 | SCREW PLUG VSTI M38X1,5 | PARAFUSO DE FECHAMENTO | | |
| 38 | 7380520 | 1 | O-RING DIN 3771 104,37X3,53 | ANEL-O | | |
| 42 | 10113731 | 2 | SEALING RING 30,7X39X2 | ANEL DE VEDAÇÃO | | |
| 53 | 9079608 | 2 | SEAL | VEDAÇÃO | | |
| 60 | 7101021 | 3 | SEALING RING DIN 7603 A 30 X 36 CU | ANEL DE VEDAÇÃO | | |
| 61 | 7007952 | 2 | SEALING RING DIN 7603 A 10X15X1 | ANEL DE VEDAÇÃO | | |

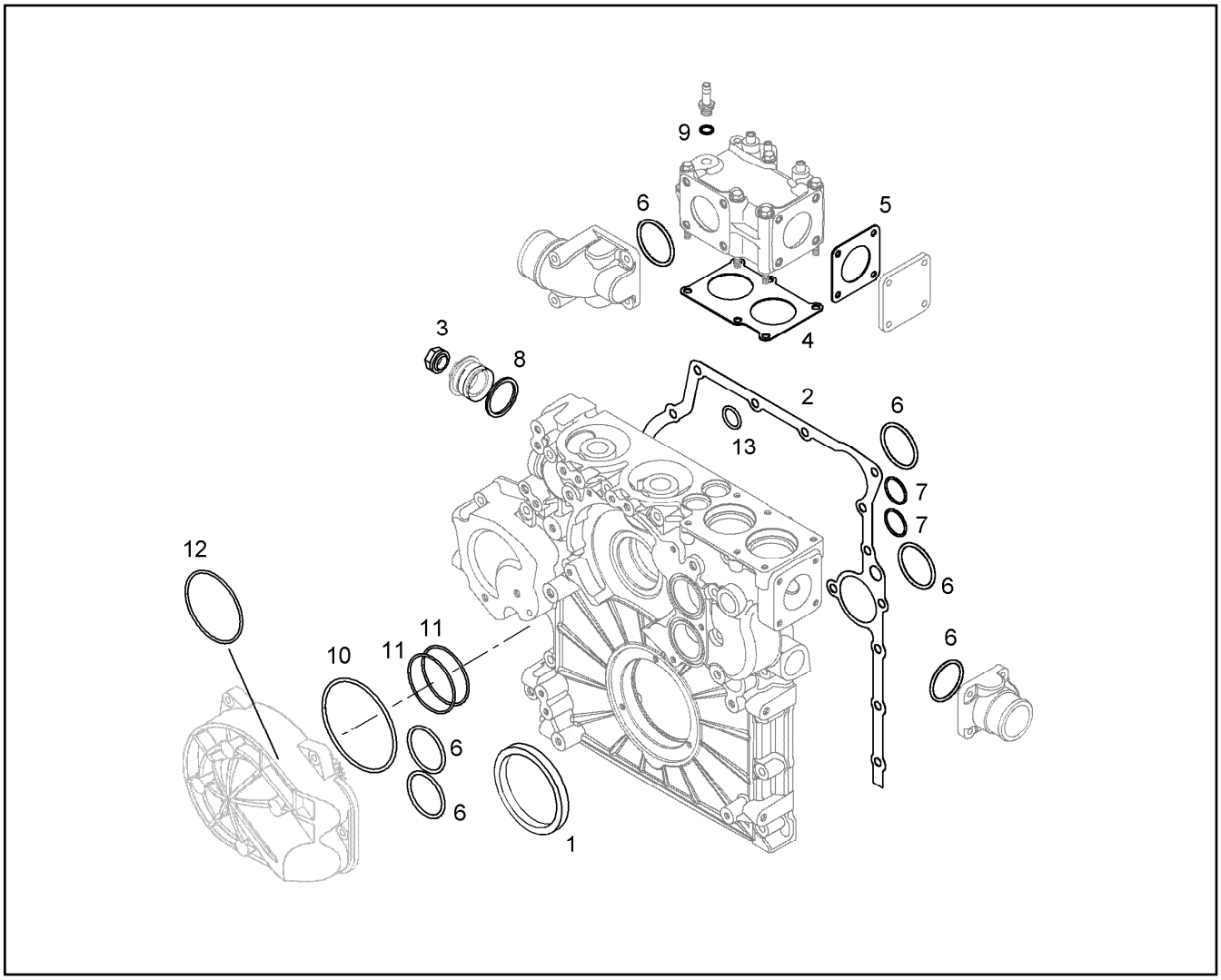


| Pos. | Item | Quantity | Description | Designação | Serie | K |
|---|---|---|---|---|---|---|
| 1 | 10121952 | 1 | RK CRANKSHAFT SEAL | KIT DE REPARO RETENTOR | | |
| 2 | 10126738 | 1 | SEAL | VEDAÇÃO | | |
| 3 | 7381226 | 1 | SEALING NUT M12 | PORCA DE VEDACAO | | |
| 4 | 9080279 | 1 | SEAL | VEDAÇÃO | | |
| 5 | 9080280 | 2 | LOCKING PIECES<br>⇨ ❑ 568 | PECAS DE FECHAMENTO | | |
| 6 | 7381779 | 6 | O-RING DIN 3771 59,92X3,53 | ANEL-O | | |
| 7 | 7380653 | 2 | O-RING DIN 3771 34,59X2,62 | ANEL-O | | |
| 8 | 7101021 | 1 | SEALING RING DIN 7603 A 30 X 36 CU | ANEL DE VEDAÇÃO | | |
| 9 | 7101008 | 2 | SEALING RING DIN 7603 A 14X18 | ANEL DE VEDAÇÃO | | |
| 10 | 7264365 | 1 | O-RING DIN 3771 113,89X3,53 | ANEL-O | | |
| 11 | 7381593 | 2 | O-RING 68,26X3,53 | ANEL-O | | |
| 12 | 7381912 | 1 | O-RING 120,50X3,53 | ANEL-O | | |
| 13 | 10004261 | 1 | O-RING 26,00X3,00 | ANEL-O | | |

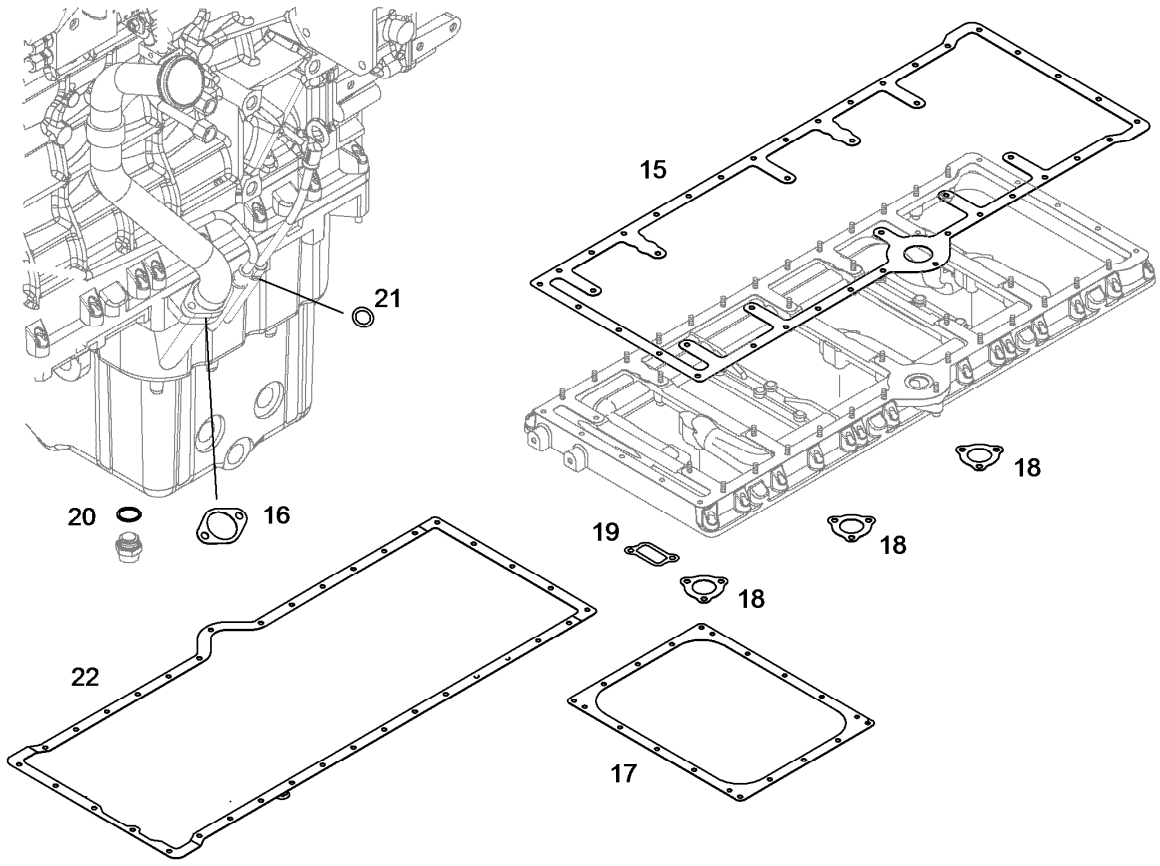


| Pos. | Item | Quantity | Description | Designação | Serie | K |
|---|---|---|---|---|---|---|
| 15 | 10123734 | 1 | SEAL | VEDAÇÃO | | |
| 16 | 9275766 | 3 | SEAL | VEDAÇÃO | | |
| 17 | 10123735 | 3 | SEAL | VEDAÇÃO | | |
| 18 | 9079124 | 3 | SEAL | VEDAÇÃO | | |
| 19 | 9079125 | 1 | SEAL | VEDAÇÃO | | |
| 20 | 7101021 | 1 | SEALING RING DIN 7603 A 30 X 36 CU | ANEL DE VEDAÇÃO | | |
| 21 | 7101008 | 2 | SEALING RING DIN 7603 A 14X18 | ANEL DE VEDAÇÃO | | |
| 22 | 10126427 | 1 | SEAL | VEDAÇÃO | | |

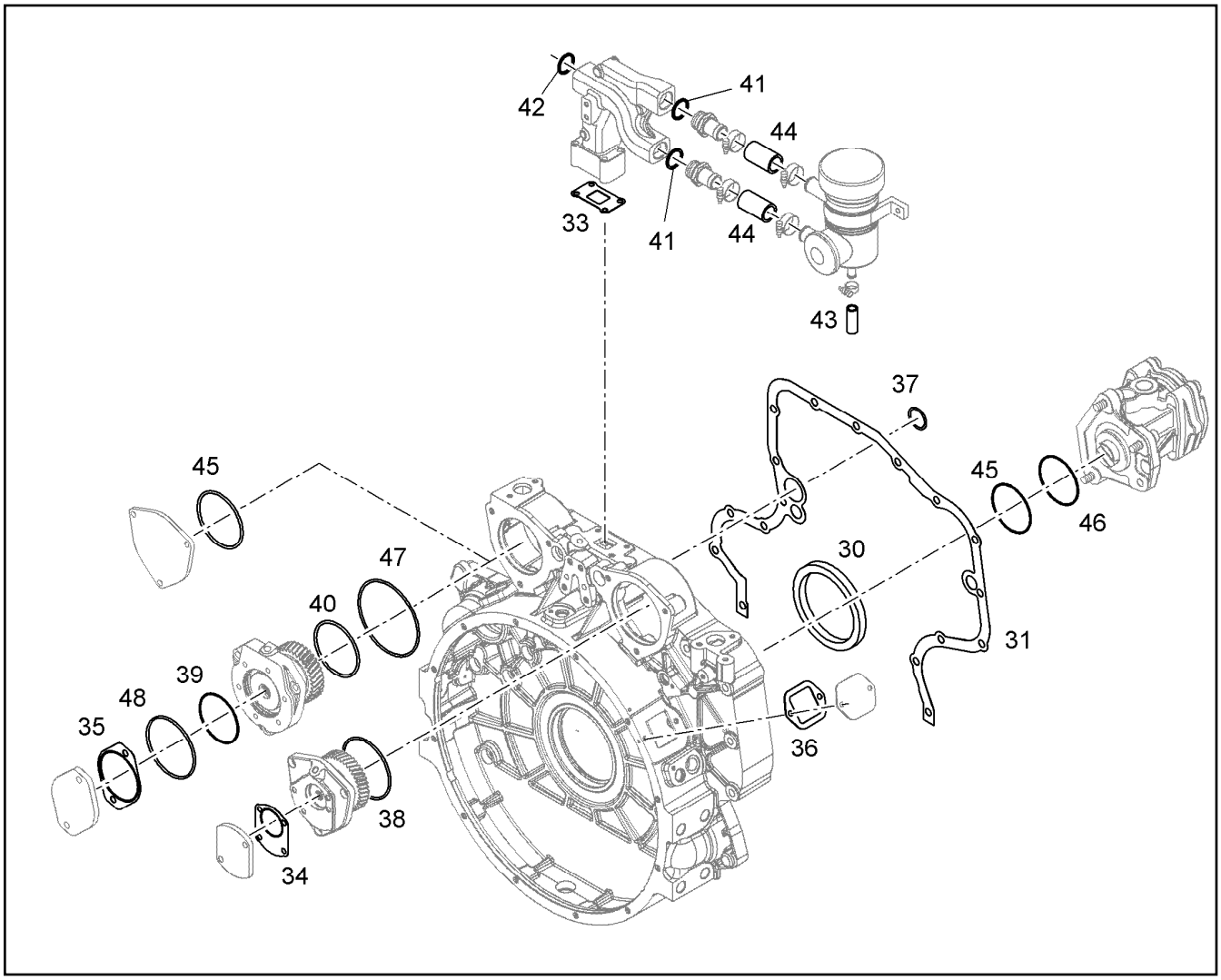


| Pos. | Item | Quantity | Description | Designação | Serie | K |
|---|---|---|---|---|---|---|
| 30 | 10121335 | 1 | RK CRANKSHAFT SEAL | KIT DE REPARO RETENTOR | | |
| 31 | 10137721 | 1 | SEAL | VEDAÇÃO | | |
| 33 | 9079130 | 1 | SEAL 1MM | VEDAÇÃO | | |
| 34 | 9885529 | 1 | SEAL | VEDAÇÃO | | |
| 35 | 9077329 | 3 | SEAL | VEDAÇÃO | | |
| 36 | 9274974 | 1 | SEAL | VEDAÇÃO | | |
| 37 | 7380653 | 1 | O-RING DIN 3771 34,59X2,62 | ANEL-O | | |
| 38 | 7380520 | 1 | O-RING DIN 3771 104,37X3,53 | ANEL-O | | |
| 39 | 7380598 | 1 | O-RING DIN 3771 82,22X2,62 | ANEL-O | | |
| 40 | 7380657 | 1 | O-RING DIN 3771 91,67X3,53 | ANEL-O | | |
| 41 | 7101021 | 2 | SEALING RING DIN 7603 A 30 X 36 CU | ANEL DE VEDAÇÃO | | |
| 42 | 10113731 | 2 | SEALING RING 30,7X39X2 | ANEL DE VEDAÇÃO | | |
| 43 | 9079603 | 1 | RUBBER CONNECTION | CONEXÃO DE BORRACHA | | |
| 44 | 9271340 | 2 | RUBBER CONNECTION | CONEXÃO DE BORRACHA | | |
| 45 | 9177948 | 2 | O-RING DIN 3771 120X3 | ANEL-O | | |
| 46 | 10040400 | 1 | O-RING | ANEL-O | | |
| 47 | 10002310 | 1 | O-RING 125,00X2,0 | ANEL-O | | |
| 48 | 7380401 | 1 | O-RING DIN 3771 101,20X3,53 | ANEL-O | | |

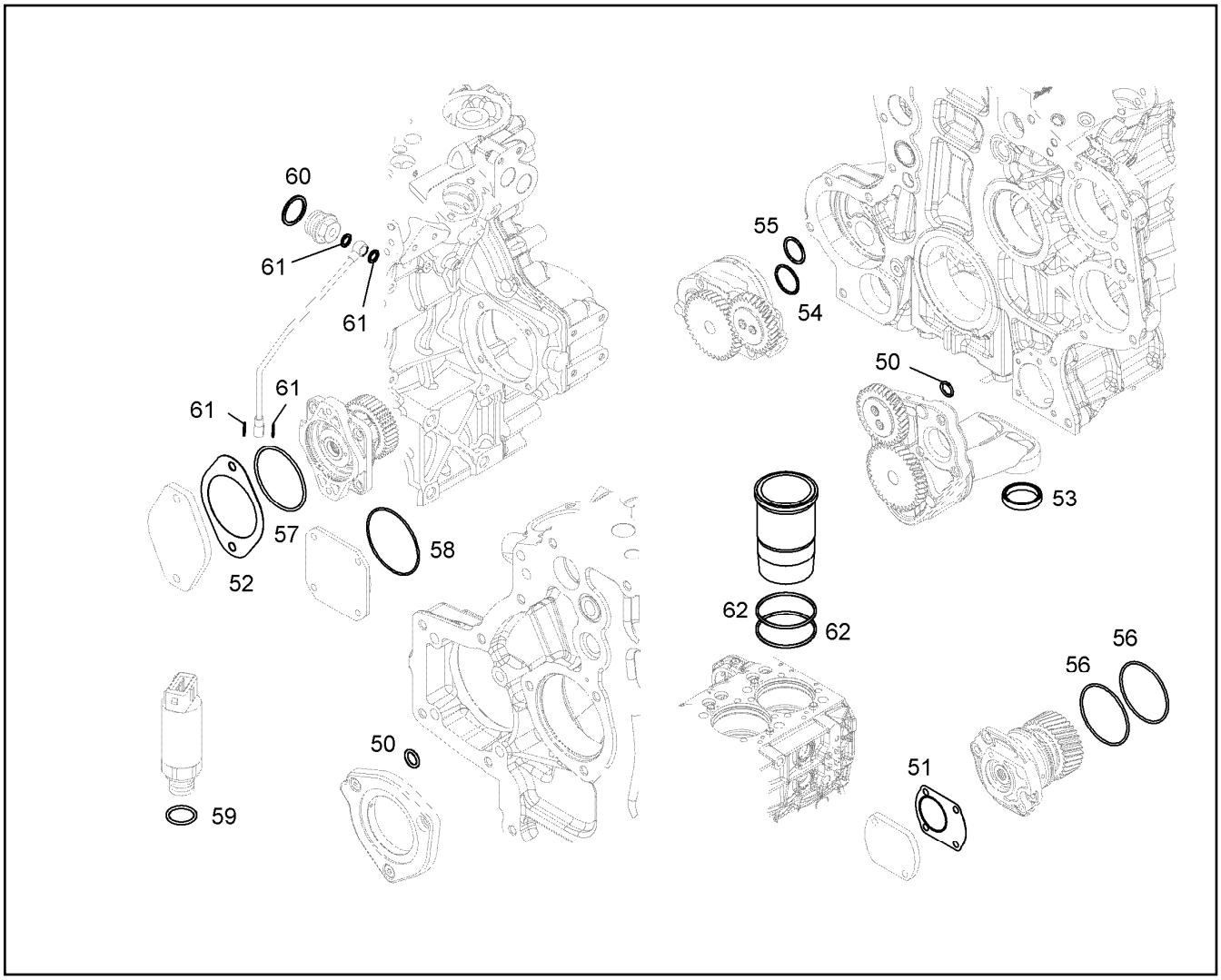


| Pos. | Item | Quantity | Description | Designação | Serie | K |
|---|---|---|---|---|---|---|
| 50 | 7381685 | 2 | O-RING DIN 3771 7,00X1,5 | ANEL-O | | |
| 51 | 9885529 | 2 | SEAL | VEDAÇÃO | | |
| 52 | 9273691 | 1 | SEAL | VEDAÇÃO | | |
| 53 | 9079608 | 2 | SEAL | VEDAÇÃO | | |
| 54 | 7381812 | 1 | O-RING 39,34X2,62 | ANEL-O | | |
| 55 | 7382059 | 1 | O-RING DIN 3771 34,59X2,62 | ANEL-O | | |
| 56 | 7381361 | 6 | O-RING DIN 3771 85,32X3,53 | ANEL-O | | |
| 57 | 7380520 | 2 | O-RING DIN 3771 104,37X3,53 | ANEL-O | | |
| 58 | 7382158 | 3 | O-RING DIN 3771 101,20X3,53 | ANEL-O | | |
| 59 | 10113975 | 1 | O-RING 15,50X2,00 | ANEL-O | | |
| 60 | 7101021 | 2 | SEALING RING DIN 7603 A 30 X 36 CU | ANEL DE VEDAÇÃO | | |
| 61 | 7007952 | 2 | SEALING RING DIN 7603 A 10X15X1 | ANEL DE VEDAÇÃO | | |
| 62 | 10006499 | 12 | O-RING 140 | ANEL-O | | |

# OHNE BILD

# WITHOUT ILLUSTRATION

# SANS PLANCHE

| Pos. | Item | Quantity | Description | Designação | Serie | K |
|---|---|---|---|---|---|---|
| 71 | 9268131 | 1 | SEAL | VEDAÇÃO | | |
| 72 | 7381415 | 1 | O-RING DIN 3771 21,95X1,78 | ANEL-O | | |
| 73 | 7381225 | 1 | SEALING RING DIN 7603 A 14X20X2,5 | ANEL DE VEDAÇÃO | | |
| 74 | 7007952 | 5 | SEALING RING DIN 7603 A 10X15X1 | ANEL DE VEDAÇÃO | | |
| 75 | 10011866 | 1 | SEALING RING 14,7X22,00X1,5 | ANEL DE VEDAÇÃO | | |
| 76 | 10011870 | 5 | SEALING RING 26,7X34,93X2 | ANEL DE VEDAÇÃO | | |
| 77 | 10011865 | 4 | SEALING RING 12,7X18,00X1,5 | ANEL DE VEDAÇÃO | | |
| 78 | 10011866 | 25 | SEALING RING 14,7X22,00X1,5 | ANEL DE VEDAÇÃO | | |
| 79 | 10011867 | 5 | SEALING RING 16,7X24,00X1,5 | ANEL DE VEDAÇÃO | | |
| 80 | 10011867 | 7 | SEALING RING 16,7X24,00X1,5 | ANEL DE VEDAÇÃO | | |
| 81 | 10115850 | 1 | SEALING SET OIL COOLER<br>⇨ ❑ 522 | KIT DE VEDAÇÃO | | |
| 82 | 10115855 | 6 | SEAL KIT INJECTION NOZZLE<br>⇨ ❑ 530 | KIT DE VEDACAO DO BICO INJET | | |
| 83 | 10115853 | 1 | SEAL KIT ZYLINDER HEAD CPL.<br>⇨ ❑ 515 | KIT DE VEDAÇÃO CABEÇOTE CO | | |

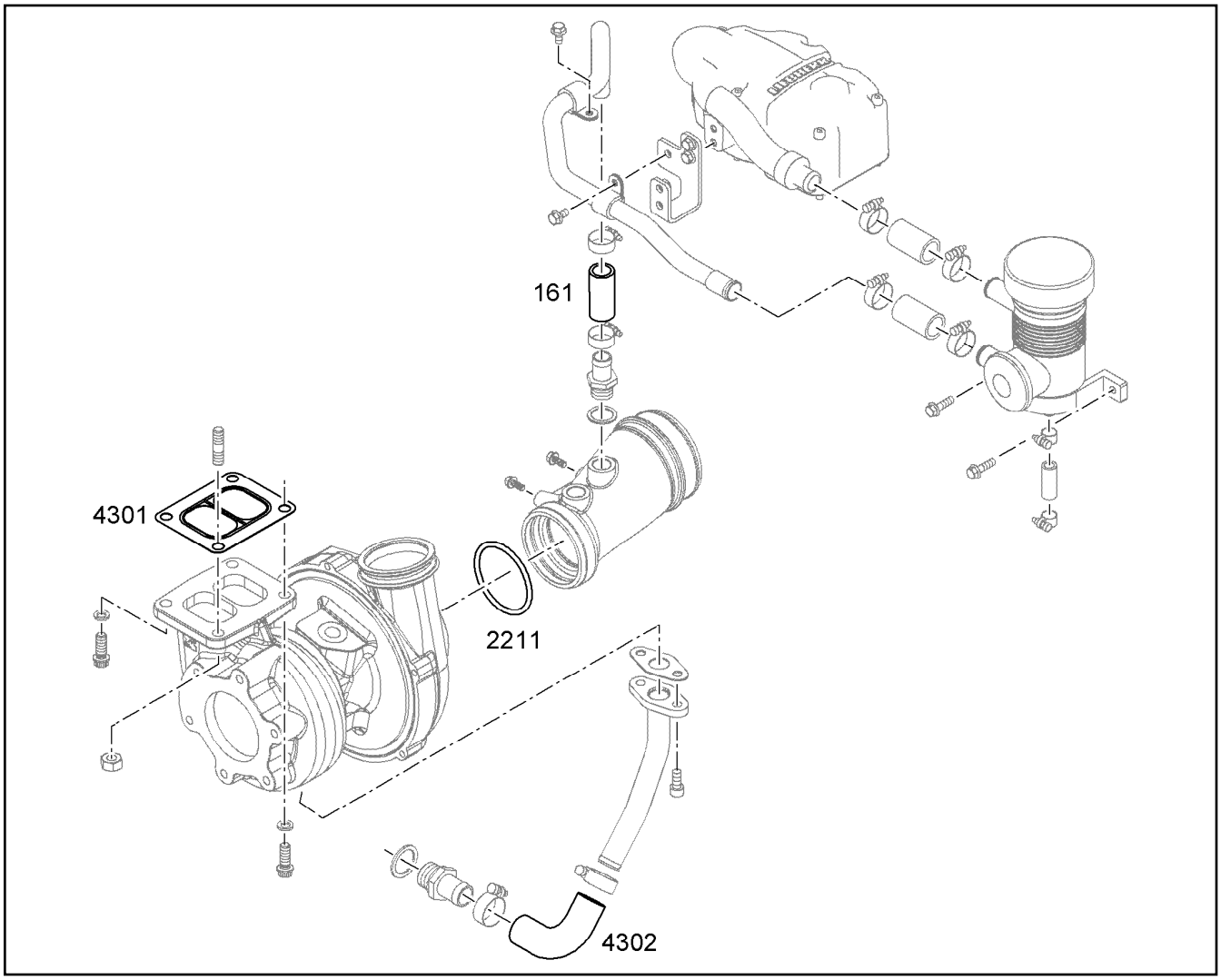


| Pos. | Item | Quantity | Description | Designação | Serie | K |
|---|---|---|---|---|---|---|
| 161 | 9273161 | 1 | RUBBER CONNECTION | CONEXÃO DE BORRACHA | | |
| 2211 | 11008055 | 1 | O-RING 100X5 | ANEL-O | | |
| 4301 | 9270109 | 1 | SEAL | VEDAÇÃO | | |
| 4302 | 10116310 | 1 | RUBBER CONNECTION 90GRAD | CONEXÃO DE BORRACHA | | |

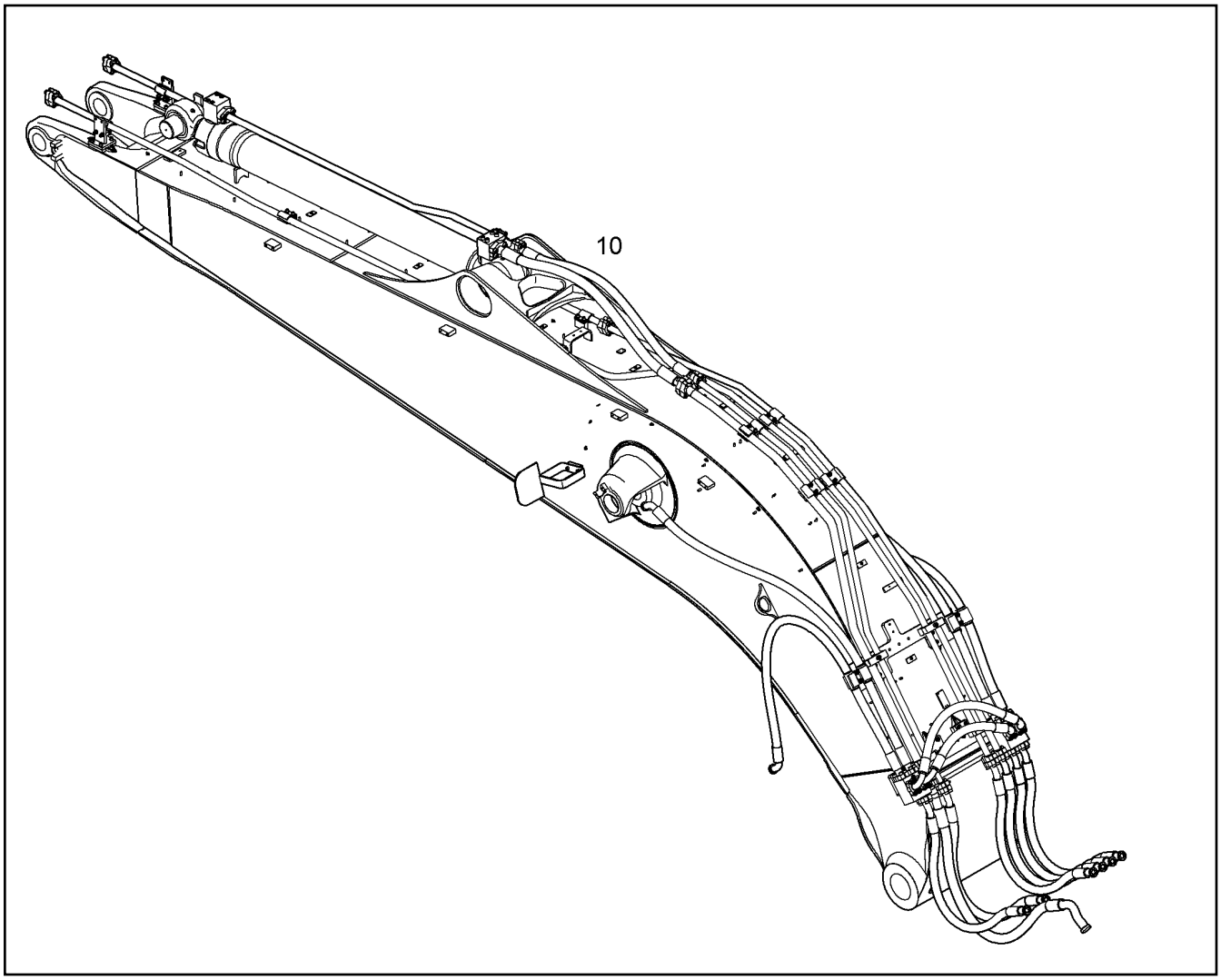


| Pos. | Item | Quantity | Description | Designação | Serie | K |
|---|---|---|---|---|---|---|
| 10 | | 1 | GOOSENECK BOOM 6,70M<br>⇨ ❑ 616 | LANÇA MONOBLOCO | | |

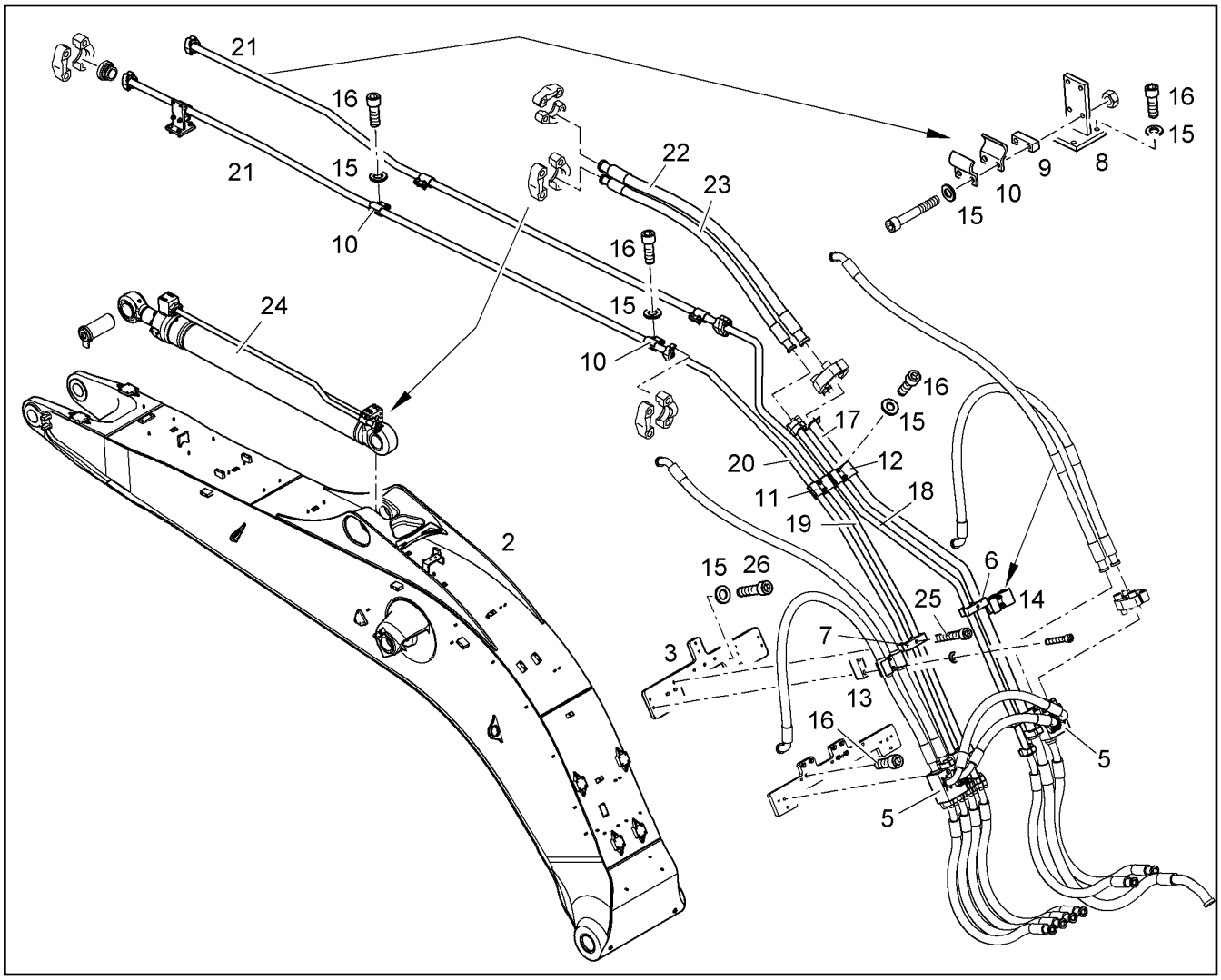


| Pos. | Item | Quantity | Description | Designação | Serie | K |
|---|---|---|---|---|---|---|
| 2 | 10498301 | 1 | GOOSENECK BOOM 6,70M<br>[MO 300 2440 ]<br>⇨ ❑ 621 | LANÇA MONOBLOCO | | |
| 3 | 9928149 | 1 | CONSOLE | SUPORTE | | |
| 5 | 9948778 | 2 | BLOCK | BLOCO | | |
| 6 | 9948779 | 4 | HALF CLAMP COLLAR 150 | MEIA ABRAÇADEIRA | | |
| 7 | 9948780 | 4 | HALF CLAMP COLLAR | MEIA ABRAÇADEIRA | | |
| 8 | 10498678 | 2 | CONSOLE | CONSOLE | | |
| 9 | 9872047 | 2 | INTERMEDIATE PIECE H=25 | PECA INTERMEDIARIA | | |
| 10 | 7373875 | 12 | HALF FLANGE | SEMI-FLANGE | | |
| 11 | 9927398 | 2 | HALF CLAMP COLLAR | MEIA ABRAÇADEIRA | | |
| 12 | 9927399 | 2 | HALF CLAMP COLLAR | MEIA ABRAÇADEIRA | | |
| 13 | 9809298 | 2 | INTERMEDIATE PIECE H=40 | PECA INTERMEDIARIA | | |
| 14 | 9928147 | 4 | HALF CLAMP COLLAR | MEIA ABRAÇADEIRA | | |
| 15 | 10289804 | 48 | WASHER ISO 7089 12 300HV | ARRUELA | | |
| 16 | 4043164 | 20 | CYLINDER SCREW ISO 4762 M12X35 10.9 | PARAFUSO CILÍNDRICO | | |
| 17 | 9949237 | 1 | PRESSURE LINE CPL | TUBULAÇÃO DE PRESSÃO COM | | |
| 18 | 9949239 | 1 | PRESSURE LINE CPL | TUBULAÇÃO DE PRESSÃO COM | | |
| 19 | 9949243 | 1 | PRESSURE LINE CPL | TUBULAÇÃO DE PRESSÃO COM | | |
| 20 | 9949245 | 1 | PRESSURE LINE CPL | TUBULAÇÃO DE PRESSÃO COM | | |
| 21 | 9948786 | 2 | PRESSURE LINE CPL | TUBULAÇÃO DE PRESSÃO COM | | |
| 22 | 5604439 | 1 | HOSE | MANGUEIRA | | 1 |
| 23 | 5604515 | 1 | HOSE | MANGUEIRA | | 1 |
| 24 | | 1 | HYDR.CYLINDER W/ADDITION.PARTS<br>⇨ ❑ 656 | CILINDRO HIDR. COM DIVISOR | | |
| 25 | 10001080 | 4 | CYLINDER SCREW ISO 4762 M16X100 10.9 | PARAFUSO CILÍNDRICO | | |

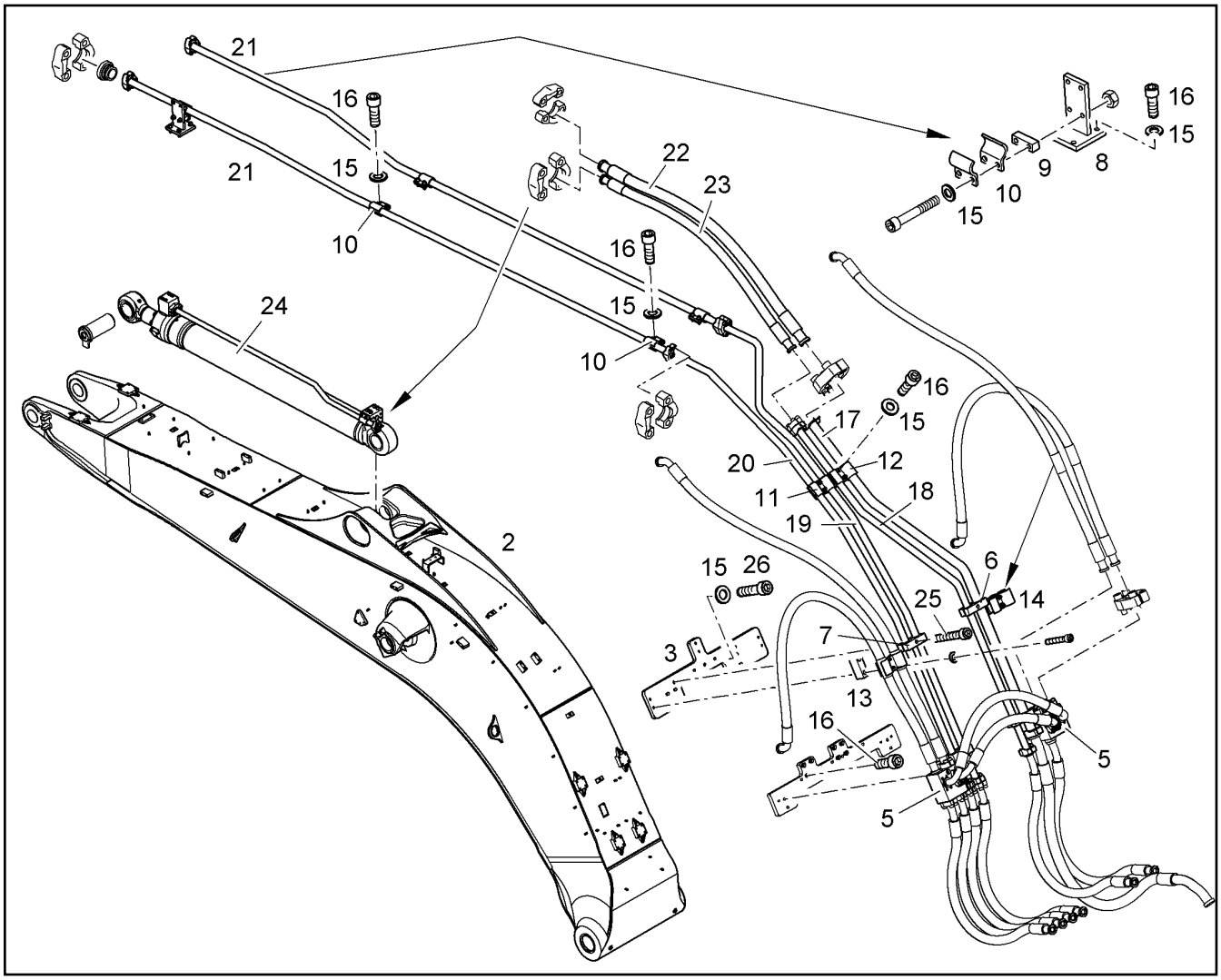


| Pos. | Item | Quantity | Description | Designação | Serie | K |
|---|---|---|---|---|---|---|
| 26 | 4000784 | 16 | CYLINDER SCREW ISO 4762 M12X50 10.9 | PARAFUSO CILÍNDRICO | | |

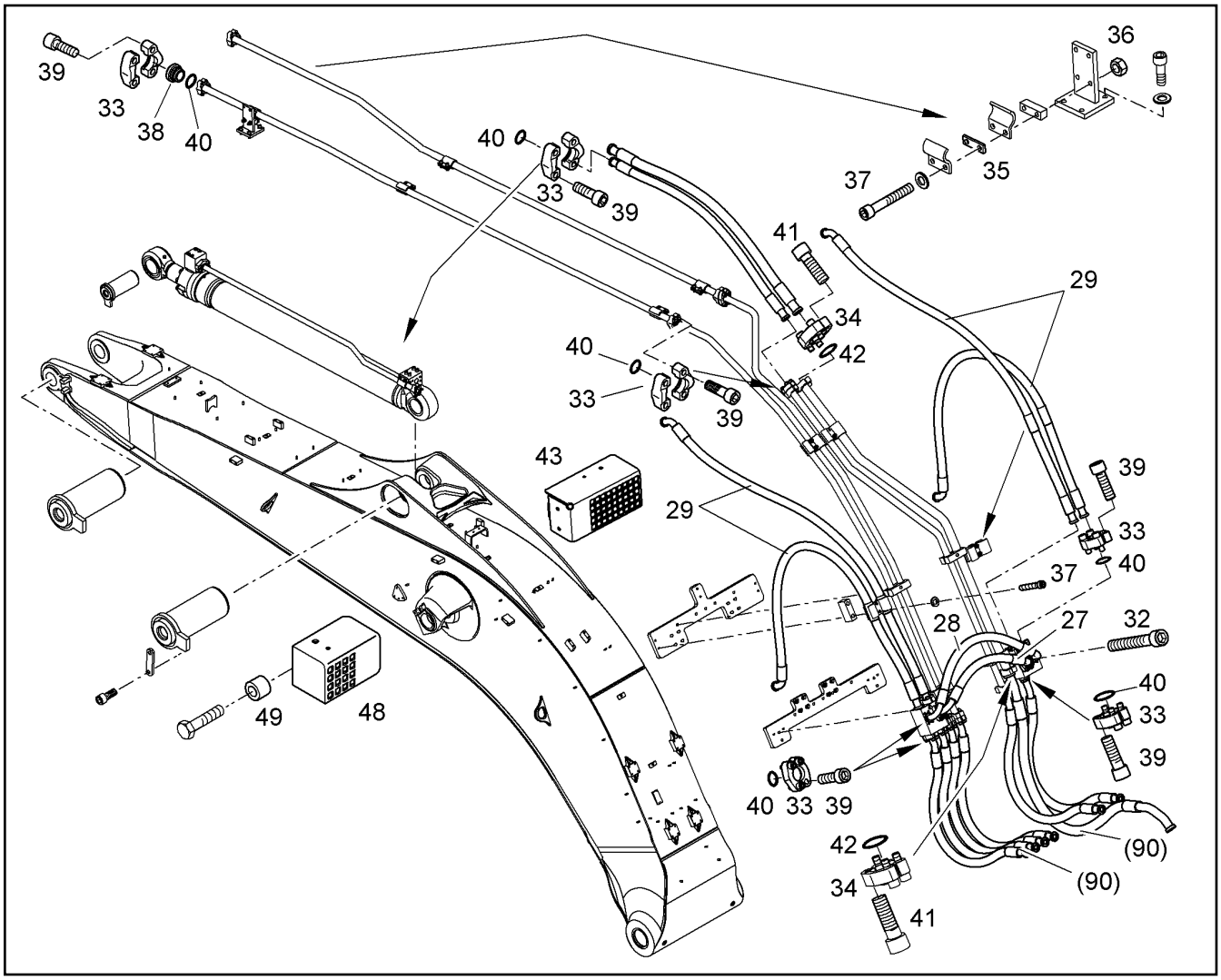


| Pos. | Item | Quantity | Description | Designação | Serie | K |
|---|---|---|---|---|---|---|
| 27 | 10044599 | 1 | HOSE | MANGUEIRA | | 1 |
| 28 | 5610216 | 1 | HOSE 32X1100 | MANGUEIRA | | 1 |
| 29 | 10044999 | 4 | HOSE 32X2580 | MANGUEIRA | | 1 |
| 30 | 10046968 | 6 | HOSE 32X1600 | MANGUEIRA | | 1 |
| 31 | 10100625 | 1 | HOSE 40X2110 | MANGUEIRA | | 1 |
| 32 | 10001471 | 4 | CYLINDER SCREW ISO 4762 M16X110 10.9 F | PARAFUSO CILÍNDRICO | | |
| 33 | 11485639 | 30 | FLANGE HALF WITH BOSSING SAE J518 SA | MEIO FLANGE COM RELEVO | | |
| 34 | 11485640 | 4 | FLANGE HALF WITH BOSSING SAE J518 SA | MEIO FLANGE COM RELEVO | | |
| 35 | 10091991 | 2 | SHEET H=5 | PLACA | | |
| 36 | 4000619 | 4 | HEX NUT M12 | PORCA SEXTAVADA | | |
| 37 | 4002171 | 8 | CYLINDER SCREW ISO 4762 M12X85 10.9 | PARAFUSO CILÍNDRICO | | |
| 38 | 9429965 | 3 | SHUTTER DISK | ARRUELA DE FECHAMENTO | | |
| 39 | 4902327 | 60 | CYLINDER SCREW ISO 4762 M14X45 10.9 | PARAFUSO CILÍNDRICO | | |
| 40 | 10472425 | 15 | PLAIN COMPRESSION RING 45,05X3,40X2,8 | ANEL DE SEÇÃO RETANGULAR | | |
| 41 | 10001077 | 8 | CYLINDER SCREW ISO 4762 M16X50 10.9 | PARAFUSO CILÍNDRICO | | |
| 42 | 10490787 | 2 | PLAIN COMPRESSION RING 54,40X3,40X2,8 | ANEL DE SEÇÃO RETANGULAR | | |
| 43 | 10374017 | 1 | COVER LEFT | PROTECAO ESQUERDA | | |
| 44 | 9375885 | 1 | SHEET | PLACA | | |
| 45 | 4043163 | 2 | CYLINDER SCREW ISO 4762 M12X30 10.9 | PARAFUSO CILÍNDRICO | | |
| 48 | 10358598 | 1 | COVER RIGHT | PROTECAO DIREITA | | |
| 49 | 9692782 | 4 | DISTANCE SLEEVE | LUVA DISTANCIADORA | | |

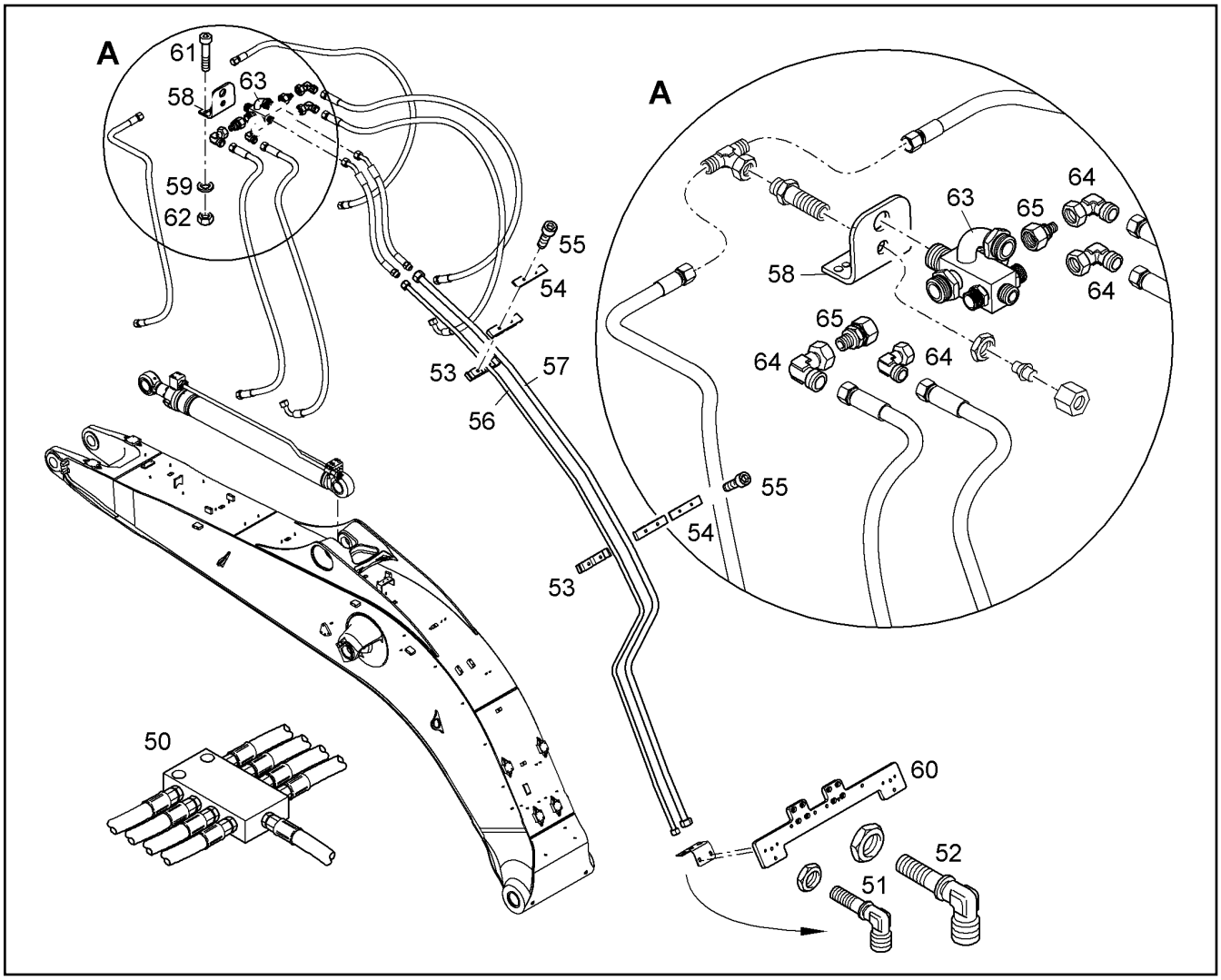


| Pos. | Item | Quantity | Description | Designação | Serie | K |
|---|---|---|---|---|---|---|
| 50 | | 1 | CENTRAL LUBRICATING SYSTEM<br>⇨ ❑ 624 | LUBRIFICAÇÃO CENTRALIZADA | | |
| 51 | 4901130 | 1 | SCREW FITTING SV 15L M22X1,5 | REDUÇÃO | | |
| 52 | 4901131 | 1 | SCREW FITTING SV 22L M30X2 | REDUÇÃO | | |
| 53 | 10057335 | 4 | HALF CLAMP COLLAR PP DOW C766-03 | MEIA ABRAÇADEIRA | | |
| 54 | 10057336 | 2 | SHEET | PLACA | | |
| 55 | 4600335 | 4 | CYLINDER SCREW ISO 4762 M8X45 10.9 A2 | PARAFUSO CILÍNDRICO | | |
| 56 | 10052696 | 1 | PRESSURE LINE CPL | TUBULAÇÃO DE PRESSÃO COM | | |
| 57 | 10052672 | 1 | PRESSURE LINE CPL | TUBULAÇÃO DE PRESSÃO COM | | |
| 58 | 9013056 | 1 | CONSOLE | SUPORTE | | |
| 59 | 10289795 | 4 | WASHER ISO 7089 10 300HV | ARRUELA | | |
| 60 | 10063343 | 1 | CONSOLE | SUPORTE | | |
| 61 | 4043127 | 2 | CYLINDER SCREW ISO 4762 M10X40 10.9 | PARAFUSO CILÍNDRICO | | |
| 62 | 4600579 | 2 | HEX NUT M10 | PORCA SEXTAVADA | | |
| 63 | 10290156 | 1 | CONTROL A.RETURN DISTRIBUTOR | DISTRIBUIDOR COMANDO E RET | | |
| 64 | 7615379 | 4 | SCREW FITTING EW 15L | REDUÇÃO | | |
| 65 | 7616913 | 2 | SCREW FITTING RED 22/15L | REDUÇÃO | | |

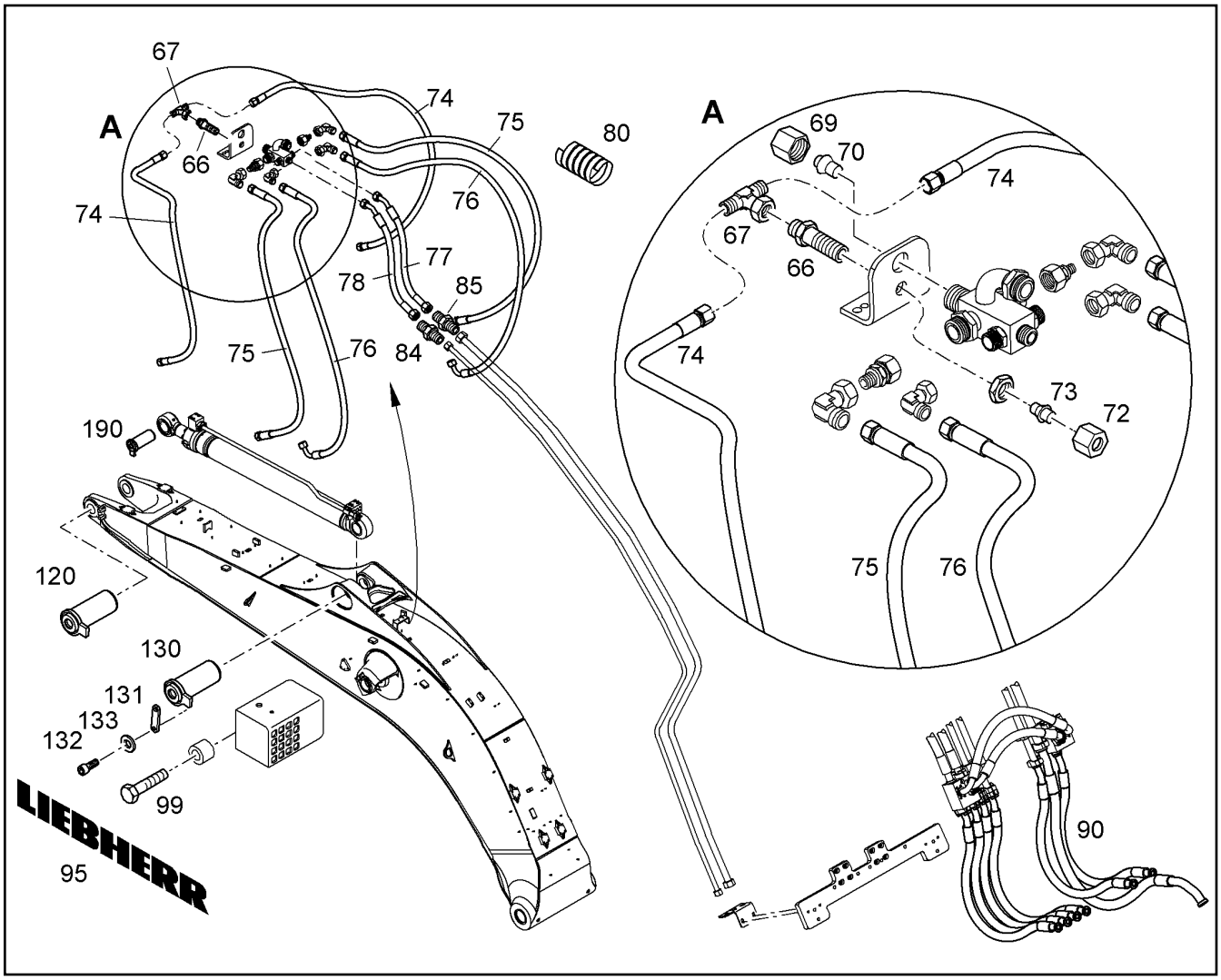


| Pos. | Item | Quantity | Description | Designação | Serie | K |
|---|---|---|---|---|---|---|
| 66 | 4901150 | 1 | BULKHEAD STUD SV 12S | CONEXÃO | | |
| 67 | 482431414 | 1 | SCREW FITTING | REDUÇÃO | | |
| 69 | 4774011 | 1 | BOX NUT DIN 3870 A 22L | PORCA DE CONEXAO | | |
| 70 | 4772028 | 1 | TAPER COLLET VKA 22L | CONE DE FECHAMENTO | | |
| 72 | 4774010 | 1 | BOX NUT DIN 3870 A 12S | PORCA DE CONEXAO | | |
| 73 | 477700514 | 1 | TAPER COLLET VKA 12L/S | CONE DE FECHAMENTO | | |
| 74 | 5617317 | 2 | HOSE 10X1450 | MANGUEIRA | | 1 |
| 75 | 10002237 | 2 | HOSE | MANGUEIRA | | 1 |
| 76 | 5618975 | 2 | HOSE | MANGUEIRA | | 1 |
| 77 | 10216661 | 1 | HOSE | MANGUEIRA | | 1 |
| 78 | 5615145 | 1 | HOSE | MANGUEIRA | | 1 |
| 80 | 7369399 | 4m | PLASTIC PROTECTION SPRING | PROTECAO ESPIRAL PLASTICA | | |
| 84 | 7362107 | 1 | SCREW FITTING G 15L | REDUÇÃO | | |
| 85 | 7362408 | 1 | SCREW FITTING G 22L | REDUÇÃO | | |
| 90 | 11451530 | 1 | HOSES UPPER-GOOSENECK BOOM<br>⇨ ❑ 637 | MANGUEIRAS MONOBLOCO C | | |
| 95 | 9612981 | 2 | STICKER LIEBHERR 1422mmX190mm | ETIQUETA ADESIVA | | |
| 99 | 4002704 | 4 | HEX BOLT ISO 4014 M12X60 10.9 FLZN | PARAFUSO SEXTAVADO | | |
| 120 | 9374949 | 1 | PIN CPL<br>⇨ ❑ 646 | PINO COMPLETO | | |
| 130 | 9374747 | 1 | PIN | PINO | | 1 |
| 131 | 9375885 | 2 | SHEET | PLACA | | |
| 132 | 4043163 | 2 | CYLINDER SCREW ISO 4762 M12X30 10.9 | PARAFUSO CILÍNDRICO | | |
| 133 | 10289804 | 1 | WASHER ISO 7089 12 300HV | ARRUELA | | |
| 190 | 9374747 | 1 | PIN | PINO | | 1 |

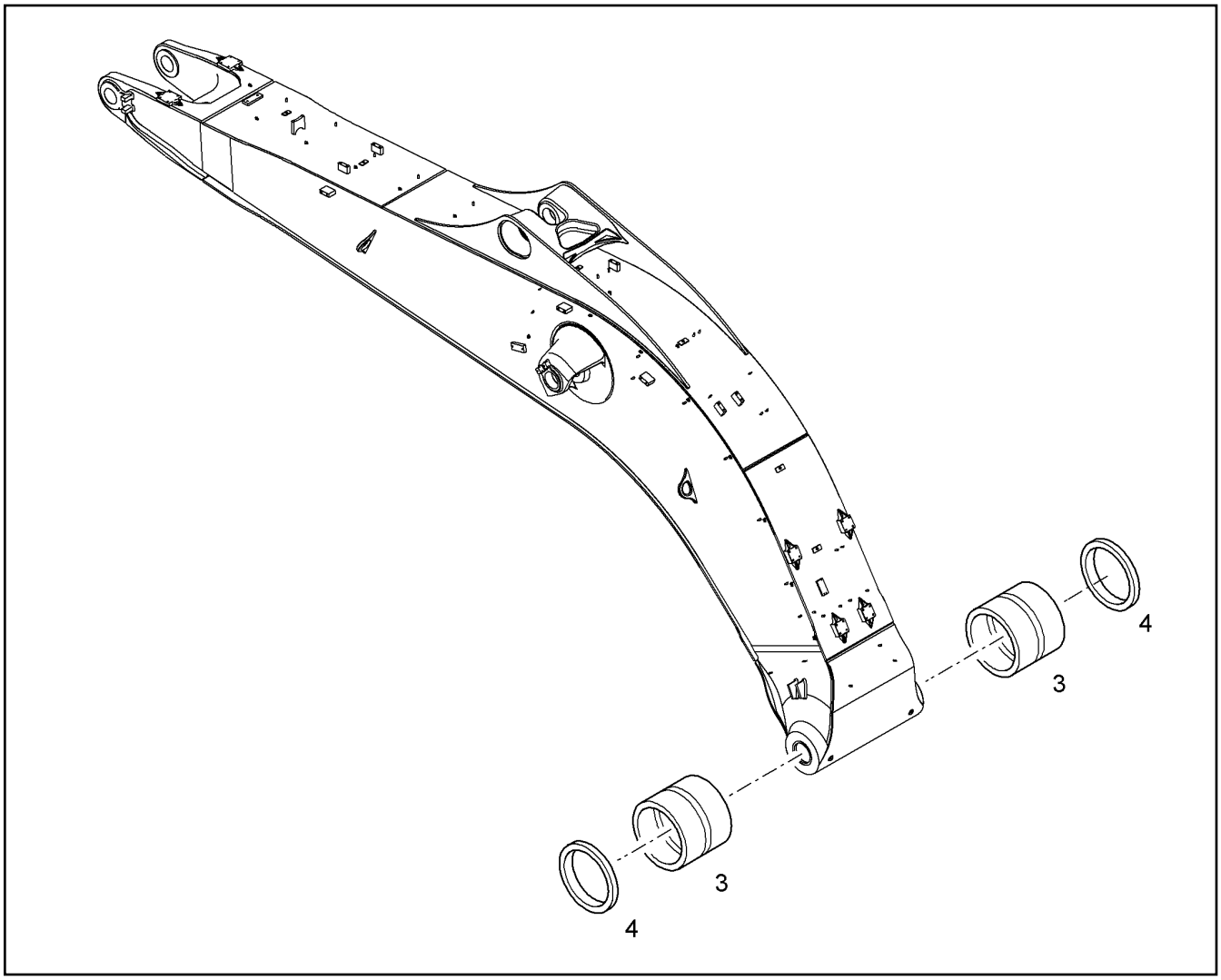


| Pos. | Item | Quantity | Description | Designação | Serie | K |
|---|---|---|---|---|---|---|
| 3 | 10820174 | 2 | BUSHING B1 140/170X206 | BUCHA | 30022- | |
| 4 | 7362185 | 2 | RADIAL SEAL X140X170X12 | ANEL RETENTOR | | |

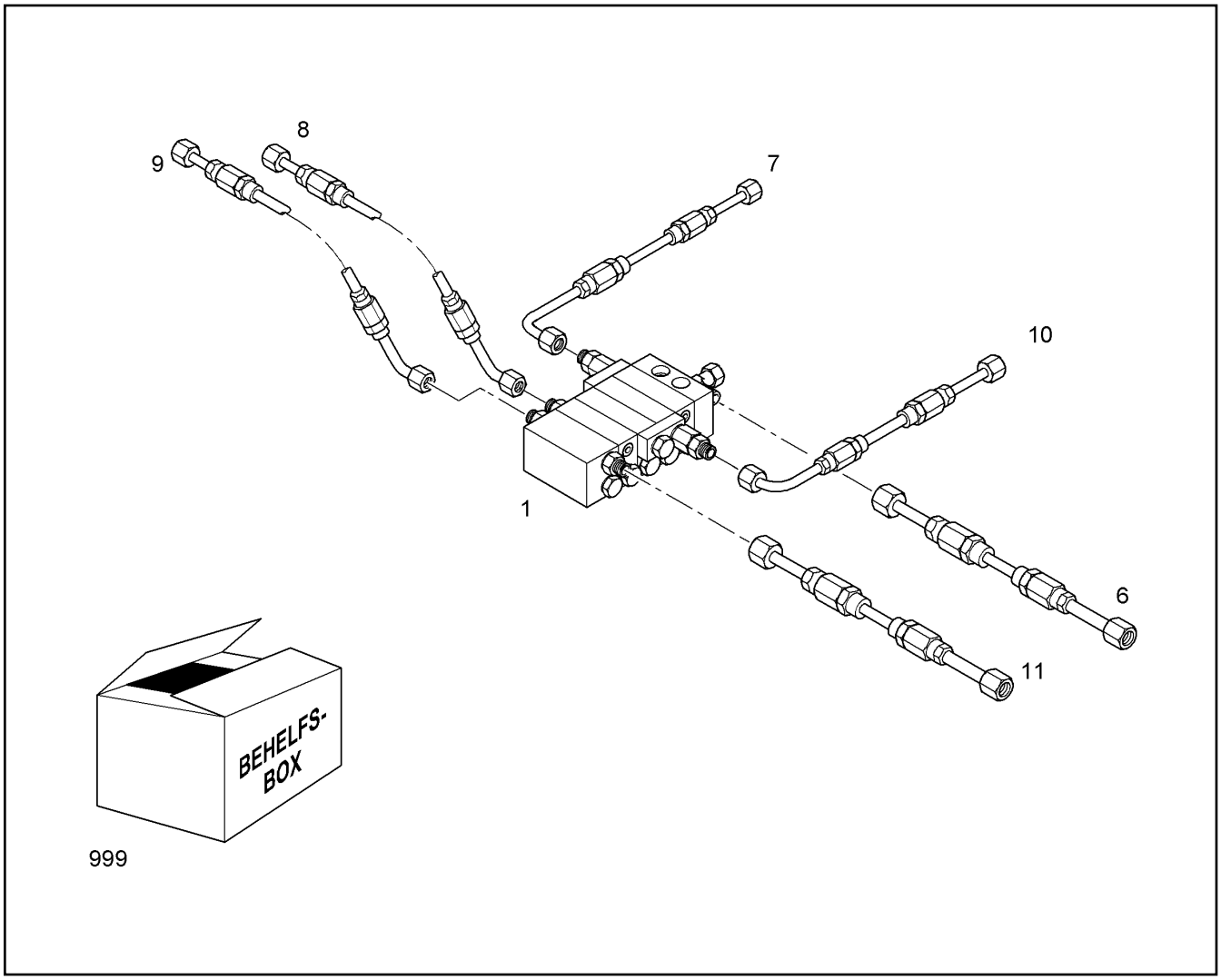


| Pos. | Item | Quantity | Description | Designação | Serie | K |
|---|---|---|---|---|---|---|
| 1 | 10101712 | 1 | DISTRIBUTION BLOCK MX-F 5/5<br>⇨ ❑ 623 | BLOCO DE DISTRIBUIÇÃO | | |
| 6 | 10294166 | 1 | HOSE | MANGUEIRA | | 1 |
| 7 | 10101727 | 1 | HOSE | MANGUEIRA | | 1 |
| 8 | 10101728 | 1 | HOSE | MANGUEIRA | | 1 |
| 9 | 10101730 | 1 | HOSE | MANGUEIRA | | 1 |
| 10 | 10101732 | 1 | HOSE | MANGUEIRA | | 1 |
| 11 | 10101733 | 1 | HOSE | MANGUEIRA | | 1 |
| 999 | 10014611 | 1 | AUXILIARY BOX<br>⇨ ❑ 219 | CAIXA AUXILIAR | | |

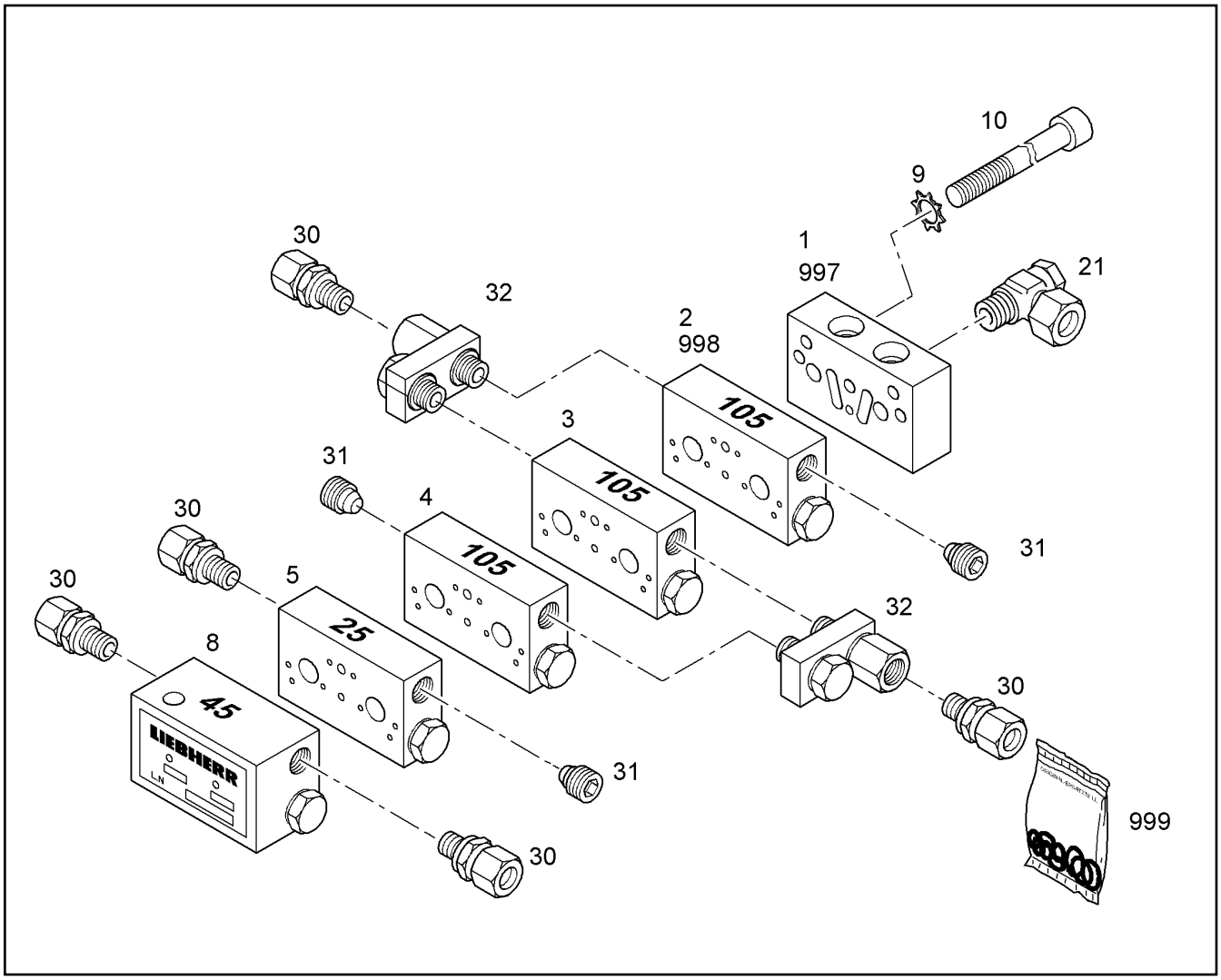


| Pos. | Item | Quantity | Description | Designação | Serie | K |
|---|---|---|---|---|---|---|
| 1 | 7027937 | 1 | STARTING ELEMENT MX-F | ELEMENTO INICIAL | | |
| 2 | 7027941 | 1 | CENTRAL ELEMENT MX-F 105 | ELEMENTO CENTRAL | | |
| 3 | 7027941 | 1 | CENTRAL ELEMENT MX-F 105 | ELEMENTO CENTRAL | | |
| 4 | 7027941 | 1 | CENTRAL ELEMENT MX-F 105 | ELEMENTO CENTRAL | | |
| 5 | 7027938 | 1 | CENTRAL ELEMENT MX-F 25 | ELEMENTO CENTRAL | | |
| 8 | 7027943 | 1 | END ELEMENT MX-F 45 | ELEMENTO FINAL | | |
| 9 | 4002259 | 2 | TOOTH LOCK WASHER A 6,4 | ARRUELA DENTADA | | |
| 10 | 404205408 | 2 | CYLINDER SCREW ISO 4762 M6x80 8.8 A2C | PARAFUSO CILÍNDRICO | | |
| 21 | 10009054 | 1 | BANJO COUPLING WSV 8LL M10X1 | CONEXÃO GIRATORIA | | |
| 30 | 7622803 | 5 | NON-RETURN VALVE | VALVULA DE RETENCAO | | |
| 31 | 774378208 | 3 | SCREW PLUG | PARAFUSO DE FECHAMENTO | | |
| 32 | 7622804 | 2 | DISTRIBUTOR BRIDGE WITH OUTLET | PONTO DISTRIBUICAO COM ESC | | |
| 997 | 10021311 | 1 | SEAL KIT<br>⇨ ❑ 222 | KIT DE VEDAÇÃO | | |
| 998 | 10021310 | 1 | SEAL KIT<br>⇨ ❑ 221 | KIT DE VEDAÇÃO | | |
| 999 | 10021308 | 1 | O-RING | ANEL-O | | |

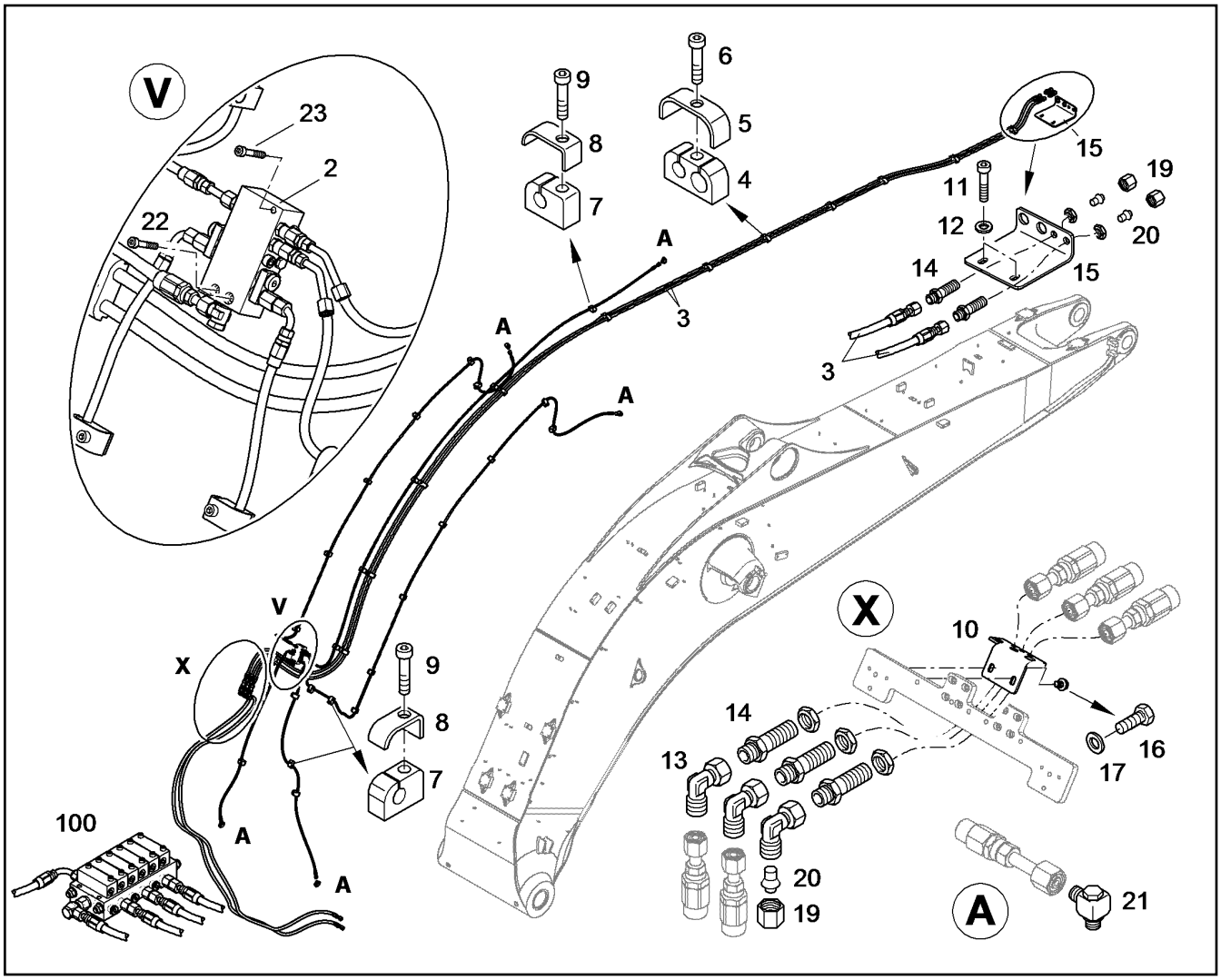


| Pos. | Item | Quantity | Description | Designação | Serie | K |
|---|---|---|---|---|---|---|
| 2 | 10101694 | 1 | DISTRIBUTION BLOCK MX-F 5/5<br>⇨ ❑ 622 | BLOCO DE DISTRIBUIÇÃO | | |
| 3 | 10101699 | 2 | HOSE | MANGUEIRA | | 1 |
| 4 | 10037724 | 12 | CLAMP HRGBS 1 G 11 11 TPE73 | BRAÇADEIRA | | |
| 5 | 10037722 | 12 | BRACKET | ESTRIBO | | |
| 6 | 4902250 | 12 | CYLINDER SCREW ISO 4762 M6X10 10.9 A2 | PARAFUSO CILÍNDRICO | | |
| 7 | 10037728 | 25 | CLAMP | BRAÇADEIRA | | |
| 8 | 10037723 | 25 | BRACKET | ESTRIBO | | |
| 9 | 4902250 | 25 | CYLINDER SCREW ISO 4762 M6X10 10.9 A2 | PARAFUSO CILÍNDRICO | | |
| 10 | 9928152 | 1 | CONSOLE | SUPORTE | | |
| 11 | 4043160 | 2 | CYLINDER SCREW ISO 4762 M12X20 10.9 | PARAFUSO CILÍNDRICO | | |
| 12 | 4901782 | 2 | WASHER 12 200HV | ARRUELA | | |
| 13 | 247021802 | 3 | SCREW FITTING EW 8L | REDUÇÃO | | |
| 14 | 7368106 | 5 | BULKHEAD STUD | CONEXÃO | | |
| 15 | 9928151 | 1 | CONSOLE | SUPORTE | | |
| 16 | 4066120 | 2 | HEX BOLT ISO 4017 M12X20 10.9 A3C | PARAFUSO SEXTAVADO | | |
| 17 | 4901782 | 2 | WASHER 12 200HV | ARRUELA | | |
| 19 | 4900507 | 3 | UNION NUT DIN 3870 A L 8 A3C | PORCA | | |
| 20 | 4900305 | 3 | TAPER COLLET VKA 8 | CONE DE FECHAMENTO | | |
| 21 | 7368426 | 5 | SCREW FITTING WH 6L M10X1 | REDUÇÃO | | |
| 22 | 4000899 | 2 | CYLINDER SCREW ISO 4762 M5x30 8.8 A2C | PARAFUSO CILÍNDRICO | | |
| 23 | 404202508 | 1 | CYLINDER SCREW ISO 4762 M5X35 8.8 A2C | PARAFUSO CILÍNDRICO | | |
| 100 | | 1 | CENTRAL LUBRICATING SYSTEM<br>⇨ ❑ 625 | LUBRIFICAÇÃO CENTRALIZADA | | |

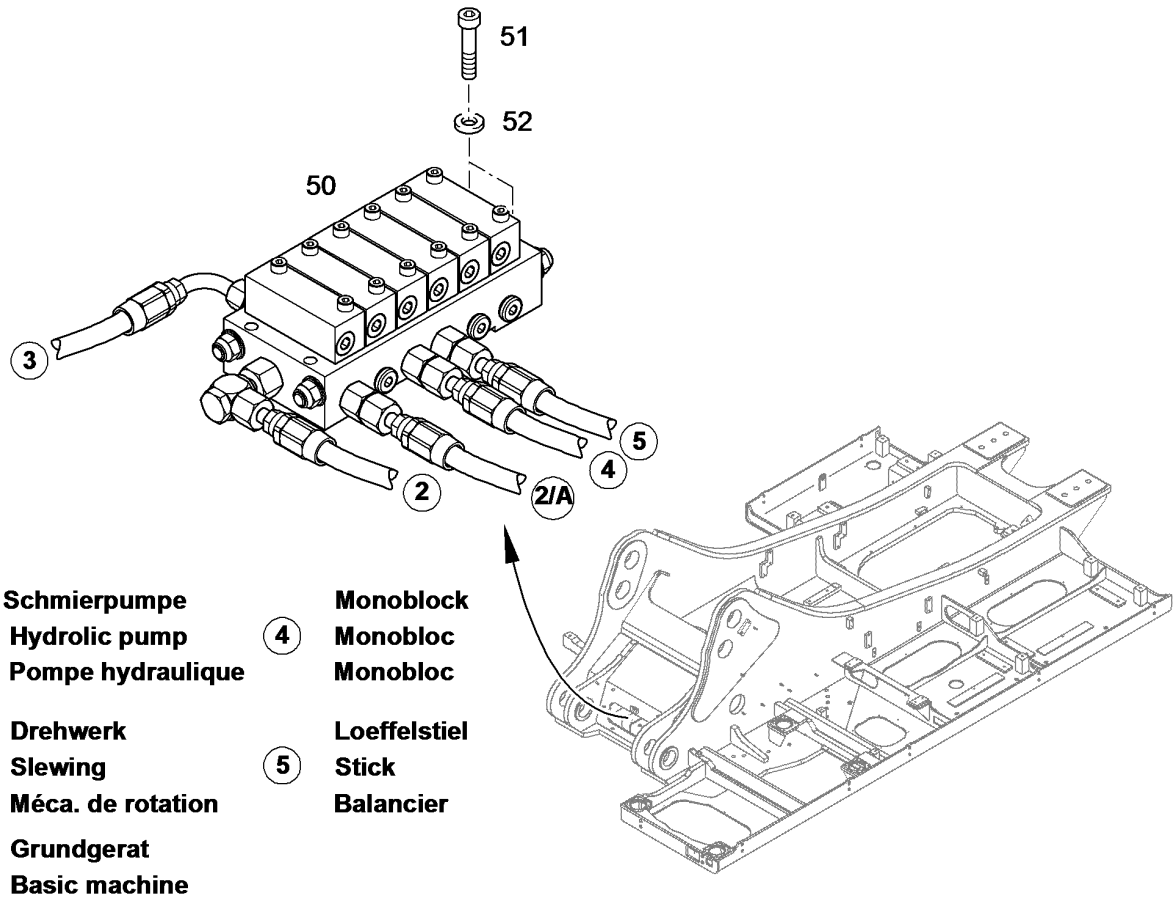


| | | |
|---|---|---|
| | Schmierpumpe | Monoblock |
| 2 | Hydrolic pump | 4 Monobloc |
| | Pompe hydraulique | Monobloc |
| | Drehwerk | Loeffelstiel |
| 2/A | Slewing | 5 Stick |
| | Méca. de rotation | Balancier |
| | Grundgerat | |
| 3 | Basic machine | |
| | Pelle de base | |

| Pos. | Item | Quantity | Description | Designação | Serie | K |
|---|---|---|---|---|---|---|
| 50 | | 1 | DISTRIBUTION BLOCK SXE-2 6/4<br>⇨ ❑ 626 | BLOCO DE DISTRIBUIÇÃO | 34951- | |
| 51 | 4600340 | 2 | CYLINDER SCREW ISO 4762 M6X40 10.9 A2 | PARAFUSO CILÍNDRICO | | |
| 52 | 10289802 | 1 | WASHER ISO 7089 6 300HV | ARRUELA | | |

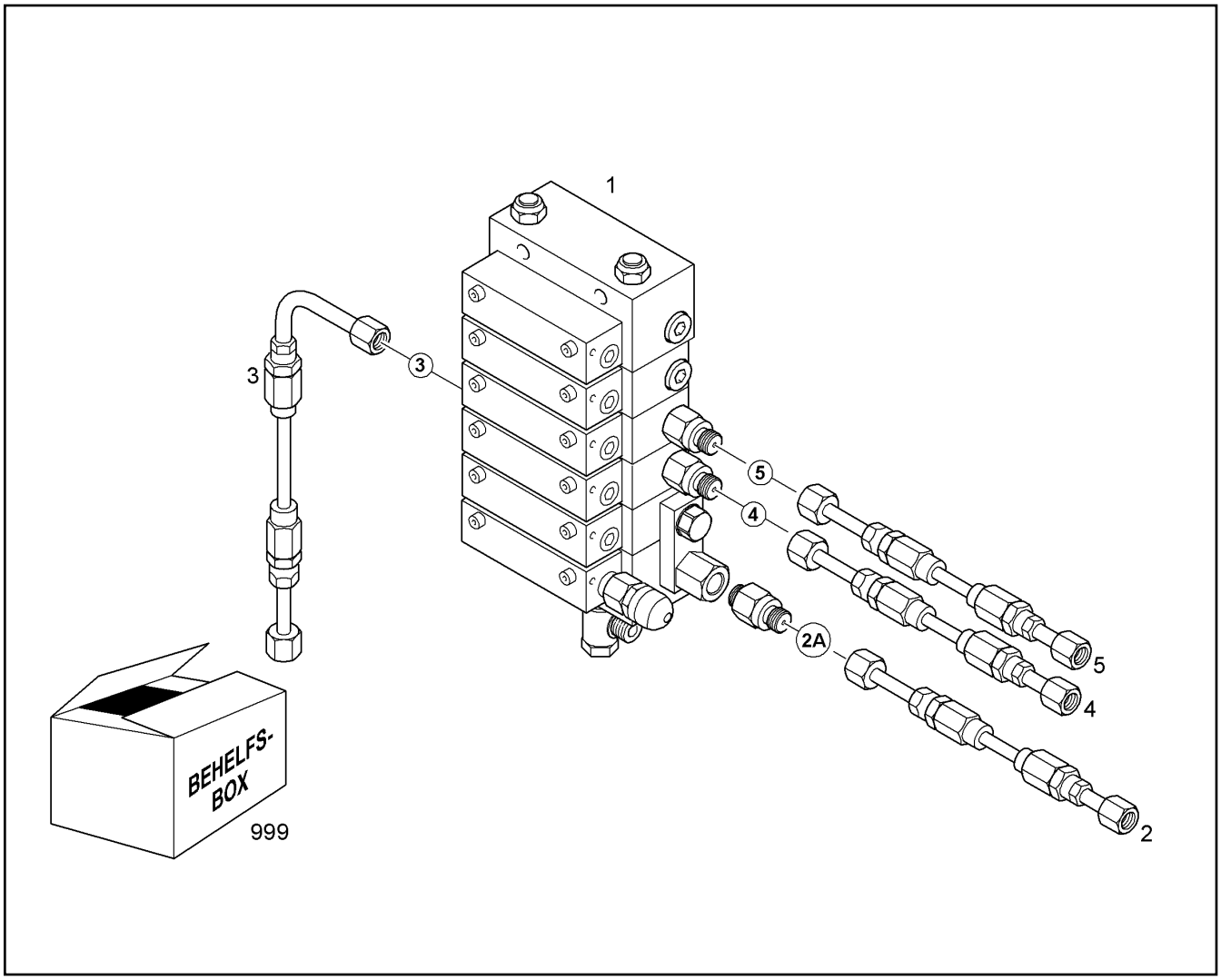


| Pos. | Item | Quantity | Description | Designação | Serie | K |
|---|---|---|---|---|---|---|
| 1 | 10488404 | 1 | DISTRIBUTION BLOCK SXE-2 6/4<br>⇨ ❑ 212 | BLOCO DE DISTRIBUIÇÃO | | |
| 2 | 10036252 | 1 | HOSE | MANGUEIRA | | 1 |
| 3 | 10101718 | 1 | HOSE | MANGUEIRA | | 1 |
| 4 | 11003506 | 1 | HOSE | MANGUEIRA | | 1 |
| 5 | 11003506 | 1 | HOSE | MANGUEIRA | | 1 |
| 999 | 10014611 | 1 | AUXILIARY BOX<br>⇨ ❑ 219 | CAIXA AUXILIAR | | |

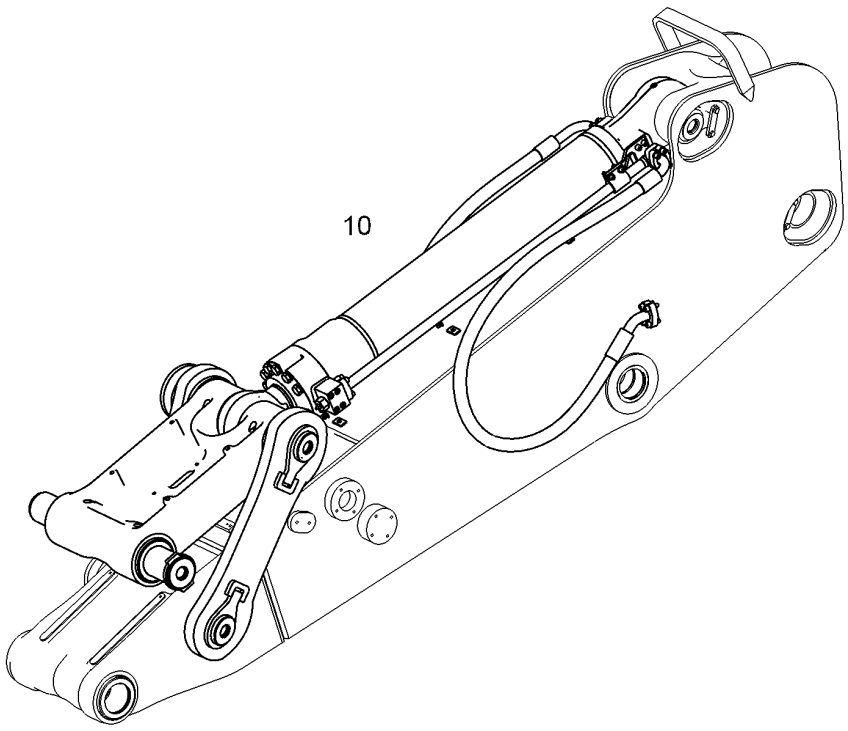


| Pos. | Item | Quantity | Description | Designação | Serie | K |
|---|---|---|---|---|---|---|
| 10 | | 1 | STICK 2,35M<br>⇨ ❑ 628 | BRACO DA CACAMBA | | |

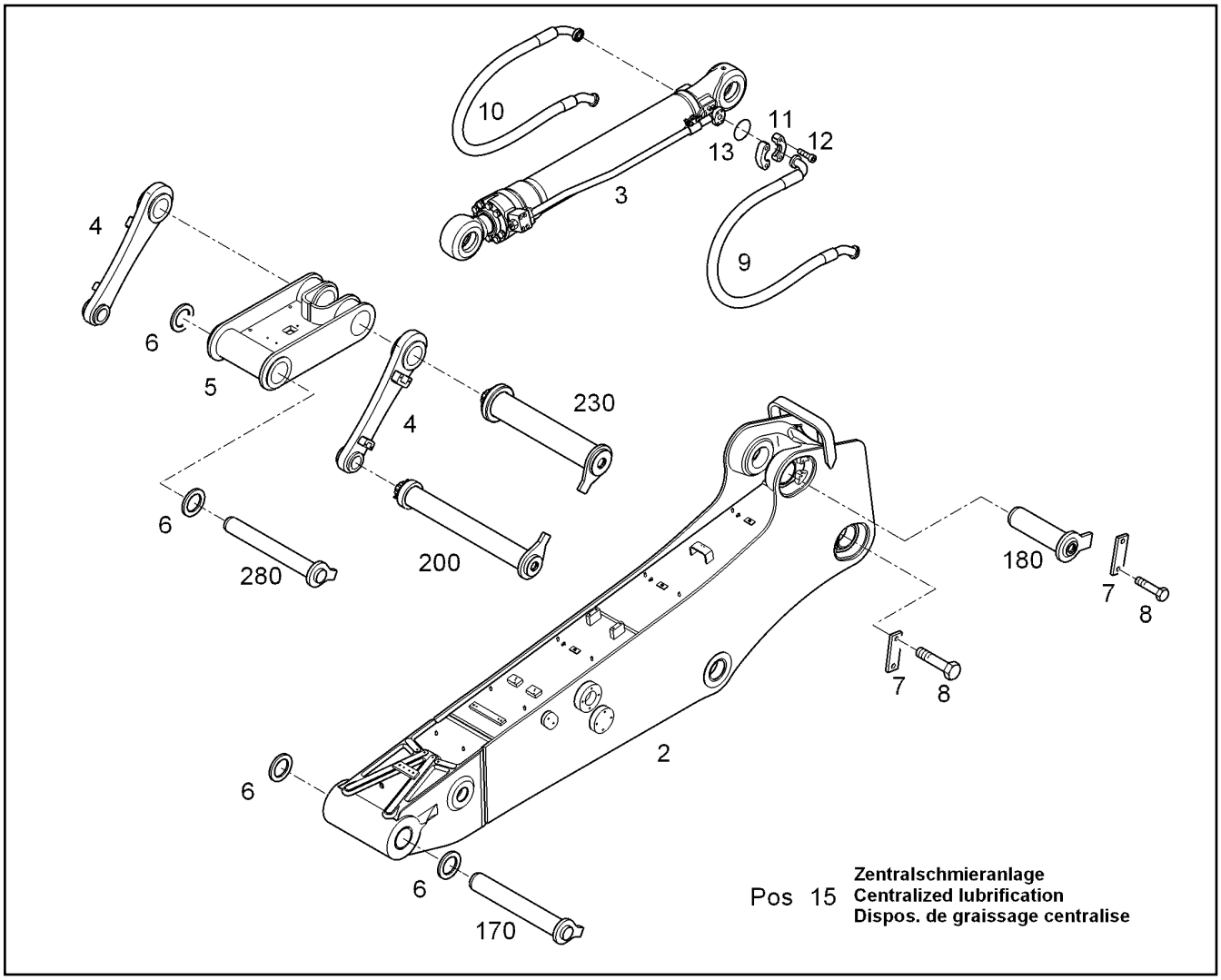


| Pos. | Item | Quantity | Description | Designação | Serie | K |
|---|---|---|---|---|---|---|
| 2 | 10498236 | 1 | STICK 2,35M<br>[MO 300 2439 ]<br>⇨ ❑ 629 | BRACO DA CACAMBA | | |
| 3 | | 1 | HYDRAULIC CYLINDER W/ DISTRIB.<br>⇨ ❑ 655 | CILINDRO HIDRAULICO | | |
| 4 | 10061699 | 2 | SHIFT LEVER | ALAVANCA DE REVERSÃO | | |
| 5 | 10357898 | 1 | CONNECTING LINK<br>⇨ ❑ 638 | PEÇA DE LIGAÇÃO | | |
| 6 | 9018795 | 4 | RING<br>⇨ ❑ 630 | ANEL | | |
| 7 | 9375885 | 2 | SHEET | PLACA | | |
| 8 | 4066124 | 4 | HEX BOLT ISO 4017 M12X30 10.9 A3C | PARAFUSO SEXTAVADO | | |
| 9 | 11181957 | 1 | HOSE 32X2200 | MANGUEIRA | | 1 |
| 10 | 11181958 | 1 | HOSE 32X2200 | MANGUEIRA | | 1 |
| 11 | 11485639 | 4 | FLANGE HALF WITH BOSSING SAE J518 SA | MEIO FLANGE COM RELEVO | | |
| 12 | 4902327 | 8 | CYLINDER SCREW ISO 4762 M14X45 10.9 | PARAFUSO CILÍNDRICO | | |
| 13 | 10472425 | 2 | PLAIN COMPRESSION RING 45,05X3,40X2,8 | ANEL DE SEÇÃO RETANGULAR | | |
| 15 | | 1 | CENTRAL LUBRICATING SYSTEM<br>⇨ ❑ 631 | LUBRIFICAÇÃO CENTRALIZADA | | |
| 170 | 9019253 | 1 | PIN 110X815X770 | PINO | | |
| 180 | 9374747 | 1 | PIN | PINO | | 1 |
| 200 | 10060901 | 1 | PIN CPL<br>⇨ ❑ 643 | PINO COMPLETO | | |
| 230 | 10060973 | 1 | PIN CPL<br>⇨ ❑ 644 | PINO COMPLETO | | |
| 280 | 9019253 | 1 | PIN 110X815X770 | PINO | | |

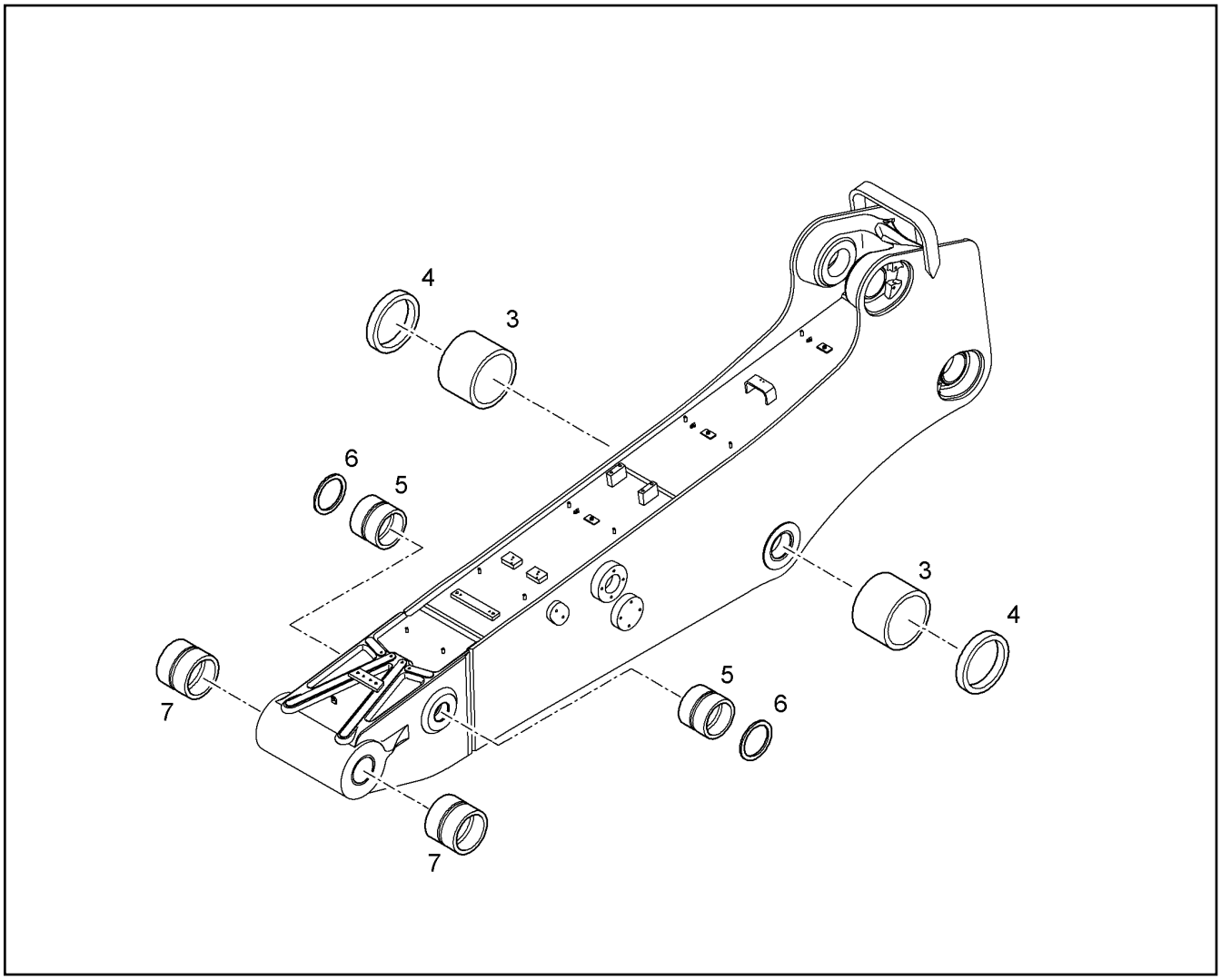


| Pos. | Item | Quantity | Description | Designação | Serie | K |
|---|---|---|---|---|---|---|
| 3 | 10409093 | 2 | BUSHING | BUCHA | | 1 |
| 4 | 7362183 | 2 | RADIAL SEAL X110X130X8 | ANEL RETENTOR | | |
| 5 | 10820141 | 2 | BUSHING | BUCHA | 30022- | 1 |
| 6 | 7362180 | 2 | RADIAL SEAL X80X95X8 | ANEL RETENTOR | | |
| 7 | 10820862 | 2 | BUSHING | BUCHA | 30022- | 1 |

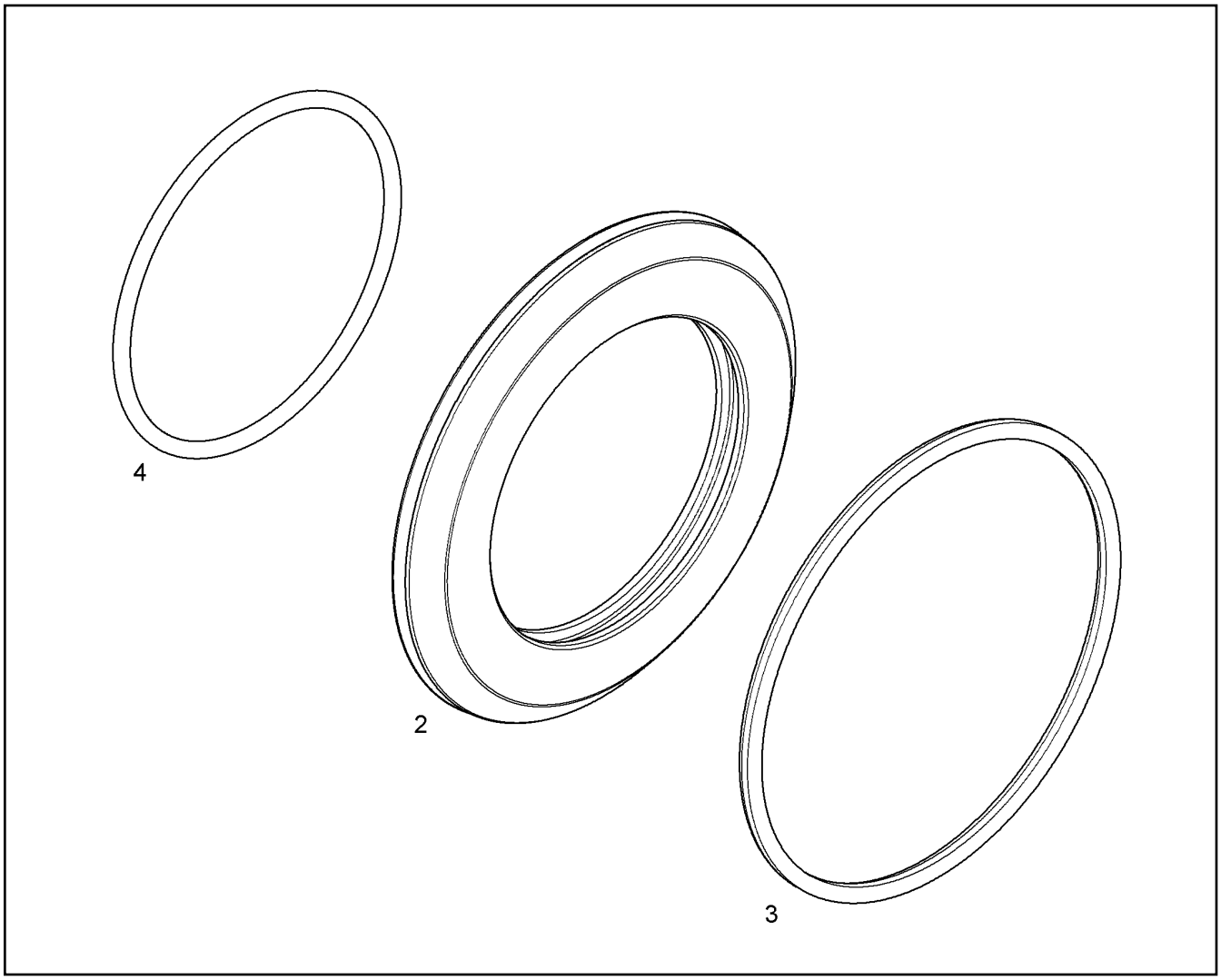


| Pos. | Item | Quantity | Description | Designação | Serie | K |
|---|---|---|---|---|---|---|
| 2 | 9018794 | 1 | RING | ANEL | | |
| 3 | 7000290 | 1 | O-RING 148,59X7 | ANEL-O | | |
| 4 | 7014178 | 1 | O-RING 110,49X5,33 | ANEL-O | | |

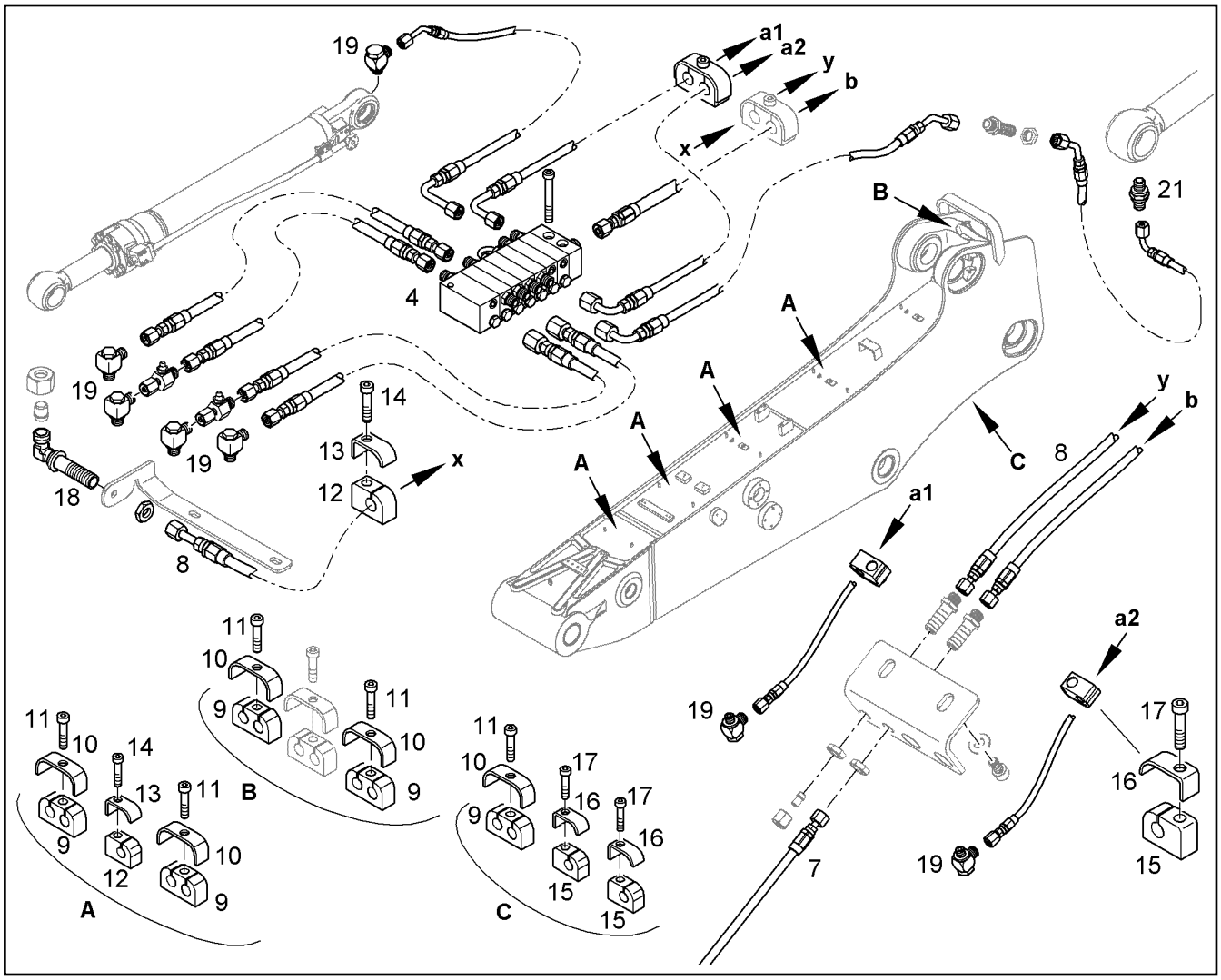


| Pos. | Item | Quantity | Description | Designação | Serie | K |
|---|---|---|---|---|---|---|
| 4 | 10488408 | 1 | DISTRIBUTION BLOCK MX-F 7/8<br>⇨ ❑ 210 | BLOCO DE DISTRIBUIÇÃO | | |
| 7 | 10101700 | 1 | HOSE | MANGUEIRA | | 1 |
| 8 | 10036375 | 1 | HOSE | MANGUEIRA | | 1 |
| 9 | 10037726 | 15 | CLAMP HRBGS 1 G 8 8 | BRAÇADEIRA | | |
| 10 | 10037722 | 15 | BRACKET | ESTRIBO | | |
| 11 | 4902250 | 15 | CYLINDER SCREW ISO 4762 M6X10 10.9 A2 | PARAFUSO CILÍNDRICO | | |
| 12 | 10037727 | 7 | CLAMP HRBGS 0A G 11 TPE73 | BRAÇADEIRA | | |
| 13 | 10037723 | 7 | BRACKET | ESTRIBO | | |
| 14 | 4902250 | 7 | CYLINDER SCREW ISO 4762 M6X10 10.9 A2 | PARAFUSO CILÍNDRICO | | |
| 15 | 10037728 | 4 | CLAMP | BRAÇADEIRA | | |
| 16 | 10037723 | 4 | BRACKET | ESTRIBO | | |
| 17 | 4902250 | 4 | CYLINDER SCREW ISO 4762 M6X10 10.9 A2 | PARAFUSO CILÍNDRICO | | |
| 18 | 7368115 | 1 | SCREW FITTING WSV 8L M14X1,5 | REDUÇÃO | | |
| 19 | 7368426 | 7 | SCREW FITTING WH 6L M10X1 | REDUÇÃO | | |
| 21 | 7362169 | 1 | SCREW FITTING GE 6L | REDUÇÃO | | |

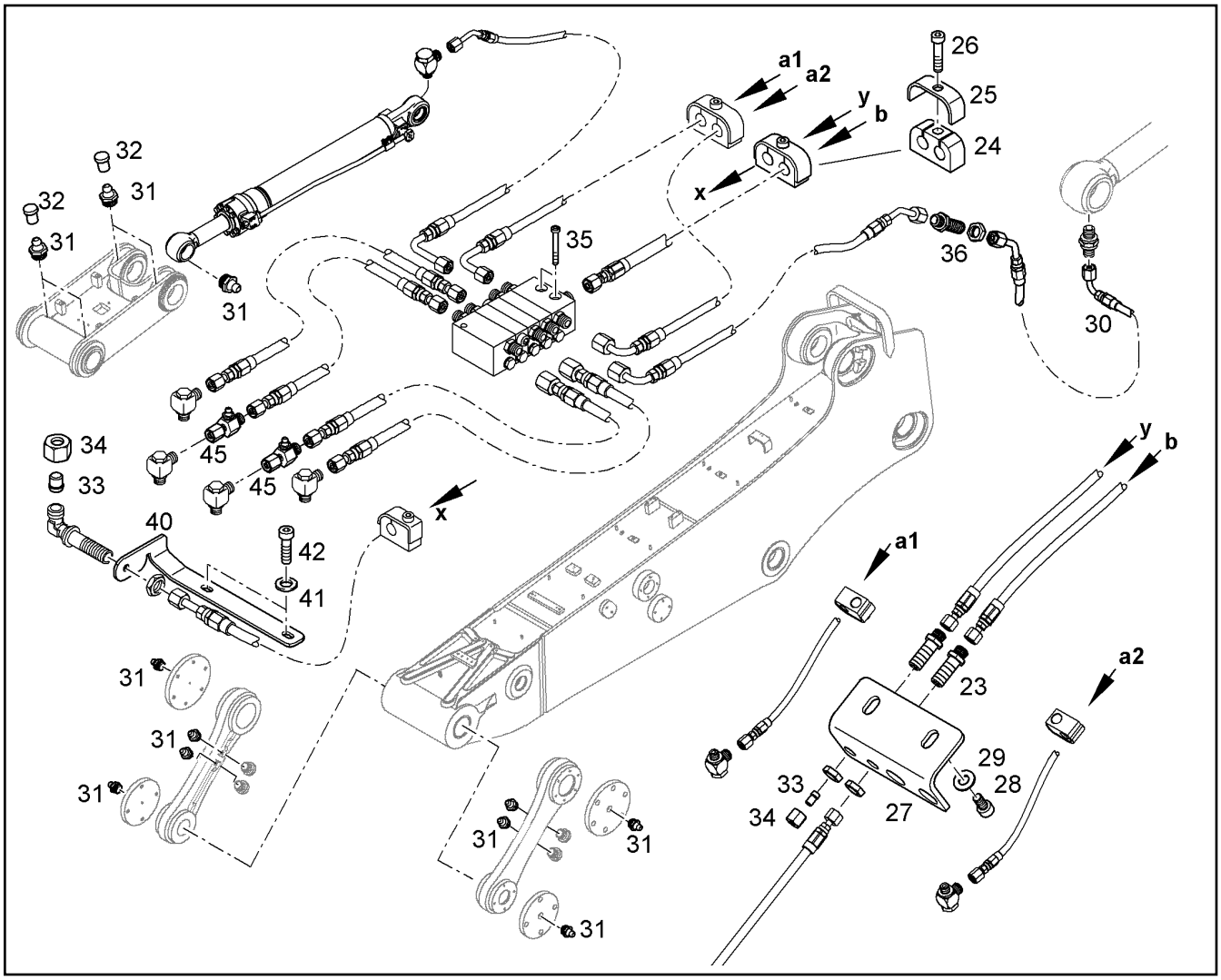


| Pos. | Item | Quantity | Description | Designação | Serie | K |
|---|---|---|---|---|---|---|
| 23 | 7368106 | 2 | BULKHEAD STUD | CONEXÃO | | |
| 24 | 10037724 | 2 | CLAMP HRGBS 1 G 11 11 TPE73 | BRAÇADEIRA | | |
| 25 | 10037722 | 2 | BRACKET | ESTRIBO | | |
| 26 | 4902250 | 2 | CYLINDER SCREW ISO 4762 M6X10 10.9 A2 | PARAFUSO CILÍNDRICO | | |
| 27 | 9928771 | 1 | CONSOLE | SUPORTE | | |
| 28 | 4043122 | 2 | CYLINDER SCREW ISO 4762 M10X20 10.9 | PARAFUSO CILÍNDRICO | | |
| 29 | 4901782 | 2 | WASHER 12 200HV | ARRUELA | | |
| 30 | 10294270 | 1 | HOSE | MANGUEIRA | | 1 |
| 31 | 10005440 | 5 | GREASE NIPPLE AEHNL.DIN 71412 A M10X | NIPLE DE GRAXA | | |
| 32 | 8500251 | 5 | GREASE NIPPLE CAP | CAPA DO NIPLE DE LUBRIFICA | | |
| 33 | 4900305 | 2 | TAPER COLLET VKA 8 | CONE DE FECHAMENTO | | |
| 34 | 4900507 | 2 | UNION NUT DIN 3870 A L 8 A3C | PORCA | | |
| 35 | 404202508 | 2 | CYLINDER SCREW ISO 4762 M5X35 8.8 A2C | PARAFUSO CILÍNDRICO | | |
| 36 | 7368105 | 1 | BULKHEAD STUD | CONEXÃO | | |
| 40 | 10369198 | 1 | BULKHEAD PLATE | PLACA DE ANTEPARO | | |
| 41 | 10006370 | 2 | WASHER DIN 7349 13 | ARRUELA | | |
| 42 | 4043002 | 2 | CYLINDER SCREW ISO 4762 M12X25 10.9 | PARAFUSO CILÍNDRICO | | |
| 45 | 10220950 | 2 | SCREW FITTING 6L | REDUÇÃO | | |

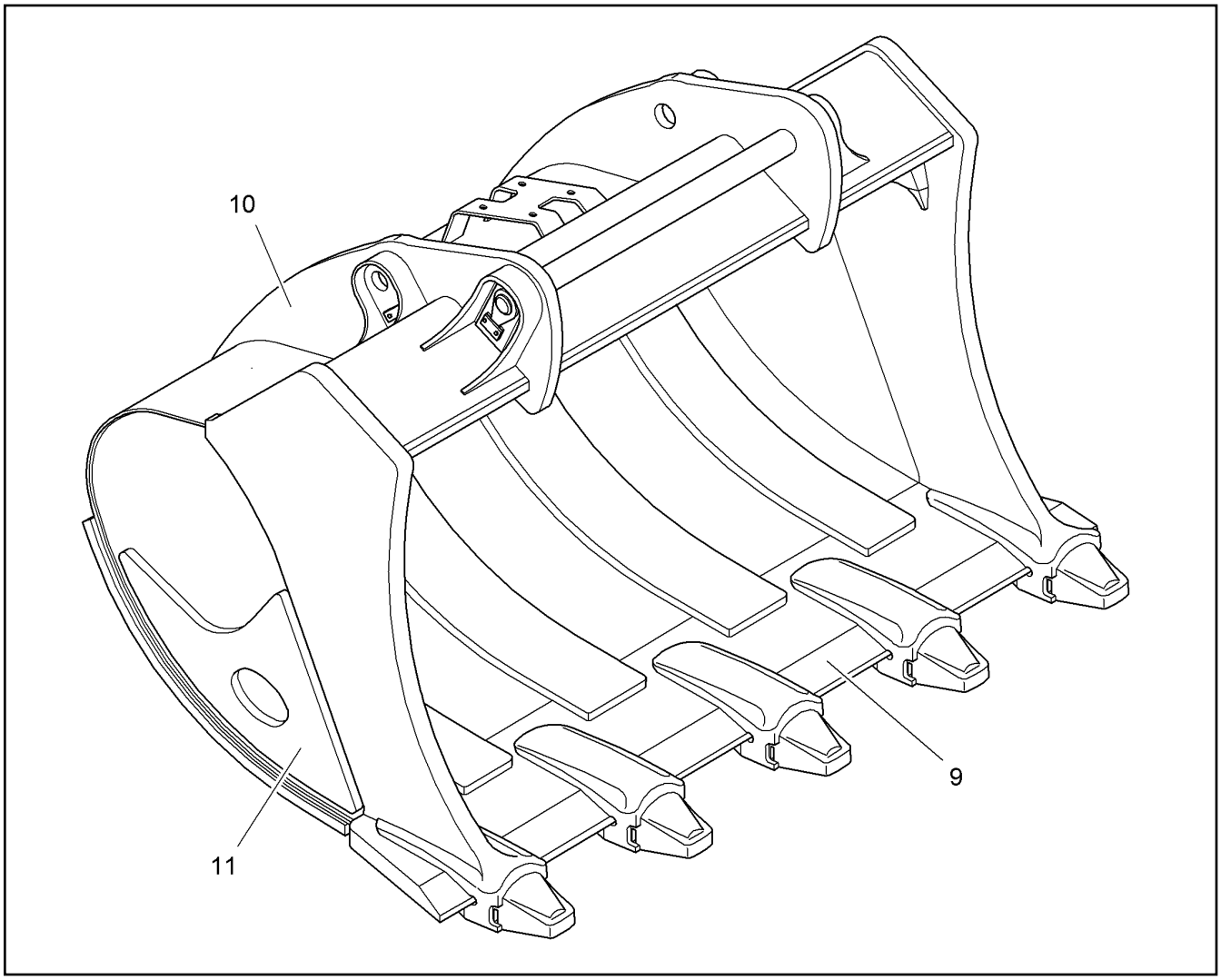


| Pos. | Item | Quantity | Description | Designação | Serie | K |
|---|---|---|---|---|---|---|
| 9 | 11102832 | 1 | SPOON BIT<br>⇨ ❑ 634 | LÂMINA RETRO | | |
| 10 | 11102830 | 1 | BEARING PILLOW BLOCK<br>⇨ ❑ 636 | TIRANTE | | |
| 11 | 11102834 | 1 | WEARING PARTS SET<br>⇨ ❑ 635 | KIT DE PEÇAS DE DESGASTE | | |

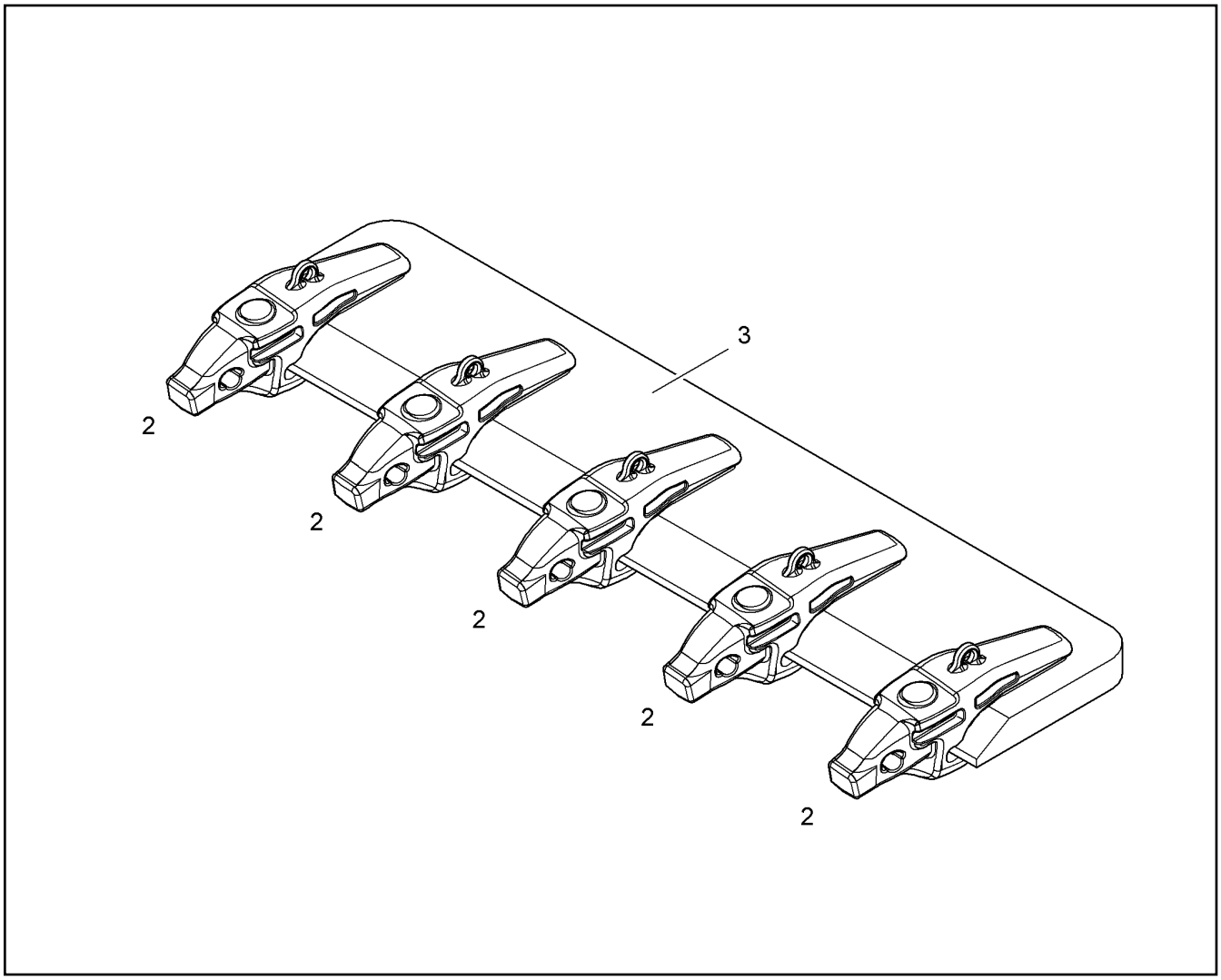


| Pos. | Item | Quantity | Description | Designação | Serie | K |
|---|---|---|---|---|---|---|
| 2 | 10451142 | 5 | ADAPTOR | ADAPTADOR | | 1 |
| 3 | 10498559 | 1 | KNIFE | LÂMINA | | |

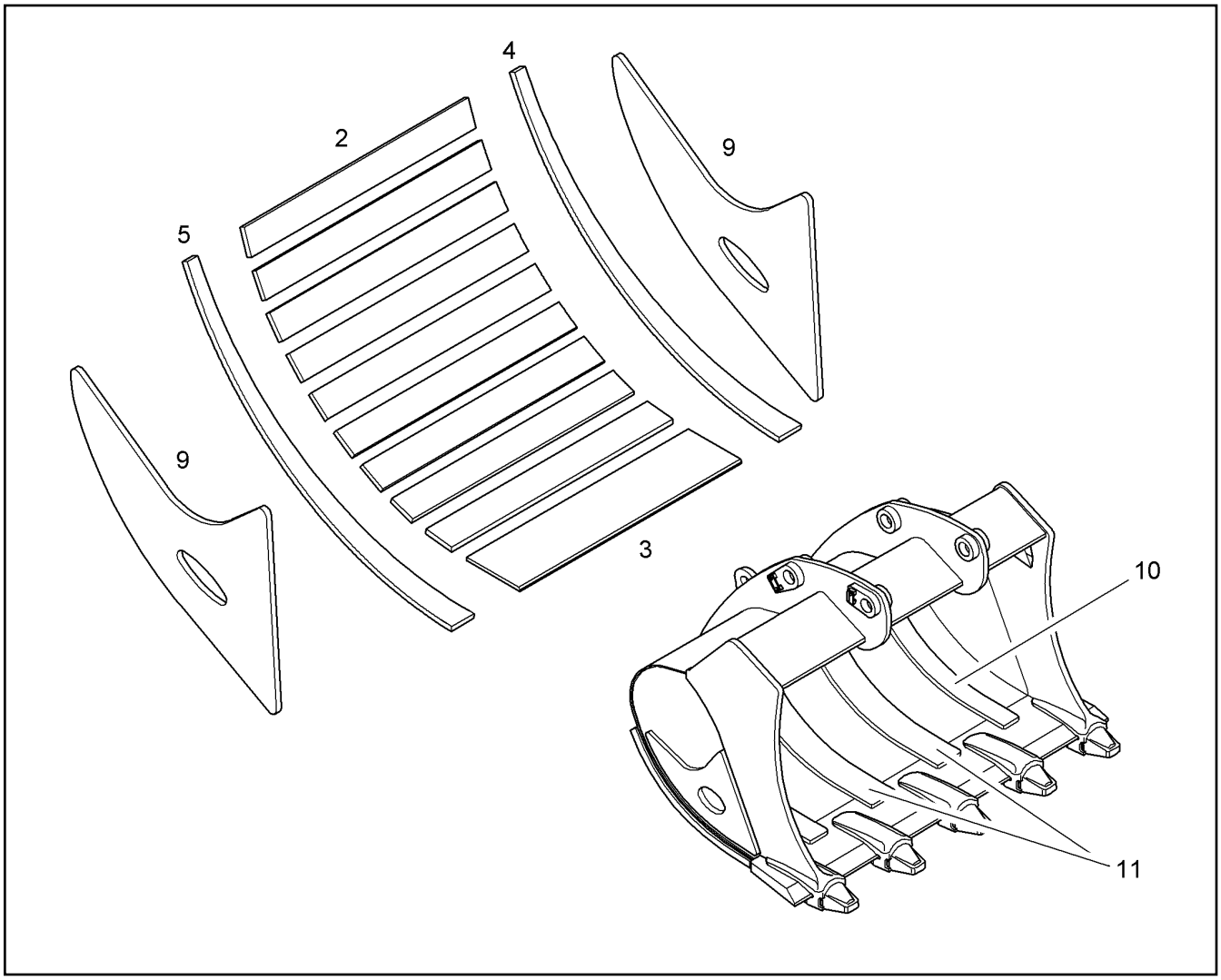


| Pos. | Item | Quantity | Description | Designação | Serie | K |
|---|---|---|---|---|---|---|
| 2 | 9006828 | 9 | WEARING PLATE | PLACA DE DESGASTE | | |
| 3 | 11460707 | 1 | WEARING PLATE | PLACA DE DESGASTE | | |
| 4 | 11461297 | 1 | WEARING PLATE RIGHT | PLACA DE DESGASTE DIREITA | | |
| 5 | 11461298 | 1 | WEARING PLATE LEFT | PLACA DE DESGASTE ESQUERD | | |
| 9 | 11461299 | 2 | SIDE WEARING PART | PEÇA DE DESGASTE LATERAL | | |
| 10 | 11461300 | 2 | WEARING PLATE | PLACA DE DESGASTE | | |
| 11 | 11461301 | 2 | WEARING PLATE | PLACA DE DESGASTE | | |

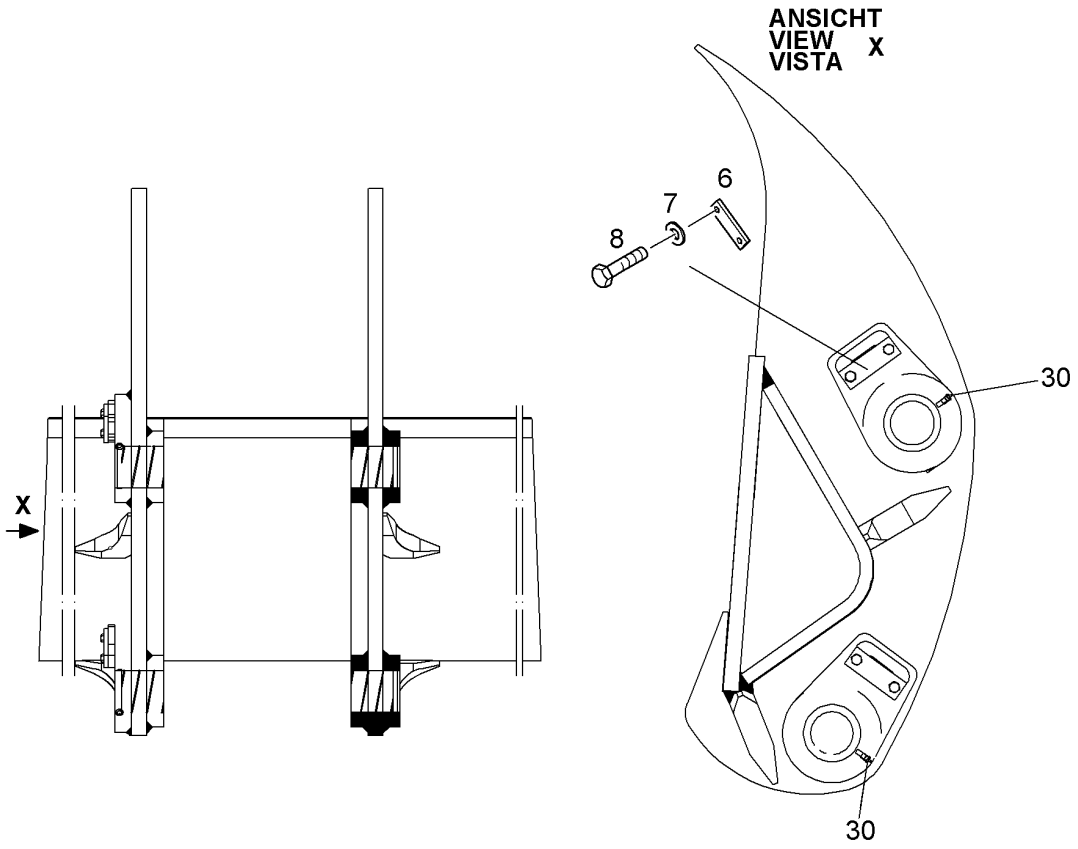


| Pos. | Item | Quantity | Description | Designação | Serie | K |
|---|---|---|---|---|---|---|
| 6 | 9830148 | 2 | SHEET | PLACA | | |
| 7 | 10289804 | 4 | WASHER ISO 7089 12 300HV | ARRUELA | | |
| 8 | 4600184 | 4 | HEX BOLT ISO 4017 M12X25 10.9 A3C | PARAFUSO SEXTAVADO | | |
| 30 | 10005440 | 4 | GREASE NIPPLE AEHNL.DIN 71412 A M10X | NIPLE DE GRAXA | | |

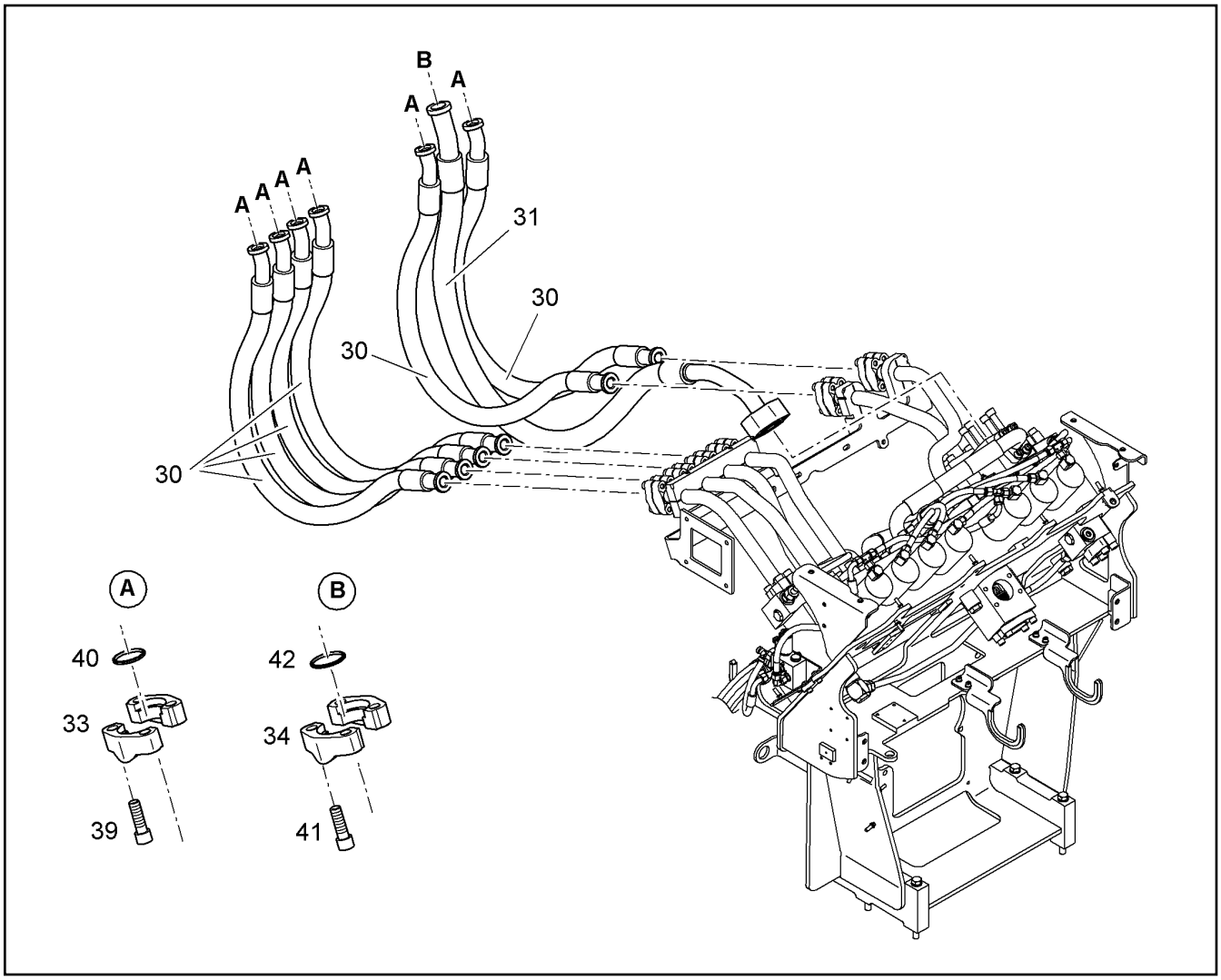


| Pos. | Item | Quantity | Description | Designação | Serie | K |
|---|---|---|---|---|---|---|
| 30 | 11341036 | 6 | HOSE 32X1600 | MANGUEIRA | | 1 |
| 31 | 11341037 | 1 | HOSE 40X2110 | MANGUEIRA | | 1 |
| 33 | 11485639 | 12 | FLANGE HALF WITH BOSSING SAE J518 SA | MEIO FLANGE COM RELEVO | | |
| 34 | 11485640 | 2 | FLANGE HALF WITH BOSSING SAE J518 SA | MEIO FLANGE COM RELEVO | | |
| 39 | 4902327 | 24 | CYLINDER SCREW ISO 4762 M14X45 10.9 | PARAFUSO CILÍNDRICO | | |
| 40 | 10472425 | 6 | PLAIN COMPRESSION RING 45,05X3,40X2,8 | ANEL DE SEÇÃO RETANGULAR | | |
| 41 | 10001077 | 4 | CYLINDER SCREW ISO 4762 M16X50 10.9 | PARAFUSO CILÍNDRICO | | |
| 42 | 10490787 | 1 | PLAIN COMPRESSION RING 54,40X3,40X2,8 | ANEL DE SEÇÃO RETANGULAR | | |

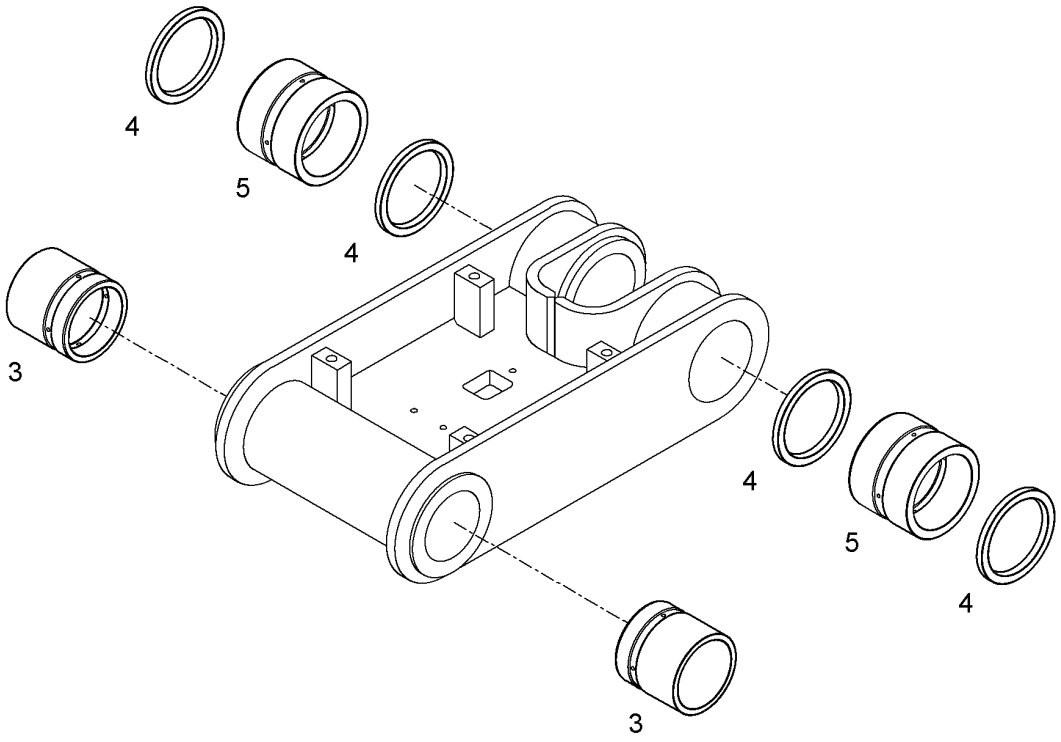


| Pos. | Item | Quantity | Description | Designação | Serie | K |
|---|---|---|---|---|---|---|
| 3 | 10820862 | 2 | BUSHING | BUCHA | 30022- | 1 |
| 4 | 7362184 | 4 | RADIAL SEAL X120X150X12 | ANEL RETENTOR | | |
| 5 | 10409084 | 2 | BUSHING | BUCHA | | 1 |

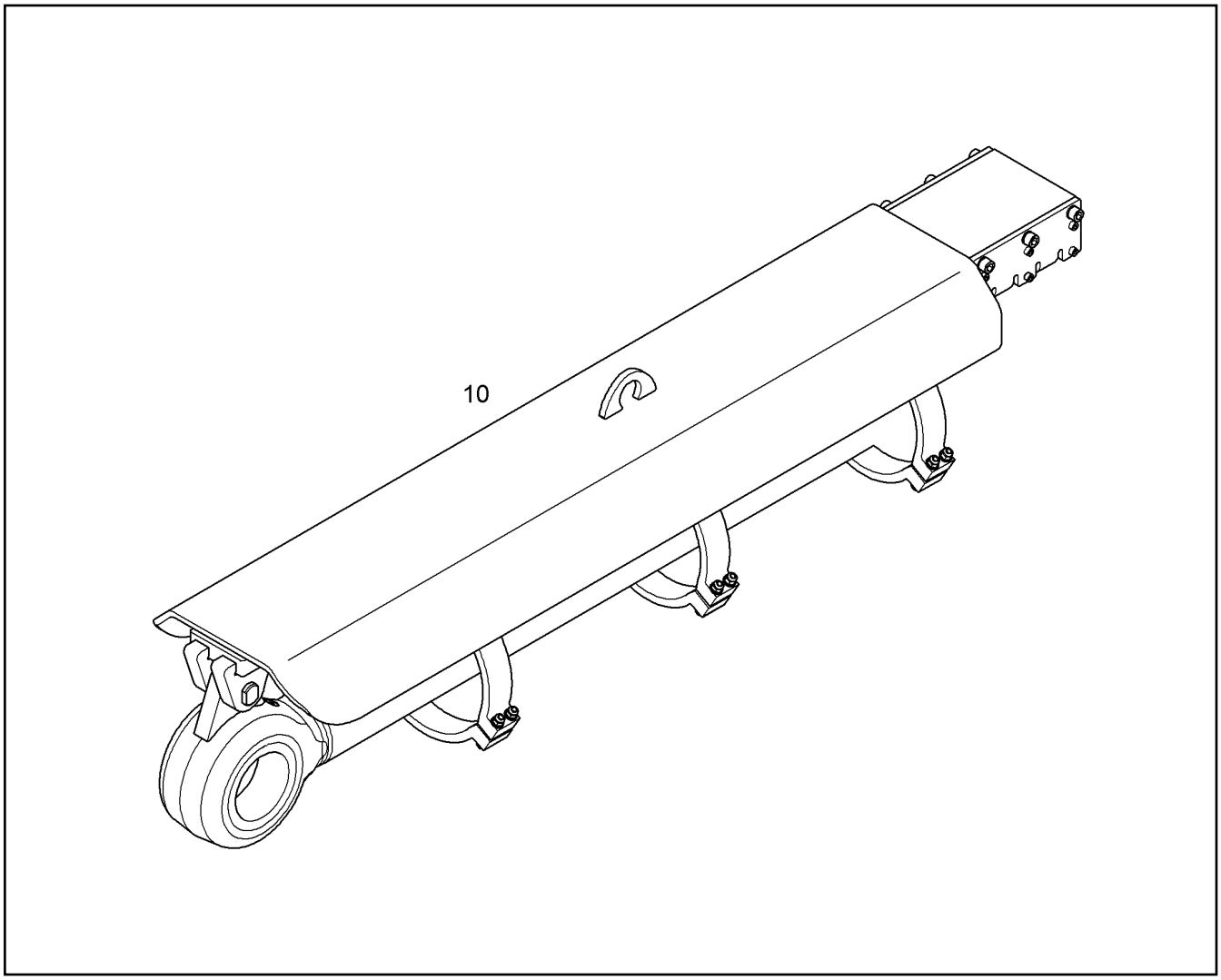


| Pos. | Item | Quantity | Description | Designação | Serie | K |
|---|---|---|---|---|---|---|
| 10 | | 1 | PISTON ROD COVER BUCKET CYL<br>⇨ ❑ 640 | PROTEÇÃO DA HASTE DO CILIN | | |

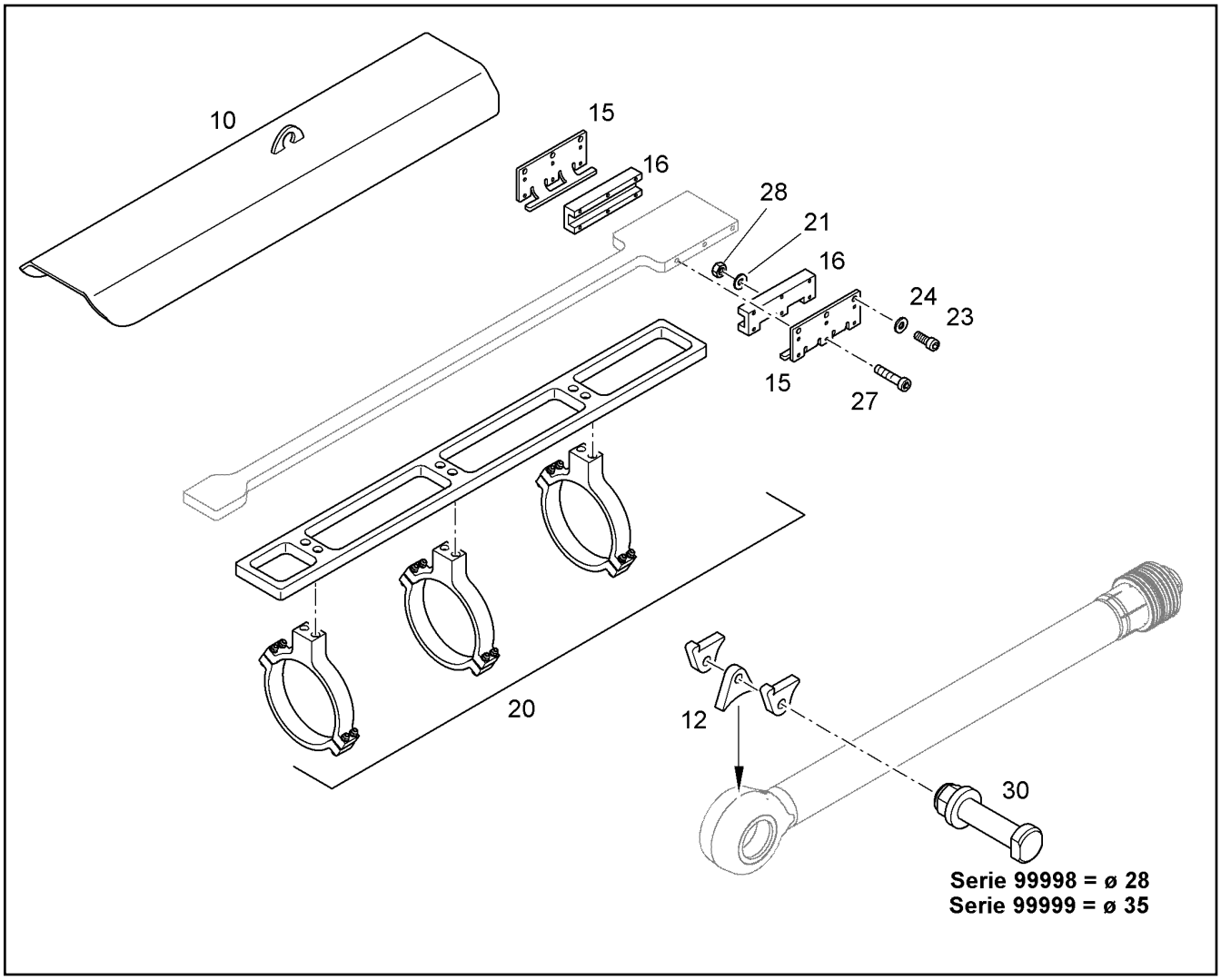


| Pos. | Item | Quantity | Description | Designação | Serie | K |
|---|---|---|---|---|---|---|
| 10 | 10498365 | 1 | PROTECTION | PROTEÇÃO | 29400- | |
| 12 | | 1 | MODIF.CYLINDER | MODIFICACAO DO CILINDRO | 29400- | |
| 15 | 10082605 | 2 | ATTACHMENT PLATE | PLACA DE FIXACAO | | |
| 16 | 10082606 | 2 | RUNNER | CHAPA CORREDIÇA | | |
| 20 | | 1 | SLIDING RAIL<br>⇨ ❑ 641 | TRILHO DESLIZANTE | | |
| 21 | 10289803 | 24 | WASHER ISO 7089 8 300HV | ARRUELA | | |
| 23 | 4601243 | 6 | CYLINDER SCREW ISO 4762 M14X35 10.9 F | PARAFUSO CILÍNDRICO | | |
| 24 | 10289805 | 6 | WASHER ISO 7089 14 300HV | ARRUELA | | |
| 27 | 4043090 | 12 | CYLINDER SCREW ISO 4762 M8X60 10.9 A2 | PARAFUSO CILÍNDRICO | | |
| 28 | 4901573 | 12 | HEX NUT M8 | PORCA SEXTAVADA | | |
| 30 | 10498335 | 1 | PIN<br>⇨ ❑ 645 | PINO | | 1 |

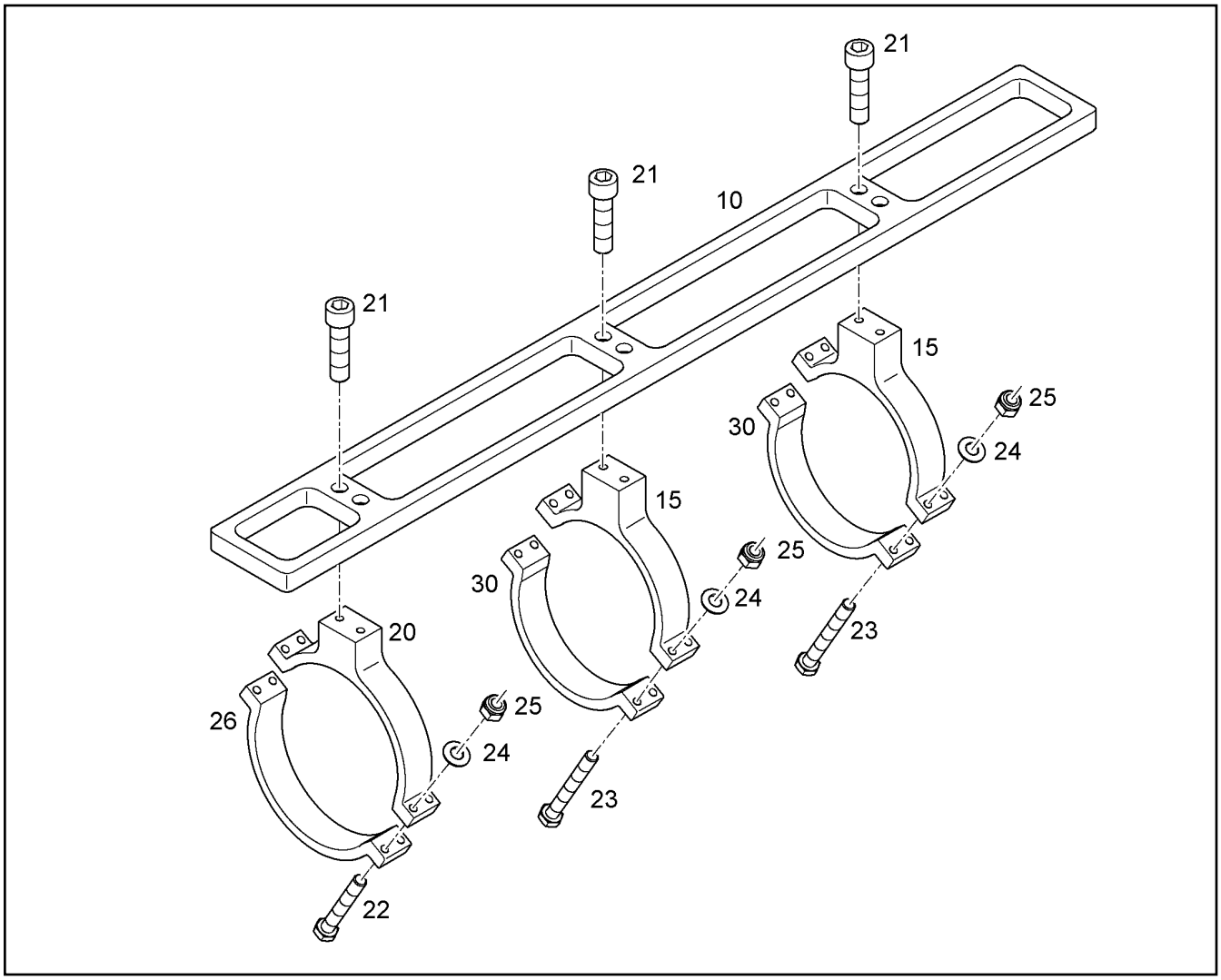


| Pos. | Item | Quantity | Description | Designação | Serie | K |
|---|---|---|---|---|---|---|
| 10 | 10498813 | 1 | SLIDING RAIL | TRILHO DESLIZANTE | | |
| 15 | 10498814 | 2 | HALF CLAMP COLLAR DIA 205,3 | MEIA ABRAÇADEIRA | | |
| 20 | 10498815 | 1 | HALF CLAMP COLLAR DIA 230 | MEIA ABRAÇADEIRA | | |
| 21 | 10001076 | 6 | CYLINDER SCREW ISO 4762 M16X45 10.9 F | PARAFUSO CILÍNDRICO | | |
| 22 | 4900980 | 4 | CYLINDER SCREW ISO 4762 M10X75 10.9 | PARAFUSO CILÍNDRICO | | |
| 23 | 4001595 | 8 | CYLINDER SCREW ISO 4762 M10X80 10.9 | PARAFUSO CILÍNDRICO | | |
| 24 | 4901879 | 25 | WASHER | ARRUELA | | |
| 25 | 4600579 | 12 | HEX NUT M10 | PORCA SEXTAVADA | | |
| 26 | 10086364 | 1 | HALF CLAMP COLLAR DIA 230 | MEIA ABRAÇADEIRA | | |
| 30 | 10086363 | 2 | HALF CLAMP COLLAR DIA 205,3 | MEIA ABRAÇADEIRA | | |

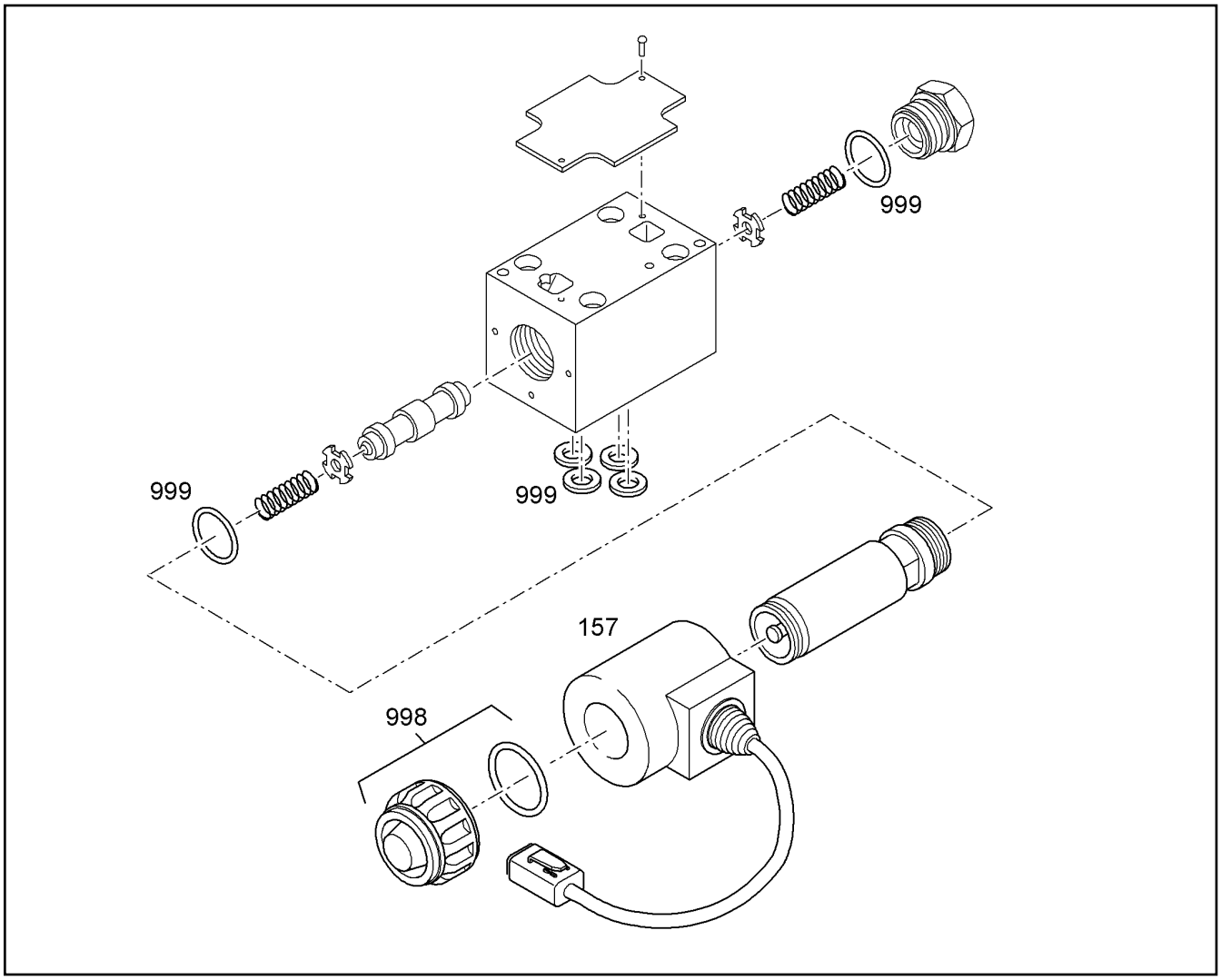


| Pos. | Item | Quantity | Description | Designação | Serie | K |
|---|---|---|---|---|---|---|
| 157 | 10101523 | 1 | COIL | BOBINA MAGNÉTICA | | |
| 998 | 7027459 | 1 | NUT | PORCA | | |
| 999 | 7624268 | 1 | SEAL KIT | KIT DE VEDAÇÃO | | |

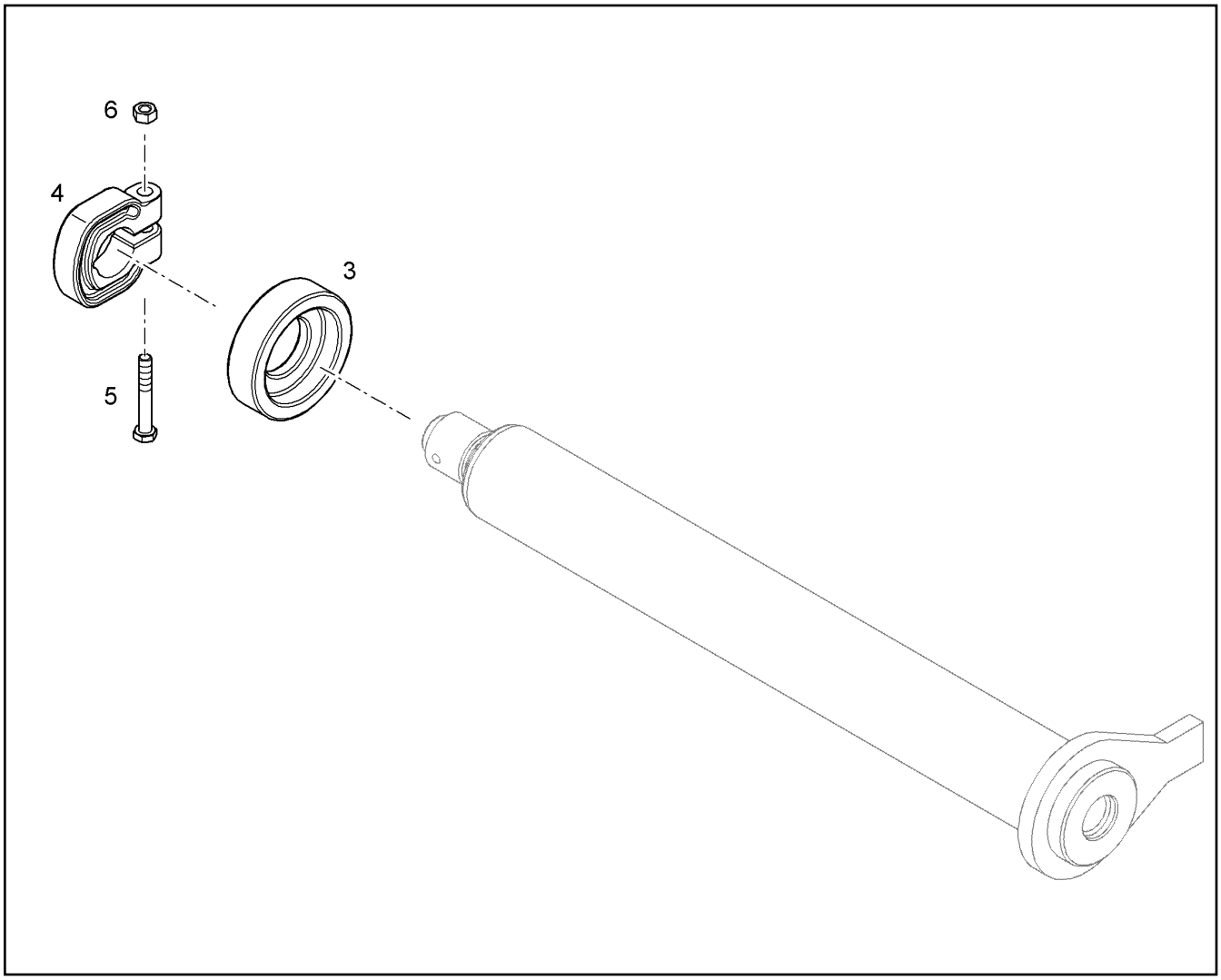


| Pos. | Item | Quantity | Description | Designação | Serie | K |
|---|---|---|---|---|---|---|
| 3 | 3001445 | 1 | WASHER | ARRUELA | | |
| 4 | 9229473 | 1 | LOCK NUT M48 | PORCA DE APERTO | | |
| 5 | 4002079 | 1 | HEX BOLT ISO 4014 M10X70 10.9 A3C | PARAFUSO SEXTAVADO | | |
| 6 | 4600579 | 1 | HEX NUT M10 | PORCA SEXTAVADA | | |

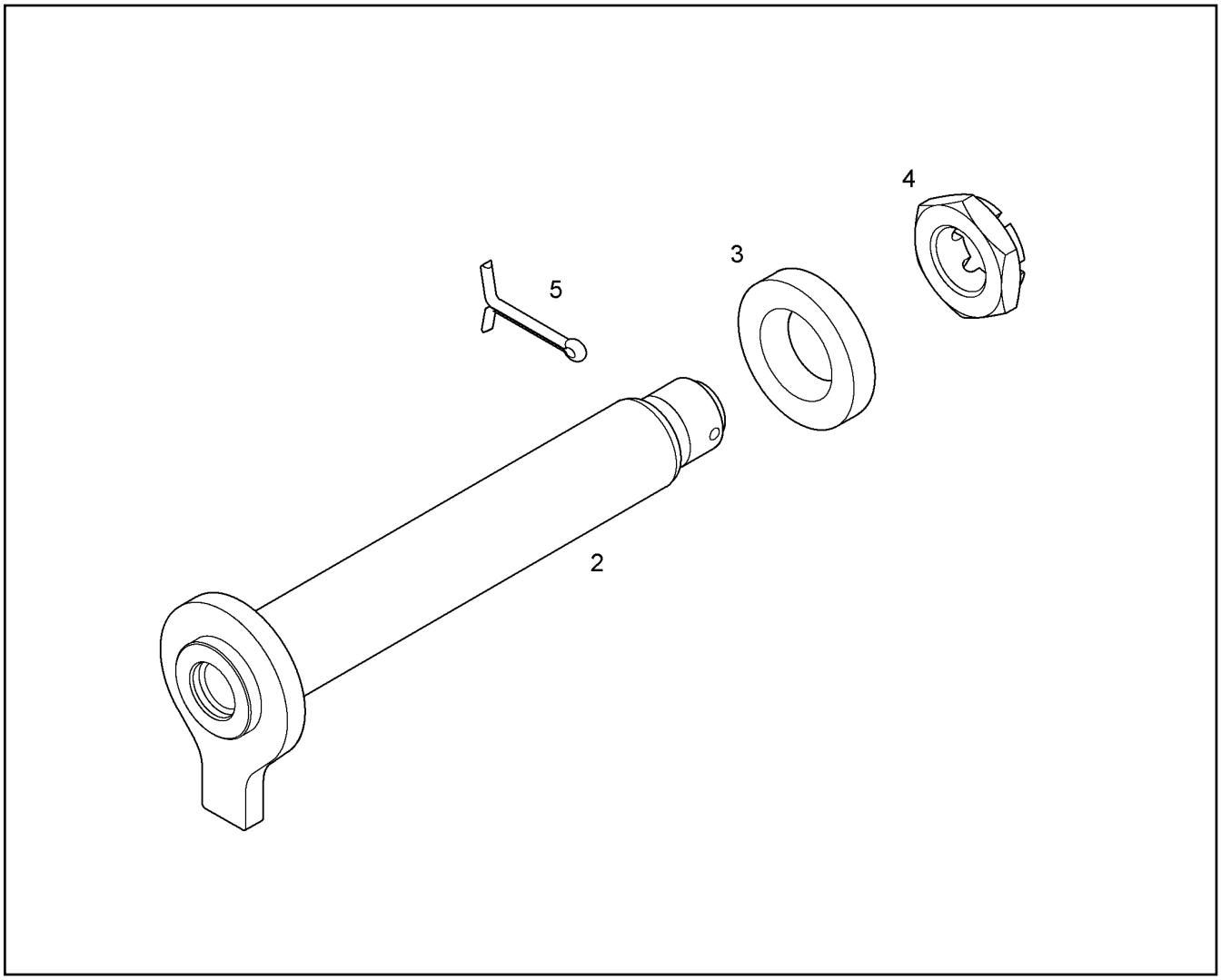


| Pos. | Item | Quantity | Description | Designação | Serie | K |
|---|---|---|---|---|---|---|
| 2 | | 1 | PIN | PINO | | |
| 3 | 3001590 | 1 | WASHER | ARRUELA | | |
| 4 | 9161348 | 1 | CROWN NUT M64 | PORCA-CASTELO | | |
| 5 | 4330049 | 1 | SPLIT PIN ISO 1234 10 X 100 ST | CONTRAPINO | | |

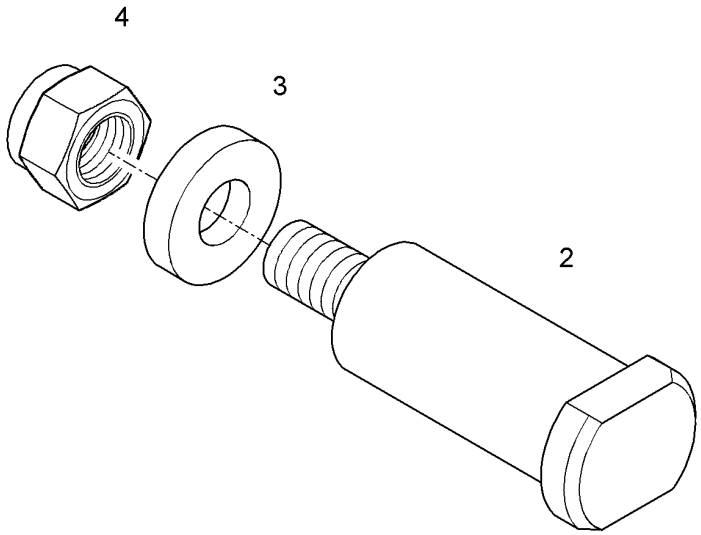


| Pos. | Item | Quantity | Description | Designação | Serie | K |
|---|---|---|---|---|---|---|
| 2 | | 1 | PIN | PINO | | 1 |
| 3 | 4600701 | 1 | WASHER 25 | ARRUELA | | |
| 4 | 4902214 | 1 | HEX NUT ISO 7040 M 24 -10 A3C | PORCA SEXTAVADA | | |

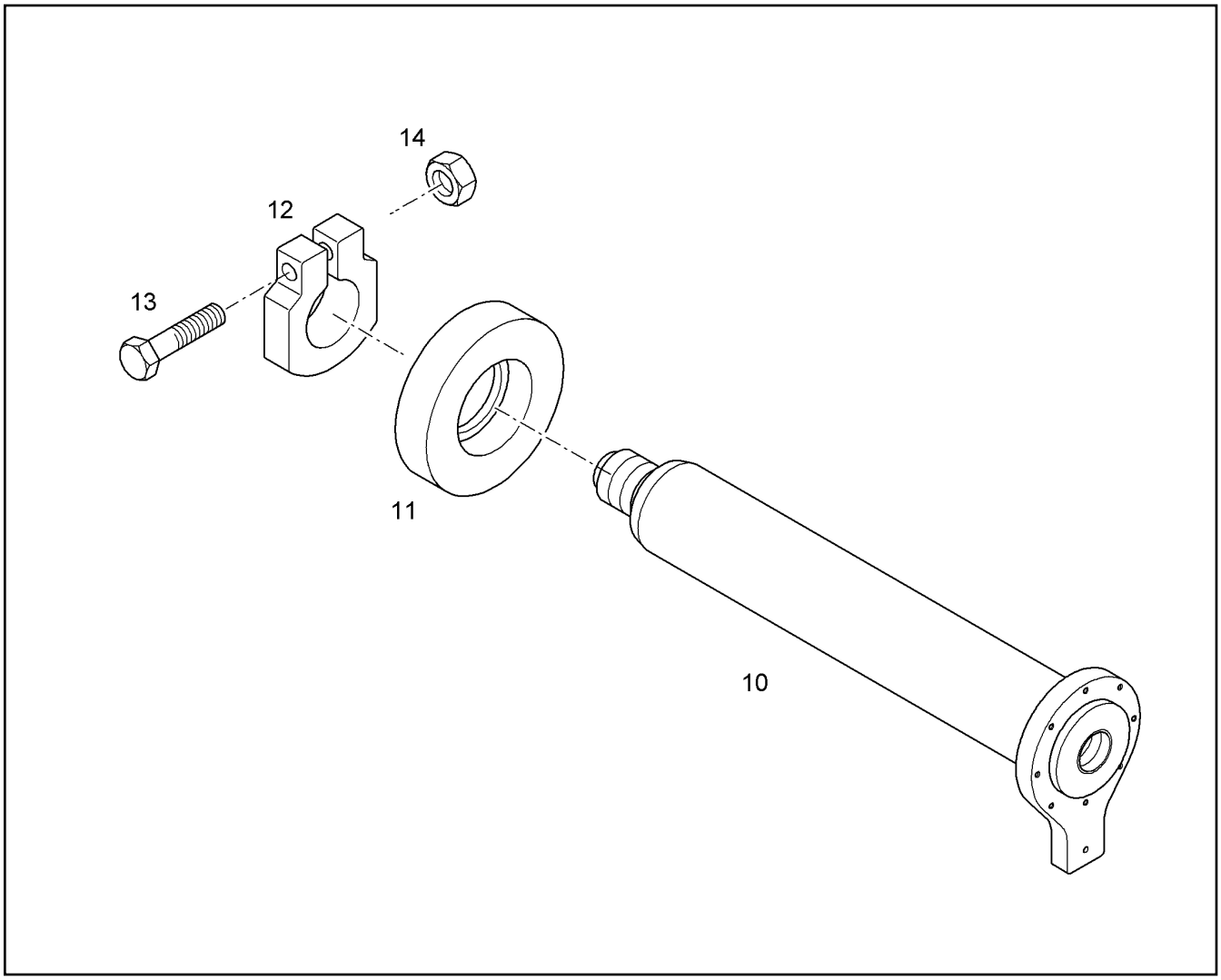


| Pos. | Item | Quantity | Description | Designação | Serie | K |
|---|---|---|---|---|---|---|
| 10 | | 1 | PIN 110X765X623 | PINO | | 1 |
| 11 | 3001446 | 1 | WASHER | ARRUELA | | |
| 12 | 9240322 | 1 | LOCK NUT M64 | PORCA DE APERTO | | |
| 13 | 4002079 | 1 | HEX BOLT ISO 4014 M10X70 10.9 A3C | PARAFUSO SEXTAVADO | | |
| 14 | 4000383 | 1 | HEX NUT M10 | PORCA SEXTAVADA | | |

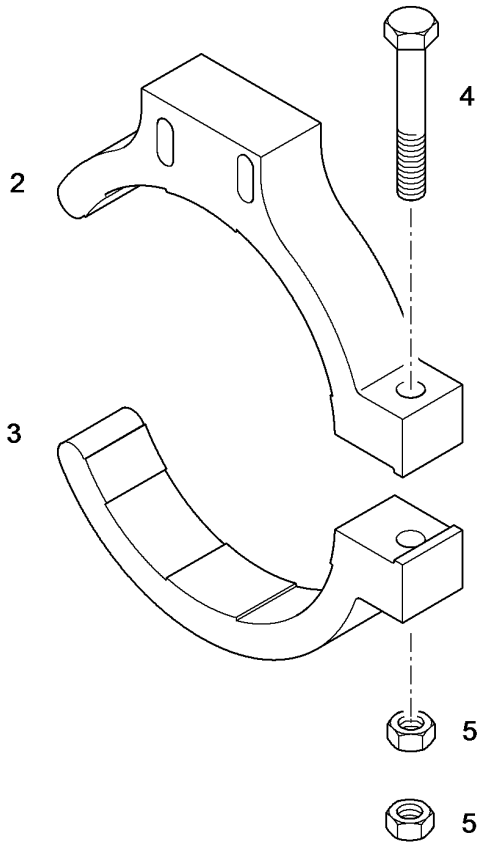


| Pos. | Item | Quantity | Description | Designação | Serie | K |
|---|---|---|---|---|---|---|
| 2 | 10064290 | 1 | HALF CLAMP COLLAR | MEIA ABRAÇADEIRA | | |
| 3 | 10064291 | 1 | HALF CLAMP COLLAR | MEIA ABRAÇADEIRA | | |
| 4 | 4062068 | 1 | HEX BOLT ISO 4014 M16X120 10.9 FLZN | PARAFUSO SEXTAVADO | | |
| 5 | 4000420 | 2 | HEX NUT M16 | PORCA SEXTAVADA | | |

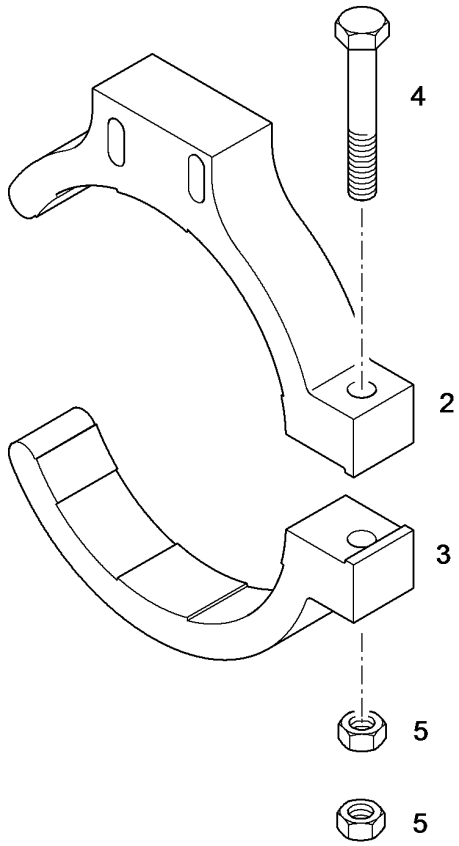


| Pos. | Item | Quantity | Description | Designação | Serie | K |
|---|---|---|---|---|---|---|
| 2 | 10385491 | 1 | HALF CLAMP COLLAR | MEIA ABRAÇADEIRA | | |
| 3 | 10064291 | 1 | HALF CLAMP COLLAR | MEIA ABRAÇADEIRA | | |
| 4 | 4062068 | 1 | HEX BOLT ISO 4014 M16X120 10.9 FLZN | PARAFUSO SEXTAVADO | | |
| 5 | 4000420 | 2 | HEX NUT M16 | PORCA SEXTAVADA | | |

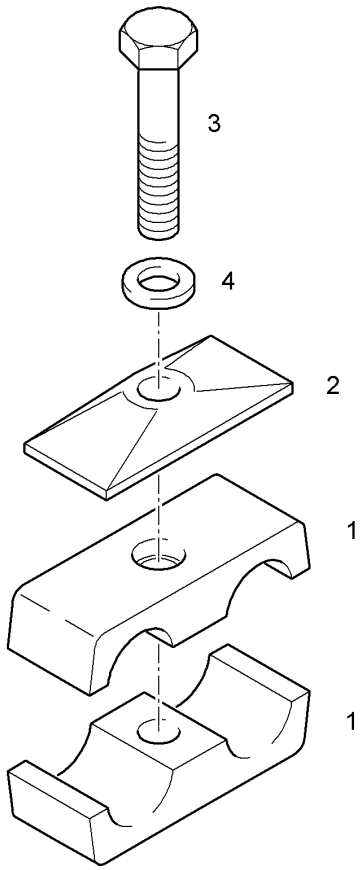


| Pos. | Item | Quantity | Description | Designação | Serie | K |
|---|---|---|---|---|---|---|
| 1 | 7005103 | 2 | CLAMP-HALF DIN 3015-3 Z 5 G 32 32 PP SW | MEIA ABRAÇADEIRA | | |
| 2 | 7005097 | 1 | LID PLATE DIN 3015-3 Z-DP 5 W1-ZN | PLACA | | |
| 3 | 4901215 | 1 | HEX BOLT ISO 4014 M8X65 10.9 A2C | PARAFUSO SEXTAVADO | | |
| 4 | 423910801 | 1 | LOCK WASHER 8,4/13X1,7 VS 8 | ARRUELA DE SEGURANÇA | | |

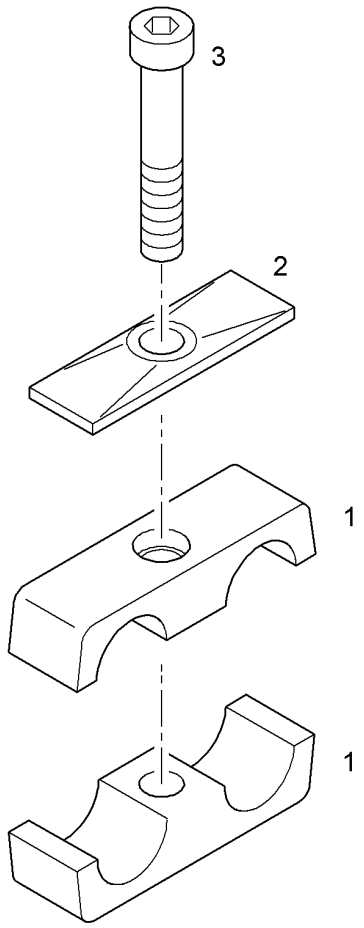


| Pos. | Item | Quantity | Description | Designação | Serie | K |
|---|---|---|---|---|---|---|
| 1 | 7029979 | 2 | CLAMP-HALF DIN 3015-3 Z 3 G 23 23 PP SW | MEIA ABRAÇADEIRA | | |
| 2 | 7401349 | 1 | LID PLATE DIN 3015-3 Z-DP 3 W1-ZN | PLACA | | |
| 3 | 4601316 | 1 | HEX BOLT ISO 4017 M8X50 10.9 A2C | PARAFUSO SEXTAVADO | | |

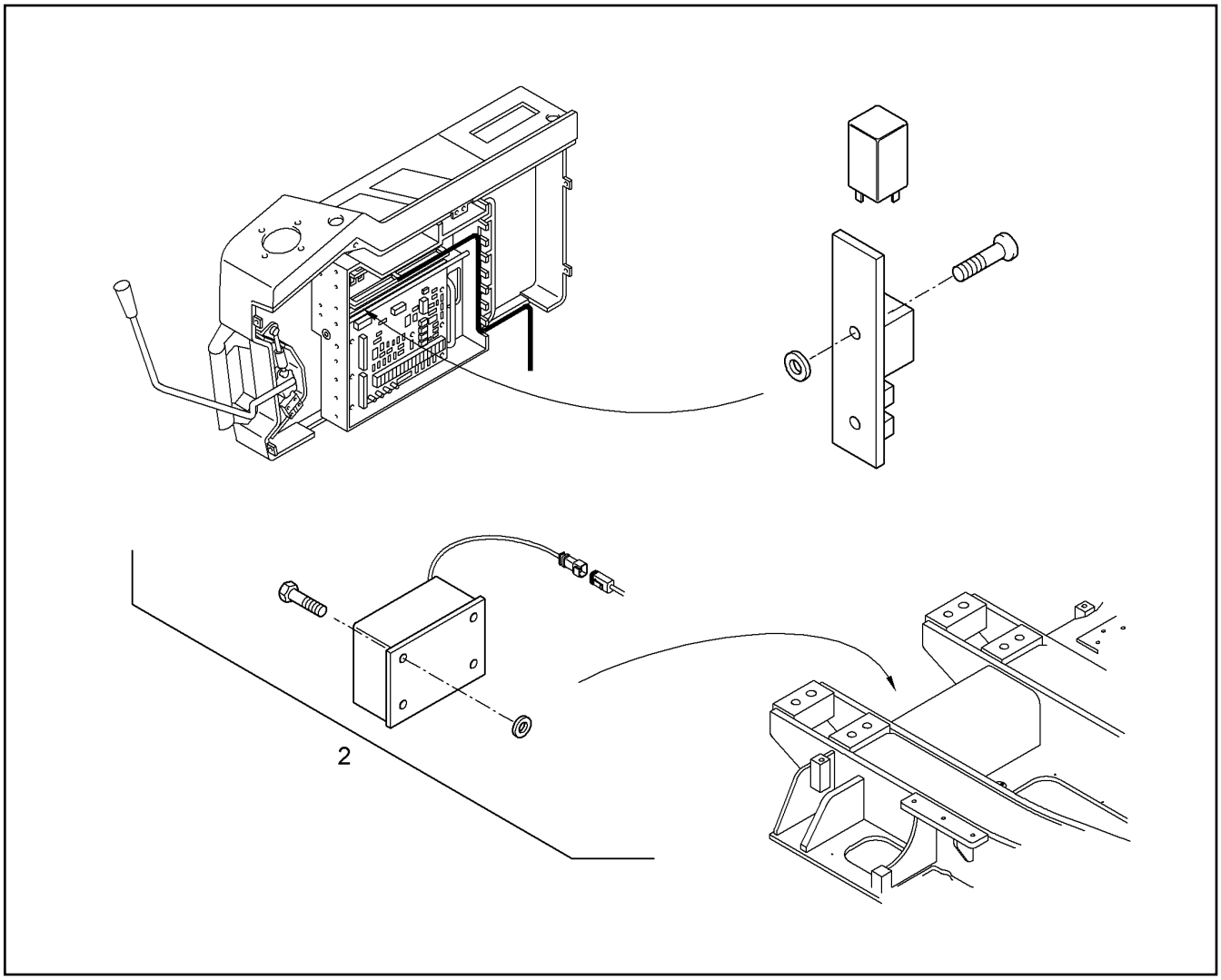


| Pos. | Item | Quantity | Description | Designação | Serie | K |
|---|---|---|---|---|---|---|
| 2 | 10358601 | 1 | TRAVEL ALARM<br>⇨ ❑ 652 | ALARME DE TRANSLACAO | | |

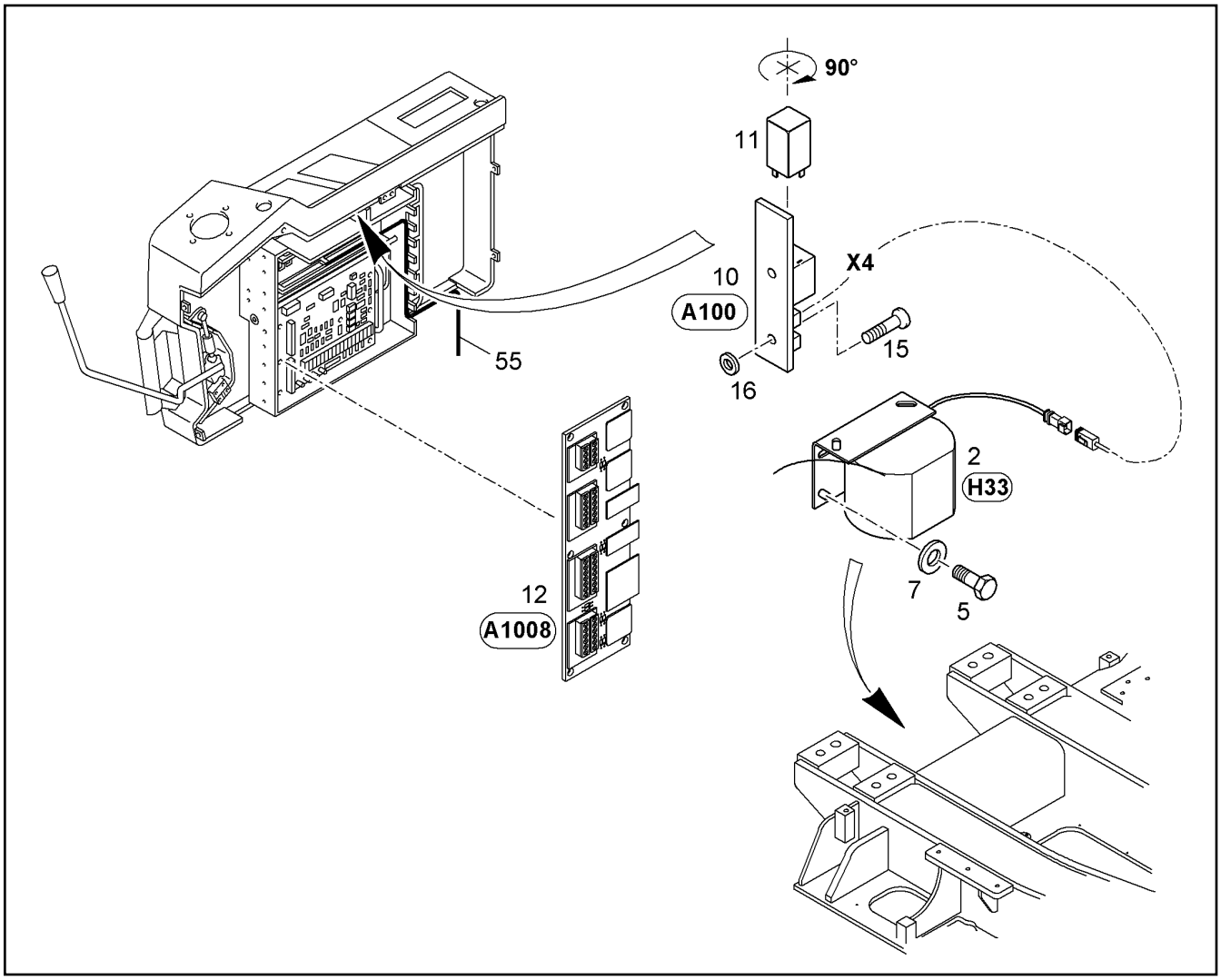


| Pos. | Item | Quantity | Description | Designação | Serie | K |
|---|---|---|---|---|---|---|
| 2 | 10288438 | 1 | BACK UP ALARM | ALARME DE SEGURANÇA | | |
| 5 | 4000704 | 4 | HEX BOLT ISO 4017 M8X20 10.9 A2C | PARAFUSO SEXTAVADO | | |
| 7 | 10289803 | 8 | WASHER ISO 7089 8 300HV | ARRUELA | | |
| 10 | 9202120 | 1 | PLATINE | PLACA ELETRONICA | | |
| 11 | 6001418 | 1 | TIME RELAY | RELE TEMPORIZADOR | | |
| 15 | 4901886 | 1 | PAN-HEAD SCREW ISO 7045 M4X6 4.8 H A2 | PARAFUSO | | |
| 16 | 4001645 | 1 | WASHER ISO 7089 4 200HV | ARRUELA | | |
| 55 | 9699736 | 1 | CABLE LOOM A100-A1008 | CHICOTE ELÉTRICO | | |

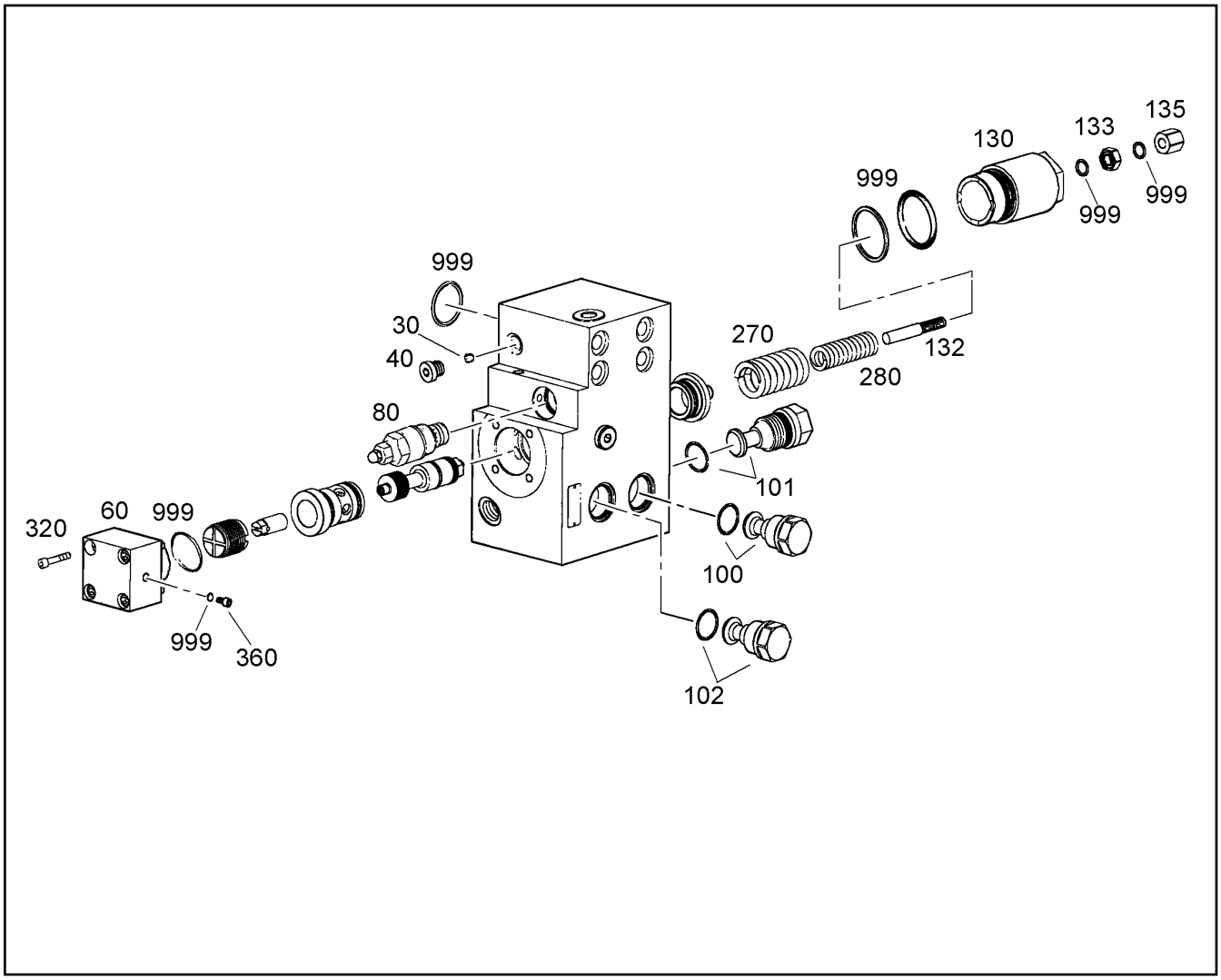


| Pos. | Item | Quantity | Description | Designação | Serie | K |
|---|---|---|---|---|---|---|
| 30 | | 1 | NOZZLE | BICO | | |
| 40 | | 1 | SCREW PLUG G 1/4 | PARAFUSO DE FECHAMENTO | | |
| 60 | | 1 | LID | TAMPA | | |
| 80 | 10289183 | 1 | PRESSURE FEEDER VALVE<br>⇨ ❑ 654 | VALVULA LIMITADORA PRESSA | | |
| 100 | | 1 | SUPPLY VALVE<br>⇨ ❑ 369 | VALVULA DE ALIMENTACAO | | |
| 101 | | 1 | NON-RETURN VALVE | VALVULA DE RETENCAO | | |
| 102 | | 1 | NON-RETURN VALVE | VALVULA DE RETENCAO | | |
| 130 | | 1 | REDUCING PIECE | PEÇA DE REDUÇÃO | | |
| 132 | | 1 | CHECK SCREW M12X1X77,6 | PARAFUSO DE AJUSTE | | |
| 133 | | 1 | HEX NUT | PORCA SEXTAVADA | | |
| 135 | | 1 | CAP NUT | PORCA DE COBERTURA | | |
| 270 | | 1 | PRESSURE SPRING | MOLA DE PRESSÃO | | |
| 280 | | 1 | PRESSURE SPRING | MOLA DE PRESSÃO | | |
| 320 | | 4 | CYLINDER SCREW ISO 4762 M8X45 10.9 A2 | PARAFUSO CILÍNDRICO | | |
| 360 | | 1 | VENTILATION SCREW M6X8 8.8 A2A | PARAFUSO DE RESPIRO | | |
| 999 | 10278595 | 1 | SEAL KIT | KIT DE VEDAÇÃO | | |

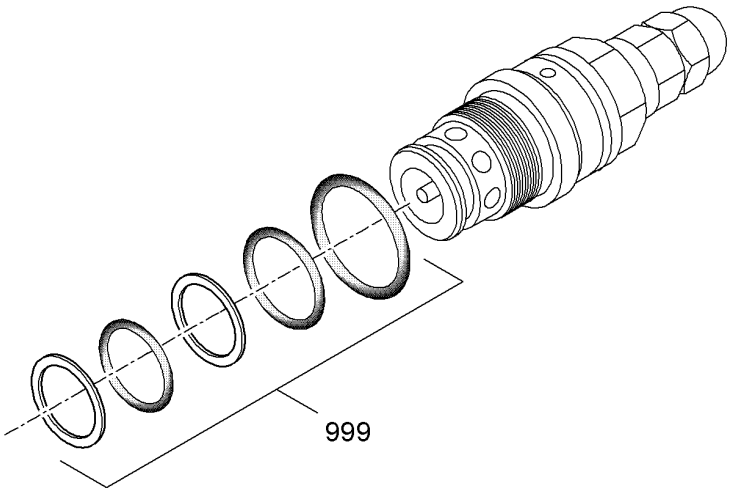


| Pos. | Item | Quantity | Description | Designação | Serie | K |
|---|---|---|---|---|---|---|
| 999 | 10332087 | 1 | SEAL KIT PRESSURE VALVE | KIT JUNTAS VALVULA PRESSAO | | |

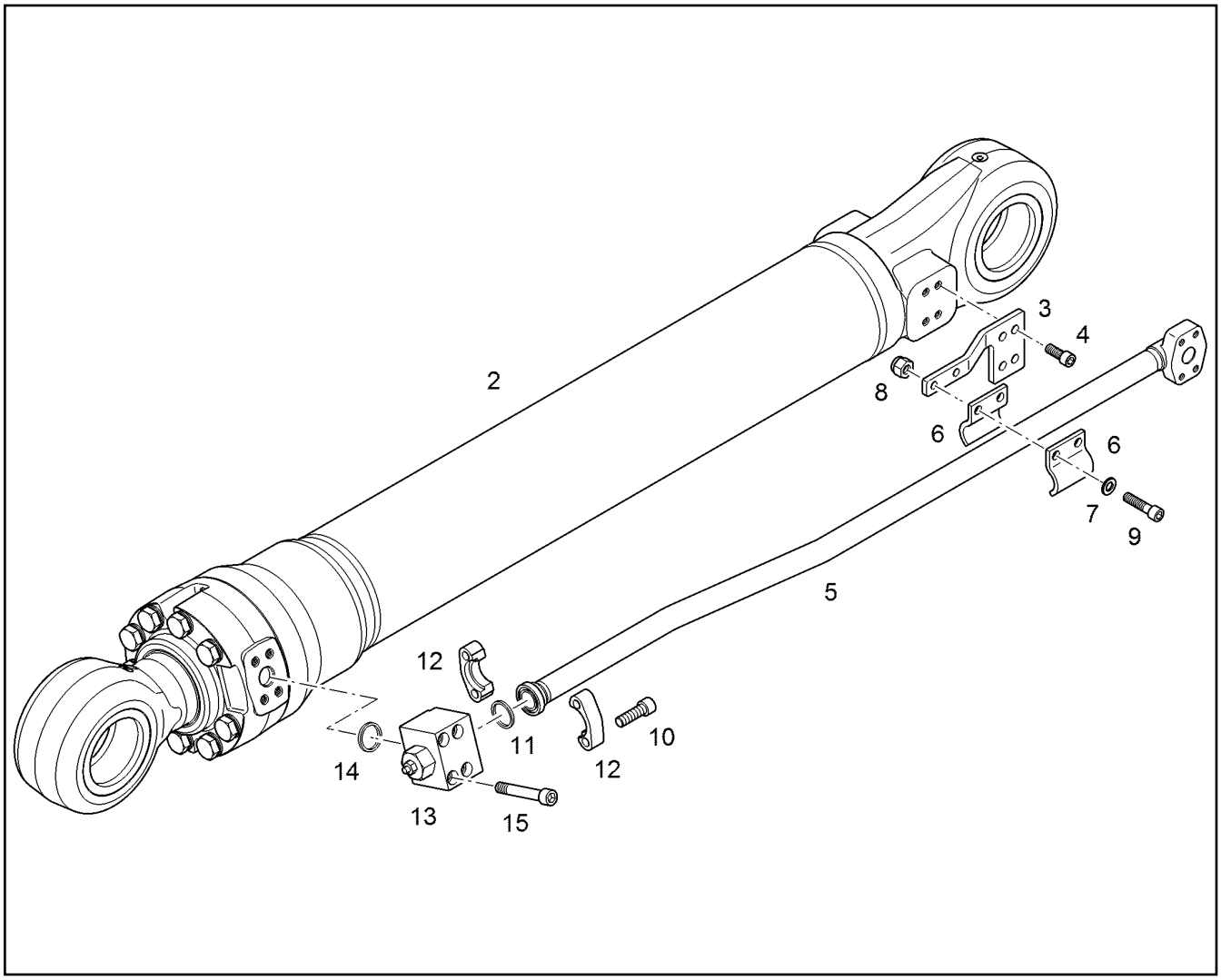


| Pos. | Item | Quantity | Description | Designação | Serie | K |
|---|---|---|---|---|---|---|
| 2 | 9596399 | 1 | HYDRAULIC CYLINDER<br>[02712 P02 ]<br>⇨ ❑ 659 | CILINDRO HIDRÁULICO | | |
| 3 | 10062090 | 1 | CONSOLE | SUPORTE | | |
| 4 | 10001468 | 4 | CYLINDER SCREW ISO 4762 M14X30 10.9 F | PARAFUSO CILÍNDRICO | | |
| 5 | 10062040 | 1 | PRESSURE LINE | TUBULAÇÃO DE PRESSÃO | | |
| 6 | 7373875 | 2 | HALF FLANGE | SEMI-FLANGE | | |
| 7 | 10289804 | 2 | WASHER ISO 7089 12 300HV | ARRUELA | | |
| 8 | 4000619 | 2 | HEX NUT M12 | PORCA SEXTAVADA | | |
| 9 | 4000784 | 2 | CYLINDER SCREW ISO 4762 M12X50 10.9 | PARAFUSO CILÍNDRICO | | |
| 10 | 4902327 | 4 | CYLINDER SCREW ISO 4762 M14X45 10.9 | PARAFUSO CILÍNDRICO | | |
| 11 | 10472425 | 1 | PLAIN COMPRESSION RING 45,05X3,40X2,8 | ANEL DE SEÇÃO RETANGULAR | | |
| 12 | 11485639 | 1 | FLANGE HALF WITH BOSSING SAE J518 SA | MEIO FLANGE COM RELEVO | | |
| 13 | 9270387 | 1 | FLOW REGULATING CHECK VALVE<br>⇨ ❑ 660 | VALVULA DE RETENCAO | | |
| 14 | 10472425 | 1 | PLAIN COMPRESSION RING 45,05X3,40X2,8 | ANEL DE SEÇÃO RETANGULAR | | |
| 15 | 10001079 | 4 | CYLINDER SCREW ISO 4762 M14X90 10.9 | PARAFUSO CILÍNDRICO | | |

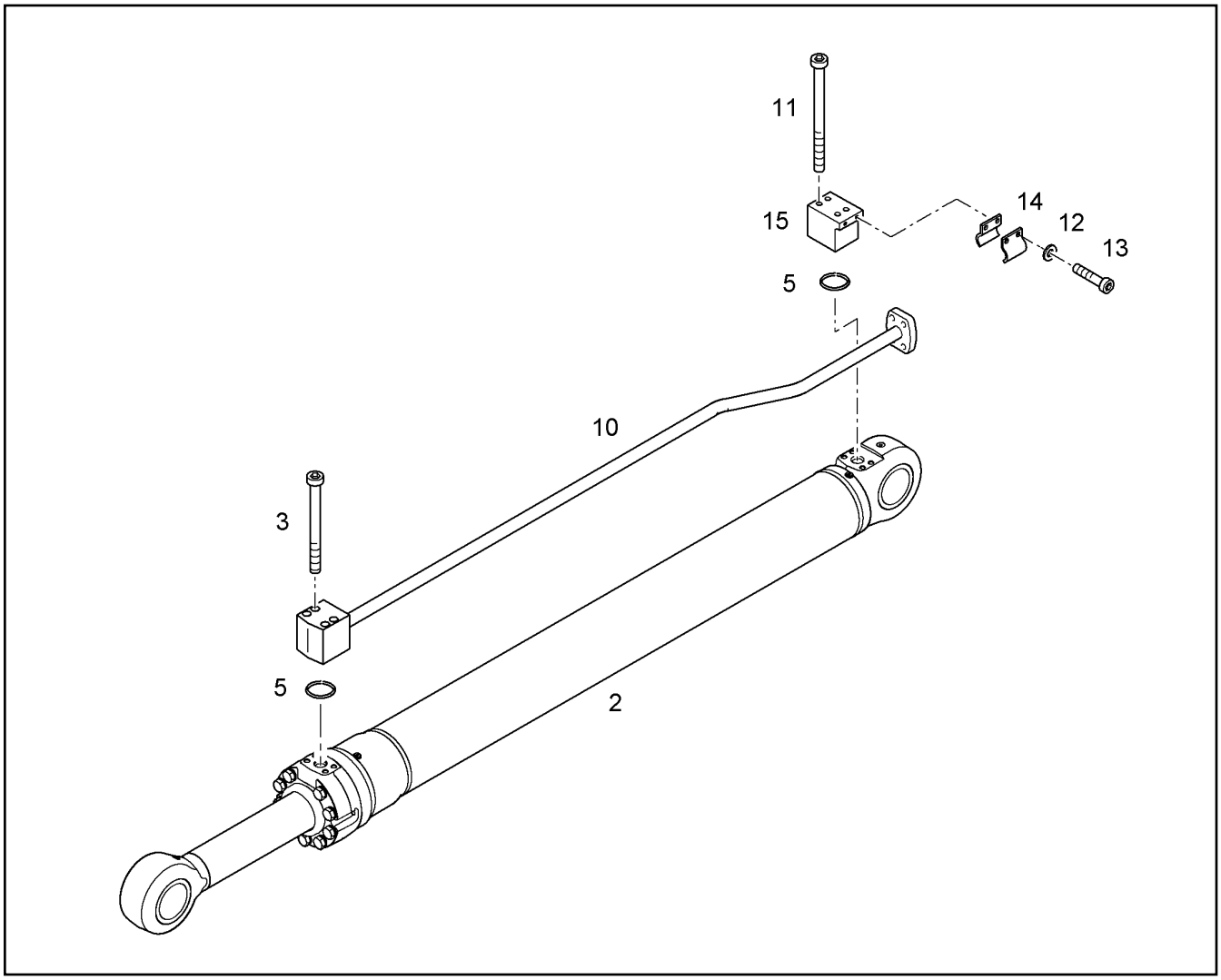


| Pos. | Item | Quantity | Description | Designação | Serie | K |
|---|---|---|---|---|---|---|
| 2 | | 1 | HYDRAULIC CYLINDER<br>[03220 P02 ]<br>⇨ ❑ 657 | CILINDRO HIDRÁULICO | 28814- | 6 |
| 3 | 4902030 | 4 | CYLINDER SCREW ISO 4762 M16X90 10.9 | PARAFUSO CILÍNDRICO | | |
| 5 | 10490787 | 2 | PLAIN COMPRESSION RING 54,40X3,40X2,8 | ANEL DE SEÇÃO RETANGULAR | | |
| 10 | 10064334 | 1 | PRESSURE LINE CPL | TUBULAÇÃO DE PRESSÃO COM | | |
| 11 | 4000657 | 4 | CYLINDER SCREW ISO 4762 M16X140 10.9 F | PARAFUSO CILÍNDRICO | | |
| 12 | 10289804 | 2 | WASHER ISO 7089 12 300HV | ARRUELA | | |
| 13 | 4043164 | 2 | CYLINDER SCREW ISO 4762 M12X35 10.9 | PARAFUSO CILÍNDRICO | | |
| 14 | 7373875 | 2 | HALF FLANGE | SEMI-FLANGE | | |
| 15 | 9948784 | 1 | BLOCK | BLOCO | | |

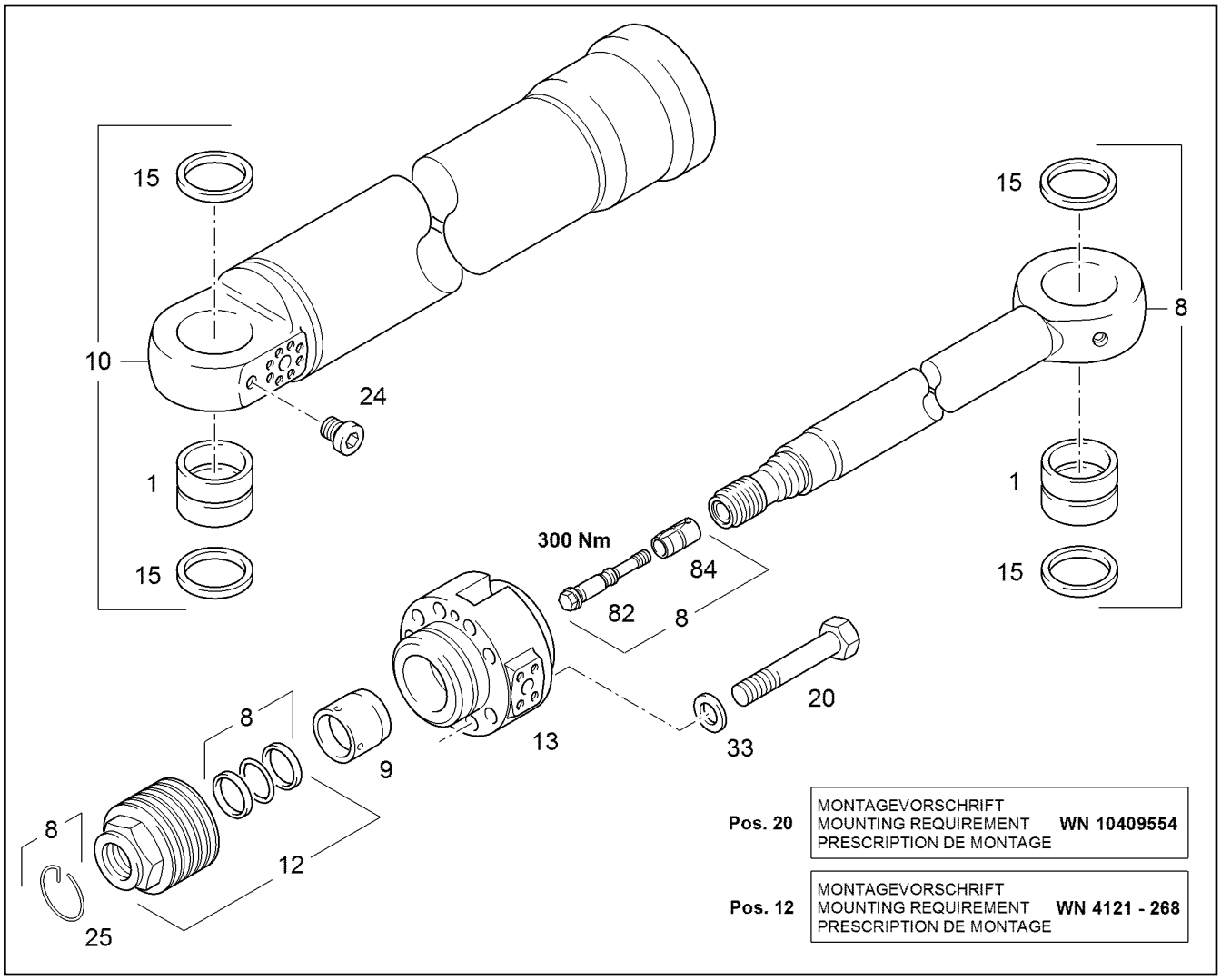


| Pos. | Item | Quantity | Description | Designação | Serie | K |
|---|---|---|---|---|---|---|
| 1 | 9233882 | 2 | BUSHING SPIRAL 120/150X105 | BUCHA | | 1 |
| 8 | 94020196 | 1 | PISTON ROD | HASTE DO CILINDRO | | |
| 9 | 9907856 | 1 | SLEEVE | LUVA | | |
| 10 | 94019254 | 1 | CYLINDER | CILINDRO | | |
| 12 | 94006061 | 1 | PISTON 180MM<br>⇨ ❑ 663 | PISTÃO | | |
| 13 | 94019364 | 1 | PISTON ROD BEARING 125/180<br>⇨ ❑ 667 | MANCAL DA HASTE DO PISTAO | | |
| 15 | 7362184 | 4 | RADIAL SEAL X120X150X12 | ANEL RETENTOR | | |
| 20 | 10425609 | 9 | HEX BOLT ISO 4014 M24X140 10.9 FLZN | PARAFUSO SEXTAVADO | | |
| 24 | 7362674 | 1 | SCREW PLUG VSTI M10X1 | PARAFUSO DE FECHAMENTO | | |
| 25 | 4242028 | 1 | RING DIN 70951 93 | ANEL | | |
| 33 | 9918230 | 9 | WASHER 24,5/40X5 | ARRUELA | | |
| 82 | 9926801 | 1 | SCREW | PARAFUSO | | |
| 84 | 9926802 | 1 | SLEEVE | LUVA | | |

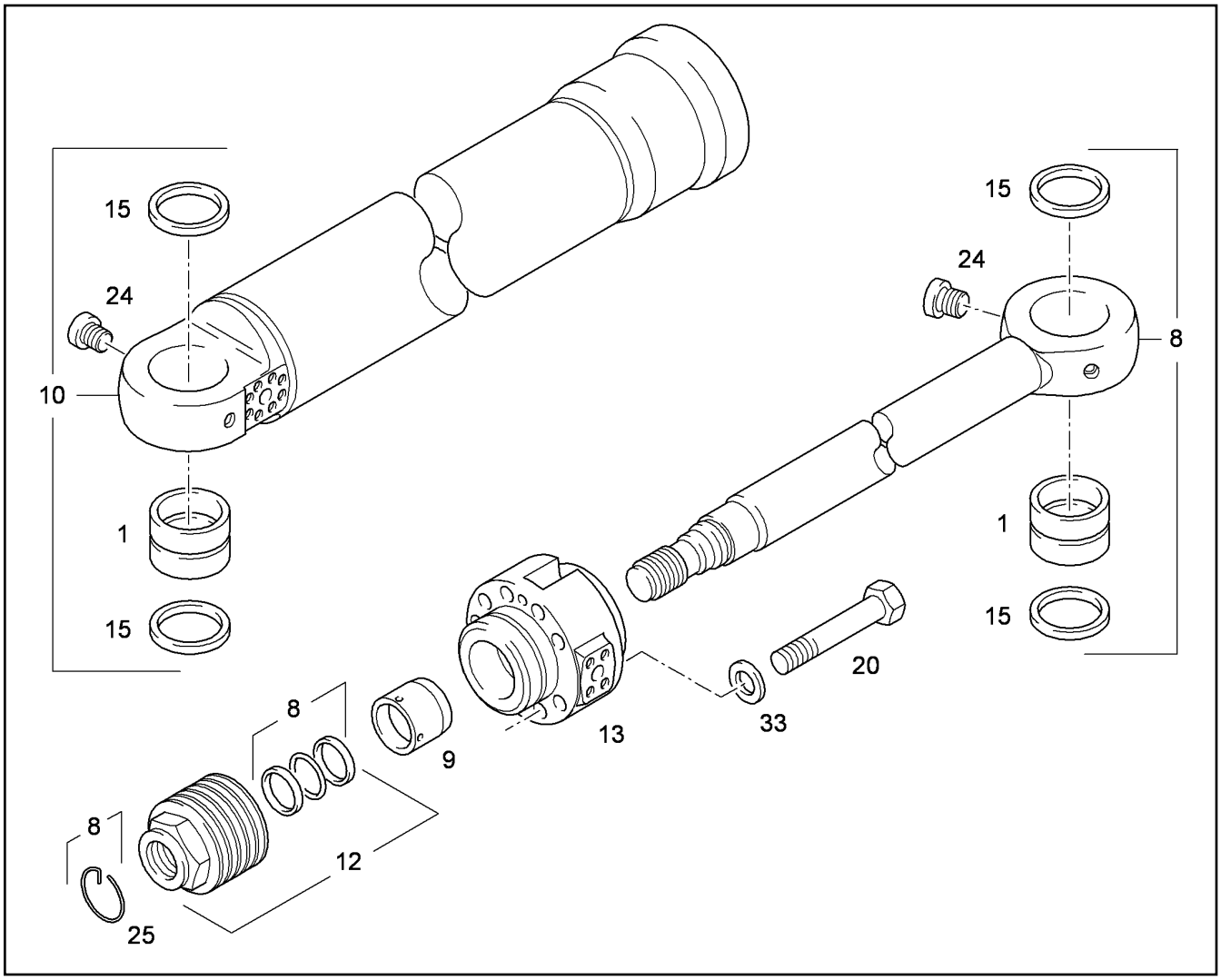


| Pos. | Item | Quantity | Description | Designação | Serie | K |
|---|---|---|---|---|---|---|
| 1 | 9233882 | 2 | BUSHING SPIRAL 120/150X105 | BUCHA | | 1 |
| 8 | 9587673 | 1 | PISTON ROD | HASTE DO CILINDRO | | |
| 9 | 9245586 | 1 | SLEEVE | LUVA | | |
| 10 | 9063420 | 1 | CYLINDER | CILINDRO | | |
| 12 | 9587597 | 1 | PISTON 180MM<br>⇨ ❑ 664 | PISTÃO | | |
| 13 | 9952600 | 1 | PISTON ROD BEARING 110/180<br>⇨ ❑ 669 | MANCAL DA HASTE DO PISTAO | | |
| 15 | 7362184 | 4 | RADIAL SEAL X120X150X12 | ANEL RETENTOR | | |
| 20 | 10425609 | 9 | HEX BOLT ISO 4014 M24X140 10.9 FLZN | PARAFUSO SEXTAVADO | | |
| 24 | 7362674 | 2 | SCREW PLUG VSTI M10X1 | PARAFUSO DE FECHAMENTO | | |
| 25 | 4242024 | 1 | RING DIN 70951 74 | ANEL | | |
| 33 | 9918230 | 9 | WASHER 24,5/40X5 | ARRUELA | | |

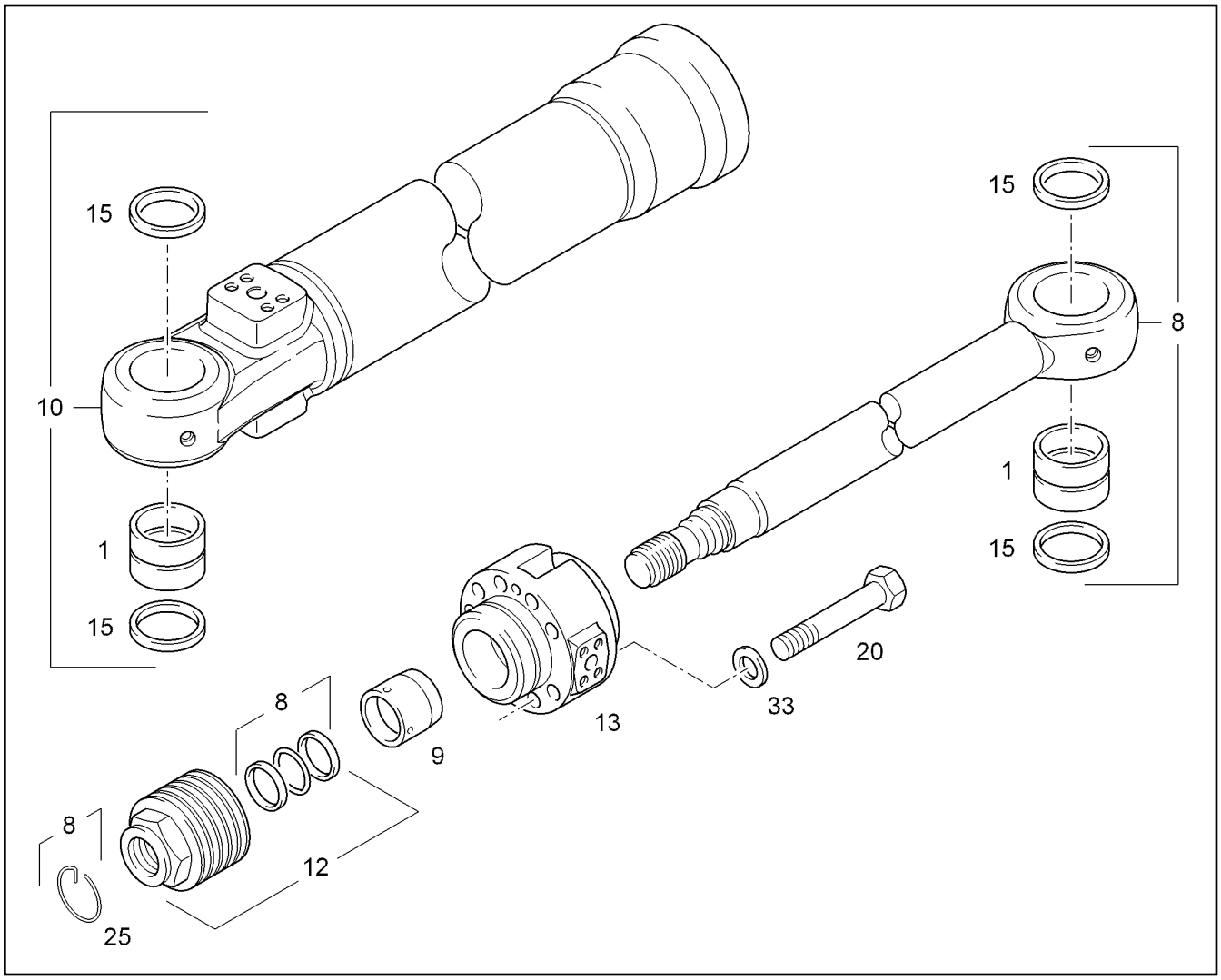


| Pos. | Item | Quantity | Description | Designação | Serie | K |
|---|---|---|---|---|---|---|
| 1 | 9233882 | 2 | BUSHING SPIRAL 120/150X105 | BUCHA | | 1 |
| 8 | 9640458 | 1 | PISTON ROD | HASTE DO CILINDRO | | |
| 9 | 9907856 | 1 | SLEEVE | LUVA | | |
| 10 | 9596877 | 1 | CYLINDER | CILINDRO | | |
| 12 | 9590264 | 1 | PISTON 170MM<br>⇨ ❑ 665 | PISTÃO | | |
| 13 | 94027336 | 1 | PISTON ROD BEARING 125/170<br>⇨ ❑ 668 | MANCAL DA HASTE DO PISTAO | | |
| 15 | 7362184 | 4 | RADIAL SEAL X120X150X12 | ANEL RETENTOR | | |
| 20 | 10285423 | 9 | HEX BOLT ISO 4014 M24X140 10.9 | PARAFUSO SEXTAVADO | | |
| 25 | 4001869 | 1 | RING DIN 70951 89 | ANEL | | |
| 33 | 9918230 | 9 | WASHER 24,5/40X5 | ARRUELA | | |

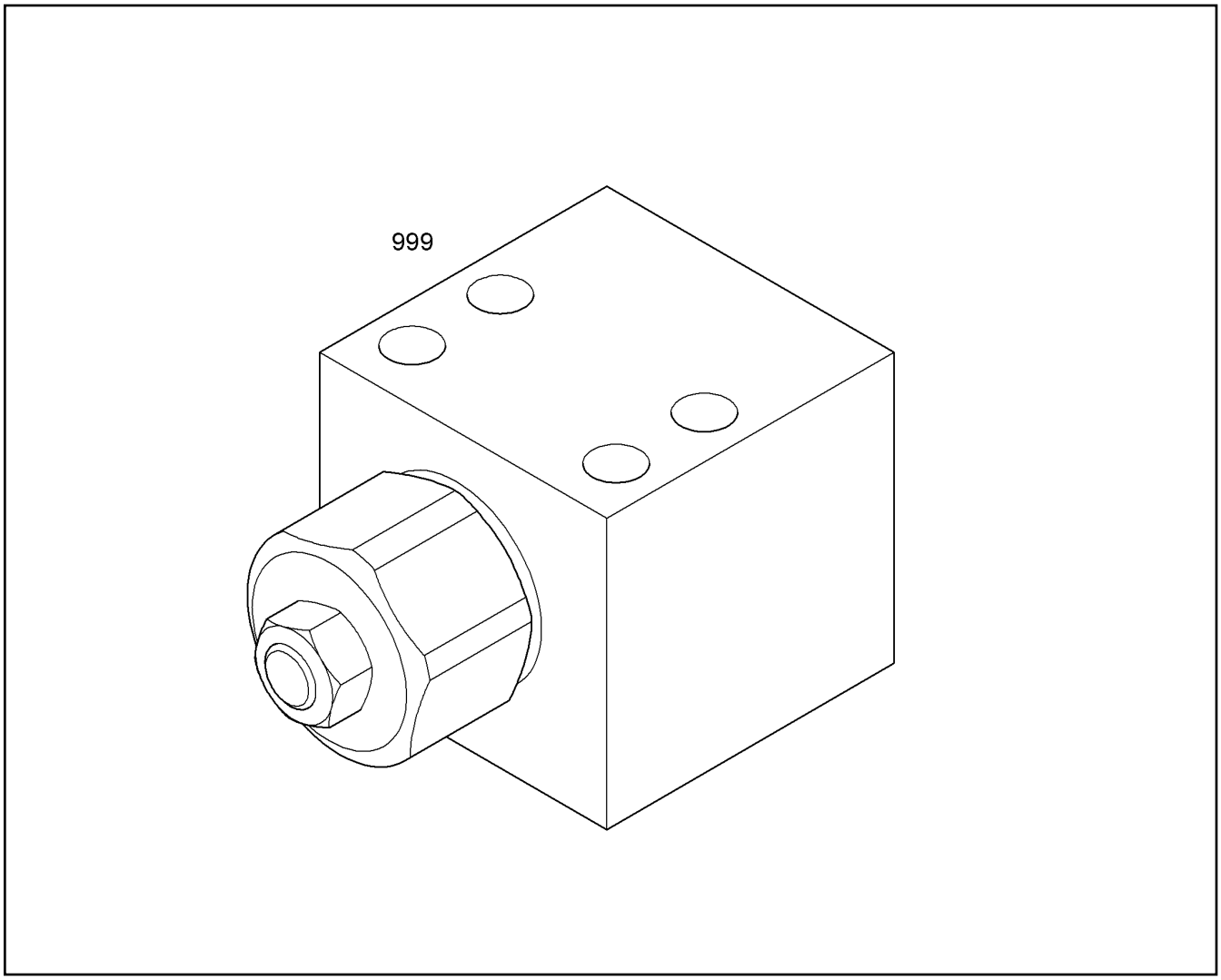


| Pos. | Item | Quantity | Description | Designação | Serie | K |
|---|---|---|---|---|---|---|
| 999 | 9270390 | 1 | SEAL KIT DRV<br>⇨ ❑ 662 | JG V VÁLVULA RET. DE ESTRA | | |

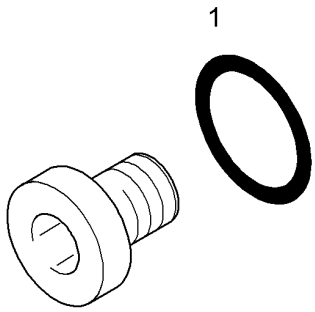


| Pos. | Item | Quantity | Description | Designação | Serie | K |
|---|---|---|---|---|---|---|
| 1 | 5602583 | 1 | SEALING RING DIN 3869 11,6X16,5X 1,5 -14- | ANEL DE VEDAÇÃO | | |

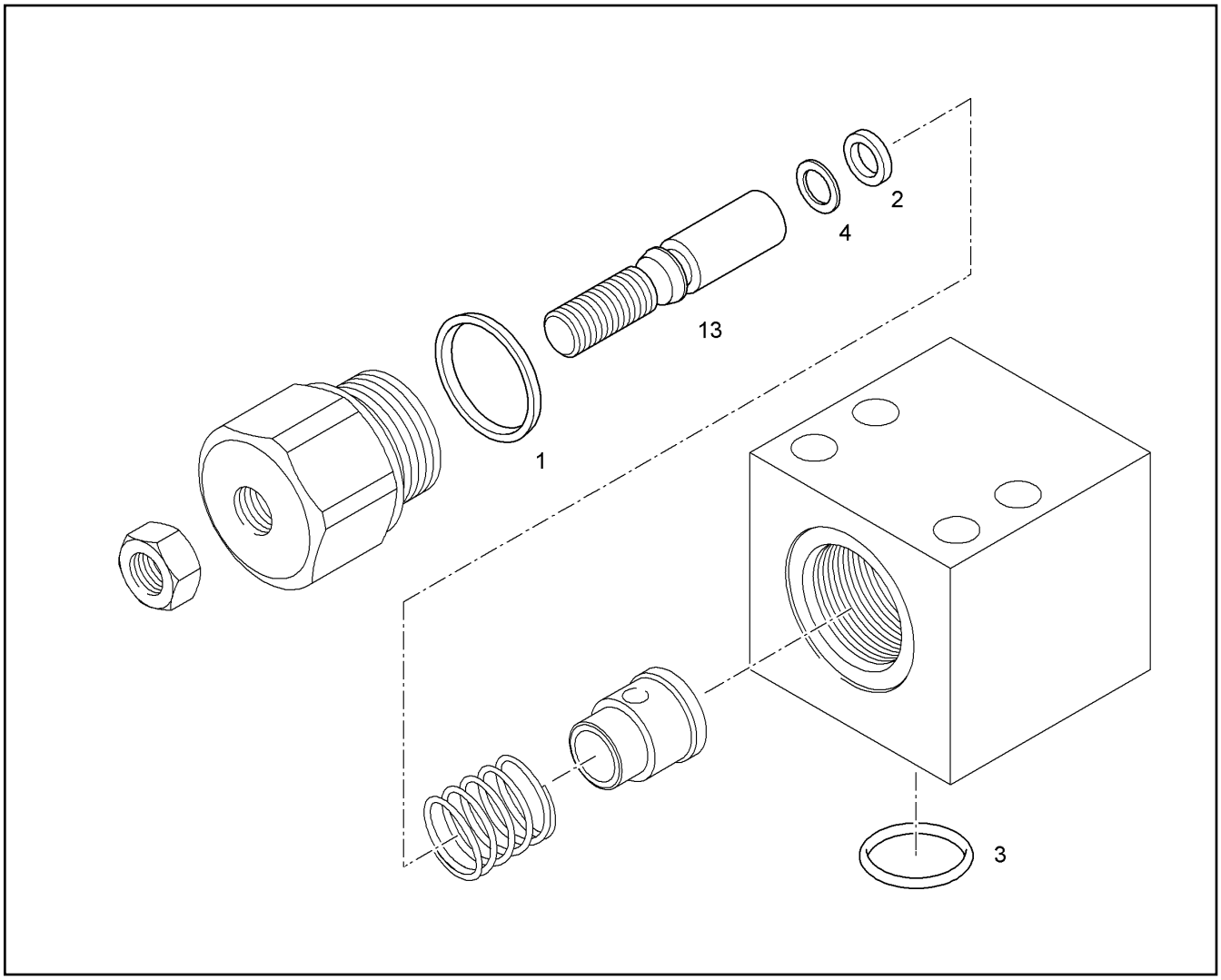


| Pos. | Item | Quantity | Description | Designação | Serie | K |
|---|---|---|---|---|---|---|
| 1 | | 1 | O-RING DIN 3771 32,00X3,00 | ANEL-O | | |
| 2 | | 1 | O-RING DIN 3771 9,19X2,62 | ANEL-O | | |
| 3 | | 1 | O-RING 37,69X3,53 | ANEL-O | | |
| 4 | | 1 | BACK-UP RING CUT 9,4/14X1,1 | ANEL DE ENCOSTO | | |
| 13 | | 1 | SPINDLE M12 FE/ZN 12C | FUSO | | |

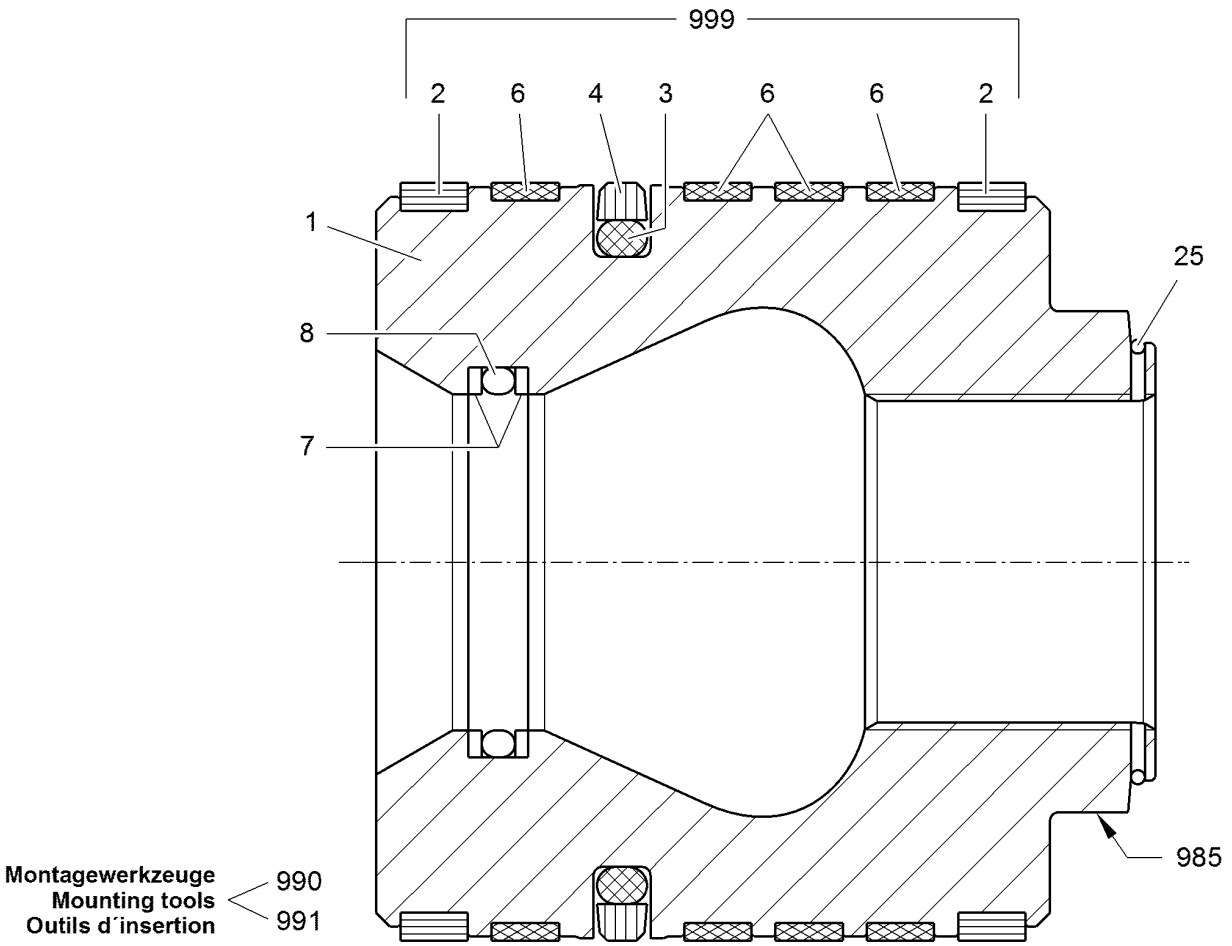


| Pos. | Item | Quantity | Description | Designação | Serie | K |
|---|---|---|---|---|---|---|
| 1 | | 1 | PISTON | PISTÃO | | |
| 2 | 9177718 | 2 | PISTON GUIDE RING 180X172X9,7 | ANEL-GUIA DO PISTAO | | |
| 3 | 7264438 | 1 | O-RING 158,12X7 | ANEL-O | | |
| 4 | 7001629 | 1 | TURCON GLYD RING 180X159X8,1 | ANEL TURCON GLYD | | |
| 6 | 7002927 | 4 | PISTON GUIDE RING 180X175X9,7 | ANEL-GUIA DO PISTAO | | |
| 7 | 7003559 | 2 | SUPPORTING RING 100,00/105,00X1,50 | ANEL DE APOIO | | |
| 8 | 7264091 | 1 | O-RING | ANEL-O | | |
| 25 | 4242028 | 1 | RING DIN 70951 93 | ANEL | | |
| 985 | 9600769 | 1 | PISTON WRENCH SW 120 | CHAVE PARA MONTAGEM DO P | | |
| 990 | 9998619 | 1 | MOUNTING SLEEVE 180 | LUVA DE MONTAGEM | | |
| 991 | 9110413 | 1 | EXPANDING BUSH D=180 | BUCHA EXPANSIVA | | |
| 999 | 9062632 | 1 | SEALING SET FOR PISTON 180MM | JOGO DE VEDAÇÃO | | |
| | | | ⇨ ❑ 666 | | | |

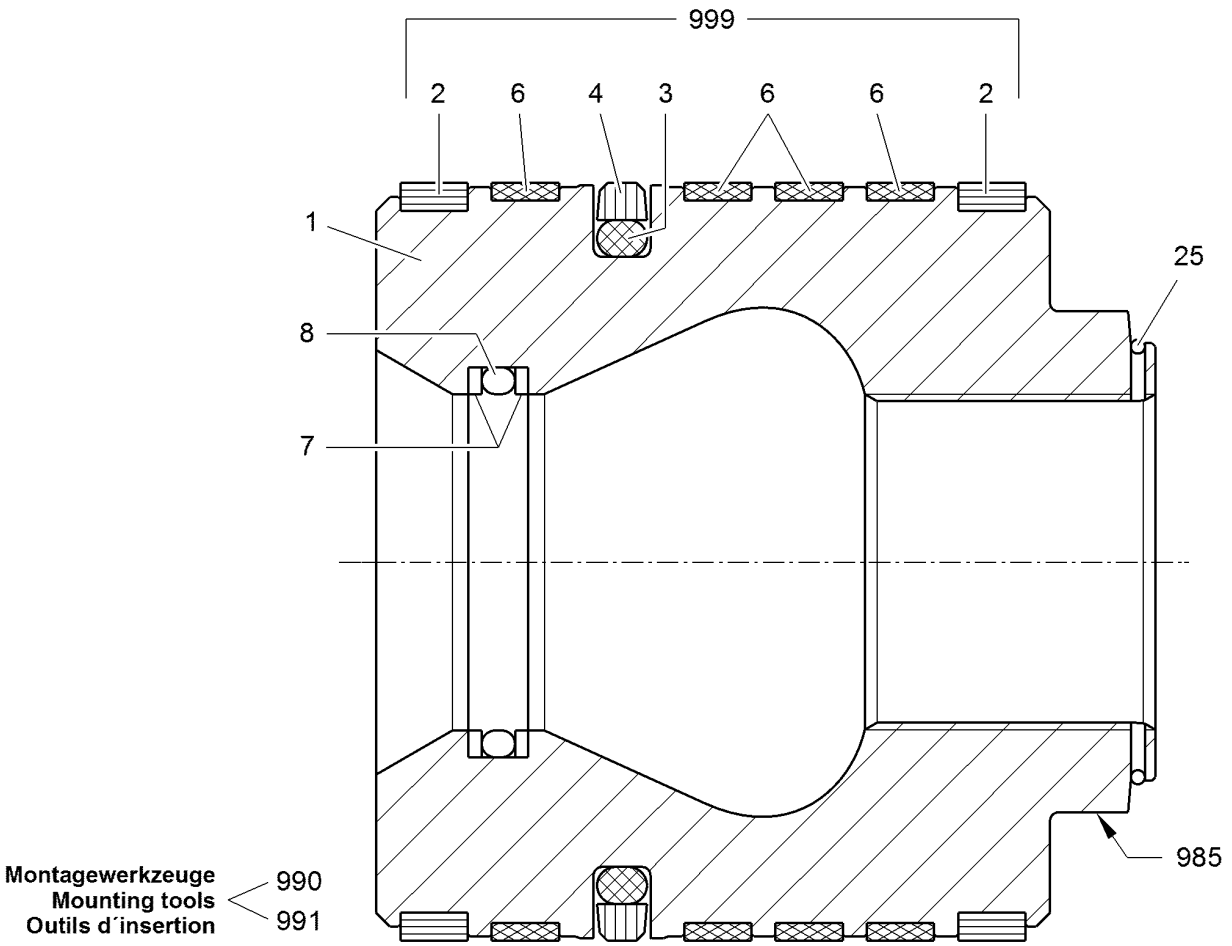


| Pos. | Item | Quantity | Description | Designação | Serie | K |
|---|---|---|---|---|---|---|
| 1 | | 1 | PISTON | PISTÃO | | |
| 2 | 9177718 | 2 | PISTON GUIDE RING 180X172X9,7 | ANEL-GUIA DO PISTAO | | |
| 3 | 7264438 | 1 | O-RING 158,12X7 | ANEL-O | | |
| 4 | 7001629 | 1 | TURCON GLYD RING 180X159X8,1 | ANEL TURCON GLYD | | |
| 6 | 7002927 | 4 | PISTON GUIDE RING 180X175X9,7 | ANEL-GUIA DO PISTAO | | |
| 7 | 7003533 | 2 | SUPPORTING RING 78/83X1,5 | ANEL DE APOIO | | |
| 8 | 7264035 | 1 | O-RING | ANEL-O | | |
| 25 | 4242024 | 1 | RING DIN 70951 74 | ANEL | | |
| 985 | 9921125 | 1 | MOUNTING KEY PISTON NUT SW100-110 | CHAVE PARA PORCA DO PISTA | | |
| 990 | 9998619 | 1 | MOUNTING SLEEVE 180 | LUVA DE MONTAGEM | | |
| 991 | 9110413 | 1 | EXPANDING BUSH D=180 | BUCHA EXPANSIVA | | |
| 999 | 9062632 | 1 | SEALING SET FOR PISTON 180MM | JOGO DE VEDAÇÃO | | |
| | | | ⇨ ❑ 666 | | | |

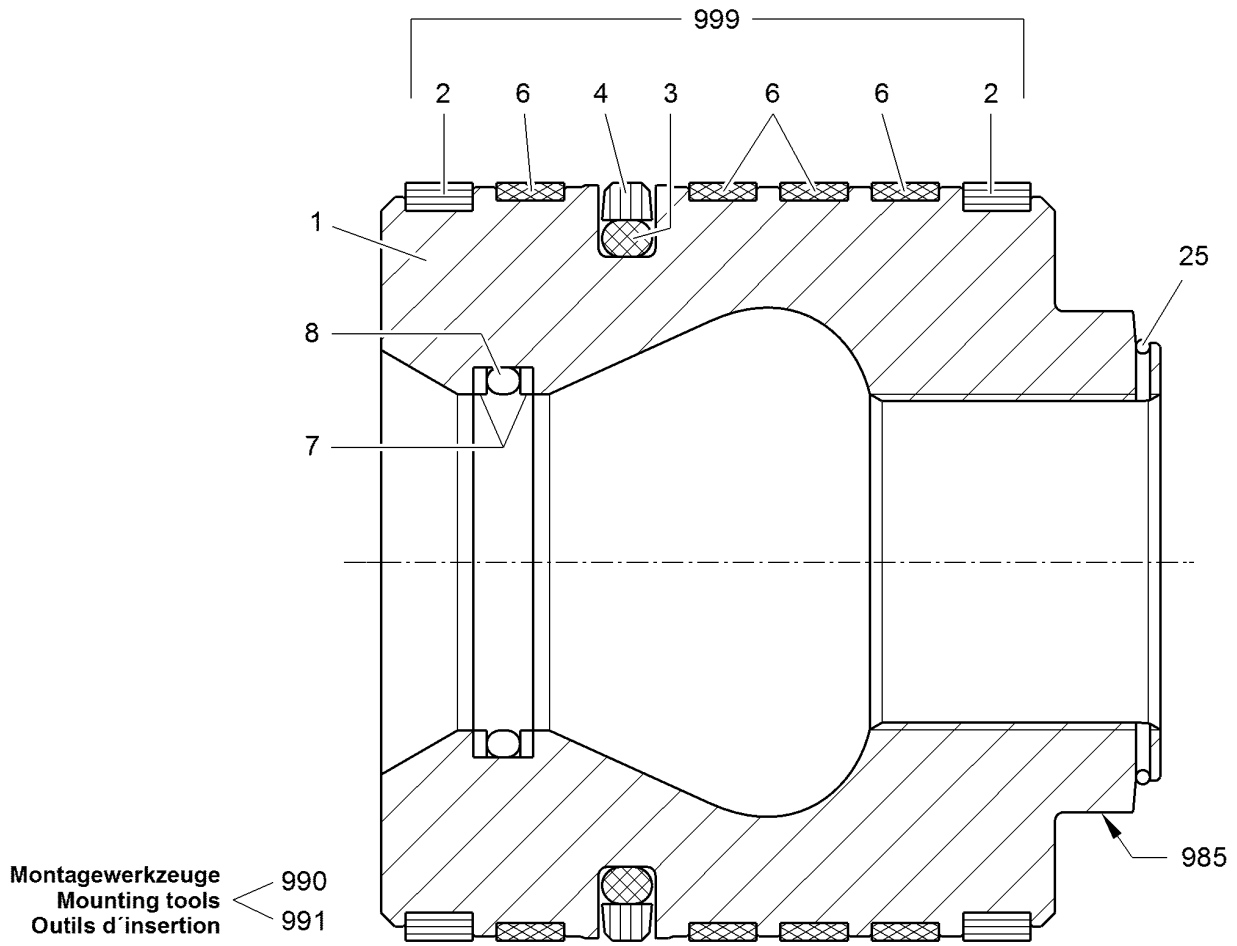


| Pos. | Item | Quantity | Description | Designação | Serie | K |
|---|---|---|---|---|---|---|
| 1 | | 1 | PISTON | PISTÃO | | |
| 2 | 9177717 | 2 | PISTON GUIDE RING 170X162X9,7 | ANEL-GUIA DO PISTAO | | |
| 3 | 7000290 | 1 | O-RING 148,59X7 | ANEL-O | | |
| 4 | 7000293 | 1 | TURCON GLYD RING 170X149X8,1 | ANEL TURCON GLYD | | |
| 6 | 7003429 | 4 | PISTON GUIDE RING 170X165X9,7 | ANEL-GUIA DO PISTAO | | |
| 7 | 7006870 | 2 | SUPPORTING RING 88/93X1,5 | ANEL DE APOIO | | |
| 8 | 7264087 | 1 | O-RING 88X3 | ANEL-O | | |
| 25 | 4001869 | 1 | RING DIN 70951 89 | ANEL | | |
| 985 | 9600769 | 1 | PISTON WRENCH SW 120 | CHAVE PARA MONTAGEM DO P | | |
| 990 | 9107931 | 1 | MOUNTING SLEEVE 170 | LUVA DE MONTAGEM | | 1 |
| 991 | 9110412 | 1 | EXPANDING BUSH D=170MM | BUCHA EXPANSIVA | | |
| 999 | 9062821 | 1 | SEALING SET FOR PISTON 170MM | JOGO DE VEDAÇÃO | | |

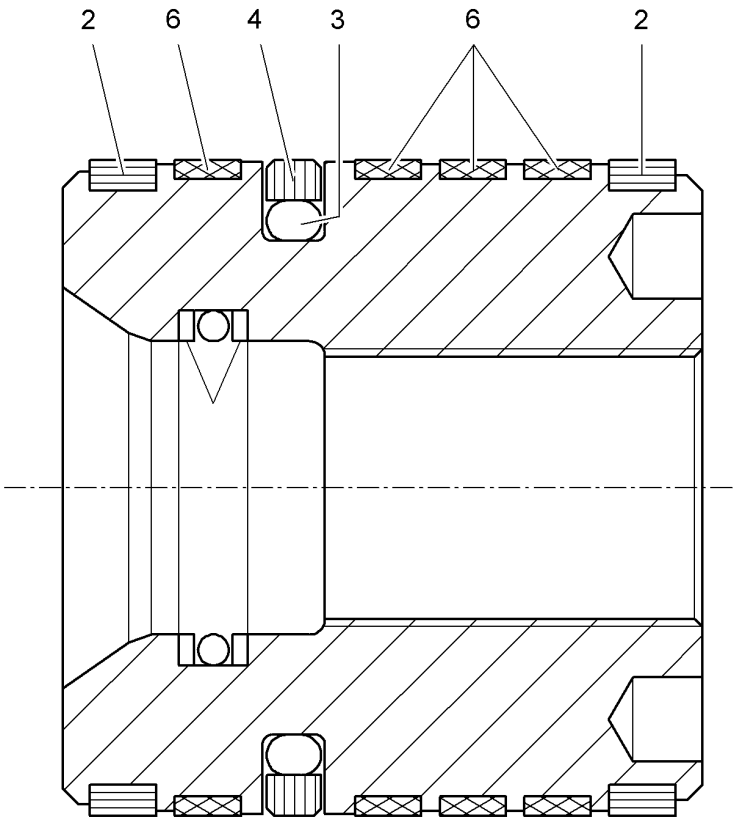


| Pos. | Item | Quantity | Description | Designação | Serie | K |
|---|---|---|---|---|---|---|
| 2 | 9177718 | 2 | PISTON GUIDE RING 180X172X9,7 | ANEL-GUIA DO PISTAO | | |
| 3 | 7264438 | 1 | O-RING 158,12X7 | ANEL-O | | |
| 4 | 7001629 | 1 | TURCON GLYD RING 180X159X8,1 | ANEL TURCON GLYD | | |
| 6 | 7002927 | 4 | PISTON GUIDE RING 180X175X9,7 | ANEL-GUIA DO PISTAO | | |

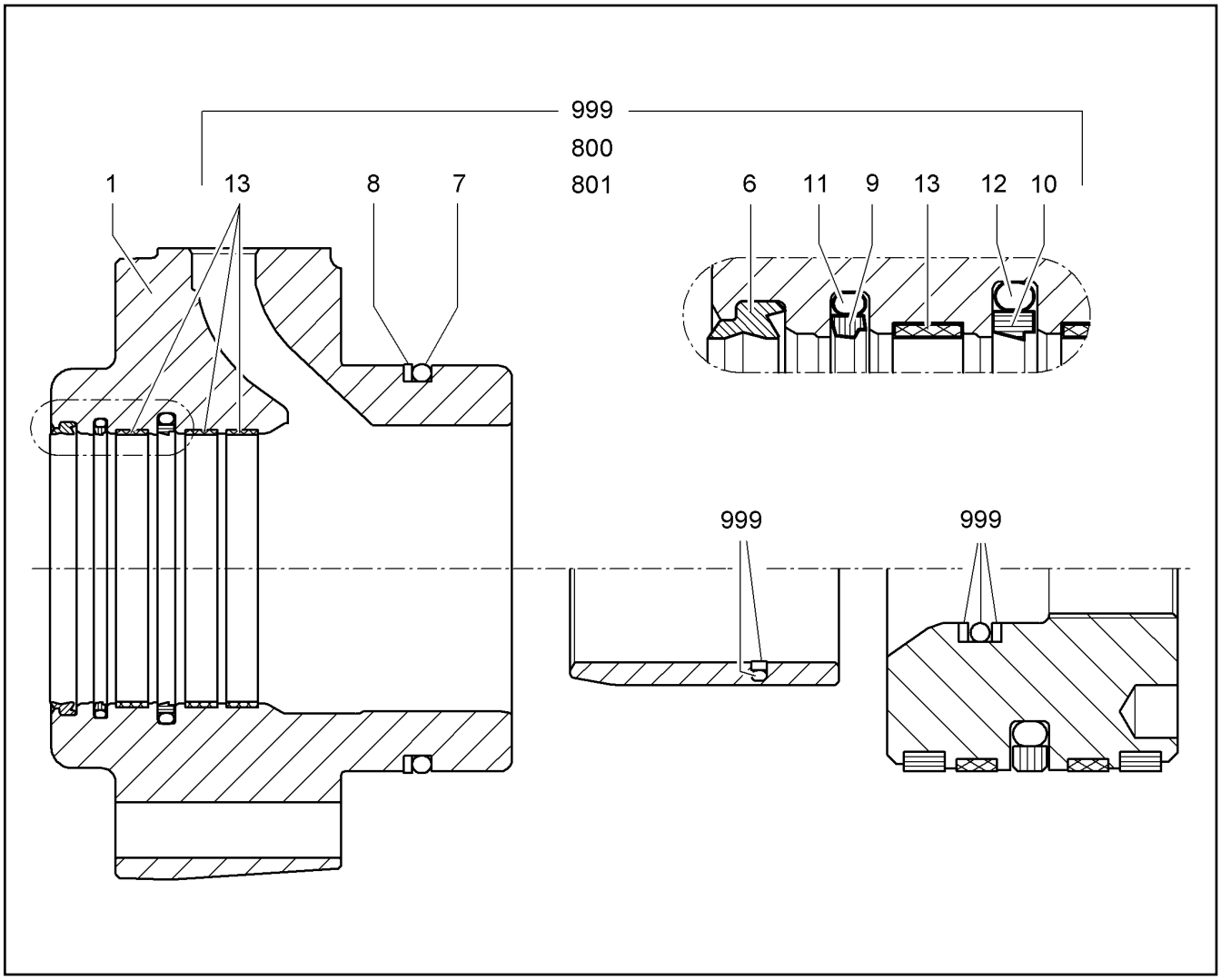


| Pos. | Item | Quantity | Description | Designação | Serie | K |
|---|---|---|---|---|---|---|
| 1 | | 1 | BEARING HEAD | CABEÇOTE DO MANCAL | | |
| 6 | 7023590 | 1 | SCRAPER RING 125X137,2X8,1 | ANEL RASPADOR | | |
| 7 | 7264535 | 1 | O-RING 169,2X5,7 | ANEL-O | | |
| 8 | 10097245 | 1 | SUPPORTING RING 180X170,7X1,7 | ANEL DE APOIO | | |
| 9 | 7010659 | 1 | RIMSEAL 125,0X140,1X6,3 | ANEL DE VEDACAO | | |
| 10 | 7017712 | 1 | TURCON-STEPSEAL K 125,0X145,5X8,1 | VEDACAO TURCON | | |
| 11 | 7017712 | 1 | TURCON-STEPSEAL K 125,0X145,5X8,1 | VEDACAO TURCON | | |
| 12 | 7264422 | 1 | O-RING DIN 3771 132,72X7 | ANEL-O | | |
| 13 | 7005250 | 3 | GUIDE RING 125X130X15,00 | ANEL GUIA | | |
| 800 | 8300004 | 1 | LH-MOLYKOTE LONGTERM | GRAXA DE ALTO RENDIMENTO L | | |
| 801 | 8300005 | 1 | LH-RUST PROTECTION | PRODUTO PROT. CONTRA COR | | |
| 999 | 9062985 | 1 | SEAL KIT F.PISTON ROD BEARING 125/180 | KIT DE VED MANCAL HASTE ÊM | | |

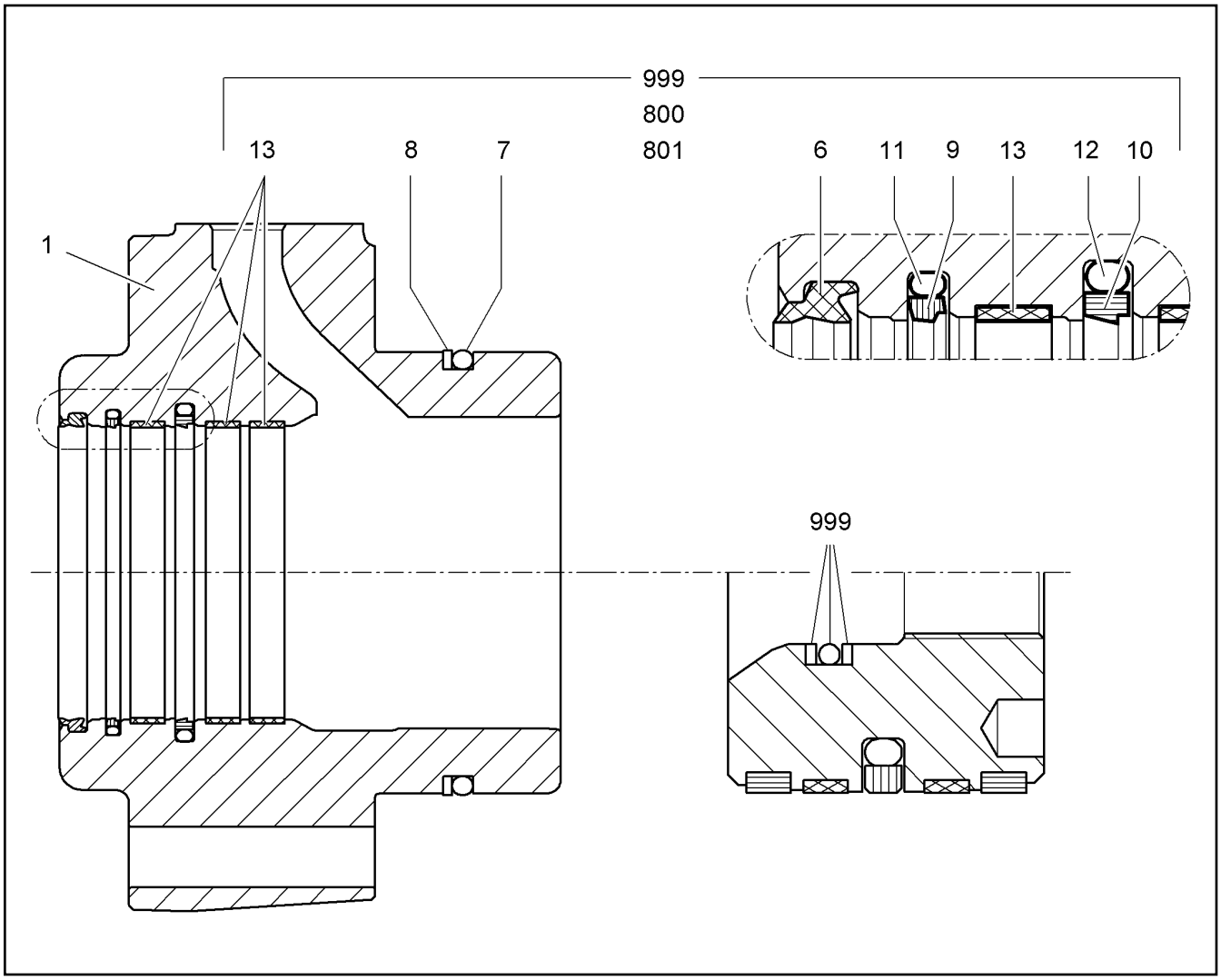


| Pos. | Item | Quantity | Description | Designação | Serie | K |
|---|---|---|---|---|---|---|
| 1 | | 1 | BEARING HEAD | CABEÇOTE DO MANCAL | | |
| 6 | 7023590 | 1 | SCRAPER RING 125X137,2X8,1 | ANEL RASPADOR | | |
| 7 | 7264098 | 1 | O-RING 159,3X5,7 | ANEL-O | | |
| 8 | 10097243 | 1 | SUPPORTING RING 160,7/170X1,7 | ANEL DE APOIO | | |
| 9 | 7010659 | 1 | RIMSEAL 125,0X140,1X6,3 | ANEL DE VEDACAO | | |
| 10 | 7017712 | 1 | TURCON-STEPSEAL K 125,0X145,5X8,1 | VEDACAO TURCON | | |
| 11 | 7001609 | 1 | O-RING DIN 3771 132,72X5,33 | ANEL-O | | |
| 12 | 7264422 | 1 | O-RING DIN 3771 132,72X7 | ANEL-O | | |
| 13 | 7005250 | 3 | GUIDE RING 125X130X15,00 | ANEL GUIA | | |
| 800 | 8300004 | 1 | LH-MOLYKOTE LONGTERM | GRAXA DE ALTO RENDIMENTO L | | |
| 801 | 8300005 | 1 | LH-RUST PROTECTION | PRODUTO PROT. CONTRA COR | | |
| 999 | 94027338 | 1 | SEAL KIT F.PISTON ROD BEARING 125/170 | KIT DE VED MANCAL HASTE ÊM | | |

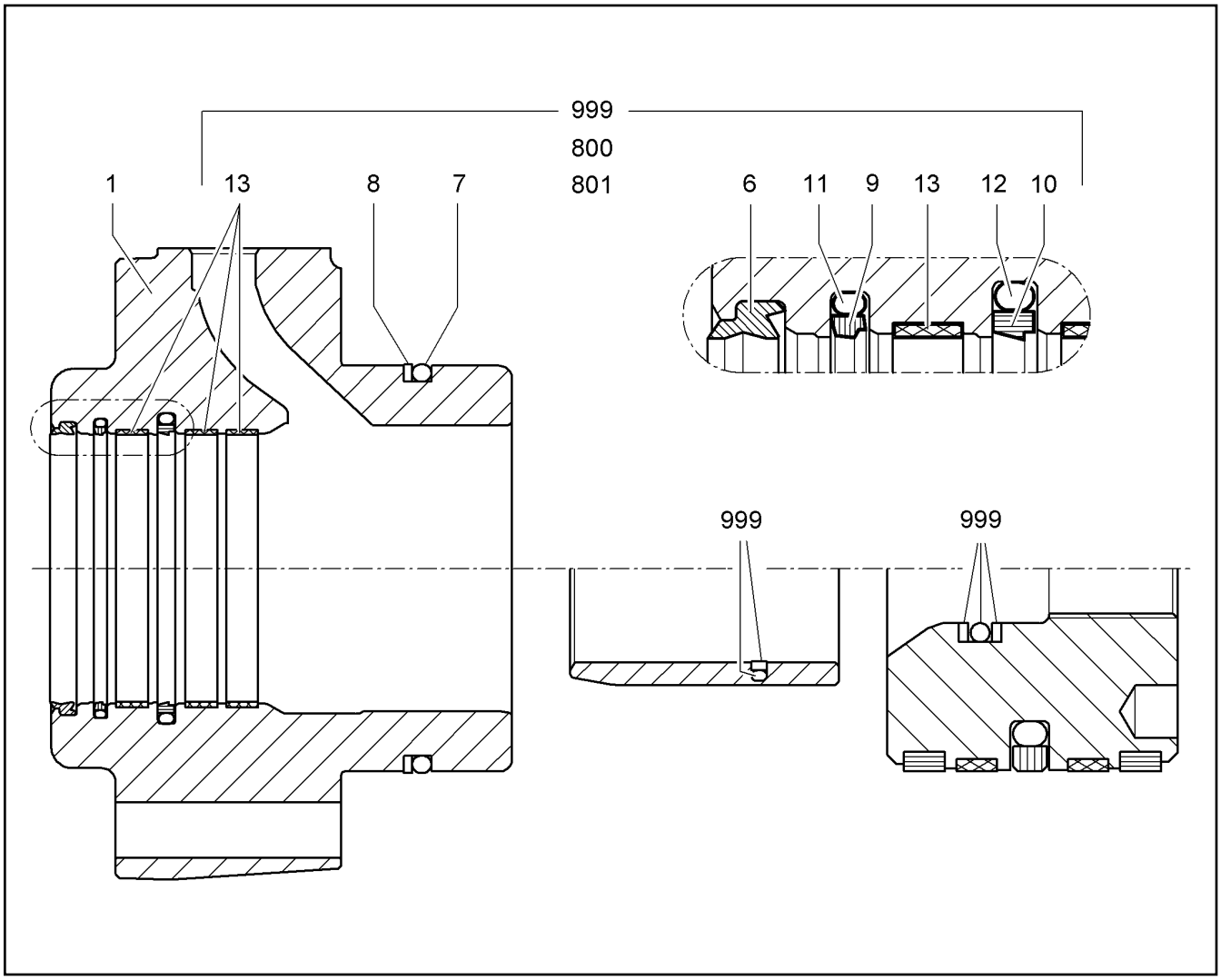


| Pos. | Item | Quantity | Description | Designação | Serie | K |
|---|---|---|---|---|---|---|
| 1 | | 1 | BEARING HEAD | CABEÇOTE DO MANCAL | | |
| 6 | 7026111 | 1 | SCRAPER RING 110X122,2X8,1 | ANEL RASPADOR | | |
| 7 | 7264535 | 1 | O-RING 169,2X5,7 | ANEL-O | | |
| 8 | 10097245 | 1 | SUPPORTING RING 180X170,7X1,7 | ANEL DE APOIO | | |
| 9 | 7010660 | 1 | RIMSEAL 110,0X125,1X6,3 | ANEL DE VEDACAO | | |
| 10 | 7017711 | 1 | TURCON-STEPSEAL K 110,0X130,5X8,1 | VEDACAO TURCON | | |
| 11 | 7000948 | 2 | O-RING 116,84X5,33 | ANEL-O | | |
| 12 | 7002054 | 1 | O-RING 116,84X7 | ANEL-O | | |
| 13 | 7005249 | 3 | GUIDE RING 110X115X15,00 | ANEL GUIA | | |
| 800 | 8300004 | 1 | LH-MOLYKOTE LONGTERM | GRAXA DE ALTO RENDIMENTO L | | |
| 801 | 8300005 | 1 | LH-RUST PROTECTION | PRODUTO PROT. CONTRA COR | | |
| 999 | 9158144 | 1 | SEAL KIT F.PISTON ROD BEARING 110/170+ | KIT DE VED MANCAL HASTE ÊM | | |

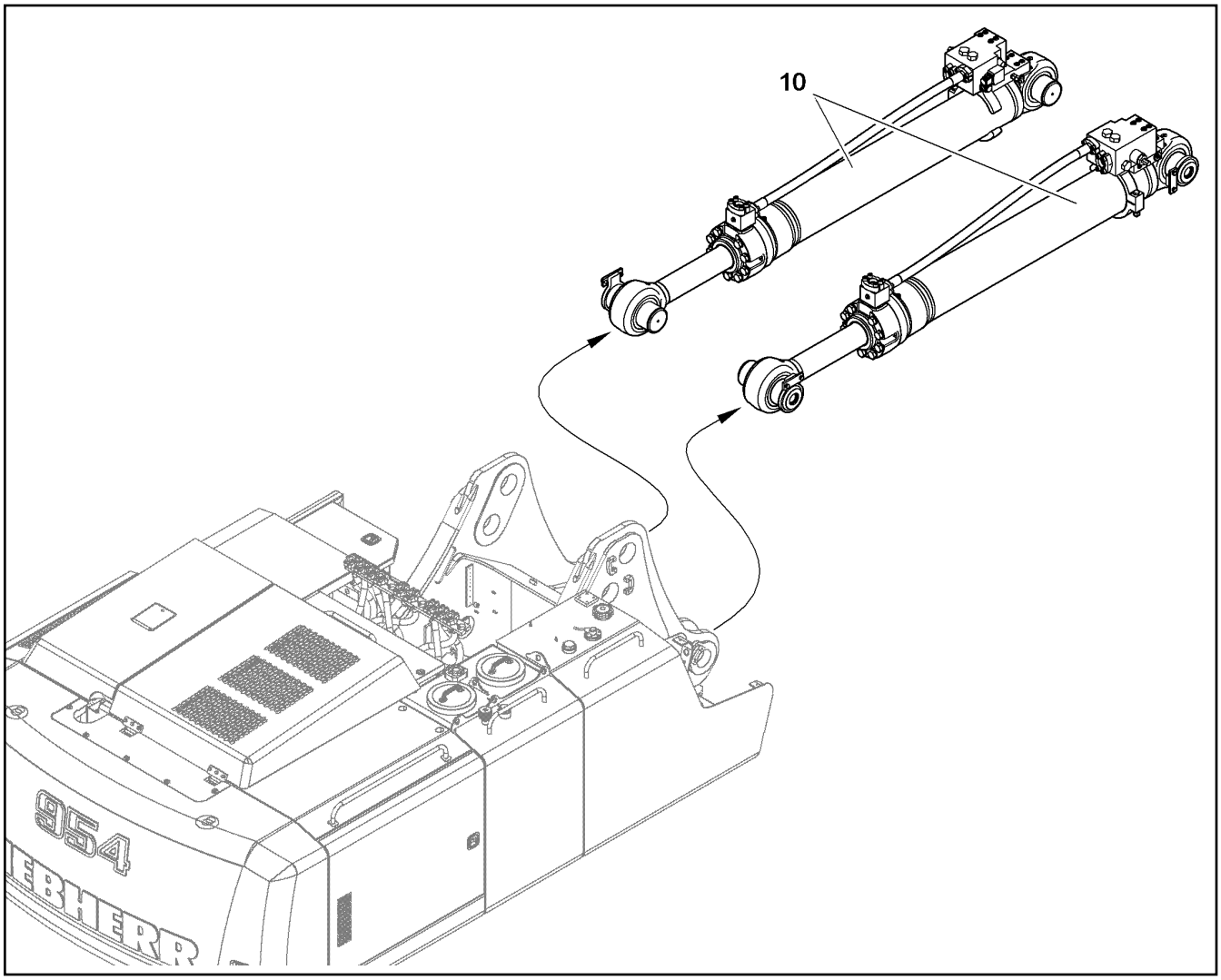


| Pos. | Item | Quantity | Description | Designação | Serie | K |
|---|---|---|---|---|---|---|
| 10 | | 1 | HOIST CYLINDERS<br>⇨ ❑ 671 | CILINDRO DE ELEVACAO | | |

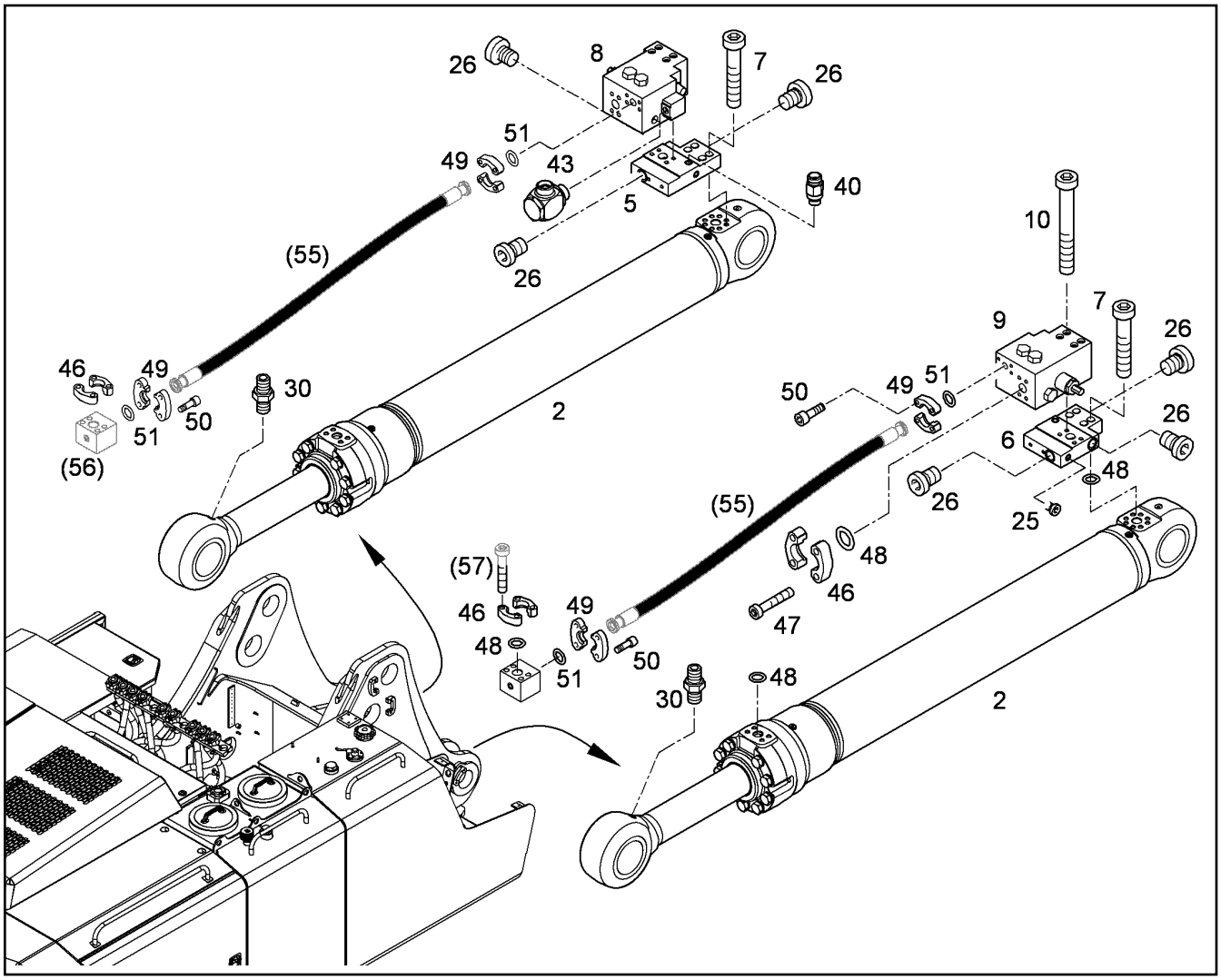


| Pos. | Item | Quantity | Description | Designação | Serie | K |
|---|---|---|---|---|---|---|
| 2 | 9587580 | 2 | HYDRAULIC CYLINDER<br>[03221 P02 ]<br>[03223 P02 ]<br>⇨ ❑ 658 | CILINDRO HIDRÁULICO | | |
| 5 | 10498157 | 1 | INTERMEDIATE BLOCK | BLOCO INTERMEDIARIO | | |
| 6 | 9988764 | 1 | INTERMEDIATE BLOCK | BLOCO INTERMEDIARIO | | |
| 7 | 4601191 | 8 | CYLINDER SCREW ISO 4762 M14X55 10.9 | PARAFUSO CILÍNDRICO | | |
| 8 | 10044700 | 1 | PIPE FRACTION SAFETY VALVE | VÁLVULA DE SEGURANÇA RUP | | |
| 9 | 10002971 | 1 | PIPE FRACTION SAFETY VALVE<br>⇨ ❑ 653 | VÁLVULA DE SEGURANÇA RUP | | |
| 10 | 4902068 | 8 | CYLINDER SCREW ISO 4762 M14X160 10.9 F | PARAFUSO CILÍNDRICO | | |
| 25 | 4900609 | 4 | SCREW PLUG VSTI G3/8 | PARAFUSO DE FECHAMENTO | | |
| 26 | 7361329 | 6 | SCREW PLUG VSTI M33X2 | PARAFUSO DE FECHAMENTO | | |
| 30 | 7362169 | 2 | SCREW FITTING GE 6L | REDUÇÃO | | |
| 40 | 9008618 | 2 | SCREW FITTING | REDUÇÃO | | |
| 43 | 7368478 | 4 | SCREW FITTING WH 15L | REDUÇÃO | | |
| 46 | 11485639 | 8 | FLANGE HALF WITH BOSSING SAE J518 SA | MEIO FLANGE COM RELEVO | | |
| 47 | 4902327 | 8 | CYLINDER SCREW ISO 4762 M14X45 10.9 | PARAFUSO CILÍNDRICO | | |
| 48 | 10472425 | 4 | PLAIN COMPRESSION RING 45,05X3,40X2,8 | ANEL DE SEÇÃO RETANGULAR | | |
| 49 | 11485638 | 8 | FLANGE HALF WITH BOSSING SAE J518 S | MEIO FLANGE COM RELEVO | | |
| 50 | 4043003 | 16 | CYLINDER SCREW ISO 4762 M12X40 10.9 | PARAFUSO CILÍNDRICO | | |
| 51 | 10490781 | 4 | PLAIN COMPRESSION RING 40,15X3,40X2,8 | ANEL DE SEÇÃO RETANGULAR | | |

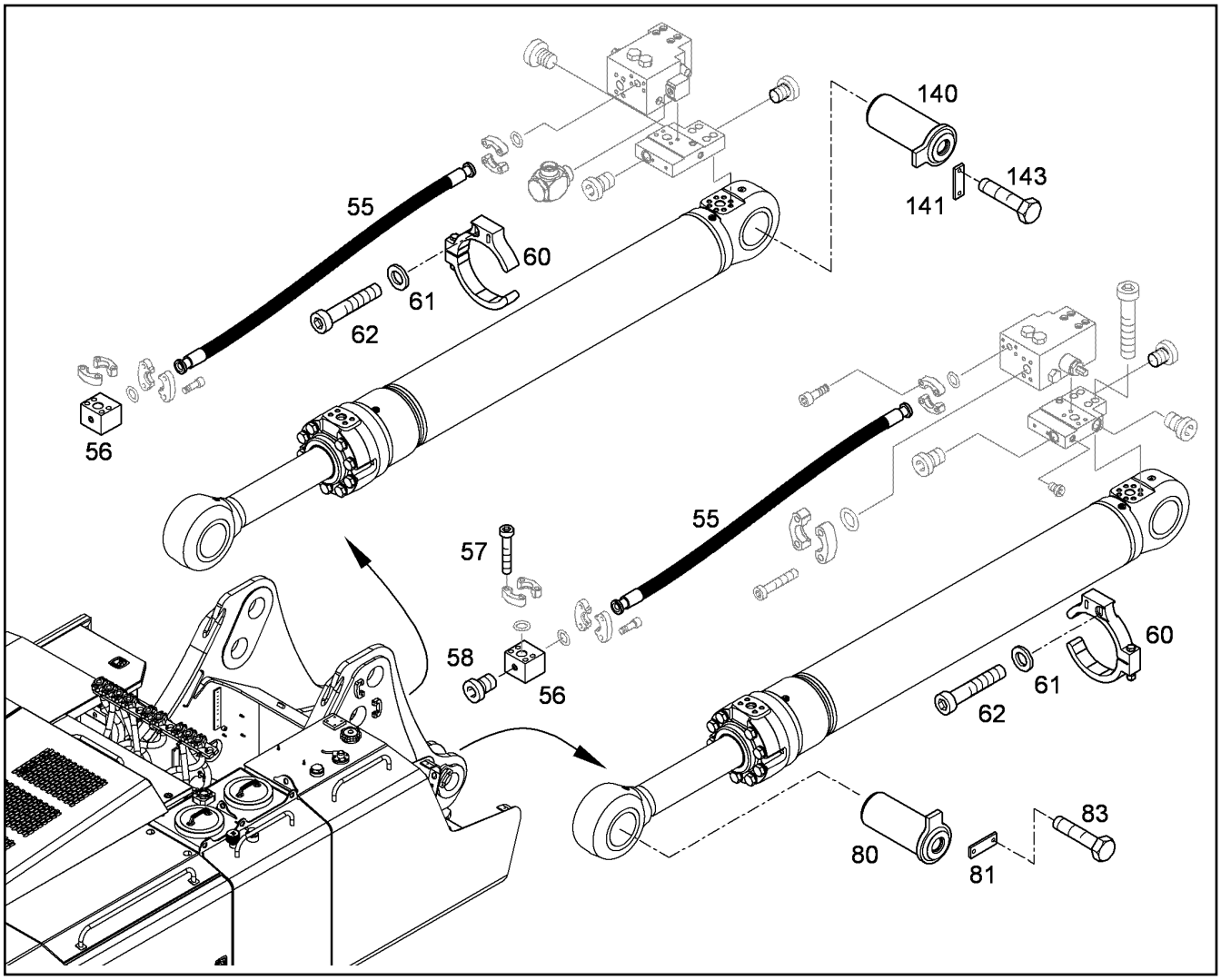


| Pos. | Item | Quantity | Description | Designação | Serie | K |
|---|---|---|---|---|---|---|
| 55 | 10219335 | 2 | HOSE | MANGUEIRA | | 1 |
| 56 | 9392953 | 2 | INTERMEDIATE BLOCK | BLOCO INTERMEDIARIO | | |
| 57 | 4901471 | 8 | CYLINDER SCREW ISO 4762 M14X130 10.9 | PARAFUSO CILÍNDRICO | | |
| 58 | 7363125 | 2 | SCREW FITTING VSTI M14X1,5<br>⇨ ❑ 661 | REDUÇÃO | | |
| 60 | 10064288 | 1 | CLAMP<br>⇨ ❑ 647 | BRAÇADEIRA | | |
| 61 | 10006370 | 4 | WASHER DIN 7349 13 | ARRUELA | | |
| 62 | 4600505 | 4 | CYLINDER SCREW ISO 4762 M12X70 10.9 | PARAFUSO CILÍNDRICO | | |
| 63 | 10385490 | 1 | CLAMP<br>⇨ ❑ 648 | BRAÇADEIRA | | |
| 80 | 9374747 | 2 | PIN | PINO | | 1 |
| 81 | 9830148 | 2 | SHEET | PLACA | | |
| 83 | 4600184 | 4 | HEX BOLT ISO 4017 M12X25 10.9 A3C | PARAFUSO SEXTAVADO | | |
| 140 | 9374747 | 2 | PIN | PINO | | 1 |
| 141 | 9830148 | 2 | SHEET | PLACA | | |
| 143 | 4600184 | 4 | HEX BOLT ISO 4017 M12X25 10.9 A3C | PARAFUSO SEXTAVADO | | |

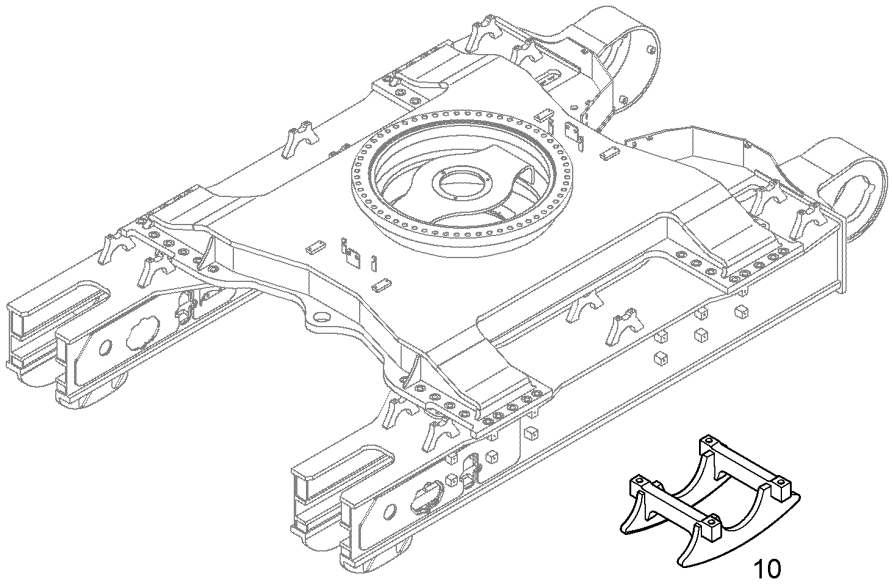


| Pos. | Item | Quantity | Description | Designação | Serie | K |
|---|---|---|---|---|---|---|
| 10 | 11102314 | 1 | TRACK GUIDES FOUR TIMES<br>⇨ ❑ 676 | GUIA DE CORRENTE QUADRUPL | | |

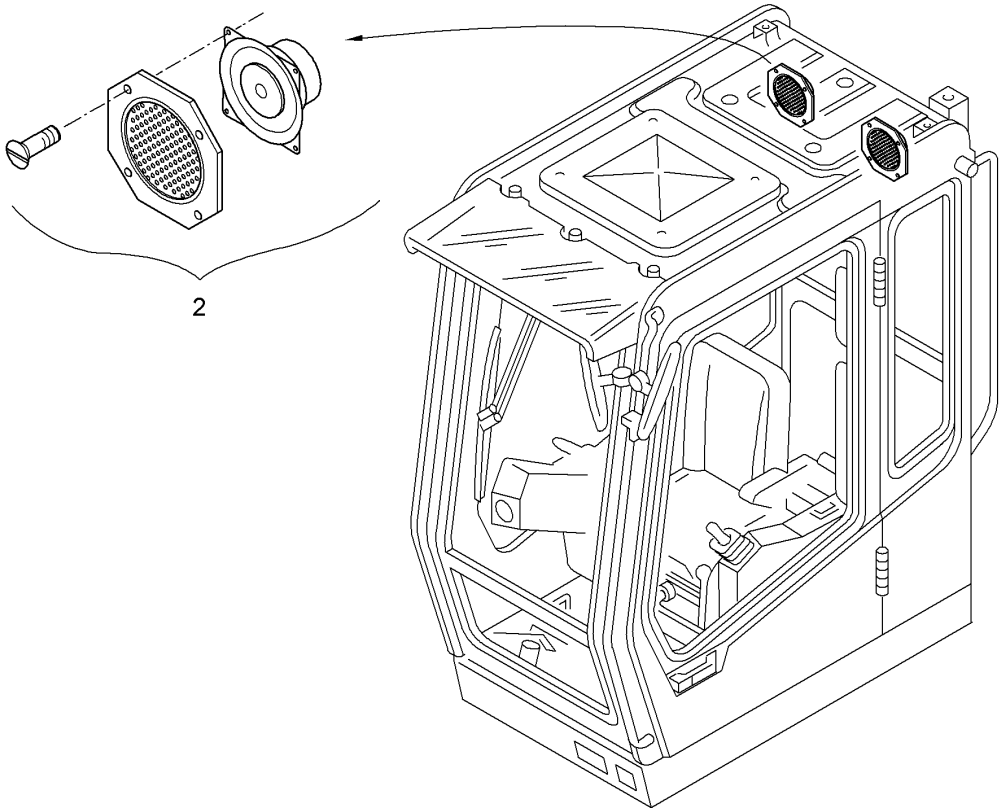


| Pos. | Item | Quantity | Description | Designação | Serie | K |
|---|---|---|---|---|---|---|
| 2 | 11102653 | 1 | PREMOUNTING F.RADIO<br>⇨ ❑ 677 | INSTALAÇÃO P/RÁDIO | | |

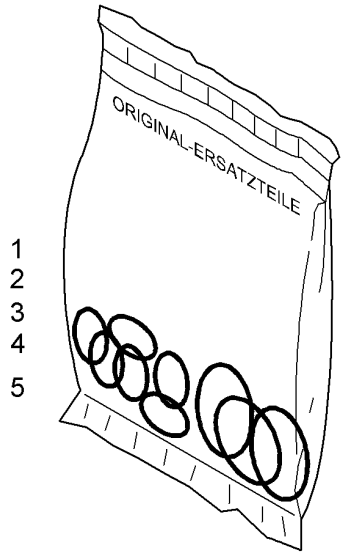


| Pos. | Item | Quantity | Description | Designação | Serie | K |
|---|---|---|---|---|---|---|
| 1 | 10490781 | 12 | PLAIN COMPRESSION RING 40,15X3,40X2,8 | ANEL DE SEÇÃO RETANGULAR | | |
| 2 | 10472425 | 12 | PLAIN COMPRESSION RING 45,05X3,40X2,8 | ANEL DE SEÇÃO RETANGULAR | | |
| 3 | 10490787 | 6 | PLAIN COMPRESSION RING 54,40X3,40X2,8 | ANEL DE SEÇÃO RETANGULAR | | |
| 4 | 10490785 | 6 | PLAIN COMPRESSION RING 25,85X3,40X2,8 | ANEL DE SEÇÃO RETANGULAR | | |
| 5 | 10490786 | 6 | PLAIN COMPRESSION RING 63,90X3,40X2,8 | ANEL DE SEÇÃO RETANGULAR | | |

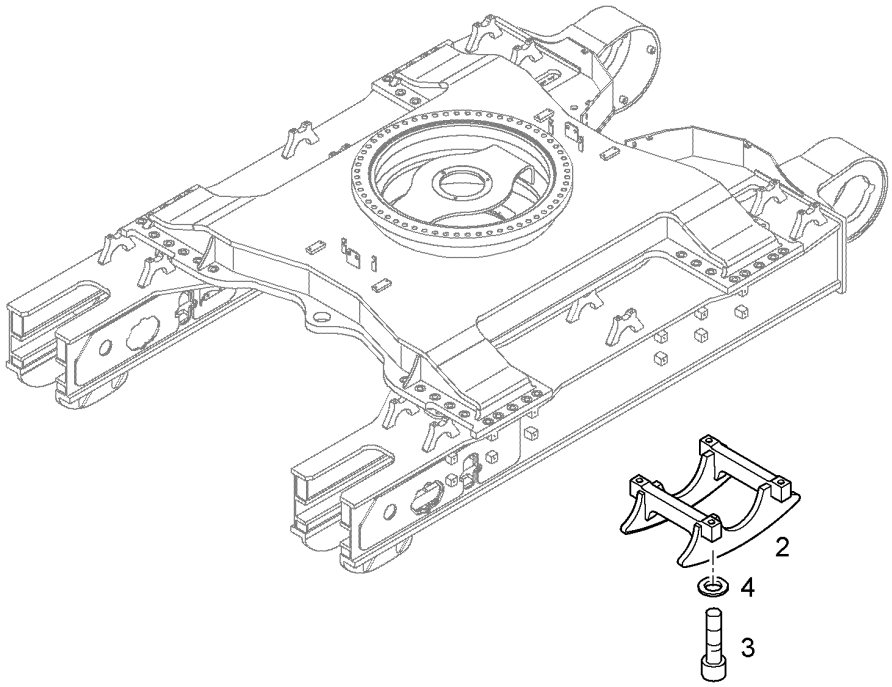


| Pos. | Item | Quantity | Description | Designação | Serie | K |
|---|---|---|---|---|---|---|
| 2 | 11102315 | 8 | CHAIN GUIDE | GUIA DE CORRENTE | | 1 |
| 3 | 4001940 | 32 | CYLINDER SCREW ISO 4762 M20X180 12.9 | PARAFUSO CILÍNDRICO | | |
| 4 | 9918229 | 32 | WASHER 20,5/34X5 | ARRUELA | | |

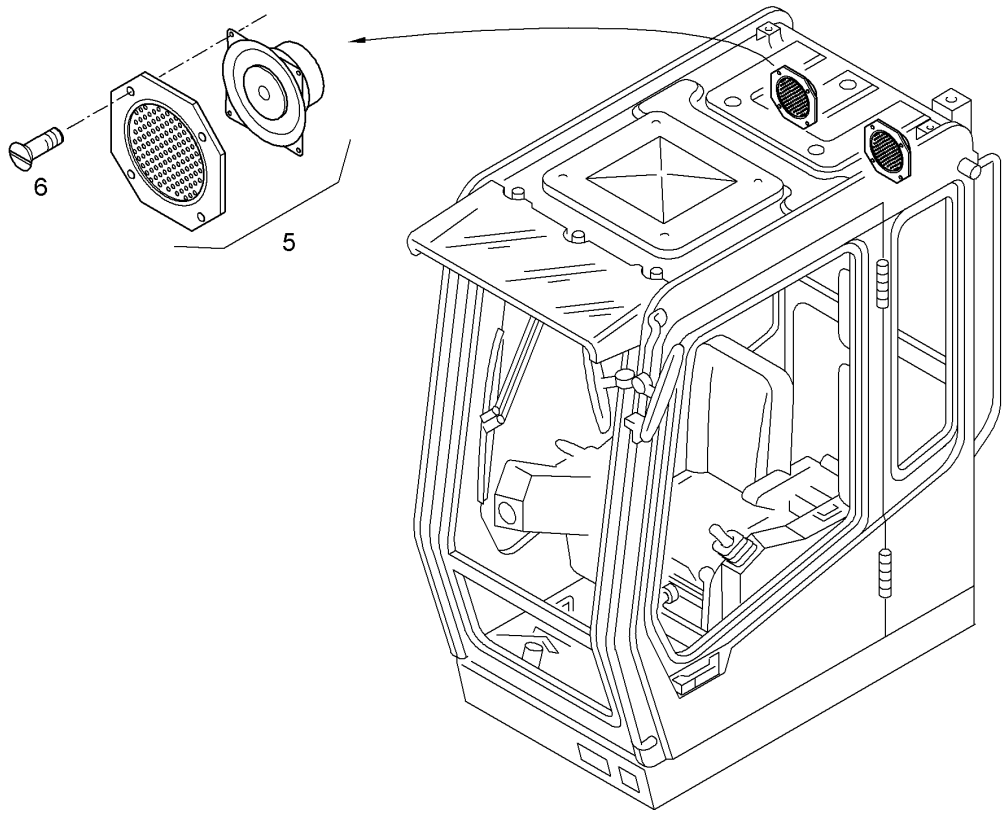


| Pos. | Item | Quantity | Description | Designação | Serie | K |
|---|---|---|---|---|---|---|
| 5 | 634308016 | 2 | LOUDSPEAKER | ALTO-FALANTE | | |
| 6 | 4002017 | 4 | SHEET-METAL SCREW ISO 7049 ST4,2X13 | PARAFUSO | | |

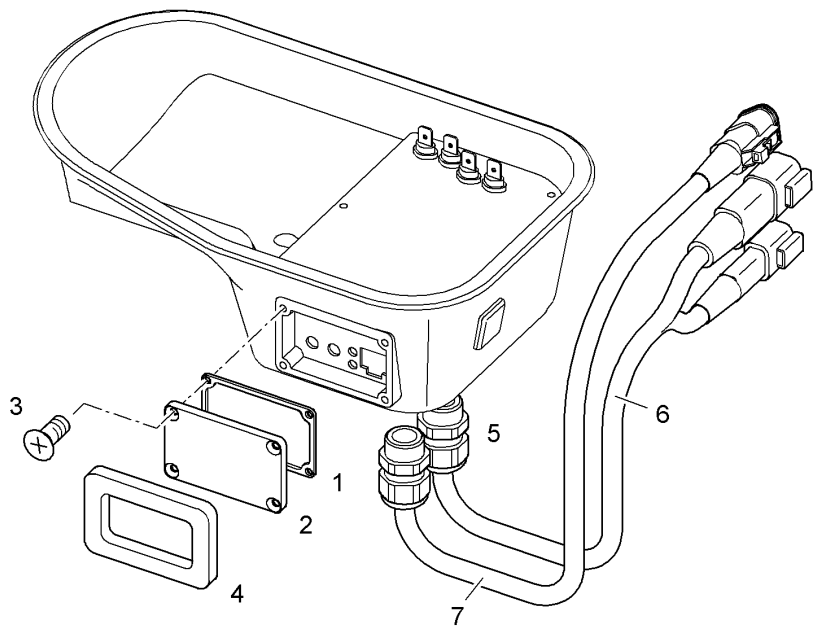


| Pos. | Item | Quantity | Description | Designação | Serie | K |
|---|---|---|---|---|---|---|
| 1 | 10014682 | 1 | SEAL | VEDAÇÃO | | |
| 2 | 10014683 | 1 | WINDOW | JANELA | | |
| 3 | 101236050 | 4 | COUNTERSUNK SCREW ISO 7046 M3X8 8.8 | PARAFUSO ESCAREADO | | |
| 4 | 10014687 | 1 | WINDOW FRAME | QUADRO DA JANELA | | |
| 5 | 10014688 | 2 | CABLE GLAND | PRENSA CABO | | |
| 6 | | 1 | SUPPLY LINE 7X1 0,50m DT04-4P/DT04-2P | CONDUTOR DE ALIMENTAÇÃO | | |
| 7 | | 1 | CONNECTING LINE 3X1 0,50m DT06-3S | CABO DE CONEXAO | | |

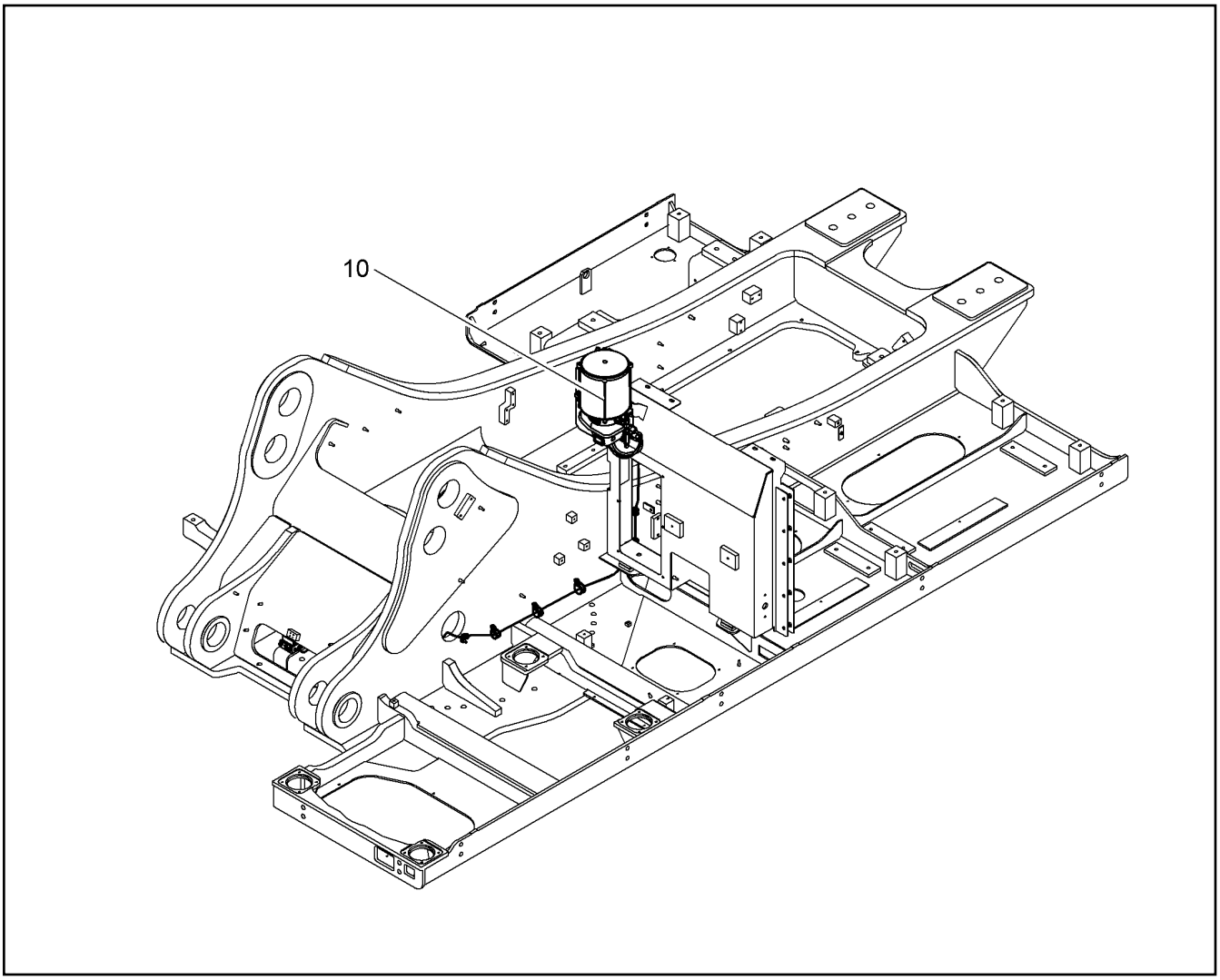


| Pos. | Item | Quantity | Description | Designação | Serie | K |
|---|---|---|---|---|---|---|
| 10 | | 1 | FULL AUTOMAT.CENTRAL.LUBRICAT.<br>⇨ ❑ 680 | LUBRIFICAÇÃO CENTR.TOTAL.A | | |

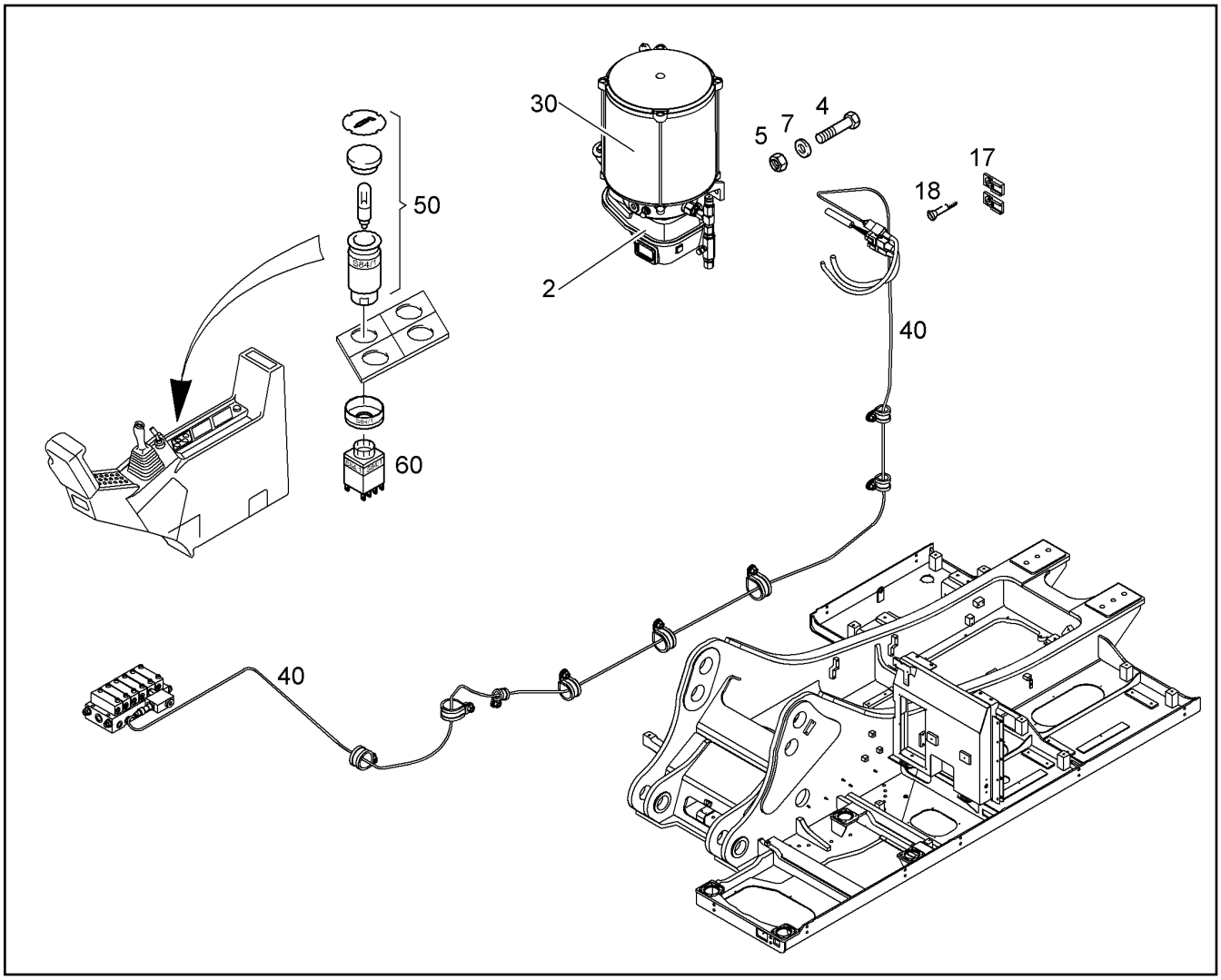


| Pos. | Item | Quantity | Description | Designação | Serie | K |
|---|---|---|---|---|---|---|
| 2 | 10286897 | 1 | LUBRICATION PUMP<br>⇨ ❑ 681 | BOMBA DE LUBRIFICACAO | | |
| 4 | 4000704 | 1 | HEX BOLT ISO 4017 M8X20 10.9 A2C | PARAFUSO SEXTAVADO | | |
| 5 | 4000381 | 1 | HEX NUT M8 | PORCA SEXTAVADA | | |
| 7 | 10289803 | 2 | WASHER ISO 7089 8 300HV | ARRUELA | | |
| 17 | 6203497 | 2 | FASTENER F.DT STECKER | ELEMENTO DE FIXACAO | | |
| 18 | 4601375 | 2 | COUNTERSUNK SCREW ISO 7047 M5X10 4. | PARAFUSO ESCAREADO | | |
| 30 | 8501527 | 4kg | GREASE BP ENERGREASE LS EP/180kg | GRAXA | | |
| 40 | 10288716 | 1 | PROXIMITY SWITCH | SENSOR DE APROXIMAÇÃO | | |
| 50 | | 1 | SWITCH INSTALLATION<br>⇨ ❑ 258 | INTERRUPTOR - INSTALAÇÃO | | |
| 60 | 10059466 | 1 | CABLE LOOM X182-2/S84-1 | CHICOTE ELÉTRICO | | |

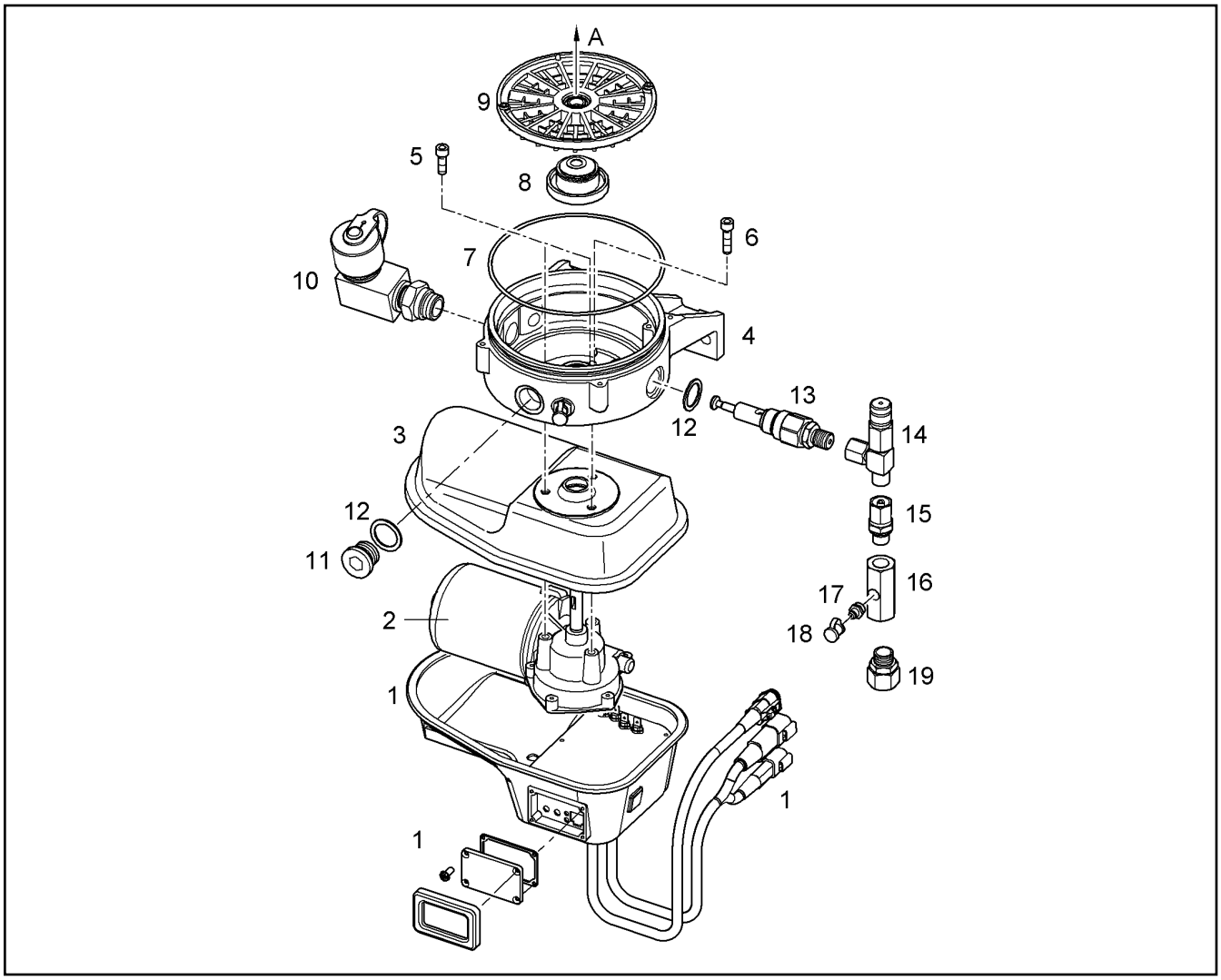


| Pos. | Item | Quantity | Description | Designação | Serie | K |
|---|---|---|---|---|---|---|
| 1 | 10014680 | 1 | MOTOR HOUSING<br>⇨ ❑ 678 | BLOCO DO MOTOR | | |
| 1 | 10014681 | 1 | -STICKER | -ETIQUETA ADESIVA | | |
| 2 | 10014691 | 1 | DIRECT-CURRENT MOTOR | MOTOR DE CORRENTE CONTI | | |
| 3 | 10014692 | 1 | MOTOR HOUSING | BLOCO DO MOTOR | | |
| 4 | 10014693 | 1 | PUMP HOUSING | CARCACA DA BOMBA | | |
| 5 | 4042002 | 2 | CYLINDER SCREW ISO 4762 M6x20 8.8 A2C | PARAFUSO CILÍNDRICO | | |
| 6 | 4042003 | 1 | CYLINDER SCREW ISO 4762 M6x25 8.8 A2C | PARAFUSO CILÍNDRICO | | |
| 7 | 10014694 | 1 | O-RING 140X3 | ANEL-O | | |
| 8 | 10014729 | 1 | DRIVER | ARRASTADOR | | |
| 9 | 10014730 | 1 | INTERMEDIATE RING | ANEL INTERMEDIÁRIO | | |
| 10 | 10651997 | 1 | FILLING CONNECTION | CONEXÃO DE ABASTECIMENTO | | |
| 11 | 4041102 | 1 | SCREW PLUG DIN 910 M20X1,5 ST | PARAFUSO DE FECHAMENTO | | |
| 12 | 10014697 | 2 | SEALING RING | ANEL DE VEDAÇÃO | | |
| 13 | 7621403 | 1 | PUMP ELEMENT PE-120 | ELEMENTO DA BOMBA | | |
| 14 | 7621324 | 1 | OVERPRESSURE VALVE | VALVULA DE SEGURANCA | | |
| 15 | 10014698 | 1 | PIPE SOCKET R1/4" | BOCAL DE TUBO | | |
| 16 | 10014699 | 1 | CONNECTING PIECE | CONEXÃO | | |
| 17 | 571578608 | 1 | GREASE NIPPLE DIN 71412 A M10x1k | NIPLE DE GRAXA | | |
| 18 | 10014701 | 1 | GREASE NIPPLE CAP | CAPA DO NIPLE DE LUBRIFICA | | |
| 19 | 774381508 | 1 | SCREW FITTING SWVE-R1/4"6S-G1/4" | REDUÇÃO | | |

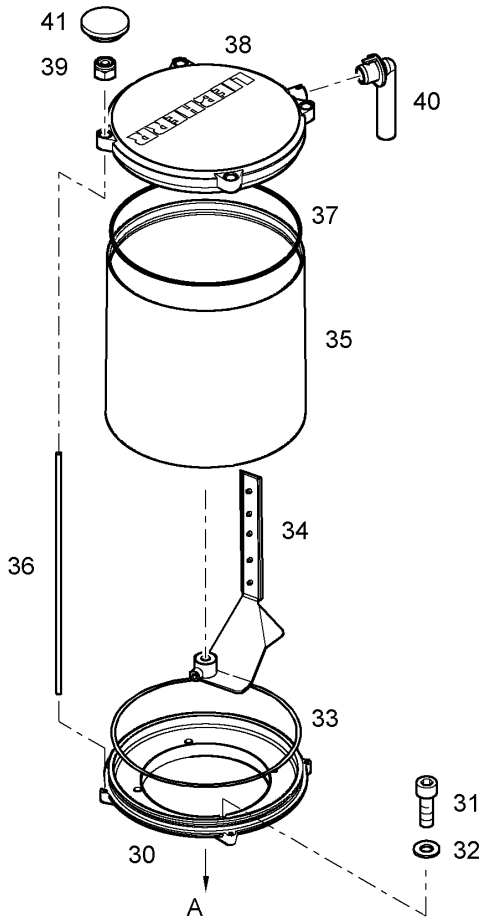


| Pos. | Item | Quantity | Description | Designação | Serie | K |
|---|---|---|---|---|---|---|
| 30 | 10016655 | 1 | INTERMEDIATE FLANGE | FLANGE INTERMEDIARIO | | |
| 31 | 404200701 | 4 | CYLINDER SCREW ISO 4762 M4x20 8.8 A2C | PARAFUSO CILÍNDRICO | | |
| 32 | 10016656 | 4 | SEALING RING 4X8X1 | ANEL DE VEDAÇÃO | | |
| 33 | 10016657 | 1 | O-RING 209,14X3,53 | ANEL-O | | |
| 34 | 10016658 | 1 | AGITATOR PADDLE | AGITADOR | | |
| 35 | 10016659 | 1 | TRANSPARENT CONTAINER | RECIPEINTE TRANSPARENTE | | |
| 35 | 10016660 | 1 | -STICKER | -ETIQUETA ADESIVA | | |
| 36 | 10016661 | 4 | PULL ROD | TIRANTE DE TRAÇÃO | | |
| 37 | 10216785 | 1 | O-RING | ANEL-O | | |
| 38 | 10016663 | 1 | CONTAINER COVER | CAPA COBERTURA DO RECIPIE | | |
| 39 | 413412301 | 4 | HEX NUT M4 | PORCA SEXTAVADA | | |
| 40 | 10016664 | 1 | VENTILATION TUBE | TUBO DE PURGAMENTO | | |
| 41 | 10016665 | 4 | COVER | TAMPA | | |

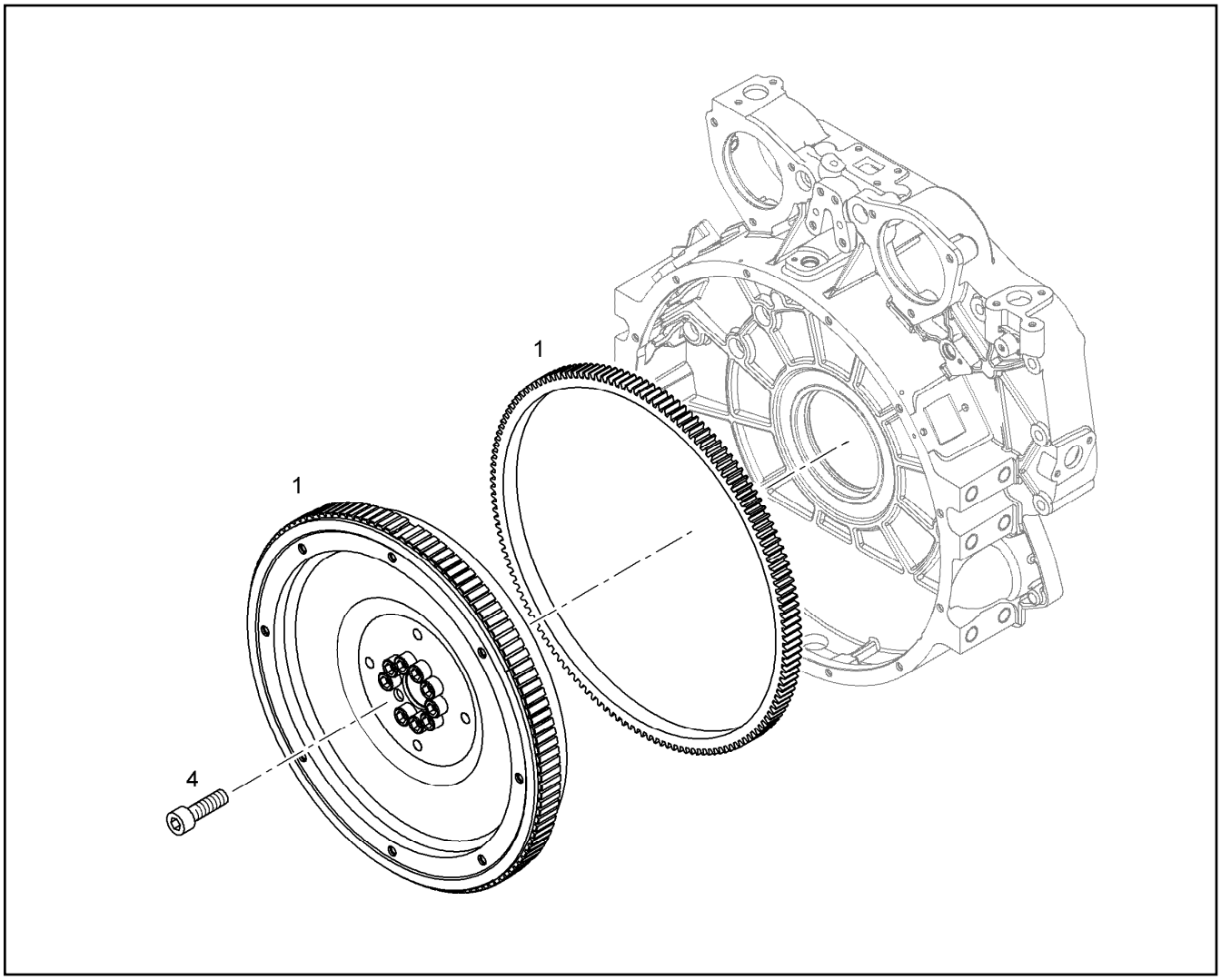


| Pos. | Item | Quantity | Description | Designação | Serie | K |
|---|---|---|---|---|---|---|
| 1 | 9080917 | 1 | FLYWHEEL PRE-ASS. SAE 1 | VOLANTE DO MOTOR PRE-MON | | |
| 1 | 9267155 | 1 | -CROWN GEAR | -COROA DENTADA | | |
| 4 | 10118912 | 10 | HEXALOBULAR HEAD SCREW M16X1,5X14 | PARAFUSO HEXAGONAL REDO | | |

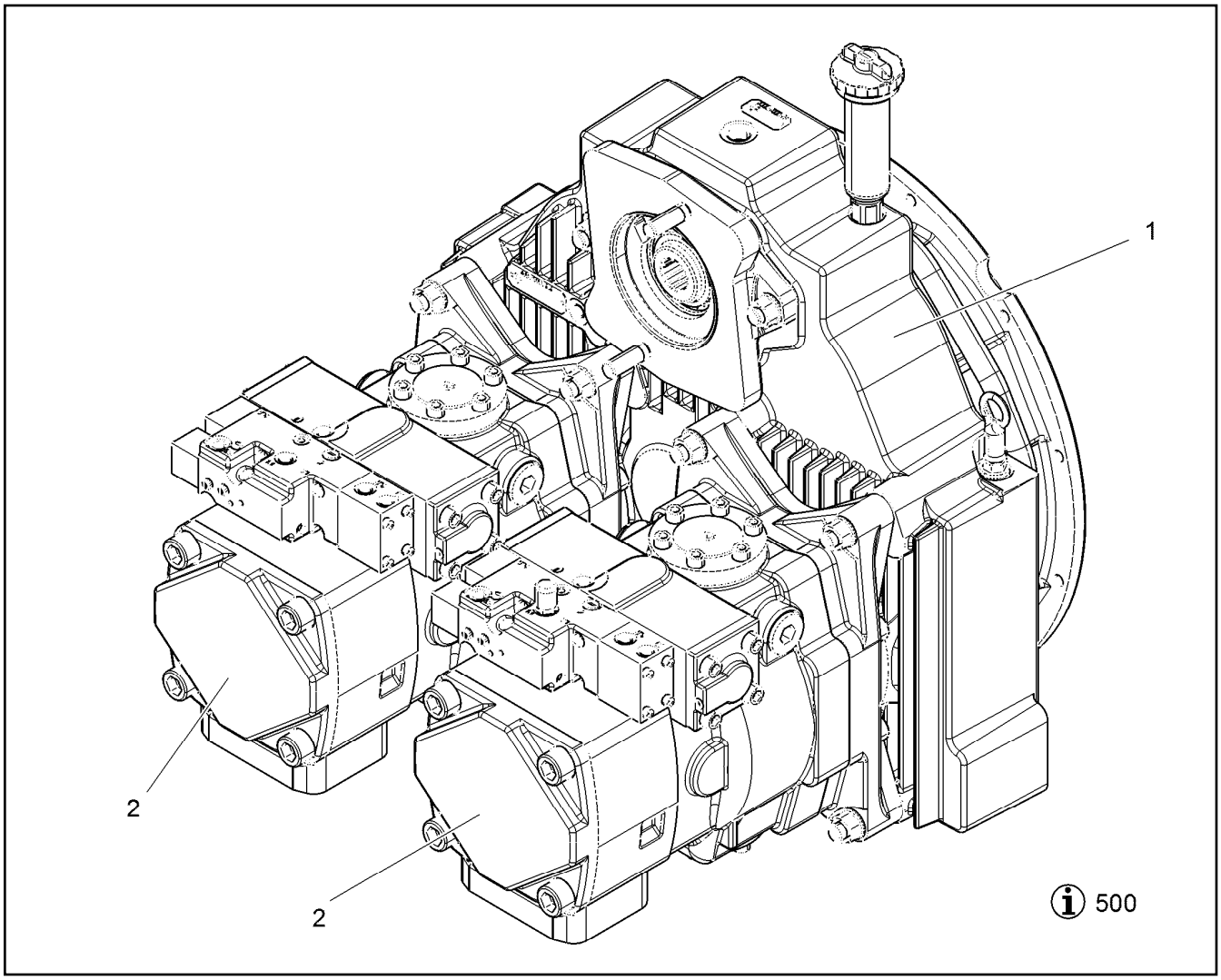


| Pos. | Item | Quantity | Description | Designação | Serie | K |
|---|---|---|---|---|---|---|
| 1 | 9077872 | 1 | PUMP DISTRIBUTION GEAR<br>[13 73 02729 ]<br>⇨ ❑ 108 | REDUTOR DISTRIBUICAO BOMB | | 2 |
| 2 | | 2 | HYDRAULIC VARIABLE DISPLACEMEN<br>[13 19 02855 ]<br>[13 19 02857 ]<br>⇨ ❑ 686 | BOMBA DE REGULAGEM HIDRA | | 6 |
| 500 | | 1 | TABLE ORDER | TABELA | | |

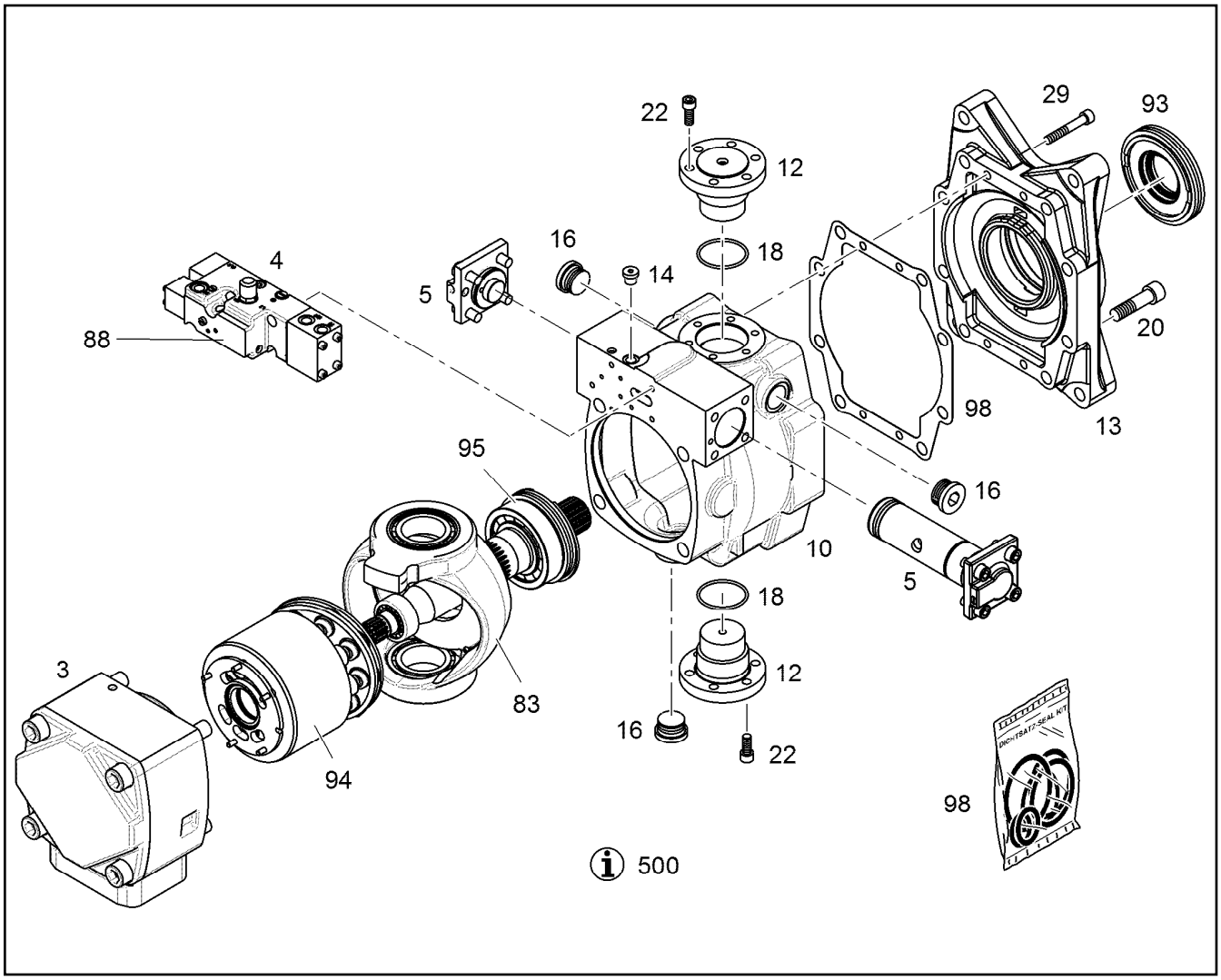


| Pos. | Item | Quantity | Description | Designação | Serie | K |
|---|---|---|---|---|---|---|
| 3 | 9888308 | 1 | CONNECTING PLATE<br>⇨ ❑ 692 | PLACA DE CONEXAO | | |
| 4 | 10133059 | 1 | REGULATING VALVE<br>⇨ ❑ 694 | VALVULA REGULADORA | | |
| 5 | 9271648 | 1 | ADJUSTMENT<br>⇨ ❑ 691 | DISPOSITIVO DE REGULAGEM | | |
| 10 | | 1 | HOUSING | CARCAÇA | | |
| 12 | 9279836 | 2 | FLANGE | FLANGE | | |
| 13 | 9273491 | 1 | ADD-ON FLANGE | FLANGE | | |
| 14 | | 1 | SCREW PLUG VSTI M14X1,5 | PARAFUSO DE FECHAMENTO | | |
| 16 | 10137121 | 3 | SCREW PLUG VSTI M33X2 | PARAFUSO DE FECHAMENTO | | |
| 18 | 7380973 | 2 | O-RING DIN 3771 58,42X2,62 | ANEL-O | | |
| 20 | 10001074 | 8 | CYLINDER SCREW ISO 4762 M16X60 10.9 | PARAFUSO CILÍNDRICO | | |
| 22 | 4043124 | 12 | CYLINDER SCREW ISO 4762 M10X25 10.9 | PARAFUSO CILÍNDRICO | | |
| 29 | 4981088 | 4 | CYLINDER SCREW ISO 4762 M10X65 10.9 | PARAFUSO CILÍNDRICO | | |
| 83 | 9079347 | 1 | REPAIR SET SWIVEL YOKE LPV 165<br>⇨ ❑ 151 | KIT DE REPARO | | |
| 88 | 9882875 | 1 | SEAL KIT REGULATING VALVE<br>⇨ ❑ 154 | KIT VEDACAO VALULA REGULAD | | |
| 93 | | 1 | REPAIR KIT LOCK RING<br>⇨ ❑ 77 | KIT DE REPARO | | |
| 94 | 9079294 | 1 | REPAIR KIT DRIVING MECHANISM<br>⇨ ❑ 150 | KIT DE REPARO | | |
| 95 | 9889282 | 1 | REPAIR KIT SHAFT<br>⇨ ❑ 128 | KIT DE REPARO | | |

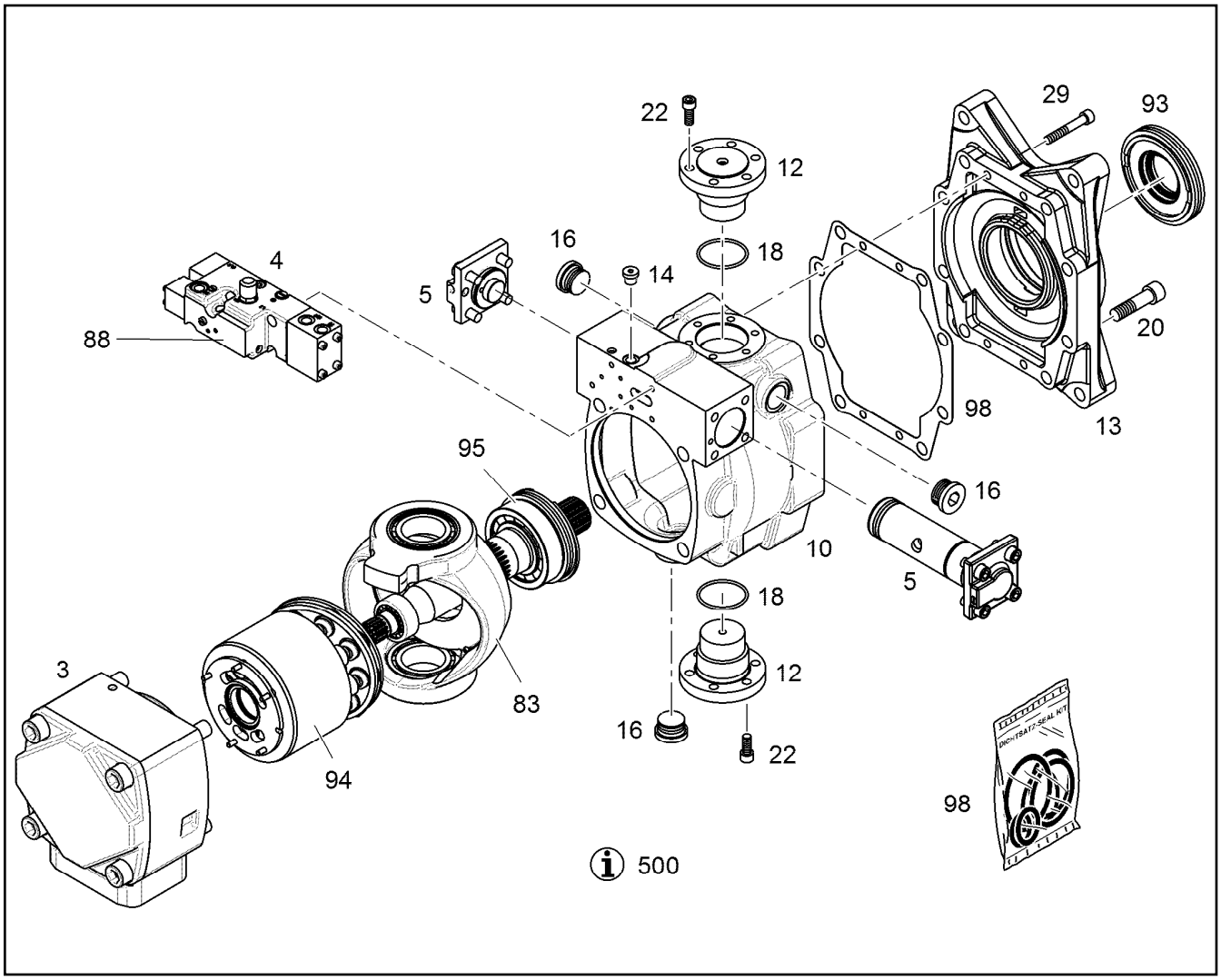


| Pos. | Item | Quantity | Description | Designação | Serie | K |
|---|---|---|---|---|---|---|
| 98 | 9271657 | 1 | SEAL KIT<br>⇨ ❑ 700 | KIT DE VEDAÇÃO | | |
| 500 | 9278153 | 1 | TABLE ORDER | TABELA | | |

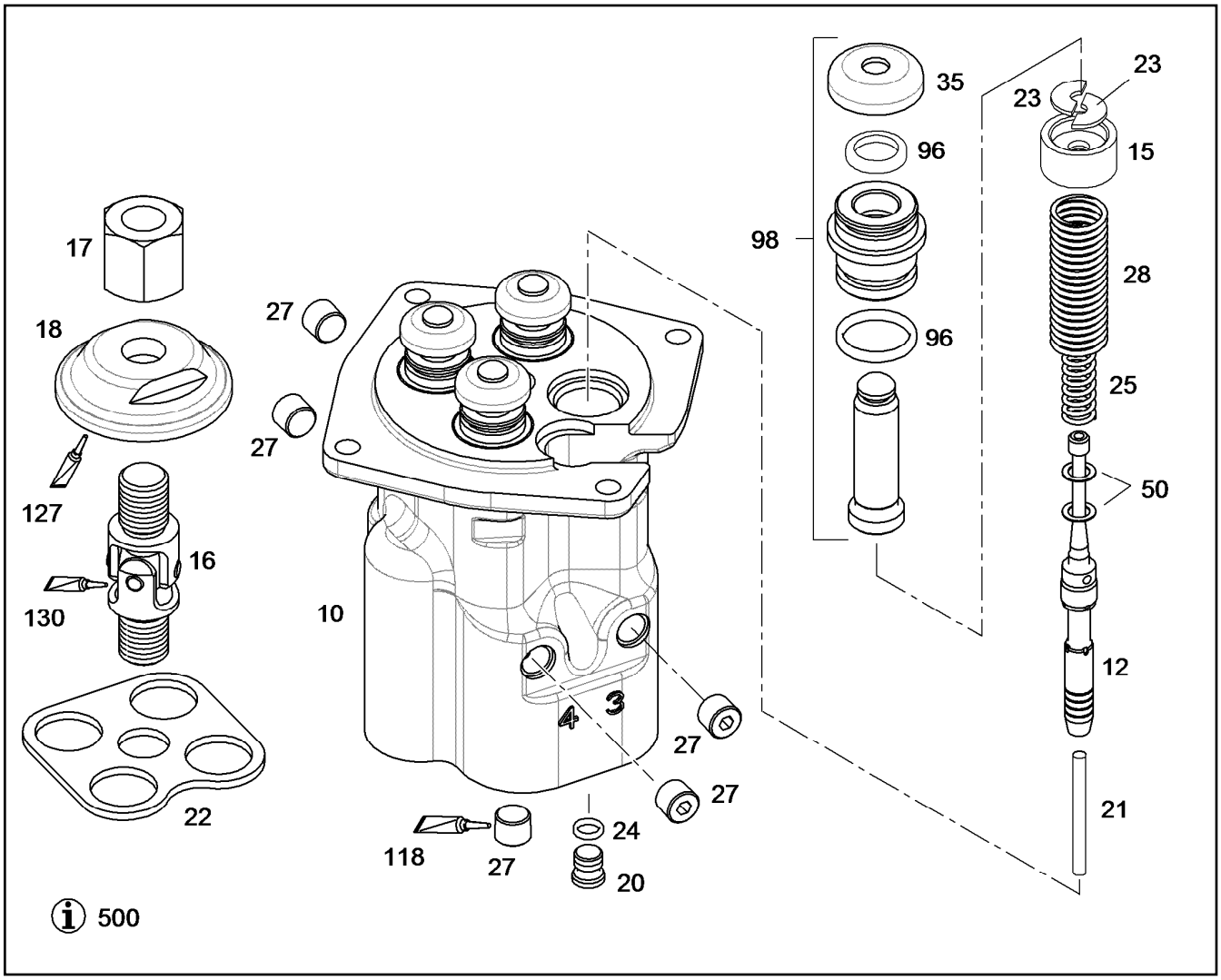


| Pos. | Item | Quantity | Description | Designação | Serie | K |
|---|---|---|---|---|---|---|
| 10 | | 1 | HOUSING | CARCAÇA | | |
| 12 | 10122498 | 4 | PISTON | PISTÃO | | |
| 15 | 9265395 | 4 | SPRING SUPPORT | PRATO DA MOLA | | |
| 16 | 9265396 | 1 | UNIVERSAL PIVOT | CRUZETA | | |
| 17 | 9270475 | 1 | NUT M14X1,5 | PORCA | | |
| 18 | 9265398 | 1 | INDEXING PLATE | DISCO DE COMUTACAO | | |
| 20 | 10122499 | 4 | SCREW PLUG M8X1 C45Pb+C | PARAFUSO DE FECHAMENTO | | |
| 21 | 10122500 | 4 | NEEDLE ROLLER d=2X19,8 - G2 | ROLAMENTO DE AGULHAS | | |
| 22 | 10118649 | 1 | LID | TAMPA | | |
| 23 | 9265402 | 8 | WASHER 3,8X12,5X1 | ARRUELA | | |
| 24 | 7381448 | 4 | O-RING DIN 3771 6,20X1,5 | ANEL-O | | |
| 25 | 10355861 | 4 | PRESSURE SPRING 1,1X6,5X31 | MOLA DE PRESSÃO | | |
| 27 | 4901108 | 5 | SCREW PLUG DIN 906 M10X1 ST A3C | PARAFUSO DE FECHAMENTO | | |
| 28 | 9265521 | 4 | PRESSURE SPRING 1,25X11,50X47,00 | MOLA DE PRESSÃO | | |
| 35 | 9276880 | 4 | PROTECTING CAP | CAPA DE PROTECAO | | |
| 50 | 7380138 | 8 | SUPPORTING WASHER S 4,9X7,5X0,3 | ANEL DE APOIO | | |
| 96 | 9269690 | 1 | SEAL KIT<br>⇨ ❑ 267 | KIT DE VEDAÇÃO | | |
| 98 | 9074482 | 1 | REPAIR SET PLUNGER<br>⇨ ❑ 266 | CR TACO | | |
| 118 | 811208201 | 1 | LOCTITE | LOCTITE | | |
| 127 | 8100714 | 1 | PASTE | PASTA | | |
| 130 | 8620769 | 1kg | GRAISE | GRAXA POLIVALENTE | | |
| 500 | 9278153 | 1 | TABLE ORDER | TABELA | | |

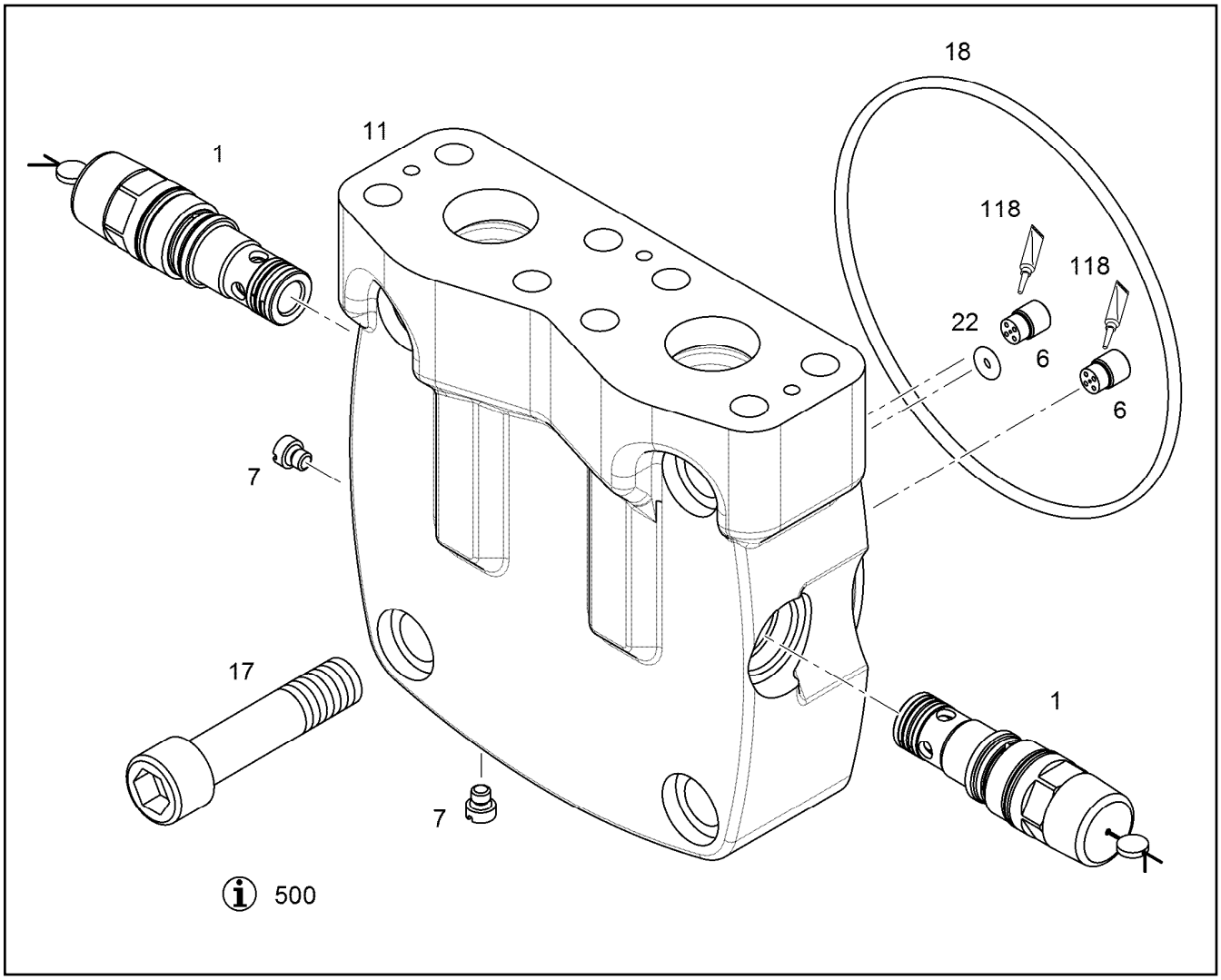


| Pos. | Item | Quantity | Description | Designação | Serie | K |
|---|---|---|---|---|---|---|
| 1 | 9267554 | 2 | PRESSURE LIMITING VALVE<br>⇨ ❑ 693 | VÁLVULA LIMITADORA DE PRES | | |
| 6 | 9270598 | 2 | NON-RETURN VALVE<br>⇨ ❑ 78 | VALVULA DE RETENCAO | | |
| 7 | 9268441 | 2 | SCREW PLUG M6<br>⇨ ❑ 112 | PARAFUSO DE FECHAMENTO | | |
| 11 | | 1 | CONNECTING PLATE<br>⇨ ❑ 6 | PLACA DE CONEXAO | | |
| 17 | 10331728 | 4 | CYLINDER SCREW ISO 4762 M16X70 10.9 | PARAFUSO CILÍNDRICO | | |
| 18 | 7380659 | 1 | O-RING DIN 3771 145,64X3,53 | ANEL-O | | |
| 22 | 7380648 | 1 | O-RING DIN 3771 6,02X2,62 | ANEL-O | | |
| 118 | 811208201 | 1 | LOCTITE | LOCTITE | | |
| 500 | 9278153 | 1 | TABLE ORDER | TABELA | | |

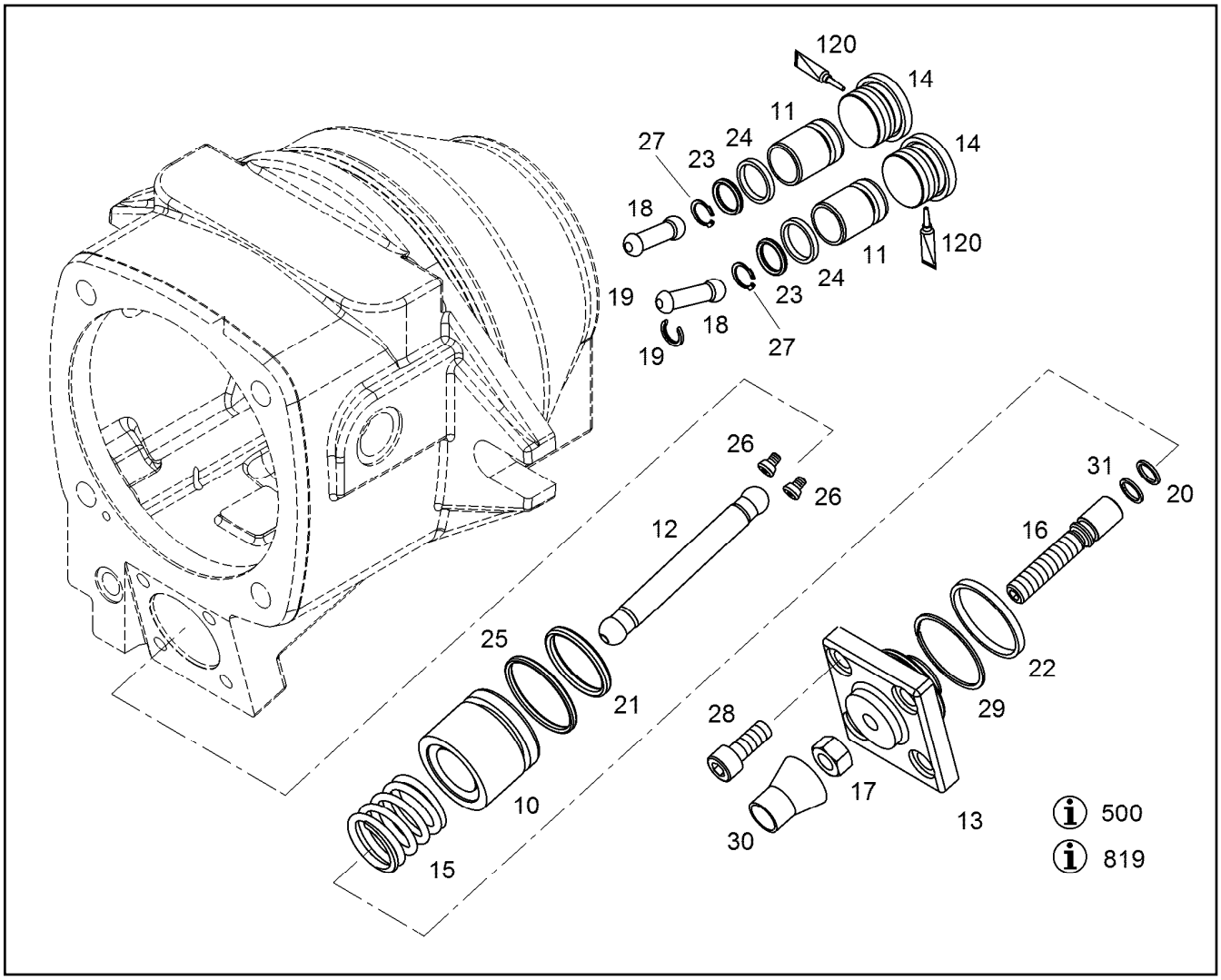


| Pos. | Item | Quantity | Description | Designação | Serie | K |
|---|---|---|---|---|---|---|
| 10 | 9277876 | 1 | ADJUSTING PISTON | PISTAO ATUADOR | | |
| 11 | 9880286 | 2 | ADJUSTING PISTON | PISTAO ATUADOR | | |
| 12 | 9277878 | 1 | ADJUSTING LEVER | ALAVANCA DE REGULAGEM | | |
| 13 | 9882767 | 1 | LID | TAMPA | | |
| 14 | 10137120 | 2 | SCREW PLUG VSTI M30X1,5 | PARAFUSO DE FECHAMENTO | | |
| 15 | 7381764 | 1 | PRESSURE SPRING | MOLA DE PRESSÃO | | |
| 16 | 9883345 | 1 | LIMIT STOP SCREW M12X49,5X8 42CrMo4 F | PARAFUSO LIMITADOR | | |
| 17 | 4900546 | 1 | HEX NUT M12 | PORCA SEXTAVADA | | |
| 18 | 9880287 | 2 | ADJUSTING LEVER | ALAVANCA DE REGULAGEM | | |
| 19 | 9880288 | 2 | CLAMPING RING | ANEL DE APERTO | | |
| 20 | 7380596 | 1 | O-RING DIN 3771 11,00X2,00 | ANEL-O | | |
| 21 | 7381254 | 1 | O-RING ISO 3601-1 36,09X3,53 | ANEL-O | | |
| 22 | 7381760 | 1 | O-RING DIN 3771 42,52X2,62 | ANEL-O | | |
| 23 | 7380611 | 2 | O-RING DIN 3771 15,54X2,62 | ANEL-O | | |
| 24 | 7381490 | 2 | TURCON GLYD RING 24X16,5X3,2 | ANEL TURCON GLYD | | |
| 25 | 7381491 | 1 | GLYD RING 48X37X4,2 | ANEL GLYD | | |
| 26 | 9880132 | 1 | LOCKING SCREW M5X6X4,2 ETG 100 | PARAFUSO TRAVA | | |
| 27 | 7381690 | 2 | V-RING JV 15 | ANEL EM V | | |
| 28 | 4043124 | 4 | CYLINDER SCREW ISO 4762 M10X25 10.9 | PARAFUSO CILÍNDRICO | | |
| 29 | 7381759 | 1 | SUPPORTING RING | ANEL DE APOIO | | |
| 30 | 7380730 | 1 | SAFETY CAP | CAPA DE PROTECAO | | |
| 31 | 7381809 | 1 | SUPPORTING RING 11,70X15,00X1,4 | ANEL DE APOIO | | |
| 120 | 11140338 | 1 | SCREW LOCKING | COLA PARA ELEMENTOS FIXA | | |
| 500 | 9278153 | 1 | TABLE ORDER | TABELA | | |
| 819 | 10135322 | 1 | MOUNTING REQUIREMENT | NORMA DE MONTAGEM | | |

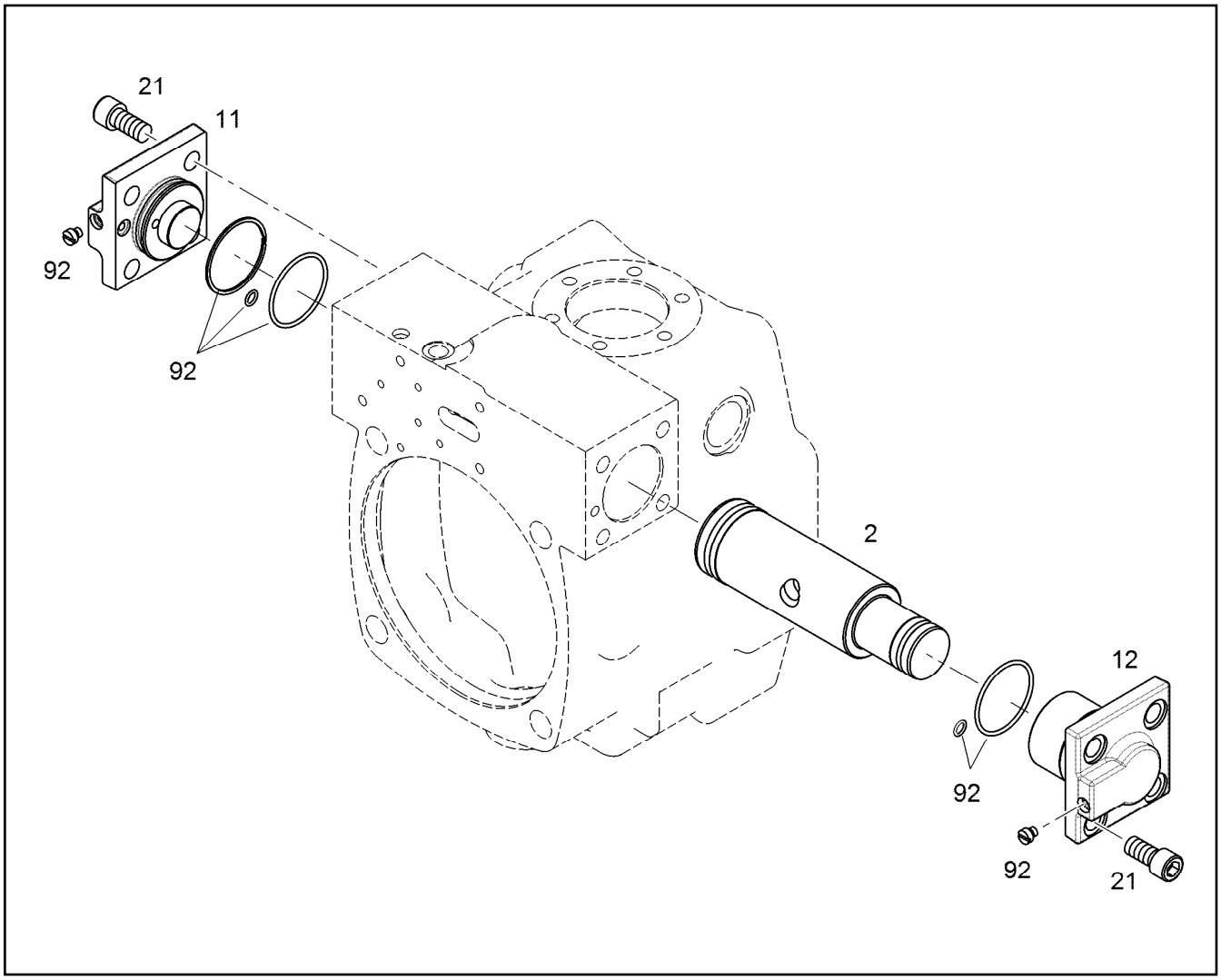


| Pos. | Item | Quantity | Description | Designação | Serie | K |
|---|---|---|---|---|---|---|
| 2 | | 1 | RK PISTON<br>⇨ ❑ 125 | KIT REPARO DO PISTAO ATUA | | |
| 11 | | 1 | LID | TAMPA | | |
| 12 | | 1 | LID | TAMPA | | |
| 21 | | 8 | CYLINDER SCREW ISO 4762 M12X25 10.9 | PARAFUSO CILÍNDRICO | | |
| 92 | 9271653 | 1 | SEAL KIT ADJUSTMENT<br>⇨ ❑ 126 | KIT DE CEDACAO DA REGULAGE | | |

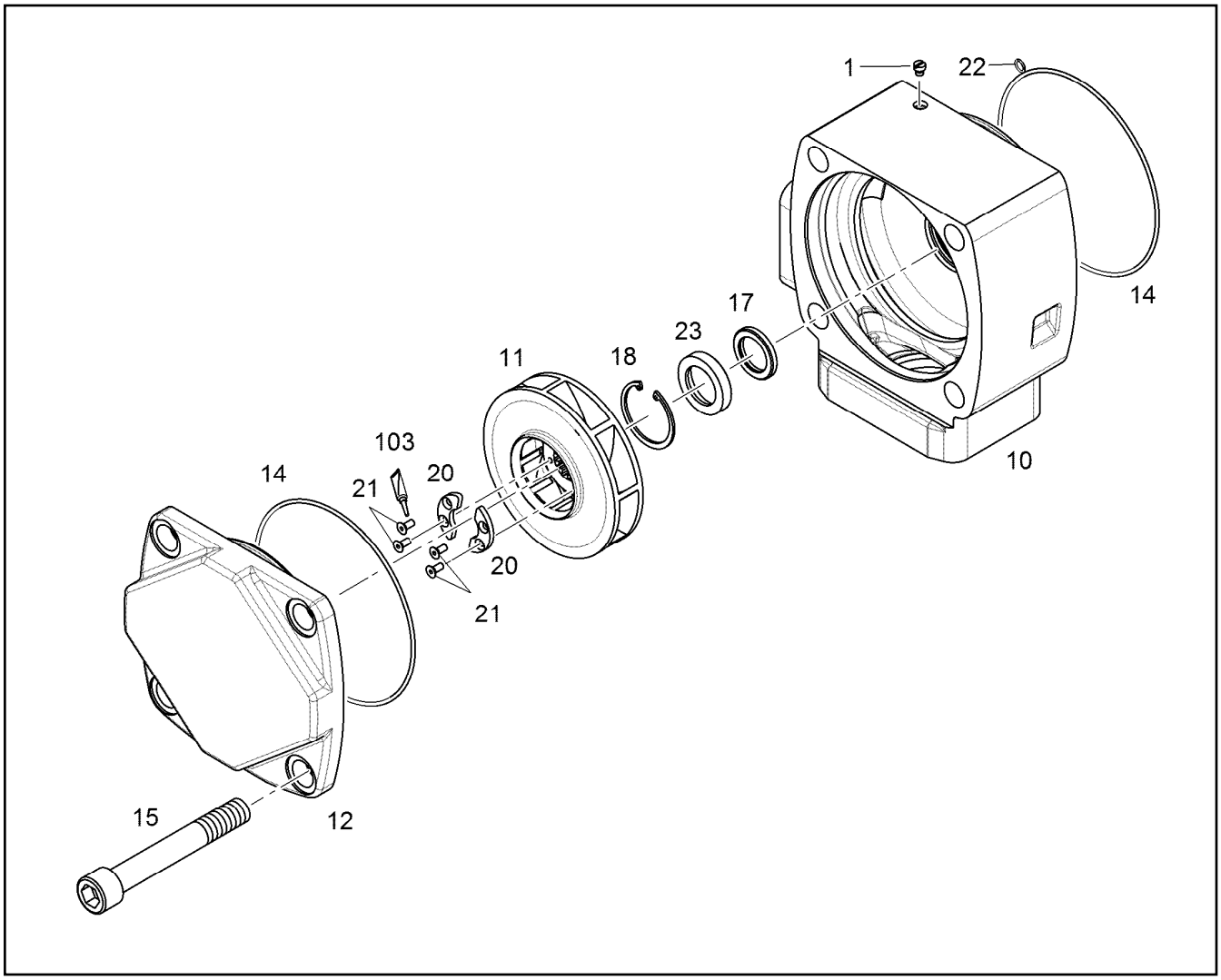


| Pos. | Item | Quantity | Description | Designação | Serie | K |
|---|---|---|---|---|---|---|
| 1 | 9268441 | 1 | SCREW PLUG M6<br>⇨ ❑ 112 | PARAFUSO DE FECHAMENTO | | |
| 10 | | 1 | CONNECTING PLATE | PLACA DE CONEXAO | | |
| 11 | 9275309 | 1 | TRAVEL WHEEL | RODA LIVRE | | |
| 12 | | 1 | LID | TAMPA | | |
| 14 | 7380592 | 2 | O-RING DIN 3771 164,69X3,53 | ANEL-O | | |
| 15 | 4000282 | 4 | CYLINDER SCREW ISO 4762 M20X140 10.9 | PARAFUSO CILÍNDRICO | | |
| 17 | 7380831 | 1 | ROTARY SHAFT LIP SEAL | ANEL DE VEDÇÃO DO EIXO RAD | | |
| 18 | 4281006 | 1 | LOCKING RING DIN 47252 | ANEL DE RETENÇÃO | | |
| 20 | 9275004 | 2 | DISK SEGMENT X50,3X5 | SEGMENTO DE DISCO | | |
| 21 | 4980801 | 4 | COUNTERSUNK SCREW DIN 7991 M5X12 1 | PARAFUSO ESCAREADO | | |
| 22 | 7380648 | 1 | O-RING DIN 3771 6,02X2,62 | ANEL-O | | |
| 23 | 9999999 | 1 | SEE REMARK | | | |
| 103 | 811205708 | 1 | SCREW LOCKING | COLA PARA ELEMENTOS FIXA | | |

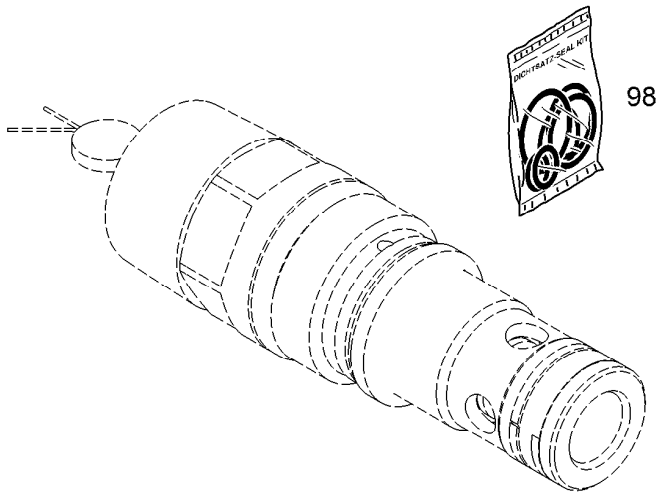


| Pos. | Item | Quantity | Description | Designação | Serie | K |
|---|---|---|---|---|---|---|
| 98 | 9266089 | 1 | SEALING SET VALVE<br>⇨ ❑ 701 | KIT DE VEDACAO DA VALVULA | | |
| 602 | 10123559 | 1 | TENSIONING INSTRUCTION | PRESCRICAO DE APERTO | | |

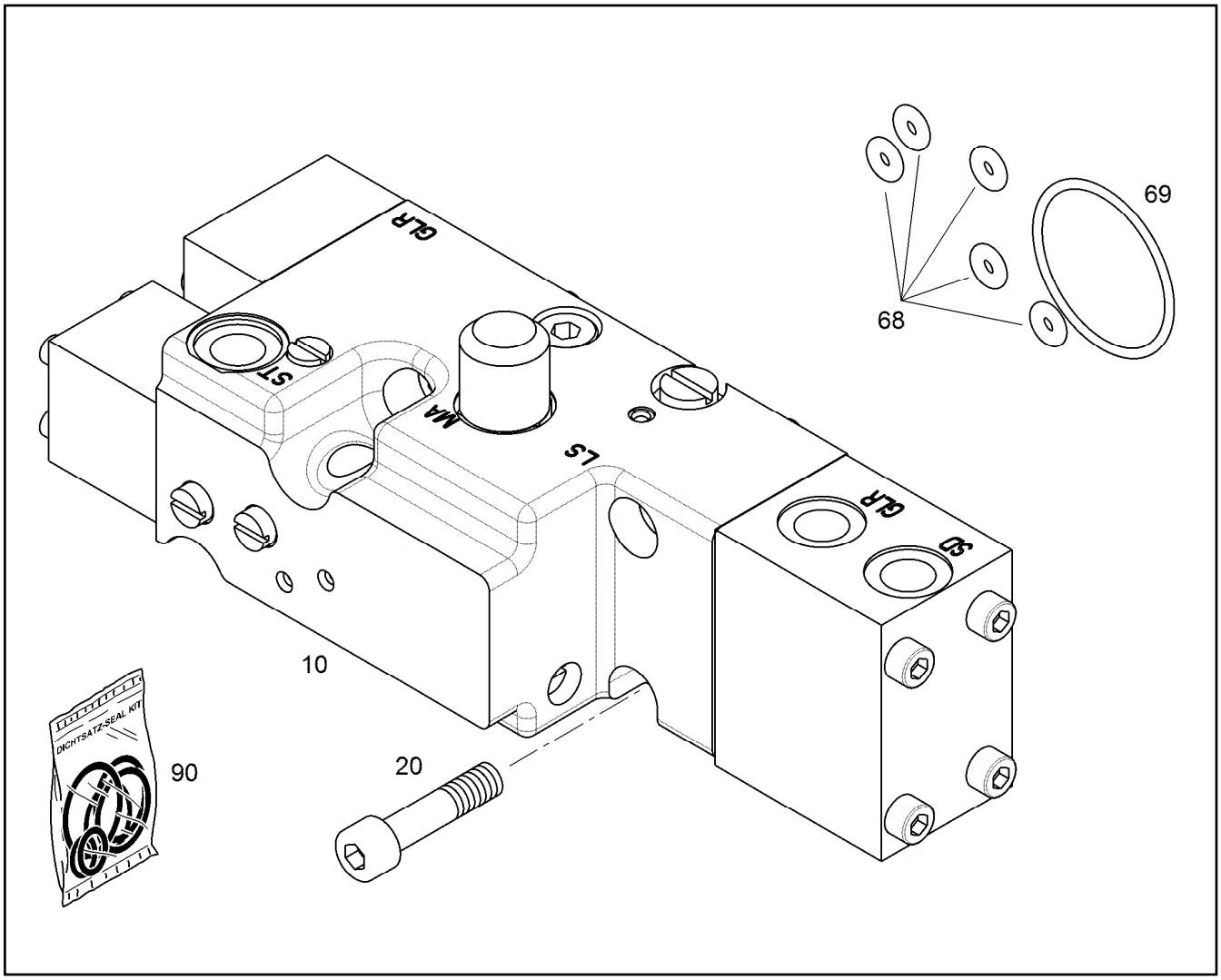


| Pos. | Item | Quantity | Description | Designação | Serie | K |
|---|---|---|---|---|---|---|
| 10 | | 1 | REGULATOR | REGULADOR | | |
| 20 | 4980388 | 4 | CYLINDER SCREW ISO 4762 M8X35 10.9 | PARAFUSO CILÍNDRICO | | |
| 68 | 7380648 | 5 | O-RING DIN 3771 6,02X2,62 | ANEL-O | | |
| 69 | 7380888 | 1 | O-RING 41X1,78 | ANEL-O | | |
| 90 | 9882875 | 1 | SEAL KIT REGULATING VALVE<br>⇨ ❑ 154 | KIT VEDACAO VALULA REGULAD | | |

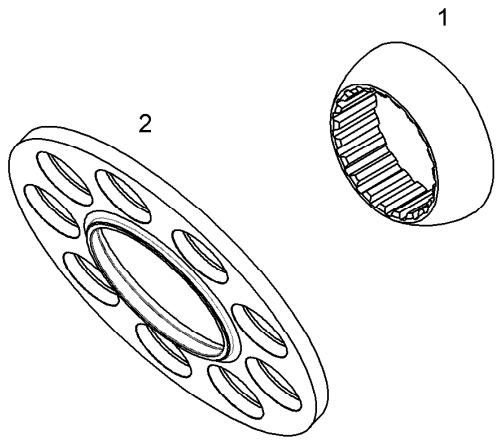


| Pos. | Item | Quantity | Description | Designação | Serie | K |
|---|---|---|---|---|---|---|
| 1 | | 1 | PULL-BACK BALL NG 125-130 | ESFERA DE RETORNO | | |
| 2 | | 1 | PULL-BACK PLATE | PLACA DE RETORNO | | |

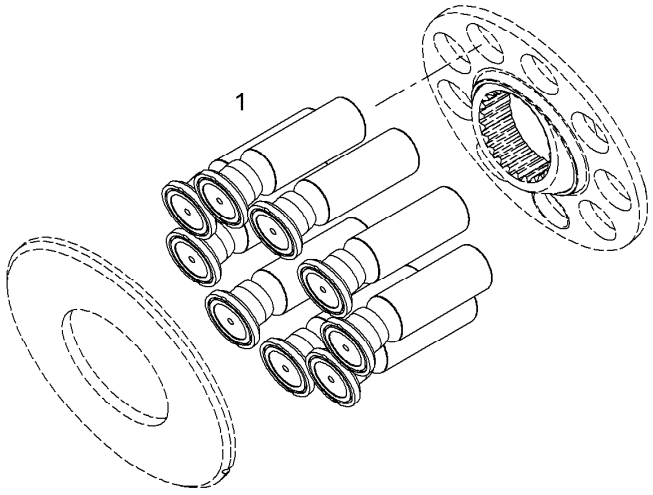


| Pos. | Item | Quantity | Description | Designação | Serie | K |
|---|---|---|---|---|---|---|
| 1 | | 9 | PISTON WITH GUIDE SHOE | PISTÃO COM SAPATA DESLIZA | | |

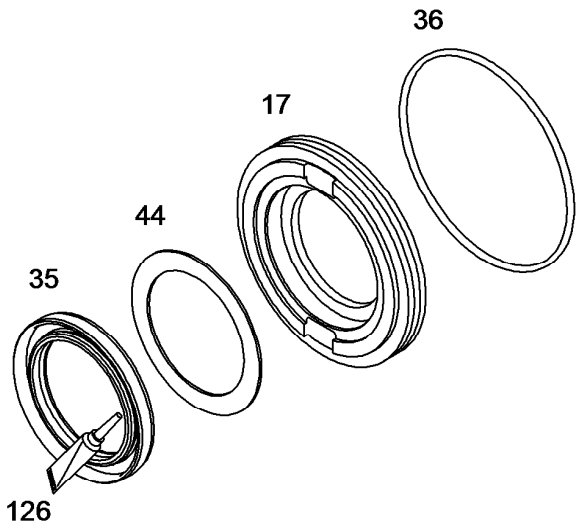


| Pos. | Item | Quantity | Description | Designação | Serie | K |
|---|---|---|---|---|---|---|
| 17 | | 1 | CLOSING RING | ANEL DE FECHAMENTO | | |
| 35 | | 1 | ROTARY SHAFT LIP SEAL ASX50X65X7 | ANEL DE VEDÇÃO DO EIXO RAD | | |
| 36 | 7380657 | 1 | O-RING DIN 3771 91,67X3,53 | ANEL-O | | |
| 44 | | 1 | SHIM RING 55X65X1,5 | ARRUELA DE AJUSTE | | |
| 126 | 8655008 | 1 | GREASE | GRAXA | | |

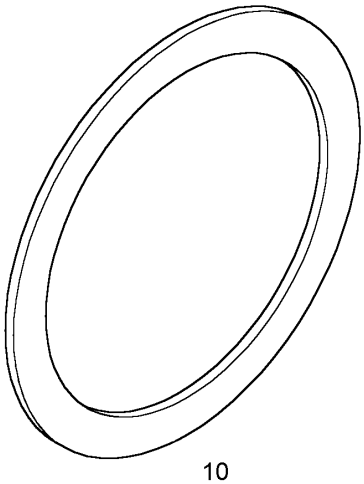


| Pos. | Item | Quantity | Description | Designação | Serie | K |
|---|---|---|---|---|---|---|
| 10 | 7380273 | 1 | SUPPORTING WASHER S 50X71X0,4 | ANEL DE APOIO | | |
| | 7380166 | 1 | SUPPORTING WASHER S 50X71X0,5 | ANEL DE APOIO | | |
| | 7380272 | 1 | SUPPORTING WASHER S 50X71X0,6 | ANEL DE APOIO | | |
| | 7380271 | 1 | SUPPORTING WASHER S 50X71X0,7 | ANEL DE APOIO | | |

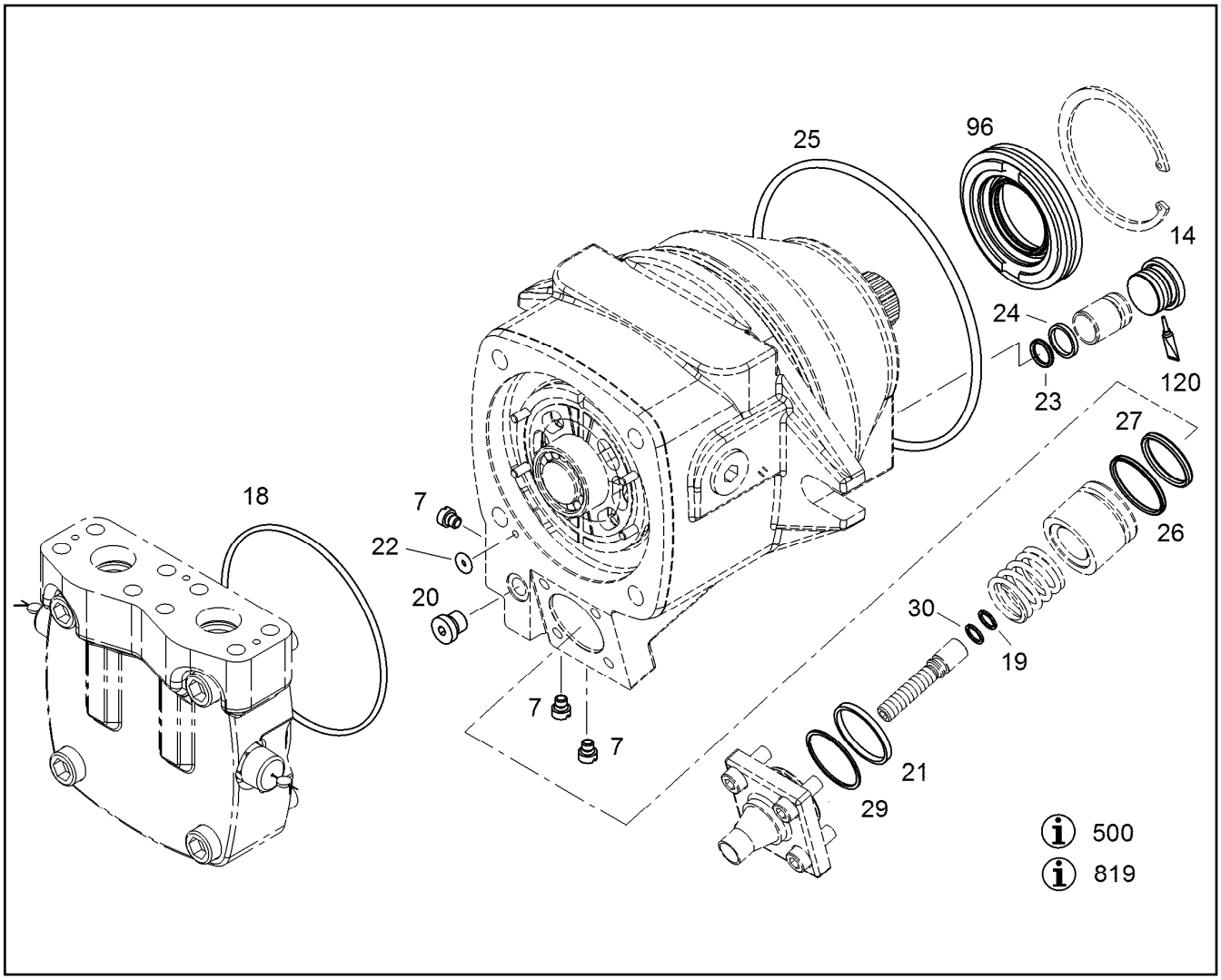


| Pos. | Item | Quantity | Description | Designação | Serie | K |
|---|---|---|---|---|---|---|
| 7 | 9268441 | 4 | SCREW PLUG M6<br>⇨ ❑ 112 | PARAFUSO DE FECHAMENTO | | |
| 14 | 10137120 | 2 | SCREW PLUG VSTI M30X1,5 | PARAFUSO DE FECHAMENTO | | |
| 18 | 7380659 | 1 | O-RING DIN 3771 145,64X3,53 | ANEL-O | | |
| 19 | 7380596 | 1 | O-RING DIN 3771 11,00X2,00 | ANEL-O | | |
| 20 | 7363125 | 1 | SCREW FITTING VSTI M14X1,5<br>⇨ ❑ 661 | REDUÇÃO | | |
| 21 | 7381760 | 1 | O-RING DIN 3771 42,52X2,62 | ANEL-O | | |
| 22 | 7380648 | 1 | O-RING DIN 3771 6,02X2,62 | ANEL-O | | |
| 23 | 7380611 | 1 | O-RING DIN 3771 15,54X2,62 | ANEL-O | | |
| 24 | 7381490 | 1 | TURCON GLYD RING 24X16,5X3,2 | ANEL TURCON GLYD | | |
| 25 | 7380613 | 1 | O-RING ISO 3601-1 196,22X5,33 | ANEL-O | | |
| 26 | 7381491 | 1 | GLYD RING 48X37X4,2 | ANEL GLYD | | |
| 27 | 7381254 | 1 | O-RING ISO 3601-1 36,09X3,53 | ANEL-O | | |
| 29 | 11007757 | 1 | BACK-UP RING CUT 43,5/48X1,4 | ANEL DE ENCOSTO | | |
| 30 | 7381809 | 1 | SUPPORTING RING 11,70X15,00X1,4 | ANEL DE APOIO | | |
| 96 | 9268016 | 1 | REPAIR KIT LOCK RING<br>⇨ ❑ 697 | KIT DE REPARO | | |
| 120 | 11140338 | 1 | SCREW LOCKING | COLA PARA ELEMENTOS FIXA | | |
| 500 | 9278153 | 1 | TABLE ORDER | TABELA | | |
| 819 | 10135322 | 1 | MOUNTING REQUIREMENT | NORMA DE MONTAGEM | | |

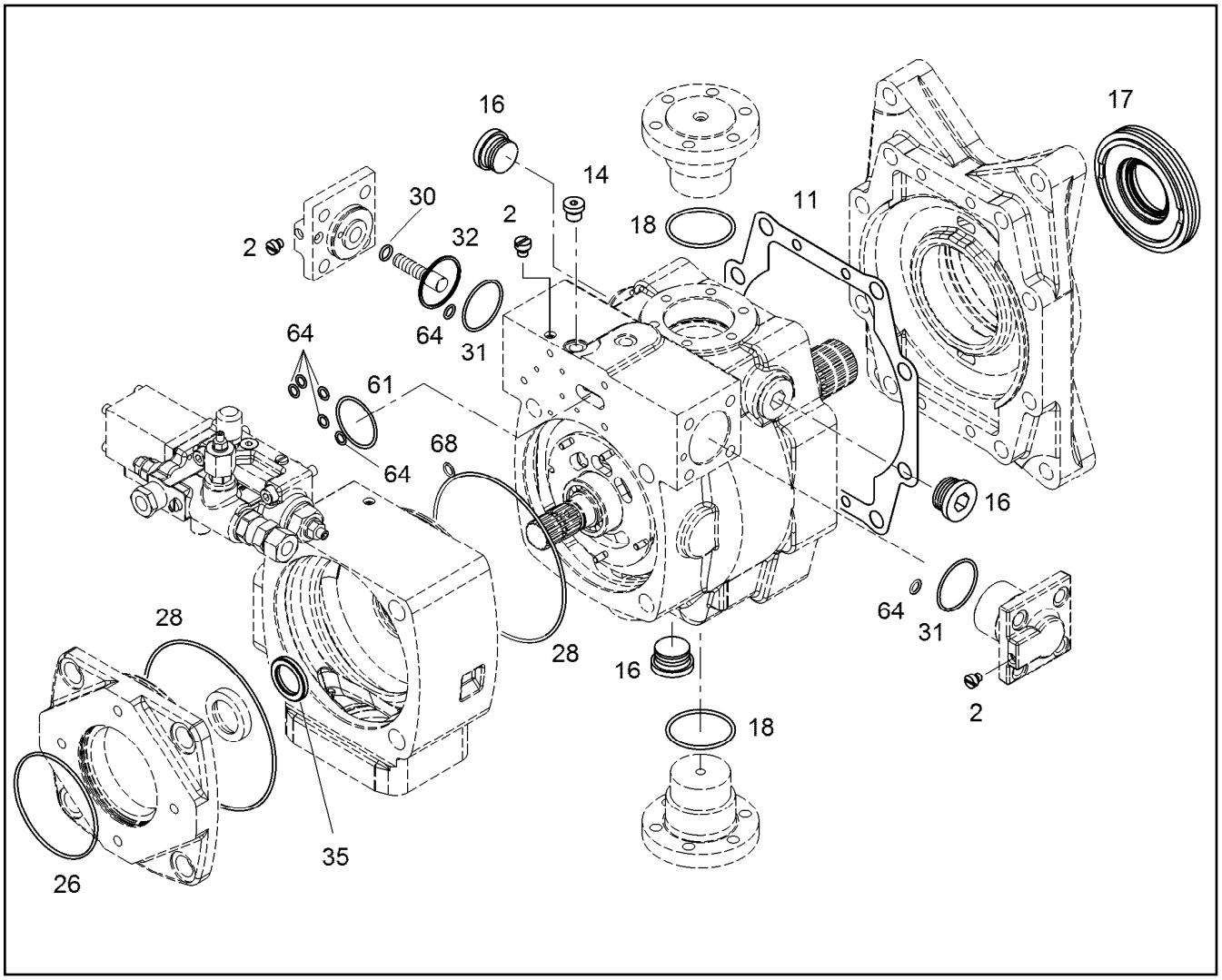


| Pos. | Item | Quantity | Description | Designação | Serie | K |
|---|---|---|---|---|---|---|
| 2 | 9268441 | 5 | SCREW PLUG M6<br>⇨ ❑ 112 | PARAFUSO DE FECHAMENTO | | |
| 11 | | 1 | SEAL | VEDAÇÃO | | |
| 14 | 10137312 | 1 | SCREW PLUG VSTI M16X1,5 | PARAFUSO DE FECHAMENTO | | |
| 16 | 10137121 | 3 | SCREW PLUG VSTI M33X2 | PARAFUSO DE FECHAMENTO | | |
| 17 | | 1 | REPAIR KIT LOCK RING<br>⇨ ❑ 77 | KIT DE REPARO | | |
| 18 | | 2 | O-RING DIN 3771 58,42X2,62 | ANEL-O | | |
| 28 | | 2 | O-RING DIN 3771 164,69X3,53 | ANEL-O | | |
| 30 | 7380596 | 1 | O-RING DIN 3771 11,00X2,00 | ANEL-O | | |
| 31 | | 2 | O-RING DIN 3771 47,29X2,62 | ANEL-O | | |
| 32 | | 1 | SUPPORTING RING | ANEL DE APOIO | | |
| 35 | | 1 | ROTARY SHAFT LIP SEAL | ANEL DE VEDÇÃO DO EIXO RAD | | |
| 61 | | 1 | O-RING 41X1,78 | ANEL-O | | |
| 64 | | 8 | O-RING DIN 3771 6,02X2,62 | ANEL-O | | |
| 68 | | 1 | O-RING DIN 3771 5,23X2,62 | ANEL-O | | |

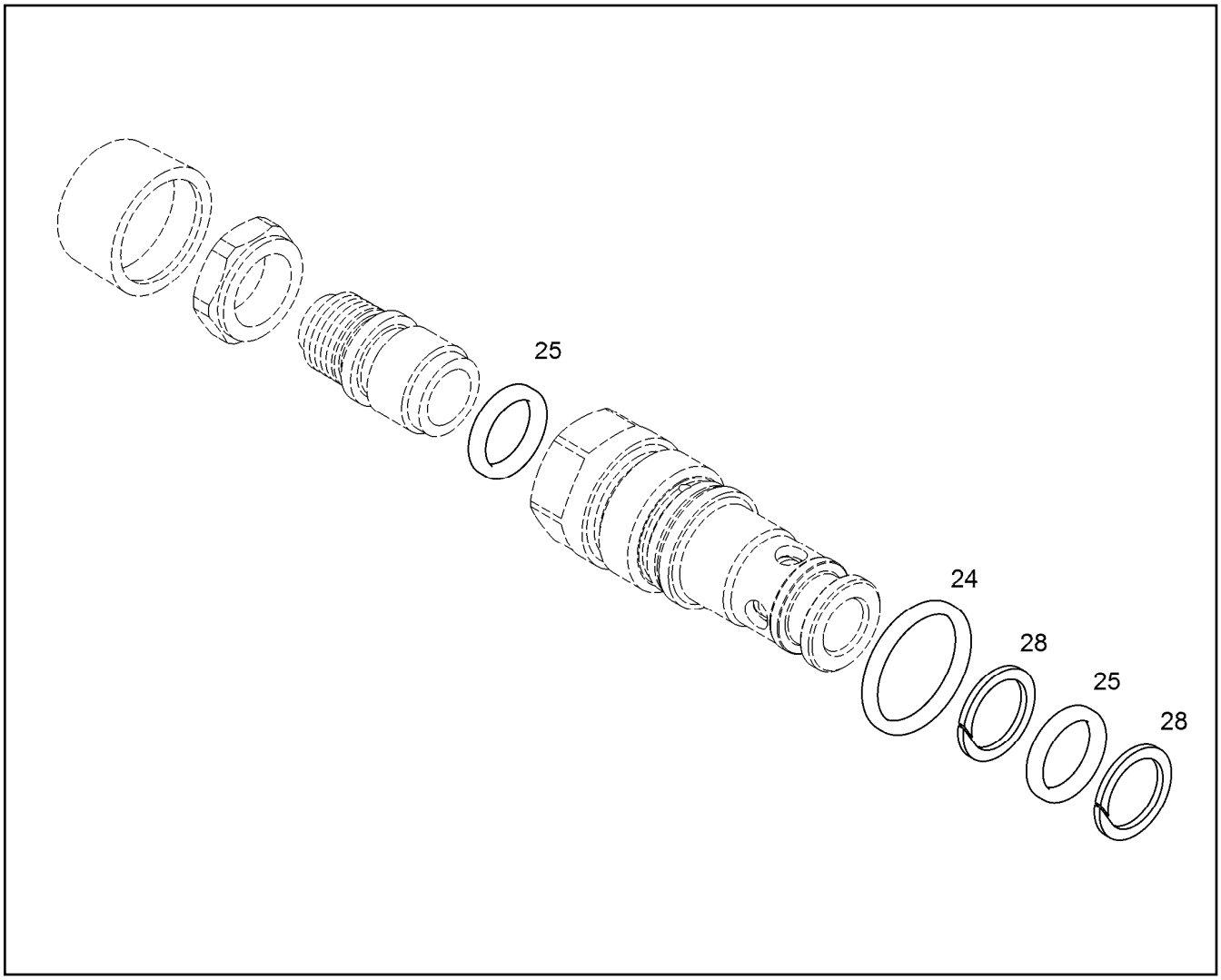


| Pos. | Item | Quantity | Description | Designação | Serie | K |
|---|---|---|---|---|---|---|
| 24 | | 1 | O-RING DIN 3771 21,89X2,62 | ANEL-O | | |
| 25 | | 2 | O-RING DIN 3771 13,94X2,62 | ANEL-O | | |
| 28 | | 2 | SUPPORTING RING | ANEL DE APOIO | | |

| Item | Page | Assembly | Pos. | Quantity | Item | Page | Assembly | Pos. | Quantity |
|---|---|---|---|---|---|---|---|---|---|
| 10000286 | 430 | 10 29 026 4 | 820 | 2 | 10005679 | 286 | 11 00 359 4 | 8 | 1 |
| 10001073 | 49 | 10 49 883 7 | 9 | 3 | 10005859 | 230 | 10 49 880 9 | 95 | 2 |
| 10001074 | 686 | 10 13 268 6 | 20 | 8 | 10005860 | 230 | 10 49 880 9 | 90 | 1 |
| 10001075 | 341 | 10 84 584 9 | 42 | 8 | 10005863 | 240 | 10 16 576 6 | 1 | 1 |
| 10001076 | 641 | 10 49 881 6 | 21 | 6 | 10006131 | 578 | 10 11 548 0 | 3 | 12 |
| 10001077 | 68 | 94 43 840 | 11 | 8 | 10006191 | 653 | 10 00 297 1 | 30 | 1 |
| 10001077 | 184 | 90 01 790 0 | 28 | 6 | 10006338 | 313 | 10 35 801 7 | 55 | 1 |
| 10001077 | 331 | 10 35 798 3 | 68 | 4 | 10006370 | 104 | 10 35 800 6 | 7 | 6 |
| 10001077 | 618 | 10 49 830 0 | 41 | 8 | 10006370 | 104 | 10 35 800 6 | 13 | 4 |
| 10001077 | 637 | 11 45 153 0 | 41 | 4 | 10006370 | 342 | 10 84 584 9 | 72 | 2 |
| 10001079 | 655 | 10 06 203 8 | 15 | 4 | 10006370 | 632 | 10 38 484 8 | 41 | 2 |
| 10001080 | 616 | 10 49 830 0 | 25 | 4 | 10006370 | 672 | 10 49 815 8 | 61 | 4 |
| 10001114 | 139 | 10 35 572 4 | 24 | 1 | 10006372 | 184 | 90 01 790 0 | 22 | 2 |
| 10001466 | 295 | 10 35 801 2 | 30 | 8 | 10006499 | 481 | 90 73 083 | 4 | 2 |
| 10001466 | 296 | 10 35 801 2 | 430 | 8 | 10006499 | 611 | 10 11 583 8 | 62 | 12 |
| 10001468 | 655 | 10 06 203 8 | 4 | 4 | 10006550 | 498 | 10 12 134 5 | 1 | 1 |
| 10001471 | 618 | 10 49 830 0 | 32 | 4 | 10006551 | 498 | 10 12 134 5 | 2 | 1 |
| 10001473 | 49 | 10 49 883 7 | 21 | 3 | 10006617 | 280 | 10 40 689 8 | 80 | 1 |
| 10001473 | 57 | 10 05 149 1 | 25 | 2 | 10007025 | 209 | 10 04 966 2 | 20 | 1 |
| 10002237 | 620 | 10 49 830 0 | 75 | 2 | 10007782 | 482 | 10 11 916 7 | 22 | 2 |
| 10002310 | 610 | 10 11 583 8 | 47 | 1 | 10007782 | 566 | 90 79 472 | 3 | 4 |
| 10002428 | 381 | 99 49 428 | 12 | 0.94m | 10007782 | 567 | 90 79 474 | 3 | 4 |
| 10002552 | 571 | 10 11 919 9 | 132 | 1 | 10007782 | 568 | 90 80 280 | 3 | 4 |
| 10002552 | 572 | 10 11 571 8 | 132 | 1 | 10007848 | 437 | 99 41 040 | 2 | 1 |
| 10002636 | 304 | 10 35 801 4 | 80 | 1 | 10007928 | 314 | 10 35 801 7 | 480 | 2 |
| 10002803 | 311 | 10 35 809 3 | 32 | 1 | 10008084 | 139 | 10 35 572 4 | 6 | 1 |
| 10002832 | 296 | 10 35 801 2 | 185 | 2 | 10008087 | 139 | 10 35 572 4 | 10 | 1 |
| 10002971 | 671 | 10 49 815 8 | 9 | 1 | 10008088 | 139 | 10 35 572 4 | 14 | 1 |
| 10003140 | 243 | 73 73 807 | 26 | 2 | 10008091 | 139 | 10 35 572 4 | 21 | 1 |
| 10003366 | 554 | 90 78 314 | 3 | 1 | 10008092 | 139 | 10 35 572 4 | 25 | 1 |
| 10003485 | 353 | 10 35 802 8 | 470 | 1 | 10008093 | 139 | 10 35 572 4 | 30 | 2 |
| 10003704 | 313 | 10 35 801 7 | 80 | 1 | 10008299 | 129 | 70 28 176 | 4 | 1 |
| 10003855 | 79 | 90 73 357 | 30 | 24 | 10008406 | 121 | 10 41 301 3 | 57 | 1 |
| 10003855 | 199 | 90 74 416 | 31 | 24 | 10008415 | 121 | 10 41 301 3 | 55 | 1 |
| 10004261 | 484 | 90 79 480 | 12 | 1 | 10008421 | 139 | 10 35 572 4 | 12 | 1 |
| 10004261 | 605 | 10 11 801 4 | 13 | 1 | 10008422 | 121 | 10 41 301 3 | 9 | 1 |
| 10004261 | 608 | 10 11 583 8 | 13 | 1 | 10008428 | 141 | 10 35 573 8 | 10 | 1 |
| 10004331 | 504 | 10 14 155 4 | 8 | 8 | 10008444 | 280 | 10 40 689 8 | 15 | 1 |
| 10004331 | 508 | 10 12 036 4 | 8 | 8 | 10008448 | 514 | 10 11 585 1 | 11 | 4 |
| 10004419 | 512 | 90 74 507 | 4 | 1 | 10008448 | 516 | 10 11 585 3 | 11 | 4 |
| 10004426 | 512 | 90 74 507 | 5 | 1 | 10008448 | 561 | 10 11 547 9 | 4 | 4 |
| 10004442 | 511 | 90 74 505 | 7 | 1 | 10008649 | 280 | 10 40 689 8 | 16 | 0.28m |
| 10005073 | 519 | 10 12 143 9 | 4 | 6 | 10009007 | 485 | 90 79 487 | 10 | 13 |
| 10005073 | 520 | 10 12 143 8 | 5 | 4 | 10009007 | 495 | 91 47 512 | 3 | 2 |
| 10005074 | 519 | 10 12 143 9 | 5 | 12 | 10009014 | 414 | 70 28 769 | 120 | 1 |
| 10005078 | 482 | 10 11 916 7 | 13 | 2 | 10009023 | 420 | 10 48 808 7 | 270 | 2 |
| 10005078 | 489 | 90 79 862 | 6 | 3 | 10009024 | 421 | 10 48 808 7 | 770 | 1 |
| 10005078 | 590 | 90 80 653 | 11 | 2 | 10009025 | 429 | 10 29 026 4 | 730 | 1 |
| 10005440 | 462 | 10 37 283 6 | 12 | 2 | 10009027 | 433 | 10 48 808 8 | 450 | 2 |
| 10005440 | 632 | 10 38 484 8 | 31 | 5 | 10009053 | 213 | 10 48 841 6 | 20 | 1 |
| 10005440 | 636 | 11 10 283 0 | 30 | 4 | 10009054 | 216 | 10 10 171 1 | 21 | 1 |
| 10005461 | 550 | 10 11 707 3 | 2 | 6 | 10009054 | 623 | 10 10 171 2 | 21 | 1 |
| 10005462 | 550 | 10 11 707 3 | 3 | 6 | 10009079 | 420 | 10 48 808 7 | 260 | 8 |
| 10005462 | 559 | 10 11 646 4 | 15 | 1 | 10009132 | 432 | 10 48 808 8 | 140 | 1 |
| 10005511 | 486 | 90 79 483 | 4 | 12 | 10009181 | 433 | 10 48 808 8 | 290 | 1 |
| 10005670 | 180 | 10 04 871 3 | 2 | 1 | 10009183 | 433 | 10 48 808 8 | 300 | 1 |
| 10005672 | 286 | 11 00 359 4 | 1 | 1 | 10009188 | 433 | 10 48 808 8 | 390 | 1 |
| 10005674 | 284 | 10 02 208 3 | 2 | 1 | 10009189 | 433 | 10 48 808 8 | 440 | 4 |
| 10005675 | 286 | 11 00 359 4 | 7 | 1 | 10009193 | 432 | 10 48 808 8 | 150 | 1 |
| 10005677 | 284 | 10 02 208 3 | 1 | 1 | 10009201 | 433 | 10 48 808 8 | 490 | 1 |

| Item | Page | Assembly | Pos. | Quantity | Item | Page | Assembly | Pos. | Quantity |
|---|---|---|---|---|---|---|---|---|---|
| 10009239 | 457 | 10 08 428 6 | 10 | 1 | 10013843 | 212 | 10 48 840 4 | 102 | 1 |
| 10009330 | 212 | 10 48 840 4 | 20 | 1 | 10013848 | 212 | 10 48 840 4 | 106 | 1 |
| 10009596 | 212 | 10 48 840 4 | 19 | 1 | 10013851 | 212 | 10 48 840 4 | 101 | 1 |
| 10009602 | 212 | 10 48 840 4 | 10 | 1 | 10013859 | 212 | 10 48 840 4 | 6 | 2 |
| 10009606 | 212 | 10 48 840 4 | 14 | 4 | 10013881 | 212 | 10 48 840 4 | 18 | 1 |
| 10009630 | 62 | 93 45 153 | 8 | 1 | 10013965 | 428 | 10 29 026 4 | 460 | 2 |
| 10009662 | 51 | 10 49 883 7 | 61 | 2 | 10014042 | 559 | 10 11 646 4 | 5 | 4 |
| 10009676 | 63 | 10 00 963 0 | 999 | 1 | 10014067 | 129 | 70 28 176 | 1 | 1 |
| 10009781 | 230 | 10 49 880 9 | 121 | 1.8m | 10014076 | 129 | 70 28 176 | 3 | 1 |
| 10009784 | 212 | 10 48 840 4 | 17 | 1 | 10014497 | 433 | 10 48 808 8 | 310 | 1 |
| 10009888 | 442 | 99 47 695 | 16 | 2 | 10014510 | 77 | 92 68 751 | 35 | 1 |
| 10009943 | 562 | 90 80 301 | 5 | 0.6m | 10014510 | 128 | 98 89 282 | 35 | 1 |
| 10010138 | 114 | 10 22 040 9 | 37 | 2 | 10014510 | 149 | 90 73 158 | 35 | 1 |
| 10010154 | 244 | 10 05 879 2 | 30 | 1 | 10014510 | 197 | 90 74 285 | 35 | 1 |
| 10010154 | 259 | 10 05 879 4 | 30 | 1 | 10014510 | 204 | 92 73 048 | 35 | 1 |
| 10011098 | 150 | 90 79 294 | 31 | 26 | 10014510 | 697 | 92 68 016 | 35 | 1 |
| 10011395 | 63 | 10 00 963 0 | 1 | 1 | 10014575 | 218 | 90 64 786 | 140 | 1 |
| 10011396 | 63 | 10 00 963 0 | 2 | 1 | 10014575 | 220 | 10 01 461 1 | 140 | 3 |
| 10011397 | 63 | 10 00 963 0 | 4 | 1 | 10014589 | 211 | 10 00 933 0 | 10 | 1 |
| 10011398 | 63 | 10 00 963 0 | 11 | 2 | 10014611 | 210 | 10 48 840 8 | 999 | 1 |
| 10011398 | 65 | 10 00 967 6 | 11 | 2 | 10014611 | 215 | 10 10 169 3 | 999 | 1 |
| 10011832 | 521 | 90 78 233 | 1 | 1 | 10014611 | 622 | 10 10 169 4 | 999 | 1 |
| 10011865 | 612 | 10 11 583 8 | 77 | 4 | 10014611 | 626 | 11 00 350 2 | 999 | 1 |
| 10011866 | 513 | 10 11 585 1 | 9 | 12 | 10014638 | 559 | 10 11 646 4 | 16 | 1 |
| 10011866 | 515 | 10 11 585 3 | 9 | 12 | 10014638 | 560 | 10 11 949 2 | 2 | 3 |
| 10011866 | 545 | 10 11 559 5 | 11 | 2 | 10014680 | 681 | 10 28 689 7 | 1 | 1 |
| 10011866 | 547 | 90 79 083 | 2 | 12 | 10014681 | 681 | 10 28 689 7 | 1 | 1 |
| 10011866 | 555 | 10 12 421 8 | 3 | 2 | 10014682 | 678 | 10 01 468 0 | 1 | 1 |
| 10011866 | 605 | 10 11 801 4 | 9 | 2 | 10014683 | 678 | 10 01 468 0 | 2 | 1 |
| 10011866 | 612 | 10 11 583 8 | 75 | 1 | 10014687 | 678 | 10 01 468 0 | 4 | 1 |
| 10011866 | 612 | 10 11 583 8 | 78 | 25 | 10014688 | 678 | 10 01 468 0 | 5 | 2 |
| 10011867 | 536 | 10 11 551 3 | 3 | 1 | 10014689 | 678 | 10 01 468 0 | 6 | 1 |
| 10011867 | 538 | 10 12 580 1 | 3 | 1 | 10014690 | 678 | 10 01 468 0 | 7 | 1 |
| 10011867 | 612 | 10 11 583 8 | 79 | 5 | 10014691 | 681 | 10 28 689 7 | 2 | 1 |
| 10011867 | 612 | 10 11 583 8 | 80 | 7 | 10014692 | 681 | 10 28 689 7 | 3 | 1 |
| 10011870 | 482 | 10 11 916 7 | 9 | 1 | 10014693 | 681 | 10 28 689 7 | 4 | 1 |
| 10011870 | 612 | 10 11 583 8 | 76 | 5 | 10014694 | 681 | 10 28 689 7 | 7 | 1 |
| 10011995 | 218 | 90 64 786 | 110 | 1 | 10014697 | 681 | 10 28 689 7 | 12 | 2 |
| 10011995 | 220 | 10 01 461 1 | 110 | 6 | 10014698 | 681 | 10 28 689 7 | 15 | 1 |
| 10011996 | 217 | 90 64 786 | 66 | 1m | 10014699 | 681 | 10 28 689 7 | 16 | 1 |
| 10011996 | 218 | 90 64 786 | 166 | 1m | 10014701 | 681 | 10 28 689 7 | 18 | 1 |
| 10012024 | 218 | 90 64 786 | 100 | 1 | 10014729 | 681 | 10 28 689 7 | 8 | 1 |
| 10012024 | 220 | 10 01 461 1 | 100 | 6 | 10014730 | 681 | 10 28 689 7 | 9 | 1 |
| 10012119 | 444 | 11 10 266 2 | 20 | 1 | 10014777 | 246 | 10 46 993 3 | 55 | 1 |
| 10012162 | 215 | 10 10 169 3 | 10 | 1 | 10014778 | 246 | 10 46 993 3 | 50 | 1 |
| 10012172 | 442 | 99 47 695 | 20 | 2 | 10014779 | 261 | 10 46 993 2 | 55 | 1 |
| 10012263 | 147 | 70 28 075 | 12 | 2 | 10014780 | 261 | 10 46 993 2 | 50 | 1 |
| 10012761 | 161 | 10 35 809 2 | 22 | 6 | 10014790 | 247 | 99 68 625 | 200 | 1 |
| 10012889 | 339 | 10 22 239 3 | 20 | 1 | 10014790 | 262 | 99 68 611 | 200 | 1 |
| 10013545 | 218 | 90 64 786 | 161 | 1 | 10014864 | 545 | 10 11 559 5 | 9 | 1 |
| 10013545 | 220 | 10 01 461 1 | 161 | 10 | 10015404 | 450 | 10 10 131 3 | 10 | 1 |
| 10013550 | 218 | 90 64 786 | 151 | 1 | 10015470 | 75 | 56 16 688 | 999 | 1 |
| 10013550 | 220 | 10 01 461 1 | 151 | 10 | 10015471 | 75 | 56 16 688 | 250 | 2 |
| 10013573 | 293 | 98 79 063 | 5 | 4 | 10015472 | 75 | 56 16 688 | 210 | 2 |
| 10013835 | 212 | 10 48 840 4 | 1 | 1 | 10015475 | 75 | 56 16 688 | 30 | 1 |
| 10013837 | 212 | 10 48 840 4 | 2 | 4 | 10015495 | 247 | 99 68 625 | 100 | 1 |
| 10013839 | 212 | 10 48 840 4 | 3 | 1 | 10015495 | 262 | 99 68 611 | 100 | 1 |
| 10013840 | 212 | 10 48 840 4 | 104 | 1 | 10015533 | 75 | 56 16 688 | 140 | 2 |
| 10013840 | 212 | 10 48 840 4 | 105 | 1 | 10015712 | 245 | 10 46 991 7 | 10 | 2 |
| 10013842 | 212 | 10 48 840 4 | 103 | 1 | 10015712 | 260 | 10 46 991 8 | 10 | 2 |

| Item | Page | Assembly | Pos. | Quantity | Item | Page | Assembly | Pos. | Quantity |
|---|---|---|---|---|---|---|---|---|---|
| 10015928 | 464 | 10 35 804 3 | 36 | 1 | 10022070 | 286 | 11 00 359 4 | 17 | 1 |
| 10016122 | 359 | 10 49 822 5 | 14 | 4 | 10022077 | 286 | 11 00 359 4 | 12 | 1 |
| 10016540 | 268 | 10 05 981 8 | 5 | 2 | 10022078 | 286 | 11 00 359 4 | 6 | 1 |
| 10016655 | 682 | 10 28 689 7 | 30 | 1 | 10022083 | 286 | 11 00 359 4 | 14 | 1 |
| 10016656 | 682 | 10 28 689 7 | 32 | 4 | 10022117 | 282 | 10 81 666 6 | 2 | 1 |
| 10016657 | 682 | 10 28 689 7 | 33 | 1 | 10022119 | 280 | 10 40 689 8 | 20 | 1 |
| 10016658 | 682 | 10 28 689 7 | 34 | 1 | 10022119 | 282 | 10 81 666 6 | 3 | 1 |
| 10016659 | 682 | 10 28 689 7 | 35 | 1 | 10022175 | 331 | 10 35 798 3 | 40 | 1 |
| 10016660 | 682 | 10 28 689 7 | 35 | 1 | 10022320 | 514 | 10 11 585 1 | 12 | 2 |
| 10016661 | 682 | 10 28 689 7 | 36 | 4 | 10022320 | 516 | 10 11 585 3 | 12 | 2 |
| 10016663 | 682 | 10 28 689 7 | 38 | 1 | 10022320 | 552 | 10 12 190 8 | 5 | 2 |
| 10016664 | 682 | 10 28 689 7 | 40 | 1 | 10022320 | 553 | 90 79 964 | 5 | 2 |
| 10016665 | 682 | 10 28 689 7 | 41 | 4 | 10022320 | 607 | 10 11 801 4 | 21 | 2 |
| 10016714 | 53 | 90 15 155 | 4 | 1 | 10022635 | 282 | 10 81 666 6 | 5 | 1 |
| 10016715 | 53 | 90 15 155 | 6 | 1 | 10022636 | 282 | 10 81 666 6 | 6 | 1 |
| 10016716 | 53 | 90 15 155 | 5 | 1 | 10022653 | 287 | 11 00 359 4 | 31 | 3 |
| 10016906 | 487 | 10 12 026 3 | 3 | 1 | 10022656 | 286 | 11 00 359 4 | 10 | 4 |
| 10016906 | 488 | 90 79 978 | 3 | 1 | 10022766 | 284 | 10 02 208 3 | 3 | 1 |
| 10016906 | 541 | 10 11 912 7 | 2 | 2 | 10022766 | 285 | 10 02 211 7 | 7 | 2 |
| 10016906 | 543 | 10 11 628 5 | 87 | 1 | 10022766 | 288 | 10 02 207 8 | 2 | 1 |
| 10016906 | 549 | 10 11 657 6 | 9 | 2 | 10022767 | 285 | 10 02 211 7 | 3 | 2 |
| 10016906 | 551 | 90 77 279 | 8 | 2 | 10022767 | 290 | 10 02 277 7 | 5 | 2 |
| 10016906 | 562 | 90 80 301 | 8 | 2 | 10022768 | 290 | 10 02 277 7 | 4 | 2 |
| 10016906 | 591 | 10 11 912 8 | 3 | 4 | 10022769 | 285 | 10 02 211 7 | 2 | 2 |
| 10016908 | 576 | 10 11 566 4 | 3 | 3 | 10022769 | 290 | 10 02 277 7 | 3 | 2 |
| 10016908 | 579 | 90 79 468 | 2 | 4 | 10022770 | 87 | 10 06 947 6 | 5 | 1 |
| 10016908 | 580 | 90 79 823 | 2 | 4 | 10022770 | 290 | 10 02 277 7 | 2 | 1 |
| 10017158 | 494 | 90 79 958 | 6 | 1 | 10022771 | 290 | 10 02 277 7 | 1 | 1 |
| 10017158 | 552 | 10 12 190 8 | 11 | 4 | 10022772 | 289 | 10 02 211 9 | 2 | 1 |
| 10017824 | 247 | 99 68 625 | 150 | 1 | 10022774 | 283 | 10 02 206 9 | 3 | 1 |
| 10017824 | 262 | 99 68 611 | 150 | 1 | 10022776 | 285 | 10 02 211 7 | 20 | 1 |
| 10017926 | 247 | 99 68 625 | 160 | 2 | 10022777 | 285 | 10 02 211 7 | 19 | 1 |
| 10017926 | 262 | 99 68 611 | 160 | 2 | 10022778 | 285 | 10 02 211 7 | 18 | 1 |
| 10018373 | 212 | 10 48 840 4 | 998 | 1 | 10022779 | 285 | 10 02 211 7 | 16 | 2 |
| 10018375 | 212 | 10 48 840 4 | 999 | 1 | 10022780 | 285 | 10 02 211 7 | 15 | 1 |
| 10018711 | 554 | 90 78 314 | 2 | 4 | 10022781 | 285 | 10 02 211 7 | 13 | 2 |
| 10018725 | 358 | 10 28 847 0 | 2 | 1 | 10022782 | 285 | 10 02 211 7 | 12 | 2 |
| 10019230 | 306 | 10 35 801 4 | 220 | 1 | 10022783 | 285 | 10 02 211 7 | 5 | 6 |
| 10020719 | 355 | 10 35 802 8 | 595 | 1 | 10022785 | 285 | 10 02 211 7 | 4 | 2 |
| 10020982 | 429 | 10 29 026 4 | 690 | 1 | 10022787 | 285 | 10 02 211 7 | 1 | 1 |
| 10021308 | 213 | 10 48 841 6 | 999 | 1 | 10023049 | 559 | 10 11 646 4 | 12 | 2 |
| 10021308 | 216 | 10 10 171 1 | 999 | 1 | 10023106 | 285 | 10 02 211 7 | 11 | 2 |
| 10021308 | 623 | 10 10 171 2 | 999 | 1 | 10023245 | 432 | 10 48 808 8 | 270 | 6 |
| 10021310 | 213 | 10 48 841 6 | 998 | 1 | 10024115 | 485 | 90 79 487 | 11 | 2 |
| 10021310 | 216 | 10 10 171 1 | 998 | 1 | 10024115 | 549 | 10 11 657 6 | 10 | 1 |
| 10021310 | 623 | 10 10 171 2 | 998 | 1 | 10024115 | 589 | 98 85 618 | 4 | 2 |
| 10021311 | 213 | 10 48 841 6 | 997 | 1 | 10024139 | 559 | 10 11 646 4 | 10 | 1 |
| 10021311 | 216 | 10 10 171 1 | 997 | 1 | 10024192 | 433 | 10 48 808 8 | 500 | 1 |
| 10021311 | 623 | 10 10 171 2 | 997 | 1 | 10024214 | 445 | 10 01 211 9 | 2 | 1 |
| 10021563 | 542 | 10 11 628 5 | 40 | 4 | 10024583 | 366 | 10 03 245 2 | 61 | 2 |
| 10021563 | 543 | 10 11 628 5 | 90 | 4 | 10024675 | 315 | 10 04 272 9 | 11 | 2 |
| 10021823 | 280 | 10 40 689 8 | 72 | 1 | 10024864 | 277 | 99 37 443 | 2 | 1 |
| 10022048 | 286 | 11 00 359 4 | 2 | 1 | 10025124 | 585 | 90 76 531 | 1 | 1 |
| 10022049 | 286 | 11 00 359 4 | 9 | 2 | 10025254 | 388 | 10 07 307 3 | 20 | 1 |
| 10022051 | 286 | 11 00 359 4 | 16 | 1 | 10025254 | 394 | 10 06 691 8 | 3 | 1 |
| 10022052 | 287 | 11 00 359 4 | 26 | 1 | 10025254 | 399 | 99 47 961 | 10 | 1 |
| 10022063 | 287 | 11 00 359 4 | 30 | 1 | 10027260 | 217 | 90 64 786 | 26 | 1 |
| 10022067 | 286 | 11 00 359 4 | 11 | 1 | 10027260 | 219 | 10 01 461 1 | 26 | 4 |
| 10022068 | 286 | 11 00 359 4 | 18 | 1 | 10027438 | 411 | 70 28 759 | 231 | 2 |
| 10022069 | 286 | 11 00 359 4 | 15 | 1 | 10027735 | 533 | 10 11 658 7 | 1 | 1 |

| Item | Page | Assembly | Pos. | Quantity | Item | Page | Assembly | Pos. | Quantity |
|---|---|---|---|---|---|---|---|---|---|
| 10028013 | 404 | 10 35 796 7 | 21 | 4 | 10040324 | 260 | 10 46 991 8 | 30 | 1 |
| 10029626 | 38 | 90 66 466 | 11 | 1 | 10040326 | 260 | 10 46 991 8 | 20 | 1 |
| 10029676 | 233 | 11 10 016 6 | 36 | 1 | 10040327 | 245 | 10 46 991 7 | 20 | 1 |
| 10030518 | 598 | 90 78 961 | 8 | 2 | 10040399 | 533 | 10 11 658 7 | 6 | 1 |
| 10030591 | 184 | 90 01 790 0 | 12 | 1 | 10040399 | 535 | 10 11 585 4 | 1 | 1 |
| 10030592 | 184 | 90 01 790 0 | 3 | 1 | 10040400 | 610 | 10 11 583 8 | 46 | 1 |
| 10030593 | 184 | 90 01 790 0 | 4 | 1 | 10040401 | 534 | 90 75 395 | 1 | 1 |
| 10031921 | 60 | 10 00 966 2 | 5 | 2 | 10040402 | 530 | 10 11 585 5 | 1 | 1 |
| 10031944 | 60 | 10 00 966 2 | 4 | 1 | 10040403 | 530 | 10 11 585 5 | 2 | 1 |
| 10031946 | 60 | 10 00 966 2 | 3 | 2 | 10040404 | 530 | 10 11 585 5 | 3 | 1 |
| 10031949 | 60 | 10 00 966 2 | 2 | 2 | 10040406 | 533 | 10 11 658 7 | 5 | 1 |
| 10031950 | 60 | 10 00 966 2 | 7 | 2 | 10040406 | 535 | 10 11 585 4 | 2 | 1 |
| 10032039 | 557 | 90 78 356 | 4 | 1 | 10040410 | 312 | 10 35 809 3 | 70 | 2 |
| 10032452 | 346 | 10 35 802 8 | 60 | 1 | 10040412 | 511 | 90 74 505 | 8 | 1 |
| 10032835 | 90 | 10 06 948 1 | 15 | 1 | 10040776 | 218 | 90 64 786 | 120 | 1 |
| 10032835 | 483 | 90 75 483 | 1 | 1 | 10040776 | 220 | 10 01 461 1 | 120 | 2 |
| 10035322 | 429 | 10 29 026 4 | 630 | 2 | 10040777 | 218 | 90 64 786 | 125 | 1 |
| 10035529 | 405 | 10 47 616 9 | 40 | 1 | 10040777 | 220 | 10 01 461 1 | 125 | 2 |
| 10035530 | 409 | 10 03 552 9 | 110 | 1 | 10040778 | 218 | 90 64 786 | 126 | 1 |
| 10035575 | 592 | 10 11 599 3 | 4 | 4 | 10040778 | 220 | 10 01 461 1 | 126 | 2 |
| 10036252 | 626 | 11 00 350 2 | 2 | 1 | 10040779 | 218 | 90 64 786 | 127 | 1 |
| 10036375 | 631 | 10 38 484 8 | 8 | 1 | 10040779 | 220 | 10 01 461 1 | 127 | 2 |
| 10036533 | 264 | 90 13 811 | 3 | 1 | 10040818 | 104 | 10 35 800 6 | 10 | 1 |
| 10037196 | 391 | 10 06 692 0 | 20 | 1 | 10040984 | 584 | 90 76 530 | 2 | 1 |
| 10037196 | 393 | 10 37 938 6 | 20 | 1 | 10040984 | 585 | 90 76 531 | 2 | 1 |
| 10037209 | 372 | 10 35 800 4 | 21 | 1 | 10041876 | 176 | 10 49 858 1 | 299 | 3 |
| 10037209 | 376 | 10 35 800 4 | 130 | 2 | 10041876 | 280 | 10 40 689 8 | 45 | 1 |
| 10037312 | 484 | 90 79 480 | 9 | 6 | 10041876 | 313 | 10 35 801 7 | 35 | 1 |
| 10037518 | 493 | 90 79 492 | 3 | 13 | 10041876 | 436 | 10 35 814 1 | 280 | 1 |
| 10037518 | 494 | 90 79 958 | 3 | 13 | 10041876 | 559 | 10 11 646 4 | 17 | 1 |
| 10037722 | 214 | 10 04 966 3 | 26 | 8 | 10042726 | 308 | 10 35 801 3 | 2 | 1 |
| 10037722 | 624 | 10 38 408 5 | 5 | 12 | 10042728 | 309 | 10 35 801 3 | 36 | 1 |
| 10037722 | 631 | 10 38 484 8 | 10 | 15 | 10042729 | 297 | 99 37 312 | 10 | 1 |
| 10037722 | 632 | 10 38 484 8 | 25 | 2 | 10043136 | 484 | 90 79 480 | 15 | 1 |
| 10037723 | 214 | 10 04 966 3 | 21 | 4 | 10043139 | 308 | 10 35 801 3 | 15 | 1 |
| 10037723 | 624 | 10 38 408 5 | 8 | 25 | 10043160 | 310 | 10 35 809 3 | 10 | 1 |
| 10037723 | 631 | 10 38 484 8 | 13 | 7 | 10043180 | 239 | 10 05 736 2 | 20 | 1 |
| 10037723 | 631 | 10 38 484 8 | 16 | 4 | 10043241 | 324 | 10 22 099 7 | 27 | 1 |
| 10037724 | 624 | 10 38 408 5 | 4 | 12 | 10043241 | 325 | 50 09 391 | 11 | 1 |
| 10037724 | 632 | 10 38 484 8 | 24 | 2 | 10043476 | 361 | 10 49 822 5 | 60 | 1 |
| 10037726 | 214 | 10 04 966 3 | 25 | 8 | 10043478 | 361 | 10 49 822 5 | 65 | 1 |
| 10037726 | 631 | 10 38 484 8 | 9 | 15 | 10043518 | 300 | 10 35 801 5 | 2 | 1 |
| 10037727 | 631 | 10 38 484 8 | 12 | 7 | 10043519 | 300 | 10 35 801 5 | 4 | 1 |
| 10037728 | 214 | 10 04 966 3 | 20 | 4 | 10043520 | 300 | 10 35 801 5 | 5 | 1 |
| 10037728 | 624 | 10 38 408 5 | 7 | 25 | 10043521 | 300 | 10 35 801 5 | 3 | 1 |
| 10037728 | 631 | 10 38 484 8 | 15 | 4 | 10043525 | 218 | 90 64 786 | 170 | 1m |
| 10037739 | 52 | 10 47 009 2 | 1 | 1 | 10043525 | 220 | 10 01 461 1 | 170 | 10m |
| 10038568 | 549 | 10 11 657 6 | 20 | 1 | 10043931 | 306 | 10 35 801 4 | 200 | 1 |
| 10038572 | 543 | 10 11 628 5 | 91 | 1 | 10043999 | 300 | 10 35 801 5 | 15 | 1 |
| 10038817 | 542 | 10 11 628 5 | 45 | 2 | 10044073 | 304 | 10 35 801 4 | 15 | 1 |
| 10039562 | 407 | 70 28 767 | 850 | 1 | 10044235 | 311 | 10 35 809 3 | 30 | 1 |
| 10039590 | 376 | 10 35 800 4 | 127 | 2 | 10044236 | 311 | 10 35 809 3 | 31 | 1 |
| 10039660 | 484 | 90 79 480 | 8 | 12 | 10044302 | 87 | 10 06 947 6 | 3 | 1 |
| 10039678 | 429 | 10 29 026 4 | 621 | 2 | 10044302 | 92 | 10 06 994 0 | 20 | 8 |
| 10039803 | 102 | 99 37 298 | 10 | 1 | 10044302 | 539 | 10 22 281 9 | 1 | 1 |
| 10040032 | 592 | 10 11 599 3 | 3 | 8 | 10044343 | 421 | 10 48 808 7 | 490 | 3 |
| 10040064 | 559 | 10 11 646 4 | 2 | 1 | 10044344 | 421 | 10 48 808 7 | 792 | 1 |
| 10040322 | 245 | 10 46 991 7 | 25 | 2 | 10044353 | 429 | 10 29 026 4 | 610 | 1 |
| 10040322 | 260 | 10 46 991 8 | 25 | 2 | 10044354 | 427 | 10 29 026 4 | 210 | 2 |
| 10040324 | 245 | 10 46 991 7 | 30 | 1 | 10044356 | 432 | 10 48 808 8 | 100 | 12 |

| Item | Page | Assembly | Pos. | Quantity | Item | Page | Assembly | Pos. | Quantity |
|---|---|---|---|---|---|---|---|---|---|
| 10044359 | 433 | 10 48 808 8 | 430 | 1 | 10056741 | 380 | 99 27 477 | 4 | 1 |
| 10044360 | 432 | 10 48 808 8 | 160 | 1 | 10056858 | 163 | 10 35 809 2 | 120 | 1 |
| 10044599 | 618 | 10 49 830 0 | 27 | 1 | 10056981 | 214 | 10 04 966 3 | 50 | 2 |
| 10044624 | 305 | 10 35 801 4 | 110 | 1 | 10056984 | 214 | 10 04 966 3 | 55 | 1 |
| 10044700 | 671 | 10 49 815 8 | 8 | 1 | 10057335 | 619 | 10 49 830 0 | 53 | 4 |
| 10044849 | 91 | 10 09 121 5 | 8 | 1 | 10057336 | 619 | 10 49 830 0 | 54 | 2 |
| 10044849 | 102 | 99 37 298 | 12 | 1 | 10057362 | 237 | 10 38 502 4 | 10 | 1 |
| 10044849 | 103 | 10 03 980 3 | 6 | 1 | 10057843 | 251 | 10 84 086 6 | 92 | 1 |
| 10044851 | 90 | 10 06 948 1 | 4 | 1 | 10058279 | 7 | . | 11 | 1 |
| 10044851 | 102 | 99 37 298 | 11 | 1 | 10058792 | 238 | 10 38 502 4 | 60 | 1 |
| 10044851 | 103 | 10 03 980 3 | 7 | 1 | 10058794 | 249 | 10 84 086 6 | 60 | 1 |
| 10044999 | 618 | 10 49 830 0 | 29 | 4 | 10058949 | 244 | 10 05 879 2 | 15 | 1 |
| 10045530 | 438 | 10 04 824 6 | 2 | 2 | 10058949 | 259 | 10 05 879 4 | 15 | 1 |
| 10045530 | 439 | 11 10 278 6 | 2 | 2 | 10059466 | 680 | 10 49 822 9 | 60 | 1 |
| 10046958 | 539 | 10 22 281 9 | 4 | 1 | 10059516 | 178 | 10 35 800 9 | 25 | 2 |
| 10046968 | 618 | 10 49 830 0 | 30 | 6 | 10059818 | 229 | 10 49 880 9 | 40 | 1 |
| 10048246 | 435 | 10 35 814 1 | 15 | 1 | 10060146 | 224 | 10 49 873 7 | 10 | 1 |
| 10048247 | 438 | 10 04 824 6 | 7 | 1 | 10060174 | 268 | 10 05 981 8 | 10 | 1 |
| 10048247 | 439 | 11 10 278 6 | 7 | 1 | 10060175 | 268 | 10 05 981 8 | 20 | 1 |
| 10048313 | 680 | 10 49 822 9 | 50 | 1 | 10060549 | 371 | 10 07 369 5 | 20 | 1 |
| 10048398 | 443 | 99 47 695 | 30 | 1 | 10060901 | 628 | 10 49 823 5 | 200 | 1 |
| 10048713 | 96 | 10 35 808 9 | 595 | 1 | 10060973 | 628 | 10 49 823 5 | 230 | 1 |
| 10049073 | 435 | 10 35 814 1 | 32 | 1 | 10060974 | 644 | 10 06 097 3 | 2 | 1 |
| 10049420 | 161 | 10 35 809 2 | 30 | 1 | 10061699 | 628 | 10 49 823 5 | 4 | 2 |
| 10049422 | 98 | 10 04 942 6 | 11 | 1 | 10062038 | 628 | 10 49 823 5 | 3 | 1 |
| 10049423 | 98 | 10 04 942 6 | 12 | 1 | 10062040 | 655 | 10 06 203 8 | 5 | 1 |
| 10049426 | 96 | 10 35 808 9 | 510 | 1 | 10062090 | 655 | 10 06 203 8 | 3 | 1 |
| 10049473 | 179 | 10 35 800 9 | 50 | 2 | 10063258 | 301 | 10 35 801 5 | 54 | 2 |
| 10049520 | 102 | 99 37 298 | 48 | 1 | 10063343 | 619 | 10 49 830 0 | 60 | 1 |
| 10049544 | 183 | 99 46 389 | 20 | 1 | 10064288 | 672 | 10 49 815 8 | 60 | 1 |
| 10049616 | 446 | 10 35 814 2 | 10 | 1 | 10064290 | 647 | 10 06 428 8 | 2 | 1 |
| 10049662 | 208 | 99 46 039 | 2 | 1 | 10064291 | 647 | 10 06 428 8 | 3 | 1 |
| 10049663 | 208 | 99 46 039 | 3 | 1 | 10064291 | 648 | 10 38 549 0 | 3 | 1 |
| 10050112 | 86 | 10 35 798 2 | 8600 | 1 | 10064334 | 656 | 99 48 785 | 10 | 1 |
| 10050113 | 403 | 10 05 011 2 | 2 | 1 | 10064339 | 403 | 10 05 011 2 | 4 | 1 |
| 10050115 | 403 | 10 05 011 2 | 3 | 1 | 10064353 | 403 | 10 05 011 2 | 20 | 1 |
| 10050119 | 403 | 10 05 011 2 | 8 | 1 | 10064359 | 403 | 10 05 011 2 | 25 | 1 |
| 10050121 | 403 | 10 05 011 2 | 9 | 1 | 10064927 | 302 | 10 35 801 5 | 80 | 2 |
| 10051238 | 57 | 10 05 149 1 | 20 | 1 | 10065162 | 360 | 10 49 822 5 | 35 | 1 |
| 10051491 | 49 | 10 49 883 7 | 20 | 1 | 10065165 | 361 | 10 49 822 5 | 50 | 1 |
| 10051492 | 57 | 10 05 149 1 | 10 | 1 | 10066076 | 237 | 10 38 502 4 | 20 | 1 |
| 10051537 | 396 | 99 47 957 | 6 | 1 | 10066101 | 465 | 10 35 804 3 | 80 | 1 |
| 10051538 | 397 | 10 05 153 7 | 2 | 1 | 10066101 | 468 | 10 49 805 9 | 80 | 1 |
| 10051539 | 397 | 10 05 153 7 | 3 | 1 | 10066252 | 181 | 90 18 423 | 10 | 1 |
| 10051599 | 435 | 10 35 814 1 | 27 | 1 | 10066586 | 341 | 10 84 584 9 | 40 | 1 |
| 10052672 | 619 | 10 49 830 0 | 57 | 1 | 10066587 | 341 | 10 84 584 9 | 45 | 1 |
| 10052696 | 619 | 10 49 830 0 | 56 | 1 | 10066588 | 329 | 10 35 798 3 | 10 | 1 |
| 10052700 | 444 | 11 10 266 2 | 19 | 1 | 10066591 | 105 | 10 06 658 8 | 2 | 1 |
| 10053858 | 300 | 10 35 801 5 | 30 | 1 | 10066863 | 170 | 10 49 858 1 | 38 | 1 |
| 10054654 | 161 | 10 35 809 2 | 20 | 1 | 10066916 | 394 | 10 06 691 8 | 2 | 1 |
| 10054703 | 161 | 10 35 809 2 | 23 | 1 | 10066918 | 391 | 10 06 692 0 | 15 | 1 |
| 10054704 | 161 | 10 35 809 2 | 24 | 1 | 10066919 | 390 | 10 06 692 0 | 2 | 1 |
| 10055071 | 253 | 10 84 086 6 | 140 | 1 | 10066920 | 375 | 10 35 800 4 | 80 | 1 |
| 10055095 | 230 | 10 49 880 9 | 138 | 1 | 10066929 | 374 | 10 35 800 4 | 63 | 2 |
| 10055216 | 331 | 10 35 798 3 | 35 | 1 | 10067004 | 391 | 10 06 692 0 | 25 | 1 |
| 10055251 | 378 | 10 35 800 4 | 160 | 1 | 10067706 | 452 | 90 18 419 | 40 | 1 |
| 10056233 | 350 | 10 35 802 8 | 340 | 1 | 10069476 | 88 | 10 09 121 4 | 2 | 1 |
| 10056235 | 350 | 10 35 802 8 | 335 | 1 | 10069476 | 91 | 10 09 121 5 | 1 | 1 |
| 10056237 | 350 | 10 35 802 8 | 330 | 1 | 10069481 | 87 | 10 06 947 6 | 1 | 1 |
| 10056401 | 178 | 10 35 800 9 | 30 | 1 | 10069481 | 88 | 10 09 121 4 | 3 | 1 |

| Item | Page | Assembly | Pos. | Quantity | Item | Page | Assembly | Pos. | Quantity |
|---|---|---|---|---|---|---|---|---|---|
| 10069481 | 89 | 10 06 948 6 | 1 | 1 | 10089014 | 7 | . | 4 | 1 |
| 10069486 | 88 | 10 09 121 4 | 1 | 1 | 10091214 | 46 | 10 35 970 2 | 100 | 1 |
| 10069940 | 46 | 10 35 970 2 | 110 | 1 | 10091215 | 88 | 10 09 121 4 | 4 | 1 |
| 10070309 | 463 | 10 35 804 3 | 15 | 1 | 10091991 | 618 | 10 49 830 0 | 35 | 2 |
| 10070505 | 451 | 90 18 419 | 3 | 1 | 10092123 | 464 | 10 35 804 3 | 22 | 1 |
| 10070633 | 461 | 10 35 852 5 | 30 | 1 | 10092123 | 467 | 10 49 805 9 | 22 | 1 |
| 10070970 | 355 | 10 35 802 8 | 7651 | 1 | 10097243 | 668 | 94 02 733 6 | 8 | 1 |
| 10071085 | 451 | 90 18 419 | 4 | 1 | 10097245 | 667 | 94 01 936 4 | 8 | 1 |
| 10072512 | 306 | 10 35 801 4 | 230 | 1 | 10097245 | 669 | 99 52 600 | 8 | 1 |
| 10072999 | 95 | 10 07 366 1 | 2 | 1 | 10097258 | 295 | 10 35 801 2 | 70 | 1 |
| 10073072 | 388 | 10 07 307 3 | 2 | 1 | 10097259 | 295 | 10 35 801 2 | 50 | 1 |
| 10073072 | 389 | 10 37 283 9 | 2 | 1 | 10097282 | 308 | 10 35 801 3 | 3 | 1 |
| 10073073 | 373 | 10 35 800 4 | 60 | 1 | 10097983 | 58 | 10 65 168 0 | 9 | 1 |
| 10073074 | 388 | 10 07 307 3 | 6 | 1 | 10097983 | 59 | 11 60 010 7 | 9 | 1 |
| 10073074 | 389 | 10 37 283 9 | 6 | 1 | 10100303 | 493 | 90 79 492 | 5 | 5 |
| 10073661 | 85 | 10 35 798 2 | 300 | 1 | 10100303 | 494 | 90 79 958 | 5 | 5 |
| 10073695 | 86 | 10 35 798 2 | 8400 | 1 | 10100303 | 505 | 10 11 960 9 | 4 | 5 |
| 10073750 | 371 | 10 07 369 5 | 10 | 1 | 10100303 | 506 | 10 11 961 0 | 4 | 5 |
| 10073785 | 371 | 10 07 369 5 | 30 | 1 | 10100303 | 507 | 10 11 963 6 | 4 | 5 |
| 10074972 | 382 | 99 29 189 | 18 | 2 | 10100304 | 486 | 90 79 483 | 7 | 16 |
| 10074972 | 386 | 10 35 792 6 | 18 | 2 | 10100625 | 618 | 10 49 830 0 | 31 | 1 |
| 10076837 | 263 | 10 05 507 1 | 6 | 1 | 10100680 | 116 | 10 22 041 1 | 35 | 2 |
| 10076844 | 386 | 10 35 792 6 | 16 | 2 | 10100680 | 148 | 70 28 075 | 27 | 1 |
| 10077135 | 49 | 10 49 883 7 | 14 | 1 | 10100781 | 587 | 90 76 550 | 1 | 1 |
| 10077137 | 49 | 10 49 883 7 | 13 | 1 | 10100944 | 304 | 10 35 801 4 | 50 | 1 |
| 10079010 | 251 | 10 84 086 6 | 93 | 1 | 10100944 | 306 | 10 35 801 4 | 190 | 1 |
| 10079279 | 462 | 10 37 283 6 | 6 | 1 | 10100946 | 308 | 10 35 801 3 | 12 | 1 |
| 10079307 | 228 | 99 39 322 | 20 | 1 | 10101257 | 300 | 10 35 801 5 | 20 | 1 |
| 10079761 | 403 | 10 05 011 2 | 18 | 1 | 10101261 | 304 | 10 35 801 4 | 100 | 1 |
| 10079846 | 251 | 10 84 086 6 | 95 | 1 | 10101305 | 447 | 10 35 814 3 | 10 | 1 |
| 10080119 | 463 | 10 35 804 3 | 9 | 1 | 10101307 | 447 | 10 35 814 3 | 16 | 1 |
| 10080119 | 466 | 10 49 805 9 | 9 | 1 | 10101313 | 447 | 10 35 814 3 | 12 | 1 |
| 10080120 | 463 | 10 35 804 3 | 10 | 1 | 10101314 | 447 | 10 35 814 3 | 14 | 1 |
| 10080120 | 466 | 10 49 805 9 | 10 | 1 | 10101342 | 300 | 10 35 801 5 | 21 | 1 |
| 10080121 | 463 | 10 35 804 3 | 11 | 1 | 10101362 | 295 | 10 35 801 2 | 80 | 1 |
| 10080121 | 466 | 10 49 805 9 | 11 | 1 | 10101365 | 295 | 10 35 801 2 | 60 | 1 |
| 10080122 | 463 | 10 35 804 3 | 12 | 1 | 10101449 | 121 | 10 41 301 3 | 22 | 1 |
| 10080122 | 466 | 10 49 805 9 | 12 | 1 | 10101453 | 144 | 10 41 302 4 | 1 | 9 |
| 10080123 | 463 | 10 35 804 3 | 14 | 1 | 10101457 | 144 | 10 41 302 4 | 7 | 1 |
| 10080123 | 466 | 10 49 805 9 | 14 | 1 | 10101458 | 144 | 10 41 302 4 | 9 | 3 |
| 10080310 | 102 | 99 37 298 | 20 | 1 | 10101459 | 144 | 10 41 302 4 | 10 | 1 |
| 10080802 | 309 | 10 35 801 3 | 30 | 1 | 10101460 | 144 | 10 41 302 4 | 11 | 1 |
| 10080803 | 309 | 10 35 801 3 | 32 | 1 | 10101523 | 642 | 10 00 348 5 | 157 | 1 |
| 10081451 | 372 | 10 35 800 4 | 36 | 1 | 10101543 | 553 | 90 79 964 | 7 | 2 |
| 10081454 | 377 | 10 35 800 4 | 145 | 1 | 10101615 | 313 | 10 35 801 7 | 30 | 2 |
| 10081673 | 376 | 10 35 800 4 | 120 | 1 | 10101657 | 559 | 10 11 646 4 | 14 | 1 |
| 10081674 | 379 | 10 08 167 3 | 2 | 1 | 10101693 | 214 | 10 04 966 3 | 15 | 1 |
| 10081683 | 372 | 10 35 800 4 | 30 | 1 | 10101694 | 624 | 10 38 408 5 | 2 | 1 |
| 10081684 | 383 | 10 08 168 3 | 2 | 1 | 10101699 | 624 | 10 38 408 5 | 3 | 2 |
| 10081994 | 379 | 10 08 167 3 | 12 | 1 | 10101700 | 631 | 10 38 484 8 | 7 | 1 |
| 10082117 | 162 | 10 35 809 2 | 40 | 2 | 10101711 | 215 | 10 10 169 3 | 1 | 1 |
| 10082605 | 640 | 10 49 817 6 | 15 | 2 | 10101712 | 622 | 10 10 169 4 | 1 | 1 |
| 10082606 | 640 | 10 49 817 6 | 16 | 2 | 10101718 | 626 | 11 00 350 2 | 3 | 1 |
| 10084286 | 86 | 10 35 798 2 | 9620 | 1 | 10101721 | 215 | 10 10 169 3 | 6 | 1 |
| 10086265 | 250 | 10 84 086 6 | 78 | 1 | 10101722 | 215 | 10 10 169 3 | 5 | 1 |
| 10086363 | 641 | 10 49 881 6 | 30 | 2 | 10101723 | 215 | 10 10 169 3 | 7 | 2 |
| 10086364 | 641 | 10 49 881 6 | 26 | 1 | 10101724 | 215 | 10 10 169 3 | 8 | 1 |
| 10087016 | 346 | 10 35 802 8 | 10 | 1 | 10101726 | 215 | 10 10 169 3 | 9 | 1 |
| 10087133 | 374 | 10 35 800 4 | 70 | 1 | 10101727 | 622 | 10 10 169 4 | 7 | 1 |
| 10087437 | 355 | 10 35 802 8 | 7601 | 1 | 10101728 | 622 | 10 10 169 4 | 8 | 1 |

| Item | Page | Assembly | Pos. | Quantity | Item | Page | Assembly | Pos. | Quantity |
|---|---|---|---|---|---|---|---|---|---|
| 10101730 | 622 | 10 10 169 4 | 9 | 1 | 10115993 | 475 | 10 11 668 5 | 571 | 1 |
| 10101732 | 622 | 10 10 169 4 | 10 | 1 | 10115994 | 592 | 10 11 599 3 | 2 | 1 |
| 10101733 | 622 | 10 10 169 4 | 11 | 1 | 10115996 | 592 | 10 11 599 3 | 1 | 1 |
| 10101747 | 102 | 99 37 298 | 85 | 1 | 10116027 | 474 | 10 11 668 5 | 435 | 1 |
| 10101997 | 539 | 10 22 281 9 | 3 | 1 | 10116036 | 543 | 10 11 628 5 | 84 | 1 |
| 10112636 | 374 | 10 35 800 4 | 64 | 2 | 10116053 | 559 | 10 11 646 4 | 9 | 1 |
| 10112929 | 564 | 10 11 983 0 | 5 | 2 | 10116078 | 536 | 10 11 551 3 | 8 | 1 |
| 10112929 | 565 | 90 75 678 | 5 | 6 | 10116078 | 538 | 10 12 580 1 | 8 | 1 |
| 10113060 | 233 | 11 10 016 6 | 15 | 1 | 10116175 | 470 | 10 11 668 5 | 53 | 1 |
| 10113062 | 233 | 11 10 016 6 | 14 | 1 | 10116255 | 554 | 90 78 314 | 1 | 1 |
| 10113250 | 388 | 10 07 307 3 | 23 | 1 | 10116257 | 528 | 10 11 683 9 | 1 | 1 |
| 10113250 | 394 | 10 06 691 8 | 6 | 1 | 10116285 | 472 | 10 11 668 5 | 212 | 1 |
| 10113250 | 399 | 99 47 961 | 13 | 1 | 10116287 | 543 | 10 11 628 5 | 54 | 1 |
| 10113710 | 559 | 10 11 646 4 | 13 | 1 | 10116289 | 543 | 10 11 628 5 | 53 | 1 |
| 10113711 | 562 | 90 80 301 | 4 | 5 | 10116290 | 542 | 10 11 628 5 | 10 | 1 |
| 10113731 | 569 | 90 79 889 | 3 | 2 | 10116310 | 573 | 90 80 735 | 24 | 1 |
| 10113731 | 607 | 10 11 801 4 | 42 | 2 | 10116310 | 613 | 10 11 583 8 | 4302 | 1 |
| 10113731 | 610 | 10 11 583 8 | 42 | 2 | 10116366 | 499 | 10 11 617 5 | 1 | 1 |
| 10113833 | 390 | 10 06 692 0 | 12 | 1 | 10116372 | 574 | 10 11 646 3 | 5 | 1 |
| 10113975 | 587 | 90 76 550 | 2 | 1 | 10116453 | 542 | 10 11 628 5 | 5 | 1 |
| 10113975 | 611 | 10 11 583 8 | 59 | 1 | 10116463 | 475 | 10 11 668 5 | 440 | 1 |
| 10115197 | 305 | 10 35 801 4 | 111 | 1 | 10116464 | 473 | 10 11 668 5 | 340 | 1 |
| 10115197 | 307 | 10 04 462 4 | 4 | 1 | 10116467 | 542 | 10 11 628 5 | 7 | 1 |
| 10115479 | 578 | 10 11 548 0 | 1 | 1 | 10116482 | 542 | 10 11 628 5 | 11 | 1 |
| 10115480 | 474 | 10 11 668 5 | 410 | 1 | 10116499 | 542 | 10 11 628 5 | 1 | 1 |
| 10115489 | 545 | 10 11 559 5 | 3 | 1 | 10116522 | 549 | 10 11 657 6 | 3 | 1 |
| 10115491 | 545 | 10 11 559 5 | 2 | 1 | 10116562 | 472 | 10 11 668 5 | 200 | 1 |
| 10115499 | 542 | 10 11 628 5 | 18 | 1 | 10116572 | 549 | 10 11 657 6 | 2 | 1 |
| 10115513 | 472 | 10 11 668 5 | 201 | 1 | 10116573 | 549 | 10 11 657 6 | 1 | 1 |
| 10115523 | 555 | 10 12 421 8 | 1 | 1 | 10116576 | 472 | 10 11 668 5 | 213 | 1 |
| 10115525 | 573 | 90 80 735 | 7 | 1 | 10116587 | 532 | 10 11 709 3 | 1 | 1 |
| 10115539 | 475 | 10 11 668 5 | 450 | 1 | 10116591 | 472 | 10 11 668 5 | 190 | 6 |
| 10115540 | 571 | 10 11 919 9 | 1 | 1 | 10116685 | 96 | 10 35 808 9 | 10 | 1 |
| 10115576 | 581 | 10 11 557 7 | 1 | 1 | 10116769 | 559 | 10 11 646 4 | 2 | 1 |
| 10115577 | 475 | 10 11 668 5 | 520 | 1 | 10116839 | 471 | 10 11 668 5 | 170 | 6 |
| 10115591 | 549 | 10 11 657 6 | 4 | 1 | 10116928 | 497 | 90 76 458 | 50 | 1 |
| 10115595 | 472 | 10 11 668 5 | 214 | 1 | 10116934 | 500 | 90 76 459 | 50 | 1 |
| 10115608 | 555 | 10 12 421 8 | 2 | 1 | 10117073 | 473 | 10 11 668 5 | 220 | 1 |
| 10115649 | 542 | 10 11 628 5 | 46 | 2 | 10117093 | 531 | 10 11 659 1 | 1 | 1 |
| 10115664 | 475 | 10 11 668 5 | 452 | 1 | 10117094 | 590 | 90 80 653 | 10 | 1 |
| 10115691 | 489 | 90 79 862 | 5 | 1 | 10117267 | 546 | 10 11 726 8 | 1 | 1 |
| 10115717 | 572 | 10 11 571 8 | 4 | 1 | 10117268 | 473 | 10 11 668 5 | 218 | 1 |
| 10115718 | 474 | 10 11 668 5 | 415 | 1 | 10117836 | 544 | 90 73 767 | 1 | 1 |
| 10115733 | 478 | 10 11 577 8 | 1 | 1 | 10117891 | 519 | 10 12 143 9 | 2 | 1 |
| 10115740 | 489 | 90 79 862 | 1 | 1 | 10117891 | 522 | 10 11 585 0 | 1 | 1 |
| 10115744 | 595 | 90 80 982 | 1 | 1 | 10117900 | 475 | 10 11 668 5 | 570 | 1 |
| 10115771 | 559 | 10 11 646 4 | 2 | 1 | 10117949 | 480 | 10 11 795 1 | 5 | 1 |
| 10115778 | 477 | 10 11 577 9 | 1 | 1 | 10117951 | 469 | 10 11 668 5 | 14 | 1 |
| 10115779 | 469 | 10 11 668 5 | 10 | 1 | 10118014 | 469 | 10 11 668 5 | 13 | 1 |
| 10115838 | 476 | 10 11 668 5 | 939 | 1 | 10118257 | 572 | 10 11 571 8 | 3 | 1 |
| 10115850 | 471 | 10 11 668 5 | 139 | 1 | 10118489 | 688 | 10 11 856 1 | 10 | 1 |
| 10115850 | 612 | 10 11 583 8 | 81 | 1 | 10118549 | 490 | 10 11 870 2 | 2 | 1 |
| 10115851 | 471 | 10 11 668 5 | 88 | 1 | 10118549 | 606 | 10 11 801 4 | 15 | 1 |
| 10115853 | 471 | 10 11 668 5 | 89 | 1 | 10118550 | 606 | 10 11 801 4 | 19 | 1 |
| 10115853 | 612 | 10 11 583 8 | 83 | 1 | 10118551 | 486 | 90 79 483 | 2 | 1 |
| 10115854 | 472 | 10 11 668 5 | 199 | 1 | 10118551 | 606 | 10 11 801 4 | 17 | 3 |
| 10115854 | 513 | 10 11 585 1 | 7 | 1 | 10118554 | 87 | 10 06 947 6 | 7 | 6 |
| 10115854 | 515 | 10 11 585 3 | 7 | 1 | 10118554 | 505 | 10 11 960 9 | 7 | 1 |
| 10115855 | 471 | 10 11 668 5 | 179 | 1 | 10118554 | 506 | 10 11 961 0 | 7 | 1 |
| 10115855 | 612 | 10 11 583 8 | 82 | 6 | 10118554 | 507 | 10 11 963 6 | 7 | 1 |

| Item | Page | Assembly | Pos. | Quantity | Item | Page | Assembly | Pos. | Quantity |
|---|---|---|---|---|---|---|---|---|---|
| 10118554 | 513 | 10 11 585 1 | 4 | 1 | 10120384 | 508 | 10 12 036 4 | 1 | 1 |
| 10118554 | 515 | 10 11 585 3 | 4 | 6 | 10120443 | 498 | 10 12 134 5 | 3 | 1 |
| 10118554 | 532 | 10 11 709 3 | 7 | 1 | 10120518 | 538 | 10 12 580 1 | 2 | 1 |
| 10118554 | 535 | 10 11 585 4 | 7 | 1 | 10120640 | 606 | 10 11 801 4 | 18 | 1 |
| 10118556 | 513 | 10 11 585 1 | 3 | 6 | 10120829 | 478 | 10 11 577 8 | 2 | 6 |
| 10118556 | 515 | 10 11 585 3 | 3 | 6 | 10120844 | 503 | 90 79 850 | 2 | 1 |
| 10118556 | 550 | 10 11 707 3 | 6 | 6 | 10120844 | 513 | 10 11 585 1 | 1 | 1 |
| 10118561 | 238 | 10 38 502 4 | 50 | 1 | 10120844 | 515 | 10 11 585 3 | 1 | 6 |
| 10118561 | 249 | 10 84 086 6 | 50 | 1 | 10120929 | 480 | 10 11 795 1 | 12 | 1 |
| 10118589 | 604 | 90 80 504 | 4 | 2 | 10121335 | 610 | 10 11 583 8 | 30 | 1 |
| 10118611 | 561 | 10 11 547 9 | 2 | 2 | 10121345 | 470 | 10 11 668 5 | 52 | 1 |
| 10118620 | 605 | 10 11 801 4 | 2 | 1 | 10121438 | 519 | 10 12 143 9 | 1 | 1 |
| 10118621 | 514 | 10 11 585 1 | 18 | 6 | 10121439 | 471 | 10 11 668 5 | 130 | 1 |
| 10118621 | 516 | 10 11 585 3 | 18 | 6 | 10121676 | 552 | 10 12 190 8 | 3 | 1 |
| 10118649 | 688 | 10 11 856 1 | 22 | 1 | 10121908 | 473 | 10 11 668 5 | 230 | 1 |
| 10118656 | 490 | 10 11 870 2 | 1 | 1 | 10121952 | 605 | 10 11 801 4 | 1 | 1 |
| 10118702 | 485 | 90 79 487 | 1 | 1 | 10121952 | 608 | 10 11 583 8 | 1 | 1 |
| 10118786 | 499 | 10 11 617 5 | 10 | 6 | 10122316 | 604 | 90 80 504 | 1 | 1 |
| 10118912 | 683 | 90 80 918 | 4 | 10 | 10122317 | 604 | 90 80 504 | 1 | 1 |
| 10119011 | 507 | 10 11 963 6 | 1 | 1 | 10122498 | 688 | 10 11 856 1 | 12 | 4 |
| 10119021 | 573 | 90 80 735 | 17 | 1 | 10122499 | 688 | 10 11 856 1 | 20 | 4 |
| 10119030 | 505 | 10 11 960 9 | 2 | 1 | 10122500 | 688 | 10 11 856 1 | 21 | 4 |
| 10119031 | 492 | 10 11 903 0 | 1 | 1 | 10123120 | 573 | 90 80 735 | 1 | 1 |
| 10119119 | 541 | 10 11 912 7 | 1 | 1 | 10123559 | 693 | 92 67 554 | 602 | 1 |
| 10119127 | 482 | 10 11 916 7 | 2 | 1 | 101236050 | 678 | 10 01 468 0 | 3 | 4 |
| 10119128 | 475 | 10 11 668 5 | 522 | 1 | 10123734 | 609 | 10 11 583 8 | 15 | 1 |
| 10119129 | 591 | 10 11 912 8 | 1 | 1 | 10123735 | 609 | 10 11 583 8 | 17 | 3 |
| 10119139 | 559 | 10 11 646 4 | 25 | 1 | 10123868 | 486 | 90 79 483 | 1 | 1 |
| 10119167 | 469 | 10 11 668 5 | 16 | 1 | 10124218 | 474 | 10 11 668 5 | 387 | 1 |
| 10119168 | 482 | 10 11 916 7 | 3 | 1 | 10125801 | 536 | 10 11 551 3 | 1 | 1 |
| 10119199 | 474 | 10 11 668 5 | 416 | 1 | 10126427 | 609 | 10 11 583 8 | 22 | 1 |
| 10119305 | 513 | 10 11 585 1 | 2 | 4 | 10126738 | 484 | 90 79 480 | 3 | 1 |
| 10119305 | 515 | 10 11 585 3 | 2 | 24 | 10126738 | 608 | 10 11 583 8 | 2 | 1 |
| 10119424 | 517 | 90 80 713 | 1 | 1 | 10127488 | 505 | 10 11 960 9 | 1 | 1 |
| 10119427 | 503 | 90 79 850 | 1 | 1 | 10127489 | 506 | 10 11 961 0 | 1 | 1 |
| 10119485 | 560 | 10 11 949 2 | 1 | 1 | 10127538 | 510 | 10 12 038 4 | 4 | 4 |
| 10119492 | 473 | 10 11 668 5 | 342 | 1 | 10131573 | 503 | 90 79 850 | 3 | 6 |
| 10119609 | 470 | 10 11 668 5 | 83 | 1 | 10131581 | 478 | 10 11 577 8 | 5 | 14 |
| 10119610 | 470 | 10 11 668 5 | 82 | 5 | 10132686 | 685 | 10 13 462 0 | 2 | 2 |
| 10119636 | 470 | 10 11 668 5 | 84 | 1 | 10132817 | 562 | 90 80 301 | 1 | 1 |
| 10119830 | 473 | 10 11 668 5 | 380 | 1 | 10133054 | 694 | 10 13 305 9 | 10 | 1 |
| 10119887 | 496 | 90 75 115 | 1 | 1 | 10133059 | 686 | 10 13 268 6 | 4 | 1 |
| 10119923 | 520 | 10 12 143 8 | 4 | 2 | 10134069 | 563 | 10 13 281 7 | 12 | 1 |
| 10119923 | 522 | 10 11 585 0 | 3 | 2 | 10134348 | 484 | 90 79 480 | 4 | 2 |
| 10119971 | 487 | 10 12 026 3 | 6 | 1 | 10134348 | 581 | 10 11 557 7 | 3 | 2 |
| 10119984 | 564 | 10 11 983 0 | 1 | 1 | 10134620 | 341 | 10 84 584 9 | 10 | 1 |
| 10119984 | 565 | 90 75 678 | 1 | 1 | 10135322 | 690 | 98 82 766 | 819 | 1 |
| 10120000 | 566 | 90 79 472 | 1 | 1 | 10135322 | 699 | 98 82 771 | 819 | 1 |
| 10120005 | 568 | 90 80 280 | 1 | 1 | 10136752 | 504 | 10 14 155 4 | 2 | 2 |
| 10120009 | 551 | 90 77 279 | 1 | 1 | 10136753 | 504 | 10 14 155 4 | 4 | 2 |
| 10120066 | 536 | 10 11 551 3 | 5 | 1 | 10137113 | 686 | 10 13 268 6 | 14 | 1 |
| 10120066 | 538 | 10 12 580 1 | 5 | 1 | 10137120 | 690 | 98 82 766 | 14 | 2 |
| 10120263 | 469 | 10 11 668 5 | 25 | 1 | 10137120 | 699 | 98 82 771 | 14 | 2 |
| 10120264 | 487 | 10 12 026 3 | 1 | 1 | 10137121 | 686 | 10 13 268 6 | 16 | 3 |
| 10120334 | 504 | 10 14 155 4 | 5 | 4 | 10137121 | 700 | 92 71 657 | 16 | 3 |
| 10120334 | 508 | 10 12 036 4 | 5 | 4 | 10137312 | 700 | 92 71 657 | 14 | 1 |
| 10120334 | 513 | 10 11 585 1 | 2 | 4 | 10137721 | 581 | 10 11 557 7 | 5 | 1 |
| 10120334 | 515 | 10 11 585 3 | 2 | 24 | 10137721 | 610 | 10 11 583 8 | 31 | 1 |
| 10120364 | 503 | 90 79 850 | 1 | 1 | 10140487 | 500 | 90 76 459 | 51 | 1 |
| 10120384 | 504 | 10 14 155 4 | 1 | 1 | 10140488 | 500 | 90 76 459 | 52 | 1 |

| Item | Page | Assembly | Pos. | Quantity | Item | Page | Assembly | Pos. | Quantity |
|---|---|---|---|---|---|---|---|---|---|
| 10140597 | 497 | 90 76 458 | 51 | 1 | 10220139 | 430 | 10 29 026 4 | 810 | 2 |
| 10140601 | 497 | 90 76 458 | 52 | 1 | 10220348 | 121 | 10 41 301 3 | 20 | 1 |
| 10141554 | 503 | 90 79 850 | 1 | 1 | 10220397 | 429 | 10 29 026 4 | 550 | 7 |
| 10141908 | 484 | 90 79 480 | 1 | 1 | 10220409 | 122 | 56 16 530 | 1 | 1 |
| 10141949 | 579 | 90 79 468 | 1 | 1 | 10220410 | 122 | 56 16 530 | 2 | 1 |
| 10146030 | 510 | 10 12 038 4 | 2 | 1 | 10220411 | 122 | 56 16 530 | 3 | 1 |
| 10147789 | 550 | 10 11 707 3 | 1 | 1 | 10220415 | 122 | 56 16 530 | 4 | 1 |
| 10149619 | 576 | 10 11 566 4 | 1 | 1 | 10220417 | 122 | 56 16 530 | 6 | 1 |
| 10165766 | 239 | 10 05 736 2 | 10 | 1 | 10220418 | 122 | 56 16 530 | 46 | 1 |
| 10167652 | 195 | 96 90 213 01 | 5 | 1 | 10220419 | 123 | 56 16 530 | 48 | 1 |
| 10167653 | 195 | 96 90 213 01 | 6 | 1 | 10220421 | 123 | 56 16 530 | 49 | 1 |
| 10170796 | 195 | 96 90 213 01 | 10 | 2 | 10220423 | 123 | 56 16 530 | 999 | 1 |
| 10215824 | 489 | 90 79 862 | 1 | 1 | 10220424 | 122 | 56 16 530 | 37 | 1 |
| 10215888 | 181 | 90 18 423 | 30 | 0.07 | 10220427 | 114 | 10 22 040 9 | 1 | 1 |
| 10215970 | 432 | 10 48 808 8 | 286 | 4 | 10220428 | 114 | 10 22 040 9 | 2 | 1 |
| 10216104 | 423 | 10 29 036 3 | 560 | 4 | 10220430 | 114 | 10 22 040 9 | 31 | 1 |
| 10216362 | 405 | 10 47 616 9 | 10 | 1 | 10220431 | 114 | 10 22 040 9 | 38 | 1 |
| 10216468 | 114 | 10 22 040 9 | 32 | 1 | 10220432 | 114 | 10 22 040 9 | 98 | 1 |
| 10216661 | 620 | 10 49 830 0 | 77 | 1 | 10220455 | 345 | 10 22 042 7 | 1 | 1 |
| 10216667 | 122 | 56 16 530 | 13 | 2 | 10220524 | 115 | 10 22 041 0 | 1 | 1 |
| 10216691 | 345 | 10 22 042 7 | 2 | 9 | 10220529 | 115 | 10 22 041 0 | 31 | 2 |
| 10216693 | 114 | 10 22 040 9 | 12 | 1 | 10220537 | 131 | 10 22 052 4 | 5 | 2 |
| 10216694 | 114 | 10 22 040 9 | 13 | 1 | 10220538 | 131 | 10 22 052 4 | 5 | 2 |
| 10216701 | 114 | 10 22 040 9 | 14 | 1 | 10220539 | 131 | 10 22 052 4 | 5 | 2 |
| 10216703 | 345 | 10 22 042 7 | 20 | 1 | 10220540 | 131 | 10 22 052 4 | 5 | 2 |
| 10216704 | 345 | 10 22 042 7 | 20 | 1 | 10220541 | 131 | 10 22 052 4 | 5 | 2 |
| 10216705 | 345 | 10 22 042 7 | 20 | 1 | 10220542 | 131 | 10 22 052 4 | 5 | 2 |
| 10216706 | 345 | 10 22 042 7 | 20 | 1 | 10220543 | 131 | 10 22 052 4 | 5 | 2 |
| 10216707 | 345 | 10 22 042 7 | 24 | 1 | 10220544 | 131 | 10 22 052 4 | 5 | 2 |
| 10216710 | 345 | 10 22 042 7 | 25 | 1 | 10220545 | 131 | 10 22 052 4 | 6 | 2 |
| 10216714 | 345 | 10 22 042 7 | 27 | 2 | 10220546 | 131 | 10 22 052 4 | 7 | 2 |
| 10216715 | 345 | 10 22 042 7 | 29 | 1 | 10220547 | 131 | 10 22 052 4 | 9 | 2 |
| 10216731 | 115 | 10 22 041 0 | 3 | 1 | 10220548 | 131 | 10 22 052 4 | 10 | 2 |
| 10216732 | 115 | 10 22 041 0 | 4 | 1 | 10220549 | 131 | 10 22 052 4 | 19 | 1 |
| 10216733 | 115 | 10 22 041 0 | 30 | 2 | 10220550 | 131 | 10 22 052 4 | 26 | 2 |
| 10216737 | 131 | 10 22 052 4 | 23 | 2 | 10220597 | 84 | 10 07 713 5 | 3 | 2 |
| 10216741 | 116 | 10 22 041 1 | 43 | 1 | 10220635 | 116 | 10 22 041 1 | 3 | 1 |
| 10216785 | 682 | 10 28 689 7 | 37 | 1 | 10220636 | 116 | 10 22 041 1 | 5 | 1 |
| 10216806 | 116 | 10 22 041 1 | 44 | 1 | 10220637 | 116 | 10 22 041 1 | 6 | 1 |
| 10216810 | 146 | 57 15 963 | 5 | 1 | 10220637 | 133 | 10 22 066 7 | 2 | 1 |
| 10216816 | 117 | 10 22 041 5 | 2 | 1 | 10220638 | 116 | 10 22 041 1 | 9 | 1 |
| 10216828 | 130 | 10 21 681 6 | 1 | 1 | 10220640 | 116 | 10 22 041 1 | 26 | 2 |
| 10217034 | 432 | 10 48 808 8 | 220 | 1 | 10220641 | 116 | 10 22 041 1 | 47 | 2 |
| 10217578 | 115 | 10 22 041 0 | 16 | 1 | 10220646 | 146 | 57 15 963 | 1 | 1 |
| 10217669 | 309 | 10 35 801 3 | 35 | 1 | 10220647 | 146 | 57 15 963 | 2 | 1 |
| 10218215 | 349 | 10 35 802 8 | 200 | 1 | 10220648 | 146 | 57 15 963 | 3 | 1 |
| 10218370 | 575 | 10 11 553 9 | 1 | 1 | 10220649 | 146 | 57 15 963 | 4 | 1 |
| 10218370 | 577 | 10 21 997 8 | 2 | 1 | 10220659 | 132 | 10 22 063 5 | 1 | 1 |
| 10218792 | 314 | 10 35 801 7 | 215 | 1 | 10220660 | 132 | 10 22 063 5 | 2 | 1 |
| 10218975 | 351 | 10 35 802 8 | 370 | 2 | 10220661 | 132 | 10 22 063 5 | 3 | 1 |
| 10219021 | 234 | 11 10 016 6 | 57 | 1 | 10220662 | 132 | 10 22 063 5 | 6 | 1 |
| 10219333 | 308 | 10 35 801 3 | 16 | 1 | 10220663 | 132 | 10 22 063 5 | 7 | 1 |
| 10219335 | 672 | 10 49 815 8 | 55 | 2 | 10220665 | 132 | 10 22 063 5 | 9 | 1 |
| 10219457 | 559 | 10 11 646 4 | 7 | 2 | 10220666 | 132 | 10 22 063 5 | 15 | 1 |
| 10219624 | 536 | 10 11 551 3 | 2 | 1 | 10220667 | 117 | 10 22 041 5 | 1 | 1 |
| 10219863 | 347 | 10 35 802 8 | 90 | 1 | 10220668 | 117 | 10 22 041 5 | 2 | 1 |
| 10219863 | 347 | 10 35 802 8 | 120 | 1 | 10220668 | 130 | 10 21 681 6 | 3 | 1 |
| 10219977 | 577 | 10 21 997 8 | 1 | 1 | 10220668 | 133 | 10 22 066 7 | 9 | 1 |
| 10219978 | 575 | 10 11 553 9 | 1 | 1 | 10220669 | 117 | 10 22 041 5 | 3 | 1 |
| 10220138 | 429 | 10 29 026 4 | 660 | 5 | 10220677 | 133 | 10 22 066 7 | 1 | 1 |

| Item | Page | Assembly | Pos. | Quantity | Item | Page | Assembly | Pos. | Quantity |
|---|---|---|---|---|---|---|---|---|---|
| 10220691 | 133 | 10 22 066 7 | 3 | 1 | 10285708 | 597 | 90 77 719 | 100 | 1 |
| 10220693 | 133 | 10 22 066 7 | 5 | 1 | 10286279 | 21 | 10 35 679 3 | 1000 | 1 |
| 10220694 | 133 | 10 22 066 7 | 6 | 1 | 10286280 | 27 | 10 35 682 9 | 1000 | 1 |
| 10220697 | 118 | 10 22 041 7 | 2 | 1 | 10286644 | 440 | 10 04 553 0 | 12 | 1 |
| 10220698 | 118 | 10 22 041 7 | 13 | 3 | 10286897 | 680 | 10 49 822 9 | 2 | 1 |
| 10220699 | 134 | 10 22 069 7 | 1 | 1 | 10287118 | 242 | 98 74 988 | 2 | 1 |
| 10220700 | 134 | 10 22 069 7 | 5 | 1 | 10287248 | 403 | 10 05 011 2 | 35 | 5 |
| 10220701 | 135 | 10 22 069 9 | 1 | 1 | 10287276 | 103 | 10 03 980 3 | 1 | 4 |
| 10220702 | 135 | 10 22 069 9 | 2 | 1 | 10287498 | 301 | 10 35 801 5 | 56 | 4Pair |
| 10220705 | 90 | 10 06 948 1 | 10 | 1 | 10287499 | 301 | 10 35 801 5 | 55 | 4Pair |
| 10220705 | 135 | 10 22 069 9 | 3 | 1 | 10287541 | 226 | 99 44 515 | 10 | 2 |
| 10220706 | 135 | 10 22 069 9 | 7 | 1 | 10287541 | 227 | 99 44 516 | 10 | 2 |
| 10220707 | 90 | 10 06 948 1 | 11 | 1 | 10287691 | 366 | 10 03 245 2 | 55 | 1 |
| 10220707 | 135 | 10 22 069 9 | 10 | 1 | 10287695 | 365 | 10 03 245 2 | 14 | 1 |
| 10220816 | 136 | 10 22 070 1 | 2 | 1 | 10287695 | 365 | 10 03 245 2 | 18 | 1 |
| 10220817 | 137 | 10 22 081 6 | 2 | 1 | 10287731 | 141 | 10 35 573 8 | 9 | 3 |
| 10220818 | 137 | 10 22 081 6 | 3 | 1 | 10287892 | 141 | 10 35 573 8 | 11 | 1 |
| 10220819 | 137 | 10 22 081 6 | 4 | 1 | 10288438 | 652 | 10 35 860 1 | 2 | 1 |
| 10220821 | 137 | 10 22 081 6 | 5 | 1 | 10288470 | 354 | 10 35 802 8 | 500 | 1 |
| 10220937 | 121 | 10 41 301 3 | 25 | 1 | 10288716 | 680 | 10 49 822 9 | 40 | 1 |
| 10220950 | 218 | 90 64 786 | 145 | 1 | 10289146 | 116 | 10 22 041 1 | 1 | 2 |
| 10220950 | 632 | 10 38 484 8 | 45 | 2 | 10289149 | 559 | 10 11 646 4 | 20 | 1 |
| 10220951 | 218 | 90 64 786 | 146 | 1 | 10289182 | 653 | 10 00 297 1 | 60 | 1 |
| 10220997 | 321 | 10 28 046 1 | 999 | 1 | 10289183 | 653 | 10 00 297 1 | 80 | 1 |
| 10221073 | 291 | 10 22 815 1 | 10 | 1 | 10289184 | 653 | 10 00 297 1 | 101 | 1 |
| 10221073 | 414 | 70 28 769 | 275 | 1 | 10289185 | 653 | 10 00 297 1 | 102 | 1 |
| 10222315 | 594 | 10 11 574 4 | 1 | 1 | 10289208 | 92 | 10 06 994 0 | 35 | 2 |
| 10222393 | 91 | 10 09 121 5 | 4 | 1 | 10289208 | 539 | 10 22 281 9 | 2 | 1 |
| 10222393 | 330 | 10 35 798 3 | 31 | 1 | 10289210 | 539 | 10 22 281 9 | 6 | 1 |
| 10222819 | 537 | 10 11 656 2 | 1 | 1 | 10289306 | 221 | 10 02 131 0 | 10 | 2 |
| 10222821 | 539 | 10 22 281 9 | 2 | 1 | 10289308 | 221 | 10 02 131 0 | 20 | 7 |
| 10228151 | 249 | 10 84 086 6 | 75 | 1 | 10289308 | 222 | 10 02 131 1 | 30 | 1 |
| 10278595 | 653 | 10 00 297 1 | 999 | 1 | 10289310 | 222 | 10 02 131 1 | 10 | 2 |
| 10278640 | 653 | 10 00 297 1 | 130 | 1 | 10289311 | 222 | 10 02 131 1 | 20 | 2 |
| 10278641 | 653 | 10 00 297 1 | 132 | 1 | 10289344 | 533 | 10 11 658 7 | 3 | 1 |
| 10278642 | 653 | 10 00 297 1 | 135 | 1 | 10289629 | 366 | 10 03 245 2 | 57 | 1 |
| 10278643 | 653 | 10 00 297 1 | 270 | 1 | 10289630 | 366 | 10 03 245 2 | 998 | 1 |
| 10278644 | 653 | 10 00 297 1 | 280 | 1 | 10289795 | 102 | 99 37 298 | 16 | 4 |
| 10280185 | 539 | 10 22 281 9 | 2 | 1 | 10289795 | 161 | 10 35 809 2 | 19 | 2 |
| 10280279 | 297 | 99 37 312 | 50 | 1 | 10289795 | 163 | 10 35 809 2 | 105 | 5 |
| 10280390 | 438 | 10 04 824 6 | 11 | 1 | 10289795 | 178 | 10 35 800 9 | 12 | 4 |
| 10280390 | 439 | 11 10 278 6 | 11 | 1 | 10289795 | 181 | 90 18 423 | 46 | 4 |
| 10280461 | 315 | 10 04 272 9 | 2 | 1 | 10289795 | 228 | 99 39 322 | 13 | 1 |
| 10282622 | 481 | 90 73 083 | 100 | 1 | 10289795 | 229 | 10 49 880 9 | 22 | 4 |
| 10282622 | 551 | 90 77 279 | 100 | 1 | 10289795 | 229 | 10 49 880 9 | 32 | 4 |
| 10282622 | 566 | 90 79 472 | 100 | 1 | 10289795 | 249 | 10 84 086 6 | 17 | 4 |
| 10282622 | 568 | 90 80 280 | 100 | 1 | 10289795 | 293 | 98 79 063 | 21 | 16 |
| 10282622 | 576 | 10 11 566 4 | 100 | 1 | 10289795 | 313 | 10 35 801 7 | 17 | 2 |
| 10282622 | 581 | 10 11 557 7 | 100 | 1 | 10289795 | 313 | 10 35 801 7 | 42 | 1 |
| 10282622 | 598 | 90 78 961 | 100 | 1 | 10289795 | 341 | 10 84 584 9 | 14 | 12 |
| 10282622 | 599 | 90 80 006 | 100 | 1 | 10289795 | 346 | 10 35 802 8 | 22 | 4 |
| 10282622 | 604 | 90 80 504 | 100 | 1 | 10289795 | 362 | 99 45 116 | 7 | 2 |
| 10285423 | 659 | 95 96 399 | 20 | 9 | 10289795 | 362 | 99 45 116 | 16 | 2 |
| 10285639 | 25 | 10 35 682 7 | 5 | 1 | 10289795 | 374 | 10 35 800 4 | 77 | 4 |
| 10285640 | 28 | 10 35 683 1 | 5 | 1 | 10289795 | 375 | 10 35 800 4 | 98 | 4 |
| 10285669 | 451 | 90 18 419 | 5 | 1 | 10289795 | 376 | 10 35 800 4 | 124 | 6 |
| 10285702 | 27 | 10 35 682 9 | 210 | 1 | 10289795 | 384 | 10 35 817 2 | 9 | 1 |
| 10285708 | 484 | 90 79 480 | 110 | 1 | 10289795 | 384 | 10 35 817 2 | 27 | 6 |
| 10285708 | 528 | 10 11 683 9 | 100 | 1 | 10289795 | 386 | 10 35 792 6 | 9 | 1 |
| 10285708 | 534 | 90 75 395 | 100 | 1 | 10289795 | 386 | 10 35 792 6 | 27 | 6 |

| Item | Page | Assembly | Pos. | Quantity | Item | Page | Assembly | Pos. | Quantity |
|---|---|---|---|---|---|---|---|---|---|
| 10289795 | 388 | 10 07 307 3 | 11 | 1 | 10289803 | 409 | 10 03 552 9 | 160 | 2 |
| 10289795 | 389 | 10 37 283 9 | 11 | 1 | 10289803 | 411 | 70 28 759 | 140 | 6 |
| 10289795 | 398 | 10 35 853 1 | 4 | 1 | 10289803 | 414 | 70 28 769 | 180 | 2 |
| 10289795 | 399 | 99 47 961 | 4 | 1 | 10289803 | 414 | 70 28 769 | 200 | 2 |
| 10289795 | 414 | 70 28 769 | 130 | 6 | 10289803 | 421 | 10 48 808 7 | 480 | 3 |
| 10289795 | 429 | 10 29 026 4 | 540 | 2 | 10289803 | 421 | 10 48 808 7 | 760 | 3 |
| 10289795 | 429 | 10 29 026 4 | 590 | 1 | 10289803 | 423 | 10 29 036 3 | 550 | 1 |
| 10289795 | 430 | 10 29 026 4 | 750 | 2 | 10289803 | 427 | 10 29 026 4 | 120 | 4 |
| 10289795 | 444 | 11 10 266 2 | 10 | 12 | 10289803 | 427 | 10 29 026 4 | 190 | 4 |
| 10289795 | 451 | 90 18 419 | 30 | 2 | 10289803 | 436 | 10 35 814 1 | 158 | 51 |
| 10289795 | 619 | 10 49 830 0 | 59 | 4 | 10289803 | 436 | 10 35 814 1 | 251 | 3 |
| 10289802 | 102 | 99 37 298 | 52 | 3 | 10289803 | 444 | 11 10 266 2 | 24 | 2 |
| 10289802 | 229 | 10 49 880 9 | 34 | 2 | 10289803 | 444 | 11 10 266 2 | 31 | 14 |
| 10289802 | 241 | 97 58 815 01 | 73 | 4 | 10289803 | 552 | 10 12 190 8 | 9 | 2 |
| 10289802 | 249 | 10 84 086 6 | 32 | 1 | 10289803 | 640 | 10 49 817 6 | 21 | 24 |
| 10289802 | 280 | 10 40 689 8 | 73 | 1 | 10289803 | 652 | 10 35 860 1 | 7 | 8 |
| 10289802 | 285 | 10 02 211 7 | 14 | 6 | 10289803 | 680 | 10 49 822 9 | 7 | 2 |
| 10289802 | 338 | 56 17 689 | 18 | 2 | 10289804 | 160 | 10 35 809 2 | 8 | 8 |
| 10289802 | 353 | 10 35 802 8 | 479 | 2 | 10289804 | 160 | 10 35 809 2 | 13 | 2 |
| 10289802 | 411 | 70 28 759 | 210 | 2 | 10289804 | 164 | 10 45 475 2 | 16 | 6 |
| 10289802 | 414 | 70 28 769 | 280 | 1 | 10289804 | 165 | 10 45 475 2 | 26 | 6 |
| 10289802 | 421 | 10 48 808 7 | 390 | 2 | 10289804 | 167 | 10 35 508 4 | 20 | 2 |
| 10289802 | 421 | 10 48 808 7 | 730 | 2 | 10289804 | 228 | 99 39 322 | 22 | 1 |
| 10289802 | 422 | 10 48 808 7 | 796 | 1 | 10289804 | 228 | 99 39 322 | 32 | 1 |
| 10289802 | 423 | 10 29 036 3 | 580 | 3 | 10289804 | 230 | 10 49 880 9 | 82 | 4 |
| 10289802 | 428 | 10 29 026 4 | 400 | 8 | 10289804 | 269 | 10 06 017 4 | 32 | 2 |
| 10289802 | 428 | 10 29 026 4 | 490 | 4 | 10289804 | 270 | 10 06 017 5 | 32 | 2 |
| 10289802 | 433 | 10 48 808 8 | 420 | 6 | 10289804 | 280 | 10 40 689 8 | 22 | 4 |
| 10289802 | 435 | 10 35 814 1 | 21 | 4 | 10289804 | 296 | 10 35 801 2 | 220 | 4 |
| 10289802 | 443 | 99 47 695 | 32 | 4 | 10289804 | 296 | 10 35 801 2 | 270 | 2 |
| 10289802 | 451 | 90 18 419 | 8 | 6 | 10289804 | 305 | 10 35 801 4 | 112 | 2 |
| 10289802 | 592 | 10 11 599 3 | 5 | 4 | 10289804 | 310 | 10 35 809 3 | 7 | 8 |
| 10289802 | 625 | 10 38 408 6 | 52 | 1 | 10289804 | 329 | 10 35 798 3 | 30 | 12 |
| 10289803 | 95 | 10 07 366 1 | 22 | 4 | 10289804 | 377 | 10 35 800 4 | 138 | 2 |
| 10289803 | 170 | 10 49 858 1 | 31 | 33 | 10289804 | 427 | 10 29 026 4 | 250 | 4 |
| 10289803 | 178 | 10 35 800 9 | 22 | 2 | 10289804 | 428 | 10 29 026 4 | 280 | 1 |
| 10289803 | 178 | 10 35 800 9 | 27 | 4 | 10289804 | 429 | 10 29 026 4 | 500 | 2 |
| 10289803 | 180 | 10 04 871 3 | 4 | 8 | 10289804 | 430 | 10 29 026 4 | 760 | 1 |
| 10289803 | 209 | 10 04 966 2 | 6 | 2 | 10289804 | 461 | 10 35 852 5 | 4 | 4 |
| 10289803 | 212 | 10 48 840 4 | 7 | 4 | 10289804 | 616 | 10 49 830 0 | 15 | 48 |
| 10289803 | 228 | 99 39 322 | 56 | 6 | 10289804 | 620 | 10 49 830 0 | 133 | 1 |
| 10289803 | 230 | 10 49 880 9 | 132 | 2 | 10289804 | 636 | 11 10 283 0 | 7 | 4 |
| 10289803 | 230 | 10 49 880 9 | 162 | 3 | 10289804 | 655 | 10 06 203 8 | 7 | 2 |
| 10289803 | 231 | 10 49 880 9 | 167 | 1 | 10289804 | 656 | 99 48 785 | 12 | 2 |
| 10289803 | 241 | 97 58 815 01 | 74 | 2 | 10289805 | 640 | 10 49 817 6 | 24 | 6 |
| 10289803 | 269 | 10 06 017 4 | 42 | 1 | 10289806 | 49 | 10 49 883 7 | 10 | 3 |
| 10289803 | 270 | 10 06 017 5 | 42 | 1 | 10289806 | 93 | 10 40 278 1 | 8 | 4 |
| 10289803 | 279 | 94 02 247 7 | 32 | 4 | 10289806 | 110 | 90 77 872 | 52 | 10 |
| 10289803 | 279 | 94 02 247 7 | 42 | 4 | 10289996 | 433 | 10 48 808 8 | 510 | 1 |
| 10289803 | 280 | 10 40 689 8 | 42 | 1 | 10289997 | 433 | 10 48 808 8 | 520 | 1 |
| 10289803 | 281 | 10 40 689 8 | 102 | 1 | 10290156 | 619 | 10 49 830 0 | 63 | 1 |
| 10289803 | 329 | 10 35 798 3 | 13 | 8 | 10290260 | 430 | 10 29 026 4 | 800 | 2 |
| 10289803 | 331 | 10 35 798 3 | 37 | 4 | 10290261 | 432 | 10 48 808 8 | 230 | 1 |
| 10289803 | 350 | 10 35 802 8 | 346 | 4 | 10290262 | 421 | 10 48 808 7 | 430 | 1 |
| 10289803 | 374 | 10 35 800 4 | 65 | 2 | 10290263 | 423 | 10 29 036 3 | 500 | 1 |
| 10289803 | 374 | 10 35 800 4 | 68 | 4 | 10290264 | 405 | 10 47 616 9 | 70 | 1 |
| 10289803 | 376 | 10 35 800 4 | 129 | 8 | 10290346 | 423 | 10 29 036 3 | 510 | 1 |
| 10289803 | 377 | 10 35 800 4 | 143 | 4 | 10290356 | 423 | 10 29 036 3 | 520 | 1 |
| 10289803 | 392 | 10 37 938 6 | 11 | 2 | 10290357 | 421 | 10 48 808 7 | 410 | 1 |
| 10289803 | 396 | 99 47 957 | 11 | 6 | 10290359 | 432 | 10 48 808 8 | 210 | 1 |

| Item | Page | Assembly | Pos. | Quantity | Item | Page | Assembly | Pos. | Quantity |
|---|---|---|---|---|---|---|---|---|---|
| 10290360 | 426 | 10 29 036 1 | 620 | 1 | 10325002 | 520 | 10 12 143 8 | 3 | 1 |
| 10290361 | 425 | 10 29 035 7 | 610 | 1 | 10326110 | 22 | 10 35 679 7 | 1000 | 1 |
| 10290363 | 421 | 10 48 808 7 | 420 | 1 | 10326111 | 22 | 10 35 679 7 | 210 | 1 |
| 10290395 | 165 | 10 45 475 2 | 40 | 4 | 10326112 | 22 | 10 35 679 7 | 20 | 1 |
| 10290395 | 167 | 10 35 508 4 | 19 | 4 | 10326113 | 22 | 10 35 679 7 | 5 | 1 |
| 10290398 | 423 | 10 29 036 3 | 530 | 1 | 10326997 | 164 | 10 45 475 2 | 17 | 8 |
| 10290506 | 21 | 10 35 679 3 | 5 | 1 | 10326997 | 167 | 10 35 508 4 | 11 | 4 |
| 10290537 | 546 | 10 11 726 8 | 2 | 2 | 10327102 | 164 | 10 45 475 2 | 10 | 8 |
| 10290537 | 549 | 10 11 657 6 | 7 | 1 | 10327102 | 167 | 10 35 508 4 | 18 | 6 |
| 10290538 | 549 | 10 11 657 6 | 11 | 1 | 10327103 | 164 | 10 45 475 2 | 18 | 24 |
| 10290607 | 302 | 10 35 801 5 | 85 | 2 | 10327106 | 167 | 10 35 508 4 | 15 | 4 |
| 10291063 | 423 | 10 29 036 3 | 590 | 1 | 10327110 | 164 | 10 45 475 2 | 12 | 4 |
| 10291064 | 430 | 10 29 026 4 | 790 | 1 | 10330239 | 21 | 10 35 679 3 | 20 | 1 |
| 10291285 | 84 | 10 07 713 5 | 2 | 2 | 10330246 | 21 | 10 35 679 3 | 210 | 1 |
| 10291971 | 138 | 10 28 914 6 | 2 | 1 | 10330255 | 23 | 10 35 680 0 | 5 | 1 |
| 10291972 | 116 | 10 22 041 1 | 999 | 1 | 10330258 | 23 | 10 35 680 0 | 20 | 1 |
| 10292443 | 255 | 56 18 923 | 6 | 1 | 10330259 | 23 | 10 35 680 0 | 210 | 1 |
| 10292659 | 449 | 10 29 266 0 | 2 | 1 | 10330260 | 23 | 10 35 680 0 | 1000 | 1 |
| 10292660 | 448 | 10 04 961 6 | 5 | 1 | 10330266 | 20 | 10 35 679 1 | 5 | 1 |
| 10292661 | 280 | 10 40 689 8 | 40 | 1 | 10330268 | 20 | 10 35 679 1 | 20 | 1 |
| 10292692 | 358 | 10 28 847 0 | 3 | 1 | 10330270 | 20 | 10 35 679 1 | 210 | 1 |
| 10294166 | 622 | 10 10 169 4 | 6 | 1 | 10330271 | 20 | 10 35 679 1 | 1000 | 1 |
| 10294270 | 632 | 10 38 484 8 | 30 | 1 | 10330272 | 47 | 10 35 630 3 | 20 | 1 |
| 10295116 | 483 | 90 75 483 | 2 | 1 | 10330276 | 47 | 10 35 630 3 | 210 | 1 |
| 10296477 | 24 | 10 35 682 6 | 1000 | 1 | 10330277 | 11 | 10 35 682 5 | 20 | 1 |
| 10296478 | 11 | 10 35 682 5 | 1000 | 1 | 10330278 | 11 | 10 35 682 5 | 210 | 1 |
| 10296479 | 11 | 10 35 682 5 | 5 | 1 | 10330280 | 26 | 10 35 682 8 | 5 | 1 |
| 10296480 | 47 | 10 35 630 3 | 5 | 1 | 10330282 | 26 | 10 35 682 8 | 20 | 1 |
| 10296481 | 47 | 10 35 630 3 | 1000 | 1 | 10330283 | 26 | 10 35 682 8 | 210 | 1 |
| 10296482 | 26 | 10 35 682 8 | 1000 | 1 | 10330285 | 24 | 10 35 682 6 | 5 | 1 |
| 10296810 | 32 | 10 35 894 9 | 180 | 1 | 10330287 | 24 | 10 35 682 6 | 20 | 1 |
| 10296811 | 32 | 10 35 894 9 | 50 | 1 | 10330288 | 24 | 10 35 682 6 | 210 | 1 |
| 10296812 | 32 | 10 35 894 9 | 25 | 1 | 10330291 | 25 | 10 35 682 7 | 20 | 1 |
| 10296813 | 32 | 10 35 894 9 | 10 | 1 | 10330292 | 25 | 10 35 682 7 | 1000 | 1 |
| 10296815 | 32 | 10 35 894 9 | 2 | 1 | 10330294 | 28 | 10 35 683 1 | 20 | 1 |
| 10296816 | 32 | 10 35 894 9 | 1 | 1 | 10330295 | 27 | 10 35 682 9 | 5 | 1 |
| 10296820 | 30 | 10 35 894 7 | 2 | 1 | 10330296 | 27 | 10 35 682 9 | 20 | 1 |
| 10296822 | 31 | 10 35 894 8 | 180 | 1 | 10330306 | 34 | 10 35 899 2 | 2 | 1 |
| 10296823 | 31 | 10 35 894 8 | 50 | 1 | 10330308 | 33 | 10 35 895 0 | 1 | 1 |
| 10296824 | 31 | 10 35 894 8 | 25 | 1 | 10330310 | 33 | 10 35 895 0 | 2 | 1 |
| 10296825 | 31 | 10 35 894 8 | 10 | 1 | 10330311 | 33 | 10 35 895 0 | 5 | 1 |
| 10296827 | 31 | 10 35 894 8 | 2 | 1 | 10330614 | 218 | 90 64 786 | 146 | 1 |
| 10296828 | 31 | 10 35 894 8 | 1 | 1 | 10330922 | 365 | 10 03 245 2 | 12 | 1 |
| 10296854 | 363 | 10 21 821 5 | 13 | 1 | 10330927 | 365 | 10 03 245 2 | 13 | 1 |
| 10296854 | 364 | 10 21 986 3 | 13 | 1 | 10330928 | 365 | 10 03 245 2 | 15 | 1 |
| 10296919 | 451 | 90 18 419 | 20 | 1 | 10330931 | 365 | 10 03 245 2 | 19 | 1 |
| 10297295 | 90 | 10 06 948 1 | 1 | 2 | 10331626 | 167 | 10 35 508 4 | 2 | 1 |
| 10297295 | 527 | 90 75 368 | 8 | 2 | 10331627 | 167 | 10 35 508 4 | 6 | 1 |
| 10297873 | 142 | 10 41 087 0 | 2 | 1 | 10331629 | 167 | 10 35 508 4 | 14 | 1 |
| 10297874 | 142 | 10 41 087 0 | 3 | 1 | 10331630 | 167 | 10 35 508 4 | 10 | 1 |
| 10297876 | 106 | 10 29 787 3 | 2 | 1 | 10331634 | 167 | 10 35 508 4 | 16 | 1 |
| 10297876 | 107 | 10 29 787 4 | 3 | 1 | 10331635 | 167 | 10 35 508 4 | 1 | 2 |
| 10297877 | 106 | 10 29 787 3 | 1 | 1 | 10331636 | 167 | 10 35 508 4 | 7 | 2 |
| 10297878 | 139 | 10 35 572 4 | 3 | 1 | 10331637 | 167 | 10 35 508 4 | 9 | 1.77m |
| 10298669 | 429 | 10 29 026 4 | 580 | 1 | 10331639 | 164 | 10 45 475 2 | 3 | 3 |
| 10299988 | 554 | 90 78 314 | 1 | 1 | 10331641 | 165 | 10 45 475 2 | 38 | 1 |
| 10301213 | 35 | 10 35 905 6 | 20 | 1 | 10331643 | 165 | 10 45 475 2 | 31 | 4 |
| 10301215 | 29 | 10 35 683 2 | 5 | 1 | 10331660 | 165 | 10 45 475 2 | 47 | 1 |
| 10301680 | 25 | 10 35 682 7 | 210 | 1 | 10331661 | 165 | 10 45 475 2 | 48 | 1 |
| 10324872 | 144 | 10 41 302 4 | 6 | 1 | 10331664 | 164 | 10 45 475 2 | 1 | 1 |

| Item | Page | Assembly | Pos. | Quantity | Item | Page | Assembly | Pos. | Quantity |
|---|---|---|---|---|---|---|---|---|---|
| 10331665 | 165 | 10 45 475 2 | 41 | 1 | 10355735 | 139 | 10 35 572 4 | 27 | 4 |
| 10331666 | 165 | 10 45 475 2 | 30 | 2 | 10355737 | 139 | 10 35 572 4 | 40 | 2 |
| 10331667 | 164 | 10 45 475 2 | 8 | 2 | 10355738 | 140 | 10 35 572 5 | 1 | 1 |
| 10331668 | 164 | 10 45 475 2 | 9 | 15 | 10355739 | 140 | 10 35 572 5 | 2 | 1 |
| 10331669 | 165 | 10 45 475 2 | 32 | 2 | 10355740 | 141 | 10 35 573 8 | 1 | 9 |
| 10331669 | 167 | 10 35 508 4 | 5 | 2 | 10355741 | 141 | 10 35 573 8 | 2 | 1 |
| 10331670 | 167 | 10 35 508 4 | 3 | 16 | 10355743 | 141 | 10 35 573 8 | 4 | 1 |
| 10331672 | 165 | 10 45 475 2 | 39 | 1 | 10355745 | 141 | 10 35 573 8 | 6 | 1 |
| 10331673 | 165 | 10 45 475 2 | 34 | 1 | 10355746 | 141 | 10 35 573 8 | 7 | 1 |
| 10331674 | 165 | 10 45 475 2 | 35 | 1 | 10355826 | 139 | 10 35 572 4 | 2 | 1 |
| 10331675 | 165 | 10 45 475 2 | 36 | 1 | 10355861 | 688 | 10 11 856 1 | 25 | 4 |
| 10331677 | 165 | 10 45 475 2 | 37 | 1 | 10356035 | 102 | 99 37 298 | 21 | 1 |
| 10331680 | 165 | 10 45 475 2 | 29 | 2 | 10356303 | 15 | 90 70 363 | 10 | 1l |
| 10331728 | 689 | 90 73 355 | 17 | 4 | 10356789 | 14 | 90 70 362 | 20 | 1l |
| 10332087 | 654 | 10 28 918 3 | 999 | 1 | 10356791 | 14 | 90 70 362 | 30 | 1l |
| 10332154 | 67 | 10 07 713 7 | 12 | 4 | 10356793 | 13 | 90 70 361 | 20 | 1l |
| 10332154 | 183 | 99 46 389 | 17 | 2 | 10356797 | 13 | 90 70 361 | 110 | 1l |
| 10332278 | 536 | 10 11 551 3 | 1 | 1 | 10356800 | 14 | 90 70 362 | 10 | 1l |
| 10332716 | 311 | 10 35 809 3 | 25 | 1 | 10356825 | 15 | 90 70 363 | 20 | 1l |
| 10332717 | 311 | 10 35 809 3 | 15 | 1 | 10356826 | 17 | 90 70 365 | 10 | 1l |
| 10332889 | 342 | 10 84 584 9 | 70 | 1 | 10356827 | 17 | 90 70 365 | 20 | 1l |
| 10332890 | 310 | 10 35 809 3 | 5 | 2 | 10356828 | 17 | 90 70 365 | 30 | 1l |
| 10333044 | 319 | 56 15 344 | 2 | 1 | 10356829 | 16 | 90 70 364 | 10 | 1l |
| 10333291 | 365 | 10 03 245 2 | 16 | 1 | 10356831 | 16 | 90 70 364 | 20 | 1l |
| 10333554 | 490 | 10 11 870 2 | 4 | 34 | 10356832 | 45 | 94 08 205 9 | 10 | 1l |
| 10333663 | 100 | 99 46 045 | 11 | 1 | 10356833 | 29 | 10 35 683 2 | 1000 | 1 |
| 10333667 | 100 | 99 46 045 | 10 | 1 | 10357898 | 628 | 10 49 823 5 | 5 | 1 |
| 10333670 | 100 | 99 46 045 | 12 | 1 | 10357911 | 384 | 10 35 817 2 | 16 | 2 |
| 10335629 | 492 | 10 11 903 0 | 3 | 1 | 10357913 | 384 | 10 35 817 2 | 18 | 2 |
| 10335968 | 164 | 10 45 475 2 | 13 | 4 | 10357926 | 373 | 10 35 800 4 | 50 | 1 |
| 10335968 | 167 | 10 35 508 4 | 17 | 4 | 10357928 | 378 | 10 35 800 4 | 165 | 1 |
| 10335969 | 164 | 10 45 475 2 | 11 | 16 | 10357928 | 378 | 10 35 800 4 | 168 | 1 |
| 10335969 | 167 | 10 35 508 4 | 8 | 16 | 10357967 | 86 | 10 35 798 2 | 8700 | 1 |
| 10336008 | 604 | 90 80 504 | 5 | 3 | 10357979 | 404 | 10 35 796 7 | 10 | 1 |
| 10336052 | 167 | 10 35 508 4 | 22 | 2 | 10357982 | 9 | 10 49 883 6 | 100 | 1 |
| 10336200 | 571 | 10 11 919 9 | 3 | 4 | 10357983 | 85 | 10 35 798 2 | 7100 | 1 |
| 10336200 | 572 | 10 11 571 8 | 15 | 7 | 10358004 | 86 | 10 35 798 2 | 8500 | 1 |
| 10340145 | 309 | 10 35 801 3 | 35 | 1 | 10358006 | 96 | 10 35 808 9 | 540 | 1 |
| 10342191 | 498 | 10 12 134 5 | 4 | 3 | 10358007 | 96 | 10 35 808 9 | 501 | 1 |
| 10342221 | 218 | 90 64 786 | 145 | 1 | 10358009 | 96 | 10 35 808 9 | 590 | 1 |
| 10342770 | 510 | 10 12 038 4 | 3 | 1 | 10358012 | 294 | 10 35 809 0 | 7020 | 1 |
| 10342884 | 354 | 10 35 802 8 | 525 | 1 | 10358013 | 294 | 10 35 809 0 | 7070 | 1 |
| 10343074 | 139 | 10 35 572 4 | 8 | 1 | 10358014 | 294 | 10 35 809 0 | 7060 | 1 |
| 10344024 | 19 | 10 35 678 9 | 5 | 1 | 10358015 | 294 | 10 35 809 0 | 7040 | 1 |
| 10344025 | 19 | 10 35 678 9 | 20 | 1 | 10358017 | 294 | 10 35 809 0 | 7080 | 1 |
| 10344026 | 19 | 10 35 678 9 | 210 | 1 | 10358025 | 329 | 10 35 798 3 | 4 | 1 |
| 10344027 | 19 | 10 35 678 9 | 1000 | 1 | 10358028 | 85 | 10 35 798 2 | 7600 | 1 |
| 10353879 | 389 | 10 37 283 9 | 20 | 1 | 10358043 | 86 | 10 35 798 2 | 9900 | 1 |
| 10353879 | 398 | 10 35 853 1 | 10 | 1 | 10358089 | 85 | 10 35 798 2 | 500 | 1 |
| 10353879 | 462 | 10 37 283 6 | 3 | 1 | 10358090 | 85 | 10 35 798 2 | 7000 | 1 |
| 10355084 | 160 | 10 35 809 2 | 6 | 1 | 10358092 | 96 | 10 35 808 9 | 560 | 1 |
| 10355107 | 379 | 10 08 167 3 | 20 | 0.3 | 10358093 | 294 | 10 35 809 0 | 7075 | 1 |
| 10355724 | 142 | 10 41 087 0 | 1 | 1 | 10358141 | 86 | 10 35 798 2 | 9000 | 1 |
| 10355725 | 139 | 10 35 572 4 | 1 | 1 | 10358142 | 86 | 10 35 798 2 | 9200 | 1 |
| 10355726 | 139 | 10 35 572 4 | 5 | 1 | 10358143 | 446 | 10 35 814 2 | 5 | 1 |
| 10355728 | 139 | 10 35 572 4 | 7 | 1 | 10358170 | 384 | 10 35 817 2 | 8 | 1 |
| 10355729 | 139 | 10 35 572 4 | 9 | 1 | 10358170 | 398 | 10 35 853 1 | 3 | 1 |
| 10355730 | 139 | 10 35 572 4 | 15 | 1 | 10358172 | 373 | 10 35 800 4 | 40 | 1 |
| 10355731 | 139 | 10 35 572 4 | 16 | 1 | 10358193 | 329 | 10 35 798 3 | 3 | 1 |
| 10355733 | 139 | 10 35 572 4 | 17 | 2 | 10358194 | 329 | 10 35 798 3 | 4 | 1 |

| Item | Page | Assembly | Pos. | Quantity | Item | Page | Assembly | Pos. | Quantity |
|---|---|---|---|---|---|---|---|---|---|
| 10358490 | 49 | 10 49 883 7 | 2 | 1 | 10411092 | 577 | 10 21 997 8 | 4 | 1 |
| 10358525 | 86 | 10 35 798 2 | 9700 | 1 | 10411093 | 577 | 10 21 997 8 | 6 | 2 |
| 10358526 | 461 | 10 35 852 5 | 2 | 1 | 10411094 | 577 | 10 21 997 8 | 3 | 1 |
| 10358531 | 375 | 10 35 800 4 | 110 | 1 | 10411095 | 577 | 10 21 997 8 | 5 | 2 |
| 10358598 | 618 | 10 49 830 0 | 48 | 1 | 10411919 | 167 | 10 35 508 4 | 13 | 1 |
| 10358601 | 651 | 10 35 860 2 | 2 | 1 | 10412177 | 164 | 10 45 475 2 | 5 | 2.058m |
| 10358602 | 7 | . | 5 | 1 | 10412177 | 164 | 10 45 475 2 | 6 | 4.28m |
| 10358890 | 407 | 70 28 767 | 140 | 1 | 10412177 | 167 | 10 35 508 4 | 4 | 2.28m |
| 10358947 | 18 | 90 70 366 | 30 | 1kg | 10412499 | 167 | 10 35 508 4 | 12 | 1 |
| 10358948 | 18 | 90 70 366 | 20 | 1kg | 10412536 | 379 | 10 08 167 3 | 10 | 27 |
| 10358949 | 18 | 90 70 366 | 10 | 1kg | 10412536 | 380 | 99 27 477 | 5 | 40 |
| 10358950 | 18 | 90 70 366 | 40 | 1kg | 10412536 | 381 | 99 49 428 | 13 | 40 |
| 10358988 | 581 | 10 11 557 7 | 8 | 17 | 10412536 | 382 | 99 29 189 | 8 | 40 |
| 10358992 | 18 | 90 70 366 | 50 | 1kg | 10412536 | 383 | 10 08 168 3 | 6 | 26 |
| 10359056 | 45 | 94 08 205 9 | 20 | 1l | 10412536 | 384 | 10 35 817 2 | 7 | 28 |
| 10359147 | 459 | 10 84 856 2 | 200 | 1 | 10412536 | 385 | 99 45 269 | 4 | 108 |
| 10359702 | 9 | 10 49 883 6 | 9999 | 1 | 10412536 | 386 | 10 35 792 6 | 7 | 20 |
| 10362013 | 223 | 10 49 872 7 | 35 | 1 | 10412536 | 387 | 99 27 471 | 4 | 72 |
| 10367055 | 178 | 10 35 800 9 | 20 | 1 | 10412536 | 388 | 10 07 307 3 | 8 | 48 |
| 10368556 | 462 | 10 37 283 6 | 5 | 1 | 10412536 | 389 | 10 37 283 9 | 8 | 48 |
| 10369198 | 632 | 10 38 484 8 | 40 | 1 | 10412536 | 396 | 99 47 957 | 4 | 9 |
| 10371175 | 161 | 10 35 809 2 | 20 | 1 | 10412536 | 398 | 10 35 853 1 | 7 | 13 |
| 10371303 | 329 | 10 35 798 3 | 2 | 1 | 10412536 | 399 | 99 47 961 | 7 | 13 |
| 10372836 | 461 | 10 35 852 5 | 10 | 1 | 10412844 | 218 | 90 64 786 | 115 | 1 |
| 10372839 | 373 | 10 35 800 4 | 60 | 1 | 10412844 | 220 | 10 01 461 1 | 115 | 2 |
| 10374017 | 618 | 10 49 830 0 | 43 | 1 | 10413013 | 120 | 10 33 289 0 | 1 | 1 |
| 10374410 | 393 | 10 37 938 6 | 25 | 1 | 10413014 | 121 | 10 41 301 3 | 1 | 1 |
| 10377687 | 160 | 10 35 809 2 | 3 | 1 | 10413015 | 121 | 10 41 301 3 | 6 | 1 |
| 10377689 | 160 | 10 35 809 2 | 4 | 1 | 10413016 | 121 | 10 41 301 3 | 7 | 1 |
| 10379045 | 462 | 10 37 283 6 | 2 | 1 | 10413017 | 121 | 10 41 301 3 | 8 | 1 |
| 10379354 | 395 | 10 37 936 3 | 2 | 1 | 10413020 | 121 | 10 41 301 3 | 14 | 1 |
| 10379363 | 393 | 10 37 938 6 | 15 | 1 | 10413021 | 121 | 10 41 301 3 | 35 | 2 |
| 10379371 | 392 | 10 37 938 6 | 2 | 1 | 10413023 | 121 | 10 41 301 3 | 56 | 1 |
| 10379386 | 375 | 10 35 800 4 | 80 | 1 | 10413024 | 143 | 10 41 301 4 | 1 | 1 |
| 10380915 | 465 | 10 35 804 3 | 90 | 2 | 10413025 | 143 | 10 41 301 4 | 2 | 1 |
| 10380915 | 468 | 10 49 805 9 | 90 | 2 | 10413026 | 144 | 10 41 302 4 | 2 | 1 |
| 10381258 | 468 | 10 49 805 9 | 70 | 1 | 10423838 | 418 | 70 29 423 | 10 | 1 |
| 10382585 | 223 | 10 49 872 7 | 5 | 1 | 10423838 | 419 | 70 29 424 | 10 | 1 |
| 10384085 | 619 | 10 49 830 0 | 50 | 1 | 10423840 | 418 | 70 29 423 | 20 | 1 |
| 10384086 | 624 | 10 38 408 5 | 100 | 1 | 10423840 | 419 | 70 29 424 | 20 | 1 |
| 10384848 | 628 | 10 49 823 5 | 15 | 1 | 10425590 | 346 | 10 35 802 8 | 64 | 3 |
| 10385024 | 229 | 10 49 880 9 | 20 | 1 | 10425592 | 67 | 10 07 713 7 | 3 | 48 |
| 10385490 | 672 | 10 49 815 8 | 63 | 1 | 10425592 | 333 | 99 46 056 | 4 | 1 |
| 10385491 | 648 | 10 38 549 0 | 2 | 1 | 10425595 | 332 | 10 37 130 3 | 3 | 1 |
| 10386774 | 464 | 10 35 804 3 | 35 | 1 | 10425595 | 333 | 99 46 056 | 3 | 1 |
| 10386774 | 467 | 10 49 805 9 | 35 | 1 | 10425595 | 453 | 90 18 426 | 3 | 1 |
| 10397442 | 93 | 10 40 278 1 | 4 | 1 | 10425597 | 332 | 10 37 130 3 | 2 | 2 |
| 10400600 | 379 | 10 08 167 3 | 3 | 1 | 10425597 | 333 | 99 46 056 | 2 | 1 |
| 10402781 | 85 | 10 35 798 2 | 170 | 1 | 10425597 | 453 | 90 18 426 | 2 | 2 |
| 10405134 | 169 | 10 49 858 1 | 3 | 1 | 10425609 | 657 | 94 02 019 4 | 20 | 9 |
| 10405887 | 466 | 10 49 805 9 | 6 | 1 | 10425609 | 658 | 95 87 580 | 20 | 9 |
| 10406664 | 382 | 99 29 189 | 16 | 2 | 10425625 | 205 | 10 83 653 3 | 13 | 36 |
| 10406898 | 230 | 10 49 880 9 | 80 | 1 | 10425629 | 205 | 10 83 653 3 | 12 | 14 |
| 10408513 | 230 | 10 49 880 9 | 140 | 1 | 10425661 | 67 | 10 07 713 7 | 6 | 48 |
| 10409084 | 638 | 10 35 789 8 | 5 | 2 | 10425667 | 67 | 10 07 713 7 | 11 | 4 |
| 10409093 | 629 | 10 49 823 6 | 3 | 2 | 10425667 | 183 | 99 46 389 | 16 | 2 |
| 10410335 | 106 | 10 29 787 3 | 999 | 1 | 10425682 | 182 | 10 06 625 2 | 5 | 18 |
| 10410659 | 138 | 10 28 914 6 | 999 | 1 | 10425709 | 456 | 99 37 333 | 3 | 4 |
| 10410790 | 599 | 90 80 006 | 8 | 2 | 10425711 | 13 | 90 70 361 | 10 | 1l |
| 10410870 | 119 | 10 33 288 9 | 1 | 1 | 10425712 | 36 | 10 42 571 1 | 5 | 1 |

| Item | Page | Assembly | Pos. | Quantity | Item | Page | Assembly | Pos. | Quantity |
|---|---|---|---|---|---|---|---|---|---|
| 10425713 | 36 | 10 42 571 1 | 20 | 1 | 10472425 | 360 | 10 49 822 5 | 21 | 1 |
| 10425715 | 36 | 10 42 571 1 | 210 | 1 | 10472425 | 360 | 10 49 822 5 | 26 | 1 |
| 10425719 | 36 | 10 42 571 1 | 1000 | 1 | 10472425 | 360 | 10 49 822 5 | 31 | 1 |
| 10425724 | 51 | 10 49 883 7 | 46 | 80 | 10472425 | 360 | 10 49 822 5 | 36 | 1 |
| 10425733 | 206 | 99 46 390 | 5 | 60 | 10472425 | 361 | 10 49 822 5 | 62 | 4 |
| 10428410 | 29 | 10 35 683 2 | 20 | 1 | 10472425 | 618 | 10 49 830 0 | 40 | 15 |
| 10428411 | 29 | 10 35 683 2 | 210 | 1 | 10472425 | 628 | 10 49 823 5 | 13 | 2 |
| 10428776 | 420 | 10 48 808 7 | 140 | 1 | 10472425 | 637 | 11 45 153 0 | 40 | 6 |
| 10429055 | 408 | 70 28 788 | 30 | 1 | 10472425 | 655 | 10 06 203 8 | 11 | 1 |
| 10429946 | 87 | 10 06 947 6 | 2 | 1 | 10472425 | 655 | 10 06 203 8 | 14 | 1 |
| 10429946 | 92 | 10 06 994 0 | 10 | 8 | 10472425 | 671 | 10 49 815 8 | 48 | 4 |
| 10429946 | 538 | 10 12 580 1 | 1 | 1 | 10472425 | 675 | 72 64 501 16 | 2 | 12 |
| 10429946 | 540 | 10 33 227 8 | 1 | 1 | 10475895 | 147 | 70 28 075 | 17 | 1 |
| 10451142 | 634 | 11 10 283 2 | 2 | 5 | 10476169 | 404 | 10 35 796 7 | 20 | 1 |
| 10451146 | 7 | . | 14 | 10 | 10488087 | 405 | 10 47 616 9 | 60 | 1 |
| 10451202 | 457 | 10 08 428 6 | 50 | 1 | 10488088 | 405 | 10 47 616 9 | 80 | 1 |
| 10451292 | 165 | 10 45 475 2 | 42 | 1 | 10488089 | 420 | 10 48 808 7 | 150 | 1 |
| 10454752 | 160 | 10 35 809 2 | 5 | 1 | 10488090 | 420 | 10 48 808 7 | 182 | 1 |
| 10455060 | 432 | 10 48 808 8 | 284 | 1 | 10488404 | 626 | 11 00 350 2 | 1 | 1 |
| 10467159 | 165 | 10 45 475 2 | 44 | 1 | 10488408 | 631 | 10 38 484 8 | 4 | 1 |
| 10467239 | 165 | 10 45 475 2 | 43 | 1 | 10488416 | 210 | 10 48 840 8 | 1 | 1 |
| 10467240 | 165 | 10 45 475 2 | 46 | 2 | 10490781 | 300 | 10 35 801 5 | 27 | 1 |
| 10467241 | 164 | 10 45 475 2 | 4 | 1 | 10490781 | 303 | 10 35 801 5 | 127 | 1 |
| 10467242 | 164 | 10 45 475 2 | 19 | 2 | 10490781 | 671 | 10 49 815 8 | 51 | 4 |
| 10467243 | 164 | 10 45 475 2 | 21 | 2 | 10490781 | 675 | 72 64 501 16 | 1 | 12 |
| 10467244 | 164 | 10 45 475 2 | 20 | 4 | 10490784 | 300 | 10 35 801 5 | 35 | 1 |
| 10467245 | 164 | 10 45 475 2 | 22 | 6 | 10490784 | 302 | 10 35 801 5 | 86 | 2 |
| 10467246 | 165 | 10 45 475 2 | 25 | 2 | 10490784 | 311 | 10 35 809 3 | 17 | 1 |
| 10467247 | 165 | 10 45 475 2 | 28 | 2 | 10490784 | 311 | 10 35 809 3 | 27 | 4 |
| 10467429 | 234 | 11 10 016 6 | 59 | 1 | 10490785 | 308 | 10 35 801 3 | 6 | 2 |
| 10467569 | 164 | 10 45 475 2 | 2 | 0.52m | 10490785 | 675 | 72 64 501 16 | 4 | 6 |
| 10467727 | 313 | 10 35 801 7 | 36 | 1 | 10490786 | 309 | 10 35 801 3 | 38 | 6 |
| 10469917 | 247 | 99 68 625 | 10 | 1 | 10490786 | 347 | 10 35 802 8 | 74 | 1 |
| 10469918 | 262 | 99 68 611 | 10 | 1 | 10490786 | 675 | 72 64 501 16 | 5 | 6 |
| 10469932 | 262 | 99 68 611 | 50 | 1 | 10490787 | 331 | 10 35 798 3 | 55 | 1 |
| 10469933 | 247 | 99 68 625 | 50 | 1 | 10490787 | 331 | 10 35 798 3 | 65 | 1 |
| 10470092 | 7 | . | 2 | 2 | 10490787 | 361 | 10 49 822 5 | 53 | 1 |
| 10470093 | 52 | 10 47 009 2 | 2 | 52 | 10490787 | 618 | 10 49 830 0 | 42 | 2 |
| 10470127 | 434 | 10 47 012 8 | 3 | 4 | 10490787 | 637 | 11 45 153 0 | 42 | 1 |
| 10470128 | 432 | 10 48 808 8 | 250 | 1 | 10490787 | 656 | 99 48 785 | 5 | 2 |
| 10470774 | 307 | 10 04 462 4 | 3 | 1 | 10490787 | 675 | 72 64 501 16 | 3 | 6 |
| 10471192 | 164 | 10 45 475 2 | 7 | 2 | 10490894 | 429 | 10 29 026 4 | 520 | 1 |
| 10471479 | 408 | 70 28 788 | 10 | 1 | 10491376 | 165 | 10 45 475 2 | 33 | 1 |
| 10471490 | 408 | 70 28 788 | 20 | 1 | 10491783 | 233 | 11 10 016 6 | 8 | 1 |
| 10472345 | 502 | 90 80 686 | 3 | 1 | 10491783 | 233 | 11 10 016 6 | 9 | 1 |
| 10472346 | 502 | 90 80 686 | 4 | 1 | 10492435 | 233 | 11 10 016 6 | 19 | 1 |
| 10472347 | 502 | 90 80 686 | 5 | 1 | 10492977 | 235 | 11 10 016 7 | 1 | 1 |
| 10472425 | 67 | 10 07 713 7 | 21 | 4 | 10492981 | 235 | 11 10 016 7 | 5 | 1 |
| 10472425 | 84 | 10 07 713 5 | 7 | 8 | 10492983 | 235 | 11 10 016 7 | 8 | 1 |
| 10472425 | 295 | 10 35 801 2 | 110 | 6 | 10492985 | 235 | 11 10 016 7 | 10 | 1 |
| 10472425 | 296 | 10 35 801 2 | 510 | 4 | 10493008 | 235 | 11 10 016 7 | 27 | 1 |
| 10472425 | 300 | 10 35 801 5 | 7 | 8 | 10493009 | 235 | 11 10 016 7 | 33 | 1 |
| 10472425 | 300 | 10 35 801 5 | 24 | 2 | 10493010 | 235 | 11 10 016 7 | 6 | 1 |
| 10472425 | 302 | 10 35 801 5 | 81 | 2 | 10493022 | 235 | 11 10 016 7 | 29 | 1 |
| 10472425 | 310 | 10 35 809 3 | 12 | 1 | 10493023 | 235 | 11 10 016 7 | 30 | 1 |
| 10472425 | 347 | 10 35 802 8 | 92 | 2 | 10493024 | 235 | 11 10 016 7 | 31 | 1 |
| 10472425 | 347 | 10 35 802 8 | 122 | 1 | 10493025 | 235 | 11 10 016 7 | 26 | 1 |
| 10472425 | 349 | 10 35 802 8 | 215 | 2 | 10493026 | 235 | 11 10 016 7 | 28 | 1 |
| 10472425 | 359 | 10 49 822 5 | 11 | 6 | 10493027 | 235 | 11 10 016 7 | 25 | 1 |
| 10472425 | 359 | 10 49 822 5 | 16 | 1 | 10493031 | 235 | 11 10 016 7 | 35 | 1 |

| Item | Page | Assembly | Pos. | Quantity | Item | Page | Assembly | Pos. | Quantity |
|---|---|---|---|---|---|---|---|---|---|
| 10493032 | 235 | 11 10 016 7 | 34 | 1 | 10652159 | 240 | 10 16 576 6 | 20 | 1 |
| 10493046 | 233 | 11 10 016 6 | 3 | 1 | 10684424 | 254 | 10 84 080 3 | 2 | 1 |
| 10493047 | 233 | 11 10 016 6 | 4 | 1 | 10684595 | 256 | 10 84 080 1 | 2 | 1 |
| 10493048 | 234 | 11 10 016 6 | 58 | 1 | 10684598 | 257 | 10 84 080 2 | 2 | 1 |
| 10493050 | 233 | 11 10 016 6 | 11 | 1 | 10687417 | 251 | 10 84 086 6 | 100 | 1 |
| 10493054 | 233 | 11 10 016 6 | 24 | 1 | 10800265 | 586 | 90 76 534 | 1 | 1 |
| 10493087 | 280 | 10 40 689 8 | 70 | 1 | 10800265 | 588 | 90 79 206 | 1 | 1 |
| 10493088 | 280 | 10 40 689 8 | 71 | 1 | 10814706 | 233 | 11 10 016 6 | 39 | 1 |
| 10493089 | 286 | 11 00 359 4 | 13 | 1 | 10814718 | 235 | 11 10 016 7 | 23 | 1 |
| 10493341 | 233 | 11 10 016 6 | 20 | 1 | 10814727 | 233 | 11 10 016 6 | 12 | 1 |
| 10493344 | 233 | 11 10 016 6 | 34 | 1 | 10816666 | 280 | 10 40 689 8 | 10 | 1 |
| 10493345 | 233 | 11 10 016 6 | 55 | 1 | 10820141 | 629 | 10 49 823 6 | 5 | 2 |
| 10493348 | 233 | 11 10 016 6 | 54 | 1 | 10820174 | 621 | 10 49 830 1 | 3 | 2 |
| 10493351 | 233 | 11 10 016 6 | 10 | 1 | 10820862 | 629 | 10 49 823 6 | 7 | 2 |
| 10493369 | 233 | 11 10 016 6 | 16 | 1 | 10820862 | 638 | 10 35 789 8 | 3 | 2 |
| 10493397 | 234 | 11 10 016 6 | 56 | 1 | 10822179 | 251 | 10 84 086 6 | 91 | 1 |
| 10493469 | 235 | 11 10 016 7 | 11 | 1 | 10836533 | 85 | 10 35 798 2 | 800 | 1 |
| 10493984 | 234 | 11 10 016 6 | 62 | 1 | 10836599 | 350 | 10 35 802 8 | 341 | 1 |
| 10493986 | 233 | 11 10 016 6 | 13 | 1 | 10840318 | 466 | 10 49 805 9 | 15 | 1 |
| 10493994 | 235 | 11 10 016 7 | 17 | 1 | 10840801 | 249 | 10 84 086 6 | 40 | 1 |
| 10498018 | 86 | 10 35 798 2 | 9500 | 1 | 10840802 | 251 | 10 84 086 6 | 85 | 1 |
| 10498023 | 455 | 10 49 801 8 | 2 | 1 | 10840803 | 249 | 10 84 086 6 | 30 | 1 |
| 10498059 | 86 | 10 35 798 2 | 9900 | 1 | 10840866 | 229 | 10 49 880 9 | 30 | 1 |
| 10498157 | 671 | 10 49 815 8 | 5 | 1 | 10841508 | 230 | 10 49 880 9 | 60 | 1 |
| 10498158 | 670 | 10 49 815 9 | 10 | 1 | 10842035 | 350 | 10 35 802 8 | 330 | 1 |
| 10498159 | 7 | . | 3 | 1 | 10842046 | 350 | 10 35 802 8 | 335 | 1 |
| 10498163 | 7 | . | 8 | 1 | 10842056 | 350 | 10 35 802 8 | 340 | 1 |
| 10498163 | 209 | 10 04 966 2 | 2 | 1 | 10842060 | 214 | 10 04 966 3 | 40 | 1 |
| 10498176 | 639 | 10 49 817 7 | 10 | 1 | 10845849 | 85 | 10 35 798 2 | 7300 | 1 |
| 10498177 | 7 | . | 13 | 2 | 10848562 | 457 | 10 08 428 6 | 5 | 1 |
| 10498223 | 466 | 10 49 805 9 | 4 | 1 | 11000856 | 279 | 94 02 247 7 | 10 | 1 |
| 10498225 | 355 | 10 35 802 8 | 7670 | 1 | 11000900 | 344 | 10 84 584 9 | 122 | 1 |
| 10498229 | 679 | 10 49 816 3 | 10 | 1 | 11002474 | 287 | 11 00 359 4 | 35 | 8 |
| 10498234 | 7 | . | 10 | 1 | 11003502 | 625 | 10 38 408 6 | 50 | 1 |
| 10498235 | 627 | 10 49 823 4 | 10 | 1 | 11003506 | 626 | 11 00 350 2 | 4 | 1 |
| 10498236 | 628 | 10 49 823 5 | 2 | 1 | 11003506 | 626 | 11 00 350 2 | 5 | 1 |
| 10498299 | 7 | . | 9 | 1 | 11003594 | 282 | 10 81 666 6 | 1 | 1 |
| 10498300 | 615 | 10 49 829 9 | 10 | 1 | 11003600 | 287 | 11 00 359 4 | 32 | 1 |
| 10498301 | 616 | 10 49 830 0 | 2 | 1 | 11003779 | 58 | 10 65 168 0 | 4 | 1 |
| 10498335 | 640 | 10 49 817 6 | 30 | 1 | 11003779 | 59 | 11 60 010 7 | 4 | 1 |
| 10498336 | 645 | 10 49 833 5 | 2 | 1 | 11003780 | 58 | 10 65 168 0 | 3 | 2 |
| 10498365 | 640 | 10 49 817 6 | 10 | 1 | 11003780 | 59 | 11 60 010 7 | 3 | 2 |
| 10498366 | 640 | 10 49 817 6 | 12 | 1 | 11003781 | 58 | 10 65 168 0 | 5 | 2 |
| 10498559 | 634 | 11 10 283 2 | 3 | 1 | 11003782 | 58 | 10 65 168 0 | 2 | 2 |
| 10498581 | 96 | 10 35 808 9 | 580 | 1 | 11003782 | 59 | 11 60 010 7 | 2 | 2 |
| 10498678 | 616 | 10 49 830 0 | 8 | 2 | 11003783 | 58 | 10 65 168 0 | 1 | 1 |
| 10498727 | 85 | 10 35 798 2 | 6000 | 1 | 11003783 | 59 | 11 60 010 7 | 1 | 1 |
| 10498733 | 85 | 10 35 798 2 | 8200 | 1 | 11004408 | 464 | 10 35 804 3 | 30 | 1 |
| 10498737 | 223 | 10 49 872 7 | 10 | 1 | 11004408 | 467 | 10 49 805 9 | 30 | 1 |
| 10498802 | 86 | 10 35 798 2 | 8200 | 1 | 11005218 | 91 | 10 09 121 5 | 2 | 1 |
| 10498809 | 223 | 10 49 872 7 | 20 | 1 | 11006050 | 116 | 10 22 041 1 | 1 | 1 |
| 10498813 | 641 | 10 49 881 6 | 10 | 1 | 11007072 | 279 | 94 02 247 7 | 60 | 1 |
| 10498814 | 641 | 10 49 881 6 | 15 | 2 | 11007750 | 662 | 92 70 390 | 4 | 1 |
| 10498815 | 641 | 10 49 881 6 | 20 | 1 | 11007757 | 699 | 98 82 771 | 29 | 1 |
| 10498816 | 640 | 10 49 817 6 | 20 | 1 | 11007768 | 338 | 56 17 689 | 16 | 2 |
| 10498836 | 7 | . | 1 | 1 | 11007770 | 338 | 56 17 689 | 7 | 1 |
| 10498837 | 9 | 10 49 883 6 | 200 | 1 | 11008055 | 551 | 90 77 279 | 5 | 1 |
| 10544052 | 359 | 10 49 822 5 | 13 | 4 | 11008055 | 613 | 10 11 583 8 | 2211 | 1 |
| 10651680 | 51 | 10 49 883 7 | 45 | 20 | 11065673 | 87 | 10 06 947 6 | 8 | 2 |
| 10651997 | 681 | 10 28 689 7 | 10 | 1 | 11065673 | 89 | 10 06 948 6 | 2 | 2 |

| Item | Page | Assembly | Pos. | Quantity | Item | Page | Assembly | Pos. | Quantity |
|---|---|---|---|---|---|---|---|---|---|
| 11065673 | 329 | 10 35 798 3 | 28 | 2 | 11162169 | 458 | 10 84 856 2 | 30 | 1 |
| 11066029 | 37 | 11 08 152 2 | 5 | 1 | 11162170 | 458 | 10 84 856 2 | 32 | 1 |
| 11066030 | 37 | 11 08 152 2 | 20 | 1 | 11162171 | 458 | 10 84 856 2 | 34 | 1 |
| 11066031 | 37 | 11 08 152 2 | 209 | 1 | 11162173 | 458 | 10 84 856 2 | 38 | 1 |
| 11066032 | 37 | 11 08 152 2 | 1045 | 1 | 11162174 | 458 | 10 84 856 2 | 48 | 1 |
| 11066525 | 235 | 11 10 016 7 | 2 | 1 | 11162175 | 458 | 10 84 856 2 | 50 | 1 |
| 11066526 | 235 | 11 10 016 7 | 3 | 1 | 11162177 | 458 | 10 84 856 2 | 51 | 1 |
| 11066527 | 235 | 11 10 016 7 | 4 | 1 | 11162178 | 458 | 10 84 856 2 | 52 | 1 |
| 11066528 | 235 | 11 10 016 7 | 9 | 1 | 11162179 | 458 | 10 84 856 2 | 54 | 1 |
| 11066530 | 235 | 11 10 016 7 | 18 | 1 | 11181957 | 628 | 10 49 823 5 | 9 | 1 |
| 11066531 | 235 | 11 10 016 7 | 19 | 1 | 11181958 | 628 | 10 49 823 5 | 10 | 1 |
| 11066532 | 236 | 11 10 016 7 | 38 | 1 | 11213009 | 146 | 57 15 963 | 9 | 1 |
| 11066536 | 236 | 11 10 016 7 | 36 | 1 | 11213474 | 132 | 10 22 063 5 | 8 | 2 |
| 11067312 | 593 | 10 11 790 0 | 2 | 14 | 11213510 | 345 | 10 22 042 7 | 11 | 1 |
| 11067315 | 593 | 10 11 790 0 | 1 | 1 | 11214366 | 52 | 10 47 009 2 | 3 | 208 |
| 11081522 | 13 | 90 70 361 | 100 | 1l | 11320176 | 360 | 10 49 822 5 | 27 | 4 |
| 11082671 | 233 | 11 10 016 6 | 1 | 1 | 11320176 | 360 | 10 49 822 5 | 32 | 4 |
| 11082672 | 233 | 11 10 016 6 | 2 | 1 | 11341036 | 637 | 11 45 153 0 | 30 | 6 |
| 11100087 | 233 | 11 10 016 6 | 26 | 1 | 11341037 | 637 | 11 45 153 0 | 31 | 1 |
| 11100088 | 233 | 11 10 016 6 | 37 | 1 | 11342118 | 90 | 10 06 948 1 | 8 | 1 |
| 11100090 | 235 | 11 10 016 7 | 16 | 1 | 11342118 | 297 | 99 37 312 | 13 | 1 |
| 11100166 | 232 | 11 00 085 6 | 10 | 1 | 11342118 | 298 | 56 09 948 | 10 | 1 |
| 11100167 | 232 | 11 00 085 6 | 20 | 1 | 11347332 | 460 | 93 58 137 | 3 | 1 |
| 11102313 | 7 | . | 6 | 1 | 11451267 | 646 | 93 74 949 | 10 | 1 |
| 11102313 | 49 | 10 49 883 7 | 35 | 1 | 11451530 | 620 | 10 49 830 0 | 90 | 1 |
| 11102313 | 49 | 10 49 883 7 | 36 | 1 | 11460707 | 635 | 11 10 283 4 | 3 | 1 |
| 11102313 | 50 | 10 49 883 7 | 37 | 1 | 11461297 | 635 | 11 10 283 4 | 4 | 1 |
| 11102314 | 673 | 11 10 231 3 | 10 | 1 | 11461298 | 635 | 11 10 283 4 | 5 | 1 |
| 11102315 | 676 | 11 10 231 4 | 2 | 8 | 11461299 | 635 | 11 10 283 4 | 9 | 2 |
| 11102652 | 7 | . | 7 | 1 | 11461300 | 635 | 11 10 283 4 | 10 | 2 |
| 11102653 | 674 | 11 10 265 2 | 2 | 1 | 11461301 | 635 | 11 10 283 4 | 11 | 2 |
| 11102662 | 435 | 10 35 814 1 | 25 | 1 | 11481247 | 40 | 90 66 466 | 200 | 1 |
| 11102786 | 435 | 10 35 814 1 | 15 | 1 | 11481248 | 40 | 90 66 466 | 310 | 1 |
| 11102829 | 7 | . | 12 | 1 | 11481249 | 40 | 90 66 466 | 210 | 1 |
| 11102830 | 633 | 11 10 282 9 | 10 | 1 | 11481250 | 40 | 90 66 466 | 300 | 1 |
| 11102832 | 633 | 11 10 282 9 | 9 | 1 | 11485620 | 41 | 94 06 645 8 | 10 | 1 |
| 11102834 | 633 | 11 10 282 9 | 11 | 1 | 11485621 | 41 | 94 06 645 8 | 210 | 1 |
| 11140338 | 690 | 98 82 766 | 120 | 1 | 11485622 | 41 | 94 06 645 8 | 1000 | 1 |
| 11140338 | 699 | 98 82 771 | 120 | 1 | 11485637 | 302 | 10 35 801 5 | 87 | 4 |
| 11162097 | 458 | 10 84 856 2 | 60 | 1 | 11485637 | 311 | 10 35 809 3 | 26 | 8 |
| 11162099 | 458 | 10 84 856 2 | 64 | 1 | 11485638 | 300 | 10 35 801 5 | 25 | 2 |
| 11162100 | 458 | 10 84 856 2 | 70 | 1 | 11485638 | 671 | 10 49 815 8 | 49 | 8 |
| 11162101 | 458 | 10 84 856 2 | 80 | 1 | 11485639 | 84 | 10 07 713 5 | 6 | 16 |
| 11162111 | 458 | 10 84 856 2 | 82 | 1 | 11485639 | 295 | 10 35 801 2 | 100 | 12 |
| 11162119 | 458 | 10 84 856 2 | 84 | 1 | 11485639 | 296 | 10 35 801 2 | 500 | 4 |
| 11162120 | 458 | 10 84 856 2 | 86 | 1 | 11485639 | 300 | 10 35 801 5 | 6 | 16 |
| 11162121 | 458 | 10 84 856 2 | 90 | 1 | 11485639 | 300 | 10 35 801 5 | 22 | 4 |
| 11162122 | 458 | 10 84 856 2 | 92 | 1 | 11485639 | 347 | 10 35 802 8 | 94 | 2 |
| 11162123 | 458 | 10 84 856 2 | 94 | 1 | 11485639 | 347 | 10 35 802 8 | 124 | 2 |
| 11162124 | 458 | 10 84 856 2 | 96 | 1 | 11485639 | 349 | 10 35 802 8 | 216 | 2 |
| 11162125 | 458 | 10 84 856 2 | 98 | 1 | 11485639 | 359 | 10 49 822 5 | 10 | 12 |
| 11162126 | 459 | 10 84 856 2 | 110 | 1 | 11485639 | 360 | 10 49 822 5 | 40 | 12 |
| 11162132 | 459 | 10 84 856 2 | 112 | 1 | 11485639 | 361 | 10 49 822 5 | 61 | 8 |
| 11162133 | 459 | 10 84 856 2 | 114 | 1 | 11485639 | 618 | 10 49 830 0 | 33 | 30 |
| 11162134 | 459 | 10 84 856 2 | 120 | 1 | 11485639 | 628 | 10 49 823 5 | 11 | 4 |
| 11162135 | 459 | 10 84 856 2 | 130 | 1 | 11485639 | 637 | 11 45 153 0 | 33 | 12 |
| 11162163 | 458 | 10 84 856 2 | 22 | 1 | 11485639 | 655 | 10 06 203 8 | 12 | 1 |
| 11162164 | 458 | 10 84 856 2 | 24 | 1 | 11485639 | 671 | 10 49 815 8 | 46 | 8 |
| 11162165 | 458 | 10 84 856 2 | 26 | 1 | 11485640 | 331 | 10 35 798 3 | 67 | 2 |
| 11162167 | 458 | 10 84 856 2 | 28 | 1 | 11485640 | 618 | 10 49 830 0 | 34 | 4 |

| Item | Page | Assembly | Pos. | Quantity | Item | Page | Assembly | Pos. | Quantity |
|---|---|---|---|---|---|---|---|---|---|
| 11485640 | 637 | 11 45 153 0 | 34 | 2 | 4000379 | 102 | 99 37 298 | 53 | 3 |
| 11485642 | 308 | 10 35 801 3 | 4 | 4 | 4000379 | 108 | 90 77 872 | 47 | 4 |
| 11485643 | 311 | 10 35 809 3 | 16 | 2 | 4000379 | 241 | 97 58 815 01 | 64 | 2 |
| 11485645 | 309 | 10 35 801 3 | 37 | 8 | 4000379 | 251 | 10 84 086 6 | 86 | 2 |
| 11485646 | 305 | 10 35 801 4 | 153 | 2 | 4000379 | 280 | 10 40 689 8 | 75 | 1 |
| 11485646 | 347 | 10 35 802 8 | 78 | 2 | 4000379 | 353 | 10 35 802 8 | 478 | 2 |
| 11485647 | 341 | 10 84 584 9 | 43 | 4 | 4000379 | 381 | 99 49 428 | 11 | 2 |
| 11490402 | 331 | 10 35 798 3 | 57 | 2 | 4000379 | 388 | 10 07 307 3 | 22 | 4 |
| 11600107 | 51 | 10 49 883 7 | 45 | 20 | 4000379 | 394 | 10 06 691 8 | 5 | 4 |
| 11601136 | 59 | 11 60 010 7 | 5 | 2 | 4000379 | 399 | 99 47 961 | 12 | 4 |
| 11644222 | 283 | 10 02 206 9 | 6 | 1 | 4000379 | 400 | 10 02 525 4 | 12 | 4 |
| 11647393 | 310 | 10 35 809 3 | 11 | 2 | 4000379 | 402 | 10 35 387 9 | 12 | 4 |
| 11657384 | 42 | 94 07 955 7 | 5 | 1 | 4000379 | 411 | 70 28 759 | 180 | 2 |
| 11657385 | 42 | 94 07 955 7 | 20 | 1 | 4000379 | 414 | 70 28 769 | 300 | 1 |
| 11657386 | 42 | 94 07 955 7 | 210 | 1 | 4000379 | 428 | 10 29 026 4 | 450 | 4 |
| 11657387 | 42 | 94 07 955 7 | 1000 | 1 | 4000381 | 163 | 10 35 809 2 | 137 | 1 |
| 11657389 | 43 | 94 07 956 0 | 5 | 1 | 4000381 | 170 | 10 49 858 1 | 30 | 33 |
| 11657390 | 43 | 94 07 956 0 | 20 | 1 | 4000381 | 179 | 10 35 800 9 | 68 | 1 |
| 11657391 | 43 | 94 07 956 0 | 210 | 1 | 4000381 | 209 | 10 04 966 2 | 23 | 2 |
| 11657392 | 43 | 94 07 956 0 | 1000 | 1 | 4000381 | 214 | 10 04 966 3 | 6 | 6 |
| 11659214 | 235 | 11 10 016 7 | 7 | 1 | 4000381 | 228 | 99 39 322 | 57 | 6 |
| 226016702 | 172 | 10 49 858 1 | 100 | 0.57m | 4000381 | 230 | 10 49 880 9 | 131 | 2 |
| 226016702 | 230 | 10 49 880 9 | 120 | 1m | 4000381 | 230 | 10 49 880 9 | 161 | 3 |
| 226016702 | 350 | 10 35 802 8 | 343 | 0.11m | 4000381 | 312 | 10 35 809 3 | 59 | 1 |
| 226016702 | 398 | 10 35 853 1 | 15 | 0.15m | 4000381 | 390 | 10 06 692 0 | 4 | 2 |
| 226016702 | 403 | 10 05 011 2 | 30 | 2.1m | 4000381 | 392 | 10 37 938 6 | 4 | 2 |
| 226016702 | 403 | 10 05 011 2 | 31 | 1.9m | 4000381 | 414 | 70 28 769 | 170 | 4 |
| 226016702 | 452 | 90 18 419 | 60 | 0.3m | 4000381 | 420 | 10 48 808 7 | 160 | 1 |
| 226017802 | 314 | 10 35 801 7 | 510 | 0.75m | 4000381 | 423 | 10 29 036 3 | 540 | 1 |
| 240049802 | 524 | 90 80 278 | 3 | 3 | 4000381 | 427 | 10 29 026 4 | 180 | 4 |
| 240049802 | 525 | 90 72 781 | 14 | 2 | 4000381 | 436 | 10 35 814 1 | 208 | 50 |
| 240049802 | 526 | 90 80 277 | 14 | 2 | 4000381 | 444 | 11 10 266 2 | 25 | 4 |
| 240050802 | 523 | 90 74 796 | 3 | 2 | 4000381 | 444 | 11 10 266 2 | 30 | 14 |
| 240127002 | 429 | 10 29 026 4 | 570 | 3 | 4000381 | 447 | 10 35 814 3 | 27 | 6 |
| 241015402 | 292 | 11 00 707 2 | 10 | 4 | 4000381 | 680 | 10 49 822 9 | 5 | 1 |
| 247021802 | 624 | 10 38 408 5 | 13 | 3 | 4000383 | 249 | 10 84 086 6 | 16 | 4 |
| 247108302 | 308 | 10 35 801 3 | 18 | 1 | 4000383 | 346 | 10 35 802 8 | 33 | 4 |
| 247108402 | 311 | 10 35 809 3 | 36 | 1 | 4000383 | 346 | 10 35 802 8 | 45 | 3 |
| 247126202 | 162 | 10 35 809 2 | 46 | 1 | 4000383 | 444 | 11 10 266 2 | 8 | 8 |
| 247126202 | 301 | 10 35 801 5 | 68 | 1 | 4000383 | 451 | 90 18 419 | 29 | 1 |
| 247126202 | 306 | 10 35 801 4 | 221 | 1 | 4000383 | 646 | 93 74 949 | 14 | 1 |
| 248016802 | 447 | 10 35 814 3 | 40 | 6 | 4000417 | 443 | 99 47 695 | 33 | 2 |
| 248017802 | 312 | 10 35 809 3 | 50 | 6 | 4000420 | 51 | 10 49 883 7 | 53 | 8 |
| 257103802 | 563 | 10 13 281 7 | 15 | 1 | 4000420 | 109 | 90 77 872 | 49 | 12 |
| 3001289 | 459 | 10 84 856 2 | 165 | 1 | 4000420 | 341 | 10 84 584 9 | 21 | 2 |
| 3001445 | 643 | 10 06 090 1 | 3 | 1 | 4000420 | 366 | 10 03 245 2 | 49 | 5 |
| 3001446 | 646 | 93 74 949 | 11 | 1 | 4000420 | 647 | 10 06 428 8 | 5 | 2 |
| 3001590 | 644 | 10 06 097 3 | 3 | 1 | 4000420 | 648 | 10 38 549 0 | 5 | 2 |
| 3021908 | 602 | 90 77 384 | 1 | 1 | 4000466 | 238 | 10 38 502 4 | 72 | 2 |
| 4000282 | 692 | 98 88 308 | 15 | 4 | 4000466 | 241 | 97 58 815 01 | 63 | 2 |
| 4000362 | 67 | 10 07 713 7 | 16 | 4 | 4000466 | 242 | 98 74 988 | 8 | 2 |
| 4000363 | 75 | 56 16 688 | 490 | 2 | 4000466 | 443 | 99 47 695 | 34 | 2 |
| 4000363 | 360 | 10 49 822 5 | 22 | 2 | 4000498 | 280 | 10 40 689 8 | 74 | 1 |
| 4000376 | 170 | 10 49 858 1 | 36 | 2 | 4000498 | 287 | 11 00 359 4 | 20 | 11 |
| 4000376 | 237 | 10 38 502 4 | 33 | 6 | 4000505 | 372 | 10 35 800 4 | 38 | 2 |
| 4000376 | 238 | 10 38 502 4 | 92 | 4 | 4000505 | 377 | 10 35 800 4 | 147 | 2 |
| 4000376 | 251 | 10 84 086 6 | 105 | 2 | 4000505 | 536 | 10 11 551 3 | 11 | 2 |
| 4000376 | 253 | 10 84 086 6 | 121 | 2 | 4000505 | 537 | 10 11 656 2 | 6 | 2 |
| 4000376 | 288 | 10 02 207 8 | 5 | 3 | 4000508 | 71 | 90 73 354 | 29 | 2 |
| 4000379 | 75 | 56 16 688 | 480 | 2 | 4000574 | 310 | 10 35 809 3 | 3 | 4 |

| Item | Page | Assembly | Pos. | Quantity | Item | Page | Assembly | Pos. | Quantity |
|---|---|---|---|---|---|---|---|---|---|
| 4000613 | 121 | 10 41 301 3 | 27 | 4 | 4001596 | 287 | 11 00 359 4 | 23 | 1 |
| 4000613 | 185 | 90 01 790 0 | 77 | 6 | 4001596 | 443 | 99 47 695 | 31 | 4 |
| 4000619 | 301 | 10 35 801 5 | 44 | 8 | 4001606 | 178 | 10 35 800 9 | 26 | 4 |
| 4000619 | 301 | 10 35 801 5 | 58 | 4 | 4001606 | 391 | 10 06 692 0 | 17 | 5 |
| 4000619 | 377 | 10 35 800 4 | 140 | 1 | 4001606 | 396 | 99 47 957 | 10 | 6 |
| 4000619 | 618 | 10 49 830 0 | 36 | 4 | 4001645 | 237 | 10 38 502 4 | 34 | 26 |
| 4000619 | 655 | 10 06 203 8 | 8 | 2 | 4001645 | 238 | 10 38 502 4 | 93 | 4 |
| 4000648 | 242 | 98 74 988 | 6 | 2 | 4001645 | 251 | 10 84 086 6 | 84 | 4 |
| 4000648 | 381 | 99 49 428 | 9 | 2 | 4001645 | 252 | 10 84 086 6 | 106 | 2 |
| 4000657 | 656 | 99 48 785 | 11 | 4 | 4001645 | 253 | 10 84 086 6 | 122 | 2 |
| 4000688 | 345 | 10 22 042 7 | 41 | 1 | 4001645 | 285 | 10 02 211 7 | 9 | 6 |
| 4000704 | 268 | 10 05 981 8 | 12 | 2 | 4001645 | 288 | 10 02 207 8 | 3 | 3 |
| 4000704 | 268 | 10 05 981 8 | 22 | 2 | 4001645 | 420 | 10 48 808 7 | 220 | 2 |
| 4000704 | 377 | 10 35 800 4 | 142 | 4 | 4001645 | 423 | 10 29 036 3 | 595 | 4 |
| 4000704 | 379 | 10 08 167 3 | 7 | 8 | 4001645 | 436 | 10 35 814 1 | 154 | 4 |
| 4000704 | 421 | 10 48 808 7 | 750 | 3 | 4001645 | 442 | 99 47 695 | 28 | 4 |
| 4000704 | 461 | 10 35 852 5 | 7 | 2 | 4001645 | 652 | 10 35 860 1 | 16 | 1 |
| 4000704 | 461 | 10 35 852 5 | 11 | 4 | 4001664 | 477 | 10 11 577 9 | 3 | 12 |
| 4000704 | 461 | 10 35 852 5 | 22 | 2 | 4001696 | 384 | 10 35 817 2 | 26 | 6 |
| 4000704 | 462 | 10 37 283 6 | 8 | 2 | 4001696 | 395 | 10 37 936 3 | 5 | 2 |
| 4000704 | 652 | 10 35 860 1 | 5 | 4 | 4001696 | 429 | 10 29 026 4 | 600 | 1 |
| 4000704 | 680 | 10 49 822 9 | 4 | 1 | 4001696 | 438 | 10 04 824 6 | 9 | 1 |
| 4000746 | 372 | 10 35 800 4 | 22 | 2 | 4001696 | 439 | 11 10 278 6 | 9 | 1 |
| 4000746 | 376 | 10 35 800 4 | 131 | 4 | 4001704 | 371 | 10 07 369 5 | 11 | 10 |
| 4000746 | 391 | 10 06 692 0 | 21 | 2 | 4001704 | 371 | 10 07 369 5 | 21 | 4 |
| 4000746 | 393 | 10 37 938 6 | 21 | 2 | 4001854 | 104 | 10 35 800 6 | 23 | 6 |
| 4000746 | 401 | 10 03 720 9 | 10 | 2 | 4001866 | 241 | 97 58 815 01 | 66 | 2 |
| 4000779 | 279 | 94 02 247 7 | 61 | 4 | 4001869 | 659 | 95 96 399 | 25 | 1 |
| 4000779 | 280 | 10 40 689 8 | 43 | 1 | 4001869 | 665 | 95 90 264 | 25 | 1 |
| 4000779 | 292 | 11 00 707 2 | 20 | 4 | 4001871 | 305 | 10 35 801 4 | 125 | 2 |
| 4000779 | 379 | 10 08 167 3 | 16 | 4 | 4001907 | 455 | 10 49 801 8 | 10 | 4 |
| 4000779 | 390 | 10 06 692 0 | 11 | 1 | 4001927 | 247 | 99 68 625 | 105 | 1 |
| 4000779 | 391 | 10 06 692 0 | 16 | 5 | 4001927 | 262 | 99 68 611 | 105 | 1 |
| 4000779 | 393 | 10 37 938 6 | 16 | 5 | 4001938 | 181 | 90 18 423 | 36 | 1 |
| 4000779 | 447 | 10 35 814 3 | 47 | 1 | 4001940 | 676 | 11 10 231 4 | 3 | 32 |
| 4000779 | 461 | 10 35 852 5 | 8 | 2 | 4001958 | 273 | 90 79 259 | 50 | 1 |
| 4000779 | 462 | 10 37 283 6 | 7 | 2 | 4002017 | 677 | 11 10 265 3 | 6 | 4 |
| 4000784 | 617 | 10 49 830 0 | 26 | 16 | 4002079 | 643 | 10 06 090 1 | 5 | 1 |
| 4000784 | 655 | 10 06 203 8 | 9 | 2 | 4002079 | 646 | 93 74 949 | 13 | 1 |
| 4000828 | 537 | 10 11 656 2 | 7 | 2 | 4002080 | 185 | 90 01 790 0 | 56 | 3 |
| 4000859 | 68 | 94 43 840 | 28 | 3 | 4002164 | 362 | 99 45 116 | 14 | 2 |
| 4000899 | 624 | 10 38 408 5 | 22 | 2 | 4002171 | 618 | 10 49 830 0 | 37 | 8 |
| 4000900 | 338 | 56 17 689 | 17 | 2 | 4002185 | 347 | 10 35 802 8 | 96 | 4 |
| 4000905 | 390 | 10 06 692 0 | 10 | 1 | 4002185 | 347 | 10 35 802 8 | 126 | 4 |
| 4000913 | 160 | 10 35 809 2 | 18 | 2 | 4002185 | 349 | 10 35 802 8 | 218 | 4 |
| 4000913 | 181 | 90 18 423 | 47 | 4 | 4002195 | 159 | 99 29 814 | 7 | 2 |
| 4001246 | 163 | 10 35 809 2 | 107 | 6 | 4002200 | 346 | 10 35 802 8 | 34 | 4 |
| 4001246 | 341 | 10 84 584 9 | 13 | 12 | 4002200 | 346 | 10 35 802 8 | 46 | 3 |
| 4001246 | 451 | 90 18 419 | 28 | 1 | 4002259 | 213 | 10 48 841 6 | 9 | 2 |
| 4001308 | 331 | 10 35 798 3 | 44 | 4 | 4002259 | 216 | 10 10 171 1 | 9 | 2 |
| 4001439 | 545 | 10 11 559 5 | 10 | 1 | 4002259 | 623 | 10 10 171 2 | 9 | 2 |
| 4001446 | 84 | 10 07 713 5 | 18 | 2 | 4002279 | 368 | 56 04 335 | 2 | 1 |
| 4001447 | 68 | 94 43 840 | 18 | 5 | 4002299 | 214 | 10 04 966 3 | 17 | 2 |
| 4001447 | 184 | 90 01 790 0 | 38 | 4 | 4002308 | 421 | 10 48 808 7 | 794 | 1 |
| 4001464 | 329 | 10 35 798 3 | 12 | 8 | 4002386 | 230 | 10 49 880 9 | 61 | 1 |
| 4001521 | 147 | 70 28 075 | 22 | 8 | 4002399 | 411 | 70 28 759 | 240 | 2 |
| 4001571 | 148 | 70 28 075 | 29 | 1 | 4002401 | 432 | 10 48 808 8 | 180 | 10 |
| 4001595 | 372 | 10 35 800 4 | 37 | 2 | 4002417 | 315 | 10 04 272 9 | 10 | 4 |
| 4001595 | 511 | 90 74 505 | 4 | 2 | 4002418 | 147 | 70 28 075 | 20 | 4 |
| 4001595 | 641 | 10 49 881 6 | 23 | 8 | 4002456 | 432 | 10 48 808 8 | 175 | 2 |

| Item | Page | Assembly | Pos. | Quantity | Item | Page | Assembly | Pos. | Quantity |
|---|---|---|---|---|---|---|---|---|---|
| 4002477 | 241 | 97 58 815 01 | 67 | 2 | 4043003 | 310 | 10 35 809 3 | 6 | 4 |
| 4002534 | 427 | 10 29 026 4 | 130 | 4 | 4043003 | 671 | 10 49 815 8 | 50 | 16 |
| 4002612 | 411 | 70 28 759 | 200 | 2 | 4043052 | 99 | 73 67 136 | 2 | 2 |
| 4002612 | 421 | 10 48 808 7 | 380 | 2 | 4043052 | 297 | 99 37 312 | 52 | 2 |
| 4002612 | 428 | 10 29 026 4 | 390 | 4 | 404306801 | 69 | 94 43 840 | 52 | 20 |
| 4002613 | 251 | 10 84 086 6 | 81 | 6 | 4043082 | 163 | 10 35 809 2 | 136 | 1 |
| 4002688 | 301 | 10 35 801 5 | 61 | 2 | 4043082 | 176 | 10 49 858 1 | 209 | 6 |
| 4002689 | 312 | 10 35 809 3 | 53 | 2 | 4043082 | 179 | 10 35 800 9 | 53 | 1 |
| 4002704 | 620 | 10 49 830 0 | 99 | 4 | 4043082 | 350 | 10 35 802 8 | 347 | 2 |
| 4002729 | 122 | 56 16 530 | 31 | 2 | 4043082 | 374 | 10 35 800 4 | 67 | 4 |
| 4002742 | 341 | 10 84 584 9 | 22 | 2 | 4043082 | 376 | 10 35 800 4 | 128 | 8 |
| 4002838 | 440 | 10 04 553 0 | 10 | 4 | 4043082 | 447 | 10 35 814 3 | 46 | 2 |
| 4002850 | 427 | 10 29 026 4 | 200 | 2 | 4043082 | 573 | 90 80 735 | 14 | 2 |
| 4002873 | 313 | 10 35 801 7 | 40 | 1 | 4043089 | 101 | 99 46 045 | 24 | 2 |
| 4002875 | 367 | 10 28 962 9 | 46 | 1 | 4043089 | 214 | 10 04 966 3 | 56 | 2 |
| 4002887 | 286 | 11 00 359 4 | 3 | 7 | 4043090 | 101 | 99 46 045 | 25 | 3 |
| 4002918 | 95 | 10 07 366 1 | 5 | 7 | 4043090 | 176 | 10 49 858 1 | 215 | 1 |
| 4041102 | 681 | 10 28 689 7 | 11 | 1 | 4043090 | 306 | 10 35 801 4 | 227 | 6 |
| 4042002 | 529 | 90 78 680 | 3 | 4 | 4043090 | 447 | 10 35 814 3 | 24 | 3 |
| 4042002 | 681 | 10 28 689 7 | 5 | 2 | 4043090 | 640 | 10 49 817 6 | 27 | 12 |
| 4042003 | 287 | 11 00 359 4 | 22 | 3 | 4043122 | 176 | 10 49 858 1 | 210 | 1 |
| 4042003 | 681 | 10 28 689 7 | 6 | 1 | 4043122 | 178 | 10 35 800 9 | 11 | 2 |
| 404200701 | 170 | 10 49 858 1 | 35 | 2 | 4043122 | 313 | 10 35 801 7 | 19 | 1 |
| 404200701 | 436 | 10 35 814 1 | 203 | 4 | 4043122 | 346 | 10 35 802 8 | 25 | 4 |
| 404200701 | 682 | 10 28 689 7 | 31 | 4 | 4043122 | 354 | 10 35 802 8 | 531 | 1 |
| 4042014 | 133 | 10 22 066 7 | 8 | 4 | 4043122 | 374 | 10 35 800 4 | 76 | 4 |
| 4042014 | 598 | 90 78 961 | 4 | 3 | 4043122 | 632 | 10 38 484 8 | 28 | 2 |
| 404202508 | 212 | 10 48 840 4 | 13 | 12 | 4043124 | 229 | 10 49 880 9 | 21 | 4 |
| 404202508 | 624 | 10 38 408 5 | 23 | 1 | 4043124 | 306 | 10 35 801 4 | 231 | 2 |
| 404202508 | 632 | 10 38 484 8 | 35 | 2 | 4043124 | 313 | 10 35 801 7 | 20 | 1 |
| 4042035 | 461 | 10 35 852 5 | 3 | 4 | 4043124 | 371 | 10 07 369 5 | 25 | 1 |
| 404204405 | 523 | 90 74 796 | 2 | 1 | 4043124 | 686 | 10 13 268 6 | 22 | 12 |
| 404205208 | 367 | 10 28 962 9 | 50 | 4 | 4043124 | 690 | 98 82 766 | 28 | 4 |
| 404205308 | 287 | 11 00 359 4 | 19 | 7 | 4043127 | 178 | 10 35 800 9 | 13 | 2 |
| 404205408 | 216 | 10 10 171 1 | 10 | 2 | 4043127 | 181 | 90 18 423 | 45 | 4 |
| 404205408 | 623 | 10 10 171 2 | 10 | 2 | 4043127 | 228 | 99 39 322 | 12 | 1 |
| 404205608 | 147 | 70 28 075 | 21 | 1 | 4043127 | 229 | 10 49 880 9 | 31 | 4 |
| 4042062 | 246 | 10 46 993 3 | 90 | 2 | 4043127 | 300 | 10 35 801 5 | 36 | 4 |
| 4042062 | 261 | 10 46 993 2 | 90 | 2 | 4043127 | 375 | 10 35 800 4 | 97 | 4 |
| 4042062 | 442 | 99 47 695 | 18 | 4 | 4043127 | 619 | 10 49 830 0 | 61 | 2 |
| 404209808 | 531 | 10 11 659 1 | 4 | 1 | 404313301 | 296 | 10 35 801 2 | 200 | 4 |
| 4042106 | 164 | 10 45 475 2 | 15 | 4 | 404313401 | 309 | 10 35 801 3 | 40 | 4 |
| 4042109 | 592 | 10 11 599 3 | 6 | 4 | 4043160 | 280 | 10 40 689 8 | 21 | 4 |
| 4042150 | 329 | 10 35 798 3 | 15 | 8 | 4043160 | 377 | 10 35 800 4 | 151 | 5 |
| 4042150 | 543 | 10 11 628 5 | 85 | 2 | 4043160 | 624 | 10 38 408 5 | 11 | 2 |
| 4042197 | 297 | 99 37 312 | 45 | 2 | 4043163 | 160 | 10 35 809 2 | 12 | 2 |
| 4042241 | 347 | 10 35 802 8 | 80 | 4 | 4043163 | 296 | 10 35 801 2 | 260 | 2 |
| 4043000 | 160 | 10 35 809 2 | 14 | 4 | 4043163 | 309 | 10 35 801 3 | 39 | 12 |
| 4043000 | 229 | 10 49 880 9 | 41 | 3 | 4043163 | 384 | 10 35 817 2 | 15 | 2 |
| 4043000 | 310 | 10 35 809 3 | 13 | 4 | 4043163 | 386 | 10 35 792 6 | 15 | 2 |
| 4043000 | 311 | 10 35 809 3 | 18 | 4 | 4043163 | 618 | 10 49 830 0 | 45 | 2 |
| 4043000 | 377 | 10 35 800 4 | 146 | 2 | 4043163 | 620 | 10 49 830 0 | 132 | 2 |
| 4043000 | 414 | 70 28 769 | 140 | 6 | 4043164 | 75 | 56 16 688 | 160 | 4 |
| 4043000 | 528 | 10 11 683 9 | 3 | 2 | 4043164 | 269 | 10 06 017 4 | 31 | 1 |
| 4043000 | 544 | 90 73 767 | 6 | 2 | 4043164 | 270 | 10 06 017 5 | 31 | 1 |
| 4043000 | 599 | 90 80 006 | 4 | 4 | 4043164 | 300 | 10 35 801 5 | 26 | 4 |
| 4043002 | 228 | 99 39 322 | 21 | 1 | 4043164 | 305 | 10 35 801 4 | 155 | 4 |
| 4043002 | 228 | 99 39 322 | 31 | 1 | 4043164 | 331 | 10 35 798 3 | 58 | 4 |
| 4043002 | 632 | 10 38 484 8 | 42 | 2 | 4043164 | 382 | 99 29 189 | 15 | 2 |
| 4043003 | 309 | 10 35 801 3 | 31 | 4 | 4043164 | 616 | 10 49 830 0 | 16 | 20 |

| Item | Page | Assembly | Pos. | Quantity | Item | Page | Assembly | Pos. | Quantity |
|---|---|---|---|---|---|---|---|---|---|
| 4043164 | 656 | 99 48 785 | 13 | 2 | 4119106 | 296 | 10 35 801 2 | 195 | 4 |
| 404316901 | 184 | 90 01 790 0 | 21 | 2 | 4119106 | 296 | 10 35 801 2 | 210 | 4 |
| 404339601 | 69 | 94 43 840 | 72 | 12 | 4119106 | 296 | 10 35 801 2 | 330 | 4 |
| 406143508 | 552 | 10 12 190 8 | 7 | 2 | 4119106 | 310 | 10 35 809 3 | 8 | 4 |
| 4062002 | 411 | 70 28 759 | 380 | 2 | 413412301 | 682 | 10 28 689 7 | 39 | 4 |
| 4062066 | 98 | 10 04 942 6 | 25 | 15 | 420001201 | 563 | 10 13 281 7 | 13 | 5 |
| 4062068 | 647 | 10 06 428 8 | 4 | 1 | 4216025 | 379 | 10 08 167 3 | 8 | 8 |
| 4062068 | 648 | 10 38 549 0 | 4 | 1 | 421802008 | 285 | 10 02 211 7 | 6 | 12 |
| 4065060 | 62 | 93 45 153 | 19 | 4 | 421802008 | 287 | 11 00 359 4 | 33 | 4 |
| 4065099 | 64 | 91 41 597 | 60 | 3 | 422001001 | 511 | 90 74 505 | 5 | 1 |
| 4065099 | 423 | 10 29 036 3 | 570 | 3 | 4229911 | 110 | 90 77 872 | 50 | 4 |
| 4065164 | 102 | 99 37 298 | 15 | 4 | 4229911 | 238 | 10 38 502 4 | 56 | 4 |
| 4066042 | 95 | 10 07 366 1 | 21 | 4 | 4229911 | 241 | 97 58 815 01 | 70 | 4 |
| 4066042 | 268 | 10 05 981 8 | 11 | 2 | 4229911 | 249 | 10 84 086 6 | 56 | 4 |
| 4066042 | 268 | 10 05 981 8 | 21 | 2 | 4229911 | 251 | 10 84 086 6 | 87 | 2 |
| 4066042 | 354 | 10 35 802 8 | 505 | 2 | 4229911 | 388 | 10 07 307 3 | 21 | 4 |
| 4066042 | 379 | 10 08 167 3 | 17 | 4 | 4229911 | 394 | 10 06 691 8 | 4 | 4 |
| 4066042 | 409 | 10 03 552 9 | 150 | 2 | 4229911 | 399 | 99 47 961 | 11 | 4 |
| 4066042 | 411 | 70 28 759 | 370 | 2 | 4229911 | 400 | 10 02 525 4 | 10 | 4 |
| 4066042 | 414 | 70 28 769 | 210 | 2 | 4229911 | 402 | 10 35 387 9 | 10 | 4 |
| 4066093 | 293 | 98 79 063 | 20 | 16 | 4229911 | 442 | 99 47 695 | 4 | 6 |
| 4066093 | 375 | 10 35 800 4 | 83 | 2 | 4229911 | 443 | 99 47 695 | 46 | 1 |
| 4066098 | 376 | 10 35 800 4 | 123 | 6 | 4229911 | 447 | 10 35 814 3 | 33 | 1 |
| 4066098 | 429 | 10 29 026 4 | 530 | 2 | 4229911 | 448 | 10 04 961 6 | 11 | 4 |
| 4066098 | 430 | 10 29 026 4 | 740 | 2 | 4229913 | 62 | 93 45 153 | 12 | 2 |
| 4066120 | 341 | 10 84 584 9 | 7 | 8 | 4229913 | 159 | 99 29 814 | 8 | 2 |
| 4066120 | 624 | 10 38 408 5 | 16 | 2 | 4229913 | 388 | 10 07 307 3 | 24 | 2 |
| 4066122 | 95 | 10 07 366 1 | 11 | 8 | 4229913 | 394 | 10 06 691 8 | 7 | 2 |
| 4066122 | 342 | 10 84 584 9 | 71 | 2 | 4229913 | 399 | 99 47 961 | 14 | 2 |
| 4066122 | 430 | 10 29 026 4 | 770 | 1 | 4229913 | 400 | 10 02 525 4 | 20 | 2 |
| 4066124 | 104 | 10 35 800 6 | 6 | 6 | 4229913 | 438 | 10 04 824 6 | 10 | 1 |
| 4066124 | 104 | 10 35 800 6 | 12 | 4 | 4229913 | 439 | 11 10 278 6 | 10 | 1 |
| 4066124 | 372 | 10 35 800 4 | 24 | 3 | 4239000 | 170 | 10 49 858 1 | 37 | 2 |
| 4066124 | 372 | 10 35 800 4 | 31 | 16 | 4239000 | 253 | 10 84 086 6 | 123 | 2 |
| 4066124 | 373 | 10 35 800 4 | 41 | 5 | 4239019 | 69 | 94 43 840 | 53 | 12 |
| 4066124 | 373 | 10 35 800 4 | 51 | 5 | 4239020 | 68 | 94 43 840 | 12 | 8 |
| 4066124 | 373 | 10 35 800 4 | 61 | 5 | 423910801 | 176 | 10 49 858 1 | 206 | 6 |
| 4066124 | 374 | 10 35 800 4 | 72 | 4 | 423910801 | 229 | 10 49 880 9 | 53 | 4 |
| 4066124 | 375 | 10 35 800 4 | 111 | 5 | 423910801 | 241 | 97 58 815 01 | 71 | 2 |
| 4066124 | 628 | 10 49 823 5 | 8 | 4 | 423910801 | 268 | 10 05 981 8 | 13 | 4 |
| 4066202 | 293 | 98 79 063 | 10 | 4 | 423910801 | 268 | 10 05 981 8 | 23 | 4 |
| 4068019 | 228 | 99 39 322 | 55 | 5 | 423910801 | 268 | 10 05 981 8 | 62 | 6 |
| 4068085 | 301 | 10 35 801 5 | 48 | 8 | 423910801 | 268 | 10 05 981 8 | 67 | 4 |
| 4068085 | 301 | 10 35 801 5 | 57 | 4 | 423910801 | 329 | 10 35 798 3 | 16 | 8 |
| 4068556 | 108 | 90 77 872 | 44 | 8 | 423910801 | 331 | 10 35 798 3 | 72 | 6 |
| 407208301 | 71 | 90 73 354 | 28 | 2 | 423910801 | 354 | 10 35 802 8 | 507 | 2 |
| 407350208 | 486 | 90 79 483 | 15 | 3 | 423910801 | 451 | 90 18 419 | 38 | 6 |
| 4079160 | 545 | 10 11 559 5 | 8 | 6 | 423910801 | 452 | 90 18 419 | 43 | 6 |
| 4079160 | 599 | 90 80 006 | 14 | 2 | 423910801 | 461 | 10 35 852 5 | 12 | 4 |
| 4079240 | 542 | 10 11 628 5 | 24 | 3 | 423910801 | 461 | 10 35 852 5 | 23 | 2 |
| 4079240 | 543 | 10 11 628 5 | 74 | 1 | 423910801 | 649 | 93 87 822 | 4 | 1 |
| 408252101 | 429 | 10 29 026 4 | 622 | 4 | 4242024 | 658 | 95 87 580 | 25 | 1 |
| 408311008 | 420 | 10 48 808 7 | 230 | 2 | 4242024 | 664 | 95 87 597 | 25 | 1 |
| 409361108 | 391 | 10 06 692 0 | 27 | 8 | 4242028 | 657 | 94 02 019 4 | 25 | 1 |
| 409361108 | 393 | 10 37 938 6 | 27 | 8 | 4242028 | 663 | 94 00 606 1 | 25 | 1 |
| 409710701 | 69 | 94 43 840 | 54 | 3 | 4280022 | 511 | 90 74 505 | 6 | 1 |
| 4097530 | 184 | 90 01 790 0 | 2 | 1 | 4280029 | 68 | 94 43 840 | 38 | 3 |
| 411508001 | 241 | 97 58 815 01 | 65 | 1 | 4280030 | 114 | 10 22 040 9 | 36 | 1 |
| 4119030 | 411 | 70 28 759 | 150 | 2 | 4280034 | 128 | 98 89 282 | 41 | 1 |
| 4119106 | 160 | 10 35 809 2 | 7 | 12 | 4280034 | 149 | 90 73 158 | 41 | 1 |

| Item | Page | Assembly | Pos. | Quantity | Item | Page | Assembly | Pos. | Quantity |
|---|---|---|---|---|---|---|---|---|---|
| 4280034 | 197 | 90 74 285 | 41 | 1 | 4600222 | 453 | 90 18 426 | 5 | 3 |
| 4281006 | 692 | 98 88 308 | 18 | 1 | 4600305 | 238 | 10 38 502 4 | 74 | 1 |
| 4281018 | 149 | 90 73 158 | 40 | 1 | 4600305 | 331 | 10 35 798 3 | 45 | 4 |
| 4281018 | 197 | 90 74 285 | 40 | 1 | 4600305 | 344 | 10 84 584 9 | 124 | 1 |
| 4281023 | 128 | 98 89 282 | 40 | 1 | 4600305 | 432 | 10 48 808 8 | 110 | 12 |
| 428109501 | 69 | 94 43 840 | 66 | 1 | 4600305 | 442 | 99 47 695 | 17 | 4 |
| 429612001 | 69 | 94 43 840 | 47 | 1 | 4600334 | 392 | 10 37 938 6 | 12 | 2 |
| 4330011 | 384 | 10 35 817 2 | 10 | 1 | 4600335 | 101 | 99 46 045 | 23 | 3 |
| 4330011 | 386 | 10 35 792 6 | 10 | 1 | 4600335 | 312 | 10 35 809 3 | 55 | 1 |
| 4330011 | 388 | 10 07 307 3 | 12 | 1 | 4600335 | 447 | 10 35 814 3 | 42 | 3 |
| 4330011 | 389 | 10 37 283 9 | 12 | 1 | 4600335 | 619 | 10 49 830 0 | 55 | 4 |
| 4330011 | 398 | 10 35 853 1 | 5 | 1 | 4600335 | 653 | 10 00 297 1 | 320 | 4 |
| 4330011 | 399 | 99 47 961 | 5 | 1 | 4600337 | 284 | 10 02 208 3 | 5 | 3 |
| 4330015 | 312 | 10 35 809 3 | 71 | 2 | 4600337 | 286 | 11 00 359 4 | 5 | 10 |
| 4330049 | 644 | 10 06 097 3 | 5 | 1 | 4600337 | 288 | 10 02 207 8 | 6 | 3 |
| 4351002 | 110 | 90 77 872 | 74 | 1 | 4600337 | 442 | 99 47 695 | 27 | 4 |
| 4451001 | 283 | 10 02 206 9 | 4 | 4 | 4600340 | 625 | 10 38 408 6 | 51 | 2 |
| 4600021 | 94 | 99 48 085 | 11 | 4 | 4600341 | 217 | 90 64 786 | 61 | 1 |
| 4600021 | 95 | 10 07 366 1 | 6 | 7 | 4600341 | 219 | 10 01 461 1 | 61 | 10 |
| 4600031 | 64 | 91 41 597 | 70 | 3 | 4600342 | 217 | 90 64 786 | 51 | 1 |
| 4600033 | 229 | 10 49 880 9 | 42 | 3 | 4600342 | 219 | 10 01 461 1 | 51 | 10 |
| 4600036 | 284 | 10 02 208 3 | 4 | 3 | 4600348 | 97 | 10 35 800 7 | 4 | 12 |
| 4600036 | 286 | 11 00 359 4 | 4 | 10 | 4600366 | 372 | 10 35 800 4 | 17 | 4 |
| 4600036 | 288 | 10 02 207 8 | 4 | 3 | 4600377 | 563 | 10 13 281 7 | 14 | 5 |
| 4600048 | 436 | 10 35 814 1 | 206 | 2 | 4600385 | 581 | 10 11 557 7 | 7 | 15 |
| 4600048 | 447 | 10 35 814 3 | 32 | 1 | 4600505 | 672 | 10 49 815 8 | 62 | 4 |
| 4600048 | 586 | 90 76 534 | 3 | 1 | 4600507 | 312 | 10 35 809 3 | 46 | 2 |
| 4600048 | 588 | 90 79 206 | 3 | 1 | 4600516 | 207 | 99 46 408 | 11 | 1 |
| 4600067 | 168 | 52 11 460 | 2 | 2 | 4600516 | 207 | 99 46 408 | 16 | 2 |
| 4600067 | 207 | 99 46 408 | 14 | 2 | 4600518 | 100 | 99 46 045 | 18 | 1 |
| 4600068 | 99 | 73 67 136 | 3 | 2 | 4600518 | 297 | 99 37 312 | 22 | 3 |
| 4600068 | 168 | 52 11 460 | 3 | 2 | 4600544 | 212 | 10 48 840 4 | 11 | 1 |
| 4600079 | 292 | 11 00 707 2 | 30 | 4 | 4600552 | 353 | 10 35 802 8 | 471 | 4 |
| 4600079 | 365 | 10 03 245 2 | 32 | 28 | 4600567 | 388 | 10 07 307 3 | 25 | 2 |
| 4600079 | 421 | 10 48 808 7 | 470 | 3 | 4600567 | 394 | 10 06 691 8 | 8 | 2 |
| 4600122 | 536 | 10 11 551 3 | 7 | 2 | 4600567 | 399 | 99 47 961 | 15 | 2 |
| 4600149 | 94 | 99 48 085 | 10 | 4 | 4600567 | 400 | 10 02 525 4 | 22 | 2 |
| 4600169 | 75 | 56 16 688 | 150 | 4 | 4600579 | 313 | 10 35 801 7 | 44 | 1 |
| 4600169 | 300 | 10 35 801 5 | 31 | 4 | 4600579 | 313 | 10 35 801 7 | 91 | 1 |
| 4600175 | 118 | 10 22 041 7 | 12 | 4 | 4600579 | 362 | 99 45 116 | 6 | 2 |
| 4600184 | 165 | 10 45 475 2 | 24 | 4 | 4600579 | 362 | 99 45 116 | 15 | 2 |
| 4600184 | 214 | 10 04 966 3 | 42 | 2 | 4600579 | 444 | 11 10 266 2 | 47 | 4 |
| 4600184 | 305 | 10 35 801 4 | 114 | 2 | 4600579 | 619 | 10 49 830 0 | 62 | 2 |
| 4600184 | 329 | 10 35 798 3 | 29 | 12 | 4600579 | 641 | 10 49 881 6 | 25 | 12 |
| 4600184 | 378 | 10 35 800 4 | 166 | 12 | 4600579 | 643 | 10 06 090 1 | 6 | 1 |
| 4600184 | 429 | 10 29 026 4 | 510 | 2 | 4600580 | 433 | 10 48 808 8 | 410 | 6 |
| 4600184 | 636 | 11 10 283 0 | 8 | 4 | 4600625 | 285 | 10 02 211 7 | 10 | 6 |
| 4600184 | 672 | 10 49 815 8 | 83 | 4 | 4600668 | 51 | 10 49 883 7 | 51 | 8 |
| 4600184 | 672 | 10 49 815 8 | 143 | 4 | 4600668 | 51 | 10 49 883 7 | 64 | 8 |
| 4600198 | 237 | 10 38 502 4 | 28 | 4 | 4600701 | 645 | 10 49 833 5 | 3 | 1 |
| 4600198 | 268 | 10 05 981 8 | 7 | 4 | 4600723 | 421 | 10 48 808 7 | 720 | 2 |
| 4600198 | 391 | 10 06 692 0 | 26 | 8 | 4600723 | 433 | 10 48 808 8 | 320 | 4 |
| 4600198 | 393 | 10 37 938 6 | 26 | 8 | 4600728 | 362 | 99 45 116 | 5 | 2 |
| 4600198 | 433 | 10 48 808 8 | 330 | 4 | 4600741 | 361 | 10 49 822 5 | 66 | 4 |
| 4600198 | 433 | 10 48 808 8 | 460 | 2 | 4600783 | 101 | 99 46 045 | 26 | 3 |
| 4600200 | 238 | 10 38 502 4 | 71 | 2 | 4600783 | 179 | 10 35 800 9 | 54 | 1 |
| 4600200 | 242 | 98 74 988 | 7 | 4 | 4600783 | 241 | 97 58 815 01 | 68 | 1 |
| 4600203 | 98 | 10 04 942 6 | 28 | 1 | 4600783 | 374 | 10 35 800 4 | 66 | 2 |
| 4600218 | 99 | 73 67 136 | 4 | 4 | 4600783 | 428 | 10 29 026 4 | 430 | 1 |
| 4600218 | 168 | 52 11 460 | 4 | 4 | 4600791 | 209 | 10 04 966 2 | 5 | 2 |

| Item | Page | Assembly | Pos. | Quantity | Item | Page | Assembly | Pos. | Quantity |
|---|---|---|---|---|---|---|---|---|---|
| 4600814 | 243 | 73 73 807 | 24 | 2 | 4772028 | 620 | 10 49 830 0 | 70 | 1 |
| 4600815 | 243 | 73 73 807 | 25 | 2 | 4774001 | 313 | 10 35 801 7 | 61 | 3 |
| 4600856 | 191 | 93 33 333 01 | 9 | 1 | 4774001 | 313 | 10 35 801 7 | 86 | 3 |
| 4600947 | 356 | 10 08 743 7 | 2 | 4 | 4774003 | 100 | 99 46 045 | 5 | 2 |
| 4600947 | 361 | 10 49 822 5 | 72 | 4 | 4774003 | 304 | 10 35 801 4 | 61 | 1 |
| 4601015 | 375 | 10 35 800 4 | 81 | 2 | 4774006 | 304 | 10 35 801 4 | 55 | 1 |
| 4601105 | 162 | 10 35 809 2 | 62 | 6 | 4774006 | 306 | 10 35 801 4 | 198 | 1 |
| 4601173 | 160 | 10 35 809 2 | 17 | 8 | 4774010 | 620 | 10 49 830 0 | 72 | 1 |
| 4601191 | 360 | 10 49 822 5 | 41 | 24 | 4774011 | 620 | 10 49 830 0 | 69 | 1 |
| 4601191 | 671 | 10 49 815 8 | 7 | 8 | 4774012 | 105 | 10 06 658 8 | 7 | 1 |
| 4601243 | 67 | 10 07 713 7 | 23 | 4 | 4774024 | 217 | 90 64 786 | 50 | 1 |
| 4601243 | 640 | 10 49 817 6 | 23 | 6 | 4774024 | 219 | 10 01 461 1 | 50 | 10 |
| 4601316 | 650 | 93 88 597 | 3 | 1 | 4774024 | 598 | 90 78 961 | 10 | 2 |
| 4601375 | 209 | 10 04 966 2 | 11 | 3 | 477700514 | 620 | 10 49 830 0 | 73 | 1 |
| 4601375 | 436 | 10 35 814 1 | 205 | 17 | 4782008 | 102 | 99 37 298 | 92 | 1 |
| 4601375 | 680 | 10 49 822 9 | 18 | 2 | 4820018 | 304 | 10 35 801 4 | 12 | 4 |
| 4601376 | 417 | 70 28 831 | 540 | 4 | 482330814 | 305 | 10 35 801 4 | 120 | 1 |
| 4601386 | 420 | 10 48 808 7 | 340 | 8 | 482430314 | 314 | 10 35 801 7 | 180 | 6 |
| 4601426 | 559 | 10 11 646 4 | 6 | 1 | 482430314 | 343 | 10 84 584 9 | 82 | 1 |
| 4601461 | 213 | 10 48 841 6 | 10 | 2 | 482431414 | 620 | 10 49 830 0 | 67 | 1 |
| 4601513 | 242 | 98 74 988 | 5 | 2 | 4900027 | 304 | 10 35 801 4 | 54 | 1 |
| 4635044 | 102 | 99 37 298 | 96 | 2 | 4900027 | 306 | 10 35 801 4 | 197 | 1 |
| 4635142 | 163 | 10 35 809 2 | 131 | 4 | 4900038 | 313 | 10 35 801 7 | 60 | 3 |
| 4635197 | 268 | 10 05 981 8 | 30 | 4 | 4900038 | 313 | 10 35 801 7 | 85 | 3 |
| 4635246 | 133 | 10 22 066 7 | 7 | 1 | 4900053 | 463 | 10 35 804 3 | 3 | 4 |
| 4635258 | 432 | 10 48 808 8 | 120 | 12 | 4900053 | 466 | 10 49 805 9 | 3 | 4 |
| 4635258 | 432 | 10 48 808 8 | 170 | 10 | 4900089 | 108 | 90 77 872 | 39 | 2 |
| 4635283 | 95 | 10 07 366 1 | 12 | 8 | 4900089 | 393 | 10 37 938 6 | 17 | 5 |
| 4635283 | 371 | 10 07 369 5 | 12 | 10 | 4900093 | 296 | 10 35 801 2 | 320 | 4 |
| 4635283 | 371 | 10 07 369 5 | 22 | 4 | 4900093 | 402 | 10 35 387 9 | 20 | 2 |
| 4635283 | 372 | 10 35 800 4 | 16 | 4 | 4900100 | 69 | 94 43 840 | 51 | 12 |
| 4635283 | 372 | 10 35 800 4 | 25 | 3 | 4900125 | 244 | 10 05 879 2 | 12 | 1 |
| 4635283 | 372 | 10 35 800 4 | 32 | 16 | 4900125 | 259 | 10 05 879 4 | 12 | 1 |
| 4635283 | 373 | 10 35 800 4 | 42 | 5 | 4900125 | 402 | 10 35 387 9 | 22 | 2 |
| 4635283 | 373 | 10 35 800 4 | 52 | 5 | 4900128 | 241 | 97 58 815 01 | 62 | 1 |
| 4635283 | 373 | 10 35 800 4 | 62 | 5 | 4900130 | 273 | 90 79 259 | 47 | 2 |
| 4635283 | 374 | 10 35 800 4 | 71 | 4 | 4900169 | 102 | 99 37 298 | 94 | 1 |
| 4635283 | 375 | 10 35 800 4 | 112 | 5 | 4900188 | 331 | 10 35 798 3 | 73 | 6 |
| 4635283 | 377 | 10 35 800 4 | 152 | 5 | 4900188 | 451 | 90 18 419 | 37 | 6 |
| 4635283 | 378 | 10 35 800 4 | 167 | 12 | 4900188 | 452 | 90 18 419 | 42 | 6 |
| 4635302 | 179 | 10 35 800 9 | 67 | 1 | 4900262 | 542 | 10 11 628 5 | 25 | 8 |
| 4635318 | 308 | 10 35 801 3 | 27 | 1 | 4900262 | 543 | 10 11 628 5 | 75 | 5 |
| 4635344 | 433 | 10 48 808 8 | 470 | 2 | 4900268 | 110 | 90 77 872 | 70 | 2 |
| 4635455 | 101 | 99 46 045 | 22 | 2 | 4900305 | 624 | 10 38 408 5 | 20 | 3 |
| 4635455 | 312 | 10 35 809 3 | 54 | 1 | 4900305 | 632 | 10 38 484 8 | 33 | 2 |
| 472330208 | 225 | 10 06 014 6 | 11 | 2 | 4900313 | 365 | 10 03 245 2 | 37 | 2 |
| 472330208 | 297 | 99 37 312 | 27 | 2 | 4900336 | 238 | 10 38 502 4 | 70 | 1 |
| 472330208 | 343 | 10 84 584 9 | 83 | 2 | 4900336 | 241 | 97 58 815 01 | 60 | 2 |
| 472330208 | 353 | 10 35 802 8 | 430 | 1 | 4900372 | 416 | 70 28 842 | 630 | 2 |
| 472330208 | 354 | 10 35 802 8 | 518 | 1 | 4900372 | 428 | 10 29 026 4 | 330 | 1 |
| 472430408 | 312 | 10 35 809 3 | 42 | 1 | 4900454 | 553 | 90 79 964 | 9 | 3 |
| 472531508 | 343 | 10 84 584 9 | 95 | 2 | 4900457 | 164 | 10 45 475 2 | 23 | 2 |
| 4755005 | 297 | 99 37 312 | 21 | 2 | 4900457 | 167 | 10 35 508 4 | 21 | 6 |
| 4771000 | 217 | 90 64 786 | 60 | 1 | 4900486 | 105 | 10 06 658 8 | 5 | 1 |
| 4771000 | 219 | 10 01 461 1 | 60 | 10 | 4900486 | 304 | 10 35 801 4 | 17 | 1 |
| 4771000 | 598 | 90 78 961 | 10 | 2 | 4900486 | 305 | 10 35 801 4 | 135 | 1 |
| 4771003 | 100 | 99 46 045 | 6 | 2 | 4900507 | 218 | 90 64 786 | 150 | 1 |
| 4771020 | 218 | 90 64 786 | 160 | 1 | 4900507 | 220 | 10 01 461 1 | 150 | 10 |
| 4771020 | 220 | 10 01 461 1 | 160 | 10 | 4900507 | 624 | 10 38 408 5 | 19 | 3 |
| 4772024 | 304 | 10 35 801 4 | 60 | 1 | 4900507 | 632 | 10 38 484 8 | 34 | 2 |

| Item | Page | Assembly | Pos. | Quantity | Item | Page | Assembly | Pos. | Quantity |
|---|---|---|---|---|---|---|---|---|---|
| 4900531 | 371 | 10 07 369 5 | 26 | 1 | 4901294 | 432 | 10 48 808 8 | 260 | 6 |
| 4900531 | 375 | 10 35 800 4 | 82 | 4 | 4901362 | 268 | 10 05 981 8 | 61 | 6 |
| 4900539 | 241 | 97 58 815 01 | 61 | 2 | 4901362 | 268 | 10 05 981 8 | 66 | 4 |
| 4900546 | 109 | 90 77 872 | 48 | 4 | 4901395 | 243 | 73 73 807 | 23 | 2 |
| 4900546 | 269 | 10 06 017 4 | 33 | 1 | 4901429 | 104 | 10 35 800 6 | 24 | 6 |
| 4900546 | 270 | 10 06 017 5 | 33 | 1 | 4901450 | 575 | 10 11 553 9 | 4 | 3 |
| 4900546 | 309 | 10 35 801 3 | 48 | 2 | 4901471 | 672 | 10 49 815 8 | 57 | 8 |
| 4900546 | 371 | 10 07 369 5 | 13 | 10 | 4901473 | 417 | 70 28 831 | 580 | 2 |
| 4900546 | 371 | 10 07 369 5 | 23 | 4 | 4901512 | 241 | 97 58 815 01 | 40 | 9 |
| 4900546 | 690 | 98 82 766 | 17 | 1 | 4901513 | 241 | 97 58 815 01 | 41 | 5 |
| 4900581 | 456 | 99 37 333 | 5 | 4 | 4901513 | 442 | 99 47 695 | 24 | 5 |
| 4900582 | 296 | 10 35 801 2 | 190 | 2 | 4901530 | 437 | 99 41 040 | 6 | 2 |
| 4900582 | 309 | 10 35 801 3 | 47 | 2 | 4901531 | 315 | 10 04 272 9 | 12 | 4 |
| 4900605 | 271 | 90 79 258 | 46 | 3 | 4901531 | 321 | 10 28 046 1 | 19 | 4 |
| 4900605 | 273 | 90 79 259 | 46 | 3 | 4901573 | 212 | 10 48 840 4 | 8 | 4 |
| 4900605 | 381 | 99 49 428 | 10 | 2 | 4901573 | 312 | 10 35 809 3 | 56 | 1 |
| 4900605 | 448 | 10 04 961 6 | 10 | 4 | 4901573 | 314 | 10 35 801 7 | 469 | 7 |
| 4900609 | 359 | 10 49 822 5 | 17 | 1 | 4901573 | 350 | 10 35 802 8 | 345 | 1 |
| 4900609 | 671 | 10 49 815 8 | 25 | 4 | 4901573 | 640 | 10 49 817 6 | 28 | 12 |
| 4900704 | 105 | 10 06 658 8 | 6 | 1 | 4901606 | 62 | 93 45 153 | 18 | 2 |
| 4900778 | 482 | 10 11 916 7 | 12 | 6 | 4901606 | 161 | 10 35 809 2 | 21 | 2 |
| 4900778 | 573 | 90 80 735 | 25 | 2 | 4901606 | 386 | 10 35 792 6 | 26 | 6 |
| 4900855 | 302 | 10 35 801 5 | 88 | 8 | 4901607 | 451 | 90 18 419 | 7 | 6 |
| 4900855 | 311 | 10 35 809 3 | 28 | 16 | 4901651 | 443 | 99 47 695 | 45 | 1 |
| 4900973 | 67 | 10 07 713 7 | 22 | 12 | 4901675 | 167 | 10 35 508 4 | 23 | 4 |
| 4900980 | 641 | 10 49 881 6 | 22 | 4 | 4901690 | 366 | 10 03 245 2 | 48 | 5 |
| 4900981 | 160 | 10 35 809 2 | 16 | 2 | 4901782 | 624 | 10 38 408 5 | 12 | 2 |
| 4900990 | 296 | 10 35 801 2 | 310 | 4 | 4901782 | 624 | 10 38 408 5 | 17 | 2 |
| 4901067 | 230 | 10 49 880 9 | 81 | 4 | 4901782 | 632 | 10 38 484 8 | 29 | 2 |
| 4901096 | 275 | 94 76 369 | 4 | 2 | 4901870 | 251 | 10 84 086 6 | 102 | 4 |
| 4901096 | 276 | 94 76 441 | 4 | 2 | 4901878 | 287 | 11 00 359 4 | 21 | 11 |
| 4901108 | 688 | 10 11 856 1 | 27 | 5 | 4901879 | 641 | 10 49 881 6 | 24 | 25 |
| 4901130 | 312 | 10 35 809 3 | 43 | 1 | 4901886 | 237 | 10 38 502 4 | 32 | 26 |
| 4901130 | 619 | 10 49 830 0 | 51 | 1 | 4901886 | 251 | 10 84 086 6 | 83 | 4 |
| 4901131 | 619 | 10 49 830 0 | 52 | 1 | 4901886 | 652 | 10 35 860 1 | 15 | 1 |
| 4901138 | 179 | 10 35 800 9 | 51 | 2 | 4901968 | 102 | 99 37 298 | 86 | 2 |
| 4901138 | 179 | 10 35 800 9 | 151 | 2 | 4902030 | 116 | 10 22 041 1 | 7 | 4 |
| 4901138 | 280 | 10 40 689 8 | 32 | 4 | 4902030 | 656 | 99 48 785 | 3 | 4 |
| 4901150 | 620 | 10 49 830 0 | 66 | 1 | 4902068 | 671 | 10 49 815 8 | 10 | 8 |
| 4901159 | 106 | 10 29 787 3 | 3 | 4 | 4902073 | 243 | 73 73 807 | 15 | 2 |
| 4901159 | 107 | 10 29 787 4 | 2 | 4 | 4902214 | 645 | 10 49 833 5 | 4 | 1 |
| 4901159 | 353 | 10 35 802 8 | 477 | 2 | 4902231 | 101 | 99 46 045 | 31 | 2 |
| 4901159 | 435 | 10 35 814 1 | 22 | 4 | 4902231 | 176 | 10 49 858 1 | 208 | 2 |
| 4901161 | 115 | 10 22 041 0 | 17 | 8 | 4902231 | 178 | 10 35 800 9 | 21 | 2 |
| 4901161 | 249 | 10 84 086 6 | 31 | 1 | 4902231 | 180 | 10 04 871 3 | 3 | 8 |
| 4901166 | 343 | 10 84 584 9 | 94 | 2 | 4902231 | 214 | 10 04 966 3 | 7 | 2 |
| 4901215 | 649 | 93 87 822 | 3 | 1 | 4902231 | 229 | 10 49 880 9 | 52 | 4 |
| 4901216 | 51 | 10 49 883 7 | 56 | 8 | 4902231 | 230 | 10 49 880 9 | 54 | 2 |
| 4901217 | 163 | 10 35 809 2 | 140 | 1 | 4902231 | 231 | 10 49 880 9 | 166 | 1 |
| 4901217 | 279 | 94 02 247 7 | 40 | 4 | 4902231 | 308 | 10 35 801 3 | 29 | 4 |
| 4901217 | 280 | 10 40 689 8 | 41 | 2 | 4902231 | 436 | 10 35 814 1 | 250 | 3 |
| 4901217 | 308 | 10 35 801 3 | 5 | 8 | 4902250 | 214 | 10 04 966 3 | 22 | 4 |
| 4901217 | 331 | 10 35 798 3 | 38 | 4 | 4902250 | 214 | 10 04 966 3 | 27 | 8 |
| 4901217 | 350 | 10 35 802 8 | 344 | 1 | 4902250 | 268 | 10 05 981 8 | 6 | 4 |
| 4901217 | 444 | 11 10 266 2 | 23 | 2 | 4902250 | 624 | 10 38 408 5 | 6 | 12 |
| 4901217 | 447 | 10 35 814 3 | 26 | 7 | 4902250 | 624 | 10 38 408 5 | 9 | 25 |
| 4901218 | 196 | 90 72 990 | 15 | 2 | 4902250 | 631 | 10 38 484 8 | 11 | 15 |
| 4901241 | 300 | 10 35 801 5 | 23 | 8 | 4902250 | 631 | 10 38 484 8 | 14 | 7 |
| 4901267 | 97 | 10 35 800 7 | 3 | 6 | 4902250 | 631 | 10 38 484 8 | 17 | 4 |
| 4901287 | 376 | 10 35 800 4 | 125 | 4 | 4902250 | 632 | 10 38 484 8 | 26 | 2 |

| Item | Page | Assembly | Pos. | Quantity | Item | Page | Assembly | Pos. | Quantity |
|---|---|---|---|---|---|---|---|---|---|
| 4902252 | 237 | 10 38 502 4 | 27 | 4 | 4980853 | 517 | 90 80 713 | 5 | 1 |
| 4902252 | 442 | 99 47 695 | 5 | 6 | 4980927 | 517 | 90 80 713 | 9 | 3 |
| 4902254 | 176 | 10 49 858 1 | 207 | 2 | 4980944 | 691 | 92 71 648 | 21 | 8 |
| 4902254 | 269 | 10 06 017 4 | 41 | 1 | 4980965 | 108 | 90 77 872 | 40 | 4 |
| 4902254 | 270 | 10 06 017 5 | 41 | 1 | 4981019 | 357 | 93 70 592 | 6 | 1 |
| 4902254 | 281 | 10 40 689 8 | 101 | 1 | 4981019 | 361 | 10 49 822 5 | 54 | 1 |
| 4902260 | 377 | 10 35 800 4 | 137 | 1 | 4981029 | 482 | 10 11 916 7 | 19 | 2 |
| 4902262 | 287 | 11 00 359 4 | 25 | 2 | 4981029 | 487 | 10 12 026 3 | 12 | 2 |
| 4902267 | 102 | 99 37 298 | 51 | 3 | 4981042 | 510 | 10 12 038 4 | 12 | 1 |
| 4902267 | 229 | 10 49 880 9 | 33 | 2 | 4981088 | 686 | 10 13 268 6 | 29 | 4 |
| 4902267 | 238 | 10 38 502 4 | 55 | 4 | 4981172 | 573 | 90 80 735 | 5 | 1 |
| 4902267 | 249 | 10 84 086 6 | 55 | 4 | 4981173 | 573 | 90 80 735 | 6 | 1 |
| 4902327 | 84 | 10 07 713 5 | 8 | 32 | 4981197 | 275 | 94 76 369 | 3 | 2 |
| 4902327 | 295 | 10 35 801 2 | 120 | 16 | 4981197 | 276 | 94 76 441 | 3 | 2 |
| 4902327 | 296 | 10 35 801 2 | 520 | 8 | 4981218 | 70 | 90 73 155 | 43 | 4 |
| 4902327 | 300 | 10 35 801 5 | 8 | 32 | 4981218 | 124 | 90 73 751 | 43 | 5 |
| 4902327 | 359 | 10 49 822 5 | 12 | 16 | 4981218 | 199 | 90 74 416 | 43 | 4 |
| 4902327 | 361 | 10 49 822 5 | 63 | 12 | 4981233 | 598 | 90 78 961 | 9 | 2 |
| 4902327 | 517 | 90 80 713 | 12 | 12 | 4981235 | 489 | 90 79 862 | 3 | 1 |
| 4902327 | 618 | 10 49 830 0 | 39 | 60 | 4981235 | 573 | 90 80 735 | 10 | 2 |
| 4902327 | 628 | 10 49 823 5 | 12 | 8 | 4981259 | 285 | 10 02 211 7 | 8 | 6 |
| 4902327 | 637 | 11 45 153 0 | 39 | 24 | 4981277 | 108 | 90 77 872 | 19 | 1 |
| 4902327 | 655 | 10 06 203 8 | 10 | 4 | 5004624 | 110 | 90 77 872 | 84 | 1 |
| 4902327 | 671 | 10 49 815 8 | 47 | 8 | 5004624 | 163 | 10 35 809 2 | 95 | 3 |
| 4902329 | 196 | 90 72 990 | 17 | 4 | 5004624 | 181 | 90 18 423 | 20 | 1 |
| 4902331 | 93 | 10 40 278 1 | 6 | 4 | 5004624 | 337 | 10 35 819 3 | 89 | 2 |
| 491035414 | 218 | 90 64 786 | 185 | 1 | 5004624 | 452 | 90 18 419 | 45 | 1 |
| 4980000 | 524 | 90 80 278 | 5 | 1 | 5004624 | 486 | 90 79 483 | 10 | 1 |
| 4980011 | 597 | 90 77 719 | 5 | 4 | 5004748 | 462 | 10 37 283 6 | 4 | 2 |
| 4980012 | 581 | 10 11 557 7 | 6 | 2 | 5004927 | 162 | 10 35 809 2 | 52 | 2 |
| 4980057 | 271 | 90 79 258 | 45 | 1 | 5005641 | 574 | 10 11 646 3 | 3 | 1 |
| 4980057 | 273 | 90 79 259 | 45 | 1 | 5008169 | 363 | 10 21 821 5 | 12 | 1 |
| 4980059 | 271 | 90 79 258 | 51 | 1 | 5008169 | 364 | 10 21 986 3 | 12 | 1 |
| 4980059 | 273 | 90 79 259 | 51 | 1 | 5009391 | 320 | 10 01 872 5 | 999 | 1 |
| 4980070 | 271 | 90 79 258 | 47 | 2 | 5009562 | 315 | 10 04 272 9 | 4 | 1 |
| 4980071 | 271 | 90 79 258 | 50 | 1 | 5009562 | 316 | 10 28 027 9 | 999 | 1 |
| 4980150 | 164 | 10 45 475 2 | 14 | 2 | 5009562 | 319 | 56 15 344 | 999 | 1 |
| 4980223 | 108 | 90 77 872 | 30 | 1 | 5009565 | 315 | 10 04 272 9 | 5 | 1 |
| 4980223 | 111 | 92 73 201 | 30 | 1 | 502036101 | 69 | 94 43 840 | 70 | 1 |
| 4980230 | 241 | 97 58 815 01 | 72 | 4 | 510160916 | 7 | . | 16 | 1 |
| 4980268 | 108 | 90 77 872 | 45 | 4 | 510363416 | 7 | . | 17 | 1 |
| 4980272 | 108 | 90 77 872 | 42 | 4 | 5106421 | 102 | 99 37 298 | 90 | 1 |
| 4980291 | 108 | 90 77 872 | 31 | 4 | 511701914 | 217 | 90 64 786 | 27 | 1 |
| 4980291 | 111 | 92 73 201 | 31 | 1 | 511701914 | 219 | 10 01 461 1 | 27 | 4 |
| 4980362 | 477 | 10 11 577 9 | 2 | 5 | 514585108 | 139 | 10 35 572 4 | 31 | 1 |
| 4980363 | 510 | 10 12 038 4 | 10 | 3 | 5209372 | 51 | 10 49 883 7 | 69 | 2 |
| 4980376 | 496 | 90 75 115 | 5 | 1 | 5209400 | 51 | 10 49 883 7 | 70 | 2 |
| 4980377 | 531 | 10 11 659 1 | 5 | 1 | 5211460 | 159 | 99 29 814 | 10 | 1 |
| 4980388 | 694 | 10 13 305 9 | 20 | 4 | 5600245 | 304 | 10 35 801 4 | 30 | 1 |
| 4980478 | 574 | 10 11 646 3 | 8 | 1 | 5602487 | 310 | 10 35 809 3 | 2 | 1 |
| 4980490 | 78 | 92 70 598 | 12 | 1 | 5602583 | 84 | 10 07 713 5 | 24 | 4 |
| 4980663 | 131 | 10 22 052 4 | 15 | 2 | 5602583 | 661 | 73 63 125 | 1 | 1 |
| 4980687 | 108 | 90 77 872 | 32 | 2 | 5604334 | 318 | 56 02 487 | 999 | 1 |
| 4980713 | 108 | 90 77 872 | 43 | 2 | 5604335 | 366 | 10 03 245 2 | 999 | 1 |
| 4980741 | 542 | 10 11 628 5 | 26 | 4 | 5604338 | 365 | 10 03 245 2 | 28 | 5 |
| 4980741 | 543 | 10 11 628 5 | 76 | 1 | 5604439 | 616 | 10 49 830 0 | 22 | 1 |
| 4980783 | 178 | 10 35 800 9 | 32 | 3 | 5604515 | 616 | 10 49 830 0 | 23 | 1 |
| 4980801 | 443 | 99 47 695 | 65 | 1 | 5605365 | 297 | 99 37 312 | 12 | 1 |
| 4980801 | 692 | 98 88 308 | 21 | 4 | 5605365 | 298 | 56 09 948 | 12 | 1 |
| 4980805 | 575 | 10 11 553 9 | 3 | 3 | 5607605 | 343 | 10 84 584 9 | 98 | 1 |

| Item | Page | Assembly | Pos. | Quantity | Item | Page | Assembly | Pos. | Quantity |
|---|---|---|---|---|---|---|---|---|---|
| 5607616 | 343 | 10 84 584 9 | 96 | 2 | 5700007 | 110 | 90 77 872 | 80 | 1 |
| 5607617 | 344 | 10 84 584 9 | 106 | 2 | 5700024 | 102 | 99 37 298 | 50 | 2 |
| 5607889 | 229 | 10 49 880 9 | 38 | 1 | 5700024 | 230 | 10 49 880 9 | 96 | 4 |
| 5608327 | 315 | 10 04 272 9 | 6 | 1 | 570948608 | 121 | 10 41 301 3 | 33 | 1 |
| 5608732 | 351 | 10 35 802 8 | 367 | 3 | 570948608 | 139 | 10 35 572 4 | 33 | 1 |
| 5609333 | 366 | 10 03 245 2 | 131 | 1 | 571578608 | 681 | 10 28 689 7 | 17 | 1 |
| 5609948 | 297 | 99 37 312 | 11 | 1 | 5715963 | 116 | 10 22 041 1 | 2 | 1 |
| 5609979 | 159 | 99 29 814 | 5 | 1 | 6000167 | 420 | 10 48 808 7 | 130 | 1 |
| 5610135 | 366 | 10 03 245 2 | 54 | 6 | 6000578 | 229 | 10 49 880 9 | 37 | 1 |
| 5610135 | 653 | 10 00 297 1 | 100 | 1 | 6000783 | 442 | 99 47 695 | 25 | 2 |
| 5610202 | 84 | 10 07 713 5 | 15 | 2 | 6001027 | 243 | 73 73 807 | 19 | 1 |
| 5610216 | 618 | 10 49 830 0 | 28 | 1 | 6001418 | 652 | 10 35 860 1 | 11 | 1 |
| 5610426 | 305 | 10 35 801 4 | 130 | 1 | 6001472 | 442 | 99 47 695 | 22 | 1 |
| 5610755 | 341 | 10 84 584 9 | 5 | 1 | 6001474 | 442 | 99 47 695 | 29 | 10 |
| 5610999 | 287 | 11 00 359 4 | 28 | 1 | 6001556 | 420 | 10 48 808 7 | 180 | 1 |
| 5610999 | 450 | 10 10 131 3 | 20 | 2 | 6001593 | 263 | 10 05 507 1 | 3 | 1 |
| 5611206 | 314 | 10 35 801 7 | 150 | 1 | 6001681 | 443 | 99 47 695 | 978 | 4 |
| 5611207 | 313 | 10 35 801 7 | 100 | 1 | 6001682 | 265 | 10 68 741 7 | 10 | 2 |
| 5611207 | 313 | 10 35 801 7 | 110 | 1 | 6001713 | 258 | 10 04 831 3 | 2 | 1 |
| 5611480 | 230 | 10 49 880 9 | 99 | 3 | 6001713 | 263 | 10 05 507 1 | 2 | 1 |
| 5611480 | 249 | 10 84 086 6 | 25 | 2 | 6001921 | 443 | 99 47 695 | 130 | 2 |
| 5611648 | 75 | 56 16 688 | 350 | 1 | 6001963 | 249 | 10 84 086 6 | 77 | 1 |
| 5611887 | 306 | 10 35 801 4 | 210 | 1 | 6002381 | 241 | 97 58 815 01 | 32 | 2 |
| 5611990 | 449 | 10 29 266 0 | 1 | 1 | 6002816 | 443 | 99 47 695 | 970 | 4 |
| 5612035 | 301 | 10 35 801 5 | 65 | 1 | 602514201 | 443 | 99 47 695 | 50 | 4 |
| 5612128 | 304 | 10 35 801 4 | 70 | 1 | 6040008 | 241 | 97 58 815 01 | 42 | 1 |
| 5612180 | 132 | 10 22 063 5 | 4 | 1 | 604521501 | 241 | 97 58 815 01 | 46 | 15 |
| 5612181 | 132 | 10 22 063 5 | 5 | 1 | 613200116 | 444 | 11 10 266 2 | 2 | 2 |
| 5612246 | 148 | 70 28 075 | 31 | 2 | 6200461 | 421 | 10 48 808 7 | 700 | 6m |
| 5613604 | 365 | 10 03 245 2 | 17 | 1 | 6200685 | 437 | 99 41 040 | 3 | 2 |
| 5613730 | 102 | 99 37 298 | 47 | 1 | 6200685 | 438 | 10 04 824 6 | 5 | 2 |
| 5614029 | 315 | 10 04 272 9 | 4 | 1 | 6200685 | 439 | 11 10 278 6 | 5 | 2 |
| 5614248 | 296 | 10 35 801 2 | 280 | 2 | 6200685 | 440 | 10 04 553 0 | 11 | 1 |
| 5614346 | 367 | 10 28 962 9 | 36 | 1 | 6201379 | 238 | 10 38 502 4 | 90 | 1 |
| 5615145 | 620 | 10 49 830 0 | 78 | 1 | 6202646 | 241 | 97 58 815 01 | 30 | 2 |
| 5615344 | 315 | 10 04 272 9 | 3 | 3 | 6202703 | 237 | 10 38 502 4 | 24 | 2 |
| 5616117 | 75 | 56 16 688 | 220 | 4 | 6202944 | 442 | 99 47 695 | 19 | 1 |
| 5616231 | 366 | 10 03 245 2 | 60 | 8 | 6203433 | 242 | 98 74 988 | 10 | 1 |
| 5616232 | 366 | 10 03 245 2 | 62 | 4 | 6203497 | 177 | 10 49 858 1 | 331 | 3 |
| 5616530 | 341 | 10 84 584 9 | 20 | 1 | 6203497 | 209 | 10 04 966 2 | 10 | 3 |
| 5616688 | 67 | 10 07 713 7 | 15 | 2 | 6203497 | 344 | 10 84 584 9 | 120 | 1 |
| 5616689 | 75 | 56 16 688 | 20 | 1 | 6203497 | 436 | 10 35 814 1 | 331 | 16 |
| 5616900 | 370 | 56 16 232 | 999 | 1 | 6203497 | 680 | 10 49 822 9 | 17 | 2 |
| 5616901 | 61 | 56 16 231 | 999 | 1 | 6203687 | 442 | 99 47 695 | 21 | 1 |
| 5617099 | 56 | 56 18 101 | 10 | 1 | 6204186 | 171 | 10 49 858 1 | 75 | 1 |
| 5617100 | 56 | 56 18 101 | 20 | 1 | 6204241 | 442 | 99 47 695 | 10 | 1 |
| 5617102 | 55 | 56 17 975 | 20 | 2 | 6204367 | 258 | 10 04 831 3 | 5 | 1 |
| 5617103 | 56 | 56 18 101 | 30 | 1 | 6204367 | 263 | 10 05 507 1 | 5 | 1 |
| 5617317 | 620 | 10 49 830 0 | 74 | 2 | 6204368 | 258 | 10 04 831 3 | 4 | 1 |
| 5617689 | 329 | 10 35 798 3 | 14 | 2 | 6204368 | 263 | 10 05 507 1 | 4 | 1 |
| 5617780 | 297 | 99 37 312 | 2 | 1 | 6204372 | 258 | 10 04 831 3 | 3 | 1 |
| 5617975 | 54 | 10 03 773 9 | 10 | 1 | 6204404 | 230 | 10 49 880 9 | 150 | 1 |
| 5618101 | 55 | 56 17 975 | 10 | 1 | 6204416 | 320 | 10 01 872 5 | 2 | 1 |
| 5618477 | 312 | 10 35 809 3 | 40 | 2 | 6204593 | 451 | 90 18 419 | 32 | 1 |
| 5618664 | 421 | 10 48 808 7 | 440 | 1 | 6204631 | 455 | 10 49 801 8 | 9 | 2 |
| 5618922 | 255 | 56 18 923 | 1 | 1 | 6204632 | 230 | 10 49 880 9 | 130 | 1 |
| 5618923 | 249 | 10 84 086 6 | 10 | 1 | 6204634 | 237 | 10 38 502 4 | 46 | 1 |
| 5618975 | 620 | 10 49 830 0 | 76 | 2 | 6205045 | 438 | 10 04 824 6 | 8 | 1 |
| 5619111 | 314 | 10 35 801 7 | 230 | 1 | 6205045 | 439 | 11 10 278 6 | 8 | 1 |
| 5619111 | 314 | 10 35 801 7 | 240 | 1 | 6205496 | 163 | 10 35 809 2 | 130 | 1 |

| Item | Page | Assembly | Pos. | Quantity | Item | Page | Assembly | Pos. | Quantity |
|---|---|---|---|---|---|---|---|---|---|
| 6290070 | 574 | 10 11 646 3 | 1 | 1 | 7003814 | 313 | 10 35 801 7 | 114 | 2 |
| 6290073 | 196 | 90 72 990 | 9 | 1 | 7003814 | 343 | 10 84 584 9 | 81 | 6 |
| 6290073 | 201 | 92 78 623 | 10 | 1 | 7003814 | 353 | 10 35 802 8 | 426 | 1 |
| 6290130 | 582 | 90 76 551 | 1 | 2 | 7004246 | 69 | 94 43 840 | 91 | 1 |
| 634308016 | 677 | 11 10 265 3 | 5 | 2 | 7004296 | 64 | 91 41 597 | 80 | 8 |
| 635867001 | 171 | 10 49 858 1 | 65 | 1 | 7005028 | 461 | 10 35 852 5 | 21 | 1 |
| 635867001 | 589 | 98 85 618 | 1 | 1 | 7005047 | 84 | 10 07 713 5 | 21 | 2 |
| 6718632 | 84 | 10 07 713 5 | 11 | 2 | 7005047 | 225 | 10 06 014 6 | 30 | 3 |
| 6905277 | 442 | 99 47 695 | 11 | 1 | 7005047 | 354 | 10 35 802 8 | 565 | 1 |
| 6905671 | 436 | 10 35 814 1 | 330 | 1 | 7005097 | 649 | 93 87 822 | 2 | 1 |
| 6905956 | 106 | 10 29 787 3 | 1 | 1 | 7005103 | 649 | 93 87 822 | 1 | 2 |
| 691180608 | 584 | 90 76 530 | 1 | 1 | 7005249 | 669 | 99 52 600 | 13 | 3 |
| 7000290 | 630 | 90 18 795 | 3 | 1 | 7005250 | 667 | 94 01 936 4 | 13 | 3 |
| 7000290 | 665 | 95 90 264 | 3 | 1 | 7005250 | 668 | 94 02 733 6 | 13 | 3 |
| 7000293 | 665 | 95 90 264 | 4 | 1 | 7005314 | 351 | 10 35 802 8 | 360 | 3 |
| 7000948 | 669 | 99 52 600 | 11 | 2 | 7005314 | 353 | 10 35 802 8 | 420 | 1 |
| 7001072 | 569 | 90 79 889 | 1 | 2 | 7005314 | 354 | 10 35 802 8 | 585 | 1 |
| 7001338 | 212 | 10 48 840 4 | 15 | 5 | 7005587 | 102 | 99 37 298 | 95 | 4 |
| 7001386 | 451 | 90 18 419 | 6 | 1 | 7005587 | 163 | 10 35 809 2 | 80 | 5 |
| 7001454 | 60 | 10 00 966 2 | 8 | 1 | 7005665 | 343 | 10 84 584 9 | 80 | 4 |
| 7001609 | 668 | 94 02 733 6 | 11 | 1 | 7005820 | 368 | 56 04 335 | 1 | 2 |
| 7001629 | 663 | 94 00 606 1 | 4 | 1 | 7006212 | 122 | 56 16 530 | 25 | 1 |
| 7001629 | 664 | 95 87 597 | 4 | 1 | 7006216 | 115 | 10 22 041 0 | 20 | 2 |
| 7001629 | 666 | 90 62 632 | 4 | 1 | 7006644 | 351 | 10 35 802 8 | 365 | 2 |
| 7001877 | 84 | 10 07 713 5 | 26 | 4 | 7006870 | 665 | 95 90 264 | 7 | 2 |
| 7001877 | 230 | 10 49 880 9 | 145 | 10 | 7006889 | 328 | 70 30 267 | 324 | 1 |
| 7001877 | 251 | 10 84 086 6 | 96 | 10 | 7007339 | 328 | 70 30 267 | 38 | 1 |
| 7001877 | 280 | 10 40 689 8 | 33 | 2 | 7007476 | 369 | 56 10 135 | 2 | 1 |
| 7001877 | 435 | 10 35 814 1 | 70 | 75 | 7007505 | 328 | 70 30 267 | 35 | 1 |
| 7002008 | 230 | 10 49 880 9 | 91 | 2 | 7007759 | 328 | 70 30 267 | 7 | 1 |
| 7002054 | 669 | 99 52 600 | 12 | 1 | 7007952 | 513 | 10 11 585 1 | 8 | 15 |
| 7002480 | 244 | 10 05 879 2 | 20 | 1 | 7007952 | 515 | 10 11 585 3 | 8 | 15 |
| 7002480 | 259 | 10 05 879 4 | 20 | 1 | 7007952 | 545 | 10 11 559 5 | 7 | 15 |
| 7002561 | 314 | 10 35 801 7 | 385 | 1 | 7007952 | 599 | 90 80 006 | 13 | 4 |
| 7002561 | 314 | 10 35 801 7 | 390 | 1 | 7007952 | 607 | 10 11 801 4 | 61 | 2 |
| 7002561 | 314 | 10 35 801 7 | 455 | 1 | 7007952 | 611 | 10 11 583 8 | 61 | 2 |
| 7002641 | 327 | 70 25 142 | 14 | 1 | 7007952 | 612 | 10 11 583 8 | 74 | 5 |
| 7002760 | 318 | 56 02 487 | 133 | 1 | 7008157 | 384 | 10 35 817 2 | 12 | 1.225m |
| 7002771 | 73 | 98 89 775 | 17 | 1 | 7008157 | 386 | 10 35 792 6 | 12 | 0.92m |
| 7002771 | 188 | 90 72 100 | 17 | 1 | 7008157 | 388 | 10 07 307 3 | 16 | 1.34m |
| 7002927 | 663 | 94 00 606 1 | 6 | 4 | 7008157 | 389 | 10 37 283 9 | 16 | 1.34m |
| 7002927 | 664 | 95 87 597 | 6 | 4 | 7008622 | 174 | 10 49 858 1 | 125 | 1 |
| 7002927 | 666 | 90 62 632 | 6 | 4 | 7008622 | 214 | 10 04 966 3 | 4 | 5 |
| 7002957 | 173 | 10 49 858 1 | 112 | 3 | 7008622 | 312 | 10 35 809 3 | 58 | 1 |
| 7002957 | 436 | 10 35 814 1 | 112 | 1 | 7008622 | 436 | 10 35 814 1 | 125 | 2 |
| 7003429 | 665 | 95 90 264 | 6 | 4 | 7008755 | 357 | 93 70 592 | 5 | 1 |
| 7003533 | 664 | 95 87 597 | 7 | 2 | 7009088 | 244 | 10 05 879 2 | 31 | 1 |
| 7003559 | 663 | 94 00 606 1 | 7 | 2 | 7009088 | 259 | 10 05 879 4 | 31 | 1 |
| 7003570 | 313 | 10 35 801 7 | 50 | 1 | 7009369 | 122 | 56 16 530 | 47 | 1 |
| 7003572 | 308 | 10 35 801 3 | 19 | 1 | 7009369 | 366 | 10 03 245 2 | 132 | 1 |
| 7003572 | 311 | 10 35 809 3 | 33 | 1 | 7009590 | 545 | 10 11 559 5 | 17 | 1 |
| 7003578 | 311 | 10 35 809 3 | 35 | 1 | 7009933 | 226 | 99 44 515 | 5 | 4 |
| 7003684 | 353 | 10 35 802 8 | 425 | 1 | 7009933 | 227 | 99 44 516 | 5 | 4 |
| 7003800 | 84 | 10 07 713 5 | 16 | 1 | 7009933 | 352 | 10 35 802 8 | 385 | 1 |
| 7003800 | 300 | 10 35 801 5 | 16 | 1 | 7010008 | 574 | 10 11 646 3 | 4 | 1 |
| 7003800 | 304 | 10 35 801 4 | 73 | 1 | 7010596 | 145 | 56 09 979 | 999 | 1 |
| 7003800 | 304 | 10 35 801 4 | 83 | 1 | 7010597 | 145 | 56 09 979 | 3 | 1 |
| 7003814 | 62 | 93 45 153 | 9 | 1 | 7010659 | 667 | 94 01 936 4 | 9 | 1 |
| 7003814 | 84 | 10 07 713 5 | 12 | 2 | 7010659 | 668 | 94 02 733 6 | 9 | 1 |
| 7003814 | 207 | 99 46 408 | 20 | 4 | 7010660 | 669 | 99 52 600 | 9 | 1 |

| Item | Page | Assembly | Pos. | Quantity | Item | Page | Assembly | Pos. | Quantity |
|---|---|---|---|---|---|---|---|---|---|
| 7011131 | 491 | 50 04 624 | 2 | 1 | 7019801 | 414 | 70 28 769 | 150 | 2 |
| 7011286 | 454 | 70 10 596 | 6 | 2 | 7019891 | 343 | 10 84 584 9 | 101 | 1 |
| 7011287 | 454 | 70 10 596 | 9 | 2 | 7020568 | 367 | 10 28 962 9 | 30 | 1 |
| 7011288 | 454 | 70 10 596 | 12 | 2 | 7020571 | 367 | 10 28 962 9 | 35 | 1 |
| 7012436 | 352 | 10 35 802 8 | 395 | 1 | 7020573 | 367 | 10 28 962 9 | 39 | 1 |
| 7012971 | 116 | 10 22 041 1 | 48 | 1 | 7020576 | 328 | 70 30 267 | 5 | 1 |
| 7013032 | 653 | 10 00 297 1 | 40 | 1 | 7020577 | 367 | 10 28 962 9 | 44 | 1 |
| 7013245 | 325 | 50 09 391 | 14 | 1 | 7020608 | 420 | 10 48 808 7 | 190 | 2 |
| 7013245 | 326 | 50 09 562 | 10 | 1 | 7020610 | 411 | 70 28 759 | 220 | 2 |
| 7013456 | 491 | 50 04 624 | 3 | 1 | 7020610 | 433 | 10 48 808 8 | 340 | 2 |
| 7013519 | 328 | 70 30 267 | 5 | 1 | 7020611 | 428 | 10 29 026 4 | 360 | 2 |
| 7013559 | 353 | 10 35 802 8 | 475 | 1 | 7020612 | 415 | 70 28 769 | 380 | 2 |
| 7014178 | 630 | 90 18 795 | 4 | 1 | 7020612 | 428 | 10 29 026 4 | 370 | 4 |
| 7014524 | 388 | 10 07 307 3 | 17 | 1 | 7020613 | 415 | 70 28 769 | 370 | 1 |
| 7014524 | 389 | 10 37 283 9 | 17 | 1 | 7020615 | 429 | 10 29 026 4 | 700 | 6 |
| 7014560 | 237 | 10 38 502 4 | 31 | 26 | 7020616 | 429 | 10 29 026 4 | 720 | 1 |
| 7014560 | 251 | 10 84 086 6 | 82 | 4 | 7021047 | 428 | 10 29 026 4 | 480 | 1 |
| 7015407 | 339 | 10 22 239 3 | 10 | 1 | 7021504 | 306 | 10 35 801 4 | 180 | 1 |
| 7015482 | 312 | 10 35 809 3 | 41 | 2 | 7021767 | 75 | 56 16 688 | 300 | 1 |
| 7015616 | 128 | 98 89 282 | 36 | 1 | 7021805 | 314 | 10 35 801 7 | 235 | 1 |
| 7016002 | 458 | 10 84 856 2 | 10 | 1 | 7021805 | 314 | 10 35 801 7 | 245 | 1 |
| 7016180 | 66 | 92 65 064 | 4 | 1 | 7021980 | 75 | 56 16 688 | 70 | 2 |
| 7016412 | 442 | 99 47 695 | 26 | 4 | 7021981 | 75 | 56 16 688 | 100 | 1 |
| 7016608 | 314 | 10 35 801 7 | 465 | 1 | 7021982 | 75 | 56 16 688 | 110 | 1 |
| 7017201 | 421 | 10 48 808 7 | 710 | 1 | 7021984 | 75 | 56 16 688 | 200 | 2 |
| 7017506 | 313 | 10 35 801 7 | 90 | 1 | 7021984 | 75 | 56 16 688 | 230 | 2 |
| 7017506 | 346 | 10 35 802 8 | 40 | 1 | 7022120 | 363 | 10 21 821 5 | 16 | 1 |
| 7017668 | 324 | 10 22 099 7 | 31 | 1 | 7022120 | 364 | 10 21 986 3 | 16 | 1 |
| 7017682 | 63 | 10 00 963 0 | 12 | 2 | 7022127 | 116 | 10 22 041 1 | 11 | 2 |
| 7017682 | 65 | 10 00 967 6 | 12 | 2 | 7022127 | 122 | 56 16 530 | 27 | 1 |
| 7017685 | 63 | 10 00 963 0 | 3 | 2 | 7022127 | 148 | 70 28 075 | 26 | 14 |
| 7017685 | 65 | 10 00 967 6 | 3 | 2 | 7022278 | 121 | 10 41 301 3 | 30 | 1 |
| 7017711 | 669 | 99 52 600 | 10 | 1 | 7023359 | 39 | 90 66 466 | 50 | 1 |
| 7017712 | 667 | 94 01 936 4 | 10 | 1 | 7023459 | 144 | 10 41 302 4 | 4 | 1 |
| 7017712 | 667 | 94 01 936 4 | 11 | 1 | 7023472 | 121 | 10 41 301 3 | 12 | 1 |
| 7017712 | 668 | 94 02 733 6 | 10 | 1 | 7023590 | 667 | 94 01 936 4 | 6 | 1 |
| 7018368 | 38 | 90 66 466 | 12 | 1 | 7023590 | 668 | 94 02 733 6 | 6 | 1 |
| 7018369 | 38 | 90 66 466 | 13 | 1 | 7023749 | 114 | 10 22 040 9 | 26 | 1 |
| 7018370 | 347 | 10 35 802 8 | 98 | 1 | 7023769 | 146 | 57 15 963 | 8 | 1 |
| 7018370 | 347 | 10 35 802 8 | 128 | 1 | 7023926 | 325 | 50 09 391 | 6 | 1 |
| 7018370 | 348 | 10 35 802 8 | 143 | 2 | 7023927 | 325 | 50 09 391 | 7 | 1 |
| 7018370 | 349 | 10 35 802 8 | 210 | 1 | 7023927 | 326 | 50 09 562 | 5 | 1 |
| 7019068 | 39 | 90 66 466 | 40 | 1 | 7023928 | 325 | 50 09 391 | 8 | 1 |
| 7019122 | 428 | 10 29 026 4 | 350 | 2 | 7023928 | 326 | 50 09 562 | 6 | 1 |
| 7019129 | 428 | 10 29 026 4 | 470 | 1 | 7023929 | 323 | 73 71 025 | 12 | 2 |
| 7019131 | 429 | 10 29 026 4 | 640 | 1 | 7023930 | 324 | 10 22 099 7 | 28 | 1 |
| 7019140 | 431 | 10 04 435 3 | 810 | 2 | 7023930 | 325 | 50 09 391 | 12 | 1 |
| 7019141 | 431 | 10 04 435 3 | 820 | 1 | 7023930 | 326 | 50 09 562 | 8 | 1 |
| 7019142 | 411 | 70 28 759 | 190 | 1 | 7023931 | 325 | 50 09 391 | 13 | 1 |
| 7019153 | 414 | 70 28 769 | 260 | 1 | 7023931 | 326 | 50 09 562 | 9 | 1 |
| 7019154 | 414 | 70 28 769 | 240 | 1 | 7023934 | 319 | 56 15 344 | 6 | 1 |
| 7019155 | 414 | 70 28 769 | 250 | 1 | 7023934 | 320 | 10 01 872 5 | 6 | 1 |
| 7019156 | 414 | 70 28 769 | 270 | 1 | 7024438 | 414 | 70 28 769 | 220 | 2 |
| 7019160 | 415 | 70 28 769 | 360 | 1 | 7024438 | 432 | 10 48 808 8 | 200 | 12 |
| 7019164 | 428 | 10 29 026 4 | 420 | 1 | 7024446 | 433 | 10 48 808 8 | 350 | 4 |
| 7019165 | 428 | 10 29 026 4 | 410 | 1 | 7024447 | 433 | 10 48 808 8 | 360 | 8 |
| 7019167 | 413 | 70 28 808 | 110 | 1 | 7024455 | 421 | 10 48 808 7 | 460 | 1 |
| 7019167 | 428 | 10 29 026 4 | 310 | 1 | 7024500 | 327 | 70 25 142 | 13 | 1 |
| 7019171 | 420 | 10 48 808 7 | 110 | 10 | 7024629 | 321 | 10 28 046 1 | 25 | 1 |
| 7019794 | 415 | 70 28 769 | 350 | 2 | 7024630 | 321 | 10 28 046 1 | 26 | 1 |

| Item | Page | Assembly | Pos. | Quantity | Item | Page | Assembly | Pos. | Quantity |
|---|---|---|---|---|---|---|---|---|---|
| 7024631 | 321 | 10 28 046 1 | 27 | 1 | 7028175 | 147 | 70 28 075 | 9 | 1 |
| 7024940 | 653 | 10 00 297 1 | 133 | 1 | 7028176 | 147 | 70 28 075 | 10 | 2 |
| 7024958 | 367 | 10 28 962 9 | 49 | 1 | 7028177 | 147 | 70 28 075 | 11 | 2 |
| 7025110 | 287 | 11 00 359 4 | 24 | 1 | 7028178 | 147 | 70 28 075 | 12 | 2 |
| 7025121 | 285 | 10 02 211 7 | 21 | 2 | 7028179 | 147 | 70 28 075 | 13 | 2 |
| 7025142 | 317 | 50 09 565 | 999 | 1 | 7028180 | 147 | 70 28 075 | 15 | 2 |
| 7025347 | 243 | 73 73 807 | 21 | 1 | 7028181 | 147 | 70 28 075 | 18 | 2 |
| 7025644 | 248 | 73 69 377 | 1 | 1 | 7028182 | 147 | 70 28 075 | 19 | 2 |
| 7025845 | 424 | 56 18 664 | 10 | 1 | 7028183 | 147 | 70 28 075 | 23 | 1 |
| 7026041 | 325 | 50 09 391 | 17 | 4 | 7028184 | 147 | 70 28 075 | 24 | 2 |
| 7026041 | 326 | 50 09 562 | 7 | 2 | 7028185 | 147 | 70 28 075 | 25 | 2 |
| 7026088 | 38 | 90 66 466 | 22 | 1 | 7028300 | 318 | 56 02 487 | 120 | 1 |
| 7026111 | 669 | 99 52 600 | 6 | 1 | 7028301 | 322 | 70 28 300 | 20 | 1 |
| 7026127 | 75 | 56 16 688 | 40 | 1 | 7028302 | 322 | 70 28 300 | 40 | 1 |
| 7026493 | 253 | 10 84 086 6 | 120 | 1 | 7028303 | 322 | 70 28 300 | 100 | 1 |
| 7026654 | 217 | 90 64 786 | 36 | 1 | 7028342 | 338 | 56 17 689 | 4 | 1 |
| 7026772 | 442 | 99 47 695 | 13 | 1 | 7028343 | 338 | 56 17 689 | 9 | 1 |
| 7026817 | 38 | 90 66 466 | 20 | 1 | 7028346 | 338 | 56 17 689 | 8 | 1 |
| 7027038 | 243 | 73 73 807 | 22 | 1 | 7028347 | 338 | 56 17 689 | 13 | 1 |
| 7027052 | 148 | 70 28 075 | 32 | 2 | 7028348 | 338 | 56 17 689 | 14 | 1 |
| 7027401 | 283 | 10 02 206 9 | 5 | 3 | 7028349 | 338 | 56 17 689 | 12 | 1 |
| 7027459 | 642 | 10 00 348 5 | 998 | 1 | 7028351 | 338 | 56 17 689 | 15 | 1 |
| 7027497 | 116 | 10 22 041 1 | 13 | 3 | 7028759 | 405 | 10 47 616 9 | 30 | 1 |
| 7027675 | 217 | 90 64 786 | 2 | 1 | 7028765 | 406 | 10 47 616 9 | 90 | 3 |
| 7027714 | 217 | 90 64 786 | 35 | 1 | 7028765 | 421 | 10 48 808 7 | 400 | 2 |
| 7027776 | 233 | 11 10 016 6 | 25 | 1 | 7028767 | 405 | 10 47 616 9 | 20 | 1 |
| 7027784 | 233 | 11 10 016 6 | 21 | 1 | 7028768 | 420 | 10 48 808 7 | 240 | 9 |
| 7027794 | 233 | 11 10 016 6 | 23 | 1 | 7028769 | 405 | 10 47 616 9 | 50 | 1 |
| 7027816 | 236 | 11 10 016 7 | 37 | 1 | 7028782 | 416 | 70 28 842 | 600 | 1 |
| 7027937 | 213 | 10 48 841 6 | 1 | 1 | 7028787 | 407 | 70 28 767 | 160 | 1 |
| 7027937 | 216 | 10 10 171 1 | 1 | 1 | 7028788 | 407 | 70 28 767 | 170 | 1 |
| 7027937 | 623 | 10 10 171 2 | 1 | 1 | 7028789 | 407 | 70 28 767 | 120 | 1 |
| 7027938 | 213 | 10 48 841 6 | 4 | 1 | 7028790 | 407 | 70 28 767 | 130 | 1 |
| 7027938 | 213 | 10 48 841 6 | 5 | 1 | 7028800 | 410 | 10 03 553 0 | 112 | 1 |
| 7027938 | 216 | 10 10 171 1 | 2 | 1 | 7028801 | 410 | 10 03 553 0 | 120 | 2 |
| 7027938 | 623 | 10 10 171 2 | 5 | 1 | 7028802 | 409 | 10 03 552 9 | 130 | 2 |
| 7027939 | 213 | 10 48 841 6 | 2 | 1 | 7028803 | 410 | 10 03 553 0 | 140 | 2 |
| 7027939 | 213 | 10 48 841 6 | 3 | 1 | 7028804 | 411 | 70 28 759 | 310 | 1 |
| 7027939 | 213 | 10 48 841 6 | 6 | 1 | 7028805 | 411 | 70 28 759 | 320 | 1 |
| 7027939 | 216 | 10 10 171 1 | 3 | 1 | 7028806 | 411 | 70 28 759 | 300 | 1 |
| 7027939 | 216 | 10 10 171 1 | 4 | 1 | 7028807 | 411 | 70 28 759 | 340 | 1 |
| 7027941 | 213 | 10 48 841 6 | 7 | 1 | 7028808 | 411 | 70 28 759 | 350 | 1 |
| 7027941 | 216 | 10 10 171 1 | 5 | 1 | 7028809 | 411 | 70 28 759 | 160 | 4 |
| 7027941 | 623 | 10 10 171 2 | 2 | 1 | 7028810 | 411 | 70 28 759 | 170 | 2 |
| 7027941 | 623 | 10 10 171 2 | 3 | 1 | 7028810 | 427 | 10 29 026 4 | 170 | 2 |
| 7027941 | 623 | 10 10 171 2 | 4 | 1 | 7028811 | 411 | 70 28 759 | 230 | 1 |
| 7027943 | 623 | 10 10 171 2 | 8 | 1 | 7028812 | 420 | 10 48 808 7 | 250 | 11 |
| 7027945 | 213 | 10 48 841 6 | 8 | 1 | 7028814 | 412 | 70 28 807 | 270 | 1 |
| 7027945 | 216 | 10 10 171 1 | 8 | 1 | 7028814 | 413 | 70 28 808 | 270 | 1 |
| 7027946 | 217 | 90 64 786 | 3 | 1 | 7028815 | 412 | 70 28 807 | 280 | 1 |
| 7027986 | 166 | 99 37 297 | 10 | 1 | 7028815 | 413 | 70 28 808 | 280 | 1 |
| 7028075 | 122 | 56 16 530 | 5 | 1 | 7028816 | 412 | 70 28 807 | 290 | 1 |
| 7028158 | 132 | 10 22 063 5 | 10 | 1 | 7028816 | 413 | 70 28 808 | 290 | 1 |
| 7028168 | 147 | 70 28 075 | 2 | 2 | 7028817 | 412 | 70 28 807 | 100 | 1 |
| 7028169 | 147 | 70 28 075 | 3 | 2 | 7028817 | 413 | 70 28 808 | 100 | 1 |
| 7028170 | 147 | 70 28 075 | 4 | 2 | 7028818 | 412 | 70 28 807 | 110 | 1 |
| 7028171 | 147 | 70 28 075 | 5 | 2 | 7028830 | 415 | 70 28 769 | 400 | 1 |
| 7028172 | 147 | 70 28 075 | 6 | 2 | 7028831 | 415 | 70 28 769 | 420 | 1 |
| 7028173 | 147 | 70 28 075 | 7 | 1 | 7028832 | 415 | 70 28 769 | 410 | 1 |
| 7028174 | 147 | 70 28 075 | 8 | 1 | 7028833 | 414 | 70 28 769 | 330 | 1 |

| Item | Page | Assembly | Pos. | Quantity | Item | Page | Assembly | Pos. | Quantity |
|---|---|---|---|---|---|---|---|---|---|
| 7028834 | 415 | 70 28 769 | 340 | 1 | 7030263 | 166 | 99 37 297 | 20 | 13 |
| 7028835 | 415 | 70 28 769 | 390 | 1 | 7030263 | 455 | 10 49 801 8 | 11 | 1 |
| 7028836 | 414 | 70 28 769 | 230 | 1 | 7030263 | 455 | 10 49 801 8 | 12 | 1 |
| 7028837 | 414 | 70 28 769 | 320 | 1 | 7030263 | 455 | 10 49 801 8 | 13 | 1 |
| 7028838 | 414 | 70 28 769 | 160 | 1 | 7030263 | 455 | 10 49 801 8 | 14 | 1 |
| 7028839 | 414 | 70 28 769 | 190 | 1 | 7030267 | 318 | 56 02 487 | 998 | 1 |
| 7028840 | 416 | 70 28 842 | 620 | 2 | 7030267 | 322 | 70 28 300 | 999 | 1 |
| 7028842 | 414 | 70 28 769 | 110 | 1 | 7030284 | 328 | 70 30 267 | 5 | 1 |
| 7028855 | 420 | 10 48 808 7 | 170 | 1 | 7030286 | 328 | 70 30 267 | 312 | 1 |
| 7028856 | 420 | 10 48 808 7 | 210 | 1 | 7030318 | 407 | 70 28 767 | 110 | 1 |
| 7028864 | 421 | 10 48 808 7 | 740 | 8 | 7041345 | 335 | 74 14 913 | 1 | 1 |
| 7028867 | 426 | 10 29 036 1 | 650 | 1 | 7101001 | 545 | 10 11 559 5 | 18 | 1 |
| 7028869 | 425 | 10 29 035 7 | 600 | 1 | 7101003 | 212 | 10 48 840 4 | 16 | 5 |
| 7028870 | 421 | 10 48 808 7 | 370 | 1 | 7101007 | 542 | 10 11 628 5 | 27 | 2 |
| 7028872 | 421 | 10 48 808 7 | 450 | 1 | 7101007 | 543 | 10 11 628 5 | 77 | 2 |
| 7028890 | 427 | 10 29 026 4 | 150 | 1 | 7101008 | 207 | 99 46 408 | 23 | 4 |
| 7028891 | 427 | 10 29 026 4 | 140 | 1 | 7101008 | 486 | 90 79 483 | 6 | 1 |
| 7028892 | 427 | 10 29 026 4 | 160 | 1 | 7101008 | 608 | 10 11 583 8 | 9 | 2 |
| 7028893 | 427 | 10 29 026 4 | 110 | 1 | 7101008 | 609 | 10 11 583 8 | 21 | 2 |
| 7028894 | 427 | 10 29 026 4 | 100 | 1 | 7101010 | 542 | 10 11 628 5 | 23 | 10 |
| 7028895 | 427 | 10 29 026 4 | 260 | 1 | 7101010 | 543 | 10 11 628 5 | 73 | 2 |
| 7028896 | 428 | 10 29 026 4 | 300 | 1 | 7101015 | 110 | 90 77 872 | 56 | 1 |
| 7028898 | 428 | 10 29 026 4 | 270 | 1 | 7101015 | 318 | 56 02 487 | 134 | 1 |
| 7028899 | 428 | 10 29 026 4 | 380 | 1 | 7101019 | 573 | 90 80 735 | 27 | 1 |
| 7028901 | 428 | 10 29 026 4 | 340 | 1 | 7101021 | 110 | 90 77 872 | 57 | 1 |
| 7028906 | 429 | 10 29 026 4 | 680 | 5 | 7101021 | 480 | 10 11 795 1 | 4 | 1 |
| 7028907 | 429 | 10 29 026 4 | 670 | 5 | 7101021 | 486 | 90 79 483 | 16 | 1 |
| 7028908 | 429 | 10 29 026 4 | 650 | 5 | 7101021 | 491 | 50 04 624 | 10 | 1 |
| 7028909 | 429 | 10 29 026 4 | 620 | 1 | 7101021 | 599 | 90 80 006 | 12 | 1 |
| 7028910 | 429 | 10 29 026 4 | 560 | 1 | 7101021 | 605 | 10 11 801 4 | 8 | 4 |
| 7028912 | 427 | 10 29 026 4 | 240 | 4 | 7101021 | 607 | 10 11 801 4 | 60 | 3 |
| 7028919 | 428 | 10 29 026 4 | 320 | 1 | 7101021 | 608 | 10 11 583 8 | 8 | 1 |
| 7028926 | 322 | 70 28 300 | 30 | 1 | 7101021 | 609 | 10 11 583 8 | 20 | 1 |
| 7028940 | 432 | 10 48 808 8 | 130 | 1 | 7101021 | 610 | 10 11 583 8 | 41 | 2 |
| 7028941 | 432 | 10 48 808 8 | 190 | 10 | 7101021 | 611 | 10 11 583 8 | 60 | 2 |
| 7028950 | 433 | 10 48 808 8 | 370 | 2 | 7101034 | 91 | 10 09 121 5 | 5 | 1 |
| 7028951 | 87 | 10 06 947 6 | 6 | 1 | 7101039 | 337 | 10 35 819 3 | 90 | 2 |
| 7028951 | 433 | 10 48 808 8 | 380 | 1 | 7101040 | 365 | 10 03 245 2 | 34 | 7 |
| 7028953 | 433 | 10 48 808 8 | 400 | 2 | 721005616 | 51 | 10 49 883 7 | 50 | 4 |
| 7028963 | 434 | 10 47 012 8 | 2 | 1 | 721005816 | 51 | 10 49 883 7 | 67 | 2 |
| 7029402 | 407 | 70 28 767 | 180 | 1 | 721005916 | 51 | 10 49 883 7 | 68 | 2 |
| 7029407 | 412 | 70 28 807 | 260 | 1 | 7264028 | 90 | 10 06 948 1 | 9 | 1 |
| 7029407 | 413 | 70 28 808 | 260 | 1 | 7264028 | 297 | 99 37 312 | 14 | 1 |
| 7029409 | 416 | 70 28 842 | 640 | 2 | 7264028 | 298 | 56 09 948 | 14 | 1 |
| 7029418 | 417 | 70 28 831 | 500 | 2 | 7264035 | 664 | 95 87 597 | 8 | 1 |
| 7029419 | 417 | 70 28 831 | 510 | 1 | 7264087 | 665 | 95 90 264 | 8 | 1 |
| 7029420 | 417 | 70 28 831 | 520 | 1 | 7264091 | 663 | 94 00 606 1 | 8 | 1 |
| 7029421 | 417 | 70 28 831 | 530 | 2 | 7264098 | 668 | 94 02 733 6 | 7 | 1 |
| 7029422 | 417 | 70 28 831 | 550 | 1 | 7264360 | 60 | 10 00 966 2 | 9 | 1 |
| 7029423 | 417 | 70 28 831 | 560 | 1 | 7264365 | 562 | 90 80 301 | 2 | 1 |
| 7029424 | 417 | 70 28 831 | 570 | 1 | 7264365 | 605 | 10 11 801 4 | 10 | 1 |
| 7029425 | 417 | 70 28 831 | 590 | 1 | 7264365 | 608 | 10 11 583 8 | 10 | 1 |
| 7029433 | 414 | 70 28 769 | 310 | 6 | 7264404 | 326 | 50 09 562 | 20 | 1 |
| 7029433 | 432 | 10 48 808 8 | 280 | 12 | 7264422 | 667 | 94 01 936 4 | 12 | 1 |
| 7029459 | 367 | 10 28 962 9 | 48 | 1 | 7264422 | 668 | 94 02 733 6 | 12 | 1 |
| 7029460 | 367 | 10 28 962 9 | 999 | 1 | 7264438 | 663 | 94 00 606 1 | 3 | 1 |
| 7029979 | 101 | 99 46 045 | 20 | 16 | 7264438 | 664 | 95 87 597 | 3 | 1 |
| 7029979 | 179 | 10 35 800 9 | 65 | 4 | 7264438 | 666 | 90 62 632 | 3 | 1 |
| 7029979 | 650 | 93 88 597 | 1 | 2 | 726450116 | 7 | . | 15 | 1 |
| 7030040 | 410 | 10 03 553 0 | 111 | 1 | 7264535 | 667 | 94 01 936 4 | 7 | 1 |

| Item | Page | Assembly | Pos. | Quantity | Item | Page | Assembly | Pos. | Quantity |
|---|---|---|---|---|---|---|---|---|---|
| 7264535 | 669 | 99 52 600 | 7 | 1 | 7362169 | 631 | 10 38 484 8 | 21 | 1 |
| 726457301 | 184 | 90 01 790 0 | 26 | 1 | 7362169 | 671 | 10 49 815 8 | 30 | 2 |
| 726458601 | 69 | 94 43 840 | 49 | 1 | 7362180 | 629 | 10 49 823 6 | 6 | 2 |
| 7264625 | 491 | 50 04 624 | 1 | 1 | 7362183 | 629 | 10 49 823 6 | 4 | 2 |
| 7264642 | 168 | 52 11 460 | 1 | 1 | 7362184 | 638 | 10 35 789 8 | 4 | 4 |
| 7264687 | 662 | 92 70 390 | 3 | 1 | 7362184 | 657 | 94 02 019 4 | 15 | 4 |
| 7264906 | 152 | 92 65 783 | 11 | 1 | 7362184 | 658 | 95 87 580 | 15 | 4 |
| 7360048 | 366 | 10 03 245 2 | 45 | 3 | 7362184 | 659 | 95 96 399 | 15 | 4 |
| 7360171 | 238 | 10 38 502 4 | 82 | 1.38m | 7362185 | 621 | 10 49 830 1 | 4 | 2 |
| 7360171 | 382 | 99 29 189 | 10 | 0.66m | 7362408 | 620 | 10 49 830 0 | 85 | 1 |
| 7360171 | 382 | 99 29 189 | 11 | 1.3m | 7362507 | 251 | 10 84 086 6 | 97 | 4 |
| 7360171 | 384 | 10 35 817 2 | 13 | 1.225m | 7362515 | 304 | 10 35 801 4 | 93 | 1 |
| 7360171 | 386 | 10 35 792 6 | 13 | 0.92m | 7362515 | 308 | 10 35 801 3 | 20 | 1 |
| 7360171 | 388 | 10 07 307 3 | 15 | 1.28m | 7362515 | 343 | 10 84 584 9 | 100 | 1 |
| 7360171 | 388 | 10 07 307 3 | 18 | 0.835m | 7362545 | 174 | 10 49 858 1 | 122 | 8 |
| 7360171 | 389 | 10 37 283 9 | 15 | 1.28m | 7362545 | 179 | 10 35 800 9 | 52 | 2 |
| 7360171 | 389 | 10 37 283 9 | 18 | 0.835m | 7362545 | 308 | 10 35 801 3 | 28 | 4 |
| 7360171 | 390 | 10 06 692 0 | 5 | 1.25m | 7362547 | 101 | 99 46 045 | 30 | 2 |
| 7360171 | 392 | 10 37 938 6 | 5 | 1.25m | 7362547 | 174 | 10 49 858 1 | 124 | 8 |
| 7360446 | 328 | 70 30 267 | 8 | 1 | 7362547 | 447 | 10 35 814 3 | 20 | 1 |
| 7360563 | 363 | 10 21 821 5 | 14 | 1 | 7362551 | 175 | 10 49 858 1 | 138 | 6 |
| 7360563 | 364 | 10 21 986 3 | 14 | 1 | 7362551 | 436 | 10 35 814 1 | 138 | 1 |
| 7361276 | 459 | 10 84 856 2 | 175 | 1 | 7362583 | 275 | 94 76 369 | 5 | 2 |
| 7361329 | 122 | 56 16 530 | 24 | 1 | 7362583 | 276 | 94 76 441 | 5 | 2 |
| 7361329 | 671 | 10 49 815 8 | 26 | 6 | 7362602 | 444 | 11 10 266 2 | 27 | 14 |
| 7361391 | 365 | 10 03 245 2 | 33 | 7 | 7362602 | 447 | 10 35 814 3 | 21 | 10 |
| 7361391 | 653 | 10 00 297 1 | 360 | 1 | 7362603 | 173 | 10 49 858 1 | 115 | 1 |
| 7361488 | 311 | 10 35 809 3 | 37 | 1 | 7362603 | 209 | 10 04 966 2 | 22 | 4 |
| 7361548 | 60 | 10 00 966 2 | 6 | 2 | 7362603 | 314 | 10 35 801 7 | 467 | 6 |
| 7361549 | 99 | 73 67 136 | 1 | 1 | 7362603 | 350 | 10 35 802 8 | 342 | 1 |
| 7361553 | 297 | 99 37 312 | 38 | 4 | 7362603 | 436 | 10 35 814 1 | 115 | 3 |
| 7361553 | 309 | 10 35 801 3 | 33 | 1 | 7362606 | 207 | 99 46 408 | 10 | 1 |
| 7361553 | 353 | 10 35 802 8 | 488 | 1 | 7362606 | 308 | 10 35 801 3 | 26 | 1 |
| 7361600 | 148 | 70 28 075 | 30 | 2 | 7362665 | 163 | 10 35 809 2 | 135 | 3 |
| 7361600 | 154 | 98 82 875 | 57 | 2 | 7362665 | 436 | 10 35 814 1 | 120 | 5 |
| 7361601 | 132 | 10 22 063 5 | 14 | 1 | 7362665 | 447 | 10 35 814 3 | 22 | 3 |
| 7361601 | 317 | 50 09 565 | 8 | 1 | 7362665 | 447 | 10 35 814 3 | 25 | 4 |
| 7361679 | 230 | 10 49 880 9 | 85 | 0.1m | 7362674 | 148 | 70 28 075 | 28 | 2 |
| 7361960 | 331 | 10 35 798 3 | 50 | 4 | 7362674 | 657 | 94 02 019 4 | 24 | 1 |
| 7361961 | 64 | 91 41 597 | 90 | 1 | 7362674 | 658 | 95 87 580 | 24 | 2 |
| 7361961 | 452 | 90 18 419 | 48 | 1 | 7362689 | 122 | 56 16 530 | 26 | 1 |
| 7361965 | 62 | 93 45 153 | 13 | 4 | 7362698 | 122 | 56 16 530 | 20 | 2 |
| 7361965 | 163 | 10 35 809 2 | 132 | 4 | 7362698 | 331 | 10 35 798 3 | 52 | 1 |
| 7361965 | 238 | 10 38 502 4 | 73 | 1 | 7362734 | 173 | 10 49 858 1 | 113 | 3 |
| 7361965 | 241 | 97 58 815 01 | 69 | 4 | 7362734 | 436 | 10 35 814 1 | 113 | 6 |
| 7361965 | 436 | 10 35 814 1 | 260 | 17 | 7362752 | 230 | 10 49 880 9 | 62 | 1 |
| 7362091 | 225 | 10 06 014 6 | 10 | 6 | 7362752 | 251 | 10 84 086 6 | 103 | 4 |
| 7362091 | 226 | 99 44 515 | 22 | 4 | 7362816 | 313 | 10 35 801 7 | 37 | 1 |
| 7362091 | 227 | 99 44 516 | 22 | 4 | 7362986 | 237 | 10 38 502 4 | 25 | 7 |
| 7362091 | 297 | 99 37 312 | 25 | 6 | 7363004 | 230 | 10 49 880 9 | 160 | 3 |
| 7362091 | 352 | 10 35 802 8 | 382 | 2 | 7363060 | 163 | 10 35 809 2 | 78 | 2m |
| 7362091 | 353 | 10 35 802 8 | 485 | 3 | 7363073 | 309 | 10 35 801 3 | 34 | 1 |
| 7362091 | 354 | 10 35 802 8 | 515 | 4 | 7363073 | 331 | 10 35 798 3 | 53 | 2 |
| 7362101 | 84 | 10 07 713 5 | 13 | 1 | 7363121 | 128 | 98 89 282 | 33 | 1 |
| 7362103 | 62 | 93 45 153 | 16 | 1 | 7363125 | 69 | 94 43 840 | 89 | 1 |
| 7362103 | 344 | 10 84 584 9 | 104 | 1 | 7363125 | 72 | 98 82 833 | 10 | 1 |
| 7362107 | 620 | 10 49 830 0 | 84 | 1 | 7363125 | 75 | 56 16 688 | 320 | 1 |
| 7362109 | 100 | 99 46 045 | 7 | 2 | 7363125 | 122 | 56 16 530 | 21 | 1 |
| 7362117 | 226 | 99 44 515 | 20 | 2 | 7363125 | 672 | 10 49 815 8 | 58 | 2 |
| 7362117 | 227 | 99 44 516 | 20 | 2 | 7363125 | 699 | 98 82 771 | 20 | 1 |

| Item | Page | Assembly | Pos. | Quantity | Item | Page | Assembly | Pos. | Quantity |
|---|---|---|---|---|---|---|---|---|---|
| 7363177 | 452 | 90 18 419 | 53 | 1 | 7367236 | 296 | 10 35 801 2 | 300 | 4 |
| 7363178 | 148 | 70 28 075 | 27 | 1 | 7367236 | 301 | 10 35 801 5 | 45 | 8 |
| 7363237 | 337 | 10 35 819 3 | 86 | 1 | 7367367 | 114 | 10 22 040 9 | 17 | 2 |
| 7363247 | 346 | 10 35 802 8 | 30 | 5 | 7367426 | 331 | 10 35 798 3 | 36 | 1 |
| 7363283 | 295 | 10 35 801 2 | 161 | 4 | 7367691 | 280 | 10 40 689 8 | 100 | 1 |
| 7363408 | 452 | 90 18 419 | 50 | 1 | 7367691 | 346 | 10 35 802 8 | 42 | 1 |
| 7363717 | 452 | 90 18 419 | 55 | 1 | 7367691 | 354 | 10 35 802 8 | 530 | 1 |
| 7363743 | 382 | 99 29 189 | 17 | 2 | 7367729 | 357 | 93 70 592 | 4 | 1 |
| 7363743 | 384 | 10 35 817 2 | 17 | 2 | 7367730 | 357 | 93 70 592 | 2 | 1 |
| 7363743 | 386 | 10 35 792 6 | 17 | 2 | 7367743 | 181 | 90 18 423 | 37 | 1 |
| 7363743 | 462 | 10 37 283 6 | 11 | 1 | 7367746 | 308 | 10 35 801 3 | 17 | 1 |
| 7363754 | 305 | 10 35 801 4 | 171 | 2 | 7368081 | 331 | 10 35 798 3 | 60 | 1 |
| 7363759 | 341 | 10 84 584 9 | 41 | 2 | 7368105 | 632 | 10 38 484 8 | 36 | 1 |
| 7363930 | 390 | 10 06 692 0 | 3 | 2 | 7368106 | 624 | 10 38 408 5 | 14 | 5 |
| 7363930 | 392 | 10 37 938 6 | 3 | 2 | 7368106 | 632 | 10 38 484 8 | 23 | 2 |
| 7364299 | 174 | 10 49 858 1 | 130 | 2 | 7368109 | 306 | 10 35 801 4 | 205 | 1 |
| 7364299 | 314 | 10 35 801 7 | 468 | 1 | 7368115 | 631 | 10 38 484 8 | 18 | 1 |
| 7364299 | 436 | 10 35 814 1 | 130 | 4 | 7368171 | 439 | 11 10 278 6 | 14 | 1 |
| 7364696 | 314 | 10 35 801 7 | 204 | 1 | 7368426 | 624 | 10 38 408 5 | 21 | 5 |
| 7364899 | 308 | 10 35 801 3 | 25 | 2 | 7368426 | 631 | 10 38 484 8 | 19 | 7 |
| 7364901 | 207 | 99 46 408 | 12 | 4 | 7368478 | 100 | 99 46 045 | 16 | 1 |
| 7364904 | 207 | 99 46 408 | 13 | 2 | 7368478 | 297 | 99 37 312 | 40 | 1 |
| 7364949 | 403 | 10 05 011 2 | 12 | 18 | 7368478 | 671 | 10 49 815 8 | 43 | 4 |
| 7365026 | 357 | 93 70 592 | 3 | 1 | 7368488 | 365 | 10 03 245 2 | 26 | 1 |
| 7365069 | 207 | 99 46 408 | 9 | 2 | 7368489 | 366 | 10 03 245 2 | 130 | 1 |
| 7365080 | 228 | 99 39 322 | 52 | 1 | 7368507 | 75 | 56 16 688 | 420 | 1 |
| 7365080 | 310 | 10 35 809 3 | 14 | 1 | 7368531 | 348 | 10 35 802 8 | 140 | 4 |
| 7365293 | 381 | 99 49 428 | 7 | 1 | 7368545 | 207 | 99 46 408 | 21 | 4 |
| 7365430 | 49 | 10 49 883 7 | 27 | 28 | 7368904 | 340 | 10 02 217 5 | 10 | 1 |
| 7365430 | 49 | 10 49 883 7 | 30 | 4 | 7368993 | 87 | 10 06 947 6 | 9 | 2 |
| 7365430 | 49 | 10 49 883 7 | 33 | 8 | 7368993 | 89 | 10 06 948 6 | 3 | 2 |
| 7365430 | 371 | 10 07 369 5 | 31 | 4 | 7368993 | 336 | 73 69 257 | 2 | 1 |
| 7365430 | 403 | 10 05 011 2 | 14 | 6 | 7368994 | 336 | 73 69 257 | 4 | 1 |
| 7365434 | 296 | 10 35 801 2 | 290 | 2 | 7368996 | 329 | 10 35 798 3 | 25 | 12 |
| 7365473 | 301 | 10 35 801 5 | 49 | 4 | 7368996 | 336 | 73 69 257 | 3 | 6 |
| 7365626 | 192 | 94 42 150 | 7 | 1 | 7369103 | 52 | 10 47 009 2 | 4 | 208 |
| 7365626 | 335 | 74 14 913 | 2 | 1 | 7369129 | 365 | 10 03 245 2 | 27 | 7 |
| 7365626 | 372 | 10 35 800 4 | 5 | 1 | 7369130 | 365 | 10 03 245 2 | 31 | 14 |
| 7365704 | 280 | 10 40 689 8 | 35 | 1 | 7369134 | 366 | 10 03 245 2 | 50 | 5 |
| 7366260 | 175 | 10 49 858 1 | 134 | 3 | 7369135 | 366 | 10 03 245 2 | 46 | 1 |
| 7366260 | 214 | 10 04 966 3 | 5 | 3 | 7369257 | 329 | 10 35 798 3 | 23 | 2 |
| 7366260 | 231 | 10 49 880 9 | 165 | 1 | 7369271 | 104 | 10 35 800 6 | 17 | 1 |
| 7366260 | 436 | 10 35 814 1 | 134 | 1 | 7369377 | 238 | 10 38 502 4 | 80 | 1 |
| 7366260 | 447 | 10 35 814 3 | 30 | 3 | 7369399 | 620 | 10 49 830 0 | 80 | 4m |
| 7366427 | 331 | 10 35 798 3 | 43 | 1 | 7369456 | 334 | 73 68 081 | 1 | 4 |
| 7366558 | 98 | 10 04 942 6 | 30 | 6 | 7369754 | 283 | 10 02 206 9 | 2 | 2 |
| 7366731 | 238 | 10 38 502 4 | 81 | 1 | 7369776 | 442 | 99 47 695 | 12 | 1 |
| 7366794 | 464 | 10 35 804 3 | 20 | 5 | 7370096 | 249 | 10 84 086 6 | 42 | 1 |
| 7366794 | 467 | 10 49 805 9 | 20 | 5 | 7370225 | 336 | 73 69 257 | 5 | 1 |
| 7366804 | 166 | 99 37 297 | 3 | 5 | 7370432 | 75 | 56 16 688 | 310 | 1 |
| 7366804 | 229 | 10 49 880 9 | 36 | 1 | 7370689 | 229 | 10 49 880 9 | 44 | 2 |
| 7366851 | 403 | 10 05 011 2 | 13 | 29 | 7370799 | 344 | 10 84 584 9 | 107 | 1 |
| 7366862 | 240 | 10 16 576 6 | 10 | 1 | 7370883 | 240 | 10 16 576 6 | 13 | 7 |
| 7367135 | 313 | 10 35 801 7 | 15 | 1 | 7370883 | 255 | 56 18 923 | 12 | 11 |
| 7367136 | 159 | 99 29 814 | 11 | 1 | 7370888 | 240 | 10 16 576 6 | 9 | 4 |
| 7367211 | 295 | 10 35 801 2 | 170 | 8 | 7370889 | 240 | 10 16 576 6 | 8 | 2 |
| 7367211 | 296 | 10 35 801 2 | 340 | 4 | 7370889 | 255 | 56 18 923 | 13 | 4 |
| 7367211 | 301 | 10 35 801 5 | 47 | 8 | 7370890 | 255 | 56 18 923 | 5 | 3 |
| 7367226 | 328 | 70 30 267 | 5 | 1 | 7370891 | 255 | 56 18 923 | 3 | 1 |
| 7367236 | 295 | 10 35 801 2 | 160 | 8 | 7370892 | 255 | 56 18 923 | 4 | 1 |

| Item | Page | Assembly | Pos. | Quantity | Item | Page | Assembly | Pos. | Quantity |
|---|---|---|---|---|---|---|---|---|---|
| 7370893 | 255 | 56 18 923 | 14 | 1 | 7380133 | 271 | 90 79 258 | 35 | 2 |
| 7370894 | 255 | 56 18 923 | 2 | 1 | 7380133 | 273 | 90 79 259 | 35 | 2 |
| 7370895 | 240 | 10 16 576 6 | 3 | 1 | 7380134 | 266 | 90 74 482 | 3 | 1 |
| 7370896 | 240 | 10 16 576 6 | 2 | 1 | 7380134 | 267 | 92 69 690 | 46 | 4 |
| 7370897 | 240 | 10 16 576 6 | 4 | 1 | 7380134 | 278 | 92 65 665 | 3 | 1 |
| 7370899 | 240 | 10 16 576 6 | 6 | 1 | 7380135 | 266 | 90 74 482 | 4 | 1 |
| 7370924 | 336 | 73 69 257 | 1 | 1 | 7380135 | 267 | 92 69 690 | 47 | 4 |
| 7371025 | 315 | 10 04 272 9 | 8 | 1 | 7380135 | 278 | 92 65 665 | 4 | 1 |
| 7371141 | 253 | 10 84 086 6 | 135 | 1 | 7380136 | 271 | 90 79 258 | 40 | 1 |
| 7371142 | 253 | 10 84 086 6 | 138 | 3 | 7380136 | 273 | 90 79 259 | 40 | 1 |
| 7371358 | 369 | 56 10 135 | 3 | 1 | 7380137 | 271 | 90 79 258 | 41 | 2 |
| 7371359 | 369 | 56 10 135 | 4 | 1 | 7380137 | 273 | 90 79 259 | 41 | 2 |
| 7371360 | 369 | 56 10 135 | 1 | 1 | 7380138 | 271 | 90 79 258 | 42 | 2 |
| 7371577 | 240 | 10 16 576 6 | 7 | 10 | 7380138 | 273 | 90 79 259 | 42 | 2 |
| 7371577 | 255 | 56 18 923 | 10 | 9 | 7380138 | 688 | 10 11 856 1 | 50 | 8 |
| 7371590 | 315 | 10 04 272 9 | 6 | 1 | 7380145 | 271 | 90 79 258 | 33 | 1 |
| 7371651 | 299 | 93 99 179 | 4 | 1 | 7380145 | 273 | 90 79 259 | 33 | 1 |
| 7371654 | 299 | 93 99 179 | 3 | 1 | 7380166 | 698 | 98 85 923 | 10 | 1 |
| 7371845 | 461 | 10 35 852 5 | 20 | 1 | 7380177 | 477 | 10 11 577 9 | 4 | 2 |
| 7371875 | 162 | 10 35 809 2 | 45 | 1 | 7380177 | 520 | 10 12 143 8 | 14 | 2 |
| 7371875 | 555 | 10 12 421 8 | 6 | 1 | 7380177 | 590 | 90 80 653 | 14 | 1 |
| 7372158 | 255 | 56 18 923 | 11 | 2 | 7380232 | 76 | 92 67 037 | 23 | 5 |
| 7372237 | 315 | 10 04 272 9 | 7 | 1 | 7380271 | 698 | 98 85 923 | 10 | 1 |
| 7372353 | 243 | 73 73 807 | 16 | 1 | 7380272 | 698 | 98 85 923 | 10 | 1 |
| 7372354 | 243 | 73 73 807 | 17 | 1 | 7380273 | 698 | 98 85 923 | 10 | 1 |
| 7372355 | 243 | 73 73 807 | 18 | 1 | 7380297 | 110 | 90 77 872 | 62 | 1 |
| 7372371 | 439 | 11 10 278 6 | 12 | 1 | 7380297 | 127 | 92 73 200 | 62 | 1 |
| 7372624 | 122 | 56 16 530 | 22 | 4 | 7380302 | 110 | 90 77 872 | 64 | 1 |
| 7372626 | 116 | 10 22 041 1 | 12 | 1 | 7380302 | 111 | 92 73 201 | 64 | 1 |
| 7372626 | 122 | 56 16 530 | 32 | 2 | 7380302 | 127 | 92 73 200 | 64 | 1 |
| 7373031 | 55 | 56 17 975 | 40 | 4 | 7380326 | 128 | 98 89 282 | 32 | 1 |
| 7373268 | 255 | 56 18 923 | 20 | 1 | 7380401 | 599 | 90 80 006 | 3 | 1 |
| 7373403 | 104 | 10 35 800 6 | 15 | 1 | 7380401 | 610 | 10 11 583 8 | 48 | 1 |
| 7373405 | 377 | 10 35 800 4 | 136 | 1 | 7380470 | 108 | 90 77 872 | 29 | 1 |
| 7373592 | 434 | 10 47 012 8 | 1 | 4 | 7380512 | 110 | 90 77 872 | 65 | 2 |
| 7373742 | 58 | 10 65 168 0 | 8 | 2 | 7380512 | 127 | 92 73 200 | 65 | 2 |
| 7373742 | 59 | 11 60 010 7 | 8 | 2 | 7380520 | 598 | 90 78 961 | 2 | 1 |
| 7373747 | 58 | 10 65 168 0 | 7 | 2 | 7380520 | 599 | 90 80 006 | 2 | 1 |
| 7373747 | 59 | 11 60 010 7 | 7 | 2 | 7380520 | 607 | 10 11 801 4 | 38 | 1 |
| 7373807 | 240 | 10 16 576 6 | 14 | 1 | 7380520 | 610 | 10 11 583 8 | 38 | 1 |
| 7373825 | 243 | 73 73 807 | 20 | 1 | 7380520 | 611 | 10 11 583 8 | 57 | 2 |
| 7373875 | 616 | 10 49 830 0 | 10 | 12 | 7380531 | 77 | 92 68 751 | 44 | 1 |
| 7373875 | 655 | 10 06 203 8 | 6 | 2 | 7380531 | 204 | 92 73 048 | 44 | 1 |
| 7373875 | 656 | 99 48 785 | 14 | 2 | 7380531 | 697 | 92 68 016 | 44 | 1 |
| 7373877 | 329 | 10 35 798 3 | 27 | 2 | 7380566 | 477 | 10 11 577 9 | 6 | 3 |
| 7373878 | 87 | 10 06 947 6 | 8 | 2 | 7380566 | 493 | 90 79 492 | 4 | 1 |
| 7373878 | 89 | 10 06 948 6 | 2 | 2 | 7380566 | 494 | 90 79 958 | 4 | 1 |
| 7373878 | 329 | 10 35 798 3 | 28 | 2 | 7380566 | 550 | 10 11 707 3 | 11 | 1 |
| 7380002 | 66 | 92 65 064 | 1 | 1 | 7380566 | 551 | 90 77 279 | 6 | 1 |
| 7380004 | 66 | 92 65 064 | 3 | 1 | 7380566 | 555 | 10 12 421 8 | 5 | 1 |
| 7380038 | 66 | 92 65 064 | 2 | 5 | 7380577 | 82 | 92 66 231 | 18 | 1 |
| 7380051 | 273 | 90 79 259 | 36 | 1 | 7380592 | 692 | 98 88 308 | 14 | 2 |
| 7380071 | 307 | 10 04 462 4 | 2 | 1 | 7380592 | 700 | 92 71 657 | 28 | 2 |
| 7380073 | 331 | 10 35 798 3 | 71 | 1 | 7380594 | 77 | 92 68 751 | 36 | 1 |
| 7380073 | 451 | 90 18 419 | 36 | 1 | 7380596 | 690 | 98 82 766 | 20 | 1 |
| 7380073 | 452 | 90 18 419 | 41 | 1 | 7380596 | 699 | 98 82 771 | 19 | 1 |
| 7380075 | 662 | 92 70 390 | 2 | 1 | 7380596 | 700 | 92 71 657 | 30 | 1 |
| 7380077 | 662 | 92 70 390 | 1 | 1 | 7380598 | 610 | 10 11 583 8 | 39 | 1 |
| 7380106 | 149 | 90 73 158 | 33 | 1 | 7380602 | 110 | 90 77 872 | 63 | 1 |
| 7380106 | 197 | 90 74 285 | 33 | 1 | 7380602 | 127 | 92 73 200 | 63 | 1 |

| Item | Page | Assembly | Pos. | Quantity | Item | Page | Assembly | Pos. | Quantity |
|---|---|---|---|---|---|---|---|---|---|
| 7380611 | 690 | 98 82 766 | 23 | 2 | 7380970 | 552 | 10 12 190 8 | 8 | 1 |
| 7380611 | 699 | 98 82 771 | 23 | 1 | 7380970 | 553 | 90 79 964 | 8 | 1 |
| 7380613 | 73 | 98 89 775 | 25 | 1 | 7380973 | 686 | 10 13 268 6 | 18 | 2 |
| 7380613 | 188 | 90 72 100 | 25 | 1 | 7380973 | 700 | 92 71 657 | 18 | 2 |
| 7380613 | 204 | 92 73 048 | 25 | 1 | 7380974 | 155 | 98 85 932 | 10 | 1 |
| 7380613 | 699 | 98 82 771 | 25 | 1 | 7380975 | 155 | 98 85 932 | 20 | 1 |
| 7380617 | 83 | 92 66 232 | 19 | 1 | 7380976 | 155 | 98 85 932 | 30 | 1 |
| 7380618 | 83 | 92 66 232 | 20 | 1 | 7380977 | 151 | 90 79 347 | 13 | 2 |
| 7380619 | 83 | 92 66 232 | 22 | 1 | 7380979 | 126 | 92 71 653 | 16 | 2 |
| 7380620 | 82 | 92 66 231 | 19 | 1 | 7380979 | 700 | 92 71 657 | 31 | 2 |
| 7380621 | 82 | 92 66 231 | 20 | 1 | 7380982 | 125 | 90 79 811 | 25 | 1 |
| 7380647 | 112 | 92 68 441 | 11 | 1 | 7380982 | 126 | 92 71 653 | 25 | 1 |
| 7380648 | 126 | 92 71 653 | 19 | 2 | 7380983 | 125 | 90 79 811 | 26 | 1 |
| 7380648 | 154 | 98 82 875 | 68 | 8 | 7380983 | 126 | 92 71 653 | 26 | 1 |
| 7380648 | 689 | 90 73 355 | 22 | 1 | 7380986 | 154 | 98 82 875 | 17 | 1 |
| 7380648 | 692 | 98 88 308 | 22 | 1 | 7380987 | 154 | 98 82 875 | 71 | 2 |
| 7380648 | 694 | 10 13 305 9 | 68 | 5 | 7380991 | 701 | 92 66 089 | 25 | 2 |
| 7380648 | 699 | 98 82 771 | 22 | 1 | 7380992 | 701 | 92 66 089 | 24 | 1 |
| 7380648 | 700 | 92 71 657 | 64 | 8 | 7381018 | 196 | 90 72 990 | 16 | 1 |
| 7380653 | 484 | 90 79 480 | 11 | 2 | 7381018 | 201 | 92 78 623 | 11 | 1 |
| 7380653 | 581 | 10 11 557 7 | 9 | 1 | 7381018 | 203 | 62 90 073 | 10 | 1 |
| 7380653 | 605 | 10 11 801 4 | 7 | 2 | 7381018 | 204 | 92 73 048 | 16 | 1 |
| 7380653 | 608 | 10 11 583 8 | 7 | 2 | 7381019 | 154 | 98 82 875 | 47 | 1 |
| 7380653 | 610 | 10 11 583 8 | 37 | 1 | 7381025 | 125 | 90 79 811 | 28 | 1 |
| 7380657 | 149 | 90 73 158 | 36 | 1 | 7381028 | 125 | 90 79 811 | 23 | 1 |
| 7380657 | 197 | 90 74 285 | 36 | 1 | 7381028 | 126 | 92 71 653 | 23 | 1 |
| 7380657 | 204 | 92 73 048 | 36 | 1 | 7381029 | 125 | 90 79 811 | 24 | 1 |
| 7380657 | 604 | 90 80 504 | 2 | 1 | 7381029 | 126 | 92 71 653 | 24 | 1 |
| 7380657 | 610 | 10 11 583 8 | 40 | 1 | 7381103 | 586 | 90 76 534 | 2 | 1 |
| 7380657 | 697 | 92 68 016 | 36 | 1 | 7381103 | 588 | 90 79 206 | 2 | 1 |
| 7380659 | 196 | 90 72 990 | 18 | 1 | 7381204 | 110 | 90 77 872 | 60 | 1 |
| 7380659 | 204 | 92 73 048 | 18 | 1 | 7381204 | 111 | 92 73 201 | 60 | 1 |
| 7380659 | 689 | 90 73 355 | 18 | 1 | 7381209 | 127 | 92 73 200 | 60 | 1 |
| 7380659 | 699 | 98 82 771 | 18 | 1 | 7381225 | 521 | 90 78 233 | 2 | 1 |
| 7380684 | 154 | 98 82 875 | 16 | 1 | 7381225 | 542 | 10 11 628 5 | 19 | 1 |
| 7380691 | 110 | 90 77 872 | 66 | 1 | 7381225 | 612 | 10 11 583 8 | 73 | 1 |
| 7380691 | 127 | 92 73 200 | 66 | 1 | 7381226 | 480 | 10 11 795 1 | 6 | 1 |
| 7380730 | 690 | 98 82 766 | 30 | 1 | 7381226 | 605 | 10 11 801 4 | 3 | 1 |
| 7380824 | 72 | 98 82 833 | 20 | 1 | 7381226 | 608 | 10 11 583 8 | 3 | 1 |
| 7380831 | 692 | 98 88 308 | 17 | 1 | 7381250 | 126 | 92 71 653 | 18 | 1 |
| 7380831 | 700 | 92 71 657 | 35 | 1 | 7381250 | 700 | 92 71 657 | 32 | 1 |
| 7380833 | 564 | 10 11 983 0 | 2 | 2 | 7381254 | 690 | 98 82 766 | 21 | 1 |
| 7380833 | 565 | 90 75 678 | 2 | 2 | 7381254 | 699 | 98 82 771 | 27 | 1 |
| 7380867 | 700 | 92 71 657 | 68 | 1 | 7381270 | 87 | 10 06 947 6 | 11 | 1 |
| 7380883 | 83 | 92 66 232 | 21 | 1 | 7381270 | 513 | 10 11 585 1 | 6 | 1 |
| 7380884 | 83 | 92 66 232 | 23 | 1 | 7381270 | 515 | 10 11 585 3 | 6 | 1 |
| 7380888 | 154 | 98 82 875 | 69 | 1 | 7381292 | 486 | 90 79 483 | 13 | 1 |
| 7380888 | 694 | 10 13 305 9 | 69 | 1 | 7381302 | 525 | 90 72 781 | 10 | 1 |
| 7380888 | 700 | 92 71 657 | 61 | 1 | 7381354 | 196 | 90 72 990 | 22 | 2 |
| 7380905 | 701 | 92 66 089 | 28 | 2 | 7381361 | 544 | 90 73 767 | 5 | 2 |
| 7380919 | 514 | 10 11 585 1 | 14 | 1 | 7381361 | 597 | 90 77 719 | 2 | 2 |
| 7380919 | 516 | 10 11 585 3 | 14 | 1 | 7381361 | 611 | 10 11 583 8 | 56 | 6 |
| 7380954 | 110 | 90 77 872 | 71 | 1 | 7381415 | 154 | 98 82 875 | 73 | 1 |
| 7380955 | 110 | 90 77 872 | 61 | 1 | 7381415 | 543 | 10 11 628 5 | 83 | 1 |
| 7380955 | 127 | 92 73 200 | 61 | 1 | 7381415 | 612 | 10 11 583 8 | 72 | 1 |
| 7380955 | 520 | 10 12 143 8 | 15 | 2 | 7381442 | 154 | 98 82 875 | 15 | 1 |
| 7380955 | 522 | 10 11 585 0 | 2 | 2 | 7381448 | 113 | 98 81 609 | 11 | 1 |
| 7380956 | 110 | 90 77 872 | 75 | 2 | 7381448 | 688 | 10 11 856 1 | 24 | 4 |
| 7380970 | 514 | 10 11 585 1 | 13 | 1 | 7381457 | 477 | 10 11 577 9 | 7 | 2 |
| 7380970 | 516 | 10 11 585 3 | 13 | 1 | 7381457 | 569 | 90 79 889 | 10 | 1 |

| Item | Page | Assembly | Pos. | Quantity | Item | Page | Assembly | Pos. | Quantity |
|---|---|---|---|---|---|---|---|---|---|
| 7381457 | 604 | 90 80 504 | 3 | 1 | 7382202 | 607 | 10 11 801 4 | 23 | 2 |
| 7381490 | 690 | 98 82 766 | 24 | 2 | 7382203 | 477 | 10 11 577 9 | 5 | 2 |
| 7381490 | 699 | 98 82 771 | 24 | 1 | 7382203 | 536 | 10 11 551 3 | 6 | 3 |
| 7381491 | 690 | 98 82 766 | 25 | 1 | 7382203 | 542 | 10 11 628 5 | 47 | 2 |
| 7381491 | 699 | 98 82 771 | 26 | 1 | 7382203 | 558 | 10 11 858 9 | 1 | 2 |
| 7381534 | 196 | 90 72 990 | 24 | 1 | 7382203 | 604 | 90 80 504 | 4 | 2 |
| 7381562 | 154 | 98 82 875 | 43 | 2 | 7382204 | 484 | 90 79 480 | 14 | 3 |
| 7381565 | 436 | 10 35 814 1 | 106 | 9 | 7382204 | 486 | 90 79 483 | 8 | 7 |
| 7381593 | 563 | 10 13 281 7 | 3 | 2 | 7382204 | 520 | 10 12 143 8 | 23 | 2 |
| 7381593 | 605 | 10 11 801 4 | 11 | 2 | 7382204 | 607 | 10 11 801 4 | 22 | 2 |
| 7381593 | 608 | 10 11 583 8 | 11 | 2 | 7382216 | 549 | 10 11 657 6 | 5 | 1 |
| 7381628 | 436 | 10 35 814 1 | 110 | 14 | 7401288 | 285 | 10 02 211 7 | 17 | 4 |
| 7381628 | 489 | 90 79 862 | 4 | 1 | 7401349 | 101 | 99 46 045 | 21 | 8 |
| 7381628 | 543 | 10 11 628 5 | 81 | 1 | 7401349 | 179 | 10 35 800 9 | 66 | 1 |
| 7381629 | 549 | 10 11 657 6 | 8 | 1 | 7401349 | 312 | 10 35 809 3 | 51 | 3 |
| 7381630 | 436 | 10 35 814 1 | 122 | 3 | 7401349 | 447 | 10 35 814 3 | 41 | 3 |
| 7381630 | 482 | 10 11 916 7 | 7 | 2 | 7401349 | 650 | 93 88 597 | 2 | 1 |
| 7381638 | 80 | 98 83 173 | 1 | 1 | 7402273 | 353 | 10 35 802 8 | 415 | 1 |
| 7381638 | 581 | 10 11 557 7 | 10 | 2 | 7402493 | 573 | 90 80 735 | 19 | 1 |
| 7381638 | 604 | 90 80 504 | 8 | 1 | 7402576 | 314 | 10 35 801 7 | 200 | 1 |
| 7381641 | 71 | 90 73 354 | 27 | 1 | 7402657 | 460 | 93 58 137 | 1 | 1 |
| 7381685 | 517 | 90 80 713 | 14 | 1 | 7402658 | 460 | 93 58 137 | 2 | 1m |
| 7381685 | 524 | 90 80 278 | 4 | 1 | 7402835 | 225 | 10 06 014 6 | 20 | 7 |
| 7381685 | 611 | 10 11 583 8 | 50 | 2 | 7403175 | 297 | 99 37 312 | 55 | 1 |
| 7381690 | 690 | 98 82 766 | 27 | 2 | 7403569 | 62 | 93 45 153 | 10 | 1 |
| 7381759 | 690 | 98 82 766 | 29 | 1 | 7403569 | 313 | 10 35 801 7 | 115 | 1 |
| 7381760 | 690 | 98 82 766 | 22 | 1 | 7403569 | 314 | 10 35 801 7 | 186 | 1 |
| 7381760 | 699 | 98 82 771 | 21 | 1 | 7403569 | 343 | 10 84 584 9 | 86 | 2 |
| 7381764 | 690 | 98 82 766 | 15 | 1 | 7403569 | 354 | 10 35 802 8 | 516 | 2 |
| 7381779 | 484 | 90 79 480 | 10 | 2 | 7403972 | 225 | 10 06 014 6 | 14 | 1 |
| 7381779 | 562 | 90 80 301 | 3 | 2 | 7403972 | 314 | 10 35 801 7 | 182 | 5 |
| 7381779 | 566 | 90 79 472 | 2 | 1 | 7404186 | 343 | 10 84 584 9 | 99 | 1 |
| 7381779 | 567 | 90 79 474 | 2 | 1 | 7404256 | 354 | 10 35 802 8 | 575 | 1 |
| 7381779 | 568 | 90 80 280 | 2 | 1 | 7404503 | 304 | 10 35 801 4 | 90 | 1 |
| 7381779 | 605 | 10 11 801 4 | 6 | 7 | 7404619 | 343 | 10 84 584 9 | 97 | 1 |
| 7381779 | 608 | 10 11 583 8 | 6 | 6 | 7406864 | 297 | 99 37 312 | 32 | 2 |
| 7381781 | 512 | 90 74 507 | 6 | 1 | 7407107 | 311 | 10 35 809 3 | 20 | 1 |
| 7381807 | 271 | 90 79 258 | 26 | 2 | 7407108 | 311 | 10 35 809 3 | 22 | 1 |
| 7381807 | 273 | 90 79 259 | 26 | 2 | 7407122 | 84 | 10 07 713 5 | 17 | 1 |
| 7381809 | 690 | 98 82 766 | 31 | 1 | 7407161 | 348 | 10 35 802 8 | 161 | 1 |
| 7381809 | 699 | 98 82 771 | 30 | 1 | 7407224 | 352 | 10 35 802 8 | 400 | 1 |
| 7381812 | 523 | 90 74 796 | 4 | 1 | 7408797 | 121 | 10 41 301 3 | 15 | 1 |
| 7381812 | 611 | 10 11 583 8 | 54 | 1 | 7408798 | 121 | 10 41 301 3 | 16 | 1 |
| 7381912 | 563 | 10 13 281 7 | 4 | 1 | 7409720 | 296 | 10 35 801 2 | 360 | 2 |
| 7381912 | 605 | 10 11 801 4 | 12 | 1 | 7409720 | 302 | 10 35 801 5 | 90 | 2 |
| 7381912 | 608 | 10 11 583 8 | 12 | 1 | 7409720 | 311 | 10 35 809 3 | 38 | 1 |
| 7381925 | 542 | 10 11 628 5 | 28 | 1 | 7409720 | 347 | 10 35 802 8 | 97 | 1 |
| 7381925 | 543 | 10 11 628 5 | 78 | 1 | 7409720 | 349 | 10 35 802 8 | 204 | 1 |
| 7381995 | 576 | 10 11 566 4 | 4 | 1 | 7410211 | 314 | 10 35 801 7 | 184 | 4 |
| 7382029 | 570 | 98 87 461 | 1 | 1 | 7410211 | 354 | 10 35 802 8 | 519 | 1 |
| 7382059 | 523 | 90 74 796 | 5 | 1 | 7410451 | 311 | 10 35 809 3 | 21 | 1 |
| 7382059 | 611 | 10 11 583 8 | 55 | 1 | 7410480 | 305 | 10 35 801 4 | 150 | 1 |
| 7382081 | 546 | 10 11 726 8 | 3 | 2 | 7410480 | 347 | 10 35 802 8 | 72 | 1 |
| 7382090 | 562 | 90 80 301 | 6 | 2 | 7410555 | 439 | 11 10 278 6 | 13 | 1 |
| 7382092 | 487 | 10 12 026 3 | 2 | 2 | 7410773 | 298 | 56 09 948 | 15 | 1 |
| 7382092 | 488 | 90 79 978 | 2 | 2 | 7411823 | 287 | 11 00 359 4 | 29 | 1 |
| 7382158 | 611 | 10 11 583 8 | 58 | 3 | 7412734 | 212 | 10 48 840 4 | 9 | 1 |
| 7382167 | 79 | 90 73 357 | 31 | 24 | 7412943 | 228 | 99 39 322 | 51 | 4 |
| 7382167 | 199 | 90 74 416 | 30 | 24 | 7413402 | 139 | 10 35 572 4 | 20 | 1 |
| 7382202 | 596 | 90 79 893 | 5 | 2 | 7414232 | 228 | 99 39 322 | 50 | 1 |

| Item | Page | Assembly | Pos. | Quantity | Item | Page | Assembly | Pos. | Quantity |
|---|---|---|---|---|---|---|---|---|---|
| 7414522 | 75 | 56 16 688 | 50 | 2 | 7622321 | 103 | 10 03 980 3 | 1 | 1 |
| 7414913 | 451 | 90 18 419 | 15 | 1 | 7622803 | 213 | 10 48 841 6 | 30 | 8 |
| 7469905 | 149 | 90 73 158 | 32 | 1 | 7622803 | 216 | 10 10 171 1 | 30 | 7 |
| 7469905 | 197 | 90 74 285 | 32 | 1 | 7622803 | 623 | 10 10 171 2 | 30 | 5 |
| 749072914 | 75 | 56 16 688 | 170 | 1 | 7622804 | 623 | 10 10 171 2 | 32 | 2 |
| 7610037 | 190 | 93 33 329 01 | 5 | 1 | 7623221 | 169 | 10 49 858 1 | 4 | 1 |
| 7610054 | 68 | 94 43 840 | 3 | 96 | 7623222 | 169 | 10 49 858 1 | 6 | 1 |
| 7610107 | 191 | 93 33 333 01 | 6 | 26 | 7623704 | 217 | 90 64 786 | 25 | 1 |
| 7610108 | 191 | 93 33 333 01 | 7 | 26 | 7623704 | 219 | 10 01 461 1 | 25 | 4 |
| 7610187 | 69 | 94 43 840 | 61 | 1 | 7623705 | 217 | 90 64 786 | 20 | 1 |
| 7610202 | 191 | 93 33 333 01 | 3 | 1 | 7623705 | 219 | 10 01 461 1 | 20 | 6 |
| 7610217 | 69 | 94 43 840 | 71 | 2 | 7623707 | 217 | 90 64 786 | 28 | 1 |
| 7610225 | 192 | 94 42 150 | 6 | 1 | 7623707 | 219 | 10 01 461 1 | 28 | 2 |
| 7610243 | 69 | 94 43 840 | 58 | 1 | 7624177 | 217 | 90 64 786 | 11 | 1 |
| 7610289 | 184 | 90 01 790 0 | 11 | 2 | 7624177 | 219 | 10 01 461 1 | 11 | 5 |
| 7610341 | 185 | 90 01 790 0 | 74 | 1 | 7624268 | 642 | 10 00 348 5 | 999 | 1 |
| 7610361 | 68 | 94 43 840 | 6 | 1 | 773150416 | 465 | 10 35 804 3 | 101 | 1 |
| 7610367 | 69 | 94 43 840 | 57 | 1 | 7738704 | 372 | 10 35 800 4 | 23 | 2 |
| 7610521 | 191 | 93 33 333 01 | 2 | 1 | 7738704 | 376 | 10 35 800 4 | 132 | 4 |
| 7610523 | 191 | 93 33 333 01 | 8 | 1 | 7738704 | 391 | 10 06 692 0 | 22 | 2 |
| 7610551 | 191 | 93 33 333 01 | 11 | 1 | 7738704 | 393 | 10 37 938 6 | 22 | 2 |
| 7610552 | 191 | 93 33 333 01 | 12 | 1 | 7738704 | 401 | 10 03 720 9 | 20 | 2 |
| 7610819 | 68 | 94 43 840 | 8 | 2 | 774252314 | 102 | 99 37 298 | 22 | 1 |
| 7610825 | 192 | 94 42 150 | 5 | 1 | 774252314 | 162 | 10 35 809 2 | 42 | 4 |
| 7610826 | 195 | 96 90 213 01 | 20 | 1 | 7743245 | 416 | 70 28 842 | 610 | 2 |
| 7615379 | 100 | 99 46 045 | 15 | 2 | 774371808 | 217 | 90 64 786 | 10 | 1 |
| 7615379 | 100 | 99 46 045 | 17 | 1 | 774371808 | 219 | 10 01 461 1 | 10 | 10 |
| 7615379 | 355 | 10 35 802 8 | 596 | 1 | 774373408 | 217 | 90 64 786 | 35 | 1 |
| 7615379 | 619 | 10 49 830 0 | 64 | 4 | 774373408 | 218 | 90 64 786 | 135 | 1 |
| 7615603 | 147 | 70 28 075 | 14 | 2 | 774373608 | 217 | 90 64 786 | 4 | 1 |
| 7615604 | 147 | 70 28 075 | 16 | 2 | 774373708 | 217 | 90 64 786 | 75 | 1m |
| 7616910 | 162 | 10 35 809 2 | 47 | 1 | 774373808 | 218 | 90 64 786 | 180 | 1 |
| 7616910 | 301 | 10 35 801 5 | 66 | 1 | 774374208 | 217 | 90 64 786 | 40 | 1 |
| 7616913 | 308 | 10 35 801 3 | 21 | 1 | 774374208 | 219 | 10 01 461 1 | 40 | 6 |
| 7616913 | 619 | 10 49 830 0 | 65 | 2 | 774376008 | 217 | 90 64 786 | 1 | 1 |
| 7616915 | 354 | 10 35 802 8 | 520 | 1 | 774376008 | 219 | 10 01 461 1 | 1 | 31 |
| 7616949 | 317 | 50 09 565 | 9 | 1 | 774376108 | 217 | 90 64 786 | 70 | 1m |
| 7617248 | 343 | 10 84 584 9 | 85 | 1 | 774376108 | 219 | 10 01 461 1 | 70 | 15m |
| 7617261 | 225 | 10 06 014 6 | 12 | 3 | 774376508 | 218 | 90 64 786 | 185 | 1 |
| 7617261 | 297 | 99 37 312 | 26 | 1 | 774378008 | 213 | 10 48 841 6 | 32 | 1 |
| 7617261 | 348 | 10 35 802 8 | 141 | 11 | 774378208 | 213 | 10 48 841 6 | 31 | 4 |
| 7617262 | 225 | 10 06 014 6 | 13 | 1 | 774378208 | 216 | 10 10 171 1 | 31 | 3 |
| 7617268 | 344 | 10 84 584 9 | 105 | 1 | 774378208 | 623 | 10 10 171 2 | 31 | 3 |
| 7617351 | 186 | 90 01 790 0 | 81 | 2 | 774381508 | 681 | 10 28 689 7 | 19 | 1 |
| 7617359 | 348 | 10 35 802 8 | 160 | 1 | 774383508 | 217 | 90 64 786 | 65 | 1m |
| 7617386 | 301 | 10 35 801 5 | 67 | 1 | 774383508 | 218 | 90 64 786 | 165 | 1m |
| 7617714 | 183 | 99 46 389 | 19 | 1 | 7900280 | 459 | 10 84 856 2 | 140 | 1 |
| 7617714 | 207 | 99 46 408 | 22 | 4 | 7900836 | 459 | 10 84 856 2 | 150 | 1 |
| 7617714 | 343 | 10 84 584 9 | 84 | 1 | 8100714 | 688 | 10 11 856 1 | 127 | 1 |
| 7618290 | 351 | 10 35 802 8 | 372 | 2 | 811205101 | 569 | 90 79 889 | 120 | 1 |
| 7618290 | 354 | 10 35 802 8 | 590 | 1 | 811205708 | 525 | 90 72 781 | 109 | 1 |
| 7618568 | 136 | 10 22 070 1 | 7 | 2 | 811205708 | 563 | 10 13 281 7 | 109 | 1 |
| 7618568 | 148 | 70 28 075 | 34 | 6 | 811205708 | 598 | 90 78 961 | 109 | 1 |
| 7618883 | 432 | 10 48 808 8 | 285 | 1 | 811205708 | 692 | 98 88 308 | 103 | 1 |
| 7619197 | 181 | 90 18 423 | 21 | 1 | 811208201 | 510 | 10 12 038 4 | 104 | 1 |
| 7621247 | 104 | 10 35 800 6 | 18 | 1 | 811208201 | 688 | 10 11 856 1 | 118 | 1 |
| 7621324 | 681 | 10 28 689 7 | 14 | 1 | 811208201 | 689 | 90 73 355 | 118 | 1 |
| 7621403 | 681 | 10 28 689 7 | 13 | 1 | 8145660 | 38 | 90 66 466 | 10 | 1 |
| 7621780 | 314 | 10 35 801 7 | 505 | 5 | 8145666 | 39 | 90 66 466 | 30 | 1 |
| 7621780 | 355 | 10 35 802 8 | 600 | 4 | 8300004 | 667 | 94 01 936 4 | 800 | 1 |

| Item | Page | Assembly | Pos. | Quantity | Item | Page | Assembly | Pos. | Quantity |
|---|---|---|---|---|---|---|---|---|---|
| 8300004 | 668 | 94 02 733 6 | 800 | 1 | 9015158 | 53 | 90 15 155 | 2 | 1 |
| 8300004 | 669 | 99 52 600 | 800 | 1 | 9015190 | 53 | 90 15 155 | 3 | 1 |
| 8300005 | 667 | 94 01 936 4 | 801 | 1 | 9018419 | 86 | 10 35 798 2 | 9300 | 1 |
| 8300005 | 668 | 94 02 733 6 | 801 | 1 | 9018423 | 85 | 10 35 798 2 | 700 | 1 |
| 8300005 | 669 | 99 52 600 | 801 | 1 | 9018426 | 451 | 90 18 419 | 2 | 1 |
| 8500251 | 632 | 10 38 484 8 | 32 | 5 | 9018743 | 95 | 10 07 366 1 | 3 | 1 |
| 8501527 | 680 | 10 49 822 9 | 30 | 4kg | 9018745 | 95 | 10 07 366 1 | 4 | 1 |
| 8501565 | 457 | 10 08 428 6 | 20 | 1 | 9018749 | 95 | 10 07 366 1 | 10 | 1 |
| 8503279 | 181 | 90 18 423 | 50 | 1 | 9018794 | 630 | 90 18 795 | 2 | 1 |
| 8610230 | 34 | 10 35 899 2 | 1 | 1 | 9018795 | 628 | 10 49 823 5 | 6 | 4 |
| 861303608 | 30 | 10 35 894 7 | 25 | 1 | 9019253 | 628 | 10 49 823 5 | 170 | 1 |
| 861304208 | 30 | 10 35 894 7 | 10 | 1 | 9019253 | 628 | 10 49 823 5 | 280 | 1 |
| 861305508 | 30 | 10 35 894 7 | 1 | 1 | 90200890 | 187 | 90 01 790 0 | 910 | 1 |
| 861305608 | 30 | 10 35 894 7 | 50 | 1 | 9062632 | 663 | 94 00 606 1 | 999 | 1 |
| 8620769 | 688 | 10 11 856 1 | 130 | 1kg | 9062632 | 664 | 95 87 597 | 999 | 1 |
| 8622897 | 72 | 98 82 833 | 102 | 1 | 9062821 | 665 | 95 90 264 | 999 | 1 |
| 8622905 | 520 | 10 12 143 8 | 108 | 1 | 9062985 | 667 | 94 01 936 4 | 999 | 1 |
| 8622905 | 597 | 90 77 719 | 108 | 1 | 9063420 | 658 | 95 87 580 | 10 | 1 |
| 8622905 | 600 | 90 77 386 | 108 | 1 | 9064786 | 210 | 10 48 840 8 | 998 | 1 |
| 8627609 | 486 | 90 79 483 | 112 | 1 | 9064882 | 586 | 90 76 534 | 98 | 1 |
| 8627609 | 490 | 10 11 870 2 | 112 | 1 | 9066460 | 46 | 10 35 970 2 | 500 | 1 |
| 8628192 | 543 | 10 11 628 5 | 109 | 1 | 9066465 | 10 | 90 66 460 | 70 | 1 |
| 8628192 | 557 | 90 78 356 | 109 | 1 | 9066466 | 10 | 90 66 460 | 100 | 1 |
| 8628192 | 559 | 10 11 646 4 | 109 | 1 | 9070361 | 10 | 90 66 460 | 10 | 1 |
| 8628192 | 580 | 90 79 823 | 109 | 1 | 9070362 | 10 | 90 66 460 | 20 | 1 |
| 8628192 | 592 | 10 11 599 3 | 109 | 1 | 9070363 | 10 | 90 66 460 | 30 | 1 |
| 8655008 | 77 | 92 68 751 | 126 | 1 | 9070364 | 10 | 90 66 460 | 40 | 1 |
| 8655008 | 128 | 98 89 282 | 126 | 1 | 9070365 | 10 | 90 66 460 | 50 | 1 |
| 8655008 | 149 | 90 73 158 | 126 | 1 | 9070366 | 10 | 90 66 460 | 60 | 1 |
| 8655008 | 697 | 92 68 016 | 126 | 1 | 9072100 | 183 | 99 46 389 | 13 | 1 |
| 8655016 | 575 | 10 11 553 9 | 109 | 1 | 9072633 | 525 | 90 72 781 | 7 | 1 |
| 8655016 | 579 | 90 79 468 | 109 | 1 | 9072633 | 526 | 90 80 277 | 7 | 1 |
| 8655016 | 599 | 90 80 006 | 109 | 1 | 9072781 | 523 | 90 74 796 | 1 | 1 |
| 8655018 | 563 | 10 13 281 7 | 100 | 1 | 9072808 | 156 | 98 88 119 | 1 | 1 |
| 8655023 | 477 | 10 11 577 9 | 104 | 1 | 9072834 | 496 | 90 75 115 | 3 | 1 |
| 8655030 | 562 | 90 80 301 | 110 | 1 | 9072908 | 557 | 90 78 356 | 3 | 1 |
| 8655030 | 567 | 90 79 474 | 110 | 1 | 9072990 | 188 | 90 72 100 | 3 | 1 |
| 8700012 | 124 | 90 73 751 | 106 | 1 | 9072991 | 196 | 90 72 990 | 11 | 1 |
| 8700039 | 70 | 90 73 155 | 106 | 1 | 9072996 | 108 | 90 77 872 | 18 | 1 |
| 8700039 | 486 | 90 79 483 | 106 | 1 | 9073074 | 108 | 90 77 872 | 20 | 1 |
| 8700039 | 526 | 90 80 277 | 100 | 1 | 9073083 | 469 | 10 11 668 5 | 40 | 6 |
| 90011490 | 184 | 90 01 790 0 | 45 | 1 | 9073098 | 517 | 90 80 713 | 3 | 1 |
| 90011580 | 184 | 90 01 790 0 | 47 | 3 | 9073100 | 517 | 90 80 713 | 13 | 1 |
| 90011582 | 184 | 90 01 790 0 | 48 | 3 | 9073113 | 149 | 90 73 158 | 10 | 1 |
| 90017900 | 183 | 99 46 389 | 10 | 1 | 9073114 | 70 | 90 73 155 | 2 | 1 |
| 90018066 | 205 | 10 83 653 3 | 16 | 1 | 9073148 | 199 | 90 74 416 | 13 | 1 |
| 90018382 | 184 | 90 01 790 0 | 10 | 1 | 9073148 | 695 | 90 73 389 | 1 | 1 |
| 9006346 | 444 | 11 10 266 2 | 46 | 4 | 9073155 | 73 | 98 89 775 | 79 | 1 |
| 9006828 | 635 | 11 10 283 4 | 2 | 9 | 9073155 | 79 | 90 73 357 | 2 | 1 |
| 9007585 | 443 | 99 47 695 | 60 | 1 | 9073158 | 71 | 90 73 354 | 95 | 1 |
| 9008100 | 301 | 10 35 801 5 | 53 | 2 | 9073158 | 73 | 98 89 775 | 95 | 1 |
| 9008517 | 344 | 10 84 584 9 | 110 | 1 | 9073163 | 517 | 90 80 713 | 8 | 1 |
| 9008530 | 280 | 10 40 689 8 | 30 | 2 | 9073188 | 517 | 90 80 713 | 6 | 2 |
| 9008618 | 671 | 10 49 815 8 | 40 | 2 | 9073190 | 549 | 10 11 657 6 | 6 | 1 |
| 9010347 | 229 | 10 49 880 9 | 10 | 1 | 9073354 | 73 | 98 89 775 | 1 | 1 |
| 9010820 | 312 | 10 35 809 3 | 47 | 1 | 9073355 | 73 | 98 89 775 | 3 | 1 |
| 9013056 | 619 | 10 49 830 0 | 58 | 1 | 9073356 | 689 | 90 73 355 | 11 | 1 |
| 9013811 | 251 | 10 84 086 6 | 104 | 1 | 9073357 | 71 | 90 73 354 | 94 | 1 |
| 9014598 | 170 | 10 49 858 1 | 23 | 1 | 9073357 | 73 | 98 89 775 | 94 | 1 |
| 9015155 | 51 | 10 49 883 7 | 62 | 2 | 9073359 | 108 | 90 77 872 | 6 | 1 |

| Item | Page | Assembly | Pos. | Quantity | Item | Page | Assembly | Pos. | Quantity |
|---|---|---|---|---|---|---|---|---|---|
| 9073389 | 188 | 90 72 100 | 78 | 1 | 9076530 | 582 | 90 76 551 | 2 | 1 |
| 9073392 | 199 | 90 74 416 | 1 | 9 | 9076531 | 583 | 90 76 551 | 11 | 1 |
| 9073392 | 696 | 90 73 393 | 1 | 9 | 9076534 | 583 | 90 76 551 | 21 | 1 |
| 9073393 | 188 | 90 72 100 | 77 | 1 | 9076550 | 582 | 90 76 551 | 10 | 1 |
| 9073505 | 520 | 10 12 143 8 | 1 | 1 | 9076551 | 476 | 10 11 668 5 | 581 | 1 |
| 9073678 | 479 | 90 73 795 | 5 | 1 | 9076621 | 545 | 10 11 559 5 | 1 | 1 |
| 9073725 | 510 | 10 12 038 4 | 6 | 2 | 9076638 | 573 | 90 80 735 | 2 | 3 |
| 9073726 | 510 | 10 12 038 4 | 7 | 2 | 9076639 | 573 | 90 80 735 | 4 | 3 |
| 9073728 | 478 | 10 11 577 8 | 3 | 1 | 9077087 | 188 | 90 72 100 | 92 | 1 |
| 9073745 | 478 | 10 11 577 8 | 10 | 7 | 9077087 | 196 | 90 72 990 | 1 | 1 |
| 9073751 | 150 | 90 79 294 | 2 | 1 | 9077172 | 480 | 10 11 795 1 | 3 | 1 |
| 9073767 | 472 | 10 11 668 5 | 210 | 1 | 9077279 | 473 | 10 11 668 5 | 221 | 1 |
| 9073795 | 469 | 10 11 668 5 | 15 | 6 | 9077327 | 600 | 90 77 386 | 1 | 1 |
| 9073796 | 479 | 90 73 795 | 1 | 1 | 9077328 | 602 | 90 77 384 | 1 | 1 |
| 9073951 | 197 | 90 74 285 | 10 | 1 | 9077329 | 610 | 10 11 583 8 | 35 | 3 |
| 9074061 | 188 | 90 72 100 | 1 | 1 | 9077384 | 600 | 90 77 386 | 2 | 1 |
| 9074065 | 198 | 90 74 415 | 2 | 1 | 9077386 | 599 | 90 80 006 | 1 | 1 |
| 9074065 | 199 | 90 74 416 | 12 | 1 | 9077612 | 600 | 90 77 386 | 3 | 1 |
| 9074285 | 188 | 90 72 100 | 95 | 1 | 9077708 | 559 | 10 11 646 4 | 4 | 2 |
| 9074387 | 188 | 90 72 100 | 10 | 1 | 9077710 | 603 | 90 77 717 | 1 | 1 |
| 9074415 | 188 | 90 72 100 | 79 | 1 | 9077713 | 601 | 90 77 718 | 1 | 1 |
| 9074416 | 188 | 90 72 100 | 94 | 1 | 9077714 | 601 | 90 77 718 | 3 | 1 |
| 9074450 | 508 | 10 12 036 4 | 2 | 2 | 9077717 | 601 | 90 77 718 | 2 | 1 |
| 9074451 | 508 | 10 12 036 4 | 4 | 2 | 9077718 | 597 | 90 77 719 | 1 | 1 |
| 9074455 | 518 | 90 79 870 | 1 | 2 | 9077719 | 476 | 10 11 668 5 | 650 | 1 |
| 9074456 | 518 | 90 79 870 | 2 | 2 | 9077777 | 485 | 90 79 487 | 8 | 1 |
| 9074456 | 528 | 10 11 683 9 | 4 | 1 | 9077777 | 495 | 91 47 512 | 1 | 1 |
| 9074480 | 504 | 10 14 155 4 | 7 | 4 | 9077872 | 685 | 10 13 462 0 | 1 | 1 |
| 9074480 | 508 | 10 12 036 4 | 7 | 4 | 9078233 | 477 | 10 11 577 9 | 13 | 1 |
| 9074481 | 504 | 10 14 155 4 | 9 | 4 | 9078314 | 473 | 10 11 668 5 | 260 | 1 |
| 9074481 | 508 | 10 12 036 4 | 9 | 4 | 9078356 | 473 | 10 11 668 5 | 331 | 1 |
| 9074482 | 688 | 10 11 856 1 | 98 | 1 | 9078680 | 472 | 10 11 668 5 | 211 | 1 |
| 9074503 | 509 | 90 79 861 | 1 | 2 | 9078681 | 529 | 90 78 680 | 1 | 1 |
| 9074504 | 511 | 90 74 505 | 1 | 1 | 9078685 | 543 | 10 11 628 5 | 92 | 1 |
| 9074505 | 509 | 90 79 861 | 2 | 1 | 9078849 | 580 | 90 79 823 | 1 | 1 |
| 9074506 | 511 | 90 74 505 | 2 | 1 | 9078961 | 476 | 10 11 668 5 | 654 | 1 |
| 9074507 | 511 | 90 74 505 | 3 | 2 | 9078962 | 598 | 90 78 961 | 1 | 1 |
| 9074628 | 528 | 10 11 683 9 | 2 | 1 | 9078983 | 598 | 90 78 961 | 10 | 1 |
| 9074677 | 534 | 90 75 395 | 1 | 1 | 9078984 | 598 | 90 78 961 | 10 | 1 |
| 9074796 | 471 | 10 11 668 5 | 140 | 1 | 9079064 | 586 | 90 76 534 | 30 | 1 |
| 9074798 | 477 | 10 11 577 9 | 9 | 12 | 9079078 | 510 | 10 12 038 4 | 9 | 1 |
| 9074975 | 578 | 10 11 548 0 | 6 | 6 | 9079082 | 547 | 90 79 083 | 1 | 1 |
| 9074977 | 578 | 10 11 548 0 | 4 | 12 | 9079083 | 474 | 10 11 668 5 | 381 | 1 |
| 9075115 | 470 | 10 11 668 5 | 50 | 1 | 9079122 | 485 | 90 79 487 | 6 | 2 |
| 9075124 | 692 | 98 88 308 | 10 | 1 | 9079123 | 485 | 90 79 487 | 13 | 1 |
| 9075128 | 573 | 90 80 735 | 26 | 1 | 9079124 | 485 | 90 79 487 | 7 | 3 |
| 9075249 | 110 | 90 77 872 | 53 | 2 | 9079124 | 606 | 10 11 801 4 | 14 | 3 |
| 9075361 | 480 | 10 11 795 1 | 1 | 1 | 9079124 | 609 | 10 11 583 8 | 18 | 3 |
| 9075368 | 471 | 10 11 668 5 | 150 | 1 | 9079125 | 485 | 90 79 487 | 12 | 1 |
| 9075372 | 531 | 10 11 659 1 | 3 | 1 | 9079125 | 609 | 10 11 583 8 | 19 | 1 |
| 9075395 | 472 | 10 11 668 5 | 191 | 6 | 9079126 | 485 | 90 79 487 | 9 | 1 |
| 9075395 | 532 | 10 11 709 3 | 191 | 1 | 9079128 | 485 | 90 79 487 | 5 | 1 |
| 9075395 | 535 | 10 11 585 4 | 191 | 1 | 9079130 | 591 | 10 11 912 8 | 2 | 1 |
| 9075483 | 482 | 10 11 916 7 | 1 | 1 | 9079130 | 610 | 10 11 583 8 | 33 | 1 |
| 9075678 | 473 | 10 11 668 5 | 380 | 1 | 9079131 | 518 | 90 79 870 | 3 | 2 |
| 9075763 | 534 | 90 75 395 | 2 | 1 | 9079206 | 583 | 90 76 551 | 20 | 2 |
| 9075894 | 70 | 90 73 155 | 1 | 1 | 9079258 | 270 | 10 06 017 5 | 10 | 1 |
| 9076311 | 124 | 90 73 751 | 2 | 1 | 9079259 | 269 | 10 06 017 4 | 10 | 1 |
| 9076458 | 470 | 10 11 668 5 | 51 | 1 | 9079261 | 271 | 90 79 258 | 15 | 2 |
| 9076459 | 470 | 10 11 668 5 | 60 | 6 | 9079261 | 273 | 90 79 259 | 15 | 2 |

| Item | Page | Assembly | Pos. | Quantity | Item | Page | Assembly | Pos. | Quantity |
|---|---|---|---|---|---|---|---|---|---|
| 9079294 | 686 | 10 13 268 6 | 94 | 1 | 9080280 | 605 | 10 11 801 4 | 5 | 1 |
| 9079347 | 686 | 10 13 268 6 | 83 | 1 | 9080280 | 608 | 10 11 583 8 | 5 | 2 |
| 9079468 | 475 | 10 11 668 5 | 481 | 1 | 9080301 | 473 | 10 11 668 5 | 370 | 1 |
| 9079472 | 474 | 10 11 668 5 | 382 | 1 | 9080360 | 548 | 90 79 580 | 8 | 2 |
| 9079473 | 567 | 90 79 474 | 1 | 1 | 9080380 | 499 | 10 11 617 5 | 8 | 1 |
| 9079474 | 474 | 10 11 668 5 | 383 | 1 | 9080410 | 472 | 10 11 668 5 | 215 | 6 |
| 9079480 | 469 | 10 11 668 5 | 12 | 1 | 9080410 | 532 | 10 11 709 3 | 215 | 1 |
| 9079483 | 485 | 90 79 487 | 2 | 1 | 9080466 | 547 | 90 79 083 | 3 | 5 |
| 9079487 | 469 | 10 11 668 5 | 20 | 1 | 9080504 | 476 | 10 11 668 5 | 656 | 1 |
| 9079492 | 485 | 90 79 487 | 3 | 2 | 9080653 | 475 | 10 11 668 5 | 521 | 1 |
| 9079494 | 486 | 90 79 483 | 3 | 1 | 9080684 | 573 | 90 80 735 | 17 | 1 |
| 9079555 | 493 | 90 79 492 | 1 | 1 | 9080685 | 502 | 90 80 686 | 1 | 1 |
| 9079556 | 493 | 90 79 492 | 2 | 1 | 9080686 | 501 | 90 80 687 | 1 | 1 |
| 9079556 | 494 | 90 79 958 | 2 | 1 | 9080687 | 470 | 10 11 668 5 | 70 | 6 |
| 9079580 | 473 | 10 11 668 5 | 217 | 1 | 9080713 | 471 | 10 11 668 5 | 100 | 1 |
| 9079582 | 552 | 10 12 190 8 | 1 | 1 | 9080735 | 474 | 10 11 668 5 | 430 | 1 |
| 9079582 | 553 | 90 79 964 | 1 | 1 | 9080876 | 561 | 10 11 547 9 | 1 | 1 |
| 9079591 | 559 | 10 11 646 4 | 11 | 1 | 9080911 | 554 | 90 78 314 | 4 | 1 |
| 9079603 | 482 | 10 11 916 7 | 18 | 1 | 9080917 | 683 | 90 80 918 | 1 | 1 |
| 9079603 | 487 | 10 12 026 3 | 11 | 1 | 9080918 | 475 | 10 11 668 5 | 530 | 1 |
| 9079603 | 610 | 10 11 583 8 | 43 | 1 | 9080922 | 543 | 10 11 628 5 | 58 | 1 |
| 9079608 | 524 | 90 80 278 | 6 | 2 | 9080982 | 476 | 10 11 668 5 | 580 | 1 |
| 9079608 | 607 | 10 11 801 4 | 53 | 2 | 9103255 | 459 | 10 84 856 2 | 170 | 1 |
| 9079608 | 611 | 10 11 583 8 | 53 | 2 | 9107931 | 665 | 95 90 264 | 990 | 1 |
| 9079811 | 691 | 92 71 648 | 2 | 1 | 9110412 | 665 | 95 90 264 | 991 | 1 |
| 9079823 | 475 | 10 11 668 5 | 480 | 1 | 9110413 | 663 | 94 00 606 1 | 991 | 1 |
| 9079844 | 486 | 90 79 483 | 14 | 1 | 9110413 | 664 | 95 87 597 | 991 | 1 |
| 9079845 | 486 | 90 79 483 | 5 | 1 | 9132577 | 571 | 10 11 919 9 | 2 | 4 |
| 9079850 | 470 | 10 11 668 5 | 80 | 6 | 9132577 | 572 | 10 11 571 8 | 20 | 7 |
| 9079861 | 470 | 10 11 668 5 | 81 | 6 | 9140351 | 482 | 10 11 916 7 | 8 | 1 |
| 9079862 | 469 | 10 11 668 5 | 21 | 1 | 9140351 | 573 | 90 80 735 | 26 | 1 |
| 9079867 | 489 | 90 79 862 | 2 | 1 | 9141597 | 62 | 93 45 153 | 7 | 1 |
| 9079870 | 471 | 10 11 668 5 | 110 | 6 | 9141600 | 64 | 91 41 597 | 40 | 1 |
| 9079889 | 474 | 10 11 668 5 | 386 | 1 | 9144757 | 492 | 10 11 903 0 | 2 | 1 |
| 9079893 | 476 | 10 11 668 5 | 630 | 1 | 9144761 | 556 | 91 44 757 | 1 | 1 |
| 9079936 | 552 | 10 12 190 8 | 4 | 1 | 9144762 | 492 | 10 11 903 0 | 2 | 1 |
| 9079936 | 553 | 90 79 964 | 4 | 1 | 9144762 | 556 | 91 44 757 | 3 | 1 |
| 9079952 | 510 | 10 12 038 4 | 1 | 1 | 9147512 | 469 | 10 11 668 5 | 24 | 2 |
| 9079957 | 552 | 10 12 190 8 | 6 | 1 | 9158144 | 669 | 99 52 600 | 999 | 1 |
| 9079957 | 553 | 90 79 964 | 6 | 1 | 9161348 | 644 | 10 06 097 3 | 4 | 1 |
| 9079958 | 485 | 90 79 487 | 4 | 1 | 9171589 | 268 | 10 05 981 8 | 60 | 2 |
| 9079959 | 494 | 90 79 958 | 1 | 1 | 9174981 | 500 | 90 76 459 | 1 | 2 |
| 9079963 | 552 | 10 12 190 8 | 2 | 1 | 9177636 | 478 | 10 11 577 8 | 6 | 14 |
| 9079963 | 553 | 90 79 964 | 2 | 1 | 9177717 | 665 | 95 90 264 | 2 | 2 |
| 9079964 | 473 | 10 11 668 5 | 230 | 1 | 9177718 | 663 | 94 00 606 1 | 2 | 2 |
| 9079972 | 488 | 90 79 978 | 1 | 1 | 9177718 | 664 | 95 87 597 | 2 | 2 |
| 9079978 | 469 | 10 11 668 5 | 25 | 1 | 9177718 | 666 | 90 62 632 | 2 | 2 |
| 9079997 | 500 | 90 76 459 | 1 | 1 | 9177948 | 610 | 10 11 583 8 | 45 | 2 |
| 9080006 | 476 | 10 11 668 5 | 652 | 1 | 9178294 | 597 | 90 77 719 | 4 | 1 |
| 9080009 | 599 | 90 80 006 | 15 | 1 | 9178294 | 598 | 90 78 961 | 6 | 1 |
| 9080013 | 599 | 90 80 006 | 11 | 1 | 9202120 | 652 | 10 35 860 1 | 10 | 1 |
| 9080027 | 512 | 90 74 507 | 2 | 1 | 9229473 | 643 | 10 06 090 1 | 4 | 1 |
| 9080084 | 481 | 90 73 083 | 1 | 1 | 9233882 | 657 | 94 02 019 4 | 1 | 2 |
| 9080277 | 524 | 90 80 278 | 1 | 1 | 9233882 | 658 | 95 87 580 | 1 | 2 |
| 9080278 | 471 | 10 11 668 5 | 141 | 1 | 9233882 | 659 | 95 96 399 | 1 | 2 |
| 9080279 | 564 | 10 11 983 0 | 4 | 1 | 9240322 | 646 | 93 74 949 | 12 | 1 |
| 9080279 | 565 | 90 75 678 | 4 | 1 | 9245586 | 658 | 95 87 580 | 9 | 1 |
| 9080279 | 605 | 10 11 801 4 | 4 | 1 | 9265064 | 64 | 91 41 597 | 11 | 1 |
| 9080279 | 608 | 10 11 583 8 | 4 | 1 | 9265265 | 662 | 92 70 390 | 13 | 1 |
| 9080280 | 474 | 10 11 668 5 | 384 | 1 | 9265392 | 271 | 90 79 258 | 12 | 2 |

| Item | Page | Assembly | Pos. | Quantity | Item | Page | Assembly | Pos. | Quantity |
|---|---|---|---|---|---|---|---|---|---|
| 9265392 | 273 | 90 79 259 | 12 | 2 | 9268441 | 692 | 98 88 308 | 1 | 1 |
| 9265394 | 266 | 90 74 482 | 2 | 1 | 9268441 | 699 | 98 82 771 | 7 | 4 |
| 9265394 | 271 | 90 79 258 | 14 | 2 | 9268441 | 700 | 92 71 657 | 2 | 5 |
| 9265394 | 273 | 90 79 259 | 14 | 2 | 9268751 | 686 | 10 13 268 6 | 93 | 1 |
| 9265394 | 278 | 92 65 665 | 2 | 1 | 9268751 | 700 | 92 71 657 | 17 | 1 |
| 9265395 | 688 | 10 11 856 1 | 15 | 4 | 9268776 | 150 | 90 79 294 | 30 | 26 |
| 9265396 | 688 | 10 11 856 1 | 16 | 1 | 9269613 | 79 | 90 73 357 | 15 | 1 |
| 9265398 | 688 | 10 11 856 1 | 18 | 1 | 9269686 | 78 | 92 70 598 | 10 | 1 |
| 9265400 | 271 | 90 79 258 | 20 | 1 | 9269690 | 271 | 90 79 258 | 96 | 1 |
| 9265400 | 273 | 90 79 259 | 20 | 1 | 9269690 | 273 | 90 79 259 | 96 | 1 |
| 9265402 | 271 | 90 79 258 | 23 | 4 | 9269690 | 688 | 10 11 856 1 | 96 | 1 |
| 9265402 | 273 | 90 79 259 | 23 | 4 | 9270109 | 514 | 10 11 585 1 | 15 | 1 |
| 9265402 | 688 | 10 11 856 1 | 23 | 8 | 9270109 | 516 | 10 11 585 3 | 15 | 1 |
| 9265404 | 76 | 92 67 037 | 15 | 1 | 9270109 | 573 | 90 80 735 | 3 | 1 |
| 9265409 | 278 | 92 65 665 | 1 | 1 | 9270109 | 613 | 10 11 583 8 | 4301 | 1 |
| 9265410 | 271 | 90 79 258 | 24 | 1 | 9270387 | 655 | 10 06 203 8 | 13 | 1 |
| 9265410 | 273 | 90 79 259 | 24 | 1 | 9270390 | 660 | 92 70 387 | 999 | 1 |
| 9265413 | 271 | 90 79 258 | 29 | 1 | 9270475 | 688 | 10 11 856 1 | 17 | 1 |
| 9265414 | 271 | 90 79 258 | 30 | 2 | 9270598 | 689 | 90 73 355 | 6 | 2 |
| 9265414 | 273 | 90 79 259 | 30 | 2 | 9270599 | 78 | 92 70 598 | 11 | 1 |
| 9265414 | 278 | 92 65 665 | 5 | 1 | 9271340 | 482 | 10 11 916 7 | 6 | 2 |
| 9265424 | 204 | 92 73 048 | 17 | 1 | 9271340 | 610 | 10 11 583 8 | 44 | 2 |
| 9265521 | 688 | 10 11 856 1 | 28 | 4 | 9271434 | 108 | 90 77 872 | 5 | 1 |
| 9265659 | 72 | 98 82 833 | 13 | 1 | 9271441 | 108 | 90 77 872 | 21 | 2 |
| 9265665 | 272 | 90 79 258 | 998 | 1 | 9271648 | 686 | 10 13 268 6 | 5 | 1 |
| 9265665 | 274 | 90 79 259 | 998 | 1 | 9271653 | 691 | 92 71 648 | 92 | 1 |
| 9265783 | 126 | 92 71 653 | 1 | 2 | 9271657 | 687 | 10 13 268 6 | 98 | 1 |
| 9266089 | 693 | 92 67 554 | 98 | 1 | 9271663 | 691 | 92 71 648 | 11 | 1 |
| 9266231 | 76 | 92 67 037 | 98 | 1 | 9271664 | 691 | 92 71 648 | 12 | 1 |
| 9266231 | 189 | 90 72 100 | 97 | 1 | 9271740 | 692 | 98 88 308 | 12 | 1 |
| 9266232 | 188 | 90 72 100 | 96 | 1 | 9271963 | 514 | 10 11 585 1 | 10 | 2 |
| 9266232 | 200 | 90 77 087 | 98 | 1 | 9271963 | 516 | 10 11 585 3 | 10 | 2 |
| 9266233 | 76 | 92 67 037 | 12 | 1 | 9271963 | 550 | 10 11 707 3 | 10 | 1 |
| 9266234 | 76 | 92 67 037 | 11 | 1 | 9271963 | 552 | 10 12 190 8 | 10 | 1 |
| 9266235 | 76 | 92 67 037 | 10 | 1 | 9271963 | 553 | 90 79 964 | 10 | 1 |
| 9266524 | 194 | 92 73 050 | 11 | 9 | 9271963 | 607 | 10 11 801 4 | 20 | 2 |
| 9266567 | 156 | 98 88 119 | 2 | 1 | 9272221 | 125 | 90 79 811 | 2 | 1 |
| 9266775 | 108 | 90 77 872 | 3 | 1 | 9273036 | 108 | 90 77 872 | 10 | 1 |
| 9266836 | 196 | 90 72 990 | 12 | 1 | 9273036 | 111 | 92 73 201 | 10 | 1 |
| 9267037 | 196 | 90 72 990 | 2 | 1 | 9273037 | 108 | 90 77 872 | 11 | 2 |
| 9267037 | 202 | 98 83 996 | 1 | 1 | 9273038 | 108 | 90 77 872 | 13 | 1 |
| 9267155 | 683 | 90 80 918 | 1 | 1 | 9273048 | 189 | 90 72 100 | 98 | 1 |
| 9267183 | 525 | 90 72 781 | 7 | 1 | 9273050 | 198 | 90 74 415 | 1 | 1 |
| 9267183 | 526 | 90 80 277 | 7 | 1 | 9273050 | 199 | 90 74 416 | 2 | 1 |
| 9267273 | 525 | 90 72 781 | 13 | 1 | 9273051 | 194 | 92 73 050 | 10 | 1 |
| 9267273 | 526 | 90 80 277 | 13 | 1 | 9273116 | 108 | 90 77 872 | 22 | 2 |
| 9267554 | 81 | 98 84 000 | 1 | 1 | 9273118 | 108 | 90 77 872 | 14 | 1 |
| 9267554 | 689 | 90 73 355 | 1 | 2 | 9273161 | 482 | 10 11 916 7 | 10 | 1 |
| 9268016 | 74 | 98 89 775 | 96 | 1 | 9273161 | 613 | 10 11 583 8 | 161 | 1 |
| 9268016 | 188 | 90 72 100 | 93 | 1 | 9273200 | 110 | 90 77 872 | 97 | 1 |
| 9268016 | 699 | 98 82 771 | 96 | 1 | 9273201 | 110 | 90 77 872 | 98 | 1 |
| 9268054 | 271 | 90 79 258 | 25 | 2 | 9273271 | 527 | 90 75 368 | 2 | 2 |
| 9268054 | 273 | 90 79 259 | 25 | 2 | 9273491 | 686 | 10 13 268 6 | 13 | 1 |
| 9268129 | 514 | 10 11 585 1 | 16 | 1 | 9273649 | 108 | 90 77 872 | 1 | 1 |
| 9268129 | 516 | 10 11 585 3 | 16 | 1 | 9273690 | 599 | 90 80 006 | 6 | 1 |
| 9268131 | 573 | 90 80 735 | 18 | 1 | 9273691 | 599 | 90 80 006 | 5 | 1 |
| 9268131 | 612 | 10 11 583 8 | 71 | 1 | 9273691 | 611 | 10 11 583 8 | 52 | 1 |
| 9268441 | 73 | 98 89 775 | 7 | 4 | 9274060 | 546 | 10 11 726 8 | 4 | 2 |
| 9268441 | 154 | 98 82 875 | 5 | 4 | 9274099 | 108 | 90 77 872 | 26 | 1 |
| 9268441 | 689 | 90 73 355 | 7 | 2 | 9274863 | 108 | 90 77 872 | 4 | 1 |

| Item | Page | Assembly | Pos. | Quantity | Item | Page | Assembly | Pos. | Quantity |
|---|---|---|---|---|---|---|---|---|---|
| 9274974 | 610 | 10 11 583 8 | 36 | 1 | 9368526 | 306 | 10 35 801 4 | 226 | 3 |
| 9275004 | 692 | 98 88 308 | 20 | 2 | 9369710 | 347 | 10 35 802 8 | 93 | 1 |
| 9275309 | 692 | 98 88 308 | 11 | 1 | 9369710 | 349 | 10 35 802 8 | 202 | 1 |
| 9275590 | 525 | 90 72 781 | 11 | 1 | 9370414 | 357 | 93 70 592 | 1 | 1 |
| 9275735 | 564 | 10 11 983 0 | 3 | 2 | 9370592 | 347 | 10 35 802 8 | 70 | 1 |
| 9275735 | 565 | 90 75 678 | 3 | 2 | 9371217 | 268 | 10 05 981 8 | 65 | 1 |
| 9275737 | 196 | 90 72 990 | 13 | 2 | 9373095 | 67 | 10 07 713 7 | 2 | 2 |
| 9275738 | 196 | 90 72 990 | 14 | 1 | 9374747 | 620 | 10 49 830 0 | 130 | 1 |
| 9275766 | 495 | 91 47 512 | 2 | 1 | 9374747 | 620 | 10 49 830 0 | 190 | 1 |
| 9275766 | 606 | 10 11 801 4 | 16 | 1 | 9374747 | 628 | 10 49 823 5 | 180 | 1 |
| 9275766 | 609 | 10 11 583 8 | 16 | 3 | 9374747 | 672 | 10 49 815 8 | 80 | 2 |
| 9276784 | 569 | 90 79 889 | 2 | 2 | 9374747 | 672 | 10 49 815 8 | 140 | 2 |
| 9276880 | 266 | 90 74 482 | 35 | 1 | 9374949 | 620 | 10 49 830 0 | 120 | 1 |
| 9276880 | 688 | 10 11 856 1 | 35 | 4 | 9375276 | 207 | 99 46 408 | 15 | 1 |
| 9277636 | 686 | 10 13 268 6 | 10 | 1 | 9375885 | 618 | 10 49 830 0 | 44 | 1 |
| 9277872 | 71 | 90 73 354 | 20 | 1 | 9375885 | 620 | 10 49 830 0 | 131 | 2 |
| 9277876 | 690 | 98 82 766 | 10 | 1 | 9375885 | 628 | 10 49 823 5 | 7 | 2 |
| 9277878 | 690 | 98 82 766 | 12 | 1 | 9376917 | 395 | 10 37 936 3 | 3 | 1 |
| 9278153 | 72 | 98 82 833 | 500 | 1 | 9376918 | 392 | 10 37 938 6 | 10 | 1 |
| 9278153 | 685 | 10 13 462 0 | 500 | 1 | 9380097 | 162 | 10 35 809 2 | 60 | 1 |
| 9278153 | 687 | 10 13 268 6 | 500 | 1 | 9380109 | 160 | 10 35 809 2 | 11 | 4 |
| 9278153 | 688 | 10 11 856 1 | 500 | 1 | 9380962 | 346 | 10 35 802 8 | 20 | 1 |
| 9278153 | 689 | 90 73 355 | 500 | 1 | 9384970 | 162 | 10 35 809 2 | 51 | 1 |
| 9278153 | 690 | 98 82 766 | 500 | 1 | 9387822 | 301 | 10 35 801 5 | 60 | 2 |
| 9278153 | 699 | 98 82 771 | 500 | 1 | 9388597 | 179 | 10 35 800 9 | 60 | 2 |
| 9278623 | 188 | 90 72 100 | 90 | 1 | 9388848 | 249 | 10 84 086 6 | 41 | 1 |
| 9279374 | 77 | 92 68 751 | 17 | 1 | 9390503 | 178 | 10 35 800 9 | 14 | 2 |
| 9279374 | 128 | 98 89 282 | 17 | 1 | 9392646 | 249 | 10 84 086 6 | 15 | 1 |
| 9279836 | 686 | 10 13 268 6 | 12 | 2 | 9392651 | 237 | 10 38 502 4 | 26 | 1 |
| 932178201 | 205 | 10 83 653 3 | 10 | 1 | 9392835 | 468 | 10 49 805 9 | 65 | 1 |
| 932719401 | 184 | 90 01 790 0 | 5 | 1 | 9392953 | 672 | 10 49 815 8 | 56 | 2 |
| 932719601 | 184 | 90 01 790 0 | 13 | 1 | 9399179 | 297 | 99 37 312 | 3 | 1 |
| 932720701 | 185 | 90 01 790 0 | 55 | 1 | 9399606 | 468 | 10 49 805 9 | 97 | 1 |
| 932720801 | 185 | 90 01 790 0 | 60 | 1 | 9399607 | 468 | 10 49 805 9 | 98 | 1 |
| 9327516 | 94 | 99 48 085 | 3 | 4 | 9399608 | 468 | 10 49 805 9 | 99 | 1 |
| 932856101 | 185 | 90 01 790 0 | 61 | 2 | 94006061 | 657 | 94 02 019 4 | 12 | 1 |
| 932858901 | 184 | 90 01 790 0 | 20 | 1 | 94006062 | 663 | 94 00 606 1 | 1 | 1 |
| 9331403 | 359 | 10 49 822 5 | 15 | 1 | 94019254 | 657 | 94 02 019 4 | 10 | 1 |
| 9332139 | 305 | 10 35 801 4 | 170 | 1 | 94019364 | 657 | 94 02 019 4 | 13 | 1 |
| 933330801 | 184 | 90 01 790 0 | 35 | 1 | 94019365 | 667 | 94 01 936 4 | 1 | 1 |
| 933332901 | 184 | 90 01 790 0 | 37 | 4 | 94020194 | 656 | 99 48 785 | 2 | 1 |
| 933333001 | 190 | 93 33 329 01 | 1 | 1 | 94020196 | 657 | 94 02 019 4 | 8 | 1 |
| 933333101 | 184 | 90 01 790 0 | 40 | 1 | 94022280 | 279 | 94 02 247 7 | 44 | 4 |
| 933333301 | 185 | 90 01 790 0 | 70 | 1 | 94022477 | 229 | 10 49 880 9 | 50 | 1 |
| 933333401 | 191 | 93 33 333 01 | 1 | 1 | 9402376 | 464 | 10 35 804 3 | 40 | 4 |
| 934430516 | 463 | 10 35 804 3 | 4 | 1 | 9402376 | 467 | 10 49 805 9 | 40 | 4 |
| 9344777 | 84 | 10 07 713 5 | 25 | 4 | 9402377 | 464 | 10 35 804 3 | 45 | 2 |
| 9344777 | 314 | 10 35 801 7 | 485 | 2 | 9402377 | 467 | 10 49 805 9 | 45 | 2 |
| 9345153 | 49 | 10 49 883 7 | 8 | 1 | 94025779 | 279 | 94 02 247 7 | 20 | 1 |
| 9346433 | 360 | 10 49 822 5 | 30 | 1 | 94027336 | 659 | 95 96 399 | 13 | 1 |
| 9349698 | 98 | 10 04 942 6 | 20 | 15 | 94027338 | 668 | 94 02 733 6 | 999 | 1 |
| 9354303 | 466 | 10 49 805 9 | 5 | 1 | 94066458 | 10 | 90 66 460 | 110 | 1l |
| 9356574 | 381 | 99 49 428 | 8 | 1 | 94079557 | 44 | 94 08 205 8 | 10 | 1l |
| 9358137 | 459 | 10 84 856 2 | 180 | 1 | 94079560 | 44 | 94 08 205 8 | 20 | 1l |
| 9358590 | 489 | 90 79 862 | 7 | 1 | 94082058 | 12 | 90 66 465 | 100 | 1l |
| 9361887 | 178 | 10 35 800 9 | 31 | 3 | 94082059 | 12 | 90 66 465 | 10 | 1l |
| 9363435 | 162 | 10 35 809 2 | 59 | 1 | 9408711 | 428 | 10 29 026 4 | 290 | 1 |
| 9368060 | 314 | 10 35 801 7 | 470 | 2 | 9429965 | 618 | 10 49 830 0 | 38 | 3 |
| 9368512 | 304 | 10 35 801 4 | 10 | 2 | 9441377 | 185 | 90 01 790 0 | 62 | 7 |
| 9368525 | 306 | 10 35 801 4 | 225 | 6 | 9441377 | 193 | 96 85 802 01 | 37 | 7 |

| Item | Page | Assembly | Pos. | Quantity | Item | Page | Assembly | Pos. | Quantity |
|---|---|---|---|---|---|---|---|---|---|
| 9441436 | 191 | 93 33 333 01 | 5 | 1 | 9587596 | 664 | 95 87 597 | 1 | 1 |
| 9441557 | 184 | 90 01 790 0 | 46 | 1 | 9587597 | 658 | 95 87 580 | 12 | 1 |
| 9442138 | 68 | 94 43 840 | 2 | 32 | 9587673 | 658 | 95 87 580 | 8 | 1 |
| 9442150 | 110 | 90 77 872 | 85 | 1 | 9588724 | 403 | 10 05 011 2 | 10 | 1 |
| 9442151 | 192 | 94 42 150 | 1 | 1 | 9590264 | 659 | 95 96 399 | 12 | 1 |
| 9442198 | 184 | 90 01 790 0 | 36 | 1 | 9590265 | 665 | 95 90 264 | 1 | 1 |
| 9442284 | 69 | 94 43 840 | 56 | 1 | 9596399 | 655 | 10 06 203 8 | 2 | 1 |
| 9442307 | 68 | 94 43 840 | 5 | 1 | 9596877 | 659 | 95 96 399 | 10 | 1 |
| 9442308 | 69 | 94 43 840 | 60 | 1 | 9600769 | 663 | 94 00 606 1 | 985 | 1 |
| 9442507 | 185 | 90 01 790 0 | 63 | 6 | 9600769 | 665 | 95 90 264 | 985 | 1 |
| 9442507 | 193 | 96 85 802 01 | 36 | 6 | 9612981 | 620 | 10 49 830 0 | 95 | 2 |
| 9443033 | 69 | 94 43 840 | 46 | 1 | 9613673 | 468 | 10 49 805 9 | 71 | 1 |
| 9443229 | 191 | 93 33 333 01 | 10 | 1 | 9619934 | 464 | 10 35 804 3 | 52 | 1 |
| 9443297 | 68 | 94 43 840 | 16 | 1 | 9619934 | 467 | 10 49 805 9 | 52 | 1 |
| 9443483 | 68 | 94 43 840 | 36 | 1 | 9634109 | 389 | 10 37 283 9 | 23 | 1 |
| 9443707 | 68 | 94 43 840 | 26 | 1 | 9634109 | 398 | 10 35 853 1 | 13 | 1 |
| 9443840 | 67 | 10 07 713 7 | 5 | 2 | 9640458 | 659 | 95 96 399 | 8 | 1 |
| 9443842 | 68 | 94 43 840 | 1 | 1 | 9641061 | 93 | 10 40 278 1 | 2 | 1 |
| 9443843 | 68 | 94 43 840 | 10 | 1 | 9681272 | 295 | 10 35 801 2 | 20 | 2 |
| 9443844 | 68 | 94 43 840 | 17 | 5 | 9683060 | 305 | 10 35 801 4 | 160 | 1 |
| 9443846 | 68 | 94 43 840 | 20 | 1 | 968461801 | 195 | 96 90 213 01 | 25 | 1 |
| 9443847 | 68 | 94 43 840 | 25 | 1 | 9684904 | 67 | 10 07 713 7 | 20 | 2 |
| 9443848 | 68 | 94 43 840 | 27 | 3 | 968580201 | 187 | 90 01 790 0 | 960 | 1 |
| 9443857 | 68 | 94 43 840 | 30 | 1 | 9686191 | 444 | 11 10 266 2 | 21 | 1 |
| 9443858 | 68 | 94 43 840 | 35 | 1 | 9686917 | 376 | 10 35 800 4 | 126 | 4 |
| 9443859 | 69 | 94 43 840 | 40 | 1 | 9686917 | 395 | 10 37 936 3 | 4 | 2 |
| 9443904 | 68 | 94 43 840 | 37 | 3 | 968868001 | 195 | 96 90 213 01 | 1 | 1 |
| 9443906 | 69 | 94 43 840 | 45 | 1 | 9689583 | 251 | 10 84 086 6 | 98 | 1 |
| 9443907 | 69 | 94 43 840 | 50 | 1 | 969021301 | 186 | 90 01 790 0 | 80 | 1 |
| 9443908 | 69 | 94 43 840 | 65 | 1 | 9690616 | 251 | 10 84 086 6 | 80 | 1 |
| 9461178 | 97 | 10 35 800 7 | 2 | 2 | 9691678 | 102 | 99 37 298 | 49 | 1 |
| 9461178 | 97 | 10 35 800 7 | 12 | 4 | 9692782 | 618 | 10 49 830 0 | 49 | 4 |
| 9467682 | 162 | 10 35 809 2 | 61 | 1 | 9697975 | 49 | 10 49 883 7 | 29 | 2 |
| 9476369 | 271 | 90 79 258 | 2 | 1 | 9697976 | 49 | 10 49 883 7 | 32 | 4 |
| 9476440 | 276 | 94 76 441 | 1 | 1 | 9697977 | 51 | 10 49 883 7 | 55 | 4 |
| 9476441 | 273 | 90 79 259 | 2 | 1 | 9698698 | 456 | 99 37 333 | 2 | 2 |
| 9476442 | 275 | 94 76 369 | 1 | 1 | 9699736 | 652 | 10 35 860 1 | 55 | 1 |
| 9476811 | 295 | 10 35 801 2 | 180 | 4 | 970643101 | 184 | 90 01 790 0 | 1 | 1 |
| 9476811 | 296 | 10 35 801 2 | 350 | 2 | 970643201 | 184 | 90 01 790 0 | 25 | 1 |
| 9476811 | 301 | 10 35 801 5 | 46 | 4 | 9753989 | 379 | 10 08 167 3 | 15 | 4 |
| 9480295 | 269 | 10 06 017 4 | 11 | 1 | 9757423 | 84 | 10 07 713 5 | 23 | 4 |
| 9480295 | 270 | 10 06 017 5 | 11 | 1 | 9757779 | 229 | 10 49 880 9 | 35 | 1 |
| 9480295 | 275 | 94 76 369 | 2 | 1 | 9758230 | 251 | 10 84 086 6 | 101 | 1 |
| 9480295 | 276 | 94 76 441 | 2 | 1 | 975881501 | 237 | 10 38 502 4 | 40 | 1 |
| 9480525 | 229 | 10 49 880 9 | 43 | 2 | 9767890 | 331 | 10 35 798 3 | 70 | 1 |
| 9485739 | 62 | 93 45 153 | 2 | 1 | 9767890 | 451 | 90 18 419 | 35 | 1 |
| 9490631 | 62 | 93 45 153 | 1 | 1 | 9768247 | 249 | 10 84 086 6 | 38 | 1 |
| 9490869 | 309 | 10 35 801 3 | 45 | 2 | 9768248 | 249 | 10 84 086 6 | 27 | 1 |
| 9491026 | 331 | 10 35 798 3 | 66 | 1 | 9809191 | 313 | 10 35 801 7 | 45 | 1 |
| 9492506 | 312 | 10 35 809 3 | 45 | 2 | 9809298 | 616 | 10 49 830 0 | 13 | 2 |
| 9560855 | 444 | 11 10 266 2 | 45 | 2 | 9809629 | 162 | 10 35 809 2 | 49 | 1 |
| 9563951 | 206 | 99 46 390 | 6 | 60 | 9822707 | 346 | 10 35 802 8 | 62 | 3 |
| 9566165 | 331 | 10 35 798 3 | 56 | 1 | 9830148 | 309 | 10 35 801 3 | 46 | 1 |
| 9573442 | 178 | 10 35 800 9 | 35 | 1 | 9830148 | 636 | 11 10 283 0 | 6 | 2 |
| 9573442 | 447 | 10 35 814 3 | 45 | 1 | 9830148 | 672 | 10 49 815 8 | 81 | 2 |
| 9576071 | 347 | 10 35 802 8 | 76 | 1 | 9830148 | 672 | 10 49 815 8 | 141 | 2 |
| 9581113 | 465 | 10 35 804 3 | 54 | 1 | 9834805 | 377 | 10 35 800 4 | 141 | 1 |
| 9581113 | 468 | 10 49 805 9 | 54 | 1 | 9837954 | 377 | 10 35 800 4 | 139 | 2 |
| 9586495 | 205 | 10 83 653 3 | 14 | 50 | 9872047 | 616 | 10 49 830 0 | 9 | 2 |
| 9587580 | 671 | 10 49 815 8 | 2 | 2 | 9874359 | 465 | 10 35 804 3 | 60 | 1 |

| Item | Page | Assembly | Pos. | Quantity | Item | Page | Assembly | Pos. | Quantity |
|---|---|---|---|---|---|---|---|---|---|
| 9874359 | 468 | 10 49 805 9 | 60 | 1 | 9889290 | 603 | 90 77 717 | 3 | 1 |
| 9874961 | 242 | 98 74 988 | 3 | 1 | 9889775 | 67 | 10 07 713 7 | 10 | 2 |
| 9874988 | 237 | 10 38 502 4 | 45 | 1 | 9889809 | 199 | 90 74 416 | 15 | 1 |
| 9879063 | 223 | 10 49 872 7 | 30 | 1 | 9889831 | 73 | 98 89 775 | 77 | 1 |
| 9880132 | 690 | 98 82 766 | 26 | 1 | 9889831 | 79 | 90 73 357 | 1 | 9 |
| 9880284 | 71 | 90 73 354 | 16 | 1 | 9889929 | 158 | 98 89 988 | 1 | 1 |
| 9880286 | 690 | 98 82 766 | 11 | 2 | 9889930 | 158 | 98 89 988 | 2 | 1 |
| 9880287 | 690 | 98 82 766 | 18 | 2 | 9889988 | 73 | 98 89 775 | 78 | 1 |
| 9880288 | 690 | 98 82 766 | 19 | 2 | 9889988 | 79 | 90 73 357 | 14 | 1 |
| 9880604 | 150 | 90 79 294 | 1 | 9 | 9890958 | 299 | 93 99 179 | 2 | 1 |
| 9881609 | 154 | 98 82 875 | 8 | 1 | 989150801 | 435 | 10 35 814 1 | 7 | 1 |
| 9882204 | 700 | 92 71 657 | 11 | 1 | 989165301 | 238 | 10 38 502 4 | 91 | 1 |
| 9882215 | 199 | 90 74 416 | 14 | 1 | 9892073 | 455 | 10 49 801 8 | 8 | 2 |
| 9882215 | 695 | 90 73 389 | 2 | 1 | 9893072 | 237 | 10 38 502 4 | 23 | 1 |
| 9882563 | 153 | 98 80 604 | 1 | 9 | 9903712 | 376 | 10 35 800 4 | 122 | 2 |
| 9882766 | 73 | 98 89 775 | 5 | 1 | 9907856 | 657 | 94 02 019 4 | 9 | 1 |
| 9882767 | 690 | 98 82 766 | 13 | 1 | 9907856 | 659 | 95 96 399 | 9 | 1 |
| 9882768 | 73 | 98 89 775 | 10 | 1 | 9909254 | 464 | 10 35 804 3 | 47 | 1 |
| 9882771 | 74 | 98 89 775 | 98 | 1 | 9909254 | 467 | 10 49 805 9 | 47 | 1 |
| 9882833 | 73 | 98 89 775 | 4 | 1 | 9910464 | 464 | 10 35 804 3 | 50 | 2 |
| 9882875 | 686 | 10 13 268 6 | 88 | 1 | 9910464 | 467 | 10 49 805 9 | 50 | 2 |
| 9882875 | 694 | 10 13 305 9 | 90 | 1 | 9911745 | 258 | 10 04 831 3 | 7 | 1 |
| 9883172 | 80 | 98 83 173 | 2 | 1 | 9911745 | 263 | 10 05 507 1 | 7 | 1 |
| 9883173 | 73 | 98 89 775 | 80 | 1 | 9918226 | 51 | 10 49 883 7 | 57 | 8 |
| 9883345 | 690 | 98 82 766 | 16 | 1 | 9918228 | 51 | 10 49 883 7 | 52 | 8 |
| 9883996 | 188 | 90 72 100 | 91 | 1 | 9918228 | 51 | 10 49 883 7 | 65 | 8 |
| 9884000 | 74 | 98 89 775 | 97 | 1 | 9918228 | 98 | 10 04 942 6 | 27 | 1 |
| 9885351 | 266 | 90 74 482 | 1 | 1 | 9918228 | 293 | 98 79 063 | 11 | 4 |
| 9885351 | 271 | 90 79 258 | 13 | 2 | 9918228 | 356 | 10 08 743 7 | 3 | 4 |
| 9885351 | 273 | 90 79 259 | 13 | 2 | 9918229 | 51 | 10 49 883 7 | 47 | 80 |
| 9885529 | 159 | 99 29 814 | 6 | 1 | 9918229 | 67 | 10 07 713 7 | 4 | 48 |
| 9885529 | 597 | 90 77 719 | 3 | 1 | 9918229 | 332 | 10 37 130 3 | 5 | 3 |
| 9885529 | 598 | 90 78 961 | 5 | 1 | 9918229 | 333 | 99 46 056 | 5 | 3 |
| 9885529 | 610 | 10 11 583 8 | 34 | 1 | 9918229 | 676 | 11 10 231 4 | 4 | 32 |
| 9885529 | 611 | 10 11 583 8 | 51 | 2 | 9918230 | 67 | 10 07 713 7 | 7 | 48 |
| 9885618 | 583 | 90 76 551 | 22 | 1 | 9918230 | 657 | 94 02 019 4 | 33 | 9 |
| 9885628 | 149 | 90 73 158 | 17 | 1 | 9918230 | 658 | 95 87 580 | 33 | 9 |
| 9885628 | 197 | 90 74 285 | 17 | 1 | 9918230 | 659 | 95 96 399 | 33 | 9 |
| 9885628 | 697 | 92 68 016 | 17 | 1 | 9918432 | 668 | 94 02 733 6 | 1 | 1 |
| 9885920 | 150 | 90 79 294 | 39 | 1 | 9921125 | 664 | 95 87 597 | 985 | 1 |
| 9885923 | 199 | 90 74 416 | 39 | 1 | 9926801 | 657 | 94 02 019 4 | 82 | 1 |
| 9885924 | 79 | 90 73 357 | 39 | 1 | 9926802 | 657 | 94 02 019 4 | 84 | 1 |
| 9885932 | 151 | 90 79 347 | 22 | 2 | 9927329 | 169 | 10 49 858 1 | 10 | 1 |
| 9886591 | 520 | 10 12 143 8 | 20 | 1 | 9927341 | 444 | 11 10 266 2 | 15 | 1 |
| 9886591 | 525 | 90 72 781 | 9 | 1 | 9927398 | 616 | 10 49 830 0 | 11 | 2 |
| 9886756 | 520 | 10 12 143 8 | 21 | 1 | 9927399 | 616 | 10 49 830 0 | 12 | 2 |
| 9887036 | 157 | 98 89 831 | 1 | 9 | 9927463 | 387 | 99 27 471 | 3 | 6 |
| 9887461 | 559 | 10 11 646 4 | 3 | 1 | 9927471 | 386 | 10 35 792 6 | 25 | 1 |
| 9888119 | 150 | 90 79 294 | 14 | 1 | 9927472 | 387 | 99 27 471 | 2 | 1 |
| 9888120 | 124 | 90 73 751 | 1 | 1 | 9927477 | 379 | 10 08 167 3 | 6 | 1 |
| 9888133 | 150 | 90 79 294 | 19 | 1 | 9927478 | 380 | 99 27 477 | 2 | 1 |
| 9888133 | 151 | 90 79 347 | 12 | 1 | 9927479 | 377 | 10 35 800 4 | 135 | 1 |
| 9888308 | 686 | 10 13 268 6 | 3 | 1 | 9927482 | 379 | 10 08 167 3 | 3 | 1 |
| 9888314 | 128 | 98 89 282 | 10 | 1 | 9927483 | 379 | 10 08 167 3 | 4 | 1 |
| 9888315 | 151 | 90 79 347 | 10 | 1 | 9927484 | 379 | 10 08 167 3 | 5 | 1 |
| 9888448 | 602 | 90 77 384 | 2 | 2 | 9927485 | 380 | 99 27 477 | 3 | 1 |
| 9888448 | 603 | 90 77 717 | 2 | 1 | 9927569 | 362 | 99 45 116 | 12 | 2 |
| 9888536 | 150 | 90 79 294 | 15 | 1 | 9927570 | 362 | 99 45 116 | 11 | 2 |
| 9888536 | 151 | 90 79 347 | 11 | 1 | 9928147 | 616 | 10 49 830 0 | 14 | 4 |
| 9889282 | 686 | 10 13 268 6 | 95 | 1 | 9928149 | 616 | 10 49 830 0 | 3 | 1 |

| Item | Page | Assembly | Pos. | Quantity | Item | Page | Assembly | Pos. | Quantity |
|---|---|---|---|---|---|---|---|---|---|
| 9928151 | 624 | 10 38 408 5 | 15 | 1 | 9945124 | 362 | 99 45 116 | 13 | 2 |
| 9928152 | 624 | 10 38 408 5 | 10 | 1 | 9945189 | 462 | 10 37 283 6 | 10 | 1 |
| 9928413 | 296 | 10 35 801 2 | 250 | 1 | 9945269 | 384 | 10 35 817 2 | 25 | 1 |
| 9928529 | 169 | 10 49 858 1 | 8 | 1 | 9945270 | 385 | 99 45 269 | 2 | 1 |
| 9928530 | 169 | 10 49 858 1 | 9 | 1 | 9945324 | 375 | 10 35 800 4 | 96 | 2 |
| 9928771 | 632 | 10 38 484 8 | 27 | 1 | 9946039 | 85 | 10 35 798 2 | 1400 | 1 |
| 9928891 | 443 | 99 47 695 | 61 | 1 | 9946045 | 96 | 10 35 808 9 | 520 | 1 |
| 9929151 | 442 | 99 47 695 | 14 | 1 | 9946056 | 329 | 10 35 798 3 | 2 | 1 |
| 9929189 | 372 | 10 35 800 4 | 20 | 1 | 9946134 | 269 | 10 06 017 4 | 30 | 1 |
| 9929190 | 382 | 99 29 189 | 2 | 1 | 9946134 | 270 | 10 06 017 5 | 30 | 1 |
| 9929193 | 382 | 99 29 189 | 3 | 2 | 9946250 | 49 | 10 49 883 7 | 23 | 1 |
| 9929194 | 382 | 99 29 189 | 6 | 1 | 9946389 | 181 | 90 18 423 | 11 | 1 |
| 9929195 | 382 | 99 29 189 | 7 | 1 | 9946390 | 205 | 10 83 653 3 | 5 | 1 |
| 9929356 | 384 | 10 35 817 2 | 2 | 1 | 9946408 | 205 | 10 83 653 3 | 20 | 1 |
| 9929357 | 384 | 10 35 817 2 | 5 | 1 | 9946410 | 207 | 99 46 408 | 2 | 1 |
| 9929358 | 384 | 10 35 817 2 | 6 | 1 | 9946411 | 207 | 99 46 408 | 3 | 1 |
| 9929376 | 388 | 10 07 307 3 | 5 | 1 | 9946412 | 207 | 99 46 408 | 4 | 1 |
| 9929376 | 389 | 10 37 283 9 | 5 | 1 | 9946413 | 207 | 99 46 408 | 5 | 1 |
| 9929378 | 388 | 10 07 307 3 | 7 | 1 | 9946939 | 268 | 10 05 981 8 | 2 | 1 |
| 9929378 | 389 | 10 37 283 9 | 7 | 1 | 9947170 | 49 | 10 49 883 7 | 24 | 1 |
| 9929455 | 377 | 10 35 800 4 | 150 | 1 | 9947234 | 160 | 10 35 809 2 | 10 | 2 |
| 9929456 | 374 | 10 35 800 4 | 75 | 1 | 9947695 | 441 | 99 48 254 | 3 | 1 |
| 9929459 | 95 | 10 07 366 1 | 20 | 1 | 9947707 | 441 | 99 48 254 | 2 | 1 |
| 9929460 | 166 | 99 37 297 | 2 | 1 | 9947713 | 442 | 99 47 695 | 3 | 1 |
| 9929814 | 96 | 10 35 808 9 | 550 | 1 | 9947845 | 359 | 10 49 822 5 | 3 | 1 |
| 9937092 | 102 | 99 37 298 | 93 | 1 | 9947847 | 359 | 10 49 822 5 | 2 | 1 |
| 9937293 | 98 | 10 04 942 6 | 13 | 1 | 9947849 | 359 | 10 49 822 5 | 4 | 1 |
| 9937294 | 98 | 10 04 942 6 | 14 | 1 | 9947851 | 359 | 10 49 822 5 | 5 | 1 |
| 9937297 | 161 | 10 35 809 2 | 25 | 1 | 9947861 | 359 | 10 49 822 5 | 7 | 1 |
| 9937298 | 96 | 10 35 808 9 | 530 | 1 | 9947863 | 359 | 10 49 822 5 | 6 | 1 |
| 9937302 | 163 | 10 35 809 2 | 100 | 1 | 9947957 | 375 | 10 35 800 4 | 95 | 1 |
| 9937303 | 163 | 10 35 809 2 | 115 | 1 | 9947958 | 396 | 99 47 957 | 2 | 1 |
| 9937309 | 104 | 10 35 800 6 | 19 | 1 | 9947961 | 375 | 10 35 800 4 | 110 | 1 |
| 9937312 | 294 | 10 35 809 0 | 7025 | 1 | 9947962 | 398 | 10 35 853 1 | 2 | 1 |
| 9937326 | 104 | 10 35 800 6 | 5 | 2 | 9947962 | 399 | 99 47 961 | 2 | 1 |
| 9937333 | 455 | 10 49 801 8 | 5 | 1 | 9948083 | 94 | 99 48 085 | 2 | 1 |
| 9937443 | 268 | 10 05 981 8 | 40 | 2 | 9948085 | 85 | 10 35 798 2 | 174 | 1 |
| 9938039 | 312 | 10 35 809 3 | 52 | 1 | 9948115 | 360 | 10 49 822 5 | 25 | 1 |
| 9939056 | 376 | 10 35 800 4 | 121 | 2 | 9948134 | 360 | 10 49 822 5 | 20 | 1 |
| 9939322 | 224 | 10 49 873 7 | 50 | 1 | 9948149 | 443 | 99 47 695 | 40 | 1 |
| 9941040 | 435 | 10 35 814 1 | 10 | 1 | 9948251 | 435 | 10 35 814 1 | 12 | 1 |
| 9941040 | 435 | 10 35 814 1 | 11 | 1 | 9948254 | 435 | 10 35 814 1 | 20 | 1 |
| 9942678 | 399 | 99 47 961 | 3 | 1 | 9948316 | 169 | 10 49 858 1 | 5 | 1 |
| 9942679 | 386 | 10 35 792 6 | 8 | 1 | 9948778 | 616 | 10 49 830 0 | 5 | 2 |
| 9942679 | 388 | 10 07 307 3 | 10 | 1 | 9948779 | 616 | 10 49 830 0 | 6 | 4 |
| 9942679 | 389 | 10 37 283 9 | 10 | 1 | 9948780 | 616 | 10 49 830 0 | 7 | 4 |
| 9943105 | 268 | 10 05 981 8 | 47 | 1 | 9948784 | 656 | 99 48 785 | 15 | 1 |
| 9943165 | 269 | 10 06 017 4 | 40 | 1 | 9948785 | 616 | 10 49 830 0 | 24 | 1 |
| 9943165 | 270 | 10 06 017 5 | 40 | 1 | 9948786 | 616 | 10 49 830 0 | 21 | 2 |
| 9943365 | 268 | 10 05 981 8 | 46 | 1 | 9948824 | 444 | 11 10 266 2 | 17 | 1 |
| 9944515 | 224 | 10 49 873 7 | 20 | 1 | 9949069 | 295 | 10 35 801 2 | 150 | 1 |
| 9944516 | 224 | 10 49 873 7 | 30 | 1 | 9949077 | 403 | 10 05 011 2 | 5 | 1 |
| 9945013 | 385 | 99 45 269 | 3 | 9 | 9949078 | 403 | 10 05 011 2 | 6 | 2 |
| 9945100 | 386 | 10 35 792 6 | 2 | 1 | 9949217 | 308 | 10 35 801 3 | 11 | 1 |
| 9945101 | 386 | 10 35 792 6 | 5 | 1 | 9949218 | 308 | 10 35 801 3 | 10 | 1 |
| 9945102 | 386 | 10 35 792 6 | 6 | 1 | 9949237 | 616 | 10 49 830 0 | 17 | 1 |
| 9945116 | 359 | 10 49 822 5 | 8 | 1 | 9949239 | 616 | 10 49 830 0 | 18 | 1 |
| 9945118 | 362 | 99 45 116 | 2 | 1 | 9949243 | 616 | 10 49 830 0 | 19 | 1 |
| 9945121 | 362 | 99 45 116 | 3 | 2 | 9949245 | 616 | 10 49 830 0 | 20 | 1 |
| 9945122 | 362 | 99 45 116 | 4 | 1 | 9949323 | 381 | 99 49 428 | 3 | 1 |

| Item | Page | Assembly | Pos. | Quantity | Item | Page | Assembly | Pos. | Quantity |
|---|---|---|---|---|---|---|---|---|---|
| 9949324 | 381 | 99 49 428 | 4 | 1 | | | | | |
| 9949325 | 381 | 99 49 428 | 5 | 1 | | | | | |
| 9949328 | 381 | 99 49 428 | 6 | 1 | | | | | |
| 9949383 | 398 | 10 35 853 1 | 6 | 1 | | | | | |
| 9949383 | 399 | 99 47 961 | 6 | 1 | | | | | |
| 9949384 | 396 | 99 47 957 | 3 | 1 | | | | | |
| 9949402 | 178 | 10 35 800 9 | 15 | 1 | | | | | |
| 9949403 | 178 | 10 35 800 9 | 10 | 1 | | | | | |
| 9949411 | 383 | 10 08 168 3 | 3 | 1 | | | | | |
| 9949413 | 383 | 10 08 168 3 | 5 | 1 | | | | | |
| 9949414 | 372 | 10 35 800 4 | 35 | 3 | | | | | |
| 9949428 | 372 | 10 35 800 4 | 15 | 1 | | | | | |
| 9949429 | 381 | 99 49 428 | 2 | 1 | | | | | |
| 9949436 | 403 | 10 05 011 2 | 7 | 1 | | | | | |
| 9949673 | 49 | 10 49 883 7 | 25 | 2 | | | | | |
| 9949686 | 251 | 10 84 086 6 | 94 | 1 | | | | | |
| 9949750 | 442 | 99 47 695 | 15 | 1 | | | | | |
| 9949751 | 463 | 10 35 804 3 | 16 | 1 | | | | | |
| 9949751 | 466 | 10 49 805 9 | 16 | 1 | | | | | |
| 9949756 | 463 | 10 35 804 3 | 13 | 1 | | | | | |
| 9949756 | 466 | 10 49 805 9 | 13 | 1 | | | | | |
| 9949978 | 444 | 11 10 266 2 | 13 | 1 | | | | | |
| 9950357 | 228 | 99 39 322 | 30 | 1 | | | | | |
| 9950358 | 228 | 99 39 322 | 11 | 1 | | | | | |
| 9950385 | 228 | 99 39 322 | 10 | 1 | | | | | |
| 9952600 | 658 | 95 87 580 | 13 | 1 | | | | | |
| 9952601 | 669 | 99 52 600 | 1 | 1 | | | | | |
| 9956949 | 279 | 94 02 247 7 | 70 | 1 | | | | | |
| 9962503 | 329 | 10 35 798 3 | 11 | 1 | | | | | |
| 9967032 | 313 | 10 35 801 7 | 10 | 1 | | | | | |
| 9968546 | 247 | 99 68 625 | 70 | 1 | | | | | |
| 9968570 | 262 | 99 68 611 | 70 | 1 | | | | | |
| 9968578 | 247 | 99 68 625 | 40 | 1 | | | | | |
| 9968580 | 262 | 99 68 611 | 40 | 1 | | | | | |
| 9968591 | 247 | 99 68 625 | 80 | 1 | | | | | |
| 9968591 | 262 | 99 68 611 | 80 | 1 | | | | | |
| 9968611 | 259 | 10 05 879 4 | 10 | 1 | | | | | |
| 9968625 | 244 | 10 05 879 2 | 10 | 1 | | | | | |
| 9988764 | 671 | 10 49 815 8 | 6 | 1 | | | | | |
| 9989595 | 176 | 10 49 858 1 | 220 | 2 | | | | | |
| 9989595 | 447 | 10 35 814 3 | 23 | 2 | | | | | |
| 9989643 | 258 | 10 04 831 3 | 6 | 1 | | | | | |
| 9998619 | 663 | 94 00 606 1 | 990 | 1 | | | | | |
| 9998619 | 664 | 95 87 597 | 990 | 1 | | | | | |
| 9999997 | 35 | 10 35 905 6 | 1000 | 1 | | | | | |
| 9999999 | 692 | 98 88 308 | 23 | 1 | | | | | |

| Description | Item | Pos. | Quantity | Page | Assembly | Description |
|---|---|---|---|---|---|---|
| | 11481247 | 200 | 1 | 40 | 90 66 466 | ACCESSORIES |
| | 11481248 | 310 | 1 | 40 | 90 66 466 | ACCESSORIES |
| | 11481249 | 210 | 1 | 40 | 90 66 466 | ACCESSORIES |
| | 11481250 | 300 | 1 | 40 | 90 66 466 | ACCESSORIES |
| | 9066460 | 500 | 1 | 46 | 10 35 970 2 | SERVICE MATERIAL |
| 12-SIDED SCREW M10X25X20, | 9076639 | 4 | 3 | 573 | 90 80 735 | EXHAUST TC MOUNTING |
| 2-LUG LOSE CLIP 25 23-27 | 11347332 | 3 | 1 | 460 | 93 58 137 | OIL DRAIN HOSE |
| ABSORPTION PANEL | 10009181 | 290 | 1 | 433 | 10 48 808 8 | INTERNAL LINING |
| ABSORPTION PANEL | 10290261 | 230 | 1 | 432 | 10 48 808 8 | INTERNAL LINING |
| ACCESSORIES | 9066466 | 100 | 1 | 10 | 90 66 460 | |
| ACTUATOR | 6204367 | 5 | 1 | 258 | 10 04 831 3 | SWITCH INSTALLATION |
| ACTUATOR | 6204367 | 5 | 1 | 263 | 10 05 507 1 | SWITCH INSTALLATION S84-1 |
| ADAPTER CABLE | 11100090 | 16 | 1 | 235 | 11 10 016 7 | SUSPENSION |
| ADAPTOR | 10451142 | 2 | 5 | 634 | 11 10 283 2 | SPOON BIT |
| ADD-ON FLANGE | 9273491 | 13 | 1 | 686 | 10 13 268 6 | HYDRAULIC VARIABLE DISPLA |
| ADDITIONAL KIT SIDE PANE | 10358890 | 140 | 1 | 407 | 70 28 767 | GLASS PANES |
| ADHESIVE FOIL | 9928891 | 61 | 1 | 443 | 99 47 695 | ELECTRICAL SYSTEM E50 |
| ADJUSTABLE RAIL | 11100088 | 37 | 1 | 233 | 11 10 016 6 | SEAT TOP |
| ADJUSTING LEVER | 9277878 | 12 | 1 | 690 | 98 82 766 | ADJUSTMENT |
| ADJUSTING LEVER | 9880287 | 18 | 2 | 690 | 98 82 766 | ADJUSTMENT |
| ADJUSTING PISTON | 10220524 | 1 | 1 | 115 | 10 22 041 0 | ADJUSTMENT |
| ADJUSTING PISTON | 9277876 | 10 | 1 | 690 | 98 82 766 | ADJUSTMENT |
| ADJUSTING PISTON | 9880286 | 11 | 2 | 690 | 98 82 766 | ADJUSTMENT |
| ADJUSTING SCREW | 10220647 | 2 | 1 | 146 | 57 15 963 | PRESSURE LIMITING VALVE |
| ADJUSTING SCREW | 10220665 | 9 | 1 | 132 | 10 22 063 5 | SHUTDOWN VALVE |
| ADJUSTING SCREW M12X36X4 | 10117949 | 5 | 1 | 480 | 10 11 795 1 | FINAL CONTROL VALVE |
| ADJUSTING SHIM | 10008421 | 12 | 1 | 139 | 10 35 572 4 | HYDRAULIC PUMP |
| ADJUSTING SHIM | 10413020 | 14 | 1 | 121 | 10 41 301 3 | HYDRAULIC PUMP |
| ADJUSTING SHIM | 7023472 | 12 | 1 | 121 | 10 41 301 3 | HYDRAULIC PUMP |
| ADJUSTING SREW PRE-ASS. | 10004419 | 4 | 1 | 512 | 90 74 507 | ROCKER ARM PRE-ASS. |
| ADJUSTMENT | 10220410 | 2 | 1 | 122 | 56 16 530 | AXIAL PISTON PUMP |
| ADJUSTMENT | 9271648 | 5 | 1 | 686 | 10 13 268 6 | HYDRAULIC VARIABLE DISPLA |
| ADJUSTMENT | 9882766 | 5 | 1 | 73 | 98 89 775 | HYDRAULIC INSTALLATION |
| AERATION FILTER | 10222393 | 4 | 1 | 91 | 10 09 121 5 | SERVICE KIT ALLE 2000 H |
| AERATION FILTER | 10222393 | 31 | 1 | 330 | 10 35 798 3 | HYDRAULIC TANK INSTALLAT |
| AGITATOR PADDLE | 10016658 | 34 | 1 | 682 | 10 28 689 7 | LUBRICATION PUMP |
| AIR CIRCULATION CASE | 10022117 | 2 | 1 | 282 | 10 81 666 6 | EVAPORATOR |
| AIR CIRCULATION CASE | 10022787 | 1 | 1 | 285 | 10 02 211 7 | AIR CIRCULATION CASE |
| AIR CIRCULATION PART | 10005677 | 1 | 1 | 284 | 10 02 208 3 | AIR CONNECTION PART |
| AIR COND. COMPRESSOR A | 10116464 | 340 | 1 | 473 | 10 11 668 5 | DIESEL ENGINE D936 L A6 240 |
| AIR CONDIT.CONDENSER IN | 10048713 | 595 | 1 | 96 | 10 35 808 9 | MOTOR INSTALLATION |
| AIR CONDITION HOSES INSTA | 10358142 | 9200 | 1 | 86 | 10 35 798 2 | UPPERCARRIAGE |
| AIR CONDITION HOSES INSTA | 10358143 | 5 | 1 | 446 | 10 35 814 2 | AIR CONDITION HOSES INSTA |
| AIR CONDITIONING COMPRES | 10116769 | 2 | 1 | 559 | 10 11 646 4 | AIR COND. COMPRESSOR A |
| AIR CONDITIONING UNIT | 10406898 | 80 | 1 | 230 | 10 49 880 9 | DRIVER STAND BASE SECTIO |
| AIR CONNECTION PART | 10022083 | 14 | 1 | 286 | 11 00 359 4 | HOUSING |
| AIR EJECTION NOZZLE | 5611480 | 99 | 3 | 230 | 10 49 880 9 | DRIVER STAND BASE SECTIO |
| AIR EJECTION NOZZLE | 5611480 | 25 | 2 | 249 | 10 84 086 6 | ARM REST RIGHT |
| AIR ELBOW | 9079936 | 4 | 1 | 552 | 10 12 190 8 | CONNECTING LINE ADD-ON |
| AIR ELBOW | 9079936 | 4 | 1 | 553 | 90 79 964 | CONNECTING LINE ADD-ON |
| AIR FEED-THROUGH | 7024446 | 350 | 4 | 433 | 10 48 808 8 | INTERNAL LINING |
| AIR FILTER | 10039803 | 10 | 1 | 102 | 99 37 298 | AIR FILTER INSTALLATION |
| AIR FILTER | 7028951 | 6 | 1 | 87 | 10 06 947 6 | SERVICE KIT |
| AIR FILTER | 7028951 | 380 | 1 | 433 | 10 48 808 8 | INTERNAL LINING |
| AIR FILTER CARTRIDGE | 10044851 | 4 | 1 | 90 | 10 06 948 1 | SERVICE KITS 1500/2500h |
| AIR FILTER CARTRIDGE | 10044851 | 11 | 1 | 102 | 99 37 298 | AIR FILTER INSTALLATION |
| AIR FILTER CARTRIDGE | 10044851 | 7 | 1 | 103 | 10 03 980 3 | AIR FILTER |
| AIR FILTER HOSE | 10080310 | 20 | 1 | 102 | 99 37 298 | AIR FILTER INSTALLATION |
| AIR FILTER INSTALLATION | 9937298 | 530 | 1 | 96 | 10 35 808 9 | MOTOR INSTALLATION |
| AIR FLAP | 10005674 | 2 | 1 | 284 | 10 02 208 3 | AIR CONNECTION PART |

| Description | Item | Pos. | Quantity | Page | Assembly | Description |
|---|---|---|---|---|---|---|
| AIR FLAP | 10005675 | 7 | 1 | 286 | 11 00 359 4 | HOUSING |
| AIR FLAP | 10022778 | 18 | 1 | 285 | 10 02 211 7 | AIR CIRCULATION CASE |
| AIR FLAP | 10022780 | 15 | 1 | 285 | 10 02 211 7 | AIR CIRCULATION CASE |
| AIR HOSE | 10005859 | 95 | 2 | 230 | 10 49 880 9 | DRIVER STAND BASE SECTIO |
| AIR HOSE | 10005860 | 90 | 1 | 230 | 10 49 880 9 | DRIVER STAND BASE SECTIO |
| AIR HOSE | 10049520 | 48 | 1 | 102 | 99 37 298 | AIR FILTER INSTALLATION |
| AIR HOSE CPL. | 11066531 | 19 | 1 | 235 | 11 10 016 7 | SUSPENSION |
| AIR INTAKE PIPE ASS. | 10117073 | 220 | 1 | 473 | 10 11 668 5 | DIESEL ENGINE D936 L A6 240 |
| AIR NOZZLE | 10016540 | 5 | 2 | 268 | 10 05 981 8 | FOOT PILOT VALVE INSTALL |
| AIR NOZZLE | 7028950 | 370 | 2 | 433 | 10 48 808 8 | INTERNAL LINING |
| AIR PIPE | 9937302 | 100 | 1 | 163 | 10 35 809 2 | ENGINE COOLING |
| AIR PIPE | 9937303 | 115 | 1 | 163 | 10 35 809 2 | ENGINE COOLING |
| AIR SUCTION HOSE | 10101747 | 85 | 1 | 102 | 99 37 298 | AIR FILTER INSTALLATION |
| AIR SUCTION PIPE | 10147789 | 1 | 1 | 550 | 10 11 707 3 | AIR INTAKE PIPE ASS. |
| ANGLE | 10049544 | 20 | 1 | 183 | 99 46 389 | SLEWING GEAR |
| ANGLE | 9573442 | 35 | 1 | 178 | 10 35 800 9 | ENGINE ADD-ON PARTS |
| ANGLE | 9573442 | 45 | 1 | 447 | 10 35 814 3 | AIR CONDITION HOSES INSTA |
| ANGLE | 9947234 | 10 | 2 | 160 | 10 35 809 2 | ENGINE COOLING |
| ANGLE | 9949414 | 35 | 3 | 372 | 10 35 800 4 | PANELLING |
| ANGLE FLANGE SCREWED UN | 5211460 | 10 | 1 | 159 | 99 29 814 | PUMPS INSTALLATION |
| ANGLE SCREW DRIVER 10X23 | 11162122 | 92 | 1 | 458 | 10 84 856 2 | TOOL EQUIPMENT |
| ANGLE SCREW DRIVER 12X1 | 11162123 | 94 | 1 | 458 | 10 84 856 2 | TOOL EQUIPMENT |
| ANGLE SCREW DRIVER 14X1 | 11162124 | 96 | 1 | 458 | 10 84 856 2 | TOOL EQUIPMENT |
| ANGLE SCREW DRIVER 17X1 | 11162125 | 98 | 1 | 458 | 10 84 856 2 | TOOL EQUIPMENT |
| ANGLE SCREW DRIVER 3X66 I | 11162101 | 80 | 1 | 458 | 10 84 856 2 | TOOL EQUIPMENT |
| ANGLE SCREW DRIVER 4X74 I | 11162111 | 82 | 1 | 458 | 10 84 856 2 | TOOL EQUIPMENT |
| ANGLE SCREW DRIVER 5X85 I | 11162119 | 84 | 1 | 458 | 10 84 856 2 | TOOL EQUIPMENT |
| ANGLE SCREW DRIVER 6X186 | 11162120 | 86 | 1 | 458 | 10 84 856 2 | TOOL EQUIPMENT |
| ANGLE SCREW DRIVER 8X208 | 11162121 | 90 | 1 | 458 | 10 84 856 2 | TOOL EQUIPMENT |
| ANNULAR PISTON | 9441436 | 5 | 1 | 191 | 93 33 333 01 | BRAKE |
| ANTENNA | 6001556 | 180 | 1 | 420 | 10 48 808 7 | ELECTRICAL INSTALLATION |
| ANTENNA CABLE | 10488090 | 182 | 1 | 420 | 10 48 808 7 | ELECTRICAL INSTALLATION |
| ANTI-KINK DEVICE SPIRAL | 10011996 | 66 | 1m | 217 | 90 64 786 | CONNECTING ELEMENT |
| ANTI-KINK DEVICE SPIRAL | 10011996 | 166 | 1m | 218 | 90 64 786 | CONNECTING ELEMENT |
| ANTICORROSION ANTIFREEZE | 10301213 | 20 | 1 | 35 | 10 35 905 6 | ANTICORROSION ANTIFREEZE |
| ANTICORROSION ANTIFREEZE | 10301215 | 5 | 1 | 29 | 10 35 683 2 | ANTICORROSION ANTIFREEZE |
| ANTICORROSION ANTIFREEZE | 10356832 | 10 | 1l | 45 | 94 08 205 9 | ANTICORROSION ANTIFREEZE |
| ANTICORROSION ANTIFREEZE | 10356833 | 1000 | 1 | 29 | 10 35 683 2 | ANTICORROSION ANTIFREEZE |
| ANTICORROSION ANTIFREEZE | 10359056 | 20 | 1l | 45 | 94 08 205 9 | ANTICORROSION ANTIFREEZE |
| ANTICORROSION ANTIFREEZE | 10428410 | 20 | 1 | 29 | 10 35 683 2 | ANTICORROSION ANTIFREEZE |
| ANTICORROSION ANTIFREEZE | 10428411 | 210 | 1 | 29 | 10 35 683 2 | ANTICORROSION ANTIFREEZE |
| ANTICORROSION ANTIFREEZE | 11657384 | 5 | 1 | 42 | 94 07 955 7 | ANTICORROSION ANTIFREEZE |
| ANTICORROSION ANTIFREEZE | 11657385 | 20 | 1 | 42 | 94 07 955 7 | ANTICORROSION ANTIFREEZE |
| ANTICORROSION ANTIFREEZE | 11657386 | 210 | 1 | 42 | 94 07 955 7 | ANTICORROSION ANTIFREEZE |
| ANTICORROSION ANTIFREEZE | 11657387 | 1000 | 1 | 42 | 94 07 955 7 | ANTICORROSION ANTIFREEZE |
| ANTICORROSION ANTIFREEZE | 11657389 | 5 | 1 | 43 | 94 07 956 0 | ANTICORROSION ANTIFREEZE |
| ANTICORROSION ANTIFREEZE | 11657390 | 20 | 1 | 43 | 94 07 956 0 | ANTICORROSION ANTIFREEZE |
| ANTICORROSION ANTIFREEZE | 11657391 | 210 | 1 | 43 | 94 07 956 0 | ANTICORROSION ANTIFREEZE |
| ANTICORROSION ANTIFREEZE | 11657392 | 1000 | 1 | 43 | 94 07 956 0 | ANTICORROSION ANTIFREEZE |
| ANTICORROSION ANTIFREEZE | 94079557 | 10 | 1l | 44 | 94 08 205 8 | ANTICORROSION ANTIFREEZE |
| ANTICORROSION ANTIFREEZE | 94079560 | 20 | 1l | 44 | 94 08 205 8 | ANTICORROSION ANTIFREEZE |
| ANTICORROSION ANTIFREEZE | 94082058 | 100 | 1l | 12 | 90 66 465 | COOLANT |
| ANTICORROSION ANTIFREEZE | 94082059 | 10 | 1l | 12 | 90 66 465 | COOLANT |
| ARM REST LEFT | 10113060 | 15 | 1 | 233 | 11 10 016 6 | SEAT TOP |
| ARM REST LEFT | 10385024 | 20 | 1 | 229 | 10 49 880 9 | DRIVER STAND BASE SECTIO |
| ARM REST RIGHT | 10113062 | 14 | 1 | 233 | 11 10 016 6 | SEAT TOP |
| ARM REST RIGHT | 10840866 | 30 | 1 | 229 | 10 49 880 9 | DRIVER STAND BASE SECTIO |
| ASH TRAY | 7366731 | 81 | 1 | 238 | 10 38 502 4 | ARM REST LEFT |
| ASSEMBLY BRACKET | 10022078 | 6 | 1 | 286 | 11 00 359 4 | HOUSING |
| ASSY. PARTS | 10290264 | 70 | 1 | 405 | 10 47 616 9 | OPERATOR'S CAB |

| Description | Item | Pos. | Quantity | Page | Assembly | Description |
|---|---|---|---|---|---|---|
| AT-WATER PUMP WITH FAST | 9080301 | 370 | 1 | 473 | 10 11 668 5 | DIESEL ENGINE D936 L A6 240 |
| ATTACHMENT PLATE | 10082605 | 15 | 2 | 640 | 10 49 817 6 | PISTON ROD COVER BUCKET |
| ATTACHMENT PLATE | 10331635 | 1 | 2 | 167 | 10 35 508 4 | OIL COOLER |
| ATTACHMENTS MOUNTING PA | 10402781 | 170 | 1 | 85 | 10 35 798 2 | UPPERCARRIAGE |
| AUTOMATIC CENTRALIZED L | 10049662 | 2 | 1 | 208 | 99 46 039 | CENTRALIZED LUBRICATION |
| AUXILIARY BOX | 10014611 | 999 | 1 | 210 | 10 48 840 8 | DISTRIBUTION BLOCK MX-F 7/ |
| AUXILIARY BOX | 10014611 | 999 | 1 | 215 | 10 10 169 3 | DISTRIBUTION BLOCK MX-F 5/ |
| AUXILIARY BOX | 10014611 | 999 | 1 | 622 | 10 10 169 4 | DISTRIBUTION BLOCK MX-F 5/ |
| AUXILIARY BOX | 10014611 | 999 | 1 | 626 | 11 00 350 2 | DISTRIBUTION BLOCK SXE-2 |
| AUXILIARY DRIVE PRE-ASS. | 10117836 | 1 | 1 | 544 | 90 73 767 | POWER TAKE-OFF ADD-ON |
| AUXILIARY DRIVE PRE-ASS. | 9077386 | 1 | 1 | 599 | 90 80 006 | POWER TAKE-OFF ADD-ON |
| AUXILIARY DRIVE PRE-ASS. | 9077718 | 1 | 1 | 597 | 90 77 719 | POWER TAKE-OFF ADD-ON |
| AUXILIARY DRIVE PRE-ASS. | 9078962 | 1 | 1 | 598 | 90 78 961 | POWER TAKE-OFF ADD-ON |
| AXIAL FACE SEAL | 10031921 | 5 | 2 | 60 | 10 00 966 2 | GUIDE WHEEL D7G/B7B |
| AXIAL FACE SEAL 429X457X38 | 7610243 | 58 | 1 | 69 | 94 43 840 | TRAVEL DRIVE FAT 450 P 004 |
| AXIAL PISTON MOTOR | 10332890 | 5 | 2 | 310 | 10 35 809 3 | HYDR.INSTALLATION FAN DR |
| AXIAL PISTON PUMP | 5616530 | 20 | 1 | 341 | 10 84 584 9 | PUMPS + COUPLING INSTALL |
| AXLE | 10031944 | 4 | 1 | 60 | 10 00 966 2 | GUIDE WHEEL D7G/B7B |
| AXLE | 11003779 | 4 | 1 | 58 | 10 65 168 0 | TRACK ROLLER D7 |
| AXLE | 11003779 | 4 | 1 | 59 | 11 60 010 7 | TRACK ROLLER D7 |
| AXLE | 9265410 | 24 | 1 | 271 | 90 79 258 | PILOT CONTROL UNIT VG7 2-3 |
| AXLE | 9265410 | 24 | 1 | 273 | 90 79 259 | PILOT CONTROL UNIT VG7 2-3 |
| AXLE AND GEAR-OIL | 9070364 | 40 | 1 | 10 | 90 66 460 | |
| AXLE AND GEAR-OIL LIEBHE | 10356829 | 10 | 1l | 16 | 90 70 364 | AXLE AND GEAR-OIL |
| AXLE AND GEAR-OIL LIEBHE | 10286280 | 1000 | 1 | 27 | 10 35 682 9 | AXLE AND GEAR-OIL LIEBHE |
| AXLE AND GEAR-OIL LIEBHE | 10330296 | 20 | 1 | 27 | 10 35 682 9 | AXLE AND GEAR-OIL LIEBHE |
| AXLE AND GEAR-OIL LIEBHER | 10285702 | 210 | 1 | 27 | 10 35 682 9 | AXLE AND GEAR-OIL LIEBHE |
| AXLE AND GEAR-OIL LIEBHER | 10330295 | 5 | 1 | 27 | 10 35 682 9 | AXLE AND GEAR-OIL LIEBHE |
| AXLE-OIL LIEBHERR/20W-40 | 10356831 | 20 | 1l | 16 | 90 70 364 | AXLE AND GEAR-OIL |
| AXLE-OIL LIEBHERR/20W-40/20 | 10330294 | 20 | 1 | 28 | 10 35 683 1 | AXLE-OIL LIEBHERR/20W-40 |
| AXLE-OIL LIEBHERR/20W-40/5 | 10285640 | 5 | 1 | 28 | 10 35 683 1 | AXLE-OIL LIEBHERR/20W-40 |
| BACK FLOW HOSE HYDR.OIL | 9332139 | 170 | 1 | 305 | 10 35 801 4 | HYDR.SUCT.+RETURN OIL HO |
| BACK REST BEARING | 10493351 | 10 | 1 | 233 | 11 10 016 6 | SEAT TOP |
| BACK UP ALARM | 10288438 | 2 | 1 | 652 | 10 35 860 1 | TRAVEL ALARM |
| BACK-UP RING CUT 15,7/20X1 | 7380884 | 23 | 1 | 83 | 92 66 232 | SEAL KIT SHUTTLE VALVE |
| BACK-UP RING CUT 43,5/48X1, | 11007757 | 29 | 1 | 699 | 98 82 771 | SEAL KIT |
| BACK-UP RING CUT 9,4/14X1,1 | 11007750 | 4 | 1 | 662 | 92 70 390 | SEAL KIT DRV |
| BACKHOE BUCKET HD 1950m | 11102829 | 12 | 1 | 7 | . | |
| BALL | 10014076 | 3 | 1 | 129 | 70 28 176 | BRAKE PISTON |
| BALL PIN | 10004426 | 5 | 1 | 512 | 90 74 507 | ROCKER ARM PRE-ASS. |
| BALL SLEWING RING | 932178201 | 10 | 1 | 205 | 10 83 653 3 | BALL SLEWING RING INSTALL |
| BALL SLEWING RING INSTALL | 10836533 | 800 | 1 | 85 | 10 35 798 2 | UPPERCARRIAGE |
| BANJO COUPLING WSV 8LL | 10009054 | 21 | 1 | 216 | 10 10 171 1 | DISTRIBUTION BLOCK MX-F 5/ |
| BANJO COUPLING WSV 8LL | 10009054 | 21 | 1 | 623 | 10 10 171 2 | DISTRIBUTION BLOCK MX-F 5/ |
| BASE PLATE | 10055251 | 160 | 1 | 378 | 10 35 800 4 | PANELLING |
| BASE PLATE | 10081451 | 36 | 1 | 372 | 10 35 800 4 | PANELLING |
| BASIC BODY | 10005863 | 1 | 1 | 240 | 10 16 576 6 | STEERING CONSOLE |
| BASIC BODY | 5618922 | 1 | 1 | 255 | 56 18 923 | CONTROL CONSOLE RIGHT |
| BASIC MACHINE | 10498836 | 1 | 1 | 7 | . | |
| BATTERY CONNECTION CABL | 9949978 | 13 | 1 | 444 | 11 10 266 2 | BATTERY INSTALLATION |
| BATTERY DRY CHARGED | 613200116 | 2 | 2 | 444 | 11 10 266 2 | BATTERY INSTALLATION |
| BATTERY INSTALLATION | 11102662 | 25 | 1 | 435 | 10 35 814 1 | ELECTRICAL SYSTEM |
| BATTERY MAIN SWITCH | 10012119 | 20 | 1 | 444 | 11 10 266 2 | BATTERY INSTALLATION |
| BEARING | 10030591 | 12 | 1 | 184 | 90 01 790 0 | SLEWING DRIVE SAT 375/250 |
| BEARING BUSH | 10216806 | 44 | 1 | 116 | 10 22 041 1 | CONNECTING PLATE |
| BEARING BUSH | 10220637 | 6 | 1 | 116 | 10 22 041 1 | CONNECTING PLATE |
| BEARING BUSH | 10220637 | 2 | 1 | 133 | 10 22 066 7 | GEAR PUMP |
| BEARING BUSH 40/44X13 | 9267183 | 7 | 1 | 525 | 90 72 781 | LUBRICATING OIL PUMP |
| BEARING BUSH 40/44X13 | 9267183 | 7 | 1 | 526 | 90 80 277 | SUCTION PUMP PRE-ASS. |
| BEARING CAP BOLT M14X1,5 | 9174981 | 1 | 2 | 500 | 90 76 459 | MAIN ROD |

| Description | Item | Pos. | Quantity | Page | Assembly | Description |
|---|---|---|---|---|---|---|
| BEARING COVER | 9072908 | 3 | 1 | 557 | 90 78 356 | LOCKING PIECES |
| BEARING COVER | 9271434 | 5 | 1 | 108 | 90 77 872 | PUMP DISTRIBUTION GEAR |
| BEARING FLANGE | 9073359 | 6 | 1 | 108 | 90 77 872 | PUMP DISTRIBUTION GEAR |
| BEARING FLANGE | 9277872 | 20 | 1 | 71 | 90 73 354 | DRIVING GEAR |
| BEARING HEAD | 94019365 | 1 | 1 | 667 | 94 01 936 4 | PISTON ROD BEARING 125/18 |
| BEARING HEAD | 9918432 | 1 | 1 | 668 | 94 02 733 6 | PISTON ROD BEARING 125/17 |
| BEARING HEAD | 9952601 | 1 | 1 | 669 | 99 52 600 | PISTON ROD BEARING 110/18 |
| BEARING HOUSING | 3021908 | 1 | 1 | 602 | 90 77 384 | BEARING HOUSING, PRE-AS |
| BEARING HOUSING | 9077328 | 1 | 1 | 602 | 90 77 384 | BEARING HOUSING, PRE-AS |
| BEARING HOUSING | 9077710 | 1 | 1 | 603 | 90 77 717 | BEARING HOUSING, PRE-AS |
| BEARING HOUSING, PRE-AS | 9077384 | 2 | 1 | 600 | 90 77 386 | AUXILIARY DRIVE PRE-ASS. |
| BEARING HOUSING, PRE-AS | 9077717 | 2 | 1 | 601 | 90 77 718 | AUXILIARY DRIVE PRE-ASS. |
| BEARING PILLOW BLOCK | 11102830 | 10 | 1 | 633 | 11 10 282 9 | BACKHOE BUCKET HD 1950m |
| BEARING RING | 9442307 | 5 | 1 | 68 | 94 43 840 | TRAVEL DRIVE FAT 450 P 004 |
| BEARING SHELL | 10355733 | 17 | 2 | 139 | 10 35 572 4 | HYDRAULIC PUMP |
| BEARING SHELL | 7023749 | 26 | 1 | 114 | 10 22 040 9 | DRIVING GEAR |
| BELT PULLEY | 10116366 | 1 | 1 | 499 | 10 11 617 5 | CRANKSHAFT ADD-ON PARTS |
| BELT PULLEY 8 PKd=54,5 | 10116372 | 5 | 1 | 574 | 10 11 646 3 | GENERATOR, PRE-ASSEMBLE |
| BELT STRIP | 10493994 | 17 | 1 | 235 | 11 10 016 7 | SUSPENSION |
| BIO-OIL-ANALYSIS SET | 510363416 | 17 | 1 | 7 | . | |
| BIO-OIL-ANALYSIS SET | 7026088 | 22 | 1 | 38 | 90 66 466 | ACCESSORIES |
| BIO-OIL-ANALYSIS SET | 7026817 | 20 | 1 | 38 | 90 66 466 | ACCESSORIES |
| BIODEGRADABLE HYDRAULIC- | 9070363 | 30 | 1 | 10 | 90 66 460 | |
| BIT-PASTE LIEBHERR | 10358992 | 50 | 1kg | 18 | 90 70 366 | GREASES |
| BIT-PASTE LIEBHERR/0,5kg | 8610230 | 1 | 1 | 34 | 10 35 899 2 | BIT-PASTE LIEBHERR |
| BIT-PASTE LIEBHERR/20X0,5k | 10330306 | 2 | 1 | 34 | 10 35 899 2 | BIT-PASTE LIEBHERR |
| BLADE-TYPE ELECT. FUSE S | 6000783 | 25 | 2 | 442 | 99 47 695 | ELECTRICAL SYSTEM E50 |
| BLANK LID | 7370890 | 5 | 3 | 255 | 56 18 923 | CONTROL CONSOLE RIGHT |
| BLANK LID | 7370899 | 6 | 1 | 240 | 10 16 576 6 | STEERING CONSOLE |
| BLANK LID | 7618883 | 285 | 1 | 432 | 10 48 808 8 | INTERNAL LINING |
| BLANKING END M10X20 DAC | 7366851 | 13 | 29 | 403 | 10 05 011 2 | LOWER COVERING |
| BLANKING END M12X20 DAC | 7365430 | 27 | 28 | 49 | 10 49 883 7 | UNDERCARRIAGE CPL |
| BLANKING END M12X20 DAC | 7365430 | 30 | 4 | 49 | 10 49 883 7 | UNDERCARRIAGE CPL |
| BLANKING END M12X20 DAC | 7365430 | 33 | 8 | 49 | 10 49 883 7 | UNDERCARRIAGE CPL |
| BLANKING END M12X20 DAC | 7365430 | 31 | 4 | 371 | 10 07 369 5 | COVERING ROTATING DECK |
| BLANKING END M12X20 DAC | 7365430 | 14 | 6 | 403 | 10 05 011 2 | LOWER COVERING |
| BLANKING END M16X35 DAC | 7364949 | 12 | 18 | 403 | 10 05 011 2 | LOWER COVERING |
| BLANKING END M8X20 A2E | 7366804 | 3 | 5 | 166 | 99 37 297 | COOLER SEALING |
| BLANKING END M8X20 A2E | 7366804 | 36 | 1 | 229 | 10 49 880 9 | DRIVER STAND BASE SECTIO |
| BLANKING PLUG | 10015404 | 10 | 1 | 450 | 10 10 131 3 | HOSE |
| BLANKING PLUG | 10022774 | 3 | 1 | 283 | 10 02 206 9 | EVAPORATOR HOUSING |
| BLANKING PLUG | 10220421 | 49 | 1 | 123 | 56 16 530 | AXIAL PISTON PUMP |
| BLANKING PLUG GPN 300 F | 4097530 | 2 | 1 | 184 | 90 01 790 0 | SLEWING DRIVE SAT 375/250 |
| BLANKING PLUG GPN 300 F | 7004246 | 91 | 1 | 69 | 94 43 840 | TRAVEL DRIVE FAT 450 P 004 |
| BLIND FLANGE | 9576071 | 76 | 1 | 347 | 10 35 802 8 | CONTROL VALVE INSTALLAT |
| BLIND RIVET | 10022656 | 10 | 4 | 286 | 11 00 359 4 | HOUSING |
| BLIND RIVET | 4900053 | 3 | 4 | 463 | 10 35 804 3 | SIGNS |
| BLIND RIVET | 4900053 | 3 | 4 | 466 | 10 49 805 9 | SIGNS |
| BLIND RIVET | 7029433 | 310 | 6 | 414 | 70 28 769 | DRIVER'S CAB DOOR |
| BLIND RIVET | 7029433 | 280 | 12 | 432 | 10 48 808 8 | INTERNAL LINING |
| BLIND RIVET A 4X8 | 10040412 | 8 | 1 | 511 | 90 74 505 | ROCKER ARM BRACKET PRE |
| BLIND RIVET A3,0 6,0 | 4451001 | 4 | 4 | 283 | 10 02 206 9 | EVAPORATOR HOUSING |
| BLOCK | 10053858 | 30 | 1 | 300 | 10 35 801 5 | HYDR.ROTARY CONNEC.+SWI |
| BLOCK | 10064927 | 80 | 2 | 302 | 10 35 801 5 | HYDR.ROTARY CONNEC.+SWI |
| BLOCK | 10065162 | 35 | 1 | 360 | 10 49 822 5 | HYDR.TUBES INSTALLATION |
| BLOCK | 10080803 | 32 | 1 | 309 | 10 35 801 3 | HYDR.AND GEAR OIL COOLIN |
| BLOCK | 9346433 | 30 | 1 | 360 | 10 49 822 5 | HYDR.TUBES INSTALLATION |
| BLOCK | 9370414 | 1 | 1 | 357 | 93 70 592 | NON-RETURN VALVE |
| BLOCK | 9948134 | 20 | 1 | 360 | 10 49 822 5 | HYDR.TUBES INSTALLATION |
| BLOCK | 9948778 | 5 | 2 | 616 | 10 49 830 0 | GOOSENECK BOOM 6,70M |

| Description | Item | Pos. | Quantity | Page | Assembly | Description |
|---|---|---|---|---|---|---|
| BLOCK | 9948784 | 15 | 1 | 656 | 99 48 785 | HYDR.CYLINDER W/ADDITION. |
| BODY | 9015190 | 3 | 1 | 53 | 90 15 155 | GREASE TENSIONER |
| BODY-BOUND RIVET | 7024438 | 220 | 2 | 414 | 70 28 769 | DRIVER'S CAB DOOR |
| BODY-BOUND RIVET | 7024438 | 200 | 12 | 432 | 10 48 808 8 | INTERNAL LINING |
| BONNET LEFT | 10081683 | 30 | 1 | 372 | 10 35 800 4 | PANELLING |
| BONNET LEFT | 10081684 | 2 | 1 | 383 | 10 08 168 3 | BONNET LEFT |
| BONNET RIGHT | 9929189 | 20 | 1 | 372 | 10 35 800 4 | PANELLING |
| BONNET RIGHT | 9929190 | 2 | 1 | 382 | 99 29 189 | BONNET RIGHT |
| BOTTOM PLATE MOUNTING | 9879063 | 30 | 1 | 223 | 10 49 872 7 | DRIVER STAND |
| BOW-TYPE CLAMP | 7369271 | 17 | 1 | 104 | 10 35 800 6 | EXHAUST GAS SYSTEM |
| BOW-TYPE CLAMP A 106 A3C | 7621247 | 18 | 1 | 104 | 10 35 800 6 | EXHAUST GAS SYSTEM |
| BOX NUT M 22X1,5 | 9075763 | 2 | 1 | 534 | 90 75 395 | PRESSURE ADAPTER ASS. |
| BRACKET | 10037722 | 26 | 8 | 214 | 10 04 966 3 | CENTRAL LUBRICATING SYS |
| BRACKET | 10037722 | 5 | 12 | 624 | 10 38 408 5 | CENTRAL LUBRICATING SYS |
| BRACKET | 10037722 | 10 | 15 | 631 | 10 38 484 8 | CENTRAL LUBRICATING SYS |
| BRACKET | 10037722 | 25 | 2 | 632 | 10 38 484 8 | CENTRAL LUBRICATING SYS |
| BRACKET | 10037723 | 21 | 4 | 214 | 10 04 966 3 | CENTRAL LUBRICATING SYS |
| BRACKET | 10037723 | 8 | 25 | 624 | 10 38 408 5 | CENTRAL LUBRICATING SYS |
| BRACKET | 10037723 | 13 | 7 | 631 | 10 38 484 8 | CENTRAL LUBRICATING SYS |
| BRACKET | 10037723 | 16 | 4 | 631 | 10 38 484 8 | CENTRAL LUBRICATING SYS |
| BRACKET | 7028838 | 160 | 1 | 414 | 70 28 769 | DRIVER'S CAB DOOR |
| BRACKET | 7028872 | 450 | 1 | 421 | 10 48 808 7 | ELECTRICAL INSTALLATION |
| BRACKET | 9408711 | 290 | 1 | 428 | 10 29 026 4 | ASSY. PARTS |
| BRACKET | 9943105 | 47 | 1 | 268 | 10 05 981 8 | FOOT PILOT VALVE INSTALL |
| BRACKET | 9943365 | 46 | 1 | 268 | 10 05 981 8 | FOOT PILOT VALVE INSTALL |
| BRACKET FRONT LEFT | 10049422 | 11 | 1 | 98 | 10 04 942 6 | MOTOR SUPPORT |
| BRACKET FRONT RIGHT | 10049423 | 12 | 1 | 98 | 10 04 942 6 | MOTOR SUPPORT |
| BRACKET REAR LEFT | 9937293 | 13 | 1 | 98 | 10 04 942 6 | MOTOR SUPPORT |
| BRACKET REAR RIGHT | 9937294 | 14 | 1 | 98 | 10 04 942 6 | MOTOR SUPPORT |
| BRAKE | 933333301 | 70 | 1 | 185 | 90 01 790 0 | SLEWING DRIVE SAT 375/250 |
| BRAKE HOUSING | 933333401 | 1 | 1 | 191 | 93 33 333 01 | BRAKE |
| BRAKE MULTI-DISC SET | 968580201 | 960 | 1 | 187 | 90 01 790 0 | SLEWING DRIVE SAT 375/250 |
| BRAKE PISTON | 10014067 | 1 | 1 | 129 | 70 28 176 | BRAKE PISTON |
| BRAKE PISTON | 7028176 | 10 | 2 | 147 | 70 28 075 | CONTROL UNIT |
| BREECH PLATE | 7371025 | 8 | 1 | 315 | 10 04 272 9 | OIL PILOT VALVE |
| BUFFER | 5004748 | 4 | 2 | 462 | 10 37 283 6 | LID |
| BULKHEAD PLATE | 10369198 | 40 | 1 | 632 | 10 38 484 8 | CENTRAL LUBRICATING SYS |
| BULKHEAD STUD | 7368105 | 36 | 1 | 632 | 10 38 484 8 | CENTRAL LUBRICATING SYS |
| BULKHEAD STUD | 7368106 | 14 | 5 | 624 | 10 38 408 5 | CENTRAL LUBRICATING SYS |
| BULKHEAD STUD | 7368106 | 23 | 2 | 632 | 10 38 484 8 | CENTRAL LUBRICATING SYS |
| BULKHEAD STUD SV 12S | 4901150 | 66 | 1 | 620 | 10 49 830 0 | GOOSENECK BOOM 6,70M |
| BULKHEAD STUD SV 35L M45X | 7368109 | 205 | 1 | 306 | 10 35 801 4 | HYDR.SUCT.+RETURN OIL HO |
| BURR FASTENING TAPE | 10022776 | 20 | 1 | 285 | 10 02 211 7 | AIR CIRCULATION CASE |
| BUSHING | 10022782 | 12 | 2 | 285 | 10 02 211 7 | AIR CIRCULATION CASE |
| BUSHING | 10031949 | 2 | 2 | 60 | 10 00 966 2 | GUIDE WHEEL D7G/B7B |
| BUSHING | 10216741 | 43 | 1 | 116 | 10 22 041 1 | CONNECTING PLATE |
| BUSHING | 10409084 | 5 | 2 | 638 | 10 35 789 8 | CONNECTING LINK |
| BUSHING | 10409093 | 3 | 2 | 629 | 10 49 823 6 | STICK 2,35M |
| BUSHING | 10820141 | 5 | 2 | 629 | 10 49 823 6 | STICK 2,35M |
| BUSHING | 10820862 | 7 | 2 | 629 | 10 49 823 6 | STICK 2,35M |
| BUSHING | 10820862 | 3 | 2 | 638 | 10 35 789 8 | CONNECTING LINK |
| BUSHING | 11003782 | 2 | 2 | 58 | 10 65 168 0 | TRACK ROLLER D7 |
| BUSHING | 11003782 | 2 | 2 | 59 | 11 60 010 7 | TRACK ROLLER D7 |
| BUSHING | 7019122 | 350 | 2 | 428 | 10 29 026 4 | ASSY. PARTS |
| BUSHING | 7020573 | 39 | 1 | 367 | 10 28 962 9 | VALVE |
| BUSHING | 7028816 | 290 | 1 | 412 | 70 28 807 | LOCK,RIGHT HAND |
| BUSHING | 7028816 | 290 | 1 | 413 | 70 28 808 | LOCK,LEFT HAND |
| BUSHING | 7362583 | 5 | 2 | 275 | 94 76 369 | FOOT PEDAL LEFT ASSEMBL |
| BUSHING | 7362583 | 5 | 2 | 276 | 94 76 441 | FOOT PEDAL RIGHT ASSEMBL |
| BUSHING | 7369135 | 46 | 1 | 366 | 10 03 245 2 | CONTROL BLOCK |

| Description | Item | Pos. | Quantity | Page | Assembly | Description |
|---|---|---|---|---|---|---|
| BUSHING | 9265394 | 2 | 1 | 266 | 90 74 482 | REPAIR SET PLUNGER |
| BUSHING | 9265394 | 14 | 2 | 271 | 90 79 258 | PILOT CONTROL UNIT VG7 2-3 |
| BUSHING | 9265394 | 14 | 2 | 273 | 90 79 259 | PILOT CONTROL UNIT VG7 2-3 |
| BUSHING | 9265394 | 2 | 1 | 278 | 92 65 665 | REPAIR SET PLUNGER |
| BUSHING | 9266235 | 10 | 1 | 76 | 92 67 037 | PRESSURE LIMITING VALVE |
| BUSHING | 9266524 | 11 | 9 | 194 | 92 73 050 | CYLINDER WITH BUSH |
| BUSHING | 9390503 | 14 | 2 | 178 | 10 35 800 9 | ENGINE ADD-ON PARTS |
| BUSHING B1 140/170X206 | 10820174 | 3 | 2 | 621 | 10 49 830 1 | GOOSENECK BOOM 6,70M |
| BUSHING SPIRAL 120/150X105 | 9233882 | 1 | 2 | 657 | 94 02 019 4 | HYDRAULIC CYLINDER |
| BUSHING SPIRAL 120/150X105 | 9233882 | 1 | 2 | 658 | 95 87 580 | HYDRAULIC CYLINDER |
| BUSHING SPIRAL 120/150X105 | 9233882 | 1 | 2 | 659 | 95 96 399 | HYDRAULIC CYLINDER |
| BUTT STRAP | 10429055 | 30 | 1 | 408 | 70 28 788 | SEAL |
| BUTTON 1 | 10040322 | 25 | 2 | 245 | 10 46 991 7 | PUSH-BUTTON COVER LEFT |
| BUTTON 1 | 10040322 | 25 | 2 | 260 | 10 46 991 8 | PUSH-BUTTON COVER RIGHT |
| BUTTON 2 | 10040324 | 30 | 1 | 245 | 10 46 991 7 | PUSH-BUTTON COVER LEFT |
| BUTTON 2 | 10040324 | 30 | 1 | 260 | 10 46 991 8 | PUSH-BUTTON COVER RIGHT |
| BUZZER | 6000578 | 37 | 1 | 229 | 10 49 880 9 | DRIVER STAND BASE SECTIO |
| CAB BOTTOM PLATE | 9010347 | 10 | 1 | 229 | 10 49 880 9 | DRIVER STAND BASE SECTIO |
| CAB ROOF | 10020982 | 690 | 1 | 429 | 10 29 026 4 | ASSY. PARTS |
| CABLE | 10493344 | 34 | 1 | 233 | 11 10 016 6 | SEAT TOP |
| CABLE ANTENNA EXTENSION | 6204404 | 150 | 1 | 230 | 10 49 880 9 | DRIVER STAND BASE SECTIO |
| CABLE BOOM MOUNTING | 9080982 | 580 | 1 | 476 | 10 11 668 5 | DIESEL ENGINE D936 L A6 240 |
| CABLE CHANNEL | 10841508 | 60 | 1 | 230 | 10 49 880 9 | DRIVER STAND BASE SECTIO |
| CABLE CLAMP M.STECKFUSS | 10023106 | 11 | 2 | 285 | 10 02 211 7 | AIR CIRCULATION CASE |
| CABLE CLIP | 10044344 | 792 | 1 | 421 | 10 48 808 7 | ELECTRICAL INSTALLATION |
| CABLE CLIP | 7362507 | 97 | 4 | 251 | 10 84 086 6 | ARM REST RIGHT |
| CABLE GLAND | 10014688 | 5 | 2 | 678 | 10 01 468 0 | MOTOR HOUSING |
| CABLE LOOM | 10006617 | 80 | 1 | 280 | 10 40 689 8 | AIR CONDITIONING UNIT |
| CABLE LOOM | 6204634 | 46 | 1 | 237 | 10 38 502 4 | ARM REST LEFT |
| CABLE LOOM A100-A1008 | 9699736 | 55 | 1 | 652 | 10 35 860 1 | TRAVEL ALARM |
| CABLE LOOM A1010-A1001 | 10822179 | 91 | 1 | 251 | 10 84 086 6 | ARM REST RIGHT |
| CABLE LOOM A1010-A1011 | 9893072 | 23 | 1 | 237 | 10 38 502 4 | ARM REST LEFT |
| CABLE LOOM A1010-U16 | 9949686 | 94 | 1 | 251 | 10 84 086 6 | ARM REST RIGHT |
| CABLE LOOM ESP01-BBT | 9768247 | 38 | 1 | 249 | 10 84 086 6 | ARM REST RIGHT |
| CABLE LOOM MP65 - MP61/1 | 10066076 | 20 | 1 | 237 | 10 38 502 4 | ARM REST LEFT |
| CABLE LOOM X1/U16-X1/A100 | 10079010 | 93 | 1 | 251 | 10 84 086 6 | ARM REST RIGHT |
| CABLE LOOM X164-X182 | 10055095 | 138 | 1 | 230 | 10 49 880 9 | DRIVER STAND BASE SECTIO |
| CABLE LOOM X182-2/S84-1 | 10057843 | 92 | 1 | 251 | 10 84 086 6 | ARM REST RIGHT |
| CABLE LOOM X182-2/S84-1 | 10059466 | 60 | 1 | 680 | 10 49 822 9 | FULL AUTOMAT.CENTRAL.LU |
| CABLE LOOM X66-X734 | 10079846 | 95 | 1 | 251 | 10 84 086 6 | ARM REST RIGHT |
| CABLE PROTECTION SWITCH | 6202944 | 19 | 1 | 442 | 99 47 695 | ELECTRICAL SYSTEM E50 |
| CABLE PROTECTION SWITCH | 6203687 | 21 | 1 | 442 | 99 47 695 | ELECTRICAL SYSTEM E50 |
| CABLE SLEEVE 14,0/15,7/19 | 6202703 | 24 | 2 | 237 | 10 38 502 4 | ARM REST LEFT |
| CABLE SLEEVE 8,5/14/20 | 7362986 | 25 | 7 | 237 | 10 38 502 4 | ARM REST LEFT |
| CABLE TIE | 11002474 | 35 | 8 | 287 | 11 00 359 4 | HOUSING |
| CABLE TIE | 7002480 | 20 | 1 | 244 | 10 05 879 2 | MANIPULATOR LEFT |
| CABLE TIE | 7002480 | 20 | 1 | 259 | 10 05 879 4 | MANIPULATOR RIGHT |
| CABLE TIE | 7005587 | 95 | 4 | 102 | 99 37 298 | AIR FILTER INSTALLATION |
| CABLE TIE | 7005587 | 80 | 5 | 163 | 10 35 809 2 | ENGINE COOLING |
| CABLE TIE | 7009088 | 31 | 1 | 244 | 10 05 879 2 | MANIPULATOR LEFT |
| CABLE TIE | 7009088 | 31 | 1 | 259 | 10 05 879 4 | MANIPULATOR RIGHT |
| CAGE | 10216468 | 32 | 1 | 114 | 10 22 040 9 | DRIVING GEAR |
| CAMS SHAFT | 10119424 | 1 | 1 | 517 | 90 80 713 | CAMSHAFT CPL. |
| CAMS SHAFT BUSH | 9073745 | 10 | 7 | 478 | 10 11 577 8 | CRANKCASE |
| CAMSHAFT CPL. | 9080713 | 100 | 1 | 471 | 10 11 668 5 | DIESEL ENGINE D936 L A6 240 |
| CAP | 10291971 | 2 | 1 | 138 | 10 28 914 6 | PRESSURE LIMITING VALVE |
| CAP LH-SCHALTHEBEL | 10040326 | 20 | 1 | 260 | 10 46 991 8 | PUSH-BUTTON COVER RIGHT |
| CAP LH-SCHALTHEBEL | 10040327 | 20 | 1 | 245 | 10 46 991 7 | PUSH-BUTTON COVER LEFT |
| CAP NUT | 10278642 | 135 | 1 | 653 | 10 00 297 1 | PIPE FRACTION SAFETY VALV |
| CAP NUT | 7028908 | 650 | 5 | 429 | 10 29 026 4 | ASSY. PARTS |

| Description | Item | Pos. | Quantity | Page | Assembly | Description |
|---|---|---|---|---|---|---|
| CARRIER RAIL | 9874961 | 3 | 1 | 242 | 98 74 988 | PLATINES INSTALLATION A101 |
| CARRYING ROLLER | 721005616 | 50 | 4 | 51 | 10 49 883 7 | UNDERCARRIAGE CPL |
| CASE | 10022119 | 20 | 1 | 280 | 10 40 689 8 | AIR CONDITIONING UNIT |
| CASE | 10022119 | 3 | 1 | 282 | 10 81 666 6 | EVAPORATOR |
| CASING, CPL | 10470128 | 250 | 1 | 432 | 10 48 808 8 | INTERNAL LINING |
| CENTERING PIN | 90018066 | 16 | 1 | 205 | 10 83 653 3 | BALL SLEWING RING INSTALL |
| CENTERING PIN | 9698698 | 2 | 2 | 456 | 99 37 333 | FIXING PARTS |
| CENTRAL ELEMENT MX-F 105 | 7027941 | 7 | 1 | 213 | 10 48 841 6 | DISTRIBUTION BLOCK MX-F 7/ |
| CENTRAL ELEMENT MX-F 105 | 7027941 | 5 | 1 | 216 | 10 10 171 1 | DISTRIBUTION BLOCK MX-F 5/ |
| CENTRAL ELEMENT MX-F 105 | 7027941 | 2 | 1 | 623 | 10 10 171 2 | DISTRIBUTION BLOCK MX-F 5/ |
| CENTRAL ELEMENT MX-F 105 | 7027941 | 3 | 1 | 623 | 10 10 171 2 | DISTRIBUTION BLOCK MX-F 5/ |
| CENTRAL ELEMENT MX-F 105 | 7027941 | 4 | 1 | 623 | 10 10 171 2 | DISTRIBUTION BLOCK MX-F 5/ |
| CENTRAL ELEMENT MX-F 25 | 7027938 | 4 | 1 | 213 | 10 48 841 6 | DISTRIBUTION BLOCK MX-F 7/ |
| CENTRAL ELEMENT MX-F 25 | 7027938 | 5 | 1 | 213 | 10 48 841 6 | DISTRIBUTION BLOCK MX-F 7/ |
| CENTRAL ELEMENT MX-F 25 | 7027938 | 2 | 1 | 216 | 10 10 171 1 | DISTRIBUTION BLOCK MX-F 5/ |
| CENTRAL ELEMENT MX-F 25 | 7027938 | 5 | 1 | 623 | 10 10 171 2 | DISTRIBUTION BLOCK MX-F 5/ |
| CENTRAL ELEMENT MX-F 45 | 7027939 | 2 | 1 | 213 | 10 48 841 6 | DISTRIBUTION BLOCK MX-F 7/ |
| CENTRAL ELEMENT MX-F 45 | 7027939 | 3 | 1 | 213 | 10 48 841 6 | DISTRIBUTION BLOCK MX-F 7/ |
| CENTRAL ELEMENT MX-F 45 | 7027939 | 6 | 1 | 213 | 10 48 841 6 | DISTRIBUTION BLOCK MX-F 7/ |
| CENTRAL ELEMENT MX-F 45 | 7027939 | 3 | 1 | 216 | 10 10 171 1 | DISTRIBUTION BLOCK MX-F 5/ |
| CENTRAL ELEMENT MX-F 45 | 7027939 | 4 | 1 | 216 | 10 10 171 1 | DISTRIBUTION BLOCK MX-F 5/ |
| CENTRAL ELEMENT SXE-2 | 10013837 | 2 | 4 | 212 | 10 48 840 4 | DISTRIBUTION BLOCK SXE-2 |
| CENTRAL LUBRICATING SYS | 10049663 | 3 | 1 | 208 | 99 46 039 | CENTRALIZED LUBRICATION |
| CENTRAL LUBRICATING SYS | 10384085 | 50 | 1 | 619 | 10 49 830 0 | GOOSENECK BOOM 6,70M |
| CENTRAL LUBRICATING SYS | 10384086 | 100 | 1 | 624 | 10 38 408 5 | CENTRAL LUBRICATING SYS |
| CENTRAL LUBRICATING SYS | 10384848 | 15 | 1 | 628 | 10 49 823 5 | STICK 2,35M |
| CENTRALIZED LUBRICATION | 9946039 | 1400 | 1 | 85 | 10 35 798 2 | UPPERCARRIAGE |
| CHAIN | 7024630 | 26 | 1 | 321 | 10 28 046 1 | CONTROL SOLENOID VALVE |
| CHAIN END LINK | 5617975 | 10 | 1 | 54 | 10 03 773 9 | NAKED CRAWLER CHAIN |
| CHAIN GUIDE | 11102315 | 2 | 8 | 676 | 11 10 231 4 | TRACK GUIDES FOUR TIMES |
| CHAIN LINK | 5617099 | 10 | 1 | 56 | 56 18 101 | MASTER LINK ASSY |
| CHAIN LINK | 5617100 | 20 | 1 | 56 | 56 18 101 | MASTER LINK ASSY |
| CHANNEL | 10024192 | 500 | 1 | 433 | 10 48 808 8 | INTERNAL LINING |
| CHANNEL REAR LEFT | 10009183 | 300 | 1 | 433 | 10 48 808 8 | INTERNAL LINING |
| CHANNEL REAR RIGHT | 10014497 | 310 | 1 | 433 | 10 48 808 8 | INTERNAL LINING |
| CHARGE AIR COOLER | 10331661 | 48 | 1 | 165 | 10 45 475 2 | COMBINATED RADIATOR |
| CHECK SCREW M12X1,5 | 5609333 | 131 | 1 | 366 | 10 03 245 2 | CONTROL BLOCK |
| CHECK SCREW M12X1X77,6 | 10278641 | 132 | 1 | 653 | 10 00 297 1 | PIPE FRACTION SAFETY VALV |
| CIGAR LIGHTER | 7369377 | 80 | 1 | 238 | 10 38 502 4 | ARM REST LEFT |
| CIRCLIP 10 | 4600033 | 42 | 3 | 229 | 10 49 880 9 | DRIVER STAND BASE SECTIO |
| CIRCLIP 6 | 4600031 | 70 | 3 | 64 | 91 41 597 | ROTARY FEED THROUGH |
| CIRCLIP B 6 | 4600218 | 4 | 4 | 99 | 73 67 136 | SCREW FITTING BFW 35L |
| CIRCLIP B 6 | 4600218 | 4 | 4 | 168 | 52 11 460 | ANGLE FLANGE SCREWED UN |
| CIRCULATING AIR GRID | 10022771 | 1 | 1 | 290 | 10 02 277 7 | CIRCULATING AIR GRID |
| CIRCULATING AIR GRID | 10022777 | 19 | 1 | 285 | 10 02 211 7 | AIR CIRCULATION CASE |
| CLAMP | 10037728 | 20 | 4 | 214 | 10 04 966 3 | CENTRAL LUBRICATING SYS |
| CLAMP | 10037728 | 7 | 25 | 624 | 10 38 408 5 | CENTRAL LUBRICATING SYS |
| CLAMP | 10037728 | 15 | 4 | 631 | 10 38 484 8 | CENTRAL LUBRICATING SYS |
| CLAMP | 10064288 | 60 | 1 | 672 | 10 49 815 8 | HOIST CYLINDERS |
| CLAMP | 10287276 | 1 | 4 | 103 | 10 03 980 3 | AIR FILTER |
| CLAMP | 10385490 | 63 | 1 | 672 | 10 49 815 8 | HOIST CYLINDERS |
| CLAMP | 7373592 | 1 | 4 | 434 | 10 47 012 8 | CASING, CPL |
| CLAMP | 9368525 | 225 | 6 | 306 | 10 35 801 4 | HYDR.SUCT.+RETURN OIL HO |
| CLAMP | 9490869 | 45 | 2 | 309 | 10 35 801 3 | HYDR.AND GEAR OIL COOLIN |
| CLAMP - ADD-ON UNIT | 10117268 | 218 | 1 | 473 | 10 11 668 5 | DIESEL ENGINE D936 L A6 240 |
| CLAMP - ADD-ON UNIT | 10119127 | 2 | 1 | 482 | 10 11 916 7 | CRANKCASE BREATHER ASSE |
| CLAMP FITTING EQUIPM. PRE | 9887461 | 3 | 1 | 559 | 10 11 646 4 | AIR COND. COMPRESSOR A |
| CLAMP HRBGS 0A G 11 TPE73 | 10037727 | 12 | 7 | 631 | 10 38 484 8 | CENTRAL LUBRICATING SYS |
| CLAMP HRBGS 1 G 8 8 | 10037726 | 25 | 8 | 214 | 10 04 966 3 | CENTRAL LUBRICATING SYS |
| CLAMP HRBGS 1 G 8 8 | 10037726 | 9 | 15 | 631 | 10 38 484 8 | CENTRAL LUBRICATING SYS |

| Description | Item | Pos. | Quantity | Page | Assembly | Description |
|---|---|---|---|---|---|---|
| CLAMP HRGBS 1 G 11 11 TPE7 | 10037724 | 4 | 12 | 624 | 10 38 408 5 | CENTRAL LUBRICATING SYS |
| CLAMP HRGBS 1 G 11 11 TPE7 | 10037724 | 24 | 2 | 632 | 10 38 484 8 | CENTRAL LUBRICATING SYS |
| CLAMP-HALF AEHNL.DIN 3015 | 7367236 | 160 | 8 | 295 | 10 35 801 2 | HYDR.PUMPS TO SPOOL VALV |
| CLAMP-HALF AEHNL.DIN 3015 | 7367236 | 300 | 4 | 296 | 10 35 801 2 | HYDR.PUMPS TO SPOOL VALV |
| CLAMP-HALF AEHNL.DIN 3015 | 7367236 | 45 | 8 | 301 | 10 35 801 5 | HYDR.ROTARY CONNEC.+SWI |
| CLAMP-HALF AEHNL.DIN 3015 | 7365069 | 9 | 2 | 207 | 99 46 408 | GREASE PIPE INSTALLATION |
| CLAMPING BRACKET | 9388848 | 41 | 1 | 249 | 10 84 086 6 | ARM REST RIGHT |
| CLAMPING PROFILE | 7014524 | 17 | 1 | 388 | 10 07 307 3 | SIDE DOOR RIGHT |
| CLAMPING PROFILE | 7014524 | 17 | 1 | 389 | 10 37 283 9 | SIDE DOOR RIGHT |
| CLAMPING PROFILE | 7027986 | 10 | 1 | 166 | 99 37 297 | COOLER SEALING |
| CLAMPING RING | 9880288 | 19 | 2 | 690 | 98 82 766 | ADJUSTMENT |
| CLAMPING SLEEVE | 10031950 | 7 | 2 | 60 | 10 00 966 2 | GUIDE WHEEL D7G/B7B |
| CLAMPING STRIP | 9903712 | 122 | 2 | 376 | 10 35 800 4 | PANELLING |
| CLIMATIC CAPCAITOR UKD 21 | 10005670 | 2 | 1 | 180 | 10 04 871 3 | AIR CONDIT.CONDENSER IN |
| CLIP | 10412536 | 10 | 27 | 379 | 10 08 167 3 | ENGINE BONNET |
| CLIP | 10412536 | 5 | 40 | 380 | 99 27 477 | SOUND PROOFING |
| CLIP | 10412536 | 13 | 40 | 381 | 99 49 428 | COOLER COWL |
| CLIP | 10412536 | 8 | 40 | 382 | 99 29 189 | BONNET RIGHT |
| CLIP | 10412536 | 6 | 26 | 383 | 10 08 168 3 | BONNET LEFT |
| CLIP | 10412536 | 7 | 28 | 384 | 10 35 817 2 | SIDE DOOR BACK LEFT |
| CLIP | 10412536 | 4 | 108 | 385 | 99 45 269 | SCOOP |
| CLIP | 10412536 | 7 | 20 | 386 | 10 35 792 6 | SIDE DOOR MIDDLE LEFT |
| CLIP | 10412536 | 4 | 72 | 387 | 99 27 471 | SCOOP |
| CLIP | 10412536 | 8 | 48 | 388 | 10 07 307 3 | SIDE DOOR RIGHT |
| CLIP | 10412536 | 8 | 48 | 389 | 10 37 283 9 | SIDE DOOR RIGHT |
| CLIP | 10412536 | 4 | 9 | 396 | 99 47 957 | PARTITION |
| CLIP | 10412536 | 7 | 13 | 398 | 10 35 853 1 | SIDE DOOR FRONT LEFT |
| CLIP | 10412536 | 7 | 13 | 399 | 99 47 961 | SIDE DOOR FRONT LEFT |
| CLIPS | 7369754 | 2 | 2 | 283 | 10 02 206 9 | EVAPORATOR HOUSING |
| CLOSING PIN | 7028896 | 300 | 1 | 428 | 10 29 026 4 | ASSY. PARTS |
| CLOSING RING | 9265424 | 17 | 1 | 204 | 92 73 048 | SEAL KIT |
| CLOSING RING | 9279374 | 17 | 1 | 77 | 92 68 751 | REPAIR KIT LOCK RING |
| CLOSING RING | 9279374 | 17 | 1 | 128 | 98 89 282 | REPAIR KIT SHAFT |
| CLOSING RING | 9443229 | 10 | 1 | 191 | 93 33 333 01 | BRAKE |
| CLOSING RING | 9885628 | 17 | 1 | 149 | 90 73 158 | REPAIR KIT SHAFT |
| CLOSING RING | 9885628 | 17 | 1 | 197 | 90 74 285 | REPAIR KIT SHAFT |
| CLOSING RING | 9885628 | 17 | 1 | 697 | 92 68 016 | REPAIR KIT LOCK RING |
| COAT HOOK | 7019131 | 640 | 1 | 429 | 10 29 026 4 | ASSY. PARTS |
| CODING PLUG | 989150801 | 7 | 1 | 435 | 10 35 814 1 | ELECTRICAL SYSTEM |
| COIL | 10101523 | 157 | 1 | 642 | 10 00 348 5 | DIRECTIONAL CONTROL VALV |
| COLD STAR VALVE | 10220816 | 2 | 1 | 136 | 10 22 070 1 | FILTER HEAD |
| COLLAR JOINT | 7028342 | 4 | 1 | 338 | 56 17 689 | SHUT OFF DEVICE DN 100 |
| COMBI PLIERS | 11162134 | 120 | 1 | 459 | 10 84 856 2 | TOOL EQUIPMENT |
| COMBINATED RADIATOR | 10454752 | 5 | 1 | 160 | 10 35 809 2 | ENGINE COOLING |
| COMPRESSION RING 10X343/ | 932856101 | 61 | 2 | 185 | 90 01 790 0 | SLEWING DRIVE SAT 375/250 |
| COMPRESSOR CPL. | 10492985 | 10 | 1 | 235 | 11 10 016 7 | SUSPENSION |
| CONDENSER FRAME | 10467239 | 43 | 1 | 165 | 10 45 475 2 | COMBINATED RADIATOR |
| CONNECTING BRANCH ADD-O | 9077279 | 221 | 1 | 473 | 10 11 668 5 | DIESEL ENGINE D936 L A6 240 |
| CONNECTING ELEMENT | 9064786 | 998 | 1 | 210 | 10 48 840 8 | DISTRIBUTION BLOCK MX-F 7/ |
| CONNECTING LINE | 9079963 | 2 | 1 | 552 | 10 12 190 8 | CONNECTING LINE ADD-ON |
| CONNECTING LINE | 9079963 | 2 | 1 | 553 | 90 79 964 | CONNECTING LINE ADD-ON |
| CONNECTING LINE 3X1 0,50m | 10014690 | 7 | 1 | 678 | 10 01 468 0 | MOTOR HOUSING |
| CONNECTING LINE 3X2,5 0,80 | 10014589 | 10 | 1 | 211 | 10 00 933 0 | PROXIMITY SWITCH |
| CONNECTING LINE ADD-ON | 10121908 | 230 | 1 | 473 | 10 11 668 5 | DIESEL ENGINE D936 L A6 240 |
| CONNECTING LINE ADD-ON | 9079964 | 230 | 1 | 473 | 10 11 668 5 | DIESEL ENGINE D936 L A6 240 |
| CONNECTING LINK | 10357898 | 5 | 1 | 628 | 10 49 823 5 | STICK 2,35M |
| CONNECTING PIECE | 10014699 | 16 | 1 | 681 | 10 28 689 7 | LUBRICATION PUMP |
| CONNECTING PIECE PRE-ASS | 9079580 | 217 | 1 | 473 | 10 11 668 5 | DIESEL ENGINE D936 L A6 240 |
| CONNECTING PLATE | 10008084 | 6 | 1 | 139 | 10 35 572 4 | HYDRAULIC PUMP |
| CONNECTING PLATE | 10220411 | 3 | 1 | 122 | 56 16 530 | AXIAL PISTON PUMP |

| Description | Item | Pos. | Quantity | Page | Assembly | Description |
|---|---|---|---|---|---|---|
| CONNECTING PLATE | 10220636 | 5 | 1 | 116 | 10 22 041 1 | CONNECTING PLATE |
| CONNECTING PLATE | 10413015 | 6 | 1 | 121 | 10 41 301 3 | HYDRAULIC PUMP |
| CONNECTING PLATE | 7013559 | 475 | 1 | 353 | 10 35 802 8 | CONTROL VALVE INSTALLAT |
| CONNECTING PLATE | 9072990 | 3 | 1 | 188 | 90 72 100 | HYDRAULIC INSTALLATION |
| CONNECTING PLATE | 9072991 | 11 | 1 | 196 | 90 72 990 | CONNECTING PLATE |
| CONNECTING PLATE | 9073356 | 11 | 1 | 689 | 90 73 355 | CONNECTING PLATE FMV 140 |
| CONNECTING PLATE | 9075124 | 10 | 1 | 692 | 98 88 308 | CONNECTING PLATE |
| CONNECTING PLATE | 9888308 | 3 | 1 | 686 | 10 13 268 6 | HYDRAULIC VARIABLE DISPLA |
| CONNECTING PLATE FMV 140 | 9073355 | 3 | 1 | 73 | 98 89 775 | HYDRAULIC INSTALLATION |
| CONNECTING SLEEVE 3 | 10015495 | 100 | 1 | 247 | 99 68 625 | LH-JOYSTICK LEFT |
| CONNECTING SLEEVE 3 | 10015495 | 100 | 1 | 262 | 99 68 611 | LH-JOYSTICK RIGHT |
| CONNECTION CABLE | 9768248 | 27 | 1 | 249 | 10 84 086 6 | ARM REST RIGHT |
| CONNECTION CARRIER | 9443842 | 1 | 1 | 68 | 94 43 840 | TRAVEL DRIVE FAT 450 P 004 |
| CONNECTION FLANGE D930 | 9079582 | 1 | 1 | 552 | 10 12 190 8 | CONNECTING LINE ADD-ON |
| CONNECTION FLANGE D930 | 9079582 | 1 | 1 | 553 | 90 79 964 | CONNECTING LINE ADD-ON |
| CONNECTION PIECE | 10116576 | 213 | 1 | 472 | 10 11 668 5 | DIESEL ENGINE D936 L A6 240 |
| CONNECTION STUB | 10120009 | 1 | 1 | 551 | 90 77 279 | CONNECTING BRANCH ADD-O |
| CONNECTOR BASE | 6001681 | 978 | 4 | 443 | 99 47 695 | ELECTRICAL SYSTEM E50 |
| CONSOLE | 10049073 | 32 | 1 | 435 | 10 35 814 1 | ELECTRICAL SYSTEM |
| CONSOLE | 10062090 | 3 | 1 | 655 | 10 06 203 8 | HYDRAULIC CYLINDER W/ DIS |
| CONSOLE | 10063343 | 60 | 1 | 619 | 10 49 830 0 | GOOSENECK BOOM 6,70M |
| CONSOLE | 10066863 | 38 | 1 | 170 | 10 49 858 1 | MOTOR-ELEKTRIK |
| CONSOLE | 10072512 | 230 | 1 | 306 | 10 35 801 4 | HYDR.SUCT.+RETURN OIL HO |
| CONSOLE | 10116053 | 9 | 1 | 559 | 10 11 646 4 | AIR COND. COMPRESSOR A |
| CONSOLE | 10374410 | 25 | 1 | 393 | 10 37 938 6 | TOOL BOX |
| CONSOLE | 10498678 | 8 | 2 | 616 | 10 49 830 0 | GOOSENECK BOOM 6,70M |
| CONSOLE | 10842060 | 40 | 1 | 214 | 10 04 966 3 | CENTRAL LUBRICATING SYS |
| CONSOLE | 9013056 | 58 | 1 | 619 | 10 49 830 0 | GOOSENECK BOOM 6,70M |
| CONSOLE | 9356574 | 8 | 1 | 381 | 99 49 428 | COOLER COWL |
| CONSOLE | 9690616 | 80 | 1 | 251 | 10 84 086 6 | ARM REST RIGHT |
| CONSOLE | 9834805 | 141 | 1 | 377 | 10 35 800 4 | PANELLING |
| CONSOLE | 9928149 | 3 | 1 | 616 | 10 49 830 0 | GOOSENECK BOOM 6,70M |
| CONSOLE | 9928151 | 15 | 1 | 624 | 10 38 408 5 | CENTRAL LUBRICATING SYS |
| CONSOLE | 9928152 | 10 | 1 | 624 | 10 38 408 5 | CENTRAL LUBRICATING SYS |
| CONSOLE | 9928413 | 250 | 1 | 296 | 10 35 801 2 | HYDR.PUMPS TO SPOOL VALV |
| CONSOLE | 9928771 | 27 | 1 | 632 | 10 38 484 8 | CENTRAL LUBRICATING SYS |
| CONSOLE | 9945118 | 2 | 1 | 362 | 99 45 116 | PIPE CLAMP |
| CONTAINER COVER | 10016663 | 38 | 1 | 682 | 10 28 689 7 | LUBRICATION PUMP |
| CONTROL | 10036533 | 3 | 1 | 264 | 90 13 811 | EMERGENCY CONTROL CPL |
| CONTROL A.RETURN DISTRI | 10290156 | 63 | 1 | 619 | 10 49 830 0 | GOOSENECK BOOM 6,70M |
| CONTROL BLOCK | 10032452 | 60 | 1 | 346 | 10 35 802 8 | CONTROL VALVE INSTALLAT |
| CONTROL BOX ANNEXE | 10115993 | 571 | 1 | 475 | 10 11 668 5 | DIESEL ENGINE D936 L A6 240 |
| CONTROL BRACKET LEFT IN | 10057362 | 10 | 1 | 237 | 10 38 502 4 | ARM REST LEFT |
| CONTROL CONSOLE RIGHT | 5618923 | 10 | 1 | 249 | 10 84 086 6 | ARM REST RIGHT |
| CONTROL ELEMENT | 10493089 | 13 | 1 | 286 | 11 00 359 4 | HOUSING |
| CONTROL HOSE | 5608732 | 367 | 3 | 351 | 10 35 802 8 | CONTROL VALVE INSTALLAT |
| CONTROL HOSE | 5611206 | 150 | 1 | 314 | 10 35 801 7 | HYDR.INSTAL.CONTROL TUBE |
| CONTROL HOSE | 5611207 | 100 | 1 | 313 | 10 35 801 7 | HYDR.INSTAL.CONTROL TUBE |
| CONTROL HOSE | 5611207 | 110 | 1 | 313 | 10 35 801 7 | HYDR.INSTAL.CONTROL TUBE |
| CONTROL HOSE | 6718632 | 11 | 2 | 84 | 10 07 713 5 | HYDR.INSTALLATION UNDER |
| CONTROL HOSE | 7002561 | 385 | 1 | 314 | 10 35 801 7 | HYDR.INSTAL.CONTROL TUBE |
| CONTROL HOSE | 7002561 | 390 | 1 | 314 | 10 35 801 7 | HYDR.INSTAL.CONTROL TUBE |
| CONTROL HOSE | 7002561 | 455 | 1 | 314 | 10 35 801 7 | HYDR.INSTAL.CONTROL TUBE |
| CONTROL HOSE | 7003684 | 425 | 1 | 353 | 10 35 802 8 | CONTROL VALVE INSTALLAT |
| CONTROL HOSE | 7005314 | 360 | 3 | 351 | 10 35 802 8 | CONTROL VALVE INSTALLAT |
| CONTROL HOSE | 7005314 | 420 | 1 | 353 | 10 35 802 8 | CONTROL VALVE INSTALLAT |
| CONTROL HOSE | 7005314 | 585 | 1 | 354 | 10 35 802 8 | CONTROL VALVE INSTALLAT |
| CONTROL HOSE | 7005665 | 80 | 4 | 343 | 10 84 584 9 | PUMPS + COUPLING INSTALL |
| CONTROL HOSE | 7012436 | 395 | 1 | 352 | 10 35 802 8 | CONTROL VALVE INSTALLAT |
| CONTROL HOSE | 7016608 | 465 | 1 | 314 | 10 35 801 7 | HYDR.INSTAL.CONTROL TUBE |

| Description | Item | Pos. | Quantity | Page | Assembly | Description |
|---|---|---|---|---|---|---|
| CONTROL HOSE | 7402273 | 415 | 1 | 353 | 10 35 802 8 | CONTROL VALVE INSTALLAT |
| CONTROL HOSE | 7402576 | 200 | 1 | 314 | 10 35 801 7 | HYDR.INSTAL.CONTROL TUBE |
| CONTROL HOSE | 7402835 | 20 | 7 | 225 | 10 06 014 6 | HYDR.INSTAL.FOOT BOARD |
| CONTROL HOSE | 7404256 | 575 | 1 | 354 | 10 35 802 8 | CONTROL VALVE INSTALLAT |
| CONTROL HOSE | 7407224 | 400 | 1 | 352 | 10 35 802 8 | CONTROL VALVE INSTALLAT |
| CONTROL HOSE 8X2000 | 7009933 | 5 | 4 | 226 | 99 44 515 | HYDR.INSTAL.ARM REST LEF |
| CONTROL HOSE 8X2000 | 7009933 | 5 | 4 | 227 | 99 44 516 | HYDR.INSTAL.ARM REST RIGH |
| CONTROL HOSE 8X2000 | 7009933 | 385 | 1 | 352 | 10 35 802 8 | CONTROL VALVE INSTALLAT |
| CONTROL HOSE 8X2600 | 10218975 | 370 | 2 | 351 | 10 35 802 8 | CONTROL VALVE INSTALLAT |
| CONTROL HOSE 8X2600 | 7618290 | 372 | 2 | 351 | 10 35 802 8 | CONTROL VALVE INSTALLAT |
| CONTROL HOSE 8X2600 | 7618290 | 590 | 1 | 354 | 10 35 802 8 | CONTROL VALVE INSTALLAT |
| CONTROL HOSE 8X300 | 7403175 | 55 | 1 | 297 | 99 37 312 | OIL PILOT VALVE INSTALLATIO |
| CONTROL HOSE 8X4000 | 7006644 | 365 | 2 | 351 | 10 35 802 8 | CONTROL VALVE INSTALLAT |
| CONTROL HOSE 8X500 | 7005047 | 21 | 2 | 84 | 10 07 713 5 | HYDR.INSTALLATION UNDER |
| CONTROL HOSE 8X500 | 7005047 | 30 | 3 | 225 | 10 06 014 6 | HYDR.INSTAL.FOOT BOARD |
| CONTROL HOSE 8X500 | 7005047 | 565 | 1 | 354 | 10 35 802 8 | CONTROL VALVE INSTALLAT |
| CONTROL PARTS | 9079870 | 110 | 6 | 471 | 10 11 668 5 | DIESEL ENGINE D936 L A6 240 |
| CONTROL PLATE | 10092123 | 22 | 1 | 464 | 10 35 804 3 | SIGNS |
| CONTROL PLATE | 10092123 | 22 | 1 | 467 | 10 49 805 9 | SIGNS |
| CONTROL PLATE | 10288470 | 500 | 1 | 354 | 10 35 802 8 | CONTROL VALVE INSTALLAT |
| CONTROL SOLENOID VALVE | 10280461 | 2 | 1 | 315 | 10 04 272 9 | OIL PILOT VALVE |
| CONTROL UNIT | 7028075 | 5 | 1 | 122 | 56 16 530 | AXIAL PISTON PUMP |
| CONTROL VALVE | 10297873 | 2 | 1 | 142 | 10 41 087 0 | HYDRAULIC PUMP |
| CONTROL VALVE | 10297877 | 1 | 1 | 106 | 10 29 787 3 | CONTROL VALVE |
| CONTROL VALVE INSTALLAT | 10358028 | 7600 | 1 | 85 | 10 35 798 2 | UPPERCARRIAGE |
| CONTROL VALVE NG 140 140 | 9882833 | 4 | 1 | 73 | 98 89 775 | HYDRAULIC INSTALLATION |
| CONTROL VALVES BRACKET | 10087016 | 10 | 1 | 346 | 10 35 802 8 | CONTROL VALVE INSTALLAT |
| COOLANT | 9066465 | 70 | 1 | 10 | 90 66 460 | |
| COOLANT PIPE BEND | 10120000 | 1 | 1 | 566 | 90 79 472 | COOLANT PIPE BEND ADD-ON |
| COOLANT PIPE BEND | 9079473 | 1 | 1 | 567 | 90 79 474 | COOLANT PIPE BEND ADD-ON |
| COOLANT PIPE BEND ADD-ON | 9079472 | 382 | 1 | 474 | 10 11 668 5 | DIESEL ENGINE D936 L A6 240 |
| COOLANT PIPE BEND ADD-ON | 9079474 | 383 | 1 | 474 | 10 11 668 5 | DIESEL ENGINE D936 L A6 240 |
| COOLER COWL | 9949428 | 15 | 1 | 372 | 10 35 800 4 | PANELLING |
| COOLER COWL | 9949429 | 2 | 1 | 381 | 99 49 428 | COOLER COWL |
| COOLER SEALING | 9937297 | 25 | 1 | 161 | 10 35 809 2 | ENGINE COOLING |
| COOLING CIRCUIT PUMP | 5700007 | 80 | 1 | 110 | 90 77 872 | PUMP DISTRIBUTION GEAR |
| COOLING WATER AIR BLEED | 10124218 | 387 | 1 | 474 | 10 11 668 5 | DIESEL ENGINE D936 L A6 240 |
| COPPER PASTE | 10002552 | 132 | 1 | 571 | 10 11 919 9 | HEAT PROTECTION W.FASTEN |
| COPPER PASTE | 10002552 | 132 | 1 | 572 | 10 11 571 8 | HEAT PROTECTION W.FASTEN |
| CORNER PROTECT.PROFILE | 7008157 | 12 | 1.225m | 384 | 10 35 817 2 | SIDE DOOR BACK LEFT |
| CORNER PROTECT.PROFILE | 7008157 | 12 | 0.92m | 386 | 10 35 792 6 | SIDE DOOR MIDDLE LEFT |
| CORNER PROTECT.PROFILE | 7008157 | 16 | 1.34m | 388 | 10 07 307 3 | SIDE DOOR RIGHT |
| CORNER PROTECT.PROFILE | 7008157 | 16 | 1.34m | 389 | 10 37 283 9 | SIDE DOOR RIGHT |
| CORNER PROTECT.PROFILE | 7360171 | 82 | 1.38m | 238 | 10 38 502 4 | ARM REST LEFT |
| CORNER PROTECT.PROFILE | 7360171 | 10 | 0.66m | 382 | 99 29 189 | BONNET RIGHT |
| CORNER PROTECT.PROFILE | 7360171 | 11 | 1.3m | 382 | 99 29 189 | BONNET RIGHT |
| CORNER PROTECT.PROFILE | 7360171 | 13 | 1.225m | 384 | 10 35 817 2 | SIDE DOOR BACK LEFT |
| CORNER PROTECT.PROFILE | 7360171 | 13 | 0.92m | 386 | 10 35 792 6 | SIDE DOOR MIDDLE LEFT |
| CORNER PROTECT.PROFILE | 7360171 | 15 | 1.28m | 388 | 10 07 307 3 | SIDE DOOR RIGHT |
| CORNER PROTECT.PROFILE | 7360171 | 18 | 0.835m | 388 | 10 07 307 3 | SIDE DOOR RIGHT |
| CORNER PROTECT.PROFILE | 7360171 | 15 | 1.28m | 389 | 10 37 283 9 | SIDE DOOR RIGHT |
| CORNER PROTECT.PROFILE | 7360171 | 18 | 0.835m | 389 | 10 37 283 9 | SIDE DOOR RIGHT |
| CORNER PROTECT.PROFILE | 7360171 | 5 | 1.25m | 390 | 10 06 692 0 | TOOL BOX |
| CORNER PROTECT.PROFILE | 7360171 | 5 | 1.25m | 392 | 10 37 938 6 | TOOL BOX |
| COUNTER BRACKET | 9560855 | 45 | 2 | 444 | 11 10 266 2 | BATTERY INSTALLATION |
| COUNTER NUT UNEF1 11/16X1 | 6905277 | 11 | 1 | 442 | 99 47 695 | ELECTRICAL SYSTEM E50 |
| COUNTERSUNK SCREW | 10355737 | 40 | 2 | 139 | 10 35 572 4 | HYDRAULIC PUMP |
| COUNTERSUNK SCREW BN 4 | 10342191 | 4 | 3 | 498 | 10 12 134 5 | RK CRANKSHAFT SEAL D930 |
| COUNTERSUNK SCREW M5X2 | 11067312 | 2 | 14 | 593 | 10 11 790 0 | MOTOR CONTROL DEVICE |
| COUNTERWEIGHT 9T | 10498023 | 2 | 1 | 455 | 10 49 801 8 | COUNTERWEIGHT INSTALLAT |

| Description | Item | Pos. | Quantity | Page | Assembly | Description |
|---|---|---|---|---|---|---|
| COUNTERWEIGHT INSTALLAT | 10498018 | 9500 | 1 | 86 | 10 35 798 2 | UPPERCARRIAGE |
| COUPLING CPL. | 10115771 | 2 | 1 | 559 | 10 11 646 4 | AIR COND. COMPRESSOR A |
| COVER | 10009132 | 140 | 1 | 432 | 10 48 808 8 | INTERNAL LINING |
| COVER | 10009596 | 19 | 1 | 212 | 10 48 840 4 | DISTRIBUTION BLOCK SXE-2 |
| COVER | 10016665 | 41 | 4 | 682 | 10 28 689 7 | LUBRICATION PUMP |
| COVER | 10022051 | 16 | 1 | 286 | 11 00 359 4 | HOUSING |
| COVER | 10116027 | 435 | 1 | 474 | 10 11 668 5 | DIESEL ENGINE D936 L A6 240 |
| COVER | 10119485 | 1 | 1 | 560 | 10 11 949 2 | COVERING ASSEMBLY |
| COVER | 10814727 | 12 | 1 | 233 | 11 10 016 6 | SEAT TOP |
| COVER | 604521501 | 46 | 15 | 241 | 97 58 815 01 | E-BOARD |
| COVER | 7027816 | 37 | 1 | 236 | 11 10 016 7 | SUSPENSION |
| COVER | 7028940 | 130 | 1 | 432 | 10 48 808 8 | INTERNAL LINING |
| COVER CPL | 10492977 | 1 | 1 | 235 | 11 10 016 7 | SUSPENSION |
| COVER F.LNV | 11100087 | 26 | 1 | 233 | 11 10 016 6 | SEAT TOP |
| COVER HOOD | 7370892 | 4 | 1 | 255 | 56 18 923 | CONTROL CONSOLE RIGHT |
| COVER LEFT | 10374017 | 43 | 1 | 618 | 10 49 830 0 | GOOSENECK BOOM 6,70M |
| COVER LEFT | 9947170 | 24 | 1 | 49 | 10 49 883 7 | UNDERCARRIAGE CPL |
| COVER LID | 968461801 | 25 | 1 | 195 | 96 90 213 01 | OIL TANK |
| COVER PLATE | 10008444 | 15 | 1 | 280 | 10 40 689 8 | AIR CONDITIONING UNIT |
| COVER RIGHT | 10358598 | 48 | 1 | 618 | 10 49 830 0 | GOOSENECK BOOM 6,70M |
| COVER RIGHT | 9946250 | 23 | 1 | 49 | 10 49 883 7 | UNDERCARRIAGE CPL |
| COVER UPPER RIGHT | 10009193 | 150 | 1 | 432 | 10 48 808 8 | INTERNAL LINING |
| COVERING ASSEMBLY | 10119492 | 342 | 1 | 473 | 10 11 668 5 | DIESEL ENGINE D936 L A6 240 |
| COVERING IN FRONT | 10060549 | 20 | 1 | 371 | 10 07 369 5 | COVERING ROTATING DECK |
| COVERING LEFT | 10073750 | 10 | 1 | 371 | 10 07 369 5 | COVERING ROTATING DECK |
| COVERING LEFT | 10493986 | 13 | 1 | 233 | 11 10 016 6 | SEAT TOP |
| COVERING RIGHT | 10073785 | 30 | 1 | 371 | 10 07 369 5 | COVERING ROTATING DECK |
| COVERING ROTATING DECK | 10073695 | 8400 | 1 | 86 | 10 35 798 2 | UPPERCARRIAGE |
| COVERS | 10217034 | 220 | 1 | 432 | 10 48 808 8 | INTERNAL LINING |
| COVERS | 10290359 | 210 | 1 | 432 | 10 48 808 8 | INTERNAL LINING |
| COVERS | 10455060 | 284 | 1 | 432 | 10 48 808 8 | INTERNAL LINING |
| CRADLE | 10216693 | 12 | 1 | 114 | 10 22 040 9 | DRIVING GEAR |
| CRANKCASE | 10115733 | 1 | 1 | 478 | 10 11 577 8 | CRANKCASE |
| CRANKCASE | 10115778 | 1 | 1 | 477 | 10 11 577 9 | CRANKCASE CPL. |
| CRANKCASE BREATHER | 9075483 | 1 | 1 | 482 | 10 11 916 7 | CRANKCASE BREATHER ASSE |
| CRANKCASE BREATHER ASSE | 10119167 | 16 | 1 | 469 | 10 11 668 5 | DIESEL ENGINE D936 L A6 240 |
| CRANKCASE CPL. | 10115779 | 10 | 1 | 469 | 10 11 668 5 | DIESEL ENGINE D936 L A6 240 |
| CRANKSHAFT | 10119887 | 1 | 1 | 496 | 90 75 115 | CRANKSHAFT WITH GEAR |
| CRANKSHAFT ADD-ON PARTS | 10116175 | 53 | 1 | 470 | 10 11 668 5 | DIESEL ENGINE D936 L A6 240 |
| CRANKSHAFT WITH GEAR | 9075115 | 50 | 1 | 470 | 10 11 668 5 | DIESEL ENGINE D936 L A6 240 |
| CRAWLER CHAIN 500mm | 10470092 | 2 | 2 | 7 | . | |
| CROWN GEAR | 9267155 | 1 | 1 | 683 | 90 80 918 | FLYWHEEL ASSEMBLY SAE 1 |
| CROWN NUT M64 | 9161348 | 4 | 1 | 644 | 10 06 097 3 | PIN CPL |
| CROWN NUT UNF5/8 | 10040410 | 70 | 2 | 312 | 10 35 809 3 | HYDR.INSTALLATION FAN DR |
| CUP SPRING PILLAR | 11213510 | 11 | 1 | 345 | 10 22 042 7 | DRIVING GEAR |
| CUTTING RING | 10013545 | 161 | 1 | 218 | 90 64 786 | CONNECTING ELEMENT |
| CUTTING RING | 10013545 | 161 | 10 | 220 | 10 01 461 1 | AUXILIARY BOX |
| CYL.NEEDLE BEARING | 7469905 | 32 | 1 | 149 | 90 73 158 | REPAIR KIT SHAFT |
| CYL.NEEDLE BEARING | 7469905 | 32 | 1 | 197 | 90 74 285 | REPAIR KIT SHAFT |
| CYL.ROLLER | 10008299 | 4 | 1 | 129 | 70 28 176 | BRAKE PISTON |
| CYLINDER | 10220455 | 1 | 1 | 345 | 10 22 042 7 | DRIVING GEAR |
| CYLINDER | 10355741 | 2 | 1 | 141 | 10 35 573 8 | DRIVING GEAR |
| CYLINDER | 10413026 | 2 | 1 | 144 | 10 41 302 4 | DRIVING GEAR |
| CYLINDER | 9063420 | 10 | 1 | 658 | 95 87 580 | HYDRAULIC CYLINDER |
| CYLINDER | 9073083 | 40 | 6 | 469 | 10 11 668 5 | DIESEL ENGINE D936 L A6 240 |
| CYLINDER | 9273051 | 10 | 1 | 194 | 92 73 050 | CYLINDER WITH BUSH |
| CYLINDER | 94019254 | 10 | 1 | 657 | 94 02 019 4 | HYDRAULIC CYLINDER |
| CYLINDER | 9596877 | 10 | 1 | 659 | 95 96 399 | HYDRAULIC CYLINDER |
| CYLINDER BUSH | 9080084 | 1 | 1 | 481 | 90 73 083 | CYLINDER |
| CYLINDER HEAD ASSEMBLY | 9079850 | 80 | 6 | 470 | 10 11 668 5 | DIESEL ENGINE D936 L A6 240 |

| Description | Item | Pos. | Quantity | Page | Assembly | Description |
|---|---|---|---|---|---|---|
| CYLINDER HEAD COVER | 10119011 | 1 | 1 | 507 | 10 11 963 6 | CYLINDER HEAD COVER ASS |
| CYLINDER HEAD COVER | 10127488 | 1 | 1 | 505 | 10 11 960 9 | CYLINDER HEAD COVER ASS |
| CYLINDER HEAD COVER | 10127489 | 1 | 1 | 506 | 10 11 961 0 | CYLINDER HEAD COVER ASS |
| CYLINDER HEAD COVER ASS | 10119609 | 83 | 1 | 470 | 10 11 668 5 | DIESEL ENGINE D936 L A6 240 |
| CYLINDER HEAD COVER ASS | 10119610 | 82 | 5 | 470 | 10 11 668 5 | DIESEL ENGINE D936 L A6 240 |
| CYLINDER HEAD COVER ASS | 10119636 | 84 | 1 | 470 | 10 11 668 5 | DIESEL ENGINE D936 L A6 240 |
| CYLINDER HEAD GASKET | 10120844 | 2 | 1 | 503 | 90 79 850 | CYLINDER HEAD ASSEMBLY |
| CYLINDER HEAD GASKET | 10120844 | 1 | 1 | 513 | 10 11 585 1 | SEAL KIT CYLINDER HEAD |
| CYLINDER HEAD GASKET | 10120844 | 1 | 6 | 515 | 10 11 585 3 | SEAL KIT ZYLINDER HEAD CPL |
| CYLINDER HEAD PRE-ASS. | 10119427 | 1 | 1 | 503 | 90 79 850 | CYLINDER HEAD ASSEMBLY |
| CYLINDER HEAD PRE-ASS. | 10120364 | 1 | 1 | 503 | 90 79 850 | CYLINDER HEAD ASSEMBLY |
| CYLINDER HEAD PRE-ASS. | 10141554 | 1 | 1 | 503 | 90 79 850 | CYLINDER HEAD ASSEMBLY |
| CYLINDER SCREW | 10355735 | 27 | 4 | 139 | 10 35 572 4 | HYDRAULIC PUMP |
| CYLINDER WITH BUSH | 9075894 | 1 | 1 | 70 | 90 73 155 | RK CYLINDER+CONTROL PLAT |
| CYLINDER WITH BUSH | 9273050 | 1 | 1 | 198 | 90 74 415 | RK CYLINDER+CONTROL PLAT |
| CYLINDER WITH BUSH | 9273050 | 2 | 1 | 199 | 90 74 416 | REPAIR KIT DRIVING MECHAN |
| CYLINDER WITH BUSH | 9888120 | 1 | 1 | 124 | 90 73 751 | RK CYLINDER+CONTROL PLAT |
| CYLINDRICAL ROLLER BEARIN | 10220430 | 31 | 1 | 114 | 10 22 040 9 | DRIVING GEAR |
| CYLINDRICAL ROLLER BEARIN | 7363121 | 33 | 1 | 128 | 98 89 282 | REPAIR KIT SHAFT |
| CYLINDRICAL ROLLER BEARIN | 7380106 | 33 | 1 | 149 | 90 73 158 | REPAIR KIT SHAFT |
| CYLINDRICAL ROLLER BEARIN | 7380106 | 33 | 1 | 197 | 90 74 285 | REPAIR KIT SHAFT |
| CYLINDRICAL ROLLER BEARIN | 7380326 | 32 | 1 | 128 | 98 89 282 | REPAIR KIT SHAFT |
| CYLINDRICAL ROLLER BEARIN | 7380470 | 29 | 1 | 108 | 90 77 872 | PUMP DISTRIBUTION GEAR |
| CYLINDRICAL ROLLER BEARIN | 7380977 | 13 | 2 | 151 | 90 79 347 | REPAIR SET SWIVEL YOKE LP |
| CYLINDRICAL ROLLER BEARIN | 7610037 | 5 | 1 | 190 | 93 33 329 01 | PLANET WHEEL |
| CYLINDRICAL ROLLER BEARI | 4980687 | 32 | 2 | 108 | 90 77 872 | PUMP DISTRIBUTION GEAR |
| DANGER SIGN DANGER SPOT | 9910464 | 50 | 2 | 464 | 10 35 804 3 | SIGNS |
| DANGER SIGN DANGER SPOT | 9910464 | 50 | 2 | 467 | 10 49 805 9 | SIGNS |
| DELIVERY PUMP | 9078681 | 1 | 1 | 529 | 90 78 680 | FUEL PUMP ASSEMBLY |
| DIAPHRAGM ACCUMULATOR | 5617780 | 2 | 1 | 297 | 99 37 312 | OIL PILOT VALVE INSTALLATIO |
| DIAPHRAGM GROMMET 16/22 | 5607889 | 38 | 1 | 229 | 10 49 880 9 | DRIVER STAND BASE SECTIO |
| DIESEL ENGINE D936 L A6 240 | 10116685 | 10 | 1 | 96 | 10 35 808 9 | MOTOR INSTALLATION |
| DIPSTICK W.TUBE | 9079862 | 21 | 1 | 469 | 10 11 668 5 | DIESEL ENGINE D936 L A6 240 |
| DIRECT-CURRENT MOTOR | 10014691 | 2 | 1 | 681 | 10 28 689 7 | LUBRICATION PUMP |
| DIRECTIONAL CONTROL VALV | 10003485 | 470 | 1 | 353 | 10 35 802 8 | CONTROL VALVE INSTALLAT |
| DIRECTIONAL CONTROL VALV | 10018725 | 2 | 1 | 358 | 10 28 847 0 | CONTROL PLATE |
| DIRECTIONAL CONTROL VALV | 10292692 | 3 | 1 | 358 | 10 28 847 0 | CONTROL PLATE |
| DIRT SCRAPER | 7610551 | 11 | 1 | 191 | 93 33 333 01 | BRAKE |
| DIRT SCRAPER 274X285X3,5 | 7610552 | 12 | 1 | 191 | 93 33 333 01 | BRAKE |
| DISC INSIDE TOOTHED | 9442507 | 63 | 6 | 185 | 90 01 790 0 | SLEWING DRIVE SAT 375/250 |
| DISC INSIDE TOOTHED | 9442507 | 36 | 6 | 193 | 96 85 802 01 | BRAKE MULTI-DISC SET |
| DISC-REST | 10219021 | 57 | 1 | 234 | 11 10 016 6 | SEAT TOP |
| DISCHARGE VALVE | 5613730 | 47 | 1 | 102 | 99 37 298 | AIR FILTER INSTALLATION |
| DISK SEGMENT X50,3X5 | 9275004 | 20 | 2 | 692 | 98 88 308 | CONNECTING PLATE |
| DISPLACEMENT PISTON | 10355826 | 2 | 1 | 139 | 10 35 572 4 | HYDRAULIC PUMP |
| DISPLAY CPL. V4.6.9 | 10840803 | 30 | 1 | 249 | 10 84 086 6 | ARM REST RIGHT |
| DISPLAY SUPPORT | 7373268 | 20 | 1 | 255 | 56 18 923 | CONTROL CONSOLE RIGHT |
| DISTANCE SLEEVE | 9074977 | 4 | 12 | 578 | 10 11 548 0 | EXHAUST PIPE ASSEMBLY |
| DISTANCE SLEEVE | 9692782 | 49 | 4 | 618 | 10 49 830 0 | GOOSENECK BOOM 6,70M |
| DISTANCE SLEEVE 15X20X19 | 9950358 | 11 | 1 | 228 | 99 39 322 | FIXING PARTS |
| DISTANCE SLEEVE 8,5X18X10 | 9132577 | 2 | 4 | 571 | 10 11 919 9 | HEAT PROTECTION W.FASTEN |
| DISTANCE SLEEVE 8,5X18X10 | 9132577 | 20 | 7 | 572 | 10 11 571 8 | HEAT PROTECTION W.FASTEN |
| DISTANCE TUBE | 9275737 | 13 | 2 | 196 | 90 72 990 | CONNECTING PLATE |
| DISTANCE TUBE | 9989595 | 220 | 2 | 176 | 10 49 858 1 | MOTOR-ELEKTRIK |
| DISTANCE TUBE | 9989595 | 23 | 2 | 447 | 10 35 814 3 | AIR CONDITION HOSES INSTA |
| DISTRIBUTION BLOCK MX-F 5/ | 10101694 | 2 | 1 | 624 | 10 38 408 5 | CENTRAL LUBRICATING SYS |
| DISTRIBUTION BLOCK MX-F 5/ | 10101712 | 1 | 1 | 622 | 10 10 169 4 | DISTRIBUTION BLOCK MX-F 5/ |
| DISTRIBUTION BLOCK MX-F 5/ | 10101693 | 15 | 1 | 214 | 10 04 966 3 | CENTRAL LUBRICATING SYS |
| DISTRIBUTION BLOCK MX-F 5/ | 10101711 | 1 | 1 | 215 | 10 10 169 3 | DISTRIBUTION BLOCK MX-F 5/ |
| DISTRIBUTION BLOCK MX-F 7/ | 10488408 | 4 | 1 | 631 | 10 38 484 8 | CENTRAL LUBRICATING SYS |

| Description | Item | Pos. | Quantity | Page | Assembly | Description |
|---|---|---|---|---|---|---|
| DISTRIBUTION BLOCK MX-F 7/ | 10488416 | 1 | 1 | 210 | 10 48 840 8 | DISTRIBUTION BLOCK MX-F 7/ |
| DISTRIBUTION BLOCK SXE-2 | 10488404 | 1 | 1 | 626 | 11 00 350 2 | DISTRIBUTION BLOCK SXE-2 |
| DISTRIBUTION BLOCK SXE-2 | 11003502 | 50 | 1 | 625 | 10 38 408 6 | CENTRAL LUBRICATING SYS |
| DISTRIBUTOR | 10009784 | 17 | 1 | 212 | 10 48 840 4 | DISTRIBUTION BLOCK SXE-2 |
| DISTRIBUTOR | 10100944 | 50 | 1 | 304 | 10 35 801 4 | HYDR.SUCT.+RETURN OIL HO |
| DISTRIBUTOR | 10100944 | 190 | 1 | 306 | 10 35 801 4 | HYDR.SUCT.+RETURN OIL HO |
| DISTRIBUTOR | 10100946 | 12 | 1 | 308 | 10 35 801 3 | HYDR.AND GEAR OIL COOLIN |
| DISTRIBUTOR | 10101615 | 30 | 2 | 313 | 10 35 801 7 | HYDR.INSTAL.CONTROL TUBE |
| DISTRIBUTOR BLOCK | 10116036 | 84 | 1 | 543 | 10 11 628 5 | FUEL LINE |
| DISTRIBUTOR BLOCK | 9681272 | 20 | 2 | 295 | 10 35 801 2 | HYDR.PUMPS TO SPOOL VALV |
| DISTRIBUTOR BRIDGE WITH O | 10013881 | 18 | 1 | 212 | 10 48 840 4 | DISTRIBUTION BLOCK SXE-2 |
| DISTRIBUTOR BRIDGE WITH O | 7622804 | 32 | 2 | 623 | 10 10 171 2 | DISTRIBUTION BLOCK MX-F 5/ |
| DISTRIBUTOR PLATE | 10355739 | 2 | 1 | 140 | 10 35 572 5 | DRIVING GEAR |
| DISTRIBUTOR PLATE | 10413025 | 2 | 1 | 143 | 10 41 301 4 | DRIVING GEAR |
| DOOR FRAME | 7028842 | 110 | 1 | 414 | 70 28 769 | DRIVER'S CAB DOOR |
| DOOR LOCK | 10025254 | 20 | 1 | 388 | 10 07 307 3 | SIDE DOOR RIGHT |
| DOOR LOCK | 10025254 | 3 | 1 | 394 | 10 06 691 8 | LID |
| DOOR LOCK | 10025254 | 10 | 1 | 399 | 99 47 961 | SIDE DOOR FRONT LEFT |
| DOOR LOCK | 10353879 | 20 | 1 | 389 | 10 37 283 9 | SIDE DOOR RIGHT |
| DOOR LOCK | 10353879 | 10 | 1 | 398 | 10 35 853 1 | SIDE DOOR FRONT LEFT |
| DOOR LOCK | 10353879 | 3 | 1 | 462 | 10 37 283 6 | LID |
| DOOR STOPPER | 7019164 | 420 | 1 | 428 | 10 29 026 4 | ASSY. PARTS |
| DOUBLE BANJO BOLT 10X1 | 10115499 | 18 | 1 | 542 | 10 11 628 5 | FUEL LINE |
| DOUBLE BANJO BOLT 6X6 | 10014864 | 9 | 1 | 545 | 10 11 559 5 | LEAK OIL RETURN LINE |
| DOUBLE BLOWER | 10022052 | 26 | 1 | 287 | 11 00 359 4 | HOUSING |
| DOUBLE NON-RETURN VALVE | 10342884 | 525 | 1 | 354 | 10 35 802 8 | CONTROL VALVE INSTALLAT |
| DOUBLE PLUG | 7618568 | 7 | 2 | 136 | 10 22 070 1 | FILTER HEAD |
| DOUBLE PLUG | 7618568 | 34 | 6 | 148 | 70 28 075 | CONTROL UNIT |
| DOUBLE RING SPANNER SW | 11162097 | 60 | 1 | 458 | 10 84 856 2 | TOOL EQUIPMENT |
| DOUBLE RING SPANNER SW | 11162099 | 64 | 1 | 458 | 10 84 856 2 | TOOL EQUIPMENT |
| DOUBLE RING SPANNER SW | 11162100 | 70 | 1 | 458 | 10 84 856 2 | TOOL EQUIPMENT |
| DOUBLE TAPER RING DKR 6 | 7027946 | 3 | 1 | 217 | 90 64 786 | CONNECTING ELEMENT |
| DOUBLE-HEADED SPANNER S | 11162164 | 24 | 1 | 458 | 10 84 856 2 | TOOL EQUIPMENT |
| DOUBLE-HEADED SPANNER S | 11162165 | 26 | 1 | 458 | 10 84 856 2 | TOOL EQUIPMENT |
| DOUBLE-HEADED SPANNER S | 11162167 | 28 | 1 | 458 | 10 84 856 2 | TOOL EQUIPMENT |
| DOUBLE-HEADED SPANNER S | 11162169 | 30 | 1 | 458 | 10 84 856 2 | TOOL EQUIPMENT |
| DOUBLE-HEADED SPANNER S | 11162170 | 32 | 1 | 458 | 10 84 856 2 | TOOL EQUIPMENT |
| DOUBLE-HEADED SPANNER S | 11162171 | 34 | 1 | 458 | 10 84 856 2 | TOOL EQUIPMENT |
| DOUBLE-HEADED SPANNER S | 11162173 | 38 | 1 | 458 | 10 84 856 2 | TOOL EQUIPMENT |
| DOUBLE-HEADED SPANNER S | 11162163 | 22 | 1 | 458 | 10 84 856 2 | TOOL EQUIPMENT |
| DOWEL PIN | 7373742 | 8 | 2 | 58 | 10 65 168 0 | TRACK ROLLER D7 |
| DOWEL PIN | 7373742 | 8 | 2 | 59 | 11 60 010 7 | TRACK ROLLER D7 |
| DOWEL PIN 13 | 10004442 | 7 | 1 | 511 | 90 74 505 | ROCKER ARM BRACKET PRE |
| DOWEL PIN 3 | 4002729 | 31 | 2 | 122 | 56 16 530 | AXIAL PISTON PUMP |
| DOWEL PIN 8 | 4980376 | 5 | 1 | 496 | 90 75 115 | CRANKSHAFT WITH GEAR |
| DRIER INSTALLATION | 10049616 | 10 | 1 | 446 | 10 35 814 2 | AIR CONDITION HOSES INSTA |
| DRIVE SHAFT | 10343074 | 8 | 1 | 139 | 10 35 572 4 | HYDRAULIC PUMP |
| DRIVE SHAFT | 10413017 | 8 | 1 | 121 | 10 41 301 3 | HYDRAULIC PUMP |
| DRIVE SHAFT | 9443859 | 40 | 1 | 69 | 94 43 840 | TRAVEL DRIVE FAT 450 P 004 |
| DRIVE SHAFT Z=53 M=3,5 | 9273036 | 10 | 1 | 108 | 90 77 872 | PUMP DISTRIBUTION GEAR |
| DRIVE SHAFT Z=53 M=3,5 | 9273036 | 10 | 1 | 111 | 92 73 201 | REPAIR KIT DRIVE SHAFT |
| DRIVE-SCREW M36 | 9103255 | 170 | 1 | 459 | 10 84 856 2 | TOOL EQUIPMENT |
| DRIVER | 10014729 | 8 | 1 | 681 | 10 28 689 7 | LUBRICATION PUMP |
| DRIVER | 9948083 | 2 | 1 | 94 | 99 48 085 | DRIVER INSTALLATION |
| DRIVER INSTALLATION | 9948085 | 174 | 1 | 85 | 10 35 798 2 | UPPERCARRIAGE |
| DRIVER STAND | 10498727 | 6000 | 1 | 85 | 10 35 798 2 | UPPERCARRIAGE |
| DRIVER STAND BASE SECTIO | 10498809 | 20 | 1 | 223 | 10 49 872 7 | DRIVER STAND |
| DRIVER'S CAB DOOR | 7028769 | 50 | 1 | 405 | 10 47 616 9 | OPERATOR'S CAB |
| DRIVER'S SEAT WITH PNEUM. | 11000856 | 10 | 1 | 279 | 94 02 247 7 | DRIVERS SEAT |
| DRIVERS SEAT | 94022477 | 50 | 1 | 229 | 10 49 880 9 | DRIVER STAND BASE SECTIO |

| Description | Item | Pos. | Quantity | Page | Assembly | Description |
|---|---|---|---|---|---|---|
| DRIVING GEAR | 10220409 | 1 | 1 | 122 | 56 16 530 | AXIAL PISTON PUMP |
| DRIVING GEAR | 10220427 | 1 | 1 | 114 | 10 22 040 9 | DRIVING GEAR |
| DRIVING GEAR | 10355725 | 1 | 1 | 139 | 10 35 572 4 | HYDRAULIC PUMP |
| DRIVING GEAR | 10355738 | 1 | 1 | 140 | 10 35 572 5 | DRIVING GEAR |
| DRIVING GEAR | 10413014 | 1 | 1 | 121 | 10 41 301 3 | HYDRAULIC PUMP |
| DRIVING GEAR | 10413024 | 1 | 1 | 143 | 10 41 301 4 | DRIVING GEAR |
| DRIVING GEAR | 9073354 | 1 | 1 | 73 | 98 89 775 | HYDRAULIC INSTALLATION |
| DRIVING GEAR NG 125 | 9074061 | 1 | 1 | 188 | 90 72 100 | HYDRAULIC INSTALLATION |
| DRIVING SHAFT | 10216701 | 14 | 1 | 114 | 10 22 040 9 | DRIVING GEAR |
| DRIVING SHAFT | 9073113 | 10 | 1 | 149 | 90 73 158 | REPAIR KIT SHAFT |
| DRIVING SHAFT | 9073951 | 10 | 1 | 197 | 90 74 285 | REPAIR KIT SHAFT |
| DRIVING SHAFT | 9888314 | 10 | 1 | 128 | 98 89 282 | REPAIR KIT SHAFT |
| DSF RING 122X113,36X4 | 10472347 | 5 | 1 | 502 | 90 80 686 | PISTON PRE-ASS. MONOTHER |
| DUST-PROF COVER | 10040064 | 2 | 1 | 559 | 10 11 646 4 | AIR COND. COMPRESSOR A |
| E-BOARD | 975881501 | 40 | 1 | 237 | 10 38 502 4 | ARM REST LEFT |
| E-BOARD | 989165301 | 91 | 1 | 238 | 10 38 502 4 | ARM REST LEFT |
| EARTH CABLE | 10009024 | 770 | 1 | 421 | 10 48 808 7 | ELECTRICAL INSTALLATION |
| EARTH CABLE | 9689583 | 98 | 1 | 251 | 10 84 086 6 | ARM REST RIGHT |
| EARTH CABLE | 9927329 | 10 | 1 | 169 | 10 49 858 1 | MOTOR-ELEKTRIK |
| EARTH STRAP | 6204632 | 130 | 1 | 230 | 10 49 880 9 | DRIVER STAND BASE SECTIO |
| EASY-CHANGE FILTER 9µm | 10297295 | 1 | 2 | 90 | 10 06 948 1 | SERVICE KITS 1500/2500h |
| EASY-CHANGE FILTER 9µm | 10297295 | 8 | 2 | 527 | 90 75 368 | LUBE OIL FILTER ASSEMBLY |
| ECCENTRIC SCREW | 10220418 | 46 | 1 | 122 | 56 16 530 | AXIAL PISTON PUMP |
| EDGE PROTECTION | 9368060 | 470 | 2 | 314 | 10 35 801 7 | HYDR.INSTAL.CONTROL TUBE |
| EEC CERTIFICATE | 9399606 | 97 | 1 | 468 | 10 49 805 9 | SIGNS |
| ELASTOMER INSERT S EL 4 3 | 7363283 | 161 | 4 | 295 | 10 35 801 2 | HYDR.PUMPS TO SPOOL VALV |
| ELECTRIC BOX | 9392651 | 26 | 1 | 237 | 10 38 502 4 | ARM REST LEFT |
| ELECTRIC BOX CPL. | 9948254 | 20 | 1 | 435 | 10 35 814 1 | ELECTRICAL SYSTEM |
| ELECTRIC BOX E50 | 9947707 | 2 | 1 | 441 | 99 48 254 | ELECTRIC BOX CPL. |
| ELECTRIC BOX MOUNTING PA | 10048398 | 30 | 1 | 443 | 99 47 695 | ELECTRICAL SYSTEM E50 |
| ELECTRIC BOX MOUNTING PA | 9948149 | 40 | 1 | 443 | 99 47 695 | ELECTRICAL SYSTEM E50 |
| ELECTRICAL INSTALLATION | 10488087 | 60 | 1 | 405 | 10 47 616 9 | OPERATOR'S CAB |
| ELECTRICAL SYSTEM | 10358141 | 9000 | 1 | 86 | 10 35 798 2 | UPPERCARRIAGE |
| ELECTRICAL SYSTEM E50 | 9947695 | 3 | 1 | 441 | 99 48 254 | ELECTRIC BOX CPL. |
| EMERGENCY CONTROL CPL | 9013811 | 104 | 1 | 251 | 10 84 086 6 | ARM REST RIGHT |
| END BUSHING | 5617103 | 30 | 1 | 56 | 56 18 101 | MASTER LINK ASSY |
| END COVER | 10012263 | 12 | 2 | 147 | 70 28 075 | CONTROL UNIT |
| END COVER | 4980363 | 10 | 3 | 510 | 10 12 038 4 | ZYLINDER HEAD |
| END COVER | 7028178 | 12 | 2 | 147 | 70 28 075 | CONTROL UNIT |
| END COVER | 9144757 | 2 | 1 | 492 | 10 11 903 0 | OIL FILLER INLET D930 |
| END COVER | 9443906 | 45 | 1 | 69 | 94 43 840 | TRAVEL DRIVE FAT 450 P 004 |
| END COVER B | 4001664 | 3 | 12 | 477 | 10 11 577 9 | CRANKCASE CPL. |
| END COVER B | 4980362 | 2 | 5 | 477 | 10 11 577 9 | CRANKCASE CPL. |
| END COVER B | 4981042 | 12 | 1 | 510 | 10 12 038 4 | ZYLINDER HEAD |
| END ELEMENT MX-F 105 | 7027945 | 8 | 1 | 213 | 10 48 841 6 | DISTRIBUTION BLOCK MX-F 7/ |
| END ELEMENT MX-F 105 | 7027945 | 8 | 1 | 216 | 10 10 171 1 | DISTRIBUTION BLOCK MX-F 5/ |
| END ELEMENT MX-F 45 | 7027943 | 8 | 1 | 623 | 10 10 171 2 | DISTRIBUTION BLOCK MX-F 5/ |
| END ELEMENT SXE-2 | 10013839 | 3 | 1 | 212 | 10 48 840 4 | DISTRIBUTION BLOCK SXE-2 |
| END PIECE | 10423838 | 10 | 1 | 418 | 70 29 423 | GLASS PANE FRONT |
| END PIECE | 10423838 | 10 | 1 | 419 | 70 29 424 | GLASS PANE BEHIND |
| END PIECE | 10423840 | 20 | 1 | 418 | 70 29 423 | GLASS PANE FRONT |
| END PIECE | 10423840 | 20 | 1 | 419 | 70 29 424 | GLASS PANE BEHIND |
| END PIECE | 11003780 | 3 | 2 | 58 | 10 65 168 0 | TRACK ROLLER D7 |
| END PIECE | 11003780 | 3 | 2 | 59 | 11 60 010 7 | TRACK ROLLER D7 |
| END PIPE | 7373403 | 15 | 1 | 104 | 10 35 800 6 | EXHAUST GAS SYSTEM |
| ENGINE ADD-ON PARTS | 10358009 | 590 | 1 | 96 | 10 35 808 9 | MOTOR INSTALLATION |
| ENGINE BONNET | 10081673 | 120 | 1 | 376 | 10 35 800 4 | PANELLING |
| ENGINE BONNET | 10081674 | 2 | 1 | 379 | 10 08 167 3 | ENGINE BONNET |
| ENGINE CONTROL SENSORS | 9076551 | 581 | 1 | 476 | 10 11 668 5 | DIESEL ENGINE D936 L A6 240 |
| ENGINE COOLING | 10358092 | 560 | 1 | 96 | 10 35 808 9 | MOTOR INSTALLATION |

| Description | Item | Pos. | Quantity | Page | Assembly | Description |
|---|---|---|---|---|---|---|
| ENGINE FIXING PARTS | 10358007 | 501 | 1 | 96 | 10 35 808 9 | MOTOR INSTALLATION |
| ENGINE OIL LIEBHERR LOW A | 10356797 | 110 | 1l | 13 | 90 70 361 | MOTOR OIL |
| ENGINE OIL LIEBHERR LOW A | 10326110 | 1000 | 1 | 22 | 10 35 679 7 | ENGINE OIL LIEBHERR LOW A |
| ENGINE OIL LIEBHERR LOW A | 10326112 | 20 | 1 | 22 | 10 35 679 7 | ENGINE OIL LIEBHERR LOW A |
| ENGINE OIL LIEBHERR LOW | 10326111 | 210 | 1 | 22 | 10 35 679 7 | ENGINE OIL LIEBHERR LOW A |
| ENGINE OIL LIEBHERR LOW | 10326113 | 5 | 1 | 22 | 10 35 679 7 | ENGINE OIL LIEBHERR LOW A |
| ENGINE OIL LIEBHERR LOW | 11081522 | 100 | 1l | 13 | 90 70 361 | MOTOR OIL |
| ENGINE OIL LIEBHERR LOW | 11066032 | 1045 | 1 | 37 | 11 08 152 2 | ENGINE OIL LIEBHERR LOW |
| ENGINE OIL LIEBHERR LOW A | 11066031 | 209 | 1 | 37 | 11 08 152 2 | ENGINE OIL LIEBHERR LOW |
| ENGINE OIL LIEBHERR LOW | 11066030 | 20 | 1 | 37 | 11 08 152 2 | ENGINE OIL LIEBHERR LOW |
| ENGINE OIL LIEBHERR LOW A | 11066029 | 5 | 1 | 37 | 11 08 152 2 | ENGINE OIL LIEBHERR LOW |
| ENGINE OIL LIEBHERR/10W-4 | 10356793 | 20 | 1l | 13 | 90 70 361 | MOTOR OIL |
| ENGINE OIL LIEBHERR/10W-4 | 10286279 | 1000 | 1 | 21 | 10 35 679 3 | ENGINE OIL LIEBHERR/10W-4 |
| ENGINE OIL LIEBHERR/10W-4 | 10330239 | 20 | 1 | 21 | 10 35 679 3 | ENGINE OIL LIEBHERR/10W-4 |
| ENGINE OIL LIEBHERR/10W-40 | 10330246 | 210 | 1 | 21 | 10 35 679 3 | ENGINE OIL LIEBHERR/10W-4 |
| ENGINE OIL LIEBHERR/10W-40 | 10290506 | 5 | 1 | 21 | 10 35 679 3 | ENGINE OIL LIEBHERR/10W-4 |
| ENGINE OIL LIEBHERR/5W-30 | 10425711 | 10 | 1l | 13 | 90 70 361 | MOTOR OIL |
| ENGINE OIL LIEBHERR/5W-30/ | 10425719 | 1000 | 1 | 36 | 10 42 571 1 | ENGINE OIL LIEBHERR/5W-30 |
| ENGINE OIL LIEBHERR/5W-30/ | 10425713 | 20 | 1 | 36 | 10 42 571 1 | ENGINE OIL LIEBHERR/5W-30 |
| ENGINE OIL LIEBHERR/5W-30 | 10425715 | 210 | 1 | 36 | 10 42 571 1 | ENGINE OIL LIEBHERR/5W-30 |
| ENGINE OIL LIEBHERR/5W-30 | 10425712 | 5 | 1 | 36 | 10 42 571 1 | ENGINE OIL LIEBHERR/5W-30 |
| ENGINEER'S HAMMER 1500 | 11162135 | 130 | 1 | 459 | 10 84 856 2 | TOOL EQUIPMENT |
| EQUALIZING RESERVOIR | 10451292 | 42 | 1 | 165 | 10 45 475 2 | COMBINATED RADIATOR |
| ET-CABIN | 10216362 | 10 | 1 | 405 | 10 47 616 9 | OPERATOR'S CAB |
| EU CONFORMITY DECLARAT | 9399607 | 98 | 1 | 468 | 10 49 805 9 | SIGNS |
| EU MANUFACTURER DECLAR | 9399608 | 99 | 1 | 468 | 10 49 805 9 | SIGNS |
| EVAPORATOR | 10816666 | 10 | 1 | 280 | 10 40 689 8 | AIR CONDITIONING UNIT |
| EVAPORATOR HOUSING | 10005672 | 1 | 1 | 286 | 11 00 359 4 | HOUSING |
| EVAPORATOR HOUSING | 10005679 | 8 | 1 | 286 | 11 00 359 4 | HOUSING |
| EVAPORATOR HOUSING | 10022069 | 15 | 1 | 286 | 11 00 359 4 | HOUSING |
| EXCAVATOR CONTROL | 10684598 | 2 | 1 | 257 | 10 84 080 2 | PUMPS CONTROL CPL. V4.6.9 |
| EXCAVATOR DISPLAY | 10684424 | 2 | 1 | 254 | 10 84 080 3 | DISPLAY CPL. V4.6.9 |
| EXHAUST GAS SYSTEM | 10358006 | 540 | 1 | 96 | 10 35 808 9 | MOTOR INSTALLATION |
| EXHAUST PIPE ASSEMBLY | 10115480 | 410 | 1 | 474 | 10 11 668 5 | DIESEL ENGINE D936 L A6 240 |
| EXHAUST PIPE LINE | 9937309 | 19 | 1 | 104 | 10 35 800 6 | EXHAUST GAS SYSTEM |
| EXHAUST PIPE PRE-ASS. | 10115479 | 1 | 1 | 578 | 10 11 548 0 | EXHAUST PIPE ASSEMBLY |
| EXHAUST SILENCER | 10040818 | 10 | 1 | 104 | 10 35 800 6 | EXHAUST GAS SYSTEM |
| EXHAUST TC MOUNTING | 9080735 | 430 | 1 | 474 | 10 11 668 5 | DIESEL ENGINE D936 L A6 240 |
| EXPANDING BUSH D=170MM | 9110412 | 991 | 1 | 665 | 95 90 264 | PISTON 170MM |
| EXPANDING BUSH D=180 | 9110413 | 991 | 1 | 663 | 94 00 606 1 | PISTON 180MM |
| EXPANDING BUSH D=180 | 9110413 | 991 | 1 | 664 | 95 87 597 | PISTON 180MM |
| EXTENSION | 10009602 | 10 | 1 | 212 | 10 48 840 4 | DISTRIBUTION BLOCK SXE-2 |
| EXTENSION | 7027714 | 35 | 1 | 217 | 90 64 786 | CONNECTING ELEMENT |
| EXTENSION | 774373408 | 35 | 1 | 217 | 90 64 786 | CONNECTING ELEMENT |
| EXTENSION | 774373408 | 135 | 1 | 218 | 90 64 786 | CONNECTING ELEMENT |
| EXTRACTION VALVE | 7019068 | 40 | 1 | 39 | 90 66 466 | ACCESSORIES |
| EXTRACTOR | 10451202 | 50 | 1 | 457 | 10 08 428 6 | TOOL EQUIPMENT |
| EYELET | 7028912 | 240 | 4 | 427 | 10 29 026 4 | ASSY. PARTS |
| FAN / BLOWER | 10331629 | 14 | 1 | 167 | 10 35 508 4 | OIL COOLER |
| FAN / BLOWER | 10331665 | 41 | 1 | 165 | 10 45 475 2 | COMBINATED RADIATOR |
| FAN / BLOWER | 5005641 | 3 | 1 | 574 | 10 11 646 3 | GENERATOR, PRE-ASSEMBLE |
| FAN COWL | 10331630 | 10 | 1 | 167 | 10 35 508 4 | OIL COOLER |
| FAN COWL | 10331641 | 38 | 1 | 165 | 10 45 475 2 | COMBINATED RADIATOR |
| FASTENER F.DT STECKER | 6203497 | 331 | 3 | 177 | 10 49 858 1 | MOTOR-ELEKTRIK |
| FASTENER F.DT STECKER | 6203497 | 10 | 3 | 209 | 10 04 966 2 | AUTOMATIC CENTRALIZED L |
| FASTENER F.DT STECKER | 6203497 | 120 | 1 | 344 | 10 84 584 9 | PUMPS + COUPLING INSTALL |
| FASTENER F.DT STECKER | 6203497 | 331 | 16 | 436 | 10 35 814 1 | ELECTRICAL SYSTEM |
| FASTENER F.DT STECKER | 6203497 | 17 | 2 | 680 | 10 49 822 9 | FULL AUTOMAT.CENTRAL.LU |
| FASTENING DEVICE | 7382029 | 1 | 1 | 570 | 98 87 461 | CLAMP FITTING EQUIPM. PRE |
| FELT RING | 7016180 | 4 | 1 | 66 | 92 65 064 | SEALINGSET ROTARY TRAN |

| Description | Item | Pos. | Quantity | Page | Assembly | Description |
|---|---|---|---|---|---|---|
| FIBRE GLASS FILTER INSERT | 7373877 | 27 | 2 | 329 | 10 35 798 3 | HYDRAULIC TANK INSTALLAT |
| FIBRE GLASS FILTER INSERT | 11065673 | 8 | 2 | 87 | 10 06 947 6 | SERVICE KIT |
| FIBRE GLASS FILTER INSERT | 11065673 | 2 | 2 | 89 | 10 06 948 6 | SERVICE KIT ERSTE 500H |
| FIBRE GLASS FILTER INSERT | 11065673 | 28 | 2 | 329 | 10 35 798 3 | HYDRAULIC TANK INSTALLAT |
| FIBRE GLASS FILTER INSERT | 7373878 | 8 | 2 | 87 | 10 06 947 6 | SERVICE KIT |
| FIBRE GLASS FILTER INSERT | 7373878 | 2 | 2 | 89 | 10 06 948 6 | SERVICE KIT ERSTE 500H |
| FIBRE GLASS FILTER INSERT | 7373878 | 28 | 2 | 329 | 10 35 798 3 | HYDRAULIC TANK INSTALLAT |
| FIL | 7367367 | 17 | 2 | 114 | 10 22 040 9 | DRIVING GEAR |
| FILLER NECK | 9442151 | 1 | 1 | 192 | 94 42 150 | OIL FILLER NECK |
| FILLER NECK CPL. | 10119031 | 1 | 1 | 492 | 10 11 903 0 | OIL FILLER INLET D930 |
| FILLER SIEVE | 10296919 | 20 | 1 | 451 | 90 18 419 | FUEL TANK ASSY. |
| FILLING CONNECTION | 10651997 | 10 | 1 | 681 | 10 28 689 7 | LUBRICATION PUMP |
| FILLING PUMP | 10009239 | 10 | 1 | 457 | 10 08 428 6 | TOOL EQUIPMENT |
| FILTER | 10220417 | 6 | 1 | 122 | 56 16 530 | AXIAL PISTON PUMP |
| FILTER | 10220697 | 2 | 1 | 118 | 10 22 041 7 | FILTER |
| FILTER | 10220699 | 1 | 1 | 134 | 10 22 069 7 | FILTER |
| FILTER ELEMENT | 10220705 | 10 | 1 | 90 | 10 06 948 1 | SERVICE KITS 1500/2500h |
| FILTER ELEMENT | 10220705 | 3 | 1 | 135 | 10 22 069 9 | FILTER |
| FILTER ELEMENT 16µm | 11342118 | 8 | 1 | 90 | 10 06 948 1 | SERVICE KITS 1500/2500h |
| FILTER ELEMENT 16µm | 11342118 | 13 | 1 | 297 | 99 37 312 | OIL PILOT VALVE INSTALLATIO |
| FILTER ELEMENT 16µm | 11342118 | 10 | 1 | 298 | 56 09 948 | OIL FILTER SET |
| FILTER HEAD | 10220701 | 1 | 1 | 135 | 10 22 069 9 | FILTER |
| FILTER HOUSING | 10220702 | 2 | 1 | 135 | 10 22 069 9 | FILTER |
| FILTER INSERT 60µm | 10115197 | 111 | 1 | 305 | 10 35 801 4 | HYDR.SUCT.+RETURN OIL HO |
| FILTER INSERT 60µm | 10115197 | 4 | 1 | 307 | 10 04 462 4 | PRESSURE FILTER |
| FILTER MAT | 10022770 | 5 | 1 | 87 | 10 06 947 6 | SERVICE KIT |
| FILTER MAT | 10022770 | 2 | 1 | 290 | 10 02 277 7 | CIRCULATING AIR GRID |
| FINAL CONTROL VALVE | 10117951 | 14 | 1 | 469 | 10 11 668 5 | DIESEL ENGINE D936 L A6 240 |
| FITTING KEY | 10008422 | 9 | 1 | 121 | 10 41 301 3 | HYDRAULIC PUMP |
| FITTING KEY | 10220694 | 6 | 1 | 133 | 10 22 066 7 | GEAR PUMP |
| FIXING BRACKET | 10022049 | 9 | 2 | 286 | 11 00 359 4 | HOUSING |
| FIXING BRACKET | 6203433 | 10 | 1 | 242 | 98 74 988 | PLATINES INSTALLATION A101 |
| FIXING PARTS | 10493025 | 26 | 1 | 235 | 11 10 016 7 | SUSPENSION |
| FIXING PARTS | 10814706 | 39 | 1 | 233 | 11 10 016 6 | SEAT TOP |
| FIXING PARTS | 11066536 | 36 | 1 | 236 | 11 10 016 7 | SUSPENSION |
| FIXING PARTS | 9937333 | 5 | 1 | 455 | 10 49 801 8 | COUNTERWEIGHT INSTALLAT |
| FIXING PARTS | 9939322 | 50 | 1 | 224 | 10 49 873 7 | HYDR.INSTALLATION CONTRO |
| FIXING PARTS CAB | 10357979 | 10 | 1 | 404 | 10 35 796 7 | OPERATOR'S CAB |
| FIXING PARTS CONTROL VALV | 10087437 | 7601 | 1 | 355 | 10 35 802 8 | CONTROL VALVE INSTALLAT |
| FIXING PARTS FUEL TANK | 9018426 | 2 | 1 | 451 | 90 18 419 | FUEL TANK ASSY. |
| FIXING PARTS HYDRAULIC T | 10371303 | 2 | 1 | 329 | 10 35 798 3 | HYDRAULIC TANK INSTALLAT |
| FIXING PARTS HYDRAULIC T | 9946056 | 2 | 1 | 329 | 10 35 798 3 | HYDRAULIC TANK INSTALLAT |
| FIXING PARTS SWING | 10066252 | 10 | 1 | 181 | 90 18 423 | SWING GEAR INSTALLATION |
| FIXING PARTS SWING RING | 9946390 | 5 | 1 | 205 | 10 83 653 3 | BALL SLEWING RING INSTALL |
| FIXING SCREW | 10215970 | 286 | 4 | 432 | 10 48 808 8 | INTERNAL LINING |
| FLANGE | 9279836 | 12 | 2 | 686 | 10 13 268 6 | HYDRAULIC VARIABLE DISPLA |
| FLANGE CONNECTION | 9948115 | 25 | 1 | 360 | 10 49 822 5 | HYDR.TUBES INSTALLATION |
| FLANGE HALF WITH BOSSING | 11490402 | 57 | 2 | 331 | 10 35 798 3 | HYDRAULIC TANK INSTALLAT |
| FLANGE HALF WITH BOSSING | 11647393 | 11 | 2 | 310 | 10 35 809 3 | HYDR.INSTALLATION FAN DR |
| FLANGE HALF WITH BOSSING | 11485638 | 25 | 2 | 300 | 10 35 801 5 | HYDR.ROTARY CONNEC.+SWI |
| FLANGE HALF WITH BOSSING | 11485638 | 49 | 8 | 671 | 10 49 815 8 | HOIST CYLINDERS |
| FLANGE HALF WITH BOSSING | 11485640 | 67 | 2 | 331 | 10 35 798 3 | HYDRAULIC TANK INSTALLAT |
| FLANGE HALF WITH BOSSING | 11485640 | 34 | 4 | 618 | 10 49 830 0 | GOOSENECK BOOM 6,70M |
| FLANGE HALF WITH BOSSING | 11485640 | 34 | 2 | 637 | 11 45 153 0 | HOSES UPPER-GOOSENECK B |
| FLANGE HALF WITH BOSSING | 11485639 | 6 | 16 | 84 | 10 07 713 5 | HYDR.INSTALLATION UNDER |
| FLANGE HALF WITH BOSSING | 11485639 | 100 | 12 | 295 | 10 35 801 2 | HYDR.PUMPS TO SPOOL VALV |
| FLANGE HALF WITH BOSSING | 11485639 | 500 | 4 | 296 | 10 35 801 2 | HYDR.PUMPS TO SPOOL VALV |
| FLANGE HALF WITH BOSSING | 11485639 | 6 | 16 | 300 | 10 35 801 5 | HYDR.ROTARY CONNEC.+SWI |
| FLANGE HALF WITH BOSSING | 11485639 | 22 | 4 | 300 | 10 35 801 5 | HYDR.ROTARY CONNEC.+SWI |
| FLANGE HALF WITH BOSSING | 11485639 | 94 | 2 | 347 | 10 35 802 8 | CONTROL VALVE INSTALLAT |

| Description | Item | Pos. | Quantity | Page | Assembly | Description |
|---|---|---|---|---|---|---|
| FLANGE HALF WITH BOSSING | 11485639 | 124 | 2 | 347 | 10 35 802 8 | CONTROL VALVE INSTALLAT |
| FLANGE HALF WITH BOSSING | 11485639 | 216 | 2 | 349 | 10 35 802 8 | CONTROL VALVE INSTALLAT |
| FLANGE HALF WITH BOSSING | 11485639 | 10 | 12 | 359 | 10 49 822 5 | HYDR.TUBES INSTALLATION |
| FLANGE HALF WITH BOSSING | 11485639 | 40 | 12 | 360 | 10 49 822 5 | HYDR.TUBES INSTALLATION |
| FLANGE HALF WITH BOSSING | 11485639 | 61 | 8 | 361 | 10 49 822 5 | HYDR.TUBES INSTALLATION |
| FLANGE HALF WITH BOSSING | 11485639 | 33 | 30 | 618 | 10 49 830 0 | GOOSENECK BOOM 6,70M |
| FLANGE HALF WITH BOSSING | 11485639 | 11 | 4 | 628 | 10 49 823 5 | STICK 2,35M |
| FLANGE HALF WITH BOSSING | 11485639 | 33 | 12 | 637 | 11 45 153 0 | HOSES UPPER-GOOSENECK B |
| FLANGE HALF WITH BOSSING | 11485639 | 12 | 1 | 655 | 10 06 203 8 | HYDRAULIC CYLINDER W/ DIS |
| FLANGE HALF WITH BOSSING | 11485639 | 46 | 8 | 671 | 10 49 815 8 | HOIST CYLINDERS |
| FLANGE HALF WITH BOSSING | 11485642 | 4 | 4 | 308 | 10 35 801 3 | HYDR.AND GEAR OIL COOLIN |
| FLANGE HALF WITH BOSSING | 11485645 | 37 | 8 | 309 | 10 35 801 3 | HYDR.AND GEAR OIL COOLIN |
| FLANGE HALF WITH BOSSING | 11485646 | 153 | 2 | 305 | 10 35 801 4 | HYDR.SUCT.+RETURN OIL HO |
| FLANGE HALF WITH BOSSING | 11485646 | 78 | 2 | 347 | 10 35 802 8 | CONTROL VALVE INSTALLAT |
| FLANGE HALF WITH BOSSING | 11485647 | 43 | 4 | 341 | 10 84 584 9 | PUMPS + COUPLING INSTALL |
| FLANGE HALF WITH BOSSING | 11485643 | 16 | 2 | 311 | 10 35 809 3 | HYDR.INSTALLATION FAN DR |
| FLANGE HALF WITH BOSSING | 11485637 | 87 | 4 | 302 | 10 35 801 5 | HYDR.ROTARY CONNEC.+SWI |
| FLANGE HALF WITH BOSSING | 11485637 | 26 | 8 | 311 | 10 35 809 3 | HYDR.INSTALLATION FAN DR |
| FLANGE PRE-ASS. | 9073163 | 8 | 1 | 517 | 90 80 713 | CAMSHAFT CPL. |
| FLANGE SLEEVE 45/50X25 | 9888448 | 2 | 2 | 602 | 90 77 384 | BEARING HOUSING, PRE-AS |
| FLANGE SLEEVE 45/50X25 | 9888448 | 2 | 1 | 603 | 90 77 717 | BEARING HOUSING, PRE-AS |
| FLOAT SWITCH | 6205496 | 130 | 1 | 163 | 10 35 809 2 | ENGINE COOLING |
| FLOODLIGHT INSTALLATION | 9941040 | 10 | 1 | 435 | 10 35 814 1 | ELECTRICAL SYSTEM |
| FLOODLIGHT INSTALLATION | 9941040 | 11 | 1 | 435 | 10 35 814 1 | ELECTRICAL SYSTEM |
| FLOOR COVERING | 10382585 | 5 | 1 | 223 | 10 49 872 7 | DRIVER STAND |
| FLOOR PLATE NUT M22 | 7369103 | 4 | 208 | 52 | 10 47 009 2 | CRAWLER CHAIN 500mm |
| FLOOR SHEET | 10467240 | 46 | 2 | 165 | 10 45 475 2 | COMBINATED RADIATOR |
| FLOW REGULATING CHECK | 9270387 | 13 | 1 | 655 | 10 06 203 8 | HYDRAULIC CYLINDER W/ DIS |
| FLUID BEARING | 10013573 | 5 | 4 | 293 | 98 79 063 | BOTTOM PLATE MOUNTING |
| FLYWHEEL ASSEMBLY SAE 1 | 9080918 | 530 | 1 | 475 | 10 11 668 5 | DIESEL ENGINE D936 L A6 240 |
| FLYWHEEL HOUSING MOUNT | 10115577 | 520 | 1 | 475 | 10 11 668 5 | DIESEL ENGINE D936 L A6 240 |
| FLYWHEEL HOUSING PRE-A | 10115576 | 1 | 1 | 581 | 10 11 557 7 | FLYWHEEL HOUSING MOUNT |
| FLYWHEEL PRE-ASS. SAE 1 | 9080917 | 1 | 1 | 683 | 90 80 918 | FLYWHEEL ASSEMBLY SAE 1 |
| FOAM RUBBER INSULATION | 10022772 | 2 | 1 | 289 | 10 02 211 9 | CASE |
| FOLDING LID | 7370893 | 14 | 1 | 255 | 56 18 923 | CONTROL CONSOLE RIGHT |
| FOOT BOARD COVERING | 9480295 | 11 | 1 | 269 | 10 06 017 4 | FOOT PILOT VALVE LEFT |
| FOOT BOARD COVERING | 9480295 | 11 | 1 | 270 | 10 06 017 5 | FOOT PILOT VALVE RIGHT |
| FOOT BOARD COVERING | 9480295 | 2 | 1 | 275 | 94 76 369 | FOOT PEDAL LEFT ASSEMBL |
| FOOT BOARD COVERING | 9480295 | 2 | 1 | 276 | 94 76 441 | FOOT PEDAL RIGHT ASSEMBL |
| FOOT BOARD LEFT | 9476442 | 1 | 1 | 275 | 94 76 369 | FOOT PEDAL LEFT ASSEMBL |
| FOOT BOARD RIGHT | 9476440 | 1 | 1 | 276 | 94 76 441 | FOOT PEDAL RIGHT ASSEMBL |
| FOOT PEDAL LEFT ASSEMBL | 9476369 | 2 | 1 | 271 | 90 79 258 | PILOT CONTROL UNIT VG7 2-3 |
| FOOT PEDAL RIGHT ASSEMBL | 9476441 | 2 | 1 | 273 | 90 79 259 | PILOT CONTROL UNIT VG7 2-3 |
| FOOT PILOT VALVE INSTALL | 10059818 | 40 | 1 | 229 | 10 49 880 9 | DRIVER STAND BASE SECTIO |
| FOOT PILOT VALVE LEFT | 10060174 | 10 | 1 | 268 | 10 05 981 8 | FOOT PILOT VALVE INSTALL |
| FOOT PILOT VALVE RIGHT | 10060175 | 20 | 1 | 268 | 10 05 981 8 | FOOT PILOT VALVE INSTALL |
| FRAME | 7028782 | 600 | 1 | 416 | 70 28 842 | DOOR FRAME |
| FRAME | 7028804 | 310 | 1 | 411 | 70 28 759 | FRONT PANE TOP |
| FRAME | 7029419 | 510 | 1 | 417 | 70 28 831 | SLIDING WINDOW |
| FRAME BACKSIDE CENTER IN | 9018749 | 10 | 1 | 95 | 10 07 366 1 | FRAME INSTALLATION |
| FRAME BACKSIDE LEFT INST | 9018743 | 3 | 1 | 95 | 10 07 366 1 | FRAME INSTALLATION |
| FRAME BACKSIDE RIGHT INST | 10072999 | 2 | 1 | 95 | 10 07 366 1 | FRAME INSTALLATION |
| FRAME INSTALLATION | 10073661 | 300 | 1 | 85 | 10 35 798 2 | UPPERCARRIAGE |
| FRAME INSTALLATION | 9018745 | 4 | 1 | 95 | 10 07 366 1 | FRAME INSTALLATION |
| FRAME PIECE | 10331673 | 34 | 1 | 165 | 10 45 475 2 | COMBINATED RADIATOR |
| FRAME PIECE | 10331674 | 35 | 1 | 165 | 10 45 475 2 | COMBINATED RADIATOR |
| FRAME PIECE | 10331675 | 36 | 1 | 165 | 10 45 475 2 | COMBINATED RADIATOR |
| FRAME PIECE | 10331677 | 37 | 1 | 165 | 10 45 475 2 | COMBINATED RADIATOR |
| FRONT PANE TOP | 7028759 | 30 | 1 | 405 | 10 47 616 9 | OPERATOR'S CAB |
| FRONT WINDOW BOTTOM | 10035529 | 40 | 1 | 405 | 10 47 616 9 | OPERATOR'S CAB |

| Description | Item | Pos. | Quantity | Page | Assembly | Description |
|---|---|---|---|---|---|---|
| FRONT WINDOW BOTTOM | 10035530 | 110 | 1 | 409 | 10 03 552 9 | FRONT WINDOW BOTTOM |
| FRONT WINDOW BOTTOM | 7030040 | 111 | 1 | 410 | 10 03 553 0 | FRONT WINDOW BOTTOM |
| FUEL COOLER | 10331627 | 6 | 1 | 167 | 10 35 508 4 | OIL COOLER |
| FUEL FILTER HEAD | 10046958 | 4 | 1 | 539 | 10 22 281 9 | FUEL PRE-FILTER CPL. |
| FUEL FILTER HEAD | 10120518 | 2 | 1 | 538 | 10 12 580 1 | FUEL FINE FILTER |
| FUEL FILTER HEAD | 10219624 | 2 | 1 | 536 | 10 11 551 3 | FUEL FINE-FILTER ASSEMBLY |
| FUEL FINE FILTER | 10125801 | 1 | 1 | 536 | 10 11 551 3 | FUEL FINE-FILTER ASSEMBLY |
| FUEL FINE FILTER | 10332278 | 1 | 1 | 536 | 10 11 551 3 | FUEL FINE-FILTER ASSEMBLY |
| FUEL FINE FILTER 3-5µm | 10429946 | 2 | 1 | 87 | 10 06 947 6 | SERVICE KIT |
| FUEL FINE FILTER 3-5µm | 10429946 | 10 | 8 | 92 | 10 06 994 0 | SERVICE KIT FUEL FILTER |
| FUEL FINE FILTER 3-5µm | 10429946 | 1 | 1 | 538 | 10 12 580 1 | FUEL FINE FILTER |
| FUEL FINE FILTER 3-5µm | 10429946 | 1 | 1 | 540 | 10 33 227 8 | FUEL FINE FILTER |
| FUEL FINE-FILTER ASSEMBLY | 10115513 | 201 | 1 | 472 | 10 11 668 5 | DIESEL ENGINE D936 L A6 240 |
| FUEL HOSE | 10333663 | 11 | 1 | 100 | 99 46 045 | FUEL SYSTEM |
| FUEL HOSE | 10333667 | 10 | 1 | 100 | 99 46 045 | FUEL SYSTEM |
| FUEL HOSE | 10333670 | 12 | 1 | 100 | 99 46 045 | FUEL SYSTEM |
| FUEL LEVEL TRANSMITTER | 10285669 | 5 | 1 | 451 | 90 18 419 | FUEL TANK ASSY. |
| FUEL LINE | 10116285 | 212 | 1 | 472 | 10 11 668 5 | DIESEL ENGINE D936 L A6 240 |
| FUEL LINE | 9076621 | 1 | 1 | 545 | 10 11 559 5 | LEAK OIL RETURN LINE |
| FUEL PRE-FILTER CPL. | 10222819 | 1 | 1 | 537 | 10 11 656 2 | FUEL PREFILTER |
| FUEL PREFILTER | 10044302 | 3 | 1 | 87 | 10 06 947 6 | SERVICE KIT |
| FUEL PREFILTER | 10044302 | 20 | 8 | 92 | 10 06 994 0 | SERVICE KIT FUEL FILTER |
| FUEL PREFILTER | 10044302 | 1 | 1 | 539 | 10 22 281 9 | FUEL PRE-FILTER CPL. |
| FUEL PREFILTER | 10116562 | 200 | 1 | 472 | 10 11 668 5 | DIESEL ENGINE D936 L A6 240 |
| FUEL PUMP ASSEMBLY | 9078680 | 211 | 1 | 472 | 10 11 668 5 | DIESEL ENGINE D936 L A6 240 |
| FUEL SYSTEM | 9946045 | 520 | 1 | 96 | 10 35 808 9 | MOTOR INSTALLATION |
| FUEL TANK | 10070505 | 3 | 1 | 451 | 90 18 419 | FUEL TANK ASSY. |
| FUEL TANK ASSY. | 9018419 | 9300 | 1 | 86 | 10 35 798 2 | UPPERCARRIAGE |
| FUEL TANK FOR EXCHANGE | 10071085 | 4 | 1 | 451 | 90 18 419 | FUEL TANK ASSY. |
| FULL AUTOMAT.CENTRAL.LU | 10498163 | 8 | 1 | 7 | . | |
| FULL AUTOMAT.CENTRAL.LU | 10498163 | 2 | 1 | 209 | 10 04 966 2 | AUTOMATIC CENTRALIZED L |
| FULL AUTOMAT.CENTRAL.LU | 10498229 | 10 | 1 | 679 | 10 49 816 3 | FULL AUTOMAT.CENTRAL.LU |
| FUSE | 7027038 | 22 | 1 | 243 | 73 73 807 | SAFETY LEVER |
| FUSE 25A 32V | 6040008 | 42 | 1 | 241 | 97 58 815 01 | E-BOARD |
| FUSE CARTRIDGE 20A 32 C | 6001472 | 22 | 1 | 442 | 99 47 695 | ELECTRICAL SYSTEM E50 |
| FUSE CARTRIDGE C 15A 32 FK | 4901512 | 40 | 9 | 241 | 97 58 815 01 | E-BOARD |
| FUSE CARTRIDGE C 7,5A 32/5 | 4901513 | 41 | 5 | 241 | 97 58 815 01 | E-BOARD |
| FUSE CARTRIDGE C 7,5A 32/5 | 4901513 | 24 | 5 | 442 | 99 47 695 | ELECTRICAL SYSTEM E50 |
| GANTRY 2 FACH | 6001474 | 29 | 10 | 442 | 99 47 695 | ELECTRICAL SYSTEM E50 |
| GAS SPRING | 10037196 | 20 | 1 | 391 | 10 06 692 0 | TOOL BOX |
| GAS SPRING | 10037196 | 20 | 1 | 393 | 10 37 938 6 | TOOL BOX |
| GAS SPRING | 10037209 | 21 | 1 | 372 | 10 35 800 4 | PANELLING |
| GAS SPRING | 10037209 | 130 | 2 | 376 | 10 35 800 4 | PANELLING |
| GAS SPRING | 7372354 | 17 | 1 | 243 | 73 73 807 | SAFETY LEVER |
| GAUGE CONNECTION | 5607605 | 98 | 1 | 343 | 10 84 584 9 | PUMPS + COUPLING INSTALL |
| GAUGE CONNECTION | 5607616 | 96 | 2 | 343 | 10 84 584 9 | PUMPS + COUPLING INSTALL |
| GAUGE CONNECTION DKO 10 | 5607617 | 106 | 2 | 344 | 10 84 584 9 | PUMPS + COUPLING INSTALL |
| GAUGE CONNECTION VKA3 10 | 7406864 | 32 | 2 | 297 | 99 37 312 | OIL PILOT VALVE INSTALLATIO |
| GAUGE CONNECTION VKA3 22 | 7019891 | 101 | 1 | 343 | 10 84 584 9 | PUMPS + COUPLING INSTALL |
| GEAR OIL | 9070365 | 50 | 1 | 10 | 90 66 460 | |
| GEAR OIL LIEBHERR/75W-90 | 10356826 | 10 | 1l | 17 | 90 70 365 | GEAR OIL |
| GEAR OIL LIEBHERR/75W-90/ | 10296477 | 1000 | 1 | 24 | 10 35 682 6 | GEAR OIL LIEBHERR/75W-90 |
| GEAR OIL LIEBHERR/75W-90/ | 10330287 | 20 | 1 | 24 | 10 35 682 6 | GEAR OIL LIEBHERR/75W-90 |
| GEAR OIL LIEBHERR/75W-90/2 | 10330288 | 210 | 1 | 24 | 10 35 682 6 | GEAR OIL LIEBHERR/75W-90 |
| GEAR OIL LIEBHERR/75W-90/5 | 10330285 | 5 | 1 | 24 | 10 35 682 6 | GEAR OIL LIEBHERR/75W-90 |
| GEAR OIL LIEBHERR/85W-140 | 10356827 | 20 | 1l | 17 | 90 70 365 | GEAR OIL |
| GEAR OIL LIEBHERR/85W-140/ | 10330292 | 1000 | 1 | 25 | 10 35 682 7 | GEAR OIL LIEBHERR/85W-140 |
| GEAR OIL LIEBHERR/85W-140/ | 10330291 | 20 | 1 | 25 | 10 35 682 7 | GEAR OIL LIEBHERR/85W-140 |
| GEAR OIL LIEBHERR/85W-140 | 10301680 | 210 | 1 | 25 | 10 35 682 7 | GEAR OIL LIEBHERR/85W-140 |
| GEAR OIL LIEBHERR/85W-140 | 10285639 | 5 | 1 | 25 | 10 35 682 7 | GEAR OIL LIEBHERR/85W-140 |

| Description | Item | Pos. | Quantity | Page | Assembly | Description |
|---|---|---|---|---|---|---|
| GEAR PUMP | 10220667 | 1 | 1 | 117 | 10 22 041 5 | INTERNAL GEAR PUMP SET |
| GEAR PUMP | 5609979 | 5 | 1 | 159 | 99 29 814 | PUMPS INSTALLATION |
| GEAR WHEEL | 9073098 | 3 | 1 | 517 | 90 80 713 | CAMSHAFT CPL. |
| GEAR WHEEL | 9073100 | 13 | 1 | 517 | 90 80 713 | CAMSHAFT CPL. |
| GEAR WHEEL Z=50 M=2.5 | 9072834 | 3 | 1 | 496 | 90 75 115 | CRANKSHAFT WITH GEAR |
| GEARBOX | 10290346 | 510 | 1 | 423 | 10 29 036 3 | WIPPER MOTOR SET |
| GEARBOX OIL COOLER | 10331660 | 47 | 1 | 165 | 10 45 475 2 | COMBINATED RADIATOR |
| GENERATOR, PRE-ASSEMBLE | 10116463 | 440 | 1 | 475 | 10 11 668 5 | DIESEL ENGINE D936 L A6 240 |
| GLASS PANE BEHIND | 7029424 | 570 | 1 | 417 | 70 28 831 | SLIDING WINDOW |
| GLASS PANE FRONT | 7029423 | 560 | 1 | 417 | 70 28 831 | SLIDING WINDOW |
| GLASS PANES | 7028767 | 20 | 1 | 405 | 10 47 616 9 | OPERATOR'S CAB |
| GLAZING PROFILE | 7028806 | 300 | 1 | 411 | 70 28 759 | FRONT PANE TOP |
| GLUE | 10355107 | 20 | 0.3 | 379 | 10 08 167 3 | ENGINE BONNET |
| GLUE | 8655023 | 104 | 1 | 477 | 10 11 577 9 | CRANKCASE CPL. |
| GLUEING SET | 7029402 | 180 | 1 | 407 | 70 28 767 | GLASS PANES |
| GLYD RING 10 | 7380136 | 40 | 1 | 271 | 90 79 258 | PILOT CONTROL UNIT VG7 2-3 |
| GLYD RING 10 | 7380136 | 40 | 1 | 273 | 90 79 259 | PILOT CONTROL UNIT VG7 2-3 |
| GLYD RING 12 | 7381019 | 47 | 1 | 154 | 98 82 875 | SEAL KIT REGULATING VALVE |
| GLYD RING 48X37X4,2 | 7381491 | 25 | 1 | 690 | 98 82 766 | ADJUSTMENT |
| GLYD RING 48X37X4,2 | 7381491 | 26 | 1 | 699 | 98 82 771 | SEAL KIT |
| GOOSENECK BOOM 6,70M | 10498299 | 9 | 1 | 7 | . | |
| GOOSENECK BOOM 6,70M | 10498300 | 10 | 1 | 615 | 10 49 829 9 | GOOSENECK BOOM 6,70M |
| GOOSENECK BOOM 6,70M | 10498301 | 2 | 1 | 616 | 10 49 830 0 | GOOSENECK BOOM 6,70M |
| GRAISE | 8620769 | 130 | 1kg | 688 | 10 11 856 1 | PILOT CONTROL UNIT VG6-8 |
| GREASE | 10282622 | 100 | 1 | 481 | 90 73 083 | CYLINDER |
| GREASE | 10282622 | 100 | 1 | 551 | 90 77 279 | CONNECTING BRANCH ADD-O |
| GREASE | 10282622 | 100 | 1 | 566 | 90 79 472 | COOLANT PIPE BEND ADD-ON |
| GREASE | 10282622 | 100 | 1 | 568 | 90 80 280 | LOCKING PIECES |
| GREASE | 10282622 | 100 | 1 | 576 | 10 11 566 4 | LOCKING PIECES |
| GREASE | 10282622 | 100 | 1 | 581 | 10 11 557 7 | FLYWHEEL HOUSING MOUNT |
| GREASE | 10282622 | 100 | 1 | 598 | 90 78 961 | POWER TAKE-OFF ADD-ON |
| GREASE | 10282622 | 100 | 1 | 599 | 90 80 006 | POWER TAKE-OFF ADD-ON |
| GREASE | 10282622 | 100 | 1 | 604 | 90 80 504 | LOCKING PIECES |
| GREASE | 8655008 | 126 | 1 | 77 | 92 68 751 | REPAIR KIT LOCK RING |
| GREASE | 8655008 | 126 | 1 | 128 | 98 89 282 | REPAIR KIT SHAFT |
| GREASE | 8655008 | 126 | 1 | 149 | 90 73 158 | REPAIR KIT SHAFT |
| GREASE | 8655008 | 126 | 1 | 697 | 92 68 016 | REPAIR KIT LOCK RING |
| GREASE BP ENERGREASE LS | 8501527 | 30 | 4kg | 680 | 10 49 822 9 | FULL AUTOMAT.CENTRAL.LU |
| GREASE HOUSING | 932858901 | 20 | 1 | 184 | 90 01 790 0 | SLEWING DRIVE SAT 375/250 |
| GREASE NBU 30/1kg | 10285708 | 110 | 1 | 484 | 90 79 480 | POWER UNIT SUPPORT ATT |
| GREASE NBU 30/1kg | 10285708 | 100 | 1 | 528 | 10 11 683 9 | INJECTION PUMP ASSEMBLY |
| GREASE NBU 30/1kg | 10285708 | 100 | 1 | 534 | 90 75 395 | PRESSURE ADAPTER ASS. |
| GREASE NBU 30/1kg | 10285708 | 100 | 1 | 597 | 90 77 719 | POWER TAKE-OFF ADD-ON |
| GREASE NIPPLE AEHNL.DIN | 10005440 | 12 | 2 | 462 | 10 37 283 6 | LID |
| GREASE NIPPLE AEHNL.DIN | 10005440 | 31 | 5 | 632 | 10 38 484 8 | CENTRAL LUBRICATING SYS |
| GREASE NIPPLE AEHNL.DIN | 10005440 | 30 | 4 | 636 | 11 10 283 0 | BEARING PILLOW BLOCK |
| GREASE NIPPLE CAP | 10014701 | 18 | 1 | 681 | 10 28 689 7 | LUBRICATION PUMP |
| GREASE NIPPLE CAP | 8500251 | 32 | 5 | 632 | 10 38 484 8 | CENTRAL LUBRICATING SYS |
| GREASE NIPPLE GERADE M1 | 5209372 | 69 | 2 | 51 | 10 49 883 7 | UNDERCARRIAGE CPL |
| GREASE PIPE | 9946410 | 2 | 1 | 207 | 99 46 408 | GREASE PIPE INSTALLATION |
| GREASE PIPE | 9946411 | 3 | 1 | 207 | 99 46 408 | GREASE PIPE INSTALLATION |
| GREASE PIPE | 9946412 | 4 | 1 | 207 | 99 46 408 | GREASE PIPE INSTALLATION |
| GREASE PIPE | 9946413 | 5 | 1 | 207 | 99 46 408 | GREASE PIPE INSTALLATION |
| GREASE PIPE INSTALLATION | 9946408 | 20 | 1 | 205 | 10 83 653 3 | BALL SLEWING RING INSTALL |
| GREASE STABURAGS | 8655030 | 110 | 1 | 562 | 90 80 301 | AT-WATER PUMP WITH FAST |
| GREASE STABURAGS | 8655030 | 110 | 1 | 567 | 90 79 474 | COOLANT PIPE BEND ADD-ON |
| GREASE TENSIONER | 9015155 | 62 | 2 | 51 | 10 49 883 7 | UNDERCARRIAGE CPL |
| GREASE-STABURAGS | 8655018 | 100 | 1 | 563 | 10 13 281 7 | WATER PUMP, PRE-ASSEMB |
| GREASES | 9070366 | 60 | 1 | 10 | 90 66 460 | |
| GRIP | 10029676 | 36 | 1 | 233 | 11 10 016 6 | SEAT TOP |

| Description | Item | Pos. | Quantity | Page | Assembly | Description |
|---|---|---|---|---|---|---|
| GRIP | 10467429 | 59 | 1 | 234 | 11 10 016 6 | SEAT TOP |
| GRIP | 10814718 | 23 | 1 | 235 | 11 10 016 7 | SUSPENSION |
| GRIP | 7019153 | 260 | 1 | 414 | 70 28 769 | DRIVER'S CAB DOOR |
| GRIP | 7029421 | 530 | 2 | 417 | 70 28 831 | SLIDING WINDOW |
| GRIP | 7370897 | 4 | 1 | 240 | 10 16 576 6 | STEERING CONSOLE |
| GRIP SHELL | 10014777 | 55 | 1 | 246 | 10 46 993 3 | HANDLES LEFT |
| GRIP SHELL | 10014778 | 50 | 1 | 246 | 10 46 993 3 | HANDLES LEFT |
| GRIP SHELL | 10014779 | 55 | 1 | 261 | 10 46 993 2 | HANDLES RIGHT |
| GRIP SHELL | 10014780 | 50 | 1 | 261 | 10 46 993 2 | HANDLES RIGHT |
| GRIP SW9,12,14,17 GEKROEPF | 10359147 | 200 | 1 | 459 | 10 84 856 2 | TOOL EQUIPMENT |
| GRUB SCREW | 7028181 | 18 | 2 | 147 | 70 28 075 | CONTROL UNIT |
| GUARD RING | 10120443 | 3 | 1 | 498 | 10 12 134 5 | RK CRANKSHAFT SEAL D930 |
| GUIDE | 10015472 | 210 | 2 | 75 | 56 16 688 | WHEEL BRAKE VALVE |
| GUIDE | 10493047 | 4 | 1 | 233 | 11 10 016 6 | SEAT TOP |
| GUIDE | 7028893 | 110 | 1 | 427 | 10 29 026 4 | ASSY. PARTS |
| GUIDE | 7028894 | 100 | 1 | 427 | 10 29 026 4 | ASSY. PARTS |
| GUIDE FOR OIL DIPSTICK CPL | 9266775 | 3 | 1 | 108 | 90 77 872 | PUMP DISTRIBUTION GEAR |
| GUIDE FUER SITZTIEFENVERS | 10493369 | 16 | 1 | 233 | 11 10 016 6 | SEAT TOP |
| GUIDE PLATE | 10220428 | 2 | 1 | 114 | 10 22 040 9 | DRIVING GEAR |
| GUIDE PLATE | 9073114 | 2 | 1 | 70 | 90 73 155 | RK CYLINDER+CONTROL PLAT |
| GUIDE PLATE | 9074065 | 2 | 1 | 198 | 90 74 415 | RK CYLINDER+CONTROL PLAT |
| GUIDE PLATE | 9074065 | 12 | 1 | 199 | 90 74 416 | REPAIR KIT DRIVING MECHAN |
| GUIDE PLATE | 9076311 | 2 | 1 | 124 | 90 73 751 | RK CYLINDER+CONTROL PLAT |
| GUIDE PULLEY COMPL. | 9077708 | 4 | 2 | 559 | 10 11 646 4 | AIR COND. COMPRESSOR A |
| GUIDE RING | 10216733 | 30 | 2 | 115 | 10 22 041 0 | ADJUSTMENT |
| GUIDE RING 110X115X15,00 | 7005249 | 13 | 3 | 669 | 99 52 600 | PISTON ROD BEARING 110/18 |
| GUIDE RING 125X130X15,00 | 7005250 | 13 | 3 | 667 | 94 01 936 4 | PISTON ROD BEARING 125/18 |
| GUIDE RING 125X130X15,00 | 7005250 | 13 | 3 | 668 | 94 02 733 6 | PISTON ROD BEARING 125/17 |
| GUIDE WHEEL D7G/B7B | 10009662 | 61 | 2 | 51 | 10 49 883 7 | UNDERCARRIAGE CPL |
| GUIDING PIPE | 9079867 | 2 | 1 | 489 | 90 79 862 | DIPSTICK W.TUBE |
| HALF CLAMP COLLAR | 10056981 | 50 | 2 | 214 | 10 04 966 3 | CENTRAL LUBRICATING SYS |
| HALF CLAMP COLLAR | 10064290 | 2 | 1 | 647 | 10 06 428 8 | CLAMP |
| HALF CLAMP COLLAR | 10064291 | 3 | 1 | 647 | 10 06 428 8 | CLAMP |
| HALF CLAMP COLLAR | 10064291 | 3 | 1 | 648 | 10 38 549 0 | CLAMP |
| HALF CLAMP COLLAR | 10385491 | 2 | 1 | 648 | 10 38 549 0 | CLAMP |
| HALF CLAMP COLLAR | 9492506 | 45 | 2 | 312 | 10 35 809 3 | HYDR.INSTALLATION FAN DR |
| HALF CLAMP COLLAR | 9927398 | 11 | 2 | 616 | 10 49 830 0 | GOOSENECK BOOM 6,70M |
| HALF CLAMP COLLAR | 9927399 | 12 | 2 | 616 | 10 49 830 0 | GOOSENECK BOOM 6,70M |
| HALF CLAMP COLLAR | 9927569 | 12 | 2 | 362 | 99 45 116 | PIPE CLAMP |
| HALF CLAMP COLLAR | 9927570 | 11 | 2 | 362 | 99 45 116 | PIPE CLAMP |
| HALF CLAMP COLLAR | 9928147 | 14 | 4 | 616 | 10 49 830 0 | GOOSENECK BOOM 6,70M |
| HALF CLAMP COLLAR | 9945121 | 3 | 2 | 362 | 99 45 116 | PIPE CLAMP |
| HALF CLAMP COLLAR | 9948780 | 7 | 4 | 616 | 10 49 830 0 | GOOSENECK BOOM 6,70M |
| HALF CLAMP COLLAR 150 | 9948779 | 6 | 4 | 616 | 10 49 830 0 | GOOSENECK BOOM 6,70M |
| HALF CLAMP COLLAR DIA 205, | 10086363 | 30 | 2 | 641 | 10 49 881 6 | SLIDING RAIL |
| HALF CLAMP COLLAR DIA 205, | 10498814 | 15 | 2 | 641 | 10 49 881 6 | SLIDING RAIL |
| HALF CLAMP COLLAR DIA 230 | 10086364 | 26 | 1 | 641 | 10 49 881 6 | SLIDING RAIL |
| HALF CLAMP COLLAR DIA 230 | 10498815 | 20 | 1 | 641 | 10 49 881 6 | SLIDING RAIL |
| HALF CLAMP COLLAR PP DO | 10057335 | 53 | 4 | 619 | 10 49 830 0 | GOOSENECK BOOM 6,70M |
| HALF FLANGE | 7373875 | 10 | 12 | 616 | 10 49 830 0 | GOOSENECK BOOM 6,70M |
| HALF FLANGE | 7373875 | 6 | 2 | 655 | 10 06 203 8 | HYDRAULIC CYLINDER W/ DIS |
| HALF FLANGE | 7373875 | 14 | 2 | 656 | 99 48 785 | HYDR.CYLINDER W/ADDITION. |
| HAND LEVER | 7028347 | 13 | 1 | 338 | 56 17 689 | SHUT OFF DEVICE DN 100 |
| HAND PUMP | 510160916 | 16 | 1 | 7 | . | |
| HAND PUMP | 8145666 | 30 | 1 | 39 | 90 66 466 | ACCESSORIES |
| HANDLE | 10009025 | 730 | 1 | 429 | 10 29 026 4 | ASSY. PARTS |
| HANDLE | 10291064 | 790 | 1 | 430 | 10 29 026 4 | ASSY. PARTS |
| HANDLE | 10358526 | 2 | 1 | 461 | 10 35 852 5 | OUTSIDE MIRROR ASSEMBLY |
| HANDLE | 10490894 | 520 | 1 | 429 | 10 29 026 4 | ASSY. PARTS |
| HANDLE BEHIND | 10298669 | 580 | 1 | 429 | 10 29 026 4 | ASSY. PARTS |

| Description | Item | Pos. | Quantity | Page | Assembly | Description |
|---|---|---|---|---|---|---|
| HANDLE CAP | 7025347 | 21 | 1 | 243 | 73 73 807 | SAFETY LEVER |
| HANDLE COVER | 7370924 | 1 | 1 | 336 | 73 69 257 | RETURN FILTER |
| HANDLES LEFT | 10469933 | 50 | 1 | 247 | 99 68 625 | LH-JOYSTICK LEFT |
| HANDLES RIGHT | 10469932 | 50 | 1 | 262 | 99 68 611 | LH-JOYSTICK RIGHT |
| HEAD LIGHT + HORN INSTALL | 10048246 | 15 | 1 | 435 | 10 35 814 1 | ELECTRICAL SYSTEM |
| HEAD LIGHT + HORN INSTALL | 11102786 | 15 | 1 | 435 | 10 35 814 1 | ELECTRICAL SYSTEM |
| HEAD LIGHT INSERT | 10286644 | 12 | 1 | 440 | 10 04 553 0 | WORK LIGHT |
| HEAD REST | 10493046 | 3 | 1 | 233 | 11 10 016 6 | SEAT TOP |
| HEAD-TYPE WASHER 9,5X15X | 10022769 | 2 | 2 | 285 | 10 02 211 7 | AIR CIRCULATION CASE |
| HEAD-TYPE WASHER 9,5X15X | 10022769 | 3 | 2 | 290 | 10 02 277 7 | CIRCULATING AIR GRID |
| HEAT EXCHANGER | 10022068 | 18 | 1 | 286 | 11 00 359 4 | HOUSING |
| HEAT PROTECTION SHEET | 10115540 | 1 | 1 | 571 | 10 11 919 9 | HEAT PROTECTION W.FASTEN |
| HEAT PROTECTION SHEET | 10115717 | 4 | 1 | 572 | 10 11 571 8 | HEAT PROTECTION W.FASTEN |
| HEAT PROTECTION SHEET | 10118257 | 3 | 1 | 572 | 10 11 571 8 | HEAT PROTECTION W.FASTEN |
| HEAT PROTECTION W.FASTEN | 10115718 | 415 | 1 | 474 | 10 11 668 5 | DIESEL ENGINE D936 L A6 240 |
| HEAT PROTECTION W.FASTEN | 10119199 | 416 | 1 | 474 | 10 11 668 5 | DIESEL ENGINE D936 L A6 240 |
| HEATER CONNECTION | 9079889 | 386 | 1 | 474 | 10 11 668 5 | DIESEL ENGINE D936 L A6 240 |
| HEATER STARTER SWITCH | 10228151 | 75 | 1 | 249 | 10 84 086 6 | ARM REST RIGHT |
| HEATING BATTERY | 10022070 | 17 | 1 | 286 | 11 00 359 4 | HOUSING |
| HEATING FLANGE ADD-ON | 9078314 | 260 | 1 | 473 | 10 11 668 5 | DIESEL ENGINE D936 L A6 240 |
| HEATING FLANGE PRE.ASS. | 10299988 | 1 | 1 | 554 | 90 78 314 | HEATING FLANGE ADD-ON |
| HEX BOLT EN 1665 M10X20 8. | 10030518 | 8 | 2 | 598 | 90 78 961 | POWER TAKE-OFF ADD-ON |
| HEX BOLT EN 1665 M10X25 8. | 10336008 | 5 | 3 | 604 | 90 80 504 | LOCKING PIECES |
| HEX BOLT EN 1665 M10x50 8.8 | 10005461 | 2 | 6 | 550 | 10 11 707 3 | AIR INTAKE PIPE ASS. |
| HEX BOLT EN 1665 M8X100 8. | 10014042 | 5 | 4 | 559 | 10 11 646 4 | AIR COND. COMPRESSOR A |
| HEX BOLT EN 1665 M8X35 8.8 | 10113711 | 4 | 5 | 562 | 90 80 301 | AT-WATER PUMP WITH FAST |
| HEX BOLT EN 1665 M8X55 8.8 | 10333554 | 4 | 34 | 490 | 10 11 870 2 | LADDER-TYPE FRAME |
| HEX BOLT EN 1665 M8x110 8.8 | 10112929 | 5 | 2 | 564 | 10 11 983 0 | THERMOSTAT HOUSING ASS |
| HEX BOLT EN 1665 M8x110 8.8 | 10112929 | 5 | 6 | 565 | 90 75 678 | THERMOSTAT HOUSING ASS |
| HEX BOLT EN 1665 M8x30 8.8 | 10007782 | 22 | 2 | 482 | 10 11 916 7 | CRANKCASE BREATHER ASSE |
| HEX BOLT EN 1665 M8x30 8.8 | 10007782 | 3 | 4 | 566 | 90 79 472 | COOLANT PIPE BEND ADD-ON |
| HEX BOLT EN 1665 M8x30 8.8 | 10007782 | 3 | 4 | 567 | 90 79 474 | COOLANT PIPE BEND ADD-ON |
| HEX BOLT EN 1665 M8x30 8.8 | 10007782 | 3 | 4 | 568 | 90 80 280 | LOCKING PIECES |
| HEX HEAD SCREW | 10001473 | 21 | 3 | 49 | 10 49 883 7 | UNDERCARRIAGE CPL |
| HEX HEAD SCREW | 10001473 | 25 | 2 | 57 | 10 05 149 1 | LID |
| HEX HEAD SCREW EN 1665 M | 10023049 | 12 | 2 | 559 | 10 11 646 4 | AIR COND. COMPRESSOR A |
| HEX HEAD SCREW EN 1665 M | 10032039 | 4 | 1 | 557 | 90 78 356 | LOCKING PIECES |
| HEX HEAD SCREW EN 1665 M | 4601426 | 6 | 1 | 559 | 10 11 646 4 | AIR COND. COMPRESSOR A |
| HEX HEAD SCREW EN 1665 M | 10290538 | 11 | 1 | 549 | 10 11 657 6 | CONNECTION PIECE |
| HEX HEAD SCREW EN 1665 M | 10005511 | 4 | 12 | 486 | 90 79 483 | OIL SUMP |
| HEX HEAD SCREW EN 1665 M | 10005073 | 4 | 6 | 519 | 10 12 143 9 | OIL COOLER ADD-ON |
| HEX HEAD SCREW EN 1665 M | 10005073 | 5 | 4 | 520 | 10 12 143 8 | OIL COOLER, PRE-ASSEMBLE |
| HEX HEAD SCREW EN 1665 M | 10100304 | 7 | 16 | 486 | 90 79 483 | OIL SUMP |
| HEX HEAD SCREW WITH FLA | 10005462 | 3 | 6 | 550 | 10 11 707 3 | AIR INTAKE PIPE ASS. |
| HEX HEAD SCREW WITH FLA | 10005462 | 15 | 1 | 559 | 10 11 646 4 | AIR COND. COMPRESSOR A |
| HEX HEAD SCREW WITH FLAN | 10101657 | 14 | 1 | 559 | 10 11 646 4 | AIR COND. COMPRESSOR A |
| HEX HEAD SCREW WITH FLA | 10009007 | 10 | 13 | 485 | 90 79 487 | OIL SUMP |
| HEX HEAD SCREW WITH FLA | 10009007 | 3 | 2 | 495 | 91 47 512 | LOCKING PIECES |
| HEX NUT | 7024940 | 133 | 1 | 653 | 10 00 297 1 | PIPE FRACTION SAFETY VALV |
| HEX NUT M 8 | 241015402 | 10 | 4 | 292 | 11 00 707 2 | SLIDE SEAT GUIDE |
| HEX NUT M10 | 10335968 | 13 | 4 | 164 | 10 45 475 2 | COMBINATED RADIATOR |
| HEX NUT M10 | 10335968 | 17 | 4 | 167 | 10 35 508 4 | OIL COOLER |
| HEX NUT M10 | 10411095 | 5 | 2 | 577 | 10 21 997 8 | STARTER |
| HEX NUT M10 | 4000383 | 16 | 4 | 249 | 10 84 086 6 | ARM REST RIGHT |
| HEX NUT M10 | 4000383 | 33 | 4 | 346 | 10 35 802 8 | CONTROL VALVE INSTALLAT |
| HEX NUT M10 | 4000383 | 45 | 3 | 346 | 10 35 802 8 | CONTROL VALVE INSTALLAT |
| HEX NUT M10 | 4000383 | 8 | 8 | 444 | 11 10 266 2 | BATTERY INSTALLATION |
| HEX NUT M10 | 4000383 | 29 | 1 | 451 | 90 18 419 | FUEL TANK ASSY. |
| HEX NUT M10 | 4000383 | 14 | 1 | 646 | 93 74 949 | PIN CPL |
| HEX NUT M10 | 4000913 | 18 | 2 | 160 | 10 35 809 2 | ENGINE COOLING |

| Description | Item | Pos. | Quantity | Page | Assembly | Description |
|---|---|---|---|---|---|---|
| HEX NUT M10 | 4000913 | 47 | 4 | 181 | 90 18 423 | SWING GEAR INSTALLATION |
| HEX NUT M10 | 4600567 | 25 | 2 | 388 | 10 07 307 3 | SIDE DOOR RIGHT |
| HEX NUT M10 | 4600567 | 8 | 2 | 394 | 10 06 691 8 | LID |
| HEX NUT M10 | 4600567 | 15 | 2 | 399 | 99 47 961 | SIDE DOOR FRONT LEFT |
| HEX NUT M10 | 4600567 | 22 | 2 | 400 | 10 02 525 4 | DOOR LOCK |
| HEX NUT M10 | 4600579 | 44 | 1 | 313 | 10 35 801 7 | HYDR.INSTAL.CONTROL TUBE |
| HEX NUT M10 | 4600579 | 91 | 1 | 313 | 10 35 801 7 | HYDR.INSTAL.CONTROL TUBE |
| HEX NUT M10 | 4600579 | 6 | 2 | 362 | 99 45 116 | PIPE CLAMP |
| HEX NUT M10 | 4600579 | 15 | 2 | 362 | 99 45 116 | PIPE CLAMP |
| HEX NUT M10 | 4600579 | 47 | 4 | 444 | 11 10 266 2 | BATTERY INSTALLATION |
| HEX NUT M10 | 4600579 | 62 | 2 | 619 | 10 49 830 0 | GOOSENECK BOOM 6,70M |
| HEX NUT M10 | 4600579 | 25 | 12 | 641 | 10 49 881 6 | SLIDING RAIL |
| HEX NUT M10 | 4600579 | 6 | 1 | 643 | 10 06 090 1 | PIN CPL |
| HEX NUT M10 | 4901429 | 24 | 6 | 104 | 10 35 800 6 | EXHAUST GAS SYSTEM |
| HEX NUT M10 | 4980805 | 3 | 3 | 575 | 10 11 553 9 | STARTER INSTALLATION |
| HEX NUT M10 | 4981173 | 6 | 1 | 573 | 90 80 735 | EXHAUST TC MOUNTING |
| HEX NUT M10 | 7370889 | 8 | 2 | 240 | 10 16 576 6 | STEERING CONSOLE |
| HEX NUT M10 | 7370889 | 13 | 4 | 255 | 56 18 923 | CONTROL CONSOLE RIGHT |
| HEX NUT M12 | 10336052 | 22 | 2 | 167 | 10 35 508 4 | OIL COOLER |
| HEX NUT M12 | 4000619 | 44 | 8 | 301 | 10 35 801 5 | HYDR.ROTARY CONNEC.+SWI |
| HEX NUT M12 | 4000619 | 58 | 4 | 301 | 10 35 801 5 | HYDR.ROTARY CONNEC.+SWI |
| HEX NUT M12 | 4000619 | 140 | 1 | 377 | 10 35 800 4 | PANELLING |
| HEX NUT M12 | 4000619 | 36 | 4 | 618 | 10 49 830 0 | GOOSENECK BOOM 6,70M |
| HEX NUT M12 | 4000619 | 8 | 2 | 655 | 10 06 203 8 | HYDRAULIC CYLINDER W/ DIS |
| HEX NUT M12 | 4119106 | 7 | 12 | 160 | 10 35 809 2 | ENGINE COOLING |
| HEX NUT M12 | 4119106 | 195 | 4 | 296 | 10 35 801 2 | HYDR.PUMPS TO SPOOL VALV |
| HEX NUT M12 | 4119106 | 210 | 4 | 296 | 10 35 801 2 | HYDR.PUMPS TO SPOOL VALV |
| HEX NUT M12 | 4119106 | 330 | 4 | 296 | 10 35 801 2 | HYDR.PUMPS TO SPOOL VALV |
| HEX NUT M12 | 4119106 | 8 | 4 | 310 | 10 35 809 3 | HYDR.INSTALLATION FAN DR |
| HEX NUT M12 | 4900125 | 12 | 1 | 244 | 10 05 879 2 | MANIPULATOR LEFT |
| HEX NUT M12 | 4900125 | 12 | 1 | 259 | 10 05 879 4 | MANIPULATOR RIGHT |
| HEX NUT M12 | 4900125 | 22 | 2 | 402 | 10 35 387 9 | DOOR LOCK |
| HEX NUT M12 | 4900546 | 48 | 4 | 109 | 90 77 872 | PUMP DISTRIBUTION GEAR |
| HEX NUT M12 | 4900546 | 33 | 1 | 269 | 10 06 017 4 | FOOT PILOT VALVE LEFT |
| HEX NUT M12 | 4900546 | 33 | 1 | 270 | 10 06 017 5 | FOOT PILOT VALVE RIGHT |
| HEX NUT M12 | 4900546 | 48 | 2 | 309 | 10 35 801 3 | HYDR.AND GEAR OIL COOLIN |
| HEX NUT M12 | 4900546 | 13 | 10 | 371 | 10 07 369 5 | COVERING ROTATING DECK |
| HEX NUT M12 | 4900546 | 23 | 4 | 371 | 10 07 369 5 | COVERING ROTATING DECK |
| HEX NUT M12 | 4900546 | 17 | 1 | 690 | 98 82 766 | ADJUSTMENT |
| HEX NUT M12 | 4980150 | 14 | 2 | 164 | 10 45 475 2 | COMBINATED RADIATOR |
| HEX NUT M12X1,5 | 10217578 | 16 | 1 | 115 | 10 22 041 0 | ADJUSTMENT |
| HEX NUT M14X1,5 | 4001927 | 105 | 1 | 247 | 99 68 625 | LH-JOYSTICK LEFT |
| HEX NUT M14X1,5 | 4001927 | 105 | 1 | 262 | 99 68 611 | LH-JOYSTICK RIGHT |
| HEX NUT M16 | 4000420 | 53 | 8 | 51 | 10 49 883 7 | UNDERCARRIAGE CPL |
| HEX NUT M16 | 4000420 | 49 | 12 | 109 | 90 77 872 | PUMP DISTRIBUTION GEAR |
| HEX NUT M16 | 4000420 | 21 | 2 | 341 | 10 84 584 9 | PUMPS + COUPLING INSTALL |
| HEX NUT M16 | 4000420 | 49 | 5 | 366 | 10 03 245 2 | CONTROL BLOCK |
| HEX NUT M16 | 4000420 | 5 | 2 | 647 | 10 06 428 8 | CLAMP |
| HEX NUT M16 | 4000420 | 5 | 2 | 648 | 10 38 549 0 | CLAMP |
| HEX NUT M16X1,5 | 4980478 | 8 | 1 | 574 | 10 11 646 3 | GENERATOR, PRE-ASSEMBLE |
| HEX NUT M3 | 10003140 | 26 | 2 | 243 | 73 73 807 | SAFETY LEVER |
| HEX NUT M4 | 4000376 | 36 | 2 | 170 | 10 49 858 1 | MOTOR-ELEKTRIK |
| HEX NUT M4 | 4000376 | 33 | 6 | 237 | 10 38 502 4 | ARM REST LEFT |
| HEX NUT M4 | 4000376 | 92 | 4 | 238 | 10 38 502 4 | ARM REST LEFT |
| HEX NUT M4 | 4000376 | 105 | 2 | 251 | 10 84 086 6 | ARM REST RIGHT |
| HEX NUT M4 | 4000376 | 121 | 2 | 253 | 10 84 086 6 | ARM REST RIGHT |
| HEX NUT M4 | 4000376 | 5 | 3 | 288 | 10 02 207 8 | ASSEMBLY BRACKET |
| HEX NUT M4 | 413412301 | 39 | 4 | 682 | 10 28 689 7 | LUBRICATION PUMP |
| HEX NUT M4 | 4600625 | 10 | 6 | 285 | 10 02 211 7 | AIR CIRCULATION CASE |
| HEX NUT M5 | 4000466 | 72 | 2 | 238 | 10 38 502 4 | ARM REST LEFT |

| Description | Item | Pos. | Quantity | Page | Assembly | Description |
|---|---|---|---|---|---|---|
| HEX NUT M5 | 4000466 | 63 | 2 | 241 | 97 58 815 01 | E-BOARD |
| HEX NUT M5 | 4000466 | 8 | 2 | 242 | 98 74 988 | PLATINES INSTALLATION A101 |
| HEX NUT M5 | 4000466 | 34 | 2 | 443 | 99 47 695 | ELECTRICAL SYSTEM E50 |
| HEX NUT M5 | 4001866 | 66 | 2 | 241 | 97 58 815 01 | E-BOARD |
| HEX NUT M6 | 10411094 | 3 | 1 | 577 | 10 21 997 8 | STARTER |
| HEX NUT M6 | 4000379 | 480 | 2 | 75 | 56 16 688 | WHEEL BRAKE VALVE |
| HEX NUT M6 | 4000379 | 53 | 3 | 102 | 99 37 298 | AIR FILTER INSTALLATION |
| HEX NUT M6 | 4000379 | 47 | 4 | 108 | 90 77 872 | PUMP DISTRIBUTION GEAR |
| HEX NUT M6 | 4000379 | 64 | 2 | 241 | 97 58 815 01 | E-BOARD |
| HEX NUT M6 | 4000379 | 86 | 2 | 251 | 10 84 086 6 | ARM REST RIGHT |
| HEX NUT M6 | 4000379 | 75 | 1 | 280 | 10 40 689 8 | AIR CONDITIONING UNIT |
| HEX NUT M6 | 4000379 | 478 | 2 | 353 | 10 35 802 8 | CONTROL VALVE INSTALLAT |
| HEX NUT M6 | 4000379 | 11 | 2 | 381 | 99 49 428 | COOLER COWL |
| HEX NUT M6 | 4000379 | 22 | 4 | 388 | 10 07 307 3 | SIDE DOOR RIGHT |
| HEX NUT M6 | 4000379 | 5 | 4 | 394 | 10 06 691 8 | LID |
| HEX NUT M6 | 4000379 | 12 | 4 | 399 | 99 47 961 | SIDE DOOR FRONT LEFT |
| HEX NUT M6 | 4000379 | 12 | 4 | 400 | 10 02 525 4 | DOOR LOCK |
| HEX NUT M6 | 4000379 | 12 | 4 | 402 | 10 35 387 9 | DOOR LOCK |
| HEX NUT M6 | 4000379 | 180 | 2 | 411 | 70 28 759 | FRONT PANE TOP |
| HEX NUT M6 | 4000379 | 300 | 1 | 414 | 70 28 769 | DRIVER'S CAB DOOR |
| HEX NUT M6 | 4000379 | 450 | 4 | 428 | 10 29 026 4 | ASSY. PARTS |
| HEX NUT M6 | 4000900 | 17 | 2 | 338 | 56 17 689 | SHUT OFF DEVICE DN 100 |
| HEX NUT M6 | 4002477 | 67 | 2 | 241 | 97 58 815 01 | E-BOARD |
| HEX NUT M6 | 4901651 | 45 | 1 | 443 | 99 47 695 | ELECTRICAL SYSTEM E50 |
| HEX NUT M8 | 4000381 | 137 | 1 | 163 | 10 35 809 2 | ENGINE COOLING |
| HEX NUT M8 | 4000381 | 30 | 33 | 170 | 10 49 858 1 | MOTOR-ELEKTRIK |
| HEX NUT M8 | 4000381 | 68 | 1 | 179 | 10 35 800 9 | ENGINE ADD-ON PARTS |
| HEX NUT M8 | 4000381 | 23 | 2 | 209 | 10 04 966 2 | AUTOMATIC CENTRALIZED L |
| HEX NUT M8 | 4000381 | 6 | 6 | 214 | 10 04 966 3 | CENTRAL LUBRICATING SYS |
| HEX NUT M8 | 4000381 | 57 | 6 | 228 | 99 39 322 | FIXING PARTS |
| HEX NUT M8 | 4000381 | 131 | 2 | 230 | 10 49 880 9 | DRIVER STAND BASE SECTIO |
| HEX NUT M8 | 4000381 | 161 | 3 | 230 | 10 49 880 9 | DRIVER STAND BASE SECTIO |
| HEX NUT M8 | 4000381 | 59 | 1 | 312 | 10 35 809 3 | HYDR.INSTALLATION FAN DR |
| HEX NUT M8 | 4000381 | 4 | 2 | 390 | 10 06 692 0 | TOOL BOX |
| HEX NUT M8 | 4000381 | 4 | 2 | 392 | 10 37 938 6 | TOOL BOX |
| HEX NUT M8 | 4000381 | 170 | 4 | 414 | 70 28 769 | DRIVER'S CAB DOOR |
| HEX NUT M8 | 4000381 | 160 | 1 | 420 | 10 48 808 7 | ELECTRICAL INSTALLATION |
| HEX NUT M8 | 4000381 | 540 | 1 | 423 | 10 29 036 3 | WIPPER MOTOR SET |
| HEX NUT M8 | 4000381 | 180 | 4 | 427 | 10 29 026 4 | ASSY. PARTS |
| HEX NUT M8 | 4000381 | 208 | 50 | 436 | 10 35 814 1 | ELECTRICAL SYSTEM |
| HEX NUT M8 | 4000381 | 25 | 4 | 444 | 11 10 266 2 | BATTERY INSTALLATION |
| HEX NUT M8 | 4000381 | 30 | 14 | 444 | 11 10 266 2 | BATTERY INSTALLATION |
| HEX NUT M8 | 4000381 | 27 | 6 | 447 | 10 35 814 3 | AIR CONDITION HOSES INSTA |
| HEX NUT M8 | 4000381 | 5 | 1 | 680 | 10 49 822 9 | FULL AUTOMAT.CENTRAL.LU |
| HEX NUT M8 | 411508001 | 65 | 1 | 241 | 97 58 815 01 | E-BOARD |
| HEX NUT M8 | 4600783 | 26 | 3 | 101 | 99 46 045 | FUEL SYSTEM |
| HEX NUT M8 | 4600783 | 54 | 1 | 179 | 10 35 800 9 | ENGINE ADD-ON PARTS |
| HEX NUT M8 | 4600783 | 68 | 1 | 241 | 97 58 815 01 | E-BOARD |
| HEX NUT M8 | 4600783 | 66 | 2 | 374 | 10 35 800 4 | PANELLING |
| HEX NUT M8 | 4600783 | 430 | 1 | 428 | 10 29 026 4 | ASSY. PARTS |
| HEX NUT M8 | 4901096 | 4 | 2 | 275 | 94 76 369 | FOOT PEDAL LEFT ASSEMBL |
| HEX NUT M8 | 4901096 | 4 | 2 | 276 | 94 76 441 | FOOT PEDAL RIGHT ASSEMBL |
| HEX NUT M8 | 4901573 | 8 | 4 | 212 | 10 48 840 4 | DISTRIBUTION BLOCK SXE-2 |
| HEX NUT M8 | 4901573 | 56 | 1 | 312 | 10 35 809 3 | HYDR.INSTALLATION FAN DR |
| HEX NUT M8 | 4901573 | 469 | 7 | 314 | 10 35 801 7 | HYDR.INSTAL.CONTROL TUBE |
| HEX NUT M8 | 4901573 | 345 | 1 | 350 | 10 35 802 8 | CONTROL VALVE INSTALLAT |
| HEX NUT M8 | 4901573 | 28 | 12 | 640 | 10 49 817 6 | PISTON ROD COVER BUCKET |
| HEX NUT M8X1 | 4119030 | 150 | 2 | 411 | 70 28 759 | FRONT PANE TOP |
| HEX SPACER PIN M4X8 | 7016412 | 26 | 4 | 442 | 99 47 695 | ELECTRICAL SYSTEM E50 |
| HEXALOBULAR HEAD SCREW | 10118912 | 4 | 10 | 683 | 90 80 918 | FLYWHEEL ASSEMBLY SAE 1 |

| Description | Item | Pos. | Quantity | Page | Assembly | Description |
|---|---|---|---|---|---|---|
| HEXALOBULAR HEAD SCREW | 10118786 | 10 | 6 | 499 | 10 11 617 5 | CRANKSHAFT ADD-ON PARTS |
| HEXALOBULAR HEAD SCREW | 10131573 | 3 | 6 | 503 | 90 79 850 | CYLINDER HEAD ASSEMBLY |
| HEXALOBULAR HEAD SCREW | 10131581 | 5 | 14 | 478 | 10 11 577 8 | CRANKCASE |
| HIGH PRESSURE HOSE | 774376108 | 70 | 1m | 217 | 90 64 786 | CONNECTING ELEMENT |
| HIGH PRESSURE HOSE | 774376108 | 70 | 15m | 219 | 10 01 461 1 | AUXILIARY BOX |
| HINGE | 7029409 | 640 | 2 | 416 | 70 28 842 | DOOR FRAME |
| HINGE | 9939056 | 121 | 2 | 376 | 10 35 800 4 | PANELLING |
| HINGED THREADED UNION | 7370799 | 107 | 1 | 344 | 10 84 584 9 | PUMPS + COUPLING INSTALL |
| HINGED THREADED UNION | 7617386 | 67 | 1 | 301 | 10 35 801 5 | HYDR.ROTARY CONNEC.+SWI |
| HINGED THREADED UNION W | 7617261 | 12 | 3 | 225 | 10 06 014 6 | HYDR.INSTAL.FOOT BOARD |
| HINGED THREADED UNION W | 7617261 | 26 | 1 | 297 | 99 37 312 | OIL PILOT VALVE INSTALLATIO |
| HINGED THREADED UNION W | 7617261 | 141 | 11 | 348 | 10 35 802 8 | CONTROL VALVE INSTALLAT |
| HINGED THREADED UNION W | 7617714 | 19 | 1 | 183 | 99 46 389 | SLEWING GEAR |
| HINGED THREADED UNION W | 7617714 | 22 | 4 | 207 | 99 46 408 | GREASE PIPE INSTALLATION |
| HINGED THREADED UNION W | 7617714 | 84 | 1 | 343 | 10 84 584 9 | PUMPS + COUPLING INSTALL |
| HINGED THREADED UNION W | 7617359 | 160 | 1 | 348 | 10 35 802 8 | CONTROL VALVE INSTALLAT |
| HINGED THREADED UNION | 7412734 | 9 | 1 | 212 | 10 48 840 4 | DISTRIBUTION BLOCK SXE-2 |
| HIP BELT | 10493984 | 62 | 1 | 234 | 11 10 016 6 | SEAT TOP |
| HOIST CYLINDERS | 10498158 | 10 | 1 | 670 | 10 49 815 9 | HOIST CYLINDERS DIA.180 |
| HOIST CYLINDERS DIA.180 | 10498159 | 3 | 1 | 7 | . | |
| HOLDER | 10009023 | 270 | 2 | 420 | 10 48 808 7 | ELECTRICAL INSTALLATION |
| HOLDER | 10027438 | 231 | 2 | 411 | 70 28 759 | FRONT PANE TOP |
| HOLDER | 10039678 | 621 | 2 | 429 | 10 29 026 4 | ASSY. PARTS |
| HOLDER | 10041876 | 299 | 3 | 176 | 10 49 858 1 | MOTOR-ELEKTRIK |
| HOLDER | 10041876 | 45 | 1 | 280 | 10 40 689 8 | AIR CONDITIONING UNIT |
| HOLDER | 10041876 | 35 | 1 | 313 | 10 35 801 7 | HYDR.INSTAL.CONTROL TUBE |
| HOLDER | 10041876 | 280 | 1 | 436 | 10 35 814 1 | ELECTRICAL SYSTEM |
| HOLDER | 10041876 | 17 | 1 | 559 | 10 11 646 4 | AIR COND. COMPRESSOR A |
| HOLDER | 10059516 | 25 | 2 | 178 | 10 35 800 9 | ENGINE ADD-ON PARTS |
| HOLDER | 10079307 | 20 | 1 | 228 | 99 39 322 | FIXING PARTS |
| HOLDER | 10116522 | 3 | 1 | 549 | 10 11 657 6 | CONNECTION PIECE |
| HOLDER | 10117267 | 1 | 1 | 546 | 10 11 726 8 | CLAMP - ADD-ON UNIT |
| HOLDER | 10119139 | 25 | 1 | 559 | 10 11 646 4 | AIR COND. COMPRESSOR A |
| HOLDER | 10367055 | 20 | 1 | 178 | 10 35 800 9 | ENGINE ADD-ON PARTS |
| HOLDER | 10377687 | 3 | 1 | 160 | 10 35 809 2 | ENGINE COOLING |
| HOLDER | 10377689 | 4 | 1 | 160 | 10 35 809 2 | ENGINE COOLING |
| HOLDER | 6905671 | 330 | 1 | 436 | 10 35 814 1 | ELECTRICAL SYSTEM |
| HOLDER | 7028768 | 240 | 9 | 420 | 10 48 808 7 | ELECTRICAL INSTALLATION |
| HOLDER | 7028801 | 120 | 2 | 410 | 10 03 553 0 | FRONT WINDOW BOTTOM |
| HOLDER | 7028812 | 250 | 11 | 420 | 10 48 808 7 | ELECTRICAL INSTALLATION |
| HOLDER | 7372355 | 18 | 1 | 243 | 73 73 807 | SAFETY LEVER |
| HOLDER | 7373825 | 20 | 1 | 243 | 73 73 807 | SAFETY LEVER |
| HOLDER | 9079591 | 11 | 1 | 559 | 10 11 646 4 | AIR COND. COMPRESSOR A |
| HOLDER | 9079844 | 14 | 1 | 486 | 90 79 483 | OIL SUMP |
| HOLDER | 9937326 | 5 | 2 | 104 | 10 35 800 6 | EXHAUST GAS SYSTEM |
| HOLDER | 9949402 | 15 | 1 | 178 | 10 35 800 9 | ENGINE ADD-ON PARTS |
| HOLDER | 9949403 | 10 | 1 | 178 | 10 35 800 9 | ENGINE ADD-ON PARTS |
| HOLDER | 9950357 | 30 | 1 | 228 | 99 39 322 | FIXING PARTS |
| HOLDER | 9950385 | 10 | 1 | 228 | 99 39 322 | FIXING PARTS |
| HOLLOW SCREW 10X1 | 9080466 | 3 | 5 | 547 | 90 79 083 | PIPELINE INSTALLATION |
| HOLLOW SCREW 10X3 | 9078685 | 92 | 1 | 543 | 10 11 628 5 | FUEL LINE |
| HOLLOW SCREW 10X3 DIN 764 | 4001439 | 10 | 1 | 545 | 10 11 559 5 | LEAK OIL RETURN LINE |
| HOLLOW SCREW 10X3 DIN 764 | 4079240 | 24 | 3 | 542 | 10 11 628 5 | FUEL LINE |
| HOLLOW SCREW 10X3 DIN 764 | 4079240 | 74 | 1 | 543 | 10 11 628 5 | FUEL LINE |
| HOLLOW SCREW 12X3 DIN 764 | 4980741 | 26 | 4 | 542 | 10 11 628 5 | FUEL LINE |
| HOLLOW SCREW 12X3 DIN 764 | 4980741 | 76 | 1 | 543 | 10 11 628 5 | FUEL LINE |
| HOLLOW SCREW 6X3 DIN 764 | 4079160 | 8 | 6 | 545 | 10 11 559 5 | LEAK OIL RETURN LINE |
| HOLLOW SCREW 6X3 DIN 764 | 4079160 | 14 | 2 | 599 | 90 80 006 | POWER TAKE-OFF ADD-ON |
| HOLLOW SCREW WITH THROT | 7381925 | 28 | 1 | 542 | 10 11 628 5 | FUEL LINE |
| HOLLOW SCREW WITH THROT | 7381925 | 78 | 1 | 543 | 10 11 628 5 | FUEL LINE |

| Description | Item | Pos. | Quantity | Page | Assembly | Description |
|---|---|---|---|---|---|---|
| HOLLOW SCREW X2 | 9073678 | 5 | 1 | 479 | 90 73 795 | PISTON COOLING |
| HOSE | 10002237 | 75 | 2 | 620 | 10 49 830 0 | GOOSENECK BOOM 6,70M |
| HOSE | 10002636 | 80 | 1 | 304 | 10 35 801 4 | HYDR.SUCT.+RETURN OIL HO |
| HOSE | 10002803 | 32 | 1 | 311 | 10 35 809 3 | HYDR.INSTALLATION FAN DR |
| HOSE | 10003704 | 80 | 1 | 313 | 10 35 801 7 | HYDR.INSTAL.CONTROL TUBE |
| HOSE | 10006338 | 55 | 1 | 313 | 10 35 801 7 | HYDR.INSTAL.CONTROL TUBE |
| HOSE | 10007025 | 20 | 1 | 209 | 10 04 966 2 | AUTOMATIC CENTRALIZED L |
| HOSE | 10009943 | 5 | 0.6m | 562 | 90 80 301 | AT-WATER PUMP WITH FAST |
| HOSE | 10012162 | 10 | 1 | 215 | 10 10 169 3 | DISTRIBUTION BLOCK MX-F 5/ |
| HOSE | 10019230 | 220 | 1 | 306 | 10 35 801 4 | HYDR.SUCT.+RETURN OIL HO |
| HOSE | 10020719 | 595 | 1 | 355 | 10 35 802 8 | CONTROL VALVE INSTALLAT |
| HOSE | 10036252 | 2 | 1 | 626 | 11 00 350 2 | DISTRIBUTION BLOCK SXE-2 |
| HOSE | 10036375 | 8 | 1 | 631 | 10 38 484 8 | CENTRAL LUBRICATING SYS |
| HOSE | 10042726 | 2 | 1 | 308 | 10 35 801 3 | HYDR.AND GEAR OIL COOLIN |
| HOSE | 10042728 | 36 | 1 | 309 | 10 35 801 3 | HYDR.AND GEAR OIL COOLIN |
| HOSE | 10043139 | 15 | 1 | 308 | 10 35 801 3 | HYDR.AND GEAR OIL COOLIN |
| HOSE | 10043160 | 10 | 1 | 310 | 10 35 809 3 | HYDR.INSTALLATION FAN DR |
| HOSE | 10043476 | 60 | 1 | 361 | 10 49 822 5 | HYDR.TUBES INSTALLATION |
| HOSE | 10043478 | 65 | 1 | 361 | 10 49 822 5 | HYDR.TUBES INSTALLATION |
| HOSE | 10043518 | 2 | 1 | 300 | 10 35 801 5 | HYDR.ROTARY CONNEC.+SWI |
| HOSE | 10043519 | 4 | 1 | 300 | 10 35 801 5 | HYDR.ROTARY CONNEC.+SWI |
| HOSE | 10043520 | 5 | 1 | 300 | 10 35 801 5 | HYDR.ROTARY CONNEC.+SWI |
| HOSE | 10043521 | 3 | 1 | 300 | 10 35 801 5 | HYDR.ROTARY CONNEC.+SWI |
| HOSE | 10043525 | 170 | 1m | 218 | 90 64 786 | CONNECTING ELEMENT |
| HOSE | 10043525 | 170 | 10m | 220 | 10 01 461 1 | AUXILIARY BOX |
| HOSE | 10043931 | 200 | 1 | 306 | 10 35 801 4 | HYDR.SUCT.+RETURN OIL HO |
| HOSE | 10043999 | 15 | 1 | 300 | 10 35 801 5 | HYDR.ROTARY CONNEC.+SWI |
| HOSE | 10044235 | 30 | 1 | 311 | 10 35 809 3 | HYDR.INSTALLATION FAN DR |
| HOSE | 10044236 | 31 | 1 | 311 | 10 35 809 3 | HYDR.INSTALLATION FAN DR |
| HOSE | 10044599 | 27 | 1 | 618 | 10 49 830 0 | GOOSENECK BOOM 6,70M |
| HOSE | 10097258 | 70 | 1 | 295 | 10 35 801 2 | HYDR.PUMPS TO SPOOL VALV |
| HOSE | 10097259 | 50 | 1 | 295 | 10 35 801 2 | HYDR.PUMPS TO SPOOL VALV |
| HOSE | 10097282 | 3 | 1 | 308 | 10 35 801 3 | HYDR.AND GEAR OIL COOLIN |
| HOSE | 10101257 | 20 | 1 | 300 | 10 35 801 5 | HYDR.ROTARY CONNEC.+SWI |
| HOSE | 10101261 | 100 | 1 | 304 | 10 35 801 4 | HYDR.SUCT.+RETURN OIL HO |
| HOSE | 10101305 | 10 | 1 | 447 | 10 35 814 3 | AIR CONDITION HOSES INSTA |
| HOSE | 10101307 | 16 | 1 | 447 | 10 35 814 3 | AIR CONDITION HOSES INSTA |
| HOSE | 10101313 | 12 | 1 | 447 | 10 35 814 3 | AIR CONDITION HOSES INSTA |
| HOSE | 10101314 | 14 | 1 | 447 | 10 35 814 3 | AIR CONDITION HOSES INSTA |
| HOSE | 10101342 | 21 | 1 | 300 | 10 35 801 5 | HYDR.ROTARY CONNEC.+SWI |
| HOSE | 10101362 | 80 | 1 | 295 | 10 35 801 2 | HYDR.PUMPS TO SPOOL VALV |
| HOSE | 10101365 | 60 | 1 | 295 | 10 35 801 2 | HYDR.PUMPS TO SPOOL VALV |
| HOSE | 10101699 | 3 | 2 | 624 | 10 38 408 5 | CENTRAL LUBRICATING SYS |
| HOSE | 10101700 | 7 | 1 | 631 | 10 38 484 8 | CENTRAL LUBRICATING SYS |
| HOSE | 10101718 | 3 | 1 | 626 | 11 00 350 2 | DISTRIBUTION BLOCK SXE-2 |
| HOSE | 10101721 | 6 | 1 | 215 | 10 10 169 3 | DISTRIBUTION BLOCK MX-F 5/ |
| HOSE | 10101722 | 5 | 1 | 215 | 10 10 169 3 | DISTRIBUTION BLOCK MX-F 5/ |
| HOSE | 10101724 | 8 | 1 | 215 | 10 10 169 3 | DISTRIBUTION BLOCK MX-F 5/ |
| HOSE | 10101726 | 9 | 1 | 215 | 10 10 169 3 | DISTRIBUTION BLOCK MX-F 5/ |
| HOSE | 10101727 | 7 | 1 | 622 | 10 10 169 4 | DISTRIBUTION BLOCK MX-F 5/ |
| HOSE | 10101728 | 8 | 1 | 622 | 10 10 169 4 | DISTRIBUTION BLOCK MX-F 5/ |
| HOSE | 10101730 | 9 | 1 | 622 | 10 10 169 4 | DISTRIBUTION BLOCK MX-F 5/ |
| HOSE | 10101732 | 10 | 1 | 622 | 10 10 169 4 | DISTRIBUTION BLOCK MX-F 5/ |
| HOSE | 10101733 | 11 | 1 | 622 | 10 10 169 4 | DISTRIBUTION BLOCK MX-F 5/ |
| HOSE | 10216661 | 77 | 1 | 620 | 10 49 830 0 | GOOSENECK BOOM 6,70M |
| HOSE | 10217669 | 35 | 1 | 309 | 10 35 801 3 | HYDR.AND GEAR OIL COOLIN |
| HOSE | 10218792 | 215 | 1 | 314 | 10 35 801 7 | HYDR.INSTAL.CONTROL TUBE |
| HOSE | 10219333 | 16 | 1 | 308 | 10 35 801 3 | HYDR.AND GEAR OIL COOLIN |
| HOSE | 10219335 | 55 | 2 | 672 | 10 49 815 8 | HOIST CYLINDERS |
| HOSE | 10220597 | 3 | 2 | 84 | 10 07 713 5 | HYDR.INSTALLATION UNDER |

| Description | Item | Pos. | Quantity | Page | Assembly | Description |
|---|---|---|---|---|---|---|
| HOSE | 10287541 | 10 | 2 | 226 | 99 44 515 | HYDR.INSTAL.ARM REST LEF |
| HOSE | 10287541 | 10 | 2 | 227 | 99 44 516 | HYDR.INSTAL.ARM REST RIGH |
| HOSE | 10290607 | 85 | 2 | 302 | 10 35 801 5 | HYDR.ROTARY CONNEC.+SWI |
| HOSE | 10294166 | 6 | 1 | 622 | 10 10 169 4 | DISTRIBUTION BLOCK MX-F 5/ |
| HOSE | 10294270 | 30 | 1 | 632 | 10 38 484 8 | CENTRAL LUBRICATING SYS |
| HOSE | 10332716 | 25 | 1 | 311 | 10 35 809 3 | HYDR.INSTALLATION FAN DR |
| HOSE | 10332717 | 15 | 1 | 311 | 10 35 809 3 | HYDR.INSTALLATION FAN DR |
| HOSE | 10340145 | 35 | 1 | 309 | 10 35 801 3 | HYDR.AND GEAR OIL COOLIN |
| HOSE | 11003506 | 4 | 1 | 626 | 11 00 350 2 | DISTRIBUTION BLOCK SXE-2 |
| HOSE | 11003506 | 5 | 1 | 626 | 11 00 350 2 | DISTRIBUTION BLOCK SXE-2 |
| HOSE | 5600245 | 30 | 1 | 304 | 10 35 801 4 | HYDR.SUCT.+RETURN OIL HO |
| HOSE | 5604439 | 22 | 1 | 616 | 10 49 830 0 | GOOSENECK BOOM 6,70M |
| HOSE | 5604515 | 23 | 1 | 616 | 10 49 830 0 | GOOSENECK BOOM 6,70M |
| HOSE | 5610202 | 15 | 2 | 84 | 10 07 713 5 | HYDR.INSTALLATION UNDER |
| HOSE | 5610426 | 130 | 1 | 305 | 10 35 801 4 | HYDR.SUCT.+RETURN OIL HO |
| HOSE | 5611887 | 210 | 1 | 306 | 10 35 801 4 | HYDR.SUCT.+RETURN OIL HO |
| HOSE | 5612035 | 65 | 1 | 301 | 10 35 801 5 | HYDR.ROTARY CONNEC.+SWI |
| HOSE | 5612128 | 70 | 1 | 304 | 10 35 801 4 | HYDR.SUCT.+RETURN OIL HO |
| HOSE | 5615145 | 78 | 1 | 620 | 10 49 830 0 | GOOSENECK BOOM 6,70M |
| HOSE | 5618477 | 40 | 2 | 312 | 10 35 809 3 | HYDR.INSTALLATION FAN DR |
| HOSE | 5618975 | 76 | 2 | 620 | 10 49 830 0 | GOOSENECK BOOM 6,70M |
| HOSE | 5619111 | 230 | 1 | 314 | 10 35 801 7 | HYDR.INSTAL.CONTROL TUBE |
| HOSE | 5619111 | 240 | 1 | 314 | 10 35 801 7 | HYDR.INSTAL.CONTROL TUBE |
| HOSE | 6200461 | 700 | 6m | 421 | 10 48 808 7 | ELECTRICAL INSTALLATION |
| HOSE | 7021504 | 180 | 1 | 306 | 10 35 801 4 | HYDR.SUCT.+RETURN OIL HO |
| HOSE | 7404503 | 90 | 1 | 304 | 10 35 801 4 | HYDR.SUCT.+RETURN OIL HO |
| HOSE | 9937092 | 93 | 1 | 102 | 99 37 298 | AIR FILTER INSTALLATION |
| HOSE 10X1450 | 5617317 | 74 | 2 | 620 | 10 49 830 0 | GOOSENECK BOOM 6,70M |
| HOSE 32X1100 | 5610216 | 28 | 1 | 618 | 10 49 830 0 | GOOSENECK BOOM 6,70M |
| HOSE 32X1600 | 10046968 | 30 | 6 | 618 | 10 49 830 0 | GOOSENECK BOOM 6,70M |
| HOSE 32X1600 | 11341036 | 30 | 6 | 637 | 11 45 153 0 | HOSES UPPER-GOOSENECK B |
| HOSE 32X2200 | 11181957 | 9 | 1 | 628 | 10 49 823 5 | STICK 2,35M |
| HOSE 32X2200 | 11181958 | 10 | 1 | 628 | 10 49 823 5 | STICK 2,35M |
| HOSE 32X2580 | 10044999 | 29 | 4 | 618 | 10 49 830 0 | GOOSENECK BOOM 6,70M |
| HOSE 32X2600 | 10291285 | 2 | 2 | 84 | 10 07 713 5 | HYDR.INSTALLATION UNDER |
| HOSE 32X650 | 5614248 | 280 | 2 | 296 | 10 35 801 2 | HYDR.PUMPS TO SPOOL VALV |
| HOSE 32X780 | 10044073 | 15 | 1 | 304 | 10 35 801 4 | HYDR.SUCT.+RETURN OIL HO |
| HOSE 40X2110 | 10100625 | 31 | 1 | 618 | 10 49 830 0 | GOOSENECK BOOM 6,70M |
| HOSE 40X2110 | 11341037 | 31 | 1 | 637 | 11 45 153 0 | HOSES UPPER-GOOSENECK B |
| HOSE 4X1012 | 10101723 | 7 | 2 | 215 | 10 10 169 3 | DISTRIBUTION BLOCK MX-F 5/ |
| HOSE CLAMP | 774252314 | 22 | 1 | 102 | 99 37 298 | AIR FILTER INSTALLATION |
| HOSE CLAMP | 774252314 | 42 | 4 | 162 | 10 35 809 2 | ENGINE COOLING |
| HOSE CLAMP | 9388597 | 60 | 2 | 179 | 10 35 800 9 | ENGINE ADD-ON PARTS |
| HOSE CLAMP CPL | 9387822 | 60 | 2 | 301 | 10 35 801 5 | HYDR.ROTARY CONNEC.+SWI |
| HOSE CLAMP HKFK 160 150-17 | 10356035 | 21 | 1 | 102 | 99 37 298 | AIR FILTER INSTALLATION |
| HOSE CLAMP HKFK 70 60-80x | 10012761 | 22 | 6 | 161 | 10 35 809 2 | ENGINE COOLING |
| HOSE CLIP | 9967032 | 10 | 1 | 313 | 10 35 801 7 | HYDR.INSTAL.CONTROL TUBE |
| HOSE CONNECTION DN25 | 9809629 | 49 | 1 | 162 | 10 35 809 2 | ENGINE COOLING |
| HOSE GUIDE | 9344777 | 25 | 4 | 84 | 10 07 713 5 | HYDR.INSTALLATION UNDER |
| HOSE GUIDE | 9344777 | 485 | 2 | 314 | 10 35 801 7 | HYDR.INSTAL.CONTROL TUBE |
| HOSE HOLDER | 9691678 | 49 | 1 | 102 | 99 37 298 | AIR FILTER INSTALLATION |
| HOSE NIPPLE | 10331639 | 3 | 3 | 164 | 10 45 475 2 | COMBINATED RADIATOR |
| HOSE NIPPLE | 10467241 | 4 | 1 | 164 | 10 45 475 2 | COMBINATED RADIATOR |
| HOSE NIPPLE | 9140351 | 8 | 1 | 482 | 10 11 916 7 | CRANKCASE BREATHER ASSE |
| HOSE NIPPLE | 9140351 | 26 | 1 | 573 | 90 80 735 | EXHAUST TC MOUNTING |
| HOSE NIPPLE 9SMnPb28K | 10115608 | 2 | 1 | 555 | 10 12 421 8 | COOLING WATER AIR BLEED |
| HOSE NIPPLE DN12 9SMn28K | 10115523 | 1 | 1 | 555 | 10 12 421 8 | COOLING WATER AIR BLEED |
| HOSE SECTION | 7402657 | 1 | 1 | 460 | 93 58 137 | OIL DRAIN HOSE |
| HOSE UNION DN6 STAHL | 774371808 | 10 | 1 | 217 | 90 64 786 | CONNECTING ELEMENT |
| HOSE UNION DN6 STAHL | 774371808 | 10 | 10 | 219 | 10 01 461 1 | AUXILIARY BOX |

| Description | Item | Pos. | Quantity | Page | Assembly | Description |
|---|---|---|---|---|---|---|
| HOSES UPPER-GOOSENECK B | 11451530 | 90 | 1 | 620 | 10 49 830 0 | GOOSENECK BOOM 6,70M |
| HOUSING | 10118489 | 10 | 1 | 688 | 10 11 856 1 | PILOT CONTROL UNIT VG6-8 |
| HOUSING | 11003594 | 1 | 1 | 282 | 10 81 666 6 | EVAPORATOR |
| HOUSING | 5605365 | 12 | 1 | 297 | 99 37 312 | OIL PILOT VALVE INSTALLATIO |
| HOUSING | 5605365 | 12 | 1 | 298 | 56 09 948 | OIL FILTER SET |
| HOUSING | 9074387 | 10 | 1 | 188 | 90 72 100 | HYDRAULIC INSTALLATION |
| HOUSING | 9277636 | 10 | 1 | 686 | 10 13 268 6 | HYDRAULIC VARIABLE DISPLA |
| HOUSING | 9882768 | 10 | 1 | 73 | 98 89 775 | HYDRAULIC INSTALLATION |
| HOUSING PVG 350 C 393 | 9273649 | 1 | 1 | 108 | 90 77 872 | PUMP DISTRIBUTION GEAR |
| HUB | 9267273 | 13 | 1 | 525 | 90 72 781 | LUBRICATING OIL PUMP |
| HUB | 9267273 | 13 | 1 | 526 | 90 80 277 | SUCTION PUMP PRE-ASS. |
| HYDR.AND GEAR OIL COOLIN | 10358013 | 7070 | 1 | 294 | 10 35 809 0 | HYDRAULIC INSTALLATION UP |
| HYDR.CYLINDER W/ADDITION. | 9948785 | 24 | 1 | 616 | 10 49 830 0 | GOOSENECK BOOM 6,70M |
| HYDR.INSTAL.ARM REST LEF | 9944515 | 20 | 1 | 224 | 10 49 873 7 | HYDR.INSTALLATION CONTRO |
| HYDR.INSTAL.ARM REST RIGH | 9944516 | 30 | 1 | 224 | 10 49 873 7 | HYDR.INSTALLATION CONTRO |
| HYDR.INSTAL.CONTROL TUBE | 10358017 | 7080 | 1 | 294 | 10 35 809 0 | HYDRAULIC INSTALLATION UP |
| HYDR.INSTAL.FOOT BOARD | 10060146 | 10 | 1 | 224 | 10 49 873 7 | HYDR.INSTALLATION CONTRO |
| HYDR.INSTALLATION CONTRO | 10498737 | 10 | 1 | 223 | 10 49 872 7 | DRIVER STAND |
| HYDR.INSTALLATION FAN DR | 10358093 | 7075 | 1 | 294 | 10 35 809 0 | HYDRAULIC INSTALLATION UP |
| HYDR.INSTALLATION UNDER | 10077135 | 14 | 1 | 49 | 10 49 883 7 | UNDERCARRIAGE CPL |
| HYDR.PUMPS TO SPOOL VALV | 10358012 | 7020 | 1 | 294 | 10 35 809 0 | HYDRAULIC INSTALLATION UP |
| HYDR.ROTARY CONNEC.+SWI | 10358015 | 7040 | 1 | 294 | 10 35 809 0 | HYDRAULIC INSTALLATION UP |
| HYDR.SUCT.+RETURN OIL HO | 10358014 | 7060 | 1 | 294 | 10 35 809 0 | HYDRAULIC INSTALLATION UP |
| HYDR.TUBES INSTALLATION | 10498225 | 7670 | 1 | 355 | 10 35 802 8 | CONTROL VALVE INSTALLAT |
| HYDRAULIC CYLINDER | 94020194 | 2 | 1 | 656 | 99 48 785 | HYDR.CYLINDER W/ADDITION. |
| HYDRAULIC CYLINDER | 9587580 | 2 | 2 | 671 | 10 49 815 8 | HOIST CYLINDERS |
| HYDRAULIC CYLINDER | 9596399 | 2 | 1 | 655 | 10 06 203 8 | HYDRAULIC CYLINDER W/ DIS |
| HYDRAULIC CYLINDER W/ DIS | 10062038 | 3 | 1 | 628 | 10 49 823 5 | STICK 2,35M |
| HYDRAULIC HOSE 16X700 | 10167652 | 5 | 1 | 195 | 96 90 213 01 | OIL TANK |
| HYDRAULIC HOSE 16X800 | 10167653 | 6 | 1 | 195 | 96 90 213 01 | OIL TANK |
| HYDRAULIC INSTALLATION | 9072100 | 13 | 1 | 183 | 99 46 389 | SLEWING GEAR |
| HYDRAULIC INSTALLATION | 9889775 | 10 | 2 | 67 | 10 07 713 7 | TRAVEL DRIVE |
| HYDRAULIC INSTALLATION UP | 10358090 | 7000 | 1 | 85 | 10 35 798 2 | UPPERCARRIAGE |
| HYDRAULIC OIL | 9070362 | 20 | 1 | 10 | 90 66 460 | |
| HYDRAULIC OIL LIEBHERR/ISO | 10356825 | 20 | 1l | 15 | 90 70 363 | BIODEGRADABLE HYDRAULIC- |
| HYDRAULIC OIL LIEBHERR/ISO | 10296478 | 1000 | 1 | 11 | 10 35 682 5 | HYDRAULIC OIL LIEBHERR/ISO |
| HYDRAULIC OIL LIEBHERR/ISO | 10330277 | 20 | 1 | 11 | 10 35 682 5 | HYDRAULIC OIL LIEBHERR/ISO |
| HYDRAULIC OIL LIEBHERR/IS | 10330278 | 210 | 1 | 11 | 10 35 682 5 | HYDRAULIC OIL LIEBHERR/ISO |
| HYDRAULIC OIL LIEBHERR/IS | 10296479 | 5 | 1 | 11 | 10 35 682 5 | HYDRAULIC OIL LIEBHERR/ISO |
| HYDRAULIC OIL LIEBHERR/IS | 10356791 | 30 | 1l | 14 | 90 70 362 | HYDRAULIC OIL |
| HYDRAULIC OIL LIEBHERR/IS | 10330271 | 1000 | 1 | 20 | 10 35 679 1 | HYDRAULIC OIL LIEBHERR/IS |
| HYDRAULIC OIL LIEBHERR/IS | 10330268 | 20 | 1 | 20 | 10 35 679 1 | HYDRAULIC OIL LIEBHERR/IS |
| HYDRAULIC OIL LIEBHERR/ISO | 10330270 | 210 | 1 | 20 | 10 35 679 1 | HYDRAULIC OIL LIEBHERR/IS |
| HYDRAULIC OIL LIEBHERR/ISO | 10330266 | 5 | 1 | 20 | 10 35 679 1 | HYDRAULIC OIL LIEBHERR/IS |
| HYDRAULIC OIL LIEBHERR/IS | 10356800 | 10 | 1l | 14 | 90 70 362 | HYDRAULIC OIL |
| HYDRAULIC OIL LIEBHERR/IS | 10330260 | 1000 | 1 | 23 | 10 35 680 0 | HYDRAULIC OIL LIEBHERR/IS |
| HYDRAULIC OIL LIEBHERR/IS | 10330258 | 20 | 1 | 23 | 10 35 680 0 | HYDRAULIC OIL LIEBHERR/IS |
| HYDRAULIC OIL LIEBHERR/ISO | 10330259 | 210 | 1 | 23 | 10 35 680 0 | HYDRAULIC OIL LIEBHERR/IS |
| HYDRAULIC OIL LIEBHERR/ISO | 10330255 | 5 | 1 | 23 | 10 35 680 0 | HYDRAULIC OIL LIEBHERR/IS |
| HYDRAULIC OIL LIEBHERR/ISO | 10356789 | 20 | 1l | 14 | 90 70 362 | HYDRAULIC OIL |
| HYDRAULIC OIL LIEBHERR/ISO | 10344027 | 1000 | 1 | 19 | 10 35 678 9 | HYDRAULIC OIL LIEBHERR/ISO |
| HYDRAULIC OIL LIEBHERR/ISO | 10344025 | 20 | 1 | 19 | 10 35 678 9 | HYDRAULIC OIL LIEBHERR/ISO |
| HYDRAULIC OIL LIEBHERR/IS | 10344026 | 210 | 1 | 19 | 10 35 678 9 | HYDRAULIC OIL LIEBHERR/ISO |
| HYDRAULIC OIL LIEBHERR/IS | 10344024 | 5 | 1 | 19 | 10 35 678 9 | HYDRAULIC OIL LIEBHERR/ISO |
| HYDRAULIC OIL LIEBHERR/IS | 10356303 | 10 | 1l | 15 | 90 70 363 | BIODEGRADABLE HYDRAULIC- |
| HYDRAULIC OIL LIEBHERR/IS | 10296481 | 1000 | 1 | 47 | 10 35 630 3 | HYDRAULIC OIL LIEBHERR/IS |
| HYDRAULIC OIL LIEBHERR/IS | 10330272 | 20 | 1 | 47 | 10 35 630 3 | HYDRAULIC OIL LIEBHERR/IS |
| HYDRAULIC OIL LIEBHERR/ISO | 10330276 | 210 | 1 | 47 | 10 35 630 3 | HYDRAULIC OIL LIEBHERR/IS |
| HYDRAULIC OIL LIEBHERR/ISO | 10296480 | 5 | 1 | 47 | 10 35 630 3 | HYDRAULIC OIL LIEBHERR/IS |
| HYDRAULIC PUMP | 10332889 | 70 | 1 | 342 | 10 84 584 9 | PUMPS + COUPLING INSTALL |

| Description | Item | Pos. | Quantity | Page | Assembly | Description |
|---|---|---|---|---|---|---|
| HYDRAULIC PUMP | 10355724 | 1 | 1 | 142 | 10 41 087 0 | HYDRAULIC PUMP |
| HYDRAULIC PUMP | 10410870 | 1 | 1 | 119 | 10 33 288 9 | HYDRAULIC PUMP |
| HYDRAULIC PUMP | 10413013 | 1 | 1 | 120 | 10 33 289 0 | AXIAL PISTON MOTOR |
| HYDRAULIC TANK | 10358193 | 3 | 1 | 329 | 10 35 798 3 | HYDRAULIC TANK INSTALLAT |
| HYDRAULIC TANK FOR EXCHA | 10358025 | 4 | 1 | 329 | 10 35 798 3 | HYDRAULIC TANK INSTALLAT |
| HYDRAULIC TANK FOR EXCHA | 10358194 | 4 | 1 | 329 | 10 35 798 3 | HYDRAULIC TANK INSTALLAT |
| HYDRAULIC TANK INSTALLAT | 10357983 | 7100 | 1 | 85 | 10 35 798 2 | UPPERCARRIAGE |
| HYDRAULIC VARIABLE DISPLA | 10132686 | 2 | 2 | 685 | 10 13 462 0 | MULTIPLE CIRCUIT AGGREG |
| HYDRAULIC+GEAR-OIL LIEBH | 10356828 | 30 | 1l | 17 | 90 70 365 | GEAR OIL |
| HYDRAULIC+GEAR-OIL LIEBH | 10296482 | 1000 | 1 | 26 | 10 35 682 8 | HYDRAULIC+GEAR-OIL LIEBH |
| HYDRAULIC+GEAR-OIL LIEBH | 10330282 | 20 | 1 | 26 | 10 35 682 8 | HYDRAULIC+GEAR-OIL LIEBH |
| HYDRAULIC+GEAR-OIL LIEBHE | 10330283 | 210 | 1 | 26 | 10 35 682 8 | HYDRAULIC+GEAR-OIL LIEBH |
| HYDRAULIC+GEAR-OIL LIEBHE | 10330280 | 5 | 1 | 26 | 10 35 682 8 | HYDRAULIC+GEAR-OIL LIEBH |
| HYDT.TUBE | 9080684 | 17 | 1 | 573 | 90 80 735 | EXHAUST TC MOUNTING |
| HYDT.TUBE 10X1 | 10120264 | 1 | 1 | 487 | 10 12 026 3 | OIL LINE PRE-ASSEMBLY 12X |
| HYDT.TUBE 10X1 | 9079972 | 1 | 1 | 488 | 90 79 978 | OIL LINE PRE-ASSEMBLY 10X |
| HYDT.TUBE 22X1,5 | 10119021 | 17 | 1 | 573 | 90 80 735 | EXHAUST TC MOUNTING |
| IGNITION KEY | 10221073 | 10 | 1 | 291 | 10 22 815 1 | HEATER STARTER SWITCH |
| IGNITION KEY | 10221073 | 275 | 1 | 414 | 70 28 769 | DRIVER'S CAB DOOR |
| INDEXING PLATE | 9265398 | 18 | 1 | 688 | 10 11 856 1 | PILOT CONTROL UNIT VG6-8 |
| INJECTION LINE | 9080410 | 215 | 6 | 472 | 10 11 668 5 | DIESEL ENGINE D936 L A6 240 |
| INJECTION LINE | 9080410 | 215 | 1 | 532 | 10 11 709 3 | RK INJECTION NOZZLE |
| INJECTION NOZZLE W.FASTEN | 10116591 | 190 | 6 | 472 | 10 11 668 5 | DIESEL ENGINE D936 L A6 240 |
| INJECTION PUMP | 10116257 | 1 | 1 | 528 | 10 11 683 9 | INJECTION PUMP ASSEMBLY |
| INJECTION PUMP ASSEMBLY | 10116839 | 170 | 6 | 471 | 10 11 668 5 | DIESEL ENGINE D936 L A6 240 |
| INJECTOR | 10116587 | 1 | 1 | 532 | 10 11 709 3 | RK INJECTION NOZZLE |
| INLET VALVE | 10136752 | 2 | 2 | 504 | 10 14 155 4 | CYLINDER HEAD PRE-ASS. |
| INLET VALVE | 9074450 | 2 | 2 | 508 | 10 12 036 4 | CYLINDER HEAD PRE-ASS. |
| INSCRIPTION TAPE | 10070970 | 7651 | 1 | 355 | 10 35 802 8 | CONTROL VALVE INSTALLAT |
| INSTALLER SET REGULATION | 7028926 | 30 | 1 | 322 | 70 28 300 | PRESSURE LIMITING VALVE |
| INSULATING MAT | 10051539 | 3 | 1 | 397 | 10 05 153 7 | LID |
| INSULATING MAT | 10056741 | 4 | 1 | 380 | 99 27 477 | SOUND PROOFING |
| INSULATING MAT | 10064359 | 25 | 1 | 403 | 10 05 011 2 | LOWER COVERING |
| INSULATING MAT | 10073074 | 6 | 1 | 388 | 10 07 307 3 | SIDE DOOR RIGHT |
| INSULATING MAT | 10073074 | 6 | 1 | 389 | 10 37 283 9 | SIDE DOOR RIGHT |
| INSULATING MAT | 10400600 | 3 | 1 | 379 | 10 08 167 3 | ENGINE BONNET |
| INSULATING MAT | 9927463 | 3 | 6 | 387 | 99 27 471 | SCOOP |
| INSULATING MAT | 9927482 | 3 | 1 | 379 | 10 08 167 3 | ENGINE BONNET |
| INSULATING MAT | 9927483 | 4 | 1 | 379 | 10 08 167 3 | ENGINE BONNET |
| INSULATING MAT | 9927484 | 5 | 1 | 379 | 10 08 167 3 | ENGINE BONNET |
| INSULATING MAT | 9927485 | 3 | 1 | 380 | 99 27 477 | SOUND PROOFING |
| INSULATING MAT | 9929193 | 3 | 2 | 382 | 99 29 189 | BONNET RIGHT |
| INSULATING MAT | 9929194 | 6 | 1 | 382 | 99 29 189 | BONNET RIGHT |
| INSULATING MAT | 9929195 | 7 | 1 | 382 | 99 29 189 | BONNET RIGHT |
| INSULATING MAT | 9929357 | 5 | 1 | 384 | 10 35 817 2 | SIDE DOOR BACK LEFT |
| INSULATING MAT | 9929358 | 6 | 1 | 384 | 10 35 817 2 | SIDE DOOR BACK LEFT |
| INSULATING MAT | 9929376 | 5 | 1 | 388 | 10 07 307 3 | SIDE DOOR RIGHT |
| INSULATING MAT | 9929376 | 5 | 1 | 389 | 10 37 283 9 | SIDE DOOR RIGHT |
| INSULATING MAT | 9929378 | 7 | 1 | 388 | 10 07 307 3 | SIDE DOOR RIGHT |
| INSULATING MAT | 9929378 | 7 | 1 | 389 | 10 37 283 9 | SIDE DOOR RIGHT |
| INSULATING MAT | 9945013 | 3 | 9 | 385 | 99 45 269 | SCOOP |
| INSULATING MAT | 9945101 | 5 | 1 | 386 | 10 35 792 6 | SIDE DOOR MIDDLE LEFT |
| INSULATING MAT | 9945102 | 6 | 1 | 386 | 10 35 792 6 | SIDE DOOR MIDDLE LEFT |
| INSULATING MAT | 9949323 | 3 | 1 | 381 | 99 49 428 | COOLER COWL |
| INSULATING MAT | 9949324 | 4 | 1 | 381 | 99 49 428 | COOLER COWL |
| INSULATING MAT | 9949325 | 5 | 1 | 381 | 99 49 428 | COOLER COWL |
| INSULATING MAT | 9949328 | 6 | 1 | 381 | 99 49 428 | COOLER COWL |
| INSULATING MAT | 9949383 | 6 | 1 | 398 | 10 35 853 1 | SIDE DOOR FRONT LEFT |
| INSULATING MAT | 9949383 | 6 | 1 | 399 | 99 47 961 | SIDE DOOR FRONT LEFT |
| INSULATING MAT | 9949384 | 3 | 1 | 396 | 99 47 957 | PARTITION |

| Description | Item | Pos. | Quantity | Page | Assembly | Description |
|---|---|---|---|---|---|---|
| INSULATING MAT | 9949411 | 3 | 1 | 383 | 10 08 168 3 | BONNET LEFT |
| INSULATING MAT | 9949413 | 5 | 1 | 383 | 10 08 168 3 | BONNET LEFT |
| INSULATING SHEET | 11644222 | 6 | 1 | 283 | 10 02 206 9 | EVAPORATOR HOUSING |
| INTAKE | 10066591 | 2 | 1 | 105 | 10 06 658 8 | INTAKE NOZZLE |
| INTAKE NOZZLE | 10066586 | 40 | 1 | 341 | 10 84 584 9 | PUMPS + COUPLING INSTALL |
| INTAKE NOZZLE | 10066587 | 45 | 1 | 341 | 10 84 584 9 | PUMPS + COUPLING INSTALL |
| INTAKE NOZZLE | 10066588 | 10 | 1 | 329 | 10 35 798 3 | HYDRAULIC TANK INSTALLAT |
| INTAKE NOZZLE | 9962503 | 11 | 1 | 329 | 10 35 798 3 | HYDRAULIC TANK INSTALLAT |
| INTERMEDIATE BLOCK | 10498157 | 5 | 1 | 671 | 10 49 815 8 | HOIST CYLINDERS |
| INTERMEDIATE BLOCK | 9392953 | 56 | 2 | 672 | 10 49 815 8 | HOIST CYLINDERS |
| INTERMEDIATE BLOCK | 9988764 | 6 | 1 | 671 | 10 49 815 8 | HOIST CYLINDERS |
| INTERMEDIATE COUPLING | 9399179 | 3 | 1 | 297 | 99 37 312 | OIL PILOT VALVE INSTALLATIO |
| INTERMEDIATE FITTING | 9890958 | 2 | 1 | 299 | 93 99 179 | INTERMEDIATE COUPLING |
| INTERMEDIATE FLANGE | 10016655 | 30 | 1 | 682 | 10 28 689 7 | LUBRICATION PUMP |
| INTERMEDIATE FLANGE | 10080802 | 30 | 1 | 309 | 10 35 801 3 | HYDR.AND GEAR OIL COOLIN |
| INTERMEDIATE FLANGE | 9369710 | 93 | 1 | 347 | 10 35 802 8 | CONTROL VALVE INSTALLAT |
| INTERMEDIATE FLANGE | 9369710 | 202 | 1 | 349 | 10 35 802 8 | CONTROL VALVE INSTALLAT |
| INTERMEDIATE FLANGE | 9684904 | 20 | 2 | 67 | 10 07 713 7 | TRAVEL DRIVE |
| INTERMEDIATE GEAR PRE-A | 9072633 | 7 | 1 | 525 | 90 72 781 | LUBRICATING OIL PUMP |
| INTERMEDIATE GEAR PRE-A | 9072633 | 7 | 1 | 526 | 90 80 277 | SUCTION PUMP PRE-ASS. |
| INTERMEDIATE PIECE | 10063258 | 54 | 2 | 301 | 10 35 801 5 | HYDR.ROTARY CONNEC.+SWI |
| INTERMEDIATE PIECE | 7365704 | 35 | 1 | 280 | 10 40 689 8 | AIR CONDITIONING UNIT |
| INTERMEDIATE PIECE | 9331403 | 15 | 1 | 359 | 10 49 822 5 | HYDR.TUBES INSTALLATION |
| INTERMEDIATE PIECE H=20 | 9008100 | 53 | 2 | 301 | 10 35 801 5 | HYDR.ROTARY CONNEC.+SWI |
| INTERMEDIATE PIECE H=25 | 9872047 | 9 | 2 | 616 | 10 49 830 0 | GOOSENECK BOOM 6,70M |
| INTERMEDIATE PIECE H=40 | 9809298 | 13 | 2 | 616 | 10 49 830 0 | GOOSENECK BOOM 6,70M |
| INTERMEDIATE PLATE | 10297874 | 3 | 1 | 142 | 10 41 087 0 | HYDRAULIC PUMP |
| INTERMEDIATE RING | 10014730 | 9 | 1 | 681 | 10 28 689 7 | LUBRICATION PUMP |
| INTERMEDIATE TUBE | 9809191 | 45 | 1 | 313 | 10 35 801 7 | HYDR.INSTAL.CONTROL TUBE |
| INTERMEDIATE WHEEL AXLE | 9072996 | 18 | 1 | 108 | 90 77 872 | PUMP DISTRIBUTION GEAR |
| INTERMEDIATE WHEEL Z=48 | 9273038 | 13 | 1 | 108 | 90 77 872 | PUMP DISTRIBUTION GEAR |
| INTERNAL GEAR PUMP SET | 10220415 | 4 | 1 | 122 | 56 16 530 | AXIAL PISTON PUMP |
| INTERNAL GEAR WHEEL | 970643201 | 25 | 1 | 184 | 90 01 790 0 | SLEWING DRIVE SAT 375/250 |
| INTERNAL GEAR WHEEL M=3, | 9443907 | 50 | 1 | 69 | 94 43 840 | TRAVEL DRIVE FAT 450 P 004 |
| INTERNAL GEAR WHEEL M=4, | 9443843 | 10 | 1 | 68 | 94 43 840 | TRAVEL DRIVE FAT 450 P 004 |
| INTERNAL LINING | 10488088 | 80 | 1 | 405 | 10 47 616 9 | OPERATOR'S CAB |
| JAW | 9075372 | 3 | 1 | 531 | 10 11 659 1 | INJECTION NOZZLE W.FASTEN |
| KANTSIL 7,65X1,68 | 10001114 | 24 | 1 | 139 | 10 35 572 4 | HYDRAULIC PUMP |
| KANTSIL SEAL KIT | 726450116 | 15 | 1 | 7 | . | |
| KB-RING 122X113,1X3,5 | 10472345 | 3 | 1 | 502 | 90 80 686 | PISTON PRE-ASS. MONOTHER |
| KEY | 7365626 | 7 | 1 | 192 | 94 42 150 | OIL FILLER NECK |
| KEY | 7365626 | 2 | 1 | 335 | 74 14 913 | LOCKABLE TANK CAP |
| KEY | 7365626 | 5 | 1 | 372 | 10 35 800 4 | PANELLING |
| KEYBOARD | 10684595 | 2 | 1 | 256 | 10 84 080 1 | KEYBOARD CPL. V4.6.9 |
| KEYBOARD CPL. V4.6.9 | 10840801 | 40 | 1 | 249 | 10 84 086 6 | ARM REST RIGHT |
| KIT DISTANCE RINGS | 9885932 | 22 | 2 | 151 | 90 79 347 | REPAIR SET SWIVEL YOKE LP |
| KNIFE | 10498559 | 3 | 1 | 634 | 11 10 283 2 | SPOON BIT |
| L RING AL 20 | 7381025 | 28 | 1 | 125 | 90 79 811 | RK PISTON |
| L RING JL50 | 429612001 | 47 | 1 | 69 | 94 43 840 | TRAVEL DRIVE FAT 450 P 004 |
| LABEL | 10076837 | 6 | 1 | 263 | 10 05 507 1 | SWITCH INSTALLATION S84-1 |
| LABEL | 10086265 | 78 | 1 | 250 | 10 84 086 6 | ARM REST RIGHT |
| LABEL | 9007585 | 60 | 1 | 443 | 99 47 695 | ELECTRICAL SYSTEM E50 |
| LABEL | 9014598 | 23 | 1 | 170 | 10 49 858 1 | MOTOR-ELEKTRIK |
| LABEL | 9989643 | 6 | 1 | 258 | 10 04 831 3 | SWITCH INSTALLATION |
| LABEL EMERGENCY EXIT | 10039562 | 850 | 1 | 407 | 70 28 767 | GLASS PANES |
| LABEL SAFETY BELT Ø65mm | 10066101 | 80 | 1 | 465 | 10 35 804 3 | SIGNS |
| LABEL SAFETY BELT Ø65mm | 10066101 | 80 | 1 | 468 | 10 49 805 9 | SIGNS |
| LADDER-TYPE FRAME | 10118656 | 1 | 1 | 490 | 10 11 870 2 | LADDER-TYPE FRAME |
| LADDER-TYPE FRAME | 10118702 | 1 | 1 | 485 | 90 79 487 | OIL SUMP |
| LAMELLAR DISK KIT | 10008448 | 11 | 4 | 514 | 10 11 585 1 | SEAL KIT CYLINDER HEAD |

| Description | Item | Pos. | Quantity | Page | Assembly | Description |
|---|---|---|---|---|---|---|
| LAMELLAR DISK KIT | 10008448 | 11 | 4 | 516 | 10 11 585 3 | SEAL KIT ZYLINDER HEAD CPL |
| LAMELLAR DISK KIT | 10008448 | 4 | 4 | 561 | 10 11 547 9 | EXHAUST PIPE PRE-ASS. |
| LASHING STRAP 18X0,35m 38 | 7621780 | 505 | 5 | 314 | 10 35 801 7 | HYDR.INSTAL.CONTROL TUBE |
| LASHING STRAP 18X0,35m 38 | 7621780 | 600 | 4 | 355 | 10 35 802 8 | CONTROL VALVE INSTALLAT |
| LEAK OIL RETURN LINE | 10115595 | 214 | 1 | 472 | 10 11 668 5 | DIESEL ENGINE D936 L A6 240 |
| LEVEL INDICATOR | 11066525 | 2 | 1 | 235 | 11 10 016 7 | SUSPENSION |
| LEVEL SENSOR | 10022175 | 40 | 1 | 331 | 10 35 798 3 | HYDRAULIC TANK INSTALLAT |
| LEVER | 7027794 | 23 | 1 | 233 | 11 10 016 6 | SEAT TOP |
| LEVER | 7028348 | 14 | 1 | 338 | 56 17 689 | SHUT OFF DEVICE DN 100 |
| LEVER | 7028919 | 320 | 1 | 428 | 10 29 026 4 | ASSY. PARTS |
| LEVER | 7372353 | 16 | 1 | 243 | 73 73 807 | SAFETY LEVER |
| LEVER HANDLE | 7370689 | 44 | 2 | 229 | 10 49 880 9 | DRIVER STAND BASE SECTIO |
| LEVER TYPE HAND GREASE | 7900280 | 140 | 1 | 459 | 10 84 856 2 | TOOL EQUIPMENT |
| LH-JOYSTICK LEFT | 9968625 | 10 | 1 | 244 | 10 05 879 2 | MANIPULATOR LEFT |
| LH-JOYSTICK RIGHT | 9968611 | 10 | 1 | 259 | 10 05 879 4 | MANIPULATOR RIGHT |
| LH-MOLYKOTE LONGTERM | 8300004 | 800 | 1 | 667 | 94 01 936 4 | PISTON ROD BEARING 125/18 |
| LH-MOLYKOTE LONGTERM | 8300004 | 800 | 1 | 668 | 94 02 733 6 | PISTON ROD BEARING 125/17 |
| LH-MOLYKOTE LONGTERM | 8300004 | 800 | 1 | 669 | 99 52 600 | PISTON ROD BEARING 110/18 |
| LH-RUST PROTECTION | 8300005 | 801 | 1 | 667 | 94 01 936 4 | PISTON ROD BEARING 125/18 |
| LH-RUST PROTECTION | 8300005 | 801 | 1 | 668 | 94 02 733 6 | PISTON ROD BEARING 125/17 |
| LH-RUST PROTECTION | 8300005 | 801 | 1 | 669 | 99 52 600 | PISTON ROD BEARING 110/18 |
| LID | 10009188 | 390 | 1 | 433 | 10 48 808 8 | INTERNAL LINING |
| LID | 10044360 | 160 | 1 | 432 | 10 48 808 8 | INTERNAL LINING |
| LID | 10051238 | 20 | 1 | 57 | 10 05 149 1 | LID |
| LID | 10051491 | 20 | 1 | 49 | 10 49 883 7 | UNDERCARRIAGE CPL |
| LID | 10051492 | 10 | 1 | 57 | 10 05 149 1 | LID |
| LID | 10051537 | 6 | 1 | 396 | 99 47 957 | PARTITION |
| LID | 10051538 | 2 | 1 | 397 | 10 05 153 7 | LID |
| LID | 10055216 | 35 | 1 | 331 | 10 35 798 3 | HYDRAULIC TANK INSTALLAT |
| LID | 10065165 | 50 | 1 | 361 | 10 49 822 5 | HYDR.TUBES INSTALLATION |
| LID | 10066916 | 2 | 1 | 394 | 10 06 691 8 | LID |
| LID | 10066918 | 15 | 1 | 391 | 10 06 692 0 | TOOL BOX |
| LID | 10067706 | 40 | 1 | 452 | 90 18 419 | FUEL TANK ASSY. |
| LID | 10117094 | 10 | 1 | 590 | 90 80 653 | LOCKING PIECES |
| LID | 10118649 | 22 | 1 | 688 | 10 11 856 1 | PILOT CONTROL UNIT VG6-8 |
| LID | 10120005 | 1 | 1 | 568 | 90 80 280 | LOCKING PIECES |
| LID | 10122316 | 1 | 1 | 604 | 90 80 504 | LOCKING PIECES |
| LID | 10122317 | 1 | 1 | 604 | 90 80 504 | LOCKING PIECES |
| LID | 10149619 | 1 | 1 | 576 | 10 11 566 4 | LOCKING PIECES |
| LID | 10216731 | 3 | 1 | 115 | 10 22 041 0 | ADJUSTMENT |
| LID | 10216732 | 4 | 1 | 115 | 10 22 041 0 | ADJUSTMENT |
| LID | 10289182 | 60 | 1 | 653 | 10 00 297 1 | PIPE FRACTION SAFETY VALV |
| LID | 10290262 | 430 | 1 | 421 | 10 48 808 7 | ELECTRICAL INSTALLATION |
| LID | 10290263 | 500 | 1 | 423 | 10 29 036 3 | WIPPER MOTOR SET |
| LID | 10372836 | 10 | 1 | 461 | 10 35 852 5 | OUTSIDE MIRROR ASSEMBLY |
| LID | 10379045 | 2 | 1 | 462 | 10 37 283 6 | LID |
| LID | 10379354 | 2 | 1 | 395 | 10 37 936 3 | LID |
| LID | 10379363 | 15 | 1 | 393 | 10 37 938 6 | TOOL BOX |
| LID | 5604338 | 28 | 5 | 365 | 10 03 245 2 | CONTROL BLOCK |
| LID | 7020608 | 190 | 2 | 420 | 10 48 808 7 | ELECTRICAL INSTALLATION |
| LID | 7021981 | 100 | 1 | 75 | 56 16 688 | WHEEL BRAKE VALVE |
| LID | 7021982 | 110 | 1 | 75 | 56 16 688 | WHEEL BRAKE VALVE |
| LID | 7025845 | 10 | 1 | 424 | 56 18 664 | WATER BASIN |
| LID | 7028349 | 12 | 1 | 338 | 56 17 689 | SHUT OFF DEVICE DN 100 |
| LID | 7028836 | 230 | 1 | 414 | 70 28 769 | DRIVER'S CAB DOOR |
| LID | 7368488 | 26 | 1 | 365 | 10 03 245 2 | CONTROL BLOCK |
| LID | 7368489 | 130 | 1 | 366 | 10 03 245 2 | CONTROL BLOCK |
| LID | 7369129 | 27 | 7 | 365 | 10 03 245 2 | CONTROL BLOCK |
| LID | 7370895 | 3 | 1 | 240 | 10 16 576 6 | STEERING CONSOLE |
| LID | 7370896 | 2 | 1 | 240 | 10 16 576 6 | STEERING CONSOLE |

| Description | Item | Pos. | Quantity | Page | Assembly | Description |
|---|---|---|---|---|---|---|
| LID | 7372237 | 7 | 1 | 315 | 10 04 272 9 | OIL PILOT VALVE |
| LID | 7622321 | 1 | 1 | 103 | 10 03 980 3 | AIR FILTER |
| LID | 9077777 | 8 | 1 | 485 | 90 79 487 | OIL SUMP |
| LID | 9077777 | 1 | 1 | 495 | 91 47 512 | LOCKING PIECES |
| LID | 9079122 | 6 | 2 | 485 | 90 79 487 | OIL SUMP |
| LID | 9079123 | 13 | 1 | 485 | 90 79 487 | OIL SUMP |
| LID | 9141600 | 40 | 1 | 64 | 91 41 597 | ROTARY FEED THROUGH |
| LID | 9144761 | 1 | 1 | 556 | 91 44 757 | END COVER |
| LID | 9171589 | 60 | 2 | 268 | 10 05 981 8 | FOOT PILOT VALVE INSTALL |
| LID | 9178294 | 4 | 1 | 597 | 90 77 719 | POWER TAKE-OFF ADD-ON |
| LID | 9178294 | 6 | 1 | 598 | 90 78 961 | POWER TAKE-OFF ADD-ON |
| LID | 9271663 | 11 | 1 | 691 | 92 71 648 | ADJUSTMENT |
| LID | 9271664 | 12 | 1 | 691 | 92 71 648 | ADJUSTMENT |
| LID | 9271740 | 12 | 1 | 692 | 98 88 308 | CONNECTING PLATE |
| LID | 9273690 | 6 | 1 | 599 | 90 80 006 | POWER TAKE-OFF ADD-ON |
| LID | 9371217 | 65 | 1 | 268 | 10 05 981 8 | FOOT PILOT VALVE INSTALL |
| LID | 9697975 | 29 | 2 | 49 | 10 49 883 7 | UNDERCARRIAGE CPL |
| LID | 9697976 | 32 | 4 | 49 | 10 49 883 7 | UNDERCARRIAGE CPL |
| LID | 9767890 | 70 | 1 | 331 | 10 35 798 3 | HYDRAULIC TANK INSTALLAT |
| LID | 9767890 | 35 | 1 | 451 | 90 18 419 | FUEL TANK ASSY. |
| LID | 9882767 | 13 | 1 | 690 | 98 82 766 | ADJUSTMENT |
| LID CPL | 10087133 | 70 | 1 | 374 | 10 35 800 4 | PANELLING |
| LID CPL | 9949673 | 25 | 2 | 49 | 10 49 883 7 | UNDERCARRIAGE CPL |
| LID PLATE | 9265413 | 29 | 1 | 271 | 90 79 258 | PILOT CONTROL UNIT VG7 2-3 |
| LIFETIME SEAL | 11003781 | 5 | 2 | 58 | 10 65 168 0 | TRACK ROLLER D7 |
| LIFETIME SEAL | 11601136 | 5 | 2 | 59 | 11 60 010 7 | TRACK ROLLER D7 |
| LIGHT | 10428776 | 140 | 1 | 420 | 10 48 808 7 | ELECTRICAL INSTALLATION |
| LIGHT BULB | 6200685 | 3 | 2 | 437 | 99 41 040 | FLOODLIGHT INSTALLATION |
| LIGHT BULB | 6200685 | 5 | 2 | 438 | 10 04 824 6 | HEAD LIGHT + HORN INSTALL |
| LIGHT BULB | 6200685 | 5 | 2 | 439 | 11 10 278 6 | HEAD LIGHT + HORN INSTALL |
| LIGHT BULB | 6200685 | 11 | 1 | 440 | 10 04 553 0 | WORK LIGHT |
| LIGHT BULB 30V/1,2W/T3 | 6001713 | 2 | 1 | 258 | 10 04 831 3 | SWITCH INSTALLATION |
| LIGHT BULB 30V/1,2W/T3 | 6001713 | 2 | 1 | 263 | 10 05 507 1 | SWITCH INSTALLATION S84-1 |
| LIMIT STOP | 10493050 | 11 | 1 | 233 | 11 10 016 6 | SEAT TOP |
| LIMIT STOP | 9077714 | 3 | 1 | 601 | 90 77 718 | AUXILIARY DRIVE PRE-ASS. |
| LIMIT STOP | 9485739 | 2 | 1 | 62 | 93 45 153 | ROTARY CONNECTION INSTA |
| LIMIT STOP BUFFER | 10112636 | 64 | 2 | 374 | 10 35 800 4 | PANELLING |
| LIMIT STOP BUFFER | 7363930 | 3 | 2 | 390 | 10 06 692 0 | TOOL BOX |
| LIMIT STOP BUFFER | 7363930 | 3 | 2 | 392 | 10 37 938 6 | TOOL BOX |
| LIMIT STOP RING | 10008088 | 14 | 1 | 139 | 10 35 572 4 | HYDRAULIC PUMP |
| LIMIT STOP SCREW M12X49,5 | 9883345 | 16 | 1 | 690 | 98 82 766 | ADJUSTMENT |
| LIP SEAL RING | 7610523 | 8 | 1 | 191 | 93 33 333 01 | BRAKE |
| LIP SEAL RING 125X133X11 | 10016715 | 6 | 1 | 53 | 90 15 155 | GREASE TENSIONER |
| LIP SEAL RING 291X281,4X5,5 | 7610521 | 2 | 1 | 191 | 93 33 333 01 | BRAKE |
| LOAD DIAGRAM CONF.TO ISO | 9392835 | 65 | 1 | 468 | 10 49 805 9 | SIGNS |
| LOADING SHEME UPPERCAR | 10386774 | 35 | 1 | 464 | 10 35 804 3 | SIGNS |
| LOADING SHEME UPPERCAR | 10386774 | 35 | 1 | 467 | 10 49 805 9 | SIGNS |
| LOCK | 10039590 | 127 | 2 | 376 | 10 35 800 4 | PANELLING |
| LOCK | 7028833 | 330 | 1 | 414 | 70 28 769 | DRIVER'S CAB DOOR |
| LOCK | 7365293 | 7 | 1 | 381 | 99 49 428 | COOLER COWL |
| LOCK NUT M48 | 9229473 | 4 | 1 | 643 | 10 06 090 1 | PIN CPL |
| LOCK NUT M64 | 9240322 | 12 | 1 | 646 | 93 74 949 | PIN CPL |
| LOCK WASHER | 4239000 | 37 | 2 | 170 | 10 49 858 1 | MOTOR-ELEKTRIK |
| LOCK WASHER | 4239000 | 123 | 2 | 253 | 10 84 086 6 | ARM REST RIGHT |
| LOCK WASHER | 4239020 | 12 | 8 | 68 | 94 43 840 | TRAVEL DRIVE FAT 450 P 004 |
| LOCK WASHER | 7361965 | 13 | 4 | 62 | 93 45 153 | ROTARY CONNECTION INSTA |
| LOCK WASHER | 7361965 | 132 | 4 | 163 | 10 35 809 2 | ENGINE COOLING |
| LOCK WASHER | 7361965 | 73 | 1 | 238 | 10 38 502 4 | ARM REST LEFT |
| LOCK WASHER | 7361965 | 69 | 4 | 241 | 97 58 815 01 | E-BOARD |
| LOCK WASHER | 7361965 | 260 | 17 | 436 | 10 35 814 1 | ELECTRICAL SYSTEM |

| Description | Item | Pos. | Quantity | Page | Assembly | Description |
|---|---|---|---|---|---|---|
| LOCK WASHER /45X3,5 VS | 4239019 | 53 | 12 | 69 | 94 43 840 | TRAVEL DRIVE FAT 450 P 004 |
| LOCK WASHER 10,5/16X2 VS 1 | 4229913 | 12 | 2 | 62 | 93 45 153 | ROTARY CONNECTION INSTA |
| LOCK WASHER 10,5/16X2 VS 1 | 4229913 | 8 | 2 | 159 | 99 29 814 | PUMPS INSTALLATION |
| LOCK WASHER 10,5/16X2 VS 1 | 4229913 | 24 | 2 | 388 | 10 07 307 3 | SIDE DOOR RIGHT |
| LOCK WASHER 10,5/16X2 VS 1 | 4229913 | 7 | 2 | 394 | 10 06 691 8 | LID |
| LOCK WASHER 10,5/16X2 VS 1 | 4229913 | 14 | 2 | 399 | 99 47 961 | SIDE DOOR FRONT LEFT |
| LOCK WASHER 10,5/16X2 VS 1 | 4229913 | 20 | 2 | 400 | 10 02 525 4 | DOOR LOCK |
| LOCK WASHER 10,5/16X2 VS 1 | 4229913 | 10 | 1 | 438 | 10 04 824 6 | HEAD LIGHT + HORN INSTALL |
| LOCK WASHER 10,5/16X2 VS 1 | 4229913 | 10 | 1 | 439 | 11 10 278 6 | HEAD LIGHT + HORN INSTALL |
| LOCK WASHER 13/18X2,1 VS 1 | 4900093 | 320 | 4 | 296 | 10 35 801 2 | HYDR.PUMPS TO SPOOL VALV |
| LOCK WASHER 13/18X2,1 VS 1 | 4900093 | 20 | 2 | 402 | 10 35 387 9 | DOOR LOCK |
| LOCK WASHER 6,4/10X1,2 VS | 4229911 | 50 | 4 | 110 | 90 77 872 | PUMP DISTRIBUTION GEAR |
| LOCK WASHER 6,4/10X1,2 VS | 4229911 | 56 | 4 | 238 | 10 38 502 4 | ARM REST LEFT |
| LOCK WASHER 6,4/10X1,2 VS | 4229911 | 70 | 4 | 241 | 97 58 815 01 | E-BOARD |
| LOCK WASHER 6,4/10X1,2 VS | 4229911 | 56 | 4 | 249 | 10 84 086 6 | ARM REST RIGHT |
| LOCK WASHER 6,4/10X1,2 VS | 4229911 | 87 | 2 | 251 | 10 84 086 6 | ARM REST RIGHT |
| LOCK WASHER 6,4/10X1,2 VS | 4229911 | 21 | 4 | 388 | 10 07 307 3 | SIDE DOOR RIGHT |
| LOCK WASHER 6,4/10X1,2 VS | 4229911 | 4 | 4 | 394 | 10 06 691 8 | LID |
| LOCK WASHER 6,4/10X1,2 VS | 4229911 | 11 | 4 | 399 | 99 47 961 | SIDE DOOR FRONT LEFT |
| LOCK WASHER 6,4/10X1,2 VS | 4229911 | 10 | 4 | 400 | 10 02 525 4 | DOOR LOCK |
| LOCK WASHER 6,4/10X1,2 VS | 4229911 | 10 | 4 | 402 | 10 35 387 9 | DOOR LOCK |
| LOCK WASHER 6,4/10X1,2 VS | 4229911 | 4 | 6 | 442 | 99 47 695 | ELECTRICAL SYSTEM E50 |
| LOCK WASHER 6,4/10X1,2 VS | 4229911 | 46 | 1 | 443 | 99 47 695 | ELECTRICAL SYSTEM E50 |
| LOCK WASHER 6,4/10X1,2 VS | 4229911 | 33 | 1 | 447 | 10 35 814 3 | AIR CONDITION HOSES INSTA |
| LOCK WASHER 6,4/10X1,2 VS | 4229911 | 11 | 4 | 448 | 10 04 961 6 | DRIER INSTALLATION |
| LOCK WASHER 8,4/13X1,7 VS | 423910801 | 206 | 6 | 176 | 10 49 858 1 | MOTOR-ELEKTRIK |
| LOCK WASHER 8,4/13X1,7 VS | 423910801 | 53 | 4 | 229 | 10 49 880 9 | DRIVER STAND BASE SECTIO |
| LOCK WASHER 8,4/13X1,7 VS | 423910801 | 71 | 2 | 241 | 97 58 815 01 | E-BOARD |
| LOCK WASHER 8,4/13X1,7 VS | 423910801 | 13 | 4 | 268 | 10 05 981 8 | FOOT PILOT VALVE INSTALL |
| LOCK WASHER 8,4/13X1,7 VS | 423910801 | 23 | 4 | 268 | 10 05 981 8 | FOOT PILOT VALVE INSTALL |
| LOCK WASHER 8,4/13X1,7 VS | 423910801 | 62 | 6 | 268 | 10 05 981 8 | FOOT PILOT VALVE INSTALL |
| LOCK WASHER 8,4/13X1,7 VS | 423910801 | 67 | 4 | 268 | 10 05 981 8 | FOOT PILOT VALVE INSTALL |
| LOCK WASHER 8,4/13X1,7 VS | 423910801 | 16 | 8 | 329 | 10 35 798 3 | HYDRAULIC TANK INSTALLAT |
| LOCK WASHER 8,4/13X1,7 VS | 423910801 | 72 | 6 | 331 | 10 35 798 3 | HYDRAULIC TANK INSTALLAT |
| LOCK WASHER 8,4/13X1,7 VS | 423910801 | 507 | 2 | 354 | 10 35 802 8 | CONTROL VALVE INSTALLAT |
| LOCK WASHER 8,4/13X1,7 VS | 423910801 | 38 | 6 | 451 | 90 18 419 | FUEL TANK ASSY. |
| LOCK WASHER 8,4/13X1,7 VS | 423910801 | 43 | 6 | 452 | 90 18 419 | FUEL TANK ASSY. |
| LOCK WASHER 8,4/13X1,7 VS | 423910801 | 12 | 4 | 461 | 10 35 852 5 | OUTSIDE MIRROR ASSEMBLY |
| LOCK WASHER 8,4/13X1,7 VS | 423910801 | 23 | 2 | 461 | 10 35 852 5 | OUTSIDE MIRROR ASSEMBLY |
| LOCK WASHER 8,4/13X1,7 VS | 423910801 | 4 | 1 | 649 | 93 87 822 | HOSE CLAMP CPL |
| LOCK WASHER VS 16 | 10006372 | 22 | 2 | 184 | 90 01 790 0 | SLEWING DRIVE SAT 375/250 |
| LOCK,LEFT HAND | 7028808 | 350 | 1 | 411 | 70 28 759 | FRONT PANE TOP |
| LOCK,RIGHT HAND | 7028807 | 340 | 1 | 411 | 70 28 759 | FRONT PANE TOP |
| LOCKABLE TANK CAP | 7414913 | 15 | 1 | 451 | 90 18 419 | FUEL TANK ASSY. |
| LOCKABLE TANK CAP | 7610825 | 5 | 1 | 192 | 94 42 150 | OIL FILLER NECK |
| LOCKABLE TANK CAP d=45 | 7610826 | 20 | 1 | 195 | 96 90 213 01 | OIL TANK |
| LOCKING | 9376917 | 3 | 1 | 395 | 10 37 936 3 | LID |
| LOCKING | 9376918 | 10 | 1 | 392 | 10 37 938 6 | TOOL BOX |
| LOCKING | 9697977 | 55 | 4 | 51 | 10 49 883 7 | UNDERCARRIAGE CPL |
| LOCKING BAR | 10079279 | 6 | 1 | 462 | 10 37 283 6 | LID |
| LOCKING BAR | 10113250 | 23 | 1 | 388 | 10 07 307 3 | SIDE DOOR RIGHT |
| LOCKING BAR | 10113250 | 6 | 1 | 394 | 10 06 691 8 | LID |
| LOCKING BAR | 10113250 | 13 | 1 | 399 | 99 47 961 | SIDE DOOR FRONT LEFT |
| LOCKING BAR | 10368556 | 5 | 1 | 462 | 10 37 283 6 | LID |
| LOCKING BAR | 7029407 | 260 | 1 | 412 | 70 28 807 | LOCK,RIGHT HAND |
| LOCKING BAR | 7029407 | 260 | 1 | 413 | 70 28 808 | LOCK,LEFT HAND |
| LOCKING BAR | 9634109 | 23 | 1 | 389 | 10 37 283 9 | SIDE DOOR RIGHT |
| LOCKING BAR | 9634109 | 13 | 1 | 398 | 10 35 853 1 | SIDE DOOR FRONT LEFT |
| LOCKING PIECES | 10115664 | 452 | 1 | 475 | 10 11 668 5 | DIESEL ENGINE D936 L A6 240 |
| LOCKING PIECES | 10118589 | 4 | 2 | 604 | 90 80 504 | LOCKING PIECES |

| Description | Item | Pos. | Quantity | Page | Assembly | Description |
|---|---|---|---|---|---|---|
| LOCKING PIECES | 10119128 | 522 | 1 | 475 | 10 11 668 5 | DIESEL ENGINE D936 L A6 240 |
| LOCKING PIECES | 9078356 | 331 | 1 | 473 | 10 11 668 5 | DIESEL ENGINE D936 L A6 240 |
| LOCKING PIECES | 9079893 | 630 | 1 | 476 | 10 11 668 5 | DIESEL ENGINE D936 L A6 240 |
| LOCKING PIECES | 9080280 | 384 | 1 | 474 | 10 11 668 5 | DIESEL ENGINE D936 L A6 240 |
| LOCKING PIECES | 9080280 | 5 | 1 | 605 | 10 11 801 4 | SEAL KIT AGGREGATE CARR |
| LOCKING PIECES | 9080280 | 5 | 2 | 608 | 10 11 583 8 | SEAL KIT DIESEL ENGINE |
| LOCKING PIECES | 9080504 | 656 | 1 | 476 | 10 11 668 5 | DIESEL ENGINE D936 L A6 240 |
| LOCKING PIECES | 9080653 | 521 | 1 | 475 | 10 11 668 5 | DIESEL ENGINE D936 L A6 240 |
| LOCKING PIECES | 9147512 | 24 | 2 | 469 | 10 11 668 5 | DIESEL ENGINE D936 L A6 240 |
| LOCKING PLUG | 7373405 | 136 | 1 | 377 | 10 35 800 4 | PANELLING |
| LOCKING RING | 7019794 | 350 | 2 | 415 | 70 28 769 | DRIVER'S CAB DOOR |
| LOCKING RING AEHNL.DIN 98 | 10220937 | 25 | 1 | 121 | 10 41 301 3 | HYDRAULIC PUMP |
| LOCKING SCREW M10X20 | 10335969 | 11 | 16 | 164 | 10 45 475 2 | COMBINATED RADIATOR |
| LOCKING SCREW M10X20 | 10335969 | 8 | 16 | 167 | 10 35 508 4 | OIL COOLER |
| LOCKING SCREW M10X20X19 | 9074456 | 2 | 2 | 518 | 90 79 870 | CONTROL PARTS |
| LOCKING SCREW M10X20X19 | 9074456 | 4 | 1 | 528 | 10 11 683 9 | INJECTION PUMP ASSEMBLY |
| LOCKING SCREW M10X25 | 10327106 | 15 | 4 | 167 | 10 35 508 4 | OIL COOLER |
| LOCKING SCREW M10X30 | 10327110 | 12 | 4 | 164 | 10 45 475 2 | COMBINATED RADIATOR |
| LOCKING SCREW M5X6X4,2 | 9880132 | 26 | 1 | 690 | 98 82 766 | ADJUSTMENT |
| LOCKING SCREW M6X20 | 10331667 | 8 | 2 | 164 | 10 45 475 2 | COMBINATED RADIATOR |
| LOCKING SCREW M8X12 | 10331668 | 9 | 15 | 164 | 10 45 475 2 | COMBINATED RADIATOR |
| LOCKING SCREW M8X16 | 10327102 | 10 | 8 | 164 | 10 45 475 2 | COMBINATED RADIATOR |
| LOCKING SCREW M8X16 | 10327102 | 18 | 6 | 167 | 10 35 508 4 | OIL COOLER |
| LOCKING SCREW M8X20 | 10331670 | 3 | 16 | 167 | 10 35 508 4 | OIL COOLER |
| LOCKING SCREW M8X25 | 10327103 | 18 | 24 | 164 | 10 45 475 2 | COMBINATED RADIATOR |
| LOCTITE | 811205101 | 120 | 1 | 569 | 90 79 889 | HEATER CONNECTION |
| LOCTITE | 811208201 | 104 | 1 | 510 | 10 12 038 4 | ZYLINDER HEAD |
| LOCTITE | 811208201 | 118 | 1 | 688 | 10 11 856 1 | PILOT CONTROL UNIT VG6-8 |
| LOCTITE | 811208201 | 118 | 1 | 689 | 90 73 355 | CONNECTING PLATE FMV 140 |
| LOCTITE | 8700039 | 106 | 1 | 70 | 90 73 155 | RK CYLINDER+CONTROL PLAT |
| LOCTITE | 8700039 | 106 | 1 | 486 | 90 79 483 | OIL SUMP |
| LOCTITE | 8700039 | 100 | 1 | 526 | 90 80 277 | SUCTION PUMP PRE-ASS. |
| LOOM | 10222315 | 1 | 1 | 594 | 10 11 574 4 | WIRING HARNESS PRE-ASS. |
| LOOM | 11066527 | 4 | 1 | 235 | 11 10 016 7 | SUSPENSION |
| LOUDSPEAKER | 634308016 | 5 | 2 | 677 | 11 10 265 3 | PREMOUNTING F.RADIO |
| LOW TEMPERATURE GREASE | 10358948 | 20 | 1kg | 18 | 90 70 366 | GREASES |
| LOW TEMPERATURE GREASE | 10296828 | 1 | 1 | 31 | 10 35 894 8 | LOW TEMPERATURE GREASE |
| LOW TEMPERATURE GREASE | 10296825 | 10 | 1 | 31 | 10 35 894 8 | LOW TEMPERATURE GREASE |
| LOW TEMPERATURE GREASE | 10296822 | 180 | 1 | 31 | 10 35 894 8 | LOW TEMPERATURE GREASE |
| LOW TEMPERATURE GREASE | 10296827 | 2 | 1 | 31 | 10 35 894 8 | LOW TEMPERATURE GREASE |
| LOW TEMPERATURE GREASE | 10296824 | 25 | 1 | 31 | 10 35 894 8 | LOW TEMPERATURE GREASE |
| LOW TEMPERATURE GREASE | 10296823 | 50 | 1 | 31 | 10 35 894 8 | LOW TEMPERATURE GREASE |
| LOWER COVERING | 10050112 | 8600 | 1 | 86 | 10 35 798 2 | UPPERCARRIAGE |
| LOWER PROTECTIVE SHEET | 10050113 | 2 | 1 | 403 | 10 05 011 2 | LOWER COVERING |
| LOWER PROTECTIVE SHEET | 10050115 | 3 | 1 | 403 | 10 05 011 2 | LOWER COVERING |
| LOWER PROTECTIVE SHEET | 10064339 | 4 | 1 | 403 | 10 05 011 2 | LOWER COVERING |
| LUBE OIL FILTER ASSEMBLY | 9075368 | 150 | 1 | 471 | 10 11 668 5 | DIESEL ENGINE D936 L A6 240 |
| LUBE OIL PUMP WITH FASTEN | 9074796 | 140 | 1 | 471 | 10 11 668 5 | DIESEL ENGINE D936 L A6 240 |
| LUBRICATING OIL LINE 10X1 | 10115525 | 7 | 1 | 573 | 90 80 735 | EXHAUST TC MOUNTING |
| LUBRICATING OIL PUMP | 9072781 | 1 | 1 | 523 | 90 74 796 | LUBE OIL PUMP WITH FASTEN |
| LUBRICATING PAD | 9375276 | 15 | 1 | 207 | 99 46 408 | GREASE PIPE INSTALLATION |
| LUBRICATION DIAGRAM | 10070309 | 15 | 1 | 463 | 10 35 804 3 | SIGNS |
| LUBRICATION DIAGRAM | 10840318 | 15 | 1 | 466 | 10 49 805 9 | SIGNS |
| LUBRICATION PUMP | 10286897 | 2 | 1 | 680 | 10 49 822 9 | FULL AUTOMAT.CENTRAL.LU |
| LUG | 10115649 | 46 | 2 | 542 | 10 11 628 5 | FUEL LINE |
| LUG | 9080360 | 8 | 2 | 548 | 90 79 580 | CONNECTING PIECE PRE-ASS |
| LUG | 9273271 | 2 | 2 | 527 | 90 75 368 | LUBE OIL FILTER ASSEMBLY |
| LUG | 9757423 | 23 | 4 | 84 | 10 07 713 5 | HYDR.INSTALLATION UNDER |
| LUG GE 18L | 7003578 | 35 | 1 | 311 | 10 35 809 3 | HYDR.INSTALLATION FAN DR |
| LUG GE 22L G3/4A | 4001446 | 18 | 2 | 84 | 10 07 713 5 | HYDR.INSTALLATION UNDER |

| Description | Item | Pos. | Quantity | Page | Assembly | Description |
|---|---|---|---|---|---|---|
| LUG GE 6S | 4901166 | 94 | 2 | 343 | 10 84 584 9 | PUMPS + COUPLING INSTALL |
| LUG GE 8S M14X1,5 | 7404619 | 97 | 1 | 343 | 10 84 584 9 | PUMPS + COUPLING INSTALL |
| LUMINOUS PUSH BUTTON CO | 6204372 | 3 | 1 | 258 | 10 04 831 3 | SWITCH INSTALLATION |
| MAGNET | 6905956 | 1 | 1 | 106 | 10 29 787 3 | CONTROL VALVE |
| MAGNET COIL | 10333044 | 2 | 1 | 319 | 56 15 344 | SOLENOID VALVE |
| MAGNET COIL | 6204416 | 2 | 1 | 320 | 10 01 872 5 | DIRECTIONAL CONTROL VALV |
| MAIN BEARING CAP | 10120829 | 2 | 6 | 478 | 10 11 577 8 | CRANKCASE |
| MAIN ROD | 9076459 | 60 | 6 | 470 | 10 11 668 5 | DIESEL ENGINE D936 L A6 240 |
| MAIN ROD | 9079997 | 1 | 1 | 500 | 90 76 459 | MAIN ROD |
| MALE FITTING FOR PIPES M1 | 7027675 | 2 | 1 | 217 | 90 64 786 | CONNECTING ELEMENT |
| MANIPULATOR LEFT | 10058792 | 60 | 1 | 238 | 10 38 502 4 | ARM REST LEFT |
| MANIPULATOR RIGHT | 10058794 | 60 | 1 | 249 | 10 84 086 6 | ARM REST RIGHT |
| MASTER LINK ASSY | 5618101 | 10 | 1 | 55 | 56 17 975 | CHAIN END LINK |
| MASTER PIN | 5617102 | 20 | 2 | 55 | 56 17 975 | CHAIN END LINK |
| MAT | 10289996 | 510 | 1 | 433 | 10 48 808 8 | INTERNAL LINING |
| MAT | 10289997 | 520 | 1 | 433 | 10 48 808 8 | INTERNAL LINING |
| METALASTIC BUFFER | 7019129 | 470 | 1 | 428 | 10 29 026 4 | ASSY. PARTS |
| METALASTIC BUFFER | 7021047 | 480 | 1 | 428 | 10 29 026 4 | ASSY. PARTS |
| METALASTIC BUFFER | 7028810 | 170 | 2 | 411 | 70 28 759 | FRONT PANE TOP |
| METALASTIC BUFFER | 7028810 | 170 | 2 | 427 | 10 29 026 4 | ASSY. PARTS |
| MINERAL-OIL-ANALYSIS SET | 7018369 | 13 | 1 | 38 | 90 66 466 | ACCESSORIES |
| MIRROR SUPPORT | 7019141 | 820 | 1 | 431 | 10 04 435 3 | OUTSIDE MIRROR |
| MIRROR SUPPORT | 7371845 | 20 | 1 | 461 | 10 35 852 5 | OUTSIDE MIRROR ASSEMBLY |
| MIRROR TOP PART | 7005028 | 21 | 1 | 461 | 10 35 852 5 | OUTSIDE MIRROR ASSEMBLY |
| MODIF.CYLINDER | 10498366 | 12 | 1 | 640 | 10 49 817 6 | PISTON ROD COVER BUCKET |
| MODULE | 10287118 | 2 | 1 | 242 | 98 74 988 | PLATINES INSTALLATION A101 |
| MOTOR BRACKET | 10056401 | 30 | 1 | 178 | 10 35 800 9 | ENGINE ADD-ON PARTS |
| MOTOR CONTROL DEVICE | 10117900 | 570 | 1 | 475 | 10 11 668 5 | DIESEL ENGINE D936 L A6 240 |
| MOTOR HOUSING | 10014680 | 1 | 1 | 681 | 10 28 689 7 | LUBRICATION PUMP |
| MOTOR HOUSING | 10014692 | 3 | 1 | 681 | 10 28 689 7 | LUBRICATION PUMP |
| MOTOR INSTALLATION | 10358089 | 500 | 1 | 85 | 10 35 798 2 | UPPERCARRIAGE |
| MOTOR MOUNTING | 10411919 | 13 | 1 | 167 | 10 35 508 4 | OIL COOLER |
| MOTOR MOUNTING | 10467159 | 44 | 1 | 165 | 10 45 475 2 | COMBINATED RADIATOR |
| MOTOR OIL | 9070361 | 10 | 1 | 10 | 90 66 460 | |
| MOTOR SUPPORT | 10049426 | 510 | 1 | 96 | 10 35 808 9 | MOTOR INSTALLATION |
| MOTOR SUPPORT | 10331634 | 16 | 1 | 167 | 10 35 508 4 | OIL COOLER |
| MOTOR SUPPORT | 10331672 | 39 | 1 | 165 | 10 45 475 2 | COMBINATED RADIATOR |
| MOTOR-ELEKTRIK | 10498581 | 580 | 1 | 96 | 10 35 808 9 | MOTOR INSTALLATION |
| MOUNTING BASE | 11003600 | 32 | 1 | 287 | 11 00 359 4 | HOUSING |
| MOUNTING BRACKET | 10021823 | 72 | 1 | 280 | 10 40 689 8 | AIR CONDITIONING UNIT |
| MOUNTING KEY PISTON NUT | 9921125 | 985 | 1 | 664 | 95 87 597 | PISTON 180MM |
| MOUNTING PIN | 7361276 | 175 | 1 | 459 | 10 84 856 2 | TOOL EQUIPMENT |
| MOUNTING REQUIREMENT | 10135322 | 819 | 1 | 690 | 98 82 766 | ADJUSTMENT |
| MOUNTING REQUIREMENT | 10135322 | 819 | 1 | 699 | 98 82 771 | SEAL KIT |
| MOUNTING SLEEVE 170 | 9107931 | 990 | 1 | 665 | 95 90 264 | PISTON 170MM |
| MOUNTING SLEEVE 180 | 9998619 | 990 | 1 | 663 | 94 00 606 1 | PISTON 180MM |
| MOUNTING SLEEVE 180 | 9998619 | 990 | 1 | 664 | 95 87 597 | PISTON 180MM |
| MULTI-DISC CARRIER | 932720701 | 55 | 1 | 185 | 90 01 790 0 | SLEWING DRIVE SAT 375/250 |
| MULTI-DISC CARRIER | 9443908 | 65 | 1 | 69 | 94 43 840 | TRAVEL DRIVE FAT 450 P 004 |
| MULTI-PLATE PLUG | 10287248 | 35 | 5 | 403 | 10 05 011 2 | LOWER COVERING |
| MULTIPLE CIRCUIT AGGREG | 10134620 | 10 | 1 | 341 | 10 84 584 9 | PUMPS + COUPLING INSTALL |
| NAKED CRAWLER CHAIN | 10037739 | 1 | 1 | 52 | 10 47 009 2 | CRAWLER CHAIN 500mm |
| NAMEPLATE 83mmX152mm | 9354303 | 5 | 1 | 466 | 10 49 805 9 | SIGNS |
| NAMEPLATE REMOTE START | 9909254 | 47 | 1 | 464 | 10 35 804 3 | SIGNS |
| NAMEPLATE REMOTE START | 9909254 | 47 | 1 | 467 | 10 49 805 9 | SIGNS |
| NEEDLE ROLLER d=2X19,8 - G | 10122500 | 21 | 4 | 688 | 10 11 856 1 | PILOT CONTROL UNIT VG6-8 |
| NETWORK | 10492435 | 19 | 1 | 233 | 11 10 016 6 | SEAT TOP |
| NILOS RING AV | 10030593 | 4 | 1 | 184 | 90 01 790 0 | SLEWING DRIVE SAT 375/250 |
| NIPPLE | 4782008 | 92 | 1 | 102 | 99 37 298 | AIR FILTER INSTALLATION |
| NIPPLE | 4900169 | 94 | 1 | 102 | 99 37 298 | AIR FILTER INSTALLATION |

| Description | Item | Pos. | Quantity | Page | Assembly | Description |
|---|---|---|---|---|---|---|
| NO LONGER AVAILABLE | 9999997 | 1000 | 1 | 35 | 10 35 905 6 | ANTICORROSION ANTIFREEZE |
| NON-RETURN VALVE | 10119971 | 6 | 1 | 487 | 10 12 026 3 | OIL LINE PRE-ASSEMBLY 12X |
| NON-RETURN VALVE | 10218215 | 200 | 1 | 349 | 10 35 802 8 | CONTROL VALVE INSTALLAT |
| NON-RETURN VALVE | 10219863 | 90 | 1 | 347 | 10 35 802 8 | CONTROL VALVE INSTALLAT |
| NON-RETURN VALVE | 10219863 | 120 | 1 | 347 | 10 35 802 8 | CONTROL VALVE INSTALLAT |
| NON-RETURN VALVE | 10287691 | 55 | 1 | 366 | 10 03 245 2 | CONTROL BLOCK |
| NON-RETURN VALVE | 10289184 | 101 | 1 | 653 | 10 00 297 1 | PIPE FRACTION SAFETY VALV |
| NON-RETURN VALVE | 10289185 | 102 | 1 | 653 | 10 00 297 1 | PIPE FRACTION SAFETY VALV |
| NON-RETURN VALVE | 5008169 | 12 | 1 | 363 | 10 21 821 5 | NON-RETURN VALVE |
| NON-RETURN VALVE | 5008169 | 12 | 1 | 364 | 10 21 986 3 | NON-RETURN VALVE |
| NON-RETURN VALVE | 5608327 | 6 | 1 | 315 | 10 04 272 9 | OIL PILOT VALVE |
| NON-RETURN VALVE | 5616232 | 62 | 4 | 366 | 10 03 245 2 | CONTROL BLOCK |
| NON-RETURN VALVE | 7017201 | 710 | 1 | 421 | 10 48 808 7 | ELECTRICAL INSTALLATION |
| NON-RETURN VALVE | 7622803 | 30 | 8 | 213 | 10 48 841 6 | DISTRIBUTION BLOCK MX-F 7/ |
| NON-RETURN VALVE | 7622803 | 30 | 7 | 216 | 10 10 171 1 | DISTRIBUTION BLOCK MX-F 5/ |
| NON-RETURN VALVE | 7622803 | 30 | 5 | 623 | 10 10 171 2 | DISTRIBUTION BLOCK MX-F 5/ |
| NON-RETURN VALVE | 9270598 | 6 | 2 | 689 | 90 73 355 | CONNECTING PLATE FMV 140 |
| NON-RETURN VALVE | 9370592 | 70 | 1 | 347 | 10 35 802 8 | CONTROL VALVE INSTALLAT |
| NOZZLE | 10006191 | 30 | 1 | 653 | 10 00 297 1 | PIPE FRACTION SAFETY VALV |
| NOZZLE | 10289344 | 3 | 1 | 533 | 10 11 658 7 | INJECTOR |
| NOZZLE | 5612246 | 31 | 2 | 148 | 70 28 075 | CONTROL UNIT |
| NOZZLE | 7020577 | 44 | 1 | 367 | 10 28 962 9 | VALVE |
| NOZZLE | 7380824 | 20 | 1 | 72 | 98 82 833 | CONTROL VALVE NG 140 140 |
| NOZZLE HOLDER | 10027735 | 1 | 1 | 533 | 10 11 658 7 | INJECTOR |
| NOZZLE PIPE | 7900836 | 150 | 1 | 459 | 10 84 856 2 | TOOL EQUIPMENT |
| NUT | 10011397 | 4 | 1 | 63 | 10 00 963 0 | ROTARY FEED THROUGH |
| NUT | 7023934 | 6 | 1 | 319 | 56 15 344 | SOLENOID VALVE |
| NUT | 7023934 | 6 | 1 | 320 | 10 01 872 5 | DIRECTIONAL CONTROL VALV |
| NUT | 7027459 | 998 | 1 | 642 | 10 00 348 5 | DIRECTIONAL CONTROL VALV |
| NUT M10X1 | 7381781 | 6 | 1 | 512 | 90 74 507 | ROCKER ARM PRE-ASS. |
| NUT M14X1,5 | 9270475 | 17 | 1 | 688 | 10 11 856 1 | PILOT CONTROL UNIT VG6-8 |
| O-RING | 10018373 | 998 | 1 | 212 | 10 48 840 4 | DISTRIBUTION BLOCK SXE-2 |
| O-RING | 10018375 | 999 | 1 | 212 | 10 48 840 4 | DISTRIBUTION BLOCK SXE-2 |
| O-RING | 10021308 | 999 | 1 | 213 | 10 48 841 6 | DISTRIBUTION BLOCK MX-F 7/ |
| O-RING | 10021308 | 999 | 1 | 216 | 10 10 171 1 | DISTRIBUTION BLOCK MX-F 5/ |
| O-RING | 10021308 | 999 | 1 | 623 | 10 10 171 2 | DISTRIBUTION BLOCK MX-F 5/ |
| O-RING | 10040400 | 46 | 1 | 610 | 10 11 583 8 | SEAL KIT DIESEL ENGINE |
| O-RING | 10216785 | 37 | 1 | 682 | 10 28 689 7 | LUBRICATION PUMP |
| O-RING | 10220638 | 9 | 1 | 116 | 10 22 041 1 | CONNECTING PLATE |
| O-RING | 7028346 | 8 | 1 | 338 | 56 17 689 | SHUT OFF DEVICE DN 100 |
| O-RING | 7264028 | 9 | 1 | 90 | 10 06 948 1 | SERVICE KITS 1500/2500h |
| O-RING | 7264028 | 14 | 1 | 297 | 99 37 312 | OIL PILOT VALVE INSTALLATIO |
| O-RING | 7264028 | 14 | 1 | 298 | 56 09 948 | OIL FILTER SET |
| O-RING | 7264035 | 8 | 1 | 664 | 95 87 597 | PISTON 180MM |
| O-RING | 7264091 | 8 | 1 | 663 | 94 00 606 1 | PISTON 180MM |
| O-RING | 726458601 | 49 | 1 | 69 | 94 43 840 | TRAVEL DRIVE FAT 450 P 004 |
| O-RING | 7363759 | 41 | 2 | 341 | 10 84 584 9 | PUMPS + COUPLING INSTALL |
| O-RING | 7366427 | 43 | 1 | 331 | 10 35 798 3 | HYDRAULIC TANK INSTALLAT |
| O-RING | 7367226 | 5 | 1 | 328 | 70 30 267 | SEAL KIT LIMIT VALVE |
| O-RING | 7367426 | 36 | 1 | 331 | 10 35 798 3 | HYDRAULIC TANK INSTALLAT |
| O-RING | 7369456 | 1 | 4 | 334 | 73 68 081 | SIGHT GLASS |
| O-RING | 7373747 | 7 | 2 | 58 | 10 65 168 0 | TRACK ROLLER D7 |
| O-RING | 7373747 | 7 | 2 | 59 | 11 60 010 7 | TRACK ROLLER D7 |
| O-RING | 7381442 | 15 | 1 | 154 | 98 82 875 | SEAL KIT REGULATING VALVE |
| O-RING | 7410480 | 150 | 1 | 305 | 10 35 801 4 | HYDR.SUCT.+RETURN OIL HO |
| O-RING | 7410480 | 72 | 1 | 347 | 10 35 802 8 | CONTROL VALVE INSTALLAT |
| O-RING | 7610361 | 6 | 1 | 68 | 94 43 840 | TRAVEL DRIVE FAT 450 P 004 |
| O-RING 10,82X1,78 | 5610999 | 28 | 1 | 287 | 11 00 359 4 | HOUSING |
| O-RING 10,82X1,78 | 5610999 | 20 | 2 | 450 | 10 10 131 3 | HOSE |
| O-RING 10,82X1,78 | 7023930 | 28 | 1 | 324 | 10 22 099 7 | SEAL KIT |

| Description | Item | Pos. | Quantity | Page | Assembly | Description |
|---|---|---|---|---|---|---|
| O-RING 10,82X1,78 | 7023930 | 12 | 1 | 325 | 50 09 391 | SEAL KIT DIRECTIONAL VALV |
| O-RING 10,82X1,78 | 7023930 | 8 | 1 | 326 | 50 09 562 | SEAL KIT DIRECTIONAL VALV |
| O-RING 100X5 | 11008055 | 5 | 1 | 551 | 90 77 279 | CONNECTING BRANCH ADD-O |
| O-RING 100X5 | 11008055 | 2211 | 1 | 613 | 10 11 583 8 | SEAL KIT DIESEL ENGINE |
| O-RING 101,19X3,53 | 10289210 | 6 | 1 | 539 | 10 22 281 9 | FUEL PRE-FILTER CPL. |
| O-RING 10X2 | 7007505 | 35 | 1 | 328 | 70 30 267 | SEAL KIT LIMIT VALVE |
| O-RING 11,5X1,5 | 10289306 | 10 | 2 | 221 | 10 02 131 0 | SEAL KIT |
| O-RING 110,49X5,33 | 7014178 | 4 | 1 | 630 | 90 18 795 | RING |
| O-RING 110X2,5 | 10008091 | 21 | 1 | 139 | 10 35 572 4 | HYDRAULIC PUMP |
| O-RING 116,84X5,33 | 7000948 | 11 | 2 | 669 | 99 52 600 | PISTON ROD BEARING 110/18 |
| O-RING 116,84X7 | 7002054 | 12 | 1 | 669 | 99 52 600 | PISTON ROD BEARING 110/18 |
| O-RING 12,37X2,62 | 7028158 | 10 | 1 | 132 | 10 22 063 5 | SHUTDOWN VALVE |
| O-RING 12,42X1,78 | 10220641 | 47 | 2 | 116 | 10 22 041 1 | CONNECTING PLATE |
| O-RING 12,42X1,78 | 7023931 | 13 | 1 | 325 | 50 09 391 | SEAL KIT DIRECTIONAL VALV |
| O-RING 12,42X1,78 | 7023931 | 9 | 1 | 326 | 50 09 562 | SEAL KIT DIRECTIONAL VALV |
| O-RING 12,60X2,80 | 10040401 | 1 | 1 | 534 | 90 75 395 | PRESSURE ADAPTER ASS. |
| O-RING 120,50X3,53 | 7381912 | 4 | 1 | 563 | 10 13 281 7 | WATER PUMP, PRE-ASSEMB |
| O-RING 120,50X3,53 | 7381912 | 12 | 1 | 605 | 10 11 801 4 | SEAL KIT AGGREGATE CARR |
| O-RING 120,50X3,53 | 7381912 | 12 | 1 | 608 | 10 11 583 8 | SEAL KIT DIESEL ENGINE |
| O-RING 120X2,5 | 10101449 | 22 | 1 | 121 | 10 41 301 3 | HYDRAULIC PUMP |
| O-RING 125,00X2,0 | 10002310 | 47 | 1 | 610 | 10 11 583 8 | SEAL KIT DIESEL ENGINE |
| O-RING 14,00X1,78 | 7411823 | 29 | 1 | 287 | 11 00 359 4 | HOUSING |
| O-RING 140 | 10006499 | 4 | 2 | 481 | 90 73 083 | CYLINDER |
| O-RING 140 | 10006499 | 62 | 12 | 611 | 10 11 583 8 | SEAL KIT DIESEL ENGINE |
| O-RING 140X3 | 10014694 | 7 | 1 | 681 | 10 28 689 7 | LUBRICATION PUMP |
| O-RING 148,59X7 | 7000290 | 3 | 1 | 630 | 90 18 795 | RING |
| O-RING 148,59X7 | 7000290 | 3 | 1 | 665 | 95 90 264 | PISTON 170MM |
| O-RING 14x2 | 10220819 | 4 | 1 | 137 | 10 22 081 6 | COLD STAR VALVE |
| O-RING 15,50X2,00 | 10113975 | 2 | 1 | 587 | 90 76 550 | PRESSURE TRANSMITTER C |
| O-RING 15,50X2,00 | 10113975 | 59 | 1 | 611 | 10 11 583 8 | SEAL KIT DIESEL ENGINE |
| O-RING 15,54X2,62 | 7002641 | 14 | 1 | 327 | 70 25 142 | SEAL KIT |
| O-RING 158,12X7 | 7264438 | 3 | 1 | 663 | 94 00 606 1 | PISTON 180MM |
| O-RING 158,12X7 | 7264438 | 3 | 1 | 664 | 95 87 597 | PISTON 180MM |
| O-RING 158,12X7 | 7264438 | 3 | 1 | 666 | 90 62 632 | SEALING SET FOR PISTON 18 |
| O-RING 159,3X5,7 | 7264098 | 7 | 1 | 668 | 94 02 733 6 | PISTON ROD BEARING 125/17 |
| O-RING 15X2 | 7264625 | 1 | 1 | 491 | 50 04 624 | OIL DRAIN PLUG M 30 1,5 |
| O-RING 16,0X1,5 | 7371590 | 6 | 1 | 315 | 10 04 272 9 | OIL PILOT VALVE |
| O-RING 169,2X5,7 | 7264535 | 7 | 1 | 667 | 94 01 936 4 | PISTON ROD BEARING 125/18 |
| O-RING 169,2X5,7 | 7264535 | 7 | 1 | 669 | 99 52 600 | PISTON ROD BEARING 110/18 |
| O-RING 16x2 | 7026041 | 17 | 4 | 325 | 50 09 391 | SEAL KIT DIRECTIONAL VALV |
| O-RING 16x2 | 7026041 | 7 | 2 | 326 | 50 09 562 | SEAL KIT DIRECTIONAL VALV |
| O-RING 17,12X2,62 | 7028185 | 25 | 2 | 147 | 70 28 075 | CONTROL UNIT |
| O-RING 17,17X1,78 | 7013245 | 14 | 1 | 325 | 50 09 391 | SEAL KIT DIRECTIONAL VALV |
| O-RING 17,17X1,78 | 7013245 | 10 | 1 | 326 | 50 09 562 | SEAL KIT DIRECTIONAL VALV |
| O-RING 18X2,5 | 7264642 | 1 | 1 | 168 | 52 11 460 | ANGLE FLANGE SCREWED UN |
| O-RING 195X3 | 7610217 | 71 | 2 | 69 | 94 43 840 | TRAVEL DRIVE FAT 450 P 004 |
| O-RING 20,29X2,62 | 7020576 | 5 | 1 | 328 | 70 30 267 | SEAL KIT LIMIT VALVE |
| O-RING 20,90X3,00 | 10040399 | 6 | 1 | 533 | 10 11 658 7 | INJECTOR |
| O-RING 20,90X3,00 | 10040399 | 1 | 1 | 535 | 10 11 585 4 | SEAL KIT INJECTION NOZZLE |
| O-RING 200X4 | 11067315 | 1 | 1 | 593 | 10 11 790 0 | MOTOR CONTROL DEVICE |
| O-RING 209,14X3,53 | 10016657 | 33 | 1 | 682 | 10 28 689 7 | LUBRICATION PUMP |
| O-RING 20X2 | 7007339 | 38 | 1 | 328 | 70 30 267 | SEAL KIT LIMIT VALVE |
| O-RING 21,89X2,62 | 10220698 | 13 | 3 | 118 | 10 22 041 7 | FILTER |
| O-RING 21,89X2,62 | 7264404 | 20 | 1 | 326 | 50 09 562 | SEAL KIT DIRECTIONAL VALV |
| O-RING 21,95X1,78 | 7024500 | 13 | 1 | 327 | 70 25 142 | SEAL KIT |
| O-RING 23,47X2,62 | 7023769 | 8 | 1 | 146 | 57 15 963 | PRESSURE LIMITING VALVE |
| O-RING 23,52X1,78 | 7017668 | 31 | 1 | 324 | 10 22 099 7 | SEAL KIT |
| O-RING 24X1,5 | 7030286 | 312 | 1 | 328 | 70 30 267 | SEAL KIT LIMIT VALVE |
| O-RING 24X2,5 | 7361549 | 1 | 1 | 99 | 73 67 136 | SCREW FITTING BFW 35L |
| O-RING 25X3,53 | 7015407 | 10 | 1 | 339 | 10 22 239 3 | AERATION FILTER |

| Description | Item | Pos. | Quantity | Page | Assembly | Description |
|---|---|---|---|---|---|---|
| O-RING 26,00X3,00 | 10004261 | 12 | 1 | 484 | 90 79 480 | POWER UNIT SUPPORT ATT |
| O-RING 26,00X3,00 | 10004261 | 13 | 1 | 605 | 10 11 801 4 | SEAL KIT AGGREGATE CARR |
| O-RING 26,00X3,00 | 10004261 | 13 | 1 | 608 | 10 11 583 8 | SEAL KIT DIESEL ENGINE |
| O-RING 260X3 | 7610202 | 3 | 1 | 191 | 93 33 333 01 | BRAKE |
| O-RING 26X3 | 7007759 | 7 | 1 | 328 | 70 30 267 | SEAL KIT LIMIT VALVE |
| O-RING 29,82X2,62 | 7006212 | 25 | 1 | 122 | 56 16 530 | AXIAL PISTON PUMP |
| O-RING 2X1,5 | 10289308 | 20 | 7 | 221 | 10 02 131 0 | SEAL KIT |
| O-RING 2X1,5 | 10289308 | 30 | 1 | 222 | 10 02 131 1 | SEAL KIT |
| O-RING 34,59X2,62 | 7007476 | 2 | 1 | 369 | 56 10 135 | SUPPLY VALVE |
| O-RING 340X4 | 7610341 | 74 | 1 | 185 | 90 01 790 0 | SLEWING DRIVE SAT 375/250 |
| O-RING 37,69X3,53 | 7022120 | 16 | 1 | 363 | 10 21 821 5 | NON-RETURN VALVE |
| O-RING 37,69X3,53 | 7022120 | 16 | 1 | 364 | 10 21 986 3 | NON-RETURN VALVE |
| O-RING 37,69X3,53 | 7264687 | 3 | 1 | 662 | 92 70 390 | SEAL KIT DRV |
| O-RING 39,34X2,62 | 7381812 | 4 | 1 | 523 | 90 74 796 | LUBE OIL PUMP WITH FASTEN |
| O-RING 39,34X2,62 | 7381812 | 54 | 1 | 611 | 10 11 583 8 | SEAL KIT DIESEL ENGINE |
| O-RING 4,00X1,00 | 7381562 | 43 | 2 | 154 | 98 82 875 | SEAL KIT REGULATING VALVE |
| O-RING 40,00X4,00 | 10040404 | 3 | 1 | 530 | 10 11 585 5 | SEAL KIT INJECTION NOZZLE |
| O-RING 41X1,78 | 7380888 | 69 | 1 | 154 | 98 82 875 | SEAL KIT REGULATING VALVE |
| O-RING 41X1,78 | 7380888 | 69 | 1 | 694 | 10 13 305 9 | REGULATING VALVE |
| O-RING 41X1,78 | 7380888 | 61 | 1 | 700 | 92 71 657 | SEAL KIT |
| O-RING 45,00X2,50 | 10040403 | 2 | 1 | 530 | 10 11 585 5 | SEAL KIT INJECTION NOZZLE |
| O-RING 46X3 | 7368904 | 10 | 1 | 340 | 10 02 217 5 | LEVEL SENSOR |
| O-RING 47,00X2,50 | 10040402 | 1 | 1 | 530 | 10 11 585 5 | SEAL KIT INJECTION NOZZLE |
| O-RING 47,22X3,53 | 7360048 | 45 | 3 | 366 | 10 03 245 2 | CONTROL BLOCK |
| O-RING 5,10X1,60 | 10215824 | 1 | 1 | 489 | 90 79 862 | DIPSTICK W.TUBE |
| O-RING 6,02X2,62 | 7028183 | 23 | 1 | 147 | 70 28 075 | CONTROL UNIT |
| O-RING 6,07X1,78 | 10220666 | 15 | 1 | 132 | 10 22 063 5 | SHUTDOWN VALVE |
| O-RING 63,17X2,62 | 7005820 | 1 | 2 | 368 | 56 04 335 | SEALING KIT |
| O-RING 63,17X2,62 | 7369130 | 31 | 14 | 365 | 10 03 245 2 | CONTROL BLOCK |
| O-RING 63,17X2,62 | 7380970 | 13 | 1 | 514 | 10 11 585 1 | SEAL KIT CYLINDER HEAD |
| O-RING 63,17X2,62 | 7380970 | 13 | 1 | 516 | 10 11 585 3 | SEAL KIT ZYLINDER HEAD CPL |
| O-RING 63,17X2,62 | 7380970 | 8 | 1 | 552 | 10 12 190 8 | CONNECTING LINE ADD-ON |
| O-RING 63,17X2,62 | 7380970 | 8 | 1 | 553 | 90 79 964 | CONNECTING LINE ADD-ON |
| O-RING 66,00X3,00 | 7008755 | 5 | 1 | 357 | 93 70 592 | NON-RETURN VALVE |
| O-RING 68,26X3,53 | 7381593 | 3 | 2 | 563 | 10 13 281 7 | WATER PUMP, PRE-ASSEMB |
| O-RING 68,26X3,53 | 7381593 | 11 | 2 | 605 | 10 11 801 4 | SEAL KIT AGGREGATE CARR |
| O-RING 68,26X3,53 | 7381593 | 11 | 2 | 608 | 10 11 583 8 | SEAL KIT DIESEL ENGINE |
| O-RING 69,52X2,62 | 7006216 | 20 | 2 | 115 | 10 22 041 0 | ADJUSTMENT |
| O-RING 6X1,5 | 10289311 | 20 | 2 | 222 | 10 02 131 1 | SEAL KIT |
| O-RING 7,5X1,5 | 10289310 | 10 | 2 | 222 | 10 02 131 1 | SEAL KIT |
| O-RING 7,65X1,78 | 7264360 | 9 | 1 | 60 | 10 00 966 2 | GUIDE WHEEL D7G/B7B |
| O-RING 7,65x1,78 | 10024675 | 11 | 2 | 315 | 10 04 272 9 | OIL PILOT VALVE |
| O-RING 78,97X3,53 | 10220707 | 11 | 1 | 90 | 10 06 948 1 | SERVICE KITS 1500/2500h |
| O-RING 78,97X3,53 | 10220707 | 10 | 1 | 135 | 10 22 069 9 | FILTER |
| O-RING 78X3 | 7361548 | 6 | 2 | 60 | 10 00 966 2 | GUIDE WHEEL D7G/B7B |
| O-RING 80X5,0 | 10022320 | 12 | 2 | 514 | 10 11 585 1 | SEAL KIT CYLINDER HEAD |
| O-RING 80X5,0 | 10022320 | 12 | 2 | 516 | 10 11 585 3 | SEAL KIT ZYLINDER HEAD CPL |
| O-RING 80X5,0 | 10022320 | 5 | 2 | 552 | 10 12 190 8 | CONNECTING LINE ADD-ON |
| O-RING 80X5,0 | 10022320 | 5 | 2 | 553 | 90 79 964 | CONNECTING LINE ADD-ON |
| O-RING 80X5,0 | 10022320 | 21 | 2 | 607 | 10 11 801 4 | SEAL KIT AGGREGATE CARR |
| O-RING 85,00X2,00 | 10218370 | 1 | 1 | 575 | 10 11 553 9 | STARTER INSTALLATION |
| O-RING 85,00X2,00 | 10218370 | 2 | 1 | 577 | 10 21 997 8 | STARTER |
| O-RING 88,57X2,62 | 10220668 | 2 | 1 | 117 | 10 22 041 5 | INTERNAL GEAR PUMP SET |
| O-RING 88,57X2,62 | 10220668 | 3 | 1 | 130 | 10 21 681 6 | WEARING PLATE |
| O-RING 88,57X2,62 | 10220668 | 9 | 1 | 133 | 10 22 066 7 | GEAR PUMP |
| O-RING 88X3 | 7264087 | 8 | 1 | 665 | 95 90 264 | PISTON 170MM |
| O-RING 9,25X1,78 | 10220549 | 19 | 1 | 131 | 10 22 052 4 | ADJUSTING PISTON |
| O-RING 9,25X1,78 | 10220640 | 26 | 2 | 116 | 10 22 041 1 | CONNECTING PLATE |
| O-RING 9,25X1,78 | 7023929 | 12 | 2 | 323 | 73 71 025 | BREECH PLATE |
| O-RING 9,25X1,78 | 7028184 | 24 | 2 | 147 | 70 28 075 | CONTROL UNIT |

| Description | Item | Pos. | Quantity | Page | Assembly | Description |
|---|---|---|---|---|---|---|
| O-RING 9,25x1,78 | 10043241 | 27 | 1 | 324 | 10 22 099 7 | SEAL KIT |
| O-RING 9,25x1,78 | 10043241 | 11 | 1 | 325 | 50 09 391 | SEAL KIT DIRECTIONAL VALV |
| O-RING AEHNL.DIN 3771 380X | 726457301 | 26 | 1 | 184 | 90 01 790 0 | SLEWING DRIVE SAT 375/250 |
| OIL ACCIDENT CASE ZW | 7023359 | 50 | 1 | 39 | 90 66 466 | ACCESSORIES |
| OIL ANALYSIS SET | 10029626 | 11 | 1 | 38 | 90 66 466 | ACCESSORIES |
| OIL ANALYSIS SET | 7018368 | 12 | 1 | 38 | 90 66 466 | ACCESSORIES |
| OIL ANALYSIS SET | 8145660 | 10 | 1 | 38 | 90 66 466 | ACCESSORIES |
| OIL COOLER | 10325002 | 3 | 1 | 520 | 10 12 143 8 | OIL COOLER, PRE-ASSEMBLE |
| OIL COOLER | 10355084 | 6 | 1 | 160 | 10 35 809 2 | ENGINE COOLING |
| OIL COOLER ADD-ON | 10121439 | 130 | 1 | 471 | 10 11 668 5 | DIESEL ENGINE D936 L A6 240 |
| OIL COOLER HOUSING D936 | 9073505 | 1 | 1 | 520 | 10 12 143 8 | OIL COOLER, PRE-ASSEMBLE |
| OIL COOLER, PRE-ASSEMBLE | 10121438 | 1 | 1 | 519 | 10 12 143 9 | OIL COOLER ADD-ON |
| OIL COOLING SYSTEM | 10331626 | 2 | 1 | 167 | 10 35 508 4 | OIL COOLER |
| OIL DIPSTICK | 10115740 | 1 | 1 | 489 | 90 79 862 | DIPSTICK W.TUBE |
| OIL DIPSTICK | 9274863 | 4 | 1 | 108 | 90 77 872 | PUMP DISTRIBUTION GEAR |
| OIL DRAIN HOSE | 9358137 | 180 | 1 | 459 | 10 84 856 2 | TOOL EQUIPMENT |
| OIL DRAIN HOSE DN18X3 | 7402658 | 2 | 1m | 460 | 93 58 137 | OIL DRAIN HOSE |
| OIL DRAIN PLUG M 30 1,5 | 5004624 | 84 | 1 | 110 | 90 77 872 | PUMP DISTRIBUTION GEAR |
| OIL DRAIN PLUG M 30 1,5 | 5004624 | 95 | 3 | 163 | 10 35 809 2 | ENGINE COOLING |
| OIL DRAIN PLUG M 30 1,5 | 5004624 | 20 | 1 | 181 | 90 18 423 | SWING GEAR INSTALLATION |
| OIL DRAIN PLUG M 30 1,5 | 5004624 | 89 | 2 | 337 | 10 35 819 3 | HYDRAULIC TANK |
| OIL DRAIN PLUG M 30 1,5 | 5004624 | 45 | 1 | 452 | 90 18 419 | FUEL TANK ASSY. |
| OIL DRAIN PLUG M 30 1,5 | 5004624 | 10 | 1 | 486 | 90 79 483 | OIL SUMP |
| OIL FILLER INLET D930 | 10119030 | 2 | 1 | 505 | 10 11 960 9 | CYLINDER HEAD COVER ASS |
| OIL FILLER NECK | 9442150 | 85 | 1 | 110 | 90 77 872 | PUMP DISTRIBUTION GEAR |
| OIL FILTER SET | 5609948 | 11 | 1 | 297 | 99 37 312 | OIL PILOT VALVE INSTALLATIO |
| OIL LINE PRE-ASSEMBLY 10X | 9079978 | 25 | 1 | 469 | 10 11 668 5 | DIESEL ENGINE D936 L A6 240 |
| OIL LINE PRE-ASSEMBLY 12X | 10120263 | 25 | 1 | 469 | 10 11 668 5 | DIESEL ENGINE D936 L A6 240 |
| OIL PILOT VALVE | 10042729 | 10 | 1 | 297 | 99 37 312 | OIL PILOT VALVE INSTALLATIO |
| OIL PILOT VALVE INSTALLATIO | 9937312 | 7025 | 1 | 294 | 10 35 809 0 | HYDRAULIC INSTALLATION UP |
| OIL SUCTION HOSE | 9368512 | 10 | 2 | 304 | 10 35 801 4 | HYDR.SUCT.+RETURN OIL HO |
| OIL SUMP | 10123868 | 1 | 1 | 486 | 90 79 483 | OIL SUMP |
| OIL SUMP | 9079483 | 2 | 1 | 485 | 90 79 487 | OIL SUMP |
| OIL SUMP | 9079487 | 20 | 1 | 469 | 10 11 668 5 | DIESEL ENGINE D936 L A6 240 |
| OIL TANK | 968868001 | 1 | 1 | 195 | 96 90 213 01 | OIL TANK |
| OIL TANK | 969021301 | 80 | 1 | 186 | 90 01 790 0 | SLEWING DRIVE SAT 375/250 |
| OPERATING ELEMENT | 10493087 | 70 | 1 | 280 | 10 40 689 8 | AIR CONDITIONING UNIT |
| OPERATING ELEMENT | 10493088 | 71 | 1 | 280 | 10 40 689 8 | AIR CONDITIONING UNIT |
| OPERATION | 10491783 | 8 | 1 | 233 | 11 10 016 6 | SEAT TOP |
| OPERATION | 10491783 | 9 | 1 | 233 | 11 10 016 6 | SEAT TOP |
| OPERATION | 10493048 | 58 | 1 | 234 | 11 10 016 6 | SEAT TOP |
| OPERATION | 10493341 | 20 | 1 | 233 | 11 10 016 6 | SEAT TOP |
| OPERATION | 11066530 | 18 | 1 | 235 | 11 10 016 7 | SUSPENSION |
| OPERATOR'S CAB | 10357967 | 8700 | 1 | 86 | 10 35 798 2 | UPPERCARRIAGE |
| OPERATOR'S CAB | 10476169 | 20 | 1 | 404 | 10 35 796 7 | OPERATOR'S CAB |
| ORIFICE PLATE | 10056858 | 120 | 1 | 163 | 10 35 809 2 | ENGINE COOLING |
| OUTER MULTI-DISC | 9441377 | 62 | 7 | 185 | 90 01 790 0 | SLEWING DRIVE SAT 375/250 |
| OUTER MULTI-DISC | 9441377 | 37 | 7 | 193 | 96 85 802 01 | BRAKE MULTI-DISC SET |
| OUTLET MANIFOLD | 10118611 | 2 | 2 | 561 | 10 11 547 9 | EXHAUST PIPE PRE-ASS. |
| OUTLET MANIFOLD | 9080876 | 1 | 1 | 561 | 10 11 547 9 | EXHAUST PIPE PRE-ASS. |
| OUTLET VALVE | 10136753 | 4 | 2 | 504 | 10 14 155 4 | CYLINDER HEAD PRE-ASS. |
| OUTLET VALVE | 9074451 | 4 | 2 | 508 | 10 12 036 4 | CYLINDER HEAD PRE-ASS. |
| OUTPUT SHAFT | 90018382 | 10 | 1 | 184 | 90 01 790 0 | SLEWING DRIVE SAT 375/250 |
| OUTPUT SHAFT HOUSING | 970643101 | 1 | 1 | 184 | 90 01 790 0 | SLEWING DRIVE SAT 375/250 |
| OUTPUT STAGE | 10687417 | 100 | 1 | 251 | 10 84 086 6 | ARM REST RIGHT |
| OUTSIDE MIRROR | 10044353 | 610 | 1 | 429 | 10 29 026 4 | ASSY. PARTS |
| OUTSIDE MIRROR 243X155 | 7019140 | 810 | 2 | 431 | 10 04 435 3 | OUTSIDE MIRROR |
| OUTSIDE MIRROR ASSEMBLY | 10358525 | 9700 | 1 | 86 | 10 35 798 2 | UPPERCARRIAGE |
| OVERFLOW VALVE | 10038572 | 91 | 1 | 543 | 10 11 628 5 | FUEL LINE |
| OVERPRESSURE VALVE | 7621324 | 14 | 1 | 681 | 10 28 689 7 | LUBRICATION PUMP |

| Description | Item | Pos. | Quantity | Page | Assembly | Description |
|---|---|---|---|---|---|---|
| PACKING CORD | 10215888 | 30 | 0.07 | 181 | 90 18 423 | SWING GEAR INSTALLATION |
| PAD | 11082671 | 1 | 1 | 233 | 11 10 016 6 | SEAT TOP |
| PANELLING | 10358004 | 8500 | 1 | 86 | 10 35 798 2 | UPPERCARRIAGE |
| PANELLING | 7028837 | 320 | 1 | 414 | 70 28 769 | DRIVER'S CAB DOOR |
| PANELLING | 7028963 | 2 | 1 | 434 | 10 47 012 8 | CASING, CPL |
| PARALLEL PIN | 10413021 | 35 | 2 | 121 | 10 41 301 3 | HYDRAULIC PUMP |
| PARALLEL PIN 6M6 | 570948608 | 33 | 1 | 121 | 10 41 301 3 | HYDRAULIC PUMP |
| PARALLEL PIN 6M6 | 570948608 | 33 | 1 | 139 | 10 35 572 4 | HYDRAULIC PUMP |
| PARALLEL PIN 6m6 | 4980000 | 5 | 1 | 524 | 90 80 278 | SUCTION PUMP WITH FASTEN |
| PARALLEL PIN 8m6 | 4980853 | 5 | 1 | 517 | 90 80 713 | CAMSHAFT CPL. |
| PARTITION | 10009201 | 490 | 1 | 433 | 10 48 808 8 | INTERNAL LINING |
| PARTITION | 9947957 | 95 | 1 | 375 | 10 35 800 4 | PANELLING |
| PARTITION | 9947958 | 2 | 1 | 396 | 99 47 957 | PARTITION |
| PASTE | 8100714 | 127 | 1 | 688 | 10 11 856 1 | PILOT CONTROL UNIT VG6-8 |
| PASTE | 8501565 | 20 | 1 | 457 | 10 08 428 6 | TOOL EQUIPMENT |
| PERFORATED PLATE | 9079126 | 9 | 1 | 485 | 90 79 487 | OIL SUMP |
| PERFORMANCE RELAY | 10009888 | 16 | 2 | 442 | 99 47 695 | ELECTRICAL SYSTEM E50 |
| PILOT CONTROL UNIT VG6-8 | 10118561 | 50 | 1 | 238 | 10 38 502 4 | ARM REST LEFT |
| PILOT CONTROL UNIT VG6-8 | 10118561 | 50 | 1 | 249 | 10 84 086 6 | ARM REST RIGHT |
| PILOT CONTROL UNIT VG7 2-3 | 9079259 | 10 | 1 | 269 | 10 06 017 4 | FOOT PILOT VALVE LEFT |
| PILOT CONTROL UNIT VG7 2-3 | 9079258 | 10 | 1 | 270 | 10 06 017 5 | FOOT PILOT VALVE RIGHT |
| PILOT VALVE | 5614029 | 4 | 1 | 315 | 10 04 272 9 | OIL PILOT VALVE |
| PIN | 10015475 | 30 | 1 | 75 | 56 16 688 | WHEEL BRAKE VALVE |
| PIN | 10022781 | 13 | 2 | 285 | 10 02 211 7 | AIR CIRCULATION CASE |
| PIN | 10060974 | 2 | 1 | 644 | 10 06 097 3 | PIN CPL |
| PIN | 10498335 | 30 | 1 | 640 | 10 49 817 6 | PISTON ROD COVER BUCKET |
| PIN | 10498336 | 2 | 1 | 645 | 10 49 833 5 | PIN |
| PIN | 7020571 | 35 | 1 | 367 | 10 28 962 9 | VALVE |
| PIN | 7028351 | 15 | 1 | 338 | 56 17 689 | SHUT OFF DEVICE DN 100 |
| PIN | 7028840 | 620 | 2 | 416 | 70 28 842 | DOOR FRAME |
| PIN | 9374747 | 130 | 1 | 620 | 10 49 830 0 | GOOSENECK BOOM 6,70M |
| PIN | 9374747 | 190 | 1 | 620 | 10 49 830 0 | GOOSENECK BOOM 6,70M |
| PIN | 9374747 | 180 | 1 | 628 | 10 49 823 5 | STICK 2,35M |
| PIN | 9374747 | 80 | 2 | 672 | 10 49 815 8 | HOIST CYLINDERS |
| PIN | 9374747 | 140 | 2 | 672 | 10 49 815 8 | HOIST CYLINDERS |
| PIN | 9442284 | 56 | 1 | 69 | 94 43 840 | TRAVEL DRIVE FAT 450 P 004 |
| PIN | 9641061 | 2 | 1 | 93 | 10 40 278 1 | ATTACHMENTS MOUNTING PA |
| PIN | 9888133 | 19 | 1 | 150 | 90 79 294 | REPAIR KIT DRIVING MECHAN |
| PIN | 9888133 | 12 | 1 | 151 | 90 79 347 | REPAIR SET SWIVEL YOKE LP |
| PIN 110X765X623 | 11451267 | 10 | 1 | 646 | 93 74 949 | PIN CPL |
| PIN 110X815X770 | 9019253 | 170 | 1 | 628 | 10 49 823 5 | STICK 2,35M |
| PIN 110X815X770 | 9019253 | 280 | 1 | 628 | 10 49 823 5 | STICK 2,35M |
| PIN 8X16 | 7738704 | 23 | 2 | 372 | 10 35 800 4 | PANELLING |
| PIN 8X16 | 7738704 | 132 | 4 | 376 | 10 35 800 4 | PANELLING |
| PIN 8X16 | 7738704 | 22 | 2 | 391 | 10 06 692 0 | TOOL BOX |
| PIN 8X16 | 7738704 | 22 | 2 | 393 | 10 37 938 6 | TOOL BOX |
| PIN 8X16 | 7738704 | 20 | 2 | 401 | 10 03 720 9 | GAS SPRING |
| PIN CPL | 10060901 | 200 | 1 | 628 | 10 49 823 5 | STICK 2,35M |
| PIN CPL | 10060973 | 230 | 1 | 628 | 10 49 823 5 | STICK 2,35M |
| PIN CPL | 9374949 | 120 | 1 | 620 | 10 49 830 0 | GOOSENECK BOOM 6,70M |
| PIN HOUSING HD 9-POL 100/6 | 6204241 | 10 | 1 | 442 | 99 47 695 | ELECTRICAL SYSTEM E50 |
| PIPE BRIDGE | 774378008 | 32 | 1 | 213 | 10 48 841 6 | DISTRIBUTION BLOCK MX-F 7/ |
| PIPE CLAMP | 10331643 | 31 | 4 | 165 | 10 45 475 2 | COMBINATED RADIATOR |
| PIPE CLAMP | 7382216 | 5 | 1 | 549 | 10 11 657 6 | CONNECTION PIECE |
| PIPE CLAMP | 9945116 | 8 | 1 | 359 | 10 49 822 5 | HYDR.TUBES INSTALLATION |
| PIPE CLAMP D=69 | 9079957 | 6 | 1 | 552 | 10 12 190 8 | CONNECTING LINE ADD-ON |
| PIPE CLAMP D=69 | 9079957 | 6 | 1 | 553 | 90 79 964 | CONNECTING LINE ADD-ON |
| PIPE CLAMP HSRS 42X80 W1-Z | 10287499 | 55 | 4Pair | 301 | 10 35 801 5 | HYDR.ROTARY CONNEC.+SWI |
| PIPE CLAMP d=12 | 7382081 | 3 | 2 | 546 | 10 11 726 8 | CLAMP - ADD-ON UNIT |
| PIPE FRACTION SAFETY VALV | 10002971 | 9 | 1 | 671 | 10 49 815 8 | HOIST CYLINDERS |

| Description | Item | Pos. | Quantity | Page | Assembly | Description |
|---|---|---|---|---|---|---|
| PIPE FRACTION SAFETY VALV | 10044700 | 8 | 1 | 671 | 10 49 815 8 | HOIST CYLINDERS |
| PIPE SOCKET | 511701914 | 27 | 1 | 217 | 90 64 786 | CONNECTING ELEMENT |
| PIPE SOCKET | 511701914 | 27 | 4 | 219 | 10 01 461 1 | AUXILIARY BOX |
| PIPE SOCKET 15° D8 | 10412844 | 115 | 1 | 218 | 90 64 786 | CONNECTING ELEMENT |
| PIPE SOCKET 15° D8 | 10412844 | 115 | 2 | 220 | 10 01 461 1 | AUXILIARY BOX |
| PIPE SOCKET DN6 | 10027260 | 26 | 1 | 217 | 90 64 786 | CONNECTING ELEMENT |
| PIPE SOCKET DN6 | 10027260 | 26 | 4 | 219 | 10 01 461 1 | AUXILIARY BOX |
| PIPE SOCKET DN6 | 7623704 | 25 | 1 | 217 | 90 64 786 | CONNECTING ELEMENT |
| PIPE SOCKET DN6 | 7623704 | 25 | 4 | 219 | 10 01 461 1 | AUXILIARY BOX |
| PIPE SOCKET DN6 | 7623705 | 20 | 1 | 217 | 90 64 786 | CONNECTING ELEMENT |
| PIPE SOCKET DN6 | 7623705 | 20 | 6 | 219 | 10 01 461 1 | AUXILIARY BOX |
| PIPE SOCKET DN6 | 7623707 | 28 | 1 | 217 | 90 64 786 | CONNECTING ELEMENT |
| PIPE SOCKET DN6 | 7623707 | 28 | 2 | 219 | 10 01 461 1 | AUXILIARY BOX |
| PIPE SOCKET DN6 | 7624177 | 11 | 1 | 217 | 90 64 786 | CONNECTING ELEMENT |
| PIPE SOCKET DN6 | 7624177 | 11 | 5 | 219 | 10 01 461 1 | AUXILIARY BOX |
| PIPE SOCKET DN8 | 10011995 | 110 | 1 | 218 | 90 64 786 | CONNECTING ELEMENT |
| PIPE SOCKET DN8 | 10011995 | 110 | 6 | 220 | 10 01 461 1 | AUXILIARY BOX |
| PIPE SOCKET DN8 | 10040776 | 120 | 1 | 218 | 90 64 786 | CONNECTING ELEMENT |
| PIPE SOCKET DN8 | 10040776 | 120 | 2 | 220 | 10 01 461 1 | AUXILIARY BOX |
| PIPE SOCKET DN8 | 10040777 | 125 | 1 | 218 | 90 64 786 | CONNECTING ELEMENT |
| PIPE SOCKET DN8 | 10040777 | 125 | 2 | 220 | 10 01 461 1 | AUXILIARY BOX |
| PIPE SOCKET DN8 | 10040778 | 126 | 1 | 218 | 90 64 786 | CONNECTING ELEMENT |
| PIPE SOCKET DN8 | 10040778 | 126 | 2 | 220 | 10 01 461 1 | AUXILIARY BOX |
| PIPE SOCKET DN8 | 10040779 | 127 | 1 | 218 | 90 64 786 | CONNECTING ELEMENT |
| PIPE SOCKET DN8 | 10040779 | 127 | 2 | 220 | 10 01 461 1 | AUXILIARY BOX |
| PIPE SOCKET R1/4" | 10014698 | 15 | 1 | 681 | 10 28 689 7 | LUBRICATION PUMP |
| PIPE UNION GE8 10X1 | 10009053 | 20 | 1 | 213 | 10 48 841 6 | DISTRIBUTION BLOCK MX-F 7/ |
| PIPELINE | 10115491 | 2 | 1 | 545 | 10 11 559 5 | LEAK OIL RETURN LINE |
| PIPELINE | 10116287 | 54 | 1 | 543 | 10 11 628 5 | FUEL LINE |
| PIPELINE | 10116499 | 1 | 1 | 542 | 10 11 628 5 | FUEL LINE |
| PIPELINE | 10116572 | 2 | 1 | 549 | 10 11 657 6 | CONNECTION PIECE |
| PIPELINE | 10116573 | 1 | 1 | 549 | 10 11 657 6 | CONNECTION PIECE |
| PIPELINE 10X1 | 10115489 | 3 | 1 | 545 | 10 11 559 5 | LEAK OIL RETURN LINE |
| PIPELINE 10X1 | 10116289 | 53 | 1 | 543 | 10 11 628 5 | FUEL LINE |
| PIPELINE 10X1 | 10116290 | 10 | 1 | 542 | 10 11 628 5 | FUEL LINE |
| PIPELINE 10X1 | 10116453 | 5 | 1 | 542 | 10 11 628 5 | FUEL LINE |
| PIPELINE 10X1 | 10116482 | 11 | 1 | 542 | 10 11 628 5 | FUEL LINE |
| PIPELINE 10X1 | 9080922 | 58 | 1 | 543 | 10 11 628 5 | FUEL LINE |
| PIPELINE 12X1 | 10116467 | 7 | 1 | 542 | 10 11 628 5 | FUEL LINE |
| PIPELINE 22X1,5 | 10119168 | 3 | 1 | 482 | 10 11 916 7 | CRANKCASE BREATHER ASSE |
| PIPELINE 6X1 | 9078984 | 10 | 1 | 598 | 90 78 961 | POWER TAKE-OFF ADD-ON |
| PIPELINE 6X1 | 9080009 | 15 | 1 | 599 | 90 80 006 | POWER TAKE-OFF ADD-ON |
| PIPELINE D936 | 9079082 | 1 | 1 | 547 | 90 79 083 | PIPELINE INSTALLATION |
| PIPELINE INSTALLATION | 9079083 | 381 | 1 | 474 | 10 11 668 5 | DIESEL ENGINE D936 L A6 240 |
| PISTON | 10101453 | 1 | 9 | 144 | 10 41 302 4 | DRIVING GEAR |
| PISTON | 10122498 | 12 | 4 | 688 | 10 11 856 1 | PILOT CONTROL UNIT VG6-8 |
| PISTON | 10216691 | 2 | 9 | 345 | 10 22 042 7 | DRIVING GEAR |
| PISTON | 10355740 | 1 | 9 | 141 | 10 35 573 8 | DRIVING GEAR |
| PISTON | 5612180 | 4 | 1 | 132 | 10 22 063 5 | SHUTDOWN VALVE |
| PISTON | 5616689 | 20 | 1 | 75 | 56 16 688 | WHEEL BRAKE VALVE |
| PISTON | 7028169 | 3 | 2 | 147 | 70 28 075 | CONTROL UNIT |
| PISTON | 9015158 | 2 | 1 | 53 | 90 15 155 | GREASE TENSIONER |
| PISTON | 9075361 | 1 | 1 | 480 | 10 11 795 1 | FINAL CONTROL VALVE |
| PISTON | 9080685 | 1 | 1 | 502 | 90 80 686 | PISTON PRE-ASS. MONOTHER |
| PISTON | 9265392 | 12 | 2 | 271 | 90 79 258 | PILOT CONTROL UNIT VG7 2-3 |
| PISTON | 9265392 | 12 | 2 | 273 | 90 79 259 | PILOT CONTROL UNIT VG7 2-3 |
| PISTON | 9266234 | 11 | 1 | 76 | 92 67 037 | PRESSURE LIMITING VALVE |
| PISTON | 94006062 | 1 | 1 | 663 | 94 00 606 1 | PISTON 180MM |
| PISTON | 9587596 | 1 | 1 | 664 | 95 87 597 | PISTON 180MM |
| PISTON | 9590265 | 1 | 1 | 665 | 95 90 264 | PISTON 170MM |

| Description | Item | Pos. | Quantity | Page | Assembly | Description |
|---|---|---|---|---|---|---|
| PISTON | 9886591 | 20 | 1 | 520 | 10 12 143 8 | OIL COOLER, PRE-ASSEMBLE |
| PISTON | 9886591 | 9 | 1 | 525 | 90 72 781 | LUBRICATING OIL PUMP |
| PISTON 170MM | 9590264 | 12 | 1 | 659 | 95 96 399 | HYDRAULIC CYLINDER |
| PISTON 180MM | 94006061 | 12 | 1 | 657 | 94 02 019 4 | HYDRAULIC CYLINDER |
| PISTON 180MM | 9587597 | 12 | 1 | 658 | 95 87 580 | HYDRAULIC CYLINDER |
| PISTON COOLING | 9073795 | 15 | 6 | 469 | 10 11 668 5 | DIESEL ENGINE D936 L A6 240 |
| PISTON COOLING NOZZLE ST | 9073796 | 1 | 1 | 479 | 90 73 795 | PISTON COOLING |
| PISTON CPL. MONOTHERM D= | 9080687 | 70 | 6 | 470 | 10 11 668 5 | DIESEL ENGINE D936 L A6 240 |
| PISTON GUIDE RING 170X162X | 9177717 | 2 | 2 | 665 | 95 90 264 | PISTON 170MM |
| PISTON GUIDE RING 170X165X | 7003429 | 6 | 4 | 665 | 95 90 264 | PISTON 170MM |
| PISTON GUIDE RING 180X172X | 9177718 | 2 | 2 | 663 | 94 00 606 1 | PISTON 180MM |
| PISTON GUIDE RING 180X172X | 9177718 | 2 | 2 | 664 | 95 87 597 | PISTON 180MM |
| PISTON GUIDE RING 180X172X | 9177718 | 2 | 2 | 666 | 90 62 632 | SEALING SET FOR PISTON 18 |
| PISTON GUIDE RING 180X175X | 7002927 | 6 | 4 | 663 | 94 00 606 1 | PISTON 180MM |
| PISTON GUIDE RING 180X175X | 7002927 | 6 | 4 | 664 | 95 87 597 | PISTON 180MM |
| PISTON GUIDE RING 180X175X | 7002927 | 6 | 4 | 666 | 90 62 632 | SEALING SET FOR PISTON 18 |
| PISTON PRE-ASS. MONOTHER | 9080686 | 1 | 1 | 501 | 90 80 687 | PISTON CPL. MONOTHERM D= |
| PISTON RING MG 122X112,1X | 10472346 | 4 | 1 | 502 | 90 80 686 | PISTON PRE-ASS. MONOTHER |
| PISTON ROD | 10297878 | 3 | 1 | 139 | 10 35 572 4 | HYDRAULIC PUMP |
| PISTON ROD | 94020196 | 8 | 1 | 657 | 94 02 019 4 | HYDRAULIC CYLINDER |
| PISTON ROD | 9587673 | 8 | 1 | 658 | 95 87 580 | HYDRAULIC CYLINDER |
| PISTON ROD | 9640458 | 8 | 1 | 659 | 95 96 399 | HYDRAULIC CYLINDER |
| PISTON ROD BEARING 110/18 | 9952600 | 13 | 1 | 658 | 95 87 580 | HYDRAULIC CYLINDER |
| PISTON ROD BEARING 125/17 | 94027336 | 13 | 1 | 659 | 95 96 399 | HYDRAULIC CYLINDER |
| PISTON ROD BEARING 125/18 | 94019364 | 13 | 1 | 657 | 94 02 019 4 | HYDRAULIC CYLINDER |
| PISTON ROD COVER BUCKET | 10498176 | 10 | 1 | 639 | 10 49 817 7 | PISTON ROD COVER BUCKET |
| PISTON ROD COVER BUCKET | 10498177 | 13 | 2 | 7 | . | |
| PISTON W/ SPRING | 10287695 | 14 | 1 | 365 | 10 03 245 2 | CONTROL BLOCK |
| PISTON W/ SPRING | 10287695 | 18 | 1 | 365 | 10 03 245 2 | CONTROL BLOCK |
| PISTON W/ SPRING | 10330922 | 12 | 1 | 365 | 10 03 245 2 | CONTROL BLOCK |
| PISTON W/ SPRING | 10330927 | 13 | 1 | 365 | 10 03 245 2 | CONTROL BLOCK |
| PISTON W/ SPRING | 10330928 | 15 | 1 | 365 | 10 03 245 2 | CONTROL BLOCK |
| PISTON W/ SPRING | 10330931 | 19 | 1 | 365 | 10 03 245 2 | CONTROL BLOCK |
| PISTON W/ SPRING | 10333291 | 16 | 1 | 365 | 10 03 245 2 | CONTROL BLOCK |
| PISTON W/ SPRING | 5613604 | 17 | 1 | 365 | 10 03 245 2 | CONTROL BLOCK |
| PISTON WITH GUIDE SHOE | 9073392 | 1 | 9 | 199 | 90 74 416 | REPAIR KIT DRIVING MECHAN |
| PISTON WITH GUIDE SHOE | 9073392 | 1 | 9 | 696 | 90 73 393 | REPAIR KIT SLIDING SHOE |
| PISTON WITH GUIDE SHOE | 9882563 | 1 | 9 | 153 | 98 80 604 | RK PISTON WITH GUIDE SHOE |
| PISTON WITH GUIDE SHOE | 9887036 | 1 | 9 | 157 | 98 89 831 | RK PISTON WITH GUIDE SHOE |
| PISTON WRENCH SW 120 | 9600769 | 985 | 1 | 663 | 94 00 606 1 | PISTON 180MM |
| PISTON WRENCH SW 120 | 9600769 | 985 | 1 | 665 | 95 90 264 | PISTON 170MM |
| PIVOT PIN | 10216667 | 13 | 2 | 122 | 56 16 530 | AXIAL PISTON PUMP |
| PLAIN BEARING BUSH 30/34X1 | 9889290 | 3 | 1 | 603 | 90 77 717 | BEARING HOUSING, PRE-AS |
| PLAIN COMPRESSION RING | 7030284 | 5 | 1 | 328 | 70 30 267 | SEAL KIT LIMIT VALVE |
| PLAIN COMPRESSION RING 2 | 10490785 | 6 | 2 | 308 | 10 35 801 3 | HYDR.AND GEAR OIL COOLIN |
| PLAIN COMPRESSION RING 2 | 10490785 | 4 | 6 | 675 | 72 64 501 16 | KANTSIL SEAL KIT |
| PLAIN COMPRESSION RING 3 | 10490784 | 35 | 1 | 300 | 10 35 801 5 | HYDR.ROTARY CONNEC.+SWI |
| PLAIN COMPRESSION RING 3 | 10490784 | 86 | 2 | 302 | 10 35 801 5 | HYDR.ROTARY CONNEC.+SWI |
| PLAIN COMPRESSION RING 3 | 10490784 | 17 | 1 | 311 | 10 35 809 3 | HYDR.INSTALLATION FAN DR |
| PLAIN COMPRESSION RING 3 | 10490784 | 27 | 4 | 311 | 10 35 809 3 | HYDR.INSTALLATION FAN DR |
| PLAIN COMPRESSION RING 4 | 10490781 | 27 | 1 | 300 | 10 35 801 5 | HYDR.ROTARY CONNEC.+SWI |
| PLAIN COMPRESSION RING 4 | 10490781 | 127 | 1 | 303 | 10 35 801 5 | HYDR.ROTARY CONNEC.+SWI |
| PLAIN COMPRESSION RING 4 | 10490781 | 51 | 4 | 671 | 10 49 815 8 | HOIST CYLINDERS |
| PLAIN COMPRESSION RING 4 | 10490781 | 1 | 12 | 675 | 72 64 501 16 | KANTSIL SEAL KIT |
| PLAIN COMPRESSION RING 4 | 10472425 | 21 | 4 | 67 | 10 07 713 7 | TRAVEL DRIVE |
| PLAIN COMPRESSION RING 4 | 10472425 | 7 | 8 | 84 | 10 07 713 5 | HYDR.INSTALLATION UNDER |
| PLAIN COMPRESSION RING 4 | 10472425 | 110 | 6 | 295 | 10 35 801 2 | HYDR.PUMPS TO SPOOL VALV |
| PLAIN COMPRESSION RING 4 | 10472425 | 510 | 4 | 296 | 10 35 801 2 | HYDR.PUMPS TO SPOOL VALV |
| PLAIN COMPRESSION RING 4 | 10472425 | 7 | 8 | 300 | 10 35 801 5 | HYDR.ROTARY CONNEC.+SWI |
| PLAIN COMPRESSION RING 4 | 10472425 | 24 | 2 | 300 | 10 35 801 5 | HYDR.ROTARY CONNEC.+SWI |

| Description | Item | Pos. | Quantity | Page | Assembly | Description |
|---|---|---|---|---|---|---|
| PLAIN COMPRESSION RING 4 | 10472425 | 81 | 2 | 302 | 10 35 801 5 | HYDR.ROTARY CONNEC.+SWI |
| PLAIN COMPRESSION RING 4 | 10472425 | 12 | 1 | 310 | 10 35 809 3 | HYDR.INSTALLATION FAN DR |
| PLAIN COMPRESSION RING 4 | 10472425 | 92 | 2 | 347 | 10 35 802 8 | CONTROL VALVE INSTALLAT |
| PLAIN COMPRESSION RING 4 | 10472425 | 122 | 1 | 347 | 10 35 802 8 | CONTROL VALVE INSTALLAT |
| PLAIN COMPRESSION RING 4 | 10472425 | 215 | 2 | 349 | 10 35 802 8 | CONTROL VALVE INSTALLAT |
| PLAIN COMPRESSION RING 4 | 10472425 | 11 | 6 | 359 | 10 49 822 5 | HYDR.TUBES INSTALLATION |
| PLAIN COMPRESSION RING 4 | 10472425 | 16 | 1 | 359 | 10 49 822 5 | HYDR.TUBES INSTALLATION |
| PLAIN COMPRESSION RING 4 | 10472425 | 21 | 1 | 360 | 10 49 822 5 | HYDR.TUBES INSTALLATION |
| PLAIN COMPRESSION RING 4 | 10472425 | 26 | 1 | 360 | 10 49 822 5 | HYDR.TUBES INSTALLATION |
| PLAIN COMPRESSION RING 4 | 10472425 | 31 | 1 | 360 | 10 49 822 5 | HYDR.TUBES INSTALLATION |
| PLAIN COMPRESSION RING 4 | 10472425 | 36 | 1 | 360 | 10 49 822 5 | HYDR.TUBES INSTALLATION |
| PLAIN COMPRESSION RING 4 | 10472425 | 62 | 4 | 361 | 10 49 822 5 | HYDR.TUBES INSTALLATION |
| PLAIN COMPRESSION RING 4 | 10472425 | 40 | 15 | 618 | 10 49 830 0 | GOOSENECK BOOM 6,70M |
| PLAIN COMPRESSION RING 4 | 10472425 | 13 | 2 | 628 | 10 49 823 5 | STICK 2,35M |
| PLAIN COMPRESSION RING 4 | 10472425 | 40 | 6 | 637 | 11 45 153 0 | HOSES UPPER-GOOSENECK B |
| PLAIN COMPRESSION RING 4 | 10472425 | 11 | 1 | 655 | 10 06 203 8 | HYDRAULIC CYLINDER W/ DIS |
| PLAIN COMPRESSION RING 4 | 10472425 | 14 | 1 | 655 | 10 06 203 8 | HYDRAULIC CYLINDER W/ DIS |
| PLAIN COMPRESSION RING 4 | 10472425 | 48 | 4 | 671 | 10 49 815 8 | HOIST CYLINDERS |
| PLAIN COMPRESSION RING 4 | 10472425 | 2 | 12 | 675 | 72 64 501 16 | KANTSIL SEAL KIT |
| PLAIN COMPRESSION RING 5 | 10490787 | 55 | 1 | 331 | 10 35 798 3 | HYDRAULIC TANK INSTALLAT |
| PLAIN COMPRESSION RING 5 | 10490787 | 65 | 1 | 331 | 10 35 798 3 | HYDRAULIC TANK INSTALLAT |
| PLAIN COMPRESSION RING 5 | 10490787 | 53 | 1 | 361 | 10 49 822 5 | HYDR.TUBES INSTALLATION |
| PLAIN COMPRESSION RING 5 | 10490787 | 42 | 2 | 618 | 10 49 830 0 | GOOSENECK BOOM 6,70M |
| PLAIN COMPRESSION RING 5 | 10490787 | 42 | 1 | 637 | 11 45 153 0 | HOSES UPPER-GOOSENECK B |
| PLAIN COMPRESSION RING 5 | 10490787 | 5 | 2 | 656 | 99 48 785 | HYDR.CYLINDER W/ADDITION. |
| PLAIN COMPRESSION RING 5 | 10490787 | 3 | 6 | 675 | 72 64 501 16 | KANTSIL SEAL KIT |
| PLAIN COMPRESSION RING 6 | 10490786 | 38 | 6 | 309 | 10 35 801 3 | HYDR.AND GEAR OIL COOLIN |
| PLAIN COMPRESSION RING 6 | 10490786 | 74 | 1 | 347 | 10 35 802 8 | CONTROL VALVE INSTALLAT |
| PLAIN COMPRESSION RING 6 | 10490786 | 5 | 6 | 675 | 72 64 501 16 | KANTSIL SEAL KIT |
| PLANET WHEEL | 90011580 | 47 | 3 | 184 | 90 01 790 0 | SLEWING DRIVE SAT 375/250 |
| PLANET WHEEL | 933332901 | 37 | 4 | 184 | 90 01 790 0 | SLEWING DRIVE SAT 375/250 |
| PLANET WHEEL | 933333001 | 1 | 1 | 190 | 93 33 329 01 | PLANET WHEEL |
| PLANET WHEEL M=3,25 Z=33 | 9443904 | 37 | 3 | 68 | 94 43 840 | TRAVEL DRIVE FAT 450 P 004 |
| PLANET WHEEL M=4,5 Z=31 | 9443844 | 17 | 5 | 68 | 94 43 840 | TRAVEL DRIVE FAT 450 P 004 |
| PLANET WHEEL M=4,5 Z=31 | 9443848 | 27 | 3 | 68 | 94 43 840 | TRAVEL DRIVE FAT 450 P 004 |
| PLANETARY CARRIER | 90011490 | 45 | 1 | 184 | 90 01 790 0 | SLEWING DRIVE SAT 375/250 |
| PLANETARY CARRIER | 933330801 | 35 | 1 | 184 | 90 01 790 0 | SLEWING DRIVE SAT 375/250 |
| PLANETARY CARRIER | 9443847 | 25 | 1 | 68 | 94 43 840 | TRAVEL DRIVE FAT 450 P 004 |
| PLANETARY CARRIER | 9443858 | 35 | 1 | 68 | 94 43 840 | TRAVEL DRIVE FAT 450 P 004 |
| PLASTIC PROTECTION SPRIN | 7369399 | 80 | 4m | 620 | 10 49 830 0 | GOOSENECK BOOM 6,70M |
| PLASTIC TUBE | 7028899 | 380 | 1 | 428 | 10 29 026 4 | ASSY. PARTS |
| PLATE | 10050119 | 8 | 1 | 403 | 10 05 011 2 | LOWER COVERING |
| PLATE | 10050121 | 9 | 1 | 403 | 10 05 011 2 | LOWER COVERING |
| PLATE | 10064353 | 20 | 1 | 403 | 10 05 011 2 | LOWER COVERING |
| PLATE | 10066929 | 63 | 2 | 374 | 10 35 800 4 | PANELLING |
| PLATE | 10067004 | 25 | 1 | 391 | 10 06 692 0 | TOOL BOX |
| PLATE | 10070633 | 30 | 1 | 461 | 10 35 852 5 | OUTSIDE MIRROR ASSEMBLY |
| PLATE | 10079761 | 18 | 1 | 403 | 10 05 011 2 | LOWER COVERING |
| PLATE | 10115591 | 4 | 1 | 549 | 10 11 657 6 | CONNECTION PIECE |
| PLATE | 10406664 | 16 | 2 | 382 | 99 29 189 | BONNET RIGHT |
| PLATE | 10836599 | 341 | 1 | 350 | 10 35 802 8 | CONTROL VALVE INSTALLAT |
| PLATE | 9008517 | 110 | 1 | 344 | 10 84 584 9 | PUMPS + COUPLING INSTALL |
| PLATE | 9758230 | 101 | 1 | 251 | 10 84 086 6 | ARM REST RIGHT |
| PLATE | 9892073 | 8 | 2 | 455 | 10 49 801 8 | COUNTERWEIGHT INSTALLAT |
| PLATE | 9929455 | 150 | 1 | 377 | 10 35 800 4 | PANELLING |
| PLATE | 9929459 | 20 | 1 | 95 | 10 07 366 1 | FRAME INSTALLATION |
| PLATE | 9929460 | 2 | 1 | 166 | 99 37 297 | COOLER SEALING |
| PLATE | 9943165 | 40 | 1 | 269 | 10 06 017 4 | FOOT PILOT VALVE LEFT |
| PLATE | 9943165 | 40 | 1 | 270 | 10 06 017 5 | FOOT PILOT VALVE RIGHT |
| PLATE | 9945122 | 4 | 1 | 362 | 99 45 116 | PIPE CLAMP |

| Description | Item | Pos. | Quantity | Page | Assembly | Description |
|---|---|---|---|---|---|---|
| PLATE | 9945124 | 13 | 2 | 362 | 99 45 116 | PIPE CLAMP |
| PLATE | 9946134 | 30 | 1 | 269 | 10 06 017 4 | FOOT PILOT VALVE LEFT |
| PLATE | 9946134 | 30 | 1 | 270 | 10 06 017 5 | FOOT PILOT VALVE RIGHT |
| PLATE | 9949069 | 150 | 1 | 295 | 10 35 801 2 | HYDR.PUMPS TO SPOOL VALV |
| PLATE | 9949077 | 5 | 1 | 403 | 10 05 011 2 | LOWER COVERING |
| PLATE | 9949078 | 6 | 2 | 403 | 10 05 011 2 | LOWER COVERING |
| PLATE | 9949436 | 7 | 1 | 403 | 10 05 011 2 | LOWER COVERING |
| PLATE 4 | 9588724 | 10 | 1 | 403 | 10 05 011 2 | LOWER COVERING |
| PLATINE | 9202120 | 10 | 1 | 652 | 10 35 860 1 | TRAVEL ALARM |
| PLATINES INSTALLATION A101 | 9874988 | 45 | 1 | 237 | 10 38 502 4 | ARM REST LEFT |
| PLUG | 10012889 | 20 | 1 | 339 | 10 22 239 3 | AERATION FILTER |
| PLUG | 7012971 | 48 | 1 | 116 | 10 22 041 1 | CONNECTING PLATE |
| PLUG | 7022127 | 11 | 2 | 116 | 10 22 041 1 | CONNECTING PLATE |
| PLUG | 7022127 | 27 | 1 | 122 | 56 16 530 | AXIAL PISTON PUMP |
| PLUG | 7022127 | 26 | 14 | 148 | 70 28 075 | CONTROL UNIT |
| PLUG | 7025644 | 1 | 1 | 248 | 73 69 377 | CIGAR LIGHTER |
| PLUG M6 | 514585108 | 31 | 1 | 139 | 10 35 572 4 | HYDRAULIC PUMP |
| PLUG-TYPE SCREW COUPLIN | 257103802 | 15 | 1 | 563 | 10 13 281 7 | WATER PUMP, PRE-ASSEMB |
| PNEUMATIC SPRING | 10492981 | 5 | 1 | 235 | 11 10 016 7 | SUSPENSION |
| POT | 10470774 | 3 | 1 | 307 | 10 04 462 4 | PRESSURE FILTER |
| POWER SAFETY SWITCH | 10012172 | 20 | 2 | 442 | 99 47 695 | ELECTRICAL SYSTEM E50 |
| POWER SUPPLY WH | 9956949 | 70 | 1 | 279 | 94 02 247 7 | DRIVERS SEAT |
| POWER TAKE-OFF ADD-ON | 9073767 | 210 | 1 | 472 | 10 11 668 5 | DIESEL ENGINE D936 L A6 240 |
| POWER TAKE-OFF ADD-ON | 9077719 | 650 | 1 | 476 | 10 11 668 5 | DIESEL ENGINE D936 L A6 240 |
| POWER TAKE-OFF ADD-ON | 9078961 | 654 | 1 | 476 | 10 11 668 5 | DIESEL ENGINE D936 L A6 240 |
| POWER TAKE-OFF ADD-ON | 9080006 | 652 | 1 | 476 | 10 11 668 5 | DIESEL ENGINE D936 L A6 240 |
| POWER UNIT SUPPORT | 10141908 | 1 | 1 | 484 | 90 79 480 | POWER UNIT SUPPORT ATT |
| POWER UNIT SUPPORT ATT | 9079480 | 12 | 1 | 469 | 10 11 668 5 | DIESEL ENGINE D936 L A6 240 |
| PREMONT.ARMREST RIGHT R | 10362013 | 35 | 1 | 223 | 10 49 872 7 | DRIVER STAND |
| PREMOUNTING F.RADIO | 11102652 | 7 | 1 | 7 | . | |
| PREMOUNTING F.RADIO | 11102653 | 2 | 1 | 674 | 11 10 265 2 | PREMOUNTING F.RADIO |
| PRESSURE ADAPTER | 9074677 | 1 | 1 | 534 | 90 75 395 | PRESSURE ADAPTER ASS. |
| PRESSURE ADAPTER ASS. | 9075395 | 191 | 6 | 472 | 10 11 668 5 | DIESEL ENGINE D936 L A6 240 |
| PRESSURE ADAPTER ASS. | 9075395 | 191 | 1 | 532 | 10 11 709 3 | RK INJECTION NOZZLE |
| PRESSURE ADAPTER ASS. | 9075395 | 191 | 1 | 535 | 10 11 585 4 | SEAL KIT INJECTION NOZZLE |
| PRESSURE FEEDER VALVE | 10289183 | 80 | 1 | 653 | 10 00 297 1 | PIPE FRACTION SAFETY VALV |
| PRESSURE FEEDER VALVE | 5616231 | 60 | 8 | 366 | 10 03 245 2 | CONTROL BLOCK |
| PRESSURE FILTER | 10044624 | 110 | 1 | 305 | 10 35 801 4 | HYDR.SUCT.+RETURN OIL HO |
| PRESSURE LIMITING CARTRI | 5009565 | 5 | 1 | 315 | 10 04 272 9 | OIL PILOT VALVE |
| PRESSURE LIMITING VALVE | 10289146 | 1 | 2 | 116 | 10 22 041 1 | CONNECTING PLATE |
| PRESSURE LIMITING VALVE | 11006050 | 1 | 1 | 116 | 10 22 041 1 | CONNECTING PLATE |
| PRESSURE LIMITING VALVE | 5602487 | 2 | 1 | 310 | 10 35 809 3 | HYDR.INSTALLATION FAN DR |
| PRESSURE LIMITING VALVE | 5715963 | 2 | 1 | 116 | 10 22 041 1 | CONNECTING PLATE |
| PRESSURE LIMITING VALVE | 7028300 | 120 | 1 | 318 | 56 02 487 | PRESSURE LIMITING VALVE |
| PRESSURE LIMITING VALVE | 9267037 | 2 | 1 | 196 | 90 72 990 | CONNECTING PLATE |
| PRESSURE LIMITING VALVE | 9267037 | 1 | 1 | 202 | 98 83 996 | REPAIR SET PRESSURE CON |
| PRESSURE LIMITING VALVE | 9267554 | 1 | 1 | 81 | 98 84 000 | REPAIR SET PRESSURE CON |
| PRESSURE LIMITING VALVE | 9267554 | 1 | 2 | 689 | 90 73 355 | CONNECTING PLATE FMV 140 |
| PRESSURE LINE | 10062040 | 5 | 1 | 655 | 10 06 203 8 | HYDRAULIC CYLINDER W/ DIS |
| PRESSURE LINE CPL | 10052672 | 57 | 1 | 619 | 10 49 830 0 | GOOSENECK BOOM 6,70M |
| PRESSURE LINE CPL | 10052696 | 56 | 1 | 619 | 10 49 830 0 | GOOSENECK BOOM 6,70M |
| PRESSURE LINE CPL | 10064334 | 10 | 1 | 656 | 99 48 785 | HYDR.CYLINDER W/ADDITION. |
| PRESSURE LINE CPL | 9490631 | 1 | 1 | 62 | 93 45 153 | ROTARY CONNECTION INSTA |
| PRESSURE LINE CPL | 9947845 | 3 | 1 | 359 | 10 49 822 5 | HYDR.TUBES INSTALLATION |
| PRESSURE LINE CPL | 9947847 | 2 | 1 | 359 | 10 49 822 5 | HYDR.TUBES INSTALLATION |
| PRESSURE LINE CPL | 9947849 | 4 | 1 | 359 | 10 49 822 5 | HYDR.TUBES INSTALLATION |
| PRESSURE LINE CPL | 9947851 | 5 | 1 | 359 | 10 49 822 5 | HYDR.TUBES INSTALLATION |
| PRESSURE LINE CPL | 9947861 | 7 | 1 | 359 | 10 49 822 5 | HYDR.TUBES INSTALLATION |
| PRESSURE LINE CPL | 9947863 | 6 | 1 | 359 | 10 49 822 5 | HYDR.TUBES INSTALLATION |
| PRESSURE LINE CPL | 9948786 | 21 | 2 | 616 | 10 49 830 0 | GOOSENECK BOOM 6,70M |

| Description | Item | Pos. | Quantity | Page | Assembly | Description |
|---|---|---|---|---|---|---|
| PRESSURE LINE CPL | 9949237 | 17 | 1 | 616 | 10 49 830 0 | GOOSENECK BOOM 6,70M |
| PRESSURE LINE CPL | 9949239 | 18 | 1 | 616 | 10 49 830 0 | GOOSENECK BOOM 6,70M |
| PRESSURE LINE CPL | 9949243 | 19 | 1 | 616 | 10 49 830 0 | GOOSENECK BOOM 6,70M |
| PRESSURE LINE CPL | 9949245 | 20 | 1 | 616 | 10 49 830 0 | GOOSENECK BOOM 6,70M |
| PRESSURE PIN | 10101458 | 9 | 3 | 144 | 10 41 302 4 | DRIVING GEAR |
| PRESSURE PIN | 10287731 | 9 | 3 | 141 | 10 35 573 8 | DRIVING GEAR |
| PRESSURE SPRING | 10008087 | 10 | 1 | 139 | 10 35 572 4 | HYDRAULIC PUMP |
| PRESSURE SPRING | 10101457 | 7 | 1 | 144 | 10 41 302 4 | DRIVING GEAR |
| PRESSURE SPRING | 10216715 | 29 | 1 | 345 | 10 22 042 7 | DRIVING GEAR |
| PRESSURE SPRING | 10216810 | 5 | 1 | 146 | 57 15 963 | PRESSURE LIMITING VALVE |
| PRESSURE SPRING | 10220547 | 9 | 2 | 131 | 10 22 052 4 | ADJUSTING PISTON |
| PRESSURE SPRING | 10220548 | 10 | 2 | 131 | 10 22 052 4 | ADJUSTING PISTON |
| PRESSURE SPRING | 10220550 | 26 | 2 | 131 | 10 22 052 4 | ADJUSTING PISTON |
| PRESSURE SPRING | 10220663 | 7 | 1 | 132 | 10 22 063 5 | SHUTDOWN VALVE |
| PRESSURE SPRING | 10220821 | 5 | 1 | 137 | 10 22 081 6 | COLD STAR VALVE |
| PRESSURE SPRING | 10278643 | 270 | 1 | 653 | 10 00 297 1 | PIPE FRACTION SAFETY VALV |
| PRESSURE SPRING | 10278644 | 280 | 1 | 653 | 10 00 297 1 | PIPE FRACTION SAFETY VALV |
| PRESSURE SPRING | 5616117 | 220 | 4 | 75 | 56 16 688 | WHEEL BRAKE VALVE |
| PRESSURE SPRING | 7028171 | 5 | 2 | 147 | 70 28 075 | CONTROL UNIT |
| PRESSURE SPRING | 7028177 | 11 | 2 | 147 | 70 28 075 | CONTROL UNIT |
| PRESSURE SPRING | 7028302 | 40 | 1 | 322 | 70 28 300 | PRESSURE LIMITING VALVE |
| PRESSURE SPRING | 7028814 | 270 | 1 | 412 | 70 28 807 | LOCK,RIGHT HAND |
| PRESSURE SPRING | 7028814 | 270 | 1 | 413 | 70 28 808 | LOCK,LEFT HAND |
| PRESSURE SPRING | 7371358 | 3 | 1 | 369 | 56 10 135 | SUPPLY VALVE |
| PRESSURE SPRING | 7381302 | 10 | 1 | 525 | 90 72 781 | LUBRICATING OIL PUMP |
| PRESSURE SPRING | 7381764 | 15 | 1 | 690 | 98 82 766 | ADJUSTMENT |
| PRESSURE SPRING | 7381807 | 26 | 2 | 271 | 90 79 258 | PILOT CONTROL UNIT VG7 2-3 |
| PRESSURE SPRING | 7381807 | 26 | 2 | 273 | 90 79 259 | PILOT CONTROL UNIT VG7 2-3 |
| PRESSURE SPRING | 749072914 | 170 | 1 | 75 | 56 16 688 | WHEEL BRAKE VALVE |
| PRESSURE SPRING | 7610107 | 6 | 26 | 191 | 93 33 333 01 | BRAKE |
| PRESSURE SPRING | 7610108 | 7 | 26 | 191 | 93 33 333 01 | BRAKE |
| PRESSURE SPRING | 9886756 | 21 | 1 | 520 | 10 12 143 8 | OIL COOLER, PRE-ASSEMBLE |
| PRESSURE SPRING 0,70/ 3,3 | 10003855 | 30 | 24 | 79 | 90 73 357 | REPAIR KIT (POWER TRAIN) |
| PRESSURE SPRING 0,70/ 3,3 | 10003855 | 31 | 24 | 199 | 90 74 416 | REPAIR KIT DRIVING MECHAN |
| PRESSURE SPRING 0,80X3,0 | 10011098 | 31 | 26 | 150 | 90 79 294 | REPAIR KIT DRIVING MECHAN |
| PRESSURE SPRING 1,1X6,5X3 | 10355861 | 25 | 4 | 688 | 10 11 856 1 | PILOT CONTROL UNIT VG6-8 |
| PRESSURE SPRING 1,25X11,5 | 9265521 | 28 | 4 | 688 | 10 11 856 1 | PILOT CONTROL UNIT VG6-8 |
| PRESSURE SPRING 1,25X11,5 | 9265404 | 15 | 1 | 76 | 92 67 037 | PRESSURE LIMITING VALVE |
| PRESSURE SPRING 1,30/ 5,5 | 7382167 | 31 | 24 | 79 | 90 73 357 | REPAIR KIT (POWER TRAIN) |
| PRESSURE SPRING 1,30/ 5,5 | 7382167 | 30 | 24 | 199 | 90 74 416 | REPAIR KIT DRIVING MECHAN |
| PRESSURE SPRING 1,30X6,1 | 9268054 | 25 | 2 | 271 | 90 79 258 | PILOT CONTROL UNIT VG7 2-3 |
| PRESSURE SPRING 1,30X6,1 | 9268054 | 25 | 2 | 273 | 90 79 259 | PILOT CONTROL UNIT VG7 2-3 |
| PRESSURE SPRING 1,6/8,4X2 | 9265659 | 13 | 1 | 72 | 98 82 833 | CONTROL VALVE NG 140 140 |
| PRESSURE SPRING 2,5/16X61 | 10120929 | 12 | 1 | 480 | 10 11 795 1 | FINAL CONTROL VALVE |
| PRESSURE SPRING 4,60X28,4 | 9074481 | 9 | 4 | 504 | 10 14 155 4 | CYLINDER HEAD PRE-ASS. |
| PRESSURE SPRING 4,60X28,4 | 9074481 | 9 | 4 | 508 | 10 12 036 4 | CYLINDER HEAD PRE-ASS. |
| PRESSURE SPRING 5,3X51,7 | 7365026 | 3 | 1 | 357 | 93 70 592 | NON-RETURN VALVE |
| PRESSURE SPRING 5,6/1,4X19 | 9268776 | 30 | 26 | 150 | 90 79 294 | REPAIR KIT DRIVING MECHAN |
| PRESSURE SWITCH | 10292659 | 2 | 1 | 449 | 10 29 266 0 | UNIT RECEIVER-DRYER |
| PRESSURE SWITCH | 10467727 | 36 | 1 | 313 | 10 35 801 7 | HYDR.INSTAL.CONTROL TUBE |
| PRESSURE TRANSMITTER | 10100781 | 1 | 1 | 587 | 90 76 550 | PRESSURE TRANSMITTER C |
| PRESSURE TRANSMITTER | 10280390 | 11 | 1 | 438 | 10 04 824 6 | HEAD LIGHT + HORN INSTALL |
| PRESSURE TRANSMITTER | 10280390 | 11 | 1 | 439 | 11 10 278 6 | HEAD LIGHT + HORN INSTALL |
| PRESSURE TRANSMITTER 0- | 10025124 | 1 | 1 | 585 | 90 76 531 | PRESSURE TRANSMITTER C |
| PRESSURE TRANSMITTER C | 9076550 | 10 | 1 | 582 | 90 76 551 | ENGINE CONTROL SENSORS |
| PRESSURE TRANSMITTER C | 9076531 | 11 | 1 | 583 | 90 76 551 | ENGINE CONTROL SENSORS |
| PROFILE | 10002428 | 12 | 0.94m | 381 | 99 49 428 | COOLER COWL |
| PROFILE | 10022653 | 31 | 3 | 287 | 11 00 359 4 | HOUSING |
| PROFILE | 10331637 | 9 | 1.77m | 167 | 10 35 508 4 | OIL COOLER |
| PROFILE | 7029425 | 590 | 1 | 417 | 70 28 831 | SLIDING WINDOW |

| Description | Item | Pos. | Quantity | Page | Assembly | Description |
|---|---|---|---|---|---|---|
| PROFILE | 7030263 | 20 | 13 | 166 | 99 37 297 | COOLER SEALING |
| PROFILE | 7030263 | 11 | 1 | 455 | 10 49 801 8 | COUNTERWEIGHT INSTALLAT |
| PROFILE | 7030263 | 12 | 1 | 455 | 10 49 801 8 | COUNTERWEIGHT INSTALLAT |
| PROFILE | 7030263 | 13 | 1 | 455 | 10 49 801 8 | COUNTERWEIGHT INSTALLAT |
| PROFILE | 7030263 | 14 | 1 | 455 | 10 49 801 8 | COUNTERWEIGHT INSTALLAT |
| PROFILE PACKING 14 | 10040984 | 2 | 1 | 584 | 90 76 530 | TEMPERATURE PROBE CPL. |
| PROFILE PACKING 14 | 10040984 | 2 | 1 | 585 | 90 76 531 | PRESSURE TRANSMITTER C |
| PROFILE PACKING 33 | 10335629 | 3 | 1 | 492 | 10 11 903 0 | OIL FILLER INLET D930 |
| PROHIBITION SIGN | 7366794 | 20 | 5 | 464 | 10 35 804 3 | SIGNS |
| PROHIBITION SIGN | 7366794 | 20 | 5 | 467 | 10 49 805 9 | SIGNS |
| PROPORTIONING ELEMENT | 10013840 | 104 | 1 | 212 | 10 48 840 4 | DISTRIBUTION BLOCK SXE-2 |
| PROPORTIONING ELEMENT | 10013840 | 105 | 1 | 212 | 10 48 840 4 | DISTRIBUTION BLOCK SXE-2 |
| PROPORTIONING ELEMENT | 10013842 | 103 | 1 | 212 | 10 48 840 4 | DISTRIBUTION BLOCK SXE-2 |
| PROPORTIONING ELEMENT | 10013843 | 102 | 1 | 212 | 10 48 840 4 | DISTRIBUTION BLOCK SXE-2 |
| PROPORTIONING ELEMENT | 10013851 | 101 | 1 | 212 | 10 48 840 4 | DISTRIBUTION BLOCK SXE-2 |
| PROPORTIONING ELEMENT | 10013848 | 106 | 1 | 212 | 10 48 840 4 | DISTRIBUTION BLOCK SXE-2 |
| PROTECTING CAP | 7013456 | 3 | 1 | 491 | 50 04 624 | OIL DRAIN PLUG M 30 1,5 |
| PROTECTING CAP | 7019165 | 410 | 1 | 428 | 10 29 026 4 | ASSY. PARTS |
| PROTECTING CAP | 7616949 | 9 | 1 | 317 | 50 09 565 | PRESSURE LIMITING CARTRI |
| PROTECTING CAP | 7623221 | 4 | 1 | 169 | 10 49 858 1 | MOTOR-ELEKTRIK |
| PROTECTING CAP | 7623222 | 6 | 1 | 169 | 10 49 858 1 | MOTOR-ELEKTRIK |
| PROTECTING CAP | 9276880 | 35 | 1 | 266 | 90 74 482 | REPAIR SET PLUNGER |
| PROTECTING CAP | 9276880 | 35 | 4 | 688 | 10 11 856 1 | PILOT CONTROL UNIT VG6-8 |
| PROTECTING SLEEVE 8/8/2,2 | 10010154 | 30 | 1 | 244 | 10 05 879 2 | MANIPULATOR LEFT |
| PROTECTING SLEEVE 8/8/2,2 | 10010154 | 30 | 1 | 259 | 10 05 879 4 | MANIPULATOR RIGHT |
| PROTECTION | 10498365 | 10 | 1 | 640 | 10 49 817 6 | PISTON ROD COVER BUCKET |
| PROTECTION | 7028800 | 112 | 1 | 410 | 10 03 553 0 | FRONT WINDOW BOTTOM |
| PROTECTION F.STICK 2,35M | 10058279 | 11 | 1 | 7 | . | |
| PROTECTION GUARD | 7028910 | 560 | 1 | 429 | 10 29 026 4 | ASSY. PARTS |
| PROTECTION GUARD | 9275738 | 14 | 1 | 196 | 90 72 990 | CONNECTING PLATE |
| PROTECTIVE GRID | 10331666 | 30 | 2 | 165 | 10 45 475 2 | COMBINATED RADIATOR |
| PROTECTIVE GRID | 10412499 | 12 | 1 | 167 | 10 35 508 4 | OIL COOLER |
| PROXIMITY SWITCH | 10009330 | 20 | 1 | 212 | 10 48 840 4 | DISTRIBUTION BLOCK SXE-2 |
| PROXIMITY SWITCH | 10024864 | 2 | 1 | 277 | 99 37 443 | PROXIMITY SWITCH W/ CON |
| PROXIMITY SWITCH | 10288716 | 40 | 1 | 680 | 10 49 822 9 | FULL AUTOMAT.CENTRAL.LU |
| PROXIMITY SWITCH W/ CON | 9937443 | 40 | 2 | 268 | 10 05 981 8 | FOOT PILOT VALVE INSTALL |
| PULL ROD | 10016661 | 36 | 4 | 682 | 10 28 689 7 | LUBRICATION PUMP |
| PULL ROD M8X187 | 10013859 | 6 | 2 | 212 | 10 48 840 4 | DISTRIBUTION BLOCK SXE-2 |
| PULL-BACK BALL | 10216710 | 25 | 1 | 345 | 10 22 042 7 | DRIVING GEAR |
| PULL-BACK BALL | 10324872 | 6 | 1 | 144 | 10 41 302 4 | DRIVING GEAR |
| PULL-BACK BALL | 10355745 | 6 | 1 | 141 | 10 35 573 8 | DRIVING GEAR |
| PULL-BACK BALL | 9889929 | 1 | 1 | 158 | 98 89 988 | REPAIR KIT NG 140 |
| PULL-BACK BALL NG 125-130 | 9073148 | 13 | 1 | 199 | 90 74 416 | REPAIR KIT DRIVING MECHAN |
| PULL-BACK BALL NG 125-130 | 9073148 | 1 | 1 | 695 | 90 73 389 | REPAIR KIT NG 125 |
| PULL-BACK BALL NG 165 | 9072808 | 1 | 1 | 156 | 98 88 119 | REPAIR KIT NG 165 |
| PULL-BACK PLATE | 10216707 | 24 | 1 | 345 | 10 22 042 7 | DRIVING GEAR |
| PULL-BACK PLATE | 10355743 | 4 | 1 | 141 | 10 35 573 8 | DRIVING GEAR |
| PULL-BACK PLATE | 7023459 | 4 | 1 | 144 | 10 41 302 4 | DRIVING GEAR |
| PULL-BACK PLATE | 9266567 | 2 | 1 | 156 | 98 88 119 | REPAIR KIT NG 165 |
| PULL-BACK PLATE | 9882215 | 14 | 1 | 199 | 90 74 416 | REPAIR KIT DRIVING MECHAN |
| PULL-BACK PLATE | 9882215 | 2 | 1 | 695 | 90 73 389 | REPAIR KIT NG 125 |
| PULL-BACK PLATE | 9889930 | 2 | 1 | 158 | 98 89 988 | REPAIR KIT NG 140 |
| PUMP COVER | 10220677 | 1 | 1 | 133 | 10 22 066 7 | GEAR PUMP |
| PUMP DISTRIBUTION GEAR | 9077872 | 1 | 1 | 685 | 10 13 462 0 | MULTIPLE CIRCUIT AGGREG |
| PUMP ELEMENT PE-120 | 7621403 | 13 | 1 | 681 | 10 28 689 7 | LUBRICATION PUMP |
| PUMP HOUSING | 10014693 | 4 | 1 | 681 | 10 28 689 7 | LUBRICATION PUMP |
| PUMP HOUSING | 10355726 | 5 | 1 | 139 | 10 35 572 4 | HYDRAULIC PUMP |
| PUMP SHAFT | 9077713 | 1 | 1 | 601 | 90 77 718 | AUXILIARY DRIVE PRE-ASS. |
| PUMP SHAFT Z=40 M=2.25 | 9077327 | 1 | 1 | 600 | 90 77 386 | AUXILIARY DRIVE PRE-ASS. |
| PUMPS + COUPLING INSTALL | 10845849 | 7300 | 1 | 85 | 10 35 798 2 | UPPERCARRIAGE |

| Description | Item | Pos. | Quantity | Page | Assembly | Description |
|---|---|---|---|---|---|---|
| PUMPS CONTROL CPL. V4.6.9 | 10840802 | 85 | 1 | 251 | 10 84 086 6 | ARM REST RIGHT |
| PUMPS INSTALLATION | 9929814 | 550 | 1 | 96 | 10 35 808 9 | MOTOR INSTALLATION |
| PUSH BUTTON LINKS | 9968578 | 40 | 1 | 247 | 99 68 625 | LH-JOYSTICK LEFT |
| PUSH BUTTON RECHTS | 9968580 | 40 | 1 | 262 | 99 68 611 | LH-JOYSTICK RIGHT |
| PUSH-BUTTON COVER LEFT | 10469917 | 10 | 1 | 247 | 99 68 625 | LH-JOYSTICK LEFT |
| PUSH-BUTTON COVER RIGHT | 10469918 | 10 | 1 | 262 | 99 68 611 | LH-JOYSTICK RIGHT |
| PUSHER | 7019156 | 270 | 1 | 414 | 70 28 769 | DRIVER'S CAB DOOR |
| QUICK LOCK | 10022768 | 4 | 2 | 290 | 10 02 277 7 | CIRCULATING AIR GRID |
| QUICK LOCK | 10022785 | 4 | 2 | 285 | 10 02 211 7 | AIR CIRCULATION CASE |
| RADIAL SEAL X110X130X8 | 7362183 | 4 | 2 | 629 | 10 49 823 6 | STICK 2,35M |
| RADIAL SEAL X120X150X12 | 7362184 | 4 | 4 | 638 | 10 35 789 8 | CONNECTING LINK |
| RADIAL SEAL X120X150X12 | 7362184 | 15 | 4 | 657 | 94 02 019 4 | HYDRAULIC CYLINDER |
| RADIAL SEAL X120X150X12 | 7362184 | 15 | 4 | 658 | 95 87 580 | HYDRAULIC CYLINDER |
| RADIAL SEAL X120X150X12 | 7362184 | 15 | 4 | 659 | 95 96 399 | HYDRAULIC CYLINDER |
| RADIAL SEAL X140X170X12 | 7362185 | 4 | 2 | 621 | 10 49 830 1 | GOOSENECK BOOM 6,70M |
| RADIAL SEAL X80X95X8 | 7362180 | 6 | 2 | 629 | 10 49 823 6 | STICK 2,35M |
| RAILING | 9929456 | 75 | 1 | 374 | 10 35 800 4 | PANELLING |
| RASTER | 7027776 | 25 | 1 | 233 | 11 10 016 6 | SEAT TOP |
| REAR REFLECTOR D196X88 | 6204631 | 9 | 2 | 455 | 10 49 801 8 | COUNTERWEIGHT INSTALLAT |
| REAR-VIEW MIRROR | 7019142 | 190 | 1 | 411 | 70 28 759 | FRONT PANE TOP |
| RECEIVER-DRIER | 5611990 | 1 | 1 | 449 | 10 29 266 0 | UNIT RECEIVER-DRYER |
| REDUCING PIECE | 10120066 | 5 | 1 | 536 | 10 11 551 3 | FUEL FINE-FILTER ASSEMBLY |
| REDUCING PIECE | 10120066 | 5 | 1 | 538 | 10 12 580 1 | FUEL FINE FILTER |
| REDUCING PIECE | 10278640 | 130 | 1 | 653 | 10 00 297 1 | PIPE FRACTION SAFETY VALV |
| REDUCING STUD | 10038817 | 45 | 2 | 542 | 10 11 628 5 | FUEL LINE |
| REDUCING STUD | 7361488 | 37 | 1 | 311 | 10 35 809 3 | HYDR.INSTALLATION FAN DR |
| REDUCING STUD | 9080013 | 11 | 1 | 599 | 90 80 006 | POWER TAKE-OFF ADD-ON |
| REDUCING STUD | 9276784 | 2 | 2 | 569 | 90 79 889 | HEATER CONNECTION |
| REDUCING STUD RI 3/4X1/2 | 4755005 | 21 | 2 | 297 | 99 37 312 | OIL PILOT VALVE INSTALLATIO |
| REFERENCE PLATE | 9402376 | 40 | 4 | 464 | 10 35 804 3 | SIGNS |
| REFERENCE PLATE | 9402376 | 40 | 4 | 467 | 10 49 805 9 | SIGNS |
| REFERENCE PLATE | 9402377 | 45 | 2 | 464 | 10 35 804 3 | SIGNS |
| REFERENCE PLATE | 9402377 | 45 | 2 | 467 | 10 49 805 9 | SIGNS |
| REGEL PISTON PRE-ASS. | 9272221 | 2 | 1 | 125 | 90 79 811 | RK PISTON |
| REGULATING VALVE | 10133059 | 4 | 1 | 686 | 10 13 268 6 | HYDRAULIC VARIABLE DISPLA |
| REGULATOR | 10133054 | 10 | 1 | 694 | 10 13 305 9 | REGULATING VALVE |
| REINFORCING SECTION | 10022779 | 16 | 2 | 285 | 10 02 211 7 | AIR CIRCULATION CASE |
| RELAY | 6001682 | 10 | 2 | 265 | 10 68 741 7 | OUTPUT STAGE |
| RELAY | 6001921 | 130 | 2 | 443 | 99 47 695 | ELECTRICAL SYSTEM E50 |
| RELAY | 6002381 | 32 | 2 | 241 | 97 58 815 01 | E-BOARD |
| RELAY | 6202646 | 30 | 2 | 241 | 97 58 815 01 | E-BOARD |
| RELAY HEADER | 6002816 | 970 | 4 | 443 | 99 47 695 | ELECTRICAL SYSTEM E50 |
| REPAIR KIT | 9883173 | 80 | 1 | 73 | 98 89 775 | HYDRAULIC INSTALLATION |
| REPAIR KIT (POWER TRAIN) | 9073357 | 94 | 1 | 71 | 90 73 354 | DRIVING GEAR |
| REPAIR KIT (POWER TRAIN) | 9073357 | 94 | 1 | 73 | 98 89 775 | HYDRAULIC INSTALLATION |
| REPAIR KIT DRIVE SHAFT | 9273201 | 98 | 1 | 110 | 90 77 872 | PUMP DISTRIBUTION GEAR |
| REPAIR KIT DRIVING MECHAN | 9074416 | 94 | 1 | 188 | 90 72 100 | HYDRAULIC INSTALLATION |
| REPAIR KIT DRIVING MECHAN | 9079294 | 94 | 1 | 686 | 10 13 268 6 | HYDRAULIC VARIABLE DISPLA |
| REPAIR KIT F.COMPRESSOR | 10493026 | 28 | 1 | 235 | 11 10 016 7 | SUSPENSION |
| REPAIR KIT LOCK RING | 9268016 | 96 | 1 | 74 | 98 89 775 | HYDRAULIC INSTALLATION |
| REPAIR KIT LOCK RING | 9268016 | 93 | 1 | 188 | 90 72 100 | HYDRAULIC INSTALLATION |
| REPAIR KIT LOCK RING | 9268016 | 96 | 1 | 699 | 98 82 771 | SEAL KIT |
| REPAIR KIT LOCK RING | 9268751 | 93 | 1 | 686 | 10 13 268 6 | HYDRAULIC VARIABLE DISPLA |
| REPAIR KIT LOCK RING | 9268751 | 17 | 1 | 700 | 92 71 657 | SEAL KIT |
| REPAIR KIT NG 125 | 9073389 | 78 | 1 | 188 | 90 72 100 | HYDRAULIC INSTALLATION |
| REPAIR KIT NG 140 | 9889988 | 78 | 1 | 73 | 98 89 775 | HYDRAULIC INSTALLATION |
| REPAIR KIT NG 140 | 9889988 | 14 | 1 | 79 | 90 73 357 | REPAIR KIT (POWER TRAIN) |
| REPAIR KIT NG 165 | 9888119 | 14 | 1 | 150 | 90 79 294 | REPAIR KIT DRIVING MECHAN |
| REPAIR KIT SHAFT | 9073158 | 95 | 1 | 71 | 90 73 354 | DRIVING GEAR |
| REPAIR KIT SHAFT | 9073158 | 95 | 1 | 73 | 98 89 775 | HYDRAULIC INSTALLATION |

| Description | Item | Pos. | Quantity | Page | Assembly | Description |
|---|---|---|---|---|---|---|
| REPAIR KIT SHAFT | 9074285 | 95 | 1 | 188 | 90 72 100 | HYDRAULIC INSTALLATION |
| REPAIR KIT SHAFT | 9889282 | 95 | 1 | 686 | 10 13 268 6 | HYDRAULIC VARIABLE DISPLA |
| REPAIR KIT SLIDING SHOE | 9073393 | 77 | 1 | 188 | 90 72 100 | HYDRAULIC INSTALLATION |
| REPAIR KIT, AIR HOSE | 10493032 | 34 | 1 | 235 | 11 10 016 7 | SUSPENSION |
| REPAIR KIT, BELT | 10493009 | 33 | 1 | 235 | 11 10 016 7 | SUSPENSION |
| REPAIR KIT, HEIGHT ADJ MOD | 10493031 | 35 | 1 | 235 | 11 10 016 7 | SUSPENSION |
| REPAIR KIT, PNEUMATIC SPR | 10493023 | 30 | 1 | 235 | 11 10 016 7 | SUSPENSION |
| REPAIR KIT, SHOCK ABSORBE | 10493027 | 25 | 1 | 235 | 11 10 016 7 | SUSPENSION |
| REPAIR KIT, SUSPENSION | 10493022 | 29 | 1 | 235 | 11 10 016 7 | SUSPENSION |
| REPAIR KIT, SUSPENSION | 10493024 | 31 | 1 | 235 | 11 10 016 7 | SUSPENSION |
| REPAIR SET PLUNGER | 9074482 | 98 | 1 | 688 | 10 11 856 1 | PILOT CONTROL UNIT VG6-8 |
| REPAIR SET PLUNGER | 9265665 | 998 | 1 | 272 | 90 79 258 | PILOT CONTROL UNIT VG7 2-3 |
| REPAIR SET PLUNGER | 9265665 | 998 | 1 | 274 | 90 79 259 | PILOT CONTROL UNIT VG7 2-3 |
| REPAIR SET PRESSURE CON | 9883996 | 91 | 1 | 188 | 90 72 100 | HYDRAULIC INSTALLATION |
| REPAIR SET PRESSURE CON | 9884000 | 97 | 1 | 74 | 98 89 775 | HYDRAULIC INSTALLATION |
| REPAIR SET SWIVEL YOKE LP | 9079347 | 83 | 1 | 686 | 10 13 268 6 | HYDRAULIC VARIABLE DISPLA |
| REPLACEMENT PART | 7367729 | 4 | 1 | 357 | 93 70 592 | NON-RETURN VALVE |
| REPLACEMENT PISTON | 5614346 | 36 | 1 | 367 | 10 28 962 9 | VALVE |
| RESILIENT BASE | 10492983 | 8 | 1 | 235 | 11 10 016 7 | SUSPENSION |
| RESILIENT UPPER PART | 11066526 | 3 | 1 | 235 | 11 10 016 7 | SUSPENSION |
| REST | 10043180 | 20 | 1 | 239 | 10 05 736 2 | CONTROL BRACKET LEFT IN |
| RESTRICTOR PIN | 10015533 | 140 | 2 | 75 | 56 16 688 | WHEEL BRAKE VALVE |
| RETAINER CPL. | 10115994 | 2 | 1 | 592 | 10 11 599 3 | CONTROL BOX ANNEXE |
| RETAINER CPL. | 10115996 | 1 | 1 | 592 | 10 11 599 3 | CONTROL BOX ANNEXE |
| RETAINER CPL. | 10119119 | 1 | 1 | 541 | 10 11 912 7 | CLAMP - ADD-ON UNIT |
| RETAINER CPL. | 10121676 | 3 | 1 | 552 | 10 12 190 8 | CONNECTING LINE ADD-ON |
| RETAINING DISK | 9441557 | 46 | 1 | 184 | 90 01 790 0 | SLEWING DRIVE SAT 375/250 |
| RETAINING DISK | 9443033 | 46 | 1 | 69 | 94 43 840 | TRAVEL DRIVE FAT 450 P 004 |
| RETAINING DISK | 9443297 | 16 | 1 | 68 | 94 43 840 | TRAVEL DRIVE FAT 450 P 004 |
| RETAINING DISK | 9443483 | 36 | 1 | 68 | 94 43 840 | TRAVEL DRIVE FAT 450 P 004 |
| RETAINING DISK 120X 55X 5 | 9443707 | 26 | 1 | 68 | 94 43 840 | TRAVEL DRIVE FAT 450 P 004 |
| RETAINING DISK 125X6 | 9442198 | 36 | 1 | 184 | 90 01 790 0 | SLEWING DRIVE SAT 375/250 |
| RETAINING PLUG | 10220669 | 3 | 1 | 117 | 10 22 041 5 | INTERNAL GEAR PUMP SET |
| RETAINING RING | 10220545 | 6 | 2 | 131 | 10 22 052 4 | ADJUSTING PISTON |
| RETURN FILTER | 7369257 | 23 | 2 | 329 | 10 35 798 3 | HYDRAULIC TANK INSTALLAT |
| RETURN PIPE | 7370225 | 5 | 1 | 336 | 73 69 257 | RETURN FILTER |
| RIBBED HEX NUT M6 | 10003366 | 3 | 1 | 554 | 90 78 314 | HEATING FLANGE ADD-ON |
| RIMSEAL 110,0X125,1X6,3 | 7010660 | 9 | 1 | 669 | 99 52 600 | PISTON ROD BEARING 110/18 |
| RIMSEAL 125,0X140,1X6,3 | 7010659 | 9 | 1 | 667 | 94 01 936 4 | PISTON ROD BEARING 125/18 |
| RIMSEAL 125,0X140,1X6,3 | 7010659 | 9 | 1 | 668 | 94 02 733 6 | PISTON ROD BEARING 125/17 |
| RING | 9018794 | 2 | 1 | 630 | 90 18 795 | RING |
| RING | 9018795 | 6 | 4 | 628 | 10 49 823 5 | STICK 2,35M |
| RING 17X25X5 | 7369134 | 50 | 5 | 366 | 10 03 245 2 | CONTROL BLOCK |
| RING S=5,67 | 10220543 | 5 | 2 | 131 | 10 22 052 4 | ADJUSTING PISTON |
| RING S=5,72 | 10220544 | 5 | 2 | 131 | 10 22 052 4 | ADJUSTING PISTON |
| RING S=5,77 | 10220538 | 5 | 2 | 131 | 10 22 052 4 | ADJUSTING PISTON |
| RING S=5,82 | 10220537 | 5 | 2 | 131 | 10 22 052 4 | ADJUSTING PISTON |
| RING S=5,87 | 10220539 | 5 | 2 | 131 | 10 22 052 4 | ADJUSTING PISTON |
| RING S=5,92 | 10220540 | 5 | 2 | 131 | 10 22 052 4 | ADJUSTING PISTON |
| RING S=5,97 | 10220541 | 5 | 2 | 131 | 10 22 052 4 | ADJUSTING PISTON |
| RING S=6,02 | 10220542 | 5 | 2 | 131 | 10 22 052 4 | ADJUSTING PISTON |
| RIVET | 10470127 | 3 | 4 | 434 | 10 47 012 8 | CASING, CPL |
| RIVET | 7020612 | 380 | 2 | 415 | 70 28 769 | DRIVER'S CAB DOOR |
| RIVET | 7020612 | 370 | 4 | 428 | 10 29 026 4 | ASSY. PARTS |
| RK BIG-END BEARING | 10116934 | 50 | 1 | 500 | 90 76 459 | MAIN ROD |
| RK COVER | 10493008 | 27 | 1 | 235 | 11 10 016 7 | SUSPENSION |
| RK CRANKSHAFT SEAL | 10121335 | 30 | 1 | 610 | 10 11 583 8 | SEAL KIT DIESEL ENGINE |
| RK CRANKSHAFT SEAL | 10121952 | 1 | 1 | 605 | 10 11 801 4 | SEAL KIT AGGREGATE CARR |
| RK CRANKSHAFT SEAL | 10121952 | 1 | 1 | 608 | 10 11 583 8 | SEAL KIT DIESEL ENGINE |
| RK CRANKSHAFT SEAL D930 | 10121345 | 52 | 1 | 470 | 10 11 668 5 | DIESEL ENGINE D936 L A6 240 |

| Description | Item | Pos. | Quantity | Page | Assembly | Description |
|---|---|---|---|---|---|---|
| RK CYLINDER+CONTROL PLAT | 9073155 | 79 | 1 | 73 | 98 89 775 | HYDRAULIC INSTALLATION |
| RK CYLINDER+CONTROL PLAT | 9073155 | 2 | 1 | 79 | 90 73 357 | REPAIR KIT (POWER TRAIN) |
| RK CYLINDER+CONTROL PLAT | 9073751 | 2 | 1 | 150 | 90 79 294 | REPAIR KIT DRIVING MECHAN |
| RK CYLINDER+CONTROL PLAT | 9074415 | 79 | 1 | 188 | 90 72 100 | HYDRAULIC INSTALLATION |
| RK INJECTION NOZZLE | 10117093 | 1 | 1 | 531 | 10 11 659 1 | INJECTION NOZZLE W.FASTEN |
| RK OIL DRAIN SCREW | 10289208 | 35 | 2 | 92 | 10 06 994 0 | SERVICE KIT FUEL FILTER |
| RK OIL DRAIN SCREW | 10289208 | 2 | 1 | 539 | 10 22 281 9 | FUEL PRE-FILTER CPL. |
| RK PISTON | 9079811 | 2 | 1 | 691 | 92 71 648 | ADJUSTMENT |
| RK PISTON WITH GUIDE SHOE | 9889831 | 77 | 1 | 73 | 98 89 775 | HYDRAULIC INSTALLATION |
| RK PISTON WITH GUIDE SHOE | 9889831 | 1 | 9 | 79 | 90 73 357 | REPAIR KIT (POWER TRAIN) |
| RK PISTON WITH GUIDE SHOE | 9880604 | 1 | 9 | 150 | 90 79 294 | REPAIR KIT DRIVING MECHAN |
| RK SPEED SENSOR | 9278623 | 90 | 1 | 188 | 90 72 100 | HYDRAULIC INSTALLATION |
| RK1 BIG-END BEARING | 10140487 | 51 | 1 | 500 | 90 76 459 | MAIN ROD |
| RK1 MAIN BEARING CPL. | 10140597 | 51 | 1 | 497 | 90 76 458 | SET MAIN BEARINGS |
| RK2 BIG-END BEARING | 10140488 | 52 | 1 | 500 | 90 76 459 | MAIN ROD |
| RK2 MAIN BEARING CPL. | 10140601 | 52 | 1 | 497 | 90 76 458 | SET MAIN BEARINGS |
| ROCKER ARM BRACKET CPL. | 9079861 | 81 | 6 | 470 | 10 11 668 5 | DIESEL ENGINE D936 L A6 240 |
| ROCKER ARM BRACKET PRE | 9074505 | 2 | 1 | 509 | 90 79 861 | ROCKER ARM BRACKET CPL. |
| ROCKER ARM BUSCH | 9080027 | 2 | 1 | 512 | 90 74 507 | ROCKER ARM PRE-ASS. |
| ROCKER ARM PRE-ASS. | 9074507 | 3 | 2 | 511 | 90 74 505 | ROCKER ARM BRACKET PRE |
| ROCKER AXLE | 9074506 | 2 | 1 | 511 | 90 74 505 | ROCKER ARM BRACKET PRE |
| ROCKER LEVER BLOCK | 9074504 | 1 | 1 | 511 | 90 74 505 | ROCKER ARM BRACKET PRE |
| ROD | 10358170 | 8 | 1 | 384 | 10 35 817 2 | SIDE DOOR BACK LEFT |
| ROD | 10358170 | 3 | 1 | 398 | 10 35 853 1 | SIDE DOOR FRONT LEFT |
| ROD | 7028815 | 280 | 1 | 412 | 70 28 807 | LOCK,RIGHT HAND |
| ROD | 7028815 | 280 | 1 | 413 | 70 28 808 | LOCK,LEFT HAND |
| ROD | 7028834 | 340 | 1 | 415 | 70 28 769 | DRIVER'S CAB DOOR |
| ROD | 9480525 | 43 | 2 | 229 | 10 49 880 9 | DRIVER STAND BASE SECTIO |
| ROD | 9927479 | 135 | 1 | 377 | 10 35 800 4 | PANELLING |
| ROD | 9942678 | 3 | 1 | 399 | 99 47 961 | SIDE DOOR FRONT LEFT |
| ROD | 9942679 | 8 | 1 | 386 | 10 35 792 6 | SIDE DOOR MIDDLE LEFT |
| ROD | 9942679 | 10 | 1 | 388 | 10 07 307 3 | SIDE DOOR RIGHT |
| ROD | 9942679 | 10 | 1 | 389 | 10 37 283 9 | SIDE DOOR RIGHT |
| ROD | 9945189 | 10 | 1 | 462 | 10 37 283 6 | LID |
| ROLLER | 7028809 | 160 | 4 | 411 | 70 28 759 | FRONT PANE TOP |
| ROLLER CAGE | 9442138 | 2 | 32 | 68 | 94 43 840 | TRAVEL DRIVE FAT 450 P 004 |
| ROLLER TAPPET | 9074455 | 1 | 2 | 518 | 90 79 870 | CONTROL PARTS |
| ROLLER TAPPET | 9074628 | 2 | 1 | 528 | 10 11 683 9 | INJECTION PUMP ASSEMBLY |
| ROSE | 10023245 | 270 | 6 | 432 | 10 48 808 8 | INTERNAL LINING |
| ROSE | 7362752 | 62 | 1 | 230 | 10 49 880 9 | DRIVER STAND BASE SECTIO |
| ROSE | 7362752 | 103 | 4 | 251 | 10 84 086 6 | ARM REST RIGHT |
| ROTARY CONNECTION INSTA | 9345153 | 8 | 1 | 49 | 10 49 883 7 | UNDERCARRIAGE CPL |
| ROTARY FEED THROUGH | 10009630 | 8 | 1 | 62 | 93 45 153 | ROTARY CONNECTION INSTA |
| ROTARY FEED THROUGH | 9141597 | 7 | 1 | 62 | 93 45 153 | ROTARY CONNECTION INSTA |
| ROTARY SHAFT LIP SEAL | 7380831 | 17 | 1 | 692 | 98 88 308 | CONNECTING PLATE |
| ROTARY SHAFT LIP SEAL | 7380831 | 35 | 1 | 700 | 92 71 657 | SEAL KIT |
| ROTARY SHAFT LIP SEAL 110 | 10006550 | 1 | 1 | 498 | 10 12 134 5 | RK CRANKSHAFT SEAL D930 |
| ROTARY SHAFT LIP SEAL 115 | 10006551 | 2 | 1 | 498 | 10 12 134 5 | RK CRANKSHAFT SEAL D930 |
| ROTARY SHAFT LIP SEAL ASX | 10014510 | 35 | 1 | 77 | 92 68 751 | REPAIR KIT LOCK RING |
| ROTARY SHAFT LIP SEAL ASX | 10014510 | 35 | 1 | 128 | 98 89 282 | REPAIR KIT SHAFT |
| ROTARY SHAFT LIP SEAL ASX | 10014510 | 35 | 1 | 149 | 90 73 158 | REPAIR KIT SHAFT |
| ROTARY SHAFT LIP SEAL ASX | 10014510 | 35 | 1 | 197 | 90 74 285 | REPAIR KIT SHAFT |
| ROTARY SHAFT LIP SEAL ASX | 10014510 | 35 | 1 | 204 | 92 73 048 | SEAL KIT |
| ROTARY SHAFT LIP SEAL ASX | 10014510 | 35 | 1 | 697 | 92 68 016 | REPAIR KIT LOCK RING |
| ROTARY SHAFT LIP SEAL X75 | 7381204 | 60 | 1 | 110 | 90 77 872 | PUMP DISTRIBUTION GEAR |
| ROTARY SHAFT LIP SEAL X75 | 7381204 | 60 | 1 | 111 | 92 73 201 | REPAIR KIT DRIVE SHAFT |
| ROTARY SHAFT LIP SEAL X75 | 7381209 | 60 | 1 | 127 | 92 73 200 | SEAL KIT |
| ROTATIONAL SPEED SENSOR | 10800265 | 1 | 1 | 586 | 90 76 534 | ROTATIONAL SPEED SENSOR |
| ROTATIONAL SPEED SENSOR | 10800265 | 1 | 1 | 588 | 90 79 206 | ROTATIONAL SPEED SENSOR |
| ROTATIONAL SPEED SENSOR | 9885618 | 22 | 1 | 583 | 90 76 551 | ENGINE CONTROL SENSORS |

| Description | Item | Pos. | Quantity | Page | Assembly | Description |
|---|---|---|---|---|---|---|
| ROTATIONAL SPEED SENSOR | 9076534 | 21 | 1 | 583 | 90 76 551 | ENGINE CONTROL SENSORS |
| ROTATIONAL SPEED SENSOR | 9079206 | 20 | 2 | 583 | 90 76 551 | ENGINE CONTROL SENSORS |
| ROTOR | 10011395 | 1 | 1 | 63 | 10 00 963 0 | ROTARY FEED THROUGH |
| ROTOR GASKET | 10011398 | 11 | 2 | 63 | 10 00 963 0 | ROTARY FEED THROUGH |
| ROTOR GASKET | 10011398 | 11 | 2 | 65 | 10 00 967 6 | SEALINGSET ROTARY TRANS |
| ROTOR GASKET | 7380002 | 1 | 1 | 66 | 92 65 064 | SEALINGSET ROTARY TRAN |
| ROTOR GASKET | 7380004 | 3 | 1 | 66 | 92 65 064 | SEALINGSET ROTARY TRAN |
| ROTOR GASKET | 7380038 | 2 | 5 | 66 | 92 65 064 | SEALINGSET ROTARY TRAN |
| ROTOR GASKET 10X13,6X2,3 | 7380134 | 3 | 1 | 266 | 90 74 482 | REPAIR SET PLUNGER |
| ROTOR GASKET 10X13,6X2,3 | 7380134 | 46 | 4 | 267 | 92 69 690 | SEAL KIT |
| ROTOR GASKET 10X13,6X2,3 | 7380134 | 3 | 1 | 278 | 92 65 665 | REPAIR SET PLUNGER |
| RS CRANKSHAFT BEARING K | 10116928 | 50 | 1 | 497 | 90 76 458 | SET MAIN BEARINGS |
| RUBBER BAND | 10471192 | 7 | 2 | 164 | 10 45 475 2 | COMBINATED RADIATOR |
| RUBBER BEADING | 10471490 | 20 | 1 | 408 | 70 28 788 | SEAL |
| RUBBER BEARING | 10331669 | 32 | 2 | 165 | 10 45 475 2 | COMBINATED RADIATOR |
| RUBBER BEARING | 10331669 | 5 | 2 | 167 | 10 35 508 4 | OIL COOLER |
| RUBBER BELLOWS | 10014790 | 200 | 1 | 247 | 99 68 625 | LH-JOYSTICK LEFT |
| RUBBER BELLOWS | 10014790 | 200 | 1 | 262 | 99 68 611 | LH-JOYSTICK RIGHT |
| RUBBER BELLOWS | 11066528 | 9 | 1 | 235 | 11 10 016 7 | SUSPENSION |
| RUBBER BUMPER | 10040032 | 3 | 8 | 592 | 10 11 599 3 | CONTROL BOX ANNEXE |
| RUBBER BUMPER | 10290395 | 40 | 4 | 165 | 10 45 475 2 | COMBINATED RADIATOR |
| RUBBER BUMPER | 10290395 | 19 | 4 | 167 | 10 35 508 4 | OIL COOLER |
| RUBBER BUMPER | 7014560 | 31 | 26 | 237 | 10 38 502 4 | ARM REST LEFT |
| RUBBER BUMPER | 7014560 | 82 | 4 | 251 | 10 84 086 6 | ARM REST RIGHT |
| RUBBER BUMPER | 7366558 | 30 | 6 | 98 | 10 04 942 6 | MOTOR SUPPORT |
| RUBBER CAP | 9265414 | 30 | 2 | 271 | 90 79 258 | PILOT CONTROL UNIT VG7 2-3 |
| RUBBER CAP | 9265414 | 30 | 2 | 273 | 90 79 259 | PILOT CONTROL UNIT VG7 2-3 |
| RUBBER CAP | 9265414 | 5 | 1 | 278 | 92 65 665 | REPAIR SET PLUNGER |
| RUBBER CONNECTION | 9079603 | 18 | 1 | 482 | 10 11 916 7 | CRANKCASE BREATHER ASSE |
| RUBBER CONNECTION | 9079603 | 11 | 1 | 487 | 10 12 026 3 | OIL LINE PRE-ASSEMBLY 12X |
| RUBBER CONNECTION | 9079603 | 43 | 1 | 610 | 10 11 583 8 | SEAL KIT DIESEL ENGINE |
| RUBBER CONNECTION | 9271340 | 6 | 2 | 482 | 10 11 916 7 | CRANKCASE BREATHER ASSE |
| RUBBER CONNECTION | 9271340 | 44 | 2 | 610 | 10 11 583 8 | SEAL KIT DIESEL ENGINE |
| RUBBER CONNECTION | 9273161 | 10 | 1 | 482 | 10 11 916 7 | CRANKCASE BREATHER ASSE |
| RUBBER CONNECTION | 9273161 | 161 | 1 | 613 | 10 11 583 8 | SEAL KIT DIESEL ENGINE |
| RUBBER CONNECTION 90GRA | 10116310 | 24 | 1 | 573 | 90 80 735 | EXHAUST TC MOUNTING |
| RUBBER CONNECTION 90GRA | 10116310 | 4302 | 1 | 613 | 10 11 583 8 | SEAL KIT DIESEL ENGINE |
| RUBBER GASKET | 7001386 | 6 | 1 | 451 | 90 18 419 | FUEL TANK ASSY. |
| RUBBER INSERT | 10467246 | 25 | 2 | 165 | 10 45 475 2 | COMBINATED RADIATOR |
| RUBBER INSERT 30/42X88 | 10287498 | 56 | 4Pair | 301 | 10 35 801 5 | HYDR.ROTARY CONNEC.+SWI |
| RUBBER INSERT 4/30X170 | 10467245 | 22 | 6 | 164 | 10 45 475 2 | COMBINATED RADIATOR |
| RUBBER INSERT 4/90X115 | 10467242 | 19 | 2 | 164 | 10 45 475 2 | COMBINATED RADIATOR |
| RUBBER INSERT 4/90X200 | 10467244 | 20 | 4 | 164 | 10 45 475 2 | COMBINATED RADIATOR |
| RUBBER INSERT 4/90X400 | 10467243 | 21 | 2 | 164 | 10 45 475 2 | COMBINATED RADIATOR |
| RUBBER MAT | 10007928 | 480 | 2 | 314 | 10 35 801 7 | HYDR.INSTAL.CONTROL TUBE |
| RUBBER PART | 10081994 | 12 | 1 | 379 | 10 08 167 3 | ENGINE BONNET |
| RUNNER | 10082606 | 16 | 2 | 640 | 10 49 817 6 | PISTON ROD COVER BUCKET |
| SAE BLIND FLANGE | 9566165 | 56 | 1 | 331 | 10 35 798 3 | HYDRAULIC TANK INSTALLAT |
| SAE BLIND FLANGE SAE 1 1/2" | 9491026 | 66 | 1 | 331 | 10 35 798 3 | HYDRAULIC TANK INSTALLAT |
| SAFETY CAP | 7380730 | 30 | 1 | 690 | 98 82 766 | ADJUSTMENT |
| SAFETY CARTRIDGE | 10044849 | 8 | 1 | 91 | 10 09 121 5 | SERVICE KIT ALLE 2000 H |
| SAFETY CARTRIDGE | 10044849 | 12 | 1 | 102 | 99 37 298 | AIR FILTER INSTALLATION |
| SAFETY CARTRIDGE | 10044849 | 6 | 1 | 103 | 10 03 980 3 | AIR FILTER |
| SAFETY LEVER | 7373807 | 14 | 1 | 240 | 10 16 576 6 | STEERING CONSOLE |
| SCOOP | 9927471 | 25 | 1 | 386 | 10 35 792 6 | SIDE DOOR MIDDLE LEFT |
| SCOOP | 9927472 | 2 | 1 | 387 | 99 27 471 | SCOOP |
| SCOOP | 9945269 | 25 | 1 | 384 | 10 35 817 2 | SIDE DOOR BACK LEFT |
| SCOOP | 9945270 | 2 | 1 | 385 | 99 45 269 | SCOOP |
| SCRAPER 125X140X9,5 | 10016714 | 4 | 1 | 53 | 90 15 155 | GREASE TENSIONER |
| SCRAPER RING 110X122,2X8, | 7026111 | 6 | 1 | 669 | 99 52 600 | PISTON ROD BEARING 110/18 |

| Description | Item | Pos. | Quantity | Page | Assembly | Description |
|---|---|---|---|---|---|---|
| SCRAPER RING 125X137,2X8, | 7023590 | 6 | 1 | 667 | 94 01 936 4 | PISTON ROD BEARING 125/18 |
| SCRAPER RING 125X137,2X8, | 7023590 | 6 | 1 | 668 | 94 02 733 6 | PISTON ROD BEARING 125/17 |
| SCREEN | 9266836 | 12 | 1 | 196 | 90 72 990 | CONNECTING PLATE |
| SCREW | 7024447 | 360 | 8 | 433 | 10 48 808 8 | INTERNAL LINING |
| SCREW | 7370888 | 9 | 4 | 240 | 10 16 576 6 | STEERING CONSOLE |
| SCREW | 7372158 | 11 | 2 | 255 | 56 18 923 | CONTROL CONSOLE RIGHT |
| SCREW | 9926801 | 82 | 1 | 657 | 94 02 019 4 | HYDRAULIC CYLINDER |
| SCREW 22X6 | 10017926 | 160 | 2 | 247 | 99 68 625 | LH-JOYSTICK LEFT |
| SCREW 22X6 | 10017926 | 160 | 2 | 262 | 99 68 611 | LH-JOYSTICK RIGHT |
| SCREW COUPLING | 7026654 | 36 | 1 | 217 | 90 64 786 | CONNECTING ELEMENT |
| SCREW COUPLING G1/4 | 7409720 | 360 | 2 | 296 | 10 35 801 2 | HYDR.PUMPS TO SPOOL VALV |
| SCREW COUPLING G1/4 | 7409720 | 90 | 2 | 302 | 10 35 801 5 | HYDR.ROTARY CONNEC.+SWI |
| SCREW COUPLING G1/4 | 7409720 | 38 | 1 | 311 | 10 35 809 3 | HYDR.INSTALLATION FAN DR |
| SCREW COUPLING G1/4 | 7409720 | 97 | 1 | 347 | 10 35 802 8 | CONTROL VALVE INSTALLAT |
| SCREW COUPLING G1/4 | 7409720 | 204 | 1 | 349 | 10 35 802 8 | CONTROL VALVE INSTALLAT |
| SCREW EXTENSION TUBE | 7364696 | 204 | 1 | 314 | 10 35 801 7 | HYDR.INSTAL.CONTROL TUBE |
| SCREW EXTENSION TUBE | 7410555 | 13 | 1 | 439 | 11 10 278 6 | HEAD LIGHT + HORN INSTALL |
| SCREW FITTING | 482431414 | 67 | 1 | 620 | 10 49 830 0 | GOOSENECK BOOM 6,70M |
| SCREW FITTING | 9008618 | 40 | 2 | 671 | 10 49 815 8 | HOIST CYLINDERS |
| SCREW FITTING 6L | 10220950 | 145 | 1 | 218 | 90 64 786 | CONNECTING ELEMENT |
| SCREW FITTING 6L | 10220950 | 45 | 2 | 632 | 10 38 484 8 | CENTRAL LUBRICATING SYS |
| SCREW FITTING 6LL | 10342221 | 145 | 1 | 218 | 90 64 786 | CONNECTING ELEMENT |
| SCREW FITTING 8L | 10220951 | 146 | 1 | 218 | 90 64 786 | CONNECTING ELEMENT |
| SCREW FITTING 8LL | 10330614 | 146 | 1 | 218 | 90 64 786 | CONNECTING ELEMENT |
| SCREW FITTING BFW 35L | 7367136 | 11 | 1 | 159 | 99 29 814 | PUMPS INSTALLATION |
| SCREW FITTING EGE 10L | 7617262 | 13 | 1 | 225 | 10 06 014 6 | HYDR.INSTAL.FOOT BOARD |
| SCREW FITTING EL 10L | 472330208 | 11 | 2 | 225 | 10 06 014 6 | HYDR.INSTAL.FOOT BOARD |
| SCREW FITTING EL 10L | 472330208 | 27 | 2 | 297 | 99 37 312 | OIL PILOT VALVE INSTALLATIO |
| SCREW FITTING EL 10L | 472330208 | 83 | 2 | 343 | 10 84 584 9 | PUMPS + COUPLING INSTALL |
| SCREW FITTING EL 10L | 472330208 | 430 | 1 | 353 | 10 35 802 8 | CONTROL VALVE INSTALLAT |
| SCREW FITTING EL 10L | 472330208 | 518 | 1 | 354 | 10 35 802 8 | CONTROL VALVE INSTALLAT |
| SCREW FITTING EL 20S | 7407107 | 20 | 1 | 311 | 10 35 809 3 | HYDR.INSTALLATION FAN DR |
| SCREW FITTING EL 35L | 482330814 | 120 | 1 | 305 | 10 35 801 4 | HYDR.SUCT.+RETURN OIL HO |
| SCREW FITTING ET 10L | 482430314 | 180 | 6 | 314 | 10 35 801 7 | HYDR.INSTAL.CONTROL TUBE |
| SCREW FITTING ET 10L | 482430314 | 82 | 1 | 343 | 10 84 584 9 | PUMPS + COUPLING INSTALL |
| SCREW FITTING ET 15L | 472430408 | 42 | 1 | 312 | 10 35 809 3 | HYDR.INSTALLATION FAN DR |
| SCREW FITTING ET 18L | 247108402 | 36 | 1 | 311 | 10 35 809 3 | HYDR.INSTALLATION FAN DR |
| SCREW FITTING ET 28L | 7407122 | 17 | 1 | 84 | 10 07 713 5 | HYDR.INSTALLATION UNDER |
| SCREW FITTING EW 10L | 7403569 | 10 | 1 | 62 | 93 45 153 | ROTARY CONNECTION INSTA |
| SCREW FITTING EW 10L | 7403569 | 115 | 1 | 313 | 10 35 801 7 | HYDR.INSTAL.CONTROL TUBE |
| SCREW FITTING EW 10L | 7403569 | 186 | 1 | 314 | 10 35 801 7 | HYDR.INSTAL.CONTROL TUBE |
| SCREW FITTING EW 10L | 7403569 | 86 | 2 | 343 | 10 84 584 9 | PUMPS + COUPLING INSTALL |
| SCREW FITTING EW 10L | 7403569 | 516 | 2 | 354 | 10 35 802 8 | CONTROL VALVE INSTALLAT |
| SCREW FITTING EW 10S | 7617268 | 105 | 1 | 344 | 10 84 584 9 | PUMPS + COUPLING INSTALL |
| SCREW FITTING EW 15L | 7615379 | 15 | 2 | 100 | 99 46 045 | FUEL SYSTEM |
| SCREW FITTING EW 15L | 7615379 | 17 | 1 | 100 | 99 46 045 | FUEL SYSTEM |
| SCREW FITTING EW 15L | 7615379 | 596 | 1 | 355 | 10 35 802 8 | CONTROL VALVE INSTALLAT |
| SCREW FITTING EW 15L | 7615379 | 64 | 4 | 619 | 10 49 830 0 | GOOSENECK BOOM 6,70M |
| SCREW FITTING EW 18L | 247108302 | 18 | 1 | 308 | 10 35 801 3 | HYDR.AND GEAR OIL COOLIN |
| SCREW FITTING EW 20S M30X | 7407108 | 22 | 1 | 311 | 10 35 809 3 | HYDR.INSTALLATION FAN DR |
| SCREW FITTING EW 22L | 247126202 | 46 | 1 | 162 | 10 35 809 2 | ENGINE COOLING |
| SCREW FITTING EW 22L | 247126202 | 68 | 1 | 301 | 10 35 801 5 | HYDR.ROTARY CONNEC.+SWI |
| SCREW FITTING EW 22L | 247126202 | 221 | 1 | 306 | 10 35 801 4 | HYDR.SUCT.+RETURN OIL HO |
| SCREW FITTING EW 6S | 472531508 | 95 | 2 | 343 | 10 84 584 9 | PUMPS + COUPLING INSTALL |
| SCREW FITTING EW 8L | 247021802 | 13 | 3 | 624 | 10 38 408 5 | CENTRAL LUBRICATING SYS |
| SCREW FITTING EW 8S M16X | 7404186 | 99 | 1 | 343 | 10 84 584 9 | PUMPS + COUPLING INSTALL |
| SCREW FITTING G 15L | 7362107 | 84 | 1 | 620 | 10 49 830 0 | GOOSENECK BOOM 6,70M |
| SCREW FITTING G 22L | 7362408 | 85 | 1 | 620 | 10 49 830 0 | GOOSENECK BOOM 6,70M |
| SCREW FITTING G 6LL | 774374208 | 40 | 1 | 217 | 90 64 786 | CONNECTING ELEMENT |
| SCREW FITTING G 6LL | 774374208 | 40 | 6 | 219 | 10 01 461 1 | AUXILIARY BOX |

| Description | Item | Pos. | Quantity | Page | Assembly | Description |
|---|---|---|---|---|---|---|
| SCREW FITTING GE 10 M14x1, | 10021563 | 40 | 4 | 542 | 10 11 628 5 | FUEL LINE |
| SCREW FITTING GE 10 M14x1, | 10021563 | 90 | 4 | 543 | 10 11 628 5 | FUEL LINE |
| SCREW FITTING GE 10L | 7362091 | 10 | 6 | 225 | 10 06 014 6 | HYDR.INSTAL.FOOT BOARD |
| SCREW FITTING GE 10L | 7362091 | 22 | 4 | 226 | 99 44 515 | HYDR.INSTAL.ARM REST LEF |
| SCREW FITTING GE 10L | 7362091 | 22 | 4 | 227 | 99 44 516 | HYDR.INSTAL.ARM REST RIGH |
| SCREW FITTING GE 10L | 7362091 | 25 | 6 | 297 | 99 37 312 | OIL PILOT VALVE INSTALLATIO |
| SCREW FITTING GE 10L | 7362091 | 382 | 2 | 352 | 10 35 802 8 | CONTROL VALVE INSTALLAT |
| SCREW FITTING GE 10L | 7362091 | 485 | 3 | 353 | 10 35 802 8 | CONTROL VALVE INSTALLAT |
| SCREW FITTING GE 10L | 7362091 | 515 | 4 | 354 | 10 35 802 8 | CONTROL VALVE INSTALLAT |
| SCREW FITTING GE 10L M14X | 4981235 | 3 | 1 | 489 | 90 79 862 | DIPSTICK W.TUBE |
| SCREW FITTING GE 10L M14X | 4981235 | 10 | 2 | 573 | 90 80 735 | EXHAUST TC MOUNTING |
| SCREW FITTING GE 10L M14X | 7003814 | 9 | 1 | 62 | 93 45 153 | ROTARY CONNECTION INSTA |
| SCREW FITTING GE 10L M14X | 7003814 | 12 | 2 | 84 | 10 07 713 5 | HYDR.INSTALLATION UNDER |
| SCREW FITTING GE 10L M14X | 7003814 | 20 | 4 | 207 | 99 46 408 | GREASE PIPE INSTALLATION |
| SCREW FITTING GE 10L M14X | 7003814 | 114 | 2 | 313 | 10 35 801 7 | HYDR.INSTAL.CONTROL TUBE |
| SCREW FITTING GE 10L M14X | 7003814 | 81 | 6 | 343 | 10 84 584 9 | PUMPS + COUPLING INSTALL |
| SCREW FITTING GE 10L M14X | 7003814 | 426 | 1 | 353 | 10 35 802 8 | CONTROL VALVE INSTALLAT |
| SCREW FITTING GE 10S | 7362103 | 16 | 1 | 62 | 93 45 153 | ROTARY CONNECTION INSTA |
| SCREW FITTING GE 10S | 7362103 | 104 | 1 | 344 | 10 84 584 9 | PUMPS + COUPLING INSTALL |
| SCREW FITTING GE 12 M16x1 | 10038568 | 20 | 1 | 549 | 10 11 657 6 | CONNECTION PIECE |
| SCREW FITTING GE 12L G1/4A | 7362117 | 20 | 2 | 226 | 99 44 515 | HYDR.INSTAL.ARM REST LEF |
| SCREW FITTING GE 12L G1/4A | 7362117 | 20 | 2 | 227 | 99 44 516 | HYDR.INSTAL.ARM REST RIGH |
| SCREW FITTING GE 15L | 4600518 | 18 | 1 | 100 | 99 46 045 | FUEL SYSTEM |
| SCREW FITTING GE 15L | 4600518 | 22 | 3 | 297 | 99 37 312 | OIL PILOT VALVE INSTALLATIO |
| SCREW FITTING GE 15L | 7021805 | 235 | 1 | 314 | 10 35 801 7 | HYDR.INSTAL.CONTROL TUBE |
| SCREW FITTING GE 15L | 7021805 | 245 | 1 | 314 | 10 35 801 7 | HYDR.INSTAL.CONTROL TUBE |
| SCREW FITTING GE 15L M18X | 7003570 | 50 | 1 | 313 | 10 35 801 7 | HYDR.INSTAL.CONTROL TUBE |
| SCREW FITTING GE 16S M27X | 7018370 | 98 | 1 | 347 | 10 35 802 8 | CONTROL VALVE INSTALLAT |
| SCREW FITTING GE 16S M27X | 7018370 | 128 | 1 | 347 | 10 35 802 8 | CONTROL VALVE INSTALLAT |
| SCREW FITTING GE 16S M27X | 7018370 | 143 | 2 | 348 | 10 35 802 8 | CONTROL VALVE INSTALLAT |
| SCREW FITTING GE 16S M27X | 7018370 | 210 | 1 | 349 | 10 35 802 8 | CONTROL VALVE INSTALLAT |
| SCREW FITTING GE 18L M22X | 7003572 | 19 | 1 | 308 | 10 35 801 3 | HYDR.AND GEAR OIL COOLIN |
| SCREW FITTING GE 18L M22X | 7003572 | 33 | 1 | 311 | 10 35 809 3 | HYDR.INSTALLATION FAN DR |
| SCREW FITTING GE 20S G1/2 | 7410451 | 21 | 1 | 311 | 10 35 809 3 | HYDR.INSTALLATION FAN DR |
| SCREW FITTING GE 22L | 7362515 | 93 | 1 | 304 | 10 35 801 4 | HYDR.SUCT.+RETURN OIL HO |
| SCREW FITTING GE 22L | 7362515 | 20 | 1 | 308 | 10 35 801 3 | HYDR.AND GEAR OIL COOLIN |
| SCREW FITTING GE 22L | 7362515 | 100 | 1 | 343 | 10 84 584 9 | PUMPS + COUPLING INSTALL |
| SCREW FITTING GE 22L | 7380956 | 75 | 2 | 110 | 90 77 872 | PUMP DISTRIBUTION GEAR |
| SCREW FITTING GE 28L M30X | 7371875 | 45 | 1 | 162 | 10 35 809 2 | ENGINE COOLING |
| SCREW FITTING GE 28L M30X | 7371875 | 6 | 1 | 555 | 10 12 421 8 | COOLING WATER AIR BLEED |
| SCREW FITTING GE 28L M33X | 7003800 | 16 | 1 | 84 | 10 07 713 5 | HYDR.INSTALLATION UNDER |
| SCREW FITTING GE 28L M33X | 7003800 | 16 | 1 | 300 | 10 35 801 5 | HYDR.ROTARY CONNEC.+SWI |
| SCREW FITTING GE 28L M33X | 7003800 | 73 | 1 | 304 | 10 35 801 4 | HYDR.SUCT.+RETURN OIL HO |
| SCREW FITTING GE 28L M33X | 7003800 | 83 | 1 | 304 | 10 35 801 4 | HYDR.SUCT.+RETURN OIL HO |
| SCREW FITTING GE 35L | 4001871 | 125 | 2 | 305 | 10 35 801 4 | HYDR.SUCT.+RETURN OIL HO |
| SCREW FITTING GE 35L M42X | 4900486 | 5 | 1 | 105 | 10 06 658 8 | INTAKE NOZZLE |
| SCREW FITTING GE 35L M42X | 4900486 | 17 | 1 | 304 | 10 35 801 4 | HYDR.SUCT.+RETURN OIL HO |
| SCREW FITTING GE 35L M42X | 4900486 | 135 | 1 | 305 | 10 35 801 4 | HYDR.SUCT.+RETURN OIL HO |
| SCREW FITTING GE 6L | 7362169 | 21 | 1 | 631 | 10 38 484 8 | CENTRAL LUBRICATING SYS |
| SCREW FITTING GE 6L | 7362169 | 30 | 2 | 671 | 10 49 815 8 | HOIST CYLINDERS |
| SCREW FITTING GE 6L M10X1 | 4981233 | 9 | 2 | 598 | 90 78 961 | POWER TAKE-OFF ADD-ON |
| SCREW FITTING GE 6LL M10X | 774376508 | 185 | 1 | 218 | 90 64 786 | CONNECTING ELEMENT |
| SCREW FITTING GE 6LL M6 | 491035414 | 185 | 1 | 218 | 90 64 786 | CONNECTING ELEMENT |
| SCREW FITTING GE 8L | 7619197 | 21 | 1 | 181 | 90 18 423 | SWING GEAR INSTALLATION |
| SCREW FITTING GE 8L M12X1, | 4001938 | 36 | 1 | 181 | 90 18 423 | SWING GEAR INSTALLATION |
| SCREW FITTING GZ 10L | 7410211 | 184 | 4 | 314 | 10 35 801 7 | HYDR.INSTAL.CONTROL TUBE |
| SCREW FITTING GZ 10L | 7410211 | 519 | 1 | 354 | 10 35 802 8 | CONTROL VALVE INSTALLAT |
| SCREW FITTING GZ 8S | 7372371 | 12 | 1 | 439 | 11 10 278 6 | HEAD LIGHT + HORN INSTALL |
| SCREW FITTING M10X1K-M10X | 774373608 | 4 | 1 | 217 | 90 64 786 | CONNECTING ELEMENT |
| SCREW FITTING RED 15/10L | 7616915 | 520 | 1 | 354 | 10 35 802 8 | CONTROL VALVE INSTALLAT |

| Description | Item | Pos. | Quantity | Page | Assembly | Description |
|---|---|---|---|---|---|---|
| SCREW FITTING RED 18/15L | 7367746 | 17 | 1 | 308 | 10 35 801 3 | HYDR.AND GEAR OIL COOLIN |
| SCREW FITTING RED 20/16S | 7407161 | 161 | 1 | 348 | 10 35 802 8 | CONTROL VALVE INSTALLAT |
| SCREW FITTING RED 22/15L | 7616913 | 21 | 1 | 308 | 10 35 801 3 | HYDR.AND GEAR OIL COOLIN |
| SCREW FITTING RED 22/15L | 7616913 | 65 | 2 | 619 | 10 49 830 0 | GOOSENECK BOOM 6,70M |
| SCREW FITTING RED 28/22L | 7616910 | 47 | 1 | 162 | 10 35 809 2 | ENGINE COOLING |
| SCREW FITTING RED 28/22L | 7616910 | 66 | 1 | 301 | 10 35 801 5 | HYDR.ROTARY CONNEC.+SWI |
| SCREW FITTING RED 8/6L | 7367743 | 37 | 1 | 181 | 90 18 423 | SWING GEAR INSTALLATION |
| SCREW FITTING SV 15L M22X | 4901130 | 43 | 1 | 312 | 10 35 809 3 | HYDR.INSTALLATION FAN DR |
| SCREW FITTING SV 15L M22X | 4901130 | 51 | 1 | 619 | 10 49 830 0 | GOOSENECK BOOM 6,70M |
| SCREW FITTING SV 22L M30X | 4901131 | 52 | 1 | 619 | 10 49 830 0 | GOOSENECK BOOM 6,70M |
| SCREW FITTING SWVE-R1/4"6 | 774381508 | 19 | 1 | 681 | 10 28 689 7 | LUBRICATION PUMP |
| SCREW FITTING T 10L | 7362101 | 13 | 1 | 84 | 10 07 713 5 | HYDR.INSTALLATION UNDER |
| SCREW FITTING TH 10L | 7368531 | 140 | 4 | 348 | 10 35 802 8 | CONTROL VALVE INSTALLAT |
| SCREW FITTING TH 10L | 7617248 | 85 | 1 | 343 | 10 84 584 9 | PUMPS + COUPLING INSTALL |
| SCREW FITTING VSTI M14X1,5 | 7363125 | 89 | 1 | 69 | 94 43 840 | TRAVEL DRIVE FAT 450 P 004 |
| SCREW FITTING VSTI M14X1,5 | 7363125 | 10 | 1 | 72 | 98 82 833 | CONTROL VALVE NG 140 140 |
| SCREW FITTING VSTI M14X1,5 | 7363125 | 320 | 1 | 75 | 56 16 688 | WHEEL BRAKE VALVE |
| SCREW FITTING VSTI M14X1,5 | 7363125 | 21 | 1 | 122 | 56 16 530 | AXIAL PISTON PUMP |
| SCREW FITTING VSTI M14X1,5 | 7363125 | 58 | 2 | 672 | 10 49 815 8 | HOIST CYLINDERS |
| SCREW FITTING VSTI M14X1,5 | 7363125 | 20 | 1 | 699 | 98 82 771 | SEAL KIT |
| SCREW FITTING W 15L | 7362109 | 7 | 2 | 100 | 99 46 045 | FUEL SYSTEM |
| SCREW FITTING WE 6LL M10x | 774373808 | 180 | 1 | 218 | 90 64 786 | CONNECTING ELEMENT |
| SCREW FITTING WH 15L | 7368478 | 16 | 1 | 100 | 99 46 045 | FUEL SYSTEM |
| SCREW FITTING WH 15L | 7368478 | 40 | 1 | 297 | 99 37 312 | OIL PILOT VALVE INSTALLATIO |
| SCREW FITTING WH 15L | 7368478 | 43 | 4 | 671 | 10 49 815 8 | HOIST CYLINDERS |
| SCREW FITTING WH 18L M22X | 7617351 | 81 | 2 | 186 | 90 01 790 0 | SLEWING DRIVE SAT 375/250 |
| SCREW FITTING WH 6L M10X1 | 7368426 | 21 | 5 | 624 | 10 38 408 5 | CENTRAL LUBRICATING SYS |
| SCREW FITTING WH 6L M10X1 | 7368426 | 19 | 7 | 631 | 10 38 484 8 | CENTRAL LUBRICATING SYS |
| SCREW FITTING WH 8S | 7368171 | 14 | 1 | 439 | 11 10 278 6 | HEAD LIGHT + HORN INSTALL |
| SCREW FITTING WSV 8L M14X | 7368115 | 18 | 1 | 631 | 10 38 484 8 | CENTRAL LUBRICATING SYS |
| SCREW LOCKING | 11140338 | 120 | 1 | 690 | 98 82 766 | ADJUSTMENT |
| SCREW LOCKING | 11140338 | 120 | 1 | 699 | 98 82 771 | SEAL KIT |
| SCREW LOCKING | 811205708 | 109 | 1 | 525 | 90 72 781 | LUBRICATING OIL PUMP |
| SCREW LOCKING | 811205708 | 109 | 1 | 563 | 10 13 281 7 | WATER PUMP, PRE-ASSEMB |
| SCREW LOCKING | 811205708 | 109 | 1 | 598 | 90 78 961 | POWER TAKE-OFF ADD-ON |
| SCREW LOCKING | 811205708 | 103 | 1 | 692 | 98 88 308 | CONNECTING PLATE |
| SCREW LOCKING | 8622897 | 102 | 1 | 72 | 98 82 833 | CONTROL VALVE NG 140 140 |
| SCREW LOCKING | 8628192 | 109 | 1 | 543 | 10 11 628 5 | FUEL LINE |
| SCREW LOCKING | 8628192 | 109 | 1 | 557 | 90 78 356 | LOCKING PIECES |
| SCREW LOCKING | 8628192 | 109 | 1 | 559 | 10 11 646 4 | AIR COND. COMPRESSOR A |
| SCREW LOCKING | 8628192 | 109 | 1 | 580 | 90 79 823 | TRANSPORT DEVICE ATTACH |
| SCREW LOCKING | 8628192 | 109 | 1 | 592 | 10 11 599 3 | CONTROL BOX ANNEXE |
| SCREW LOCKING | 8655016 | 109 | 1 | 575 | 10 11 553 9 | STARTER INSTALLATION |
| SCREW LOCKING | 8655016 | 109 | 1 | 579 | 90 79 468 | TRANSPORT DEVICE ATTACH |
| SCREW LOCKING | 8655016 | 109 | 1 | 599 | 90 80 006 | POWER TAKE-OFF ADD-ON |
| SCREW LOCKING | 8700012 | 106 | 1 | 124 | 90 73 751 | RK CYLINDER+CONTROL PLAT |
| SCREW M8X40 12.9 | 7368996 | 25 | 12 | 329 | 10 35 798 3 | HYDRAULIC TANK INSTALLAT |
| SCREW M8X40 12.9 | 7368996 | 3 | 6 | 336 | 73 69 257 | RETURN FILTER |
| SCREW PLUG | 10008093 | 30 | 2 | 139 | 10 35 572 4 | HYDRAULIC PUMP |
| SCREW PLUG | 10008415 | 55 | 1 | 121 | 10 41 301 3 | HYDRAULIC PUMP |
| SCREW PLUG | 10024583 | 61 | 2 | 366 | 10 03 245 2 | CONTROL BLOCK |
| SCREW PLUG | 10097983 | 9 | 1 | 58 | 10 65 168 0 | TRACK ROLLER D7 |
| SCREW PLUG | 10097983 | 9 | 1 | 59 | 11 60 010 7 | TRACK ROLLER D7 |
| SCREW PLUG | 10220646 | 1 | 1 | 146 | 57 15 963 | PRESSURE LIMITING VALVE |
| SCREW PLUG | 10220659 | 1 | 1 | 132 | 10 22 063 5 | SHUTDOWN VALVE |
| SCREW PLUG | 10220700 | 5 | 1 | 134 | 10 22 069 7 | FILTER |
| SCREW PLUG | 10355729 | 9 | 1 | 139 | 10 35 572 4 | HYDRAULIC PUMP |
| SCREW PLUG | 7001454 | 8 | 1 | 60 | 10 00 966 2 | GUIDE WHEEL D7G/B7B |
| SCREW PLUG | 7002760 | 133 | 1 | 318 | 56 02 487 | PRESSURE LIMITING VALVE |
| SCREW PLUG | 7020568 | 30 | 1 | 367 | 10 28 962 9 | VALVE |

| Description | Item | Pos. | Quantity | Page | Assembly | Description |
|---|---|---|---|---|---|---|
| SCREW PLUG | 7022278 | 30 | 1 | 121 | 10 41 301 3 | HYDRAULIC PUMP |
| SCREW PLUG | 7028172 | 6 | 2 | 147 | 70 28 075 | CONTROL UNIT |
| SCREW PLUG | 7363178 | 27 | 1 | 148 | 70 28 075 | CONTROL UNIT |
| SCREW PLUG | 7363717 | 55 | 1 | 452 | 90 18 419 | FUEL TANK ASSY. |
| SCREW PLUG | 7371360 | 1 | 1 | 369 | 56 10 135 | SUPPLY VALVE |
| SCREW PLUG | 774378208 | 31 | 4 | 213 | 10 48 841 6 | DISTRIBUTION BLOCK MX-F 7/ |
| SCREW PLUG | 774378208 | 31 | 3 | 216 | 10 10 171 1 | DISTRIBUTION BLOCK MX-F 5/ |
| SCREW PLUG | 774378208 | 31 | 3 | 623 | 10 10 171 2 | DISTRIBUTION BLOCK MX-F 5/ |
| SCREW PLUG G 1/4 | 7013032 | 40 | 1 | 653 | 10 00 297 1 | PIPE FRACTION SAFETY VALV |
| SCREW PLUG G 1/4 | 7024958 | 49 | 1 | 367 | 10 28 962 9 | VALVE |
| SCREW PLUG M10X1 | 7372626 | 12 | 1 | 116 | 10 22 041 1 | CONNECTING PLATE |
| SCREW PLUG M10X1 | 7372626 | 32 | 2 | 122 | 56 16 530 | AXIAL PISTON PUMP |
| SCREW PLUG M10X1 | 9883172 | 2 | 1 | 80 | 98 83 173 | REPAIR KIT |
| SCREW PLUG M10X1 A3C | 7370432 | 310 | 1 | 75 | 56 16 688 | WHEEL BRAKE VALVE |
| SCREW PLUG M12X1,5 | 10100680 | 35 | 2 | 116 | 10 22 041 1 | CONNECTING PLATE |
| SCREW PLUG M12X1,5 | 10100680 | 27 | 1 | 148 | 70 28 075 | CONTROL UNIT |
| SCREW PLUG M12X1,5 | 7372624 | 22 | 4 | 122 | 56 16 530 | AXIAL PISTON PUMP |
| SCREW PLUG M18X1,5 | 10220419 | 48 | 1 | 123 | 56 16 530 | AXIAL PISTON PUMP |
| SCREW PLUG M18X1,5 | 9266233 | 12 | 1 | 76 | 92 67 037 | PRESSURE LIMITING VALVE |
| SCREW PLUG M20X1,5X19 | 10296854 | 13 | 1 | 363 | 10 21 821 5 | NON-RETURN VALVE |
| SCREW PLUG M20X1,5X19 | 10296854 | 13 | 1 | 364 | 10 21 986 3 | NON-RETURN VALVE |
| SCREW PLUG M22X1,5 | 7368507 | 420 | 1 | 75 | 56 16 688 | WHEEL BRAKE VALVE |
| SCREW PLUG M30X1,5 9SMnP | 9077172 | 3 | 1 | 480 | 10 11 795 1 | FINAL CONTROL VALVE |
| SCREW PLUG M30X1,5 St Rm> | 9275590 | 11 | 1 | 525 | 90 72 781 | LUBRICATING OIL PUMP |
| SCREW PLUG M30X1X47 | 10015471 | 250 | 2 | 75 | 56 16 688 | WHEEL BRAKE VALVE |
| SCREW PLUG M6 | 9265783 | 1 | 2 | 126 | 92 71 653 | SEAL KIT ADJUSTMENT |
| SCREW PLUG M6 | 9268441 | 7 | 4 | 73 | 98 89 775 | HYDRAULIC INSTALLATION |
| SCREW PLUG M6 | 9268441 | 5 | 4 | 154 | 98 82 875 | SEAL KIT REGULATING VALVE |
| SCREW PLUG M6 | 9268441 | 7 | 2 | 689 | 90 73 355 | CONNECTING PLATE FMV 140 |
| SCREW PLUG M6 | 9268441 | 1 | 1 | 692 | 98 88 308 | CONNECTING PLATE |
| SCREW PLUG M6 | 9268441 | 7 | 4 | 699 | 98 82 771 | SEAL KIT |
| SCREW PLUG M6 | 9268441 | 2 | 5 | 700 | 92 71 657 | SEAL KIT |
| SCREW PLUG M8X1 | 7027497 | 13 | 3 | 116 | 10 22 041 1 | CONNECTING PLATE |
| SCREW PLUG M8X1 | 9881609 | 8 | 1 | 154 | 98 82 875 | SEAL KIT REGULATING VALVE |
| SCREW PLUG M8X1 C45Pb+C | 10122499 | 20 | 4 | 688 | 10 11 856 1 | PILOT CONTROL UNIT VG6-8 |
| SCREW PLUG VSTI | 7004296 | 80 | 8 | 64 | 91 41 597 | ROTARY FEED THROUGH |
| SCREW PLUG VSTI | 7361553 | 38 | 4 | 297 | 99 37 312 | OIL PILOT VALVE INSTALLATIO |
| SCREW PLUG VSTI | 7361553 | 33 | 1 | 309 | 10 35 801 3 | HYDR.AND GEAR OIL COOLIN |
| SCREW PLUG VSTI | 7361553 | 488 | 1 | 353 | 10 35 802 8 | CONTROL VALVE INSTALLAT |
| SCREW PLUG VSTI | 7363177 | 53 | 1 | 452 | 90 18 419 | FUEL TANK ASSY. |
| SCREW PLUG VSTI G1/4A | 7380145 | 33 | 1 | 271 | 90 79 258 | PILOT CONTROL UNIT VG7 2-3 |
| SCREW PLUG VSTI G1/4A | 7380145 | 33 | 1 | 273 | 90 79 259 | PILOT CONTROL UNIT VG7 2-3 |
| SCREW PLUG VSTI G1/8A | 7001338 | 15 | 5 | 212 | 10 48 840 4 | DISTRIBUTION BLOCK SXE-2 |
| SCREW PLUG VSTI G3/4A | 7002771 | 17 | 1 | 73 | 98 89 775 | HYDRAULIC INSTALLATION |
| SCREW PLUG VSTI G3/4A | 7002771 | 17 | 1 | 188 | 90 72 100 | HYDRAULIC INSTALLATION |
| SCREW PLUG VSTI G3/8 | 4900609 | 17 | 1 | 359 | 10 49 822 5 | HYDR.TUBES INSTALLATION |
| SCREW PLUG VSTI G3/8 | 4900609 | 25 | 4 | 671 | 10 49 815 8 | HOIST CYLINDERS |
| SCREW PLUG VSTI M10X1 | 7362674 | 28 | 2 | 148 | 70 28 075 | CONTROL UNIT |
| SCREW PLUG VSTI M10X1 | 7362674 | 24 | 1 | 657 | 94 02 019 4 | HYDRAULIC CYLINDER |
| SCREW PLUG VSTI M10X1 | 7362674 | 24 | 2 | 658 | 95 87 580 | HYDRAULIC CYLINDER |
| SCREW PLUG VSTI M10X1 | 7381638 | 1 | 1 | 80 | 98 83 173 | REPAIR KIT |
| SCREW PLUG VSTI M10X1 | 7381638 | 10 | 2 | 581 | 10 11 557 7 | FLYWHEEL HOUSING MOUNT |
| SCREW PLUG VSTI M10X1 | 7381638 | 8 | 1 | 604 | 90 80 504 | LOCKING PIECES |
| SCREW PLUG VSTI M14X1,5 | 10137113 | 14 | 1 | 686 | 10 13 268 6 | HYDRAULIC VARIABLE DISPLA |
| SCREW PLUG VSTI M14X1,5 | 7380566 | 6 | 3 | 477 | 10 11 577 9 | CRANKCASE CPL. |
| SCREW PLUG VSTI M14X1,5 | 7380566 | 4 | 1 | 493 | 90 79 492 | SHEET |
| SCREW PLUG VSTI M14X1,5 | 7380566 | 4 | 1 | 494 | 90 79 958 | SHEET |
| SCREW PLUG VSTI M14X1,5 | 7380566 | 11 | 1 | 550 | 10 11 707 3 | AIR INTAKE PIPE ASS. |
| SCREW PLUG VSTI M14X1,5 | 7380566 | 6 | 1 | 551 | 90 77 279 | CONNECTING BRANCH ADD-O |
| SCREW PLUG VSTI M14X1,5 | 7380566 | 5 | 1 | 555 | 10 12 421 8 | COOLING WATER AIR BLEED |

| Description | Item | Pos. | Quantity | Page | Assembly | Description |
|---|---|---|---|---|---|---|
| SCREW PLUG VSTI M16X1,5 | 10116078 | 8 | 1 | 536 | 10 11 551 3 | FUEL FINE-FILTER ASSEMBLY |
| SCREW PLUG VSTI M16X1,5 | 10116078 | 8 | 1 | 538 | 10 12 580 1 | FUEL FINE FILTER |
| SCREW PLUG VSTI M16X1,5 | 10137312 | 14 | 1 | 700 | 92 71 657 | SEAL KIT |
| SCREW PLUG VSTI M16X1,5 | 7382203 | 5 | 2 | 477 | 10 11 577 9 | CRANKCASE CPL. |
| SCREW PLUG VSTI M16X1,5 | 7382203 | 6 | 3 | 536 | 10 11 551 3 | FUEL FINE-FILTER ASSEMBLY |
| SCREW PLUG VSTI M16X1,5 | 7382203 | 47 | 2 | 542 | 10 11 628 5 | FUEL LINE |
| SCREW PLUG VSTI M16X1,5 | 7382203 | 1 | 2 | 558 | 10 11 858 9 | LOCKING PIECES |
| SCREW PLUG VSTI M16X1,5 | 7382203 | 4 | 2 | 604 | 90 80 504 | LOCKING PIECES |
| SCREW PLUG VSTI M18X1,5 | 7361960 | 50 | 4 | 331 | 10 35 798 3 | HYDRAULIC TANK INSTALLAT |
| SCREW PLUG VSTI M20X1,5 | 7363237 | 86 | 1 | 337 | 10 35 819 3 | HYDRAULIC TANK |
| SCREW PLUG VSTI M22X1,5 | 7361961 | 90 | 1 | 64 | 91 41 597 | ROTARY FEED THROUGH |
| SCREW PLUG VSTI M22X1,5 | 7361961 | 48 | 1 | 452 | 90 18 419 | FUEL TANK ASSY. |
| SCREW PLUG VSTI M22X1,5 | 7380177 | 4 | 2 | 477 | 10 11 577 9 | CRANKCASE CPL. |
| SCREW PLUG VSTI M22X1,5 | 7380177 | 14 | 2 | 520 | 10 12 143 8 | OIL COOLER, PRE-ASSEMBLE |
| SCREW PLUG VSTI M22X1,5 | 7380177 | 14 | 1 | 590 | 90 80 653 | LOCKING PIECES |
| SCREW PLUG VSTI M26X1,5 | 7362698 | 20 | 2 | 122 | 56 16 530 | AXIAL PISTON PUMP |
| SCREW PLUG VSTI M26X1,5 | 7362698 | 52 | 1 | 331 | 10 35 798 3 | HYDRAULIC TANK INSTALLAT |
| SCREW PLUG VSTI M26X1,5 | 7381457 | 7 | 2 | 477 | 10 11 577 9 | CRANKCASE CPL. |
| SCREW PLUG VSTI M26X1,5 | 7381457 | 10 | 1 | 569 | 90 79 889 | HEATER CONNECTION |
| SCREW PLUG VSTI M26X1,5 | 7381457 | 3 | 1 | 604 | 90 80 504 | LOCKING PIECES |
| SCREW PLUG VSTI M27X2 | 7360563 | 14 | 1 | 363 | 10 21 821 5 | NON-RETURN VALVE |
| SCREW PLUG VSTI M27X2 | 7360563 | 14 | 1 | 364 | 10 21 986 3 | NON-RETURN VALVE |
| SCREW PLUG VSTI M30X1,5 | 10137120 | 14 | 2 | 690 | 98 82 766 | ADJUSTMENT |
| SCREW PLUG VSTI M30X1,5 | 10137120 | 14 | 2 | 699 | 98 82 771 | SEAL KIT |
| SCREW PLUG VSTI M30X1,5 | 7382204 | 14 | 3 | 484 | 90 79 480 | POWER UNIT SUPPORT ATT |
| SCREW PLUG VSTI M30X1,5 | 7382204 | 8 | 7 | 486 | 90 79 483 | OIL SUMP |
| SCREW PLUG VSTI M30X1,5 | 7382204 | 23 | 2 | 520 | 10 12 143 8 | OIL COOLER, PRE-ASSEMBLE |
| SCREW PLUG VSTI M30X1,5 | 7382204 | 22 | 2 | 607 | 10 11 801 4 | SEAL KIT AGGREGATE CARR |
| SCREW PLUG VSTI M33X2 | 10043136 | 15 | 1 | 484 | 90 79 480 | POWER UNIT SUPPORT ATT |
| SCREW PLUG VSTI M33X2 | 10137121 | 16 | 3 | 686 | 10 13 268 6 | HYDRAULIC VARIABLE DISPLA |
| SCREW PLUG VSTI M33X2 | 10137121 | 16 | 3 | 700 | 92 71 657 | SEAL KIT |
| SCREW PLUG VSTI M33X2 | 7361329 | 24 | 1 | 122 | 56 16 530 | AXIAL PISTON PUMP |
| SCREW PLUG VSTI M33X2 | 7361329 | 26 | 6 | 671 | 10 49 815 8 | HOIST CYLINDERS |
| SCREW PLUG VSTI M38X1,5 | 7382202 | 5 | 2 | 596 | 90 79 893 | LOCKING PIECES |
| SCREW PLUG VSTI M38X1,5 | 7382202 | 23 | 2 | 607 | 10 11 801 4 | SEAL KIT AGGREGATE CARR |
| SCREW PLUG VSTI M42X2 | 7363073 | 34 | 1 | 309 | 10 35 801 3 | HYDR.AND GEAR OIL COOLIN |
| SCREW PLUG VSTI M42X2 | 7363073 | 53 | 2 | 331 | 10 35 798 3 | HYDRAULIC TANK INSTALLAT |
| SCREW PLUG VSTI M8X1 | 7362689 | 26 | 1 | 122 | 56 16 530 | AXIAL PISTON PUMP |
| SCREW SLEEVE DN6 | 774376008 | 1 | 1 | 217 | 90 64 786 | CONNECTING ELEMENT |
| SCREW SLEEVE DN6 | 774376008 | 1 | 31 | 219 | 10 01 461 1 | AUXILIARY BOX |
| SCREW SLEEVE DN6,5 ST | 10012024 | 100 | 1 | 218 | 90 64 786 | CONNECTING ELEMENT |
| SCREW SLEEVE DN6,5 ST | 10012024 | 100 | 6 | 220 | 10 01 461 1 | AUXILIARY BOX |
| SCREW-ON CONNECTION | 7368545 | 21 | 4 | 207 | 99 46 408 | GREASE PIPE INSTALLATION |
| SCREW-ON CONNECTION | 9075128 | 26 | 1 | 573 | 90 80 735 | EXHAUST TC MOUNTING |
| SCREW-ON CONNECTION GE | 7402493 | 19 | 1 | 573 | 90 80 735 | EXHAUST TC MOUNTING |
| SCREW-ON CONNECTION GE | 7015482 | 41 | 2 | 312 | 10 35 809 3 | HYDR.INSTALLATION FAN DR |
| SCREWDRIVER 2X210 | 11162132 | 112 | 1 | 459 | 10 84 856 2 | TOOL EQUIPMENT |
| SEAL | 10009014 | 120 | 1 | 414 | 70 28 769 | DRIVER'S CAB DOOR |
| SEAL | 10009027 | 450 | 2 | 433 | 10 48 808 8 | INTERNAL LINING |
| SEAL | 10014682 | 1 | 1 | 678 | 10 01 468 0 | MOTOR HOUSING |
| SEAL | 10117891 | 2 | 1 | 519 | 10 12 143 9 | OIL COOLER ADD-ON |
| SEAL | 10117891 | 1 | 1 | 522 | 10 11 585 0 | SEALING SET OIL COOLER |
| SEAL | 10118549 | 2 | 1 | 490 | 10 11 870 2 | LADDER-TYPE FRAME |
| SEAL | 10118549 | 15 | 1 | 606 | 10 11 801 4 | SEAL KIT AGGREGATE CARR |
| SEAL | 10118550 | 19 | 1 | 606 | 10 11 801 4 | SEAL KIT AGGREGATE CARR |
| SEAL | 10118551 | 2 | 1 | 486 | 90 79 483 | OIL SUMP |
| SEAL | 10118551 | 17 | 3 | 606 | 10 11 801 4 | SEAL KIT AGGREGATE CARR |
| SEAL | 10118554 | 7 | 6 | 87 | 10 06 947 6 | SERVICE KIT |
| SEAL | 10118554 | 7 | 1 | 505 | 10 11 960 9 | CYLINDER HEAD COVER ASS |
| SEAL | 10118554 | 7 | 1 | 506 | 10 11 961 0 | CYLINDER HEAD COVER ASS |

| Description | Item | Pos. | Quantity | Page | Assembly | Description |
|---|---|---|---|---|---|---|
| SEAL | 10118554 | 7 | 1 | 507 | 10 11 963 6 | CYLINDER HEAD COVER ASS |
| SEAL | 10118554 | 4 | 1 | 513 | 10 11 585 1 | SEAL KIT CYLINDER HEAD |
| SEAL | 10118554 | 4 | 6 | 515 | 10 11 585 3 | SEAL KIT ZYLINDER HEAD CPL |
| SEAL | 10118554 | 7 | 1 | 532 | 10 11 709 3 | RK INJECTION NOZZLE |
| SEAL | 10118554 | 7 | 1 | 535 | 10 11 585 4 | SEAL KIT INJECTION NOZZLE |
| SEAL | 10118556 | 3 | 6 | 513 | 10 11 585 1 | SEAL KIT CYLINDER HEAD |
| SEAL | 10118556 | 3 | 6 | 515 | 10 11 585 3 | SEAL KIT ZYLINDER HEAD CPL |
| SEAL | 10118556 | 6 | 6 | 550 | 10 11 707 3 | AIR INTAKE PIPE ASS. |
| SEAL | 10118620 | 2 | 1 | 605 | 10 11 801 4 | SEAL KIT AGGREGATE CARR |
| SEAL | 10118621 | 18 | 6 | 514 | 10 11 585 1 | SEAL KIT CYLINDER HEAD |
| SEAL | 10118621 | 18 | 6 | 516 | 10 11 585 3 | SEAL KIT ZYLINDER HEAD CPL |
| SEAL | 10119923 | 4 | 2 | 520 | 10 12 143 8 | OIL COOLER, PRE-ASSEMBLE |
| SEAL | 10119923 | 3 | 2 | 522 | 10 11 585 0 | SEALING SET OIL COOLER |
| SEAL | 10120640 | 18 | 1 | 606 | 10 11 801 4 | SEAL KIT AGGREGATE CARR |
| SEAL | 10123734 | 15 | 1 | 609 | 10 11 583 8 | SEAL KIT DIESEL ENGINE |
| SEAL | 10123735 | 17 | 3 | 609 | 10 11 583 8 | SEAL KIT DIESEL ENGINE |
| SEAL | 10126427 | 22 | 1 | 609 | 10 11 583 8 | SEAL KIT DIESEL ENGINE |
| SEAL | 10126738 | 3 | 1 | 484 | 90 79 480 | POWER UNIT SUPPORT ATT |
| SEAL | 10126738 | 2 | 1 | 608 | 10 11 583 8 | SEAL KIT DIESEL ENGINE |
| SEAL | 10137721 | 5 | 1 | 581 | 10 11 557 7 | FLYWHEEL HOUSING MOUNT |
| SEAL | 10137721 | 31 | 1 | 610 | 10 11 583 8 | SEAL KIT DIESEL ENGINE |
| SEAL | 10297876 | 2 | 1 | 106 | 10 29 787 3 | CONTROL VALVE |
| SEAL | 10297876 | 3 | 1 | 107 | 10 29 787 4 | INTERMEDIATE PLATE |
| SEAL | 10471479 | 10 | 1 | 408 | 70 28 788 | SEAL |
| SEAL | 10475895 | 17 | 1 | 147 | 70 28 075 | CONTROL UNIT |
| SEAL | 7011131 | 2 | 1 | 491 | 50 04 624 | OIL DRAIN PLUG M 30 1,5 |
| SEAL | 7019154 | 240 | 1 | 414 | 70 28 769 | DRIVER'S CAB DOOR |
| SEAL | 7019155 | 250 | 1 | 414 | 70 28 769 | DRIVER'S CAB DOOR |
| SEAL | 7024455 | 460 | 1 | 421 | 10 48 808 7 | ELECTRICAL INSTALLATION |
| SEAL | 7026772 | 13 | 1 | 442 | 99 47 695 | ELECTRICAL SYSTEM E50 |
| SEAL | 7028343 | 9 | 1 | 338 | 56 17 689 | SHUT OFF DEVICE DN 100 |
| SEAL | 7028788 | 170 | 1 | 407 | 70 28 767 | GLASS PANES |
| SEAL | 7028790 | 130 | 1 | 407 | 70 28 767 | GLASS PANES |
| SEAL | 7028803 | 140 | 2 | 410 | 10 03 553 0 | FRONT WINDOW BOTTOM |
| SEAL | 7028832 | 410 | 1 | 415 | 70 28 769 | DRIVER'S CAB DOOR |
| SEAL | 7028890 | 150 | 1 | 427 | 10 29 026 4 | ASSY. PARTS |
| SEAL | 7028891 | 140 | 1 | 427 | 10 29 026 4 | ASSY. PARTS |
| SEAL | 7028892 | 160 | 1 | 427 | 10 29 026 4 | ASSY. PARTS |
| SEAL | 7028953 | 400 | 2 | 433 | 10 48 808 8 | INTERNAL LINING |
| SEAL | 7029418 | 500 | 2 | 417 | 70 28 831 | SLIDING WINDOW |
| SEAL | 7041345 | 1 | 1 | 335 | 74 14 913 | LOCKABLE TANK CAP |
| SEAL | 7264906 | 11 | 1 | 152 | 92 65 783 | SCREW PLUG M6 |
| SEAL | 7368993 | 9 | 2 | 87 | 10 06 947 6 | SERVICE KIT |
| SEAL | 7368993 | 3 | 2 | 89 | 10 06 948 6 | SERVICE KIT ERSTE 500H |
| SEAL | 7368993 | 2 | 1 | 336 | 73 69 257 | RETURN FILTER |
| SEAL | 7368994 | 4 | 1 | 336 | 73 69 257 | RETURN FILTER |
| SEAL | 9074975 | 6 | 6 | 578 | 10 11 548 0 | EXHAUST PIPE ASSEMBLY |
| SEAL | 9077329 | 35 | 3 | 610 | 10 11 583 8 | SEAL KIT DIESEL ENGINE |
| SEAL | 9079124 | 7 | 3 | 485 | 90 79 487 | OIL SUMP |
| SEAL | 9079124 | 14 | 3 | 606 | 10 11 801 4 | SEAL KIT AGGREGATE CARR |
| SEAL | 9079124 | 18 | 3 | 609 | 10 11 583 8 | SEAL KIT DIESEL ENGINE |
| SEAL | 9079125 | 12 | 1 | 485 | 90 79 487 | OIL SUMP |
| SEAL | 9079125 | 19 | 1 | 609 | 10 11 583 8 | SEAL KIT DIESEL ENGINE |
| SEAL | 9079556 | 2 | 1 | 493 | 90 79 492 | SHEET |
| SEAL | 9079556 | 2 | 1 | 494 | 90 79 958 | SHEET |
| SEAL | 9079608 | 6 | 2 | 524 | 90 80 278 | SUCTION PUMP WITH FASTEN |
| SEAL | 9079608 | 53 | 2 | 607 | 10 11 801 4 | SEAL KIT AGGREGATE CARR |
| SEAL | 9079608 | 53 | 2 | 611 | 10 11 583 8 | SEAL KIT DIESEL ENGINE |
| SEAL | 9080279 | 4 | 1 | 564 | 10 11 983 0 | THERMOSTAT HOUSING ASS |
| SEAL | 9080279 | 4 | 1 | 565 | 90 75 678 | THERMOSTAT HOUSING ASS |

| Description | Item | Pos. | Quantity | Page | Assembly | Description |
|---|---|---|---|---|---|---|
| SEAL | 9080279 | 4 | 1 | 605 | 10 11 801 4 | SEAL KIT AGGREGATE CARR |
| SEAL | 9080279 | 4 | 1 | 608 | 10 11 583 8 | SEAL KIT DIESEL ENGINE |
| SEAL | 9144762 | 2 | 1 | 492 | 10 11 903 0 | OIL FILLER INLET D930 |
| SEAL | 9144762 | 3 | 1 | 556 | 91 44 757 | END COVER |
| SEAL | 9268129 | 16 | 1 | 514 | 10 11 585 1 | SEAL KIT CYLINDER HEAD |
| SEAL | 9268129 | 16 | 1 | 516 | 10 11 585 3 | SEAL KIT ZYLINDER HEAD CPL |
| SEAL | 9268131 | 18 | 1 | 573 | 90 80 735 | EXHAUST TC MOUNTING |
| SEAL | 9268131 | 71 | 1 | 612 | 10 11 583 8 | SEAL KIT DIESEL ENGINE |
| SEAL | 9270109 | 15 | 1 | 514 | 10 11 585 1 | SEAL KIT CYLINDER HEAD |
| SEAL | 9270109 | 15 | 1 | 516 | 10 11 585 3 | SEAL KIT ZYLINDER HEAD CPL |
| SEAL | 9270109 | 3 | 1 | 573 | 90 80 735 | EXHAUST TC MOUNTING |
| SEAL | 9270109 | 4301 | 1 | 613 | 10 11 583 8 | SEAL KIT DIESEL ENGINE |
| SEAL | 9271963 | 10 | 2 | 514 | 10 11 585 1 | SEAL KIT CYLINDER HEAD |
| SEAL | 9271963 | 10 | 2 | 516 | 10 11 585 3 | SEAL KIT ZYLINDER HEAD CPL |
| SEAL | 9271963 | 10 | 1 | 550 | 10 11 707 3 | AIR INTAKE PIPE ASS. |
| SEAL | 9271963 | 10 | 1 | 552 | 10 12 190 8 | CONNECTING LINE ADD-ON |
| SEAL | 9271963 | 10 | 1 | 553 | 90 79 964 | CONNECTING LINE ADD-ON |
| SEAL | 9271963 | 20 | 2 | 607 | 10 11 801 4 | SEAL KIT AGGREGATE CARR |
| SEAL | 9273691 | 5 | 1 | 599 | 90 80 006 | POWER TAKE-OFF ADD-ON |
| SEAL | 9273691 | 52 | 1 | 611 | 10 11 583 8 | SEAL KIT DIESEL ENGINE |
| SEAL | 9274974 | 36 | 1 | 610 | 10 11 583 8 | SEAL KIT DIESEL ENGINE |
| SEAL | 9275766 | 2 | 1 | 495 | 91 47 512 | LOCKING PIECES |
| SEAL | 9275766 | 16 | 1 | 606 | 10 11 801 4 | SEAL KIT AGGREGATE CARR |
| SEAL | 9275766 | 16 | 3 | 609 | 10 11 583 8 | SEAL KIT DIESEL ENGINE |
| SEAL | 9882204 | 11 | 1 | 700 | 92 71 657 | SEAL KIT |
| SEAL | 9885529 | 6 | 1 | 159 | 99 29 814 | PUMPS INSTALLATION |
| SEAL | 9885529 | 3 | 1 | 597 | 90 77 719 | POWER TAKE-OFF ADD-ON |
| SEAL | 9885529 | 5 | 1 | 598 | 90 78 961 | POWER TAKE-OFF ADD-ON |
| SEAL | 9885529 | 34 | 1 | 610 | 10 11 583 8 | SEAL KIT DIESEL ENGINE |
| SEAL | 9885529 | 51 | 2 | 611 | 10 11 583 8 | SEAL KIT DIESEL ENGINE |
| SEAL 1MM | 9079130 | 2 | 1 | 591 | 10 11 912 8 | LOCKING PIECES |
| SEAL 1MM | 9079130 | 33 | 1 | 610 | 10 11 583 8 | SEAL KIT DIESEL ENGINE |
| SEAL KIT | 10015470 | 999 | 1 | 75 | 56 16 688 | WHEEL BRAKE VALVE |
| SEAL KIT | 10021310 | 998 | 1 | 213 | 10 48 841 6 | DISTRIBUTION BLOCK MX-F 7/ |
| SEAL KIT | 10021310 | 998 | 1 | 216 | 10 10 171 1 | DISTRIBUTION BLOCK MX-F 5/ |
| SEAL KIT | 10021310 | 998 | 1 | 623 | 10 10 171 2 | DISTRIBUTION BLOCK MX-F 5/ |
| SEAL KIT | 10021311 | 997 | 1 | 213 | 10 48 841 6 | DISTRIBUTION BLOCK MX-F 7/ |
| SEAL KIT | 10021311 | 997 | 1 | 216 | 10 10 171 1 | DISTRIBUTION BLOCK MX-F 5/ |
| SEAL KIT | 10021311 | 997 | 1 | 623 | 10 10 171 2 | DISTRIBUTION BLOCK MX-F 5/ |
| SEAL KIT | 10220423 | 999 | 1 | 123 | 56 16 530 | AXIAL PISTON PUMP |
| SEAL KIT | 10220997 | 999 | 1 | 321 | 10 28 046 1 | CONTROL SOLENOID VALVE |
| SEAL KIT | 10278595 | 999 | 1 | 653 | 10 00 297 1 | PIPE FRACTION SAFETY VALV |
| SEAL KIT | 10289630 | 998 | 1 | 366 | 10 03 245 2 | CONTROL BLOCK |
| SEAL KIT | 10291972 | 999 | 1 | 116 | 10 22 041 1 | CONNECTING PLATE |
| SEAL KIT | 10410335 | 999 | 1 | 106 | 10 29 787 3 | CONTROL VALVE |
| SEAL KIT | 10410659 | 999 | 1 | 138 | 10 28 914 6 | PRESSURE LIMITING VALVE |
| SEAL KIT | 7025142 | 999 | 1 | 317 | 50 09 565 | PRESSURE LIMITING CARTRI |
| SEAL KIT | 7029460 | 999 | 1 | 367 | 10 28 962 9 | VALVE |
| SEAL KIT | 7624268 | 999 | 1 | 642 | 10 00 348 5 | DIRECTIONAL CONTROL VALV |
| SEAL KIT | 90200890 | 910 | 1 | 187 | 90 01 790 0 | SLEWING DRIVE SAT 375/250 |
| SEAL KIT | 9269690 | 96 | 1 | 271 | 90 79 258 | PILOT CONTROL UNIT VG7 2-3 |
| SEAL KIT | 9269690 | 96 | 1 | 273 | 90 79 259 | PILOT CONTROL UNIT VG7 2-3 |
| SEAL KIT | 9269690 | 96 | 1 | 688 | 10 11 856 1 | PILOT CONTROL UNIT VG6-8 |
| SEAL KIT | 9271657 | 98 | 1 | 687 | 10 13 268 6 | HYDRAULIC VARIABLE DISPLA |
| SEAL KIT | 9273048 | 98 | 1 | 189 | 90 72 100 | HYDRAULIC INSTALLATION |
| SEAL KIT | 9273200 | 97 | 1 | 110 | 90 77 872 | PUMP DISTRIBUTION GEAR |
| SEAL KIT | 9882771 | 98 | 1 | 74 | 98 89 775 | HYDRAULIC INSTALLATION |
| SEAL KIT ADJUSTMENT | 9271653 | 92 | 1 | 691 | 92 71 648 | ADJUSTMENT |
| SEAL KIT AGGREGATE CARR | 10118014 | 13 | 1 | 469 | 10 11 668 5 | DIESEL ENGINE D936 L A6 240 |
| SEAL KIT CYLINDER HEAD | 10115851 | 88 | 1 | 471 | 10 11 668 5 | DIESEL ENGINE D936 L A6 240 |

| Description | Item | Pos. | Quantity | Page | Assembly | Description |
|---|---|---|---|---|---|---|
| SEAL KIT DIESEL ENGINE | 10115838 | 939 | 1 | 476 | 10 11 668 5 | DIESEL ENGINE D936 L A6 240 |
| SEAL KIT DIRECTIONAL VALV | 5009391 | 999 | 1 | 320 | 10 01 872 5 | DIRECTIONAL CONTROL VALV |
| SEAL KIT DIRECTIONAL VALV | 5009562 | 4 | 1 | 315 | 10 04 272 9 | OIL PILOT VALVE |
| SEAL KIT DIRECTIONAL VALV | 5009562 | 999 | 1 | 316 | 10 28 027 9 | VALVE |
| SEAL KIT DIRECTIONAL VALV | 5009562 | 999 | 1 | 319 | 56 15 344 | SOLENOID VALVE |
| SEAL KIT DRV | 9270390 | 999 | 1 | 660 | 92 70 387 | FLOW REGULATING CHECK |
| SEAL KIT F.PISTON ROD BEAR | 9158144 | 999 | 1 | 669 | 99 52 600 | PISTON ROD BEARING 110/18 |
| SEAL KIT F.PISTON ROD BEAR | 94027338 | 999 | 1 | 668 | 94 02 733 6 | PISTON ROD BEARING 125/17 |
| SEAL KIT F.PISTON ROD BEAR | 9062985 | 999 | 1 | 667 | 94 01 936 4 | PISTON ROD BEARING 125/18 |
| SEAL KIT F.PUMP | 7010596 | 999 | 1 | 145 | 56 09 979 | GEAR PUMP |
| SEAL KIT GEAR DRIVE | 10220432 | 98 | 1 | 114 | 10 22 040 9 | DRIVING GEAR |
| SEAL KIT INJECTION NOZZLE | 10115854 | 199 | 1 | 472 | 10 11 668 5 | DIESEL ENGINE D936 L A6 240 |
| SEAL KIT INJECTION NOZZLE | 10115854 | 7 | 1 | 513 | 10 11 585 1 | SEAL KIT CYLINDER HEAD |
| SEAL KIT INJECTION NOZZLE | 10115854 | 7 | 1 | 515 | 10 11 585 3 | SEAL KIT ZYLINDER HEAD CPL |
| SEAL KIT INJECTION NOZZLE | 10115855 | 179 | 1 | 471 | 10 11 668 5 | DIESEL ENGINE D936 L A6 240 |
| SEAL KIT INJECTION NOZZLE | 10115855 | 82 | 6 | 612 | 10 11 583 8 | SEAL KIT DIESEL ENGINE |
| SEAL KIT LIMIT VALVE | 7030267 | 998 | 1 | 318 | 56 02 487 | PRESSURE LIMITING VALVE |
| SEAL KIT LIMIT VALVE | 7030267 | 999 | 1 | 322 | 70 28 300 | PRESSURE LIMITING VALVE |
| SEAL KIT PRESSURE VALVE | 10332087 | 999 | 1 | 654 | 10 28 918 3 | PRESSURE FEEDER VALVE |
| SEAL KIT PRESSURE VALVE | 5616900 | 999 | 1 | 370 | 56 16 232 | NON-RETURN VALVE |
| SEAL KIT PRESSURE VALVE | 5616901 | 999 | 1 | 61 | 56 16 231 | PRESSURE FEEDER VALVE |
| SEAL KIT REGULATING VALVE | 9882875 | 88 | 1 | 686 | 10 13 268 6 | HYDRAULIC VARIABLE DISPLA |
| SEAL KIT REGULATING VALVE | 9882875 | 90 | 1 | 694 | 10 13 305 9 | REGULATING VALVE |
| SEAL KIT SHUTTLE VALVE | 9266232 | 96 | 1 | 188 | 90 72 100 | HYDRAULIC INSTALLATION |
| SEAL KIT SHUTTLE VALVE | 9266232 | 98 | 1 | 200 | 90 77 087 | SHUTTLE VALVE WV 10 |
| SEAL KIT ZYLINDER HEAD CPL | 10115853 | 89 | 1 | 471 | 10 11 668 5 | DIESEL ENGINE D936 L A6 240 |
| SEAL KIT ZYLINDER HEAD CPL | 10115853 | 83 | 1 | 612 | 10 11 583 8 | SEAL KIT DIESEL ENGINE |
| SEAL-LOCK-SHOULDER NUT | 7009369 | 47 | 1 | 122 | 56 16 530 | AXIAL PISTON PUMP |
| SEAL-LOCK-SHOULDER NUT | 7009369 | 132 | 1 | 366 | 10 03 245 2 | CONTROL BLOCK |
| SEAL-LOCK-SHOULDER NUT | 7361601 | 14 | 1 | 132 | 10 22 063 5 | SHUTDOWN VALVE |
| SEAL-LOCK-SHOULDER NUT | 7361601 | 8 | 1 | 317 | 50 09 565 | PRESSURE LIMITING CARTRI |
| SEAL-LOCK-SHOULDER NUT M | 7361600 | 30 | 2 | 148 | 70 28 075 | CONTROL UNIT |
| SEAL-LOCK-SHOULDER NUT M | 7361600 | 57 | 2 | 154 | 98 82 875 | SEAL KIT REGULATING VALVE |
| SEAL-LOCK-SHOULDER NUT M | 7027052 | 32 | 2 | 148 | 70 28 075 | CONTROL UNIT |
| SEALANT | 8622905 | 108 | 1 | 520 | 10 12 143 8 | OIL COOLER, PRE-ASSEMBLE |
| SEALANT | 8622905 | 108 | 1 | 597 | 90 77 719 | POWER TAKE-OFF ADD-ON |
| SEALANT | 8622905 | 108 | 1 | 600 | 90 77 386 | AUXILIARY DRIVE PRE-ASS. |
| SEALANT | 8627609 | 112 | 1 | 486 | 90 79 483 | OIL SUMP |
| SEALANT | 8627609 | 112 | 1 | 490 | 10 11 870 2 | LADDER-TYPE FRAME |
| SEALING KIT | 5604335 | 999 | 1 | 366 | 10 03 245 2 | CONTROL BLOCK |
| SEALING NUT M10X1 | 11213009 | 9 | 1 | 146 | 57 15 963 | PRESSURE LIMITING VALVE |
| SEALING NUT M12 | 7381226 | 6 | 1 | 480 | 10 11 795 1 | FINAL CONTROL VALVE |
| SEALING NUT M12 | 7381226 | 3 | 1 | 605 | 10 11 801 4 | SEAL KIT AGGREGATE CARR |
| SEALING NUT M12 | 7381226 | 3 | 1 | 608 | 10 11 583 8 | SEAL KIT DIESEL ENGINE |
| SEALING PLUG MB 700 | 7380133 | 35 | 2 | 271 | 90 79 258 | PILOT CONTROL UNIT VG7 2-3 |
| SEALING PLUG MB 700 | 7380133 | 35 | 2 | 273 | 90 79 259 | PILOT CONTROL UNIT VG7 2-3 |
| SEALING PLUG MB 700 | 7610819 | 8 | 2 | 68 | 94 43 840 | TRAVEL DRIVE FAT 450 P 004 |
| SEALING PLUG MB 850 | 7380051 | 36 | 1 | 273 | 90 79 259 | PILOT CONTROL UNIT VG7 2-3 |
| SEALING PROFILE | 10008649 | 16 | 0.28m | 280 | 10 40 689 8 | AIR CONDITIONING UNIT |
| SEALING PROFILE | 10412177 | 5 | 2.058m | 164 | 10 45 475 2 | COMBINATED RADIATOR |
| SEALING PROFILE | 10412177 | 6 | 4.28m | 164 | 10 45 475 2 | COMBINATED RADIATOR |
| SEALING PROFILE | 10412177 | 4 | 2.28m | 167 | 10 35 508 4 | OIL COOLER |
| SEALING PROFILE | 10467247 | 28 | 2 | 165 | 10 45 475 2 | COMBINATED RADIATOR |
| SEALING PUTTY | 10022063 | 30 | 1 | 287 | 11 00 359 4 | HOUSING |
| SEALING RING | 10014697 | 12 | 2 | 681 | 10 28 689 7 | LUBRICATION PUMP |
| SEALING RING | 7011286 | 6 | 2 | 454 | 70 10 596 | SEAL KIT F.PUMP |
| SEALING RING | 7011288 | 12 | 2 | 454 | 70 10 596 | SEAL KIT F.PUMP |
| SEALING RING | 7610225 | 6 | 1 | 192 | 94 42 150 | OIL FILLER NECK |
| SEALING RING 12,7X18,00X1,5 | 10011865 | 77 | 4 | 612 | 10 11 583 8 | SEAL KIT DIESEL ENGINE |
| SEALING RING 14,7X22,00X1,5 | 10011866 | 9 | 12 | 513 | 10 11 585 1 | SEAL KIT CYLINDER HEAD |

| Description | Item | Pos. | Quantity | Page | Assembly | Description |
|---|---|---|---|---|---|---|
| SEALING RING 14,7X22,00X1,5 | 10011866 | 9 | 12 | 515 | 10 11 585 3 | SEAL KIT ZYLINDER HEAD CPL |
| SEALING RING 14,7X22,00X1,5 | 10011866 | 11 | 2 | 545 | 10 11 559 5 | LEAK OIL RETURN LINE |
| SEALING RING 14,7X22,00X1,5 | 10011866 | 2 | 12 | 547 | 90 79 083 | PIPELINE INSTALLATION |
| SEALING RING 14,7X22,00X1,5 | 10011866 | 3 | 2 | 555 | 10 12 421 8 | COOLING WATER AIR BLEED |
| SEALING RING 14,7X22,00X1,5 | 10011866 | 9 | 2 | 605 | 10 11 801 4 | SEAL KIT AGGREGATE CARR |
| SEALING RING 14,7X22,00X1,5 | 10011866 | 75 | 1 | 612 | 10 11 583 8 | SEAL KIT DIESEL ENGINE |
| SEALING RING 14,7X22,00X1,5 | 10011866 | 78 | 25 | 612 | 10 11 583 8 | SEAL KIT DIESEL ENGINE |
| SEALING RING 16,7X24,00X1,5 | 10011867 | 3 | 1 | 536 | 10 11 551 3 | FUEL FINE-FILTER ASSEMBLY |
| SEALING RING 16,7X24,00X1,5 | 10011867 | 3 | 1 | 538 | 10 12 580 1 | FUEL FINE FILTER |
| SEALING RING 16,7X24,00X1,5 | 10011867 | 79 | 5 | 612 | 10 11 583 8 | SEAL KIT DIESEL ENGINE |
| SEALING RING 16,7X24,00X1,5 | 10011867 | 80 | 7 | 612 | 10 11 583 8 | SEAL KIT DIESEL ENGINE |
| SEALING RING 21 | 7371651 | 4 | 1 | 299 | 93 99 179 | INTERMEDIATE COUPLING |
| SEALING RING 26,7X34,93X2 | 10011870 | 9 | 1 | 482 | 10 11 916 7 | CRANKCASE BREATHER ASSE |
| SEALING RING 26,7X34,93X2 | 10011870 | 76 | 5 | 612 | 10 11 583 8 | SEAL KIT DIESEL ENGINE |
| SEALING RING 30,7X39X2 | 10113731 | 3 | 2 | 569 | 90 79 889 | HEATER CONNECTION |
| SEALING RING 30,7X39X2 | 10113731 | 42 | 2 | 607 | 10 11 801 4 | SEAL KIT AGGREGATE CARR |
| SEALING RING 30,7X39X2 | 10113731 | 42 | 2 | 610 | 10 11 583 8 | SEAL KIT DIESEL ENGINE |
| SEALING RING 4X8X1 | 10016656 | 32 | 4 | 682 | 10 28 689 7 | LUBRICATION PUMP |
| SEALING SET FOR PISTON 17 | 9062821 | 999 | 1 | 665 | 95 90 264 | PISTON 170MM |
| SEALING SET FOR PISTON 18 | 9062632 | 999 | 1 | 663 | 94 00 606 1 | PISTON 180MM |
| SEALING SET FOR PISTON 18 | 9062632 | 999 | 1 | 664 | 95 87 597 | PISTON 180MM |
| SEALING SET OIL COOLER | 10115850 | 139 | 1 | 471 | 10 11 668 5 | DIESEL ENGINE D936 L A6 240 |
| SEALING SET OIL COOLER | 10115850 | 81 | 1 | 612 | 10 11 583 8 | SEAL KIT DIESEL ENGINE |
| SEALING SET VALVE | 5604334 | 999 | 1 | 318 | 56 02 487 | PRESSURE LIMITING VALVE |
| SEALING SET VALVE | 9266089 | 98 | 1 | 693 | 92 67 554 | PRESSURE LIMITING VALVE |
| SEALING SET VALVE | 9266231 | 98 | 1 | 76 | 92 67 037 | PRESSURE LIMITING VALVE |
| SEALING SET VALVE | 9266231 | 97 | 1 | 189 | 90 72 100 | HYDRAULIC INSTALLATION |
| SEALING STRIP | 7027401 | 5 | 3 | 283 | 10 02 206 9 | EVAPORATOR HOUSING |
| SEALING TAPE | 10467569 | 2 | 0.52m | 164 | 10 45 475 2 | COMBINATED RADIATOR |
| SEALINGSET ROTARY TRANS | 10009676 | 999 | 1 | 63 | 10 00 963 0 | ROTARY FEED THROUGH |
| SEALINGSET ROTARY TRAN | 9265064 | 11 | 1 | 64 | 91 41 597 | ROTARY FEED THROUGH |
| SEAT INSERT RING EXHAUST | 9073726 | 7 | 2 | 510 | 10 12 038 4 | ZYLINDER HEAD |
| SEAT INSERT RING INLET | 9073725 | 6 | 2 | 510 | 10 12 038 4 | ZYLINDER HEAD |
| SEAT TOP | 11100166 | 10 | 1 | 232 | 11 00 085 6 | DRIVER'S SEAT WITH PNEUM. |
| SEAT UPHOLSTERY | 11082672 | 2 | 1 | 233 | 11 10 016 6 | SEAT TOP |
| SEAT VAT | 94025779 | 20 | 1 | 279 | 94 02 247 7 | DRIVERS SEAT |
| SECTION | 10009781 | 121 | 1.8m | 230 | 10 49 880 9 | DRIVER STAND BASE SECTIO |
| SECTION | 226016702 | 100 | 0.57m | 172 | 10 49 858 1 | MOTOR-ELEKTRIK |
| SECTION | 226016702 | 120 | 1m | 230 | 10 49 880 9 | DRIVER STAND BASE SECTIO |
| SECTION | 226016702 | 343 | 0.11m | 350 | 10 35 802 8 | CONTROL VALVE INSTALLAT |
| SECTION | 226016702 | 15 | 0.15m | 398 | 10 35 853 1 | SIDE DOOR FRONT LEFT |
| SECTION | 226016702 | 30 | 2.1m | 403 | 10 05 011 2 | LOWER COVERING |
| SECTION | 226016702 | 31 | 1.9m | 403 | 10 05 011 2 | LOWER COVERING |
| SECTION | 226016702 | 60 | 0.3m | 452 | 90 18 419 | FUEL TANK ASSY. |
| SECTION | 226017802 | 510 | 0.75m | 314 | 10 35 801 7 | HYDR.INSTAL.CONTROL TUBE |
| SEE REMARK | 9999999 | 23 | 1 | 692 | 98 88 308 | CONNECTING PLATE |
| SELF-TAPPING SCREW AEHN | 4901530 | 6 | 2 | 437 | 99 41 040 | FLOODLIGHT INSTALLATION |
| SENSOR | 635867001 | 65 | 1 | 171 | 10 49 858 1 | MOTOR-ELEKTRIK |
| SENSOR | 635867001 | 1 | 1 | 589 | 98 85 618 | ROTATIONAL SPEED SENSOR |
| SENSORIC | 10017824 | 150 | 1 | 247 | 99 68 625 | LH-JOYSTICK LEFT |
| SENSORIC | 10017824 | 150 | 1 | 262 | 99 68 611 | LH-JOYSTICK RIGHT |
| SERVICE HOUR METER | 6201379 | 90 | 1 | 238 | 10 38 502 4 | ARM REST LEFT |
| SERVICE KIT | 10069476 | 2 | 1 | 88 | 10 09 121 4 | SERVICE KIT 0-2000 H |
| SERVICE KIT | 10069476 | 1 | 1 | 91 | 10 09 121 5 | SERVICE KIT ALLE 2000 H |
| SERVICE KIT 0-2000 H | 10091214 | 100 | 1 | 46 | 10 35 970 2 | SERVICE MATERIAL |
| SERVICE KIT ALLE 2000 H | 10091215 | 4 | 1 | 88 | 10 09 121 4 | SERVICE KIT 0-2000 H |
| SERVICE KIT ERSTE 500H | 10069486 | 1 | 1 | 88 | 10 09 121 4 | SERVICE KIT 0-2000 H |
| SERVICE KIT FUEL FILTER | 10069940 | 110 | 1 | 46 | 10 35 970 2 | SERVICE MATERIAL |
| SERVICE KITS 1500/2500h | 10069481 | 1 | 1 | 87 | 10 06 947 6 | SERVICE KIT |
| SERVICE KITS 1500/2500h | 10069481 | 3 | 1 | 88 | 10 09 121 4 | SERVICE KIT 0-2000 H |

| Description | Item | Pos. | Quantity | Page | Assembly | Description |
|---|---|---|---|---|---|---|
| SERVICE KITS 1500/2500h | 10069481 | 1 | 1 | 89 | 10 06 948 6 | SERVICE KIT ERSTE 500H |
| SERVICE MATERIAL | 10359702 | 9999 | 1 | 9 | 10 49 883 6 | BASIC MACHINE |
| SERVOMOTOR | 10022766 | 3 | 1 | 284 | 10 02 208 3 | AIR CONNECTION PART |
| SERVOMOTOR | 10022766 | 7 | 2 | 285 | 10 02 211 7 | AIR CIRCULATION CASE |
| SERVOMOTOR | 10022766 | 2 | 1 | 288 | 10 02 207 8 | ASSEMBLY BRACKET |
| SET MAIN BEARINGS | 9076458 | 51 | 1 | 470 | 10 11 668 5 | DIESEL ENGINE D936 L A6 240 |
| SHAFT SEAL | 10220431 | 38 | 1 | 114 | 10 22 040 9 | DRIVING GEAR |
| SHAFT SEAL | 7010597 | 3 | 1 | 145 | 56 09 979 | GEAR PUMP |
| SHAFT SEAL X25X35X6 | 7413402 | 20 | 1 | 139 | 10 35 572 4 | HYDRAULIC PUMP |
| SHAFT SEAL X28X40X6 | 10220348 | 20 | 1 | 121 | 10 41 301 3 | HYDRAULIC PUMP |
| SHEET | 10056984 | 55 | 1 | 214 | 10 04 966 3 | CENTRAL LUBRICATING SYS |
| SHEET | 10057336 | 54 | 2 | 619 | 10 49 830 0 | GOOSENECK BOOM 6,70M |
| SHEET | 10058949 | 15 | 1 | 244 | 10 05 879 2 | MANIPULATOR LEFT |
| SHEET | 10058949 | 15 | 1 | 259 | 10 05 879 4 | MANIPULATOR RIGHT |
| SHEET | 10115691 | 5 | 1 | 489 | 90 79 862 | DIPSTICK W.TUBE |
| SHEET | 10119129 | 1 | 1 | 591 | 10 11 912 8 | LOCKING PIECES |
| SHEET | 10290356 | 520 | 1 | 423 | 10 29 036 3 | WIPPER MOTOR SET |
| SHEET | 10397442 | 4 | 1 | 93 | 10 40 278 1 | ATTACHMENTS MOUNTING PA |
| SHEET | 10652159 | 20 | 1 | 240 | 10 16 576 6 | STEERING CONSOLE |
| SHEET | 7028802 | 130 | 2 | 409 | 10 03 552 9 | FRONT WINDOW BOTTOM |
| SHEET | 7028839 | 190 | 1 | 414 | 70 28 769 | DRIVER'S CAB DOOR |
| SHEET | 7028870 | 370 | 1 | 421 | 10 48 808 7 | ELECTRICAL INSTALLATION |
| SHEET | 7028895 | 260 | 1 | 427 | 10 29 026 4 | ASSY. PARTS |
| SHEET | 7029420 | 520 | 1 | 417 | 70 28 831 | SLIDING WINDOW |
| SHEET | 7029422 | 550 | 1 | 417 | 70 28 831 | SLIDING WINDOW |
| SHEET | 9079492 | 3 | 2 | 485 | 90 79 487 | OIL SUMP |
| SHEET | 9079494 | 3 | 1 | 486 | 90 79 483 | OIL SUMP |
| SHEET | 9079555 | 1 | 1 | 493 | 90 79 492 | SHEET |
| SHEET | 9079958 | 4 | 1 | 485 | 90 79 487 | OIL SUMP |
| SHEET | 9079959 | 1 | 1 | 494 | 90 79 958 | SHEET |
| SHEET | 9368526 | 226 | 3 | 306 | 10 35 801 4 | HYDR.SUCT.+RETURN OIL HO |
| SHEET | 9375885 | 44 | 1 | 618 | 10 49 830 0 | GOOSENECK BOOM 6,70M |
| SHEET | 9375885 | 131 | 2 | 620 | 10 49 830 0 | GOOSENECK BOOM 6,70M |
| SHEET | 9375885 | 7 | 2 | 628 | 10 49 823 5 | STICK 2,35M |
| SHEET | 9380962 | 20 | 1 | 346 | 10 35 802 8 | CONTROL VALVE INSTALLAT |
| SHEET | 9392646 | 15 | 1 | 249 | 10 84 086 6 | ARM REST RIGHT |
| SHEET | 9476811 | 180 | 4 | 295 | 10 35 801 2 | HYDR.PUMPS TO SPOOL VALV |
| SHEET | 9476811 | 350 | 2 | 296 | 10 35 801 2 | HYDR.PUMPS TO SPOOL VALV |
| SHEET | 9476811 | 46 | 4 | 301 | 10 35 801 5 | HYDR.ROTARY CONNEC.+SWI |
| SHEET | 9757779 | 35 | 1 | 229 | 10 49 880 9 | DRIVER STAND BASE SECTIO |
| SHEET | 9830148 | 46 | 1 | 309 | 10 35 801 3 | HYDR.AND GEAR OIL COOLIN |
| SHEET | 9830148 | 6 | 2 | 636 | 11 10 283 0 | BEARING PILLOW BLOCK |
| SHEET | 9830148 | 81 | 2 | 672 | 10 49 815 8 | HOIST CYLINDERS |
| SHEET | 9830148 | 141 | 2 | 672 | 10 49 815 8 | HOIST CYLINDERS |
| SHEET | 9938039 | 52 | 1 | 312 | 10 35 809 3 | HYDR.INSTALLATION FAN DR |
| SHEET | 9945324 | 96 | 2 | 375 | 10 35 800 4 | PANELLING |
| SHEET 10X20X25 | 7028898 | 270 | 1 | 428 | 10 29 026 4 | ASSY. PARTS |
| SHEET 3X20X37 | 7020611 | 360 | 2 | 428 | 10 29 026 4 | ASSY. PARTS |
| SHEET GASKET | 11007770 | 7 | 1 | 338 | 56 17 689 | SHUT OFF DEVICE DN 100 |
| SHEET GASKET 7,03X15,1X1,5 | 10040406 | 5 | 1 | 533 | 10 11 658 7 | INJECTOR |
| SHEET GASKET 7,03X15,1X1,5 | 10040406 | 2 | 1 | 535 | 10 11 585 4 | SEAL KIT INJECTION NOZZLE |
| SHEET H=5 | 10091991 | 35 | 2 | 618 | 10 49 830 0 | GOOSENECK BOOM 6,70M |
| SHEET METAL NUT | 10009079 | 260 | 8 | 420 | 10 48 808 7 | ELECTRICAL INSTALLATION |
| SHEET METAL NUT | 10009189 | 440 | 4 | 433 | 10 48 808 8 | INTERNAL LINING |
| SHEET METAL NUT | 10044356 | 100 | 12 | 432 | 10 48 808 8 | INTERNAL LINING |
| SHEET METAL NUT | 10290260 | 800 | 2 | 430 | 10 29 026 4 | ASSY. PARTS |
| SHEET METAL NUT | 7366862 | 10 | 1 | 240 | 10 16 576 6 | STEERING CONSOLE |
| SHEET METAL NUT M6 | 7370883 | 13 | 7 | 240 | 10 16 576 6 | STEERING CONSOLE |
| SHEET METAL NUT M6 | 7370883 | 12 | 11 | 255 | 56 18 923 | CONTROL CONSOLE RIGHT |
| SHEET METAL NUT ST4,8 | 7028941 | 190 | 10 | 432 | 10 48 808 8 | INTERNAL LINING |

| Description | Item | Pos. | Quantity | Page | Assembly | Description |
|---|---|---|---|---|---|---|
| SHELL | 7370891 | 3 | 1 | 255 | 56 18 923 | CONTROL CONSOLE RIGHT |
| SHIFT LEVER | 10061699 | 4 | 2 | 628 | 10 49 823 5 | STICK 2,35M |
| SHIM RING | 10216703 | 20 | 1 | 345 | 10 22 042 7 | DRIVING GEAR |
| SHIM RING | 10216704 | 20 | 1 | 345 | 10 22 042 7 | DRIVING GEAR |
| SHIM RING | 10216705 | 20 | 1 | 345 | 10 22 042 7 | DRIVING GEAR |
| SHIM RING | 10216706 | 20 | 1 | 345 | 10 22 042 7 | DRIVING GEAR |
| SHIM RING | 7028182 | 19 | 2 | 147 | 70 28 075 | CONTROL UNIT |
| SHIM RING | 90011582 | 48 | 3 | 184 | 90 01 790 0 | SLEWING DRIVE SAT 375/250 |
| SHIM RING 18,5X23X0,2 | 7381354 | 22 | 2 | 196 | 90 72 990 | CONNECTING PLATE |
| SHIM RING 50X63X3 | 4981277 | 19 | 1 | 108 | 90 77 872 | PUMP DISTRIBUTION GEAR |
| SHIM RING 55X65X1,5 | 7380531 | 44 | 1 | 77 | 92 68 751 | REPAIR KIT LOCK RING |
| SHIM RING 55X65X1,5 | 7380531 | 44 | 1 | 204 | 92 73 048 | SEAL KIT |
| SHIM RING 55X65X1,5 | 7380531 | 44 | 1 | 697 | 92 68 016 | REPAIR KIT LOCK RING |
| SHOCK ABSORBER | 10493469 | 11 | 1 | 235 | 11 10 016 7 | SUSPENSION |
| SHUT OFF DEVICE DN 100 | 5617689 | 14 | 2 | 329 | 10 35 798 3 | HYDRAULIC TANK INSTALLAT |
| SHUTDOWN VALVE | 10220635 | 3 | 1 | 116 | 10 22 041 1 | CONNECTING PLATE |
| SHUTTER DISK | 9429965 | 38 | 3 | 618 | 10 49 830 0 | GOOSENECK BOOM 6,70M |
| SHUTTLE VALVE | 7021767 | 300 | 1 | 75 | 56 16 688 | WHEEL BRAKE VALVE |
| SHUTTLE VALVE | 7403972 | 14 | 1 | 225 | 10 06 014 6 | HYDR.INSTAL.FOOT BOARD |
| SHUTTLE VALVE | 7403972 | 182 | 5 | 314 | 10 35 801 7 | HYDR.INSTAL.CONTROL TUBE |
| SHUTTLE VALVE WV 10 | 9077087 | 92 | 1 | 188 | 90 72 100 | HYDRAULIC INSTALLATION |
| SHUTTLE VALVE WV 10 | 9077087 | 1 | 1 | 196 | 90 72 990 | CONNECTING PLATE |
| SIDE DOOR BACK LEFT | 10358172 | 40 | 1 | 373 | 10 35 800 4 | PANELLING |
| SIDE DOOR BACK LEFT | 9929356 | 2 | 1 | 384 | 10 35 817 2 | SIDE DOOR BACK LEFT |
| SIDE DOOR FRONT LEFT | 10358531 | 110 | 1 | 375 | 10 35 800 4 | PANELLING |
| SIDE DOOR FRONT LEFT | 9947961 | 110 | 1 | 375 | 10 35 800 4 | PANELLING |
| SIDE DOOR FRONT LEFT | 9947962 | 2 | 1 | 398 | 10 35 853 1 | SIDE DOOR FRONT LEFT |
| SIDE DOOR FRONT LEFT | 9947962 | 2 | 1 | 399 | 99 47 961 | SIDE DOOR FRONT LEFT |
| SIDE DOOR MIDDLE LEFT | 10357926 | 50 | 1 | 373 | 10 35 800 4 | PANELLING |
| SIDE DOOR MIDDLE LEFT | 9945100 | 2 | 1 | 386 | 10 35 792 6 | SIDE DOOR MIDDLE LEFT |
| SIDE DOOR RIGHT | 10073072 | 2 | 1 | 388 | 10 07 307 3 | SIDE DOOR RIGHT |
| SIDE DOOR RIGHT | 10073072 | 2 | 1 | 389 | 10 37 283 9 | SIDE DOOR RIGHT |
| SIDE DOOR RIGHT | 10073073 | 60 | 1 | 373 | 10 35 800 4 | PANELLING |
| SIDE DOOR RIGHT | 10372839 | 60 | 1 | 373 | 10 35 800 4 | PANELLING |
| SIDE PLATE | 10331636 | 7 | 2 | 167 | 10 35 508 4 | OIL COOLER |
| SIDE WEARING PART | 11461299 | 9 | 2 | 635 | 11 10 283 4 | WEARING PARTS SET |
| SIGHT GLASS | 7368081 | 60 | 1 | 331 | 10 35 798 3 | HYDRAULIC TANK INSTALLAT |
| SIGN | 10022636 | 6 | 1 | 282 | 10 81 666 6 | EVAPORATOR |
| SIGN 954 | 10381258 | 70 | 1 | 468 | 10 49 805 9 | SIGNS |
| SIGN MOTORSTILLSTAND 120 | 9619934 | 52 | 1 | 464 | 10 35 804 3 | SIGNS |
| SIGN MOTORSTILLSTAND 120 | 9619934 | 52 | 1 | 467 | 10 49 805 9 | SIGNS |
| SIGN RUECKLAUF | 10022635 | 5 | 1 | 282 | 10 81 666 6 | EVAPORATOR |
| SIGN WAXOYL | 10015928 | 36 | 1 | 464 | 10 35 804 3 | SIGNS |
| SIGNS | 10358043 | 9900 | 1 | 86 | 10 35 798 2 | UPPERCARRIAGE |
| SIGNS | 10498059 | 9900 | 1 | 86 | 10 35 798 2 | UPPERCARRIAGE |
| SILICONE HOSE | 10082117 | 40 | 2 | 162 | 10 35 809 2 | ENGINE COOLING |
| SINGLE-END SPANNER SW32 | 11162174 | 48 | 1 | 458 | 10 84 856 2 | TOOL EQUIPMENT |
| SINGLE-END SPANNER SW36 | 11162175 | 50 | 1 | 458 | 10 84 856 2 | TOOL EQUIPMENT |
| SINGLE-END SPANNER SW41 | 11162177 | 51 | 1 | 458 | 10 84 856 2 | TOOL EQUIPMENT |
| SINGLE-END SPANNER SW46 | 11162178 | 52 | 1 | 458 | 10 84 856 2 | TOOL EQUIPMENT |
| SINGLE-END SPANNER SW50 | 11162179 | 54 | 1 | 458 | 10 84 856 2 | TOOL EQUIPMENT |
| SLEEVE | 10146030 | 2 | 1 | 510 | 10 12 038 4 | ZYLINDER HEAD |
| SLEEVE | 9245586 | 9 | 1 | 658 | 95 87 580 | HYDRAULIC CYLINDER |
| SLEEVE | 9327516 | 3 | 4 | 94 | 99 48 085 | DRIVER INSTALLATION |
| SLEEVE | 9349698 | 20 | 15 | 98 | 10 04 942 6 | MOTOR SUPPORT |
| SLEEVE | 9358590 | 7 | 1 | 489 | 90 79 862 | DIPSTICK W.TUBE |
| SLEEVE | 9822707 | 62 | 3 | 346 | 10 35 802 8 | CONTROL VALVE INSTALLAT |
| SLEEVE | 9837954 | 139 | 2 | 377 | 10 35 800 4 | PANELLING |
| SLEEVE | 9907856 | 9 | 1 | 657 | 94 02 019 4 | HYDRAULIC CYLINDER |
| SLEEVE | 9907856 | 9 | 1 | 659 | 95 96 399 | HYDRAULIC CYLINDER |

| Description | Item | Pos. | Quantity | Page | Assembly | Description |
|---|---|---|---|---|---|---|
| SLEEVE | 9926802 | 84 | 1 | 657 | 94 02 019 4 | HYDRAULIC CYLINDER |
| SLEEVE 12,4x16x87 | 7367211 | 170 | 8 | 295 | 10 35 801 2 | HYDR.PUMPS TO SPOOL VALV |
| SLEEVE 12,4x16x87 | 7367211 | 340 | 4 | 296 | 10 35 801 2 | HYDR.PUMPS TO SPOOL VALV |
| SLEEVE 12,4x16x87 | 7367211 | 47 | 8 | 301 | 10 35 801 5 | HYDR.ROTARY CONNEC.+SWI |
| SLEEVE 28X50X25 | 9563951 | 6 | 60 | 206 | 99 46 390 | FIXING PARTS SWING RING |
| SLEWING DRIVE SAT 375/250 | 90017900 | 10 | 1 | 183 | 99 46 389 | SLEWING GEAR |
| SLEWING GEAR | 9946389 | 11 | 1 | 181 | 90 18 423 | SWING GEAR INSTALLATION |
| SLEWING PLATFORM | 10498733 | 8200 | 1 | 85 | 10 35 798 2 | UPPERCARRIAGE |
| SLEWING PLATFORM | 10498802 | 8200 | 1 | 86 | 10 35 798 2 | UPPERCARRIAGE |
| SLIDE SEAT GUIDE | 11007072 | 60 | 1 | 279 | 94 02 247 7 | DRIVERS SEAT |
| SLIDER | 10031946 | 3 | 2 | 60 | 10 00 966 2 | GUIDE WHEEL D7G/B7B |
| SLIDING DISC 72X152X6 | 9269613 | 15 | 1 | 79 | 90 73 357 | REPAIR KIT (POWER TRAIN) |
| SLIDING DISC 72X152X6 | 9889809 | 15 | 1 | 199 | 90 74 416 | REPAIR KIT DRIVING MECHAN |
| SLIDING DISC 77X167X7,2 | 9888536 | 15 | 1 | 150 | 90 79 294 | REPAIR KIT DRIVING MECHAN |
| SLIDING DISC 77X167X7,2 | 9888536 | 11 | 1 | 151 | 90 79 347 | REPAIR SET SWIVEL YOKE LP |
| SLIDING PAD | 10216694 | 13 | 1 | 114 | 10 22 040 9 | DRIVING GEAR |
| SLIDING RAIL | 10498813 | 10 | 1 | 641 | 10 49 881 6 | SLIDING RAIL |
| SLIDING RAIL | 10498816 | 20 | 1 | 640 | 10 49 817 6 | PISTON ROD COVER BUCKET |
| SLIDING WINDOW | 7028831 | 420 | 1 | 415 | 70 28 769 | DRIVER'S CAB DOOR |
| SLOTTE SCREW DRIVER 10X | 11162133 | 114 | 1 | 459 | 10 84 856 2 | TOOL EQUIPMENT |
| SLOTTE SCREW DRIVER 5.5X | 11162126 | 110 | 1 | 459 | 10 84 856 2 | TOOL EQUIPMENT |
| SLOTTED NUT | 932719601 | 13 | 1 | 184 | 90 01 790 0 | SLEWING DRIVE SAT 375/250 |
| SMALL PARTS | 10493345 | 55 | 1 | 233 | 11 10 016 6 | SEAT TOP |
| SMALL PARTS | 10493397 | 56 | 1 | 234 | 11 10 016 6 | SEAT TOP |
| SNAP RING SB 110 | 7380954 | 71 | 1 | 110 | 90 77 872 | PUMP DISTRIBUTION GEAR |
| SNAP RING SB 23 | 7381534 | 24 | 1 | 196 | 90 72 990 | CONNECTING PLATE |
| SNAP SWITCH | 6001027 | 19 | 1 | 243 | 73 73 807 | SAFETY LEVER |
| SOCKET | 6001963 | 77 | 1 | 249 | 10 84 086 6 | ARM REST RIGHT |
| SOCKET JPT 3POL. | 9064882 | 98 | 1 | 586 | 90 76 534 | ROTATIONAL SPEED SENSOR |
| SOLENOID VALVE | 5615344 | 3 | 3 | 315 | 10 04 272 9 | OIL PILOT VALVE |
| SOUND PROOFING | 9927477 | 6 | 1 | 379 | 10 08 167 3 | ENGINE BONNET |
| SOUND PROOFING | 9927478 | 2 | 1 | 380 | 99 27 477 | SOUND PROOFING |
| SPACER BUSH | 10022783 | 5 | 6 | 285 | 10 02 211 7 | AIR CIRCULATION CASE |
| SPACER BUSH | 7028907 | 670 | 5 | 429 | 10 29 026 4 | ASSY. PARTS |
| SPACER PIECE | 9079064 | 30 | 1 | 586 | 90 76 534 | ROTATIONAL SPEED SENSOR |
| SPACER PIECE | 9361887 | 31 | 3 | 178 | 10 35 800 9 | ENGINE ADD-ON PARTS |
| SPACER SLEEVE ZINCING 9X | 94022280 | 44 | 4 | 279 | 94 02 247 7 | DRIVERS SEAT |
| SPARE ELEMENT OEL | 10032835 | 15 | 1 | 90 | 10 06 948 1 | SERVICE KITS 1500/2500h |
| SPARE ELEMENT OEL | 10032835 | 1 | 1 | 483 | 90 75 483 | CRANKCASE BREATHER |
| SPECIAL COMPOUND CRL/5x0, | 8503279 | 50 | 1 | 181 | 90 18 423 | SWING GEAR INSTALLATION |
| SPECIAL GREASE LIEBHERR | 10358947 | 30 | 1kg | 18 | 90 70 366 | GREASES |
| SPECIAL GREASE LIEBHERR/ | 861305508 | 1 | 1 | 30 | 10 35 894 7 | SPECIAL GREASE LIEBHERR |
| SPECIAL GREASE LIEBHERR/1 | 861304208 | 10 | 1 | 30 | 10 35 894 7 | SPECIAL GREASE LIEBHERR |
| SPECIAL GREASE LIEBHERR/2 | 10296820 | 2 | 1 | 30 | 10 35 894 7 | SPECIAL GREASE LIEBHERR |
| SPECIAL GREASE LIEBHERR/2 | 861303608 | 25 | 1 | 30 | 10 35 894 7 | SPECIAL GREASE LIEBHERR |
| SPECIAL GREASE LIEBHERR/5 | 861305608 | 50 | 1 | 30 | 10 35 894 7 | SPECIAL GREASE LIEBHERR |
| SPEED SENSOR | 6290073 | 9 | 1 | 196 | 90 72 990 | CONNECTING PLATE |
| SPEED SENSOR | 6290073 | 10 | 1 | 201 | 92 78 623 | RK SPEED SENSOR |
| SPHERICAL CAP | 6204368 | 4 | 1 | 258 | 10 04 831 3 | SWITCH INSTALLATION |
| SPHERICAL CAP | 6204368 | 4 | 1 | 263 | 10 05 507 1 | SWITCH INSTALLATION S84-1 |
| SPHERICAL KNOB | 7019167 | 110 | 1 | 413 | 70 28 808 | LOCK,LEFT HAND |
| SPHERICAL KNOB | 7019167 | 310 | 1 | 428 | 10 29 026 4 | ASSY. PARTS |
| SPHERICAL KNOB | 7028818 | 110 | 1 | 412 | 70 28 807 | LOCK,RIGHT HAND |
| SPHERICAL WASHER C 10,5X2 | 4980377 | 5 | 1 | 531 | 10 11 659 1 | INJECTION NOZZLE W.FASTEN |
| SPIGOT | 10081454 | 145 | 1 | 377 | 10 35 800 4 | PANELLING |
| SPINDLE M12 FE/ZN 12C | 9265265 | 13 | 1 | 662 | 92 70 390 | SEAL KIT DRV |
| SPLIT PIN | 4330015 | 71 | 2 | 312 | 10 35 809 3 | HYDR.INSTALLATION FAN DR |
| SPOOL | 10220661 | 3 | 1 | 132 | 10 22 063 5 | SHUTDOWN VALVE |
| SPOON BIT | 11102832 | 9 | 1 | 633 | 11 10 282 9 | BACKHOE BUCKET HD 1950m |
| SPOUT | 7020613 | 370 | 1 | 415 | 70 28 769 | DRIVER'S CAB DOOR |

| Description | Item | Pos. | Quantity | Page | Assembly | Description |
|---|---|---|---|---|---|---|
| SPOUT | 7028906 | 680 | 5 | 429 | 10 29 026 4 | ASSY. PARTS |
| SPOUT 5/16/20 | 7019171 | 110 | 10 | 420 | 10 48 808 7 | ELECTRICAL INSTALLATION |
| SPOUT 6/10/13 | 7019160 | 360 | 1 | 415 | 70 28 769 | DRIVER'S CAB DOOR |
| SPRAY NOZZLE | 7028867 | 650 | 1 | 426 | 10 29 036 1 | WIPER ARM |
| SPRAY-PASTE LIEBHERR | 10358950 | 40 | 1kg | 18 | 90 70 366 | GREASES |
| SPRAY-PASTE LIEBHERR/0,95 | 10330308 | 1 | 1 | 33 | 10 35 895 0 | SPRAY-PASTE LIEBHERR |
| SPRAY-PASTE LIEBHERR/10X | 10330310 | 2 | 1 | 33 | 10 35 895 0 | SPRAY-PASTE LIEBHERR |
| SPRAY-PASTE LIEBHERR/5kg | 10330311 | 5 | 1 | 33 | 10 35 895 0 | SPRAY-PASTE LIEBHERR |
| SPRING | 10220706 | 7 | 1 | 135 | 10 22 069 9 | FILTER |
| SPRING | 10355746 | 7 | 1 | 141 | 10 35 573 8 | DRIVING GEAR |
| SPRING | 7024629 | 25 | 1 | 321 | 10 28 046 1 | CONTROL SOLENOID VALVE |
| SPRING | 7028835 | 390 | 1 | 415 | 70 28 769 | DRIVER'S CAB DOOR |
| SPRING | 7028901 | 340 | 1 | 428 | 10 29 026 4 | ASSY. PARTS |
| SPRING | 721005816 | 67 | 2 | 51 | 10 49 883 7 | UNDERCARRIAGE CPL |
| SPRING CUP ABOVE | 9074480 | 7 | 4 | 504 | 10 14 155 4 | CYLINDER HEAD PRE-ASS. |
| SPRING CUP ABOVE | 9074480 | 7 | 4 | 508 | 10 12 036 4 | CYLINDER HEAD PRE-ASS. |
| SPRING LOADED MULTI-DISC | 502036101 | 70 | 1 | 69 | 94 43 840 | TRAVEL DRIVE FAT 450 P 004 |
| SPRING PLATE | 10493054 | 24 | 1 | 233 | 11 10 016 6 | SEAT TOP |
| SPRING PLATE | 7027784 | 21 | 1 | 233 | 11 10 016 6 | SEAT TOP |
| SPRING SUPPORT | 10216737 | 23 | 2 | 131 | 10 22 052 4 | ADJUSTING PISTON |
| SPRING SUPPORT | 10220546 | 7 | 2 | 131 | 10 22 052 4 | ADJUSTING PISTON |
| SPRING SUPPORT | 10220649 | 4 | 1 | 146 | 57 15 963 | PRESSURE LIMITING VALVE |
| SPRING SUPPORT | 11213474 | 8 | 2 | 132 | 10 22 063 5 | SHUTDOWN VALVE |
| SPRING SUPPORT | 7021980 | 70 | 2 | 75 | 56 16 688 | WHEEL BRAKE VALVE |
| SPRING SUPPORT | 7028170 | 4 | 2 | 147 | 70 28 075 | CONTROL UNIT |
| SPRING SUPPORT | 7028303 | 100 | 1 | 322 | 70 28 300 | PRESSURE LIMITING VALVE |
| SPRING SUPPORT | 721005916 | 68 | 2 | 51 | 10 49 883 7 | UNDERCARRIAGE CPL |
| SPRING SUPPORT | 9079261 | 15 | 2 | 271 | 90 79 258 | PILOT CONTROL UNIT VG7 2-3 |
| SPRING SUPPORT | 9079261 | 15 | 2 | 273 | 90 79 259 | PILOT CONTROL UNIT VG7 2-3 |
| SPRING SUPPORT | 9265395 | 15 | 4 | 688 | 10 11 856 1 | PILOT CONTROL UNIT VG6-8 |
| SPRING WASHER | 7025121 | 21 | 2 | 285 | 10 02 211 7 | AIR CIRCULATION CASE |
| SPRING WASHER 10 | 10411093 | 6 | 2 | 577 | 10 21 997 8 | STARTER |
| SPRING WASHER 6 | 10411092 | 4 | 1 | 577 | 10 21 997 8 | STARTER |
| SPUR WHEEL Z=38 M=3,5 | 9273118 | 14 | 1 | 108 | 90 77 872 | PUMP DISTRIBUTION GEAR |
| SPUR WHEEL Z=44 M=3,5 | 9273037 | 11 | 2 | 108 | 90 77 872 | PUMP DISTRIBUTION GEAR |
| STARTER | 10219977 | 1 | 1 | 577 | 10 21 997 8 | STARTER |
| STARTER | 10219978 | 1 | 1 | 575 | 10 11 553 9 | STARTER INSTALLATION |
| STARTER INSTALLATION | 10115539 | 450 | 1 | 475 | 10 11 668 5 | DIESEL ENGINE D936 L A6 240 |
| STARTING ELEMENT MX-F | 7027937 | 1 | 1 | 213 | 10 48 841 6 | DISTRIBUTION BLOCK MX-F 7/ |
| STARTING ELEMENT MX-F | 7027937 | 1 | 1 | 216 | 10 10 171 1 | DISTRIBUTION BLOCK MX-F 5/ |
| STARTING ELEMENT MX-F | 7027937 | 1 | 1 | 623 | 10 10 171 2 | DISTRIBUTION BLOCK MX-F 5/ |
| STARTING ELEMENT SXE-2 | 10013835 | 1 | 1 | 212 | 10 48 840 4 | DISTRIBUTION BLOCK SXE-2 |
| STATOR | 10011396 | 2 | 1 | 63 | 10 00 963 0 | ROTARY FEED THROUGH |
| STEERING CONSOLE | 10165766 | 10 | 1 | 239 | 10 05 736 2 | CONTROL BRACKET LEFT IN |
| STEP PLATE | 9946939 | 2 | 1 | 268 | 10 05 981 8 | FOOT PILOT VALVE INSTALL |
| STICK 2,35M | 10498234 | 10 | 1 | 7 | . | |
| STICK 2,35M | 10498235 | 10 | 1 | 627 | 10 49 823 4 | STICK 2,35M |
| STICK 2,35M | 10498236 | 2 | 1 | 628 | 10 49 823 5 | STICK 2,35M |
| STICKER | 10014681 | 1 | 1 | 681 | 10 28 689 7 | LUBRICATION PUMP |
| STICKER | 10016660 | 35 | 1 | 682 | 10 28 689 7 | LUBRICATION PUMP |
| STICKER | 10080119 | 9 | 1 | 463 | 10 35 804 3 | SIGNS |
| STICKER | 10080119 | 9 | 1 | 466 | 10 49 805 9 | SIGNS |
| STICKER | 10080120 | 10 | 1 | 463 | 10 35 804 3 | SIGNS |
| STICKER | 10080120 | 10 | 1 | 466 | 10 49 805 9 | SIGNS |
| STICKER | 10080121 | 11 | 1 | 463 | 10 35 804 3 | SIGNS |
| STICKER | 10080121 | 11 | 1 | 466 | 10 49 805 9 | SIGNS |
| STICKER | 10080122 | 12 | 1 | 463 | 10 35 804 3 | SIGNS |
| STICKER | 10080122 | 12 | 1 | 466 | 10 49 805 9 | SIGNS |
| STICKER | 10080123 | 14 | 1 | 463 | 10 35 804 3 | SIGNS |
| STICKER | 10080123 | 14 | 1 | 466 | 10 49 805 9 | SIGNS |

| Description | Item | Pos. | Quantity | Page | Assembly | Description |
|---|---|---|---|---|---|---|
| STICKER | 773150416 | 101 | 1 | 465 | 10 35 804 3 | SIGNS |
| STICKER | 9949751 | 16 | 1 | 463 | 10 35 804 3 | SIGNS |
| STICKER | 9949751 | 16 | 1 | 466 | 10 49 805 9 | SIGNS |
| STICKER | 9949756 | 13 | 1 | 463 | 10 35 804 3 | SIGNS |
| STICKER | 9949756 | 13 | 1 | 466 | 10 49 805 9 | SIGNS |
| STICKER 132mmX115mm | 11004408 | 30 | 1 | 464 | 10 35 804 3 | SIGNS |
| STICKER 132mmX115mm | 11004408 | 30 | 1 | 467 | 10 49 805 9 | SIGNS |
| STICKER LIEBHERR 1422mmX | 9612981 | 95 | 2 | 620 | 10 49 830 0 | GOOSENECK BOOM 6,70M |
| STICKER LIEBHERR 1872mmX | 9613673 | 71 | 1 | 468 | 10 49 805 9 | SIGNS |
| STICKER SOUND VOLUME LE | 9874359 | 60 | 1 | 465 | 10 35 804 3 | SIGNS |
| STICKER SOUND VOLUME LE | 9874359 | 60 | 1 | 468 | 10 49 805 9 | SIGNS |
| STOP PLUG | 10000286 | 820 | 2 | 430 | 10 29 026 4 | ASSY. PARTS |
| STOP PLUG | 10044354 | 210 | 2 | 427 | 10 29 026 4 | ASSY. PARTS |
| STOP PLUG | 10291063 | 590 | 1 | 423 | 10 29 036 3 | WIPPER MOTOR SET |
| STOP PLUG | 10292443 | 6 | 1 | 255 | 56 18 923 | CONTROL CONSOLE RIGHT |
| STOP PLUG | 7020615 | 700 | 6 | 429 | 10 29 026 4 | ASSY. PARTS |
| STOP PLUG | 7020616 | 720 | 1 | 429 | 10 29 026 4 | ASSY. PARTS |
| STOP PLUG | 7363408 | 50 | 1 | 452 | 90 18 419 | FUEL TANK ASSY. |
| STOP PLUG GPN 350 | 10220397 | 550 | 7 | 429 | 10 29 026 4 | ASSY. PARTS |
| STOPPER PLUG | 7371142 | 138 | 3 | 253 | 10 84 086 6 | ARM REST RIGHT |
| STOPPER PLUG M20X1,5 | 602514201 | 50 | 4 | 443 | 99 47 695 | ELECTRICAL SYSTEM E50 |
| STRAIGHT COUPLING G8 L | 10014575 | 140 | 1 | 218 | 90 64 786 | CONNECTING ELEMENT |
| STRAIGHT COUPLING G8 L | 10014575 | 140 | 3 | 220 | 10 01 461 1 | AUXILIARY BOX |
| STRIP | 9080911 | 4 | 1 | 554 | 90 78 314 | HEATING FLANGE ADD-ON |
| STUB SHAFT | 10220691 | 3 | 1 | 133 | 10 22 066 7 | GEAR PUMP |
| SUBPLATE | 9947713 | 3 | 1 | 442 | 99 47 695 | ELECTRICAL SYSTEM E50 |
| SUCTION PIPE | 9079128 | 5 | 1 | 485 | 90 79 487 | OIL SUMP |
| SUCTION PUMP PRE-ASS. | 9080277 | 1 | 1 | 524 | 90 80 278 | SUCTION PUMP WITH FASTEN |
| SUCTION PUMP WITH FASTEN | 9080278 | 141 | 1 | 471 | 10 11 668 5 | DIESEL ENGINE D936 L A6 240 |
| SUN WHEEL | 932720801 | 60 | 1 | 185 | 90 01 790 0 | SLEWING DRIVE SAT 375/250 |
| SUN WHEEL | 933333101 | 40 | 1 | 184 | 90 01 790 0 | SLEWING DRIVE SAT 375/250 |
| SUN WHEEL M=4,5 Z=20 | 9443857 | 30 | 1 | 68 | 94 43 840 | TRAVEL DRIVE FAT 450 P 004 |
| SUN WHEEL M=4,5 Z=24 | 9443846 | 20 | 1 | 68 | 94 43 840 | TRAVEL DRIVE FAT 450 P 004 |
| SUNHALDE SET | 7028811 | 230 | 1 | 411 | 70 28 759 | FRONT PANE TOP |
| SUNHALDE SET | 7028909 | 620 | 1 | 429 | 10 29 026 4 | ASSY. PARTS |
| SUPERTONE HORN | 6204593 | 32 | 1 | 451 | 90 18 419 | FUEL TANK ASSY. |
| SUPERTONE HORN | 6205045 | 8 | 1 | 438 | 10 04 824 6 | HEAD LIGHT + HORN INSTALL |
| SUPERTONE HORN | 6205045 | 8 | 1 | 439 | 11 10 278 6 | HEAD LIGHT + HORN INSTALL |
| SUPPLY LINE 7X1 0,50m DT04 | 10014689 | 6 | 1 | 678 | 10 01 468 0 | MOTOR HOUSING |
| SUPPLY VALVE | 5610135 | 54 | 6 | 366 | 10 03 245 2 | CONTROL BLOCK |
| SUPPLY VALVE | 5610135 | 100 | 1 | 653 | 10 00 297 1 | PIPE FRACTION SAFETY VALV |
| SUPPORT | 9683060 | 160 | 1 | 305 | 10 35 801 4 | HYDR.SUCT.+RETURN OIL HO |
| SUPPORT LEG | 10357928 | 165 | 1 | 378 | 10 35 800 4 | PANELLING |
| SUPPORT LEG | 10357928 | 168 | 1 | 378 | 10 35 800 4 | PANELLING |
| SUPPORT PLATE | 9073190 | 6 | 1 | 549 | 10 11 657 6 | CONNECTION PIECE |
| SUPPORT PLATE | 9274060 | 4 | 2 | 546 | 10 11 726 8 | CLAMP - ADD-ON UNIT |
| SUPPORT RING | 7360446 | 8 | 1 | 328 | 70 30 267 | SEAL KIT LIMIT VALVE |
| SUPPORTING RING | 10016716 | 5 | 1 | 53 | 90 15 155 | GREASE TENSIONER |
| SUPPORTING RING | 7011287 | 9 | 2 | 454 | 70 10 596 | SEAL KIT F.PUMP |
| SUPPORTING RING | 7380684 | 16 | 1 | 154 | 98 82 875 | SEAL KIT REGULATING VALVE |
| SUPPORTING RING | 7380883 | 21 | 1 | 83 | 92 66 232 | SEAL KIT SHUTTLE VALVE |
| SUPPORTING RING | 7380905 | 28 | 2 | 701 | 92 66 089 | SEALING SET VALVE |
| SUPPORTING RING | 7381250 | 18 | 1 | 126 | 92 71 653 | SEAL KIT ADJUSTMENT |
| SUPPORTING RING | 7381250 | 32 | 1 | 700 | 92 71 657 | SEAL KIT |
| SUPPORTING RING | 7381759 | 29 | 1 | 690 | 98 82 766 | ADJUSTMENT |
| SUPPORTING RING | 9275735 | 3 | 2 | 564 | 10 11 983 0 | THERMOSTAT HOUSING ASS |
| SUPPORTING RING | 9275735 | 3 | 2 | 565 | 90 75 678 | THERMOSTAT HOUSING ASS |
| SUPPORTING RING 10,7X1,45X | 7023928 | 8 | 1 | 325 | 50 09 391 | SEAL KIT DIRECTIONAL VALV |
| SUPPORTING RING 10,7X1,45X | 7023928 | 6 | 1 | 326 | 50 09 562 | SEAL KIT DIRECTIONAL VALV |
| SUPPORTING RING 10/13X1 | 7006889 | 324 | 1 | 328 | 70 30 267 | SEAL KIT LIMIT VALVE |

| Description | Item | Pos. | Quantity | Page | Assembly | Description |
|---|---|---|---|---|---|---|
| SUPPORTING RING 100,00/105, | 7003559 | 7 | 2 | 663 | 94 00 606 1 | PISTON 180MM |
| SUPPORTING RING 11,70X15,0 | 7381809 | 31 | 1 | 690 | 98 82 766 | ADJUSTMENT |
| SUPPORTING RING 11,70X15,0 | 7381809 | 30 | 1 | 699 | 98 82 771 | SEAL KIT |
| SUPPORTING RING 160,7/170X | 10097243 | 8 | 1 | 668 | 94 02 733 6 | PISTON ROD BEARING 125/17 |
| SUPPORTING RING 180X170, | 10097245 | 8 | 1 | 667 | 94 01 936 4 | PISTON ROD BEARING 125/18 |
| SUPPORTING RING 180X170, | 10097245 | 8 | 1 | 669 | 99 52 600 | PISTON ROD BEARING 110/18 |
| SUPPORTING RING 58,5/63,5X | 7410773 | 15 | 1 | 298 | 56 09 948 | OIL FILTER SET |
| SUPPORTING RING 78/83X1,5 | 7003533 | 7 | 2 | 664 | 95 87 597 | PISTON 180MM |
| SUPPORTING RING 88/93X1,5 | 7006870 | 7 | 2 | 665 | 95 90 264 | PISTON 170MM |
| SUPPORTING RING 9,4X1,45X | 7023927 | 7 | 1 | 325 | 50 09 391 | SEAL KIT DIRECTIONAL VALV |
| SUPPORTING RING 9,4X1,45X | 7023927 | 5 | 1 | 326 | 50 09 562 | SEAL KIT DIRECTIONAL VALV |
| SUPPORTING RING 9,8X12,7X | 7023926 | 6 | 1 | 325 | 50 09 391 | SEAL KIT DIRECTIONAL VALV |
| SUPPORTING WASHER | 10101460 | 11 | 1 | 144 | 10 41 302 4 | DRIVING GEAR |
| SUPPORTING WASHER | 10287892 | 11 | 1 | 141 | 10 35 573 8 | DRIVING GEAR |
| SUPPORTING WASHER 28X4 | 422001001 | 5 | 1 | 511 | 90 74 505 | ROCKER ARM BRACKET PRE |
| SUPPORTING WASHER S 17X5 | 7010008 | 4 | 1 | 574 | 10 11 646 3 | GENERATOR, PRE-ASSEMBLE |
| SUPPORTING WASHER S 4,9X | 7380137 | 41 | 2 | 271 | 90 79 258 | PILOT CONTROL UNIT VG7 2-3 |
| SUPPORTING WASHER S 4,9X | 7380137 | 41 | 2 | 273 | 90 79 259 | PILOT CONTROL UNIT VG7 2-3 |
| SUPPORTING WASHER S 4,9X | 7380138 | 42 | 2 | 271 | 90 79 258 | PILOT CONTROL UNIT VG7 2-3 |
| SUPPORTING WASHER S 4,9X | 7380138 | 42 | 2 | 273 | 90 79 259 | PILOT CONTROL UNIT VG7 2-3 |
| SUPPORTING WASHER S 4,9X | 7380138 | 50 | 8 | 688 | 10 11 856 1 | PILOT CONTROL UNIT VG6-8 |
| SUPPORTING WASHER S 50X7 | 7380273 | 10 | 1 | 698 | 98 85 923 | WASHER SET |
| SUPPORTING WASHER S 50X7 | 7380166 | 10 | 1 | 698 | 98 85 923 | WASHER SET |
| SUPPORTING WASHER S 50X7 | 7380272 | 10 | 1 | 698 | 98 85 923 | WASHER SET |
| SUPPORTING WASHER S 50X7 | 7380271 | 10 | 1 | 698 | 98 85 923 | WASHER SET |
| SUPPORTING WASHER S 55,3 | 7380974 | 10 | 1 | 155 | 98 85 932 | KIT DISTANCE RINGS |
| SUPPORTING WASHER S 55,3 | 7380975 | 20 | 1 | 155 | 98 85 932 | KIT DISTANCE RINGS |
| SUPPORTING WASHER S 55,3 | 7380976 | 30 | 1 | 155 | 98 85 932 | KIT DISTANCE RINGS |
| SUSPENSION | 11100167 | 20 | 1 | 232 | 11 00 085 6 | DRIVER'S SEAT WITH PNEUM. |
| SUSPENSION | 11659214 | 7 | 1 | 235 | 11 10 016 7 | SUSPENSION |
| SWING GEAR INSTALLATION | 9018423 | 700 | 1 | 85 | 10 35 798 2 | UPPERCARRIAGE |
| SWING ROCKER | 10355728 | 7 | 1 | 139 | 10 35 572 4 | HYDRAULIC PUMP |
| SWING ROCKER | 10413016 | 7 | 1 | 121 | 10 41 301 3 | HYDRAULIC PUMP |
| SWING ROCKER | 9880284 | 16 | 1 | 71 | 90 73 354 | DRIVING GEAR |
| SWITCH | 10493348 | 54 | 1 | 233 | 11 10 016 6 | SEAT TOP |
| SWITCH | 7028856 | 210 | 1 | 420 | 10 48 808 7 | ELECTRICAL INSTALLATION |
| SWITCH INSTALLATION | 10048313 | 50 | 1 | 680 | 10 49 822 9 | FULL AUTOMAT.CENTRAL.LU |
| SWITCH INSTALLATION S84-1 | 10055071 | 140 | 1 | 253 | 10 84 086 6 | ARM REST RIGHT |
| SWITCH LEVER | 10024214 | 2 | 1 | 445 | 10 01 211 9 | BATTERY MAIN SWITCH |
| SWITCH MODULE | 7371141 | 135 | 1 | 253 | 10 84 086 6 | ARM REST RIGHT |
| SWITCH R-R | 9968570 | 70 | 1 | 262 | 99 68 611 | LH-JOYSTICK RIGHT |
| SWITCH T-0-T | 9968546 | 70 | 1 | 247 | 99 68 625 | LH-JOYSTICK LEFT |
| SYMBOL LUBRICATOR Ø19m | 9911745 | 7 | 1 | 258 | 10 04 831 3 | SWITCH INSTALLATION |
| SYMBOL LUBRICATOR Ø19m | 9911745 | 7 | 1 | 263 | 10 05 507 1 | SWITCH INSTALLATION S84-1 |
| SYNTHETIC HOSE | 7363060 | 78 | 2m | 163 | 10 35 809 2 | ENGINE COOLING |
| TABLE ORDER | 9278153 | 500 | 1 | 72 | 98 82 833 | CONTROL VALVE NG 140 140 |
| TABLE ORDER | 9278153 | 500 | 1 | 685 | 10 13 462 0 | MULTIPLE CIRCUIT AGGREG |
| TABLE ORDER | 9278153 | 500 | 1 | 687 | 10 13 268 6 | HYDRAULIC VARIABLE DISPLA |
| TABLE ORDER | 9278153 | 500 | 1 | 688 | 10 11 856 1 | PILOT CONTROL UNIT VG6-8 |
| TABLE ORDER | 9278153 | 500 | 1 | 689 | 90 73 355 | CONNECTING PLATE FMV 140 |
| TABLE ORDER | 9278153 | 500 | 1 | 690 | 98 82 766 | ADJUSTMENT |
| TABLE ORDER | 9278153 | 500 | 1 | 699 | 98 82 771 | SEAL KIT |
| TALLOW-DROP SCREW 2,5X12 | 10015712 | 10 | 2 | 245 | 10 46 991 7 | PUSH-BUTTON COVER LEFT |
| TALLOW-DROP SCREW 2,5X12 | 10015712 | 10 | 2 | 260 | 10 46 991 8 | PUSH-BUTTON COVER RIGHT |
| TAPER | 7021984 | 200 | 2 | 75 | 56 16 688 | WHEEL BRAKE VALVE |
| TAPER | 7021984 | 230 | 2 | 75 | 56 16 688 | WHEEL BRAKE VALVE |
| TAPER | 7367730 | 2 | 1 | 357 | 93 70 592 | NON-RETURN VALVE |
| TAPER | 7371359 | 4 | 1 | 369 | 56 10 135 | SUPPLY VALVE |
| TAPER COLLET | 4900027 | 54 | 1 | 304 | 10 35 801 4 | HYDR.SUCT.+RETURN OIL HO |
| TAPER COLLET | 4900027 | 197 | 1 | 306 | 10 35 801 4 | HYDR.SUCT.+RETURN OIL HO |

| Description | Item | Pos. | Quantity | Page | Assembly | Description |
|---|---|---|---|---|---|---|
| TAPER COLLET | 4900038 | 60 | 3 | 313 | 10 35 801 7 | HYDR.INSTAL.CONTROL TUBE |
| TAPER COLLET | 4900038 | 85 | 3 | 313 | 10 35 801 7 | HYDR.INSTAL.CONTROL TUBE |
| TAPER COLLET VKA 12L/S | 477700514 | 73 | 1 | 620 | 10 49 830 0 | GOOSENECK BOOM 6,70M |
| TAPER COLLET VKA 15L | 4772024 | 60 | 1 | 304 | 10 35 801 4 | HYDR.SUCT.+RETURN OIL HO |
| TAPER COLLET VKA 22L | 4772028 | 70 | 1 | 620 | 10 49 830 0 | GOOSENECK BOOM 6,70M |
| TAPER COLLET VKA 35 | 4900704 | 6 | 1 | 105 | 10 06 658 8 | INTAKE NOZZLE |
| TAPER COLLET VKA 8 | 4900305 | 20 | 3 | 624 | 10 38 408 5 | CENTRAL LUBRICATING SYS |
| TAPER COLLET VKA 8 | 4900305 | 33 | 2 | 632 | 10 38 484 8 | CENTRAL LUBRICATING SYS |
| TAPERED ROLLER BEARING | 10030592 | 3 | 1 | 184 | 90 01 790 0 | SLEWING DRIVE SAT 375/250 |
| TAPERED ROLLER BEARING | 10355730 | 15 | 1 | 139 | 10 35 572 4 | HYDRAULIC PUMP |
| TAPERED ROLLER BEARING | 10355731 | 16 | 1 | 139 | 10 35 572 4 | HYDRAULIC PUMP |
| TAPERED ROLLER BEARING | 7408797 | 15 | 1 | 121 | 10 41 301 3 | HYDRAULIC PUMP |
| TAPERED ROLLER BEARING | 7408798 | 16 | 1 | 121 | 10 41 301 3 | HYDRAULIC PUMP |
| TAPPET | 9265409 | 1 | 1 | 278 | 92 65 665 | REPAIR SET PLUNGER |
| TAPPET | 9885351 | 1 | 1 | 266 | 90 74 482 | REPAIR SET PLUNGER |
| TAPPET | 9885351 | 13 | 2 | 271 | 90 79 258 | PILOT CONTROL UNIT VG7 2-3 |
| TAPPET | 9885351 | 13 | 2 | 273 | 90 79 259 | PILOT CONTROL UNIT VG7 2-3 |
| TAPPET PUSH ROD | 9079131 | 3 | 2 | 518 | 90 79 870 | CONTROL PARTS |
| TEMPERATURE PROBE CPL. | 9076530 | 2 | 1 | 582 | 90 76 551 | ENGINE CONTROL SENSORS |
| TEMPERATURE SENSOR | 10022067 | 11 | 1 | 286 | 11 00 359 4 | HOUSING |
| TEMPERATURE SENSOR | 10022077 | 12 | 1 | 286 | 11 00 359 4 | HOUSING |
| TEMPERATURE SENSOR | 691180608 | 1 | 1 | 584 | 90 76 530 | TEMPERATURE PROBE CPL. |
| TEMPERATURE SWITCH | 6204186 | 75 | 1 | 171 | 10 49 858 1 | MOTOR-ELEKTRIK |
| TEMPERATURE TEST | 6290130 | 1 | 2 | 582 | 90 76 551 | ENGINE CONTROL SENSORS |
| TENSION PIN 12 | 7381641 | 27 | 1 | 71 | 90 73 354 | DRIVING GEAR |
| TENSIONING INSTRUCTION | 10123559 | 602 | 1 | 693 | 92 67 554 | PRESSURE LIMITING VALVE |
| TERMINAL DISK 48,6/71,6X12, | 7373031 | 40 | 4 | 55 | 56 17 975 | CHAIN END LINK |
| TERMINAL RING | 9442308 | 60 | 1 | 69 | 94 43 840 | TRAVEL DRIVE FAT 450 P 004 |
| THERMOSTAT | 10022048 | 2 | 1 | 286 | 11 00 359 4 | HOUSING |
| THERMOSTAT | 7380833 | 2 | 2 | 564 | 10 11 983 0 | THERMOSTAT HOUSING ASS |
| THERMOSTAT | 7380833 | 2 | 2 | 565 | 90 75 678 | THERMOSTAT HOUSING ASS |
| THERMOSTAT HOUSING ASS | 10119830 | 380 | 1 | 473 | 10 11 668 5 | DIESEL ENGINE D936 L A6 240 |
| THERMOSTAT HOUSING ASS | 9075678 | 380 | 1 | 473 | 10 11 668 5 | DIESEL ENGINE D936 L A6 240 |
| THERMOSTAT HOUSING PRE | 10119984 | 1 | 1 | 564 | 10 11 983 0 | THERMOSTAT HOUSING ASS |
| THERMOSTAT HOUSING PRE | 10119984 | 1 | 1 | 565 | 90 75 678 | THERMOSTAT HOUSING ASS |
| THREADED BAR | 7028817 | 100 | 1 | 412 | 70 28 807 | LOCK,RIGHT HAND |
| THREADED BAR | 7028817 | 100 | 1 | 413 | 70 28 808 | LOCK,LEFT HAND |
| THREADED BAR | 9006346 | 46 | 4 | 444 | 11 10 266 2 | BATTERY INSTALLATION |
| THREADED BUSH | 9079078 | 9 | 1 | 510 | 10 12 038 4 | ZYLINDER HEAD |
| THREADED INSERT | 10044343 | 490 | 3 | 421 | 10 48 808 7 | ELECTRICAL INSTALLATION |
| THREADED INSERT | 10044359 | 430 | 1 | 433 | 10 48 808 8 | INTERNAL LINING |
| THREADED INSERT | 7028765 | 90 | 3 | 406 | 10 47 616 9 | OPERATOR'S CAB |
| THREADED INSERT | 7028765 | 400 | 2 | 421 | 10 48 808 7 | ELECTRICAL INSTALLATION |
| THREADED INSERT M6 | 7020610 | 220 | 2 | 411 | 70 28 759 | FRONT PANE TOP |
| THREADED INSERT M6 | 7020610 | 340 | 2 | 433 | 10 48 808 8 | INTERNAL LINING |
| THREADED PLATE | 9010820 | 47 | 1 | 312 | 10 35 809 3 | HYDR.INSTALLATION FAN DR |
| THREE PHASE CURRENT GE | 6290070 | 1 | 1 | 574 | 10 11 646 3 | GENERATOR, PRE-ASSEMBLE |
| THROTTLE SCREW | 7615603 | 14 | 2 | 147 | 70 28 075 | CONTROL UNIT |
| THROTTLE SCREW | 7615604 | 16 | 2 | 147 | 70 28 075 | CONTROL UNIT |
| THRUST BEARING / FIXED BE | 11066532 | 38 | 1 | 236 | 11 10 016 7 | SUSPENSION |
| THRUST WASHER | 7017685 | 3 | 2 | 63 | 10 00 963 0 | ROTARY FEED THROUGH |
| THRUST WASHER | 7017685 | 3 | 2 | 65 | 10 00 967 6 | SEALINGSET ROTARY TRANS |
| TIE WRAP | 7001877 | 26 | 4 | 84 | 10 07 713 5 | HYDR.INSTALLATION UNDER |
| TIE WRAP | 7001877 | 145 | 10 | 230 | 10 49 880 9 | DRIVER STAND BASE SECTIO |
| TIE WRAP | 7001877 | 96 | 10 | 251 | 10 84 086 6 | ARM REST RIGHT |
| TIE WRAP | 7001877 | 33 | 2 | 280 | 10 40 689 8 | AIR CONDITIONING UNIT |
| TIE WRAP | 7001877 | 70 | 75 | 435 | 10 35 814 1 | ELECTRICAL SYSTEM |
| TIE WRAP | 7028864 | 740 | 8 | 421 | 10 48 808 7 | ELECTRICAL INSTALLATION |
| TIGHT FIT BEARING COVER | 9073728 | 3 | 1 | 478 | 10 11 577 8 | CRANKCASE |
| TIGHT FIT SLEEVE 15,5X19,5 | 9177636 | 6 | 14 | 478 | 10 11 577 8 | CRANKCASE |

| Description | Item | Pos. | Quantity | Page | Assembly | Description |
|---|---|---|---|---|---|---|
| TIGHT FIT SLEEVE 16X20X20 | 10134348 | 4 | 2 | 484 | 90 79 480 | POWER UNIT SUPPORT ATT |
| TIGHT FIT SLEEVE 16X20X20 | 10134348 | 3 | 2 | 581 | 10 11 557 7 | FLYWHEEL HOUSING MOUNT |
| TIGHT FIT SLEEVE 16X20X20 | 9074798 | 9 | 12 | 477 | 10 11 577 9 | CRANKCASE CPL. |
| TIME RELAY | 6001418 | 11 | 1 | 652 | 10 35 860 1 | TRAVEL ALARM |
| TOOL BOX | 10066919 | 2 | 1 | 390 | 10 06 692 0 | TOOL BOX |
| TOOL BOX | 10066920 | 80 | 1 | 375 | 10 35 800 4 | PANELLING |
| TOOL BOX | 10379371 | 2 | 1 | 392 | 10 37 938 6 | TOOL BOX |
| TOOL BOX | 10379386 | 80 | 1 | 375 | 10 35 800 4 | PANELLING |
| TOOL BOX | 7016002 | 10 | 1 | 458 | 10 84 856 2 | TOOL EQUIPMENT |
| TOOL EQUIPMENT | 10084286 | 9620 | 1 | 86 | 10 35 798 2 | UPPERCARRIAGE |
| TOOL EQUIPMENT | 10848562 | 5 | 1 | 457 | 10 08 428 6 | TOOL EQUIPMENT |
| TOOTH | 10451146 | 14 | 10 | 7 | . | |
| TOOTH LOCK WASHER | 10113833 | 12 | 1 | 390 | 10 06 692 0 | TOOL BOX |
| TOOTH LOCK WASHER | 7028855 | 170 | 1 | 420 | 10 48 808 7 | ELECTRICAL INSTALLATION |
| TOOTH LOCK WASHER | 7363743 | 17 | 2 | 382 | 99 29 189 | BONNET RIGHT |
| TOOTH LOCK WASHER | 7363743 | 17 | 2 | 384 | 10 35 817 2 | SIDE DOOR BACK LEFT |
| TOOTH LOCK WASHER | 7363743 | 17 | 2 | 386 | 10 35 792 6 | SIDE DOOR MIDDLE LEFT |
| TOOTH LOCK WASHER | 7363743 | 11 | 1 | 462 | 10 37 283 6 | LID |
| TOOTH LOCK WASHER A 6,4 | 4002259 | 9 | 2 | 213 | 10 48 841 6 | DISTRIBUTION BLOCK MX-F 7/ |
| TOOTH LOCK WASHER A 6,4 | 4002259 | 9 | 2 | 216 | 10 10 171 1 | DISTRIBUTION BLOCK MX-F 5/ |
| TOOTH LOCK WASHER A 6,4 | 4002259 | 9 | 2 | 623 | 10 10 171 2 | DISTRIBUTION BLOCK MX-F 5/ |
| TORSIONAL VIBRATION DAM | 5610755 | 5 | 1 | 341 | 10 84 584 9 | PUMPS + COUPLING INSTALL |
| TOUCH CONTACT TRANSMIT | 6001593 | 3 | 1 | 263 | 10 05 507 1 | SWITCH INSTALLATION S84-1 |
| TRACK GUIDES FOUR TIMES | 11102313 | 6 | 1 | 7 | . | |
| TRACK GUIDES FOUR TIMES | 11102313 | 35 | 1 | 49 | 10 49 883 7 | UNDERCARRIAGE CPL |
| TRACK GUIDES FOUR TIMES | 11102313 | 36 | 1 | 49 | 10 49 883 7 | UNDERCARRIAGE CPL |
| TRACK GUIDES FOUR TIMES | 11102313 | 37 | 1 | 50 | 10 49 883 7 | UNDERCARRIAGE CPL |
| TRACK GUIDES FOUR TIMES | 11102314 | 10 | 1 | 673 | 11 10 231 3 | TRACK GUIDES FOUR TIMES |
| TRACK PAD 500mm | 10470093 | 2 | 52 | 52 | 10 47 009 2 | CRAWLER CHAIN 500mm |
| TRACK PAD SCREW M22X1,5 | 11214366 | 3 | 208 | 52 | 10 47 009 2 | CRAWLER CHAIN 500mm |
| TRACK ROLLER D7 | 10651680 | 45 | 20 | 51 | 10 49 883 7 | UNDERCARRIAGE CPL |
| TRACK ROLLER D7 | 11600107 | 45 | 20 | 51 | 10 49 883 7 | UNDERCARRIAGE CPL |
| TRACK ROLLER HOUSING | 11003783 | 1 | 1 | 58 | 10 65 168 0 | TRACK ROLLER D7 |
| TRACK ROLLER HOUSING | 11003783 | 1 | 1 | 59 | 11 60 010 7 | TRACK ROLLER D7 |
| TRANSPARENT CONTAINER | 10016659 | 35 | 1 | 682 | 10 28 689 7 | LUBRICATION PUMP |
| TRANSPARENT CONTAINER W | 10222821 | 2 | 1 | 539 | 10 22 281 9 | FUEL PRE-FILTER CPL. |
| TRANSPORT DEVICE ATTACH | 9079468 | 481 | 1 | 475 | 10 11 668 5 | DIESEL ENGINE D936 L A6 240 |
| TRANSPORT DEVICE ATTACH | 9079823 | 480 | 1 | 475 | 10 11 668 5 | DIESEL ENGINE D936 L A6 240 |
| TRANSPORTER CONSOLE | 10141949 | 1 | 1 | 579 | 90 79 468 | TRANSPORT DEVICE ATTACH |
| TRANSPORTER CONSOLE | 9078849 | 1 | 1 | 580 | 90 79 823 | TRANSPORT DEVICE ATTACH |
| TRAVEL ALARM | 10358601 | 2 | 1 | 651 | 10 35 860 2 | TRAVEL ALARM |
| TRAVEL ALARM | 10358602 | 5 | 1 | 7 | . | |
| TRAVEL DRIVE | 10077137 | 13 | 1 | 49 | 10 49 883 7 | UNDERCARRIAGE CPL |
| TRAVEL DRIVE FAT 450 P 004 | 9443840 | 5 | 2 | 67 | 10 07 713 7 | TRAVEL DRIVE |
| TRAVEL WHEEL | 9275309 | 11 | 1 | 692 | 98 88 308 | CONNECTING PLATE |
| TROPICAL EXECUTION | 10089014 | 4 | 1 | 7 | . | |
| TUBE | 10056233 | 340 | 1 | 350 | 10 35 802 8 | CONTROL VALVE INSTALLAT |
| TUBE | 10056235 | 335 | 1 | 350 | 10 35 802 8 | CONTROL VALVE INSTALLAT |
| TUBE | 10056237 | 330 | 1 | 350 | 10 35 802 8 | CONTROL VALVE INSTALLAT |
| TUBE | 10842035 | 330 | 1 | 350 | 10 35 802 8 | CONTROL VALVE INSTALLAT |
| TUBE | 10842046 | 335 | 1 | 350 | 10 35 802 8 | CONTROL VALVE INSTALLAT |
| TUBE | 10842056 | 340 | 1 | 350 | 10 35 802 8 | CONTROL VALVE INSTALLAT |
| TUBE | 774373708 | 75 | 1m | 217 | 90 64 786 | CONNECTING ELEMENT |
| TUBE | 9078983 | 10 | 1 | 598 | 90 78 961 | POWER TAKE-OFF ADD-ON |
| TUBE | 9079845 | 5 | 1 | 486 | 90 79 483 | OIL SUMP |
| TUBE | 9274099 | 26 | 1 | 108 | 90 77 872 | PUMP DISTRIBUTION GEAR |
| TUBE | 9753989 | 15 | 4 | 379 | 10 08 167 3 | ENGINE BONNET |
| TUBE | 9949217 | 11 | 1 | 308 | 10 35 801 3 | HYDR.AND GEAR OIL COOLIN |
| TUBE | 9949218 | 10 | 1 | 308 | 10 35 801 3 | HYDR.AND GEAR OIL COOLIN |
| TUBING COIL | 774383508 | 65 | 1m | 217 | 90 64 786 | CONNECTING ELEMENT |

| Description | Item | Pos. | Quantity | Page | Assembly | Description |
|---|---|---|---|---|---|---|
| TUBING COIL | 774383508 | 165 | 1m | 218 | 90 64 786 | CONNECTING ELEMENT |
| TUMBLER WHEEL D7E | 9373095 | 2 | 2 | 67 | 10 07 713 7 | TRAVEL DRIVE |
| TURBOCHARGER | 10123120 | 1 | 1 | 573 | 90 80 735 | EXHAUST TC MOUNTING |
| TURCON GLYD RING 170X14 | 7000293 | 4 | 1 | 665 | 95 90 264 | PISTON 170MM |
| TURCON GLYD RING 180X15 | 7001629 | 4 | 1 | 663 | 94 00 606 1 | PISTON 180MM |
| TURCON GLYD RING 180X15 | 7001629 | 4 | 1 | 664 | 95 87 597 | PISTON 180MM |
| TURCON GLYD RING 180X15 | 7001629 | 4 | 1 | 666 | 90 62 632 | SEALING SET FOR PISTON 18 |
| TURCON GLYD RING 24X16,5X | 7381490 | 24 | 2 | 690 | 98 82 766 | ADJUSTMENT |
| TURCON GLYD RING 24X16,5X | 7381490 | 24 | 1 | 699 | 98 82 771 | SEAL KIT |
| TURCON GLYD RING 35X27,5X | 7381029 | 24 | 1 | 125 | 90 79 811 | RK PISTON |
| TURCON GLYD RING 35X27,5X | 7381029 | 24 | 1 | 126 | 92 71 653 | SEAL KIT ADJUSTMENT |
| TURCON GLYD RING 52X41X4, | 7380982 | 25 | 1 | 125 | 90 79 811 | RK PISTON |
| TURCON GLYD RING 52X41X4, | 7380982 | 25 | 1 | 126 | 92 71 653 | SEAL KIT ADJUSTMENT |
| TURCON GLYD RING 77,7X67X | 10220529 | 31 | 2 | 115 | 10 22 041 0 | ADJUSTMENT |
| TURCON-STEPSEAL K 110,0X | 7017711 | 10 | 1 | 669 | 99 52 600 | PISTON ROD BEARING 110/18 |
| TURCON-STEPSEAL K 125,0X | 7017712 | 10 | 1 | 667 | 94 01 936 4 | PISTON ROD BEARING 125/18 |
| TURCON-STEPSEAL K 125,0X | 7017712 | 11 | 1 | 667 | 94 01 936 4 | PISTON ROD BEARING 125/18 |
| TURCON-STEPSEAL K 125,0X | 7017712 | 10 | 1 | 668 | 94 02 733 6 | PISTON ROD BEARING 125/17 |
| TWIST HANDLE | 10331680 | 29 | 2 | 165 | 10 45 475 2 | COMBINATED RADIATOR |
| TWIST HANDLE | 7370096 | 42 | 1 | 249 | 10 84 086 6 | ARM REST RIGHT |
| TYPE PLATE LBR | 10498223 | 4 | 1 | 466 | 10 49 805 9 | SIGNS |
| TYPEPLATE LFR (PORT) | 934430516 | 4 | 1 | 463 | 10 35 804 3 | SIGNS |
| TYPEPLATE LFR 150mmX100m | 10405887 | 6 | 1 | 466 | 10 49 805 9 | SIGNS |
| UNDERCARRIAGE | 10358490 | 2 | 1 | 49 | 10 49 883 7 | UNDERCARRIAGE CPL |
| UNDERCARRIAGE CPL | 10498837 | 200 | 1 | 9 | 10 49 883 6 | BASIC MACHINE |
| UNION NUT | 10013550 | 151 | 1 | 218 | 90 64 786 | CONNECTING ELEMENT |
| UNION NUT | 10013550 | 151 | 10 | 220 | 10 01 461 1 | AUXILIARY BOX |
| UNIT RECEIVER-DRYER | 10292660 | 5 | 1 | 448 | 10 04 961 6 | DRIER INSTALLATION |
| UNIVERSAL GREASE LIEBHER | 10358949 | 10 | 1kg | 18 | 90 70 366 | GREASES |
| UNIVERSAL GREASE LIEBHER | 10296816 | 1 | 1 | 32 | 10 35 894 9 | UNIVERSAL GREASE LIEBHER |
| UNIVERSAL GREASE LIEBHE | 10296813 | 10 | 1 | 32 | 10 35 894 9 | UNIVERSAL GREASE LIEBHER |
| UNIVERSAL GREASE LIEBHER | 10296810 | 180 | 1 | 32 | 10 35 894 9 | UNIVERSAL GREASE LIEBHER |
| UNIVERSAL GREASE LIEBHE | 10296815 | 2 | 1 | 32 | 10 35 894 9 | UNIVERSAL GREASE LIEBHER |
| UNIVERSAL GREASE LIEBHE | 10296812 | 25 | 1 | 32 | 10 35 894 9 | UNIVERSAL GREASE LIEBHER |
| UNIVERSAL GREASE LIEBHE | 10296811 | 50 | 1 | 32 | 10 35 894 9 | UNIVERSAL GREASE LIEBHER |
| UNIVERSAL PIVOT | 9265396 | 16 | 1 | 688 | 10 11 856 1 | PILOT CONTROL UNIT VG6-8 |
| UPPERCARRIAGE | 10357982 | 100 | 1 | 9 | 10 49 883 6 | BASIC MACHINE |
| UREA SOLUTION | 11485620 | 10 | 1 | 41 | 94 06 645 8 | UREA SOLUTION |
| UREA SOLUTION | 11485621 | 210 | 1 | 41 | 94 06 645 8 | UREA SOLUTION |
| UREA SOLUTION | 11485622 | 1000 | 1 | 41 | 94 06 645 8 | UREA SOLUTION |
| UREA SOLUTION | 94066458 | 110 | 1l | 10 | 90 66 460 | |
| USIT RING | 5209400 | 70 | 2 | 51 | 10 49 883 7 | UNDERCARRIAGE CPL |
| USIT RING 24,7X31X2 | 7013519 | 5 | 1 | 328 | 70 30 267 | SEAL KIT LIMIT VALVE |
| V-RING | 10008428 | 10 | 1 | 141 | 10 35 573 8 | DRIVING GEAR |
| V-RING 381,5 | 10101459 | 10 | 1 | 144 | 10 41 302 4 | DRIVING GEAR |
| V-RING JV 15 | 7381690 | 27 | 2 | 690 | 98 82 766 | ADJUSTMENT |
| V-SEALING | 7017682 | 12 | 2 | 63 | 10 00 963 0 | ROTARY FEED THROUGH |
| V-SEALING | 7017682 | 12 | 2 | 65 | 10 00 967 6 | SEALINGSET ROTARY TRANS |
| VACUUM INDICATOR | 5106421 | 90 | 1 | 102 | 99 37 298 | AIR FILTER INSTALLATION |
| VALVE | 10280279 | 50 | 1 | 297 | 99 37 312 | OIL PILOT VALVE INSTALLATIO |
| VALVE | 10289629 | 57 | 1 | 366 | 10 03 245 2 | CONTROL BLOCK |
| VALVE | 5611648 | 350 | 1 | 75 | 56 16 688 | WHEEL BRAKE VALVE |
| VALVE | 7025110 | 24 | 1 | 287 | 11 00 359 4 | HOUSING |
| VALVE BRIDGE | 9074503 | 1 | 2 | 509 | 90 79 861 | ROCKER ARM BRACKET CPL. |
| VALVE BUSH | 10220660 | 2 | 1 | 132 | 10 22 063 5 | SHUTDOWN VALVE |
| VALVE BUSH | 7028168 | 2 | 2 | 147 | 70 28 075 | CONTROL UNIT |
| VALVE BUSH | 7414522 | 50 | 2 | 75 | 56 16 688 | WHEEL BRAKE VALVE |
| VALVE COLLET MK9 | 10004331 | 8 | 8 | 504 | 10 14 155 4 | CYLINDER HEAD PRE-ASS. |
| VALVE COLLET MK9 | 10004331 | 8 | 8 | 508 | 10 12 036 4 | CYLINDER HEAD PRE-ASS. |
| VALVE COVER | 10331664 | 1 | 1 | 164 | 10 45 475 2 | COMBINATED RADIATOR |

| Description | Item | Pos. | Quantity | Page | Assembly | Description |
|---|---|---|---|---|---|---|
| VALVE COVER | 9270599 | 11 | 1 | 78 | 92 70 598 | NON-RETURN VALVE |
| VALVE GUIDE | 10009606 | 14 | 4 | 212 | 10 48 840 4 | DISTRIBUTION BLOCK SXE-2 |
| VALVE HOUSING | 7028173 | 7 | 1 | 147 | 70 28 075 | CONTROL UNIT |
| VALVE HOUSING | 7028175 | 9 | 1 | 147 | 70 28 075 | CONTROL UNIT |
| VALVE INSERT | 10008406 | 57 | 1 | 121 | 10 41 301 3 | HYDRAULIC PUMP |
| VALVE M 14X1,5 | 9078233 | 13 | 1 | 477 | 10 11 577 9 | CRANKCASE CPL. |
| VALVE M14X1,5 | 10011832 | 1 | 1 | 521 | 90 78 233 | VALVE M 14X1,5 |
| VALVE PIN | 7028174 | 8 | 1 | 147 | 70 28 075 | CONTROL UNIT |
| VALVE PIN | 7028180 | 15 | 2 | 147 | 70 28 075 | CONTROL UNIT |
| VALVE PISTON | 10220648 | 3 | 1 | 146 | 57 15 963 | PRESSURE LIMITING VALVE |
| VALVE PISTON | 10220817 | 2 | 1 | 137 | 10 22 081 6 | COLD STAR VALVE |
| VALVE PISTON | 5612181 | 5 | 1 | 132 | 10 22 063 5 | SHUTDOWN VALVE |
| VALVE PISTON | 7028179 | 13 | 2 | 147 | 70 28 075 | CONTROL UNIT |
| VALVE SEAT | 10220662 | 6 | 1 | 132 | 10 22 063 5 | SHUTDOWN VALVE |
| VALVE SEAT | 10220818 | 3 | 1 | 137 | 10 22 081 6 | COLD STAR VALVE |
| VALVE SEAT | 7026127 | 40 | 1 | 75 | 56 16 688 | WHEEL BRAKE VALVE |
| VALVE SEAT | 7028301 | 20 | 1 | 322 | 70 28 300 | PRESSURE LIMITING VALVE |
| VALVE SEAT | 7029459 | 48 | 1 | 367 | 10 28 962 9 | VALVE |
| VALVE SEAT | 9265400 | 20 | 1 | 271 | 90 79 258 | PILOT CONTROL UNIT VG7 2-3 |
| VALVE SEAT | 9265400 | 20 | 1 | 273 | 90 79 259 | PILOT CONTROL UNIT VG7 2-3 |
| VALVE SEAT SLEEVE | 10413023 | 56 | 1 | 121 | 10 41 301 3 | HYDRAULIC PUMP |
| VALVE SLEEVE | 9269686 | 10 | 1 | 78 | 92 70 598 | NON-RETURN VALVE |
| VALVE STEM GUIDE | 10127538 | 4 | 4 | 510 | 10 12 038 4 | ZYLINDER HEAD |
| VALVE STEM SEAL RING | 10119305 | 2 | 4 | 513 | 10 11 585 1 | SEAL KIT CYLINDER HEAD |
| VALVE STEM SEAL RING | 10119305 | 2 | 24 | 515 | 10 11 585 3 | SEAL KIT ZYLINDER HEAD CPL |
| VALVE STEM SEAL RING | 10120334 | 5 | 4 | 504 | 10 14 155 4 | CYLINDER HEAD PRE-ASS. |
| VALVE STEM SEAL RING | 10120334 | 5 | 4 | 508 | 10 12 036 4 | CYLINDER HEAD PRE-ASS. |
| VALVE STEM SEAL RING | 10120334 | 2 | 4 | 513 | 10 11 585 1 | SEAL KIT CYLINDER HEAD |
| VALVE STEM SEAL RING | 10120334 | 2 | 24 | 515 | 10 11 585 3 | SEAL KIT ZYLINDER HEAD CPL |
| VENTILATION SCREW | 10101997 | 3 | 1 | 539 | 10 22 281 9 | FUEL PRE-FILTER CPL. |
| VENTILATION SCREW | 7009590 | 17 | 1 | 545 | 10 11 559 5 | LEAK OIL RETURN LINE |
| VENTILATION SCREW M6X8 8. | 7361391 | 33 | 7 | 365 | 10 03 245 2 | CONTROL BLOCK |
| VENTILATION SCREW M6X8 8. | 7361391 | 360 | 1 | 653 | 10 00 297 1 | PIPE FRACTION SAFETY VALV |
| VENTILATION TUBE | 10016664 | 40 | 1 | 682 | 10 28 689 7 | LUBRICATION PUMP |
| VISCOSE DAMPER | 9080380 | 8 | 1 | 499 | 10 11 617 5 | CRANKSHAFT ADD-ON PARTS |
| VISIT COVER | 7370894 | 2 | 1 | 255 | 56 18 923 | CONTROL CONSOLE RIGHT |
| VOLTAGE TRANSFORMER | 7026493 | 120 | 1 | 253 | 10 84 086 6 | ARM REST RIGHT |
| WARNING SIGN | 10380915 | 90 | 2 | 465 | 10 35 804 3 | SIGNS |
| WARNING SIGN | 10380915 | 90 | 2 | 468 | 10 49 805 9 | SIGNS |
| WARNING SIGN | 9581113 | 54 | 1 | 465 | 10 35 804 3 | SIGNS |
| WARNING SIGN | 9581113 | 54 | 1 | 468 | 10 49 805 9 | SIGNS |
| WASHER | 10013965 | 460 | 2 | 428 | 10 29 026 4 | ASSY. PARTS |
| WASHER | 10074972 | 18 | 2 | 382 | 99 29 189 | BONNET RIGHT |
| WASHER | 10074972 | 18 | 2 | 386 | 10 35 792 6 | SIDE DOOR MIDDLE LEFT |
| WASHER | 10076844 | 16 | 2 | 386 | 10 35 792 6 | SIDE DOOR MIDDLE LEFT |
| WASHER | 10216714 | 27 | 2 | 345 | 10 22 042 7 | DRIVING GEAR |
| WASHER | 10220138 | 660 | 5 | 429 | 10 29 026 4 | ASSY. PARTS |
| WASHER | 10326997 | 17 | 8 | 164 | 10 45 475 2 | COMBINATED RADIATOR |
| WASHER | 10326997 | 11 | 4 | 167 | 10 35 508 4 | OIL COOLER |
| WASHER | 10357911 | 16 | 2 | 384 | 10 35 817 2 | SIDE DOOR BACK LEFT |
| WASHER | 10357913 | 18 | 2 | 384 | 10 35 817 2 | SIDE DOOR BACK LEFT |
| WASHER | 3001445 | 3 | 1 | 643 | 10 06 090 1 | PIN CPL |
| WASHER | 3001446 | 11 | 1 | 646 | 93 74 949 | PIN CPL |
| WASHER | 3001590 | 3 | 1 | 644 | 10 06 097 3 | PIN CPL |
| WASHER | 4901879 | 24 | 25 | 641 | 10 49 881 6 | SLIDING RAIL |
| WASHER | 4980230 | 72 | 4 | 241 | 97 58 815 01 | E-BOARD |
| WASHER | 7019801 | 150 | 2 | 414 | 70 28 769 | DRIVER'S CAB DOOR |
| WASHER | 7369776 | 12 | 1 | 442 | 99 47 695 | ELECTRICAL SYSTEM E50 |
| WASHER | 932719401 | 5 | 1 | 184 | 90 01 790 0 | SLEWING DRIVE SAT 375/250 |
| WASHER | 9461178 | 2 | 2 | 97 | 10 35 800 7 | ENGINE FIXING PARTS |

| Description | Item | Pos. | Quantity | Page | Assembly | Description |
|---|---|---|---|---|---|---|
| WASHER | 9461178 | 12 | 4 | 97 | 10 35 800 7 | ENGINE FIXING PARTS |
| WASHER | 9686917 | 126 | 4 | 376 | 10 35 800 4 | PANELLING |
| WASHER | 9686917 | 4 | 2 | 395 | 10 37 936 3 | LID |
| WASHER 10 200HV | 4900531 | 26 | 1 | 371 | 10 07 369 5 | COVERING ROTATING DECK |
| WASHER 10 200HV | 4900531 | 82 | 4 | 375 | 10 35 800 4 | PANELLING |
| WASHER 10,5 | 4601173 | 17 | 8 | 160 | 10 35 809 2 | ENGINE COOLING |
| WASHER 10,5X18,5X2 | 9076638 | 2 | 3 | 573 | 90 80 735 | EXHAUST TC MOUNTING |
| WASHER 12 200HV | 4901782 | 12 | 2 | 624 | 10 38 408 5 | CENTRAL LUBRICATING SYS |
| WASHER 12 200HV | 4901782 | 17 | 2 | 624 | 10 38 408 5 | CENTRAL LUBRICATING SYS |
| WASHER 12 200HV | 4901782 | 29 | 2 | 632 | 10 38 484 8 | CENTRAL LUBRICATING SYS |
| WASHER 12 300HV | 10358988 | 8 | 17 | 581 | 10 11 557 7 | FLYWHEEL HOUSING MOUNT |
| WASHER 12,5/21X3,5 | 9918226 | 57 | 8 | 51 | 10 49 883 7 | UNDERCARRIAGE CPL |
| WASHER 12,5/55X5 | 9380109 | 11 | 4 | 160 | 10 35 809 2 | ENGINE COOLING |
| WASHER 13X35X5 | 4635283 | 12 | 8 | 95 | 10 07 366 1 | FRAME INSTALLATION |
| WASHER 13X35X5 | 4635283 | 12 | 10 | 371 | 10 07 369 5 | COVERING ROTATING DECK |
| WASHER 13X35X5 | 4635283 | 22 | 4 | 371 | 10 07 369 5 | COVERING ROTATING DECK |
| WASHER 13X35X5 | 4635283 | 16 | 4 | 372 | 10 35 800 4 | PANELLING |
| WASHER 13X35X5 | 4635283 | 25 | 3 | 372 | 10 35 800 4 | PANELLING |
| WASHER 13X35X5 | 4635283 | 32 | 16 | 372 | 10 35 800 4 | PANELLING |
| WASHER 13X35X5 | 4635283 | 42 | 5 | 373 | 10 35 800 4 | PANELLING |
| WASHER 13X35X5 | 4635283 | 52 | 5 | 373 | 10 35 800 4 | PANELLING |
| WASHER 13X35X5 | 4635283 | 62 | 5 | 373 | 10 35 800 4 | PANELLING |
| WASHER 13X35X5 | 4635283 | 71 | 4 | 374 | 10 35 800 4 | PANELLING |
| WASHER 13X35X5 | 4635283 | 112 | 5 | 375 | 10 35 800 4 | PANELLING |
| WASHER 13X35X5 | 4635283 | 152 | 5 | 377 | 10 35 800 4 | PANELLING |
| WASHER 13X35X5 | 4635283 | 167 | 12 | 378 | 10 35 800 4 | PANELLING |
| WASHER 16,5/28X4 | 9918228 | 52 | 8 | 51 | 10 49 883 7 | UNDERCARRIAGE CPL |
| WASHER 16,5/28X4 | 9918228 | 65 | 8 | 51 | 10 49 883 7 | UNDERCARRIAGE CPL |
| WASHER 16,5/28X4 | 9918228 | 27 | 1 | 98 | 10 04 942 6 | MOTOR SUPPORT |
| WASHER 16,5/28X4 | 9918228 | 11 | 4 | 293 | 98 79 063 | BOTTOM PLATE MOUNTING |
| WASHER 16,5/28X4 | 9918228 | 3 | 4 | 356 | 10 08 743 7 | FIXING PARTS CONTROL VALV |
| WASHER 16,5X32X8 | 9075249 | 53 | 2 | 110 | 90 77 872 | PUMP DISTRIBUTION GEAR |
| WASHER 20 300-370HV | 4600222 | 5 | 3 | 453 | 90 18 426 | FIXING PARTS FUEL TANK |
| WASHER 20,5/34X5 | 9918229 | 47 | 80 | 51 | 10 49 883 7 | UNDERCARRIAGE CPL |
| WASHER 20,5/34X5 | 9918229 | 4 | 48 | 67 | 10 07 713 7 | TRAVEL DRIVE |
| WASHER 20,5/34X5 | 9918229 | 5 | 3 | 332 | 10 37 130 3 | FIXING PARTS HYDRAULIC T |
| WASHER 20,5/34X5 | 9918229 | 5 | 3 | 333 | 99 46 056 | FIXING PARTS HYDRAULIC T |
| WASHER 20,5/34X5 | 9918229 | 4 | 32 | 676 | 11 10 231 4 | TRACK GUIDES FOUR TIMES |
| WASHER 24,5/40X5 | 9918230 | 7 | 48 | 67 | 10 07 713 7 | TRAVEL DRIVE |
| WASHER 24,5/40X5 | 9918230 | 33 | 9 | 657 | 94 02 019 4 | HYDRAULIC CYLINDER |
| WASHER 24,5/40X5 | 9918230 | 33 | 9 | 658 | 95 87 580 | HYDRAULIC CYLINDER |
| WASHER 24,5/40X5 | 9918230 | 33 | 9 | 659 | 95 96 399 | HYDRAULIC CYLINDER |
| WASHER 25 | 4600701 | 3 | 1 | 645 | 10 49 833 5 | PIN |
| WASHER 27,5/45X6 | 9586495 | 14 | 50 | 205 | 10 83 653 3 | BALL SLEWING RING INSTALL |
| WASHER 29X47X5 | 9273116 | 22 | 2 | 108 | 90 77 872 | PUMP DISTRIBUTION GEAR |
| WASHER 3,8X12,5X1 | 9265402 | 23 | 4 | 271 | 90 79 258 | PILOT CONTROL UNIT VG7 2-3 |
| WASHER 3,8X12,5X1 | 9265402 | 23 | 4 | 273 | 90 79 259 | PILOT CONTROL UNIT VG7 2-3 |
| WASHER 3,8X12,5X1 | 9265402 | 23 | 8 | 688 | 10 11 856 1 | PILOT CONTROL UNIT VG6-8 |
| WASHER 4 | 421802008 | 6 | 12 | 285 | 10 02 211 7 | AIR CIRCULATION CASE |
| WASHER 4 | 421802008 | 33 | 4 | 287 | 11 00 359 4 | HOUSING |
| WASHER 44X63X10 | 9073074 | 20 | 1 | 108 | 90 77 872 | PUMP DISTRIBUTION GEAR |
| WASHER 5 200HV | 4600305 | 74 | 1 | 238 | 10 38 502 4 | ARM REST LEFT |
| WASHER 5 200HV | 4600305 | 45 | 4 | 331 | 10 35 798 3 | HYDRAULIC TANK INSTALLAT |
| WASHER 5 200HV | 4600305 | 124 | 1 | 344 | 10 84 584 9 | PUMPS + COUPLING INSTALL |
| WASHER 5 200HV | 4600305 | 110 | 12 | 432 | 10 48 808 8 | INTERNAL LINING |
| WASHER 5 200HV | 4600305 | 17 | 4 | 442 | 99 47 695 | ELECTRICAL SYSTEM E50 |
| WASHER 6 200HV | 4600198 | 28 | 4 | 237 | 10 38 502 4 | ARM REST LEFT |
| WASHER 6 200HV | 4600198 | 7 | 4 | 268 | 10 05 981 8 | FOOT PILOT VALVE INSTALL |
| WASHER 6 200HV | 4600198 | 26 | 8 | 391 | 10 06 692 0 | TOOL BOX |
| WASHER 6 200HV | 4600198 | 26 | 8 | 393 | 10 37 938 6 | TOOL BOX |

| Description | Item | Pos. | Quantity | Page | Assembly | Description |
|---|---|---|---|---|---|---|
| WASHER 6 200HV | 4600198 | 330 | 4 | 433 | 10 48 808 8 | INTERNAL LINING |
| WASHER 6 200HV | 4600198 | 460 | 2 | 433 | 10 48 808 8 | INTERNAL LINING |
| WASHER 8 200HV | 420001201 | 13 | 5 | 563 | 10 13 281 7 | WATER PUMP, PRE-ASSEMB |
| WASHER 8,4 200HV | 4216025 | 8 | 8 | 379 | 10 08 167 3 | ENGINE BONNET |
| WASHER 9,3X13X0,5 | 7380232 | 23 | 5 | 76 | 92 67 037 | PRESSURE LIMITING VALVE |
| WASHER 9X25X6 | 9271441 | 21 | 2 | 108 | 90 77 872 | PUMP DISTRIBUTION GEAR |
| WASHER A 8 200HV | 4000779 | 61 | 4 | 279 | 94 02 247 7 | DRIVERS SEAT |
| WASHER A 8 200HV | 4000779 | 43 | 1 | 280 | 10 40 689 8 | AIR CONDITIONING UNIT |
| WASHER A 8 200HV | 4000779 | 20 | 4 | 292 | 11 00 707 2 | SLIDE SEAT GUIDE |
| WASHER A 8 200HV | 4000779 | 16 | 4 | 379 | 10 08 167 3 | ENGINE BONNET |
| WASHER A 8 200HV | 4000779 | 11 | 1 | 390 | 10 06 692 0 | TOOL BOX |
| WASHER A 8 200HV | 4000779 | 16 | 5 | 391 | 10 06 692 0 | TOOL BOX |
| WASHER A 8 200HV | 4000779 | 16 | 5 | 393 | 10 37 938 6 | TOOL BOX |
| WASHER A 8 200HV | 4000779 | 47 | 1 | 447 | 10 35 814 3 | AIR CONDITION HOSES INSTA |
| WASHER A 8 200HV | 4000779 | 8 | 2 | 461 | 10 35 852 5 | OUTSIDE MIRROR ASSEMBLY |
| WASHER A 8 200HV | 4000779 | 7 | 2 | 462 | 10 37 283 6 | LID |
| WASHER SET | 9885920 | 39 | 1 | 150 | 90 79 294 | REPAIR KIT DRIVING MECHAN |
| WASHER SET | 9885923 | 39 | 1 | 199 | 90 74 416 | REPAIR KIT DRIVING MECHAN |
| WASHER SET | 9885924 | 39 | 1 | 79 | 90 73 357 | REPAIR KIT (POWER TRAIN) |
| WASHER T 5,5X18X2 | 10022767 | 3 | 2 | 285 | 10 02 211 7 | AIR CIRCULATION CASE |
| WASHER T 5,5X18X2 | 10022767 | 5 | 2 | 290 | 10 02 277 7 | CIRCULATING AIR GRID |
| WATER BASIN | 5618664 | 440 | 1 | 421 | 10 48 808 7 | ELECTRICAL INSTALLATION |
| WATER COCK | 7001072 | 1 | 2 | 569 | 90 79 889 | HEATER CONNECTION |
| WATER COOLER | 10491376 | 33 | 1 | 165 | 10 45 475 2 | COMBINATED RADIATOR |
| WATER HOSE | 10049420 | 30 | 1 | 161 | 10 35 809 2 | ENGINE COOLING |
| WATER HOSE | 10049473 | 50 | 2 | 179 | 10 35 800 9 | ENGINE ADD-ON PARTS |
| WATER HOSE | 10054703 | 23 | 1 | 161 | 10 35 809 2 | ENGINE COOLING |
| WATER HOSE | 10054704 | 24 | 1 | 161 | 10 35 809 2 | ENGINE COOLING |
| WATER HOSE | 9008530 | 30 | 2 | 280 | 10 40 689 8 | AIR CONDITIONING UNIT |
| WATER HOSE | 9363435 | 59 | 1 | 162 | 10 35 809 2 | ENGINE COOLING |
| WATER HOSE | 9380097 | 60 | 1 | 162 | 10 35 809 2 | ENGINE COOLING |
| WATER HOSE | 9384970 | 51 | 1 | 162 | 10 35 809 2 | ENGINE COOLING |
| WATER HOSE | 9467682 | 61 | 1 | 162 | 10 35 809 2 | ENGINE COOLING |
| WATER PIPE | 10054654 | 20 | 1 | 161 | 10 35 809 2 | ENGINE COOLING |
| WATER PIPE | 10371175 | 20 | 1 | 161 | 10 35 809 2 | ENGINE COOLING |
| WATER PUMP LID | 10134069 | 12 | 1 | 563 | 10 13 281 7 | WATER PUMP, PRE-ASSEMB |
| WATER PUMP, PRE-ASSEMB | 10132817 | 1 | 1 | 562 | 90 80 301 | AT-WATER PUMP WITH FAST |
| WATER SOUND | 10280185 | 2 | 1 | 539 | 10 22 281 9 | FUEL PRE-FILTER CPL. |
| WATER VALVE | 10292661 | 40 | 1 | 280 | 10 40 689 8 | AIR CONDITIONING UNIT |
| WEARING PART | 10493010 | 6 | 1 | 235 | 11 10 016 7 | SUSPENSION |
| WEARING PARTS SET | 11102834 | 11 | 1 | 633 | 11 10 282 9 | BACKHOE BUCKET HD 1950m |
| WEARING PLATE | 10216816 | 2 | 1 | 117 | 10 22 041 5 | INTERNAL GEAR PUMP SET |
| WEARING PLATE | 10216828 | 1 | 1 | 130 | 10 21 681 6 | WEARING PLATE |
| WEARING PLATE | 11460707 | 3 | 1 | 635 | 11 10 283 4 | WEARING PARTS SET |
| WEARING PLATE | 11461300 | 10 | 2 | 635 | 11 10 283 4 | WEARING PARTS SET |
| WEARING PLATE | 11461301 | 11 | 2 | 635 | 11 10 283 4 | WEARING PARTS SET |
| WEARING PLATE | 9006828 | 2 | 9 | 635 | 11 10 283 4 | WEARING PARTS SET |
| WEARING PLATE LEFT | 11461298 | 5 | 1 | 635 | 11 10 283 4 | WEARING PARTS SET |
| WEARING PLATE RIGHT | 11461297 | 4 | 1 | 635 | 11 10 283 4 | WEARING PARTS SET |
| WEARING RING | 9073188 | 6 | 2 | 517 | 90 80 713 | CAMSHAFT CPL. |
| WEARING RING M 40X1,5 | 9077612 | 3 | 1 | 600 | 90 77 386 | AUXILIARY DRIVE PRE-ASS. |
| WEDGE DRIVE OUT | 3001289 | 165 | 1 | 459 | 10 84 856 2 | TOOL EQUIPMENT |
| WHEEL BRAKE VALVE | 5616688 | 15 | 2 | 67 | 10 07 713 7 | TRAVEL DRIVE |
| WHEEL SET | 10220693 | 5 | 1 | 133 | 10 22 066 7 | GEAR PUMP |
| WINDOW | 10014683 | 2 | 1 | 678 | 10 01 468 0 | MOTOR HOUSING |
| WINDOW FRAME | 10014687 | 4 | 1 | 678 | 10 01 468 0 | MOTOR HOUSING |
| WINDOW GLASS | 7028787 | 160 | 1 | 407 | 70 28 767 | GLASS PANES |
| WINDOW GLASS | 7028789 | 120 | 1 | 407 | 70 28 767 | GLASS PANES |
| WINDOW GLASS | 7028805 | 320 | 1 | 411 | 70 28 759 | FRONT PANE TOP |
| WINDOW GLASS | 7028830 | 400 | 1 | 415 | 70 28 769 | DRIVER'S CAB DOOR |

| Description | Item | Pos. | Quantity | Page | Assembly | Description |
|---|---|---|---|---|---|---|
| WINDOW GLASS | 7030318 | 110 | 1 | 407 | 70 28 767 | GLASS PANES |
| WINDSHIELD WIPER | 10290357 | 410 | 1 | 421 | 10 48 808 7 | ELECTRICAL INSTALLATION |
| WIPER ARM | 10290360 | 620 | 1 | 426 | 10 29 036 1 | WIPER ARM |
| WIPER ARM | 10290361 | 610 | 1 | 425 | 10 29 035 7 | WINDSHIELD WIPER |
| WIPER BLADE 800 | 7028869 | 600 | 1 | 425 | 10 29 035 7 | WINDSHIELD WIPER |
| WIPER MOTOR | 10290398 | 530 | 1 | 423 | 10 29 036 3 | WIPPER MOTOR SET |
| WIPPER MOTOR SET | 10290363 | 420 | 1 | 421 | 10 48 808 7 | ELECTRICAL INSTALLATION |
| WIR.HARNESS UNDER CONT | 10408513 | 140 | 1 | 230 | 10 49 880 9 | DRIVER STAND BASE SECTIO |
| WIRE HARNESS - CABIN | 10488089 | 150 | 1 | 420 | 10 48 808 7 | ELECTRICAL INSTALLATION |
| WIRE HARNESS HANDLE | 9968591 | 80 | 1 | 247 | 99 68 625 | LH-JOYSTICK LEFT |
| WIRE HARNESS HANDLE | 9968591 | 80 | 1 | 262 | 99 68 611 | LH-JOYSTICK RIGHT |
| WIRING HARN.BATTERY SHU | 9927341 | 15 | 1 | 444 | 11 10 266 2 | BATTERY INSTALLATION |
| WIRING HARN.BATTERY-STAR | 9948824 | 17 | 1 | 444 | 11 10 266 2 | BATTERY INSTALLATION |
| WIRING HARNESS DYNAMO G | 9928530 | 9 | 1 | 169 | 10 49 858 1 | MOTOR-ELEKTRIK |
| WIRING HARNESS ELECTRIC | 9929151 | 14 | 1 | 442 | 99 47 695 | ELECTRICAL SYSTEM E50 |
| WIRING HARNESS ELECTRIC | 9949750 | 15 | 1 | 442 | 99 47 695 | ELECTRICAL SYSTEM E50 |
| WIRING HARNESS ENGINE | 9948316 | 5 | 1 | 169 | 10 49 858 1 | MOTOR-ELEKTRIK |
| WIRING HARNESS HEAD LIGH | 10048247 | 7 | 1 | 438 | 10 04 824 6 | HEAD LIGHT + HORN INSTALL |
| WIRING HARNESS HEAD LIGH | 10048247 | 7 | 1 | 439 | 11 10 278 6 | HEAD LIGHT + HORN INSTALL |
| WIRING HARNESS HYDRAULIC | 10051599 | 27 | 1 | 435 | 10 35 814 1 | ELECTRICAL SYSTEM |
| WIRING HARNESS PRE-ASS. | 10115744 | 1 | 1 | 595 | 90 80 982 | CABLE BOOM MOUNTING |
| WIRING HARNESS ROTATING | 9948251 | 12 | 1 | 435 | 10 35 814 1 | ELECTRICAL SYSTEM |
| WIRING HARNESS S9/S9 | 9686191 | 21 | 1 | 444 | 11 10 266 2 | BATTERY INSTALLATION |
| WIRING HARNESS SHUT-OFF | 10052700 | 19 | 1 | 444 | 11 10 266 2 | BATTERY INSTALLATION |
| WIRING HARNESS STARTER D | 9928529 | 8 | 1 | 169 | 10 49 858 1 | MOTOR-ELEKTRIK |
| WIRING HARNESS STARTER M | 10405134 | 3 | 1 | 169 | 10 49 858 1 | MOTOR-ELEKTRIK |
| WORK LIGHT | 10007848 | 2 | 1 | 437 | 99 41 040 | FLOODLIGHT INSTALLATION |
| WORK LIGHT | 10045530 | 2 | 2 | 438 | 10 04 824 6 | HEAD LIGHT + HORN INSTALL |
| WORK LIGHT | 10045530 | 2 | 2 | 439 | 11 10 278 6 | HEAD LIGHT + HORN INSTALL |
| YOKE | 9888315 | 10 | 1 | 151 | 90 79 347 | REPAIR SET SWIVEL YOKE LP |
| YOKE G 8X16 | 4000746 | 22 | 2 | 372 | 10 35 800 4 | PANELLING |
| YOKE G 8X16 | 4000746 | 131 | 4 | 376 | 10 35 800 4 | PANELLING |
| YOKE G 8X16 | 4000746 | 21 | 2 | 391 | 10 06 692 0 | TOOL BOX |
| YOKE G 8X16 | 4000746 | 21 | 2 | 393 | 10 37 938 6 | TOOL BOX |
| YOKE G 8X16 | 4000746 | 10 | 2 | 401 | 10 03 720 9 | GAS SPRING |
| ZYLINDER HEAD | 10120384 | 1 | 1 | 504 | 10 14 155 4 | CYLINDER HEAD PRE-ASS. |
| ZYLINDER HEAD | 10120384 | 1 | 1 | 508 | 10 12 036 4 | CYLINDER HEAD PRE-ASS. |
| ZYLINDER HEAD | 9079952 | 1 | 1 | 510 | 10 12 038 4 | ZYLINDER HEAD |

| Designação | Artigo | Item | Quanti | Página | Módulo | Designação |
|---|---|---|---|---|---|---|
| | 10009183 | 300 | 1 | 433 | 10 48 808 8 | REVESTIMENTO INTERNO |
| | 10014497 | 310 | 1 | 433 | 10 48 808 8 | REVESTIMENTO INTERNO |
| | 10029626 | 11 | 1 | 38 | 90 66 466 | ACESSORIOS |
| | 10120829 | 2 | 6 | 478 | 10 11 577 8 | BLOCO DO MOTOR |
| | 10358890 | 140 | 1 | 407 | 70 28 767 | VIDRO FIXO |
| | 10470128 | 250 | 1 | 432 | 10 48 808 8 | REVESTIMENTO INTERNO |
| | 10492435 | 19 | 1 | 233 | 11 10 016 6 | PARTE SUPERIOR DE ASSENT |
| | 10493351 | 10 | 1 | 233 | 11 10 016 6 | PARTE SUPERIOR DE ASSENT |
| | 10493994 | 17 | 1 | 235 | 11 10 016 7 | SUSPENSAO |
| | 11066525 | 2 | 1 | 235 | 11 10 016 7 | SUSPENSAO |
| | 11481247 | 200 | 1 | 40 | 90 66 466 | ACESSORIOS |
| | 11481248 | 310 | 1 | 40 | 90 66 466 | ACESSORIOS |
| | 11481249 | 210 | 1 | 40 | 90 66 466 | ACESSORIOS |
| | 11481250 | 300 | 1 | 40 | 90 66 466 | ACESSORIOS |
| | 7018368 | 12 | 1 | 38 | 90 66 466 | ACESSORIOS |
| | 7029402 | 180 | 1 | 407 | 70 28 767 | VIDRO FIXO |
| | 8145660 | 10 | 1 | 38 | 90 66 466 | ACESSORIOS |
| | 9066460 | 500 | 1 | 46 | 10 35 970 2 | MATERIAL DE MANUTENÇÃO |
| | 9070363 | 30 | 1 | 10 | 90 66 460 | |
| | 9070366 | 60 | 1 | 10 | 90 66 460 | |
| | 9076530 | 2 | 1 | 582 | 90 76 551 | SENSORAMENTO AJUSTE DO |
| | 9278623 | 90 | 1 | 188 | 90 72 100 | MOTOR HIDRÁULICO |
| | 9999999 | 23 | 1 | 692 | 98 88 308 | PLACA DE CONEXAO |
| 10X300 | 11162133 | 114 | 1 | 459 | 10 84 856 2 | KIT DE FERRAMENTAS |
| 5.5X200 | 11162126 | 110 | 1 | 459 | 10 84 856 2 | KIT DE FERRAMENTAS |
| FUER SITZTIEFENVERSTELL | 10493369 | 16 | 1 | 233 | 11 10 016 6 | PARTE SUPERIOR DE ASSENT |
| OT KPL. | 11066532 | 38 | 1 | 236 | 11 10 016 7 | SUSPENSAO |
| ABRAÇADEIRA DE MANGUEIR | 774252314 | 22 | 1 | 102 | 99 37 298 | INSTALAÇÃO DO FILTRO DE A |
| ABRAÇADEIRA DE MANGUEIR | 774252314 | 42 | 4 | 162 | 10 35 809 2 | ARREFECIMENTO DO MOTOR |
| ABRAÇADEIRA DE MANGUEIR | 9388597 | 60 | 2 | 179 | 10 35 800 9 | MOTOR - PECAS ANEXAS |
| ABRAÇADEIRA DE MANGUEIR | 9967032 | 10 | 1 | 313 | 10 35 801 7 | INSTALACAO HIDRAULICA |
| ABRAÇADEIRA DE MANGUEI | 10356035 | 21 | 1 | 102 | 99 37 298 | INSTALAÇÃO DO FILTRO DE A |
| ABRAÇADEIRA DE MANGUEIR | 10012761 | 22 | 6 | 161 | 10 35 809 2 | ARREFECIMENTO DO MOTOR |
| ACENDEDOR DE CIGARROS | 7369377 | 80 | 1 | 238 | 10 38 502 4 | APOIO ESQUERDO PARA BR |
| ACESSORIOS | 9066466 | 100 | 1 | 10 | 90 66 460 | |
| ACION. DE EMERGÊNCIA COM | 9013811 | 104 | 1 | 251 | 10 84 086 6 | APOIO DIREITO PARA BRAÇO |
| ACIONADOR | 6204367 | 5 | 1 | 258 | 10 04 831 3 | INTERRUPTOR - INSTALAÇÃO |
| ACIONADOR | 6204367 | 5 | 1 | 263 | 10 05 507 1 | INTERRUPTOR - INSTALAÇÃO |
| ACIONAMENTO | 10491783 | 8 | 1 | 233 | 11 10 016 6 | PARTE SUPERIOR DE ASSENT |
| ACIONAMENTO | 10491783 | 9 | 1 | 233 | 11 10 016 6 | PARTE SUPERIOR DE ASSENT |
| ACIONAMENTO | 10493048 | 58 | 1 | 234 | 11 10 016 6 | PARTE SUPERIOR DE ASSENT |
| ACIONAMENTO | 10493341 | 20 | 1 | 233 | 11 10 016 6 | PARTE SUPERIOR DE ASSENT |
| ACIONAMENTO | 11066530 | 18 | 1 | 235 | 11 10 016 7 | SUSPENSAO |
| ACOPLAMENTO COMPLETO | 10115771 | 2 | 1 | 559 | 10 11 646 4 | COMPRESSOR DO AR-CONDI |
| ACOPLAMENTO ROSCADO G1/ | 7409720 | 360 | 2 | 296 | 10 35 801 2 | INSTALACAO HDRAULICA |
| ACOPLAMENTO ROSCADO G1/ | 7409720 | 90 | 2 | 302 | 10 35 801 5 | PASSAGEM HIDRAULICA |
| ACOPLAMENTO ROSCADO G1/ | 7409720 | 38 | 1 | 311 | 10 35 809 3 | INSTALACAO HIDRAULICA |
| ACOPLAMENTO ROSCADO G1/ | 7409720 | 97 | 1 | 347 | 10 35 802 8 | INSTALAÇÃO BLOCO DE VÁL |
| ACOPLAMENTO ROSCADO G1/ | 7409720 | 204 | 1 | 349 | 10 35 802 8 | INSTALAÇÃO BLOCO DE VÁL |
| ACUMULADOR DE PRESSÃO | 5617780 | 2 | 1 | 297 | 99 37 312 | UNIDADE DE COMANDO DE O |
| ADAPTADOR | 10451142 | 2 | 5 | 634 | 11 10 283 2 | LÂMINA RETRO |
| ADESIVO | 9928891 | 61 | 1 | 443 | 99 47 695 | INSTALAÇÃO ELÉTRICA E50 |
| ADESIVO NÍVEL SONORO LW | 9874359 | 60 | 1 | 465 | 10 35 804 3 | PLAQUETAS |
| ADESIVO NÍVEL SONORO LW | 9874359 | 60 | 1 | 468 | 10 49 805 9 | PLAQUETAS |
| AGITADOR | 10016658 | 34 | 1 | 682 | 10 28 689 7 | BOMBA DE LUBRIFICACAO |
| AGREAGADO CIRCUITOS MU | 10134620 | 10 | 1 | 341 | 10 84 584 9 | INSTALACAO BOMBA E EMBR |
| ALARME DE SEGURANÇA | 10288438 | 2 | 1 | 652 | 10 35 860 1 | ALARME DE TRANSLACAO |
| ALARME DE TRANSLACAO | 10358601 | 2 | 1 | 651 | 10 35 860 2 | ALARME DE TRANSLACAO |
| ALARME DE TRANSLACAO | 10358602 | 5 | 1 | 7 | . | |
| ALAVANCA | 7027794 | 23 | 1 | 233 | 11 10 016 6 | PARTE SUPERIOR DE ASSENT |

| Designação | Artigo | Item | Quanti | Página | Módulo | Designação |
|---|---|---|---|---|---|---|
| ALAVANCA | 7028348 | 14 | 1 | 338 | 56 17 689 | VÁLVULA DE FECHAMENTO D |
| ALAVANCA | 7028919 | 320 | 1 | 428 | 10 29 026 4 | PEÇAS DE MONTAGEM |
| ALAVANCA | 7370689 | 44 | 2 | 229 | 10 49 880 9 | POSTO DE COMANDO - PEÇA |
| ALAVANCA | 7372353 | 16 | 1 | 243 | 73 73 807 | ALAVANCA DE SEGURANCA |
| ALAVANCA DE MUDANCAS | 10024214 | 2 | 1 | 445 | 10 01 211 9 | INTERRUPTOR PRINCIPAL BA |
| ALAVANCA DE REGULAGEM | 9277878 | 12 | 1 | 690 | 98 82 766 | DISPOSITIVO DE REGULAGE |
| ALAVANCA DE REGULAGEM | 9880287 | 18 | 2 | 690 | 98 82 766 | DISPOSITIVO DE REGULAGE |
| ALAVANCA DE REVERSÃO | 10061699 | 4 | 2 | 628 | 10 49 823 5 | BRACO DA CACAMBA 2,35M |
| ALAVANCA DE SEGURANCA | 7373807 | 14 | 1 | 240 | 10 16 576 6 | CONSOLE DE COMANDO |
| ALAVANCA MANUAL | 7028347 | 13 | 1 | 338 | 56 17 689 | VÁLVULA DE FECHAMENTO D |
| ALICATE UNIVERSAL | 11162134 | 120 | 1 | 459 | 10 84 856 2 | KIT DE FERRAMENTAS |
| ALIMETAÇÃO DE TENSÃO KS | 9956949 | 70 | 1 | 279 | 94 02 247 7 | BANCO DO MOTORISTA |
| ALTERNADOR TRIFASICO | 6290070 | 1 | 1 | 574 | 10 11 646 3 | GERADOR PRE-MONTAGEM |
| ALTO-FALANTE | 634308016 | 5 | 2 | 677 | 11 10 265 3 | INSTALAÇÃO P/RÁDIO |
| ALÇA DE TRANSMISSÃO-LH E | 9968625 | 10 | 1 | 244 | 10 05 879 2 | SENSOR DE PRE-COMANDO E |
| AMARRA PARA CABOS | 11002474 | 35 | 8 | 287 | 11 00 359 4 | CARCAÇA |
| AMARRA PARA CABOS | 7001877 | 26 | 4 | 84 | 10 07 713 5 | INST.HIDR.CARRO INFERIOR |
| AMARRA PARA CABOS | 7001877 | 145 | 10 | 230 | 10 49 880 9 | POSTO DE COMANDO - PEÇA |
| AMARRA PARA CABOS | 7001877 | 96 | 10 | 251 | 10 84 086 6 | APOIO DIREITO PARA BRAÇO |
| AMARRA PARA CABOS | 7001877 | 33 | 2 | 280 | 10 40 689 8 | SISTEMA DE AR CONDICION |
| AMARRA PARA CABOS | 7001877 | 70 | 75 | 435 | 10 35 814 1 | INSTALAÇÃO ELÉTRICA |
| AMARRA PARA CABOS | 7002480 | 20 | 1 | 244 | 10 05 879 2 | SENSOR DE PRE-COMANDO E |
| AMARRA PARA CABOS | 7002480 | 20 | 1 | 259 | 10 05 879 4 | SENSOR DE PRE-COMANDO |
| AMARRA PARA CABOS | 7005587 | 95 | 4 | 102 | 99 37 298 | INSTALAÇÃO DO FILTRO DE A |
| AMARRA PARA CABOS | 7005587 | 80 | 5 | 163 | 10 35 809 2 | ARREFECIMENTO DO MOTOR |
| AMARRA PARA CABOS | 7009088 | 31 | 1 | 244 | 10 05 879 2 | SENSOR DE PRE-COMANDO E |
| AMARRA PARA CABOS | 7009088 | 31 | 1 | 259 | 10 05 879 4 | SENSOR DE PRE-COMANDO |
| AMARRA PARA CABOS | 7028864 | 740 | 8 | 421 | 10 48 808 7 | INSTALACAO ELETRICA |
| AMORTECEDOR | 10493469 | 11 | 1 | 235 | 11 10 016 7 | SUSPENSAO |
| AMORTECEDOR DE TORÇÃO | 5610755 | 5 | 1 | 341 | 10 84 584 9 | INSTALACAO BOMBA E EMBR |
| AMORTECEDOR DE VISCOSE | 9080380 | 8 | 1 | 499 | 10 11 617 5 | VIRABREQUIM PEÇAS DE AC |
| ANEL | 9018794 | 2 | 1 | 630 | 90 18 795 | ANEL |
| ANEL | 9018795 | 6 | 4 | 628 | 10 49 823 5 | BRACO DA CACAMBA 2,35M |
| ANEL 122X112,1X2,5 | 10472346 | 4 | 1 | 502 | 90 80 686 | PISTÃO PRÉ-MONT. MONOTH |
| ANEL 17X25X5 | 7369134 | 50 | 5 | 366 | 10 03 245 2 | BLOCO DE COMANDO |
| ANEL DE ALOJAMENTO | 10220545 | 6 | 2 | 131 | 10 22 052 4 | PISTAO ATUADOR |
| ANEL DE APERTO | 9880288 | 19 | 2 | 690 | 98 82 766 | DISPOSITIVO DE REGULAGE |
| ANEL DE APOIO | 10016716 | 5 | 1 | 53 | 90 15 155 | TENSIONADOR DE GRAXA |
| ANEL DE APOIO | 10101460 | 11 | 1 | 144 | 10 41 302 4 | MECANISMO DE ACIONAMENT |
| ANEL DE APOIO | 10287892 | 11 | 1 | 141 | 10 35 573 8 | MECANISMO DE ACIONAMENT |
| ANEL DE APOIO | 7011287 | 9 | 2 | 454 | 70 10 596 | KIT DE VEDACAO DA BOMBA |
| ANEL DE APOIO | 7380684 | 16 | 1 | 154 | 98 82 875 | KIT VEDACAO VALULA REGUL |
| ANEL DE APOIO | 7380883 | 21 | 1 | 83 | 92 66 232 | KIT VEDACAO VAVLULA DUAS |
| ANEL DE APOIO | 7380905 | 28 | 2 | 701 | 92 66 089 | KIT DE VEDACAO DA VALVUL |
| ANEL DE APOIO | 7381250 | 18 | 1 | 126 | 92 71 653 | KIT DE CEDACAO DA REGULA |
| ANEL DE APOIO | 7381250 | 32 | 1 | 700 | 92 71 657 | KIT DE VEDAÇÃO |
| ANEL DE APOIO | 7381759 | 29 | 1 | 690 | 98 82 766 | DISPOSITIVO DE REGULAGE |
| ANEL DE APOIO | 9275735 | 3 | 2 | 564 | 10 11 983 0 | INVÓLUCRO TERMOSTATO |
| ANEL DE APOIO | 9275735 | 3 | 2 | 565 | 90 75 678 | INVÓLUCRO TERMOSTATO |
| ANEL DE APOIO 10,7X1,45X1,0 | 7023928 | 8 | 1 | 325 | 50 09 391 | KIT VEDAÇÃO VÁLVULA DIREC |
| ANEL DE APOIO 10,7X1,45X1,0 | 7023928 | 6 | 1 | 326 | 50 09 562 | KIT VEDAÇÃO VÁLVULA DIREC |
| ANEL DE APOIO 10/13X1 | 7006889 | 324 | 1 | 328 | 70 30 267 | KIT DE VEDACAO |
| ANEL DE APOIO 100,00/105,00 | 7003559 | 7 | 2 | 663 | 94 00 606 1 | PISTÃO 180MM |
| ANEL DE APOIO 11,70X15,00X | 7381809 | 31 | 1 | 690 | 98 82 766 | DISPOSITIVO DE REGULAGE |
| ANEL DE APOIO 11,70X15,00X | 7381809 | 30 | 1 | 699 | 98 82 771 | KIT DE VEDAÇÃO |
| ANEL DE APOIO 160,7/170X1,7 | 10097243 | 8 | 1 | 668 | 94 02 733 6 | MANCAL DA HASTE DO PISTA |
| ANEL DE APOIO 180X170,7X1, | 10097245 | 8 | 1 | 667 | 94 01 936 4 | MANCAL DA HASTE DO PISTA |
| ANEL DE APOIO 180X170,7X1, | 10097245 | 8 | 1 | 669 | 99 52 600 | MANCAL DA HASTE DO PISTA |
| ANEL DE APOIO 28X40X2 440- | 422001001 | 5 | 1 | 511 | 90 74 505 | BALANCIM PRE-MONTADO |
| ANEL DE APOIO 58,5/63,5X1,4 | 7410773 | 15 | 1 | 298 | 56 09 948 | KIT DE FILTRO DE OLEO |

| Designação | Artigo | Item | Quanti | Página | Módulo | Designação |
|---|---|---|---|---|---|---|
| ANEL DE APOIO 78/83X1,5 | 7003533 | 7 | 2 | 664 | 95 87 597 | PISTÃO 180MM |
| ANEL DE APOIO 88/93X1,5 | 7006870 | 7 | 2 | 665 | 95 90 264 | PISTÃO 170MM |
| ANEL DE APOIO 9,4X1,45X1,0 | 7023927 | 7 | 1 | 325 | 50 09 391 | KIT VEDAÇÃO VÁLVULA DIREC |
| ANEL DE APOIO 9,4X1,45X1,0 | 7023927 | 5 | 1 | 326 | 50 09 562 | KIT VEDAÇÃO VÁLVULA DIREC |
| ANEL DE APOIO 9,8X12,7X1 | 7023926 | 6 | 1 | 325 | 50 09 391 | KIT VEDAÇÃO VÁLVULA DIREC |
| ANEL DE APOIO S 17X55X2,5 | 7010008 | 4 | 1 | 574 | 10 11 646 3 | GERADOR PRE-MONTAGEM |
| ANEL DE APOIO S 4,9X7,5X0,1 | 7380137 | 41 | 2 | 271 | 90 79 258 | MODULO DE COMANDO VG7 |
| ANEL DE APOIO S 4,9X7,5X0,1 | 7380137 | 41 | 2 | 273 | 90 79 259 | MODULO DE COMANDO VG7 |
| ANEL DE APOIO S 4,9X7,5X0,3 | 7380138 | 42 | 2 | 271 | 90 79 258 | MODULO DE COMANDO VG7 |
| ANEL DE APOIO S 4,9X7,5X0,3 | 7380138 | 42 | 2 | 273 | 90 79 259 | MODULO DE COMANDO VG7 |
| ANEL DE APOIO S 4,9X7,5X0,3 | 7380138 | 50 | 8 | 688 | 10 11 856 1 | MODULO DE COMANDO VG6- |
| ANEL DE APOIO S 50X71X0,4 | 7380273 | 10 | 1 | 698 | 98 85 923 | KIT DE ARRUELAS |
| ANEL DE APOIO S 50X71X0,5 | 7380166 | 10 | 1 | 698 | 98 85 923 | KIT DE ARRUELAS |
| ANEL DE APOIO S 50X71X0,6 | 7380272 | 10 | 1 | 698 | 98 85 923 | KIT DE ARRUELAS |
| ANEL DE APOIO S 50X71X0,7 | 7380271 | 10 | 1 | 698 | 98 85 923 | KIT DE ARRUELAS |
| ANEL DE APOIO S 55,3X63,7X | 7380974 | 10 | 1 | 155 | 98 85 932 | KIT DE ANEIS DISTANCIADO |
| ANEL DE APOIO S 55,3X63,7X | 7380975 | 20 | 1 | 155 | 98 85 932 | KIT DE ANEIS DISTANCIADO |
| ANEL DE APOIO S 55,3X63,7X | 7380976 | 30 | 1 | 155 | 98 85 932 | KIT DE ANEIS DISTANCIADO |
| ANEL DE ASSENTO DA VALV | 9073725 | 6 | 2 | 510 | 10 12 038 4 | CABECOTE |
| ANEL DE ASSENTO VÁLVULA | 9073726 | 7 | 2 | 510 | 10 12 038 4 | CABECOTE |
| ANEL DE CORTE | 10013545 | 161 | 1 | 218 | 90 64 786 | ELEMENTO DE CONEXÃO |
| ANEL DE CORTE | 10013545 | 161 | 10 | 220 | 10 01 461 1 | CAIXA AUXILIAR |
| ANEL DE ENCOSTO | 10008088 | 14 | 1 | 139 | 10 35 572 4 | BOMBA HIDRÁULICA |
| ANEL DE ENCOSTO | 9073188 | 6 | 2 | 517 | 90 80 713 | EIXO DE EXCÊNTRICOS COM |
| ANEL DE ENCOSTO 15,7/20X1 | 7380884 | 23 | 1 | 83 | 92 66 232 | KIT VEDACAO VAVLULA DUAS |
| ANEL DE ENCOSTO 43,5/48X1, | 11007757 | 29 | 1 | 699 | 98 82 771 | KIT DE VEDAÇÃO |
| ANEL DE ENCOSTO 9,4/14X1,1 | 11007750 | 4 | 1 | 662 | 92 70 390 | JG V VÁLVULA RET. DE ESTRA |
| ANEL DE ENCOSTO M 40X1,5 | 9077612 | 3 | 1 | 600 | 90 77 386 | SAIDA AUXILIAR P´RE-MONTA |
| ANEL DE FECHAMENTO | 9265424 | 17 | 1 | 204 | 92 73 048 | KIT DE VEDAÇÃO |
| ANEL DE FECHAMENTO | 9279374 | 17 | 1 | 77 | 92 68 751 | KIT DE REPARO |
| ANEL DE FECHAMENTO | 9279374 | 17 | 1 | 128 | 98 89 282 | KIT DE REPARO |
| ANEL DE FECHAMENTO | 9442308 | 60 | 1 | 69 | 94 43 840 | MECANISMO DE TRANSLAÇÃ |
| ANEL DE FECHAMENTO | 9443229 | 10 | 1 | 191 | 93 33 333 01 | FREIO |
| ANEL DE FECHAMENTO | 9885628 | 17 | 1 | 149 | 90 73 158 | KIT DE REPARO |
| ANEL DE FECHAMENTO | 9885628 | 17 | 1 | 197 | 90 74 285 | KIT DE REPARO |
| ANEL DE FECHAMENTO | 9885628 | 17 | 1 | 697 | 92 68 016 | KIT DE REPARO |
| ANEL DE FELTRO | 7016180 | 4 | 1 | 66 | 92 65 064 | KIT VEDAÇÃO COLETOR GIRA |
| ANEL DE PRESSÃO 10X343/29 | 932856101 | 61 | 2 | 185 | 90 01 790 0 | REDUTOR DE GIRO SAT 375/ |
| ANEL DE PROTECAO | 10120443 | 3 | 1 | 498 | 10 12 134 5 | KIT DE REPARO RETENTOR D |
| ANEL DE RETENÇÃO | 7019794 | 350 | 2 | 415 | 70 28 769 | PORTA DA CABINE DO MOTO |
| ANEL DE RETENÇÃO AEHNL. | 10220937 | 25 | 1 | 121 | 10 41 301 3 | BOMBA HIDRÁULICA |
| ANEL DE RETENÇÃO SB 110 | 7380954 | 71 | 1 | 110 | 90 77 872 | REDUTOR DISTRIBUICAO BO |
| ANEL DE RETENÇÃO SB 23 | 7381534 | 24 | 1 | 196 | 90 72 990 | PLACA DE CONEXAO |
| ANEL DE SEÇÃO RETANGULA | 7030284 | 5 | 1 | 328 | 70 30 267 | KIT DE VEDACAO |
| ANEL DE SEÇÃO RETANGUL | 10490785 | 6 | 2 | 308 | 10 35 801 3 | ARREFECIMENTO DE OLEO |
| ANEL DE SEÇÃO RETANGUL | 10490785 | 4 | 6 | 675 | 72 64 501 16 | JOGO DE VEDAÇÃO KANTSIL |
| ANEL DE SEÇÃO RETANGUL | 10490784 | 35 | 1 | 300 | 10 35 801 5 | PASSAGEM HIDRAULICA |
| ANEL DE SEÇÃO RETANGUL | 10490784 | 86 | 2 | 302 | 10 35 801 5 | PASSAGEM HIDRAULICA |
| ANEL DE SEÇÃO RETANGUL | 10490784 | 17 | 1 | 311 | 10 35 809 3 | INSTALACAO HIDRAULICA |
| ANEL DE SEÇÃO RETANGUL | 10490784 | 27 | 4 | 311 | 10 35 809 3 | INSTALACAO HIDRAULICA |
| ANEL DE SEÇÃO RETANGUL | 10490781 | 27 | 1 | 300 | 10 35 801 5 | PASSAGEM HIDRAULICA |
| ANEL DE SEÇÃO RETANGUL | 10490781 | 127 | 1 | 303 | 10 35 801 5 | PASSAGEM HIDRAULICA |
| ANEL DE SEÇÃO RETANGUL | 10490781 | 51 | 4 | 671 | 10 49 815 8 | CILINDRO DE ELEVACAO |
| ANEL DE SEÇÃO RETANGUL | 10490781 | 1 | 12 | 675 | 72 64 501 16 | JOGO DE VEDAÇÃO KANTSIL |
| ANEL DE SEÇÃO RETANGUL | 10472425 | 21 | 4 | 67 | 10 07 713 7 | MECANISMO DE TRANSLAÇÃ |
| ANEL DE SEÇÃO RETANGUL | 10472425 | 7 | 8 | 84 | 10 07 713 5 | INST.HIDR.CARRO INFERIOR |
| ANEL DE SEÇÃO RETANGUL | 10472425 | 110 | 6 | 295 | 10 35 801 2 | INSTALACAO HDRAULICA |
| ANEL DE SEÇÃO RETANGUL | 10472425 | 510 | 4 | 296 | 10 35 801 2 | INSTALACAO HDRAULICA |
| ANEL DE SEÇÃO RETANGUL | 10472425 | 7 | 8 | 300 | 10 35 801 5 | PASSAGEM HIDRAULICA |
| ANEL DE SEÇÃO RETANGUL | 10472425 | 24 | 2 | 300 | 10 35 801 5 | PASSAGEM HIDRAULICA |

| Designação | Artigo | Item | Quanti | Página | Módulo | Designação |
|---|---|---|---|---|---|---|
| ANEL DE SEÇÃO RETANGUL | 10472425 | 81 | 2 | 302 | 10 35 801 5 | PASSAGEM HIDRAULICA |
| ANEL DE SEÇÃO RETANGUL | 10472425 | 12 | 1 | 310 | 10 35 809 3 | INSTALACAO HIDRAULICA |
| ANEL DE SEÇÃO RETANGUL | 10472425 | 92 | 2 | 347 | 10 35 802 8 | INSTALAÇÃO BLOCO DE VÁL |
| ANEL DE SEÇÃO RETANGUL | 10472425 | 122 | 1 | 347 | 10 35 802 8 | INSTALAÇÃO BLOCO DE VÁL |
| ANEL DE SEÇÃO RETANGUL | 10472425 | 215 | 2 | 349 | 10 35 802 8 | INSTALAÇÃO BLOCO DE VÁL |
| ANEL DE SEÇÃO RETANGUL | 10472425 | 11 | 6 | 359 | 10 49 822 5 | TUBULACOES PRESSAO INS |
| ANEL DE SEÇÃO RETANGUL | 10472425 | 16 | 1 | 359 | 10 49 822 5 | TUBULACOES PRESSAO INS |
| ANEL DE SEÇÃO RETANGUL | 10472425 | 21 | 1 | 360 | 10 49 822 5 | TUBULACOES PRESSAO INS |
| ANEL DE SEÇÃO RETANGUL | 10472425 | 26 | 1 | 360 | 10 49 822 5 | TUBULACOES PRESSAO INS |
| ANEL DE SEÇÃO RETANGUL | 10472425 | 31 | 1 | 360 | 10 49 822 5 | TUBULACOES PRESSAO INS |
| ANEL DE SEÇÃO RETANGUL | 10472425 | 36 | 1 | 360 | 10 49 822 5 | TUBULACOES PRESSAO INS |
| ANEL DE SEÇÃO RETANGUL | 10472425 | 62 | 4 | 361 | 10 49 822 5 | TUBULACOES PRESSAO INS |
| ANEL DE SEÇÃO RETANGUL | 10472425 | 40 | 15 | 618 | 10 49 830 0 | LANÇA MONOBLOCO 6,70M |
| ANEL DE SEÇÃO RETANGUL | 10472425 | 13 | 2 | 628 | 10 49 823 5 | BRACO DA CACAMBA 2,35M |
| ANEL DE SEÇÃO RETANGUL | 10472425 | 40 | 6 | 637 | 11 45 153 0 | MANGUEIRAS MONOBLOCO |
| ANEL DE SEÇÃO RETANGUL | 10472425 | 11 | 1 | 655 | 10 06 203 8 | CILINDRO HIDRAULICO |
| ANEL DE SEÇÃO RETANGUL | 10472425 | 14 | 1 | 655 | 10 06 203 8 | CILINDRO HIDRAULICO |
| ANEL DE SEÇÃO RETANGUL | 10472425 | 48 | 4 | 671 | 10 49 815 8 | CILINDRO DE ELEVACAO |
| ANEL DE SEÇÃO RETANGUL | 10472425 | 2 | 12 | 675 | 72 64 501 16 | JOGO DE VEDAÇÃO KANTSIL |
| ANEL DE SEÇÃO RETANGUL | 10490787 | 55 | 1 | 331 | 10 35 798 3 | TANQUE HIDRAULICO INSTA |
| ANEL DE SEÇÃO RETANGUL | 10490787 | 65 | 1 | 331 | 10 35 798 3 | TANQUE HIDRAULICO INSTA |
| ANEL DE SEÇÃO RETANGUL | 10490787 | 53 | 1 | 361 | 10 49 822 5 | TUBULACOES PRESSAO INS |
| ANEL DE SEÇÃO RETANGUL | 10490787 | 42 | 2 | 618 | 10 49 830 0 | LANÇA MONOBLOCO 6,70M |
| ANEL DE SEÇÃO RETANGUL | 10490787 | 42 | 1 | 637 | 11 45 153 0 | MANGUEIRAS MONOBLOCO |
| ANEL DE SEÇÃO RETANGUL | 10490787 | 5 | 2 | 656 | 99 48 785 | CILINDRO HIDR. COM DIVISO |
| ANEL DE SEÇÃO RETANGUL | 10490787 | 3 | 6 | 675 | 72 64 501 16 | JOGO DE VEDAÇÃO KANTSIL |
| ANEL DE SEÇÃO RETANGUL | 10490786 | 38 | 6 | 309 | 10 35 801 3 | ARREFECIMENTO DE OLEO |
| ANEL DE SEÇÃO RETANGUL | 10490786 | 74 | 1 | 347 | 10 35 802 8 | INSTALAÇÃO BLOCO DE VÁL |
| ANEL DE SEÇÃO RETANGUL | 10490786 | 5 | 6 | 675 | 72 64 501 16 | JOGO DE VEDAÇÃO KANTSIL |
| ANEL DE VEDACAO 110,0X125, | 7010660 | 9 | 1 | 669 | 99 52 600 | MANCAL DA HASTE DO PISTA |
| ANEL DE VEDACAO 125,0X140, | 7010659 | 9 | 1 | 667 | 94 01 936 4 | MANCAL DA HASTE DO PISTA |
| ANEL DE VEDACAO 125,0X140, | 7010659 | 9 | 1 | 668 | 94 02 733 6 | MANCAL DA HASTE DO PISTA |
| ANEL DE VEDACAO KANTSIL | 10001114 | 24 | 1 | 139 | 10 35 572 4 | BOMBA HIDRÁULICA |
| ANEL DE VEDAÇÃO | 10014697 | 12 | 2 | 681 | 10 28 689 7 | BOMBA DE LUBRIFICACAO |
| ANEL DE VEDAÇÃO | 10031921 | 5 | 2 | 60 | 10 00 966 2 | RODA GUIA D7G/B7B |
| ANEL DE VEDAÇÃO | 7011286 | 6 | 2 | 454 | 70 10 596 | KIT DE VEDACAO DA BOMBA |
| ANEL DE VEDAÇÃO | 7011288 | 12 | 2 | 454 | 70 10 596 | KIT DE VEDACAO DA BOMBA |
| ANEL DE VEDAÇÃO | 7610225 | 6 | 1 | 192 | 94 42 150 | BOCAL DE ENCHIMENTO DE O |
| ANEL DE VEDAÇÃO 12,7X18,0 | 10011865 | 77 | 4 | 612 | 10 11 583 8 | JOGO DE VEDAÇÃO MOTOR D |
| ANEL DE VEDAÇÃO 14,7X22,0 | 10011866 | 9 | 12 | 513 | 10 11 585 1 | KIT DE VED DO CABEÇOTE CIL |
| ANEL DE VEDAÇÃO 14,7X22,0 | 10011866 | 9 | 12 | 515 | 10 11 585 3 | KIT DE VEDAÇÃO CABEÇOTE |
| ANEL DE VEDAÇÃO 14,7X22,0 | 10011866 | 11 | 2 | 545 | 10 11 559 5 | RETORNO DE OLEO VAZADO |
| ANEL DE VEDAÇÃO 14,7X22,0 | 10011866 | 2 | 12 | 547 | 90 79 083 | TUBULACAO ANEXO |
| ANEL DE VEDAÇÃO 14,7X22,0 | 10011866 | 3 | 2 | 555 | 10 12 421 8 | PURGAMENTO DA ÁGUA REFR |
| ANEL DE VEDAÇÃO 14,7X22,0 | 10011866 | 9 | 2 | 605 | 10 11 801 4 | KIT DE VEDACAO |
| ANEL DE VEDAÇÃO 14,7X22,0 | 10011866 | 75 | 1 | 612 | 10 11 583 8 | JOGO DE VEDAÇÃO MOTOR D |
| ANEL DE VEDAÇÃO 14,7X22,0 | 10011866 | 78 | 25 | 612 | 10 11 583 8 | JOGO DE VEDAÇÃO MOTOR D |
| ANEL DE VEDAÇÃO 16,7X24,0 | 10011867 | 3 | 1 | 536 | 10 11 551 3 | FILTRO FINO DE COMBUSTÍVE |
| ANEL DE VEDAÇÃO 16,7X24,0 | 10011867 | 3 | 1 | 538 | 10 12 580 1 | FILTRO DE COMBUSTÍVEL |
| ANEL DE VEDAÇÃO 16,7X24,0 | 10011867 | 79 | 5 | 612 | 10 11 583 8 | JOGO DE VEDAÇÃO MOTOR D |
| ANEL DE VEDAÇÃO 16,7X24,0 | 10011867 | 80 | 7 | 612 | 10 11 583 8 | JOGO DE VEDAÇÃO MOTOR D |
| ANEL DE VEDAÇÃO 21 | 7371651 | 4 | 1 | 299 | 93 99 179 | CONEXAO P/ ACUMULADOR |
| ANEL DE VEDAÇÃO 26,7X34,9 | 10011870 | 9 | 1 | 482 | 10 11 916 7 | CARCAÇA MANIVELA PURGAM |
| ANEL DE VEDAÇÃO 26,7X34,9 | 10011870 | 76 | 5 | 612 | 10 11 583 8 | JOGO DE VEDAÇÃO MOTOR D |
| ANEL DE VEDAÇÃO 30,7X39X2 | 10113731 | 3 | 2 | 569 | 90 79 889 | CONEXÃO DE AQUECIMENTO |
| ANEL DE VEDAÇÃO 30,7X39X2 | 10113731 | 42 | 2 | 607 | 10 11 801 4 | KIT DE VEDACAO |
| ANEL DE VEDAÇÃO 30,7X39X2 | 10113731 | 42 | 2 | 610 | 10 11 583 8 | JOGO DE VEDAÇÃO MOTOR D |
| ANEL DE VEDAÇÃO 429X457X3 | 7610243 | 58 | 1 | 69 | 94 43 840 | MECANISMO DE TRANSLAÇÃ |
| ANEL DE VEDAÇÃO 4X8X1 | 10016656 | 32 | 4 | 682 | 10 28 689 7 | BOMBA DE LUBRIFICACAO |
| ANEL DE VEDAÇÃO USIT | 5209400 | 70 | 2 | 51 | 10 49 883 7 | CARRO INFERIOR COMPLETO |

| Designação | Artigo | Item | Quanti | Página | Módulo | Designação |
|---|---|---|---|---|---|---|
| ANEL DE VEDAÇÃO USIT 24,7 | 7013519 | 5 | 1 | 328 | 70 30 267 | KIT DE VEDACAO |
| ANEL DE VEDÇÃO DO EIXO R | 7380831 | 17 | 1 | 692 | 98 88 308 | PLACA DE CONEXAO |
| ANEL DE VEDÇÃO DO EIXO R | 7380831 | 35 | 1 | 700 | 92 71 657 | KIT DE VEDAÇÃO |
| ANEL DE VEDÇÃO DO EIXO RA | 10006550 | 1 | 1 | 498 | 10 12 134 5 | KIT DE REPARO RETENTOR D |
| ANEL DE VEDÇÃO DO EIXO RA | 10006551 | 2 | 1 | 498 | 10 12 134 5 | KIT DE REPARO RETENTOR D |
| ANEL DE VEDÇÃO DO EIXO RA | 10014510 | 35 | 1 | 77 | 92 68 751 | KIT DE REPARO |
| ANEL DE VEDÇÃO DO EIXO RA | 10014510 | 35 | 1 | 128 | 98 89 282 | KIT DE REPARO |
| ANEL DE VEDÇÃO DO EIXO RA | 10014510 | 35 | 1 | 149 | 90 73 158 | KIT DE REPARO |
| ANEL DE VEDÇÃO DO EIXO RA | 10014510 | 35 | 1 | 197 | 90 74 285 | KIT DE REPARO |
| ANEL DE VEDÇÃO DO EIXO RA | 10014510 | 35 | 1 | 204 | 92 73 048 | KIT DE VEDAÇÃO |
| ANEL DE VEDÇÃO DO EIXO RA | 10014510 | 35 | 1 | 697 | 92 68 016 | KIT DE REPARO |
| ANEL DE VEDÇÃO DO EIXO RA | 7381204 | 60 | 1 | 110 | 90 77 872 | REDUTOR DISTRIBUICAO BO |
| ANEL DE VEDÇÃO DO EIXO RA | 7381204 | 60 | 1 | 111 | 92 73 201 | KIT DE REPARO |
| ANEL DE VEDÇÃO DO EIXO RA | 7381209 | 60 | 1 | 127 | 92 73 200 | KIT DE VEDAÇÃO |
| ANEL DSF 122X113,36X4 | 10472347 | 5 | 1 | 502 | 90 80 686 | PISTÃO PRÉ-MONT. MONOTH |
| ANEL EM V | 10008428 | 10 | 1 | 141 | 10 35 573 8 | MECANISMO DE ACIONAMENT |
| ANEL EM V 381,5 | 10101459 | 10 | 1 | 144 | 10 41 302 4 | MECANISMO DE ACIONAMENT |
| ANEL EM V JV 15 | 7381690 | 27 | 2 | 690 | 98 82 766 | DISPOSITIVO DE REGULAGE |
| ANEL ESPIRAL DE TEFLON | 7360446 | 8 | 1 | 328 | 70 30 267 | KIT DE VEDACAO |
| ANEL GLYD 10 | 7380136 | 40 | 1 | 271 | 90 79 258 | MODULO DE COMANDO VG7 |
| ANEL GLYD 10 | 7380136 | 40 | 1 | 273 | 90 79 259 | MODULO DE COMANDO VG7 |
| ANEL GLYD 12 | 7381019 | 47 | 1 | 154 | 98 82 875 | KIT VEDACAO VALULA REGUL |
| ANEL GLYD 48X37X4,2 | 7381491 | 25 | 1 | 690 | 98 82 766 | DISPOSITIVO DE REGULAGE |
| ANEL GLYD 48X37X4,2 | 7381491 | 26 | 1 | 699 | 98 82 771 | KIT DE VEDAÇÃO |
| ANEL GUIA | 10216733 | 30 | 2 | 115 | 10 22 041 0 | DISPOSITIVO DE REGULAGE |
| ANEL GUIA 110X115X15,00 | 7005249 | 13 | 3 | 669 | 99 52 600 | MANCAL DA HASTE DO PISTA |
| ANEL GUIA 125X130X15,00 | 7005250 | 13 | 3 | 667 | 94 01 936 4 | MANCAL DA HASTE DO PISTA |
| ANEL GUIA 125X130X15,00 | 7005250 | 13 | 3 | 668 | 94 02 733 6 | MANCAL DA HASTE DO PISTA |
| ANEL INTERMEDIARIO | 9809191 | 45 | 1 | 313 | 10 35 801 7 | INSTALACAO HIDRAULICA |
| ANEL INTERMEDIÁRIO | 10014730 | 9 | 1 | 681 | 10 28 689 7 | BOMBA DE LUBRIFICACAO |
| ANEL L AL 20 | 7381025 | 28 | 1 | 125 | 90 79 811 | KIT REPARO DO PISTAO ATUA |
| ANEL L JL50 | 429612001 | 47 | 1 | 69 | 94 43 840 | MECANISMO DE TRANSLAÇÃ |
| ANEL MANCAL | 9442307 | 5 | 1 | 68 | 94 43 840 | MECANISMO DE TRANSLAÇÃ |
| ANEL NILOS AV | 10030593 | 4 | 1 | 184 | 90 01 790 0 | REDUTOR DE GIRO SAT 375/ |
| ANEL PARA PISTAO 122X113, | 10472345 | 3 | 1 | 502 | 90 80 686 | PISTÃO PRÉ-MONT. MONOTH |
| ANEL RANHURADO | 7610523 | 8 | 1 | 191 | 93 33 333 01 | FREIO |
| ANEL RANHURADO 125X133X1 | 10016715 | 6 | 1 | 53 | 90 15 155 | TENSIONADOR DE GRAXA |
| ANEL RANHURADO 291X281, | 7610521 | 2 | 1 | 191 | 93 33 333 01 | FREIO |
| ANEL RASPADOR | 7610551 | 11 | 1 | 191 | 93 33 333 01 | FREIO |
| ANEL RASPADOR 110X122,2X | 7026111 | 6 | 1 | 669 | 99 52 600 | MANCAL DA HASTE DO PISTA |
| ANEL RASPADOR 125X137,2X | 7023590 | 6 | 1 | 667 | 94 01 936 4 | MANCAL DA HASTE DO PISTA |
| ANEL RASPADOR 125X137,2X | 7023590 | 6 | 1 | 668 | 94 02 733 6 | MANCAL DA HASTE DO PISTA |
| ANEL RASPADOR 274X285X3, | 7610552 | 12 | 1 | 191 | 93 33 333 01 | FREIO |
| ANEL RETENTOR X110X130X8 | 7362183 | 4 | 2 | 629 | 10 49 823 6 | BRACO DA CACAMBA 2,35M |
| ANEL RETENTOR X120X150X1 | 7362184 | 4 | 4 | 638 | 10 35 789 8 | PEÇA DE LIGAÇÃO |
| ANEL RETENTOR X120X150X1 | 7362184 | 15 | 4 | 657 | 94 02 019 4 | CILINDRO HIDRÁULICO |
| ANEL RETENTOR X120X150X1 | 7362184 | 15 | 4 | 658 | 95 87 580 | CILINDRO HIDRÁULICO |
| ANEL RETENTOR X120X150X1 | 7362184 | 15 | 4 | 659 | 95 96 399 | CILINDRO HIDRÁULICO |
| ANEL RETENTOR X140X170X1 | 7362185 | 4 | 2 | 621 | 10 49 830 1 | LANÇA MONOBLOCO 6,70M |
| ANEL RETENTOR X80X95X8 | 7362180 | 6 | 2 | 629 | 10 49 823 6 | BRACO DA CACAMBA 2,35M |
| ANEL S=5,67 | 10220543 | 5 | 2 | 131 | 10 22 052 4 | PISTAO ATUADOR |
| ANEL S=5,72 | 10220544 | 5 | 2 | 131 | 10 22 052 4 | PISTAO ATUADOR |
| ANEL S=5,77 | 10220538 | 5 | 2 | 131 | 10 22 052 4 | PISTAO ATUADOR |
| ANEL S=5,82 | 10220537 | 5 | 2 | 131 | 10 22 052 4 | PISTAO ATUADOR |
| ANEL S=5,87 | 10220539 | 5 | 2 | 131 | 10 22 052 4 | PISTAO ATUADOR |
| ANEL S=5,92 | 10220540 | 5 | 2 | 131 | 10 22 052 4 | PISTAO ATUADOR |
| ANEL S=5,97 | 10220541 | 5 | 2 | 131 | 10 22 052 4 | PISTAO ATUADOR |
| ANEL S=6,02 | 10220542 | 5 | 2 | 131 | 10 22 052 4 | PISTAO ATUADOR |
| ANEL TURCON GLYD 170X14 | 7000293 | 4 | 1 | 665 | 95 90 264 | PISTÃO 170MM |
| ANEL TURCON GLYD 180X15 | 7001629 | 4 | 1 | 663 | 94 00 606 1 | PISTÃO 180MM |

| Designação | Artigo | Item | Quanti | Página | Módulo | Designação |
|---|---|---|---|---|---|---|
| ANEL TURCON GLYD 180X15 | 7001629 | 4 | 1 | 664 | 95 87 597 | PISTÃO 180MM |
| ANEL TURCON GLYD 180X15 | 7001629 | 4 | 1 | 666 | 90 62 632 | JOGO DE VEDAÇÃO 180MM |
| ANEL TURCON GLYD 24X16,5X | 7381490 | 24 | 2 | 690 | 98 82 766 | DISPOSITIVO DE REGULAGE |
| ANEL TURCON GLYD 24X16,5X | 7381490 | 24 | 1 | 699 | 98 82 771 | KIT DE VEDAÇÃO |
| ANEL TURCON GLYD 35X27,5X | 7381029 | 24 | 1 | 125 | 90 79 811 | KIT REPARO DO PISTAO ATUA |
| ANEL TURCON GLYD 35X27,5X | 7381029 | 24 | 1 | 126 | 92 71 653 | KIT DE CEDACAO DA REGULA |
| ANEL TURCON GLYD 52X41X4, | 7380982 | 25 | 1 | 125 | 90 79 811 | KIT REPARO DO PISTAO ATUA |
| ANEL TURCON GLYD 52X41X4, | 7380982 | 25 | 1 | 126 | 92 71 653 | KIT DE CEDACAO DA REGULA |
| ANEL TURCON GLYD 77,7X67X | 10220529 | 31 | 2 | 115 | 10 22 041 0 | DISPOSITIVO DE REGULAGE |
| ANEL VEDACAO HASTE VALV | 10119305 | 2 | 4 | 513 | 10 11 585 1 | KIT DE VED DO CABEÇOTE CIL |
| ANEL VEDACAO HASTE VALV | 10119305 | 2 | 24 | 515 | 10 11 585 3 | KIT DE VEDAÇÃO CABEÇOTE |
| ANEL VEDACAO HASTE VALV | 10120334 | 5 | 4 | 504 | 10 14 155 4 | CABEÇOTE PRÉ-MONTADO |
| ANEL VEDACAO HASTE VALV | 10120334 | 5 | 4 | 508 | 10 12 036 4 | CABEÇOTE PRÉ-MONTADO |
| ANEL VEDACAO HASTE VALV | 10120334 | 2 | 4 | 513 | 10 11 585 1 | KIT DE VED DO CABEÇOTE CIL |
| ANEL VEDACAO HASTE VALV | 10120334 | 2 | 24 | 515 | 10 11 585 3 | KIT DE VEDAÇÃO CABEÇOTE |
| ANEL-GUIA DO PISTAO 170X16 | 9177717 | 2 | 2 | 665 | 95 90 264 | PISTÃO 170MM |
| ANEL-GUIA DO PISTAO 170X16 | 7003429 | 6 | 4 | 665 | 95 90 264 | PISTÃO 170MM |
| ANEL-GUIA DO PISTAO 180X17 | 9177718 | 2 | 2 | 663 | 94 00 606 1 | PISTÃO 180MM |
| ANEL-GUIA DO PISTAO 180X17 | 9177718 | 2 | 2 | 664 | 95 87 597 | PISTÃO 180MM |
| ANEL-GUIA DO PISTAO 180X17 | 9177718 | 2 | 2 | 666 | 90 62 632 | JOGO DE VEDAÇÃO 180MM |
| ANEL-GUIA DO PISTAO 180X17 | 7002927 | 6 | 4 | 663 | 94 00 606 1 | PISTÃO 180MM |
| ANEL-GUIA DO PISTAO 180X17 | 7002927 | 6 | 4 | 664 | 95 87 597 | PISTÃO 180MM |
| ANEL-GUIA DO PISTAO 180X17 | 7002927 | 6 | 4 | 666 | 90 62 632 | JOGO DE VEDAÇÃO 180MM |
| ANEL-O | 10021308 | 999 | 1 | 213 | 10 48 841 6 | BLOCO DE DISTRIBUIÇÃO MX- |
| ANEL-O | 10021308 | 999 | 1 | 216 | 10 10 171 1 | BLOCO DE DISTRIBUIÇÃO MX- |
| ANEL-O | 10021308 | 999 | 1 | 623 | 10 10 171 2 | BLOCO DE DISTRIBUIÇÃO MX- |
| ANEL-O | 10040400 | 46 | 1 | 610 | 10 11 583 8 | JOGO DE VEDAÇÃO MOTOR D |
| ANEL-O | 10216785 | 37 | 1 | 682 | 10 28 689 7 | BOMBA DE LUBRIFICACAO |
| ANEL-O | 10220638 | 9 | 1 | 116 | 10 22 041 1 | PLACA DE CONEXAO |
| ANEL-O | 7028346 | 8 | 1 | 338 | 56 17 689 | VÁLVULA DE FECHAMENTO D |
| ANEL-O | 7264028 | 9 | 1 | 90 | 10 06 948 1 | KIT DE MANUTENÇÃO 1500/25 |
| ANEL-O | 7264028 | 14 | 1 | 297 | 99 37 312 | UNIDADE DE COMANDO DE O |
| ANEL-O | 7264028 | 14 | 1 | 298 | 56 09 948 | KIT DE FILTRO DE OLEO |
| ANEL-O | 7264035 | 8 | 1 | 664 | 95 87 597 | PISTÃO 180MM |
| ANEL-O | 7264091 | 8 | 1 | 663 | 94 00 606 1 | PISTÃO 180MM |
| ANEL-O | 726458601 | 49 | 1 | 69 | 94 43 840 | MECANISMO DE TRANSLAÇÃ |
| ANEL-O | 7363759 | 41 | 2 | 341 | 10 84 584 9 | INSTALACAO BOMBA E EMBR |
| ANEL-O | 7366427 | 43 | 1 | 331 | 10 35 798 3 | TANQUE HIDRAULICO INSTA |
| ANEL-O | 7367226 | 5 | 1 | 328 | 70 30 267 | KIT DE VEDACAO |
| ANEL-O | 7367426 | 36 | 1 | 331 | 10 35 798 3 | TANQUE HIDRAULICO INSTA |
| ANEL-O | 7369456 | 1 | 4 | 334 | 73 68 081 | VIDRO DE INSPECAO |
| ANEL-O | 7373747 | 7 | 2 | 58 | 10 65 168 0 | ROLETE INFERIOR D7 |
| ANEL-O | 7373747 | 7 | 2 | 59 | 11 60 010 7 | ROLETE INFERIOR D7 |
| ANEL-O | 7381442 | 15 | 1 | 154 | 98 82 875 | KIT VEDACAO VALULA REGUL |
| ANEL-O | 7410480 | 150 | 1 | 305 | 10 35 801 4 | MANGUEIRAS HIDRAULICAS |
| ANEL-O | 7410480 | 72 | 1 | 347 | 10 35 802 8 | INSTALAÇÃO BLOCO DE VÁL |
| ANEL-O | 7610361 | 6 | 1 | 68 | 94 43 840 | MECANISMO DE TRANSLAÇÃ |
| ANEL-O 10,82X1,78 | 5610999 | 28 | 1 | 287 | 11 00 359 4 | CARCAÇA |
| ANEL-O 10,82X1,78 | 5610999 | 20 | 2 | 450 | 10 10 131 3 | MANGUEIRA |
| ANEL-O 10,82X1,78 | 7023930 | 28 | 1 | 324 | 10 22 099 7 | KIT DE VEDAÇÃO |
| ANEL-O 10,82X1,78 | 7023930 | 12 | 1 | 325 | 50 09 391 | KIT VEDAÇÃO VÁLVULA DIREC |
| ANEL-O 10,82X1,78 | 7023930 | 8 | 1 | 326 | 50 09 562 | KIT VEDAÇÃO VÁLVULA DIREC |
| ANEL-O 100X5 | 11008055 | 5 | 1 | 551 | 90 77 279 | LUVA DE CONEXÃO MONTAGE |
| ANEL-O 100X5 | 11008055 | 2211 | 1 | 613 | 10 11 583 8 | JOGO DE VEDAÇÃO MOTOR D |
| ANEL-O 101,19X3,53 | 10289210 | 6 | 1 | 539 | 10 22 281 9 | PRÉ-FILTRO COMBUST.COM |
| ANEL-O 10X2 | 7007505 | 35 | 1 | 328 | 70 30 267 | KIT DE VEDACAO |
| ANEL-O 11,5X1,5 | 10289306 | 10 | 2 | 221 | 10 02 131 0 | KIT DE VEDAÇÃO |
| ANEL-O 110,49X5,33 | 7014178 | 4 | 1 | 630 | 90 18 795 | ANEL |
| ANEL-O 110X2,5 | 10008091 | 21 | 1 | 139 | 10 35 572 4 | BOMBA HIDRÁULICA |
| ANEL-O 116,84X5,33 | 7000948 | 11 | 2 | 669 | 99 52 600 | MANCAL DA HASTE DO PISTA |

| Designação | Artigo | Item | Quanti | Página | Módulo | Designação |
|---|---|---|---|---|---|---|
| ANEL-O 116,84X7 | 7002054 | 12 | 1 | 669 | 99 52 600 | MANCAL DA HASTE DO PISTA |
| ANEL-O 12,37X2,62 | 7028158 | 10 | 1 | 132 | 10 22 063 5 | VALVULA INTERRUPTORA |
| ANEL-O 12,42X1,78 | 10220641 | 47 | 2 | 116 | 10 22 041 1 | PLACA DE CONEXAO |
| ANEL-O 12,42X1,78 | 7023931 | 13 | 1 | 325 | 50 09 391 | KIT VEDAÇÃO VÁLVULA DIREC |
| ANEL-O 12,42X1,78 | 7023931 | 9 | 1 | 326 | 50 09 562 | KIT VEDAÇÃO VÁLVULA DIREC |
| ANEL-O 12,60X2,80 | 10040401 | 1 | 1 | 534 | 90 75 395 | BOCAL DE TUBO DE PRESSA |
| ANEL-O 120,50X3,53 | 7381912 | 4 | 1 | 563 | 10 13 281 7 | BOMBA DE ÁGUA PRÉ-MONT |
| ANEL-O 120,50X3,53 | 7381912 | 12 | 1 | 605 | 10 11 801 4 | KIT DE VEDACAO |
| ANEL-O 120,50X3,53 | 7381912 | 12 | 1 | 608 | 10 11 583 8 | JOGO DE VEDAÇÃO MOTOR D |
| ANEL-O 120X2,5 | 10101449 | 22 | 1 | 121 | 10 41 301 3 | BOMBA HIDRÁULICA |
| ANEL-O 125,00X2,0 | 10002310 | 47 | 1 | 610 | 10 11 583 8 | JOGO DE VEDAÇÃO MOTOR D |
| ANEL-O 14,00X1,78 | 7411823 | 29 | 1 | 287 | 11 00 359 4 | CARCAÇA |
| ANEL-O 140 | 10006499 | 4 | 2 | 481 | 90 73 083 | CILINDRO |
| ANEL-O 140 | 10006499 | 62 | 12 | 611 | 10 11 583 8 | JOGO DE VEDAÇÃO MOTOR D |
| ANEL-O 140X3 | 10014694 | 7 | 1 | 681 | 10 28 689 7 | BOMBA DE LUBRIFICACAO |
| ANEL-O 148,59X7 | 7000290 | 3 | 1 | 630 | 90 18 795 | ANEL |
| ANEL-O 148,59X7 | 7000290 | 3 | 1 | 665 | 95 90 264 | PISTÃO 170MM |
| ANEL-O 14x2 | 10220819 | 4 | 1 | 137 | 10 22 081 6 | VÁLVULA DE PARTIDA FRIA |
| ANEL-O 15,50X2,00 | 10113975 | 2 | 1 | 587 | 90 76 550 | TRANSDUTOR DE PRESSAO C |
| ANEL-O 15,50X2,00 | 10113975 | 59 | 1 | 611 | 10 11 583 8 | JOGO DE VEDAÇÃO MOTOR D |
| ANEL-O 15,54X2,62 | 7002641 | 14 | 1 | 327 | 70 25 142 | KIT DE VEDAÇÃO |
| ANEL-O 158,12X7 | 7264438 | 3 | 1 | 663 | 94 00 606 1 | PISTÃO 180MM |
| ANEL-O 158,12X7 | 7264438 | 3 | 1 | 664 | 95 87 597 | PISTÃO 180MM |
| ANEL-O 158,12X7 | 7264438 | 3 | 1 | 666 | 90 62 632 | JOGO DE VEDAÇÃO 180MM |
| ANEL-O 159,3X5,7 | 7264098 | 7 | 1 | 668 | 94 02 733 6 | MANCAL DA HASTE DO PISTA |
| ANEL-O 15X2 | 7264625 | 1 | 1 | 491 | 50 04 624 | VÁLVULA DE DRENAGEM M 3 |
| ANEL-O 16,0X1,5 | 7371590 | 6 | 1 | 315 | 10 04 272 9 | BLOCO DE VÁLVULAS DE CO |
| ANEL-O 169,2X5,7 | 7264535 | 7 | 1 | 667 | 94 01 936 4 | MANCAL DA HASTE DO PISTA |
| ANEL-O 169,2X5,7 | 7264535 | 7 | 1 | 669 | 99 52 600 | MANCAL DA HASTE DO PISTA |
| ANEL-O 16x2 | 7026041 | 17 | 4 | 325 | 50 09 391 | KIT VEDAÇÃO VÁLVULA DIREC |
| ANEL-O 16x2 | 7026041 | 7 | 2 | 326 | 50 09 562 | KIT VEDAÇÃO VÁLVULA DIREC |
| ANEL-O 17,12X2,62 | 7028185 | 25 | 2 | 147 | 70 28 075 | UNIDADE DE CONTROLE |
| ANEL-O 17,17X1,78 | 7013245 | 14 | 1 | 325 | 50 09 391 | KIT VEDAÇÃO VÁLVULA DIREC |
| ANEL-O 17,17X1,78 | 7013245 | 10 | 1 | 326 | 50 09 562 | KIT VEDAÇÃO VÁLVULA DIREC |
| ANEL-O 18X2,5 | 7264642 | 1 | 1 | 168 | 52 11 460 | UNIAO ROSCADA FLANGE EM |
| ANEL-O 195X3 | 7610217 | 71 | 2 | 69 | 94 43 840 | MECANISMO DE TRANSLAÇÃ |
| ANEL-O 20,29X2,62 | 7020576 | 5 | 1 | 328 | 70 30 267 | KIT DE VEDACAO |
| ANEL-O 20,90X3,00 | 10040399 | 6 | 1 | 533 | 10 11 658 7 | VALVULA INJETORA |
| ANEL-O 20,90X3,00 | 10040399 | 1 | 1 | 535 | 10 11 585 4 | KIT DE VEDACAO DO BICO IN |
| ANEL-O 200X4 | 11067315 | 1 | 1 | 593 | 10 11 790 0 | MÓDULO DE CONTROLE DO |
| ANEL-O 209,14X3,53 | 10016657 | 33 | 1 | 682 | 10 28 689 7 | BOMBA DE LUBRIFICACAO |
| ANEL-O 20X2 | 7007339 | 38 | 1 | 328 | 70 30 267 | KIT DE VEDACAO |
| ANEL-O 21,89X2,62 | 10220698 | 13 | 3 | 118 | 10 22 041 7 | FILTRO |
| ANEL-O 21,89X2,62 | 7264404 | 20 | 1 | 326 | 50 09 562 | KIT VEDAÇÃO VÁLVULA DIREC |
| ANEL-O 21,95X1,78 | 7024500 | 13 | 1 | 327 | 70 25 142 | KIT DE VEDAÇÃO |
| ANEL-O 23,47X2,62 | 7023769 | 8 | 1 | 146 | 57 15 963 | VÁLVULA LIMITADORA DE PR |
| ANEL-O 23,52X1,78 | 7017668 | 31 | 1 | 324 | 10 22 099 7 | KIT DE VEDAÇÃO |
| ANEL-O 24X1,5 | 7030286 | 312 | 1 | 328 | 70 30 267 | KIT DE VEDACAO |
| ANEL-O 24X2,5 | 7361549 | 1 | 1 | 99 | 73 67 136 | REDUÇÃO BFW 35L |
| ANEL-O 25X3,53 | 7015407 | 10 | 1 | 339 | 10 22 239 3 | FILTRO DE VENTILACAO |
| ANEL-O 26,00X3,00 | 10004261 | 12 | 1 | 484 | 90 79 480 | SUPORTE DOS AGREGADOS |
| ANEL-O 26,00X3,00 | 10004261 | 13 | 1 | 605 | 10 11 801 4 | KIT DE VEDACAO |
| ANEL-O 26,00X3,00 | 10004261 | 13 | 1 | 608 | 10 11 583 8 | JOGO DE VEDAÇÃO MOTOR D |
| ANEL-O 260X3 | 7610202 | 3 | 1 | 191 | 93 33 333 01 | FREIO |
| ANEL-O 26X3 | 7007759 | 7 | 1 | 328 | 70 30 267 | KIT DE VEDACAO |
| ANEL-O 29,82X2,62 | 7006212 | 25 | 1 | 122 | 56 16 530 | BOMBA DE PISTÃO AXIAL |
| ANEL-O 2X1,5 | 10289308 | 20 | 7 | 221 | 10 02 131 0 | KIT DE VEDAÇÃO |
| ANEL-O 2X1,5 | 10289308 | 30 | 1 | 222 | 10 02 131 1 | KIT DE VEDAÇÃO |
| ANEL-O 34,59X2,62 | 7007476 | 2 | 1 | 369 | 56 10 135 | VALVULA DE ALIMENTACAO |
| ANEL-O 340X4 | 7610341 | 74 | 1 | 185 | 90 01 790 0 | REDUTOR DE GIRO SAT 375/ |

| Designação | Artigo | Item | Quanti | Página | Módulo | Designação |
|---|---|---|---|---|---|---|
| ANEL-O 37,69X3,53 | 7022120 | 16 | 1 | 363 | 10 21 821 5 | VALVULA DE RETENCAO |
| ANEL-O 37,69X3,53 | 7022120 | 16 | 1 | 364 | 10 21 986 3 | VALVULA DE RETENCAO |
| ANEL-O 37,69X3,53 | 7264687 | 3 | 1 | 662 | 92 70 390 | JG V VÁLVULA RET. DE ESTRA |
| ANEL-O 39,34X2,62 | 7381812 | 4 | 1 | 523 | 90 74 796 | BOMBA ÓLEO LUBR. C/FIX. |
| ANEL-O 39,34X2,62 | 7381812 | 54 | 1 | 611 | 10 11 583 8 | JOGO DE VEDAÇÃO MOTOR D |
| ANEL-O 4,00X1,00 | 7381562 | 43 | 2 | 154 | 98 82 875 | KIT VEDACAO VALULA REGUL |
| ANEL-O 40,00X4,00 | 10040404 | 3 | 1 | 530 | 10 11 585 5 | KIT DE VEDACAO DO BICO IN |
| ANEL-O 41X1,78 | 7380888 | 69 | 1 | 154 | 98 82 875 | KIT VEDACAO VALULA REGUL |
| ANEL-O 41X1,78 | 7380888 | 69 | 1 | 694 | 10 13 305 9 | VALVULA REGULADORA |
| ANEL-O 41X1,78 | 7380888 | 61 | 1 | 700 | 92 71 657 | KIT DE VEDAÇÃO |
| ANEL-O 45,00X2,50 | 10040403 | 2 | 1 | 530 | 10 11 585 5 | KIT DE VEDACAO DO BICO IN |
| ANEL-O 46X3 | 7368904 | 10 | 1 | 340 | 10 02 217 5 | SENSOR DE NÍVEL |
| ANEL-O 47,00X2,50 | 10040402 | 1 | 1 | 530 | 10 11 585 5 | KIT DE VEDACAO DO BICO IN |
| ANEL-O 47,22X3,53 | 7360048 | 45 | 3 | 366 | 10 03 245 2 | BLOCO DE COMANDO |
| ANEL-O 5,10X1,60 | 10215824 | 1 | 1 | 489 | 90 79 862 | VARETA DE NÍVEL DE ÓLEO C |
| ANEL-O 6,02X2,62 | 7028183 | 23 | 1 | 147 | 70 28 075 | UNIDADE DE CONTROLE |
| ANEL-O 6,07X1,78 | 10220666 | 15 | 1 | 132 | 10 22 063 5 | VALVULA INTERRUPTORA |
| ANEL-O 63,17X2,62 | 7005820 | 1 | 2 | 368 | 56 04 335 | JOGO VEDAÇÃO EIXO DO PIS |
| ANEL-O 63,17X2,62 | 7369130 | 31 | 14 | 365 | 10 03 245 2 | BLOCO DE COMANDO |
| ANEL-O 63,17X2,62 | 7380970 | 13 | 1 | 514 | 10 11 585 1 | KIT DE VED DO CABEÇOTE CIL |
| ANEL-O 63,17X2,62 | 7380970 | 13 | 1 | 516 | 10 11 585 3 | KIT DE VEDAÇÃO CABEÇOTE |
| ANEL-O 63,17X2,62 | 7380970 | 8 | 1 | 552 | 10 12 190 8 | LINHA DE CONEXAO |
| ANEL-O 63,17X2,62 | 7380970 | 8 | 1 | 553 | 90 79 964 | LINHA DE CONEXAO |
| ANEL-O 66,00X3,00 | 7008755 | 5 | 1 | 357 | 93 70 592 | VALVULA DE RETENCAO |
| ANEL-O 68,26X3,53 | 7381593 | 3 | 2 | 563 | 10 13 281 7 | BOMBA DE ÁGUA PRÉ-MONT |
| ANEL-O 68,26X3,53 | 7381593 | 11 | 2 | 605 | 10 11 801 4 | KIT DE VEDACAO |
| ANEL-O 68,26X3,53 | 7381593 | 11 | 2 | 608 | 10 11 583 8 | JOGO DE VEDAÇÃO MOTOR D |
| ANEL-O 69,52X2,62 | 7006216 | 20 | 2 | 115 | 10 22 041 0 | DISPOSITIVO DE REGULAGE |
| ANEL-O 6X1,5 | 10289311 | 20 | 2 | 222 | 10 02 131 1 | KIT DE VEDAÇÃO |
| ANEL-O 7,5X1,5 | 10289310 | 10 | 2 | 222 | 10 02 131 1 | KIT DE VEDAÇÃO |
| ANEL-O 7,65X1,78 | 7264360 | 9 | 1 | 60 | 10 00 966 2 | RODA GUIA D7G/B7B |
| ANEL-O 7,65x1,78 | 10024675 | 11 | 2 | 315 | 10 04 272 9 | BLOCO DE VÁLVULAS DE CO |
| ANEL-O 78,97X3,53 | 10220707 | 11 | 1 | 90 | 10 06 948 1 | KIT DE MANUTENÇÃO 1500/25 |
| ANEL-O 78,97X3,53 | 10220707 | 10 | 1 | 135 | 10 22 069 9 | FILTRO |
| ANEL-O 78X3 | 7361548 | 6 | 2 | 60 | 10 00 966 2 | RODA GUIA D7G/B7B |
| ANEL-O 80X5,0 | 10022320 | 12 | 2 | 514 | 10 11 585 1 | KIT DE VED DO CABEÇOTE CIL |
| ANEL-O 80X5,0 | 10022320 | 12 | 2 | 516 | 10 11 585 3 | KIT DE VEDAÇÃO CABEÇOTE |
| ANEL-O 80X5,0 | 10022320 | 5 | 2 | 552 | 10 12 190 8 | LINHA DE CONEXAO |
| ANEL-O 80X5,0 | 10022320 | 5 | 2 | 553 | 90 79 964 | LINHA DE CONEXAO |
| ANEL-O 80X5,0 | 10022320 | 21 | 2 | 607 | 10 11 801 4 | KIT DE VEDACAO |
| ANEL-O 85,00X2,00 | 10218370 | 1 | 1 | 575 | 10 11 553 9 | MOTOR DE PARTIDA - MONTA |
| ANEL-O 85,00X2,00 | 10218370 | 2 | 1 | 577 | 10 21 997 8 | MOTOR DE PARTIDA |
| ANEL-O 88,57X2,62 | 10220668 | 2 | 1 | 117 | 10 22 041 5 | REPARO DA BOMBA |
| ANEL-O 88,57X2,62 | 10220668 | 3 | 1 | 130 | 10 21 681 6 | PLACA DE DESGASTE |
| ANEL-O 88,57X2,62 | 10220668 | 9 | 1 | 133 | 10 22 066 7 | BOMBA DE ENGRENAGENS |
| ANEL-O 88X3 | 7264087 | 8 | 1 | 665 | 95 90 264 | PISTÃO 170MM |
| ANEL-O 9,25X1,78 | 10220549 | 19 | 1 | 131 | 10 22 052 4 | PISTAO ATUADOR |
| ANEL-O 9,25X1,78 | 10220640 | 26 | 2 | 116 | 10 22 041 1 | PLACA DE CONEXAO |
| ANEL-O 9,25X1,78 | 7023929 | 12 | 2 | 323 | 73 71 025 | PLACA DE FECHAMENTO |
| ANEL-O 9,25X1,78 | 7028184 | 24 | 2 | 147 | 70 28 075 | UNIDADE DE CONTROLE |
| ANEL-O 9,25x1,78 | 10043241 | 27 | 1 | 324 | 10 22 099 7 | KIT DE VEDAÇÃO |
| ANEL-O 9,25x1,78 | 10043241 | 11 | 1 | 325 | 50 09 391 | KIT VEDAÇÃO VÁLVULA DIREC |
| ANEL-O AEHNL.DIN 3771 380X | 726457301 | 26 | 1 | 184 | 90 01 790 0 | REDUTOR DE GIRO SAT 375/ |
| ANILHA CÔNICA DKR 6 | 7027946 | 3 | 1 | 217 | 90 64 786 | ELEMENTO DE CONEXÃO |
| ANTENA | 6001556 | 180 | 1 | 420 | 10 48 808 7 | INSTALACAO ELETRICA |
| APOIO DE CABECA | 10493046 | 3 | 1 | 233 | 11 10 016 6 | PARTE SUPERIOR DE ASSENT |
| APOIO DIREITO PARA BRAÇO | 10113062 | 14 | 1 | 233 | 11 10 016 6 | PARTE SUPERIOR DE ASSENT |
| APOIO DIREITO PARA BRAÇO | 10840866 | 30 | 1 | 229 | 10 49 880 9 | POSTO DE COMANDO - PEÇA |
| APOIO DO MOTOR | 10331634 | 16 | 1 | 167 | 10 35 508 4 | RADIADOR DE ÓLEO |
| APOIO DO MOTOR | 10331672 | 39 | 1 | 165 | 10 45 475 2 | RADIADOR COMBINADO |

| Designação | Artigo | Item | Quanti | Página | Módulo | Designação |
|---|---|---|---|---|---|---|
| APOIO ESQUERDO PARA BR | 10113060 | 15 | 1 | 233 | 11 10 016 6 | PARTE SUPERIOR DE ASSENT |
| APOIO ESQUERDO PARA BR | 10385024 | 20 | 1 | 229 | 10 49 880 9 | POSTO DE COMANDO - PEÇA |
| APOIO PARA COLUNA | 10219021 | 57 | 1 | 234 | 11 10 016 6 | PARTE SUPERIOR DE ASSENT |
| ARCO DE FIXACAO | 10021823 | 72 | 1 | 280 | 10 40 689 8 | SISTEMA DE AR CONDICION |
| ARRASTADOR | 10014729 | 8 | 1 | 681 | 10 28 689 7 | BOMBA DE LUBRIFICACAO |
| ARRASTADOR | 9948083 | 2 | 1 | 94 | 99 48 085 | ARRASTADOR - INSTALACAO |
| ARRASTADOR - INSTALACAO | 9948085 | 174 | 1 | 85 | 10 35 798 2 | CARRO SUPERIOR |
| ARREFECIMENTO DE OLEO | 10358013 | 7070 | 1 | 294 | 10 35 809 0 | INSTALACAO HIDRAULICA |
| ARREFECIMENTO DO MOTOR | 10358092 | 560 | 1 | 96 | 10 35 808 9 | INSTALAÇÃO DO MOTOR |
| ARREFECIMENTO DO PISTAO | 9073795 | 15 | 6 | 469 | 10 11 668 5 | MOTOR DIESEL D936 L A6 240 |
| ARRUELA | 10013965 | 460 | 2 | 428 | 10 29 026 4 | PEÇAS DE MONTAGEM |
| ARRUELA | 10023245 | 270 | 6 | 432 | 10 48 808 8 | REVESTIMENTO INTERNO |
| ARRUELA | 10074972 | 18 | 2 | 382 | 99 29 189 | CAPO DIREITO |
| ARRUELA | 10074972 | 18 | 2 | 386 | 10 35 792 6 | PORTA LATERAL CENTRAL E |
| ARRUELA | 10076844 | 16 | 2 | 386 | 10 35 792 6 | PORTA LATERAL CENTRAL E |
| ARRUELA | 10216714 | 27 | 2 | 345 | 10 22 042 7 | MECANISMO DE ACIONAMENT |
| ARRUELA | 10220138 | 660 | 5 | 429 | 10 29 026 4 | PEÇAS DE MONTAGEM |
| ARRUELA | 10326997 | 17 | 8 | 164 | 10 45 475 2 | RADIADOR COMBINADO |
| ARRUELA | 10326997 | 11 | 4 | 167 | 10 35 508 4 | RADIADOR DE ÓLEO |
| ARRUELA | 10357911 | 16 | 2 | 384 | 10 35 817 2 | PORTA LATERAL TRASEIRA |
| ARRUELA | 10357913 | 18 | 2 | 384 | 10 35 817 2 | PORTA LATERAL TRASEIRA |
| ARRUELA | 3001445 | 3 | 1 | 643 | 10 06 090 1 | PINO COMPLETO |
| ARRUELA | 3001446 | 11 | 1 | 646 | 93 74 949 | PINO COMPLETO |
| ARRUELA | 3001590 | 3 | 1 | 644 | 10 06 097 3 | PINO COMPLETO |
| ARRUELA | 4901879 | 24 | 25 | 641 | 10 49 881 6 | TRILHO DESLIZANTE |
| ARRUELA | 4980230 | 72 | 4 | 241 | 97 58 815 01 | PLACA ELETRÔNICA |
| ARRUELA | 7019801 | 150 | 2 | 414 | 70 28 769 | PORTA DA CABINE DO MOTO |
| ARRUELA | 7362752 | 62 | 1 | 230 | 10 49 880 9 | POSTO DE COMANDO - PEÇA |
| ARRUELA | 7362752 | 103 | 4 | 251 | 10 84 086 6 | APOIO DIREITO PARA BRAÇO |
| ARRUELA | 7369776 | 12 | 1 | 442 | 99 47 695 | INSTALAÇÃO ELÉTRICA E50 |
| ARRUELA | 932719401 | 5 | 1 | 184 | 90 01 790 0 | REDUTOR DE GIRO SAT 375/ |
| ARRUELA | 9461178 | 2 | 2 | 97 | 10 35 800 7 | PECAS DE FIXACAO DO MOTO |
| ARRUELA | 9461178 | 12 | 4 | 97 | 10 35 800 7 | PECAS DE FIXACAO DO MOTO |
| ARRUELA | 9686917 | 126 | 4 | 376 | 10 35 800 4 | REVESTIMENTO |
| ARRUELA | 9686917 | 4 | 2 | 395 | 10 37 936 3 | TAMPA |
| ARRUELA 10 200HV | 4900531 | 26 | 1 | 371 | 10 07 369 5 | REVESTIMENTO DA PLAT.GI |
| ARRUELA 10 200HV | 4900531 | 82 | 4 | 375 | 10 35 800 4 | REVESTIMENTO |
| ARRUELA 10,5 | 4601173 | 17 | 8 | 160 | 10 35 809 2 | ARREFECIMENTO DO MOTOR |
| ARRUELA 10,5X18,5X2 | 9076638 | 2 | 3 | 573 | 90 80 735 | KIT DO TURBO COMPRESSOR |
| ARRUELA 12 200HV | 4901782 | 12 | 2 | 624 | 10 38 408 5 | LUBRIFICAÇÃO CENTRALIZAD |
| ARRUELA 12 200HV | 4901782 | 17 | 2 | 624 | 10 38 408 5 | LUBRIFICAÇÃO CENTRALIZAD |
| ARRUELA 12 200HV | 4901782 | 29 | 2 | 632 | 10 38 484 8 | LUBRIFICAÇÃO CENTRALIZAD |
| ARRUELA 12 300HV | 10358988 | 8 | 17 | 581 | 10 11 557 7 | CÁRTER VOLANTE MONT. EXT |
| ARRUELA 12,5/21X3,5 | 9918226 | 57 | 8 | 51 | 10 49 883 7 | CARRO INFERIOR COMPLETO |
| ARRUELA 12,5/55X5 | 9380109 | 11 | 4 | 160 | 10 35 809 2 | ARREFECIMENTO DO MOTOR |
| ARRUELA 13X35X5 | 4635283 | 12 | 8 | 95 | 10 07 366 1 | QUADRO INSTALACAO |
| ARRUELA 13X35X5 | 4635283 | 12 | 10 | 371 | 10 07 369 5 | REVESTIMENTO DA PLAT.GI |
| ARRUELA 13X35X5 | 4635283 | 22 | 4 | 371 | 10 07 369 5 | REVESTIMENTO DA PLAT.GI |
| ARRUELA 13X35X5 | 4635283 | 16 | 4 | 372 | 10 35 800 4 | REVESTIMENTO |
| ARRUELA 13X35X5 | 4635283 | 25 | 3 | 372 | 10 35 800 4 | REVESTIMENTO |
| ARRUELA 13X35X5 | 4635283 | 32 | 16 | 372 | 10 35 800 4 | REVESTIMENTO |
| ARRUELA 13X35X5 | 4635283 | 42 | 5 | 373 | 10 35 800 4 | REVESTIMENTO |
| ARRUELA 13X35X5 | 4635283 | 52 | 5 | 373 | 10 35 800 4 | REVESTIMENTO |
| ARRUELA 13X35X5 | 4635283 | 62 | 5 | 373 | 10 35 800 4 | REVESTIMENTO |
| ARRUELA 13X35X5 | 4635283 | 71 | 4 | 374 | 10 35 800 4 | REVESTIMENTO |
| ARRUELA 13X35X5 | 4635283 | 112 | 5 | 375 | 10 35 800 4 | REVESTIMENTO |
| ARRUELA 13X35X5 | 4635283 | 152 | 5 | 377 | 10 35 800 4 | REVESTIMENTO |
| ARRUELA 13X35X5 | 4635283 | 167 | 12 | 378 | 10 35 800 4 | REVESTIMENTO |
| ARRUELA 16,5/28X4 | 9918228 | 52 | 8 | 51 | 10 49 883 7 | CARRO INFERIOR COMPLETO |
| ARRUELA 16,5/28X4 | 9918228 | 65 | 8 | 51 | 10 49 883 7 | CARRO INFERIOR COMPLETO |

| Designação | Artigo | Item | Quanti | Página | Módulo | Designação |
|---|---|---|---|---|---|---|
| ARRUELA 16,5/28X4 | 9918228 | 27 | 1 | 98 | 10 04 942 6 | SUSPENSAO DO MOTOR |
| ARRUELA 16,5/28X4 | 9918228 | 11 | 4 | 293 | 98 79 063 | PLACA DO ASSOALHO DA CAB |
| ARRUELA 16,5/28X4 | 9918228 | 3 | 4 | 356 | 10 08 743 7 | PECAS DE FIXACAO PARA VA |
| ARRUELA 16,5X32X8 | 9075249 | 53 | 2 | 110 | 90 77 872 | REDUTOR DISTRIBUICAO BO |
| ARRUELA 20 300-370HV | 4600222 | 5 | 3 | 453 | 90 18 426 | FIXACAO TANQUE DE COMB |
| ARRUELA 20,5/34X5 | 9918229 | 47 | 80 | 51 | 10 49 883 7 | CARRO INFERIOR COMPLETO |
| ARRUELA 20,5/34X5 | 9918229 | 4 | 48 | 67 | 10 07 713 7 | MECANISMO DE TRANSLAÇÃ |
| ARRUELA 20,5/34X5 | 9918229 | 5 | 3 | 332 | 10 37 130 3 | FIXACAO TANQUE HIDRAULIC |
| ARRUELA 20,5/34X5 | 9918229 | 5 | 3 | 333 | 99 46 056 | FIXACAO TANQUE HIDRAULIC |
| ARRUELA 20,5/34X5 | 9918229 | 4 | 32 | 676 | 11 10 231 4 | GUIA DE CORRENTE QUADRU |
| ARRUELA 24,5/40X5 | 9918230 | 7 | 48 | 67 | 10 07 713 7 | MECANISMO DE TRANSLAÇÃ |
| ARRUELA 24,5/40X5 | 9918230 | 33 | 9 | 657 | 94 02 019 4 | CILINDRO HIDRÁULICO |
| ARRUELA 24,5/40X5 | 9918230 | 33 | 9 | 658 | 95 87 580 | CILINDRO HIDRÁULICO |
| ARRUELA 24,5/40X5 | 9918230 | 33 | 9 | 659 | 95 96 399 | CILINDRO HIDRÁULICO |
| ARRUELA 25 | 4600701 | 3 | 1 | 645 | 10 49 833 5 | PINO |
| ARRUELA 27,5/45X6 | 9586495 | 14 | 50 | 205 | 10 83 653 3 | COROA GIRATÓRIA - INSTALA |
| ARRUELA 29X47X5 | 9273116 | 22 | 2 | 108 | 90 77 872 | REDUTOR DISTRIBUICAO BO |
| ARRUELA 3,8X12,5X1 | 9265402 | 23 | 4 | 271 | 90 79 258 | MODULO DE COMANDO VG7 |
| ARRUELA 3,8X12,5X1 | 9265402 | 23 | 4 | 273 | 90 79 259 | MODULO DE COMANDO VG7 |
| ARRUELA 3,8X12,5X1 | 9265402 | 23 | 8 | 688 | 10 11 856 1 | MODULO DE COMANDO VG6- |
| ARRUELA 4 | 421802008 | 6 | 12 | 285 | 10 02 211 7 | CARCACA DE CONDUCAO DE |
| ARRUELA 4 | 421802008 | 33 | 4 | 287 | 11 00 359 4 | CARCAÇA |
| ARRUELA 44X63X10 | 9073074 | 20 | 1 | 108 | 90 77 872 | REDUTOR DISTRIBUICAO BO |
| ARRUELA 5 200HV | 4600305 | 74 | 1 | 238 | 10 38 502 4 | APOIO ESQUERDO PARA BR |
| ARRUELA 5 200HV | 4600305 | 45 | 4 | 331 | 10 35 798 3 | TANQUE HIDRAULICO INSTA |
| ARRUELA 5 200HV | 4600305 | 124 | 1 | 344 | 10 84 584 9 | INSTALACAO BOMBA E EMBR |
| ARRUELA 5 200HV | 4600305 | 110 | 12 | 432 | 10 48 808 8 | REVESTIMENTO INTERNO |
| ARRUELA 5 200HV | 4600305 | 17 | 4 | 442 | 99 47 695 | INSTALAÇÃO ELÉTRICA E50 |
| ARRUELA 6 200HV | 4600198 | 28 | 4 | 237 | 10 38 502 4 | APOIO ESQUERDO PARA BR |
| ARRUELA 6 200HV | 4600198 | 7 | 4 | 268 | 10 05 981 8 | PRÉ-COMANDO DE PEDAL M |
| ARRUELA 6 200HV | 4600198 | 26 | 8 | 391 | 10 06 692 0 | CAIXA DE FERRAMENTAS |
| ARRUELA 6 200HV | 4600198 | 26 | 8 | 393 | 10 37 938 6 | CAIXA DE FERRAMENTAS |
| ARRUELA 6 200HV | 4600198 | 330 | 4 | 433 | 10 48 808 8 | REVESTIMENTO INTERNO |
| ARRUELA 6 200HV | 4600198 | 460 | 2 | 433 | 10 48 808 8 | REVESTIMENTO INTERNO |
| ARRUELA 8 200HV | 420001201 | 13 | 5 | 563 | 10 13 281 7 | BOMBA DE ÁGUA PRÉ-MONT |
| ARRUELA 8,4 200HV | 4216025 | 8 | 8 | 379 | 10 08 167 3 | CAPO DO MOTOR |
| ARRUELA 9,3X13X0,5 | 7380232 | 23 | 5 | 76 | 92 67 037 | VÁLVULA LIMITADORA DE PR |
| ARRUELA 9,5X15X0,2 | 10022769 | 2 | 2 | 285 | 10 02 211 7 | CARCACA DE CONDUCAO DE |
| ARRUELA 9,5X15X0,2 | 10022769 | 3 | 2 | 290 | 10 02 277 7 | GRADE DE CIRCULACAO DE A |
| ARRUELA 9X25X6 | 9271441 | 21 | 2 | 108 | 90 77 872 | REDUTOR DISTRIBUICAO BO |
| ARRUELA A 8 200HV | 4000779 | 61 | 4 | 279 | 94 02 247 7 | BANCO DO MOTORISTA |
| ARRUELA A 8 200HV | 4000779 | 43 | 1 | 280 | 10 40 689 8 | SISTEMA DE AR CONDICION |
| ARRUELA A 8 200HV | 4000779 | 20 | 4 | 292 | 11 00 707 2 | TRILHO DO BANCO DO OPERA |
| ARRUELA A 8 200HV | 4000779 | 16 | 4 | 379 | 10 08 167 3 | CAPO DO MOTOR |
| ARRUELA A 8 200HV | 4000779 | 11 | 1 | 390 | 10 06 692 0 | CAIXA DE FERRAMENTAS |
| ARRUELA A 8 200HV | 4000779 | 16 | 5 | 391 | 10 06 692 0 | CAIXA DE FERRAMENTAS |
| ARRUELA A 8 200HV | 4000779 | 16 | 5 | 393 | 10 37 938 6 | CAIXA DE FERRAMENTAS |
| ARRUELA A 8 200HV | 4000779 | 47 | 1 | 447 | 10 35 814 3 | MAGUEIRAS DO AR-CONDICI |
| ARRUELA A 8 200HV | 4000779 | 8 | 2 | 461 | 10 35 852 5 | ESPELHO EXTERNO - INSTALA |
| ARRUELA A 8 200HV | 4000779 | 7 | 2 | 462 | 10 37 283 6 | TAMPA |
| ARRUELA DE AJUSTE | 10008421 | 12 | 1 | 139 | 10 35 572 4 | BOMBA HIDRÁULICA |
| ARRUELA DE AJUSTE | 10216703 | 20 | 1 | 345 | 10 22 042 7 | MECANISMO DE ACIONAMENT |
| ARRUELA DE AJUSTE | 10216704 | 20 | 1 | 345 | 10 22 042 7 | MECANISMO DE ACIONAMENT |
| ARRUELA DE AJUSTE | 10216705 | 20 | 1 | 345 | 10 22 042 7 | MECANISMO DE ACIONAMENT |
| ARRUELA DE AJUSTE | 10216706 | 20 | 1 | 345 | 10 22 042 7 | MECANISMO DE ACIONAMENT |
| ARRUELA DE AJUSTE | 10413020 | 14 | 1 | 121 | 10 41 301 3 | BOMBA HIDRÁULICA |
| ARRUELA DE AJUSTE | 7023472 | 12 | 1 | 121 | 10 41 301 3 | BOMBA HIDRÁULICA |
| ARRUELA DE AJUSTE | 7028182 | 19 | 2 | 147 | 70 28 075 | UNIDADE DE CONTROLE |
| ARRUELA DE AJUSTE | 90011582 | 48 | 3 | 184 | 90 01 790 0 | REDUTOR DE GIRO SAT 375/ |
| ARRUELA DE AJUSTE 18,5X2 | 7381354 | 22 | 2 | 196 | 90 72 990 | PLACA DE CONEXAO |

| Designação | Artigo | Item | Quanti | Página | Módulo | Designação |
|---|---|---|---|---|---|---|
| ARRUELA DE AJUSTE 50X63X | 4981277 | 19 | 1 | 108 | 90 77 872 | REDUTOR DISTRIBUICAO BO |
| ARRUELA DE AJUSTE 55X65X | 7380531 | 44 | 1 | 77 | 92 68 751 | KIT DE REPARO |
| ARRUELA DE AJUSTE 55X65X | 7380531 | 44 | 1 | 204 | 92 73 048 | KIT DE VEDAÇÃO |
| ARRUELA DE AJUSTE 55X65X | 7380531 | 44 | 1 | 697 | 92 68 016 | KIT DE REPARO |
| ARRUELA DE ENCOSTO | 7017685 | 3 | 2 | 63 | 10 00 963 0 | COLETOR GIRATÓRIO |
| ARRUELA DE ENCOSTO | 7017685 | 3 | 2 | 65 | 10 00 967 6 | KIT VEDAÇÃO COLETOR GIRA |
| ARRUELA DE FECHAMENTO | 9429965 | 38 | 3 | 618 | 10 49 830 0 | LANÇA MONOBLOCO 6,70M |
| ARRUELA DE PRESSÃO | 7025121 | 21 | 2 | 285 | 10 02 211 7 | CARCACA DE CONDUCAO DE |
| ARRUELA DE PRESSÃO 10 | 10411093 | 6 | 2 | 577 | 10 21 997 8 | MOTOR DE PARTIDA |
| ARRUELA DE PRESSÃO 10 | 4600033 | 42 | 3 | 229 | 10 49 880 9 | POSTO DE COMANDO - PEÇA |
| ARRUELA DE PRESSÃO 6 | 10411092 | 4 | 1 | 577 | 10 21 997 8 | MOTOR DE PARTIDA |
| ARRUELA DE PRESSÃO 6 | 4600031 | 70 | 3 | 64 | 91 41 597 | COLETOR GIRATÓRIO |
| ARRUELA DE PRESSÃO B 6 | 4600218 | 4 | 4 | 99 | 73 67 136 | REDUÇÃO BFW 35L |
| ARRUELA DE PRESSÃO B 6 | 4600218 | 4 | 4 | 168 | 52 11 460 | UNIAO ROSCADA FLANGE EM |
| ARRUELA DE RETENÇÃO | 9441557 | 46 | 1 | 184 | 90 01 790 0 | REDUTOR DE GIRO SAT 375/ |
| ARRUELA DE RETENÇÃO | 9443033 | 46 | 1 | 69 | 94 43 840 | MECANISMO DE TRANSLAÇÃ |
| ARRUELA DE RETENÇÃO | 9443297 | 16 | 1 | 68 | 94 43 840 | MECANISMO DE TRANSLAÇÃ |
| ARRUELA DE RETENÇÃO | 9443483 | 36 | 1 | 68 | 94 43 840 | MECANISMO DE TRANSLAÇÃ |
| ARRUELA DE RETENÇÃO 120 | 9443707 | 26 | 1 | 68 | 94 43 840 | MECANISMO DE TRANSLAÇÃ |
| ARRUELA DE RETENÇÃO 125X | 9442198 | 36 | 1 | 184 | 90 01 790 0 | REDUTOR DE GIRO SAT 375/ |
| ARRUELA DE SEGURANÇA | 4239000 | 37 | 2 | 170 | 10 49 858 1 | SISTEMA ELETRICO DO MOTO |
| ARRUELA DE SEGURANÇA | 4239000 | 123 | 2 | 253 | 10 84 086 6 | APOIO DIREITO PARA BRAÇO |
| ARRUELA DE SEGURANÇA | 4239020 | 12 | 8 | 68 | 94 43 840 | MECANISMO DE TRANSLAÇÃ |
| ARRUELA DE SEGURANÇA | 7361965 | 13 | 4 | 62 | 93 45 153 | COLETOR GIRATÓRIO - INSTA |
| ARRUELA DE SEGURANÇA | 7361965 | 132 | 4 | 163 | 10 35 809 2 | ARREFECIMENTO DO MOTOR |
| ARRUELA DE SEGURANÇA | 7361965 | 73 | 1 | 238 | 10 38 502 4 | APOIO ESQUERDO PARA BR |
| ARRUELA DE SEGURANÇA | 7361965 | 69 | 4 | 241 | 97 58 815 01 | PLACA ELETRÔNICA |
| ARRUELA DE SEGURANÇA | 7361965 | 260 | 17 | 436 | 10 35 814 1 | INSTALAÇÃO ELÉTRICA |
| ARRUELA DE SEGURANÇA /45 | 4239019 | 53 | 12 | 69 | 94 43 840 | MECANISMO DE TRANSLAÇÃ |
| ARRUELA DE SEGURANÇA 10 | 4229913 | 12 | 2 | 62 | 93 45 153 | COLETOR GIRATÓRIO - INSTA |
| ARRUELA DE SEGURANÇA 10 | 4229913 | 8 | 2 | 159 | 99 29 814 | INSTALAÇÃO DA BOMBA |
| ARRUELA DE SEGURANÇA 10 | 4229913 | 24 | 2 | 388 | 10 07 307 3 | PORTA LATERAL DIREITA |
| ARRUELA DE SEGURANÇA 10 | 4229913 | 7 | 2 | 394 | 10 06 691 8 | TAMPA |
| ARRUELA DE SEGURANÇA 10 | 4229913 | 14 | 2 | 399 | 99 47 961 | PORTA LATERAL DIANTEIRA |
| ARRUELA DE SEGURANÇA 10 | 4229913 | 20 | 2 | 400 | 10 02 525 4 | FECHO DA PORTA |
| ARRUELA DE SEGURANÇA 10 | 4229913 | 10 | 1 | 438 | 10 04 824 6 | FAROL E BUZINA INSTALACA |
| ARRUELA DE SEGURANÇA 10 | 4229913 | 10 | 1 | 439 | 11 10 278 6 | FAROL E BUZINA INSTALACA |
| ARRUELA DE SEGURANÇA 13 | 4900093 | 320 | 4 | 296 | 10 35 801 2 | INSTALACAO HDRAULICA |
| ARRUELA DE SEGURANÇA 13 | 4900093 | 20 | 2 | 402 | 10 35 387 9 | FECHADURA DA PORTA |
| ARRUELA DE SEGURANÇA 6,4/ | 4229911 | 50 | 4 | 110 | 90 77 872 | REDUTOR DISTRIBUICAO BO |
| ARRUELA DE SEGURANÇA 6,4/ | 4229911 | 56 | 4 | 238 | 10 38 502 4 | APOIO ESQUERDO PARA BR |
| ARRUELA DE SEGURANÇA 6,4/ | 4229911 | 70 | 4 | 241 | 97 58 815 01 | PLACA ELETRÔNICA |
| ARRUELA DE SEGURANÇA 6,4/ | 4229911 | 56 | 4 | 249 | 10 84 086 6 | APOIO DIREITO PARA BRAÇO |
| ARRUELA DE SEGURANÇA 6,4/ | 4229911 | 87 | 2 | 251 | 10 84 086 6 | APOIO DIREITO PARA BRAÇO |
| ARRUELA DE SEGURANÇA 6,4/ | 4229911 | 21 | 4 | 388 | 10 07 307 3 | PORTA LATERAL DIREITA |
| ARRUELA DE SEGURANÇA 6,4/ | 4229911 | 4 | 4 | 394 | 10 06 691 8 | TAMPA |
| ARRUELA DE SEGURANÇA 6,4/ | 4229911 | 11 | 4 | 399 | 99 47 961 | PORTA LATERAL DIANTEIRA |
| ARRUELA DE SEGURANÇA 6,4/ | 4229911 | 10 | 4 | 400 | 10 02 525 4 | FECHO DA PORTA |
| ARRUELA DE SEGURANÇA 6,4/ | 4229911 | 10 | 4 | 402 | 10 35 387 9 | FECHADURA DA PORTA |
| ARRUELA DE SEGURANÇA 6,4/ | 4229911 | 4 | 6 | 442 | 99 47 695 | INSTALAÇÃO ELÉTRICA E50 |
| ARRUELA DE SEGURANÇA 6,4/ | 4229911 | 46 | 1 | 443 | 99 47 695 | INSTALAÇÃO ELÉTRICA E50 |
| ARRUELA DE SEGURANÇA 6,4/ | 4229911 | 33 | 1 | 447 | 10 35 814 3 | MAGUEIRAS DO AR-CONDICI |
| ARRUELA DE SEGURANÇA 6,4/ | 4229911 | 11 | 4 | 448 | 10 04 961 6 | SECADOR - INSTALACAO |
| ARRUELA DE SEGURANÇA 8,4/ | 423910801 | 206 | 6 | 176 | 10 49 858 1 | SISTEMA ELETRICO DO MOTO |
| ARRUELA DE SEGURANÇA 8,4/ | 423910801 | 53 | 4 | 229 | 10 49 880 9 | POSTO DE COMANDO - PEÇA |
| ARRUELA DE SEGURANÇA 8,4/ | 423910801 | 71 | 2 | 241 | 97 58 815 01 | PLACA ELETRÔNICA |
| ARRUELA DE SEGURANÇA 8,4/ | 423910801 | 13 | 4 | 268 | 10 05 981 8 | PRÉ-COMANDO DE PEDAL M |
| ARRUELA DE SEGURANÇA 8,4/ | 423910801 | 23 | 4 | 268 | 10 05 981 8 | PRÉ-COMANDO DE PEDAL M |
| ARRUELA DE SEGURANÇA 8,4/ | 423910801 | 62 | 6 | 268 | 10 05 981 8 | PRÉ-COMANDO DE PEDAL M |
| ARRUELA DE SEGURANÇA 8,4/ | 423910801 | 67 | 4 | 268 | 10 05 981 8 | PRÉ-COMANDO DE PEDAL M |

| Designação | Artigo | Item | Quanti | Página | Módulo | Designação |
|---|---|---|---|---|---|---|
| ARRUELA DE SEGURANÇA 8,4/ | 423910801 | 16 | 8 | 329 | 10 35 798 3 | TANQUE HIDRAULICO INSTA |
| ARRUELA DE SEGURANÇA 8,4/ | 423910801 | 72 | 6 | 331 | 10 35 798 3 | TANQUE HIDRAULICO INSTA |
| ARRUELA DE SEGURANÇA 8,4/ | 423910801 | 507 | 2 | 354 | 10 35 802 8 | INSTALAÇÃO BLOCO DE VÁL |
| ARRUELA DE SEGURANÇA 8,4/ | 423910801 | 38 | 6 | 451 | 90 18 419 | TANQUE COMBUSTIVEL INSTA |
| ARRUELA DE SEGURANÇA 8,4/ | 423910801 | 43 | 6 | 452 | 90 18 419 | TANQUE COMBUSTIVEL INSTA |
| ARRUELA DE SEGURANÇA 8,4/ | 423910801 | 12 | 4 | 461 | 10 35 852 5 | ESPELHO EXTERNO - INSTALA |
| ARRUELA DE SEGURANÇA 8,4/ | 423910801 | 23 | 2 | 461 | 10 35 852 5 | ESPELHO EXTERNO - INSTALA |
| ARRUELA DE SEGURANÇA 8,4/ | 423910801 | 4 | 1 | 649 | 93 87 822 | BRACADEIRA MANGUEIRA C |
| ARRUELA DE SEGURANÇA VS | 10006372 | 22 | 2 | 184 | 90 01 790 0 | REDUTOR DE GIRO SAT 375/ |
| ARRUELA DE VEDACAO | 11007770 | 7 | 1 | 338 | 56 17 689 | VÁLVULA DE FECHAMENTO D |
| ARRUELA DE VEDACAO 7,03 | 10040406 | 5 | 1 | 533 | 10 11 658 7 | VALVULA INJETORA |
| ARRUELA DE VEDACAO 7,03 | 10040406 | 2 | 1 | 535 | 10 11 585 4 | KIT DE VEDACAO DO BICO IN |
| ARRUELA DENTADA | 10113833 | 12 | 1 | 390 | 10 06 692 0 | CAIXA DE FERRAMENTAS |
| ARRUELA DENTADA | 7028855 | 170 | 1 | 420 | 10 48 808 7 | INSTALACAO ELETRICA |
| ARRUELA DENTADA | 7363743 | 17 | 2 | 382 | 99 29 189 | CAPO DIREITO |
| ARRUELA DENTADA | 7363743 | 17 | 2 | 384 | 10 35 817 2 | PORTA LATERAL TRASEIRA |
| ARRUELA DENTADA | 7363743 | 17 | 2 | 386 | 10 35 792 6 | PORTA LATERAL CENTRAL E |
| ARRUELA DENTADA | 7363743 | 11 | 1 | 462 | 10 37 283 6 | TAMPA |
| ARRUELA DENTADA A 6,4 | 4002259 | 9 | 2 | 213 | 10 48 841 6 | BLOCO DE DISTRIBUIÇÃO MX- |
| ARRUELA DENTADA A 6,4 | 4002259 | 9 | 2 | 216 | 10 10 171 1 | BLOCO DE DISTRIBUIÇÃO MX- |
| ARRUELA DENTADA A 6,4 | 4002259 | 9 | 2 | 623 | 10 10 171 2 | BLOCO DE DISTRIBUIÇÃO MX- |
| ARRUELA DESLIZANTE 72X15 | 9269613 | 15 | 1 | 79 | 90 73 357 | CONJ REP (ACION.) FMF 140 |
| ARRUELA DESLIZANTE 72X15 | 9889809 | 15 | 1 | 199 | 90 74 416 | KIT DE REPARO |
| ARRUELA DESLIZANTE 77X16 | 9888536 | 15 | 1 | 150 | 90 79 294 | KIT DE REPARO |
| ARRUELA DESLIZANTE 77X16 | 9888536 | 11 | 1 | 151 | 90 79 347 | KIT DE REPARO LPV 165 |
| ARRUELA ESFERICA C 10,5X2 | 4980377 | 5 | 1 | 531 | 10 11 659 1 | BICO INJETOR COM ELEMEN |
| ARRUELA T 5,5X18X2 | 10022767 | 3 | 2 | 285 | 10 02 211 7 | CARCACA DE CONDUCAO DE |
| ARRUELA T 5,5X18X2 | 10022767 | 5 | 2 | 290 | 10 02 277 7 | GRADE DE CIRCULACAO DE A |
| ASSENTO | 11082671 | 1 | 1 | 233 | 11 10 016 6 | PARTE SUPERIOR DE ASSENT |
| ASSENTO DA VALVULA | 10220662 | 6 | 1 | 132 | 10 22 063 5 | VALVULA INTERRUPTORA |
| ASSENTO DA VALVULA | 10220818 | 3 | 1 | 137 | 10 22 081 6 | VÁLVULA DE PARTIDA FRIA |
| ASSENTO DA VALVULA | 7026127 | 40 | 1 | 75 | 56 16 688 | VALVULA FRENAGEM DA TRA |
| ASSENTO DA VALVULA | 7028301 | 20 | 1 | 322 | 70 28 300 | VÁLVULA LIMITADORA DE PR |
| ASSENTO DA VALVULA | 7029459 | 48 | 1 | 367 | 10 28 962 9 | VÁLVULA |
| ASSENTO DA VALVULA | 9265400 | 20 | 1 | 271 | 90 79 258 | MODULO DE COMANDO VG7 |
| ASSENTO DA VALVULA | 9265400 | 20 | 1 | 273 | 90 79 259 | MODULO DE COMANDO VG7 |
| AVANCO DO TETO DA CABINE | 10020982 | 690 | 1 | 429 | 10 29 026 4 | PEÇAS DE MONTAGEM |
| BALANCIM PRE-MONTADO | 9074505 | 2 | 1 | 509 | 90 79 861 | CAVALETE BALANCINS COM |
| BALANCIM PRE-MONTAGEM | 9074507 | 3 | 2 | 511 | 90 74 505 | BALANCIM PRE-MONTADO |
| BALANCO GIRATORIO | 10355728 | 7 | 1 | 139 | 10 35 572 4 | BOMBA HIDRÁULICA |
| BALANCO GIRATORIO | 10413016 | 7 | 1 | 121 | 10 41 301 3 | BOMBA HIDRÁULICA |
| BALANCO GIRATORIO | 9880284 | 16 | 1 | 71 | 90 73 354 | MECANISMO DE ACIONAMENT |
| BANCO COM SUSP. PENUMAT | 11000856 | 10 | 1 | 279 | 94 02 247 7 | BANCO DO MOTORISTA |
| BANCO DO MOTORISTA | 94022477 | 50 | 1 | 229 | 10 49 880 9 | POSTO DE COMANDO - PEÇA |
| BASE DE FIXACAO | 11003600 | 32 | 1 | 287 | 11 00 359 4 | CARCAÇA |
| BASE DE RELE | 6002816 | 970 | 4 | 443 | 99 47 695 | INSTALAÇÃO ELÉTRICA E50 |
| BASE DE SOQUETE | 6001681 | 978 | 4 | 443 | 99 47 695 | INSTALAÇÃO ELÉTRICA E50 |
| BASE DO ASSENTO | 94025779 | 20 | 1 | 279 | 94 02 247 7 | BANCO DO MOTORISTA |
| BASE DO DISPLAY | 7373268 | 20 | 1 | 255 | 56 18 923 | CONSOLE DE COMANDO DIRE |
| BATENTE DE BORRACHA | 10040032 | 3 | 8 | 592 | 10 11 599 3 | DISPOSITIVO COMANDO - M |
| BATENTE DE BORRACHA | 10112636 | 64 | 2 | 374 | 10 35 800 4 | REVESTIMENTO |
| BATENTE DE BORRACHA | 10290395 | 40 | 4 | 165 | 10 45 475 2 | RADIADOR COMBINADO |
| BATENTE DE BORRACHA | 10290395 | 19 | 4 | 167 | 10 35 508 4 | RADIADOR DE ÓLEO |
| BATENTE DE BORRACHA | 7014560 | 31 | 26 | 237 | 10 38 502 4 | APOIO ESQUERDO PARA BR |
| BATENTE DE BORRACHA | 7014560 | 82 | 4 | 251 | 10 84 086 6 | APOIO DIREITO PARA BRAÇO |
| BATENTE DE BORRACHA | 7363930 | 3 | 2 | 390 | 10 06 692 0 | CAIXA DE FERRAMENTAS |
| BATENTE DE BORRACHA | 7363930 | 3 | 2 | 392 | 10 37 938 6 | CAIXA DE FERRAMENTAS |
| BATENTE DE BORRACHA | 7366558 | 30 | 6 | 98 | 10 04 942 6 | SUSPENSAO DO MOTOR |
| BATERIA - INSTALACAO | 11102662 | 25 | 1 | 435 | 10 35 814 1 | INSTALAÇÃO ELÉTRICA |
| BATERIA DE AQUECIMENTO | 10022070 | 17 | 1 | 286 | 11 00 359 4 | CARCAÇA |

| Designação | Artigo | Item | Quanti | Página | Módulo | Designação |
|---|---|---|---|---|---|---|
| BATERIA SECA | 613200116 | 2 | 2 | 444 | 11 10 266 2 | BATERIA - INSTALACAO |
| BICO | 10006191 | 30 | 1 | 653 | 10 00 297 1 | VÁLVULA DE SEGURANÇA RU |
| BICO | 10289344 | 3 | 1 | 533 | 10 11 658 7 | VALVULA INJETORA |
| BICO | 5612246 | 31 | 2 | 148 | 70 28 075 | UNIDADE DE CONTROLE |
| BICO | 7020577 | 44 | 1 | 367 | 10 28 962 9 | VÁLVULA |
| BICO | 7380824 | 20 | 1 | 72 | 98 82 833 | VÁLVULA DE COMANDO NG 14 |
| BICO DE LUBRIFICACAO DO PI | 9073796 | 1 | 1 | 479 | 90 73 795 | ARREFECIMENTO DO PISTAO |
| BICO INJETOR COM ELEMEN | 10116591 | 190 | 6 | 472 | 10 11 668 5 | MOTOR DIESEL D936 L A6 240 |
| BIELA | 9076459 | 60 | 6 | 470 | 10 11 668 5 | MOTOR DIESEL D936 L A6 240 |
| BIELA | 9079997 | 1 | 1 | 500 | 90 76 459 | BIELA |
| BLOCO | 10053858 | 30 | 1 | 300 | 10 35 801 5 | PASSAGEM HIDRAULICA |
| BLOCO | 10064927 | 80 | 2 | 302 | 10 35 801 5 | PASSAGEM HIDRAULICA |
| BLOCO | 10065162 | 35 | 1 | 360 | 10 49 822 5 | TUBULACOES PRESSAO INS |
| BLOCO | 10080803 | 32 | 1 | 309 | 10 35 801 3 | ARREFECIMENTO DE OLEO |
| BLOCO | 9346433 | 30 | 1 | 360 | 10 49 822 5 | TUBULACOES PRESSAO INS |
| BLOCO | 9370414 | 1 | 1 | 357 | 93 70 592 | VALVULA DE RETENCAO |
| BLOCO | 9948134 | 20 | 1 | 360 | 10 49 822 5 | TUBULACOES PRESSAO INS |
| BLOCO | 9948778 | 5 | 2 | 616 | 10 49 830 0 | LANÇA MONOBLOCO 6,70M |
| BLOCO | 9948784 | 15 | 1 | 656 | 99 48 785 | CILINDRO HIDR. COM DIVISO |
| BLOCO DE COMANDO | 10032452 | 60 | 1 | 346 | 10 35 802 8 | INSTALAÇÃO BLOCO DE VÁL |
| BLOCO DE DISTRIBUICAO | 10009784 | 17 | 1 | 212 | 10 48 840 4 | BLOCO DE DISTRIBUIÇÃO SX |
| BLOCO DE DISTRIBUIÇÃO | 10116036 | 84 | 1 | 543 | 10 11 628 5 | TUBULACAO DE COMBUSTIVE |
| BLOCO DE DISTRIBUIÇÃO | 9681272 | 20 | 2 | 295 | 10 35 801 2 | INSTALACAO HDRAULICA |
| BLOCO DE DISTRIBUIÇÃO MX- | 10101694 | 2 | 1 | 624 | 10 38 408 5 | LUBRIFICAÇÃO CENTRALIZAD |
| BLOCO DE DISTRIBUIÇÃO MX- | 10101712 | 1 | 1 | 622 | 10 10 169 4 | BLOCO DE DISTRIBUIÇÃO MX- |
| BLOCO DE DISTRIBUIÇÃO MX- | 10101693 | 15 | 1 | 214 | 10 04 966 3 | LUBRIFICAÇÃO CENTRALIZAD |
| BLOCO DE DISTRIBUIÇÃO MX- | 10101711 | 1 | 1 | 215 | 10 10 169 3 | BLOCO DE DISTRIBUIÇÃO MX- |
| BLOCO DE DISTRIBUIÇÃO MX- | 10488408 | 4 | 1 | 631 | 10 38 484 8 | LUBRIFICAÇÃO CENTRALIZAD |
| BLOCO DE DISTRIBUIÇÃO MX- | 10488416 | 1 | 1 | 210 | 10 48 840 8 | BLOCO DE DISTRIBUIÇÃO MX- |
| BLOCO DE DISTRIBUIÇÃO SX | 10488404 | 1 | 1 | 626 | 11 00 350 2 | BLOCO DE DISTRIBUIÇÃO SX |
| BLOCO DE DISTRIBUIÇÃO SX | 11003502 | 50 | 1 | 625 | 10 38 408 6 | LUBRIFICAÇÃO CENTRALIZAD |
| BLOCO DE VÁLVULAS DE CO | 10042729 | 10 | 1 | 297 | 99 37 312 | UNIDADE DE COMANDO DE O |
| BLOCO DO MOTOR | 10014680 | 1 | 1 | 681 | 10 28 689 7 | BOMBA DE LUBRIFICACAO |
| BLOCO DO MOTOR | 10014692 | 3 | 1 | 681 | 10 28 689 7 | BOMBA DE LUBRIFICACAO |
| BLOCO DO MOTOR | 10115733 | 1 | 1 | 478 | 10 11 577 8 | BLOCO DO MOTOR |
| BLOCO DO MOTOR | 10115778 | 1 | 1 | 477 | 10 11 577 9 | BLOCO DO MOTOR COMPLET |
| BLOCO DO MOTOR COMPLET | 10115779 | 10 | 1 | 469 | 10 11 668 5 | MOTOR DIESEL D936 L A6 240 |
| BLOCO INTERMEDIARIO | 10498157 | 5 | 1 | 671 | 10 49 815 8 | CILINDRO DE ELEVACAO |
| BLOCO INTERMEDIARIO | 9392953 | 56 | 2 | 672 | 10 49 815 8 | CILINDRO DE ELEVACAO |
| BLOCO INTERMEDIARIO | 9988764 | 6 | 1 | 671 | 10 49 815 8 | CILINDRO DE ELEVACAO |
| BOBINA MAGNÉTICA | 10101523 | 157 | 1 | 642 | 10 00 348 5 | VÁLVULA DIRECIONAL |
| BOBINA MAGNÉTICA | 10333044 | 2 | 1 | 319 | 56 15 344 | VÁLVULA SOLENÓIDE |
| BOBINA MAGNÉTICA | 6204416 | 2 | 1 | 320 | 10 01 872 5 | VÁLVULA DIRECIONAL |
| BOBINA MAGNÉTICA | 6905956 | 1 | 1 | 106 | 10 29 787 3 | VÁLVULA DE COMANDO |
| BOCAL COMPL. DE ABASTECI | 10119031 | 1 | 1 | 492 | 10 11 903 0 | ENCHIMENTO DE OLEO D930 |
| BOCAL DE ACOPLAMENTO | 10120009 | 1 | 1 | 551 | 90 77 279 | LUVA DE CONEXÃO MONTAGE |
| BOCAL DE AR | 10022083 | 14 | 1 | 286 | 11 00 359 4 | CARCAÇA |
| BOCAL DE ENCHIMENTO DE O | 9442150 | 85 | 1 | 110 | 90 77 872 | REDUTOR DISTRIBUICAO BO |
| BOCAL DE MEDICAO | 5607605 | 98 | 1 | 343 | 10 84 584 9 | INSTALACAO BOMBA E EMBR |
| BOCAL DE MEDICAO | 5607616 | 96 | 2 | 343 | 10 84 584 9 | INSTALACAO BOMBA E EMBR |
| BOCAL DE MEDICAO DKO 10S | 5607617 | 106 | 2 | 344 | 10 84 584 9 | INSTALACAO BOMBA E EMBR |
| BOCAL DE MEDICAO VKA3 10 | 7406864 | 32 | 2 | 297 | 99 37 312 | UNIDADE DE COMANDO DE O |
| BOCAL DE MEDICAO VKA3 22 | 7019891 | 101 | 1 | 343 | 10 84 584 9 | INSTALACAO BOMBA E EMBR |
| BOCAL DE SUCCAO | 10066591 | 2 | 1 | 105 | 10 06 658 8 | BOCAL DE SUCÇÃO |
| BOCAL DE SUCÇÃO | 10066586 | 40 | 1 | 341 | 10 84 584 9 | INSTALACAO BOMBA E EMBR |
| BOCAL DE SUCÇÃO | 10066587 | 45 | 1 | 341 | 10 84 584 9 | INSTALACAO BOMBA E EMBR |
| BOCAL DE SUCÇÃO | 10066588 | 10 | 1 | 329 | 10 35 798 3 | TANQUE HIDRAULICO INSTA |
| BOCAL DE SUCÇÃO | 9962503 | 11 | 1 | 329 | 10 35 798 3 | TANQUE HIDRAULICO INSTA |
| BOCAL DE TUBO | 511701914 | 27 | 1 | 217 | 90 64 786 | ELEMENTO DE CONEXÃO |
| BOCAL DE TUBO | 511701914 | 27 | 4 | 219 | 10 01 461 1 | CAIXA AUXILIAR |

| Designação | Artigo | Item | Quanti | Página | Módulo | Designação |
|---|---|---|---|---|---|---|
| BOCAL DE TUBO 15° D8 | 10412844 | 115 | 1 | 218 | 90 64 786 | ELEMENTO DE CONEXÃO |
| BOCAL DE TUBO 15° D8 | 10412844 | 115 | 2 | 220 | 10 01 461 1 | CAIXA AUXILIAR |
| BOCAL DE TUBO DE PRESSA | 9074677 | 1 | 1 | 534 | 90 75 395 | BOCAL DE TUBO DE PRESSA |
| BOCAL DE TUBO DE PRESSA | 9075395 | 191 | 6 | 472 | 10 11 668 5 | MOTOR DIESEL D936 L A6 240 |
| BOCAL DE TUBO DE PRESSA | 9075395 | 191 | 1 | 532 | 10 11 709 3 | KIT REPARO DA VALVULA INJ |
| BOCAL DE TUBO DE PRESSA | 9075395 | 191 | 1 | 535 | 10 11 585 4 | KIT DE VEDACAO DO BICO IN |
| BOCAL DE TUBO DN6 | 10027260 | 26 | 1 | 217 | 90 64 786 | ELEMENTO DE CONEXÃO |
| BOCAL DE TUBO DN6 | 10027260 | 26 | 4 | 219 | 10 01 461 1 | CAIXA AUXILIAR |
| BOCAL DE TUBO DN6 | 7623704 | 25 | 1 | 217 | 90 64 786 | ELEMENTO DE CONEXÃO |
| BOCAL DE TUBO DN6 | 7623704 | 25 | 4 | 219 | 10 01 461 1 | CAIXA AUXILIAR |
| BOCAL DE TUBO DN6 | 7623705 | 20 | 1 | 217 | 90 64 786 | ELEMENTO DE CONEXÃO |
| BOCAL DE TUBO DN6 | 7623705 | 20 | 6 | 219 | 10 01 461 1 | CAIXA AUXILIAR |
| BOCAL DE TUBO DN6 | 7623707 | 28 | 1 | 217 | 90 64 786 | ELEMENTO DE CONEXÃO |
| BOCAL DE TUBO DN6 | 7623707 | 28 | 2 | 219 | 10 01 461 1 | CAIXA AUXILIAR |
| BOCAL DE TUBO DN6 | 7624177 | 11 | 1 | 217 | 90 64 786 | ELEMENTO DE CONEXÃO |
| BOCAL DE TUBO DN6 | 7624177 | 11 | 5 | 219 | 10 01 461 1 | CAIXA AUXILIAR |
| BOCAL DE TUBO DN8 | 10011995 | 110 | 1 | 218 | 90 64 786 | ELEMENTO DE CONEXÃO |
| BOCAL DE TUBO DN8 | 10011995 | 110 | 6 | 220 | 10 01 461 1 | CAIXA AUXILIAR |
| BOCAL DE TUBO DN8 | 10040776 | 120 | 1 | 218 | 90 64 786 | ELEMENTO DE CONEXÃO |
| BOCAL DE TUBO DN8 | 10040776 | 120 | 2 | 220 | 10 01 461 1 | CAIXA AUXILIAR |
| BOCAL DE TUBO DN8 | 10040777 | 125 | 1 | 218 | 90 64 786 | ELEMENTO DE CONEXÃO |
| BOCAL DE TUBO DN8 | 10040777 | 125 | 2 | 220 | 10 01 461 1 | CAIXA AUXILIAR |
| BOCAL DE TUBO DN8 | 10040778 | 126 | 1 | 218 | 90 64 786 | ELEMENTO DE CONEXÃO |
| BOCAL DE TUBO DN8 | 10040778 | 126 | 2 | 220 | 10 01 461 1 | CAIXA AUXILIAR |
| BOCAL DE TUBO DN8 | 10040779 | 127 | 1 | 218 | 90 64 786 | ELEMENTO DE CONEXÃO |
| BOCAL DE TUBO DN8 | 10040779 | 127 | 2 | 220 | 10 01 461 1 | CAIXA AUXILIAR |
| BOCAL DE TUBO R1/4" | 10014698 | 15 | 1 | 681 | 10 28 689 7 | BOMBA DE LUBRIFICACAO |
| BOCAL INTERMEDIARIO | 9890958 | 2 | 1 | 299 | 93 99 179 | CONEXAO P/ ACUMULADOR |
| BOCAL REDUTOR | 10038817 | 45 | 2 | 542 | 10 11 628 5 | TUBULACAO DE COMBUSTIVE |
| BOCAL REDUTOR | 7361488 | 37 | 1 | 311 | 10 35 809 3 | INSTALACAO HIDRAULICA |
| BOCAL REDUTOR | 9080013 | 11 | 1 | 599 | 90 80 006 | SAIDA AUXILIAR ANEXA |
| BOCAL REDUTOR | 9276784 | 2 | 2 | 569 | 90 79 889 | CONEXÃO DE AQUECIMENTO |
| BOCAL REDUTOR RI 3/4X1/2 | 4755005 | 21 | 2 | 297 | 99 37 312 | UNIDADE DE COMANDO DE O |
| BOCAL ROSCADO | 7364696 | 204 | 1 | 314 | 10 35 801 7 | INSTALACAO HIDRAULICA |
| BOCAL ROSCADO | 7410555 | 13 | 1 | 439 | 11 10 278 6 | FAROL E BUZINA INSTALACA |
| BOMBA ALIMENTAÇÃO COMB | 9078681 | 1 | 1 | 529 | 90 78 680 | BOMBA DE COMBUSTÍVEL AC |
| BOMBA CIRCUITO ARREFECI | 5700007 | 80 | 1 | 110 | 90 77 872 | REDUTOR DISTRIBUICAO BO |
| BOMBA DE COMBUSTÍVEL AC | 9078680 | 211 | 1 | 472 | 10 11 668 5 | MOTOR DIESEL D936 L A6 240 |
| BOMBA DE ENCHIMENTO | 10009239 | 10 | 1 | 457 | 10 08 428 6 | KIT DE FERRAMENTAS |
| BOMBA DE ENGRENAGENS | 10220667 | 1 | 1 | 117 | 10 22 041 5 | REPARO DA BOMBA |
| BOMBA DE ENGRENAGENS | 5609979 | 5 | 1 | 159 | 99 29 814 | INSTALAÇÃO DA BOMBA |
| BOMBA DE INJECAO - ACESS | 10116839 | 170 | 6 | 471 | 10 11 668 5 | MOTOR DIESEL D936 L A6 240 |
| BOMBA DE LUBRIFICACAO | 10286897 | 2 | 1 | 680 | 10 49 822 9 | LUBRIFICAÇÃO CENTR.TOTAL. |
| BOMBA DE PISTÃO AXIAL | 5616530 | 20 | 1 | 341 | 10 84 584 9 | INSTALACAO BOMBA E EMBR |
| BOMBA DE REGULAGEM HID | 10132686 | 2 | 2 | 685 | 10 13 462 0 | AGREAGADO CIRCUITOS MU |
| BOMBA DE SUCÇÃO COM FIXA | 9080278 | 141 | 1 | 471 | 10 11 668 5 | MOTOR DIESEL D936 L A6 240 |
| BOMBA DE ÁGUA PRÉ-MONT | 10132817 | 1 | 1 | 562 | 90 80 301 | KIT MONTAGEM DA BOMBA A |
| BOMBA DE ÓLEO DE LUBRIFI | 9072781 | 1 | 1 | 523 | 90 74 796 | BOMBA ÓLEO LUBR. C/FIX. |
| BOMBA HIDRÁULICA | 10332889 | 70 | 1 | 342 | 10 84 584 9 | INSTALACAO BOMBA E EMBR |
| BOMBA HIDRÁULICA | 10355724 | 1 | 1 | 142 | 10 41 087 0 | BOMBA HIDRÁULICA |
| BOMBA HIDRÁULICA | 10410870 | 1 | 1 | 119 | 10 33 288 9 | BOMBA HIDRÁULICA |
| BOMBA HIDRÁULICA | 10413013 | 1 | 1 | 120 | 10 33 289 0 | MOTOR DE PISTAO AXIAL |
| BOMBA INJETORA | 10116257 | 1 | 1 | 528 | 10 11 683 9 | BOMBA DE INJECAO - ACESS |
| BOMBA MANUAL | 510160916 | 16 | 1 | 7 | . | |
| BOMBA MANUAL | 8145666 | 30 | 1 | 39 | 90 66 466 | ACESSORIOS |
| BOMBA ÓLEO LUBR. C/FIX. | 9074796 | 140 | 1 | 471 | 10 11 668 5 | MOTOR DIESEL D936 L A6 240 |
| BORRACHA SANFONADA | 10014790 | 200 | 1 | 247 | 99 68 625 | ALÇA DE TRANSMISSÃO-LH E |
| BORRACHA SANFONADA | 10014790 | 200 | 1 | 262 | 99 68 611 | MANETE DIREITA |
| BORRACHA SANFONADA | 11066528 | 9 | 1 | 235 | 11 10 016 7 | SUSPENSAO |
| BOTAO 1 | 10040322 | 25 | 2 | 245 | 10 46 991 7 | BOTOES DA MANETE ESQUE |

| Designação | Artigo | Item | Quanti | Página | Módulo | Designação |
|---|---|---|---|---|---|---|
| BOTAO 1 | 10040322 | 25 | 2 | 260 | 10 46 991 8 | BOTOES MANETE DIREITA |
| BOTAO 2 | 10040324 | 30 | 1 | 245 | 10 46 991 7 | BOTOES DA MANETE ESQUE |
| BOTAO 2 | 10040324 | 30 | 1 | 260 | 10 46 991 8 | BOTOES MANETE DIREITA |
| BOTAO DE CONTATO LUMIN | 6204372 | 3 | 1 | 258 | 10 04 831 3 | INTERRUPTOR - INSTALAÇÃO |
| BOTAO ESFERICO | 7019167 | 110 | 1 | 413 | 70 28 808 | TRAVA ESQUERDA |
| BOTAO ESFERICO | 7019167 | 310 | 1 | 428 | 10 29 026 4 | PEÇAS DE MONTAGEM |
| BOTAO ESFERICO | 7028818 | 110 | 1 | 412 | 70 28 807 | TRAVA DIREITA |
| BOTOES DA MANETE ESQUE | 10469917 | 10 | 1 | 247 | 99 68 625 | ALÇA DE TRANSMISSÃO-LH E |
| BOTOES MANETE DIREITA | 10469918 | 10 | 1 | 262 | 99 68 611 | MANETE DIREITA |
| BOTÃO | 7019156 | 270 | 1 | 414 | 70 28 769 | PORTA DA CABINE DO MOTO |
| BOTÃO DE PRESSÃO LINKS | 9968578 | 40 | 1 | 247 | 99 68 625 | ALÇA DE TRANSMISSÃO-LH E |
| BOTÃO DE PRESSÃO RECHTS | 9968580 | 40 | 1 | 262 | 99 68 611 | MANETE DIREITA |
| BRACADEIRA DE ARCO | 7369271 | 17 | 1 | 104 | 10 35 800 6 | SISTEMA DE ESPACAMENTO |
| BRACADEIRA DE ARCO A 106 | 7621247 | 18 | 1 | 104 | 10 35 800 6 | SISTEMA DE ESPACAMENTO |
| BRACADEIRA MANGUEIRA C | 9387822 | 60 | 2 | 301 | 10 35 801 5 | PASSAGEM HIDRAULICA |
| BRACO DA CACAMBA 2,35M | 10498234 | 10 | 1 | 7 | . | |
| BRACO DA CACAMBA 2,35M | 10498235 | 10 | 1 | 627 | 10 49 823 4 | BRACO DA CACAMBA 2,35M |
| BRACO DA CACAMBA 2,35M | 10498236 | 2 | 1 | 628 | 10 49 823 5 | BRACO DA CACAMBA 2,35M |
| BRACO DO ESPELHO | 7019141 | 820 | 1 | 431 | 10 04 435 3 | ESPELHO EXTERNO |
| BRACO DO LIMPADOR | 10290360 | 620 | 1 | 426 | 10 29 036 1 | BRACO DO LIMPADOR |
| BRACO DO LIMPADOR | 10290361 | 610 | 1 | 425 | 10 29 035 7 | LIMPADOR DE PÁRA-BRISA |
| BRAÇADEIRA | 10037728 | 20 | 4 | 214 | 10 04 966 3 | LUBRIFICAÇÃO CENTRALIZAD |
| BRAÇADEIRA | 10037728 | 7 | 25 | 624 | 10 38 408 5 | LUBRIFICAÇÃO CENTRALIZAD |
| BRAÇADEIRA | 10037728 | 15 | 4 | 631 | 10 38 484 8 | LUBRIFICAÇÃO CENTRALIZAD |
| BRAÇADEIRA | 10064288 | 60 | 1 | 672 | 10 49 815 8 | CILINDRO DE ELEVACAO |
| BRAÇADEIRA | 10385490 | 63 | 1 | 672 | 10 49 815 8 | CILINDRO DE ELEVACAO |
| BRAÇADEIRA | 9368525 | 225 | 6 | 306 | 10 35 801 4 | MANGUEIRAS HIDRAULICAS |
| BRAÇADEIRA | 9490869 | 45 | 2 | 309 | 10 35 801 3 | ARREFECIMENTO DE OLEO |
| BRAÇADEIRA DE CABOS | 10044344 | 792 | 1 | 421 | 10 48 808 7 | INSTALACAO ELETRICA |
| BRAÇADEIRA DE CABOS | 7362507 | 97 | 4 | 251 | 10 84 086 6 | APOIO DIREITO PARA BRAÇO |
| BRAÇADEIRA DE TUBO | 10331643 | 31 | 4 | 165 | 10 45 475 2 | RADIADOR COMBINADO |
| BRAÇADEIRA DE TUBO | 7382216 | 5 | 1 | 549 | 10 11 657 6 | PEÇA DE CONEXÃO |
| BRAÇADEIRA DE TUBO | 9945116 | 8 | 1 | 359 | 10 49 822 5 | TUBULACOES PRESSAO INS |
| BRAÇADEIRA DE TUBO D=69 | 9079957 | 6 | 1 | 552 | 10 12 190 8 | LINHA DE CONEXAO |
| BRAÇADEIRA DE TUBO D=69 | 9079957 | 6 | 1 | 553 | 90 79 964 | LINHA DE CONEXAO |
| BRAÇADEIRA DE TUBO HSRS | 10287499 | 55 | 4 | 301 | 10 35 801 5 | PASSAGEM HIDRAULICA |
| BRAÇADEIRA DE TUBO d=12 | 7382081 | 3 | 2 | 546 | 10 11 726 8 | SUPORTE - MONTAGEM |
| BRAÇADEIRA HRBGS 0A G 11 | 10037727 | 12 | 7 | 631 | 10 38 484 8 | LUBRIFICAÇÃO CENTRALIZAD |
| BRAÇADEIRA HRBGS 1 G 8 8 | 10037726 | 25 | 8 | 214 | 10 04 966 3 | LUBRIFICAÇÃO CENTRALIZAD |
| BRAÇADEIRA HRBGS 1 G 8 8 | 10037726 | 9 | 15 | 631 | 10 38 484 8 | LUBRIFICAÇÃO CENTRALIZAD |
| BRAÇADEIRA HRGBS 1 G 11 1 | 10037724 | 4 | 12 | 624 | 10 38 408 5 | LUBRIFICAÇÃO CENTRALIZAD |
| BRAÇADEIRA HRGBS 1 G 11 1 | 10037724 | 24 | 2 | 632 | 10 38 484 8 | LUBRIFICAÇÃO CENTRALIZAD |
| BRAÇADEIRA ROSCADA C/2O | 11347332 | 3 | 1 | 460 | 93 58 137 | MANGUEIRA ESCOAMENTO O |
| BUCHA | 10022782 | 12 | 2 | 285 | 10 02 211 7 | CARCACA DE CONDUCAO DE |
| BUCHA | 10031949 | 2 | 2 | 60 | 10 00 966 2 | RODA GUIA D7G/B7B |
| BUCHA | 10216741 | 43 | 1 | 116 | 10 22 041 1 | PLACA DE CONEXAO |
| BUCHA | 10409084 | 5 | 2 | 638 | 10 35 789 8 | PEÇA DE LIGAÇÃO |
| BUCHA | 10409093 | 3 | 2 | 629 | 10 49 823 6 | BRACO DA CACAMBA 2,35M |
| BUCHA | 10820141 | 5 | 2 | 629 | 10 49 823 6 | BRACO DA CACAMBA 2,35M |
| BUCHA | 10820862 | 7 | 2 | 629 | 10 49 823 6 | BRACO DA CACAMBA 2,35M |
| BUCHA | 10820862 | 3 | 2 | 638 | 10 35 789 8 | PEÇA DE LIGAÇÃO |
| BUCHA | 11003782 | 2 | 2 | 58 | 10 65 168 0 | ROLETE INFERIOR D7 |
| BUCHA | 11003782 | 2 | 2 | 59 | 11 60 010 7 | ROLETE INFERIOR D7 |
| BUCHA | 7019122 | 350 | 2 | 428 | 10 29 026 4 | PEÇAS DE MONTAGEM |
| BUCHA | 7020573 | 39 | 1 | 367 | 10 28 962 9 | VÁLVULA |
| BUCHA | 7028816 | 290 | 1 | 412 | 70 28 807 | TRAVA DIREITA |
| BUCHA | 7028816 | 290 | 1 | 413 | 70 28 808 | TRAVA ESQUERDA |
| BUCHA | 7362583 | 5 | 2 | 275 | 94 76 369 | PLACA DE DEGRAU MONT. E |
| BUCHA | 7362583 | 5 | 2 | 276 | 94 76 441 | PLACA DE DEGRAU MONT. D |
| BUCHA | 7369135 | 46 | 1 | 366 | 10 03 245 2 | BLOCO DE COMANDO |

| Designação | Artigo | Item | Quanti | Página | Módulo | Designação |
|---|---|---|---|---|---|---|
| BUCHA | 9265394 | 2 | 1 | 266 | 90 74 482 | CR TACO |
| BUCHA | 9265394 | 14 | 2 | 271 | 90 79 258 | MODULO DE COMANDO VG7 |
| BUCHA | 9265394 | 14 | 2 | 273 | 90 79 259 | MODULO DE COMANDO VG7 |
| BUCHA | 9265394 | 2 | 1 | 278 | 92 65 665 | CR TACO |
| BUCHA | 9266235 | 10 | 1 | 76 | 92 67 037 | VÁLVULA LIMITADORA DE PR |
| BUCHA | 9266524 | 11 | 9 | 194 | 92 73 050 | CILINDRO COM BUCHA |
| BUCHA | 9390503 | 14 | 2 | 178 | 10 35 800 9 | MOTOR - PECAS ANEXAS |
| BUCHA B1 140/170X206 | 10820174 | 3 | 2 | 621 | 10 49 830 1 | LANÇA MONOBLOCO 6,70M |
| BUCHA CILINDRICA | 9080084 | 1 | 1 | 481 | 90 73 083 | CILINDRO |
| BUCHA COM FLANGE 45/50X2 | 9888448 | 2 | 2 | 602 | 90 77 384 | CARCACA DO MANCAL PRE- |
| BUCHA COM FLANGE 45/50X2 | 9888448 | 2 | 1 | 603 | 90 77 717 | CARCACA DO MANCAL PRE- |
| BUCHA DA VALVULA | 9269686 | 10 | 1 | 78 | 92 70 598 | VALVULA DE RETENCAO |
| BUCHA DE ASSENTO DA VALV | 10413023 | 56 | 1 | 121 | 10 41 301 3 | BOMBA HIDRÁULICA |
| BUCHA DE MANCA,L DESLIZ | 9889290 | 3 | 1 | 603 | 90 77 717 | CARCACA DO MANCAL PRE- |
| BUCHA DE VÁLVULA | 10220660 | 2 | 1 | 132 | 10 22 063 5 | VALVULA INTERRUPTORA |
| BUCHA DE VÁLVULA | 7028168 | 2 | 2 | 147 | 70 28 075 | UNIDADE DE CONTROLE |
| BUCHA DE VÁLVULA | 7414522 | 50 | 2 | 75 | 56 16 688 | VALVULA FRENAGEM DA TRA |
| BUCHA DISTANCIADORA | 10022783 | 5 | 6 | 285 | 10 02 211 7 | CARCACA DE CONDUCAO DE |
| BUCHA DISTANCIADORA | 7028907 | 670 | 5 | 429 | 10 29 026 4 | PEÇAS DE MONTAGEM |
| BUCHA DO BALANCIM | 9080027 | 2 | 1 | 512 | 90 74 507 | BALANCIM PRE-MONTAGEM |
| BUCHA DO EIXO DE COMAND | 9073745 | 10 | 7 | 478 | 10 11 577 8 | BLOCO DO MOTOR |
| BUCHA EXPANSIVA D=170MM | 9110412 | 991 | 1 | 665 | 95 90 264 | PISTÃO 170MM |
| BUCHA EXPANSIVA D=180 | 9110413 | 991 | 1 | 663 | 94 00 606 1 | PISTÃO 180MM |
| BUCHA EXPANSIVA D=180 | 9110413 | 991 | 1 | 664 | 95 87 597 | PISTÃO 180MM |
| BUCHA MANCAL | 10216806 | 44 | 1 | 116 | 10 22 041 1 | PLACA DE CONEXAO |
| BUCHA MANCAL | 10220637 | 6 | 1 | 116 | 10 22 041 1 | PLACA DE CONEXAO |
| BUCHA MANCAL | 10220637 | 2 | 1 | 133 | 10 22 066 7 | BOMBA DE ENGRENAGENS |
| BUCHA MANCAL 40/44X13 | 9267183 | 7 | 1 | 525 | 90 72 781 | BOMBA DE ÓLEO DE LUBRIFI |
| BUCHA MANCAL 40/44X13 | 9267183 | 7 | 1 | 526 | 90 80 277 | PLACA DE COBERTURA PRÉ- |
| BUCHA ROSCADA | 9079078 | 9 | 1 | 510 | 10 12 038 4 | CABECOTE |
| BUCHA SPIRAL 120/150X105 | 9233882 | 1 | 2 | 657 | 94 02 019 4 | CILINDRO HIDRÁULICO |
| BUCHA SPIRAL 120/150X105 | 9233882 | 1 | 2 | 658 | 95 87 580 | CILINDRO HIDRÁULICO |
| BUCHA SPIRAL 120/150X105 | 9233882 | 1 | 2 | 659 | 95 96 399 | CILINDRO HIDRÁULICO |
| BUCHA TERMINAL | 5617103 | 30 | 1 | 56 | 56 18 101 | ELO MESTRE DA CORRENTE |
| BUJÃO DE FIXAÇÃO | 10220669 | 3 | 1 | 117 | 10 22 041 5 | REPARO DA BOMBA |
| BUJÃO DE RUPTURA DUPLA | 7012971 | 48 | 1 | 116 | 10 22 041 1 | PLACA DE CONEXAO |
| BUJÃO DE RUPTURA DUPLA | 7022127 | 11 | 2 | 116 | 10 22 041 1 | PLACA DE CONEXAO |
| BUJÃO DE RUPTURA DUPLA | 7022127 | 27 | 1 | 122 | 56 16 530 | BOMBA DE PISTÃO AXIAL |
| BUJÃO DE RUPTURA DUPLA | 7022127 | 26 | 14 | 148 | 70 28 075 | UNIDADE DE CONTROLE |
| BUJÃO DE RUPTURA M6 | 514585108 | 31 | 1 | 139 | 10 35 572 4 | BOMBA HIDRÁULICA |
| BUZINA | 6204593 | 32 | 1 | 451 | 90 18 419 | TANQUE COMBUSTIVEL INSTA |
| BUZINA | 6205045 | 8 | 1 | 438 | 10 04 824 6 | FAROL E BUZINA INSTALACA |
| BUZINA | 6205045 | 8 | 1 | 439 | 11 10 278 6 | FAROL E BUZINA INSTALACA |
| CABECA DO FILTRO COMBUS | 10046958 | 4 | 1 | 539 | 10 22 281 9 | PRÉ-FILTRO COMBUST.COM |
| CABECA DO FILTRO COMBUS | 10120518 | 2 | 1 | 538 | 10 12 580 1 | FILTRO DE COMBUSTÍVEL |
| CABECA DO FILTRO COMBUS | 10219624 | 2 | 1 | 536 | 10 11 551 3 | FILTRO FINO DE COMBUSTÍVE |
| CABECOTE | 10120384 | 1 | 1 | 504 | 10 14 155 4 | CABEÇOTE PRÉ-MONTADO |
| CABECOTE | 10120384 | 1 | 1 | 508 | 10 12 036 4 | CABEÇOTE PRÉ-MONTADO |
| CABECOTE | 9079952 | 1 | 1 | 510 | 10 12 038 4 | CABECOTE |
| CABECOTE DO FILTRO | 10220701 | 1 | 1 | 135 | 10 22 069 9 | FILTRO |
| CABEÇOTE DO MANCAL | 94019365 | 1 | 1 | 667 | 94 01 936 4 | MANCAL DA HASTE DO PISTA |
| CABEÇOTE DO MANCAL | 9918432 | 1 | 1 | 668 | 94 02 733 6 | MANCAL DA HASTE DO PISTA |
| CABEÇOTE DO MANCAL | 9952601 | 1 | 1 | 669 | 99 52 600 | MANCAL DA HASTE DO PISTA |
| CABEÇOTE PRÉ-MONTADO | 10119427 | 1 | 1 | 503 | 90 79 850 | MONTAGEM DO CABEÇOTE D |
| CABEÇOTE PRÉ-MONTADO | 10120364 | 1 | 1 | 503 | 90 79 850 | MONTAGEM DO CABEÇOTE D |
| CABEÇOTE PRÉ-MONTADO | 10141554 | 1 | 1 | 503 | 90 79 850 | MONTAGEM DO CABEÇOTE D |
| CABIDE | 7019131 | 640 | 1 | 429 | 10 29 026 4 | PEÇAS DE MONTAGEM |
| CABINE DE OPERADOR | 10357967 | 8700 | 1 | 86 | 10 35 798 2 | CARRO SUPERIOR |
| CABINE DE OPERADOR | 10476169 | 20 | 1 | 404 | 10 35 796 7 | CABINE DE OPERADOR |
| CABO | 10493344 | 34 | 1 | 233 | 11 10 016 6 | PARTE SUPERIOR DE ASSENT |

| Designação | Artigo | Item | Quanti | Página | Módulo | Designação |
|---|---|---|---|---|---|---|
| CABO ADAPTADOR | 11100090 | 16 | 1 | 235 | 11 10 016 7 | SUSPENSAO |
| CABO DA ANTENA | 6204404 | 150 | 1 | 230 | 10 49 880 9 | POSTO DE COMANDO - PEÇA |
| CABO DE ANTENA | 10488090 | 182 | 1 | 420 | 10 48 808 7 | INSTALACAO ELETRICA |
| CABO DE CONEXAO 3X1 0,50 | 10014690 | 7 | 1 | 678 | 10 01 468 0 | BLOCO DO MOTOR |
| CABO DE CONEXAO 3X2,5 0,80 | 10014589 | 10 | 1 | 211 | 10 00 933 0 | SENSOR DE APROXIMAÇÃO |
| CABO DE LIGACAO BBT/DISP | 9768248 | 27 | 1 | 249 | 10 84 086 6 | APOIO DIREITO PARA BRAÇO |
| CABO DE LIGACAO DA BATERI | 9949978 | 13 | 1 | 444 | 11 10 266 2 | BATERIA - INSTALACAO |
| CABO MASSA | 10009024 | 770 | 1 | 421 | 10 48 808 7 | INSTALACAO ELETRICA |
| CABO MASSA | 9689583 | 98 | 1 | 251 | 10 84 086 6 | APOIO DIREITO PARA BRAÇO |
| CABO MASSA | 9927329 | 10 | 1 | 169 | 10 49 858 1 | SISTEMA ELETRICO DO MOTO |
| CABO MASSA TRANÇADO | 6204632 | 130 | 1 | 230 | 10 49 880 9 | POSTO DE COMANDO - PEÇA |
| CAIXA | 10022119 | 20 | 1 | 280 | 10 40 689 8 | SISTEMA DE AR CONDICION |
| CAIXA | 10022119 | 3 | 1 | 282 | 10 81 666 6 | EVAPORADOR |
| CAIXA AUXILIAR | 10014611 | 999 | 1 | 210 | 10 48 840 8 | BLOCO DE DISTRIBUIÇÃO MX- |
| CAIXA AUXILIAR | 10014611 | 999 | 1 | 215 | 10 10 169 3 | BLOCO DE DISTRIBUIÇÃO MX- |
| CAIXA AUXILIAR | 10014611 | 999 | 1 | 622 | 10 10 169 4 | BLOCO DE DISTRIBUIÇÃO MX- |
| CAIXA AUXILIAR | 10014611 | 999 | 1 | 626 | 11 00 350 2 | BLOCO DE DISTRIBUIÇÃO SX |
| CAIXA DE FERRAMENTAS | 10066919 | 2 | 1 | 390 | 10 06 692 0 | CAIXA DE FERRAMENTAS |
| CAIXA DE FERRAMENTAS | 10066920 | 80 | 1 | 375 | 10 35 800 4 | REVESTIMENTO |
| CAIXA DE FERRAMENTAS | 10379371 | 2 | 1 | 392 | 10 37 938 6 | CAIXA DE FERRAMENTAS |
| CAIXA DE FERRAMENTAS | 10379386 | 80 | 1 | 375 | 10 35 800 4 | REVESTIMENTO |
| CAIXA DE FERRAMENTAS | 7016002 | 10 | 1 | 458 | 10 84 856 2 | KIT DE FERRAMENTAS |
| CAIXA DE FUSIVEIS CHATOS | 6000783 | 25 | 2 | 442 | 99 47 695 | INSTALAÇÃO ELÉTRICA E50 |
| CAIXA ELETRICA | 9392651 | 26 | 1 | 237 | 10 38 502 4 | APOIO ESQUERDO PARA BR |
| CAIXA ELETRICA E50 | 9947707 | 2 | 1 | 441 | 99 48 254 | CAIXA ELÉTRICA COMPLETA |
| CAIXA ELÉTRICA COMPLETA | 9948254 | 20 | 1 | 435 | 10 35 814 1 | INSTALAÇÃO ELÉTRICA |
| CALOTA | 6204368 | 4 | 1 | 258 | 10 04 831 3 | INTERRUPTOR - INSTALAÇÃO |
| CALOTA | 6204368 | 4 | 1 | 263 | 10 05 507 1 | INTERRUPTOR - INSTALAÇÃO |
| CANALETA DE CABOS | 10841508 | 60 | 1 | 230 | 10 49 880 9 | POSTO DE COMANDO - PEÇA |
| CANTONEIRA | 10049544 | 20 | 1 | 183 | 99 46 389 | MECANISMO GIRATORIO |
| CANTONEIRA | 9573442 | 35 | 1 | 178 | 10 35 800 9 | MOTOR - PECAS ANEXAS |
| CANTONEIRA | 9573442 | 45 | 1 | 447 | 10 35 814 3 | MAGUEIRAS DO AR-CONDICI |
| CANTONEIRA | 9947234 | 10 | 2 | 160 | 10 35 809 2 | ARREFECIMENTO DO MOTOR |
| CANTONEIRA | 9949414 | 35 | 3 | 372 | 10 35 800 4 | REVESTIMENTO |
| CANTONEIRA DE FIXACAO | 10022049 | 9 | 2 | 286 | 11 00 359 4 | CARCAÇA |
| CANTONEIRA DE FIXACAO | 6203433 | 10 | 1 | 242 | 98 74 988 | PLACAS INSTALACAO A1016 |
| CANTONEIRA DE MONTAGEM | 10022078 | 6 | 1 | 286 | 11 00 359 4 | CARCAÇA |
| CAPA | 10291971 | 2 | 1 | 138 | 10 28 914 6 | VÁLVULA LIMITADORA DE PR |
| CAPA COBERTURA DO RECIP | 10016663 | 38 | 1 | 682 | 10 28 689 7 | BOMBA DE LUBRIFICACAO |
| CAPA DE BORRACHA | 9265414 | 30 | 2 | 271 | 90 79 258 | MODULO DE COMANDO VG7 |
| CAPA DE BORRACHA | 9265414 | 30 | 2 | 273 | 90 79 259 | MODULO DE COMANDO VG7 |
| CAPA DE BORRACHA | 9265414 | 5 | 1 | 278 | 92 65 665 | CR TACO |
| CAPA DE COBERTURA | 968461801 | 25 | 1 | 195 | 96 90 213 01 | RESERVATÓRIO DE ÓLEO |
| CAPA DE PROTECAO | 7013456 | 3 | 1 | 491 | 50 04 624 | VÁLVULA DE DRENAGEM M 3 |
| CAPA DE PROTECAO | 7019165 | 410 | 1 | 428 | 10 29 026 4 | PEÇAS DE MONTAGEM |
| CAPA DE PROTECAO | 7380730 | 30 | 1 | 690 | 98 82 766 | DISPOSITIVO DE REGULAGE |
| CAPA DE PROTECAO | 7616949 | 9 | 1 | 317 | 50 09 565 | CARTUCHO LIMITADOR DE PR |
| CAPA DE PROTECAO | 7623221 | 4 | 1 | 169 | 10 49 858 1 | SISTEMA ELETRICO DO MOTO |
| CAPA DE PROTECAO | 7623222 | 6 | 1 | 169 | 10 49 858 1 | SISTEMA ELETRICO DO MOTO |
| CAPA DE PROTECAO | 9276880 | 35 | 1 | 266 | 90 74 482 | CR TACO |
| CAPA DE PROTECAO | 9276880 | 35 | 4 | 688 | 10 11 856 1 | MODULO DE COMANDO VG6- |
| CAPA DO NIPLE DE LUBRIFICA | 10014701 | 18 | 1 | 681 | 10 28 689 7 | BOMBA DE LUBRIFICACAO |
| CAPA DO NIPLE DE LUBRIFICA | 8500251 | 32 | 5 | 632 | 10 38 484 8 | LUBRIFICAÇÃO CENTRALIZAD |
| CAPA DO PUNHO | 7025347 | 21 | 1 | 243 | 73 73 807 | ALAVANCA DE SEGURANCA |
| CAPA LH-SCHALTHEBEL | 10040326 | 20 | 1 | 260 | 10 46 991 8 | BOTOES MANETE DIREITA |
| CAPA LH-SCHALTHEBEL | 10040327 | 20 | 1 | 245 | 10 46 991 7 | BOTOES DA MANETE ESQUE |
| CAPO DIREITO | 9929189 | 20 | 1 | 372 | 10 35 800 4 | REVESTIMENTO |
| CAPO DIREITO | 9929190 | 2 | 1 | 382 | 99 29 189 | CAPO DIREITO |
| CAPO DO MOTOR | 10081673 | 120 | 1 | 376 | 10 35 800 4 | REVESTIMENTO |
| CAPO DO MOTOR | 10081674 | 2 | 1 | 379 | 10 08 167 3 | CAPO DO MOTOR |

| Designação | Artigo | Item | Quanti | Página | Módulo | Designação |
|---|---|---|---|---|---|---|
| CAPO DO RADIADOR | 9949428 | 15 | 1 | 372 | 10 35 800 4 | REVESTIMENTO |
| CAPO DO RADIADOR | 9949429 | 2 | 1 | 381 | 99 49 428 | CAPO DO RADIADOR |
| CAPO ESQUERDO | 10081683 | 30 | 1 | 372 | 10 35 800 4 | REVESTIMENTO |
| CAPO ESQUERDO | 10081684 | 2 | 1 | 383 | 10 08 168 3 | CAPO ESQUERDO |
| CARCACA DA BOMBA | 10014693 | 4 | 1 | 681 | 10 28 689 7 | BOMBA DE LUBRIFICACAO |
| CARCACA DA BOMBA | 10355726 | 5 | 1 | 139 | 10 35 572 4 | BOMBA HIDRÁULICA |
| CARCACA DE CONDUCAO DE | 10022117 | 2 | 1 | 282 | 10 81 666 6 | EVAPORADOR |
| CARCACA DE CONDUCAO DE | 10022787 | 1 | 1 | 285 | 10 02 211 7 | CARCACA DE CONDUCAO DE |
| CARCACA DO EVAPORADOR | 10005672 | 1 | 1 | 286 | 11 00 359 4 | CARCAÇA |
| CARCACA DO EVAPORADOR | 10005679 | 8 | 1 | 286 | 11 00 359 4 | CARCAÇA |
| CARCACA DO EVAPORADOR | 10022069 | 15 | 1 | 286 | 11 00 359 4 | CARCAÇA |
| CARCACA DO FILTRO | 10220702 | 2 | 1 | 135 | 10 22 069 9 | FILTRO |
| CARCACA DO MANCAL | 3021908 | 1 | 1 | 602 | 90 77 384 | CARCACA DO MANCAL PRE- |
| CARCACA DO MANCAL | 9077328 | 1 | 1 | 602 | 90 77 384 | CARCACA DO MANCAL PRE- |
| CARCACA DO MANCAL | 9077710 | 1 | 1 | 603 | 90 77 717 | CARCACA DO MANCAL PRE- |
| CARCACA DO MANCAL PRE- | 9077384 | 2 | 1 | 600 | 90 77 386 | SAIDA AUXILIAR P´RE-MONTA |
| CARCACA DO MANCAL PRE- | 9077717 | 2 | 1 | 601 | 90 77 718 | SAIDA AUXILIAR P´RE-MONTA |
| CARCACA DO RADIADOR DE | 9073505 | 1 | 1 | 520 | 10 12 143 8 | RADIADOR DE OLEO PRE-M |
| CARCACA DO SEPARADOR DE | 9075483 | 1 | 1 | 482 | 10 11 916 7 | CARCAÇA MANIVELA PURGAM |
| CARCACA DO TERMOSTATO | 10119984 | 1 | 1 | 564 | 10 11 983 0 | INVÓLUCRO TERMOSTATO |
| CARCACA DO TERMOSTATO | 10119984 | 1 | 1 | 565 | 90 75 678 | INVÓLUCRO TERMOSTATO |
| CARCACA VOLANTE PRE-MON | 10115576 | 1 | 1 | 581 | 10 11 557 7 | CÁRTER VOLANTE MONT. EXT |
| CARCAÇA | 10118489 | 10 | 1 | 688 | 10 11 856 1 | MODULO DE COMANDO VG6- |
| CARCAÇA | 11003594 | 1 | 1 | 282 | 10 81 666 6 | EVAPORADOR |
| CARCAÇA | 5605365 | 12 | 1 | 297 | 99 37 312 | UNIDADE DE COMANDO DE O |
| CARCAÇA | 5605365 | 12 | 1 | 298 | 56 09 948 | KIT DE FILTRO DE OLEO |
| CARCAÇA | 9074387 | 10 | 1 | 188 | 90 72 100 | MOTOR HIDRÁULICO |
| CARCAÇA | 9277636 | 10 | 1 | 686 | 10 13 268 6 | BOMBA DE REGULAGEM HID |
| CARCAÇA | 9882768 | 10 | 1 | 73 | 98 89 775 | MOTOR HIDRÁULICO |
| CARCAÇA DA MANETE DIREIT | 10469932 | 50 | 1 | 262 | 99 68 611 | MANETE DIREITA |
| CARCAÇA DA MANETE ESQUE | 10469933 | 50 | 1 | 247 | 99 68 625 | ALÇA DE TRANSMISSÃO-LH E |
| CARCAÇA DE CONECTOR ELÉ | 6204241 | 10 | 1 | 442 | 99 47 695 | INSTALAÇÃO ELÉTRICA E50 |
| CARCAÇA DO EIXO DE SAÍDA | 970643101 | 1 | 1 | 184 | 90 01 790 0 | REDUTOR DE GIRO SAT 375/ |
| CARCAÇA DO FREIO | 933333401 | 1 | 1 | 191 | 93 33 333 01 | FREIO |
| CARCAÇA MANIVELA PURGAM | 10119167 | 16 | 1 | 469 | 10 11 668 5 | MOTOR DIESEL D936 L A6 240 |
| CARCAÇA PVG 350 C 393 | 9273649 | 1 | 1 | 108 | 90 77 872 | REDUTOR DISTRIBUICAO BO |
| CARRO INFERIOR | 10358490 | 2 | 1 | 49 | 10 49 883 7 | CARRO INFERIOR COMPLETO |
| CARRO INFERIOR COMPLETO | 10498837 | 200 | 1 | 9 | 10 49 883 6 | MÁQUINA BASE |
| CARRO SUPERIOR | 10357982 | 100 | 1 | 9 | 10 49 883 6 | MÁQUINA BASE |
| CARTER | 10123868 | 1 | 1 | 486 | 90 79 483 | CARTER |
| CARTER | 9079483 | 2 | 1 | 485 | 90 79 487 | CARTER |
| CARTER | 9079487 | 20 | 1 | 469 | 10 11 668 5 | MOTOR DIESEL D936 L A6 240 |
| CARTUCHO DE FILTRO DE AR | 10044851 | 4 | 1 | 90 | 10 06 948 1 | KIT DE MANUTENÇÃO 1500/25 |
| CARTUCHO DE FILTRO DE AR | 10044851 | 11 | 1 | 102 | 99 37 298 | INSTALAÇÃO DO FILTRO DE A |
| CARTUCHO DE FILTRO DE AR | 10044851 | 7 | 1 | 103 | 10 03 980 3 | FILTRO DE AR |
| CARTUCHO LIMITADOR DE PR | 5009565 | 5 | 1 | 315 | 10 04 272 9 | BLOCO DE VÁLVULAS DE CO |
| CASQUILHO | 10140487 | 51 | 1 | 500 | 90 76 459 | BIELA |
| CASQUILHO | 10140488 | 52 | 1 | 500 | 90 76 459 | BIELA |
| CASQUILHO DE MANCAL | 10355733 | 17 | 2 | 139 | 10 35 572 4 | BOMBA HIDRÁULICA |
| CASQUILHO DE MANCAL | 7023749 | 26 | 1 | 114 | 10 22 040 9 | MECANISMO DE ACIONAMENT |
| CASTANHA DESLIZANTE | 10216694 | 13 | 1 | 114 | 10 22 040 9 | MECANISMO DE ACIONAMENT |
| CAVALETE BALANCINS COM | 9079861 | 81 | 6 | 470 | 10 11 668 5 | MOTOR DIESEL D936 L A6 240 |
| CAVALETE DOS BALANCINS | 9074504 | 1 | 1 | 511 | 90 74 505 | BALANCIM PRE-MONTADO |
| CAÇAMBA RETRO HD 1950mm | 11102829 | 12 | 1 | 7 | . | |
| CERTIFICADO EWG | 9399606 | 97 | 1 | 468 | 10 49 805 9 | PLAQUETAS |
| CHAPA CORREDIÇA | 10082606 | 16 | 2 | 640 | 10 49 817 6 | PROTEÇÃO DA HASTE DO CIL |
| CHAPA DE APOIO | 9073190 | 6 | 1 | 549 | 10 11 657 6 | PEÇA DE CONEXÃO |
| CHAPA DE APOIO | 9274060 | 4 | 2 | 546 | 10 11 726 8 | SUPORTE - MONTAGEM |
| CHAPA DE COBERTURA | 10008444 | 15 | 1 | 280 | 10 40 689 8 | SISTEMA DE AR CONDICION |
| CHAPA DE MOLA | 10493054 | 24 | 1 | 233 | 11 10 016 6 | PARTE SUPERIOR DE ASSENT |

| Designação | Artigo | Item | Quanti | Página | Módulo | Designação |
|---|---|---|---|---|---|---|
| CHAPA DE MOLA | 7027784 | 21 | 1 | 233 | 11 10 016 6 | PARTE SUPERIOR DE ASSENT |
| CHAPA DE PROTECAO | 7028910 | 560 | 1 | 429 | 10 29 026 4 | PEÇAS DE MONTAGEM |
| CHAPA DE PROTECAO | 9275738 | 14 | 1 | 196 | 90 72 990 | PLACA DE CONEXAO |
| CHAPA DE PROTECAO INFER | 10050113 | 2 | 1 | 403 | 10 05 011 2 | TAMPAS INFERIORES |
| CHAPA DE PROTECAO INFER | 10050115 | 3 | 1 | 403 | 10 05 011 2 | TAMPAS INFERIORES |
| CHAPA DE PROTECAO INFER | 10064339 | 4 | 1 | 403 | 10 05 011 2 | TAMPAS INFERIORES |
| CHAPA DE PROTEÇÃO TÉRM | 10115540 | 1 | 1 | 571 | 10 11 919 9 | PROTECAO TERMICA COM FI |
| CHAPA DE PROTEÇÃO TÉRM | 10115717 | 4 | 1 | 572 | 10 11 571 8 | PROTECAO TERMICA COM FI |
| CHAPA DE PROTEÇÃO TÉRM | 10118257 | 3 | 1 | 572 | 10 11 571 8 | PROTECAO TERMICA COM FI |
| CHAPA DO ASSOALHO | 10467240 | 46 | 2 | 165 | 10 45 475 2 | RADIADOR COMBINADO |
| CHAPA LATERAL | 10331636 | 7 | 2 | 167 | 10 35 508 4 | RADIADOR DE ÓLEO |
| CHAPA LIMITADORA | 10493050 | 11 | 1 | 233 | 11 10 016 6 | PARTE SUPERIOR DE ASSENT |
| CHAPA LIMITADORA | 9077714 | 3 | 1 | 601 | 90 77 718 | SAIDA AUXILIAR P´RE-MONTA |
| CHAPA LIMITADORA | 9485739 | 2 | 1 | 62 | 93 45 153 | COLETOR GIRATÓRIO - INSTA |
| CHAPA PERFURADA | 10056858 | 120 | 1 | 163 | 10 35 809 2 | ARREFECIMENTO DO MOTOR |
| CHAPA PERFURADA | 9079126 | 9 | 1 | 485 | 90 79 487 | CARTER |
| CHAVE | 7365626 | 7 | 1 | 192 | 94 42 150 | BOCAL DE ENCHIMENTO DE O |
| CHAVE | 7365626 | 2 | 1 | 335 | 74 14 913 | FECHO DO TANQUE |
| CHAVE | 7365626 | 5 | 1 | 372 | 10 35 800 4 | REVESTIMENTO |
| CHAVE ALLEN 10X234 | 11162122 | 92 | 1 | 458 | 10 84 856 2 | KIT DE FERRAMENTAS |
| CHAVE ALLEN 12X137 ISO 293 | 11162123 | 94 | 1 | 458 | 10 84 856 2 | KIT DE FERRAMENTAS |
| CHAVE ALLEN 14X154 ISO 293 | 11162124 | 96 | 1 | 458 | 10 84 856 2 | KIT DE FERRAMENTAS |
| CHAVE ALLEN 17X168 ISO 293 | 11162125 | 98 | 1 | 458 | 10 84 856 2 | KIT DE FERRAMENTAS |
| CHAVE ALLEN 3X66 ISO 2936 | 11162101 | 80 | 1 | 458 | 10 84 856 2 | KIT DE FERRAMENTAS |
| CHAVE ALLEN 4X74 ISO 2936 | 11162111 | 82 | 1 | 458 | 10 84 856 2 | KIT DE FERRAMENTAS |
| CHAVE ALLEN 5X85 ISO 2936 | 11162119 | 84 | 1 | 458 | 10 84 856 2 | KIT DE FERRAMENTAS |
| CHAVE ALLEN 6X186 | 11162120 | 86 | 1 | 458 | 10 84 856 2 | KIT DE FERRAMENTAS |
| CHAVE ALLEN 8X208 | 11162121 | 90 | 1 | 458 | 10 84 856 2 | KIT DE FERRAMENTAS |
| CHAVE DE BOCA SIMPLES S | 11162174 | 48 | 1 | 458 | 10 84 856 2 | KIT DE FERRAMENTAS |
| CHAVE DE BOCA SIMPLES S | 11162175 | 50 | 1 | 458 | 10 84 856 2 | KIT DE FERRAMENTAS |
| CHAVE DE BOCA SIMPLES S | 11162177 | 51 | 1 | 458 | 10 84 856 2 | KIT DE FERRAMENTAS |
| CHAVE DE BOCA SIMPLES S | 11162178 | 52 | 1 | 458 | 10 84 856 2 | KIT DE FERRAMENTAS |
| CHAVE DE BOCA SIMPLES S | 11162179 | 54 | 1 | 458 | 10 84 856 2 | KIT DE FERRAMENTAS |
| CHAVE DE FENDAS PHILLIPS | 11162132 | 112 | 1 | 459 | 10 84 856 2 | KIT DE FERRAMENTAS |
| CHAVE DE IGNICAO | 10221073 | 10 | 1 | 291 | 10 22 815 1 | CHAVE DE IGNICAO |
| CHAVE DE IGNICAO | 10221073 | 275 | 1 | 414 | 70 28 769 | PORTA DA CABINE DO MOTO |
| CHAVE DE IGNICAO | 10228151 | 75 | 1 | 249 | 10 84 086 6 | APOIO DIREITO PARA BRAÇO |
| CHAVE ESTRELA DUPLA SW10 | 11162097 | 60 | 1 | 458 | 10 84 856 2 | KIT DE FERRAMENTAS |
| CHAVE ESTRELA DUPLA SW16 | 11162099 | 64 | 1 | 458 | 10 84 856 2 | KIT DE FERRAMENTAS |
| CHAVE ESTRELA DUPLA SW24 | 11162100 | 70 | 1 | 458 | 10 84 856 2 | KIT DE FERRAMENTAS |
| CHAVE FIXA DUPLA SW10 X 11 | 11162164 | 24 | 1 | 458 | 10 84 856 2 | KIT DE FERRAMENTAS |
| CHAVE FIXA DUPLA SW12 X 13 | 11162165 | 26 | 1 | 458 | 10 84 856 2 | KIT DE FERRAMENTAS |
| CHAVE FIXA DUPLA SW14 X 15 | 11162167 | 28 | 1 | 458 | 10 84 856 2 | KIT DE FERRAMENTAS |
| CHAVE FIXA DUPLA SW16 X 17 | 11162169 | 30 | 1 | 458 | 10 84 856 2 | KIT DE FERRAMENTAS |
| CHAVE FIXA DUPLA SW18 X 19 | 11162170 | 32 | 1 | 458 | 10 84 856 2 | KIT DE FERRAMENTAS |
| CHAVE FIXA DUPLA SW22 X 24 | 11162171 | 34 | 1 | 458 | 10 84 856 2 | KIT DE FERRAMENTAS |
| CHAVE FIXA DUPLA SW27 X 30 | 11162173 | 38 | 1 | 458 | 10 84 856 2 | KIT DE FERRAMENTAS |
| CHAVE FIXA DUPLA SW8 X 9 D | 11162163 | 22 | 1 | 458 | 10 84 856 2 | KIT DE FERRAMENTAS |
| CHAVE PARA MONTAGEM DO | 9600769 | 985 | 1 | 663 | 94 00 606 1 | PISTÃO 180MM |
| CHAVE PARA MONTAGEM DO | 9600769 | 985 | 1 | 665 | 95 90 264 | PISTÃO 170MM |
| CHAVE PARA PORCA DO PIS | 9921125 | 985 | 1 | 664 | 95 87 597 | PISTÃO 180MM |
| CHAVETA | 10008422 | 9 | 1 | 121 | 10 41 301 3 | BOMBA HIDRÁULICA |
| CHAVETA | 10220694 | 6 | 1 | 133 | 10 22 066 7 | BOMBA DE ENGRENAGENS |
| CHICOTE | 10222315 | 1 | 1 | 594 | 10 11 574 4 | CHICOTE ELETRICO |
| CHICOTE | 11066527 | 4 | 1 | 235 | 11 10 016 7 | SUSPENSAO |
| CHICOTE DE CABOS ACESSÓ | 9080982 | 580 | 1 | 476 | 10 11 668 5 | MOTOR DIESEL D936 L A6 240 |
| CHICOTE ELETRICO | 10051599 | 27 | 1 | 435 | 10 35 814 1 | INSTALAÇÃO ELÉTRICA |
| CHICOTE ELETRICO | 10115744 | 1 | 1 | 595 | 90 80 982 | CHICOTE DE CABOS ACESSÓ |
| CHICOTE ELETRICO | 10405134 | 3 | 1 | 169 | 10 49 858 1 | SISTEMA ELETRICO DO MOTO |
| CHICOTE ELETRICO | 9928529 | 8 | 1 | 169 | 10 49 858 1 | SISTEMA ELETRICO DO MOTO |

| Designação | Artigo | Item | Quanti | Página | Módulo | Designação |
|---|---|---|---|---|---|---|
| CHICOTE ELETRICO | 9928530 | 9 | 1 | 169 | 10 49 858 1 | SISTEMA ELETRICO DO MOTO |
| CHICOTE ELETRICO | 9948251 | 12 | 1 | 435 | 10 35 814 1 | INSTALAÇÃO ELÉTRICA |
| CHICOTE ELETRICO | 9948824 | 17 | 1 | 444 | 11 10 266 2 | BATERIA - INSTALACAO |
| CHICOTE ELETRICO CHAVE- | 10052700 | 19 | 1 | 444 | 11 10 266 2 | BATERIA - INSTALACAO |
| CHICOTE ELETRICO DA BATE | 9927341 | 15 | 1 | 444 | 11 10 266 2 | BATERIA - INSTALACAO |
| CHICOTE ELETRICO DA CABIN | 10488089 | 150 | 1 | 420 | 10 48 808 7 | INSTALACAO ELETRICA |
| CHICOTE ELETRICO DA MAN | 9968591 | 80 | 1 | 247 | 99 68 625 | ALÇA DE TRANSMISSÃO-LH E |
| CHICOTE ELETRICO DA MAN | 9968591 | 80 | 1 | 262 | 99 68 611 | MANETE DIREITA |
| CHICOTE ELETRICO E50 | 9929151 | 14 | 1 | 442 | 99 47 695 | INSTALAÇÃO ELÉTRICA E50 |
| CHICOTE ELETRICO E50 | 9949750 | 15 | 1 | 442 | 99 47 695 | INSTALAÇÃO ELÉTRICA E50 |
| CHICOTE ELETRICO FAROL | 10048247 | 7 | 1 | 438 | 10 04 824 6 | FAROL E BUZINA INSTALACA |
| CHICOTE ELETRICO FAROL | 10048247 | 7 | 1 | 439 | 11 10 278 6 | FAROL E BUZINA INSTALACA |
| CHICOTE ELETRICO MOTOR | 9948316 | 5 | 1 | 169 | 10 49 858 1 | SISTEMA ELETRICO DO MOTO |
| CHICOTE ELETRICO S9/S9 | 9686191 | 21 | 1 | 444 | 11 10 266 2 | BATERIA - INSTALACAO |
| CHICOTE ELÉTRICO | 10006617 | 80 | 1 | 280 | 10 40 689 8 | SISTEMA DE AR CONDICION |
| CHICOTE ELÉTRICO | 6204634 | 46 | 1 | 237 | 10 38 502 4 | APOIO ESQUERDO PARA BR |
| CHICOTE ELÉTRICO A100-A1 | 9699736 | 55 | 1 | 652 | 10 35 860 1 | ALARME DE TRANSLACAO |
| CHICOTE ELÉTRICO A1010-A1 | 10822179 | 91 | 1 | 251 | 10 84 086 6 | APOIO DIREITO PARA BRAÇO |
| CHICOTE ELÉTRICO A1010-A1 | 9893072 | 23 | 1 | 237 | 10 38 502 4 | APOIO ESQUERDO PARA BR |
| CHICOTE ELÉTRICO A1010-U1 | 9949686 | 94 | 1 | 251 | 10 84 086 6 | APOIO DIREITO PARA BRAÇO |
| CHICOTE ELÉTRICO ESP01-BB | 9768247 | 38 | 1 | 249 | 10 84 086 6 | APOIO DIREITO PARA BRAÇO |
| CHICOTE ELÉTRICO MP65 - M | 10066076 | 20 | 1 | 237 | 10 38 502 4 | APOIO ESQUERDO PARA BR |
| CHICOTE ELÉTRICO POSTO | 10408513 | 140 | 1 | 230 | 10 49 880 9 | POSTO DE COMANDO - PEÇA |
| CHICOTE ELÉTRICO X1/U16-X | 10079010 | 93 | 1 | 251 | 10 84 086 6 | APOIO DIREITO PARA BRAÇO |
| CHICOTE ELÉTRICO X164-X18 | 10055095 | 138 | 1 | 230 | 10 49 880 9 | POSTO DE COMANDO - PEÇA |
| CHICOTE ELÉTRICO X182-2/S8 | 10057843 | 92 | 1 | 251 | 10 84 086 6 | APOIO DIREITO PARA BRAÇO |
| CHICOTE ELÉTRICO X182-2/S8 | 10059466 | 60 | 1 | 680 | 10 49 822 9 | LUBRIFICAÇÃO CENTR.TOTAL. |
| CHICOTE ELÉTRICO X66-X734 | 10079846 | 95 | 1 | 251 | 10 84 086 6 | APOIO DIREITO PARA BRAÇO |
| CILINDRO | 10220455 | 1 | 1 | 345 | 10 22 042 7 | MECANISMO DE ACIONAMENT |
| CILINDRO | 10355741 | 2 | 1 | 141 | 10 35 573 8 | MECANISMO DE ACIONAMENT |
| CILINDRO | 10413026 | 2 | 1 | 144 | 10 41 302 4 | MECANISMO DE ACIONAMENT |
| CILINDRO | 9063420 | 10 | 1 | 658 | 95 87 580 | CILINDRO HIDRÁULICO |
| CILINDRO | 9073083 | 40 | 6 | 469 | 10 11 668 5 | MOTOR DIESEL D936 L A6 240 |
| CILINDRO | 9273051 | 10 | 1 | 194 | 92 73 050 | CILINDRO COM BUCHA |
| CILINDRO | 94019254 | 10 | 1 | 657 | 94 02 019 4 | CILINDRO HIDRÁULICO |
| CILINDRO | 9596877 | 10 | 1 | 659 | 95 96 399 | CILINDRO HIDRÁULICO |
| CILINDRO COM BUCHA | 9075894 | 1 | 1 | 70 | 90 73 155 | KIT DE REPARO GRUPO ROT |
| CILINDRO COM BUCHA | 9273050 | 1 | 1 | 198 | 90 74 415 | KIT DE REPARO GRUPO ROT |
| CILINDRO COM BUCHA | 9273050 | 2 | 1 | 199 | 90 74 416 | KIT DE REPARO |
| CILINDRO COM BUCHA | 9888120 | 1 | 1 | 124 | 90 73 751 | KIT DE REPARO GRUPO ROT |
| CILINDRO DE ELEVACAO | 10498158 | 10 | 1 | 670 | 10 49 815 9 | CILINDRO DE ELEVACAO DIA. |
| CILINDRO DE ELEVACAO DIA. | 10498159 | 3 | 1 | 7 | . | |
| CILINDRO HIDR. COM DIVISO | 9948785 | 24 | 1 | 616 | 10 49 830 0 | LANÇA MONOBLOCO 6,70M |
| CILINDRO HIDRAULICO | 10062038 | 3 | 1 | 628 | 10 49 823 5 | BRACO DA CACAMBA 2,35M |
| CILINDRO HIDRÁULICO | 94020194 | 2 | 1 | 656 | 99 48 785 | CILINDRO HIDR. COM DIVISO |
| CILINDRO HIDRÁULICO | 9587580 | 2 | 2 | 671 | 10 49 815 8 | CILINDRO DE ELEVACAO |
| CILINDRO HIDRÁULICO | 9596399 | 2 | 1 | 655 | 10 06 203 8 | CILINDRO HIDRAULICO |
| CINTA DE AMARRACAO 18X0, | 7621780 | 505 | 5 | 314 | 10 35 801 7 | INSTALACAO HIDRAULICA |
| CINTA DE AMARRACAO 18X0, | 7621780 | 600 | 4 | 355 | 10 35 802 8 | INSTALAÇÃO BLOCO DE VÁL |
| CINTO DE SEGURANCA ABDO | 10493984 | 62 | 1 | 234 | 11 10 016 6 | PARTE SUPERIOR DE ASSENT |
| CINZEIRO | 7366731 | 81 | 1 | 238 | 10 38 502 4 | APOIO ESQUERDO PARA BR |
| CIRENE | 6000578 | 37 | 1 | 229 | 10 49 880 9 | POSTO DE COMANDO - PEÇA |
| CJ. DE ANÁLISE ÓLEO MINERA | 7018369 | 13 | 1 | 38 | 90 66 466 | ACESSORIOS |
| CLIP DE MOLA | 7369754 | 2 | 2 | 283 | 10 02 206 9 | CARCACA DO EVAPORADOR |
| CLIPE | 10412536 | 10 | 27 | 379 | 10 08 167 3 | CAPO DO MOTOR |
| CLIPE | 10412536 | 5 | 40 | 380 | 99 27 477 | ISOLAÇÃO ACÚSTICA |
| CLIPE | 10412536 | 13 | 40 | 381 | 99 49 428 | CAPO DO RADIADOR |
| CLIPE | 10412536 | 8 | 40 | 382 | 99 29 189 | CAPO DIREITO |
| CLIPE | 10412536 | 6 | 26 | 383 | 10 08 168 3 | CAPO ESQUERDO |
| CLIPE | 10412536 | 7 | 28 | 384 | 10 35 817 2 | PORTA LATERAL TRASEIRA |

| Designação | Artigo | Item | Quanti | Página | Módulo | Designação |
|---|---|---|---|---|---|---|
| CLIPE | 10412536 | 4 | 108 | 385 | 99 45 269 | DEFLETOR |
| CLIPE | 10412536 | 7 | 20 | 386 | 10 35 792 6 | PORTA LATERAL CENTRAL E |
| CLIPE | 10412536 | 4 | 72 | 387 | 99 27 471 | DEFLETOR |
| CLIPE | 10412536 | 8 | 48 | 388 | 10 07 307 3 | PORTA LATERAL DIREITA |
| CLIPE | 10412536 | 8 | 48 | 389 | 10 37 283 9 | PORTA LATERAL DIREITA |
| CLIPE | 10412536 | 4 | 9 | 396 | 99 47 957 | PAREDE DIVISÓRIA |
| CLIPE | 10412536 | 7 | 13 | 398 | 10 35 853 1 | PORTA LATERAL DIANTEIRA |
| CLIPE | 10412536 | 7 | 13 | 399 | 99 47 961 | PORTA LATERAL DIANTEIRA |
| COB.CABEÇA CILINDRO INSTA | 10119609 | 83 | 1 | 470 | 10 11 668 5 | MOTOR DIESEL D936 L A6 240 |
| COB.CABEÇA CILINDRO INSTA | 10119610 | 82 | 5 | 470 | 10 11 668 5 | MOTOR DIESEL D936 L A6 240 |
| COB.CABEÇA CILINDRO INSTA | 10119636 | 84 | 1 | 470 | 10 11 668 5 | MOTOR DIESEL D936 L A6 240 |
| COBERTURA | 10119492 | 342 | 1 | 473 | 10 11 668 5 | MOTOR DIESEL D936 L A6 240 |
| COBERTURA DO VENTLADOR | 10331630 | 10 | 1 | 167 | 10 35 508 4 | RADIADOR DE ÓLEO |
| COBERTURA DO VENTLADOR | 10331641 | 38 | 1 | 165 | 10 45 475 2 | RADIADOR COMBINADO |
| COBERTURA ESQUERDA | 10493986 | 13 | 1 | 233 | 11 10 016 6 | PARTE SUPERIOR DE ASSENT |
| COLA | 10355107 | 20 | 0.3 | 379 | 10 08 167 3 | CAPO DO MOTOR |
| COLA | 8655023 | 104 | 1 | 477 | 10 11 577 9 | BLOCO DO MOTOR COMPLET |
| COLA PARA ELEMENTOS FIXA | 11140338 | 120 | 1 | 690 | 98 82 766 | DISPOSITIVO DE REGULAGE |
| COLA PARA ELEMENTOS FIXA | 11140338 | 120 | 1 | 699 | 98 82 771 | KIT DE VEDAÇÃO |
| COLA PARA ELEMENTOS FIXA | 811205708 | 109 | 1 | 525 | 90 72 781 | BOMBA DE ÓLEO DE LUBRIFI |
| COLA PARA ELEMENTOS FIXA | 811205708 | 109 | 1 | 563 | 10 13 281 7 | BOMBA DE ÁGUA PRÉ-MONT |
| COLA PARA ELEMENTOS FIXA | 811205708 | 109 | 1 | 598 | 90 78 961 | SAIDA AUXILIAR ANEXA |
| COLA PARA ELEMENTOS FIXA | 811205708 | 103 | 1 | 692 | 98 88 308 | PLACA DE CONEXAO |
| COLA PARA ELEMENTOS FIXA | 8622897 | 102 | 1 | 72 | 98 82 833 | VÁLVULA DE COMANDO NG 14 |
| COLA PARA ELEMENTOS FIXA | 8628192 | 109 | 1 | 543 | 10 11 628 5 | TUBULACAO DE COMBUSTIVE |
| COLA PARA ELEMENTOS FIXA | 8628192 | 109 | 1 | 557 | 90 78 356 | PECAS DE FECHAMENTO |
| COLA PARA ELEMENTOS FIXA | 8628192 | 109 | 1 | 559 | 10 11 646 4 | COMPRESSOR DO AR-CONDI |
| COLA PARA ELEMENTOS FIXA | 8628192 | 109 | 1 | 580 | 90 79 823 | DISPOSITIVO TRANSP.MONT.E |
| COLA PARA ELEMENTOS FIXA | 8628192 | 109 | 1 | 592 | 10 11 599 3 | DISPOSITIVO COMANDO - M |
| COLA PARA ELEMENTOS FIXA | 8655016 | 109 | 1 | 575 | 10 11 553 9 | MOTOR DE PARTIDA - MONTA |
| COLA PARA ELEMENTOS FIXA | 8655016 | 109 | 1 | 579 | 90 79 468 | DISPOSITIVO TRANSP.MONT.E |
| COLA PARA ELEMENTOS FIXA | 8655016 | 109 | 1 | 599 | 90 80 006 | SAIDA AUXILIAR ANEXA |
| COLA PARA ELEMENTOS FIXA | 8700012 | 106 | 1 | 124 | 90 73 751 | KIT DE REPARO GRUPO ROT |
| COLETOR DE ADMISSAO | 9079936 | 4 | 1 | 552 | 10 12 190 8 | LINHA DE CONEXAO |
| COLETOR DE ADMISSAO | 9079936 | 4 | 1 | 553 | 90 79 964 | LINHA DE CONEXAO |
| COLETOR DE ESCAPAMENTO | 10118611 | 2 | 2 | 561 | 10 11 547 9 | TUBO ESCAPAMENTO PRE-M |
| COLETOR DE ESCAPAMENTO | 9080876 | 1 | 1 | 561 | 10 11 547 9 | TUBO ESCAPAMENTO PRE-M |
| COLETOR GIRATÓRIO | 10009630 | 8 | 1 | 62 | 93 45 153 | COLETOR GIRATÓRIO - INSTA |
| COLETOR GIRATÓRIO | 9141597 | 7 | 1 | 62 | 93 45 153 | COLETOR GIRATÓRIO - INSTA |
| COLETOR GIRATÓRIO - INSTA | 9345153 | 8 | 1 | 49 | 10 49 883 7 | CARRO INFERIOR COMPLETO |
| COLETOR-SECADOR | 5611990 | 1 | 1 | 449 | 10 29 266 0 | SECADOR COLETOR |
| COLUNA DE MOLAS-PRATO | 11213510 | 11 | 1 | 345 | 10 22 042 7 | MECANISMO DE ACIONAMENT |
| COMANDO | 10036533 | 3 | 1 | 264 | 90 13 811 | ACION. DE EMERGÊNCIA COM |
| COMPRESSOR COMPL. | 10492985 | 10 | 1 | 235 | 11 10 016 7 | SUSPENSAO |
| COMPRESSOR DO AR-CONDI | 10048713 | 595 | 1 | 96 | 10 35 808 9 | INSTALAÇÃO DO MOTOR |
| COMPRESSOR DO AR-CONDI | 10116464 | 340 | 1 | 473 | 10 11 668 5 | MOTOR DIESEL D936 L A6 240 |
| COMPRESSOR DO AR-CONDI | 10116769 | 2 | 1 | 559 | 10 11 646 4 | COMPRESSOR DO AR-CONDI |
| CONCHA | 7370891 | 3 | 1 | 255 | 56 18 923 | CONSOLE DE COMANDO DIRE |
| CONCHA DO PUNHO | 10014777 | 55 | 1 | 246 | 10 46 993 3 | CARCAÇA DA MANETE ESQUE |
| CONCHA DO PUNHO | 10014778 | 50 | 1 | 246 | 10 46 993 3 | CARCAÇA DA MANETE ESQUE |
| CONCHA DO PUNHO | 10014779 | 55 | 1 | 261 | 10 46 993 2 | CARCAÇA DA MANETE DIREIT |
| CONCHA DO PUNHO | 10014780 | 50 | 1 | 261 | 10 46 993 2 | CARCAÇA DA MANETE DIREIT |
| CONDENSADOR DE AR-COND | 10005670 | 2 | 1 | 180 | 10 04 871 3 | COMPRESSOR DO AR-CONDI |
| CONDUTOR DE ALIMENTAÇÃ | 10014689 | 6 | 1 | 678 | 10 01 468 0 | BLOCO DO MOTOR |
| CONDUTOR DE AR | 10024192 | 500 | 1 | 433 | 10 48 808 8 | REVESTIMENTO INTERNO |
| CONE | 7021984 | 200 | 2 | 75 | 56 16 688 | VALVULA FRENAGEM DA TRA |
| CONE | 7021984 | 230 | 2 | 75 | 56 16 688 | VALVULA FRENAGEM DA TRA |
| CONE | 7367730 | 2 | 1 | 357 | 93 70 592 | VALVULA DE RETENCAO |
| CONE | 7371359 | 4 | 1 | 369 | 56 10 135 | VALVULA DE ALIMENTACAO |
| CONE DE FECHAMENTO | 4900027 | 54 | 1 | 304 | 10 35 801 4 | MANGUEIRAS HIDRAULICAS |

| Designação | Artigo | Item | Quanti | Página | Módulo | Designação |
|---|---|---|---|---|---|---|
| CONE DE FECHAMENTO | 4900027 | 197 | 1 | 306 | 10 35 801 4 | MANGUEIRAS HIDRAULICAS |
| CONE DE FECHAMENTO | 4900038 | 60 | 3 | 313 | 10 35 801 7 | INSTALACAO HIDRAULICA |
| CONE DE FECHAMENTO | 4900038 | 85 | 3 | 313 | 10 35 801 7 | INSTALACAO HIDRAULICA |
| CONE DE FECHAMENTO VKA | 477700514 | 73 | 1 | 620 | 10 49 830 0 | LANÇA MONOBLOCO 6,70M |
| CONE DE FECHAMENTO VKA | 4772024 | 60 | 1 | 304 | 10 35 801 4 | MANGUEIRAS HIDRAULICAS |
| CONE DE FECHAMENTO VKA | 4772028 | 70 | 1 | 620 | 10 49 830 0 | LANÇA MONOBLOCO 6,70M |
| CONE DE FECHAMENTO VKA 3 | 4900704 | 6 | 1 | 105 | 10 06 658 8 | BOCAL DE SUCÇÃO |
| CONE DE FECHAMENTO VKA | 4900305 | 20 | 3 | 624 | 10 38 408 5 | LUBRIFICAÇÃO CENTRALIZAD |
| CONE DE FECHAMENTO VKA | 4900305 | 33 | 2 | 632 | 10 38 484 8 | LUBRIFICAÇÃO CENTRALIZAD |
| CONEX. ROSCA DE ENCAIXE | 7026654 | 36 | 1 | 217 | 90 64 786 | ELEMENTO DE CONEXÃO |
| CONEXAO DE SAIDA | 10009606 | 14 | 4 | 212 | 10 48 840 4 | BLOCO DE DISTRIBUIÇÃO SX |
| CONEXAO P/ ACUMULADOR | 9399179 | 3 | 1 | 297 | 99 37 312 | UNIDADE DE COMANDO DE O |
| CONEXÃO | 10014699 | 16 | 1 | 681 | 10 28 689 7 | BOMBA DE LUBRIFICACAO |
| CONEXÃO | 10115649 | 46 | 2 | 542 | 10 11 628 5 | TUBULACAO DE COMBUSTIVE |
| CONEXÃO | 7368105 | 36 | 1 | 632 | 10 38 484 8 | LUBRIFICAÇÃO CENTRALIZAD |
| CONEXÃO | 7368106 | 14 | 5 | 624 | 10 38 408 5 | LUBRIFICAÇÃO CENTRALIZAD |
| CONEXÃO | 7368106 | 23 | 2 | 632 | 10 38 484 8 | LUBRIFICAÇÃO CENTRALIZAD |
| CONEXÃO | 9080360 | 8 | 2 | 548 | 90 79 580 | PEÇA DE FECHO PRÉ-MONT |
| CONEXÃO | 9273271 | 2 | 2 | 527 | 90 75 368 | FILTRO ÓLEO LUBRIF. MONT. |
| CONEXÃO | 9757423 | 23 | 4 | 84 | 10 07 713 5 | INST.HIDR.CARRO INFERIOR |
| CONEXÃO DE ABASTECIMENT | 10651997 | 10 | 1 | 681 | 10 28 689 7 | BOMBA DE LUBRIFICACAO |
| CONEXÃO DE ABASTECIMENT | 9442151 | 1 | 1 | 192 | 94 42 150 | BOCAL DE ENCHIMENTO DE O |
| CONEXÃO DE AQUECIMENTO | 9079889 | 386 | 1 | 474 | 10 11 668 5 | MOTOR DIESEL D936 L A6 240 |
| CONEXÃO DE BORRACHA | 9079603 | 18 | 1 | 482 | 10 11 916 7 | CARCAÇA MANIVELA PURGAM |
| CONEXÃO DE BORRACHA | 9079603 | 11 | 1 | 487 | 10 12 026 3 | LINHA DE ÓLEO PRÉ-MONTA |
| CONEXÃO DE BORRACHA | 9079603 | 43 | 1 | 610 | 10 11 583 8 | JOGO DE VEDAÇÃO MOTOR D |
| CONEXÃO DE BORRACHA | 9271340 | 6 | 2 | 482 | 10 11 916 7 | CARCAÇA MANIVELA PURGAM |
| CONEXÃO DE BORRACHA | 9271340 | 44 | 2 | 610 | 10 11 583 8 | JOGO DE VEDAÇÃO MOTOR D |
| CONEXÃO DE BORRACHA | 9273161 | 10 | 1 | 482 | 10 11 916 7 | CARCAÇA MANIVELA PURGAM |
| CONEXÃO DE BORRACHA | 9273161 | 161 | 1 | 613 | 10 11 583 8 | JOGO DE VEDAÇÃO MOTOR D |
| CONEXÃO DE BORRACHA 90G | 10116310 | 24 | 1 | 573 | 90 80 735 | KIT DO TURBO COMPRESSOR |
| CONEXÃO DE BORRACHA 90G | 10116310 | 4302 | 1 | 613 | 10 11 583 8 | JOGO DE VEDAÇÃO MOTOR D |
| CONEXÃO DE MANGUEIRA D | 9809629 | 49 | 1 | 162 | 10 35 809 2 | ARREFECIMENTO DO MOTOR |
| CONEXÃO DE MANGUEIRA DN | 774371808 | 10 | 1 | 217 | 90 64 786 | ELEMENTO DE CONEXÃO |
| CONEXÃO DE MANGUEIRA DN | 774371808 | 10 | 10 | 219 | 10 01 461 1 | CAIXA AUXILIAR |
| CONEXÃO FLAGEADA | 9948115 | 25 | 1 | 360 | 10 49 822 5 | TUBULACOES PRESSAO INS |
| CONEXÃO GE 18L | 7003578 | 35 | 1 | 311 | 10 35 809 3 | INSTALACAO HIDRAULICA |
| CONEXÃO GE 22L G3/4A | 4001446 | 18 | 2 | 84 | 10 07 713 5 | INST.HIDR.CARRO INFERIOR |
| CONEXÃO GE 6S | 4901166 | 94 | 2 | 343 | 10 84 584 9 | INSTALACAO BOMBA E EMBR |
| CONEXÃO GE 8S M14X1,5 | 7404619 | 97 | 1 | 343 | 10 84 584 9 | INSTALACAO BOMBA E EMBR |
| CONEXÃO GIRATORIA WSV 8L | 10009054 | 21 | 1 | 216 | 10 10 171 1 | BLOCO DE DISTRIBUIÇÃO MX- |
| CONEXÃO GIRATORIA WSV 8L | 10009054 | 21 | 1 | 623 | 10 10 171 2 | BLOCO DE DISTRIBUIÇÃO MX- |
| CONEXÃO ROSCADA | 7368545 | 21 | 4 | 207 | 99 46 408 | TUBO LUBRIFICAÇÃO - INSTA |
| CONEXÃO ROSCADA | 7370799 | 107 | 1 | 344 | 10 84 584 9 | INSTALACAO BOMBA E EMBR |
| CONEXÃO ROSCADA | 7617386 | 67 | 1 | 301 | 10 35 801 5 | PASSAGEM HIDRAULICA |
| CONEXÃO ROSCADA | 9075128 | 26 | 1 | 573 | 90 80 735 | KIT DO TURBO COMPRESSOR |
| CONEXÃO ROSCADA GE 10L | 7402493 | 19 | 1 | 573 | 90 80 735 | KIT DO TURBO COMPRESSOR |
| CONEXÃO ROSCADA GE 15L 7 | 7015482 | 41 | 2 | 312 | 10 35 809 3 | INSTALACAO HIDRAULICA |
| CONEXÃO ROSCADA GE8 10X | 10009053 | 20 | 1 | 213 | 10 48 841 6 | BLOCO DE DISTRIBUIÇÃO MX- |
| CONEXÃO ROSCADA WH 10L | 7617261 | 12 | 3 | 225 | 10 06 014 6 | INSTALACAO HIDRAULICA |
| CONEXÃO ROSCADA WH 10L | 7617261 | 26 | 1 | 297 | 99 37 312 | UNIDADE DE COMANDO DE O |
| CONEXÃO ROSCADA WH 10L | 7617261 | 141 | 11 | 348 | 10 35 802 8 | INSTALAÇÃO BLOCO DE VÁL |
| CONEXÃO ROSCADA WH 10L | 7617714 | 19 | 1 | 183 | 99 46 389 | MECANISMO GIRATORIO |
| CONEXÃO ROSCADA WH 10L | 7617714 | 22 | 4 | 207 | 99 46 408 | TUBO LUBRIFICAÇÃO - INSTA |
| CONEXÃO ROSCADA WH 10L | 7617714 | 84 | 1 | 343 | 10 84 584 9 | INSTALACAO BOMBA E EMBR |
| CONEXÃO ROSCADA WH 20S | 7617359 | 160 | 1 | 348 | 10 35 802 8 | INSTALAÇÃO BLOCO DE VÁL |
| CONEXÃO ROSCADA WH 8L | 7412734 | 9 | 1 | 212 | 10 48 840 4 | BLOCO DE DISTRIBUIÇÃO SX |
| CONEXÃO SV 12S | 4901150 | 66 | 1 | 620 | 10 49 830 0 | LANÇA MONOBLOCO 6,70M |
| CONEXÃO SV 35L M45X2 | 7368109 | 205 | 1 | 306 | 10 35 801 4 | MANGUEIRAS HIDRAULICAS |
| CONJ REP (ACION.) FMF 140 | 9073357 | 94 | 1 | 71 | 90 73 354 | MECANISMO DE ACIONAMENT |

| Designação | Artigo | Item | Quanti | Página | Módulo | Designação |
|---|---|---|---|---|---|---|
| CONJ REP (ACION.) FMF 140 | 9073357 | 94 | 1 | 73 | 98 89 775 | MOTOR HIDRÁULICO |
| CONJ REP (ESFERA RZ+PL) N | 9073389 | 78 | 1 | 188 | 90 72 100 | MOTOR HIDRÁULICO |
| CONJ REP (ESFERA RZ+PL) N | 9889988 | 78 | 1 | 73 | 98 89 775 | MOTOR HIDRÁULICO |
| CONJ REP (ESFERA RZ+PL) N | 9889988 | 14 | 1 | 79 | 90 73 357 | CONJ REP (ACION.) FMF 140 |
| CONJ REP (ESFERA RZ+PL) N | 9888119 | 14 | 1 | 150 | 90 79 294 | KIT DE REPARO |
| CONJ. DE ANÁLISE ÓLEO BIOL | 510363416 | 17 | 1 | 7 | . | |
| CONJ. DE ANÁLISE ÓLEO BIOL | 7026088 | 22 | 1 | 38 | 90 66 466 | ACESSORIOS |
| CONJ. DE ANÁLISE ÓLEO BIOL | 7026817 | 20 | 1 | 38 | 90 66 466 | ACESSORIOS |
| CONSOLE | 10116053 | 9 | 1 | 559 | 10 11 646 4 | COMPRESSOR DO AR-CONDI |
| CONSOLE | 10498678 | 8 | 2 | 616 | 10 49 830 0 | LANÇA MONOBLOCO 6,70M |
| CONSOLE | 9690616 | 80 | 1 | 251 | 10 84 086 6 | APOIO DIREITO PARA BRAÇO |
| CONSOLE DE COMANDO | 10057362 | 10 | 1 | 237 | 10 38 502 4 | APOIO ESQUERDO PARA BR |
| CONSOLE DE COMANDO | 10165766 | 10 | 1 | 239 | 10 05 736 2 | CONSOLE DE COMANDO |
| CONSOLE DE COMANDO DIRE | 5618923 | 10 | 1 | 249 | 10 84 086 6 | APOIO DIREITO PARA BRAÇO |
| CONSOLE DE TRANSPORTE | 10141949 | 1 | 1 | 579 | 90 79 468 | DISPOSITIVO TRANSP.MONT.E |
| CONSOLE DE TRANSPORTE | 9078849 | 1 | 1 | 580 | 90 79 823 | DISPOSITIVO TRANSP.MONT.E |
| CONSOLE DIANTEIRO DIREIT | 10049423 | 12 | 1 | 98 | 10 04 942 6 | SUSPENSAO DO MOTOR |
| CONSOLE DO MOTOR | 10056401 | 30 | 1 | 178 | 10 35 800 9 | MOTOR - PECAS ANEXAS |
| CONSOLE TRASEIRA DIREITA | 9937294 | 14 | 1 | 98 | 10 04 942 6 | SUSPENSAO DO MOTOR |
| CONSOLE TRASEIRA ESQUE | 9937293 | 13 | 1 | 98 | 10 04 942 6 | SUSPENSAO DO MOTOR |
| CONTATOR ELÉTRICO | 6001593 | 3 | 1 | 263 | 10 05 507 1 | INTERRUPTOR - INSTALAÇÃO |
| CONTRA-APOIO | 9560855 | 45 | 2 | 444 | 11 10 266 2 | BATERIA - INSTALACAO |
| CONTRA-PORCA UNEF1 11/16 | 6905277 | 11 | 1 | 442 | 99 47 695 | INSTALAÇÃO ELÉTRICA E50 |
| CONTRAPESO 9T | 10498023 | 2 | 1 | 455 | 10 49 801 8 | INSTALAÇÃO DO CONTRAPES |
| CONTRAPINO | 4330015 | 71 | 2 | 312 | 10 35 809 3 | INSTALACAO HIDRAULICA |
| CORDÃO DE VEDAÇÃO | 10215888 | 30 | 0.07 | 181 | 90 18 423 | INSTALACAO MECANISMO GI |
| COROA DENTADA | 9267155 | 1 | 1 | 683 | 90 80 918 | VOLANTE MONTAGEM EXTER |
| COROA GIRATÓRIA | 932178201 | 10 | 1 | 205 | 10 83 653 3 | COROA GIRATÓRIA - INSTALA |
| COROA GIRATÓRIA - INSTALA | 10836533 | 800 | 1 | 85 | 10 35 798 2 | CARRO SUPERIOR |
| CORPO | 9015190 | 3 | 1 | 53 | 90 15 155 | TENSIONADOR DE GRAXA |
| CORPO BASICO | 10005863 | 1 | 1 | 240 | 10 16 576 6 | CONSOLE DE COMANDO |
| CORPO BASICO | 5618922 | 1 | 1 | 255 | 56 18 923 | CONSOLE DE COMANDO DIRE |
| CORRENTE | 7024630 | 26 | 1 | 321 | 10 28 046 1 | VALVULA MAGNETICA DE RE |
| CORRENTE DA ESTEIRA | 10037739 | 1 | 1 | 52 | 10 47 009 2 | ESTEIRA 500mm |
| CORRIMÃO | 9929456 | 75 | 1 | 374 | 10 35 800 4 | REVESTIMENTO |
| COXIM | 10013573 | 5 | 4 | 293 | 98 79 063 | PLACA DO ASSOALHO DA CAB |
| COXIM | 7019129 | 470 | 1 | 428 | 10 29 026 4 | PEÇAS DE MONTAGEM |
| COXIM | 7021047 | 480 | 1 | 428 | 10 29 026 4 | PEÇAS DE MONTAGEM |
| COXIM | 7028810 | 170 | 2 | 411 | 70 28 759 | PÁRA-BRISA SUPERIOR |
| COXIM | 7028810 | 170 | 2 | 427 | 10 29 026 4 | PEÇAS DE MONTAGEM |
| COXIM GMT | 5004748 | 4 | 2 | 462 | 10 37 283 6 | TAMPA |
| CR COMPRESSOR | 10493026 | 28 | 1 | 235 | 11 10 016 7 | SUSPENSAO |
| CR TACO | 9074482 | 98 | 1 | 688 | 10 11 856 1 | MODULO DE COMANDO VG6- |
| CR TACO | 9265665 | 998 | 1 | 272 | 90 79 258 | MODULO DE COMANDO VG7 |
| CR TACO | 9265665 | 998 | 1 | 274 | 90 79 259 | MODULO DE COMANDO VG7 |
| CRUZETA | 9265396 | 16 | 1 | 688 | 10 11 856 1 | MODULO DE COMANDO VG6- |
| CUBO | 9267273 | 13 | 1 | 525 | 90 72 781 | BOMBA DE ÓLEO DE LUBRIFI |
| CUBO | 9267273 | 13 | 1 | 526 | 90 80 277 | PLACA DE COBERTURA PRÉ- |
| CÁRTER VOLANTE MONT. EXT | 10115577 | 520 | 1 | 475 | 10 11 668 5 | MOTOR DIESEL D936 L A6 240 |
| CÂMARA DA VÁLVULA | 7028173 | 7 | 1 | 147 | 70 28 075 | UNIDADE DE CONTROLE |
| CÂMARA DA VÁLVULA | 7028175 | 9 | 1 | 147 | 70 28 075 | UNIDADE DE CONTROLE |
| DECLARACAO DE CONFORMI | 9399607 | 98 | 1 | 468 | 10 49 805 9 | PLAQUETAS |
| DECLARACAO DO FABRICAN | 9399608 | 99 | 1 | 468 | 10 49 805 9 | PLAQUETAS |
| DEFLETOR | 9927471 | 25 | 1 | 386 | 10 35 792 6 | PORTA LATERAL CENTRAL E |
| DEFLETOR | 9927472 | 2 | 1 | 387 | 99 27 471 | DEFLETOR |
| DEFLETOR | 9945269 | 25 | 1 | 384 | 10 35 817 2 | PORTA LATERAL TRASEIRA |
| DEFLETOR | 9945270 | 2 | 1 | 385 | 99 45 269 | DEFLETOR |
| DENTE | 10451146 | 14 | 10 | 7 | . | |
| DIFUSOR DE AR | 5611480 | 99 | 3 | 230 | 10 49 880 9 | POSTO DE COMANDO - PEÇA |
| DIFUSOR DE AR | 5611480 | 25 | 2 | 249 | 10 84 086 6 | APOIO DIREITO PARA BRAÇO |

| Designação | Artigo | Item | Quanti | Página | Módulo | Designação |
|---|---|---|---|---|---|---|
| DISCO DE COMUTACAO | 9265398 | 18 | 1 | 688 | 10 11 856 1 | MODULO DE COMANDO VG6- |
| DISJUNTOR | 10012172 | 20 | 2 | 442 | 99 47 695 | INSTALAÇÃO ELÉTRICA E50 |
| DISJUNTOR ELÉTRICO | 6202944 | 19 | 1 | 442 | 99 47 695 | INSTALAÇÃO ELÉTRICA E50 |
| DISJUNTOR ELÉTRICO | 6203687 | 21 | 1 | 442 | 99 47 695 | INSTALAÇÃO ELÉTRICA E50 |
| DISPLAY DE ESCAVADEIRA | 10684424 | 2 | 1 | 254 | 10 84 080 3 | DISPLAY ESCAVADEIRA COMP |
| DISPLAY ESCAVADEIRA COMP | 10840803 | 30 | 1 | 249 | 10 84 086 6 | APOIO DIREITO PARA BRAÇO |
| DISPOSITIVO APERTO | 9887461 | 3 | 1 | 559 | 10 11 646 4 | COMPRESSOR DO AR-CONDI |
| DISPOSITIVO COMANDO - M | 10115993 | 571 | 1 | 475 | 10 11 668 5 | MOTOR DIESEL D936 L A6 240 |
| DISPOSITIVO DE REGULAGE | 10220410 | 2 | 1 | 122 | 56 16 530 | BOMBA DE PISTÃO AXIAL |
| DISPOSITIVO DE REGULAGE | 9271648 | 5 | 1 | 686 | 10 13 268 6 | BOMBA DE REGULAGEM HID |
| DISPOSITIVO DE REGULAGE | 9882766 | 5 | 1 | 73 | 98 89 775 | MOTOR HIDRÁULICO |
| DISPOSITIVO TENSIONADOR | 7382029 | 1 | 1 | 570 | 98 87 461 | DISPOSITIVO APERTO |
| DISPOSITIVO TRANSP.MONT.E | 9079468 | 481 | 1 | 475 | 10 11 668 5 | MOTOR DIESEL D936 L A6 240 |
| DISPOSITIVO TRANSP.MONT.E | 9079823 | 480 | 1 | 475 | 10 11 668 5 | MOTOR DIESEL D936 L A6 240 |
| DISTRIBUIDOR | 10100944 | 50 | 1 | 304 | 10 35 801 4 | MANGUEIRAS HIDRAULICAS |
| DISTRIBUIDOR | 10100944 | 190 | 1 | 306 | 10 35 801 4 | MANGUEIRAS HIDRAULICAS |
| DISTRIBUIDOR | 10100946 | 12 | 1 | 308 | 10 35 801 3 | ARREFECIMENTO DE OLEO |
| DISTRIBUIDOR | 10101615 | 30 | 2 | 313 | 10 35 801 7 | INSTALACAO HIDRAULICA |
| DISTRIBUIDOR COMANDO E R | 10290156 | 63 | 1 | 619 | 10 49 830 0 | LANÇA MONOBLOCO 6,70M |
| DOBRADICA | 7029409 | 640 | 2 | 416 | 70 28 842 | MARCO DA PORTA |
| DOBRADICA | 9939056 | 121 | 2 | 376 | 10 35 800 4 | REVESTIMENTO |
| EIXO | 10031944 | 4 | 1 | 60 | 10 00 966 2 | RODA GUIA D7G/B7B |
| EIXO | 11003779 | 4 | 1 | 58 | 10 65 168 0 | ROLETE INFERIOR D7 |
| EIXO | 11003779 | 4 | 1 | 59 | 11 60 010 7 | ROLETE INFERIOR D7 |
| EIXO | 9265410 | 24 | 1 | 271 | 90 79 258 | MODULO DE COMANDO VG7 |
| EIXO | 9265410 | 24 | 1 | 273 | 90 79 259 | MODULO DE COMANDO VG7 |
| EIXO DA BOMBA | 9077713 | 1 | 1 | 601 | 90 77 718 | SAIDA AUXILIAR P´RE-MONTA |
| EIXO DA BOMBA Z=40 M=2.25 | 9077327 | 1 | 1 | 600 | 90 77 386 | SAIDA AUXILIAR P´RE-MONTA |
| EIXO DE ACIONAMENTO | 10343074 | 8 | 1 | 139 | 10 35 572 4 | BOMBA HIDRÁULICA |
| EIXO DE ACIONAMENTO | 10413017 | 8 | 1 | 121 | 10 41 301 3 | BOMBA HIDRÁULICA |
| EIXO DE ACIONAMENTO | 9443859 | 40 | 1 | 69 | 94 43 840 | MECANISMO DE TRANSLAÇÃ |
| EIXO DE ACIONAMENTO Z=53 | 9273036 | 10 | 1 | 108 | 90 77 872 | REDUTOR DISTRIBUICAO BO |
| EIXO DE ACIONAMENTO Z=53 | 9273036 | 10 | 1 | 111 | 92 73 201 | KIT DE REPARO |
| EIXO DE COMANDO | 10119424 | 1 | 1 | 517 | 90 80 713 | EIXO DE EXCÊNTRICOS COM |
| EIXO DE ENCAIXE | 10220691 | 3 | 1 | 133 | 10 22 066 7 | BOMBA DE ENGRENAGENS |
| EIXO DE EXCÊNTRICOS COM | 9080713 | 100 | 1 | 471 | 10 11 668 5 | MOTOR DIESEL D936 L A6 240 |
| EIXO DE SAIDA | 90018382 | 10 | 1 | 184 | 90 01 790 0 | REDUTOR DE GIRO SAT 375/ |
| EIXO DOS BALANCINS | 9074506 | 2 | 1 | 511 | 90 74 505 | BALANCIM PRE-MONTADO |
| EIXO ENGRENAGEM INTERME | 9072996 | 18 | 1 | 108 | 90 77 872 | REDUTOR DISTRIBUICAO BO |
| EIXO MOTOR | 10216701 | 14 | 1 | 114 | 10 22 040 9 | MECANISMO DE ACIONAMENT |
| EIXO MOTOR | 9073113 | 10 | 1 | 149 | 90 73 158 | KIT DE REPARO |
| EIXO MOTOR | 9073951 | 10 | 1 | 197 | 90 74 285 | KIT DE REPARO |
| EIXO MOTOR | 9888314 | 10 | 1 | 128 | 98 89 282 | KIT DE REPARO |
| ELEMENTO CENTRAL MX-F 10 | 7027941 | 7 | 1 | 213 | 10 48 841 6 | BLOCO DE DISTRIBUIÇÃO MX- |
| ELEMENTO CENTRAL MX-F 10 | 7027941 | 5 | 1 | 216 | 10 10 171 1 | BLOCO DE DISTRIBUIÇÃO MX- |
| ELEMENTO CENTRAL MX-F 10 | 7027941 | 2 | 1 | 623 | 10 10 171 2 | BLOCO DE DISTRIBUIÇÃO MX- |
| ELEMENTO CENTRAL MX-F 10 | 7027941 | 3 | 1 | 623 | 10 10 171 2 | BLOCO DE DISTRIBUIÇÃO MX- |
| ELEMENTO CENTRAL MX-F 10 | 7027941 | 4 | 1 | 623 | 10 10 171 2 | BLOCO DE DISTRIBUIÇÃO MX- |
| ELEMENTO CENTRAL MX-F 25 | 7027938 | 4 | 1 | 213 | 10 48 841 6 | BLOCO DE DISTRIBUIÇÃO MX- |
| ELEMENTO CENTRAL MX-F 25 | 7027938 | 5 | 1 | 213 | 10 48 841 6 | BLOCO DE DISTRIBUIÇÃO MX- |
| ELEMENTO CENTRAL MX-F 25 | 7027938 | 2 | 1 | 216 | 10 10 171 1 | BLOCO DE DISTRIBUIÇÃO MX- |
| ELEMENTO CENTRAL MX-F 25 | 7027938 | 5 | 1 | 623 | 10 10 171 2 | BLOCO DE DISTRIBUIÇÃO MX- |
| ELEMENTO CENTRAL MX-F 45 | 7027939 | 2 | 1 | 213 | 10 48 841 6 | BLOCO DE DISTRIBUIÇÃO MX- |
| ELEMENTO CENTRAL MX-F 45 | 7027939 | 3 | 1 | 213 | 10 48 841 6 | BLOCO DE DISTRIBUIÇÃO MX- |
| ELEMENTO CENTRAL MX-F 45 | 7027939 | 6 | 1 | 213 | 10 48 841 6 | BLOCO DE DISTRIBUIÇÃO MX- |
| ELEMENTO CENTRAL MX-F 45 | 7027939 | 3 | 1 | 216 | 10 10 171 1 | BLOCO DE DISTRIBUIÇÃO MX- |
| ELEMENTO CENTRAL MX-F 45 | 7027939 | 4 | 1 | 216 | 10 10 171 1 | BLOCO DE DISTRIBUIÇÃO MX- |
| ELEMENTO CENTRAL SXE-2 | 10013837 | 2 | 4 | 212 | 10 48 840 4 | BLOCO DE DISTRIBUIÇÃO SX |
| ELEMENTO DA BOMBA PE-120 | 7621403 | 13 | 1 | 681 | 10 28 689 7 | BOMBA DE LUBRIFICACAO |
| ELEMENTO DE CONEXÃO | 9064786 | 998 | 1 | 210 | 10 48 840 8 | BLOCO DE DISTRIBUIÇÃO MX- |

| Designação | Artigo | Item | Quanti | Página | Módulo | Designação |
|---|---|---|---|---|---|---|
| ELEMENTO DE DOSAGEM SX | 10013840 | 104 | 1 | 212 | 10 48 840 4 | BLOCO DE DISTRIBUIÇÃO SX |
| ELEMENTO DE DOSAGEM SX | 10013840 | 105 | 1 | 212 | 10 48 840 4 | BLOCO DE DISTRIBUIÇÃO SX |
| ELEMENTO DE DOSAGEM SX | 10013842 | 103 | 1 | 212 | 10 48 840 4 | BLOCO DE DISTRIBUIÇÃO SX |
| ELEMENTO DE DOSAGEM SX | 10013843 | 102 | 1 | 212 | 10 48 840 4 | BLOCO DE DISTRIBUIÇÃO SX |
| ELEMENTO DE DOSAGEM SX | 10013851 | 101 | 1 | 212 | 10 48 840 4 | BLOCO DE DISTRIBUIÇÃO SX |
| ELEMENTO DE DOSAGEM SX | 10013848 | 106 | 1 | 212 | 10 48 840 4 | BLOCO DE DISTRIBUIÇÃO SX |
| ELEMENTO DE FIXACAO F.DT | 6203497 | 331 | 3 | 177 | 10 49 858 1 | SISTEMA ELETRICO DO MOTO |
| ELEMENTO DE FIXACAO F.DT | 6203497 | 10 | 3 | 209 | 10 04 966 2 | LUBRIFICAÇÃO CENTR. AUT |
| ELEMENTO DE FIXACAO F.DT | 6203497 | 120 | 1 | 344 | 10 84 584 9 | INSTALACAO BOMBA E EMBR |
| ELEMENTO DE FIXACAO F.DT | 6203497 | 331 | 16 | 436 | 10 35 814 1 | INSTALAÇÃO ELÉTRICA |
| ELEMENTO DE FIXACAO F.DT | 6203497 | 17 | 2 | 680 | 10 49 822 9 | LUBRIFICAÇÃO CENTR.TOTAL. |
| ELEMENTO DE SUBST. DO FIL | 10032835 | 15 | 1 | 90 | 10 06 948 1 | KIT DE MANUTENÇÃO 1500/25 |
| ELEMENTO DE SUBST. DO FIL | 10032835 | 1 | 1 | 483 | 90 75 483 | CARCACA DO SEPARADOR DE |
| ELEMENTO FILTRANTE | 10044849 | 8 | 1 | 91 | 10 09 121 5 | KIT DE MANUTENÇÃO ALLE 2 |
| ELEMENTO FILTRANTE | 10044849 | 12 | 1 | 102 | 99 37 298 | INSTALAÇÃO DO FILTRO DE A |
| ELEMENTO FILTRANTE | 10044849 | 6 | 1 | 103 | 10 03 980 3 | FILTRO DE AR |
| ELEMENTO FILTRANTE | 10220705 | 10 | 1 | 90 | 10 06 948 1 | KIT DE MANUTENÇÃO 1500/25 |
| ELEMENTO FILTRANTE | 10220705 | 3 | 1 | 135 | 10 22 069 9 | FILTRO |
| ELEMENTO FILTRANTE 10µm | 7373877 | 27 | 2 | 329 | 10 35 798 3 | TANQUE HIDRAULICO INSTA |
| ELEMENTO FILTRANTE 15/5µ | 11065673 | 8 | 2 | 87 | 10 06 947 6 | KIT DE MANUTENÇÃO |
| ELEMENTO FILTRANTE 15/5µ | 11065673 | 2 | 2 | 89 | 10 06 948 6 | KIT DE MANUTENÇÃO ERSTE |
| ELEMENTO FILTRANTE 15/5µ | 11065673 | 28 | 2 | 329 | 10 35 798 3 | TANQUE HIDRAULICO INSTA |
| ELEMENTO FILTRANTE 16µm | 11342118 | 8 | 1 | 90 | 10 06 948 1 | KIT DE MANUTENÇÃO 1500/25 |
| ELEMENTO FILTRANTE 16µm | 11342118 | 13 | 1 | 297 | 99 37 312 | UNIDADE DE COMANDO DE O |
| ELEMENTO FILTRANTE 16µm | 11342118 | 10 | 1 | 298 | 56 09 948 | KIT DE FILTRO DE OLEO |
| ELEMENTO FILTRANTE 20/5µ | 7373878 | 8 | 2 | 87 | 10 06 947 6 | KIT DE MANUTENÇÃO |
| ELEMENTO FILTRANTE 20/5µ | 7373878 | 2 | 2 | 89 | 10 06 948 6 | KIT DE MANUTENÇÃO ERSTE |
| ELEMENTO FILTRANTE 20/5µ | 7373878 | 28 | 2 | 329 | 10 35 798 3 | TANQUE HIDRAULICO INSTA |
| ELEMENTO FILTRANTE 60µm | 10115197 | 111 | 1 | 305 | 10 35 801 4 | MANGUEIRAS HIDRAULICAS |
| ELEMENTO FILTRANTE 60µm | 10115197 | 4 | 1 | 307 | 10 04 462 4 | FILTRO DE PRESSAO |
| ELEMENTO FINAL MX-F 105 | 7027945 | 8 | 1 | 213 | 10 48 841 6 | BLOCO DE DISTRIBUIÇÃO MX- |
| ELEMENTO FINAL MX-F 105 | 7027945 | 8 | 1 | 216 | 10 10 171 1 | BLOCO DE DISTRIBUIÇÃO MX- |
| ELEMENTO FINAL MX-F 45 | 7027943 | 8 | 1 | 623 | 10 10 171 2 | BLOCO DE DISTRIBUIÇÃO MX- |
| ELEMENTO FINAL SXE-2 | 10013839 | 3 | 1 | 212 | 10 48 840 4 | BLOCO DE DISTRIBUIÇÃO SX |
| ELEMENTO INICIAL MX-F | 7027937 | 1 | 1 | 213 | 10 48 841 6 | BLOCO DE DISTRIBUIÇÃO MX- |
| ELEMENTO INICIAL MX-F | 7027937 | 1 | 1 | 216 | 10 10 171 1 | BLOCO DE DISTRIBUIÇÃO MX- |
| ELEMENTO INICIAL MX-F | 7027937 | 1 | 1 | 623 | 10 10 171 2 | BLOCO DE DISTRIBUIÇÃO MX- |
| ELEMENTO INICIAL SXE-2 | 10013835 | 1 | 1 | 212 | 10 48 840 4 | BLOCO DE DISTRIBUIÇÃO SX |
| ELO DA CORRENTE | 5617099 | 10 | 1 | 56 | 56 18 101 | ELO MESTRE DA CORRENTE |
| ELO DA CORRENTE | 5617100 | 20 | 1 | 56 | 56 18 101 | ELO MESTRE DA CORRENTE |
| ELO FINAL DA CORRENTE | 5617975 | 10 | 1 | 54 | 10 03 773 9 | CORRENTE DA ESTEIRA |
| ELO MESTRE DA CORRENTE | 5618101 | 10 | 1 | 55 | 56 17 975 | ELO FINAL DA CORRENTE |
| ENCHIMENTO DE OLEO D930 | 10119030 | 2 | 1 | 505 | 10 11 960 9 | COB.CABEÇA CILINDRO INSTA |
| ENCOSTO DO ASSENTO | 11082672 | 2 | 1 | 233 | 11 10 016 6 | PARTE SUPERIOR DE ASSENT |
| ENGATE | 7027776 | 25 | 1 | 233 | 11 10 016 6 | PARTE SUPERIOR DE ASSENT |
| ENGRENAGEM | 9073098 | 3 | 1 | 517 | 90 80 713 | EIXO DE EXCÊNTRICOS COM |
| ENGRENAGEM | 9073100 | 13 | 1 | 517 | 90 80 713 | EIXO DE EXCÊNTRICOS COM |
| ENGRENAGEM CILINDRICA Z | 9273118 | 14 | 1 | 108 | 90 77 872 | REDUTOR DISTRIBUICAO BO |
| ENGRENAGEM CILINDRICA Z | 9273037 | 11 | 2 | 108 | 90 77 872 | REDUTOR DISTRIBUICAO BO |
| ENGRENAGEM INTERMEDIARI | 9072633 | 7 | 1 | 525 | 90 72 781 | BOMBA DE ÓLEO DE LUBRIFI |
| ENGRENAGEM INTERMEDIARI | 9072633 | 7 | 1 | 526 | 90 80 277 | PLACA DE COBERTURA PRÉ- |
| ENGRENAGEM INTERMEDIAR | 9273038 | 13 | 1 | 108 | 90 77 872 | REDUTOR DISTRIBUICAO BO |
| ENGRENAGEM INTERNA | 970643201 | 25 | 1 | 184 | 90 01 790 0 | REDUTOR DE GIRO SAT 375/ |
| ENGRENAGEM INTERNA M=3, | 9443907 | 50 | 1 | 69 | 94 43 840 | MECANISMO DE TRANSLAÇÃ |
| ENGRENAGEM INTERNA M=4, | 9443843 | 10 | 1 | 68 | 94 43 840 | MECANISMO DE TRANSLAÇÃ |
| ENGRENAGEM PLANETÁRIA | 90011580 | 47 | 3 | 184 | 90 01 790 0 | REDUTOR DE GIRO SAT 375/ |
| ENGRENAGEM PLANETÁRIA | 933332901 | 37 | 4 | 184 | 90 01 790 0 | REDUTOR DE GIRO SAT 375/ |
| ENGRENAGEM PLANETÁRIA | 933333001 | 1 | 1 | 190 | 93 33 329 01 | ENGRENAGEM PLANETÁRIA |
| ENGRENAGEM PLANETÁRIA | 9443904 | 37 | 3 | 68 | 94 43 840 | MECANISMO DE TRANSLAÇÃ |
| ENGRENAGEM PLANETÁRIA M | 9443844 | 17 | 5 | 68 | 94 43 840 | MECANISMO DE TRANSLAÇÃ |

| Designação | Artigo | Item | Quanti | Página | Módulo | Designação |
|---|---|---|---|---|---|---|
| ENGRENAGEM PLANETÁRIA M | 9443848 | 27 | 3 | 68 | 94 43 840 | MECANISMO DE TRANSLAÇÃ |
| ENGRENAGEM SOLAR | 932720801 | 60 | 1 | 185 | 90 01 790 0 | REDUTOR DE GIRO SAT 375/ |
| ENGRENAGEM SOLAR | 933333101 | 40 | 1 | 184 | 90 01 790 0 | REDUTOR DE GIRO SAT 375/ |
| ENGRENAGEM SOLAR M=4,5 Z | 9443857 | 30 | 1 | 68 | 94 43 840 | MECANISMO DE TRANSLAÇÃ |
| ENGRENAGEM SOLAR M=4,5 Z | 9443846 | 20 | 1 | 68 | 94 43 840 | MECANISMO DE TRANSLAÇÃ |
| ENGRENAGEM Z=50 M=2.5 | 9072834 | 3 | 1 | 496 | 90 75 115 | VIRABREQUIM COM ENGRENA |
| ESFERA | 10014076 | 3 | 1 | 129 | 70 28 176 | PISTAO DE FREIO |
| ESFERA DE RETORNO | 10216710 | 25 | 1 | 345 | 10 22 042 7 | MECANISMO DE ACIONAMENT |
| ESFERA DE RETORNO | 10324872 | 6 | 1 | 144 | 10 41 302 4 | MECANISMO DE ACIONAMENT |
| ESFERA DE RETORNO | 10355745 | 6 | 1 | 141 | 10 35 573 8 | MECANISMO DE ACIONAMENT |
| ESFERA DE RETORNO | 9889929 | 1 | 1 | 158 | 98 89 988 | CONJ REP (ESFERA RZ+PL) N |
| ESFERA DE RETORNO NG 12 | 9073148 | 13 | 1 | 199 | 90 74 416 | KIT DE REPARO |
| ESFERA DE RETORNO NG 12 | 9073148 | 1 | 1 | 695 | 90 73 389 | CONJ REP (ESFERA RZ+PL) N |
| ESFERA DE RETORNO NG 165 | 9072808 | 1 | 1 | 156 | 98 88 119 | CONJ REP (ESFERA RZ+PL) N |
| ESGUICHO DO LIMPADOR | 7028867 | 650 | 1 | 426 | 10 29 036 1 | BRACO DO LIMPADOR |
| ESPAÇADOR | 9079064 | 30 | 1 | 586 | 90 76 534 | SENSOR DE ROTACAO |
| ESPAÇADOR | 9361887 | 31 | 3 | 178 | 10 35 800 9 | MOTOR - PECAS ANEXAS |
| ESPELHO EXTERNO | 10044353 | 610 | 1 | 429 | 10 29 026 4 | PEÇAS DE MONTAGEM |
| ESPELHO EXTERNO - INSTALA | 10358525 | 9700 | 1 | 86 | 10 35 798 2 | CARRO SUPERIOR |
| ESPELHO EXTERNO 243X155 | 7019140 | 810 | 2 | 431 | 10 04 435 3 | ESPELHO EXTERNO |
| ESPELHO RETROVISOR | 7019142 | 190 | 1 | 411 | 70 28 759 | PÁRA-BRISA SUPERIOR |
| ESPIRAL DE PROT.CONTRA D | 10011996 | 66 | 1 | 217 | 90 64 786 | ELEMENTO DE CONEXÃO |
| ESPIRAL DE PROT.CONTRA D | 10011996 | 166 | 1 | 218 | 90 64 786 | ELEMENTO DE CONEXÃO |
| ESPUMA DE PE | 10022776 | 20 | 1 | 285 | 10 02 211 7 | CARCACA DE CONDUCAO DE |
| ESQUEMA DE TRANSPORTE | 10386774 | 35 | 1 | 464 | 10 35 804 3 | PLAQUETAS |
| ESQUEMA DE TRANSPORTE | 10386774 | 35 | 1 | 467 | 10 49 805 9 | PLAQUETAS |
| ESTATOR | 10011396 | 2 | 1 | 63 | 10 00 963 0 | COLETOR GIRATÓRIO |
| ESTEIRA | 10289996 | 510 | 1 | 433 | 10 48 808 8 | REVESTIMENTO INTERNO |
| ESTEIRA | 10289997 | 520 | 1 | 433 | 10 48 808 8 | REVESTIMENTO INTERNO |
| ESTEIRA 500mm | 10470092 | 2 | 2 | 7 | . | |
| ESTEIRA FILTRANTE | 10022770 | 5 | 1 | 87 | 10 06 947 6 | KIT DE MANUTENÇÃO |
| ESTEIRA FILTRANTE | 10022770 | 2 | 1 | 290 | 10 02 277 7 | GRADE DE CIRCULACAO DE A |
| ESTRIBO | 10037722 | 26 | 8 | 214 | 10 04 966 3 | LUBRIFICAÇÃO CENTRALIZAD |
| ESTRIBO | 10037722 | 5 | 12 | 624 | 10 38 408 5 | LUBRIFICAÇÃO CENTRALIZAD |
| ESTRIBO | 10037722 | 10 | 15 | 631 | 10 38 484 8 | LUBRIFICAÇÃO CENTRALIZAD |
| ESTRIBO | 10037722 | 25 | 2 | 632 | 10 38 484 8 | LUBRIFICAÇÃO CENTRALIZAD |
| ESTRIBO | 10037723 | 21 | 4 | 214 | 10 04 966 3 | LUBRIFICAÇÃO CENTRALIZAD |
| ESTRIBO | 10037723 | 8 | 25 | 624 | 10 38 408 5 | LUBRIFICAÇÃO CENTRALIZAD |
| ESTRIBO | 10037723 | 13 | 7 | 631 | 10 38 484 8 | LUBRIFICAÇÃO CENTRALIZAD |
| ESTRIBO | 10037723 | 16 | 4 | 631 | 10 38 484 8 | LUBRIFICAÇÃO CENTRALIZAD |
| ESTRIBO | 7028838 | 160 | 1 | 414 | 70 28 769 | PORTA DA CABINE DO MOTO |
| ESTRIBO | 7028872 | 450 | 1 | 421 | 10 48 808 7 | INSTALACAO ELETRICA |
| ESTRIBO | 9943105 | 47 | 1 | 268 | 10 05 981 8 | PRÉ-COMANDO DE PEDAL M |
| ESTRIBO | 9943365 | 46 | 1 | 268 | 10 05 981 8 | PRÉ-COMANDO DE PEDAL M |
| ESTRUTURA DO CONDENSA | 10467239 | 43 | 1 | 165 | 10 45 475 2 | RADIADOR COMBINADO |
| ETIQUETA | 10076837 | 6 | 1 | 263 | 10 05 507 1 | INTERRUPTOR - INSTALAÇÃO |
| ETIQUETA | 10086265 | 78 | 1 | 250 | 10 84 086 6 | APOIO DIREITO PARA BRAÇO |
| ETIQUETA | 9007585 | 60 | 1 | 443 | 99 47 695 | INSTALAÇÃO ELÉTRICA E50 |
| ETIQUETA | 9014598 | 23 | 1 | 170 | 10 49 858 1 | SISTEMA ELETRICO DO MOTO |
| ETIQUETA | 9989643 | 6 | 1 | 258 | 10 04 831 3 | INTERRUPTOR - INSTALAÇÃO |
| ETIQUETA ADESIVA | 10014681 | 1 | 1 | 681 | 10 28 689 7 | BOMBA DE LUBRIFICACAO |
| ETIQUETA ADESIVA | 10016660 | 35 | 1 | 682 | 10 28 689 7 | BOMBA DE LUBRIFICACAO |
| ETIQUETA ADESIVA | 10080119 | 9 | 1 | 463 | 10 35 804 3 | PLAQUETAS |
| ETIQUETA ADESIVA | 10080119 | 9 | 1 | 466 | 10 49 805 9 | PLAQUETAS |
| ETIQUETA ADESIVA | 10080120 | 10 | 1 | 463 | 10 35 804 3 | PLAQUETAS |
| ETIQUETA ADESIVA | 10080120 | 10 | 1 | 466 | 10 49 805 9 | PLAQUETAS |
| ETIQUETA ADESIVA | 10080121 | 11 | 1 | 463 | 10 35 804 3 | PLAQUETAS |
| ETIQUETA ADESIVA | 10080121 | 11 | 1 | 466 | 10 49 805 9 | PLAQUETAS |
| ETIQUETA ADESIVA | 10080122 | 12 | 1 | 463 | 10 35 804 3 | PLAQUETAS |
| ETIQUETA ADESIVA | 10080122 | 12 | 1 | 466 | 10 49 805 9 | PLAQUETAS |

| Designação | Artigo | Item | Quanti | Página | Módulo | Designação |
|---|---|---|---|---|---|---|
| ETIQUETA ADESIVA | 10080123 | 14 | 1 | 463 | 10 35 804 3 | PLAQUETAS |
| ETIQUETA ADESIVA | 10080123 | 14 | 1 | 466 | 10 49 805 9 | PLAQUETAS |
| ETIQUETA ADESIVA | 773150416 | 101 | 1 | 465 | 10 35 804 3 | PLAQUETAS |
| ETIQUETA ADESIVA | 9949751 | 16 | 1 | 463 | 10 35 804 3 | PLAQUETAS |
| ETIQUETA ADESIVA | 9949751 | 16 | 1 | 466 | 10 49 805 9 | PLAQUETAS |
| ETIQUETA ADESIVA | 9949756 | 13 | 1 | 463 | 10 35 804 3 | PLAQUETAS |
| ETIQUETA ADESIVA | 9949756 | 13 | 1 | 466 | 10 49 805 9 | PLAQUETAS |
| ETIQUETA ADESIVA 132mmX | 11004408 | 30 | 1 | 464 | 10 35 804 3 | PLAQUETAS |
| ETIQUETA ADESIVA 132mmX | 11004408 | 30 | 1 | 467 | 10 49 805 9 | PLAQUETAS |
| ETIQUETA ADESIVA LIEBHERR | 9612981 | 95 | 2 | 620 | 10 49 830 0 | LANÇA MONOBLOCO 6,70M |
| ETIQUETA ADESIVA LIEBHERR | 9613673 | 71 | 1 | 468 | 10 49 805 9 | PLAQUETAS |
| EVAPORADOR | 10816666 | 10 | 1 | 280 | 10 40 689 8 | SISTEMA DE AR CONDICION |
| EXTENSÃO | 10009602 | 10 | 1 | 212 | 10 48 840 4 | BLOCO DE DISTRIBUIÇÃO SX |
| EXTENSÃO | 7027714 | 35 | 1 | 217 | 90 64 786 | ELEMENTO DE CONEXÃO |
| EXTENSÃO | 774373408 | 35 | 1 | 217 | 90 64 786 | ELEMENTO DE CONEXÃO |
| EXTENSÃO | 774373408 | 135 | 1 | 218 | 90 64 786 | ELEMENTO DE CONEXÃO |
| FAROL | 10286644 | 12 | 1 | 440 | 10 04 553 0 | FAROL DE TRABALHO |
| FAROL CPL - INSTALAÇÃO | 9941040 | 10 | 1 | 435 | 10 35 814 1 | INSTALAÇÃO ELÉTRICA |
| FAROL CPL - INSTALAÇÃO | 9941040 | 11 | 1 | 435 | 10 35 814 1 | INSTALAÇÃO ELÉTRICA |
| FAROL DE TRABALHO | 10007848 | 2 | 1 | 437 | 99 41 040 | FAROL CPL - INSTALAÇÃO |
| FAROL DE TRABALHO | 10045530 | 2 | 2 | 438 | 10 04 824 6 | FAROL E BUZINA INSTALACA |
| FAROL DE TRABALHO | 10045530 | 2 | 2 | 439 | 11 10 278 6 | FAROL E BUZINA INSTALACA |
| FAROL E BUZINA INSTALACA | 10048246 | 15 | 1 | 435 | 10 35 814 1 | INSTALAÇÃO ELÉTRICA |
| FAROL E BUZINA INSTALACA | 11102786 | 15 | 1 | 435 | 10 35 814 1 | INSTALAÇÃO ELÉTRICA |
| FECHADURA | 10039590 | 127 | 2 | 376 | 10 35 800 4 | REVESTIMENTO |
| FECHADURA | 7028833 | 330 | 1 | 414 | 70 28 769 | PORTA DA CABINE DO MOTO |
| FECHADURA | 7365293 | 7 | 1 | 381 | 99 49 428 | CAPO DO RADIADOR |
| FECHADURA DA PORTA | 10353879 | 20 | 1 | 389 | 10 37 283 9 | PORTA LATERAL DIREITA |
| FECHADURA DA PORTA | 10353879 | 10 | 1 | 398 | 10 35 853 1 | PORTA LATERAL DIANTEIRA |
| FECHADURA DA PORTA | 10353879 | 3 | 1 | 462 | 10 37 283 6 | TAMPA |
| FECHO DA PORTA | 10025254 | 20 | 1 | 388 | 10 07 307 3 | PORTA LATERAL DIREITA |
| FECHO DA PORTA | 10025254 | 3 | 1 | 394 | 10 06 691 8 | TAMPA |
| FECHO DA PORTA | 10025254 | 10 | 1 | 399 | 99 47 961 | PORTA LATERAL DIANTEIRA |
| FECHO DO TANQUE | 7414913 | 15 | 1 | 451 | 90 18 419 | TANQUE COMBUSTIVEL INSTA |
| FECHO DO TANQUE | 7610825 | 5 | 1 | 192 | 94 42 150 | BOCAL DE ENCHIMENTO DE O |
| FECHO DO TANQUE d=45 | 7610826 | 20 | 1 | 195 | 96 90 213 01 | RESERVATÓRIO DE ÓLEO |
| FECHO RAPIDO | 10022768 | 4 | 2 | 290 | 10 02 277 7 | GRADE DE CIRCULACAO DE A |
| FECHO RAPIDO | 10022785 | 4 | 2 | 285 | 10 02 211 7 | CARCACA DE CONDUCAO DE |
| FERRAMENTA DE EXTRAÇÃO | 10451202 | 50 | 1 | 457 | 10 08 428 6 | KIT DE FERRAMENTAS |
| FIL | 7367367 | 17 | 2 | 114 | 10 22 040 9 | MECANISMO DE ACIONAMENT |
| FILTRO | 10220417 | 6 | 1 | 122 | 56 16 530 | BOMBA DE PISTÃO AXIAL |
| FILTRO | 10220697 | 2 | 1 | 118 | 10 22 041 7 | FILTRO |
| FILTRO | 10220699 | 1 | 1 | 134 | 10 22 069 7 | FILTRO |
| FILTRO DE AR | 10039803 | 10 | 1 | 102 | 99 37 298 | INSTALAÇÃO DO FILTRO DE A |
| FILTRO DE AR | 7028951 | 6 | 1 | 87 | 10 06 947 6 | KIT DE MANUTENÇÃO |
| FILTRO DE AR | 7028951 | 380 | 1 | 433 | 10 48 808 8 | REVESTIMENTO INTERNO |
| FILTRO DE COMBUSTÍVEL | 10125801 | 1 | 1 | 536 | 10 11 551 3 | FILTRO FINO DE COMBUSTÍVE |
| FILTRO DE COMBUSTÍVEL | 10332278 | 1 | 1 | 536 | 10 11 551 3 | FILTRO FINO DE COMBUSTÍVE |
| FILTRO DE COMBUSTÍVEL 3-5µ | 10429946 | 2 | 1 | 87 | 10 06 947 6 | KIT DE MANUTENÇÃO |
| FILTRO DE COMBUSTÍVEL 3-5µ | 10429946 | 10 | 8 | 92 | 10 06 994 0 | KIT DE FILTROS DE COMBUSTÍ |
| FILTRO DE COMBUSTÍVEL 3-5µ | 10429946 | 1 | 1 | 538 | 10 12 580 1 | FILTRO DE COMBUSTÍVEL |
| FILTRO DE COMBUSTÍVEL 3-5µ | 10429946 | 1 | 1 | 540 | 10 33 227 8 | FILTRO DE COMBUSTÍVEL |
| FILTRO DE FLUXO DE RETO | 7369257 | 23 | 2 | 329 | 10 35 798 3 | TANQUE HIDRAULICO INSTA |
| FILTRO DE PRESSAO | 10044624 | 110 | 1 | 305 | 10 35 801 4 | MANGUEIRAS HIDRAULICAS |
| FILTRO DE VENTILACAO | 10222393 | 4 | 1 | 91 | 10 09 121 5 | KIT DE MANUTENÇÃO ALLE 2 |
| FILTRO DE VENTILACAO | 10222393 | 31 | 1 | 330 | 10 35 798 3 | TANQUE HIDRAULICO INSTA |
| FILTRO FINO DE COMBUSTÍVE | 10115513 | 201 | 1 | 472 | 10 11 668 5 | MOTOR DIESEL D936 L A6 240 |
| FILTRO INTERCAMBIÁVEL 9µ | 10297295 | 1 | 2 | 90 | 10 06 948 1 | KIT DE MANUTENÇÃO 1500/25 |
| FILTRO INTERCAMBIÁVEL 9µ | 10297295 | 8 | 2 | 527 | 90 75 368 | FILTRO ÓLEO LUBRIF. MONT. |
| FILTRO TIPO PENEIRA | 10296919 | 20 | 1 | 451 | 90 18 419 | TANQUE COMBUSTIVEL INSTA |

| Designação | Artigo | Item | Quanti | Página | Módulo | Designação |
|---|---|---|---|---|---|---|
| FILTRO ÓLEO LUBRIF. MONT. | 9075368 | 150 | 1 | 471 | 10 11 668 5 | MOTOR DIESEL D936 L A6 240 |
| FITA DE IDENTIFICAÇÃO | 10070970 | 7651 | 1 | 355 | 10 35 802 8 | INSTALAÇÃO BLOCO DE VÁL |
| FITA DE VEDACAO | 10467569 | 2 | 0.52 | 164 | 10 45 475 2 | RADIADOR COMBINADO |
| FIXACAO DO MOTOR | 10411919 | 13 | 1 | 167 | 10 35 508 4 | RADIADOR DE ÓLEO |
| FIXACAO DO MOTOR | 10467159 | 44 | 1 | 165 | 10 45 475 2 | RADIADOR COMBINADO |
| FIXACAO TANQUE DE COMB | 9018426 | 2 | 1 | 451 | 90 18 419 | TANQUE COMBUSTIVEL INSTA |
| FIXACAO TANQUE HIDRAULIC | 10371303 | 2 | 1 | 329 | 10 35 798 3 | TANQUE HIDRAULICO INSTA |
| FIXACAO TANQUE HIDRAULIC | 9946056 | 2 | 1 | 329 | 10 35 798 3 | TANQUE HIDRAULICO INSTA |
| FLANGE | 9273491 | 13 | 1 | 686 | 10 13 268 6 | BOMBA DE REGULAGEM HID |
| FLANGE | 9279836 | 12 | 2 | 686 | 10 13 268 6 | BOMBA DE REGULAGEM HID |
| FLANGE CALEFAÇÃO PRÉ-MO | 10299988 | 1 | 1 | 554 | 90 78 314 | FLANGE DE AQUECIMENTO |
| FLANGE CEGO | 9566165 | 56 | 1 | 331 | 10 35 798 3 | TANQUE HIDRAULICO INSTA |
| FLANGE CEGO | 9576071 | 76 | 1 | 347 | 10 35 802 8 | INSTALAÇÃO BLOCO DE VÁL |
| FLANGE CEGO SAE 1 1/2" CO | 9491026 | 66 | 1 | 331 | 10 35 798 3 | TANQUE HIDRAULICO INSTA |
| FLANGE DE AQUECIMENTO | 9078314 | 260 | 1 | 473 | 10 11 668 5 | MOTOR DIESEL D936 L A6 240 |
| FLANGE DE CONEXAO D930 | 9079582 | 1 | 1 | 552 | 10 12 190 8 | LINHA DE CONEXAO |
| FLANGE DE CONEXAO D930 | 9079582 | 1 | 1 | 553 | 90 79 964 | LINHA DE CONEXAO |
| FLANGE INTERMEDIARIO | 10016655 | 30 | 1 | 682 | 10 28 689 7 | BOMBA DE LUBRIFICACAO |
| FLANGE INTERMEDIARIO | 10080802 | 30 | 1 | 309 | 10 35 801 3 | ARREFECIMENTO DE OLEO |
| FLANGE INTERMEDIARIO | 9369710 | 93 | 1 | 347 | 10 35 802 8 | INSTALAÇÃO BLOCO DE VÁL |
| FLANGE INTERMEDIARIO | 9369710 | 202 | 1 | 349 | 10 35 802 8 | INSTALAÇÃO BLOCO DE VÁL |
| FLANGE INTERMEDIARIO | 9684904 | 20 | 2 | 67 | 10 07 713 7 | MECANISMO DE TRANSLAÇÃ |
| FLANGE MANCAL | 9073359 | 6 | 1 | 108 | 90 77 872 | REDUTOR DISTRIBUICAO BO |
| FLANGE MANCAL | 9277872 | 20 | 1 | 71 | 90 73 354 | MECANISMO DE ACIONAMENT |
| FLANGE PRE-MONTAGEM | 9073163 | 8 | 1 | 517 | 90 80 713 | EIXO DE EXCÊNTRICOS COM |
| FREIO | 933333301 | 70 | 1 | 185 | 90 01 790 0 | REDUTOR DE GIRO SAT 375/ |
| FREIO DE LAMELAS | 502036101 | 70 | 1 | 69 | 94 43 840 | MECANISMO DE TRANSLAÇÃ |
| FUNIL DE PROTEÇÃO 8/8/2,2 | 10010154 | 30 | 1 | 244 | 10 05 879 2 | SENSOR DE PRE-COMANDO E |
| FUNIL DE PROTEÇÃO 8/8/2,2 | 10010154 | 30 | 1 | 259 | 10 05 879 4 | SENSOR DE PRE-COMANDO |
| FUSIVEL | 7027038 | 22 | 1 | 243 | 73 73 807 | ALAVANCA DE SEGURANCA |
| FUSIVEL 25A 32V | 6040008 | 42 | 1 | 241 | 97 58 815 01 | PLACA ELETRÔNICA |
| FUSO M12 FE/ZN 12C | 9265265 | 13 | 1 | 662 | 92 70 390 | JG V VÁLVULA RET. DE ESTRA |
| FUSÍVEL TIPO CARTUCHO 20A | 6001472 | 22 | 1 | 442 | 99 47 695 | INSTALAÇÃO ELÉTRICA E50 |
| FUSÍVEL TIPO CARTUCHO C 1 | 4901512 | 40 | 9 | 241 | 97 58 815 01 | PLACA ELETRÔNICA |
| FUSÍVEL TIPO CARTUCHO C 7 | 4901513 | 41 | 5 | 241 | 97 58 815 01 | PLACA ELETRÔNICA |
| FUSÍVEL TIPO CARTUCHO C 7 | 4901513 | 24 | 5 | 442 | 99 47 695 | INSTALAÇÃO ELÉTRICA E50 |
| GAIOLA | 10216468 | 32 | 1 | 114 | 10 22 040 9 | MECANISMO DE ACIONAMENT |
| GAIOLA DE ROLETES | 9442138 | 2 | 32 | 68 | 94 43 840 | MECANISMO DE TRANSLAÇÃ |
| GARRA | 9075372 | 3 | 1 | 531 | 10 11 659 1 | BICO INJETOR COM ELEMEN |
| GERADOR PRE-MONTAGEM | 10116463 | 440 | 1 | 475 | 10 11 668 5 | MOTOR DIESEL D936 L A6 240 |
| GRADE DE CIRCULACAO DE A | 10022771 | 1 | 1 | 290 | 10 02 277 7 | GRADE DE CIRCULACAO DE A |
| GRADE DE CIRCULACAO DE A | 10022777 | 19 | 1 | 285 | 10 02 211 7 | CARCACA DE CONDUCAO DE |
| GRADE DE PROTECÇÃO | 10331666 | 30 | 2 | 165 | 10 45 475 2 | RADIADOR COMBINADO |
| GRADE DE PROTECÇÃO | 10412499 | 12 | 1 | 167 | 10 35 508 4 | RADIADOR DE ÓLEO |
| GRAMPO | 10287276 | 1 | 4 | 103 | 10 03 980 3 | FILTRO DE AR |
| GRAMPO | 7373592 | 1 | 4 | 434 | 10 47 012 8 | |
| GRAMPO DE FIXAÇÃO | 9388848 | 41 | 1 | 249 | 10 84 086 6 | APOIO DIREITO PARA BRAÇO |
| GRAXA | 10282622 | 100 | 1 | 481 | 90 73 083 | CILINDRO |
| GRAXA | 10282622 | 100 | 1 | 551 | 90 77 279 | LUVA DE CONEXÃO MONTAGE |
| GRAXA | 10282622 | 100 | 1 | 566 | 90 79 472 | TUBO CURV.PROD.REFRIGER |
| GRAXA | 10282622 | 100 | 1 | 568 | 90 80 280 | PECAS DE FECHAMENTO |
| GRAXA | 10282622 | 100 | 1 | 576 | 10 11 566 4 | PECAS DE FECHAMENTO |
| GRAXA | 10282622 | 100 | 1 | 581 | 10 11 557 7 | CÁRTER VOLANTE MONT. EXT |
| GRAXA | 10282622 | 100 | 1 | 598 | 90 78 961 | SAIDA AUXILIAR ANEXA |
| GRAXA | 10282622 | 100 | 1 | 599 | 90 80 006 | SAIDA AUXILIAR ANEXA |
| GRAXA | 10282622 | 100 | 1 | 604 | 90 80 504 | PECAS DE FECHAMENTO |
| GRAXA | 8655008 | 126 | 1 | 77 | 92 68 751 | KIT DE REPARO |
| GRAXA | 8655008 | 126 | 1 | 128 | 98 89 282 | KIT DE REPARO |
| GRAXA | 8655008 | 126 | 1 | 149 | 90 73 158 | KIT DE REPARO |
| GRAXA | 8655008 | 126 | 1 | 697 | 92 68 016 | KIT DE REPARO |

| Designação | Artigo | Item | Quanti | Página | Módulo | Designação |
|---|---|---|---|---|---|---|
| GRAXA BP ENERGREASE LS E | 8501527 | 30 | 4 | 680 | 10 49 822 9 | LUBRIFICAÇÃO CENTR.TOTAL. |
| GRAXA DE ALTO RENDIMEN | 8300004 | 800 | 1 | 667 | 94 01 936 4 | MANCAL DA HASTE DO PISTA |
| GRAXA DE ALTO RENDIMEN | 8300004 | 800 | 1 | 668 | 94 02 733 6 | MANCAL DA HASTE DO PISTA |
| GRAXA DE ALTO RENDIMEN | 8300004 | 800 | 1 | 669 | 99 52 600 | MANCAL DA HASTE DO PISTA |
| GRAXA ESPECIAL LIEBHERR | 10358947 | 30 | 1 | 18 | 90 70 366 | |
| GRAXA ESPECIAL LIEBHERR/ | 861305508 | 1 | 1 | 30 | 10 35 894 7 | GRAXA ESPECIAL LIEBHERR |
| GRAXA ESPECIAL LIEBHERR/1 | 861304208 | 10 | 1 | 30 | 10 35 894 7 | GRAXA ESPECIAL LIEBHERR |
| GRAXA ESPECIAL LIEBHERR/2 | 10296820 | 2 | 1 | 30 | 10 35 894 7 | GRAXA ESPECIAL LIEBHERR |
| GRAXA ESPECIAL LIEBHERR/2 | 861303608 | 25 | 1 | 30 | 10 35 894 7 | GRAXA ESPECIAL LIEBHERR |
| GRAXA ESPECIAL LIEBHERR/5 | 861305608 | 50 | 1 | 30 | 10 35 894 7 | GRAXA ESPECIAL LIEBHERR |
| GRAXA NBU 30/1kg | 10285708 | 110 | 1 | 484 | 90 79 480 | SUPORTE DOS AGREGADOS |
| GRAXA NBU 30/1kg | 10285708 | 100 | 1 | 528 | 10 11 683 9 | BOMBA DE INJECAO - ACESS |
| GRAXA NBU 30/1kg | 10285708 | 100 | 1 | 534 | 90 75 395 | BOCAL DE TUBO DE PRESSA |
| GRAXA NBU 30/1kg | 10285708 | 100 | 1 | 597 | 90 77 719 | SAIDA AUXILIAR ANEXA |
| GRAXA PARA BAIXAS TEMPE | 10358948 | 20 | 1 | 18 | 90 70 366 | |
| GRAXA PARA BAIXAS TEMPE | 10296828 | 1 | 1 | 31 | 10 35 894 8 | GRAXA PARA BAIXAS TEMPE |
| GRAXA PARA BAIXAS TEMPER | 10296825 | 10 | 1 | 31 | 10 35 894 8 | GRAXA PARA BAIXAS TEMPE |
| GRAXA PARA BAIXAS TEMPE | 10296822 | 180 | 1 | 31 | 10 35 894 8 | GRAXA PARA BAIXAS TEMPE |
| GRAXA PARA BAIXAS TEMPER | 10296827 | 2 | 1 | 31 | 10 35 894 8 | GRAXA PARA BAIXAS TEMPE |
| GRAXA PARA BAIXAS TEMPER | 10296824 | 25 | 1 | 31 | 10 35 894 8 | GRAXA PARA BAIXAS TEMPE |
| GRAXA PARA BAIXAS TEMPER | 10296823 | 50 | 1 | 31 | 10 35 894 8 | GRAXA PARA BAIXAS TEMPE |
| GRAXA POLIVALENTE | 8620769 | 130 | 1 | 688 | 10 11 856 1 | MODULO DE COMANDO VG6- |
| GRAXA STABURAGS | 8655030 | 110 | 1 | 562 | 90 80 301 | KIT MONTAGEM DA BOMBA A |
| GRAXA STABURAGS | 8655030 | 110 | 1 | 567 | 90 79 474 | TUBO CURV.PROD.REFRIGER |
| GRAXA UNIVESAL LIEBHERR | 10358949 | 10 | 1 | 18 | 90 70 366 | |
| GRAXA UNIVESAL LIEBHERR/ | 10296816 | 1 | 1 | 32 | 10 35 894 9 | GRAXA UNIVESAL LIEBHERR |
| GRAXA UNIVESAL LIEBHERR/1 | 10296813 | 10 | 1 | 32 | 10 35 894 9 | GRAXA UNIVESAL LIEBHERR |
| GRAXA UNIVESAL LIEBHERR/ | 10296810 | 180 | 1 | 32 | 10 35 894 9 | GRAXA UNIVESAL LIEBHERR |
| GRAXA UNIVESAL LIEBHERR/2 | 10296815 | 2 | 1 | 32 | 10 35 894 9 | GRAXA UNIVESAL LIEBHERR |
| GRAXA UNIVESAL LIEBHERR/2 | 10296812 | 25 | 1 | 32 | 10 35 894 9 | GRAXA UNIVESAL LIEBHERR |
| GRAXA UNIVESAL LIEBHERR/5 | 10296811 | 50 | 1 | 32 | 10 35 894 9 | GRAXA UNIVESAL LIEBHERR |
| GUIA | 10015472 | 210 | 2 | 75 | 56 16 688 | VALVULA FRENAGEM DA TRA |
| GUIA | 10493047 | 4 | 1 | 233 | 11 10 016 6 | PARTE SUPERIOR DE ASSENT |
| GUIA | 7028893 | 110 | 1 | 427 | 10 29 026 4 | PEÇAS DE MONTAGEM |
| GUIA | 7028894 | 100 | 1 | 427 | 10 29 026 4 | PEÇAS DE MONTAGEM |
| GUIA DA VALVULA | 10127538 | 4 | 4 | 510 | 10 12 038 4 | CABECOTE |
| GUIA DE CORRENTE | 11102315 | 2 | 8 | 676 | 11 10 231 4 | GUIA DE CORRENTE QUADRU |
| GUIA DE CORRENTE QUADRU | 11102313 | 6 | 1 | 7 | . | |
| GUIA DE CORRENTE QUADRU | 11102313 | 35 | 1 | 49 | 10 49 883 7 | CARRO INFERIOR COMPLETO |
| GUIA DE CORRENTE QUADRU | 11102313 | 36 | 1 | 49 | 10 49 883 7 | CARRO INFERIOR COMPLETO |
| GUIA DE CORRENTE QUADRU | 11102313 | 37 | 1 | 50 | 10 49 883 7 | CARRO INFERIOR COMPLETO |
| GUIA DE CORRENTE QUADRU | 11102314 | 10 | 1 | 673 | 11 10 231 3 | GUIA DE CORRENTE QUADRU |
| GUIA DE MANGUEIRA | 9344777 | 25 | 4 | 84 | 10 07 713 5 | INST.HIDR.CARRO INFERIOR |
| GUIA DE MANGUEIRA | 9344777 | 485 | 2 | 314 | 10 35 801 7 | INSTALACAO HIDRAULICA |
| HASTE | 10358170 | 8 | 1 | 384 | 10 35 817 2 | PORTA LATERAL TRASEIRA |
| HASTE | 10358170 | 3 | 1 | 398 | 10 35 853 1 | PORTA LATERAL DIANTEIRA |
| HASTE | 7028815 | 280 | 1 | 412 | 70 28 807 | TRAVA DIREITA |
| HASTE | 7028815 | 280 | 1 | 413 | 70 28 808 | TRAVA ESQUERDA |
| HASTE | 7028834 | 340 | 1 | 415 | 70 28 769 | PORTA DA CABINE DO MOTO |
| HASTE | 9480525 | 43 | 2 | 229 | 10 49 880 9 | POSTO DE COMANDO - PEÇA |
| HASTE | 9927479 | 135 | 1 | 377 | 10 35 800 4 | REVESTIMENTO |
| HASTE | 9942678 | 3 | 1 | 399 | 99 47 961 | PORTA LATERAL DIANTEIRA |
| HASTE | 9942679 | 8 | 1 | 386 | 10 35 792 6 | PORTA LATERAL CENTRAL E |
| HASTE | 9942679 | 10 | 1 | 388 | 10 07 307 3 | PORTA LATERAL DIREITA |
| HASTE | 9942679 | 10 | 1 | 389 | 10 37 283 9 | PORTA LATERAL DIREITA |
| HASTE | 9945189 | 10 | 1 | 462 | 10 37 283 6 | TAMPA |
| HASTE DO CILINDRO | 10297878 | 3 | 1 | 139 | 10 35 572 4 | BOMBA HIDRÁULICA |
| HASTE DO CILINDRO | 94020196 | 8 | 1 | 657 | 94 02 019 4 | CILINDRO HIDRÁULICO |
| HASTE DO CILINDRO | 9587673 | 8 | 1 | 658 | 95 87 580 | CILINDRO HIDRÁULICO |
| HASTE DO CILINDRO | 9640458 | 8 | 1 | 659 | 95 96 399 | CILINDRO HIDRÁULICO |

| Designação | Artigo | Item | Quanti | Página | Módulo | Designação |
|---|---|---|---|---|---|---|
| HASTE DO TUCHO | 9079131 | 3 | 2 | 518 | 90 79 870 | PEÇAS DO COMANDO |
| HASTE ROSCADA | 7028817 | 100 | 1 | 412 | 70 28 807 | TRAVA DIREITA |
| HASTE ROSCADA | 7028817 | 100 | 1 | 413 | 70 28 808 | TRAVA ESQUERDA |
| HASTE ROSCADA | 9006346 | 46 | 4 | 444 | 11 10 266 2 | BATERIA - INSTALACAO |
| HIDRÁULICA+ÓLEO DE ENGR | 10356828 | 30 | 1 | 17 | 90 70 365 | ÓLEO DE TRANSMISSÃO |
| HIDRÁULICA+ÓLEO DE ENGR | 10296482 | 1000 | 1 | 26 | 10 35 682 8 | HIDRÁULICA+ÓLEO DE ENGR |
| HIDRÁULICA+ÓLEO DE ENGR | 10330282 | 20 | 1 | 26 | 10 35 682 8 | HIDRÁULICA+ÓLEO DE ENGR |
| HIDRÁULICA+ÓLEO DE ENGRE | 10330283 | 210 | 1 | 26 | 10 35 682 8 | HIDRÁULICA+ÓLEO DE ENGR |
| HIDRÁULICA+ÓLEO DE ENGRE | 10330280 | 5 | 1 | 26 | 10 35 682 8 | HIDRÁULICA+ÓLEO DE ENGR |
| HORIMETRO | 6201379 | 90 | 1 | 238 | 10 38 502 4 | APOIO ESQUERDO PARA BR |
| INDICADOR DE PRESSÃO | 9074503 | 1 | 2 | 509 | 90 79 861 | CAVALETE BALANCINS COM |
| INDICADOR DE VACUO | 5106421 | 90 | 1 | 102 | 99 37 298 | INSTALAÇÃO DO FILTRO DE A |
| INJETOR DE AR | 10016540 | 5 | 2 | 268 | 10 05 981 8 | PRÉ-COMANDO DE PEDAL M |
| INJETOR DE AR | 7028950 | 370 | 2 | 433 | 10 48 808 8 | REVESTIMENTO INTERNO |
| INSERTO DE BORRACHA 30/42 | 10287498 | 56 | 4 | 301 | 10 35 801 5 | PASSAGEM HIDRAULICA |
| INSERTO DE ELASTOMERO S | 7363283 | 161 | 4 | 295 | 10 35 801 2 | INSTALACAO HDRAULICA |
| INSERTO DE ROSCA | 10044343 | 490 | 3 | 421 | 10 48 808 7 | INSTALACAO ELETRICA |
| INSERTO DE ROSCA | 10044359 | 430 | 1 | 433 | 10 48 808 8 | REVESTIMENTO INTERNO |
| INSERTO DE ROSCA | 7028765 | 90 | 3 | 406 | 10 47 616 9 | CABINE DE OPERADOR |
| INSERTO DE ROSCA | 7028765 | 400 | 2 | 421 | 10 48 808 7 | INSTALACAO ELETRICA |
| INSERTO DE ROSCA M6 | 7020610 | 220 | 2 | 411 | 70 28 759 | PÁRA-BRISA SUPERIOR |
| INSERTO DE ROSCA M6 | 7020610 | 340 | 2 | 433 | 10 48 808 8 | REVESTIMENTO INTERNO |
| INSERTO DE VALVULA | 10008406 | 57 | 1 | 121 | 10 41 301 3 | BOMBA HIDRÁULICA |
| INST. HIDR. MANETE ESQUE | 9944515 | 20 | 1 | 224 | 10 49 873 7 | INSTALACAO HIDRAULICA |
| INST. HIDRAULICA DA MANET | 9944516 | 30 | 1 | 224 | 10 49 873 7 | INSTALACAO HIDRAULICA |
| INST.HIDR.CARRO INFERIOR | 10077135 | 14 | 1 | 49 | 10 49 883 7 | CARRO INFERIOR COMPLETO |
| INSTALACAO BOMBA E EMBR | 10845849 | 7300 | 1 | 85 | 10 35 798 2 | CARRO SUPERIOR |
| INSTALACAO DE COMBUSTIVE | 9946045 | 520 | 1 | 96 | 10 35 808 9 | INSTALAÇÃO DO MOTOR |
| INSTALACAO ELETRICA | 10488087 | 60 | 1 | 405 | 10 47 616 9 | CABINE DE OPERADOR |
| INSTALACAO HDRAULICA | 10358012 | 7020 | 1 | 294 | 10 35 809 0 | INSTALACAO HIDRAULICA |
| INSTALACAO HIDRAULICA | 10060146 | 10 | 1 | 224 | 10 49 873 7 | INSTALACAO HIDRAULICA |
| INSTALACAO HIDRAULICA | 10358017 | 7080 | 1 | 294 | 10 35 809 0 | INSTALACAO HIDRAULICA |
| INSTALACAO HIDRAULICA | 10358090 | 7000 | 1 | 85 | 10 35 798 2 | CARRO SUPERIOR |
| INSTALACAO HIDRAULICA | 10358093 | 7075 | 1 | 294 | 10 35 809 0 | INSTALACAO HIDRAULICA |
| INSTALACAO HIDRAULICA | 10498737 | 10 | 1 | 223 | 10 49 872 7 | POSTO DE COMANDO |
| INSTALACAO MECANISMO GI | 9018423 | 700 | 1 | 85 | 10 35 798 2 | CARRO SUPERIOR |
| INSTALAÇÃO BLOCO DE VÁL | 10358028 | 7600 | 1 | 85 | 10 35 798 2 | CARRO SUPERIOR |
| INSTALAÇÃO DA BOMBA | 9929814 | 550 | 1 | 96 | 10 35 808 9 | INSTALAÇÃO DO MOTOR |
| INSTALAÇÃO DO CONTRAPES | 10498018 | 9500 | 1 | 86 | 10 35 798 2 | CARRO SUPERIOR |
| INSTALAÇÃO DO FILTRO DE A | 9937298 | 530 | 1 | 96 | 10 35 808 9 | INSTALAÇÃO DO MOTOR |
| INSTALAÇÃO DO MOTOR | 10358089 | 500 | 1 | 85 | 10 35 798 2 | CARRO SUPERIOR |
| INSTALAÇÃO ELÉTRICA | 10358141 | 9000 | 1 | 86 | 10 35 798 2 | CARRO SUPERIOR |
| INSTALAÇÃO ELÉTRICA E50 | 9947695 | 3 | 1 | 441 | 99 48 254 | CAIXA ELÉTRICA COMPLETA |
| INSTALAÇÃO P/RÁDIO | 11102652 | 7 | 1 | 7 | . | |
| INSTALAÇÃO P/RÁDIO | 11102653 | 2 | 1 | 674 | 11 10 265 2 | INSTALAÇÃO P/RÁDIO |
| INTERRUPTOR | 10493348 | 54 | 1 | 233 | 11 10 016 6 | PARTE SUPERIOR DE ASSENT |
| INTERRUPTOR | 7028856 | 210 | 1 | 420 | 10 48 808 7 | INSTALACAO ELETRICA |
| INTERRUPTOR - INSTALAÇÃO | 10048313 | 50 | 1 | 680 | 10 49 822 9 | LUBRIFICAÇÃO CENTR.TOTAL. |
| INTERRUPTOR - INSTALAÇÃO | 10055071 | 140 | 1 | 253 | 10 84 086 6 | APOIO DIREITO PARA BRAÇO |
| INTERRUPTOR DE PRESSAO | 10292659 | 2 | 1 | 449 | 10 29 266 0 | SECADOR COLETOR |
| INTERRUPTOR DE PRESSAO | 10467727 | 36 | 1 | 313 | 10 35 801 7 | INSTALACAO HIDRAULICA |
| INTERRUPTOR DE RUPTURA B | 6001027 | 19 | 1 | 243 | 73 73 807 | ALAVANCA DE SEGURANCA |
| INTERRUPTOR PRINCIPAL BA | 10012119 | 20 | 1 | 444 | 11 10 266 2 | BATERIA - INSTALACAO |
| INTERRUPTOR R-R | 9968570 | 70 | 1 | 262 | 99 68 611 | MANETE DIREITA |
| INTERRUPTOR T-0-T | 9968546 | 70 | 1 | 247 | 99 68 625 | ALÇA DE TRANSMISSÃO-LH E |
| INVÓLUCRO TERMOSTATO | 10119830 | 380 | 1 | 473 | 10 11 668 5 | MOTOR DIESEL D936 L A6 240 |
| INVÓLUCRO TERMOSTATO | 9075678 | 380 | 1 | 473 | 10 11 668 5 | MOTOR DIESEL D936 L A6 240 |
| ISOLAÇÃO ACÚSTICA | 9927477 | 6 | 1 | 379 | 10 08 167 3 | CAPO DO MOTOR |
| ISOLAÇÃO ACÚSTICA | 9927478 | 2 | 1 | 380 | 99 27 477 | ISOLAÇÃO ACÚSTICA |
| JANELA | 10014683 | 2 | 1 | 678 | 10 01 468 0 | BLOCO DO MOTOR |

| Designação | Artigo | Item | Quanti | Página | Módulo | Designação |
|---|---|---|---|---|---|---|
| JG V MECANISMO DE TRANSM | 10220432 | 98 | 1 | 114 | 10 22 040 9 | MECANISMO DE ACIONAMENT |
| JG V VÁLVULA RET. DE ESTRA | 9270390 | 999 | 1 | 660 | 92 70 387 | VALVULA DE RETENCAO |
| JOGO DE ANEL O | 10018373 | 998 | 1 | 212 | 10 48 840 4 | BLOCO DE DISTRIBUIÇÃO SX |
| JOGO DE ANEL O | 10018375 | 999 | 1 | 212 | 10 48 840 4 | BLOCO DE DISTRIBUIÇÃO SX |
| JOGO DE LAMELAS DO FREIO | 968580201 | 960 | 1 | 187 | 90 01 790 0 | REDUTOR DE GIRO SAT 375/ |
| JOGO DE MANCAIS DO VIRA | 9076458 | 51 | 1 | 470 | 10 11 668 5 | MOTOR DIESEL D936 L A6 240 |
| JOGO DE MONTAGEM AJUST | 7028926 | 30 | 1 | 322 | 70 28 300 | VÁLVULA LIMITADORA DE PR |
| JOGO DE VEDAÇÃO 170MM | 9062821 | 999 | 1 | 665 | 95 90 264 | PISTÃO 170MM |
| JOGO DE VEDAÇÃO 180MM | 9062632 | 999 | 1 | 663 | 94 00 606 1 | PISTÃO 180MM |
| JOGO DE VEDAÇÃO 180MM | 9062632 | 999 | 1 | 664 | 95 87 597 | PISTÃO 180MM |
| JOGO DE VEDAÇÃO KANTSIL | 726450116 | 15 | 1 | 7 | . | |
| JOGO DE VEDAÇÃO MOTOR D | 10115838 | 939 | 1 | 476 | 10 11 668 5 | MOTOR DIESEL D936 L A6 240 |
| JOGO VEDAÇÃO EIXO DO PIS | 5604335 | 999 | 1 | 366 | 10 03 245 2 | BLOCO DE COMANDO |
| JUNTA DO CABECOTE | 10120844 | 2 | 1 | 503 | 90 79 850 | MONTAGEM DO CABEÇOTE D |
| JUNTA DO CABECOTE | 10120844 | 1 | 1 | 513 | 10 11 585 1 | KIT DE VED DO CABEÇOTE CIL |
| JUNTA DO CABECOTE | 10120844 | 1 | 6 | 515 | 10 11 585 3 | KIT DE VEDAÇÃO CABEÇOTE |
| KIT DE ANEIS DISTANCIADO | 9885932 | 22 | 2 | 151 | 90 79 347 | KIT DE REPARO LPV 165 |
| KIT DE ANEIS LAMELARES | 10008448 | 11 | 4 | 514 | 10 11 585 1 | KIT DE VED DO CABEÇOTE CIL |
| KIT DE ANEIS LAMELARES | 10008448 | 11 | 4 | 516 | 10 11 585 3 | KIT DE VEDAÇÃO CABEÇOTE |
| KIT DE ANEIS LAMELARES | 10008448 | 4 | 4 | 561 | 10 11 547 9 | TUBO ESCAPAMENTO PRE-M |
| KIT DE ARRUELAS | 9885920 | 39 | 1 | 150 | 90 79 294 | KIT DE REPARO |
| KIT DE ARRUELAS | 9885923 | 39 | 1 | 199 | 90 74 416 | KIT DE REPARO |
| KIT DE ARRUELAS | 9885924 | 39 | 1 | 79 | 90 73 357 | CONJ REP (ACION.) FMF 140 |
| KIT DE CEDACAO DA REGULA | 9271653 | 92 | 1 | 691 | 92 71 648 | DISPOSITIVO DE REGULAGE |
| KIT DE ENGRENAGENS | 10220693 | 5 | 1 | 133 | 10 22 066 7 | BOMBA DE ENGRENAGENS |
| KIT DE FERRAMENTAS | 10084286 | 9620 | 1 | 86 | 10 35 798 2 | CARRO SUPERIOR |
| KIT DE FERRAMENTAS | 10848562 | 5 | 1 | 457 | 10 08 428 6 | KIT DE FERRAMENTAS |
| KIT DE FILTRO DE OLEO | 5609948 | 11 | 1 | 297 | 99 37 312 | UNIDADE DE COMANDO DE O |
| KIT DE FILTROS DE COMBUSTÍ | 10069940 | 110 | 1 | 46 | 10 35 970 2 | MATERIAL DE MANUTENÇÃO |
| KIT DE MANUTENÇÃO | 10069476 | 2 | 1 | 88 | 10 09 121 4 | KIT DE MANUTENÇÃO 0-2000 |
| KIT DE MANUTENÇÃO | 10069476 | 1 | 1 | 91 | 10 09 121 5 | KIT DE MANUTENÇÃO ALLE 2 |
| KIT DE MANUTENÇÃO 0-2000 | 10091214 | 100 | 1 | 46 | 10 35 970 2 | MATERIAL DE MANUTENÇÃO |
| KIT DE MANUTENÇÃO 1500/25 | 10069481 | 1 | 1 | 87 | 10 06 947 6 | KIT DE MANUTENÇÃO |
| KIT DE MANUTENÇÃO 1500/25 | 10069481 | 3 | 1 | 88 | 10 09 121 4 | KIT DE MANUTENÇÃO 0-2000 |
| KIT DE MANUTENÇÃO 1500/25 | 10069481 | 1 | 1 | 89 | 10 06 948 6 | KIT DE MANUTENÇÃO ERSTE |
| KIT DE MANUTENÇÃO ALLE 2 | 10091215 | 4 | 1 | 88 | 10 09 121 4 | KIT DE MANUTENÇÃO 0-2000 |
| KIT DE MANUTENÇÃO ERSTE | 10069486 | 1 | 1 | 88 | 10 09 121 4 | KIT DE MANUTENÇÃO 0-2000 |
| KIT DE MONTAGEM DO PARA- | 7028811 | 230 | 1 | 411 | 70 28 759 | PÁRA-BRISA SUPERIOR |
| KIT DE MONTAGEM DO PARA- | 7028909 | 620 | 1 | 429 | 10 29 026 4 | PEÇAS DE MONTAGEM |
| KIT DE PEÇAS DE DESGASTE | 11102834 | 11 | 1 | 633 | 11 10 282 9 | CAÇAMBA RETRO HD 1950mm |
| KIT DE REPARO | 10116928 | 50 | 1 | 497 | 90 76 458 | JOGO DE MANCAIS DO VIRA |
| KIT DE REPARO | 10140597 | 51 | 1 | 497 | 90 76 458 | JOGO DE MANCAIS DO VIRA |
| KIT DE REPARO | 10140601 | 52 | 1 | 497 | 90 76 458 | JOGO DE MANCAIS DO VIRA |
| KIT DE REPARO | 9073158 | 95 | 1 | 71 | 90 73 354 | MECANISMO DE ACIONAMENT |
| KIT DE REPARO | 9073158 | 95 | 1 | 73 | 98 89 775 | MOTOR HIDRÁULICO |
| KIT DE REPARO | 9073393 | 77 | 1 | 188 | 90 72 100 | MOTOR HIDRÁULICO |
| KIT DE REPARO | 9074285 | 95 | 1 | 188 | 90 72 100 | MOTOR HIDRÁULICO |
| KIT DE REPARO | 9074416 | 94 | 1 | 188 | 90 72 100 | MOTOR HIDRÁULICO |
| KIT DE REPARO | 9079294 | 94 | 1 | 686 | 10 13 268 6 | BOMBA DE REGULAGEM HID |
| KIT DE REPARO | 9268016 | 96 | 1 | 74 | 98 89 775 | MOTOR HIDRÁULICO |
| KIT DE REPARO | 9268016 | 93 | 1 | 188 | 90 72 100 | MOTOR HIDRÁULICO |
| KIT DE REPARO | 9268016 | 96 | 1 | 699 | 98 82 771 | KIT DE VEDAÇÃO |
| KIT DE REPARO | 9268751 | 93 | 1 | 686 | 10 13 268 6 | BOMBA DE REGULAGEM HID |
| KIT DE REPARO | 9268751 | 17 | 1 | 700 | 92 71 657 | KIT DE VEDAÇÃO |
| KIT DE REPARO | 9273201 | 98 | 1 | 110 | 90 77 872 | REDUTOR DISTRIBUICAO BO |
| KIT DE REPARO | 9883173 | 80 | 1 | 73 | 98 89 775 | MOTOR HIDRÁULICO |
| KIT DE REPARO | 9883996 | 91 | 1 | 188 | 90 72 100 | MOTOR HIDRÁULICO |
| KIT DE REPARO | 9884000 | 97 | 1 | 74 | 98 89 775 | MOTOR HIDRÁULICO |
| KIT DE REPARO | 9889282 | 95 | 1 | 686 | 10 13 268 6 | BOMBA DE REGULAGEM HID |
| KIT DE REPARO AMORTECE | 10493027 | 25 | 1 | 235 | 11 10 016 7 | SUSPENSAO |

| Designação | Artigo | Item | Quanti | Página | Módulo | Designação |
|---|---|---|---|---|---|---|
| KIT DE REPARO COBERTURA | 10493008 | 27 | 1 | 235 | 11 10 016 7 | SUSPENSAO |
| KIT DE REPARO CORREIA | 10493009 | 33 | 1 | 235 | 11 10 016 7 | SUSPENSAO |
| KIT DE REPARO DO DRENO | 10289208 | 35 | 2 | 92 | 10 06 994 0 | KIT DE FILTROS DE COMBUSTÍ |
| KIT DE REPARO DO DRENO | 10289208 | 2 | 1 | 539 | 10 22 281 9 | PRÉ-FILTRO COMBUST.COM |
| KIT DE REPARO GRUPO ROT | 9073155 | 79 | 1 | 73 | 98 89 775 | MOTOR HIDRÁULICO |
| KIT DE REPARO GRUPO ROT | 9073155 | 2 | 1 | 79 | 90 73 357 | CONJ REP (ACION.) FMF 140 |
| KIT DE REPARO GRUPO ROT | 9073751 | 2 | 1 | 150 | 90 79 294 | KIT DE REPARO |
| KIT DE REPARO GRUPO ROT | 9074415 | 79 | 1 | 188 | 90 72 100 | MOTOR HIDRÁULICO |
| KIT DE REPARO LPV 165 | 9079347 | 83 | 1 | 686 | 10 13 268 6 | BOMBA DE REGULAGEM HID |
| KIT DE REPARO MANGUEIRA | 10493032 | 34 | 1 | 235 | 11 10 016 7 | SUSPENSAO |
| KIT DE REPARO PISTÕES AXIA | 9889831 | 77 | 1 | 73 | 98 89 775 | MOTOR HIDRÁULICO |
| KIT DE REPARO PISTÕES AXIA | 9889831 | 1 | 9 | 79 | 90 73 357 | CONJ REP (ACION.) FMF 140 |
| KIT DE REPARO PISTÕES AXIA | 9880604 | 1 | 9 | 150 | 90 79 294 | KIT DE REPARO |
| KIT DE REPARO RETENTOR | 10121335 | 30 | 1 | 610 | 10 11 583 8 | JOGO DE VEDAÇÃO MOTOR D |
| KIT DE REPARO RETENTOR | 10121952 | 1 | 1 | 605 | 10 11 801 4 | KIT DE VEDACAO |
| KIT DE REPARO RETENTOR | 10121952 | 1 | 1 | 608 | 10 11 583 8 | JOGO DE VEDAÇÃO MOTOR D |
| KIT DE REPARO RETENTOR D | 10121345 | 52 | 1 | 470 | 10 11 668 5 | MOTOR DIESEL D936 L A6 240 |
| KIT DE REPARO SUSPENSÃO | 10493022 | 29 | 1 | 235 | 11 10 016 7 | SUSPENSAO |
| KIT DE REPARO SUSPENSÃO | 10493024 | 31 | 1 | 235 | 11 10 016 7 | SUSPENSAO |
| KIT DE REPARO SUSPENSÃO | 10493023 | 30 | 1 | 235 | 11 10 016 7 | SUSPENSAO |
| KIT DE VED DO CABEÇOTE CIL | 10115851 | 88 | 1 | 471 | 10 11 668 5 | MOTOR DIESEL D936 L A6 240 |
| KIT DE VED MANCAL HASTE | 9158144 | 999 | 1 | 669 | 99 52 600 | MANCAL DA HASTE DO PISTA |
| KIT DE VED MANCAL HASTE | 94027338 | 999 | 1 | 668 | 94 02 733 6 | MANCAL DA HASTE DO PISTA |
| KIT DE VED MANCAL HASTE | 9062985 | 999 | 1 | 667 | 94 01 936 4 | MANCAL DA HASTE DO PISTA |
| KIT DE VEDACAO | 10118014 | 13 | 1 | 469 | 10 11 668 5 | MOTOR DIESEL D936 L A6 240 |
| KIT DE VEDACAO | 7030267 | 998 | 1 | 318 | 56 02 487 | VÁLVULA LIMITADORA DE PR |
| KIT DE VEDACAO | 7030267 | 999 | 1 | 322 | 70 28 300 | VÁLVULA LIMITADORA DE PR |
| KIT DE VEDACAO DA BOMBA | 7010596 | 999 | 1 | 145 | 56 09 979 | BOMBA DE ENGRENAGENS |
| KIT DE VEDACAO DA VALVUL | 5604334 | 999 | 1 | 318 | 56 02 487 | VÁLVULA LIMITADORA DE PR |
| KIT DE VEDACAO DA VALVUL | 9266089 | 98 | 1 | 693 | 92 67 554 | VÁLVULA LIMITADORA DE PR |
| KIT DE VEDACAO DA VALVUL | 9266231 | 98 | 1 | 76 | 92 67 037 | VÁLVULA LIMITADORA DE PR |
| KIT DE VEDACAO DA VALVUL | 9266231 | 97 | 1 | 189 | 90 72 100 | MOTOR HIDRÁULICO |
| KIT DE VEDACAO DO BICO IN | 10115854 | 199 | 1 | 472 | 10 11 668 5 | MOTOR DIESEL D936 L A6 240 |
| KIT DE VEDACAO DO BICO IN | 10115854 | 7 | 1 | 513 | 10 11 585 1 | KIT DE VED DO CABEÇOTE CIL |
| KIT DE VEDACAO DO BICO IN | 10115854 | 7 | 1 | 515 | 10 11 585 3 | KIT DE VEDAÇÃO CABEÇOTE |
| KIT DE VEDACAO DO BICO IN | 10115855 | 179 | 1 | 471 | 10 11 668 5 | MOTOR DIESEL D936 L A6 240 |
| KIT DE VEDACAO DO BICO IN | 10115855 | 82 | 6 | 612 | 10 11 583 8 | JOGO DE VEDAÇÃO MOTOR D |
| KIT DE VEDAÇÃO | 10015470 | 999 | 1 | 75 | 56 16 688 | VALVULA FRENAGEM DA TRA |
| KIT DE VEDAÇÃO | 10021310 | 998 | 1 | 213 | 10 48 841 6 | BLOCO DE DISTRIBUIÇÃO MX- |
| KIT DE VEDAÇÃO | 10021310 | 998 | 1 | 216 | 10 10 171 1 | BLOCO DE DISTRIBUIÇÃO MX- |
| KIT DE VEDAÇÃO | 10021310 | 998 | 1 | 623 | 10 10 171 2 | BLOCO DE DISTRIBUIÇÃO MX- |
| KIT DE VEDAÇÃO | 10021311 | 997 | 1 | 213 | 10 48 841 6 | BLOCO DE DISTRIBUIÇÃO MX- |
| KIT DE VEDAÇÃO | 10021311 | 997 | 1 | 216 | 10 10 171 1 | BLOCO DE DISTRIBUIÇÃO MX- |
| KIT DE VEDAÇÃO | 10021311 | 997 | 1 | 623 | 10 10 171 2 | BLOCO DE DISTRIBUIÇÃO MX- |
| KIT DE VEDAÇÃO | 10022063 | 30 | 1 | 287 | 11 00 359 4 | CARCAÇA |
| KIT DE VEDAÇÃO | 10115850 | 139 | 1 | 471 | 10 11 668 5 | MOTOR DIESEL D936 L A6 240 |
| KIT DE VEDAÇÃO | 10115850 | 81 | 1 | 612 | 10 11 583 8 | JOGO DE VEDAÇÃO MOTOR D |
| KIT DE VEDAÇÃO | 10220423 | 999 | 1 | 123 | 56 16 530 | BOMBA DE PISTÃO AXIAL |
| KIT DE VEDAÇÃO | 10220997 | 999 | 1 | 321 | 10 28 046 1 | VALVULA MAGNETICA DE RE |
| KIT DE VEDAÇÃO | 10278595 | 999 | 1 | 653 | 10 00 297 1 | VÁLVULA DE SEGURANÇA RU |
| KIT DE VEDAÇÃO | 10289630 | 998 | 1 | 366 | 10 03 245 2 | BLOCO DE COMANDO |
| KIT DE VEDAÇÃO | 10291972 | 999 | 1 | 116 | 10 22 041 1 | PLACA DE CONEXAO |
| KIT DE VEDAÇÃO | 10410335 | 999 | 1 | 106 | 10 29 787 3 | VÁLVULA DE COMANDO |
| KIT DE VEDAÇÃO | 10410659 | 999 | 1 | 138 | 10 28 914 6 | VÁLVULA LIMITADORA DE PR |
| KIT DE VEDAÇÃO | 7025142 | 999 | 1 | 317 | 50 09 565 | CARTUCHO LIMITADOR DE PR |
| KIT DE VEDAÇÃO | 7029460 | 999 | 1 | 367 | 10 28 962 9 | VÁLVULA |
| KIT DE VEDAÇÃO | 7624268 | 999 | 1 | 642 | 10 00 348 5 | VÁLVULA DIRECIONAL |
| KIT DE VEDAÇÃO | 90200890 | 910 | 1 | 187 | 90 01 790 0 | REDUTOR DE GIRO SAT 375/ |
| KIT DE VEDAÇÃO | 9269690 | 96 | 1 | 271 | 90 79 258 | MODULO DE COMANDO VG7 |
| KIT DE VEDAÇÃO | 9269690 | 96 | 1 | 273 | 90 79 259 | MODULO DE COMANDO VG7 |

| Designação | Artigo | Item | Quanti | Página | Módulo | Designação |
|---|---|---|---|---|---|---|
| KIT DE VEDAÇÃO | 9269690 | 96 | 1 | 688 | 10 11 856 1 | MODULO DE COMANDO VG6- |
| KIT DE VEDAÇÃO | 9271657 | 98 | 1 | 687 | 10 13 268 6 | BOMBA DE REGULAGEM HID |
| KIT DE VEDAÇÃO | 9273048 | 98 | 1 | 189 | 90 72 100 | MOTOR HIDRÁULICO |
| KIT DE VEDAÇÃO | 9273200 | 97 | 1 | 110 | 90 77 872 | REDUTOR DISTRIBUICAO BO |
| KIT DE VEDAÇÃO | 9882771 | 98 | 1 | 74 | 98 89 775 | MOTOR HIDRÁULICO |
| KIT DE VEDAÇÃO CABEÇOTE | 10115853 | 89 | 1 | 471 | 10 11 668 5 | MOTOR DIESEL D936 L A6 240 |
| KIT DE VEDAÇÃO CABEÇOTE | 10115853 | 83 | 1 | 612 | 10 11 583 8 | JOGO DE VEDAÇÃO MOTOR D |
| KIT DO MOTOR DO LIMPADOR | 10290363 | 420 | 1 | 421 | 10 48 808 7 | INSTALACAO ELETRICA |
| KIT DO TURBO COMPRESSOR | 9080735 | 430 | 1 | 474 | 10 11 668 5 | MOTOR DIESEL D936 L A6 240 |
| KIT JUNTAS VALVULA PRESSA | 10332087 | 999 | 1 | 654 | 10 28 918 3 | VALVULA LIMITADORA PRES |
| KIT JUNTAS VALVULA PRESSA | 5616900 | 999 | 1 | 370 | 56 16 232 | VALVULA DE RETENCAO |
| KIT JUNTAS VALVULA PRESSA | 5616901 | 999 | 1 | 61 | 56 16 231 | VALVULA LIMITADORA PRES |
| KIT MONTAGEM DA BOMBA A | 9080301 | 370 | 1 | 473 | 10 11 668 5 | MOTOR DIESEL D936 L A6 240 |
| KIT PARA ACIDENTE COM ÓL | 7023359 | 50 | 1 | 39 | 90 66 466 | ACESSORIOS |
| KIT REPAR MÓDUL AJUS DE A | 10493031 | 35 | 1 | 235 | 11 10 016 7 | SUSPENSAO |
| KIT REPARO DA VALVULA INJ | 10117093 | 1 | 1 | 531 | 10 11 659 1 | BICO INJETOR COM ELEMEN |
| KIT REPARO DO MANCAL BIEL | 10116934 | 50 | 1 | 500 | 90 76 459 | BIELA |
| KIT REPARO DO PISTAO ATUA | 9079811 | 2 | 1 | 691 | 92 71 648 | DISPOSITIVO DE REGULAGE |
| KIT VEDACAO VALULA REGUL | 9882875 | 88 | 1 | 686 | 10 13 268 6 | BOMBA DE REGULAGEM HID |
| KIT VEDACAO VALULA REGUL | 9882875 | 90 | 1 | 694 | 10 13 305 9 | VALVULA REGULADORA |
| KIT VEDACAO VAVLULA DUAS | 9266232 | 96 | 1 | 188 | 90 72 100 | MOTOR HIDRÁULICO |
| KIT VEDACAO VAVLULA DUAS | 9266232 | 98 | 1 | 200 | 90 77 087 | VALVULA INTERCAMBIAVEL |
| KIT VEDAÇÃO COLETOR GIRA | 10009676 | 999 | 1 | 63 | 10 00 963 0 | COLETOR GIRATÓRIO |
| KIT VEDAÇÃO COLETOR GIRA | 9265064 | 11 | 1 | 64 | 91 41 597 | COLETOR GIRATÓRIO |
| KIT VEDAÇÃO VÁLVULA DIREC | 5009391 | 999 | 1 | 320 | 10 01 872 5 | VÁLVULA DIRECIONAL |
| KIT VEDAÇÃO VÁLVULA DIREC | 5009562 | 4 | 1 | 315 | 10 04 272 9 | BLOCO DE VÁLVULAS DE CO |
| KIT VEDAÇÃO VÁLVULA DIREC | 5009562 | 999 | 1 | 316 | 10 28 027 9 | VÁLVULA |
| KIT VEDAÇÃO VÁLVULA DIREC | 5009562 | 999 | 1 | 319 | 56 15 344 | VÁLVULA SOLENÓIDE |
| LAMELA EXTERNA | 9441377 | 62 | 7 | 185 | 90 01 790 0 | REDUTOR DE GIRO SAT 375/ |
| LAMELA EXTERNA | 9441377 | 37 | 7 | 193 | 96 85 802 01 | JOGO DE LAMELAS DO FREIO |
| LAMELAS INTERNAS | 9442507 | 63 | 6 | 185 | 90 01 790 0 | REDUTOR DE GIRO SAT 375/ |
| LAMELAS INTERNAS | 9442507 | 36 | 6 | 193 | 96 85 802 01 | JOGO DE LAMELAS DO FREIO |
| LANÇA MONOBLOCO 6,70M | 10498299 | 9 | 1 | 7 | . | |
| LANÇA MONOBLOCO 6,70M | 10498300 | 10 | 1 | 615 | 10 49 829 9 | LANÇA MONOBLOCO 6,70M |
| LANÇA MONOBLOCO 6,70M | 10498301 | 2 | 1 | 616 | 10 49 830 0 | LANÇA MONOBLOCO 6,70M |
| LIMITADOR DA PORTA | 7019164 | 420 | 1 | 428 | 10 29 026 4 | PEÇAS DE MONTAGEM |
| LIMPADOR DE PÁRA-BRISA | 10290357 | 410 | 1 | 421 | 10 48 808 7 | INSTALACAO ELETRICA |
| LINHA DE CONEXAO | 10121908 | 230 | 1 | 473 | 10 11 668 5 | MOTOR DIESEL D936 L A6 240 |
| LINHA DE CONEXAO | 9079964 | 230 | 1 | 473 | 10 11 668 5 | MOTOR DIESEL D936 L A6 240 |
| LINHA DE ÓLEO PRÉ-MONTA | 9079978 | 25 | 1 | 469 | 10 11 668 5 | MOTOR DIESEL D936 L A6 240 |
| LINHA DE ÓLEO PRÉ-MONTA | 10120263 | 25 | 1 | 469 | 10 11 668 5 | MOTOR DIESEL D936 L A6 240 |
| LIQUIDO DE ARREFECIMENT | 10301213 | 20 | 1 | 35 | 10 35 905 6 | LIQUIDO DE ARREFECIMENT |
| LIQUIDO DE ARREFECIMENT | 10301215 | 5 | 1 | 29 | 10 35 683 2 | LIQUIDO DE ARREFECIMENT |
| LIQUIDO DE ARREFECIMENT | 10356832 | 10 | 1 | 45 | 94 08 205 9 | LIQUIDO DE ARREFECIMENT |
| LIQUIDO DE ARREFECIMENT | 10356833 | 1000 | 1 | 29 | 10 35 683 2 | LIQUIDO DE ARREFECIMENT |
| LIQUIDO DE ARREFECIMENT | 10359056 | 20 | 1 | 45 | 94 08 205 9 | LIQUIDO DE ARREFECIMENT |
| LIQUIDO DE ARREFECIMENT | 10428410 | 20 | 1 | 29 | 10 35 683 2 | LIQUIDO DE ARREFECIMENT |
| LIQUIDO DE ARREFECIMENT | 10428411 | 210 | 1 | 29 | 10 35 683 2 | LIQUIDO DE ARREFECIMENT |
| LIQUIDO DE ARREFECIMENT | 11657384 | 5 | 1 | 42 | 94 07 955 7 | LIQUIDO DE ARREFECIMENT |
| LIQUIDO DE ARREFECIMENT | 11657385 | 20 | 1 | 42 | 94 07 955 7 | LIQUIDO DE ARREFECIMENT |
| LIQUIDO DE ARREFECIMENT | 11657386 | 210 | 1 | 42 | 94 07 955 7 | LIQUIDO DE ARREFECIMENT |
| LIQUIDO DE ARREFECIMENT | 11657387 | 1000 | 1 | 42 | 94 07 955 7 | LIQUIDO DE ARREFECIMENT |
| LIQUIDO DE ARREFECIMENT | 11657389 | 5 | 1 | 43 | 94 07 956 0 | LIQUIDO DE ARREFECIMENT |
| LIQUIDO DE ARREFECIMENT | 11657390 | 20 | 1 | 43 | 94 07 956 0 | LIQUIDO DE ARREFECIMENT |
| LIQUIDO DE ARREFECIMENT | 11657391 | 210 | 1 | 43 | 94 07 956 0 | LIQUIDO DE ARREFECIMENT |
| LIQUIDO DE ARREFECIMENT | 11657392 | 1000 | 1 | 43 | 94 07 956 0 | LIQUIDO DE ARREFECIMENT |
| LIQUIDO DE ARREFECIMENT | 9066465 | 70 | 1 | 10 | 90 66 460 | |
| LIQUIDO DE ARREFECIMENT | 94079557 | 10 | 1 | 44 | 94 08 205 8 | LIQUIDO DE ARREFECIMENT |
| LIQUIDO DE ARREFECIMENT | 94079560 | 20 | 1 | 44 | 94 08 205 8 | LIQUIDO DE ARREFECIMENT |
| LIQUIDO DE ARREFECIMENT | 94082058 | 100 | 1 | 12 | 90 66 465 | LIQUIDO DE ARREFECIMENT |

| Designação | Artigo | Item | Quanti | Página | Módulo | Designação |
|---|---|---|---|---|---|---|
| LIQUIDO DE ARREFECIMENT | 94082059 | 10 | 1 | 12 | 90 66 465 | LIQUIDO DE ARREFECIMENT |
| LOCTITE | 811205101 | 120 | 1 | 569 | 90 79 889 | CONEXÃO DE AQUECIMENTO |
| LOCTITE | 811208201 | 104 | 1 | 510 | 10 12 038 4 | CABECOTE |
| LOCTITE | 811208201 | 118 | 1 | 688 | 10 11 856 1 | MODULO DE COMANDO VG6- |
| LOCTITE | 811208201 | 118 | 1 | 689 | 90 73 355 | PLACA DE CONEXAO FMV 140 |
| LOCTITE | 8700039 | 106 | 1 | 70 | 90 73 155 | KIT DE REPARO GRUPO ROT |
| LOCTITE | 8700039 | 106 | 1 | 486 | 90 79 483 | CARTER |
| LOCTITE | 8700039 | 100 | 1 | 526 | 90 80 277 | PLACA DE COBERTURA PRÉ- |
| LUBRIFICACAO CENTRALIZAD | 9946039 | 1400 | 1 | 85 | 10 35 798 2 | CARRO SUPERIOR |
| LUBRIFICAÇÃO CENTR. AUT | 10049662 | 2 | 1 | 208 | 99 46 039 | LUBRIFICACAO CENTRALIZAD |
| LUBRIFICAÇÃO CENTR.TOTAL. | 10498163 | 8 | 1 | 7 | . | |
| LUBRIFICAÇÃO CENTR.TOTAL. | 10498163 | 2 | 1 | 209 | 10 04 966 2 | LUBRIFICAÇÃO CENTR. AUT |
| LUBRIFICAÇÃO CENTR.TOTAL. | 10498229 | 10 | 1 | 679 | 10 49 816 3 | LUBRIFICAÇÃO CENTR.TOTAL. |
| LUBRIFICAÇÃO CENTRALIZAD | 10049663 | 3 | 1 | 208 | 99 46 039 | LUBRIFICACAO CENTRALIZAD |
| LUBRIFICAÇÃO CENTRALIZAD | 10384085 | 50 | 1 | 619 | 10 49 830 0 | LANÇA MONOBLOCO 6,70M |
| LUBRIFICAÇÃO CENTRALIZAD | 10384086 | 100 | 1 | 624 | 10 38 408 5 | LUBRIFICAÇÃO CENTRALIZAD |
| LUBRIFICAÇÃO CENTRALIZAD | 10384848 | 15 | 1 | 628 | 10 49 823 5 | BRACO DA CACAMBA 2,35M |
| LUMINÁRIA | 10428776 | 140 | 1 | 420 | 10 48 808 7 | INSTALACAO ELETRICA |
| LUVA | 10146030 | 2 | 1 | 510 | 10 12 038 4 | CABECOTE |
| LUVA | 7020613 | 370 | 1 | 415 | 70 28 769 | PORTA DA CABINE DO MOTO |
| LUVA | 7028906 | 680 | 5 | 429 | 10 29 026 4 | PEÇAS DE MONTAGEM |
| LUVA | 9245586 | 9 | 1 | 658 | 95 87 580 | CILINDRO HIDRÁULICO |
| LUVA | 9327516 | 3 | 4 | 94 | 99 48 085 | ARRASTADOR - INSTALACAO |
| LUVA | 9349698 | 20 | 15 | 98 | 10 04 942 6 | SUSPENSAO DO MOTOR |
| LUVA | 9358590 | 7 | 1 | 489 | 90 79 862 | VARETA DE NÍVEL DE ÓLEO C |
| LUVA | 9822707 | 62 | 3 | 346 | 10 35 802 8 | INSTALAÇÃO BLOCO DE VÁL |
| LUVA | 9837954 | 139 | 2 | 377 | 10 35 800 4 | REVESTIMENTO |
| LUVA | 9907856 | 9 | 1 | 657 | 94 02 019 4 | CILINDRO HIDRÁULICO |
| LUVA | 9907856 | 9 | 1 | 659 | 95 96 399 | CILINDRO HIDRÁULICO |
| LUVA | 9926802 | 84 | 1 | 657 | 94 02 019 4 | CILINDRO HIDRÁULICO |
| LUVA 12,4x16x87 | 7367211 | 170 | 8 | 295 | 10 35 801 2 | INSTALACAO HDRAULICA |
| LUVA 12,4x16x87 | 7367211 | 340 | 4 | 296 | 10 35 801 2 | INSTALACAO HDRAULICA |
| LUVA 12,4x16x87 | 7367211 | 47 | 8 | 301 | 10 35 801 5 | PASSAGEM HIDRAULICA |
| LUVA 28X50X25 | 9563951 | 6 | 60 | 206 | 99 46 390 | PEÇAS FIXAÇÃO COROA GIRA |
| LUVA 5/16/20 | 7019171 | 110 | 10 | 420 | 10 48 808 7 | INSTALACAO ELETRICA |
| LUVA 6/10/13 | 7019160 | 360 | 1 | 415 | 70 28 769 | PORTA DA CABINE DO MOTO |
| LUVA DE AJUSTE 15,5X19,5X2 | 9177636 | 6 | 14 | 478 | 10 11 577 8 | BLOCO DO MOTOR |
| LUVA DE AJUSTE 16X20X20 | 10134348 | 4 | 2 | 484 | 90 79 480 | SUPORTE DOS AGREGADOS |
| LUVA DE AJUSTE 16X20X20 | 10134348 | 3 | 2 | 581 | 10 11 557 7 | CÁRTER VOLANTE MONT. EXT |
| LUVA DE AJUSTE 16X20X20 | 9074798 | 9 | 12 | 477 | 10 11 577 9 | BLOCO DO MOTOR COMPLET |
| LUVA DE APERTO | 10031950 | 7 | 2 | 60 | 10 00 966 2 | RODA GUIA D7G/B7B |
| LUVA DE CONEXÃO 3 | 10015495 | 100 | 1 | 247 | 99 68 625 | ALÇA DE TRANSMISSÃO-LH E |
| LUVA DE CONEXÃO 3 | 10015495 | 100 | 1 | 262 | 99 68 611 | MANETE DIREITA |
| LUVA DE CONEXÃO M10X1 | 7027675 | 2 | 1 | 217 | 90 64 786 | ELEMENTO DE CONEXÃO |
| LUVA DE CONEXÃO MONTAGE | 9077279 | 221 | 1 | 473 | 10 11 668 5 | MOTOR DIESEL D936 L A6 240 |
| LUVA DE MONTAGEM 170 | 9107931 | 990 | 1 | 665 | 95 90 264 | PISTÃO 170MM |
| LUVA DE MONTAGEM 180 | 9998619 | 990 | 1 | 663 | 94 00 606 1 | PISTÃO 180MM |
| LUVA DE MONTAGEM 180 | 9998619 | 990 | 1 | 664 | 95 87 597 | PISTÃO 180MM |
| LUVA DE PASSAGEM 16/22,5/2 | 5607889 | 38 | 1 | 229 | 10 49 880 9 | POSTO DE COMANDO - PEÇA |
| LUVA DISTANCIADORA | 9074977 | 4 | 12 | 578 | 10 11 548 0 | TUBO DE ESCAPAMENTO M |
| LUVA DISTANCIADORA | 9692782 | 49 | 4 | 618 | 10 49 830 0 | LANÇA MONOBLOCO 6,70M |
| LUVA DISTANCIADORA 15X20 | 9950358 | 11 | 1 | 228 | 99 39 322 | PECAS DE FIXACAO |
| LUVA DISTANCIADORA 8,5X18 | 9132577 | 2 | 4 | 571 | 10 11 919 9 | PROTECAO TERMICA COM FI |
| LUVA DISTANCIADORA 8,5X18 | 9132577 | 20 | 7 | 572 | 10 11 571 8 | PROTECAO TERMICA COM FI |
| LUVA DISTANCIADORA GALVA | 94022280 | 44 | 4 | 279 | 94 02 247 7 | BANCO DO MOTORISTA |
| LUVA PARA CABOS 14,0/15,7/1 | 6202703 | 24 | 2 | 237 | 10 38 502 4 | APOIO ESQUERDO PARA BR |
| LUVA PARA CABOS 8,5/14/20 | 7362986 | 25 | 7 | 237 | 10 38 502 4 | APOIO ESQUERDO PARA BR |
| LUVA ROSQUEADA DN6 | 774376008 | 1 | 1 | 217 | 90 64 786 | ELEMENTO DE CONEXÃO |
| LUVA ROSQUEADA DN6 | 774376008 | 1 | 31 | 219 | 10 01 461 1 | CAIXA AUXILIAR |
| LUVA ROSQUEADA DN6,5 ST | 10012024 | 100 | 1 | 218 | 90 64 786 | ELEMENTO DE CONEXÃO |

| Designação | Artigo | Item | Quanti | Página | Módulo | Designação |
|---|---|---|---|---|---|---|
| LUVA ROSQUEADA DN6,5 ST | 10012024 | 100 | 6 | 220 | 10 01 461 1 | CAIXA AUXILIAR |
| LÂMINA | 10498559 | 3 | 1 | 634 | 11 10 283 2 | LÂMINA RETRO |
| LÂMINA RETRO | 11102832 | 9 | 1 | 633 | 11 10 282 9 | CAÇAMBA RETRO HD 1950mm |
| LÂMPADA INCANDESCENTE | 6200685 | 3 | 2 | 437 | 99 41 040 | FAROL CPL - INSTALAÇÃO |
| LÂMPADA INCANDESCENTE | 6200685 | 5 | 2 | 438 | 10 04 824 6 | FAROL E BUZINA INSTALACA |
| LÂMPADA INCANDESCENTE | 6200685 | 5 | 2 | 439 | 11 10 278 6 | FAROL E BUZINA INSTALACA |
| LÂMPADA INCANDESCENTE | 6200685 | 11 | 1 | 440 | 10 04 553 0 | FAROL DE TRABALHO |
| LÂMPADA INCANDESCENTE | 6001713 | 2 | 1 | 258 | 10 04 831 3 | INTERRUPTOR - INSTALAÇÃO |
| LÂMPADA INCANDESCENTE | 6001713 | 2 | 1 | 263 | 10 05 507 1 | INTERRUPTOR - INSTALAÇÃO |
| MACANETA TRAZEIRA | 10298669 | 580 | 1 | 429 | 10 29 026 4 | PEÇAS DE MONTAGEM |
| MAGUEIRAS DO AR-CONDICI | 10358142 | 9200 | 1 | 86 | 10 35 798 2 | CARRO SUPERIOR |
| MAGUEIRAS DO AR-CONDICI | 10358143 | 5 | 1 | 446 | 10 35 814 2 | MAGUEIRAS DO AR-CONDICI |
| MANCAL DA HASTE DO PISTA | 9952600 | 13 | 1 | 658 | 95 87 580 | CILINDRO HIDRÁULICO |
| MANCAL DA HASTE DO PISTA | 94027336 | 13 | 1 | 659 | 95 96 399 | CILINDRO HIDRÁULICO |
| MANCAL DA HASTE DO PISTA | 94019364 | 13 | 1 | 657 | 94 02 019 4 | CILINDRO HIDRÁULICO |
| MANCAL DE BORRACHA | 10331669 | 32 | 2 | 165 | 10 45 475 2 | RADIADOR COMBINADO |
| MANCAL DE BORRACHA | 10331669 | 5 | 2 | 167 | 10 35 508 4 | RADIADOR DE ÓLEO |
| MANETE DIREITA | 9968611 | 10 | 1 | 259 | 10 05 879 4 | SENSOR DE PRE-COMANDO |
| MANGUEIRA | 10002237 | 75 | 2 | 620 | 10 49 830 0 | LANÇA MONOBLOCO 6,70M |
| MANGUEIRA | 10002636 | 80 | 1 | 304 | 10 35 801 4 | MANGUEIRAS HIDRAULICAS |
| MANGUEIRA | 10002803 | 32 | 1 | 311 | 10 35 809 3 | INSTALACAO HIDRAULICA |
| MANGUEIRA | 10003704 | 80 | 1 | 313 | 10 35 801 7 | INSTALACAO HIDRAULICA |
| MANGUEIRA | 10006338 | 55 | 1 | 313 | 10 35 801 7 | INSTALACAO HIDRAULICA |
| MANGUEIRA | 10007025 | 20 | 1 | 209 | 10 04 966 2 | LUBRIFICAÇÃO CENTR. AUT |
| MANGUEIRA | 10009943 | 5 | 0.6 | 562 | 90 80 301 | KIT MONTAGEM DA BOMBA A |
| MANGUEIRA | 10012162 | 10 | 1 | 215 | 10 10 169 3 | BLOCO DE DISTRIBUIÇÃO MX- |
| MANGUEIRA | 10019230 | 220 | 1 | 306 | 10 35 801 4 | MANGUEIRAS HIDRAULICAS |
| MANGUEIRA | 10020719 | 595 | 1 | 355 | 10 35 802 8 | INSTALAÇÃO BLOCO DE VÁL |
| MANGUEIRA | 10036252 | 2 | 1 | 626 | 11 00 350 2 | BLOCO DE DISTRIBUIÇÃO SX |
| MANGUEIRA | 10036375 | 8 | 1 | 631 | 10 38 484 8 | LUBRIFICAÇÃO CENTRALIZAD |
| MANGUEIRA | 10042726 | 2 | 1 | 308 | 10 35 801 3 | ARREFECIMENTO DE OLEO |
| MANGUEIRA | 10042728 | 36 | 1 | 309 | 10 35 801 3 | ARREFECIMENTO DE OLEO |
| MANGUEIRA | 10043139 | 15 | 1 | 308 | 10 35 801 3 | ARREFECIMENTO DE OLEO |
| MANGUEIRA | 10043160 | 10 | 1 | 310 | 10 35 809 3 | INSTALACAO HIDRAULICA |
| MANGUEIRA | 10043476 | 60 | 1 | 361 | 10 49 822 5 | TUBULACOES PRESSAO INS |
| MANGUEIRA | 10043478 | 65 | 1 | 361 | 10 49 822 5 | TUBULACOES PRESSAO INS |
| MANGUEIRA | 10043518 | 2 | 1 | 300 | 10 35 801 5 | PASSAGEM HIDRAULICA |
| MANGUEIRA | 10043519 | 4 | 1 | 300 | 10 35 801 5 | PASSAGEM HIDRAULICA |
| MANGUEIRA | 10043520 | 5 | 1 | 300 | 10 35 801 5 | PASSAGEM HIDRAULICA |
| MANGUEIRA | 10043521 | 3 | 1 | 300 | 10 35 801 5 | PASSAGEM HIDRAULICA |
| MANGUEIRA | 10043525 | 170 | 1 | 218 | 90 64 786 | ELEMENTO DE CONEXÃO |
| MANGUEIRA | 10043525 | 170 | 10 | 220 | 10 01 461 1 | CAIXA AUXILIAR |
| MANGUEIRA | 10043931 | 200 | 1 | 306 | 10 35 801 4 | MANGUEIRAS HIDRAULICAS |
| MANGUEIRA | 10043999 | 15 | 1 | 300 | 10 35 801 5 | PASSAGEM HIDRAULICA |
| MANGUEIRA | 10044235 | 30 | 1 | 311 | 10 35 809 3 | INSTALACAO HIDRAULICA |
| MANGUEIRA | 10044236 | 31 | 1 | 311 | 10 35 809 3 | INSTALACAO HIDRAULICA |
| MANGUEIRA | 10044599 | 27 | 1 | 618 | 10 49 830 0 | LANÇA MONOBLOCO 6,70M |
| MANGUEIRA | 10097258 | 70 | 1 | 295 | 10 35 801 2 | INSTALACAO HDRAULICA |
| MANGUEIRA | 10097259 | 50 | 1 | 295 | 10 35 801 2 | INSTALACAO HDRAULICA |
| MANGUEIRA | 10097282 | 3 | 1 | 308 | 10 35 801 3 | ARREFECIMENTO DE OLEO |
| MANGUEIRA | 10101257 | 20 | 1 | 300 | 10 35 801 5 | PASSAGEM HIDRAULICA |
| MANGUEIRA | 10101261 | 100 | 1 | 304 | 10 35 801 4 | MANGUEIRAS HIDRAULICAS |
| MANGUEIRA | 10101305 | 10 | 1 | 447 | 10 35 814 3 | MAGUEIRAS DO AR-CONDICI |
| MANGUEIRA | 10101307 | 16 | 1 | 447 | 10 35 814 3 | MAGUEIRAS DO AR-CONDICI |
| MANGUEIRA | 10101313 | 12 | 1 | 447 | 10 35 814 3 | MAGUEIRAS DO AR-CONDICI |
| MANGUEIRA | 10101314 | 14 | 1 | 447 | 10 35 814 3 | MAGUEIRAS DO AR-CONDICI |
| MANGUEIRA | 10101342 | 21 | 1 | 300 | 10 35 801 5 | PASSAGEM HIDRAULICA |
| MANGUEIRA | 10101362 | 80 | 1 | 295 | 10 35 801 2 | INSTALACAO HDRAULICA |
| MANGUEIRA | 10101365 | 60 | 1 | 295 | 10 35 801 2 | INSTALACAO HDRAULICA |
| MANGUEIRA | 10101699 | 3 | 2 | 624 | 10 38 408 5 | LUBRIFICAÇÃO CENTRALIZAD |

| Designação | Artigo | Item | Quanti | Página | Módulo | Designação |
|---|---|---|---|---|---|---|
| MANGUEIRA | 10101700 | 7 | 1 | 631 | 10 38 484 8 | LUBRIFICAÇÃO CENTRALIZAD |
| MANGUEIRA | 10101718 | 3 | 1 | 626 | 11 00 350 2 | BLOCO DE DISTRIBUIÇÃO SX |
| MANGUEIRA | 10101721 | 6 | 1 | 215 | 10 10 169 3 | BLOCO DE DISTRIBUIÇÃO MX- |
| MANGUEIRA | 10101722 | 5 | 1 | 215 | 10 10 169 3 | BLOCO DE DISTRIBUIÇÃO MX- |
| MANGUEIRA | 10101724 | 8 | 1 | 215 | 10 10 169 3 | BLOCO DE DISTRIBUIÇÃO MX- |
| MANGUEIRA | 10101726 | 9 | 1 | 215 | 10 10 169 3 | BLOCO DE DISTRIBUIÇÃO MX- |
| MANGUEIRA | 10101727 | 7 | 1 | 622 | 10 10 169 4 | BLOCO DE DISTRIBUIÇÃO MX- |
| MANGUEIRA | 10101728 | 8 | 1 | 622 | 10 10 169 4 | BLOCO DE DISTRIBUIÇÃO MX- |
| MANGUEIRA | 10101730 | 9 | 1 | 622 | 10 10 169 4 | BLOCO DE DISTRIBUIÇÃO MX- |
| MANGUEIRA | 10101732 | 10 | 1 | 622 | 10 10 169 4 | BLOCO DE DISTRIBUIÇÃO MX- |
| MANGUEIRA | 10101733 | 11 | 1 | 622 | 10 10 169 4 | BLOCO DE DISTRIBUIÇÃO MX- |
| MANGUEIRA | 10216661 | 77 | 1 | 620 | 10 49 830 0 | LANÇA MONOBLOCO 6,70M |
| MANGUEIRA | 10217669 | 35 | 1 | 309 | 10 35 801 3 | ARREFECIMENTO DE OLEO |
| MANGUEIRA | 10218792 | 215 | 1 | 314 | 10 35 801 7 | INSTALACAO HIDRAULICA |
| MANGUEIRA | 10219333 | 16 | 1 | 308 | 10 35 801 3 | ARREFECIMENTO DE OLEO |
| MANGUEIRA | 10219335 | 55 | 2 | 672 | 10 49 815 8 | CILINDRO DE ELEVACAO |
| MANGUEIRA | 10220597 | 3 | 2 | 84 | 10 07 713 5 | INST.HIDR.CARRO INFERIOR |
| MANGUEIRA | 10287541 | 10 | 2 | 226 | 99 44 515 | INST. HIDR. MANETE ESQUE |
| MANGUEIRA | 10287541 | 10 | 2 | 227 | 99 44 516 | INST. HIDRAULICA DA MANET |
| MANGUEIRA | 10290607 | 85 | 2 | 302 | 10 35 801 5 | PASSAGEM HIDRAULICA |
| MANGUEIRA | 10294166 | 6 | 1 | 622 | 10 10 169 4 | BLOCO DE DISTRIBUIÇÃO MX- |
| MANGUEIRA | 10294270 | 30 | 1 | 632 | 10 38 484 8 | LUBRIFICAÇÃO CENTRALIZAD |
| MANGUEIRA | 10332716 | 25 | 1 | 311 | 10 35 809 3 | INSTALACAO HIDRAULICA |
| MANGUEIRA | 10332717 | 15 | 1 | 311 | 10 35 809 3 | INSTALACAO HIDRAULICA |
| MANGUEIRA | 10340145 | 35 | 1 | 309 | 10 35 801 3 | ARREFECIMENTO DE OLEO |
| MANGUEIRA | 11003506 | 4 | 1 | 626 | 11 00 350 2 | BLOCO DE DISTRIBUIÇÃO SX |
| MANGUEIRA | 11003506 | 5 | 1 | 626 | 11 00 350 2 | BLOCO DE DISTRIBUIÇÃO SX |
| MANGUEIRA | 5600245 | 30 | 1 | 304 | 10 35 801 4 | MANGUEIRAS HIDRAULICAS |
| MANGUEIRA | 5604439 | 22 | 1 | 616 | 10 49 830 0 | LANÇA MONOBLOCO 6,70M |
| MANGUEIRA | 5604515 | 23 | 1 | 616 | 10 49 830 0 | LANÇA MONOBLOCO 6,70M |
| MANGUEIRA | 5610202 | 15 | 2 | 84 | 10 07 713 5 | INST.HIDR.CARRO INFERIOR |
| MANGUEIRA | 5610426 | 130 | 1 | 305 | 10 35 801 4 | MANGUEIRAS HIDRAULICAS |
| MANGUEIRA | 5611887 | 210 | 1 | 306 | 10 35 801 4 | MANGUEIRAS HIDRAULICAS |
| MANGUEIRA | 5612035 | 65 | 1 | 301 | 10 35 801 5 | PASSAGEM HIDRAULICA |
| MANGUEIRA | 5612128 | 70 | 1 | 304 | 10 35 801 4 | MANGUEIRAS HIDRAULICAS |
| MANGUEIRA | 5615145 | 78 | 1 | 620 | 10 49 830 0 | LANÇA MONOBLOCO 6,70M |
| MANGUEIRA | 5618477 | 40 | 2 | 312 | 10 35 809 3 | INSTALACAO HIDRAULICA |
| MANGUEIRA | 5618975 | 76 | 2 | 620 | 10 49 830 0 | LANÇA MONOBLOCO 6,70M |
| MANGUEIRA | 5619111 | 230 | 1 | 314 | 10 35 801 7 | INSTALACAO HIDRAULICA |
| MANGUEIRA | 5619111 | 240 | 1 | 314 | 10 35 801 7 | INSTALACAO HIDRAULICA |
| MANGUEIRA | 6200461 | 700 | 6 | 421 | 10 48 808 7 | INSTALACAO ELETRICA |
| MANGUEIRA | 7021504 | 180 | 1 | 306 | 10 35 801 4 | MANGUEIRAS HIDRAULICAS |
| MANGUEIRA | 7404503 | 90 | 1 | 304 | 10 35 801 4 | MANGUEIRAS HIDRAULICAS |
| MANGUEIRA | 9368512 | 10 | 2 | 304 | 10 35 801 4 | MANGUEIRAS HIDRAULICAS |
| MANGUEIRA | 9937092 | 93 | 1 | 102 | 99 37 298 | INSTALAÇÃO DO FILTRO DE A |
| MANGUEIRA 10X1450 | 5617317 | 74 | 2 | 620 | 10 49 830 0 | LANÇA MONOBLOCO 6,70M |
| MANGUEIRA 32X1100 | 5610216 | 28 | 1 | 618 | 10 49 830 0 | LANÇA MONOBLOCO 6,70M |
| MANGUEIRA 32X1600 | 10046968 | 30 | 6 | 618 | 10 49 830 0 | LANÇA MONOBLOCO 6,70M |
| MANGUEIRA 32X1600 | 11341036 | 30 | 6 | 637 | 11 45 153 0 | MANGUEIRAS MONOBLOCO |
| MANGUEIRA 32X2200 | 11181957 | 9 | 1 | 628 | 10 49 823 5 | BRACO DA CACAMBA 2,35M |
| MANGUEIRA 32X2200 | 11181958 | 10 | 1 | 628 | 10 49 823 5 | BRACO DA CACAMBA 2,35M |
| MANGUEIRA 32X2580 | 10044999 | 29 | 4 | 618 | 10 49 830 0 | LANÇA MONOBLOCO 6,70M |
| MANGUEIRA 32X2600 | 10291285 | 2 | 2 | 84 | 10 07 713 5 | INST.HIDR.CARRO INFERIOR |
| MANGUEIRA 32X650 | 5614248 | 280 | 2 | 296 | 10 35 801 2 | INSTALACAO HDRAULICA |
| MANGUEIRA 32X780 | 10044073 | 15 | 1 | 304 | 10 35 801 4 | MANGUEIRAS HIDRAULICAS |
| MANGUEIRA 40X2110 | 10100625 | 31 | 1 | 618 | 10 49 830 0 | LANÇA MONOBLOCO 6,70M |
| MANGUEIRA 40X2110 | 11341037 | 31 | 1 | 637 | 11 45 153 0 | MANGUEIRAS MONOBLOCO |
| MANGUEIRA 4X1012 | 10101723 | 7 | 2 | 215 | 10 10 169 3 | BLOCO DE DISTRIBUIÇÃO MX- |
| MANGUEIRA DE AGUA | 10049420 | 30 | 1 | 161 | 10 35 809 2 | ARREFECIMENTO DO MOTOR |
| MANGUEIRA DE AGUA | 10049473 | 50 | 2 | 179 | 10 35 800 9 | MOTOR - PECAS ANEXAS |

| Designação | Artigo | Item | Quanti | Página | Módulo | Designação |
|---|---|---|---|---|---|---|
| MANGUEIRA DE AGUA | 10054703 | 23 | 1 | 161 | 10 35 809 2 | ARREFECIMENTO DO MOTOR |
| MANGUEIRA DE AGUA | 10054704 | 24 | 1 | 161 | 10 35 809 2 | ARREFECIMENTO DO MOTOR |
| MANGUEIRA DE AGUA | 9008530 | 30 | 2 | 280 | 10 40 689 8 | SISTEMA DE AR CONDICION |
| MANGUEIRA DE AGUA | 9363435 | 59 | 1 | 162 | 10 35 809 2 | ARREFECIMENTO DO MOTOR |
| MANGUEIRA DE AGUA | 9380097 | 60 | 1 | 162 | 10 35 809 2 | ARREFECIMENTO DO MOTOR |
| MANGUEIRA DE AGUA | 9384970 | 51 | 1 | 162 | 10 35 809 2 | ARREFECIMENTO DO MOTOR |
| MANGUEIRA DE AGUA | 9467682 | 61 | 1 | 162 | 10 35 809 2 | ARREFECIMENTO DO MOTOR |
| MANGUEIRA DE ALTA PRESSA | 774376108 | 70 | 1 | 217 | 90 64 786 | ELEMENTO DE CONEXÃO |
| MANGUEIRA DE ALTA PRESSA | 774376108 | 70 | 15 | 219 | 10 01 461 1 | CAIXA AUXILIAR |
| MANGUEIRA DE AR | 10005859 | 95 | 2 | 230 | 10 49 880 9 | POSTO DE COMANDO - PEÇA |
| MANGUEIRA DE AR | 10005860 | 90 | 1 | 230 | 10 49 880 9 | POSTO DE COMANDO - PEÇA |
| MANGUEIRA DE AR | 10049520 | 48 | 1 | 102 | 99 37 298 | INSTALAÇÃO DO FILTRO DE A |
| MANGUEIRA DE AR COMPL. | 11066531 | 19 | 1 | 235 | 11 10 016 7 | SUSPENSAO |
| MANGUEIRA DE ASPIRACAO | 10101747 | 85 | 1 | 102 | 99 37 298 | INSTALAÇÃO DO FILTRO DE A |
| MANGUEIRA DE COMANDO | 5608732 | 367 | 3 | 351 | 10 35 802 8 | INSTALAÇÃO BLOCO DE VÁL |
| MANGUEIRA DE COMANDO | 5611206 | 150 | 1 | 314 | 10 35 801 7 | INSTALACAO HIDRAULICA |
| MANGUEIRA DE COMANDO | 5611207 | 100 | 1 | 313 | 10 35 801 7 | INSTALACAO HIDRAULICA |
| MANGUEIRA DE COMANDO | 5611207 | 110 | 1 | 313 | 10 35 801 7 | INSTALACAO HIDRAULICA |
| MANGUEIRA DE COMANDO | 6718632 | 11 | 2 | 84 | 10 07 713 5 | INST.HIDR.CARRO INFERIOR |
| MANGUEIRA DE COMANDO | 7002561 | 385 | 1 | 314 | 10 35 801 7 | INSTALACAO HIDRAULICA |
| MANGUEIRA DE COMANDO | 7002561 | 390 | 1 | 314 | 10 35 801 7 | INSTALACAO HIDRAULICA |
| MANGUEIRA DE COMANDO | 7002561 | 455 | 1 | 314 | 10 35 801 7 | INSTALACAO HIDRAULICA |
| MANGUEIRA DE COMANDO | 7003684 | 425 | 1 | 353 | 10 35 802 8 | INSTALAÇÃO BLOCO DE VÁL |
| MANGUEIRA DE COMANDO | 7005314 | 360 | 3 | 351 | 10 35 802 8 | INSTALAÇÃO BLOCO DE VÁL |
| MANGUEIRA DE COMANDO | 7005314 | 420 | 1 | 353 | 10 35 802 8 | INSTALAÇÃO BLOCO DE VÁL |
| MANGUEIRA DE COMANDO | 7005314 | 585 | 1 | 354 | 10 35 802 8 | INSTALAÇÃO BLOCO DE VÁL |
| MANGUEIRA DE COMANDO | 7005665 | 80 | 4 | 343 | 10 84 584 9 | INSTALACAO BOMBA E EMBR |
| MANGUEIRA DE COMANDO | 7012436 | 395 | 1 | 352 | 10 35 802 8 | INSTALAÇÃO BLOCO DE VÁL |
| MANGUEIRA DE COMANDO | 7016608 | 465 | 1 | 314 | 10 35 801 7 | INSTALACAO HIDRAULICA |
| MANGUEIRA DE COMANDO | 7402273 | 415 | 1 | 353 | 10 35 802 8 | INSTALAÇÃO BLOCO DE VÁL |
| MANGUEIRA DE COMANDO | 7402576 | 200 | 1 | 314 | 10 35 801 7 | INSTALACAO HIDRAULICA |
| MANGUEIRA DE COMANDO | 7402835 | 20 | 7 | 225 | 10 06 014 6 | INSTALACAO HIDRAULICA |
| MANGUEIRA DE COMANDO | 7404256 | 575 | 1 | 354 | 10 35 802 8 | INSTALAÇÃO BLOCO DE VÁL |
| MANGUEIRA DE COMANDO | 7407224 | 400 | 1 | 352 | 10 35 802 8 | INSTALAÇÃO BLOCO DE VÁL |
| MANGUEIRA DE COMANDO 8 | 7009933 | 5 | 4 | 226 | 99 44 515 | INST. HIDR. MANETE ESQUE |
| MANGUEIRA DE COMANDO 8 | 7009933 | 5 | 4 | 227 | 99 44 516 | INST. HIDRAULICA DA MANET |
| MANGUEIRA DE COMANDO 8 | 7009933 | 385 | 1 | 352 | 10 35 802 8 | INSTALAÇÃO BLOCO DE VÁL |
| MANGUEIRA DE COMANDO 8 | 10218975 | 370 | 2 | 351 | 10 35 802 8 | INSTALAÇÃO BLOCO DE VÁL |
| MANGUEIRA DE COMANDO 8 | 7618290 | 372 | 2 | 351 | 10 35 802 8 | INSTALAÇÃO BLOCO DE VÁL |
| MANGUEIRA DE COMANDO 8 | 7618290 | 590 | 1 | 354 | 10 35 802 8 | INSTALAÇÃO BLOCO DE VÁL |
| MANGUEIRA DE COMANDO 8X | 7403175 | 55 | 1 | 297 | 99 37 312 | UNIDADE DE COMANDO DE O |
| MANGUEIRA DE COMANDO 8 | 7006644 | 365 | 2 | 351 | 10 35 802 8 | INSTALAÇÃO BLOCO DE VÁL |
| MANGUEIRA DE COMANDO 8X | 7005047 | 21 | 2 | 84 | 10 07 713 5 | INST.HIDR.CARRO INFERIOR |
| MANGUEIRA DE COMANDO 8X | 7005047 | 30 | 3 | 225 | 10 06 014 6 | INSTALACAO HIDRAULICA |
| MANGUEIRA DE COMANDO 8X | 7005047 | 565 | 1 | 354 | 10 35 802 8 | INSTALAÇÃO BLOCO DE VÁL |
| MANGUEIRA DE COMBUSTIVE | 10333663 | 11 | 1 | 100 | 99 46 045 | INSTALACAO DE COMBUSTIVE |
| MANGUEIRA DE COMBUSTIVE | 10333667 | 10 | 1 | 100 | 99 46 045 | INSTALACAO DE COMBUSTIVE |
| MANGUEIRA DE COMBUSTIVE | 10333670 | 12 | 1 | 100 | 99 46 045 | INSTALACAO DE COMBUSTIVE |
| MANGUEIRA DE PLASTICO | 7363060 | 78 | 2 | 163 | 10 35 809 2 | ARREFECIMENTO DO MOTOR |
| MANGUEIRA DE RETORNO DE | 9332139 | 170 | 1 | 305 | 10 35 801 4 | MANGUEIRAS HIDRAULICAS |
| MANGUEIRA DE SILICONE | 10082117 | 40 | 2 | 162 | 10 35 809 2 | ARREFECIMENTO DO MOTOR |
| MANGUEIRA DO FILTRO DE A | 10080310 | 20 | 1 | 102 | 99 37 298 | INSTALAÇÃO DO FILTRO DE A |
| MANGUEIRA ESCOAMENTO O | 9358137 | 180 | 1 | 459 | 10 84 856 2 | KIT DE FERRAMENTAS |
| MANGUEIRA ESCOAMENTO | 7402658 | 2 | 1 | 460 | 93 58 137 | MANGUEIRA ESCOAMENTO O |
| MANGUEIRA HIDRAULICA 16X | 10167652 | 5 | 1 | 195 | 96 90 213 01 | RESERVATÓRIO DE ÓLEO |
| MANGUEIRA HIDRAULICA 16X | 10167653 | 6 | 1 | 195 | 96 90 213 01 | RESERVATÓRIO DE ÓLEO |
| MANGUEIRA TUBULADURA | 9683060 | 160 | 1 | 305 | 10 35 801 4 | MANGUEIRAS HIDRAULICAS |
| MANGUEIRAS HIDRAULICAS | 10358014 | 7060 | 1 | 294 | 10 35 809 0 | INSTALACAO HIDRAULICA |
| MANGUEIRAS MONOBLOCO | 11451530 | 90 | 1 | 620 | 10 49 830 0 | LANÇA MONOBLOCO 6,70M |
| MANTA DE ISOLAMENTO ACÚ | 10051539 | 3 | 1 | 397 | 10 05 153 7 | TAMPA |

| Designação | Artigo | Item | Quanti | Página | Módulo | Designação |
|---|---|---|---|---|---|---|
| MANTA DE ISOLAMENTO ACÚ | 10056741 | 4 | 1 | 380 | 99 27 477 | ISOLAÇÃO ACÚSTICA |
| MANTA DE ISOLAMENTO ACÚ | 10064359 | 25 | 1 | 403 | 10 05 011 2 | TAMPAS INFERIORES |
| MANTA DE ISOLAMENTO ACÚ | 10073074 | 6 | 1 | 388 | 10 07 307 3 | PORTA LATERAL DIREITA |
| MANTA DE ISOLAMENTO ACÚ | 10073074 | 6 | 1 | 389 | 10 37 283 9 | PORTA LATERAL DIREITA |
| MANTA DE ISOLAMENTO ACÚ | 10400600 | 3 | 1 | 379 | 10 08 167 3 | CAPO DO MOTOR |
| MANTA DE ISOLAMENTO ACÚ | 9927463 | 3 | 6 | 387 | 99 27 471 | DEFLETOR |
| MANTA DE ISOLAMENTO ACÚ | 9927482 | 3 | 1 | 379 | 10 08 167 3 | CAPO DO MOTOR |
| MANTA DE ISOLAMENTO ACÚ | 9927483 | 4 | 1 | 379 | 10 08 167 3 | CAPO DO MOTOR |
| MANTA DE ISOLAMENTO ACÚ | 9927484 | 5 | 1 | 379 | 10 08 167 3 | CAPO DO MOTOR |
| MANTA DE ISOLAMENTO ACÚ | 9927485 | 3 | 1 | 380 | 99 27 477 | ISOLAÇÃO ACÚSTICA |
| MANTA DE ISOLAMENTO ACÚ | 9929193 | 3 | 2 | 382 | 99 29 189 | CAPO DIREITO |
| MANTA DE ISOLAMENTO ACÚ | 9929194 | 6 | 1 | 382 | 99 29 189 | CAPO DIREITO |
| MANTA DE ISOLAMENTO ACÚ | 9929195 | 7 | 1 | 382 | 99 29 189 | CAPO DIREITO |
| MANTA DE ISOLAMENTO ACÚ | 9929357 | 5 | 1 | 384 | 10 35 817 2 | PORTA LATERAL TRASEIRA |
| MANTA DE ISOLAMENTO ACÚ | 9929358 | 6 | 1 | 384 | 10 35 817 2 | PORTA LATERAL TRASEIRA |
| MANTA DE ISOLAMENTO ACÚ | 9929376 | 5 | 1 | 388 | 10 07 307 3 | PORTA LATERAL DIREITA |
| MANTA DE ISOLAMENTO ACÚ | 9929376 | 5 | 1 | 389 | 10 37 283 9 | PORTA LATERAL DIREITA |
| MANTA DE ISOLAMENTO ACÚ | 9929378 | 7 | 1 | 388 | 10 07 307 3 | PORTA LATERAL DIREITA |
| MANTA DE ISOLAMENTO ACÚ | 9929378 | 7 | 1 | 389 | 10 37 283 9 | PORTA LATERAL DIREITA |
| MANTA DE ISOLAMENTO ACÚ | 9945013 | 3 | 9 | 385 | 99 45 269 | DEFLETOR |
| MANTA DE ISOLAMENTO ACÚ | 9945101 | 5 | 1 | 386 | 10 35 792 6 | PORTA LATERAL CENTRAL E |
| MANTA DE ISOLAMENTO ACÚ | 9945102 | 6 | 1 | 386 | 10 35 792 6 | PORTA LATERAL CENTRAL E |
| MANTA DE ISOLAMENTO ACÚ | 9949323 | 3 | 1 | 381 | 99 49 428 | CAPO DO RADIADOR |
| MANTA DE ISOLAMENTO ACÚ | 9949324 | 4 | 1 | 381 | 99 49 428 | CAPO DO RADIADOR |
| MANTA DE ISOLAMENTO ACÚ | 9949325 | 5 | 1 | 381 | 99 49 428 | CAPO DO RADIADOR |
| MANTA DE ISOLAMENTO ACÚ | 9949328 | 6 | 1 | 381 | 99 49 428 | CAPO DO RADIADOR |
| MANTA DE ISOLAMENTO ACÚ | 9949383 | 6 | 1 | 398 | 10 35 853 1 | PORTA LATERAL DIANTEIRA |
| MANTA DE ISOLAMENTO ACÚ | 9949383 | 6 | 1 | 399 | 99 47 961 | PORTA LATERAL DIANTEIRA |
| MANTA DE ISOLAMENTO ACÚ | 9949384 | 3 | 1 | 396 | 99 47 957 | PAREDE DIVISÓRIA |
| MANTA DE ISOLAMENTO ACÚ | 9949411 | 3 | 1 | 383 | 10 08 168 3 | CAPO ESQUERDO |
| MANTA DE ISOLAMENTO ACÚ | 9949413 | 5 | 1 | 383 | 10 08 168 3 | CAPO ESQUERDO |
| MARCO DA PORTA | 7028842 | 110 | 1 | 414 | 70 28 769 | PORTA DA CABINE DO MOTO |
| MARTELO DE PENA 1500 | 11162135 | 130 | 1 | 459 | 10 84 856 2 | KIT DE FERRAMENTAS |
| MASSA | 9080911 | 4 | 1 | 554 | 90 78 314 | FLANGE DE AQUECIMENTO |
| MASSA LUBRIFICANTE STAB | 8655018 | 100 | 1 | 563 | 10 13 281 7 | BOMBA DE ÁGUA PRÉ-MONT |
| MATERIAL DE MANUTENÇÃO | 10359702 | 9999 | 1 | 9 | 10 49 883 6 | MÁQUINA BASE |
| MAÇANETA | 10009025 | 730 | 1 | 429 | 10 29 026 4 | PEÇAS DE MONTAGEM |
| MAÇANETA | 10029676 | 36 | 1 | 233 | 11 10 016 6 | PARTE SUPERIOR DE ASSENT |
| MAÇANETA | 10291064 | 790 | 1 | 430 | 10 29 026 4 | PEÇAS DE MONTAGEM |
| MAÇANETA | 10358526 | 2 | 1 | 461 | 10 35 852 5 | ESPELHO EXTERNO - INSTALA |
| MAÇANETA | 10467429 | 59 | 1 | 234 | 11 10 016 6 | PARTE SUPERIOR DE ASSENT |
| MAÇANETA | 10490894 | 520 | 1 | 429 | 10 29 026 4 | PEÇAS DE MONTAGEM |
| MAÇANETA | 10814718 | 23 | 1 | 235 | 11 10 016 7 | SUSPENSAO |
| MAÇANETA | 7019153 | 260 | 1 | 414 | 70 28 769 | PORTA DA CABINE DO MOTO |
| MAÇANETA | 7029421 | 530 | 2 | 417 | 70 28 831 | VIDRO CORREDICO |
| MAÇANETA | 7370897 | 4 | 1 | 240 | 10 16 576 6 | CONSOLE DE COMANDO |
| MAÇANETA SW9,12,14,17 GE | 10359147 | 200 | 1 | 459 | 10 84 856 2 | KIT DE FERRAMENTAS |
| MECANISMO DE ACIONAMENT | 10220409 | 1 | 1 | 122 | 56 16 530 | BOMBA DE PISTÃO AXIAL |
| MECANISMO DE ACIONAMENT | 10220427 | 1 | 1 | 114 | 10 22 040 9 | MECANISMO DE ACIONAMENT |
| MECANISMO DE ACIONAMENT | 10355725 | 1 | 1 | 139 | 10 35 572 4 | BOMBA HIDRÁULICA |
| MECANISMO DE ACIONAMENT | 10355738 | 1 | 1 | 140 | 10 35 572 5 | MECANISMO DE ACIONAMENT |
| MECANISMO DE ACIONAMENT | 10413014 | 1 | 1 | 121 | 10 41 301 3 | BOMBA HIDRÁULICA |
| MECANISMO DE ACIONAMENT | 10413024 | 1 | 1 | 143 | 10 41 301 4 | MECANISMO DE ACIONAMENT |
| MECANISMO DE ACIONAMENT | 9073354 | 1 | 1 | 73 | 98 89 775 | MOTOR HIDRÁULICO |
| MECANISMO DE ACIONAMEN | 9074061 | 1 | 1 | 188 | 90 72 100 | MOTOR HIDRÁULICO |
| MECANISMO DE TRANSLAÇÃ | 10077137 | 13 | 1 | 49 | 10 49 883 7 | CARRO INFERIOR COMPLETO |
| MECANISMO DE TRANSLAÇÃ | 9443840 | 5 | 2 | 67 | 10 07 713 7 | MECANISMO DE TRANSLAÇÃ |
| MECANISMO GIRATORIO | 9946389 | 11 | 1 | 181 | 90 18 423 | INSTALACAO MECANISMO GI |
| MEIA ABRAÇADEIRA | 10056981 | 50 | 2 | 214 | 10 04 966 3 | LUBRIFICAÇÃO CENTRALIZAD |
| MEIA ABRAÇADEIRA | 10064290 | 2 | 1 | 647 | 10 06 428 8 | BRAÇADEIRA |

| Designação | Artigo | Item | Quanti | Página | Módulo | Designação |
|---|---|---|---|---|---|---|
| MEIA ABRAÇADEIRA | 10064291 | 3 | 1 | 647 | 10 06 428 8 | BRAÇADEIRA |
| MEIA ABRAÇADEIRA | 10064291 | 3 | 1 | 648 | 10 38 549 0 | BRAÇADEIRA |
| MEIA ABRAÇADEIRA | 10385491 | 2 | 1 | 648 | 10 38 549 0 | BRAÇADEIRA |
| MEIA ABRAÇADEIRA | 9492506 | 45 | 2 | 312 | 10 35 809 3 | INSTALACAO HIDRAULICA |
| MEIA ABRAÇADEIRA | 9927398 | 11 | 2 | 616 | 10 49 830 0 | LANÇA MONOBLOCO 6,70M |
| MEIA ABRAÇADEIRA | 9927399 | 12 | 2 | 616 | 10 49 830 0 | LANÇA MONOBLOCO 6,70M |
| MEIA ABRAÇADEIRA | 9927569 | 12 | 2 | 362 | 99 45 116 | BRAÇADEIRA DE TUBO |
| MEIA ABRAÇADEIRA | 9927570 | 11 | 2 | 362 | 99 45 116 | BRAÇADEIRA DE TUBO |
| MEIA ABRAÇADEIRA | 9928147 | 14 | 4 | 616 | 10 49 830 0 | LANÇA MONOBLOCO 6,70M |
| MEIA ABRAÇADEIRA | 9945121 | 3 | 2 | 362 | 99 45 116 | BRAÇADEIRA DE TUBO |
| MEIA ABRAÇADEIRA | 9948780 | 7 | 4 | 616 | 10 49 830 0 | LANÇA MONOBLOCO 6,70M |
| MEIA ABRAÇADEIRA 150 | 9948779 | 6 | 4 | 616 | 10 49 830 0 | LANÇA MONOBLOCO 6,70M |
| MEIA ABRAÇADEIRA AEHNL.DI | 7367236 | 160 | 8 | 295 | 10 35 801 2 | INSTALACAO HDRAULICA |
| MEIA ABRAÇADEIRA AEHNL.DI | 7367236 | 300 | 4 | 296 | 10 35 801 2 | INSTALACAO HDRAULICA |
| MEIA ABRAÇADEIRA AEHNL.DI | 7367236 | 45 | 8 | 301 | 10 35 801 5 | PASSAGEM HIDRAULICA |
| MEIA ABRAÇADEIRA AEHNL.DI | 7365069 | 9 | 2 | 207 | 99 46 408 | TUBO LUBRIFICAÇÃO - INSTA |
| MEIA ABRAÇADEIRA DIA 205,3 | 10086363 | 30 | 2 | 641 | 10 49 881 6 | TRILHO DESLIZANTE |
| MEIA ABRAÇADEIRA DIA 205,3 | 10498814 | 15 | 2 | 641 | 10 49 881 6 | TRILHO DESLIZANTE |
| MEIA ABRAÇADEIRA DIA 230 | 10086364 | 26 | 1 | 641 | 10 49 881 6 | TRILHO DESLIZANTE |
| MEIA ABRAÇADEIRA DIA 230 | 10498815 | 20 | 1 | 641 | 10 49 881 6 | TRILHO DESLIZANTE |
| MEIA ABRAÇADEIRA PP DOW | 10057335 | 53 | 4 | 619 | 10 49 830 0 | LANÇA MONOBLOCO 6,70M |
| MEIO FLANGE COM RELEVO | 11490402 | 57 | 2 | 331 | 10 35 798 3 | TANQUE HIDRAULICO INSTA |
| MEIO FLANGE COM RELEVO | 11647393 | 11 | 2 | 310 | 10 35 809 3 | INSTALACAO HIDRAULICA |
| MEIO FLANGE COM RELEVO | 11485638 | 25 | 2 | 300 | 10 35 801 5 | PASSAGEM HIDRAULICA |
| MEIO FLANGE COM RELEVO | 11485638 | 49 | 8 | 671 | 10 49 815 8 | CILINDRO DE ELEVACAO |
| MEIO FLANGE COM RELEVO S | 11485640 | 67 | 2 | 331 | 10 35 798 3 | TANQUE HIDRAULICO INSTA |
| MEIO FLANGE COM RELEVO S | 11485640 | 34 | 4 | 618 | 10 49 830 0 | LANÇA MONOBLOCO 6,70M |
| MEIO FLANGE COM RELEVO S | 11485640 | 34 | 2 | 637 | 11 45 153 0 | MANGUEIRAS MONOBLOCO |
| MEIO FLANGE COM RELEVO S | 11485639 | 6 | 16 | 84 | 10 07 713 5 | INST.HIDR.CARRO INFERIOR |
| MEIO FLANGE COM RELEVO S | 11485639 | 100 | 12 | 295 | 10 35 801 2 | INSTALACAO HDRAULICA |
| MEIO FLANGE COM RELEVO S | 11485639 | 500 | 4 | 296 | 10 35 801 2 | INSTALACAO HDRAULICA |
| MEIO FLANGE COM RELEVO S | 11485639 | 6 | 16 | 300 | 10 35 801 5 | PASSAGEM HIDRAULICA |
| MEIO FLANGE COM RELEVO S | 11485639 | 22 | 4 | 300 | 10 35 801 5 | PASSAGEM HIDRAULICA |
| MEIO FLANGE COM RELEVO S | 11485639 | 94 | 2 | 347 | 10 35 802 8 | INSTALAÇÃO BLOCO DE VÁL |
| MEIO FLANGE COM RELEVO S | 11485639 | 124 | 2 | 347 | 10 35 802 8 | INSTALAÇÃO BLOCO DE VÁL |
| MEIO FLANGE COM RELEVO S | 11485639 | 216 | 2 | 349 | 10 35 802 8 | INSTALAÇÃO BLOCO DE VÁL |
| MEIO FLANGE COM RELEVO S | 11485639 | 10 | 12 | 359 | 10 49 822 5 | TUBULACOES PRESSAO INS |
| MEIO FLANGE COM RELEVO S | 11485639 | 40 | 12 | 360 | 10 49 822 5 | TUBULACOES PRESSAO INS |
| MEIO FLANGE COM RELEVO S | 11485639 | 61 | 8 | 361 | 10 49 822 5 | TUBULACOES PRESSAO INS |
| MEIO FLANGE COM RELEVO S | 11485639 | 33 | 30 | 618 | 10 49 830 0 | LANÇA MONOBLOCO 6,70M |
| MEIO FLANGE COM RELEVO S | 11485639 | 11 | 4 | 628 | 10 49 823 5 | BRACO DA CACAMBA 2,35M |
| MEIO FLANGE COM RELEVO S | 11485639 | 33 | 12 | 637 | 11 45 153 0 | MANGUEIRAS MONOBLOCO |
| MEIO FLANGE COM RELEVO S | 11485639 | 12 | 1 | 655 | 10 06 203 8 | CILINDRO HIDRAULICO |
| MEIO FLANGE COM RELEVO S | 11485639 | 46 | 8 | 671 | 10 49 815 8 | CILINDRO DE ELEVACAO |
| MEIO FLANGE COM RELEVO | 11485642 | 4 | 4 | 308 | 10 35 801 3 | ARREFECIMENTO DE OLEO |
| MEIO FLANGE COM RELEVO | 11485645 | 37 | 8 | 309 | 10 35 801 3 | ARREFECIMENTO DE OLEO |
| MEIO FLANGE COM RELEVO S | 11485646 | 153 | 2 | 305 | 10 35 801 4 | MANGUEIRAS HIDRAULICAS |
| MEIO FLANGE COM RELEVO S | 11485646 | 78 | 2 | 347 | 10 35 802 8 | INSTALAÇÃO BLOCO DE VÁL |
| MEIO FLANGE COM RELEVO | 11485647 | 43 | 4 | 341 | 10 84 584 9 | INSTALACAO BOMBA E EMBR |
| MEIO FLANGE COM RELEVO | 11485643 | 16 | 2 | 311 | 10 35 809 3 | INSTALACAO HIDRAULICA |
| MEIO FLANGE COM RELEVO | 11485637 | 87 | 4 | 302 | 10 35 801 5 | PASSAGEM HIDRAULICA |
| MEIO FLANGE COM RELEVO | 11485637 | 26 | 8 | 311 | 10 35 809 3 | INSTALACAO HIDRAULICA |
| MODIFICACAO DO CILINDRO | 10498366 | 12 | 1 | 640 | 10 49 817 6 | PROTEÇÃO DA HASTE DO CIL |
| MODULO COMANDO ESCAVA | 10840802 | 85 | 1 | 251 | 10 84 086 6 | APOIO DIREITO PARA BRAÇO |
| MODULO DA CHAVE | 7371141 | 135 | 1 | 253 | 10 84 086 6 | APOIO DIREITO PARA BRAÇO |
| MODULO DE COMANDO VG6- | 10118561 | 50 | 1 | 238 | 10 38 502 4 | APOIO ESQUERDO PARA BR |
| MODULO DE COMANDO VG6- | 10118561 | 50 | 1 | 249 | 10 84 086 6 | APOIO DIREITO PARA BRAÇO |
| MODULO DE COMANDO VG7 | 9079259 | 10 | 1 | 269 | 10 06 017 4 | PEDAL ESQUERDO COMPLET |
| MODULO DE COMANDO VG7 | 9079258 | 10 | 1 | 270 | 10 06 017 5 | PEDAL DIREITO COMPLETO |
| MOLA | 10220706 | 7 | 1 | 135 | 10 22 069 9 | FILTRO |

| Designação | Artigo | Item | Quanti | Página | Módulo | Designação |
|---|---|---|---|---|---|---|
| MOLA | 10355746 | 7 | 1 | 141 | 10 35 573 8 | MECANISMO DE ACIONAMENT |
| MOLA | 7028835 | 390 | 1 | 415 | 70 28 769 | PORTA DA CABINE DO MOTO |
| MOLA | 7028901 | 340 | 1 | 428 | 10 29 026 4 | PEÇAS DE MONTAGEM |
| MOLA | 721005816 | 67 | 2 | 51 | 10 49 883 7 | CARRO INFERIOR COMPLETO |
| MOLA A GÁS | 10037196 | 20 | 1 | 391 | 10 06 692 0 | CAIXA DE FERRAMENTAS |
| MOLA A GÁS | 10037196 | 20 | 1 | 393 | 10 37 938 6 | CAIXA DE FERRAMENTAS |
| MOLA A GÁS | 10037209 | 21 | 1 | 372 | 10 35 800 4 | REVESTIMENTO |
| MOLA A GÁS | 10037209 | 130 | 2 | 376 | 10 35 800 4 | REVESTIMENTO |
| MOLA A GÁS | 7372354 | 17 | 1 | 243 | 73 73 807 | ALAVANCA DE SEGURANCA |
| MOLA DE PRESSÃO | 10008087 | 10 | 1 | 139 | 10 35 572 4 | BOMBA HIDRÁULICA |
| MOLA DE PRESSÃO | 10101457 | 7 | 1 | 144 | 10 41 302 4 | MECANISMO DE ACIONAMENT |
| MOLA DE PRESSÃO | 10216715 | 29 | 1 | 345 | 10 22 042 7 | MECANISMO DE ACIONAMENT |
| MOLA DE PRESSÃO | 10216810 | 5 | 1 | 146 | 57 15 963 | VÁLVULA LIMITADORA DE PR |
| MOLA DE PRESSÃO | 10220547 | 9 | 2 | 131 | 10 22 052 4 | PISTAO ATUADOR |
| MOLA DE PRESSÃO | 10220548 | 10 | 2 | 131 | 10 22 052 4 | PISTAO ATUADOR |
| MOLA DE PRESSÃO | 10220550 | 26 | 2 | 131 | 10 22 052 4 | PISTAO ATUADOR |
| MOLA DE PRESSÃO | 10220663 | 7 | 1 | 132 | 10 22 063 5 | VALVULA INTERRUPTORA |
| MOLA DE PRESSÃO | 10220821 | 5 | 1 | 137 | 10 22 081 6 | VÁLVULA DE PARTIDA FRIA |
| MOLA DE PRESSÃO | 10278643 | 270 | 1 | 653 | 10 00 297 1 | VÁLVULA DE SEGURANÇA RU |
| MOLA DE PRESSÃO | 10278644 | 280 | 1 | 653 | 10 00 297 1 | VÁLVULA DE SEGURANÇA RU |
| MOLA DE PRESSÃO | 5616117 | 220 | 4 | 75 | 56 16 688 | VALVULA FRENAGEM DA TRA |
| MOLA DE PRESSÃO | 7028171 | 5 | 2 | 147 | 70 28 075 | UNIDADE DE CONTROLE |
| MOLA DE PRESSÃO | 7028177 | 11 | 2 | 147 | 70 28 075 | UNIDADE DE CONTROLE |
| MOLA DE PRESSÃO | 7028302 | 40 | 1 | 322 | 70 28 300 | VÁLVULA LIMITADORA DE PR |
| MOLA DE PRESSÃO | 7028814 | 270 | 1 | 412 | 70 28 807 | TRAVA DIREITA |
| MOLA DE PRESSÃO | 7028814 | 270 | 1 | 413 | 70 28 808 | TRAVA ESQUERDA |
| MOLA DE PRESSÃO | 7371358 | 3 | 1 | 369 | 56 10 135 | VALVULA DE ALIMENTACAO |
| MOLA DE PRESSÃO | 7381302 | 10 | 1 | 525 | 90 72 781 | BOMBA DE ÓLEO DE LUBRIFI |
| MOLA DE PRESSÃO | 7381764 | 15 | 1 | 690 | 98 82 766 | DISPOSITIVO DE REGULAGE |
| MOLA DE PRESSÃO | 7381807 | 26 | 2 | 271 | 90 79 258 | MODULO DE COMANDO VG7 |
| MOLA DE PRESSÃO | 7381807 | 26 | 2 | 273 | 90 79 259 | MODULO DE COMANDO VG7 |
| MOLA DE PRESSÃO | 749072914 | 170 | 1 | 75 | 56 16 688 | VALVULA FRENAGEM DA TRA |
| MOLA DE PRESSÃO | 7610107 | 6 | 26 | 191 | 93 33 333 01 | FREIO |
| MOLA DE PRESSÃO | 7610108 | 7 | 26 | 191 | 93 33 333 01 | FREIO |
| MOLA DE PRESSÃO | 9886756 | 21 | 1 | 520 | 10 12 143 8 | RADIADOR DE OLEO PRE-M |
| MOLA DE PRESSÃO 0,70/ 3,3 | 10003855 | 30 | 24 | 79 | 90 73 357 | CONJ REP (ACION.) FMF 140 |
| MOLA DE PRESSÃO 0,70/ 3,3 | 10003855 | 31 | 24 | 199 | 90 74 416 | KIT DE REPARO |
| MOLA DE PRESSÃO 0,80X3,0 | 10011098 | 31 | 26 | 150 | 90 79 294 | KIT DE REPARO |
| MOLA DE PRESSÃO 1,1X6,5X3 | 10355861 | 25 | 4 | 688 | 10 11 856 1 | MODULO DE COMANDO VG6- |
| MOLA DE PRESSÃO 1,25X11,5 | 9265521 | 28 | 4 | 688 | 10 11 856 1 | MODULO DE COMANDO VG6- |
| MOLA DE PRESSÃO 1,25X11,5 | 9265404 | 15 | 1 | 76 | 92 67 037 | VÁLVULA LIMITADORA DE PR |
| MOLA DE PRESSÃO 1,30/ 5,5 | 7382167 | 31 | 24 | 79 | 90 73 357 | CONJ REP (ACION.) FMF 140 |
| MOLA DE PRESSÃO 1,30/ 5,5 | 7382167 | 30 | 24 | 199 | 90 74 416 | KIT DE REPARO |
| MOLA DE PRESSÃO 1,30X6,1 | 9268054 | 25 | 2 | 271 | 90 79 258 | MODULO DE COMANDO VG7 |
| MOLA DE PRESSÃO 1,30X6,1 | 9268054 | 25 | 2 | 273 | 90 79 259 | MODULO DE COMANDO VG7 |
| MOLA DE PRESSÃO 1,6/8,4X2 | 9265659 | 13 | 1 | 72 | 98 82 833 | VÁLVULA DE COMANDO NG 14 |
| MOLA DE PRESSÃO 2,5/16X61 | 10120929 | 12 | 1 | 480 | 10 11 795 1 | VALVULA DE REGULAGEM FI |
| MOLA DE PRESSÃO 4,60X28,4 | 9074481 | 9 | 4 | 504 | 10 14 155 4 | CABEÇOTE PRÉ-MONTADO |
| MOLA DE PRESSÃO 4,60X28,4 | 9074481 | 9 | 4 | 508 | 10 12 036 4 | CABEÇOTE PRÉ-MONTADO |
| MOLA DE PRESSÃO 5,3X51,7 | 7365026 | 3 | 1 | 357 | 93 70 592 | VALVULA DE RETENCAO |
| MOLA DE PRESSÃO 5,6/1,4X19 | 9268776 | 30 | 26 | 150 | 90 79 294 | KIT DE REPARO |
| MOLA ENCAIXE PRÉVIO | 7024629 | 25 | 1 | 321 | 10 28 046 1 | VALVULA MAGNETICA DE RE |
| MOLA PNEUMATICA | 10492981 | 5 | 1 | 235 | 11 10 016 7 | SUSPENSAO |
| MOLDURA | 7028782 | 600 | 1 | 416 | 70 28 842 | MARCO DA PORTA |
| MOLDURA | 7028804 | 310 | 1 | 411 | 70 28 759 | PÁRA-BRISA SUPERIOR |
| MOLDURA | 7029419 | 510 | 1 | 417 | 70 28 831 | VIDRO CORREDICO |
| MONT.ESTRUTURA TRASEIRA | 10072999 | 2 | 1 | 95 | 10 07 366 1 | QUADRO INSTALACAO |
| MONTAGEM DO CABEÇOTE D | 9079850 | 80 | 6 | 470 | 10 11 668 5 | MOTOR DIESEL D936 L A6 240 |
| MOTOR - PECAS ANEXAS | 10358009 | 590 | 1 | 96 | 10 35 808 9 | INSTALAÇÃO DO MOTOR |
| MOTOR DE CORRENTE CONTI | 10014691 | 2 | 1 | 681 | 10 28 689 7 | BOMBA DE LUBRIFICACAO |

| Designação | Artigo | Item | Quanti | Página | Módulo | Designação |
|---|---|---|---|---|---|---|
| MOTOR DE PARTIDA | 10219977 | 1 | 1 | 577 | 10 21 997 8 | MOTOR DE PARTIDA |
| MOTOR DE PARTIDA | 10219978 | 1 | 1 | 575 | 10 11 553 9 | MOTOR DE PARTIDA - MONTA |
| MOTOR DE PARTIDA - MONTA | 10115539 | 450 | 1 | 475 | 10 11 668 5 | MOTOR DIESEL D936 L A6 240 |
| MOTOR DE PISTAO AXIAL | 10332890 | 5 | 2 | 310 | 10 35 809 3 | INSTALACAO HIDRAULICA |
| MOTOR DIESEL D936 L A6 240 | 10116685 | 10 | 1 | 96 | 10 35 808 9 | INSTALAÇÃO DO MOTOR |
| MOTOR DO LIMPADOR | 10290398 | 530 | 1 | 423 | 10 29 036 3 | KIT DO MOTOR DO LIMPADOR |
| MOTOR HIDRÁULICO | 9072100 | 13 | 1 | 183 | 99 46 389 | MECANISMO GIRATORIO |
| MOTOR HIDRÁULICO | 9889775 | 10 | 2 | 67 | 10 07 713 7 | MECANISMO DE TRANSLAÇÃ |
| MÁQUINA BASE | 10498836 | 1 | 1 | 7 | . | |
| MÓDULO | 10287118 | 2 | 1 | 242 | 98 74 988 | PLACAS INSTALACAO A1016 |
| MÓDULO DE CONTROLE DO | 10117900 | 570 | 1 | 475 | 10 11 668 5 | MOTOR DIESEL D936 L A6 240 |
| MÓDULO ELETRÔNICO DE CO | 10684598 | 2 | 1 | 257 | 10 84 080 2 | MODULO COMANDO ESCAVA |
| NIPLE | 4782008 | 92 | 1 | 102 | 99 37 298 | INSTALAÇÃO DO FILTRO DE A |
| NIPLE | 4900169 | 94 | 1 | 102 | 99 37 298 | INSTALAÇÃO DO FILTRO DE A |
| NIPLE DE GRAXA AEHNL.DIN | 10005440 | 12 | 2 | 462 | 10 37 283 6 | TAMPA |
| NIPLE DE GRAXA AEHNL.DIN | 10005440 | 31 | 5 | 632 | 10 38 484 8 | LUBRIFICAÇÃO CENTRALIZAD |
| NIPLE DE GRAXA AEHNL.DIN | 10005440 | 30 | 4 | 636 | 11 10 283 0 | TIRANTE |
| NIPLE DE GRAXA GERADE M1 | 5209372 | 69 | 2 | 51 | 10 49 883 7 | CARRO INFERIOR COMPLETO |
| NIPLE DE MANGUEIRA | 10331639 | 3 | 3 | 164 | 10 45 475 2 | RADIADOR COMBINADO |
| NIPLE DE MANGUEIRA | 10467241 | 4 | 1 | 164 | 10 45 475 2 | RADIADOR COMBINADO |
| NIPLE DE MANGUEIRA | 9140351 | 8 | 1 | 482 | 10 11 916 7 | CARCAÇA MANIVELA PURGAM |
| NIPLE DE MANGUEIRA | 9140351 | 26 | 1 | 573 | 90 80 735 | KIT DO TURBO COMPRESSOR |
| NIPLE DE MANGUEIRA 9SMn | 10115608 | 2 | 1 | 555 | 10 12 421 8 | PURGAMENTO DA ÁGUA REFR |
| NIPLE DE MANGUEIRA DN12 | 10115523 | 1 | 1 | 555 | 10 12 421 8 | PURGAMENTO DA ÁGUA REFR |
| NORMA DE MONTAGEM | 10135322 | 819 | 1 | 690 | 98 82 766 | DISPOSITIVO DE REGULAGE |
| NORMA DE MONTAGEM | 10135322 | 819 | 1 | 699 | 98 82 771 | KIT DE VEDAÇÃO |
| NÃO PODE SER MAIS FORNEC | 9999997 | 1000 | 1 | 35 | 10 35 905 6 | LIQUIDO DE ARREFECIMENT |
| OLEO DE MOTOR LIEBHERR L | 10356797 | 110 | 1 | 13 | 90 70 361 | ÓLEO DE MOTOR |
| OLEO DE MOTOR LIEBHERR L | 10326110 | 1000 | 1 | 22 | 10 35 679 7 | OLEO DE MOTOR LIEBHERR L |
| OLEO DE MOTOR LIEBHERR L | 10326112 | 20 | 1 | 22 | 10 35 679 7 | OLEO DE MOTOR LIEBHERR L |
| OLEO DE MOTOR LIEBHERR | 10326111 | 210 | 1 | 22 | 10 35 679 7 | OLEO DE MOTOR LIEBHERR L |
| OLEO DE MOTOR LIEBHERR | 10326113 | 5 | 1 | 22 | 10 35 679 7 | OLEO DE MOTOR LIEBHERR L |
| OLEO DE MOTOR LIEBHERR | 11081522 | 100 | 1 | 13 | 90 70 361 | ÓLEO DE MOTOR |
| OLEO DE MOTOR LIEBHERR | 11066032 | 1045 | 1 | 37 | 11 08 152 2 | OLEO DE MOTOR LIEBHERR |
| OLEO DE MOTOR LIEBHERR L | 11066031 | 209 | 1 | 37 | 11 08 152 2 | OLEO DE MOTOR LIEBHERR |
| OLEO DE MOTOR LIEBHERR | 11066030 | 20 | 1 | 37 | 11 08 152 2 | OLEO DE MOTOR LIEBHERR |
| OLEO DE MOTOR LIEBHERR L | 11066029 | 5 | 1 | 37 | 11 08 152 2 | OLEO DE MOTOR LIEBHERR |
| OLEO DE MOTOR LIEBHERR/1 | 10356793 | 20 | 1 | 13 | 90 70 361 | ÓLEO DE MOTOR |
| OLEO DE MOTOR LIEBHERR/1 | 10286279 | 1000 | 1 | 21 | 10 35 679 3 | OLEO DE MOTOR LIEBHERR/1 |
| OLEO DE MOTOR LIEBHERR/1 | 10330239 | 20 | 1 | 21 | 10 35 679 3 | OLEO DE MOTOR LIEBHERR/1 |
| OLEO DE MOTOR LIEBHERR/ | 10330246 | 210 | 1 | 21 | 10 35 679 3 | OLEO DE MOTOR LIEBHERR/1 |
| OLEO DE MOTOR LIEBHERR/ | 10290506 | 5 | 1 | 21 | 10 35 679 3 | OLEO DE MOTOR LIEBHERR/1 |
| OLEO DE MOTOR LIEBHERR/ | 10425711 | 10 | 1 | 13 | 90 70 361 | ÓLEO DE MOTOR |
| OLEO DE MOTOR LIEBHERR/ | 10425719 | 1000 | 1 | 36 | 10 42 571 1 | OLEO DE MOTOR LIEBHERR/ |
| OLEO DE MOTOR LIEBHERR/ | 10425713 | 20 | 1 | 36 | 10 42 571 1 | OLEO DE MOTOR LIEBHERR/ |
| OLEO DE MOTOR LIEBHERR/5 | 10425715 | 210 | 1 | 36 | 10 42 571 1 | OLEO DE MOTOR LIEBHERR/ |
| OLEO DE MOTOR LIEBHERR/5 | 10425712 | 5 | 1 | 36 | 10 42 571 1 | OLEO DE MOTOR LIEBHERR/ |
| OLEO PARA CAMBIO E EIXOS | 9070364 | 40 | 1 | 10 | 90 66 460 | |
| OLEO PARA CAMBIO E EIXOS | 10356829 | 10 | 1 | 16 | 90 70 364 | OLEO PARA CAMBIO E EIXOS |
| OLEO PARA CAMBIO E EIXOS | 10286280 | 1000 | 1 | 27 | 10 35 682 9 | OLEO PARA CAMBIO E EIXOS |
| OLEO PARA CAMBIO E EIXOS | 10330296 | 20 | 1 | 27 | 10 35 682 9 | OLEO PARA CAMBIO E EIXOS |
| OLEO PARA CAMBIO E EIXOS | 10285702 | 210 | 1 | 27 | 10 35 682 9 | OLEO PARA CAMBIO E EIXOS |
| OLEO PARA CAMBIO E EIXOS | 10330295 | 5 | 1 | 27 | 10 35 682 9 | OLEO PARA CAMBIO E EIXOS |
| OLHAL | 7028912 | 240 | 4 | 427 | 10 29 026 4 | PEÇAS DE MONTAGEM |
| PAINEL DE OPERAÇÃO | 10493087 | 70 | 1 | 280 | 10 40 689 8 | SISTEMA DE AR CONDICION |
| PAINEL DE OPERAÇÃO | 10493088 | 71 | 1 | 280 | 10 40 689 8 | SISTEMA DE AR CONDICION |
| PALHETA DO LIMPADOR 800 | 7028869 | 600 | 1 | 425 | 10 29 035 7 | LIMPADOR DE PÁRA-BRISA |
| PARAFUSO | 7024447 | 360 | 8 | 433 | 10 48 808 8 | REVESTIMENTO INTERNO |
| PARAFUSO | 7370888 | 9 | 4 | 240 | 10 16 576 6 | CONSOLE DE COMANDO |
| PARAFUSO | 7372158 | 11 | 2 | 255 | 56 18 923 | CONSOLE DE COMANDO DIRE |

| Designação | Artigo | Item | Quanti | Página | Módulo | Designação |
|---|---|---|---|---|---|---|
| PARAFUSO | 9926801 | 82 | 1 | 657 | 94 02 019 4 | CILINDRO HIDRÁULICO |
| PARAFUSO 22X6 | 10017926 | 160 | 2 | 247 | 99 68 625 | ALÇA DE TRANSMISSÃO-LH E |
| PARAFUSO 22X6 | 10017926 | 160 | 2 | 262 | 99 68 611 | MANETE DIREITA |
| PARAFUSO AUTO-ATARRAXA | 4901530 | 6 | 2 | 437 | 99 41 040 | FAROL CPL - INSTALAÇÃO |
| PARAFUSO BORBOLETA | 10331680 | 29 | 2 | 165 | 10 45 475 2 | RADIADOR COMBINADO |
| PARAFUSO BORBOLETA | 7370096 | 42 | 1 | 249 | 10 84 086 6 | APOIO DIREITO PARA BRAÇO |
| PARAFUSO CILÍNDRICO | 10355735 | 27 | 4 | 139 | 10 35 572 4 | BOMBA HIDRÁULICA |
| PARAFUSO COM CABEÇA SAL | 10015712 | 10 | 2 | 245 | 10 46 991 7 | BOTOES DA MANETE ESQUE |
| PARAFUSO COM CABEÇA SAL | 10015712 | 10 | 2 | 260 | 10 46 991 8 | BOTOES MANETE DIREITA |
| PARAFUSO DA BIELA M14X1,5 | 9174981 | 1 | 2 | 500 | 90 76 459 | BIELA |
| PARAFUSO DE AJUSTE | 10220647 | 2 | 1 | 146 | 57 15 963 | VÁLVULA LIMITADORA DE PR |
| PARAFUSO DE AJUSTE | 10220665 | 9 | 1 | 132 | 10 22 063 5 | VALVULA INTERRUPTORA |
| PARAFUSO DE AJUSTE M12X | 5609333 | 131 | 1 | 366 | 10 03 245 2 | BLOCO DE COMANDO |
| PARAFUSO DE AJUSTE M12X1 | 10278641 | 132 | 1 | 653 | 10 00 297 1 | VÁLVULA DE SEGURANÇA RU |
| PARAFUSO DE AJUSTE M12X | 10117949 | 5 | 1 | 480 | 10 11 795 1 | VALVULA DE REGULAGEM FI |
| PARAFUSO DE AJUSTE PRÉ- | 10004419 | 4 | 1 | 512 | 90 74 507 | BALANCIM PRE-MONTAGEM |
| PARAFUSO DE FECHAMENTO | 10008093 | 30 | 2 | 139 | 10 35 572 4 | BOMBA HIDRÁULICA |
| PARAFUSO DE FECHAMENTO | 10008415 | 55 | 1 | 121 | 10 41 301 3 | BOMBA HIDRÁULICA |
| PARAFUSO DE FECHAMENTO | 10024583 | 61 | 2 | 366 | 10 03 245 2 | BLOCO DE COMANDO |
| PARAFUSO DE FECHAMENTO | 10097983 | 9 | 1 | 58 | 10 65 168 0 | ROLETE INFERIOR D7 |
| PARAFUSO DE FECHAMENTO | 10097983 | 9 | 1 | 59 | 11 60 010 7 | ROLETE INFERIOR D7 |
| PARAFUSO DE FECHAMENTO | 10220646 | 1 | 1 | 146 | 57 15 963 | VÁLVULA LIMITADORA DE PR |
| PARAFUSO DE FECHAMENTO | 10220659 | 1 | 1 | 132 | 10 22 063 5 | VALVULA INTERRUPTORA |
| PARAFUSO DE FECHAMENTO | 10220700 | 5 | 1 | 134 | 10 22 069 7 | FILTRO |
| PARAFUSO DE FECHAMENTO | 10355729 | 9 | 1 | 139 | 10 35 572 4 | BOMBA HIDRÁULICA |
| PARAFUSO DE FECHAMENTO | 7001454 | 8 | 1 | 60 | 10 00 966 2 | RODA GUIA D7G/B7B |
| PARAFUSO DE FECHAMENTO | 7002760 | 133 | 1 | 318 | 56 02 487 | VÁLVULA LIMITADORA DE PR |
| PARAFUSO DE FECHAMENTO | 7020568 | 30 | 1 | 367 | 10 28 962 9 | VÁLVULA |
| PARAFUSO DE FECHAMENTO | 7022278 | 30 | 1 | 121 | 10 41 301 3 | BOMBA HIDRÁULICA |
| PARAFUSO DE FECHAMENTO | 7028172 | 6 | 2 | 147 | 70 28 075 | UNIDADE DE CONTROLE |
| PARAFUSO DE FECHAMENTO | 7363178 | 27 | 1 | 148 | 70 28 075 | UNIDADE DE CONTROLE |
| PARAFUSO DE FECHAMENTO | 7363717 | 55 | 1 | 452 | 90 18 419 | TANQUE COMBUSTIVEL INSTA |
| PARAFUSO DE FECHAMENTO | 7371142 | 138 | 3 | 253 | 10 84 086 6 | APOIO DIREITO PARA BRAÇO |
| PARAFUSO DE FECHAMENTO | 7371360 | 1 | 1 | 369 | 56 10 135 | VALVULA DE ALIMENTACAO |
| PARAFUSO DE FECHAMENTO | 774378208 | 31 | 4 | 213 | 10 48 841 6 | BLOCO DE DISTRIBUIÇÃO MX- |
| PARAFUSO DE FECHAMENTO | 774378208 | 31 | 3 | 216 | 10 10 171 1 | BLOCO DE DISTRIBUIÇÃO MX- |
| PARAFUSO DE FECHAMENTO | 774378208 | 31 | 3 | 623 | 10 10 171 2 | BLOCO DE DISTRIBUIÇÃO MX- |
| PARAFUSO DE FECHAMENTO | 7013032 | 40 | 1 | 653 | 10 00 297 1 | VÁLVULA DE SEGURANÇA RU |
| PARAFUSO DE FECHAMENTO | 7024958 | 49 | 1 | 367 | 10 28 962 9 | VÁLVULA |
| PARAFUSO DE FECHAMENTO | 7372626 | 12 | 1 | 116 | 10 22 041 1 | PLACA DE CONEXAO |
| PARAFUSO DE FECHAMENTO | 7372626 | 32 | 2 | 122 | 56 16 530 | BOMBA DE PISTÃO AXIAL |
| PARAFUSO DE FECHAMENTO | 9883172 | 2 | 1 | 80 | 98 83 173 | KIT DE REPARO |
| PARAFUSO DE FECHAMENTO | 7370432 | 310 | 1 | 75 | 56 16 688 | VALVULA FRENAGEM DA TRA |
| PARAFUSO DE FECHAMENTO | 10100680 | 35 | 2 | 116 | 10 22 041 1 | PLACA DE CONEXAO |
| PARAFUSO DE FECHAMENTO | 10100680 | 27 | 1 | 148 | 70 28 075 | UNIDADE DE CONTROLE |
| PARAFUSO DE FECHAMENTO | 7372624 | 22 | 4 | 122 | 56 16 530 | BOMBA DE PISTÃO AXIAL |
| PARAFUSO DE FECHAMENTO | 10220419 | 48 | 1 | 123 | 56 16 530 | BOMBA DE PISTÃO AXIAL |
| PARAFUSO DE FECHAMENTO | 9266233 | 12 | 1 | 76 | 92 67 037 | VÁLVULA LIMITADORA DE PR |
| PARAFUSO DE FECHAMENTO | 602514201 | 50 | 4 | 443 | 99 47 695 | INSTALAÇÃO ELÉTRICA E50 |
| PARAFUSO DE FECHAMENTO | 10296854 | 13 | 1 | 363 | 10 21 821 5 | VALVULA DE RETENCAO |
| PARAFUSO DE FECHAMENTO | 10296854 | 13 | 1 | 364 | 10 21 986 3 | VALVULA DE RETENCAO |
| PARAFUSO DE FECHAMENTO | 7368507 | 420 | 1 | 75 | 56 16 688 | VALVULA FRENAGEM DA TRA |
| PARAFUSO DE FECHAMENTO | 9077172 | 3 | 1 | 480 | 10 11 795 1 | VALVULA DE REGULAGEM FI |
| PARAFUSO DE FECHAMENTO | 9275590 | 11 | 1 | 525 | 90 72 781 | BOMBA DE ÓLEO DE LUBRIFI |
| PARAFUSO DE FECHAMENTO | 10015471 | 250 | 2 | 75 | 56 16 688 | VALVULA FRENAGEM DA TRA |
| PARAFUSO DE FECHAMENTO | 9265783 | 1 | 2 | 126 | 92 71 653 | KIT DE CEDACAO DA REGULA |
| PARAFUSO DE FECHAMENTO | 9268441 | 7 | 4 | 73 | 98 89 775 | MOTOR HIDRÁULICO |
| PARAFUSO DE FECHAMENTO | 9268441 | 5 | 4 | 154 | 98 82 875 | KIT VEDACAO VALULA REGUL |
| PARAFUSO DE FECHAMENTO | 9268441 | 7 | 2 | 689 | 90 73 355 | PLACA DE CONEXAO FMV 140 |
| PARAFUSO DE FECHAMENTO | 9268441 | 1 | 1 | 692 | 98 88 308 | PLACA DE CONEXAO |

| Designação | Artigo | Item | Quanti | Página | Módulo | Designação |
|---|---|---|---|---|---|---|
| PARAFUSO DE FECHAMENTO | 9268441 | 7 | 4 | 699 | 98 82 771 | KIT DE VEDAÇÃO |
| PARAFUSO DE FECHAMENTO | 9268441 | 2 | 5 | 700 | 92 71 657 | KIT DE VEDAÇÃO |
| PARAFUSO DE FECHAMENTO | 7027497 | 13 | 3 | 116 | 10 22 041 1 | PLACA DE CONEXAO |
| PARAFUSO DE FECHAMENTO | 9881609 | 8 | 1 | 154 | 98 82 875 | KIT VEDACAO VALULA REGUL |
| PARAFUSO DE FECHAMENTO | 10122499 | 20 | 4 | 688 | 10 11 856 1 | MODULO DE COMANDO VG6- |
| PARAFUSO DE FECHAMENTO | 7004296 | 80 | 8 | 64 | 91 41 597 | COLETOR GIRATÓRIO |
| PARAFUSO DE FECHAMENTO | 7361553 | 38 | 4 | 297 | 99 37 312 | UNIDADE DE COMANDO DE O |
| PARAFUSO DE FECHAMENTO | 7361553 | 33 | 1 | 309 | 10 35 801 3 | ARREFECIMENTO DE OLEO |
| PARAFUSO DE FECHAMENTO | 7361553 | 488 | 1 | 353 | 10 35 802 8 | INSTALAÇÃO BLOCO DE VÁL |
| PARAFUSO DE FECHAMENTO | 7363177 | 53 | 1 | 452 | 90 18 419 | TANQUE COMBUSTIVEL INSTA |
| PARAFUSO DE FECHAMENTO | 7380145 | 33 | 1 | 271 | 90 79 258 | MODULO DE COMANDO VG7 |
| PARAFUSO DE FECHAMENTO | 7380145 | 33 | 1 | 273 | 90 79 259 | MODULO DE COMANDO VG7 |
| PARAFUSO DE FECHAMENTO | 7001338 | 15 | 5 | 212 | 10 48 840 4 | BLOCO DE DISTRIBUIÇÃO SX |
| PARAFUSO DE FECHAMENTO | 7002771 | 17 | 1 | 73 | 98 89 775 | MOTOR HIDRÁULICO |
| PARAFUSO DE FECHAMENTO | 7002771 | 17 | 1 | 188 | 90 72 100 | MOTOR HIDRÁULICO |
| PARAFUSO DE FECHAMENTO | 4900609 | 17 | 1 | 359 | 10 49 822 5 | TUBULACOES PRESSAO INS |
| PARAFUSO DE FECHAMENTO | 4900609 | 25 | 4 | 671 | 10 49 815 8 | CILINDRO DE ELEVACAO |
| PARAFUSO DE FECHAMENTO | 7362674 | 28 | 2 | 148 | 70 28 075 | UNIDADE DE CONTROLE |
| PARAFUSO DE FECHAMENTO | 7362674 | 24 | 1 | 657 | 94 02 019 4 | CILINDRO HIDRÁULICO |
| PARAFUSO DE FECHAMENTO | 7362674 | 24 | 2 | 658 | 95 87 580 | CILINDRO HIDRÁULICO |
| PARAFUSO DE FECHAMENTO | 7381638 | 1 | 1 | 80 | 98 83 173 | KIT DE REPARO |
| PARAFUSO DE FECHAMENTO | 7381638 | 10 | 2 | 581 | 10 11 557 7 | CÁRTER VOLANTE MONT. EXT |
| PARAFUSO DE FECHAMENTO | 7381638 | 8 | 1 | 604 | 90 80 504 | PECAS DE FECHAMENTO |
| PARAFUSO DE FECHAMENTO | 10137113 | 14 | 1 | 686 | 10 13 268 6 | BOMBA DE REGULAGEM HID |
| PARAFUSO DE FECHAMENTO | 7380566 | 6 | 3 | 477 | 10 11 577 9 | BLOCO DO MOTOR COMPLET |
| PARAFUSO DE FECHAMENTO | 7380566 | 4 | 1 | 493 | 90 79 492 | PLACA |
| PARAFUSO DE FECHAMENTO | 7380566 | 4 | 1 | 494 | 90 79 958 | PLACA |
| PARAFUSO DE FECHAMENTO | 7380566 | 11 | 1 | 550 | 10 11 707 3 | TUBO DE ADMISSÃO DE AR |
| PARAFUSO DE FECHAMENTO | 7380566 | 6 | 1 | 551 | 90 77 279 | LUVA DE CONEXÃO MONTAGE |
| PARAFUSO DE FECHAMENTO | 7380566 | 5 | 1 | 555 | 10 12 421 8 | PURGAMENTO DA ÁGUA REFR |
| PARAFUSO DE FECHAMENTO | 10116078 | 8 | 1 | 536 | 10 11 551 3 | FILTRO FINO DE COMBUSTÍVE |
| PARAFUSO DE FECHAMENTO | 10116078 | 8 | 1 | 538 | 10 12 580 1 | FILTRO DE COMBUSTÍVEL |
| PARAFUSO DE FECHAMENTO | 10137312 | 14 | 1 | 700 | 92 71 657 | KIT DE VEDAÇÃO |
| PARAFUSO DE FECHAMENTO | 7382203 | 5 | 2 | 477 | 10 11 577 9 | BLOCO DO MOTOR COMPLET |
| PARAFUSO DE FECHAMENTO | 7382203 | 6 | 3 | 536 | 10 11 551 3 | FILTRO FINO DE COMBUSTÍVE |
| PARAFUSO DE FECHAMENTO | 7382203 | 47 | 2 | 542 | 10 11 628 5 | TUBULACAO DE COMBUSTIVE |
| PARAFUSO DE FECHAMENTO | 7382203 | 1 | 2 | 558 | 10 11 858 9 | PECAS DE FECHAMENTO |
| PARAFUSO DE FECHAMENTO | 7382203 | 4 | 2 | 604 | 90 80 504 | PECAS DE FECHAMENTO |
| PARAFUSO DE FECHAMENTO | 7361960 | 50 | 4 | 331 | 10 35 798 3 | TANQUE HIDRAULICO INSTA |
| PARAFUSO DE FECHAMENTO | 7363237 | 86 | 1 | 337 | 10 35 819 3 | TANQUE HIDRÁULICO |
| PARAFUSO DE FECHAMENTO | 7361961 | 90 | 1 | 64 | 91 41 597 | COLETOR GIRATÓRIO |
| PARAFUSO DE FECHAMENTO | 7361961 | 48 | 1 | 452 | 90 18 419 | TANQUE COMBUSTIVEL INSTA |
| PARAFUSO DE FECHAMENTO | 7380177 | 4 | 2 | 477 | 10 11 577 9 | BLOCO DO MOTOR COMPLET |
| PARAFUSO DE FECHAMENTO | 7380177 | 14 | 2 | 520 | 10 12 143 8 | RADIADOR DE OLEO PRE-M |
| PARAFUSO DE FECHAMENTO | 7380177 | 14 | 1 | 590 | 90 80 653 | PECAS DE FECHAMENTO |
| PARAFUSO DE FECHAMENTO | 7362698 | 20 | 2 | 122 | 56 16 530 | BOMBA DE PISTÃO AXIAL |
| PARAFUSO DE FECHAMENTO | 7362698 | 52 | 1 | 331 | 10 35 798 3 | TANQUE HIDRAULICO INSTA |
| PARAFUSO DE FECHAMENTO | 7381457 | 7 | 2 | 477 | 10 11 577 9 | BLOCO DO MOTOR COMPLET |
| PARAFUSO DE FECHAMENTO | 7381457 | 10 | 1 | 569 | 90 79 889 | CONEXÃO DE AQUECIMENTO |
| PARAFUSO DE FECHAMENTO | 7381457 | 3 | 1 | 604 | 90 80 504 | PECAS DE FECHAMENTO |
| PARAFUSO DE FECHAMENTO | 7360563 | 14 | 1 | 363 | 10 21 821 5 | VALVULA DE RETENCAO |
| PARAFUSO DE FECHAMENTO | 7360563 | 14 | 1 | 364 | 10 21 986 3 | VALVULA DE RETENCAO |
| PARAFUSO DE FECHAMENTO | 10137120 | 14 | 2 | 690 | 98 82 766 | DISPOSITIVO DE REGULAGE |
| PARAFUSO DE FECHAMENTO | 10137120 | 14 | 2 | 699 | 98 82 771 | KIT DE VEDAÇÃO |
| PARAFUSO DE FECHAMENTO | 7382204 | 14 | 3 | 484 | 90 79 480 | SUPORTE DOS AGREGADOS |
| PARAFUSO DE FECHAMENTO | 7382204 | 8 | 7 | 486 | 90 79 483 | CARTER |
| PARAFUSO DE FECHAMENTO | 7382204 | 23 | 2 | 520 | 10 12 143 8 | RADIADOR DE OLEO PRE-M |
| PARAFUSO DE FECHAMENTO | 7382204 | 22 | 2 | 607 | 10 11 801 4 | KIT DE VEDACAO |
| PARAFUSO DE FECHAMENTO | 10043136 | 15 | 1 | 484 | 90 79 480 | SUPORTE DOS AGREGADOS |
| PARAFUSO DE FECHAMENTO | 10137121 | 16 | 3 | 686 | 10 13 268 6 | BOMBA DE REGULAGEM HID |

| Designação | Artigo | Item | Quanti | Página | Módulo | Designação |
|---|---|---|---|---|---|---|
| PARAFUSO DE FECHAMENTO | 10137121 | 16 | 3 | 700 | 92 71 657 | KIT DE VEDAÇÃO |
| PARAFUSO DE FECHAMENTO | 7361329 | 24 | 1 | 122 | 56 16 530 | BOMBA DE PISTÃO AXIAL |
| PARAFUSO DE FECHAMENTO | 7361329 | 26 | 6 | 671 | 10 49 815 8 | CILINDRO DE ELEVACAO |
| PARAFUSO DE FECHAMENTO | 7382202 | 5 | 2 | 596 | 90 79 893 | PECAS DE FECHAMENTO |
| PARAFUSO DE FECHAMENTO | 7382202 | 23 | 2 | 607 | 10 11 801 4 | KIT DE VEDACAO |
| PARAFUSO DE FECHAMENTO | 7363073 | 34 | 1 | 309 | 10 35 801 3 | ARREFECIMENTO DE OLEO |
| PARAFUSO DE FECHAMENTO | 7363073 | 53 | 2 | 331 | 10 35 798 3 | TANQUE HIDRAULICO INSTA |
| PARAFUSO DE FECHAMENTO | 7362689 | 26 | 1 | 122 | 56 16 530 | BOMBA DE PISTÃO AXIAL |
| PARAFUSO DE FIXACAO | 10215970 | 286 | 4 | 432 | 10 48 808 8 | REVESTIMENTO INTERNO |
| PARAFUSO DE PERCUSSÃO | 9103255 | 170 | 1 | 459 | 10 84 856 2 | KIT DE FERRAMENTAS |
| PARAFUSO DE RESPIRO | 10101997 | 3 | 1 | 539 | 10 22 281 9 | PRÉ-FILTRO COMBUST.COM |
| PARAFUSO DE RESPIRO | 7009590 | 17 | 1 | 545 | 10 11 559 5 | RETORNO DE OLEO VAZADO |
| PARAFUSO DE RESPIRO M6X | 7361391 | 33 | 7 | 365 | 10 03 245 2 | BLOCO DE COMANDO |
| PARAFUSO DE RESPIRO M6X | 7361391 | 360 | 1 | 653 | 10 00 297 1 | VÁLVULA DE SEGURANÇA RU |
| PARAFUSO DO EXCENTRICO | 10220418 | 46 | 1 | 122 | 56 16 530 | BOMBA DE PISTÃO AXIAL |
| PARAFUSO DODECAGONAL | 9076639 | 4 | 3 | 573 | 90 80 735 | KIT DO TURBO COMPRESSOR |
| PARAFUSO ESCAREADO | 10355737 | 40 | 2 | 139 | 10 35 572 4 | BOMBA HIDRÁULICA |
| PARAFUSO ESCAREADO BN 4 | 10342191 | 4 | 3 | 498 | 10 12 134 5 | KIT DE REPARO RETENTOR D |
| PARAFUSO ESCAREADO M5X2 | 11067312 | 2 | 14 | 593 | 10 11 790 0 | MÓDULO DE CONTROLE DO |
| PARAFUSO ESTRANGULADO | 7615603 | 14 | 2 | 147 | 70 28 075 | UNIDADE DE CONTROLE |
| PARAFUSO ESTRANGULADO | 7615604 | 16 | 2 | 147 | 70 28 075 | UNIDADE DE CONTROLE |
| PARAFUSO HEXAGONAL RE | 10118912 | 4 | 10 | 683 | 90 80 918 | VOLANTE MONTAGEM EXTER |
| PARAFUSO HEXAGONAL RE | 10118786 | 10 | 6 | 499 | 10 11 617 5 | VIRABREQUIM PEÇAS DE AC |
| PARAFUSO HEXAGONAL RED | 10131573 | 3 | 6 | 503 | 90 79 850 | MONTAGEM DO CABEÇOTE D |
| PARAFUSO HEXAGONAL RE | 10131581 | 5 | 14 | 478 | 10 11 577 8 | BLOCO DO MOTOR |
| PARAFUSO LIMITADOR M12X | 9883345 | 16 | 1 | 690 | 98 82 766 | DISPOSITIVO DE REGULAGE |
| PARAFUSO M10X20 DAC | 7366851 | 13 | 29 | 403 | 10 05 011 2 | TAMPAS INFERIORES |
| PARAFUSO M12X20 DAC | 7365430 | 27 | 28 | 49 | 10 49 883 7 | CARRO INFERIOR COMPLETO |
| PARAFUSO M12X20 DAC | 7365430 | 30 | 4 | 49 | 10 49 883 7 | CARRO INFERIOR COMPLETO |
| PARAFUSO M12X20 DAC | 7365430 | 33 | 8 | 49 | 10 49 883 7 | CARRO INFERIOR COMPLETO |
| PARAFUSO M12X20 DAC | 7365430 | 31 | 4 | 371 | 10 07 369 5 | REVESTIMENTO DA PLAT.GI |
| PARAFUSO M12X20 DAC | 7365430 | 14 | 6 | 403 | 10 05 011 2 | TAMPAS INFERIORES |
| PARAFUSO M16X35 DAC | 7364949 | 12 | 18 | 403 | 10 05 011 2 | TAMPAS INFERIORES |
| PARAFUSO M8X20 A2E | 7366804 | 3 | 5 | 166 | 99 37 297 | VEDACAO DO RADIADOR |
| PARAFUSO M8X20 A2E | 7366804 | 36 | 1 | 229 | 10 49 880 9 | POSTO DE COMANDO - PEÇA |
| PARAFUSO M8X40 12.9 | 7368996 | 25 | 12 | 329 | 10 35 798 3 | TANQUE HIDRAULICO INSTA |
| PARAFUSO M8X40 12.9 | 7368996 | 3 | 6 | 336 | 73 69 257 | FILTRO DE FLUXO DE RETO |
| PARAFUSO OCO 10X1 | 9080466 | 3 | 5 | 547 | 90 79 083 | TUBULACAO ANEXO |
| PARAFUSO OCO 10X3 | 9078685 | 92 | 1 | 543 | 10 11 628 5 | TUBULACAO DE COMBUSTIVE |
| PARAFUSO OCO 10X3 DIN 764 | 4001439 | 10 | 1 | 545 | 10 11 559 5 | RETORNO DE OLEO VAZADO |
| PARAFUSO OCO 10X3 DIN 764 | 4079240 | 24 | 3 | 542 | 10 11 628 5 | TUBULACAO DE COMBUSTIVE |
| PARAFUSO OCO 10X3 DIN 764 | 4079240 | 74 | 1 | 543 | 10 11 628 5 | TUBULACAO DE COMBUSTIVE |
| PARAFUSO OCO 12X3 DIN 764 | 4980741 | 26 | 4 | 542 | 10 11 628 5 | TUBULACAO DE COMBUSTIVE |
| PARAFUSO OCO 12X3 DIN 764 | 4980741 | 76 | 1 | 543 | 10 11 628 5 | TUBULACAO DE COMBUSTIVE |
| PARAFUSO OCO 6X3 DIN 7643 | 4079160 | 8 | 6 | 545 | 10 11 559 5 | RETORNO DE OLEO VAZADO |
| PARAFUSO OCO 6X3 DIN 7643 | 4079160 | 14 | 2 | 599 | 90 80 006 | SAIDA AUXILIAR ANEXA |
| PARAFUSO OCO COM ESTR | 7381925 | 28 | 1 | 542 | 10 11 628 5 | TUBULACAO DE COMBUSTIVE |
| PARAFUSO OCO COM ESTR | 7381925 | 78 | 1 | 543 | 10 11 628 5 | TUBULACAO DE COMBUSTIVE |
| PARAFUSO OCO DUPLO 10X1 | 10115499 | 18 | 1 | 542 | 10 11 628 5 | TUBULACAO DE COMBUSTIVE |
| PARAFUSO OCO DUPLO 6X6 | 10014864 | 9 | 1 | 545 | 10 11 559 5 | RETORNO DE OLEO VAZADO |
| PARAFUSO OCO X2 | 9073678 | 5 | 1 | 479 | 90 73 795 | ARREFECIMENTO DO PISTAO |
| PARAFUSO PARA SAPATA M22 | 11214366 | 3 | 208 | 52 | 10 47 009 2 | ESTEIRA 500mm |
| PARAFUSO SEXTAVADO | 10001473 | 21 | 3 | 49 | 10 49 883 7 | CARRO INFERIOR COMPLETO |
| PARAFUSO SEXTAVADO | 10001473 | 25 | 2 | 57 | 10 05 149 1 | TAMPA |
| PARAFUSO SEXTAVADO COM | 10005462 | 3 | 6 | 550 | 10 11 707 3 | TUBO DE ADMISSÃO DE AR |
| PARAFUSO SEXTAVADO COM | 10005462 | 15 | 1 | 559 | 10 11 646 4 | COMPRESSOR DO AR-CONDI |
| PARAFUSO SEXTAVADO COM | 10101657 | 14 | 1 | 559 | 10 11 646 4 | COMPRESSOR DO AR-CONDI |
| PARAFUSO SEXTAVADO COM | 10009007 | 10 | 13 | 485 | 90 79 487 | CARTER |
| PARAFUSO SEXTAVADO COM | 10009007 | 3 | 2 | 495 | 91 47 512 | PECAS DE FECHAMENTO |
| PARAFUSO SEXTAVADO EN 1 | 10023049 | 12 | 2 | 559 | 10 11 646 4 | COMPRESSOR DO AR-CONDI |

| Designação | Artigo | Item | Quanti | Página | Módulo | Designação |
|---|---|---|---|---|---|---|
| PARAFUSO SEXTAVADO EN 1 | 10032039 | 4 | 1 | 557 | 90 78 356 | PECAS DE FECHAMENTO |
| PARAFUSO SEXTAVADO EN 1 | 4601426 | 6 | 1 | 559 | 10 11 646 4 | COMPRESSOR DO AR-CONDI |
| PARAFUSO SEXTAVADO EN 16 | 10290538 | 11 | 1 | 549 | 10 11 657 6 | PEÇA DE CONEXÃO |
| PARAFUSO SEXTAVADO EN 16 | 10005511 | 4 | 12 | 486 | 90 79 483 | CARTER |
| PARAFUSO SEXTAVADO EN 16 | 10005073 | 4 | 6 | 519 | 10 12 143 9 | RADIADOR DE ÓLEO - ACES |
| PARAFUSO SEXTAVADO EN 16 | 10005073 | 5 | 4 | 520 | 10 12 143 8 | RADIADOR DE OLEO PRE-M |
| PARAFUSO SEXTAVADO EN 16 | 10100304 | 7 | 16 | 486 | 90 79 483 | CARTER |
| PARAFUSO SEXTAVADO EN 16 | 10030518 | 8 | 2 | 598 | 90 78 961 | SAIDA AUXILIAR ANEXA |
| PARAFUSO SEXTAVADO EN 16 | 10336008 | 5 | 3 | 604 | 90 80 504 | PECAS DE FECHAMENTO |
| PARAFUSO SEXTAVADO EN 16 | 10005461 | 2 | 6 | 550 | 10 11 707 3 | TUBO DE ADMISSÃO DE AR |
| PARAFUSO SEXTAVADO EN 16 | 10014042 | 5 | 4 | 559 | 10 11 646 4 | COMPRESSOR DO AR-CONDI |
| PARAFUSO SEXTAVADO EN 1 | 10113711 | 4 | 5 | 562 | 90 80 301 | KIT MONTAGEM DA BOMBA A |
| PARAFUSO SEXTAVADO EN 1 | 10333554 | 4 | 34 | 490 | 10 11 870 2 | SUPORTE TIPO ESCADA |
| PARAFUSO SEXTAVADO EN 16 | 10112929 | 5 | 2 | 564 | 10 11 983 0 | INVÓLUCRO TERMOSTATO |
| PARAFUSO SEXTAVADO EN 16 | 10112929 | 5 | 6 | 565 | 90 75 678 | INVÓLUCRO TERMOSTATO |
| PARAFUSO SEXTAVADO EN 1 | 10007782 | 22 | 2 | 482 | 10 11 916 7 | CARCAÇA MANIVELA PURGAM |
| PARAFUSO SEXTAVADO EN 1 | 10007782 | 3 | 4 | 566 | 90 79 472 | TUBO CURV.PROD.REFRIGER |
| PARAFUSO SEXTAVADO EN 1 | 10007782 | 3 | 4 | 567 | 90 79 474 | TUBO CURV.PROD.REFRIGER |
| PARAFUSO SEXTAVADO EN 1 | 10007782 | 3 | 4 | 568 | 90 80 280 | PECAS DE FECHAMENTO |
| PARAFUSO TRAVA M10X20 | 10335969 | 11 | 16 | 164 | 10 45 475 2 | RADIADOR COMBINADO |
| PARAFUSO TRAVA M10X20 | 10335969 | 8 | 16 | 167 | 10 35 508 4 | RADIADOR DE ÓLEO |
| PARAFUSO TRAVA M10X20X1 | 9074456 | 2 | 2 | 518 | 90 79 870 | PEÇAS DO COMANDO |
| PARAFUSO TRAVA M10X20X1 | 9074456 | 4 | 1 | 528 | 10 11 683 9 | BOMBA DE INJECAO - ACESS |
| PARAFUSO TRAVA M10X25 | 10327106 | 15 | 4 | 167 | 10 35 508 4 | RADIADOR DE ÓLEO |
| PARAFUSO TRAVA M10X30 | 10327110 | 12 | 4 | 164 | 10 45 475 2 | RADIADOR COMBINADO |
| PARAFUSO TRAVA M5X6X4,2 | 9880132 | 26 | 1 | 690 | 98 82 766 | DISPOSITIVO DE REGULAGE |
| PARAFUSO TRAVA M6X20 | 10331667 | 8 | 2 | 164 | 10 45 475 2 | RADIADOR COMBINADO |
| PARAFUSO TRAVA M8X12 | 10331668 | 9 | 15 | 164 | 10 45 475 2 | RADIADOR COMBINADO |
| PARAFUSO TRAVA M8X16 | 10327102 | 10 | 8 | 164 | 10 45 475 2 | RADIADOR COMBINADO |
| PARAFUSO TRAVA M8X16 | 10327102 | 18 | 6 | 167 | 10 35 508 4 | RADIADOR DE ÓLEO |
| PARAFUSO TRAVA M8X20 | 10331670 | 3 | 16 | 167 | 10 35 508 4 | RADIADOR DE ÓLEO |
| PARAFUSO TRAVA M8X25 | 10327103 | 18 | 24 | 164 | 10 45 475 2 | RADIADOR COMBINADO |
| PAREDE DIVISÓRIA | 10009201 | 490 | 1 | 433 | 10 48 808 8 | REVESTIMENTO INTERNO |
| PAREDE DIVISÓRIA | 9947957 | 95 | 1 | 375 | 10 35 800 4 | REVESTIMENTO |
| PAREDE DIVISÓRIA | 9947958 | 2 | 1 | 396 | 99 47 957 | PAREDE DIVISÓRIA |
| PARTE QUADRO | 10331673 | 34 | 1 | 165 | 10 45 475 2 | RADIADOR COMBINADO |
| PARTE QUADRO | 10331674 | 35 | 1 | 165 | 10 45 475 2 | RADIADOR COMBINADO |
| PARTE QUADRO | 10331675 | 36 | 1 | 165 | 10 45 475 2 | RADIADOR COMBINADO |
| PARTE QUADRO | 10331677 | 37 | 1 | 165 | 10 45 475 2 | RADIADOR COMBINADO |
| PARTE SUPERIOR DA SUSPEN | 11066526 | 3 | 1 | 235 | 11 10 016 7 | SUSPENSAO |
| PARTE SUPERIOR DE ASSENT | 11100166 | 10 | 1 | 232 | 11 00 085 6 | BANCO COM SUSP. PENUMAT |
| PARTE SUPERIOR DO ESPELH | 7005028 | 21 | 1 | 461 | 10 35 852 5 | ESPELHO EXTERNO - INSTALA |
| PAS.VARETA IND.NÍV.ÓLEO C | 9266775 | 3 | 1 | 108 | 90 77 872 | REDUTOR DISTRIBUICAO BO |
| PASSAGEM DE AR | 7024446 | 350 | 4 | 433 | 10 48 808 8 | REVESTIMENTO INTERNO |
| PASSAGEM HIDRAULICA | 10358015 | 7040 | 1 | 294 | 10 35 809 0 | INSTALACAO HIDRAULICA |
| PASTA | 8100714 | 127 | 1 | 688 | 10 11 856 1 | MODULO DE COMANDO VG6- |
| PASTA | 8501565 | 20 | 1 | 457 | 10 08 428 6 | KIT DE FERRAMENTAS |
| PASTA DE CINZEL LIEBHERR | 10358992 | 50 | 1 | 18 | 90 70 366 | |
| PASTA DE CINZEL LIEBHERR/ | 8610230 | 1 | 1 | 34 | 10 35 899 2 | PASTA DE CINZEL LIEBHERR |
| PASTA DE CINZEL LIEBHERR/2 | 10330306 | 2 | 1 | 34 | 10 35 899 2 | PASTA DE CINZEL LIEBHERR |
| PASTA DE COBRE | 10002552 | 132 | 1 | 571 | 10 11 919 9 | PROTECAO TERMICA COM FI |
| PASTA DE COBRE | 10002552 | 132 | 1 | 572 | 10 11 571 8 | PROTECAO TERMICA COM FI |
| PASTA EM PULVERIZADOR LIE | 10358950 | 40 | 1 | 18 | 90 70 366 | |
| PASTA EM PULVERIZADOR LIE | 10330308 | 1 | 1 | 33 | 10 35 895 0 | PASTA EM PULVERIZADOR LIE |
| PASTA EM PULVERIZADOR LI | 10330310 | 2 | 1 | 33 | 10 35 895 0 | PASTA EM PULVERIZADOR LIE |
| PASTA EM PULVERIZADOR LIE | 10330311 | 5 | 1 | 33 | 10 35 895 0 | PASTA EM PULVERIZADOR LIE |
| PASTA ESPECIAL CRL/5x0,4kg | 8503279 | 50 | 1 | 181 | 90 18 423 | INSTALACAO MECANISMO GI |
| PATOLA | 10357928 | 165 | 1 | 378 | 10 35 800 4 | REVESTIMENTO |
| PATOLA | 10357928 | 168 | 1 | 378 | 10 35 800 4 | REVESTIMENTO |
| PECA DE COMANDO | 10493089 | 13 | 1 | 286 | 11 00 359 4 | CARCAÇA |

| Designação | Artigo | Item | Quanti | Página | Módulo | Designação |
|---|---|---|---|---|---|---|
| PECA DE DESGASTE | 10493010 | 6 | 1 | 235 | 11 10 016 7 | SUSPENSAO |
| PECA FINAL | 10423838 | 10 | 1 | 418 | 70 29 423 | VIDRO DIANTEIRO |
| PECA FINAL | 10423838 | 10 | 1 | 419 | 70 29 424 | VIDRO TRASEIRO |
| PECA FINAL | 10423840 | 20 | 1 | 418 | 70 29 423 | VIDRO DIANTEIRO |
| PECA FINAL | 10423840 | 20 | 1 | 419 | 70 29 424 | VIDRO TRASEIRO |
| PECA FINAL | 11003780 | 3 | 2 | 58 | 10 65 168 0 | ROLETE INFERIOR D7 |
| PECA FINAL | 11003780 | 3 | 2 | 59 | 11 60 010 7 | ROLETE INFERIOR D7 |
| PECA INTERMEDIARIA | 10063258 | 54 | 2 | 301 | 10 35 801 5 | PASSAGEM HIDRAULICA |
| PECA INTERMEDIARIA | 7365704 | 35 | 1 | 280 | 10 40 689 8 | SISTEMA DE AR CONDICION |
| PECA INTERMEDIARIA | 9331403 | 15 | 1 | 359 | 10 49 822 5 | TUBULACOES PRESSAO INS |
| PECA INTERMEDIARIA H=20 | 9008100 | 53 | 2 | 301 | 10 35 801 5 | PASSAGEM HIDRAULICA |
| PECA INTERMEDIARIA H=25 | 9872047 | 9 | 2 | 616 | 10 49 830 0 | LANÇA MONOBLOCO 6,70M |
| PECA INTERMEDIARIA H=40 | 9809298 | 13 | 2 | 616 | 10 49 830 0 | LANÇA MONOBLOCO 6,70M |
| PECAS DE FECHAMENTO | 10115664 | 452 | 1 | 475 | 10 11 668 5 | MOTOR DIESEL D936 L A6 240 |
| PECAS DE FECHAMENTO | 10118589 | 4 | 2 | 604 | 90 80 504 | PECAS DE FECHAMENTO |
| PECAS DE FECHAMENTO | 10119128 | 522 | 1 | 475 | 10 11 668 5 | MOTOR DIESEL D936 L A6 240 |
| PECAS DE FECHAMENTO | 9078356 | 331 | 1 | 473 | 10 11 668 5 | MOTOR DIESEL D936 L A6 240 |
| PECAS DE FECHAMENTO | 9079893 | 630 | 1 | 476 | 10 11 668 5 | MOTOR DIESEL D936 L A6 240 |
| PECAS DE FECHAMENTO | 9080280 | 384 | 1 | 474 | 10 11 668 5 | MOTOR DIESEL D936 L A6 240 |
| PECAS DE FECHAMENTO | 9080280 | 5 | 1 | 605 | 10 11 801 4 | KIT DE VEDACAO |
| PECAS DE FECHAMENTO | 9080280 | 5 | 2 | 608 | 10 11 583 8 | JOGO DE VEDAÇÃO MOTOR D |
| PECAS DE FECHAMENTO | 9080504 | 656 | 1 | 476 | 10 11 668 5 | MOTOR DIESEL D936 L A6 240 |
| PECAS DE FECHAMENTO | 9080653 | 521 | 1 | 475 | 10 11 668 5 | MOTOR DIESEL D936 L A6 240 |
| PECAS DE FECHAMENTO | 9147512 | 24 | 2 | 469 | 10 11 668 5 | MOTOR DIESEL D936 L A6 240 |
| PECAS DE FIXACAO | 10493025 | 26 | 1 | 235 | 11 10 016 7 | SUSPENSAO |
| PECAS DE FIXACAO | 10814706 | 39 | 1 | 233 | 11 10 016 6 | PARTE SUPERIOR DE ASSENT |
| PECAS DE FIXACAO | 11066536 | 36 | 1 | 236 | 11 10 016 7 | SUSPENSAO |
| PECAS DE FIXACAO | 9939322 | 50 | 1 | 224 | 10 49 873 7 | INSTALACAO HIDRAULICA |
| PECAS DE FIXACAO DO MOTO | 10358007 | 501 | 1 | 96 | 10 35 808 9 | INSTALAÇÃO DO MOTOR |
| PECAS DE FIXACAO PARA A C | 10357979 | 10 | 1 | 404 | 10 35 796 7 | CABINE DE OPERADOR |
| PECAS DE FIXACAO PARA VA | 10087437 | 7601 | 1 | 355 | 10 35 802 8 | INSTALAÇÃO BLOCO DE VÁL |
| PECAS FIXACAO | 10066252 | 10 | 1 | 181 | 90 18 423 | INSTALACAO MECANISMO GI |
| PECAS FIXACAO PARA CONTR | 9937333 | 5 | 1 | 455 | 10 49 801 8 | INSTALAÇÃO DO CONTRAPES |
| PEDAL DIREITO COMPLETO | 10060175 | 20 | 1 | 268 | 10 05 981 8 | PRÉ-COMANDO DE PEDAL M |
| PEDAL ESQUERDO COMPLET | 10060174 | 10 | 1 | 268 | 10 05 981 8 | PRÉ-COMANDO DE PEDAL M |
| PERFIL | 10002428 | 12 | 0.94 | 381 | 99 49 428 | CAPO DO RADIADOR |
| PERFIL | 10022653 | 31 | 3 | 287 | 11 00 359 4 | CARCAÇA |
| PERFIL | 10331637 | 9 | 1.77 | 167 | 10 35 508 4 | RADIADOR DE ÓLEO |
| PERFIL | 7029425 | 590 | 1 | 417 | 70 28 831 | VIDRO CORREDICO |
| PERFIL | 7030263 | 20 | 13 | 166 | 99 37 297 | VEDACAO DO RADIADOR |
| PERFIL | 7030263 | 11 | 1 | 455 | 10 49 801 8 | INSTALAÇÃO DO CONTRAPES |
| PERFIL | 7030263 | 12 | 1 | 455 | 10 49 801 8 | INSTALAÇÃO DO CONTRAPES |
| PERFIL | 7030263 | 13 | 1 | 455 | 10 49 801 8 | INSTALAÇÃO DO CONTRAPES |
| PERFIL | 7030263 | 14 | 1 | 455 | 10 49 801 8 | INSTALAÇÃO DO CONTRAPES |
| PERFIL DE ENCHIMENTO | 10471490 | 20 | 1 | 408 | 70 28 788 | VEDAÇÃO |
| PERFIL DE ENVIDRACAMENT | 7028806 | 300 | 1 | 411 | 70 28 759 | PÁRA-BRISA SUPERIOR |
| PERFIL DE FIXAÇÃO | 7014524 | 17 | 1 | 388 | 10 07 307 3 | PORTA LATERAL DIREITA |
| PERFIL DE FIXAÇÃO | 7014524 | 17 | 1 | 389 | 10 37 283 9 | PORTA LATERAL DIREITA |
| PERFIL DE FIXAÇÃO | 7027986 | 10 | 1 | 166 | 99 37 297 | VEDACAO DO RADIADOR |
| PERFIL DE PROTECAO DE CA | 10009781 | 121 | 1.8 | 230 | 10 49 880 9 | POSTO DE COMANDO - PEÇA |
| PERFIL DE PROTECAO DE CA | 226016702 | 100 | 0.57 | 172 | 10 49 858 1 | SISTEMA ELETRICO DO MOTO |
| PERFIL DE PROTECAO DE CA | 226016702 | 120 | 1 | 230 | 10 49 880 9 | POSTO DE COMANDO - PEÇA |
| PERFIL DE PROTECAO DE CA | 226016702 | 343 | 0.11 | 350 | 10 35 802 8 | INSTALAÇÃO BLOCO DE VÁL |
| PERFIL DE PROTECAO DE CA | 226016702 | 15 | 0.15 | 398 | 10 35 853 1 | PORTA LATERAL DIANTEIRA |
| PERFIL DE PROTECAO DE CA | 226016702 | 30 | 2.1 | 403 | 10 05 011 2 | TAMPAS INFERIORES |
| PERFIL DE PROTECAO DE CA | 226016702 | 31 | 1.9 | 403 | 10 05 011 2 | TAMPAS INFERIORES |
| PERFIL DE PROTECAO DE CA | 226016702 | 60 | 0.3 | 452 | 90 18 419 | TANQUE COMBUSTIVEL INSTA |
| PERFIL DE PROTECAO DE CA | 226017802 | 510 | 0.75 | 314 | 10 35 801 7 | INSTALACAO HIDRAULICA |
| PERFIL DE REFORÇO | 10022779 | 16 | 2 | 285 | 10 02 211 7 | CARCACA DE CONDUCAO DE |
| PERFIL DE VEDACAO | 10008649 | 16 | 0.28 | 280 | 10 40 689 8 | SISTEMA DE AR CONDICION |

| Designação | Artigo | Item | Quanti | Página | Módulo | Designação |
|---|---|---|---|---|---|---|
| PERFIL DE VEDACAO | 10412177 | 5 | 2.058 | 164 | 10 45 475 2 | RADIADOR COMBINADO |
| PERFIL DE VEDACAO | 10412177 | 6 | 4.28 | 164 | 10 45 475 2 | RADIADOR COMBINADO |
| PERFIL DE VEDACAO | 10412177 | 4 | 2.28 | 167 | 10 35 508 4 | RADIADOR DE ÓLEO |
| PERFIL DE VEDACAO | 10467247 | 28 | 2 | 165 | 10 45 475 2 | RADIADOR COMBINADO |
| PERFIL DE VEDACAO | 7008157 | 12 | 1.225 | 384 | 10 35 817 2 | PORTA LATERAL TRASEIRA |
| PERFIL DE VEDACAO | 7008157 | 12 | 0.92 | 386 | 10 35 792 6 | PORTA LATERAL CENTRAL E |
| PERFIL DE VEDACAO | 7008157 | 16 | 1.34 | 388 | 10 07 307 3 | PORTA LATERAL DIREITA |
| PERFIL DE VEDACAO | 7008157 | 16 | 1.34 | 389 | 10 37 283 9 | PORTA LATERAL DIREITA |
| PERFIL DE VEDACAO | 7360171 | 82 | 1.38 | 238 | 10 38 502 4 | APOIO ESQUERDO PARA BR |
| PERFIL DE VEDACAO | 7360171 | 10 | 0.66 | 382 | 99 29 189 | CAPO DIREITO |
| PERFIL DE VEDACAO | 7360171 | 11 | 1.3 | 382 | 99 29 189 | CAPO DIREITO |
| PERFIL DE VEDACAO | 7360171 | 13 | 1.225 | 384 | 10 35 817 2 | PORTA LATERAL TRASEIRA |
| PERFIL DE VEDACAO | 7360171 | 13 | 0.92 | 386 | 10 35 792 6 | PORTA LATERAL CENTRAL E |
| PERFIL DE VEDACAO | 7360171 | 15 | 1.28 | 388 | 10 07 307 3 | PORTA LATERAL DIREITA |
| PERFIL DE VEDACAO | 7360171 | 18 | 0.835 | 388 | 10 07 307 3 | PORTA LATERAL DIREITA |
| PERFIL DE VEDACAO | 7360171 | 15 | 1.28 | 389 | 10 37 283 9 | PORTA LATERAL DIREITA |
| PERFIL DE VEDACAO | 7360171 | 18 | 0.835 | 389 | 10 37 283 9 | PORTA LATERAL DIREITA |
| PERFIL DE VEDACAO | 7360171 | 5 | 1.25 | 390 | 10 06 692 0 | CAIXA DE FERRAMENTAS |
| PERFIL DE VEDACAO | 7360171 | 5 | 1.25 | 392 | 10 37 938 6 | CAIXA DE FERRAMENTAS |
| PERFIL DE VEDACAO 14 | 10040984 | 2 | 1 | 584 | 90 76 530 | |
| PERFIL DE VEDACAO 14 | 10040984 | 2 | 1 | 585 | 90 76 531 | TRANSDUTOR DE PRESSAO |
| PERFIL DE VEDACAO 33 | 10335629 | 3 | 1 | 492 | 10 11 903 0 | ENCHIMENTO DE OLEO D930 |
| PEÇA DE CONEXÃO | 10116576 | 213 | 1 | 472 | 10 11 668 5 | MOTOR DIESEL D936 L A6 240 |
| PEÇA DE DESGASTE LATERA | 11461299 | 9 | 2 | 635 | 11 10 283 4 | KIT DE PEÇAS DE DESGASTE |
| PEÇA DE FECHO PRÉ-MONT | 9079580 | 217 | 1 | 473 | 10 11 668 5 | MOTOR DIESEL D936 L A6 240 |
| PEÇA DE LIGAÇÃO | 10357898 | 5 | 1 | 628 | 10 49 823 5 | BRACO DA CACAMBA 2,35M |
| PEÇA DE REDUÇÃO | 10120066 | 5 | 1 | 536 | 10 11 551 3 | FILTRO FINO DE COMBUSTÍVE |
| PEÇA DE REDUÇÃO | 10120066 | 5 | 1 | 538 | 10 12 580 1 | FILTRO DE COMBUSTÍVEL |
| PEÇA DE REDUÇÃO | 10278640 | 130 | 1 | 653 | 10 00 297 1 | VÁLVULA DE SEGURANÇA RU |
| PEÇA DE REPOSIÇÃO | 7367729 | 4 | 1 | 357 | 93 70 592 | VALVULA DE RETENCAO |
| PEÇA DESLIZANTE | 10031946 | 3 | 2 | 60 | 10 00 966 2 | RODA GUIA D7G/B7B |
| PEÇA INFERIOR DE SUSPEN | 10492983 | 8 | 1 | 235 | 11 10 016 7 | SUSPENSAO |
| PEÇA P/CIRCULAÇÃO DE AR | 10005677 | 1 | 1 | 284 | 10 02 208 3 | BOCAL DE AR |
| PEÇA REP.CABINE | 10216362 | 10 | 1 | 405 | 10 47 616 9 | CABINE DE OPERADOR |
| PEÇAS DE BORRACHA | 10081994 | 12 | 1 | 379 | 10 08 167 3 | CAPO DO MOTOR |
| PEÇAS DE MONTAGEM | 10290264 | 70 | 1 | 405 | 10 47 616 9 | CABINE DE OPERADOR |
| PEÇAS DO COMANDO | 9079870 | 110 | 6 | 471 | 10 11 668 5 | MOTOR DIESEL D936 L A6 240 |
| PEÇAS FIXAÇÃO COROA GIRA | 9946390 | 5 | 1 | 205 | 10 83 653 3 | COROA GIRATÓRIA - INSTALA |
| PEÇAS MONTAGEM DE IMPLE | 10402781 | 170 | 1 | 85 | 10 35 798 2 | CARRO SUPERIOR |
| PEÇAS MONTAGEM QUADRO | 10048398 | 30 | 1 | 443 | 99 47 695 | INSTALAÇÃO ELÉTRICA E50 |
| PEÇAS MONTAGEM QUADRO | 9948149 | 40 | 1 | 443 | 99 47 695 | INSTALAÇÃO ELÉTRICA E50 |
| PEÇAS PEQUENAS | 10493345 | 55 | 1 | 233 | 11 10 016 6 | PARTE SUPERIOR DE ASSENT |
| PEÇAS PEQUENAS | 10493397 | 56 | 1 | 234 | 11 10 016 6 | PARTE SUPERIOR DE ASSENT |
| PINO | 10015475 | 30 | 1 | 75 | 56 16 688 | VALVULA FRENAGEM DA TRA |
| PINO | 10022781 | 13 | 2 | 285 | 10 02 211 7 | CARCACA DE CONDUCAO DE |
| PINO | 10060974 | 2 | 1 | 644 | 10 06 097 3 | PINO COMPLETO |
| PINO | 10413021 | 35 | 2 | 121 | 10 41 301 3 | BOMBA HIDRÁULICA |
| PINO | 10498335 | 30 | 1 | 640 | 10 49 817 6 | PROTEÇÃO DA HASTE DO CIL |
| PINO | 10498336 | 2 | 1 | 645 | 10 49 833 5 | PINO |
| PINO | 7020571 | 35 | 1 | 367 | 10 28 962 9 | VÁLVULA |
| PINO | 7028351 | 15 | 1 | 338 | 56 17 689 | VÁLVULA DE FECHAMENTO D |
| PINO | 7028840 | 620 | 2 | 416 | 70 28 842 | MARCO DA PORTA |
| PINO | 9374747 | 130 | 1 | 620 | 10 49 830 0 | LANÇA MONOBLOCO 6,70M |
| PINO | 9374747 | 190 | 1 | 620 | 10 49 830 0 | LANÇA MONOBLOCO 6,70M |
| PINO | 9374747 | 180 | 1 | 628 | 10 49 823 5 | BRACO DA CACAMBA 2,35M |
| PINO | 9374747 | 80 | 2 | 672 | 10 49 815 8 | CILINDRO DE ELEVACAO |
| PINO | 9374747 | 140 | 2 | 672 | 10 49 815 8 | CILINDRO DE ELEVACAO |
| PINO | 9442284 | 56 | 1 | 69 | 94 43 840 | MECANISMO DE TRANSLAÇÃ |
| PINO | 9641061 | 2 | 1 | 93 | 10 40 278 1 | PEÇAS MONTAGEM DE IMPLE |
| PINO | 9888133 | 19 | 1 | 150 | 90 79 294 | KIT DE REPARO |

| Designação | Artigo | Item | Quanti | Página | Módulo | Designação |
|---|---|---|---|---|---|---|
| PINO | 9888133 | 12 | 1 | 151 | 90 79 347 | KIT DE REPARO LPV 165 |
| PINO 110X765X623 | 11451267 | 10 | 1 | 646 | 93 74 949 | PINO COMPLETO |
| PINO 110X815X770 | 9019253 | 170 | 1 | 628 | 10 49 823 5 | BRACO DA CACAMBA 2,35M |
| PINO 110X815X770 | 9019253 | 280 | 1 | 628 | 10 49 823 5 | BRACO DA CACAMBA 2,35M |
| PINO 6M6 | 570948608 | 33 | 1 | 121 | 10 41 301 3 | BOMBA HIDRÁULICA |
| PINO 6M6 | 570948608 | 33 | 1 | 139 | 10 35 572 4 | BOMBA HIDRÁULICA |
| PINO 6m6 | 4980000 | 5 | 1 | 524 | 90 80 278 | BOMBA DE SUCÇÃO COM FIXA |
| PINO 8X16 | 7738704 | 23 | 2 | 372 | 10 35 800 4 | REVESTIMENTO |
| PINO 8X16 | 7738704 | 132 | 4 | 376 | 10 35 800 4 | REVESTIMENTO |
| PINO 8X16 | 7738704 | 22 | 2 | 391 | 10 06 692 0 | CAIXA DE FERRAMENTAS |
| PINO 8X16 | 7738704 | 22 | 2 | 393 | 10 37 938 6 | CAIXA DE FERRAMENTAS |
| PINO 8X16 | 7738704 | 20 | 2 | 401 | 10 03 720 9 | MOLA A GÁS |
| PINO 8m6 | 4980853 | 5 | 1 | 517 | 90 80 713 | EIXO DE EXCÊNTRICOS COM |
| PINO COMPLETO | 10060901 | 200 | 1 | 628 | 10 49 823 5 | BRACO DA CACAMBA 2,35M |
| PINO COMPLETO | 10060973 | 230 | 1 | 628 | 10 49 823 5 | BRACO DA CACAMBA 2,35M |
| PINO COMPLETO | 9374949 | 120 | 1 | 620 | 10 49 830 0 | LANÇA MONOBLOCO 6,70M |
| PINO DA ARTICULACAO | 10216667 | 13 | 2 | 122 | 56 16 530 | BOMBA DE PISTÃO AXIAL |
| PINO DA VALVULA | 7028174 | 8 | 1 | 147 | 70 28 075 | UNIDADE DE CONTROLE |
| PINO DA VALVULA | 7028180 | 15 | 2 | 147 | 70 28 075 | UNIDADE DE CONTROLE |
| PINO DE CENTRAGEM | 90018066 | 16 | 1 | 205 | 10 83 653 3 | COROA GIRATÓRIA - INSTALA |
| PINO DE CENTRAGEM | 9698698 | 2 | 2 | 456 | 99 37 333 | PECAS FIXACAO PARA CONTR |
| PINO DE FECHAMENTO | 7028896 | 300 | 1 | 428 | 10 29 026 4 | PEÇAS DE MONTAGEM |
| PINO DE PRESSAO | 10101458 | 9 | 3 | 144 | 10 41 302 4 | MECANISMO DE ACIONAMENT |
| PINO DE PRESSAO | 10287731 | 9 | 3 | 141 | 10 35 573 8 | MECANISMO DE ACIONAMENT |
| PINO DE RESTRICAO | 10015533 | 140 | 2 | 75 | 56 16 688 | VALVULA FRENAGEM DA TRA |
| PINO DISTANCIADOR HEXAG | 7016412 | 26 | 4 | 442 | 99 47 695 | INSTALAÇÃO ELÉTRICA E50 |
| PINO ELÁSTICO | 7373742 | 8 | 2 | 58 | 10 65 168 0 | ROLETE INFERIOR D7 |
| PINO ELÁSTICO | 7373742 | 8 | 2 | 59 | 11 60 010 7 | ROLETE INFERIOR D7 |
| PINO ELÁSTICO 12 | 7381641 | 27 | 1 | 71 | 90 73 354 | MECANISMO DE ACIONAMENT |
| PINO ELÁSTICO 13 | 10004442 | 7 | 1 | 511 | 90 74 505 | BALANCIM PRE-MONTADO |
| PINO ELÁSTICO 3 | 4002729 | 31 | 2 | 122 | 56 16 530 | BOMBA DE PISTÃO AXIAL |
| PINO ELÁSTICO 8 | 4980376 | 5 | 1 | 496 | 90 75 115 | VIRABREQUIM COM ENGRENA |
| PINO ESFERICO | 10004426 | 5 | 1 | 512 | 90 74 507 | BALANCIM PRE-MONTAGEM |
| PINO MESTRE | 5617102 | 20 | 2 | 55 | 56 17 975 | ELO FINAL DA CORRENTE |
| PINO ROSCADO | 7028181 | 18 | 2 | 147 | 70 28 075 | UNIDADE DE CONTROLE |
| PISTAO ANELAR | 9441436 | 5 | 1 | 191 | 93 33 333 01 | FREIO |
| PISTAO ATUADOR | 10220524 | 1 | 1 | 115 | 10 22 041 0 | DISPOSITIVO DE REGULAGE |
| PISTAO ATUADOR | 9277876 | 10 | 1 | 690 | 98 82 766 | DISPOSITIVO DE REGULAGE |
| PISTAO ATUADOR | 9880286 | 11 | 2 | 690 | 98 82 766 | DISPOSITIVO DE REGULAGE |
| PISTAO DA VALVULA | 10220648 | 3 | 1 | 146 | 57 15 963 | VÁLVULA LIMITADORA DE PR |
| PISTAO DA VALVULA | 10220817 | 2 | 1 | 137 | 10 22 081 6 | VÁLVULA DE PARTIDA FRIA |
| PISTAO DA VALVULA | 5612181 | 5 | 1 | 132 | 10 22 063 5 | VALVULA INTERRUPTORA |
| PISTAO DA VALVULA | 7028179 | 13 | 2 | 147 | 70 28 075 | UNIDADE DE CONTROLE |
| PISTAO DE COMANDO | 10220661 | 3 | 1 | 132 | 10 22 063 5 | VALVULA INTERRUPTORA |
| PISTAO DE FREIO | 10014067 | 1 | 1 | 129 | 70 28 176 | PISTAO DE FREIO |
| PISTAO DE FREIO | 7028176 | 10 | 2 | 147 | 70 28 075 | UNIDADE DE CONTROLE |
| PISTAO DE REGULAGEM | 10355826 | 2 | 1 | 139 | 10 35 572 4 | BOMBA HIDRÁULICA |
| PISTAO REGUL. COM BUCHA | 9272221 | 2 | 1 | 125 | 90 79 811 | KIT REPARO DO PISTAO ATUA |
| PISTOLA GRAXA MANUAL CO | 7900280 | 140 | 1 | 459 | 10 84 856 2 | KIT DE FERRAMENTAS |
| PISTÃO | 10101453 | 1 | 9 | 144 | 10 41 302 4 | MECANISMO DE ACIONAMENT |
| PISTÃO | 10122498 | 12 | 4 | 688 | 10 11 856 1 | MODULO DE COMANDO VG6- |
| PISTÃO | 10216691 | 2 | 9 | 345 | 10 22 042 7 | MECANISMO DE ACIONAMENT |
| PISTÃO | 10355740 | 1 | 9 | 141 | 10 35 573 8 | MECANISMO DE ACIONAMENT |
| PISTÃO | 5612180 | 4 | 1 | 132 | 10 22 063 5 | VALVULA INTERRUPTORA |
| PISTÃO | 5616689 | 20 | 1 | 75 | 56 16 688 | VALVULA FRENAGEM DA TRA |
| PISTÃO | 7028169 | 3 | 2 | 147 | 70 28 075 | UNIDADE DE CONTROLE |
| PISTÃO | 9015158 | 2 | 1 | 53 | 90 15 155 | TENSIONADOR DE GRAXA |
| PISTÃO | 9075361 | 1 | 1 | 480 | 10 11 795 1 | VALVULA DE REGULAGEM FI |
| PISTÃO | 9080685 | 1 | 1 | 502 | 90 80 686 | PISTÃO PRÉ-MONT. MONOTH |
| PISTÃO | 9265392 | 12 | 2 | 271 | 90 79 258 | MODULO DE COMANDO VG7 |

| Designação | Artigo | Item | Quanti | Página | Módulo | Designação |
|---|---|---|---|---|---|---|
| PISTÃO | 9265392 | 12 | 2 | 273 | 90 79 259 | MODULO DE COMANDO VG7 |
| PISTÃO | 9266234 | 11 | 1 | 76 | 92 67 037 | VÁLVULA LIMITADORA DE PR |
| PISTÃO | 94006062 | 1 | 1 | 663 | 94 00 606 1 | PISTÃO 180MM |
| PISTÃO | 9587596 | 1 | 1 | 664 | 95 87 597 | PISTÃO 180MM |
| PISTÃO | 9590265 | 1 | 1 | 665 | 95 90 264 | PISTÃO 170MM |
| PISTÃO | 9886591 | 20 | 1 | 520 | 10 12 143 8 | RADIADOR DE OLEO PRE-M |
| PISTÃO | 9886591 | 9 | 1 | 525 | 90 72 781 | BOMBA DE ÓLEO DE LUBRIFI |
| PISTÃO 170MM | 9590264 | 12 | 1 | 659 | 95 96 399 | CILINDRO HIDRÁULICO |
| PISTÃO 180MM | 94006061 | 12 | 1 | 657 | 94 02 019 4 | CILINDRO HIDRÁULICO |
| PISTÃO 180MM | 9587597 | 12 | 1 | 658 | 95 87 580 | CILINDRO HIDRÁULICO |
| PISTÃO COM PACOTE DE MOL | 10287695 | 14 | 1 | 365 | 10 03 245 2 | BLOCO DE COMANDO |
| PISTÃO COM PACOTE DE MOL | 10287695 | 18 | 1 | 365 | 10 03 245 2 | BLOCO DE COMANDO |
| PISTÃO COM PACOTE DE MOL | 10330922 | 12 | 1 | 365 | 10 03 245 2 | BLOCO DE COMANDO |
| PISTÃO COM PACOTE DE MOL | 10330927 | 13 | 1 | 365 | 10 03 245 2 | BLOCO DE COMANDO |
| PISTÃO COM PACOTE DE MOL | 10330928 | 15 | 1 | 365 | 10 03 245 2 | BLOCO DE COMANDO |
| PISTÃO COM PACOTE DE MOL | 10330931 | 19 | 1 | 365 | 10 03 245 2 | BLOCO DE COMANDO |
| PISTÃO COM PACOTE DE MOL | 10333291 | 16 | 1 | 365 | 10 03 245 2 | BLOCO DE COMANDO |
| PISTÃO COM PACOTE DE MOL | 5613604 | 17 | 1 | 365 | 10 03 245 2 | BLOCO DE COMANDO |
| PISTÃO COM SAPATA DESLIZA | 9073392 | 1 | 9 | 199 | 90 74 416 | KIT DE REPARO |
| PISTÃO COM SAPATA DESLIZA | 9073392 | 1 | 9 | 696 | 90 73 393 | KIT DE REPARO |
| PISTÃO COM SAPATA DESLIZA | 9882563 | 1 | 9 | 153 | 98 80 604 | KIT DE REPARO PISTÕES AXIA |
| PISTÃO COM SAPATA DESLIZA | 9887036 | 1 | 9 | 157 | 98 89 831 | KIT DE REPARO PISTÕES AXIA |
| PISTÃO COMPLETO MONOTH | 9080687 | 70 | 6 | 470 | 10 11 668 5 | MOTOR DIESEL D936 L A6 240 |
| PISTÃO DE SUBSTITUIÇÃO | 5614346 | 36 | 1 | 367 | 10 28 962 9 | VÁLVULA |
| PISTÃO PRÉ-MONT. MONOTH | 9080686 | 1 | 1 | 501 | 90 80 687 | PISTÃO COMPLETO MONOTH |
| PLACA | 10022636 | 6 | 1 | 282 | 10 81 666 6 | EVAPORADOR |
| PLACA | 10050119 | 8 | 1 | 403 | 10 05 011 2 | TAMPAS INFERIORES |
| PLACA | 10050121 | 9 | 1 | 403 | 10 05 011 2 | TAMPAS INFERIORES |
| PLACA | 10056984 | 55 | 1 | 214 | 10 04 966 3 | LUBRIFICAÇÃO CENTRALIZAD |
| PLACA | 10057336 | 54 | 2 | 619 | 10 49 830 0 | LANÇA MONOBLOCO 6,70M |
| PLACA | 10058949 | 15 | 1 | 244 | 10 05 879 2 | SENSOR DE PRE-COMANDO E |
| PLACA | 10058949 | 15 | 1 | 259 | 10 05 879 4 | SENSOR DE PRE-COMANDO |
| PLACA | 10064353 | 20 | 1 | 403 | 10 05 011 2 | TAMPAS INFERIORES |
| PLACA | 10066929 | 63 | 2 | 374 | 10 35 800 4 | REVESTIMENTO |
| PLACA | 10067004 | 25 | 1 | 391 | 10 06 692 0 | CAIXA DE FERRAMENTAS |
| PLACA | 10070633 | 30 | 1 | 461 | 10 35 852 5 | ESPELHO EXTERNO - INSTALA |
| PLACA | 10079761 | 18 | 1 | 403 | 10 05 011 2 | TAMPAS INFERIORES |
| PLACA | 10115591 | 4 | 1 | 549 | 10 11 657 6 | PEÇA DE CONEXÃO |
| PLACA | 10115691 | 5 | 1 | 489 | 90 79 862 | VARETA DE NÍVEL DE ÓLEO C |
| PLACA | 10119129 | 1 | 1 | 591 | 10 11 912 8 | PECAS DE FECHAMENTO |
| PLACA | 10290356 | 520 | 1 | 423 | 10 29 036 3 | KIT DO MOTOR DO LIMPADOR |
| PLACA | 10397442 | 4 | 1 | 93 | 10 40 278 1 | PEÇAS MONTAGEM DE IMPLE |
| PLACA | 10406664 | 16 | 2 | 382 | 99 29 189 | CAPO DIREITO |
| PLACA | 10652159 | 20 | 1 | 240 | 10 16 576 6 | CONSOLE DE COMANDO |
| PLACA | 10836599 | 341 | 1 | 350 | 10 35 802 8 | INSTALAÇÃO BLOCO DE VÁL |
| PLACA | 7028802 | 130 | 2 | 409 | 10 03 552 9 | PÁRA-BRISA INFERIOR |
| PLACA | 7028839 | 190 | 1 | 414 | 70 28 769 | PORTA DA CABINE DO MOTO |
| PLACA | 7028870 | 370 | 1 | 421 | 10 48 808 7 | INSTALACAO ELETRICA |
| PLACA | 7028895 | 260 | 1 | 427 | 10 29 026 4 | PEÇAS DE MONTAGEM |
| PLACA | 7029420 | 520 | 1 | 417 | 70 28 831 | VIDRO CORREDICO |
| PLACA | 7029422 | 550 | 1 | 417 | 70 28 831 | VIDRO CORREDICO |
| PLACA | 9008517 | 110 | 1 | 344 | 10 84 584 9 | INSTALACAO BOMBA E EMBR |
| PLACA | 9079492 | 3 | 2 | 485 | 90 79 487 | CARTER |
| PLACA | 9079494 | 3 | 1 | 486 | 90 79 483 | CARTER |
| PLACA | 9079555 | 1 | 1 | 493 | 90 79 492 | PLACA |
| PLACA | 9079958 | 4 | 1 | 485 | 90 79 487 | CARTER |
| PLACA | 9079959 | 1 | 1 | 494 | 90 79 958 | PLACA |
| PLACA | 9265413 | 29 | 1 | 271 | 90 79 258 | MODULO DE COMANDO VG7 |
| PLACA | 9368526 | 226 | 3 | 306 | 10 35 801 4 | MANGUEIRAS HIDRAULICAS |
| PLACA | 9375885 | 44 | 1 | 618 | 10 49 830 0 | LANÇA MONOBLOCO 6,70M |

| Designação | Artigo | Item | Quanti | Página | Módulo | Designação |
|---|---|---|---|---|---|---|
| PLACA | 9375885 | 131 | 2 | 620 | 10 49 830 0 | LANÇA MONOBLOCO 6,70M |
| PLACA | 9375885 | 7 | 2 | 628 | 10 49 823 5 | BRACO DA CACAMBA 2,35M |
| PLACA | 9392646 | 15 | 1 | 249 | 10 84 086 6 | APOIO DIREITO PARA BRAÇO |
| PLACA | 9476811 | 180 | 4 | 295 | 10 35 801 2 | INSTALACAO HDRAULICA |
| PLACA | 9476811 | 350 | 2 | 296 | 10 35 801 2 | INSTALACAO HDRAULICA |
| PLACA | 9476811 | 46 | 4 | 301 | 10 35 801 5 | PASSAGEM HIDRAULICA |
| PLACA | 9757779 | 35 | 1 | 229 | 10 49 880 9 | POSTO DE COMANDO - PEÇA |
| PLACA | 9758230 | 101 | 1 | 251 | 10 84 086 6 | APOIO DIREITO PARA BRAÇO |
| PLACA | 9830148 | 46 | 1 | 309 | 10 35 801 3 | ARREFECIMENTO DE OLEO |
| PLACA | 9830148 | 6 | 2 | 636 | 11 10 283 0 | TIRANTE |
| PLACA | 9830148 | 81 | 2 | 672 | 10 49 815 8 | CILINDRO DE ELEVACAO |
| PLACA | 9830148 | 141 | 2 | 672 | 10 49 815 8 | CILINDRO DE ELEVACAO |
| PLACA | 9892073 | 8 | 2 | 455 | 10 49 801 8 | INSTALAÇÃO DO CONTRAPES |
| PLACA | 9929455 | 150 | 1 | 377 | 10 35 800 4 | REVESTIMENTO |
| PLACA | 9929459 | 20 | 1 | 95 | 10 07 366 1 | QUADRO INSTALACAO |
| PLACA | 9929460 | 2 | 1 | 166 | 99 37 297 | VEDACAO DO RADIADOR |
| PLACA | 9938039 | 52 | 1 | 312 | 10 35 809 3 | INSTALACAO HIDRAULICA |
| PLACA | 9943165 | 40 | 1 | 269 | 10 06 017 4 | PEDAL ESQUERDO COMPLET |
| PLACA | 9943165 | 40 | 1 | 270 | 10 06 017 5 | PEDAL DIREITO COMPLETO |
| PLACA | 9945122 | 4 | 1 | 362 | 99 45 116 | BRAÇADEIRA DE TUBO |
| PLACA | 9945124 | 13 | 2 | 362 | 99 45 116 | BRAÇADEIRA DE TUBO |
| PLACA | 9945324 | 96 | 2 | 375 | 10 35 800 4 | REVESTIMENTO |
| PLACA | 9946134 | 30 | 1 | 269 | 10 06 017 4 | PEDAL ESQUERDO COMPLET |
| PLACA | 9946134 | 30 | 1 | 270 | 10 06 017 5 | PEDAL DIREITO COMPLETO |
| PLACA | 9949069 | 150 | 1 | 295 | 10 35 801 2 | INSTALACAO HDRAULICA |
| PLACA | 9949077 | 5 | 1 | 403 | 10 05 011 2 | TAMPAS INFERIORES |
| PLACA | 9949078 | 6 | 2 | 403 | 10 05 011 2 | TAMPAS INFERIORES |
| PLACA | 9949436 | 7 | 1 | 403 | 10 05 011 2 | TAMPAS INFERIORES |
| PLACA 10X20X25 | 7028898 | 270 | 1 | 428 | 10 29 026 4 | PEÇAS DE MONTAGEM |
| PLACA 3X20X37 | 7020611 | 360 | 2 | 428 | 10 29 026 4 | PEÇAS DE MONTAGEM |
| PLACA 4 | 9588724 | 10 | 1 | 403 | 10 05 011 2 | TAMPAS INFERIORES |
| PLACA 954 | 10381258 | 70 | 1 | 468 | 10 49 805 9 | PLAQUETAS |
| PLACA ADESIVA | 10092123 | 22 | 1 | 464 | 10 35 804 3 | PLAQUETAS |
| PLACA ADESIVA | 10092123 | 22 | 1 | 467 | 10 49 805 9 | PLAQUETAS |
| PLACA DE ADVERTÊNCIA | 10380915 | 90 | 2 | 465 | 10 35 804 3 | PLAQUETAS |
| PLACA DE ADVERTÊNCIA | 10380915 | 90 | 2 | 468 | 10 49 805 9 | PLAQUETAS |
| PLACA DE ADVERTÊNCIA | 9581113 | 54 | 1 | 465 | 10 35 804 3 | PLAQUETAS |
| PLACA DE ADVERTÊNCIA | 9581113 | 54 | 1 | 468 | 10 49 805 9 | PLAQUETAS |
| PLACA DE ANGULACAO | 10216693 | 12 | 1 | 114 | 10 22 040 9 | MECANISMO DE ACIONAMENT |
| PLACA DE ANGULACAO | 9888315 | 10 | 1 | 151 | 90 79 347 | KIT DE REPARO LPV 165 |
| PLACA DE ANTEPARO | 10369198 | 40 | 1 | 632 | 10 38 484 8 | LUBRIFICAÇÃO CENTRALIZAD |
| PLACA DE APOIO | 10055251 | 160 | 1 | 378 | 10 35 800 4 | REVESTIMENTO |
| PLACA DE APOIO | 10081451 | 36 | 1 | 372 | 10 35 800 4 | REVESTIMENTO |
| PLACA DE COBERTURA PRÉ- | 9080277 | 1 | 1 | 524 | 90 80 278 | BOMBA DE SUCÇÃO COM FIXA |
| PLACA DE CONEXAO | 10008084 | 6 | 1 | 139 | 10 35 572 4 | BOMBA HIDRÁULICA |
| PLACA DE CONEXAO | 10220411 | 3 | 1 | 122 | 56 16 530 | BOMBA DE PISTÃO AXIAL |
| PLACA DE CONEXAO | 10220636 | 5 | 1 | 116 | 10 22 041 1 | PLACA DE CONEXAO |
| PLACA DE CONEXAO | 10413015 | 6 | 1 | 121 | 10 41 301 3 | BOMBA HIDRÁULICA |
| PLACA DE CONEXAO | 7013559 | 475 | 1 | 353 | 10 35 802 8 | INSTALAÇÃO BLOCO DE VÁL |
| PLACA DE CONEXAO | 9072990 | 3 | 1 | 188 | 90 72 100 | MOTOR HIDRÁULICO |
| PLACA DE CONEXAO | 9072991 | 11 | 1 | 196 | 90 72 990 | PLACA DE CONEXAO |
| PLACA DE CONEXAO | 9073356 | 11 | 1 | 689 | 90 73 355 | PLACA DE CONEXAO FMV 140 |
| PLACA DE CONEXAO | 9075124 | 10 | 1 | 692 | 98 88 308 | PLACA DE CONEXAO |
| PLACA DE CONEXAO | 9888308 | 3 | 1 | 686 | 10 13 268 6 | BOMBA DE REGULAGEM HID |
| PLACA DE CONEXAO FMV 140 | 9073355 | 3 | 1 | 73 | 98 89 775 | MOTOR HIDRÁULICO |
| PLACA DE CONTROLE | 10220428 | 2 | 1 | 114 | 10 22 040 9 | MECANISMO DE ACIONAMENT |
| PLACA DE CONTROLE | 9073114 | 2 | 1 | 70 | 90 73 155 | KIT DE REPARO GRUPO ROT |
| PLACA DE CONTROLE | 9074065 | 2 | 1 | 198 | 90 74 415 | KIT DE REPARO GRUPO ROT |
| PLACA DE CONTROLE | 9074065 | 12 | 1 | 199 | 90 74 416 | KIT DE REPARO |
| PLACA DE CONTROLE | 9076311 | 2 | 1 | 124 | 90 73 751 | KIT DE REPARO GRUPO ROT |

| Designação | Artigo | Item | Quanti | Página | Módulo | Designação |
|---|---|---|---|---|---|---|
| PLACA DE DEGRAU MONT. D | 9476441 | 2 | 1 | 273 | 90 79 259 | MODULO DE COMANDO VG7 |
| PLACA DE DEGRAU MONT. E | 9476369 | 2 | 1 | 271 | 90 79 258 | MODULO DE COMANDO VG7 |
| PLACA DE DESGASTE | 10216816 | 2 | 1 | 117 | 10 22 041 5 | REPARO DA BOMBA |
| PLACA DE DESGASTE | 10216828 | 1 | 1 | 130 | 10 21 681 6 | PLACA DE DESGASTE |
| PLACA DE DESGASTE | 11460707 | 3 | 1 | 635 | 11 10 283 4 | KIT DE PEÇAS DE DESGASTE |
| PLACA DE DESGASTE | 11461300 | 10 | 2 | 635 | 11 10 283 4 | KIT DE PEÇAS DE DESGASTE |
| PLACA DE DESGASTE | 11461301 | 11 | 2 | 635 | 11 10 283 4 | KIT DE PEÇAS DE DESGASTE |
| PLACA DE DESGASTE | 9006828 | 2 | 9 | 635 | 11 10 283 4 | KIT DE PEÇAS DE DESGASTE |
| PLACA DE DESGASTE DIREIT | 11461297 | 4 | 1 | 635 | 11 10 283 4 | KIT DE PEÇAS DE DESGASTE |
| PLACA DE DESGASTE ESQUE | 11461298 | 5 | 1 | 635 | 11 10 283 4 | KIT DE PEÇAS DE DESGASTE |
| PLACA DE DISTRIBUICAO | 10355739 | 2 | 1 | 140 | 10 35 572 5 | MECANISMO DE ACIONAMENT |
| PLACA DE DISTRIBUICAO | 10413025 | 2 | 1 | 143 | 10 41 301 4 | MECANISMO DE ACIONAMENT |
| PLACA DE ESTRIBO | 9946939 | 2 | 1 | 268 | 10 05 981 8 | PRÉ-COMANDO DE PEDAL M |
| PLACA DE ESTRIBO DIREITA | 9476440 | 1 | 1 | 276 | 94 76 441 | PLACA DE DEGRAU MONT. D |
| PLACA DE ESTRIBO ESQUERD | 9476442 | 1 | 1 | 275 | 94 76 369 | PLACA DE DEGRAU MONT. E |
| PLACA DE FECHAMENTO | 7371025 | 8 | 1 | 315 | 10 04 272 9 | BLOCO DE VÁLVULAS DE CO |
| PLACA DE FIXACAO | 10082605 | 15 | 2 | 640 | 10 49 817 6 | PROTEÇÃO DA HASTE DO CIL |
| PLACA DE FIXACAO | 10331635 | 1 | 2 | 167 | 10 35 508 4 | RADIADOR DE ÓLEO |
| PLACA DE IDENTIFICAÇÃO LB | 10498223 | 4 | 1 | 466 | 10 49 805 9 | PLAQUETAS |
| PLACA DE ISOLAMENTO | 10009181 | 290 | 1 | 433 | 10 48 808 8 | REVESTIMENTO INTERNO |
| PLACA DE ISOLAMENTO | 10290261 | 230 | 1 | 432 | 10 48 808 8 | REVESTIMENTO INTERNO |
| PLACA DE LUBRIFICACAO | 9375276 | 15 | 1 | 207 | 99 46 408 | TUBO LUBRIFICAÇÃO - INSTA |
| PLACA DE MONTAGEM | 9947713 | 3 | 1 | 442 | 99 47 695 | INSTALAÇÃO ELÉTRICA E50 |
| PLACA DE PISO 500mm | 10470093 | 2 | 52 | 52 | 10 47 009 2 | ESTEIRA 500mm |
| PLACA DE PROIBICAO | 7366794 | 20 | 5 | 464 | 10 35 804 3 | PLAQUETAS |
| PLACA DE PROIBICAO | 7366794 | 20 | 5 | 467 | 10 49 805 9 | PLAQUETAS |
| PLACA DE RETORNO | 10216707 | 24 | 1 | 345 | 10 22 042 7 | MECANISMO DE ACIONAMENT |
| PLACA DE RETORNO | 10355743 | 4 | 1 | 141 | 10 35 573 8 | MECANISMO DE ACIONAMENT |
| PLACA DE RETORNO | 7023459 | 4 | 1 | 144 | 10 41 302 4 | MECANISMO DE ACIONAMENT |
| PLACA DE RETORNO | 9266567 | 2 | 1 | 156 | 98 88 119 | CONJ REP (ESFERA RZ+PL) N |
| PLACA DE RETORNO | 9882215 | 14 | 1 | 199 | 90 74 416 | KIT DE REPARO |
| PLACA DE RETORNO | 9882215 | 2 | 1 | 695 | 90 73 389 | CONJ REP (ESFERA RZ+PL) N |
| PLACA DE RETORNO | 9889930 | 2 | 1 | 158 | 98 89 988 | CONJ REP (ESFERA RZ+PL) N |
| PLACA DO ASSOALHO DA CAB | 9010347 | 10 | 1 | 229 | 10 49 880 9 | POSTO DE COMANDO - PEÇA |
| PLACA DO ASSOALHO DA CAB | 9879063 | 30 | 1 | 223 | 10 49 872 7 | POSTO DE COMANDO |
| PLACA ELETRONICA | 9202120 | 10 | 1 | 652 | 10 35 860 1 | ALARME DE TRANSLACAO |
| PLACA ELETRÔNICA | 10687417 | 100 | 1 | 251 | 10 84 086 6 | APOIO DIREITO PARA BRAÇO |
| PLACA ELETRÔNICA | 975881501 | 40 | 1 | 237 | 10 38 502 4 | APOIO ESQUERDO PARA BR |
| PLACA ELETRÔNICA | 989165301 | 91 | 1 | 238 | 10 38 502 4 | APOIO ESQUERDO PARA BR |
| PLACA H=5 | 10091991 | 35 | 2 | 618 | 10 49 830 0 | LANÇA MONOBLOCO 6,70M |
| PLACA INDICAÇÃO-PONTO A | 9402376 | 40 | 4 | 464 | 10 35 804 3 | PLAQUETAS |
| PLACA INDICAÇÃO-PONTO A | 9402376 | 40 | 4 | 467 | 10 49 805 9 | PLAQUETAS |
| PLACA INDICAÇÃO-PONTO IÇA | 9402377 | 45 | 2 | 464 | 10 35 804 3 | PLAQUETAS |
| PLACA INDICAÇÃO-PONTO IÇA | 9402377 | 45 | 2 | 467 | 10 49 805 9 | PLAQUETAS |
| PLACA INTERMEDIARIA | 10297874 | 3 | 1 | 142 | 10 41 087 0 | BOMBA HIDRÁULICA |
| PLACA ISOLANTE | 11644222 | 6 | 1 | 283 | 10 02 206 9 | CARCACA DO EVAPORADOR |
| PLACA MOTORSTILLSTAND 1 | 9619934 | 52 | 1 | 464 | 10 35 804 3 | PLAQUETAS |
| PLACA MOTORSTILLSTAND 1 | 9619934 | 52 | 1 | 467 | 10 49 805 9 | PLAQUETAS |
| PLACA ROSCADA | 9010820 | 47 | 1 | 312 | 10 35 809 3 | INSTALACAO HIDRAULICA |
| PLACA RUECKLAUF | 10022635 | 5 | 1 | 282 | 10 81 666 6 | EVAPORADOR |
| PLACA WAXOYL | 10015928 | 36 | 1 | 464 | 10 35 804 3 | PLAQUETAS |
| PLACAS INSTALACAO A1016 | 9874988 | 45 | 1 | 237 | 10 38 502 4 | APOIO ESQUERDO PARA BR |
| PLANO DE LUBRIFICACAO | 10070309 | 15 | 1 | 463 | 10 35 804 3 | PLAQUETAS |
| PLANO DE LUBRIFICACAO | 10840318 | 15 | 1 | 466 | 10 49 805 9 | PLAQUETAS |
| PLAQUETA CINTO DE SEGURA | 10066101 | 80 | 1 | 465 | 10 35 804 3 | PLAQUETAS |
| PLAQUETA CINTO DE SEGURA | 10066101 | 80 | 1 | 468 | 10 49 805 9 | PLAQUETAS |
| PLAQUETA DE ADVERTENCIA | 9910464 | 50 | 2 | 464 | 10 35 804 3 | PLAQUETAS |
| PLAQUETA DE ADVERTENCIA | 9910464 | 50 | 2 | 467 | 10 49 805 9 | PLAQUETAS |
| PLAQUETA DE TIPO LAM 83m | 9354303 | 5 | 1 | 466 | 10 49 805 9 | PLAQUETAS |
| PLAQUETA DE TIPO LFR (PO | 934430516 | 4 | 1 | 463 | 10 35 804 3 | PLAQUETAS |

| Designação | Artigo | Item | Quanti | Página | Módulo | Designação |
|---|---|---|---|---|---|---|
| PLAQUETA DE TIPO LFR 150m | 10405887 | 6 | 1 | 466 | 10 49 805 9 | PLAQUETAS |
| PLAQUETA PARTIDA EXTERNA | 9909254 | 47 | 1 | 464 | 10 35 804 3 | PLAQUETAS |
| PLAQUETA PARTIDA EXTERNA | 9909254 | 47 | 1 | 467 | 10 49 805 9 | PLAQUETAS |
| PLAQUETA SAIDA DE EMERG | 10039562 | 850 | 1 | 407 | 70 28 767 | VIDRO FIXO |
| PLAQUETAS | 10358043 | 9900 | 1 | 86 | 10 35 798 2 | CARRO SUPERIOR |
| PLAQUETAS | 10498059 | 9900 | 1 | 86 | 10 35 798 2 | CARRO SUPERIOR |
| PLATAFORMA GIRATÓRIA | 10498733 | 8200 | 1 | 85 | 10 35 798 2 | CARRO SUPERIOR |
| PLATAFORMA GIRATÓRIA | 10498802 | 8200 | 1 | 86 | 10 35 798 2 | CARRO SUPERIOR |
| PLUG ELETRICO CODIFICADO | 989150801 | 7 | 1 | 435 | 10 35 814 1 | INSTALAÇÃO ELÉTRICA |
| PLUGUE | 10012889 | 20 | 1 | 339 | 10 22 239 3 | FILTRO DE VENTILACAO |
| PLUGUE | 7025644 | 1 | 1 | 248 | 73 69 377 | ACENDEDOR DE CIGARROS |
| PLUGUE DE FECHAMENTO | 10000286 | 820 | 2 | 430 | 10 29 026 4 | PEÇAS DE MONTAGEM |
| PLUGUE DE FECHAMENTO | 10044354 | 210 | 2 | 427 | 10 29 026 4 | PEÇAS DE MONTAGEM |
| PLUGUE DE FECHAMENTO | 10291063 | 590 | 1 | 423 | 10 29 036 3 | KIT DO MOTOR DO LIMPADOR |
| PLUGUE DE FECHAMENTO | 10292443 | 6 | 1 | 255 | 56 18 923 | CONSOLE DE COMANDO DIRE |
| PLUGUE DE FECHAMENTO | 7020615 | 700 | 6 | 429 | 10 29 026 4 | PEÇAS DE MONTAGEM |
| PLUGUE DE FECHAMENTO | 7020616 | 720 | 1 | 429 | 10 29 026 4 | PEÇAS DE MONTAGEM |
| PLUGUE DE FECHAMENTO | 7363408 | 50 | 1 | 452 | 90 18 419 | TANQUE COMBUSTIVEL INSTA |
| PLUGUE DE FECHAMENTO GP | 10220397 | 550 | 7 | 429 | 10 29 026 4 | PEÇAS DE MONTAGEM |
| PLUGUE ELÉTRICO | 6001963 | 77 | 1 | 249 | 10 84 086 6 | APOIO DIREITO PARA BRAÇO |
| PLUGUE ELÉTRICO JPT 3POL. | 9064882 | 98 | 1 | 586 | 90 76 534 | SENSOR DE ROTACAO |
| POLIA | 10116366 | 1 | 1 | 499 | 10 11 617 5 | VIRABREQUIM PEÇAS DE AC |
| POLIA 8 PKd=54,5 | 10116372 | 5 | 1 | 574 | 10 11 646 3 | GERADOR PRE-MONTAGEM |
| PONTE (JUMPER) 2 FACH | 6001474 | 29 | 10 | 442 | 99 47 695 | INSTALAÇÃO ELÉTRICA E50 |
| PONTO DISTRIBUICAO COM E | 10013881 | 18 | 1 | 212 | 10 48 840 4 | BLOCO DE DISTRIBUIÇÃO SX |
| PONTO DISTRIBUICAO COM E | 7622804 | 32 | 2 | 623 | 10 10 171 2 | BLOCO DE DISTRIBUIÇÃO MX- |
| PORCA | 10011397 | 4 | 1 | 63 | 10 00 963 0 | COLETOR GIRATÓRIO |
| PORCA | 10013550 | 151 | 1 | 218 | 90 64 786 | ELEMENTO DE CONEXÃO |
| PORCA | 10013550 | 151 | 10 | 220 | 10 01 461 1 | CAIXA AUXILIAR |
| PORCA | 7027459 | 998 | 1 | 642 | 10 00 348 5 | VÁLVULA DIRECIONAL |
| PORCA DE APERTO M48 | 9229473 | 4 | 1 | 643 | 10 06 090 1 | PINO COMPLETO |
| PORCA DE APERTO M64 | 9240322 | 12 | 1 | 646 | 93 74 949 | PINO COMPLETO |
| PORCA DE CHAPA | 10009079 | 260 | 8 | 420 | 10 48 808 7 | INSTALACAO ELETRICA |
| PORCA DE CHAPA | 10009189 | 440 | 4 | 433 | 10 48 808 8 | REVESTIMENTO INTERNO |
| PORCA DE CHAPA | 10044356 | 100 | 12 | 432 | 10 48 808 8 | REVESTIMENTO INTERNO |
| PORCA DE CHAPA | 10290260 | 800 | 2 | 430 | 10 29 026 4 | PEÇAS DE MONTAGEM |
| PORCA DE CHAPA | 7366862 | 10 | 1 | 240 | 10 16 576 6 | CONSOLE DE COMANDO |
| PORCA DE CHAPA M6 | 7370883 | 13 | 7 | 240 | 10 16 576 6 | CONSOLE DE COMANDO |
| PORCA DE CHAPA M6 | 7370883 | 12 | 11 | 255 | 56 18 923 | CONSOLE DE COMANDO DIRE |
| PORCA DE CHAPA ST4,8 | 7028941 | 190 | 10 | 432 | 10 48 808 8 | REVESTIMENTO INTERNO |
| PORCA DE COBERTURA | 10278642 | 135 | 1 | 653 | 10 00 297 1 | VÁLVULA DE SEGURANÇA RU |
| PORCA DE COBERTURA | 7028908 | 650 | 5 | 429 | 10 29 026 4 | PEÇAS DE MONTAGEM |
| PORCA DE CONEXAO M 22X1, | 9075763 | 2 | 1 | 534 | 90 75 395 | BOCAL DE TUBO DE PRESSA |
| PORCA DE VEDACAO M10X1 | 11213009 | 9 | 1 | 146 | 57 15 963 | VÁLVULA LIMITADORA DE PR |
| PORCA DE VEDACAO M12 | 7381226 | 6 | 1 | 480 | 10 11 795 1 | VALVULA DE REGULAGEM FI |
| PORCA DE VEDACAO M12 | 7381226 | 3 | 1 | 605 | 10 11 801 4 | KIT DE VEDACAO |
| PORCA DE VEDACAO M12 | 7381226 | 3 | 1 | 608 | 10 11 583 8 | JOGO DE VEDAÇÃO MOTOR D |
| PORCA M10X1 | 7381781 | 6 | 1 | 512 | 90 74 507 | BALANCIM PRE-MONTAGEM |
| PORCA M14X1,5 | 9270475 | 17 | 1 | 688 | 10 11 856 1 | MODULO DE COMANDO VG6- |
| PORCA M22 | 7369103 | 4 | 208 | 52 | 10 47 009 2 | ESTEIRA 500mm |
| PORCA RANHURADA | 932719601 | 13 | 1 | 184 | 90 01 790 0 | REDUTOR DE GIRO SAT 375/ |
| PORCA SEAL-LOCK | 7009369 | 47 | 1 | 122 | 56 16 530 | BOMBA DE PISTÃO AXIAL |
| PORCA SEAL-LOCK | 7009369 | 132 | 1 | 366 | 10 03 245 2 | BLOCO DE COMANDO |
| PORCA SEAL-LOCK | 7361601 | 14 | 1 | 132 | 10 22 063 5 | VALVULA INTERRUPTORA |
| PORCA SEAL-LOCK | 7361601 | 8 | 1 | 317 | 50 09 565 | CARTUCHO LIMITADOR DE PR |
| PORCA SEAL-LOCK M6 | 7361600 | 30 | 2 | 148 | 70 28 075 | UNIDADE DE CONTROLE |
| PORCA SEAL-LOCK M6 | 7361600 | 57 | 2 | 154 | 98 82 875 | KIT VEDACAO VALULA REGUL |
| PORCA SEAL-LOCK M6X0,5 | 7027052 | 32 | 2 | 148 | 70 28 075 | UNIDADE DE CONTROLE |
| PORCA SERRILHADA | 7023934 | 6 | 1 | 319 | 56 15 344 | VÁLVULA SOLENÓIDE |
| PORCA SERRILHADA | 7023934 | 6 | 1 | 320 | 10 01 872 5 | VÁLVULA DIRECIONAL |

| Designação | Artigo | Item | Quanti | Página | Módulo | Designação |
|---|---|---|---|---|---|---|
| PORCA SEXTAVADA | 7024940 | 133 | 1 | 653 | 10 00 297 1 | VÁLVULA DE SEGURANÇA RU |
| PORCA SEXTAVADA M 8 | 241015402 | 10 | 4 | 292 | 11 00 707 2 | TRILHO DO BANCO DO OPERA |
| PORCA SEXTAVADA M10 | 10335968 | 13 | 4 | 164 | 10 45 475 2 | RADIADOR COMBINADO |
| PORCA SEXTAVADA M10 | 10335968 | 17 | 4 | 167 | 10 35 508 4 | RADIADOR DE ÓLEO |
| PORCA SEXTAVADA M10 | 10411095 | 5 | 2 | 577 | 10 21 997 8 | MOTOR DE PARTIDA |
| PORCA SEXTAVADA M10 | 4000383 | 16 | 4 | 249 | 10 84 086 6 | APOIO DIREITO PARA BRAÇO |
| PORCA SEXTAVADA M10 | 4000383 | 33 | 4 | 346 | 10 35 802 8 | INSTALAÇÃO BLOCO DE VÁL |
| PORCA SEXTAVADA M10 | 4000383 | 45 | 3 | 346 | 10 35 802 8 | INSTALAÇÃO BLOCO DE VÁL |
| PORCA SEXTAVADA M10 | 4000383 | 8 | 8 | 444 | 11 10 266 2 | BATERIA - INSTALACAO |
| PORCA SEXTAVADA M10 | 4000383 | 29 | 1 | 451 | 90 18 419 | TANQUE COMBUSTIVEL INSTA |
| PORCA SEXTAVADA M10 | 4000383 | 14 | 1 | 646 | 93 74 949 | PINO COMPLETO |
| PORCA SEXTAVADA M10 | 4000913 | 18 | 2 | 160 | 10 35 809 2 | ARREFECIMENTO DO MOTOR |
| PORCA SEXTAVADA M10 | 4000913 | 47 | 4 | 181 | 90 18 423 | INSTALACAO MECANISMO GI |
| PORCA SEXTAVADA M10 | 4600567 | 25 | 2 | 388 | 10 07 307 3 | PORTA LATERAL DIREITA |
| PORCA SEXTAVADA M10 | 4600567 | 8 | 2 | 394 | 10 06 691 8 | TAMPA |
| PORCA SEXTAVADA M10 | 4600567 | 15 | 2 | 399 | 99 47 961 | PORTA LATERAL DIANTEIRA |
| PORCA SEXTAVADA M10 | 4600567 | 22 | 2 | 400 | 10 02 525 4 | FECHO DA PORTA |
| PORCA SEXTAVADA M10 | 4600579 | 44 | 1 | 313 | 10 35 801 7 | INSTALACAO HIDRAULICA |
| PORCA SEXTAVADA M10 | 4600579 | 91 | 1 | 313 | 10 35 801 7 | INSTALACAO HIDRAULICA |
| PORCA SEXTAVADA M10 | 4600579 | 6 | 2 | 362 | 99 45 116 | BRAÇADEIRA DE TUBO |
| PORCA SEXTAVADA M10 | 4600579 | 15 | 2 | 362 | 99 45 116 | BRAÇADEIRA DE TUBO |
| PORCA SEXTAVADA M10 | 4600579 | 47 | 4 | 444 | 11 10 266 2 | BATERIA - INSTALACAO |
| PORCA SEXTAVADA M10 | 4600579 | 62 | 2 | 619 | 10 49 830 0 | LANÇA MONOBLOCO 6,70M |
| PORCA SEXTAVADA M10 | 4600579 | 25 | 12 | 641 | 10 49 881 6 | TRILHO DESLIZANTE |
| PORCA SEXTAVADA M10 | 4600579 | 6 | 1 | 643 | 10 06 090 1 | PINO COMPLETO |
| PORCA SEXTAVADA M10 | 4901429 | 24 | 6 | 104 | 10 35 800 6 | SISTEMA DE ESPACAMENTO |
| PORCA SEXTAVADA M10 | 4980805 | 3 | 3 | 575 | 10 11 553 9 | MOTOR DE PARTIDA - MONTA |
| PORCA SEXTAVADA M10 | 4981173 | 6 | 1 | 573 | 90 80 735 | KIT DO TURBO COMPRESSOR |
| PORCA SEXTAVADA M10 | 7370889 | 8 | 2 | 240 | 10 16 576 6 | CONSOLE DE COMANDO |
| PORCA SEXTAVADA M10 | 7370889 | 13 | 4 | 255 | 56 18 923 | CONSOLE DE COMANDO DIRE |
| PORCA SEXTAVADA M12 | 10336052 | 22 | 2 | 167 | 10 35 508 4 | RADIADOR DE ÓLEO |
| PORCA SEXTAVADA M12 | 4000619 | 44 | 8 | 301 | 10 35 801 5 | PASSAGEM HIDRAULICA |
| PORCA SEXTAVADA M12 | 4000619 | 58 | 4 | 301 | 10 35 801 5 | PASSAGEM HIDRAULICA |
| PORCA SEXTAVADA M12 | 4000619 | 140 | 1 | 377 | 10 35 800 4 | REVESTIMENTO |
| PORCA SEXTAVADA M12 | 4000619 | 36 | 4 | 618 | 10 49 830 0 | LANÇA MONOBLOCO 6,70M |
| PORCA SEXTAVADA M12 | 4000619 | 8 | 2 | 655 | 10 06 203 8 | CILINDRO HIDRAULICO |
| PORCA SEXTAVADA M12 | 4119106 | 7 | 12 | 160 | 10 35 809 2 | ARREFECIMENTO DO MOTOR |
| PORCA SEXTAVADA M12 | 4119106 | 195 | 4 | 296 | 10 35 801 2 | INSTALACAO HDRAULICA |
| PORCA SEXTAVADA M12 | 4119106 | 210 | 4 | 296 | 10 35 801 2 | INSTALACAO HDRAULICA |
| PORCA SEXTAVADA M12 | 4119106 | 330 | 4 | 296 | 10 35 801 2 | INSTALACAO HDRAULICA |
| PORCA SEXTAVADA M12 | 4119106 | 8 | 4 | 310 | 10 35 809 3 | INSTALACAO HIDRAULICA |
| PORCA SEXTAVADA M12 | 4900125 | 12 | 1 | 244 | 10 05 879 2 | SENSOR DE PRE-COMANDO E |
| PORCA SEXTAVADA M12 | 4900125 | 12 | 1 | 259 | 10 05 879 4 | SENSOR DE PRE-COMANDO |
| PORCA SEXTAVADA M12 | 4900125 | 22 | 2 | 402 | 10 35 387 9 | FECHADURA DA PORTA |
| PORCA SEXTAVADA M12 | 4900546 | 48 | 4 | 109 | 90 77 872 | REDUTOR DISTRIBUICAO BO |
| PORCA SEXTAVADA M12 | 4900546 | 33 | 1 | 269 | 10 06 017 4 | PEDAL ESQUERDO COMPLET |
| PORCA SEXTAVADA M12 | 4900546 | 33 | 1 | 270 | 10 06 017 5 | PEDAL DIREITO COMPLETO |
| PORCA SEXTAVADA M12 | 4900546 | 48 | 2 | 309 | 10 35 801 3 | ARREFECIMENTO DE OLEO |
| PORCA SEXTAVADA M12 | 4900546 | 13 | 10 | 371 | 10 07 369 5 | REVESTIMENTO DA PLAT.GI |
| PORCA SEXTAVADA M12 | 4900546 | 23 | 4 | 371 | 10 07 369 5 | REVESTIMENTO DA PLAT.GI |
| PORCA SEXTAVADA M12 | 4900546 | 17 | 1 | 690 | 98 82 766 | DISPOSITIVO DE REGULAGE |
| PORCA SEXTAVADA M12 | 4980150 | 14 | 2 | 164 | 10 45 475 2 | RADIADOR COMBINADO |
| PORCA SEXTAVADA M12X1,5 | 10217578 | 16 | 1 | 115 | 10 22 041 0 | DISPOSITIVO DE REGULAGE |
| PORCA SEXTAVADA M14X1,5 | 4001927 | 105 | 1 | 247 | 99 68 625 | ALÇA DE TRANSMISSÃO-LH E |
| PORCA SEXTAVADA M14X1,5 | 4001927 | 105 | 1 | 262 | 99 68 611 | MANETE DIREITA |
| PORCA SEXTAVADA M16 | 4000420 | 53 | 8 | 51 | 10 49 883 7 | CARRO INFERIOR COMPLETO |
| PORCA SEXTAVADA M16 | 4000420 | 49 | 12 | 109 | 90 77 872 | REDUTOR DISTRIBUICAO BO |
| PORCA SEXTAVADA M16 | 4000420 | 21 | 2 | 341 | 10 84 584 9 | INSTALACAO BOMBA E EMBR |
| PORCA SEXTAVADA M16 | 4000420 | 49 | 5 | 366 | 10 03 245 2 | BLOCO DE COMANDO |
| PORCA SEXTAVADA M16 | 4000420 | 5 | 2 | 647 | 10 06 428 8 | BRAÇADEIRA |

| Designação | Artigo | Item | Quanti | Página | Módulo | Designação |
|---|---|---|---|---|---|---|
| PORCA SEXTAVADA M16 | 4000420 | 5 | 2 | 648 | 10 38 549 0 | BRAÇADEIRA |
| PORCA SEXTAVADA M16X1,5 | 4980478 | 8 | 1 | 574 | 10 11 646 3 | GERADOR PRE-MONTAGEM |
| PORCA SEXTAVADA M3 | 10003140 | 26 | 2 | 243 | 73 73 807 | ALAVANCA DE SEGURANCA |
| PORCA SEXTAVADA M4 | 4000376 | 36 | 2 | 170 | 10 49 858 1 | SISTEMA ELETRICO DO MOTO |
| PORCA SEXTAVADA M4 | 4000376 | 33 | 6 | 237 | 10 38 502 4 | APOIO ESQUERDO PARA BR |
| PORCA SEXTAVADA M4 | 4000376 | 92 | 4 | 238 | 10 38 502 4 | APOIO ESQUERDO PARA BR |
| PORCA SEXTAVADA M4 | 4000376 | 105 | 2 | 251 | 10 84 086 6 | APOIO DIREITO PARA BRAÇO |
| PORCA SEXTAVADA M4 | 4000376 | 121 | 2 | 253 | 10 84 086 6 | APOIO DIREITO PARA BRAÇO |
| PORCA SEXTAVADA M4 | 4000376 | 5 | 3 | 288 | 10 02 207 8 | CANTONEIRA DE MONTAGEM |
| PORCA SEXTAVADA M4 | 413412301 | 39 | 4 | 682 | 10 28 689 7 | BOMBA DE LUBRIFICACAO |
| PORCA SEXTAVADA M4 | 4600625 | 10 | 6 | 285 | 10 02 211 7 | CARCACA DE CONDUCAO DE |
| PORCA SEXTAVADA M5 | 4000466 | 72 | 2 | 238 | 10 38 502 4 | APOIO ESQUERDO PARA BR |
| PORCA SEXTAVADA M5 | 4000466 | 63 | 2 | 241 | 97 58 815 01 | PLACA ELETRÔNICA |
| PORCA SEXTAVADA M5 | 4000466 | 8 | 2 | 242 | 98 74 988 | PLACAS INSTALACAO A1016 |
| PORCA SEXTAVADA M5 | 4000466 | 34 | 2 | 443 | 99 47 695 | INSTALAÇÃO ELÉTRICA E50 |
| PORCA SEXTAVADA M5 | 4001866 | 66 | 2 | 241 | 97 58 815 01 | PLACA ELETRÔNICA |
| PORCA SEXTAVADA M6 | 10003366 | 3 | 1 | 554 | 90 78 314 | FLANGE DE AQUECIMENTO |
| PORCA SEXTAVADA M6 | 10411094 | 3 | 1 | 577 | 10 21 997 8 | MOTOR DE PARTIDA |
| PORCA SEXTAVADA M6 | 4000379 | 480 | 2 | 75 | 56 16 688 | VALVULA FRENAGEM DA TRA |
| PORCA SEXTAVADA M6 | 4000379 | 53 | 3 | 102 | 99 37 298 | INSTALAÇÃO DO FILTRO DE A |
| PORCA SEXTAVADA M6 | 4000379 | 47 | 4 | 108 | 90 77 872 | REDUTOR DISTRIBUICAO BO |
| PORCA SEXTAVADA M6 | 4000379 | 64 | 2 | 241 | 97 58 815 01 | PLACA ELETRÔNICA |
| PORCA SEXTAVADA M6 | 4000379 | 86 | 2 | 251 | 10 84 086 6 | APOIO DIREITO PARA BRAÇO |
| PORCA SEXTAVADA M6 | 4000379 | 75 | 1 | 280 | 10 40 689 8 | SISTEMA DE AR CONDICION |
| PORCA SEXTAVADA M6 | 4000379 | 478 | 2 | 353 | 10 35 802 8 | INSTALAÇÃO BLOCO DE VÁL |
| PORCA SEXTAVADA M6 | 4000379 | 11 | 2 | 381 | 99 49 428 | CAPO DO RADIADOR |
| PORCA SEXTAVADA M6 | 4000379 | 22 | 4 | 388 | 10 07 307 3 | PORTA LATERAL DIREITA |
| PORCA SEXTAVADA M6 | 4000379 | 5 | 4 | 394 | 10 06 691 8 | TAMPA |
| PORCA SEXTAVADA M6 | 4000379 | 12 | 4 | 399 | 99 47 961 | PORTA LATERAL DIANTEIRA |
| PORCA SEXTAVADA M6 | 4000379 | 12 | 4 | 400 | 10 02 525 4 | FECHO DA PORTA |
| PORCA SEXTAVADA M6 | 4000379 | 12 | 4 | 402 | 10 35 387 9 | FECHADURA DA PORTA |
| PORCA SEXTAVADA M6 | 4000379 | 180 | 2 | 411 | 70 28 759 | PÁRA-BRISA SUPERIOR |
| PORCA SEXTAVADA M6 | 4000379 | 300 | 1 | 414 | 70 28 769 | PORTA DA CABINE DO MOTO |
| PORCA SEXTAVADA M6 | 4000379 | 450 | 4 | 428 | 10 29 026 4 | PEÇAS DE MONTAGEM |
| PORCA SEXTAVADA M6 | 4000900 | 17 | 2 | 338 | 56 17 689 | VÁLVULA DE FECHAMENTO D |
| PORCA SEXTAVADA M6 | 4002477 | 67 | 2 | 241 | 97 58 815 01 | PLACA ELETRÔNICA |
| PORCA SEXTAVADA M6 | 4901651 | 45 | 1 | 443 | 99 47 695 | INSTALAÇÃO ELÉTRICA E50 |
| PORCA SEXTAVADA M8 | 4000381 | 137 | 1 | 163 | 10 35 809 2 | ARREFECIMENTO DO MOTOR |
| PORCA SEXTAVADA M8 | 4000381 | 30 | 33 | 170 | 10 49 858 1 | SISTEMA ELETRICO DO MOTO |
| PORCA SEXTAVADA M8 | 4000381 | 68 | 1 | 179 | 10 35 800 9 | MOTOR - PECAS ANEXAS |
| PORCA SEXTAVADA M8 | 4000381 | 23 | 2 | 209 | 10 04 966 2 | LUBRIFICAÇÃO CENTR. AUT |
| PORCA SEXTAVADA M8 | 4000381 | 6 | 6 | 214 | 10 04 966 3 | LUBRIFICAÇÃO CENTRALIZAD |
| PORCA SEXTAVADA M8 | 4000381 | 57 | 6 | 228 | 99 39 322 | PECAS DE FIXACAO |
| PORCA SEXTAVADA M8 | 4000381 | 131 | 2 | 230 | 10 49 880 9 | POSTO DE COMANDO - PEÇA |
| PORCA SEXTAVADA M8 | 4000381 | 161 | 3 | 230 | 10 49 880 9 | POSTO DE COMANDO - PEÇA |
| PORCA SEXTAVADA M8 | 4000381 | 59 | 1 | 312 | 10 35 809 3 | INSTALACAO HIDRAULICA |
| PORCA SEXTAVADA M8 | 4000381 | 4 | 2 | 390 | 10 06 692 0 | CAIXA DE FERRAMENTAS |
| PORCA SEXTAVADA M8 | 4000381 | 4 | 2 | 392 | 10 37 938 6 | CAIXA DE FERRAMENTAS |
| PORCA SEXTAVADA M8 | 4000381 | 170 | 4 | 414 | 70 28 769 | PORTA DA CABINE DO MOTO |
| PORCA SEXTAVADA M8 | 4000381 | 160 | 1 | 420 | 10 48 808 7 | INSTALACAO ELETRICA |
| PORCA SEXTAVADA M8 | 4000381 | 540 | 1 | 423 | 10 29 036 3 | KIT DO MOTOR DO LIMPADOR |
| PORCA SEXTAVADA M8 | 4000381 | 180 | 4 | 427 | 10 29 026 4 | PEÇAS DE MONTAGEM |
| PORCA SEXTAVADA M8 | 4000381 | 208 | 50 | 436 | 10 35 814 1 | INSTALAÇÃO ELÉTRICA |
| PORCA SEXTAVADA M8 | 4000381 | 25 | 4 | 444 | 11 10 266 2 | BATERIA - INSTALACAO |
| PORCA SEXTAVADA M8 | 4000381 | 30 | 14 | 444 | 11 10 266 2 | BATERIA - INSTALACAO |
| PORCA SEXTAVADA M8 | 4000381 | 27 | 6 | 447 | 10 35 814 3 | MAGUEIRAS DO AR-CONDICI |
| PORCA SEXTAVADA M8 | 4000381 | 5 | 1 | 680 | 10 49 822 9 | LUBRIFICAÇÃO CENTR.TOTAL. |
| PORCA SEXTAVADA M8 | 411508001 | 65 | 1 | 241 | 97 58 815 01 | PLACA ELETRÔNICA |
| PORCA SEXTAVADA M8 | 4600783 | 26 | 3 | 101 | 99 46 045 | INSTALACAO DE COMBUSTIVE |
| PORCA SEXTAVADA M8 | 4600783 | 54 | 1 | 179 | 10 35 800 9 | MOTOR - PECAS ANEXAS |

| Designação | Artigo | Item | Quanti | Página | Módulo | Designação |
|---|---|---|---|---|---|---|
| PORCA SEXTAVADA M8 | 4600783 | 68 | 1 | 241 | 97 58 815 01 | PLACA ELETRÔNICA |
| PORCA SEXTAVADA M8 | 4600783 | 66 | 2 | 374 | 10 35 800 4 | REVESTIMENTO |
| PORCA SEXTAVADA M8 | 4600783 | 430 | 1 | 428 | 10 29 026 4 | PEÇAS DE MONTAGEM |
| PORCA SEXTAVADA M8 | 4901096 | 4 | 2 | 275 | 94 76 369 | PLACA DE DEGRAU MONT. E |
| PORCA SEXTAVADA M8 | 4901096 | 4 | 2 | 276 | 94 76 441 | PLACA DE DEGRAU MONT. D |
| PORCA SEXTAVADA M8 | 4901573 | 8 | 4 | 212 | 10 48 840 4 | BLOCO DE DISTRIBUIÇÃO SX |
| PORCA SEXTAVADA M8 | 4901573 | 56 | 1 | 312 | 10 35 809 3 | INSTALACAO HIDRAULICA |
| PORCA SEXTAVADA M8 | 4901573 | 469 | 7 | 314 | 10 35 801 7 | INSTALACAO HIDRAULICA |
| PORCA SEXTAVADA M8 | 4901573 | 345 | 1 | 350 | 10 35 802 8 | INSTALAÇÃO BLOCO DE VÁL |
| PORCA SEXTAVADA M8 | 4901573 | 28 | 12 | 640 | 10 49 817 6 | PROTEÇÃO DA HASTE DO CIL |
| PORCA SEXTAVADA M8X1 | 4119030 | 150 | 2 | 411 | 70 28 759 | PÁRA-BRISA SUPERIOR |
| PORCA-CASTELO M64 | 9161348 | 4 | 1 | 644 | 10 06 097 3 | PINO COMPLETO |
| PORCA-CASTELO UNF5/8 | 10040410 | 70 | 2 | 312 | 10 35 809 3 | INSTALACAO HIDRAULICA |
| PORTA DA CABINE DO MOTO | 7028769 | 50 | 1 | 405 | 10 47 616 9 | CABINE DE OPERADOR |
| PORTA LATERAL CENTRAL E | 10357926 | 50 | 1 | 373 | 10 35 800 4 | REVESTIMENTO |
| PORTA LATERAL CENTRAL E | 9945100 | 2 | 1 | 386 | 10 35 792 6 | PORTA LATERAL CENTRAL E |
| PORTA LATERAL DIANTEIRA | 10358531 | 110 | 1 | 375 | 10 35 800 4 | REVESTIMENTO |
| PORTA LATERAL DIANTEIRA | 9947961 | 110 | 1 | 375 | 10 35 800 4 | REVESTIMENTO |
| PORTA LATERAL DIANTEIRA | 9947962 | 2 | 1 | 398 | 10 35 853 1 | PORTA LATERAL DIANTEIRA |
| PORTA LATERAL DIANTEIRA | 9947962 | 2 | 1 | 399 | 99 47 961 | PORTA LATERAL DIANTEIRA |
| PORTA LATERAL DIREITA | 10073072 | 2 | 1 | 388 | 10 07 307 3 | PORTA LATERAL DIREITA |
| PORTA LATERAL DIREITA | 10073072 | 2 | 1 | 389 | 10 37 283 9 | PORTA LATERAL DIREITA |
| PORTA LATERAL DIREITA | 10073073 | 60 | 1 | 373 | 10 35 800 4 | REVESTIMENTO |
| PORTA LATERAL DIREITA | 10372839 | 60 | 1 | 373 | 10 35 800 4 | REVESTIMENTO |
| PORTA LATERAL TRASEIRA | 10358172 | 40 | 1 | 373 | 10 35 800 4 | REVESTIMENTO |
| PORTA LATERAL TRASEIRA | 9929356 | 2 | 1 | 384 | 10 35 817 2 | PORTA LATERAL TRASEIRA |
| PORTA-INJETOR | 10027735 | 1 | 1 | 533 | 10 11 658 7 | VALVULA INJETORA |
| POSTO DE COMANDO | 10498727 | 6000 | 1 | 85 | 10 35 798 2 | CARRO SUPERIOR |
| POSTO DE COMANDO - PEÇA | 10498809 | 20 | 1 | 223 | 10 49 872 7 | POSTO DE COMANDO |
| PRATO DA MOLA | 10216737 | 23 | 2 | 131 | 10 22 052 4 | PISTAO ATUADOR |
| PRATO DA MOLA | 10220546 | 7 | 2 | 131 | 10 22 052 4 | PISTAO ATUADOR |
| PRATO DA MOLA | 10220649 | 4 | 1 | 146 | 57 15 963 | VÁLVULA LIMITADORA DE PR |
| PRATO DA MOLA | 11213474 | 8 | 2 | 132 | 10 22 063 5 | VALVULA INTERRUPTORA |
| PRATO DA MOLA | 7021980 | 70 | 2 | 75 | 56 16 688 | VALVULA FRENAGEM DA TRA |
| PRATO DA MOLA | 7028170 | 4 | 2 | 147 | 70 28 075 | UNIDADE DE CONTROLE |
| PRATO DA MOLA | 7028303 | 100 | 1 | 322 | 70 28 300 | VÁLVULA LIMITADORA DE PR |
| PRATO DA MOLA | 721005916 | 68 | 2 | 51 | 10 49 883 7 | CARRO INFERIOR COMPLETO |
| PRATO DA MOLA | 9079261 | 15 | 2 | 271 | 90 79 258 | MODULO DE COMANDO VG7 |
| PRATO DA MOLA | 9079261 | 15 | 2 | 273 | 90 79 259 | MODULO DE COMANDO VG7 |
| PRATO DA MOLA | 9265395 | 15 | 4 | 688 | 10 11 856 1 | MODULO DE COMANDO VG6- |
| PRATO MOLA SUPERIOR | 9074480 | 7 | 4 | 504 | 10 14 155 4 | CABEÇOTE PRÉ-MONTADO |
| PRATO MOLA SUPERIOR | 9074480 | 7 | 4 | 508 | 10 12 036 4 | CABEÇOTE PRÉ-MONTADO |
| PRE-FILTRO DE COMBUSTÍVE | 10044302 | 3 | 1 | 87 | 10 06 947 6 | KIT DE MANUTENÇÃO |
| PRE-FILTRO DE COMBUSTÍVE | 10044302 | 20 | 8 | 92 | 10 06 994 0 | KIT DE FILTROS DE COMBUSTÍ |
| PRE-FILTRO DE COMBUSTÍVE | 10044302 | 1 | 1 | 539 | 10 22 281 9 | PRÉ-FILTRO COMBUST.COM |
| PRE-FILTRO DE COMBUSTÍVE | 10116562 | 200 | 1 | 472 | 10 11 668 5 | MOTOR DIESEL D936 L A6 240 |
| PRENSA CABO | 10014688 | 5 | 2 | 678 | 10 01 468 0 | BLOCO DO MOTOR |
| PRESCRICAO DE APERTO | 10123559 | 602 | 1 | 693 | 92 67 554 | VÁLVULA LIMITADORA DE PR |
| PRISIONEIRO | 10081454 | 145 | 1 | 377 | 10 35 800 4 | REVESTIMENTO |
| PRODUTO PROT. CONTRA C | 8300005 | 801 | 1 | 667 | 94 01 936 4 | MANCAL DA HASTE DO PISTA |
| PRODUTO PROT. CONTRA C | 8300005 | 801 | 1 | 668 | 94 02 733 6 | MANCAL DA HASTE DO PISTA |
| PRODUTO PROT. CONTRA C | 8300005 | 801 | 1 | 669 | 99 52 600 | MANCAL DA HASTE DO PISTA |
| PROTECAO | 9408711 | 290 | 1 | 428 | 10 29 026 4 | PEÇAS DE MONTAGEM |
| PROTECAO ANTI-PO | 10040064 | 2 | 1 | 559 | 10 11 646 4 | COMPRESSOR DO AR-CONDI |
| PROTECAO CINTA INFERIOR | 10058279 | 11 | 1 | 7 | . | |
| PROTECAO DIREITA | 10358598 | 48 | 1 | 618 | 10 49 830 0 | LANÇA MONOBLOCO 6,70M |
| PROTECAO ESPIRAL PLASTIC | 7369399 | 80 | 4 | 620 | 10 49 830 0 | LANÇA MONOBLOCO 6,70M |
| PROTECAO ESQUERDA | 10374017 | 43 | 1 | 618 | 10 49 830 0 | LANÇA MONOBLOCO 6,70M |
| PROTECAO TERMICA COM FI | 10115718 | 415 | 1 | 474 | 10 11 668 5 | MOTOR DIESEL D936 L A6 240 |
| PROTECAO TERMICA COM FI | 10119199 | 416 | 1 | 474 | 10 11 668 5 | MOTOR DIESEL D936 L A6 240 |

| Designação | Artigo | Item | Quanti | Página | Módulo | Designação |
|---|---|---|---|---|---|---|
| PROTEÇÃO | 10498365 | 10 | 1 | 640 | 10 49 817 6 | PROTEÇÃO DA HASTE DO CIL |
| PROTEÇÃO | 7028800 | 112 | 1 | 410 | 10 03 553 0 | PÁRA-BRISA INFERIOR |
| PROTEÇÃO | 9266836 | 12 | 1 | 196 | 90 72 990 | PLACA DE CONEXAO |
| PROTEÇÃO DA HASTE DO CIL | 10498176 | 10 | 1 | 639 | 10 49 817 7 | PROTEÇÃO DA HASTE DO CIL |
| PROTEÇÃO DA HASTE DO CIL | 10498177 | 13 | 2 | 7 | . | |
| PROTEÇÃO DE CANTO | 9368060 | 470 | 2 | 314 | 10 35 801 7 | INSTALACAO HIDRAULICA |
| PRÉ-COMANDO DE PEDAL M | 10059818 | 40 | 1 | 229 | 10 49 880 9 | POSTO DE COMANDO - PEÇA |
| PRÉ-FILTRO COMBUST.COM | 10222819 | 1 | 1 | 537 | 10 11 656 2 | PRE-FILTRO DE COMBUSTÍVE |
| PRÉ-MONT. APOIO BRAÇO DI | 10362013 | 35 | 1 | 223 | 10 49 872 7 | POSTO DE COMANDO |
| PURGAMENTO DA ÁGUA REFR | 10124218 | 387 | 1 | 474 | 10 11 668 5 | MOTOR DIESEL D936 L A6 240 |
| PÁRA-BRISA INFERIOR | 10035529 | 40 | 1 | 405 | 10 47 616 9 | CABINE DE OPERADOR |
| PÁRA-BRISA INFERIOR | 10035530 | 110 | 1 | 409 | 10 03 552 9 | PÁRA-BRISA INFERIOR |
| PÁRA-BRISA INFERIOR | 7030040 | 111 | 1 | 410 | 10 03 553 0 | PÁRA-BRISA INFERIOR |
| PÁRA-BRISA SUPERIOR | 7028759 | 30 | 1 | 405 | 10 47 616 9 | CABINE DE OPERADOR |
| QUADRO DA JANELA | 10014687 | 4 | 1 | 678 | 10 01 468 0 | BLOCO DO MOTOR |
| QUADRO INSTALACAO | 10073661 | 300 | 1 | 85 | 10 35 798 2 | CARRO SUPERIOR |
| QUADRO INSTALACAO | 9018745 | 4 | 1 | 95 | 10 07 366 1 | QUADRO INSTALACAO |
| QUADRO TRASEIRO CENTRA | 9018749 | 10 | 1 | 95 | 10 07 366 1 | QUADRO INSTALACAO |
| QUADRO TRASEIRO ESQUE | 9018743 | 3 | 1 | 95 | 10 07 366 1 | QUADRO INSTALACAO |
| RADIADOR COMBINADO | 10454752 | 5 | 1 | 160 | 10 35 809 2 | ARREFECIMENTO DO MOTOR |
| RADIADOR DE AGUA | 10491376 | 33 | 1 | 165 | 10 45 475 2 | RADIADOR COMBINADO |
| RADIADOR DE COMBUSTIVEL | 10331627 | 6 | 1 | 167 | 10 35 508 4 | RADIADOR DE ÓLEO |
| RADIADOR DE FLUIDO HIDRA | 10331626 | 2 | 1 | 167 | 10 35 508 4 | RADIADOR DE ÓLEO |
| RADIADOR DE OLEO PRE-M | 10121438 | 1 | 1 | 519 | 10 12 143 9 | RADIADOR DE ÓLEO - ACES |
| RADIADOR DE ÓLEO | 10325002 | 3 | 1 | 520 | 10 12 143 8 | RADIADOR DE OLEO PRE-M |
| RADIADOR DE ÓLEO | 10355084 | 6 | 1 | 160 | 10 35 809 2 | ARREFECIMENTO DO MOTOR |
| RADIADOR DE ÓLEO - ACES | 10121439 | 130 | 1 | 471 | 10 11 668 5 | MOTOR DIESEL D936 L A6 240 |
| RADIADOR DO AR DE ADMIS | 10331661 | 48 | 1 | 165 | 10 45 475 2 | RADIADOR COMBINADO |
| RADIADOR OLEO DA TRANSM | 10331660 | 47 | 1 | 165 | 10 45 475 2 | RADIADOR COMBINADO |
| RASPADOR 125X140X9,5 | 10016714 | 4 | 1 | 53 | 90 15 155 | TENSIONADOR DE GRAXA |
| REBITE | 10470127 | 3 | 4 | 434 | 10 47 012 8 | |
| REBITE | 7020612 | 380 | 2 | 415 | 70 28 769 | PORTA DA CABINE DO MOTO |
| REBITE | 7020612 | 370 | 4 | 428 | 10 29 026 4 | PEÇAS DE MONTAGEM |
| REBITE CEGO | 10022656 | 10 | 4 | 286 | 11 00 359 4 | CARCAÇA |
| REBITE CEGO | 4900053 | 3 | 4 | 463 | 10 35 804 3 | PLAQUETAS |
| REBITE CEGO | 4900053 | 3 | 4 | 466 | 10 49 805 9 | PLAQUETAS |
| REBITE CEGO | 7029433 | 310 | 6 | 414 | 70 28 769 | PORTA DA CABINE DO MOTO |
| REBITE CEGO | 7029433 | 280 | 12 | 432 | 10 48 808 8 | REVESTIMENTO INTERNO |
| REBITE CEGO A 4X8 | 10040412 | 8 | 1 | 511 | 90 74 505 | BALANCIM PRE-MONTADO |
| REBITE CEGO A3,0 6,0 | 4451001 | 4 | 4 | 283 | 10 02 206 9 | CARCACA DO EVAPORADOR |
| REBITE EXPANSIVO | 7024438 | 220 | 2 | 414 | 70 28 769 | PORTA DA CABINE DO MOTO |
| REBITE EXPANSIVO | 7024438 | 200 | 12 | 432 | 10 48 808 8 | REVESTIMENTO INTERNO |
| RECIPEINTE TRANSPARENTE | 10016659 | 35 | 1 | 682 | 10 28 689 7 | BOMBA DE LUBRIFICACAO |
| RECIPEINTE TRANSPARENTE | 10222821 | 2 | 1 | 539 | 10 22 281 9 | PRÉ-FILTRO COMBUST.COM |
| REDUTOR | 10290346 | 510 | 1 | 423 | 10 29 036 3 | KIT DO MOTOR DO LIMPADOR |
| REDUTOR DE GIRO SAT 375/ | 90017900 | 10 | 1 | 183 | 99 46 389 | MECANISMO GIRATORIO |
| REDUTOR DISTRIBUICAO BO | 9077872 | 1 | 1 | 685 | 10 13 462 0 | AGREAGADO CIRCUITOS MU |
| REDUÇÃO | 482431414 | 67 | 1 | 620 | 10 49 830 0 | LANÇA MONOBLOCO 6,70M |
| REDUÇÃO | 9008618 | 40 | 2 | 671 | 10 49 815 8 | CILINDRO DE ELEVACAO |
| REDUÇÃO 6L | 10220950 | 145 | 1 | 218 | 90 64 786 | ELEMENTO DE CONEXÃO |
| REDUÇÃO 6L | 10220950 | 45 | 2 | 632 | 10 38 484 8 | LUBRIFICAÇÃO CENTRALIZAD |
| REDUÇÃO 6LL | 10342221 | 145 | 1 | 218 | 90 64 786 | ELEMENTO DE CONEXÃO |
| REDUÇÃO 8L | 10220951 | 146 | 1 | 218 | 90 64 786 | ELEMENTO DE CONEXÃO |
| REDUÇÃO 8LL | 10330614 | 146 | 1 | 218 | 90 64 786 | ELEMENTO DE CONEXÃO |
| REDUÇÃO BFW 35L | 7367136 | 11 | 1 | 159 | 99 29 814 | INSTALAÇÃO DA BOMBA |
| REDUÇÃO EGE 10L | 7617262 | 13 | 1 | 225 | 10 06 014 6 | INSTALACAO HIDRAULICA |
| REDUÇÃO EL 10L | 472330208 | 11 | 2 | 225 | 10 06 014 6 | INSTALACAO HIDRAULICA |
| REDUÇÃO EL 10L | 472330208 | 27 | 2 | 297 | 99 37 312 | UNIDADE DE COMANDO DE O |
| REDUÇÃO EL 10L | 472330208 | 83 | 2 | 343 | 10 84 584 9 | INSTALACAO BOMBA E EMBR |
| REDUÇÃO EL 10L | 472330208 | 430 | 1 | 353 | 10 35 802 8 | INSTALAÇÃO BLOCO DE VÁL |

| Designação | Artigo | Item | Quanti | Página | Módulo | Designação |
|---|---|---|---|---|---|---|
| REDUÇÃO EL 10L | 472330208 | 518 | 1 | 354 | 10 35 802 8 | INSTALAÇÃO BLOCO DE VÁL |
| REDUÇÃO EL 20S | 7407107 | 20 | 1 | 311 | 10 35 809 3 | INSTALACAO HIDRAULICA |
| REDUÇÃO EL 35L | 482330814 | 120 | 1 | 305 | 10 35 801 4 | MANGUEIRAS HIDRAULICAS |
| REDUÇÃO ET 10L | 482430314 | 180 | 6 | 314 | 10 35 801 7 | INSTALACAO HIDRAULICA |
| REDUÇÃO ET 10L | 482430314 | 82 | 1 | 343 | 10 84 584 9 | INSTALACAO BOMBA E EMBR |
| REDUÇÃO ET 15L | 472430408 | 42 | 1 | 312 | 10 35 809 3 | INSTALACAO HIDRAULICA |
| REDUÇÃO ET 18L | 247108402 | 36 | 1 | 311 | 10 35 809 3 | INSTALACAO HIDRAULICA |
| REDUÇÃO ET 28L | 7407122 | 17 | 1 | 84 | 10 07 713 5 | INST.HIDR.CARRO INFERIOR |
| REDUÇÃO EW 10L | 7403569 | 10 | 1 | 62 | 93 45 153 | COLETOR GIRATÓRIO - INSTA |
| REDUÇÃO EW 10L | 7403569 | 115 | 1 | 313 | 10 35 801 7 | INSTALACAO HIDRAULICA |
| REDUÇÃO EW 10L | 7403569 | 186 | 1 | 314 | 10 35 801 7 | INSTALACAO HIDRAULICA |
| REDUÇÃO EW 10L | 7403569 | 86 | 2 | 343 | 10 84 584 9 | INSTALACAO BOMBA E EMBR |
| REDUÇÃO EW 10L | 7403569 | 516 | 2 | 354 | 10 35 802 8 | INSTALAÇÃO BLOCO DE VÁL |
| REDUÇÃO EW 10S | 7617268 | 105 | 1 | 344 | 10 84 584 9 | INSTALACAO BOMBA E EMBR |
| REDUÇÃO EW 15L | 7615379 | 15 | 2 | 100 | 99 46 045 | INSTALACAO DE COMBUSTIVE |
| REDUÇÃO EW 15L | 7615379 | 17 | 1 | 100 | 99 46 045 | INSTALACAO DE COMBUSTIVE |
| REDUÇÃO EW 15L | 7615379 | 596 | 1 | 355 | 10 35 802 8 | INSTALAÇÃO BLOCO DE VÁL |
| REDUÇÃO EW 15L | 7615379 | 64 | 4 | 619 | 10 49 830 0 | LANÇA MONOBLOCO 6,70M |
| REDUÇÃO EW 18L | 247108302 | 18 | 1 | 308 | 10 35 801 3 | ARREFECIMENTO DE OLEO |
| REDUÇÃO EW 20S M30X2 | 7407108 | 22 | 1 | 311 | 10 35 809 3 | INSTALACAO HIDRAULICA |
| REDUÇÃO EW 22L | 247126202 | 46 | 1 | 162 | 10 35 809 2 | ARREFECIMENTO DO MOTOR |
| REDUÇÃO EW 22L | 247126202 | 68 | 1 | 301 | 10 35 801 5 | PASSAGEM HIDRAULICA |
| REDUÇÃO EW 22L | 247126202 | 221 | 1 | 306 | 10 35 801 4 | MANGUEIRAS HIDRAULICAS |
| REDUÇÃO EW 6S | 472531508 | 95 | 2 | 343 | 10 84 584 9 | INSTALACAO BOMBA E EMBR |
| REDUÇÃO EW 8L | 247021802 | 13 | 3 | 624 | 10 38 408 5 | LUBRIFICAÇÃO CENTRALIZAD |
| REDUÇÃO EW 8S M16X1,5 | 7404186 | 99 | 1 | 343 | 10 84 584 9 | INSTALACAO BOMBA E EMBR |
| REDUÇÃO G 15L | 7362107 | 84 | 1 | 620 | 10 49 830 0 | LANÇA MONOBLOCO 6,70M |
| REDUÇÃO G 22L | 7362408 | 85 | 1 | 620 | 10 49 830 0 | LANÇA MONOBLOCO 6,70M |
| REDUÇÃO G 6LL | 774374208 | 40 | 1 | 217 | 90 64 786 | ELEMENTO DE CONEXÃO |
| REDUÇÃO G 6LL | 774374208 | 40 | 6 | 219 | 10 01 461 1 | CAIXA AUXILIAR |
| REDUÇÃO GE 10 M14x1,5/9/16 | 10021563 | 40 | 4 | 542 | 10 11 628 5 | TUBULACAO DE COMBUSTIVE |
| REDUÇÃO GE 10 M14x1,5/9/16 | 10021563 | 90 | 4 | 543 | 10 11 628 5 | TUBULACAO DE COMBUSTIVE |
| REDUÇÃO GE 10L | 7362091 | 10 | 6 | 225 | 10 06 014 6 | INSTALACAO HIDRAULICA |
| REDUÇÃO GE 10L | 7362091 | 22 | 4 | 226 | 99 44 515 | INST. HIDR. MANETE ESQUE |
| REDUÇÃO GE 10L | 7362091 | 22 | 4 | 227 | 99 44 516 | INST. HIDRAULICA DA MANET |
| REDUÇÃO GE 10L | 7362091 | 25 | 6 | 297 | 99 37 312 | UNIDADE DE COMANDO DE O |
| REDUÇÃO GE 10L | 7362091 | 382 | 2 | 352 | 10 35 802 8 | INSTALAÇÃO BLOCO DE VÁL |
| REDUÇÃO GE 10L | 7362091 | 485 | 3 | 353 | 10 35 802 8 | INSTALAÇÃO BLOCO DE VÁL |
| REDUÇÃO GE 10L | 7362091 | 515 | 4 | 354 | 10 35 802 8 | INSTALAÇÃO BLOCO DE VÁL |
| REDUÇÃO GE 10L M14X1,5 | 4981235 | 3 | 1 | 489 | 90 79 862 | VARETA DE NÍVEL DE ÓLEO C |
| REDUÇÃO GE 10L M14X1,5 | 4981235 | 10 | 2 | 573 | 90 80 735 | KIT DO TURBO COMPRESSOR |
| REDUÇÃO GE 10L M14X1,5 | 7003814 | 9 | 1 | 62 | 93 45 153 | COLETOR GIRATÓRIO - INSTA |
| REDUÇÃO GE 10L M14X1,5 | 7003814 | 12 | 2 | 84 | 10 07 713 5 | INST.HIDR.CARRO INFERIOR |
| REDUÇÃO GE 10L M14X1,5 | 7003814 | 20 | 4 | 207 | 99 46 408 | TUBO LUBRIFICAÇÃO - INSTA |
| REDUÇÃO GE 10L M14X1,5 | 7003814 | 114 | 2 | 313 | 10 35 801 7 | INSTALACAO HIDRAULICA |
| REDUÇÃO GE 10L M14X1,5 | 7003814 | 81 | 6 | 343 | 10 84 584 9 | INSTALACAO BOMBA E EMBR |
| REDUÇÃO GE 10L M14X1,5 | 7003814 | 426 | 1 | 353 | 10 35 802 8 | INSTALAÇÃO BLOCO DE VÁL |
| REDUÇÃO GE 10S | 7362103 | 16 | 1 | 62 | 93 45 153 | COLETOR GIRATÓRIO - INSTA |
| REDUÇÃO GE 10S | 7362103 | 104 | 1 | 344 | 10 84 584 9 | INSTALACAO BOMBA E EMBR |
| REDUÇÃO GE 12 M16x1,5/3/4-1 | 10038568 | 20 | 1 | 549 | 10 11 657 6 | PEÇA DE CONEXÃO |
| REDUÇÃO GE 12L G1/4A | 7362117 | 20 | 2 | 226 | 99 44 515 | INST. HIDR. MANETE ESQUE |
| REDUÇÃO GE 12L G1/4A | 7362117 | 20 | 2 | 227 | 99 44 516 | INST. HIDRAULICA DA MANET |
| REDUÇÃO GE 15L | 4600518 | 18 | 1 | 100 | 99 46 045 | INSTALACAO DE COMBUSTIVE |
| REDUÇÃO GE 15L | 4600518 | 22 | 3 | 297 | 99 37 312 | UNIDADE DE COMANDO DE O |
| REDUÇÃO GE 15L | 7021805 | 235 | 1 | 314 | 10 35 801 7 | INSTALACAO HIDRAULICA |
| REDUÇÃO GE 15L | 7021805 | 245 | 1 | 314 | 10 35 801 7 | INSTALACAO HIDRAULICA |
| REDUÇÃO GE 15L M18X1,5 | 7003570 | 50 | 1 | 313 | 10 35 801 7 | INSTALACAO HIDRAULICA |
| REDUÇÃO GE 16S M27X2 | 7018370 | 98 | 1 | 347 | 10 35 802 8 | INSTALAÇÃO BLOCO DE VÁL |
| REDUÇÃO GE 16S M27X2 | 7018370 | 128 | 1 | 347 | 10 35 802 8 | INSTALAÇÃO BLOCO DE VÁL |
| REDUÇÃO GE 16S M27X2 | 7018370 | 143 | 2 | 348 | 10 35 802 8 | INSTALAÇÃO BLOCO DE VÁL |

| Designação | Artigo | Item | Quanti | Página | Módulo | Designação |
|---|---|---|---|---|---|---|
| REDUÇÃO GE 16S M27X2 | 7018370 | 210 | 1 | 349 | 10 35 802 8 | INSTALAÇÃO BLOCO DE VÁL |
| REDUÇÃO GE 18L M22X1,5 | 7003572 | 19 | 1 | 308 | 10 35 801 3 | ARREFECIMENTO DE OLEO |
| REDUÇÃO GE 18L M22X1,5 | 7003572 | 33 | 1 | 311 | 10 35 809 3 | INSTALACAO HIDRAULICA |
| REDUÇÃO GE 20S G1/2A | 7410451 | 21 | 1 | 311 | 10 35 809 3 | INSTALACAO HIDRAULICA |
| REDUÇÃO GE 22L | 7362515 | 93 | 1 | 304 | 10 35 801 4 | MANGUEIRAS HIDRAULICAS |
| REDUÇÃO GE 22L | 7362515 | 20 | 1 | 308 | 10 35 801 3 | ARREFECIMENTO DE OLEO |
| REDUÇÃO GE 22L | 7362515 | 100 | 1 | 343 | 10 84 584 9 | INSTALACAO BOMBA E EMBR |
| REDUÇÃO GE 22L | 7380956 | 75 | 2 | 110 | 90 77 872 | REDUTOR DISTRIBUICAO BO |
| REDUÇÃO GE 28L M30X1,5 | 7371875 | 45 | 1 | 162 | 10 35 809 2 | ARREFECIMENTO DO MOTOR |
| REDUÇÃO GE 28L M30X1,5 | 7371875 | 6 | 1 | 555 | 10 12 421 8 | PURGAMENTO DA ÁGUA REFR |
| REDUÇÃO GE 28L M33X2 | 7003800 | 16 | 1 | 84 | 10 07 713 5 | INST.HIDR.CARRO INFERIOR |
| REDUÇÃO GE 28L M33X2 | 7003800 | 16 | 1 | 300 | 10 35 801 5 | PASSAGEM HIDRAULICA |
| REDUÇÃO GE 28L M33X2 | 7003800 | 73 | 1 | 304 | 10 35 801 4 | MANGUEIRAS HIDRAULICAS |
| REDUÇÃO GE 28L M33X2 | 7003800 | 83 | 1 | 304 | 10 35 801 4 | MANGUEIRAS HIDRAULICAS |
| REDUÇÃO GE 35L | 4001871 | 125 | 2 | 305 | 10 35 801 4 | MANGUEIRAS HIDRAULICAS |
| REDUÇÃO GE 35L M42X2 | 4900486 | 5 | 1 | 105 | 10 06 658 8 | BOCAL DE SUCÇÃO |
| REDUÇÃO GE 35L M42X2 | 4900486 | 17 | 1 | 304 | 10 35 801 4 | MANGUEIRAS HIDRAULICAS |
| REDUÇÃO GE 35L M42X2 | 4900486 | 135 | 1 | 305 | 10 35 801 4 | MANGUEIRAS HIDRAULICAS |
| REDUÇÃO GE 6L | 7362169 | 21 | 1 | 631 | 10 38 484 8 | LUBRIFICAÇÃO CENTRALIZAD |
| REDUÇÃO GE 6L | 7362169 | 30 | 2 | 671 | 10 49 815 8 | CILINDRO DE ELEVACAO |
| REDUÇÃO GE 6L M10X1 | 4981233 | 9 | 2 | 598 | 90 78 961 | SAIDA AUXILIAR ANEXA |
| REDUÇÃO GE 6LL M10X1 | 774376508 | 185 | 1 | 218 | 90 64 786 | ELEMENTO DE CONEXÃO |
| REDUÇÃO GE 6LL M6 | 491035414 | 185 | 1 | 218 | 90 64 786 | ELEMENTO DE CONEXÃO |
| REDUÇÃO GE 8L | 7619197 | 21 | 1 | 181 | 90 18 423 | INSTALACAO MECANISMO GI |
| REDUÇÃO GE 8L M12X1,5 | 4001938 | 36 | 1 | 181 | 90 18 423 | INSTALACAO MECANISMO GI |
| REDUÇÃO GZ 10L | 7410211 | 184 | 4 | 314 | 10 35 801 7 | INSTALACAO HIDRAULICA |
| REDUÇÃO GZ 10L | 7410211 | 519 | 1 | 354 | 10 35 802 8 | INSTALAÇÃO BLOCO DE VÁL |
| REDUÇÃO GZ 8S | 7372371 | 12 | 1 | 439 | 11 10 278 6 | FAROL E BUZINA INSTALACA |
| REDUÇÃO M10X1K-M10X1 | 774373608 | 4 | 1 | 217 | 90 64 786 | ELEMENTO DE CONEXÃO |
| REDUÇÃO RED 15/10L | 7616915 | 520 | 1 | 354 | 10 35 802 8 | INSTALAÇÃO BLOCO DE VÁL |
| REDUÇÃO RED 18/15L | 7367746 | 17 | 1 | 308 | 10 35 801 3 | ARREFECIMENTO DE OLEO |
| REDUÇÃO RED 20/16S | 7407161 | 161 | 1 | 348 | 10 35 802 8 | INSTALAÇÃO BLOCO DE VÁL |
| REDUÇÃO RED 22/15L | 7616913 | 21 | 1 | 308 | 10 35 801 3 | ARREFECIMENTO DE OLEO |
| REDUÇÃO RED 22/15L | 7616913 | 65 | 2 | 619 | 10 49 830 0 | LANÇA MONOBLOCO 6,70M |
| REDUÇÃO RED 28/22L | 7616910 | 47 | 1 | 162 | 10 35 809 2 | ARREFECIMENTO DO MOTOR |
| REDUÇÃO RED 28/22L | 7616910 | 66 | 1 | 301 | 10 35 801 5 | PASSAGEM HIDRAULICA |
| REDUÇÃO RED 8/6L | 7367743 | 37 | 1 | 181 | 90 18 423 | INSTALACAO MECANISMO GI |
| REDUÇÃO SV 15L M22X1,5 | 4901130 | 43 | 1 | 312 | 10 35 809 3 | INSTALACAO HIDRAULICA |
| REDUÇÃO SV 15L M22X1,5 | 4901130 | 51 | 1 | 619 | 10 49 830 0 | LANÇA MONOBLOCO 6,70M |
| REDUÇÃO SV 22L M30X2 | 4901131 | 52 | 1 | 619 | 10 49 830 0 | LANÇA MONOBLOCO 6,70M |
| REDUÇÃO SWVE-R1/4"6S-G1/4 | 774381508 | 19 | 1 | 681 | 10 28 689 7 | BOMBA DE LUBRIFICACAO |
| REDUÇÃO T 10L | 7362101 | 13 | 1 | 84 | 10 07 713 5 | INST.HIDR.CARRO INFERIOR |
| REDUÇÃO TH 10L | 7368531 | 140 | 4 | 348 | 10 35 802 8 | INSTALAÇÃO BLOCO DE VÁL |
| REDUÇÃO TH 10L | 7617248 | 85 | 1 | 343 | 10 84 584 9 | INSTALACAO BOMBA E EMBR |
| REDUÇÃO VSTI M14X1,5 | 7363125 | 89 | 1 | 69 | 94 43 840 | MECANISMO DE TRANSLAÇÃ |
| REDUÇÃO VSTI M14X1,5 | 7363125 | 10 | 1 | 72 | 98 82 833 | VÁLVULA DE COMANDO NG 14 |
| REDUÇÃO VSTI M14X1,5 | 7363125 | 320 | 1 | 75 | 56 16 688 | VALVULA FRENAGEM DA TRA |
| REDUÇÃO VSTI M14X1,5 | 7363125 | 21 | 1 | 122 | 56 16 530 | BOMBA DE PISTÃO AXIAL |
| REDUÇÃO VSTI M14X1,5 | 7363125 | 58 | 2 | 672 | 10 49 815 8 | CILINDRO DE ELEVACAO |
| REDUÇÃO VSTI M14X1,5 | 7363125 | 20 | 1 | 699 | 98 82 771 | KIT DE VEDAÇÃO |
| REDUÇÃO W 15L | 7362109 | 7 | 2 | 100 | 99 46 045 | INSTALACAO DE COMBUSTIVE |
| REDUÇÃO WE 6LL M10x1 | 774373808 | 180 | 1 | 218 | 90 64 786 | ELEMENTO DE CONEXÃO |
| REDUÇÃO WH 15L | 7368478 | 16 | 1 | 100 | 99 46 045 | INSTALACAO DE COMBUSTIVE |
| REDUÇÃO WH 15L | 7368478 | 40 | 1 | 297 | 99 37 312 | UNIDADE DE COMANDO DE O |
| REDUÇÃO WH 15L | 7368478 | 43 | 4 | 671 | 10 49 815 8 | CILINDRO DE ELEVACAO |
| REDUÇÃO WH 18L M22X1,5 | 7617351 | 81 | 2 | 186 | 90 01 790 0 | REDUTOR DE GIRO SAT 375/ |
| REDUÇÃO WH 6L M10X1 | 7368426 | 21 | 5 | 624 | 10 38 408 5 | LUBRIFICAÇÃO CENTRALIZAD |
| REDUÇÃO WH 6L M10X1 | 7368426 | 19 | 7 | 631 | 10 38 484 8 | LUBRIFICAÇÃO CENTRALIZAD |
| REDUÇÃO WH 8S | 7368171 | 14 | 1 | 439 | 11 10 278 6 | FAROL E BUZINA INSTALACA |
| REDUÇÃO WSV 8L M14X1,5 | 7368115 | 18 | 1 | 631 | 10 38 484 8 | LUBRIFICAÇÃO CENTRALIZAD |

| Designação | Artigo | Item | Quanti | Página | Módulo | Designação |
|---|---|---|---|---|---|---|
| REFLETOR LUMINOSO D196X8 | 6204631 | 9 | 2 | 455 | 10 49 801 8 | INSTALAÇÃO DO CONTRAPES |
| REGUA DE COMANDO | 10288470 | 500 | 1 | 354 | 10 35 802 8 | INSTALAÇÃO BLOCO DE VÁL |
| REGULADOR | 10133054 | 10 | 1 | 694 | 10 13 305 9 | VALVULA REGULADORA |
| RELE | 6001682 | 10 | 2 | 265 | 10 68 741 7 | PLACA ELETRÔNICA |
| RELE | 6001921 | 130 | 2 | 443 | 99 47 695 | INSTALAÇÃO ELÉTRICA E50 |
| RELE | 6002381 | 32 | 2 | 241 | 97 58 815 01 | PLACA ELETRÔNICA |
| RELE | 6202646 | 30 | 2 | 241 | 97 58 815 01 | PLACA ELETRÔNICA |
| RELE DE POTENCIA | 10009888 | 16 | 2 | 442 | 99 47 695 | INSTALAÇÃO ELÉTRICA E50 |
| RELE TEMPORIZADOR | 6001418 | 11 | 1 | 652 | 10 35 860 1 | ALARME DE TRANSLACAO |
| REPARO DA BOMBA | 10220415 | 4 | 1 | 122 | 56 16 530 | BOMBA DE PISTÃO AXIAL |
| RESERVATORIO DE AGUA | 5618664 | 440 | 1 | 421 | 10 48 808 7 | INSTALACAO ELETRICA |
| RESERVATÓRIO DE ÓLEO | 968868001 | 1 | 1 | 195 | 96 90 213 01 | RESERVATÓRIO DE ÓLEO |
| RESERVATÓRIO DE ÓLEO | 969021301 | 80 | 1 | 186 | 90 01 790 0 | REDUTOR DE GIRO SAT 375/ |
| RETENTOR | 10220431 | 38 | 1 | 114 | 10 22 040 9 | MECANISMO DE ACIONAMENT |
| RETENTOR | 7010597 | 3 | 1 | 145 | 56 09 979 | BOMBA DE ENGRENAGENS |
| RETENTOR X25X35X6 | 7413402 | 20 | 1 | 139 | 10 35 572 4 | BOMBA HIDRÁULICA |
| RETENTOR X28X40X6 | 10220348 | 20 | 1 | 121 | 10 41 301 3 | BOMBA HIDRÁULICA |
| RETORNO DE OLEO VAZADO | 10115595 | 214 | 1 | 472 | 10 11 668 5 | MOTOR DIESEL D936 L A6 240 |
| REVESTIMENTO | 10217034 | 220 | 1 | 432 | 10 48 808 8 | REVESTIMENTO INTERNO |
| REVESTIMENTO | 10290359 | 210 | 1 | 432 | 10 48 808 8 | REVESTIMENTO INTERNO |
| REVESTIMENTO | 10358004 | 8500 | 1 | 86 | 10 35 798 2 | CARRO SUPERIOR |
| REVESTIMENTO | 10455060 | 284 | 1 | 432 | 10 48 808 8 | REVESTIMENTO INTERNO |
| REVESTIMENTO | 7028837 | 320 | 1 | 414 | 70 28 769 | PORTA DA CABINE DO MOTO |
| REVESTIMENTO | 7028963 | 2 | 1 | 434 | 10 47 012 8 | |
| REVESTIMENTO DA PLAT.GI | 10073695 | 8400 | 1 | 86 | 10 35 798 2 | CARRO SUPERIOR |
| REVESTIMENTO DE BORRACH | 10467246 | 25 | 2 | 165 | 10 45 475 2 | RADIADOR COMBINADO |
| REVESTIMENTO DE BORRAC | 10467245 | 22 | 6 | 164 | 10 45 475 2 | RADIADOR COMBINADO |
| REVESTIMENTO DE BORRAC | 10467242 | 19 | 2 | 164 | 10 45 475 2 | RADIADOR COMBINADO |
| REVESTIMENTO DE BORRAC | 10467244 | 20 | 4 | 164 | 10 45 475 2 | RADIADOR COMBINADO |
| REVESTIMENTO DE BORRAC | 10467243 | 21 | 2 | 164 | 10 45 475 2 | RADIADOR COMBINADO |
| REVESTIMENTO DIANTEIRO | 10060549 | 20 | 1 | 371 | 10 07 369 5 | REVESTIMENTO DA PLAT.GI |
| REVESTIMENTO DIREITO | 10073785 | 30 | 1 | 371 | 10 07 369 5 | REVESTIMENTO DA PLAT.GI |
| REVESTIMENTO DO PISO | 10382585 | 5 | 1 | 223 | 10 49 872 7 | POSTO DE COMANDO |
| REVESTIMENTO ESQUERDO | 10073750 | 10 | 1 | 371 | 10 07 369 5 | REVESTIMENTO DA PLAT.GI |
| REVESTIMENTO INTERNO | 10488088 | 80 | 1 | 405 | 10 47 616 9 | CABINE DE OPERADOR |
| REVESTIMENTO PLACA DE ES | 9480295 | 11 | 1 | 269 | 10 06 017 4 | PEDAL ESQUERDO COMPLET |
| REVESTIMENTO PLACA DE ES | 9480295 | 11 | 1 | 270 | 10 06 017 5 | PEDAL DIREITO COMPLETO |
| REVESTIMENTO PLACA DE ES | 9480295 | 2 | 1 | 275 | 94 76 369 | PLACA DE DEGRAU MONT. E |
| REVESTIMENTO PLACA DE ES | 9480295 | 2 | 1 | 276 | 94 76 441 | PLACA DE DEGRAU MONT. D |
| RODA GUIA D7G/B7B | 10009662 | 61 | 2 | 51 | 10 49 883 7 | CARRO INFERIOR COMPLETO |
| RODA LIVRE | 9275309 | 11 | 1 | 692 | 98 88 308 | PLACA DE CONEXAO |
| RODA MOTRIZ D7E | 9373095 | 2 | 2 | 67 | 10 07 713 7 | MECANISMO DE TRANSLAÇÃ |
| ROLAMENTO | 10030591 | 12 | 1 | 184 | 90 01 790 0 | REDUTOR DE GIRO SAT 375/ |
| ROLAMENTO | 7469905 | 32 | 1 | 149 | 90 73 158 | KIT DE REPARO |
| ROLAMENTO | 7469905 | 32 | 1 | 197 | 90 74 285 | KIT DE REPARO |
| ROLAMENTO DE AGULHA | 10008299 | 4 | 1 | 129 | 70 28 176 | PISTAO DE FREIO |
| ROLAMENTO DE AGULHAS d= | 10122500 | 21 | 4 | 688 | 10 11 856 1 | MODULO DE COMANDO VG6- |
| ROLAMENTO DE ROLETES CÔ | 10030592 | 3 | 1 | 184 | 90 01 790 0 | REDUTOR DE GIRO SAT 375/ |
| ROLAMENTO DE ROLETES CÔ | 10355730 | 15 | 1 | 139 | 10 35 572 4 | BOMBA HIDRÁULICA |
| ROLAMENTO DE ROLETES CÔ | 10355731 | 16 | 1 | 139 | 10 35 572 4 | BOMBA HIDRÁULICA |
| ROLAMENTO DE ROLETES CÔ | 7408797 | 15 | 1 | 121 | 10 41 301 3 | BOMBA HIDRÁULICA |
| ROLAMENTO DE ROLETES CÔ | 7408798 | 16 | 1 | 121 | 10 41 301 3 | BOMBA HIDRÁULICA |
| ROLAMENTO ROLOS CILINDRI | 10220430 | 31 | 1 | 114 | 10 22 040 9 | MECANISMO DE ACIONAMENT |
| ROLAMENTO ROLOS CILINDRI | 7363121 | 33 | 1 | 128 | 98 89 282 | KIT DE REPARO |
| ROLAMENTO ROLOS CILINDRI | 7380106 | 33 | 1 | 149 | 90 73 158 | KIT DE REPARO |
| ROLAMENTO ROLOS CILINDRI | 7380106 | 33 | 1 | 197 | 90 74 285 | KIT DE REPARO |
| ROLAMENTO ROLOS CILINDRI | 7380326 | 32 | 1 | 128 | 98 89 282 | KIT DE REPARO |
| ROLAMENTO ROLOS CILINDRI | 7380470 | 29 | 1 | 108 | 90 77 872 | REDUTOR DISTRIBUICAO BO |
| ROLAMENTO ROLOS CILINDRI | 7380977 | 13 | 2 | 151 | 90 79 347 | KIT DE REPARO LPV 165 |
| ROLAMENTO ROLOS CILINDRI | 7610037 | 5 | 1 | 190 | 93 33 329 01 | ENGRENAGEM PLANETÁRIA |

| Designação | Artigo | Item | Quanti | Página | Módulo | Designação |
|---|---|---|---|---|---|---|
| ROLAMENTO ROLOS CILINDR | 4980687 | 32 | 2 | 108 | 90 77 872 | REDUTOR DISTRIBUICAO BO |
| ROLDANA | 11003783 | 1 | 1 | 58 | 10 65 168 0 | ROLETE INFERIOR D7 |
| ROLDANA | 11003783 | 1 | 1 | 59 | 11 60 010 7 | ROLETE INFERIOR D7 |
| ROLDANA DE DESVIO PRÉ-MO | 9077708 | 4 | 2 | 559 | 10 11 646 4 | COMPRESSOR DO AR-CONDI |
| ROLETE | 7028809 | 160 | 4 | 411 | 70 28 759 | PÁRA-BRISA SUPERIOR |
| ROLETE INFERIOR D7 | 10651680 | 45 | 20 | 51 | 10 49 883 7 | CARRO INFERIOR COMPLETO |
| ROLETE INFERIOR D7 | 11600107 | 45 | 20 | 51 | 10 49 883 7 | CARRO INFERIOR COMPLETO |
| ROLETE SUPERIOR | 721005616 | 50 | 4 | 51 | 10 49 883 7 | CARRO INFERIOR COMPLETO |
| ROTOR | 10011395 | 1 | 1 | 63 | 10 00 963 0 | COLETOR GIRATÓRIO |
| RÉGUA DE BORNES | 9903712 | 122 | 2 | 376 | 10 35 800 4 | REVESTIMENTO |
| SACA PINO | 7361276 | 175 | 1 | 459 | 10 84 856 2 | KIT DE FERRAMENTAS |
| SACA-PINOS CONICO | 3001289 | 165 | 1 | 459 | 10 84 856 2 | KIT DE FERRAMENTAS |
| SAIDA AUXILIAR ANEXA | 9073767 | 210 | 1 | 472 | 10 11 668 5 | MOTOR DIESEL D936 L A6 240 |
| SAIDA AUXILIAR ANEXA | 9077719 | 650 | 1 | 476 | 10 11 668 5 | MOTOR DIESEL D936 L A6 240 |
| SAIDA AUXILIAR ANEXA | 9078961 | 654 | 1 | 476 | 10 11 668 5 | MOTOR DIESEL D936 L A6 240 |
| SAIDA AUXILIAR ANEXA | 9080006 | 652 | 1 | 476 | 10 11 668 5 | MOTOR DIESEL D936 L A6 240 |
| SAIDA AUXILIAR P´RE-MONTA | 10117836 | 1 | 1 | 544 | 90 73 767 | SAIDA AUXILIAR ANEXA |
| SAIDA AUXILIAR P´RE-MONTA | 9077386 | 1 | 1 | 599 | 90 80 006 | SAIDA AUXILIAR ANEXA |
| SAIDA AUXILIAR P´RE-MONTA | 9077718 | 1 | 1 | 597 | 90 77 719 | SAIDA AUXILIAR ANEXA |
| SAIDA AUXILIAR P´RE-MONTA | 9078962 | 1 | 1 | 598 | 90 78 961 | SAIDA AUXILIAR ANEXA |
| SECADOR - INSTALACAO | 10049616 | 10 | 1 | 446 | 10 35 814 2 | MAGUEIRAS DO AR-CONDICI |
| SECADOR COLETOR | 10292660 | 5 | 1 | 448 | 10 04 961 6 | SECADOR - INSTALACAO |
| SEGMENTO DE DISCO X50,3X | 9275004 | 20 | 2 | 692 | 98 88 308 | PLACA DE CONEXAO |
| SEMI-FLANGE | 7373875 | 10 | 12 | 616 | 10 49 830 0 | LANÇA MONOBLOCO 6,70M |
| SEMI-FLANGE | 7373875 | 6 | 2 | 655 | 10 06 203 8 | CILINDRO HIDRAULICO |
| SEMI-FLANGE | 7373875 | 14 | 2 | 656 | 99 48 785 | CILINDRO HIDR. COM DIVISO |
| SENSOR | 635867001 | 65 | 1 | 171 | 10 49 858 1 | SISTEMA ELETRICO DO MOTO |
| SENSOR | 635867001 | 1 | 1 | 589 | 98 85 618 | TACOMETRO - MONTAGEM |
| SENSOR DE APROXIMACAO | 10017824 | 150 | 1 | 247 | 99 68 625 | ALÇA DE TRANSMISSÃO-LH E |
| SENSOR DE APROXIMACAO | 10017824 | 150 | 1 | 262 | 99 68 611 | MANETE DIREITA |
| SENSOR DE APROXIMAÇÃO | 10009330 | 20 | 1 | 212 | 10 48 840 4 | BLOCO DE DISTRIBUIÇÃO SX |
| SENSOR DE APROXIMAÇÃO | 10024864 | 2 | 1 | 277 | 99 37 443 | SENSOR DE APROXIMAÇÃO |
| SENSOR DE APROXIMAÇÃO | 10288716 | 40 | 1 | 680 | 10 49 822 9 | LUBRIFICAÇÃO CENTR.TOTAL. |
| SENSOR DE APROXIMAÇÃO | 9937443 | 40 | 2 | 268 | 10 05 981 8 | PRÉ-COMANDO DE PEDAL M |
| SENSOR DE NÍVEL | 10022175 | 40 | 1 | 331 | 10 35 798 3 | TANQUE HIDRAULICO INSTA |
| SENSOR DE NÍVEL | 6205496 | 130 | 1 | 163 | 10 35 809 2 | ARREFECIMENTO DO MOTOR |
| SENSOR DE PRE-COMANDO | 10058794 | 60 | 1 | 249 | 10 84 086 6 | APOIO DIREITO PARA BRAÇO |
| SENSOR DE PRE-COMANDO E | 10058792 | 60 | 1 | 238 | 10 38 502 4 | APOIO ESQUERDO PARA BR |
| SENSOR DE ROTACAO | 9076534 | 21 | 1 | 583 | 90 76 551 | SENSORAMENTO AJUSTE DO |
| SENSOR DE ROTACAO | 9079206 | 20 | 2 | 583 | 90 76 551 | SENSORAMENTO AJUSTE DO |
| SENSOR DE ROTAÇAO | 10800265 | 1 | 1 | 586 | 90 76 534 | SENSOR DE ROTACAO |
| SENSOR DE ROTAÇAO | 10800265 | 1 | 1 | 588 | 90 79 206 | SENSOR DE ROTACAO |
| SENSOR DE ROTAÇÃO | 6290073 | 9 | 1 | 196 | 90 72 990 | PLACA DE CONEXAO |
| SENSOR DE ROTAÇÃO | 6290073 | 10 | 1 | 201 | 92 78 623 | |
| SENSOR DE TEMPERATURA | 10022067 | 11 | 1 | 286 | 11 00 359 4 | CARCAÇA |
| SENSOR DE TEMPERATURA | 10022077 | 12 | 1 | 286 | 11 00 359 4 | CARCAÇA |
| SENSOR DE TEMPERATURA | 6290130 | 1 | 2 | 582 | 90 76 551 | SENSORAMENTO AJUSTE DO |
| SENSOR DE TEMPERATURA | 691180608 | 1 | 1 | 584 | 90 76 530 | |
| SENSOR DE ÁGUA | 10280185 | 2 | 1 | 539 | 10 22 281 9 | PRÉ-FILTRO COMBUST.COM |
| SENSOR NÍVEL DE COMBUSTÍ | 10285669 | 5 | 1 | 451 | 90 18 419 | TANQUE COMBUSTIVEL INSTA |
| SENSORAMENTO AJUSTE DO | 9076551 | 581 | 1 | 476 | 10 11 668 5 | MOTOR DIESEL D936 L A6 240 |
| SERPENTINA DE TUBO | 774383508 | 65 | 1 | 217 | 90 64 786 | ELEMENTO DE CONEXÃO |
| SERPENTINA DE TUBO | 774383508 | 165 | 1 | 218 | 90 64 786 | ELEMENTO DE CONEXÃO |
| SERVOMOTOR | 10022766 | 3 | 1 | 284 | 10 02 208 3 | BOCAL DE AR |
| SERVOMOTOR | 10022766 | 7 | 2 | 285 | 10 02 211 7 | CARCACA DE CONDUCAO DE |
| SERVOMOTOR | 10022766 | 2 | 1 | 288 | 10 02 207 8 | CANTONEIRA DE MONTAGEM |
| SILENCIOSO | 10040818 | 10 | 1 | 104 | 10 35 800 6 | SISTEMA DE ESPACAMENTO |
| SIMBOLO LUBRIFICACAO Ø1 | 9911745 | 7 | 1 | 258 | 10 04 831 3 | INTERRUPTOR - INSTALAÇÃO |
| SIMBOLO LUBRIFICACAO Ø1 | 9911745 | 7 | 1 | 263 | 10 05 507 1 | INTERRUPTOR - INSTALAÇÃO |
| SISTEMA DE AR CONDICION | 10406898 | 80 | 1 | 230 | 10 49 880 9 | POSTO DE COMANDO - PEÇA |

| Designação | Artigo | Item | Quanti | Página | Módulo | Designação |
|---|---|---|---|---|---|---|
| SISTEMA DE ESPACAMENTO | 10358006 | 540 | 1 | 96 | 10 35 808 9 | INSTALAÇÃO DO MOTOR |
| SISTEMA ELETRICO DO MOTO | 10498581 | 580 | 1 | 96 | 10 35 808 9 | INSTALAÇÃO DO MOTOR |
| SOLUÇÃO DE UREIA | 11485620 | 10 | 1 | 41 | 94 06 645 8 | SOLUÇÃO DE UREIA |
| SOLUÇÃO DE UREIA | 11485621 | 210 | 1 | 41 | 94 06 645 8 | SOLUÇÃO DE UREIA |
| SOLUÇÃO DE UREIA | 11485622 | 1000 | 1 | 41 | 94 06 645 8 | SOLUÇÃO DE UREIA |
| SOLUÇÃO DE UREIA | 94066458 | 110 | 1 | 10 | 90 66 460 | |
| SUPORTE | 10009023 | 270 | 2 | 420 | 10 48 808 7 | INSTALACAO ELETRICA |
| SUPORTE | 10027438 | 231 | 2 | 411 | 70 28 759 | PÁRA-BRISA SUPERIOR |
| SUPORTE | 10039678 | 621 | 2 | 429 | 10 29 026 4 | PEÇAS DE MONTAGEM |
| SUPORTE | 10041876 | 299 | 3 | 176 | 10 49 858 1 | SISTEMA ELETRICO DO MOTO |
| SUPORTE | 10041876 | 45 | 1 | 280 | 10 40 689 8 | SISTEMA DE AR CONDICION |
| SUPORTE | 10041876 | 35 | 1 | 313 | 10 35 801 7 | INSTALACAO HIDRAULICA |
| SUPORTE | 10041876 | 280 | 1 | 436 | 10 35 814 1 | INSTALAÇÃO ELÉTRICA |
| SUPORTE | 10041876 | 17 | 1 | 559 | 10 11 646 4 | COMPRESSOR DO AR-CONDI |
| SUPORTE | 10043180 | 20 | 1 | 239 | 10 05 736 2 | CONSOLE DE COMANDO |
| SUPORTE | 10049073 | 32 | 1 | 435 | 10 35 814 1 | INSTALAÇÃO ELÉTRICA |
| SUPORTE | 10059516 | 25 | 2 | 178 | 10 35 800 9 | MOTOR - PECAS ANEXAS |
| SUPORTE | 10062090 | 3 | 1 | 655 | 10 06 203 8 | CILINDRO HIDRAULICO |
| SUPORTE | 10063343 | 60 | 1 | 619 | 10 49 830 0 | LANÇA MONOBLOCO 6,70M |
| SUPORTE | 10066863 | 38 | 1 | 170 | 10 49 858 1 | SISTEMA ELETRICO DO MOTO |
| SUPORTE | 10072512 | 230 | 1 | 306 | 10 35 801 4 | MANGUEIRAS HIDRAULICAS |
| SUPORTE | 10079307 | 20 | 1 | 228 | 99 39 322 | PECAS DE FIXACAO |
| SUPORTE | 10116522 | 3 | 1 | 549 | 10 11 657 6 | PEÇA DE CONEXÃO |
| SUPORTE | 10117267 | 1 | 1 | 546 | 10 11 726 8 | SUPORTE - MONTAGEM |
| SUPORTE | 10119139 | 25 | 1 | 559 | 10 11 646 4 | COMPRESSOR DO AR-CONDI |
| SUPORTE | 10367055 | 20 | 1 | 178 | 10 35 800 9 | MOTOR - PECAS ANEXAS |
| SUPORTE | 10374410 | 25 | 1 | 393 | 10 37 938 6 | CAIXA DE FERRAMENTAS |
| SUPORTE | 10377687 | 3 | 1 | 160 | 10 35 809 2 | ARREFECIMENTO DO MOTOR |
| SUPORTE | 10377689 | 4 | 1 | 160 | 10 35 809 2 | ARREFECIMENTO DO MOTOR |
| SUPORTE | 10842060 | 40 | 1 | 214 | 10 04 966 3 | LUBRIFICAÇÃO CENTRALIZAD |
| SUPORTE | 6905671 | 330 | 1 | 436 | 10 35 814 1 | INSTALAÇÃO ELÉTRICA |
| SUPORTE | 7028768 | 240 | 9 | 420 | 10 48 808 7 | INSTALACAO ELETRICA |
| SUPORTE | 7028801 | 120 | 2 | 410 | 10 03 553 0 | PÁRA-BRISA INFERIOR |
| SUPORTE | 7028812 | 250 | 11 | 420 | 10 48 808 7 | INSTALACAO ELETRICA |
| SUPORTE | 7372355 | 18 | 1 | 243 | 73 73 807 | ALAVANCA DE SEGURANCA |
| SUPORTE | 7373825 | 20 | 1 | 243 | 73 73 807 | ALAVANCA DE SEGURANCA |
| SUPORTE | 9013056 | 58 | 1 | 619 | 10 49 830 0 | LANÇA MONOBLOCO 6,70M |
| SUPORTE | 9079591 | 11 | 1 | 559 | 10 11 646 4 | COMPRESSOR DO AR-CONDI |
| SUPORTE | 9079844 | 14 | 1 | 486 | 90 79 483 | CARTER |
| SUPORTE | 9356574 | 8 | 1 | 381 | 99 49 428 | CAPO DO RADIADOR |
| SUPORTE | 9834805 | 141 | 1 | 377 | 10 35 800 4 | REVESTIMENTO |
| SUPORTE | 9928149 | 3 | 1 | 616 | 10 49 830 0 | LANÇA MONOBLOCO 6,70M |
| SUPORTE | 9928151 | 15 | 1 | 624 | 10 38 408 5 | LUBRIFICAÇÃO CENTRALIZAD |
| SUPORTE | 9928152 | 10 | 1 | 624 | 10 38 408 5 | LUBRIFICAÇÃO CENTRALIZAD |
| SUPORTE | 9928413 | 250 | 1 | 296 | 10 35 801 2 | INSTALACAO HDRAULICA |
| SUPORTE | 9928771 | 27 | 1 | 632 | 10 38 484 8 | LUBRIFICAÇÃO CENTRALIZAD |
| SUPORTE | 9937326 | 5 | 2 | 104 | 10 35 800 6 | SISTEMA DE ESPACAMENTO |
| SUPORTE | 9945118 | 2 | 1 | 362 | 99 45 116 | BRAÇADEIRA DE TUBO |
| SUPORTE | 9949402 | 15 | 1 | 178 | 10 35 800 9 | MOTOR - PECAS ANEXAS |
| SUPORTE | 9949403 | 10 | 1 | 178 | 10 35 800 9 | MOTOR - PECAS ANEXAS |
| SUPORTE | 9950357 | 30 | 1 | 228 | 99 39 322 | PECAS DE FIXACAO |
| SUPORTE | 9950385 | 10 | 1 | 228 | 99 39 322 | PECAS DE FIXACAO |
| SUPORTE - MONTAGEM | 10117268 | 218 | 1 | 473 | 10 11 668 5 | MOTOR DIESEL D936 L A6 240 |
| SUPORTE - MONTAGEM | 10119127 | 2 | 1 | 482 | 10 11 916 7 | CARCAÇA MANIVELA PURGAM |
| SUPORTE COMPL. | 10115994 | 2 | 1 | 592 | 10 11 599 3 | DISPOSITIVO COMANDO - M |
| SUPORTE COMPL. | 10115996 | 1 | 1 | 592 | 10 11 599 3 | DISPOSITIVO COMANDO - M |
| SUPORTE COMPL. | 10119119 | 1 | 1 | 541 | 10 11 912 7 | SUPORTE - MONTAGEM |
| SUPORTE COMPL. | 10121676 | 3 | 1 | 552 | 10 12 190 8 | LINHA DE CONEXAO |
| SUPORTE DAS LAMELAS | 932720701 | 55 | 1 | 185 | 90 01 790 0 | REDUTOR DE GIRO SAT 375/ |
| SUPORTE DAS LAMELAS | 9443908 | 65 | 1 | 69 | 94 43 840 | MECANISMO DE TRANSLAÇÃ |

| Designação | Artigo | Item | Quanti | Página | Módulo | Designação |
|---|---|---|---|---|---|---|
| SUPORTE DE CABOS M.STEC | 10023106 | 11 | 2 | 285 | 10 02 211 7 | CARCACA DE CONDUCAO DE |
| SUPORTE DE CONEXAO | 9443842 | 1 | 1 | 68 | 94 43 840 | MECANISMO DE TRANSLAÇÃ |
| SUPORTE DE MANGUEIRA | 9691678 | 49 | 1 | 102 | 99 37 298 | INSTALAÇÃO DO FILTRO DE A |
| SUPORTE DIANTEIRO ESQUE | 10049422 | 11 | 1 | 98 | 10 04 942 6 | SUSPENSAO DO MOTOR |
| SUPORTE DO BLOCO DE VÁL | 10087016 | 10 | 1 | 346 | 10 35 802 8 | INSTALAÇÃO BLOCO DE VÁL |
| SUPORTE DO ESPELHO | 7371845 | 20 | 1 | 461 | 10 35 852 5 | ESPELHO EXTERNO - INSTALA |
| SUPORTE DOS AGREGADOS | 10141908 | 1 | 1 | 484 | 90 79 480 | SUPORTE DOS AGREGADOS |
| SUPORTE DOS AGREGADOS | 9079480 | 12 | 1 | 469 | 10 11 668 5 | MOTOR DIESEL D936 L A6 240 |
| SUPORTE PLANETARIO | 90011490 | 45 | 1 | 184 | 90 01 790 0 | REDUTOR DE GIRO SAT 375/ |
| SUPORTE PLANETARIO | 933330801 | 35 | 1 | 184 | 90 01 790 0 | REDUTOR DE GIRO SAT 375/ |
| SUPORTE PLANETARIO | 9443847 | 25 | 1 | 68 | 94 43 840 | MECANISMO DE TRANSLAÇÃ |
| SUPORTE PLANETARIO | 9443858 | 35 | 1 | 68 | 94 43 840 | MECANISMO DE TRANSLAÇÃ |
| SUPORTE TIPO ESCADA | 10118656 | 1 | 1 | 490 | 10 11 870 2 | SUPORTE TIPO ESCADA |
| SUPORTE TIPO ESCADA | 10118702 | 1 | 1 | 485 | 90 79 487 | CARTER |
| SUSPENSAO | 11100167 | 20 | 1 | 232 | 11 00 085 6 | BANCO COM SUSP. PENUMAT |
| SUSPENSAO | 11659214 | 7 | 1 | 235 | 11 10 016 7 | SUSPENSAO |
| SUSPENSAO DO MOTOR | 10049426 | 510 | 1 | 96 | 10 35 808 9 | INSTALAÇÃO DO MOTOR |
| TABELA | 9278153 | 500 | 1 | 72 | 98 82 833 | VÁLVULA DE COMANDO NG 14 |
| TABELA | 9278153 | 500 | 1 | 685 | 10 13 462 0 | AGREAGADO CIRCUITOS MU |
| TABELA | 9278153 | 500 | 1 | 687 | 10 13 268 6 | BOMBA DE REGULAGEM HID |
| TABELA | 9278153 | 500 | 1 | 688 | 10 11 856 1 | MODULO DE COMANDO VG6- |
| TABELA | 9278153 | 500 | 1 | 689 | 90 73 355 | PLACA DE CONEXAO FMV 140 |
| TABELA | 9278153 | 500 | 1 | 690 | 98 82 766 | DISPOSITIVO DE REGULAGE |
| TABELA | 9278153 | 500 | 1 | 699 | 98 82 771 | KIT DE VEDAÇÃO |
| TABELA DE CAPACIDADE DE | 9392835 | 65 | 1 | 468 | 10 49 805 9 | PLAQUETAS |
| TACOMETRO - MONTAGEM | 9885618 | 22 | 1 | 583 | 90 76 551 | SENSORAMENTO AJUSTE DO |
| TALA | 10429055 | 30 | 1 | 408 | 70 28 788 | VEDAÇÃO |
| TAMPA | 10009132 | 140 | 1 | 432 | 10 48 808 8 | REVESTIMENTO INTERNO |
| TAMPA | 10009188 | 390 | 1 | 433 | 10 48 808 8 | REVESTIMENTO INTERNO |
| TAMPA | 10009596 | 19 | 1 | 212 | 10 48 840 4 | BLOCO DE DISTRIBUIÇÃO SX |
| TAMPA | 10016665 | 41 | 4 | 682 | 10 28 689 7 | BOMBA DE LUBRIFICACAO |
| TAMPA | 10022051 | 16 | 1 | 286 | 11 00 359 4 | CARCAÇA |
| TAMPA | 10044360 | 160 | 1 | 432 | 10 48 808 8 | REVESTIMENTO INTERNO |
| TAMPA | 10051238 | 20 | 1 | 57 | 10 05 149 1 | TAMPA |
| TAMPA | 10051491 | 20 | 1 | 49 | 10 49 883 7 | CARRO INFERIOR COMPLETO |
| TAMPA | 10051492 | 10 | 1 | 57 | 10 05 149 1 | TAMPA |
| TAMPA | 10051537 | 6 | 1 | 396 | 99 47 957 | PAREDE DIVISÓRIA |
| TAMPA | 10051538 | 2 | 1 | 397 | 10 05 153 7 | TAMPA |
| TAMPA | 10055216 | 35 | 1 | 331 | 10 35 798 3 | TANQUE HIDRAULICO INSTA |
| TAMPA | 10065165 | 50 | 1 | 361 | 10 49 822 5 | TUBULACOES PRESSAO INS |
| TAMPA | 10066916 | 2 | 1 | 394 | 10 06 691 8 | TAMPA |
| TAMPA | 10066918 | 15 | 1 | 391 | 10 06 692 0 | CAIXA DE FERRAMENTAS |
| TAMPA | 10067706 | 40 | 1 | 452 | 90 18 419 | TANQUE COMBUSTIVEL INSTA |
| TAMPA | 10116027 | 435 | 1 | 474 | 10 11 668 5 | MOTOR DIESEL D936 L A6 240 |
| TAMPA | 10117094 | 10 | 1 | 590 | 90 80 653 | PECAS DE FECHAMENTO |
| TAMPA | 10118649 | 22 | 1 | 688 | 10 11 856 1 | MODULO DE COMANDO VG6- |
| TAMPA | 10119485 | 1 | 1 | 560 | 10 11 949 2 | COBERTURA |
| TAMPA | 10120005 | 1 | 1 | 568 | 90 80 280 | PECAS DE FECHAMENTO |
| TAMPA | 10122316 | 1 | 1 | 604 | 90 80 504 | PECAS DE FECHAMENTO |
| TAMPA | 10122317 | 1 | 1 | 604 | 90 80 504 | PECAS DE FECHAMENTO |
| TAMPA | 10149619 | 1 | 1 | 576 | 10 11 566 4 | PECAS DE FECHAMENTO |
| TAMPA | 10216731 | 3 | 1 | 115 | 10 22 041 0 | DISPOSITIVO DE REGULAGE |
| TAMPA | 10216732 | 4 | 1 | 115 | 10 22 041 0 | DISPOSITIVO DE REGULAGE |
| TAMPA | 10289182 | 60 | 1 | 653 | 10 00 297 1 | VÁLVULA DE SEGURANÇA RU |
| TAMPA | 10290262 | 430 | 1 | 421 | 10 48 808 7 | INSTALACAO ELETRICA |
| TAMPA | 10290263 | 500 | 1 | 423 | 10 29 036 3 | KIT DO MOTOR DO LIMPADOR |
| TAMPA | 10372836 | 10 | 1 | 461 | 10 35 852 5 | ESPELHO EXTERNO - INSTALA |
| TAMPA | 10379045 | 2 | 1 | 462 | 10 37 283 6 | TAMPA |
| TAMPA | 10379354 | 2 | 1 | 395 | 10 37 936 3 | TAMPA |
| TAMPA | 10379363 | 15 | 1 | 393 | 10 37 938 6 | CAIXA DE FERRAMENTAS |

| Designação | Artigo | Item | Quanti | Página | Módulo | Designação |
|---|---|---|---|---|---|---|
| TAMPA | 10814727 | 12 | 1 | 233 | 11 10 016 6 | PARTE SUPERIOR DE ASSENT |
| TAMPA | 5604338 | 28 | 5 | 365 | 10 03 245 2 | BLOCO DE COMANDO |
| TAMPA | 604521501 | 46 | 15 | 241 | 97 58 815 01 | PLACA ELETRÔNICA |
| TAMPA | 7020608 | 190 | 2 | 420 | 10 48 808 7 | INSTALACAO ELETRICA |
| TAMPA | 7021981 | 100 | 1 | 75 | 56 16 688 | VALVULA FRENAGEM DA TRA |
| TAMPA | 7021982 | 110 | 1 | 75 | 56 16 688 | VALVULA FRENAGEM DA TRA |
| TAMPA | 7025845 | 10 | 1 | 424 | 56 18 664 | RESERVATORIO DE AGUA |
| TAMPA | 7027816 | 37 | 1 | 236 | 11 10 016 7 | SUSPENSAO |
| TAMPA | 7028349 | 12 | 1 | 338 | 56 17 689 | VÁLVULA DE FECHAMENTO D |
| TAMPA | 7028836 | 230 | 1 | 414 | 70 28 769 | PORTA DA CABINE DO MOTO |
| TAMPA | 7028940 | 130 | 1 | 432 | 10 48 808 8 | REVESTIMENTO INTERNO |
| TAMPA | 7368488 | 26 | 1 | 365 | 10 03 245 2 | BLOCO DE COMANDO |
| TAMPA | 7368489 | 130 | 1 | 366 | 10 03 245 2 | BLOCO DE COMANDO |
| TAMPA | 7369129 | 27 | 7 | 365 | 10 03 245 2 | BLOCO DE COMANDO |
| TAMPA | 7370895 | 3 | 1 | 240 | 10 16 576 6 | CONSOLE DE COMANDO |
| TAMPA | 7370896 | 2 | 1 | 240 | 10 16 576 6 | CONSOLE DE COMANDO |
| TAMPA | 7372237 | 7 | 1 | 315 | 10 04 272 9 | BLOCO DE VÁLVULAS DE CO |
| TAMPA | 7622321 | 1 | 1 | 103 | 10 03 980 3 | FILTRO DE AR |
| TAMPA | 9077777 | 8 | 1 | 485 | 90 79 487 | CARTER |
| TAMPA | 9077777 | 1 | 1 | 495 | 91 47 512 | PECAS DE FECHAMENTO |
| TAMPA | 9079122 | 6 | 2 | 485 | 90 79 487 | CARTER |
| TAMPA | 9079123 | 13 | 1 | 485 | 90 79 487 | CARTER |
| TAMPA | 9141600 | 40 | 1 | 64 | 91 41 597 | COLETOR GIRATÓRIO |
| TAMPA | 9144761 | 1 | 1 | 556 | 91 44 757 | TAMPA DE FECHAMENTO |
| TAMPA | 9171589 | 60 | 2 | 268 | 10 05 981 8 | PRÉ-COMANDO DE PEDAL M |
| TAMPA | 9178294 | 4 | 1 | 597 | 90 77 719 | SAIDA AUXILIAR ANEXA |
| TAMPA | 9178294 | 6 | 1 | 598 | 90 78 961 | SAIDA AUXILIAR ANEXA |
| TAMPA | 9271663 | 11 | 1 | 691 | 92 71 648 | DISPOSITIVO DE REGULAGE |
| TAMPA | 9271664 | 12 | 1 | 691 | 92 71 648 | DISPOSITIVO DE REGULAGE |
| TAMPA | 9271740 | 12 | 1 | 692 | 98 88 308 | PLACA DE CONEXAO |
| TAMPA | 9273690 | 6 | 1 | 599 | 90 80 006 | SAIDA AUXILIAR ANEXA |
| TAMPA | 9371217 | 65 | 1 | 268 | 10 05 981 8 | PRÉ-COMANDO DE PEDAL M |
| TAMPA | 9380962 | 20 | 1 | 346 | 10 35 802 8 | INSTALAÇÃO BLOCO DE VÁL |
| TAMPA | 9697975 | 29 | 2 | 49 | 10 49 883 7 | CARRO INFERIOR COMPLETO |
| TAMPA | 9697976 | 32 | 4 | 49 | 10 49 883 7 | CARRO INFERIOR COMPLETO |
| TAMPA | 9767890 | 70 | 1 | 331 | 10 35 798 3 | TANQUE HIDRAULICO INSTA |
| TAMPA | 9767890 | 35 | 1 | 451 | 90 18 419 | TANQUE COMBUSTIVEL INSTA |
| TAMPA | 9882767 | 13 | 1 | 690 | 98 82 766 | DISPOSITIVO DE REGULAGE |
| TAMPA BASCULANTE | 7370893 | 14 | 1 | 255 | 56 18 923 | CONSOLE DE COMANDO DIRE |
| TAMPA CEGA | 7370890 | 5 | 3 | 255 | 56 18 923 | CONSOLE DE COMANDO DIRE |
| TAMPA CEGA | 7370899 | 6 | 1 | 240 | 10 16 576 6 | CONSOLE DE COMANDO |
| TAMPA CEGA | 7618883 | 285 | 1 | 432 | 10 48 808 8 | REVESTIMENTO INTERNO |
| TAMPA COM ALÇA | 7370924 | 1 | 1 | 336 | 73 69 257 | FILTRO DE FLUXO DE RETO |
| TAMPA COMPLETA | 10087133 | 70 | 1 | 374 | 10 35 800 4 | REVESTIMENTO |
| TAMPA COMPLETA | 10492977 | 1 | 1 | 235 | 11 10 016 7 | SUSPENSAO |
| TAMPA COMPLETA | 9949673 | 25 | 2 | 49 | 10 49 883 7 | CARRO INFERIOR COMPLETO |
| TAMPA DA BOMBA | 10220677 | 1 | 1 | 133 | 10 22 066 7 | BOMBA DE ENGRENAGENS |
| TAMPA DA BOMBA DE ÁGUA | 10134069 | 12 | 1 | 563 | 10 13 281 7 | BOMBA DE ÁGUA PRÉ-MONT |
| TAMPA DE COBERTURA | 7370892 | 4 | 1 | 255 | 56 18 923 | CONSOLE DE COMANDO DIRE |
| TAMPA DE FECHAMENTO | 10012263 | 12 | 2 | 147 | 70 28 075 | UNIDADE DE CONTROLE |
| TAMPA DE FECHAMENTO | 4980363 | 10 | 3 | 510 | 10 12 038 4 | CABECOTE |
| TAMPA DE FECHAMENTO | 7028178 | 12 | 2 | 147 | 70 28 075 | UNIDADE DE CONTROLE |
| TAMPA DE FECHAMENTO | 9144757 | 2 | 1 | 492 | 10 11 903 0 | ENCHIMENTO DE OLEO D930 |
| TAMPA DE FECHAMENTO | 9443906 | 45 | 1 | 69 | 94 43 840 | MECANISMO DE TRANSLAÇÃ |
| TAMPA DE FECHAMENTO B | 4001664 | 3 | 12 | 477 | 10 11 577 9 | BLOCO DO MOTOR COMPLET |
| TAMPA DE FECHAMENTO B | 4980362 | 2 | 5 | 477 | 10 11 577 9 | BLOCO DO MOTOR COMPLET |
| TAMPA DE FECHAMENTO B | 4981042 | 12 | 1 | 510 | 10 12 038 4 | CABECOTE |
| TAMPA DE GRAXA | 932858901 | 20 | 1 | 184 | 90 01 790 0 | REDUTOR DE GIRO SAT 375/ |
| TAMPA DE MANCAL DE AJUST | 9073728 | 3 | 1 | 478 | 10 11 577 8 | BLOCO DO MOTOR |
| TAMPA DE MANUTENCAO | 7370894 | 2 | 1 | 255 | 56 18 923 | CONSOLE DE COMANDO DIRE |

| Designação | Artigo | Item | Quanti | Página | Módulo | Designação |
|---|---|---|---|---|---|---|
| TAMPA DIREITA | 9946250 | 23 | 1 | 49 | 10 49 883 7 | CARRO INFERIOR COMPLETO |
| TAMPA DIREITA SUPERIOR | 10009193 | 150 | 1 | 432 | 10 48 808 8 | REVESTIMENTO INTERNO |
| TAMPA DO CABECOTE | 10119011 | 1 | 1 | 507 | 10 11 963 6 | COB.CABEÇA CILINDRO INSTA |
| TAMPA DO CABECOTE | 10127488 | 1 | 1 | 505 | 10 11 960 9 | COB.CABEÇA CILINDRO INSTA |
| TAMPA DO CABECOTE | 10127489 | 1 | 1 | 506 | 10 11 961 0 | COB.CABEÇA CILINDRO INSTA |
| TAMPA DO MANCAL | 9072908 | 3 | 1 | 557 | 90 78 356 | PECAS DE FECHAMENTO |
| TAMPA DO MANCAL | 9271434 | 5 | 1 | 108 | 90 77 872 | REDUTOR DISTRIBUICAO BO |
| TAMPA DO RESERVATÓRIO | 10331664 | 1 | 1 | 164 | 10 45 475 2 | RADIADOR COMBINADO |
| TAMPA DO RESERVATÓRIO | 9270599 | 11 | 1 | 78 | 92 70 598 | VALVULA DE RETENCAO |
| TAMPA ESQUERDA | 9947170 | 24 | 1 | 49 | 10 49 883 7 | CARRO INFERIOR COMPLETO |
| TAMPA F.LNV | 11100087 | 26 | 1 | 233 | 11 10 016 6 | PARTE SUPERIOR DE ASSENT |
| TAMPA PLASTICA | 10470774 | 3 | 1 | 307 | 10 04 462 4 | FILTRO DE PRESSAO |
| TAMPAO DE RUPTURA DUPL | 7618568 | 7 | 2 | 136 | 10 22 070 1 | CABECOTE DO FILTRO |
| TAMPAO DE RUPTURA DUPL | 7618568 | 34 | 6 | 148 | 70 28 075 | UNIDADE DE CONTROLE |
| TAMPAO DE VEDACAO MB 70 | 7380133 | 35 | 2 | 271 | 90 79 258 | MODULO DE COMANDO VG7 |
| TAMPAO DE VEDACAO MB 70 | 7380133 | 35 | 2 | 273 | 90 79 259 | MODULO DE COMANDO VG7 |
| TAMPAO DE VEDACAO MB 70 | 7610819 | 8 | 2 | 68 | 94 43 840 | MECANISMO DE TRANSLAÇÃ |
| TAMPAO DE VEDACAO MB 85 | 7380051 | 36 | 1 | 273 | 90 79 259 | MODULO DE COMANDO VG7 |
| TAMPAS INFERIORES | 10050112 | 8600 | 1 | 86 | 10 35 798 2 | CARRO SUPERIOR |
| TAMPÃO | 10015404 | 10 | 1 | 450 | 10 10 131 3 | MANGUEIRA |
| TAMPÃO | 10022774 | 3 | 1 | 283 | 10 02 206 9 | CARCACA DO EVAPORADOR |
| TAMPÃO | 10220421 | 49 | 1 | 123 | 56 16 530 | BOMBA DE PISTÃO AXIAL |
| TAMPÃO | 10287248 | 35 | 5 | 403 | 10 05 011 2 | TAMPAS INFERIORES |
| TAMPÃO DE FECHAMENTO | 7373405 | 136 | 1 | 377 | 10 35 800 4 | REVESTIMENTO |
| TAMPÃO GPN 300 F | 4097530 | 2 | 1 | 184 | 90 01 790 0 | REDUTOR DE GIRO SAT 375/ |
| TAMPÃO GPN 300 F | 7004246 | 91 | 1 | 69 | 94 43 840 | MECANISMO DE TRANSLAÇÃ |
| TANQUE COMBUSTIVEL INSTA | 9018419 | 9300 | 1 | 86 | 10 35 798 2 | CARRO SUPERIOR |
| TANQUE COMBUSTIVEL REPO | 10071085 | 4 | 1 | 451 | 90 18 419 | TANQUE COMBUSTIVEL INSTA |
| TANQUE DE COMBUSTÍVEL | 10070505 | 3 | 1 | 451 | 90 18 419 | TANQUE COMBUSTIVEL INSTA |
| TANQUE DE EXPANSÃO | 10451292 | 42 | 1 | 165 | 10 45 475 2 | RADIADOR COMBINADO |
| TANQUE HIDRAULICO INSTA | 10357983 | 7100 | 1 | 85 | 10 35 798 2 | CARRO SUPERIOR |
| TANQUE HIDRÁULICO | 10358025 | 4 | 1 | 329 | 10 35 798 3 | TANQUE HIDRAULICO INSTA |
| TANQUE HIDRÁULICO | 10358193 | 3 | 1 | 329 | 10 35 798 3 | TANQUE HIDRAULICO INSTA |
| TANQUE HIDRÁULICO | 10358194 | 4 | 1 | 329 | 10 35 798 3 | TANQUE HIDRAULICO INSTA |
| TAPETE DE BORRACHA | 10007928 | 480 | 2 | 314 | 10 35 801 7 | INSTALACAO HIDRAULICA |
| TECLADO | 10684595 | 2 | 1 | 256 | 10 84 080 1 | TECLADO ESCAVADEIRA CO |
| TECLADO ESCAVADEIRA CO | 10840801 | 40 | 1 | 249 | 10 84 086 6 | APOIO DIREITO PARA BRAÇO |
| TENSIONADOR DE GRAXA | 9015155 | 62 | 2 | 51 | 10 49 883 7 | CARRO INFERIOR COMPLETO |
| TERMINAL GARFO G 8X16 | 4000746 | 22 | 2 | 372 | 10 35 800 4 | REVESTIMENTO |
| TERMINAL GARFO G 8X16 | 4000746 | 131 | 4 | 376 | 10 35 800 4 | REVESTIMENTO |
| TERMINAL GARFO G 8X16 | 4000746 | 21 | 2 | 391 | 10 06 692 0 | CAIXA DE FERRAMENTAS |
| TERMINAL GARFO G 8X16 | 4000746 | 21 | 2 | 393 | 10 37 938 6 | CAIXA DE FERRAMENTAS |
| TERMINAL GARFO G 8X16 | 4000746 | 10 | 2 | 401 | 10 03 720 9 | MOLA A GÁS |
| TERMINAL PARA MANGUEIRA | 7402657 | 1 | 1 | 460 | 93 58 137 | MANGUEIRA ESCOAMENTO O |
| TERMOSTATO | 10022048 | 2 | 1 | 286 | 11 00 359 4 | CARCAÇA |
| TERMOSTATO | 6204186 | 75 | 1 | 171 | 10 49 858 1 | SISTEMA ELETRICO DO MOTO |
| TERMOSTATO | 7380833 | 2 | 2 | 564 | 10 11 983 0 | INVÓLUCRO TERMOSTATO |
| TERMOSTATO | 7380833 | 2 | 2 | 565 | 90 75 678 | INVÓLUCRO TERMOSTATO |
| TIRA DE BORRACHA | 10471192 | 7 | 2 | 164 | 10 45 475 2 | RADIADOR COMBINADO |
| TIRA DE ESPUMA | 10022772 | 2 | 1 | 289 | 10 02 211 9 | CAIXA |
| TIRA DE VEDACAO | 7027401 | 5 | 3 | 283 | 10 02 206 9 | CARCACA DO EVAPORADOR |
| TIRANTE | 11102830 | 10 | 1 | 633 | 11 10 282 9 | CAÇAMBA RETRO HD 1950mm |
| TIRANTE DE TRAÇÃO | 10016661 | 36 | 4 | 682 | 10 28 689 7 | BOMBA DE LUBRIFICACAO |
| TIRANTE DE TRAÇÃO M8X187 | 10013859 | 6 | 2 | 212 | 10 48 840 4 | BLOCO DE DISTRIBUIÇÃO SX |
| TORNEIRA | 7001072 | 1 | 2 | 569 | 90 79 889 | CONEXÃO DE AQUECIMENTO |
| TRANSDUTOR DE PRESSAO C | 9076550 | 10 | 1 | 582 | 90 76 551 | SENSORAMENTO AJUSTE DO |
| TRANSDUTOR DE PRESSAO | 9076531 | 11 | 1 | 583 | 90 76 551 | SENSORAMENTO AJUSTE DO |
| TRANSDUTOR DE PRESSÃO | 10100781 | 1 | 1 | 587 | 90 76 550 | TRANSDUTOR DE PRESSAO C |
| TRANSDUTOR DE PRESSÃO | 10280390 | 11 | 1 | 438 | 10 04 824 6 | FAROL E BUZINA INSTALACA |
| TRANSDUTOR DE PRESSÃO | 10280390 | 11 | 1 | 439 | 11 10 278 6 | FAROL E BUZINA INSTALACA |

| Designação | Artigo | Item | Quanti | Página | Módulo | Designação |
|---|---|---|---|---|---|---|
| TRANSDUTOR DE PRESSÃO 0- | 10025124 | 1 | 1 | 585 | 90 76 531 | TRANSDUTOR DE PRESSAO |
| TRANSFORMADOR | 7026493 | 120 | 1 | 253 | 10 84 086 6 | APOIO DIREITO PARA BRAÇO |
| TRAVA | 10079279 | 6 | 1 | 462 | 10 37 283 6 | TAMPA |
| TRAVA | 10113250 | 23 | 1 | 388 | 10 07 307 3 | PORTA LATERAL DIREITA |
| TRAVA | 10113250 | 6 | 1 | 394 | 10 06 691 8 | TAMPA |
| TRAVA | 10113250 | 13 | 1 | 399 | 99 47 961 | PORTA LATERAL DIANTEIRA |
| TRAVA | 10368556 | 5 | 1 | 462 | 10 37 283 6 | TAMPA |
| TRAVA | 7029407 | 260 | 1 | 412 | 70 28 807 | TRAVA DIREITA |
| TRAVA | 7029407 | 260 | 1 | 413 | 70 28 808 | TRAVA ESQUERDA |
| TRAVA | 9376917 | 3 | 1 | 395 | 10 37 936 3 | TAMPA |
| TRAVA | 9376918 | 10 | 1 | 392 | 10 37 938 6 | CAIXA DE FERRAMENTAS |
| TRAVA | 9634109 | 23 | 1 | 389 | 10 37 283 9 | PORTA LATERAL DIREITA |
| TRAVA | 9634109 | 13 | 1 | 398 | 10 35 853 1 | PORTA LATERAL DIANTEIRA |
| TRAVA | 9697977 | 55 | 4 | 51 | 10 49 883 7 | CARRO INFERIOR COMPLETO |
| TRAVA DA VALVULA MK9 | 10004331 | 8 | 8 | 504 | 10 14 155 4 | CABEÇOTE PRÉ-MONTADO |
| TRAVA DA VALVULA MK9 | 10004331 | 8 | 8 | 508 | 10 12 036 4 | CABEÇOTE PRÉ-MONTADO |
| TRAVA DIREITA | 7028807 | 340 | 1 | 411 | 70 28 759 | PÁRA-BRISA SUPERIOR |
| TRAVA ESQUERDA | 7028808 | 350 | 1 | 411 | 70 28 759 | PÁRA-BRISA SUPERIOR |
| TRILHO DESLIZANTE | 10498813 | 10 | 1 | 641 | 10 49 881 6 | TRILHO DESLIZANTE |
| TRILHO DESLIZANTE | 10498816 | 20 | 1 | 640 | 10 49 817 6 | PROTEÇÃO DA HASTE DO CIL |
| TRILHO DO BANCO DO OPERA | 11007072 | 60 | 1 | 279 | 94 02 247 7 | BANCO DO MOTORISTA |
| TRILHO SUPORTE | 9874961 | 3 | 1 | 242 | 98 74 988 | PLACAS INSTALACAO A1016 |
| TRILHOS DE AJUSTE | 11100088 | 37 | 1 | 233 | 11 10 016 6 | PARTE SUPERIOR DE ASSENT |
| TROCADOR DE CALOR | 10022068 | 18 | 1 | 286 | 11 00 359 4 | CARCAÇA |
| TUBO | 10056233 | 340 | 1 | 350 | 10 35 802 8 | INSTALAÇÃO BLOCO DE VÁL |
| TUBO | 10056235 | 335 | 1 | 350 | 10 35 802 8 | INSTALAÇÃO BLOCO DE VÁL |
| TUBO | 10056237 | 330 | 1 | 350 | 10 35 802 8 | INSTALAÇÃO BLOCO DE VÁL |
| TUBO | 10842035 | 330 | 1 | 350 | 10 35 802 8 | INSTALAÇÃO BLOCO DE VÁL |
| TUBO | 10842046 | 335 | 1 | 350 | 10 35 802 8 | INSTALAÇÃO BLOCO DE VÁL |
| TUBO | 10842056 | 340 | 1 | 350 | 10 35 802 8 | INSTALAÇÃO BLOCO DE VÁL |
| TUBO | 774373708 | 75 | 1 | 217 | 90 64 786 | ELEMENTO DE CONEXÃO |
| TUBO | 9078983 | 10 | 1 | 598 | 90 78 961 | SAIDA AUXILIAR ANEXA |
| TUBO | 9079845 | 5 | 1 | 486 | 90 79 483 | CARTER |
| TUBO | 9274099 | 26 | 1 | 108 | 90 77 872 | REDUTOR DISTRIBUICAO BO |
| TUBO | 9753989 | 15 | 4 | 379 | 10 08 167 3 | CAPO DO MOTOR |
| TUBO | 9949217 | 11 | 1 | 308 | 10 35 801 3 | ARREFECIMENTO DE OLEO |
| TUBO | 9949218 | 10 | 1 | 308 | 10 35 801 3 | ARREFECIMENTO DE OLEO |
| TUBO CURV.PROD.REFRIGER | 9079472 | 382 | 1 | 474 | 10 11 668 5 | MOTOR DIESEL D936 L A6 240 |
| TUBO CURV.PROD.REFRIGER | 9079474 | 383 | 1 | 474 | 10 11 668 5 | MOTOR DIESEL D936 L A6 240 |
| TUBO DE ADMISSÃO DE AR | 10117073 | 220 | 1 | 473 | 10 11 668 5 | MOTOR DIESEL D936 L A6 240 |
| TUBO DE AGUA | 10054654 | 20 | 1 | 161 | 10 35 809 2 | ARREFECIMENTO DO MOTOR |
| TUBO DE AGUA | 10371175 | 20 | 1 | 161 | 10 35 809 2 | ARREFECIMENTO DO MOTOR |
| TUBO DE AR | 9937302 | 100 | 1 | 163 | 10 35 809 2 | ARREFECIMENTO DO MOTOR |
| TUBO DE AR | 9937303 | 115 | 1 | 163 | 10 35 809 2 | ARREFECIMENTO DO MOTOR |
| TUBO DE ASPIRAÇÃO DE AR | 10147789 | 1 | 1 | 550 | 10 11 707 3 | TUBO DE ADMISSÃO DE AR |
| TUBO DE CONEXÃO | 774378008 | 32 | 1 | 213 | 10 48 841 6 | BLOCO DE DISTRIBUIÇÃO MX- |
| TUBO DE ESCAPAMENTO M | 10115480 | 410 | 1 | 474 | 10 11 668 5 | MOTOR DIESEL D936 L A6 240 |
| TUBO DE INJEÇÃO | 9080410 | 215 | 6 | 472 | 10 11 668 5 | MOTOR DIESEL D936 L A6 240 |
| TUBO DE INJEÇÃO | 9080410 | 215 | 1 | 532 | 10 11 709 3 | KIT REPARO DA VALVULA INJ |
| TUBO DE LIGACAO | 9079963 | 2 | 1 | 552 | 10 12 190 8 | LINHA DE CONEXAO |
| TUBO DE LIGACAO | 9079963 | 2 | 1 | 553 | 90 79 964 | LINHA DE CONEXAO |
| TUBO DE LUBRIFICAÇÃO | 9946410 | 2 | 1 | 207 | 99 46 408 | TUBO LUBRIFICAÇÃO - INSTA |
| TUBO DE LUBRIFICAÇÃO | 9946411 | 3 | 1 | 207 | 99 46 408 | TUBO LUBRIFICAÇÃO - INSTA |
| TUBO DE LUBRIFICAÇÃO | 9946412 | 4 | 1 | 207 | 99 46 408 | TUBO LUBRIFICAÇÃO - INSTA |
| TUBO DE LUBRIFICAÇÃO | 9946413 | 5 | 1 | 207 | 99 46 408 | TUBO LUBRIFICAÇÃO - INSTA |
| TUBO DE PLASTICO | 7028899 | 380 | 1 | 428 | 10 29 026 4 | PEÇAS DE MONTAGEM |
| TUBO DE PURGAMENTO | 10016664 | 40 | 1 | 682 | 10 28 689 7 | BOMBA DE LUBRIFICACAO |
| TUBO DE RETORNO | 7370225 | 5 | 1 | 336 | 73 69 257 | FILTRO DE FLUXO DE RETO |
| TUBO DE SUCCAO DE OLEO | 9079128 | 5 | 1 | 485 | 90 79 487 | CARTER |
| TUBO DISTANCIADOR | 9275737 | 13 | 2 | 196 | 90 72 990 | PLACA DE CONEXAO |

| Designação | Artigo | Item | Quanti | Página | Módulo | Designação |
|---|---|---|---|---|---|---|
| TUBO DISTANCIADOR | 9989595 | 220 | 2 | 176 | 10 49 858 1 | SISTEMA ELETRICO DO MOTO |
| TUBO DISTANCIADOR | 9989595 | 23 | 2 | 447 | 10 35 814 3 | MAGUEIRAS DO AR-CONDICI |
| TUBO DO FLUIDO ARREFECI | 10120000 | 1 | 1 | 566 | 90 79 472 | TUBO CURV.PROD.REFRIGER |
| TUBO DO FLUIDO ARREFECI | 9079473 | 1 | 1 | 567 | 90 79 474 | TUBO CURV.PROD.REFRIGER |
| TUBO ESCAPAMENTO PRE-M | 10115479 | 1 | 1 | 578 | 10 11 548 0 | TUBO DE ESCAPAMENTO M |
| TUBO GUIA | 9079867 | 2 | 1 | 489 | 90 79 862 | VARETA DE NÍVEL DE ÓLEO C |
| TUBO INJETOR | 7900836 | 150 | 1 | 459 | 10 84 856 2 | KIT DE FERRAMENTAS |
| TUBO LUBRIFICAÇÃO - INSTA | 9946408 | 20 | 1 | 205 | 10 83 653 3 | COROA GIRATÓRIA - INSTALA |
| TUBO TERMINAL | 7373403 | 15 | 1 | 104 | 10 35 800 6 | SISTEMA DE ESPACAMENTO |
| TUBULACAO | 10115491 | 2 | 1 | 545 | 10 11 559 5 | RETORNO DE OLEO VAZADO |
| TUBULACAO | 10116287 | 54 | 1 | 543 | 10 11 628 5 | TUBULACAO DE COMBUSTIVE |
| TUBULACAO | 10116499 | 1 | 1 | 542 | 10 11 628 5 | TUBULACAO DE COMBUSTIVE |
| TUBULACAO | 10116572 | 2 | 1 | 549 | 10 11 657 6 | PEÇA DE CONEXÃO |
| TUBULACAO | 10116573 | 1 | 1 | 549 | 10 11 657 6 | PEÇA DE CONEXÃO |
| TUBULACAO 10X1 | 10115489 | 3 | 1 | 545 | 10 11 559 5 | RETORNO DE OLEO VAZADO |
| TUBULACAO 10X1 | 10116289 | 53 | 1 | 543 | 10 11 628 5 | TUBULACAO DE COMBUSTIVE |
| TUBULACAO 10X1 | 10116290 | 10 | 1 | 542 | 10 11 628 5 | TUBULACAO DE COMBUSTIVE |
| TUBULACAO 10X1 | 10116453 | 5 | 1 | 542 | 10 11 628 5 | TUBULACAO DE COMBUSTIVE |
| TUBULACAO 10X1 | 10116482 | 11 | 1 | 542 | 10 11 628 5 | TUBULACAO DE COMBUSTIVE |
| TUBULACAO 10X1 | 9080922 | 58 | 1 | 543 | 10 11 628 5 | TUBULACAO DE COMBUSTIVE |
| TUBULACAO 12X1 | 10116467 | 7 | 1 | 542 | 10 11 628 5 | TUBULACAO DE COMBUSTIVE |
| TUBULACAO 22X1,5 | 10119168 | 3 | 1 | 482 | 10 11 916 7 | CARCAÇA MANIVELA PURGAM |
| TUBULACAO 6X1 | 9078984 | 10 | 1 | 598 | 90 78 961 | SAIDA AUXILIAR ANEXA |
| TUBULACAO 6X1 | 9080009 | 15 | 1 | 599 | 90 80 006 | SAIDA AUXILIAR ANEXA |
| TUBULACAO ANEXO | 9079083 | 381 | 1 | 474 | 10 11 668 5 | MOTOR DIESEL D936 L A6 240 |
| TUBULACAO D936 | 9079082 | 1 | 1 | 547 | 90 79 083 | TUBULACAO ANEXO |
| TUBULACAO DE COMBUSTIVE | 10116285 | 212 | 1 | 472 | 10 11 668 5 | MOTOR DIESEL D936 L A6 240 |
| TUBULACAO DE COMBUSTIVE | 9076621 | 1 | 1 | 545 | 10 11 559 5 | RETORNO DE OLEO VAZADO |
| TUBULACAO DE ESCAPAMENT | 9937309 | 19 | 1 | 104 | 10 35 800 6 | SISTEMA DE ESPACAMENTO |
| TUBULACAO DE RETORNO DE | 9080684 | 17 | 1 | 573 | 90 80 735 | KIT DO TURBO COMPRESSOR |
| TUBULACAO DE RETORNO D | 10120264 | 1 | 1 | 487 | 10 12 026 3 | LINHA DE ÓLEO PRÉ-MONTA |
| TUBULACAO DE RETORNO D | 9079972 | 1 | 1 | 488 | 90 79 978 | LINHA DE ÓLEO PRÉ-MONTA |
| TUBULACAO DE RETORNO D | 10119021 | 17 | 1 | 573 | 90 80 735 | KIT DO TURBO COMPRESSOR |
| TUBULACOES PRESSAO INS | 10498225 | 7670 | 1 | 355 | 10 35 802 8 | INSTALAÇÃO BLOCO DE VÁL |
| TUBULAÇÃO DE PRESSÃO | 10062040 | 5 | 1 | 655 | 10 06 203 8 | CILINDRO HIDRAULICO |
| TUBULAÇÃO DE PRESSÃO C | 10052672 | 57 | 1 | 619 | 10 49 830 0 | LANÇA MONOBLOCO 6,70M |
| TUBULAÇÃO DE PRESSÃO C | 10052696 | 56 | 1 | 619 | 10 49 830 0 | LANÇA MONOBLOCO 6,70M |
| TUBULAÇÃO DE PRESSÃO C | 10064334 | 10 | 1 | 656 | 99 48 785 | CILINDRO HIDR. COM DIVISO |
| TUBULAÇÃO DE PRESSÃO C | 9490631 | 1 | 1 | 62 | 93 45 153 | COLETOR GIRATÓRIO - INSTA |
| TUBULAÇÃO DE PRESSÃO C | 9947845 | 3 | 1 | 359 | 10 49 822 5 | TUBULACOES PRESSAO INS |
| TUBULAÇÃO DE PRESSÃO C | 9947847 | 2 | 1 | 359 | 10 49 822 5 | TUBULACOES PRESSAO INS |
| TUBULAÇÃO DE PRESSÃO C | 9947849 | 4 | 1 | 359 | 10 49 822 5 | TUBULACOES PRESSAO INS |
| TUBULAÇÃO DE PRESSÃO C | 9947851 | 5 | 1 | 359 | 10 49 822 5 | TUBULACOES PRESSAO INS |
| TUBULAÇÃO DE PRESSÃO C | 9947861 | 7 | 1 | 359 | 10 49 822 5 | TUBULACOES PRESSAO INS |
| TUBULAÇÃO DE PRESSÃO C | 9947863 | 6 | 1 | 359 | 10 49 822 5 | TUBULACOES PRESSAO INS |
| TUBULAÇÃO DE PRESSÃO C | 9948786 | 21 | 2 | 616 | 10 49 830 0 | LANÇA MONOBLOCO 6,70M |
| TUBULAÇÃO DE PRESSÃO C | 9949237 | 17 | 1 | 616 | 10 49 830 0 | LANÇA MONOBLOCO 6,70M |
| TUBULAÇÃO DE PRESSÃO C | 9949239 | 18 | 1 | 616 | 10 49 830 0 | LANÇA MONOBLOCO 6,70M |
| TUBULAÇÃO DE PRESSÃO C | 9949243 | 19 | 1 | 616 | 10 49 830 0 | LANÇA MONOBLOCO 6,70M |
| TUBULAÇÃO DE PRESSÃO C | 9949245 | 20 | 1 | 616 | 10 49 830 0 | LANÇA MONOBLOCO 6,70M |
| TUBULAÇÃO DE ÓLEO LUBRIFI | 10115525 | 7 | 1 | 573 | 90 80 735 | KIT DO TURBO COMPRESSOR |
| TUCHO | 9265409 | 1 | 1 | 278 | 92 65 665 | CR TACO |
| TUCHO | 9885351 | 1 | 1 | 266 | 90 74 482 | CR TACO |
| TUCHO | 9885351 | 13 | 2 | 271 | 90 79 258 | MODULO DE COMANDO VG7 |
| TUCHO | 9885351 | 13 | 2 | 273 | 90 79 259 | MODULO DE COMANDO VG7 |
| TUCHO DE ROLETE | 9074455 | 1 | 2 | 518 | 90 79 870 | PEÇAS DO COMANDO |
| TUCHO DE ROLETE | 9074628 | 2 | 1 | 528 | 10 11 683 9 | BOMBA DE INJECAO - ACESS |
| TURBOCOMPRESSOR | 10123120 | 1 | 1 | 573 | 90 80 735 | KIT DO TURBO COMPRESSOR |
| UNIAO ROSCADA FLANGE EM | 5211460 | 10 | 1 | 159 | 99 29 814 | INSTALAÇÃO DA BOMBA |
| UNIDADE DE COMANDO DE O | 9937312 | 7025 | 1 | 294 | 10 35 809 0 | INSTALACAO HIDRAULICA |

| Designação | Artigo | Item | Quanti | Página | Módulo | Designação |
|---|---|---|---|---|---|---|
| UNIDADE DE CONTROLE | 7028075 | 5 | 1 | 122 | 56 16 530 | BOMBA DE PISTÃO AXIAL |
| UNIÃO ROSCADA DE ENCAIX | 257103802 | 15 | 1 | 563 | 10 13 281 7 | BOMBA DE ÁGUA PRÉ-MONT |
| UNIÃO ROSCADA G8 L | 10014575 | 140 | 1 | 218 | 90 64 786 | ELEMENTO DE CONEXÃO |
| UNIÃO ROSCADA G8 L | 10014575 | 140 | 3 | 220 | 10 01 461 1 | CAIXA AUXILIAR |
| VALVULA DE ADMISSAO | 10136752 | 2 | 2 | 504 | 10 14 155 4 | CABEÇOTE PRÉ-MONTADO |
| VALVULA DE ADMISSAO | 9074450 | 2 | 2 | 508 | 10 12 036 4 | CABEÇOTE PRÉ-MONTADO |
| VALVULA DE AGUA | 10292661 | 40 | 1 | 280 | 10 40 689 8 | SISTEMA DE AR CONDICION |
| VALVULA DE ALIMENTACAO | 5610135 | 54 | 6 | 366 | 10 03 245 2 | BLOCO DE COMANDO |
| VALVULA DE ALIMENTACAO | 5610135 | 100 | 1 | 653 | 10 00 297 1 | VÁLVULA DE SEGURANÇA RU |
| VALVULA DE ALÍVIO | 10038572 | 91 | 1 | 543 | 10 11 628 5 | TUBULACAO DE COMBUSTIVE |
| VALVULA DE COMUTACAO | 5614029 | 4 | 1 | 315 | 10 04 272 9 | BLOCO DE VÁLVULAS DE CO |
| VALVULA DE ESCAPE | 10136753 | 4 | 2 | 504 | 10 14 155 4 | CABEÇOTE PRÉ-MONTADO |
| VALVULA DE ESCAPE | 9074451 | 4 | 2 | 508 | 10 12 036 4 | CABEÇOTE PRÉ-MONTADO |
| VALVULA DE REGULAGEM FI | 10117951 | 14 | 1 | 469 | 10 11 668 5 | MOTOR DIESEL D936 L A6 240 |
| VALVULA DE RETENCAO | 10119971 | 6 | 1 | 487 | 10 12 026 3 | LINHA DE ÓLEO PRÉ-MONTA |
| VALVULA DE RETENCAO | 10218215 | 200 | 1 | 349 | 10 35 802 8 | INSTALAÇÃO BLOCO DE VÁL |
| VALVULA DE RETENCAO | 10219863 | 90 | 1 | 347 | 10 35 802 8 | INSTALAÇÃO BLOCO DE VÁL |
| VALVULA DE RETENCAO | 10219863 | 120 | 1 | 347 | 10 35 802 8 | INSTALAÇÃO BLOCO DE VÁL |
| VALVULA DE RETENCAO | 10287691 | 55 | 1 | 366 | 10 03 245 2 | BLOCO DE COMANDO |
| VALVULA DE RETENCAO | 10289184 | 101 | 1 | 653 | 10 00 297 1 | VÁLVULA DE SEGURANÇA RU |
| VALVULA DE RETENCAO | 10289185 | 102 | 1 | 653 | 10 00 297 1 | VÁLVULA DE SEGURANÇA RU |
| VALVULA DE RETENCAO | 5008169 | 12 | 1 | 363 | 10 21 821 5 | VALVULA DE RETENCAO |
| VALVULA DE RETENCAO | 5008169 | 12 | 1 | 364 | 10 21 986 3 | VALVULA DE RETENCAO |
| VALVULA DE RETENCAO | 5608327 | 6 | 1 | 315 | 10 04 272 9 | BLOCO DE VÁLVULAS DE CO |
| VALVULA DE RETENCAO | 5616232 | 62 | 4 | 366 | 10 03 245 2 | BLOCO DE COMANDO |
| VALVULA DE RETENCAO | 7017201 | 710 | 1 | 421 | 10 48 808 7 | INSTALACAO ELETRICA |
| VALVULA DE RETENCAO | 7622803 | 30 | 8 | 213 | 10 48 841 6 | BLOCO DE DISTRIBUIÇÃO MX- |
| VALVULA DE RETENCAO | 7622803 | 30 | 7 | 216 | 10 10 171 1 | BLOCO DE DISTRIBUIÇÃO MX- |
| VALVULA DE RETENCAO | 7622803 | 30 | 5 | 623 | 10 10 171 2 | BLOCO DE DISTRIBUIÇÃO MX- |
| VALVULA DE RETENCAO | 9270387 | 13 | 1 | 655 | 10 06 203 8 | CILINDRO HIDRAULICO |
| VALVULA DE RETENCAO | 9270598 | 6 | 2 | 689 | 90 73 355 | PLACA DE CONEXAO FMV 140 |
| VALVULA DE RETENCAO | 9370592 | 70 | 1 | 347 | 10 35 802 8 | INSTALAÇÃO BLOCO DE VÁL |
| VALVULA DE RETENCAO DUPL | 10342884 | 525 | 1 | 354 | 10 35 802 8 | INSTALAÇÃO BLOCO DE VÁL |
| VALVULA DE SAIDA | 5613730 | 47 | 1 | 102 | 99 37 298 | INSTALAÇÃO DO FILTRO DE A |
| VALVULA DE SEGURANCA | 7621324 | 14 | 1 | 681 | 10 28 689 7 | BOMBA DE LUBRIFICACAO |
| VALVULA DE VENTILACAO | 10005674 | 2 | 1 | 284 | 10 02 208 3 | BOCAL DE AR |
| VALVULA DE VENTILACAO | 10005675 | 7 | 1 | 286 | 11 00 359 4 | CARCAÇA |
| VALVULA DE VENTILACAO | 10022778 | 18 | 1 | 285 | 10 02 211 7 | CARCACA DE CONDUCAO DE |
| VALVULA DE VENTILACAO | 10022780 | 15 | 1 | 285 | 10 02 211 7 | CARCACA DE CONDUCAO DE |
| VALVULA FRENAGEM DA TRA | 5616688 | 15 | 2 | 67 | 10 07 713 7 | MECANISMO DE TRANSLAÇÃ |
| VALVULA INJETORA | 10116587 | 1 | 1 | 532 | 10 11 709 3 | KIT REPARO DA VALVULA INJ |
| VALVULA INTERCAMBIAVEL | 7021767 | 300 | 1 | 75 | 56 16 688 | VALVULA FRENAGEM DA TRA |
| VALVULA INTERCAMBIAVEL | 7403972 | 14 | 1 | 225 | 10 06 014 6 | INSTALACAO HIDRAULICA |
| VALVULA INTERCAMBIAVEL | 7403972 | 182 | 5 | 314 | 10 35 801 7 | INSTALACAO HIDRAULICA |
| VALVULA INTERCAMBIAVEL | 9077087 | 92 | 1 | 188 | 90 72 100 | MOTOR HIDRÁULICO |
| VALVULA INTERCAMBIAVEL | 9077087 | 1 | 1 | 196 | 90 72 990 | PLACA DE CONEXAO |
| VALVULA INTERRUPTORA | 10220635 | 3 | 1 | 116 | 10 22 041 1 | PLACA DE CONEXAO |
| VALVULA LIMITADORA PRES | 10289183 | 80 | 1 | 653 | 10 00 297 1 | VÁLVULA DE SEGURANÇA RU |
| VALVULA LIMITADORA PRES | 5616231 | 60 | 8 | 366 | 10 03 245 2 | BLOCO DE COMANDO |
| VALVULA MAGNETICA DE RE | 10280461 | 2 | 1 | 315 | 10 04 272 9 | BLOCO DE VÁLVULAS DE CO |
| VALVULA REGULADORA | 10133059 | 4 | 1 | 686 | 10 13 268 6 | BOMBA DE REGULAGEM HID |
| VARETA DE NÍVEL DE ÓLEO C | 10115740 | 1 | 1 | 489 | 90 79 862 | VARETA DE NÍVEL DE ÓLEO C |
| VARETA DE NÍVEL DE ÓLEO C | 9274863 | 4 | 1 | 108 | 90 77 872 | REDUTOR DISTRIBUICAO BO |
| VARETA DE NÍVEL DE ÓLEO C | 9079862 | 21 | 1 | 469 | 10 11 668 5 | MOTOR DIESEL D936 L A6 240 |
| VEDACAO | 7028342 | 4 | 1 | 338 | 56 17 689 | VÁLVULA DE FECHAMENTO D |
| VEDACAO | 8622905 | 108 | 1 | 520 | 10 12 143 8 | RADIADOR DE OLEO PRE-M |
| VEDACAO | 8622905 | 108 | 1 | 597 | 90 77 719 | SAIDA AUXILIAR ANEXA |
| VEDACAO | 8622905 | 108 | 1 | 600 | 90 77 386 | SAIDA AUXILIAR P´RE-MONTA |
| VEDACAO | 8627609 | 112 | 1 | 486 | 90 79 483 | CARTER |
| VEDACAO | 8627609 | 112 | 1 | 490 | 10 11 870 2 | SUPORTE TIPO ESCADA |

| Designação | Artigo | Item | Quanti | Página | Módulo | Designação |
|---|---|---|---|---|---|---|
| VEDACAO DO RADIADOR | 9937297 | 25 | 1 | 161 | 10 35 809 2 | ARREFECIMENTO DO MOTOR |
| VEDACAO LIFETIME | 11003781 | 5 | 2 | 58 | 10 65 168 0 | ROLETE INFERIOR D7 |
| VEDACAO LIFETIME | 11601136 | 5 | 2 | 59 | 11 60 010 7 | ROLETE INFERIOR D7 |
| VEDACAO TURCON 110,0X130, | 7017711 | 10 | 1 | 669 | 99 52 600 | MANCAL DA HASTE DO PISTA |
| VEDACAO TURCON 125,0X145, | 7017712 | 10 | 1 | 667 | 94 01 936 4 | MANCAL DA HASTE DO PISTA |
| VEDACAO TURCON 125,0X145, | 7017712 | 11 | 1 | 667 | 94 01 936 4 | MANCAL DA HASTE DO PISTA |
| VEDACAO TURCON 125,0X145, | 7017712 | 10 | 1 | 668 | 94 02 733 6 | MANCAL DA HASTE DO PISTA |
| VEDAÇÃO | 10009014 | 120 | 1 | 414 | 70 28 769 | PORTA DA CABINE DO MOTO |
| VEDAÇÃO | 10009027 | 450 | 2 | 433 | 10 48 808 8 | REVESTIMENTO INTERNO |
| VEDAÇÃO | 10014682 | 1 | 1 | 678 | 10 01 468 0 | BLOCO DO MOTOR |
| VEDAÇÃO | 10117891 | 2 | 1 | 519 | 10 12 143 9 | RADIADOR DE ÓLEO - ACES |
| VEDAÇÃO | 10117891 | 1 | 1 | 522 | 10 11 585 0 | KIT DE VEDAÇÃO |
| VEDAÇÃO | 10118549 | 2 | 1 | 490 | 10 11 870 2 | SUPORTE TIPO ESCADA |
| VEDAÇÃO | 10118549 | 15 | 1 | 606 | 10 11 801 4 | KIT DE VEDACAO |
| VEDAÇÃO | 10118550 | 19 | 1 | 606 | 10 11 801 4 | KIT DE VEDACAO |
| VEDAÇÃO | 10118551 | 2 | 1 | 486 | 90 79 483 | CARTER |
| VEDAÇÃO | 10118551 | 17 | 3 | 606 | 10 11 801 4 | KIT DE VEDACAO |
| VEDAÇÃO | 10118554 | 7 | 6 | 87 | 10 06 947 6 | KIT DE MANUTENÇÃO |
| VEDAÇÃO | 10118554 | 7 | 1 | 505 | 10 11 960 9 | COB.CABEÇA CILINDRO INSTA |
| VEDAÇÃO | 10118554 | 7 | 1 | 506 | 10 11 961 0 | COB.CABEÇA CILINDRO INSTA |
| VEDAÇÃO | 10118554 | 7 | 1 | 507 | 10 11 963 6 | COB.CABEÇA CILINDRO INSTA |
| VEDAÇÃO | 10118554 | 4 | 1 | 513 | 10 11 585 1 | KIT DE VED DO CABEÇOTE CIL |
| VEDAÇÃO | 10118554 | 4 | 6 | 515 | 10 11 585 3 | KIT DE VEDAÇÃO CABEÇOTE |
| VEDAÇÃO | 10118554 | 7 | 1 | 532 | 10 11 709 3 | KIT REPARO DA VALVULA INJ |
| VEDAÇÃO | 10118554 | 7 | 1 | 535 | 10 11 585 4 | KIT DE VEDACAO DO BICO IN |
| VEDAÇÃO | 10118556 | 3 | 6 | 513 | 10 11 585 1 | KIT DE VED DO CABEÇOTE CIL |
| VEDAÇÃO | 10118556 | 3 | 6 | 515 | 10 11 585 3 | KIT DE VEDAÇÃO CABEÇOTE |
| VEDAÇÃO | 10118556 | 6 | 6 | 550 | 10 11 707 3 | TUBO DE ADMISSÃO DE AR |
| VEDAÇÃO | 10118620 | 2 | 1 | 605 | 10 11 801 4 | KIT DE VEDACAO |
| VEDAÇÃO | 10118621 | 18 | 6 | 514 | 10 11 585 1 | KIT DE VED DO CABEÇOTE CIL |
| VEDAÇÃO | 10118621 | 18 | 6 | 516 | 10 11 585 3 | KIT DE VEDAÇÃO CABEÇOTE |
| VEDAÇÃO | 10119923 | 4 | 2 | 520 | 10 12 143 8 | RADIADOR DE OLEO PRE-M |
| VEDAÇÃO | 10119923 | 3 | 2 | 522 | 10 11 585 0 | KIT DE VEDAÇÃO |
| VEDAÇÃO | 10120640 | 18 | 1 | 606 | 10 11 801 4 | KIT DE VEDACAO |
| VEDAÇÃO | 10123734 | 15 | 1 | 609 | 10 11 583 8 | JOGO DE VEDAÇÃO MOTOR D |
| VEDAÇÃO | 10123735 | 17 | 3 | 609 | 10 11 583 8 | JOGO DE VEDAÇÃO MOTOR D |
| VEDAÇÃO | 10126427 | 22 | 1 | 609 | 10 11 583 8 | JOGO DE VEDAÇÃO MOTOR D |
| VEDAÇÃO | 10126738 | 3 | 1 | 484 | 90 79 480 | SUPORTE DOS AGREGADOS |
| VEDAÇÃO | 10126738 | 2 | 1 | 608 | 10 11 583 8 | JOGO DE VEDAÇÃO MOTOR D |
| VEDAÇÃO | 10137721 | 5 | 1 | 581 | 10 11 557 7 | CÁRTER VOLANTE MONT. EXT |
| VEDAÇÃO | 10137721 | 31 | 1 | 610 | 10 11 583 8 | JOGO DE VEDAÇÃO MOTOR D |
| VEDAÇÃO | 10297876 | 2 | 1 | 106 | 10 29 787 3 | VÁLVULA DE COMANDO |
| VEDAÇÃO | 10297876 | 3 | 1 | 107 | 10 29 787 4 | PLACA INTERMEDIARIA |
| VEDAÇÃO | 10471479 | 10 | 1 | 408 | 70 28 788 | VEDAÇÃO |
| VEDAÇÃO | 10475895 | 17 | 1 | 147 | 70 28 075 | UNIDADE DE CONTROLE |
| VEDAÇÃO | 7011131 | 2 | 1 | 491 | 50 04 624 | VÁLVULA DE DRENAGEM M 3 |
| VEDAÇÃO | 7019154 | 240 | 1 | 414 | 70 28 769 | PORTA DA CABINE DO MOTO |
| VEDAÇÃO | 7019155 | 250 | 1 | 414 | 70 28 769 | PORTA DA CABINE DO MOTO |
| VEDAÇÃO | 7024455 | 460 | 1 | 421 | 10 48 808 7 | INSTALACAO ELETRICA |
| VEDAÇÃO | 7026772 | 13 | 1 | 442 | 99 47 695 | INSTALAÇÃO ELÉTRICA E50 |
| VEDAÇÃO | 7028343 | 9 | 1 | 338 | 56 17 689 | VÁLVULA DE FECHAMENTO D |
| VEDAÇÃO | 7028788 | 170 | 1 | 407 | 70 28 767 | VIDRO FIXO |
| VEDAÇÃO | 7028790 | 130 | 1 | 407 | 70 28 767 | VIDRO FIXO |
| VEDAÇÃO | 7028803 | 140 | 2 | 410 | 10 03 553 0 | PÁRA-BRISA INFERIOR |
| VEDAÇÃO | 7028832 | 410 | 1 | 415 | 70 28 769 | PORTA DA CABINE DO MOTO |
| VEDAÇÃO | 7028890 | 150 | 1 | 427 | 10 29 026 4 | PEÇAS DE MONTAGEM |
| VEDAÇÃO | 7028891 | 140 | 1 | 427 | 10 29 026 4 | PEÇAS DE MONTAGEM |
| VEDAÇÃO | 7028892 | 160 | 1 | 427 | 10 29 026 4 | PEÇAS DE MONTAGEM |
| VEDAÇÃO | 7028953 | 400 | 2 | 433 | 10 48 808 8 | REVESTIMENTO INTERNO |
| VEDAÇÃO | 7029418 | 500 | 2 | 417 | 70 28 831 | VIDRO CORREDICO |

| Designação | Artigo | Item | Quanti | Página | Módulo | Designação |
|---|---|---|---|---|---|---|
| VEDAÇÃO | 7041345 | 1 | 1 | 335 | 74 14 913 | FECHO DO TANQUE |
| VEDAÇÃO | 7264906 | 11 | 1 | 152 | 92 65 783 | PARAFUSO DE FECHAMENTO |
| VEDAÇÃO | 7368993 | 9 | 2 | 87 | 10 06 947 6 | KIT DE MANUTENÇÃO |
| VEDAÇÃO | 7368993 | 3 | 2 | 89 | 10 06 948 6 | KIT DE MANUTENÇÃO ERSTE |
| VEDAÇÃO | 7368993 | 2 | 1 | 336 | 73 69 257 | FILTRO DE FLUXO DE RETO |
| VEDAÇÃO | 7368994 | 4 | 1 | 336 | 73 69 257 | FILTRO DE FLUXO DE RETO |
| VEDAÇÃO | 9074975 | 6 | 6 | 578 | 10 11 548 0 | TUBO DE ESCAPAMENTO M |
| VEDAÇÃO | 9077329 | 35 | 3 | 610 | 10 11 583 8 | JOGO DE VEDAÇÃO MOTOR D |
| VEDAÇÃO | 9079124 | 7 | 3 | 485 | 90 79 487 | CARTER |
| VEDAÇÃO | 9079124 | 14 | 3 | 606 | 10 11 801 4 | KIT DE VEDACAO |
| VEDAÇÃO | 9079124 | 18 | 3 | 609 | 10 11 583 8 | JOGO DE VEDAÇÃO MOTOR D |
| VEDAÇÃO | 9079125 | 12 | 1 | 485 | 90 79 487 | CARTER |
| VEDAÇÃO | 9079125 | 19 | 1 | 609 | 10 11 583 8 | JOGO DE VEDAÇÃO MOTOR D |
| VEDAÇÃO | 9079556 | 2 | 1 | 493 | 90 79 492 | PLACA |
| VEDAÇÃO | 9079556 | 2 | 1 | 494 | 90 79 958 | PLACA |
| VEDAÇÃO | 9079608 | 6 | 2 | 524 | 90 80 278 | BOMBA DE SUCÇÃO COM FIXA |
| VEDAÇÃO | 9079608 | 53 | 2 | 607 | 10 11 801 4 | KIT DE VEDACAO |
| VEDAÇÃO | 9079608 | 53 | 2 | 611 | 10 11 583 8 | JOGO DE VEDAÇÃO MOTOR D |
| VEDAÇÃO | 9080279 | 4 | 1 | 564 | 10 11 983 0 | INVÓLUCRO TERMOSTATO |
| VEDAÇÃO | 9080279 | 4 | 1 | 565 | 90 75 678 | INVÓLUCRO TERMOSTATO |
| VEDAÇÃO | 9080279 | 4 | 1 | 605 | 10 11 801 4 | KIT DE VEDACAO |
| VEDAÇÃO | 9080279 | 4 | 1 | 608 | 10 11 583 8 | JOGO DE VEDAÇÃO MOTOR D |
| VEDAÇÃO | 9144762 | 2 | 1 | 492 | 10 11 903 0 | ENCHIMENTO DE OLEO D930 |
| VEDAÇÃO | 9144762 | 3 | 1 | 556 | 91 44 757 | TAMPA DE FECHAMENTO |
| VEDAÇÃO | 9268129 | 16 | 1 | 514 | 10 11 585 1 | KIT DE VED DO CABEÇOTE CIL |
| VEDAÇÃO | 9268129 | 16 | 1 | 516 | 10 11 585 3 | KIT DE VEDAÇÃO CABEÇOTE |
| VEDAÇÃO | 9268131 | 18 | 1 | 573 | 90 80 735 | KIT DO TURBO COMPRESSOR |
| VEDAÇÃO | 9268131 | 71 | 1 | 612 | 10 11 583 8 | JOGO DE VEDAÇÃO MOTOR D |
| VEDAÇÃO | 9270109 | 15 | 1 | 514 | 10 11 585 1 | KIT DE VED DO CABEÇOTE CIL |
| VEDAÇÃO | 9270109 | 15 | 1 | 516 | 10 11 585 3 | KIT DE VEDAÇÃO CABEÇOTE |
| VEDAÇÃO | 9270109 | 3 | 1 | 573 | 90 80 735 | KIT DO TURBO COMPRESSOR |
| VEDAÇÃO | 9270109 | 4301 | 1 | 613 | 10 11 583 8 | JOGO DE VEDAÇÃO MOTOR D |
| VEDAÇÃO | 9271963 | 10 | 2 | 514 | 10 11 585 1 | KIT DE VED DO CABEÇOTE CIL |
| VEDAÇÃO | 9271963 | 10 | 2 | 516 | 10 11 585 3 | KIT DE VEDAÇÃO CABEÇOTE |
| VEDAÇÃO | 9271963 | 10 | 1 | 550 | 10 11 707 3 | TUBO DE ADMISSÃO DE AR |
| VEDAÇÃO | 9271963 | 10 | 1 | 552 | 10 12 190 8 | LINHA DE CONEXAO |
| VEDAÇÃO | 9271963 | 10 | 1 | 553 | 90 79 964 | LINHA DE CONEXAO |
| VEDAÇÃO | 9271963 | 20 | 2 | 607 | 10 11 801 4 | KIT DE VEDACAO |
| VEDAÇÃO | 9273691 | 5 | 1 | 599 | 90 80 006 | SAIDA AUXILIAR ANEXA |
| VEDAÇÃO | 9273691 | 52 | 1 | 611 | 10 11 583 8 | JOGO DE VEDAÇÃO MOTOR D |
| VEDAÇÃO | 9274974 | 36 | 1 | 610 | 10 11 583 8 | JOGO DE VEDAÇÃO MOTOR D |
| VEDAÇÃO | 9275766 | 2 | 1 | 495 | 91 47 512 | PECAS DE FECHAMENTO |
| VEDAÇÃO | 9275766 | 16 | 1 | 606 | 10 11 801 4 | KIT DE VEDACAO |
| VEDAÇÃO | 9275766 | 16 | 3 | 609 | 10 11 583 8 | JOGO DE VEDAÇÃO MOTOR D |
| VEDAÇÃO | 9882204 | 11 | 1 | 700 | 92 71 657 | KIT DE VEDAÇÃO |
| VEDAÇÃO | 9885529 | 6 | 1 | 159 | 99 29 814 | INSTALAÇÃO DA BOMBA |
| VEDAÇÃO | 9885529 | 3 | 1 | 597 | 90 77 719 | SAIDA AUXILIAR ANEXA |
| VEDAÇÃO | 9885529 | 5 | 1 | 598 | 90 78 961 | SAIDA AUXILIAR ANEXA |
| VEDAÇÃO | 9885529 | 34 | 1 | 610 | 10 11 583 8 | JOGO DE VEDAÇÃO MOTOR D |
| VEDAÇÃO | 9885529 | 51 | 2 | 611 | 10 11 583 8 | JOGO DE VEDAÇÃO MOTOR D |
| VEDAÇÃO 1MM | 9079130 | 2 | 1 | 591 | 10 11 912 8 | PECAS DE FECHAMENTO |
| VEDAÇÃO 1MM | 9079130 | 33 | 1 | 610 | 10 11 583 8 | JOGO DE VEDAÇÃO MOTOR D |
| VEDAÇÃO DE BORRACHA | 7001386 | 6 | 1 | 451 | 90 18 419 | TANQUE COMBUSTIVEL INSTA |
| VEDAÇÃO DO ROTOR | 10011398 | 11 | 2 | 63 | 10 00 963 0 | COLETOR GIRATÓRIO |
| VEDAÇÃO DO ROTOR | 10011398 | 11 | 2 | 65 | 10 00 967 6 | KIT VEDAÇÃO COLETOR GIRA |
| VEDAÇÃO DO ROTOR | 7380002 | 1 | 1 | 66 | 92 65 064 | KIT VEDAÇÃO COLETOR GIRA |
| VEDAÇÃO DO ROTOR | 7380004 | 3 | 1 | 66 | 92 65 064 | KIT VEDAÇÃO COLETOR GIRA |
| VEDAÇÃO DO ROTOR | 7380038 | 2 | 5 | 66 | 92 65 064 | KIT VEDAÇÃO COLETOR GIRA |
| VEDAÇÃO DO ROTOR 10X13, | 7380134 | 3 | 1 | 266 | 90 74 482 | CR TACO |
| VEDAÇÃO DO ROTOR 10X13, | 7380134 | 46 | 4 | 267 | 92 69 690 | KIT DE VEDAÇÃO |

| Designação | Artigo | Item | Quanti | Página | Módulo | Designação |
|---|---|---|---|---|---|---|
| VEDAÇÃO DO ROTOR 10X13, | 7380134 | 3 | 1 | 278 | 92 65 665 | CR TACO |
| VEDAÇÃO EM V | 7017682 | 12 | 2 | 63 | 10 00 963 0 | COLETOR GIRATÓRIO |
| VEDAÇÃO EM V | 7017682 | 12 | 2 | 65 | 10 00 967 6 | KIT VEDAÇÃO COLETOR GIRA |
| VENTILADOR | 10331629 | 14 | 1 | 167 | 10 35 508 4 | RADIADOR DE ÓLEO |
| VENTILADOR | 10331665 | 41 | 1 | 165 | 10 45 475 2 | RADIADOR COMBINADO |
| VENTILADOR | 5005641 | 3 | 1 | 574 | 10 11 646 3 | GERADOR PRE-MONTAGEM |
| VENTILADOR DUPLO | 10022052 | 26 | 1 | 287 | 11 00 359 4 | CARCAÇA |
| VERSAO TROPICALIZADA | 10089014 | 4 | 1 | 7 | . | |
| VIDRO | 7028787 | 160 | 1 | 407 | 70 28 767 | VIDRO FIXO |
| VIDRO | 7028789 | 120 | 1 | 407 | 70 28 767 | VIDRO FIXO |
| VIDRO | 7028805 | 320 | 1 | 411 | 70 28 759 | PÁRA-BRISA SUPERIOR |
| VIDRO | 7028830 | 400 | 1 | 415 | 70 28 769 | PORTA DA CABINE DO MOTO |
| VIDRO | 7030318 | 110 | 1 | 407 | 70 28 767 | VIDRO FIXO |
| VIDRO CORREDICO | 7028831 | 420 | 1 | 415 | 70 28 769 | PORTA DA CABINE DO MOTO |
| VIDRO DE INSPECAO | 7368081 | 60 | 1 | 331 | 10 35 798 3 | TANQUE HIDRAULICO INSTA |
| VIDRO DIANTEIRO | 7029423 | 560 | 1 | 417 | 70 28 831 | VIDRO CORREDICO |
| VIDRO FIXO | 7028767 | 20 | 1 | 405 | 10 47 616 9 | CABINE DE OPERADOR |
| VIDRO TRASEIRO | 7029424 | 570 | 1 | 417 | 70 28 831 | VIDRO CORREDICO |
| VIDRO TRASEIRO 48,6/71,6X1 | 7373031 | 40 | 4 | 55 | 56 17 975 | ELO FINAL DA CORRENTE |
| VIRABREQUIM | 10119887 | 1 | 1 | 496 | 90 75 115 | VIRABREQUIM COM ENGRENA |
| VIRABREQUIM COM ENGRENA | 9075115 | 50 | 1 | 470 | 10 11 668 5 | MOTOR DIESEL D936 L A6 240 |
| VIRABREQUIM PEÇAS DE AC | 10116175 | 53 | 1 | 470 | 10 11 668 5 | MOTOR DIESEL D936 L A6 240 |
| VOLANTE DO MOTOR PRE-M | 9080917 | 1 | 1 | 683 | 90 80 918 | VOLANTE MONTAGEM EXTER |
| VOLANTE MONTAGEM EXTER | 9080918 | 530 | 1 | 475 | 10 11 668 5 | MOTOR DIESEL D936 L A6 240 |
| VÁLVULA | 10280279 | 50 | 1 | 297 | 99 37 312 | UNIDADE DE COMANDO DE O |
| VÁLVULA | 10289629 | 57 | 1 | 366 | 10 03 245 2 | BLOCO DE COMANDO |
| VÁLVULA | 5611648 | 350 | 1 | 75 | 56 16 688 | VALVULA FRENAGEM DA TRA |
| VÁLVULA | 7025110 | 24 | 1 | 287 | 11 00 359 4 | CARCAÇA |
| VÁLVULA DE COMANDO | 10297873 | 2 | 1 | 142 | 10 41 087 0 | BOMBA HIDRÁULICA |
| VÁLVULA DE COMANDO | 10297877 | 1 | 1 | 106 | 10 29 787 3 | VÁLVULA DE COMANDO |
| VÁLVULA DE COMANDO NG 14 | 9882833 | 4 | 1 | 73 | 98 89 775 | MOTOR HIDRÁULICO |
| VÁLVULA DE DRENAGEM M 3 | 5004624 | 84 | 1 | 110 | 90 77 872 | REDUTOR DISTRIBUICAO BO |
| VÁLVULA DE DRENAGEM M 3 | 5004624 | 95 | 3 | 163 | 10 35 809 2 | ARREFECIMENTO DO MOTOR |
| VÁLVULA DE DRENAGEM M 3 | 5004624 | 20 | 1 | 181 | 90 18 423 | INSTALACAO MECANISMO GI |
| VÁLVULA DE DRENAGEM M 3 | 5004624 | 89 | 2 | 337 | 10 35 819 3 | TANQUE HIDRÁULICO |
| VÁLVULA DE DRENAGEM M 3 | 5004624 | 45 | 1 | 452 | 90 18 419 | TANQUE COMBUSTIVEL INSTA |
| VÁLVULA DE DRENAGEM M 3 | 5004624 | 10 | 1 | 486 | 90 79 483 | CARTER |
| VÁLVULA DE EXTRAÇÃO | 7019068 | 40 | 1 | 39 | 90 66 466 | ACESSORIOS |
| VÁLVULA DE FECHAMENTO D | 5617689 | 14 | 2 | 329 | 10 35 798 3 | TANQUE HIDRAULICO INSTA |
| VÁLVULA DE PARTIDA FRIA | 10220816 | 2 | 1 | 136 | 10 22 070 1 | CABECOTE DO FILTRO |
| VÁLVULA DE SEGURANÇA RU | 10002971 | 9 | 1 | 671 | 10 49 815 8 | CILINDRO DE ELEVACAO |
| VÁLVULA DE SEGURANÇA RU | 10044700 | 8 | 1 | 671 | 10 49 815 8 | CILINDRO DE ELEVACAO |
| VÁLVULA DIRECIONAL | 10003485 | 470 | 1 | 353 | 10 35 802 8 | INSTALAÇÃO BLOCO DE VÁL |
| VÁLVULA DIRECIONAL | 10018725 | 2 | 1 | 358 | 10 28 847 0 | REGUA DE COMANDO |
| VÁLVULA DIRECIONAL | 10292692 | 3 | 1 | 358 | 10 28 847 0 | REGUA DE COMANDO |
| VÁLVULA LIMITADORA DE PR | 10289146 | 1 | 2 | 116 | 10 22 041 1 | PLACA DE CONEXAO |
| VÁLVULA LIMITADORA DE PR | 11006050 | 1 | 1 | 116 | 10 22 041 1 | PLACA DE CONEXAO |
| VÁLVULA LIMITADORA DE PR | 5602487 | 2 | 1 | 310 | 10 35 809 3 | INSTALACAO HIDRAULICA |
| VÁLVULA LIMITADORA DE PR | 5715963 | 2 | 1 | 116 | 10 22 041 1 | PLACA DE CONEXAO |
| VÁLVULA LIMITADORA DE PR | 7028300 | 120 | 1 | 318 | 56 02 487 | VÁLVULA LIMITADORA DE PR |
| VÁLVULA LIMITADORA DE PR | 9267037 | 2 | 1 | 196 | 90 72 990 | PLACA DE CONEXAO |
| VÁLVULA LIMITADORA DE PR | 9267037 | 1 | 1 | 202 | 98 83 996 | KIT DE REPARO |
| VÁLVULA LIMITADORA DE PR | 9267554 | 1 | 1 | 81 | 98 84 000 | KIT DE REPARO |
| VÁLVULA LIMITADORA DE PR | 9267554 | 1 | 2 | 689 | 90 73 355 | PLACA DE CONEXAO FMV 140 |
| VÁLVULA M 14X1,5 | 9078233 | 13 | 1 | 477 | 10 11 577 9 | BLOCO DO MOTOR COMPLET |
| VÁLVULA M14X1,5 | 10011832 | 1 | 1 | 521 | 90 78 233 | VÁLVULA M 14X1,5 |
| VÁLVULA SOLENÓIDE | 5615344 | 3 | 3 | 315 | 10 04 272 9 | BLOCO DE VÁLVULAS DE CO |
| ÓLEO DE MOTOR | 9070361 | 10 | 1 | 10 | 90 66 460 | |
| ÓLEO DE TRANSMISSÃO | 9070365 | 50 | 1 | 10 | 90 66 460 | |
| ÓLEO DE TRANSMISSÃO LIEB | 10356826 | 10 | 1 | 17 | 90 70 365 | ÓLEO DE TRANSMISSÃO |

| Designação | Artigo | Item | Quanti | Página | Módulo | Designação |
|---|---|---|---|---|---|---|
| ÓLEO DE TRANSMISSÃO LIEB | 10296477 | 1000 | 1 | 24 | 10 35 682 6 | ÓLEO DE TRANSMISSÃO LIEB |
| ÓLEO DE TRANSMISSÃO LIEB | 10330287 | 20 | 1 | 24 | 10 35 682 6 | ÓLEO DE TRANSMISSÃO LIEB |
| ÓLEO DE TRANSMISSÃO LIE | 10330288 | 210 | 1 | 24 | 10 35 682 6 | ÓLEO DE TRANSMISSÃO LIEB |
| ÓLEO DE TRANSMISSÃO LIE | 10330285 | 5 | 1 | 24 | 10 35 682 6 | ÓLEO DE TRANSMISSÃO LIEB |
| ÓLEO DE TRANSMISSÃO LIE | 10356827 | 20 | 1 | 17 | 90 70 365 | ÓLEO DE TRANSMISSÃO |
| ÓLEO DE TRANSMISSÃO LIE | 10330292 | 1000 | 1 | 25 | 10 35 682 7 | ÓLEO DE TRANSMISSÃO LIE |
| ÓLEO DE TRANSMISSÃO LIE | 10330291 | 20 | 1 | 25 | 10 35 682 7 | ÓLEO DE TRANSMISSÃO LIE |
| ÓLEO DE TRANSMISSÃO LIEB | 10301680 | 210 | 1 | 25 | 10 35 682 7 | ÓLEO DE TRANSMISSÃO LIE |
| ÓLEO DE TRANSMISSÃO LIEB | 10285639 | 5 | 1 | 25 | 10 35 682 7 | ÓLEO DE TRANSMISSÃO LIE |
| ÓLEO DO EIXO LIEBHERR/20W | 10356831 | 20 | 1 | 16 | 90 70 364 | OLEO PARA CAMBIO E EIXOS |
| ÓLEO DO EIXO LIEBHERR/20W | 10330294 | 20 | 1 | 28 | 10 35 683 1 | ÓLEO DO EIXO LIEBHERR/20W |
| ÓLEO DO EIXO LIEBHERR/20 | 10285640 | 5 | 1 | 28 | 10 35 683 1 | ÓLEO DO EIXO LIEBHERR/20W |
| ÓLEO HIDRÁULICO | 9070362 | 20 | 1 | 10 | 90 66 460 | |
| ÓLEO HIDRÁULICO LIEBHERR | 10356825 | 20 | 1 | 15 | 90 70 363 | |
| ÓLEO HIDRÁULICO LIEBHERR | 10296478 | 1000 | 1 | 11 | 10 35 682 5 | ÓLEO HIDRÁULICO LIEBHERR |
| ÓLEO HIDRÁULICO LIEBHERR | 10330277 | 20 | 1 | 11 | 10 35 682 5 | ÓLEO HIDRÁULICO LIEBHERR |
| ÓLEO HIDRÁULICO LIEBHERR/ | 10330278 | 210 | 1 | 11 | 10 35 682 5 | ÓLEO HIDRÁULICO LIEBHERR |
| ÓLEO HIDRÁULICO LIEBHERR/ | 10296479 | 5 | 1 | 11 | 10 35 682 5 | ÓLEO HIDRÁULICO LIEBHERR |
| ÓLEO HIDRÁULICO LIEBHERR/ | 10356791 | 30 | 1 | 14 | 90 70 362 | ÓLEO HIDRÁULICO |
| ÓLEO HIDRÁULICO LIEBHERR/ | 10330271 | 1000 | 1 | 20 | 10 35 679 1 | ÓLEO HIDRÁULICO LIEBHERR/ |
| ÓLEO HIDRÁULICO LIEBHERR/ | 10330268 | 20 | 1 | 20 | 10 35 679 1 | ÓLEO HIDRÁULICO LIEBHERR/ |
| ÓLEO HIDRÁULICO LIEBHERR | 10330270 | 210 | 1 | 20 | 10 35 679 1 | ÓLEO HIDRÁULICO LIEBHERR/ |
| ÓLEO HIDRÁULICO LIEBHERR | 10330266 | 5 | 1 | 20 | 10 35 679 1 | ÓLEO HIDRÁULICO LIEBHERR/ |
| ÓLEO HIDRÁULICO LIEBHERR/ | 10356800 | 10 | 1 | 14 | 90 70 362 | ÓLEO HIDRÁULICO |
| ÓLEO HIDRÁULICO LIEBHERR/ | 10330260 | 1000 | 1 | 23 | 10 35 680 0 | ÓLEO HIDRÁULICO LIEBHERR/ |
| ÓLEO HIDRÁULICO LIEBHERR/ | 10330258 | 20 | 1 | 23 | 10 35 680 0 | ÓLEO HIDRÁULICO LIEBHERR/ |
| ÓLEO HIDRÁULICO LIEBHERR | 10330259 | 210 | 1 | 23 | 10 35 680 0 | ÓLEO HIDRÁULICO LIEBHERR/ |
| ÓLEO HIDRÁULICO LIEBHERR | 10330255 | 5 | 1 | 23 | 10 35 680 0 | ÓLEO HIDRÁULICO LIEBHERR/ |
| ÓLEO HIDRÁULICO LIEBHERR | 10356789 | 20 | 1 | 14 | 90 70 362 | ÓLEO HIDRÁULICO |
| ÓLEO HIDRÁULICO LIEBHERR | 10344027 | 1000 | 1 | 19 | 10 35 678 9 | ÓLEO HIDRÁULICO LIEBHERR |
| ÓLEO HIDRÁULICO LIEBHERR | 10344025 | 20 | 1 | 19 | 10 35 678 9 | ÓLEO HIDRÁULICO LIEBHERR |
| ÓLEO HIDRÁULICO LIEBHERR/ | 10344026 | 210 | 1 | 19 | 10 35 678 9 | ÓLEO HIDRÁULICO LIEBHERR |
| ÓLEO HIDRÁULICO LIEBHERR/ | 10344024 | 5 | 1 | 19 | 10 35 678 9 | ÓLEO HIDRÁULICO LIEBHERR |
| ÓLEO HIDRÁULICO LIEBHERR/ | 10356303 | 10 | 1 | 15 | 90 70 363 | |
| ÓLEO HIDRÁULICO LIEBHERR/ | 10296481 | 1000 | 1 | 47 | 10 35 630 3 | ÓLEO HIDRÁULICO LIEBHERR/ |
| ÓLEO HIDRÁULICO LIEBHERR/ | 10330272 | 20 | 1 | 47 | 10 35 630 3 | ÓLEO HIDRÁULICO LIEBHERR/ |
| ÓLEO HIDRÁULICO LIEBHERR | 10330276 | 210 | 1 | 47 | 10 35 630 3 | ÓLEO HIDRÁULICO LIEBHERR/ |
| ÓLEO HIDRÁULICO LIEBHERR | 10296480 | 5 | 1 | 47 | 10 35 630 3 | ÓLEO HIDRÁULICO LIEBHERR/ |