LIEBHERR

RUTHZIL TRATOR COMERCIAL DE PEÇAS LTDA 11 97083-6812 ROLANDO CITRANGULO

Catalog
Catálogo

R 964C HD 1165 30801

Important for spare parts orders!

Check delivery documentation for machine details.

Required information for spare parts orders:
Spare parts orders can only be completed quickly and correctly if the order contains the following data.

- Type (see data tag)
- Machine S/N (see data tag)
- Article number, description and quantity of the desired part.
  - If a manufacturer's number for the part is entered in your spare parts list, for example [2003 28 0481], then it must be noted on the order.
  - When ordering spare parts for engines, the Diesel engine serial number must be noted. This serial number can be found on the data tag of the Diesel engine.
- Type of delivery and exact delivery address.
  - Please confirm phone orders in writing.

Note
- Technical detail changes compared to the data and illustrations in available documentation are reserved.
- Parts not listed are not spare parts!

Information for spare parts page

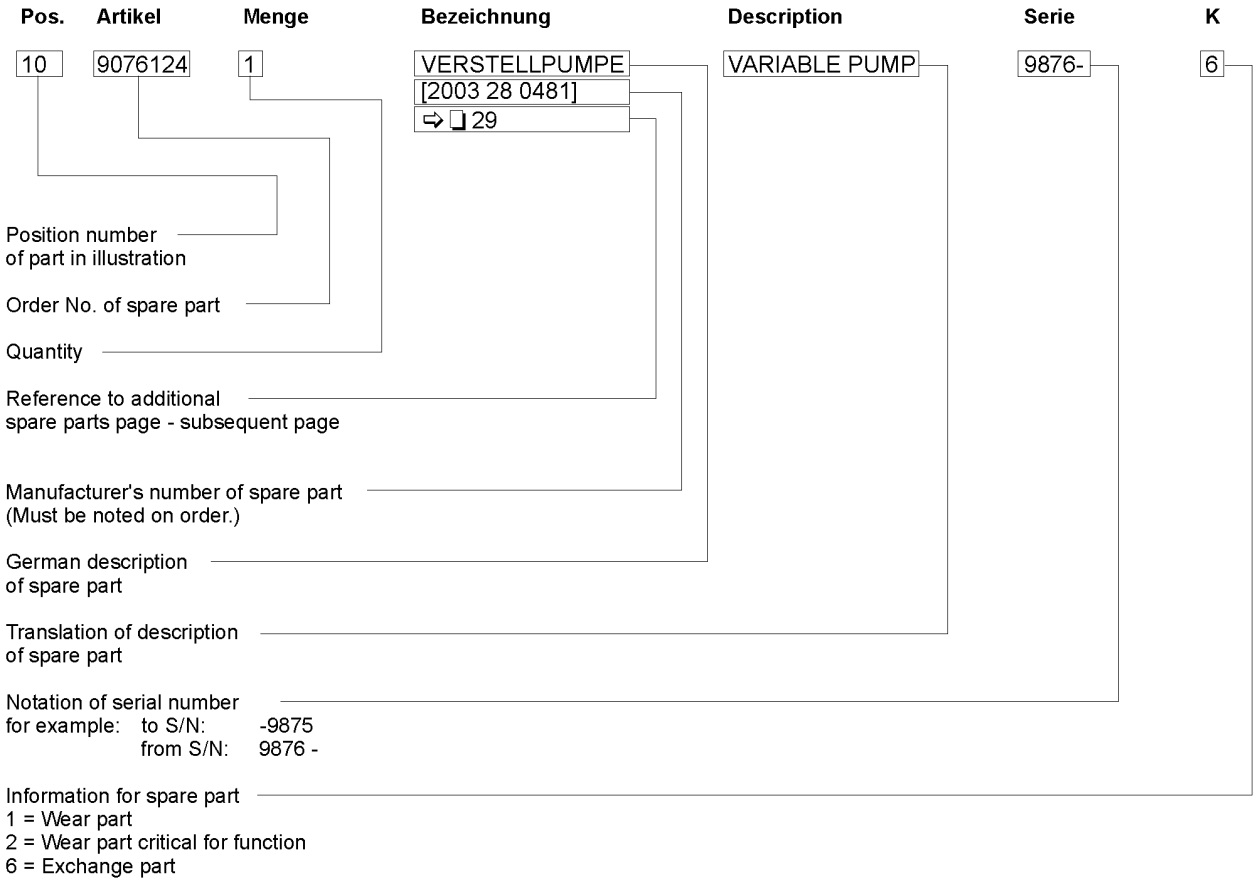

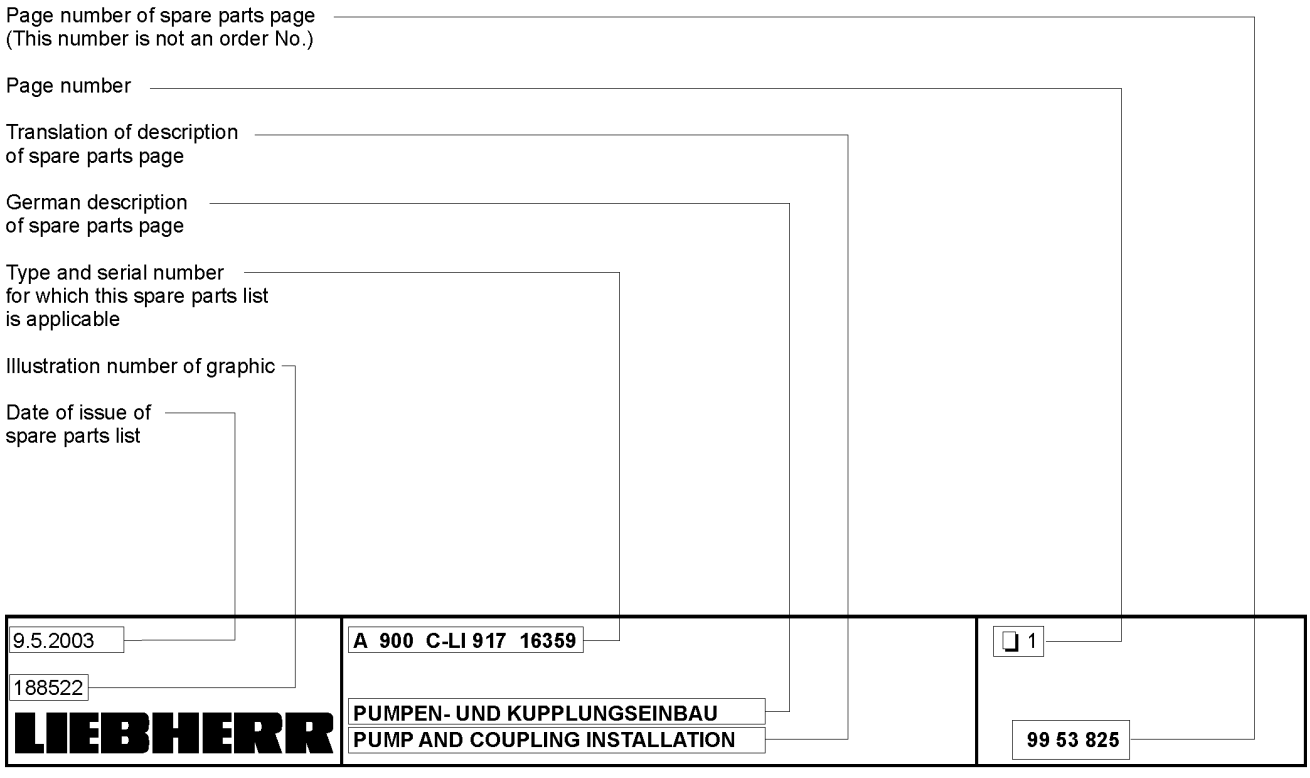

Pos.	Item	Quantity	Description	Descripción	Serie	K
1	10358741	1	BASIC MACHINE R964C HD LI ⇨ ❑ 9	MAQUINA BASE		1
2	10300122	2	CRAWLER CHAIN 600mm ⇨ ❑ 48	CADENA DE ORUGA		2
3	10057656	1	TROPICAL EXECUTION	VERSION TROPICAL		
4	10358730	1	HOIST CYLINDERS DIA.190 ⇨ ❑ 769	CILINDRO ELEVADOR		
5	10057651	1	TRAVEL ALARM ⇨ ❑ 746	DISP.ALARMA MARCHA		
6	10498313	1	FUEL COUPLING WIGGINS ⇨ ❑ 787	ACOP.RAP.WIGGINS P.COMBU		
7	10092946	1	ADDIT.HEAD LIGHTS F.CAB VAR.3B ⇨ ❑ 790	FAROS ADICIONALES EN CABIN		1
8	10092948	1	ADDIT.HEAD LIGHTS F.CAB VAR.3B ⇨ ❑ 791	FAROS ADICIONALES EN CABIN		1
9	10498331	1	FIRE EXTINGUISHER ⇨ ❑ 779	EXTINTOR		
10	10498156	1	CAB ELEVATION 1200MM ⇨ ❑ 794	ELEVACIÓN CABINA CONDUCTO		
11	10358724	1	GOOSENECK BOOM 7,00M ⇨ ❑ 699	PLUMA MONOBLOC		
12	10358722	1	STICK 2,6M ⇨ ❑ 716	MANGO DE LA PALA		
13	10076271	1	PROTECTION F.STICK 2,60M	CINTURÓN PROT.INF.P.BALANCÍ		
14	10498640	1				
15	10358736	1	PISTON ROD COVER BUCKET CYL ⇨ ❑ 732	ÉMBOLO PROT.VÁST.P.CIL.CUC		
16	10498497	1	BACKHOE BUCKET HD 1950MM 4,30M3 ⇨ ❑ 724	CUCHARA RETRO HD		
17	620321216	1				
18	726450116	1	KANTSIL SEAL KIT ⇨ ❑ 775			
19	510160916	1	HAND PUMP	BOMBA MANUAL		1
20	510363416	1	BIO-OIL-ANALYSIS SET	KIT ANÁLISIS ACEITE BIO		1

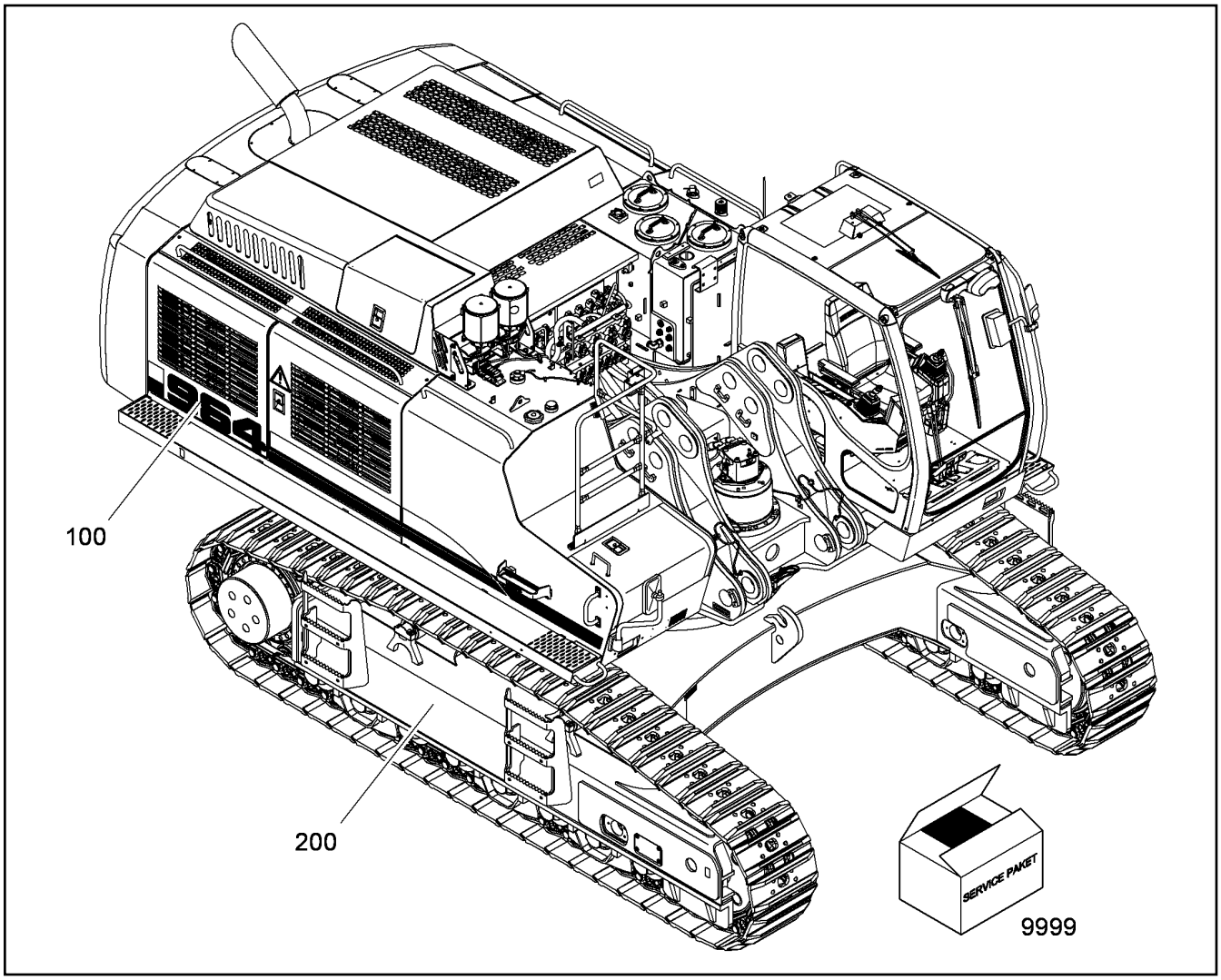

Pos.	Item	Quantity	Description	Descripción	Serie	K
100		1	UPPERCARRIAGE ⇨ ❑ 91	SUPERESTRUCTURA	-99998	1
100		1	UPPERCARRIAGE ⇨ ❑ 93	SUPERESTRUCTURA	99999-	1
200		1	UNDERCARRIAGE CPL ⇨ ❑ 41	ESTRUC.INF.COMPL.		1
9999		1	SERVICE MATERIAL ⇨ ❑ 40	MATERIAL SERV.		1

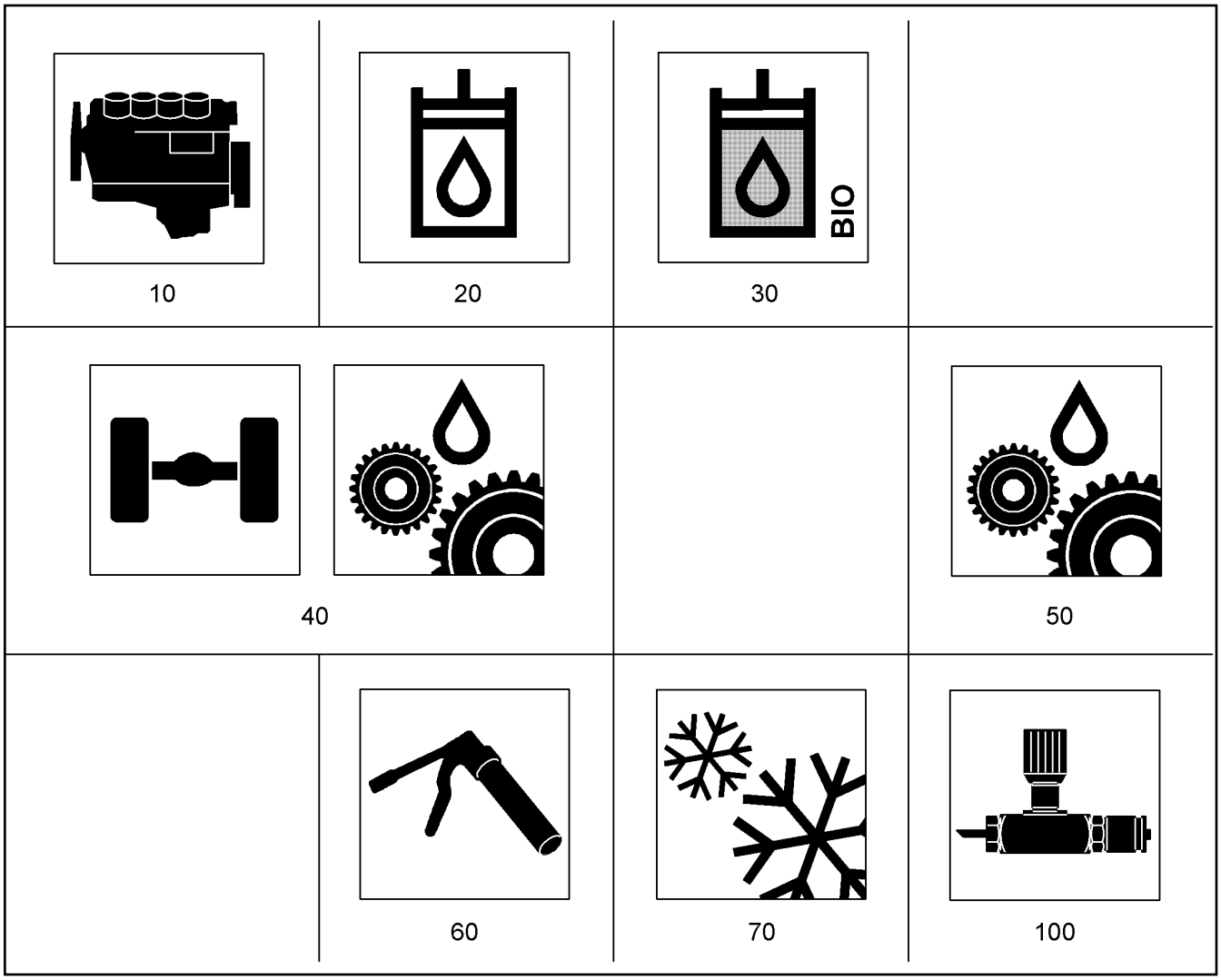

Pos.	Item	Quantity	Description	Descripción	Serie	K
10		1	MOTOR OIL ⇨ ❑ 12	ACEITE DE MOTOR		
20		1	HYDRAULIC OIL ⇨ ❑ 13	ACEITE HIDRAULICO		
30		1	BIODEGRADABLE HYDRAULIC-OIL ⇨ ❑ 14	ACEITE HIDRAULICO ECOLOGIC		
40		1	AXLE AND GEAR-OIL ⇨ ❑ 15	ACEITE P.EJE Y TRANS.		
50		1	GEAR OIL ⇨ ❑ 16	ACEITE PARA ENGRANAJES		
60		1	GREASES ⇨ ❑ 17	GRASAS		
70		1	COOLANT ⇨ ❑ 11	AGENTE REFRIGERANTE		
100		1	ACCESSORIES ⇨ ❑ 38	ACCESORIOS		



10



20

Pos.	Item	Quantity	Description	Descripción	Serie	K
10		1l	ANTICORROSION ANTIFREEZER ⇨ ❑ 30	ANTICORROSIVO		
20		1l	ANTICORROSION ANTIFREEZER ⇨ ❑ 36	ANTICORROSIVO		

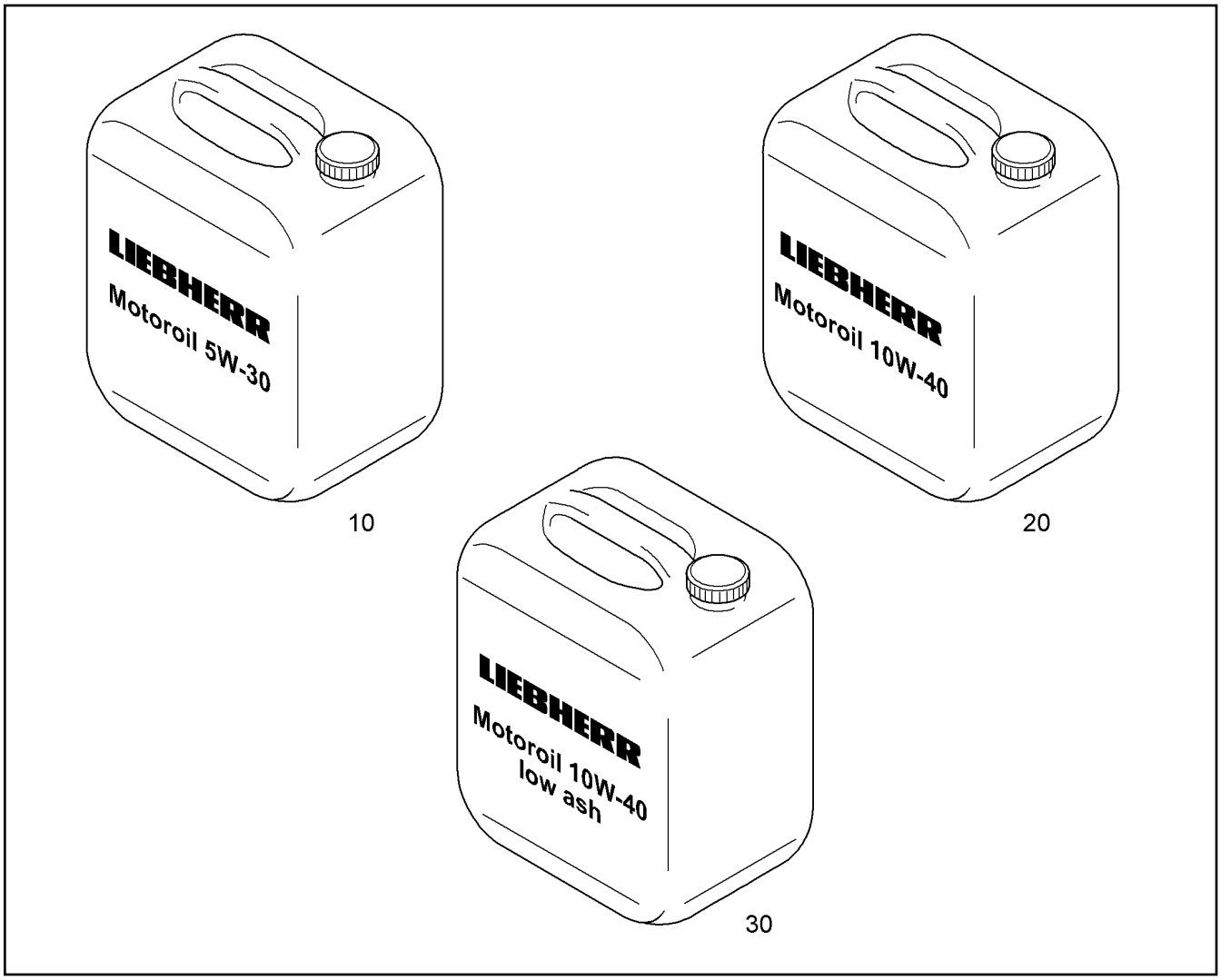

Pos.	Item	Quantity	Description	Descripción	Serie	K
10		1l	ENGINE OIL LIEBHERR/5W-30 ⇨ ❑ 37	ACEITE DE MOTOR		
20		1l	ENGINE OIL LIEBHERR/10W-40 ⇨ ❑ 21	ACEITE DE MOTOR		
30		1l	ENGINE OIL LIEBHERR LOW ASH/10W-40 ⇨ ❑ 22	ACEITE DE MOTOR		

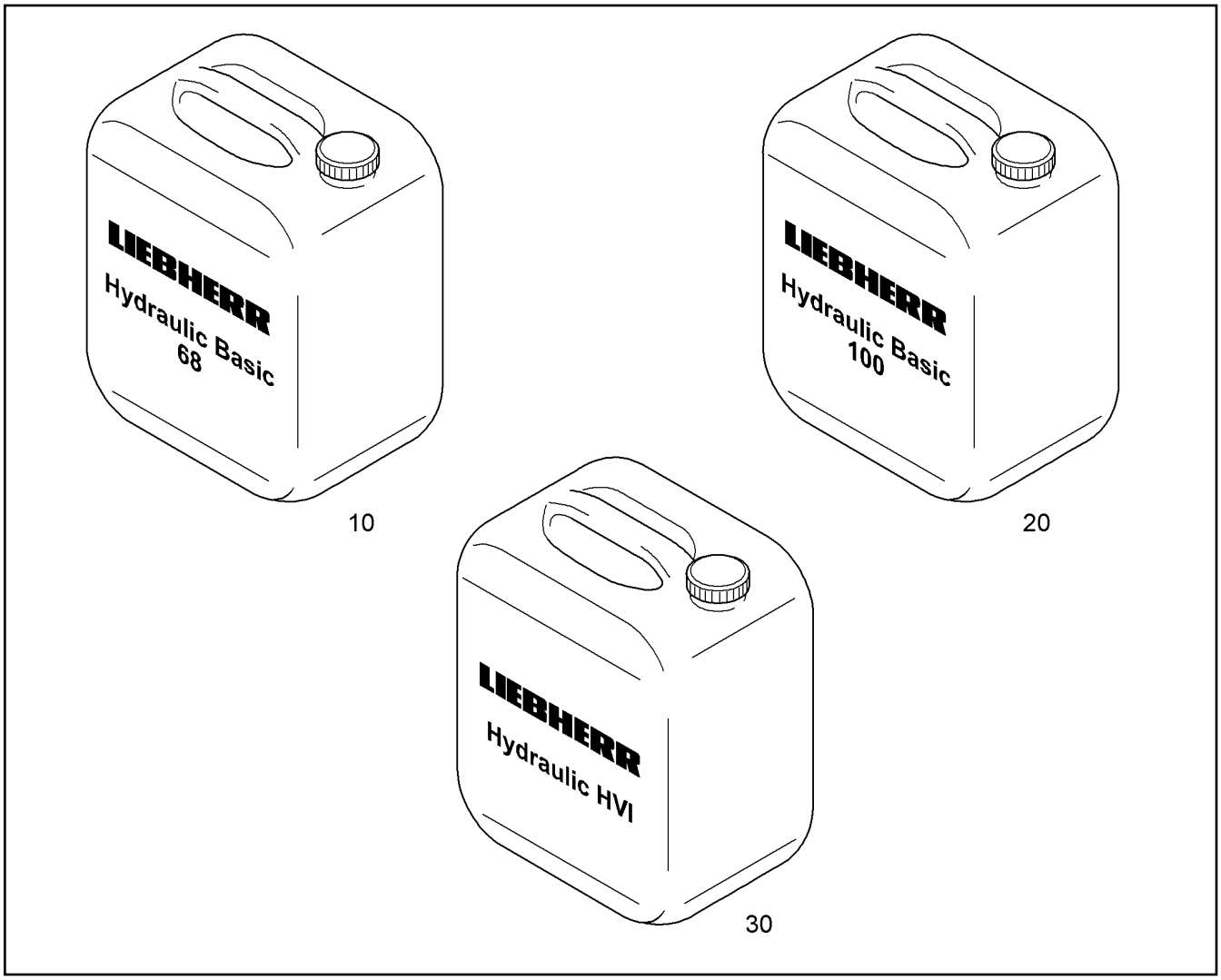

Pos.	Item	Quantity	Description	Descripción	Serie	K
10		1l	HYDRAULIC OIL LIEBHERR/ISO VG 68 ⇨ ❑ 23	ACEITE HIDRAULICO		
20		1l	HYDRAULIC OIL LIEBHERR/ISO-VG 100 ⇨ ❑ 19	ACEITE HIDRAULICO		
30		1l	HYDRAULIC OIL LIEBHERR/ISO VG 46 ⇨ ❑ 20	ACEITE HIDRAULICO		

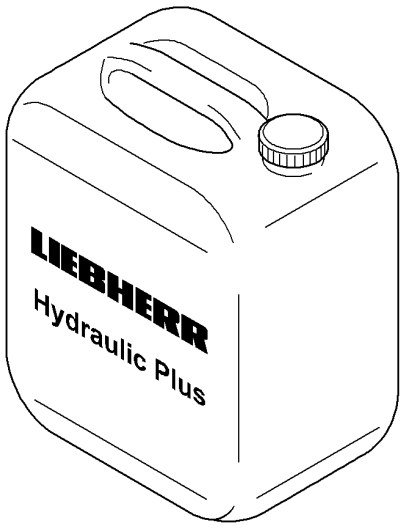

10

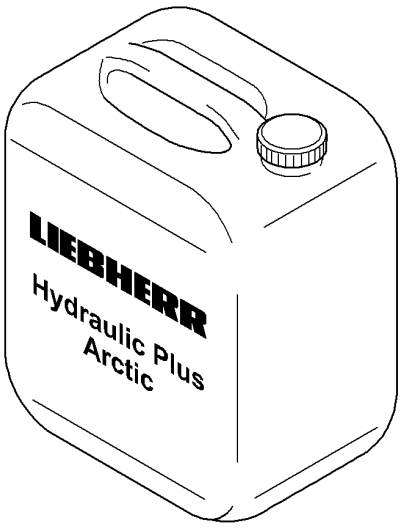

20

Pos.	Item	Quantity	Description	Descripción	Serie	K
10		1l	HYDRAULIC OIL LIEBHERR/ISO-VG 46 ⇨ ❑ 18	ACEITE HIDRAULICO		
20		1l	HYDRAULIC OIL LIEBHERR/ISO VG 15-46 ⇨ ❑ 24	ACEITE HIDRAULICO		

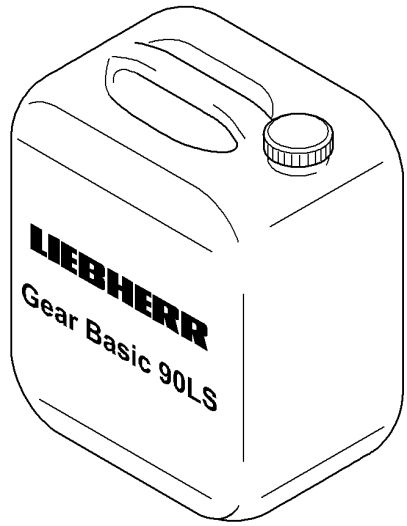

10

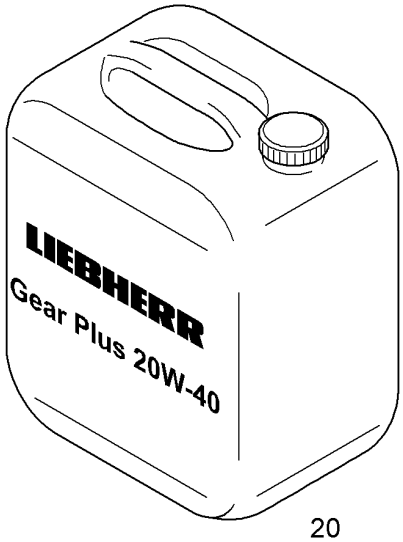

20

Pos.	Item	Quantity	Description	Descripción	Serie	K
10		1l	AXLE AND GEAR-OIL LIEBHERR/85W-90 ⇨ ❑ 28	ACEITE P.EJE Y TRANS.		
20		1l	AXLE-OIL LIEBHERR/20W-40 ⇨ ❑ 29	ACEITE DE EJE		

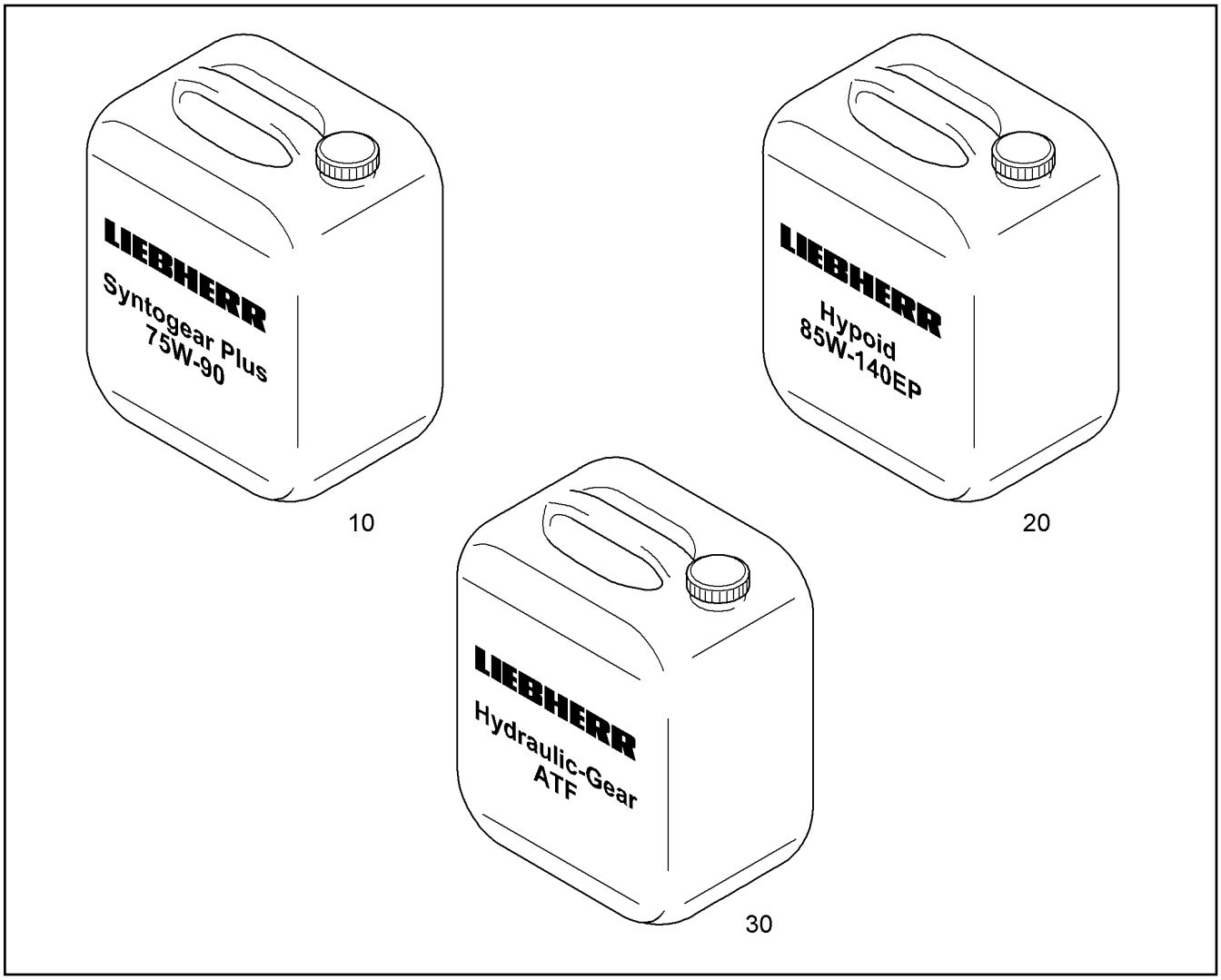

Pos.	Item	Quantity	Description	Descripción	Serie	K
10		1l	GEAR OIL LIEBHERR/75W-90 ⇨ ❑ 25	ACEITE PARA ENGRANAJES		
20		1l	GEAR OIL LIEBHERR/85W-140 ⇨ ❑ 26	ACEITE PARA ENGRANAJES		
30		1l	HYDRAULIC+GEAR-OIL LIEBHERR/5W-20 ⇨ ❑ 27	ACEITE P.SIST.HIDR.+ENGRAN		

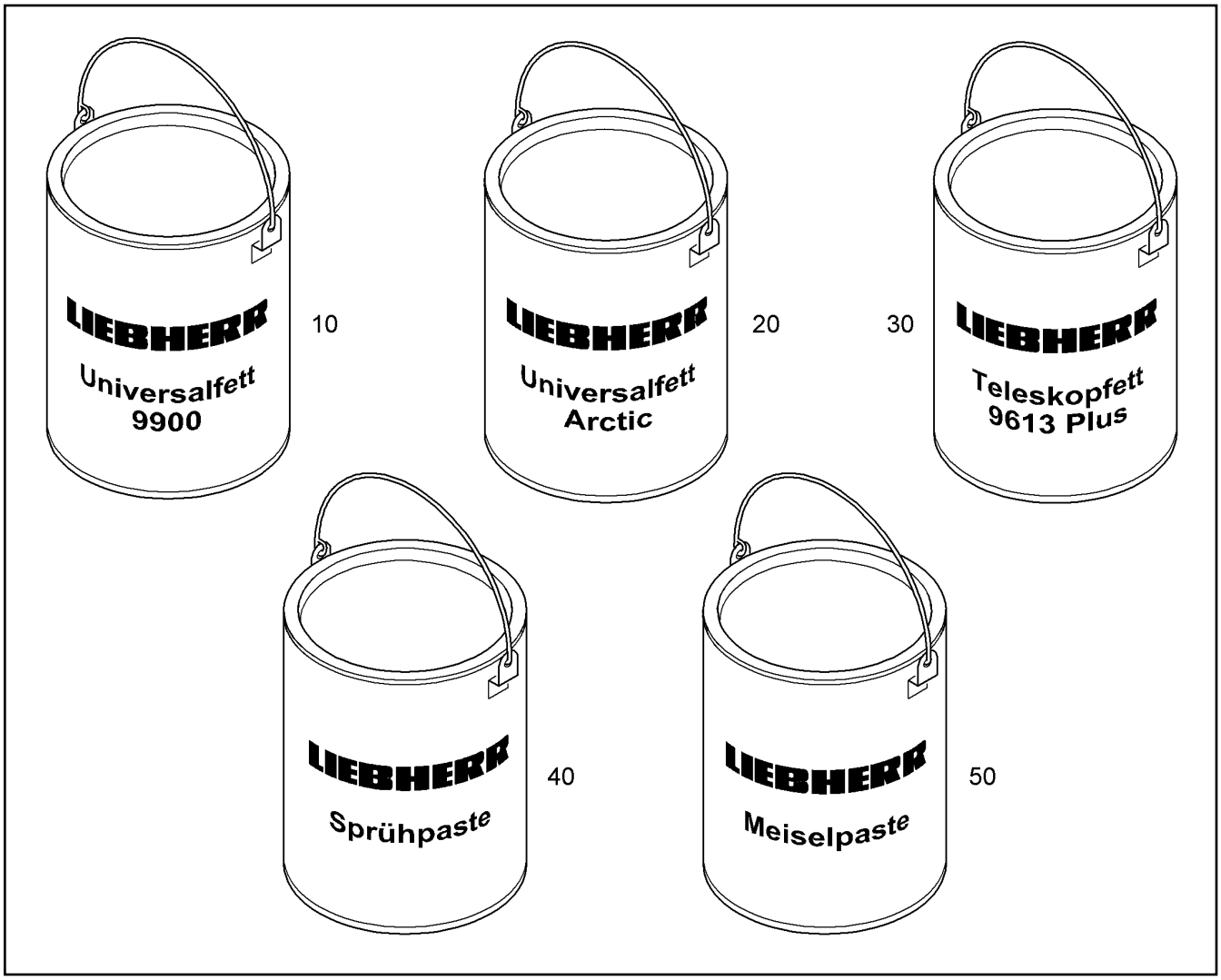

Pos.	Item	Quantity	Description	Descripción	Serie	K
10		1kg	UNIVERSAL GREASE LIEBHERR ⇨ ❑ 33	GRASA UNIVERSAL		
20		1kg	LOW TEMPERATURE GREASE LIEBHERR ⇨ ❑ 32	GRASA P.BAJAS TEMP.		
30		1kg	SPECIAL GREASE LIEBHERR ⇨ ❑ 31	GRASA ESPECIAL		
40		1kg	SPRAY-PASTE LIEBHERR ⇨ ❑ 34	PASTA SPRAY		
50		1kg	BIT-PASTE LIEBHERR ⇨ ❑ 35	PASTA DE CINCEL		

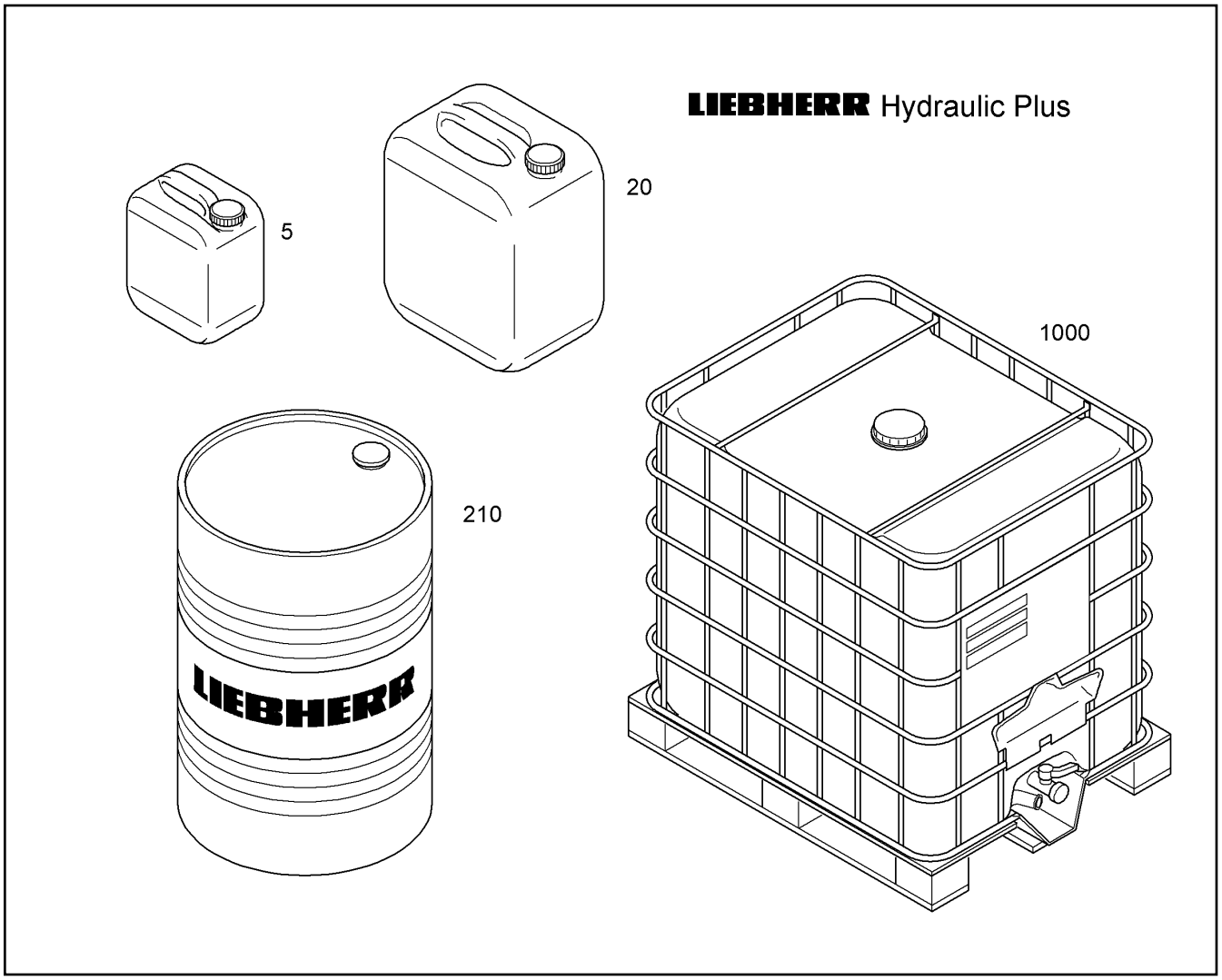

Pos.	Item	Quantity	Description	Descripción	Serie	K
5	10296480	1	HYDRAULIC OIL LIEBHERR/ISO-VG 46/5L	ACEITE HIDRAULICO		
20	10330272	1	HYDRAULIC OIL LIEBHERR/ISO-VG 46/20L	ACEITE HIDRAULICO		
210	10330276	1	HYDRAULIC OIL LIEBHERR/ISO-VG 46/210L	ACEITE HIDRAULICO		
1000	10296481	1	HYDRAULIC OIL LIEBHERR/ISO-VG 46/1000	ACEITE HIDRAULICO		

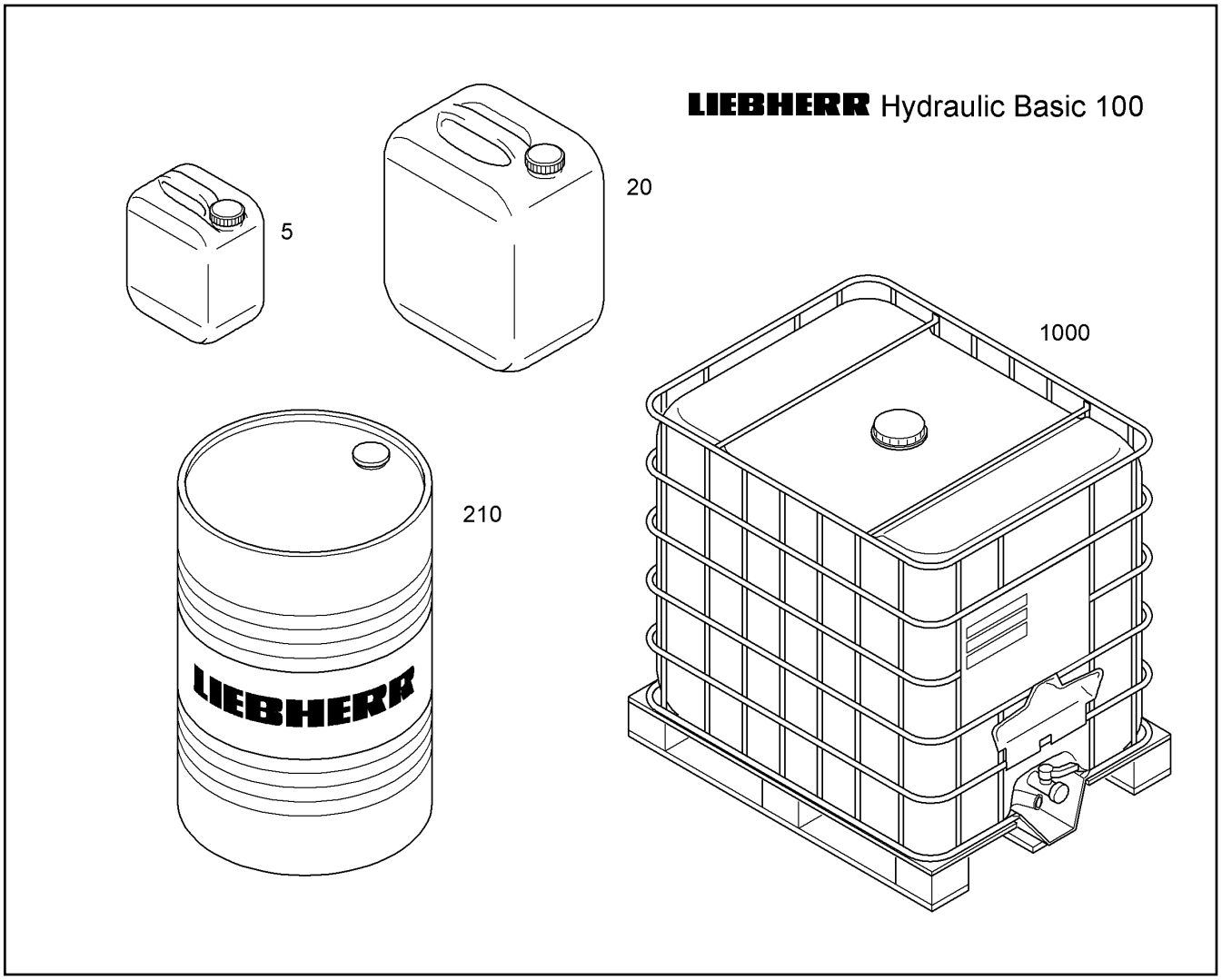

Pos.	Item	Quantity	Description	Descripción	Serie	K
5	10344024	1	HYDRAULIC OIL LIEBHERR/ISO-VG 100/5L	ACEITE HIDRAULICO		
20	10344025	1	HYDRAULIC OIL LIEBHERR/ISO-VG 100/20L	ACEITE HIDRAULICO		
210	10344026	1	HYDRAULIC OIL LIEBHERR/ISO-VG 100/210	ACEITE HIDRAULICO		
1000	10344027	1	HYDRAULIC OIL LIEBHERR/ISO-VG 100/1000	ACEITE HIDRAULICO		

LIEBHERR Hydraulic HVI

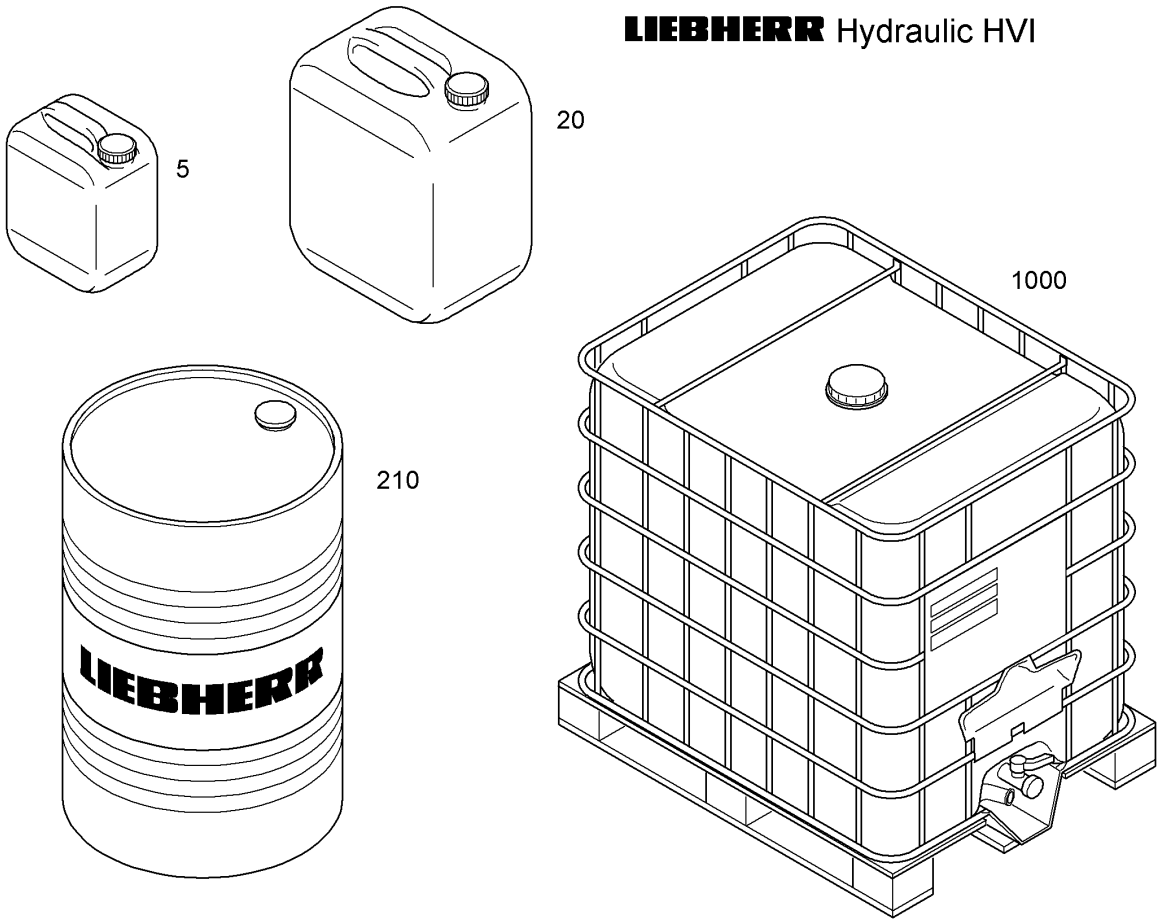

Pos.	Item	Quantity	Description	Descripción	Serie	K
5	10330266	1	HYDRAULIC OIL LIEBHERR/ISO VG 46/5L	ACEITE HIDRAULICO		
20	10330268	1	HYDRAULIC OIL LIEBHERR/ISO VG 46/20L	ACEITE HIDRAULICO		
210	10330270	1	HYDRAULIC OIL LIEBHERR/ISO VG 46/210L	ACEITE HIDRAULICO		
1000	10330271	1	HYDRAULIC OIL LIEBHERR/ISO VG 46/1000	ACEITE HIDRAULICO		

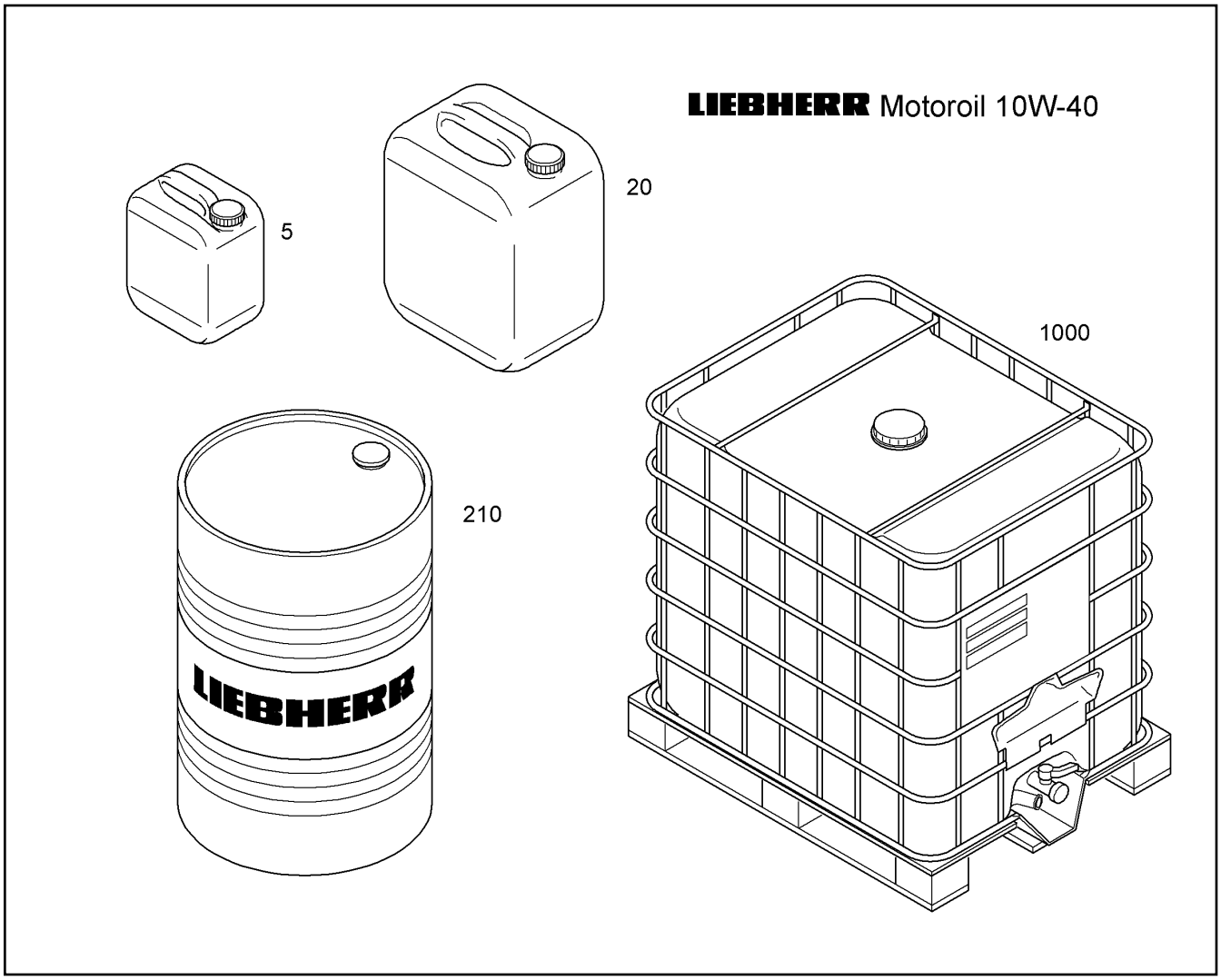

Pos.	Item	Quantity	Description	Descripción	Serie	K
5	10290506	1	ENGINE OIL LIEBHERR/10W-40/5L	ACEITE DE MOTOR		
20	10330239	1	ENGINE OIL LIEBHERR/10W-40/20L	ACEITE DE MOTOR		
210	10330246	1	ENGINE OIL LIEBHERR/10W-40/210L	ACEITE DE MOTOR		
1000	10286279	1	ENGINE OIL LIEBHERR/10W-40/1000L	ACEITE DE MOTOR		

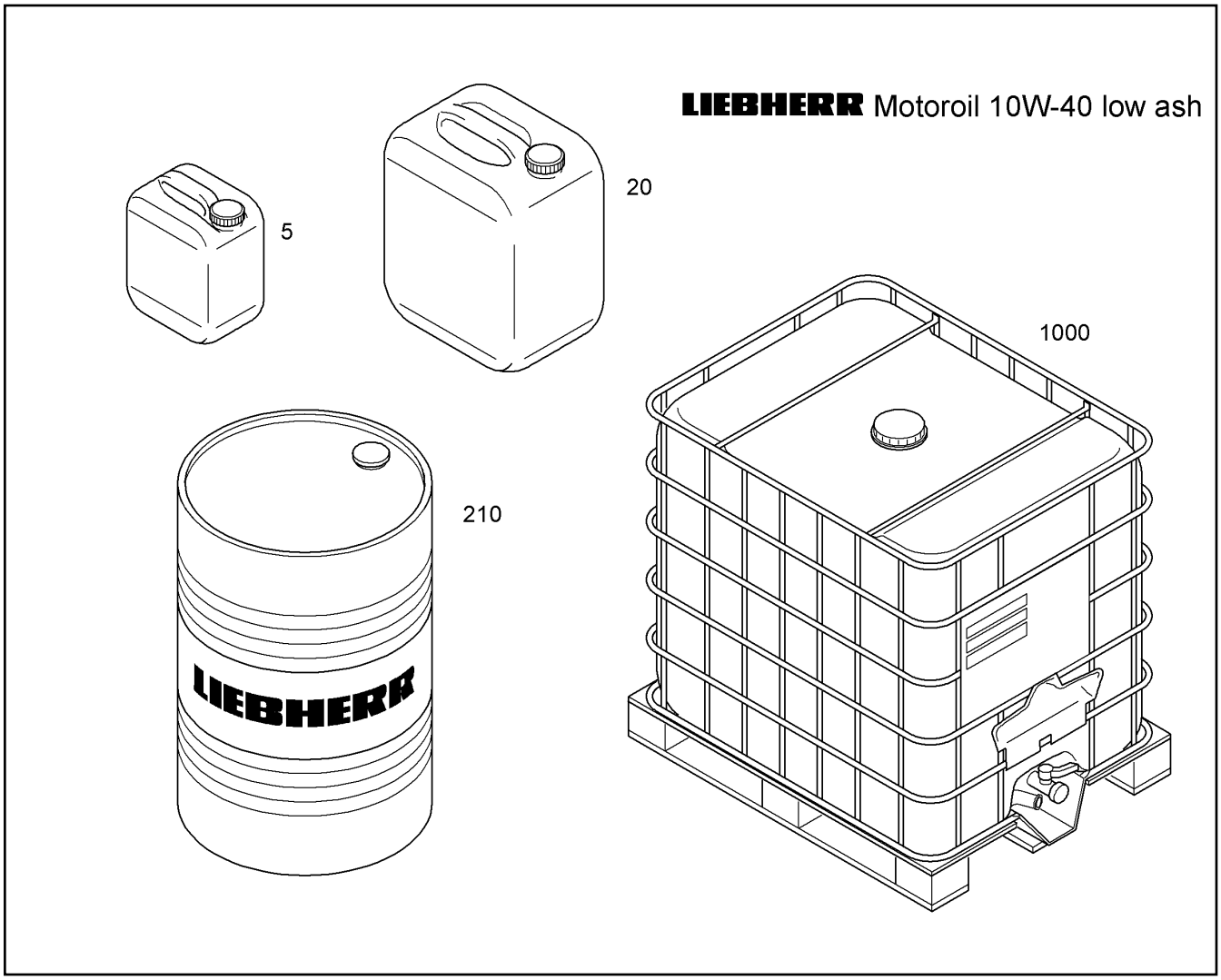

Pos.	Item	Quantity	Description	Descripción	Serie	K
5	10326113	1	ENGINE OIL LIEBHERR LOW ASH/10W-40/5	ACEITE DE MOTOR		
20	10326112	1	ENGINE OIL LIEBHERR LOW ASH/10W-40/20	ACEITE DE MOTOR		
210	10326111	1	ENGINE OIL LIEBHERR LOW ASH/10W-40/2	ACEITE DE MOTOR		
1000	10326110	1	ENGINE OIL LIEBHERR LOW ASH/10W-40/10	ACEITE DE MOTOR		

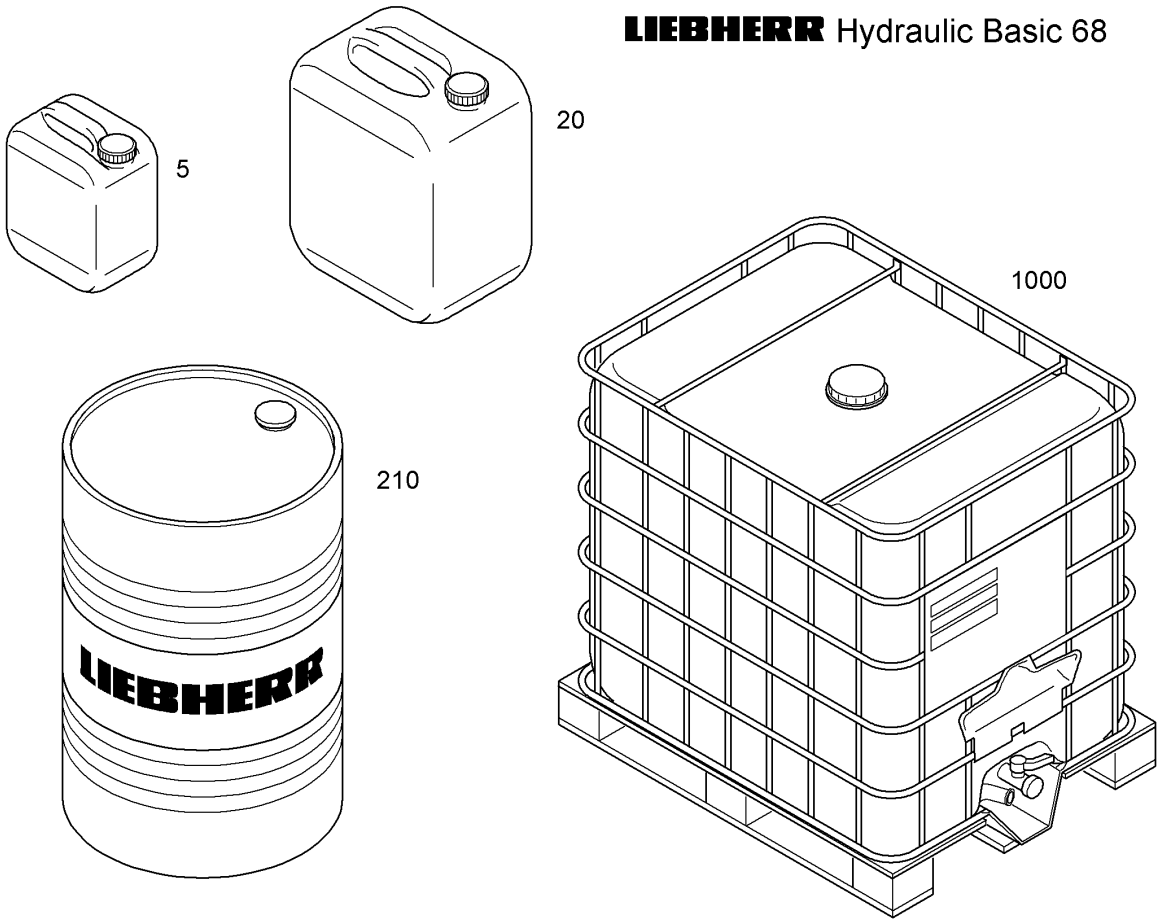

Pos.	Item	Quantity	Description	Descripción	Serie	K
5	10330255	1	HYDRAULIC OIL LIEBHERR/ISO VG 68/5L	ACEITE HIDRAULICO		
20	10330258	1	HYDRAULIC OIL LIEBHERR/ISO VG 68/20L	ACEITE HIDRAULICO		
210	10330259	1	HYDRAULIC OIL LIEBHERR/ISO VG 68/210L	ACEITE HIDRAULICO		
1000	10330260	1	HYDRAULIC OIL LIEBHERR/ISO VG 68/1000	ACEITE HIDRAULICO		

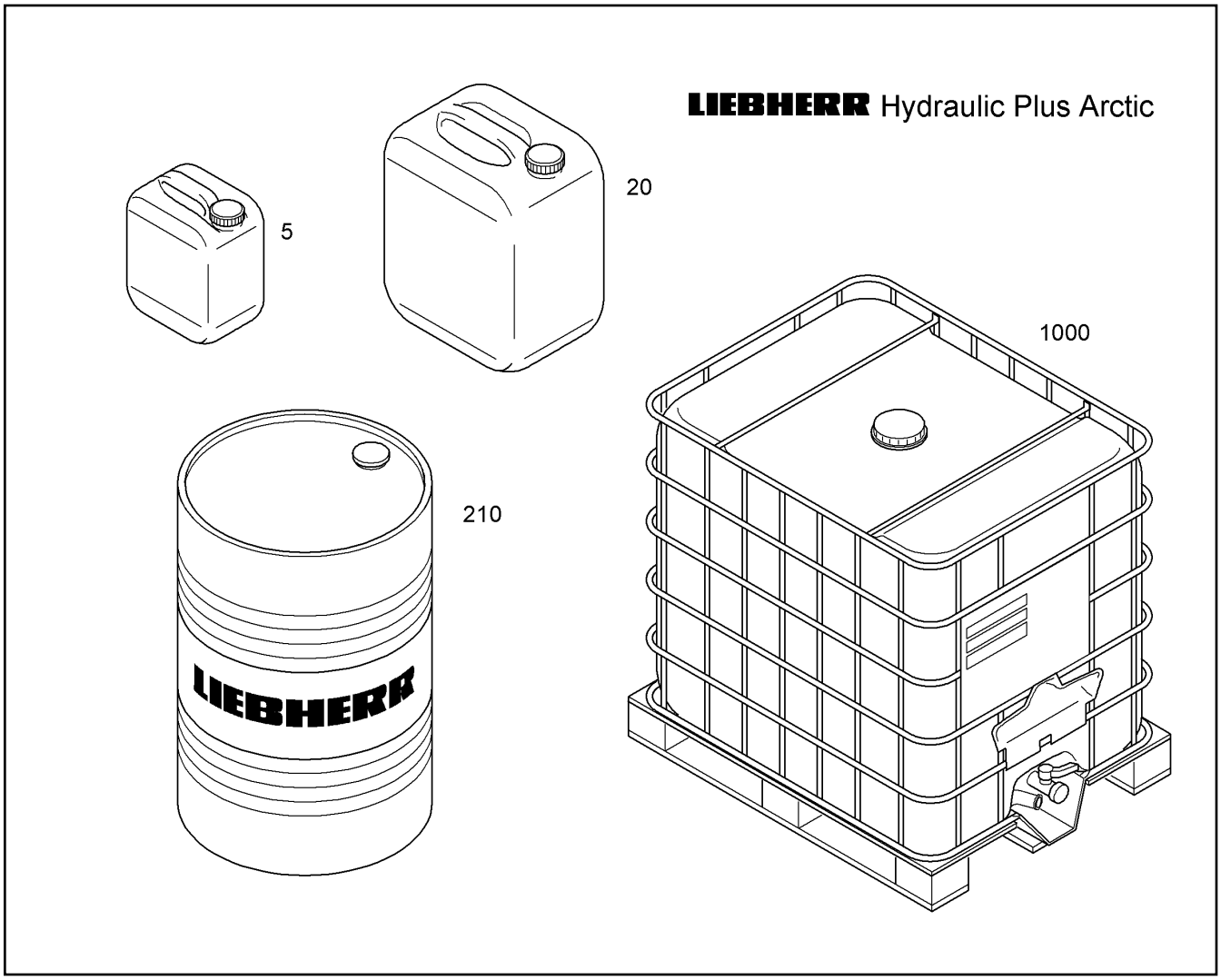

Pos.	Item	Quantity	Description	Descripción	Serie	K
5	10296479	1	HYDRAULIC OIL LIEBHERR/ISO VG 15-46/5L	ACEITE HIDRAULICO		
20	10330277	1	HYDRAULIC OIL LIEBHERR/ISO VG 15-46/20	ACEITE HIDRAULICO		
210	10330278	1	HYDRAULIC OIL LIEBHERR/ISO VG 15-46/2	ACEITE HIDRAULICO		
1000	10296478	1	HYDRAULIC OIL LIEBHERR/ISO VG 15-46/10	ACEITE HIDRAULICO		

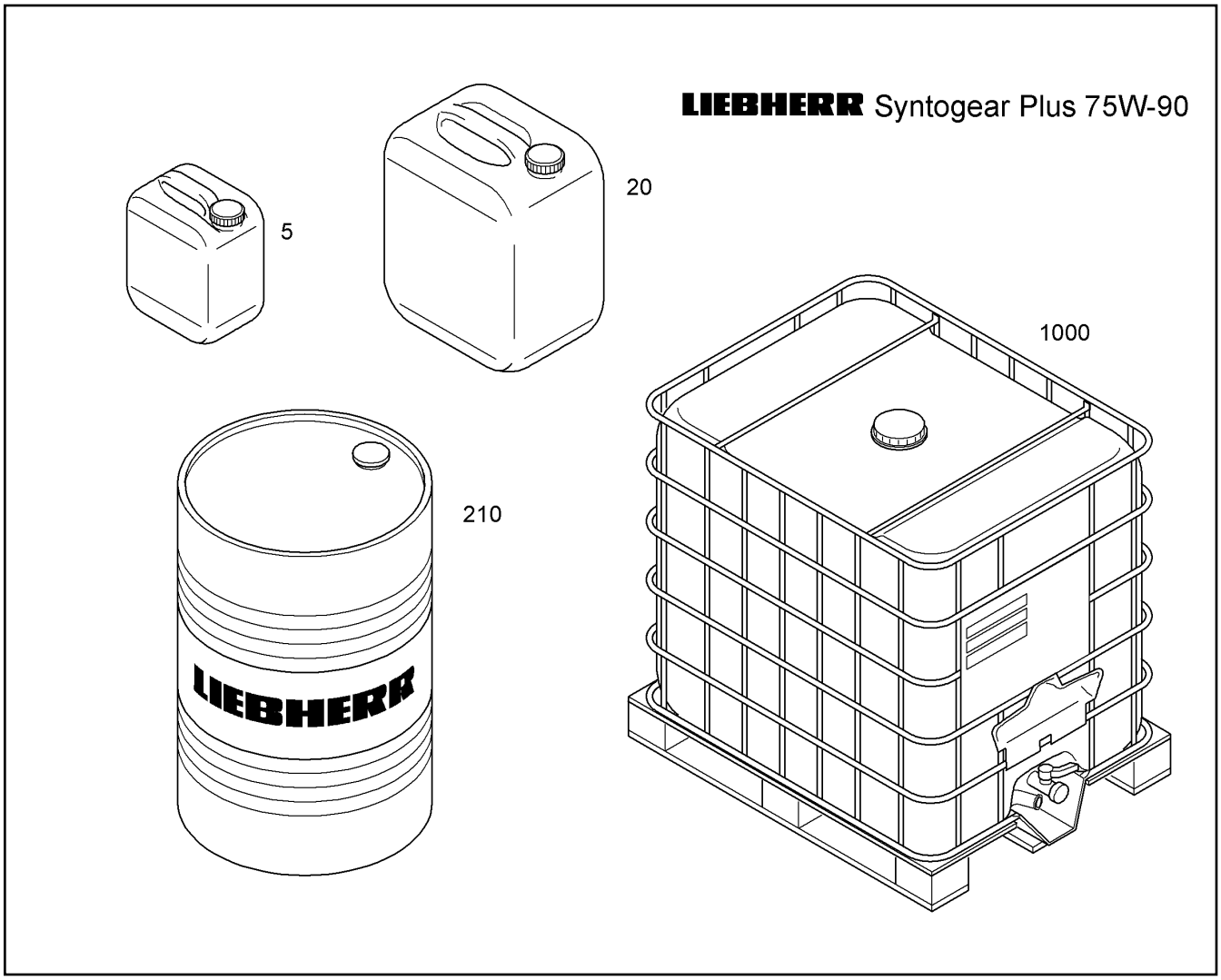

Pos.	Item	Quantity	Description	Descripción	Serie	K
5	10330285	1	GEAR OIL LIEBHERR/75W-90/5L	ACEITE PARA ENGRANAJES		
20	10330287	1	GEAR OIL LIEBHERR/75W-90/20L	ACEITE PARA ENGRANAJES		
210	10330288	1	GEAR OIL LIEBHERR/75W-90/210L	ACEITE PARA ENGRANAJES		
1000	10296477	1	GEAR OIL LIEBHERR/75W-90/1000L	ACEITE PARA ENGRANAJES		

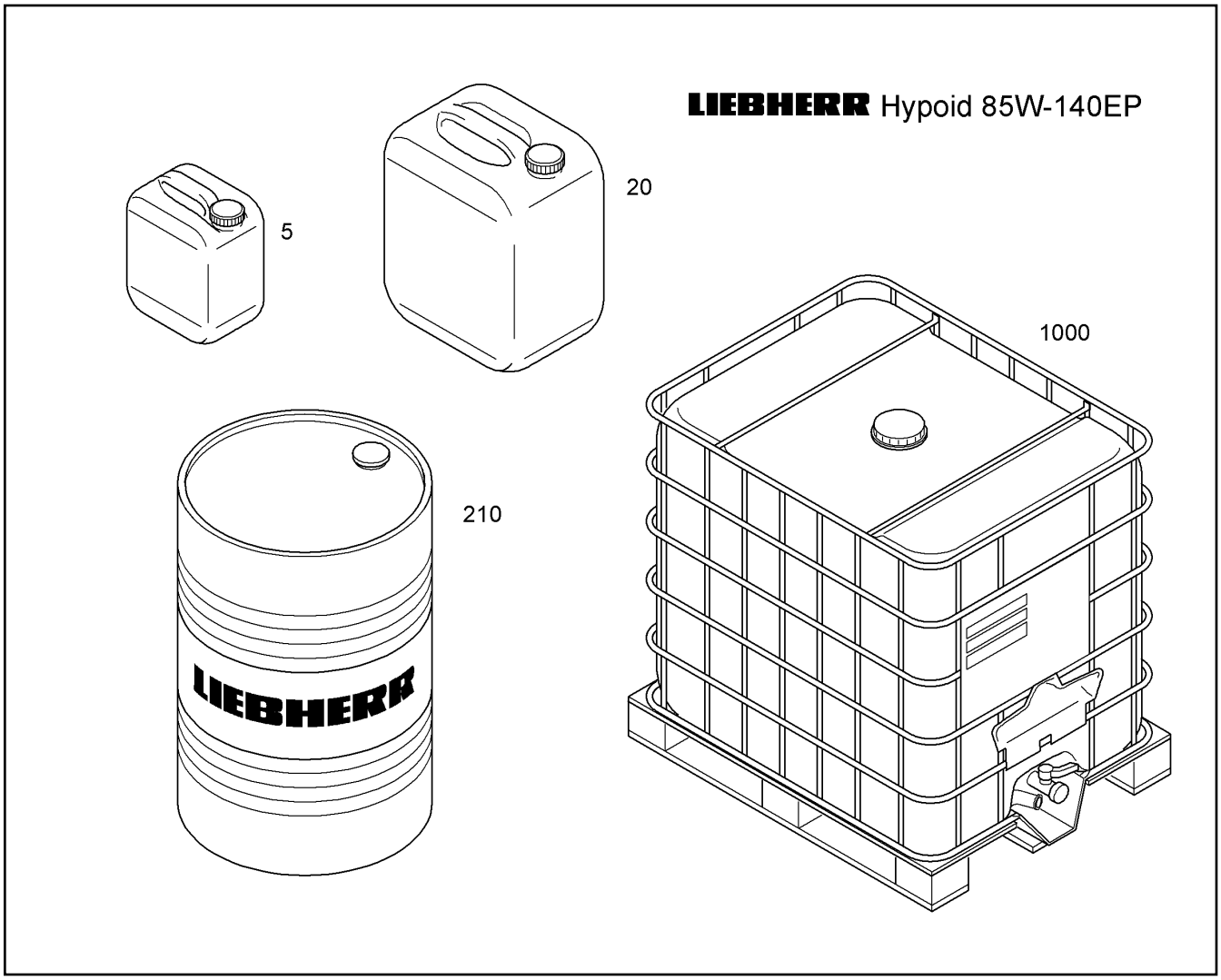

Pos.	Item	Quantity	Description	Descripción	Serie	K
5	10285639	1	GEAR OIL LIEBHERR/85W-140/5L	ACEITE PARA ENGRANAJES		
20	10330291	1	GEAR OIL LIEBHERR/85W-140/20L	ACEITE PARA ENGRANAJES		
210	10301680	1	GEAR OIL LIEBHERR/85W-140/210L	ACEITE PARA ENGRANAJES		
1000	10330292	1	GEAR OIL LIEBHERR/85W-140/1000L	ACEITE PARA ENGRANAJES		

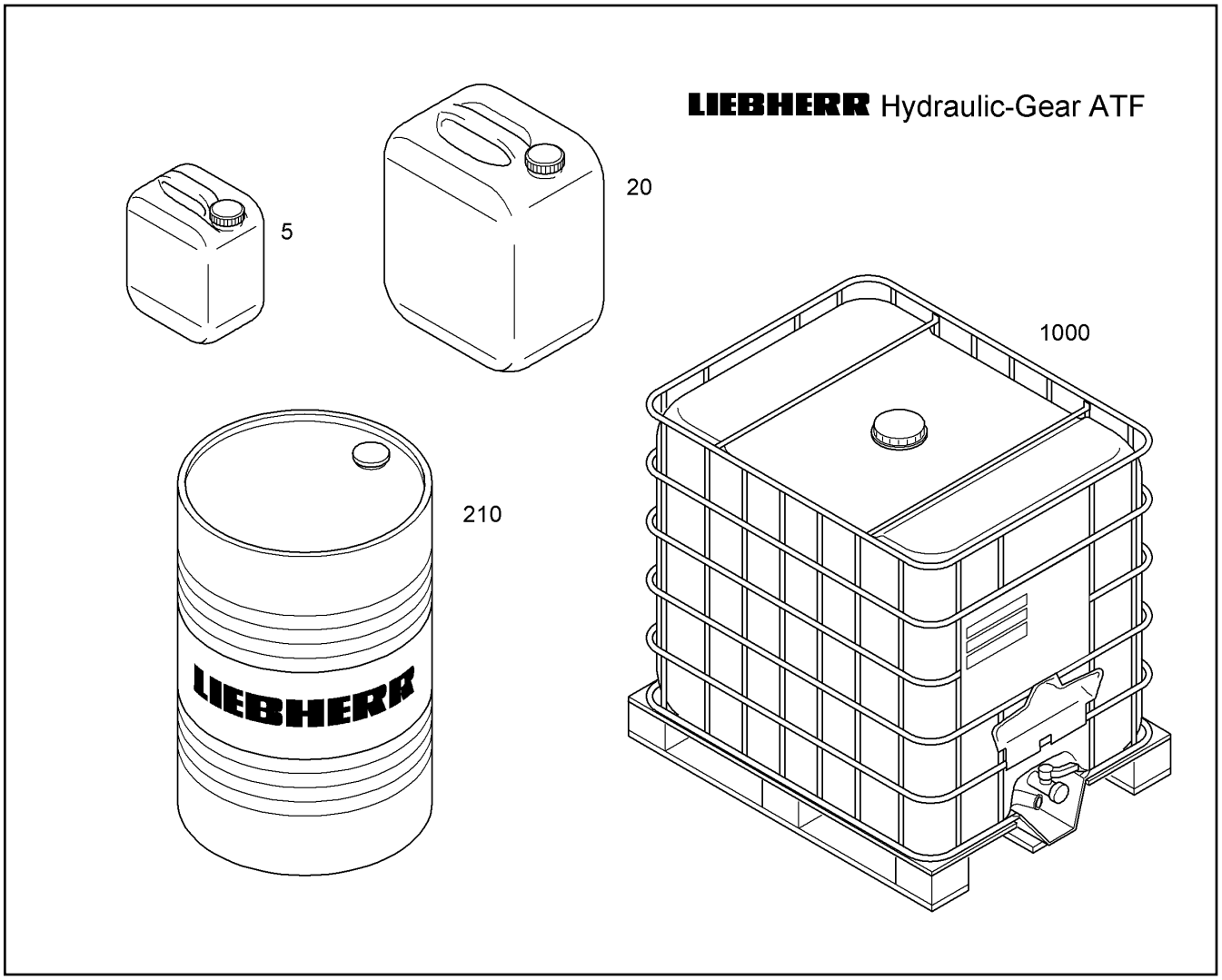

Pos.	Item	Quantity	Description	Descripción	Serie	K
5	10330280	1	HYDRAULIC+GEAR-OIL LIEBHERR/5W-20/5	ACEITE P.SIST.HIDR.+ENGRAN		
20	10330282	1	HYDRAULIC+GEAR-OIL LIEBHERR/5W-20/20	ACEITE P.SIST.HIDR.+ENGRAN		
210	10330283	1	HYDRAULIC+GEAR-OIL LIEBHERR/5W-20/2	ACEITE P.SIST.HIDR.+ENGRAN		
1000	10296482	1	HYDRAULIC+GEAR-OIL LIEBHERR/5W-20/10	ACEITE P.SIST.HIDR.+ENGRAN		

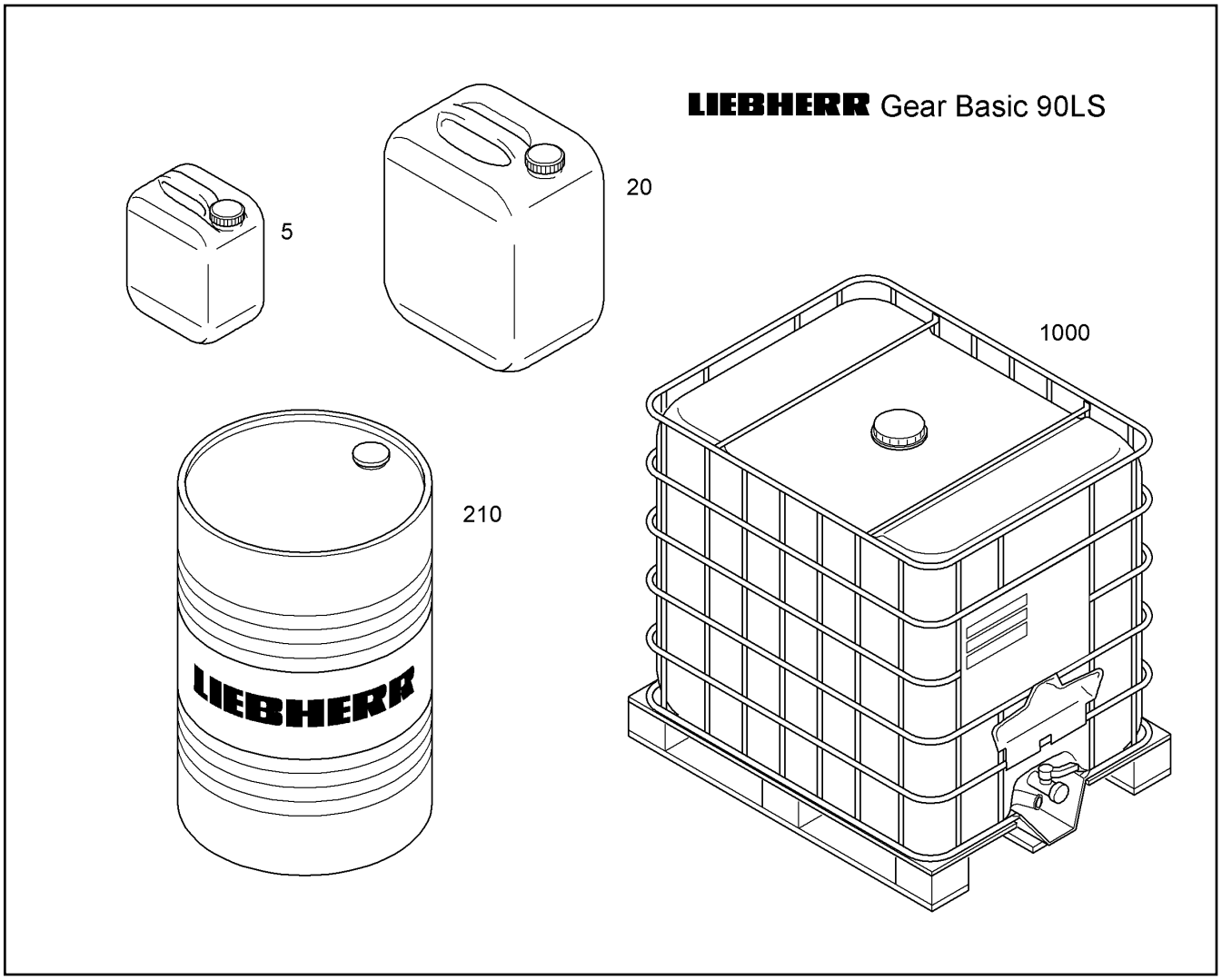

Pos.	Item	Quantity	Description	Descripción	Serie	K
5	10330295	1	AXLE AND GEAR-OIL LIEBHERR/85W-90/5L	ACEITE P.EJE Y TRANS.		
20	10330296	1	AXLE AND GEAR-OIL LIEBHERR/85W-90/20	ACEITE P.EJE Y TRANS.		
210	10285702	1	AXLE AND GEAR-OIL LIEBHERR/85W-90/210	ACEITE P.EJE Y TRANS.		
1000	10286280	1	AXLE AND GEAR-OIL LIEBHERR/85W-90/10	ACEITE P.EJE Y TRANS.		

LIEBHERR Gear Plus 20W-40

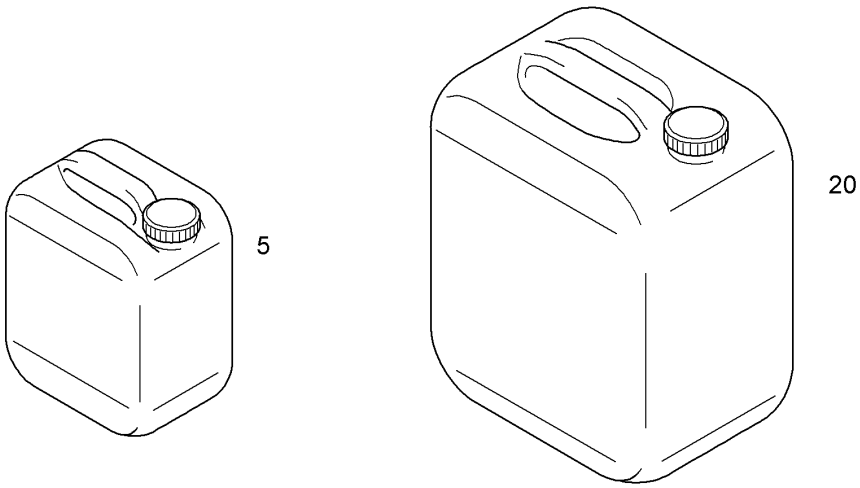

Pos.	Item	Quantity	Description	Descripción	Serie	K
5	10285640	1	AXLE-OIL LIEBHERR/20W-40/5L	ACEITE DE EJE		
20	10330294	1	AXLE-OIL LIEBHERR/20W-40/20L	ACEITE DE EJE		

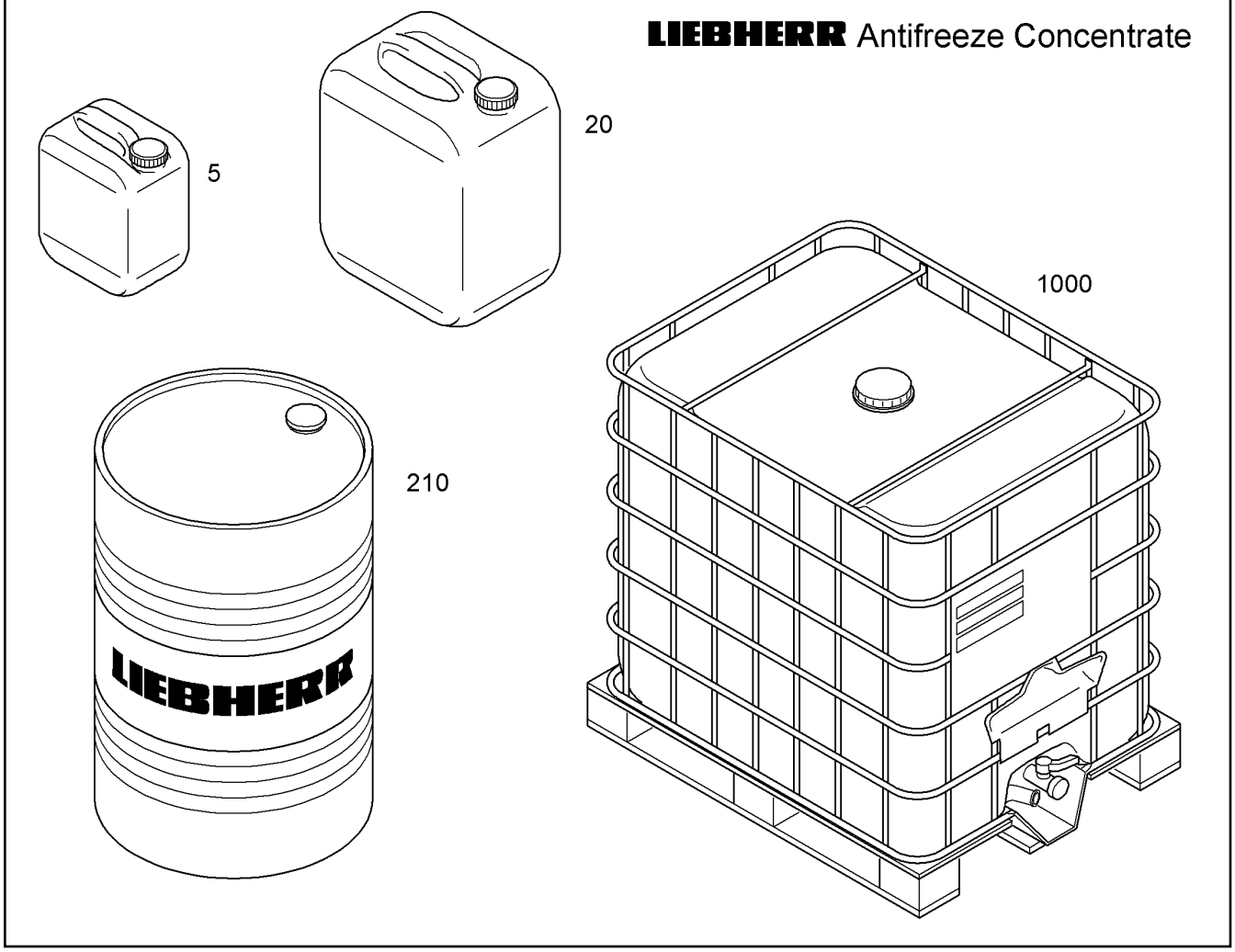

Pos.	Item	Quantity	Description	Descripción	Serie	K
5	10301215	1	ANTICORROSION ANTIFREEZER	ANTICORROSIVO		
20	10428410	1	ANTICORROSION ANTIFREEZER	ANTICORROSIVO		
210	10428411	1	ANTICORROSION ANTIFREEZER	ANTICORROSIVO		
1000	10356833	1	ANTICORROSION ANTIFREEZER	ANTICORROSIVO		

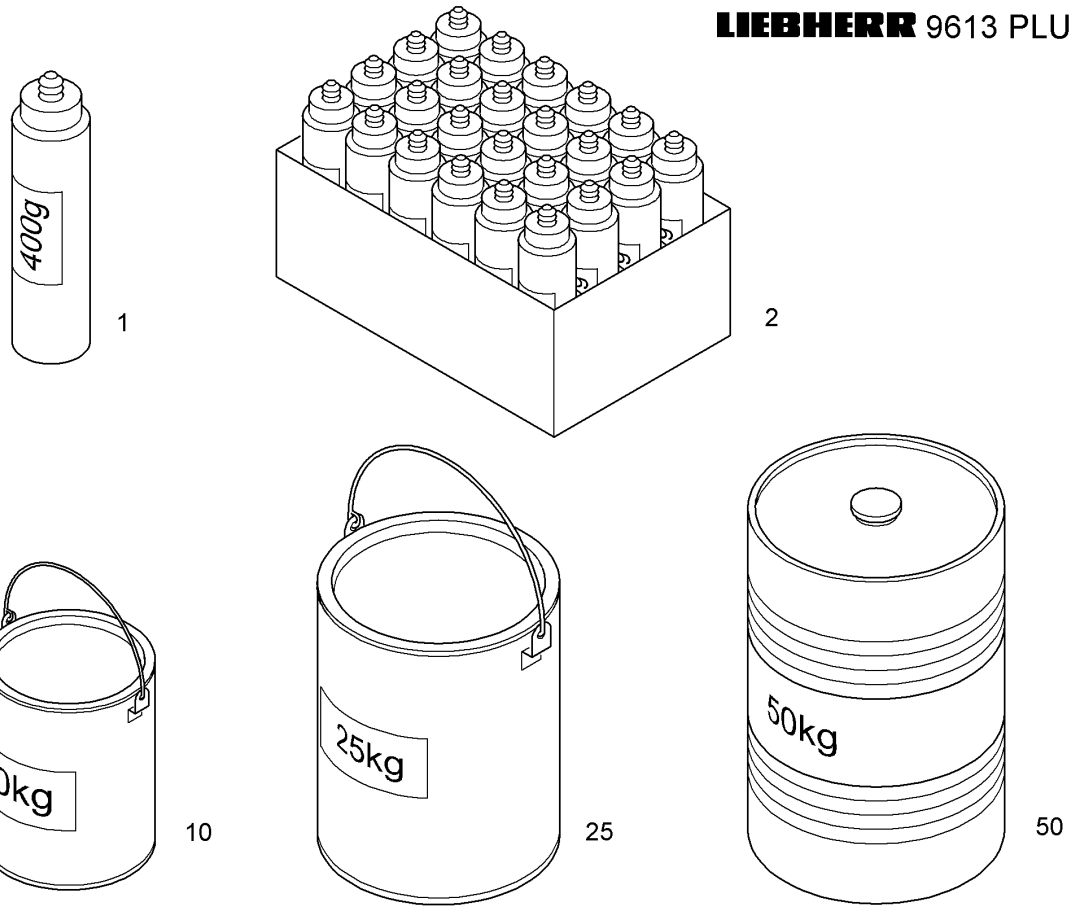

Pos.	Item	Quantity	Description	Descripción	Serie	K
1	861305508	1	SPECIAL GREASE LIEBHERR/0,4kg	GRASA ESPECIAL		
2	10296820	1	SPECIAL GREASE LIEBHERR/24X0,4kg	GRASA ESPECIAL		
10	861304208	1	SPECIAL GREASE LIEBHERR/10kg	GRASA ESPECIAL		
25	861303608	1	SPECIAL GREASE LIEBHERR/25kg	GRASA ESPECIAL		
50	861305608	1	SPECIAL GREASE LIEBHERR/50kg	GRASA ESPECIAL		

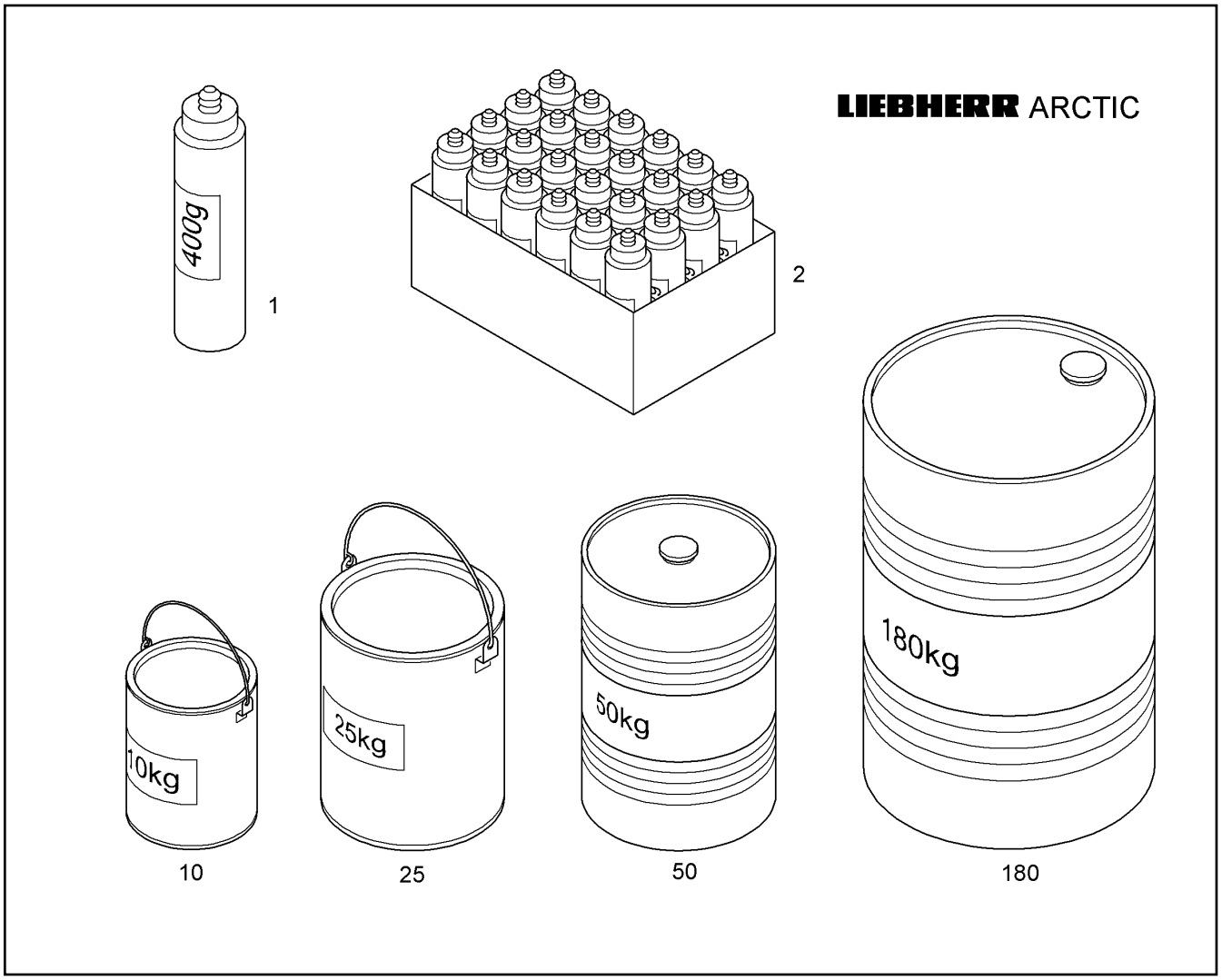

Pos.	Item	Quantity	Description	Descripción	Serie	K
1	10296828	1	LOW TEMPERATURE GREASE LIEBHERR/0,	GRASA P.BAJAS TEMP.		
2	10296827	1	LOW TEMPERATURE GREASE LIEBHERR/2	GRASA P.BAJAS TEMP.		
10	10296825	1	LOW TEMPERATURE GREASE LIEBHERR/1	GRASA P.BAJAS TEMP.		
25	10296824	1	LOW TEMPERATURE GREASE LIEBHERR/2	GRASA P.BAJAS TEMP.		
50	10296823	1	LOW TEMPERATURE GREASE LIEBHERR/5	GRASA P.BAJAS TEMP.		
180	10296822	1	LOW TEMPERATURE GREASE LIEBHERR/18	GRASA P.BAJAS TEMP.		

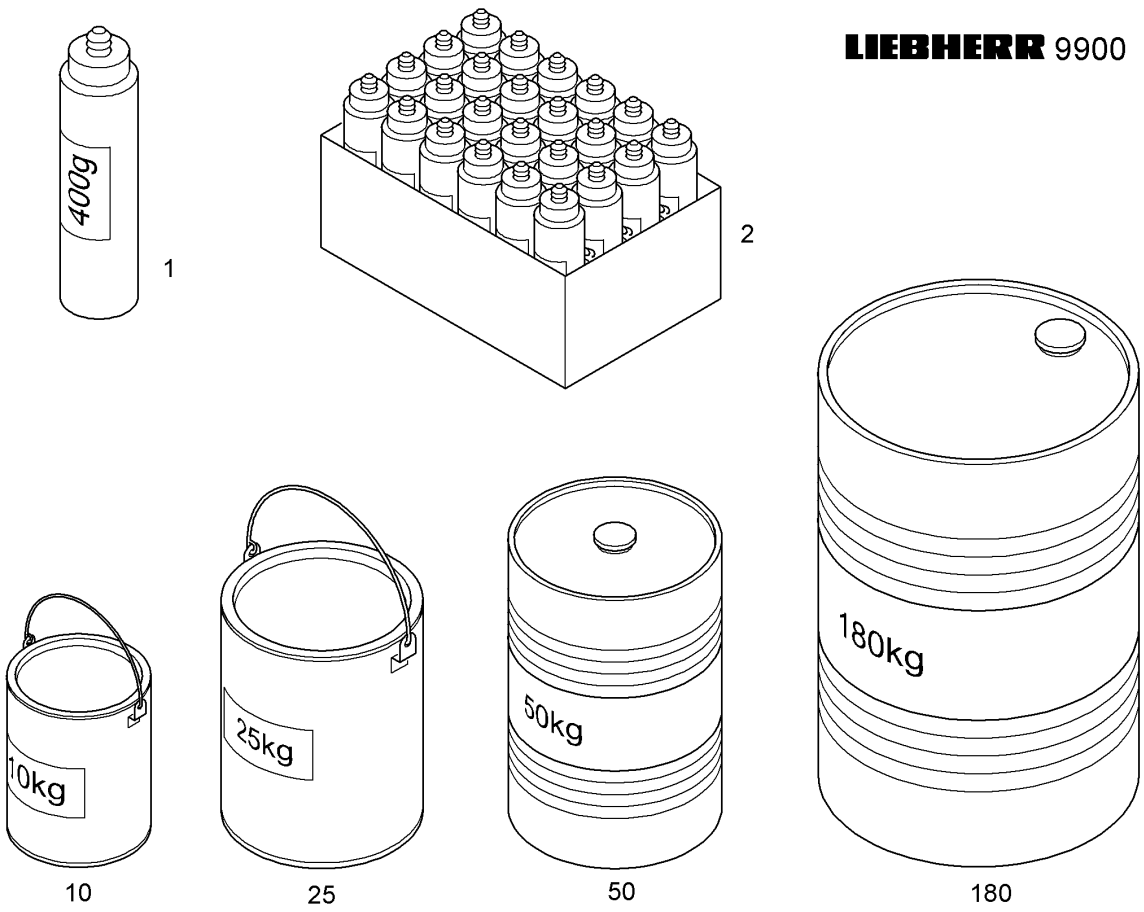

Pos.	Item	Quantity	Description	Descripción	Serie	K
1	10296816	1	UNIVERSAL GREASE LIEBHERR/0,4kg	GRASA UNIVERSAL		
2	10296815	1	UNIVERSAL GREASE LIEBHERR/24X0,4kg	GRASA UNIVERSAL		
10	10296813	1	UNIVERSAL GREASE LIEBHERR/10kg	GRASA UNIVERSAL		
25	10296812	1	UNIVERSAL GREASE LIEBHERR/25kg	GRASA UNIVERSAL		
50	10296811	1	UNIVERSAL GREASE LIEBHERR/50kg	GRASA UNIVERSAL		
180	10296810	1	UNIVERSAL GREASE LIEBHERR/180kg	GRASA UNIVERSAL		

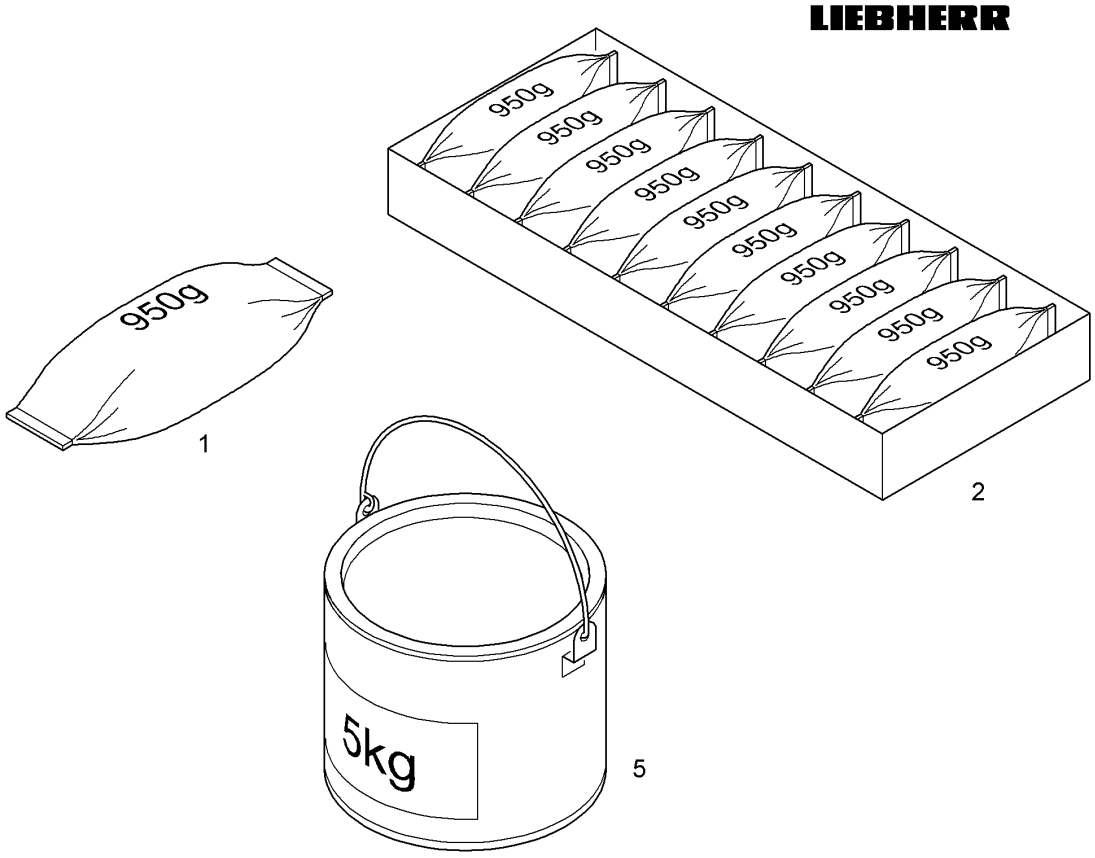

Pos.	Item	Quantity	Description	Descripción	Serie	K
1	10330308	1	SPRAY-PASTE LIEBHERR/0,950kg	PASTA SPRAY		
2	10330310	1	SPRAY-PASTE LIEBHERR/10X0,950kg	PASTA SPRAY		
5	10330311	1	SPRAY-PASTE LIEBHERR/5kg	PASTA SPRAY		

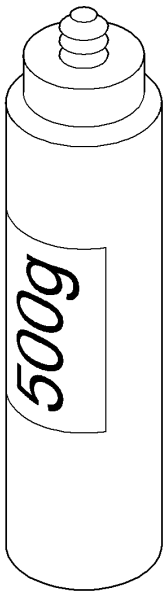

1

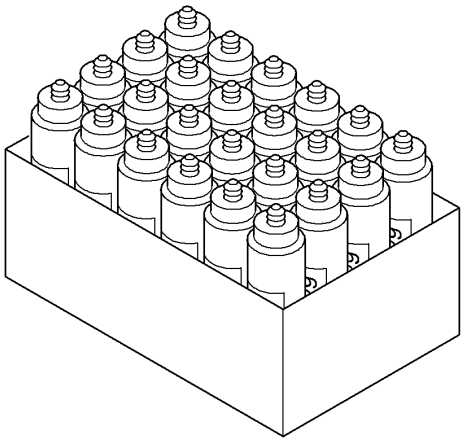

2

Pos.	Item	Quantity	Description	Descripción	Serie	K
1	8610230	1	BIT-PASTE LIEBHERR/0,5kg	PASTA DE CINCEL		
2	10330306	1	BIT-PASTE LIEBHERR/20X0,5kg	PASTA DE CINCEL		

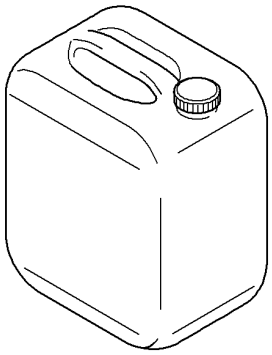

20

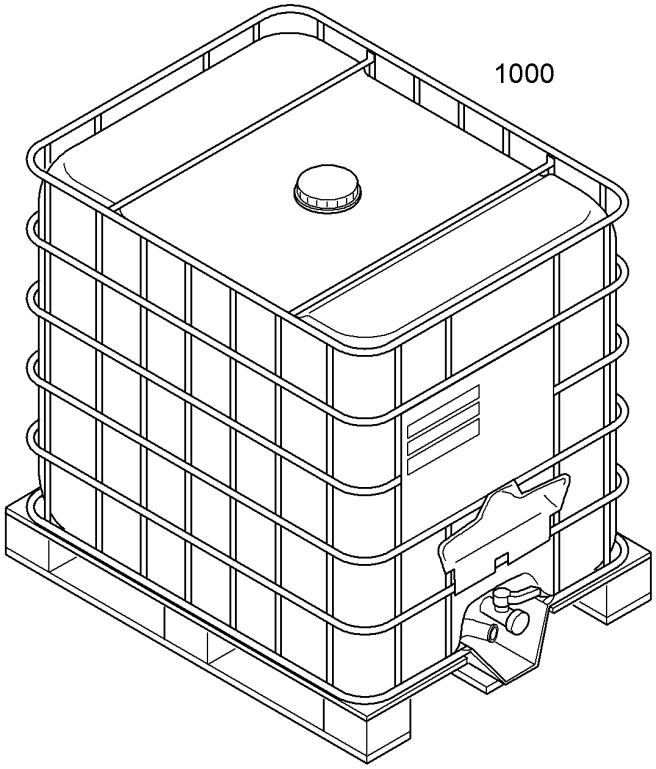

1000

Pos.	Item	Quantity	Description	Descripción	Serie	K
20	10301213	1	ANTICORROSION ANTIFREEZER	ANTICORROSIVO		
1000	9999997	1	NO LONGER AVAILABLE	NO SUMINISTRABLE		

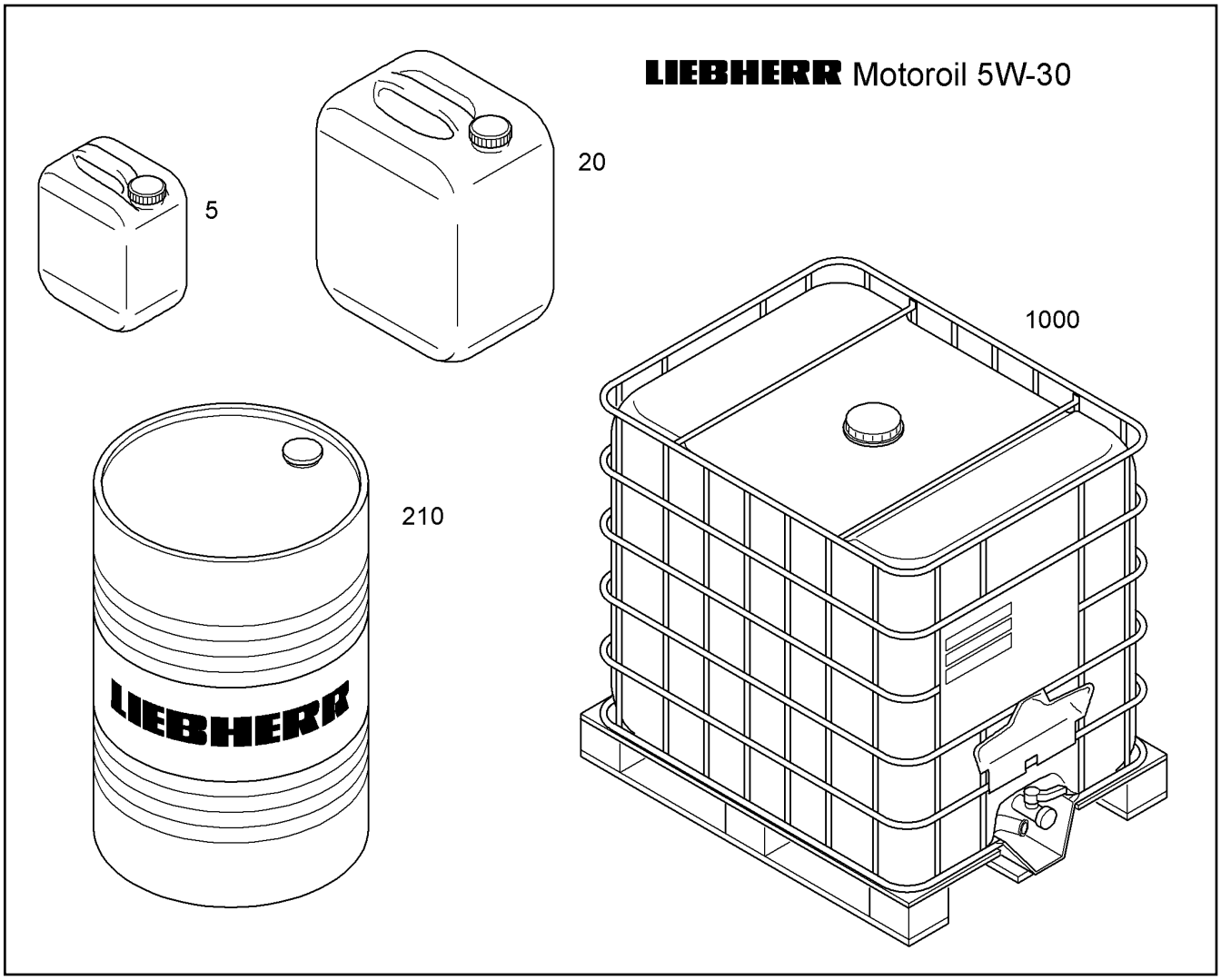

Pos.	Item	Quantity	Description	Descripción	Serie	K
5	10425712	1	ENGINE OIL LIEBHERR/5W-30/5L	ACEITE DE MOTOR		
20	10425713	1	ENGINE OIL LIEBHERR/5W-30/20L	ACEITE DE MOTOR		
210	10425715	1	ENGINE OIL LIEBHERR/5W-30/210L	ACEITE DE MOTOR		
1000	10425719	1	ENGINE OIL LIEBHERR/5W-30/1000L	ACEITE DE MOTOR		

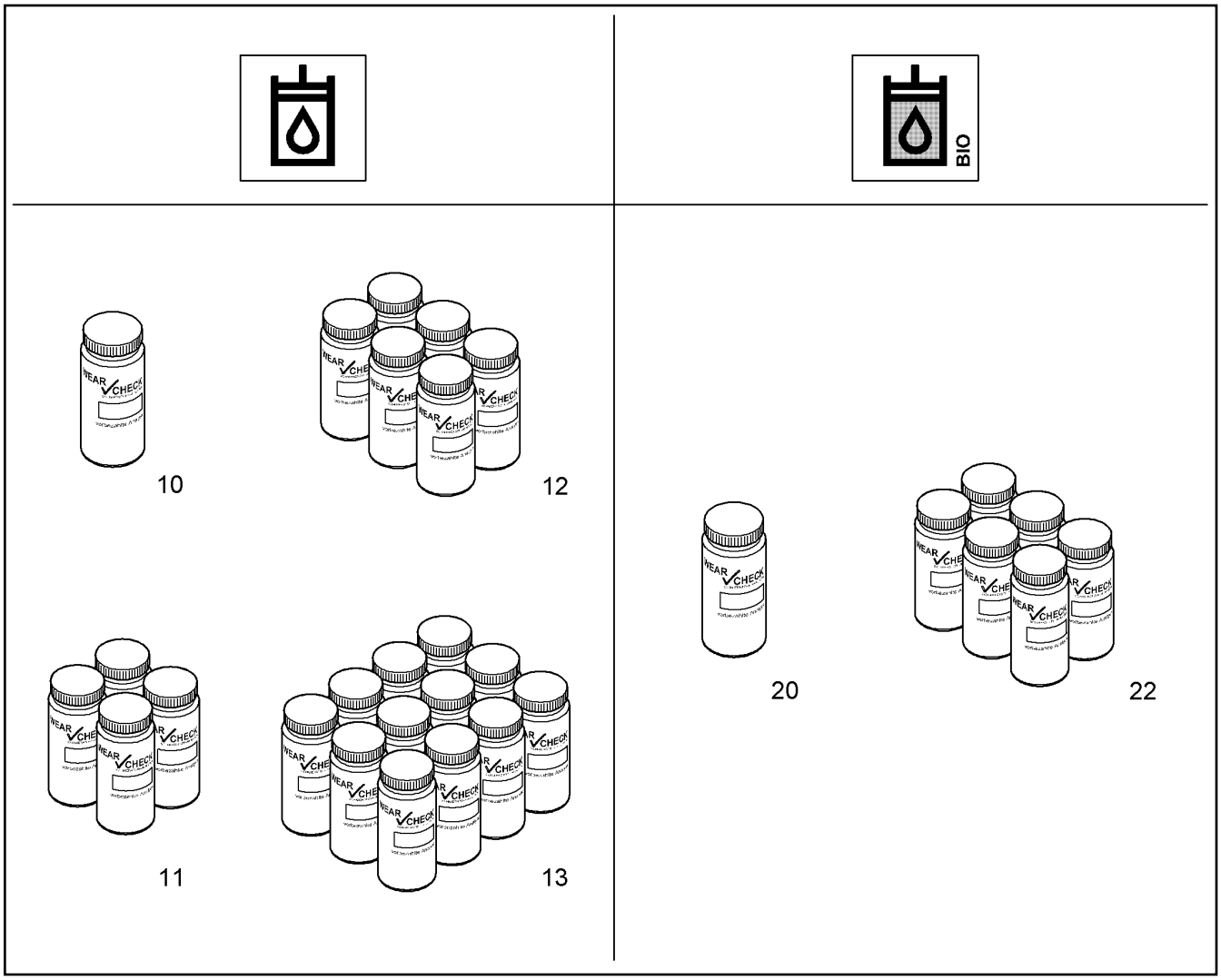

Pos.	Item	Quantity	Description	Descripción	Serie	K
10	8145660	1	MINERAL-OIL-ANALYSIS SET	KIT ANÁLISIS ACEITE MINERAL		
11	10029626	1	MINERAL-OIL-ANALYSIS SET	KIT ANÁLISIS ACEITE MINERAL		1
12	7018368	1	MINERAL-OIL-ANALYSIS SET	KIT ANÁLISIS ACEITE MINERAL		
13	7018369	1	MINERAL-OIL-ANALYSIS SET	KIT ANÁLISIS ACEITE MINERAL		
20	7026817	1	BIO-OIL-ANALYSIS SET	KIT ANÁLISIS ACEITE BIO		
22	7026088	1	BIO-OIL-ANALYSIS SET	KIT ANÁLISIS ACEITE BIO		

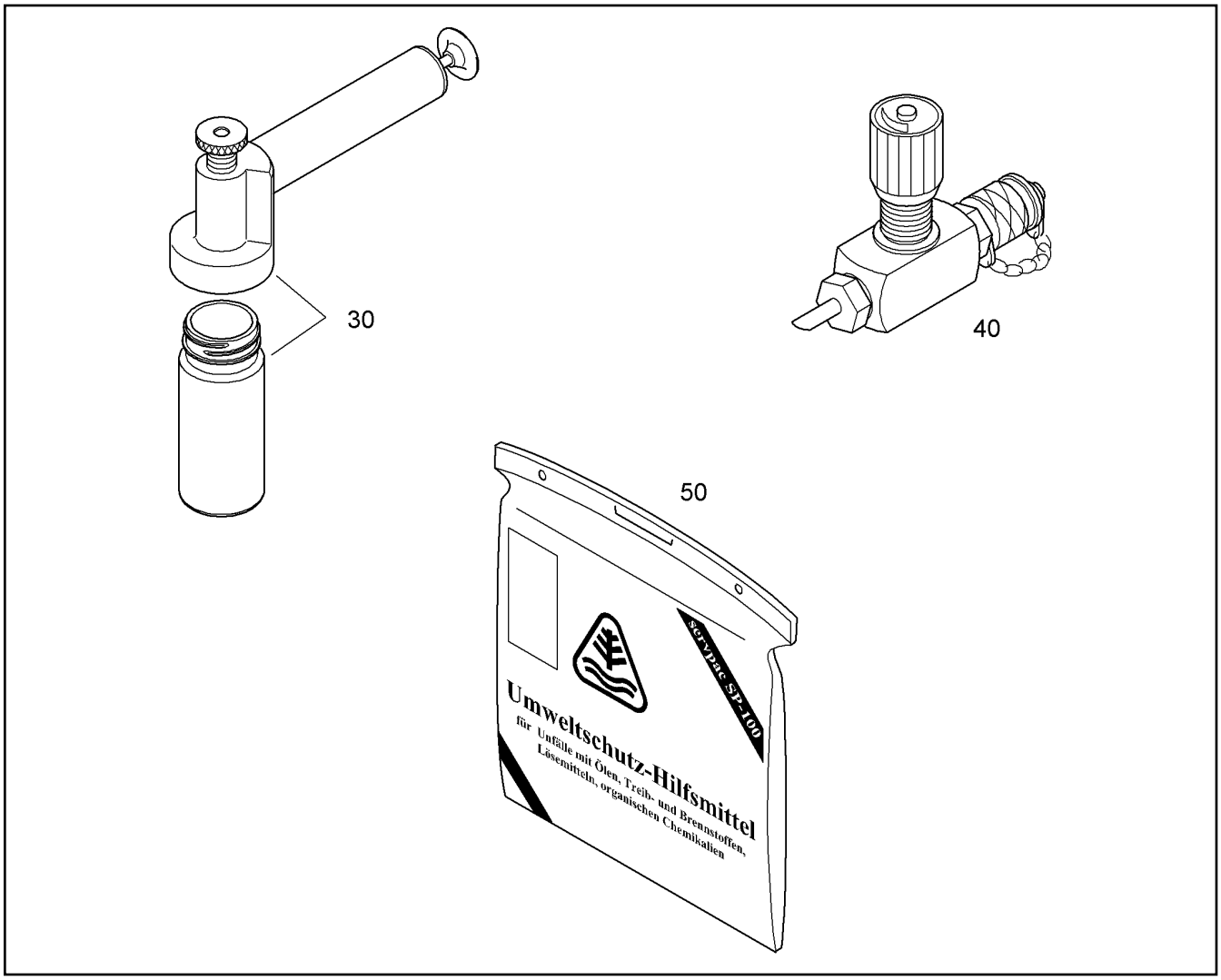

Pos.	Item	Quantity	Description	Descripción	Serie	K
30	8145666	1	HAND PUMP	BOMBA MANUAL		
40	7019068	1	EXTRACTION VALVE	VÁLVULA EXTRACCIÓN		
50	7023359	1	OIL ACCIDENT CASE ZW	BOLSA P.ACCIDENTE C.ACEITE		

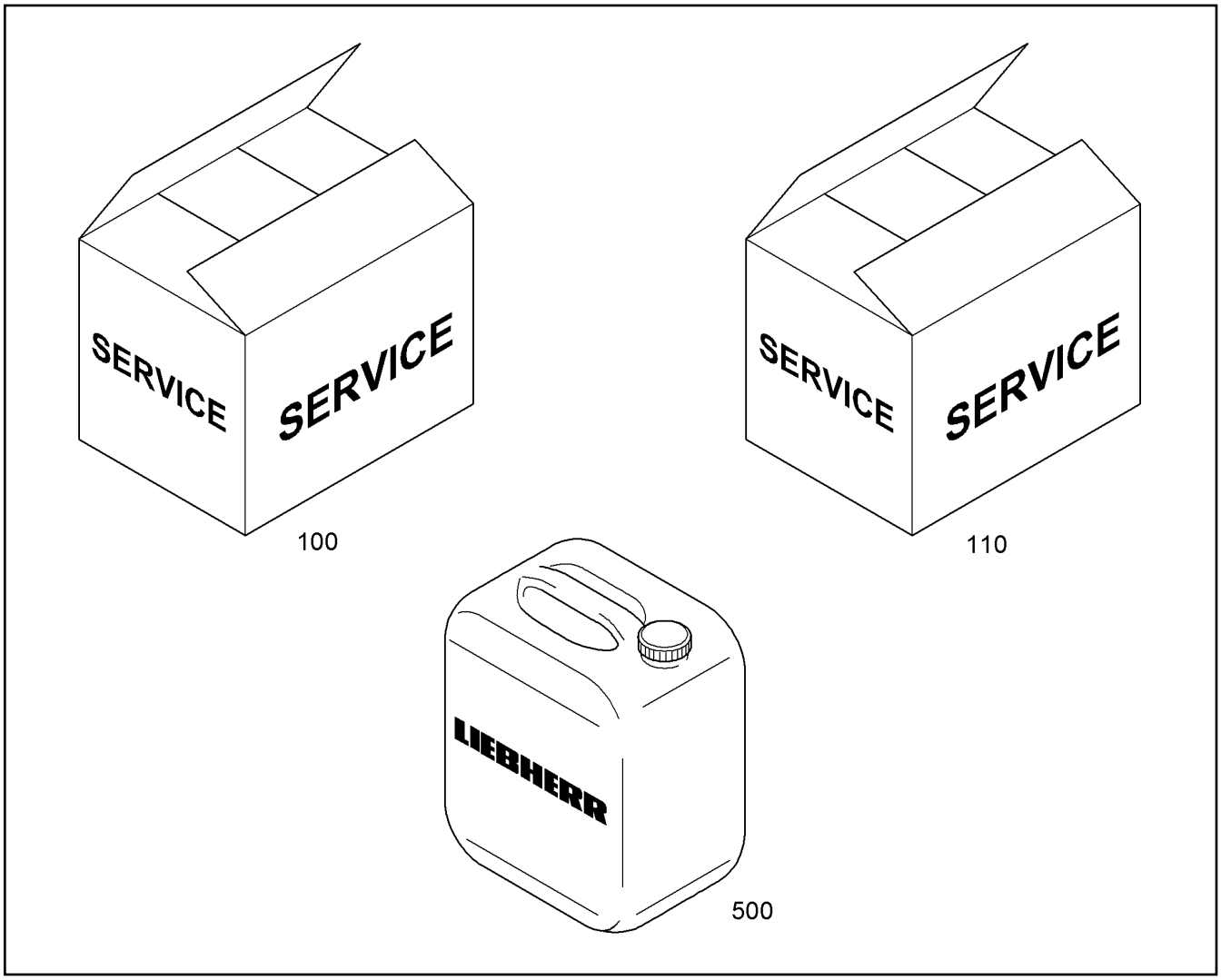

Pos.	Item	Quantity	Description	Descripción	Serie	K
100		1	SERVICE KIT 0-2000H ⇨ ❑ 94	PAQUETE SERV.	29466-	
110		1	SERVICE KIT FUEL FILTER ⇨ ❑ 99	PAQUETE SERV.FILTRO COMBU		
500		1	LUBRICANTS ⇨ ❑ 10	LUBRICANTES		

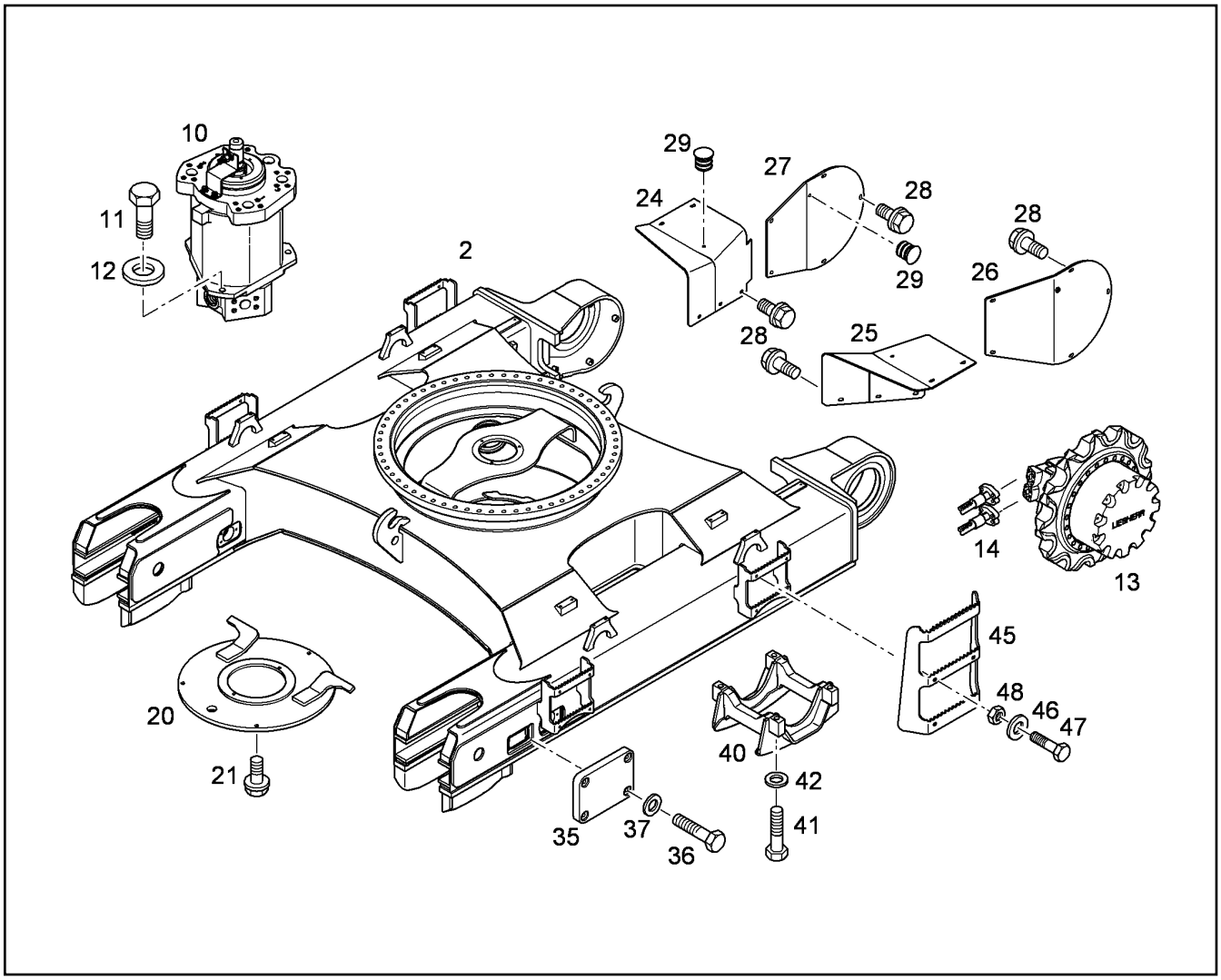

Pos.	Item	Quantity	Description	Descripción	Serie	K
2	10358387	1	UNDERCARRIAGE [M00030429]	CARRETON		1
10	10498670	1	ROTARY CONNECTION INSTALLATION ⇨ ❑ 54	MONTAJE CONEXIÓN GIRATORI		1
11	10001073	3	HEX BOLT ISO 4017 M16X40 10.9 DAC	TORNILLO DE CABEZA HEXAGO		
12	9918228	3	WASHER 16,5/28X4	ARANDELA		
13	10074987	1	TRAVEL DRIVE ⇨ ❑ 60	ACCIONAMIENTO DE TRASLAC		
14	10074448	1	HYDR.INSTALLATION UNDERCARR. ⇨ ❑ 89	INST.HIDR.ESTRUC.INF.		1
20	10051491	1	LID ⇨ ❑ 44	TAPA		1
21	10001473	3	HEX HEAD SCREW	TORNILLO HEXAGONAL		
24	10073300	1	COVER RIGHT	TAPA DCHA.		
25	10073303	1	COVER LEFT	TAPA IZDA.		
26	10079999	1	LID CPL	TAPA CPL.		
27	10080000	1	LID CPL	TAPA CPL.		
28	4900641	20	BLANKING END	TORNILLO VERBUS-RIPP		
29	10228539	4	STOP PLUG	TAPON		
35	9397081	2	COVER GREASE TENSIONER	TAPA PRES. HIDR.		1
36	4062002	8	HEX BOLT ISO 4017 M8X30 10.9 A2C	TORNILLO DE CABEZA HEXAGO		
37	4229912	8	LOCK WASHER /13X1,6 VS	ARANDELA SEGURIDAD		
40	9693923	6	CHAIN GUIDE	GUIA DE CADENA		1
41	10425607	24	HEX BOLT ISO 4014 M24X130 10.9 FLZN 100	TORNILLO DE CABEZA HEXAGO		
42	9918230	24	WASHER 24,5/40X5	ARANDELA		
45	9821638	4	ACCESS	SUBIDA		1

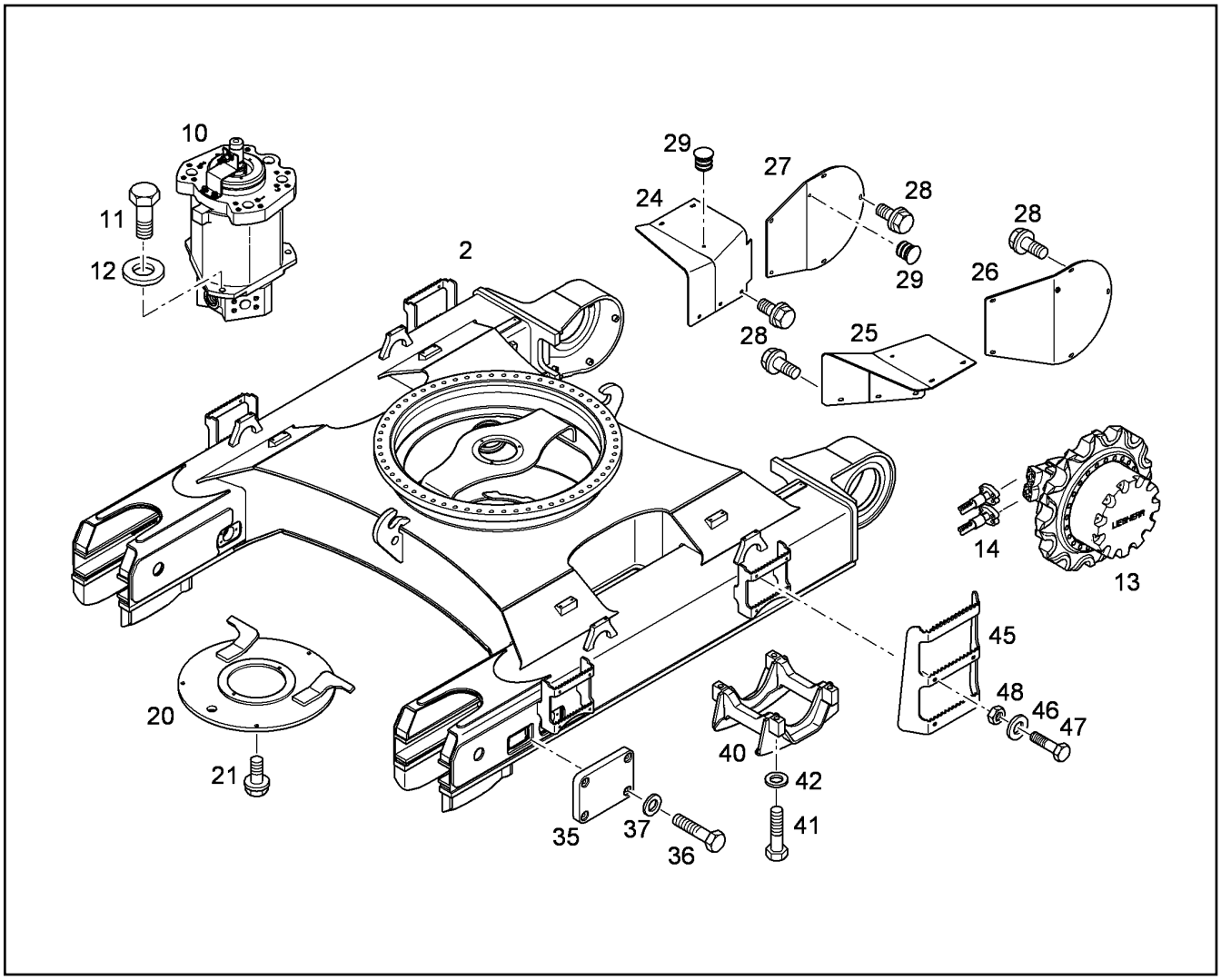

Pos.	Item	Quantity	Description	Descripción	Serie	K
46	9918228	16	WASHER 16,5/28X4	ARANDELA		
47	4902325	8	HEX BOLT ISO 4017 M16X55 10.9 DAC	TORNILLO DE CABEZA HEXAGO		
48	4000420	8	HEX NUT M16	TUERCA HEXAGONAL		

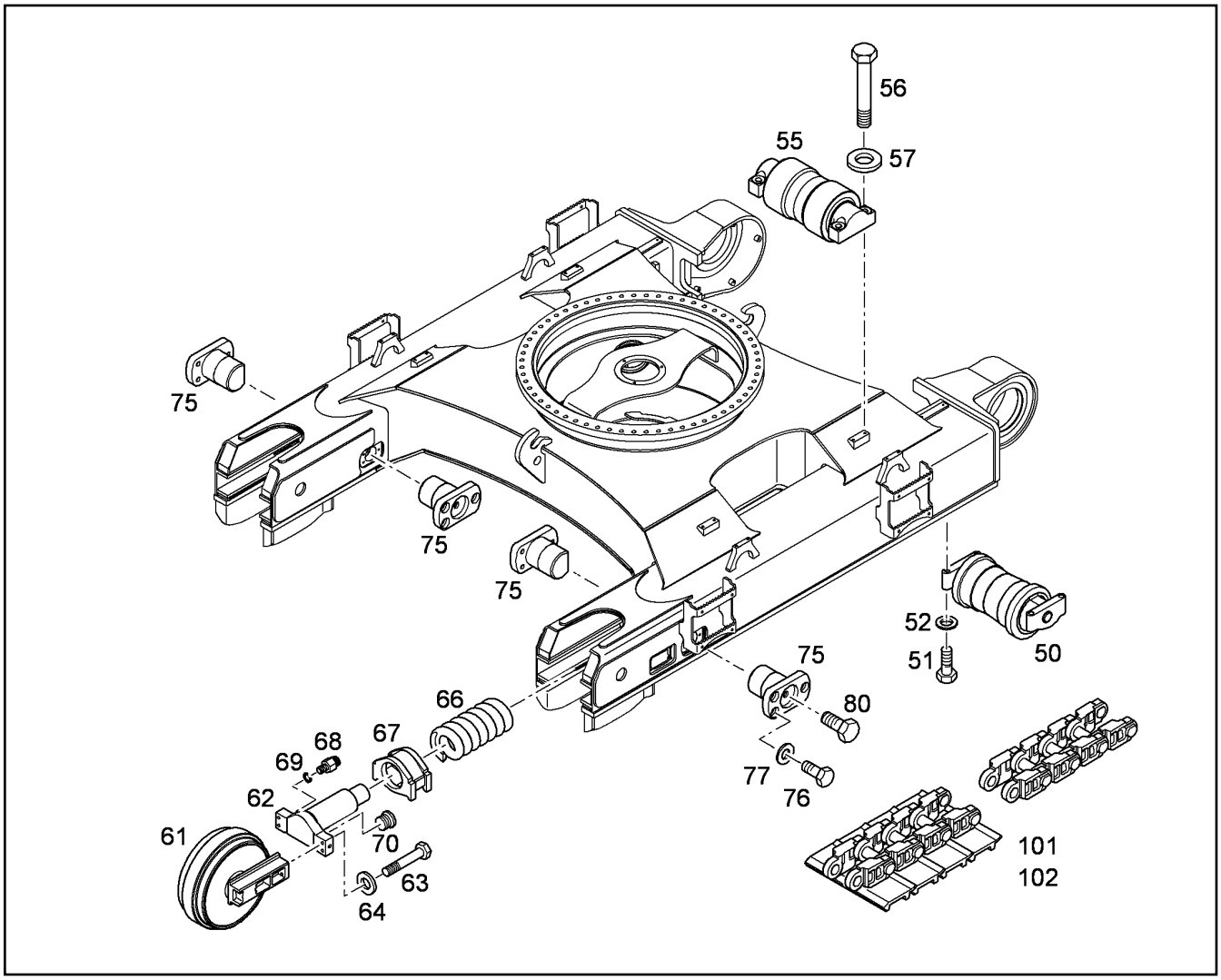

Pos.	Item	Quantity	Description	Descripción	Serie	K
50	10221212	16	TRACK ROLLER ⇨ ❑ 45	POLEA RODADURA		2
51	10425607	64	HEX BOLT ISO 4014 M24X130 10.9 FLZN 100	TORNILLO DE CABEZA HEXAGO		
52	9918230	64	WASHER 24,5/40X5	ARANDELA		
55	10290674	4	CARRYING ROLLER D8K ⇨ ❑ 46	RODILLO APOYO		2
56	4901443	16	HEX BOLT ISO 4014 M18X80 10.9 A3C	TORNILLO DE CABEZA HEXAGO		
57	9586492	16	WASHER 18,5/31X5	ARANDELA		
61	10470769	2	GUIDE WHEEL D8K ⇨ ❑ 49	RUEDA DIRECTRIZ	23351-	2
62	10075353	2	GREASE TENSIONER ⇨ ❑ 47	TENSOR GRASA		1
63	10425592	8	HEX BOLT ISO 4014 M20X110 10.9 FLZN 100	TORNILLO DE CABEZA HEXAGO		
64	9918229	8	WASHER 20,5/34X5	ARANDELA		
66	7370910	2	SPRING	MUELLE		
67	10326232	2	SPRING SUPPORT	PLATILLO DE RESORTES		
68	7401897	2	GREASE NIPPLE TR/A M 16X1,5	ENGRASADOR		
69	5209400	2	USIT RING	ANILLO USIT		1
70	7004971	2	SCREW PLUG VSTI ⇨ ❑ 228	TORNILLO DE CIERRE		
75	921618116	4	LOCKING	BLOQUEO		1
76	10000362	12	HEX BOLT ISO 4017 M16X50 10.9 DAC	TORNILLO DE CABEZA HEXAGO		
77	9918228	12	WASHER 16,5/28X4	ARANDELA		
80	4902328	4	HEX BOLT ISO 4017 M24X45 8.8 DAC	TORNILLO DE CABEZA HEXAGO		
102	10300122	2	CRAWLER CHAIN 600mm ⇨ ❑ 48	CADENA DE ORUGA		2

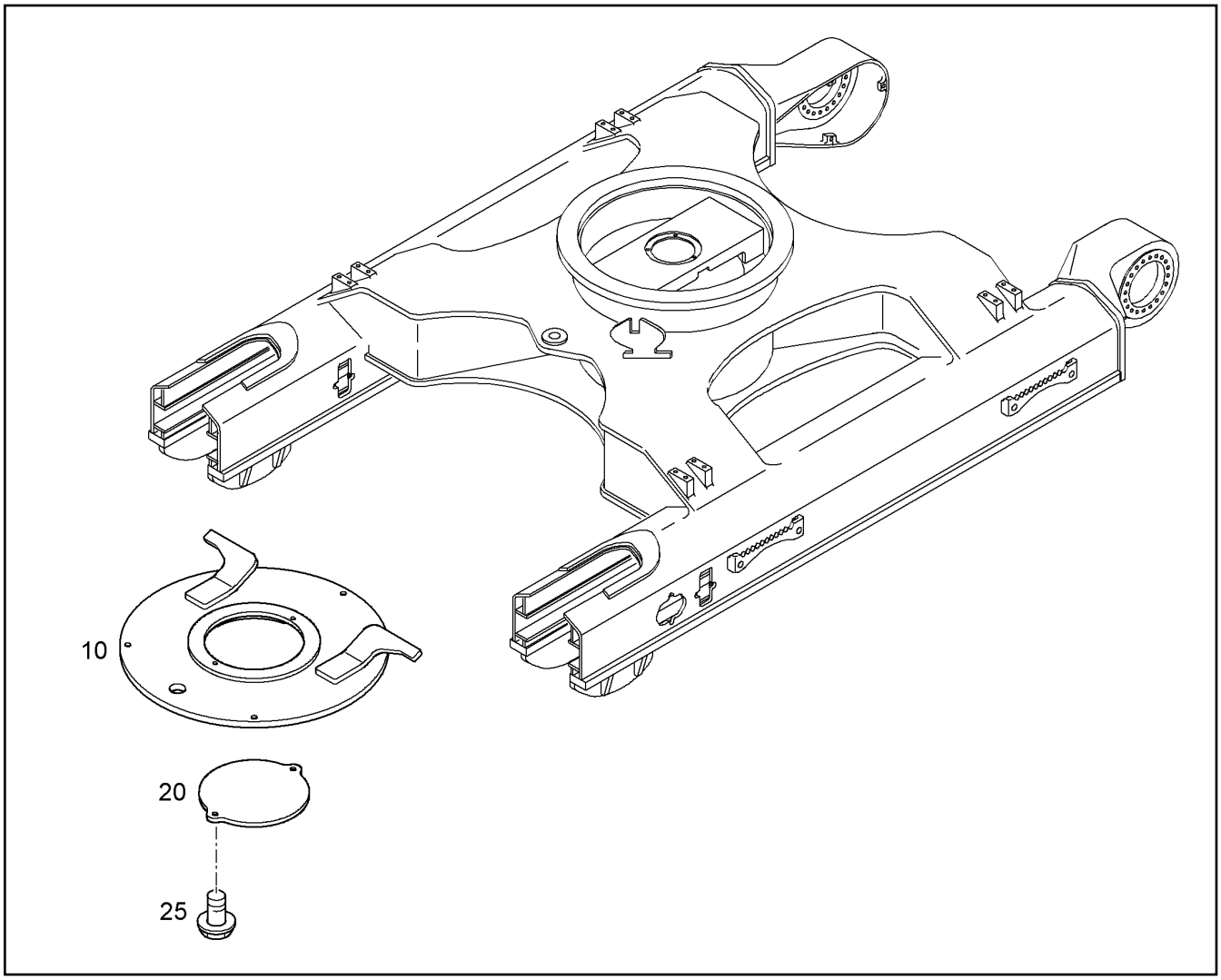

Pos.	Item	Quantity	Description	Descripción	Serie	K
10	10051492	1	LID	TAPA		1
20	10051238	1	LID	TAPA		
25	10001473	2	HEX HEAD SCREW	TORNILLO HEXAGONAL		

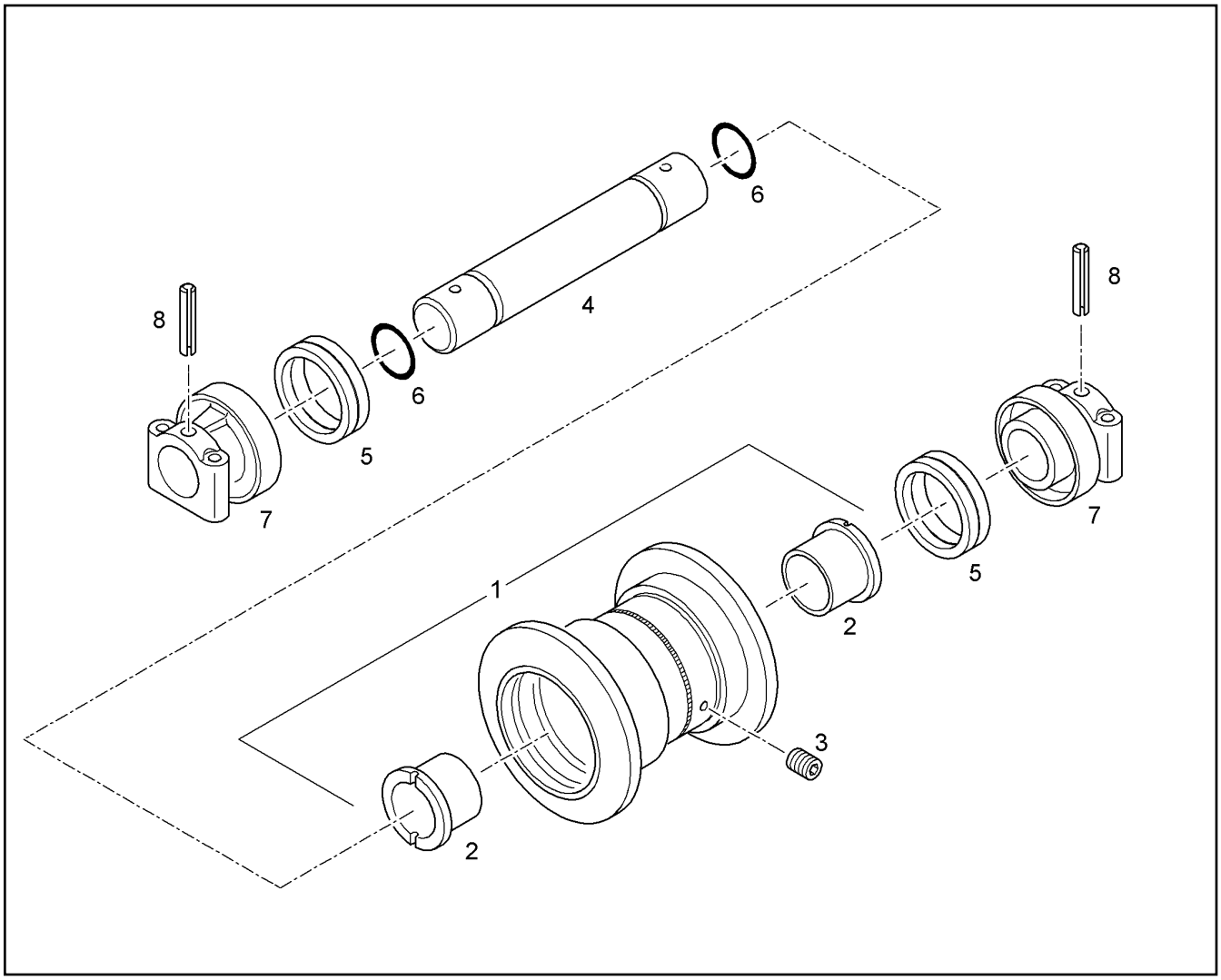

Pos.	Item	Quantity	Description	Descripción	Serie	K
1		1	ROLLER CORE	CUERPO DE POLEA		
2	7370556	2	-COLLER BUSH	-CASQUILLO CON BORDE		1
3	10097983	1	SCREW PLUG	TORNILLO DE CIERRE		
4	10301922	1	AXLE	EJE		
5	10030866	2	AXIAL FACE SEAL	JUNTA ANILLO DESLIZANTE		1
6	10301924	2	O-RING	JUNTA TORICA		1
7	10301925	2	END PIECE	PIEZA FINAL		
8	10301923	2	DOWEL PIN	PASADOR ELASTICO		

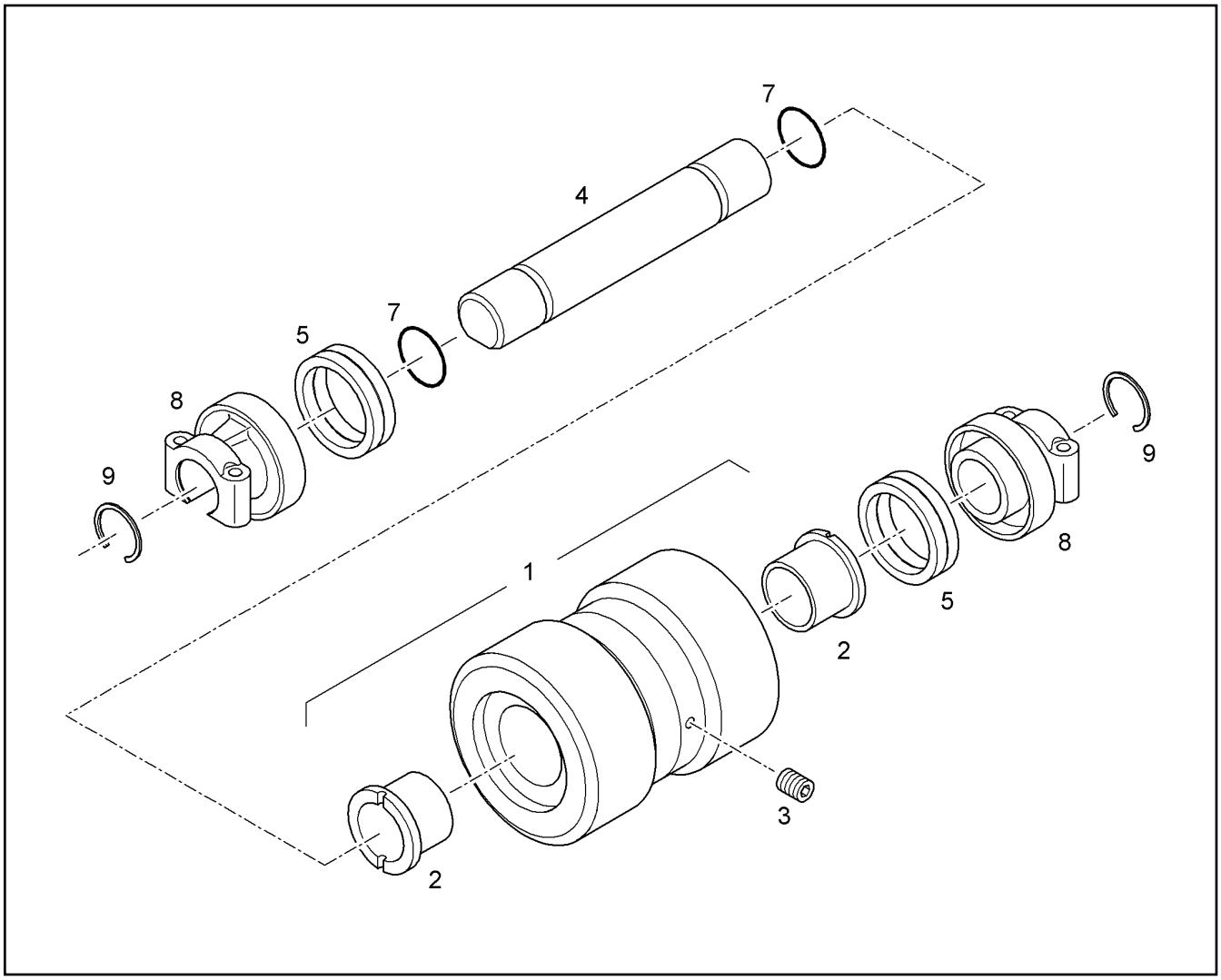

Pos.	Item	Quantity	Description	Descripción	Serie	K
1		1	ROLLER CORE	CUERPO DE POLEA		
2	10302997	2	-BUSH	-CASQUILLO		
3	10097983	1	SCREW PLUG	TORNILLO DE CIERRE		
4	10302998	1	AXLE	EJE		
5	10303000	2	LIFETIME SEAL	JUNTA LIFETIME		1
7	10303001	2	O-RING	JUNTA TORICA		1
8	10303003	2	END PIECE	PIEZA FINAL		
9	10303006	2	LOCKING RING	ANILLO SEGURIDAD		

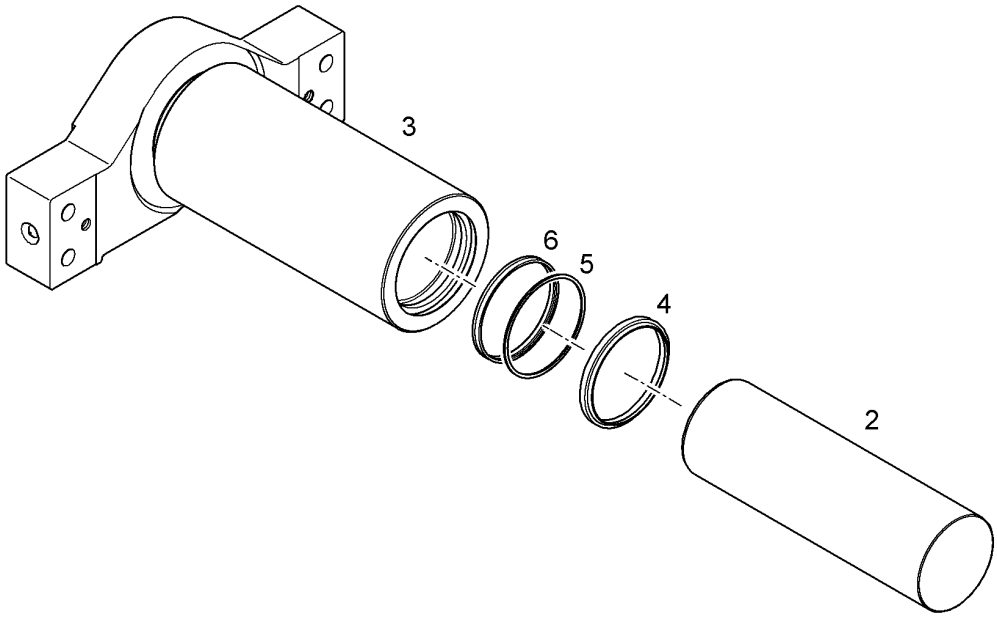

Pos.	Item	Quantity	Description	Descripción	Serie	K
2	10075356	1	PISTON	EMBOLO		1
3	10075352	1	BODY	CUERPO		
4	10016714	1	SCRAPER	PALA LIMPIEZA LATERAL		1
5	10016716	1	SUPPORTING RING	ANILLO SOPORTE		1
6	10016715	1	LIP SEAL RING	COLLARIN HIDRAULICO		1

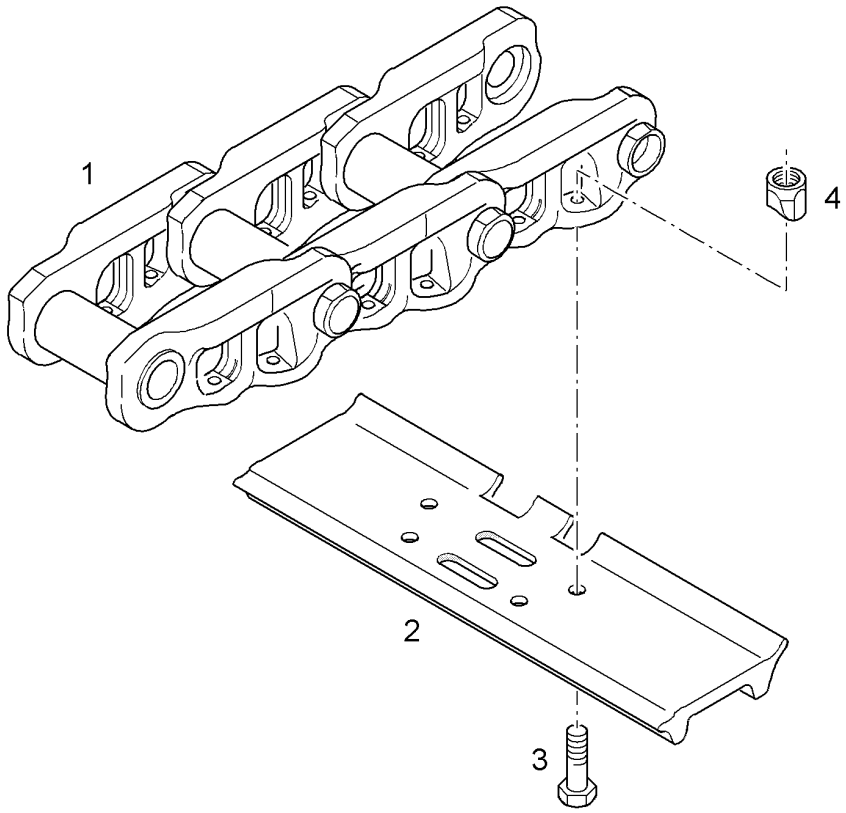

Pos.	Item	Quantity	Description	Descripción	Serie	K
1	10300127	1	CRAWLER CHAIN ⇨ ❑ 50	CADENA DE ORUGA		2
1	10300127	1	CRAWLER CHAIN ⇨ ❑ 50	CADENA DE ORUGA		2
2	10330318	50	DOUBLE GROUSER PLATE 600mm	PLACA SUELO 2 PIEZAS		1
2	10330318	50	DOUBLE GROUSER PLATE 600mm	PLACA SUELO 2 PIEZAS		1
3	4900654	200	TRACK PAD SCREW	TORNILLO PLACA FONDO		
3	4900654	200	TRACK PAD SCREW	TORNILLO PLACA FONDO		
4	7368691	200	TRACK PAD NUT 1"-14UNS	TUERCA PLACA FONDO		
4	7368691	200	TRACK PAD NUT 1"-14UNS	TUERCA PLACA FONDO		

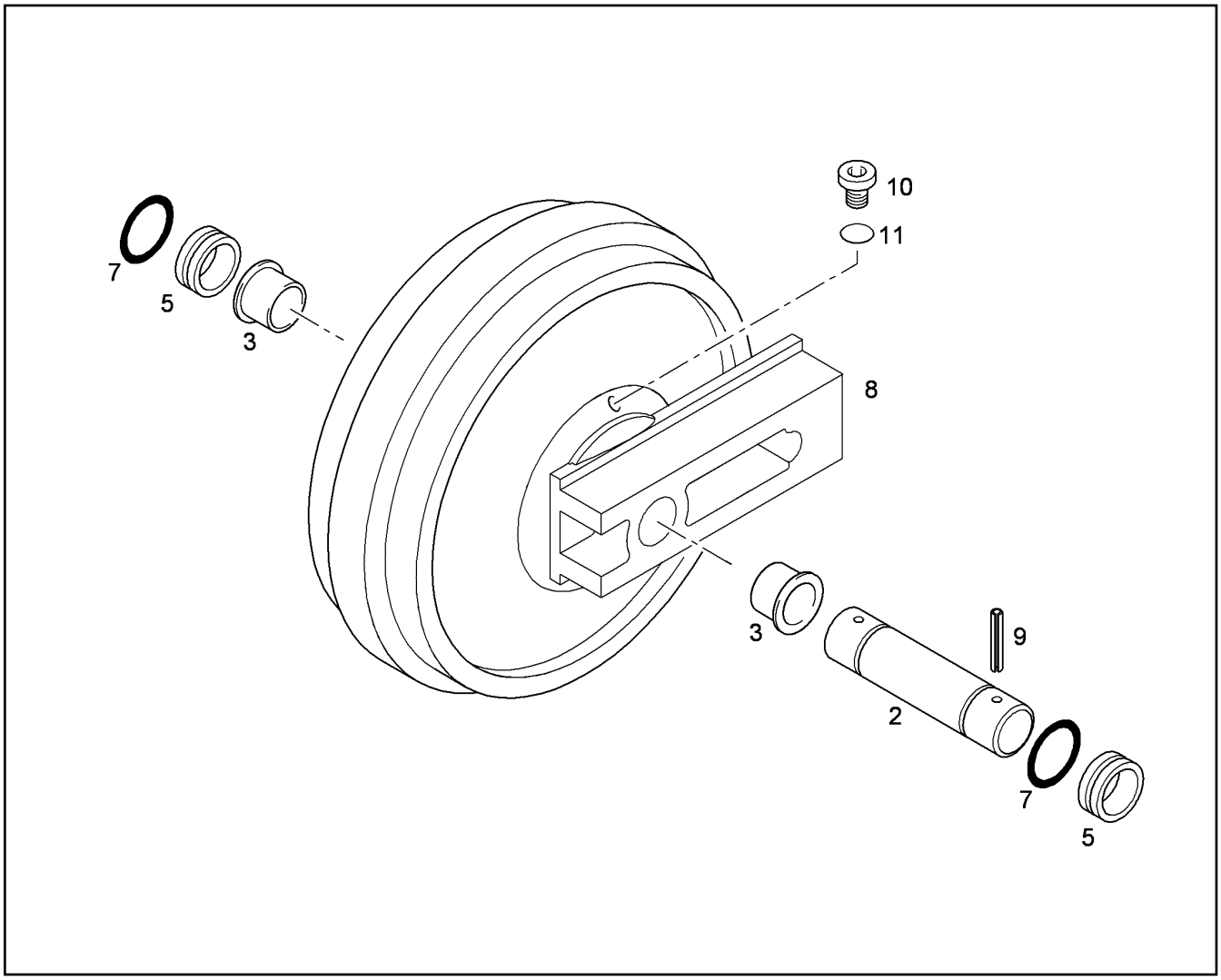

Pos.	Item	Quantity	Description	Descripción	Serie	K
2	10099876	1	AXLE	EJE		2
3	10099877	2	BUSH 100mm	CASQUILLO		1
5	10099878	4	AXIAL FACE SEAL	JUNTA ANILLO DESLIZANTE		1
7	10099879	2	SEAL	JUNTA		1
8	10475119	2	SLIDER	PATIN		
9	10099881	2	CLAMPING SLEEVE	MANGUITO DE SUJECION		
10	7264360	1	O-RING 7,65X1,78	JUNTA TORICA		1
11	7001454	1	SCREW PLUG	TORNILLO DE CIERRE		

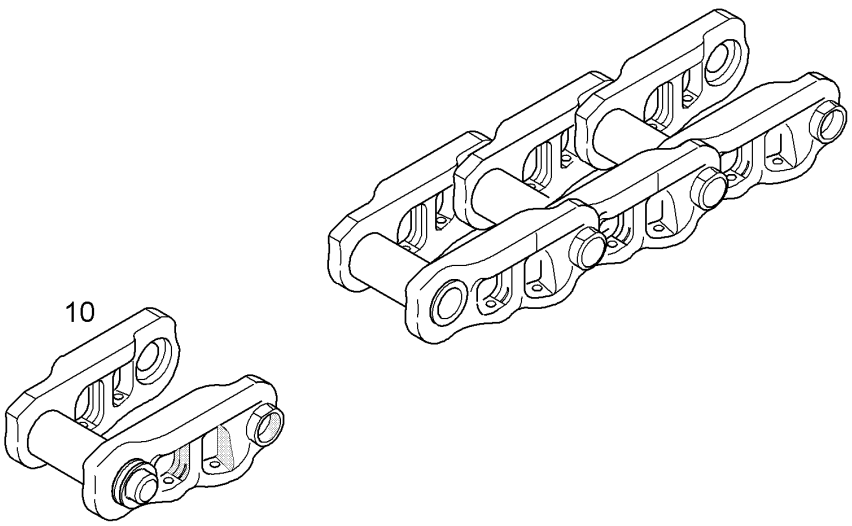

Pos.	Item	Quantity	Description	Descripción	Serie	K
10	5618003	1	CHAIN END LINK ⇨ ❑ 51	ESLABON FINAL		

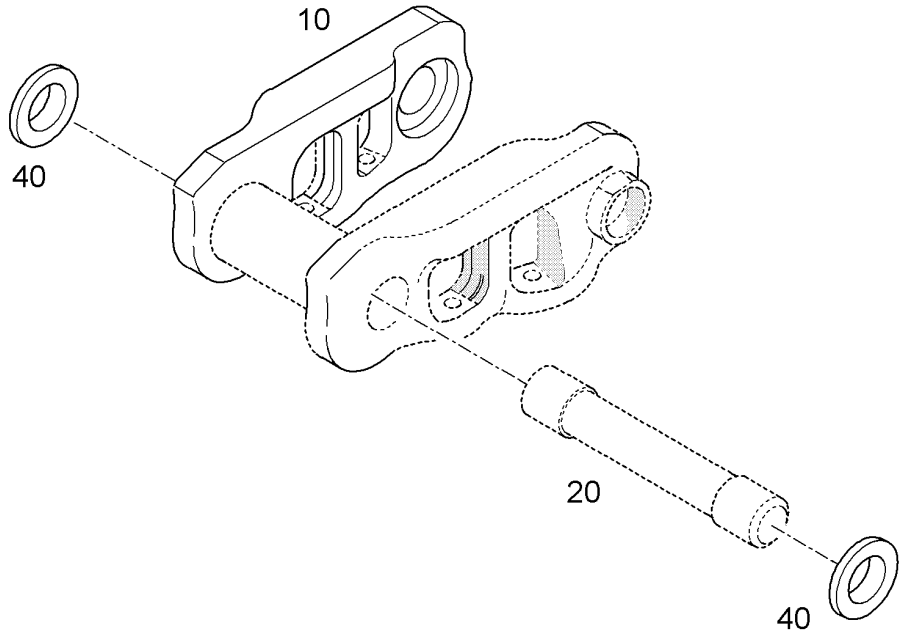

Pos.	Item	Quantity	Description	Descripción	Serie	K
10		1	MASTER LINK ASSY ⇨ ❑ 52	SEGMENTO TERMINAL CADENA		
20	5609594	1	END PIN	BULON FINAL		
40	10800585	2	DISTANCE RING	ANILLO DISTANCIADOR		1

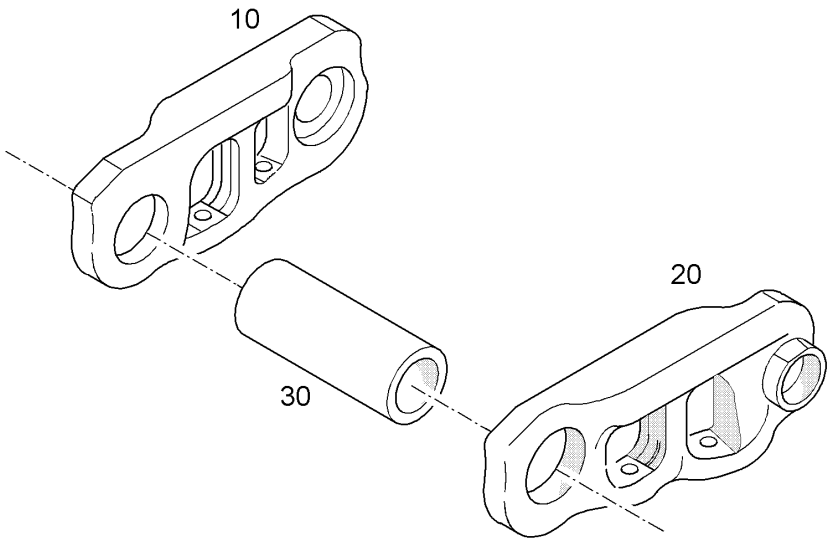

Pos.	Item	Quantity	Description	Descripción	Serie	K
10		1	MASTER LINK	SEGMENTO DE LA CADENA		
20		1	MASTER LINK	SEGMENTO DE LA CADENA		
30		1	END BUSHING	CASQUILLO FINAL		1

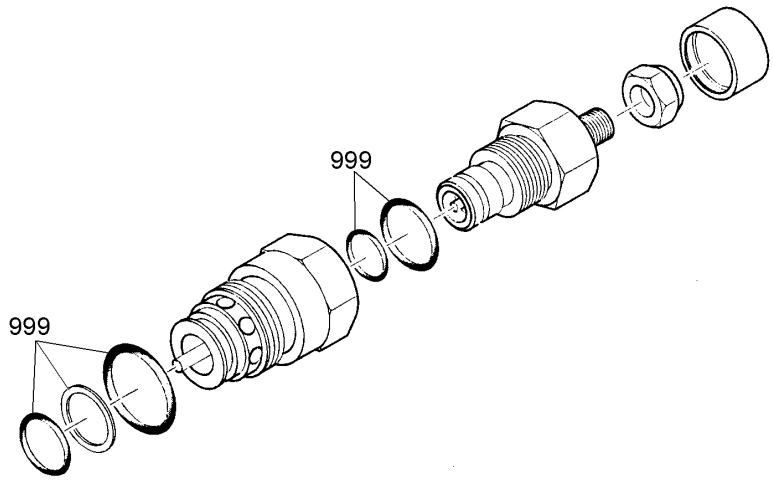

Pos.	Item	Quantity	Description	Descripción	Serie	K
999	5616901	1	SEAL KIT PRESSURE VALVE	JJ VÁLVULA PRESIÓN		

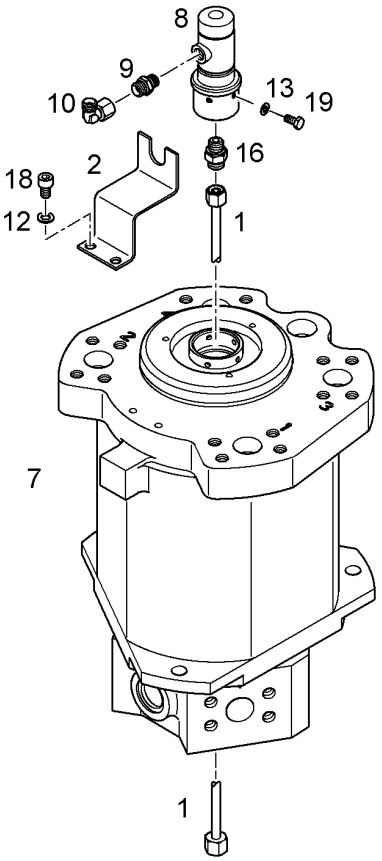

Pos.	Item	Quantity	Description	Descripción	Serie	K
1	9490631	1	PRESSURE LINE CPL	TUB.IMPULS.COMPL.		1
2	9485739	1	LIMIT STOP	TOPE		1
7	9141597	1	ROTARY FEED THROUGH ⇨ ❑ 57	TRANSMISION ROTATIVO		2
8	10009630	1	ROTARY FEED THROUGH ⇨ ❑ 56	TRANSMISION ROTATIVO		
9	7405399	1	SCREW FITTING GE 12L M14X1,5	ATORNILLAMIENTO		
10	247117702	1	SCREW FITTING EW 12L	ATORNILLAMIENTO		
12	10289795	2	WASHER ISO 7089 10 300HV	ARANDELA		
13	7361965	4	LOCK WASHER	ARANDELA SEGURIDAD		
16	7362103	1	SCREW FITTING GE 10S	ATORNILLAMIENTO		
18	4901606	2	CYLINDER SCREW ISO 4762 M10X16 10.9	TORNILLO CILINDRICO		
19	4065060	4	HEX BOLT ISO 4017 M5X10 8.8 A2C	TORNILLO DE CABEZA HEXAGO		

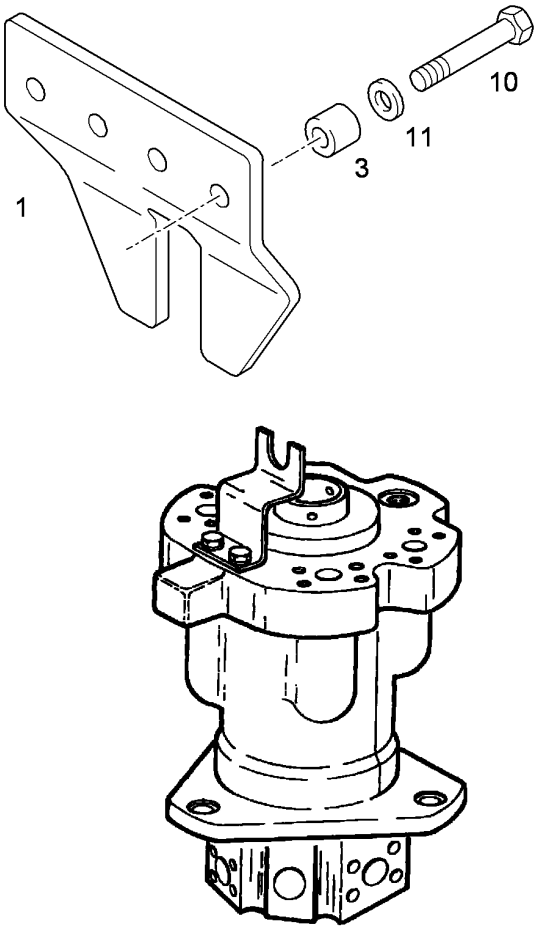

Pos.	Item	Quantity	Description	Descripción	Serie	K
1	9354942	1	DRIVER	ARRASTRE		
3	9327516	4	SLEEVE	CASQUILLO.		
10	4600149	4	HEX BOLT ISO 4014 M16X85 10.9 DAC	TORNILLO DE CABEZA HEXAGO		
11	4600021	4	WASHER DIN 7349 17	ARANDELA		

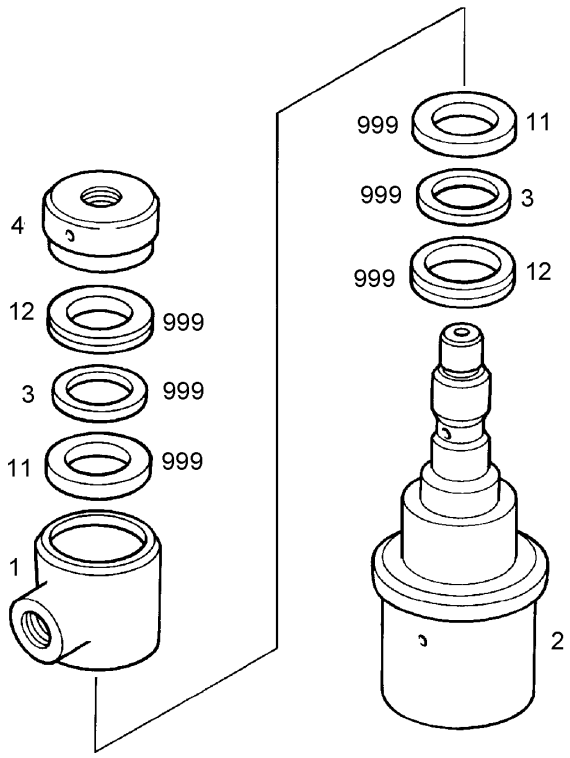

Pos.	Item	Quantity	Description	Descripción	Serie	K
1		1	ROTOR	ROTOR		
2		1	STATOR	ESTATOR		
3	7017685	2	THRUST WASHER	ARANDELA TOPE		
4	10011397	1	NUT	TUERCA		
11	10011398	2	ROTOR GASKET	JUNTA DE ROTOR		
12	7017682	2	V-SEALING	V-SEAL		
999	10009676	1	SEALINGSET ROTARY TRANSMISSION ⇨ ❑ 58	JJ DISTRIBUIDOR GIRATORIO		1

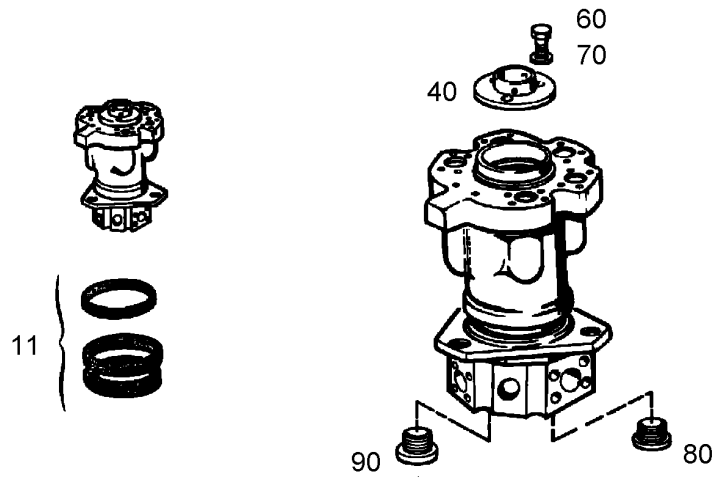

Pos.	Item	Quantity	Description	Descripción	Serie	K
11	9265064	1	-SEALINGSET ROTARY TRANSMISSIONDD ⇨ ❑ 59	-JJ DISTRIBUIDOR GIRATORIO		1
40	9141600	1	LID	TAPA		1
60	4065099	3	HEX BOLT ISO 4017 M6x16 8.8 A2C	TORNILLO DE CABEZA HEXAGO		
70	4600031	3	CIRCLIP DIN 7980 6 A3C	ANILLO DE MUELLE		
80	7004296	8	SCREW PLUG VSTI	TORNILLO DE CIERRE		
90	7361961	1	SCREW PLUG VSTI	TORNILLO DE CIERRE		

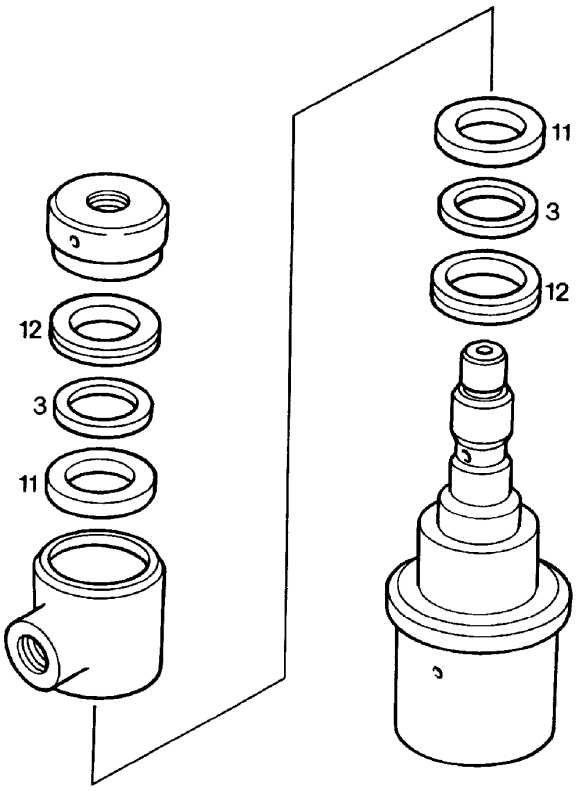

Pos.	Item	Quantity	Description	Descripción	Serie	K
3		2	THRUST WASHER	ARANDELA TOPE		
11		2	ROTOR GASKET	JUNTA DE ROTOR		
12		2	V-SEALING	V-SEAL		

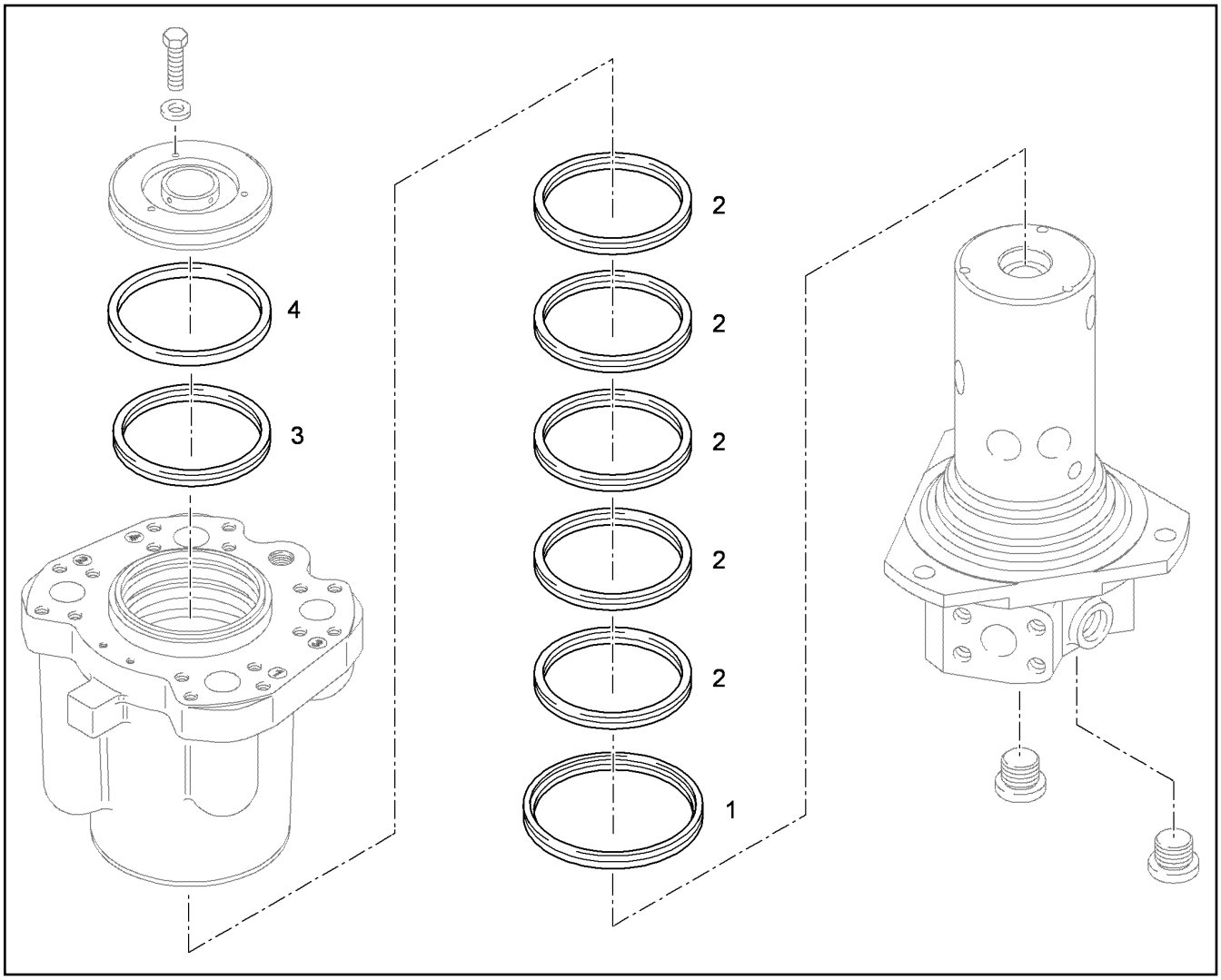

Pos.	Item	Quantity	Description	Descripción	Serie	K
1		1	ROTOR GASKET	JUNTA DE ROTOR		1
2		5	ROTOR GASKET	JUNTA DE ROTOR		1
3		1	ROTOR GASKET	JUNTA DE ROTOR		1
4		1	FELT RING	ANILLO DE FIELTRO		2

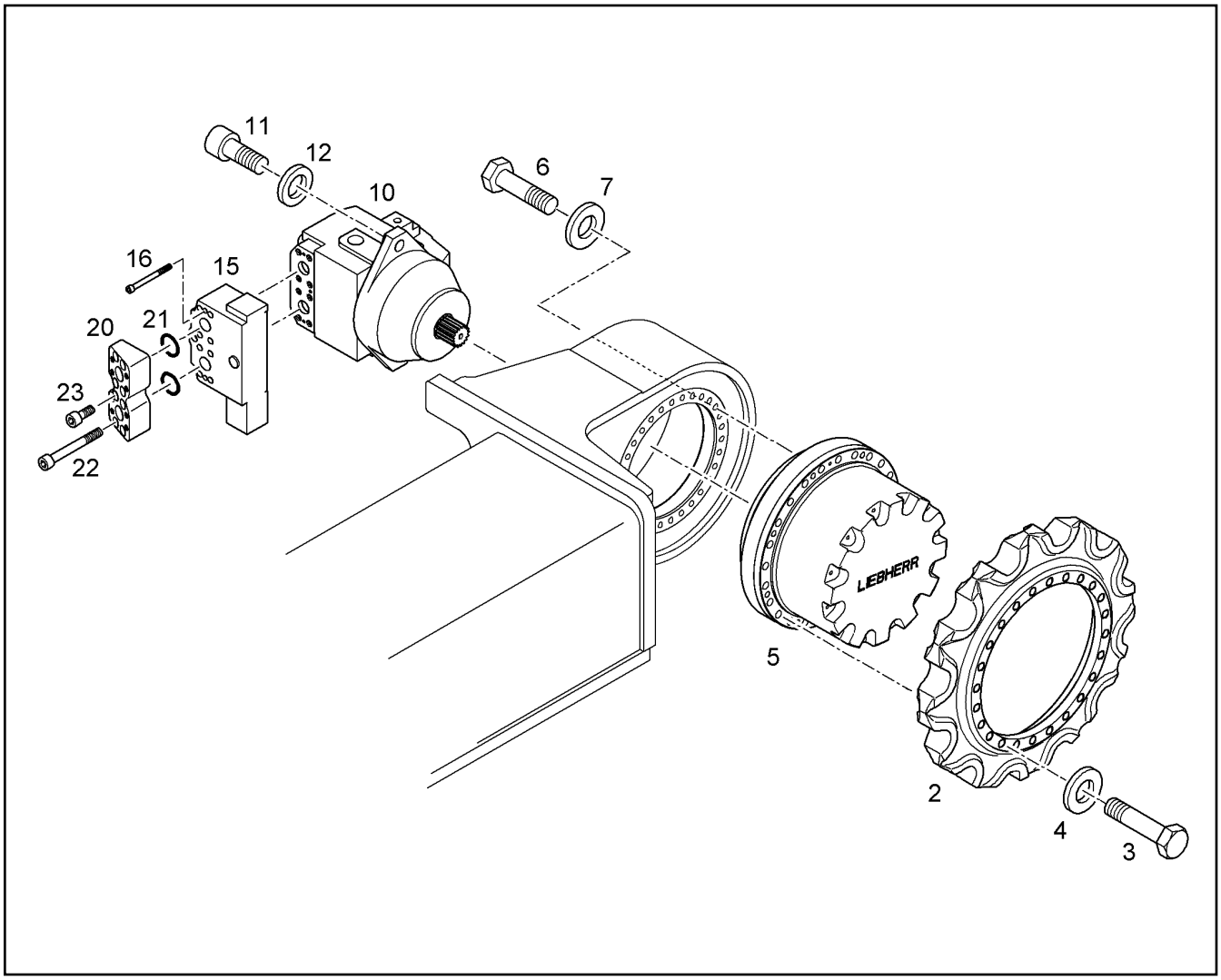

Pos.	Item	Quantity	Description	Descripción	Serie	K
2	9379235	2	TUMBLER WHEEL D8K	RUEDA DE CADENA		
3	10425662	48	HEX BOLT ISO 4017 M24X100 10.9 FLZN 100	TORNILLO DE CABEZA HEXAGO		
4	9918230	48	WASHER 24,5/40X5	ARANDELA		
5	9443970	2	TRAVEL DRIVE FAT 500P005 [977 3/11] [960 50/10] ⇨ ❑ 64	ACCIONAMIENTO DE TRASLAC		2
6	10425604	48	HEX BOLT ISO 4014 M24X90 10.9 FLZN 1002	TORNILLO DE CABEZA HEXAGO		
7	9918230	48	WASHER 24,5/40X5	ARANDELA		
10	9072024	2	HYDR.MOTOR VAR.FMV 165 [101937592] [101937597] ⇨ ❑ 68	MOTOR HIDR. INCORP.		6
11	10425681	4	CYLINDER SCREW ISO 4762 M24X60 10.9 F	TORNILLO CILINDRICO		
12	10019101	4	WASHER A 24	ARANDELA		
15	5616688	2	WHEEL BRAKE VALVE [286 35/10] [296 35/10] ⇨ ❑ 71	VÁLVULA FRENO MARCHA		2
16	4000362	4	CYLINDER SCREW ISO 4762 M6X70 10.9 A2	TORNILLO CILINDRICO		
20	9684904	2	INTERMEDIATE FLANGE	BRIDA INTERMEDIA		
21	7264687	4	O-RING 37,69X3,53	JUNTA TORICA		1
22	4900973	12	CYLINDER SCREW ISO 4762 M14X120 10.9	TORNILLO CILINDRICO		
23	4601243	4	CYLINDER SCREW ISO 4762 M14X35 10.9	TORNILLO CILINDRICO		

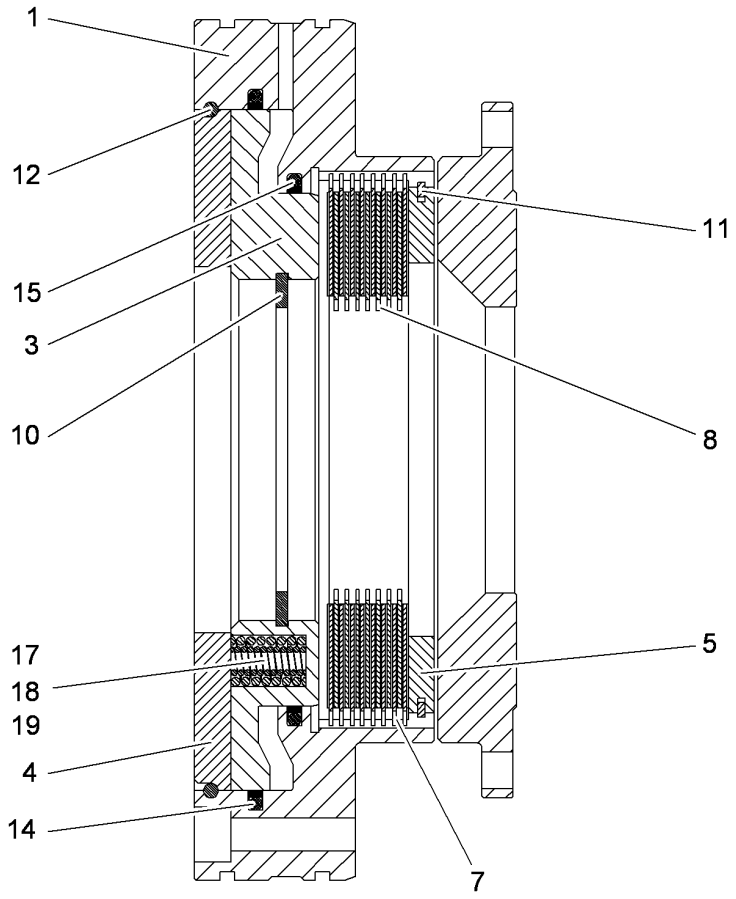

Pos.	Item	Quantity	Description	Descripción	Serie	K
1	5618131	1	EXTERNAL BODY	CUERPO EXTERIOR		
3	5618132	1	PISTON	EMBOLO		1
4	7373503	1	CYLINDER COVER	TAPA DE CILINDRO		
5	7373504	1	COMPRESSION WASHER	ARANDELA PRESION		
7	7373506	9	OUTER MULTI-DISC	LAMINA EXTERIOR		
8	7373505	8	INTERNAL MULTI-DISC	DISCO INTERIOR		
10	4281016	1	LOCKING RING DIN 472 90 X3	ANILLO SEGURIDAD		
11	7003394	1	SNAP RING SB143	ANILLO MUELLE		
12	7373509	1	SNAP RING	ANILLO MUELLE		
14	7373507	1	ROD PACKING	JUNTA VARILLA		1
15	7373508	1	ROD PACKING	JUNTA VARILLA		1
17	7373500	24	PRESSURE SPRING 13,6X29,1X 2,6	MUELLE COMPRESION		
18	7373501	24	PRESSURE SPRING 8,2X29,1X 1,7	MUELLE COMPRESION		
19	7373502	24	PRESSURE SPRING 4,5X31,1X 0,9	MUELLE COMPRESION		

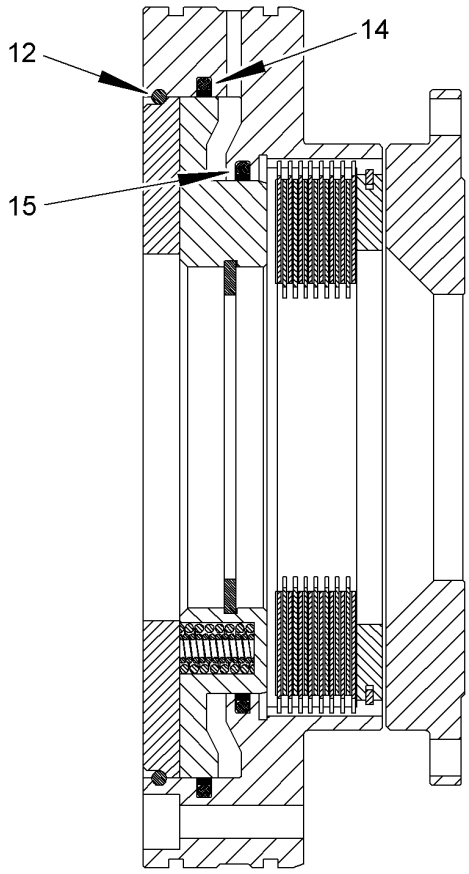

Pos.	Item	Quantity	Description	Descripción	Serie	K
12		1	SNAP RING	ANILLO MUELLE		
14		1	ROD PACKING 186	JUNTA VARILLA		1
15		1	ROD PACKING 140	JUNTA VARILLA		1

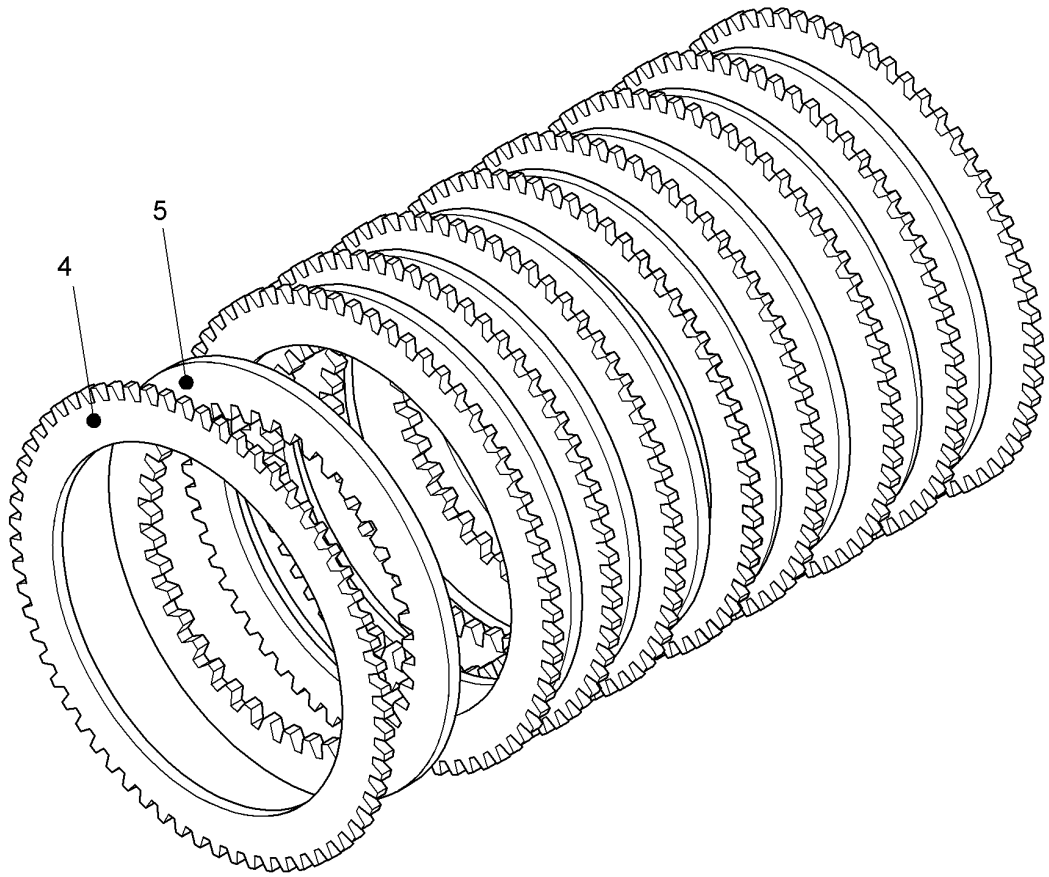

Pos.	Item	Quantity	Description	Descripción	Serie	K
4		9	OUTER MULTI-DISC	LAMINA EXTERIOR		
5		8	INTERNAL MULTI-DISC	DISCO INTERIOR		

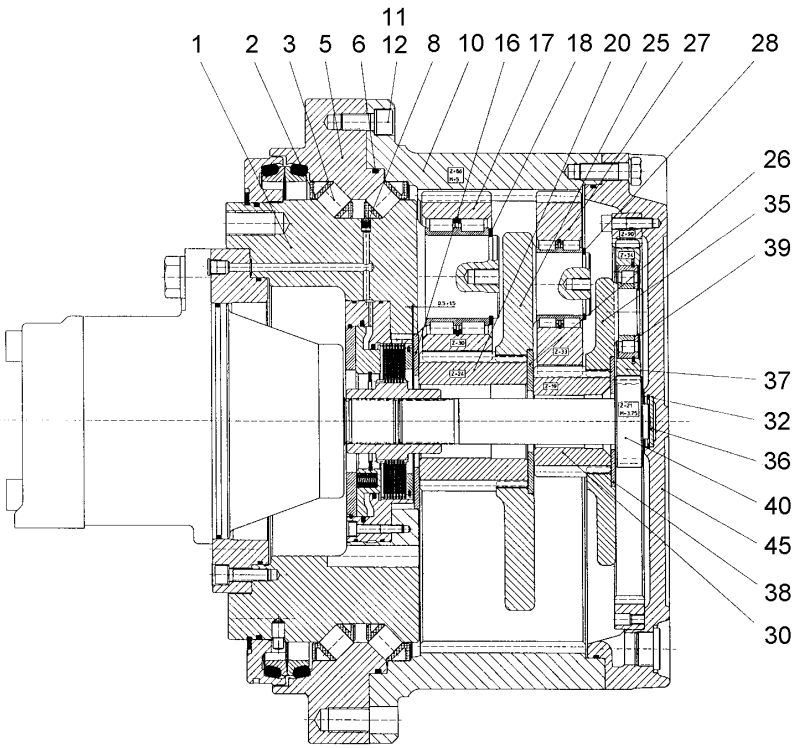

Pos.	Item	Quantity	Description	Descripción	Serie	K
1	9444412	1	CONNECTION CARRIER	SOPORTE DE CONEXIÓN		
2	9442231	32	ROLLER CAGE	CAJA DE RODILLOS		1
3	747005901	96	CYL.ROLLER DIN 5402 d=24X24	RODILLO CILINDRICO		1
5	9442439	1	BEARING RING	ANILLO COJINETE		1
6	7610617	1	O-RING 470x5	JUNTA TORICA		1
8	7610819	2	SEALING PLUG D= 9,00MM	TAPON ESTANCO		1
10	9444413	1	INTERNAL GEAR WHEEL M=5 Z=86	PIÑON INTERIOR		
11	404316801	8	CYLINDER SCREW ISO 4762 M16X35 10.9	TORNILLO CILINDRICO		
12	423911601	8	LOCK WASHER 17/24X2,6 VS	ARANDELA SEGURIDAD		
16	9444408	1	HOLDING RING 170X90X5	ARO SOPORTE		
17	9444414	5	PLANET WHEEL M=5 Z=30 ⇨ ❑ 75	PIÑON PLANETARIA		
18	4002478	5	LOCKING RING DIN 471 80 X4	ANILLO SEGURIDAD		
20	9444416	1	SUN WHEEL M=5 Z=24	PIÑON PRINCIPAL		
25	9444417	1	PLANETARY CARRIER	BRAZO PLANETARIO		
26	9277007	1	HOUSING	CARCASA		
27	9444418	3	PLANET WHEEL M=5 Z=33 ⇨ ❑ 76	PIÑON PLANETARIA		
28	4280089	3	LOCKING RING DIN 471 60 X3	ANILLO SEGURIDAD		
30	9444422	1	SUN WHEEL M=5 Z=19	PIÑON PRINCIPAL		
32	429612001	1	L RING JL50	ANILLO L		
35	9444452	1	PLANETARY CARRIER	BRAZO PLANETARIO		
36	9443033	1	RETAINING DISK	ARANDELA SOPORTE		
37	9444453	3	PLANET WHEEL M=3,75 Z=34 ⇨ ❑ 77	PIÑON PLANETARIA		
38	9443344	1	RETAINING DISK	ARANDELA SOPORTE		

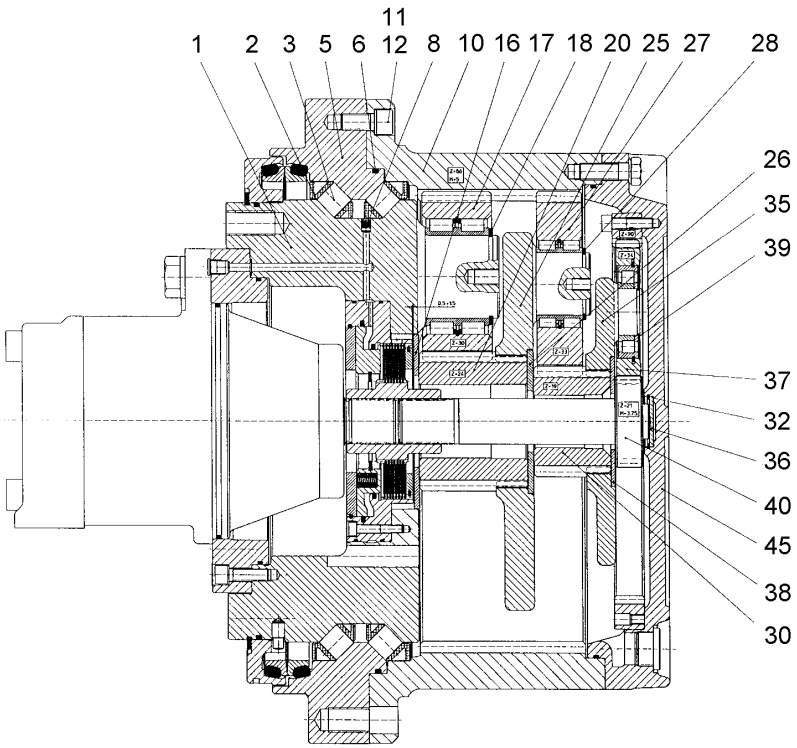

Pos.	Item	Quantity	Description	Descripción	Serie	K
39	10171583	3	LOCKING RING DIN 47145	ANILLO SEGURIDAD		
40	9444455	1	DRIVE SHAFT M=3,75 Z=21	EJE MOTRIZ		
45	9444456	1	END COVER	TAPA DE CIERRE		

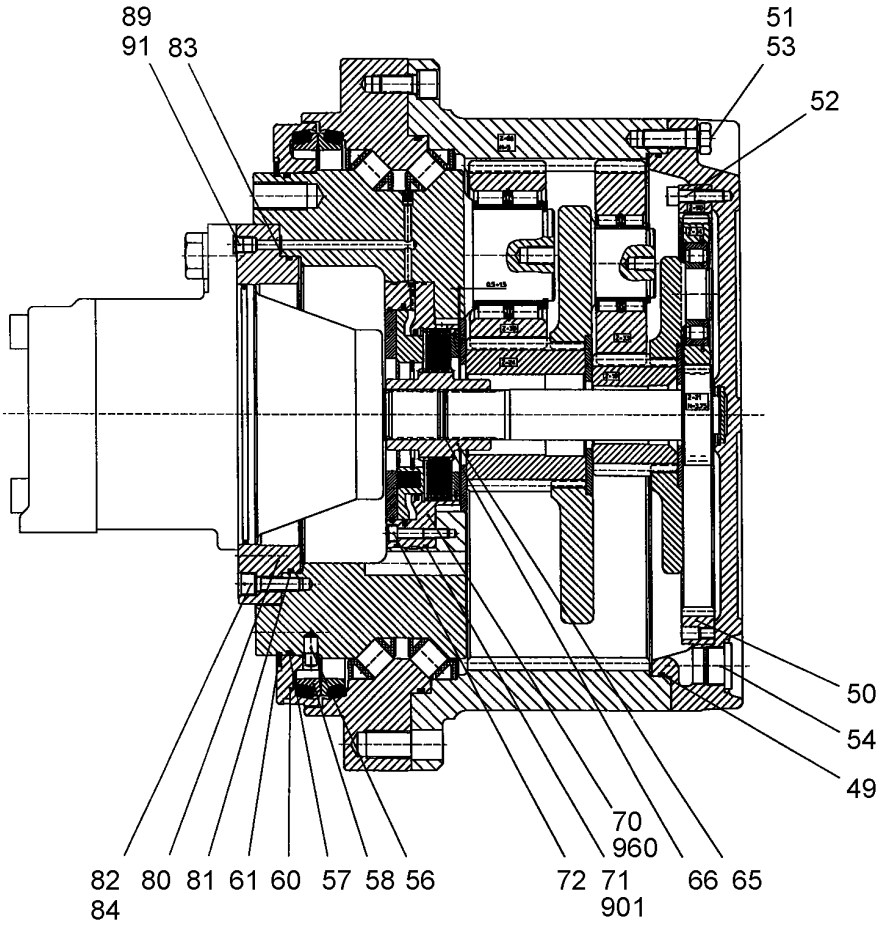

Pos.	Item	Quantity	Description	Descripción	Serie	K
49	7364303	1	O-RING	JUNTA TORICA		1
50	9444429	1	INTERNAL GEAR WHEEL M=3,75 Z=90	PIÑON INTERIOR		
51	4600189	12	HEX BOLT ISO 4017 M16x50 8.8 A3C	TORNILLO DE CABEZA HEXAGO		
52	4043127	24	CYLINDER SCREW ISO 4762 M10X40 10.9	TORNILLO CILINDRICO		
53	423911601	12	LOCK WASHER 17/24X2,6 VS	ARANDELA SEGURIDAD		
54	409710601	3	SCREW PLUG DIN 908 M33X2,00 ST PM A3	TORNILLO DE CIERRE		
56	9442284	1	PIN	PASADOR		
57	7610378	1	O-RING 400X5	JUNTA TORICA		1
58	7610244	1	AXIAL FACE SEAL	JUNTA ANILLO DESLIZANTE		1
60	9442287	1	TERMINAL RING	ANILLO FINAL		1
61	7610186	1	SNAP RING DIN 5417 SW420 X4,5	ANILLO MUELLE		
65	9444467	1	MULTI-DISC CARRIER	VIGA DE LAMINAS		
66	428110201	1	LOCKING RING DIN 47241	ANILLO SEGURIDAD		
70	502037001	1	SPRING LOADED MULTI-DISC BRAKE ⇨ ❑ 61	FRENO DISCOS MULT.PRESION		2
71	726428001	2	O-RING	JUNTA TORICA		1
72	404339601	12	CYLINDER SCREW ISO 4762 M8X45 10.9	TORNILLO CILINDRICO		
80	9444457	1	MOTOR FLANGE	BRIDA DE MOTOR		
81	726428201	1	O-RING DIN 3771 265,00X4,00	JUNTA TORICA		1
82	4043003	8	CYLINDER SCREW ISO 4762 M12X40 10.9	TORNILLO CILINDRICO		
83	726403201	2	O-RING	JUNTA TORICA		1
84	4900093	8	LOCK WASHER 12 VS	ARANDELA SEGURIDAD		
89	7363125	1	SCREW PLUG ⇨ ❑ 760	TORNILLO DE CIERRE		
91	7004246	1	LOCKING PLUG	TAPON DE CIERRE		1

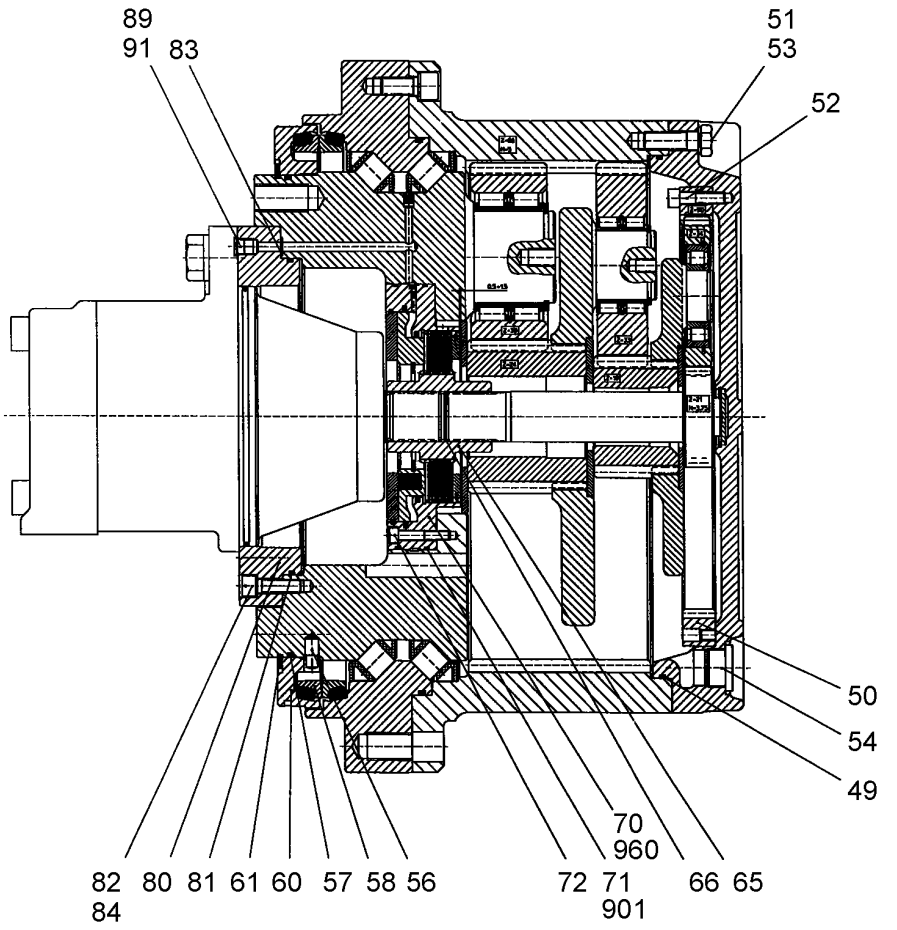

Pos.	Item	Quantity	Description	Descripción	Serie	K
901	932180401	1	BRAKE PACKING SET ⇨ ❑ 62	JUEGO JUNTAS FRENO		
960	932180501	1	BRAKE MULTI-DISC SET ⇨ ❑ 63	JUEGO DE DISCOS DE FRENO		

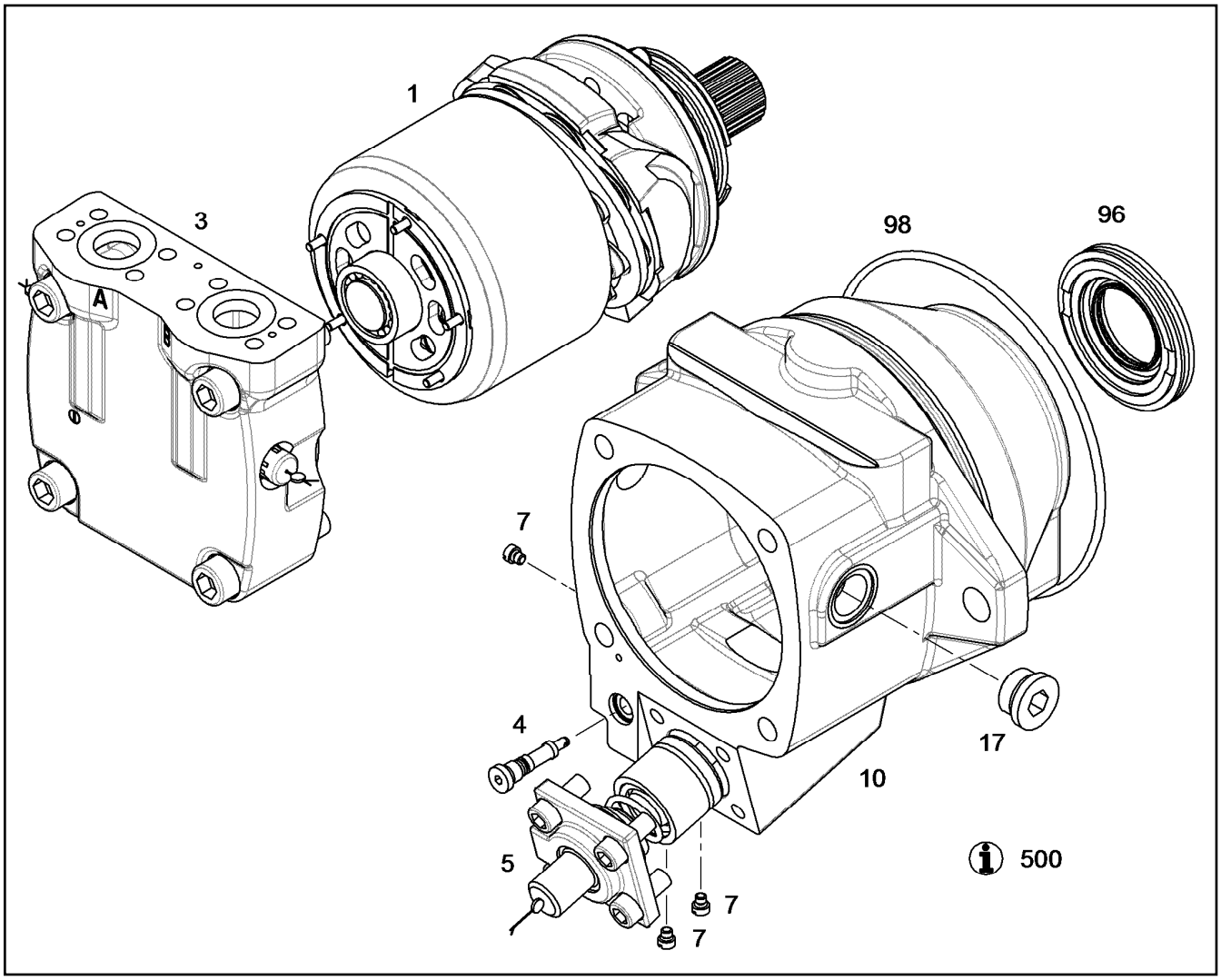

Pos.	Item	Quantity	Description	Descripción	Serie	K
1	9888126	1	DRIVING GEAR ⇨ ❑ 70	MECANISMO DE ACCIONAMIENT		1
3	9072026	1	CONNECTING PLATE NG 165 ⇨ ❑ 69	PLACA DE CONEXION		1
4	9882892	1	PILOT VALVE NG 165	VALVULA DE MANDO		
5	9278174	1	ADJUSTMENT ⇨ ❑ 80	REGULACIÓN		
7	9268441	3	SCREW PLUG M6X6 ⇨ ❑ 138	TORNILLO DE CIERRE		
10		1	HOUSING FMV 165	CARCASA		
17	7361329	1	SCREW PLUG	TORNILLO DE CIERRE		
94	9888123	1	REPAIR KIT DRIVING MECHANISM ⇨ ❑ 83	JR GRUPO MOTOR		2
96	9268751	1	REPAIR KIT LOCK RING ⇨ ❑ 73	JR ARO CIERRE		2
98	9278179	1	SEAL KIT ⇨ ❑ 88	JUEGO JUNTAS		1
500	9278153	1	TABLE ORDER	TABLA		

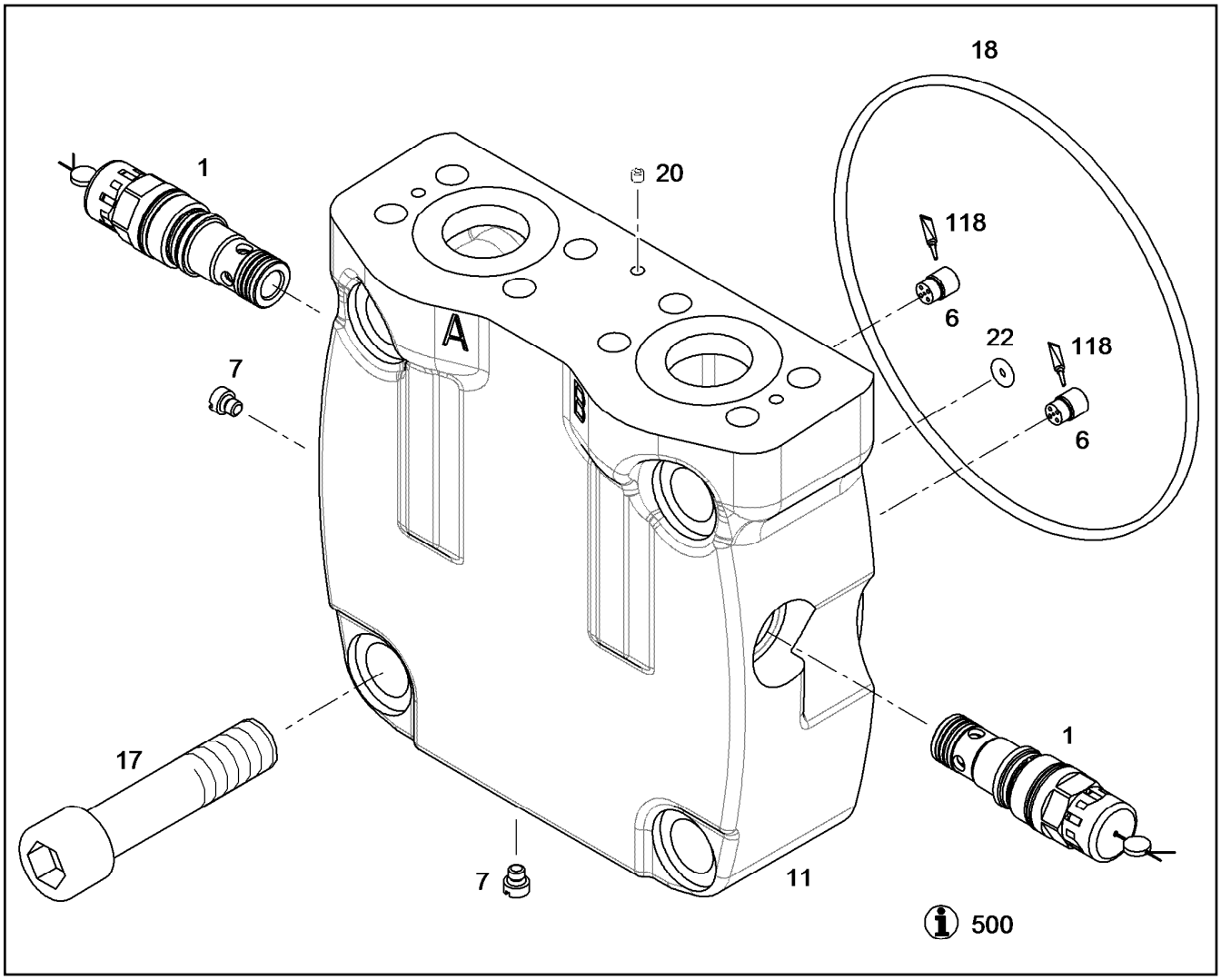

Pos.	Item	Quantity	Description	Descripción	Serie	K
1	9267554	2	PRESSURE LIMITING VALVE ⇨ ❑ 78	VALVULA LIMITADORA DE PRES		1
6	9270598	2	NON-RETURN VALVE ⇨ ❑ 79	VALVULA DE RETENCION		2
7	9268441	2	SCREW PLUG M6X6 ⇨ ❑ 138	TORNILLO DE CIERRE		
11		1	CONNECTING PLATE	PLACA DE CONEXION		1
17	4000523	4	CYLINDER SCREW ISO 4762 M20X80 10.9	TORNILLO CILINDRICO		
18	7380592	1	O-RING	JUNTA TORICA		1
20	7381298	1	NOZZLE	BOQUILLA		
22	7380648	1	O-RING	JUNTA TORICA		1
118	8655023	1	GLUE	PEGAMENTO		
500	9278153	1	TABLE ORDER	TABLA		

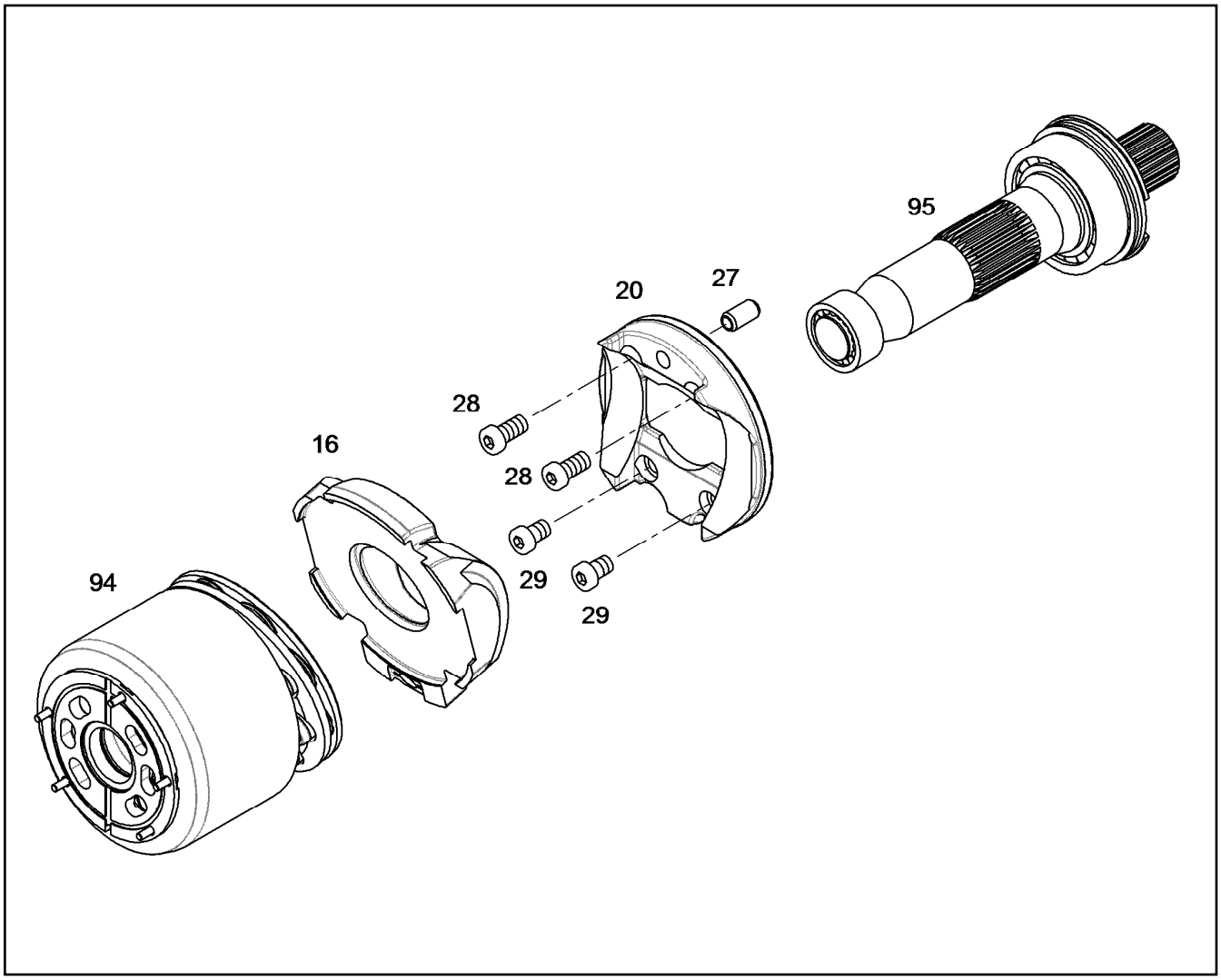

Pos.	Item	Quantity	Description	Descripción	Serie	K
16	9882407	1	SWING ROCKER	CUNA BASC.		
20	9882408	1	BEARING FLANGE	BRIDA COJINETE		
27	7381640	1	TENSION PIN	PASADOR AJUSTE		
28	240122602	2	CYLINDER SCREW DIN 7984 M10X25 8.8	TORNILLO CILINDRICO		
29	4000508	2	CYLINDER SCREW DIN 7984 M10X16 8.8 A3	TORNILLO CILINDRICO		
94	9888123	1	REPAIR KIT DRIVING MECHANISM ⇨ ❑ 83	JR GRUPO MOTOR		2
95	9888124	1	REPAIR KIT SHAFT ⇨ ❑ 84	JR ÁRBOL		2

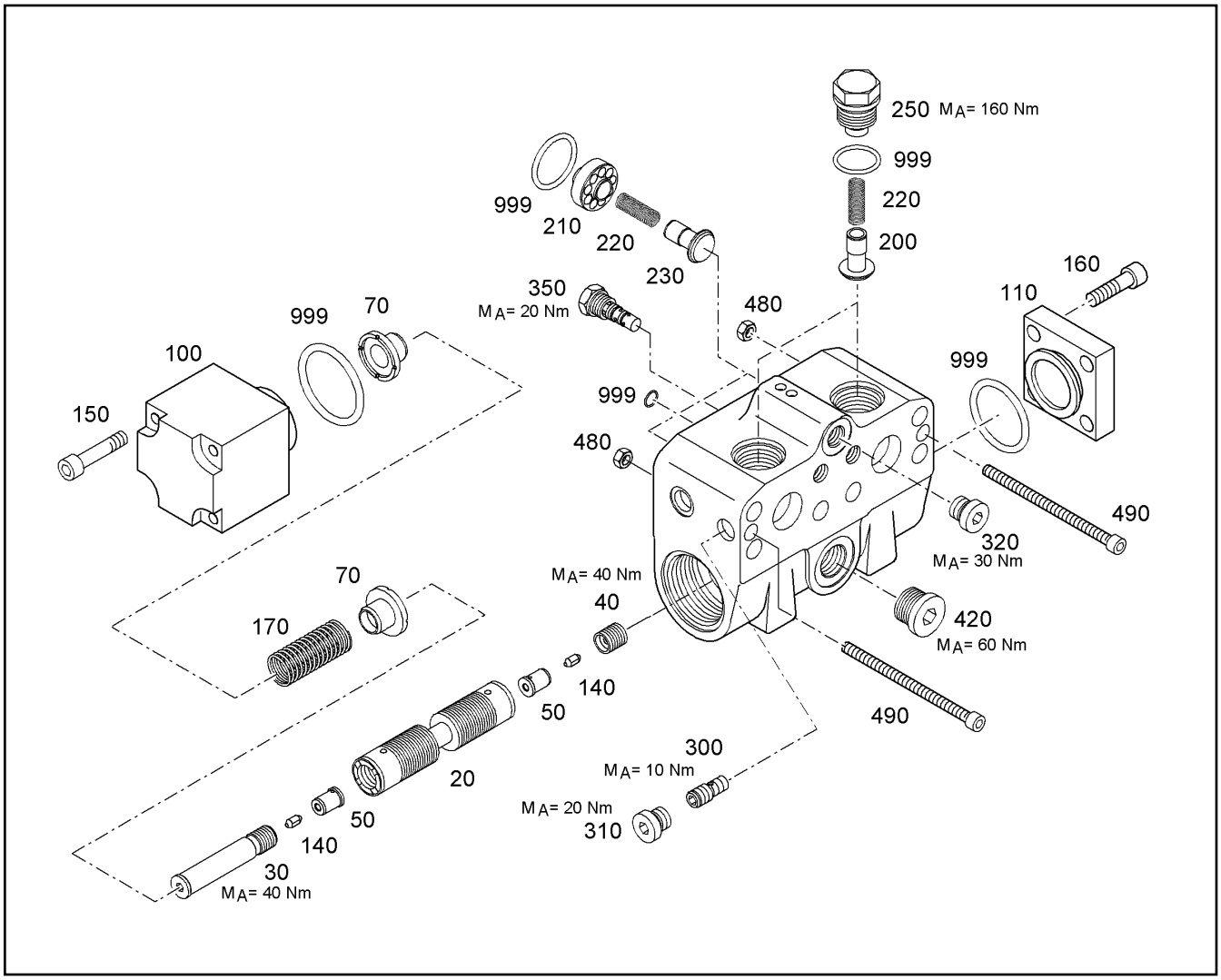

Pos.	Item	Quantity	Description	Descripción	Serie	K
20	5616689	1	PISTON	EMBOLO		1
30	10015475	1	PIN	BULON		1
40	7026127	1	VALVE SEAT	ASIENTO DE VALVULA		
50	7414522	2	VALVE BUSH	CASQUILLO DE VALVULA		1
70	7021980	2	SPRING SUPPORT	PLATILLO DE RESORTES		
100	10015474	1	LID	TAPA		
110	10015473	1	LID	TAPA		
140	10015533	2	RESTRICTOR PIN	BULON ESTRANGULADOR		1
150	4600169	4	CYLINDER SCREW ISO 4762 M12X90 10.9	TORNILLO CILINDRICO		
160	4043164	4	CYLINDER SCREW ISO 4762 M12X35 10.9	TORNILLO CILINDRICO		
170	749072914	1	PRESSURE SPRING	MUELLE COMPRESION		
200	7021984	2	TAPER	CONO		1
210	10015472	2	GUIDE	GUIA		1
220	5616117	4	PRESSURE SPRING	MUELLE COMPRESION		
230	7021984	2	TAPER	CONO		1
250	10015471	2	SCREW PLUG	TORNILLO DE CIERRE		
300	7021767	1	SHUTTLE VALVE	VALVULA SELECTORA		2
310	7370432	1	SCREW PLUG	TORNILLO DE CIERRE		
320		1	SCREW PLUG ⇨ ❑ 760	TORNILLO DE CIERRE		
350	5611648	1	VALVE	VALVULA		2
420	7368507	1	SCREW PLUG	TORNILLO DE CIERRE		
480	4000379	2	HEX NUT M6	TUERCA HEXAGONAL		
490	4000363	2	CYLINDER SCREW ISO 4762 M6X100 10.9	TORNILLO CILINDRICO		
999	10015470	1	SEAL KIT	JUEGO JUNTAS		1

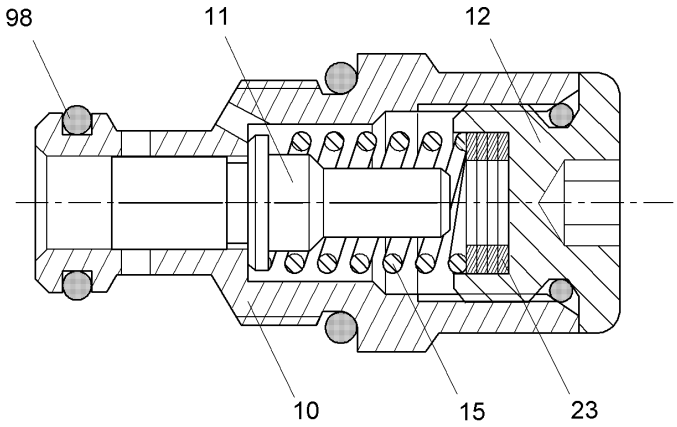

Pos.	Item	Quantity	Description	Descripción	Serie	K
10		1	BUSH	CASQUILLO		1
11		1	PISTON	EMBOLO		1
12		1	SCREW PLUG M18X1,5X11,5	TORNILLO DE CIERRE		1
15		1	PRESSURE SPRING	MUELLE COMPRESION		
23		5	WASHER S= 0,50	ARANDELA		
98	9266231	1	SEAL KIT SHUTTLE VALVE ⇨ ❑ 86	JJ VÁLVULA MÚLTIPLES VÍAS		1

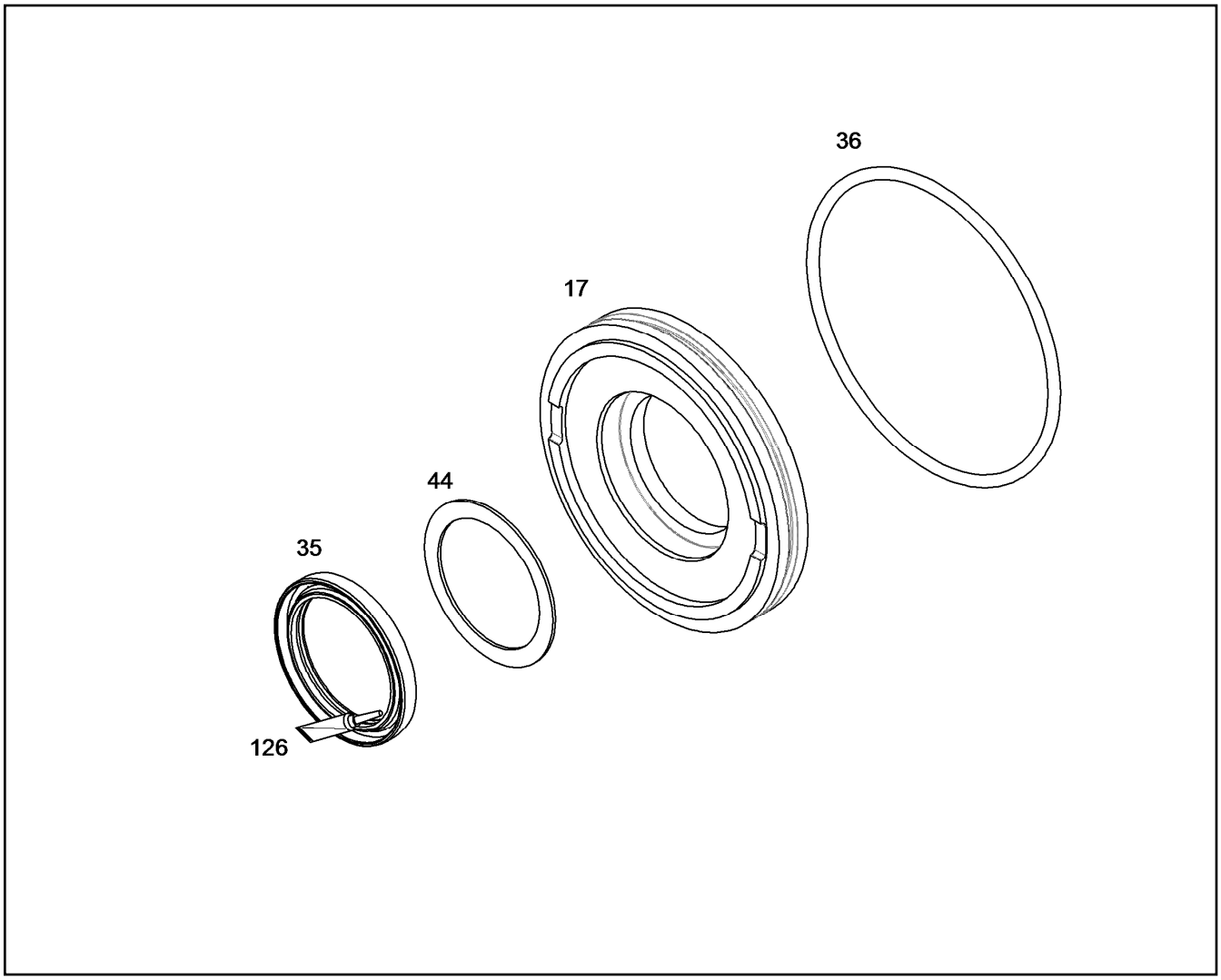

Pos.	Item	Quantity	Description	Descripción	Serie	K
17		1	CLOSING RING	ANILLO DE CIERRE		
35		1	ROTARY SHAFT LIP SEAL 50X65X7,0	RETEN RADIAL		1
36		1	O-RING	JUNTA TORICA		1
44		1	SHIM RING DIN 988 55,1X 65X 1,5	ARANDELA AJUSTE		
126	8655008	1	GREASE	GRASA		

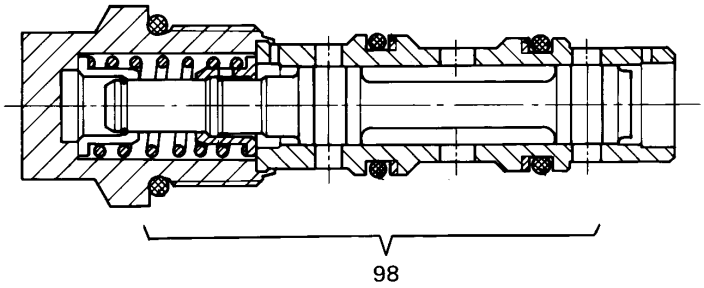

Pos.	Item	Quantity	Description	Descripción	Serie	K
98	9266232	1	SEAL KIT SHUTTLE VALVE ⇨ ❑ 87	JJ VÁLVULA MÚLTIPLES VÍAS		1

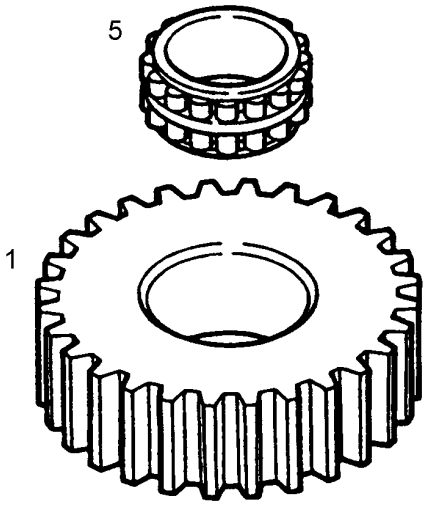

Pos.	Item	Quantity	Description	Descripción	Serie	K
1		1	PLANET WHEEL M=5 Z=30	PIÑON PLANETARIA		
5	7610039	1	CYLINDRICAL ROLLER BEARING	RODAMIENTO RODILLO CILINDR		1

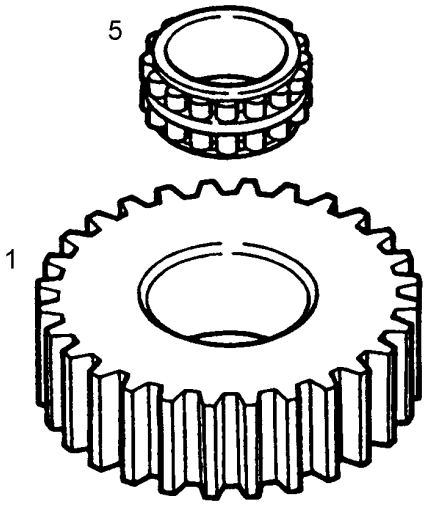

Pos.	Item	Quantity	Description	Descripción	Serie	K
1		1	PLANET WHEEL M=5 Z=33	PIÑON PLANETARIA		
5	7610034	1	ROLLER BEARING DIN 5412 RNN 60X 83,83	COJINETE DE RODILLOS P.CIL.		1

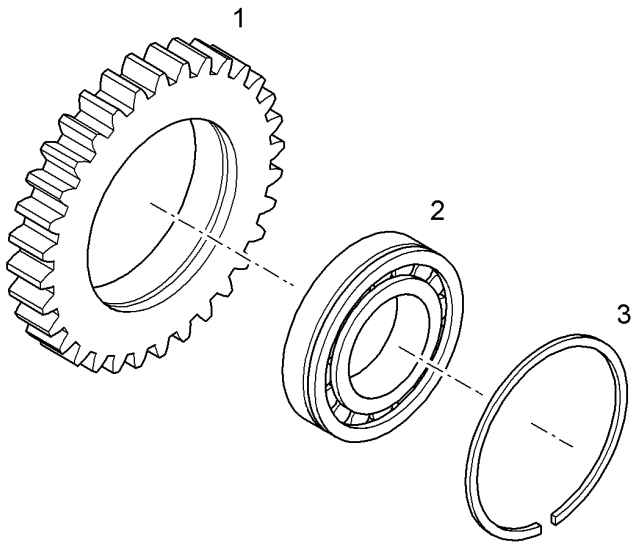

Pos.	Item	Quantity	Description	Descripción	Serie	K
1		1	PLANET WHEEL M=3,75 Z=34	PIÑON PLANETARIA		
2	7610091	1	BEARING	COJINETE		1
3	747191901	1	SNAP RING DIN 5417 SP 90	ANILLO MUELLE		

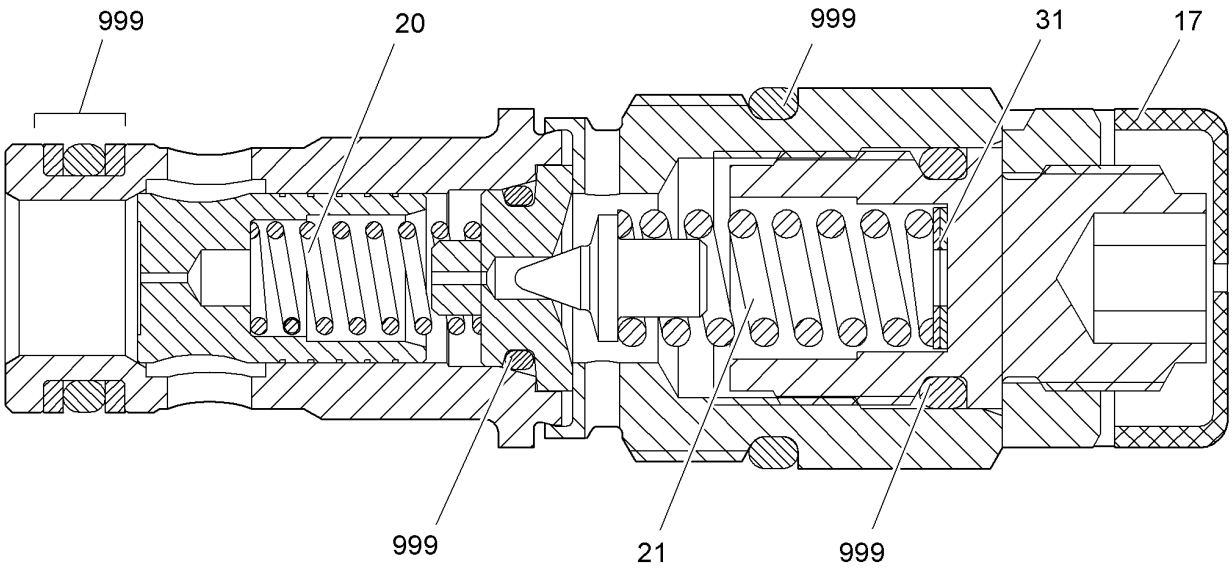

Pos.	Item	Quantity	Description	Descripción	Serie	K
17		1	PROTECTING CAP	CAPUCHON DE PROTECCION		
20		1	PRESSURE SPRING 6,8/1,2X20/6	MUELLE COMPRESION		
21		1	PRESSURE SPRING 2,25X8,00X23,00	MUELLE COMPRESION		
31		1	WASHER S= 0,50	ARANDELA		
999	9266089	1	SEALING SET VALVE ⇨ ❑ 85	JJ VÁLVULA		1

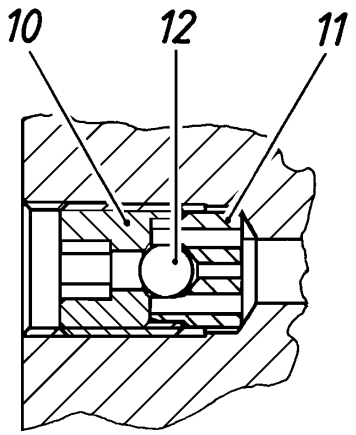

Pos.	Item	Quantity	Description	Descripción	Serie	K
10	9269686	1	VALVE SLEEVE	CASQUILLO DE VALVULA		1
11	9270599	1	VALVE COVER	TAPA DE VALVULA		1
12	4980490	1	BALL DIN 5401 3,96 III	ESFERA		1

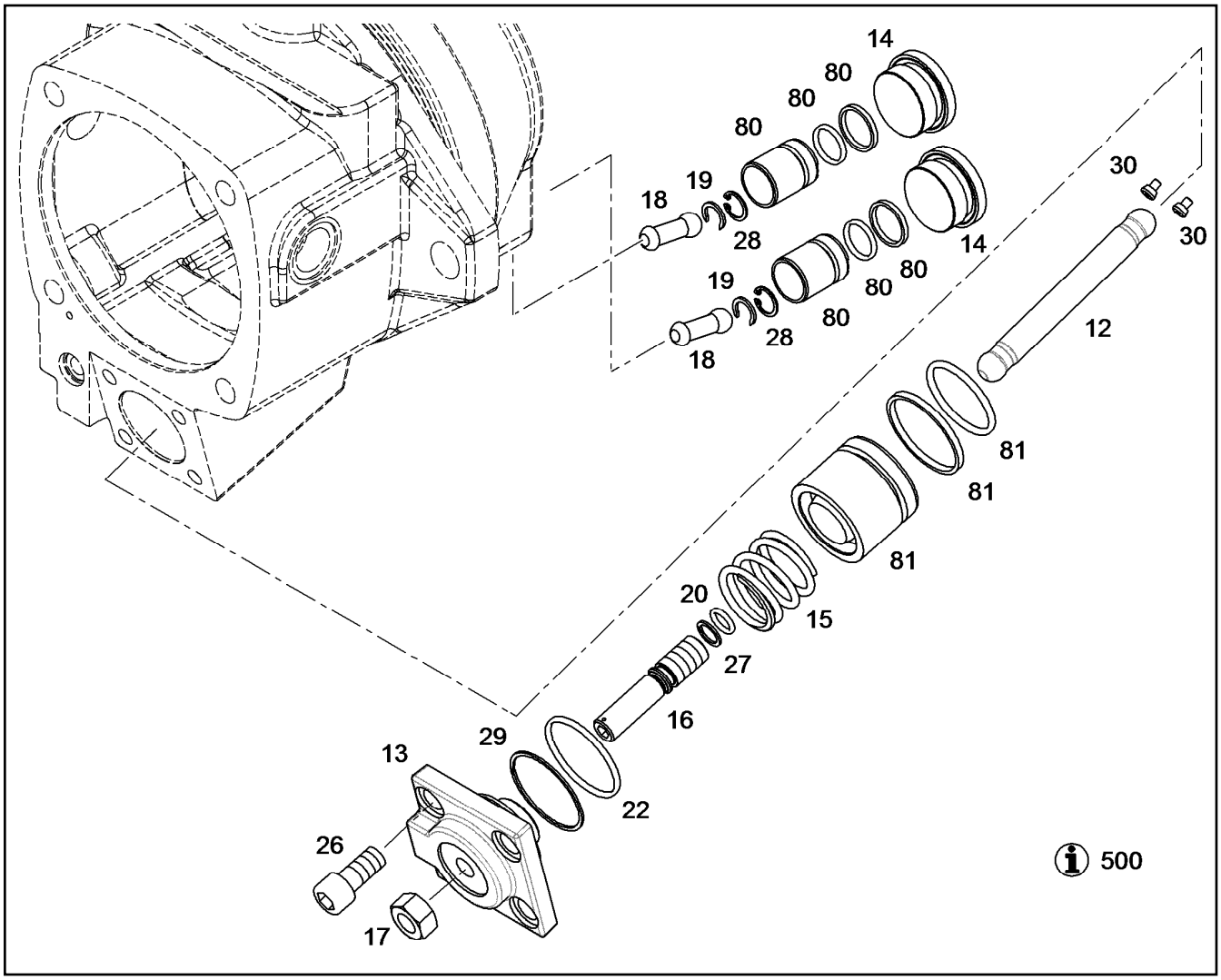

Pos.	Item	Quantity	Description	Descripción	Serie	K
12	9278189	1	ADJUSTING LEVER	PALANCA AJUSTE		
13	9278190	1	LID	TAPA		
14	7361329	2	SCREW PLUG	TORNILLO DE CIERRE		
15	7381499	1	PRESSURE SPRING 5/37X54,5/5,4	MUELLE COMPRESION		
16	9880236	1	LIMIT STOP SCREW NG 165	TORNILLO TOPE		
17	4000420	1	HEX NUT M16	TUERCA HEXAGONAL		
18	9278653	2	LEVER	PALANCA		
19	9278553	2	CLAMPING RING	ANILLO DE APRIETE		
20	7380576	1	O-RING	JUNTA TORICA		1
22	7380979	1	O-RING	JUNTA TORICA		1
26	4043002	4	CYLINDER SCREW ISO 4762 M12X25 10.9	TORNILLO CILINDRICO		
27	7381949	1	BACK-UP RING CUT 13,5/18X1,4	ANILLO DE APOYO CERRADO		1
28	7381525	2	V-RING	ANILLOS EN V		
29	7381250	1	SUPPORTING RING	ANILLO SOPORTE		1
30	9880132	2	SCREW FMV 075 075	TORNILLO DE SEGURIDAD FMV		
80	9077412	1	REPAIR KIT FMV 165 ⇨ ❑ 81	JR (PISTÓN AJUSTE)		2
81	9077481	1	REPAIR KIT FMV 165 ⇨ ❑ 82	JR (PISTÓN AJUSTE)		2
500	9278153	1	TABLE ORDER	TABLA		

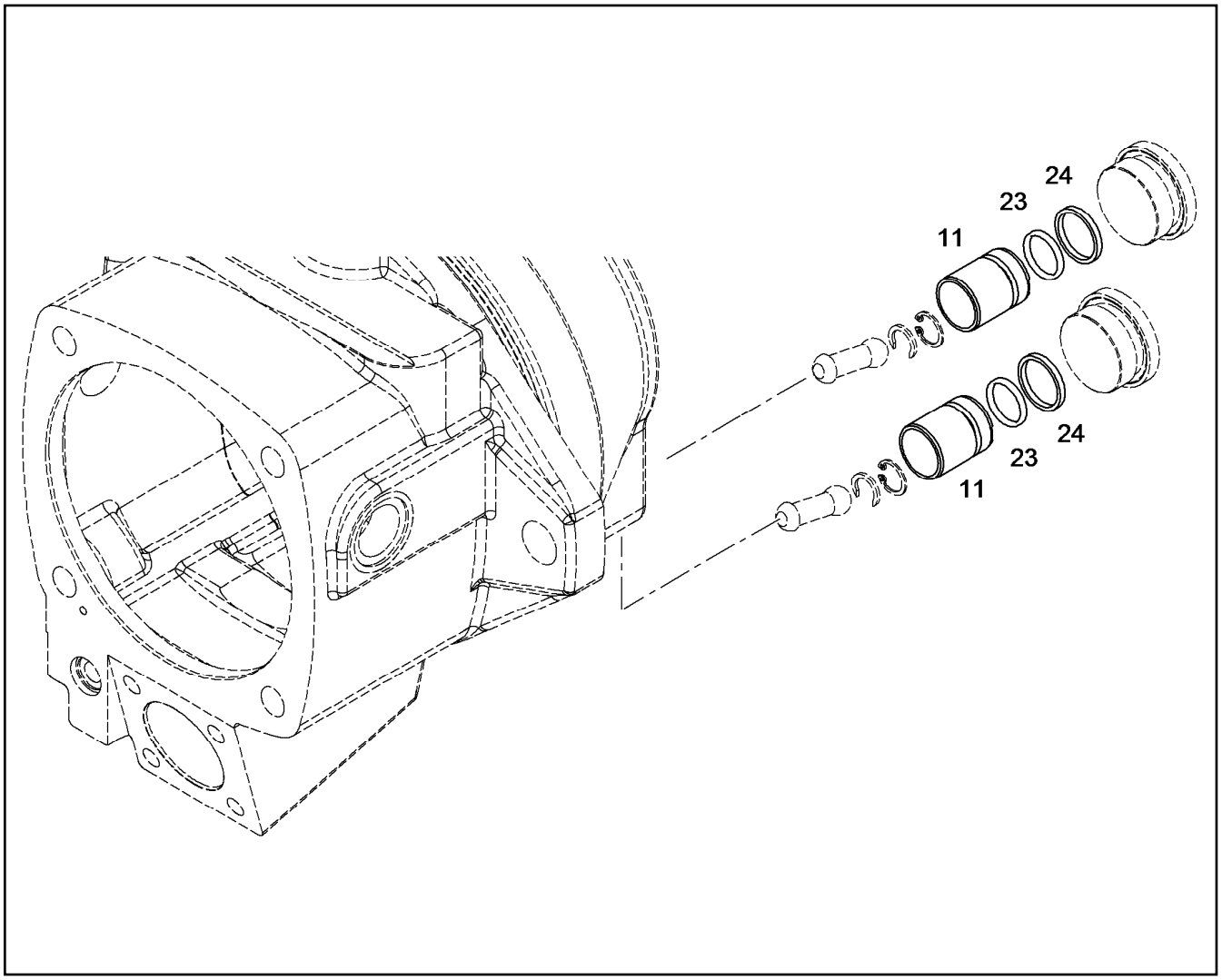

Pos.	Item	Quantity	Description	Descripción	Serie	K
11		1	ADJUSTING PISTON	CILINDRO TRANSPORTADOR		
23	7380866	1	O-RING	JUNTA TORICA		1
24	7381501	1	TURCON GLYD RING 16,5X26X3,2	ANILLO GLYD TURCON		1

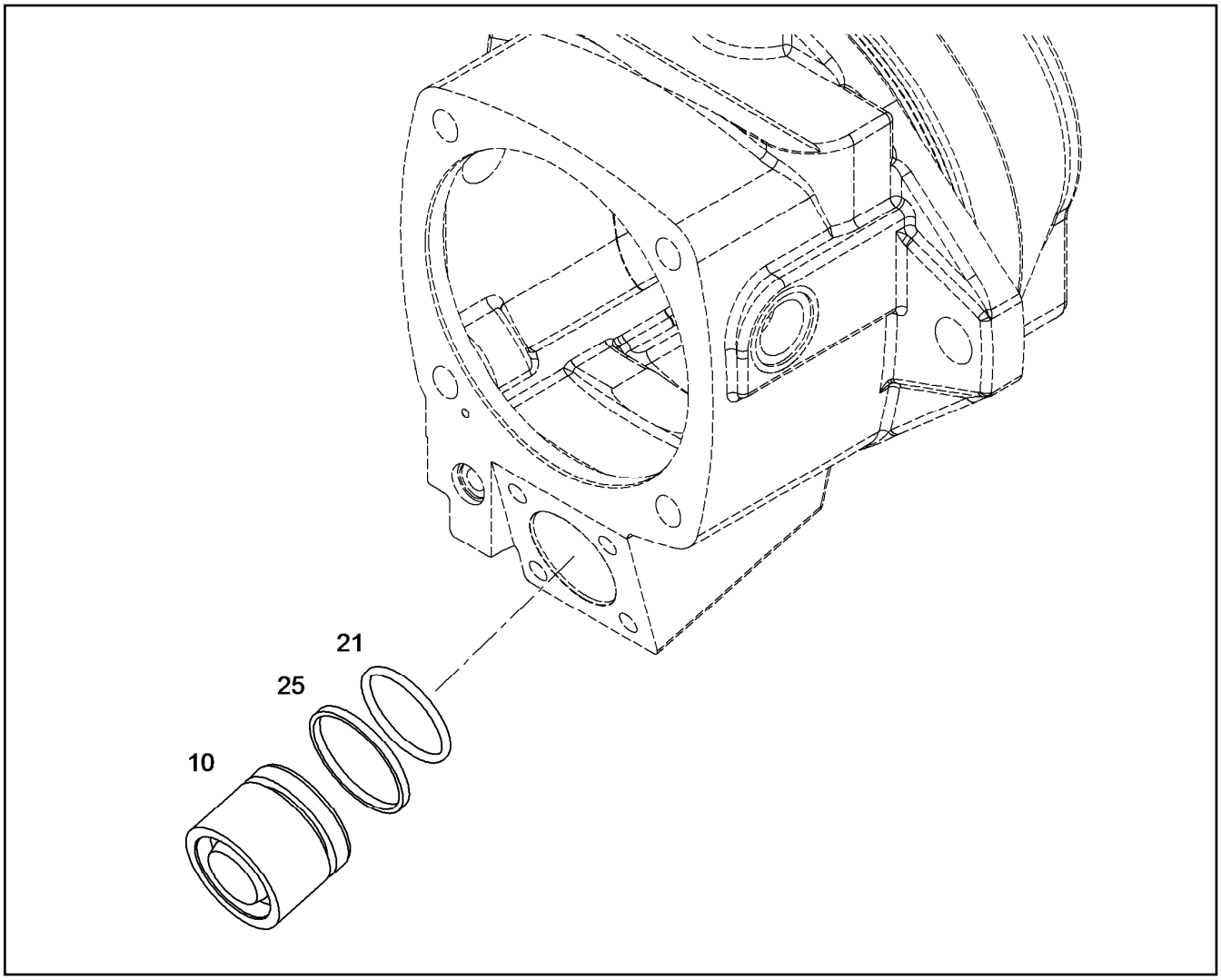

Pos.	Item	Quantity	Description	Descripción	Serie	K
10		1	SPOOL	PISTON DE MANDO		
21	7380983	1	O-RING	JUNTA TORICA		1
25	7380982	1	GLYD RING 52X41X4,2	ANILLO GLYD		2

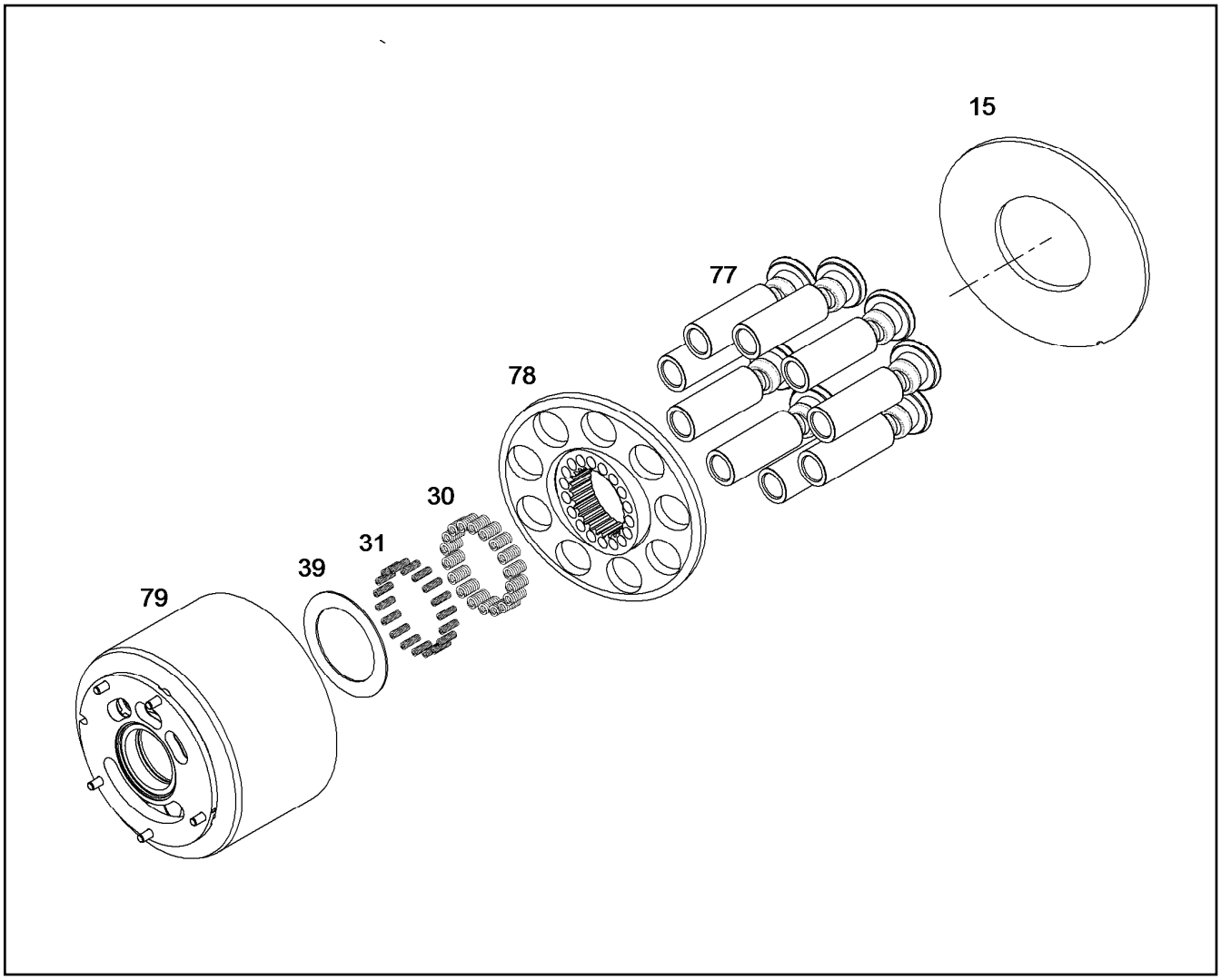

Pos.	Item	Quantity	Description	Descripción	Serie	K
15	9268999	1	SLIDING DISC	DISCO DE DESLIZAMIENTO		
30	9268776	26	PRESSURE SPRING 5,6/1,4X192/8	MUELLE COMPRESION		
31	10011098	26	PRESSURE SPRING 0,8X3,06X20.33X1	MUELLE COMPRESION		
39	9885920	1	WASHER SET	JUEGO LUNAS		
77	9880604	1	RK PISTON WITH GUIDE SHOE NG 165 ⇨ ❑ 186	JR ÉMBOLO C.PATÍN DESL.		1
78	9888119	1	REPAIR KIT NG 165 ⇨ ❑ 190	JR (RZ-ESF.+PL)		2
79	9888122	1	RK CYLINDER+CONTROL PLATE ⇨ ❑ 191	JR CIL.+PLACA MANDO		2

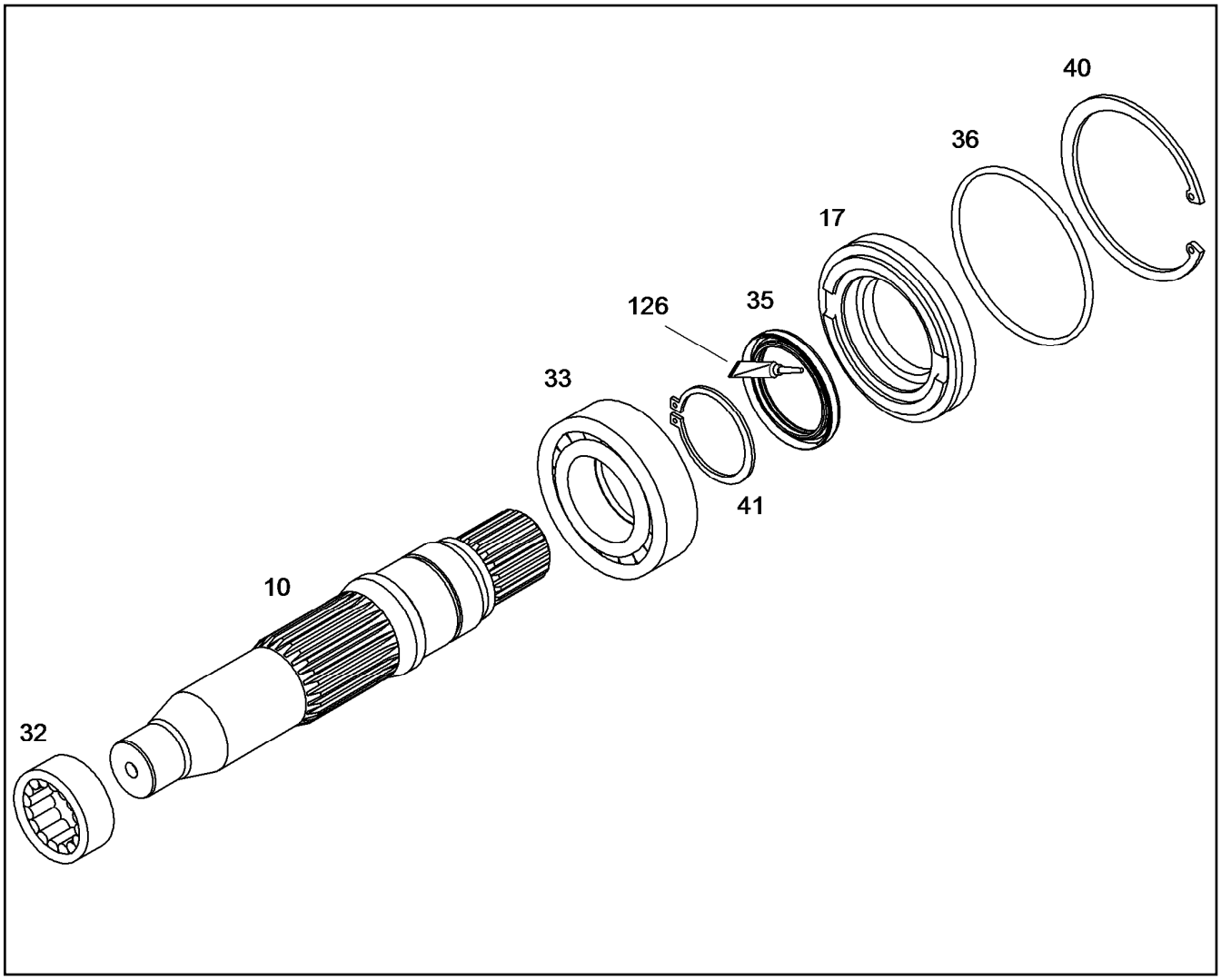

Pos.	Item	Quantity	Description	Descripción	Serie	K
10		1	DRIVING SHAFT	EJE MOTOR		
17		1	CLOSING RING	ANILLO DE CIERRE		
32		1	CYLINDRICAL ROLLER BEARING	RODAMIENTO RODILLO CILINDR		1
33		1	CYLINDRICAL ROLLER BEARING	RODAMIENTO RODILLO CILINDR		1
35		1	ROTARY SHAFT LIP SEAL 50X65X7,0	RETEN RADIAL		1
36		1	O-RING 113.89X3.53	JUNTA TORICA		1
40		1	LOCKING RING DIN 472 120 X4	ANILLO SEGURIDAD		
41		1	LOCKING RING DIN 471 50 X2	ANILLO SEGURIDAD		
126	8655008	1	GREASE	GRASA		

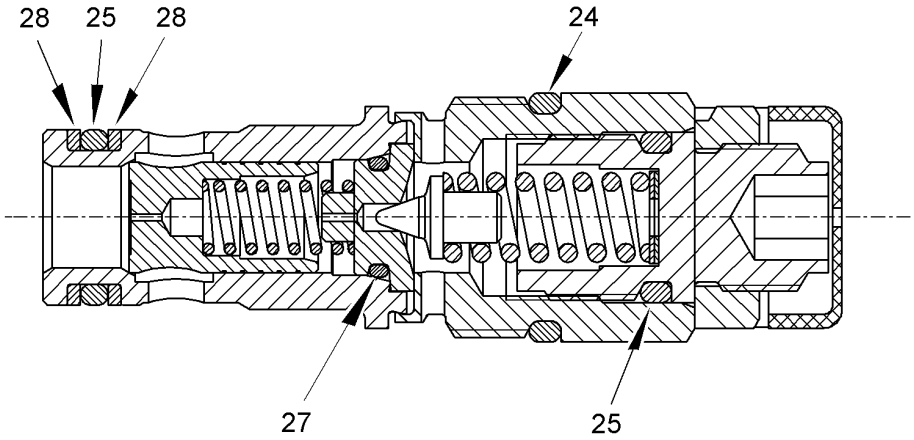

Pos.	Item	Quantity	Description	Descripción	Serie	K
24		1	O-RING DIN 3771 21,89X2,62	JUNTA TORICA		1
25		2	O-RING	JUNTA TORICA		1
27		1	O-RING	JUNTA TORICA		1
28		2	SUPPORTING RING	ANILLO SOPORTE		1

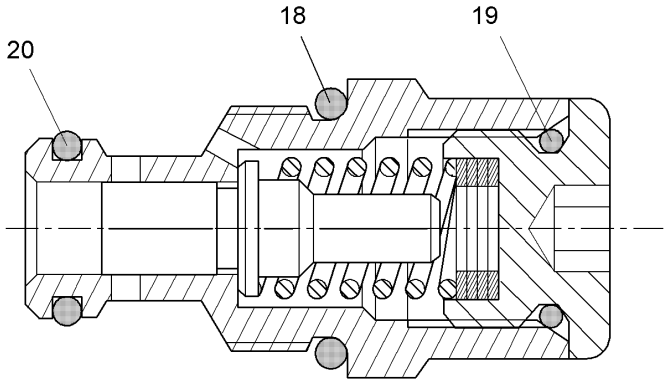

Pos.	Item	Quantity	Description	Descripción	Serie	K
18		1	O-RING	JUNTA TORICA		1
19		1	O-RING	JUNTA TORICA		1
20		1	O-RING	JUNTA TORICA		1

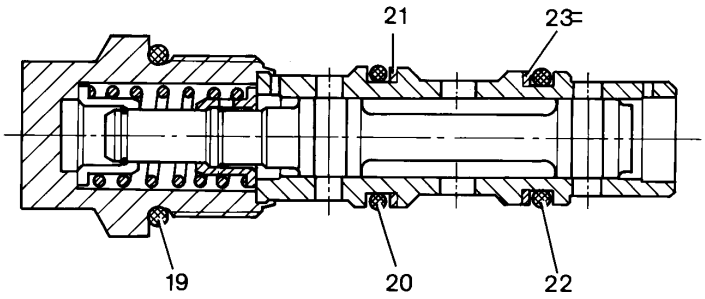

Pos.	Item	Quantity	Description	Descripción	Serie	K
19		1	O-RING	JUNTA TORICA		1
20		1	O-RING	JUNTA TORICA		1
21		1	SUPPORTING RING	ANILLO SOPORTE		1
22		1	O-RING	JUNTA TORICA		1
23		1	SUPPORTING RING	ANILLO SOPORTE		1

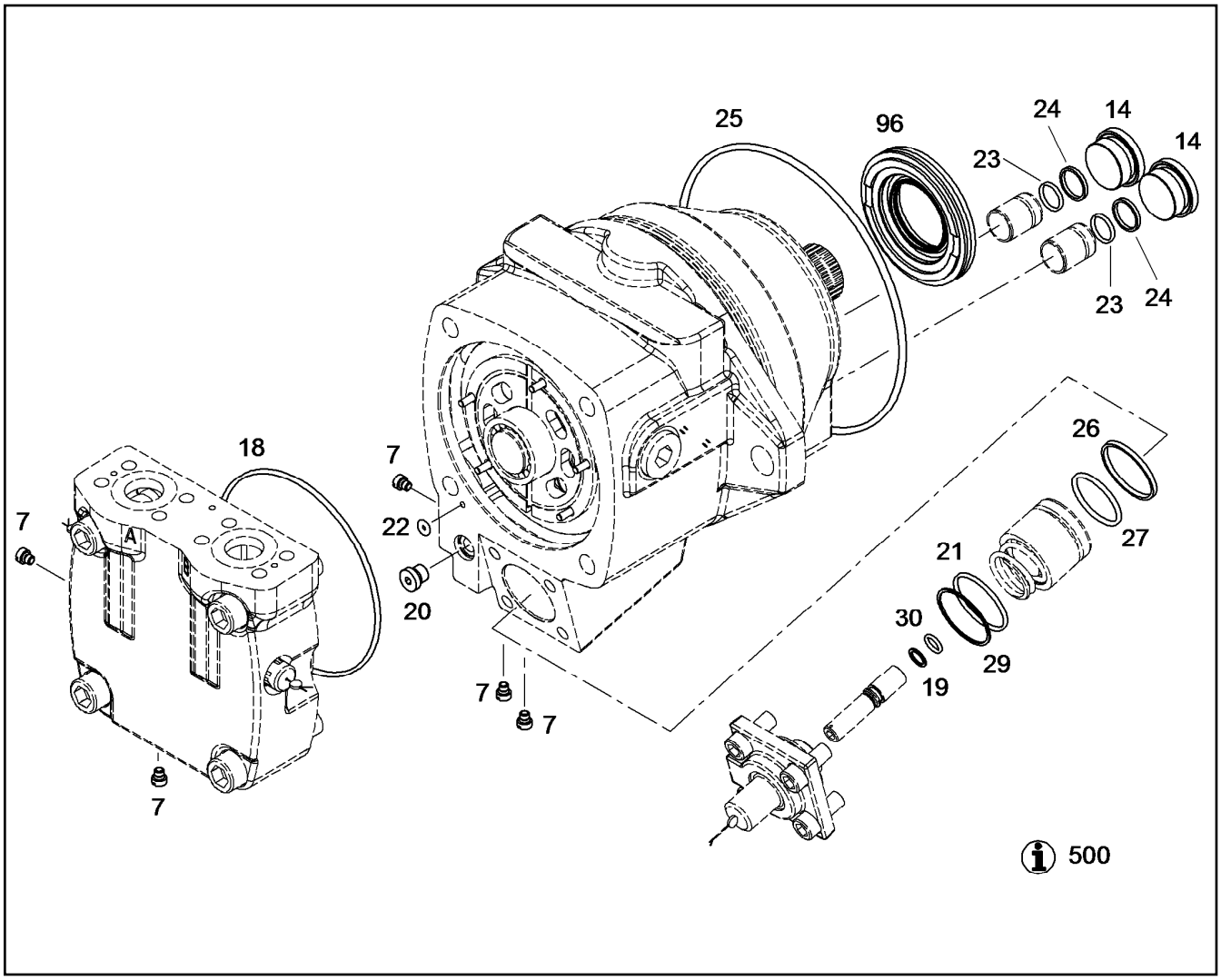

Pos.	Item	Quantity	Description	Descripción	Serie	K
7		5	SCREW PLUG M6X6 ⇨ ❑ 138	TORNILLO DE CIERRE		
14		2	SCREW PLUG	TORNILLO DE CIERRE		
18		1	O-RING	JUNTA TORICA		1
19		1	O-RING	JUNTA TORICA		1
20		1	SCREW PLUG ⇨ ❑ 760	TORNILLO DE CIERRE		
21		1	O-RING	JUNTA TORICA		1
22		1	O-RING	JUNTA TORICA		1
23		1	O-RING	JUNTA TORICA		1
24		2	TURCON GLYD RING 16,5X26X3,2	ANILLO GLYD TURCON		1
25		1	O-RING	JUNTA TORICA		1
26		1	GLYD RING 52X41X4,2	ANILLO GLYD		2
27		1	O-RING	JUNTA TORICA		1
29		1	SUPPORTING RING	ANILLO SOPORTE		1
30		1	BACK-UP RING CUT 13,5/18X1,4	ANILLO DE APOYO CERRADO		1
96	9268751	1	REPAIR KIT LOCK RING ⇨ ❑ 73	JR ARO CIERRE		2
500	9278153	1	TABLE ORDER	TABLA		

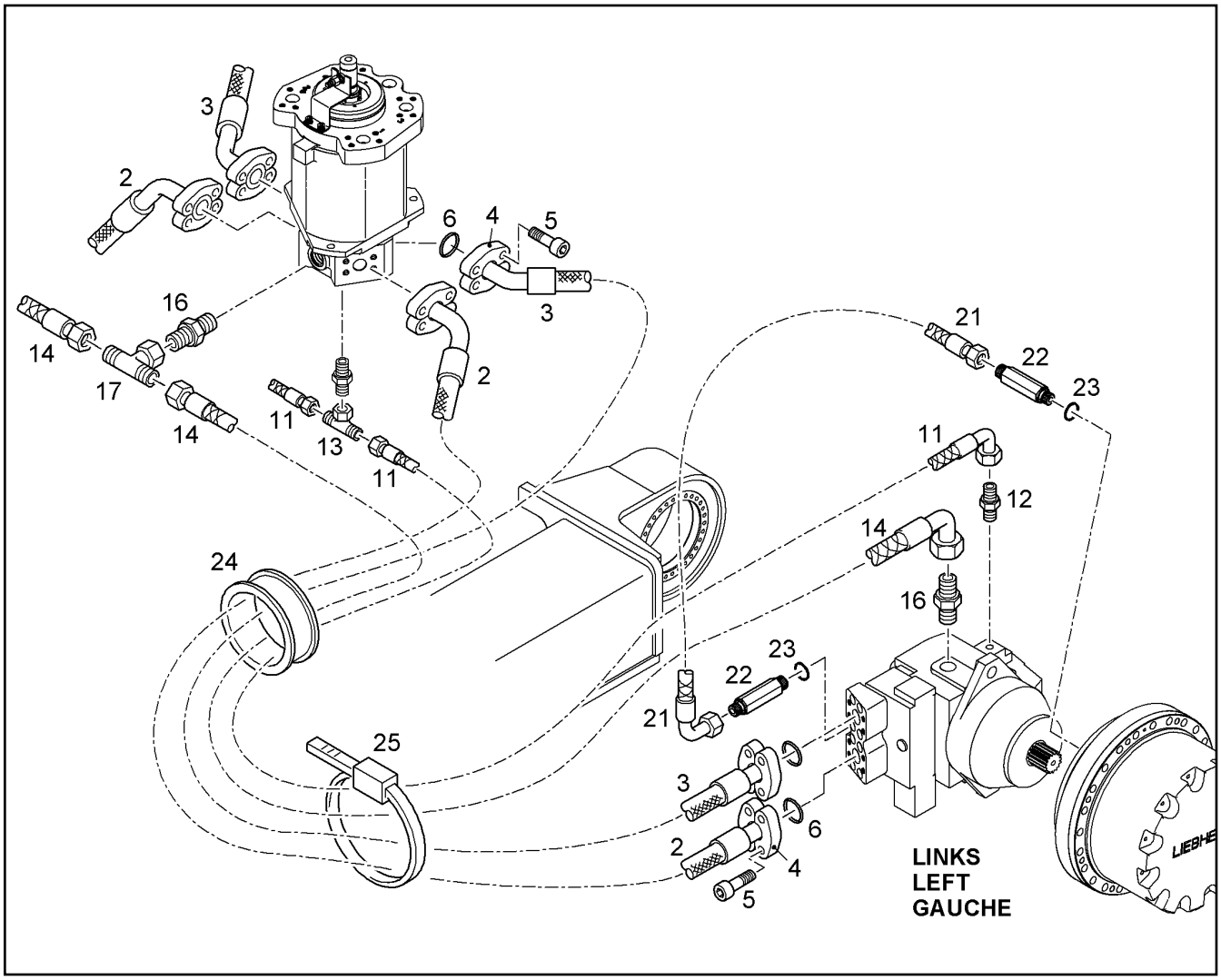

Pos.	Item	Quantity	Description	Descripción	Serie	K
2	5611369	2	HOSE	TUBO GOMA		2
3	5604252	2	HOSE	TUBO GOMA		2
4	10286361	16	FLANGE HALF	MITAD DE BRIDA		
5	4902327	32	CYLINDER SCREW ISO 4762 M14X45 10.9	TORNILLO CILINDRICO		
6	10290518	8	PLAIN COMPRESSION RING 45,05x3,40x2,8	ARO DE SECCION RECTANGULA		1
11	6718632	2	CONTROL HOSE	TUBO FLEX.MANDO		2
12	7003814	2	LUG GE 10L	ESPIGA		
13	7362101	1	LUG T 10L	ESPIGA		
14	10000380	2	HOSE	TUBO GOMA		2
16	7003800	3	SCREW FITTING GE 28L	ATORNILLAMIENTO		
17	7407122	1	SCREW FITTING ET 28L	ATORNILLAMIENTO		
21	7005047	2	CONTROL HOSE	TUBO FLEX.MANDO		2
22	9757423	4	LUG	ESPIGA		
23	5602583	4	SEALING RING DIN 3869 11,6X16,5X 1,5 -14-	JUNTA ANULAR		1
24	9358887	6	HOSE GUIDE	GUIA DE MANGUERA		1
25	7002480	4	CABLE TIE	BRIDAS		

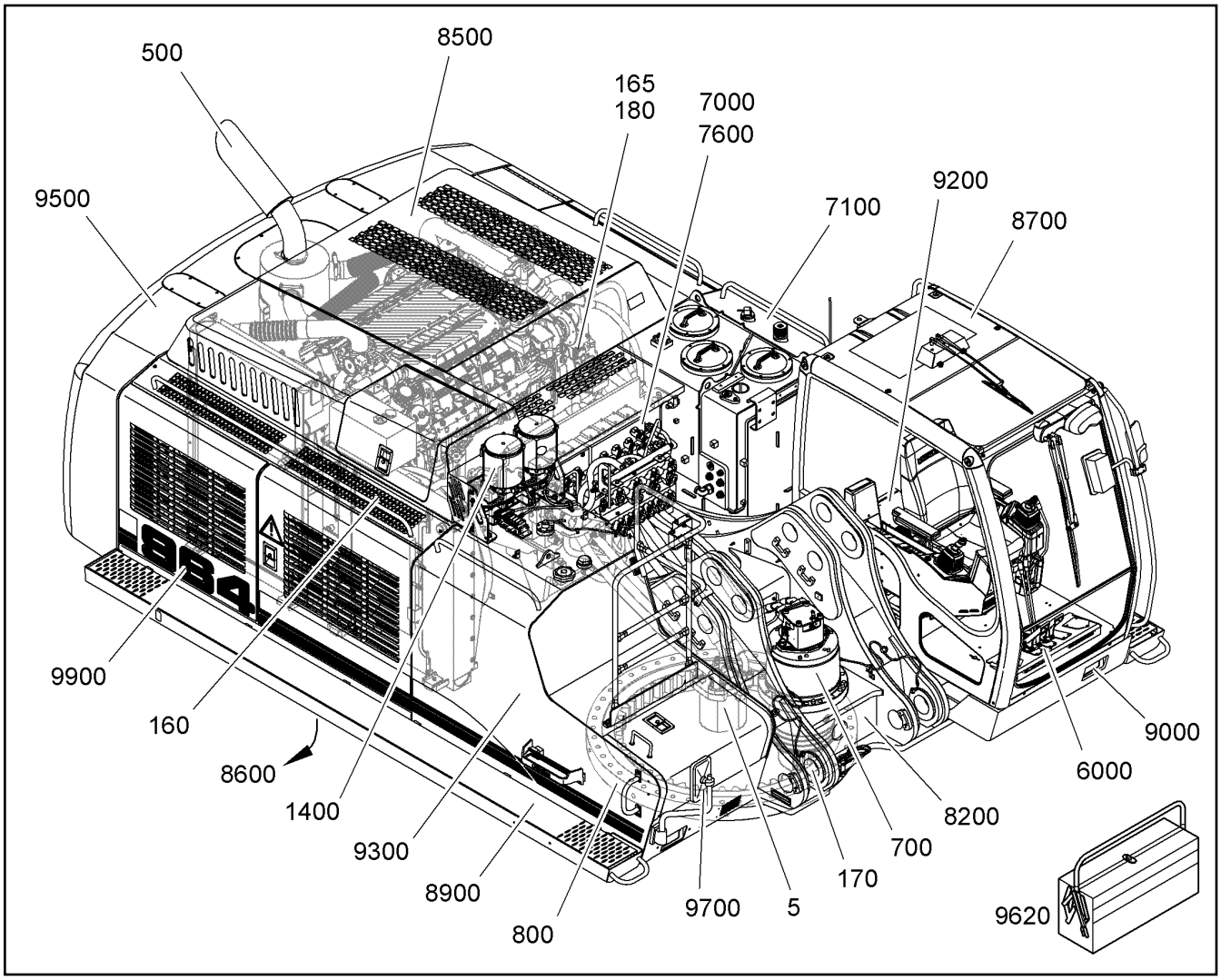

Pos.	Item	Quantity	Description	Descripción	Serie	K
5		1	CAM ⇨ ❑ 55	MONTAJE ELEMENTO ARRASTR		
160		1	RADIATOR BOX INSTALLATION ⇨ ❑ 100	MONTAJE CAJA RADIADOR		1
165		1	PUMPS BOX PARTS ⇨ ❑ 103	COMPART.BOMBA PIEZAS		1
170		1	ATTACHMENTS MOUNTING PARTS ⇨ ❑ 106	PIEZAS MONTAJE EQUIPAMIENT		1
180		1	HEATING HOSES INSTALLATION ⇨ ❑ 107	MONTAJE TUBOS FLEX.CALEF.		1
500		1	MOTOR INSTALLATION ⇨ ❑ 108	MOTOR MONTAJE		1
700		1	SWING GEAR INSTALLATION ⇨ ❑ 219	MONTAJE MEC. GIRO		1
800		1	SLEWING RING INSTALLATION ⇨ ❑ 241	MONTAJE CORONA ROTACIÓN		1
1400		1	CENTRALIZED LUBRICATION UPPER ⇨ ❑ 242	LUBR.CENTR.CARRO SUPERIO		1
6000		1	DRIVER STAND ⇨ ❑ 268	PUESTO DEL CONDUCTOR		
7000		1	HYDRAULIC INSTALLATION UPPER ⇨ ❑ 332	INST.HIDR.CARRO SUPERIOR		1
7100		1	HYDRAULIC TANK INSTALLATION ⇨ ❑ 381	MONTAJE DEPÓSITO HIDR.		1
7600		1	CONTROL VALVE INSTALLATION ⇨ ❑ 394	MONTAJE CORREDERA DISTR.		1

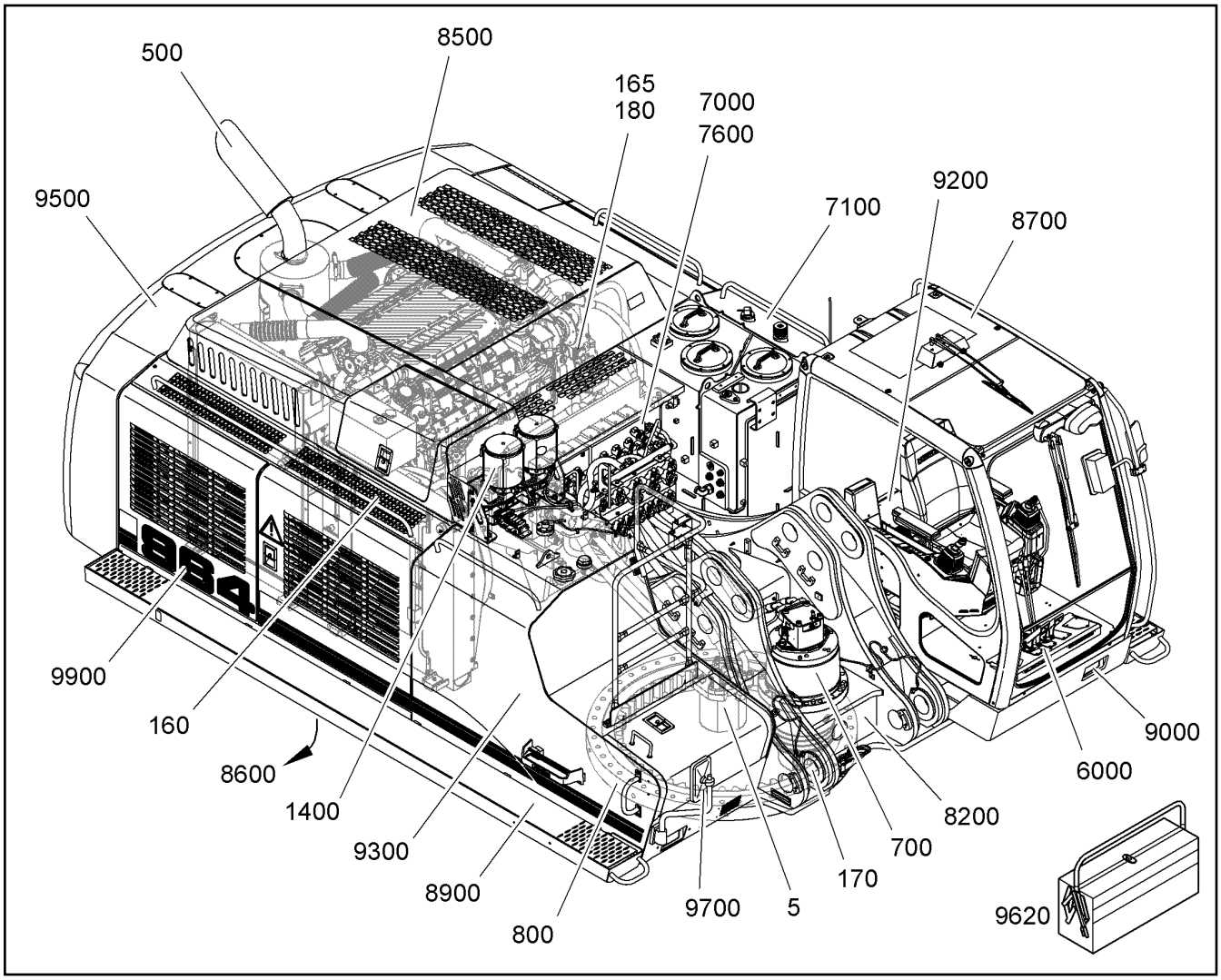

Pos.	Item	Quantity	Description	Descripción	Serie	K
8200		1	ROTATING DECK [M00030428]	PLATAFORMA GIRATORIA		1
8500		1	PANELLING ⇨ ❑ 413	REVESTIMIENTO		1
8600		1	LOWER COVERING ⇨ ❑ 465	CUBIERTA INF.		1
8700		1	CAB ⇨ ❑ 467	CABINA DEL CONDUCTOR		1
8900		1	GANGWAY ⇨ ❑ 493	PASILLO MALLA		1
9000		1	ELECTR.SYST.UPPERCARRIAGE ⇨ ❑ 494	INST.EL.CARRO SUPERIOR		1
9200		1	AIR CONDITION HOSES INSTALLAT. ⇨ ❑ 540	MONTAJE TUBOS FLEX. AIRE AC		1
9300		1	FUEL SYSTEM ⇨ ❑ 545	INSTALACION CARBURANTE		1
9500		1	COUNTERWEIGHT INSTALLATION ⇨ ❑ 549	MONTAJE LASTRE		1
9620		1	TOOL EQUIPMENT ⇨ ❑ 550	HERRAMIENTAS DE EQUIPAMIE		1
9700		1	OUTSIDE MIRROR ASSEMBLY ⇨ ❑ 556	MONTAJE RETROVISOR EXT.		
9900		1	SIGNS ⇨ ❑ 557	LETREROS		1

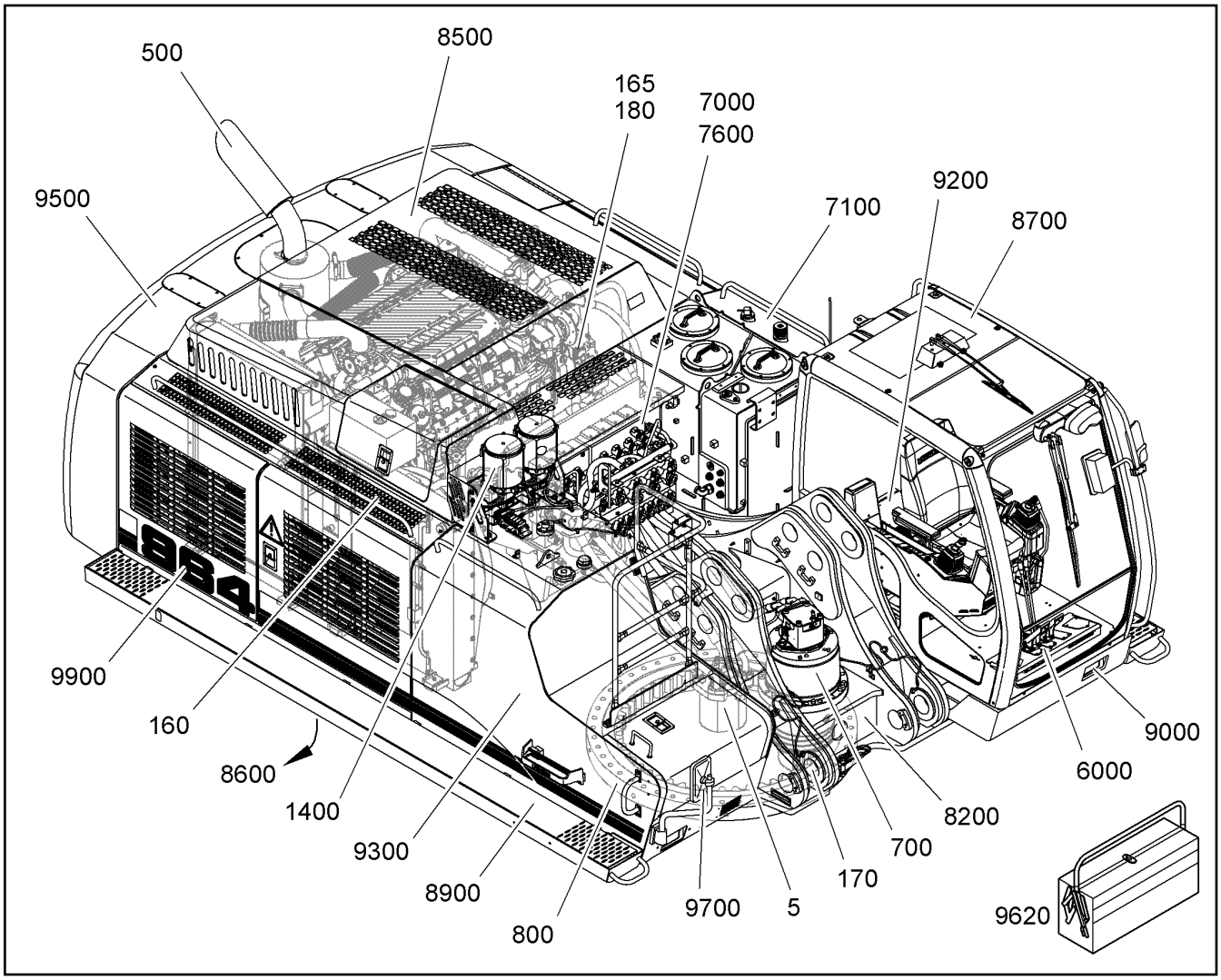

Pos.	Item	Quantity	Description	Descripción	Serie	K
5	9566869	1	CAM ⇨ ❑ 55	MONTAJE ELEMENTO ARRASTR		
165	10053008	1	PUMPS BOX PARTS ⇨ ❑ 103	COMPART.BOMBA PIEZAS		1
170	10395893	1	ATTACHMENTS MOUNTING PARTS ⇨ ❑ 106	PIEZAS MONTAJE EQUIPAMIENT		1
700	10053024	1	SWING GEAR INSTALLATION ⇨ ❑ 219	MONTAJE MEC. GIRO		1
1400	10076047	1	CENTRALIZED LUBRICATION UPPER ⇨ ❑ 242	LUBR.CENTR.CARRO SUPERIO		1
7000	10498537	1	HYDRAULIC INSTALLATION UPPER ⇨ ❑ 333	INST.HIDR.CARRO SUPERIOR		1
8500	10053036	1	PANELLING ⇨ ❑ 413	REVESTIMIENTO	-99998	1
8500	10498571	1	PANELLING ⇨ ❑ 428	REVESTIMIENTO	-99999	1
8600	10498574	1	LOWER COVERING ⇨ ❑ 466	CUBIERTA INF.	-99999	1
9620	10498152	1	TOOL EQUIPMENT ⇨ ❑ 550	HERRAMIENTAS DE EQUIPAMIE		1
9900	10498636	1	SIGNS ⇨ ❑ 561	LETREROS		1

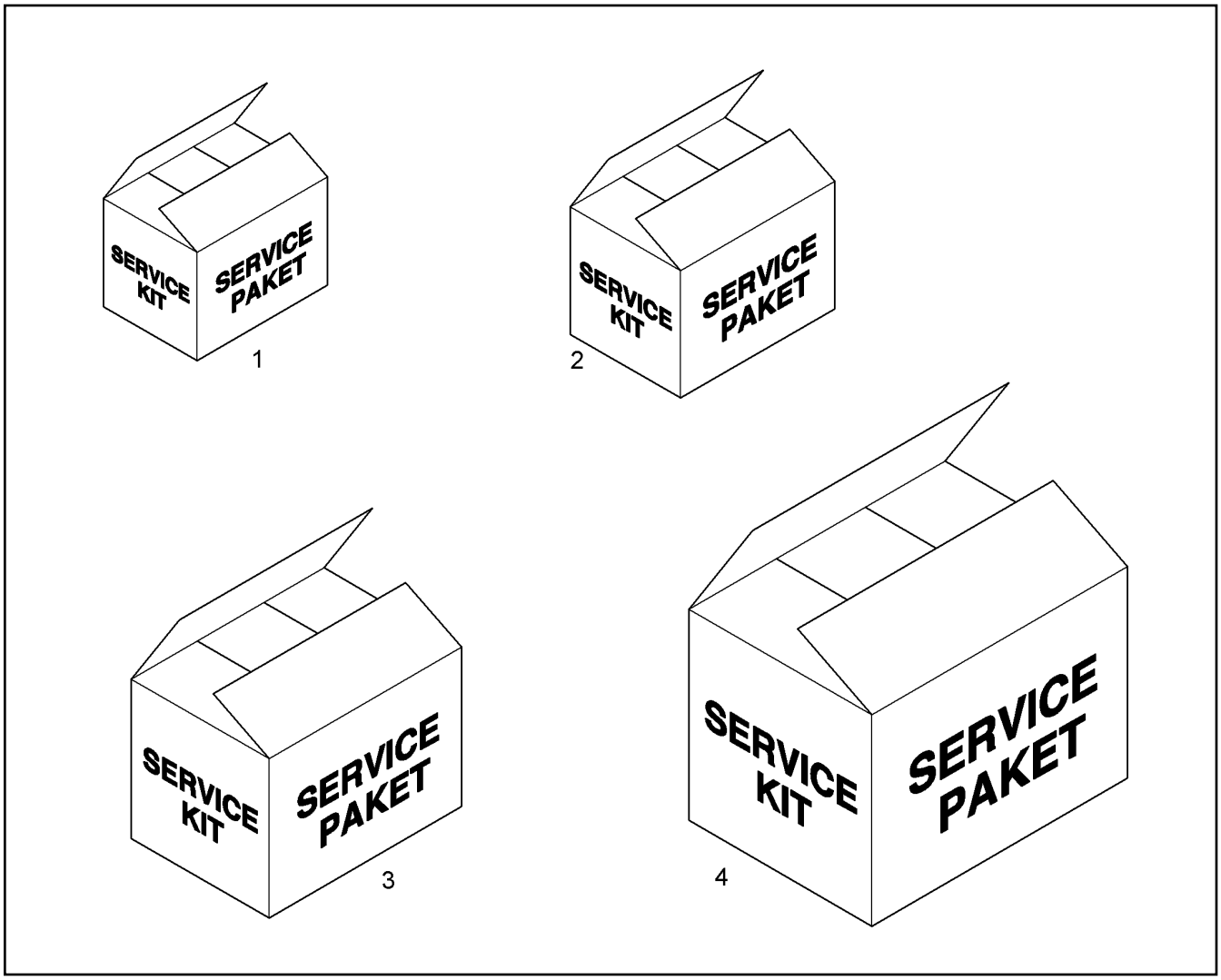

Pos.	Item	Quantity	Description	Descripción	Serie	K
1	10091073	1	SERVICE KIT ERSTE 500H ⇨ ❑ 95	PAQUETE SERV.		
2	10361907	1	SERVICE KIT 1000H ⇨ ❑ 97	PAQUETE SERV.		
3	10091074	1	SERVICE KIT 1500H/2500H ⇨ ❑ 96	PAQUETE SERV.		
4	10361908	1	SERVICE KIT ALLE 2000H ⇨ ❑ 98	PAQUETE SERV.		

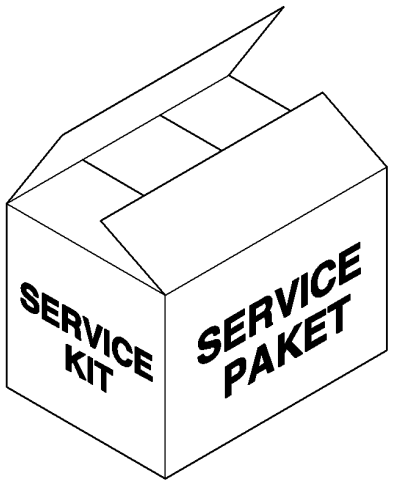

2 0105

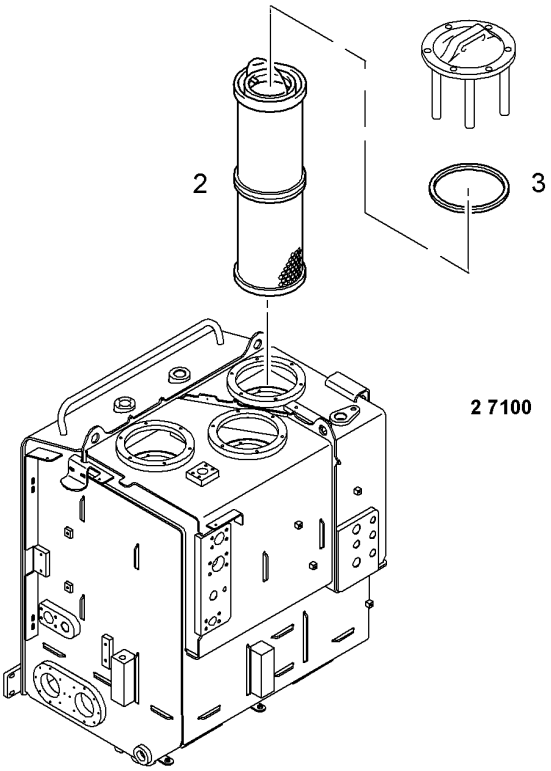

2 7100

Pos.	Item	Quantity	Description	Descripción	Serie	K
1	10091074	1	SERVICE KIT 1500H/2500H ⇨ ❑ 96	PAQUETE SERV.		
2	7373881	3	FIBRE GLASS FILTER INSERT ⇨ ❑ 391	CARTUCHO DE FILTRO FIBRAVI		1
3	7368993	3	SEAL	JUNTA		1

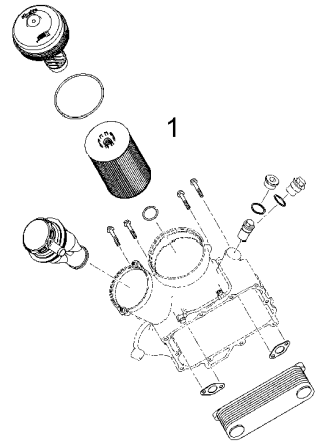

3 1305

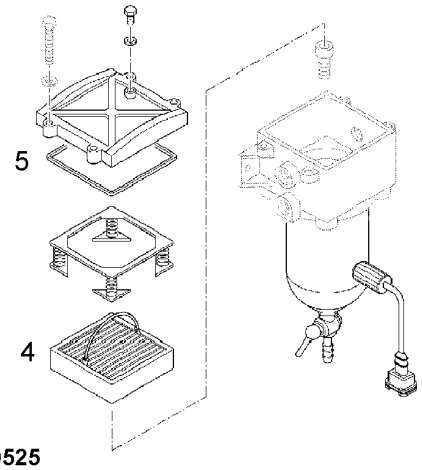

2 0525

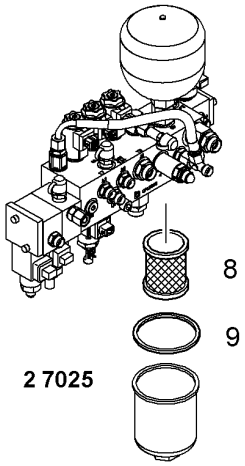

2 7025

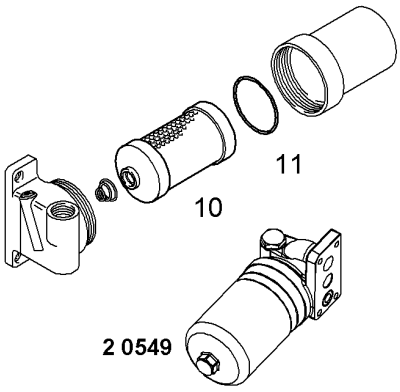

2 0549

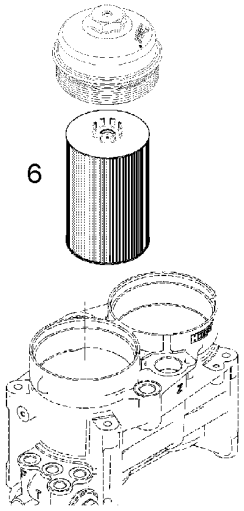

3 2010

Pos.	Item	Quantity	Description	Descripción	Serie	K
1	10044373	2	OIL FILTER INSERT 17µ	CARTUCHO FILTRO ACEITE		
4	553183708	1	FILTER ELEMENT	ELEMENTO FILTRADOR		1
5	10294171	1	LID SEAL	JUNTA TAPA DE BORNES		1
6	10289138	2	FUEL FILTER INSERT PRE-ASS. 3-5µ BEI 98	PREMONT. CARTUCHO FILTRO		
8	10037617	1	FILTER INSERT	CARTUCHO DE FILTRO		1
9	7264028	1	O-RING	JUNTA TORICA		1
10	10220705	1	FILTER ELEMENT	ELEMENTO FILTRADOR		1
11	10220707	1	O-RING 78,97X3,53	JUNTA TORICA		1

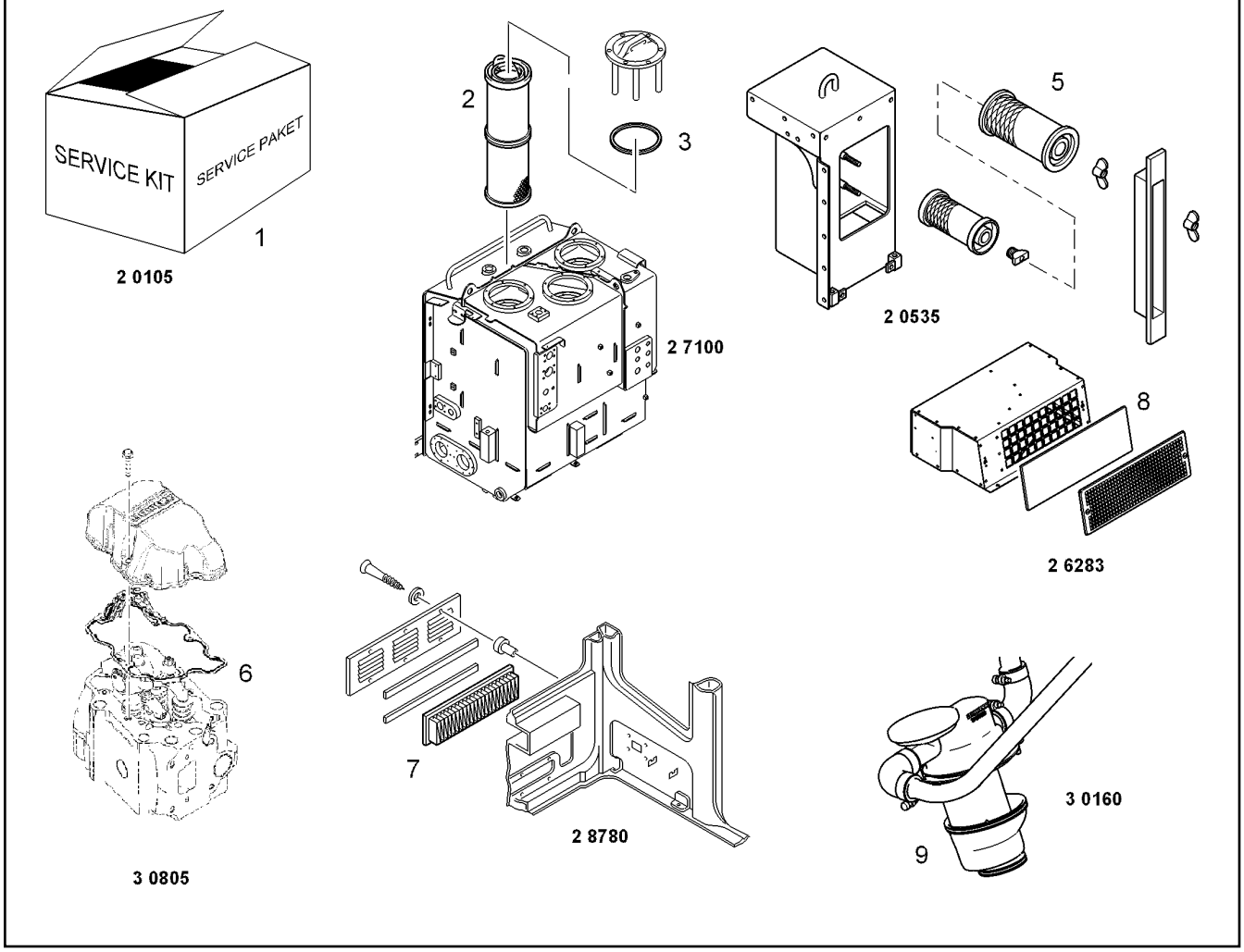

Pos.	Item	Quantity	Description	Descripción	Serie	K
1	10091074	1	SERVICE KIT 1500H/2500H ⇨ ❑ 96	PAQUETE SERV.		
2	7373881	3	FIBRE GLASS FILTER INSERT ⇨ ❑ 391	CARTUCHO DE FILTRO FIBRAVI		1
3	7368993	3	SEAL	JUNTA		1
5	5604682	2	MAIN ELEMENT	ELEMENTO PRINCIPAL		1
6	9079885	8	SEAL	JUNTA		
7	7028951	1	AIR FILTER	FILTRO DEL AIRE		1
8	10022770	1	FILTER MAT	TEJIDO DEL FILTRO		1
9	10123751	2	FILTER INSERT 4µm	CARTUCHO DE FILTRO		1

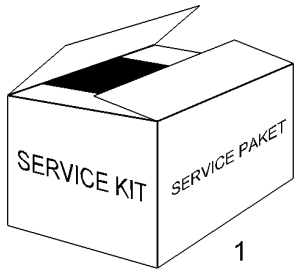

2 0105

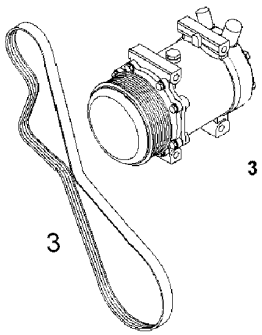

3 3400

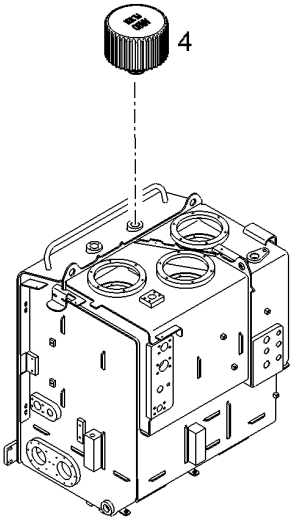

2 7100

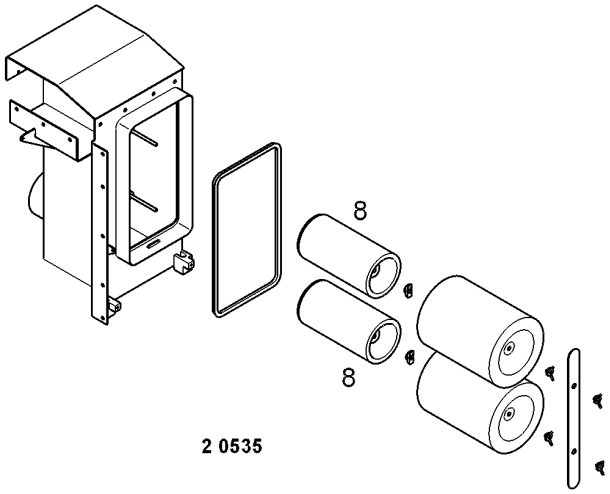

2 0535

Pos.	Item	Quantity	Description	Descripción	Serie	K
1	10361907	1	SERVICE KIT 1000H ⇨ ❑ 97	PAQUETE SERV.		
3	4981124	1	RIPPENRIEMEN DIN 7867 8 PK 1890	CORREA DENTADA		2
4	10222393	1	AERATION FILTER ⇨ ❑ 392	FILTRO AIREAR		1
8	5604683	2	SAFETY ELEMENT	ELEMENTO DE SEGURIDAD		1

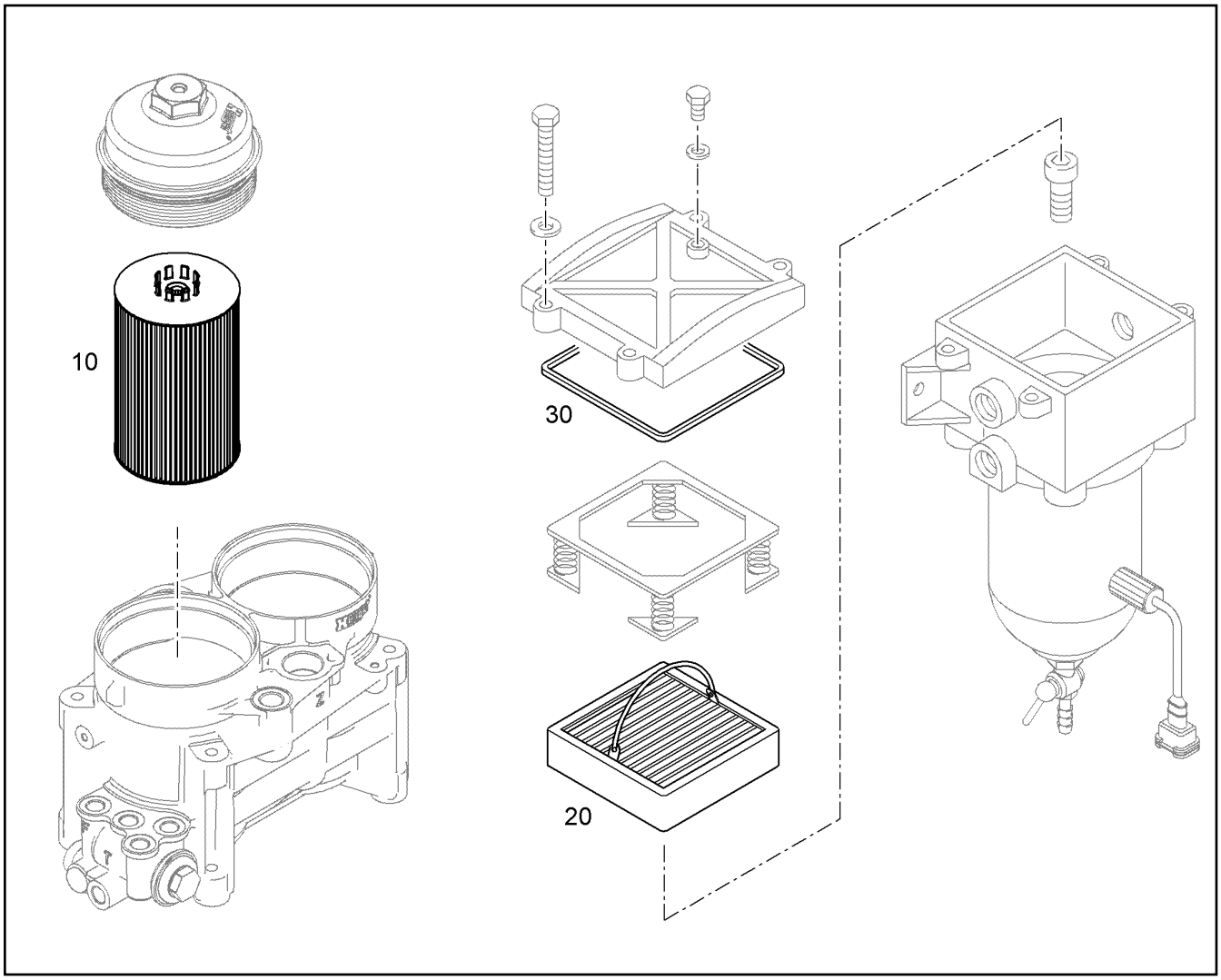

Pos.	Item	Quantity	Description	Descripción	Serie	K
10	10289138	8	FUEL FILTER INSERT PRE-ASS. 3-5µ BEI 98	PREMONT. CARTUCHO FILTRO		
20	553183708	4	FILTER ELEMENT	ELEMENTO FILTRADOR		1
30	10294171	4	LID SEAL	JUNTA TAPA DE BORNES		1

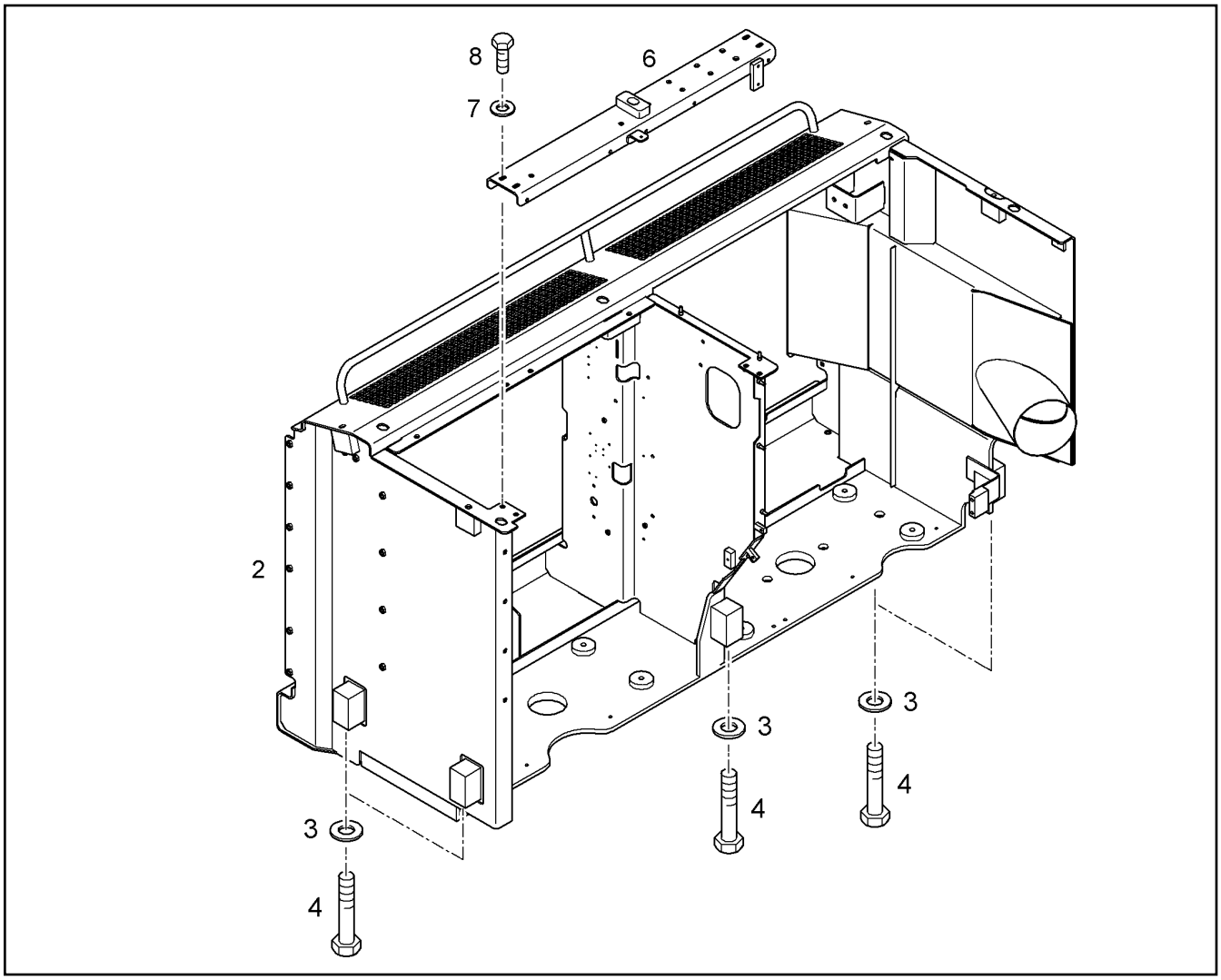

Pos.	Item	Quantity	Description	Descripción	Serie	K
2	10358600	1	RADIATOR BOX	CAJA DEL REFRIGERADOR		1
3	9918229	5	WASHER 20,5/34X5	ARANDELA		
4	10425599	5	HEX BOLT ISO 4014 M20X220 10.9 FLZN 100	TORNILLO DE CABEZA HEXAGO		
6	10058506	1	U-PLATE	CHAPA EN U		
7	10289804	4	WASHER ISO 7089 12 300HV	ARANDELA		
8	4600366	4	HEX BOLT ISO 4017 M12X40 10.9 A3C	TORNILLO DE CABEZA HEXAGO		

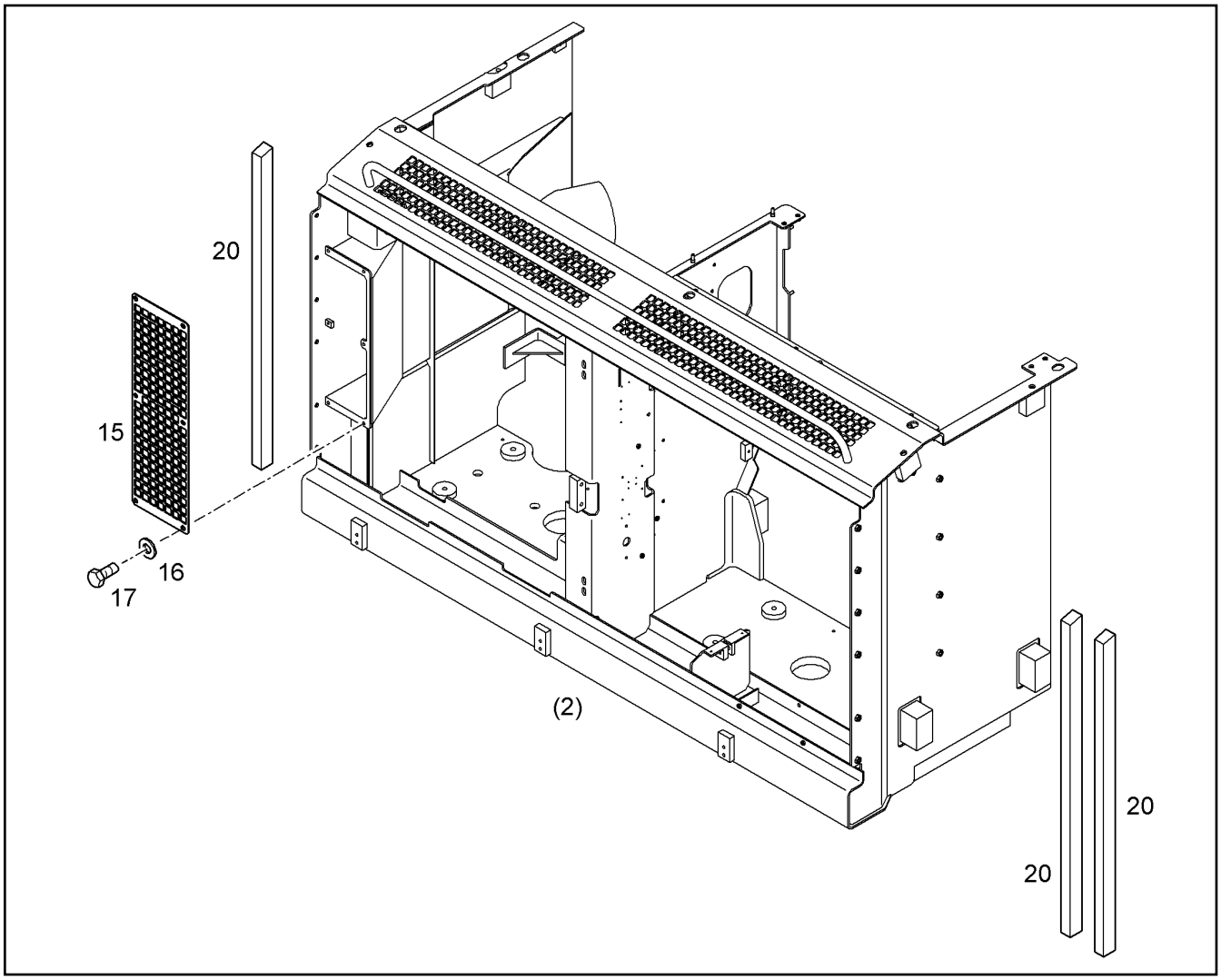

Pos.	Item	Quantity	Description	Descripción	Serie	K
15	10067947	1	SPARE HOLE PLATE	CHAPA PERFORADA CUADRAD		1
16	4202002	6	WASHER DIN 433 8,4 ST A3C	ARANDELA		
17	4001606	6	HEX BOLT ISO 4017 M8X16 10.9 A2C	TORNILLO DE CABEZA HEXAGO		
20	10294466	3	PROFILE	PERFIL		

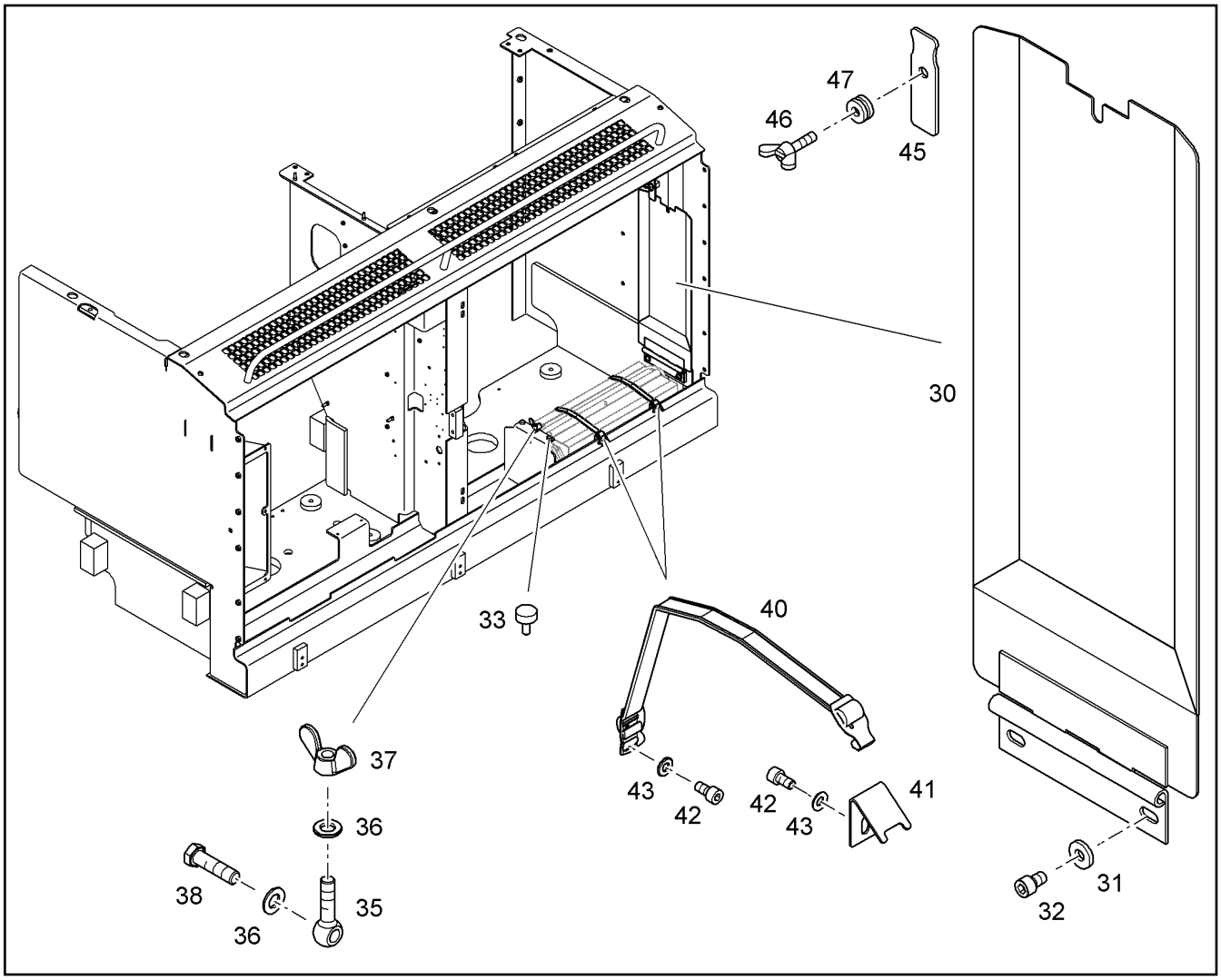

Pos.	Item	Quantity	Description	Descripción	Serie	K
30	10096670	1	COVER TOOL BOX	TAPA CAJA DE HERRAMIENTAS		
31	4000505	2	WASHER S=4	ARANDELA		
32	4901606	2	CYLINDER SCREW ISO 4762 M10X16 10.9	TORNILLO CILINDRICO		
33	5004748	2	BUFFER	AMORTIGUADOR GMT		
35	10423776	1	EYE BOLT DIN 444 BM12x55 10.9 A3C	TORNILLO ARMELLA		
36	10289804	2	WASHER ISO 7089 12 300HV	ARANDELA		
37	4100003	1	WING NUT DIN 315 M 12 GT-C A3C	TUERCA DE MARIPOSA		
38	4600706	1	HEX BOLT ISO 4017 M12X45 10.9 A3C	TORNILLO DE CABEZA HEXAGO		
40	10425216	2	TIGTENING STRAP 300 20	CINTA SUJECION		
41	10096795	2	HOOK	GANCHO		1
42	4902231	4	CYLINDER SCREW ISO 4762 M8X16 10.9 A2	TORNILLO CILINDRICO		
43	10289803	4	WASHER ISO 7089 8 300HV	ARANDELA		
45	10364395	1	PLATE	CHAPA		1
46	4000905	1	WING SCREW DIN 316 M8X16 4.6 A3C	TORNILLO DE MARIPOSA		
47	4216025	2	WASHER DIN 7349 8,4 A3C	ARANDELA		

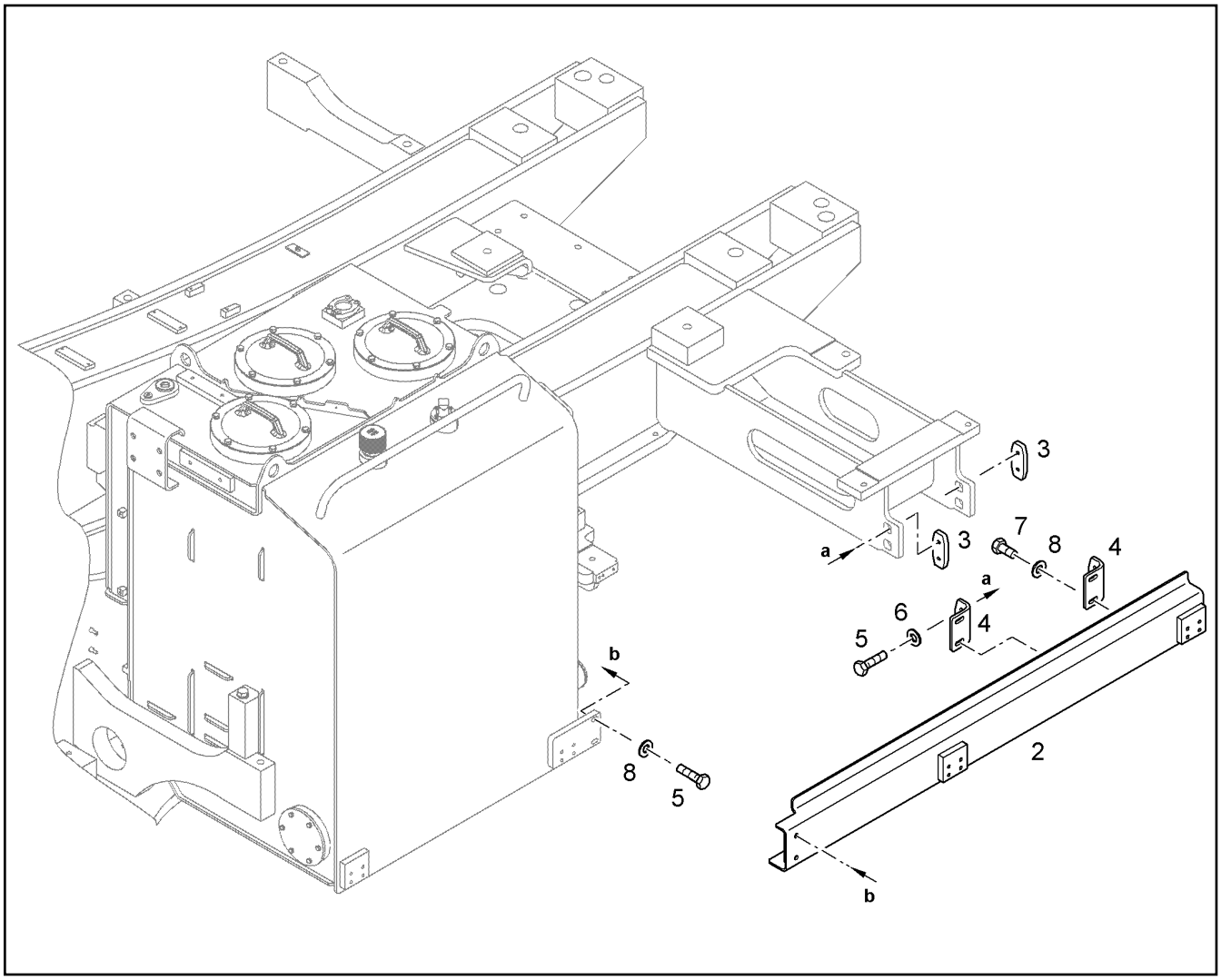

Pos.	Item	Quantity	Description	Descripción	Serie	K
2	10058048	1	U-BEAM	TRAVIESA EN U		
3	9376780	2	THREADED PLATE	PLACA ROSCADA		
4	9376779	2	ANGLE	ANGULAR		
5	4601319	6	HEX BOLT ISO 4017 M12X50 10.9 A3C	TORNILLO DE CABEZA HEXAGO		
6	4900093	4	LOCK WASHER 12 VS	ARANDELA SEGURIDAD		
7	4066124	4	HEX BOLT ISO 4017 M12X30 10.9 A3C	TORNILLO DE CABEZA HEXAGO		
8	10006370	6	WASHER DIN 7349 13	ARANDELA		

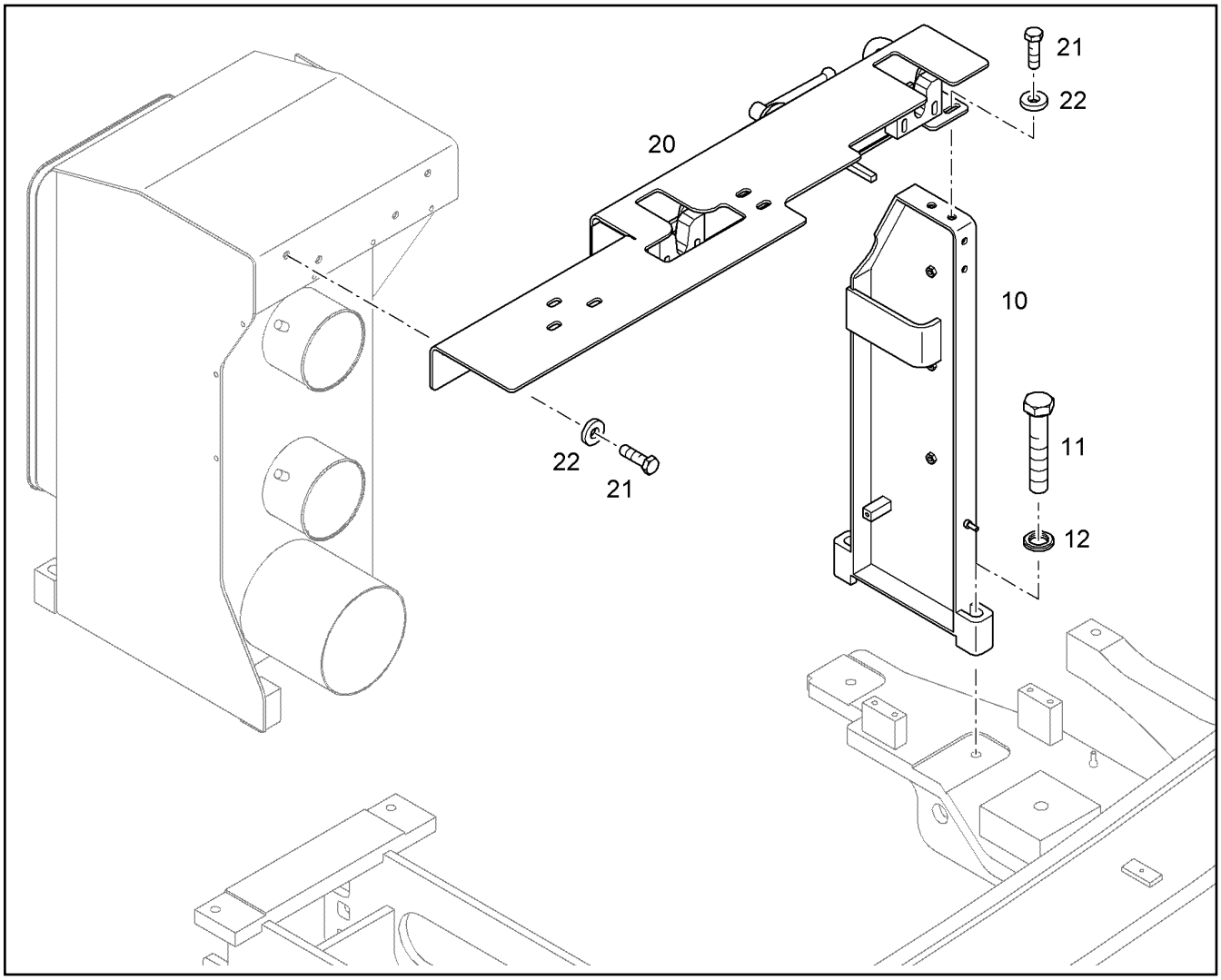

Pos.	Item	Quantity	Description	Descripción	Serie	K
10	10052716	1	CONSOLE	CONSOLA		1
11	10425592	2	HEX BOLT ISO 4014 M20X110 10.9 FLZN 100	TORNILLO DE CABEZA HEXAGO		
12	9918229	2	WASHER 20,5/34X5	ARANDELA		
20	10057978	1	LOOCK BRACKET ⇨ ❑ 105	CONSOLA CIERRE		
21	4600366	6	HEX BOLT ISO 4017 M12X40 10.9 A3C	TORNILLO DE CABEZA HEXAGO		
22	10006370	6	WASHER DIN 7349 13	ARANDELA		

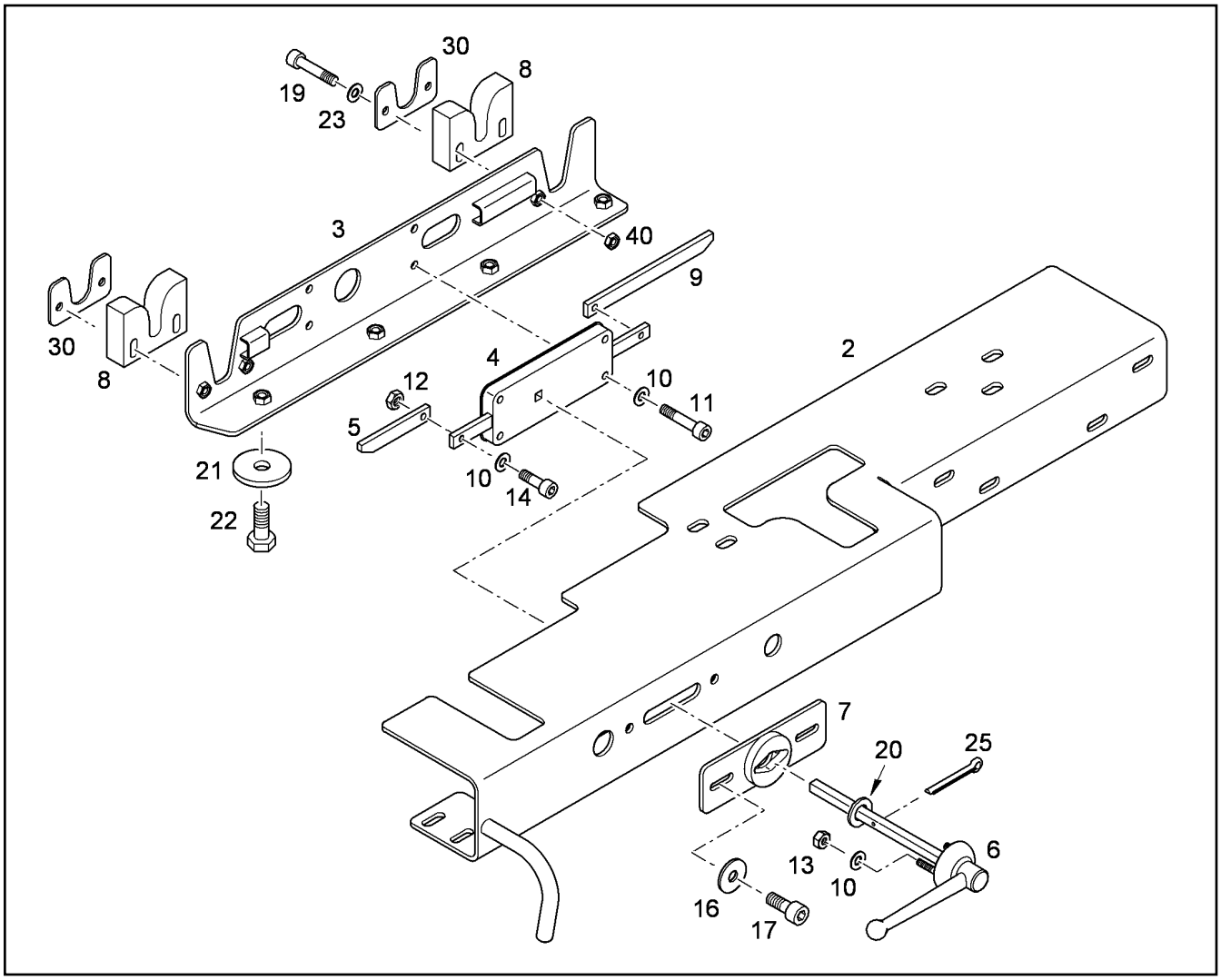

Pos.	Item	Quantity	Description	Descripción	Serie	K
2	10058016	1	GIRDER	VIGA APRETADOR		
3	10058018	1	CONSOLE	CONSOLA		
4	7363883	1	LOCK	CERRADURA		
5	9866763	1	ROD	VARILLA		1
6	7372418	1	HANDLE	TIRADOR DE MANO		
7	9688482	1	SHEET KPL	PLACA COMPL.		1
8	10389374	2	BASE PLATE	PLACA SOPORTE		
9	10058095	1	ROD	VARILLA		
10	10289803	10	WASHER ISO 7089 8 300HV	ARANDELA		
11	4600516	4	CYLINDER SCREW ISO 4762 M8X40 10.9 A2	TORNILLO CILINDRICO		
12	4901573	2	HEX NUT M8	TUERCA HEXAGONAL		
13	4901732	2	HEX NUT M8	TUERCA HEXAGONAL		
14	4635318	2	CYLINDER SCREW ISO 4762 M8X35 10.9 A2	TORNILLO CILINDRICO		
16	4900531	2	WASHER ISO 7093-1 10 200HV	ARANDELA		
17	4043124	2	CYLINDER SCREW ISO 4762 M10X25 10.9	TORNILLO CILINDRICO		
19	4600143	4	CYL HEAD STUD ISO 4762 M 10 X 60 8.8 A3	TORNILLO CIL.		
20	10289806	1	WASHER ISO 7089 16 300HV	ARANDELA		
21	9561312	4	WASHER	ARANDELA		1
22	4066124	4	HEX BOLT ISO 4017 M12X30 10.9 A3C	TORNILLO DE CABEZA HEXAGO		
23	10289795	4	WASHER ISO 7089 10 300HV	ARANDELA		
25	4330012	1	SPLIT PIN ISO 1234 3,2X 32 ST	PASADOR ALETAS		
30	10389225	2	BOARD	PLETINA		
40	4000383	4	HEX NUT ISO 4032 M 10 -10 A3C	TUERCA HEXAGONAL		

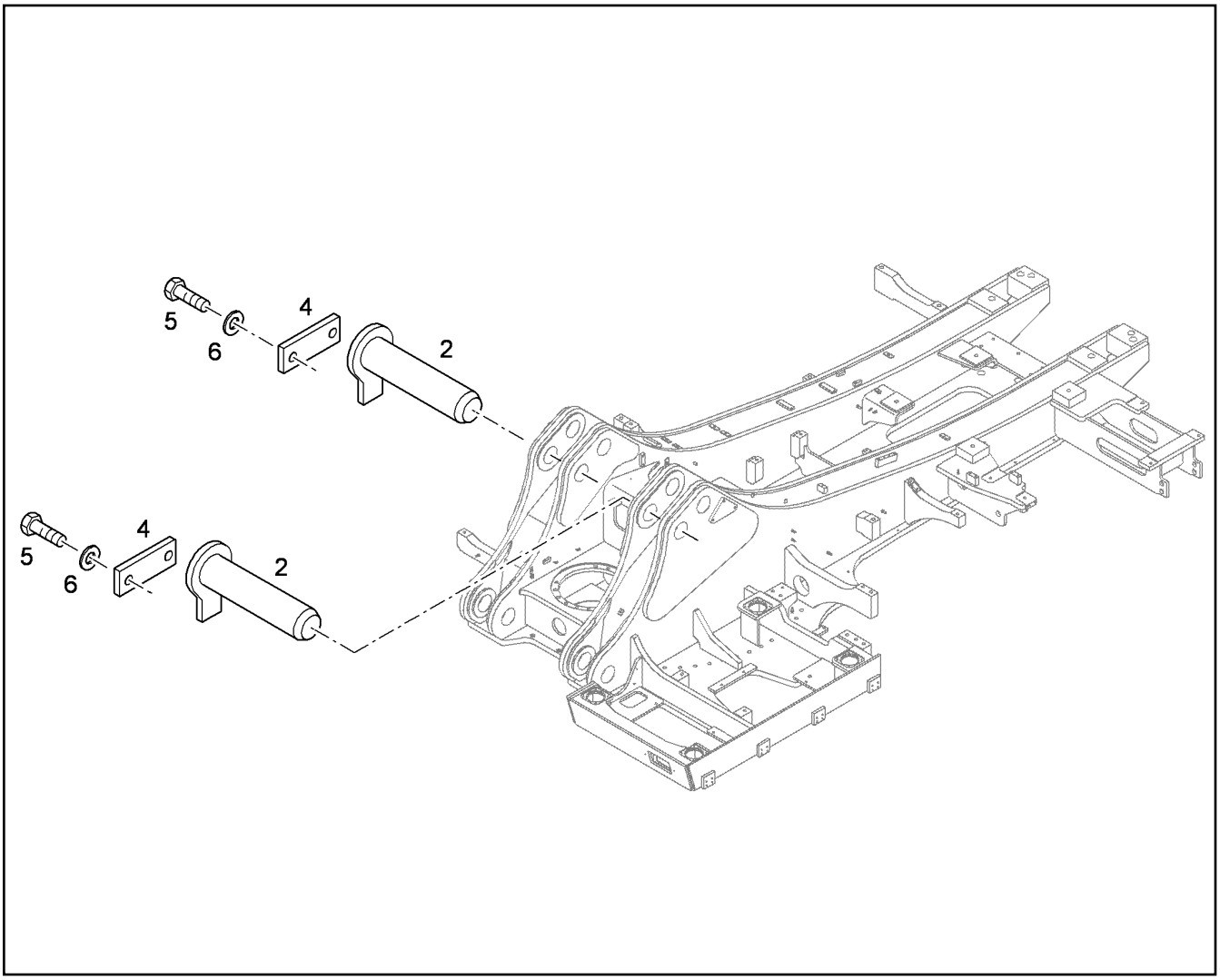

Pos.	Item	Quantity	Description	Descripción	Serie	K
2	9325867	2	PIN	BULON		1
4	9830148	2	SHEET	PLACA		1
5	4900094	4	HEX BOLT ISO 4017 M12x25 8.8 A3C	TORNILLO DE CABEZA HEXAGO		
6	10289804	4	WASHER ISO 7089 12 300HV	ARANDELA		

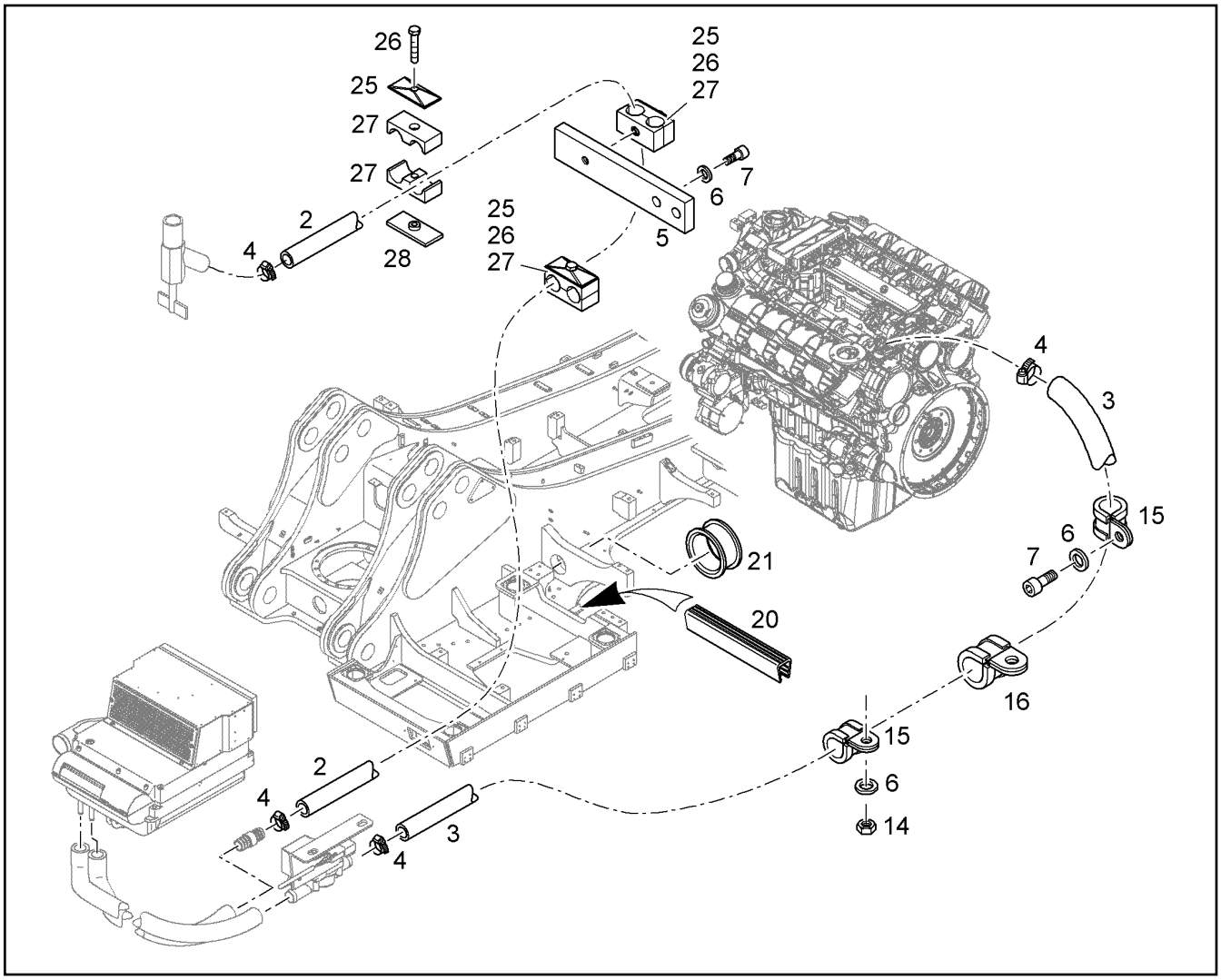

Pos.	Item	Quantity	Description	Descripción	Serie	K
2	7361679	6.4m	HOSE DIN 73411 A 15 X3,5	TUBO GOMA		
3	7361679	4.4m	HOSE DIN 73411 A 15 X3,5	TUBO GOMA		
4	4901138	4	HOSE CLAMP DIN 3017 A 16 - 27 X 9 W2-2	ABRAZADERA MANGUERA		
5	10358267	1	SHEET	PLACA		1
6	10289803	6	WASHER ISO 7089 8 300HV	ARANDELA		
7	4043082	3	CYLINDER SCREW ISO 4762 M8X20 10.9 A2	TORNILLO CILINDRICO		
14	4000381	3	HEX NUT M8	TUERCA HEXAGONAL		
15	7362545	4	CLAMP DIN 3016-1 D1 22X20 W1-2-CR	ABRAZADERA		
16	7362816	1	CLAMP DIN 3016 D1- 25 X 25 W1-2-CR	ABRAZADERA		
20	9591327	1	CLAMPING PROFILE	PERFIL APRIETE		
21	10073593	1	HOSE GUIDE	GUIA DE MANGUERA		1
25	7401349	3	LID PLATE DIN 3015-3 Z-DP 3 W1-ZN	PLACA CUBIERTA		
26	4001648	3	HEX BOLT ISO 4017 M8X45 10.9 A2C	TORNILLO DE CABEZA HEXAGO		
27	7029979	6	CLAMP-HALF DIN 3015-3 Z 3 G 23 23 PP SW	MEDIA BRIDA		
28	7005098	1	WELD PLATE DIN 3015-3 Z-AP 3 W1	BASE ABRAZADERA		

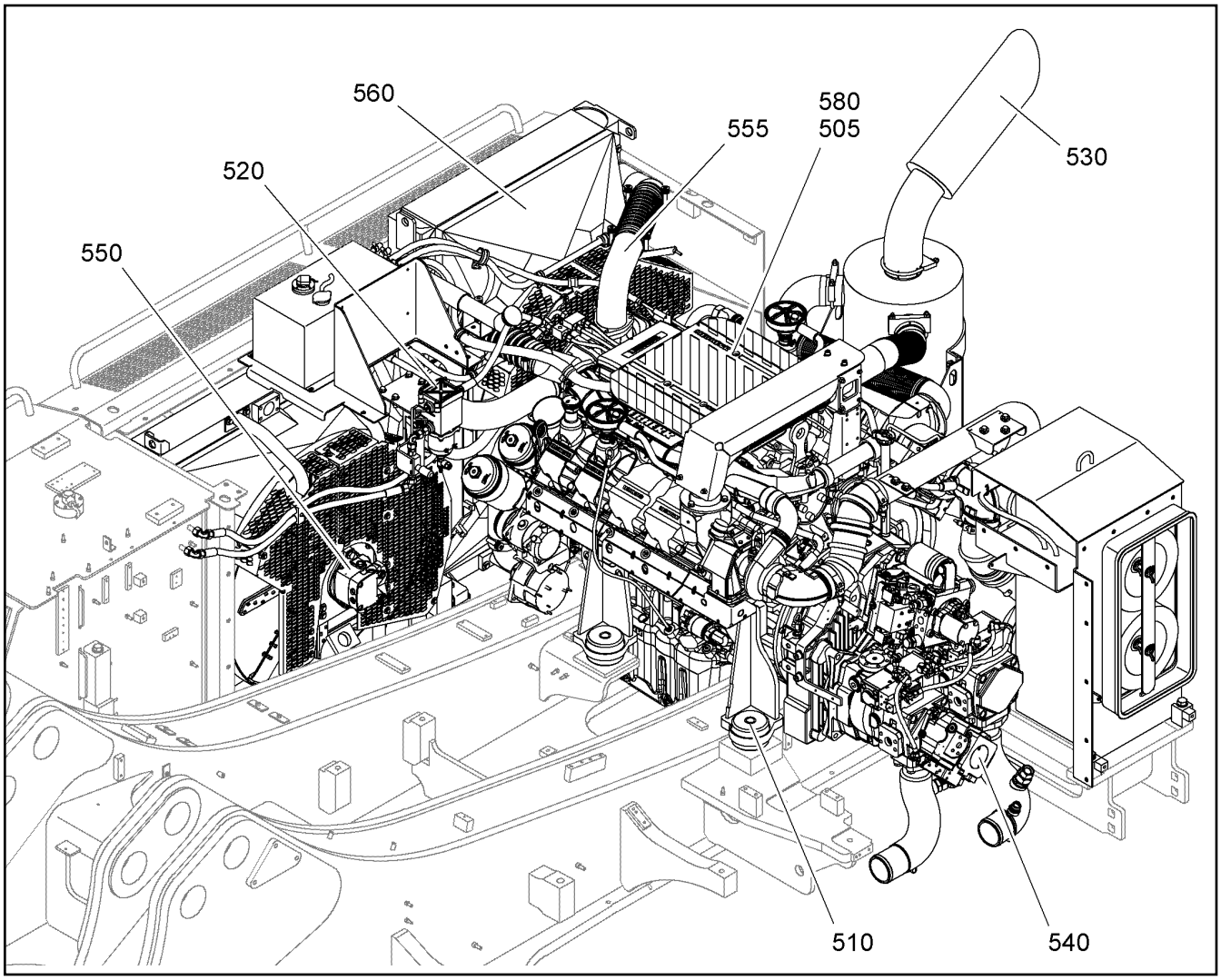

Pos.	Item	Quantity	Description	Descripción	Serie	K
505		1	DRIVE UNIT AG 9508 M 076 ⇨ ❑ 109	GRUPO DE ACCIONAMIENTO	-99998	
510		1	MOTOR SUPPORT ⇨ ❑ 110	ALOJAMIENTO DE MOTOR		1
520		1	ENGINE FUEL SYSTEM ⇨ ❑ 112	INST.COMBUSTIBLE MOTOR		1
530		1	AIR AND EXHAUST INSTALLATION ⇨ ❑ 114	AIRE Y SISTEMA ESCAPE		1
540		1	PUMPS INSTALLATION ⇨ ❑ 119	MONTAJE BOMBAS		1
550		1	FAN INSTALLATION ⇨ ❑ 193	MONTAJE VENTILADOR	-99998	1
550		1	FAN INSTALLATION ⇨ ❑ 195	MONTAJE VENTILADOR	99999-	1
555	10053109	1	CHARGE AIR LINE	CONDUCTO AIRE SOBREALIME		1
560		1	COOLER INSTALLATION ⇨ ❑ 199	MONTAJE DE RADIADOR		1
580		1	MOTOR-ELEKTRIK ⇨ ❑ 212	MOTOR - SISTEMA ELÉCTRICO		1

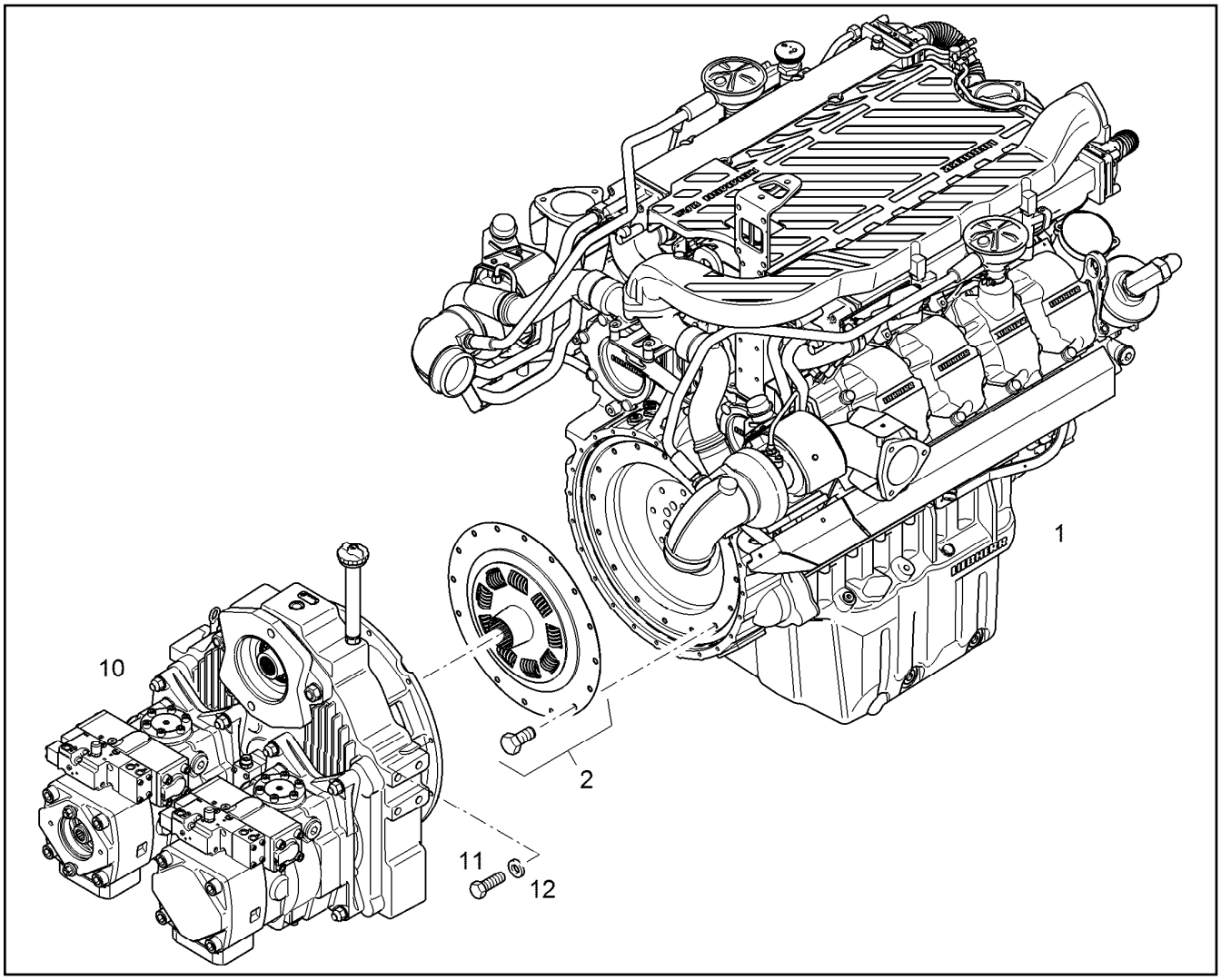

Pos.	Item	Quantity	Description	Descripción	Serie	K
1	10125959	1	DIESEL ENGINE D9508 A7 320kW [2010140798] ⇨ ❑ 565	MOTOR DIESEL		6
2	9080481	1	CLUTCH ASSEMBLY ⇨ ❑ 668	MONTAJE DE EMBRAGUE		
10		1	MULTIPLE CIRCUIT AGGREGATE ⇨ ❑ 125	GRUPO MULTICIRC.		
11	4001246	12	HEX BOLT ISO 4017 M10X35 10.9 A3C	TORNILLO DE CABEZA HEXAGO		
12	4229913	12	LOCK WASHER 10,5/16X2 VS 10	ARANDELA SEGURIDAD		

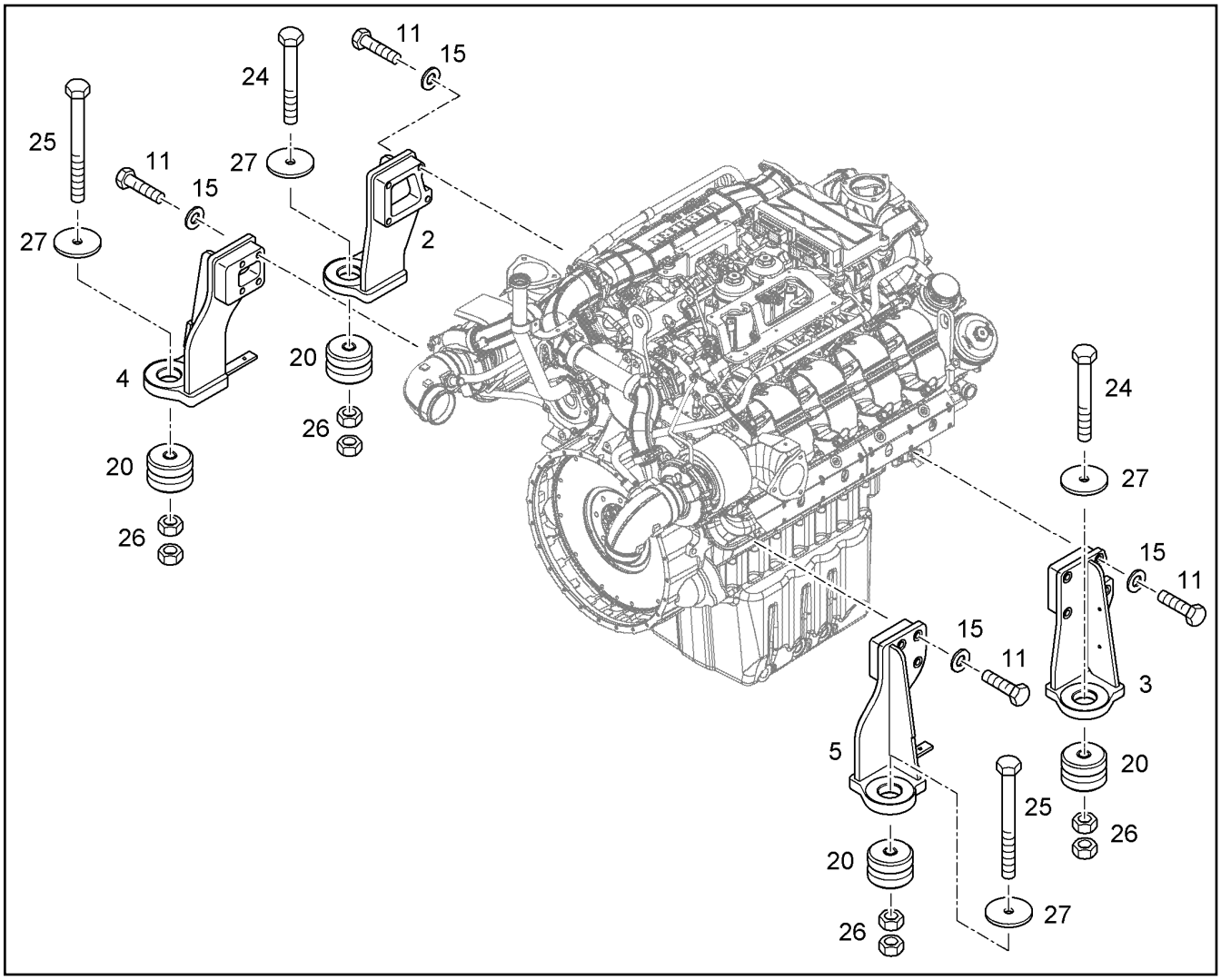

Pos.	Item	Quantity	Description	Descripción	Serie	K
2	10054797	1	BRACKET FRONT LEFT	CONSOLA IZDA.ANT.		1
3	10054800	1	BRACKET FRONT RIGHT	CONSOLA ANT.DCHA.		1
4	10498454	1	BRACKET REAR LEFT	CONSOLA POST.IZDA.		1
5	10054811	1	BRACKET REAR RIGHT	CONSOLA POST.DCHA.		1
11	4600149	16	HEX BOLT ISO 4014 M16X85 10.9 DAC	TORNILLO DE CABEZA HEXAGO		
15	9918228	16	WASHER 16,5/28X4	ARANDELA		
20	7368721	4	RUBBER BUMPER	TOPE GOMA		
24	10425613	2	HEX BOLT ISO 4014 M24X180 10.9 FLZN 100	TORNILLO DE CABEZA HEXAGO		
25	10425616	2	HEX BOLT ISO 4014 M24X240 10.9 FLZN 100	TORNILLO DE CABEZA HEXAGO		
26	10425688	8	HEX NUT M24 10021432-006	TUERCA HEXAGONAL		
27	9385349	3	WASHER	ARANDELA		1
28	10066832	1	PLATE	CHAPA		1

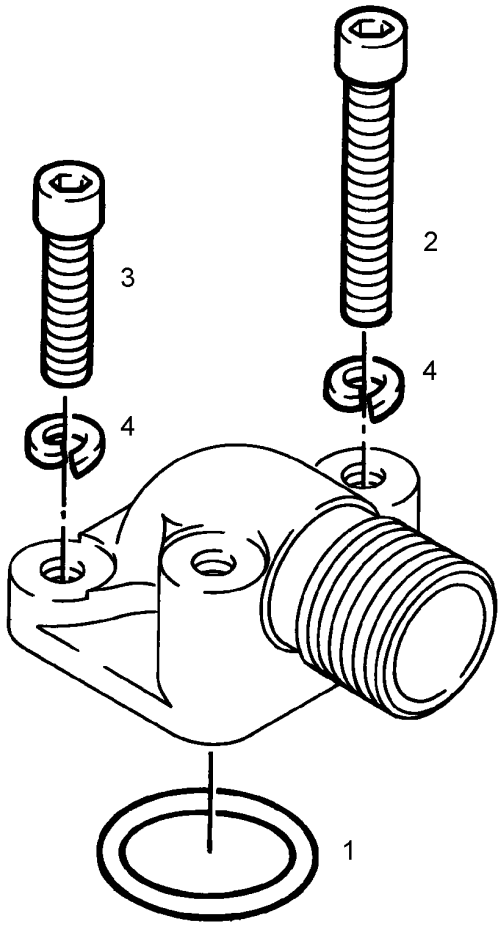

Pos.	Item	Quantity	Description	Descripción	Serie	K
1	7361549	1	O-RING	JUNTA TORICA		1
2	4043052	2	CYLINDER SCREW ISO 4762 M6X60 10.9 A2	TORNILLO CILINDRICO		
3	4600068	2	CYLINDER SCREW ISO 4762 M6X22 10.9 A2	TORNILLO CILINDRICO		
4	4600218	4	CIRCLIP DIN 127 B 6 ST A3C	ANILLO DE MUELLE		

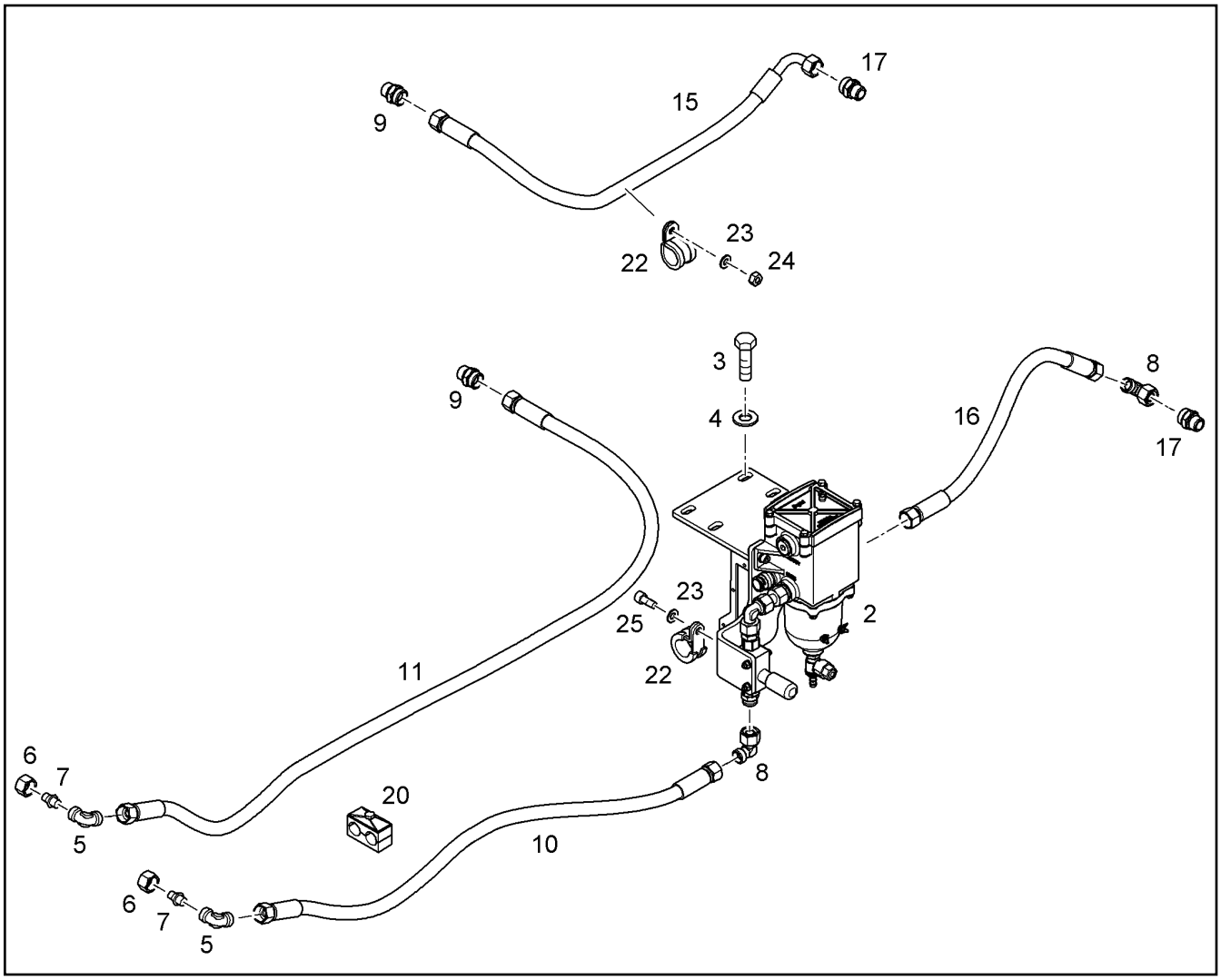

Pos.	Item	Quantity	Description	Descripción	Serie	K
2		1	FUEL FILTER INSTALLATION ⇨ ❑ 113	MONTAJE FILTRO COMBUSTIBL		1
3	4600366	4	HEX BOLT ISO 4017 M12X40 10.9 A3C	TORNILLO DE CABEZA HEXAGO		
4	9918226	4	WASHER 12,5/21X3,5	ARANDELA		
5	7362109	2	LUG ISO 8434 E L 15 A3C	ESPIGA		
6	4774003	2	UNION NUT DIN 3870 A L 15 A3C	TUERCA UEWF		
7	4771003	2	CUTTING RING DIN 3861 L 15 ST	ANILLO CORTANTE		
8	7615379	2	SCREW FITTING EW 15L	ATORNILLAMIENTO		
9	7403083	2	SCREW FITTING GE 15L	ATORNILLAMIENTO		
10	10333662	1	FUEL HOSE	MANGUERA COMBUSTIBLE		2
11	10333665	1	FUEL HOSE	MANGUERA COMBUSTIBLE		2
15	10450748	1	FUEL HOSE	MANGUERA COMBUSTIBLE		2
16	10333660	1	FUEL HOSE	MANGUERA COMBUSTIBLE		2
17	7003570	2	SCREW FITTING GE 15L	ATORNILLAMIENTO		
20	9388597	1	HOSE CLAMP ⇨ ❑ 744	ABRAZADERA MANGUERA		1
22	7362545	2	CLAMP DIN 3016-1 D1 22X20 W1-2-CR	ABRAZADERA		
23	10289803	2	WASHER ISO 7089 8 300HV	ARANDELA		
24	4000381	1	HEX NUT M8	TUERCA HEXAGONAL		
25	4902231	1	CYLINDER SCREW ISO 4762 M8X16 10.9 A2	TORNILLO CILINDRICO		

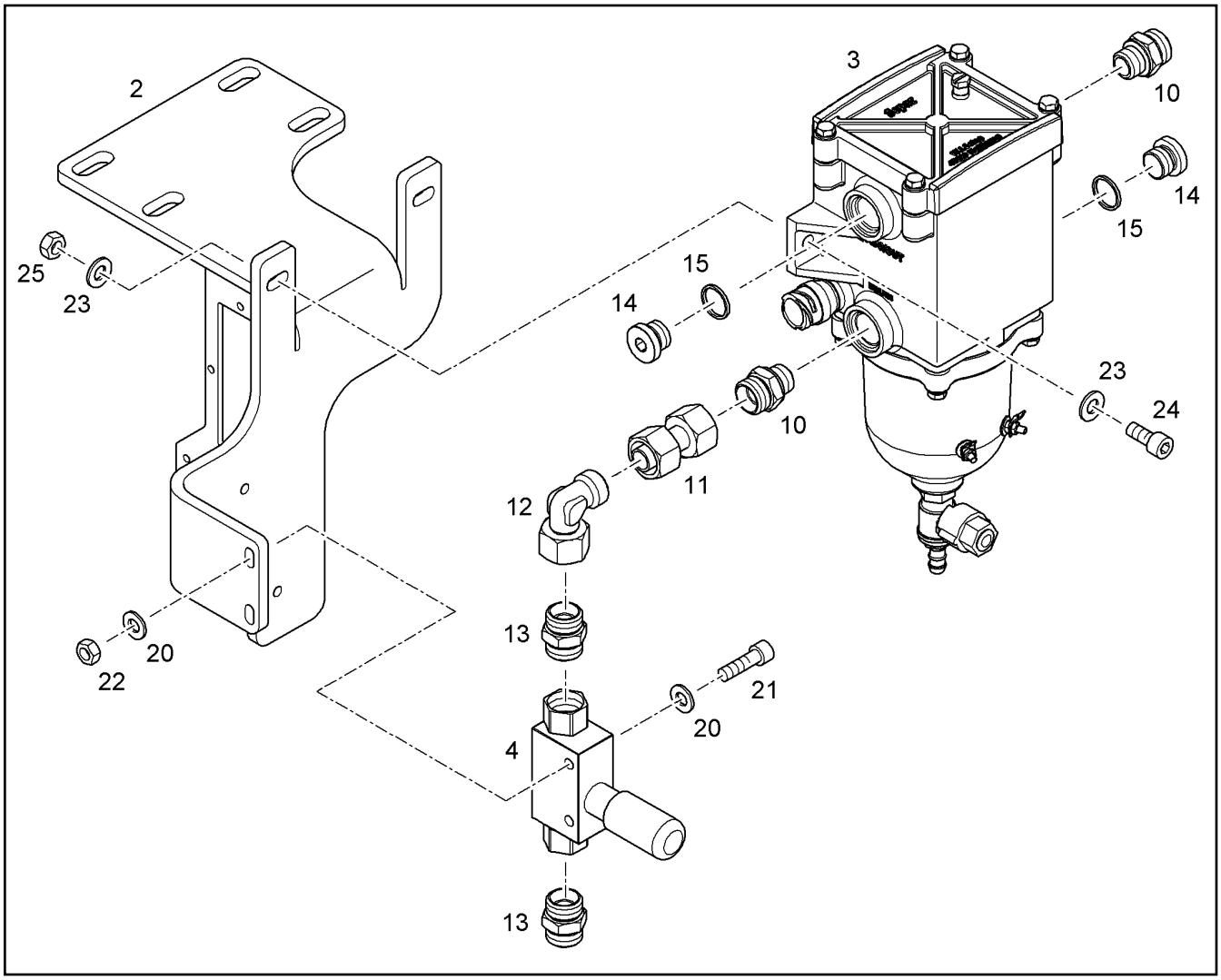

Pos.	Item	Quantity	Description	Descripción	Serie	K
2	10095388	1	CONSOLE	CONSOLA		
3	10303007	1	FUEL PREFILTER ⇨ ❑ 619	PREFILTRO COMBUSTIBLE		1
4	7027480	1	FUEL HAND PUMP	BOMBA MANUAL COMBUSTIBLE		2
10	7029651	2	SCREW FITTING GEO 15L	ATORNILLAMIENTO		
11	7410213	1	SCREW FITTING GZ 15L	ATORNILLAMIENTO		
12	7615379	1	SCREW FITTING EW 15L	ATORNILLAMIENTO		
13	7003570	2	SCREW FITTING GE 15L	ATORNILLAMIENTO		
14	10340236	2	SCREW PLUG M22X1,5	TORNILLO DE CIERRE		
15	10340226	2	O-RING 19,4X2,5	JUNTA TORICA		1
20	10289802	4	WASHER ISO 7089 6 300HV	ARANDELA		
21	4043050	2	CYLINDER SCREW ISO 4762 M6X50 10.9 A2	TORNILLO CILINDRICO		
22	4000379	2	HEX NUT M6	TUERCA HEXAGONAL		
23	10289803	4	WASHER ISO 7089 8 300HV	ARANDELA		
24	4600791	2	CYLINDER SCREW ISO 4762 M8X30 10.9 A2	TORNILLO CILINDRICO		
25	4000381	2	HEX NUT M8	TUERCA HEXAGONAL		

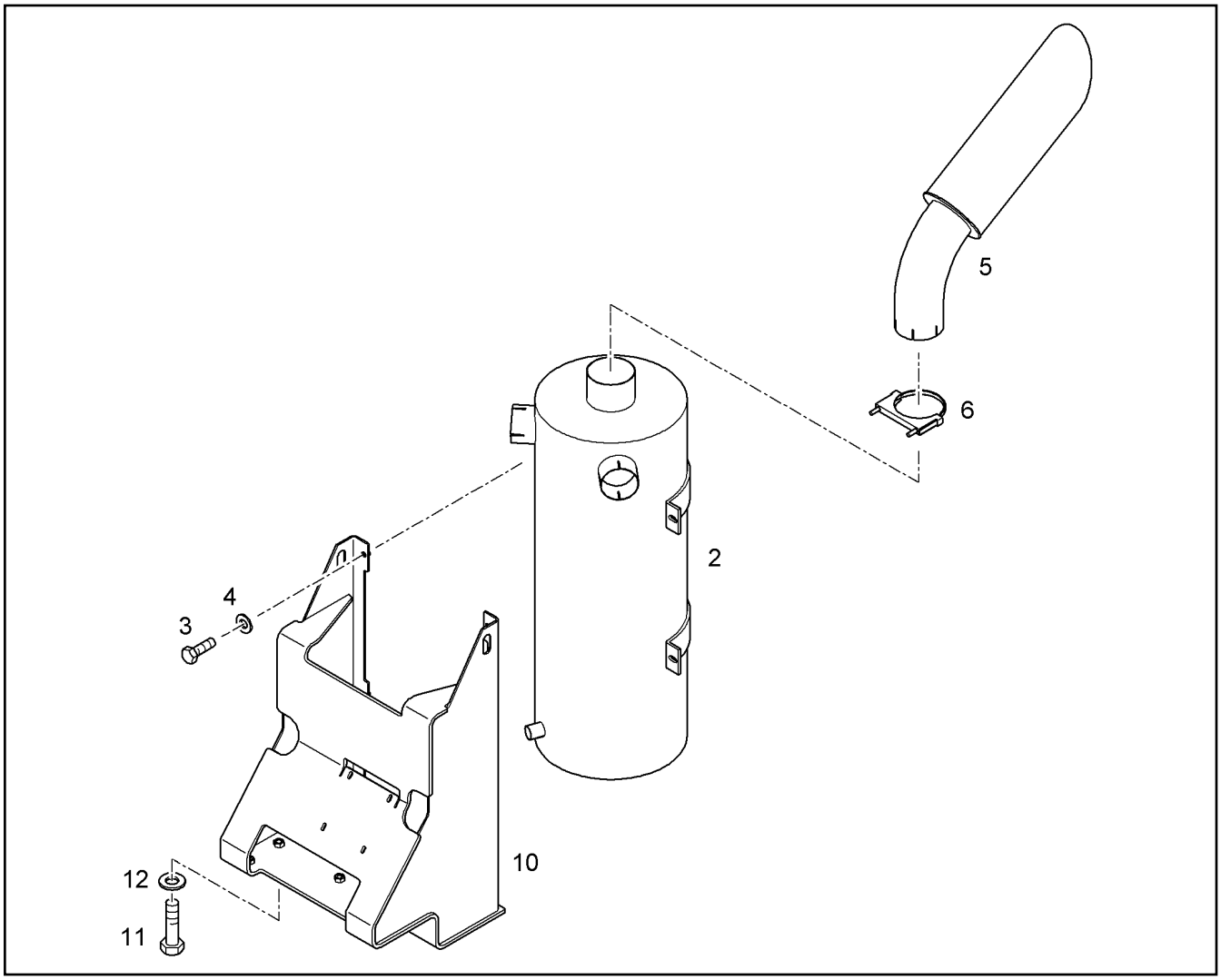

Pos.	Item	Quantity	Description	Descripción	Serie	K
2	10216441	1	EXHAUST SILENCER	SILENCIADOR		1
3	4066122	4	HEX BOLT ISO 4017 M12X35 10.9 A3C	TORNILLO DE CABEZA HEXAGO		
4	10006370	4	WASHER DIN 7349 13	ARANDELA		
5	10001685	1	REAR SILENCER	SILENCIADOR POST.		1
6	7369271	1	BOW-TYPE CLAMP	BRIDA ABIERTA		
10	10385890	1	CONSOLE	CONSOLA		
11	4062072	5	HEX BOLT ISO 4014 M16X55 10.9 DAC	TORNILLO DE CABEZA HEXAGO		
12	9918228	5	WASHER 16,5/28X4	ARANDELA		

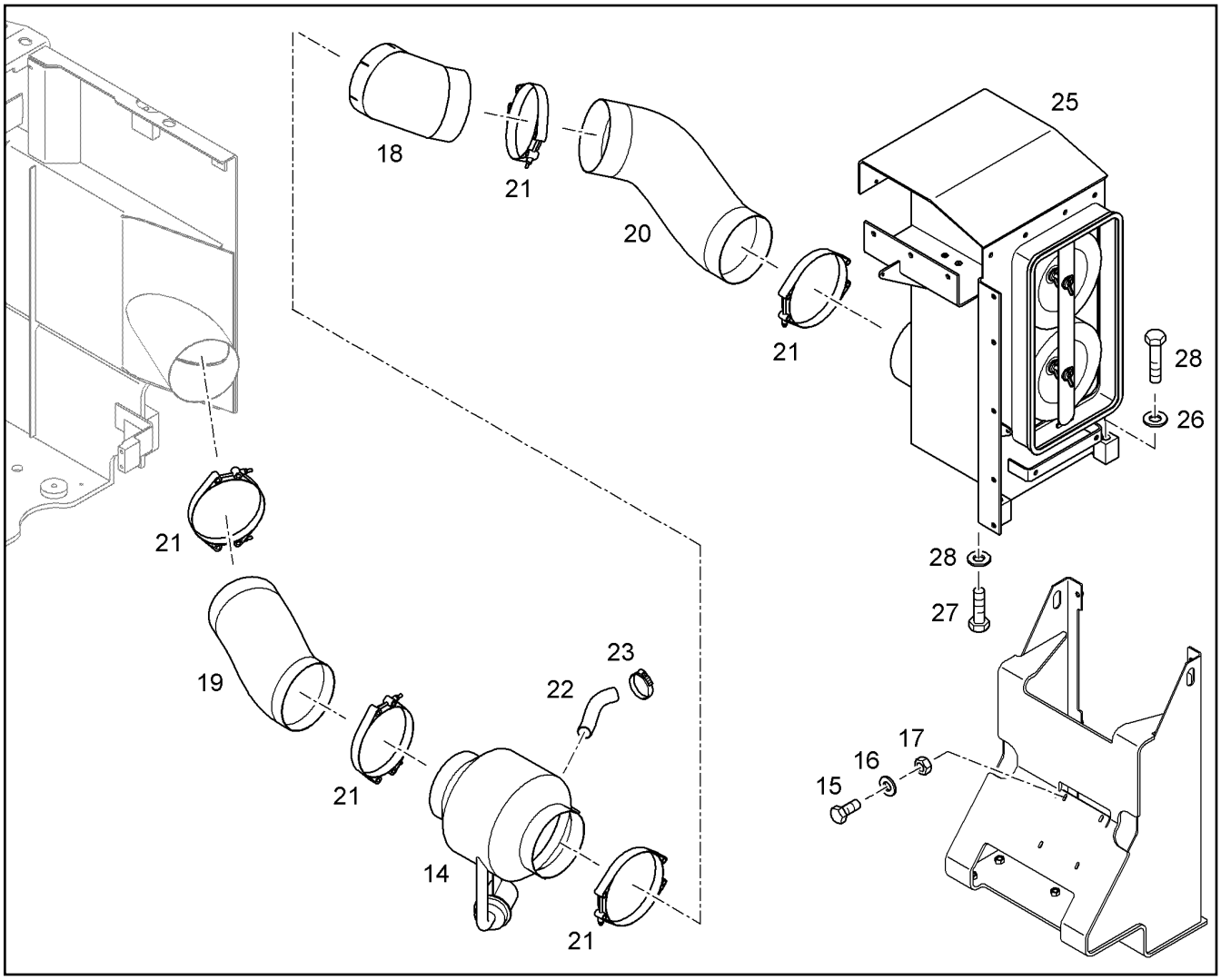

Pos.	Item	Quantity	Description	Descripción	Serie	K
14	5610704	1	PREFILTER	RETENEDOR FILTRO		1
15	4062002	4	HEX BOLT ISO 4017 M8X30 10.9 A2C	TORNILLO DE CABEZA HEXAGO		
16	4000779	8	WASHER DIN 9021 8,4 ST A3C	ARANDELA		
17	4000381	4	HEX NUT M8	TUERCA HEXAGONAL		
18	9011050	1	TUBE BEND	CURVA		1
19	10067638	1	AIR HOSE	CAMARA DE AIRE		1
20	10067637	1	AIR HOSE	CAMARA DE AIRE		1
21	4901572	5	HOSE CLAMP DIN 3017 C2-220 X 30 W2-2	ABRAZADERA MANGUERA		
22	10326460	0.26m	AIR HOSE	CAMARA DE AIRE		2
23	5004927	2	HOSE CLAMP DIN 3017-1 A 32 25-40x13 W2-	ABRAZADERA MANGUERA		
25	10358734	1	AIR FILTER INSTALLATION ⇨ ❑ 118	MONTAJE FILTRO AIRE		1
26	9918229	3	WASHER 20,5/34X5	ARANDELA		
27	10425656	1	HEX BOLT ISO 4017 M20X70 10.9 FLZN 1002	TORNILLO DE CABEZA HEXAGO		
28	10425592	2	HEX BOLT ISO 4014 M20X110 10.9 FLZN 100	TORNILLO DE CABEZA HEXAGO		

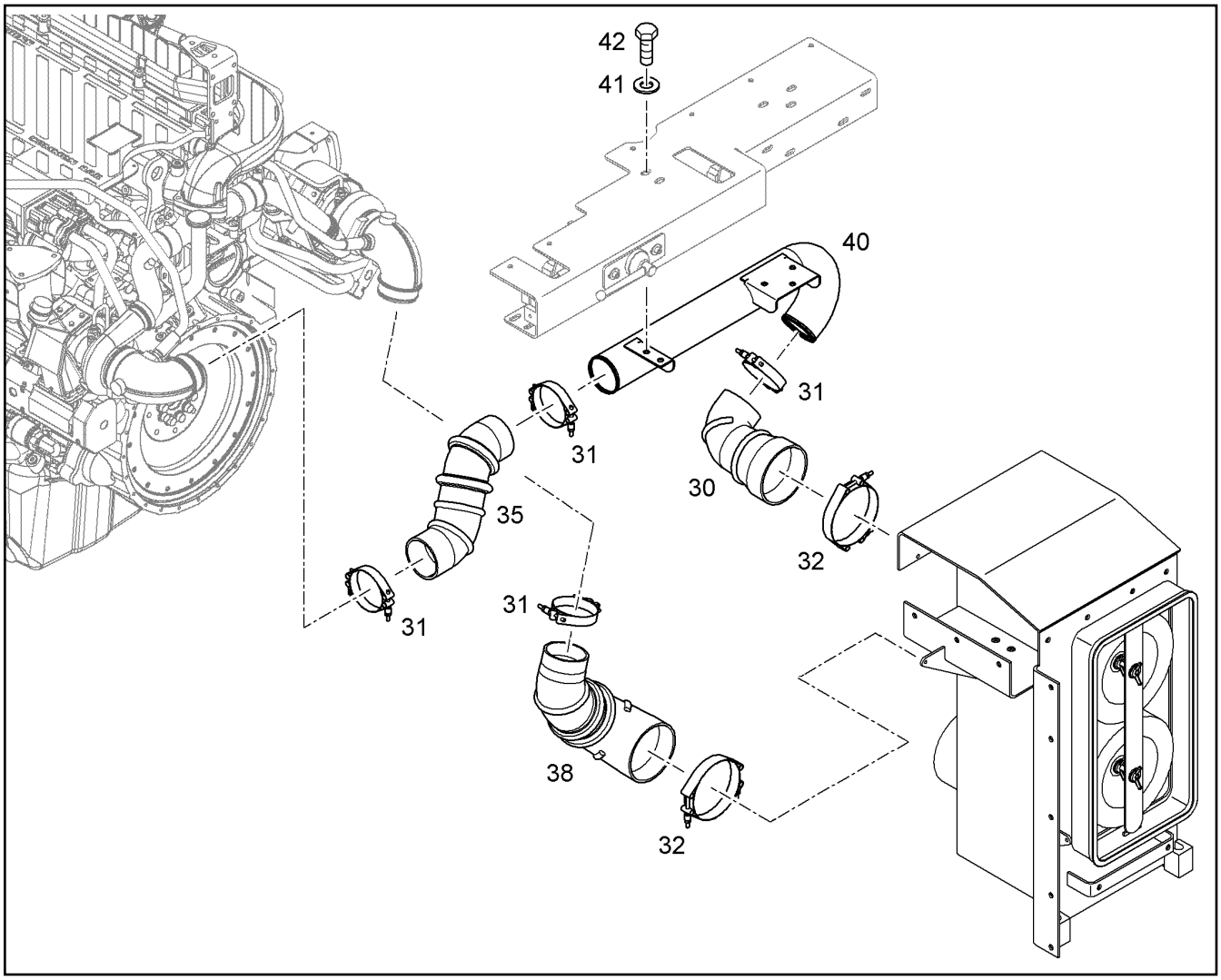

Pos.	Item	Quantity	Description	Descripción	Serie	K
30	10051671	1	AIR HOSE	CAMARA DE AIRE		1
31	4901437	4	HOSE CLAMP DIN 3017 C2-112 X 25 W2	ABRAZADERA MANGUERA		
32	7363410	2	HOSE CLAMP DIN 3017 C2-168 X 30 W2-2	ABRAZADERA MANGUERA		
35	10081306	1	AIR HOSE	CAMARA DE AIRE		1
38	10081307	1	AIR HOSE	CAMARA DE AIRE		1
40	10060949	1	AIR PIPE	TUBO AIRE		
41	4635283	5	WASHER DIN 6340 13 ST A3C	ARANDELA		
42	4066124	5	HEX BOLT ISO 4017 M12X30 10.9 A3C	TORNILLO DE CABEZA HEXAGO		

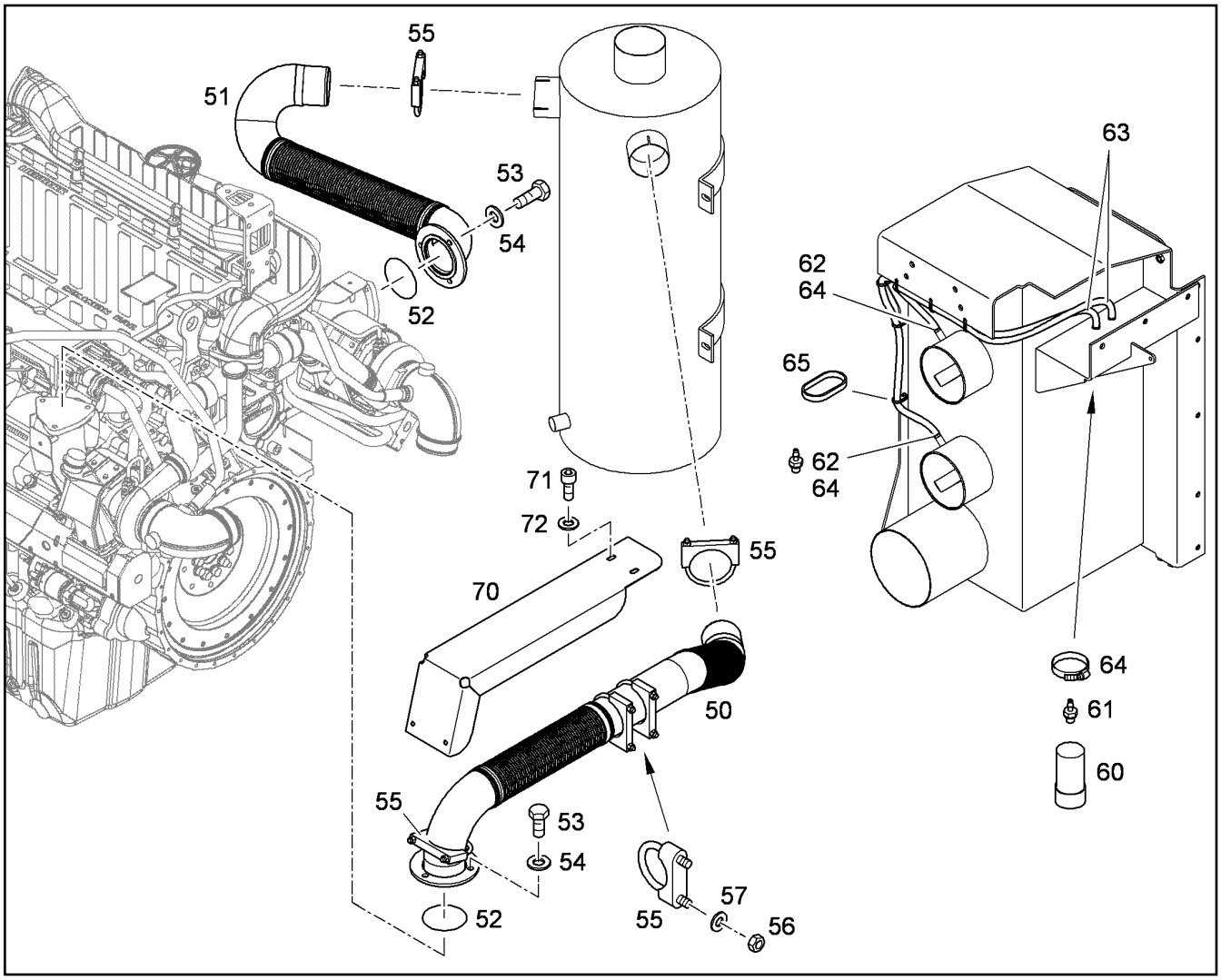

Pos.	Item	Quantity	Description	Descripción	Serie	K
50	10055118	1	EXHAUST PIPE LINE	TUBERIA DE ESCAPE		1
51	10055117	1	EXHAUST PIPE LINE	TUBERIA DE ESCAPE		1
52	10117568	2	SEAL	JUNTA		
53	4066122	6	HEX BOLT ISO 4017 M12X35 10.9 A3C	TORNILLO DE CABEZA HEXAGO		
54	9918226	6	WASHER 12,5/21X3,5	ARANDELA		
55	10100620	5	BOW-TYPE CLAMP 105 S235JR;EN 10025-2	BRIDA ABIERTA		
56	4901429	10	HEX NUT M10	TUERCA HEXAGONAL		
57	10289795	8	WASHER ISO 7089 10 300HV	ARANDELA		
60	5611326	2	VACUUM INDICATOR	INDICADOR PRESION BAJA		2
61	4782008	2	NIPPLE	BOQUILLA ROSCADA		
62	4900169	2	NIPPLE	BOQUILLA ROSCADA		
63	7360075	2m	HOSE	TUBO GOMA		2
64	4635044	4	HOSE CLAMP DIN 3017-1 A 12 8-16X9 W2-2	ABRAZADERA MANGUERA		
65	7001877	10	TIE WRAP	CINTA PARA CABLES		
70	10059445	1	HEAT PROTECTION	PROTECCION TERMICA		
71	4066093	2	HEX BOLT ISO 4017 M10X25 10.9 A3C	TORNILLO DE CABEZA HEXAGO		
72	4601173	4	WASHER 10,5	ARANDELA		

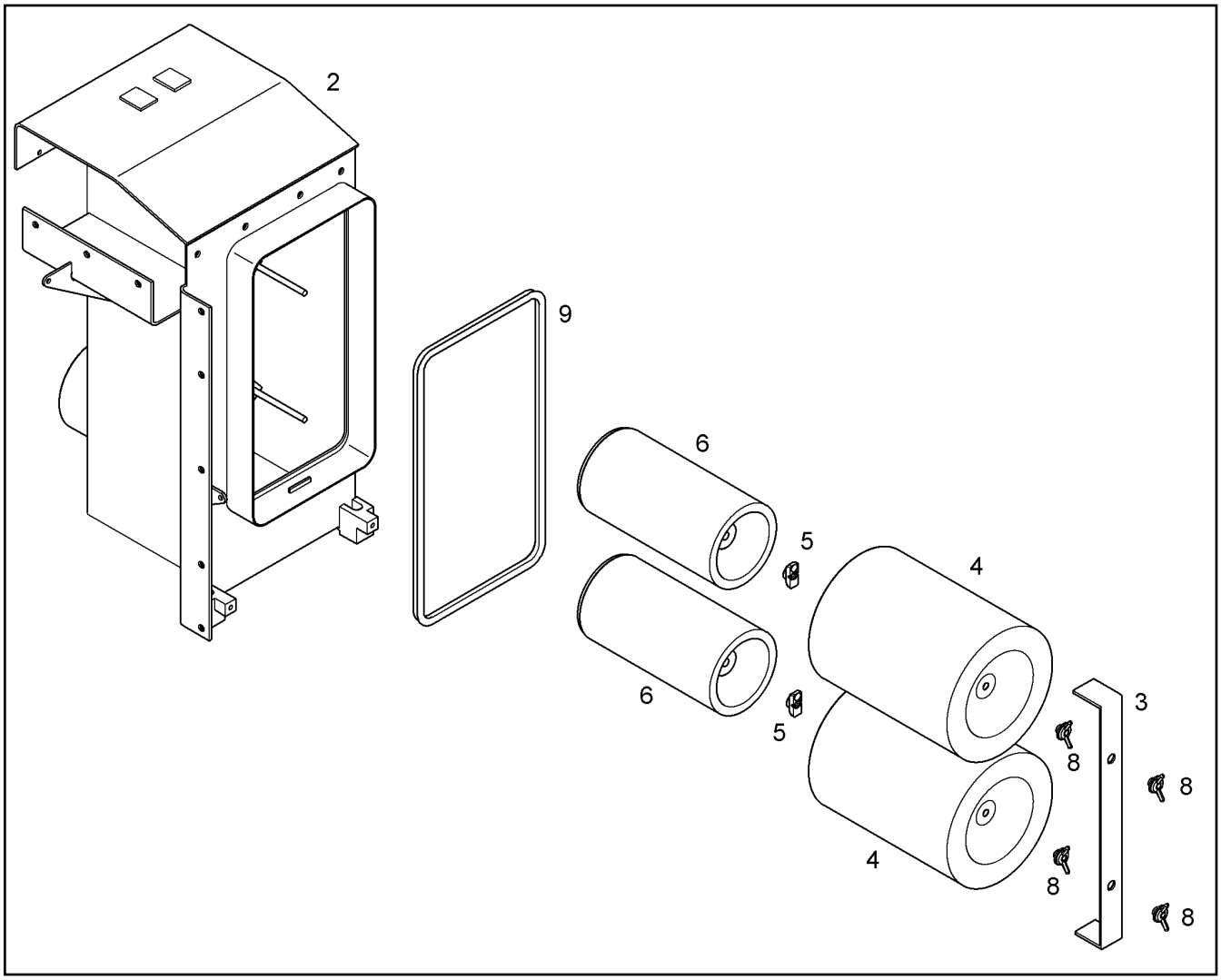

Pos.	Item	Quantity	Description	Descripción	Serie	K
2	10358246	1	AIR FILTER BOX	CAJA FILTRO DE AIRE		1
3	10358248	1	PLATE	CHAPA		1
4	5604682	2	MAIN ELEMENT	ELEMENTO PRINCIPAL		1
5	7364276	2	MAINTENANCE INDICATOR	INDICADOR DE MANTENIMIENT		2
6	5604683	2	SAFETY ELEMENT	ELEMENTO DE SEGURIDAD		1
8	7403149	4	WING NUT	TUERCA DE MARIPOSA		
9	10000465	2.06m	SEALING PROFILE	PERFIL ESTANCO		1

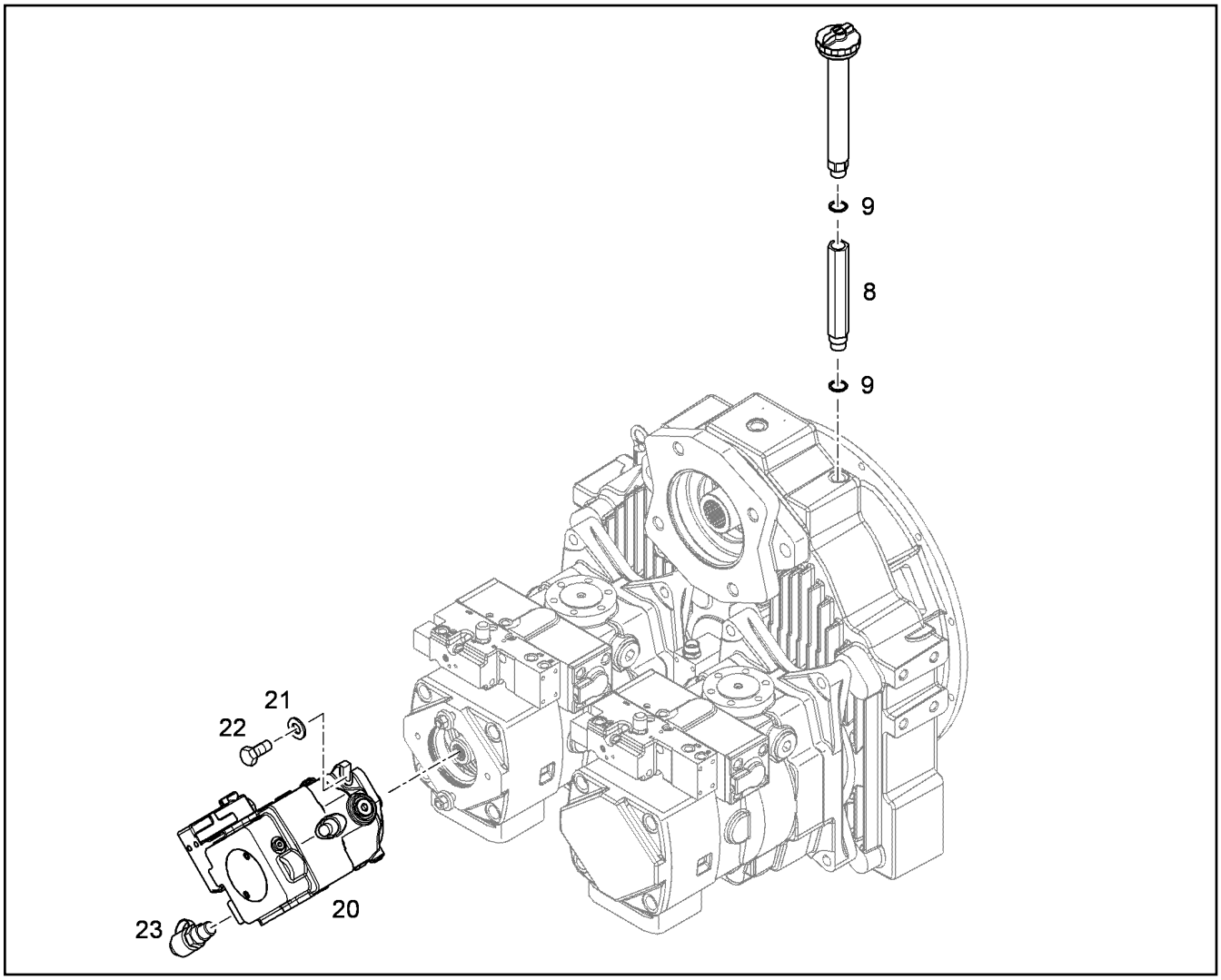

Pos.	Item	Quantity	Description	Descripción	Serie	K
8	9752281	1	LUG	ESPIGA		
9	7101015	2	SEALING RING DIN 7603 A 22 X 27 CU	JUNTA ANULAR		1
20	10215935	1	PUMP [25386352] ⇨ ❑ 130	BOMBA		6
21	9051252	2	WASHER	ARANDELA		
22	4066122	2	HEX BOLT ISO 4017 M12X35 10.9 A3C	TORNILLO DE CABEZA HEXAGO		
23	7407071	1	SCREW COUPLING M12X1,5	ACOPLAMIENTO ROSCADO		2

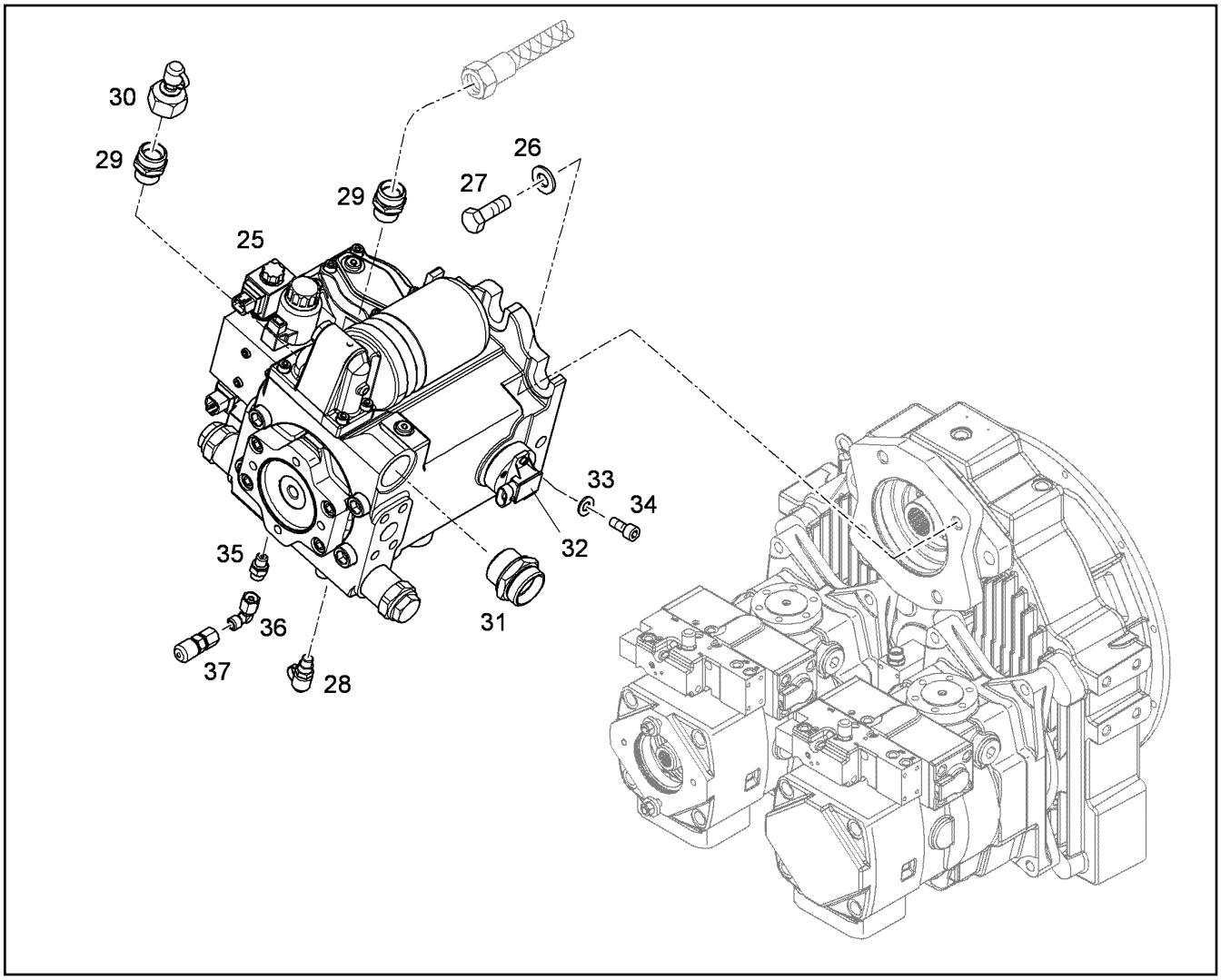

Pos.	Item	Quantity	Description	Descripción	Serie	K
25	10428459	1	SWING PUMP [25149048] ⇨ ❑ 131	BOMBA MEC. GIRO		6
26	9918229	2	WASHER 20,5/34X5	ARANDELA		
27	10425650	2	HEX BOLT ISO 4017 M20X45 10.9 FLZN	TORNILLO DE CABEZA HEXAGO		
28	7407071	1	SCREW COUPLING M12X1,5	ACOPLAMIENTO ROSCADO		2
29	7362515	2	SCREW FITTING GE 22L	ATORNILLAMIENTO		
30	7019891	1	GAUGE CONNECTION	BOCA MEDIDA		
31	4900486	1	SCREW FITTING GE 35L	ATORNILLAMIENTO		
32	10341869	1	SLEWING ANGLE SENSOR	SENSOR ANGULO DE GIRO		
33	4001645	2	WASHER DIN 125 B 4,3 ST A3C	ARANDELA		
34	4600387	2	CYLINDER SCREW ISO 4762 M4x12 8.8 A2C	TORNILLO CILINDRICO		
35	4901166	1	LUG GE 6S	ESPIGA		
36	472531508	1	SCREW FITTING EW 6S	ATORNILLAMIENTO		
37	5607616	1	GAUGE CONNECTION	BOCA MEDIDA		

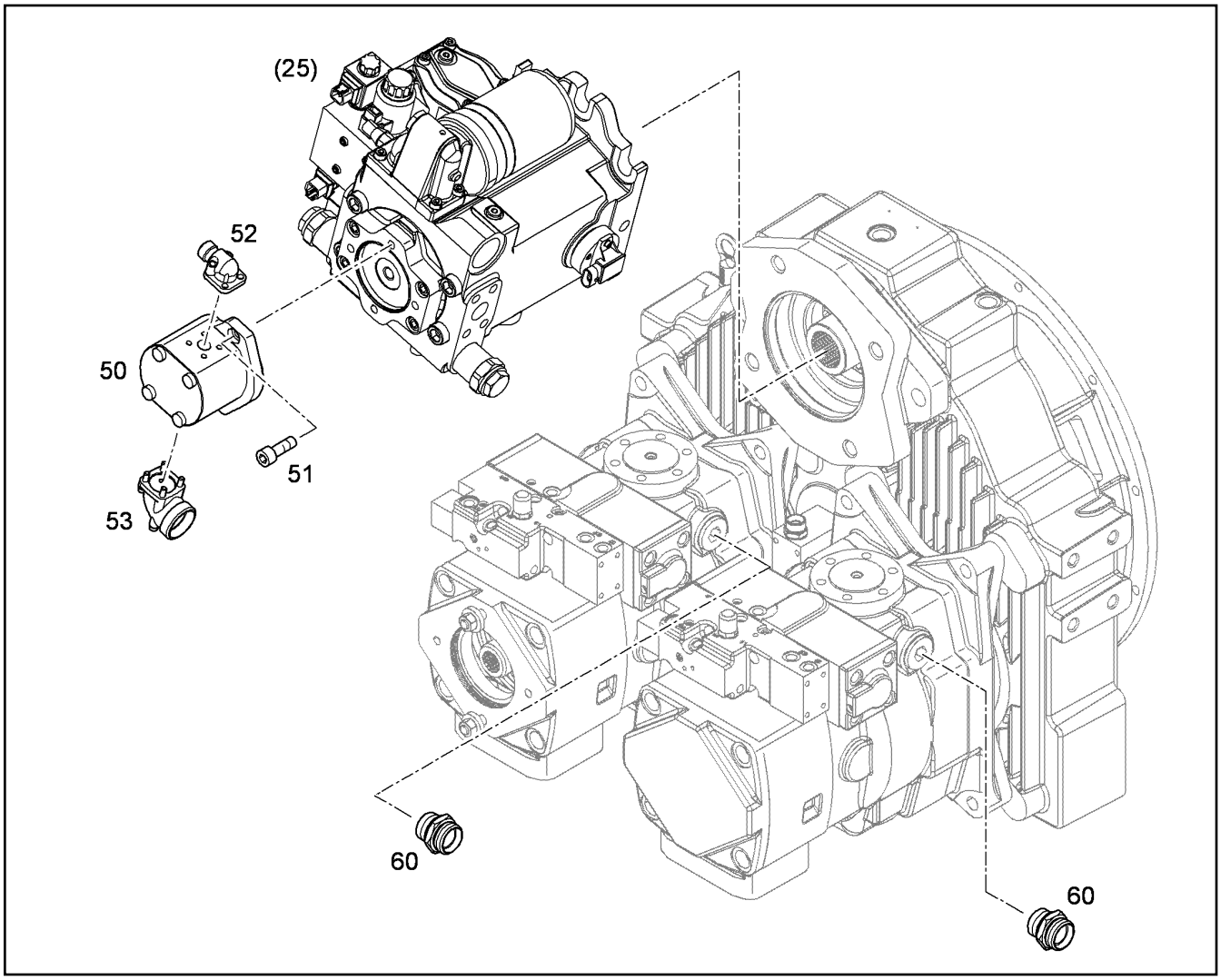

Pos.	Item	Quantity	Description	Descripción	Serie	K
50	10355486	1	GEAR PUMP ⇨ ❑ 164	BOMBA DE ENGRANAJES		2
51	4043122	2	CYLINDER SCREW ISO 4762 M10X20 10.9	TORNILLO CILINDRICO		
52	7402296	1	SCREW FITTING BFW 15L	ATORNILLAMIENTO		
53	7367136	1	SCREW FITTING BFW 35L ⇨ ❑ 111	ATORNILLAMIENTO		
60	7003800	2	SCREW FITTING GE 28L	ATORNILLAMIENTO		

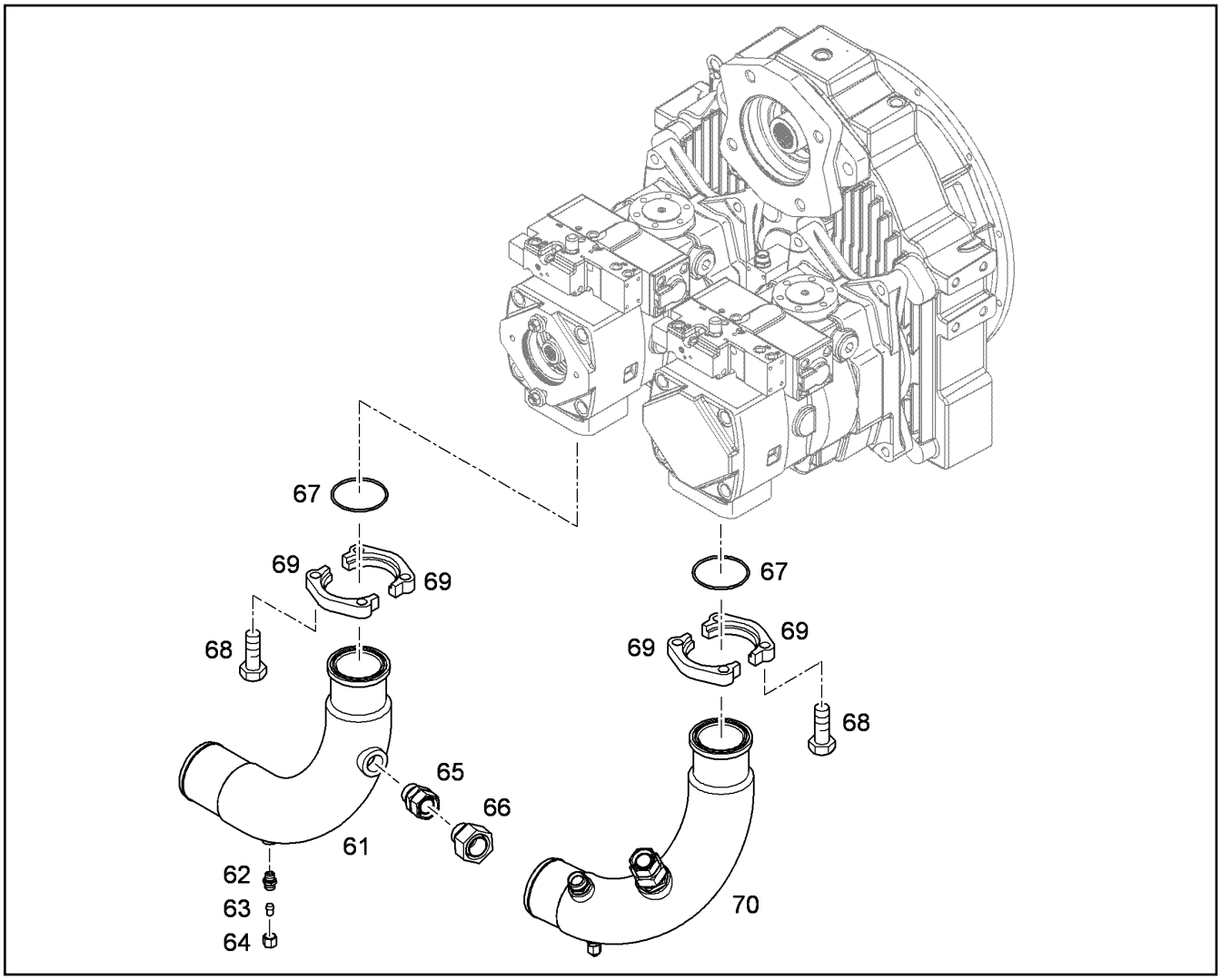

Pos.	Item	Quantity	Description	Descripción	Serie	K
61	9018026	1	INTAKE NOZZLE	RACOR ASPIRACION		1
62	7003814	1	LUG GE 10L	ESPIGA		
63	4774001	1	UNION NUT DIN 3870 A L 10 A3C	TUERCA UEWF		
64	4900038	1	TAPER COLLET	CONO DE CIERRE		
65	7367993	1	SCREW FITTING EGE 28L	ATORNILLAMIENTO		
66	7367750	1	SCREW FITTING RED 35/28L	ATORNILLAMIENTO		
67	7363759	2	O-RING	JUNTA TORICA		1
68	10001073	8	HEX BOLT ISO 4017 M16X40 10.9 DAC	TORNILLO DE CABEZA HEXAGO		
69	5603839	4	FLANGE HALF	MITAD DE BRIDA		
70	9943041	1	INTAKE NOZZLE	RACOR ASPIRACION		1

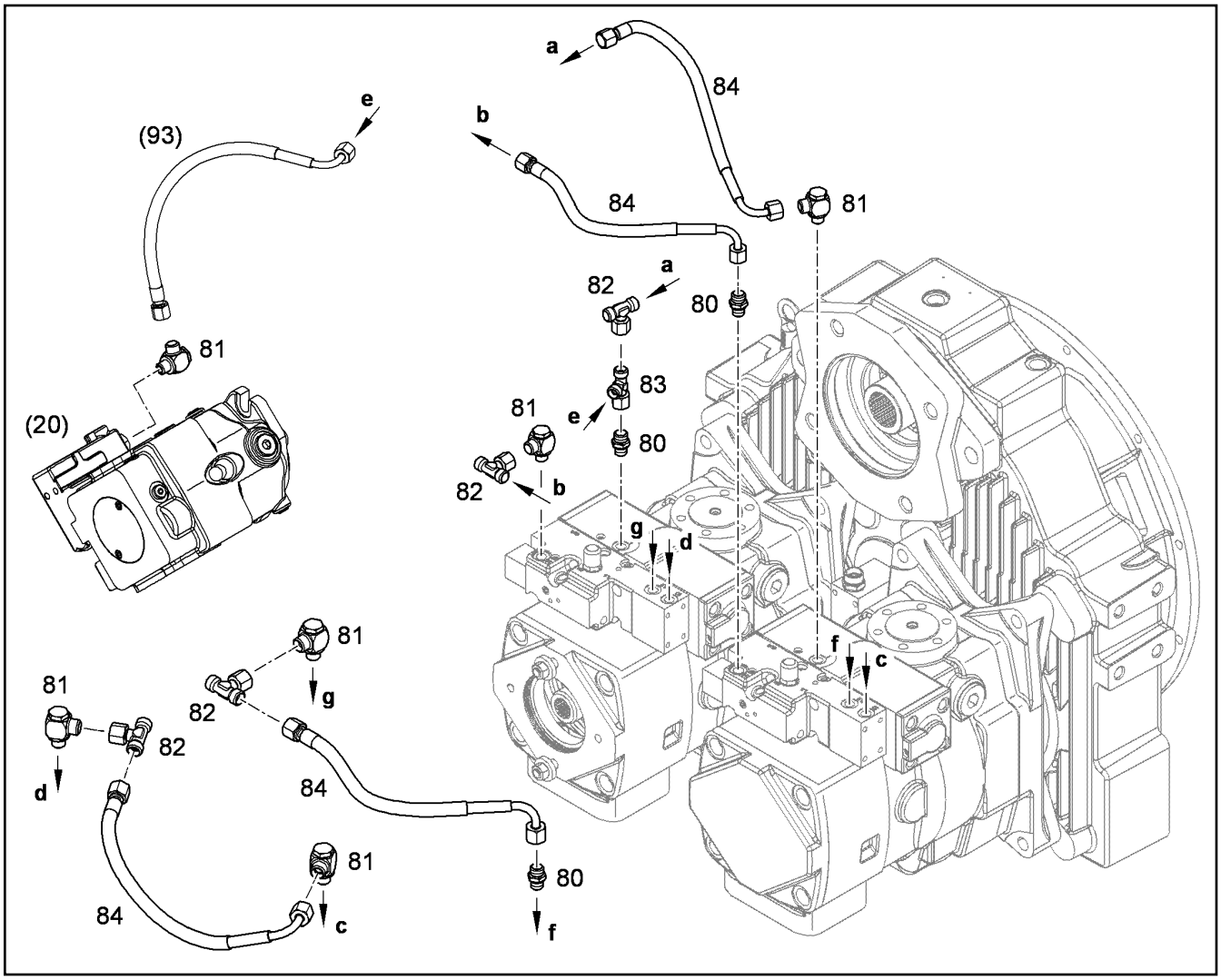

Pos.	Item	Quantity	Description	Descripción	Serie	K
80	7003814	3	LUG GE 10L	ESPIGA		
81	7617714	6	HINGED THREADED UNION WH 10L	ATORNILLAMIENTO ORIENTABL		
82	482430314	4	SCREW FITTING ET 10L	ATORNILLAMIENTO		
83	247242302	1	SCREW FITTING EL 10L	ATORNILLAMIENTO		
84	5612659	4	HOSE	TUBO GOMA		2

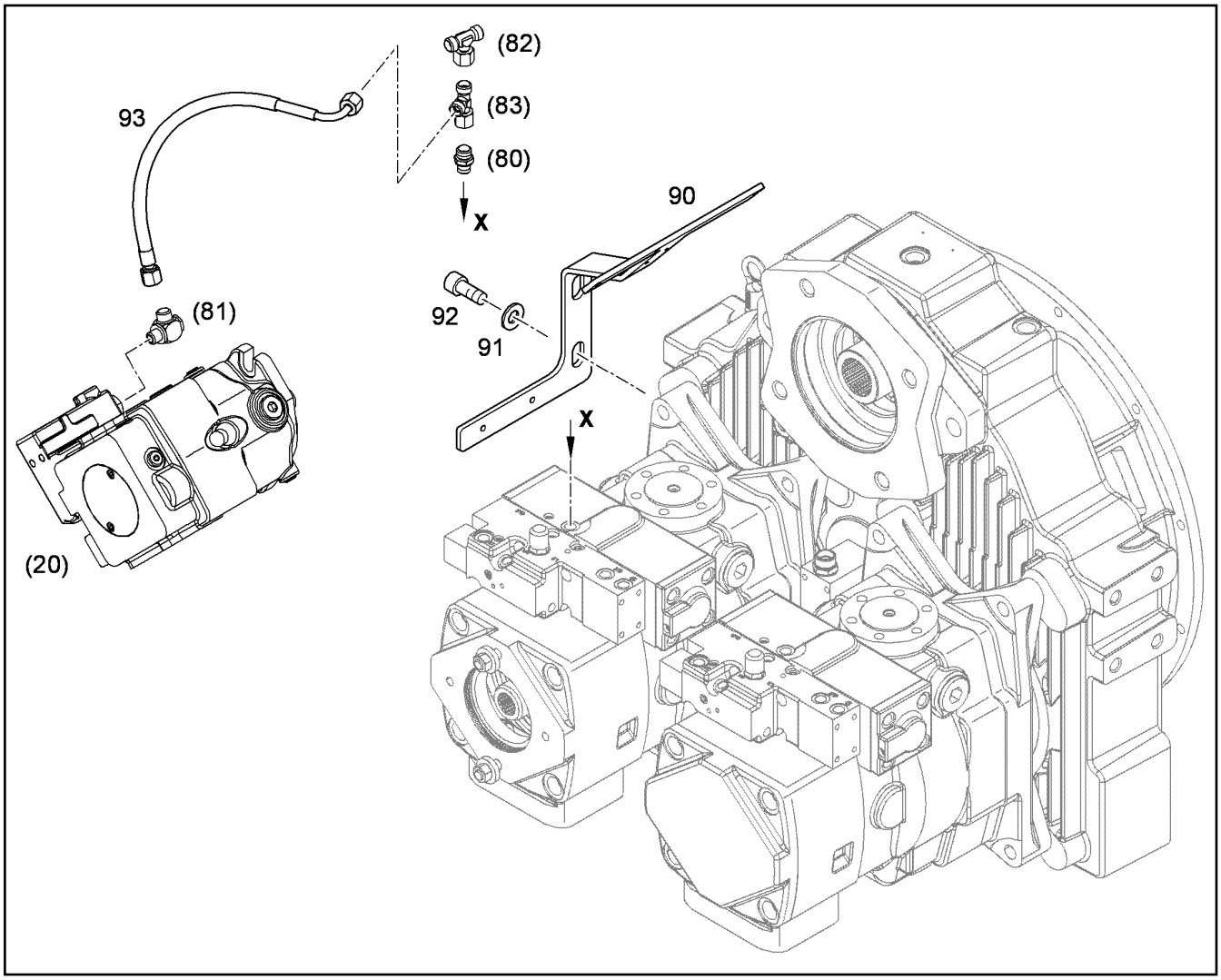

Pos.	Item	Quantity	Description	Descripción	Serie	K
90	10065439	1	CONSOLE	CONSOLA		1
91	10289806	2	WASHER ISO 7089 16 300HV	ARANDELA		
92	10001464	2	CYLINDER SCREW ISO 4762 M16X35 10.9	TORNILLO CILINDRICO		
93	5612659	1	HOSE	TUBO GOMA		2

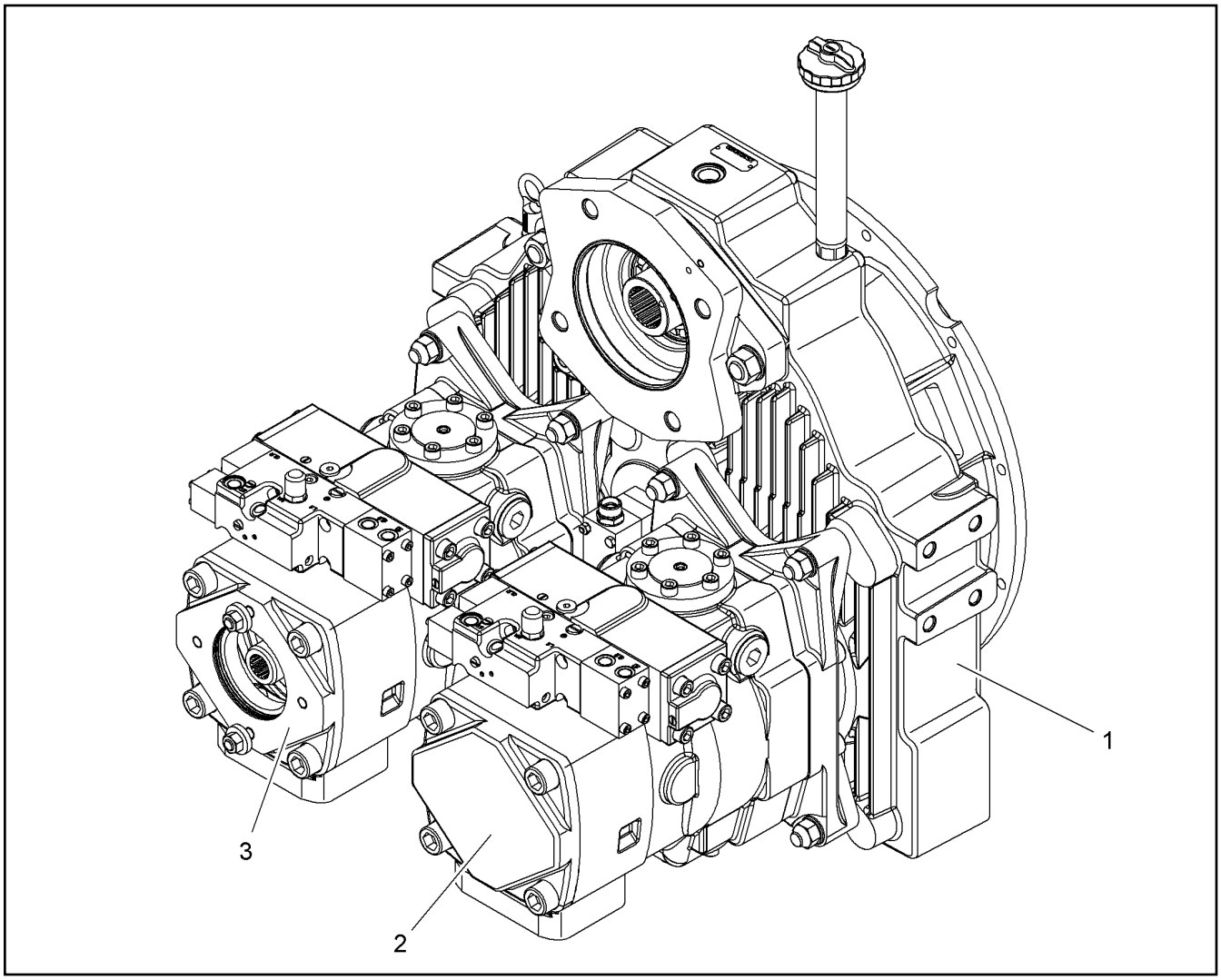

Pos.	Item	Quantity	Description	Descripción	Serie	K
1	9080120	1	PUMP DISTRIBUTION GEAR [107334099] ⇨ ❑ 126	ENGRANAJE DISTRIBUCION BO		2
2	9072922	1	HYDRAULIC VARIABLE DISPLACEMEN [101937457] ⇨ ❑ 134	BOMBA CIL. VAR. HIDR.	-99998	6
3	9077452	1	HYDRAULIC VARIABLE DISPLACEMEN [101933541] ⇨ ❑ 136	BOMBA CIL. VAR. HIDR.	-99998	6

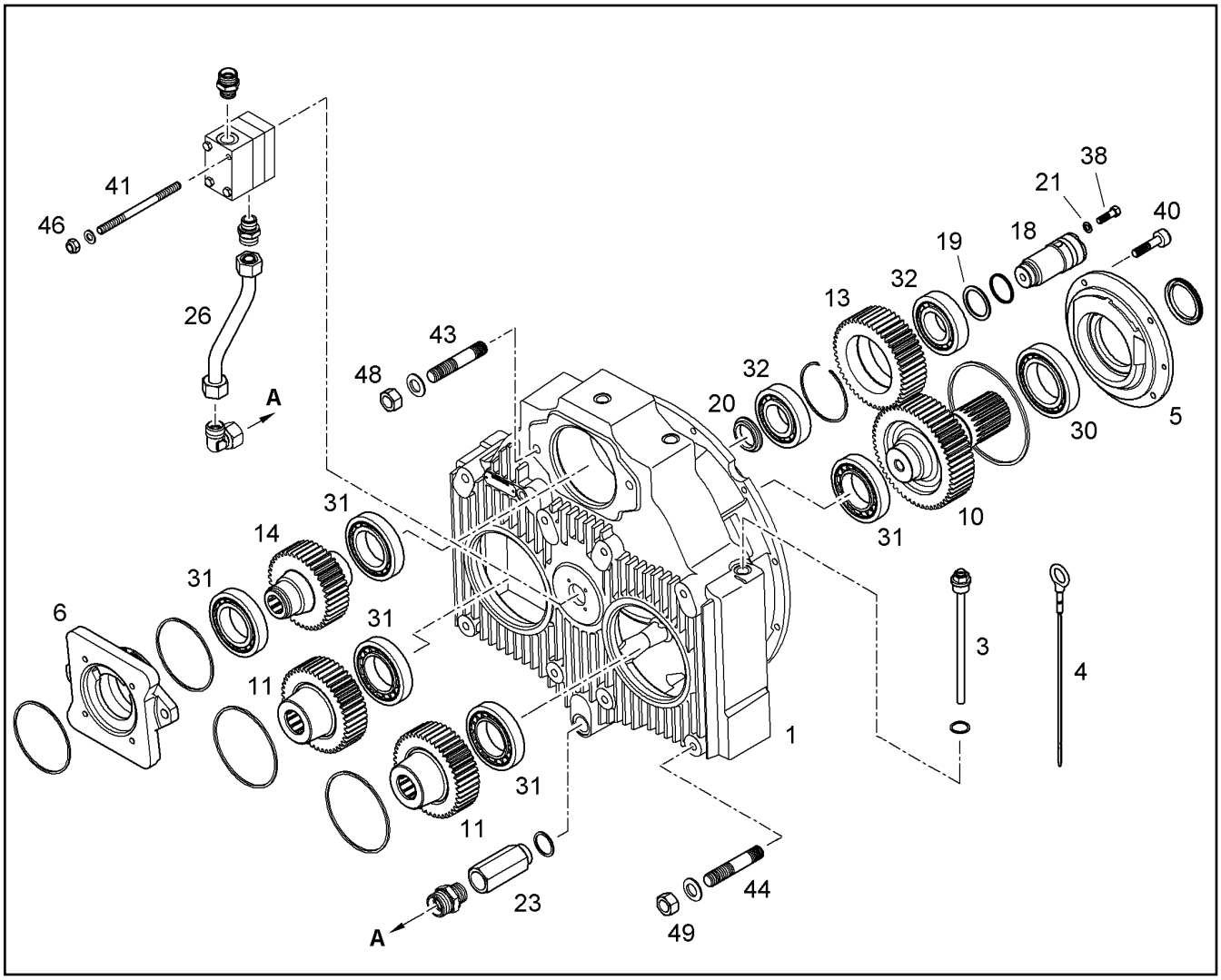

Pos.	Item	Quantity	Description	Descripción	Serie	K
1	9077975	1	HOUSING	CARCASA		
3	9080211	1	GUIDE FOR OIL DIPSTICK CPL. ⇨ ❑ 129			
4	9080210	1	OIL DIPSTICK	VARILLA NIVEL ACEITE C.ANILL		
5	9078145	1	BEARING COVER	SOMBRERETE		
6	9080197	1	BEARING FLANGE	BRIDA COJINETE		
10	9080192	1	PRIMARY SHAFT CPL. Z=59 M=3,5	ÁRBOL DE ENTRADA COMPL.		
11	9080175	2	SPUR WHEEL Z=43 M=3.5	ENGRANAJE CILINDRICO		
13	9080189	1	INTERMEDIATE WHEEL Z=45 M=3.5	RUEDA INTERMEDIA		
14	9080176	1	SPUR WHEEL Z=39 M=3.5	ENGRANAJE CILINDRICO		
18	9072996	1	INTERMEDIATE WHEEL AXLE	EJE DE RUEDA INTERMEDIA		
19	4981277	1	SHIM RING DIN 988 50 X 63X 3,0	ARANDELA AJUSTE		
20	9073074	1	WASHER	ARANDELA		
21	9271441	2	WASHER	ARANDELA		
23	9080193	1	LUG	ESPIGA		
26	9080198	1	SUCTION PIPE	TUBO DE ASPIRACION		
30	4980223	1	ROLLER BEARING DIN 5412 NJ 215 ECP C3	COJINETE DE RODILLOS P.CIL.		1
31	4980224	5	ROLLER BEARING DIN 5412 NJ 213 ECP C3	COJINETE DE RODILLOS P.CIL.		1
32	4980687	2	ROLLER BEARING DIN 5412 NJ 310 ECP C3	COJINETE DE RODILLOS P.CIL.		1
38	4900089	2	HEX BOLT ISO 4017 M8x20 8.8 A2C	TORNILLO DE CABEZA HEXAGO		
40	4980965	4	CYLINDER SCREW DIN 6912 M10X25 8.8	TORNILLO CILINDRICO		
41	4981153	2	DOUBLE-ENDED STUD DIN 939 M 6 X 80 8.8	TORNILLO ESPARRAGO		
43	4980222	2	DOUBLE-ENDED STUD DIN 939 M 20 X 50 1	TORNILLO ESPARRAGO		
44	4068556	8	DOUBLE-ENDED STUD DIN 939 M 16 X 70 8.	TORNILLO ESPARRAGO		
46	4000379	2	HEX NUT M6	TUERCA HEXAGONAL		
48	10425687	2	HEX NUT M20 10021432-006	TUERCA HEXAGONAL		

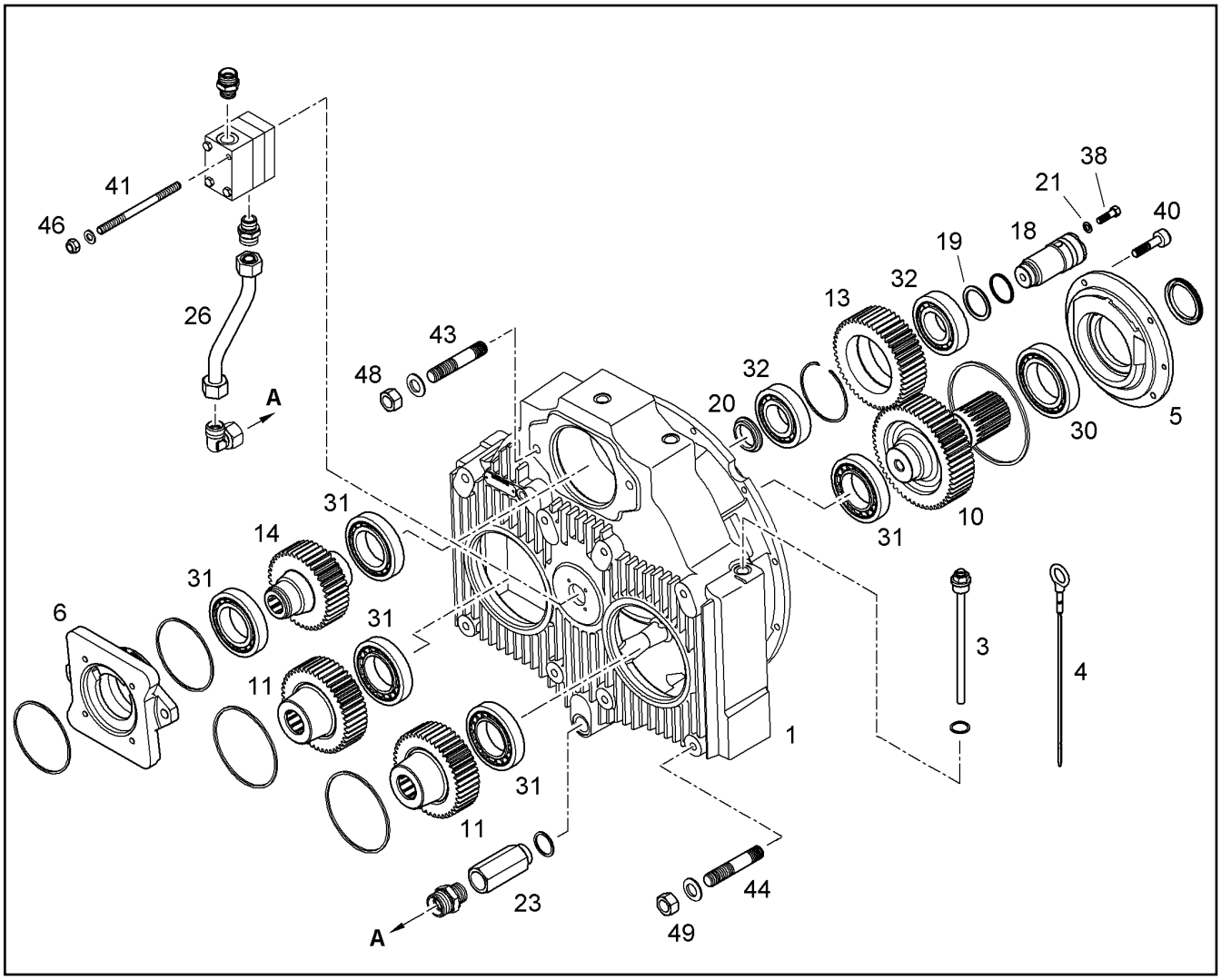

Pos.	Item	Quantity	Description	Descripción	Serie	K
49	4000420	8	HEX NUT M16	TUERCA HEXAGONAL		

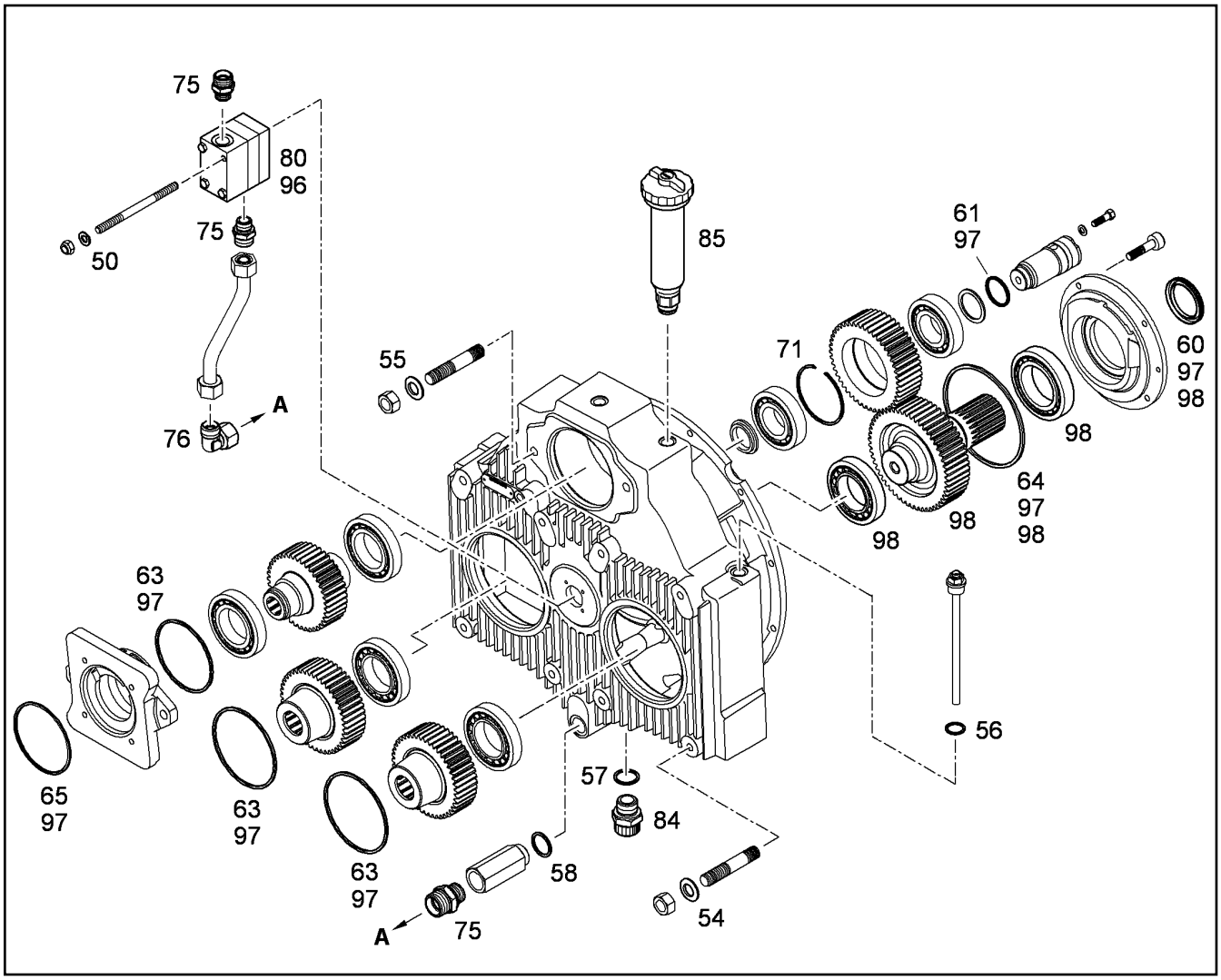

Pos.	Item	Quantity	Description	Descripción	Serie	K
50	4229911	2	LOCK WASHER	ARANDELA SEGURIDAD		
54	10289806	8	WASHER ISO 7089 16 300HV	ARANDELA		
55	10289808	2	WASHER ISO 7089 20 300HV	ARANDELA		
56	7101015	1	SEALING RING DIN 7603 A 22 X 27 CU	JUNTA ANULAR		1
57	7101021	1	SEALING RING DIN 7603 A 30 X 36 CU	JUNTA ANULAR		1
58	7101012	1	SEALING RING DIN 7603 A 18 X 22 CU	JUNTA ANULAR		1
60	7381204	1	ROTARY SHAFT LIP SEAL	RETEN RADIAL		1
61	7380955	1	O-RING	JUNTA TORICA		1
63	7380512	3	O-RING	JUNTA TORICA		1
64	7380626	1	O-RING	JUNTA TORICA		1
65	7380601	1	O-RING	JUNTA TORICA		1
71	7380954	1	SNAP RING	ANILLO MUELLE		
75	7003570	3	SCREW FITTING GE 15L	ATORNILLAMIENTO		
76	7615379	1	SCREW FITTING EW 15L	ATORNILLAMIENTO		
80	9884140	1	COOLING CIRCUIT PUMP ⇨ ❑ 188	BOMBA CTO.REFRIG.		2
84	5004624	1	OIL DRAIN PLUG ⇨ ❑ 584	TORNILLO PURGA ACEITE		
85	9442350	1	OIL FILLER NECK ⇨ ❑ 225	CODO DE LLENADO DE ACEITE		
96	10119482	1	SEAL KIT COOLING PUMP ⇨ ❑ 265	JJ BOMBA REFRIG.		
97	9080195	1	SEAL KIT ⇨ ❑ 218	JUEGO JUNTAS		2
98	9080196	1	REPAIR KIT DRIVE SHAFT ⇨ ❑ 169	JR ÁRBOL DE ENTRADA		2

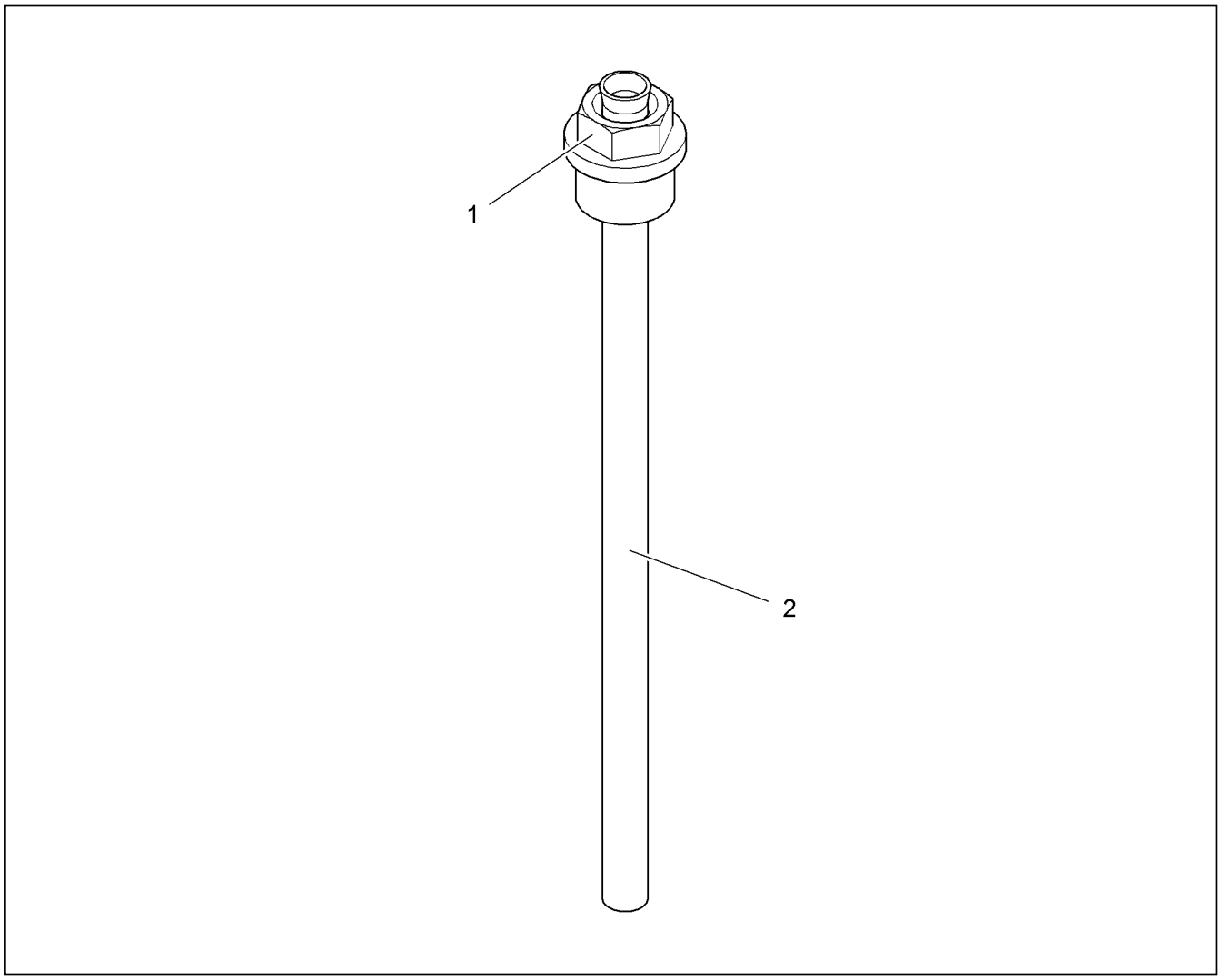

Pos.	Item	Quantity	Description	Descripción	Serie	K
1		1	SCREW	TORNILLO		1
2		1	GUIDING PIPE	TUBO GUIA		

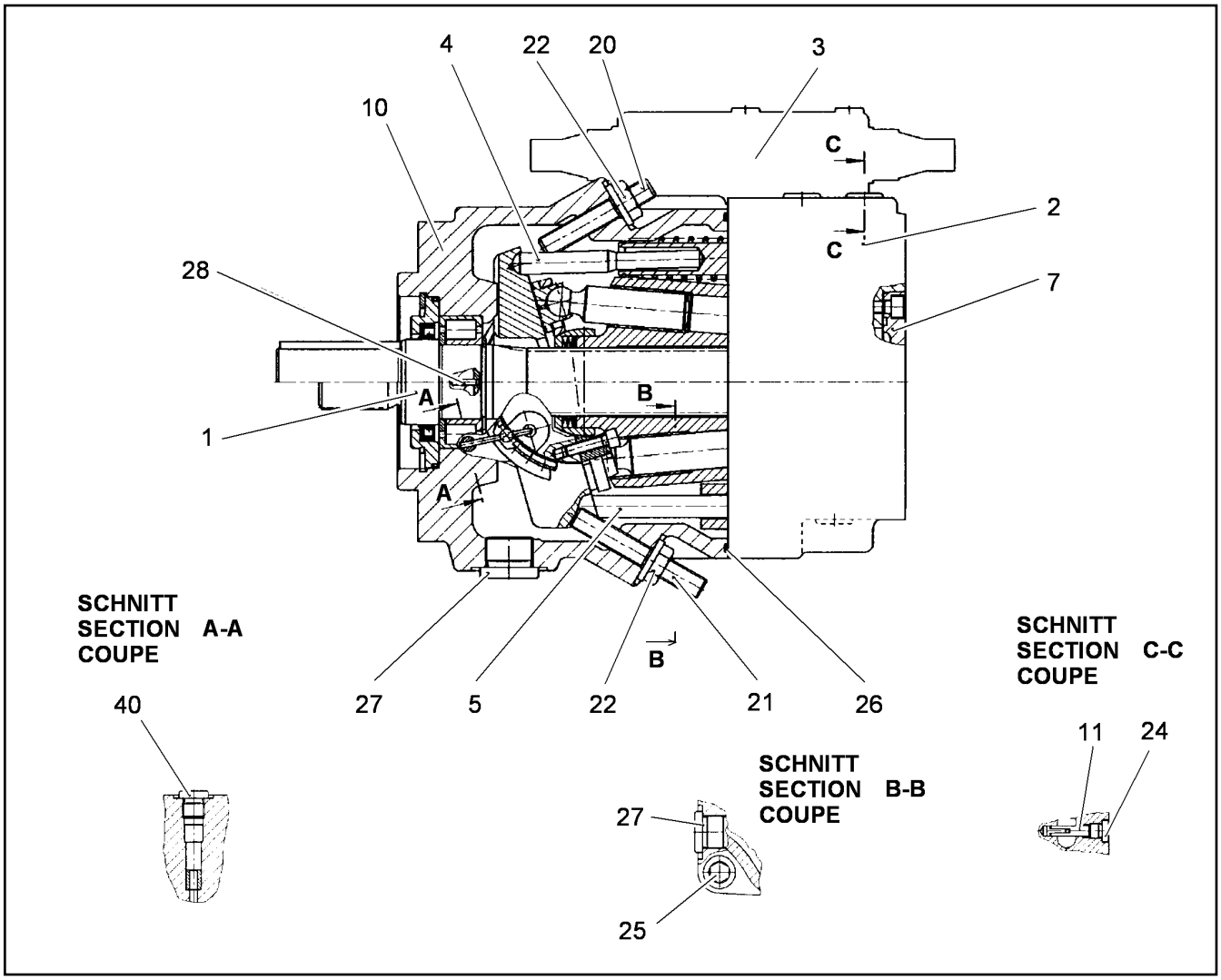

Pos.	Item	Quantity	Description	Descripción	Serie	K
1	10333070	1	DRIVING GEAR ⇨ ❑ 149	MECANISMO DE ACCIONAMIENT		
2	10333071	1	CONNECTING PLATE ⇨ ❑ 150	PLACA DE CONEXION		
3	10102064	1	REGULATOR ⇨ ❑ 146	REGULADOR		1
4	10333238	1	HYDRAULIC ADJUSTMENT ⇨ ❑ 156	REGUL.HIDR.		
5	10007956	1	ADJUSTMENT ⇨ ❑ 174	REGULACIÓN		
7	10333073	1	COVER WITH ACCESSORIES ⇨ ❑ 151	TAPA CON ACCESORIOS		
10	10333074	1	HOUSING	CARCASA		
11	7023646	2	PIVOT PIN	ESPIGA ARTICULADA		
20	7369967	1	GRUB SCREW	TORNILLO PRISIONERO		
21	7623427	1	GRUB SCREW M10X68	TORNILLO PRISIONERO		
22	7369934	2	COLLAR NUT	TUERCA CON BRIDA		
24	10115237	4	SCREW PLUG M10X1	TORNILLO DE CIERRE		
25	10001466	4	CYLINDER SCREW ISO 4762 M14X60 10.9	TORNILLO CILINDRICO		
26	10333075	1	O-RING	JUNTA TORICA		1
27	10101654	2	SCREW PLUG	TORNILLO DE CIERRE		
28	4002729	2	DOWEL PIN ISO 8748 3 X 10	PASADOR ELASTICO		
40	10333078	1	LOCKING SET ⇨ ❑ 152	PIEZA DE CIERRE		

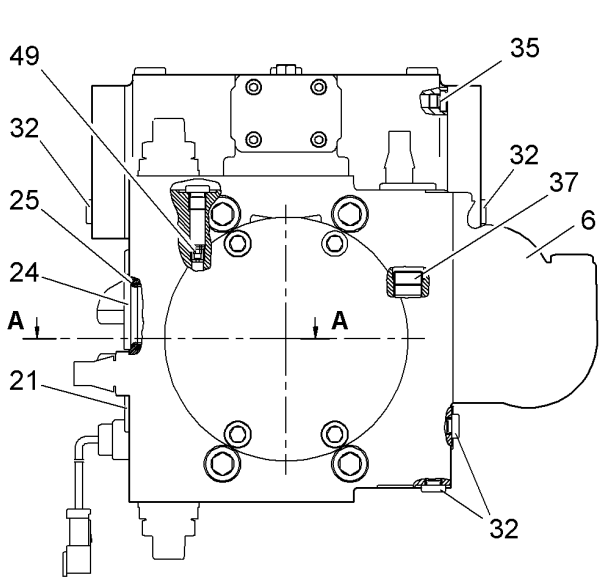

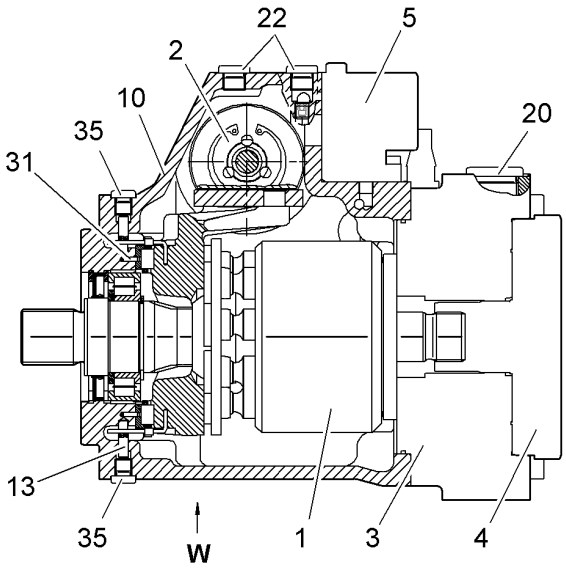

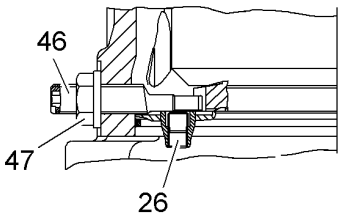

Schnitt
Section A-A
Coupe

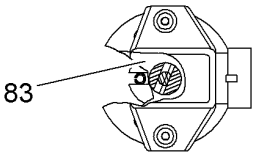

Ansicht
View W
Vue

Pos.	Item	Quantity	Description	Descripción	Serie	K
1	10441456	1	DRIVING GEAR ⇨ ❑ 133	MECANISMO DE ACCIONAMIENT		
2	10409747	1	REGULATION ⇨ ❑ 177	REGULACIÓN HIDR.		
3	10333226	1	CONNECTING PLATE ⇨ ❑ 153	PLACA DE CONEXION		
4	10333227	1	GEAR PUMP ⇨ ❑ 154	BOMBA DE ENGRANAJES		2
5	10346684	1	CONTROL UNIT ⇨ ❑ 176	SERVOMANDO		2
6	10333228	1	FILTER ⇨ ❑ 155	FILTRO		1
10	10333230	1	HOUSING	CARCASA		
13	10216667	2	PIVOT PIN	ESPIGA ARTICULADA		
20	7369939	2	SCREW PLUG	TORNILLO DE CIERRE		
21	7009357	1	SCREW PLUG	TORNILLO DE CIERRE		
22	10115014	3	SCREW PLUG M16X1,5	TORNILLO DE CIERRE		
24	10410639	1	SCREW PLUG	TORNILLO DE CIERRE		
25	10333232	1	O-RING 29,82	JUNTA TORICA		1
26	4000529	1	THREAD.PLUG DIN 906 M 18 X1,5 ST	TORNILLO VSL		
31	4002828	2	DOWEL PIN DIN 7346 3 X 10	PASADOR ELASTICO		
32	7009358	3	SCREW PLUG VSTI	TORNILLO DE CIERRE		
35	10115237	4	SCREW PLUG M10X1	TORNILLO DE CIERRE		
37	10440724	1	SCREW PLUG	TORNILLO DE CIERRE		
46	10333239	1	ECCENTRIC SCREW	TORNILLO EXCÉNTRICO		
47	7009369	1	SEAL-LOCK-SHOULDER NUT M12	TUERCA CON COLLAR SEALLOC		

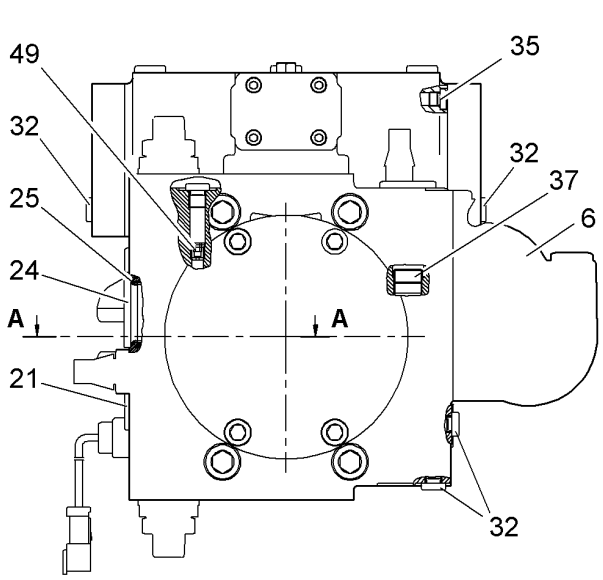

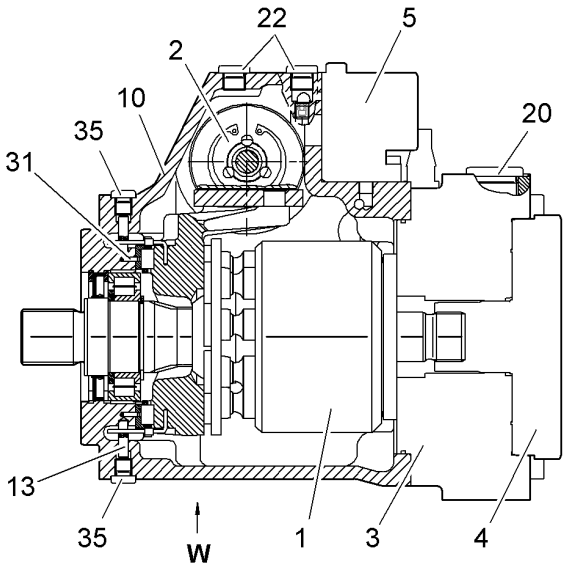

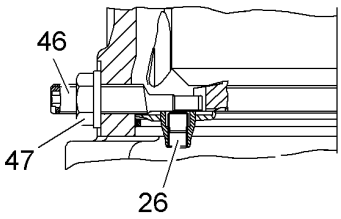

Schnitt
Section A-A
Coupe

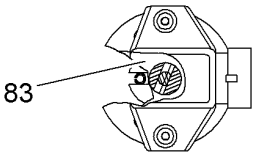

Ansicht
View W
Vue

Pos.	Item	Quantity	Description	Descripción	Serie	K
49	7618601	1	NOZZLE	BOQUILLA		
83	10441458	1	SWIVELLING ANGLE SENSOR ⇨ ❑ 166	SENSOR DE ÁNGULO DE GIRO		2

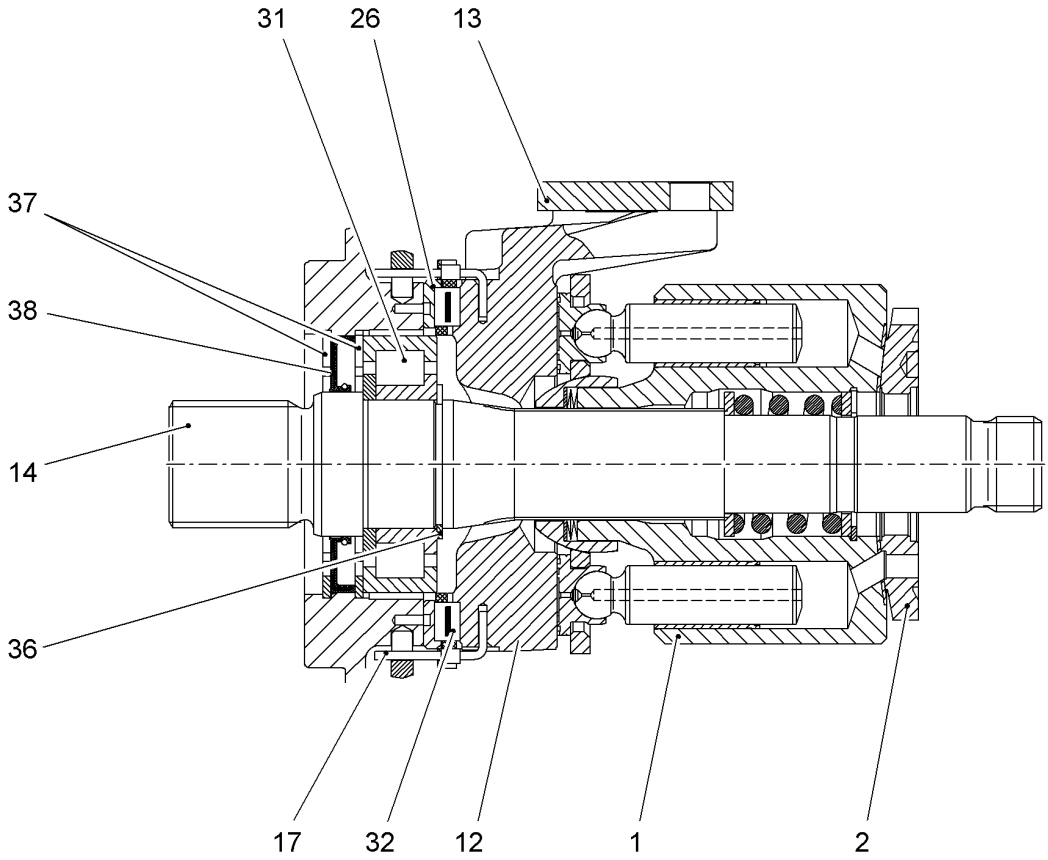

Pos.	Item	Quantity	Description	Descripción	Serie	K
1	10410640	1	DRIVING GEAR ⇨ ❑ 165	MECANISMO DE ACCIONAMIENT		
2	10410653	1	GUIDE PLATE	PLACA MANDO		
12	10333246	1	CRADLE	CUNA		
13	10216694	1	SLIDING PAD	BLOQUE DESLIZANTE		1
14	10294787	1	DRIVING SHAFT	EJE MOTOR		2
17	514586508	1	WIRE	HILO		
26	10040134	1	BEARING BOXES-PAIR	PAR DE SEMICOJINETES		1
31	7618605	1	CYLINDRICAL ROLLER BEARING	RODAMIENTO RODILLO CILINDR		1
32	7623835	1	CAGE PAIR	PAR DE JAULAS		1
36	10216718	1	LOCKING RING	ANILLO SEGURIDAD		
37	10216719	2	LOCKING RING	ANILLO SEGURIDAD		
38	7620752	1	SHAFT SEAL 50X80X7/5	ANILLO DE RETÉN		1

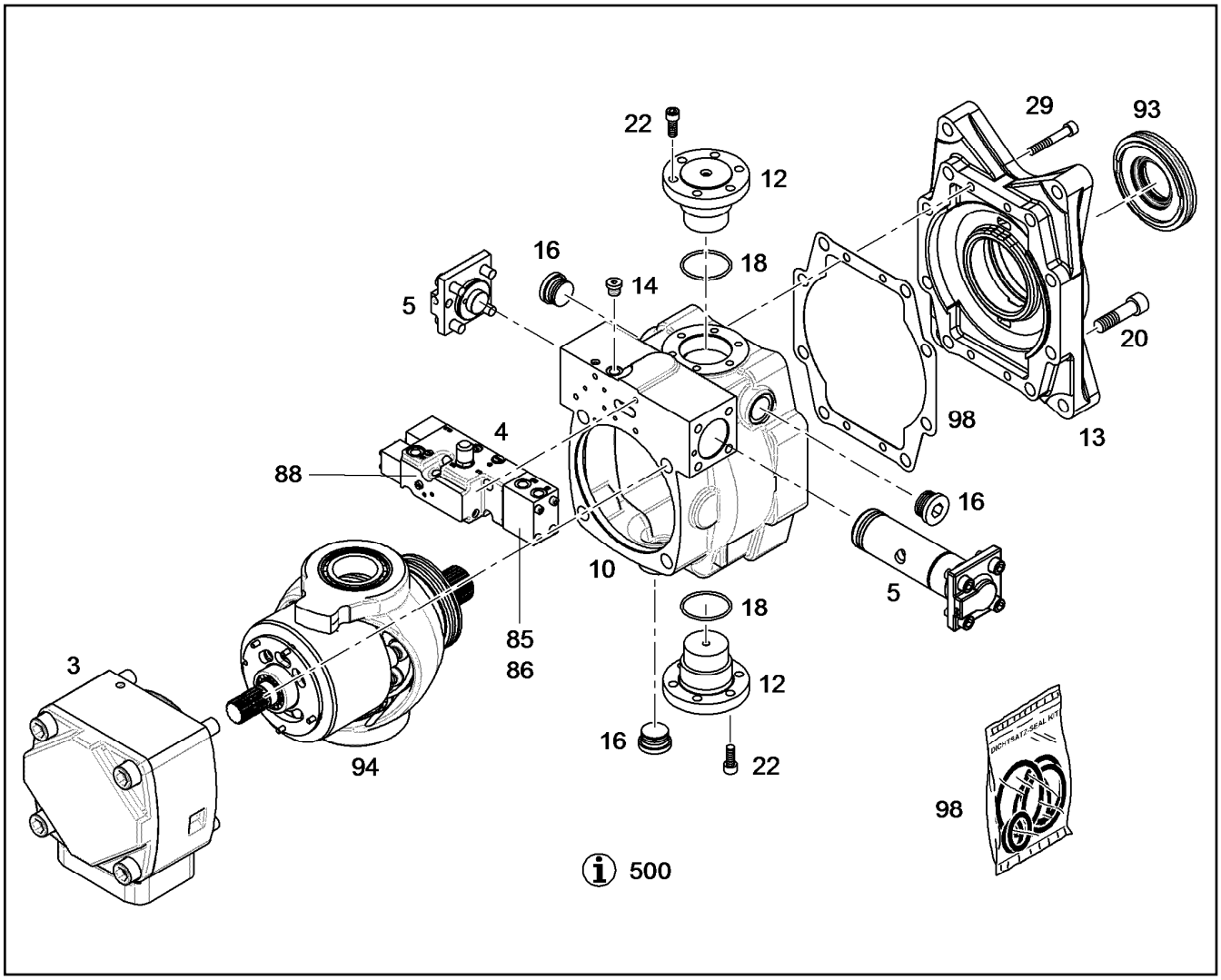

Pos.	Item	Quantity	Description	Descripción	Serie	K
3		1	CONNECTING PLATE ⇨ ❑ 145	PLACA DE CONEXION		1
4		1	REGULATING VALVE ⇨ ❑ 175	VALVULA DE REGULACION		1
5		1	ADJUSTMENT ⇨ ❑ 139	REGULACIÓN		
10		1	HOUSING	CARCASA		
12	9279836	2	FLANGE	BRIDA		
13	9273491	1	ADD-ON FLANGE	BRIDA DE MONTAJE		
14		1	SCREW PLUG ⇨ ❑ 760	TORNILLO DE CIERRE		
16	7361329	3	SCREW PLUG	TORNILLO DE CIERRE		
18	7380973	2	O-RING	JUNTA TORICA		1
20	10001074	8	CYLINDER SCREW ISO 4762 M16X60 10.9	TORNILLO CILINDRICO		
22	4043124	12	CYLINDER SCREW ISO 4762 M10X25 10.9	TORNILLO CILINDRICO		
29	4981088	4	CYLINDER SCREW ISO 4762 M10X65 10.9	TORNILLO CILINDRICO		
85		1	REPAIR SET LID ⇨ ❑ 185	JR TAPA		1
86		1	REPAIR KIT LR/SD/DA ⇨ ❑ 181	JR (TAPA DEL REGUL.)		
88	9882875	1	SEAL KIT REGULATING VALVE ⇨ ❑ 187	JJ VÁLVULA REGULADORA		1
93		1	REPAIR KIT LOCK RING ⇨ ❑ 73	JR ARO CIERRE		2
94		1	REPAIR KIT DRIVING MECHANISM ⇨ ❑ 172	JR GRUPO MOTOR		1

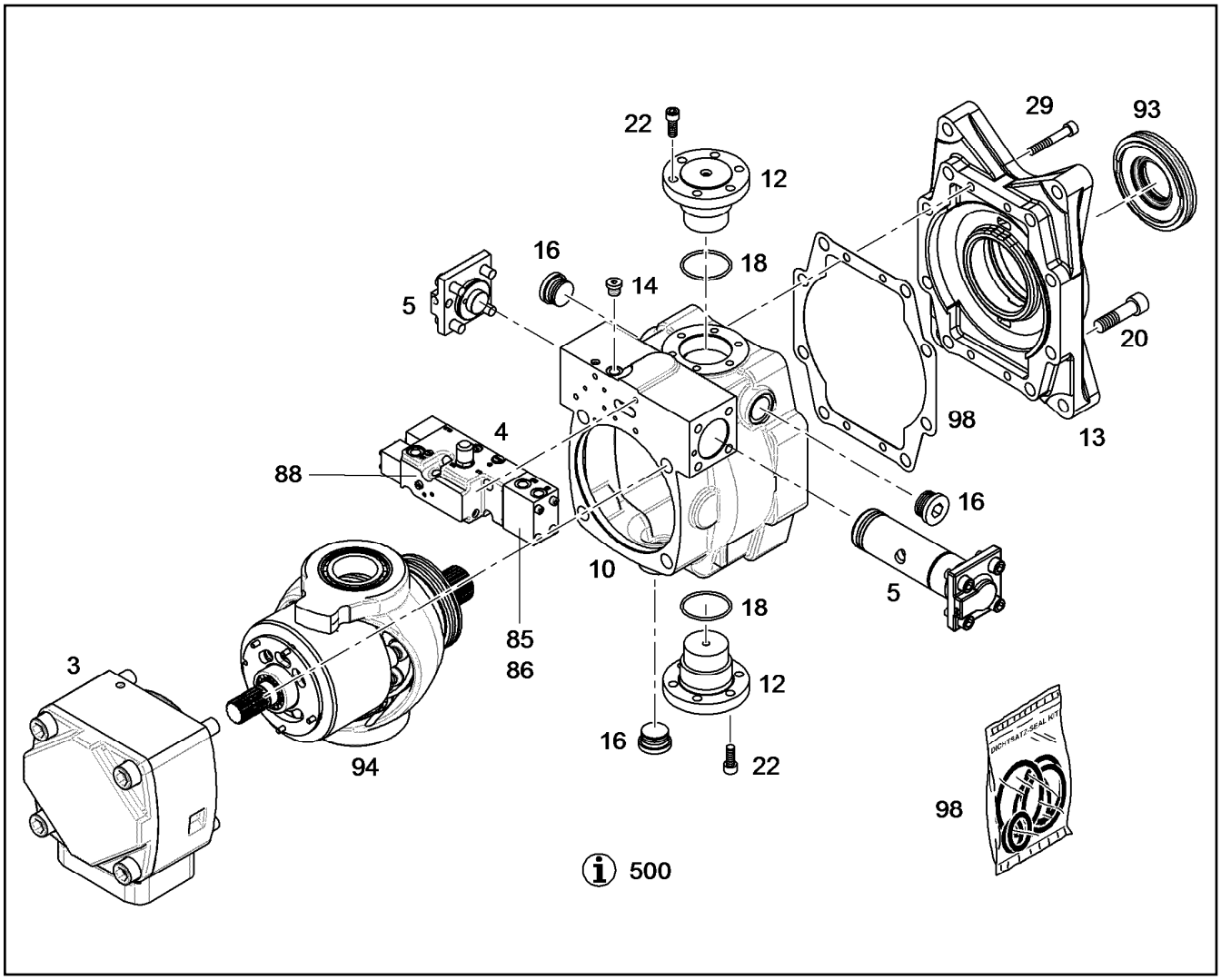

Pos.	Item	Quantity	Description	Descripción	Serie	K
98	9271657	1	SEAL KIT ⇨ ❑ 171	JUEGO JUNTAS		1
500	9278153	1	TABLE ORDER	TABLA		

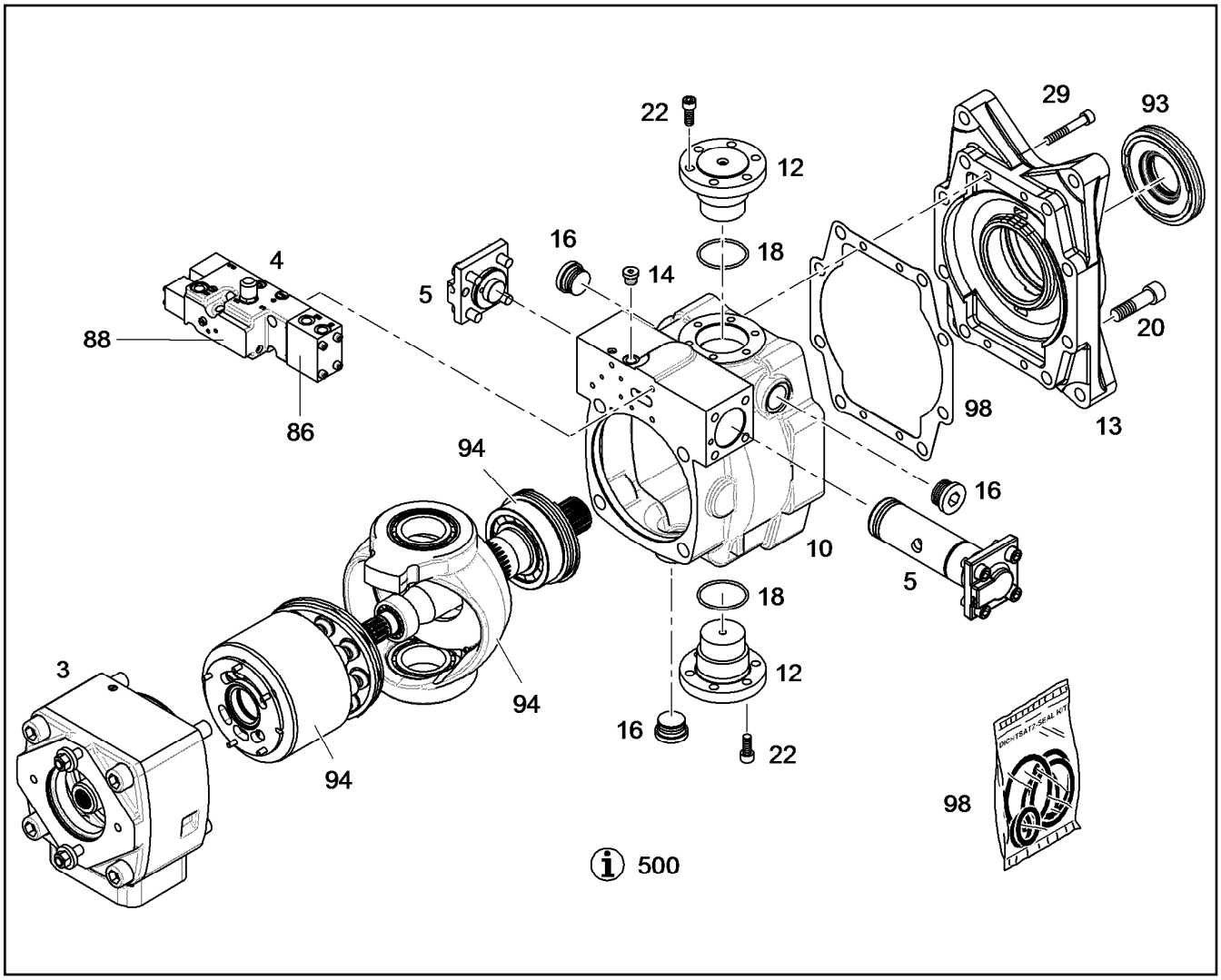

Pos.	Item	Quantity	Description	Descripción	Serie	K
3	9889161	1	CONNECTING PLATE ⇨ ❑ 192	PLACA DE CONEXION		1
4	10118374	1	REGULATING VALVE ⇨ ❑ 175	VALVULA DE REGULACION		1
5	9271648	1	ADJUSTMENT ⇨ ❑ 139	REGULACIÓN		
10		1	HOUSING	CARCASA		
12	9279836	2	FLANGE	BRIDA		
13	9273491	1	ADD-ON FLANGE	BRIDA DE MONTAJE		
14	7363125	1	SCREW PLUG ⇨ ❑ 760	TORNILLO DE CIERRE		
16	7380172	3	SCREW PLUG VSTI	TORNILLO DE CIERRE		
18	7380973	2	O-RING	JUNTA TORICA		1
20	10001074	8	CYLINDER SCREW ISO 4762 M16X60 10.9	TORNILLO CILINDRICO		
22	4043124	12	CYLINDER SCREW ISO 4762 M10X25 10.9	TORNILLO CILINDRICO		
29	4981088	4	CYLINDER SCREW ISO 4762 M10X65 10.9	TORNILLO CILINDRICO		
86	9078788	1	REPAIR KIT LR/SD/DA ⇨ ❑ 181	JR (TAPA DEL REGUL.)		
88	9882875	1	SEAL KIT REGULATING VALVE ⇨ ❑ 187	JJ VÁLVULA REGULADORA		1
93	9268751	1	REPAIR KIT LOCK RING ⇨ ❑ 73	JR ARO CIERRE		2
94	9888321	1	REPAIR KIT DRIVING MECHANISM ⇨ ❑ 172	JR GRUPO MOTOR		1
98	9271657	1	SEAL KIT ⇨ ❑ 171	JUEGO JUNTAS		1

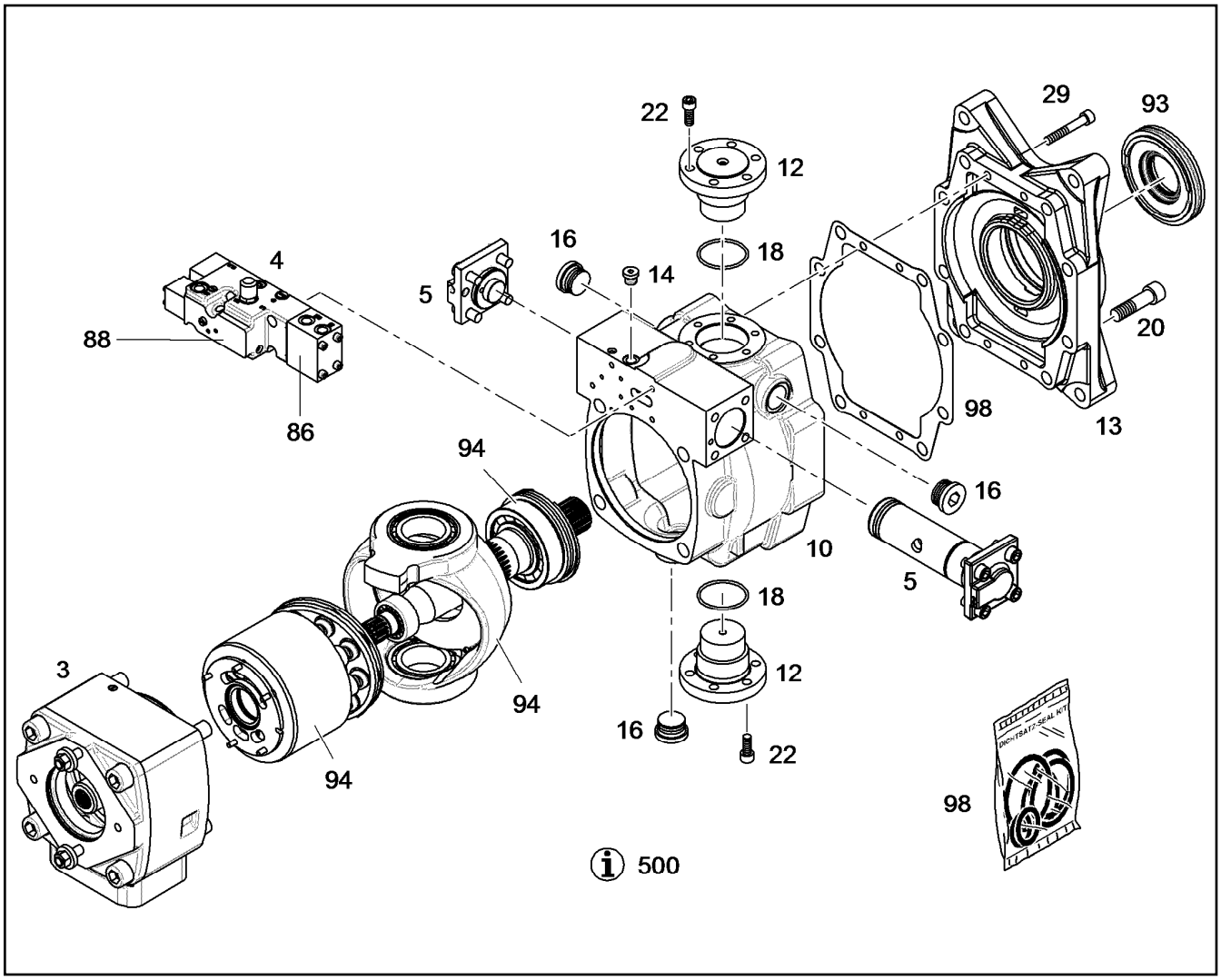

Pos.	Item	Quantity	Description	Descripción	Serie	K
500	9278153	1	TABLE ORDER	TABLA		

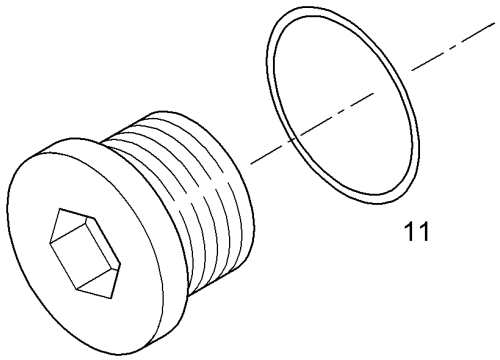

Pos.	Item	Quantity	Description	Descripción	Serie	K
11	7380647	1	O-RING	JUNTA TORICA		1

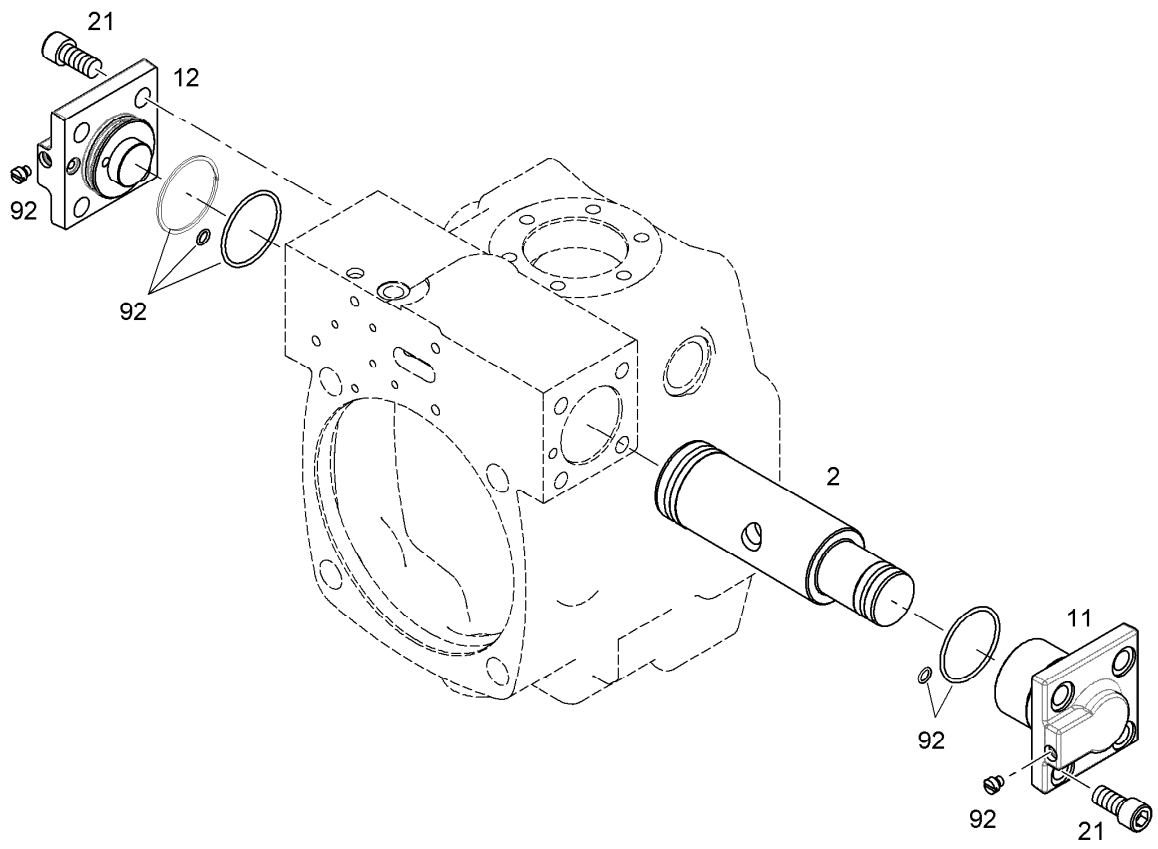

Pos.	Item	Quantity	Description	Descripción	Serie	K
2		1	RK PISTON ⇨ ❑ 168	JR PISTÓN AJUSTE		1
11		1	LID	TAPA		
12		1	LID	TAPA		
21		8	CYLINDER SCREW ISO 4762 M12X25 10.9	TORNILLO CILINDRICO		
92	9271653	1	SEAL KIT ADJUSTMENT ⇨ ❑ 170	JJ REGUL.		1

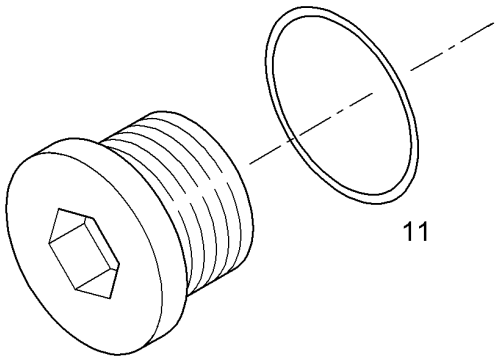

Pos.	Item	Quantity	Description	Descripción	Serie	K
11	7381448	1	O-RING	JUNTA TORICA		1

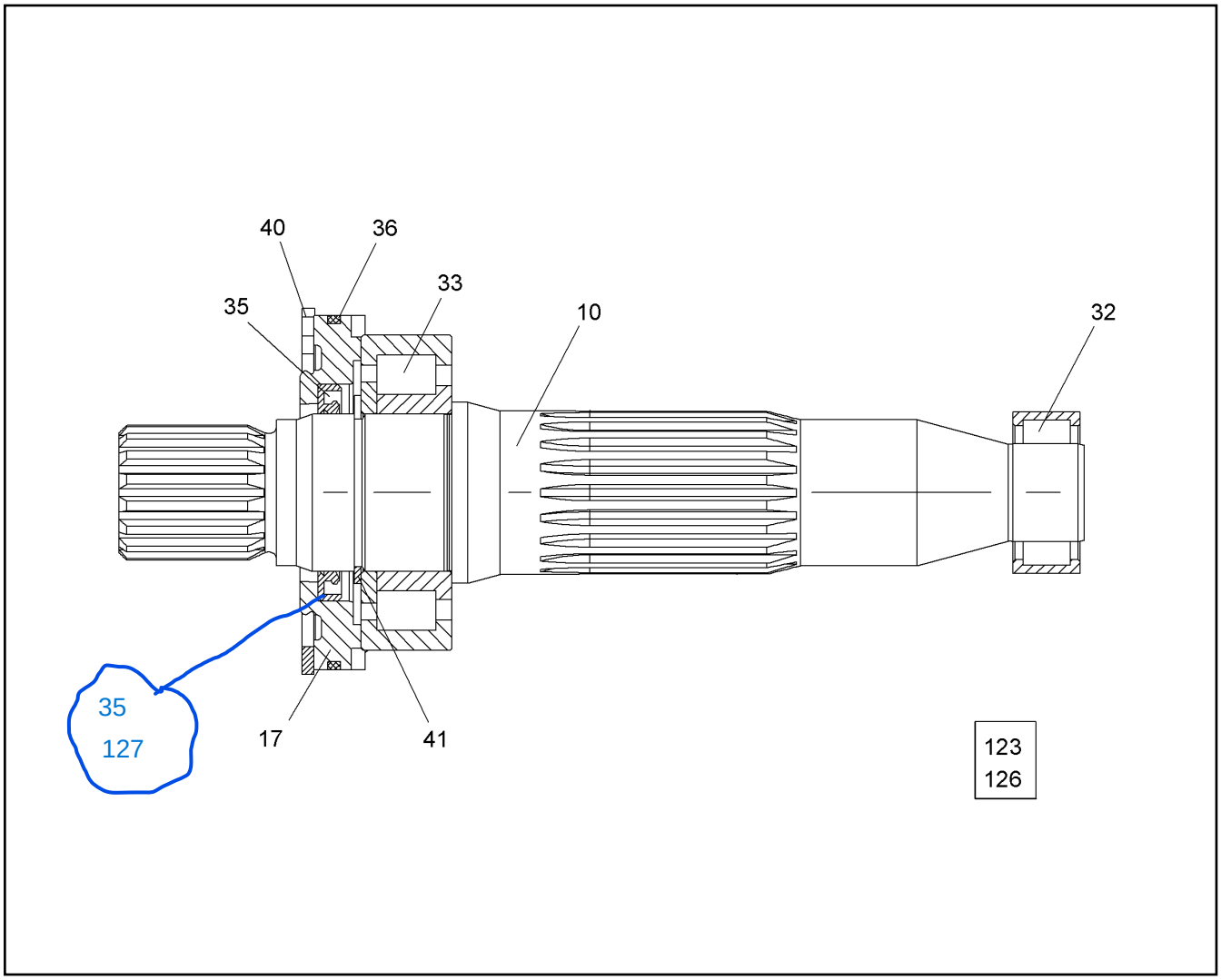

Pos.	Item	Quantity	Description	Descripción	Serie	K
10		1	DRIVING SHAFT	EJE MOTOR		
17		1	CLOSING RING	ANILLO DE CIERRE		
32		1	CYLINDRICAL ROLLER BEARING	RODAMIENTO RODILLO CILINDR		1
33		1	CYLINDRICAL ROLLER BEARING	RODAMIENTO RODILLO CILINDR		1
35	49417708	1	ROTARY SHAFT LIP SEAL 50X65X7,0	RETEN RADIAL		1
36		1	O-RING	JUNTA TORICA		1
40		1	LOCKING RING DIN 472 120 X4	ANILLO SEGURIDAD		
41		1	LOCKING RING DIN 471 50 X2	ANILLO SEGURIDAD		
123		1	SEALANT	AGENTE OBTURADOR		
126		1	GREASE	GRASA		

127 49417708 RETENTOR DO EIXO MOTOR GIRO

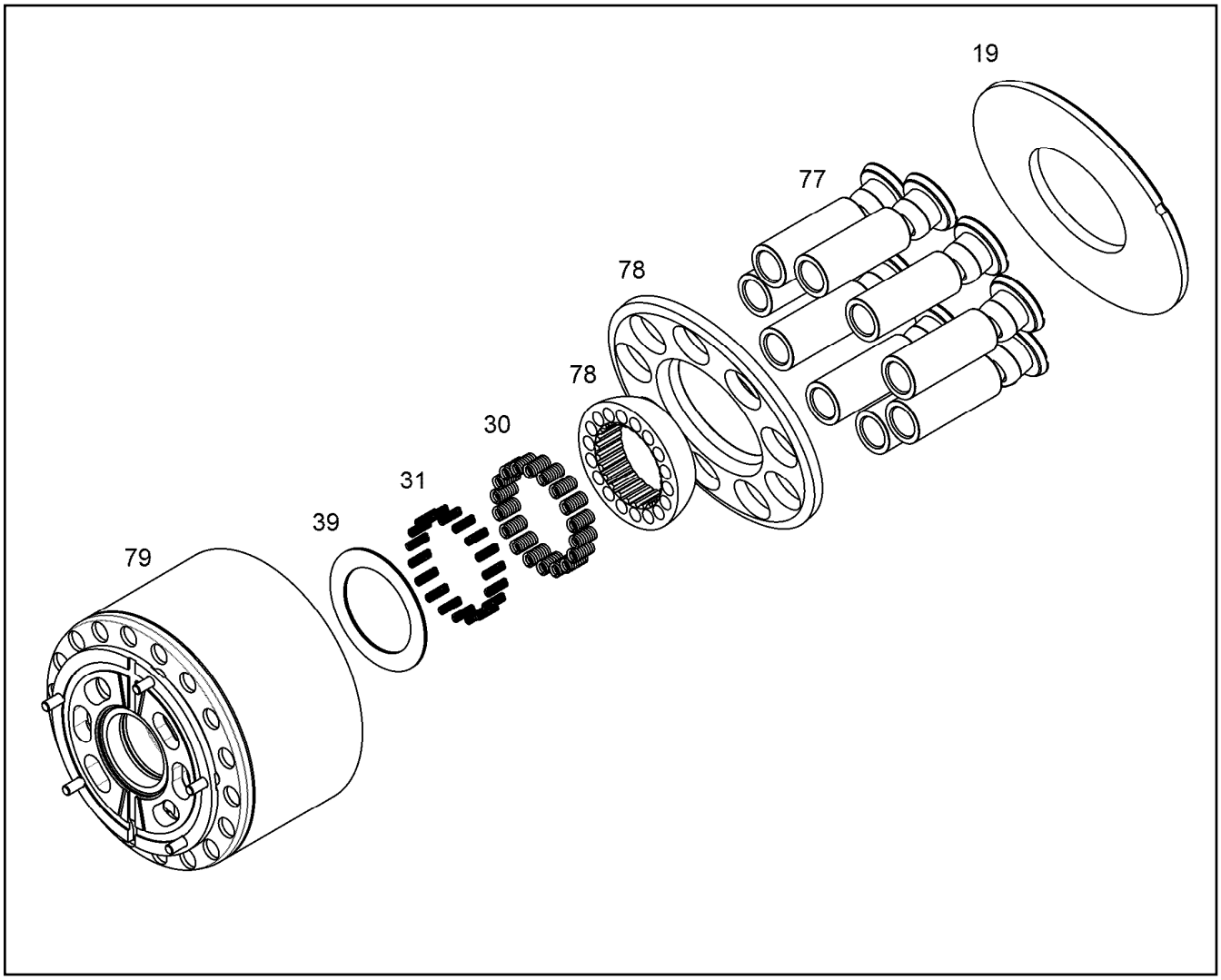

Pos.	Item	Quantity	Description	Descripción	Serie	K
19	9886688	1	SLIDING DISC	DISCO DE DESLIZAMIENTO		
30	9266641	20	PRESSURE SPRING	MUELLE COMPRESION		
31	9268747	20	PRESSURE SPRING	MUELLE COMPRESION		
39	9885920	1	WASHER SET	JUEGO LUNAS		
77	9880604	1	RK PISTON WITH GUIDE SHOE NG 165 ⇨ ❑ 186	JR ÉMBOLO C.PATÍN DESL.		1
78	9888119	1	REPAIR KIT NG 165 ⇨ ❑ 190	JR (RZ-ESF.+PL)		2
79	9886678	1	RK CYLINDER+CONTROL PLATE ⇨ ❑ 227	JR CIL.+PLACA MANDO		2

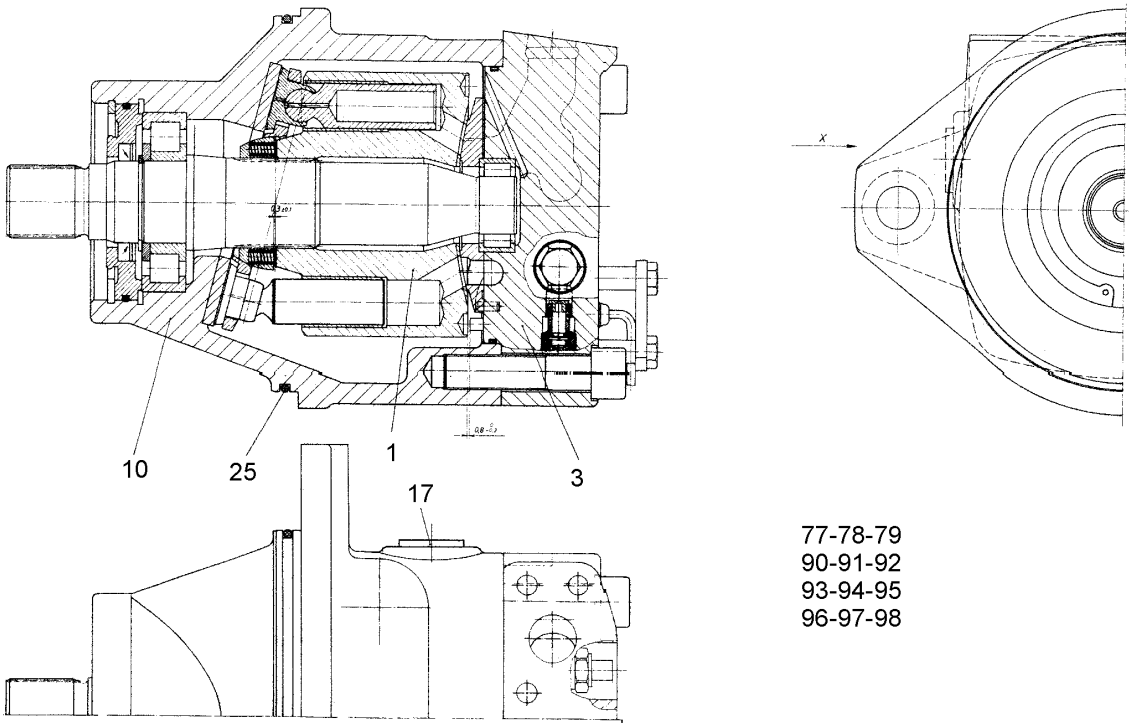

Pos.	Item	Quantity	Description	Descripción	Serie	K
1	9886675	1	DRIVING GEAR	MECANISMO DE ACCIONAMIENT		
3	9886676	1	CONNECTING PLATE NG 165	PLACA DE CONEXION		1
10	9886677	1	HOUSING	CARCASA		
17	7361329	1	SCREW PLUG	TORNILLO DE CIERRE		
25	7380593	1	O-RING	JUNTA TORICA		1
77	9880604	1	RK PISTON WITH GUIDE SHOE NG 165 ⇨ ❑ 186	JR ÉMBOLO C.PATÍN DESL.		1
78	9888119	1	REPAIR KIT NG 165 ⇨ ❑ 190	JR (RZ-ESF.+PL)		2
79	9886678	1	RK CYLINDER+CONTROL PLATE ⇨ ❑ 227	JR CIL.+PLACA MANDO		2
90	9278623	1	RK SPEED SENSOR ⇨ ❑ 232			2
91	9883996	1	REPAIR SET PRESSURE CONTROL VA ⇨ ❑ 236	JR VÁLVULA LIM.PRESIÓN		
92	9884008	1	SHAFT REPAIR KIT ⇨ ❑ 237	JR		
93	9886679	1	REPAIR KIT SHAFT ⇨ ❑ 141	JR ÁRBOL		2
94	9886680	1	REPAIR KIT DRIVING MECHANISM ⇨ ❑ 142	JR GRUPO MOTOR		2
95	9266232	1	SEAL KIT SHUTTLE VALVE ⇨ ❑ 87	JJ VÁLVULA MÚLTIPLES VÍAS		1
96	9268751	1	REPAIR KIT LOCK RING ⇨ ❑ 73	JR ARO CIERRE		2

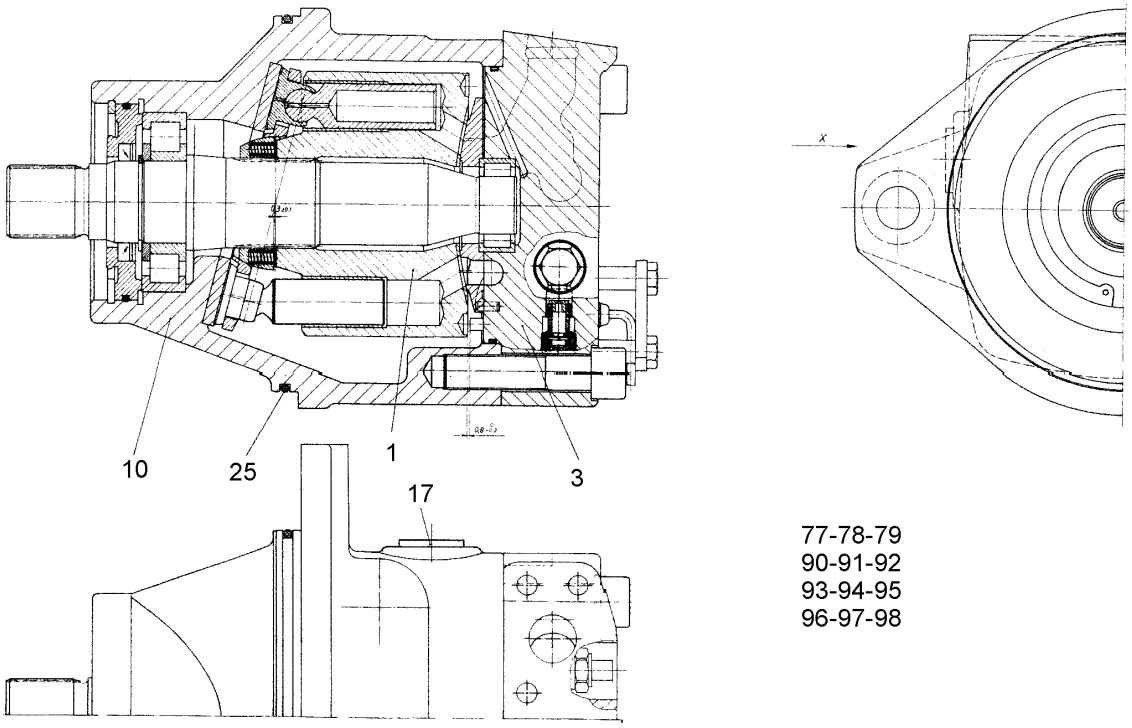

Pos.	Item	Quantity	Description	Descripción	Serie	K
97	9266231	1	SEAL KIT SHUTTLE VALVE ⇨ ❑ 86	JJ VÁLVULA MÚLTIPLES VÍAS		1
98	9274199	1	SEAL KIT ⇨ ❑ 184	JUEGO JUNTAS		1

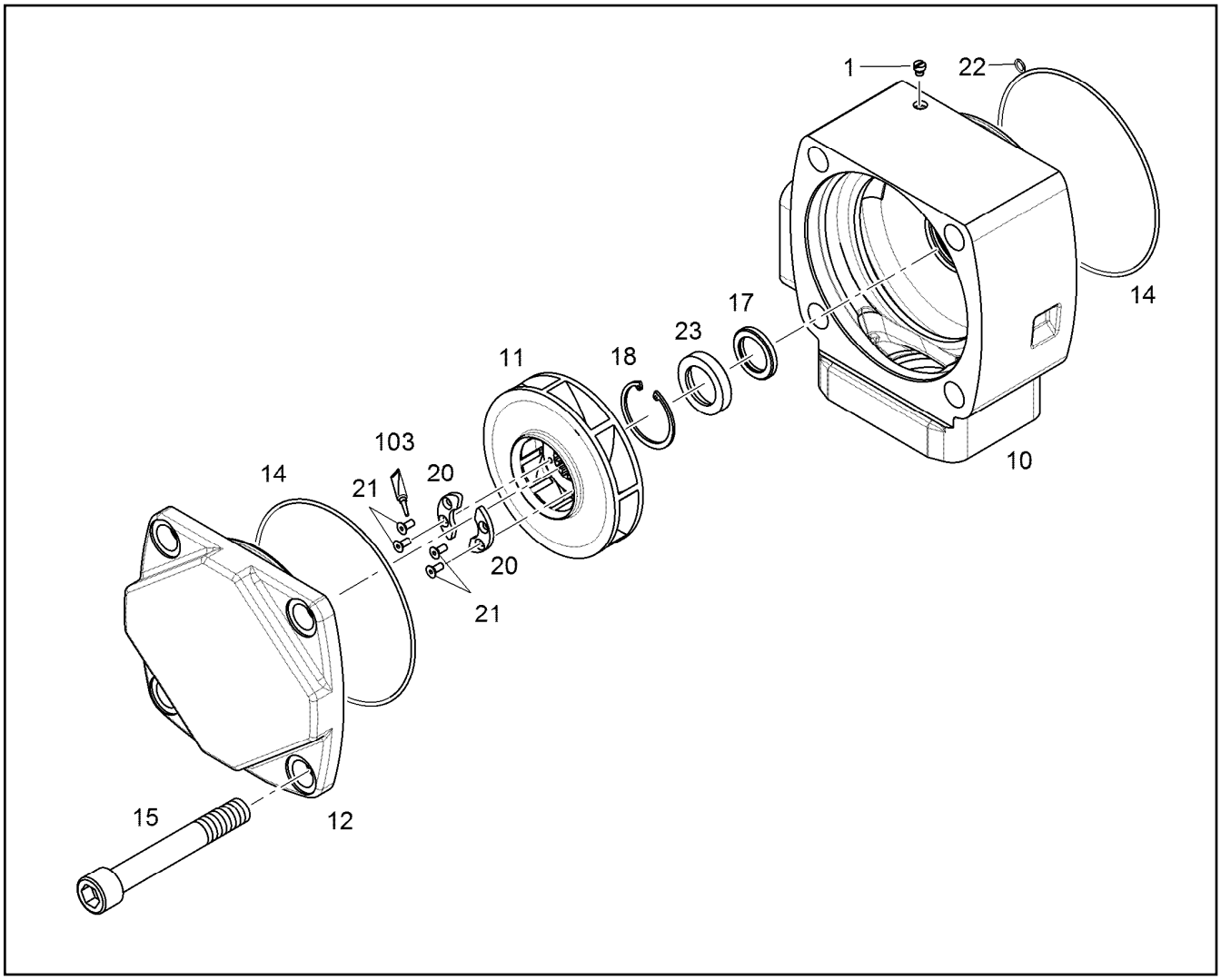

Pos.	Item	Quantity	Description	Descripción	Serie	K
1	9265783	1	SCREW PLUG M6X6 ⇨ ❑ 183	TORNILLO DE CIERRE		
10		1	CONNECTING PLATE	PLACA DE CONEXION		1
11	9275309	1	TRAVEL WHEEL	RUEDA MOTRIZ		
12		1	LID	TAPA		
14	7380592	2	O-RING	JUNTA TORICA		1
15	4000282	4	CYLINDER SCREW ISO 4762 M20X140 10.9	TORNILLO CILINDRICO		
17	7380831	1	ROTARY SHAFT LIP SEAL	RETEN RADIAL		1
18	4281006	1	LOCKING RING DIN 472 52 X2	ANILLO SEGURIDAD		
20	9275004	2	DISK SEGMENT	SEGMENTO DE DISCO		1
21	4980801	4	COUNTERSUNK SCREW DIN 7991 M5X12 1	TORNILLO AVELLANADO		
22	7380648	1	O-RING	JUNTA TORICA		1
23	9999999	1	SEE REMARK (BOTTOM)	VÉASE COMENTARIO (DEBAJO)		1
103	811205708	1	SCREW LOCKING	SEGURO PARA TORNILLO		

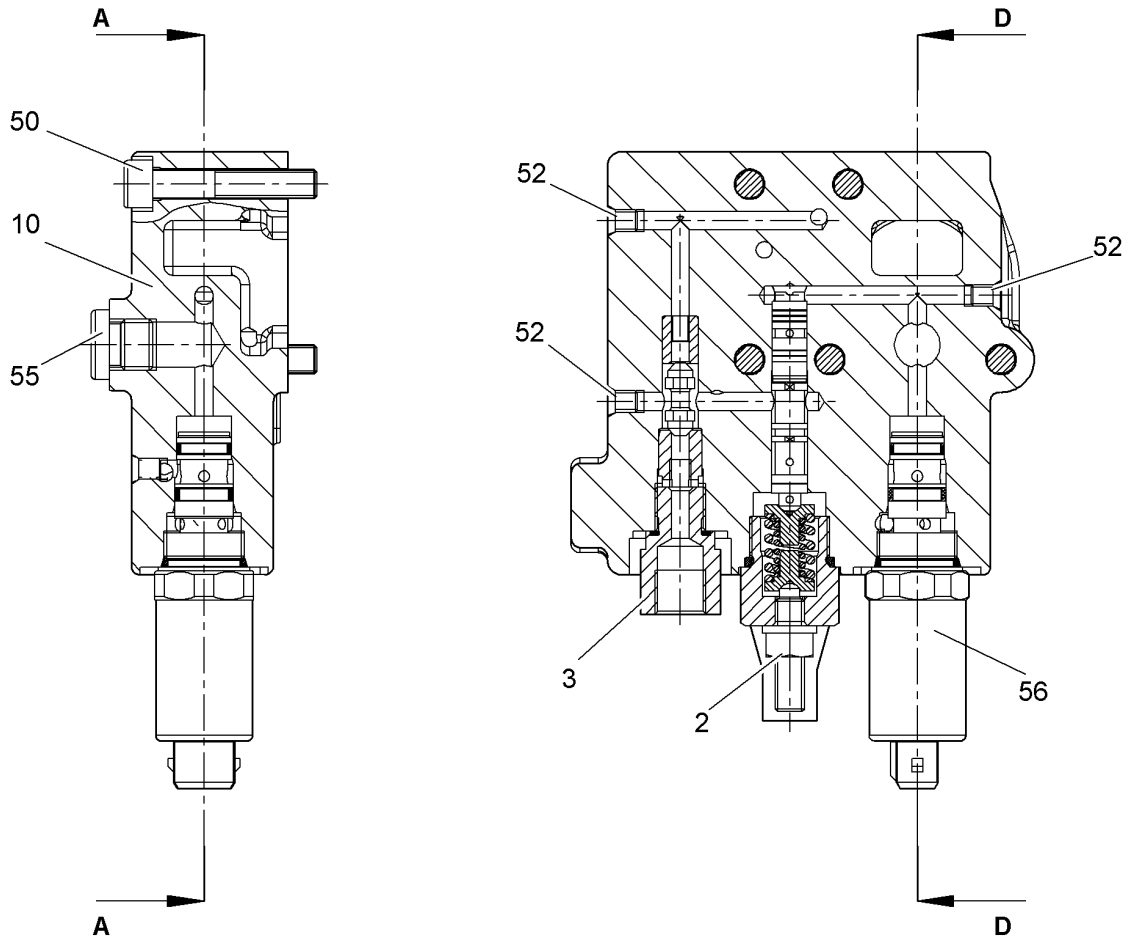

Pos.	Item	Quantity	Description	Descripción	Serie	K
2	10102067	1	REGULATOR ELEMENT ⇨ ❑ 261	ELEMENTO REGULACION		
3	10020735	1	SHUTTLE VALVE ⇨ ❑ 774	VALVULA SELECTORA		1
3	10442998	1	SHUTTLE VALVE ⇨ ❑ 180	VALVULA SELECTORA		2
10	10102068	1	GOVERNOR HOUSING	CARCASA REGUL.		
50	404204405	5	CYLINDER SCREW ISO 4762 M8x45 8.8 A2C	TORNILLO CILINDRICO		
52	7022127	9	PLUG	TAPÓN ROTURA DOBLE		
55	7363125	2	SCREW PLUG ⇨ ❑ 760	TORNILLO DE CIERRE		
56	7623606	1	PROPORTIONAL PRESSURE CONTROL	VÁLV.REDUC.PRESIÓN PROPOR		2

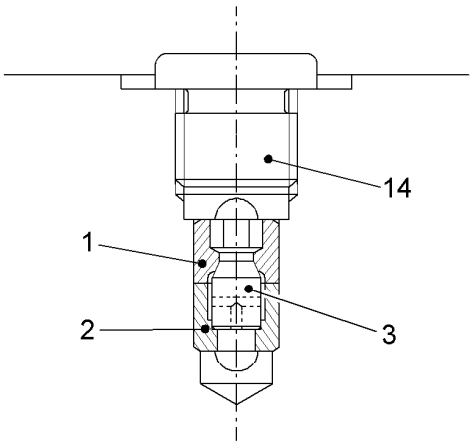

Pos.	Item	Quantity	Description	Descripción	Serie	K
1	7615604	1	THROTTLE SCREW	TORNILLO ESTRANGULADOR		
2	7615603	1	THROTTLE SCREW	TORNILLO ESTRANGULADOR		
3	7621949	1	PIN	PASADOR ESTRANGULADOR		
14	7363125	1	SCREW PLUG ⇨ ❑ 760	TORNILLO DE CIERRE		

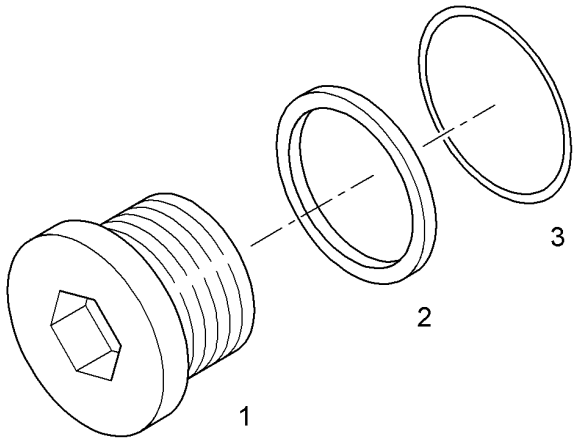

Pos.	Item	Quantity	Description	Descripción	Serie	K
1	7028192	1	SCREW PLUG	TORNILLO DE CIERRE		
2	10298637	1	SEALING RING	JUNTA ANULAR		1
3	10298636	1	O-RING	JUNTA TORICA		1

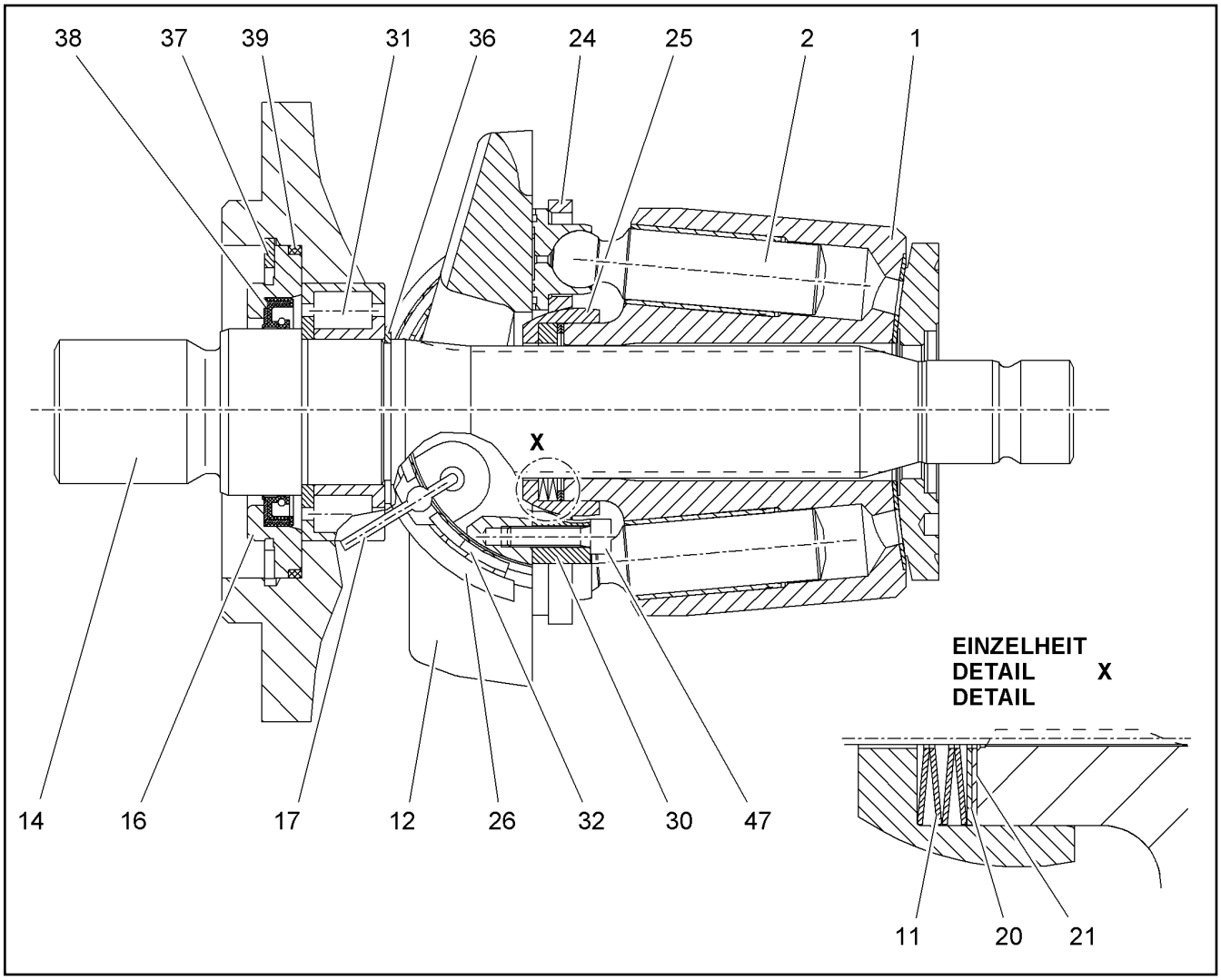

Pos.	Item	Quantity	Description	Descripción	Serie	K
1	10333079	1	CYLINDER W.CONTROL PLATE	CILINDRO C.PLACA MANDO		1
2	10007866	9	PISTON W.SLIDING	PATÍN DESLIZANTE ÉMBOLO		
11	10007880	1	CUP SPRING PILLAR	COLUMNA DE RESORTE DE DI		
12	10007867	1	CRADLE	CUNA		
14	10007874	1	DRIVING SHAFT	EJE MOTOR		
16	10007876	1	CLOSING RING	ANILLO DE CIERRE		
17	7028089	2	WIRE	HILO		
20	10007879	1	SHIM RING	ARANDELA AJUSTE		
20	10007939	1	SHIM RING	ARANDELA AJUSTE		
20	10007942	1	SHIM RING	ARANDELA AJUSTE		
20	10007878	1	SHIM RING	ARANDELA AJUSTE		
21	10007879	1	SHIM RING	ARANDELA AJUSTE		
24	10007943	1	PULL-BACK PLATE	PLACA DE RETROCESO		
25	10333081	1	PULL-BACK BALL	ESFERA DE RETROCESO		1
26	10037583	1	BEARING BOXES-PAIR	PAR DE SEMICOJINETES		1
30	10007945	2	HOLDING SEGMENT	SEGMENTO SUJECIÓN		
31	570118208	1	CYLINDRICAL ROLLER BEARING	RODAMIENTO RODILLO CILINDR		1
32	10007990	1	CAGE PAIR	PAR DE JAULAS		1
36	4280027	1	LOCKING RING DIN 471 35 X1,5	ANILLO SEGURIDAD		
37	4281013	1	LOCKING RING DIN 472 80 X2,5	ANILLO SEGURIDAD		
38	10007991	1	SHAFT SEAL X40X55X7	ANILLO DE RETÉN		1
39	7017766	1	O-RING	JUNTA TORICA		1
47	4635142	4	CYLINDER SCREW ISO 4762 M5x20 8.8 A2C	TORNILLO CILINDRICO		

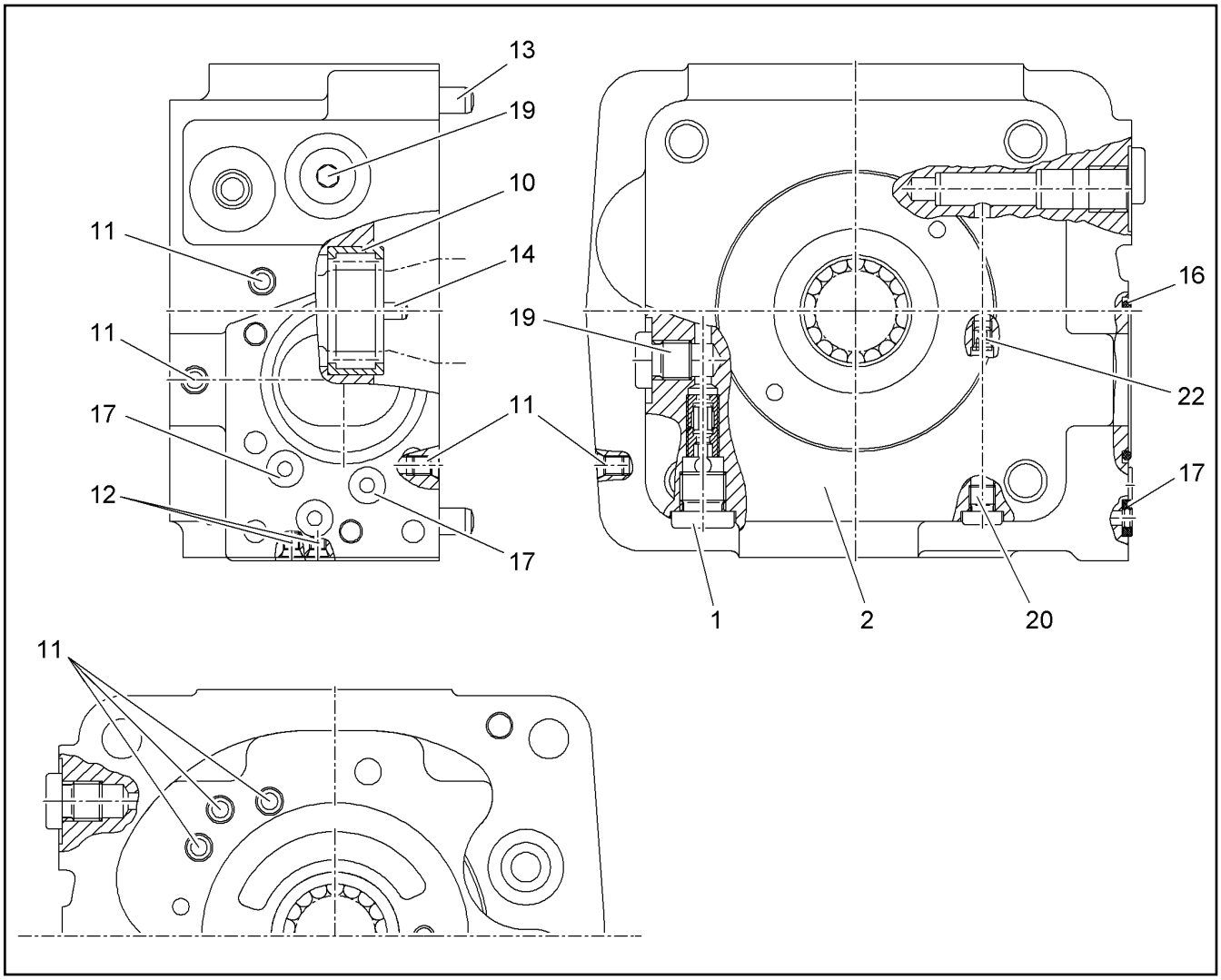

Pos.	Item	Quantity	Description	Descripción	Serie	K
1	10292071	1	REGULATOR ELEMENT ⇨ ❑ 263	ELEMENTO REGULACION		
1	10102066	1	REGULATOR ELEMENT ⇨ ❑ 147	ELEMENTO REGULACION		
2	10333083	1	CONNECTING PLATE	PLACA DE CONEXION		
10	10008109	1	CYL.ROL.BEARING	COJINETE ROD.CIL.		1
11	7022127	4	PLUG	TAPÓN ROTURA DOBLE		
12	7012972	1	DOUBLE PLUG	TAPÓN ROTURA DOBLE		
13	10000797	2	PARALLEL PIN 8M6	PASADOR CILINDRICO		
14	514588908	1	PARALLEL PIN 5M6	PASADOR CILINDRICO		
16	514507808	1	O-RING ARP 568 45,69X2,62	JUNTA TORICA		1
17	10303270	3	EDGE SEALING RING	ANILLO JUNTA DE BORDES		1
19	10100680	2	SCREW PLUG	TORNILLO DE CIERRE		
20	10220639	2	SCREW PLUG	TORNILLO DE CIERRE		
22	7023702	1	NOZZLE	BOQUILLA		

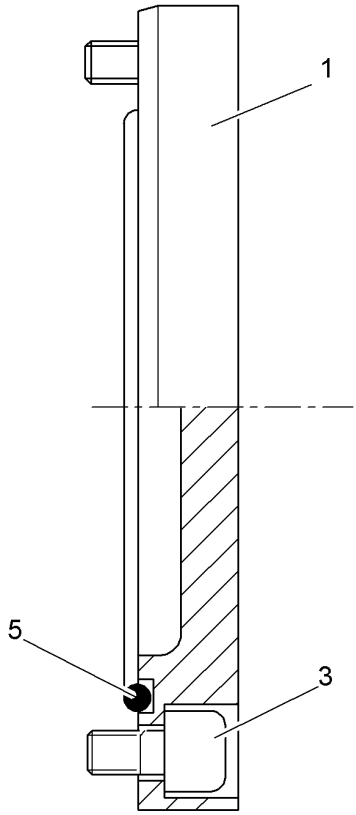

Pos.	Item	Quantity	Description	Descripción	Serie	K
1	10333087	1	END COVER	TAPA DE CIERRE		
3	4902252	2	CYLINDER SCREW ISO 4762 M6X12 10.9 A2	TORNILLO CILINDRICO		
5	7380830	1	O-RING	JUNTA TORICA		1

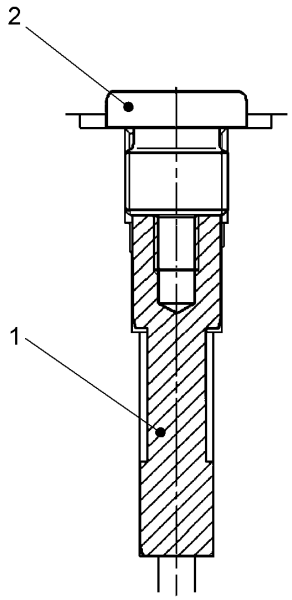

Pos.	Item	Quantity	Description	Descripción	Serie	K
1		1	PIN	BULON		
2	7414500	1	SCREW PLUG	TORNILLO DE CIERRE		

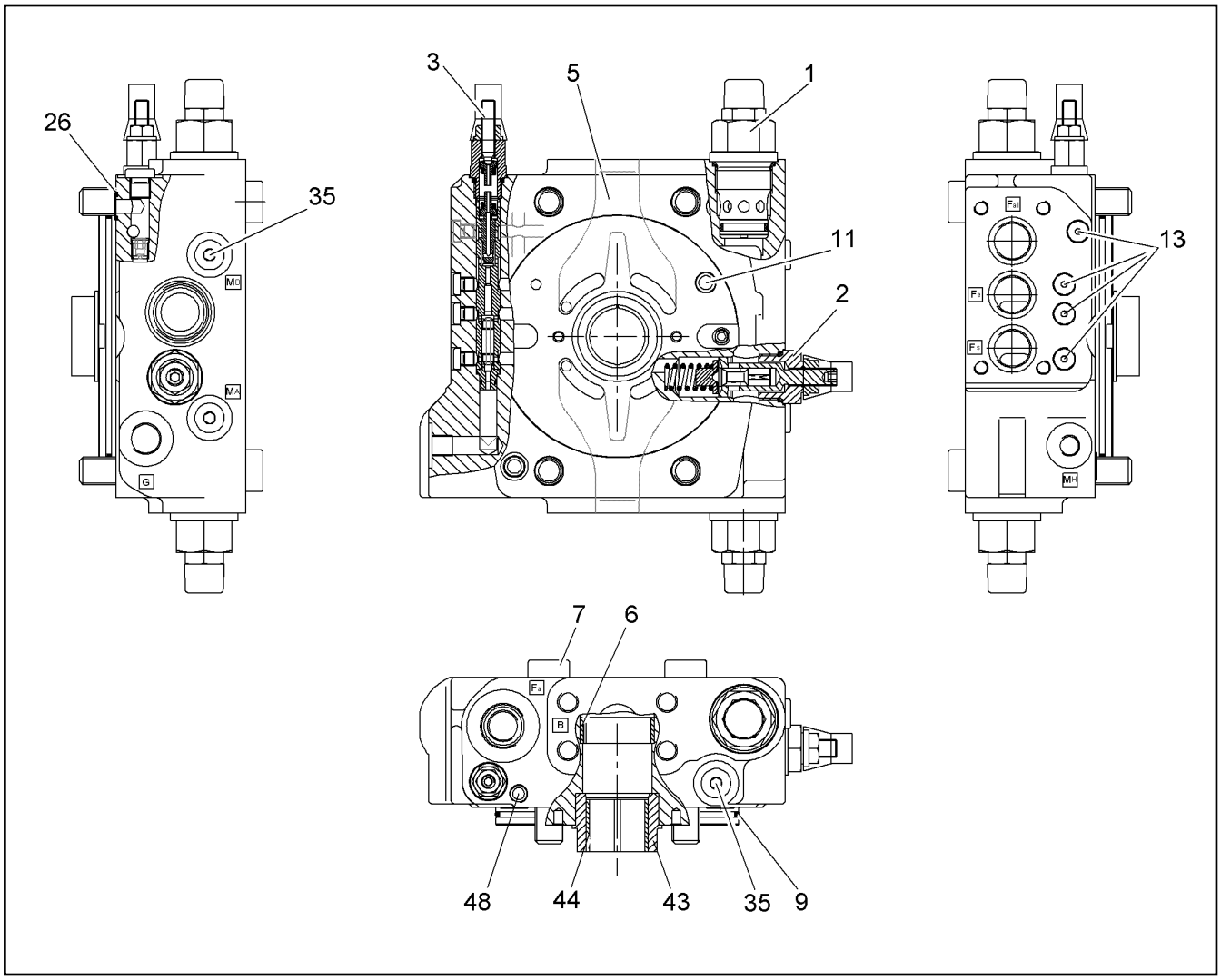

Pos.	Item	Quantity	Description	Descripción	Serie	K
1	10333237	2	PRESSURE LIMITING VALVE ⇨ ❑ 264	VALVULA LIMITADORA DE PRES		2
2	10297929	1	PRESSURE LIMITING VALVE ⇨ ❑ 262	VALVULA LIMITADORA DE PRES		2
3	10333242	1	SHUTDOWN VALVE ⇨ ❑ 157	VALVULA DE DESCONEXION		2
5	7623775	1	CONNECTING PLATE	PLACA DE CONEXION		
6	7623779	1	BEARING BUSH	CASQUILLO DE COJINETE		1
7	4902030	4	CYLINDER SCREW ISO 4762 M16X90 10.9	TORNILLO CILINDRICO		
9	10333245	1	O-RING	JUNTA TORICA		1
11	7370947	1	PLUG	TAPÓN ROTURA DOBLE		
13	7369938	4	SCREW PLUG	TORNILLO DE CIERRE		
26	10115072	2	O-RING	JUNTA TORICA		1
35	7009358	3	SCREW PLUG VSTI	TORNILLO DE CIERRE		
43	7623776	1	BUSH	CASQUILLO		1
44	7623777	1	BEARING BUSH	CASQUILLO DE COJINETE		1
48	7369966	1	DOUBLE PLUG	TAPÓN ROTURA DOBLE		

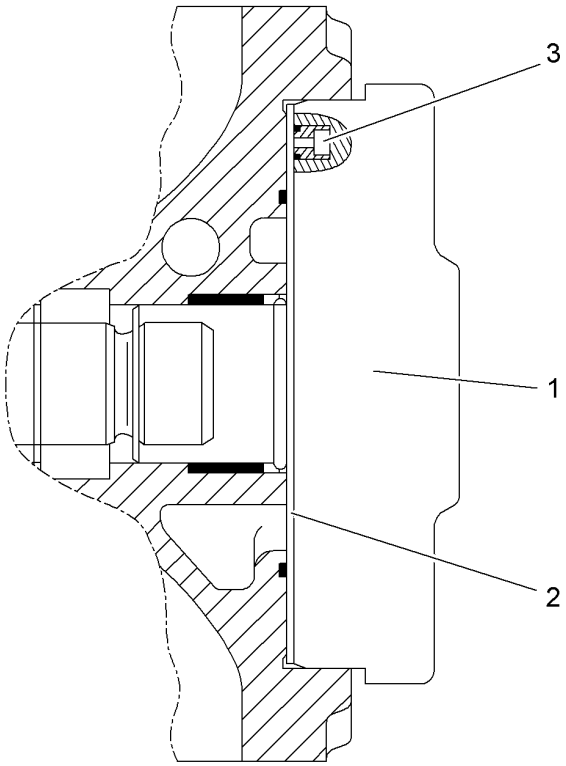

Pos.	Item	Quantity	Description	Descripción	Serie	K
1	10333259	1	GEAR PUMP ⇨ ❑ 158	BOMBA DE ENGRANAJES		2
2	10333262	1	WEARING PLATE ⇨ ❑ 159	PLACA DE DESGASTE		
3	10037594	2	RETAINING PLUG	TAPÓN SUJECIÓN		

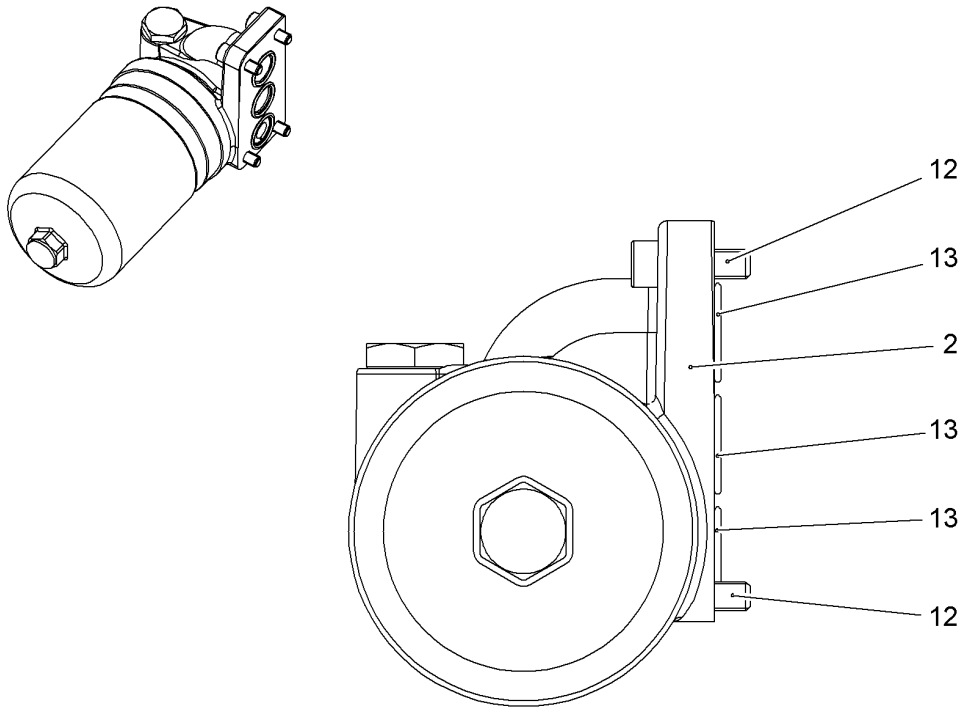

Pos.	Item	Quantity	Description	Descripción	Serie	K
2	10333268	1	FILTER ⇨ ❑ 160	FILTRO		
12	4901217	4	CYLINDER SCREW ISO 4762 M8X25 10.9 A2	TORNILLO CILINDRICO		
13	10333269	3	O-RING	JUNTA TORICA		1

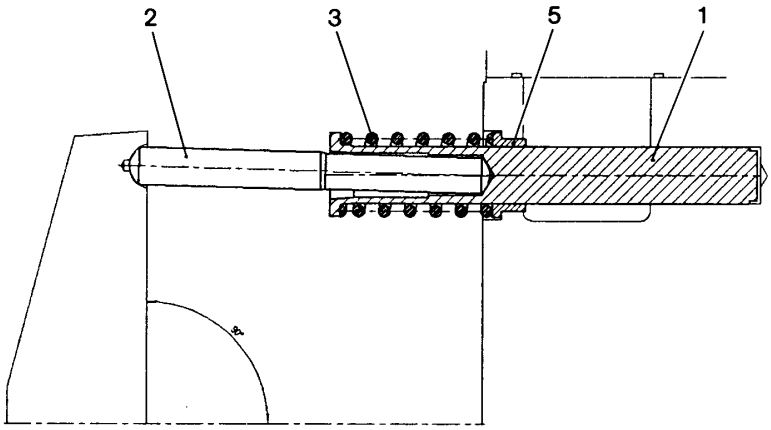

Pos.	Item	Quantity	Description	Descripción	Serie	K
1	10333086	1	ADJUSTING PISTON	CILINDRO TRANSPORTADOR		
2	10000811	1	HOSE	TUBO GOMA		2
3	10000815	1	SUCTION BASKET	EMBUDO ASPIRACION		
5	10008118	1	BUSH	CASQUILLO		1

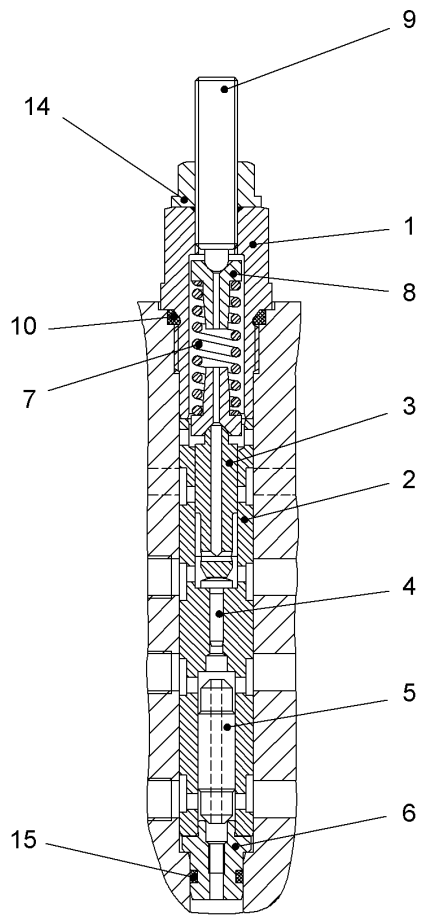

Pos.	Item	Quantity	Description	Descripción	Serie	K
1	10333254	1	SCREW PLUG	TORNILLO DE CIERRE		
2	10333256	1	VALVE BUSH	CASQUILLO DE VALVULA		
3	10333258	1	SPOOL	PISTON DE MANDO		
4	7624222	1	PISTON	EMBOLO		
5	7624223	1	VALVE PISTON	PISTON DE VALVULA		
6	10220662	1	VALVE SEAT	ASIENTO DE VALVULA		2
7	7371759	1	PRESSURE SPRING	MUELLE COMPRESION		
8	10220664	2	SPRING SUPPORT	PLATILLO DE RESORTES		
9	7369886	1	ADJUSTING SCREW	TORNILLO DE REGULACION		
10	7028158	1	O-RING 12,37X2,62	JUNTA TORICA		1
14	7372252	1	SEAL LOCK NUT M8	TUERCA SEAL-LOCK		
15	10115023	1	O-RING 6,07X1,78	JUNTA TORICA		1

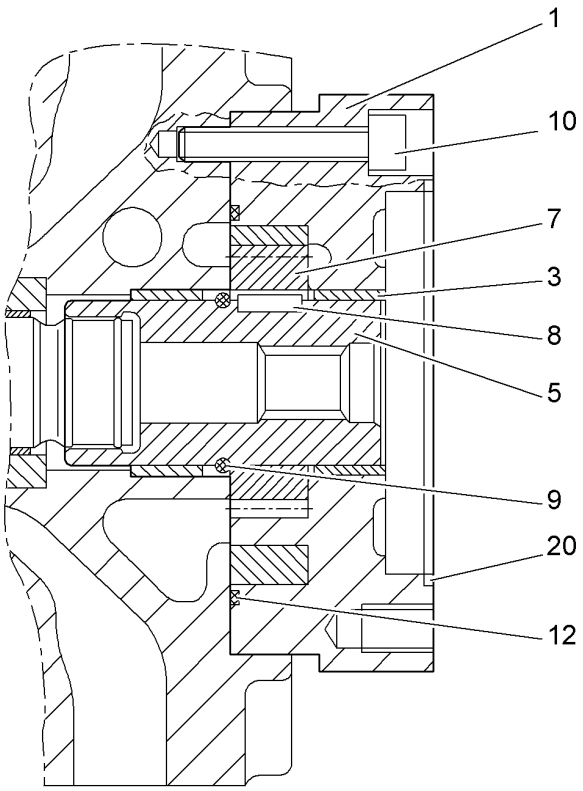

Pos.	Item	Quantity	Description	Descripción	Serie	K
1	10333263	1	INTERMEDIATE FLANGE	BRIDA INTERMEDIA		
3	7623779	1	BEARING BUSH	CASQUILLO DE COJINETE		1
5	10333264	1	DRIVE-THROUGH SHAFT	ARBOL DE PASO		2
7	10220693	1	WHEEL SET	JUEGO DE RUEDAS		
8	10220694	1	FITTING KEY	CHAVETA		
9	4635246	1	SNAP RING DIN 7993 A 38	ANILLO MUELLE		
10	404212008	4	CYLINDER SCREW ISO 4762 M12X40 8.8 A3	TORNILLO CILINDRICO		
12	10333265	1	O-RING	JUNTA TORICA		1
20	10300920	1	O-RING	JUNTA TORICA		1

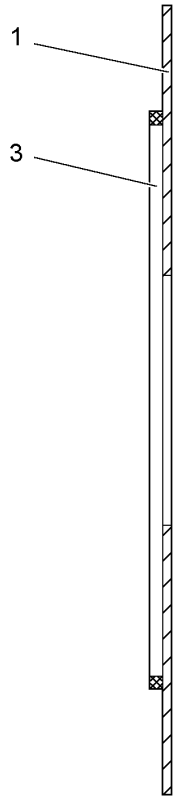

Pos.	Item	Quantity	Description	Descripción	Serie	K
1	10333267	1	WEARING PLATE	PLACA DE DESGASTE		
3	10333265	1	O-RING	JUNTA TORICA		1

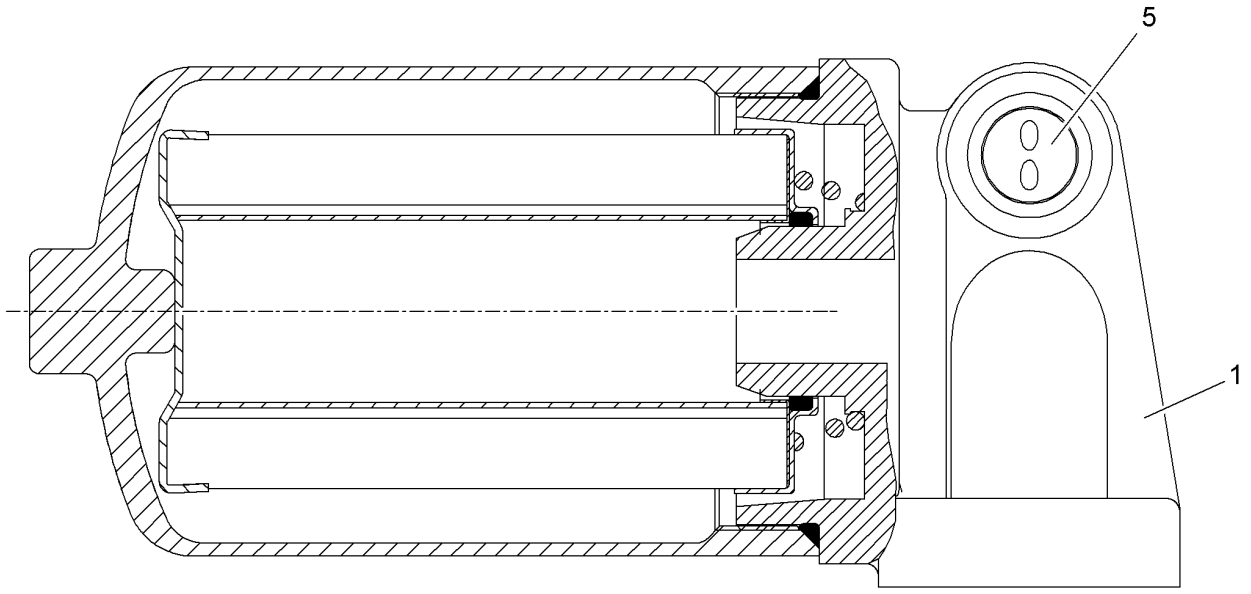

Pos.	Item	Quantity	Description	Descripción	Serie	K
1	10333270	1	FILTER HEAD ⇨ ❑ 161	CABEZA FILTRO		
5	10298663	1	SCREW PLUG ⇨ ❑ 148	TORNILLO DE CIERRE		

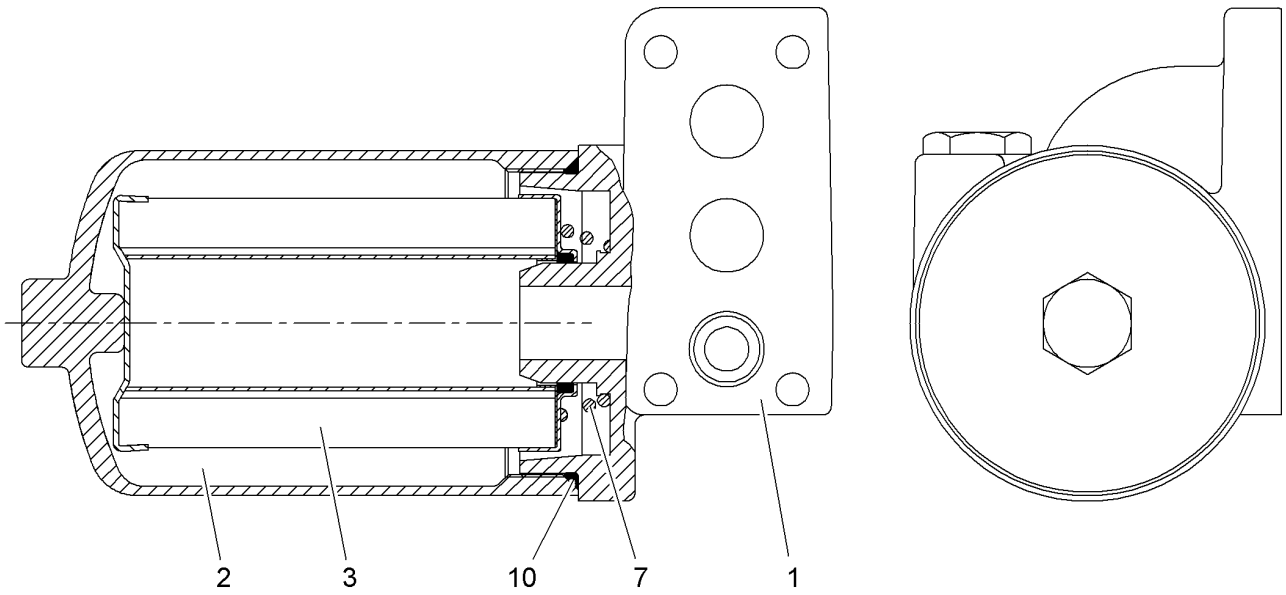

Pos.	Item	Quantity	Description	Descripción	Serie	K
1	10333271	1	FILTER HEAD ⇨ ❑ 162	CABEZA FILTRO		
2	10220702	1	FILTER HOUSING	CARCASA FILTRO		
3	10220705	1	FILTER ELEMENT	ELEMENTO FILTRADOR		1
7	10220706	1	SPRING	MUELLE		
10	10220707	1	O-RING 78,97X3,53	JUNTA TORICA		1

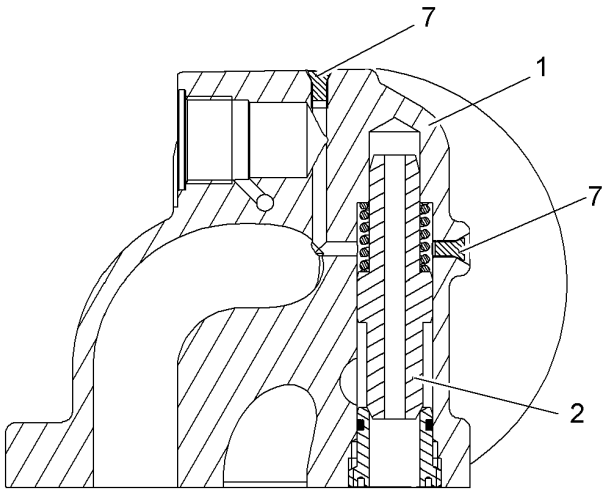

Pos.	Item	Quantity	Description	Descripción	Serie	K
1	10333272	1	FILTER HEAD	CABEZA FILTRO		
2	10333273	1	COLD STAR VALVE ⇨ ❑ 163	VÁLVULA ARRANQUE EN FRÍO		
7	7618568	2	DOUBLE PLUG	TAPÓN ROTURA DOBLE		

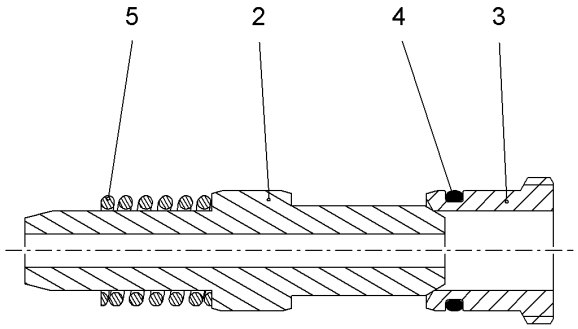

Pos.	Item	Quantity	Description	Descripción	Serie	K
2	10220817	1	VALVE PISTON	PISTON DE VALVULA		1
3	10220818	1	VALVE SEAT	ASIENTO DE VALVULA		2
4	10333276	1	O-RING	JUNTA TORICA		1
5	10220821	1	PRESSURE SPRING	MUELLE COMPRESION		

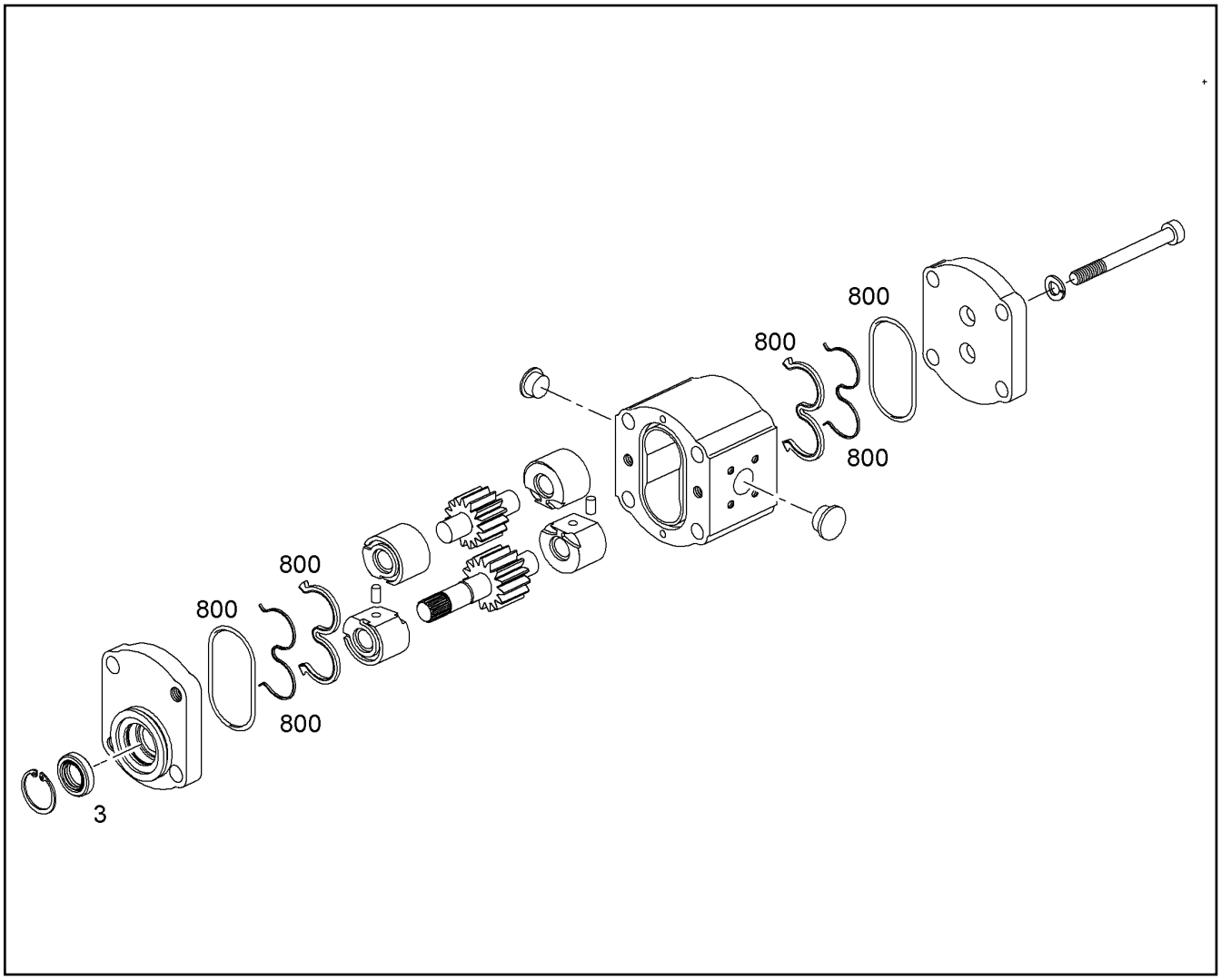

Pos.	Item	Quantity	Description	Descripción	Serie	K
3	570319508	1	SHAFT SEAL X17X30X7	ANILLO DE RETÉN		1
800	7622254	1	SEAL KIT	JUEGO JUNTAS		1

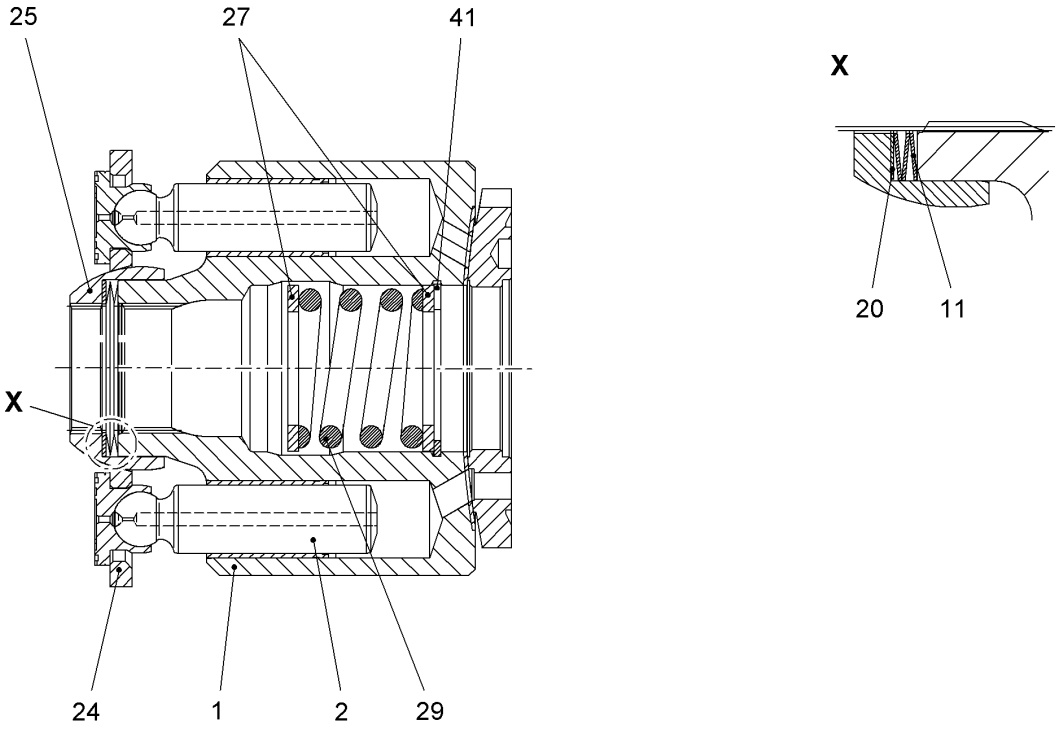

Pos.	Item	Quantity	Description	Descripción	Serie	K
1	10410654	1	CYLINDER	CILINDRO		1
2	10410641	9	PISTON W.SLIDING	PATÍN DESLIZANTE ÉMBOLO		1
11	10410673	1	CUP SPRING PILLAR	COLUMNA DE RESORTE DE DI		
20	10035542	1	SHIM RING	ARANDELA AJUSTE		
20	10035543	1	SHIM RING	ARANDELA AJUSTE		
20	10035541	1	SHIM RING	ARANDELA AJUSTE		
20	10035544	1	SHIM RING	ARANDELA AJUSTE		
24	10410642	1	PULL-BACK PLATE	PLACA DE RETROCESO		
25	10410643	1	PULL-BACK BALL	ESFERA DE RETROCESO		1
27	10410655	2	SHIM WASHER	DISCO DE SUPLEMENTO		
29	10410644	1	PRESSURE SPRING	MUELLE COMPRESION		
41	10410656	1	LOCKING RING	ANILLO SEGURIDAD		

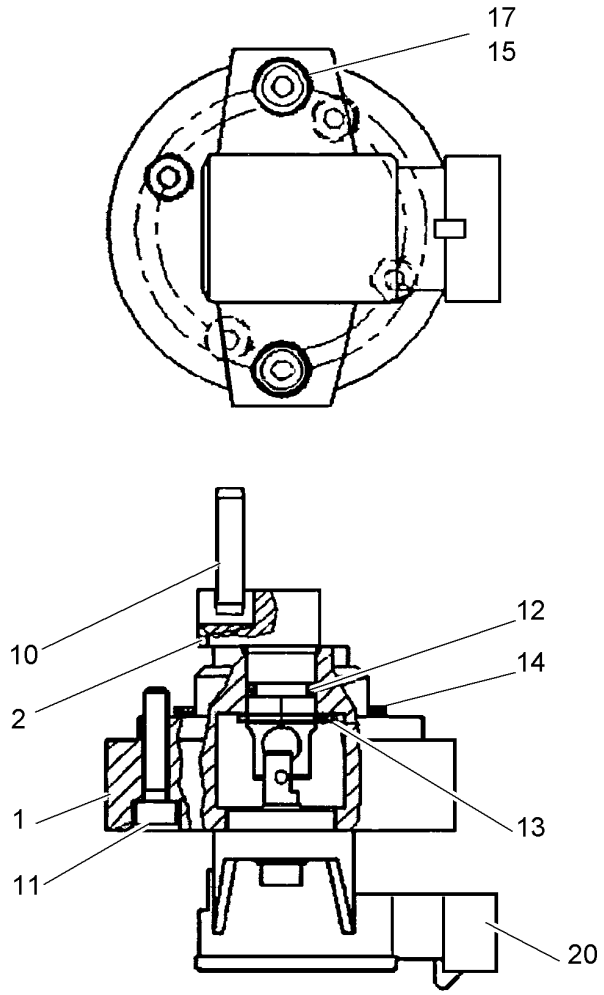

Pos.	Item	Quantity	Description	Descripción	Serie	K
1	10298629	1	HOUSING	CARCASA		
2	10298630	1	SHAFT	EJE GIRATORIO		2
10	10298633	1	DOWEL PIN	PASADOR ELASTICO		
11	404200701	4	CYLINDER SCREW ISO 4762 M4x20 8.8 A2C	TORNILLO CILINDRICO		
12	7009366	1	O-RING 9,25x1,78	JUNTA TORICA		1
13	4280008	1	LOCKING RING DIN 471 12 X1	ANILLO SEGURIDAD		
14	10298634	1	O-RING	JUNTA TORICA		1
15	4600387	2	CYLINDER SCREW ISO 4762 M4x12 8.8 A2C	TORNILLO CILINDRICO		
17	10298635	2	WASHER	ARANDELA		
20	10441464	1	SLEWING ANGLE SENSOR	SENSOR ANGULO DE GIRO		

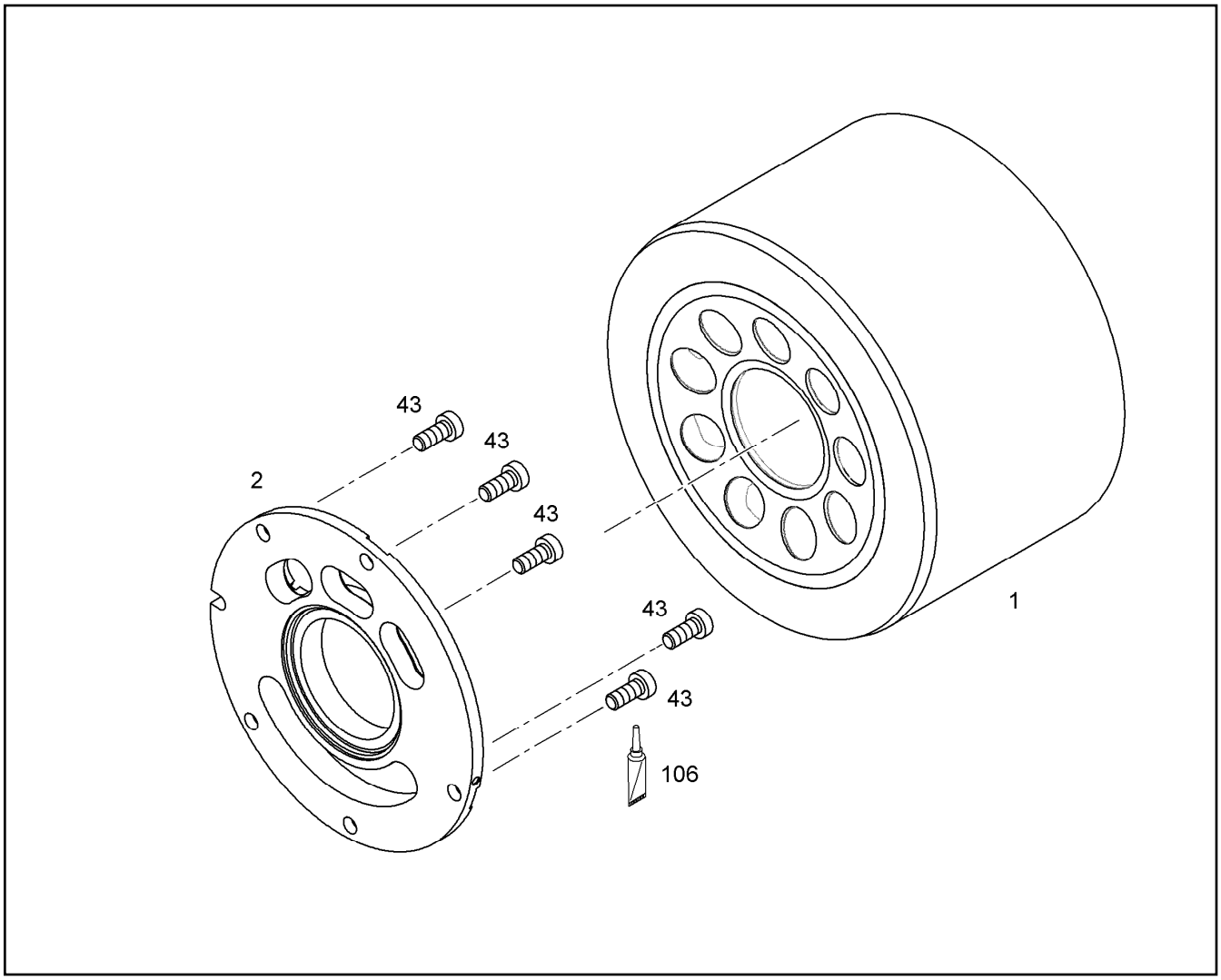

Pos.	Item	Quantity	Description	Descripción	Serie	K
1		1	CYLINDER WITH BUSH	CILINDRO CON CASQUILLO		
2		1	GUIDE PLATE	PLACA MANDO		
43	4981218	5	CYLINDER SCREW ISO 14580 M6X16 10.9	TORNILLO CILINDRICO		
106	8700012	1	SCREW LOCKING	SEGURO PARA TORNILLO		

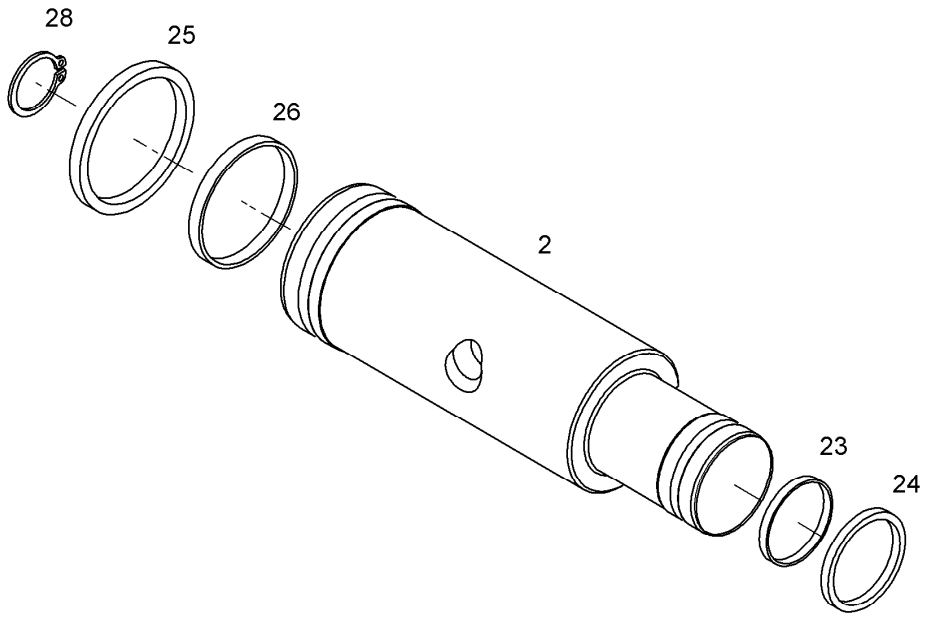

Pos.	Item	Quantity	Description	Descripción	Serie	K
2		1	REGEL PISTON PRE-ASS.			
23		1	O-RING	JUNTA TORICA		1
24		1	GLYD RING 35X27,5X3,2	ANILLO GLYD		2
25		1	GLYD RING 52X41X4,2	ANILLO GLYD		2
26		1	O-RING	JUNTA TORICA		1
28		1	L RING	ANILLO L		

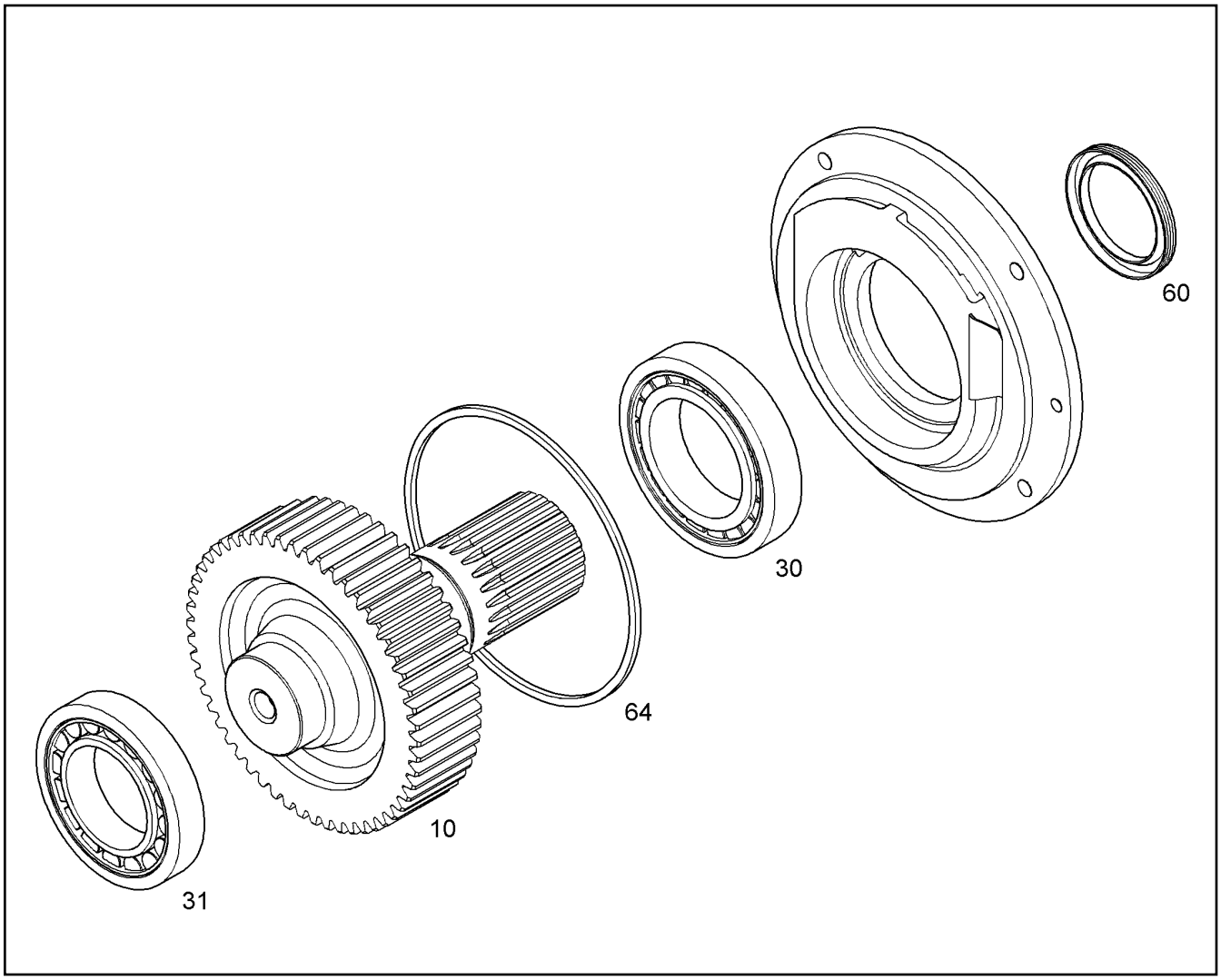

Pos.	Item	Quantity	Description	Descripción	Serie	K
10		1	DRIVE SHAFT Z=59 M=3,5	EJE MOTRIZ		1
30		1	ROLLER BEARING DIN 5412 NJ 215 ECP C3	COJINETE DE RODILLOS P.CIL.		1
31		1	ROLLER BEARING DIN 5412 NJ 213 ECP C3	COJINETE DE RODILLOS P.CIL.		1
60		1	ROTARY SHAFT LIP SEAL	RETEN RADIAL		1
64		1	O-RING	JUNTA TORICA		1

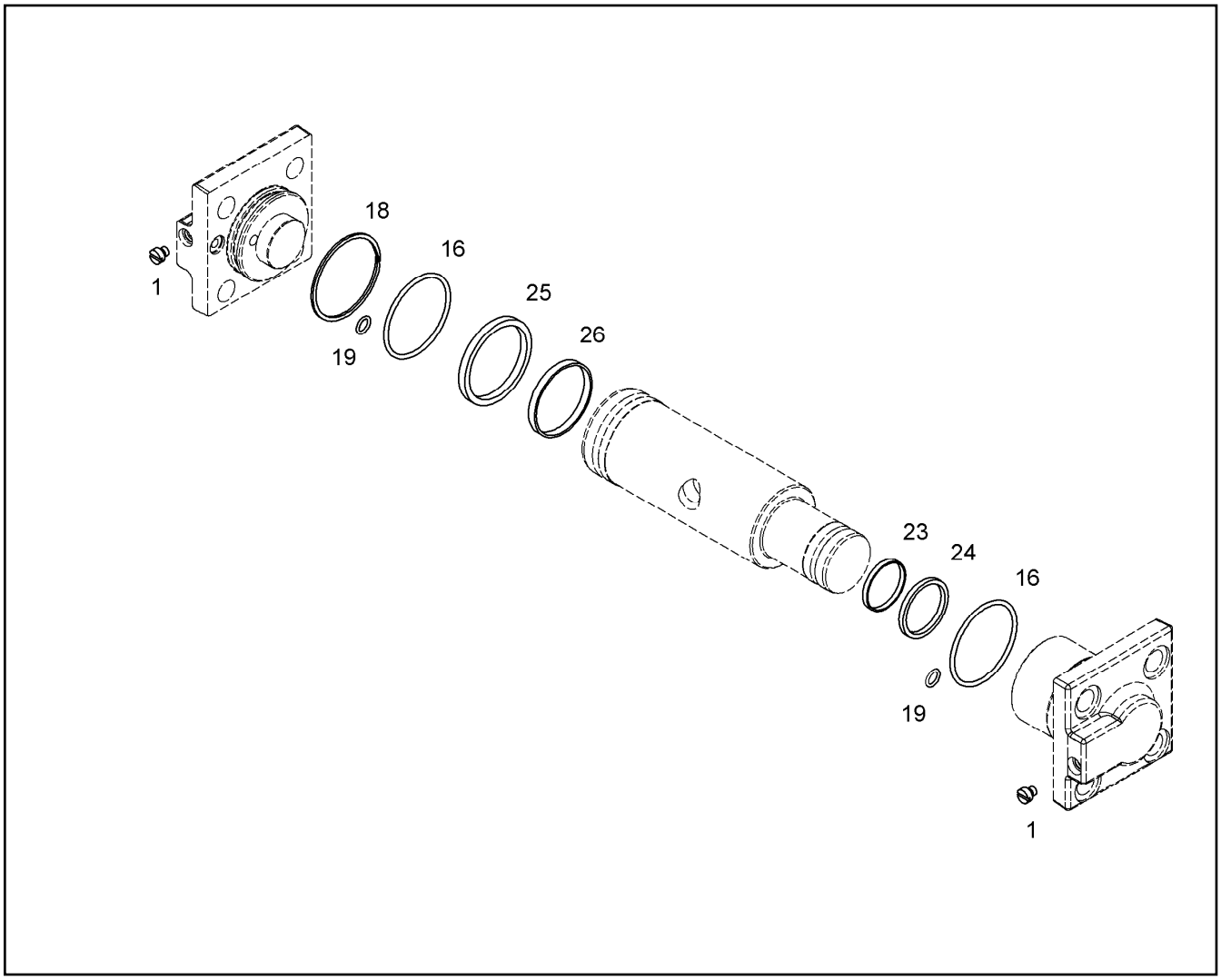

Pos.	Item	Quantity	Description	Descripción	Serie	K
1		2	SCREW PLUG M6X6 ⇨ ❑ 183	TORNILLO DE CIERRE		
16		2	O-RING	JUNTA TORICA		1
18		1	SUPPORTING RING	ANILLO SOPORTE		1
19		2	O-RING	JUNTA TORICA		1
23		1	O-RING	JUNTA TORICA		1
24		1	GLYD RING 35X27,5X3,2	ANILLO GLYD		2
25		1	GLYD RING 52X41X4,2	ANILLO GLYD		2
26		1	O-RING	JUNTA TORICA		1

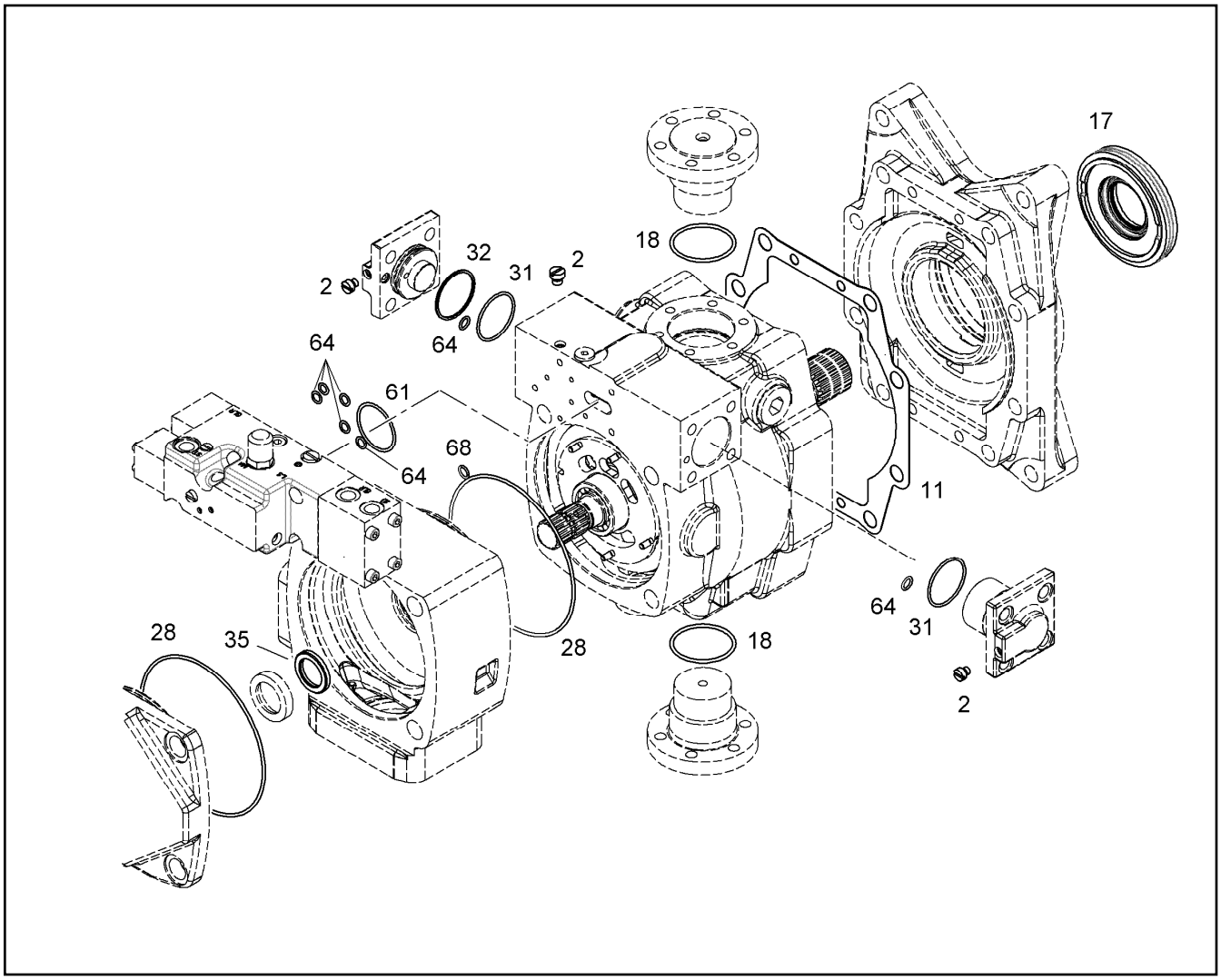

Pos.	Item	Quantity	Description	Descripción	Serie	K
2		5	SCREW PLUG M6X6 ⇨ ❑ 183	TORNILLO DE CIERRE		
11		1	SEAL	JUNTA		1
17		1	REPAIR KIT LOCK RING ⇨ ❑ 73	JR ARO CIERRE		2
18		2	O-RING	JUNTA TORICA		1
28		2	O-RING	JUNTA TORICA		1
31		2	O-RING	JUNTA TORICA		1
32		1	SUPPORTING RING	ANILLO SOPORTE		1
35		1	ROTARY SHAFT LIP SEAL	RETEN RADIAL		1
61		1	O-RING	JUNTA TORICA		1
64		8	O-RING	JUNTA TORICA		1
68		1	O-RING	JUNTA TORICA		1

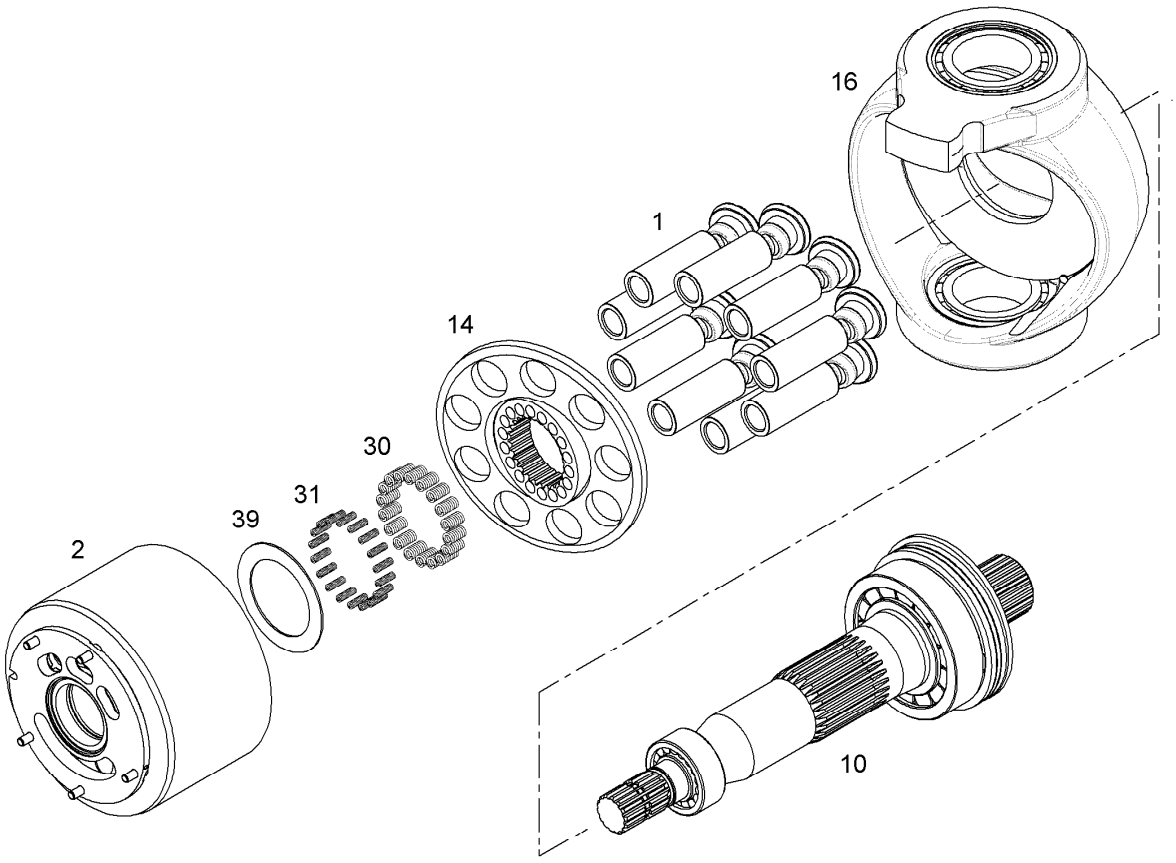

Pos.	Item	Quantity	Description	Descripción	Serie	K
1	9880604	1	RK PISTON WITH GUIDE SHOE NG 165 ⇨ ❑ 186	JR ÉMBOLO C.PATÍN DESL.		1
2	9073751	1	RK CYLINDER+CONTROL PLATE ⇨ ❑ 167	JR CIL.+PLACA MANDO		1
10	9889282	1	REPAIR KIT SHAFT ⇨ ❑ 173	JR ÁRBOL		1
14	9888119	1	REPAIR KIT NG 165 ⇨ ❑ 190	JR (RZ-ESF.+PL)		2
16	9079347	1	REPAIR SET SWIVEL YOKE LPV 165 ⇨ ❑ 182	JR YUGO BASC.		1
30	9268776	26	PRESSURE SPRING 5,6/1,4X192/8	MUELLE COMPRESION		
31	10011098	26	PRESSURE SPRING 0,8X3,06X20.33X1	MUELLE COMPRESION		
39	9885920	1	WASHER SET	JUEGO LUNAS		

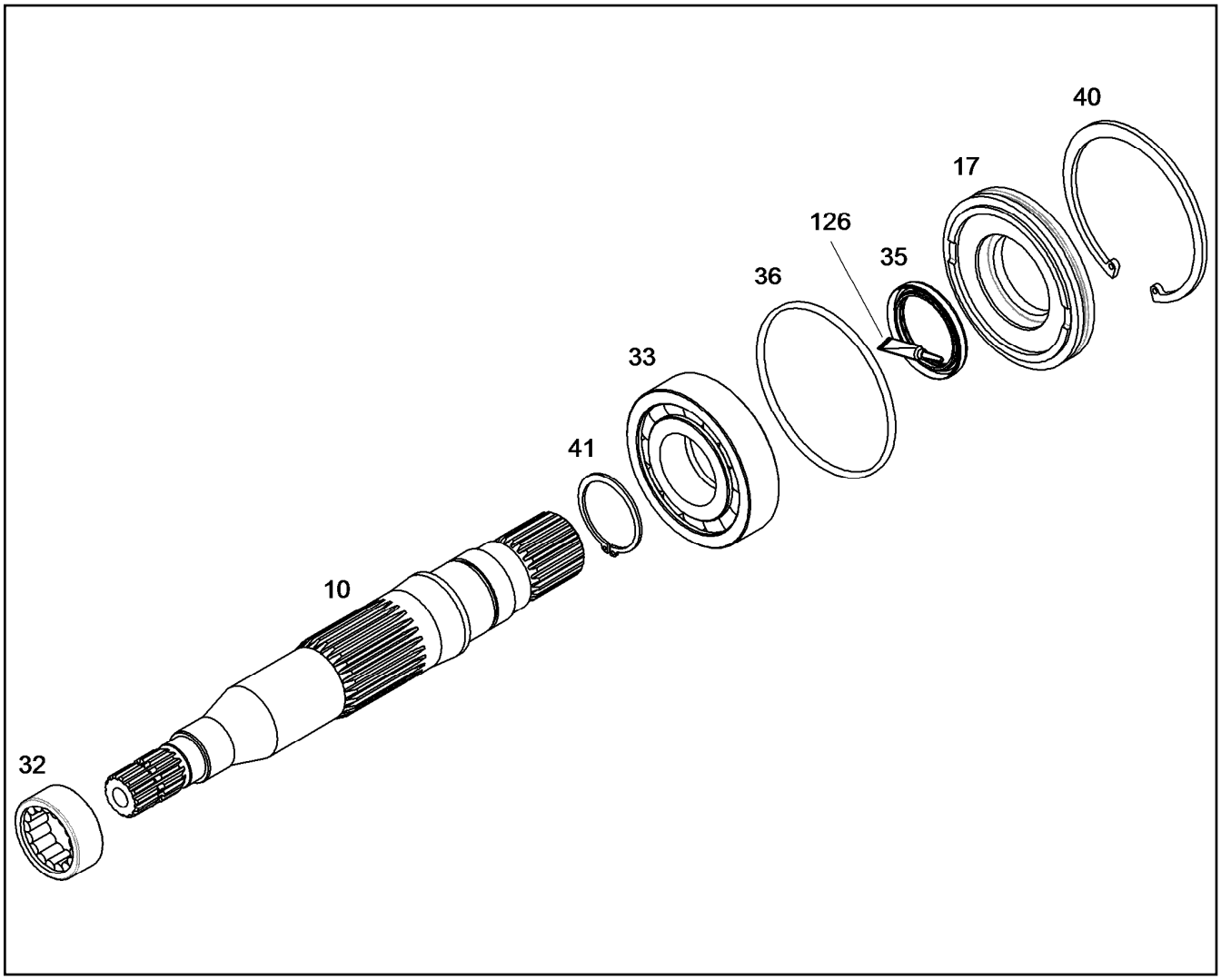

Pos.	Item	Quantity	Description	Descripción	Serie	K
10		1	DRIVING SHAFT	EJE MOTOR		
17		1	CLOSING RING	ANILLO DE CIERRE		
32		1	CYLINDRICAL ROLLER BEARING	RODAMIENTO RODILLO CILINDR		1
33		1	CYLINDRICAL ROLLER BEARING	RODAMIENTO RODILLO CILINDR		1
35		1	ROTARY SHAFT LIP SEAL 50X65X7,0	RETEN RADIAL		1
36		1	O-RING 113.89X3.53	JUNTA TORICA		1
40		1	LOCKING RING DIN 472 120 X4	ANILLO SEGURIDAD		
41		1	LOCKING RING DIN 471 50 X2	ANILLO SEGURIDAD		
126		1	GREASE	GRASA		

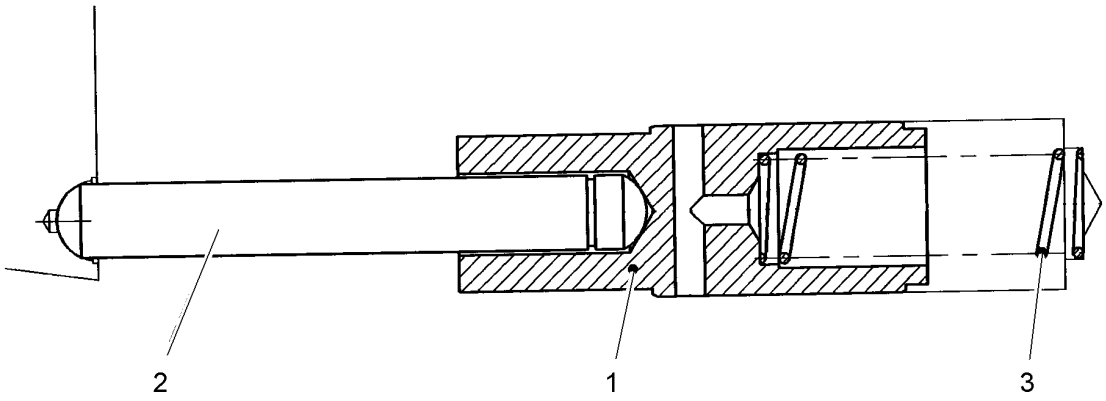

Pos.	Item	Quantity	Description	Descripción	Serie	K
1	10008155	1	RESET PISTON	PISTÓN DE RETORNO		1
2	10008154	1	RESET ROD	BARRA DE RETORNO		
2	10008156	1	RESET ROD	BARRA DE RETORNO		
2	10008157	1	RESET ROD	BARRA DE RETORNO		
2	10008158	1	RESET ROD	BARRA DE RETORNO		
2	10008160	1	RESET ROD	BARRA DE RETORNO		
3	10008165	1	PRESSURE SPRING	MUELLE COMPRESION		

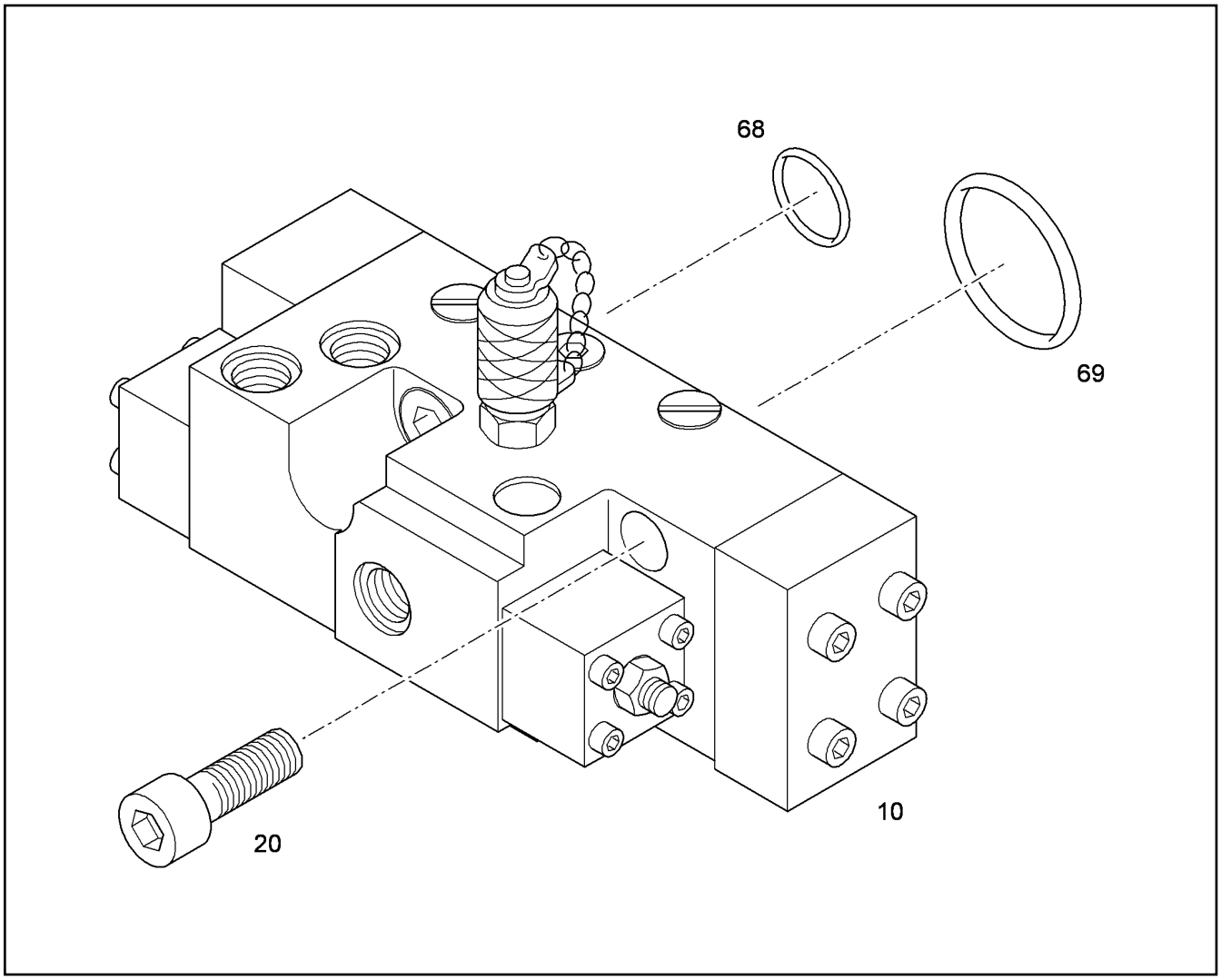

Pos.	Item	Quantity	Description	Descripción	Serie	K
10		1	REGULATOR	REGULADOR		1
20	4980388	4	CYLINDER SCREW ISO 4762 M8X35 10.9	TORNILLO CILINDRICO		
68	7380648	5	O-RING	JUNTA TORICA		1
69	7380888	1	O-RING	JUNTA TORICA		1

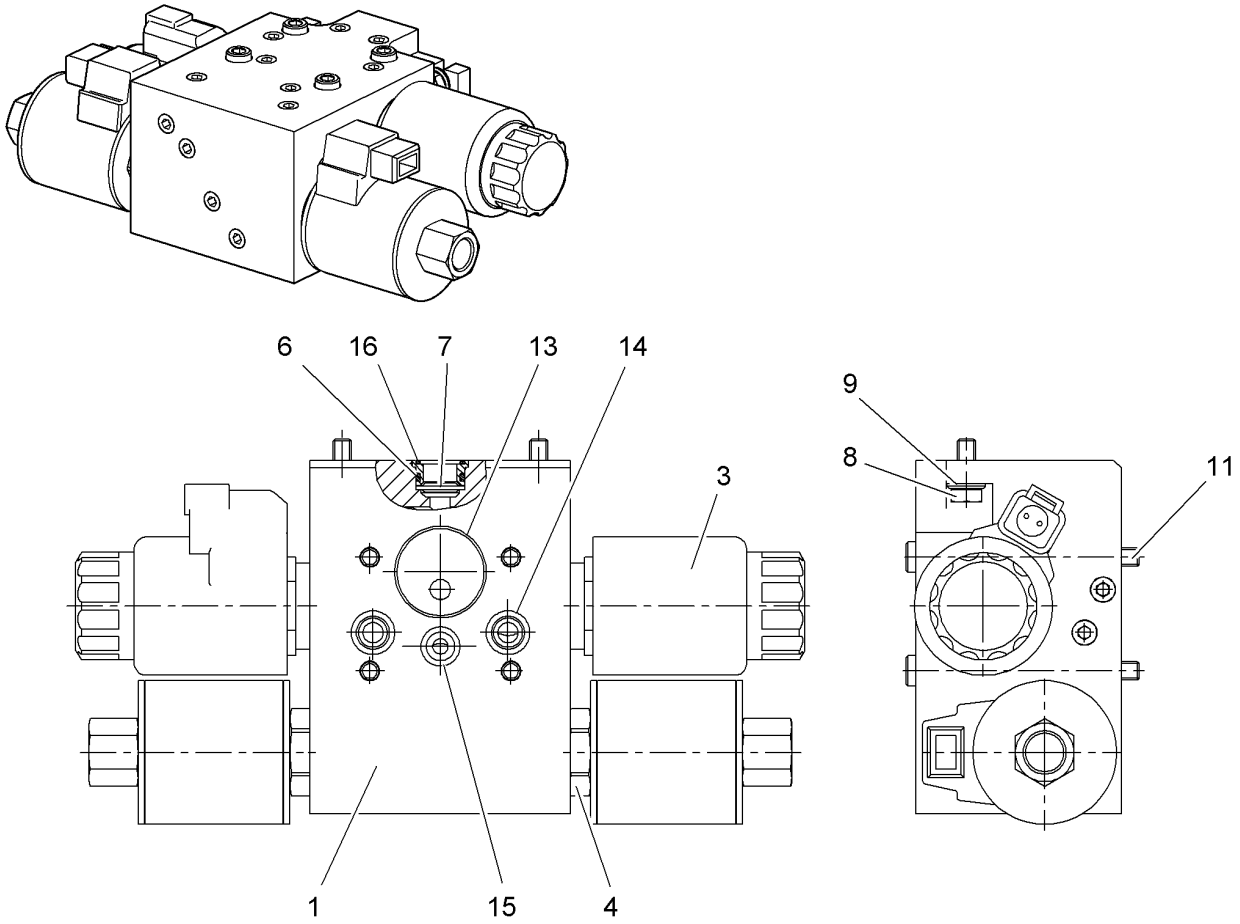

Pos.	Item	Quantity	Description	Descripción	Serie	K
1	10409752	1	VALVE HOUSING ⇨ ❑ 179	CAJA DE VALVULA		
3	10341929	2	PRESSURE REDUCTION VALVE ⇨ ❑ 411	VALVULA REDUCTORA DE PRES		2
4	10409845	2	2/2 WAY VALVE	VALVULA DE PASO 2/2		2
6	10337545	1	RING	ANILLO		
7	10337550	1	FILTER DISK	DISCO FILTRANTE		
8	4065099	2	HEX BOLT ISO 4017 M6x16 8.8 A2C	TORNILLO DE CABEZA HEXAGO		
9	10298680	2	WASHER	ARANDELA		
11	4002418	4	CYLINDER SCREW ISO 4762 M6x65 8.8 A2C	TORNILLO CILINDRICO		
13	10115021	1	O-RING 29,87X1,78	JUNTA TORICA		1
14	10115018	3	O-RING 10,82X1,78	JUNTA TORICA		1
15	7009366	1	O-RING 9,25x1,78	JUNTA TORICA		1
16	10115072	2	O-RING	JUNTA TORICA		1

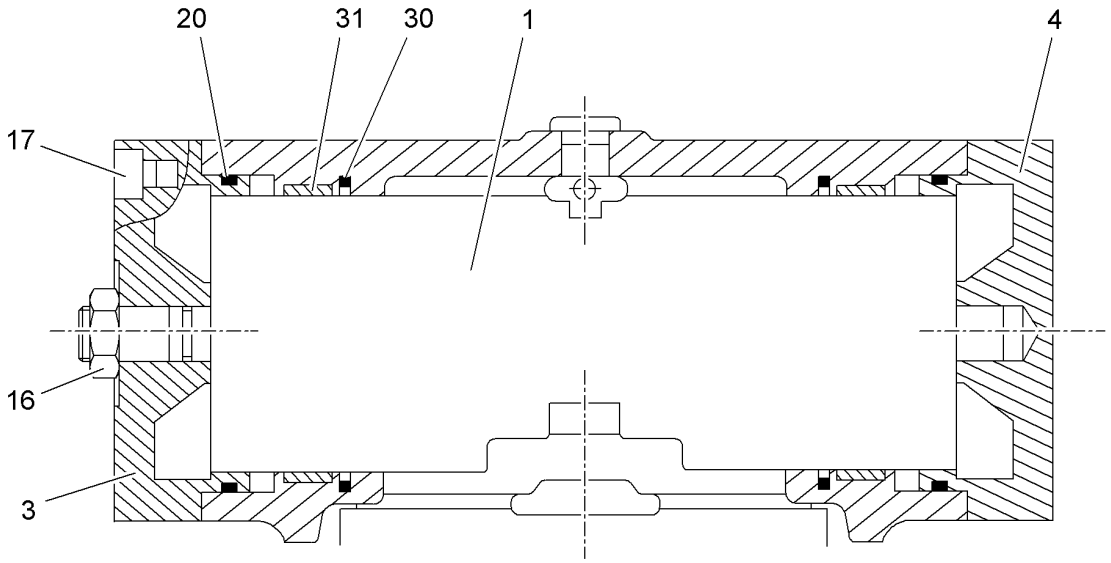

Pos.	Item	Quantity	Description	Descripción	Serie	K
1	10409751	1	ADJUSTING PISTON ⇨ ❑ 178	CILINDRO TRANSPORTADOR		1
3	10333224	1	LID	TAPA		
4	10333225	1	LID	TAPA		
16	10297942	1	HEX NUT	TUERCA HEXAGONAL		
17	4043082	8	CYLINDER SCREW ISO 4762 M8X20 10.9 A2	TORNILLO CILINDRICO		
20	7017766	2	O-RING	JUNTA TORICA		1
30	7623863	2	GUIDE RING	ANILLO GUIA		
31	10333229	2	TURCON GLYD RING	ANILLO TURCON-GLYD		1

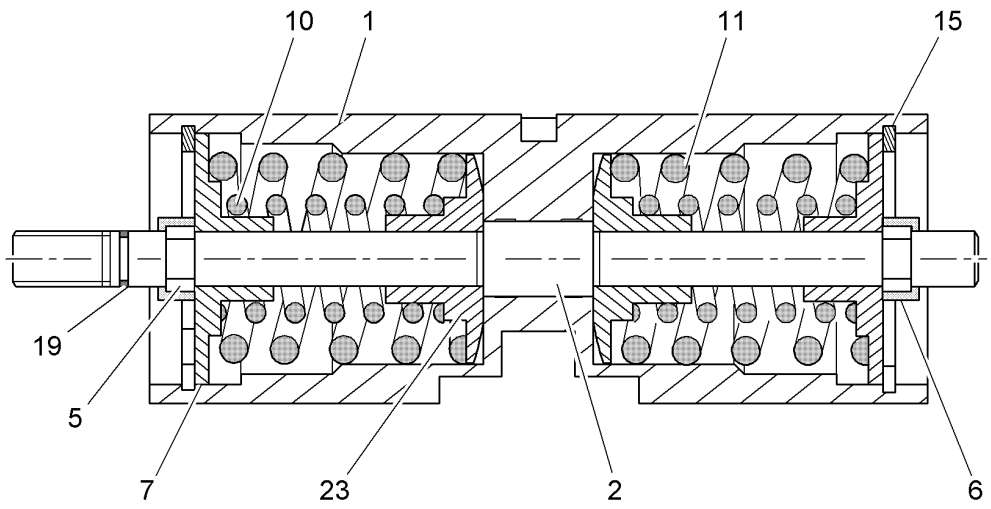

Pos.	Item	Quantity	Description	Descripción	Serie	K
1	7622886	1	ADJUSTING PISTON	CILINDRO TRANSPORTADOR		
2	10333231	1	ROD	VARILLA		
5	7373412	2	RING	ANILLO		
5	7373411	2	RING	ANILLO		
5	7373413	2	RING	ANILLO		
5	7373414	2	RING	ANILLO		
5	7373415	2	RING	ANILLO		
5	7373416	2	RING	ANILLO		
5	7373417	2	RING	ANILLO		
5	7373418	2	RING	ANILLO		
5	10297934	2	RING	ANILLO		
6	7373420	2	RETAINING RING	ANILLO DE ASIENTO		
7	7621957	2	SPRING SUPPORT	PLATILLO DE RESORTES		
10	7621958	2	PRESSURE SPRING	MUELLE COMPRESION		
11	7621959	2	PRESSURE SPRING	MUELLE COMPRESION		
15	4281007	2	LOCKING RING DIN 472 63 2	ANILLO SEGURIDAD		
19	10115072	1	O-RING	JUNTA TORICA		1
23	10333235	2	SPRING SUPPORT	PLATILLO DE RESORTES		

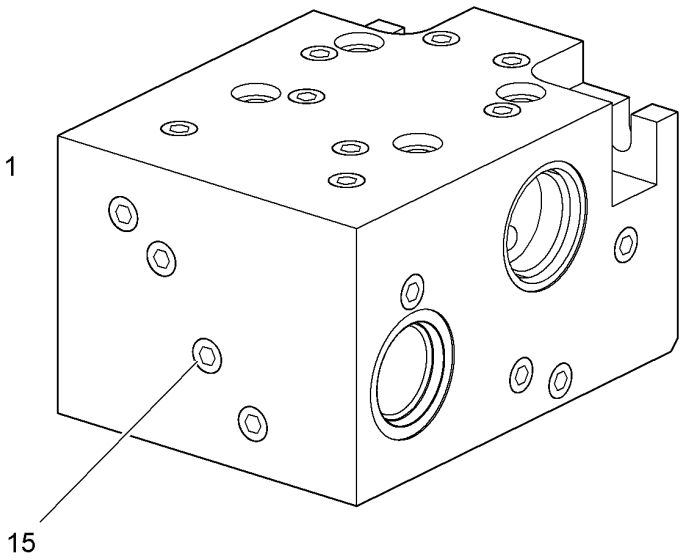

Pos.	Item	Quantity	Description	Descripción	Serie	K
1	10409753	1	HOUSING	CARCASA		
15	10409754	20	BLANKING PLUG	TAPON DE CIERRE		

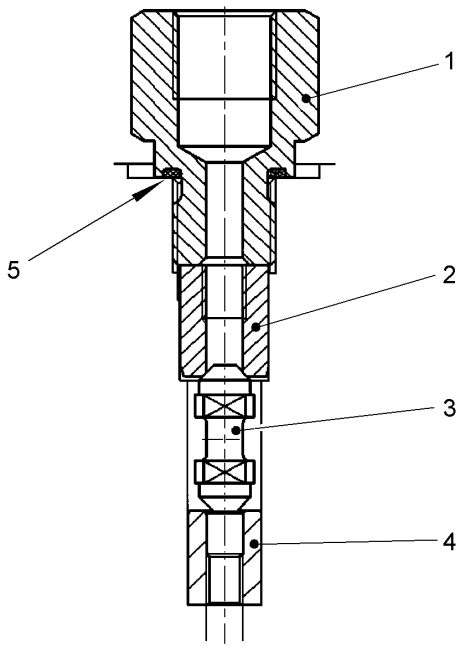

Pos.	Item	Quantity	Description	Descripción	Serie	K
1		1	CONNECTION PIECE	PIEZA DE EMPALME		1
2		1	VALVE BUSH	CASQUILLO DE VALVULA		1
3		1	VALVE CONE	CONO DE VALVULA		1
4		1	VALVE BUSH	CASQUILLO DE VALVULA		1
5		1	SEALING RING 14	JUNTA ANULAR		1

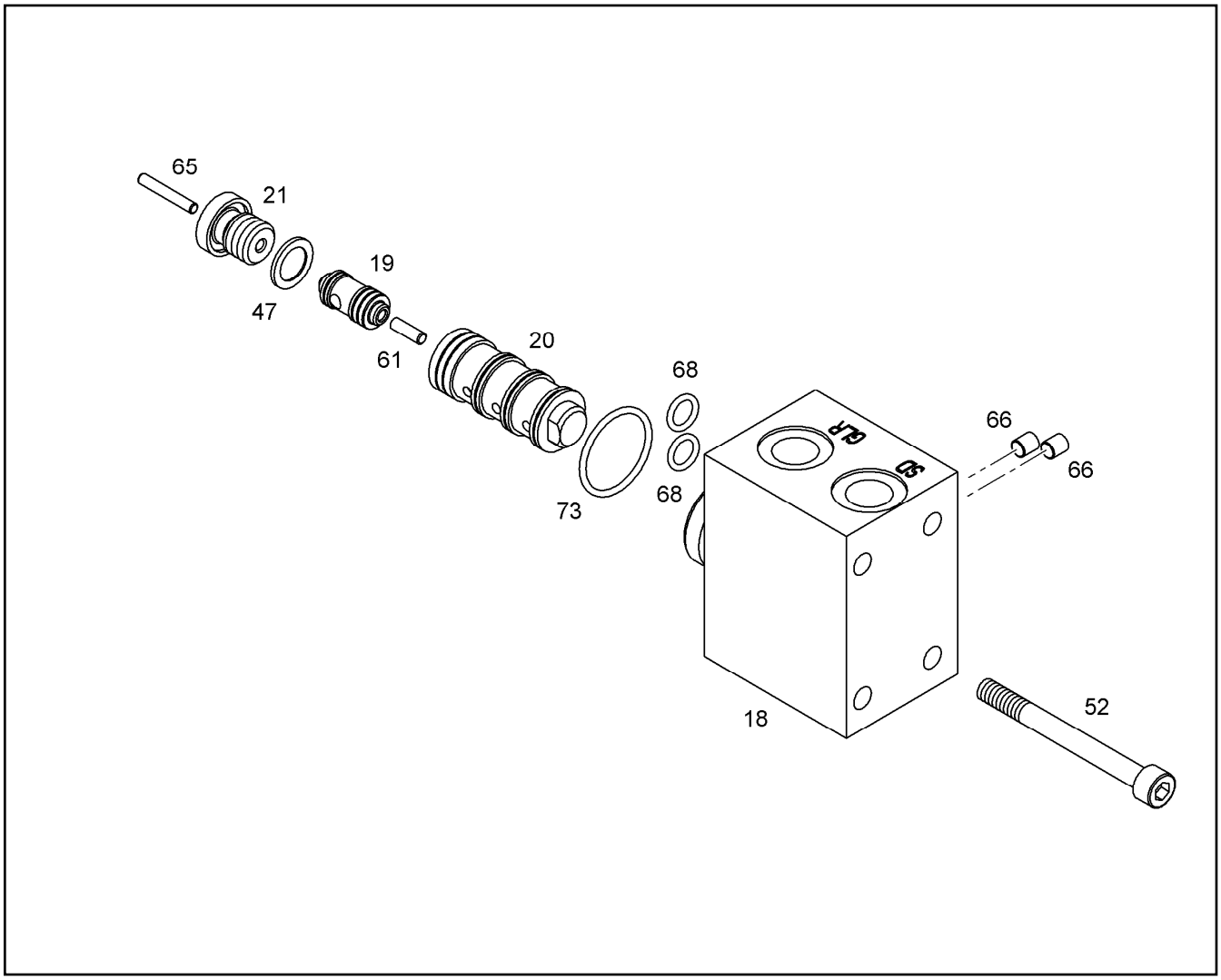

Pos.	Item	Quantity	Description	Descripción	Serie	K
18		1	COVER NG 165 165	TAPA NG		1
19		1	PISTON GLR NG 165 165	ÉMBOLO GLR NG		
20		1	PISTON SD NG 165 165	ÉMBOLO SD NG		
21		1	SCREW PLUG NG165	TORNILLO DE CIERRE		
47		1	GLYD RING 12	ANILLO GLYD		1
52		4	CYLINDER SCREW ISO 4762 M6X60 8.8 A2C	TORNILLO CILINDRICO		
61		1	PISTON	EMBOLO		
65		1	NEEDLE ROLLER DIN 5402 B 3,0X19,8	RODILLO DE AGUJAS		1
66		2	SEALING PLUG	TAPON ESTANCO		
68		1	O-RING	JUNTA TORICA		1
73		1	O-RING	JUNTA TORICA		1

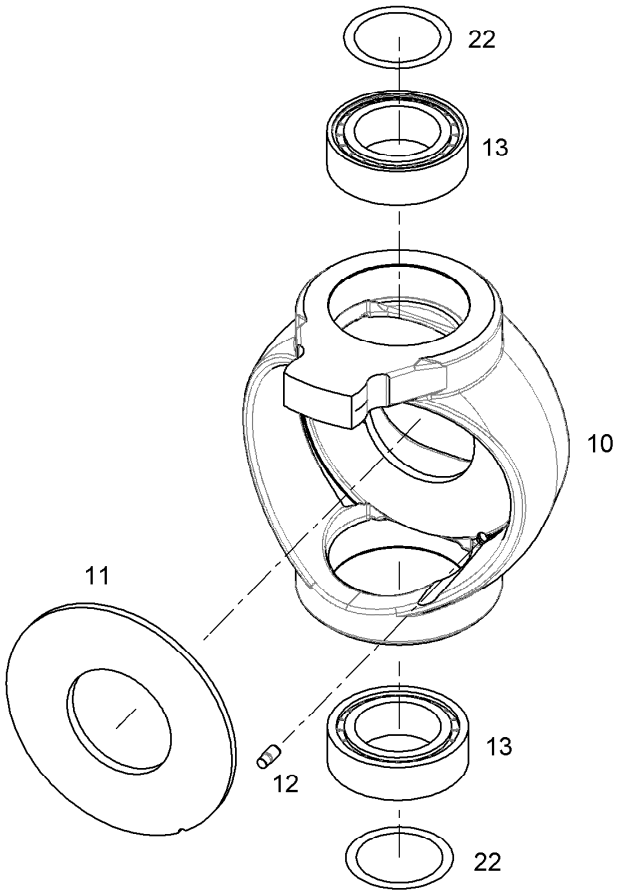

Pos.	Item	Quantity	Description	Descripción	Serie	K
10		1	YOKE	YUGO BASC.		
11		1	SLIDING DISC	DISCO DE DESLIZAMIENTO		
12		1	PIN	PASADOR		
13		2	CYLINDRICAL ROLLER BEARING	RODAMIENTO RODILLO CILINDR		1
22		2	KIT DISTANCE RINGS ⇨ ❑ 189			

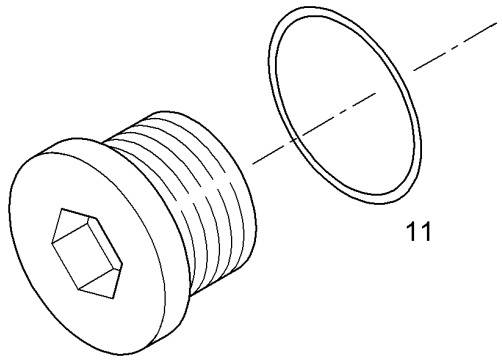

Pos.	Item	Quantity	Description	Descripción	Serie	K
11	7264906	1	SEAL	JUNTA		1

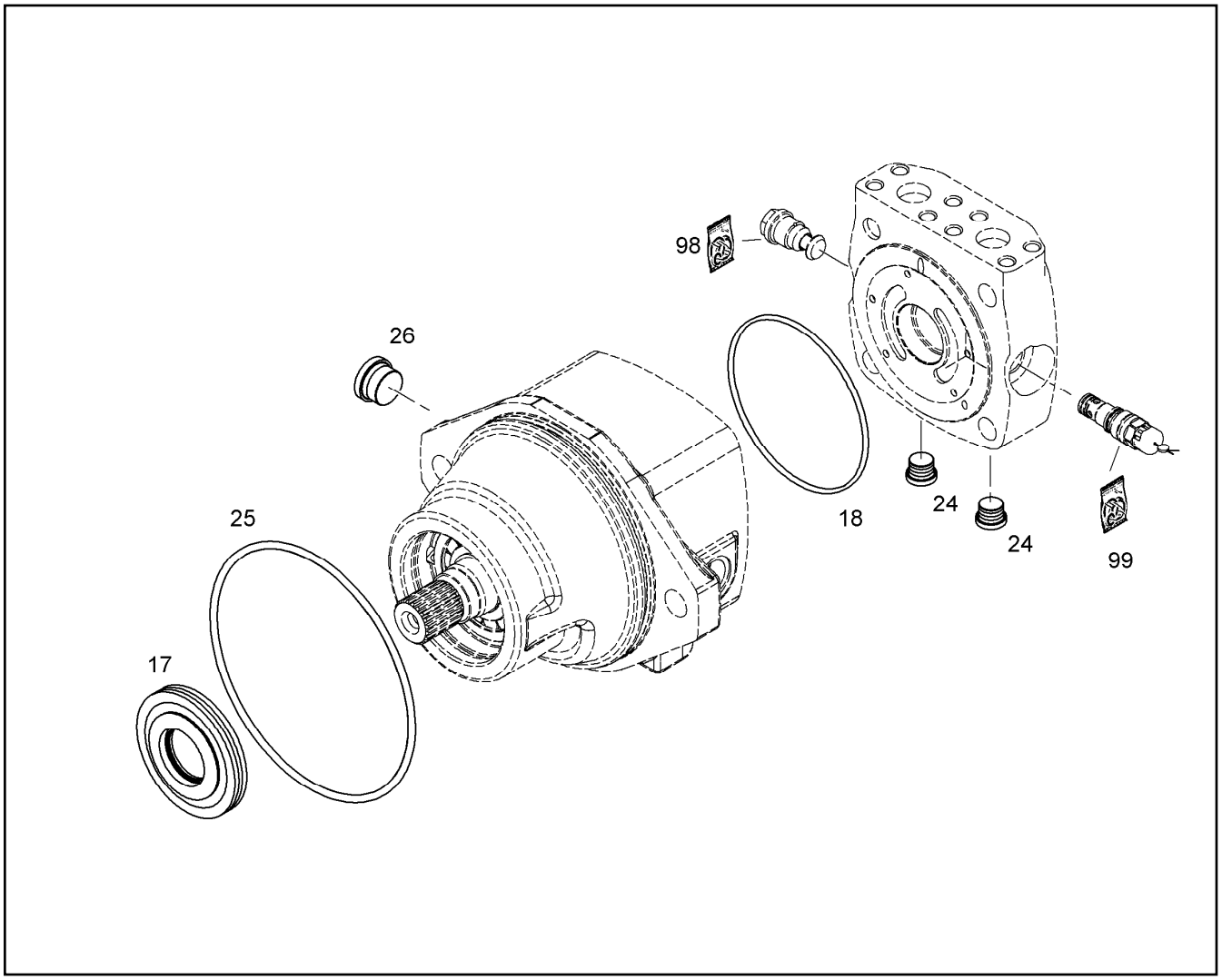

Pos.	Item	Quantity	Description	Descripción	Serie	K
17	9268751	1	REPAIR KIT LOCK RING ⇨ ❑ 73	JR ARO CIERRE		2
18	7380592	1	O-RING	JUNTA TORICA		1
24	7361961	2	SCREW PLUG VSTI	TORNILLO DE CIERRE		
25	7380593	1	O-RING	JUNTA TORICA		1
26	7361329	1	SCREW PLUG	TORNILLO DE CIERRE		
98	9268642	1	SEAL KIT SHUTTLE VALVE ⇨ ❑ 240	JJ VÁLVULA MÚLTIPLES VÍAS		1
99	9266089	1	SEALING SET VALVE ⇨ ❑ 85	JJ VÁLVULA		1

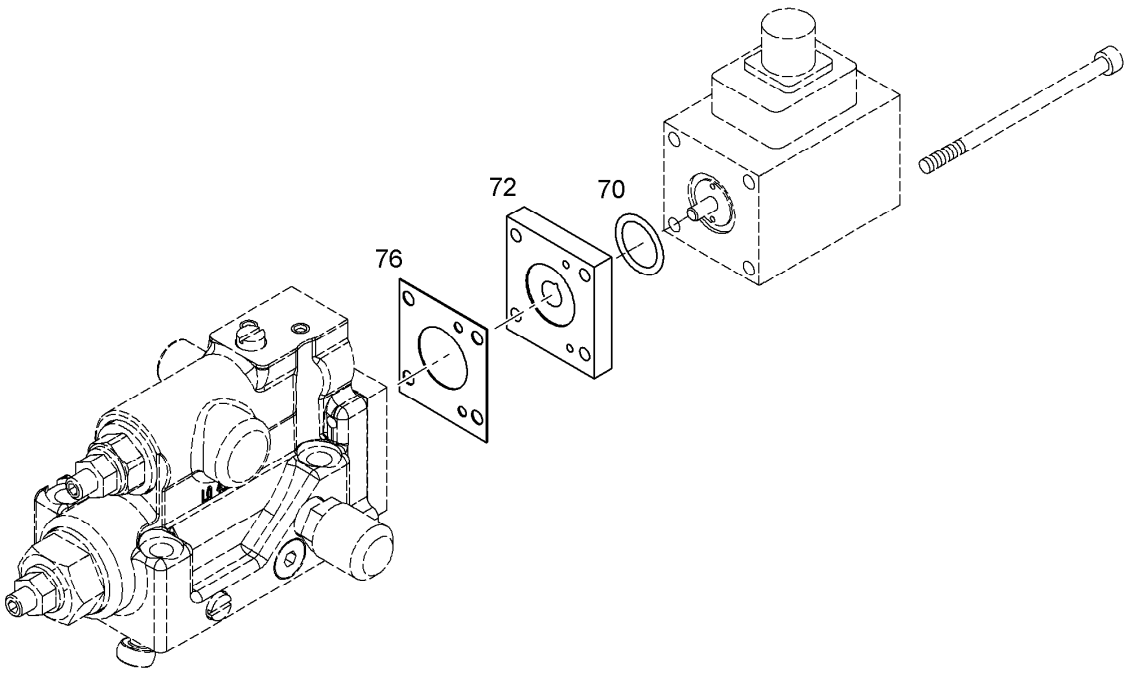

Pos.	Item	Quantity	Description	Descripción	Serie	K
70		1	O-RING	JUNTA TORICA		1
72		1	LID	TAPA		1
76		1	SEAL	JUNTA		1

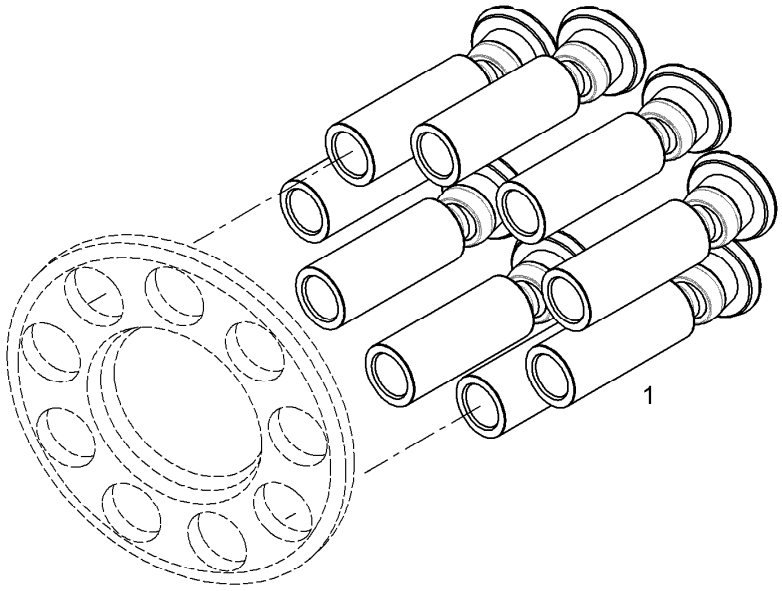

Pos.	Item	Quantity	Description	Descripción	Serie	K
1		9	PISTON WITH GUIDE SHOE	ÉMBOLO CON PATÍN DESL.		

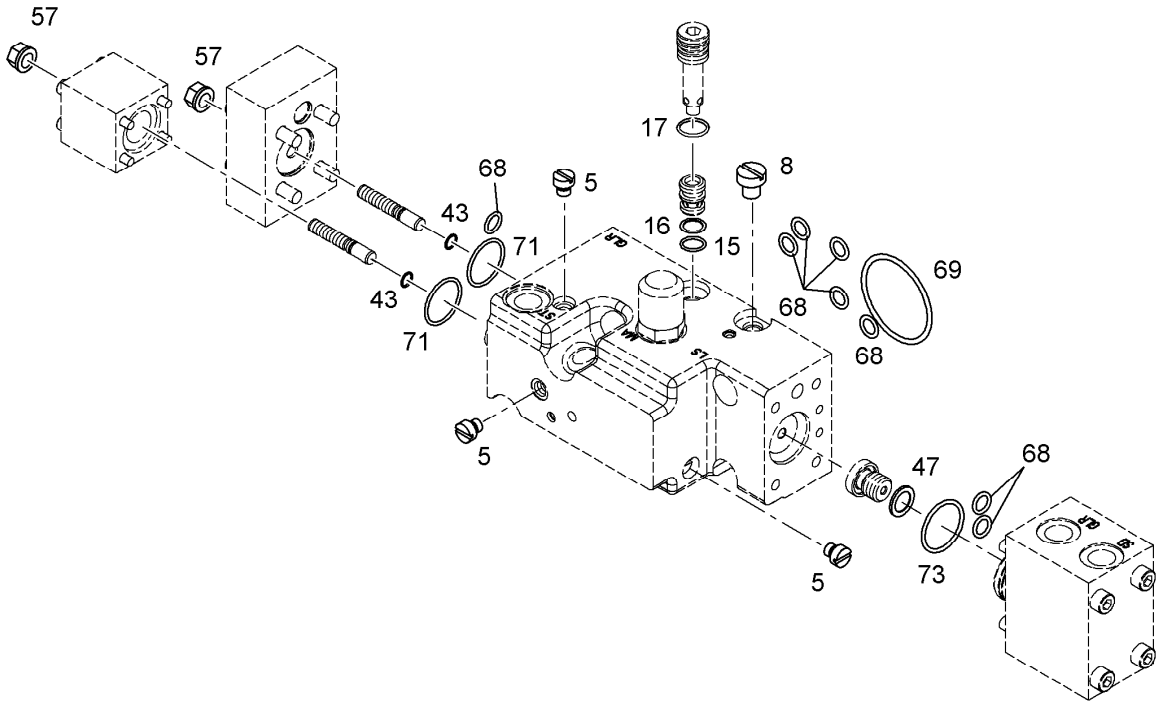

Pos.	Item	Quantity	Description	Descripción	Serie	K
5		4	SCREW PLUG M6X6 ⇨ ❑ 138	TORNILLO DE CIERRE		
8		1	SCREW PLUG M8X1X8,5 ⇨ ❑ 140	TORNILLO DE CIERRE		
15		1	O-RING	JUNTA TORICA		1
16		1	SUPPORTING RING	ANILLO SOPORTE		1
17		1	O-RING	JUNTA TORICA		1
43		2	O-RING	JUNTA TORICA		1
47		1	GLYD RING 12	ANILLO GLYD		1
57		2	SEAL-LOCK-SHOULDER NUT M6	TUERCA CON COLLAR SEALLOC		
68		8	O-RING	JUNTA TORICA		1
69		1	O-RING	JUNTA TORICA		1
71		2	O-RING	JUNTA TORICA		1
73		1	O-RING	JUNTA TORICA		1

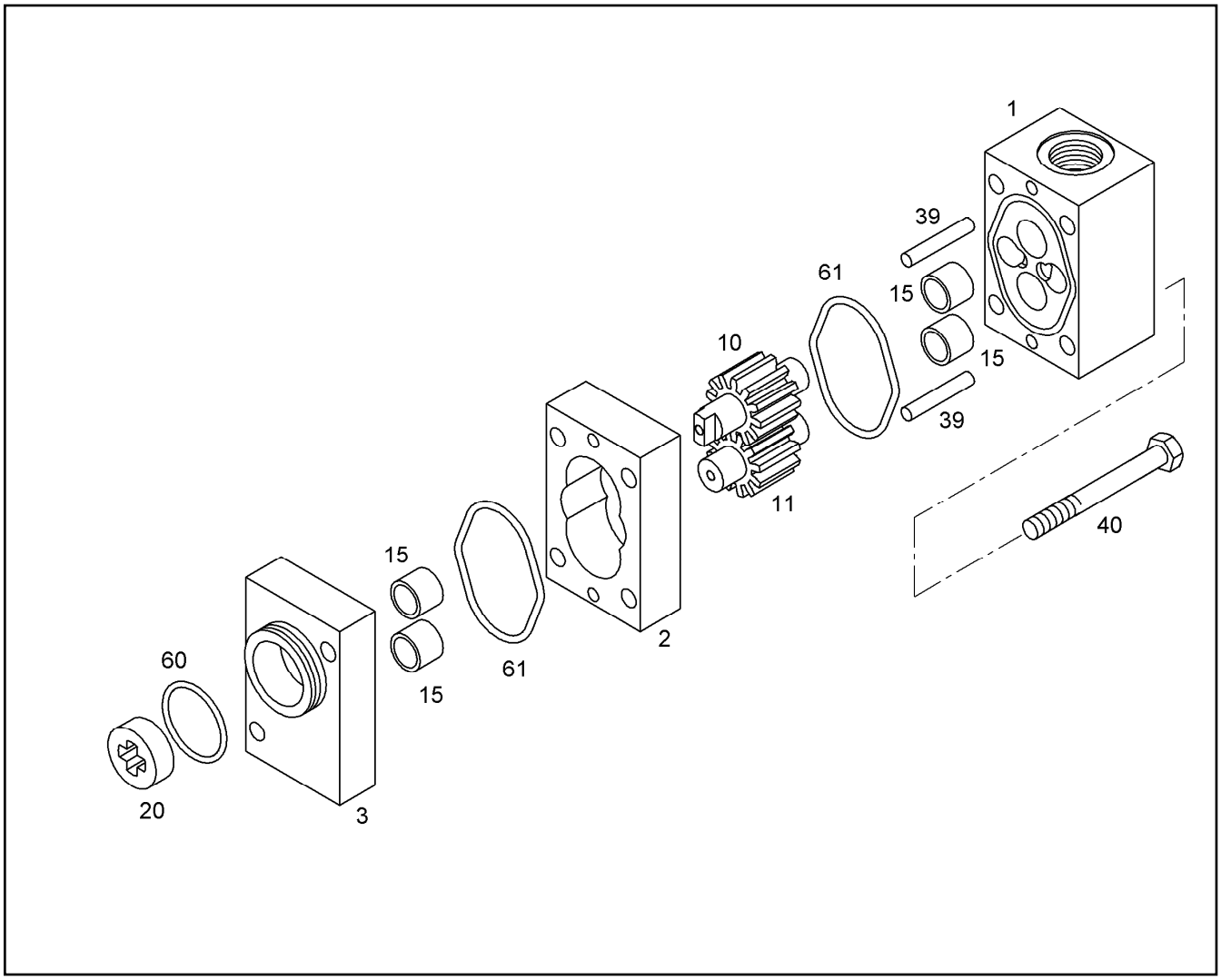

Pos.	Item	Quantity	Description	Descripción	Serie	K
1		1	CONNECTION HOUSING	CAJA DE CONEXION		
2		1	MIDDLE HOUSING	CARCASAS CENTRALES		
3		1	CONNECTION HOUSING	CAJA DE CONEXION		
10	9884138	1	DRIVE SHAFT Z=12 M=1.75	EJE MOTRIZ		
11	9884139	1	GEAR WHEEL	RUEDA DENTADA		
15	7381855	4	BEARING BUSH	CASQUILLO DE COJINETE		1
20	9073639	1	CLUTCH RING	ANILLO DE EMBRAGUE		
39	4981146	2	PARALLEL PIN ISO 8734 A 3 H 6 X 28 ST	PASADOR CILINDRICO		
40	4600356	2	HEX HEAD SCREW ISO 4014 M 6 X 65 8.8 A2	TORNILLO HEXAGONAL		
60	7381903	1	O-RING	JUNTA TORICA		1
61	7381861	2	O-RING	JUNTA TORICA		1

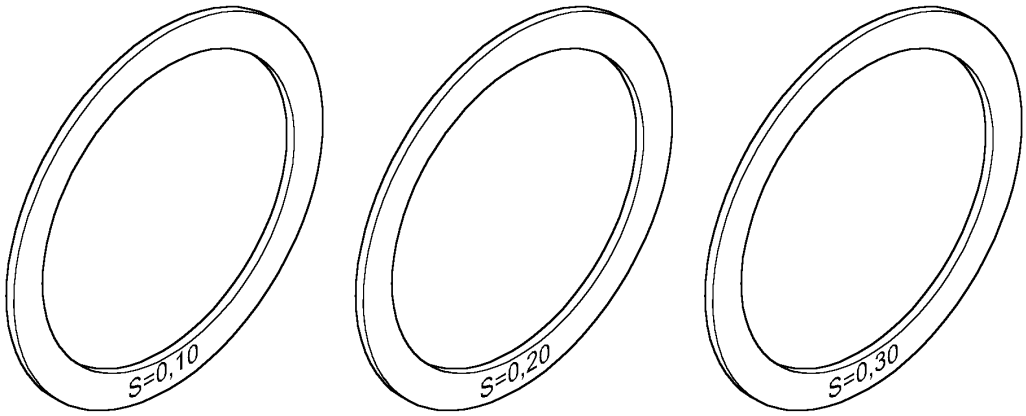

Pos.	Item	Quantity	Description	Descripción	Serie	K
10	7380974	1	WASHER	ARANDELA		
20	7380975	1	WASHER S= 0,20	ARANDELA		
30	7380976	1	WASHER S= 0,30	ARANDELA		

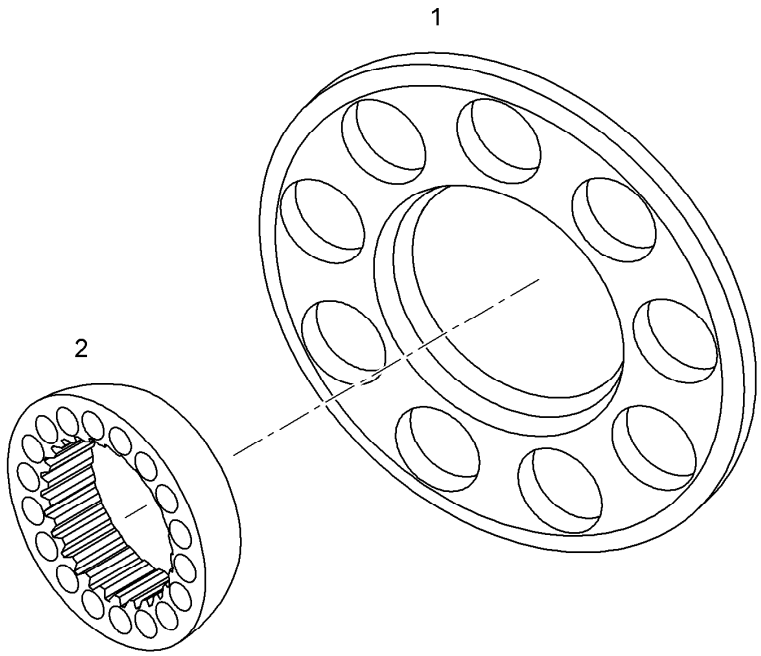

Pos.	Item	Quantity	Description	Descripción	Serie	K
1		1	PULL-BACK BALL NG 165	ESFERA DE RETROCESO		
2		1	PULL-BACK PLATE	PLACA DE RETROCESO		

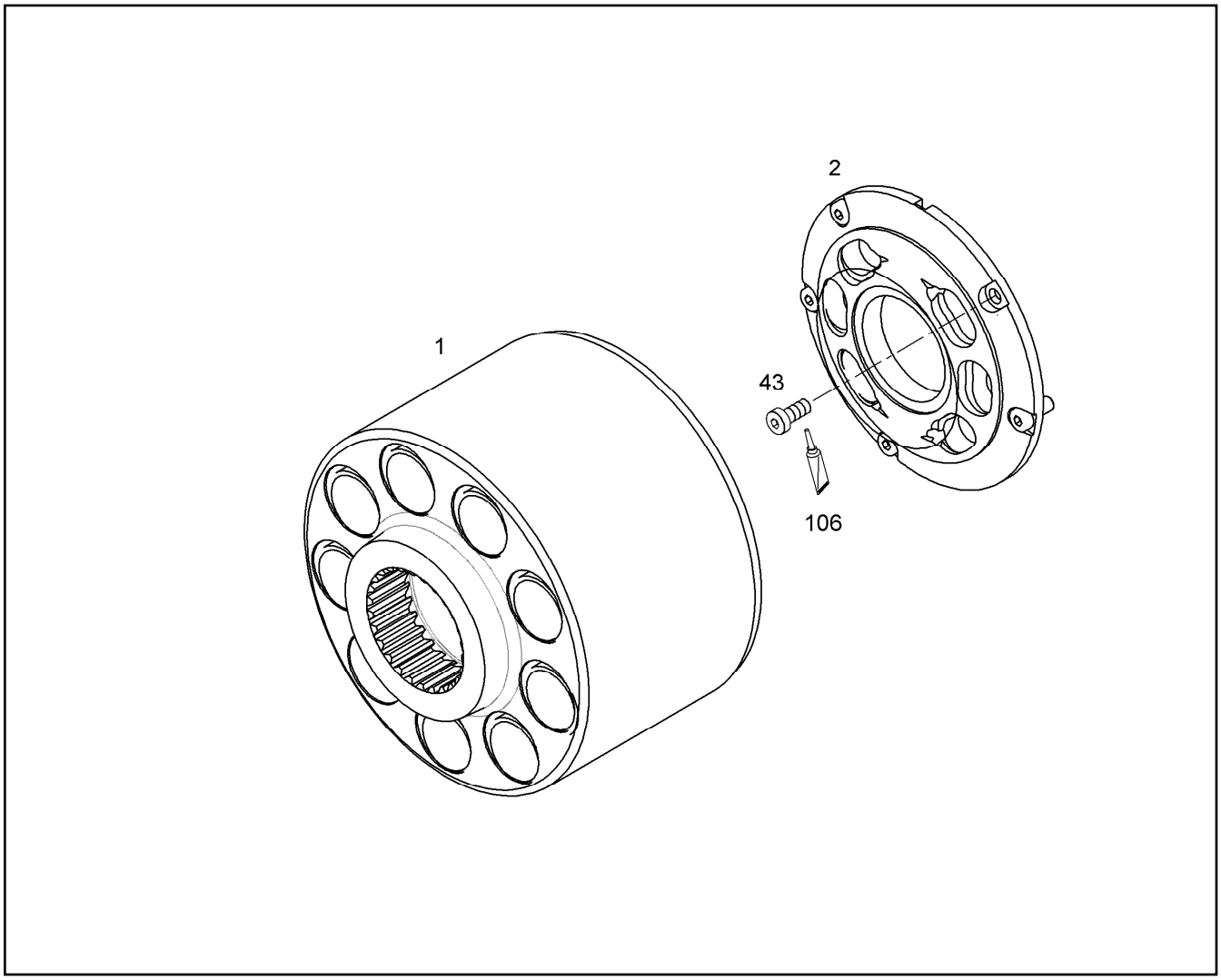

Pos.	Item	Quantity	Description	Descripción	Serie	K
1	9888120	1	CYLINDER WITH BUSH	CILINDRO CON CASQUILLO		
2	9888546	1	GUIDE PLATE	PLACA MANDO		
43	4981218	5	CYLINDER SCREW ISO 14580 M6X16 10.9	TORNILLO CILINDRICO		
106	8700012	1	SCREW LOCKING	SEGURO PARA TORNILLO		

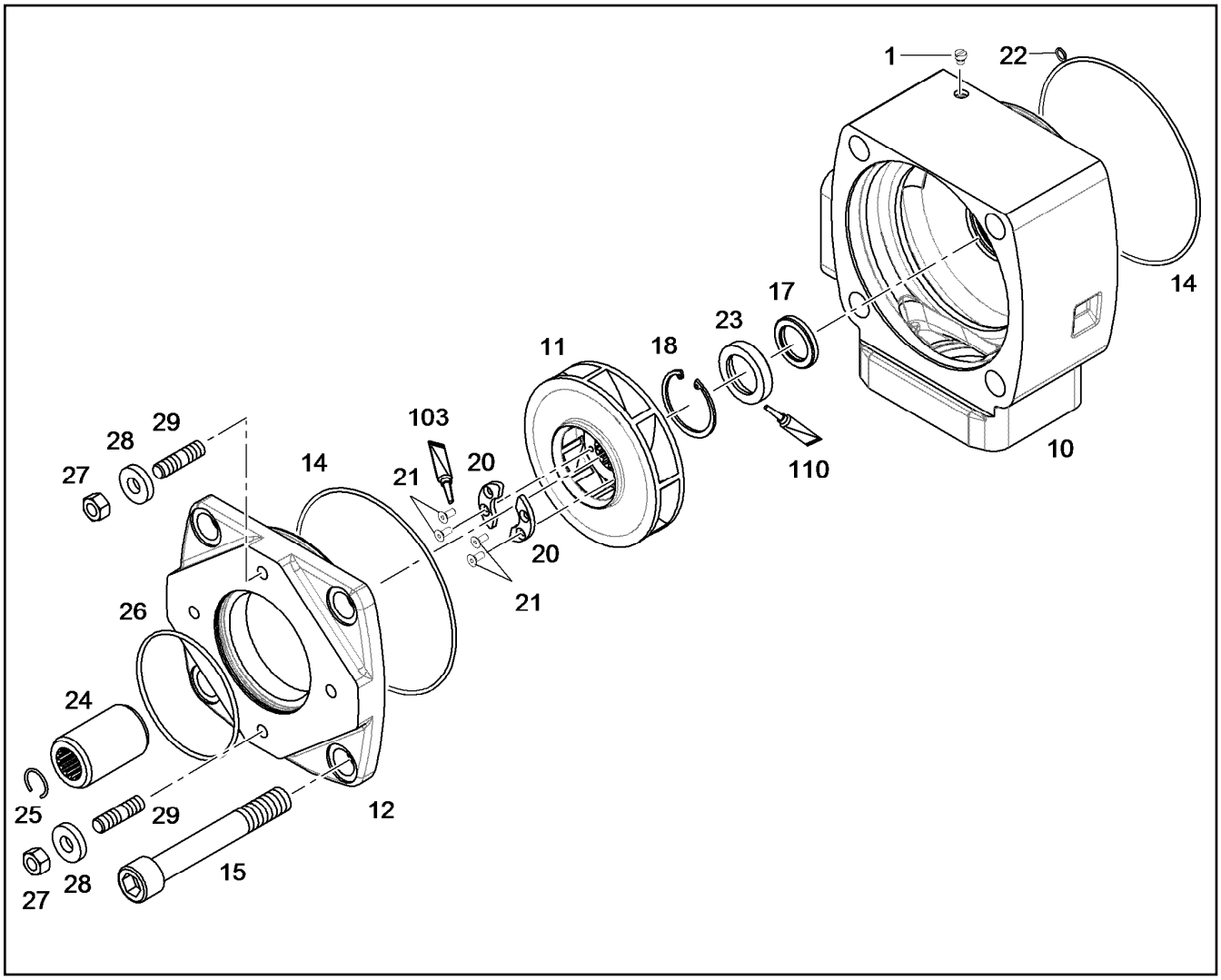

Pos.	Item	Quantity	Description	Descripción	Serie	K
1	9265783	1	SCREW PLUG M6X6 ⇨ ❑ 183	TORNILLO DE CIERRE		
10		1	CONNECTING PLATE	PLACA DE CONEXION		1
11	9275309	1	TRAVEL WHEEL	RUEDA MOTRIZ		
12		1	INTERMEDIATE FLANGE	BRIDA INTERMEDIA		
14	7380592	2	O-RING	JUNTA TORICA		1
15	4635377	4	CYLINDER SCREW ISO 4762 M20X140 10.9	TORNILLO CILINDRICO		
17	7380831	1	ROTARY SHAFT LIP SEAL	RETEN RADIAL		1
18	4281006	1	LOCKING RING DIN 472 52 X2	ANILLO SEGURIDAD		
20	9275004	2	DISK SEGMENT	SEGMENTO DE DISCO		1
21	4980801	4	COUNTERSUNK SCREW DIN 7991 M5X12 1	TORNILLO AVELLANADO		
22	7380648	1	O-RING	JUNTA TORICA		1
23	9272511	1	CLOSING RING	ANILLO DE CIERRE		
24	10117766	1	COUPLING FERRULE	CASQUILLO ACOPLAMIENTO		1
25	4980080	1	SNAP RING DIN 7993 B 22	ANILLO MUELLE		
26	7380605	1	O-RING	JUNTA TORICA		1
27	4900546	2	HEX NUT ISO 4032 M 12 -10 A3C	TUERCA HEXAGONAL		
28	10006370	2	WASHER DIN 7349 13	ARANDELA		
29	4980073	2	DOUBLE-ENDED STUD DIN 939 M12X30 10.9	TORNILLO ESPARRAGO		
103	8628192	1	LOCTITE	LOCTITE		
110	8624636	1	GLUE	PEGAMENTO		

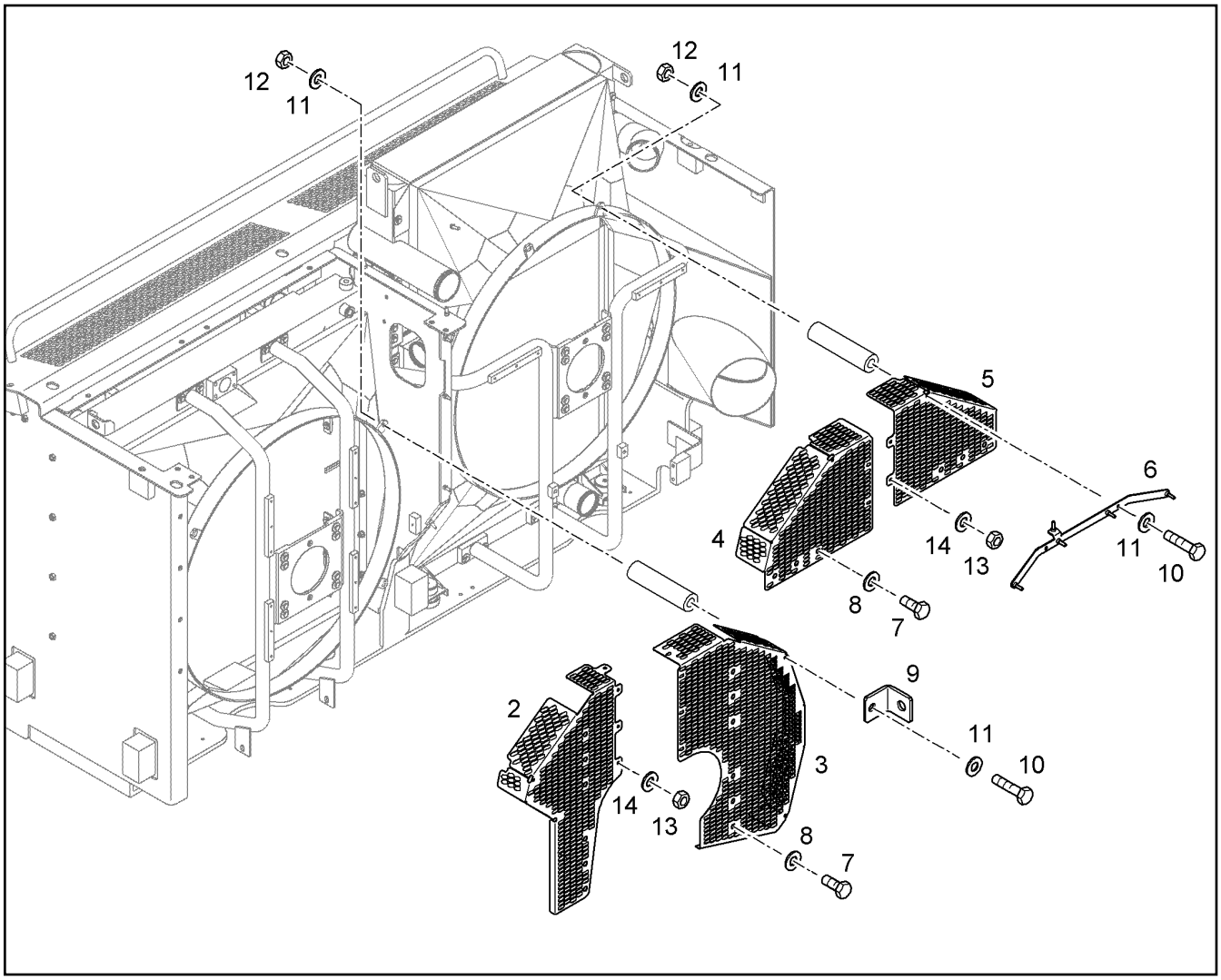

Pos.	Item	Quantity	Description	Descripción	Serie	K
2	10093804	1	FINGER GUARD	PROTECCION DEDOS		1
3	10093805	1	FINGER GUARD	PROTECCION DEDOS		
4	10093806	1	FINGER GUARD	PROTECCION DEDOS		
5	10093807	1	FINGER GUARD	PROTECCION DEDOS		
6	10083506	1	CABLE CLAMP	FIJADOR CABLE		1
7	4902231	18	CYLINDER SCREW ISO 4762 M8X16 10.9 A2	TORNILLO CILINDRICO		
8	4000779	18	WASHER DIN 9021 8,4 ST A3C	ARANDELA		
9	9573442	1	ANGLE	ANGULAR		
10	4002003	5	HEX BOLT ISO 4014 M8X140 10.9 A2C	TORNILLO DE CABEZA HEXAGO		
11	4000779	10	WASHER DIN 9021 8,4 ST A3C	ARANDELA		
12	4901573	5	HEX NUT M8	TUERCA HEXAGONAL		
13	4901573	6	HEX NUT M8	TUERCA HEXAGONAL		
14	4000779	6	WASHER DIN 9021 8,4 ST A3C	ARANDELA		

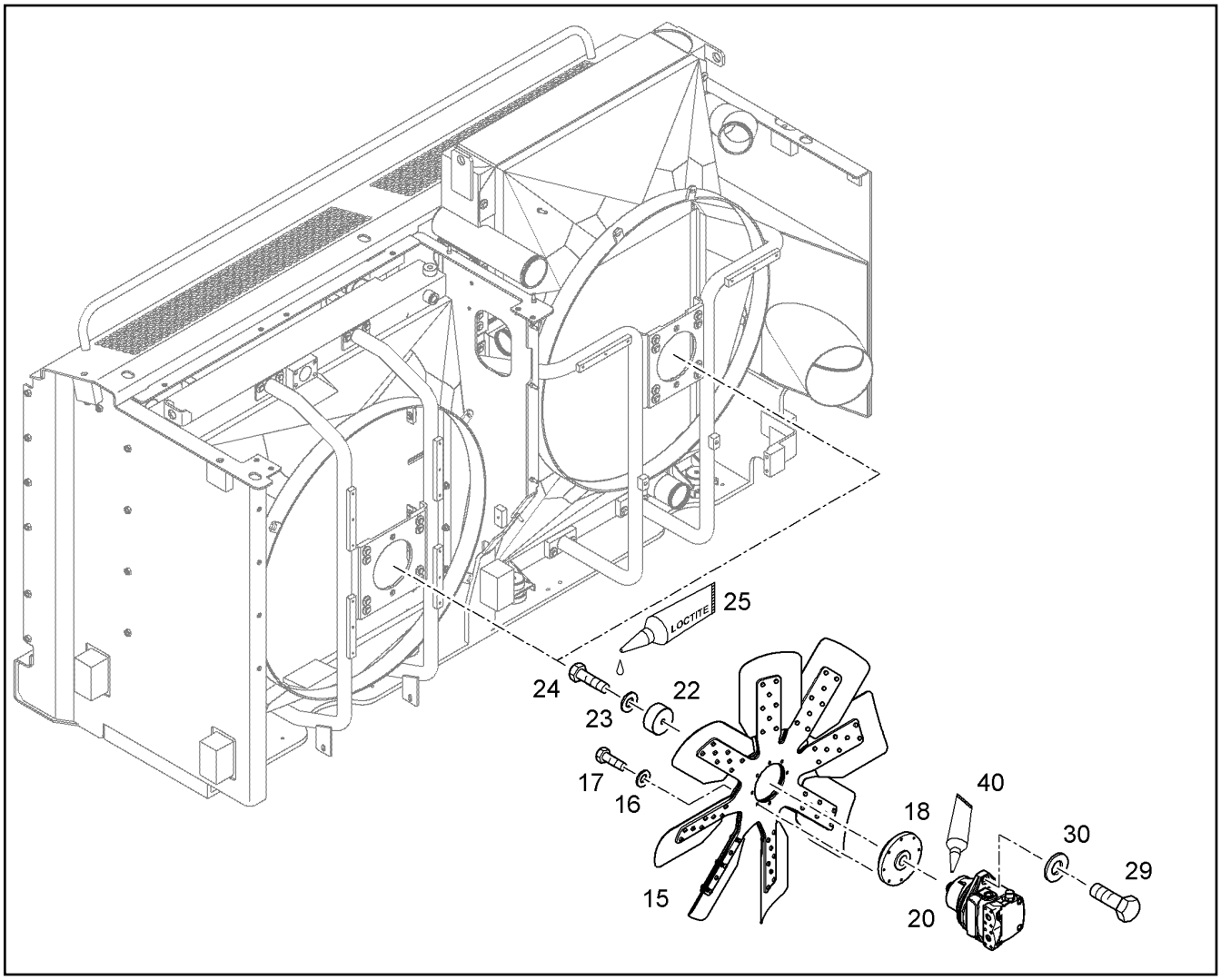

Pos.	Item	Quantity	Description	Descripción	Serie	K
15	10217803	2	FAN / BLOWER	AIREADOR		1
16	423910801	16	LOCK WASHER 8,4/13X1,7 VS 8	ARANDELA SEGURIDAD		
17	4635318	16	CYLINDER SCREW ISO 4762 M8X35 10.9 A2	TORNILLO CILINDRICO		
18	10372282	2	HUB	MOYU		1
20	10125042	2	HYDRAULIC INSTALLATION MOTOR [101237401] [111203530] ⇨ ❑ 197	MOTOR INCORP.HIDR.		6
22	10058104	2	WASHER	ARANDELA		
23	10289795	2	WASHER ISO 7089 10 300HV	ARANDELA		
24	4002133	2	HEX BOLT ISO 4014 M10X55 10.9 A3C	TORNILLO DE CABEZA HEXAGO		
25	8628192	0.001	LOCTITE	LOCTITE		
29	10000362	4	HEX BOLT ISO 4017 M16X50 10.9 DAC	TORNILLO DE CABEZA HEXAGO		
30	9918228	4	WASHER 16,5/28X4	ARANDELA		

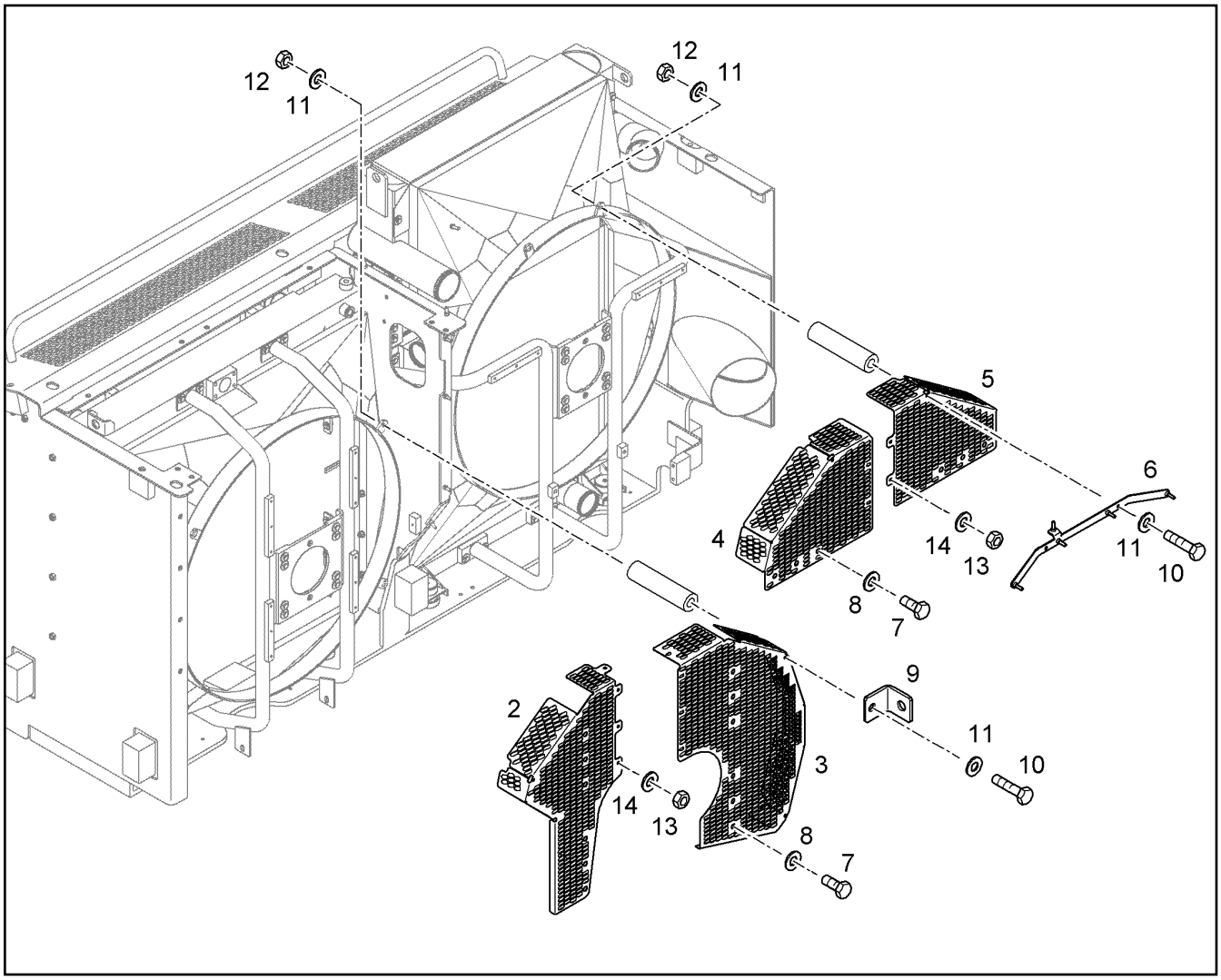

Pos.	Item	Quantity	Description	Descripción	Serie	K
2	10093804	1	FINGER GUARD	PROTECCION DEDOS		1
3	10093805	1	FINGER GUARD	PROTECCION DEDOS		
4	10093806	1	FINGER GUARD	PROTECCION DEDOS		
5	10093807	1	FINGER GUARD	PROTECCION DEDOS		
6	10083506	1	CABLE CLAMP	FIJADOR CABLE		1
7	4902231	18	CYLINDER SCREW ISO 4762 M8X16 10.9 A2	TORNILLO CILINDRICO		
8	4000779	18	WASHER DIN 9021 8,4 ST A3C	ARANDELA		
9	9573442	1	ANGLE	ANGULAR		
10	4002003	5	HEX BOLT ISO 4014 M8X140 10.9 A2C	TORNILLO DE CABEZA HEXAGO		
11	4000779	10	WASHER DIN 9021 8,4 ST A3C	ARANDELA		
12	4901573	5	HEX NUT M8	TUERCA HEXAGONAL		
13	4901573	6	HEX NUT M8	TUERCA HEXAGONAL		
14	4000779	6	WASHER DIN 9021 8,4 ST A3C	ARANDELA		

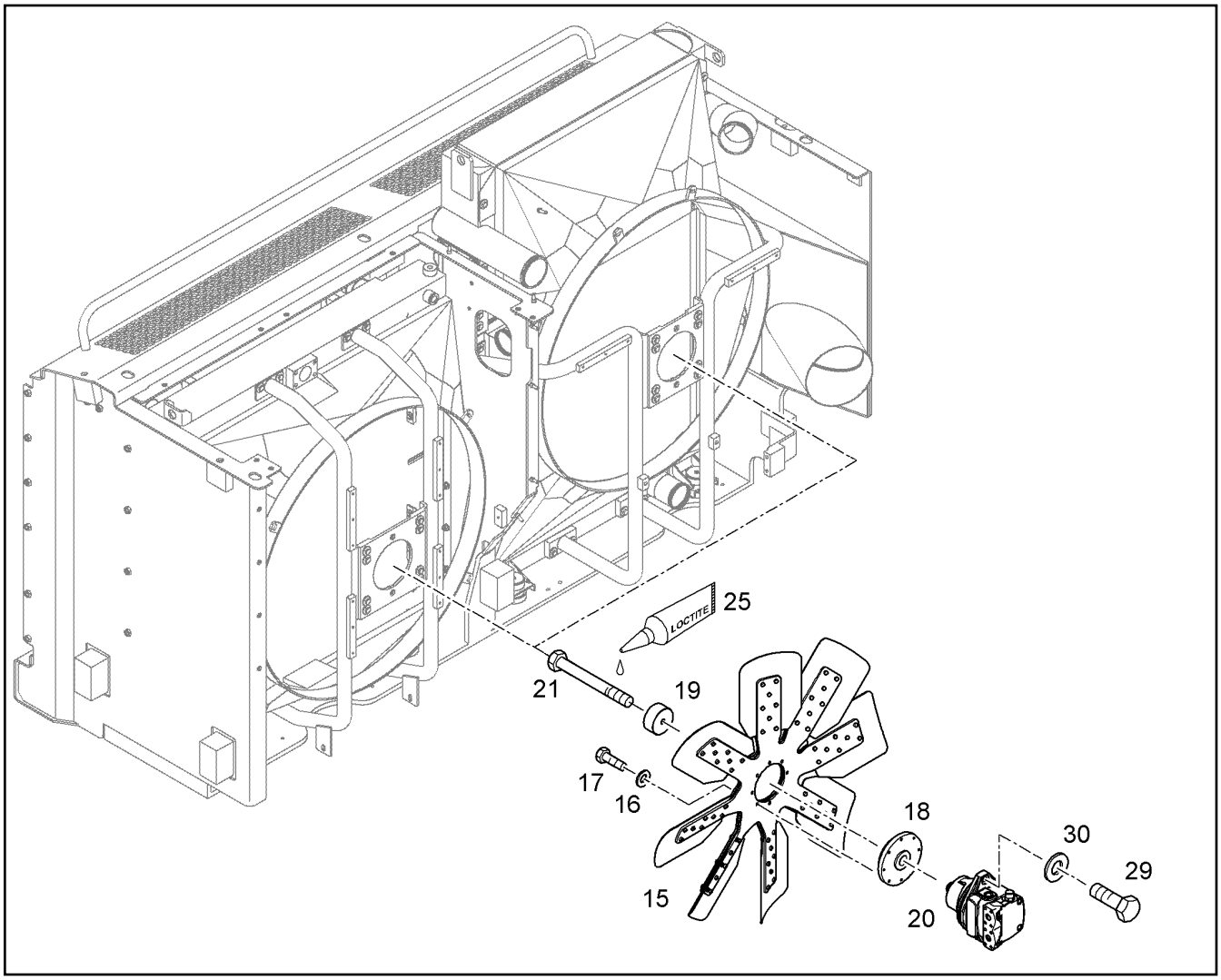

Pos.	Item	Quantity	Description	Descripción	Serie	K
15	10217803	2	FAN / BLOWER	AIREADOR		1
16	423910801	16	LOCK WASHER 8,4/13X1,7 VS 8	ARANDELA SEGURIDAD		
17	4062002	16	HEX BOLT ISO 4017 M8X30 10.9 A2C	TORNILLO DE CABEZA HEXAGO		
18	10841515	2	HUB	MOYU		1
19	10841516	2	DISTANCE WASHER	ARANDELA DISTANCIADORA		1
21	4901253	2	HEX BOLT ISO 4014 M12X120 10.9 A3C	TORNILLO DE CABEZA HEXAGO		
25	8628192	0.001	LOCTITE	LOCTITE		
29	10000362	4	HEX BOLT ISO 4017 M16X50 10.9 DAC	TORNILLO DE CABEZA HEXAGO		
30	9918228	4	WASHER 16,5/28X4	ARANDELA		

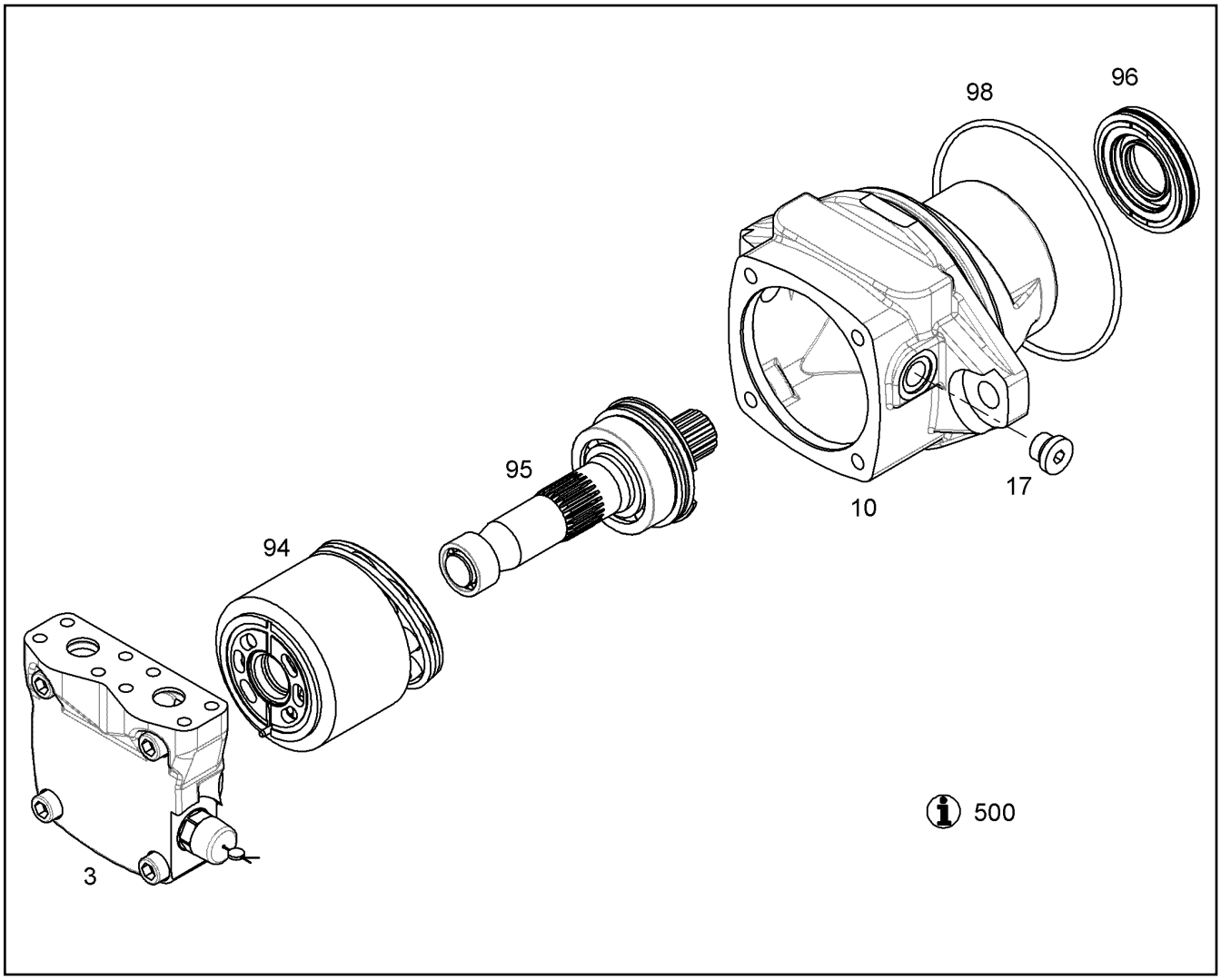

Pos.	Item	Quantity	Description	Descripción	Serie	K
3	9077032	1	CONNECTING PLATE NG 045 ⇨ ❑ 198	PLACA DE CONEXION		1
10		1	HOUSING	CARCASA		
17	7361960	1	SCREW PLUG M18X1,5X17 A3C	TORNILLO DE CIERRE		
94	9271427	1	REPAIR KIT DRIVING MECHANISM ⇨ ❑ 231	JR GRUPO MOTOR		2
95	9882882	1	REPAIR KIT SHAFT ⇨ ❑ 267	JR ÁRBOL		2
96	9268011	1	REPAIR KIT LOCK RING ⇨ ❑ 229	JR ARO CIERRE		2
98	9268786	1	SEAL KIT ⇨ ❑ 230	JUEGO JUNTAS		1
500	9278153	1	TABLE ORDER	TABLA		

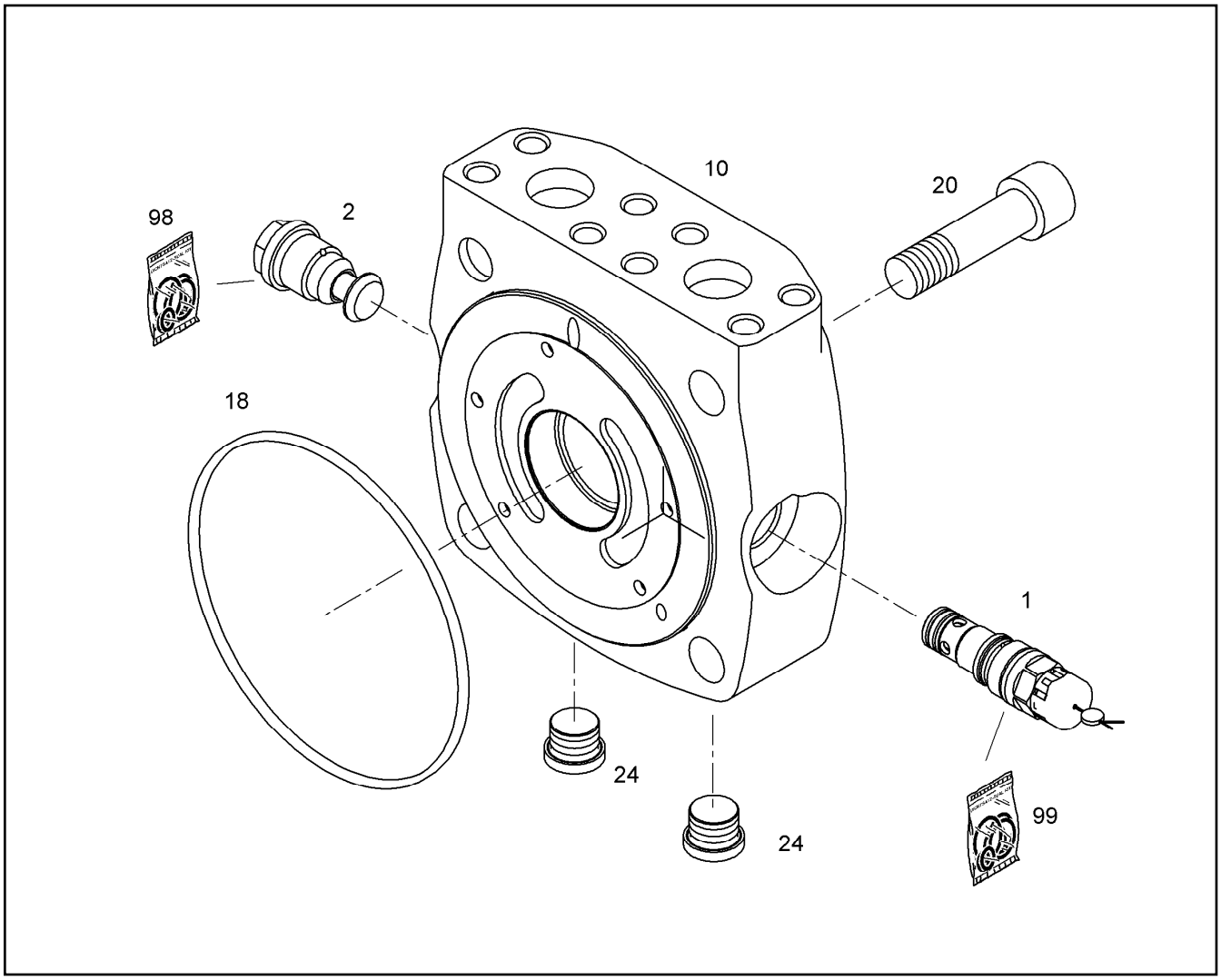

Pos.	Item	Quantity	Description	Descripción	Serie	K
1	9076052	1	REPAIR SET PRESSURE CONTROL VA	JR VÁLVULA LIM.PRESIÓN		
2	9889008	1	REPAIR KIT ⇨ ❑ 393	JR VÁLV.RETENCIÓN		
10		1	CONNECTING PLATE	PLACA DE CONEXION		
18	7380605	1	O-RING	JUNTA TORICA		1
20	4980434	4	CYLINDER SCREW ISO 4762 M12X50 10.9	TORNILLO CILINDRICO		
24	7363125	2	SCREW PLUG ⇨ ❑ 760	TORNILLO DE CIERRE		
98	9268642	1	SEAL KIT SHUTTLE VALVE ⇨ ❑ 240	JJ VÁLVULA MÚLTIPLES VÍAS		1
99	9266089	1	SEALING SET VALVE ⇨ ❑ 85	JJ VÁLVULA		1

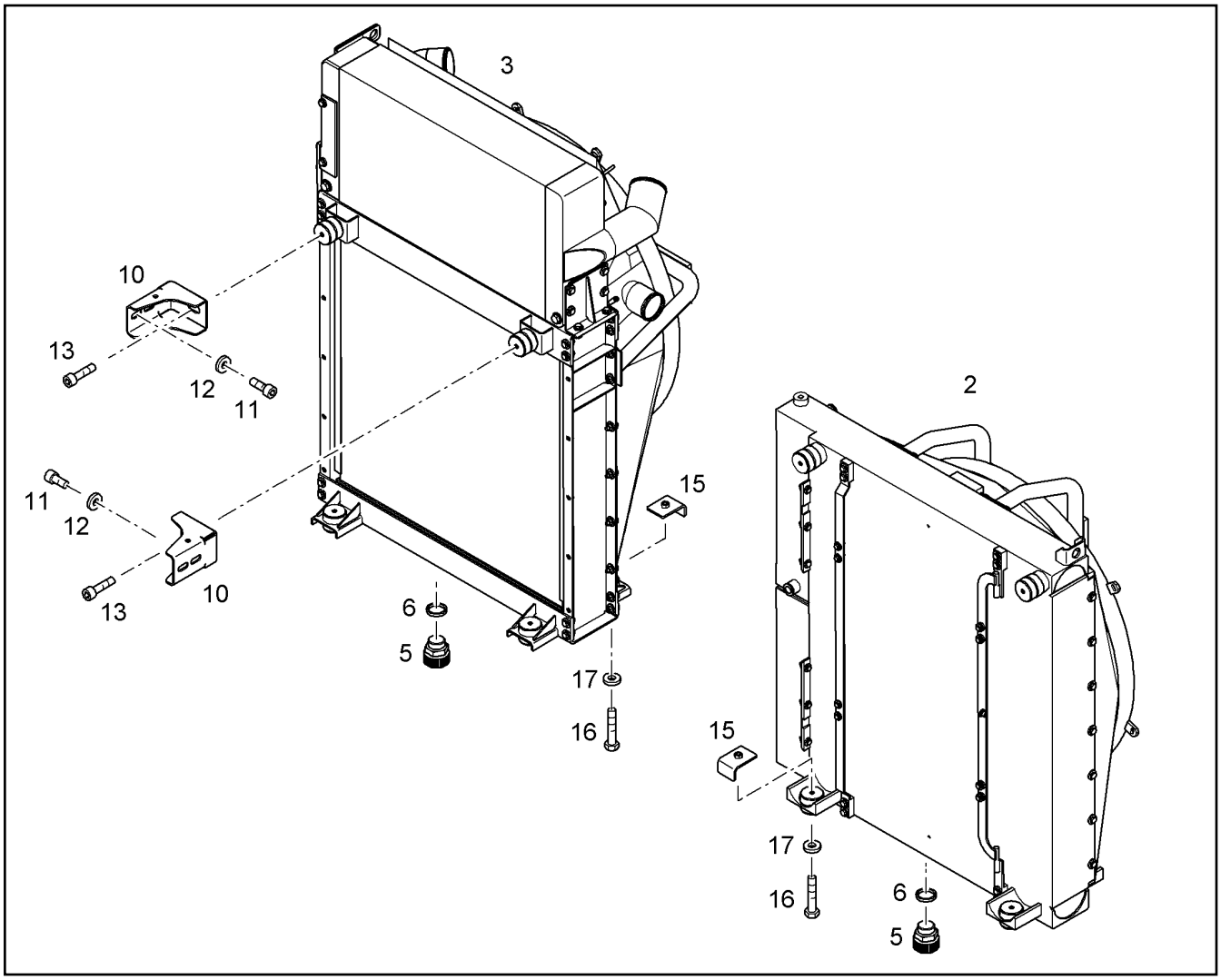

Pos.	Item	Quantity	Description	Descripción	Serie	K
2	10425385	1	COMBINED OIL COOLER [4610P12267] ⇨ ❑ 208	RADIADOR ACEITE COMB.		2
5	7365034	2	OIL DRAIN PLUG M26X1,5	TORNILLO PURGA ACEITE		
6	7101019	2	SEALING RING DIN 7603 A 26 X 31 CU	JUNTA ANULAR		1
10	10058351	4	CONSOLE	CONSOLA		
11	4043163	8	CYLINDER SCREW ISO 4762 M12X30 10.9	TORNILLO CILINDRICO		
12	4000750	8	WASHER ISO 7093 -1 12 -200HV DAC	ARANDELA		
13	4600505	4	CYLINDER SCREW ISO 4762 M12X70 10.9	TORNILLO CILINDRICO		
15	10060891	8	CONSOLE	CONSOLA		
16	4001314	8	HEX BOLT ISO 4014 M12X90 10.9 A3C	TORNILLO DE CABEZA HEXAGO		
17	10289804	8	WASHER ISO 7089 12 300HV	ARANDELA		

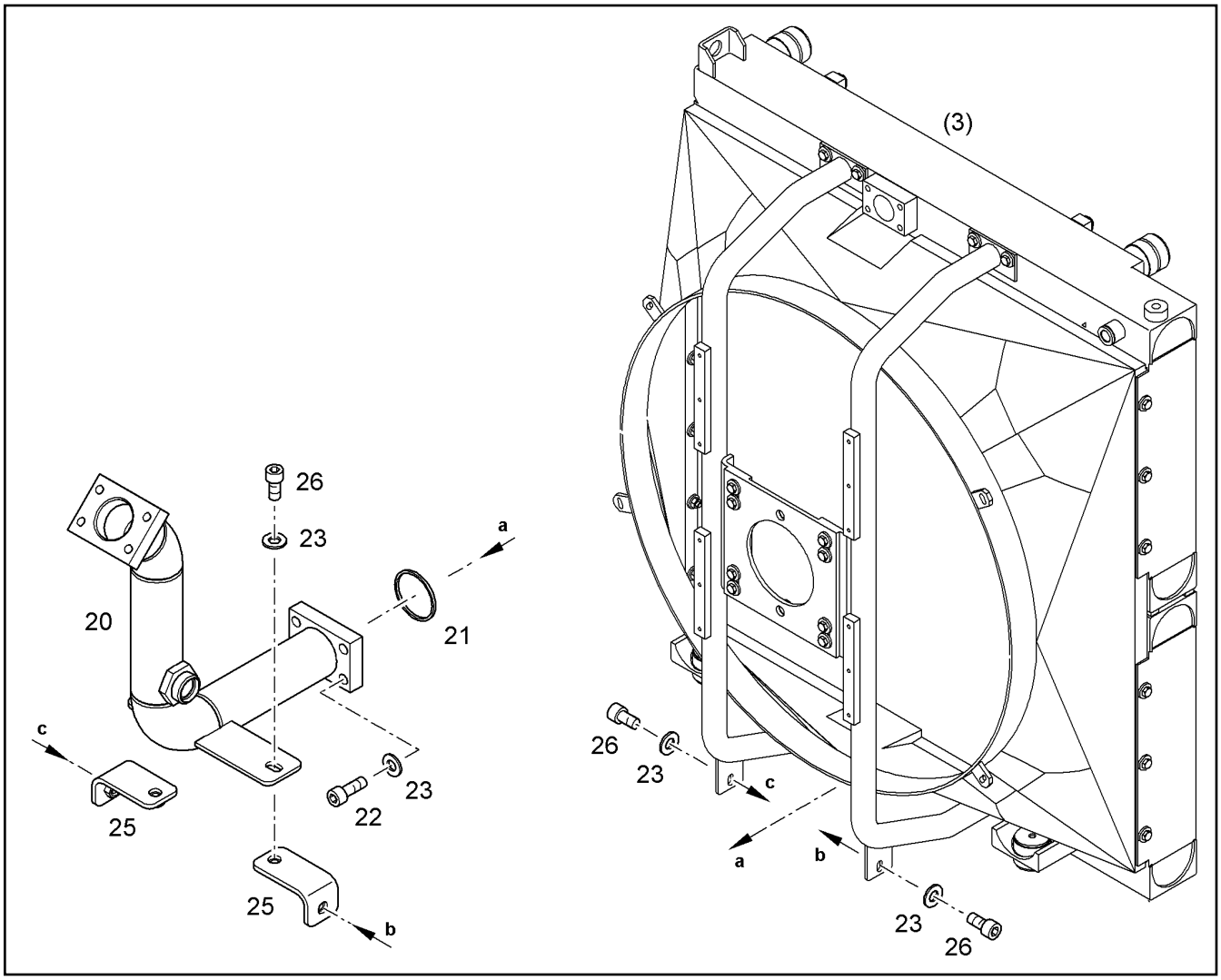

Pos.	Item	Quantity	Description	Descripción	Serie	K
20	10071345	1	TUBE	TUBO		
21	10290516	1	PLAIN COMPRESSION RING 63,9x3,4x2,8	ARO DE SECCION RECTANGULA		1
22	4043164	4	CYLINDER SCREW ISO 4762 M12X35 10.9	TORNILLO CILINDRICO		
23	9918226	8	WASHER 12,5/21X3,5	ARANDELA		
25	10072416	2	INTERMEDIATE LEDGE	LISTÓN INTERMEDIO		
26	4043163	4	CYLINDER SCREW ISO 4762 M12X30 10.9	TORNILLO CILINDRICO		

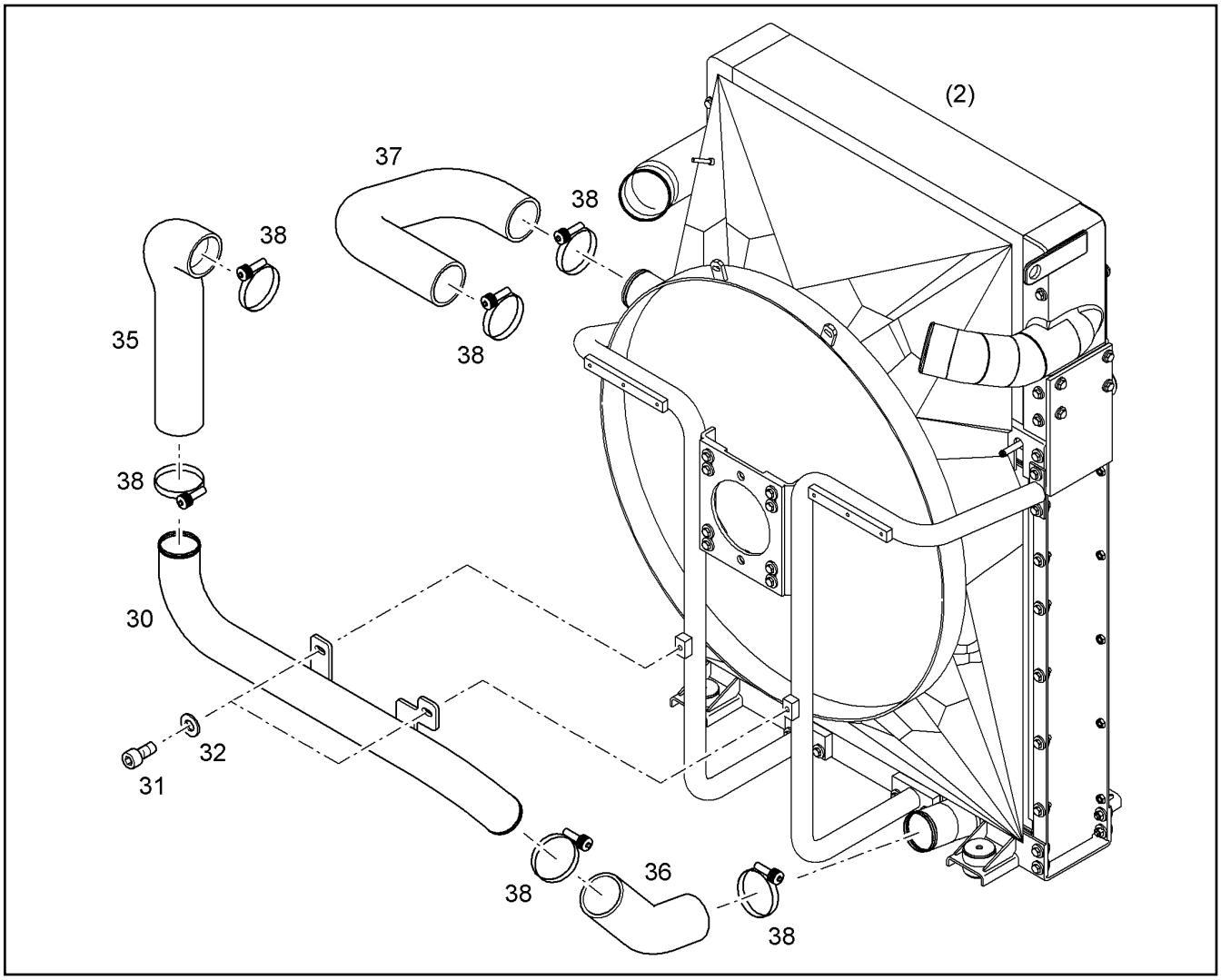

Pos.	Item	Quantity	Description	Descripción	Serie	K
30	10054423	1	WATER PIPE	TUBO DE AGUA		1
31	4043163	2	CYLINDER SCREW ISO 4762 M12X30 10.9	TORNILLO CILINDRICO		
32	9918226	2	WASHER 12,5/21X3,5	ARANDELA		
35	10054420	1	WATER HOSE	MANGUERA DE AGUA		1
36	10054421	1	WATER HOSE	MANGUERA DE AGUA		1
37	10054422	1	WATER HOSE	MANGUERA DE AGUA		1
38	10031940	6	HOSE CLAMP	ABRAZADERA MANGUERA		

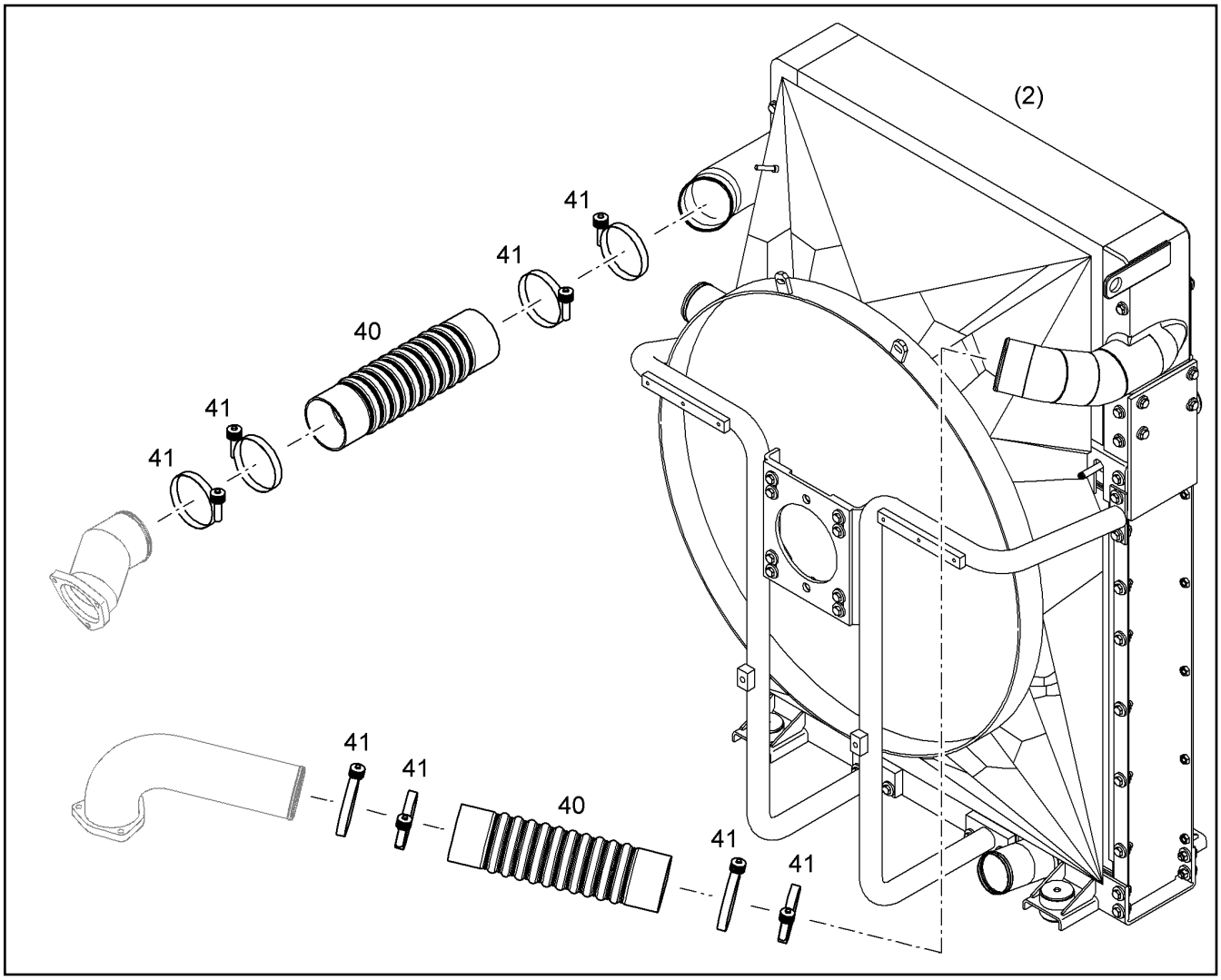

Pos.	Item	Quantity	Description	Descripción	Serie	K
40	10054419	2	AIR HOSE	CAMARA DE AIRE		1
41	774252314	8	HOSE CLAMP	ABRAZADERA MANGUERA		

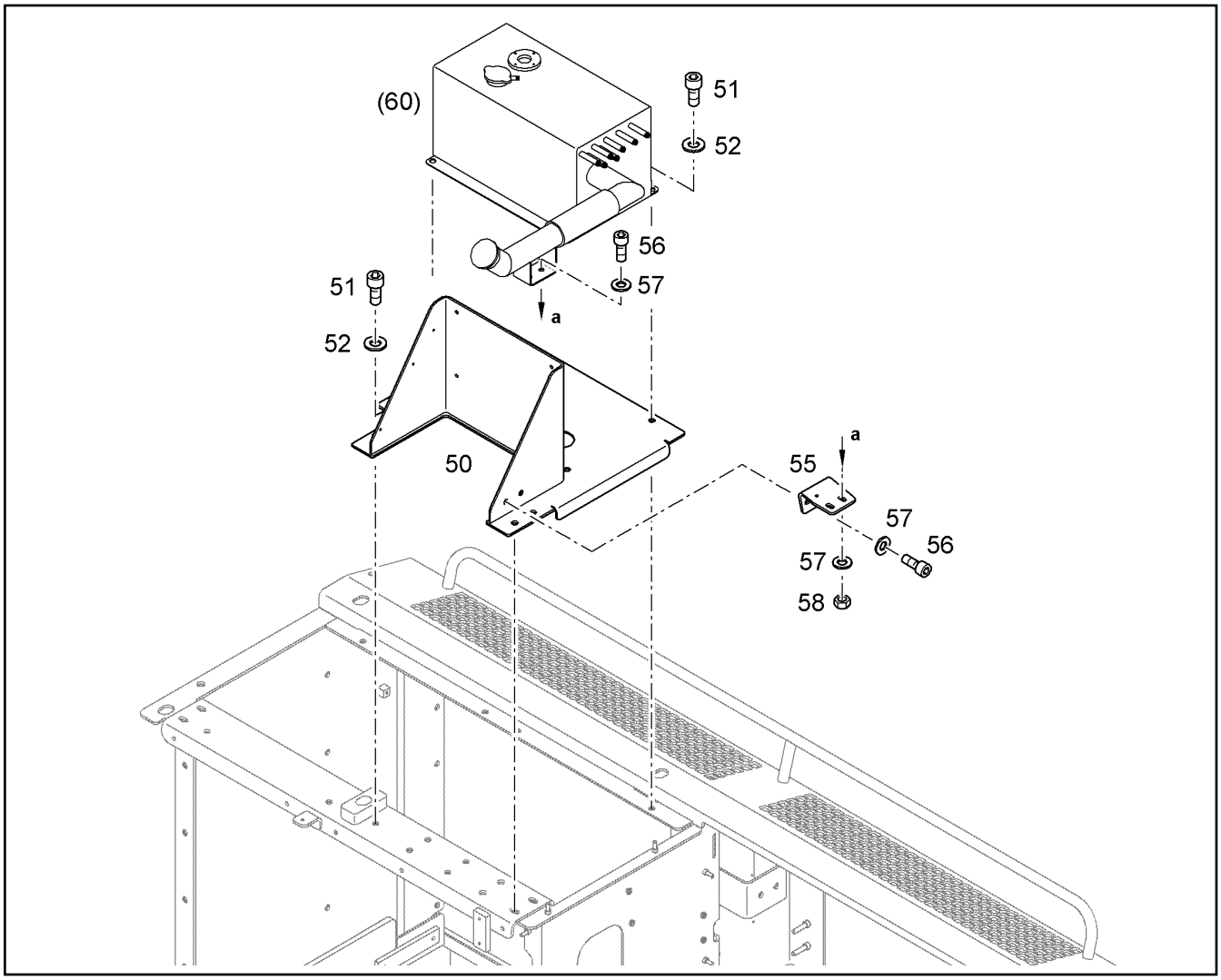

Pos.	Item	Quantity	Description	Descripción	Serie	K
50	10064480	1	CONSOLE	CONSOLA		
51	4043163	7	CYLINDER SCREW ISO 4762 M12X30 10.9	TORNILLO CILINDRICO		
52	9918226	7	WASHER 12,5/21X3,5	ARANDELA		
55	10064585	1	CONSOLE	CONSOLA		1
56	4043000	4	CYLINDER SCREW ISO 4762 M10X30 10.9	TORNILLO CILINDRICO		
57	9918225	6	WASHER 10,5/18X3	ARANDELA		
58	4000383	2	HEX NUT ISO 4032 M 10 -10 A3C	TUERCA HEXAGONAL		

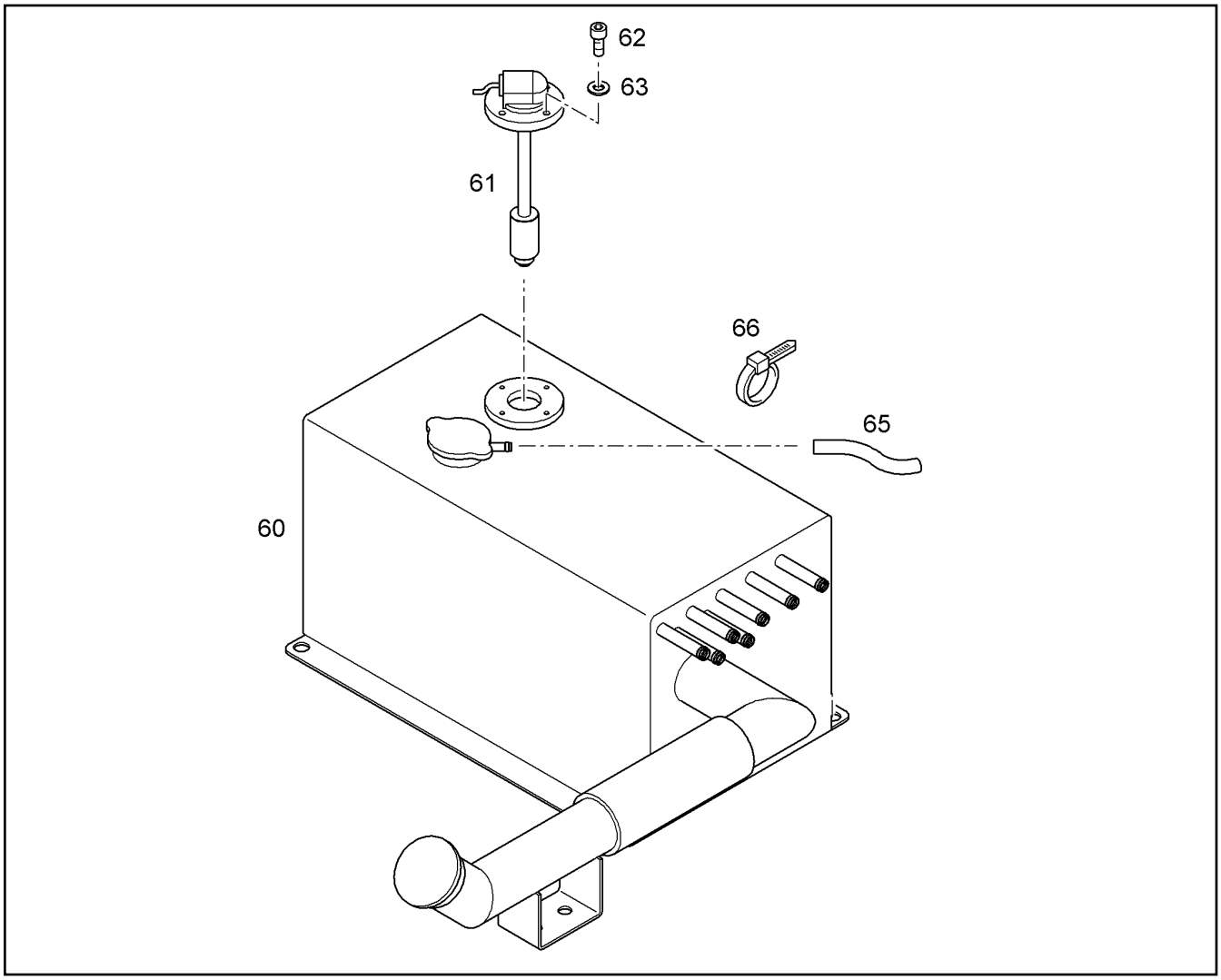

Pos.	Item	Quantity	Description	Descripción	Serie	K
60	10217750	1	EQUALIZING RESERVOIR ⇨ ❑ 211	RECIPIENTE DE COMPENSACIO		
61	10029026	1	FLOAT SWITCH	INTERRUPTOR DE FLOTADOR		2
62	4042062	4	CYLINDER SCREW ISO 4762 M5x16 8.8 A2C	TORNILLO CILINDRICO		
63	7361965	4	LOCK WASHER	ARANDELA SEGURIDAD		
65	7363060	2.4m	SYNTHETIC HOSE	MANGUERA DE PLASTICO		
66	7005587	8	CABLE TIE	BRIDAS		

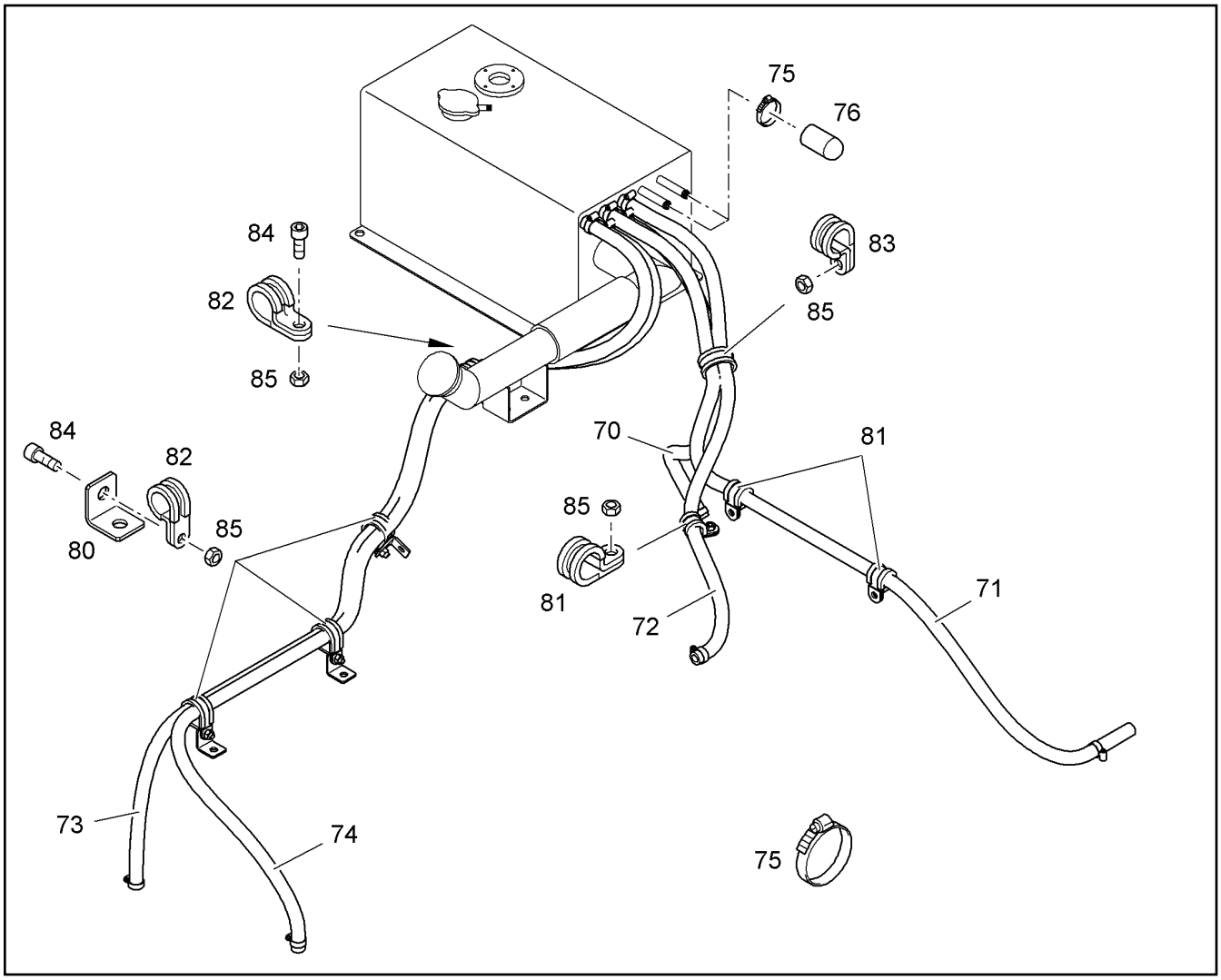

Pos.	Item	Quantity	Description	Descripción	Serie	K
70	9935645	1	WATER HOSE	MANGUERA DE AGUA		1
71	9361947	1	WATER HOSE	MANGUERA DE AGUA		
72	9384967	1	WATER HOSE	MANGUERA DE AGUA		1
73	9808622	1	WATER HOSE	MANGUERA DE AGUA		1
74	9898321	1	WATER HOSE	MANGUERA DE AGUA		
75	4901138	12	HOSE CLAMP DIN 3017 A 16 - 27 X 9 W2-2	ABRAZADERA MANGUERA		
76	9898335	2	STOP PLUG	TAPON		
80	10358447	3	ANGLE	ANGULAR		1
81	7367137	3	CLAMP DIN 3016 D1- 20 X 25 W1-2-CR	ABRAZADERA		
82	480405605	4	CLAMP DIN 3016 D1- 35 X 20 W1-2-CR	ABRAZADERA		
83	7365080	1	CLAMP DIN 3016 D1- 45 X 20 W1-2-CR	ABRAZADERA		
84	4043082	4	CYLINDER SCREW ISO 4762 M8X20 10.9 A2	TORNILLO CILINDRICO		
85	4000381	5	HEX NUT M8	TUERCA HEXAGONAL		

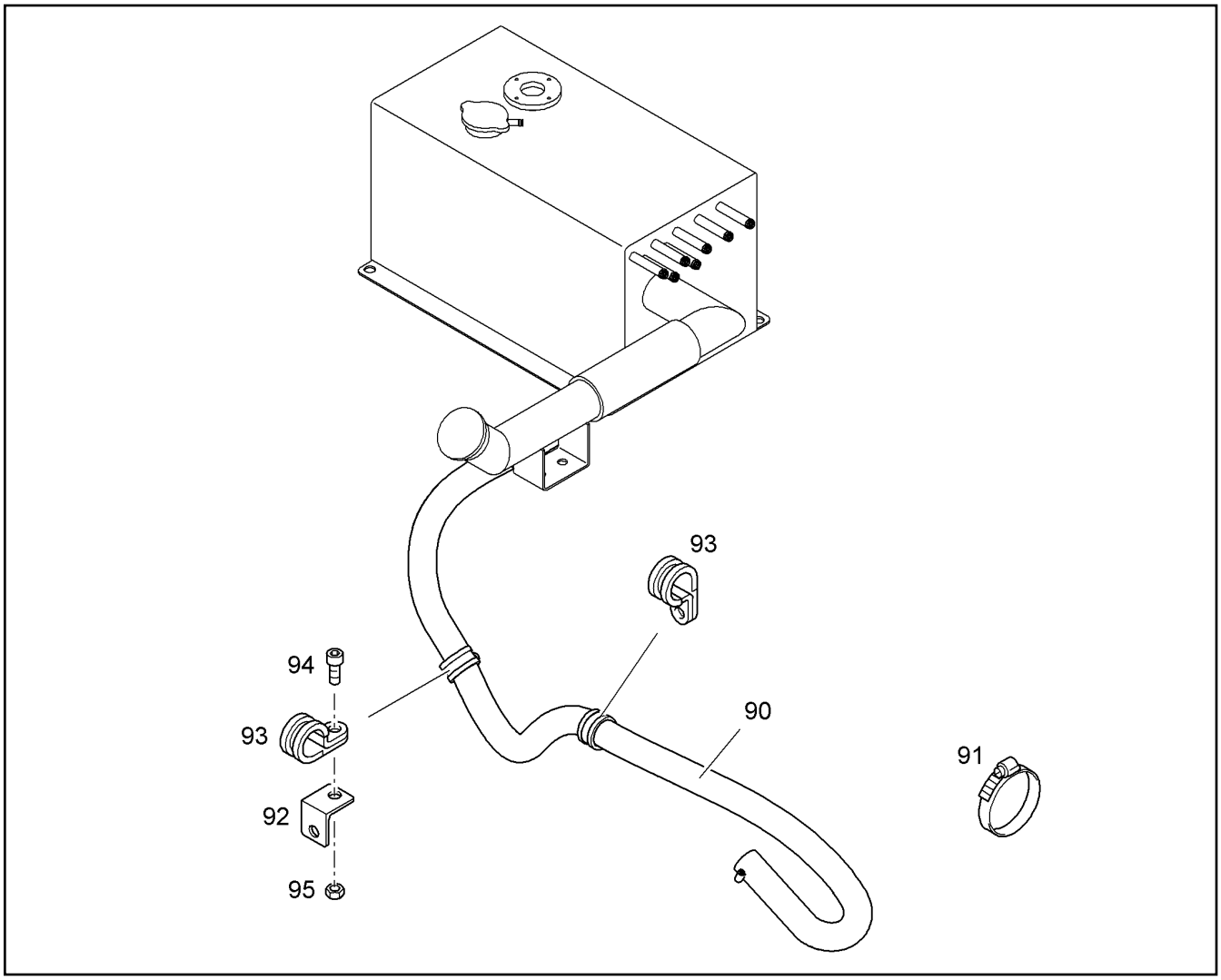

Pos.	Item	Quantity	Description	Descripción	Serie	K
90	10065182	1	WATER HOSE	MANGUERA DE AGUA		1
91	5004927	2	HOSE CLAMP DIN 3017-1 A 32 25-40x13 W2-	ABRAZADERA MANGUERA		
92	9573442	1	ANGLE	ANGULAR		
93	7362551	2	CLAMP DIN 3016 D1- 38 X 20 W1-2-CR	ABRAZADERA		
94	4902231	1	CYLINDER SCREW ISO 4762 M8X16 10.9 A2	TORNILLO CILINDRICO		
95	4000381	1	HEX NUT M8	TUERCA HEXAGONAL		

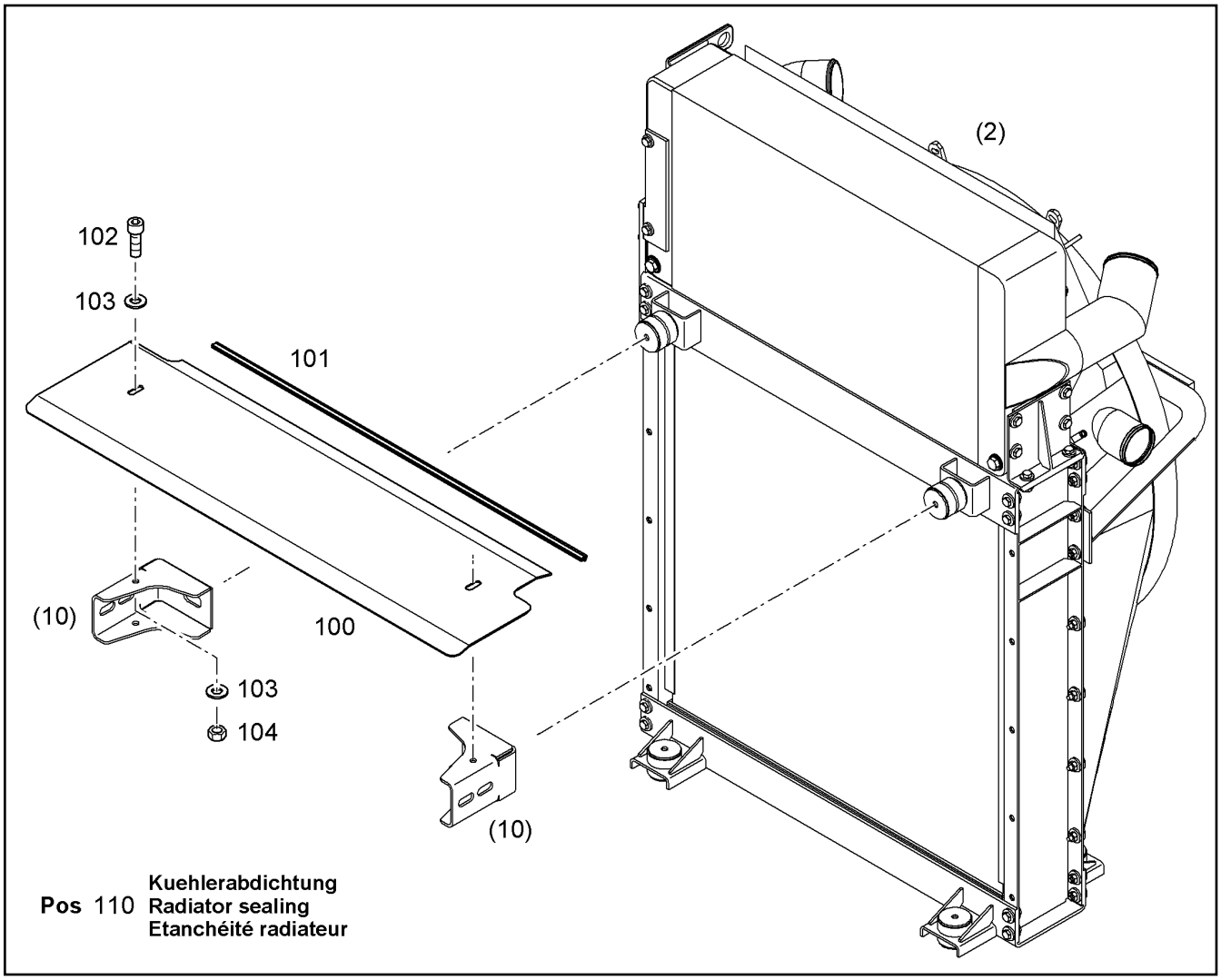

Pos.	Item	Quantity	Description	Descripción	Serie	K
100	10080708	1	PLATE	CHAPA		1
101	7360171	1m	CORNER PROTECT.PROFILE	PERFIL OBTURACIÓN CANTON		
102	4043000	2	CYLINDER SCREW ISO 4762 M10X30 10.9	TORNILLO CILINDRICO		
103	4601173	4	WASHER 10,5	ARANDELA		
104	4002563	2	HEX NUT M10	TUERCA HEXAGONAL		
110	10064613	1	COOLER SEALING ⇨ ❑ 210	JUNTA HERMET.RADIADOR		1

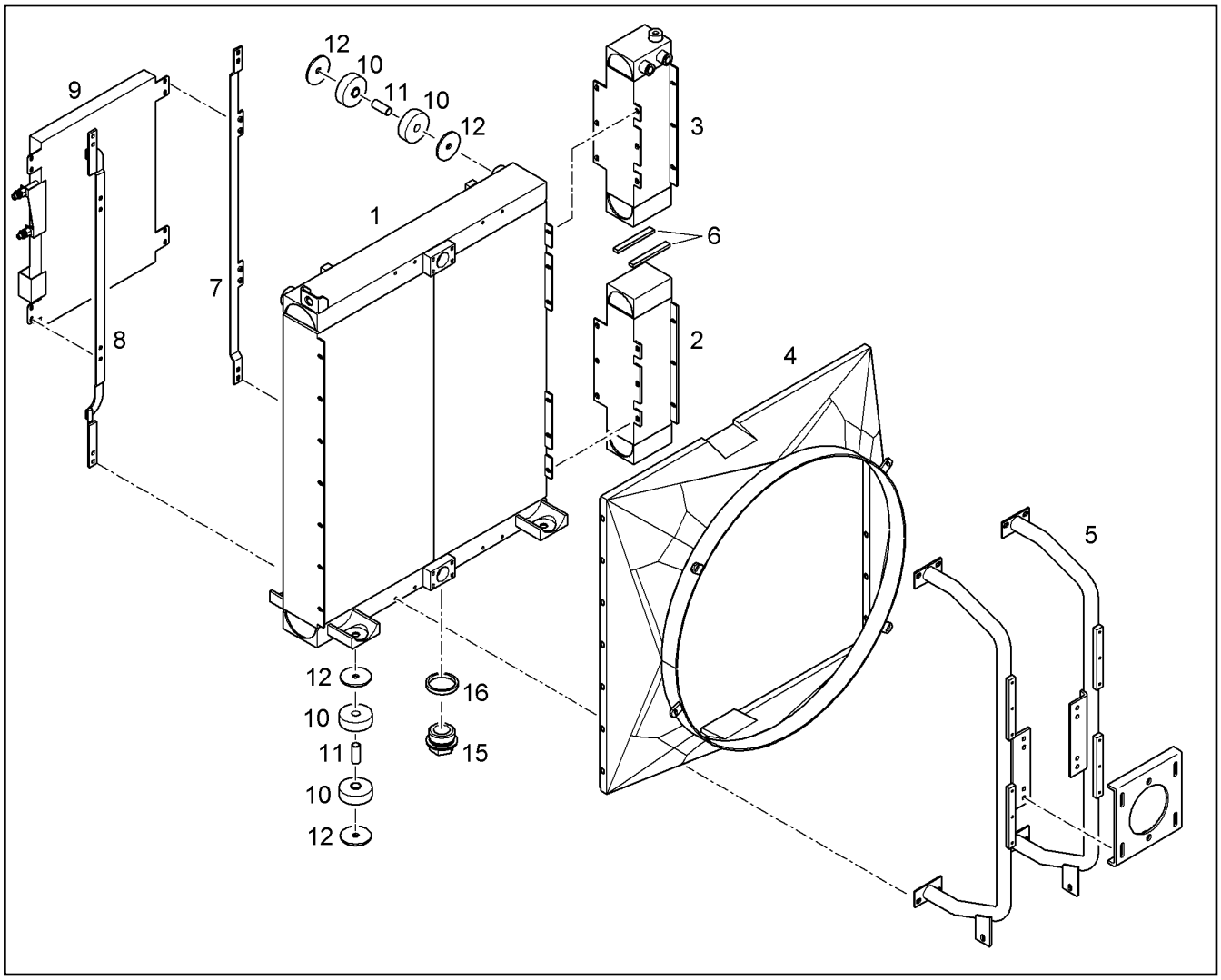

Pos.	Item	Quantity	Description	Descripción	Serie	K
1	10289190	1	OIL COOLING SYSTEM	REFRIGERADOR ACEITE HIDR		2
2	10289191	1	GEARBOX OIL COOLER	REFRIG.ACEITE TRANS.		2
3	10428947	1	FUEL COOLER	REFRIG.COMBUSTIBLE		2
4	10331758	1	FAN COWL	TAPA VENTILADOR		1
5	10331756	1	MOTOR MOUNTING	SOPORTE DEL MOTOR		
6	10355809	0.3	SEALING PROFILE	PERFIL ESTANCO		1
7	10355810	1	HOLDER LEFT	FIJADOR IZQUIERDO		
8	10355811	1	HOLDER RIGHT	FIJADOR DERECHO		
9	10005670	1	CAPACITOR [9003080164]	CONDENSADOR		
10	10355813	12	RUBBER BUMPER	TOPE GOMA		
11	7372147	6	DISTANCE SLEEVE	CASQUILLO DISTANCIADOR		
12	10297307	12	WASHER	ARANDELA		
15	4041117	1	SCREW PLUG DIN 910 M26X1,50 ST	TORNILLO DE CIERRE		
16	7101064	1	SEALING RING DIN 7603 A 27 X 35 CU	JUNTA ANULAR		1

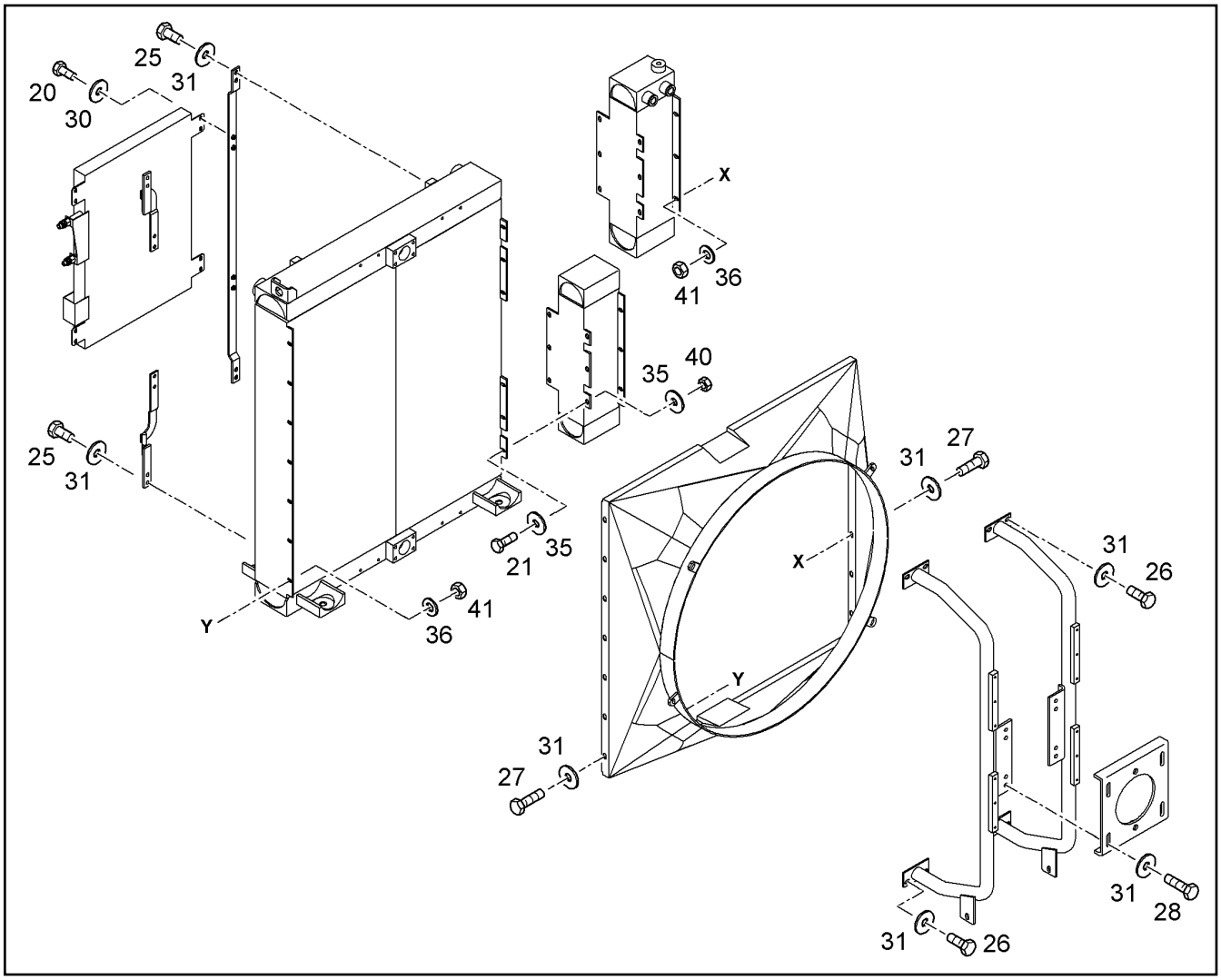

Pos.	Item	Quantity	Description	Descripción	Serie	K
20	4066042	8	HEX BOLT ISO 4017 M8X25 10.9 A2C	TORNILLO DE CABEZA HEXAGO		
21	4062002	12	HEX BOLT ISO 4017 M8X30 10.9 A2C	TORNILLO DE CABEZA HEXAGO		
25	4001696	8	HEX BOLT ISO 4017 M10X20 10.9 A3C	TORNILLO DE CABEZA HEXAGO		
26	4066093	8	HEX BOLT ISO 4017 M10X25 10.9 A3C	TORNILLO DE CABEZA HEXAGO		
27	4066098	13	HEX BOLT ISO 4017 M10X30 10.9 A3C	TORNILLO DE CABEZA HEXAGO		
28	4001246	8	HEX BOLT ISO 4017 M10X35 10.9 A3C	TORNILLO DE CABEZA HEXAGO		
30	242005302	24	WASHER 8,4X23X4	ARANDELA		
31	7981194	30	WASHER DIN 6340 10,5	ARANDELA		
35	4216025	12	WASHER DIN 7349 8,4 A3C	ARANDELA		
36	4000505	20	WASHER S=4	ARANDELA		
40	4000381	20	HEX NUT M8	TUERCA HEXAGONAL		
41	4000383	20	HEX NUT ISO 4032 M 10 -10 A3C	TUERCA HEXAGONAL		

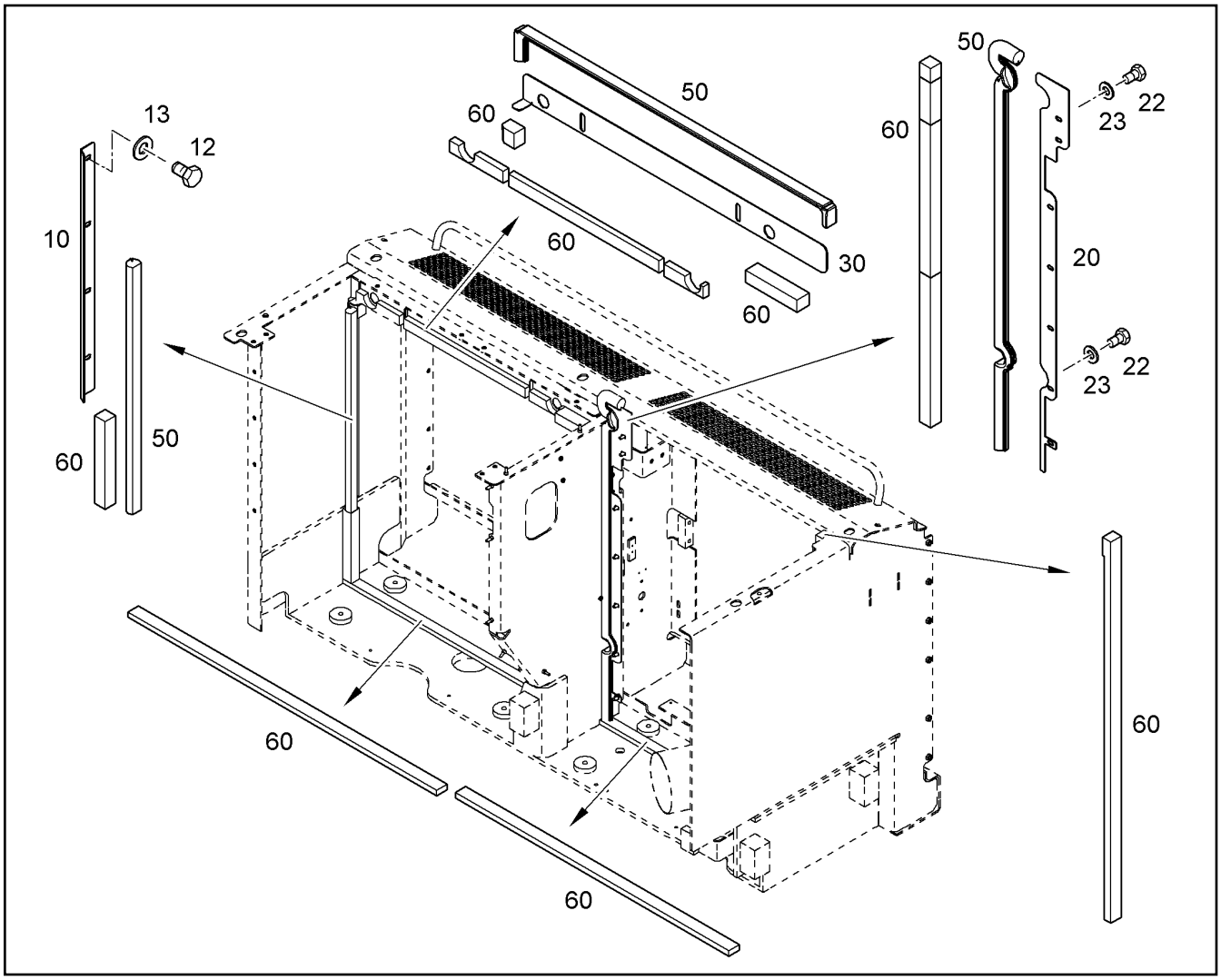

Pos.	Item	Quantity	Description	Descripción	Serie	K
10	10064616	1	PLATE	CHAPA		1
12	4600184	4	HEX BOLT ISO 4017 M12X25 10.9 A3C	TORNILLO DE CABEZA HEXAGO		
13	4600687	4	WASHER 13	ARANDELA		
20	10064617	1	PLATE	CHAPA		1
22	4001696	7	HEX BOLT ISO 4017 M10X20 10.9 A3C	TORNILLO DE CABEZA HEXAGO		
23	10289795	7	WASHER ISO 7089 10 300HV	ARANDELA		
30	10076219	1	PLATE	CHAPA		1
50	7014524	4	CLAMPING PROFILE	PERFIL APRIETE		
60	10294466	5	PROFILE	PERFIL		

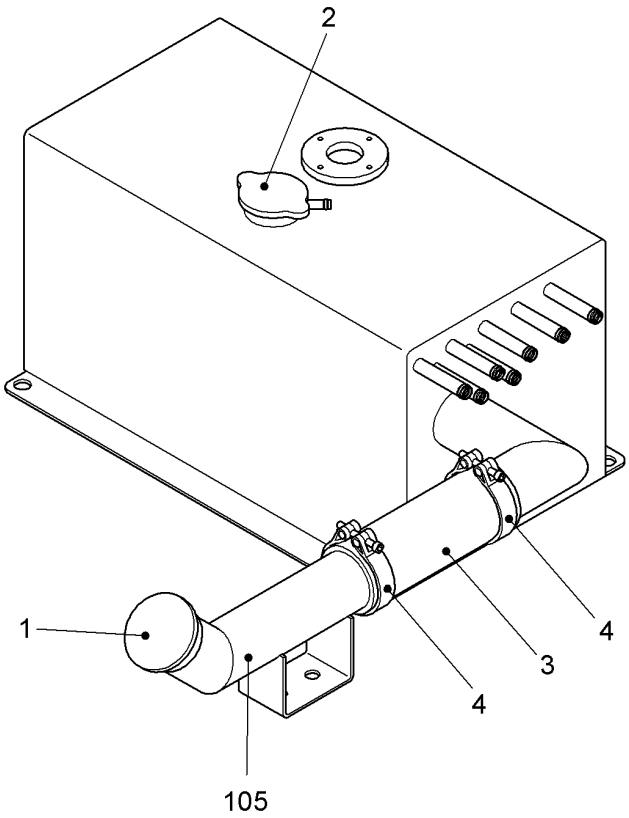

Pos.	Item	Quantity	Description	Descripción	Serie	K
1	10471614	1	END COVER	TAPA DE CIERRE		1
2	10471615	1	END COVER	TAPA DE CIERRE		1
3	10471616	1	COOLING WATER HOSE	MANGUERA AGUA REFRIGERAC		
4	7365297	2	HOSE CLAMP DIN 3017-3 C1 61 59-63X20	ABRAZADERA MANGUERA		
105	11002881	1	TUBE BEND	CURVA		

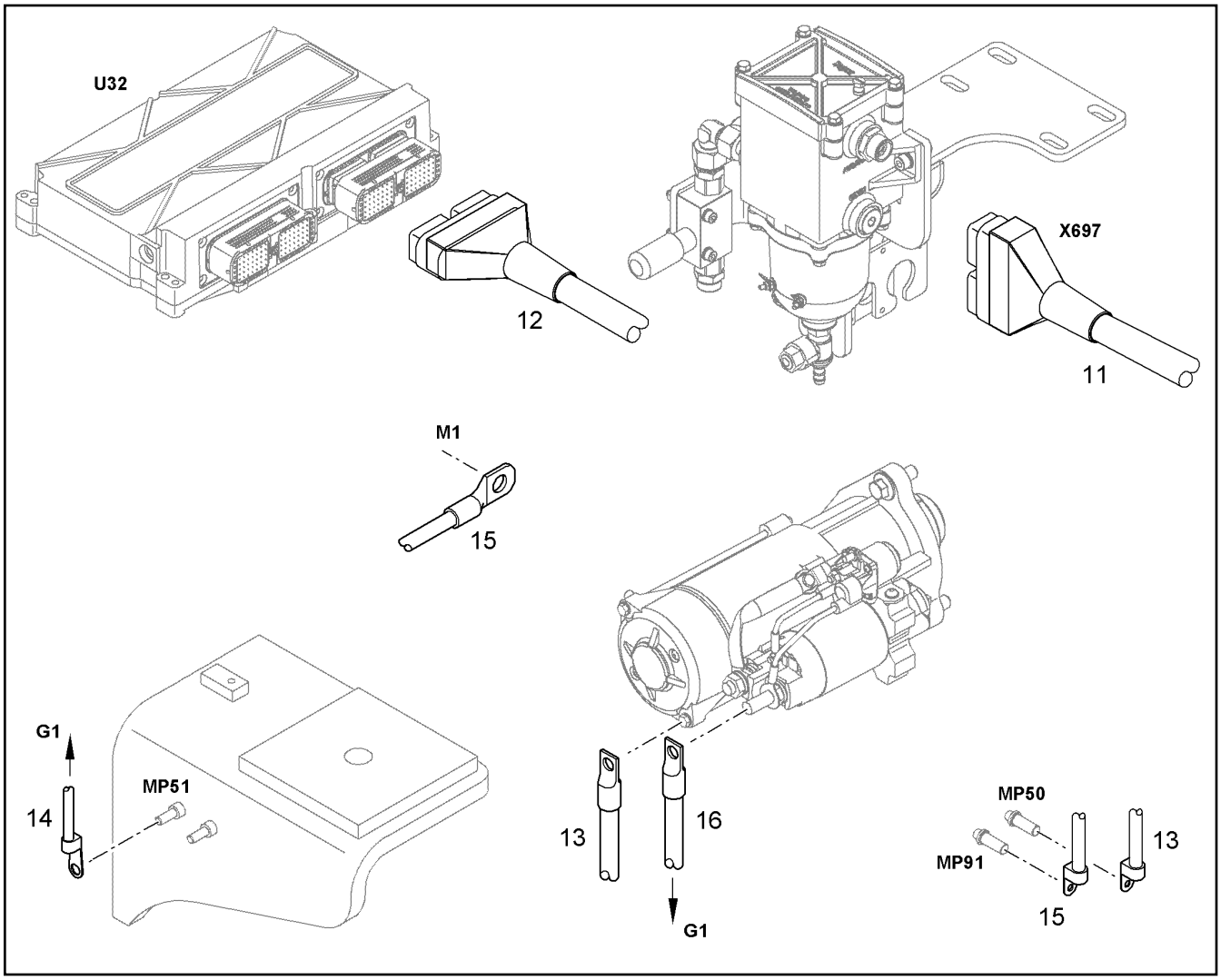

Pos.	Item	Quantity	Description	Descripción	Serie	K
11	10364488	1	WIRING HARNESS PUMP	JUEGO CABLES BOMBA		
12	10063957	1	CABLE LOOM U32-E50	KIT DE CABLES		1
13	10066005	1	WIRING HARNESS STARTER MASS	JC TIERRA MOTOR ARRANQUE		1
14	10066006	1	WIRING HARNESS DYNAMO GROUND	JC INST.ILUMINACIÓN TIERRA		1
15	10066007	1	EARTH CABLE	CABLE DE TIERRA		1
16	10066004	1	WIRING HARNESS STARTER DYNAMO	JC DÍNAMO MOTOR ARRANQUE		1

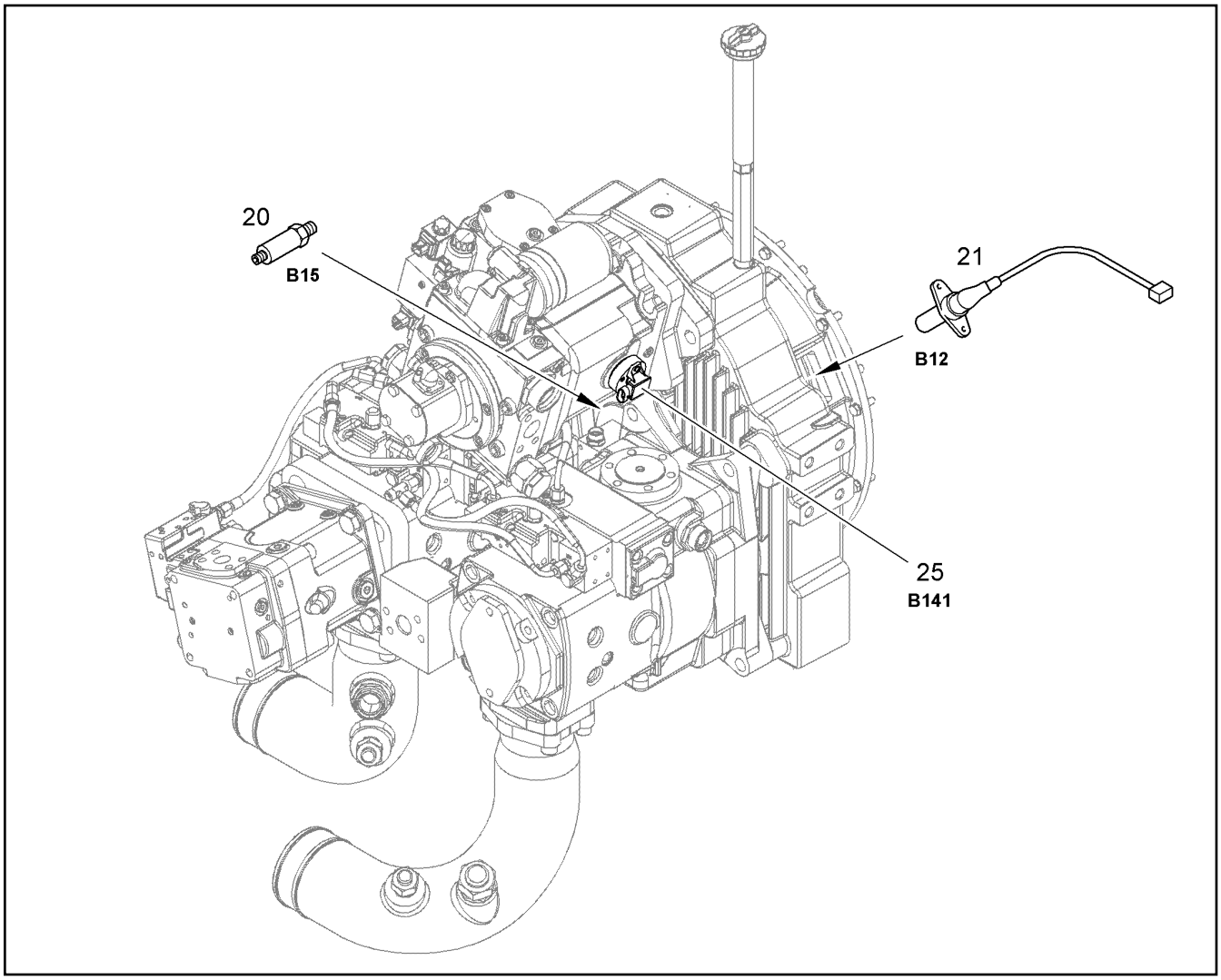

Pos.	Item	Quantity	Description	Descripción	Serie	K
20	6204186	1	TEMPERATURE SWITCH	TERMOINTERRUPTOR		2
21	635867001	1	SENSOR	SENSOR		2
25	10341869	1	SLEWING ANGLE SENSOR	SENSOR ANGULO DE GIRO		

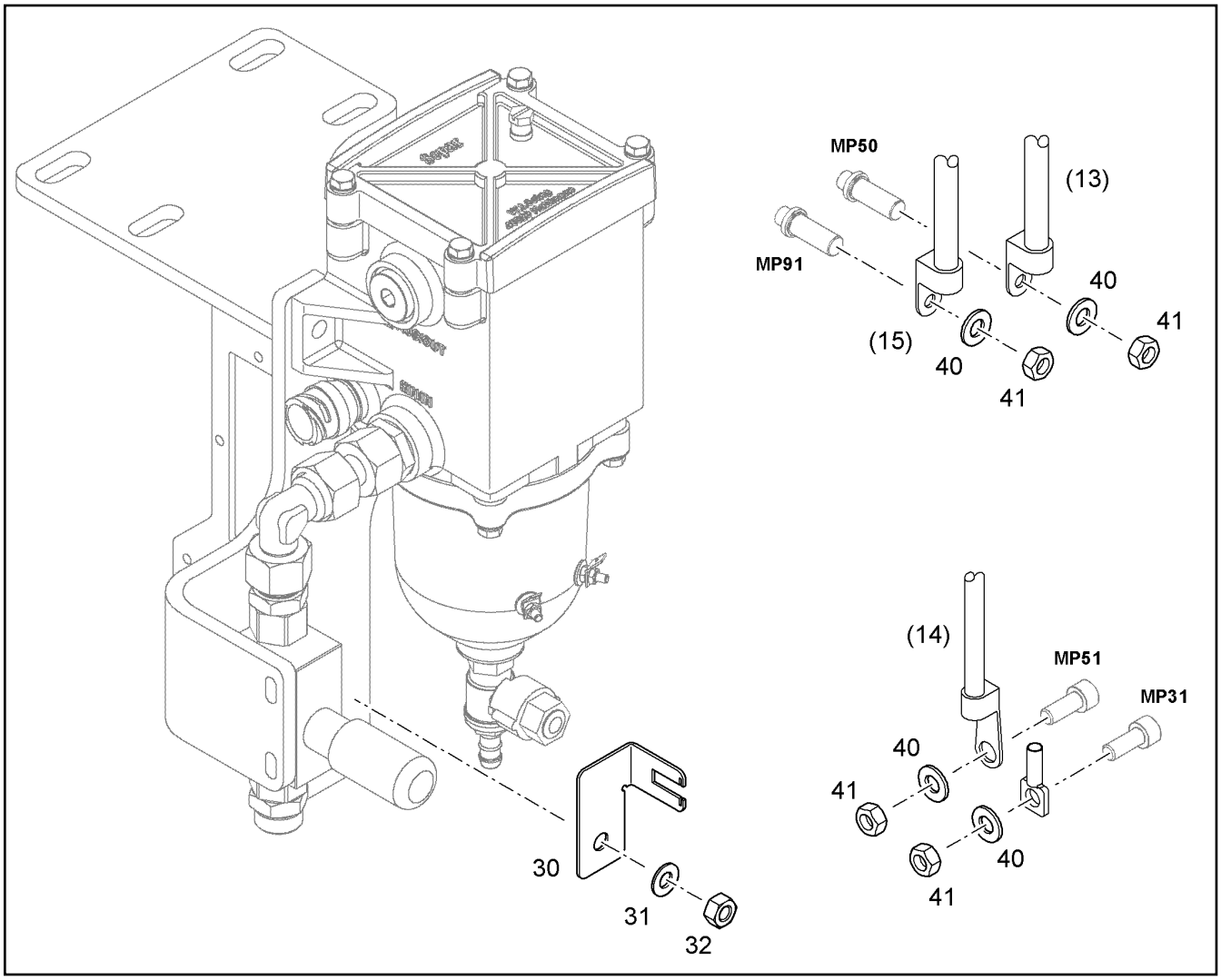

Pos.	Item	Quantity	Description	Descripción	Serie	K
30	10118125	1	HOLDER	FIJADOR		
31	10289803	1	WASHER ISO 7089 8 300HV	ARANDELA		
32	4000381	1	HEX NUT M8	TUERCA HEXAGONAL		
40	10289803	3	WASHER ISO 7089 8 300HV	ARANDELA		
41	4000381	3	HEX NUT M8	TUERCA HEXAGONAL		

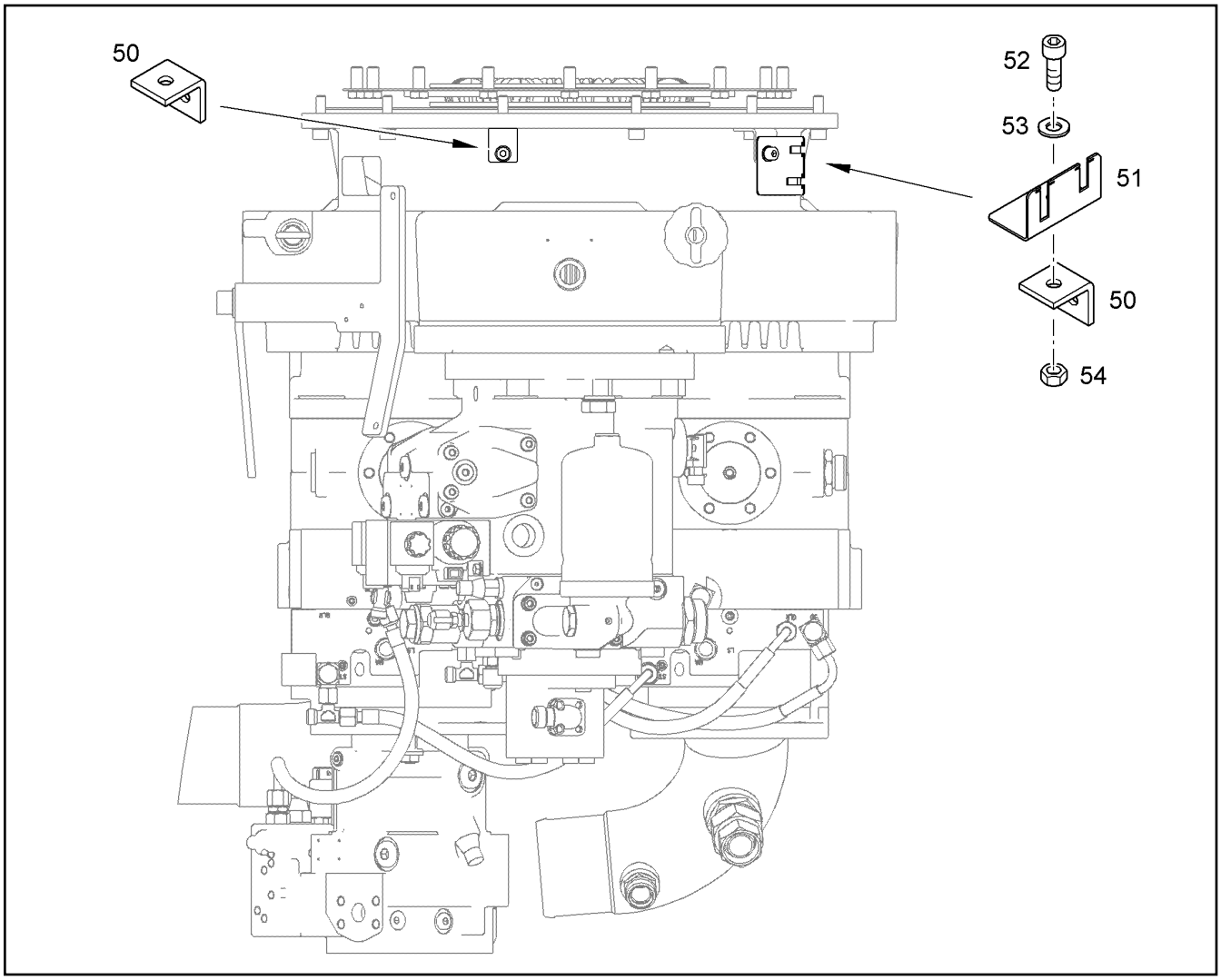

Pos.	Item	Quantity	Description	Descripción	Serie	K
50	9573442	2	ANGLE	ANGULAR		
51	10118125	1	HOLDER	FIJADOR		
52	4902254	1	CYLINDER SCREW ISO 4762 M8X12 10.9 A2	TORNILLO CILINDRICO		
53	10289803	1	WASHER ISO 7089 8 300HV	ARANDELA		
54	4000381	1	HEX NUT M8	TUERCA HEXAGONAL		

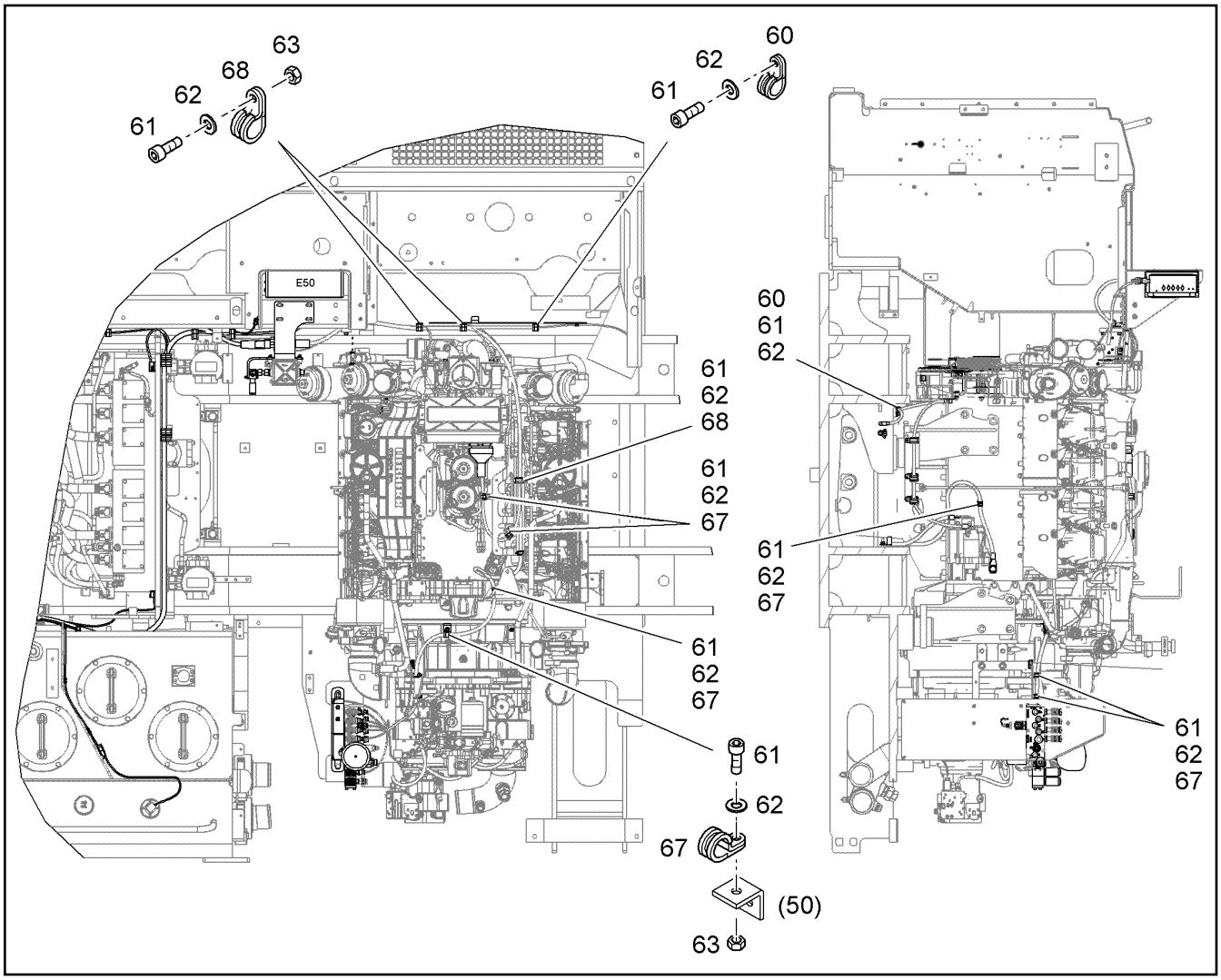

Pos.	Item	Quantity	Description	Descripción	Serie	K
60	7362734	2	CLAMP DIN 3016 D1- 13 X 20 W1-2-CR	ABRAZADERA		
61	4902231	13	CYLINDER SCREW ISO 4762 M8X16 10.9 A2	TORNILLO CILINDRICO		
62	10289803	13	WASHER ISO 7089 8 300HV	ARANDELA		
63	4000381	1	HEX NUT M8	TUERCA HEXAGONAL		
67	7362603	7	CLAMP DIN 3016-1 D1 15X20 W1-2-CR	ABRAZADERA		
68	7363002	3	CLAMP DIN 3016 D1- 27 X 20 W1-2-CR	ABRAZADERA		

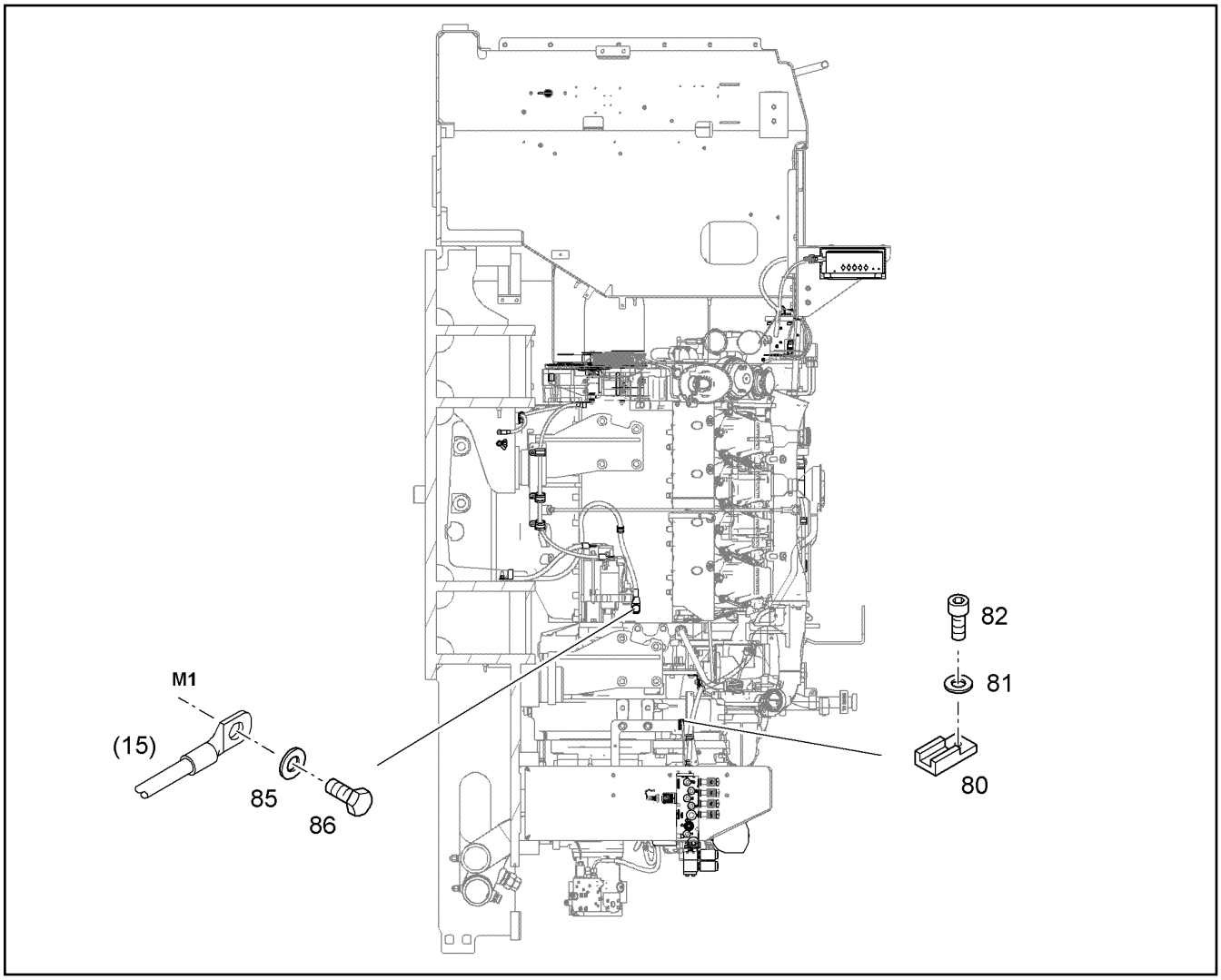

Pos.	Item	Quantity	Description	Descripción	Serie	K
80	6203497	2	FASTENER	ELEMENTO DE FIJACION		
81	10471469	2	CYLINDER SCREW BN 1206 M5X10 10.9	TORNILLO CILINDRICO		
82	4001308	2	CYLINDER SCREW ISO 4762 M5x12 8.8 A2C	TORNILLO CILINDRICO		
85	10289806	1	WASHER ISO 7089 16 300HV	ARANDELA		
86	4600805	1	HEX BOLT ISO 4017 M16X30 10.9 DAC	TORNILLO DE CABEZA HEXAGO		
100	10066863	1	CONSOLE	CONSOLA		1
101	404200701	2	CYLINDER SCREW ISO 4762 M4x20 8.8 A2C	TORNILLO CILINDRICO		
102	4001645	2	WASHER DIN 125 B 4,3 ST A3C	ARANDELA		

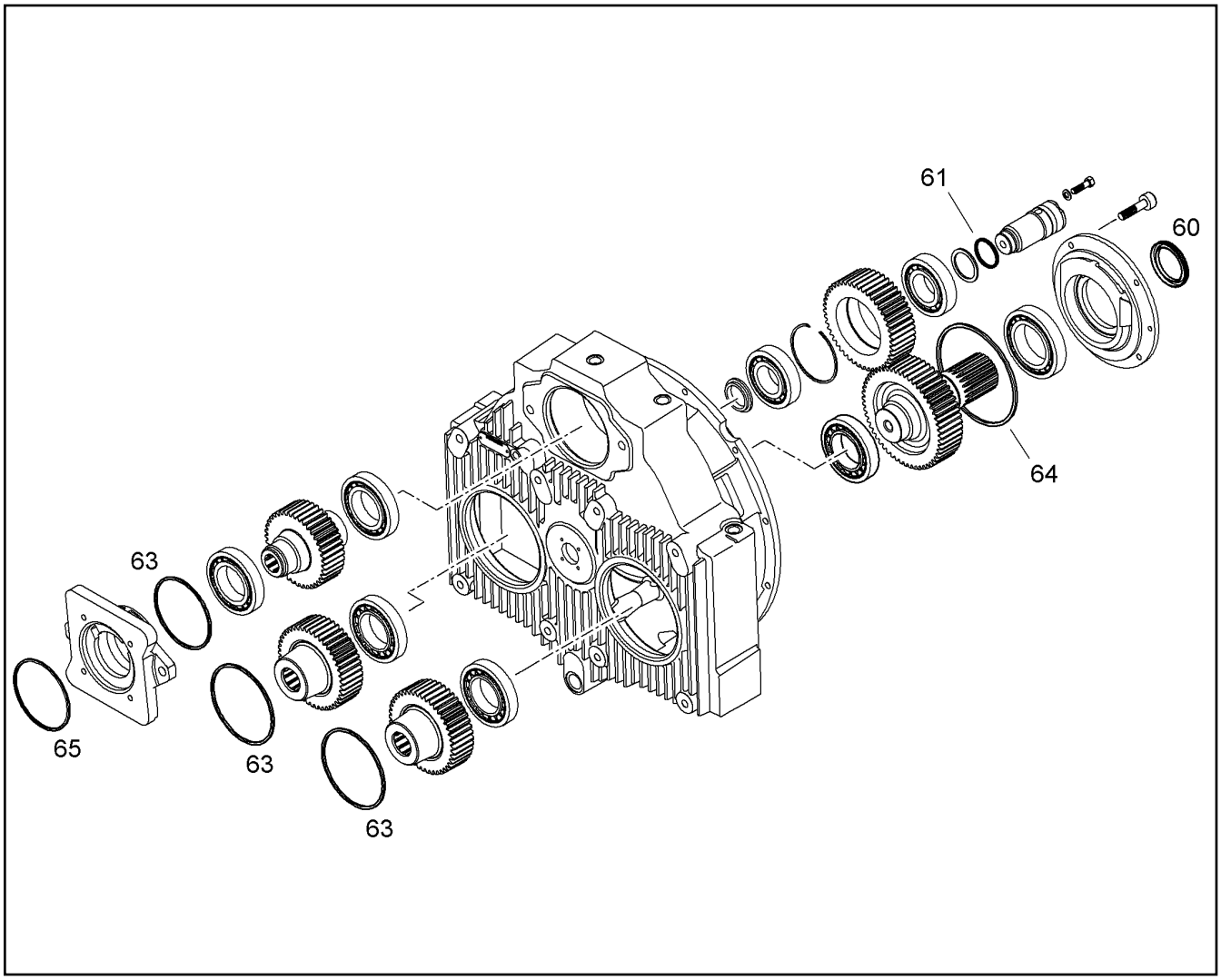

Pos.	Item	Quantity	Description	Descripción	Serie	K
60		1	ROTARY SHAFT LIP SEAL	RETEN RADIAL		1
61		1	O-RING	JUNTA TORICA		1
63		3	O-RING	JUNTA TORICA		1
64		1	O-RING	JUNTA TORICA		1
65		1	O-RING	JUNTA TORICA		1

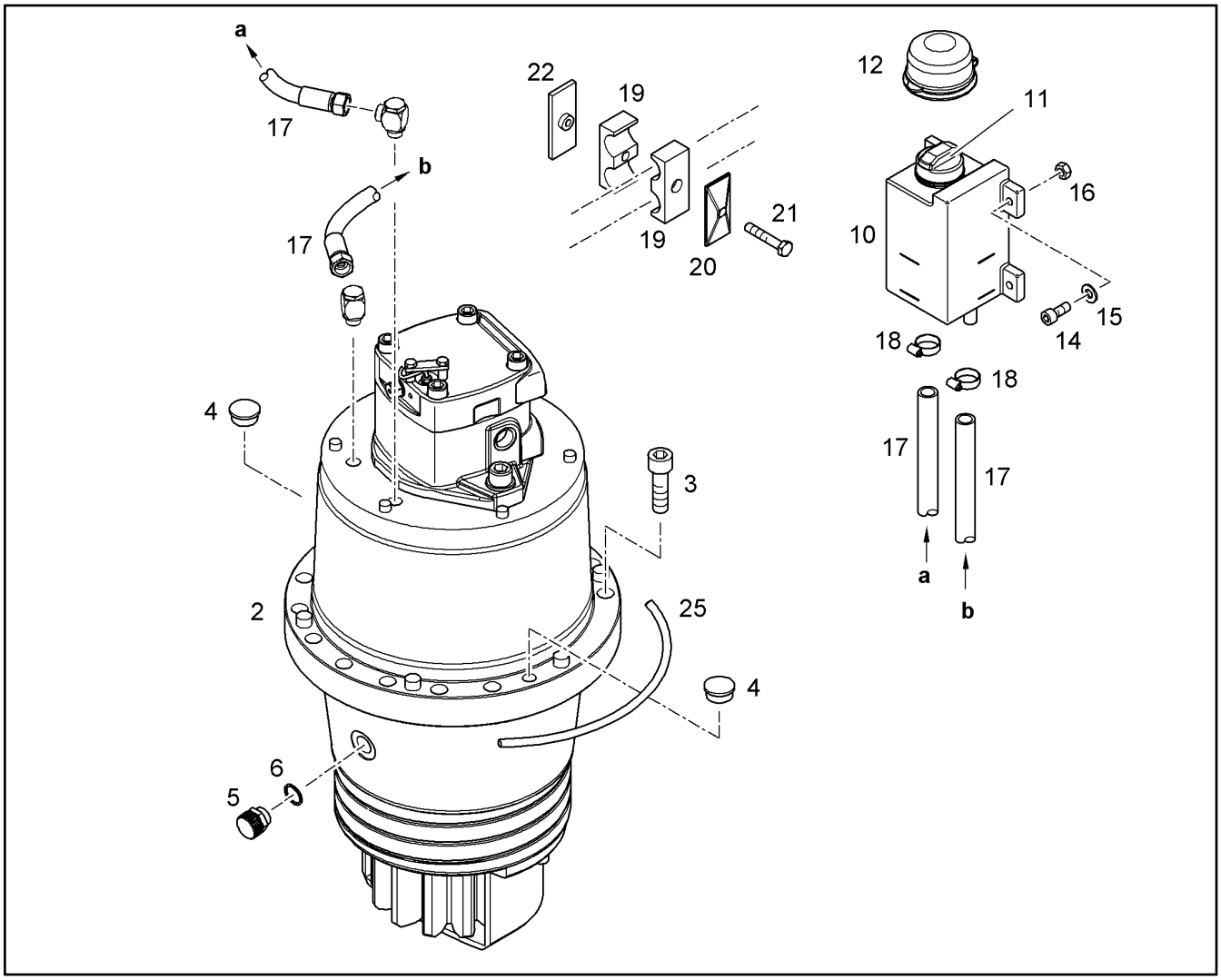

Pos.	Item	Quantity	Description	Descripción	Serie	K
2	10053117	1	SLEWING GEAR ⇨ ❑ 220	MEC. GIRO		1
3	10425682	18	CYLINDER SCREW ISO 4762 M24X90 10.9 F	TORNILLO CILINDRICO		
4	789000601	2	LOCKING PLUG	TAPON DE CIERRE		
5	5004624	1	OIL DRAIN PLUG ⇨ ❑ 584	TORNILLO PURGA ACEITE		
6	7101021	1	SEALING RING DIN 7603 A 30 X 36 CU	JUNTA ANULAR		1
10	968868001	1	OIL TANK	DEPOSITO DE ACEITE		
11	7610826	1	LOCKABLE TANK CAP d=45	CIERRE DEL TANQUE		
12	968461801	1	COVER LID NBR80	TAPON COBERTURA		
14	4901251	4	CYLINDER SCREW ISO 4762 M10X50 10.9	TORNILLO CILINDRICO		
15	10289795	4	WASHER ISO 7089 10 300HV	ARANDELA		
16	4002563	4	HEX NUT M10	TUERCA HEXAGONAL		
17	10289376	2	HOSE	TUBO GOMA		2
18	4901138	2	HOSE CLAMP DIN 3017 A 16 - 27 X 9 W2-2	ABRAZADERA MANGUERA		
19	7029979	6	CLAMP-HALF DIN 3015-3 Z 3 G 23 23 PP SW	MEDIA BRIDA		
20	7401349	3	LID PLATE DIN 3015-3 Z-DP 3 W1-ZN	PLACA CUBIERTA		
21	4001648	3	HEX BOLT ISO 4017 M8X45 10.9 A2C	TORNILLO DE CABEZA HEXAGO		
22	7005098	1	WELD PLATE DIN 3015-3 Z-AP 3 W1	BASE ABRAZADERA		
25	10215888	0.07	PACKING CORD	CORDON HERMETIZANTE		1

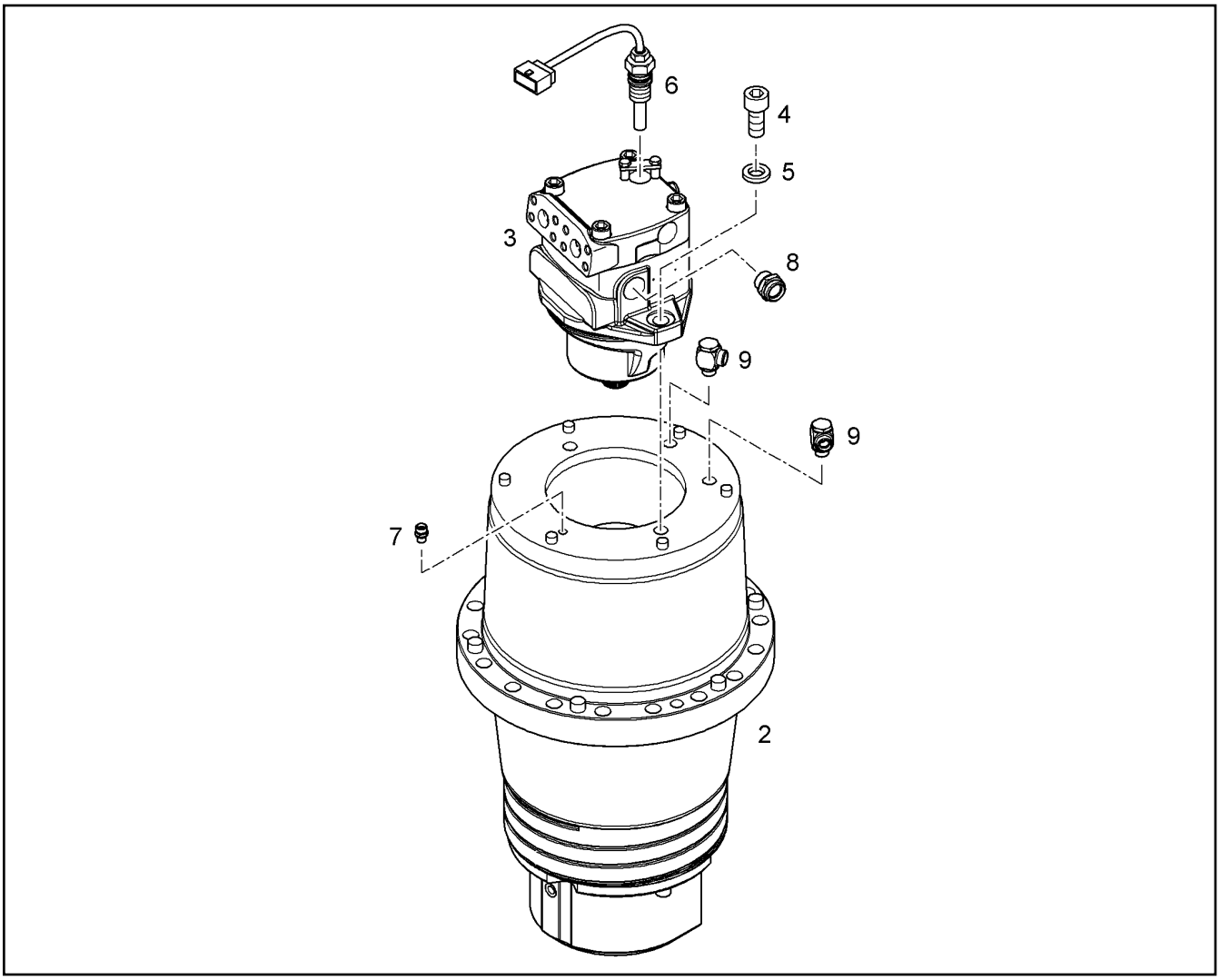

Pos.	Item	Quantity	Description	Descripción	Serie	K
2		1	SLEWING DRIVE SAT 375/253 [32 49/10] ⇨ ❑ 221	ACCIONAMIENTO GIRATORIO	30610-	6
3	9888041	1	HYDR.MOTOR FIX FMF 165 [101937330] ⇨ ❑ 143	MOTOR HIDR. INCORP.		6
4	10425681	2	CYLINDER SCREW ISO 4762 M24X60 10.9 F	TORNILLO CILINDRICO		
5	10019101	2	WASHER A 24	ARANDELA		
6	6290073	1	SPEED SENSOR ⇨ ❑ 238	SENSOR DE REVOLUCIONES		2
7	7405399	1	SCREW FITTING GE 12L M14X1,5	ATORNILLAMIENTO		
8	7003800	1	SCREW FITTING GE 28L	ATORNILLAMIENTO		
9	7617351	2	SCREW FITTING WH 18L	ATORNILLAMIENTO		

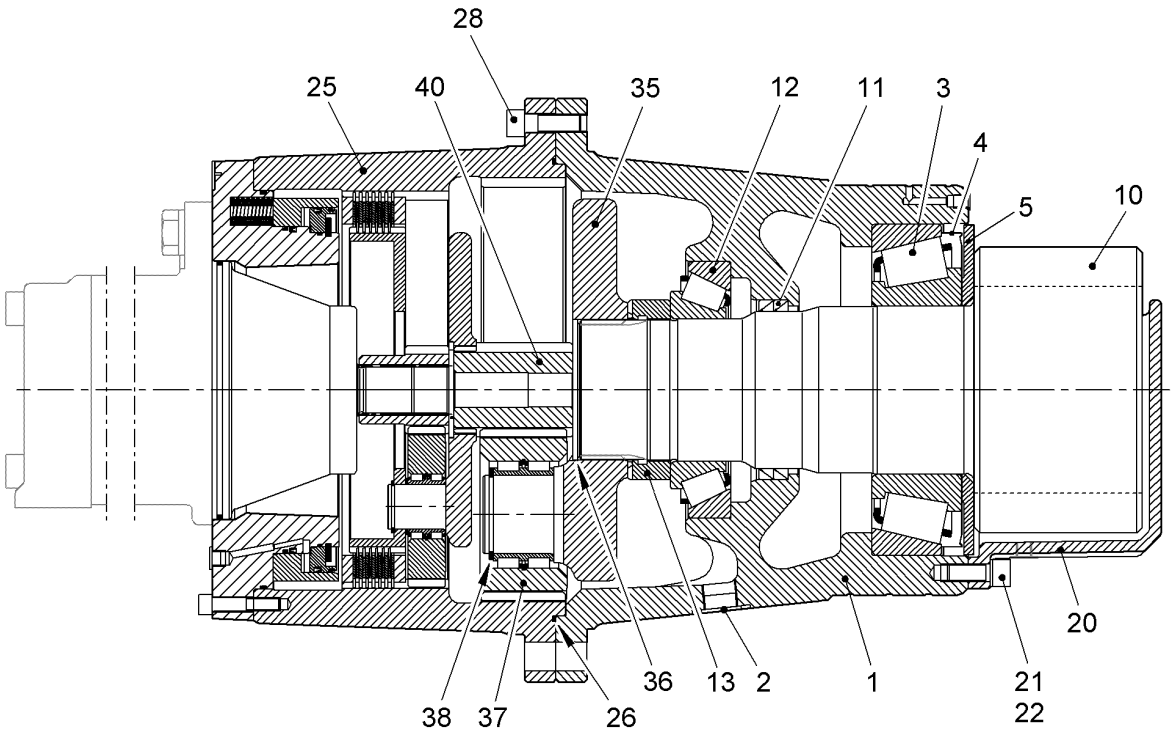

Pos.	Item	Quantity	Description	Descripción	Serie	K
1		1	OUTPUT SHAFT HOUSING	CARCASA ACCTO.		
2	4097530	1	LOCKING PLUG	TAPON DE CIERRE		1
3	10030592	1	TAPERED ROLLER BEARING	RODAMIENTO DE RODILLOS C		1
4	10030593	1	NILOS RING	RETEN NILOS		1
5	932719401	1	WASHER	ARANDELA		
10	933604101	1	OUTPUT SHAFT M=16 Z=13	EJE INDUCIDO		
11	7610289	2	SHAFT SEAL DIN 3760 A 140 X160X 13 NB	WDR		1
12	10030591	1	BEARING	COJINETE		1
13	932719601	1	SLOTTED NUT	TUERCA C/RANURA		
20	933605101	1	GREASE HOUSING	TAPA DE GRASA LUBR.		
21	404316901	2	CYLINDER SCREW ISO 4762 M16X40 10.9	TORNILLO CILINDRICO		
22	10006372	2	LOCK WASHER VS 16	ARANDELA SEGURIDAD		
25	970643201	1	INTERNAL GEAR WHEEL M=3,75/4,0 Z=90/9	PIÑON INTERIOR		
26	726457301	1	O-RING AEHNL. DIN 3771 380X4	JUNTA TORICA		1
28	10001077	6	CYLINDER SCREW ISO 4762 M16X50 10.9	TORNILLO CILINDRICO		
35	933330801	1	PLANETARY CARRIER	BRAZO PLANETARIO		
36	9442198	1	RETAINING DISK 125X6	ARANDELA SOPORTE		
37	933332901	4	PLANET WHEEL M=4 Z=35 ⇨ ❑ 223	PIÑON PLANETARIA		
38	4001447	4	LOCKING RING DIN 471 70 X4	ANILLO SEGURIDAD		
40	933333101	1	SUN WHEEL M=4 Z=18	PIÑON PRINCIPAL		

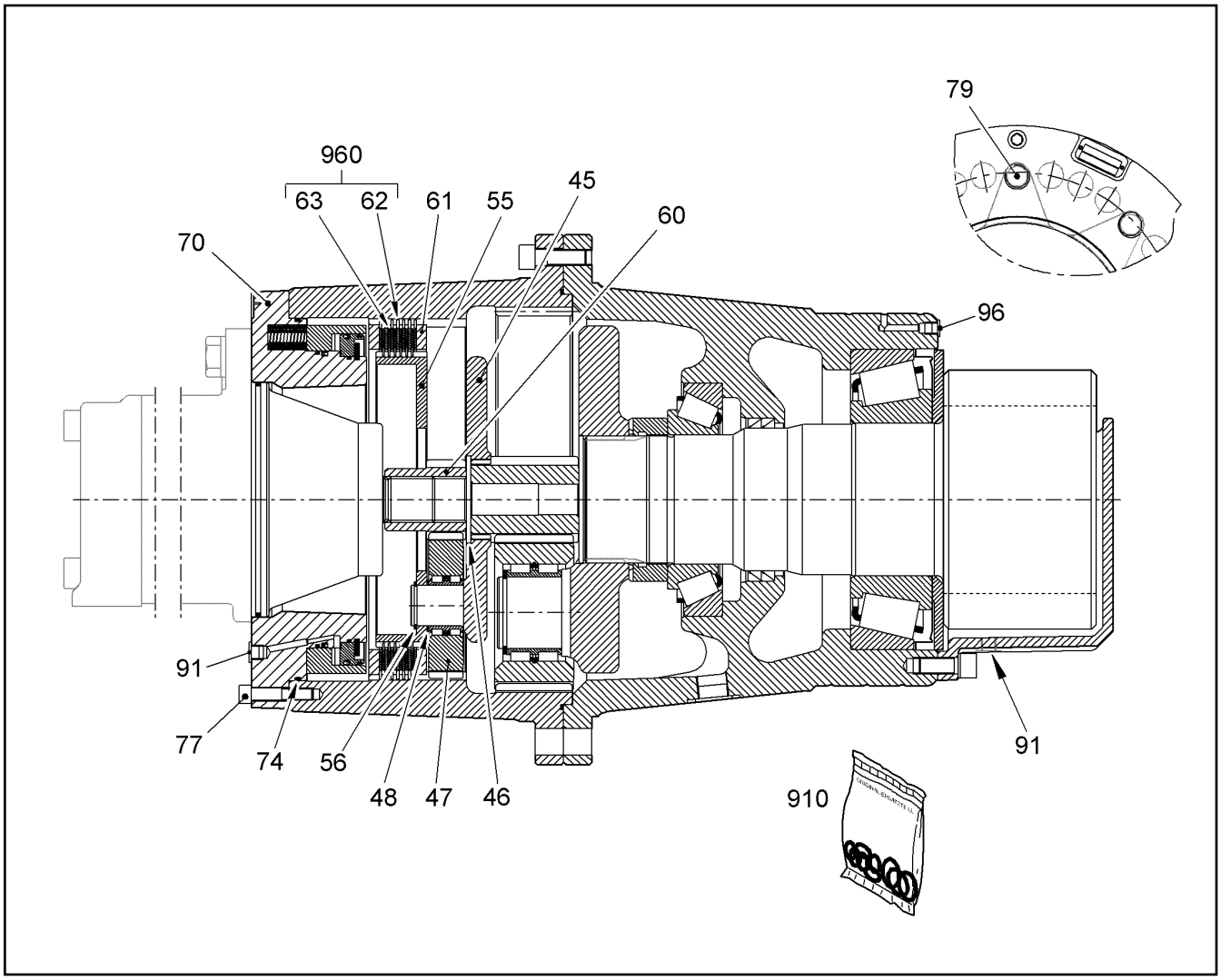

Pos.	Item	Quantity	Description	Descripción	Serie	K
45	90011490	1	PLANETARY CARRIER	BRAZO PLANETARIO		
46	9441557	1	RETAINING DISK	ARANDELA SOPORTE		
47	90011580	3	PLANET WHEEL	PIÑON PLANETARIA		
48	90011582	3	SHIM RING	ARANDELA AJUSTE		
55	932720701	1	MULTI-DISC CARRIER	VIGA DE LAMINAS		
56	4002080	3	LOCKING RING DIN 471 40 X2,5	ANILLO SEGURIDAD		
60	933605201	1	SUN WHEEL M=3,75 Z=18	PIÑON PRINCIPAL		
61	932856101	2	COMPRESSION RING 10X343/295RD	ANILLO COMPRESION		
62		7	OUTER MULTI-DISC	LAMINA EXTERIOR		
63		6	DISC INSIDE TOOTHED	LAMINA INTERIOR SINTERIZAD		
70	933605301	1	BRAKE ⇨ ❑ 224	FRENO		2
74	7610341	1	O-RING 340X4	JUNTA TORICA		1
77	4000613	6	CYLINDER SCREW ISO 4762 M12X60 10.9	TORNILLO CILINDRICO		
79	4097529	2	LOCKING PLUG	TAPON DE CIERRE		1
91	7004246	2	LOCKING PLUG	TAPON DE CIERRE		1
96	779016501	1	LOCKING PLUG	TAPON DE CIERRE		
910	90003864	1	SEAL KIT ⇨ ❑ 239	JUEGO DE JUNTAS		
960	968580201	1	BRAKE MULTI-DISC SET ⇨ ❑ 226	JUEGO DE DISCOS DE FRENO		

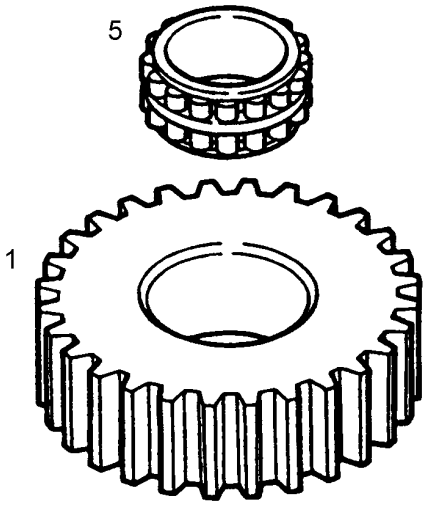

Pos.	Item	Quantity	Description	Descripción	Serie	K
1		1	PLANET WHEEL M=4 Z=35	PIÑON PLANETARIA		
5	7610037	1	CYLINDRICAL ROLLER BEARING	RODAMIENTO RODILLO CILINDR		1

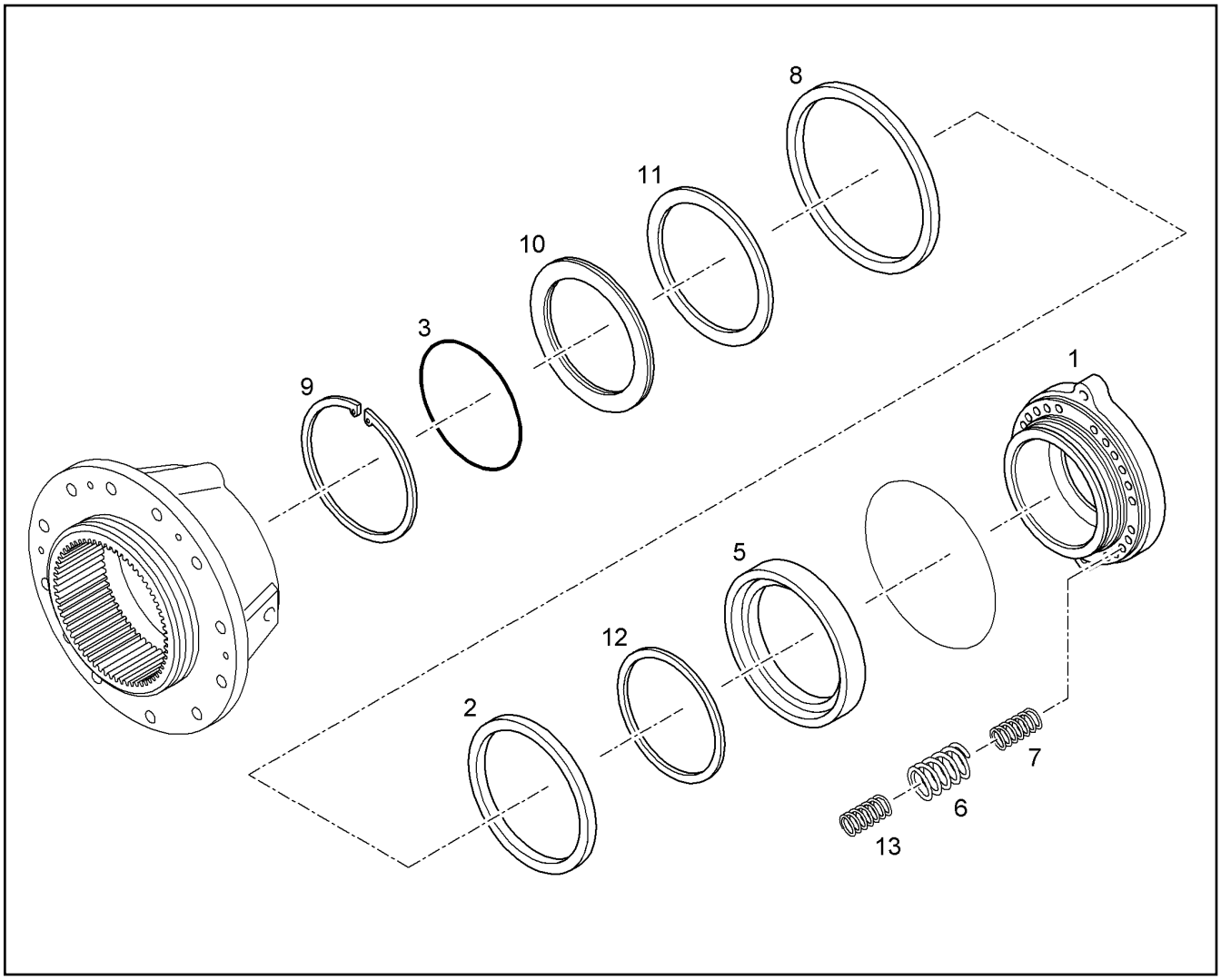

Pos.	Item	Quantity	Description	Descripción	Serie	K
1	933605401	1	BRAKE HOUSING	CARCASA FRENO		
2	7610521	1	LIP SEAL RING 291X281,4X5,5	COLLARIN HIDRAULICO		1
3	7610202	1	O-RING	JUNTA TORICA		1
5	9441436	1	ANNULAR PISTON	EMBOLO ANULAR		1
6	7610107	26	PRESSURE SPRING	MUELLE COMPRESION		
7	7610108	26	PRESSURE SPRING	MUELLE COMPRESION		
8	7610523	1	LIP SEAL RING	COLLARIN HIDRAULICO		1
9	4600856	1	LOCKING RING DIN 471 280 X5	ANILLO SEGURIDAD		
10	9443229	1	CLOSING RING	ANILLO DE CIERRE		
11	7610551	1	DIRT SCRAPER	RETEN RASCADOR EXTERIOR		1
12	7610552	1	DIRT SCRAPER 274X285X3,5	RETEN RASCADOR EXTERIOR		1
13	7610132	26	PRESSURE SPRING	MUELLE COMPRESION		

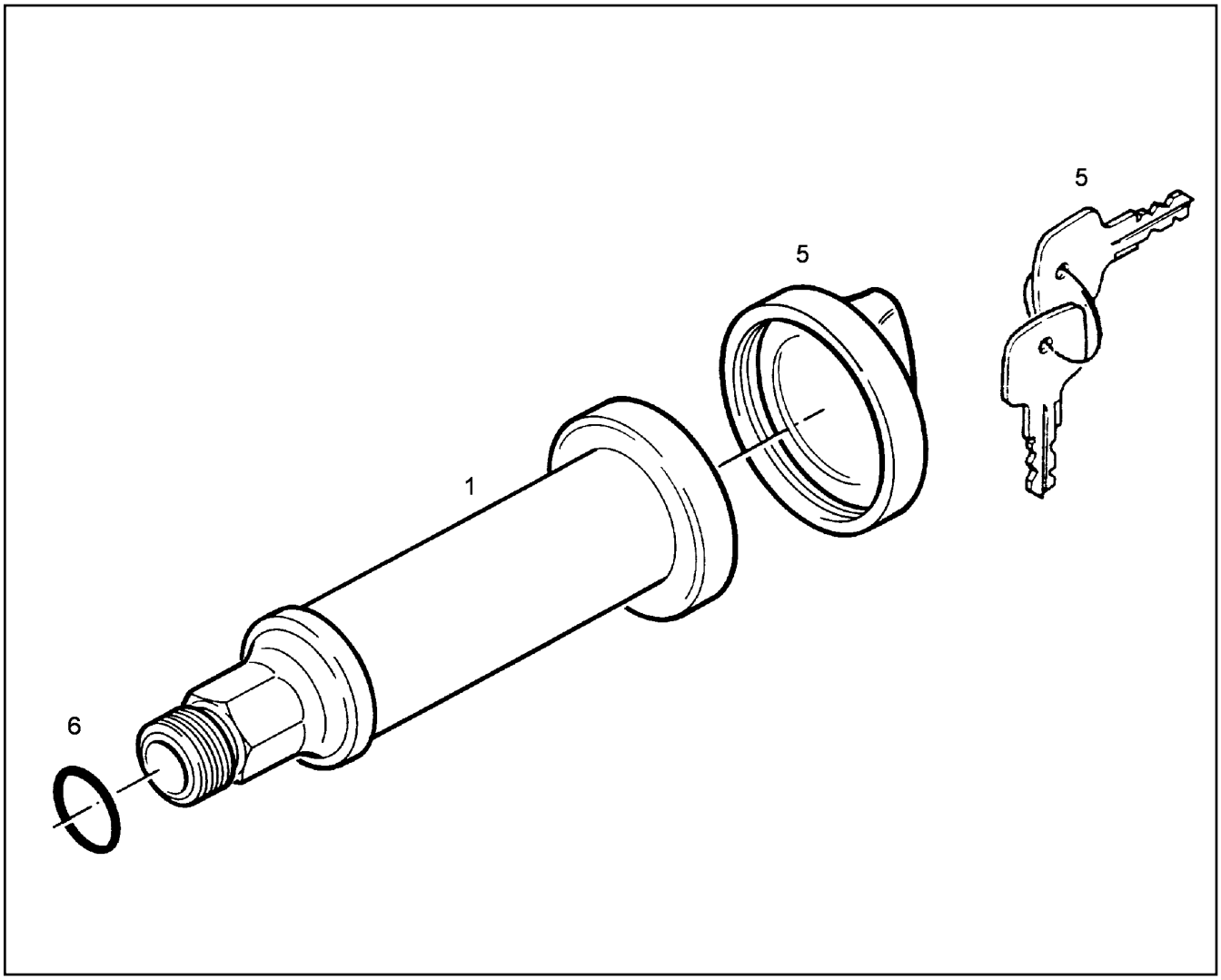

Pos.	Item	Quantity	Description	Descripción	Serie	K
1	9442359	1	FILLER NECK	CONEXION DE LLENADO		1
5	7610825	1	LOCKABLE TANK CAP	CIERRE DEL TANQUE		
5	7365626	1	KEY	LLAVE		
6	7610225	1	SEALING RING	JUNTA ANULAR		2

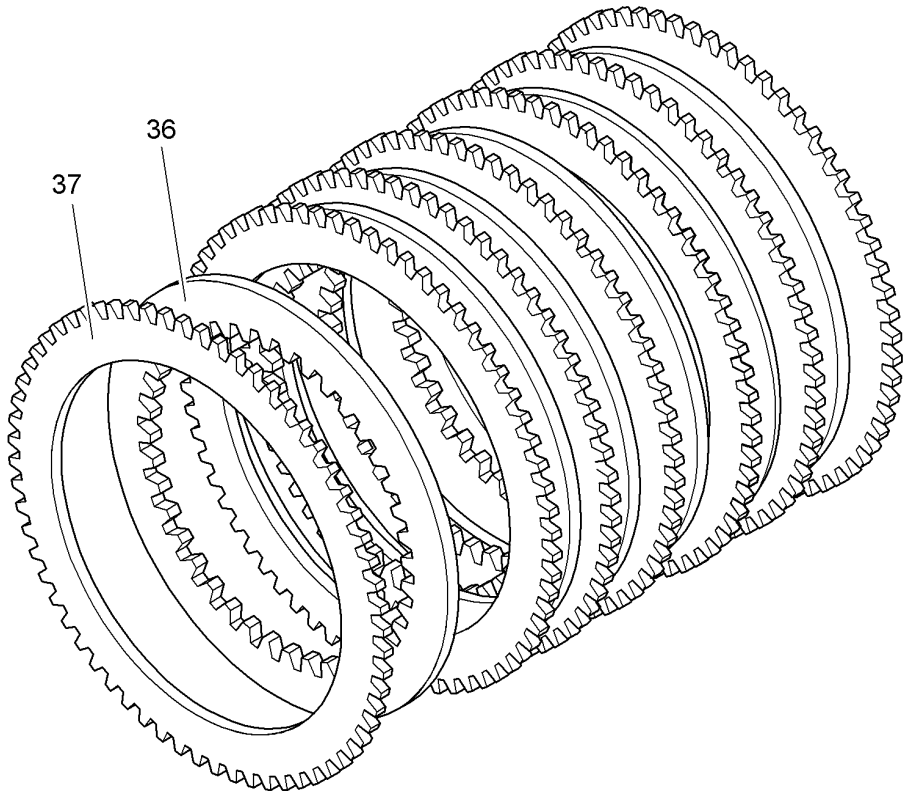

Pos.	Item	Quantity	Description	Descripción	Serie	K
36		6	DISC INSIDE TOOTHED	LAMINA INTERIOR SINTERIZAD		
37		7	OUTER MULTI-DISC	LAMINA EXTERIOR		

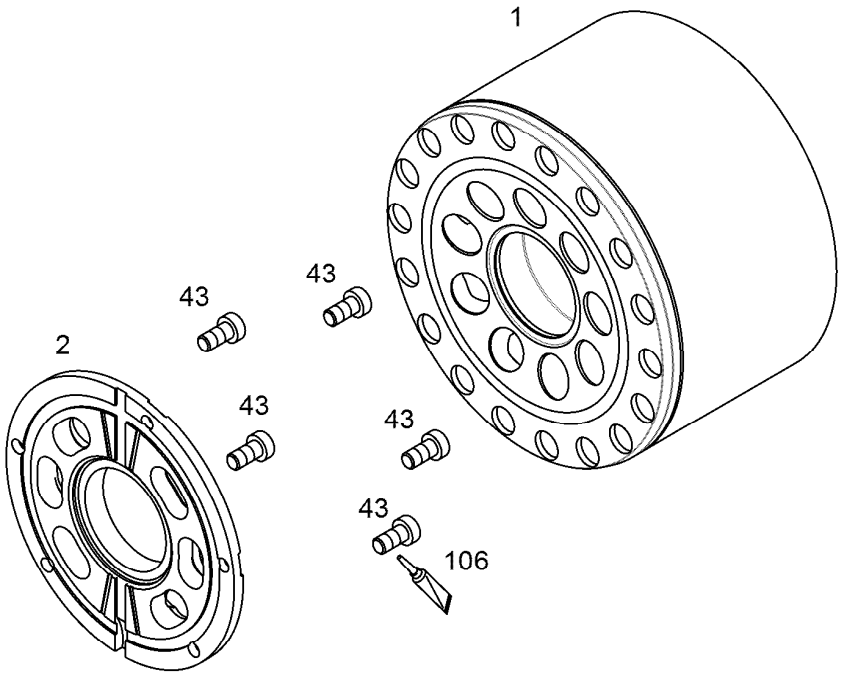

Pos.	Item	Quantity	Description	Descripción	Serie	K
1		1	CYLINDER WITH BUSH	CILINDRO CON CASQUILLO		
2		1	GUIDE PLATE	PLACA MANDO		
43	4981218	5	CYLINDER SCREW ISO 14580 M6X16 10.9	TORNILLO CILINDRICO		
106	7016208	1	OMNIFIT	OMNIFIT		

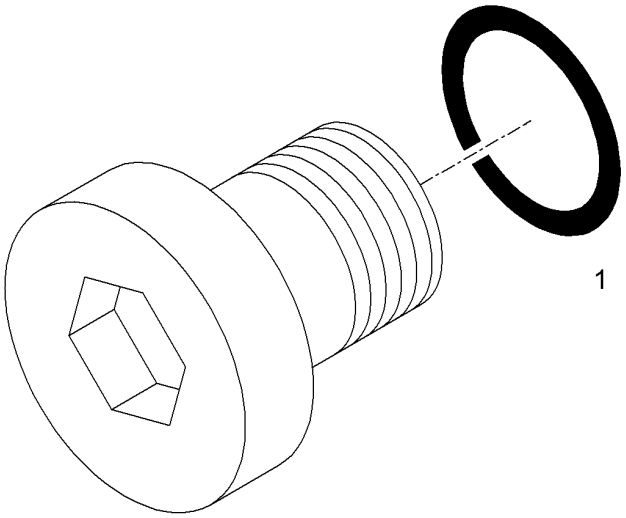

Pos.	Item	Quantity	Description	Descripción	Serie	K
1	7013115	1	SEALING RING DIN 3869 13,8X18,9X 1,5 -16-	JUNTA ANULAR		1

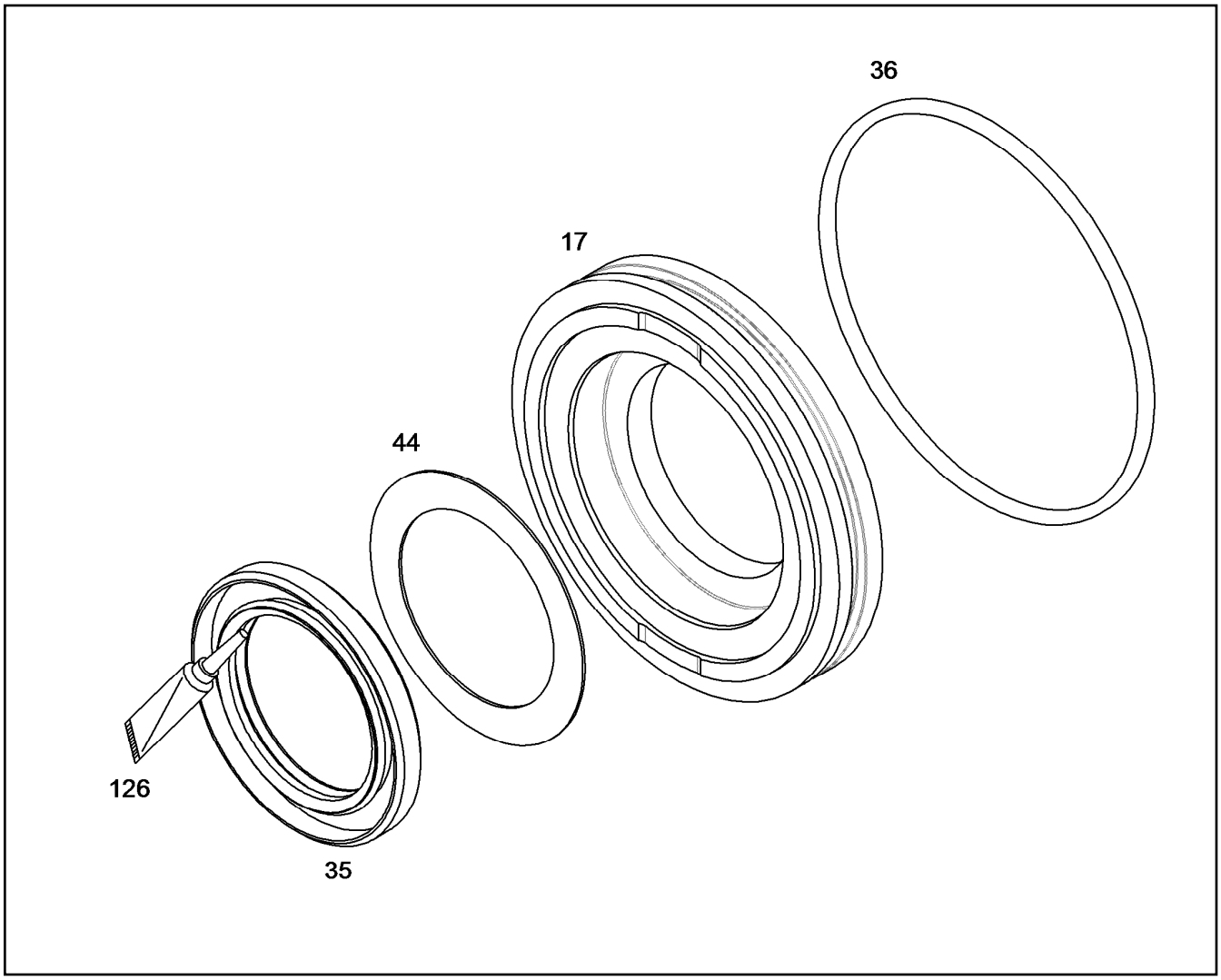

Pos.	Item	Quantity	Description	Descripción	Serie	K
17		1	CLOSING RING	ANILLO DE CIERRE		
35		1	ROTARY SHAFT LIP SEAL ASX35X52X6 ⇨ ❑ 6	RETEN RADIAL		2
36	7380599	1	O-RING	JUNTA TORICA		1
44		1	SHIM RING DIN 988 42 X 52X 1,5	ARANDELA AJUSTE		
126	8655008	1	GREASE	GRASA		

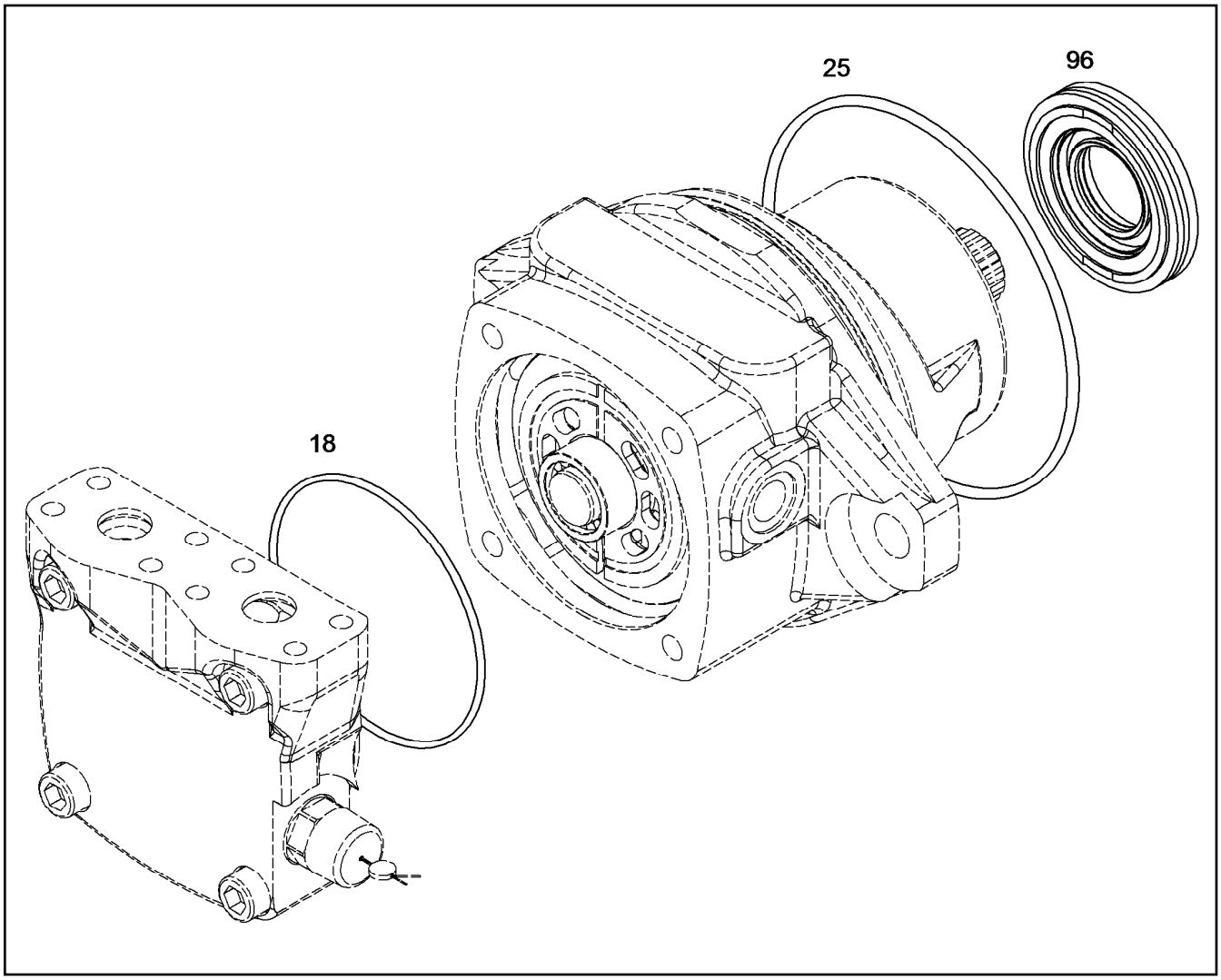

Pos.	Item	Quantity	Description	Descripción	Serie	K
18		1	O-RING	JUNTA TORICA		1
25		1	O-RING	JUNTA TORICA		1
96	9268011	1	REPAIR KIT LOCK RING ⇨ ❑ 229	JR ARO CIERRE		2

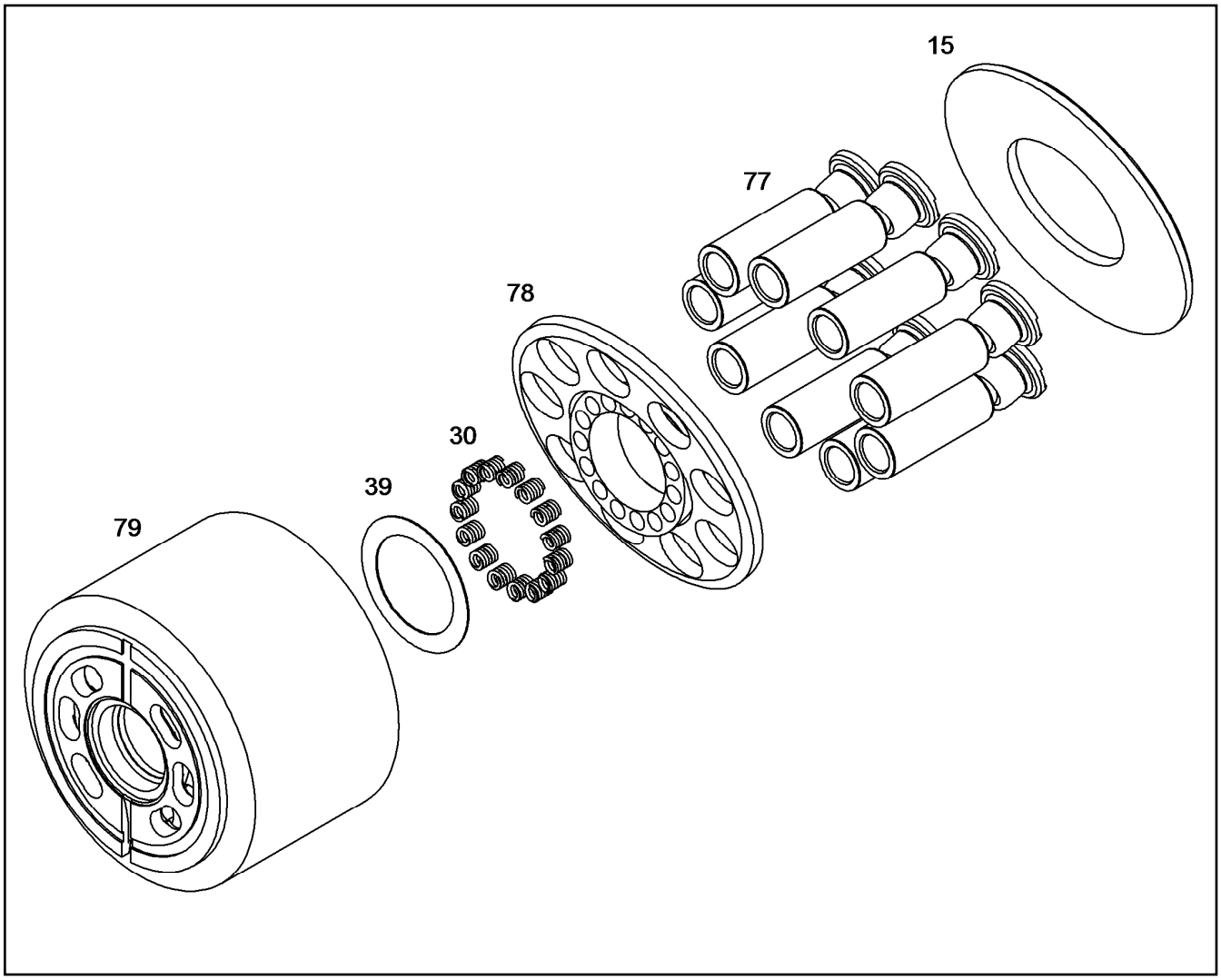

Pos.	Item	Quantity	Description	Descripción	Serie	K
15	9265104	1	SLIDING DISC	DISCO DE DESLIZAMIENTO		
30	9265050	15	PRESSURE SPRING 1,25X5,10X10,50	MUELLE COMPRESION		
39	9885919	1	WASHER SET	JUEGO LUNAS		
77	9880601	1	RK PISTON WITH GUIDE SHOE ⇨ ❑ 234	JR ÉMBOLO C.PATÍN DESL.		1
78	9880619	1	BALL REPAIR SET ⇨ ❑ 235	JR BOLA RETR.C.PLACA		2
79	9880521	1	RK CYLINDER+CONTROL PLATE ⇨ ❑ 233	JR CIL.+PLACA MANDO		2

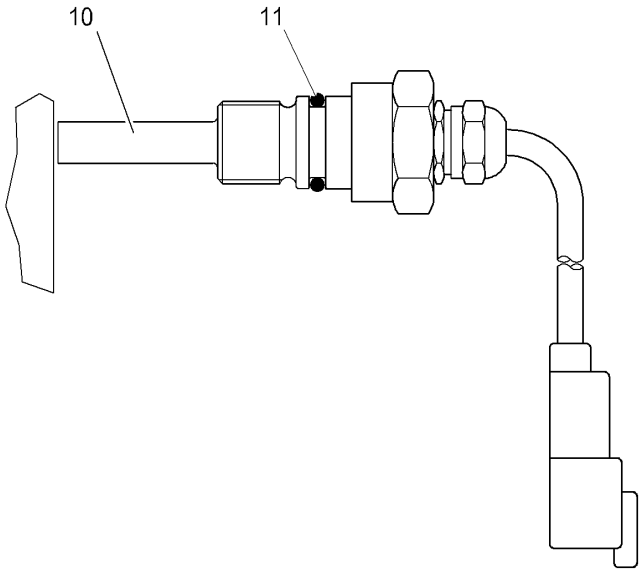

Pos.	Item	Quantity	Description	Descripción	Serie	K
10	6290073	1	SPEED SENSOR ⇨ ❑ 238	SENSOR DE REVOLUCIONES		2
11	7381018	1	O-RING	JUNTA TORICA		1

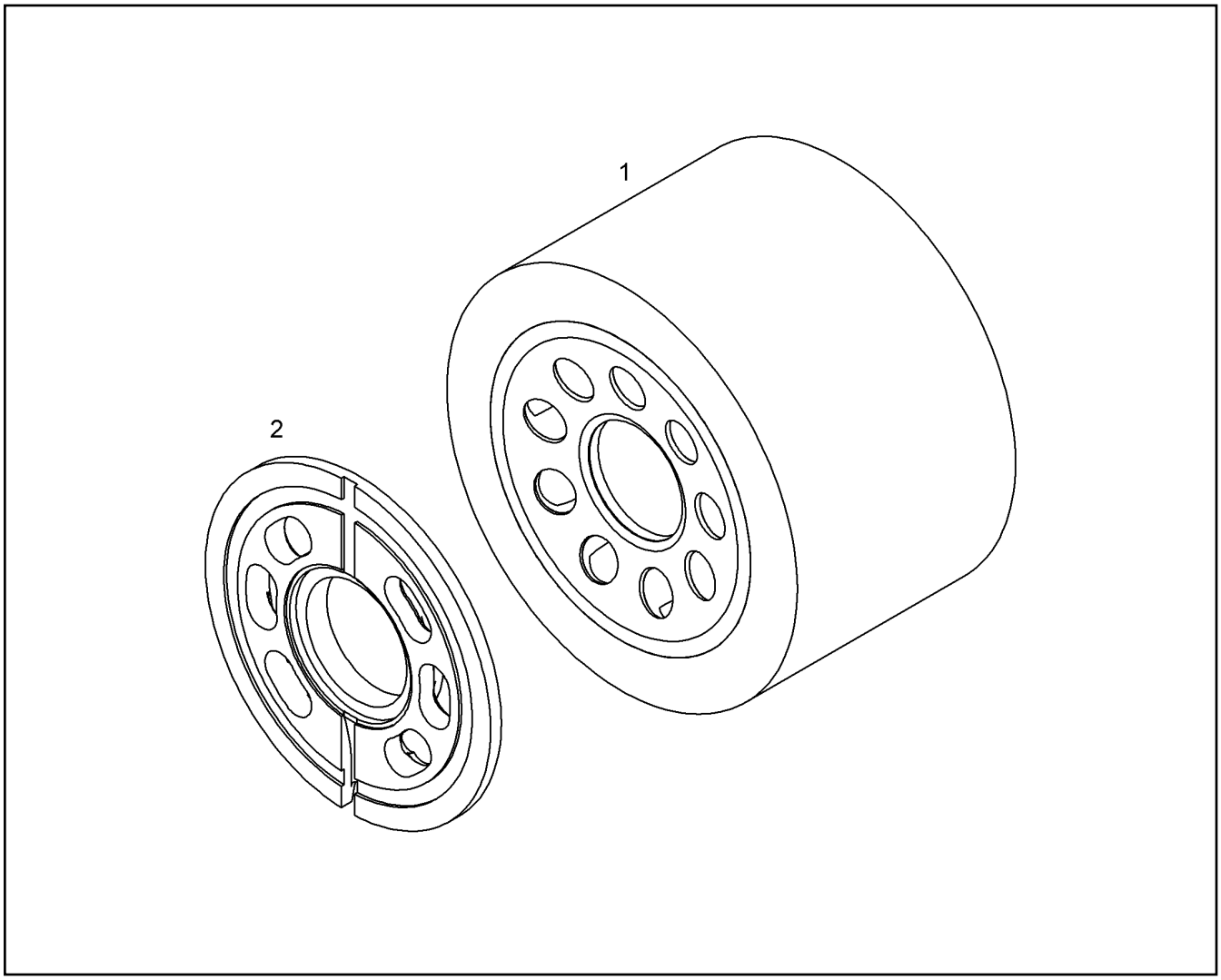

Pos.	Item	Quantity	Description	Descripción	Serie	K
1		1	CYLINDER WITH BUSH	CILINDRO CON CASQUILLO		
2		1	GUIDE PLATE	PLACA MANDO		1

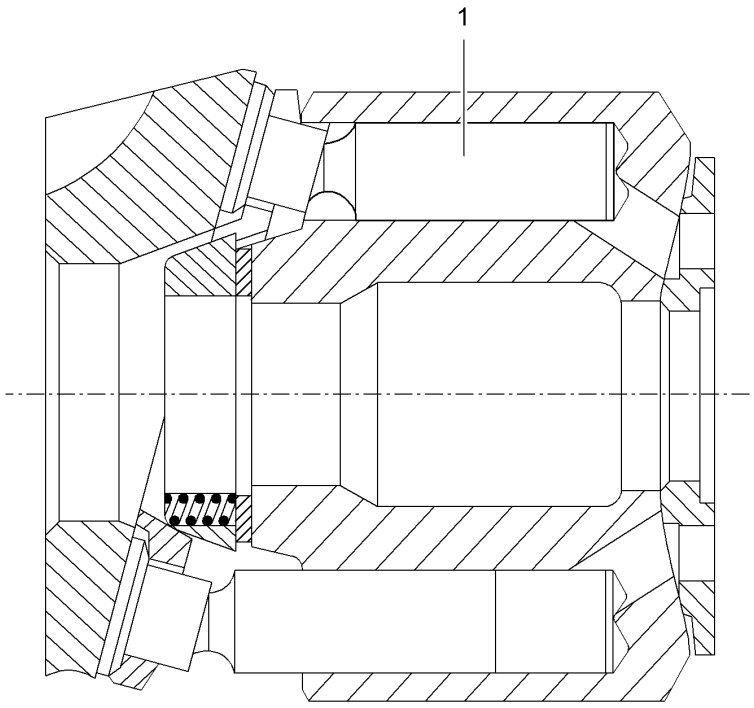

Pos.	Item	Quantity	Description	Descripción	Serie	K
1		9	PISTON WITH GUIDE SHOE	ÉMBOLO CON PATÍN DESL.		

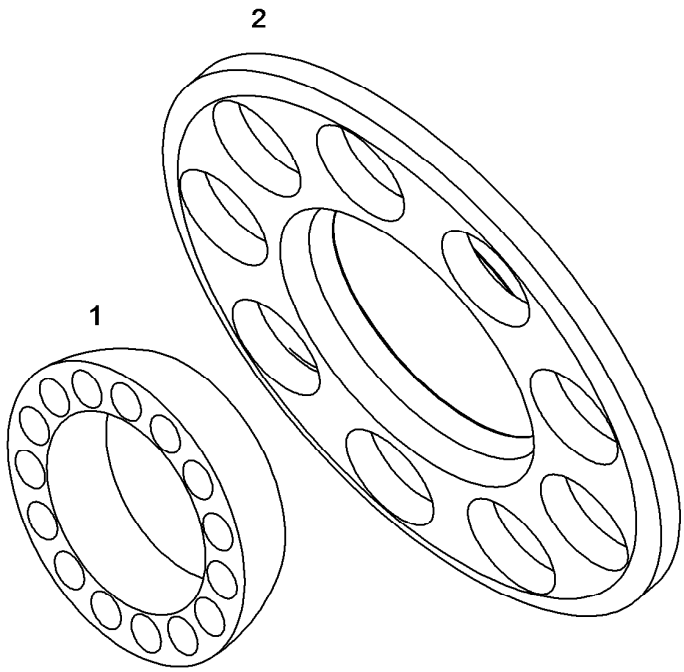

Pos.	Item	Quantity	Description	Descripción	Serie	K
1		1	PULL-BACK BALL	ESFERA DE RETROCESO		1
2		1	PULL-BACK PLATE	PLACA DE RETROCESO		

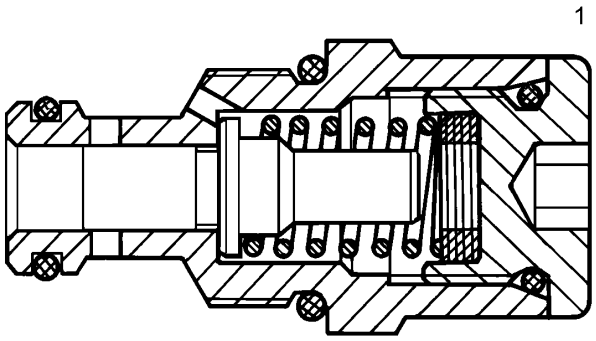

Pos.	Item	Quantity	Description	Descripción	Serie	K
1	9267037	1	PRESSURE LIMITING VALVE ⇨ ❑ 72	VALVULA LIMITADORA DE PRES		1

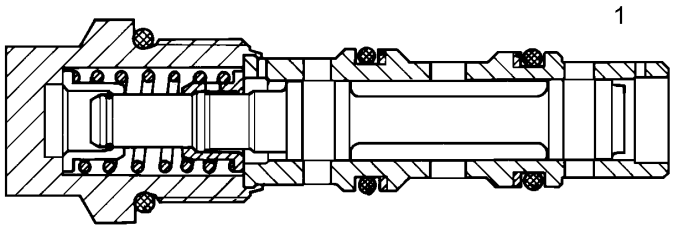

Pos.	Item	Quantity	Description	Descripción	Serie	K
1	9275505	1	VALVE WV 10 ⇨ ❑ 74	VÁLVULA MÚLTIPLES VÍAS WV 1		2

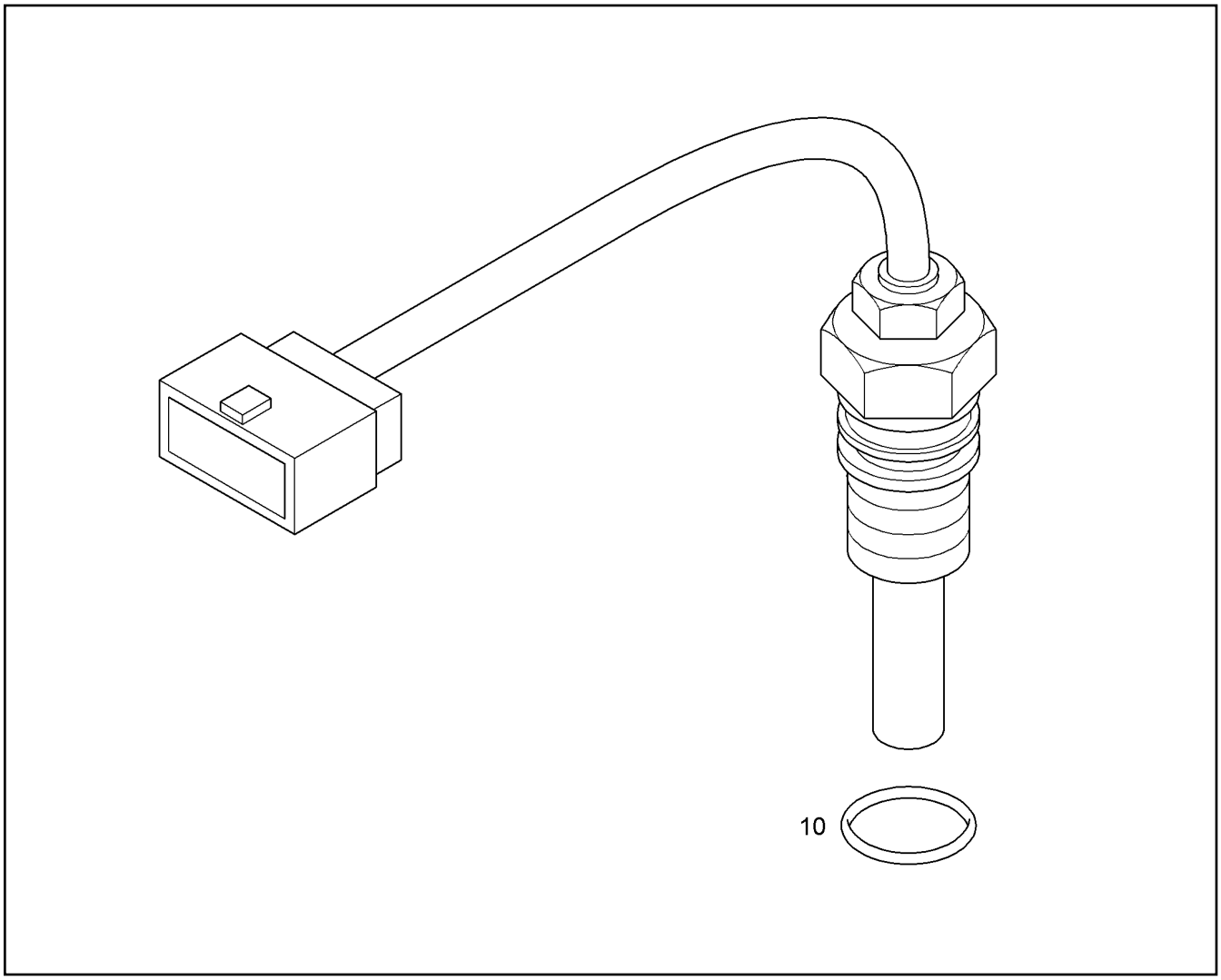

Pos.	Item	Quantity	Description	Descripción	Serie	K
10	7381018	1	O-RING	JUNTA TORICA		1

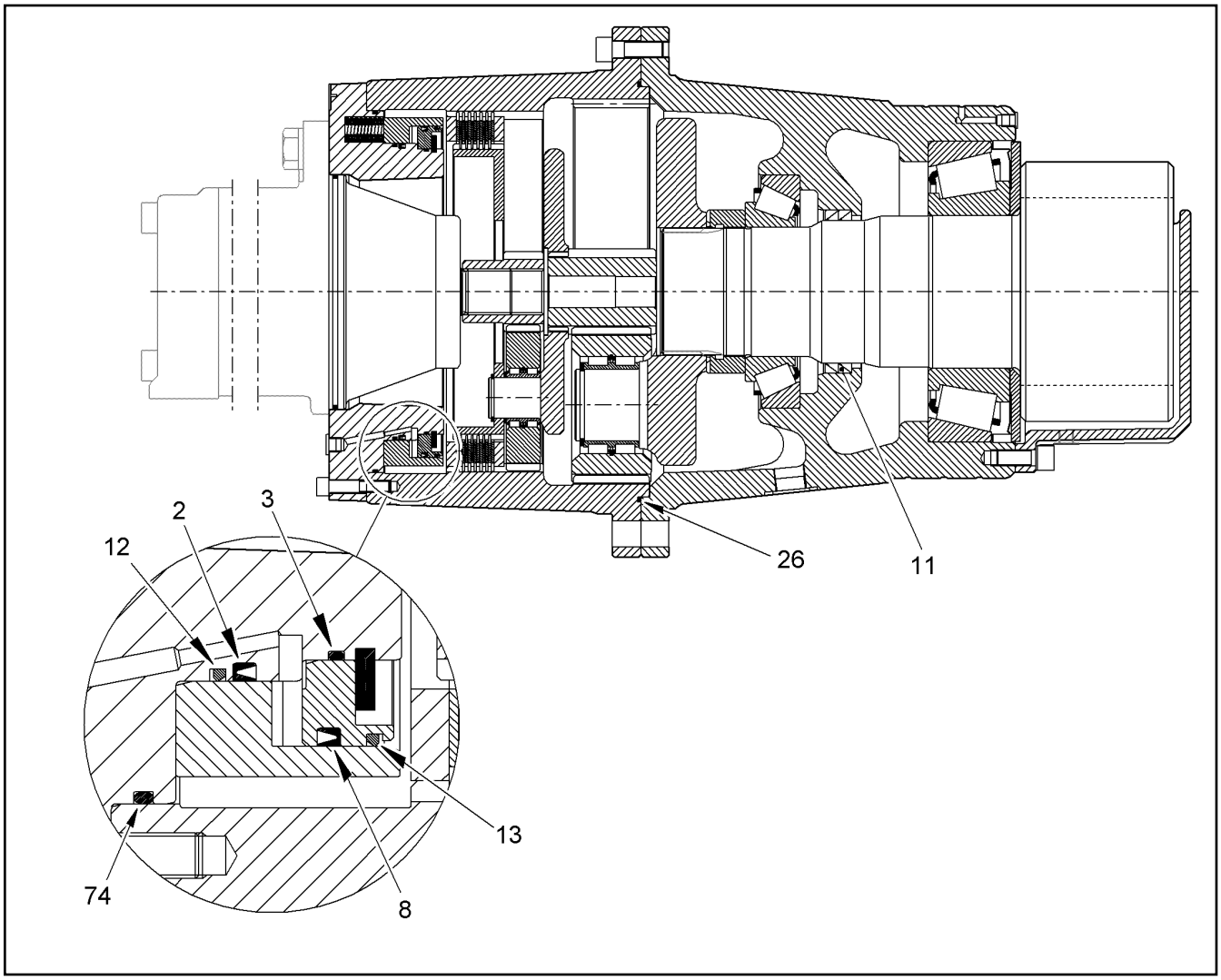

Pos.	Item	Quantity	Description	Descripción	Serie	K
2		1	LIP SEAL RING 291X281,4X5,5	COLLARIN HIDRAULICO		1
3		1	O-RING	JUNTA TORICA		1
8		1	LIP SEAL RING	COLLARIN HIDRAULICO		1
11		2	SHAFT SEAL DIN 3760 A 140 X160X 13 NB	WDR		1
12		1	DIRT SCRAPER 274X285X3,5	RETEN RASCADOR EXTERIOR		1
13		1	DIRT SCRAPER	RETEN RASCADOR EXTERIOR		1
26		1	O-RING AEHNL. DIN 3771 380X4	JUNTA TORICA		1
74		1	O-RING 340X4	JUNTA TORICA		1

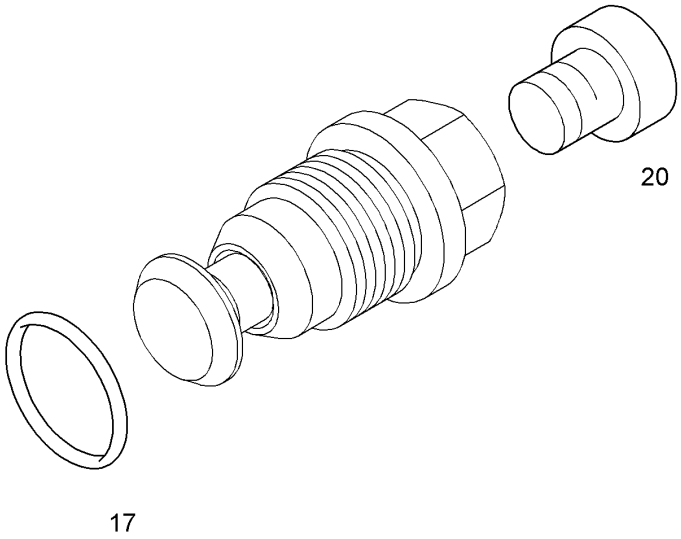

Pos.	Item	Quantity	Description	Descripción	Serie	K
17		1	O-RING	JUNTA TORICA		1
20		1	SCREW PLUG ⇨ ❑ 760	TORNILLO DE CIERRE		

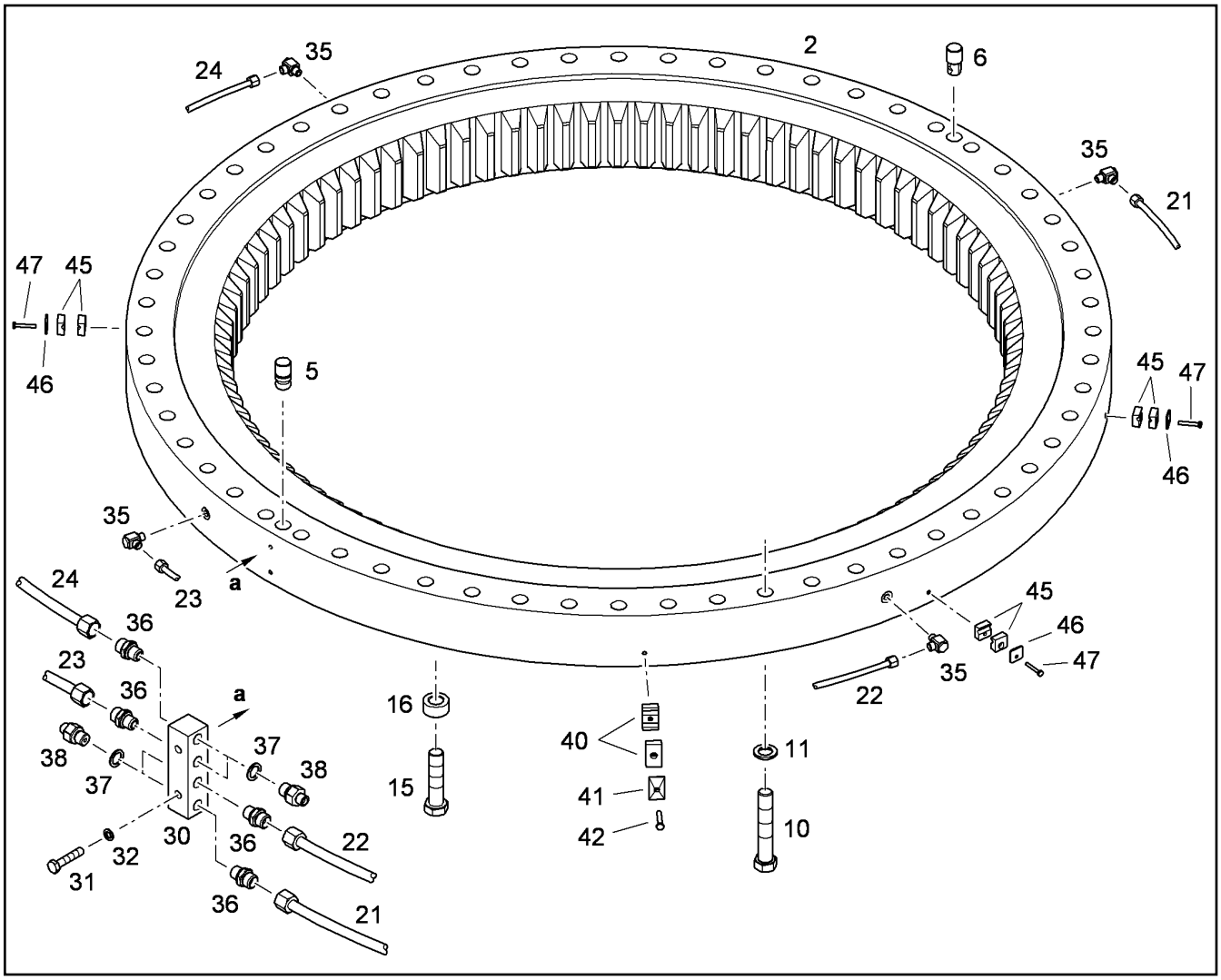

Pos.	Item	Quantity	Description	Descripción	Serie	K
2	982720001	1	BALL SLEWING RING 1910X1503X165 [584 41/10]	PISTA DE GIRO		1
5	7373199	1	LOCATING BOLT DIA.30MM	BULON DE SUJECION		1
6	7373198	1	LOCATING BOLT DIA.30MM	BULON DE SUJECION		1
10	10425734	60	HEX BOLT ISO 4014 M27X160 10.9 FLZN 100	TORNILLO DE CABEZA HEXAGO		
11	9586495	60	WASHER 27,5/45X6	ARANDELA		
15	10425623	60	HEX BOLT ISO 4014 M27X120 10.9 FLZN 100	TORNILLO DE CABEZA HEXAGO		
16	9563951	60	SLEEVE	CASQUILLO.		
21	9375104	1	GREASE TUBE CPL.	CONDUCTO DE LUBRICACIÓN		1
22	9375105	1	GREASE TUBE CPL.	CONDUCTO DE LUBRICACIÓN		1
23	9375106	1	GREASE TUBE CPL.	CONDUCTO DE LUBRICACIÓN		1
24	9375107	1	GREASE TUBE CPL.	CONDUCTO DE LUBRICACIÓN		1
30	9375276	1	LUBRICATING PAD	PLACA DE LUBRICACIÓN		
31	4601406	2	HEX BOLT ISO 4017 M8X40 10.9 A2C	TORNILLO DE CABEZA HEXAGO		
32	4229912	2	LOCK WASHER /13X1,6 VS	ARANDELA SEGURIDAD		
35	7617714	4	HINGED THREADED UNION WH 10L	ATORNILLAMIENTO ORIENTABL		
36	7003814	4	LUG GE 10L	ESPIGA		
37	7101008	4	SEALING RING DIN 7603 A 14 X 18 CU	JUNTA ANULAR		1
38	7368545	4	SCREW-ON CONNECTION	ESPIGA MACHO		
40	7365069	2	CLAMP-HALF AEHNL.DIN 3015 Z 2 R 10 10 P	MEDIA BRIDA		
41	7362606	1	LID PLATE DIN 3015 Z-DP 2 W1-ZN	PLACA CUBIERTA		
42	4001648	1	HEX BOLT ISO 4017 M8X45 10.9 A2C	TORNILLO DE CABEZA HEXAGO		
45	7364901	6	CLAMP-HALF DIN 3015-1 L 0 R 10 PP SW	MEDIA BRIDA		
46	7364904	3	LID PLATE DIN 3015 L-DP 0 W1-ZN	PLACA CUBIERTA		
47	4001928	3	HEX BOLT ISO 4014 M6x40 8.8 A2C	TORNILLO DE CABEZA HEXAGO		

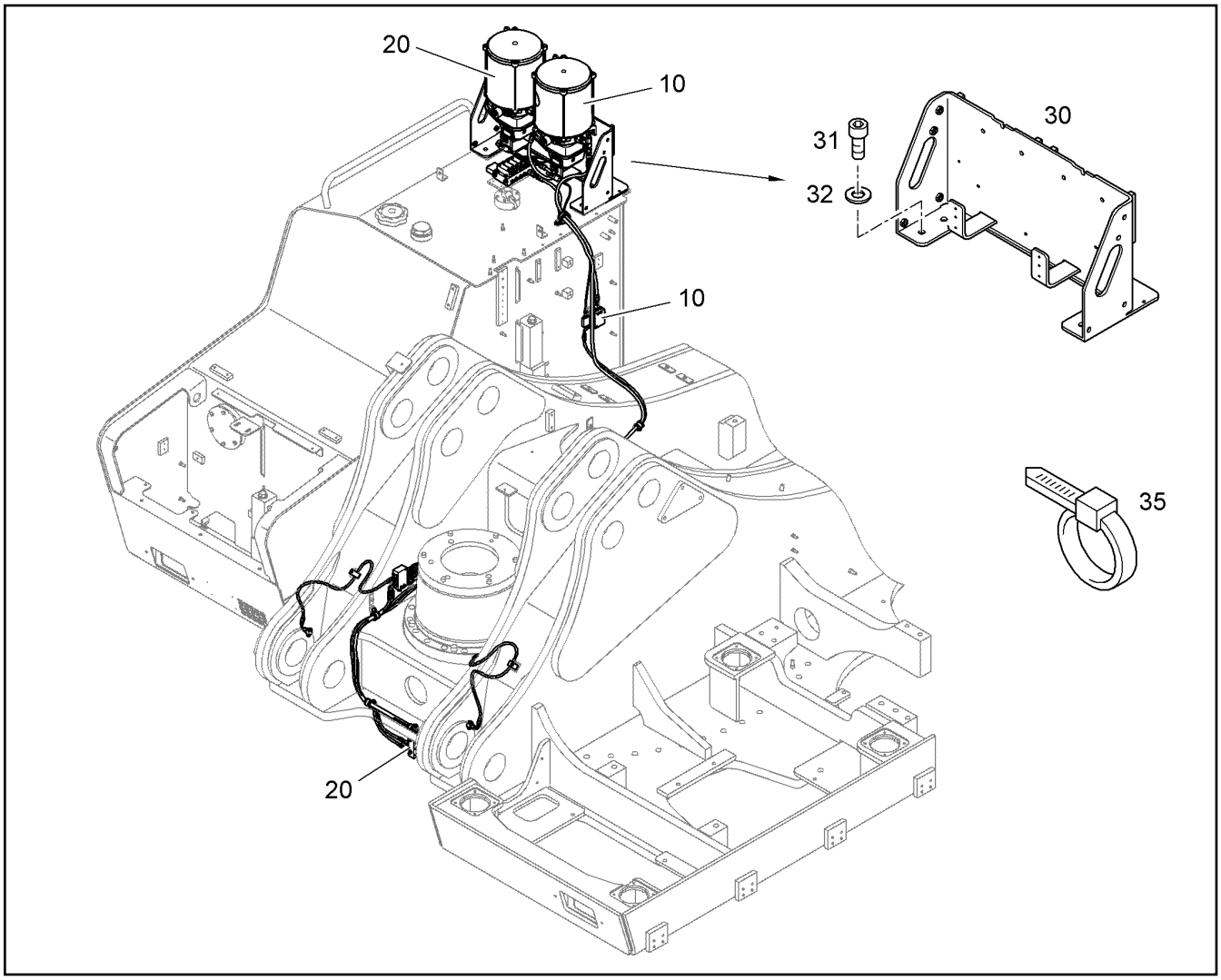

Pos.	Item	Quantity	Description	Descripción	Serie	K
10	10076756	1	SWING GEAR PINION GREASING ⇨ ❑ 243	LUBR.PIÑÓN MEC. GIRO		1
20	10076757	1	CENTRALIZED LUBRICATION UPPER ⇨ ❑ 246	LUBR.CENTR.CARRO SUPERIO		1
30	10064888	1	CONSOLE	CONSOLA		
31	4043002	4	CYLINDER SCREW ISO 4762 M12X25 10.9	TORNILLO CILINDRICO		
32	4635283	4	WASHER DIN 6340 13 ST A3C	ARANDELA		
35	7005587	3	CABLE TIE	BRIDAS		

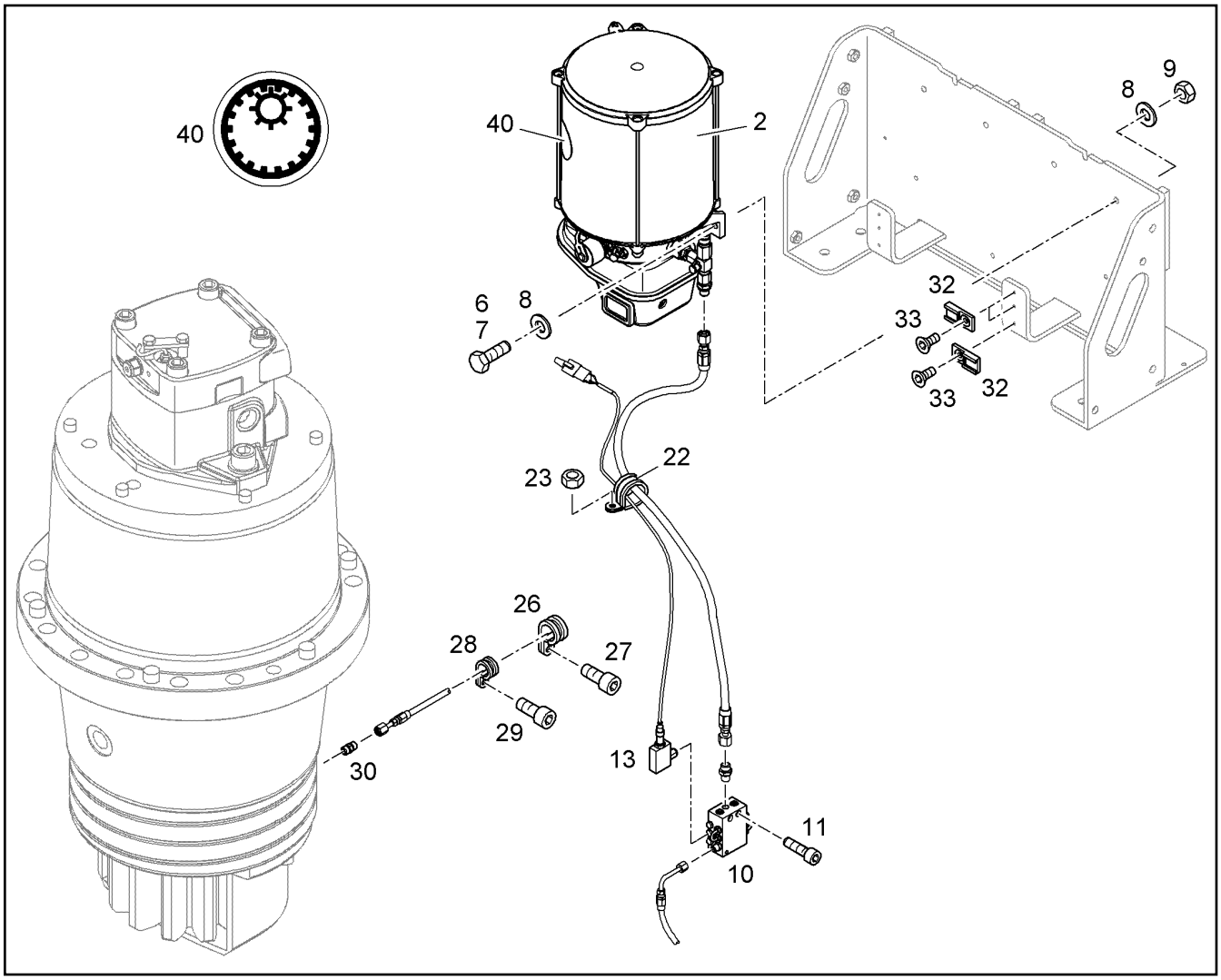

Pos.	Item	Quantity	Description	Descripción	Serie	K
2	10340717	1	LUBRICATION PUMP ⇨ ❑ 249	ENGRASADORA		2
6	4066042	1	HEX BOLT ISO 4017 M8X25 10.9 A2C	TORNILLO DE CABEZA HEXAGO		
7	4001650	2	HEX BOLT ISO 4017 M8X35 10.9 A2C	TORNILLO DE CABEZA HEXAGO		
8	4211012	5	WASHER ISO 8738 8 A3C	ARANDELA		
9	4600783	3	HEX NUT M8	TUERCA HEXAGONAL		
10	10293019	1	DISTRIBUTION BLOCK MX-F 3/1 ⇨ ❑ 244	COMBINACIÓN DE DISTRIB.		2
11	4902262	2	CYLINDER SCREW ISO 4762 M5X35 10.9 A2	TORNILLO CILINDRICO		
13	10331873	1	PROXIMITY SWITCH	DETECTOR DE PROXIMIDAD		2
22	7366260	1	CLAMP DIN 3016 D1- 34 X 20 W1-2-CR	ABRAZADERA		
23	4901573	1	HEX NUT M8	TUERCA HEXAGONAL		
26	7362665	2	CLAMP DIN 3016 D1- 20 X 20 W1-2-CR	ABRAZADERA		
27	4043082	2	CYLINDER SCREW ISO 4762 M8X20 10.9 A2	TORNILLO CILINDRICO		
28	7361498	1	CLAMP DIN 3016 D1- 15 X 15 W1-2-CR	ABRAZADERA		
29	4043082	1	CYLINDER SCREW ISO 4762 M8X20 10.9 A2	TORNILLO CILINDRICO		
30	7368545	1	SCREW-ON CONNECTION	ESPIGA MACHO		
32	6203497	3	FASTENER	ELEMENTO DE FIJACION		
33	4601375	3	COUNTERSUNK SCREW ISO 7047 M5X10 4.	TORNILLO AVELLANADO		
40	9384072	1	ADHESIVE SIGN	LETRERO PEGATINA		

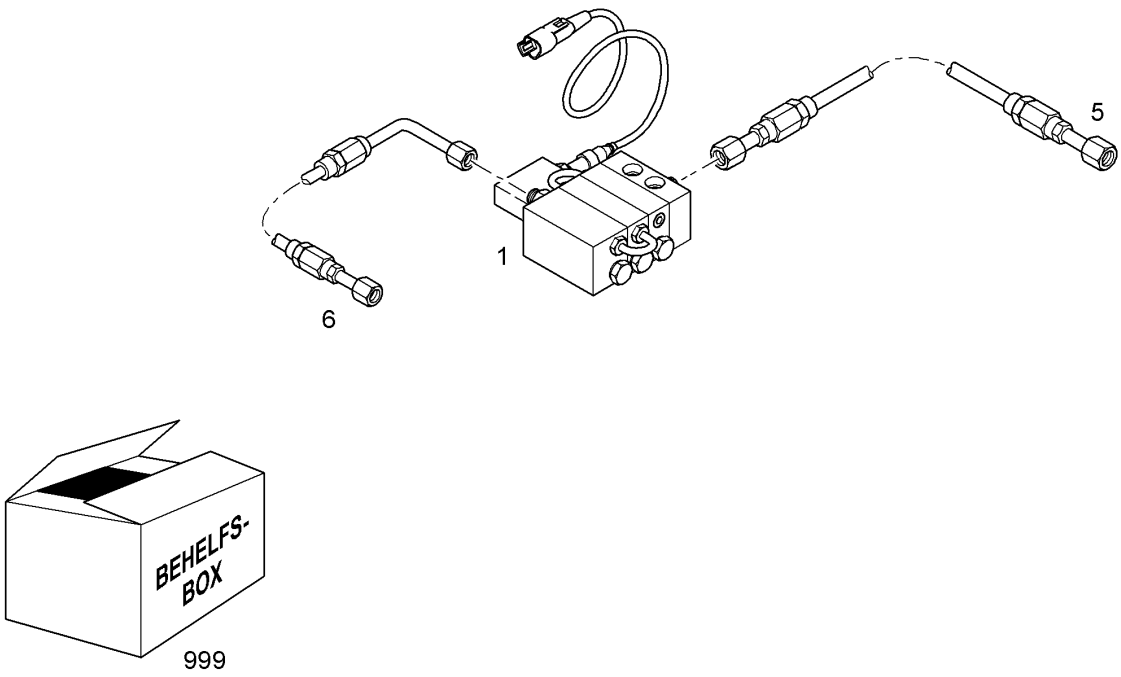

Pos.	Item	Quantity	Description	Descripción	Serie	K
1	10293020	1	DISTRIBUTION BLOCK MX-F 3/1 ⇨ ❑ 245	COMBINACIÓN DE DISTRIB.		2
5	10030891	1	HOSE	TUBO GOMA		2
6	10293172	1	HOSE	TUBO GOMA		2
999	10014611	1	AUXILIARY BOX ⇨ ❑ 257	CAJA AUXILIAR		

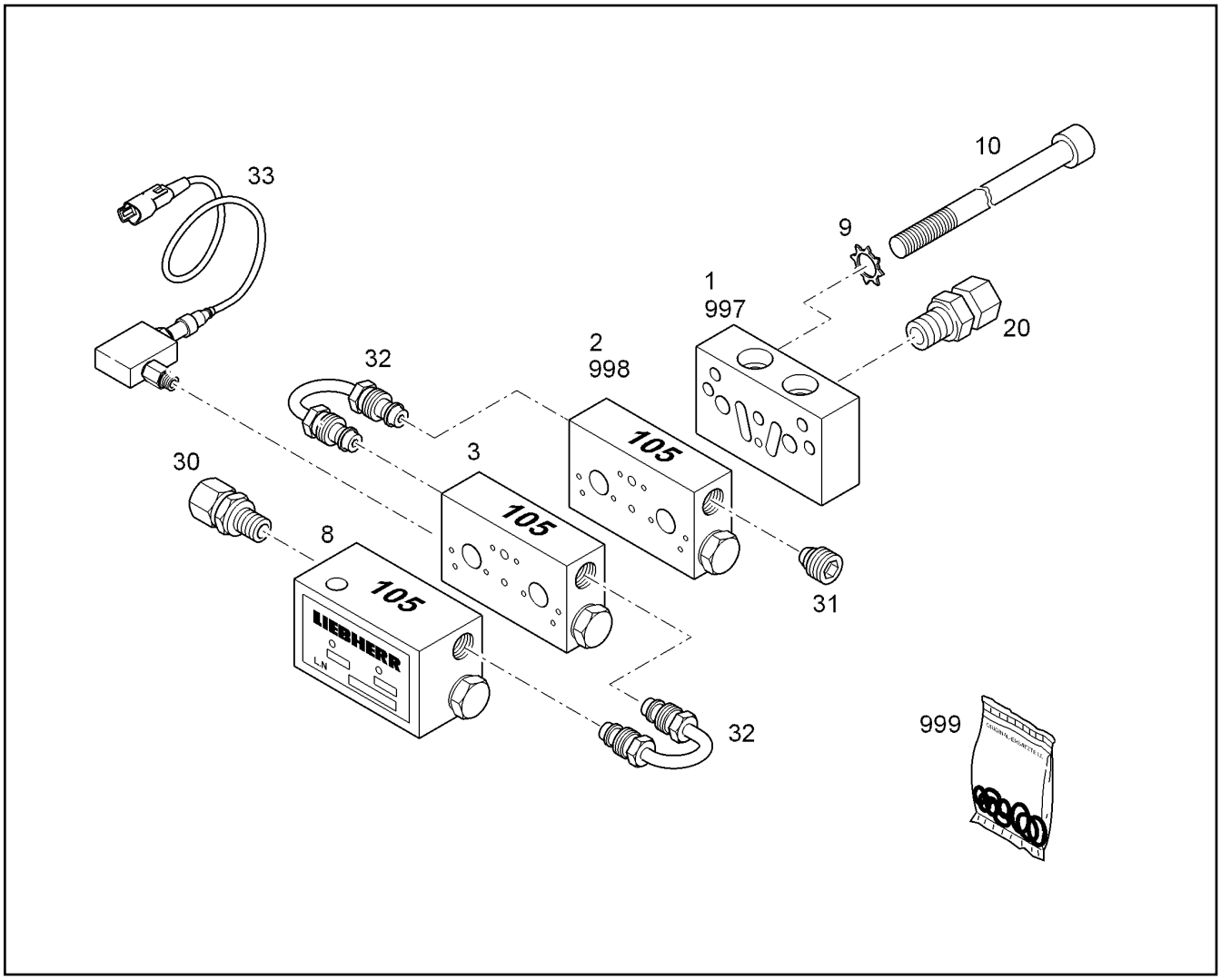

Pos.	Item	Quantity	Description	Descripción	Serie	K
1	7027937	1	STARTING ELEMENT MX-F	ELEMENTO INICIAL		2
2	7027941	1	CENTRAL ELEMENT MX-F 105	ELEMENTO INTERMEDIO		2
3	7027941	1	CENTRAL ELEMENT MX-F 105	ELEMENTO INTERMEDIO		2
8	7027945	1	END ELEMENT MX-F 105	ELEMENTO FINAL		2
9	4002259	2	TOOTH LOCK WASHER DIN 6797 A 6,2 A3C	ARANDELA DENTADA		
10	4600091	2	CYLINDER SCREW ISO 4762 M6x50 8.8 A2C	TORNILLO CILINDRICO		
20	10009053	1	PIPE UNION GE8 10X1	RACOR PARA ENROSCAR		
30	7622803	1	NON-RETURN VALVE	VALVULA DE RETENCION		2
31	774378208	1	SCREW PLUG	TORNILLO DE CIERRE		
32	774378008	2	PIPE BRIDGE	PUENTE TUBO		
33	10331873	1	PROXIMITY SWITCH	DETECTOR DE PROXIMIDAD		2
997	10021311	1	SEAL KIT ⇨ ❑ 260	JUEGO DE JUNTAS		1
998	10021310	1	SEAL KIT ⇨ ❑ 259	JUEGO DE JUNTAS		1
999	10021308	1	O-RING	JUEGO ANILLOS TÓRICOS		1

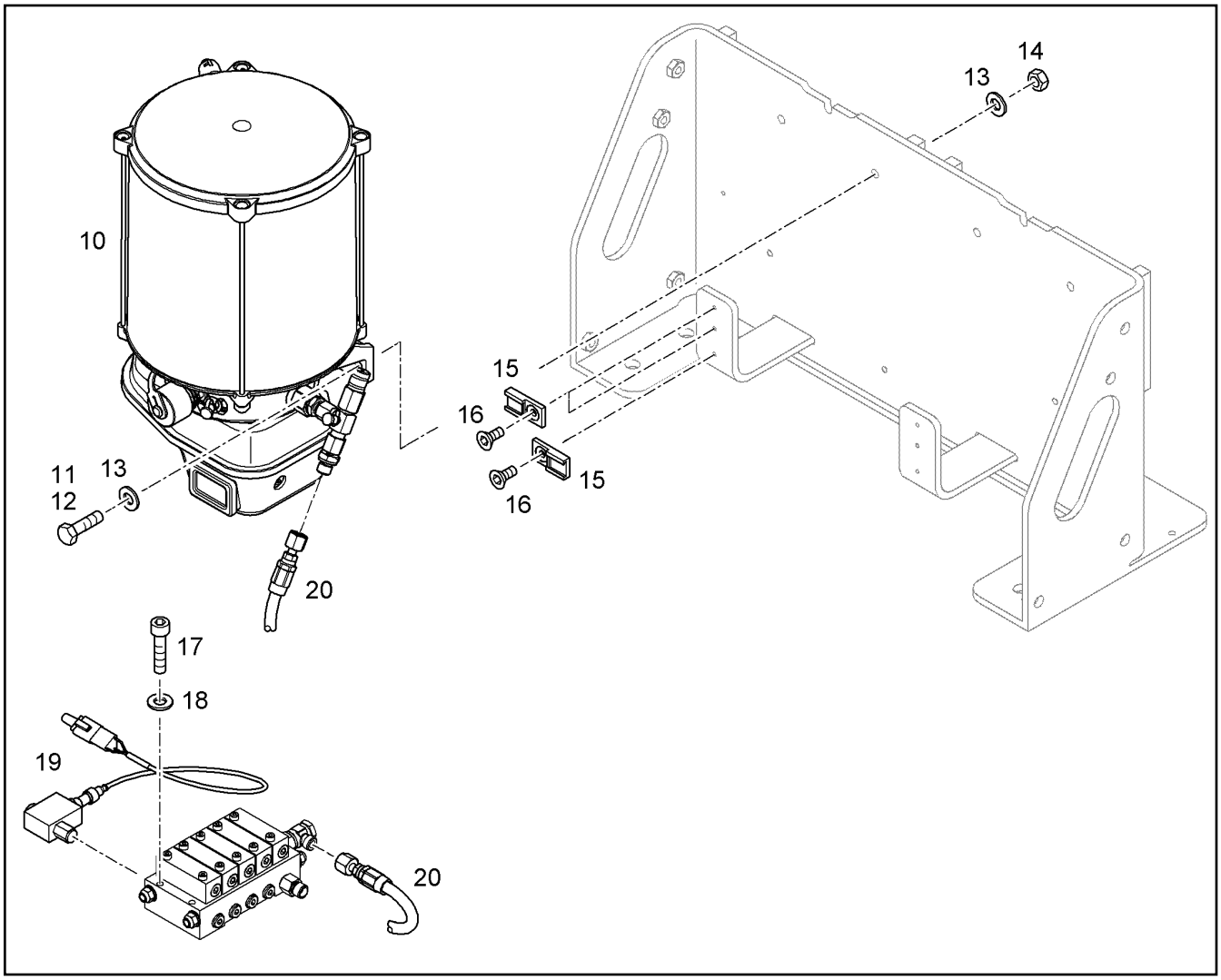

Pos.	Item	Quantity	Description	Descripción	Serie	K
10	10340717	1	LUBRICATION PUMP ⇨ ❑ 249	ENGRASADORA		2
11	4066042	1	HEX BOLT ISO 4017 M8X25 10.9 A2C	TORNILLO DE CABEZA HEXAGO		
12	4001650	2	HEX BOLT ISO 4017 M8X35 10.9 A2C	TORNILLO DE CABEZA HEXAGO		
13	4211012	5	WASHER ISO 8738 8 A3C	ARANDELA		
14	4600783	3	HEX NUT M8	TUERCA HEXAGONAL		
15	6203497	3	FASTENER	ELEMENTO DE FIJACION		
16	4601375	3	COUNTERSUNK SCREW ISO 7047 M5X10 4.	TORNILLO AVELLANADO		
17	4002698	4	CYLINDER SCREW ISO 4762 M6X45 10.9 A2	TORNILLO CILINDRICO		
18	4601163	4	WASHER ISO 7092 6 -200HV ST A3C	ARANDELA		
19	10009330	1	PROXIMITY SWITCH ⇨ ❑ 253	DETECTOR DE PROXIMIDAD		2
20	10340098	1	HOSE	TUBO GOMA		2

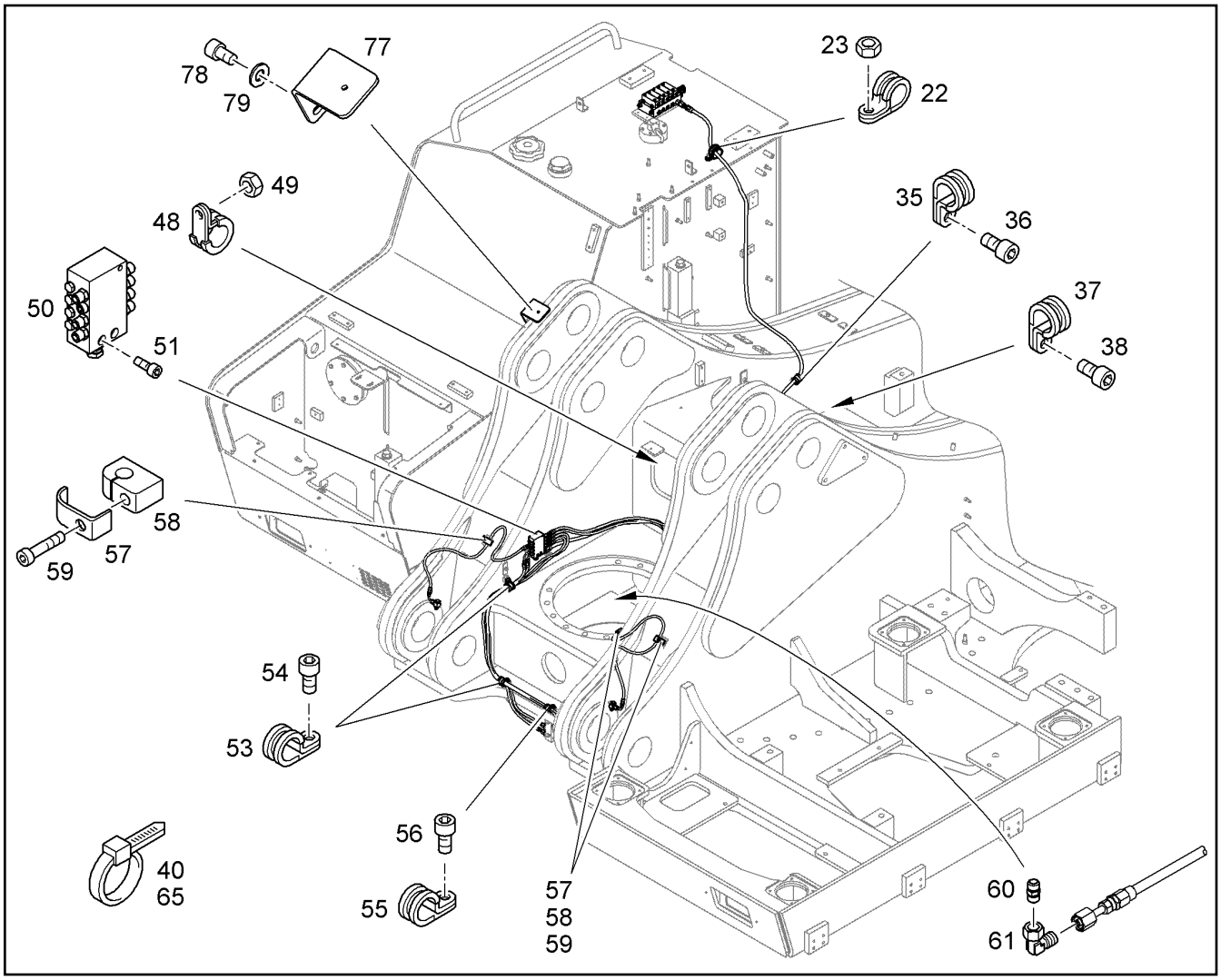

Pos.	Item	Quantity	Description	Descripción	Serie	K
22	7366260	1	CLAMP DIN 3016 D1- 34 X 20 W1-2-CR	ABRAZADERA		
23	4901573	1	HEX NUT M8	TUERCA HEXAGONAL		
35	7362665	2	CLAMP DIN 3016 D1- 20 X 20 W1-2-CR	ABRAZADERA		
36	4043082	2	CYLINDER SCREW ISO 4762 M8X20 10.9 A2	TORNILLO CILINDRICO		
37	7361498	1	CLAMP DIN 3016 D1- 15 X 15 W1-2-CR	ABRAZADERA		
38	4043082	1	CYLINDER SCREW ISO 4762 M8X20 10.9 A2	TORNILLO CILINDRICO		
40	7005587	2	CABLE TIE	BRIDAS		
48	7362665	1	CLAMP DIN 3016 D1- 20 X 20 W1-2-CR	ABRAZADERA		
49	4901573	1	HEX NUT M8	TUERCA HEXAGONAL		
50	10293016	1	DISTRIBUTION BLOCK MX-F 4/7 ⇨ ❑ 248	COMBINACIÓN DE DISTRIB.		2
51	4902262	2	CYLINDER SCREW ISO 4762 M5X35 10.9 A2	TORNILLO CILINDRICO		
53	7362665	2	CLAMP DIN 3016 D1- 20 X 20 W1-2-CR	ABRAZADERA		
54	4902254	2	CYLINDER SCREW ISO 4762 M8X12 10.9 A2	TORNILLO CILINDRICO		
55	7362603	1	CLAMP DIN 3016-1 D1 15X20 W1-2-CR	ABRAZADERA		
56	4902254	1	CYLINDER SCREW ISO 4762 M8X12 10.9 A2	TORNILLO CILINDRICO		
57	10037723	3	BRACKET	ESTRIBO		
58	10037728	3	CLAMP	ABRAZADERA		
59	4902267	3	CYLINDER SCREW ISO 4762 M6X25 10.9 A2	TORNILLO CILINDRICO		
60	10000277	1	SCREW-ON CONNECTION	ESPIGA MACHO		
61	247021702	1	SCREW FITTING EW 6L	ATORNILLAMIENTO		
65	7005587	6	CABLE TIE	BRIDAS		
77	10072688	1	CONSOLE	CONSOLA		1
78	4043122	2	CYLINDER SCREW ISO 4762 M10X20 10.9	TORNILLO CILINDRICO		
79	10289795	2	WASHER ISO 7089 10 300HV	ARANDELA		

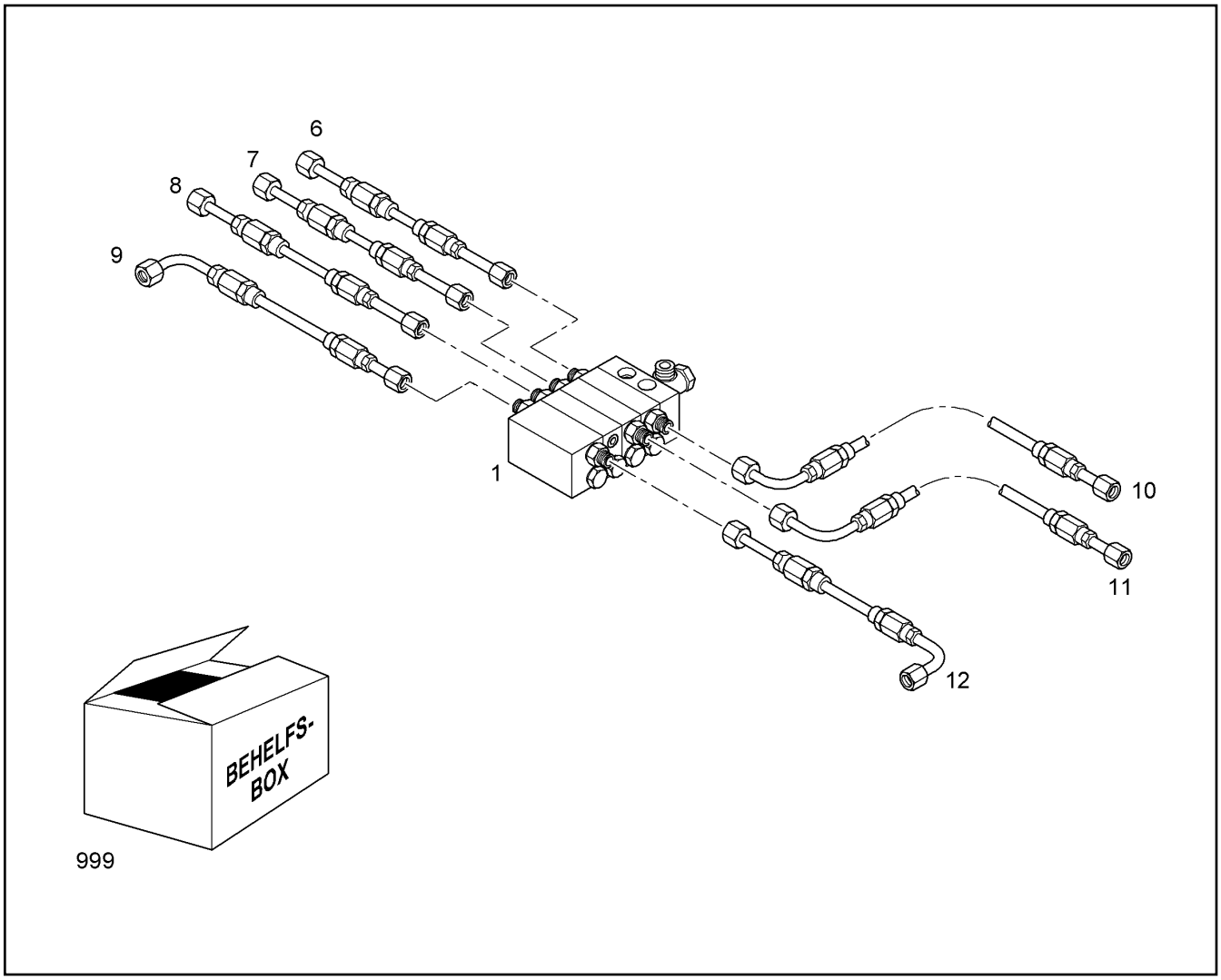

Pos.	Item	Quantity	Description	Descripción	Serie	K
1	10293018	1	DISTRIBUTION BLOCK MX-F 4/7 ⇨ ❑ 254	COMBINACIÓN DE DISTRIB.		2
6	10293162	1	HOSE	TUBO GOMA		2
7	10293163	1	HOSE	TUBO GOMA		2
8	10293164	1	HOSE	TUBO GOMA		2
9	10293165	1	HOSE	TUBO GOMA		2
10	10293166	1	HOSE	TUBO GOMA		2
11	10293169	1	HOSE	TUBO GOMA		2
999	10014611	1	AUXILIARY BOX ⇨ ❑ 257	CAJA AUXILIAR		

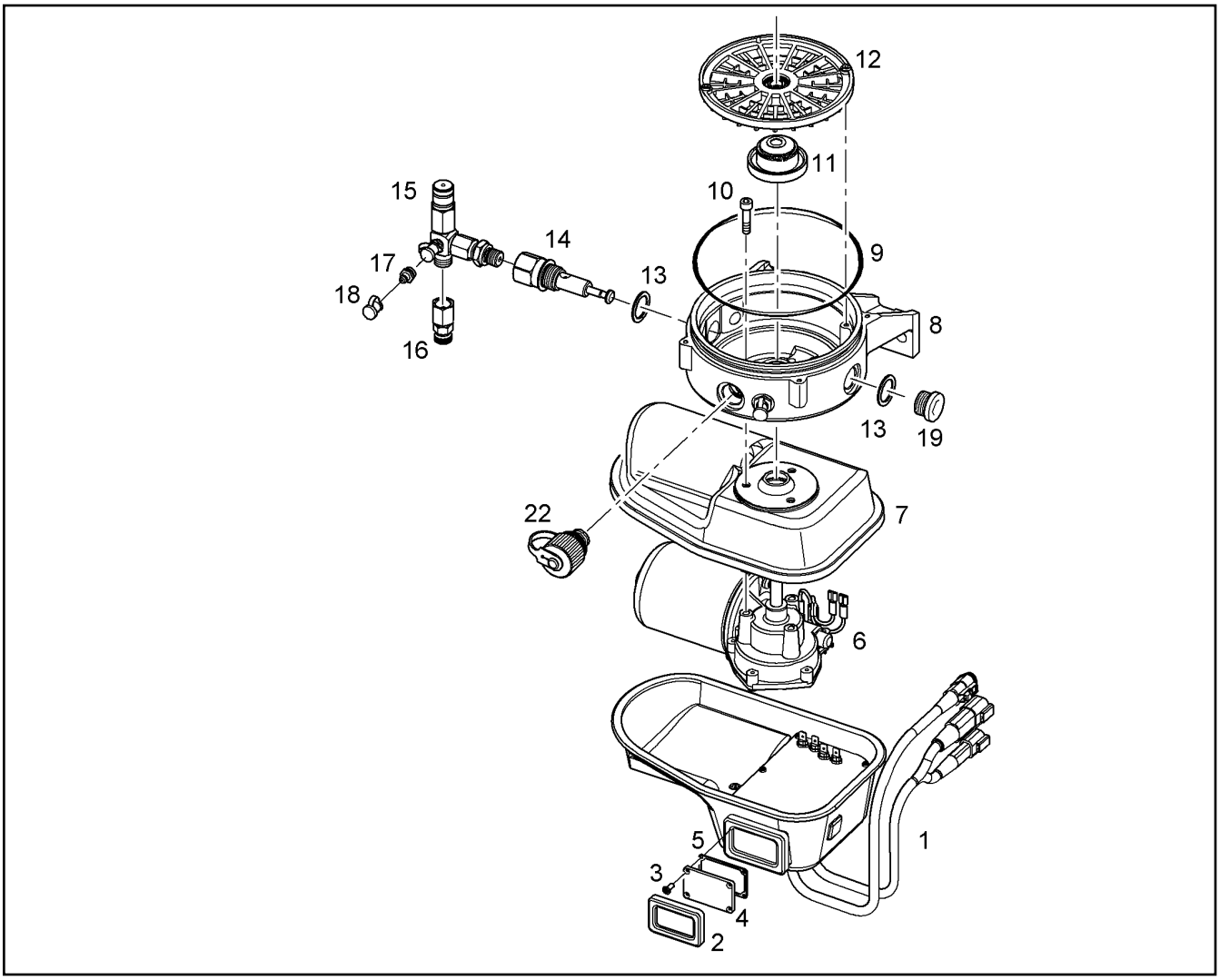

Pos.	Item	Quantity	Description	Descripción	Serie	K
1	10424598	1	MOTOR HOUSING	CARCASA MOTOR		
2	10014687	1	WINDOW FRAME	MARCO VENTANA		1
3	101236050	4	COUNTERSUNK SCREW ISO 7046 M3X8 8.8	TORNILLO AVELLANADO		
4	10014683	1	WINDOW	VENTANA		1
5	10014682	1	SEAL	JUNTA		1
6	10014691	1	DIRECT-CURRENT MOTOR 24V	MOTOR DE CONTINUA		2
7	10014692	1	MOTOR HOUSING	CARCASA MOTOR		
8	10014693	1	PUMP HOUSING	CARTER DE BOMBA		
9	10014694	1	O-RING 140X3	JUNTA TORICA		
10	4042003	3	CYLINDER SCREW ISO 4762 M6x25 8.8 A2C	TORNILLO CILINDRICO		
11	10014729	1	DRIVER	ARRASTRE		
12	10014730	1	INTERMEDIATE RING	ANILLO INTERMEDIO		
13	10014697	2	SEALING RING	JUNTA ANULAR		1
14	10216340	1	PUMP ELEMENT PE-120	ELEMENTO DE BOMBA		
15	10424599	1	OVERPRESSURE VALVE	VALVULA SOBREPRESION		
16	10424588	1	REDUCING SCREW	ATORNILLAMIENTO REDUCCIO		
17	571578608	1	GREASE NIPPLE DIN 71412 A M10x1k	ENGRASADOR		
18	10014701	1	GREASE NIPPLE CAP	TAPA DE ENGRASADOR		
19	4041102	1	SCREW PLUG DIN 910 M20X1,50 ST	TORNILLO DE CIERRE		
22	7029283	1	FILLING CONNECTION	CONEXION DE LLENADO		

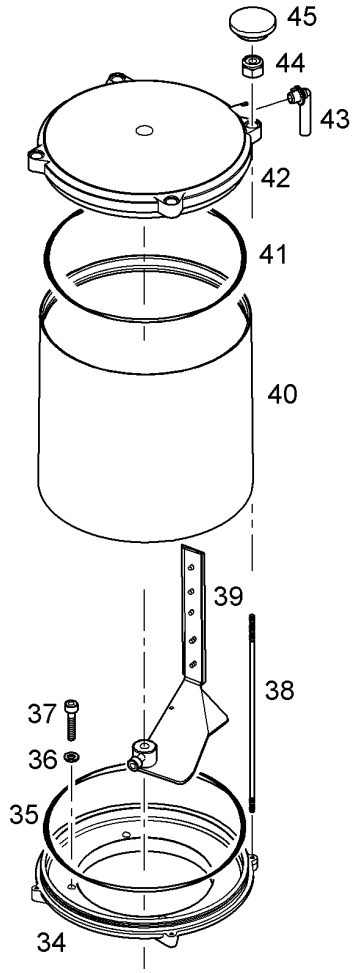

Pos.	Item	Quantity	Description	Descripción	Serie	K
34	10016655	1	INTERMEDIATE FLANGE	BRIDA INTERMEDIA		
35	10016657	1	O-RING 209,14X3,53	JUNTA TORICA		1
36	10016656	4	SEALING RING 4X8X1	JUNTA ANULAR		1
37	404200701	4	CYLINDER SCREW ISO 4762 M4x20 8.8 A2C	TORNILLO CILINDRICO		
38	10016661	4	PULL ROD	BARRA TRACCION		
39	10016658	1	AGITATOR PADDLE	PALETA AGITADORA		1
40	10016659	1	TRANSPARENT CONTAINER	DEPOSITO TRANSPARENTE		
40	10016660	1	STICKER	ADHESIVO		
41	10016657	1	O-RING 209,14X3,53	JUNTA TORICA		1
42	10016663	1	CONTAINER COVER	TAPA RECIPIENTE		
43	10016664	1	VENTILATION TUBE	TUBO PURGADOR		
44	413412301	4	HEX NUT M4	TUERCA HEXAGONAL		
45	10016665	4	COVER	CUBIERTA		

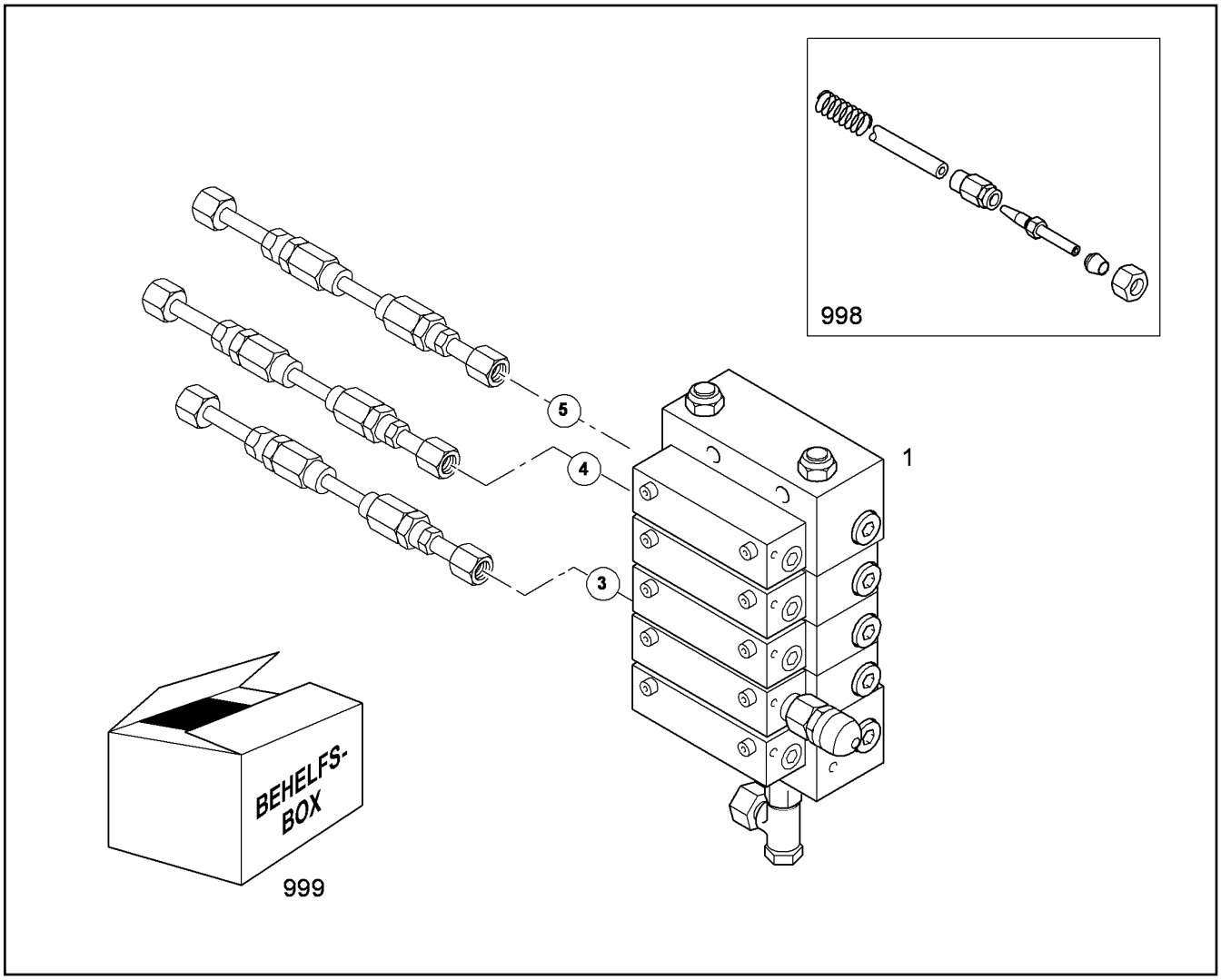

Pos.	Item	Quantity	Description	Descripción	Serie	K
1	10489277	1	DISTRIBUTION BLOCK SXE-2 5/3 ⇨ ❑ 252	COMBINACIÓN DE DISTRIB.		2
998	9064786	1	CONNECTING ELEMENT ⇨ ❑ 255	BASE DE FIJACION		
999		1	AUXILIARY BOX ⇨ ❑ 257	CAJA AUXILIAR		

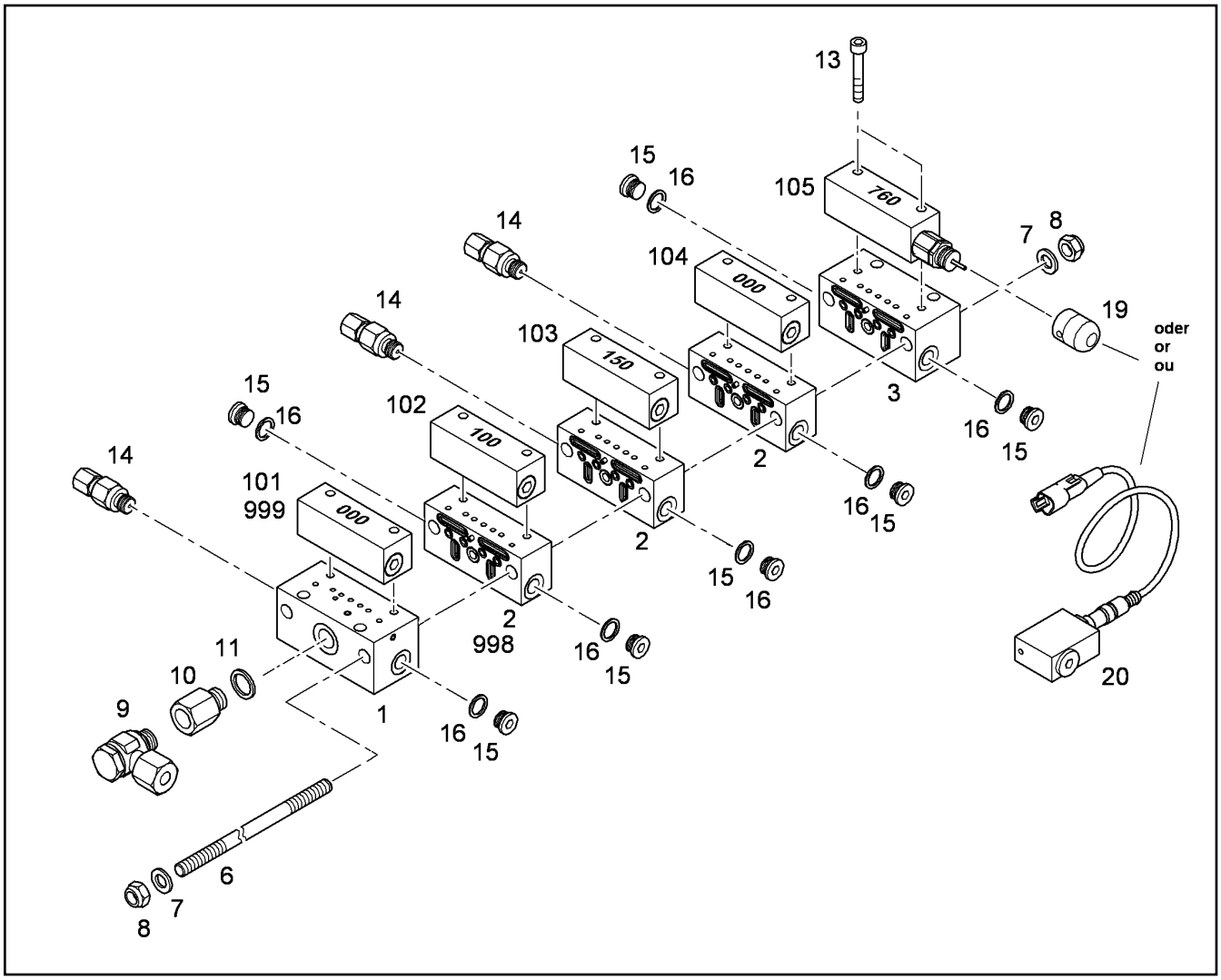

Pos.	Item	Quantity	Description	Descripción	Serie	K
1	10013835	1	STARTING ELEMENT SXE-2	ELEMENTO INICIAL		2
2	10013837	3	CENTRAL ELEMENT SXE-2	ELEMENTO INTERMEDIO		2
3	10013839	1	END ELEMENT SXE-2	ELEMENTO FINAL		2
6	10013858	2	PULL ROD M8X163	BARRA TRACCION		
7	10289803	4	WASHER ISO 7089 8 300HV	ARANDELA		
8	4901573	4	HEX NUT M8	TUERCA HEXAGONAL		
9	7412734	1	HINGED THREADED UNION	ATORNILLAMIENTO ORIENTABL		
10	10009602	1	EXTENSION	PROLONGADOR		
11	4600544	1	SEALING RING DIN 7603 A 13 X 17 CU	JUNTA ANULAR		1
13	404202508	10	CYLINDER SCREW ISO 4762 M5X35 8.8 A2C	TORNILLO CILINDRICO		
14	10009606	3	VALVE GUIDE	SALIDA		2
15	7001338	7	SCREW PLUG VSTI G1/8A	TORNILLO DE CIERRE		1
16	7101003	7	SEALING RING DIN 7603 A 10 X 13,5 CU	JUNTA ANULAR		1
19	10009596	1	COVER	CUBIERTA		
20	10009330	1	PROXIMITY SWITCH ⇨ ❑ 253	DETECTOR DE PROXIMIDAD		2
101	10013840	1	PROPORTIONING ELEMENT SXE-2 000	ELEMENTO DOSIFICADOR		2
102	10013841	1	PROPORTIONING ELEMENT SXE-2 100	ELEMENTO DOSIFICADOR		2
103	10013842	1	PROPORTIONING ELEMENT SXE-2 150	ELEMENTO DOSIFICADOR		2
104	10013840	1	PROPORTIONING ELEMENT SXE-2 000	ELEMENTO DOSIFICADOR		2
105	10013853	1	PROPORTIONING ELEMENT SXE-2 760	ELEMENTO DOSIFICADOR		2
998	10018373	1	O-RING	JUEGO ANILLOS TÓRICOS		1
999	10018375	1	O-RING	JUEGO ANILLOS TÓRICOS		1

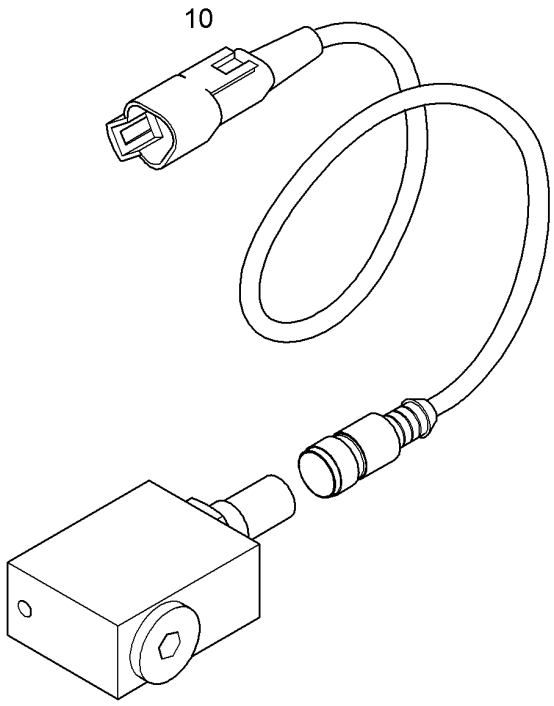

Pos.	Item	Quantity	Description	Descripción	Serie	K
10	10013884	1	CONNECTING LINE 3X2,5 5m DT04-3P	CABLE DE CONEXION		2
10	10014589	1	CONNECTING LINE 3X2,5 0,80m DT04-3P	CABLE DE CONEXION		2

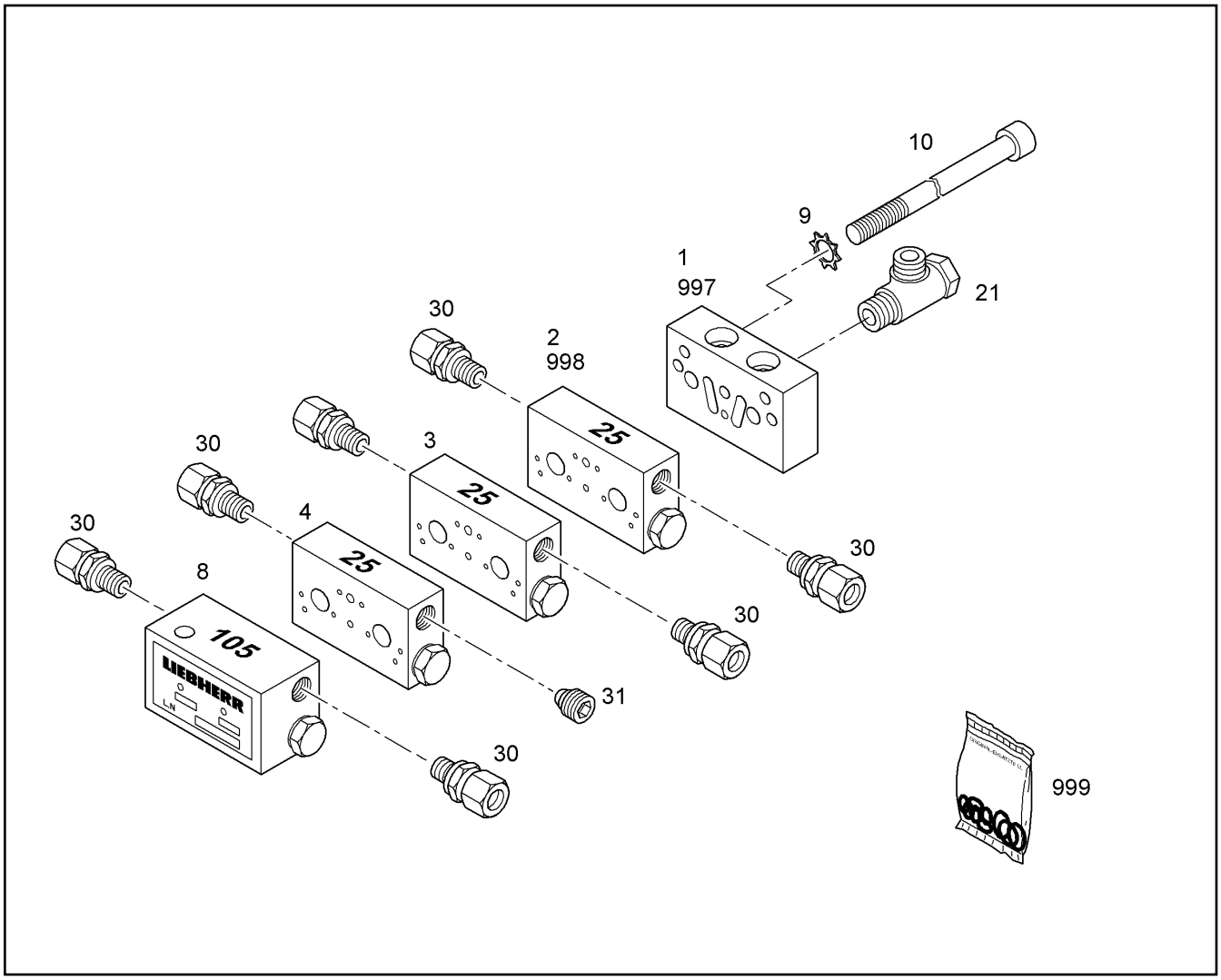

Pos.	Item	Quantity	Description	Descripción	Serie	K
1	7027937	1	STARTING ELEMENT MX-F	ELEMENTO INICIAL		2
2	7027938	1	CENTRAL ELEMENT MX-F 25	ELEMENTO INTERMEDIO		2
3	7027938	1	CENTRAL ELEMENT MX-F 25	ELEMENTO INTERMEDIO		2
4	7027938	1	CENTRAL ELEMENT MX-F 25	ELEMENTO INTERMEDIO		2
8	7027945	1	END ELEMENT MX-F 105	ELEMENTO FINAL		2
9	4002259	2	TOOTH LOCK WASHER DIN 6797 A 6,2 A3C	ARANDELA DENTADA		
10	4002418	2	CYLINDER SCREW ISO 4762 M6x65 8.8 A2C	TORNILLO CILINDRICO		
21	10009054	1	BANJO COUPLING WSV 8LL M10X1	RACOR ORIENTABLE EN ANGUL		
30	7622803	7	NON-RETURN VALVE	VALVULA DE RETENCION		2
31	774378208	1	SCREW PLUG	TORNILLO DE CIERRE		
997	10021311	1	SEAL KIT ⇨ ❑ 260	JUEGO DE JUNTAS		1
998	10021310	1	SEAL KIT ⇨ ❑ 259	JUEGO DE JUNTAS		1
999	10021308	1	O-RING	JUEGO ANILLOS TÓRICOS		1

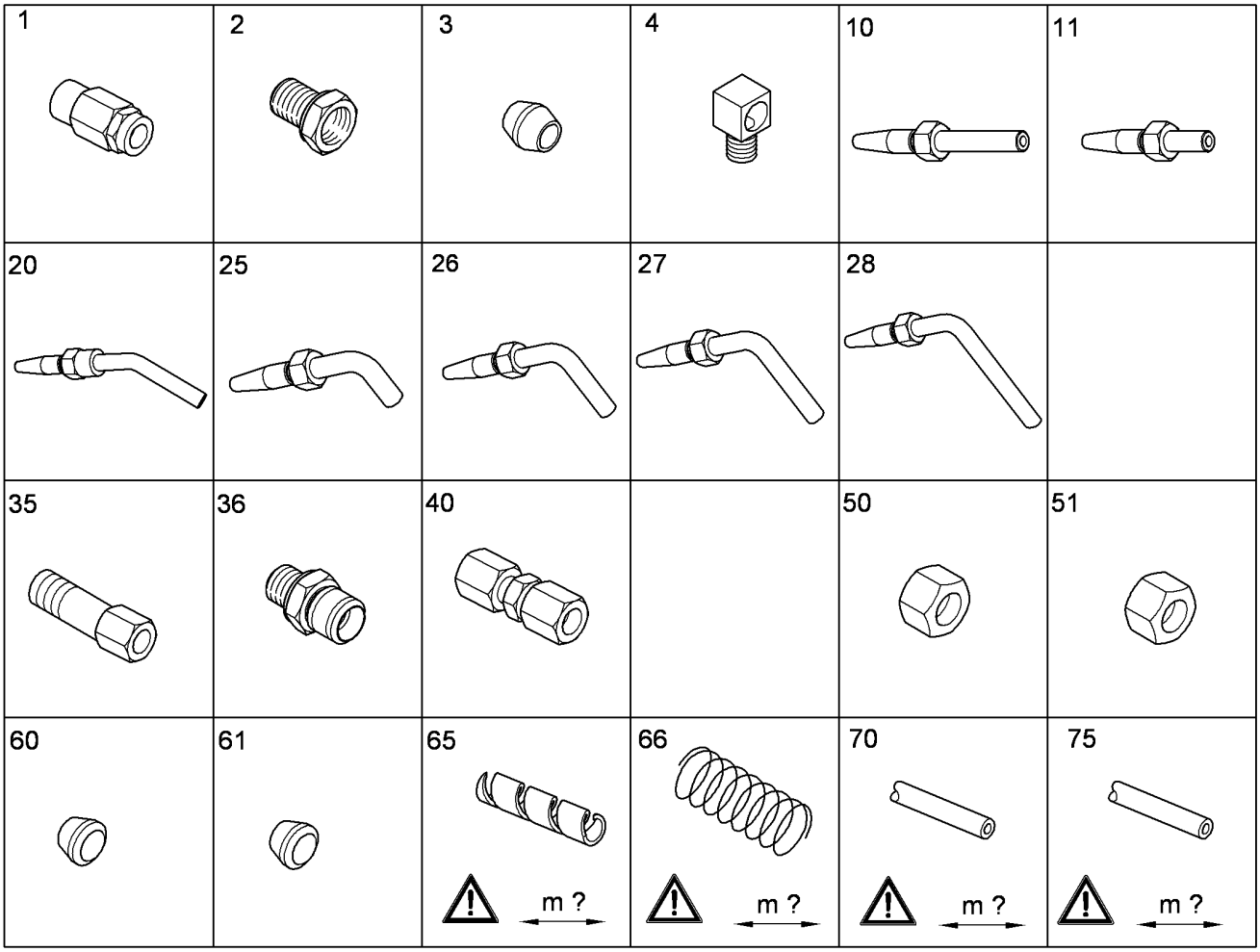

Pos.	Item	Quantity	Description	Descripción	Serie	K
1	774376008	1	SCREW SLEEVE DN6	MANGUITO ROSCADO		
2	7027675	1	MALE FITTING FOR PIPES M10X1	TAPON ROSCADO		
3	7027946	1	DOUBLE TAPER RING DKR 6	ARO CONICO DOBLE		
4	774373608	1	SCREW FITTING M10X1K-M10X1	ATORNILLAMIENTO		
10	774371808	1	HOSE UNION DN6 STAHL	ESPIGA MACHO MANGUERA		
11	7624177	1	PIPE SOCKET DN6	APOYO DE TUBO		
20	7623705	1	PIPE SOCKET 45° D6	APOYO DE TUBO		
25	7623704	1	PIPE SOCKET 90°-21MM D6	APOYO DE TUBO		
26	10027260	1	PIPE SOCKET 90°-33MM D6	APOYO DE TUBO		
27	511701914	1	PIPE SOCKET 90°-38MM D6	APOYO DE TUBO		
28	7623707	1	PIPE SOCKET 90°-50MM D6	APOYO DE TUBO		
35	774373408	1	EXTENSION M10X1K-M10X1	PROLONGADOR		
35	7027714	1	EXTENSION	PROLONGADOR		
36	7026654	1	SCREW COUPLING	RACOR ENCHUFABLE RECTO		
40	774374208	1	SCREW FITTING G 6LL	ATORNILLAMIENTO		
50	4774024	1	UNION NUT DIN 3870 A L 6 A3C	TUERCA UEWF		
51	4600342	1	BOX NUT DIN 3870 A 6LL	TUERCA RACOR		
60	4771000	1	CUTTING RING DIN 3861 S 6 ST	ANILLO CORTANTE		
61	4600341	1	CUTTING RING DIN 3861 LL 6	ANILLO CORTANTE		
65	774383508	1m	TUBING COIL	TUBO HELICOIDAL		
66	10011996	1m	ANTI-KINK DEVICE SPIRAL	ESPIRAL PROTECTORA DOBLE		
70	774376108	1m	HIGH PRESSURE HOSE	MANGUERA ALTA PRESION		
75	774373708	1m	TUBE	TUBO		

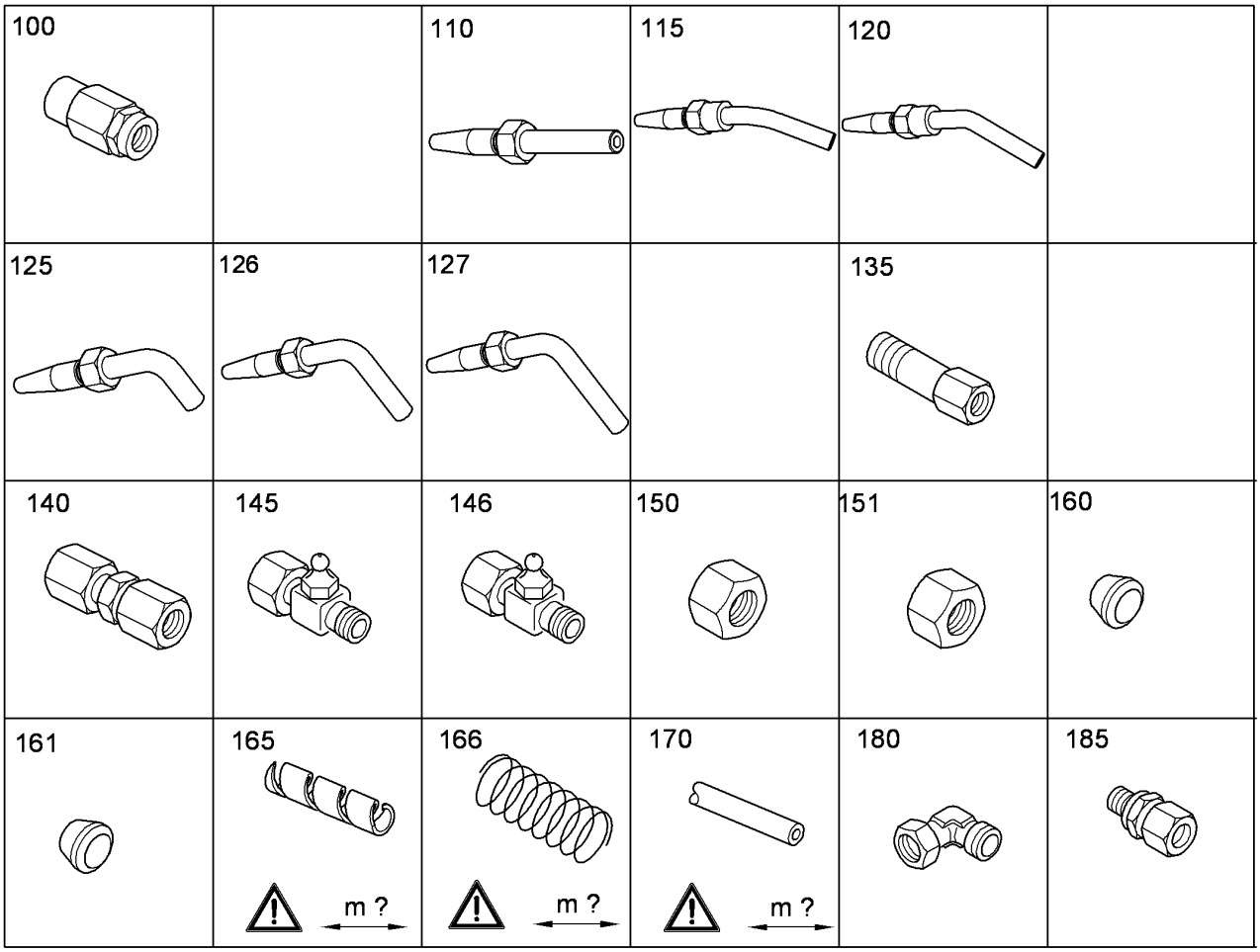

Pos.	Item	Quantity	Description	Descripción	Serie	K
100	10012024	1	SCREW SLEEVE DN6,5 ST	MANGUITO ROSCADO		
110	10011995	1	PIPE SOCKET DN8	APOYO DE TUBO		
115	10412844	1	PIPE SOCKET 15°D8	APOYO DE TUBO		
120	10040776	1	PIPE SOCKET 45° D8	APOYO DE TUBO		
125	10040777	1	PIPE SOCKET DN8	APOYO DE TUBO		
126	10040778	1	PIPE SOCKET DN8	APOYO DE TUBO		
127	10040779	1	PIPE SOCKET DN8	APOYO DE TUBO		
135	774373408	1	EXTENSION M10X1K-M10X1	PROLONGADOR		
140	10014575	1	STRAIGHT COUPLING G8 L	RACOR RECTO		
145	10220950	1	SCREW FITTING 6L	ATORNILLAMIENTO		
145	10342221	1	SCREW FITTING 6LL	ATORNILLAMIENTO		
146	10220951	1	SCREW FITTING 8L	ATORNILLAMIENTO		
146	10330614	1	SCREW FITTING 8LL	ATORNILLAMIENTO		
150	4900507	1	UNION NUT DIN 3870 A L 8 A3C	TUERCA UEWF		
151	10013550	1	UNION NUT	TUERCA UEWF		
160	4771020	1	CUTTING RING DIN 3861 L 8 ST	ANILLO CORTANTE		
161	10013545	1	CUTTING RING	ANILLO CORTANTE		
165	774383508	1m	TUBING COIL	TUBO HELICOIDAL		
166	10011996	1m	ANTI-KINK DEVICE SPIRAL	ESPIRAL PROTECTORA DOBLE		
170	10043525	1m	HOSE NW 6,5	TUBO GOMA		
180	774373808	1	SCREW FITTING WE 6LL	ATORNILLAMIENTO		
185	491035414	1	SCREW FITTING M6K	ATORNILLAMIENTO		
185	774376508	1	PIPE UNION M10X1K	RACOR PARA ENROSCAR		

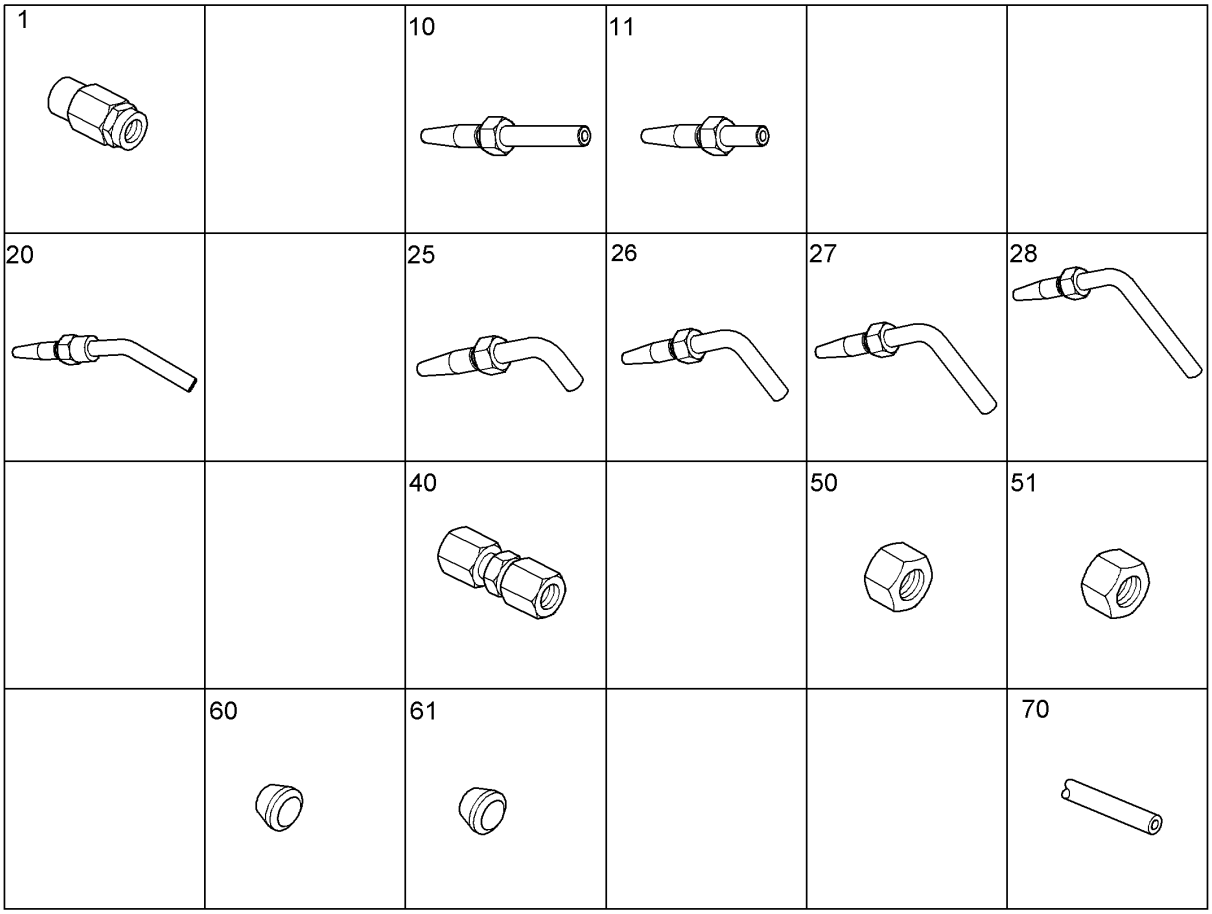

Pos.	Item	Quantity	Description	Descripción	Serie	K
1	774376008	31	SCREW SLEEVE DN6	MANGUITO ROSCADO		
10	774371808	10	HOSE UNION DN6 STAHL	ESPIGA MACHO MANGUERA		
11	7624177	5	PIPE SOCKET DN6	APOYO DE TUBO		
20	7623705	6	PIPE SOCKET 45° D6	APOYO DE TUBO		
25	7623704	4	PIPE SOCKET 90°-21MM D6	APOYO DE TUBO		
26	10027260	4	PIPE SOCKET 90°-33MM D6	APOYO DE TUBO		
27	511701914	4	PIPE SOCKET 90°-38MM D6	APOYO DE TUBO		
28	7623707	2	PIPE SOCKET 90°-50MM D6	APOYO DE TUBO		
40	774374208	6	SCREW FITTING G 6LL	ATORNILLAMIENTO		
50	4774024	10	UNION NUT DIN 3870 A L 6 A3C	TUERCA UEWF		
51	4600342	10	BOX NUT DIN 3870 A 6LL	TUERCA RACOR		
60	4771000	10	CUTTING RING DIN 3861 S 6 ST	ANILLO CORTANTE		
61	4600341	10	CUTTING RING DIN 3861 LL 6	ANILLO CORTANTE		
70	774376108	15m	HIGH PRESSURE HOSE	MANGUERA ALTA PRESION		

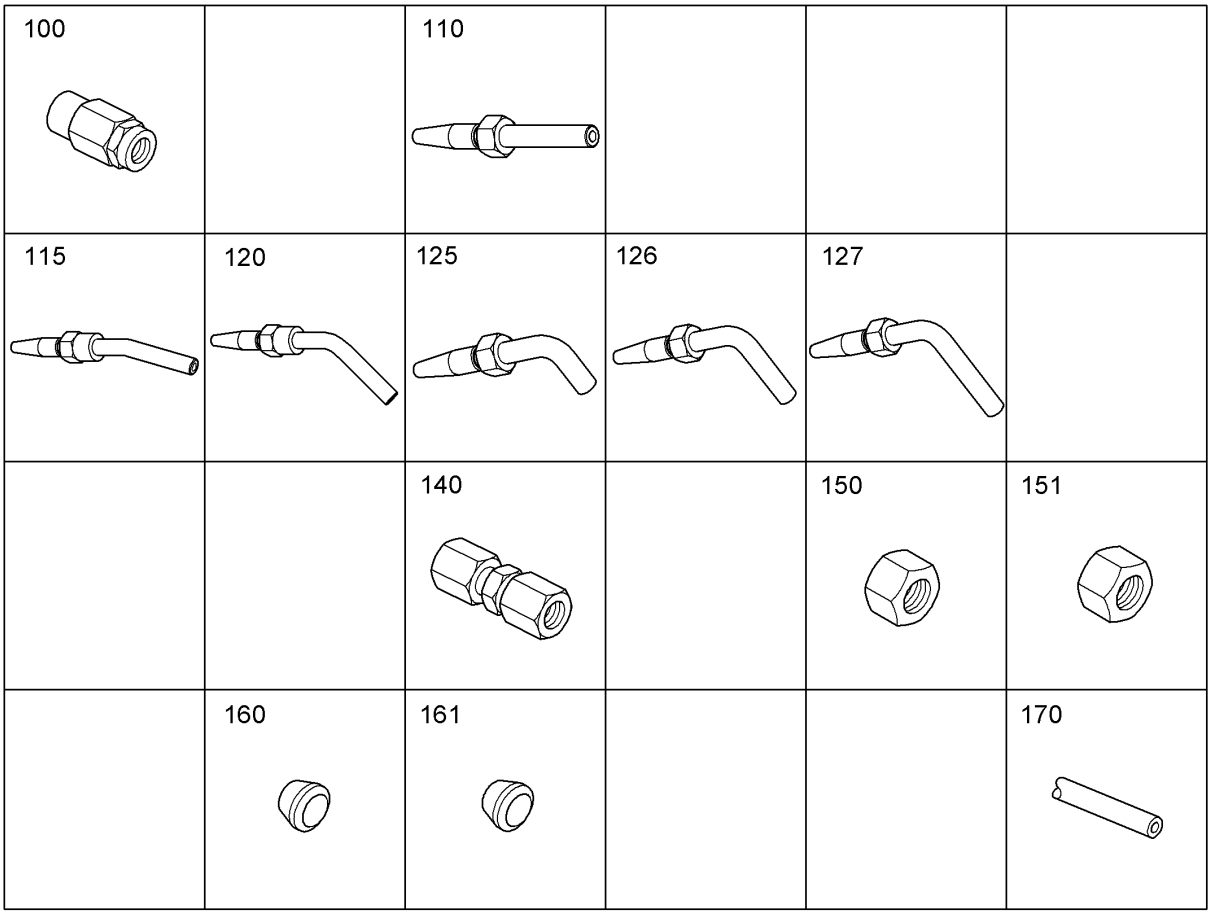

Pos.	Item	Quantity	Description	Descripción	Serie	K
100	10012024	6	SCREW SLEEVE DN6,5 ST	MANGUITO ROSCADO		
110	10011995	6	PIPE SOCKET DN8	APOYO DE TUBO		
115	10412844	2	PIPE SOCKET 15°D8	APOYO DE TUBO		
120	10040776	2	PIPE SOCKET 45° D8	APOYO DE TUBO		
125	10040777	2	PIPE SOCKET DN8	APOYO DE TUBO		
126	10040778	2	PIPE SOCKET DN8	APOYO DE TUBO		
127	10040779	2	PIPE SOCKET DN8	APOYO DE TUBO		
140	10014575	3	STRAIGHT COUPLING G8 L	RACOR RECTO		
150	4900507	10	UNION NUT DIN 3870 A L 8 A3C	TUERCA UEWF		
151	10013550	10	UNION NUT	TUERCA UEWF		
160	4771020	10	CUTTING RING DIN 3861 L 8 ST	ANILLO CORTANTE		
161	10013545	10	CUTTING RING	ANILLO CORTANTE		
170	10043525	10m	HOSE NW 6,5	TUBO GOMA		

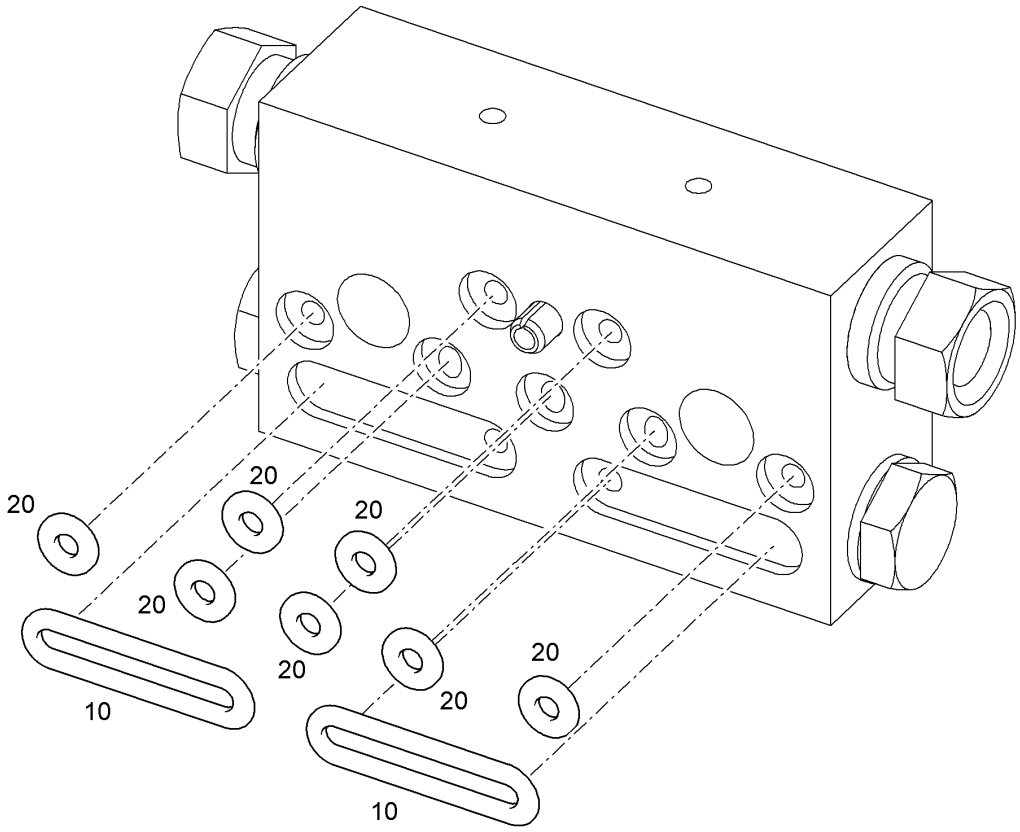

Pos.	Item	Quantity	Description	Descripción	Serie	K
10		2	O-RING 11,5X1,5	JUNTA TORICA		1
20		7	O-RING 2X1,5	JUNTA TORICA		1

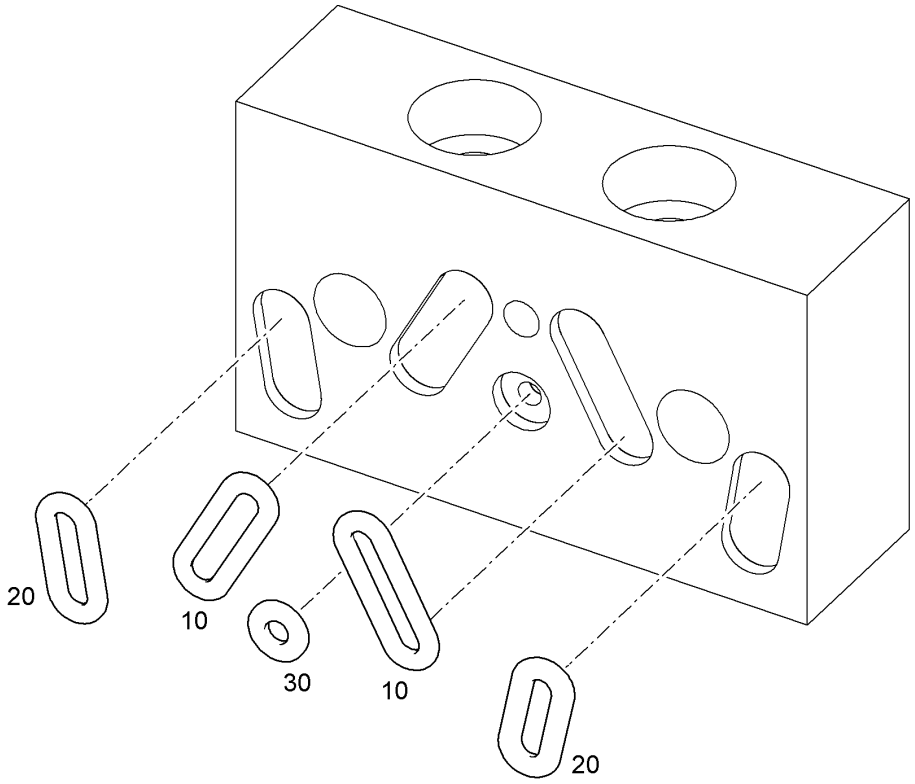

Pos.	Item	Quantity	Description	Descripción	Serie	K
10		2	O-RING 7,5X1,5	JUNTA TORICA		1
20		2	O-RING 6X1,5	JUNTA TORICA		1
30		1	O-RING 2X1,5	JUNTA TORICA		1

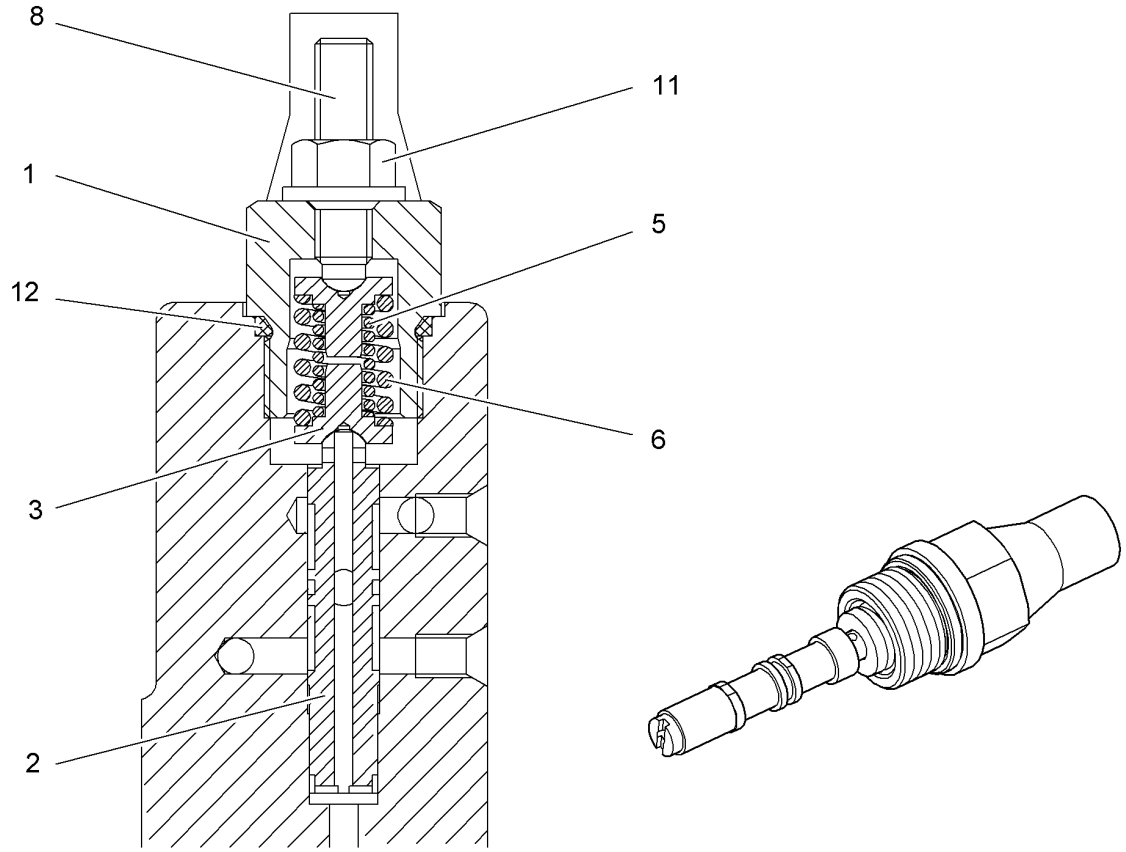

Pos.	Item	Quantity	Description	Descripción	Serie	K
1	7369951	1	SCREW PLUG	TORNILLO DE CIERRE		
2	10292073	1	SPOOL	PISTON DE MANDO		2
3	7372258	2	SPRING SUPPORT	PLATILLO DE RESORTES		
5	7372254	1	PRESSURE SPRING	MUELLE COMPRESION		
6	7023708	1	PRESSURE SPRING	MUELLE COMPRESION		
8	7369959	1	GRUB SCREW M8	TORNILLO PRISIONERO		
11	7372252	1	SEAL LOCK NUT M8	TUERCA SEAL-LOCK		
12	7023765	1	O-RING 18,72X2,62	JUNTA TORICA		1

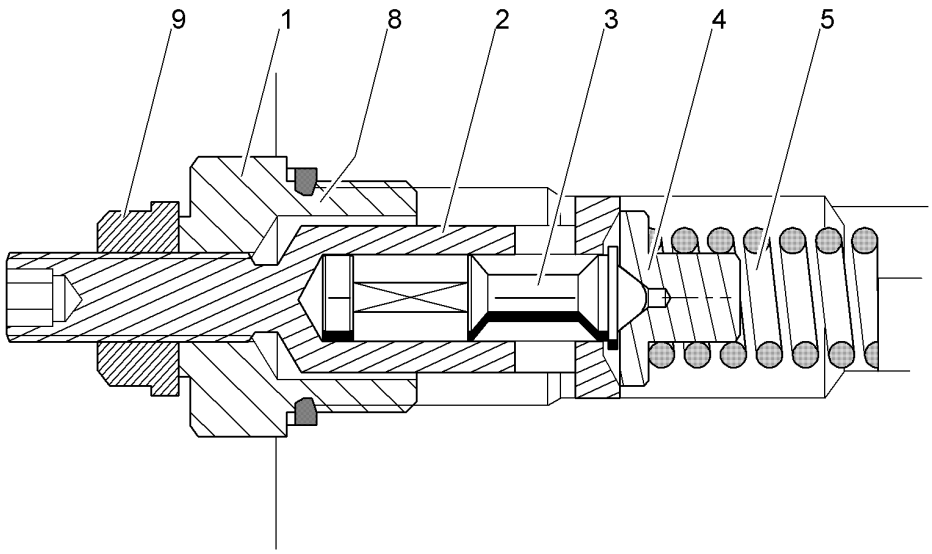

Pos.	Item	Quantity	Description	Descripción	Serie	K
1	10220646	1	SCREW PLUG	TORNILLO DE CIERRE		
2	10220647	1	ADJUSTING SCREW	TORNILLO DE REGULACION		
3	7028148	1	VALVE PISTON	PISTON DE VALVULA		1
4	7028149	1	SPRING SUPPORT	PLATILLO DE RESORTES		
5	10216810	1	PRESSURE SPRING	MUELLE COMPRESION		
8	7028151	1	O-RING 23,47X2,62	JUNTA TORICA		1
9	7014529	1	SEAL-LOCK-SHOULDER NUT M10	TUERCA CON COLLAR SEALLOC		

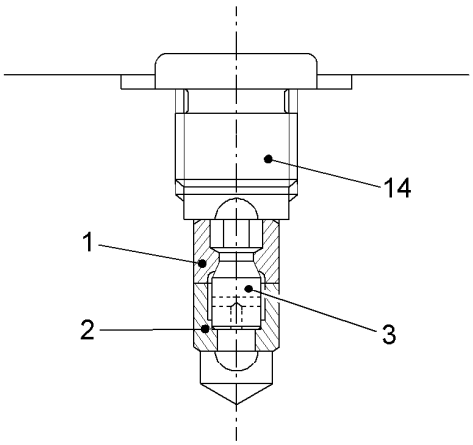

Pos.	Item	Quantity	Description	Descripción	Serie	K
1	7615604	1	THROTTLE SCREW	TORNILLO ESTRANGULADOR		
2	7615603	1	THROTTLE SCREW	TORNILLO ESTRANGULADOR		
3	7025515	1	PIN	PASADOR ESTRANGULADOR		
14	7363125	1	SCREW PLUG ⇨ ❑ 760	TORNILLO DE CIERRE		

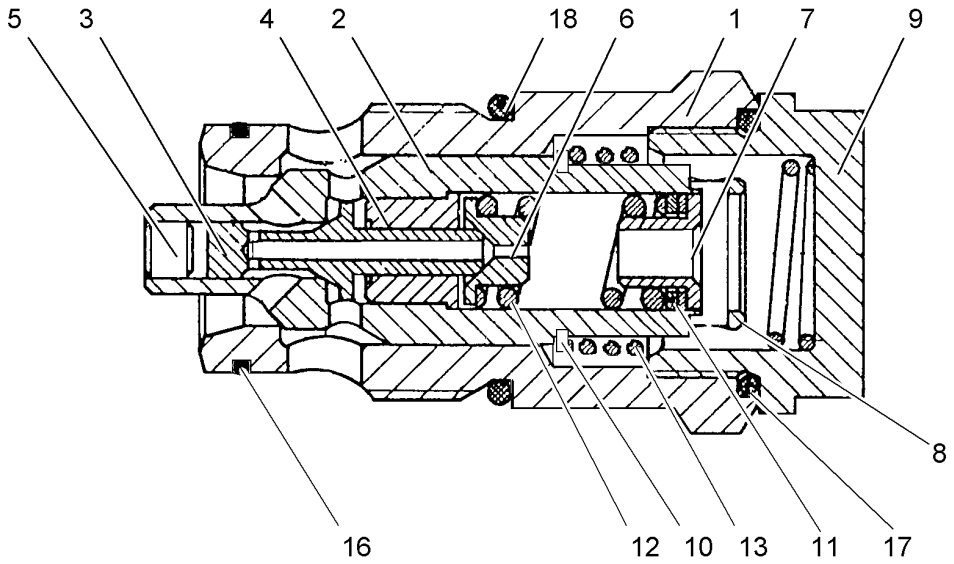

Pos.	Item	Quantity	Description	Descripción	Serie	K
1	10333248	1	VALVE BUSH	CASQUILLO DE VALVULA		1
2	10333252	1	PISTON	EMBOLO		1
3	10115005	1	VALVE PISTON	PISTON DE VALVULA		1
4	10115007	1	GUIDE BUSH	CASQUILLO GUIA		1
5	10300923	1	STOP PLUG	TAPON		1
6	10115009	1	SPRING SUPPORT	PLATILLO DE RESORTES		
7	10115013	1	SPRING SUPPORT	PLATILLO DE RESORTES		
8	10115022	1	HOLDING PIN	PASADOR DE SUJECION		1
9	10333250	1	SCREW PLUG	TORNILLO DE CIERRE		1
10	10333251	1	RING	ANILLO EN V SEEGER		
11	4002831	1	SHIM RING DIN 988 10 X 16X 0,3	ARANDELA AJUSTE		
11	10008049	1	SHIM RING DIN 988 10 X 16X 1	ARANDELA AJUSTE		
11	4980036	1	SHIM RING DIN 988 10 X 16X 0,5	ARANDELA AJUSTE		
12	570036608	1	PRESSURE SPRING	MUELLE COMPRESION		
13	10333253	1	PRESSURE SPRING	MUELLE COMPRESION		
16	7028151	1	O-RING 23,47X2,62	JUNTA TORICA		1
17	10333232	1	O-RING 29,82	JUNTA TORICA		1
18	10298634	1	O-RING	JUNTA TORICA		1

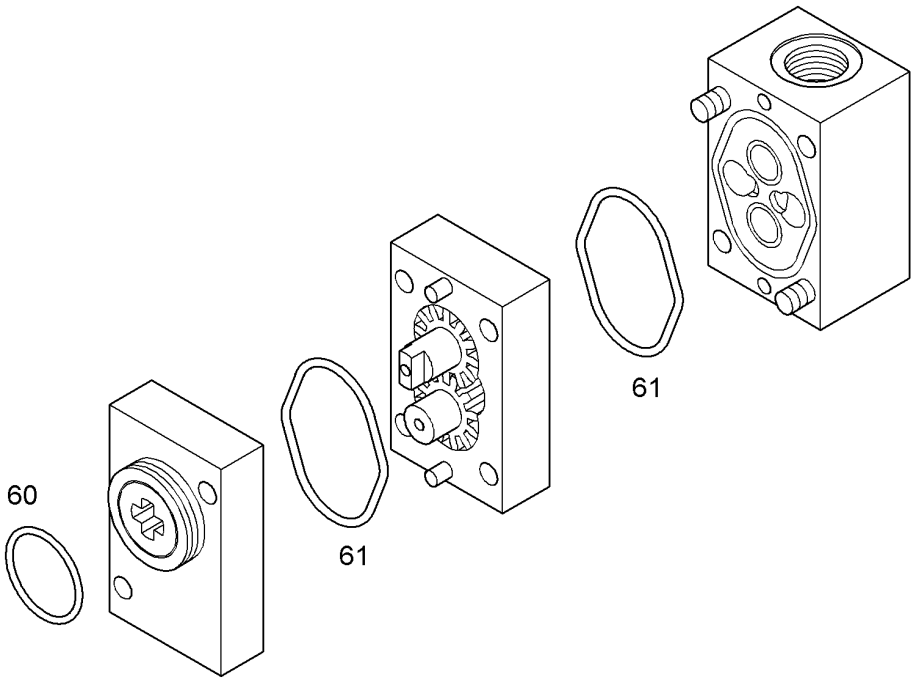

Pos.	Item	Quantity	Description	Descripción	Serie	K
60		1	O-RING	JUNTA TORICA		1
61		2	O-RING	JUNTA TORICA		1

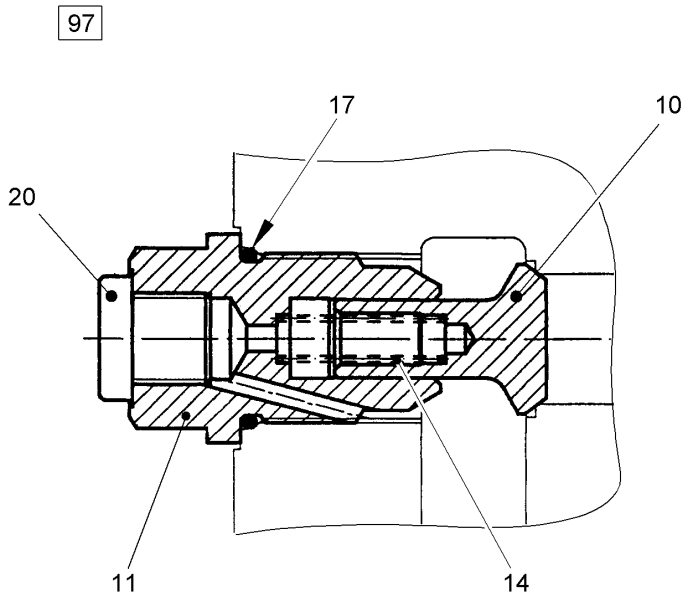

Pos.	Item	Quantity	Description	Descripción	Serie	K
10	9889004	1	TAPER	CONO		
11	9889005	1	VSL-SCREW	TORNILLO DE CIERRE		
14	7382063	1	PRESSURE SPRING 0,80/ 6,30x27,40	MUELLE COMPRESION		
17	7380615	1	O-RING	JUNTA TORICA		1
20	7363125	1	SCREW PLUG ⇨ ❑ 760	TORNILLO DE CIERRE		
97	9268642	1	SEAL KIT SHUTTLE VALVE ⇨ ❑ 240	JJ VÁLVULA MÚLTIPLES VÍAS		1

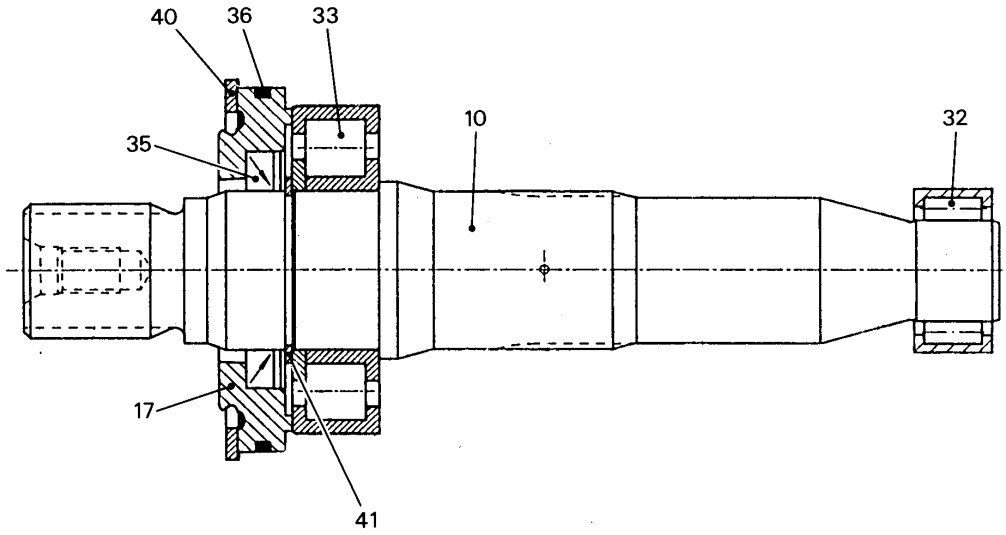

Pos.	Item	Quantity	Description	Descripción	Serie	K
10	9271552	1	DRIVING SHAFT	EJE MOTOR		1
17	9265049	1	CLOSING RING	ANILLO DE CIERRE		
32	7380090	1	CYLINDRICAL ROLLER BEARING	RODAMIENTO RODILLO CILINDR		1
33	7380021	1	CYLINDRICAL ROLLER BEARING	RODAMIENTO RODILLO CILINDR		1
35	10014508	1	ROTARY SHAFT LIP SEAL ASX35X52X6 ⇨ ❑ 6	RETEN RADIAL		2
36	7380599	1	O-RING	JUNTA TORICA		1
40	4281013	1	LOCKING RING DIN 472 80 X2,5	ANILLO SEGURIDAD		
41	4280027	1	LOCKING RING DIN 471 35 X1,5	ANILLO SEGURIDAD		

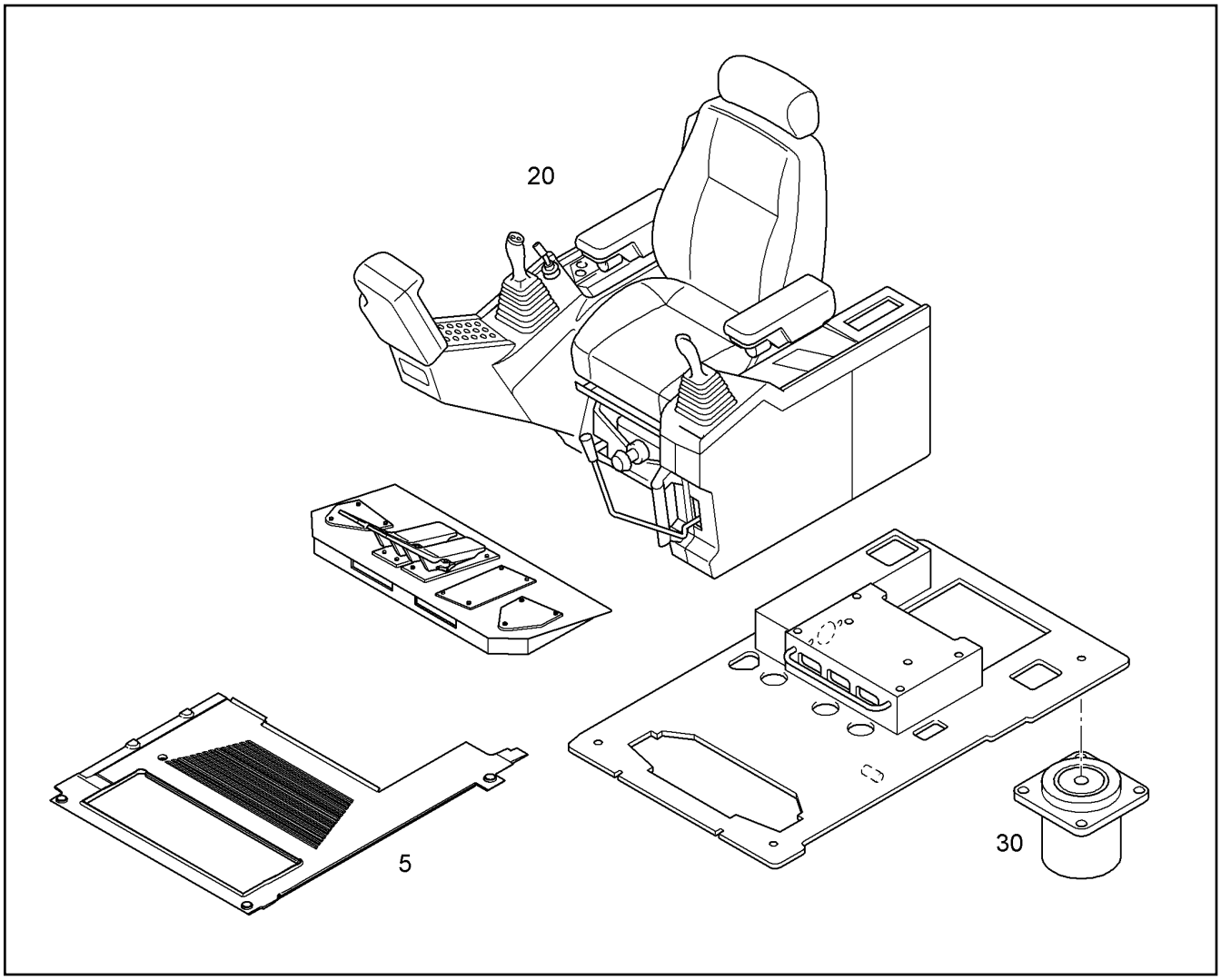

Pos.	Item	Quantity	Description	Descripción	Serie	K
5	9879754	1	FLOOR COVERING	PAVIMIENTO		1
20	10053118	1	DRIVER STAND BASE SECTION ⇨ ❑ 269	BASE PUESTO CONDUCTOR	-99998	
30	9879063	1	BOTTOM PLATE MOUNTING ⇨ ❑ 331	SUJ.PLACA FONDO CABINA		

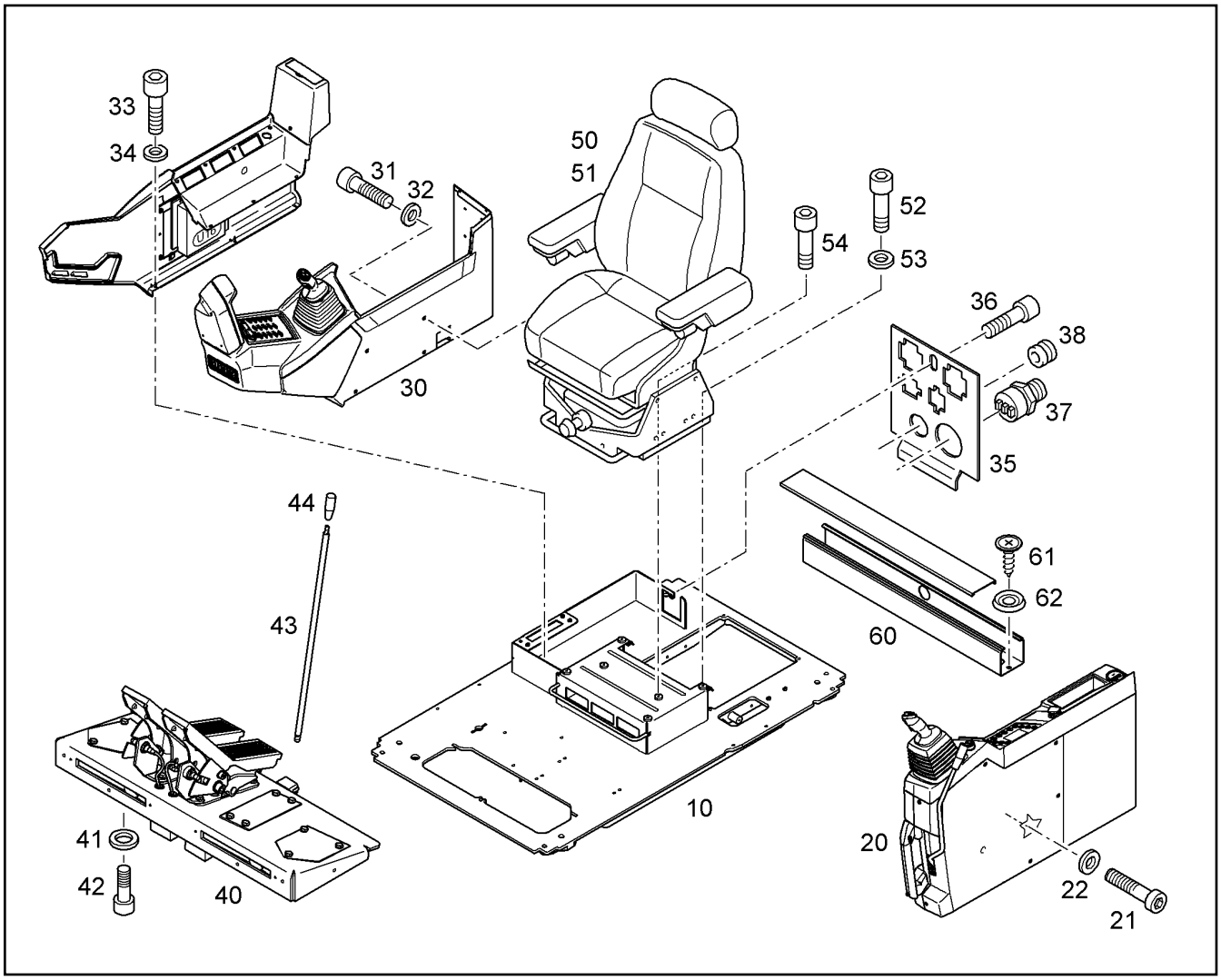

Pos.	Item	Quantity	Description	Descripción	Serie	K
10	10067754	1	CAB BOTTOM PLATE [442L11 086246]	PLACA FONDO CABINA		
20		1	ARM REST LEFT ⇨ ❑ 277	REPOSABRAZOS IZQUIERDA		
21	4043124	4	CYLINDER SCREW ISO 4762 M10X25 10.9	TORNILLO CILINDRICO		
22	10289795	4	WASHER ISO 7089 10 300HV	ARANDELA		
30		1	ARM REST RIGHT ⇨ ❑ 291	REPOSABRAZOS DERECHA	-99998	1
31	4043127	4	CYLINDER SCREW ISO 4762 M10X40 10.9	TORNILLO CILINDRICO		
32	10289795	4	WASHER ISO 7089 10 300HV	ARANDELA		
33	4902267	2	CYLINDER SCREW ISO 4762 M6X25 10.9 A2	TORNILLO CILINDRICO		
34	10289802	2	WASHER ISO 7089 6 300HV	ARANDELA		
35	9757779	1	SHEET	PLACA		1
36	7366804	1	BLANKING END	TORNILLO VERBUS-RIPP		
37	6000578	1	BUZZER	ZUMBADOR		
38	5607889	1	DIAPHRAGM GROMMET 16/22,5/27,5	BOQUILLA PASO DE MEMBRAN		
40		1	FOOT BOARD INSTALLATION ⇨ ❑ 308	MONTAJE PLACA REPOSAPIÉS		
41	4043000	3	CYLINDER SCREW ISO 4762 M10X30 10.9	TORNILLO CILINDRICO		
42	10289795	3	WASHER ISO 7089 10 300HV	ARANDELA		
43	9480525	2	ROD	VARILLA		
44	7370689	2	LEVER HANDLE	MANGO PALANCA		
50	10043632	1	DRIVERS SEAT [61100266110 8] ⇨ ❑ 274	ASIENTO CONDUCTOR		

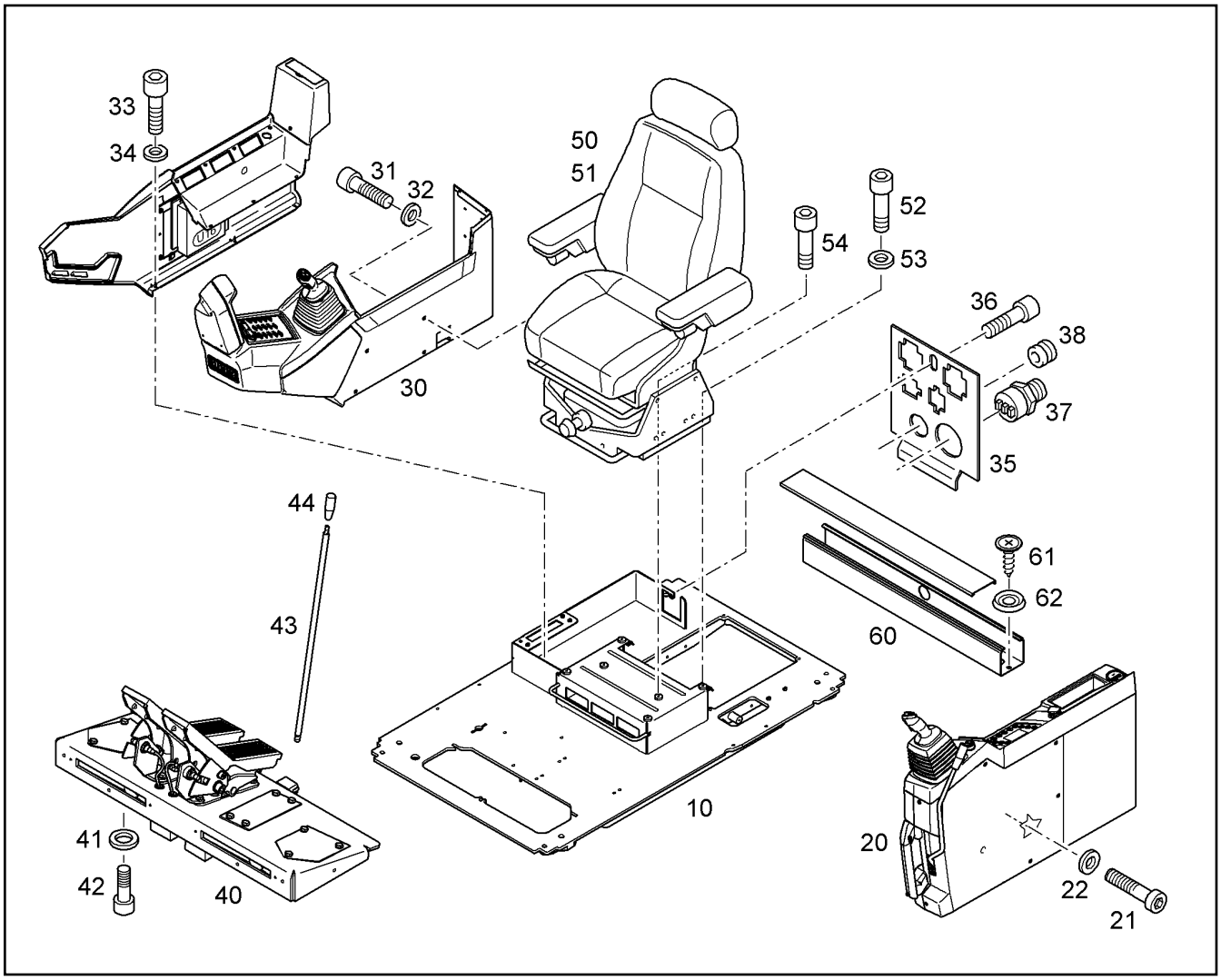

Pos.	Item	Quantity	Description	Descripción	Serie	K
51	10043631	1	DRIVERS SEAT ⇨ ❑ 273	ASIENTO CONDUCTOR		
52	4902231	4	CYLINDER SCREW ISO 4762 M8X16 10.9 A2	TORNILLO CILINDRICO		
53	4229912	4	LOCK WASHER /13X1,6 VS	ARANDELA SEGURIDAD		
54	4902231	2	CYLINDER SCREW ISO 4762 M8X16 10.9 A2	TORNILLO CILINDRICO		
60	9392650	1	CABLE CHANNEL	CANAL DE CABLE		
61	4002386	1	SHEET-METAL SCREW ISO 7051 ST5,5X19 S	TORNILLO ROSCACHAPAS		
62	7362752	1	ROSE	ROSETA		

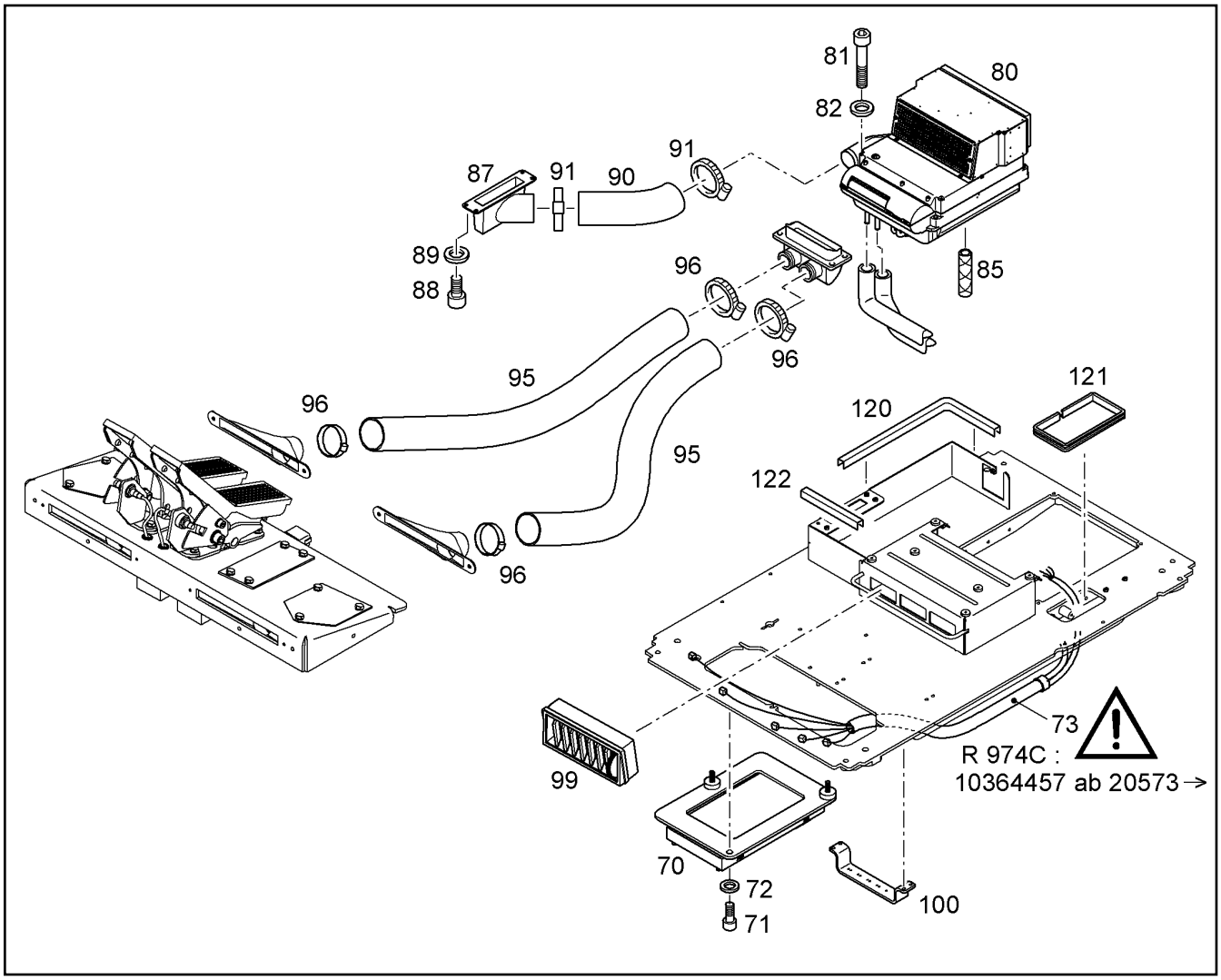

Pos.	Item	Quantity	Description	Descripción	Serie	K
70	10066484	1	ELECTRIC BOX INSTALLATION U47 ⇨ ❑ 314	MONTAJE CAJA ELÉCTRICA		
71	4600791	3	CYLINDER SCREW ISO 4762 M8X30 10.9 A2	TORNILLO CILINDRICO		
72	10289803	3	WASHER ISO 7089 8 300HV	ARANDELA		
73	10364457	1	CABLE LOOM CAN U47	KIT DE CABLES	-99998	1
73	10401821	1	CABLE LOOM CAN U47	KIT DE CABLES	99999-	
80		1	AIR CONDITIONING UNIT ⇨ ❑ 316	AIRE ACONDICIONADO	28753-	1
81	4901067	4	CYLINDER SCREW ISO 4762 M12X65 10.9	TORNILLO CILINDRICO		
82	10289804	4	WASHER ISO 7089 12 300HV	ARANDELA		
85	9697359	1	WATER HOSE	MANGUERA DE AGUA		
87	11003425	1	AIR CONNECTION PART D=80MM	TUBULADURA AIRE		
88	4902231	4	CYLINDER SCREW ISO 4762 M8X16 10.9 A2	TORNILLO CILINDRICO		
89	10289803	4	WASHER ISO 7089 8 300HV	ARANDELA		
90	10013635	1	AIR HOSE	CAMARA DE AIRE		2
91	7002008	2	HOSE CLAMP DIN 3017-1 A 80 70-90x13 W2-	ABRAZADERA MANGUERA		
95	10296116	2	AIR HOSE	CAMARA DE AIRE		2
96	5700024	4	HOSE CLAMP DIN 3017-1 A 50 40-60X13 W2-	ABRAZADERA MANGUERA		
99	5611480	3	AIR EJECTION NOZZLE	TOBERA DE EMPUJE AIRE		
100		1	FIXING PARTS ⇨ ❑ 327	PIEZAS DE FIJACION		1
120	226016702	0.7m	SECTION	PERFIL CANTONERA		
121	10009781	0.9m	SECTION	PERFIL CANTONERA		
122	226016702	0.2m	SECTION	PERFIL CANTONERA		

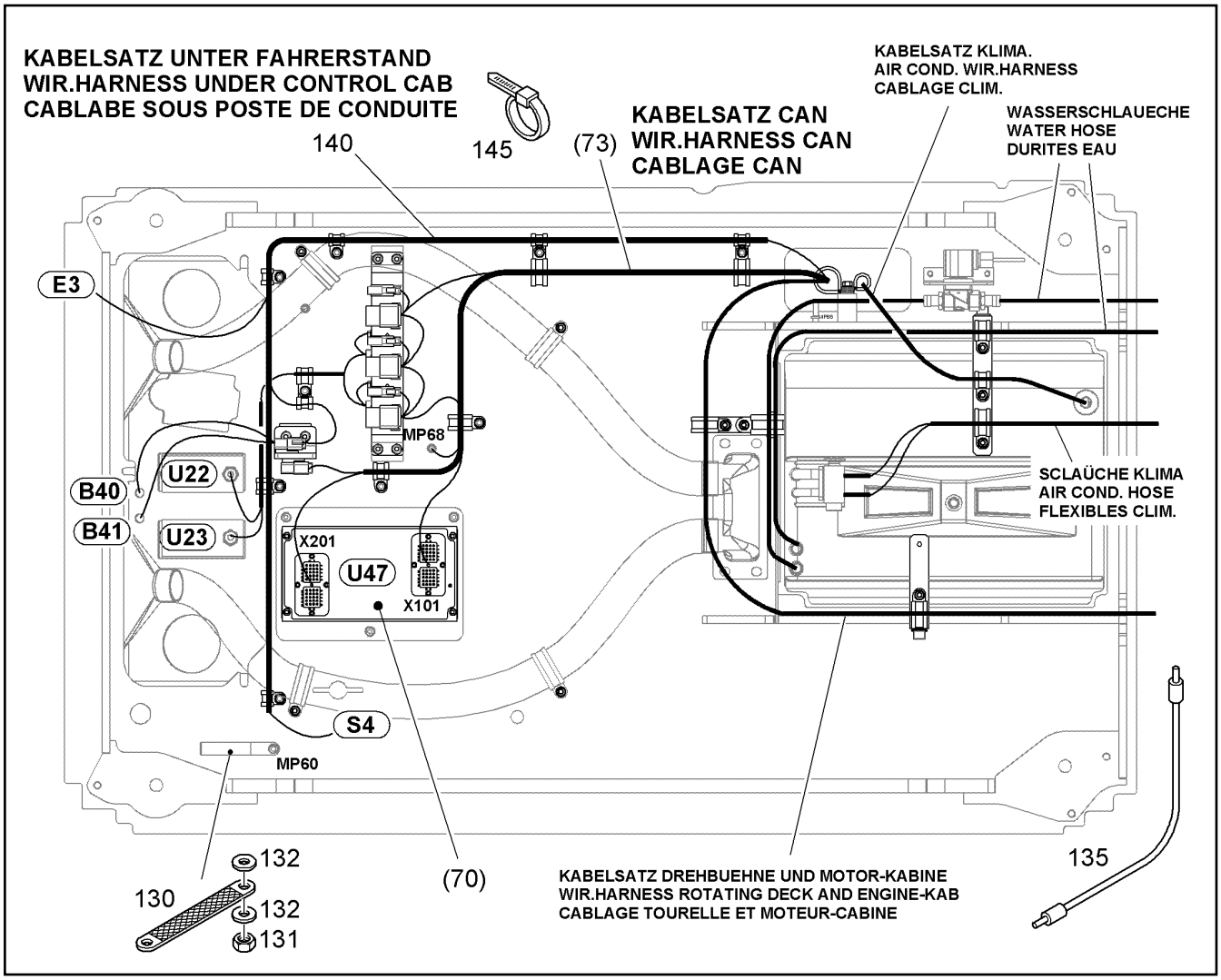

Pos.	Item	Quantity	Description	Descripción	Serie	K
130	6204632	1	EARTH STRAP	CINTA CONEXION A MASA		2
131	4000381	2	HEX NUT M8	TUERCA HEXAGONAL		
132	10289803	2	WASHER ISO 7089 8 300HV	ARANDELA		
135	6204404	1	CABLE ANTENNA EXTENSION	CABLE DE ANTENA		2
140	10401819	1	WIR.HARNESS UNDER CONTROL CAB	JC BAJO PUESTO CONDUCTOR	28596-	
145	7001877	10	TIE WRAP	CINTA PARA CABLES		

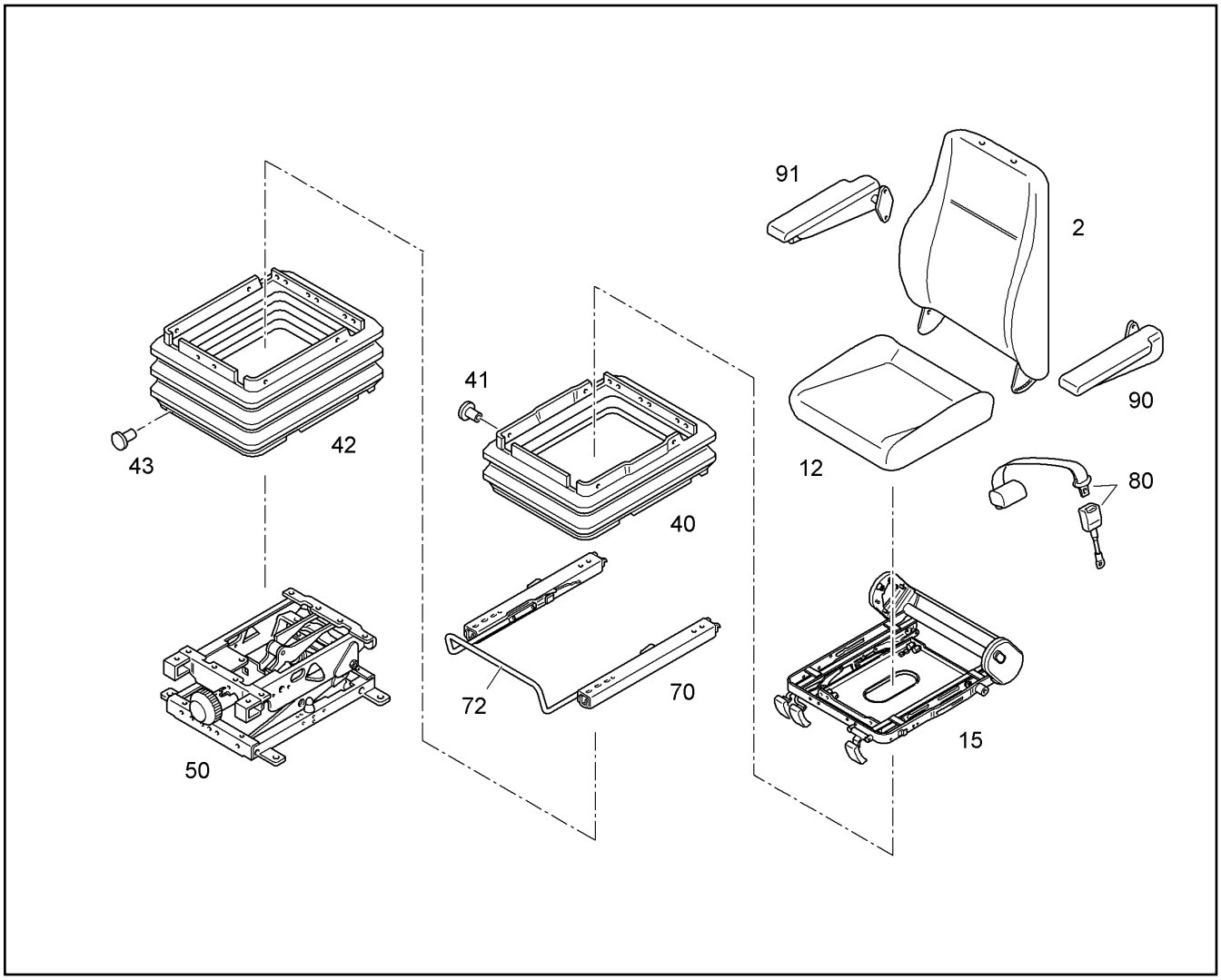

Pos.	Item	Quantity	Description	Descripción	Serie	K
2	10289988	1	BACK PART	ELEMENTO DORSAL		
2	7024985	1	-COVERING	-FUNDA		
12	7024981	1	SEAT PART	PARTE DE ASIENTO		
12	7024986	1	-COVERING	-FUNDA		
15	7024996	1	SEAT FRAME ⇨ ❑ 276	BASTIDOR DE ASIENTO		
40	7025004	1	RUBBER BELLOWS	FUELLE DOBLADO		
41	10289973	1	FASTENERS SET			
42	7366620	1	RUBBER BELLOWS	FUELLE DOBLADO		
43	10289975	4	BUTTON	BOTON		2
50	10289993	1	VIBRATING SYSTEM ⇨ ❑ 275	SISTEMA OSCIL.		
70	10289990	1	SLIDE SEAT GUIDE	GUIA ASIENTO DESPLAZABLE		
72	10289976	1	-BRACKET	-ESTRIBO		
80	7371746	1	HIP BELT	CINTURON PELVICO		1
90	7024982	1	ARM REST LEFT	REPOSABRAZOS IZQUIERDA		
90	7025993	1	-SUPPORT LEFT	-SOPORTE IZQUIERDA		
91	7024983	1	ARM REST RIGHT	REPOSABRAZOS DERECHA		
91	7025994	1	-SUPPORT RIGHT	-SOPORTE DERECHA		

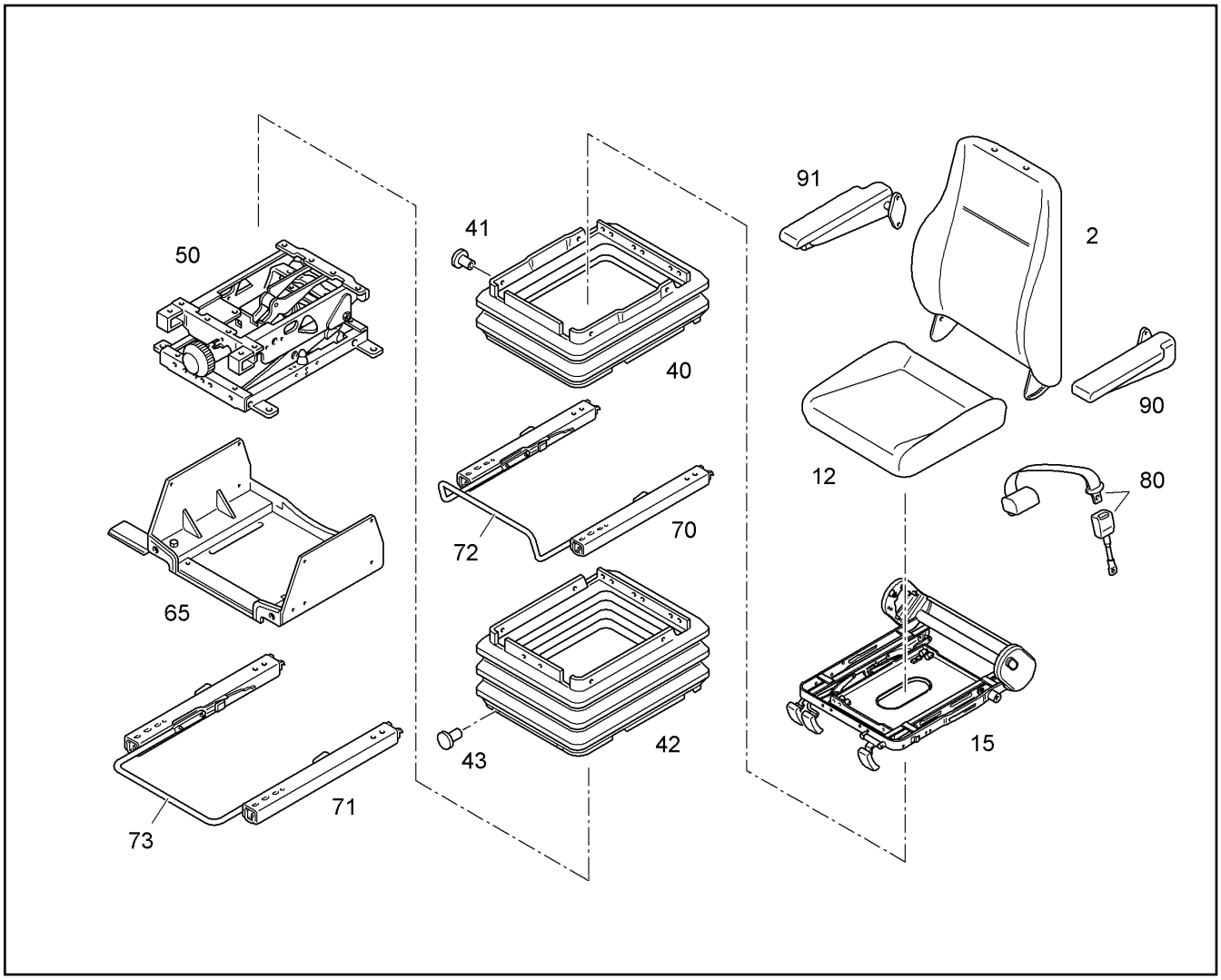

Pos.	Item	Quantity	Description	Descripción	Serie	K
2	10289988	1	BACK PART	ELEMENTO DORSAL		
2	7024985	1	-COVERING	-FUNDA		
12	7024981	1	SEAT PART	PARTE DE ASIENTO		
12	7024986	1	-COVERING	-FUNDA		
15	7024996	1	SEAT FRAME ⇨ ❑ 276	BASTIDOR DE ASIENTO		
40	7025004	1	RUBBER BELLOWS	FUELLE DOBLADO		
41	10289973	1	FASTENERS SET			
42	7366620	1	RUBBER BELLOWS	FUELLE DOBLADO		
43	10289975	4	BUTTON	BOTON		2
50	10289993	1	VIBRATING SYSTEM ⇨ ❑ 275	SISTEMA OSCIL.		
65	10165637	1	SEAT VAT	CUBETA DE ASIENTO		
70	10289990	1	SLIDE SEAT GUIDE	GUIA ASIENTO DESPLAZABLE		
71	10289989	1	SLIDE SEAT GUIDE	GUIA ASIENTO DESPLAZABLE		
72	10289976	1	-BRACKET	-ESTRIBO		
73	7370581	1	-RAIL STIRRUP	-ESTRIBO DE CARRIL		
80	7371746	1	HIP BELT	CINTURON PELVICO		1
90	7024982	1	ARM REST LEFT	REPOSABRAZOS IZQUIERDA		
90	7025993	1	-SUPPORT LEFT	-SOPORTE IZQUIERDA		
91	7024983	1	ARM REST RIGHT	REPOSABRAZOS DERECHA		
91	7025994	1	-SUPPORT RIGHT	-SOPORTE DERECHA		

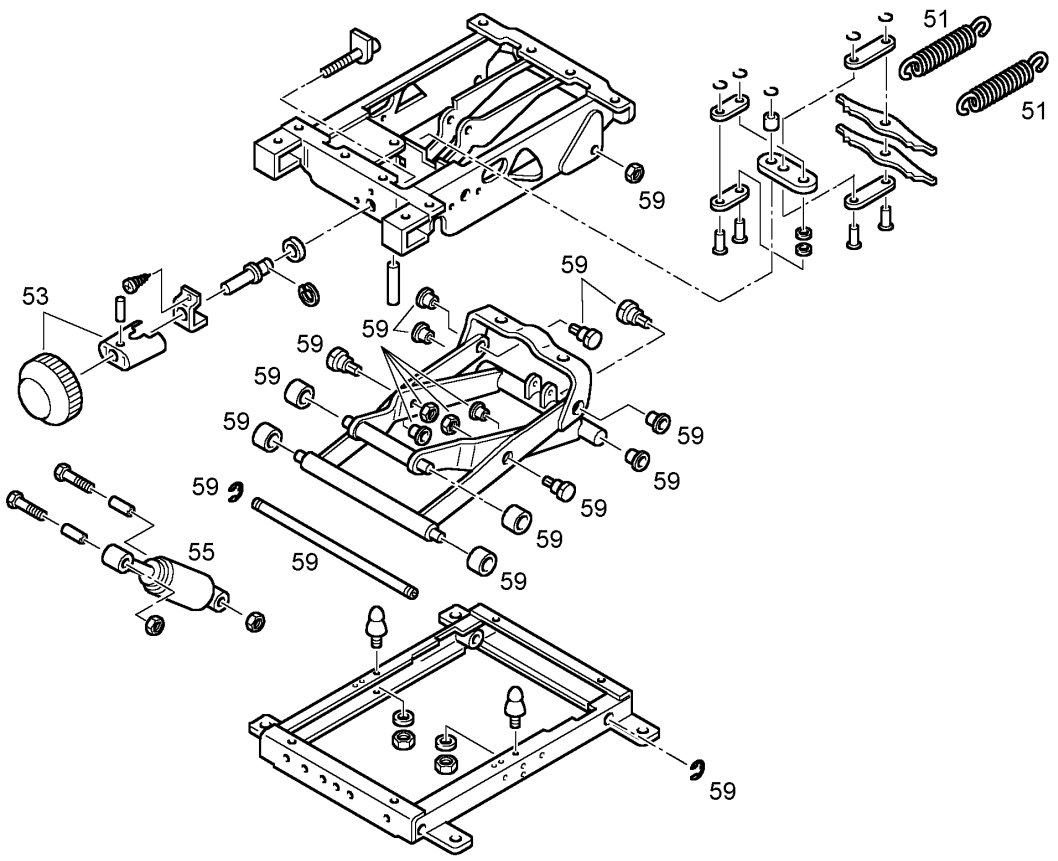

Pos.	Item	Quantity	Description	Descripción	Serie	K
51	7617520	2	TENSION SPRING	MUELLE TRACCION		
53	5609144	1	HANDWHEEL	VOLANTE MANUAL		1
55	10289994	1	SHOCK ABSORBER	AMORTIGUADOR		
59	7025009	1	BEARING	APOYO DE CIZALLA		

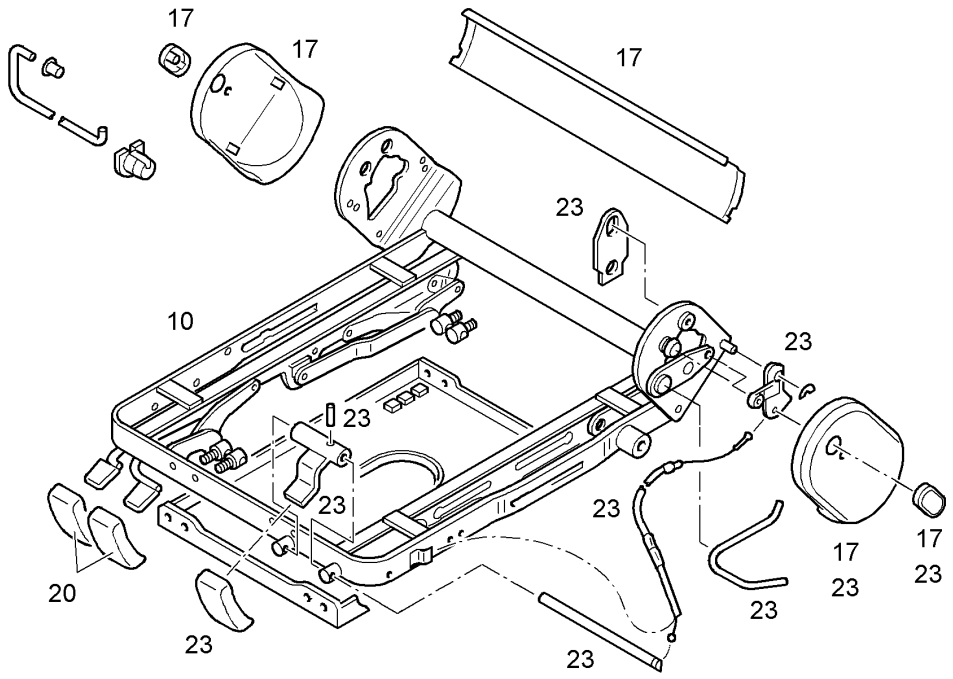

Pos.	Item	Quantity	Description	Descripción	Serie	K
10		1	SEAT FRAME	BASTIDOR DE ASIENTO		
17	7025005	1	COVER LID	TAPON COBERTURA		
20	7025006	1	GRIP	TIRADOR		
23	7025007	1	REGULATION DEVICE SEAT BACK	ENGANCHE DE RESPALDO		

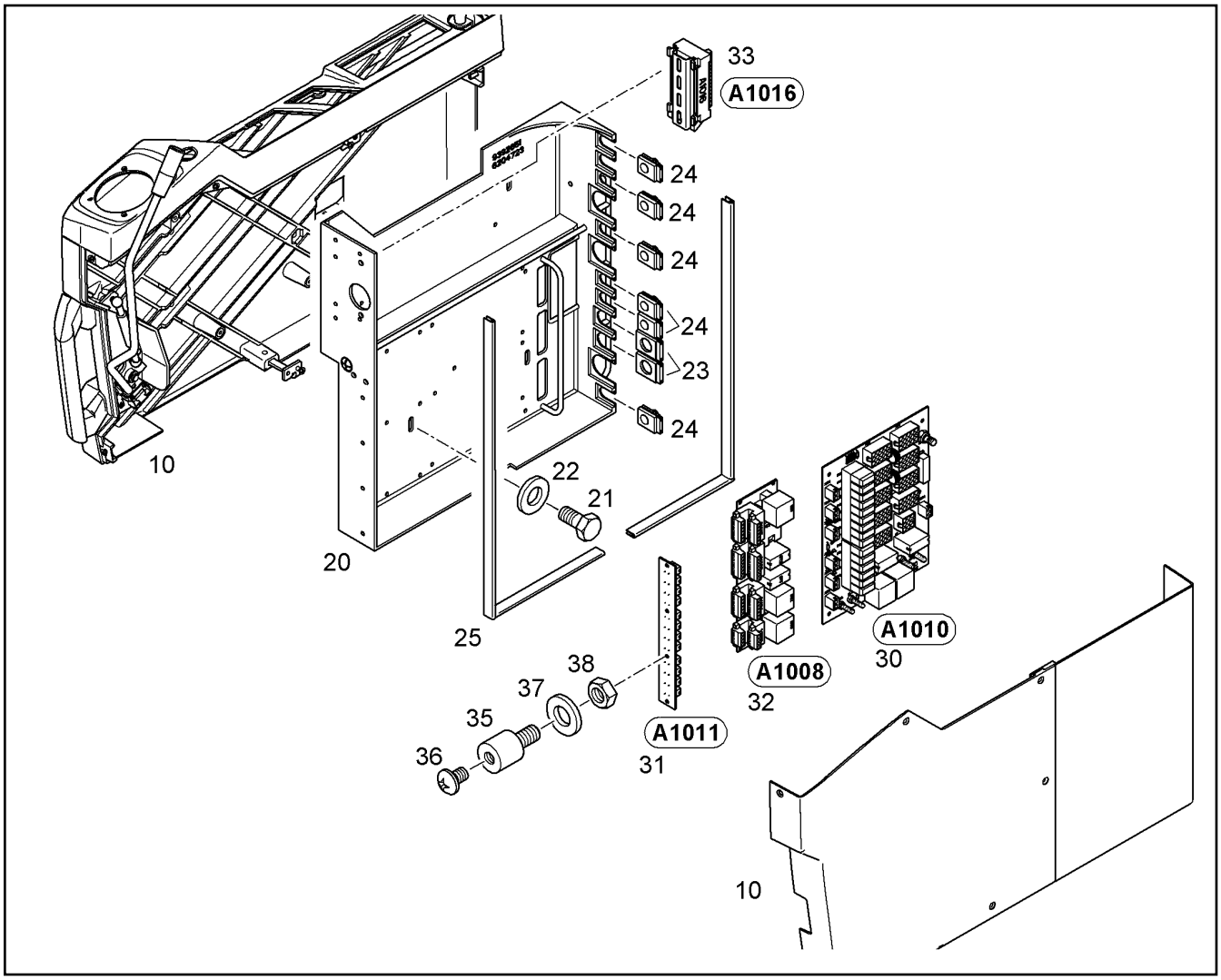

Pos.	Item	Quantity	Description	Descripción	Serie	K
10		1	CONTROL BRACKET LEFT INST. ⇨ ❑ 279	MONTAJE CONSOLA MANDO IZ		
20	9392651	1	ELECTRIC BOX	CAJA ELÉCTRICA		2
21	4900605	4	HEX BOLT ISO 4017 M6x12 8.8 A2C	TORNILLO DE CABEZA HEXAGO		
22	4600198	4	WASHER DIN 9021 6,4 ST A3C	ARANDELA		
23	6202703	2	CABLE SLEEVE 14,0/15,7/19	MANGUITO GOMA POR CABLES		
24	7362986	6	CABLE SLEEVE 8,5/14/20	MANGUITO GOMA POR CABLES		
25	7360171	1.38m	CORNER PROTECT.PROFILE	PERFIL OBTURACIÓN CANTON		
30	975881501	1	E-BOARD [21710] ⇨ ❑ 282	PLACA E		2
31	989165301	1	E-BOARD	PLACA E		2
32	10427532	1	ADD BOARD ⇨ ❑ 281	PLETINA ADICIONAL		2
33	9874988	1	PLATINES INSTALLATION A1016 ⇨ ❑ 283	MONTAJE PLETINAS		
35	7014560	18	RUBBER BUMPER	TOPE GOMA		
36	4901886	18	PAN-HEAD SCREW ISO 7045 M4X6 4.8 H A2	TORNILLO ROSCACHAPA		
37	4001645	16	WASHER DIN 125 B 4,3 ST A3C	ARANDELA		
38	4000376	16	HEX NUT M4	TUERCA HEXAGONAL		

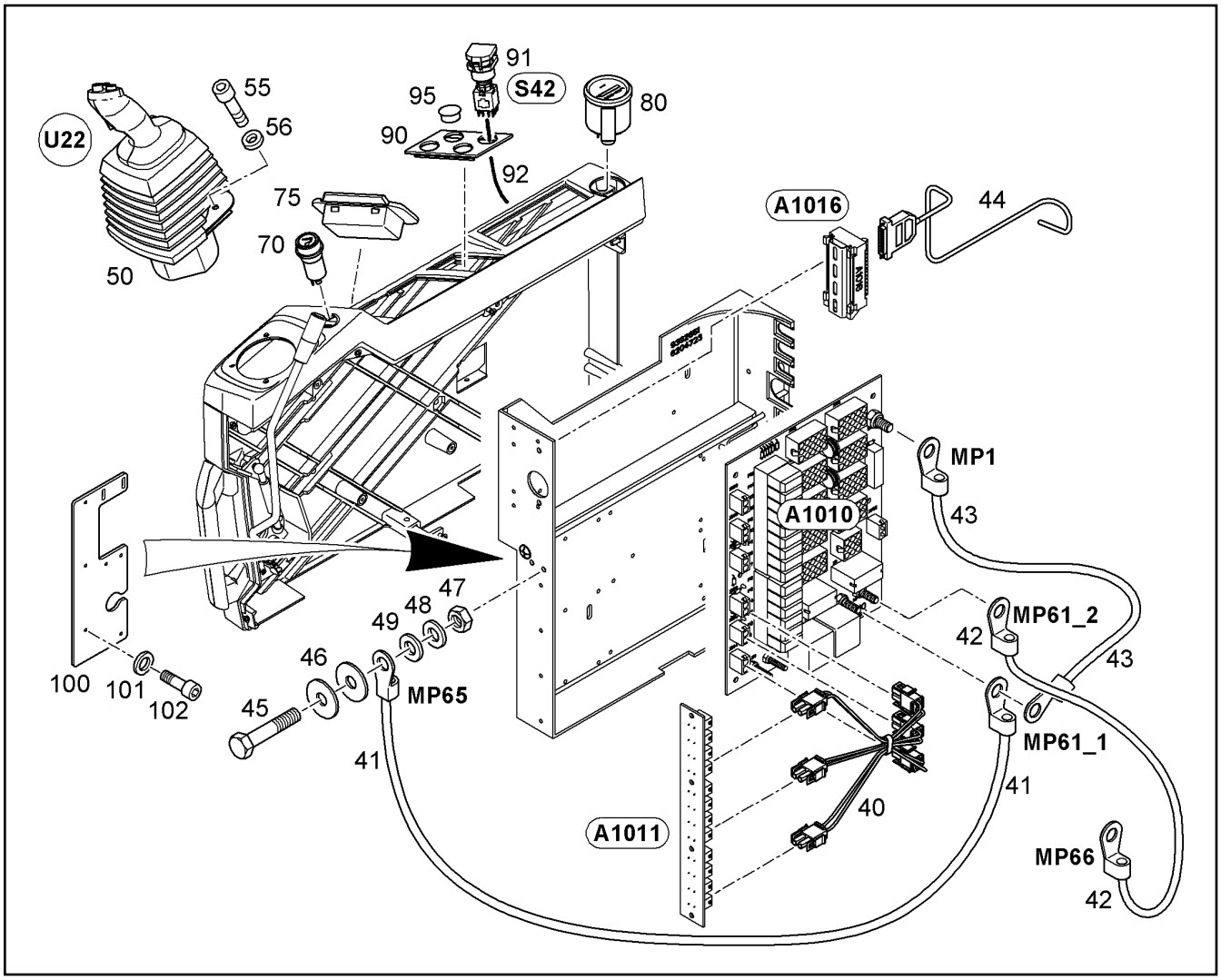

Pos.	Item	Quantity	Description	Descripción	Serie	K
40	9893072	1	CABLE LOOM A1010-A1011	KIT DE CABLES		2
41	10066076	1	CABLE LOOM MP65 - MP61/1	KIT DE CABLES		1
42	10066011	1	CABLE LOOM MP66 - MP61/2	KIT DE CABLES		1
43	10077900	1	CABLE LOOM MP1-MP61-1	KIT DE CABLES		1
44	6204634	1	CABLE LOOM	KIT DE CABLES		2
45	4900336	1	HEX BOLT ISO 4017 M5x25 8.8 A2C	TORNILLO DE CABEZA HEXAGO		
46	4600200	2	WASHER DIN 9021 5,3 ST A3C	ARANDELA		
47	4000466	2	HEX NUT M5	TUERCA HEXAGONAL		
48	7361965	1	LOCK WASHER	ARANDELA SEGURIDAD		
49	4600305	1	WASHER DIN 125 B 5,3 ST A3C	ARANDELA		
50	10068041	1	MANIPULATOR LEFT CPL CAN ⇨ ❑ 285	MANIPULATOR LADO CPL		1
55	4902267	4	CYLINDER SCREW ISO 4762 M6X25 10.9 A2	TORNILLO CILINDRICO		
56	4229911	4	LOCK WASHER	ARANDELA SEGURIDAD		
70	7369377	1	CIGAR LIGHTER ⇨ ❑ 305	ENCENDEDOR		
75	7366731	1	ASH TRAY	CENICERO		
80	6201379	1	SERVICE HOUR METER	CONTADOR HORAS DE SERVICI		2
90	7371141	1	SWITCH MODULE	MÓDULO CONMUT.		2
91	10080466	1	SWITCH INSTALLATION S42 ⇨ ❑ 290	MONTAJE INTERR.		1
92	10079008	1	CABLE LOOM S42	KIT DE CABLES		1
95	7371142	3	STOPPER PLUG	TAPON CIEGO		
100	10083630	1	PLATE	CHAPA		1
101	4001645	3	WASHER DIN 125 B 4,3 ST A3C	ARANDELA		
102	4600387	3	CYLINDER SCREW ISO 4762 M4x12 8.8 A2C	TORNILLO CILINDRICO		

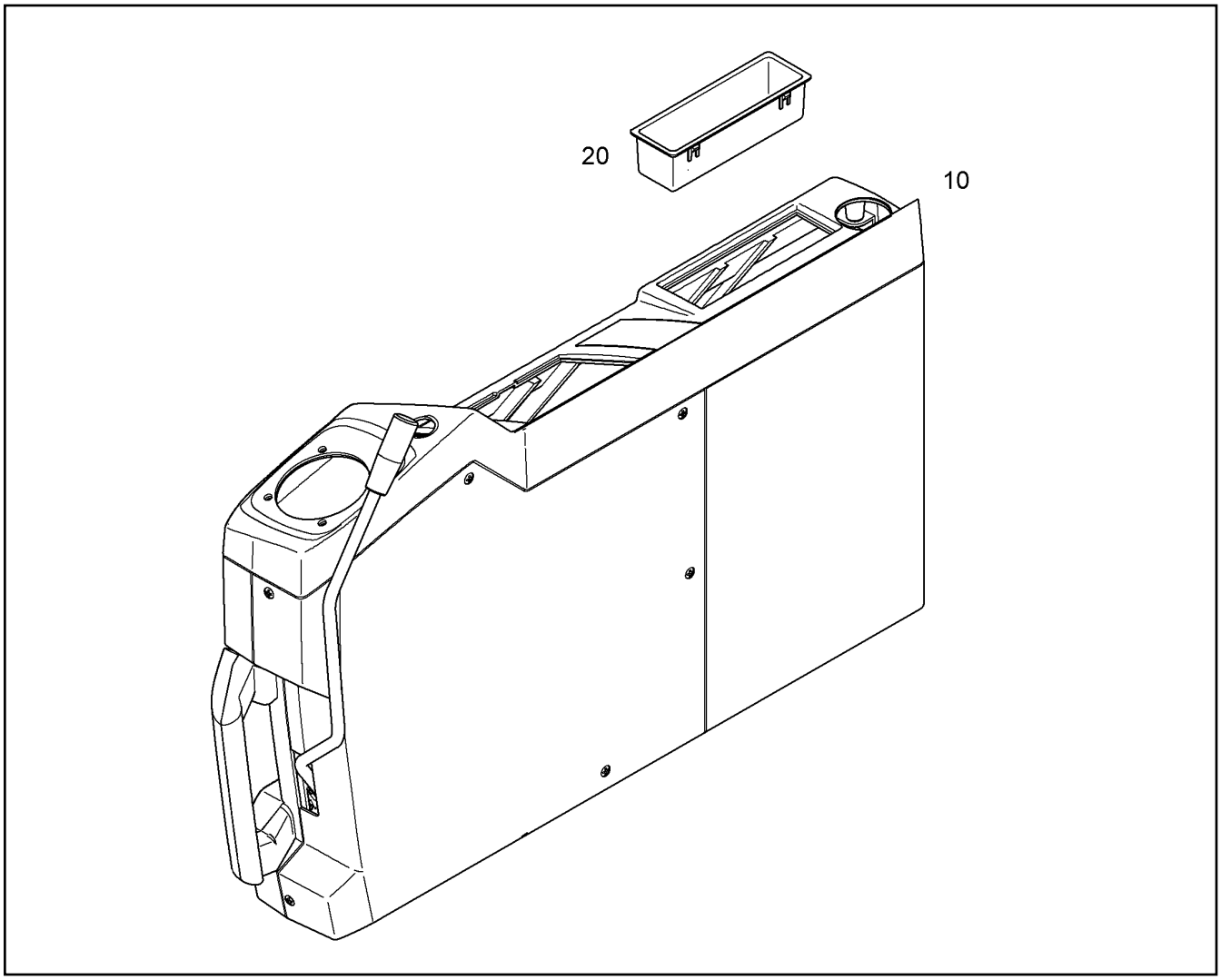

Pos.	Item	Quantity	Description	Descripción	Serie	K
10	10165766	1	CONTROL CONSOLE LEFT ⇨ ❑ 280	CONSOLA MANDO IZDA.		
20	10043180	1	REST	BANDEJA		

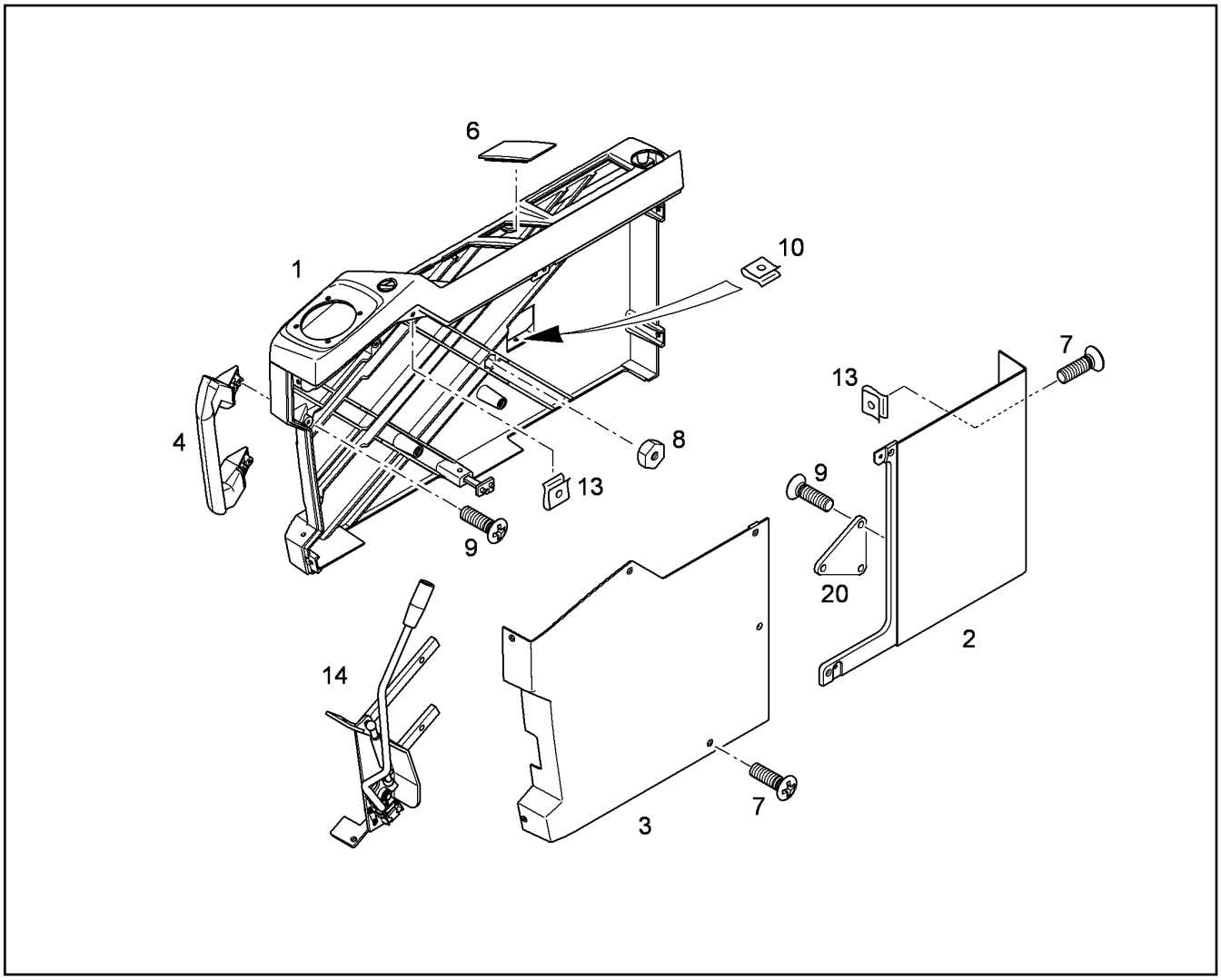

Pos.	Item	Quantity	Description	Descripción	Serie	K
1	10005863	1	BASIC BODY	CUERPO BASE		
2	7370896	1	LID	TAPA		
3	7370895	1	LID	TAPA		
4	7370897	1	GRIP	TIRADOR		
6	7370899	1	BLANK LID	TAPA POSTIZA		
7	7371577	10	COUNTERSUNK SCREW ISO 7047 M6X20 4	TORNILLO AVELLANADO		
8	7370889	2	HEX NUT M10	TUERCA HEXAGONAL		1
9	7370888	4	SCREW	TORNILLO		
10	7366862	1	SHEET METAL NUT	TUERCA PARA CHAPA		
13	7370883	7	SHEET METAL NUT	TUERCA PARA CHAPA		
14	7373807	1	SAFETY LEVER ⇨ ❑ 284	PALANCA SEG.		
20	10652159	1	SHEET	PLACA		

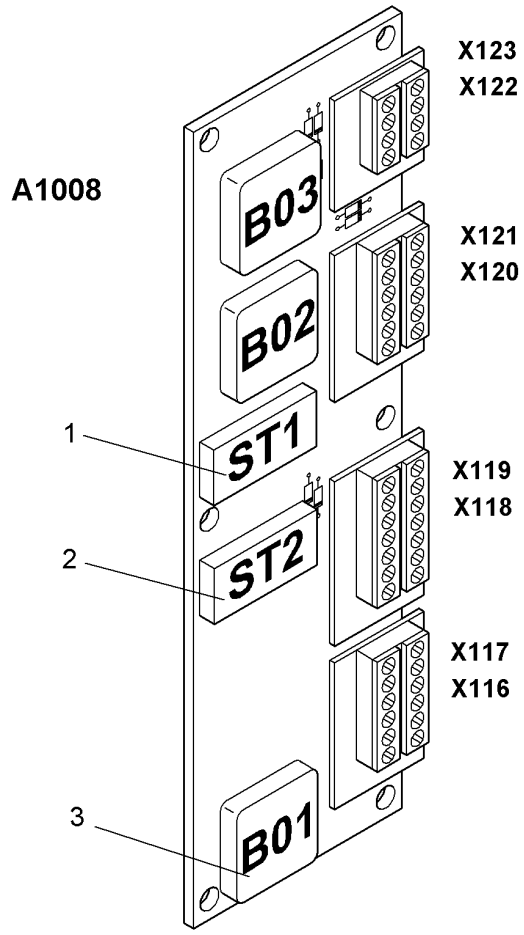

Pos.	Item	Quantity	Description	Descripción	Serie	K
1	6202646	1	RELAY	RELE		1
2	6001254	1	RELAY	RELÉ CONTACTO CIERRE DOBL		2
3	630165901	3	RELAY	RELE		2

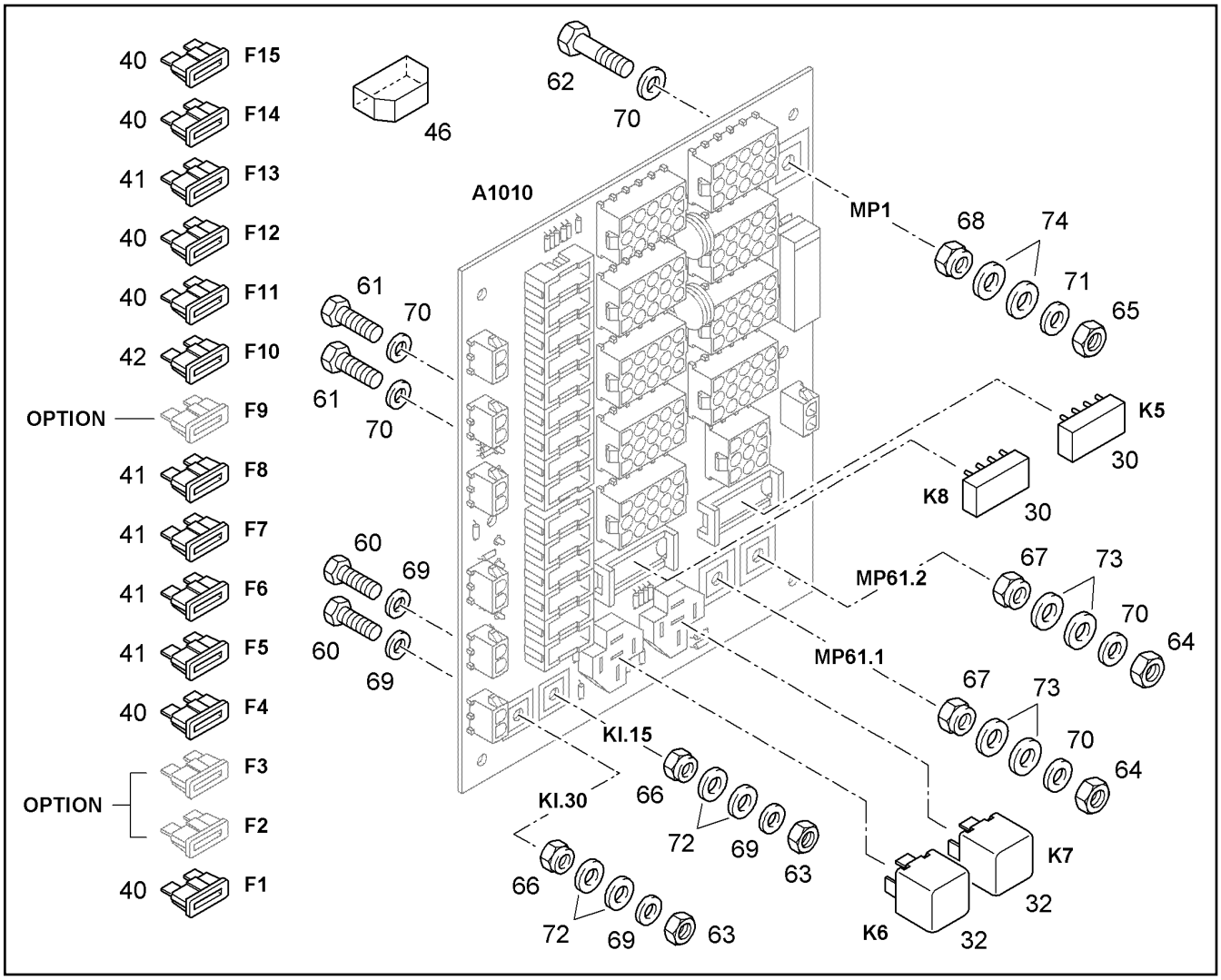

Pos.	Item	Quantity	Description	Descripción	Serie	K
30	6202646	2	RELAY	RELE		1
32	6002381	2	RELAY	RELE		2
40	4901512	9	FUSE CARTRIDGE C 15A 32 FKS	CARTUCHO DE FUSIBLE		1
41	4901513	5	FUSE CARTRIDGE C 7,5A 32/56 FKS	CARTUCHO DE FUSIBLE		1
42	6040008	1	FUSE DIN 72581 A 25	FUSIBLE		1
46	604521501	15	COVER	CUBIERTA		1
60	4900336	2	HEX BOLT ISO 4017 M5x25 8.8 A2C	TORNILLO DE CABEZA HEXAGO		
61	4900539	2	HEX BOLT ISO 4017 M6x25 8.8 A2C	TORNILLO DE CABEZA HEXAGO		
62	4900128	1	HEX BOLT ISO 4017 M8x25 8.8 A2C	TORNILLO DE CABEZA HEXAGO		
63	4000466	2	HEX NUT M5	TUERCA HEXAGONAL		
64	4000379	2	HEX NUT M6	TUERCA HEXAGONAL		
65	411508001	1	HEX NUT M8	TUERCA HEXAGONAL		
66	4001866	2	HEX NUT M5	TUERCA HEXAGONAL		
67	4002477	2	HEX NUT M6	TUERCA HEXAGONAL		
68	4600783	1	HEX NUT M8	TUERCA HEXAGONAL		
69	7361965	4	LOCK WASHER	ARANDELA SEGURIDAD		
70	4229911	4	LOCK WASHER	ARANDELA SEGURIDAD		
71	4229912	2	LOCK WASHER /13X1,6 VS	ARANDELA SEGURIDAD		
72	4980230	4	WASHER ISO 7089 5 -200HV A3C	ARANDELA		
73	10289802	4	WASHER ISO 7089 6 300HV	ARANDELA		
74	10289803	2	WASHER ISO 7089 8 300HV	ARANDELA		

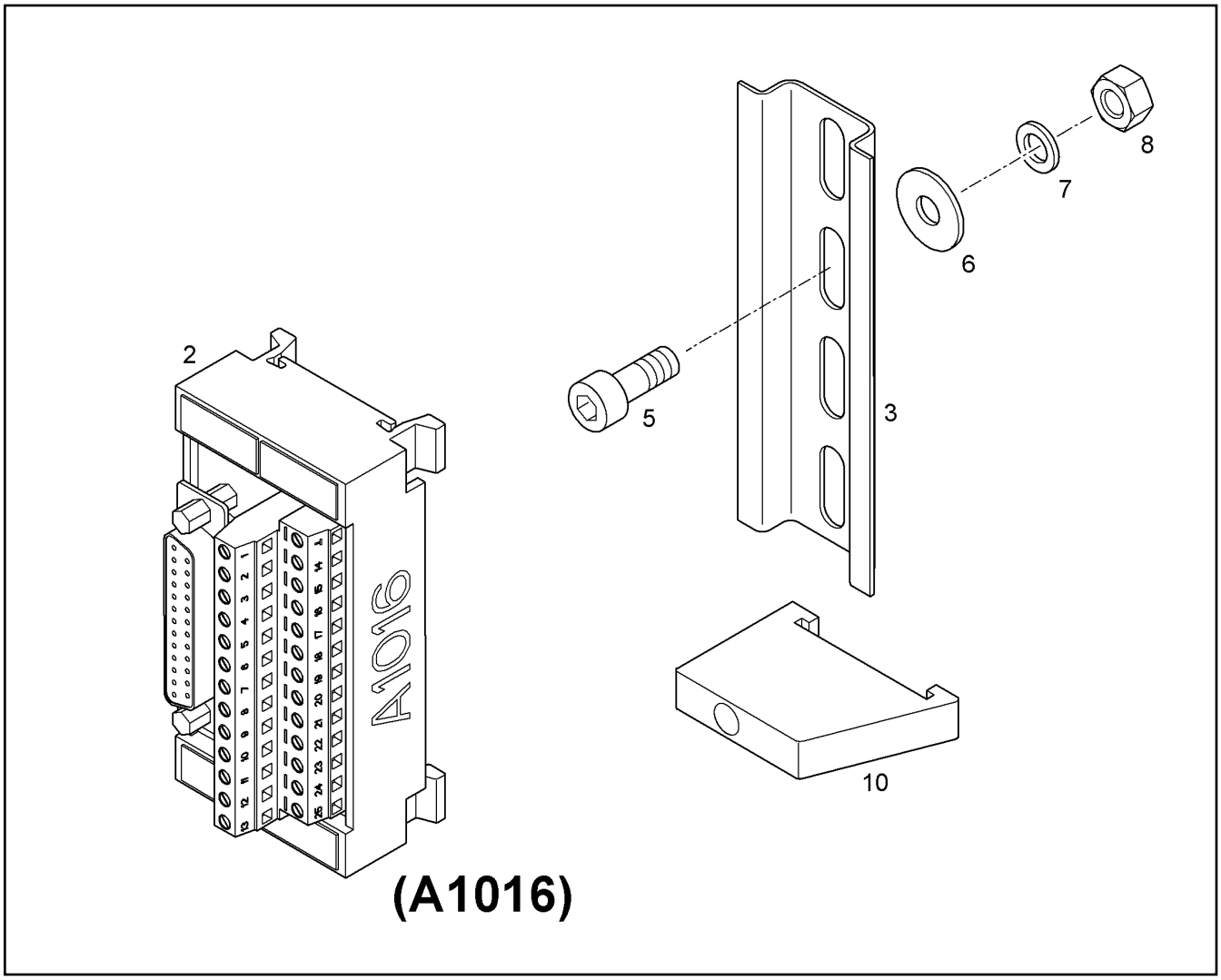

Pos.	Item	Quantity	Description	Descripción	Serie	K
2	10287118	1	MODULE	MODULO		2
3	9874961	1	CARRIER RAIL	REGLETA SOPORTE		1
5	4601513	2	CYLINDER SCREW ISO 4762 M5X16 10.9 A2	TORNILLO CILINDRICO		
6	4000648	2	WASHER DIN 7349 6,4 A3C	ARANDELA		
7	4600200	4	WASHER DIN 9021 5,3 ST A3C	ARANDELA		
8	4000466	2	HEX NUT M5	TUERCA HEXAGONAL		
10	6203433	1	FIXING BRACKET	PERFIL DE FIJACION		

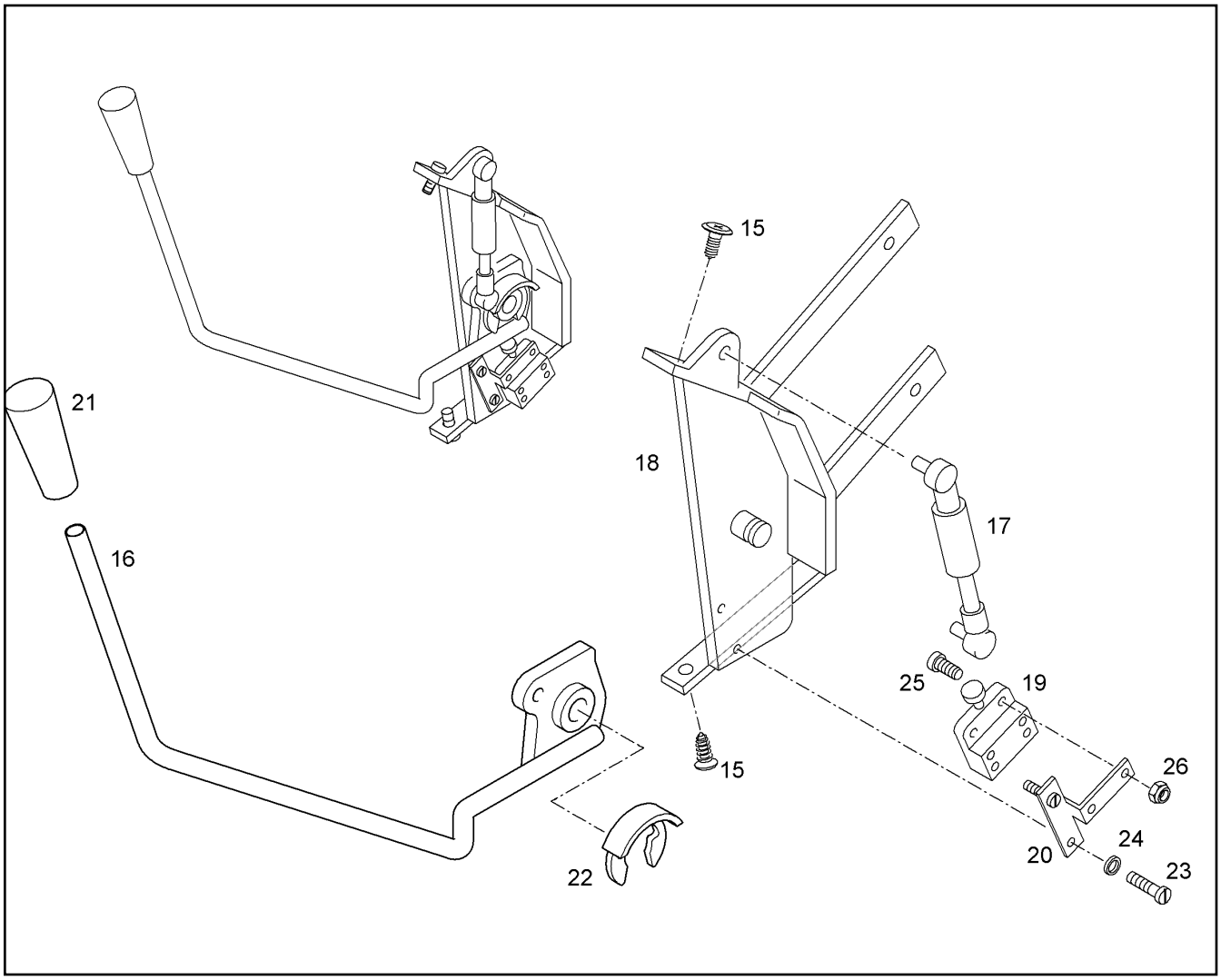

Pos.	Item	Quantity	Description	Descripción	Serie	K
15	4902073	2	SHEET-METAL SCREW ISO 1479 ST6,3X38 S	TORNILLO ROSCACHAPAS		
16	7372353	1	LEVER	PALANCA		1
17	7372354	1	GAS SPRING	MUELLE DE GAS		
18	7372355	1	HOLDER	FIJADOR		
19	6001027	1	SNAP SWITCH	CONMUTADOR DE RESORTE		
20	7373825	1	HOLDER	FIJADOR		
21	7025347	1	HANDLE CAP	CAPERUZA DE EMPUÑADURA		
22	7027038	1	FUSE	FUSIBLE		2
23	4901395	2	CYLINDER SCREW ISO 1207 M3X10 MS	TORNILLO CILINDRICO		
24	4600814	2	WASHER DIN 125 B 3,2 ST A3C	ARANDELA		
25	4600815	2	CYL HEAD STUD ISO 1207 M 3 X 20 5.8 A3C	TORNILLO CIL.		
26	10003140	2	HEX NUT ISO 10511 M 3	TUERCA HEXAGONAL		

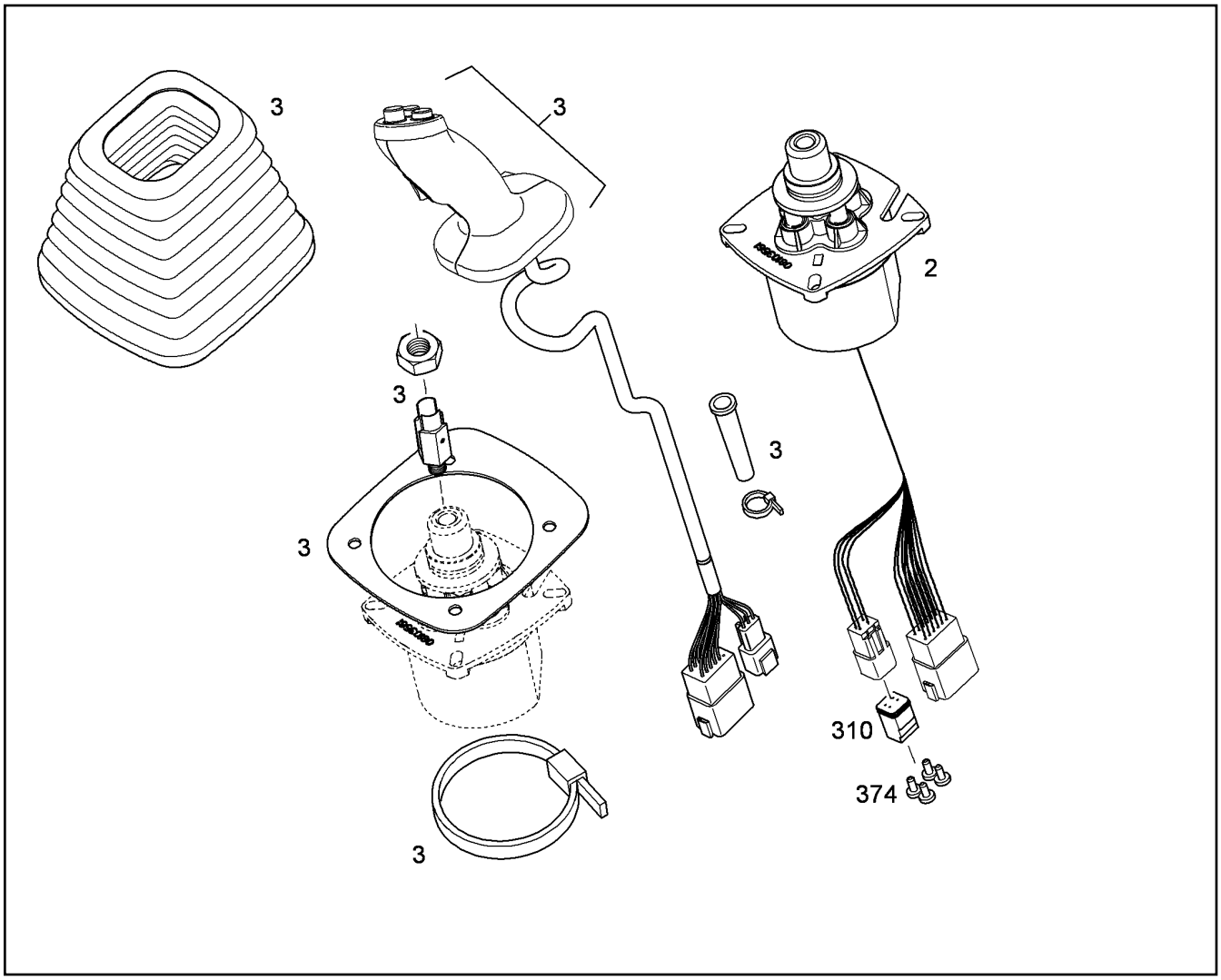

Pos.	Item	Quantity	Description	Descripción	Serie	K
2	10301737	1	CONTROL VALVE LEFT [L101028063551]	AP.CONTR.PILOT. IZDO.		6
3	10058792	1	MANIPULATOR LEFT ⇨ ❑ 286	SENSOR CONTR.PILOT.PREVIO		
310	6203136	1	BUSH HOUSING	CAJA DEL CASQUILLO		
374	7368253	4	STOPPER PLUG	TAPON CIEGO		

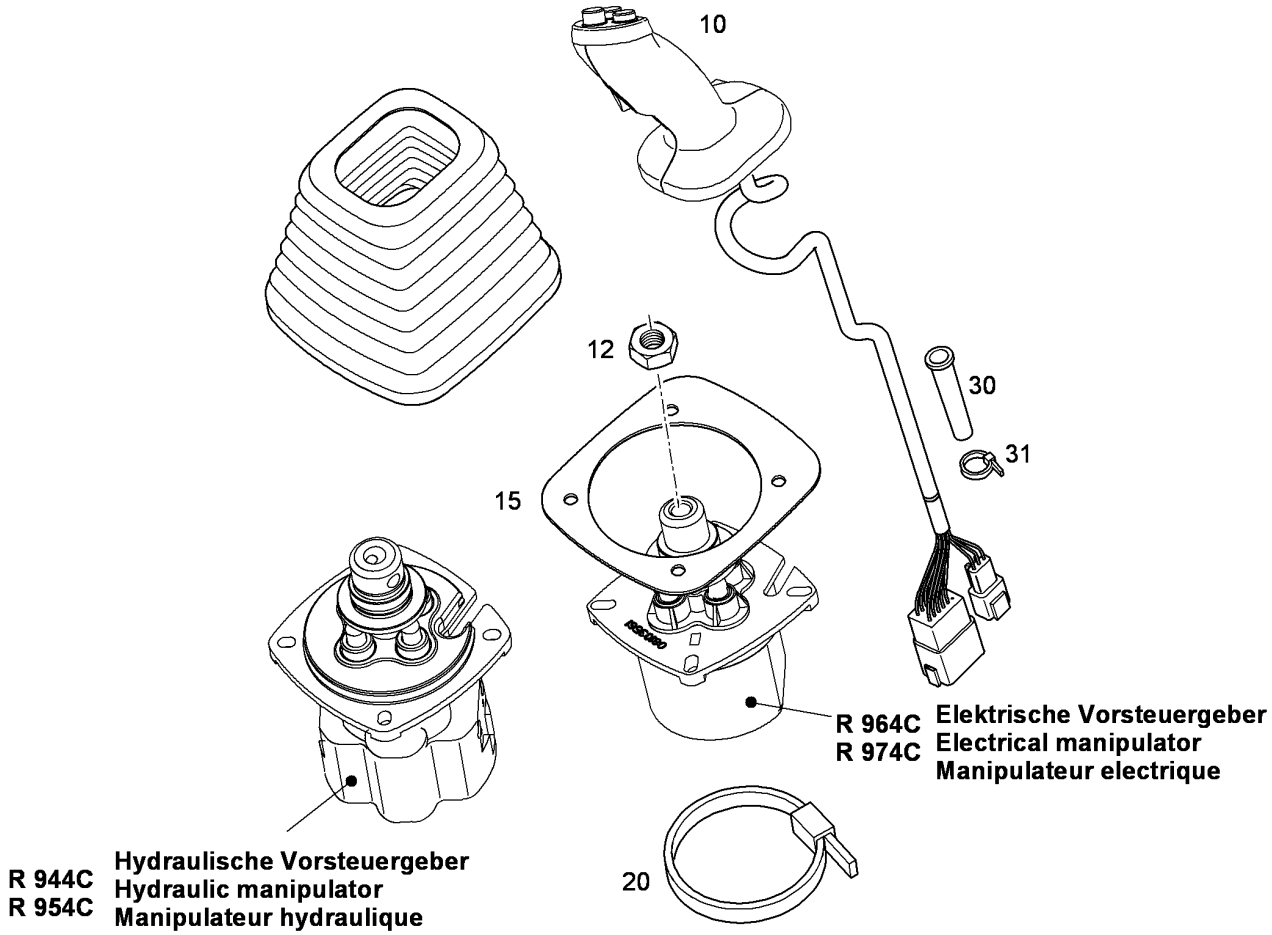

Pos.	Item	Quantity	Description	Descripción	Serie	K
10	9968625	1	LH-JOYSTICK LEFT ⇨ ❑ 289	MANILLA DEL SENSOR LH IZDA.		2
12	4900125	1	HEX NUT M12	TUERCA HEXAGONAL		
15	10058949	1	SHEET	PLACA		
20	7002480	1	CABLE TIE	BRIDAS		
30	10010154	1	PROTECTING SLEEVE 8/8/2,2	MANGUITO PROTECTOR		
31	7009088	1	CABLE TIE	BRIDAS		

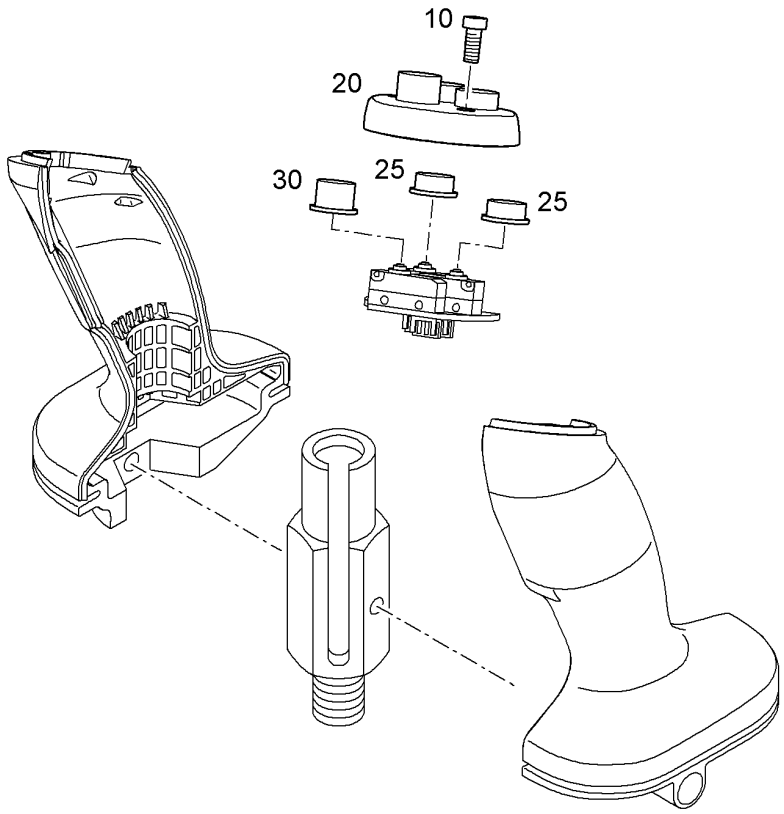

Pos.	Item	Quantity	Description	Descripción	Serie	K
10	10015712	2	SCREW	TORNILLO		
20	10040327	1	CAP	CAPUCHON		
25	10040322	2	BUTTON 1	BOTON		2
30	10040324	1	BUTTON 2	BOTON		2

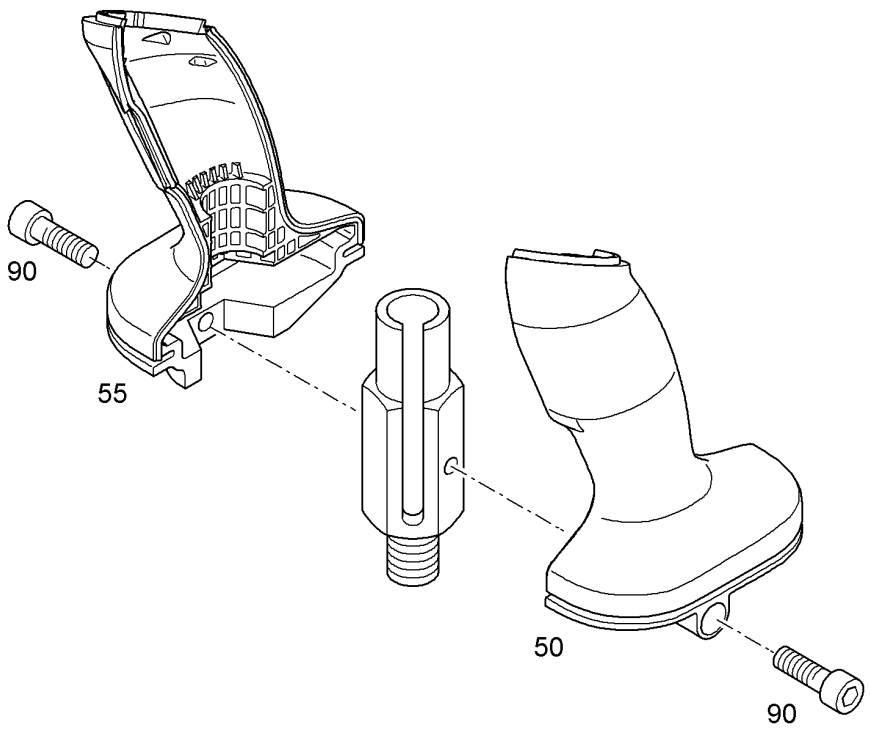

Pos.	Item	Quantity	Description	Descripción	Serie	K
50	10014778	1	GRIP SHELL	CACHA		
55	10014777	1	GRIP SHELL	CACHA		
90	4042062	2	CYLINDER SCREW ISO 4762 M5x16 8.8 A2C	TORNILLO CILINDRICO		

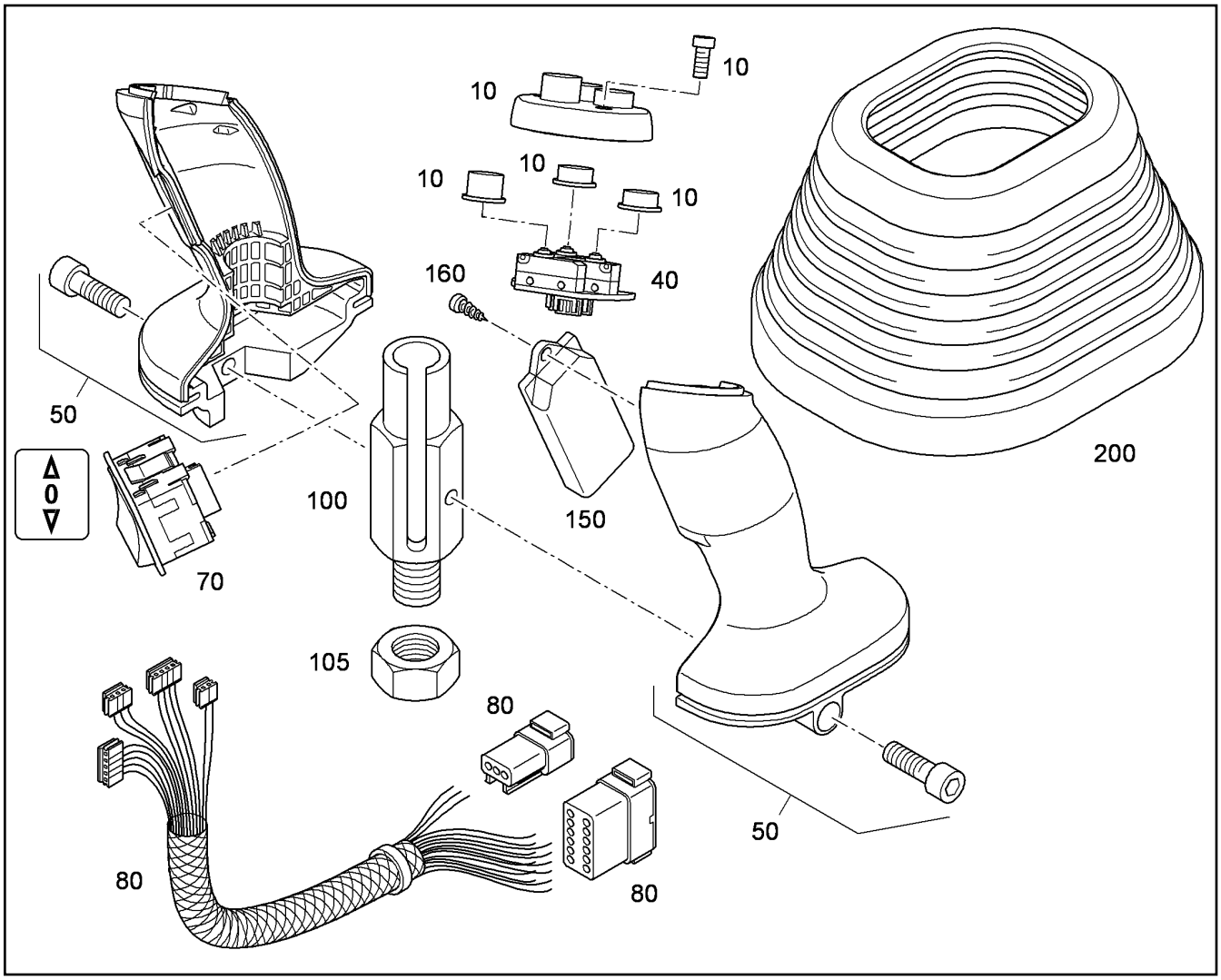

Pos.	Item	Quantity	Description	Descripción	Serie	K
10	10469917	1	PUSH-BUTTON COVER LEFT ⇨ ❑ 287			
40	9968578	1	PUSH BUTTON LINKS	TECLA PULSADORA		1
50	10469933	1	HANDLES LEFT ⇨ ❑ 288			
70	9968546	1	SWITCH T-0-T	INTERRUPTOR MANILLA		1
80	9968591	1	WIRE HARNESS HANDLE	JC MANILLA		1
100	10015495	1	CONNECTING SLEEVE 3	CASQUILLO DE UNION		
105	4001927	1	HEX NUT ISO 8675 M 14 X1,5 -10 DAC	TUERCA HEXAGONAL		
150	10017824	1	SENSORIC	SENSOR MANILLA CAPAC.		2
160	10017926	2	SCREW 22X6	TORNILLO		
200	10014790	1	RUBBER BELLOWS	FUELLE DOBLADO		

8

Ident :				
S ..	S ..	S ..	S ..	S ..
S ..	S ..	S ..	S ..	S ..
S ..	S ..	S ..	S ..	S ..
S ..	S ..	S ..	S ..	S ..

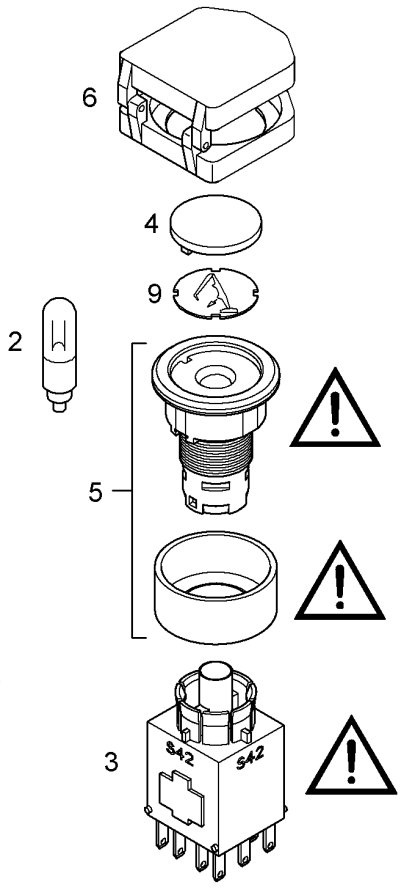

Diese Teile immer mit Pos. 8 bestellen damit diese markiert werden können.
Allways order this parts with pos. 8 to be able to label them.
Toujours commander ces pièces avec la pièce pos. 8 pour étiquetage,

Pos.	Item	Quantity	Description	Descripción	Serie	K
2	6001713	1	LIGHT BULB 30V/1,2W/T3	BOMBILLA		1
3	6204372	1	LUMINOUS PUSH BUTTON CONTACTOR	SENSOR CONTADOR PULSO LU		2
4	6204370	1	SPHERICAL CAP	CAZOLETA		
5	6204367	1	ACTUATOR	ACCIONADOR		2
6	6203735	1	PROTECTIVE COVER	TAPA PROTECCION		
8	10080490	1	LABEL	ETIQUETA		1
9	10080491	1	LABEL	ETIQUETA		1

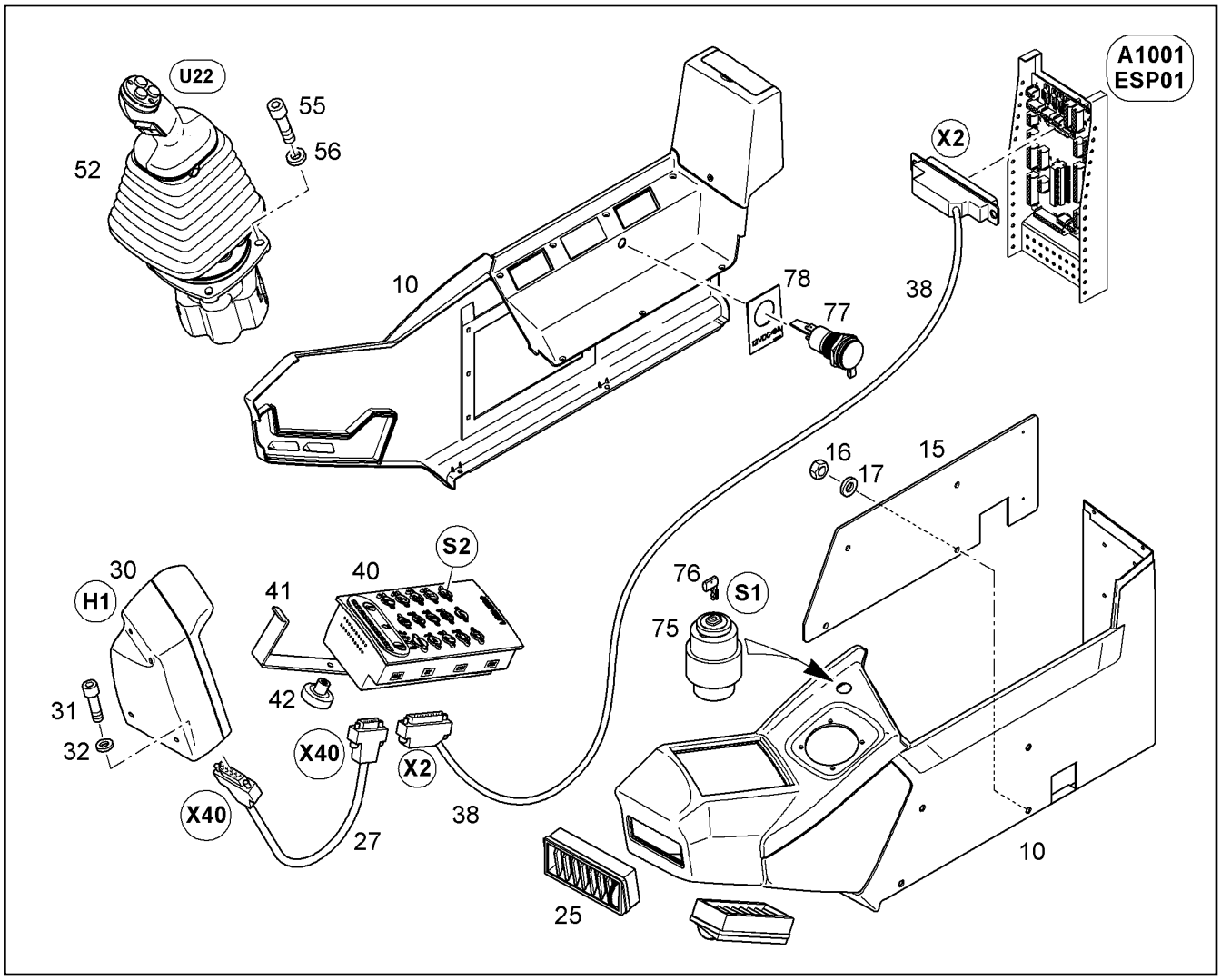

Pos.	Item	Quantity	Description	Descripción	Serie	K
10	5618923	1	CONTROL CONSOLE RIGHT ⇨ ❑ 295	CONSOLA DE MANDO A LA DE		
15	9392646	1	SHEET	PLACA		
16	4000383	4	HEX NUT ISO 4032 M 10 -10 A3C	TUERCA HEXAGONAL		
17	10289795	4	WASHER ISO 7089 10 300HV	ARANDELA		
25	5611480	1	AIR EJECTION NOZZLE	TOBERA DE EMPUJE AIRE		
27	9768248	1	CONNECTION CABLE	ENCHUFE MULTIPIN		2
30		1	DISPLAY CPL. R5.2/V6.2 ⇨ ❑ 294	DISPLAY EXCAVADORA COMPL.	29260-	1
31	4901161	1	CYLINDER SCREW ISO 4762 M6X20 10.9 A2	TORNILLO CILINDRICO		
32	10289802	1	WASHER ISO 7089 6 300HV	ARANDELA		
38	9768247	1	CABLE LOOM ESP01-BBT	KIT DE CABLES		2
40	10821963	1	KEYBOARD CPL. R5.1/V6.2 ⇨ ❑ 296	TECLADO EXCAVADORA COMPL		1
41	9388848	1	CLAMPING BRACKET	ESTRIBO DE APRIETE		1
42	7370096	1	TWIST HANDLE	MANDO INTERRUPTOR		
52	10068045	1	MANIPULATOR RIGHT CPL CAN ⇨ ❑ 298	APARATO MANDO MAN. DCHA.		1
55	4902267	4	CYLINDER SCREW ISO 4762 M6X25 10.9 A2	TORNILLO CILINDRICO		
56	4229911	4	LOCK WASHER	ARANDELA SEGURIDAD		
75	10228151	1	HEATER STARTER SWITCH	INTERRUPTOR ARRANQUE PRE		2
76	10221073	1	IGNITION KEY	LLAVE DE CONTACTO		
77	6001963	1	SOCKET	CAJA ENCHUFE		
78	10086265	1	LABEL	ETIQUETA		1

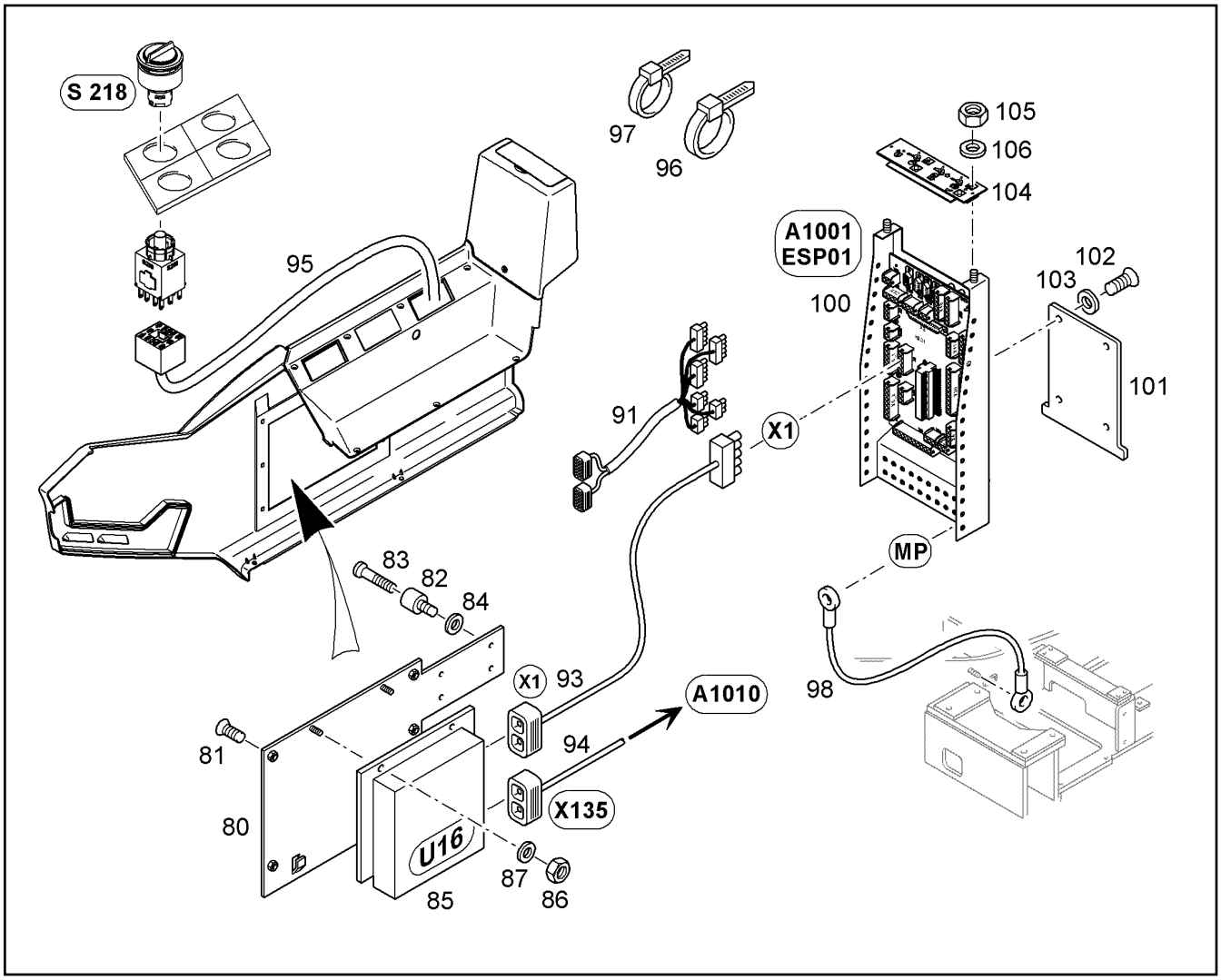

Pos.	Item	Quantity	Description	Descripción	Serie	K
80	9690616	1	CONSOLE	CONSOLA		
81	4002613	6	COUNTERSUNK SCREW ISO 7046 M6X20 4.	TORNILLO AVELLANADO		
82	7014560	4	RUBBER BUMPER	TOPE GOMA		
83	4901886	4	PAN-HEAD SCREW ISO 7045 M4X6 4.8 H A2	TORNILLO ROSCACHAPA		
84	4001645	4	WASHER DIN 125 B 4,3 ST A3C	ARANDELA		
85		1	PUMPS CONTROL CPL. R5.8/V6.2 ⇨ ❑ 297	MANDO EXCAVADORA COMPL.	29260-	1
86	4000379	2	HEX NUT M6	TUERCA HEXAGONAL		
87	10289802	2	WASHER ISO 7089 6 300HV	ARANDELA		
91	10822179	1	CABLE LOOM A1010-A1001	KIT DE CABLES		
93	10079010	1	CABLE LOOM X1/U16-X1/A1001	KIT DE CABLES		1
94	9949686	1	CABLE LOOM A1010-U16	KIT DE CABLES		1
95	9016551	1	CABLE LOOM S218-K34-X348	KIT DE CABLES		1
96	7001877	10	TIE WRAP	CINTA PARA CABLES		
97	7362507	4	CABLE CLIP	BRIDA DE CABLES		
98	9689583	1	EARTH CABLE	CABLE DE TIERRA		2
100	10347900	1	OUTPUT STAGE [10974] ⇨ ❑ 307	ETAPA FINAL		2
101	9758230	1	PLATE	CHAPA		1
102	4901870	4	COUNTERSUNK SCREW ISO 7046 M6X20 4.	TORNILLO AVELLANADO		
103	7362752	4	ROSE	ROSETA		
104	9013811	1	EMERGENCY CONTROL CPL ⇨ ❑ 306	ACC. EMERGENCIA COMPL.		1
105	4000376	1	HEX NUT M4	TUERCA HEXAGONAL		
106	4001645	1	WASHER DIN 125 B 4,3 ST A3C	ARANDELA		

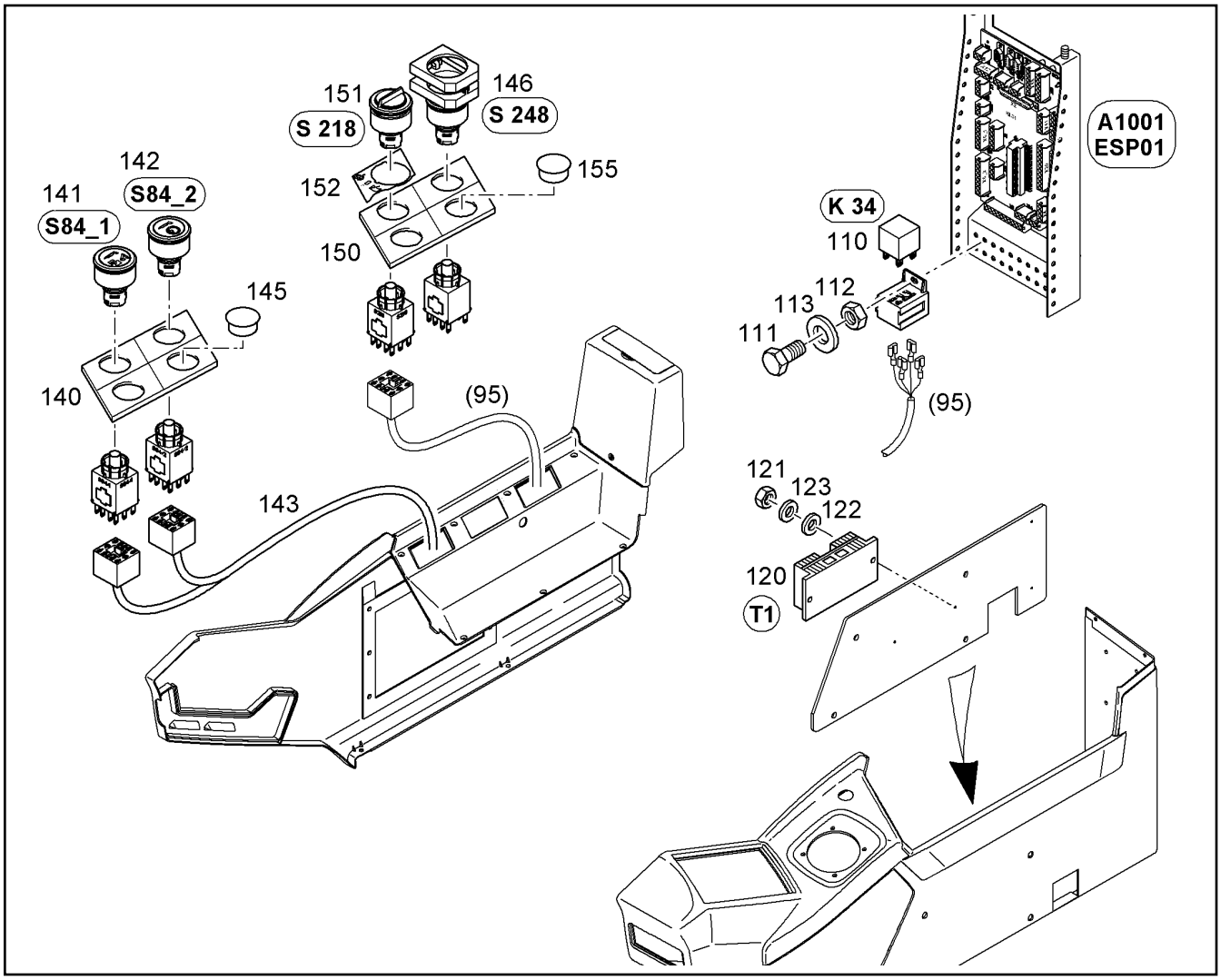

Pos.	Item	Quantity	Description	Descripción	Serie	K
110	6200906	1	RELAY	RELE		2
111	4065060	1	HEX BOLT ISO 4017 M5X10 8.8 A2C	TORNILLO DE CABEZA HEXAGO		
112	4000466	1	HEX NUT M5	TUERCA HEXAGONAL		
113	4202014	1	WASHER DIN 433 5,3 ST A3C	ARANDELA		
120	7026493	1	VOLTAGE TRANSFORMER	TRANSFORMADOR DE TENSION		
121	4000376	2	HEX NUT M4	TUERCA HEXAGONAL		
122	4001645	2	WASHER DIN 125 B 4,3 ST A3C	ARANDELA		
123	4239000	2	LOCK WASHER	ARANDELA SEGURIDAD		
140	7371141	1	SWITCH MODULE	MÓDULO CONMUT.		2
141	9989645	1	SWITCH INSTALLATION ⇨ ❑ 777	MONTAJE INTERR.		1
142	9989646	1	SWITCH INSTALLATION S84-2 ⇨ ❑ 778	MONTAJE INTERR.		1
143	9806352	1	CABLE LOOM S84-1/2	KIT DE CABLES		2
145	7371142	2	STOPPER PLUG	TAPON CIEGO		
146	10085767	1	SWITCH INSTALLATION S248 ⇨ ❑ 300	MONTAJE INTERR.		1
150	7371141	1	SWITCH MODULE	MÓDULO CONMUT.		2
151	9016516	1	SWITCH INSTALLATION S218 ⇨ ❑ 303	MONTAJE INTERR.		1
152	9016517	1	ADHESIVE FOIL	LAMINA ADHESIVA		1
155	7371142	2	STOPPER PLUG	TAPON CIEGO		

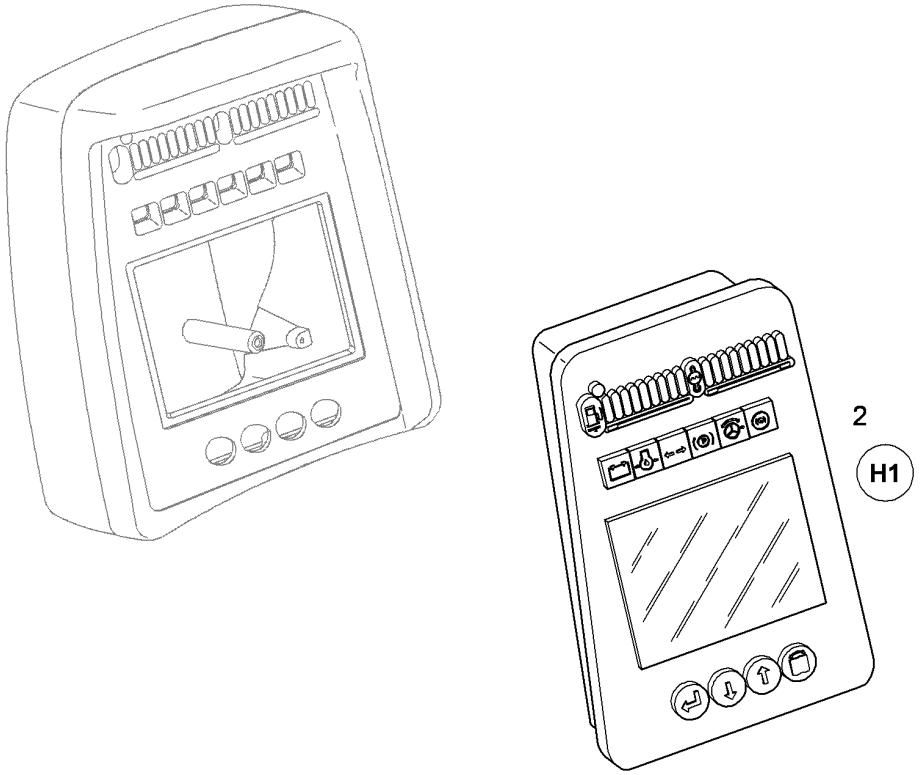

Pos.	Item	Quantity	Description	Descripción	Serie	K
2	10677204	1	EXCAVATOR DISPLAY [040571 9/10]	DISPLAY EXCAVADORA		2

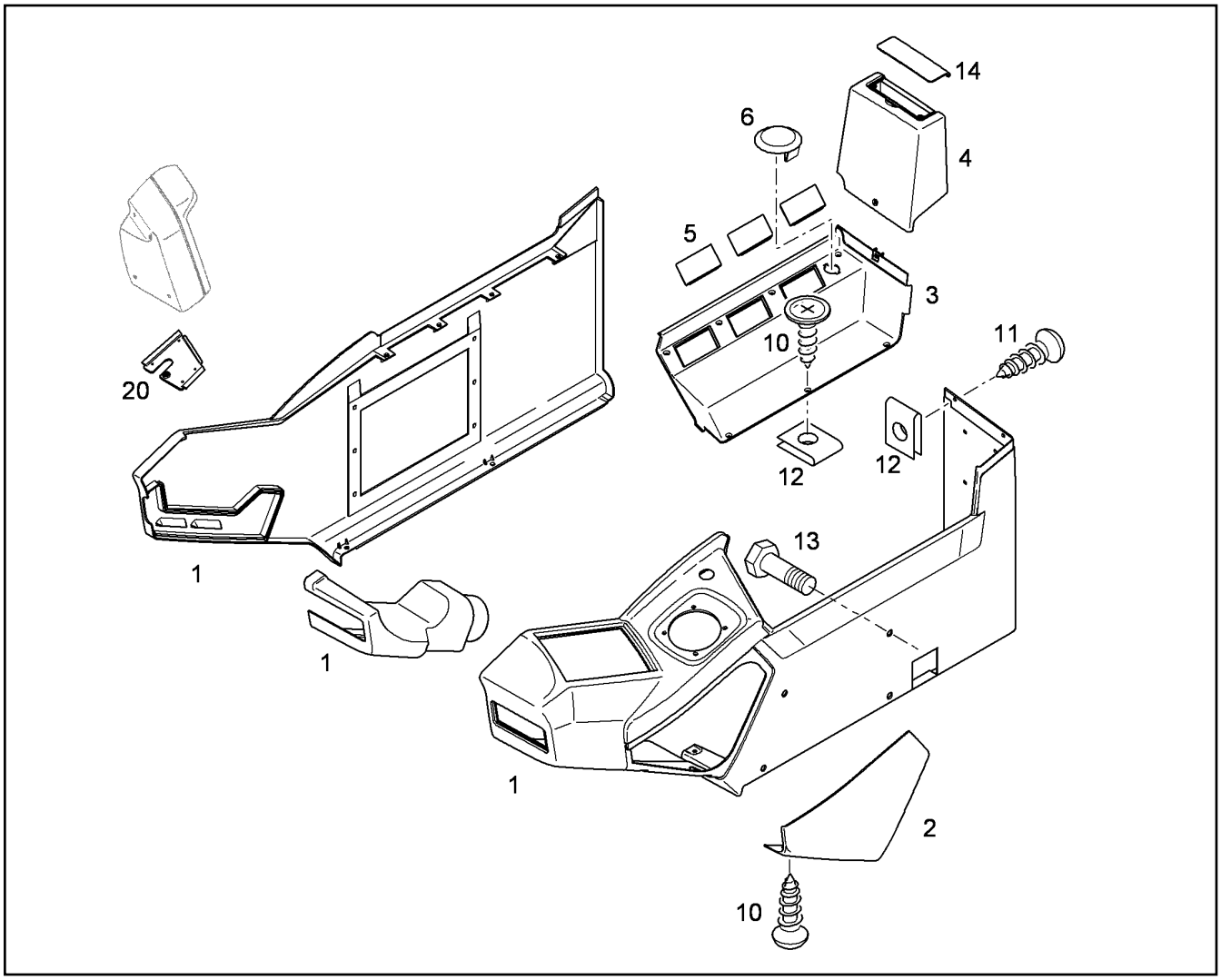

Pos.	Item	Quantity	Description	Descripción	Serie	K
1	5618922	1	BASIC BODY	CUERPO BASE		
2	7370894	1	VISIT COVER	TAPA DE MANTENIMIENTO		
3	7370891	1	SHELL	CUBETA		1
4	7370892	1	COVER HOOD	TAPA PROTECCION		
5	7370890	3	BLANK LID	TAPA POSTIZA		
6	10292443	1	STOP PLUG	TAPON		
10	7371577	9	COUNTERSUNK SCREW ISO 7047 M6X20 4	TORNILLO AVELLANADO		
11	7372158	2	SCREW	TORNILLO		
12	7370883	11	SHEET METAL NUT	TUERCA PARA CHAPA		
13	7370889	4	HEX NUT M10	TUERCA HEXAGONAL		1
14	7370893	1	FOLDING LID	TAPA ABATIBLE		
20	7373268	1	DISPLAY SUPPORT	BASE DISPLAY		

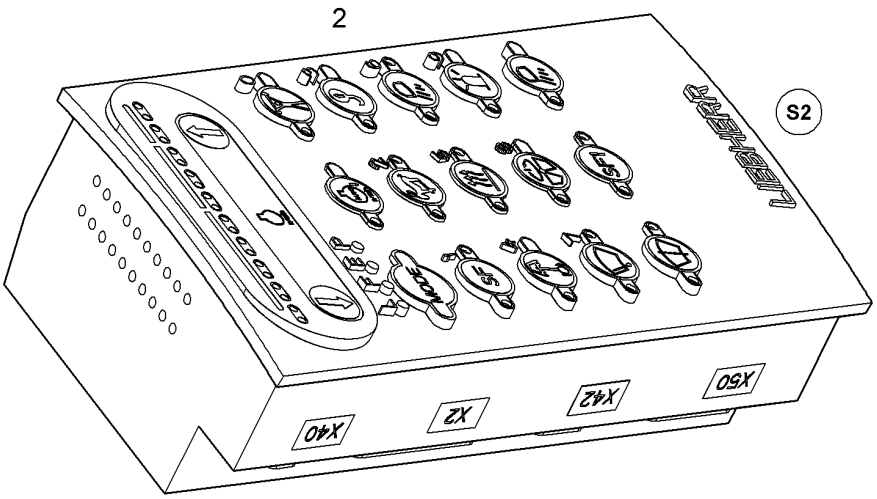

Pos.	Item	Quantity	Description	Descripción	Serie	K
2	10677206	1	KEYBOARD [043130 11/10]	TECLADO EXCAVADORA		

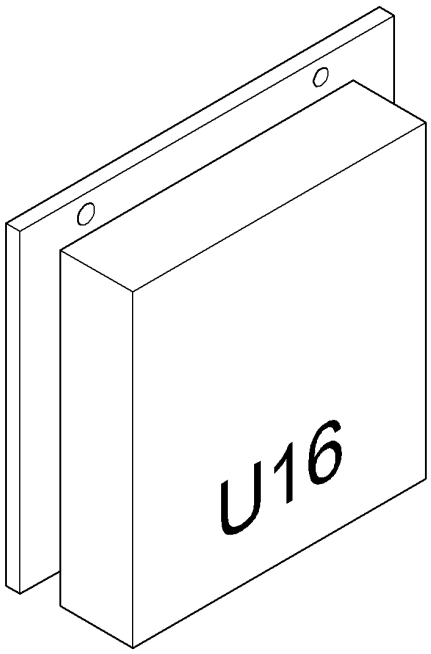

Pos.	Item	Quantity	Description	Descripción	Serie	K
2	10677645	1	EXCAVATOR CONTROL [037611 9/10]	MANDO EXCAVADORA		2

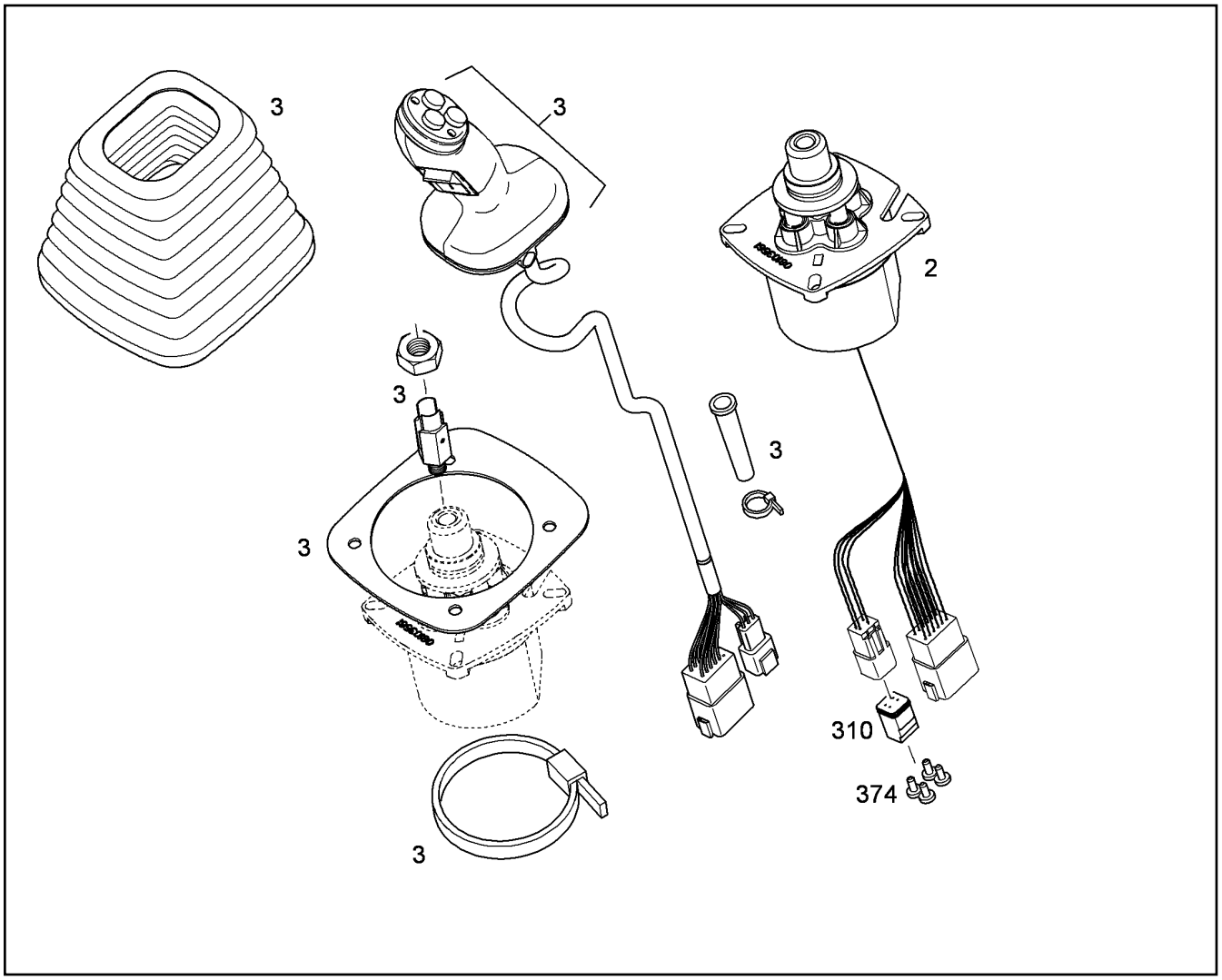

Pos.	Item	Quantity	Description	Descripción	Serie	K
2	10280039	1	PILOT CONTROL UNIT [L110105142154]	APARATO DE MANDO PREVIO		6
3	10058794	1	MANIPULATOR RIGHT ⇨ ❑ 299	SENSOR CONTR.PILOT.PREVIO		
310	6203136	1	BUSH HOUSING	CAJA DEL CASQUILLO		
374	7368253	4	STOPPER PLUG	TAPON CIEGO		

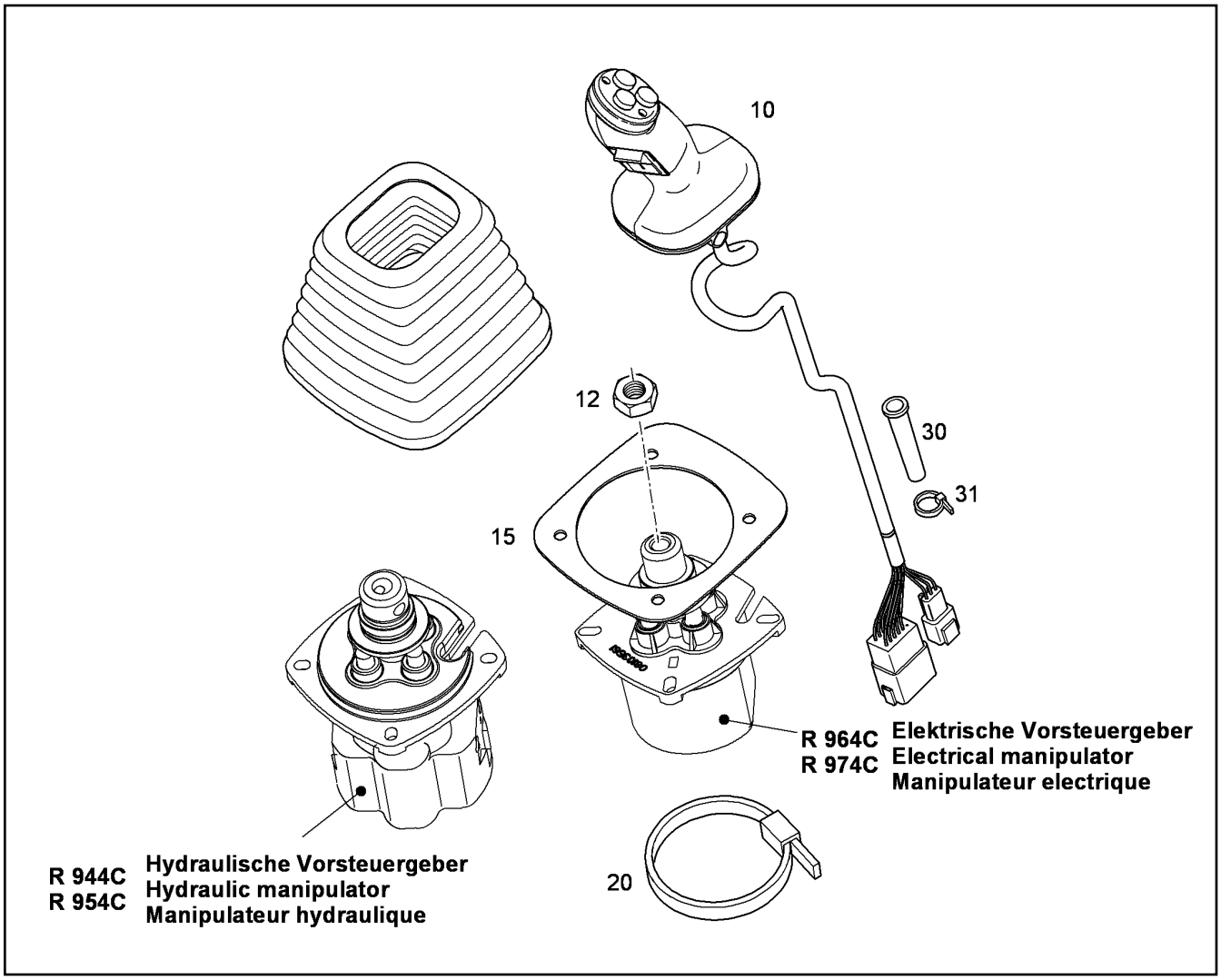

Pos.	Item	Quantity	Description	Descripción	Serie	K
10	9968611	1	LH-JOYSTICK RIGHT ⇨ ❑ 304	MANILLA DEL SENSOR LH DCHA		1
12	4900125	1	HEX NUT M12	TUERCA HEXAGONAL		
15	10058949	1	SHEET	PLACA		
20	7002480	1	CABLE TIE	BRIDAS		
30	10010154	1	PROTECTING SLEEVE 8/8/2,2	MANGUITO PROTECTOR		
31	7009088	1	CABLE TIE	BRIDAS		

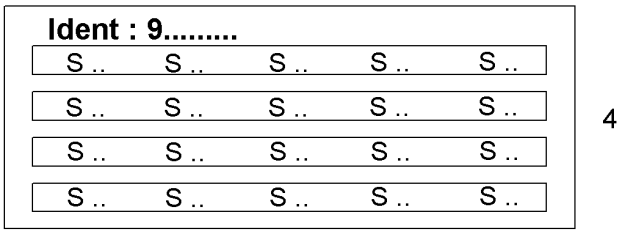

4

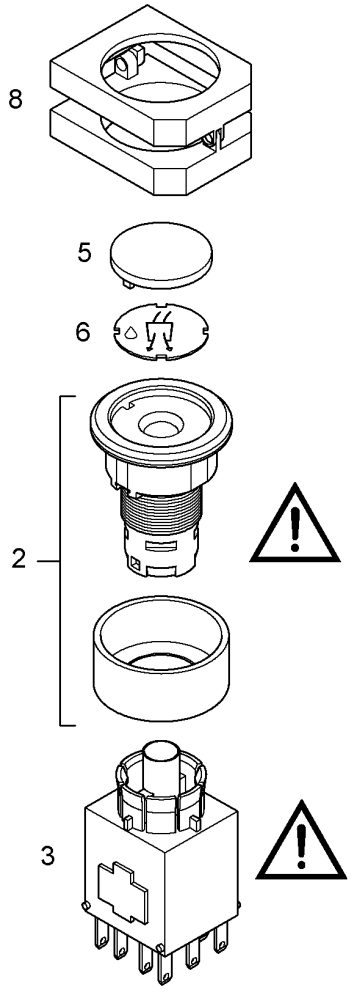

Diese Teile immer mit Pos. 4 bestellen damit diese markiert werden können.
Allways order this parts with pos. 4 to be able to label them.
Toujours commander ces pièces avec la pièce pos. 4 pour étiquetage,

Pos.	Item	Quantity	Description	Descripción	Serie	K
2	6204367	1	ACTUATOR	ACCIONADOR		2
3	6204371	1	TOUCH CONTACT TRANSMITTER	CONTACTOR PALPADOR		2
4	10085768	1	LABEL	ETIQUETA		1
5	10007193	1	SPHERICAL CAP	CAZOLETA		
6	10085769	1	LABEL	ETIQUETA		1
8	6203735	1	PROTECTIVE COVER	TAPA PROTECCION		

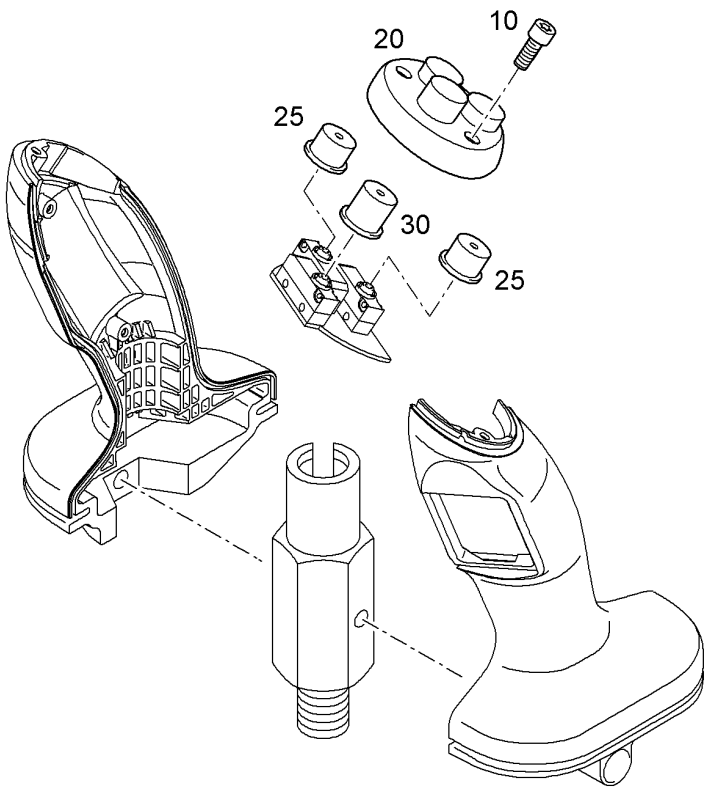

Pos.	Item	Quantity	Description	Descripción	Serie	K
10	10015712	2	SCREW	TORNILLO		
20	10040326	1	CAP	CAPUCHON		
25	10040322	2	BUTTON 1	BOTON		2
30	10040324	1	BUTTON 2	BOTON		2

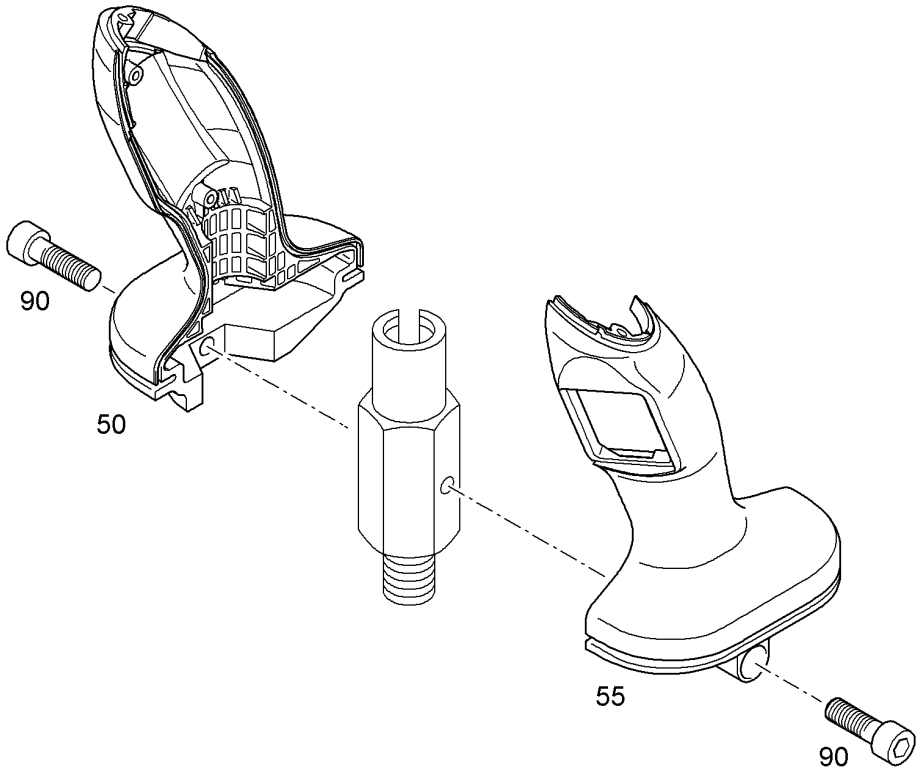

Pos.	Item	Quantity	Description	Descripción	Serie	K
50	10014780	1	GRIP SHELL	CACHA		
55	10014779	1	GRIP SHELL	CACHA		
90	4042062	2	CYLINDER SCREW ISO 4762 M5x16 8.8 A2C	TORNILLO CILINDRICO		

4

Ident : 9.....

S ..	S ..	S ..	S ..	S ..
S ..	S ..	S ..	S ..	S ..
S ..	S ..	S ..	S ..	S ..
S ..	S ..	S ..	S ..	S ..

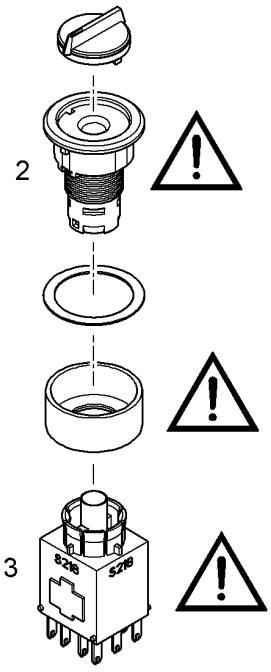

Diese Teile immer mit Pos. 4 bestellen
damit diese markiert werden können.
Allways order this parts with pos. 4
to be able to label them.
Toujours commander ces pièces avec la pièce pos. 4
pour étiquetage,

Pos.	Item	Quantity	Description	Descripción	Serie	K
2	10021882	1	SLECT BUTTON	INTERRUPTOR SELECTOR		2
3	6204371	1	TOUCH CONTACT TRANSMITTER	CONTACTOR PALPADOR		2
4	9988683	1	LABEL	ETIQUETA		

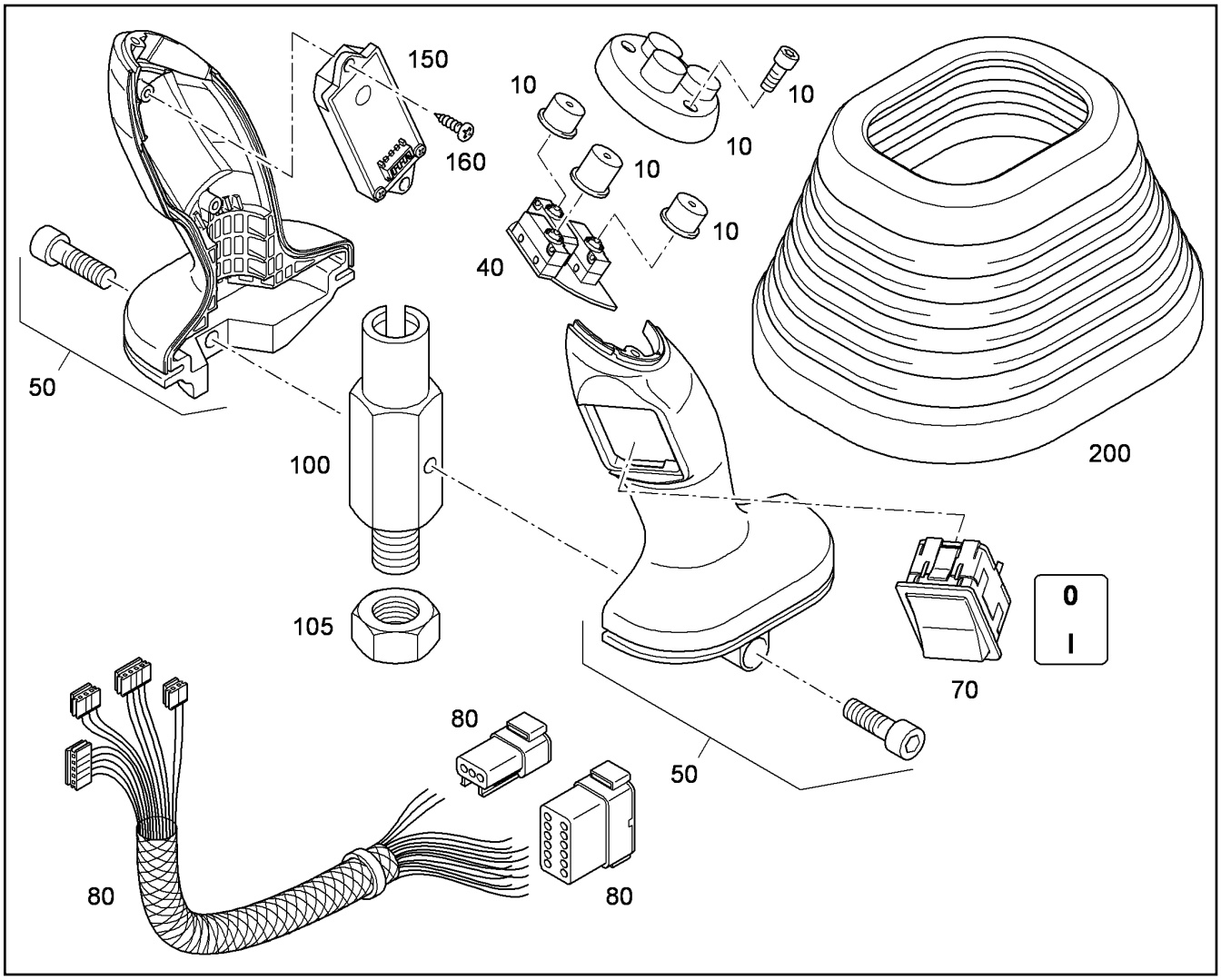

Pos.	Item	Quantity	Description	Descripción	Serie	K
10	10469918	1	PUSH-BUTTON COVER RIGHT ⇨ ❑ 301			
40	9968580	1	PUSH BUTTON RECHTS	TECLA PULSADORA		1
50	10469932	1	HANDLES RIGHT ⇨ ❑ 302			
70	9968570	1	SWITCH R-R	INTERRUPTOR MANILLA		1
80	9968591	1	WIRE HARNESS HANDLE	JC MANILLA		1
100	10015495	1	CONNECTING SLEEVE 3	CASQUILLO DE UNION		
105	4001927	1	HEX NUT ISO 8675 M 14 X1,5 -10 DAC	TUERCA HEXAGONAL		
150	10017824	1	SENSORIC	SENSOR MANILLA CAPAC.		2
160	10017926	2	SCREW 22X6	TORNILLO		
200	10014790	1	RUBBER BELLOWS	FUELLE DOBLADO		

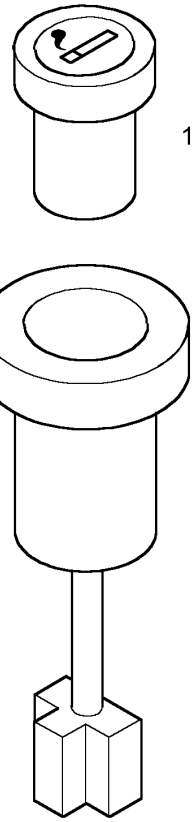

Pos.	Item	Quantity	Description	Descripción	Serie	K
1	7025644	1	PLUG	ENCHUFE		

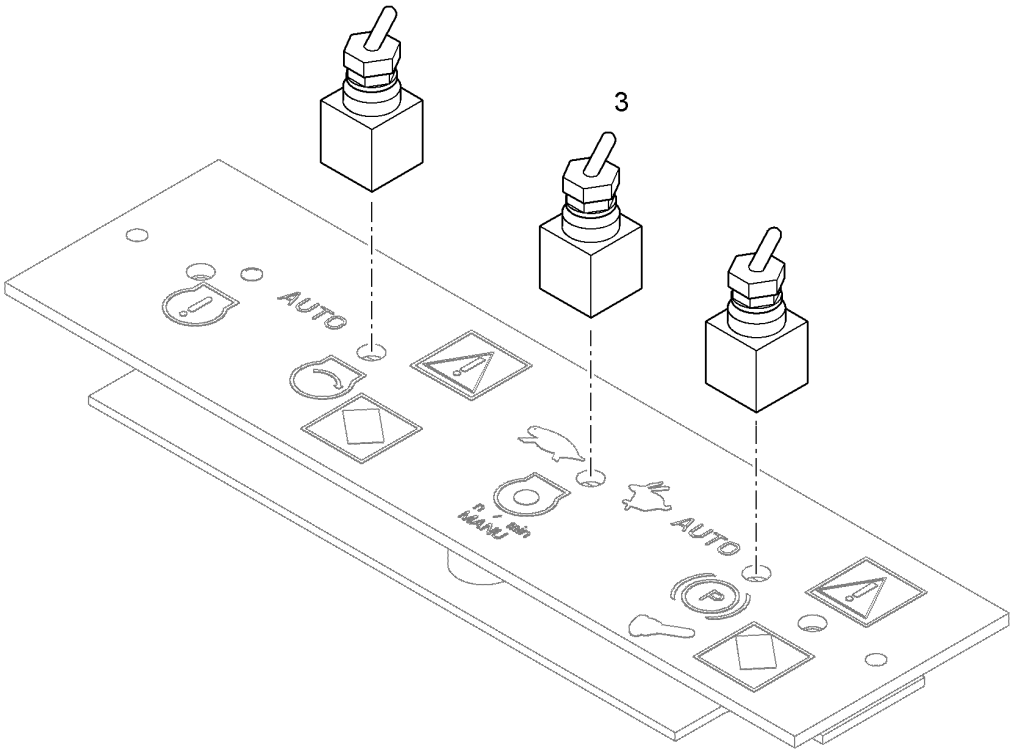

Pos.	Item	Quantity	Description	Descripción	Serie	K
3	10036533	1	CONTROL	SISTEMA DE CONTROL		2

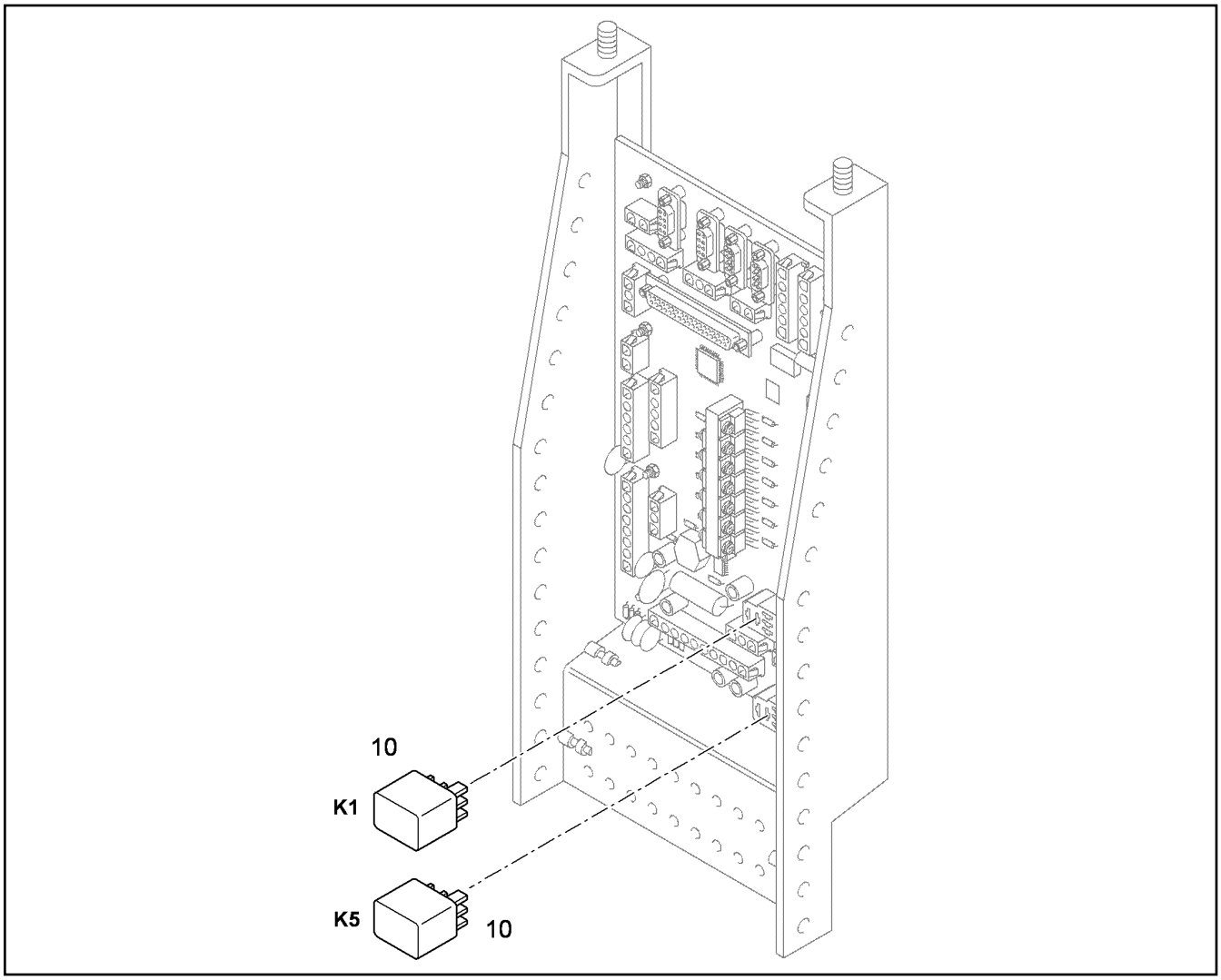

Pos.	Item	Quantity	Description	Descripción	Serie	K
10	6001682	2	RELAY	RELE		2

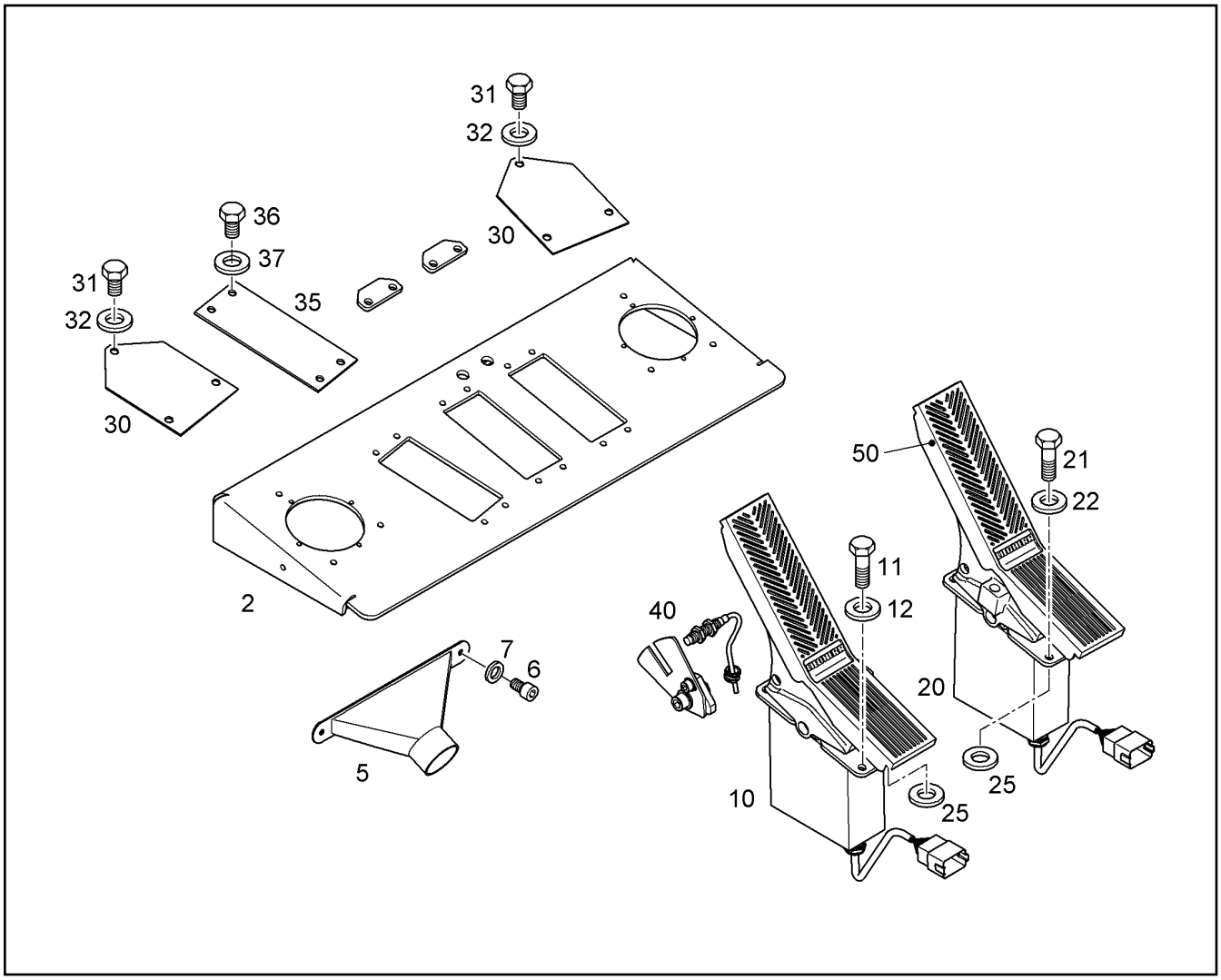

Pos.	Item	Quantity	Description	Descripción	Serie	K
2	10057988	1	SHEET	PLACA		
5	10016540	2	AIR NOZZLE	BOQUILLA CORRIENTE		
6	4902250	4	CYLINDER SCREW ISO 4762 M6X10 10.9 A2	TORNILLO CILINDRICO		
7	10289802	4	WASHER ISO 7089 6 300HV	ARANDELA		
10	10081424	1	FOOT PILOT VALVE LEFT ⇨ ❑ 309	AP.CONTR.PILOT.PEDAL IZDO.		1
11	4066042	4	HEX BOLT ISO 4017 M8X25 10.9 A2C	TORNILLO DE CABEZA HEXAGO		
12	4229912	4	LOCK WASHER /13X1,6 VS	ARANDELA SEGURIDAD		
20	10081426	1	FOOT PILOT VALVE RIGHT ⇨ ❑ 310	AP.CONTR.PILOT.PED.DCHO.		1
21	4066042	4	HEX BOLT ISO 4017 M8X25 10.9 A2C	TORNILLO DE CABEZA HEXAGO		
22	4229912	4	LOCK WASHER /13X1,6 VS	ARANDELA SEGURIDAD		
25	4635197	4	SHIM RING DIN 9888X14X1	ARANDELA AJUSTE		
30	9171589	2	LID	TAPA		1
31	4901362	6	HEX BOLT ISO 4017 M8X12 10.9 A2C	TORNILLO DE CABEZA HEXAGO		
32	4229912	6	LOCK WASHER /13X1,6 VS	ARANDELA SEGURIDAD		
35	9394442	1	LID	TAPA		1
36	4901362	4	HEX BOLT ISO 4017 M8X12 10.9 A2C	TORNILLO DE CABEZA HEXAGO		
37	4229912	4	LOCK WASHER /13X1,6 VS	ARANDELA SEGURIDAD		
40	10082560	1	PROXIMITY SWITCH INSTALLATION ⇨ ❑ 311	MONTAJE DETECTOR PROXIMI		1
50	9480295	1	FOOT BOARD COVERING	REVEST. P.PLACA REPOSAPIÉS		

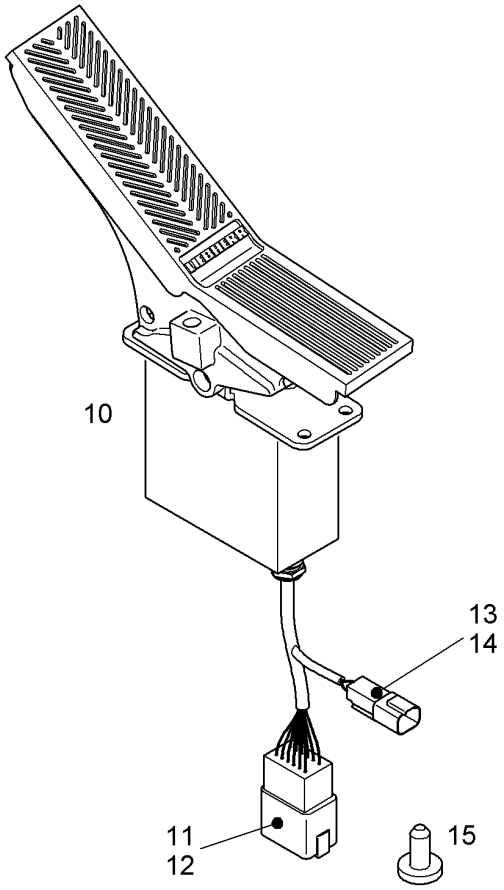

Pos.	Item	Quantity	Description	Descripción	Serie	K
10		1	FOOT SWITCH ⇨ ❑ 538	INTERUPTOR DE PEDAL		2
11	6905303	1	PIN HOUSING	CAJA DE CLAVIJAS		
12	6905304	1	CONTACT LOCK	BLOQUEO DE CONTACTO		
13	6203129	1	PIN HOUSING DT 2-POL 13A 1500V	CAJA DE CLAVIJAS		
14	7368241	1	CONTACT LOCK DT-STECKDOSE 2-POL	BLOQUEO DE CONTACTO		
15	7368253	11	STOPPER PLUG	TAPON CIEGO		

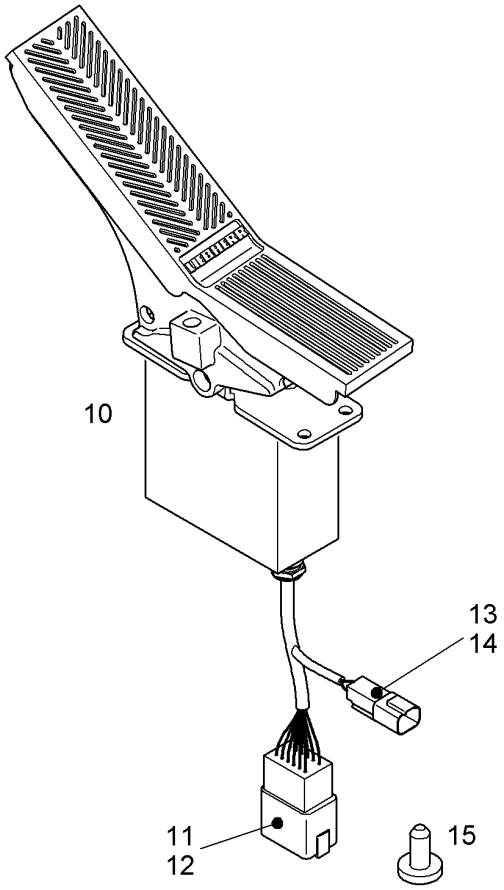

Pos.	Item	Quantity	Description	Descripción	Serie	K
10		1	FOOT SWITCH ⇨ ❑ 539	INTERUPTOR DE PEDAL		2
11	6905303	1	PIN HOUSING	CAJA DE CLAVIJAS		
12	6905304	1	CONTACT LOCK	BLOQUEO DE CONTACTO		
13	6203129	1	PIN HOUSING DT 2-POL 13A 1500V	CAJA DE CLAVIJAS		
14	7368241	1	CONTACT LOCK DT-STECKDOSE 2-POL	BLOQUEO DE CONTACTO		
15	7368253	11	STOPPER PLUG	TAPON CIEGO		

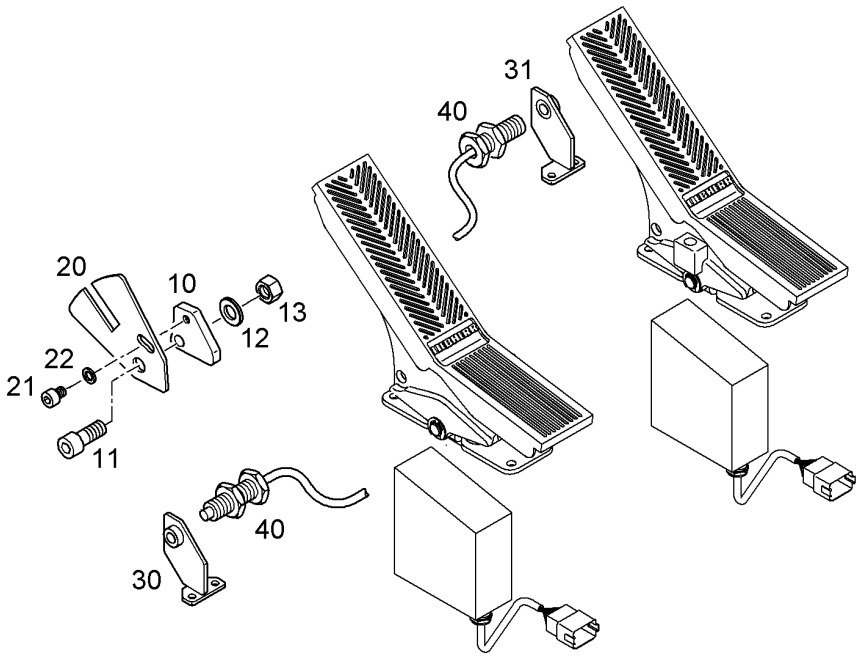

Pos.	Item	Quantity	Description	Descripción	Serie	K
10	9946134	2	PLATE	CHAPA		1
11	4043164	2	CYLINDER SCREW ISO 4762 M12X35 10.9	TORNILLO CILINDRICO		
12	10289804	4	WASHER ISO 7089 12 300HV	ARANDELA		
13	4900546	2	HEX NUT ISO 4032 M 12 -10 A3C	TUERCA HEXAGONAL		
20	9943165	2	PLATE	CHAPA		1
21	4902254	2	CYLINDER SCREW ISO 4762 M8X12 10.9 A2	TORNILLO CILINDRICO		
22	10289803	2	WASHER ISO 7089 8 300HV	ARANDELA		
30	9943365	1	BRACKET	ESTRIBO		1
31	9943105	1	BRACKET	ESTRIBO		1
40	9937443	2	PROXIMITY SWITCH W/ CONNECT. ⇨ ❑ 312	DETECTOR PROXIMIDAD C.EN		1

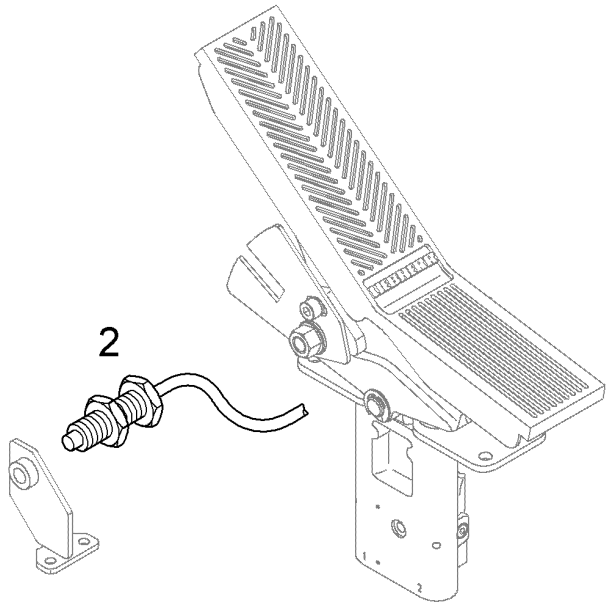

Pos.	Item	Quantity	Description	Descripción	Serie	K
2	10024864	1	PROXIMITY SWITCH	DETECTOR DE PROXIMIDAD		2

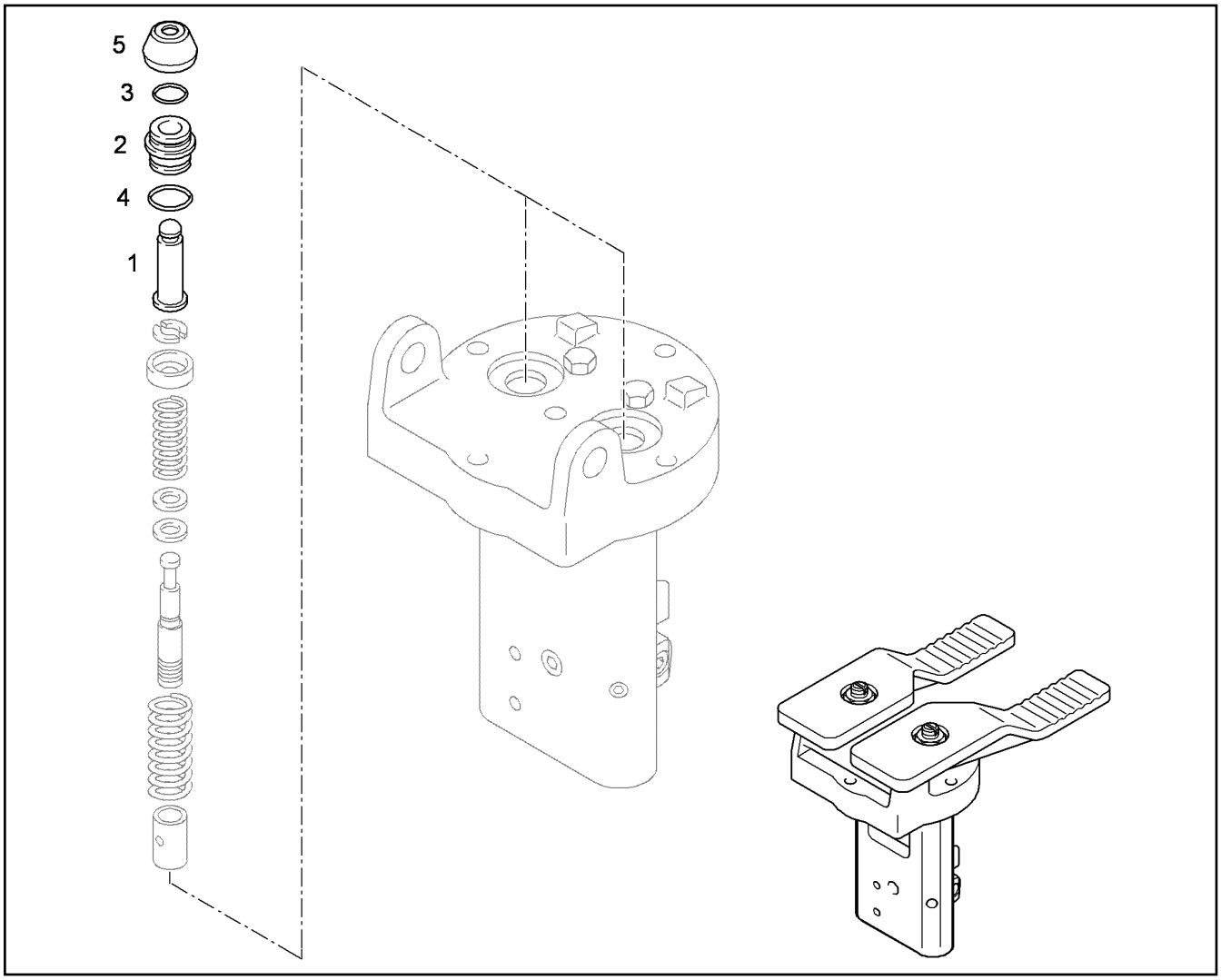

Pos.	Item	Quantity	Description	Descripción	Serie	K
1		1	TAPPET	CABEZAL		1
2		1	BUSH	CASQUILLO		1
3		1	ROTOR GASKET 10X13,6X2,3	JUNTA DE ROTOR		1
4		1	O-RING	JUNTA TORICA		1
5		1	RUBBER CAP	CUBIERTA GOMA		1

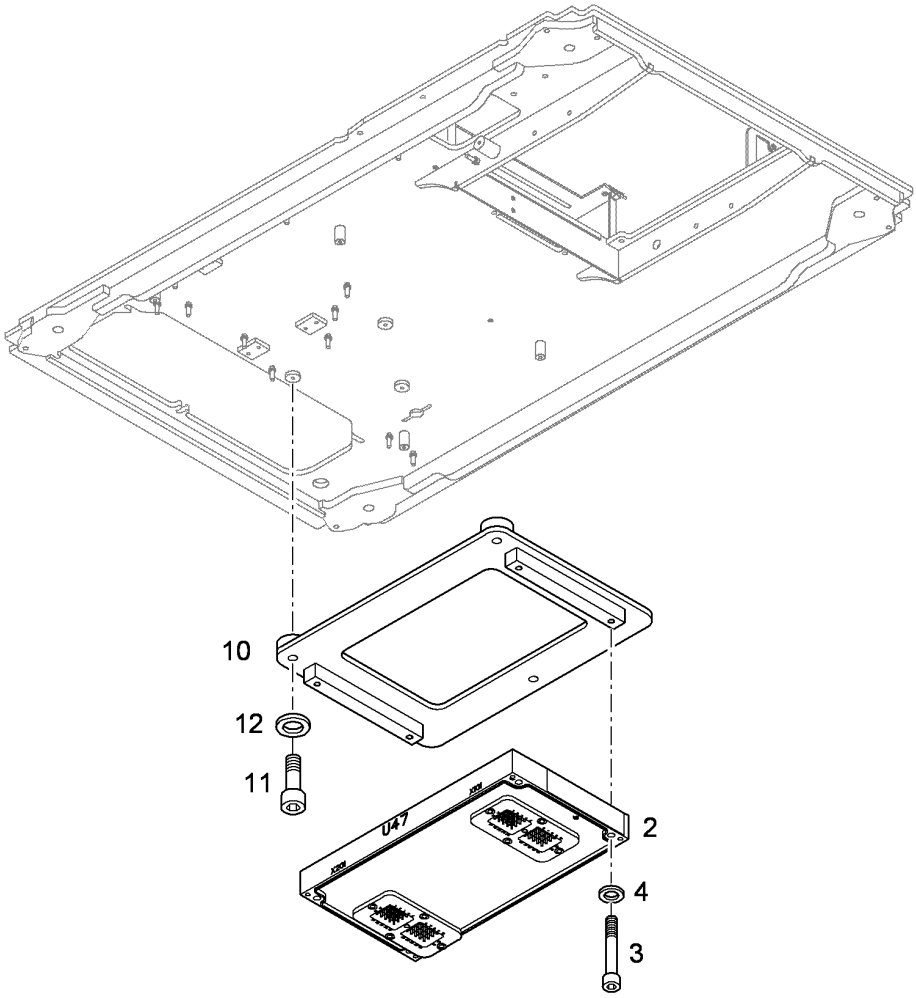

Pos.	Item	Quantity	Description	Descripción	Serie	K
2	10829248	1	ELECTRIC BOX CPL. U47-V1.5 ⇨ ❑ 329	CAJA EL.COMPL.	99999-	1
3	4600340	4	CYLINDER SCREW ISO 4762 M6X40 10.9 A2	TORNILLO CILINDRICO		
4	10289802	4	WASHER ISO 7089 6 300HV	ARANDELA		
10	10079148	1	CONSOLE	CONSOLA		
11	4901217	3	CYLINDER SCREW ISO 4762 M8X25 10.9 A2	TORNILLO CILINDRICO		
12	10289803	3	WASHER ISO 7089 8 300HV	ARANDELA		

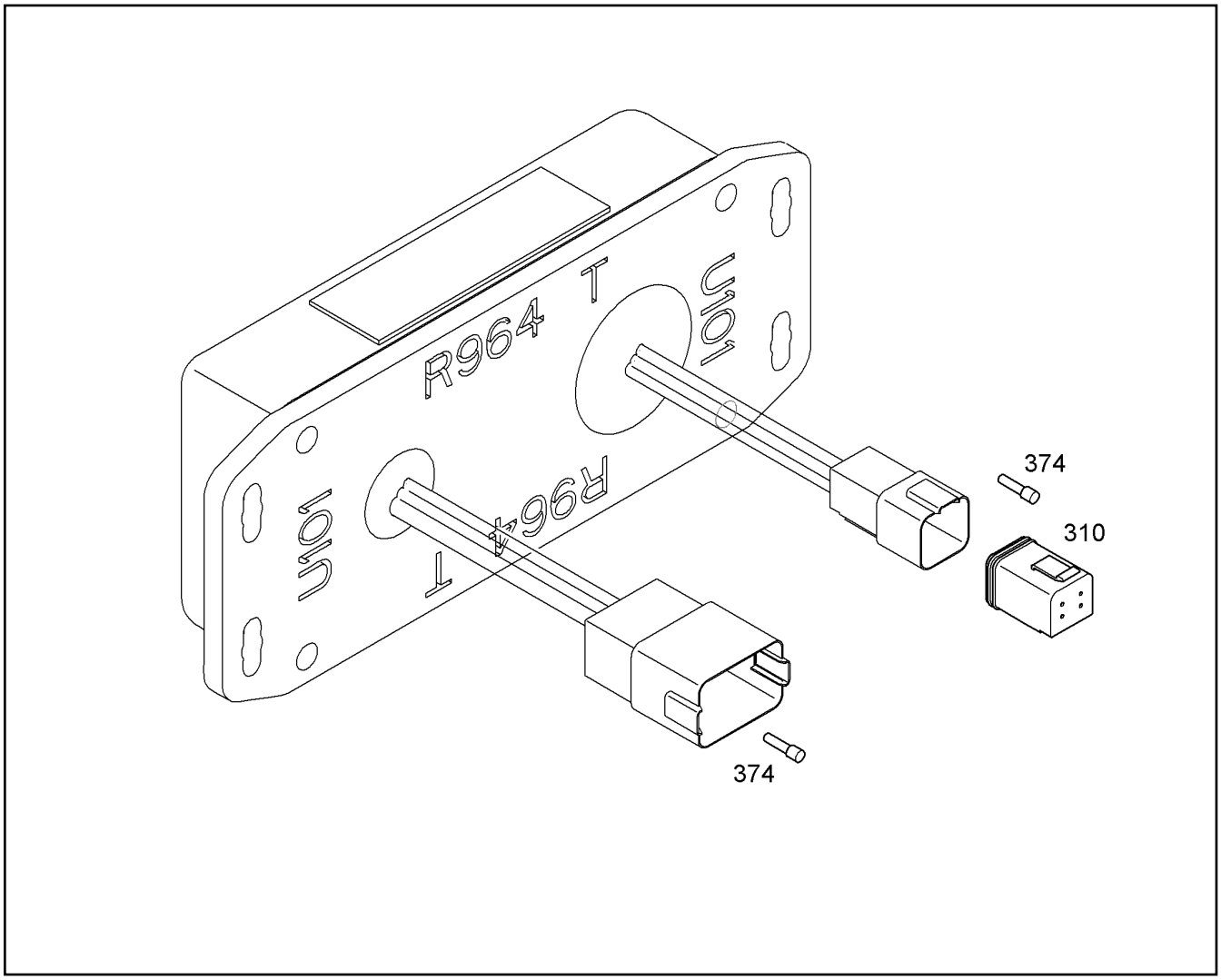

Pos.	Item	Quantity	Description	Descripción	Serie	K
310	6203136	1	BUSH HOUSING	CAJA DEL CASQUILLO		
374	7368253	12	STOPPER PLUG	TAPON CIEGO		

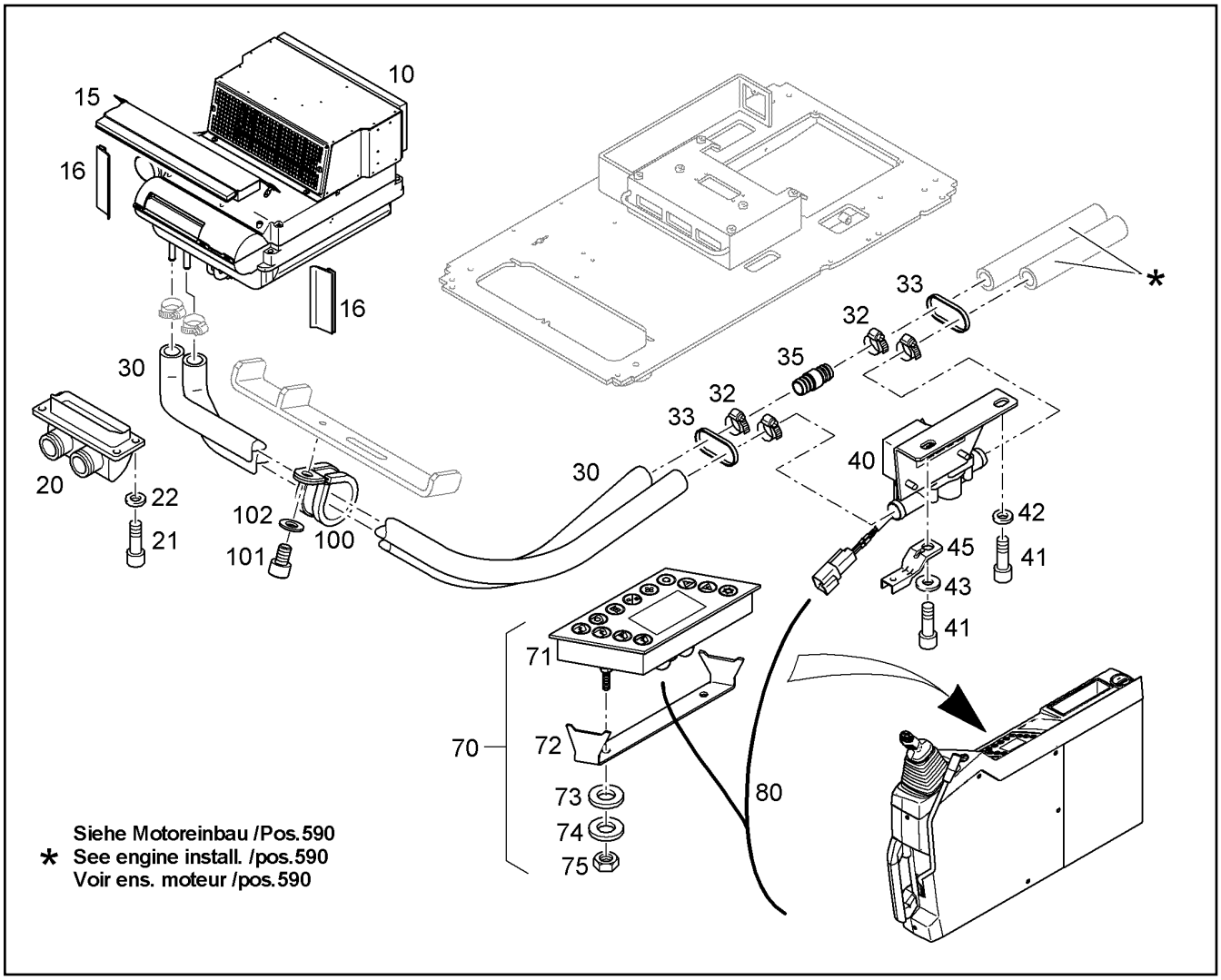

Pos.	Item	Quantity	Description	Descripción	Serie	K
10		1	EVAPORATOR [1774870038] ⇨ ❑ 318	EVAPORADOR	-99999	
15		1	COVER PLATE	CHAPA COBERTURA		
16	10008649	0.28m	SEALING PROFILE	PERFIL ESTANCO		1
20		1	CASE ⇨ ❑ 325	CAJON		
21	4043160	4	CYLINDER SCREW ISO 4762 M12X20 10.9	TORNILLO CILINDRICO		
22	10289804	4	WASHER ISO 7089 12 300HV	ARANDELA		
30	9008530	2	WATER HOSE	MANGUERA DE AGUA		1
32	4901138	4	HOSE CLAMP DIN 3017 A 16 - 27 X 9 W2-2	ABRAZADERA MANGUERA		
33	7001877	2	TIE WRAP	CINTA PARA CABLES		
35	7365704	1	INTERMEDIATE PIECE	PIEZA INTERMEDIA		
40	10292661	1	WATER VALVE	VALVULA DE AGUA		1
41	4901217	2	CYLINDER SCREW ISO 4762 M8X25 10.9 A2	TORNILLO CILINDRICO		
42	10289803	1	WASHER ISO 7089 8 300HV	ARANDELA		
43	4000779	1	WASHER DIN 9021 8,4 ST A3C	ARANDELA		
45	10041876	1	HOLDER	FIJADOR		
70	10493087	1	OPERATING ELEMENT	ELEMENTO DE MANDO		
71		1	OPERATING ELEMENT	ELEMENTO DE MANDO		
72		1	MOUNTING BRACKET	ESTRIBO DE FIJACION		
73		1	WASHER ISO 7089 6 300HV	ARANDELA		
74		1	CIRCLIP DIN 127 A 6 A3C	ANILLO DE MUELLE		
75		1	HEX NUT M6	TUERCA HEXAGONAL		
80		1	CABLE LOOM	KIT DE CABLES		2
100	7367691	1	CLAMP DIN 3016 D1- 40 X 25 W1-2-CR	ABRAZADERA		

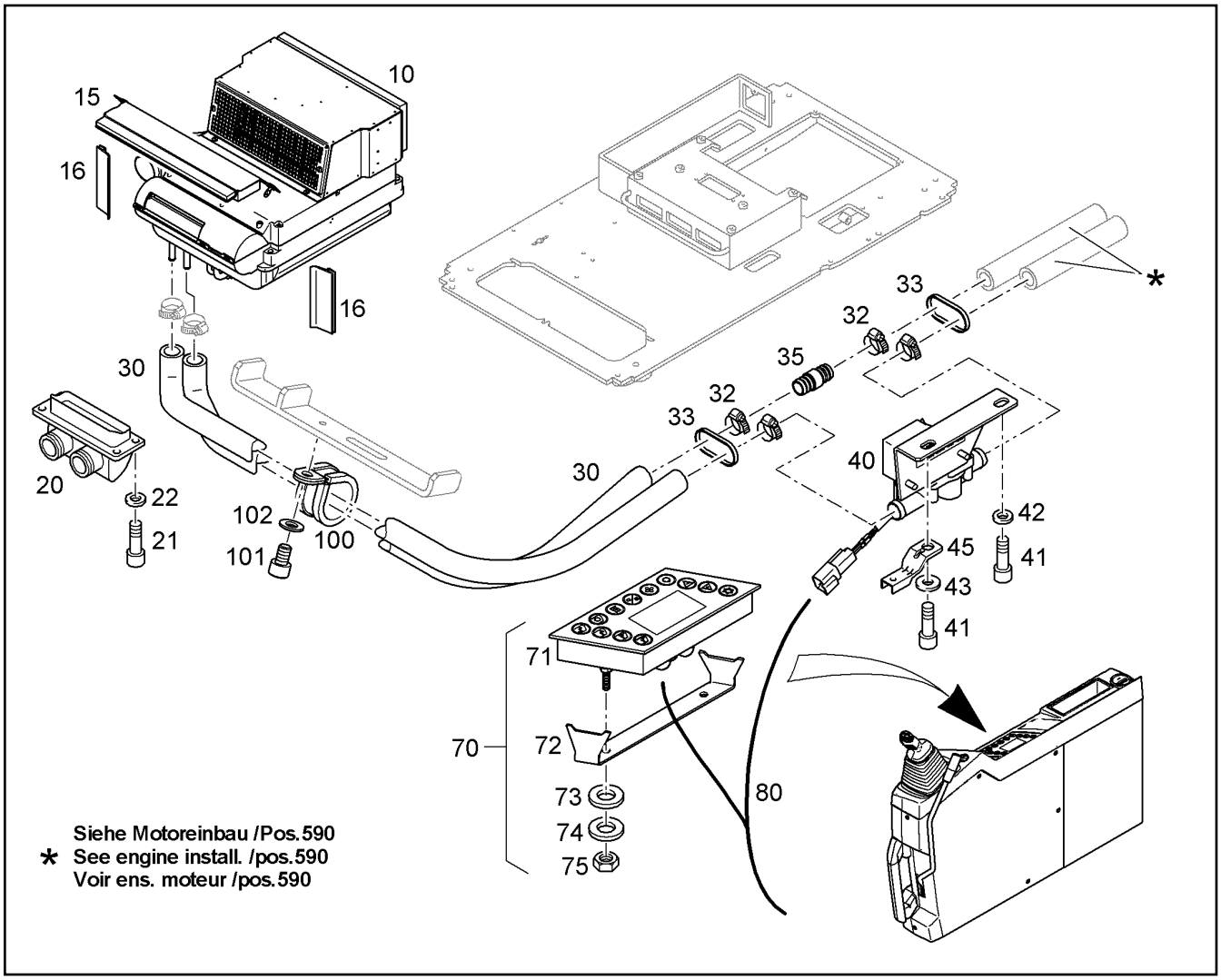

Pos.	Item	Quantity	Description	Descripción	Serie	K
101	4902254	1	CYLINDER SCREW ISO 4762 M8X12 10.9 A2	TORNILLO CILINDRICO		
102	10289803	1	WASHER ISO 7089 8 300HV	ARANDELA		

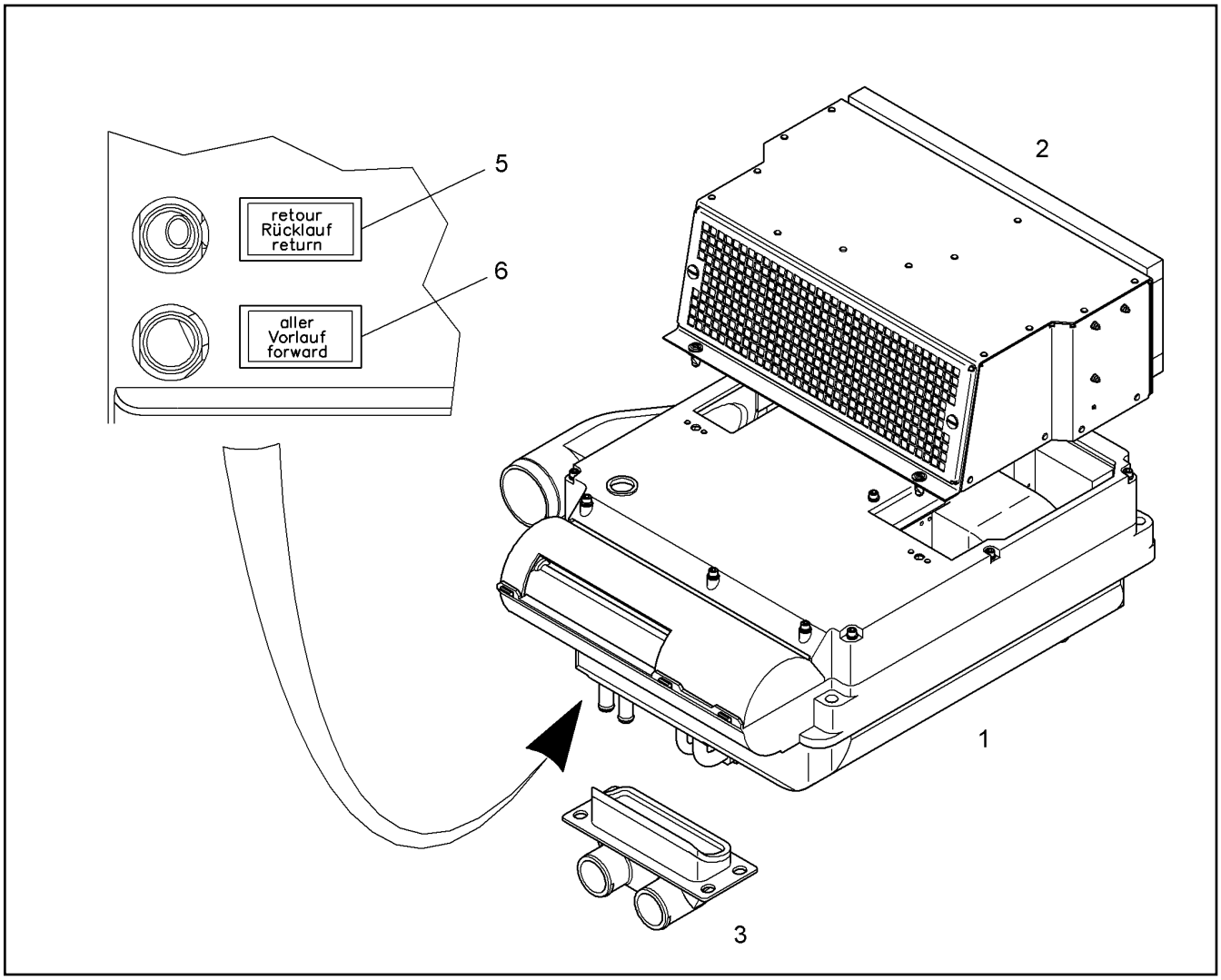

Pos.	Item	Quantity	Description	Descripción	Serie	K
1	11003594	1	HOUSING ⇨ ❑ 322	CARCASA		
2	10022117	1	AIR CIRCULATION CASE ⇨ ❑ 321	CAJA CONDUCTO AIRE		
3	10022119	1	CASE ⇨ ❑ 325	CAJON		
5	10022635	1	SIGN	LETRERO		
6	10022636	1	SIGN	LETRERO		

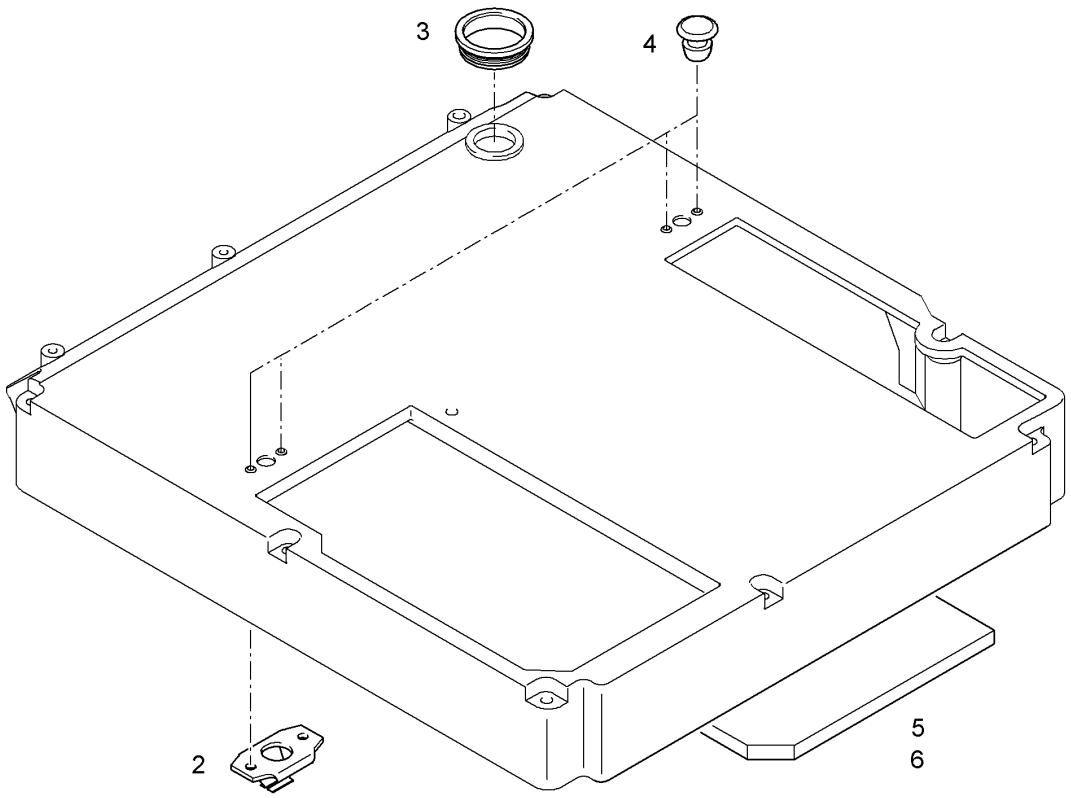

Pos.	Item	Quantity	Description	Descripción	Serie	K
2	10022775	2	SPRING CLIPS			
3	10022774	1	BLANKING PLUG	TAPON DE CIERRE		
4	4451001	4	RIVET	REMACHE		
5	10022773	1	INSULATING MAT	ESTERA AISLANTE		
6	8716533	1	SPRAY STICKER	ADHESIVO SPRAY		

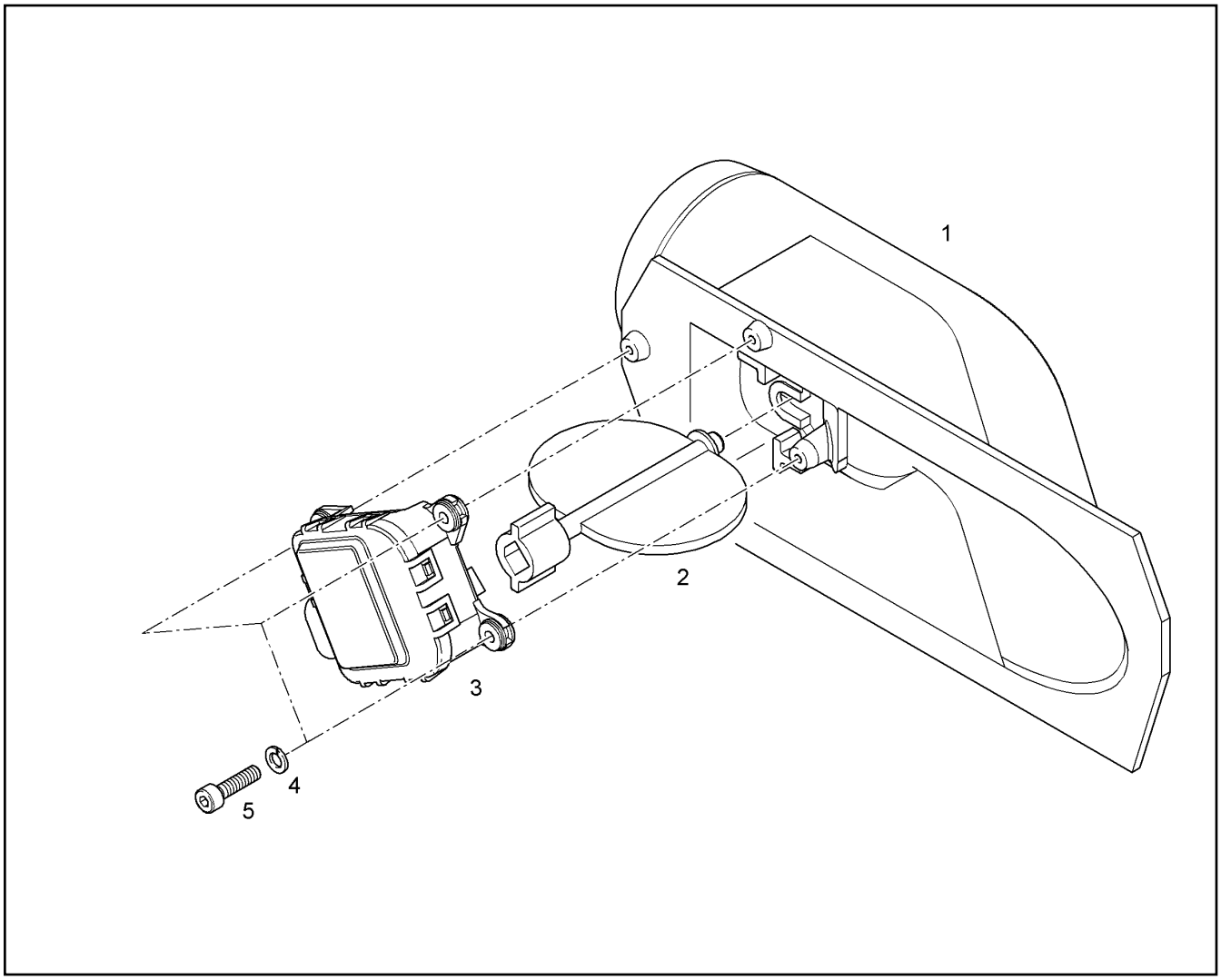

Pos.	Item	Quantity	Description	Descripción	Serie	K
1	10005677	1	AIR CIRCULATION PART	PIEZA GUIA DE AIRE		
2	10005674	1	AIR FLAP	CHAPALETA DE AIRE		
3	10022766	1	SERVOMOTOR	MOTOR AJUSTE		2
4	4600036	3	CIRCLIP DIN 127 A 4 A3C	ANILLO DE MUELLE		
5	4600337	3	CYLINDER SCREW ISO 4762 M4x16 8.8 A2C	TORNILLO CILINDRICO		

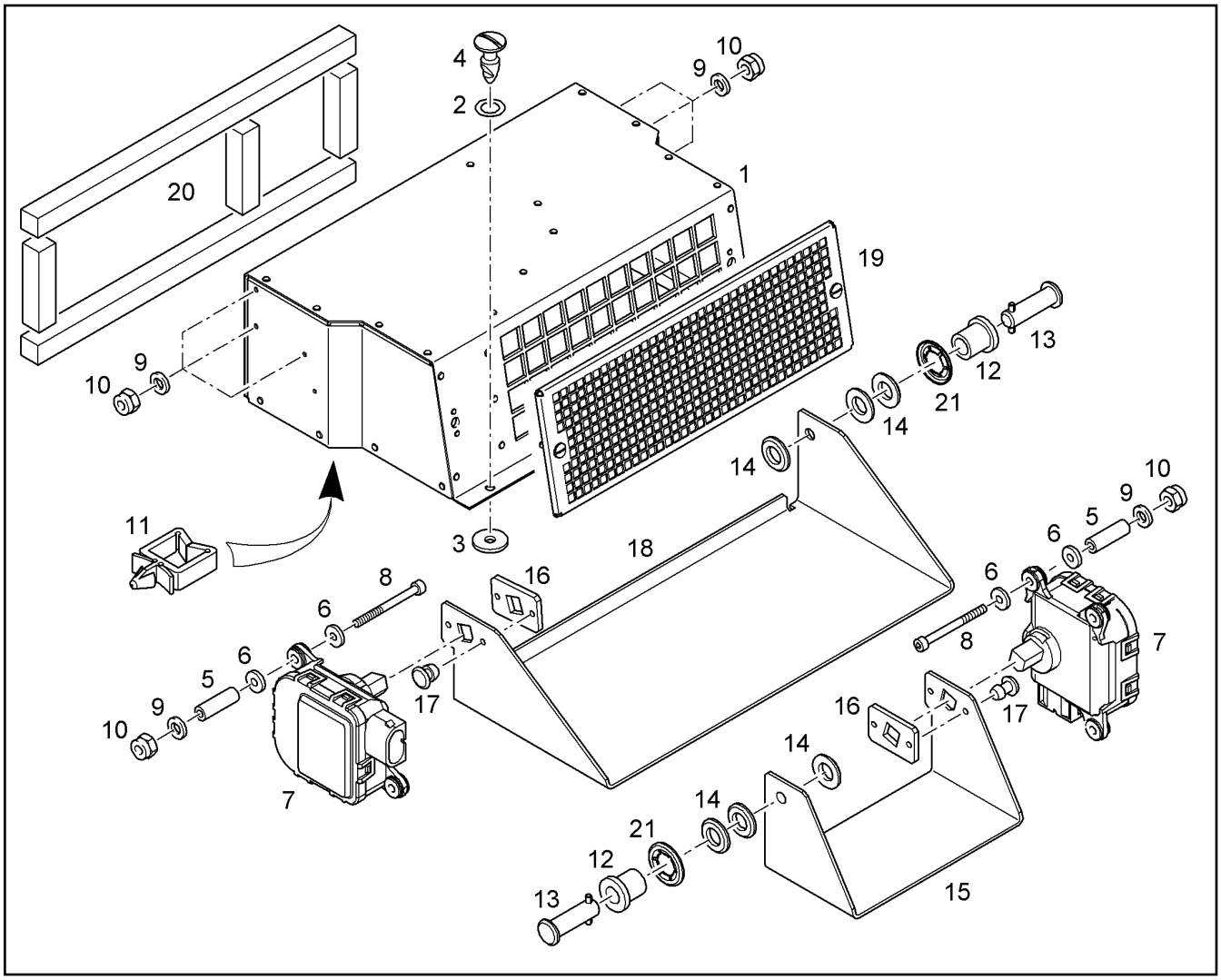

Pos.	Item	Quantity	Description	Descripción	Serie	K
1	10022787	1	AIR CIRCULATION CASE	CAJA CONDUCTO AIRE		
2	10022769	2	HEAD-TYPE WASHER S=0,2	ARANDELA DE CABECERA		
3	10022767	2	U-WASHER	ARANDELA U		
4	10022785	2	QUICK LOCK	CONEXION RAPIDA		
5	10022783	6	SPACER BUSH	CASQUILLO DISTANCIADOR		1
6	421802008	12	WASHER 4	ARANDELA		
7	10022766	2	SERVOMOTOR	MOTOR AJUSTE		2
8	4981259	6	CYLINDER SCREW ISO 4762 M4X45 10.9	TORNILLO CILINDRICO		
9	4001645	6	WASHER DIN 125 B 4,3 ST A3C	ARANDELA		
10	4600625	6	HEX NUT M4	TUERCA HEXAGONAL		
11	10023106	2	CABLE CLAMP	FIJADOR CABLE		
12	10022782	2	BUSH	CASQUILLO		1
13	10022781	2	PIN	BULON		1
14	10289802	6	WASHER ISO 7089 6 300HV	ARANDELA		
15	10022780	1	AIR FLAP	CHAPALETA DE AIRE		1
16	10022779	2	REINFORCING SECTION	PERFIL DE REFUERZO		1
17	7401288	4	BLIND RIVET DIN 7337 A 4,0X 8,0 AL/ST	REMACHE CIEGO		
18	10022778	1	AIR FLAP	CHAPALETA DE AIRE		1
19	10022777	1	CIRCULATING AIR GRID ⇨ ❑ 326	REJILLA CIRCUL.AIRE		
20	10022776	1	BURR FASTENING TAPE	ESPUMA PE		
21	7025121	2	SPRING WASHER	ARANDELA DE MUELLE		

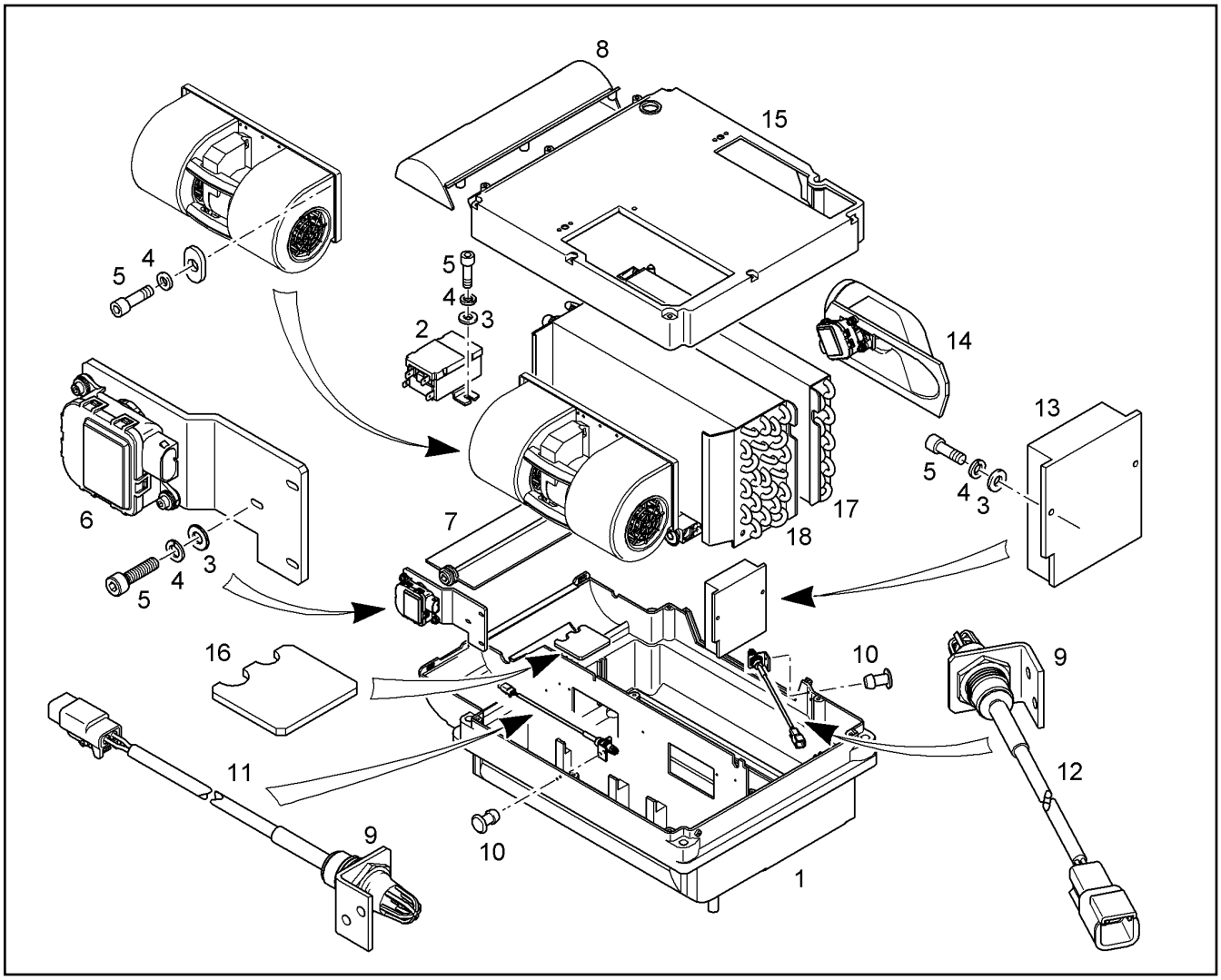

Pos.	Item	Quantity	Description	Descripción	Serie	K
1	10005672	1	EVAPORATOR HOUSING	CAJA DE EVAPORADOR		
2	10022048	1	THERMOSTAT	TERMOSTATO		2
3	4002887	7	WASHER ISO 7090 4 -200HV A2	ARANDELA		
4	4600036	10	CIRCLIP DIN 127 A 4 A3C	ANILLO DE MUELLE		
5	4600337	10	CYLINDER SCREW ISO 4762 M4x16 8.8 A2C	TORNILLO CILINDRICO		
6	10022078	1	ASSEMBLY BRACKET ⇨ ❑ 324	ESCUADRA DE MONTAJE		
7	10005675	1	AIR FLAP	CHAPALETA DE AIRE		
8	10005679	1	EVAPORATOR HOUSING	CAJA DE EVAPORADOR		
9	10022049	2	FIXING BRACKET	PERFIL DE FIJACION		
10	10022656	4	BLIND RIVET	REMACHE CIEGO		
11	10022067	1	TEMPERATURE SENSOR	PALPADOR DE TEMPERATURA		2
12	10022077	1	TEMPERATURE SENSOR	PALPADOR DE TEMPERATURA		2
13	10493089	1	CONTROL ELEMENT	ELEMENTO DE MANDO		
14	10022083	1	AIR CONNECTION PART ⇨ ❑ 320	TUBULADURA AIRE		
15	10022069	1	EVAPORATOR HOUSING ⇨ ❑ 319	CAJA DE EVAPORADOR		
16	10022051	1	COVER	CUBIERTA		
17	10022070	1	HEATING BATTERY	BATERÍA CALEFACCIÓN		2
18	10022068	1	HEAT EXCHANGER	INTERCAMBIADOR DE CALOR		2

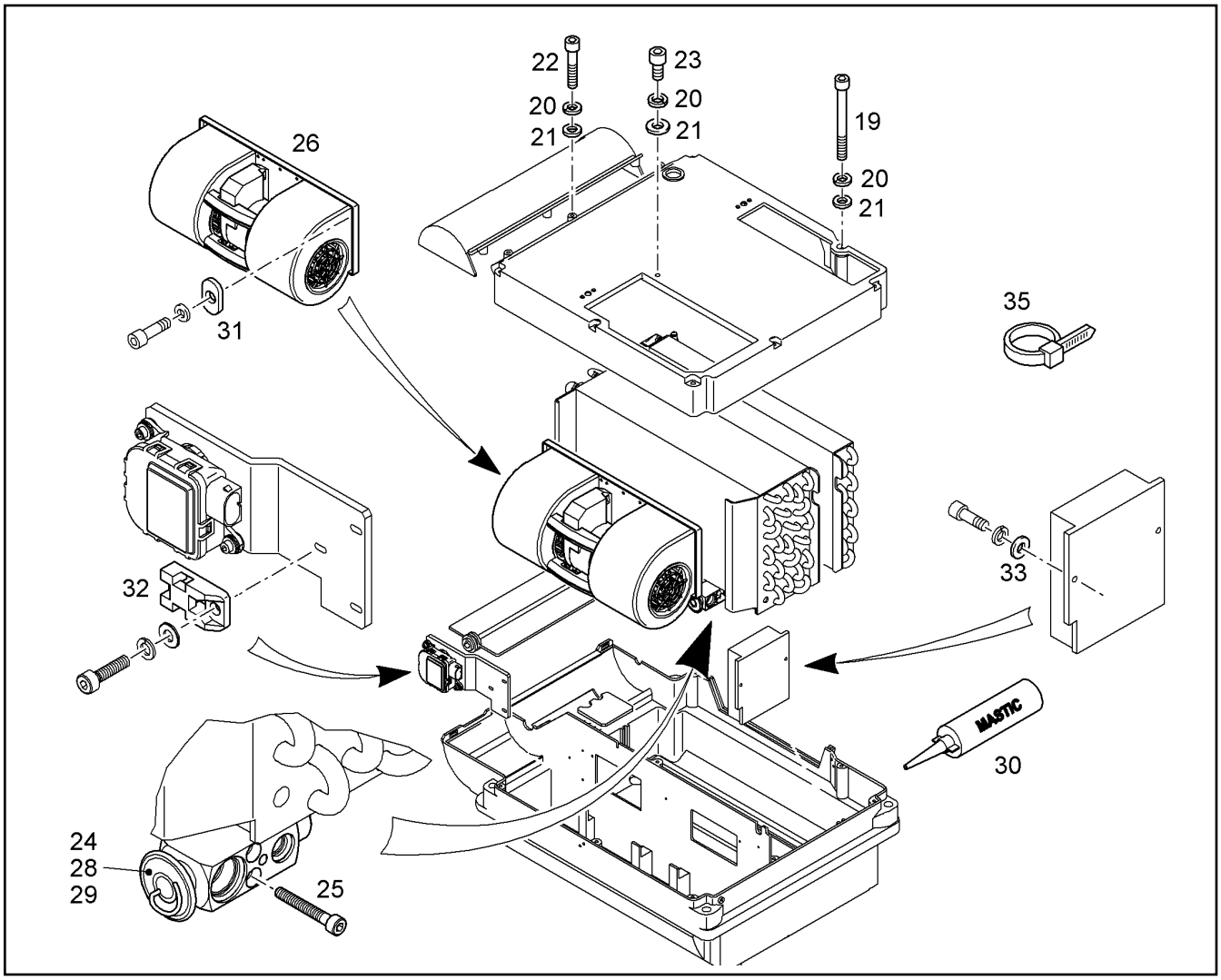

Pos.	Item	Quantity	Description	Descripción	Serie	K
19	404205308	7	CYLINDER SCREW ISO 4762 M6X75 8.8 A2C	TORNILLO CILINDRICO		
20	4000498	11	CIRCLIP DIN 127 A 6 A3C	ANILLO DE MUELLE		
21	4901878	11	WASHER ISO 7090 6 - 200HV A4	ARANDELA		
22	4042003	3	CYLINDER SCREW ISO 4762 M6x25 8.8 A2C	TORNILLO CILINDRICO		
23	4001596	1	CYLINDER SCREW ISO 4762 M6X16 10.9 A2	TORNILLO CILINDRICO		
24	7025110	1	VALVE	VALVULA		
25	4902262	2	CYLINDER SCREW ISO 4762 M5X35 10.9 A2	TORNILLO CILINDRICO		
26	10022052	1	DOUBLE BLOWER	SOPLANTE DOBLE		1
28	5610999	1	O-RING 10,82X1,78	JUNTA TORICA		1
29	7411823	1	O-RING 14,00X1,78	JUNTA TORICA		1
30	10022063	1	SEALING PUTTY	KIT DE JUNTAS		1
31	10022653	3	PROFILE	PERFIL		
32	11003600	1	MOUNTING BASE	BASE FIJACION		
33	421802008	4	WASHER 4	ARANDELA		
35	11002474	8	CABLE TIE	BRIDAS		

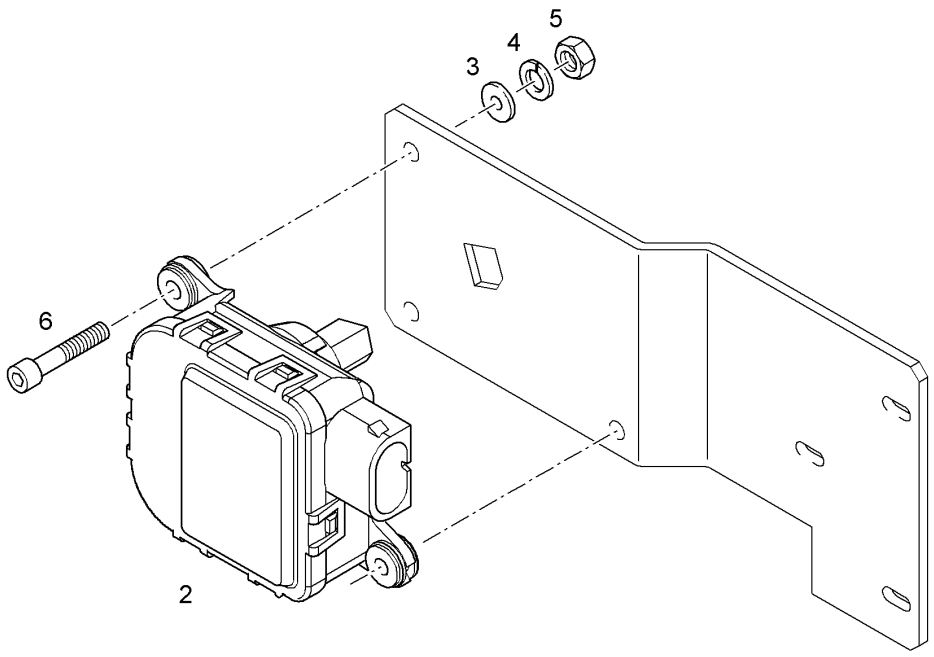

Pos.	Item	Quantity	Description	Descripción	Serie	K
2	10022766	1	SERVOMOTOR	MOTOR AJUSTE		2
3	4001645	3	WASHER DIN 125 B 4,3 ST A3C	ARANDELA		
4	4600036	3	CIRCLIP DIN 127 A 4 A3C	ANILLO DE MUELLE		
5	4000376	3	HEX NUT M4	TUERCA HEXAGONAL		
6	4600337	3	CYLINDER SCREW ISO 4762 M4x16 8.8 A2C	TORNILLO CILINDRICO		

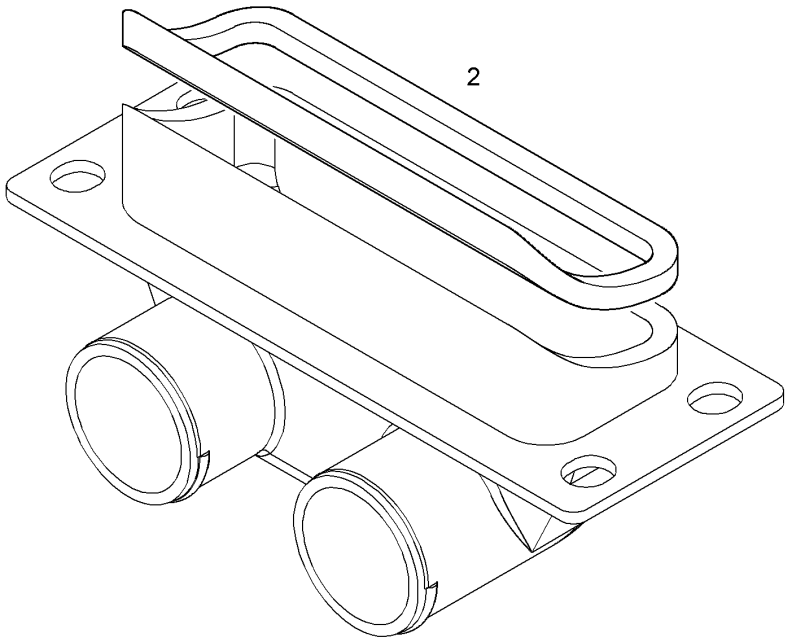

Pos.	Item	Quantity	Description	Descripción	Serie	K
2	10022772	1	FOAM RUBBER INSULATION	TIRA DE ESPUMA		

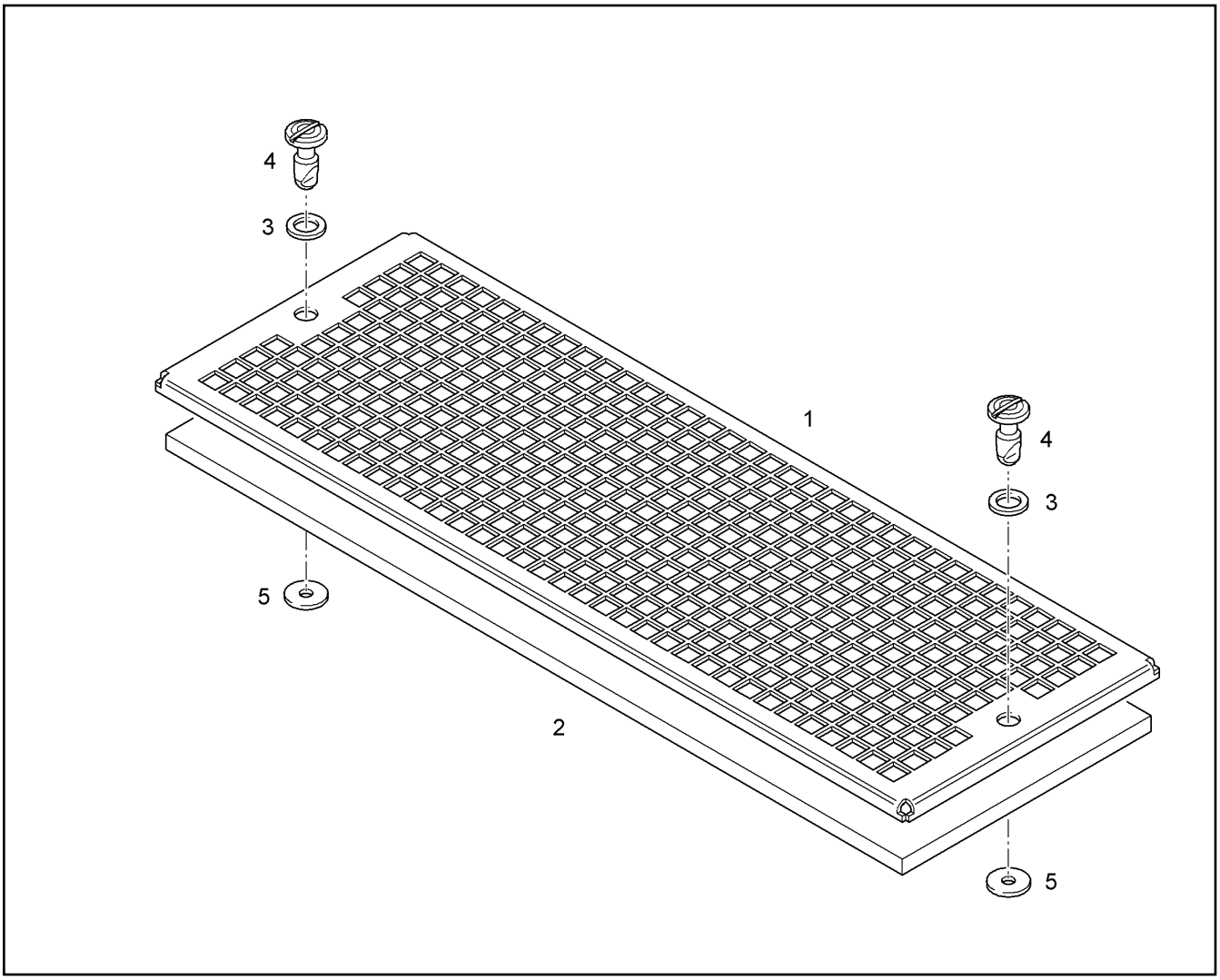

Pos.	Item	Quantity	Description	Descripción	Serie	K
1	10022771	1	CIRCULATING AIR GRID	REJILLA CIRCUL.AIRE		
2	10022770	1	FILTER MAT	TEJIDO DEL FILTRO		1
3	10022769	2	HEAD-TYPE WASHER S=0,2	ARANDELA DE CABECERA		
4	10022768	2	QUICK LOCK	CONEXION RAPIDA		
5	10022767	2	U-WASHER	ARANDELA U		

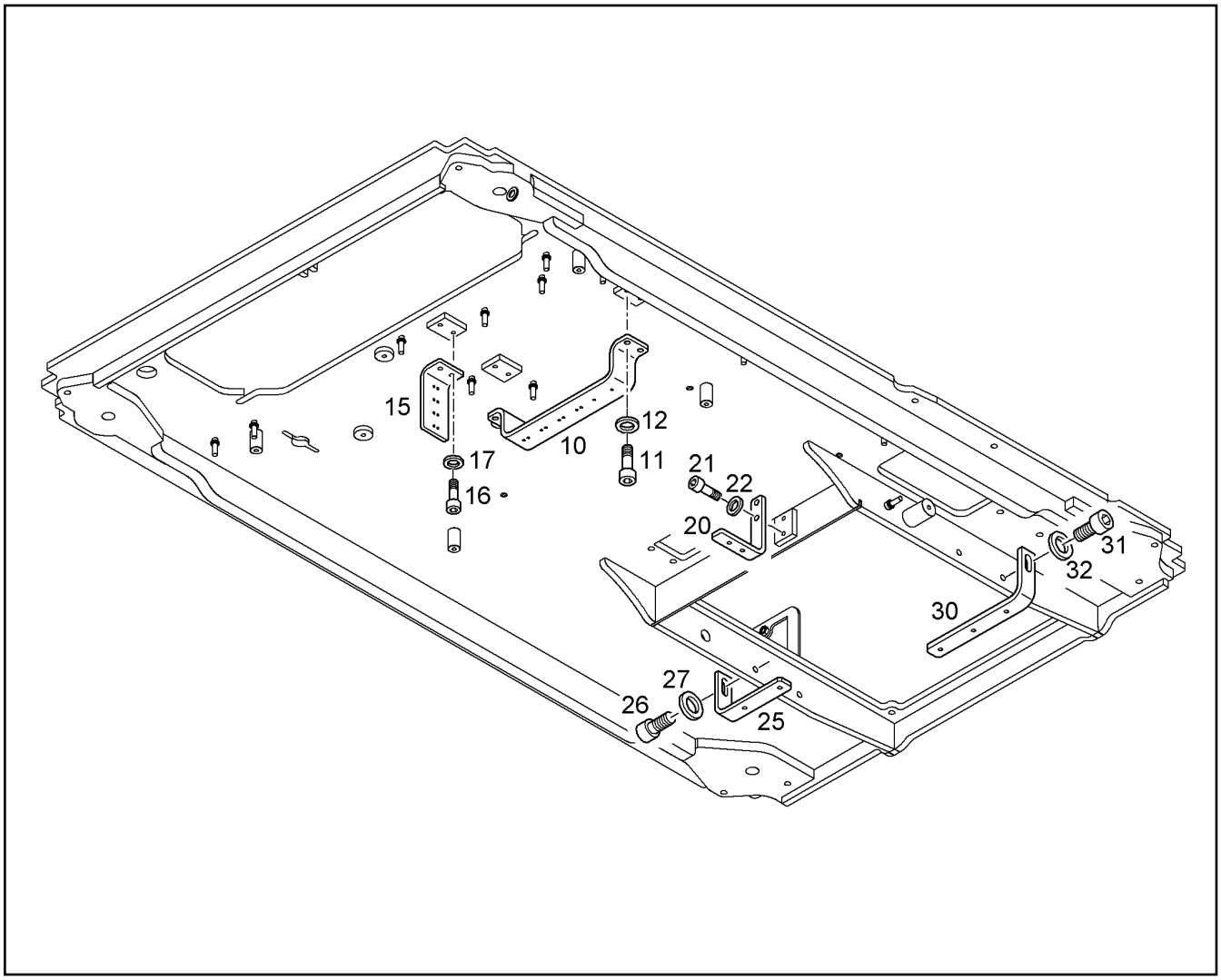

Pos.	Item	Quantity	Description	Descripción	Serie	K
10	10079251	1	HOLDER	FIJADOR		1
11	4901217	4	CYLINDER SCREW ISO 4762 M8X25 10.9 A2	TORNILLO CILINDRICO		
12	10289803	4	WASHER ISO 7089 8 300HV	ARANDELA		
15	10079252	1	HOLDER	FIJADOR		1
16	4901217	2	CYLINDER SCREW ISO 4762 M8X25 10.9 A2	TORNILLO CILINDRICO		
17	10289803	2	WASHER ISO 7089 8 300HV	ARANDELA		
20	10079253	1	HOLDER	FIJADOR		1
21	4901217	2	CYLINDER SCREW ISO 4762 M8X25 10.9 A2	TORNILLO CILINDRICO		
22	10289803	2	WASHER ISO 7089 8 300HV	ARANDELA		
25	10079307	1	HOLDER	FIJADOR		1
26	4043002	1	CYLINDER SCREW ISO 4762 M12X25 10.9	TORNILLO CILINDRICO		
27	10289804	1	WASHER ISO 7089 12 300HV	ARANDELA		
30	9950357	1	HOLDER	FIJADOR		
31	4043002	1	CYLINDER SCREW ISO 4762 M12X25 10.9	TORNILLO CILINDRICO		
32	10289804	1	WASHER ISO 7089 12 300HV	ARANDELA		

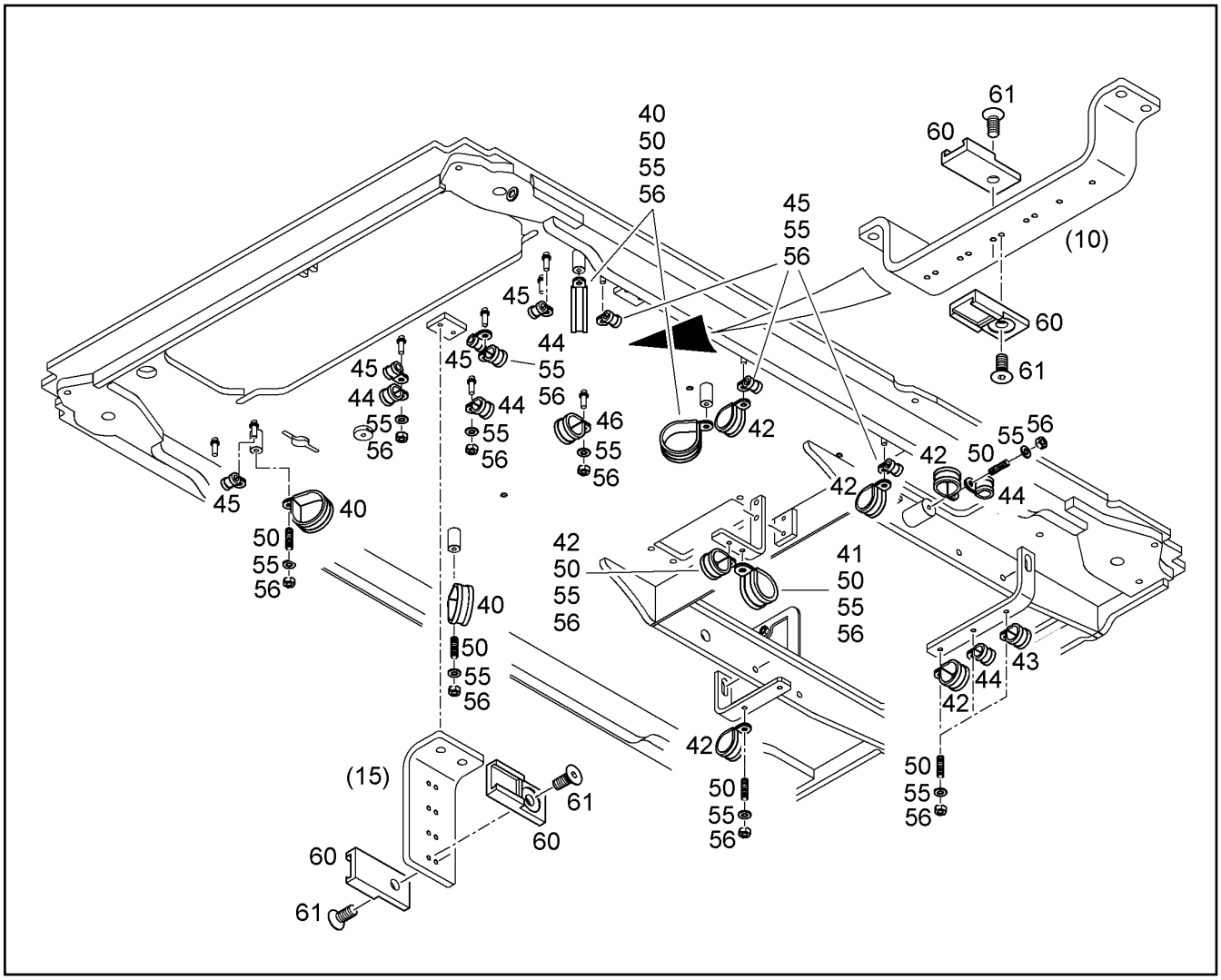

Pos.	Item	Quantity	Description	Descripción	Serie	K
40	7361513	4	CLAMP DIN 3016 D1- 55 X 20 W1-2-CR	ABRAZADERA		
41	7367691	1	CLAMP DIN 3016 D1- 40 X 25 W1-2-CR	ABRAZADERA		
42	7366260	6	CLAMP DIN 3016 D1- 34 X 20 W1-2-CR	ABRAZADERA		
43	7362547	1	CLAMP DIN 3016 D1- 24 X 20 W1-2-CR	ABRAZADERA		
44	7362602	5	CLAMP DIN 3016 D1- 18 X 20 W1-2-CR	ABRAZADERA		
45	7363004	6	CLAMP DIN 3016 D1- 10 X 20 W1-2-CR	ABRAZADERA		
46	7364299	1	CLAMP DIN 3016-1 D1 30X20 W1-2-CR	ABRAZADERA		
50	4068019	11	DOUBLE-ENDED STUD DIN 939 M 8 X 20 8.8	TORNILLO ESPARRAGO		
55	10289803	20	WASHER ISO 7089 8 300HV	ARANDELA		
56	4000381	20	HEX NUT M8	TUERCA HEXAGONAL		
60	6203497	18	FASTENER	ELEMENTO DE FIJACION		
61	4980801	18	COUNTERSUNK SCREW DIN 7991 M5X12 1	TORNILLO AVELLANADO		

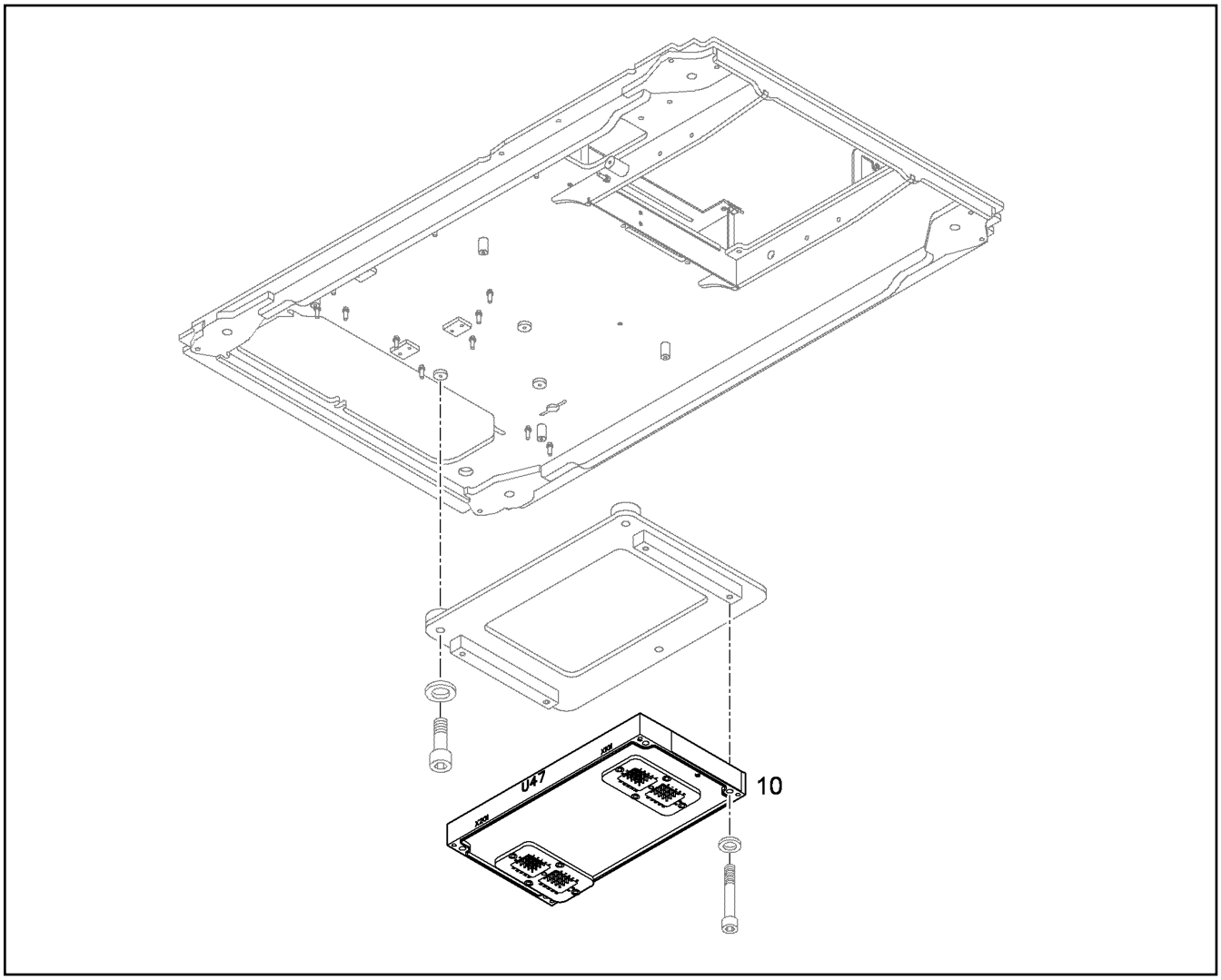

Pos.	Item	Quantity	Description	Descripción	Serie	K
10		1	ELECTRIC BOX CPL. U47	CAJA EL.COMPL.		

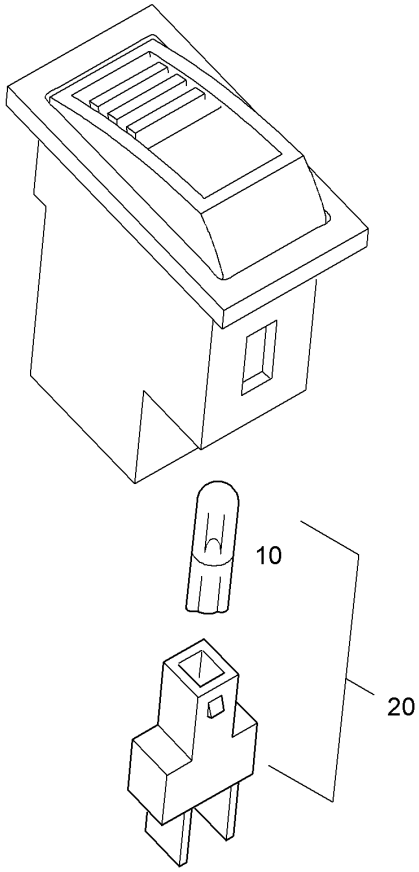

Pos.	Item	Quantity	Description	Descripción	Serie	K
10	6201058	1	LIGHT BULB DIN 72601 W 5/1,2 24V 1,2 W	BOMBILLA		1
20	6002233	1	LAMP	LAMPARA		1

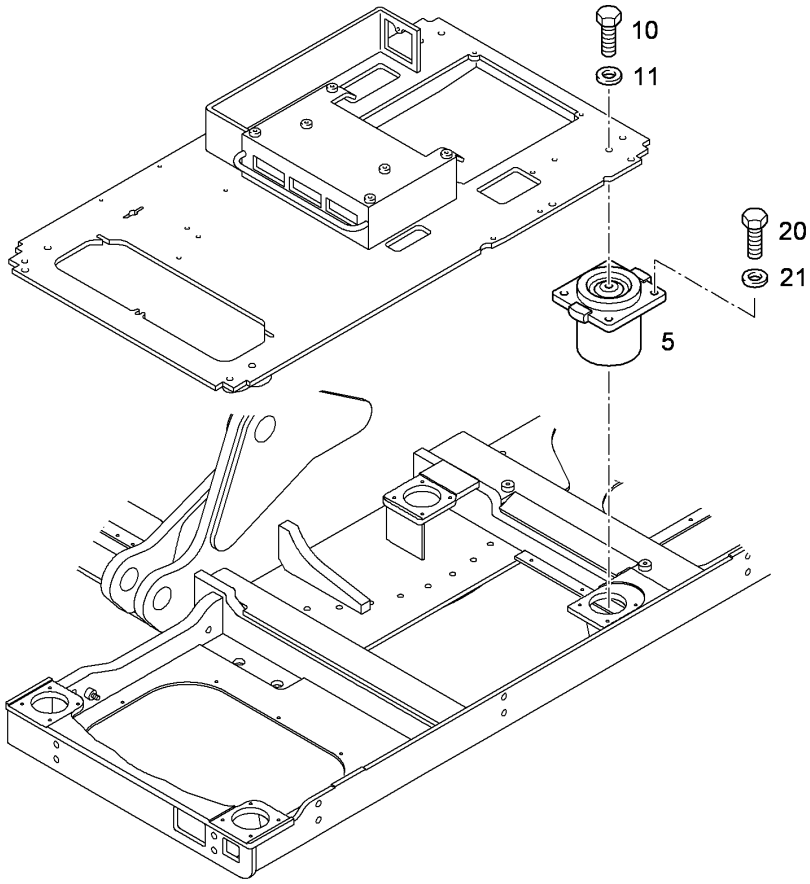

Pos.	Item	Quantity	Description	Descripción	Serie	K
5	10013573	4	FLUID BEARING	APOYO FLUIDO	9848-	
10	4066202	4	HEX BOLT ISO 4017 M16X60 10.9 DAC	TORNILLO DE CABEZA HEXAGO		
11	9918228	4	WASHER 16,5/28X4	ARANDELA		
20	4066093	16	HEX BOLT ISO 4017 M10X25 10.9 A3C	TORNILLO DE CABEZA HEXAGO		
21	10289795	16	WASHER ISO 7089 10 300HV	ARANDELA		

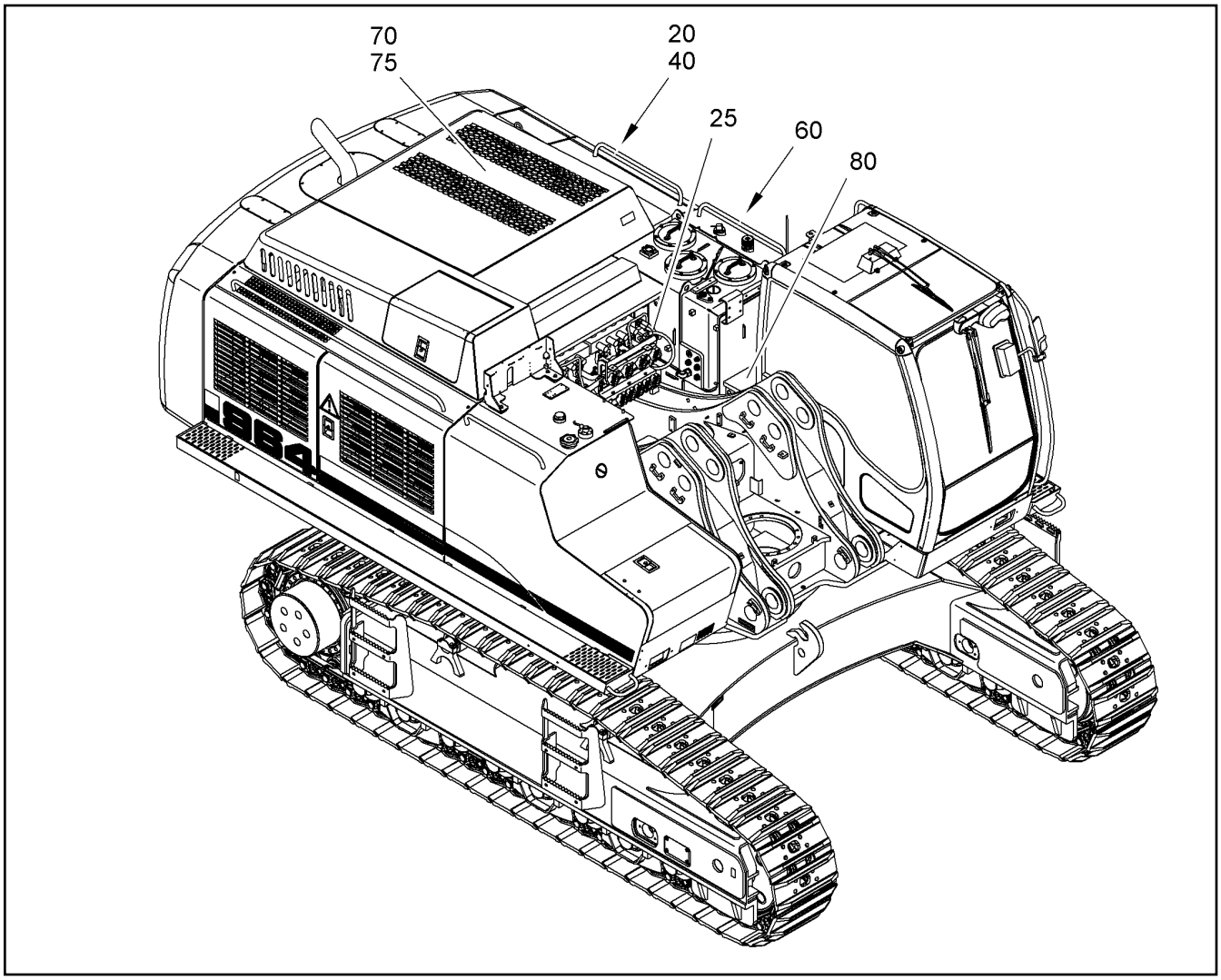

Pos.	Item	Quantity	Description	Descripción	Serie	K
20	10386982	1	HYDR.PUMPS TO SPOOL VALVE ⇨ ❑ 334	INST.HIDR.BOMBAS A CORR.DI	-99998	1
20	10498044	1	HYDR.PUMPS TO SPOOL VALVE ⇨ ❑ 337	INST.HIDR.BOMBAS A CORR.DI	99999-	1
25	10053144	1	OIL PILOT VALVE INSTALLATION ⇨ ❑ 340	MONTAJE UNIDAD ACEITE MA		1
40	10358755	1	HYDR.ROTARY CONNEC.+SWING GEAR ⇨ ❑ 343	EJEC.GIRADA HIDR.+MEC.GIRO		1
60	10053126	1	HYDR.SUCT.+RETURN OIL HOSES ⇨ ❑ 345	TUBOS FLEX.HIDR./ASPIR.+RET.		1
70	10053129	1	HYDR.AND GEAR OIL COOLING ⇨ ❑ 351	REFRIG.ACEITE TRANS.E HIDR.		1
75	10358751	1	HYDR.INSTALLATION FAN DRIVE ⇨ ❑ 353	INST.HIDR.ACC. VENTILADOR		1
80	10358754	1	HYDR.INSTAL.CONTROL TUBES ⇨ ❑ 359	INST.HIDR.CONDUCTOS MANDO		1

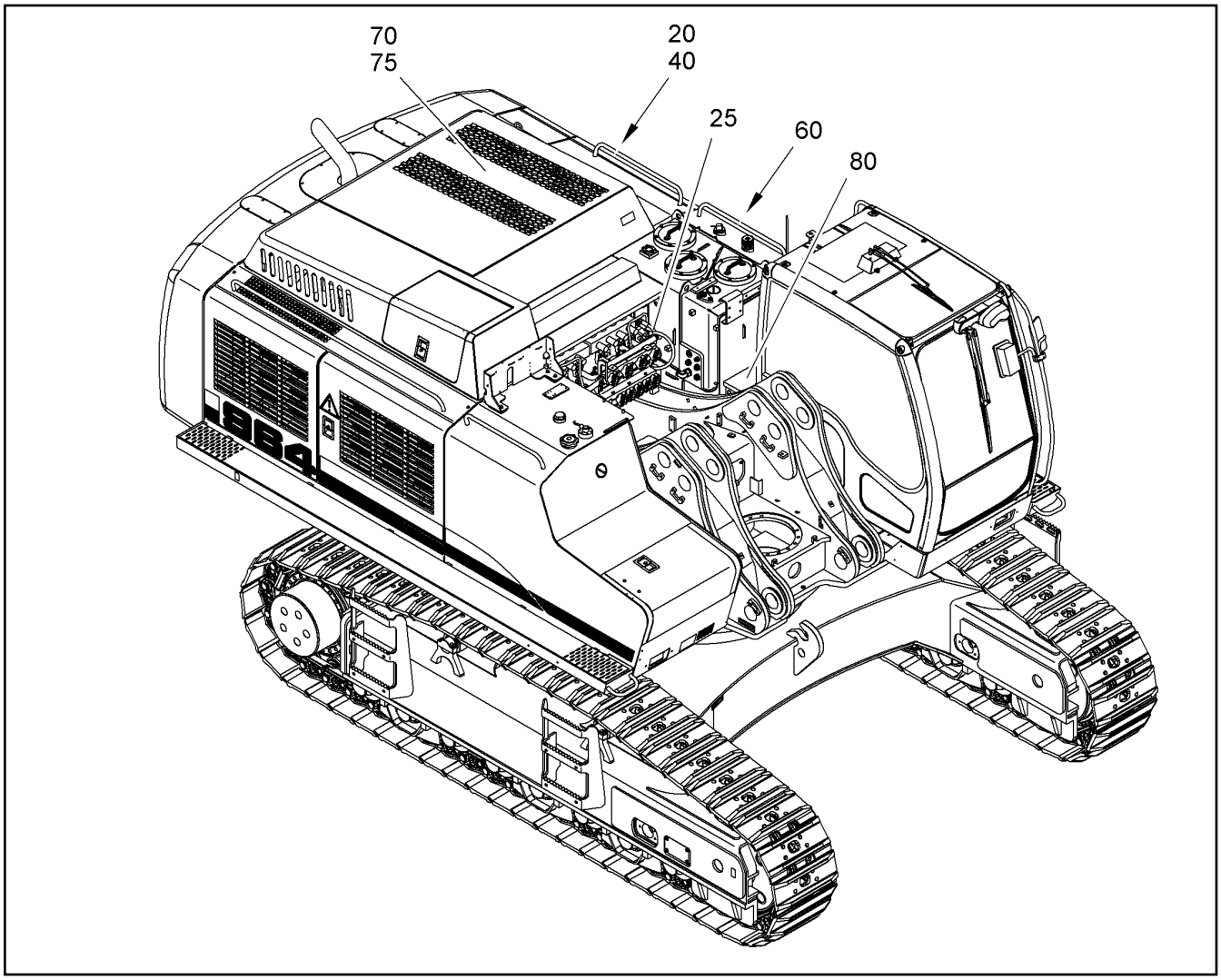

Pos.	Item	Quantity	Description	Descripción	Serie	K
20	10498044	1	HYDR.PUMPS TO SPOOL VALVE ⇨ ❑ 337	INST.HIDR.BOMBAS A CORR.DI		1
25	10824389	1	OIL PILOT VALVE INSTALLATION ⇨ ❑ 341	MONTAJE UNIDAD ACEITE MA		1
40	10358755	1	HYDR.ROTARY CONNEC.+SWING GEAR ⇨ ❑ 343	EJEC.GIRADA HIDR.+MEC.GIRO		1
60	10053126	1	HYDR.SUCT.+RETURN OIL HOSES ⇨ ❑ 345	TUBOS FLEX.HIDR./ASPIR.+RET.		1
70	10053129	1	HYDR.AND GEAR OIL COOLING ⇨ ❑ 351	REFRIG.ACEITE TRANS.E HIDR.		1
75	10358751	1	HYDR.INSTALLATION FAN DRIVE ⇨ ❑ 353	INST.HIDR.ACC. VENTILADOR		1
80	10824380	1	HYDR.INSTAL.CONTROL TUBES ⇨ ❑ 366	INST.HIDR.CONDUCTOS MANDO		1

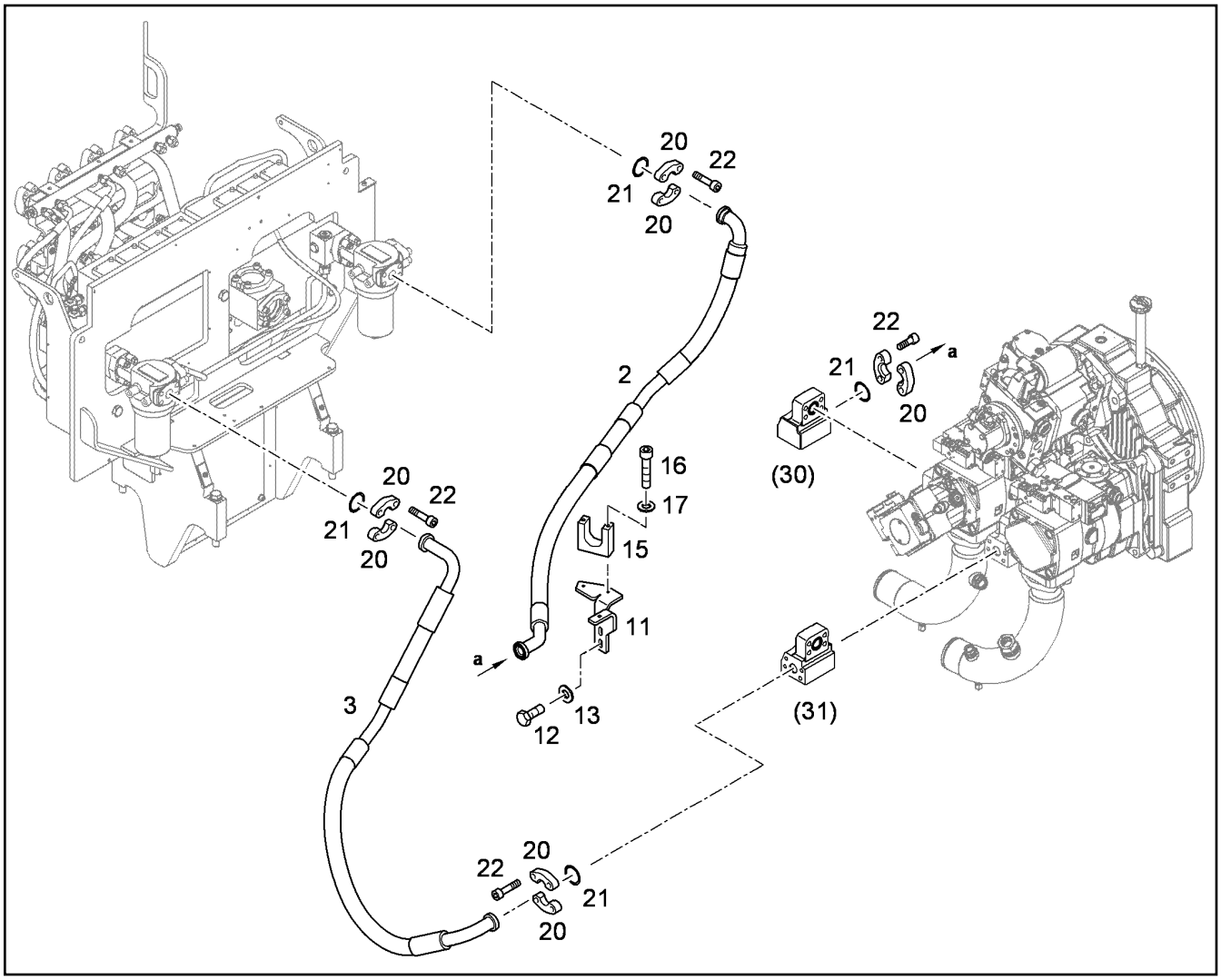

Pos.	Item	Quantity	Description	Descripción	Serie	K
2	10290254	1	HOSE	TUBO GOMA		2
3	10327169	1	HOSE	TUBO GOMA		2
11	10076826	1	CONSOLE	CONSOLA		1
12	4001696	2	HEX BOLT ISO 4017 M10X20 10.9 A3C	TORNILLO DE CABEZA HEXAGO		
13	10289795	2	WASHER ISO 7089 10 300HV	ARANDELA		
15	10065571	1	HOSE HOLDER	FIJADOR MANGUERA		1
16	4902239	2	CYLINDER SCREW ISO 4762 M8X120 10.9	TORNILLO CILINDRICO		
17	10289803	2	WASHER ISO 7089 8 300HV	ARANDELA		
20	10286361	8	FLANGE HALF	MITAD DE BRIDA		
21	10290518	4	PLAIN COMPRESSION RING 45,05x3,40x2,8	ARO DE SECCION RECTANGULA		1
22	4902327	16	CYLINDER SCREW ISO 4762 M14X45 10.9	TORNILLO CILINDRICO		

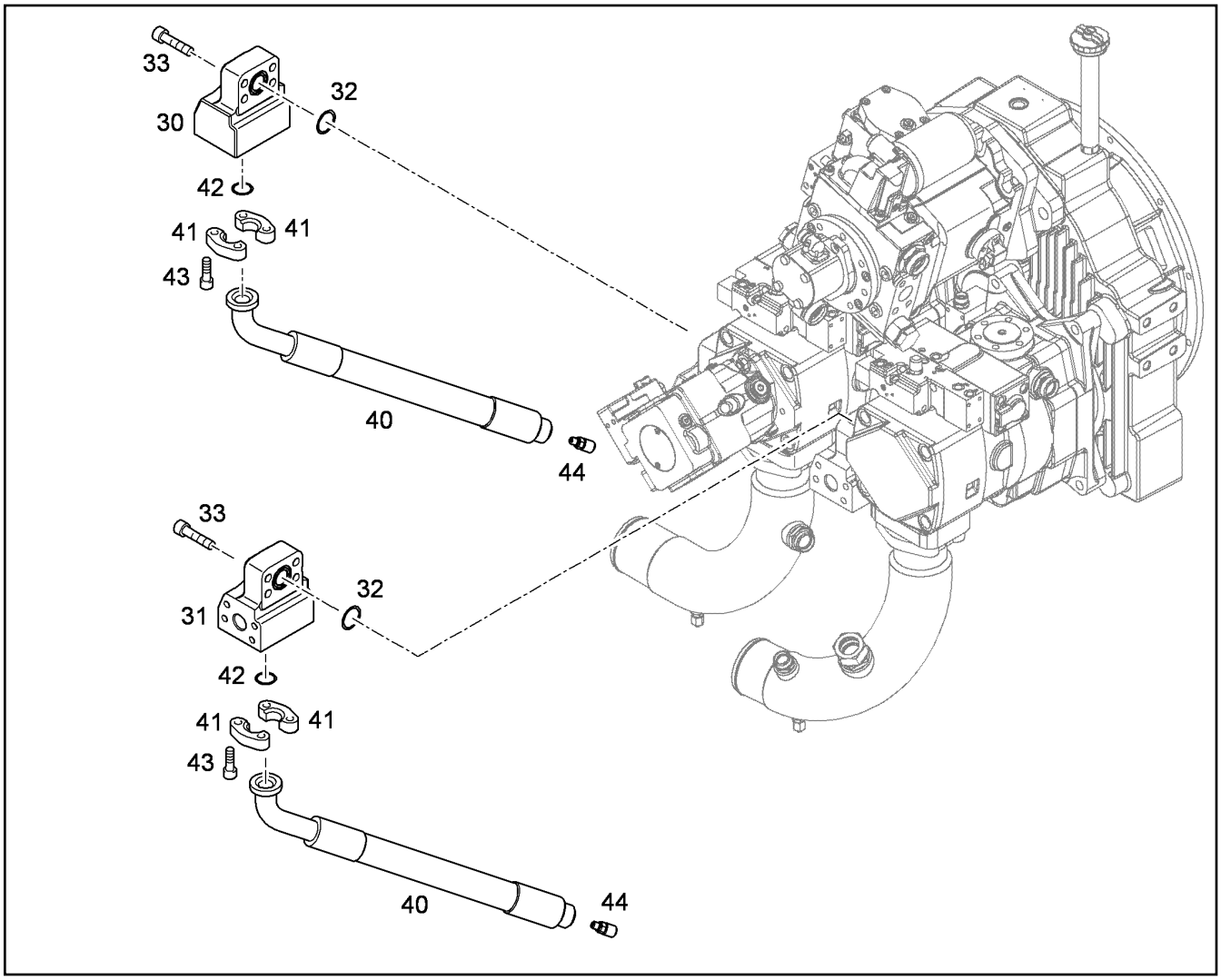

Pos.	Item	Quantity	Description	Descripción	Serie	K
30	9681272	1	DISTRIBUTOR BLOCK	BLOQUE DISTRIBUIDOR		2
31	9386212	1	DISTRIBUTOR BLOCK	BLOQUE DISTRIBUIDOR		2
32	10290518	2	PLAIN COMPRESSION RING 45,05x3,40x2,8	ARO DE SECCION RECTANGULA		1
33	10001466	8	CYLINDER SCREW ISO 4762 M14X60 10.9	TORNILLO CILINDRICO		
40	10289307	2	HOSE	TUBO GOMA		2
41	10286361	4	FLANGE HALF	MITAD DE BRIDA		
42	10290518	2	PLAIN COMPRESSION RING 45,05x3,40x2,8	ARO DE SECCION RECTANGULA		1
43	4902327	8	CYLINDER SCREW ISO 4762 M14X45 10.9	TORNILLO CILINDRICO		
44	7409720	2	SCREW COUPLING G1/4	ACOPLAMIENTO ROSCADO		2

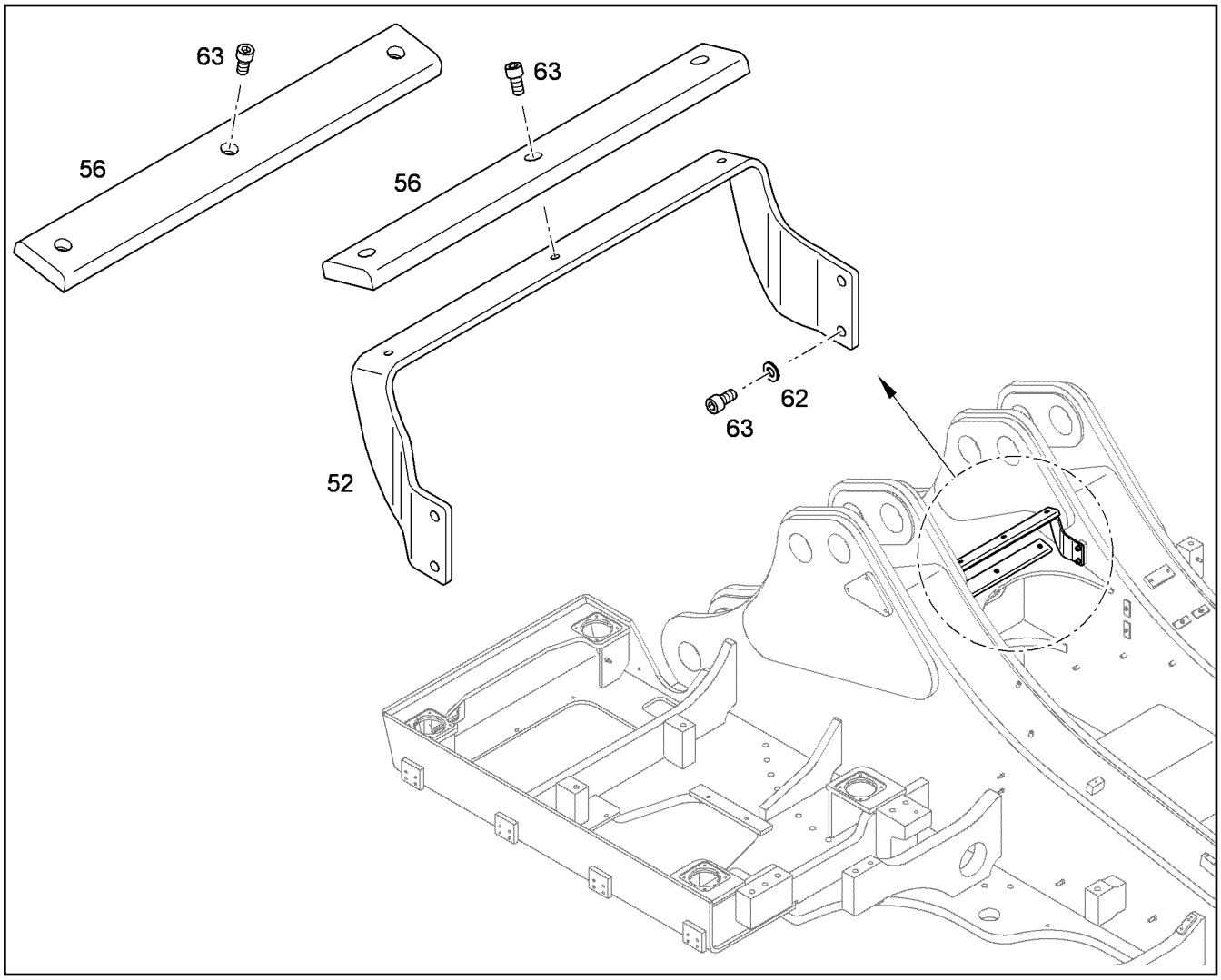

Pos.	Item	Quantity	Description	Descripción	Serie	K
52	10386999	1	HOLDER	FIJADOR		1
56	10387001	2	HOLDER	FIJADOR		1
62	10289795	4	WASHER ISO 7089 10 300HV	ARANDELA		
63	4043122	10	CYLINDER SCREW ISO 4762 M10X20 10.9	TORNILLO CILINDRICO		

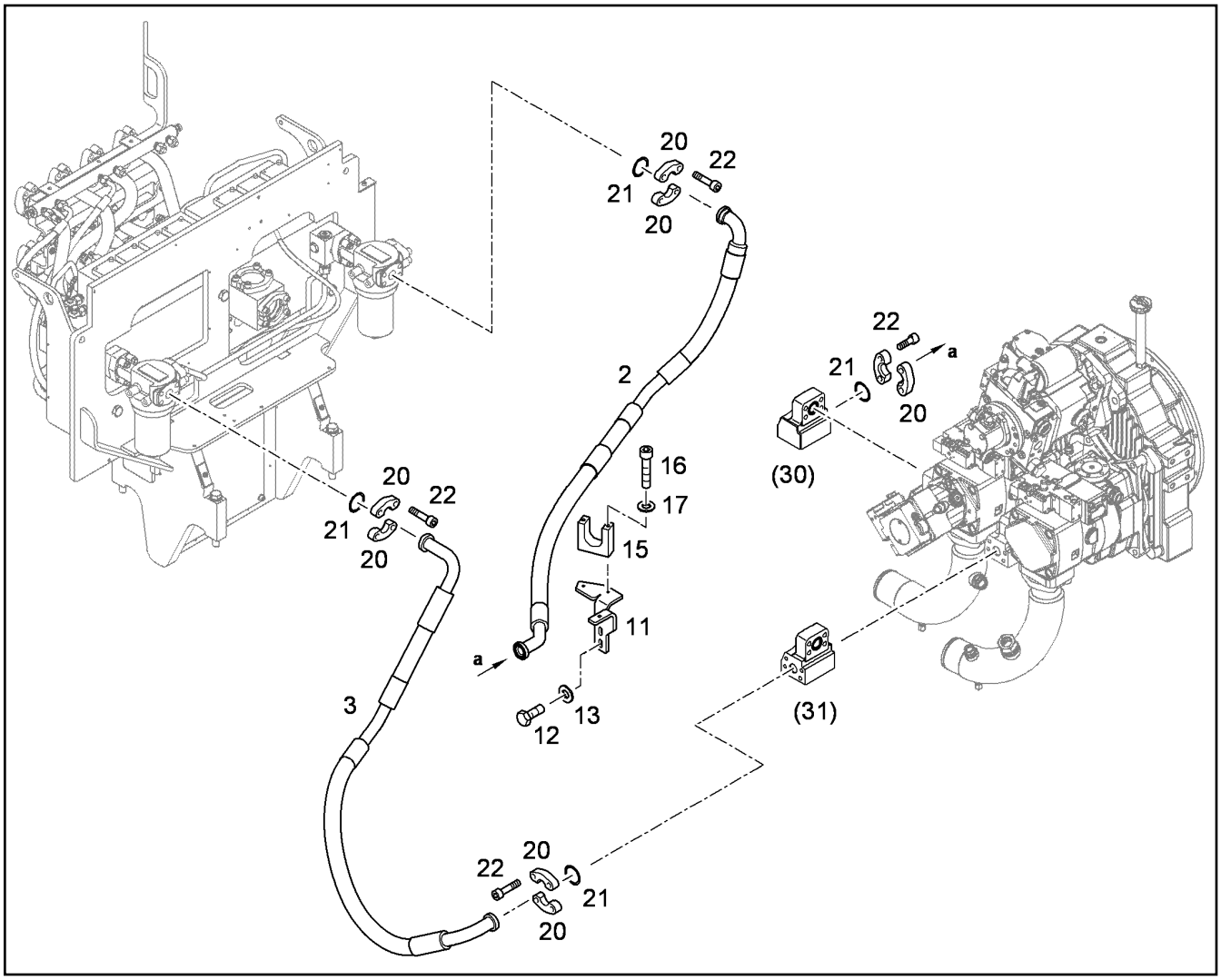

Pos.	Item	Quantity	Description	Descripción	Serie	K
2	10290254	1	HOSE	TUBO GOMA		2
3	10327169	1	HOSE	TUBO GOMA		2
11	10076826	1	CONSOLE	CONSOLA		1
12	4001696	2	HEX BOLT ISO 4017 M10X20 10.9 A3C	TORNILLO DE CABEZA HEXAGO		
13	10289795	2	WASHER ISO 7089 10 300HV	ARANDELA		
15	10065571	1	HOSE HOLDER	FIJADOR MANGUERA		1
16	4902239	2	CYLINDER SCREW ISO 4762 M8X120 10.9	TORNILLO CILINDRICO		
17	10289803	2	WASHER ISO 7089 8 300HV	ARANDELA		
20	10286361	8	FLANGE HALF	MITAD DE BRIDA		
21	10290518	4	PLAIN COMPRESSION RING 45,05x3,40x2,8	ARO DE SECCION RECTANGULA		1
22	4902327	16	CYLINDER SCREW ISO 4762 M14X45 10.9	TORNILLO CILINDRICO		

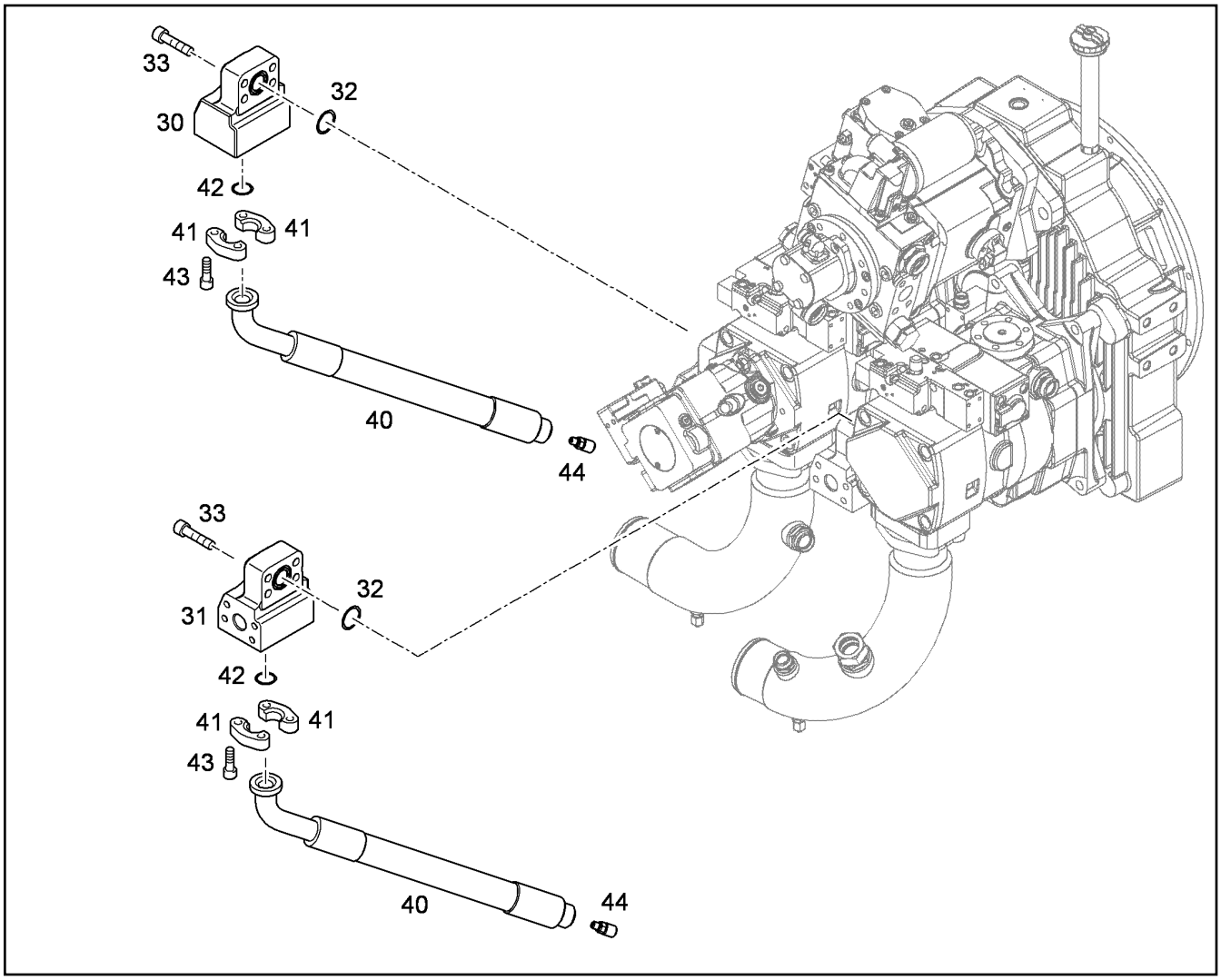

Pos.	Item	Quantity	Description	Descripción	Serie	K
30	9681272	1	DISTRIBUTOR BLOCK	BLOQUE DISTRIBUIDOR		2
31	9386212	1	DISTRIBUTOR BLOCK	BLOQUE DISTRIBUIDOR		2
32	10290518	2	PLAIN COMPRESSION RING 45,05x3,40x2,8	ARO DE SECCION RECTANGULA		1
33	10001466	8	CYLINDER SCREW ISO 4762 M14X60 10.9	TORNILLO CILINDRICO		
40	10289307	2	HOSE	TUBO GOMA		2
41	10286361	4	FLANGE HALF	MITAD DE BRIDA		
42	10290518	2	PLAIN COMPRESSION RING 45,05x3,40x2,8	ARO DE SECCION RECTANGULA		1
43	4902327	8	CYLINDER SCREW ISO 4762 M14X45 10.9	TORNILLO CILINDRICO		
44	7409720	2	SCREW COUPLING G1/4	ACOPLAMIENTO ROSCADO		2

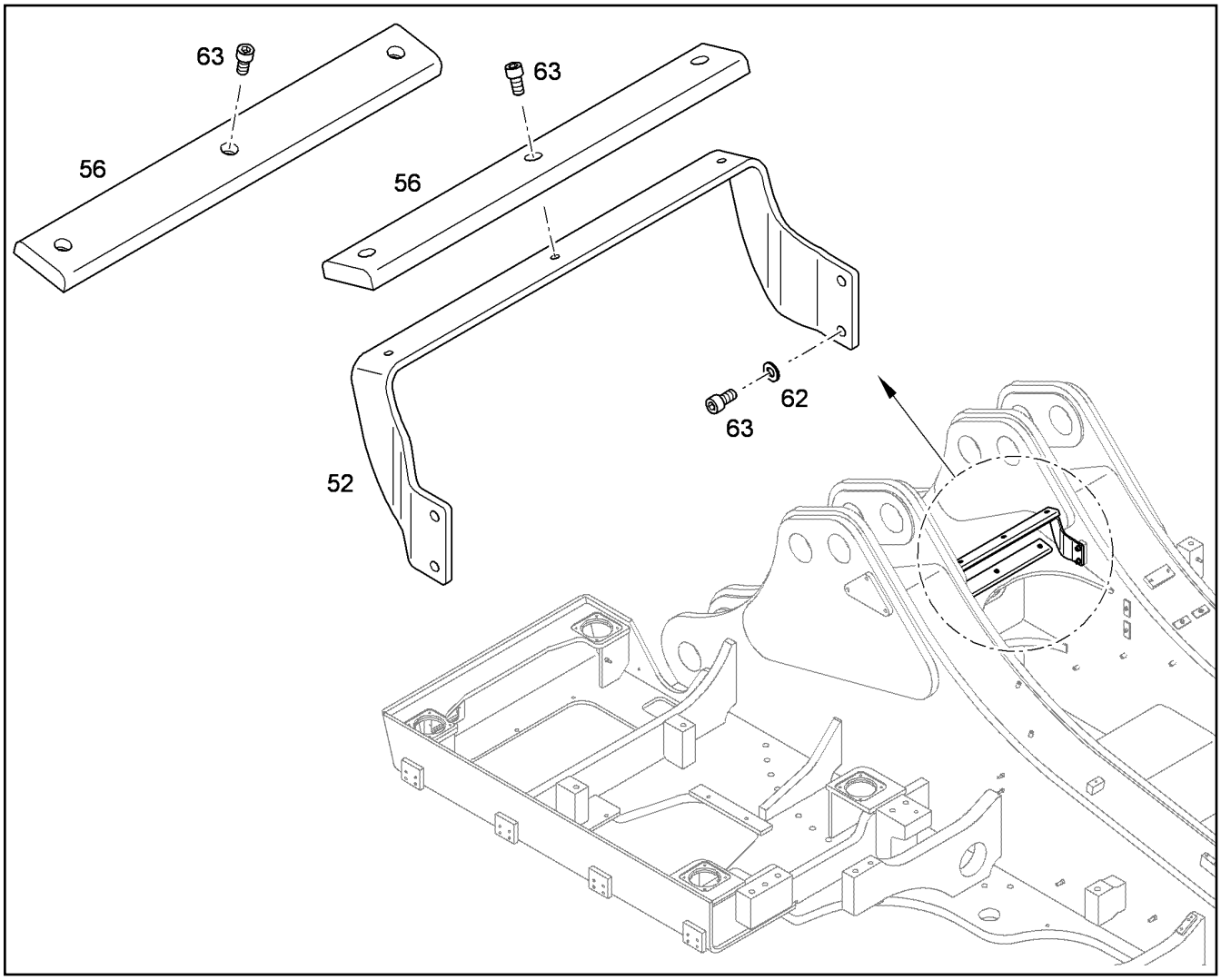

Pos.	Item	Quantity	Description	Descripción	Serie	K
52	10386999	1	HOLDER	FIJADOR		1
56	10387001	2	HOLDER	FIJADOR		1
62	10289795	4	WASHER ISO 7089 10 300HV	ARANDELA		
63	4043122	10	CYLINDER SCREW ISO 4762 M10X20 10.9	TORNILLO CILINDRICO		

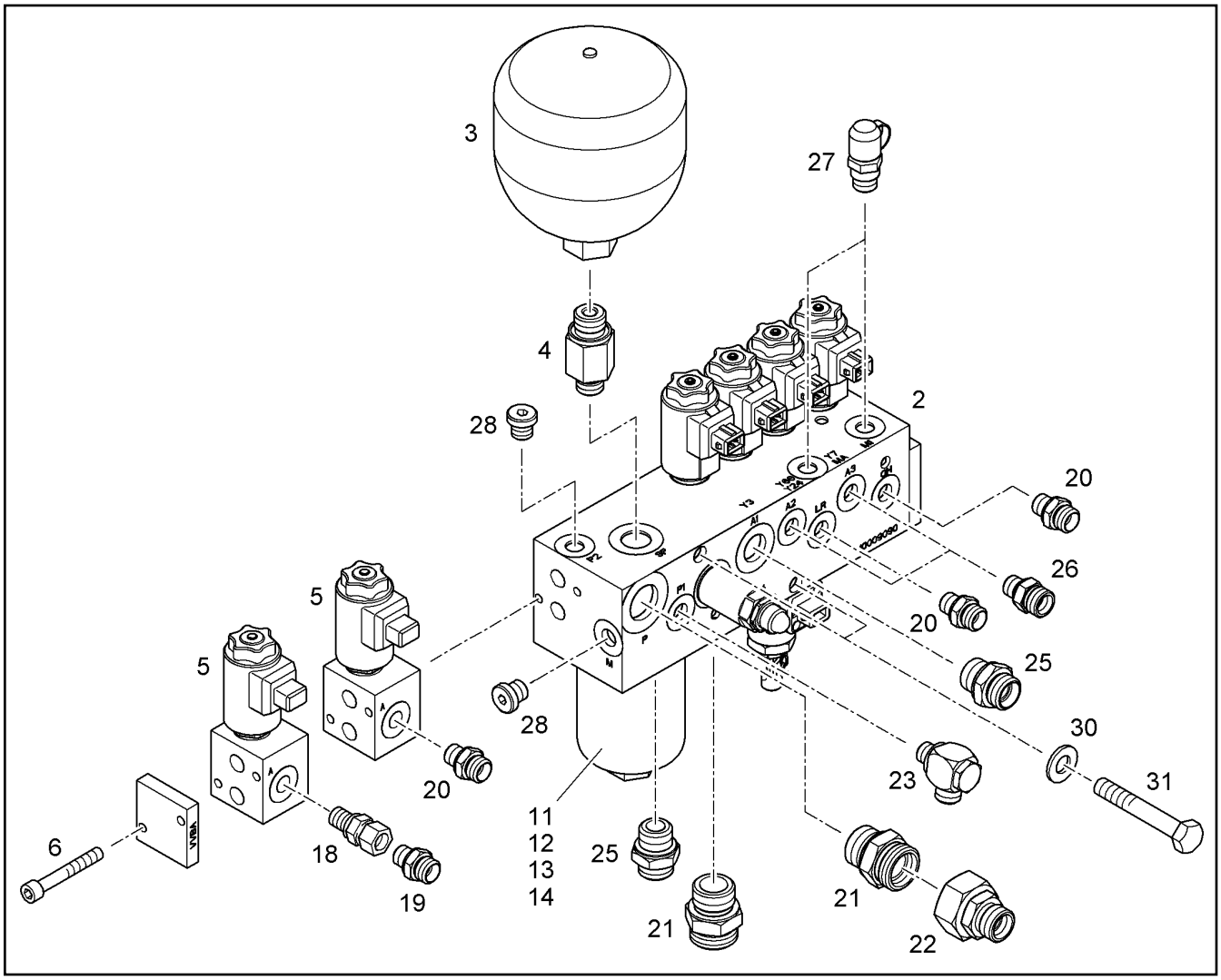

Pos.	Item	Quantity	Description	Descripción	Serie	K
2	10009090	1	OIL PILOT VALVE ⇨ ❑ 372	UNIDAD ACEITE MANDO		2
3	5617780	1	DIAPHRAGM ACCUMULATOR [0848510]	ACUMULADOR DE MEMBRANA		2
4	9399179	1	INTERMEDIATE COUPLING ⇨ ❑ 767	RACOR INTER. P.ACUMULADOR		
5	10280279	2	VALVE ⇨ ❑ 373	VALVULA		2
6	4000363	2	CYLINDER SCREW ISO 4762 M6X100 10.9	TORNILLO CILINDRICO		
11	5609948	1	OIL FILTER SET ⇨ ❑ 342	KIT FILTRO P.ACEITE		1
12	5605365	1	HOUSING	CARCASA		
13	10037617	1	FILTER INSERT	CARTUCHO DE FILTRO		1
14	7264028	1	O-RING	JUNTA TORICA		1
18	7617262	1	SCREW FITTING EGE 10L	ATORNILLAMIENTO		
19	7406699	1	SCREW FITTING GR 15/10L	ATORNILLAMIENTO		
20	7362091	3	SCREW FITTING GE 10L	ATORNILLAMIENTO		
21	4001446	2	LUG GE 22L G3/4A	ESPIGA		
22	7616913	1	SCREW FITTING RED 22/15L	ATORNILLAMIENTO		
23	7617261	1	HINGED THREADED UNION	ATORNILLAMIENTO ORIENTABL		
25	4600518	2	SCREW FITTING GE 15L	ATORNILLAMIENTO		
26	7362117	2	SCREW FITTING GE 12L G1/4A	ATORNILLAMIENTO		
27	7409720	2	SCREW COUPLING G1/4	ACOPLAMIENTO ROSCADO		2
28	7361553	2	SCREW PLUG VSTI	TORNILLO DE CIERRE		
30	4229913	2	LOCK WASHER 10,5/16X2 VS 10	ARANDELA SEGURIDAD		
31	4002195	2	HEX BOLT ISO 4014 M10X100 10.9 A3C	TORNILLO DE CABEZA HEXAGO		

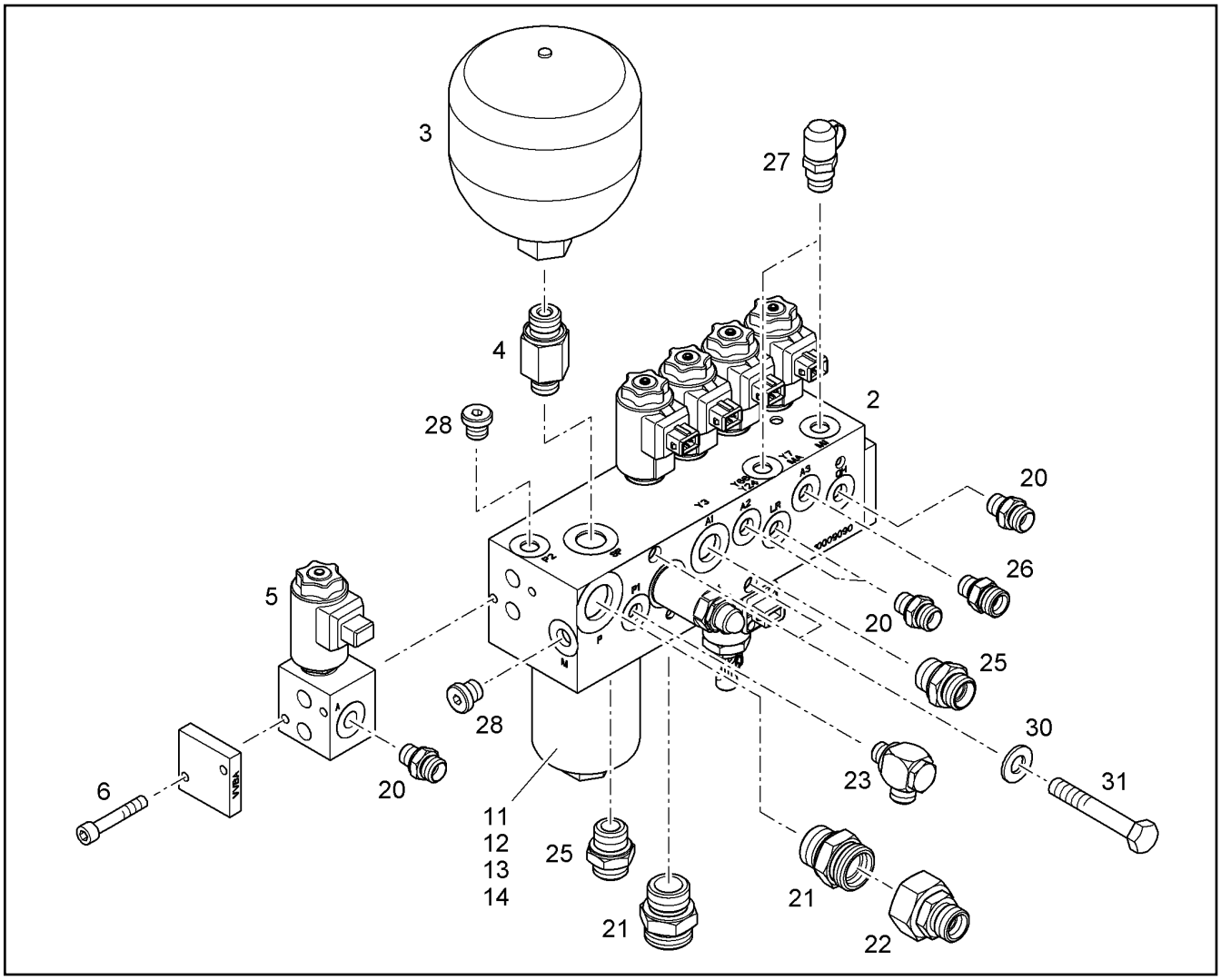

Pos.	Item	Quantity	Description	Descripción	Serie	K
4	9399179	1	INTERMEDIATE COUPLING ⇨ ❑ 767	RACOR INTER. P.ACUMULADOR		
5	10280279	1	VALVE ⇨ ❑ 373	VALVULA		2
6	4043052	2	CYLINDER SCREW ISO 4762 M6X60 10.9 A2	TORNILLO CILINDRICO		
11	5609948	1	OIL FILTER SET ⇨ ❑ 342	KIT FILTRO P.ACEITE		1
12	5605365	1	HOUSING	CARCASA		
13	10037617	1	FILTER INSERT	CARTUCHO DE FILTRO		1
14	7264028	1	O-RING	JUNTA TORICA		1
20	7362091	4	SCREW FITTING GE 10L	ATORNILLAMIENTO		
21	4001446	2	LUG GE 22L G3/4A	ESPIGA		
22	7616913	1	SCREW FITTING RED 22/15L	ATORNILLAMIENTO		
23	7617261	1	HINGED THREADED UNION	ATORNILLAMIENTO ORIENTABL		
25	4600518	2	SCREW FITTING GE 15L	ATORNILLAMIENTO		
26	7362117	1	SCREW FITTING GE 12L G1/4A	ATORNILLAMIENTO		
27	7409720	2	SCREW COUPLING G1/4	ACOPLAMIENTO ROSCADO		2
28	7361553	2	SCREW PLUG VSTI	TORNILLO DE CIERRE		
30	10289795	2	WASHER ISO 7089 10 300HV	ARANDELA		
31	4002195	2	HEX BOLT ISO 4014 M10X100 10.9 A3C	TORNILLO DE CABEZA HEXAGO		

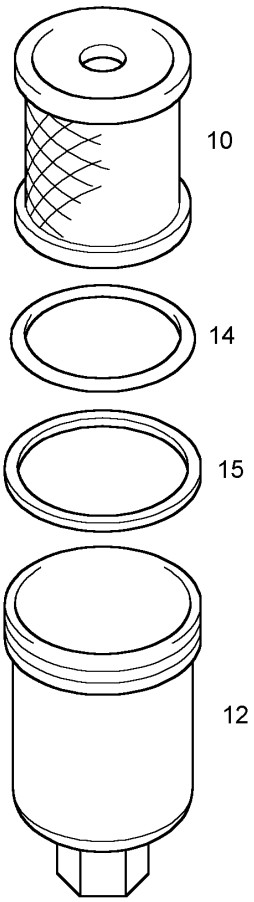

Pos.	Item	Quantity	Description	Descripción	Serie	K
10	10037617	1	FILTER INSERT	CARTUCHO DE FILTRO		1
12	5605365	1	HOUSING	CARCASA		
14	7264028	1	O-RING	JUNTA TORICA		1
15	7410773	1	SUPPORTING RING	ANILLO SOPORTE		1

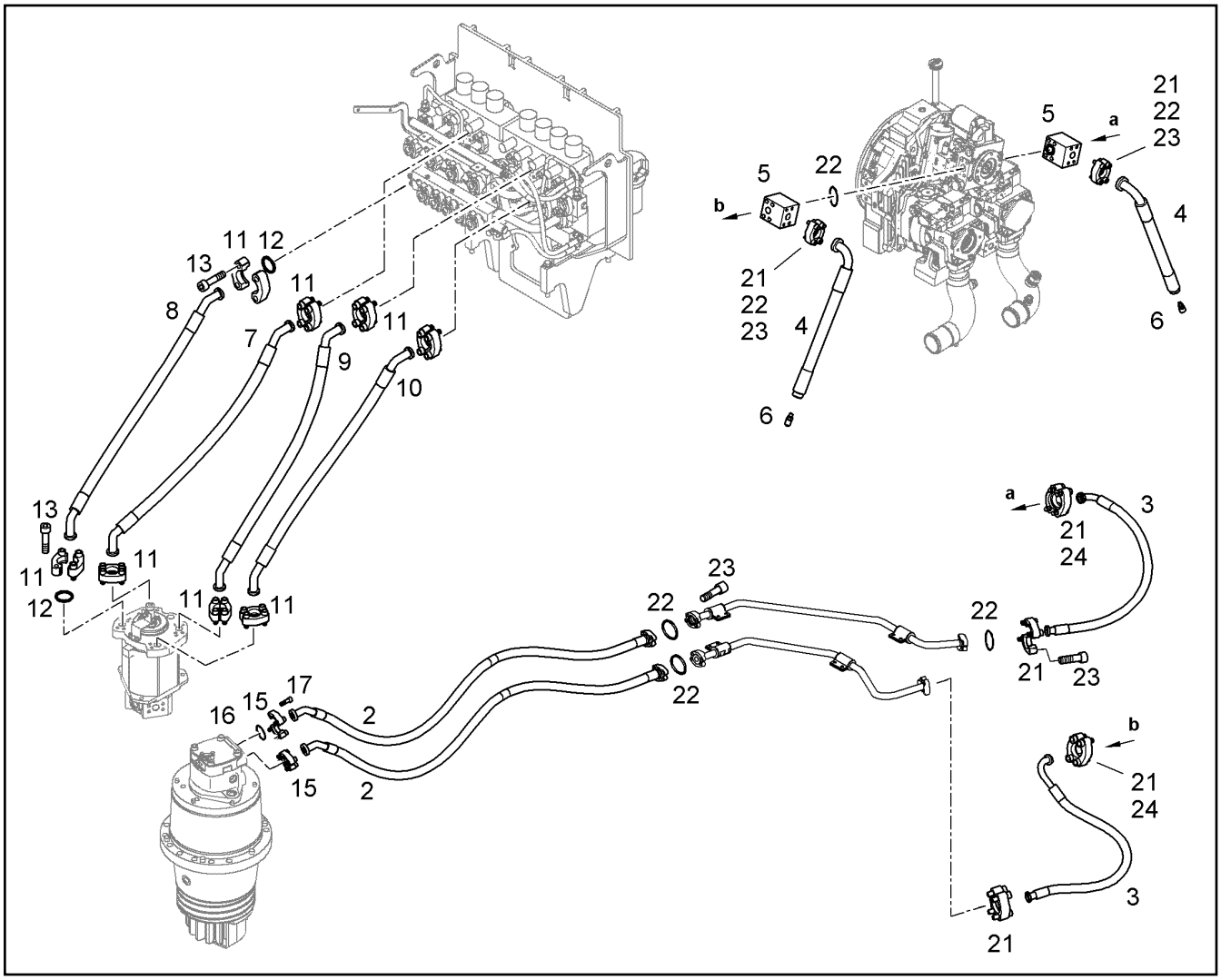

Pos.	Item	Quantity	Description	Descripción	Serie	K
2	10289045	2	HOSE	TUBO GOMA		2
3	10353605	2	HOSE	TUBO GOMA		2
4	10353606	2	HOSE	TUBO GOMA		2
5	10092096	2	BLOCK	BLOQUE BLANCO COMBINADO		1
6	7409720	2	SCREW COUPLING G1/4	ACOPLAMIENTO ROSCADO		2
7	10289035	1	HOSE	TUBO GOMA		2
8	10289036	1	HOSE	TUBO GOMA		2
9	10289037	1	HOSE	TUBO GOMA		2
10	10289038	1	HOSE	TUBO GOMA		2
11	10286361	16	FLANGE HALF	MITAD DE BRIDA		
12	10290518	8	PLAIN COMPRESSION RING 45,05x3,40x2,8	ARO DE SECCION RECTANGULA		1
13	4902327	32	CYLINDER SCREW ISO 4762 M14X45 10.9	TORNILLO CILINDRICO		
15	10286361	4	FLANGE HALF	MITAD DE BRIDA		
16	10290518	2	PLAIN COMPRESSION RING 45,05x3,40x2,8	ARO DE SECCION RECTANGULA		1
17	4902327	8	CYLINDER SCREW ISO 4762 M14X45 10.9	TORNILLO CILINDRICO		
21	10286360	12	FLANGE HALF	MITAD DE BRIDA		
22	10290519	10	PLAIN COMPRESSION RING 40,15x3,40x2,8	ARO DE SECCION RECTANGULA		1
23	4043003	24	CYLINDER SCREW ISO 4762 M12X40 10.9	TORNILLO CILINDRICO		
24	10006354	8	CYLINDER SCREW ISO 4762 M12X115 10.9	TORNILLO CILINDRICO		

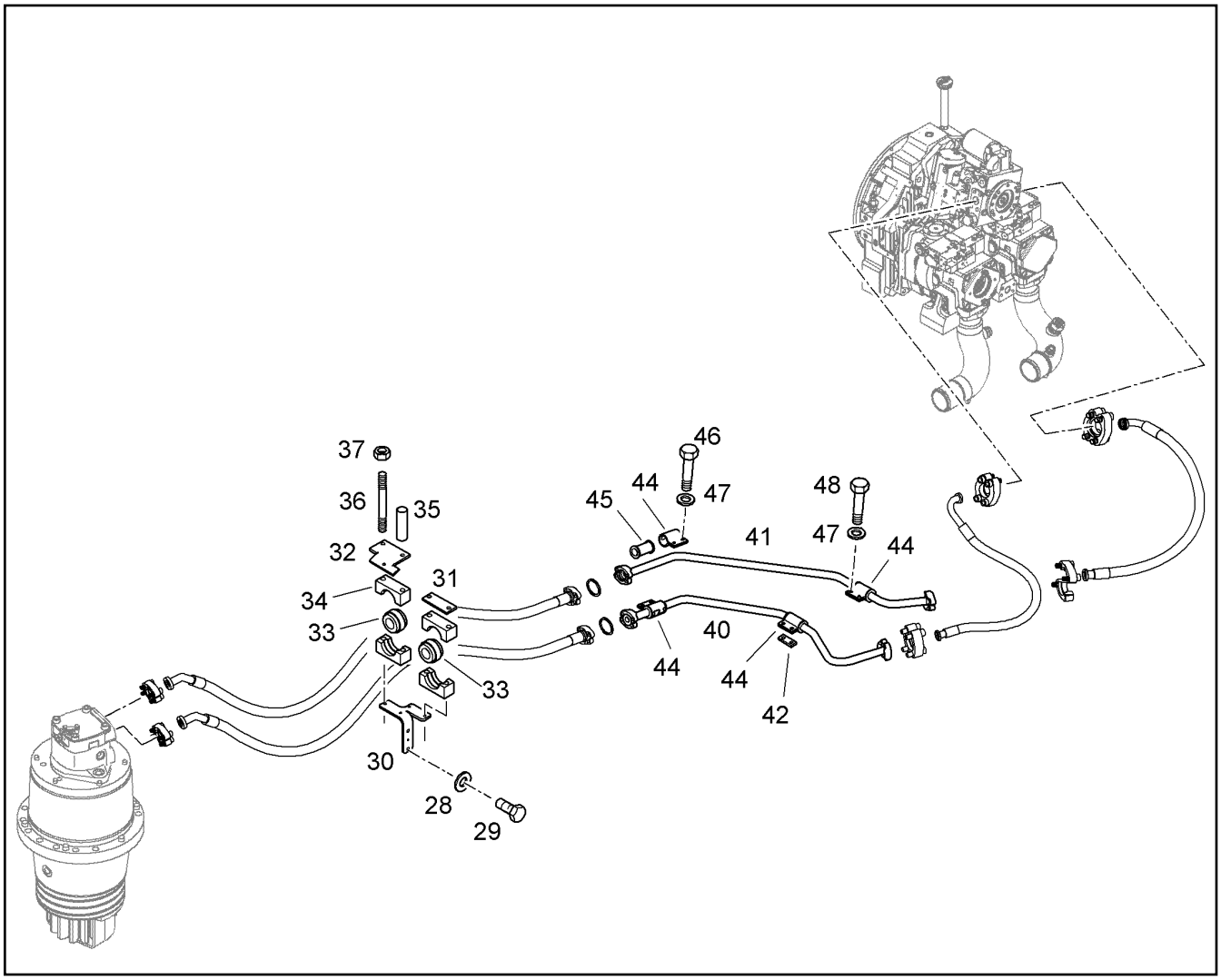

Pos.	Item	Quantity	Description	Descripción	Serie	K
28	10289804	2	WASHER ISO 7089 12 300HV	ARANDELA		
29	4600184	2	HEX BOLT ISO 4017 M12X25 10.9 A3C	TORNILLO DE CABEZA HEXAGO		
30	10065437	1	CONSOLE	CONSOLA		1
31	9476811	1	SHEET	PLACA		
32	10065440	1	CONSOLE	CONSOLA		1
33	7363283	2	ELASTOMER INSERT S EL 4 38,7/64X45 TP	SUPLEMENTO DE ELASTOMERO		
34	7367236	4	CLAMP-HALF AEHNL.DIN 3015 S 4 E 65 PP H	MEDIA BRIDA		
35	7367211	4	SLEEVE 12,4x16x87	CASQUILLO.		
36	4068085	4	DOUBLE-ENDED STUD DIN 939 M 12 X 110	TORNILLO ESPARRAGO		
37	4000619	4	HEX NUT M12	TUERCA HEXAGONAL		
40	10093284	1	PRESSURE LINE	TUBERÍA IMPULSIÓN		1
41	10064100	1	PRESSURE LINE	TUBERÍA IMPULSIÓN		1
42	9008100	1	INTERMEDIATE PIECE H=20	PIEZA INTERMEDIA		1
44	10287499	4Pair	PIPE CLAMP HSRS 42X80 W1-ZN	ABRAZADERA TUBO		
45	10287498	4Pair	RUBBER INSERT 30/42X88	INSERTO GOMA		
46	10289804	8	WASHER ISO 7089 12 300HV	ARANDELA		
47	4066124	6	HEX BOLT ISO 4017 M12X30 10.9 A3C	TORNILLO DE CABEZA HEXAGO		
48	4601319	2	HEX BOLT ISO 4017 M12X50 10.9 A3C	TORNILLO DE CABEZA HEXAGO		

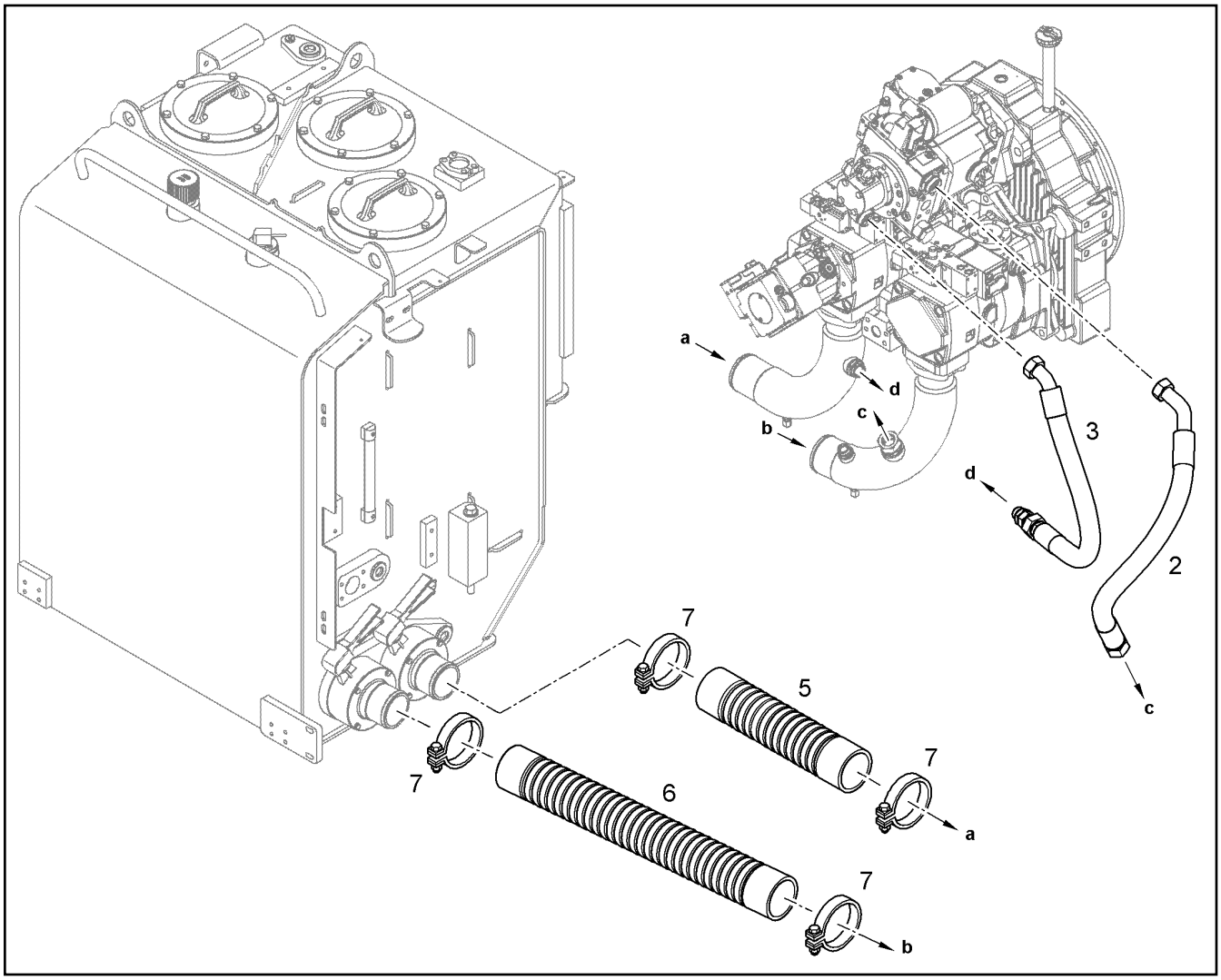

Pos.	Item	Quantity	Description	Descripción	Serie	K
2	7011398	1	HOSE	TUBO GOMA		2
3	10289039	1	HOSE	TUBO GOMA		2
5	9569943	1	SIPHON PIPE	LATIGUILLO DE ASPIRACION		2
6	9570013	1	BACK FLOW HOSE HYDR.OIL	TUBO RETORNO ACEITE		2
7	4820018	4	HOSE CLAMP DIN 3017 B2-116 X 30 W1-2	ABRAZADERA MANGUERA		

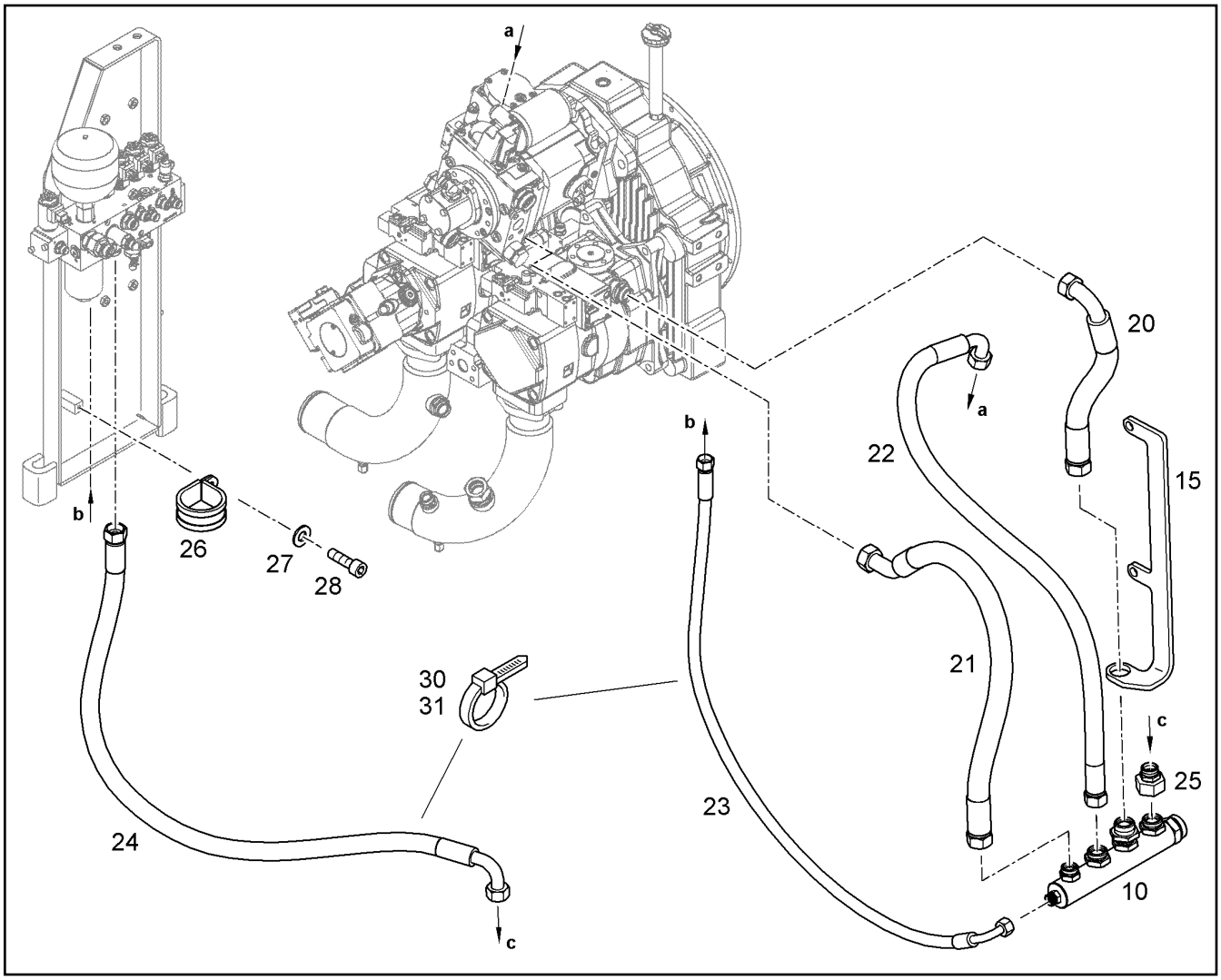

Pos.	Item	Quantity	Description	Descripción	Serie	K
10	10100944	1	DISTRIBUTOR	DISTRIBUIDOR		
15	10066552	1	CONSOLE	CONSOLA		1
20	5602647	1	HOSE	TUBO GOMA		2
21	7413022	1	HOSE	TUBO GOMA		2
22	10000269	1	HOSE	TUBO GOMA		2
23	7620786	1	HOSE	TUBO GOMA		2
24	10000463	1	HOSE	TUBO GOMA		2
25	7616910	1	SCREW FITTING RED 28/22L	ATORNILLAMIENTO		
26	7362551	1	CLAMP DIN 3016 D1- 38 X 20 W1-2-CR	ABRAZADERA		
27	10289803	1	WASHER ISO 7089 8 300HV	ARANDELA		
28	4043082	1	CYLINDER SCREW ISO 4762 M8X20 10.9 A2	TORNILLO CILINDRICO		
30	7369399	0.18m	PLASTIC PROTECTION SPRING	HÉLICE P.PROT.CIZALLA PLÁSTI		1
31	7005587	2	CABLE TIE	BRIDAS		

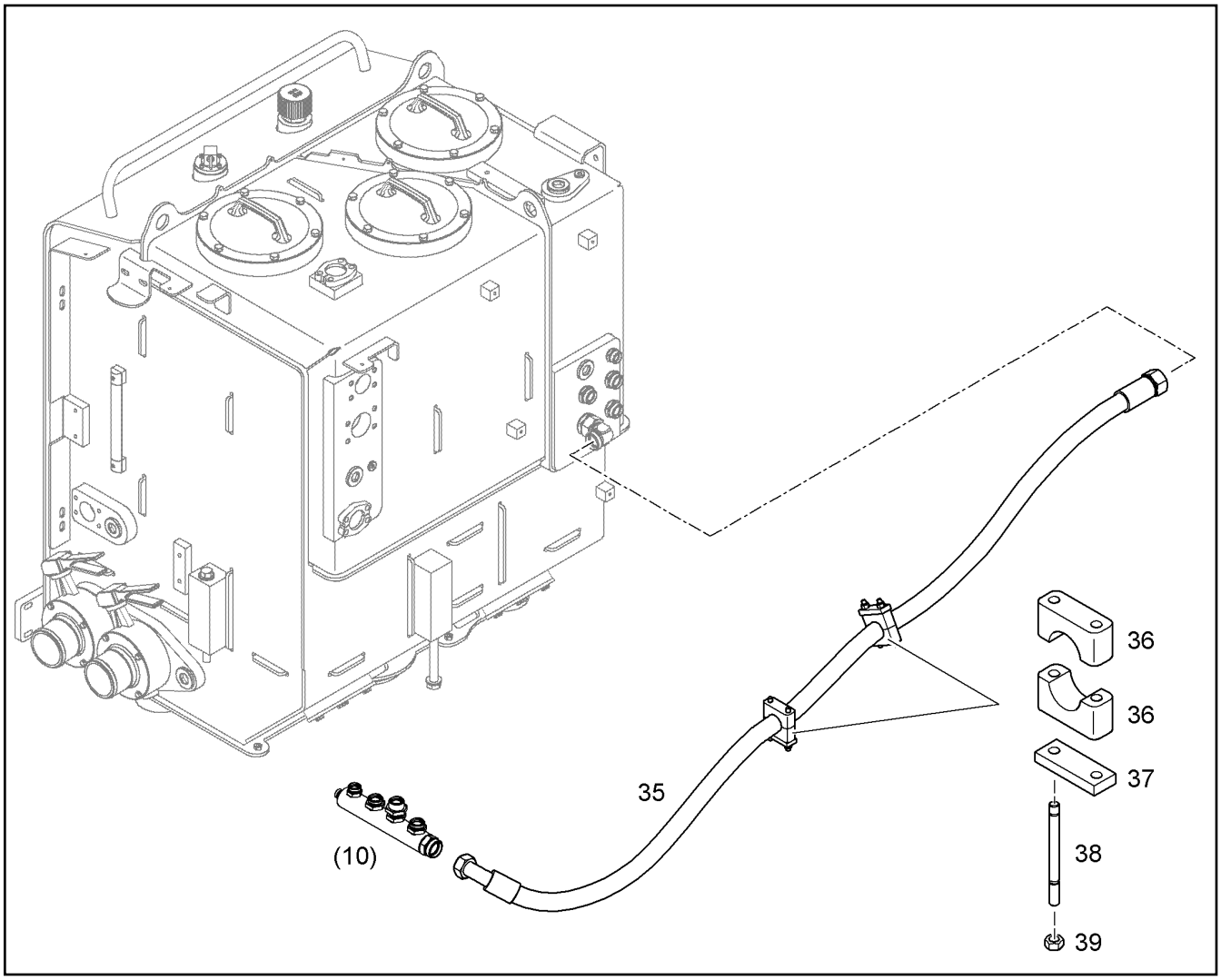

Pos.	Item	Quantity	Description	Descripción	Serie	K
35	10289159	1	HOSE	TUBO GOMA		2
36	9492506	4	HALF CLAMP COLLAR	SEMI-ABRAZADERA		
37	9483466	2	SHEET	PLACA		
38	4000906	4	DOUBLE-ENDED STUD DIN 939 M 10 X 110	TORNILLO ESPARRAGO		
39	4600579	4	HEX NUT ISO 7040 M 10 -10 A3C	TUERCA HEXAGONAL		

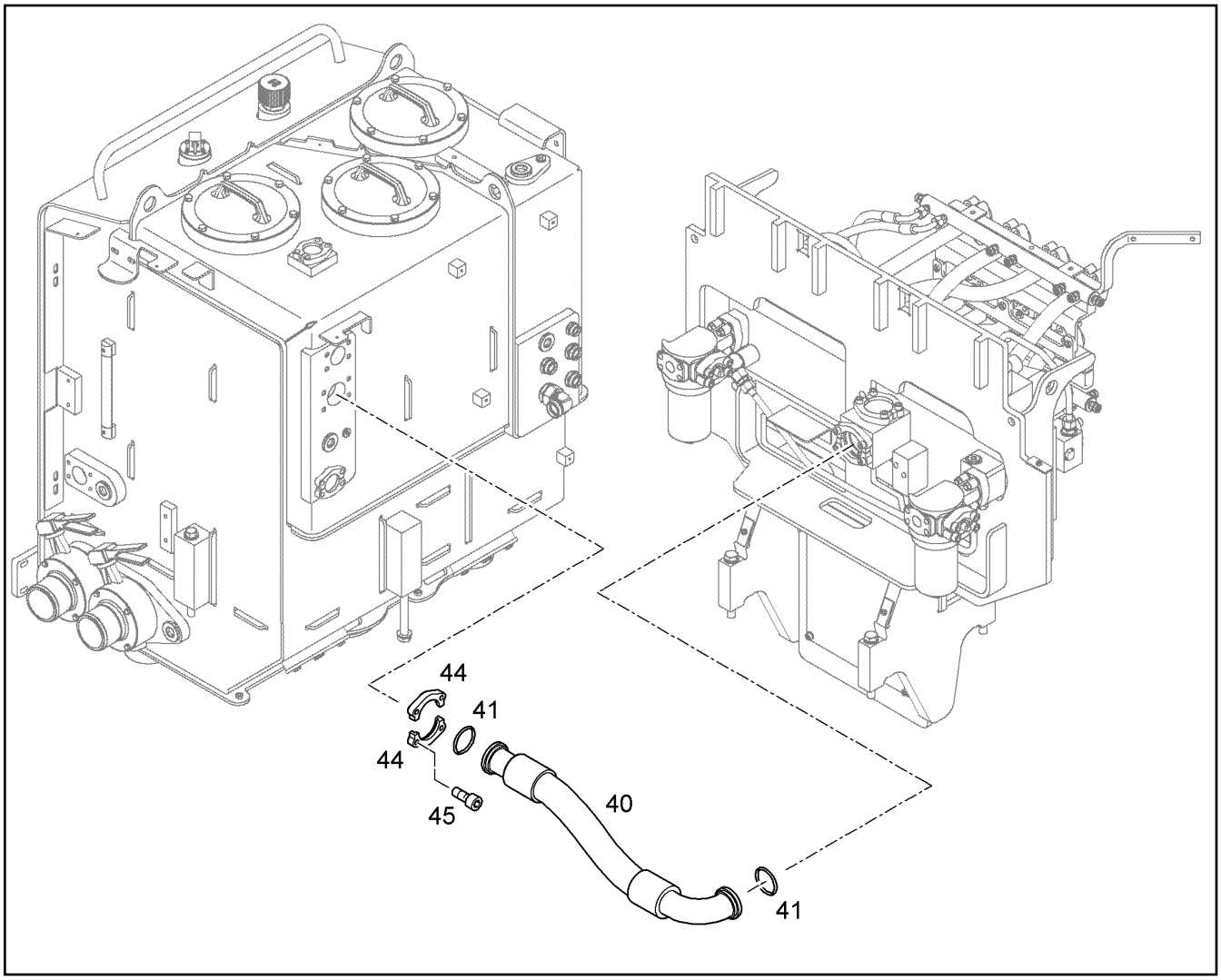

Pos.	Item	Quantity	Description	Descripción	Serie	K
40	5610046	1	HOSE	TUBO GOMA		2
41	7410480	2	O-RING	JUNTA TORICA		1
44	5602640	2	FLANGE HALF	MITAD DE BRIDA		
45	4043003	4	CYLINDER SCREW ISO 4762 M12X40 10.9	TORNILLO CILINDRICO		

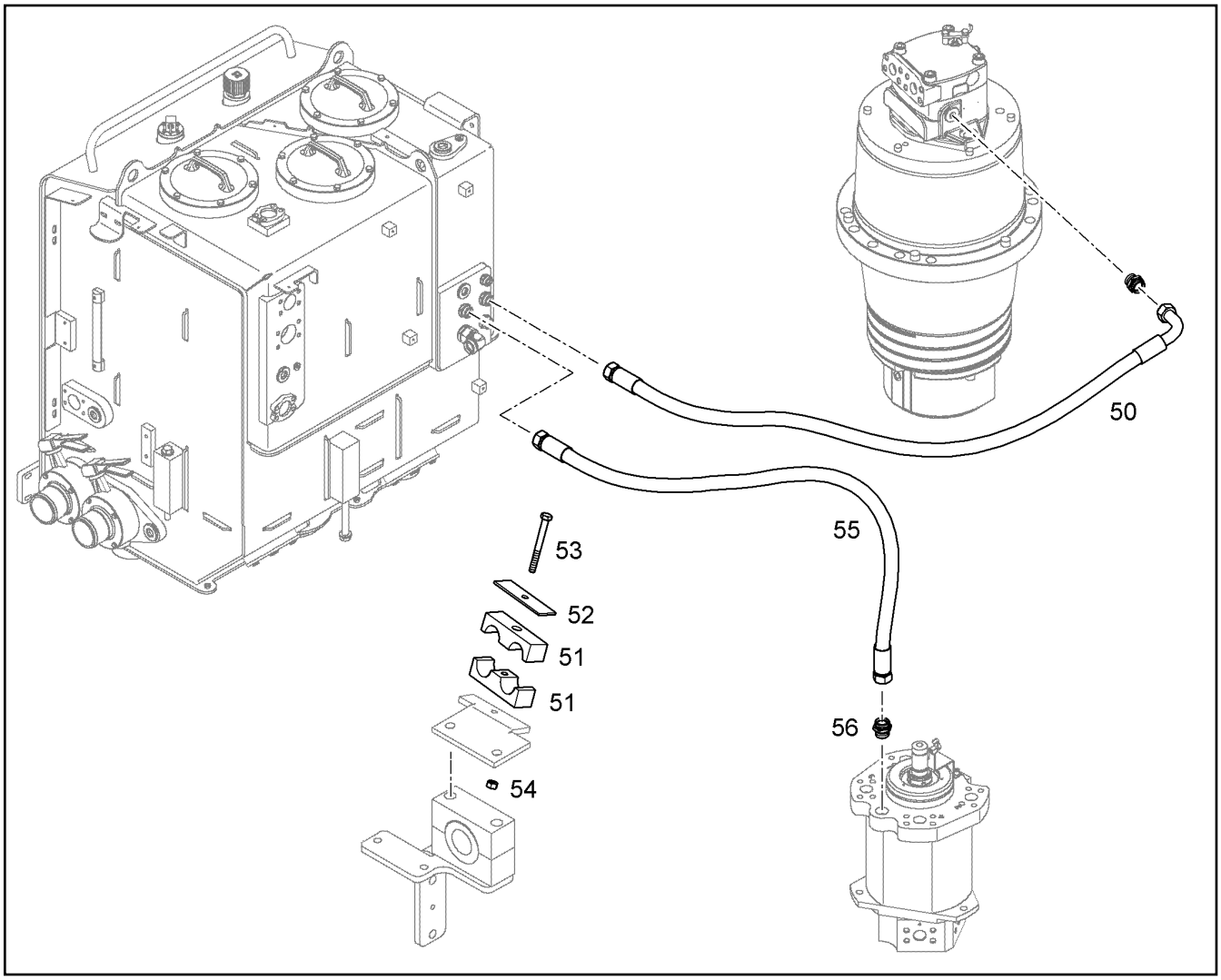

Pos.	Item	Quantity	Description	Descripción	Serie	K
50	5618881	1	HOSE	TUBO GOMA		2
51	7005103	2	CLAMP-HALF DIN 3015-3 Z 5 G 32 32 PP SW	MEDIA BRIDA		
52	7005097	1	LID PLATE DIN 3015-3 Z-DP 5 W1-ZN	PLACA CUBIERTA		
53	4001961	1	HEX BOLT ISO 4014 M8X80 10.9 A2C	TORNILLO DE CABEZA HEXAGO		
54	4000381	1	HEX NUT M8	TUERCA HEXAGONAL		
55	10017322	1	HOSE	TUBO GOMA		2
56	7003800	1	SCREW FITTING GE 28L	ATORNILLAMIENTO		

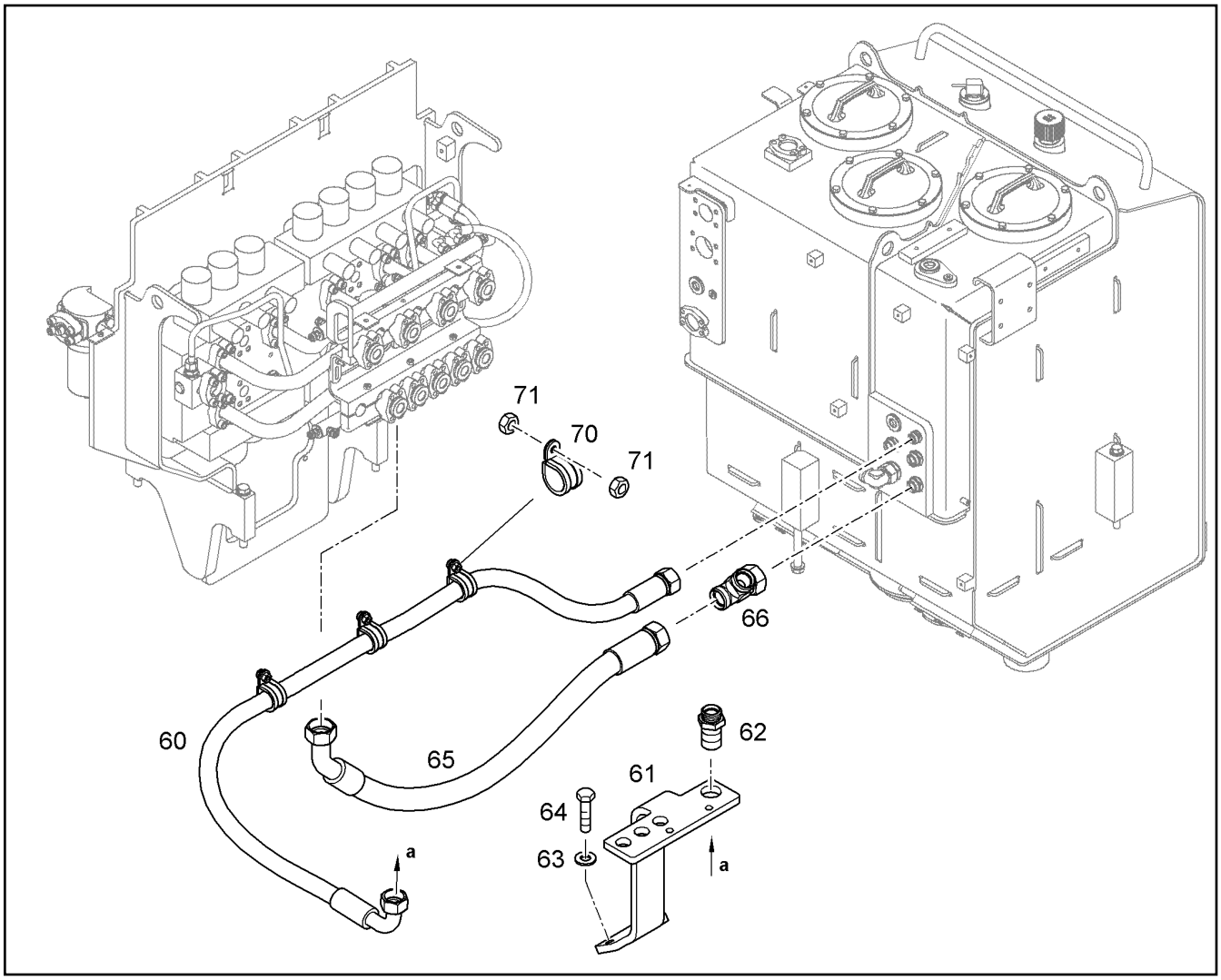

Pos.	Item	Quantity	Description	Descripción	Serie	K
60	5618801	1	HOSE	TUBO GOMA		2
61	10072148	1	CONSOLE	CONSOLA		1
62	4901131	1	BULKHEAD STUD	RACOR DE MAMPARO		
63	10289804	2	WASHER ISO 7089 12 300HV	ARANDELA		
64	4066124	2	HEX BOLT ISO 4017 M12X30 10.9 A3C	TORNILLO DE CABEZA HEXAGO		
65	10000954	1	HOSE	TUBO GOMA		2
66	7407120	1	SCREW FITTING EL 28L	ATORNILLAMIENTO		
70	7364299	3	CLAMP DIN 3016-1 D1 30X20 W1-2-CR	ABRAZADERA		
71	4000381	6	HEX NUT M8	TUERCA HEXAGONAL		

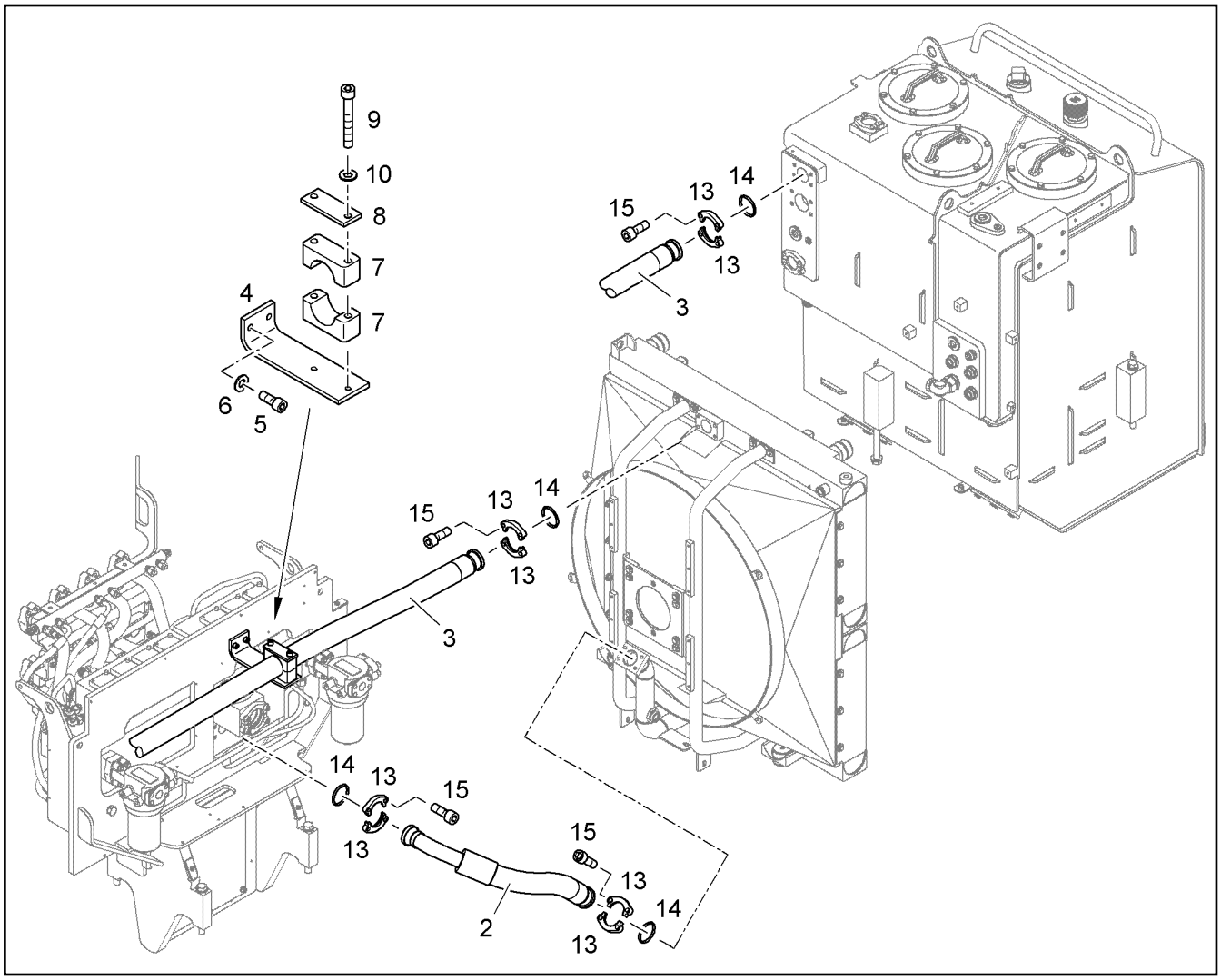

Pos.	Item	Quantity	Description	Descripción	Serie	K
2	10289313	1	HOSE	TUBO GOMA		2
3	10289314	1	HOSE	TUBO GOMA		2
4	10065428	1	CONSOLE	CONSOLA		1
5	4043000	2	CYLINDER SCREW ISO 4762 M10X30 10.9	TORNILLO CILINDRICO		
6	4229913	2	LOCK WASHER 10,5/16X2 VS 10	ARANDELA SEGURIDAD		
7	7371926	2	CLAMP-HALF DIN 3015-2 S 4 G 63,5 PP SW	MEDIA BRIDA		
8	9476811	1	SHEET	PLACA		
9	4600830	2	CYLINDER SCREW ISO 4762 M12X120 10.9	TORNILLO CILINDRICO		
10	4900093	2	LOCK WASHER 12 VS	ARANDELA SEGURIDAD		
13	5002070	8	FLANGE HALF SAE 2" FLACH CODE 61	MITAD DE BRIDA		
14	10290516	4	PLAIN COMPRESSION RING 63,9x3,4x2,8	ARO DE SECCION RECTANGULA		1
15	4043164	16	CYLINDER SCREW ISO 4762 M12X35 10.9	TORNILLO CILINDRICO		

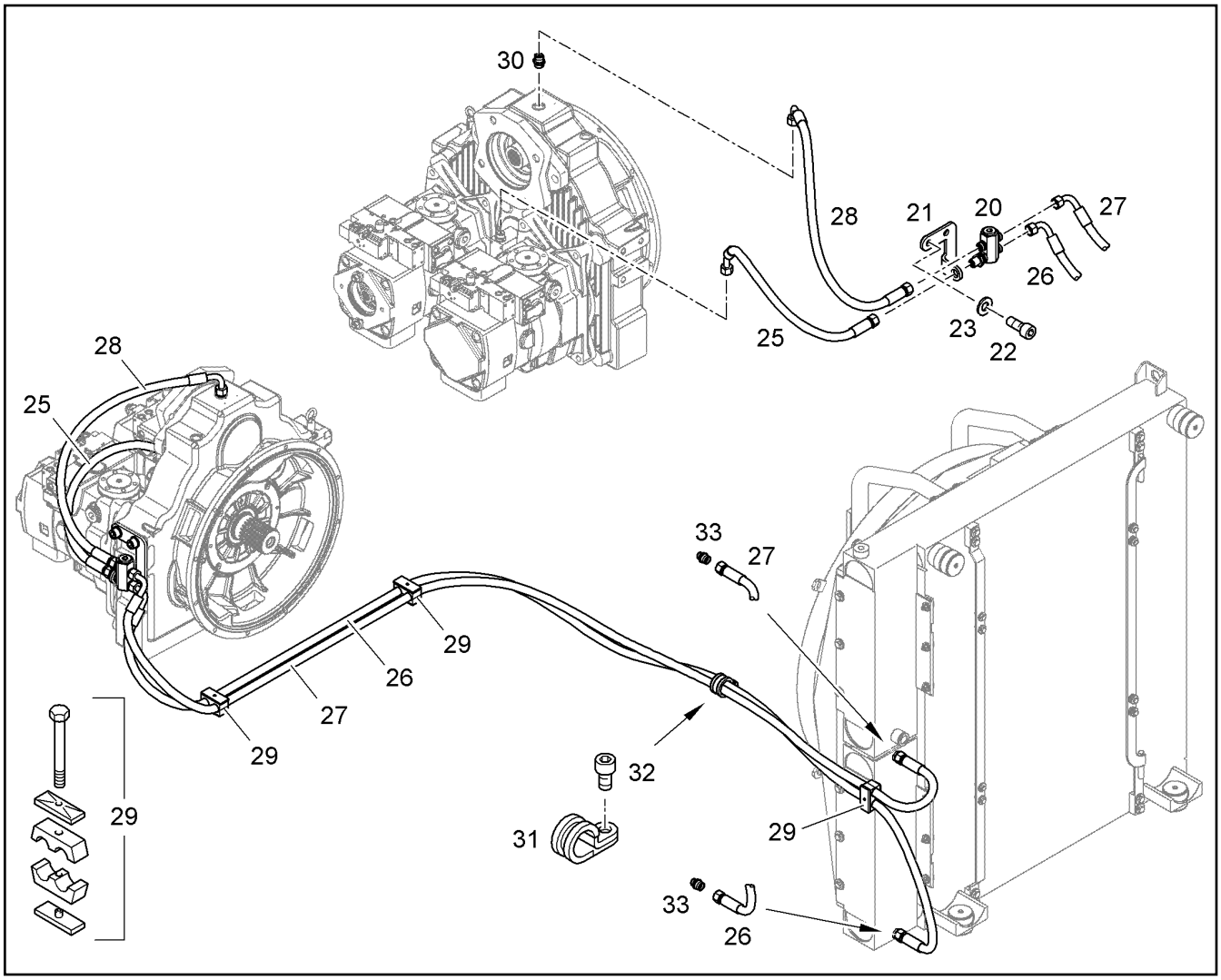

Pos.	Item	Quantity	Description	Descripción	Serie	K
20	10100946	1	DISTRIBUTOR	DISTRIBUIDOR		
21	10066550	1	CONSOLE	CONSOLA		1
22	4000877	2	CYLINDER SCREW ISO 4762 M16X30 10.9	TORNILLO CILINDRICO		
23	10289806	2	WASHER ISO 7089 16 300HV	ARANDELA		
25	10000896	1	HOSE	TUBO GOMA		2
26	10285271	1	HOSE	TUBO GOMA		2
27	7413201	1	HOSE	TUBO GOMA		2
28	5618388	1	HOSE	TUBO GOMA		2
29	9368905	3	HOSE CLAMP ⇨ ❑ 742	ABRAZADERA MANGUERA		1
30	7403083	1	SCREW FITTING GE 15L	ATORNILLAMIENTO		
31	7367691	1	CLAMP DIN 3016 D1- 40 X 25 W1-2-CR	ABRAZADERA		
32	4000445	1	CYLINDER SCREW ISO 4762 M8x10 8.8 A2C	TORNILLO CILINDRICO		
33	7003570	2	SCREW FITTING GE 15L	ATORNILLAMIENTO		

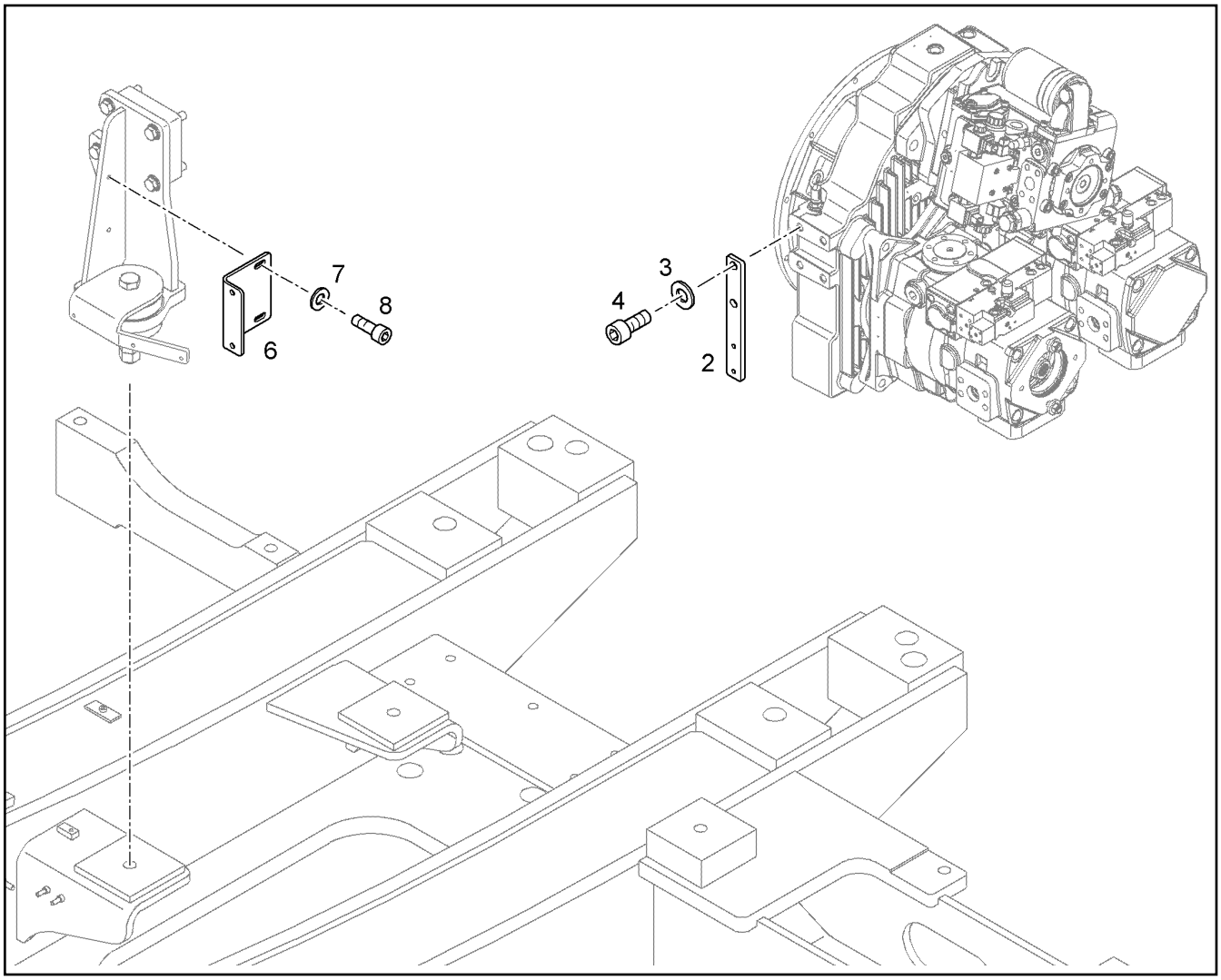

Pos.	Item	Quantity	Description	Descripción	Serie	K
2	10358268	1	SHEET	PLACA		1
3	10289806	2	WASHER ISO 7089 16 300HV	ARANDELA		
4	10001464	2	CYLINDER SCREW ISO 4762 M16X35 10.9	TORNILLO CILINDRICO		
6	10072141	1	CONSOLE	CONSOLA		1
7	4901879	2	WASHER ISO 7090 10 - 200HV A4	ARANDELA		
8	4043124	2	CYLINDER SCREW ISO 4762 M10X25 10.9	TORNILLO CILINDRICO		

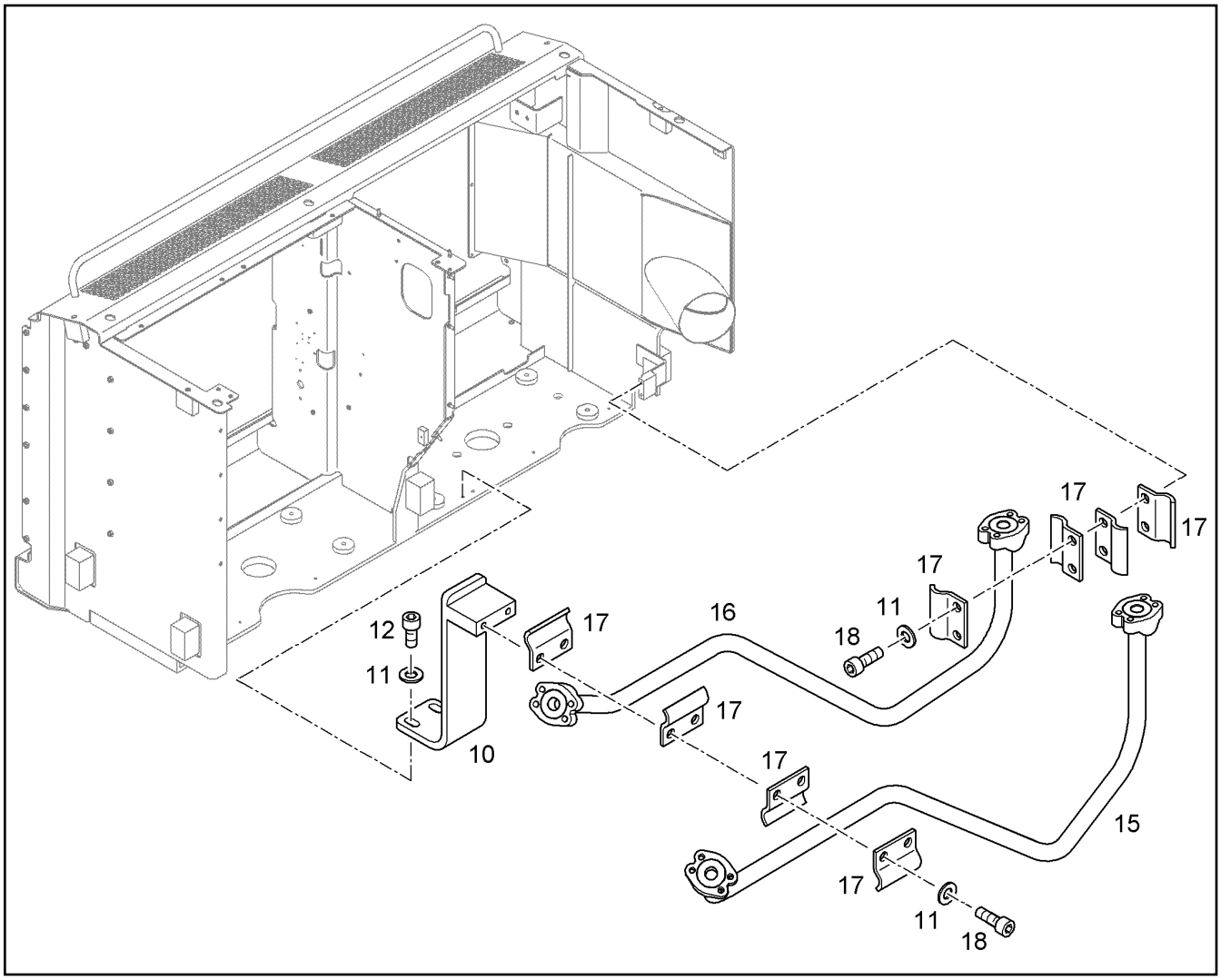

Pos.	Item	Quantity	Description	Descripción	Serie	K
10	10071836	1	CONSOLE	CONSOLA		
11	10289804	6	WASHER ISO 7089 12 300HV	ARANDELA		
12	4043163	2	CYLINDER SCREW ISO 4762 M12X30 10.9	TORNILLO CILINDRICO		
15	10061167	1	TUBE	TUBO		
16	10061171	1	TUBE	TUBO		
17	7373873	8	HALF FLANGE	SEMI-BRIDA		
18	4043003	4	CYLINDER SCREW ISO 4762 M12X40 10.9	TORNILLO CILINDRICO		

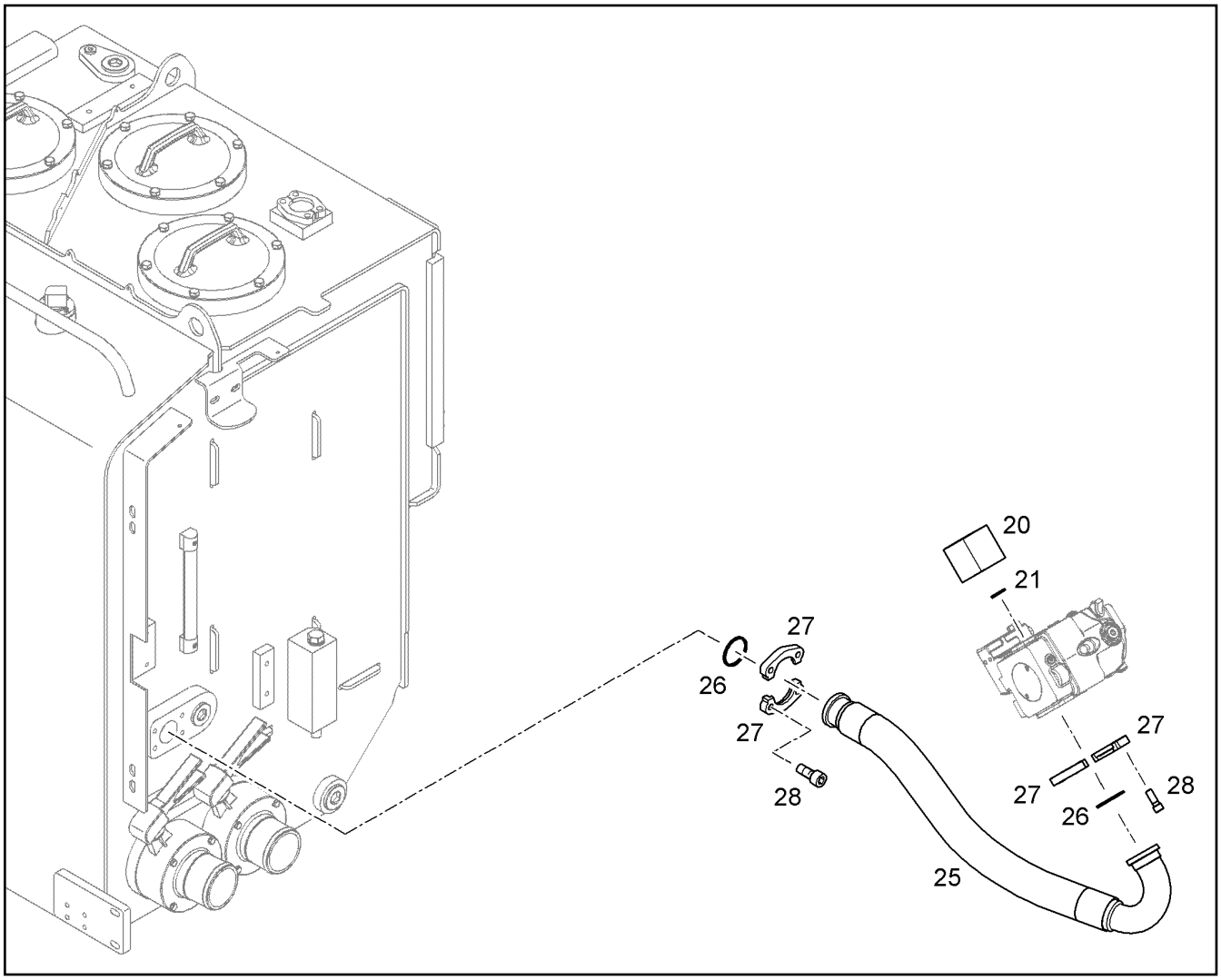

Pos.	Item	Quantity	Description	Descripción	Serie	K
20	10073622	1	BLOCK	BLOQUE BLANCO COMBINADO		1
21	10290520	1	PLAIN COMPRESSION RING 32,3x3,4x2,8	ARO DE SECCION RECTANGULA		1
25	10289040	1	HOSE	TUBO GOMA		2
26	10290516	2	PLAIN COMPRESSION RING 63,9x3,4x2,8	ARO DE SECCION RECTANGULA		1
27	5002070	4	FLANGE HALF SAE 2" FLACH CODE 61	MITAD DE BRIDA		
28	4043164	8	CYLINDER SCREW ISO 4762 M12X35 10.9	TORNILLO CILINDRICO		

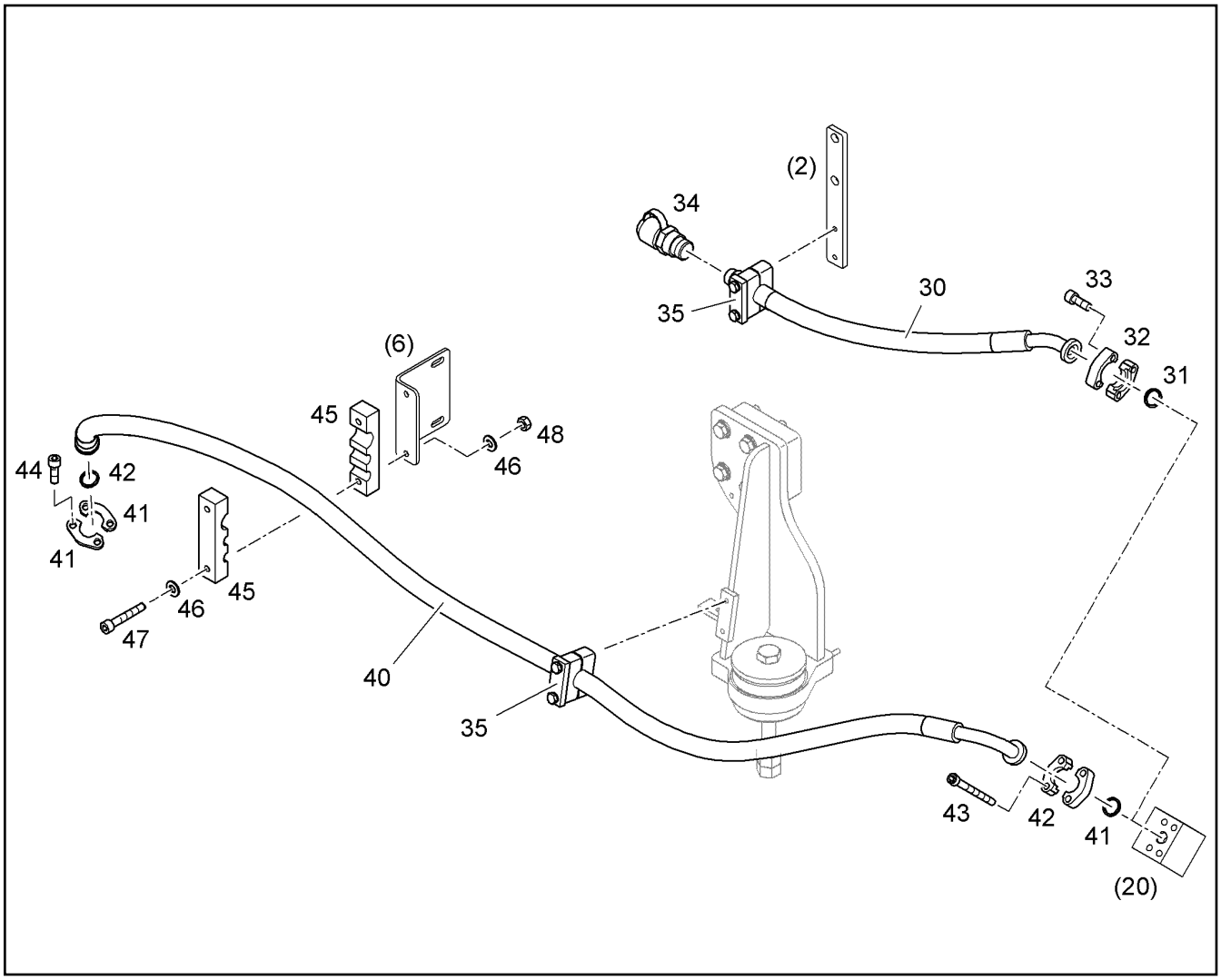

Pos.	Item	Quantity	Description	Descripción	Serie	K
30	10303056	1	HOSE	TUBO GOMA		2
31	10290520	1	PLAIN COMPRESSION RING 32,3x3,4x2,8	ARO DE SECCION RECTANGULA		1
32	10286359	2	FLANGE HALF	MITAD DE BRIDA		
33	4900855	4	CYLINDER SCREW ISO 4762 M10X35 10.9	TORNILLO CILINDRICO		
34	7409720	1	SCREW COUPLING G1/4	ACOPLAMIENTO ROSCADO		2
35	9363937	2	PIPE CLAMP ⇨ ❑ 741	ABRAZADERA TUBO		1
40	10346618	1	HOSE	TUBO GOMA		2
41	10290520	2	PLAIN COMPRESSION RING 32,3x3,4x2,8	ARO DE SECCION RECTANGULA		1
42	10286359	4	FLANGE HALF	MITAD DE BRIDA		
43	4901269	4	CYLINDER SCREW ISO 4762 M10X110 10.9	TORNILLO CILINDRICO		
44	4900855	4	CYLINDER SCREW ISO 4762 M10X35 10.9	TORNILLO CILINDRICO		
45	10072165	2	HALF CLAMP COLLAR	SEMI-ABRAZADERA		1
46	4901879	4	WASHER ISO 7090 10 - 200HV A4	ARANDELA		
47	4043136	2	CYLINDER SCREW ISO 4762 M10X90 10.9	TORNILLO CILINDRICO		
48	4600579	2	HEX NUT ISO 7040 M 10 -10 A3C	TUERCA HEXAGONAL		

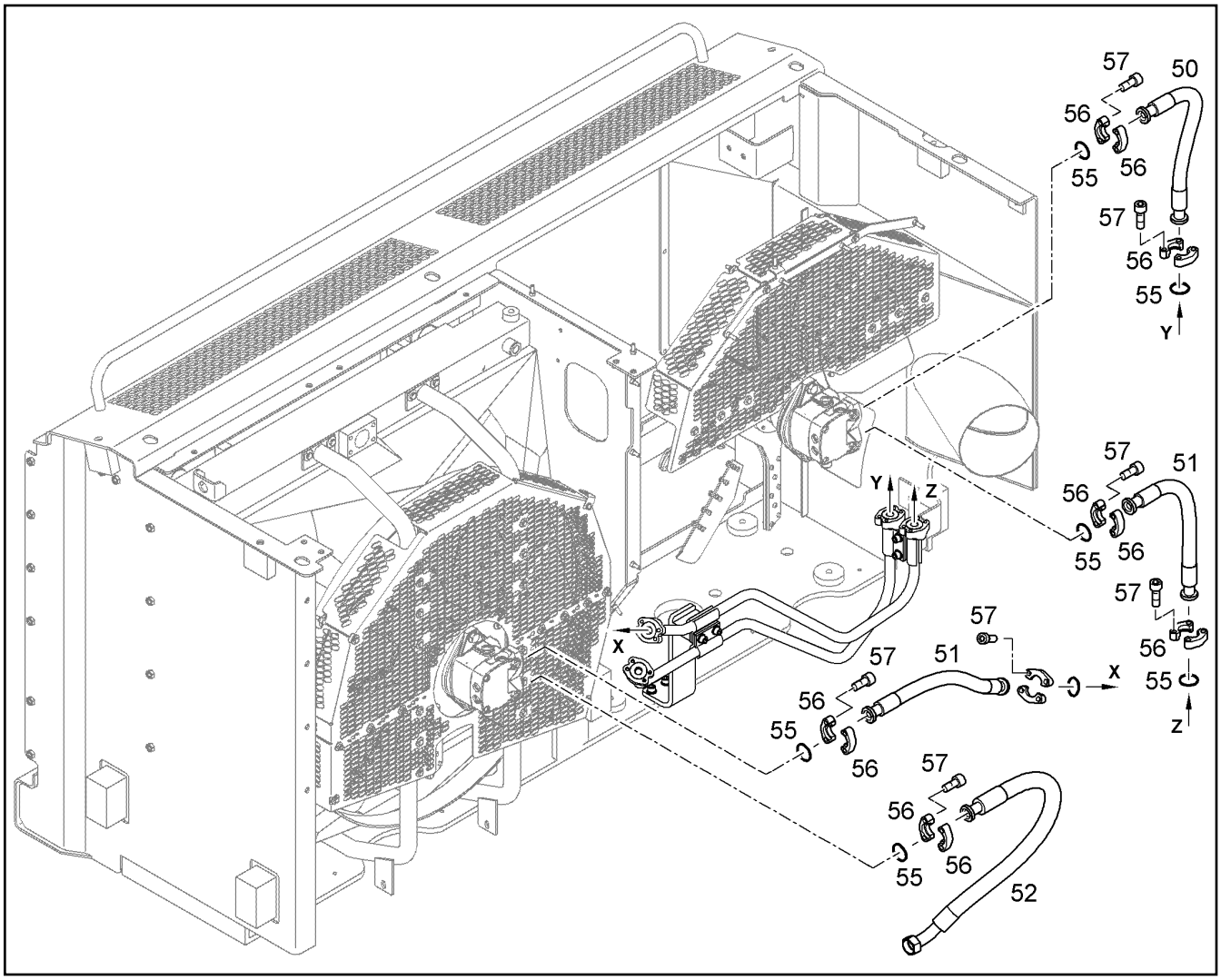

Pos.	Item	Quantity	Description	Descripción	Serie	K
50	5615135	1	HOSE	TUBO GOMA		2
51	7025676	2	HOSE	TUBO GOMA		2
52	10289158	1	HOSE	TUBO GOMA		2
55	10290520	7	PLAIN COMPRESSION RING 32,3x3,4x2,8	ARO DE SECCION RECTANGULA		1
56	10286359	14	FLANGE HALF	MITAD DE BRIDA		
57	4900855	28	CYLINDER SCREW ISO 4762 M10X35 10.9	TORNILLO CILINDRICO		

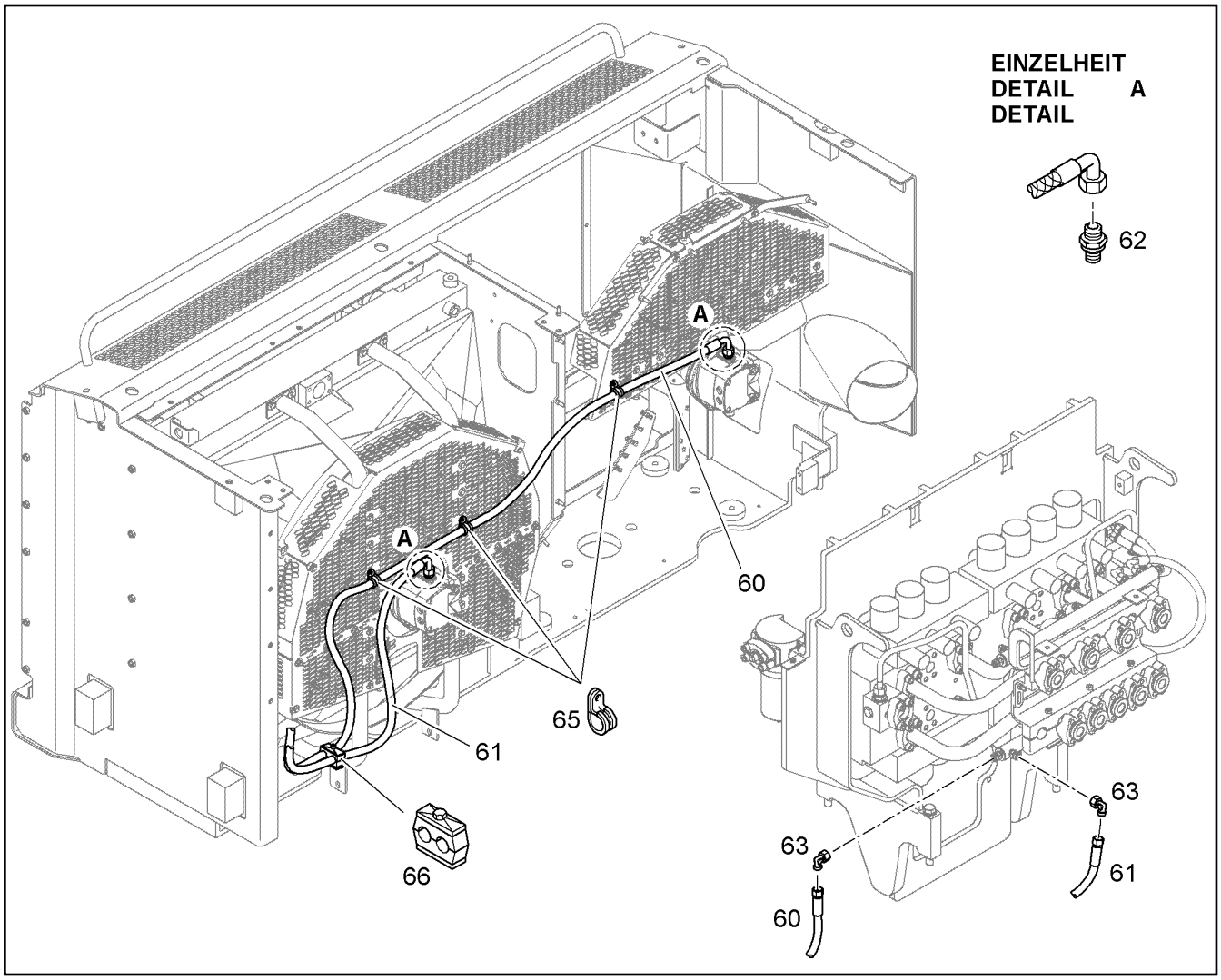

Pos.	Item	Quantity	Description	Descripción	Serie	K
60	5618265	1	HOSE	TUBO GOMA		2
61	10000292	1	HOSE	TUBO GOMA		2
62	7003570	2	SCREW FITTING GE 15L	ATORNILLAMIENTO		
63	7615379	2	SCREW FITTING EW 15L	ATORNILLAMIENTO		
65	7362665	3	CLAMP DIN 3016 D1- 20 X 20 W1-2-CR	ABRAZADERA		
66	9385073	1	HOSE CLAMP ⇨ ❑ 743	ABRAZADERA MANGUERA		1

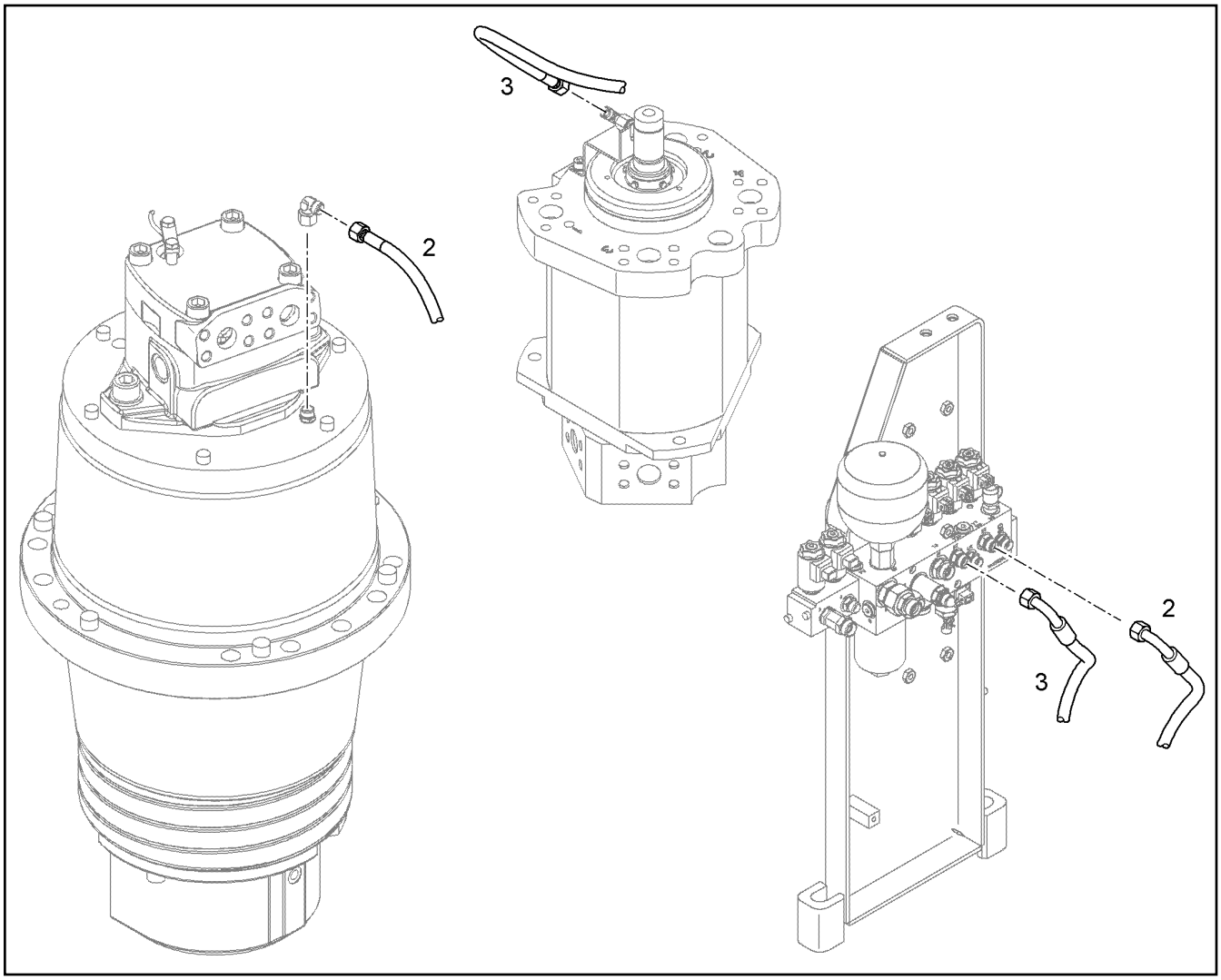

Pos.	Item	Quantity	Description	Descripción	Serie	K
2	10289157	1	HOSE	TUBO GOMA		2
3	10289156	1	HOSE	TUBO GOMA		2

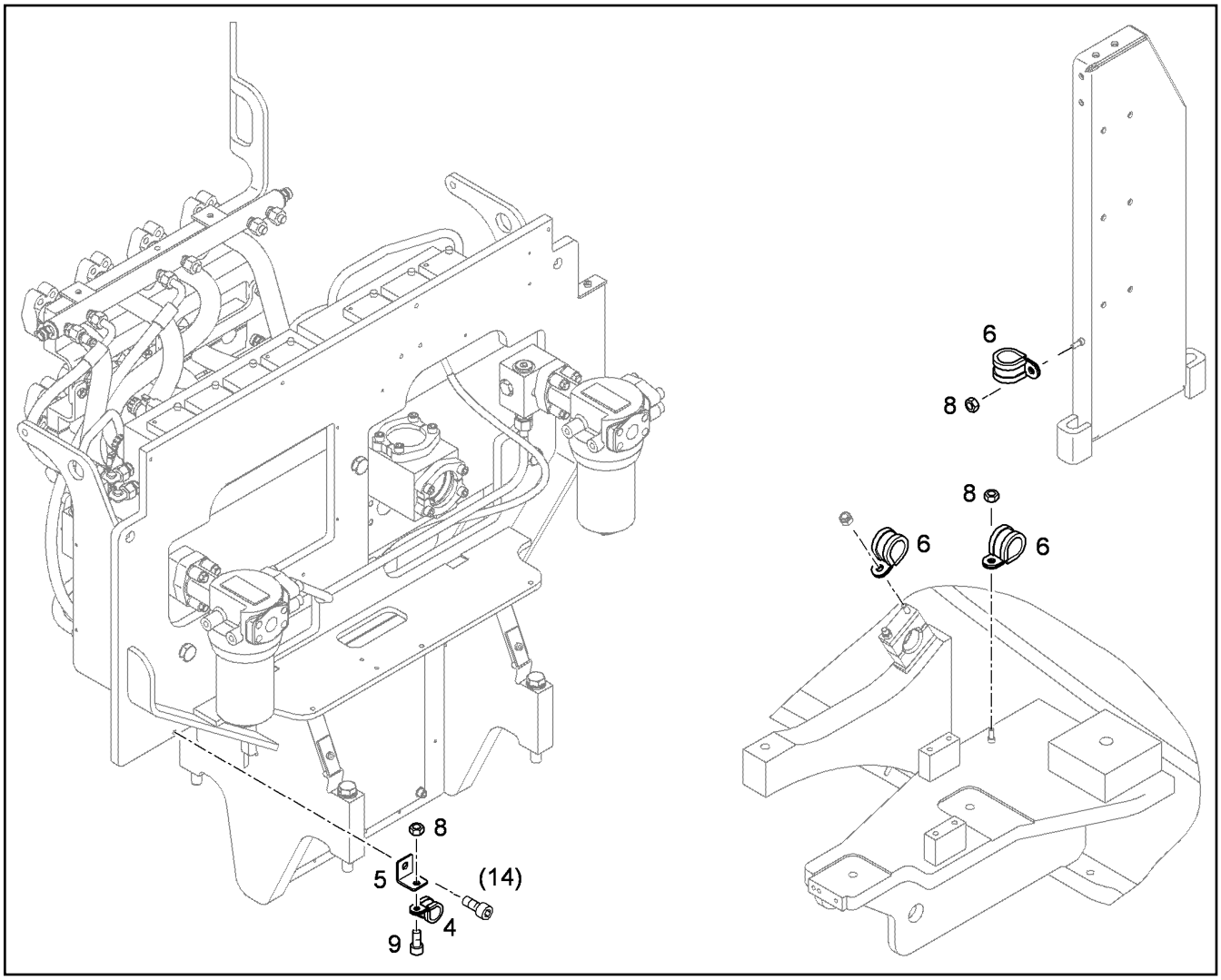

Pos.	Item	Quantity	Description	Descripción	Serie	K
4	7362545	1	CLAMP DIN 3016-1 D1 22X20 W1-2-CR	ABRAZADERA		
5	9573442	1	ANGLE	ANGULAR		
6	7367448	3	CLAMP DIN 3016 D1- 30 X 25 W1-2-CR	ABRAZADERA		
8	4901096	3	HEX NUT ISO 4035 M 8 -04 A3C	TUERCA HEXAGONAL		
9	4902231	1	CYLINDER SCREW ISO 4762 M8X16 10.9 A2	TORNILLO CILINDRICO		

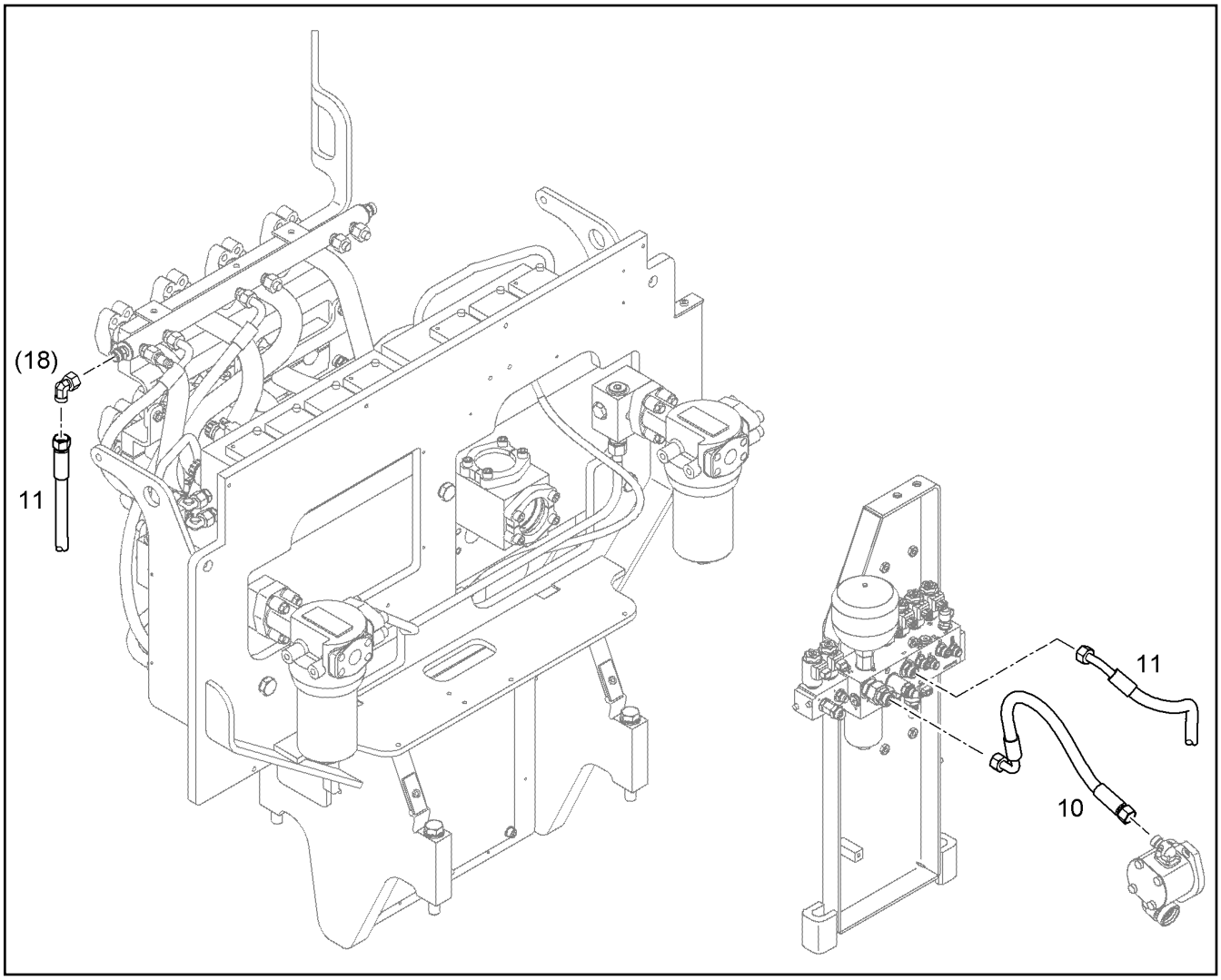

Pos.	Item	Quantity	Description	Descripción	Serie	K
10	7008082	1	HOSE	TUBO GOMA		2
11	10003614	1	HOSE	TUBO GOMA		2

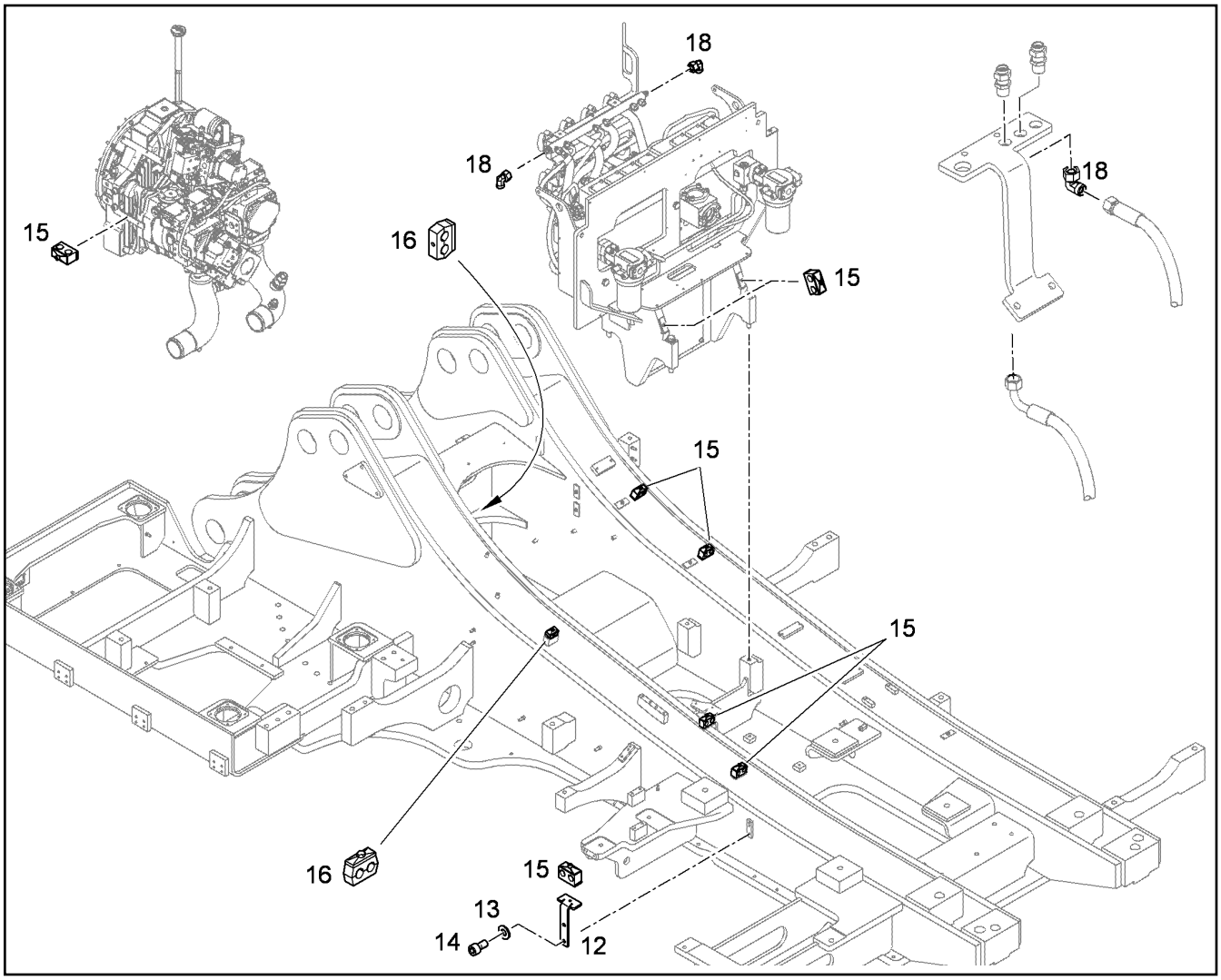

Pos.	Item	Quantity	Description	Descripción	Serie	K
12	10077268	1	CONSOLE	CONSOLA		1
13	4900531	2	WASHER ISO 7093-1 10 200HV	ARANDELA		
14	4901606	3	CYLINDER SCREW ISO 4762 M10X16 10.9	TORNILLO CILINDRICO		
15	9385073	8	HOSE CLAMP ⇨ ❑ 743	ABRAZADERA MANGUERA		1
16	9577441	2	PIPE CLAMP ⇨ ❑ 745	ABRAZADERA TUBO		1
18	7615379	3	SCREW FITTING EW 15L	ATORNILLAMIENTO		

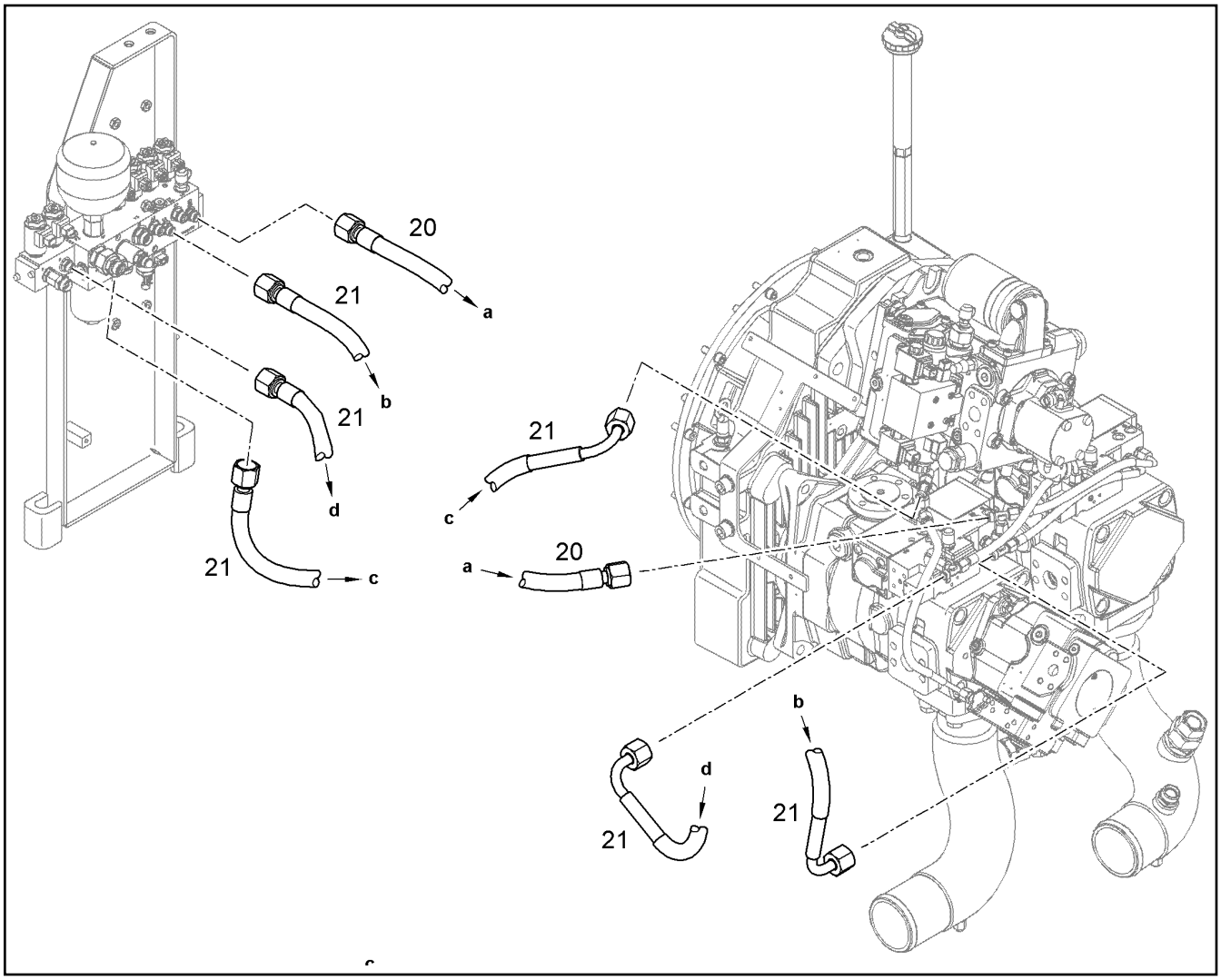

Pos.	Item	Quantity	Description	Descripción	Serie	K
20	5616211	1	HOSE	TUBO GOMA		2
21	5613500	3	HOSE	TUBO GOMA		2

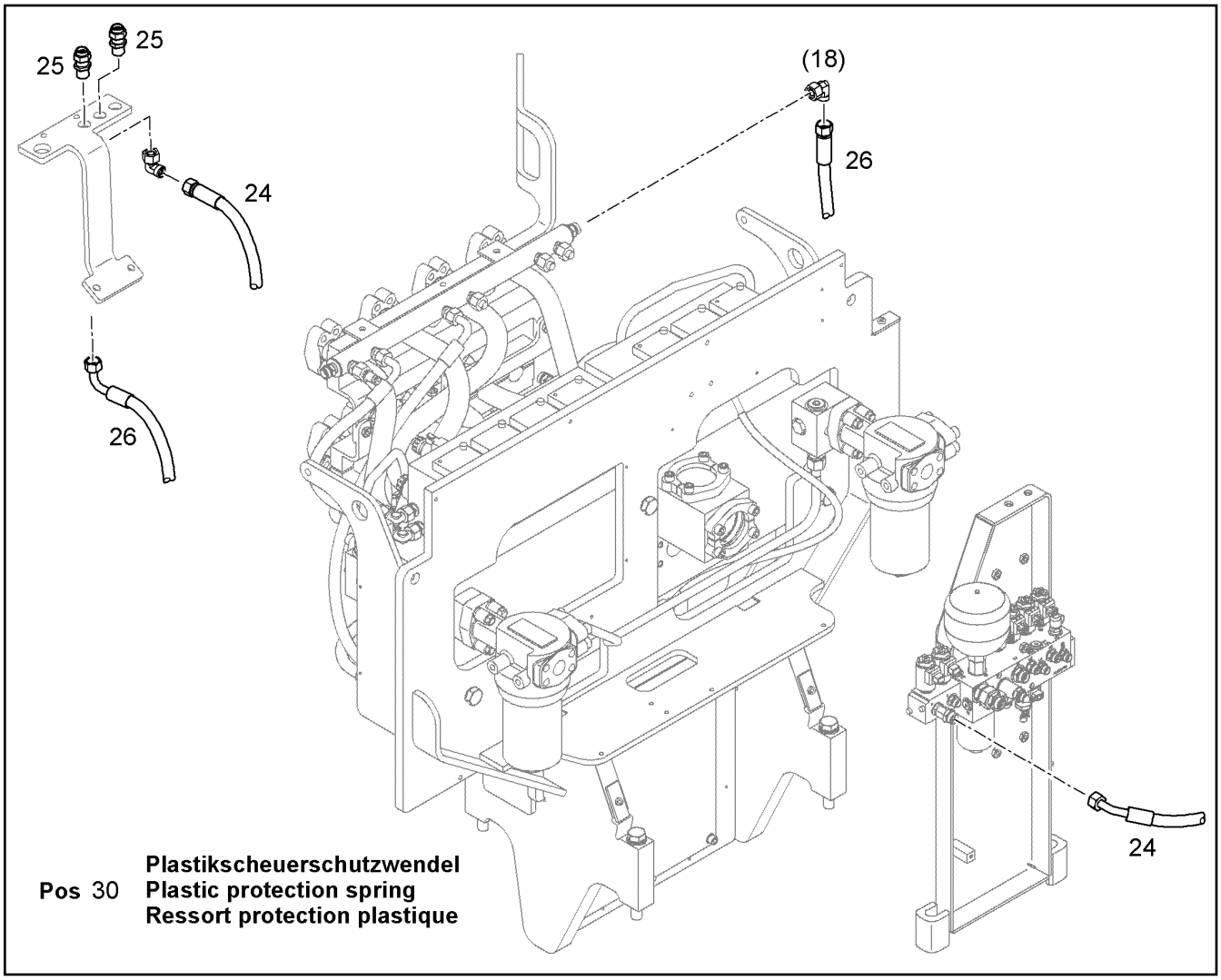

Pos.	Item	Quantity	Description	Descripción	Serie	K
24	10323710	1	HOSE	TUBO GOMA		2
25	4901130	2	SCREW FITTING SV 15L	ATORNILLAMIENTO		
26	10032752	1	HOSE	TUBO GOMA		2
30	7369397	1m	PLASTIC PROTECTION SPRING	HÉLICE P.PROT.CIZALLA PLÁSTI		1

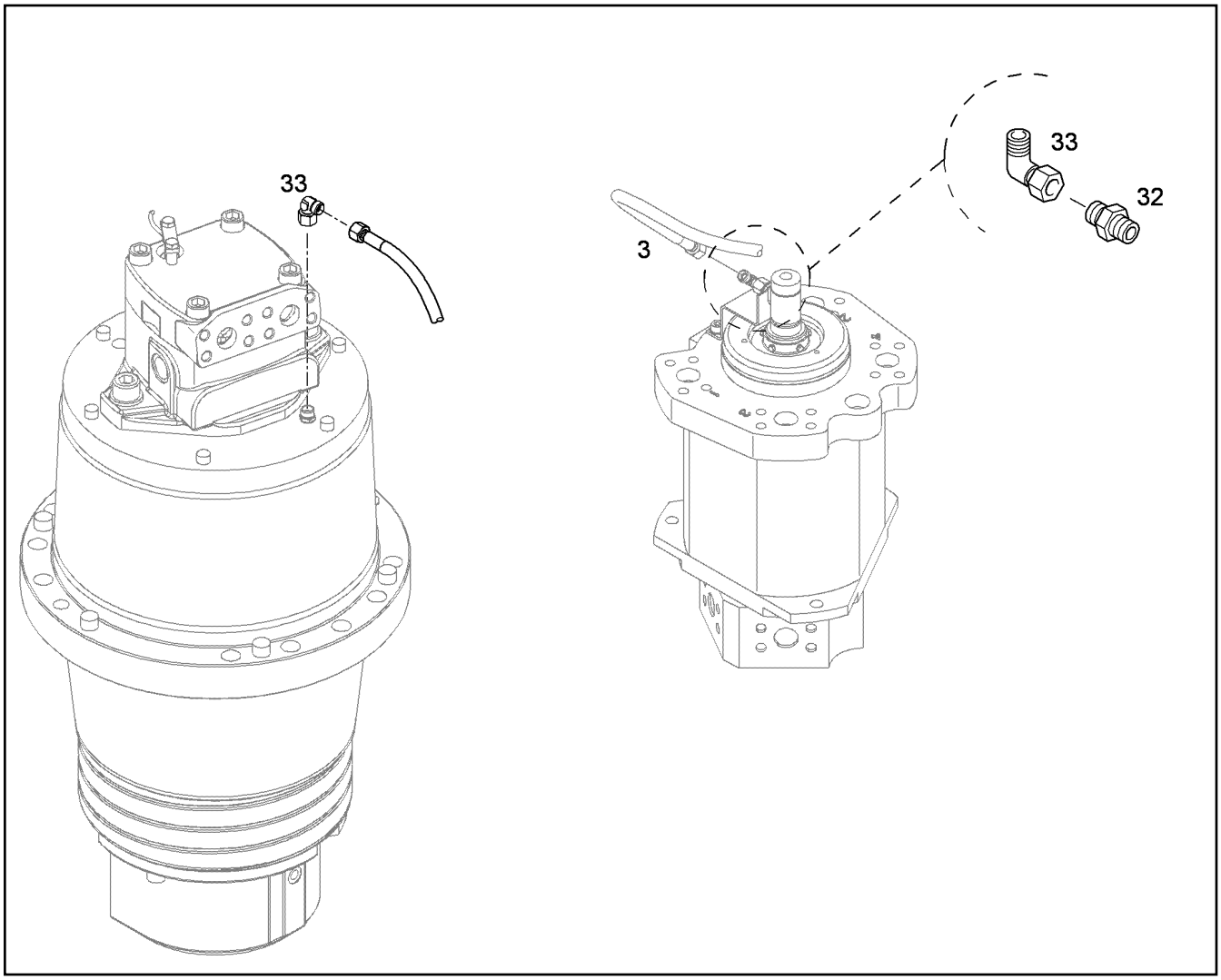

Pos.	Item	Quantity	Description	Descripción	Serie	K
32	7405399	1	SCREW FITTING GE 12L M14X1,5	ATORNILLAMIENTO		
33	247117702	2	SCREW FITTING EW 12L	ATORNILLAMIENTO		

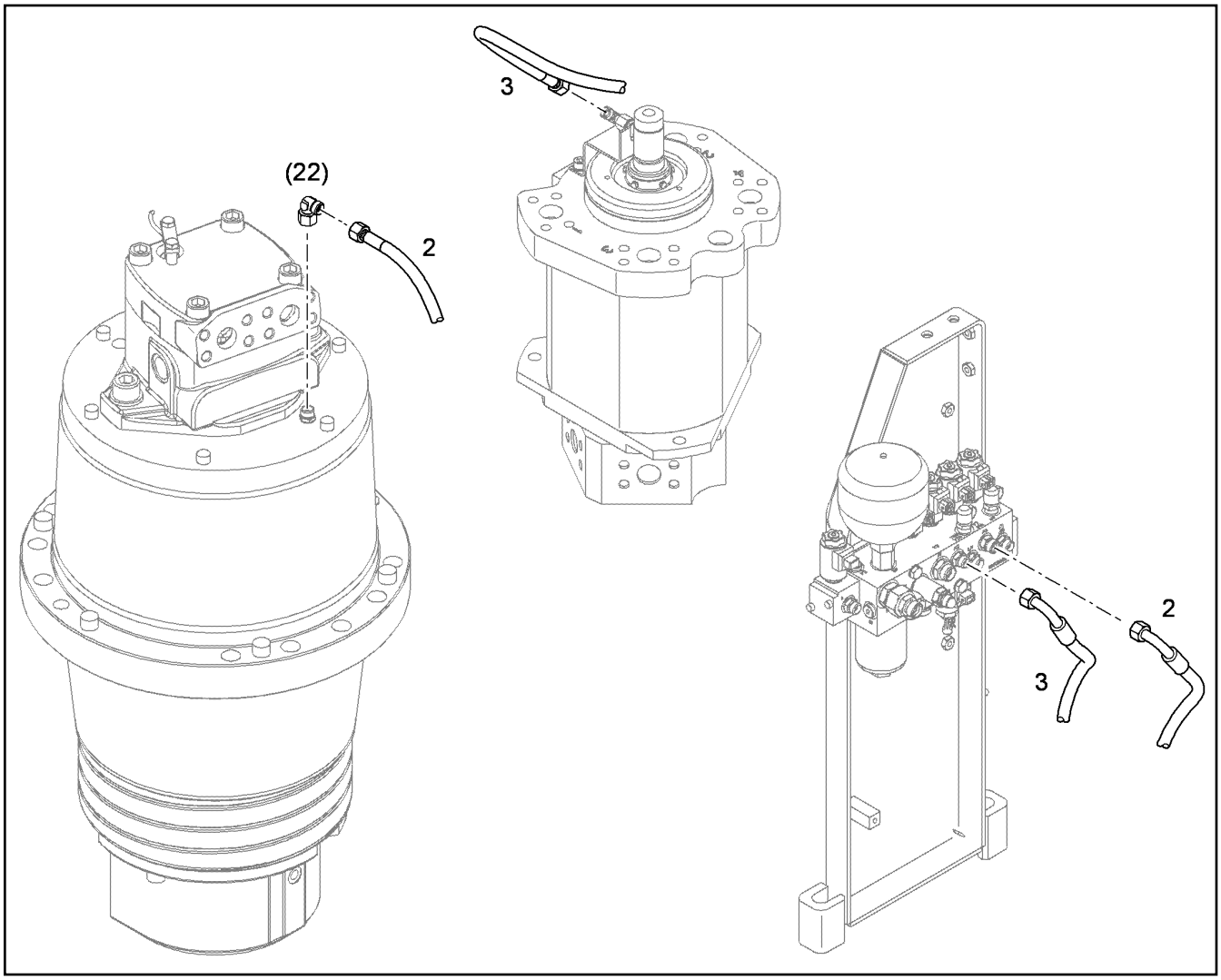

Pos.	Item	Quantity	Description	Descripción	Serie	K
2	10289157	1	HOSE	TUBO GOMA		2
3	5609395	1	CONTROL HOSE	TUBO FLEX.MANDO		2

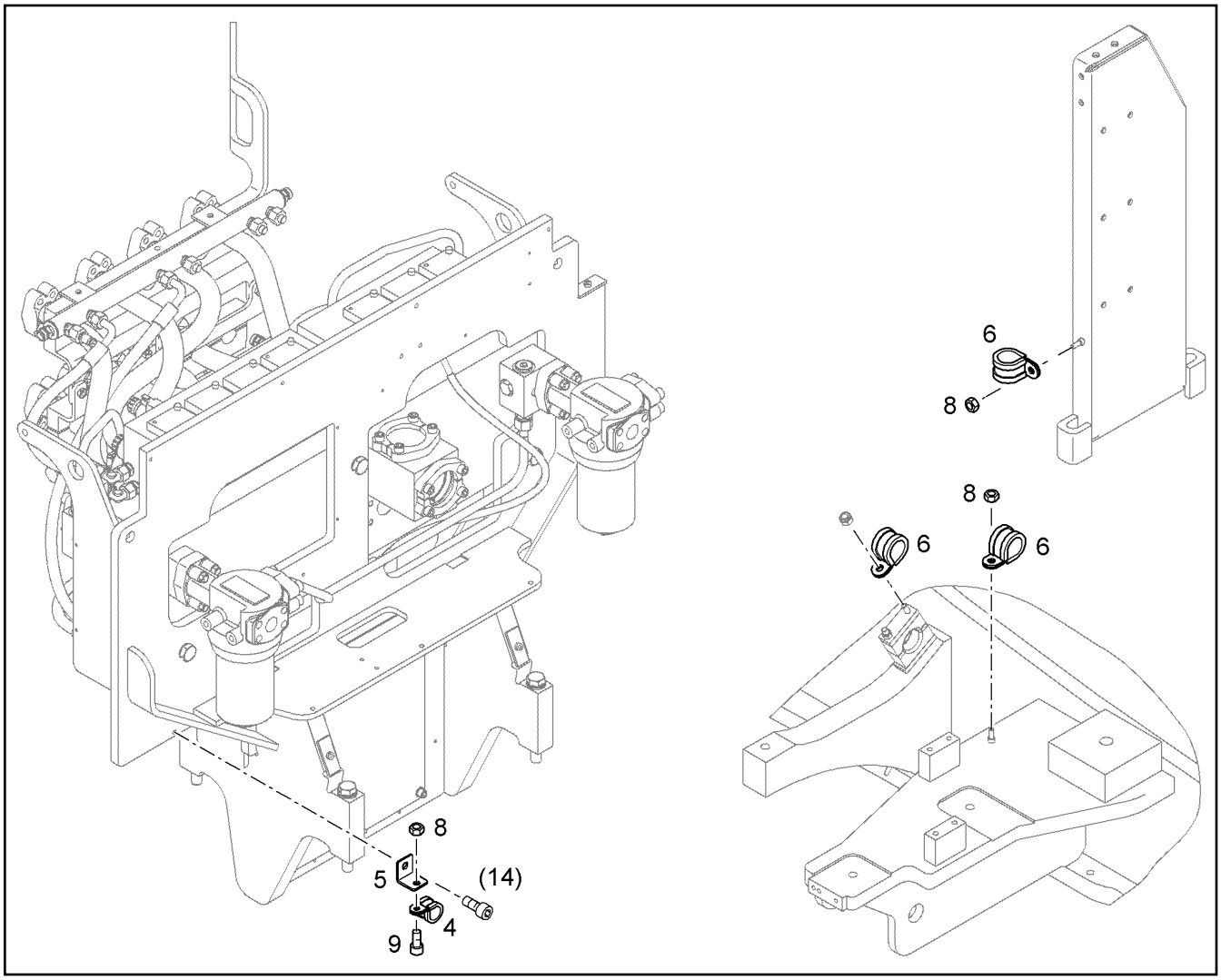

Pos.	Item	Quantity	Description	Descripción	Serie	K
4	7362545	1	CLAMP DIN 3016-1 D1 22X20 W1-2-CR	ABRAZADERA		
5	9573442	1	ANGLE	ANGULAR		
6	7367448	3	CLAMP DIN 3016 D1- 30 X 25 W1-2-CR	ABRAZADERA		
8	4901096	3	HEX NUT ISO 4035 M 8 -04 A3C	TUERCA HEXAGONAL		
9	4902231	1	CYLINDER SCREW ISO 4762 M8X16 10.9 A2	TORNILLO CILINDRICO		

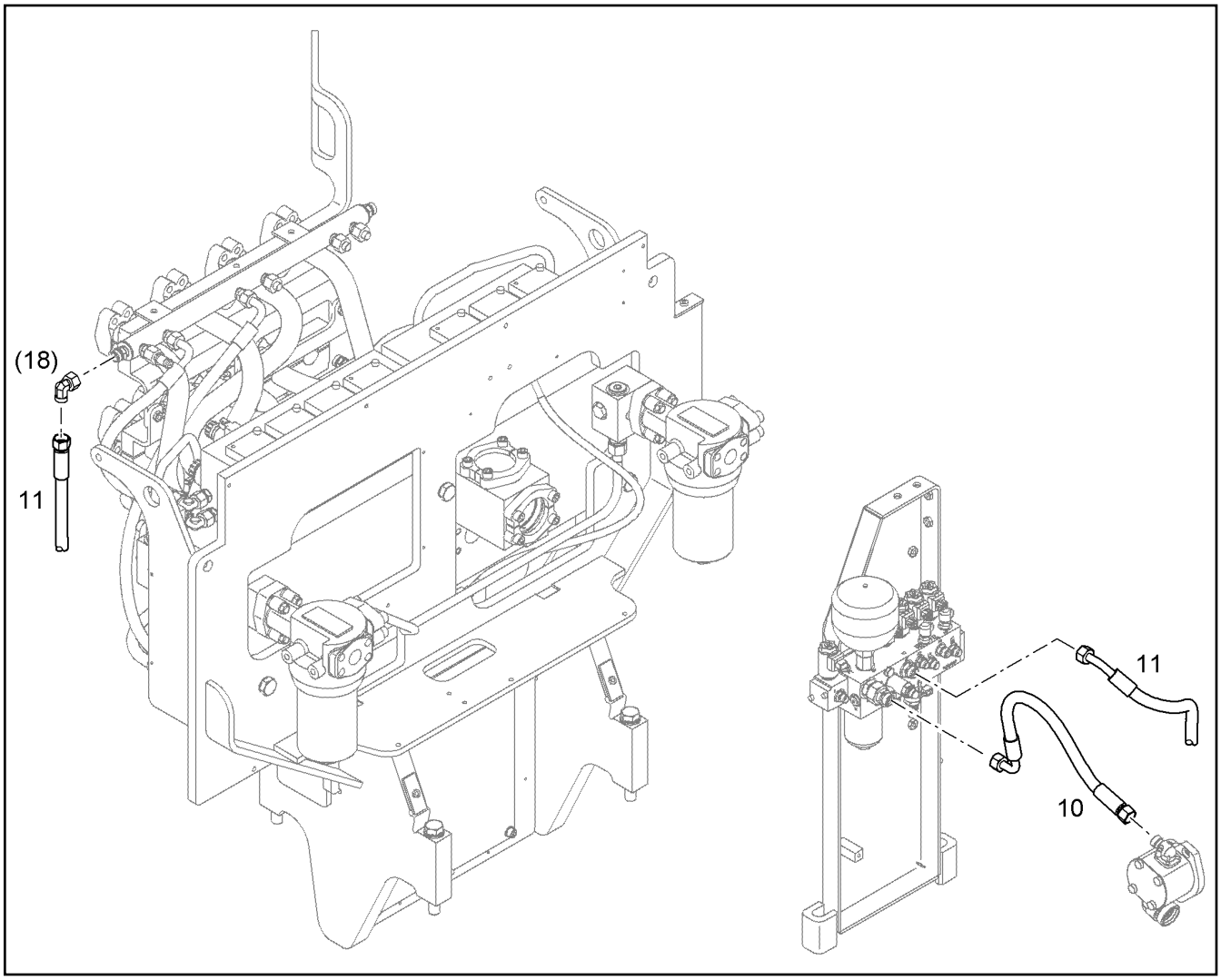

Pos.	Item	Quantity	Description	Descripción	Serie	K
10	7008082	1	HOSE	TUBO GOMA		2
11	10003614	1	HOSE	TUBO GOMA		2

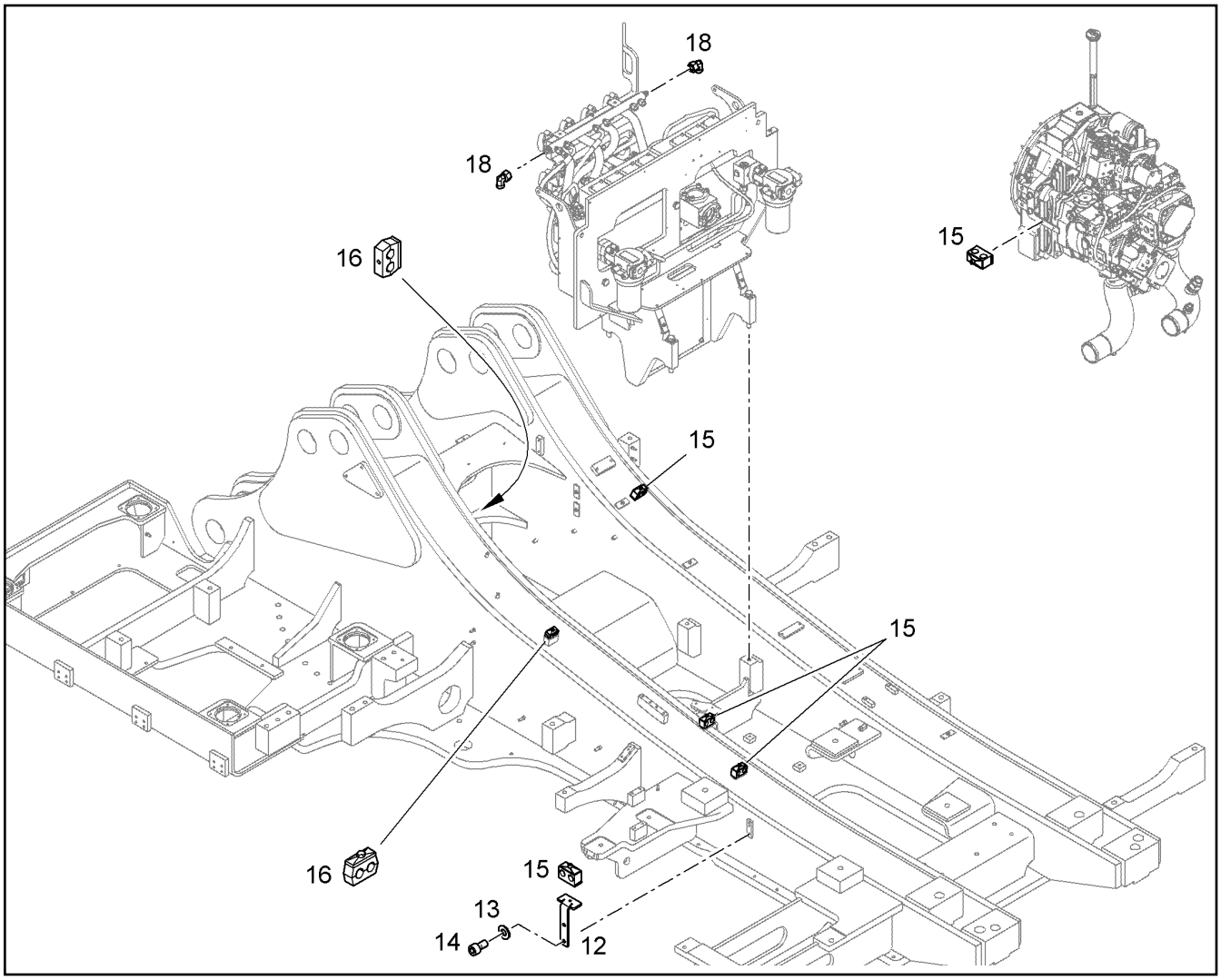

Pos.	Item	Quantity	Description	Descripción	Serie	K
12	10077268	1	CONSOLE	CONSOLA		1
13	10289795	2	WASHER ISO 7089 10 300HV	ARANDELA		
14	4901606	3	CYLINDER SCREW ISO 4762 M10X16 10.9	TORNILLO CILINDRICO		
15	9385073	5	HOSE CLAMP ⇨ ❑ 743	ABRAZADERA MANGUERA		1
16	9577441	2	PIPE CLAMP ⇨ ❑ 745	ABRAZADERA TUBO		1
18	7615379	2	SCREW FITTING EW 15L	ATORNILLAMIENTO		

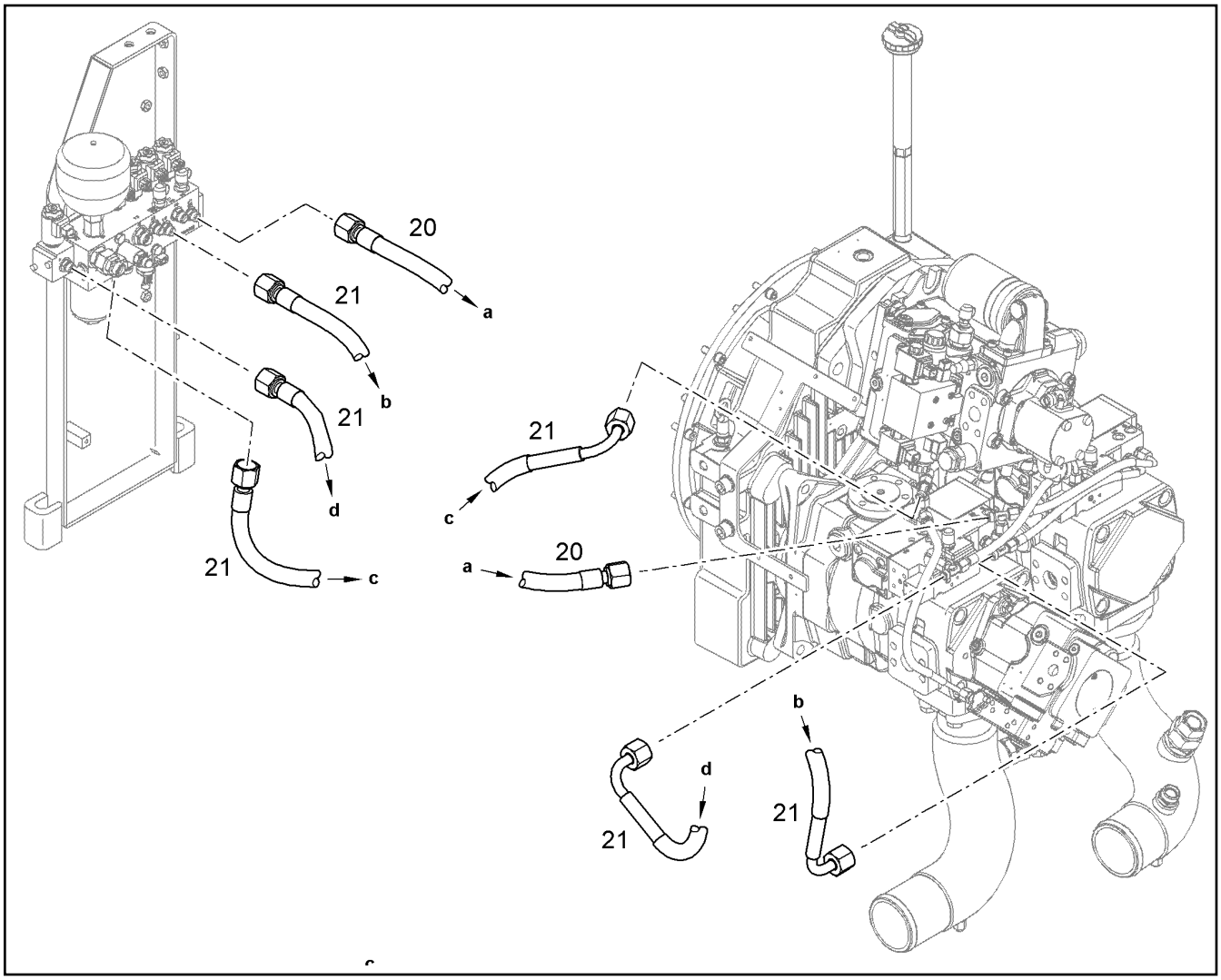

Pos.	Item	Quantity	Description	Descripción	Serie	K
20	5616211	1	HOSE	TUBO GOMA		2
21	5613500	3	HOSE	TUBO GOMA		2

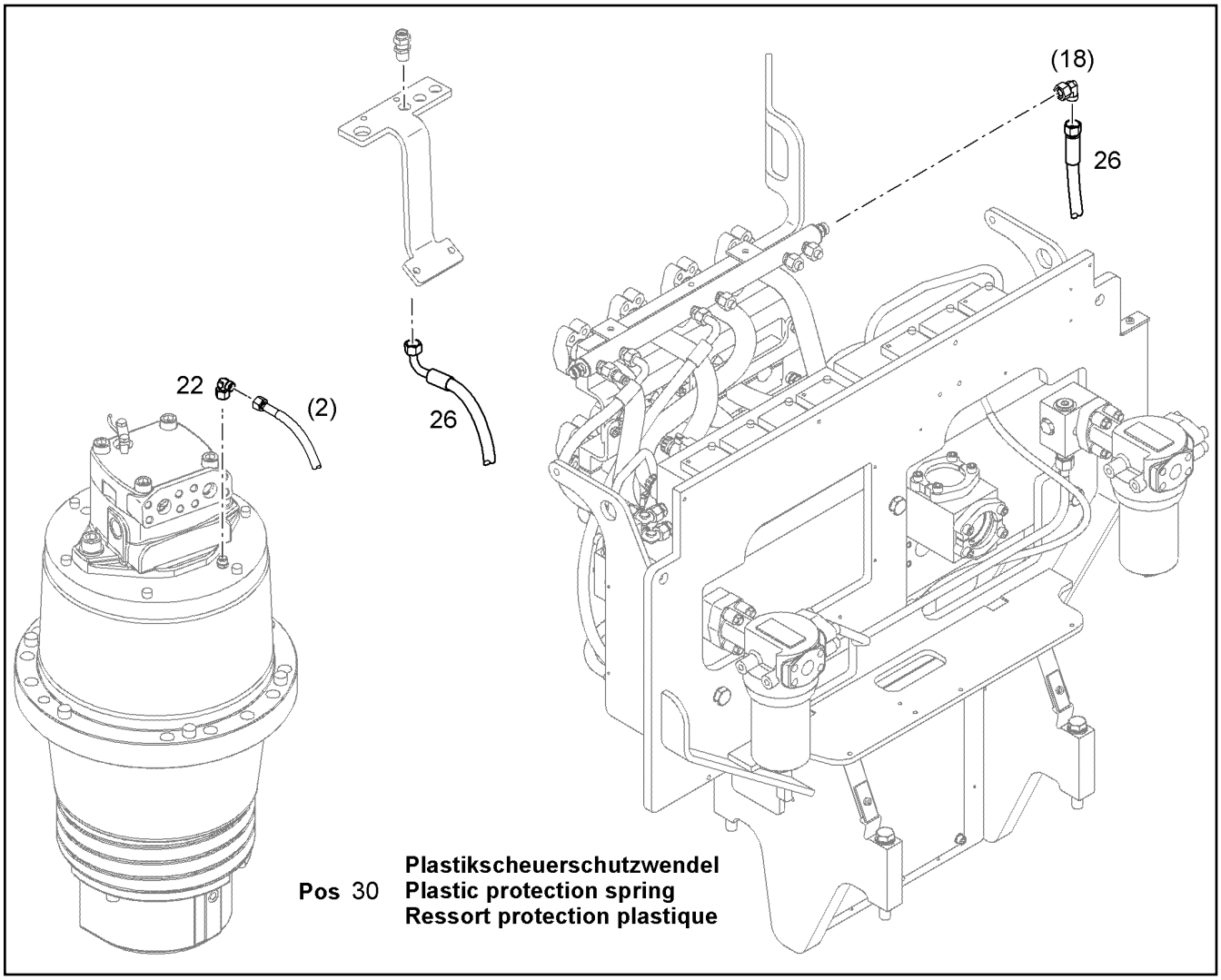

Pos.	Item	Quantity	Description	Descripción	Serie	K
22	247117702	1	SCREW FITTING EW 12L	ATORNILLAMIENTO		
26	10032752	1	HOSE	TUBO GOMA		2
30	7369397	1m	PLASTIC PROTECTION SPRING	HÉLICE P.PROT.CIZALLA PLÁSTI		1

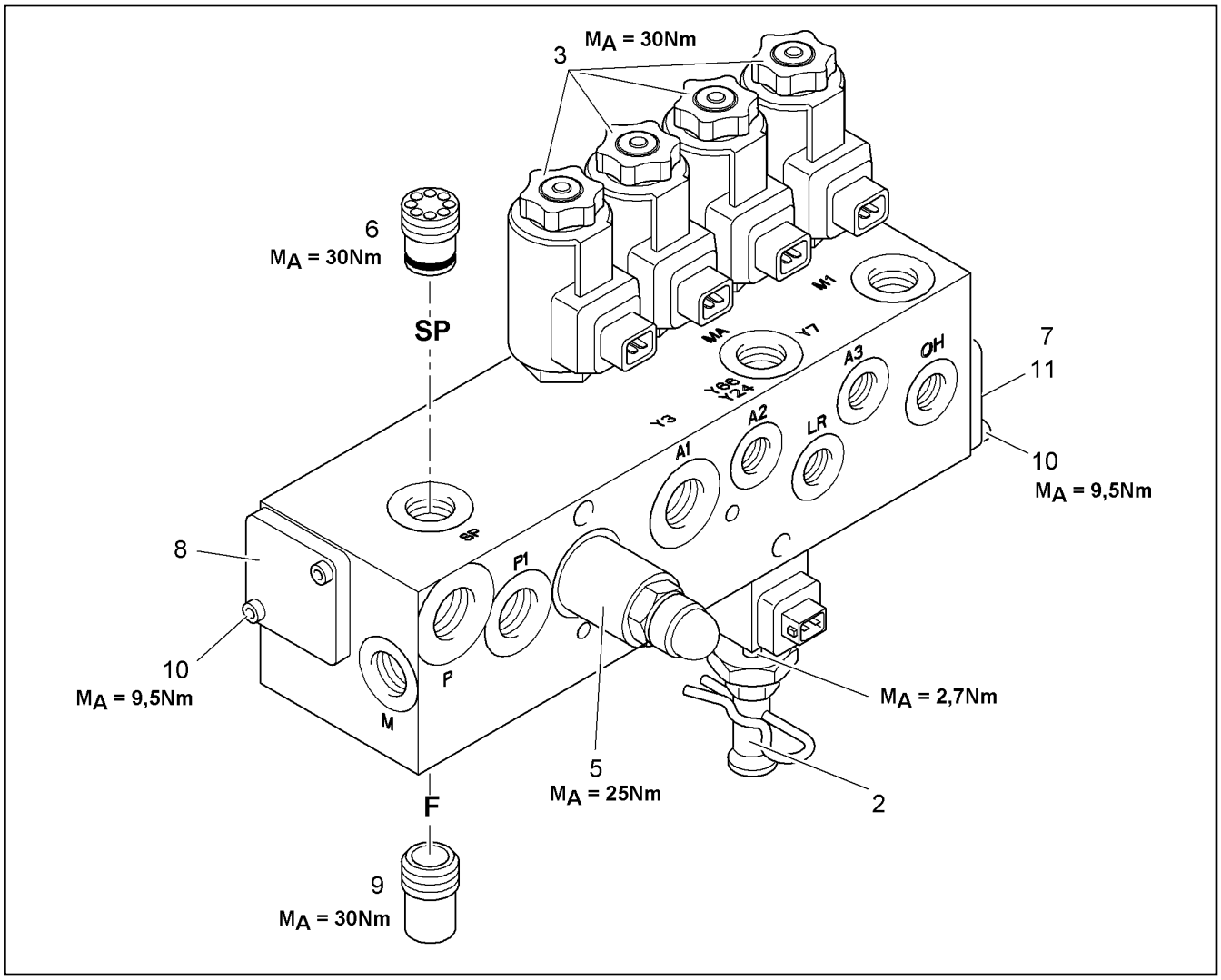

Pos.	Item	Quantity	Description	Descripción	Serie	K
2	10280461	1	CONTROL SOLENOID VALVE ⇨ ❑ 376	VÁLVULA MAGNÉTICA REGULAC		2
3	5615344	4	SOLENOID VALVE ⇨ ❑ 375	VÁLVULA SOLENOIDE		2
5	5009565	1	PRESSURE LIMITING CARTRIDGE ⇨ ❑ 374	CARTUCHO LIM.PRESIÓN		2
6	5608327	1	NON-RETURN VALVE	VALVULA DE RETENCION		2
6	7371590	1	-O-RING 16,0X1,5	-JUNTA TORICA		1
7	7372237	1	LID	TAPA		
8	7371025	1	BREECH PLATE ⇨ ❑ 377	PLACA DE CIERRE		
9	7373759	1	SLEEVE 21,8X28	CASQUILLO.		
10	4002417	4	CYLINDER SCREW ISO 4762 M6x18 8.8 A2C	TORNILLO CILINDRICO		
11	10024675	3	O-RING 7,65x1,78	JUNTA TORICA		1

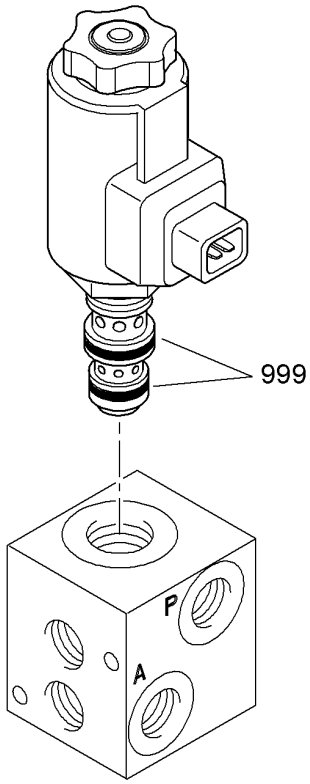

Pos.	Item	Quantity	Description	Descripción	Serie	K
999	5009562	1	SEAL KIT DIRECTIONAL VALVE ⇨ ❑ 379	JJ VÁLVULA DE PASO		2

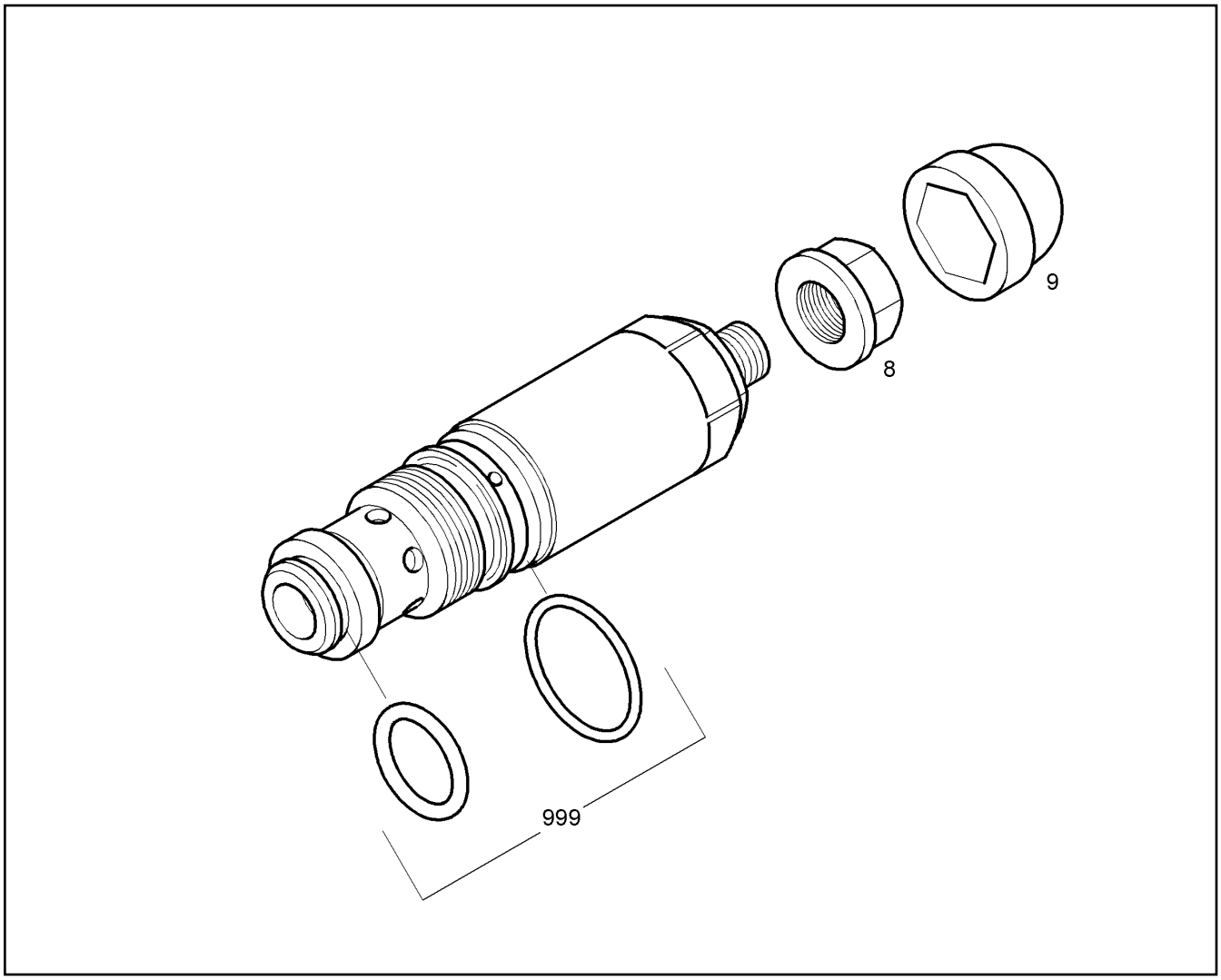

Pos.	Item	Quantity	Description	Descripción	Serie	K
8	7361601	1	SEAL-LOCK-SHOULDER NUT M8	TUERCA CON COLLAR SEALLOC		
9	7616949	1	PROTECTING CAP	CAPUCHON DE PROTECCION		
999	7025142	1	SEAL KIT ⇨ ❑ 380	JUEGO JUNTAS		1

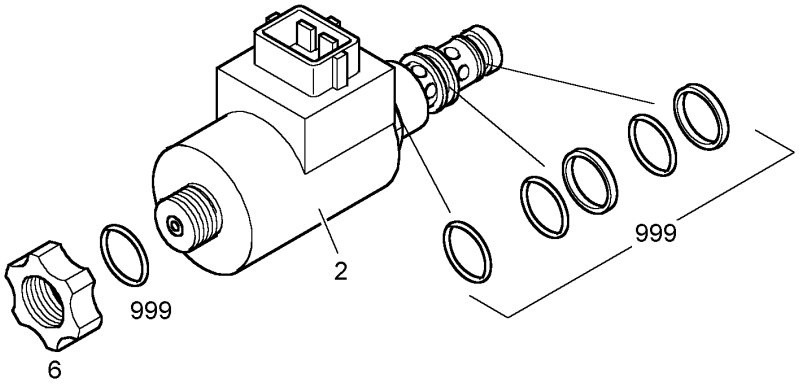

Pos.	Item	Quantity	Description	Descripción	Serie	K
2	10333044	1	MAGNET COIL	BOBINA ELECTROIMAN		1
6	7023934	1	NUT	TUERCA MOLETEADA		
999	5009562	1	SEAL KIT DIRECTIONAL VALVE ⇨ ❑ 379	JJ VÁLVULA DE PASO		2

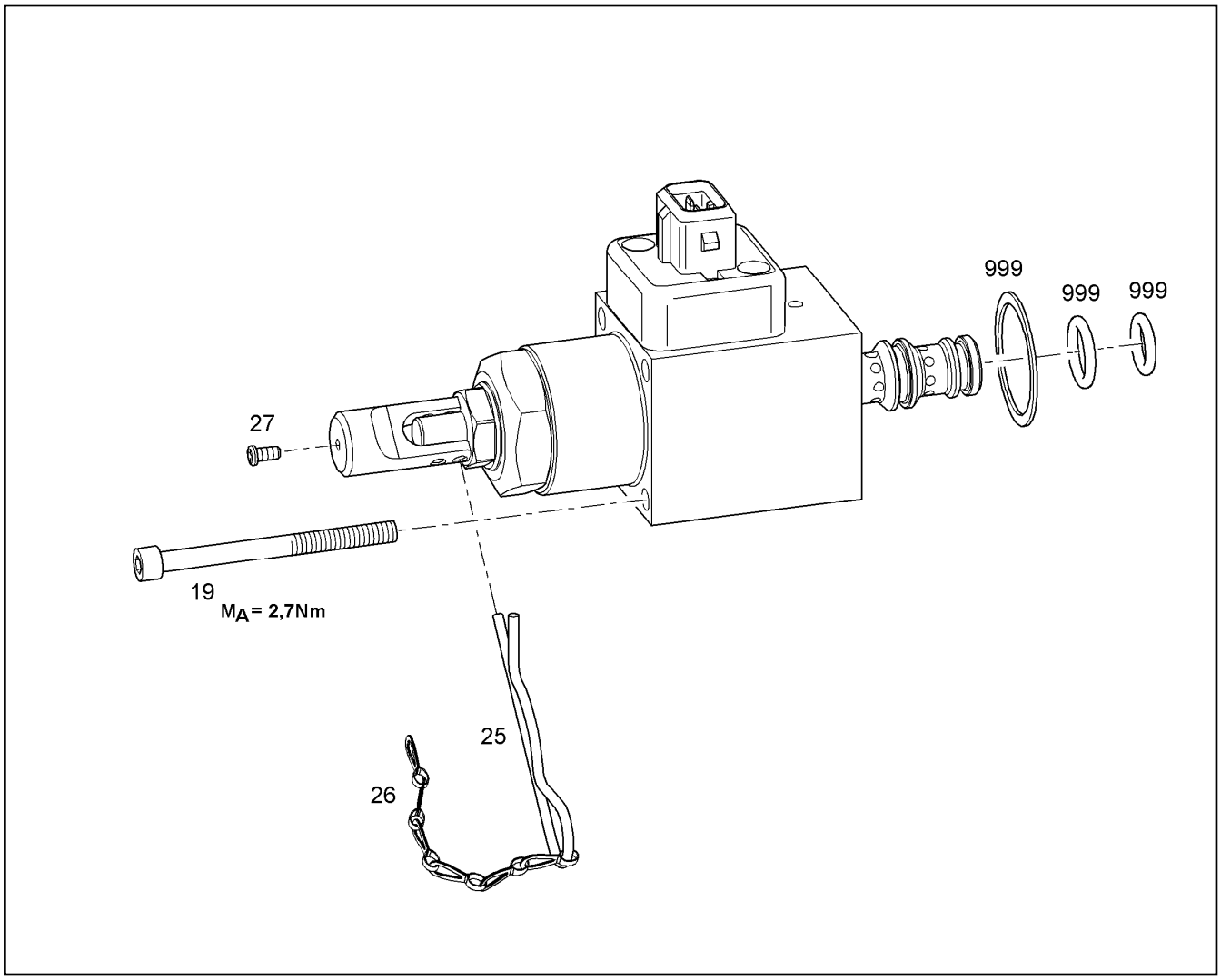

Pos.	Item	Quantity	Description	Descripción	Serie	K
19	4901531	4	CYLINDER SCREW ISO 4762 M4x50 8.8 A2C	TORNILLO CILINDRICO		
25	7024629	1	SPRING	RESORTE INSERCIÓN FRONTAL		
26	7024630	1	CHAIN	CADENA		
27	7024631	1	SCREW	TORNILLO		
999	10220997	1	SEAL KIT ⇨ ❑ 378	JUEGO JUNTAS		2

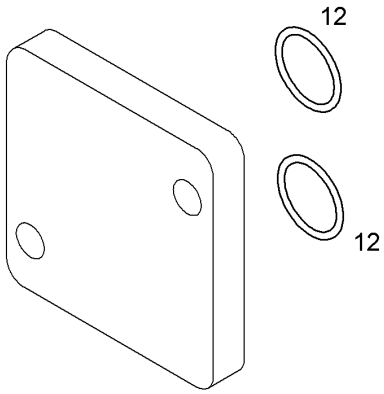

Pos.	Item	Quantity	Description	Descripción	Serie	K
12	7023929	2	O-RING 9,25X1,78	JUNTA TORICA		1

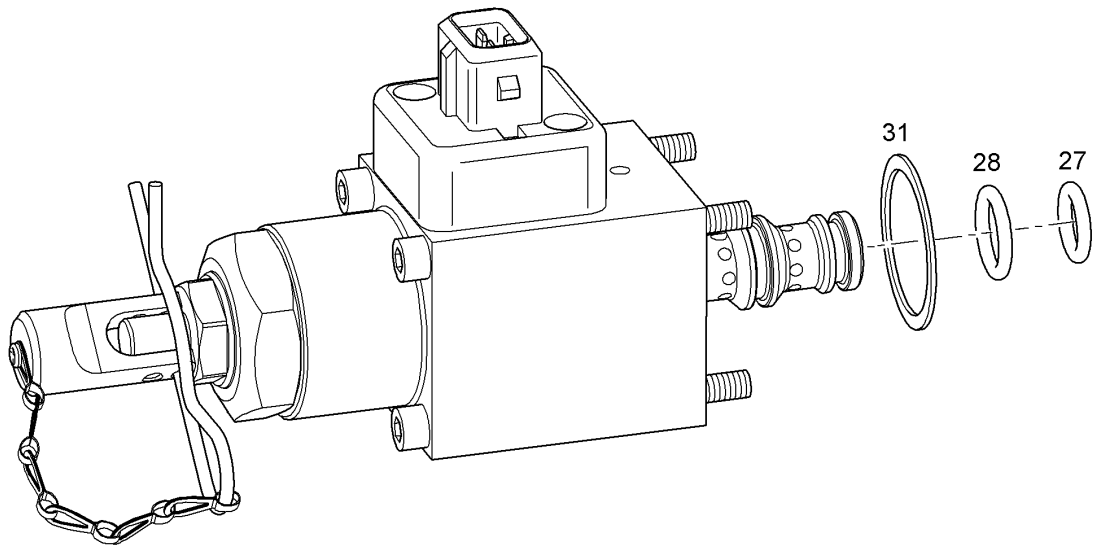

Pos.	Item	Quantity	Description	Descripción	Serie	K
27		1	O-RING 9,25x1,78	JUNTA TORICA		1
28		1	O-RING 10,82X1,78	JUNTA TORICA		1
31		1	O-RING 23,52X1,78	JUNTA TORICA		1

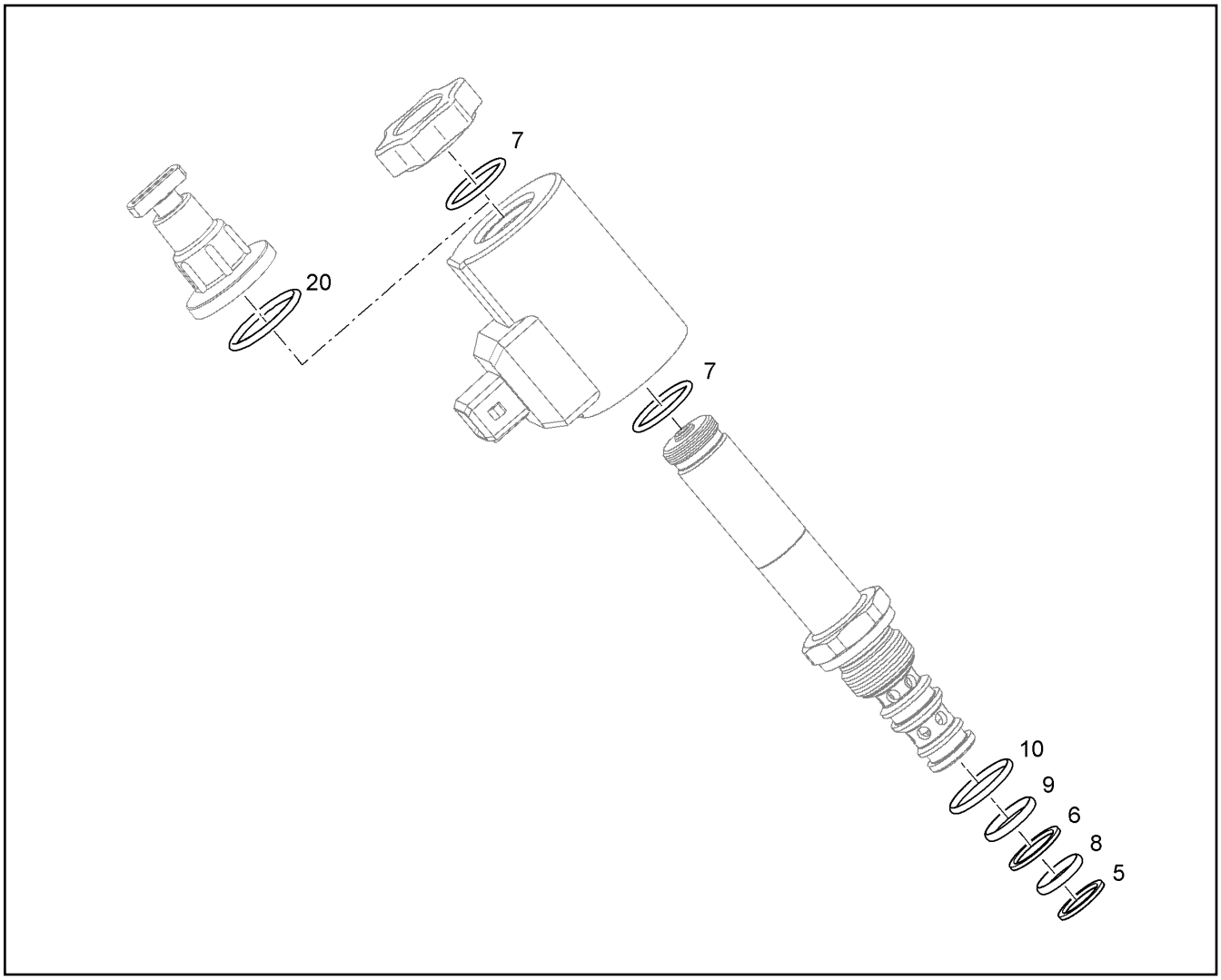

Pos.	Item	Quantity	Description	Descripción	Serie	K
5		1	SUPPORTING RING 9,4X1,45X1,0	ANILLO SOPORTE		1
6		1	SUPPORTING RING 10,7X1,45X1,0	ANILLO SOPORTE		1
7		2	O-RING 16x2	JUNTA TORICA		1
8		1	O-RING 10,82X1,78	JUNTA TORICA		1
9		1	O-RING 12,42X1,78	JUNTA TORICA		1
10		1	O-RING 17,17X1,78	JUNTA TORICA		1
20		1	O-RING 21,89X2,62	JUNTA TORICA		1

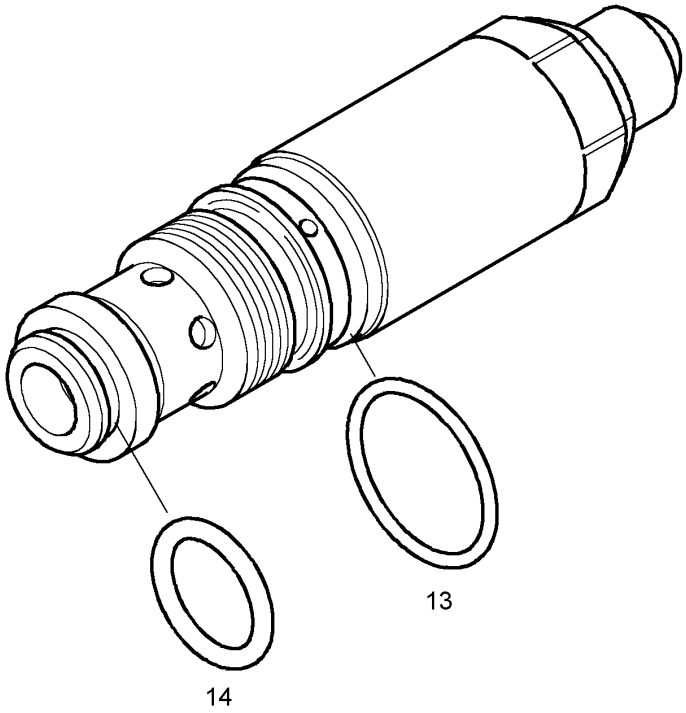

Pos.	Item	Quantity	Description	Descripción	Serie	K
13		1	O-RING 21,95x1,78	JUNTA TORICA		1
14		1	O-RING	JUNTA TORICA		1

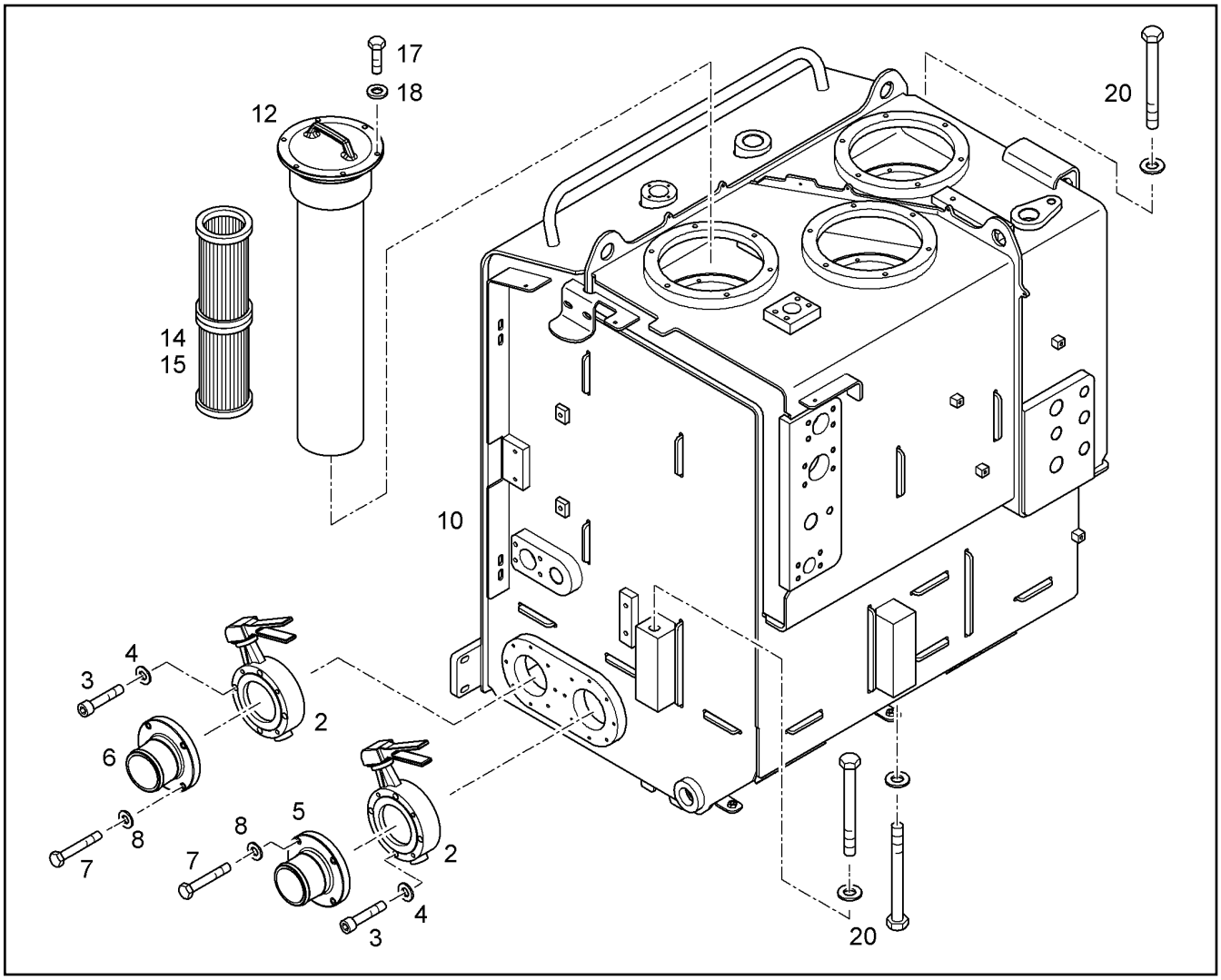

Pos.	Item	Quantity	Description	Descripción	Serie	K
2	5617689	2	SHUT OFF DEVICE DN 100 ⇨ ❑ 388	DISPOSITIVO DE CIERRE		1
3	4043090	8	CYLINDER SCREW ISO 4762 M8X60 10.9 A2	TORNILLO CILINDRICO		
4	4229912	8	LOCK WASHER /13X1,6 VS	ARANDELA SEGURIDAD		
5	9805113	1	INTAKE NOZZLE	RACOR ASPIRACION		1
6	9805114	1	INTAKE NOZZLE	RACOR ASPIRACION		1
7	4601308	8	HEX BOLT ISO 4014 M8X90 10.9 A2C	TORNILLO DE CABEZA HEXAGO		
8	4229912	8	LOCK WASHER /13X1,6 VS	ARANDELA SEGURIDAD		
10	10358202	1	HYDRAULIC TANK	DEPOSITO HIDRAULICO		1
12	7368771	3	RETURN FILTER ⇨ ❑ 389	FILTRO DE RETORNO		1
14	7373880	3	FIBRE GLASS FILTER INSERT ⇨ ❑ 390	CARTUCHO DE FILTRO FIBRAVI		1
15	7373881	3	FIBRE GLASS FILTER INSERT ⇨ ❑ 391	CARTUCHO DE FILTRO FIBRAVI		1
17	4600184	18	HEX BOLT ISO 4017 M12X25 10.9 A3C	TORNILLO DE CABEZA HEXAGO		
18	10289804	18	WASHER ISO 7089 12 300HV	ARANDELA		
20	10087958	1	FIXING PARTS HYDRAULIC TANK ⇨ ❑ 386	PIEZAS SUJ.DEPÓSITO HIDR.		1

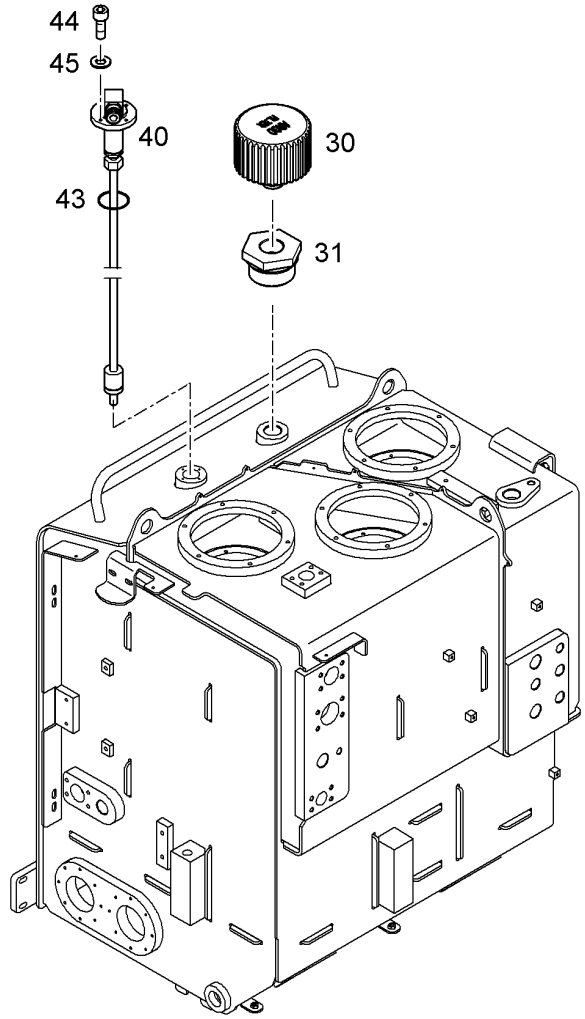

Pos.	Item	Quantity	Description	Descripción	Serie	K
30	10222393	1	AERATION FILTER ⇨ ❑ 392	FILTRO AIREAR		1
31	7022708	1	REDUCING STUD RI	EMBUDO DE REDUCCION		
40	6204694	1	FLOAT SWITCH	INTERRUPTOR DE FLOTADOR		2
43	7366427	1	O-RING	JUNTA TORICA		1
44	4600613	4	CYLINDER SCREW ISO 4762 M5x18 8.8 A2C	TORNILLO CILINDRICO		
45	7361965	4	LOCK WASHER	ARANDELA SEGURIDAD		

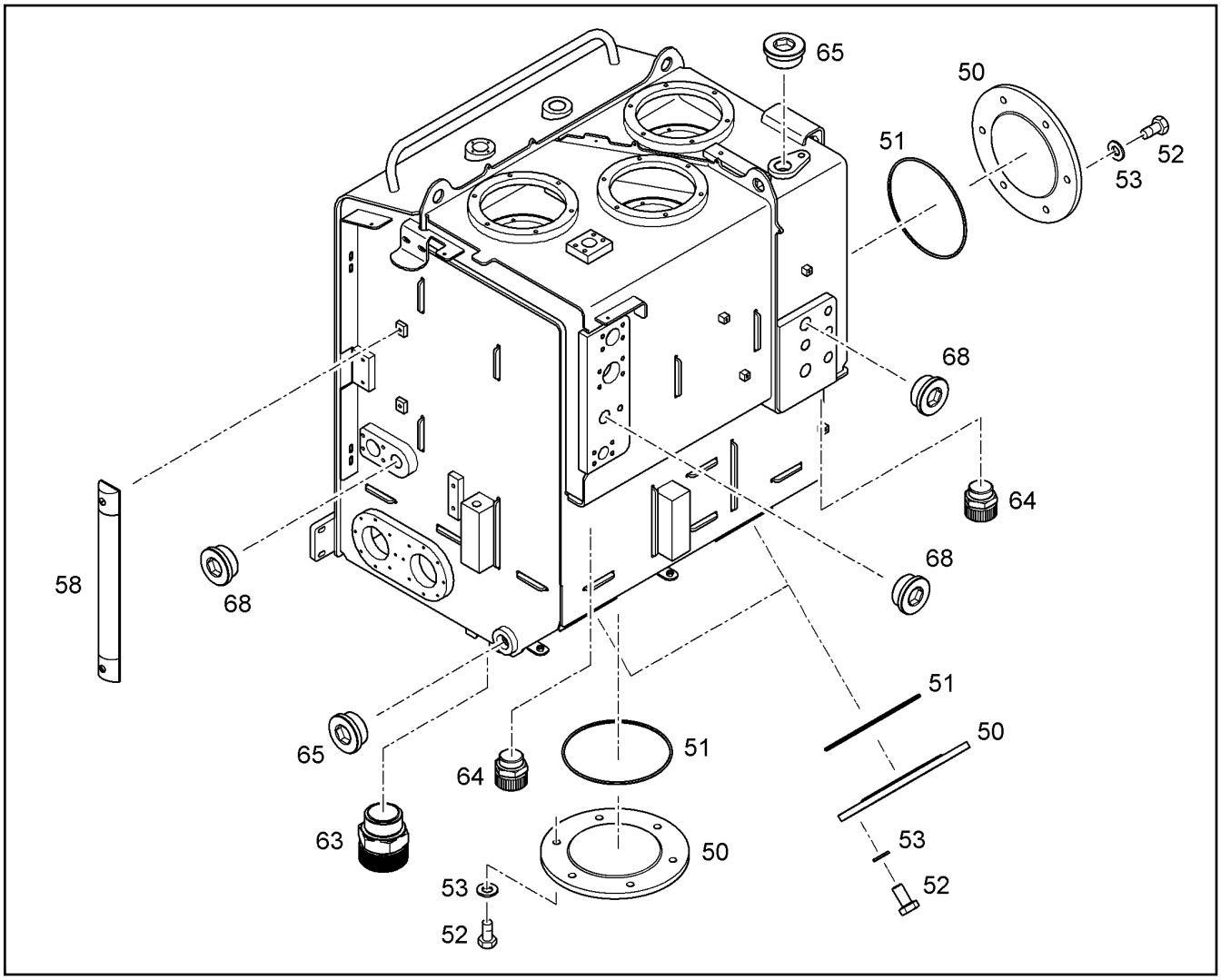

Pos.	Item	Quantity	Description	Descripción	Serie	K
50	9767890	4	LID	TAPA		1
51	7380073	4	O-RING	JUNTA TORICA		1
52	4001606	24	HEX BOLT ISO 4017 M8X16 10.9 A2C	TORNILLO DE CABEZA HEXAGO		
53	4229912	24	LOCK WASHER /13X1,6 VS	ARANDELA SEGURIDAD		
58	7368081	1	SIGHT GLASS ⇨ ❑ 385	MIRILLA		
63	10301776	1	DRAIN VALVE ⇨ ❑ 387	VALVULA DE DESCARGA		2
64	5004624	2	OIL DRAIN PLUG ⇨ ❑ 584	TORNILLO PURGA ACEITE		
65	7363177	2	SCREW PLUG VSTI	TORNILLO DE CIERRE		
68	7363073	3	SCREW PLUG	TORNILLO DE CIERRE		

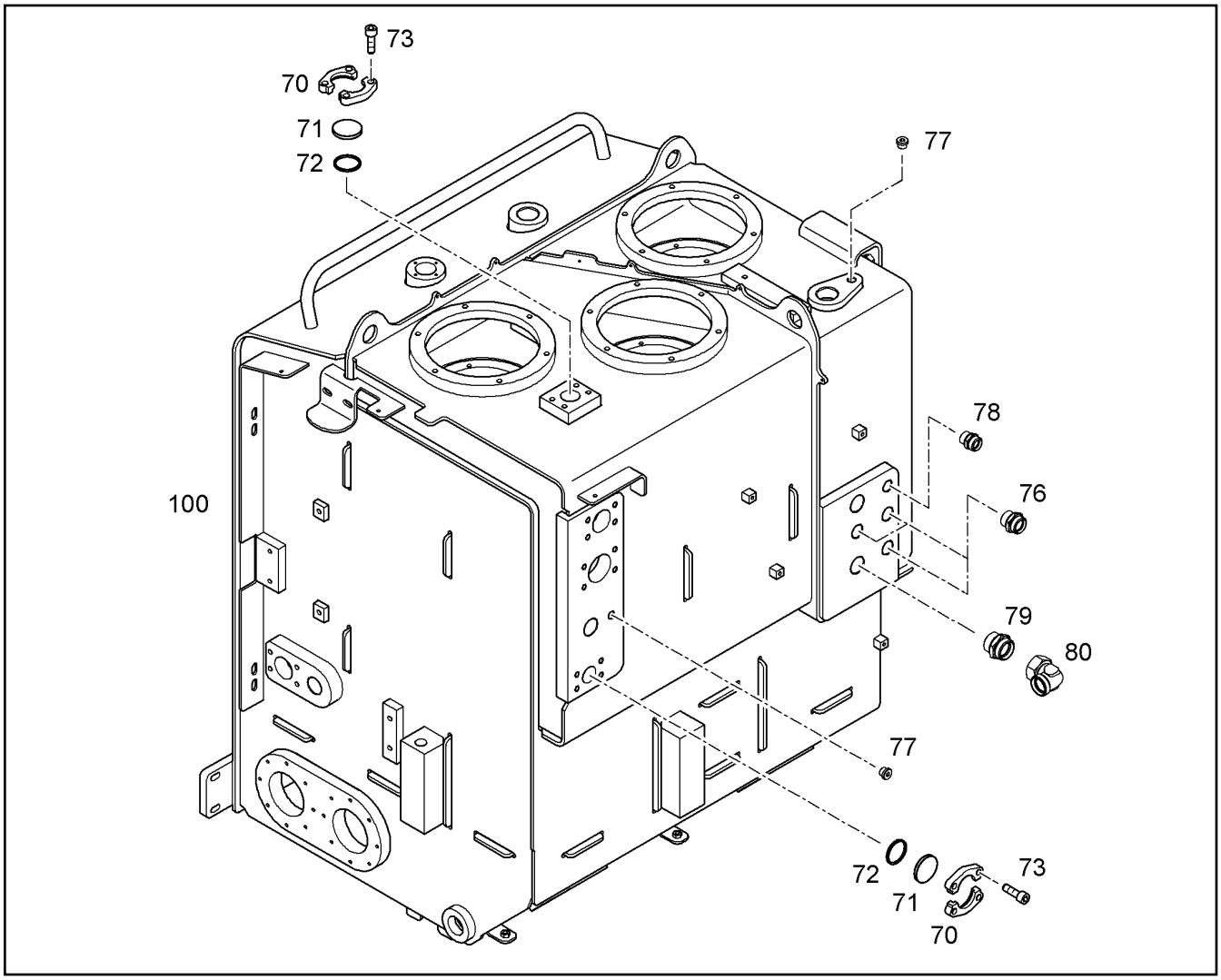

Pos.	Item	Quantity	Description	Descripción	Serie	K
70	10286362	4	FLANGE HALF	MITAD DE BRIDA		
71	9566165	2	SAE BLIND FLANGE	BRIDA CIEGA SAE		
72	10290517	2	PLAIN COMPRESSION RING 54,40x3,40x2,8	ARO DE SECCION RECTANGULA		1
73	4043163	8	CYLINDER SCREW ISO 4762 M12X30 10.9	TORNILLO CILINDRICO		
76	7003800	3	SCREW FITTING GE 28L	ATORNILLAMIENTO		
77	7361960	2	SCREW PLUG M18X1,5X17 A3C	TORNILLO DE CIERRE		
78	7362515	1	SCREW FITTING GE 22L	ATORNILLAMIENTO		
79	4900486	1	SCREW FITTING GE 35L	ATORNILLAMIENTO		
80	482530914	1	SCREW FITTING EW 35L	ATORNILLAMIENTO		
100	10358746	1	HYDRAULIC TANK FOR EXCHANGE	SUST.DEPÓSITO HIDR.		

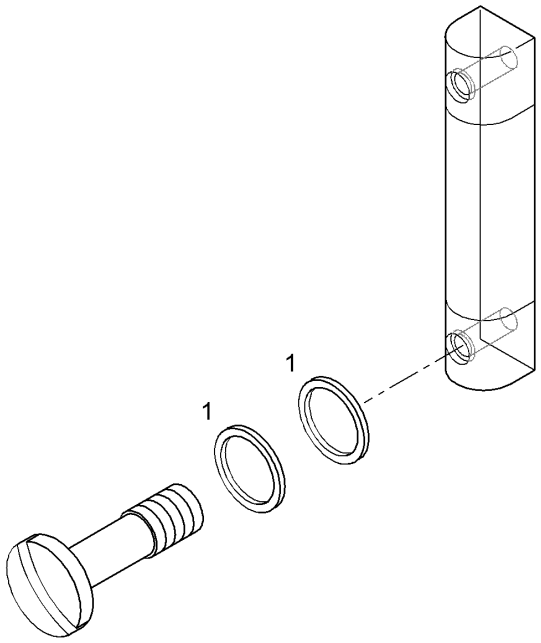

Pos.	Item	Quantity	Description	Descripción	Serie	K
1	7369456	4	O-RING	JUNTA TORICA		1

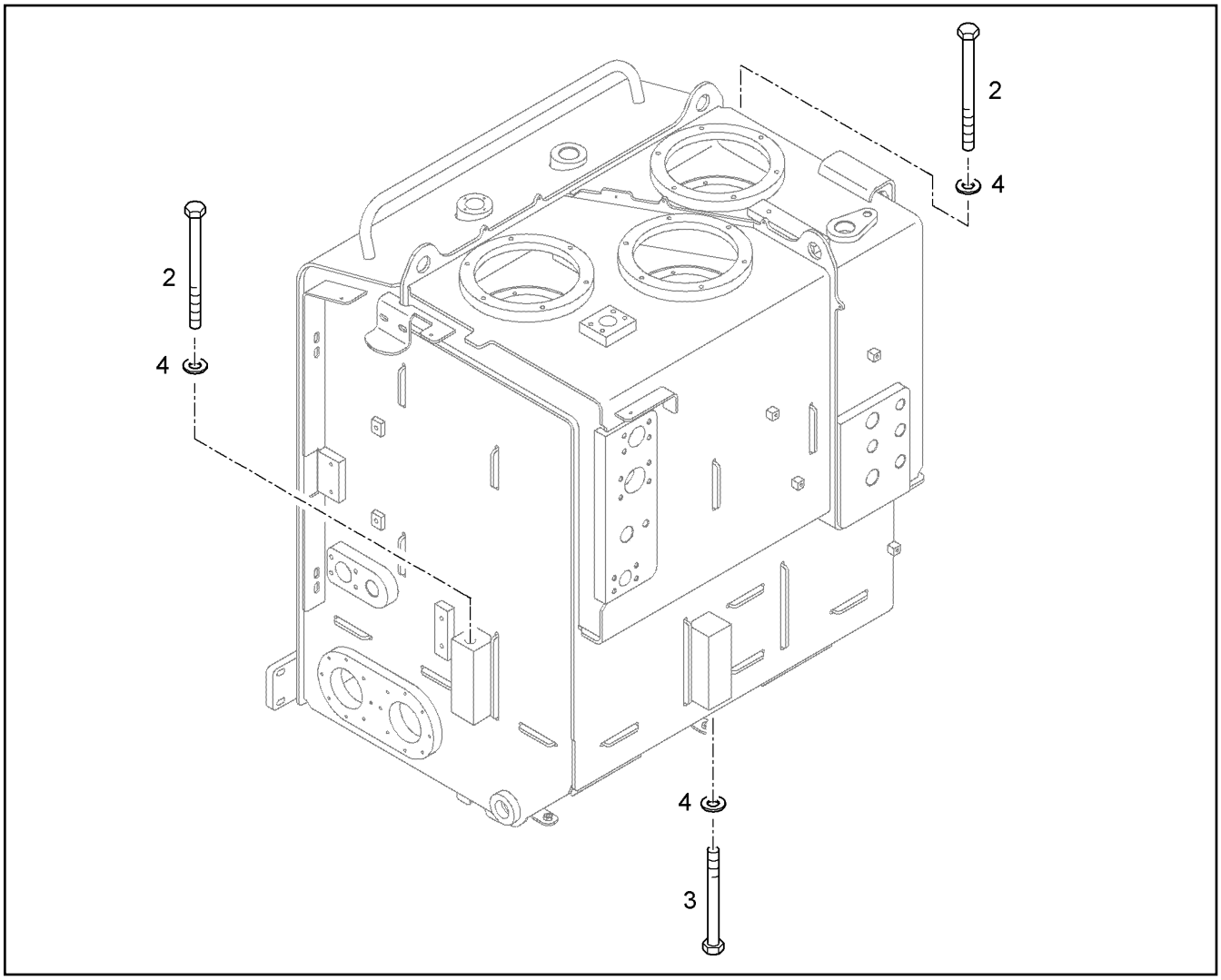

Pos.	Item	Quantity	Description	Descripción	Serie	K
2	10294867	2	HEX BOLT ISO 4014 M20X240 10.9 FLZN 100	TORNILLO DE CABEZA HEXAGO		
3	10425597	1	HEX BOLT ISO 4014 M20X180 10.9 FLZN 100	TORNILLO DE CABEZA HEXAGO		
4	9918229	3	WASHER 20,5/34X5	ARANDELA		

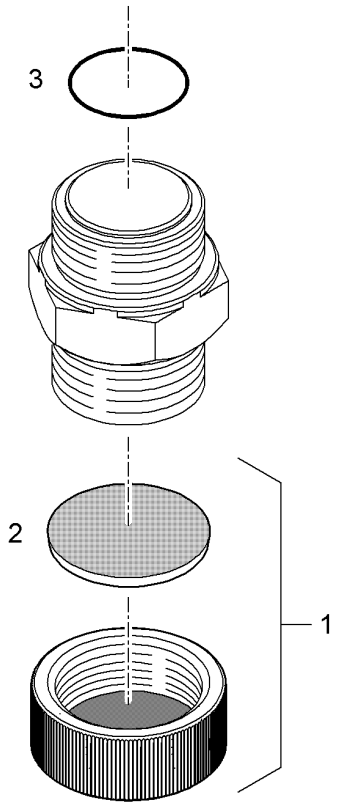

Pos.	Item	Quantity	Description	Descripción	Serie	K
1	10354822	1	PROTECTING CAP	CAPUCHON DE PROTECCION		
2	10354823	1	-SHEET GASKET	-ARANDELA RETEN		1
3	10354824	1	O-RING	JUNTA TORICA		1

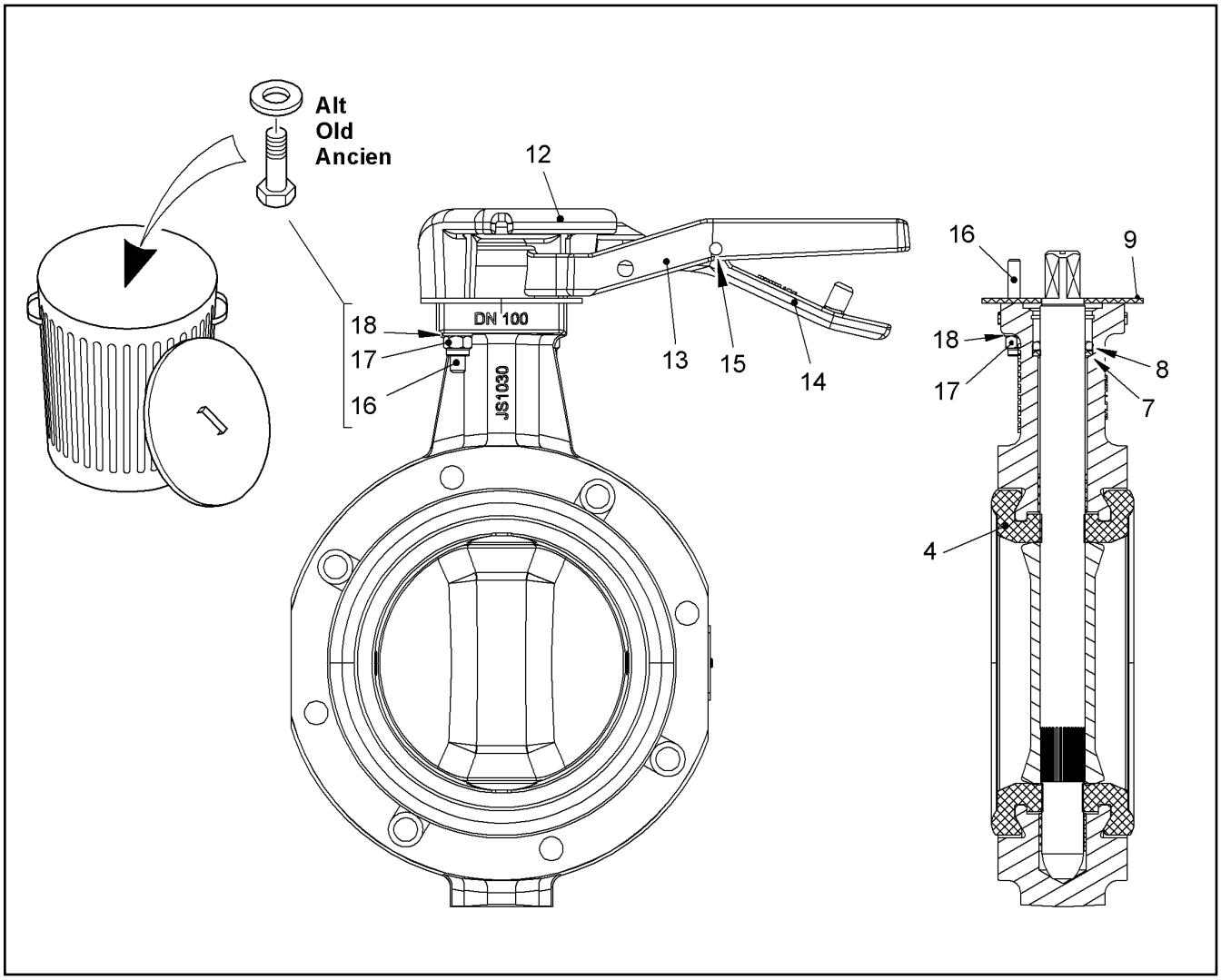

Pos.	Item	Quantity	Description	Descripción	Serie	K
4	7028342	1	COLLAR JOINT	JUNTA DE COLLAR		1
7	11007770	1	SHEET GASKET	ARANDELA RETEN		1
8	7028346	1	O-RING	JUNTA TORICA		1
9	7028343	1	SEAL	JUNTA		1
12	7028349	1	LID	TAPA		
13	7028347	1	HAND LEVER	PALANCA MANUAL		
14	7028348	1	LEVER	PALANCA		
15	7028351	1	PIN	PASADOR		
16	11007768	2	GRUB SCREW DIN 913 M6X45 45H A2	TORNILLO PRISIONERO		
17	4000900	2	HEX NUT ISO 7040 M 6 -10 A3C	TUERCA HEXAGONAL		
18	10289802	2	WASHER ISO 7089 6 300HV	ARANDELA		

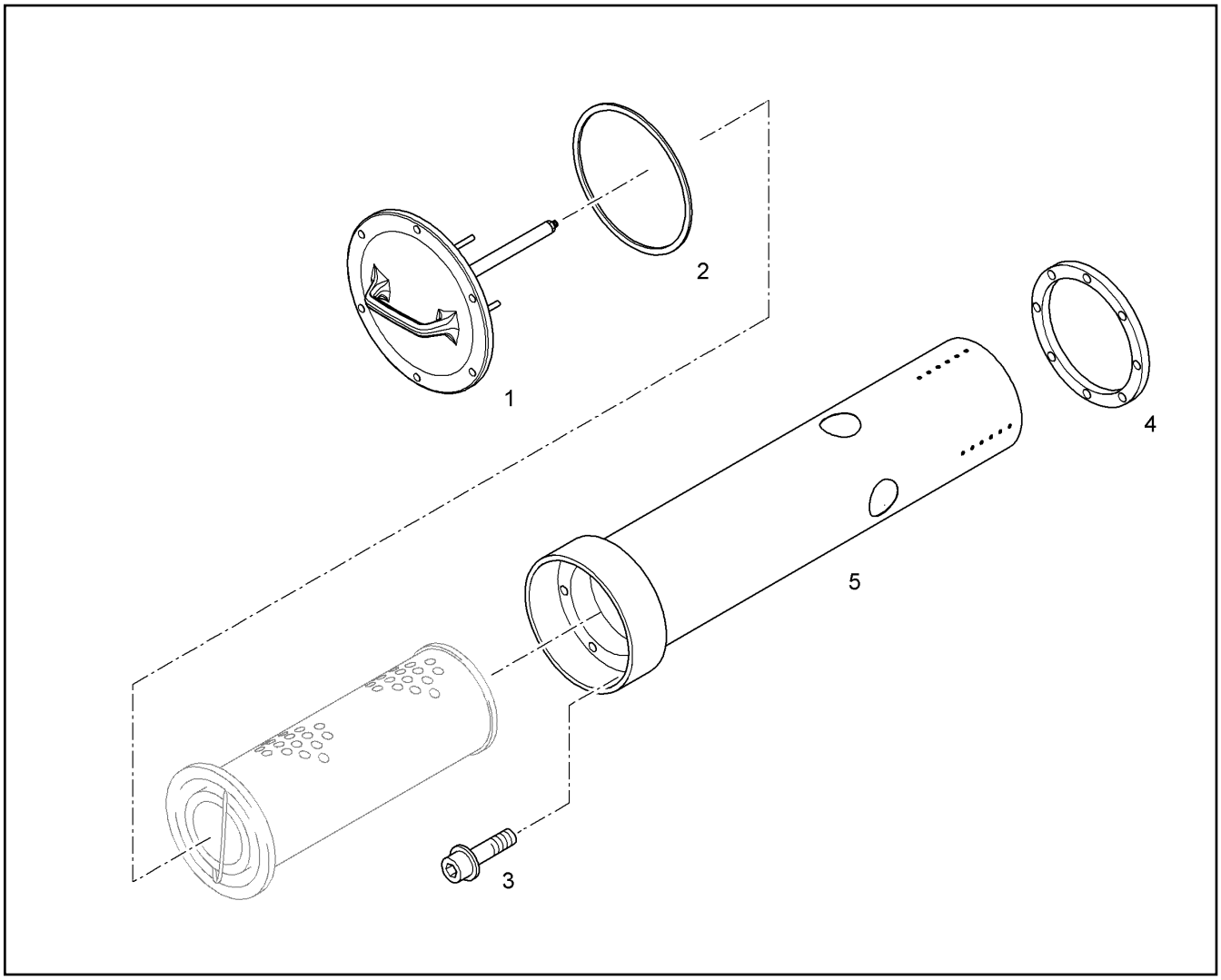

Pos.	Item	Quantity	Description	Descripción	Serie	K
1	7370924	1	HANDLE COVER	TAPA CON TIRADOR		
2	7368993	1	SEAL	JUNTA		1
3	7368996	6	SCREW	TORNILLO		
4	7368994	1	SEAL	JUNTA		1
5	7368995	1	RETURN PIPE	TUBO DE RETORNO		

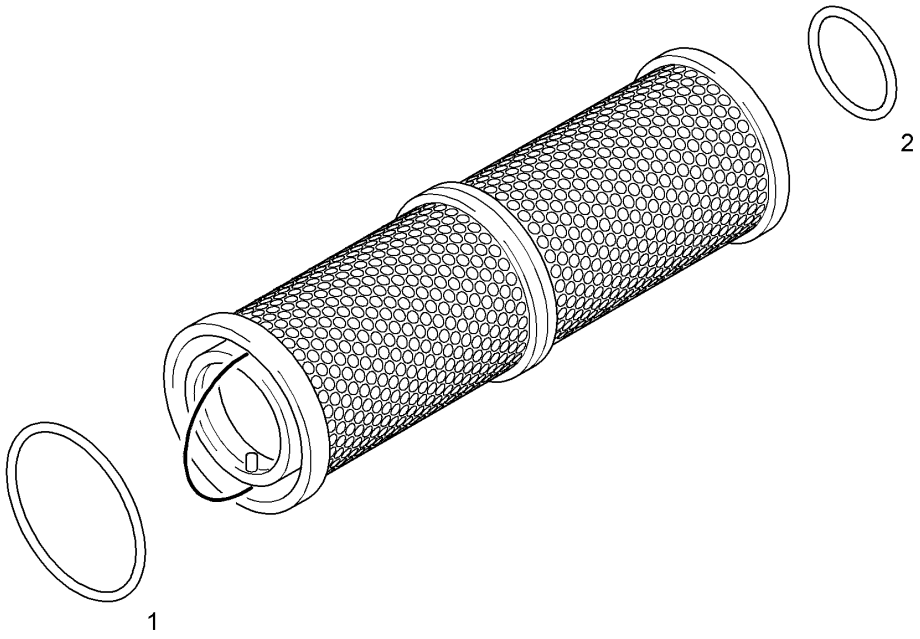

Pos.	Item	Quantity	Description	Descripción	Serie	K
1	7369266	1	O-RING	JUNTA TORICA		1
2	7369286	1	O-RING	JUNTA TORICA		1

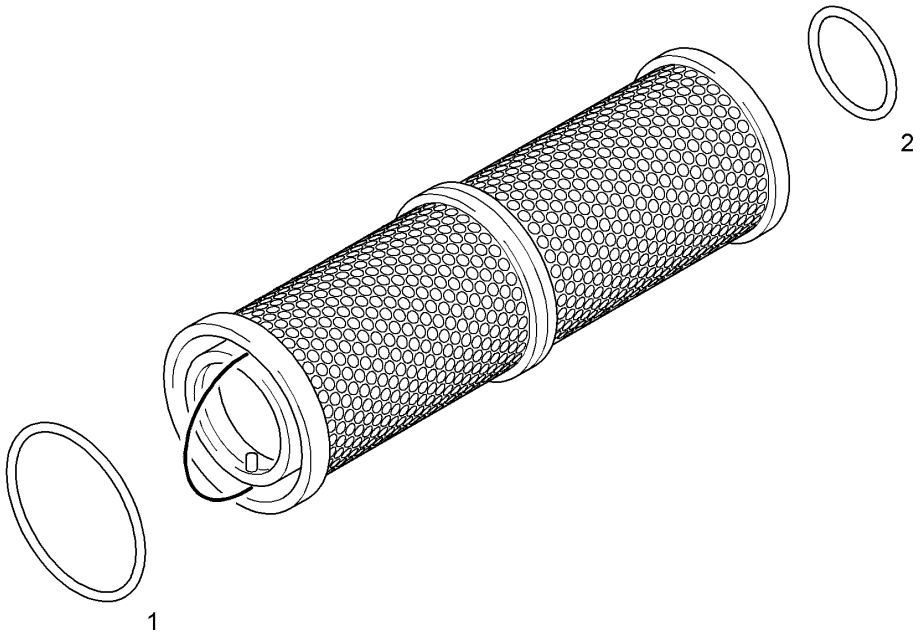

Pos.	Item	Quantity	Description	Descripción	Serie	K
1	7369266	1	O-RING	JUNTA TORICA		1
2	7369286	1	O-RING	JUNTA TORICA		1

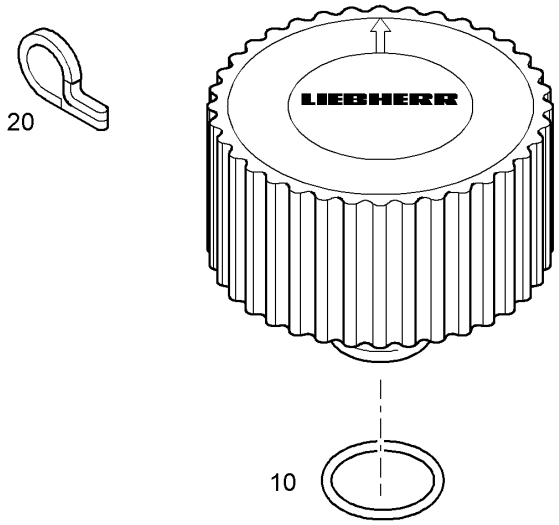

Pos.	Item	Quantity	Description	Descripción	Serie	K
10	7015407	1	O-RING 25x3,53	JUNTA TORICA		1
20	10012889	1	PLUG	ENCHUFE		

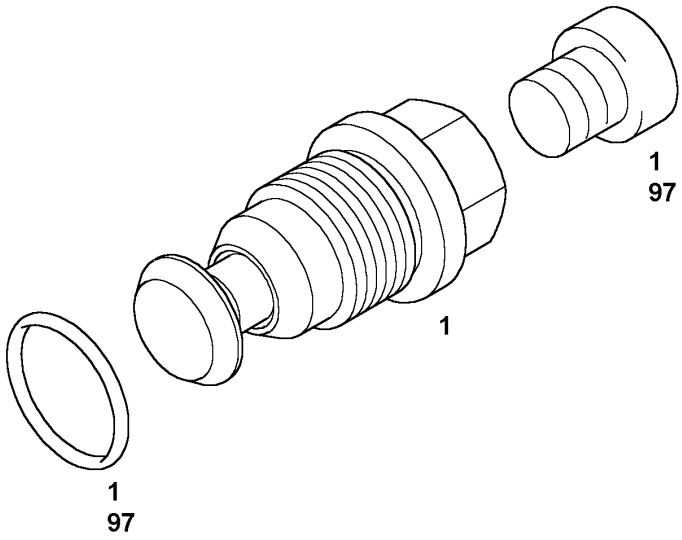

Pos.	Item	Quantity	Description	Descripción	Serie	K
1		1	NON-RETURN VALVE RV ⇨ ❑ 266	VALVULA DE RETENCION		
97	9268642	1	SEAL KIT SHUTTLE VALVE ⇨ ❑ 240	JJ VÁLVULA MÚLTIPLES VÍAS		1

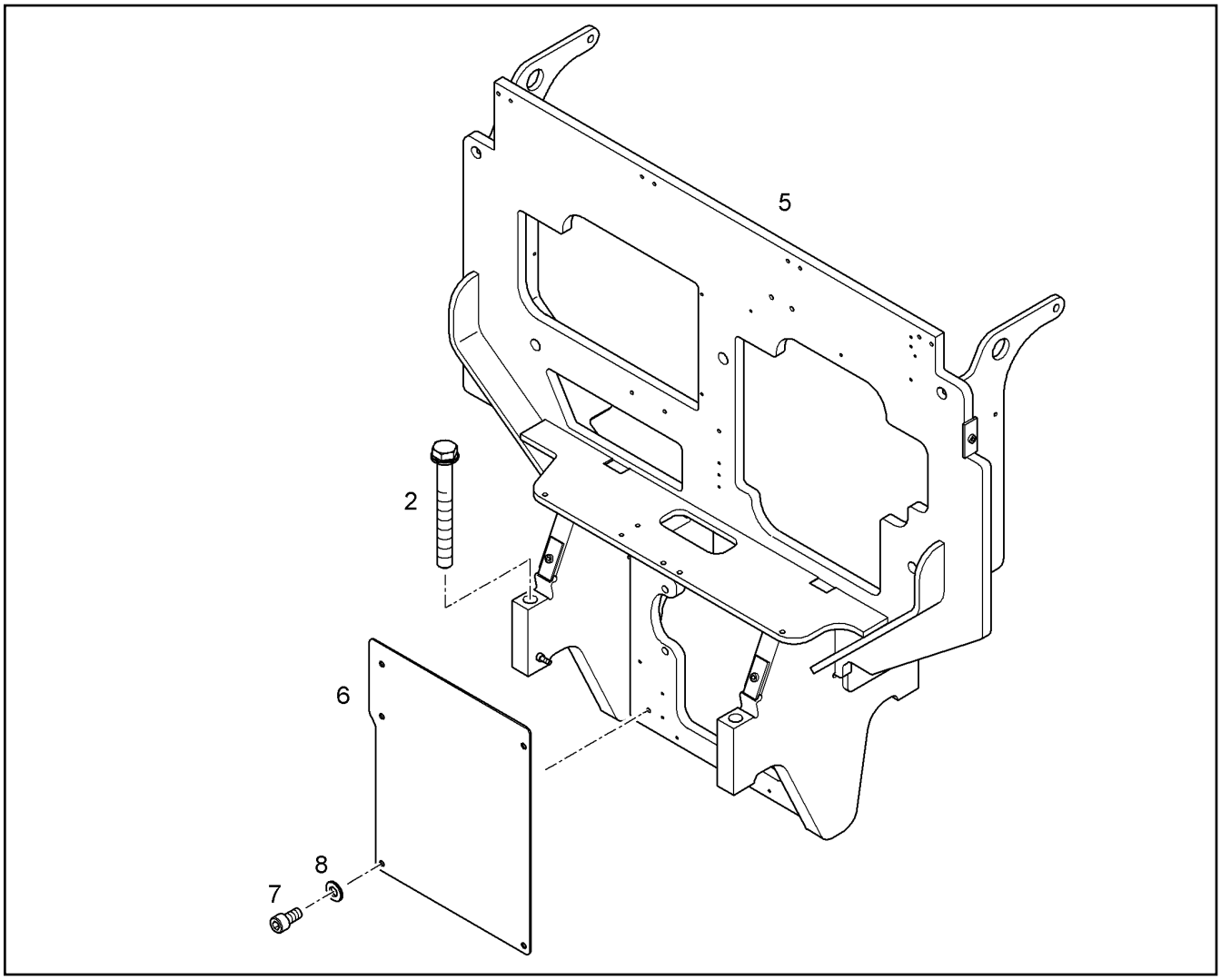

Pos.	Item	Quantity	Description	Descripción	Serie	K
2	9375164	1	FIXING PARTS CONTROL VALVE ⇨ ❑ 401	PIEZA SUJ. CORREDERA DISTR.		
5	10053143	1	CONTROL VALVES BRACKET	CONSOLA CORR.DISTR.		1
6	10096391	1	LID	TAPA		1
7	4043122	4	CYLINDER SCREW ISO 4762 M10X20 10.9	TORNILLO CILINDRICO		
8	10289795	4	WASHER ISO 7089 10 300HV	ARANDELA		

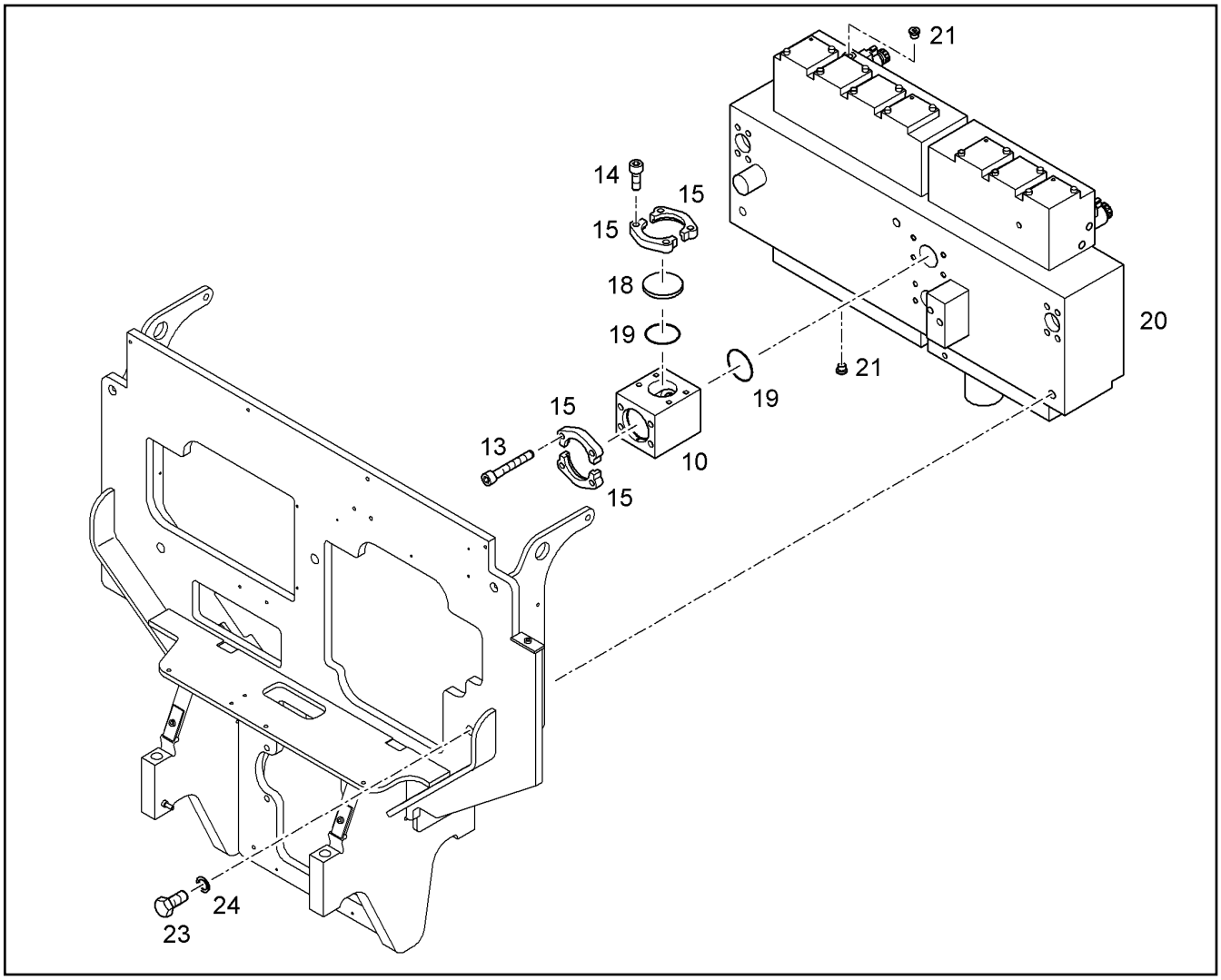

Pos.	Item	Quantity	Description	Descripción	Serie	K
10	9370592	1	NON-RETURN VALVE ⇨ ❑ 400	VALVULA DE RETENCION		1
13	404313701	4	CYLINDER SCREW ISO 4762 M12X170 10.9	TORNILLO CILINDRICO		
14	4043163	4	CYLINDER SCREW ISO 4762 M12X30 10.9	TORNILLO CILINDRICO		
15	5602640	4	FLANGE HALF	MITAD DE BRIDA		
18	9577407	1	SAE BLIND FLANGE	BRIDA CIEGA SAE		1
19	7410480	2	O-RING	JUNTA TORICA		1
20	10113557	1	CONTROL BLOCK [92 50/10] ⇨ ❑ 407	BLOQUE MANDO		2
21	7004971	2	SCREW PLUG VSTI ⇨ ❑ 228	TORNILLO DE CIERRE		
23	10425650	3	HEX BOLT ISO 4017 M20X45 10.9 FLZN	TORNILLO DE CABEZA HEXAGO		
24	10006374	3	LOCK WASHER	ARANDELA SEGURIDAD		

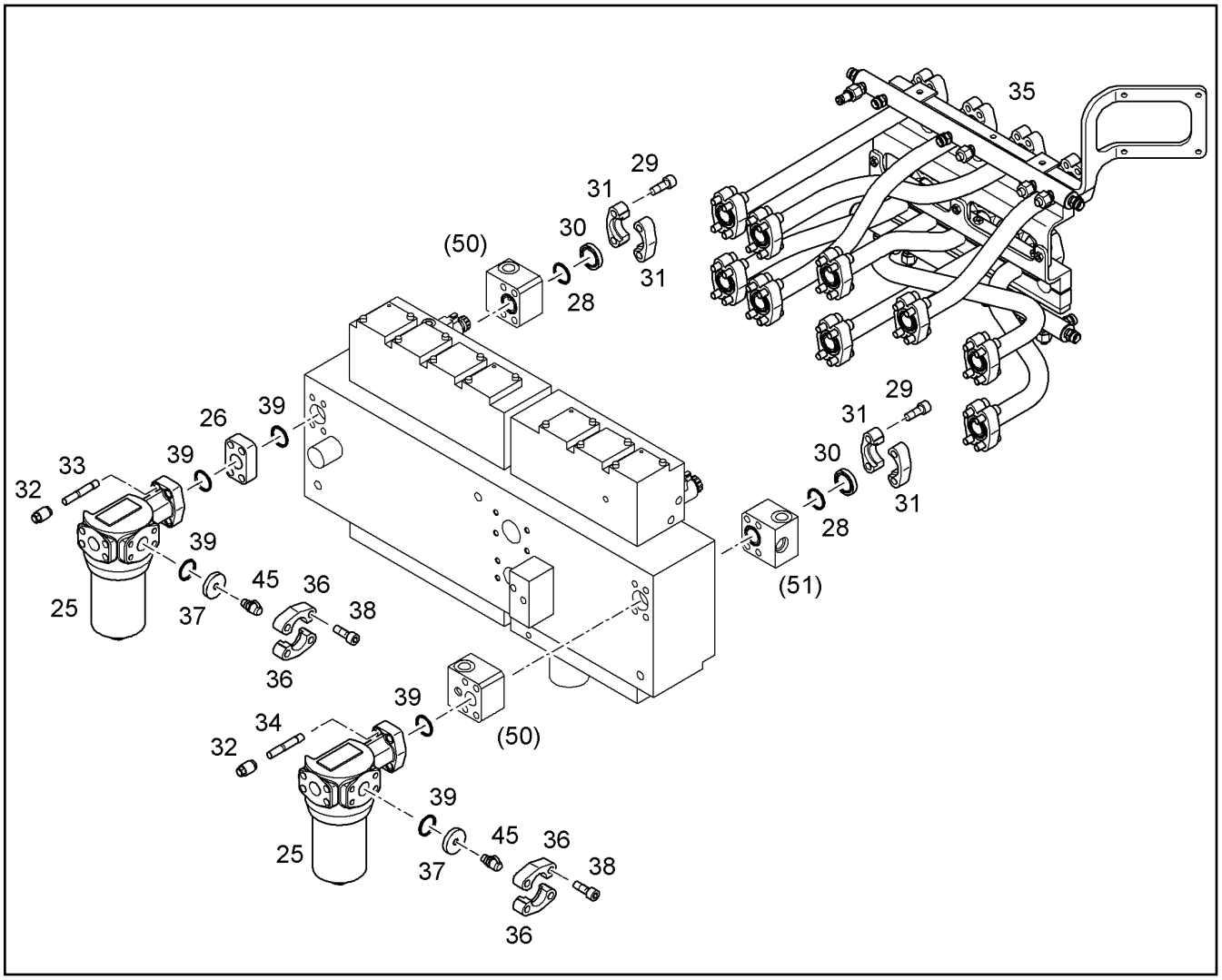

Pos.	Item	Quantity	Description	Descripción	Serie	K
25	5615220	2	HIGH PRESSURE FILTER ⇨ ❑ 402	FILTRO DE ALTA PRESION		1
26	10068223	1	SPACER PIECE	PIEZA DISTANCIADOR		1
28	10290518	2	PLAIN COMPRESSION RING 45,05x3,40x2,8	ARO DE SECCION RECTANGULA		1
29	4002185	8	CYLINDER SCREW ISO 4762 M14X110 10.9	TORNILLO CILINDRICO		
30	9429965	2	SHUTTER DISK	DISCO CIERRE		1
31	10286361	4	FLANGE HALF	MITAD DE BRIDA		
32	10066360	8	NUT	TUERCA		1
33	10288921	4	DOUBLE-ENDED STUD DIN 939 M14x75 10.9	TORNILLO ESPARRAGO		
34	10288922	4	DOUBLE-ENDED STUD DIN 939 M14x110 10.	TORNILLO ESPARRAGO		
35	10067717	1	HYDR.TUBES INSTALLATION ⇨ ❑ 403	MONTAJE TUBERÍAS IMPULS.		1
36	10286361	4	FLANGE HALF	MITAD DE BRIDA		
37	934174716	2	INTERMEDIATE FLANGE	BRIDA INTERMEDIA		1
38	4902327	8	CYLINDER SCREW ISO 4762 M14X45 10.9	TORNILLO CILINDRICO		
39	10290518	5	PLAIN COMPRESSION RING 45,05x3,40x2,8	ARO DE SECCION RECTANGULA		1
45	7409720	2	SCREW COUPLING G1/4	ACOPLAMIENTO ROSCADO		2

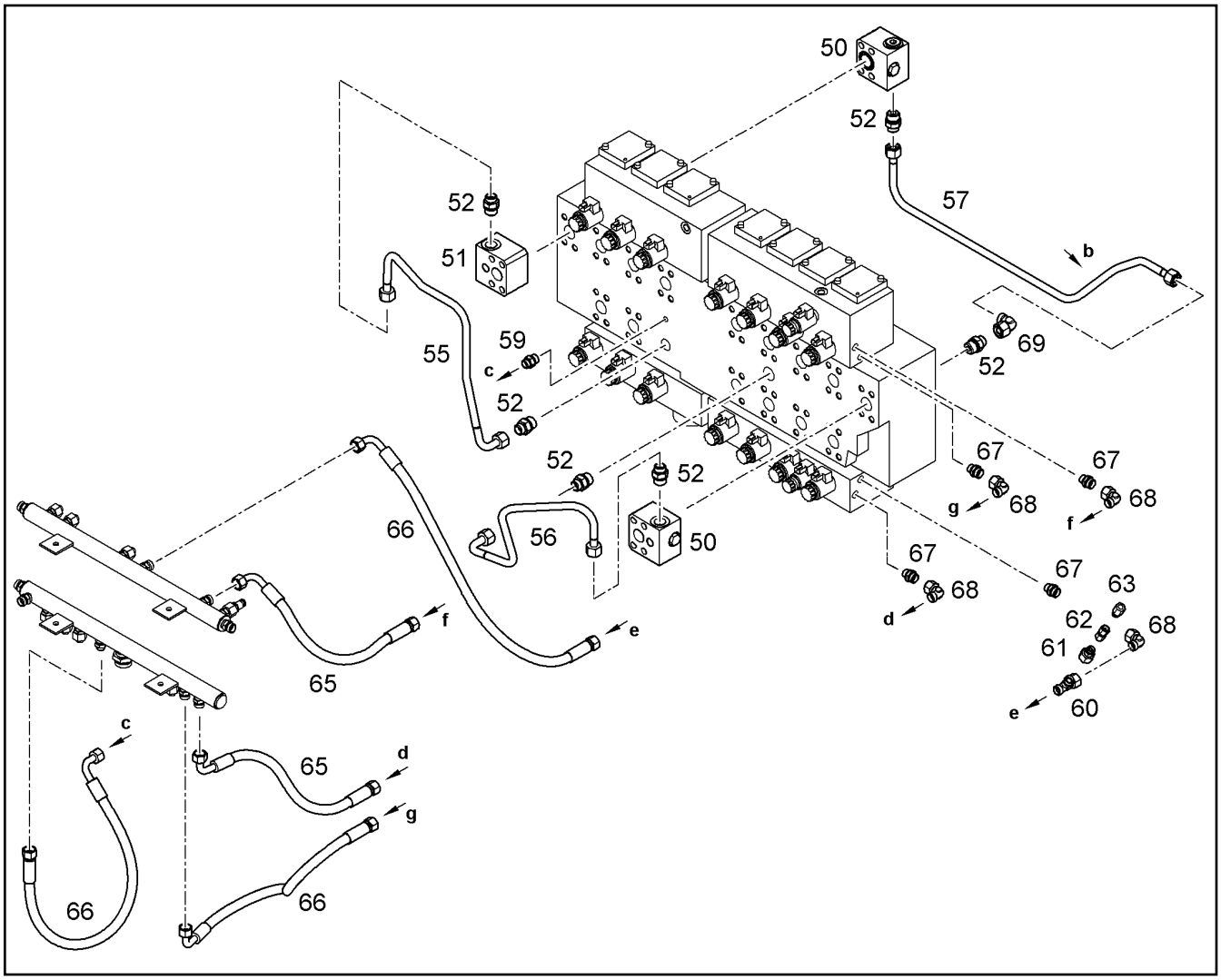

Pos.	Item	Quantity	Description	Descripción	Serie	K
50	10219863	2	NON-RETURN VALVE ⇨ ❑ 406	VALVULA DE RETENCION		2
51	10218215	1	NON-RETURN VALVE ⇨ ❑ 405	VALVULA DE RETENCION		2
52	7018370	6	SCREW FITTING GE 16S	ATORNILLAMIENTO		
55	10358242	1	PRESSURE LINE CPL	TUB.IMPULS.COMPL.		1
56	10064709	1	TUBE	TUBO		1
57	10074612	1	TUBE	TUBO		
59	7411760	1	SCREW FITTING GE 15L	ATORNILLAMIENTO		
60	472300414	1	SCREW FITTING EL 15L	ATORNILLAMIENTO		
61	7616915	1	SCREW FITTING RED 15/10L	ATORNILLAMIENTO		
62	7410211	1	SCREW FITTING GZ 10L	ATORNILLAMIENTO		
63	7364696	1	SCREW EXTENSION TUBE	RACOR ATORNILLABLE		
65	5618677	2	HOSE	TUBO GOMA		2
66	5618453	3	HOSE	TUBO GOMA		2
67	7003570	4	SCREW FITTING GE 15L	ATORNILLAMIENTO		
68	7615379	4	SCREW FITTING EW 15L	ATORNILLAMIENTO		
69	7617460	1	SCREW FITTING EW 16S	ATORNILLAMIENTO		

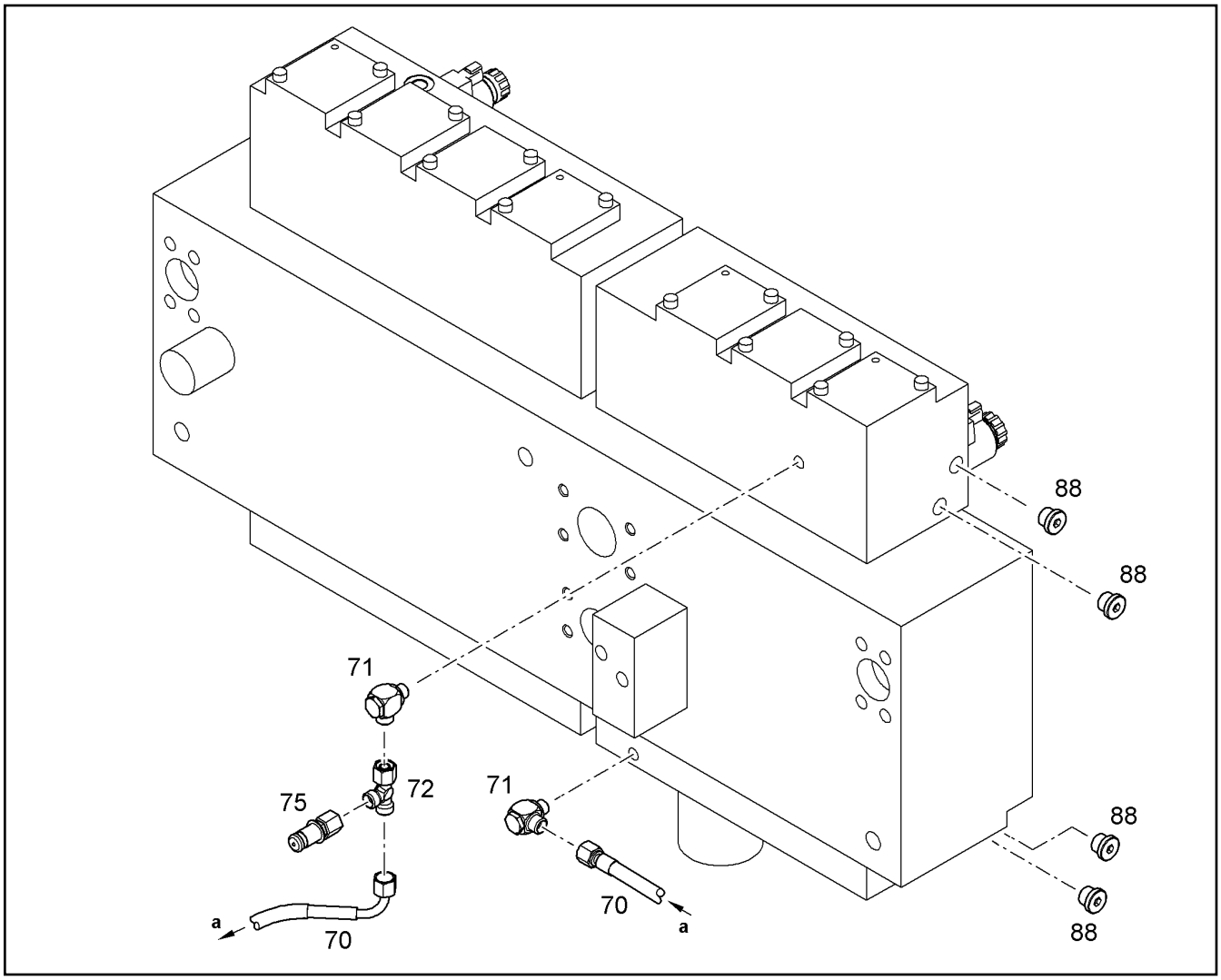

Pos.	Item	Quantity	Description	Descripción	Serie	K
70	7005314	1	CONTROL HOSE	TUBO FLEX.MANDO		2
71	7617714	2	HINGED THREADED UNION WH 10L	ATORNILLAMIENTO ORIENTABL		
72	247242302	1	SCREW FITTING EL 10L	ATORNILLAMIENTO		
75	7406864	1	GAUGE CONNECTION	BOCA MEDIDA		
88	7361960	4	SCREW PLUG M18X1,5X17 A3C	TORNILLO DE CIERRE		

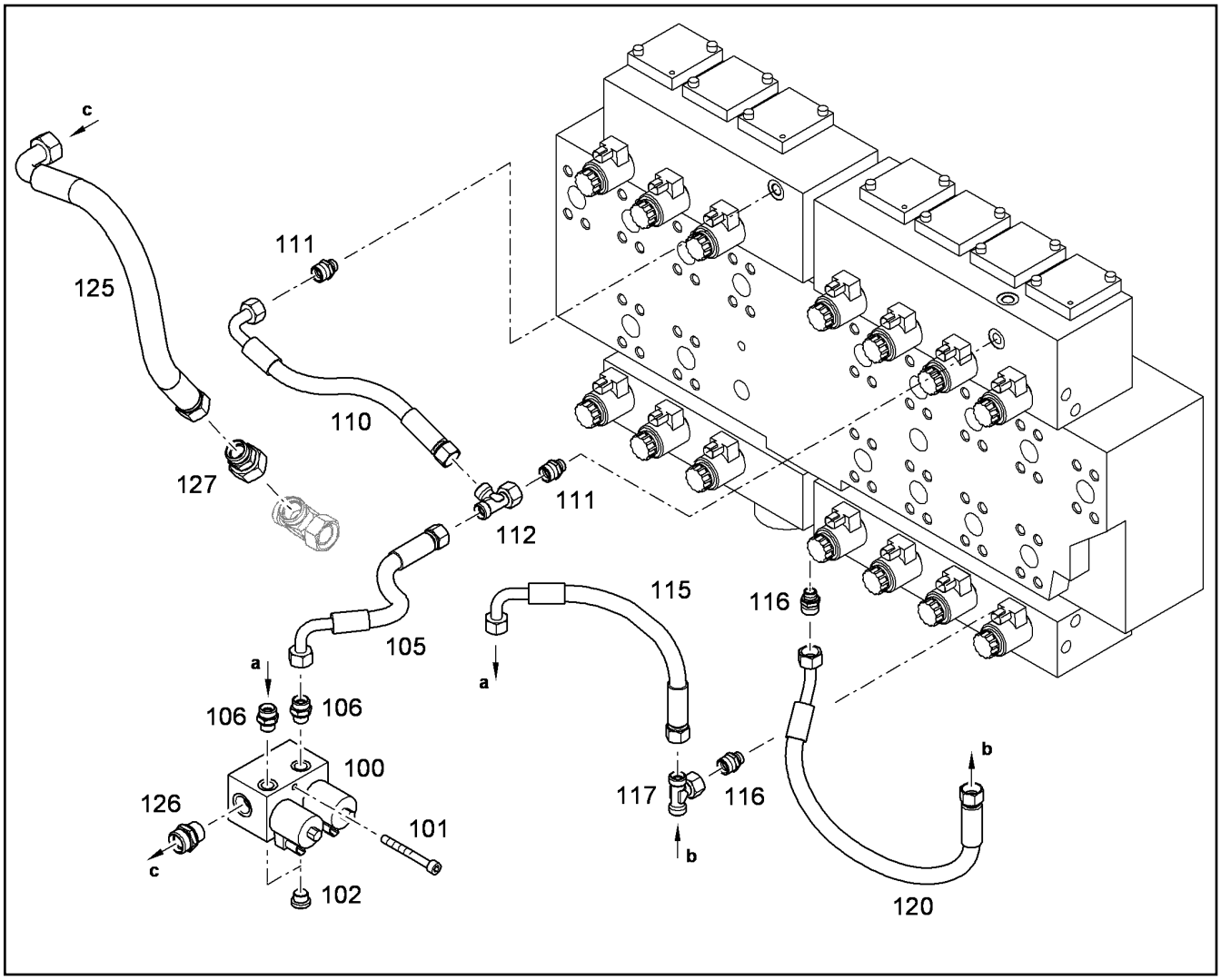

Pos.	Item	Quantity	Description	Descripción	Serie	K
100	10472666	1	DOUBLE CHECK VALVE	VÁLVULA DOBLE RETENCIÓN		2
101	4902255	2	CYLINDER SCREW ISO 4762 M8X85 10.9 A2	TORNILLO CILINDRICO		
102	7361960	2	SCREW PLUG M18X1,5X17 A3C	TORNILLO DE CIERRE		
105	5619289	1	HOSE	TUBO GOMA		2
106	7003570	2	SCREW FITTING GE 15L	ATORNILLAMIENTO		
110	5619289	1	HOSE	TUBO GOMA		2
111	7410394	2	SCREW-ON CONNECTION GE 15L M16X1,5	ESPIGA MACHO		
112	472300414	1	SCREW FITTING EL 15L	ATORNILLAMIENTO		
115	5618412	1	HOSE	TUBO GOMA		2
116	7410394	2	SCREW-ON CONNECTION GE 15L M16X1,5	ESPIGA MACHO		
117	472430408	1	SCREW FITTING ET 15L	ATORNILLAMIENTO		
120	7413028	1	HOSE	TUBO GOMA		2
125	5612243	1	HOSE	TUBO GOMA		2
126	7362515	1	SCREW FITTING GE 22L	ATORNILLAMIENTO		
127	7616910	1	SCREW FITTING RED 28/22L	ATORNILLAMIENTO		

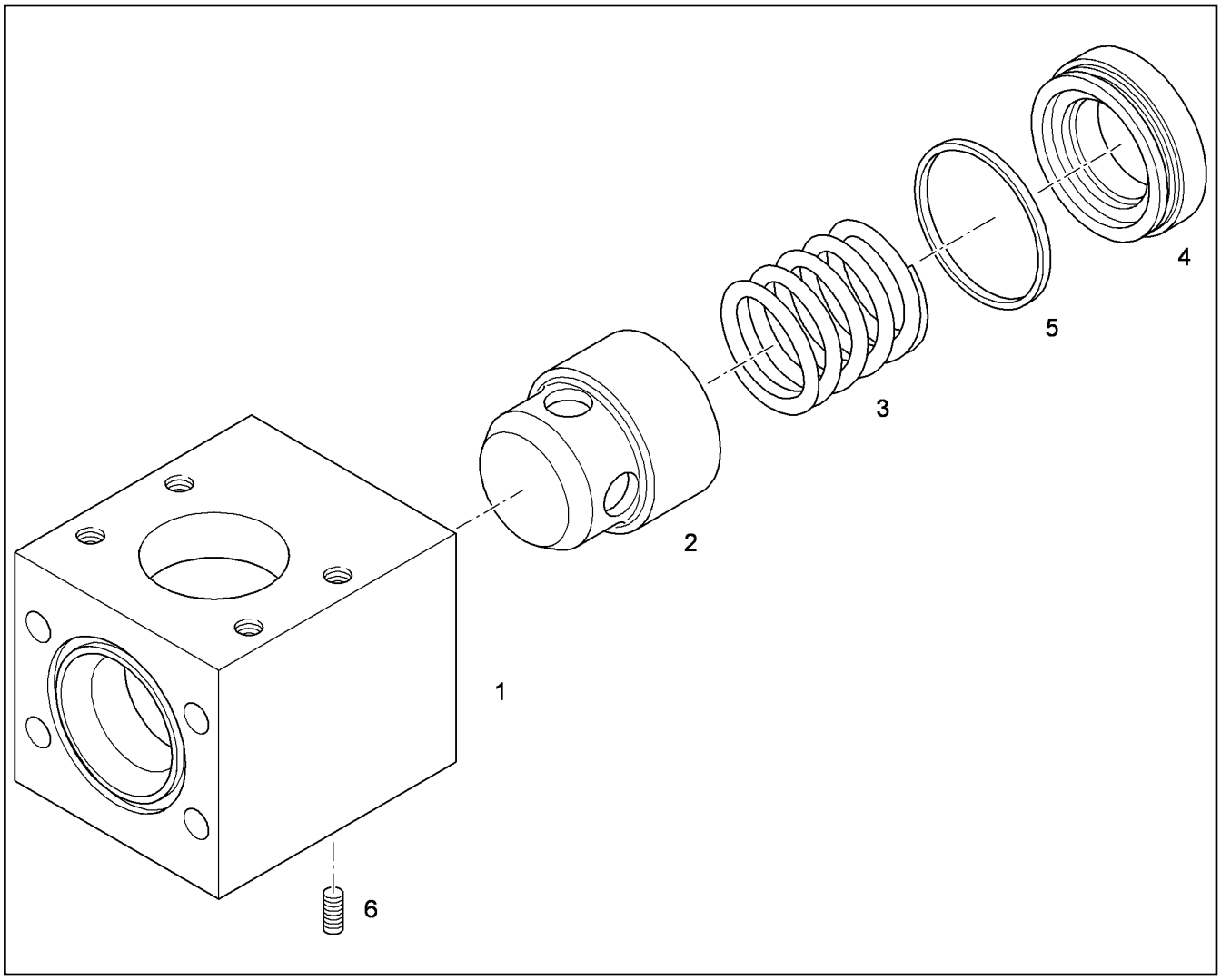

Pos.	Item	Quantity	Description	Descripción	Serie	K
1	9370414	1	BLOCK	BLOQUE BLANCO COMBINADO		2
2	7367730	1	TAPER	CONO		
3	7365026	1	PRESSURE SPRING 51,7/ 5,3X95/4,0	MUELLE COMPRESION		
4	7367729	1	BUSH	CASQUILLO		1
5	7008755	1	O-RING 66,00X3,00	JUNTA TORICA		1
6	4981019	1	GRUB SCREW DIN 915 M 6 X 20 45H	TORNILLO PRISIONERO		

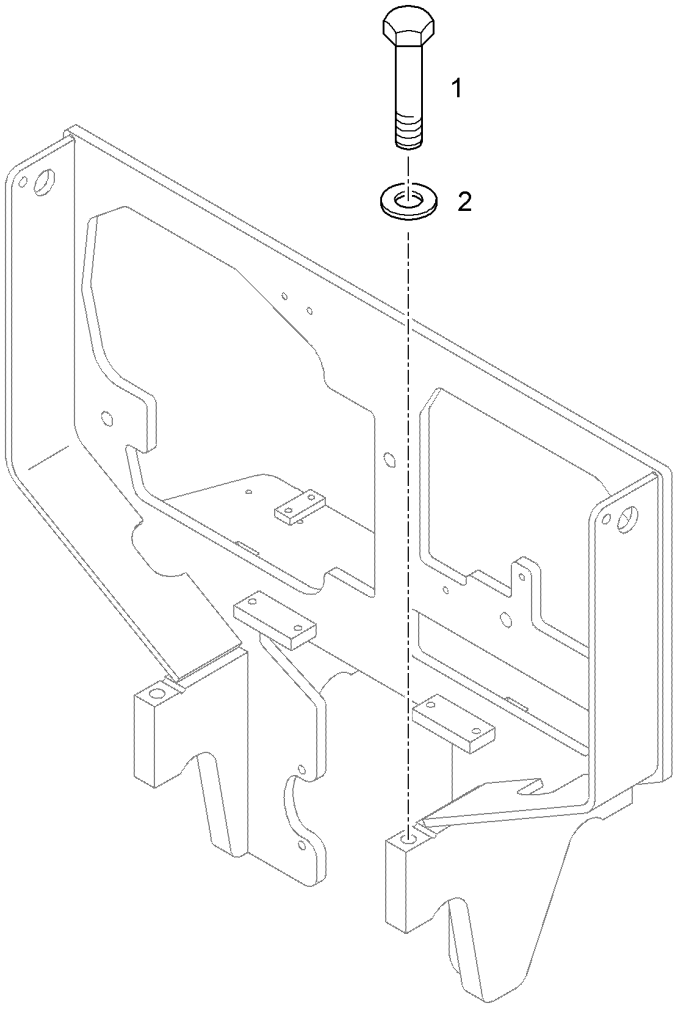

Pos.	Item	Quantity	Description	Descripción	Serie	K
1	10425597	4	HEX BOLT ISO 4014 M20X180 10.9 FLZN 100	TORNILLO DE CABEZA HEXAGO		
2	4600222	4	WASHER DIN 6916 21 DAC	ARANDELA		

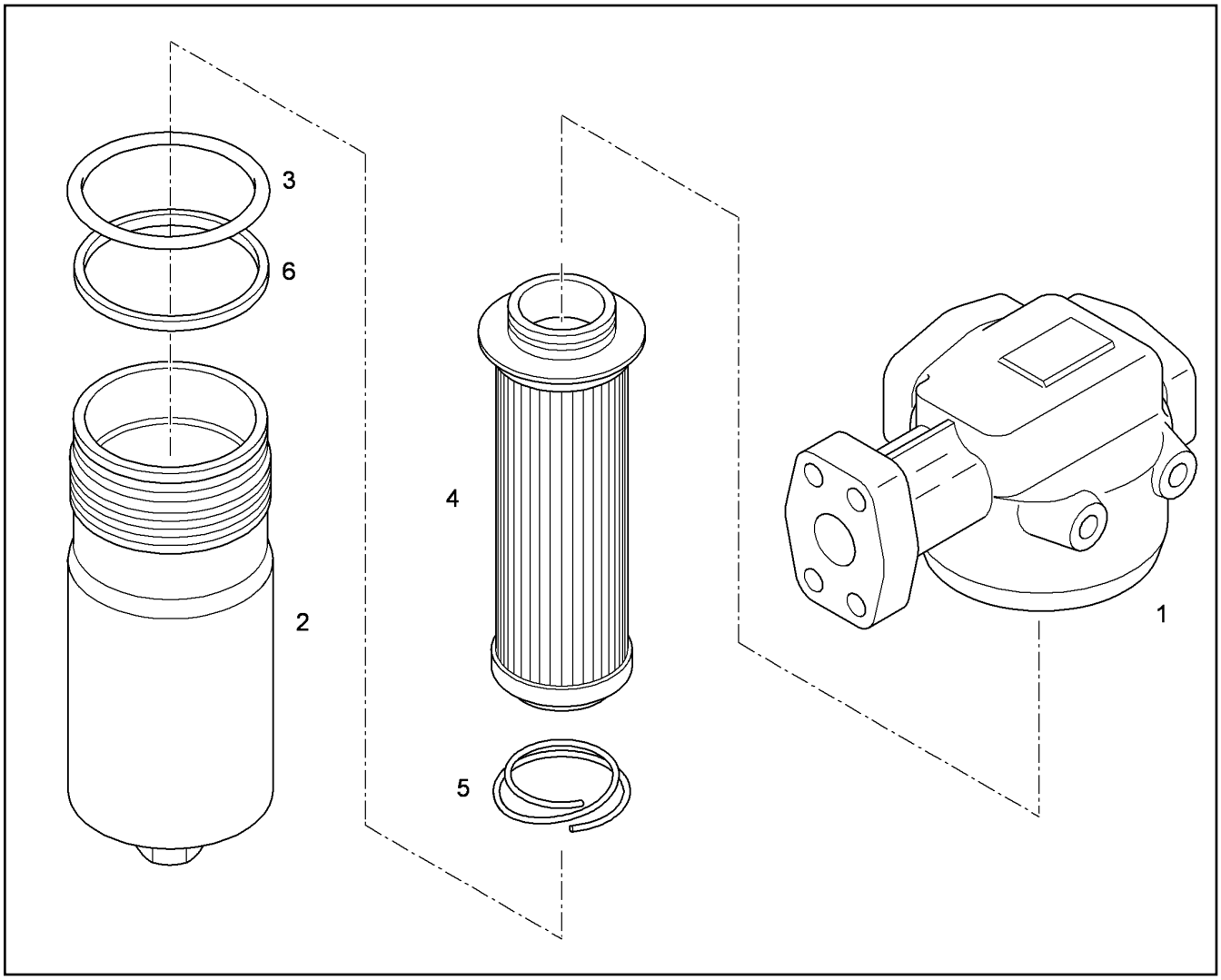

Pos.	Item	Quantity	Description	Descripción	Serie	K
1		1	HEAD PART	PIEZA DE CABEZA		
2	7372318	1	HOUSING	CARCASA		
3	5608035	1	O-RING	JUNTA TORICA		1
4	10470100	1	FILTER INSERT	CARTUCHO DE FILTRO		1
5	5606650	1	PRESSURE SPRING	MUELLE COMPRESION		
6	7372317	1	SUPPORTING RING	ANILLO SOPORTE		1

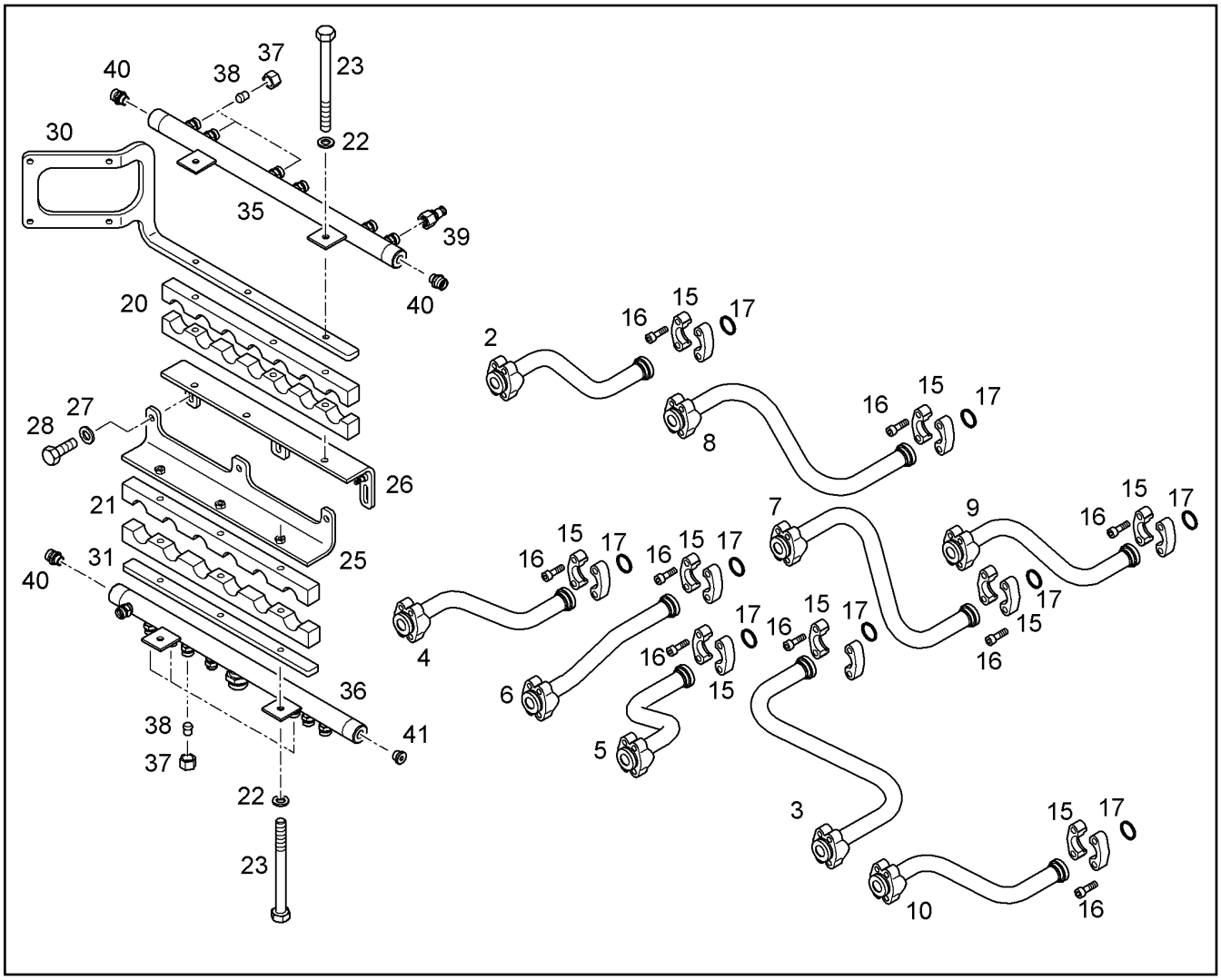

Pos.	Item	Quantity	Description	Descripción	Serie	K
2	10067722	1	PRESSURE LINE CPL	TUB.IMPULS.COMPL.		1
3	10067724	1	PRESSURE LINE CPL	TUB.IMPULS.COMPL.		1
4	10067726	1	PRESSURE LINE CPL	TUB.IMPULS.COMPL.		1
5	10067728	1	PRESSURE LINE CPL	TUB.IMPULS.COMPL.		1
6	10067730	1	PRESSURE LINE CPL	TUB.IMPULS.COMPL.		1
7	10067732	1	PRESSURE LINE CPL	TUB.IMPULS.COMPL.		1
8	10067734	1	PRESSURE LINE CPL	TUB.IMPULS.COMPL.		1
9	10067736	1	PRESSURE LINE CPL	TUB.IMPULS.COMPL.		1
10	10067738	1	PRESSURE LINE CPL	TUB.IMPULS.COMPL.		1
15	10286361	18	FLANGE HALF	MITAD DE BRIDA		
16	4902327	36	CYLINDER SCREW ISO 4762 M14X45 10.9	TORNILLO CILINDRICO		
17	10290518	9	PLAIN COMPRESSION RING 45,05x3,40x2,8	ARO DE SECCION RECTANGULA		1
20	10068163	2	HALF CLAMP COLLAR	SEMI-ABRAZADERA		1
21	10068164	2	HALF CLAMP COLLAR	SEMI-ABRAZADERA		1
22	4229913	6	LOCK WASHER 10,5/16X2 VS 10	ARANDELA SEGURIDAD		
23	4600728	6	HEX BOLT ISO 4014 M10X110 10.9 A3C	TORNILLO DE CABEZA HEXAGO		
25	10068165	1	HOLDER	FIJADOR		
26	10068167	1	HOLDER	FIJADOR		
27	4229913	3	LOCK WASHER 10,5/16X2 VS 10	ARANDELA SEGURIDAD		
28	4066093	3	HEX BOLT ISO 4017 M10X25 10.9 A3C	TORNILLO DE CABEZA HEXAGO		
30	10068169	1	PLATE	CHAPA		1
31	10068170	1	PLATE	CHAPA		1
35	10068187	1	COLLECTING PIPE	TUBO COLECTOR		
36	10068188	1	COLLECTING PIPE	TUBO COLECTOR		
37	4774003	7	UNION NUT DIN 3870 A L 15 A3C	TUERCA UEWF		
38	4772024	7	TAPER COLLET VKA 15L	CONO DE CIERRE		

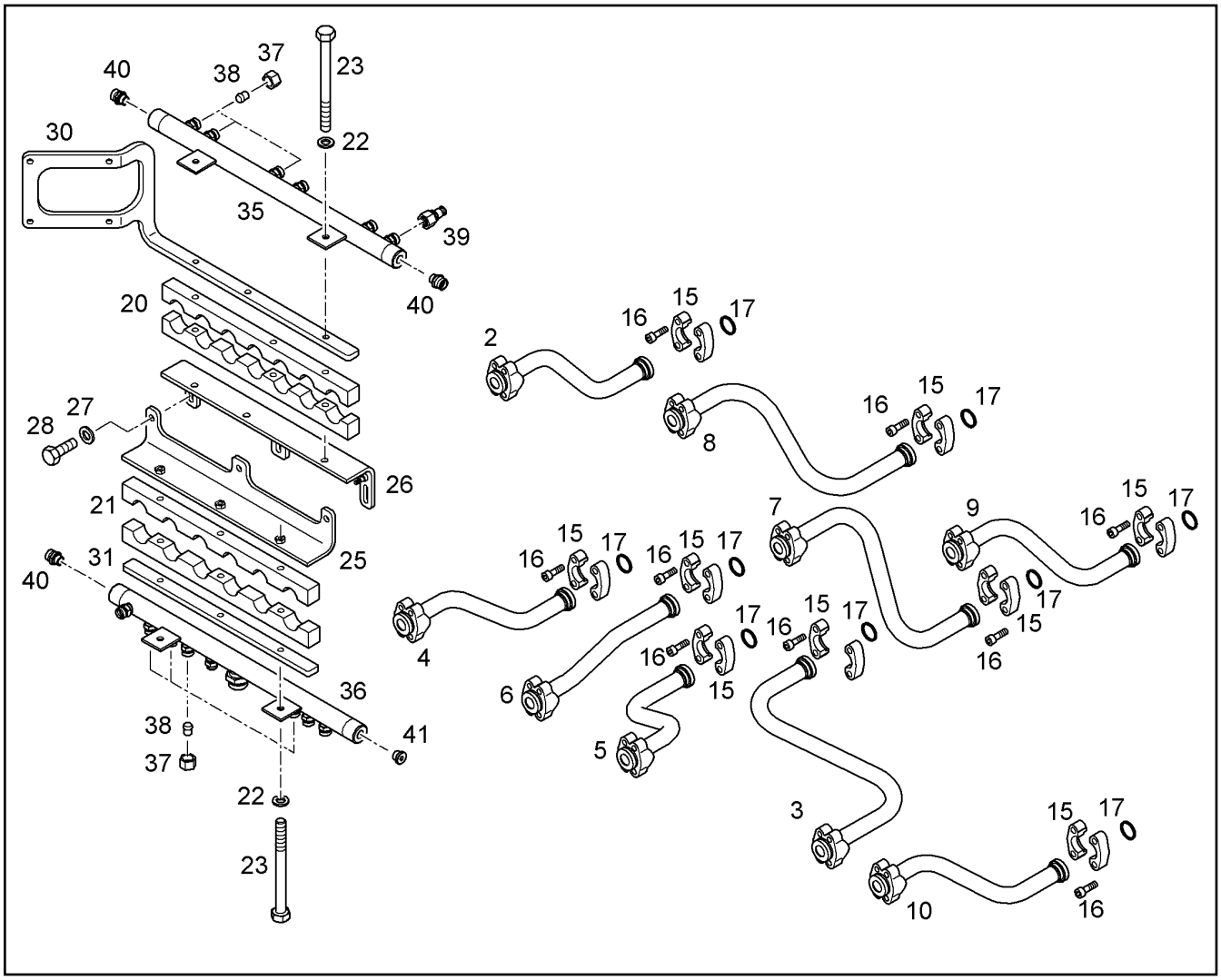

Pos.	Item	Quantity	Description	Descripción	Serie	K
39	5607671	1	GAUGE CONNECTION 15L	BOCA MEDIDA		
40	7003570	3	SCREW FITTING GE 15L	ATORNILLAMIENTO		
41	7361960	1	SCREW PLUG M18X1,5X17 A3C	TORNILLO DE CIERRE		

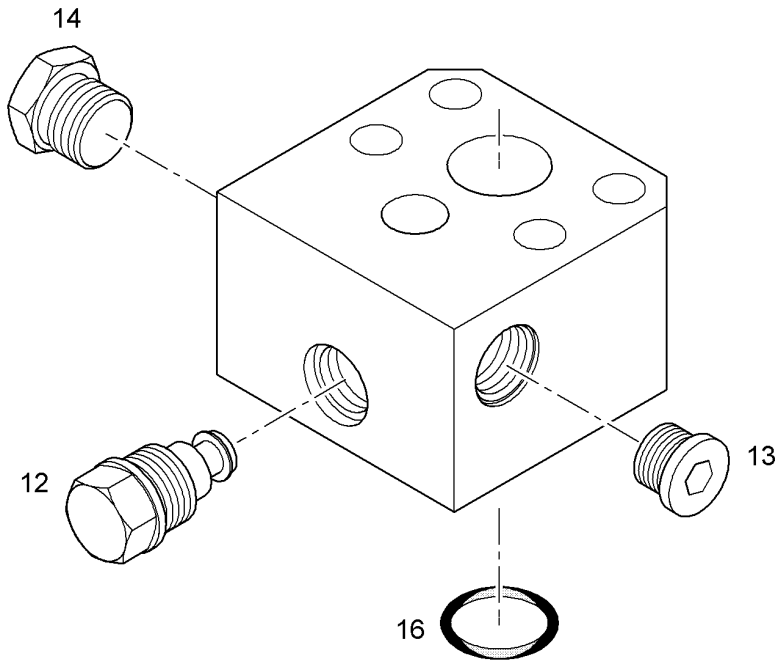

Pos.	Item	Quantity	Description	Descripción	Serie	K
12	5008169	1	NON-RETURN VALVE	VALVULA DE RETENCION		2
13	10296854	1	SCREW PLUG M20X1,5X19	TORNILLO DE CIERRE		
14	7360563	1	SCREW PLUG	TORNILLO DE CIERRE		
16	7022120	1	O-RING 37,69x3,53	JUNTA TORICA		1

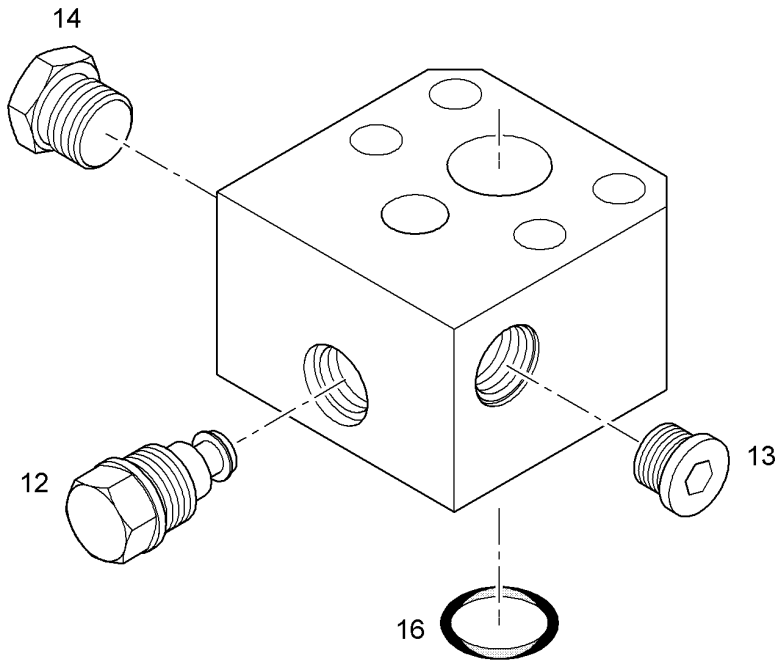

Pos.	Item	Quantity	Description	Descripción	Serie	K
12	5008169	1	NON-RETURN VALVE	VALVULA DE RETENCION		2
13	10296854	1	SCREW PLUG M20X1,5X19	TORNILLO DE CIERRE		
14	7360563	1	SCREW PLUG	TORNILLO DE CIERRE		
16	7022120	1	O-RING 37,69x3,53	JUNTA TORICA		1

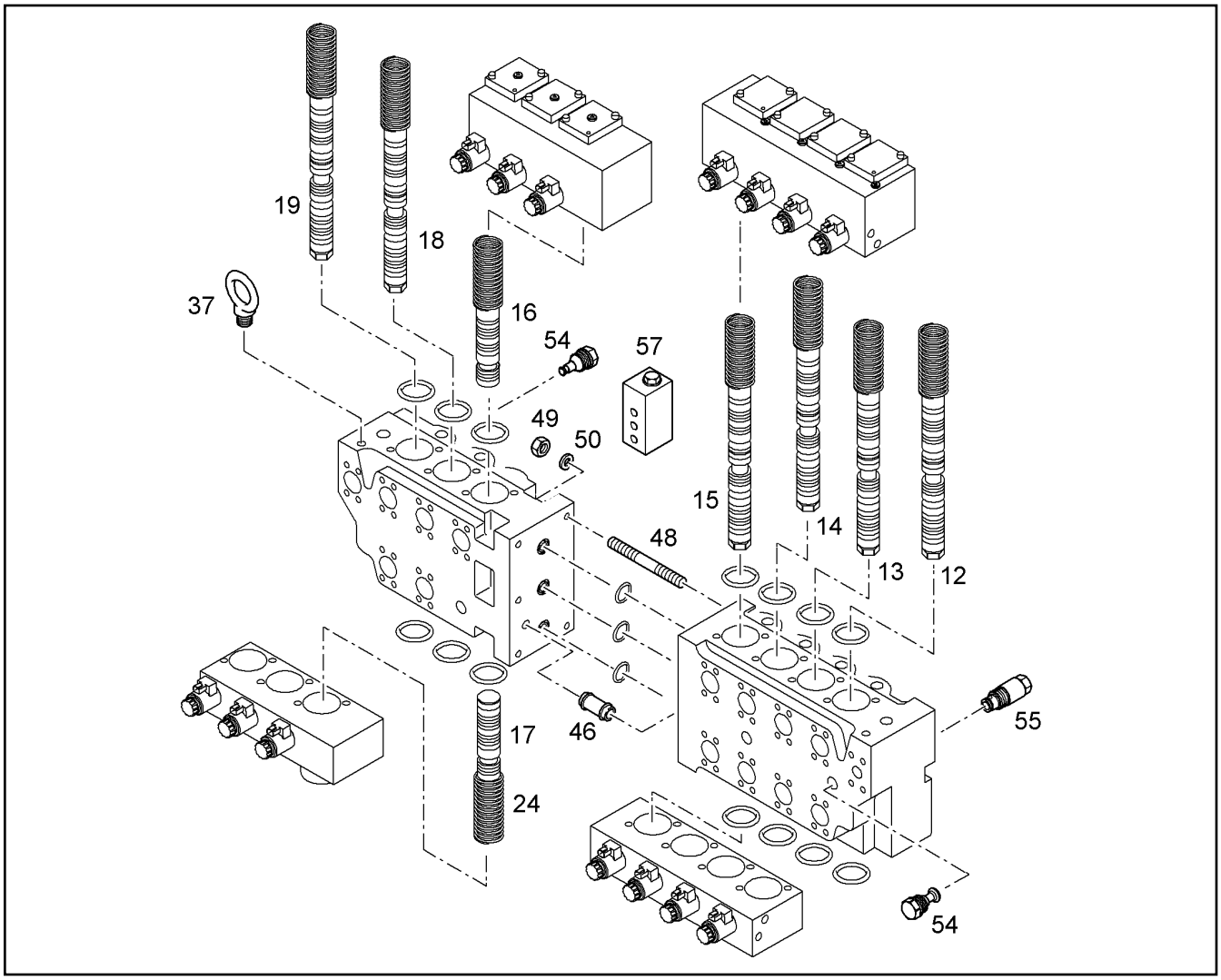

Pos.	Item	Quantity	Description	Descripción	Serie	K
12	10342561	1	PISTON CPL.	ÉMBOLO COMPL.		1
13	10342562	1	PISTON CPL.	ÉMBOLO COMPL.		1
14	10342563	1	PISTON CPL.	ÉMBOLO COMPL.		1
15	10342565	1	PISTON CPL.	ÉMBOLO COMPL.		1
16	10342569	1	PISTON CPL.	ÉMBOLO COMPL.		1
17	10356667	1	PISTON	ÉMBOLO C.PAQUETE RESORTE		1
18	10342563	1	PISTON CPL.	ÉMBOLO COMPL.		1
19	10342567	1	PISTON CPL.	ÉMBOLO COMPL.		1
24	7369128	1	SPRING	MUELLE		
37	4900313	2	RING BOLT DIN 580 M 20 C15E A3C	TORNILLO DE ANILLO		
46	7369135	1	BUSH	CASQUILLO		1
48	4901690	5	DOUBLE-ENDED STUD DIN 939 M16X80 10.9	TORNILLO ESPARRAGO		
49	4000420	5	HEX NUT M16	TUERCA HEXAGONAL		
50	7369134	5	RING	ANILLO		
54	5610135	6	SUPPLY VALVE ⇨ ❑ 412	VÁLVULA ALIM.		2
55	10296500	1	NON-RETURN VALVE	VALVULA DE RETENCION		2
57	10286294	1	SHUTTLE VALVE BLOCK ⇨ ❑ 410	BLOQUE DE VALVULAS SELEC		2

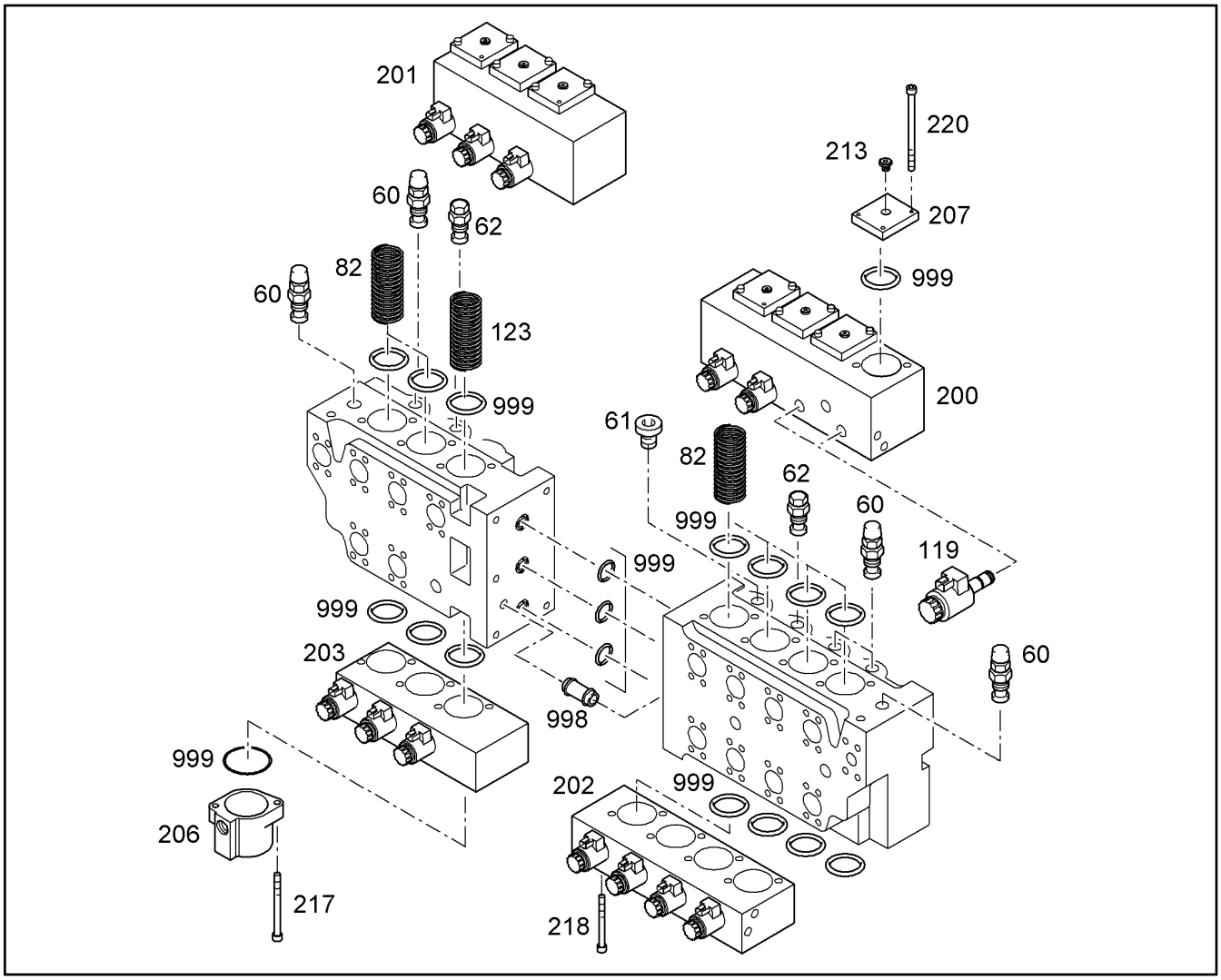

Pos.	Item	Quantity	Description	Descripción	Serie	K
60	5616231	8	PRESSURE FEEDER VALVE ⇨ ❑ 53	VÁLVULA ALIM.PRESIÓN		2
61	10024583	2	SCREW PLUG 32	TORNILLO DE CIERRE		
62	5616232	4	SUPPLY VALVE	VÁLVULA ALIM.		2
82	7372747	6	SPRING	MUELLE		
119	10475942	14	PRESSURE REDUCTION VALVE ⇨ ❑ 409	VALVULA REDUCTORA DE PRES		2
123	10296502	1	SPRING	MUELLE		
200	10356668	1	INTERMEDIATE PLATE	PLACA INTERMEDIA		
201	10356670	1	INTERMEDIATE PLATE	PLACA INTERMEDIA		
202	10356671	1	LID	TAPA		
203	10356672	1	LID	TAPA		
206	10356673	1	LID	TAPA		
207	10356674	7	LID	TAPA		
213	7372622	8	SCREW PLUG M14X1,5	TORNILLO DE CIERRE		
217	4600236	2	CYLINDER SCREW ISO 4762 M8x110 8.8 A2	TORNILLO CILINDRICO		
218	4900323	12	CYLINDER SCREW ISO 4762 M8x90 8.8 A2C	TORNILLO CILINDRICO		
220	10356676	14	CYLINDER SCREW ISO 4762 M8x165 8.8 A3	TORNILLO CILINDRICO		
998	10289630	1	SEAL KIT HOUSING	JJ CARCASA		1
999	10356675	1	SEAL KIT	JUEGO JUNTAS		1

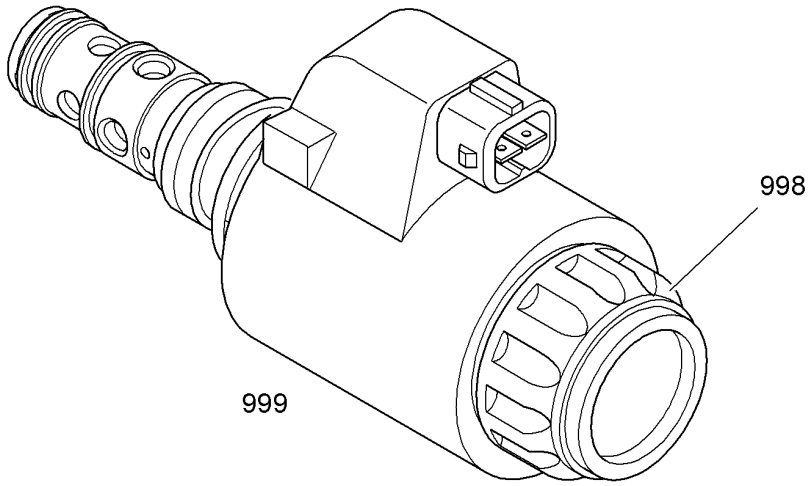

Pos.	Item	Quantity	Description	Descripción	Serie	K
998	10489539	1	NUT	TUERCA		
999	10489538	1	SEAL KIT	JUEGO DE JUNTAS		1

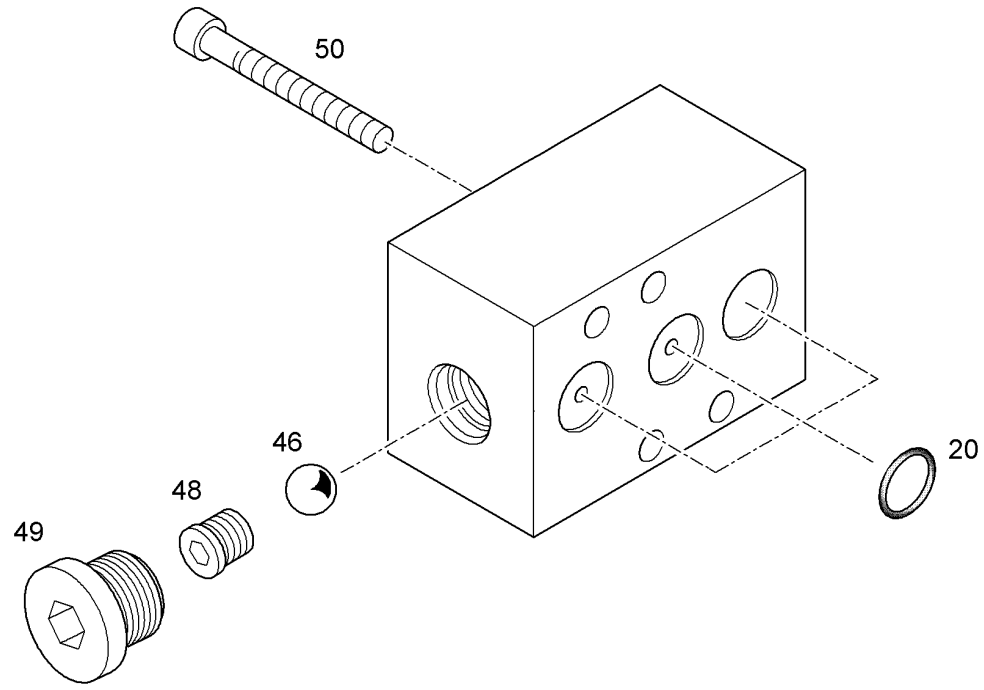

Pos.	Item	Quantity	Description	Descripción	Serie	K
20	7005971	3	O-RING 13x2,5	JUNTA TORICA		1
46	4002875	1	BALL DIN 5401 8,3 G 20	ESFERA		1
48	7029459	1	VALVE SEAT	ASIENTO DE VALVULA		
49	7024958	1	SCREW PLUG G 1/4	TORNILLO DE CIERRE		
50	4043089	4	CYLINDER SCREW ISO 4762 M8X50 10.9 A2	TORNILLO CILINDRICO		

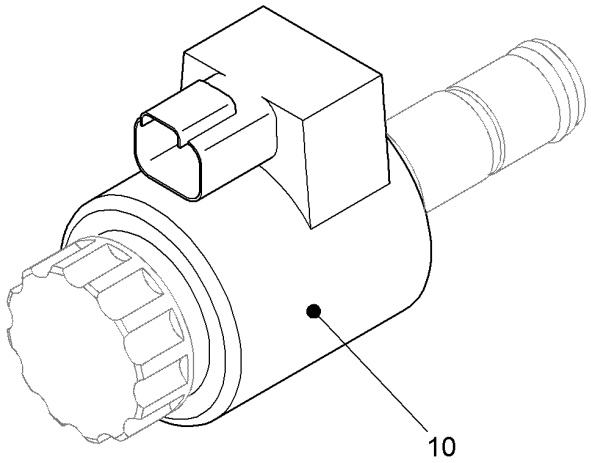

Pos.	Item	Quantity	Description	Descripción	Serie	K
10	10455143	1	MAGNET COIL	BOBINA ELECTROIMAN		1

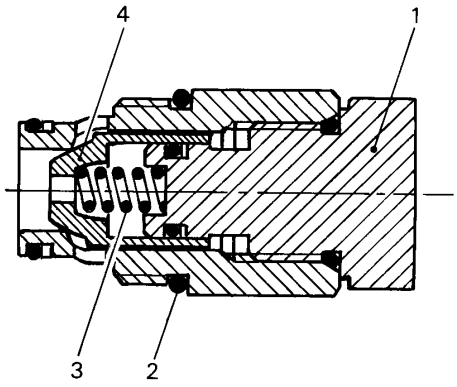

Pos.	Item	Quantity	Description	Descripción	Serie	K
1	7371360	1	SCREW PLUG	TORNILLO DE CIERRE		
2	7007476	1	O-RING 34,59x2,62	JUNTA TORICA		1
3	7371358	1	PRESSURE SPRING	MUELLE COMPRESION		
4	7371359	1	TAPER	CONO		

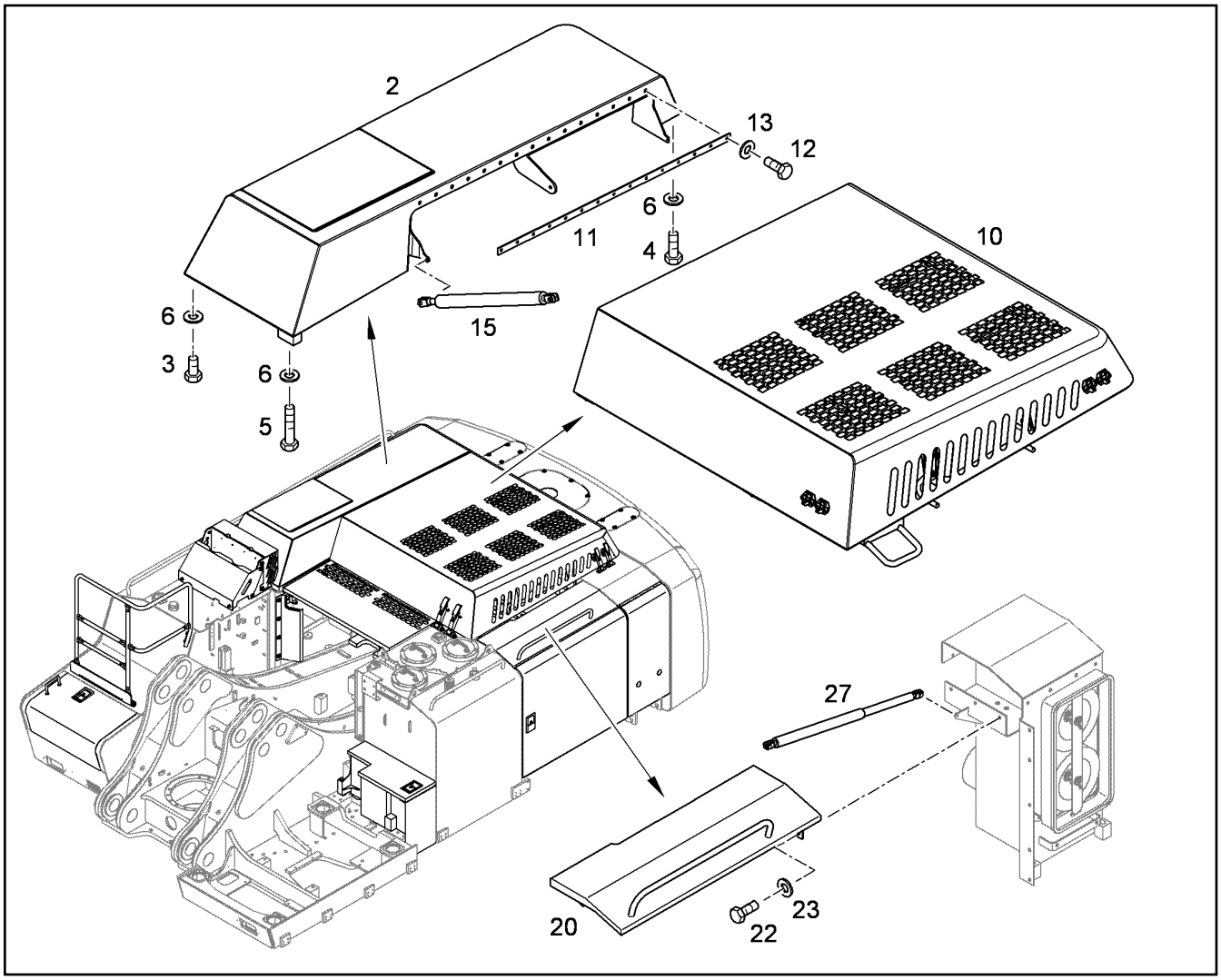

Pos.	Item	Quantity	Description	Descripción	Serie	K
2	10055354	1	COOLER COWL ⇨ ❑ 447	CAPOT		1
3	10001073	3	HEX BOLT ISO 4017 M16X40 10.9 DAC	TORNILLO DE CABEZA HEXAGO		
4	10000362	1	HEX BOLT ISO 4017 M16X50 10.9 DAC	TORNILLO DE CABEZA HEXAGO		
5	4600149	2	HEX BOLT ISO 4014 M16X85 10.9 DAC	TORNILLO DE CABEZA HEXAGO		
6	4600180	6	WASHER DIN 6340 17 DAC	ARANDELA		
10	10055303	1	ENGINE BONNET ⇨ ❑ 443	CAPOT DEL MOTOR		1
11	10055481	1	FLAT STEEL	PLETINA DE ACERO		1
12	4066122	15	HEX BOLT ISO 4017 M12X35 10.9 A3C	TORNILLO DE CABEZA HEXAGO		
13	4635283	15	WASHER DIN 6340 13 ST A3C	ARANDELA		
15	10441154	2	GAS SPRING	MUELLE DE GAS		
20	10055464	1	BONNET LEFT ⇨ ❑ 451	CUBIERTA IZQUIERDA		1
22	4600184	3	HEX BOLT ISO 4017 M12X25 10.9 A3C	TORNILLO DE CABEZA HEXAGO		
23	4635283	3	WASHER DIN 6340 13 ST A3C	ARANDELA		
27	10037214	1	GAS SPRING	MUELLE DE GAS		

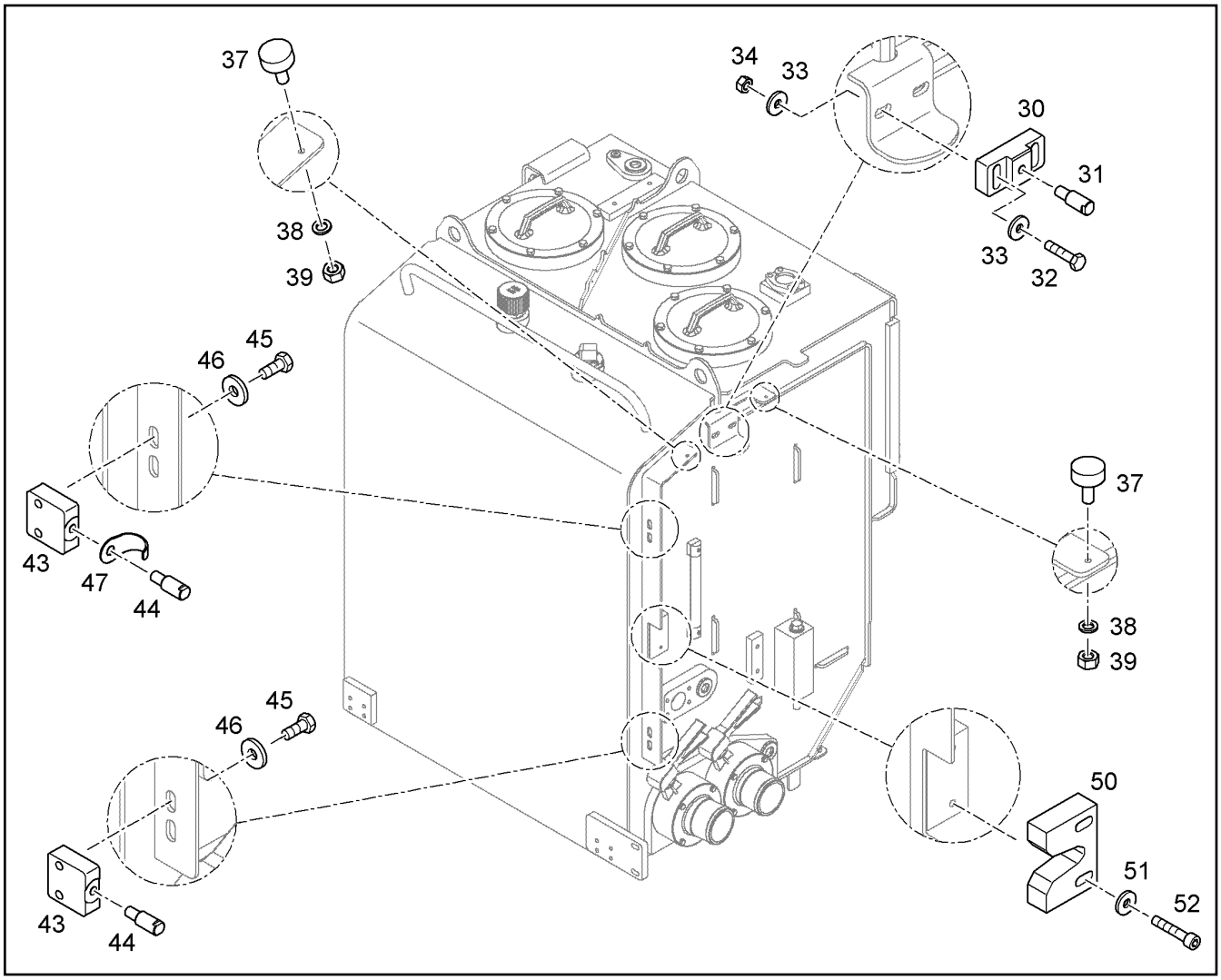

Pos.	Item	Quantity	Description	Descripción	Serie	K
30	9988206	1	BRICK	BLOQUE		1
31	9869072	1	PIN	BULON		1
32	4601134	2	HEX BOLT ISO 4017 M10X45 10.9 A3C	TORNILLO DE CABEZA HEXAGO		
33	4601173	4	WASHER 10,5	ARANDELA		
34	4000383	2	HEX NUT ISO 4032 M 10 -10 A3C	TUERCA HEXAGONAL		
37	5004748	2	BUFFER	AMORTIGUADOR GMT		
38	4229911	2	LOCK WASHER	ARANDELA SEGURIDAD		
39	4000379	2	HEX NUT M6	TUERCA HEXAGONAL		
43	9820573	2	BRICK	BLOQUE		1
44	9869072	2	PIN	BULON		1
45	4066124	4	HEX BOLT ISO 4017 M12X30 10.9 A3C	TORNILLO DE CABEZA HEXAGO		
46	4635283	4	WASHER DIN 6340 13 ST A3C	ARANDELA		
47	7415239	1	BRACKET	ESTRIBO DEFENSA		
50	9686594	1	FEEDER PLATE	PLACA DE SUJECION		1
51	4901251	2	CYLINDER SCREW ISO 4762 M10X50 10.9	TORNILLO CILINDRICO		
52	4601173	2	WASHER 10,5	ARANDELA		

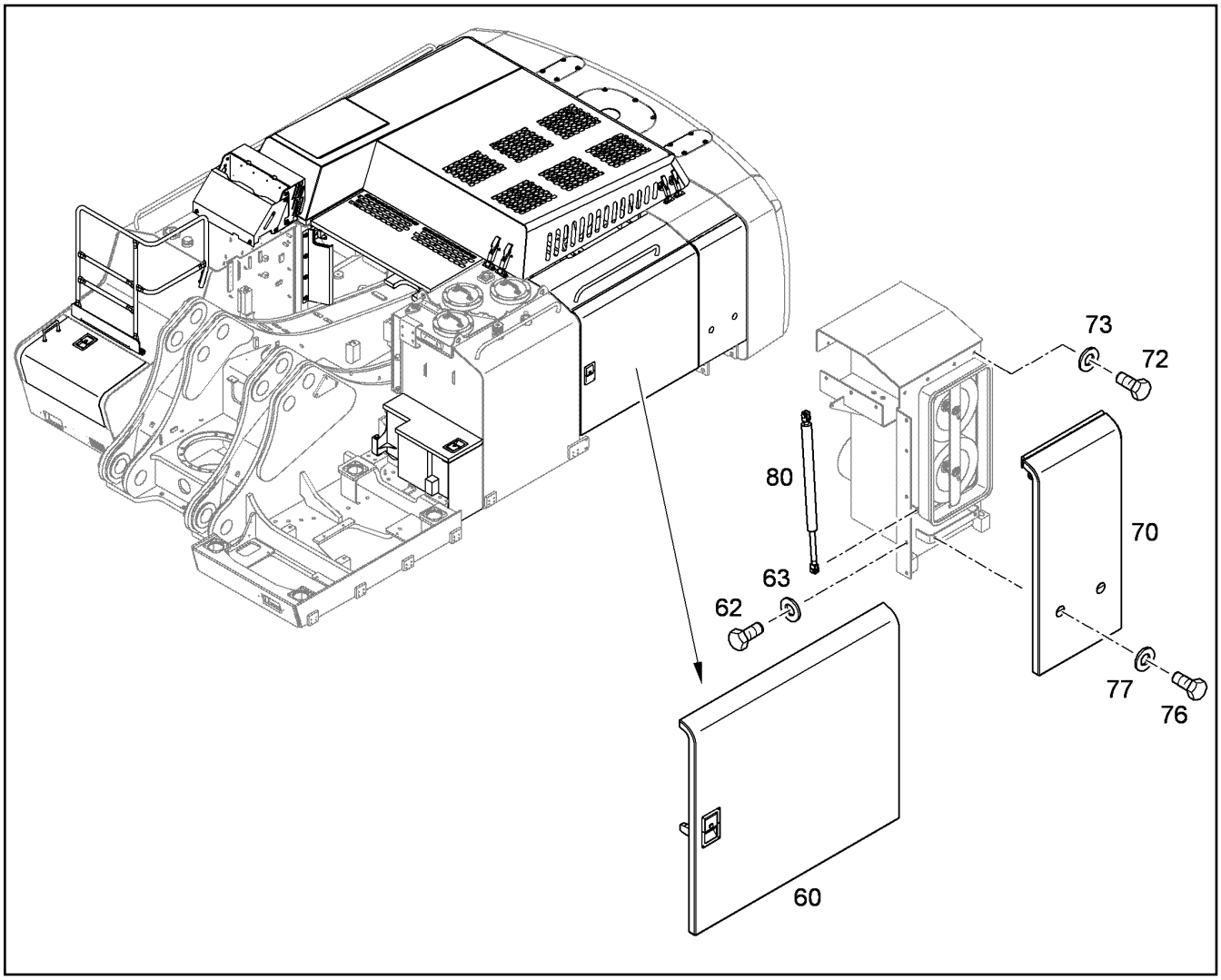

Pos.	Item	Quantity	Description	Descripción	Serie	K
60	10055392	1	SIDE DOOR LEFT ⇨ ❑ 801	PUERTA LATERAL IZDA.		1
62	4066124	5	HEX BOLT ISO 4017 M12X30 10.9 A3C	TORNILLO DE CABEZA HEXAGO		
63	4635283	5	WASHER DIN 6340 13 ST A3C	ARANDELA		
70	10055381	1	DOOR AIR FILTER LEFT ⇨ ❑ 452	PUERTA FILTRO AIRE IZD.		1
72	4066124	4	HEX BOLT ISO 4017 M12X30 10.9 A3C	TORNILLO DE CABEZA HEXAGO		
73	4635283	4	WASHER DIN 6340 13 ST A3C	ARANDELA		
76	4066124	2	HEX BOLT ISO 4017 M12X30 10.9 A3C	TORNILLO DE CABEZA HEXAGO		
77	4635283	2	WASHER DIN 6340 13 ST A3C	ARANDELA		
80	10037209	1	GAS SPRING ⇨ ❑ 463	MUELLE DE GAS		

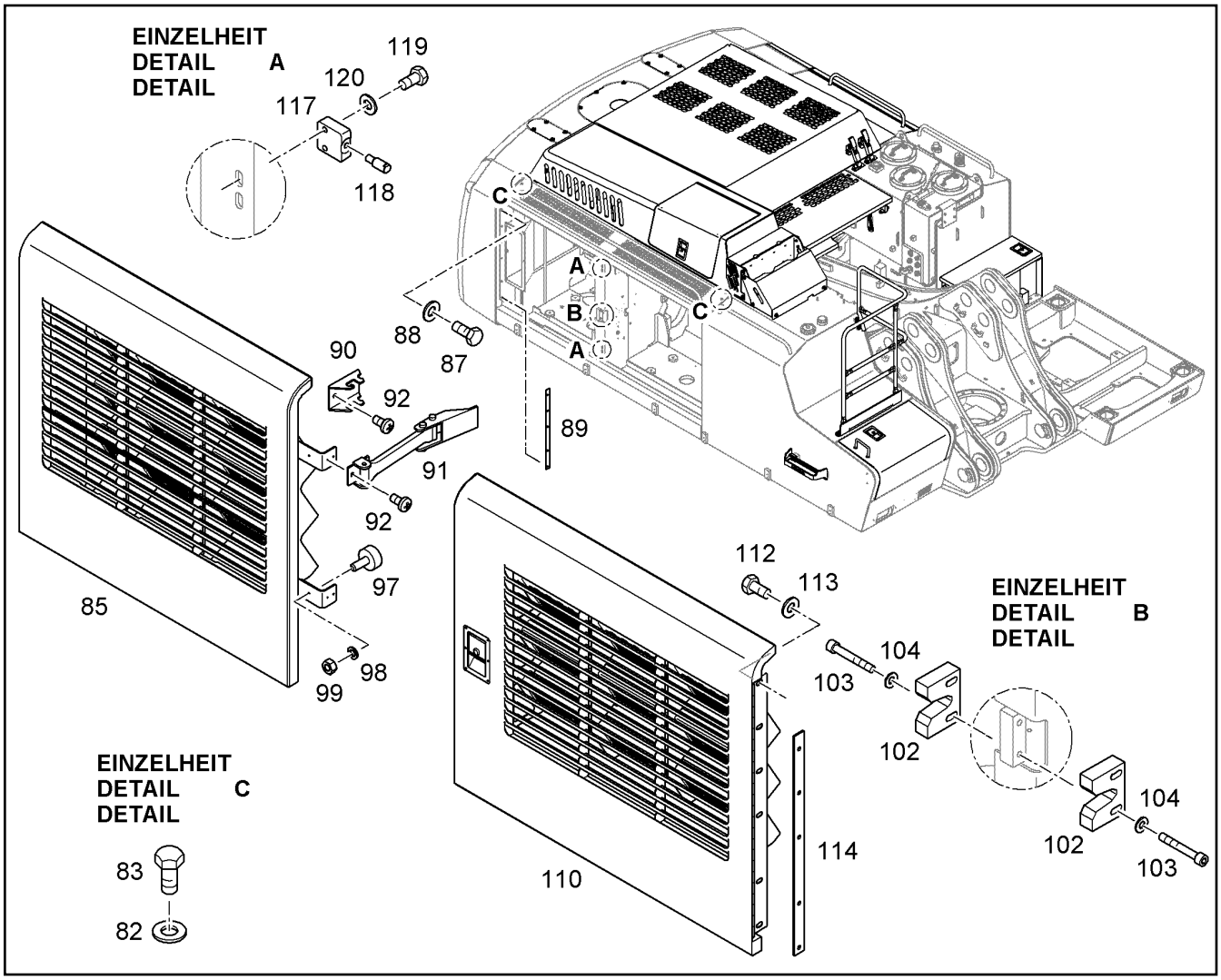

Pos.	Item	Quantity	Description	Descripción	Serie	K
82	9918228	2	WASHER 16,5/28X4	ARANDELA		
83	10001073	2	HEX BOLT ISO 4017 M16X40 10.9 DAC	TORNILLO DE CABEZA HEXAGO		
85	10055433	1	SIDE DOOR BACK RIGHT ⇨ ❑ 453	PUERTA LATERAL POST.DCHA.		1
87	4600184	6	HEX BOLT ISO 4017 M12X25 10.9 A3C	TORNILLO DE CABEZA HEXAGO		
88	4635283	1	WASHER DIN 6340 13 ST A3C	ARANDELA		
89	10406679	1	FLAT STEEL	PLETINA DE ACERO		1
90	7615636	2	HOLDER	FIJADOR		
91	7615635	2	TENSION LEVER	PALANCA TENSORA		
92	4600388	8	PAN-HEAD SCREW ISO 7045 M5X10 4.8 H	TORNILLO ROSCACHAPA		
97	5004748	2	BUFFER	AMORTIGUADOR GMT		
98	4229911	2	LOCK WASHER	ARANDELA SEGURIDAD		
99	4000379	2	HEX NUT M6	TUERCA HEXAGONAL		
102	9686594	2	FEEDER PLATE	PLACA DE SUJECION		1
103	4901251	4	CYLINDER SCREW ISO 4762 M10X50 10.9	TORNILLO CILINDRICO		
104	4601173	4	WASHER 10,5	ARANDELA		
110	10055410	1	SIDE DOOR FRONT RIGHT ⇨ ❑ 456	PUERTA LATERAL ANT.DCHA.		1
112	4600184	6	HEX BOLT ISO 4017 M12X25 10.9 A3C	TORNILLO DE CABEZA HEXAGO		
113	4635283	1	WASHER DIN 6340 13 ST A3C	ARANDELA		
114	10406679	1	FLAT STEEL	PLETINA DE ACERO		1
117	9820573	2	BRICK	BLOQUE		1
118	9869072	2	PIN	BULON		1
119	4066124	4	HEX BOLT ISO 4017 M12X30 10.9 A3C	TORNILLO DE CABEZA HEXAGO		
120	4635283	4	WASHER DIN 6340 13 ST A3C	ARANDELA		

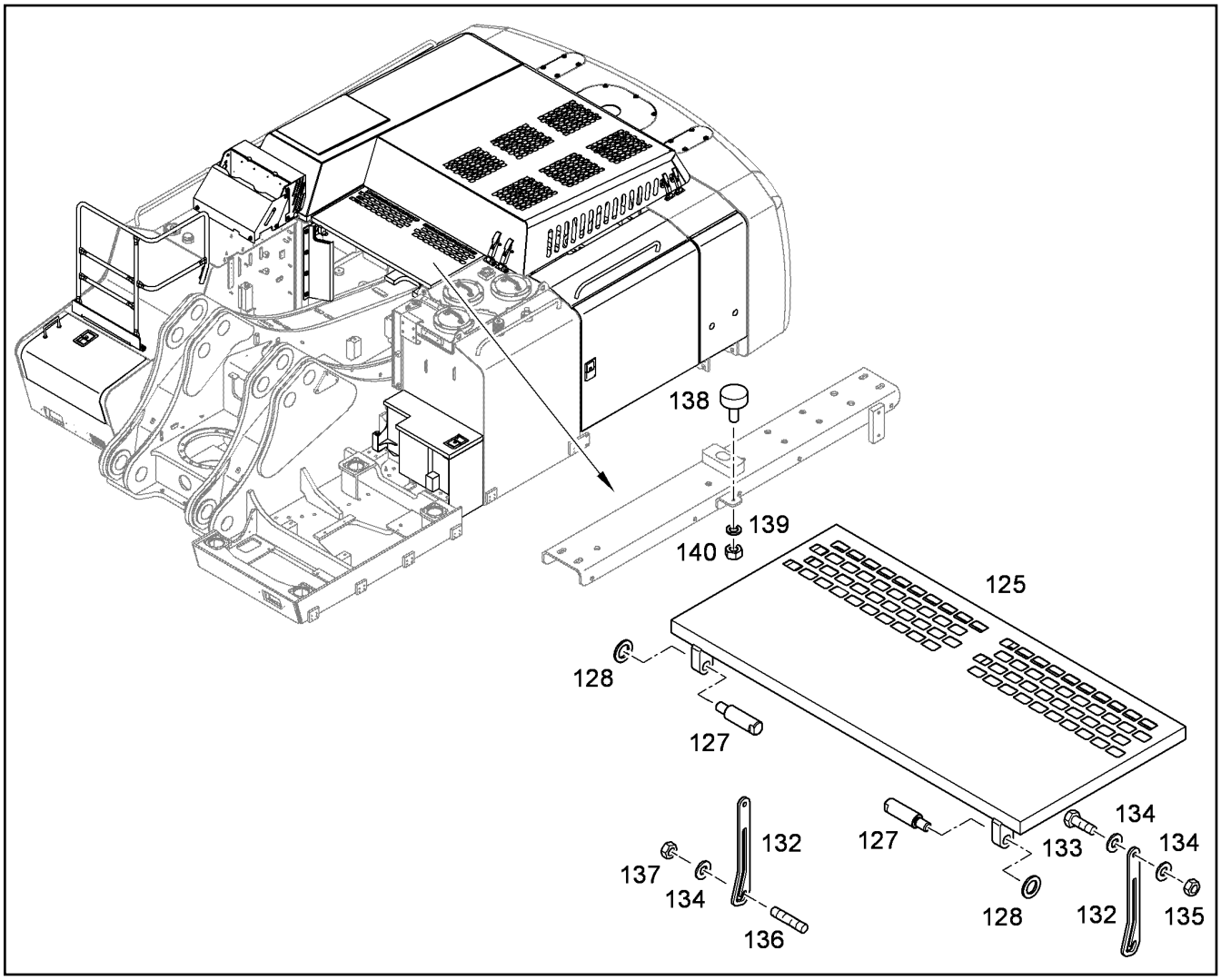

Pos.	Item	Quantity	Description	Descripción	Serie	K
125	10055453	1	COVER MIDDLE ⇨ ❑ 455	TAPA CENTRO		1
127	9480332	2	SCREW	TORNILLO		
128	4211007	2	WASHER ISO 8738 25 A3C	ARANDELA		
132	9827870	1	RAIL	CARRIL		1
133	4600706	1	HEX BOLT ISO 4017 M12X45 10.9 A3C	TORNILLO DE CABEZA HEXAGO		
134	10289804	3	WASHER ISO 7089 12 300HV	ARANDELA		
135	4900546	1	HEX NUT ISO 4032 M 12 -10 A3C	TUERCA HEXAGONAL		
136	4001704	1	DOUBLE-ENDED STUD DIN 939 M 12 X 35 1	TORNILLO ESPARRAGO		
137	4002564	1	HEX NUT ISO 7040 M 12 -08 A3C	TUERCA HEXAGONAL		
138	5004748	2	BUFFER	AMORTIGUADOR GMT		
139	4229911	2	LOCK WASHER	ARANDELA SEGURIDAD		
140	4000379	2	HEX NUT M6	TUERCA HEXAGONAL		

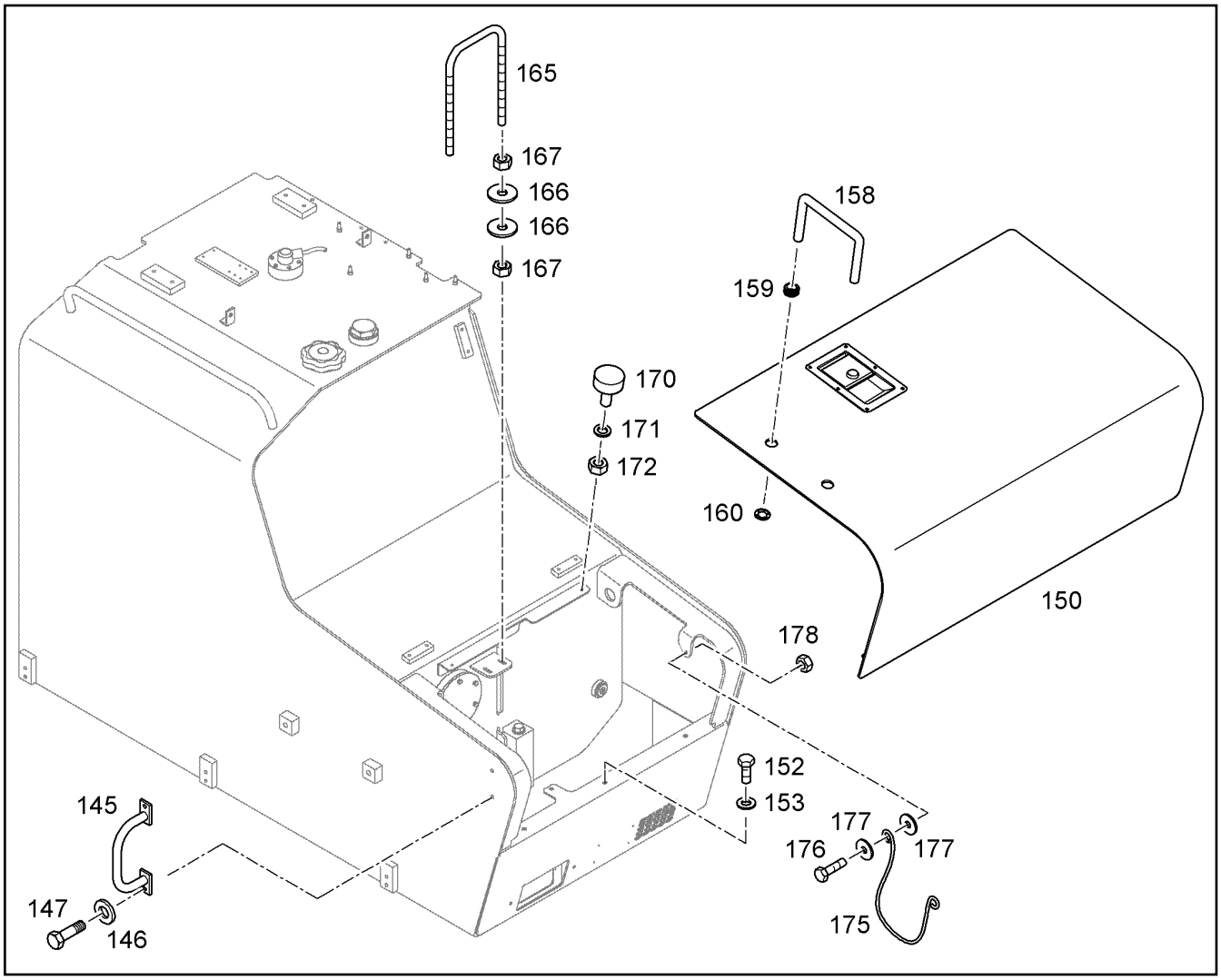

Pos.	Item	Quantity	Description	Descripción	Serie	K
145	9699421	1	GRIP	TIRADOR		
146	10289795	2	WASHER ISO 7089 10 300HV	ARANDELA		
147	4001246	2	HEX BOLT ISO 4017 M10X35 10.9 A3C	TORNILLO DE CABEZA HEXAGO		
150	10063553	1	LID ⇨ ❑ 462	TAPA		1
152	4066093	3	HEX BOLT ISO 4017 M10X25 10.9 A3C	TORNILLO DE CABEZA HEXAGO		
153	4601173	3	WASHER 10,5	ARANDELA		
158	9496454	1	HANDLE	TIRADOR DE MANO		
159	5608314	2	CABLE SHEATHING	REVESTIMIENTO DE CABLE		
160	7363744	2	TOOTH LOCK WASHER	ARANDELA DENTADA		
165	9201724	1	BRACKET	ESTRIBO		
166	4000779	4	WASHER DIN 9021 8,4 ST A3C	ARANDELA		
167	4000381	4	HEX NUT M8	TUERCA HEXAGONAL		
170	5004748	2	BUFFER	AMORTIGUADOR GMT		
171	4229911	2	LOCK WASHER	ARANDELA SEGURIDAD		
172	4000379	2	HEX NUT M6	TUERCA HEXAGONAL		
175	10326658	1	WIRE ROPE	CABLE METALICO		
176	4001650	2	HEX BOLT ISO 4017 M8X35 10.9 A2C	TORNILLO DE CABEZA HEXAGO		
177	4900531	4	WASHER ISO 7093-1 10 200HV	ARANDELA		
178	4000381	2	HEX NUT M8	TUERCA HEXAGONAL		

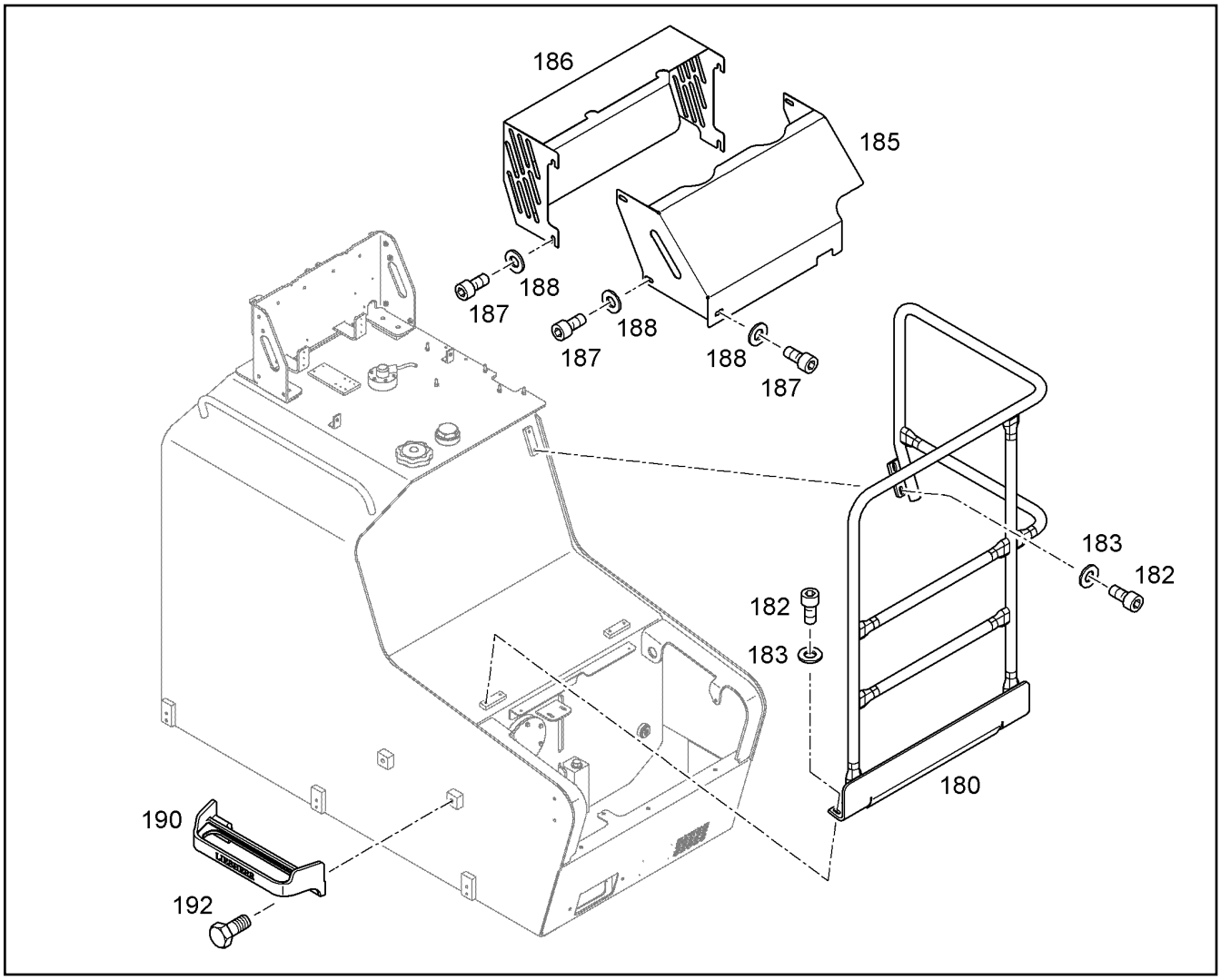

Pos.	Item	Quantity	Description	Descripción	Serie	K
180	10071592	1	RAILING	BARANDILLA		1
182	4043124	6	CYLINDER SCREW ISO 4762 M10X25 10.9	TORNILLO CILINDRICO		
183	4601173	6	WASHER 10,5	ARANDELA		
185	10073043	1	LID	TAPA		1
186	10078627	1	LID	TAPA		1
187	4043124	10	CYLINDER SCREW ISO 4762 M10X25 10.9	TORNILLO CILINDRICO		
188	4601173	10	WASHER 10,5	ARANDELA		
190	9490985	1	STEP	PELDAÑO (LO 3259 B)		1
192	4900850	2	DURLOCK SCREW M16X35 12.9 FLZN 10021	TORNILLO DURLOK		

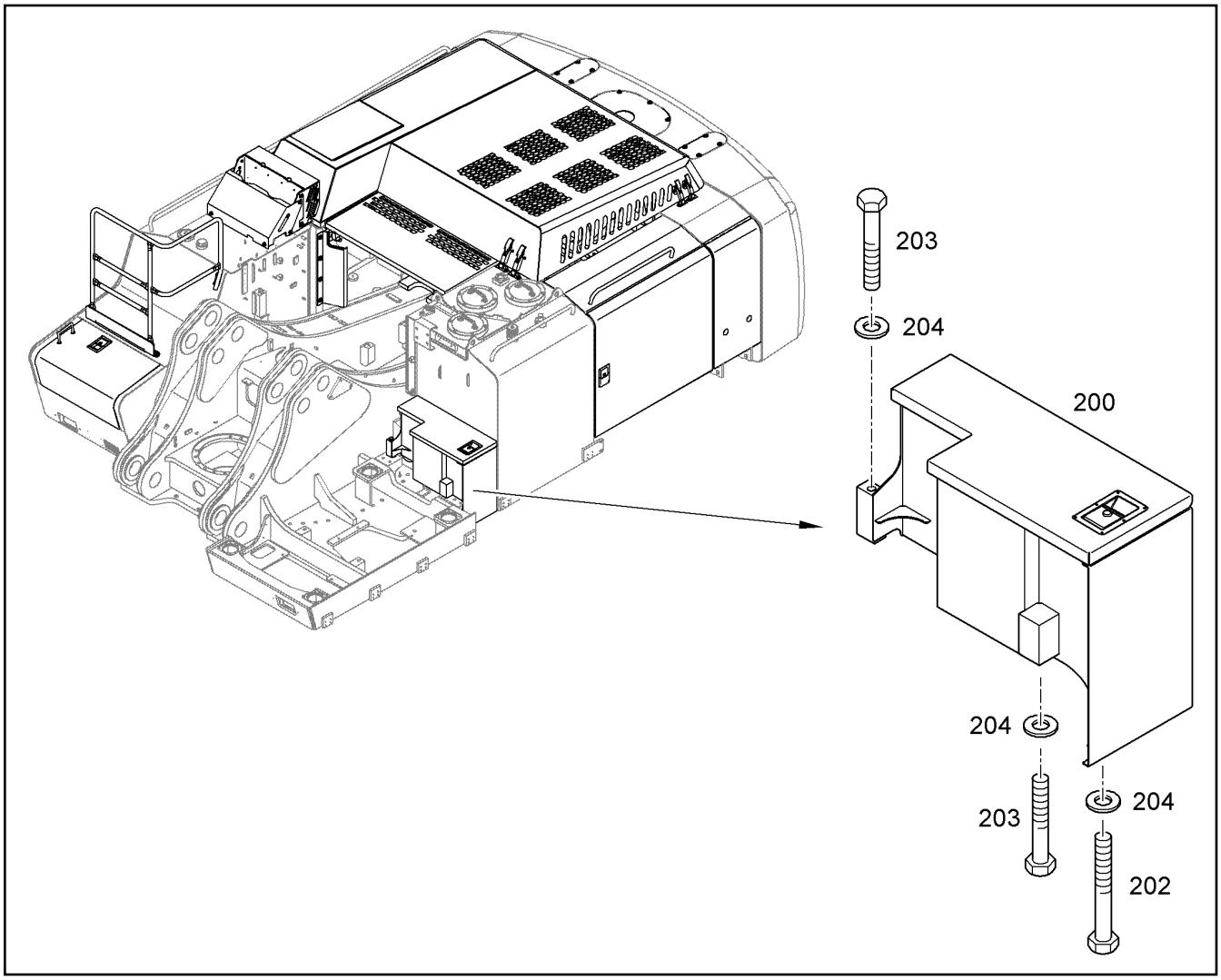

Pos.	Item	Quantity	Description	Descripción	Serie	K
200	10063755	1	BOX CPL ⇨ ❑ 460	CAJA COMPL.		1
202	4902209	1	HEX BOLT ISO 4014 M16X210 10.9 A3C	TORNILLO DE CABEZA HEXAGO		
203	4600947	2	HEX BOLT ISO 4014 M16X180 10.9 DAC	TORNILLO DE CABEZA HEXAGO		
204	9918228	3	WASHER 16,5/28X4	ARANDELA		

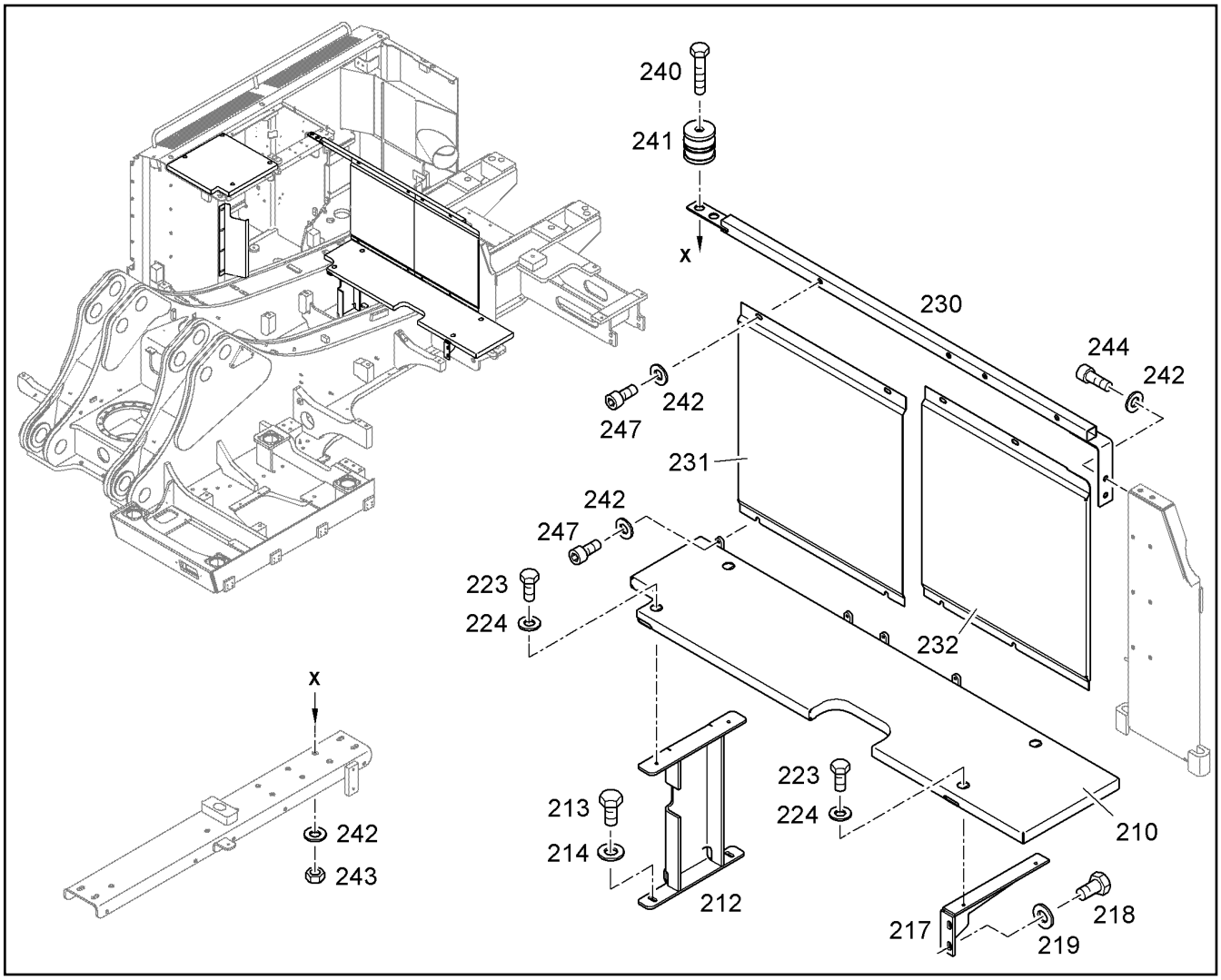

Pos.	Item	Quantity	Description	Descripción	Serie	K
210	10092431	1	FOOTBOARD	CORREDERA	20105-	
212	10062253	1	CONSOLE	CONSOLA		1
213	4600184	2	HEX BOLT ISO 4017 M12X25 10.9 A3C	TORNILLO DE CABEZA HEXAGO		
214	10289804	2	WASHER ISO 7089 12 300HV	ARANDELA		
217	10067961	1	HOLDER	FIJADOR		1
218	4600184	2	HEX BOLT ISO 4017 M12X25 10.9 A3C	TORNILLO DE CABEZA HEXAGO		
219	10289804	2	WASHER ISO 7089 12 300HV	ARANDELA		
223	4001696	4	HEX BOLT ISO 4017 M10X20 10.9 A3C	TORNILLO DE CABEZA HEXAGO		
224	4900531	4	WASHER ISO 7093-1 10 200HV	ARANDELA		
230	10092471	1	HOLDER	FIJADOR	20105-	
231	10092371	1	PLATE	CHAPA	20105-	1
232	10092451	1	PLATE	CHAPA	20105-	1
240	4002117	2	HEX BOLT ISO 4014 M10X65 10.9 A3C	TORNILLO DE CABEZA HEXAGO		
241	10015159	2	RUBBER BEARING	SILENTBLOC		
242	4601173	12	WASHER 10,5	ARANDELA		
243	4600579	2	HEX NUT ISO 7040 M 10 -10 A3C	TUERCA HEXAGONAL		
244	4043124	2	CYLINDER SCREW ISO 4762 M10X25 10.9	TORNILLO CILINDRICO		
247	4043122	8	CYLINDER SCREW ISO 4762 M10X20 10.9	TORNILLO CILINDRICO		

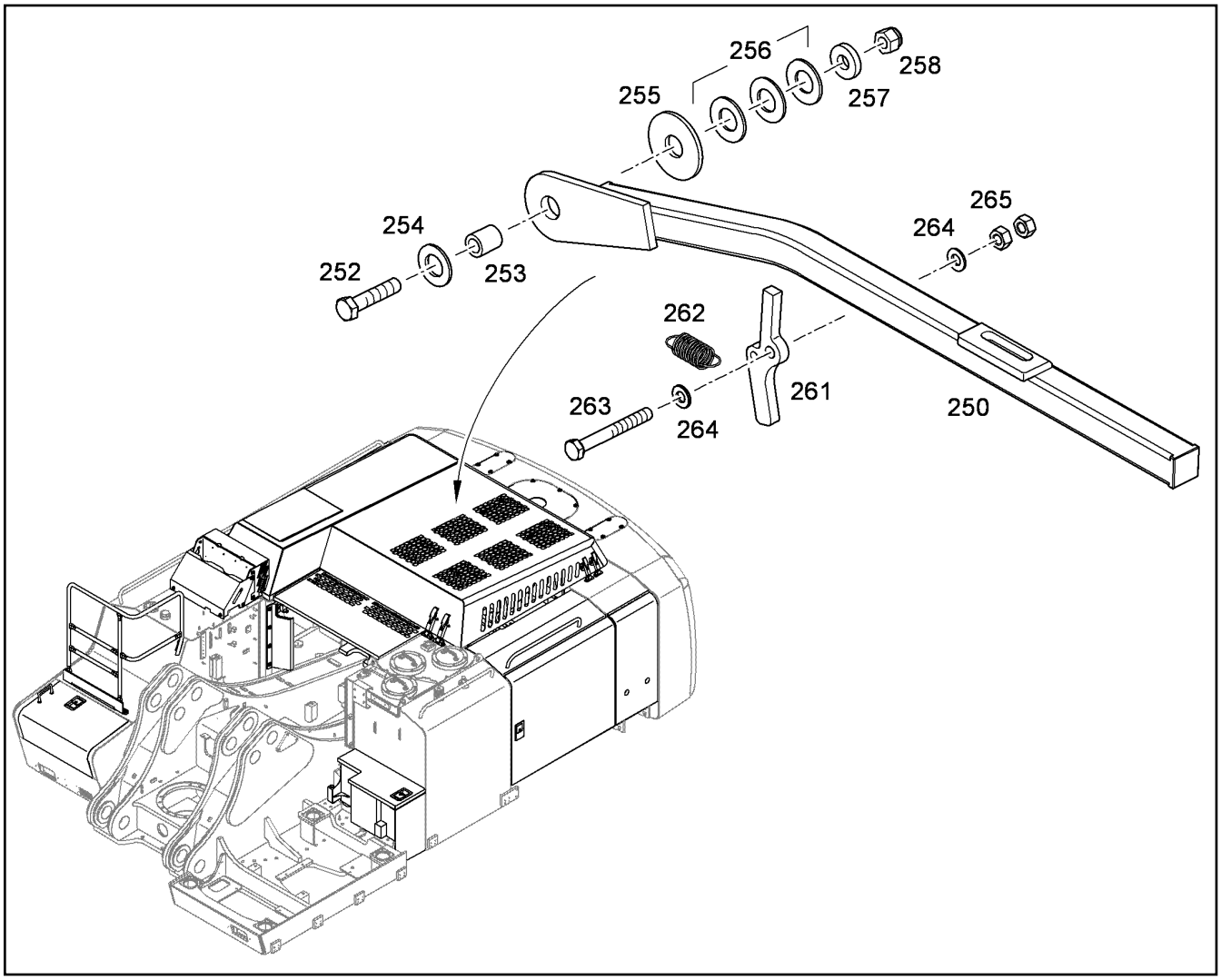

Pos.	Item	Quantity	Description	Descripción	Serie	K
250	10055306	1	GUIDING RAIL ⇨ ❑ 449	CARRIL DE GUIA		1
252	4902260	1	HEX BOLT ISO 4017 M12X55 10.9 A3C	TORNILLO DE CABEZA HEXAGO		
253	9836528	1	INTERMEDIATE PIECE	PIEZA INTERMEDIA		1
254	10289808	1	WASHER ISO 7089 20 300HV	ARANDELA		
255	4600328	1	WASHER ISO 7093 20 -200HV ST DAC	ARANDELA		
256	4002104	3	DISC SPRING	RESORTE DE DISCO		
257	10006370	1	WASHER DIN 7349 13	ARANDELA		
258	4000619	1	HEX NUT M12	TUERCA HEXAGONAL		
261	9836526	1	LOCKING BAR	PESTILLO		1
262	7615768	1	TENSION SPRING	MUELLE TRACCION		
263	4002172	1	HEX BOLT ISO 4014 M10X85 10.9 A3C	TORNILLO DE CABEZA HEXAGO		
264	10289795	2	WASHER ISO 7089 10 300HV	ARANDELA		
265	4000383	2	HEX NUT ISO 4032 M 10 -10 A3C	TUERCA HEXAGONAL		

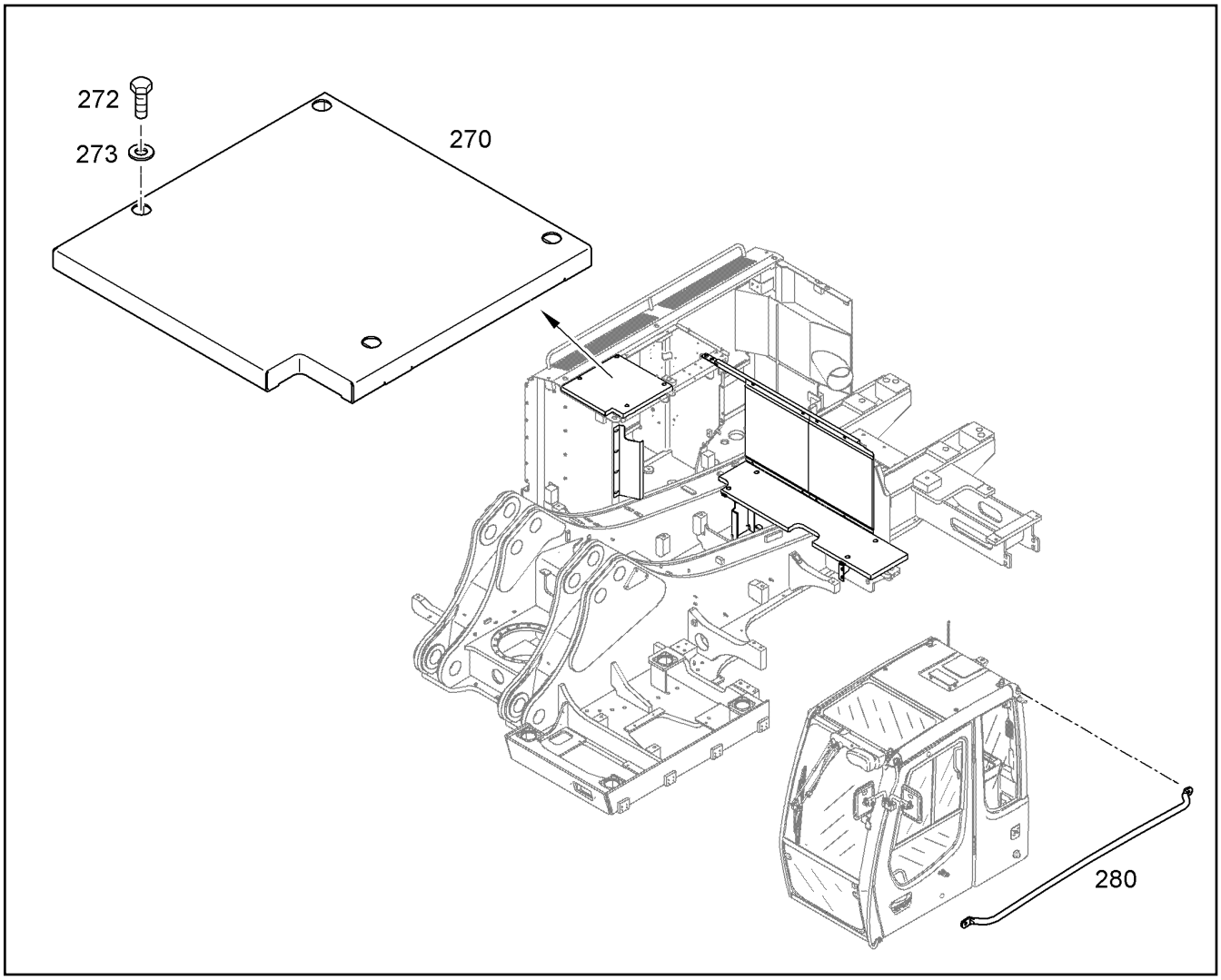

Pos.	Item	Quantity	Description	Descripción	Serie	K
270	10058623	1	LID	TAPA		
272	4600184	4	HEX BOLT ISO 4017 M12X25 10.9 A3C	TORNILLO DE CABEZA HEXAGO		
273	10289804	4	WASHER ISO 7089 12 300HV	ARANDELA		
280	10016620	1	HANDLE	TIRADOR DE MANO		

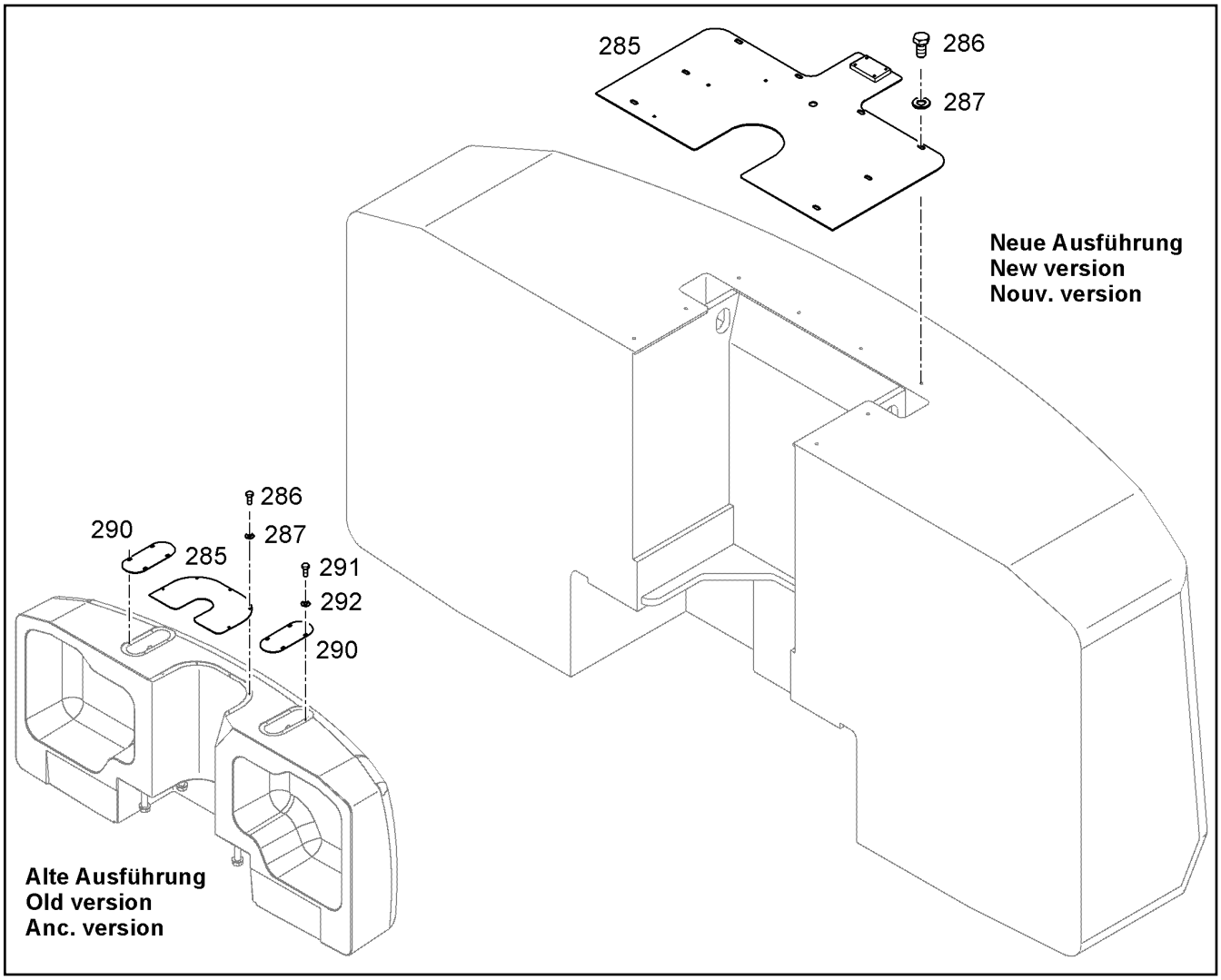

Pos.	Item	Quantity	Description	Descripción	Serie	K
285	10378152	1	LID	TAPA	28022-	
286	4001696	8	HEX BOLT ISO 4017 M10X20 10.9 A3C	TORNILLO DE CABEZA HEXAGO	28022-	
287	10289795	8	WASHER ISO 7089 10 300HV	ARANDELA	28022-	

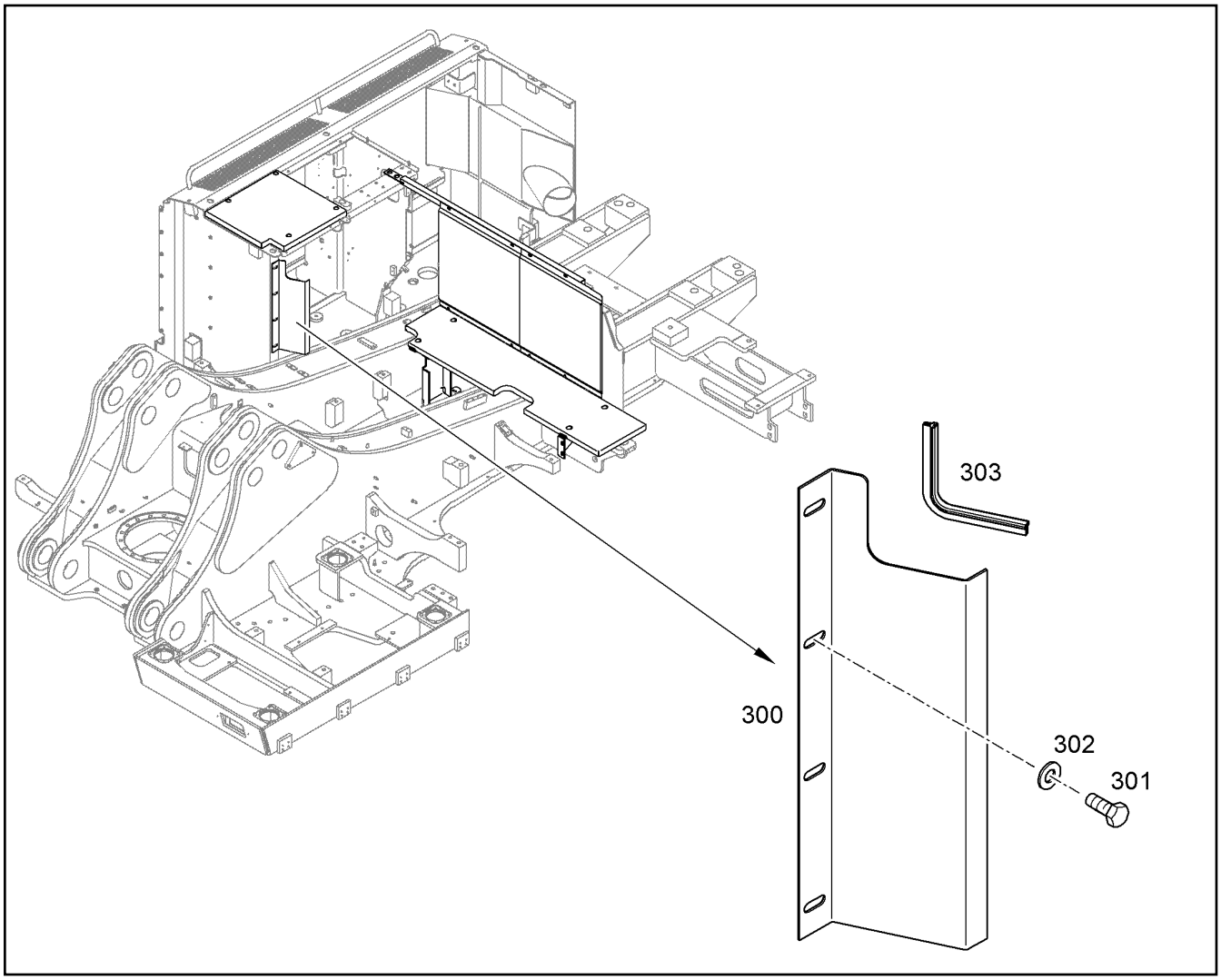

Pos.	Item	Quantity	Description	Descripción	Serie	K
300	10076829	1	DEFLECTOR	CHAPA DE GUIA		1
301	4600184	4	HEX BOLT ISO 4017 M12X25 10.9 A3C	TORNILLO DE CABEZA HEXAGO		
302	4635283	4	WASHER DIN 6340 13 ST A3C	ARANDELA		
303	7360171	0.27m	CORNER PROTECT.PROFILE	PERFIL OBTURACIÓN CANTON		

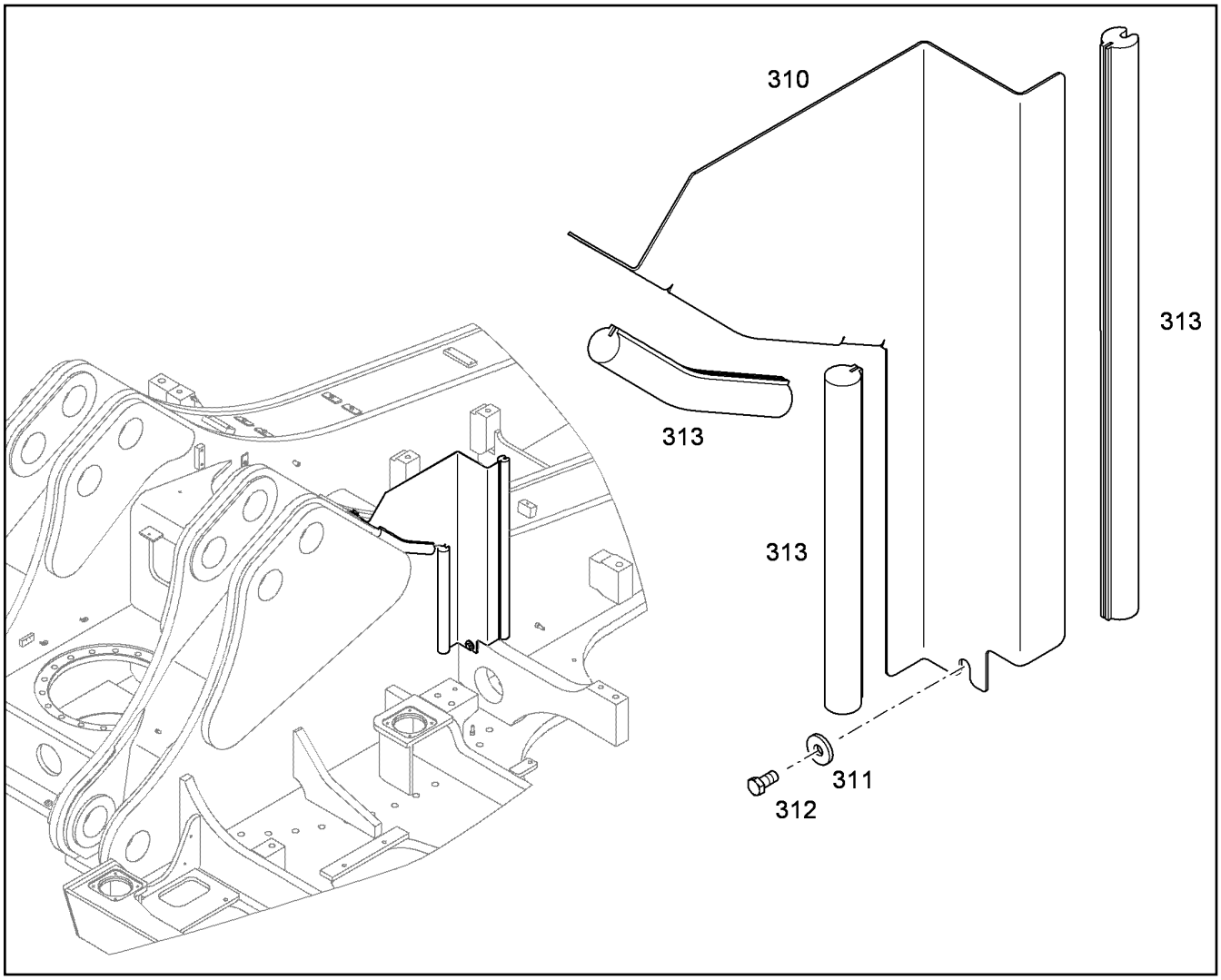

Pos.	Item	Quantity	Description	Descripción	Serie	K
310	10369606	1	AIR DEFLECTING SHEET	CHAPA CONDUCTO AIRE		1
311	4635283	3	WASHER DIN 6340 13 ST A3C	ARANDELA		
312	4600184	3	HEX BOLT ISO 4017 M12X25 10.9 A3C	TORNILLO DE CABEZA HEXAGO		
313	7014524	2	CLAMPING PROFILE	PERFIL APRIETE		

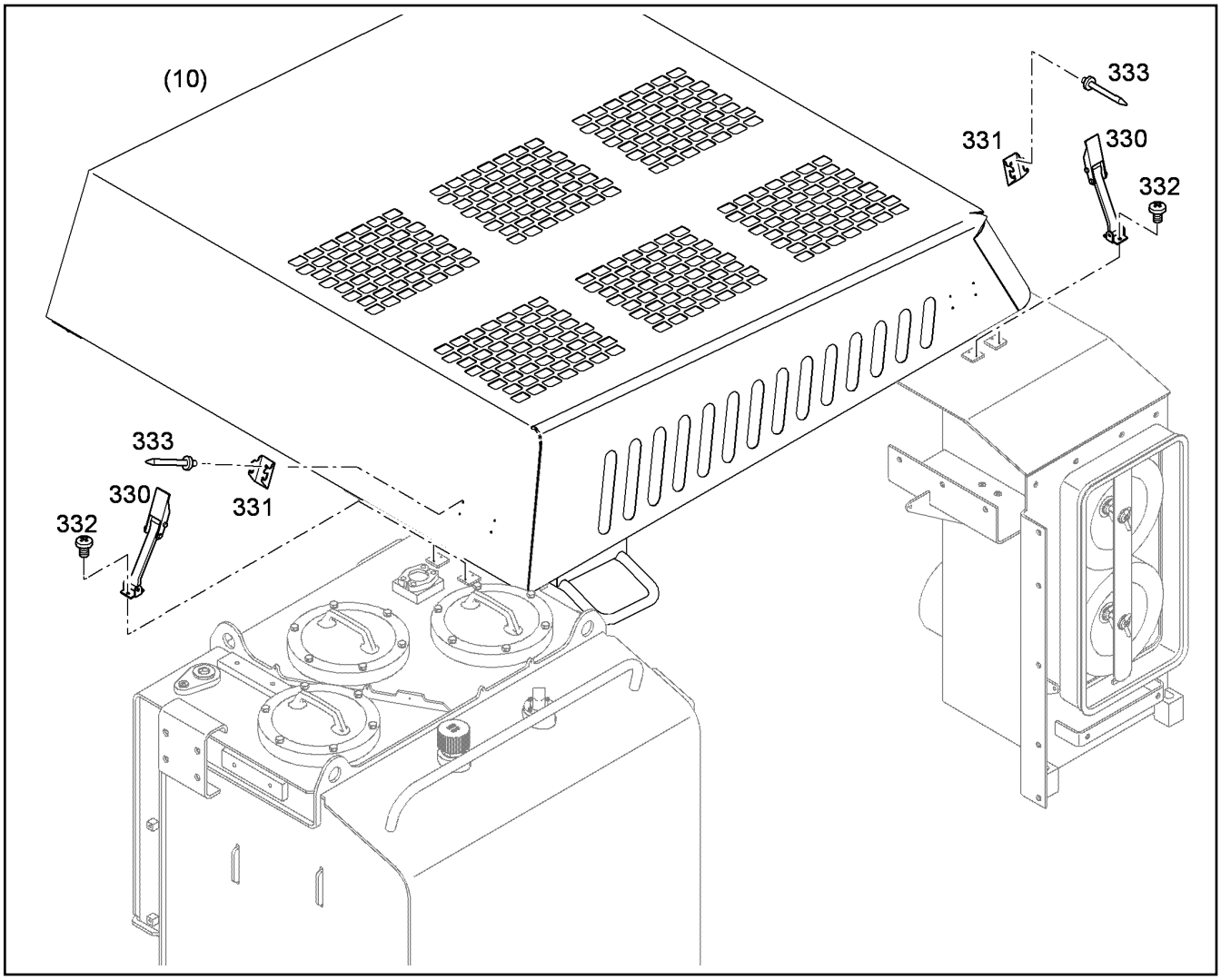

Pos.	Item	Quantity	Description	Descripción	Serie	K
330	7615635	4	TENSION LEVER	PALANCA TENSORA		
331	7615636	4	HOLDER	FIJADOR		
332	4601302	8	PAN-HEAD SCREW ISO 7045 M5X8 4.8 H A2	TORNILLO ROSCACHAPA		
333	4902277	8	BLIND RIVET DIN 7337 A 5 X 16 ST/ST	REMACHE CIEGO		

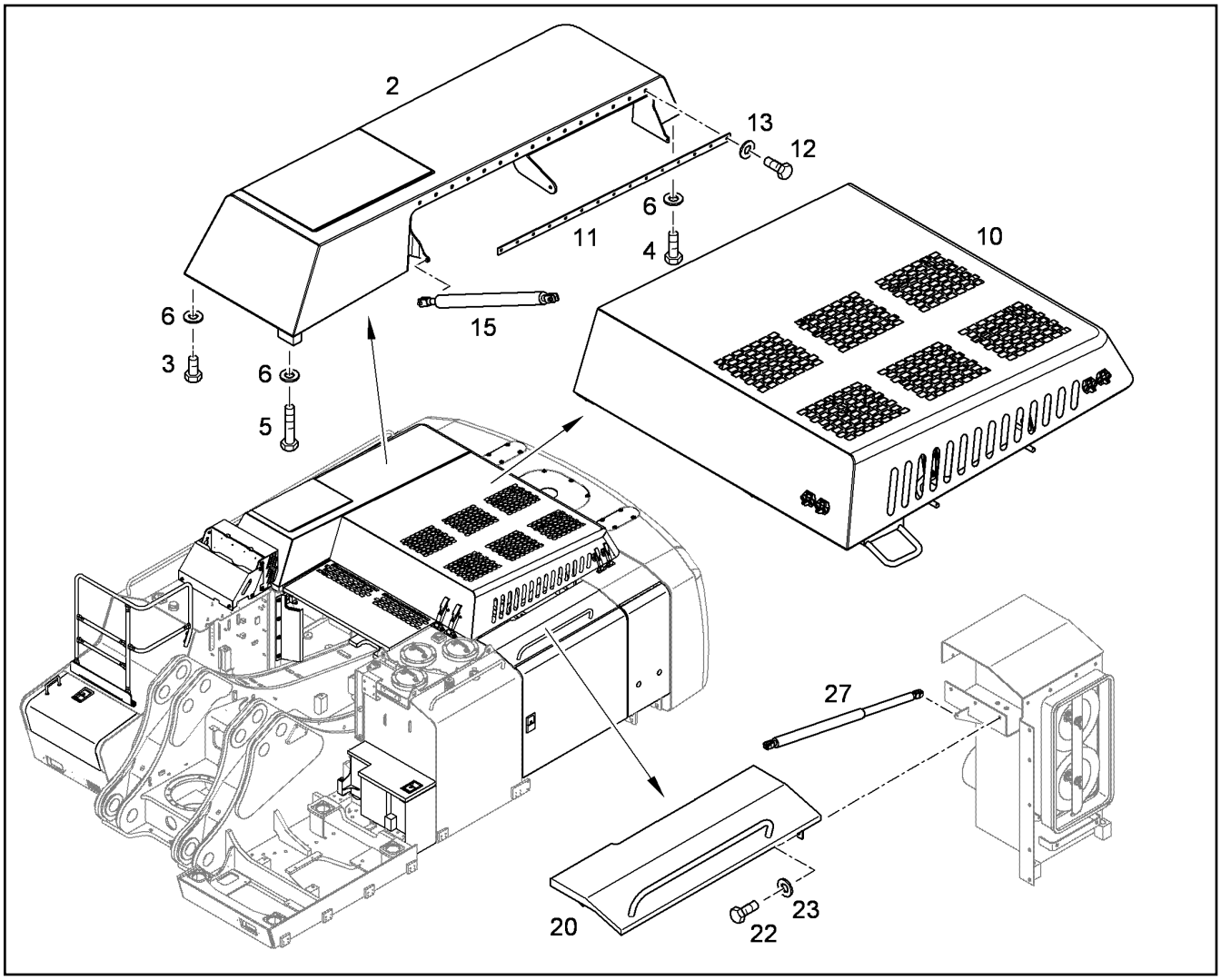

Pos.	Item	Quantity	Description	Descripción	Serie	K
2	10055354	1	COOLER COWL ⇨ ❑ 447	CAPOT		1
3	10001073	3	HEX BOLT ISO 4017 M16X40 10.9 DAC	TORNILLO DE CABEZA HEXAGO		
4	10000362	1	HEX BOLT ISO 4017 M16X50 10.9 DAC	TORNILLO DE CABEZA HEXAGO		
5	4600149	2	HEX BOLT ISO 4014 M16X85 10.9 DAC	TORNILLO DE CABEZA HEXAGO		
6	4600180	6	WASHER DIN 6340 17 DAC	ARANDELA		
10	10055303	1	ENGINE BONNET ⇨ ❑ 443	CAPOT DEL MOTOR		1
11	10055481	1	FLAT STEEL	PLETINA DE ACERO		1
12	4066122	15	HEX BOLT ISO 4017 M12X35 10.9 A3C	TORNILLO DE CABEZA HEXAGO		
13	4635283	15	WASHER DIN 6340 13 ST A3C	ARANDELA		
15	10441154	2	GAS SPRING	MUELLE DE GAS		
20	10055464	1	BONNET LEFT ⇨ ❑ 451	CUBIERTA IZQUIERDA		1
22	4600184	3	HEX BOLT ISO 4017 M12X25 10.9 A3C	TORNILLO DE CABEZA HEXAGO		
23	4635283	3	WASHER DIN 6340 13 ST A3C	ARANDELA		
27	10037214	1	GAS SPRING	MUELLE DE GAS		

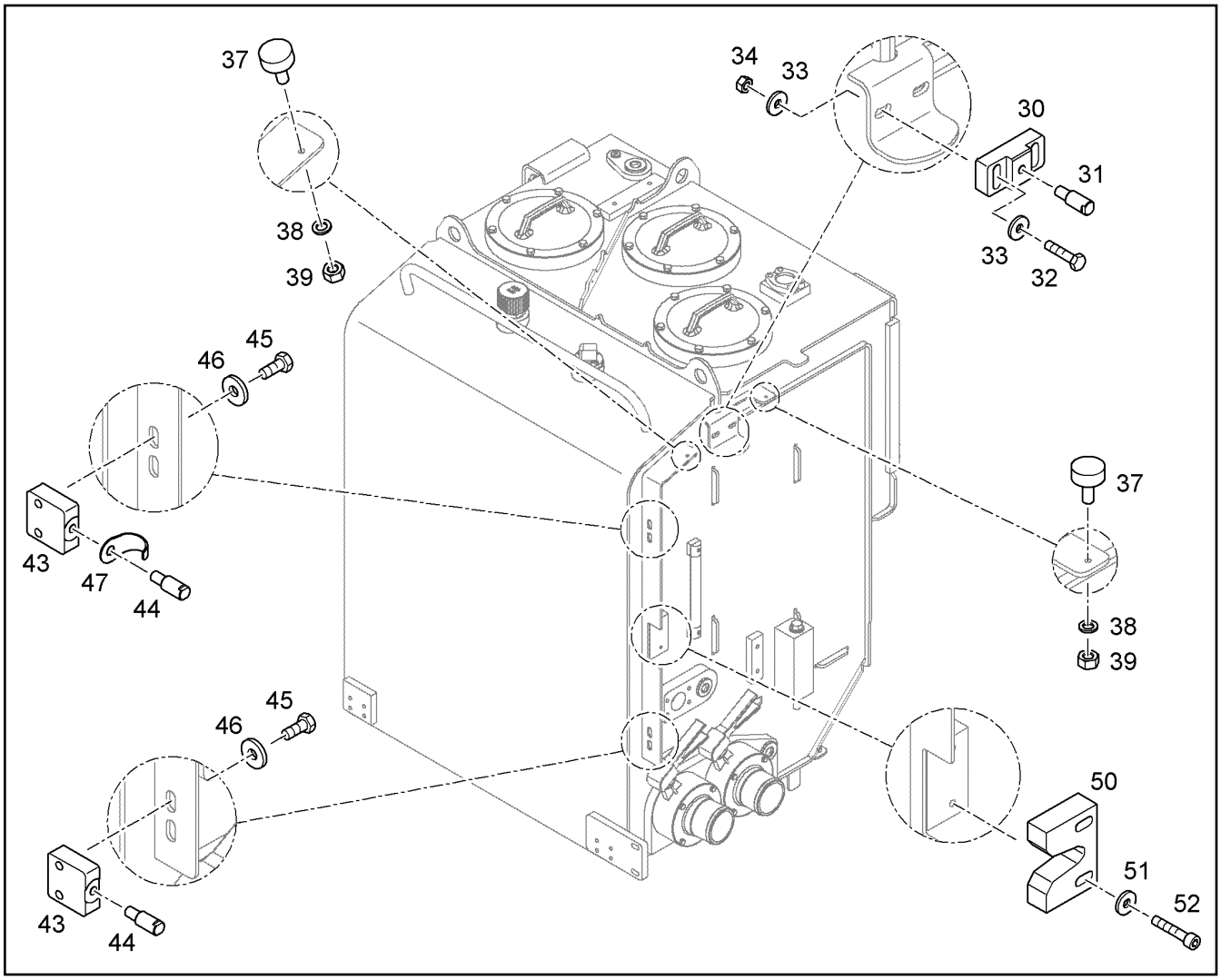

Pos.	Item	Quantity	Description	Descripción	Serie	K
30	9988206	1	BRICK	BLOQUE		1
31	9869072	1	PIN	BULON		1
32	4900981	2	CYLINDER SCREW ISO 4762 M10X45 10.9	TORNILLO CILINDRICO		
33	4601173	4	WASHER 10,5	ARANDELA		
34	4000383	2	HEX NUT ISO 4032 M 10 -10 A3C	TUERCA HEXAGONAL		
37	5004748	2	BUFFER	AMORTIGUADOR GMT		
38	4229911	2	LOCK WASHER	ARANDELA SEGURIDAD		
39	4000379	2	HEX NUT M6	TUERCA HEXAGONAL		
43	9820573	2	BRICK	BLOQUE		1
44	9869072	2	PIN	BULON		1
45	4066124	4	HEX BOLT ISO 4017 M12X30 10.9 A3C	TORNILLO DE CABEZA HEXAGO		
46	4635283	4	WASHER DIN 6340 13 ST A3C	ARANDELA		
47	7415239	1	BRACKET	ESTRIBO DEFENSA		
50	9686594	1	FEEDER PLATE	PLACA DE SUJECION		1
51	4900981	2	CYLINDER SCREW ISO 4762 M10X45 10.9	TORNILLO CILINDRICO		
52	4601173	2	WASHER 10,5	ARANDELA		

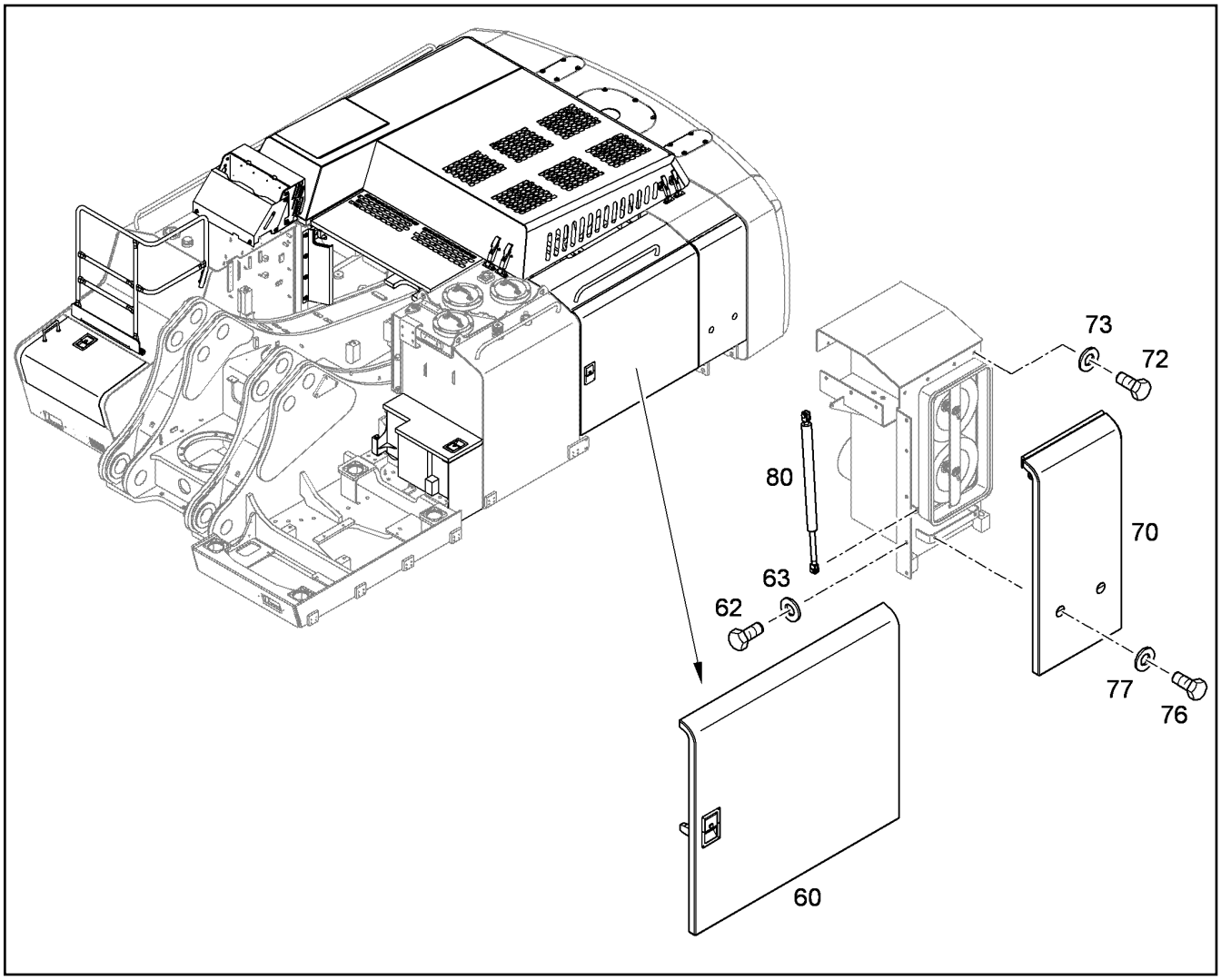

Pos.	Item	Quantity	Description	Descripción	Serie	K
60	10055392	1	SIDE DOOR LEFT ⇨ ❑ 801	PUERTA LATERAL IZDA.		1
62	4066124	5	HEX BOLT ISO 4017 M12X30 10.9 A3C	TORNILLO DE CABEZA HEXAGO		
63	4635283	5	WASHER DIN 6340 13 ST A3C	ARANDELA		
70	10055381	1	DOOR AIR FILTER LEFT ⇨ ❑ 452	PUERTA FILTRO AIRE IZD.		1
72	4066124	4	HEX BOLT ISO 4017 M12X30 10.9 A3C	TORNILLO DE CABEZA HEXAGO		
73	4635283	4	WASHER DIN 6340 13 ST A3C	ARANDELA		
76	4066124	2	HEX BOLT ISO 4017 M12X30 10.9 A3C	TORNILLO DE CABEZA HEXAGO		
77	4635283	2	WASHER DIN 6340 13 ST A3C	ARANDELA		
80	10037209	1	GAS SPRING ⇨ ❑ 463	MUELLE DE GAS		

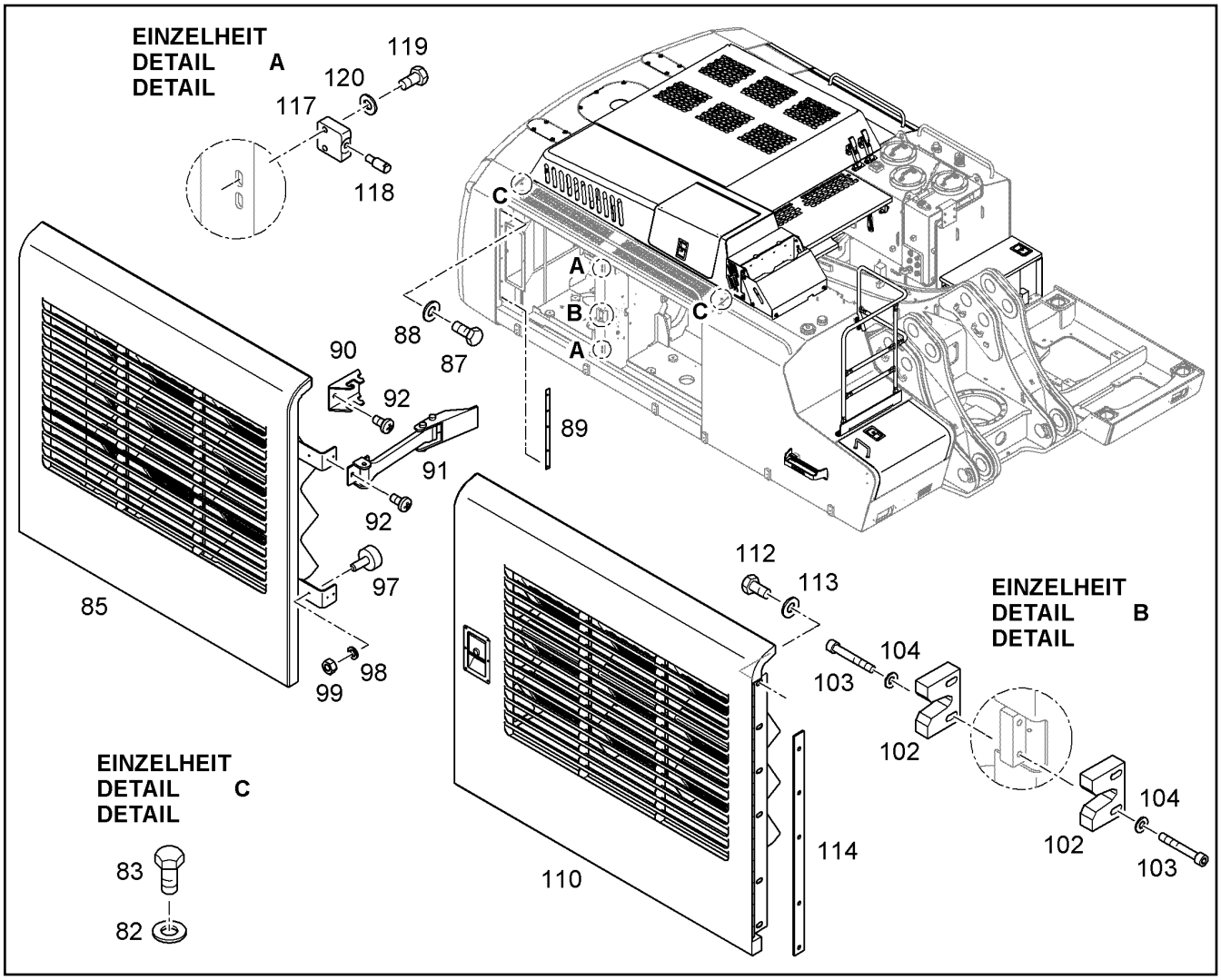

Pos.	Item	Quantity	Description	Descripción	Serie	K
82	9918228	2	WASHER 16,5/28X4	ARANDELA		
83	10001073	2	HEX BOLT ISO 4017 M16X40 10.9 DAC	TORNILLO DE CABEZA HEXAGO		
85	10055433	1	SIDE DOOR BACK RIGHT ⇨ ❑ 453	PUERTA LATERAL POST.DCHA.		1
87	4600184	6	HEX BOLT ISO 4017 M12X25 10.9 A3C	TORNILLO DE CABEZA HEXAGO		
88	4635283	1	WASHER DIN 6340 13 ST A3C	ARANDELA		
89	10498568	1	FLAT STEEL	PLETINA DE ACERO		1
90	7615636	2	HOLDER	FIJADOR		
91	7615635	2	TENSION LEVER	PALANCA TENSORA		
92	4600388	8	PAN-HEAD SCREW ISO 7045 M5X10 4.8 H	TORNILLO ROSCACHAPA		
97	5004748	2	BUFFER	AMORTIGUADOR GMT		
98	4229911	2	LOCK WASHER	ARANDELA SEGURIDAD		
99	4000379	2	HEX NUT M6	TUERCA HEXAGONAL		
102	9686594	2	FEEDER PLATE	PLACA DE SUJECION		1
103	4900981	4	CYLINDER SCREW ISO 4762 M10X45 10.9	TORNILLO CILINDRICO		
104	4601173	4	WASHER 10,5	ARANDELA		
110	10055410	1	SIDE DOOR FRONT RIGHT ⇨ ❑ 456	PUERTA LATERAL ANT.DCHA.		1
112	4600184	6	HEX BOLT ISO 4017 M12X25 10.9 A3C	TORNILLO DE CABEZA HEXAGO		
113	4635283	1	WASHER DIN 6340 13 ST A3C	ARANDELA		
114	10498568	1	FLAT STEEL	PLETINA DE ACERO		1
117	9820573	2	BRICK	BLOQUE		1
118	9869072	2	PIN	BULON		1
119	4066124	4	HEX BOLT ISO 4017 M12X30 10.9 A3C	TORNILLO DE CABEZA HEXAGO		
120	4635283	4	WASHER DIN 6340 13 ST A3C	ARANDELA		

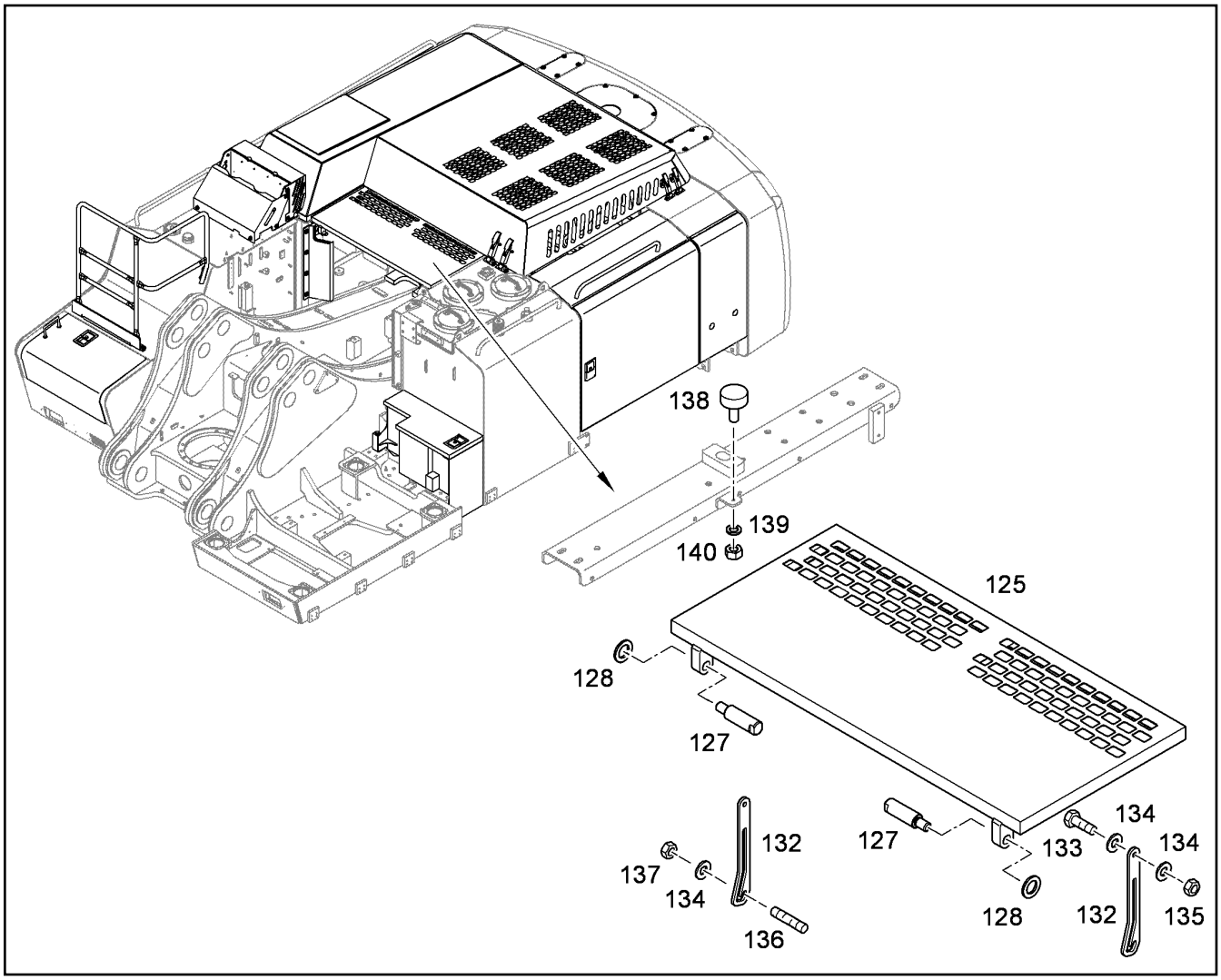

Pos.	Item	Quantity	Description	Descripción	Serie	K
125	10055453	1	COVER MIDDLE ⇨ ❑ 455	TAPA CENTRO		1
127	9480332	2	SCREW	TORNILLO		
128	4600146	2	WASHER DIN 6916 25 DAC	ARANDELA		
132	9827870	1	RAIL	CARRIL		1
133	4600706	1	HEX BOLT ISO 4017 M12X45 10.9 A3C	TORNILLO DE CABEZA HEXAGO		
134	10289804	3	WASHER ISO 7089 12 300HV	ARANDELA		
135	4900546	1	HEX NUT ISO 4032 M 12 -10 A3C	TUERCA HEXAGONAL		
136	4001704	1	DOUBLE-ENDED STUD DIN 939 M 12 X 35 1	TORNILLO ESPARRAGO		
137	4000619	1	HEX NUT M12	TUERCA HEXAGONAL		
138	5004748	2	BUFFER	AMORTIGUADOR GMT		
139	4229911	2	LOCK WASHER	ARANDELA SEGURIDAD		
140	4000379	2	HEX NUT M6	TUERCA HEXAGONAL		

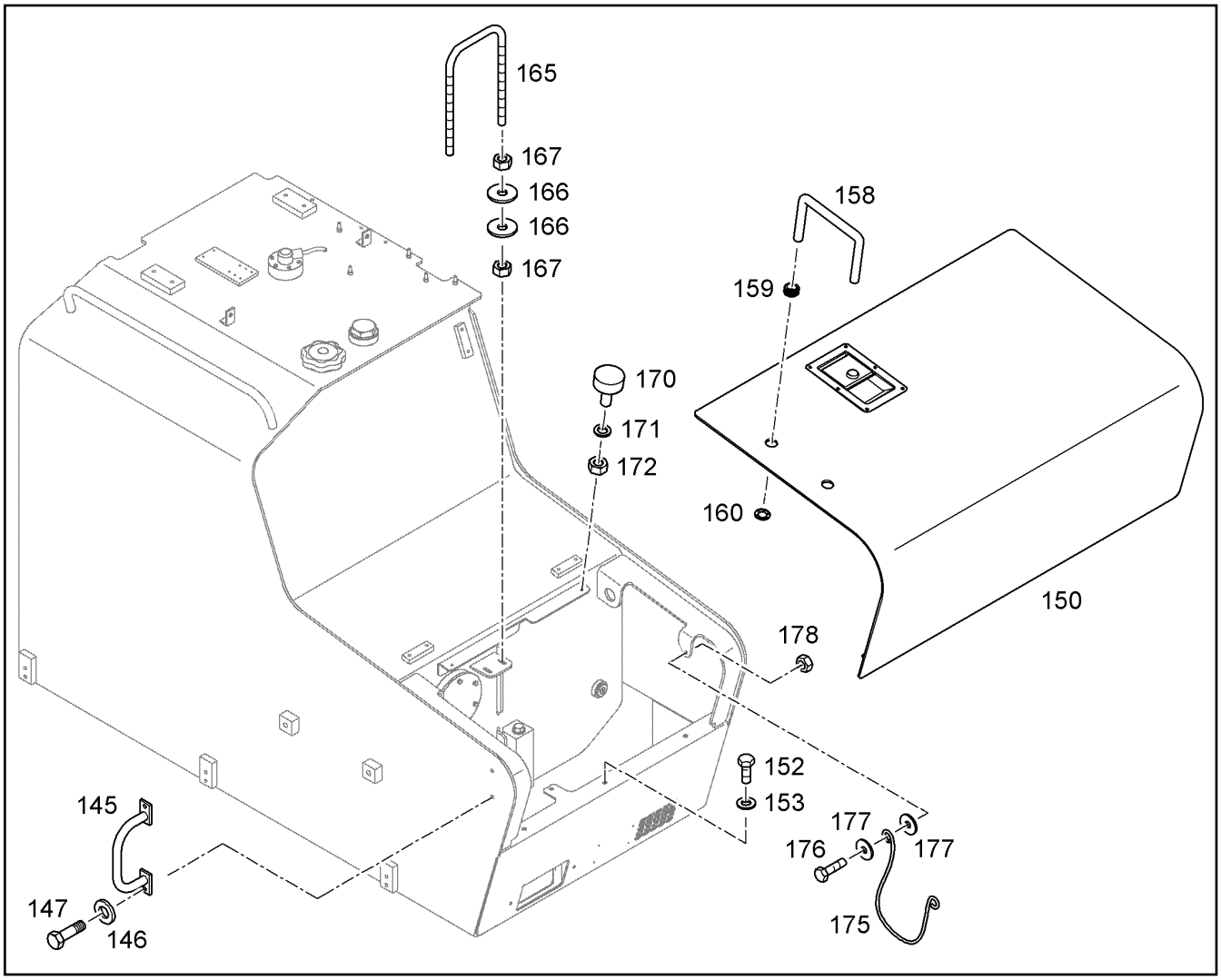

Pos.	Item	Quantity	Description	Descripción	Serie	K
145	9699421	1	GRIP	TIRADOR		
146	10289795	2	WASHER ISO 7089 10 300HV	ARANDELA		
147	4001246	2	HEX BOLT ISO 4017 M10X35 10.9 A3C	TORNILLO DE CABEZA HEXAGO		
150	10063553	1	LID ⇨ ❑ 462	TAPA		1
152	4066093	3	HEX BOLT ISO 4017 M10X25 10.9 A3C	TORNILLO DE CABEZA HEXAGO		
153	4601173	3	WASHER 10,5	ARANDELA		
158	9496454	1	HANDLE	TIRADOR DE MANO		
159	5608314	2	CABLE SHEATHING	REVESTIMIENTO DE CABLE		
160	7363744	2	TOOTH LOCK WASHER	ARANDELA DENTADA		
165	9201724	1	BRACKET	ESTRIBO		
166	4000779	4	WASHER DIN 9021 8,4 ST A3C	ARANDELA		
167	4000381	4	HEX NUT M8	TUERCA HEXAGONAL		
170	5004748	2	BUFFER	AMORTIGUADOR GMT		
171	4229911	2	LOCK WASHER	ARANDELA SEGURIDAD		
172	4000379	2	HEX NUT M6	TUERCA HEXAGONAL		
175	10326658	1	WIRE ROPE	CABLE METALICO		
176	4635318	2	CYLINDER SCREW ISO 4762 M8X35 10.9 A2	TORNILLO CILINDRICO		
177	4900531	4	WASHER ISO 7093-1 10 200HV	ARANDELA		
178	4000381	2	HEX NUT M8	TUERCA HEXAGONAL		

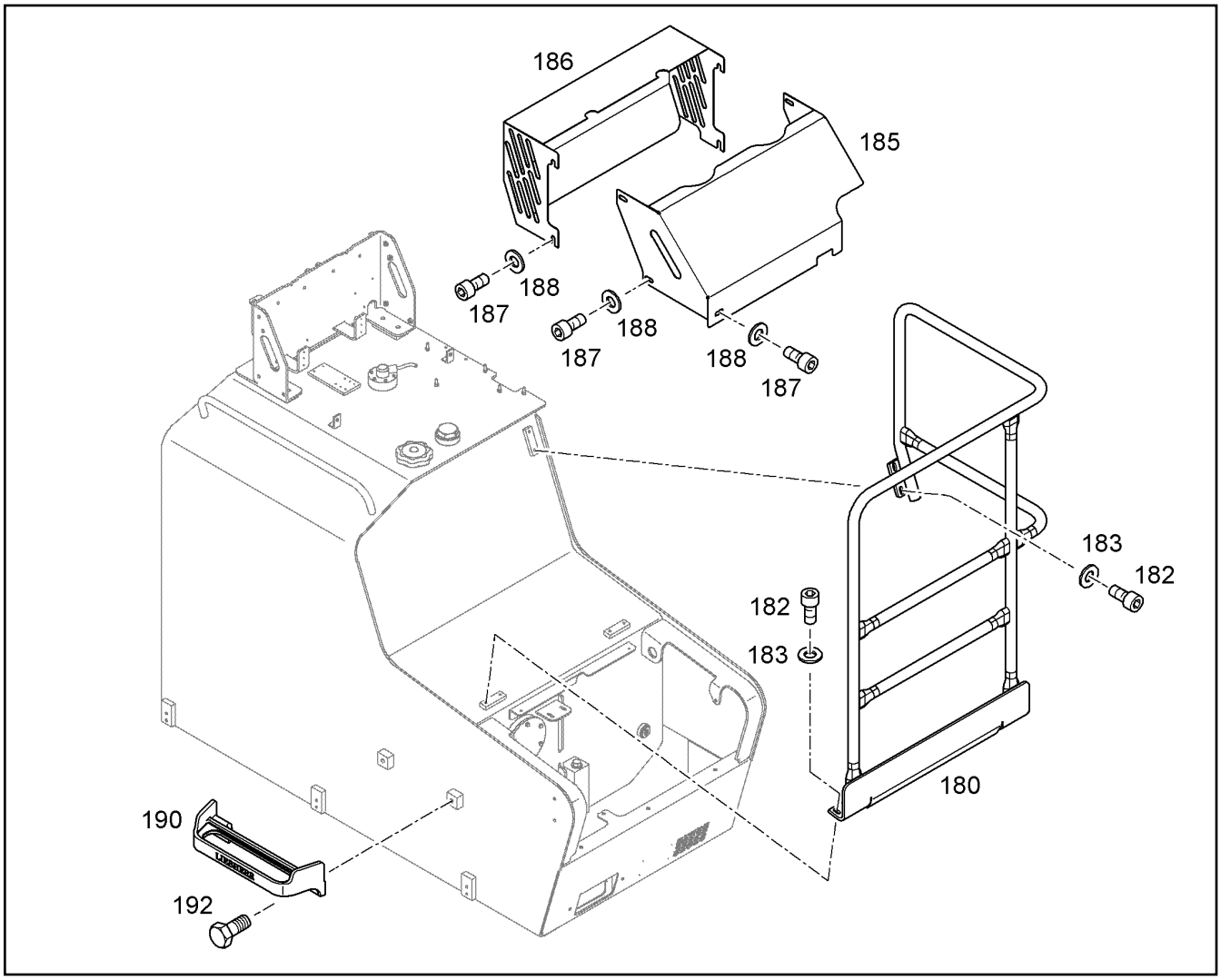

Pos.	Item	Quantity	Description	Descripción	Serie	K
180	10071592	1	RAILING	BARANDILLA		1
182	4043124	6	CYLINDER SCREW ISO 4762 M10X25 10.9	TORNILLO CILINDRICO		
183	4601173	6	WASHER 10,5	ARANDELA		
185	10073043	1	LID	TAPA		1
186	10078627	1	LID	TAPA		1
187	4043124	10	CYLINDER SCREW ISO 4762 M10X25 10.9	TORNILLO CILINDRICO		
188	4601173	10	WASHER 10,5	ARANDELA		
190	9490985	1	STEP	PELDAÑO (LO 3259 B)		1
192	4900850	2	DURLOCK SCREW M16X35 12.9 FLZN 10021	TORNILLO DURLOK		

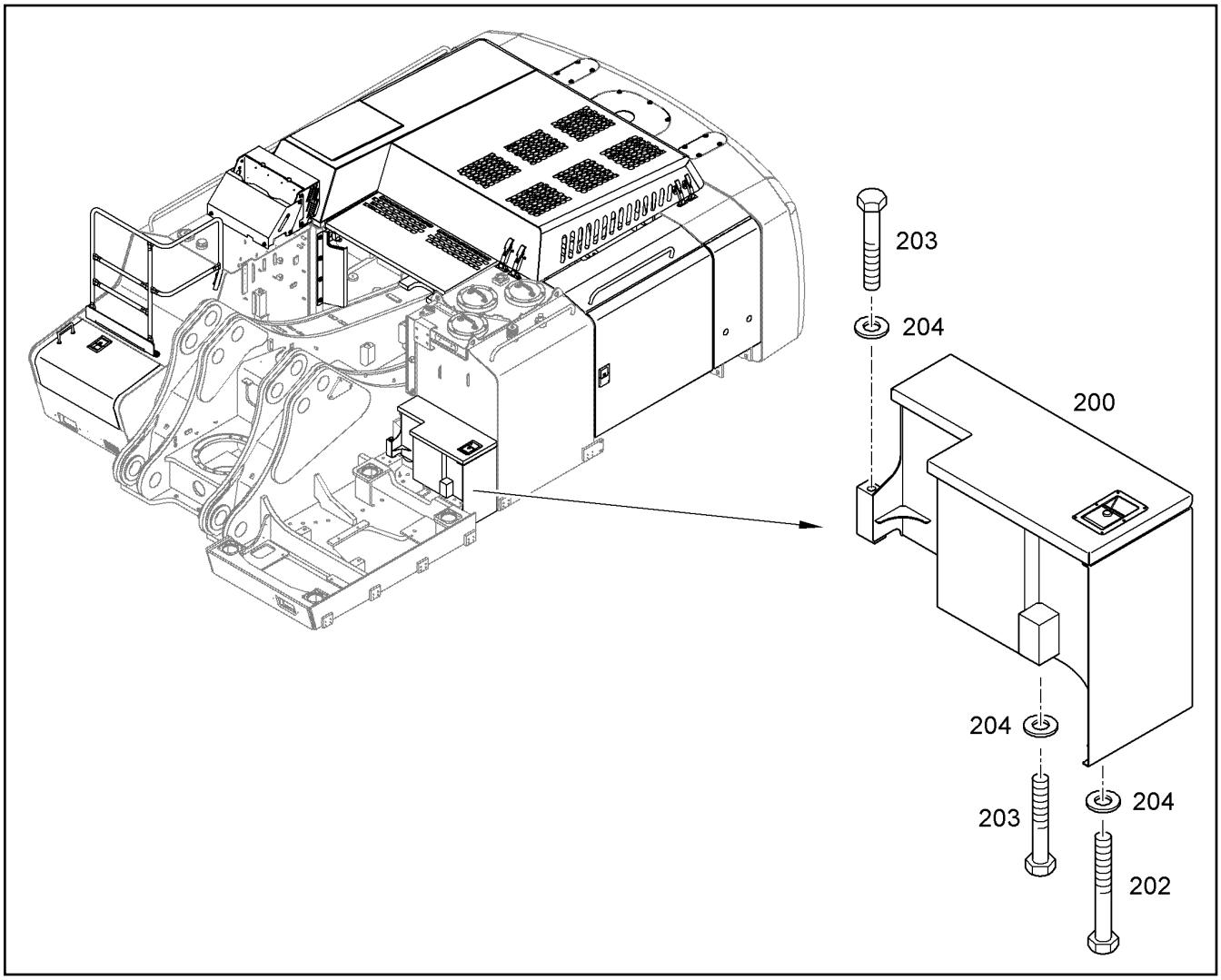

Pos.	Item	Quantity	Description	Descripción	Serie	K
200	10063755	1	BOX CPL ⇨ ❑ 460	CAJA COMPL.		1
202	4902209	1	HEX BOLT ISO 4014 M16X210 10.9 A3C	TORNILLO DE CABEZA HEXAGO		
203	4600947	2	HEX BOLT ISO 4014 M16X180 10.9 DAC	TORNILLO DE CABEZA HEXAGO		
204	9918228	3	WASHER 16,5/28X4	ARANDELA		

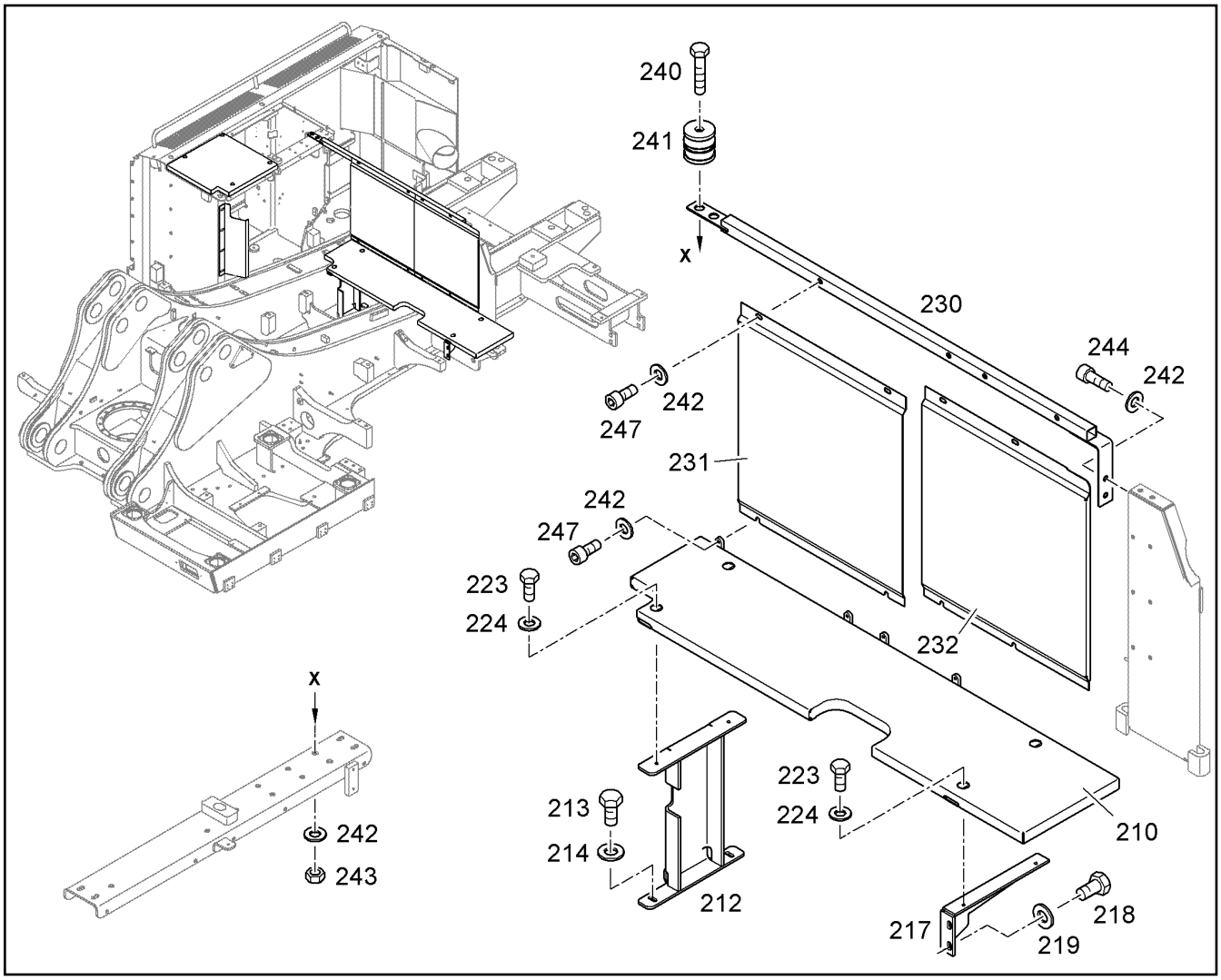

Pos.	Item	Quantity	Description	Descripción	Serie	K
210	10092431	1	FOOTBOARD	CORREDERA		
212	10062253	1	CONSOLE	CONSOLA		1
213	4600184	2	HEX BOLT ISO 4017 M12X25 10.9 A3C	TORNILLO DE CABEZA HEXAGO		
214	10289804	2	WASHER ISO 7089 12 300HV	ARANDELA		
217	10067961	1	HOLDER	FIJADOR		1
218	4600184	2	HEX BOLT ISO 4017 M12X25 10.9 A3C	TORNILLO DE CABEZA HEXAGO		
219	10289804	2	WASHER ISO 7089 12 300HV	ARANDELA		
223	4001696	4	HEX BOLT ISO 4017 M10X20 10.9 A3C	TORNILLO DE CABEZA HEXAGO		
224	4900531	4	WASHER ISO 7093-1 10 200HV	ARANDELA		
230	10092471	1	HOLDER	FIJADOR		
231	10092371	1	PLATE	CHAPA		1
232	10092451	1	PLATE	CHAPA		1
240	4002117	2	HEX BOLT ISO 4014 M10X65 10.9 A3C	TORNILLO DE CABEZA HEXAGO		
241	10015159	2	RUBBER BEARING	SILENTBLOC		
242	4601173	12	WASHER 10,5	ARANDELA		
243	4600579	2	HEX NUT ISO 7040 M 10 -10 A3C	TUERCA HEXAGONAL		
244	4043124	2	CYLINDER SCREW ISO 4762 M10X25 10.9	TORNILLO CILINDRICO		
247	4043122	8	CYLINDER SCREW ISO 4762 M10X20 10.9	TORNILLO CILINDRICO		

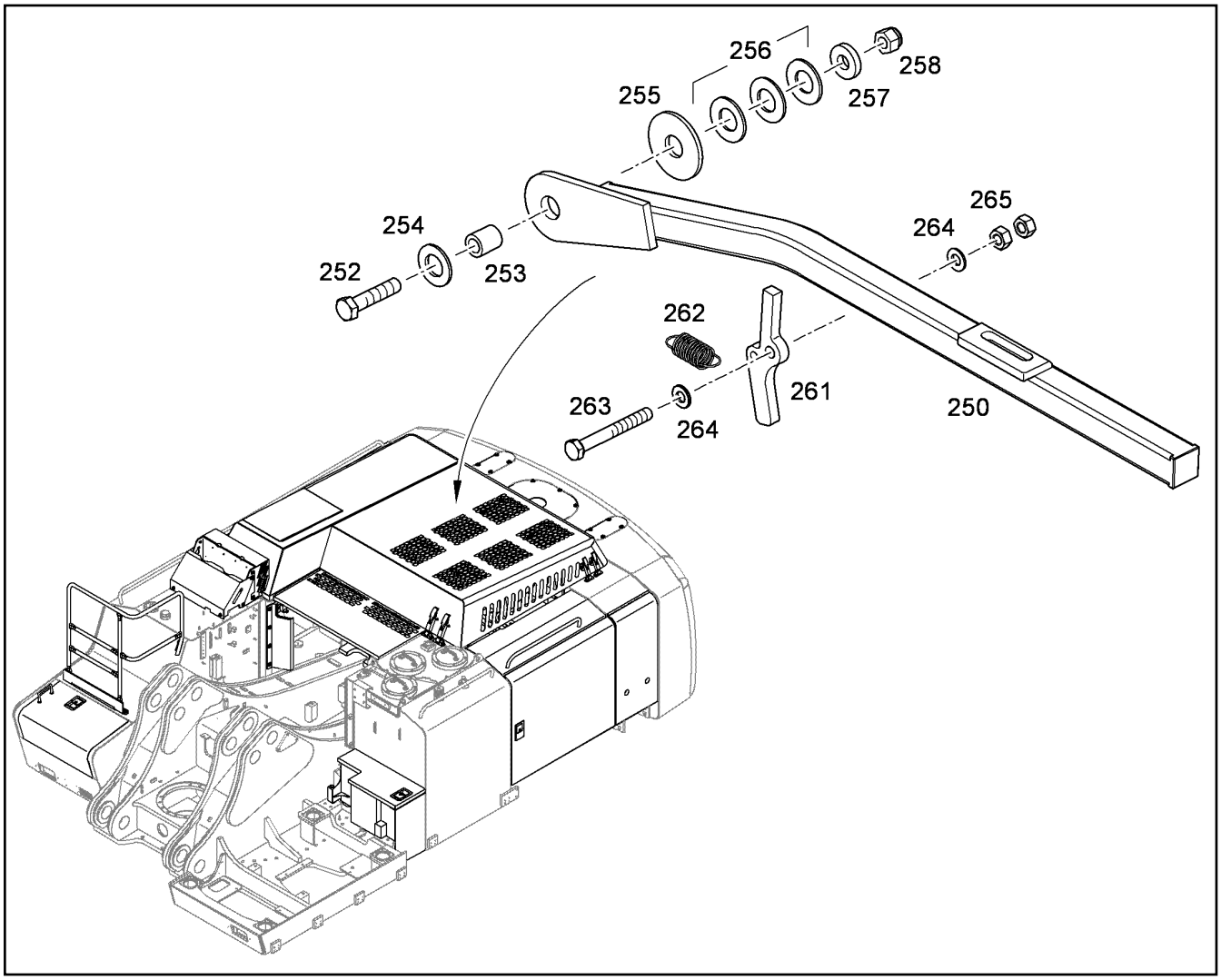

Pos.	Item	Quantity	Description	Descripción	Serie	K
250	10055306	1	GUIDING RAIL ⇨ ❑ 449	CARRIL DE GUIA		1
252	4902260	1	HEX BOLT ISO 4017 M12X55 10.9 A3C	TORNILLO DE CABEZA HEXAGO		
253	9836528	1	INTERMEDIATE PIECE	PIEZA INTERMEDIA		1
254	9918229	1	WASHER 20,5/34X5	ARANDELA		
255	4600328	1	WASHER ISO 7093 20 -200HV ST DAC	ARANDELA		
256	4002104	3	DISC SPRING	RESORTE DE DISCO		
257	10006370	1	WASHER DIN 7349 13	ARANDELA		
258	4000619	1	HEX NUT M12	TUERCA HEXAGONAL		
261	9836526	1	LOCKING BAR	PESTILLO		1
262	7615768	1	TENSION SPRING	MUELLE TRACCION		
263	4980670	1	CYLINDER SCREW ISO 4762 M10X85 10.9	TORNILLO CILINDRICO		
264	10289795	2	WASHER ISO 7089 10 300HV	ARANDELA		
265	4000383	2	HEX NUT ISO 4032 M 10 -10 A3C	TUERCA HEXAGONAL		

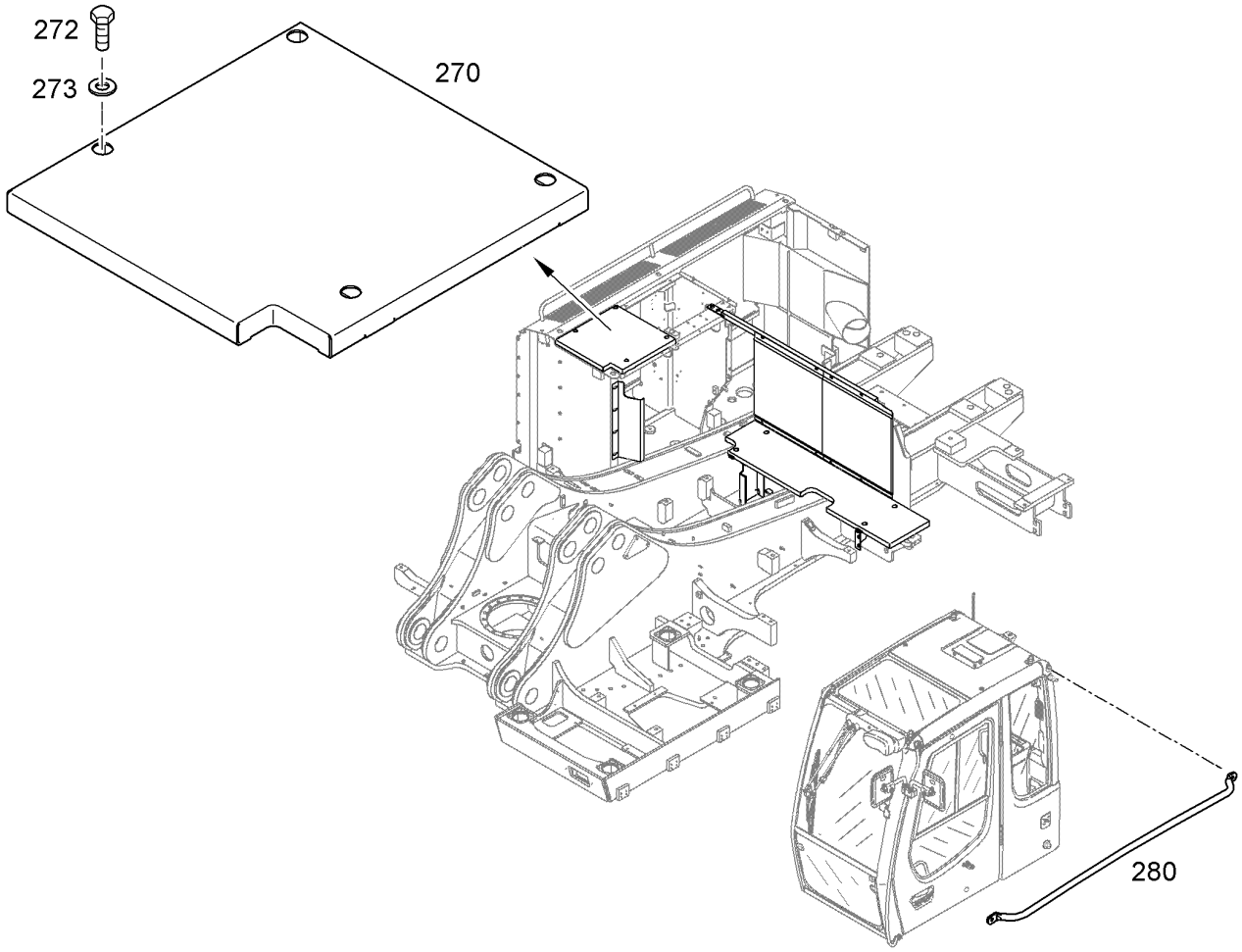

Pos.	Item	Quantity	Description	Descripción	Serie	K
270	10058623	1	LID	TAPA		
272	4600184	4	HEX BOLT ISO 4017 M12X25 10.9 A3C	TORNILLO DE CABEZA HEXAGO		
273	10289804	4	WASHER ISO 7089 12 300HV	ARANDELA		
280	10016620	1	HANDLE	TIRADOR DE MANO		

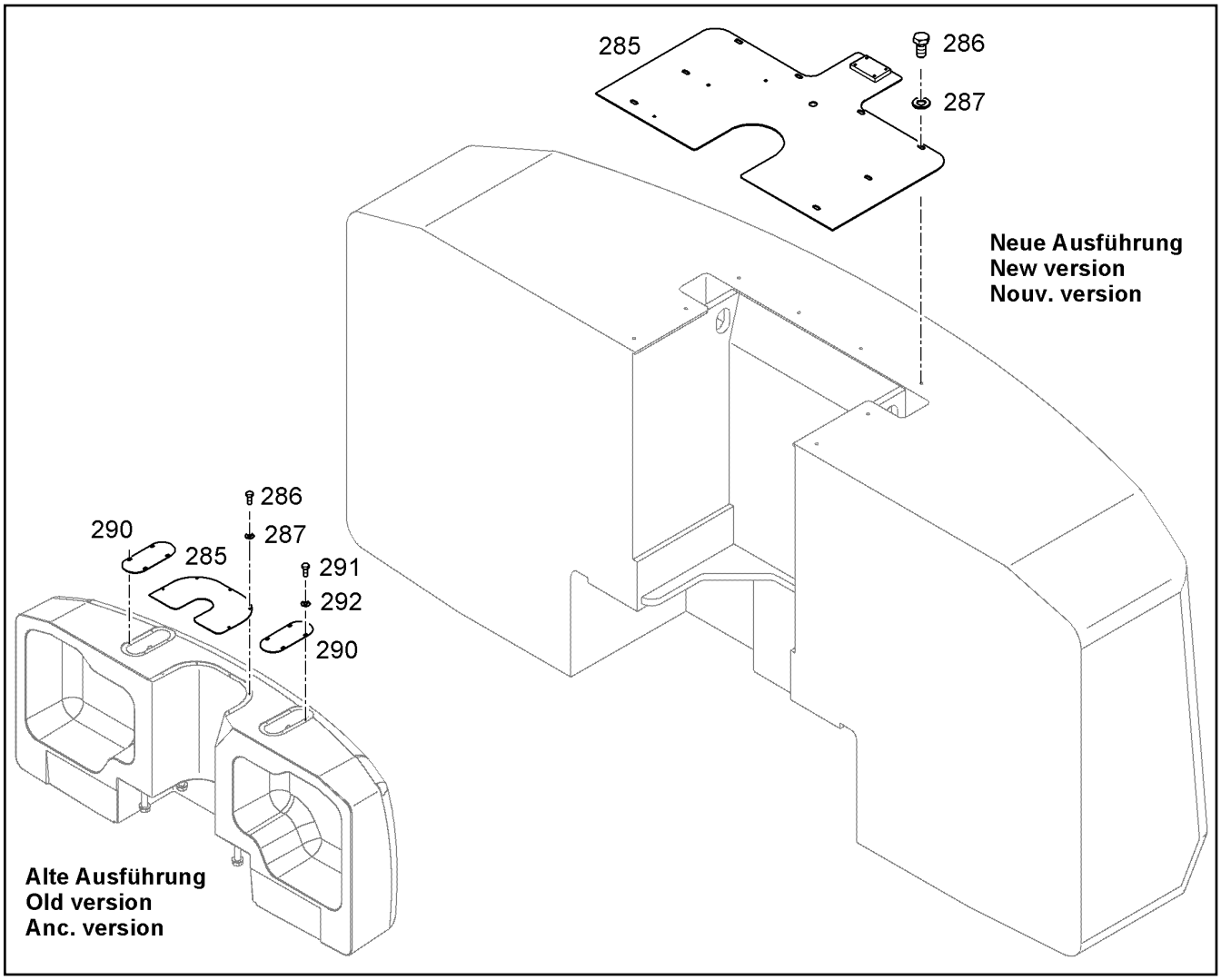

Pos.	Item	Quantity	Description	Descripción	Serie	K
285	10498570	1	LID	TAPA		1
286	4001696	8	HEX BOLT ISO 4017 M10X20 10.9 A3C	TORNILLO DE CABEZA HEXAGO		
287	10289795	8	WASHER ISO 7089 10 300HV	ARANDELA		

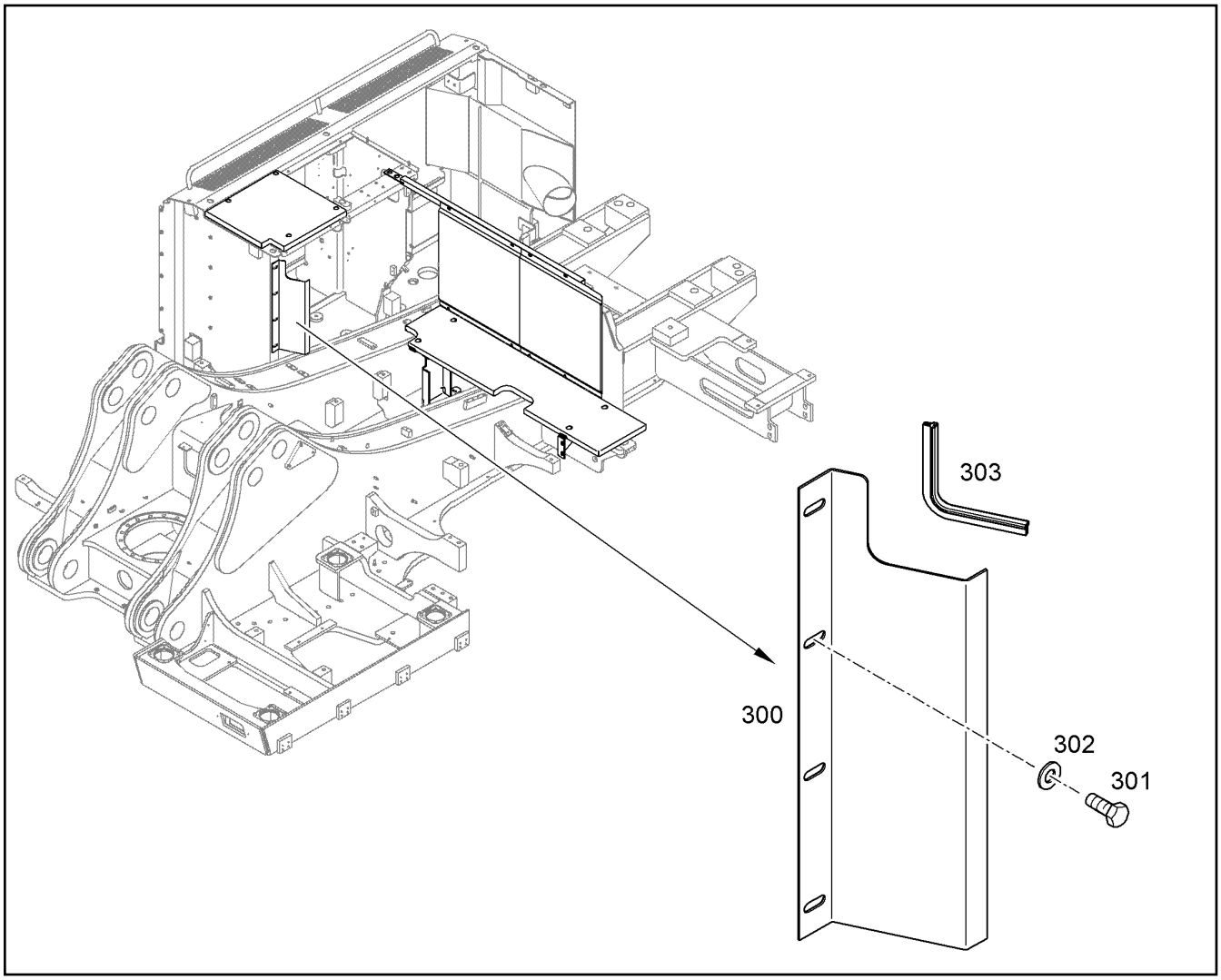

Pos.	Item	Quantity	Description	Descripción	Serie	K
300	10076829	1	DEFLECTOR	CHAPA DE GUIA		1
301	4600184	4	HEX BOLT ISO 4017 M12X25 10.9 A3C	TORNILLO DE CABEZA HEXAGO		
302	4635283	4	WASHER DIN 6340 13 ST A3C	ARANDELA		
303	7360171	0.27m	CORNER PROTECT.PROFILE	PERFIL OBTURACIÓN CANTON		

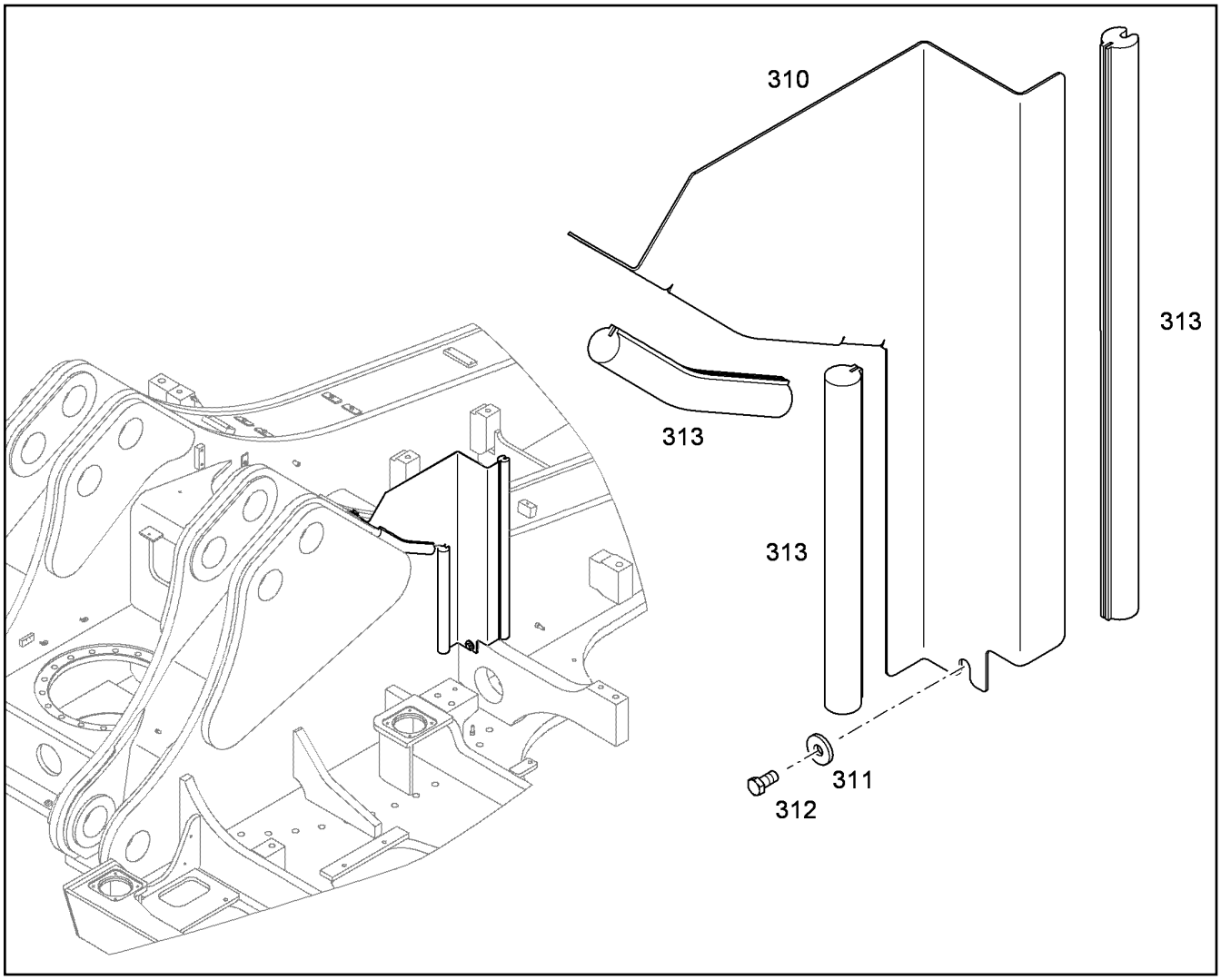

Pos.	Item	Quantity	Description	Descripción	Serie	K
310	10369606	1	AIR DEFLECTING SHEET	CHAPA CONDUCTO AIRE		1
311	4635283	3	WASHER DIN 6340 13 ST A3C	ARANDELA		
312	4600184	3	HEX BOLT ISO 4017 M12X25 10.9 A3C	TORNILLO DE CABEZA HEXAGO		
313	7014524	2	CLAMPING PROFILE	PERFIL APRIETE		

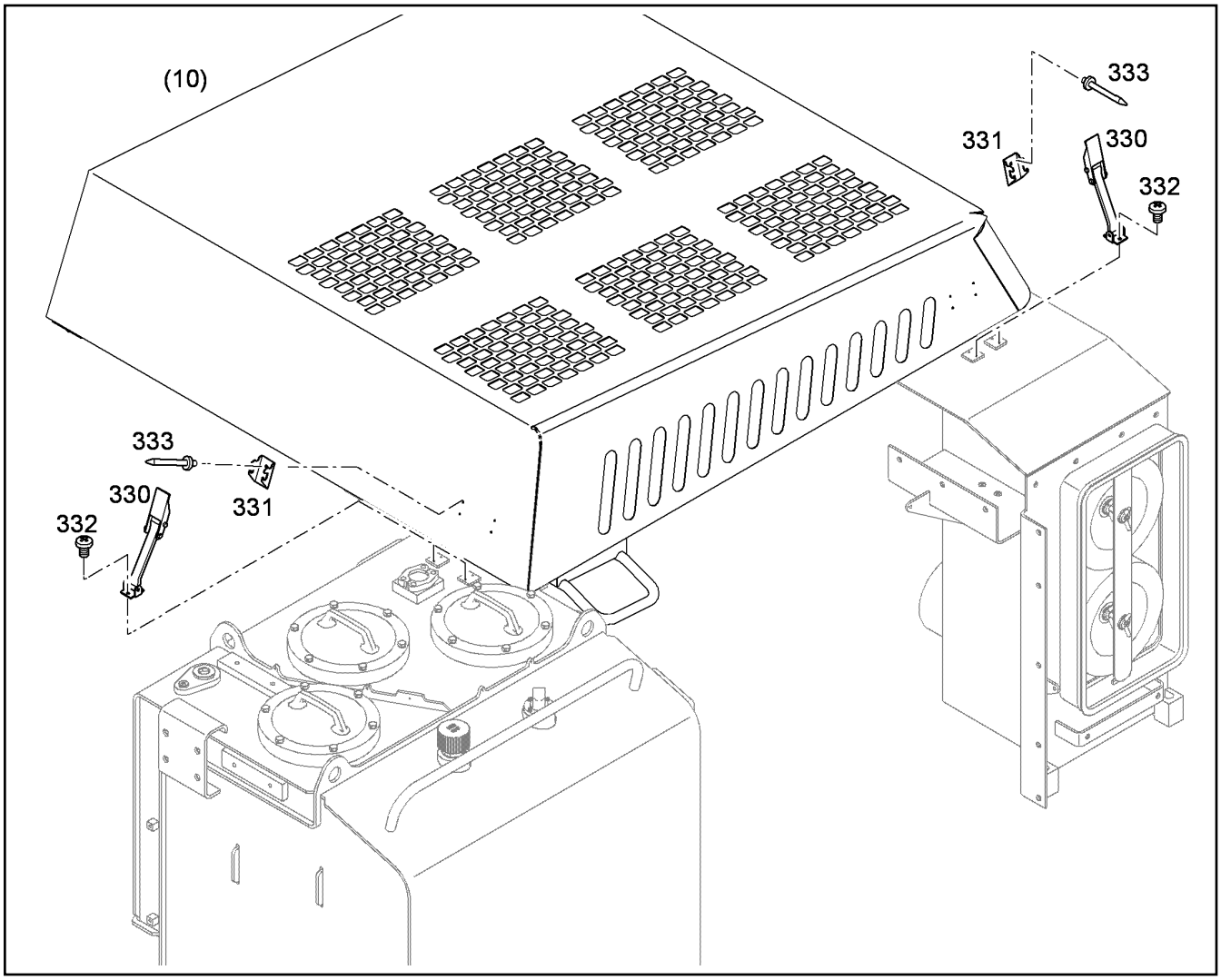

Pos.	Item	Quantity	Description	Descripción	Serie	K
330	7615635	4	TENSION LEVER	PALANCA TENSORA		
331	7615636	4	HOLDER	FIJADOR		
332	4601302	8	PAN-HEAD SCREW ISO 7045 M5X8 4.8 H A2	TORNILLO ROSCACHAPA		
333	4902277	8	BLIND RIVET DIN 7337 A 5 X 16 ST/ST	REMACHE CIEGO		

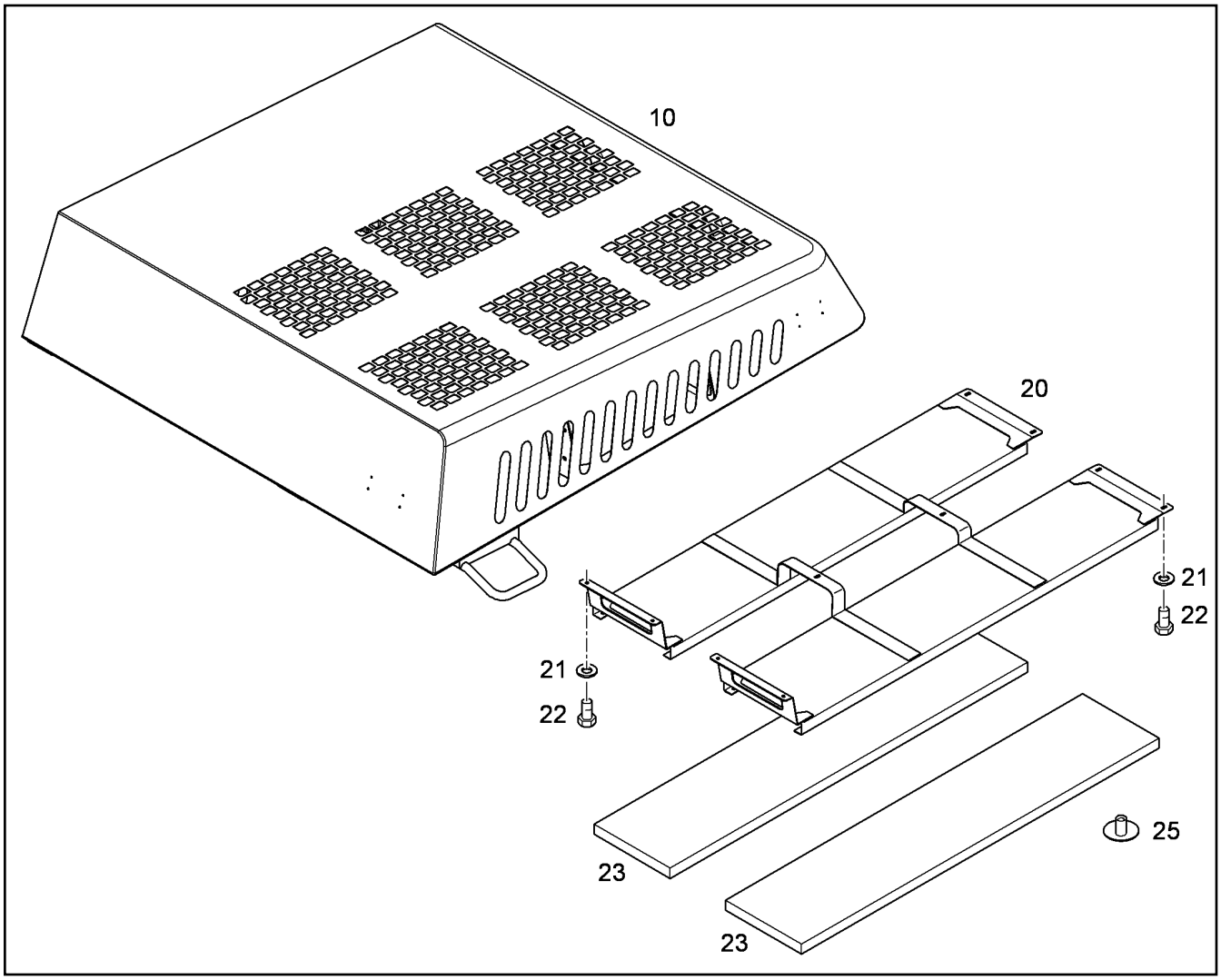

Pos.	Item	Quantity	Description	Descripción	Serie	K
10		1	ENGINE BONNET	CAPOT DEL MOTOR		1
20	10055305	1	SCOOP	TOMA		1
21	10289803	10	WASHER ISO 7089 8 300HV	ARANDELA		
22	4001606	10	HEX BOLT ISO 4017 M8X16 10.9 A2C	TORNILLO DE CABEZA HEXAGO		
23	10055318	2	INSULATING MAT	ESTERA AISLANTE		1
25	10412536	56	CLIP	CLIP		

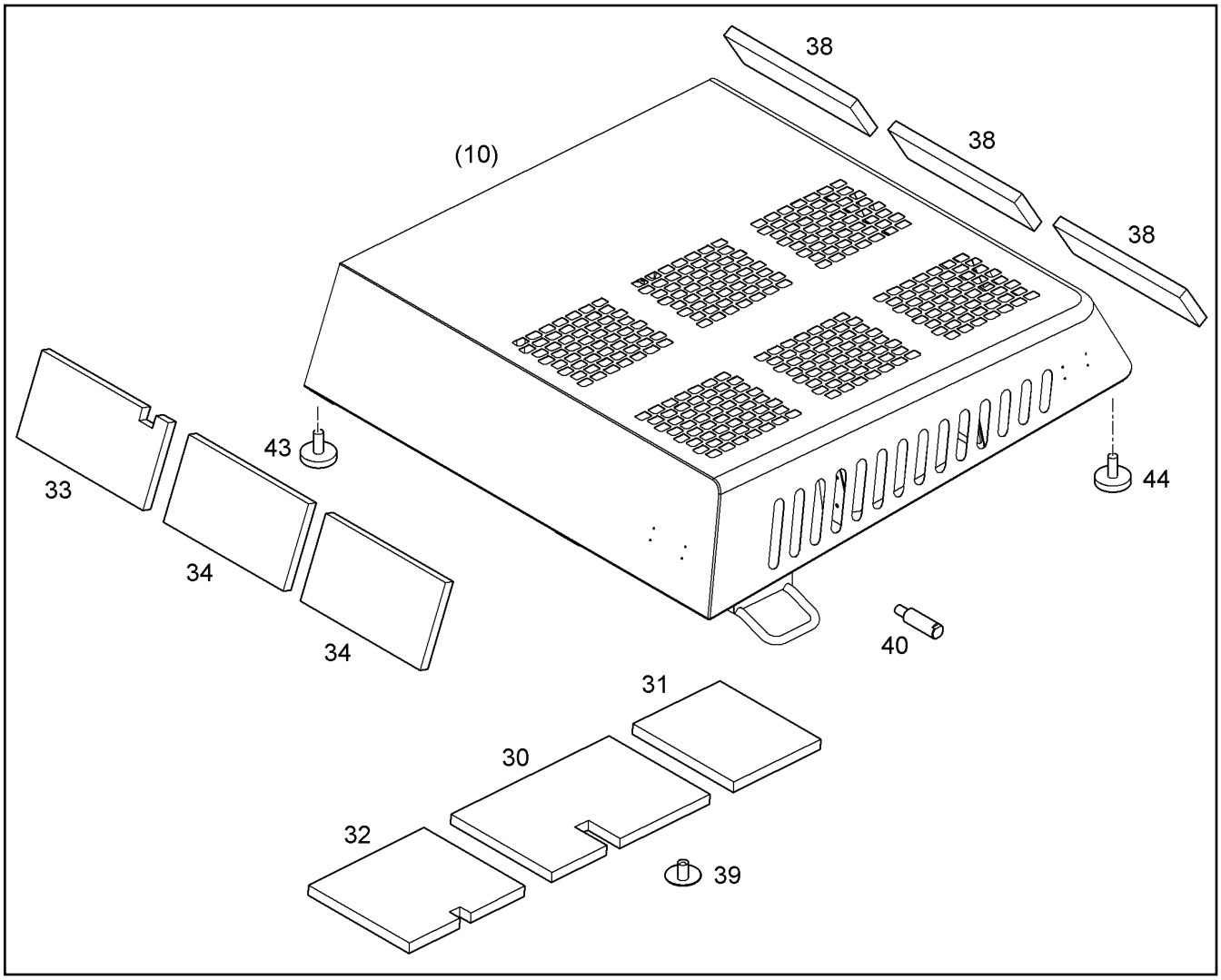

Pos.	Item	Quantity	Description	Descripción	Serie	K
30	10055309	1	INSULATING MAT	ESTERA AISLANTE		1
31	10055310	1	INSULATING MAT	ESTERA AISLANTE		1
32	10055311	1	INSULATING MAT	ESTERA AISLANTE		1
33	10055312	1	INSULATING MAT	ESTERA AISLANTE		1
34	10055313	2	INSULATING MAT	ESTERA AISLANTE		1
38	10055317	3	INSULATING MAT	ESTERA AISLANTE		1
39	10412536	137	CLIP	CLIP		
40	10065983	2	PIN	BULON		1
43	7363930	2	LIMIT STOP BUFFER	AMORTIGUADOR DE TOPE		
44	10492230	3	LIMIT STOP BUFFER	AMORTIGUADOR DE TOPE		

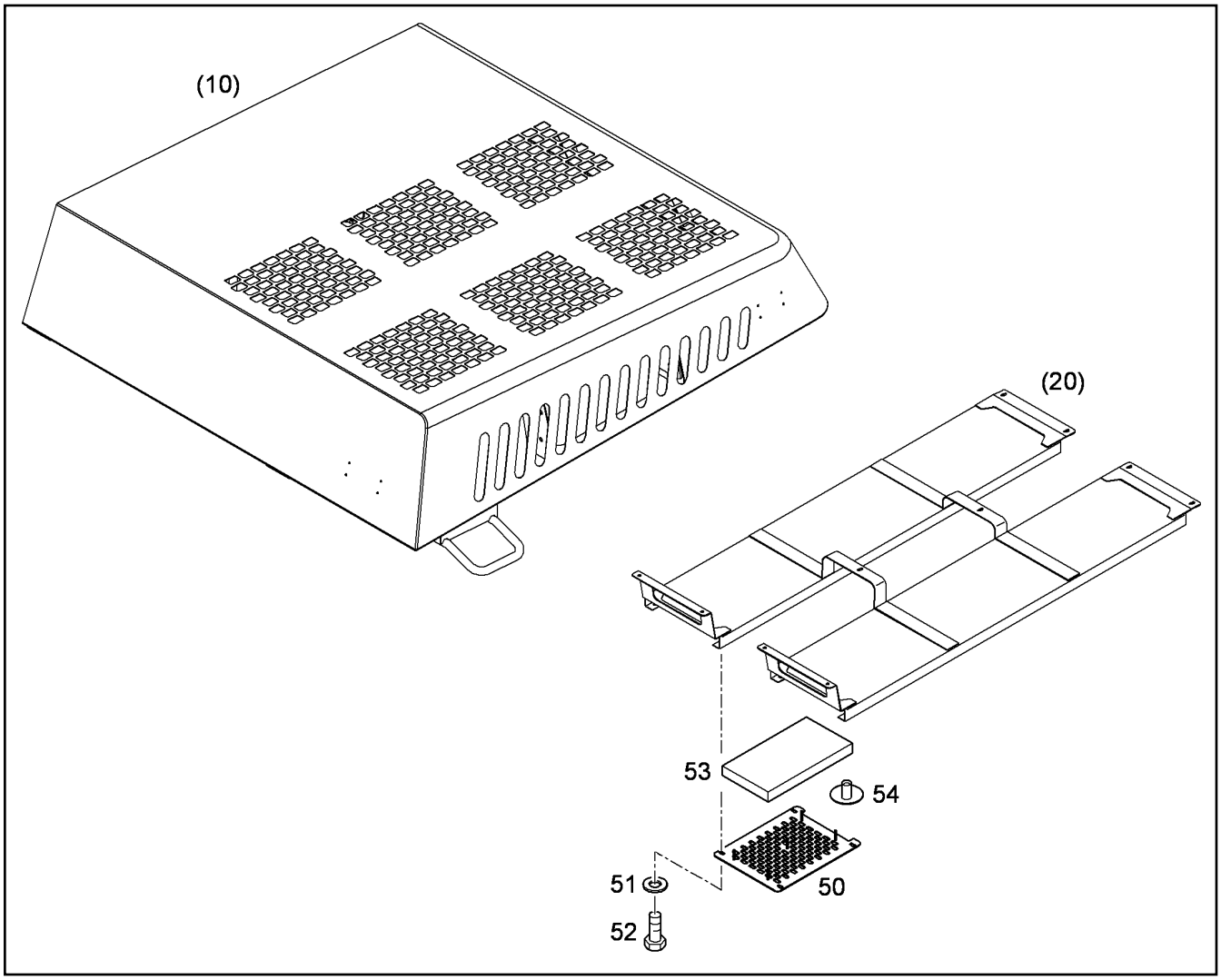

Pos.	Item	Quantity	Description	Descripción	Serie	K
50	10079187	1	INSULATION WALL	PARED AISLANTE		
51	10289803	4	WASHER ISO 7089 8 300HV	ARANDELA		
52	4001606	4	HEX BOLT ISO 4017 M8X16 10.9 A2C	TORNILLO DE CABEZA HEXAGO		
53	10079194	1	INSULATING MAT	ESTERA AISLANTE		1
54	10412536	5	CLIP	CLIP		

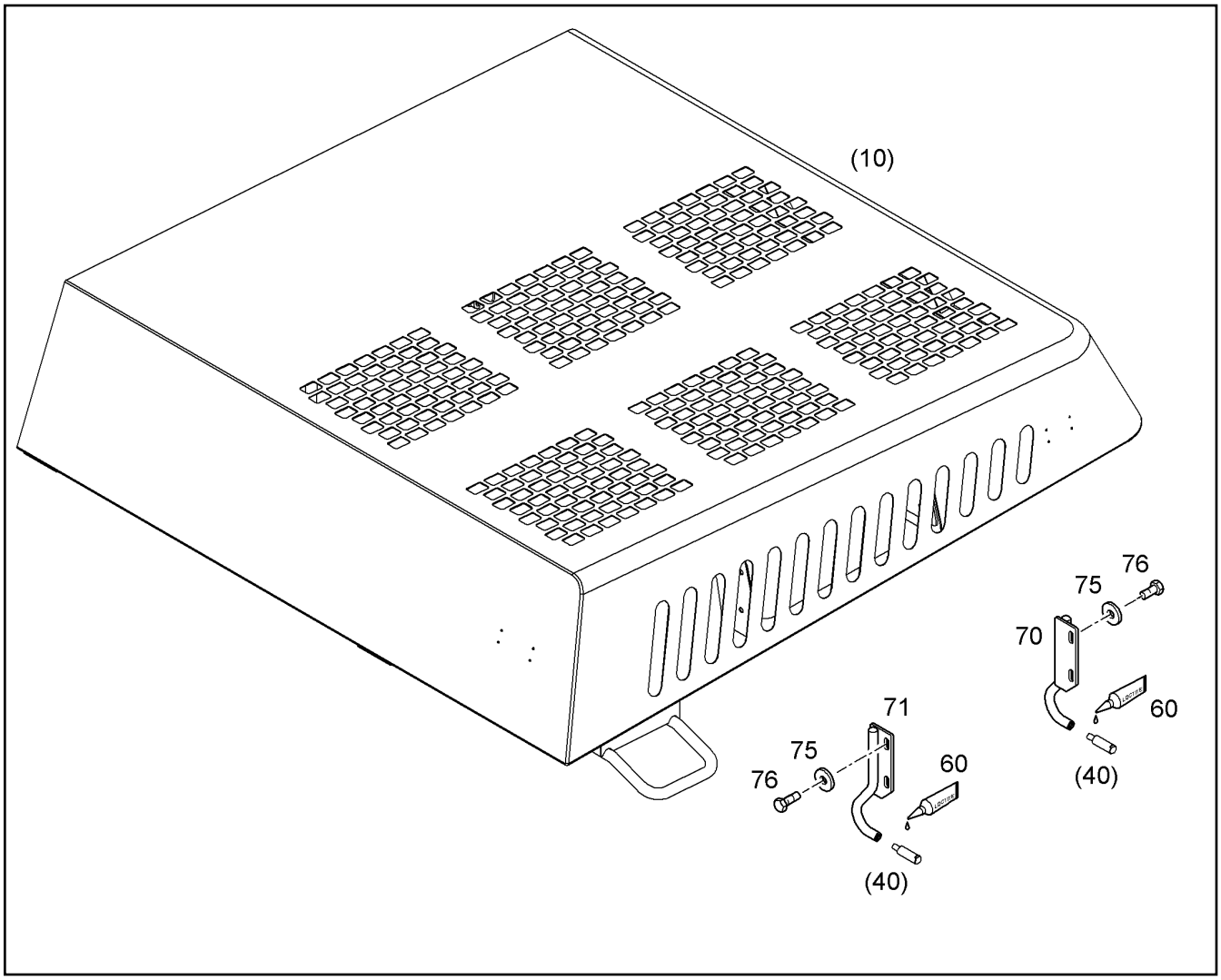

Pos.	Item	Quantity	Description	Descripción	Serie	K
60	8503598	0.01	LOCTITE	LOCTITE		
70	10093820	1	LOOCK BRACKET	CONSOLA CIERRE		
71	10093901	1	LOOCK BRACKET	CONSOLA CIERRE		
75	4601173	4	WASHER 10,5	ARANDELA		
76	4066093	4	HEX BOLT ISO 4017 M10X25 10.9 A3C	TORNILLO DE CABEZA HEXAGO		

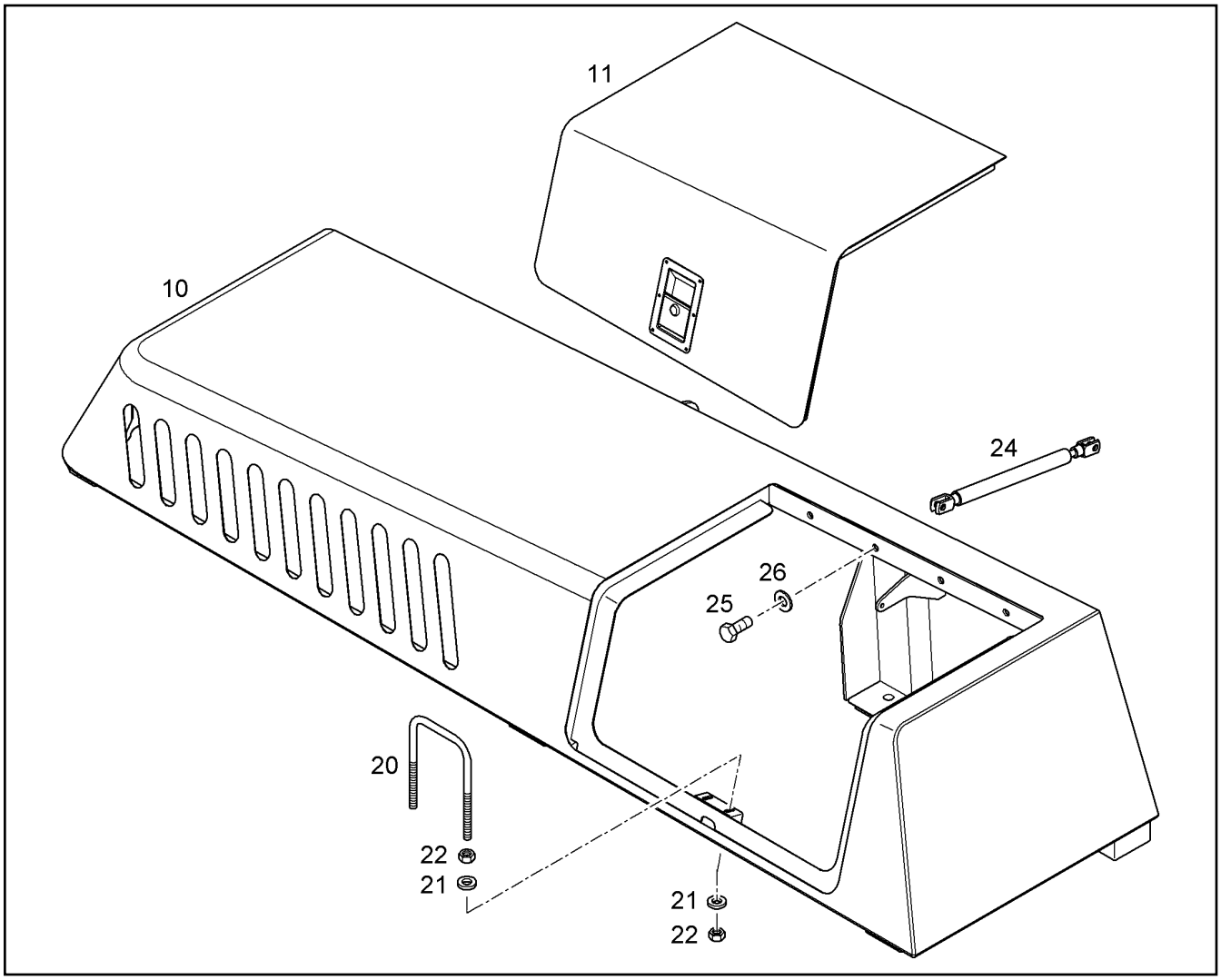

Pos.	Item	Quantity	Description	Descripción	Serie	K
10	10055355	1	COOLER COWL	CAPOT		1
11	10063605	1	LID ⇨ ❑ 450	TAPA		
20	9230122	1	BRACKET	ESTRIBO		
21	10289803	4	WASHER ISO 7089 8 300HV	ARANDELA		
22	4000381	4	HEX NUT M8	TUERCA HEXAGONAL		
24	10037204	1	GAS SPRING	MUELLE DE GAS		
25	4066120	4	HEX BOLT ISO 4017 M12X20 10.9 A3C	TORNILLO DE CABEZA HEXAGO		
26	4600687	4	WASHER 13	ARANDELA		

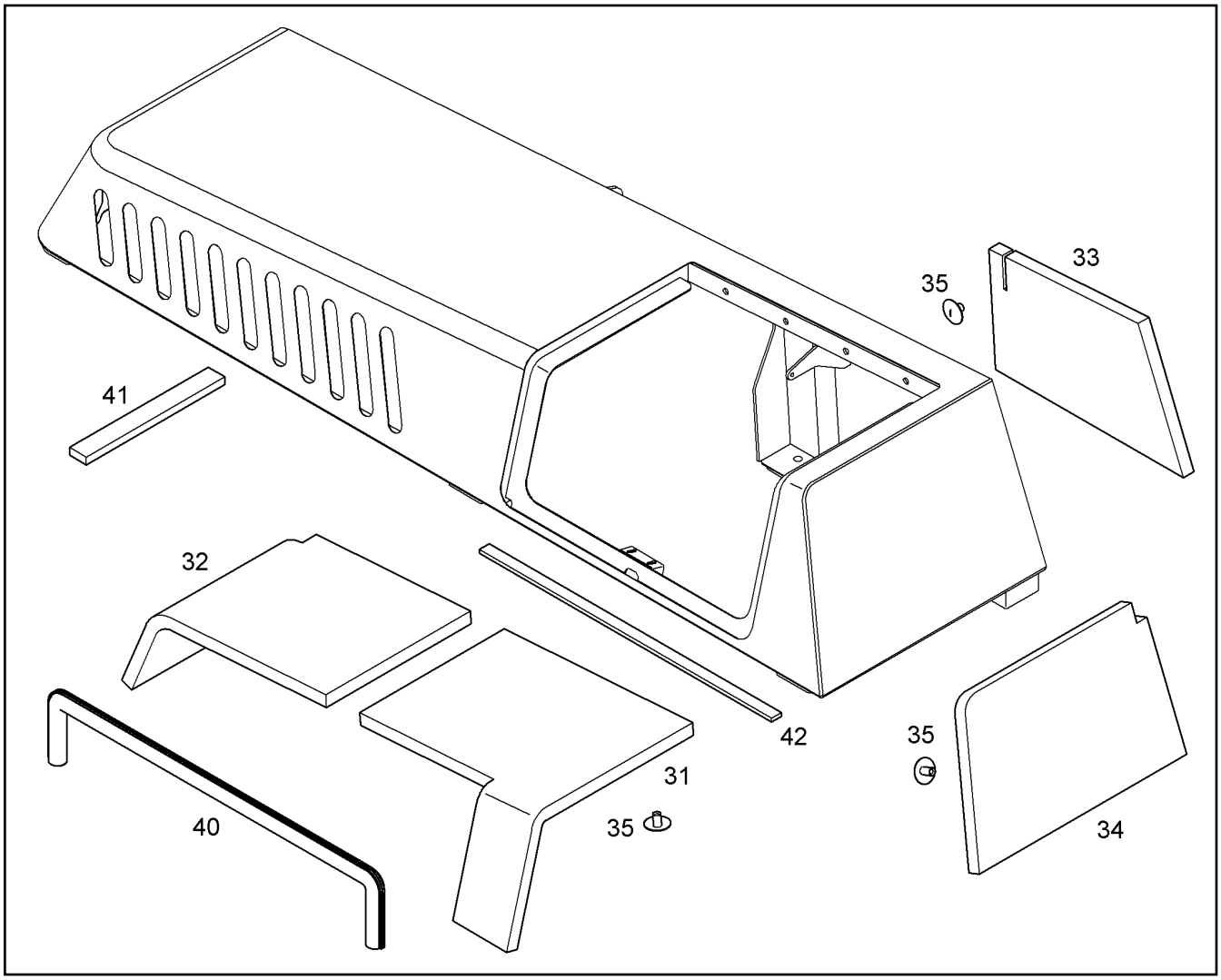

Pos.	Item	Quantity	Description	Descripción	Serie	K
31	10055357	1	INSULATING MAT	ESTERA AISLANTE		1
32	10055358	1	INSULATING MAT	ESTERA AISLANTE		1
33	10055359	1	INSULATING MAT	ESTERA AISLANTE		1
34	10063818	1	INSULATING MAT	ESTERA AISLANTE		1
35	10412536	114	CLIP	CLIP		
40	7014524	2	CLAMPING PROFILE	PERFIL APRIETE		
41	7360734	0.418m	PROFILE	PERFIL		
42	10002428	0.613m	PROFILE	PERFIL		

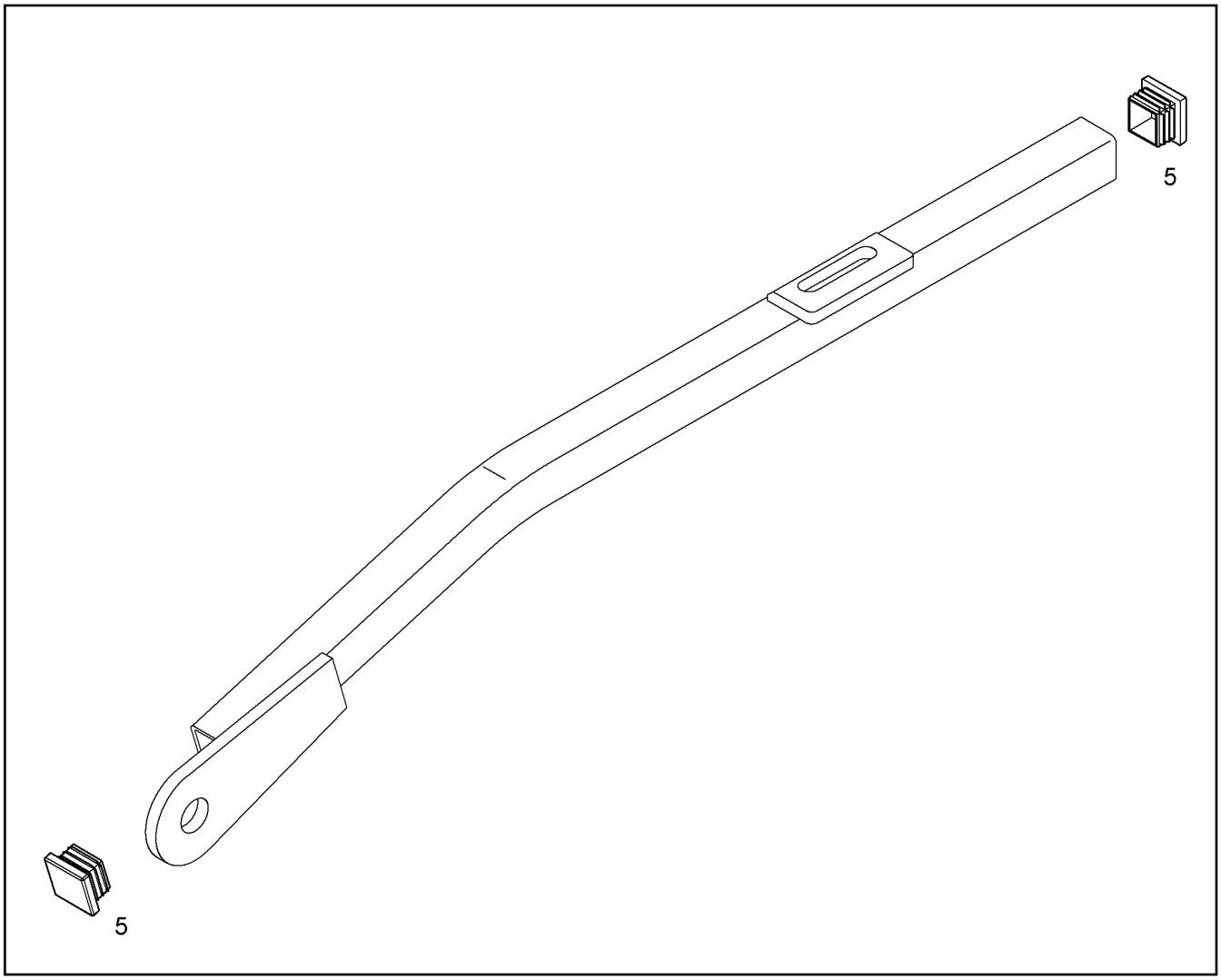

Pos.	Item	Quantity	Description	Descripción	Serie	K
5	7373405	2	LOCKING PLUG	TAPON DE CIERRE		

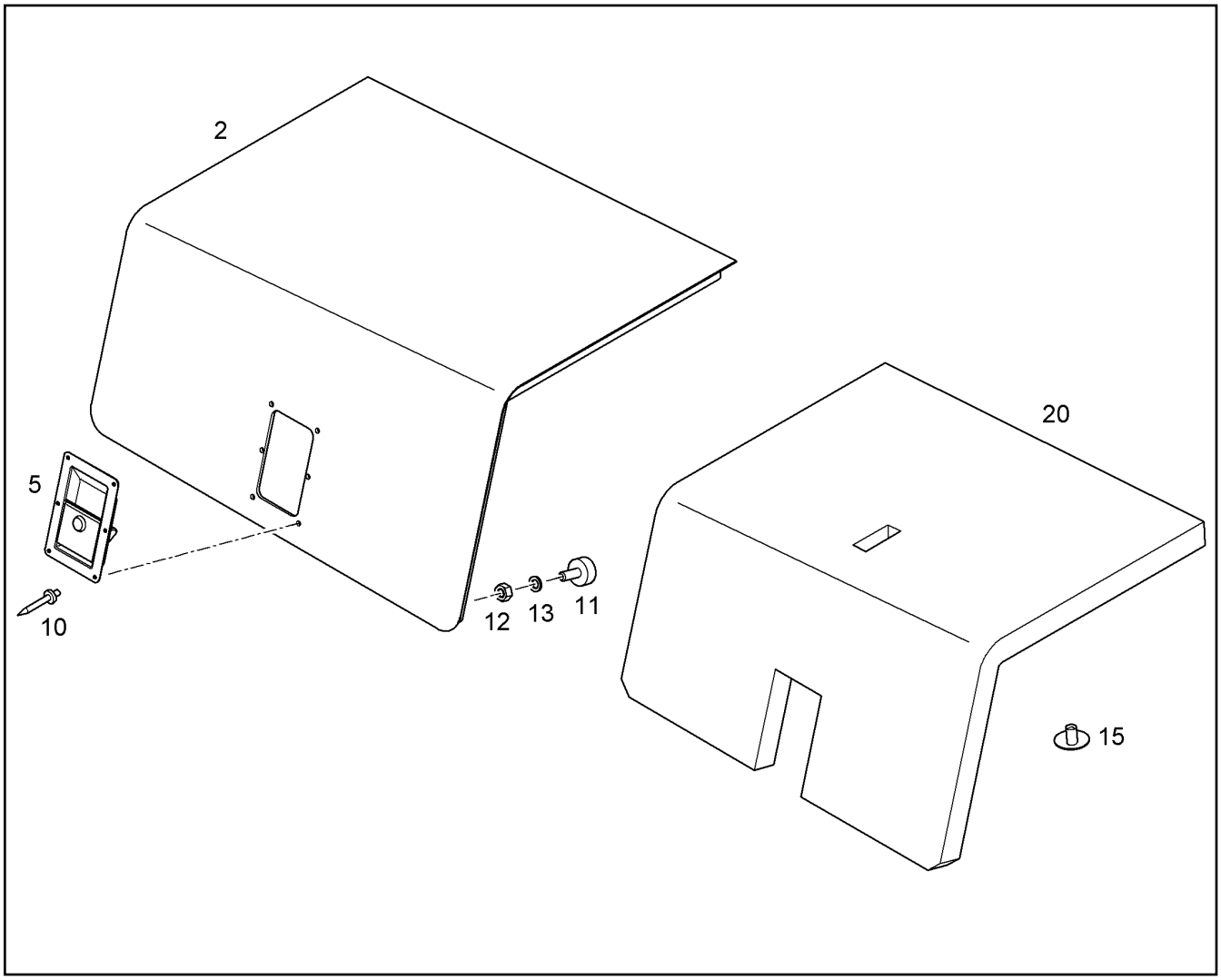

Pos.	Item	Quantity	Description	Descripción	Serie	K
2	10063606	1	LID	TAPA		
5	7372093	1	LOCK ⇨ ❑ 464	CERRADURA		
10	7009867	6	4			
11	5004748	2	BUFFER	AMORTIGUADOR GMT		
12	4000379	2	HEX NUT M6	TUERCA HEXAGONAL		
13	4229911	2	LOCK WASHER	ARANDELA SEGURIDAD		
15	10412536	28	CLIP	CLIP		
20	10063611	1	INSULATING MAT	ESTERA AISLANTE		1

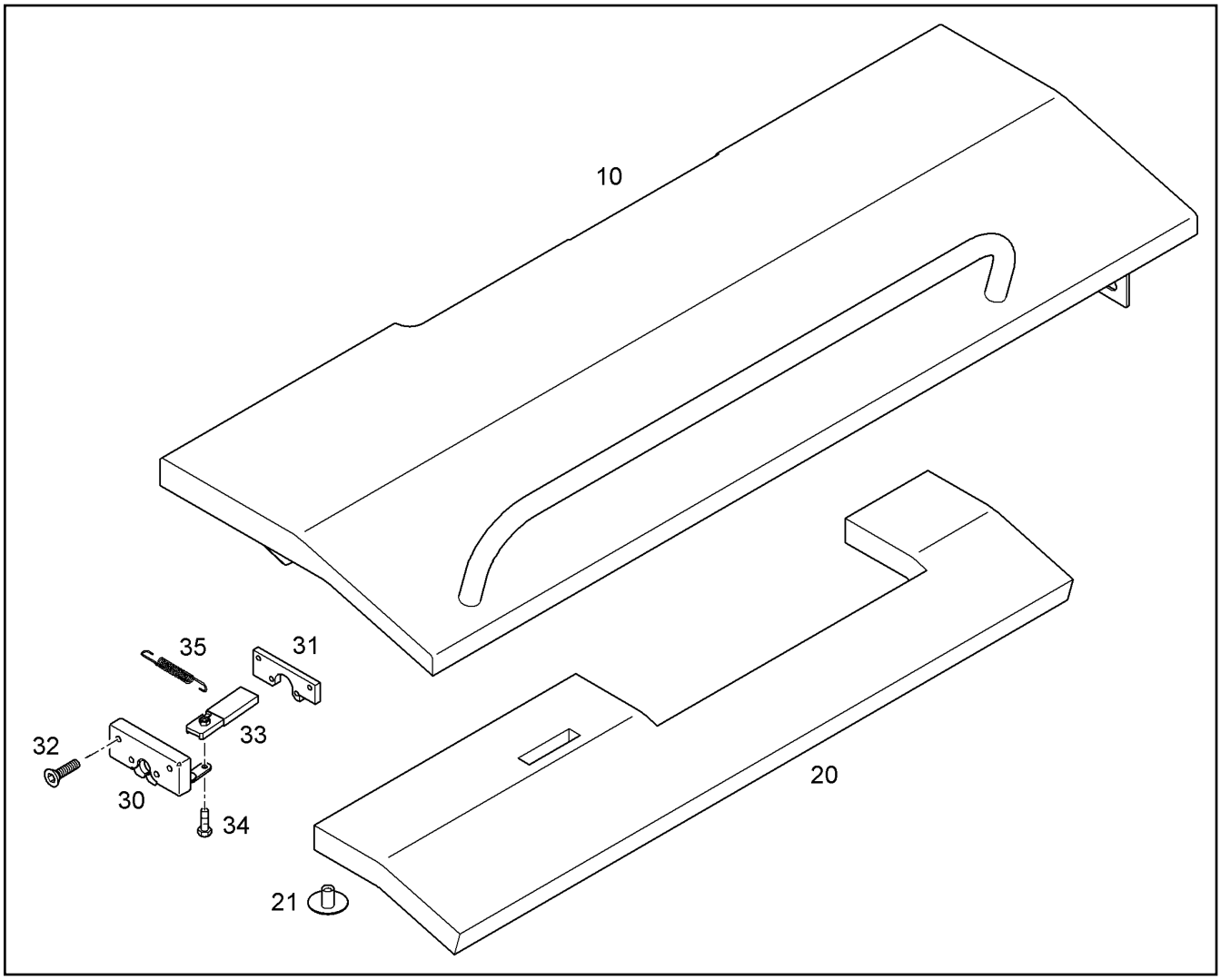

Pos.	Item	Quantity	Description	Descripción	Serie	K
10	10055465	1	BONNET LEFT	CUBIERTA IZQUIERDA		1
20	10055466	1	INSULATING MAT	ESTERA AISLANTE		1
21	10412536	20	CLIP	CLIP		
30	7371009	1	LOCK	CERRADURA		
31	9867368	1	THREADED PLATE	PLACA ROSCADA		1
32	4002419	4	COUNTERSUNK SCREW DIN 7991 M6X35 8.	TORNILLO AVELLANADO		
33	9691297	1	GRIP	TIRADOR		
34	4001880	1	HEX BOLT ISO 4017 M6X20 10.9 A2C	TORNILLO DE CABEZA HEXAGO		
35	7371115	1	TENSION SPRING 1,6X9,6X75,8	MUELLE TRACCION		

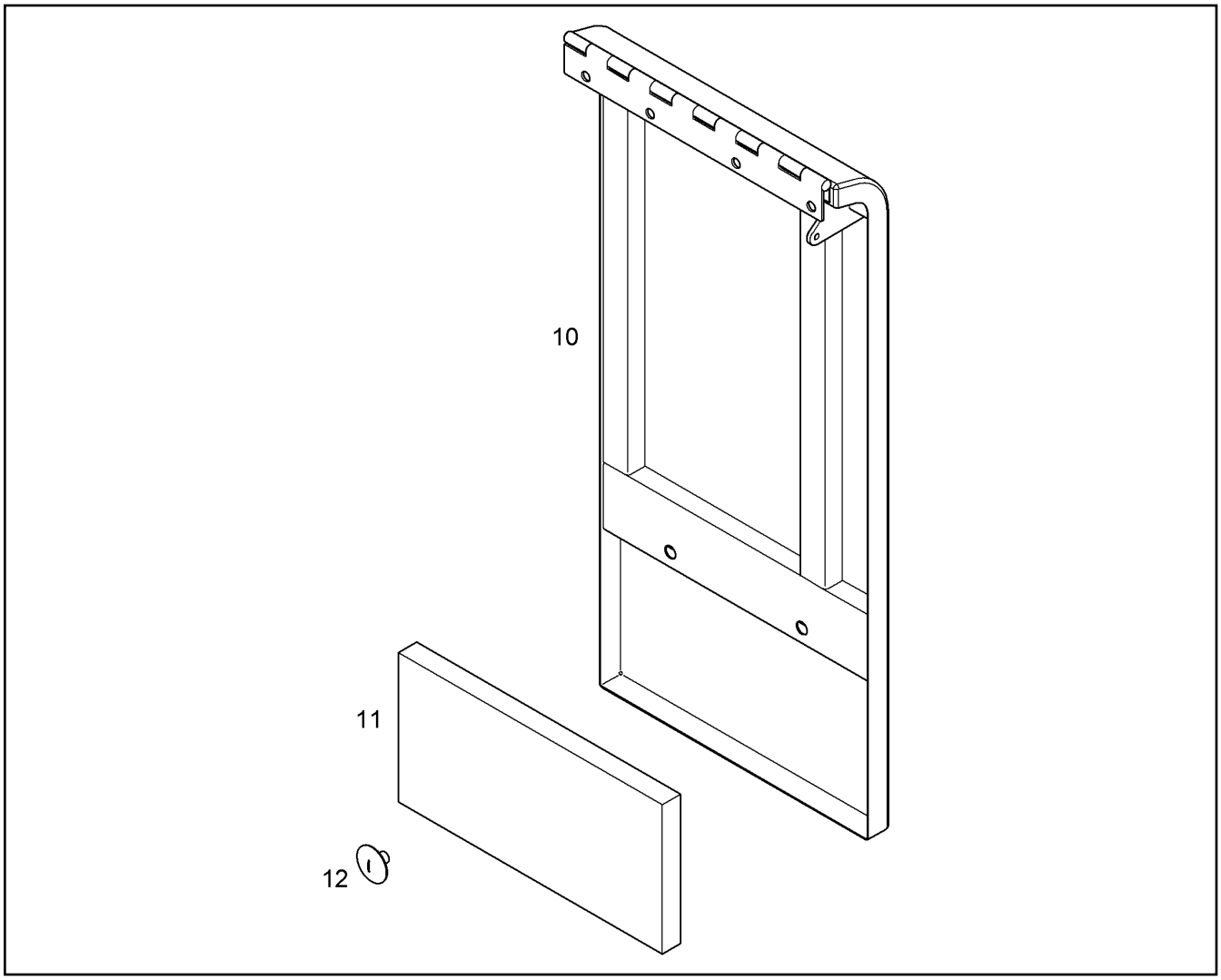

Pos.	Item	Quantity	Description	Descripción	Serie	K
10	10055382	1	DOOR AIR FILTER LEFT	PUERTA FILTRO AIRE IZD.		1
11	10055352	1	INSULATING MAT	ESTERA AISLANTE		1
12	10412536	6	CLIP	CLIP		

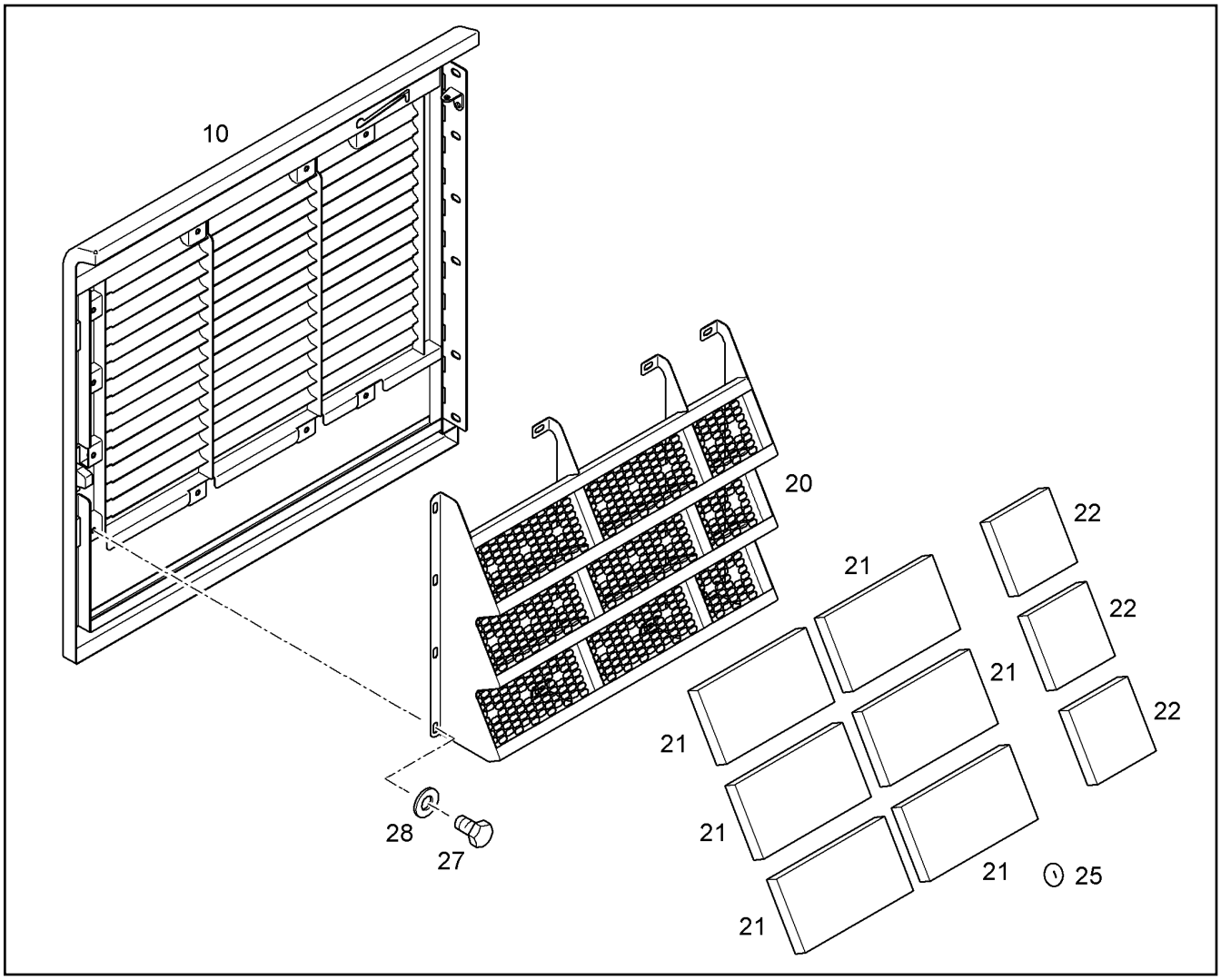

Pos.	Item	Quantity	Description	Descripción	Serie	K
10	10055434	1	SIDE DOOR BACK RIGHT	PUERTA LATERAL POST.DCHA.		1
20	10055436	1	SCOOP	TOMA		1
21	10055417	6	INSULATING MAT	ESTERA AISLANTE		1
22	10055439	3	INSULATING MAT	ESTERA AISLANTE		1
25	10412536	24	CLIP	CLIP		
27	4001696	10	HEX BOLT ISO 4017 M10X20 10.9 A3C	TORNILLO DE CABEZA HEXAGO		
28	4000505	10	WASHER S=4	ARANDELA		

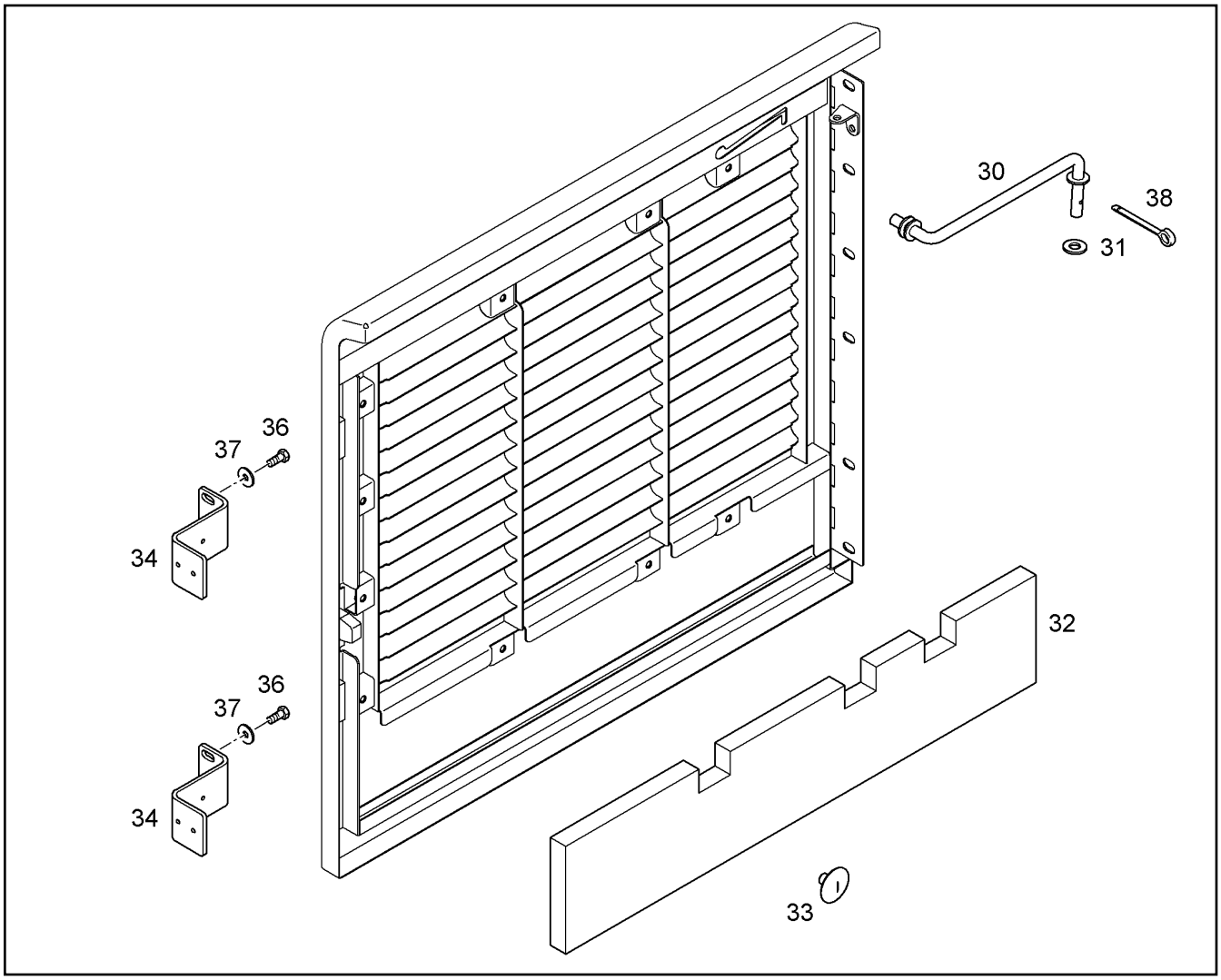

Pos.	Item	Quantity	Description	Descripción	Serie	K
30	10055437	1	ROD	VARILLA		1
31	10289795	1	WASHER ISO 7089 10 300HV	ARANDELA		
32	10055440	1	INSULATING MAT	ESTERA AISLANTE		1
33	10412536	18	CLIP	CLIP		
34	10066930	2	CONSOLE	CONSOLA		1
36	4001606	4	HEX BOLT ISO 4017 M8X16 10.9 A2C	TORNILLO DE CABEZA HEXAGO		
37	4000779	4	WASHER DIN 9021 8,4 ST A3C	ARANDELA		
38	4330011	1	SPLIT PIN ISO 1234 3,2X 25 ST	PASADOR ALETAS		

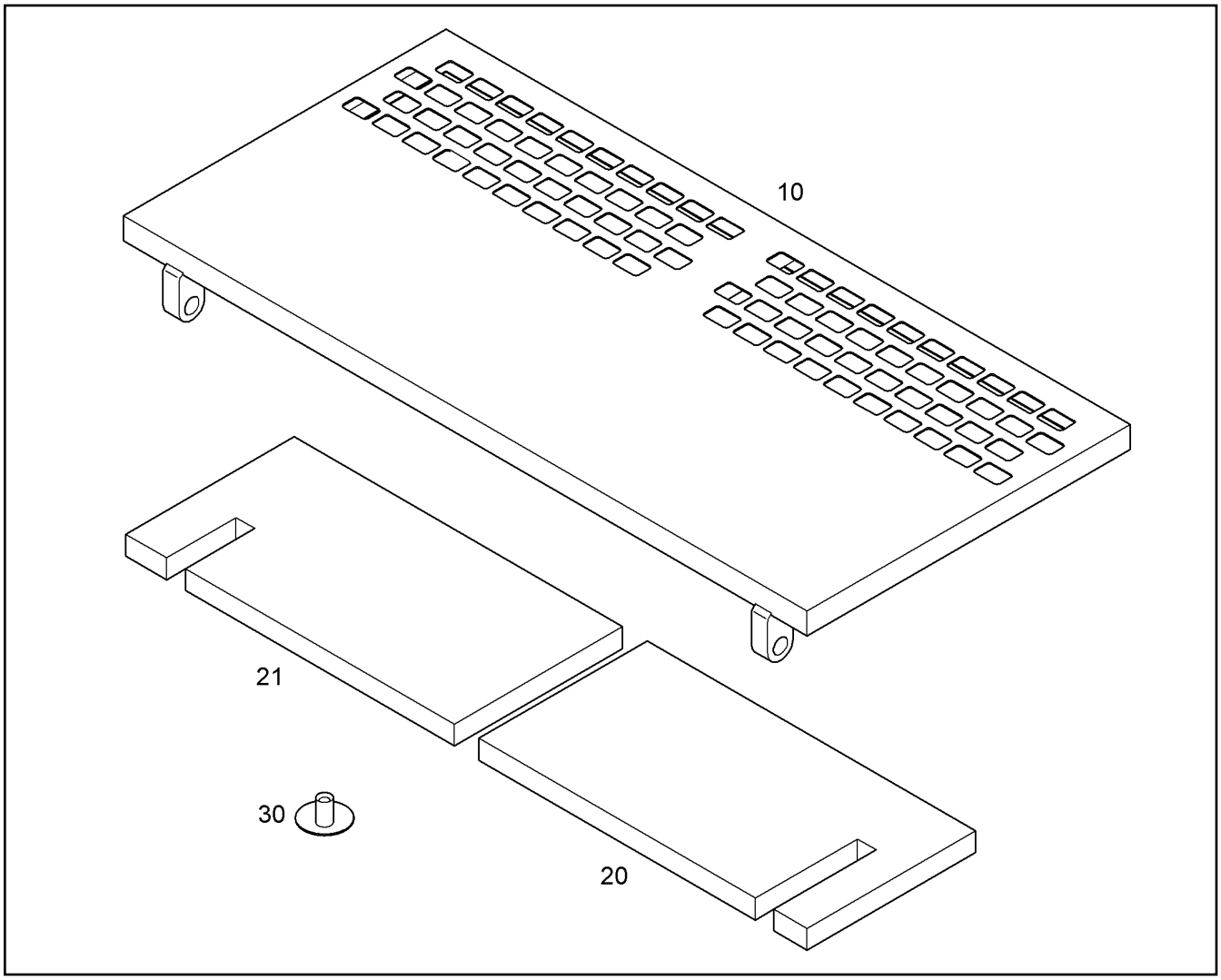

Pos.	Item	Quantity	Description	Descripción	Serie	K
10	10055455	1	COVER MIDDLE	TAPA CENTRO		1
20	10055456	1	INSULATING MAT	ESTERA AISLANTE		1
21	10089716	1	INSULATING MAT	ESTERA AISLANTE		1
30	10412536	14	CLIP	CLIP		

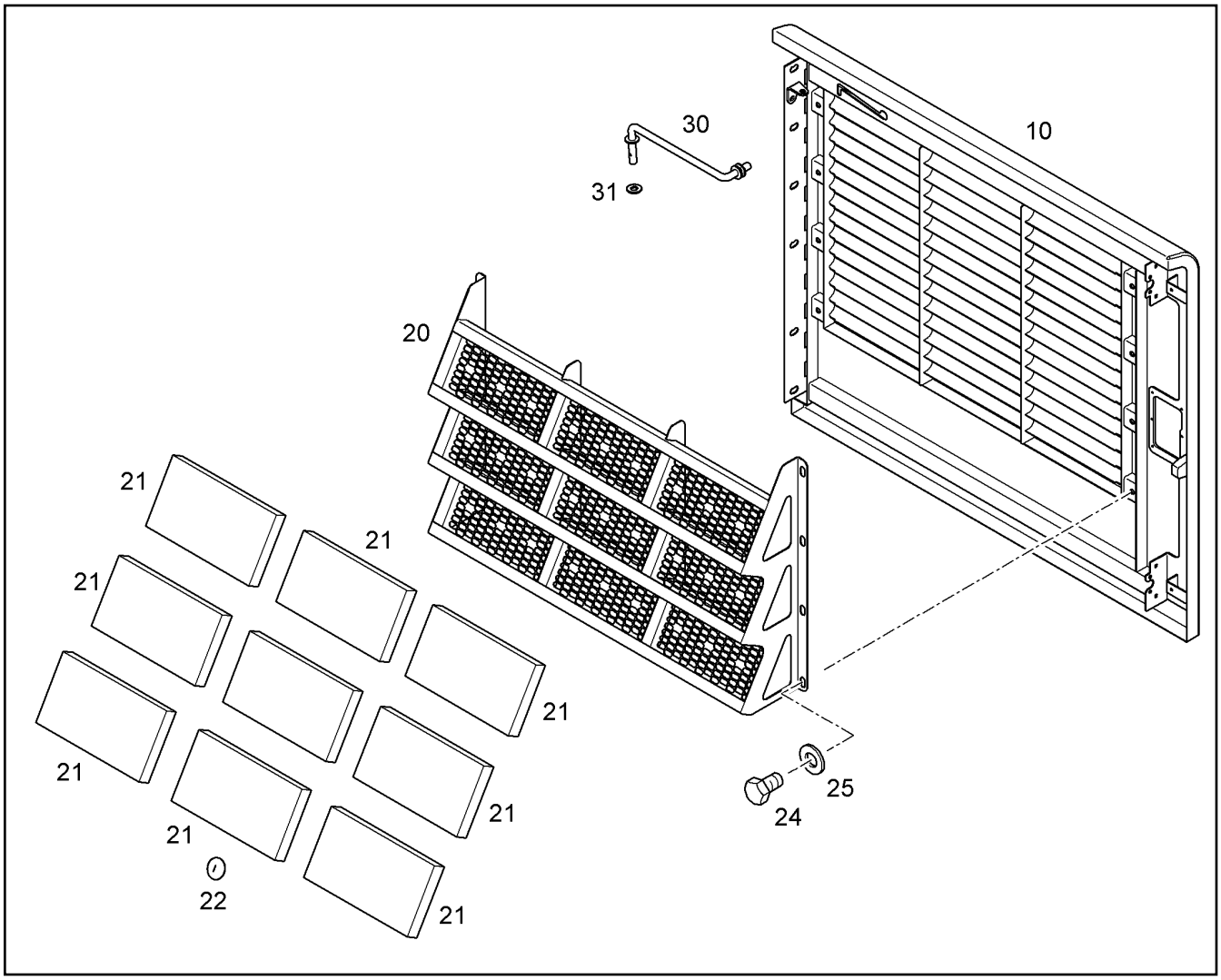

Pos.	Item	Quantity	Description	Descripción	Serie	K
10	10055411	1	SIDE DOOR FRONT RIGHT ⇨ ❑ 458	PUERTA LATERAL ANT.DCHA.		1
20	10055413	1	SCOOP	TOMA		1
21	10055417	9	INSULATING MAT	ESTERA AISLANTE		1
22	10412536	27	CLIP	CLIP		
24	4001696	8	HEX BOLT ISO 4017 M10X20 10.9 A3C	TORNILLO DE CABEZA HEXAGO		
25	4000505	8	WASHER S=4	ARANDELA		
30	10055394	1	ROD	VARILLA		1
31	10289795	1	WASHER ISO 7089 10 300HV	ARANDELA		

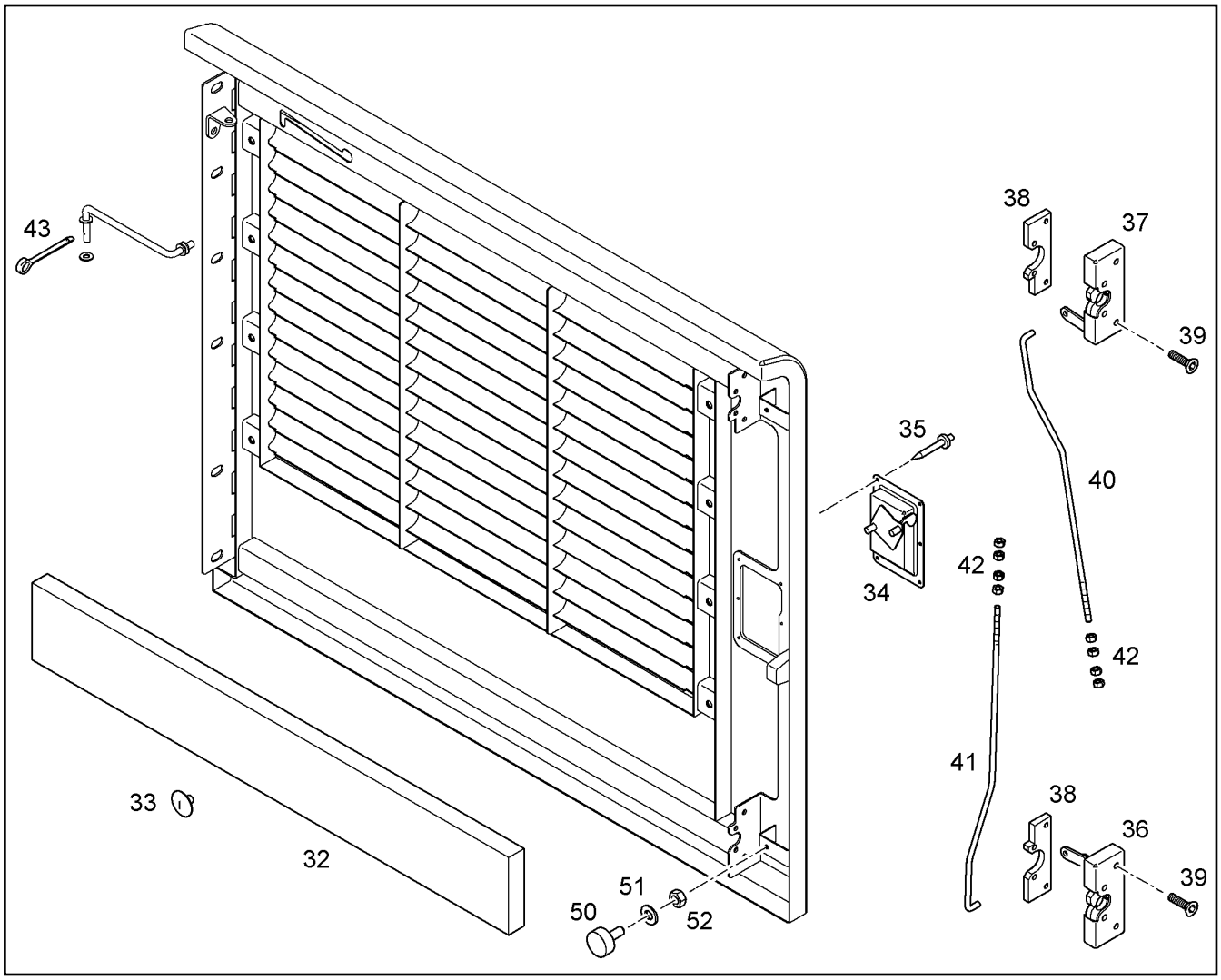

Pos.	Item	Quantity	Description	Descripción	Serie	K
32	10055414	1	INSULATING MAT	ESTERA AISLANTE		1
33	10412536	20	CLIP	CLIP		
34	7372348	1	LOCK ⇨ ❑ 459	CERRADURA		
35	7009867	6	4			
36	7371008	1	LOCK	CERRADURA		
37	7371009	1	LOCK	CERRADURA		
38	9867368	2	THREADED PLATE	PLACA ROSCADA		1
39	4002419	8	COUNTERSUNK SCREW DIN 7991 M6X35 8.	TORNILLO AVELLANADO		
40	10055415	1	ROD	VARILLA		1
41	10055416	1	ROD	VARILLA		1
42	4000379	8	HEX NUT M6	TUERCA HEXAGONAL		
43	4330011	1	SPLIT PIN ISO 1234 3,2X 25 ST	PASADOR ALETAS		
50	5004748	2	BUFFER	AMORTIGUADOR GMT		
51	10289802	2	WASHER ISO 7089 6 300HV	ARANDELA		
52	4000379	2	HEX NUT M6	TUERCA HEXAGONAL		

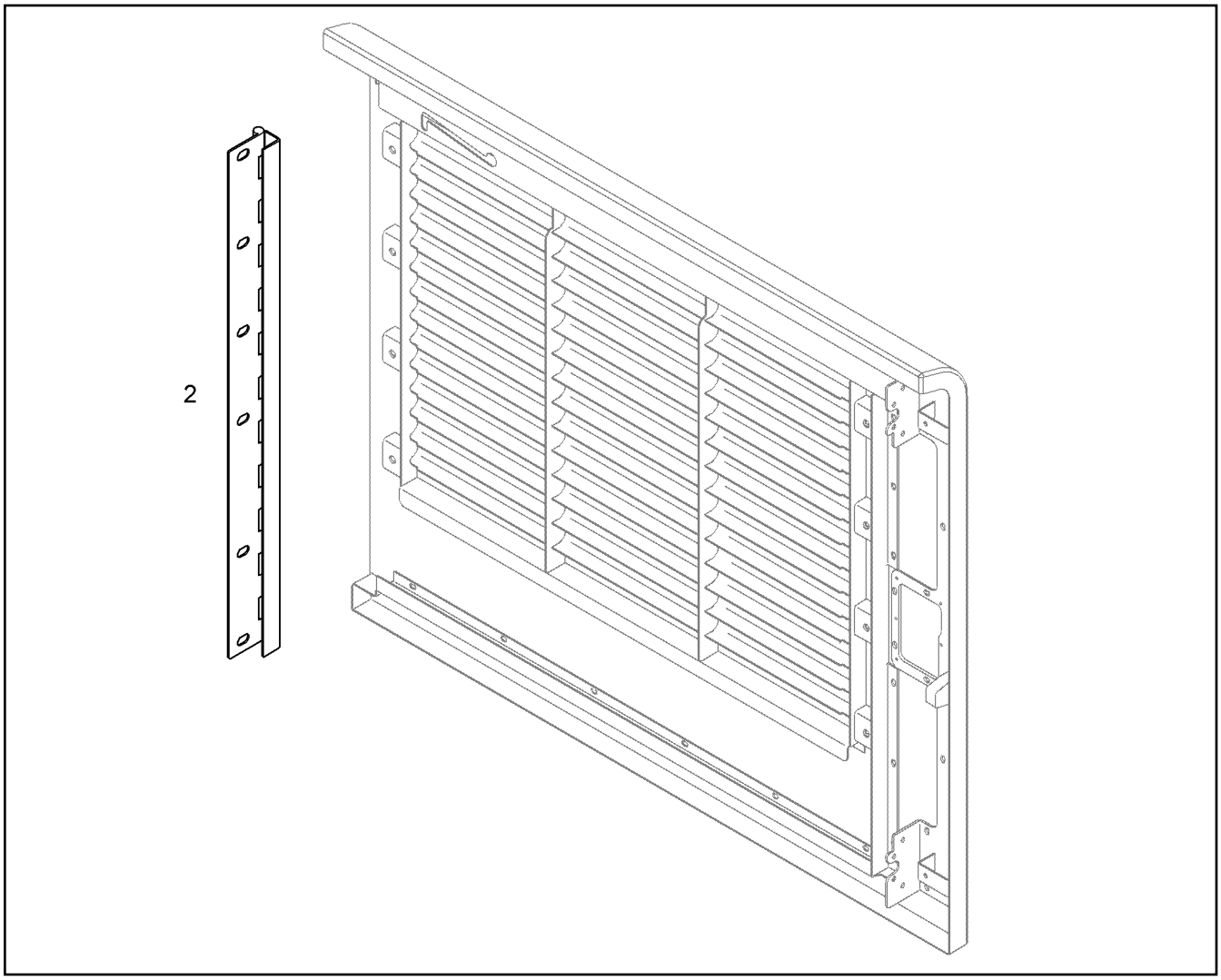

Pos.	Item	Quantity	Description	Descripción	Serie	K
2	10066497	1	HINGE	BISAGRA		1

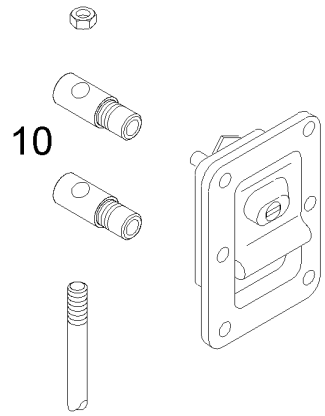

Pos.	Item	Quantity	Description	Descripción	Serie	K
10	11080307	2	PIN	BULON		1

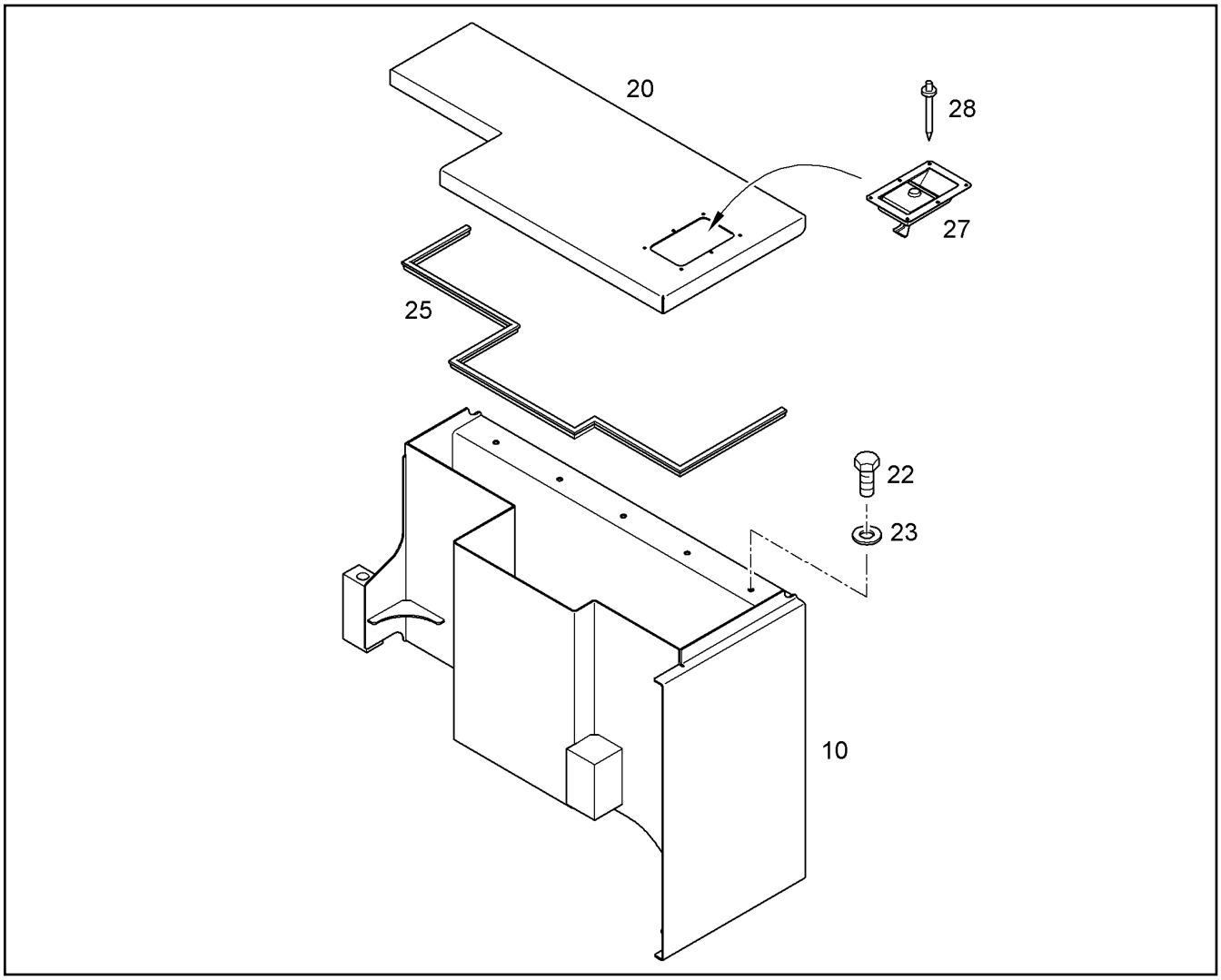

Pos.	Item	Quantity	Description	Descripción	Serie	K
10	10063756	1	CASE	CAJON		
20	10063758	1	LID	TAPA		
22	4000704	5	HEX BOLT ISO 4017 M8X20 10.9 A2C	TORNILLO DE CABEZA HEXAGO		
23	4216025	5	WASHER DIN 7349 8,4 A3C	ARANDELA		
25	7360171	1.5m	CORNER PROTECT.PROFILE	PERFIL OBTURACIÓN CANTON		
27	7372093	1	LOCK ⇨ ❑ 464	CERRADURA		
28	7009867	6	4			

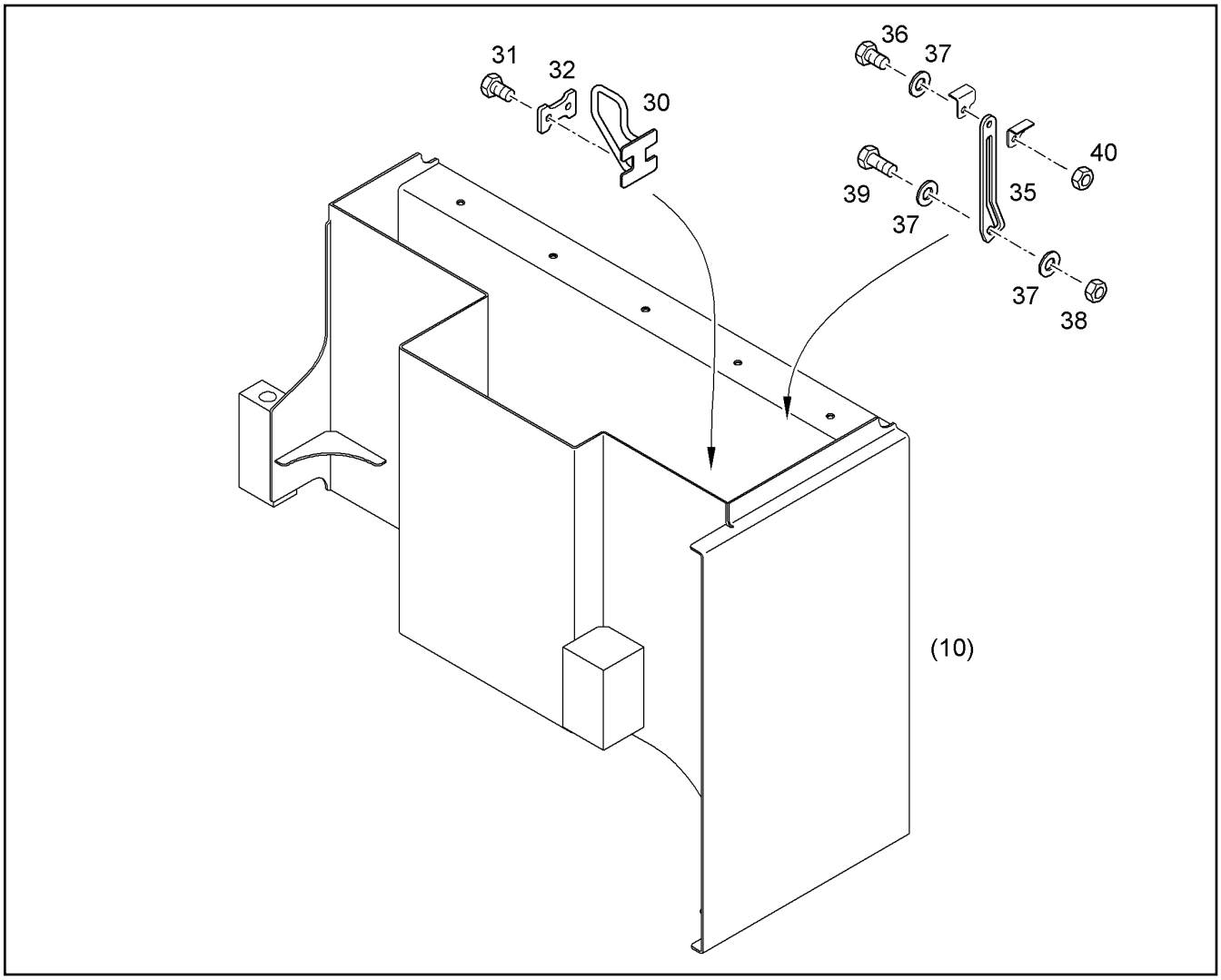

Pos.	Item	Quantity	Description	Descripción	Serie	K
30	9012477	1	BRACKET	ESTRIBO		1
31	4000704	2	HEX BOLT ISO 4017 M8X20 10.9 A2C	TORNILLO DE CABEZA HEXAGO		
32	9012222	1	SHEET	PLACA		1
35	10063827	1	RAIL	CARRIL		1
36	4066042	1	HEX BOLT ISO 4017 M8X25 10.9 A2C	TORNILLO DE CABEZA HEXAGO		
37	10289803	3	WASHER ISO 7089 8 300HV	ARANDELA		
38	4000381	1	HEX NUT M8	TUERCA HEXAGONAL		
39	4062002	1	HEX BOLT ISO 4017 M8X30 10.9 A2C	TORNILLO DE CABEZA HEXAGO		
40	4901573	1	HEX NUT M8	TUERCA HEXAGONAL		

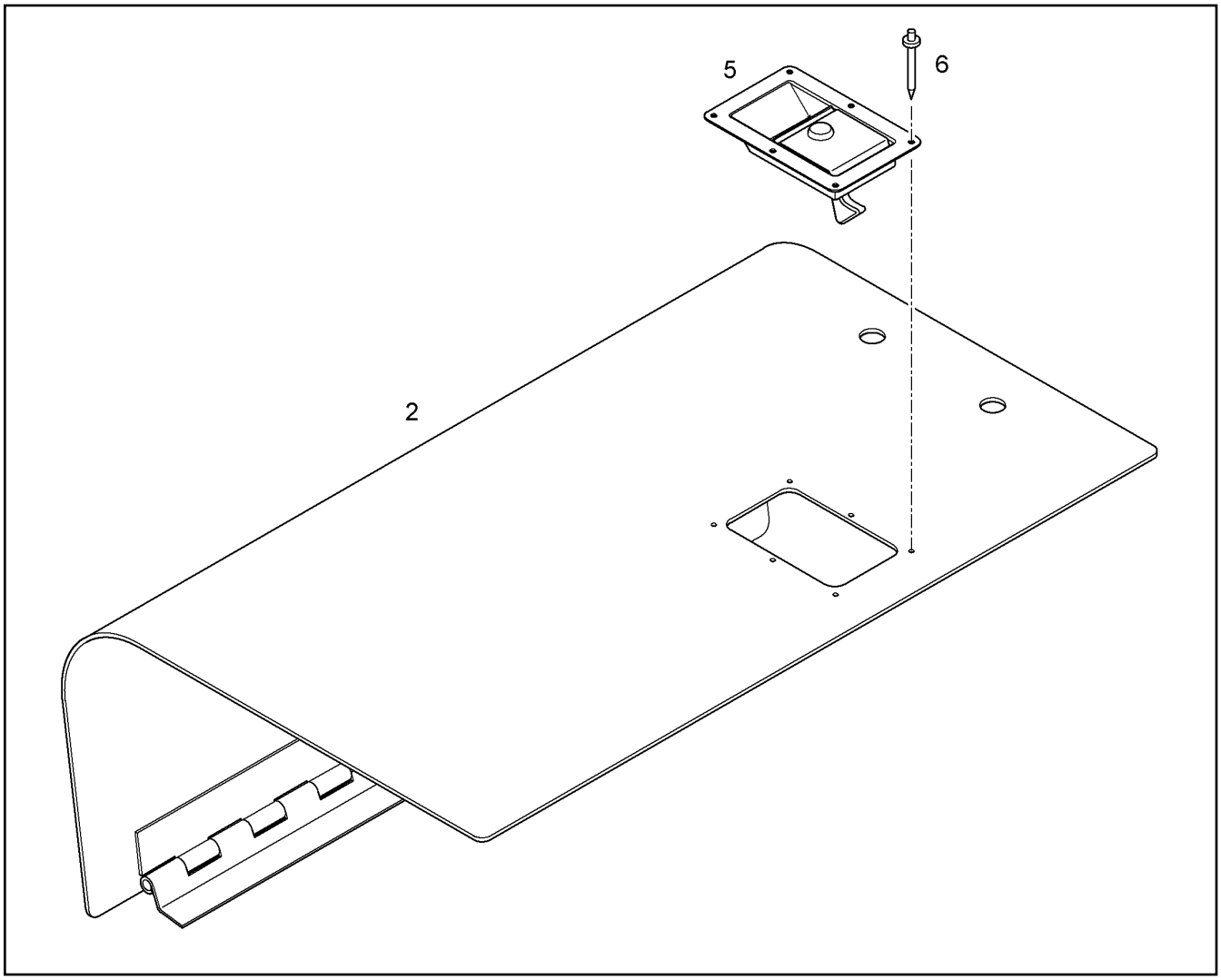

Pos.	Item	Quantity	Description	Descripción	Serie	K
2	10063555	1	LID	TAPA		
5	7372093	1	LOCK ⇨ ❑ 464	CERRADURA		
6	7009867	6	4			

OHNE BILD

WITHOUT ILLUSTRATION

SANS PLANCHE

Pos.	Item	Quantity	Description	Descripción	Serie	K
10	4000746	2	YOKE G 8X16	TERMINAL HORQUILLA		
20	7738704	2	PIN 8X16	BULON		1

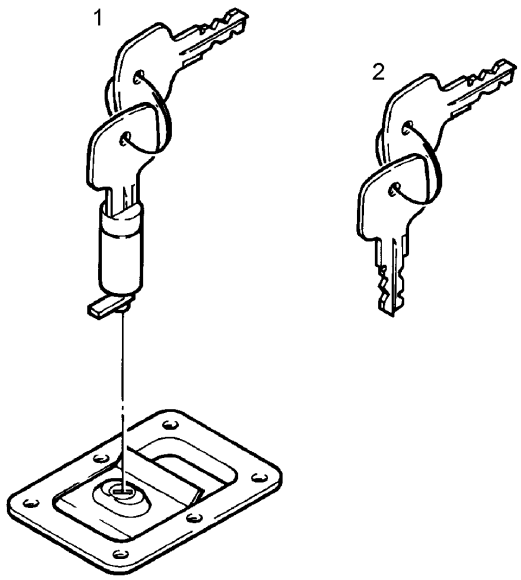

Pos.	Item	Quantity	Description	Descripción	Serie	K
1	7365293	1	LOCK	CERRADURA		
2	7365626	1	KEY	LLAVE		

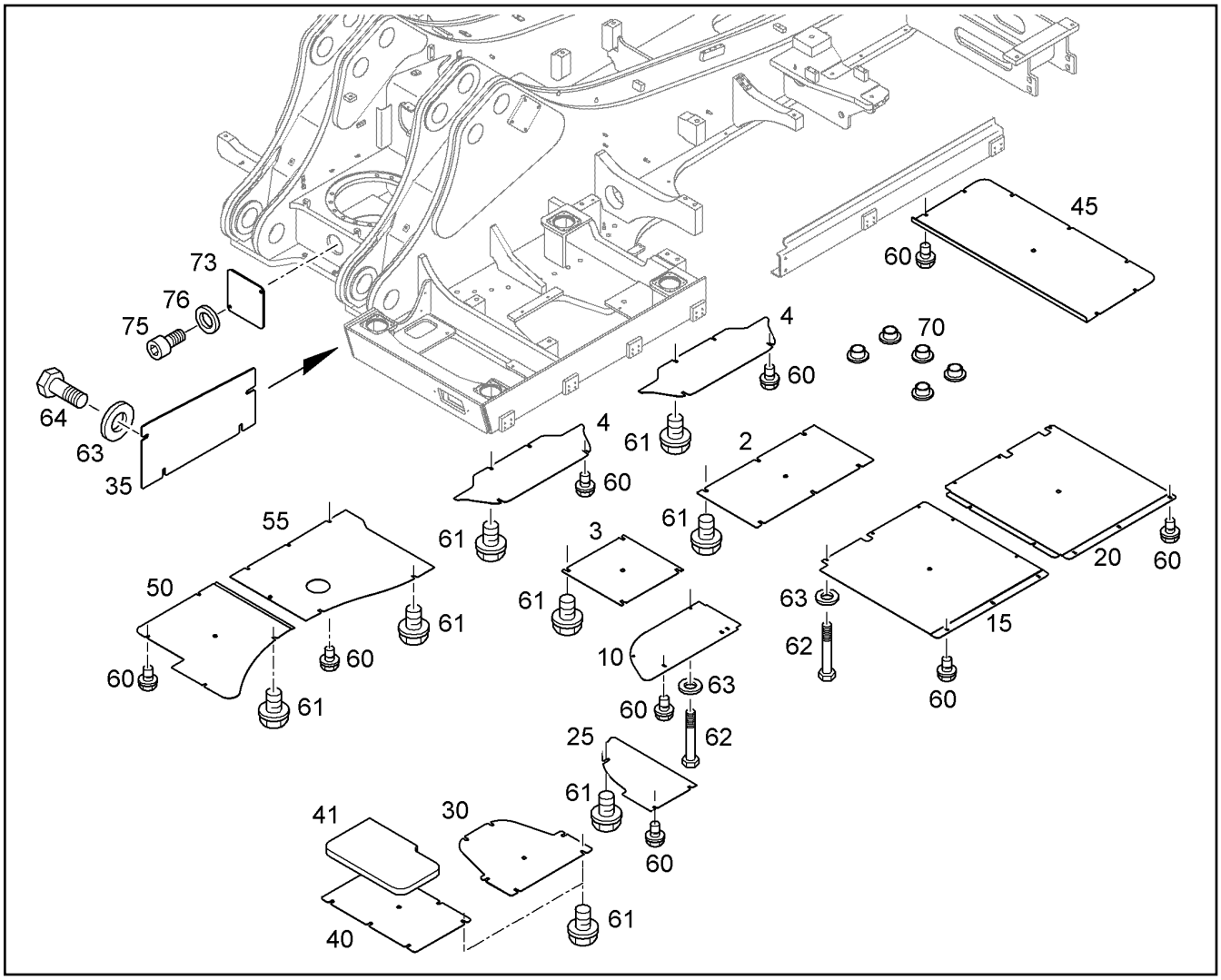

Pos.	Item	Quantity	Description	Descripción	Serie	K
2	10062288	1	LID	TAPA		1
3	9016187	1	LID	TAPA		1
4	10367531	2	LID	TAPA		1
10	10062296	1	COVER HYDRAULIC TANK	TAPA		
15	10062299	1	COVER FILTER BOX	TAPA CAJA FILTRO		
20	10062300	1	COVER FILTER BOX	TAPA CAJA FILTRO		
25	10062306	1	LID	TAPA		1
30	9941036	1	LID	TAPA		1
35	10049759	1	LID	TAPA		1
40	9941043	1	LID	TAPA		1
41	10365325	1	INSULATING MAT	ESTERA AISLANTE		1
45	10062308	1	LID	TAPA		1
50	10068038	1	COVER FUEL TANK	TAPA DEP. COMBUSTIBLE		1
55	10077922	1	COVER FUEL TANK	TAPA DEP. COMBUSTIBLE		
60	7366851	30	VERBUS-RIPP SCREW	TORNILLO HEXAGONAL VERBU		
61	10010205	30	BLANKING END M16X25 DAC	TORNILLO VERBUS-RIPP		
62	4601324	8	HEX BOLT ISO 4017 M10X60 10.9 A3C	TORNILLO DE CABEZA HEXAGO		
63	10289795	12	WASHER ISO 7089 10 300HV	ARANDELA		
64	4066093	4	HEX BOLT ISO 4017 M10X25 10.9 A3C	TORNILLO DE CABEZA HEXAGO		
70	7002773	5	BLANKING PLUG	TAPON DE CIERRE		1
73	9697208	1	COVER PLATE	CHAPA COBERTURA		
75	4902231	2	CYLINDER SCREW ISO 4762 M8X16 10.9 A2	TORNILLO CILINDRICO		
76	10289803	2	WASHER ISO 7089 8 300HV	ARANDELA		

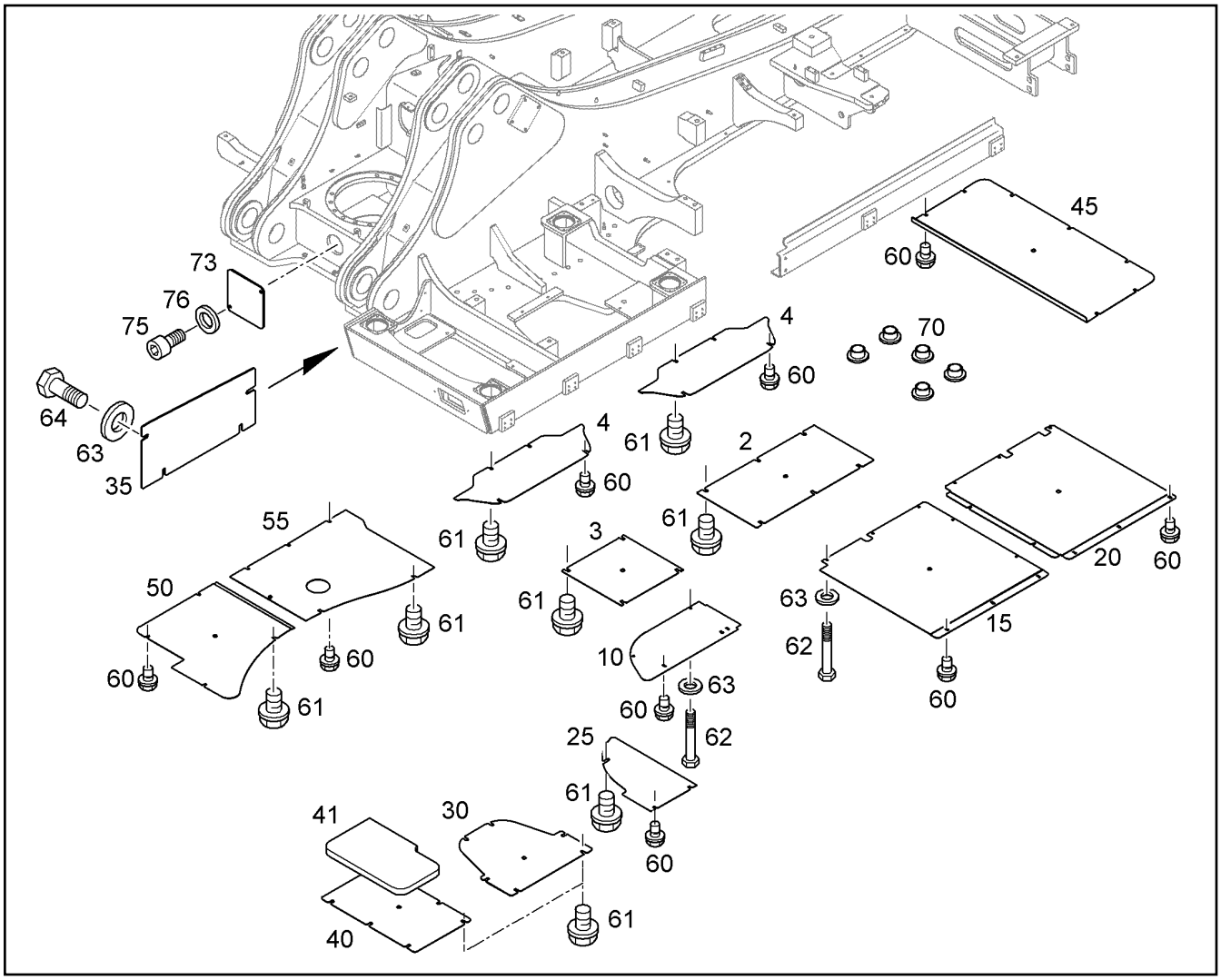

Pos.	Item	Quantity	Description	Descripción	Serie	K
2	10062288	1	LID	TAPA		1
3	9016187	1	LID	TAPA		1
4	10367531	2	LID	TAPA		1
10	10062296	1	COVER HYDRAULIC TANK	TAPA		
15	10062299	1	COVER FILTER BOX	TAPA CAJA FILTRO		
20	10062300	1	COVER FILTER BOX	TAPA CAJA FILTRO		
25	10062306	1	LID	TAPA		1
30	9941036	1	LID	TAPA		1
35	10049759	1	LID	TAPA		1
40	9941043	1	LID	TAPA		1
41	10365325	1	INSULATING MAT	ESTERA AISLANTE		1
45	10059995	1	PLATE	CHAPA		
50	10068038	1	COVER FUEL TANK	TAPA DEP. COMBUSTIBLE		1
55	10077922	1	COVER FUEL TANK	TAPA DEP. COMBUSTIBLE		
60	7366851	29	VERBUS-RIPP SCREW	TORNILLO HEXAGONAL VERBU		
61	10010205	30	BLANKING END M16X25 DAC	TORNILLO VERBUS-RIPP		
62	4601324	8	HEX BOLT ISO 4017 M10X60 10.9 A3C	TORNILLO DE CABEZA HEXAGO		
63	10289795	12	WASHER ISO 7089 10 300HV	ARANDELA		
64	4066093	4	HEX BOLT ISO 4017 M10X25 10.9 A3C	TORNILLO DE CABEZA HEXAGO		
70	7002773	5	BLANKING PLUG	TAPON DE CIERRE		1
73	9697208	1	COVER PLATE	CHAPA COBERTURA		
75	4902231	2	CYLINDER SCREW ISO 4762 M8X16 10.9 A2	TORNILLO CILINDRICO		
76	10289803	2	WASHER ISO 7089 8 300HV	ARANDELA		

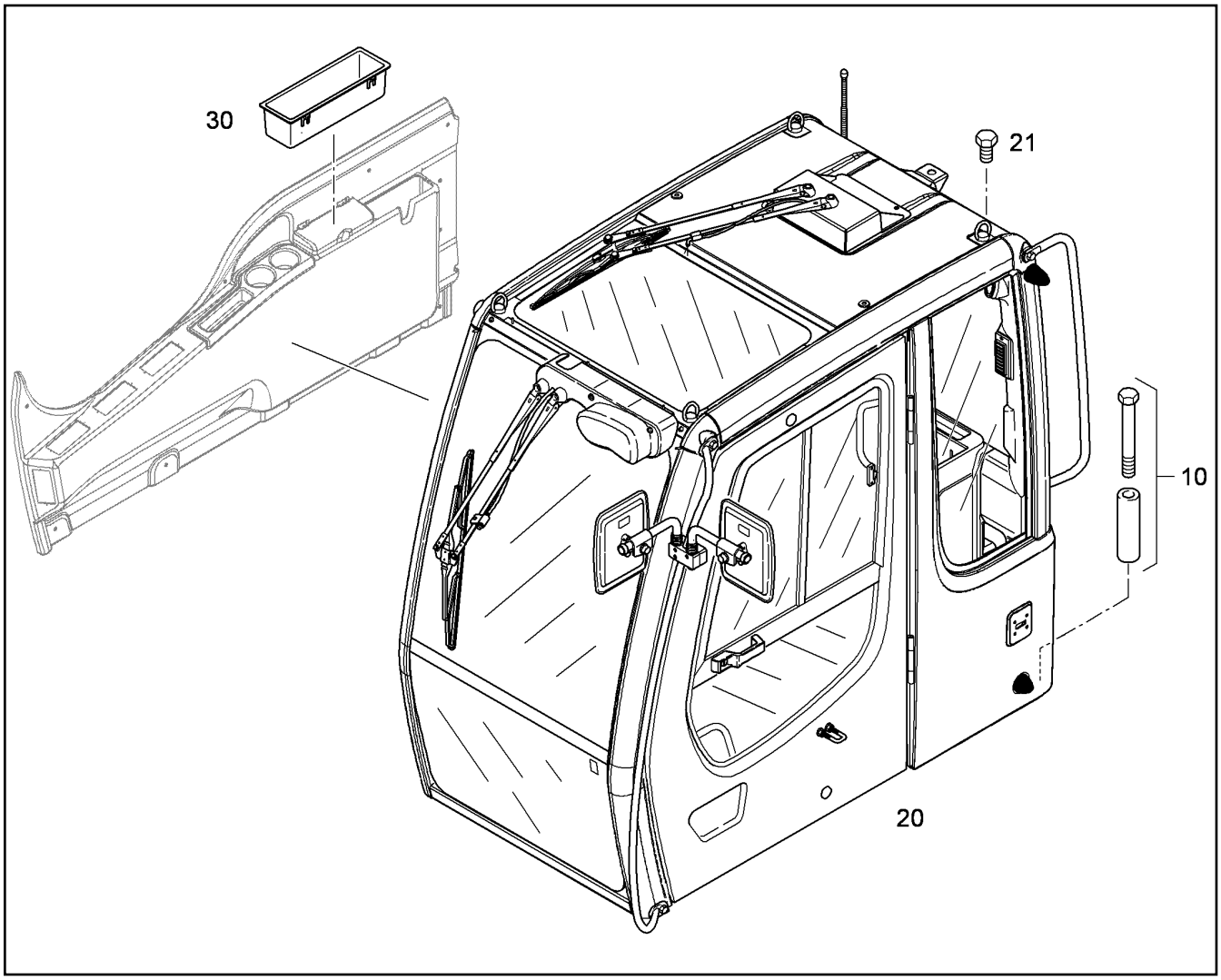

Pos.	Item	Quantity	Description	Descripción	Serie	K
10	10357979	1	FIXING PARTS CAB ⇨ ❑ 6	PIEZAS SUJ. CABINA		1
20	10476167	1	CAB [JA 22019] ⇨ ❑ 468	CABINA DEL CONDUCTOR		
21	10028013	4	HEX BOLT ISO 4017 M12X12 10.9 A3C	TORNILLO DE CABEZA HEXAGO		
30	10043180	1	REST	BANDEJA		

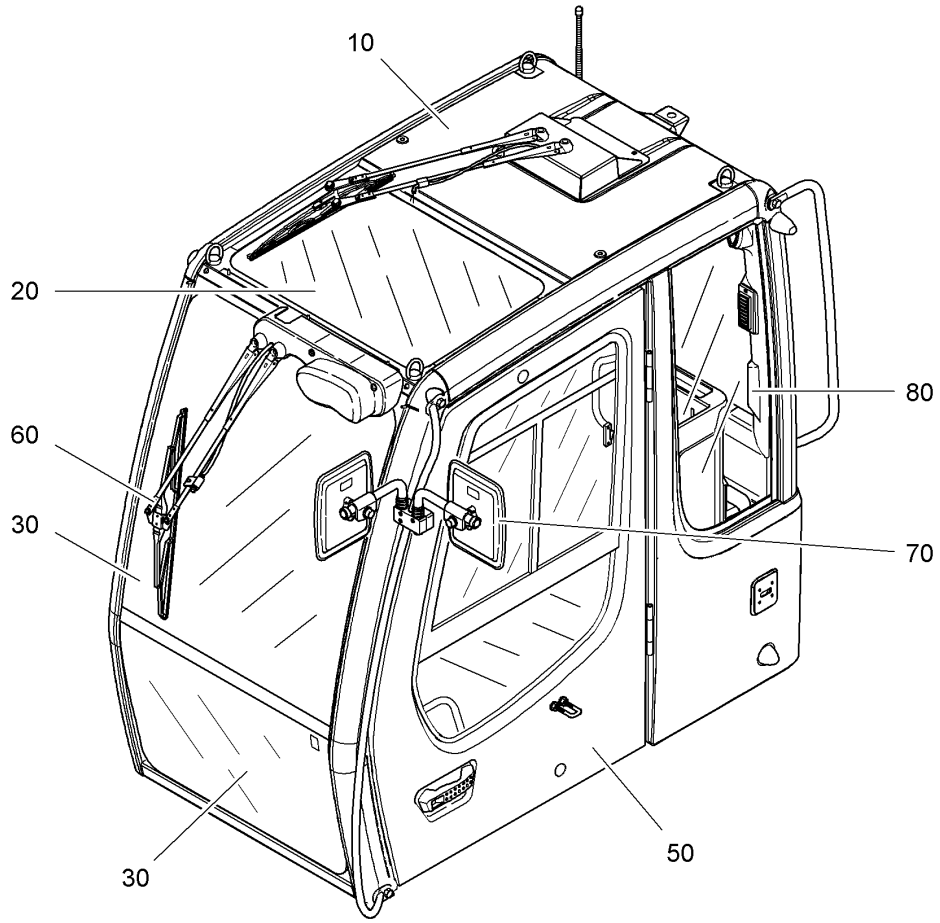

Pos.	Item	Quantity	Description	Descripción	Serie	K
10		1	DEFINITED ON FIRST MONTAGE	SE DETERMINA EN EL 1ER MON		
20		1	GLASS PANES ⇨ ❑ 469	LUNAS		1
30	7028775	1	FRONT WINDOW ⇨ ❑ 470	PARABRISAS		1
50	10046788	1	DRIVER'S CAB DOOR ⇨ ❑ 472	PUERTA CABINA CONDUCTOR		
60		1	ELECTRICAL INSTALLATION ⇨ ❑ 477	INST.ELÉCTRICA		2
70		1	ASSY. PARTS ⇨ ❑ 484	PIEZAS DE MONTAJE		
80		1	INTERNAL LINING ⇨ ❑ 488	REVESTIMIENTO INTERIOR		

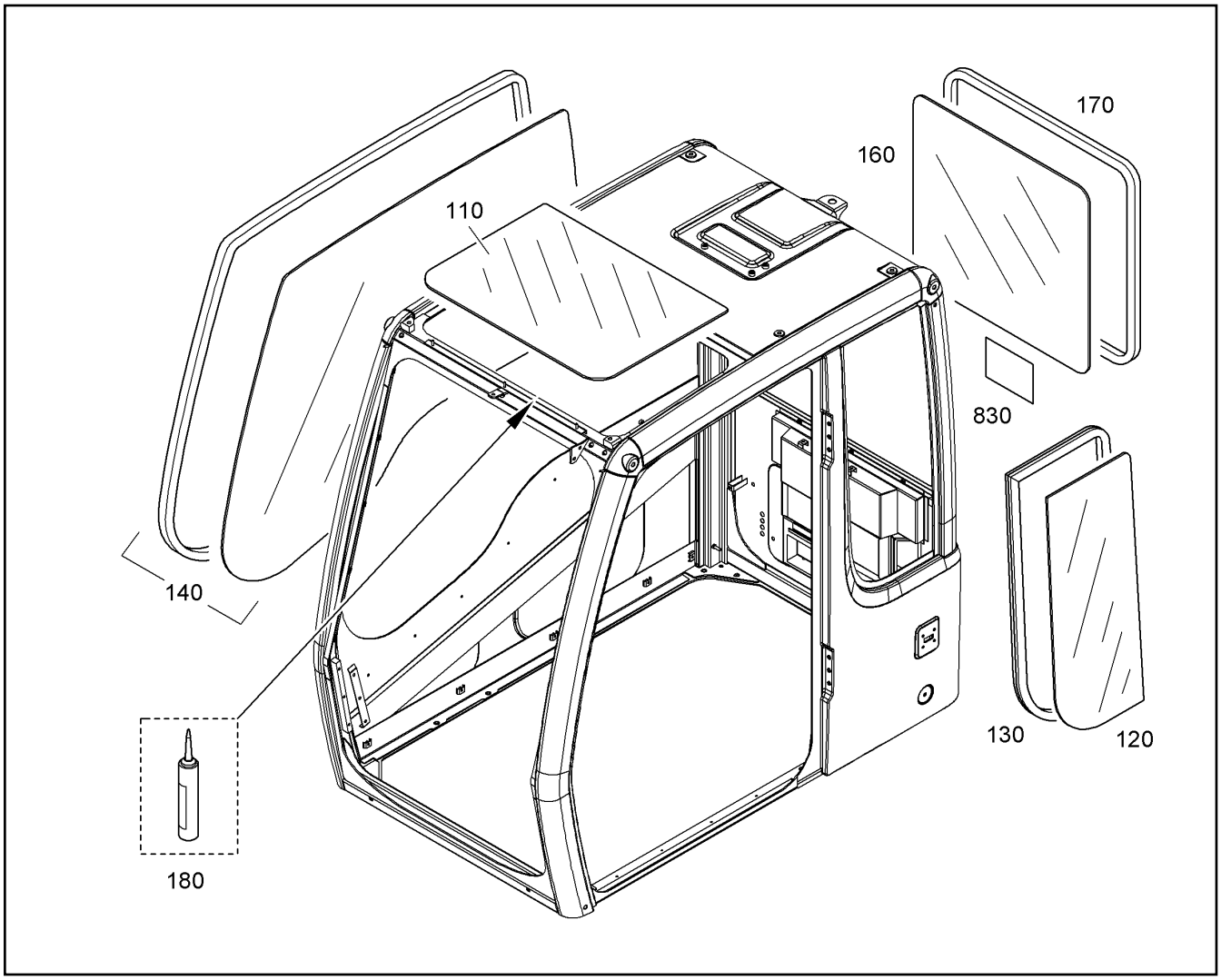

Pos.	Item	Quantity	Description	Descripción	Serie	K
110	7028793	1	WINDOW GLASS	LUNA		1
120	7030315	1	WINDOW GLASS	LUNA		1
130	7028790	1	SEAL	JUNTA		1
140	10358890	1	ADDITIONAL KIT	KIT DE MODIFICACION		
160	10009223	1	WINDOW GLASS	LUNA		1
170	7028795	1	SEAL	JUNTA		1
180	7029402	1	SEALING COMPOUND	PASTA DE OBTURACION		
830	10039562	1	LABEL EMERGENCY EXIT	LETRERO SALIDA EMERG.		

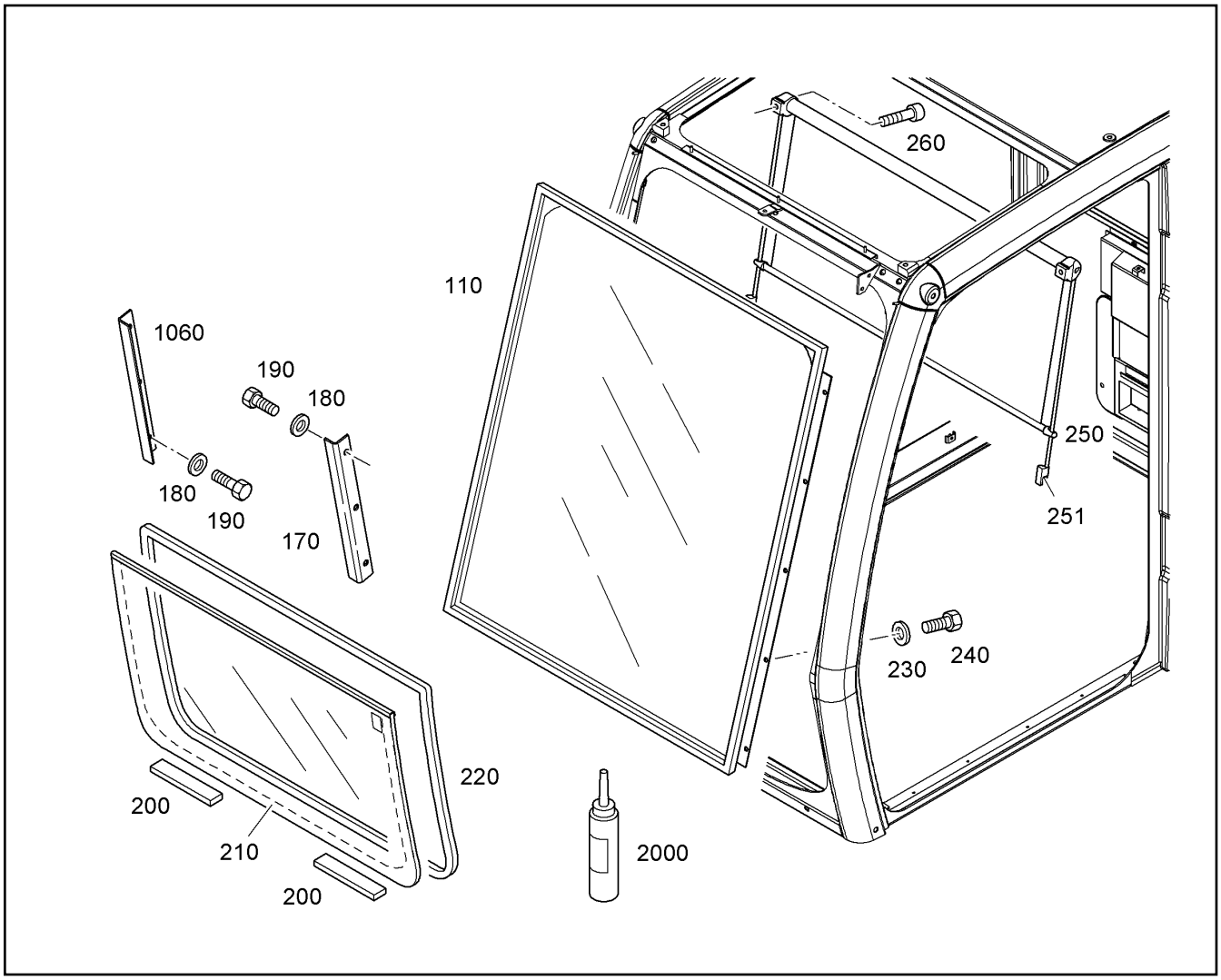

Pos.	Item	Quantity	Description	Descripción	Serie	K
110	7030512	1	FRONT PANE TOP	PARABRISAS		
170	10044326	1	PLATE LEFT	PLACA IZDA.		
180	10289803	6	WASHER ISO 7089 8 300HV	ARANDELA		
190	4000704	6	HEX BOLT ISO 4017 M8X20 10.9 A2C	TORNILLO DE CABEZA HEXAGO		
200	7028801	2	HOLDER	FIJADOR		
210	7028820	1	FRONT WINDOW BOTTOM	PARABRISAS INFERIOR		1
220	7028821	1.44m	SEALING PROFILE	PERFIL ESTANCO		
230	10289803	10	WASHER ISO 7089 8 300HV	ARANDELA		
240	4000704	10	HEX BOLT ISO 4017 M8X20 10.9 A2C	TORNILLO DE CABEZA HEXAGO		
250	7028826	1	SUNHALDE SET	JUEGO PARASOLES		1
251	10027438	2	-HOLDER	-FIJADOR		
260	4600387	2	CYLINDER SCREW ISO 4762 M4x12 8.8 A2C	TORNILLO CILINDRICO		
1060	10044328	1	PLATE RIGHT	PLACA DCHA.		
2000	8501674	1	LUBRISEAL TRANSPARENT	LUBRISEAL		1

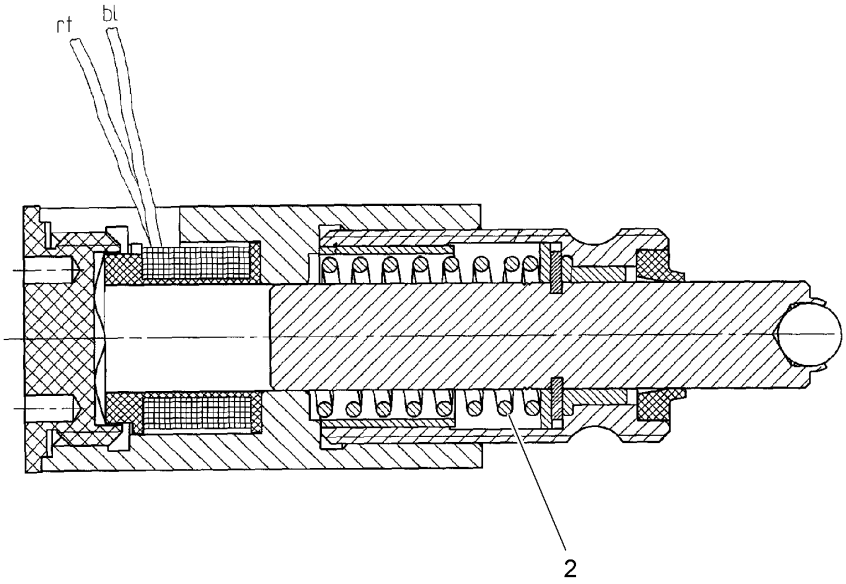

Pos.	Item	Quantity	Description	Descripción	Serie	K
2	10013879	1	SPRING	MUELLE		

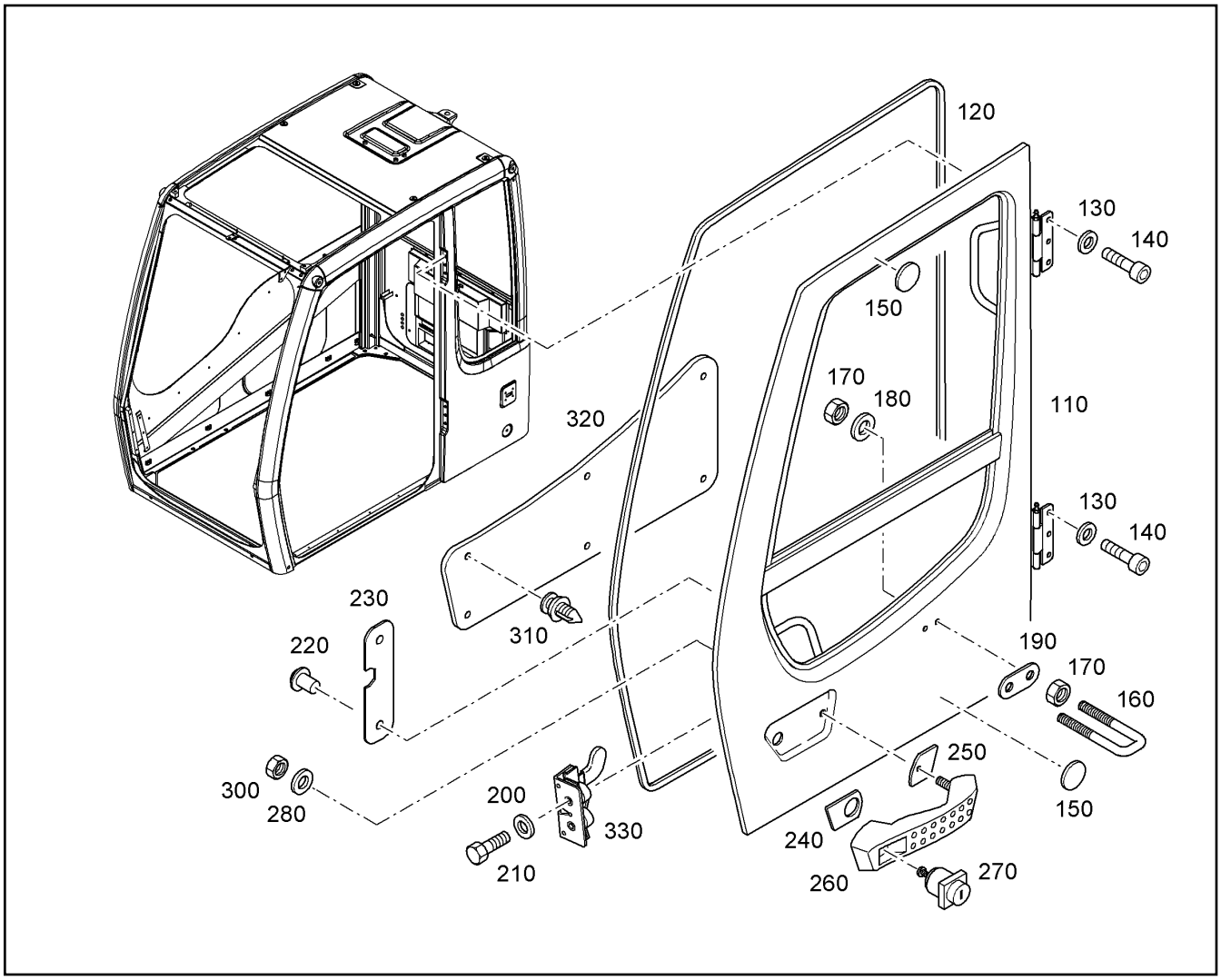

Pos.	Item	Quantity	Description	Descripción	Serie	K
110	10046789	1	DOOR FRAME ⇨ ❑ 474	MARCO DE LA PUERTA		
120	10009014	1	SEAL	JUNTA		1
130	10289795	6	WASHER ISO 7089 10 300HV	ARANDELA		
140	4043000	6	CYLINDER SCREW ISO 4762 M10X30 10.9	TORNILLO CILINDRICO		
150	7019801	2	WASHER	ARANDELA		1
160	7028838	1	BRACKET	ESTRIBO		
170	4000381	4	HEX NUT M8	TUERCA HEXAGONAL		
180	10289803	2	WASHER ISO 7089 8 300HV	ARANDELA		
190	7028839	1	SHEET	PLACA		
200	10289803	2	WASHER ISO 7089 8 300HV	ARANDELA		
210	4066042	2	HEX BOLT ISO 4017 M8X25 10.9 A2C	TORNILLO DE CABEZA HEXAGO		
220	7024438	2	BODY-BOUND RIVET	REMACHE EXPANSIBLE		
230	7028836	1	LID	TAPA		
240	7019154	1	SEAL	JUNTA		1
250	7019155	1	SEAL	JUNTA		1
260	7019153	1	GRIP	TIRADOR		1
270	7025758	1	GRIP F.DRIVERS ⇨ ❑ 475	CILINDRO DE CIERRE		
280	10289802	1	WASHER ISO 7089 6 300HV	ARANDELA		
300	4000379	1	HEX NUT M6	TUERCA HEXAGONAL		
310	10044330	6	BLIND RIVET	REMACHE CIEGO		
320	7028837	1	PANELLING	REVESTIMIENTO		
330	7028833	1	LOCK	CERRADURA		

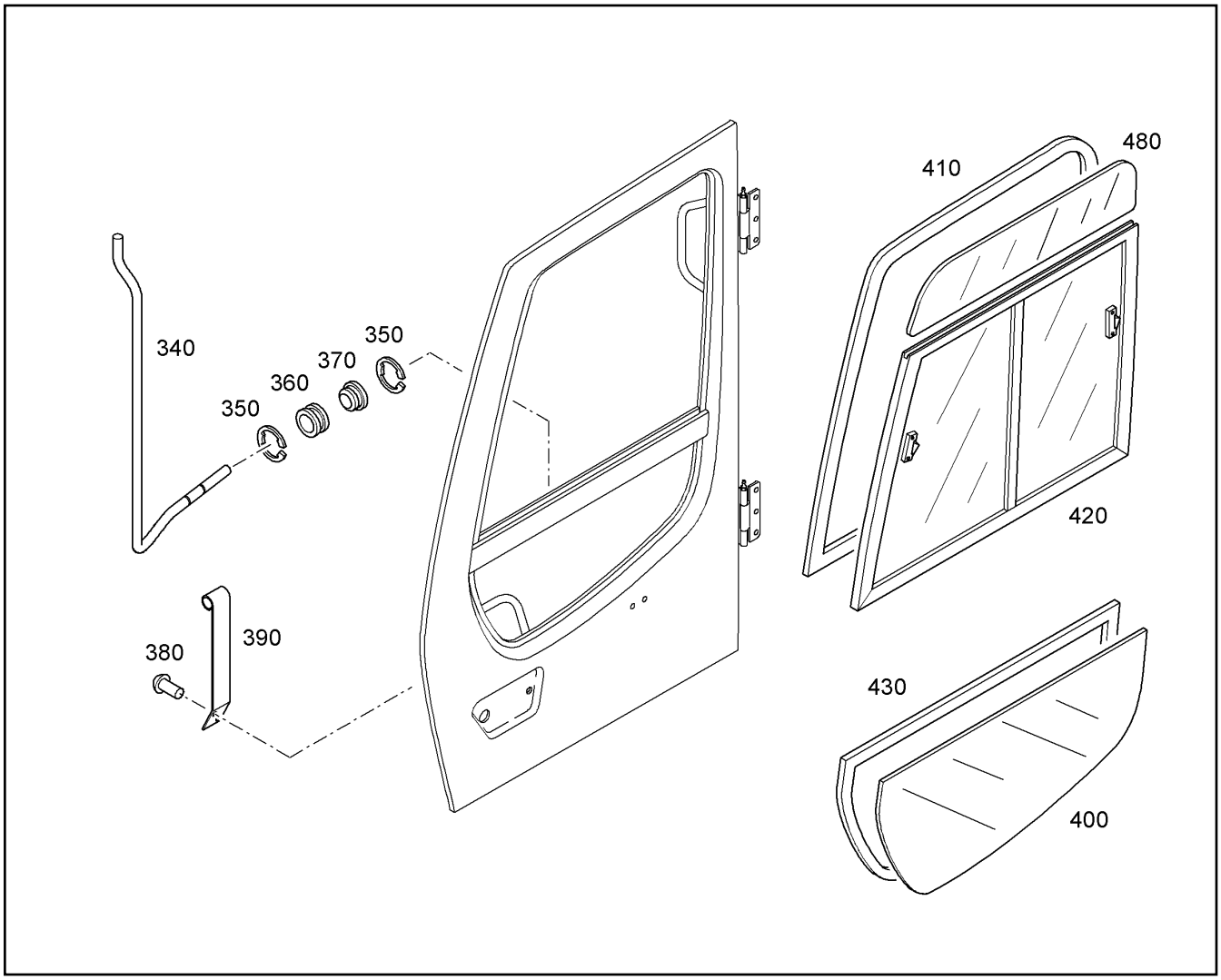

Pos.	Item	Quantity	Description	Descripción	Serie	K
340	7028834	1	ROD	VARILLA		
350	7019794	2	LOCKING RING	ANILLO SEGURIDAD		
360	7020613	1	SPOUT	BOQUILLA		
370	7019160	1	SPOUT 6/10/13	BOQUILLA		
380	7028835	1	SPRING	MUELLE		2
390	7020612	2	RIVET	REMACHE		
400	10009225	1	WINDOW GLASS	LUNA		1
410	7028846	1	SEAL	JUNTA		2
420	7028844	1	SLIDING WINDOW ⇨ ❑ 476	VENTANA DE CORREDERA		1
430	7028847	1	SEAL	JUNTA		2
480	10009056	1	WINDOW GLASS	LUNA		1

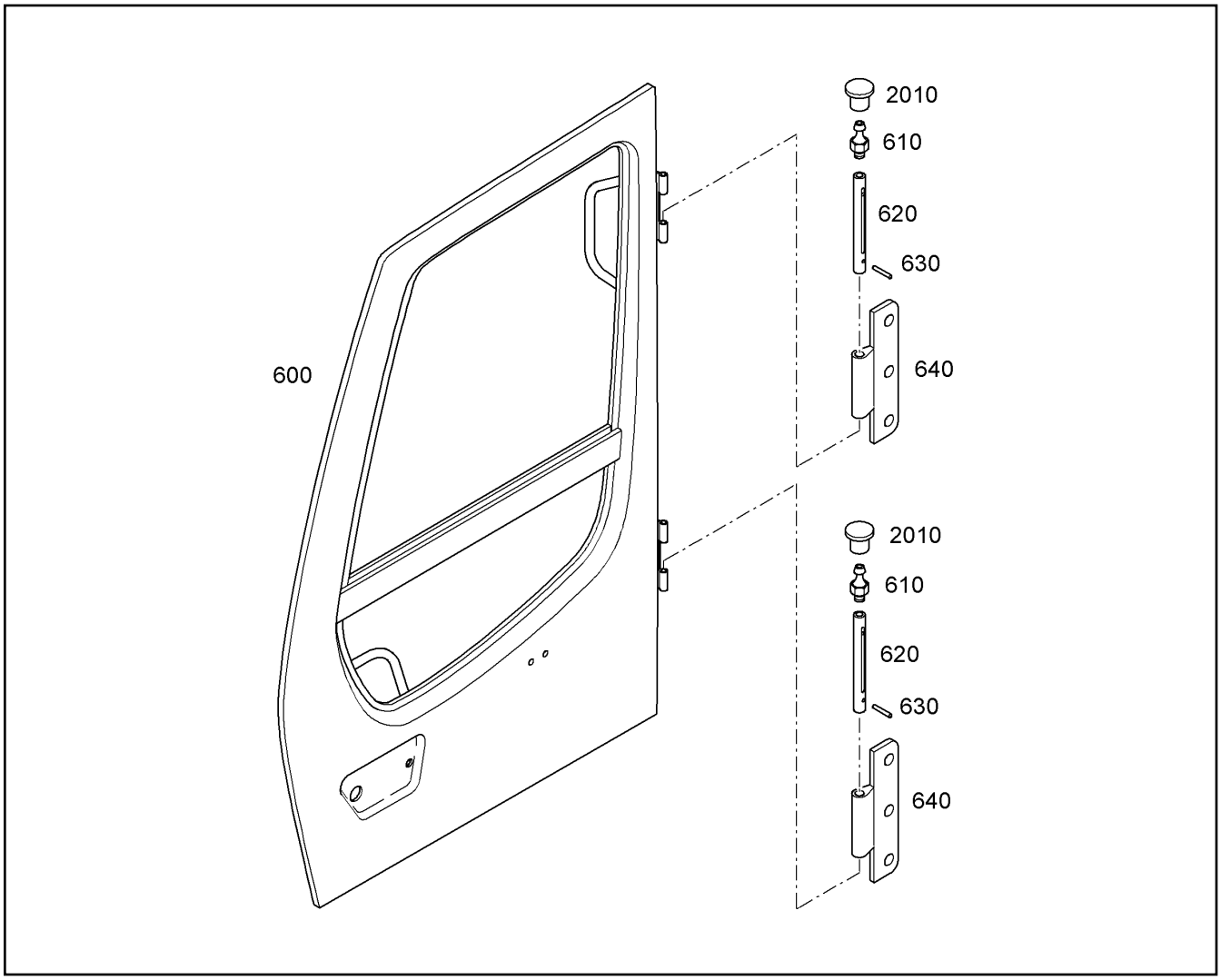

Pos.	Item	Quantity	Description	Descripción	Serie	K
600	10101225	1	FRAME	BASTIDOR		1
610	7743245	2	GREASE FITTING DIN 71412 A M6	BOQUILLA KEG SHM		
620	7028840	2	PIN	BULON		1
630	4900372	2	DOWEL PIN ISO 8752 A 3 X 20 ST	PASADOR ELASTICO		
640	7029409	2	HINGE	BISAGRA		
2010	10046783	2	CAP	CAPUCHON		

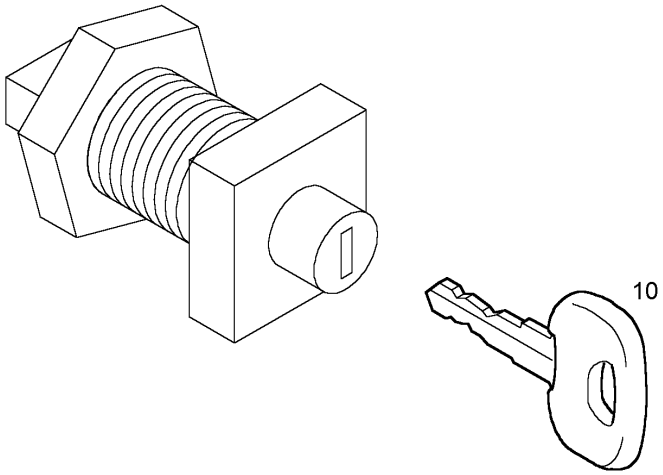

Pos.	Item	Quantity	Description	Descripción	Serie	K
10	10221073	1	IGNITION KEY	LLAVE DE CONTACTO		

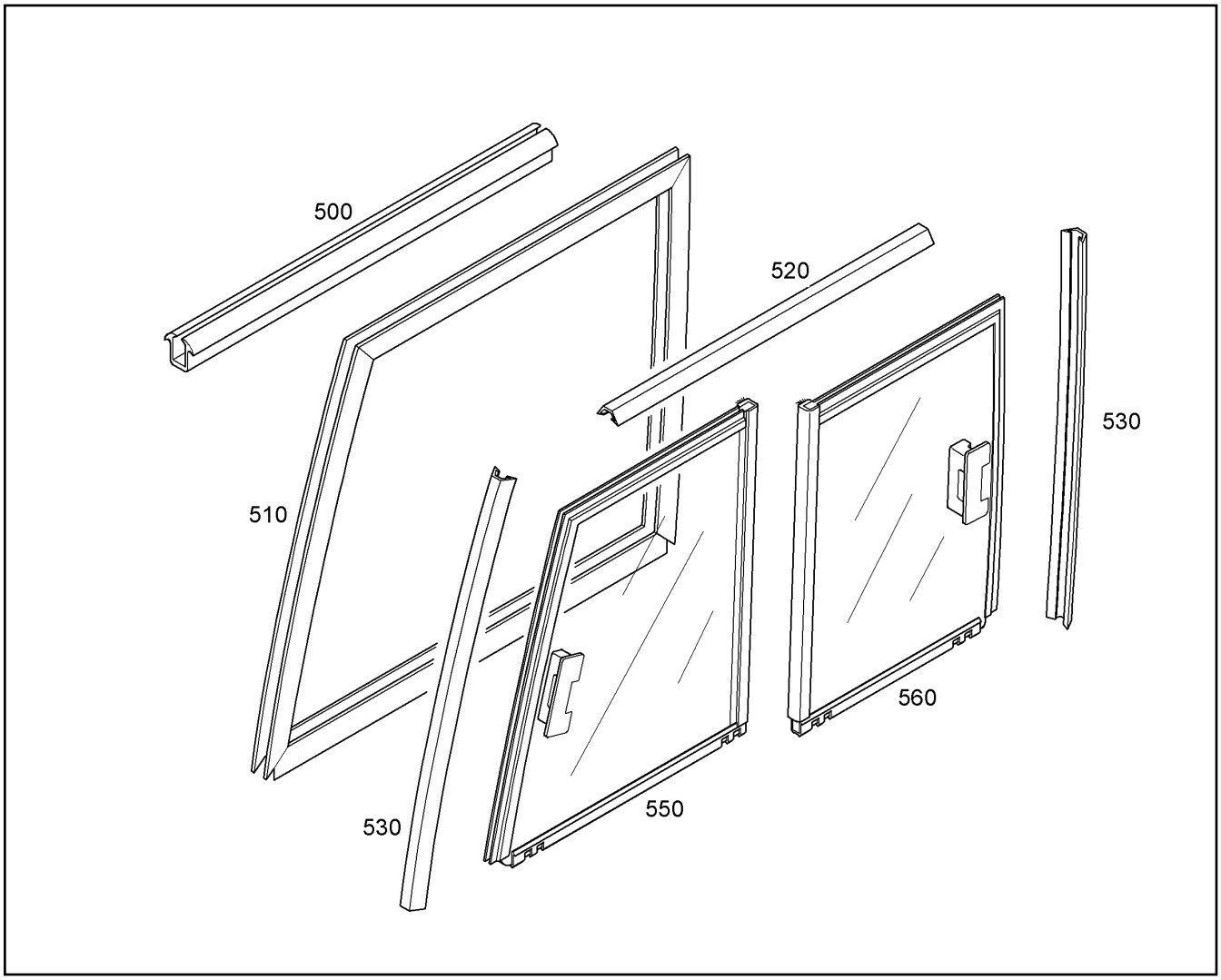

Pos.	Item	Quantity	Description	Descripción	Serie	K
500	7029410	1	RUBBER PROFILE	PERFIL GOMA		
510	7029411	1	FRAME	BASTIDOR		1
520	7029412	1	SEAL	JUNTA		1
530	7029413	2	SEAL	JUNTA		1
550	7029415	1	WINDOW	VENTANA		1
560	7029416	1	WINDOW	VENTANA		1

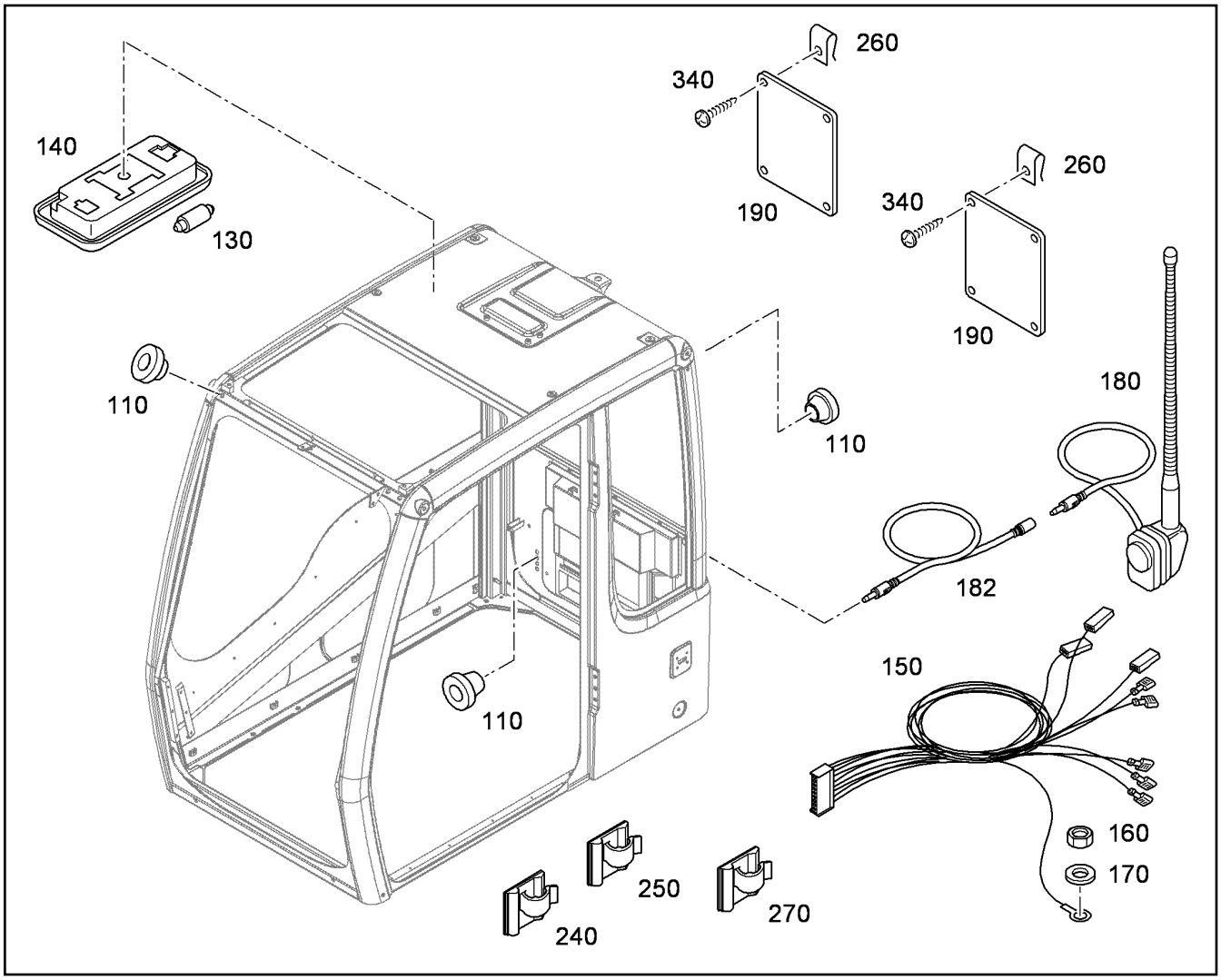

Pos.	Item	Quantity	Description	Descripción	Serie	K
110	7019171	9	SPOUT 5/16/20	BOQUILLA		
130	6000167	1	LIGHT BULB DIN 72601 K 24V 10 W	BOMBILLA		1
140	10428776	1	LIGHT	LAMPARA		1
150	10488707	1	WIRE HARNESS - CABIN	JC CABINA		2
160	4000381	1	HEX NUT M8	TUERCA HEXAGONAL		
170	7028855	1	TOOTH LOCK WASHER	ARANDELA DENTADA		
180	6001556	1	ANTENNA	ANTENA		2
182	10488090	1	ANTENNA CABLE	CABLE DE ANTENA		2
190	7020608	2	LID	TAPA		
240	7028768	9	HOLDER	FIJADOR		
250	7028812	11	HOLDER	FIJADOR		
260		8	SHEET METAL NUT ISO 1478 M 3,5	TUERCA PARA CHAPA		
270	10009023	2	HOLDER	FIJADOR		
340	4601386	8	SHEET-METAL SCREW ISO 7049 ST3,5X16	TORNILLO ROSCACHAPAS		

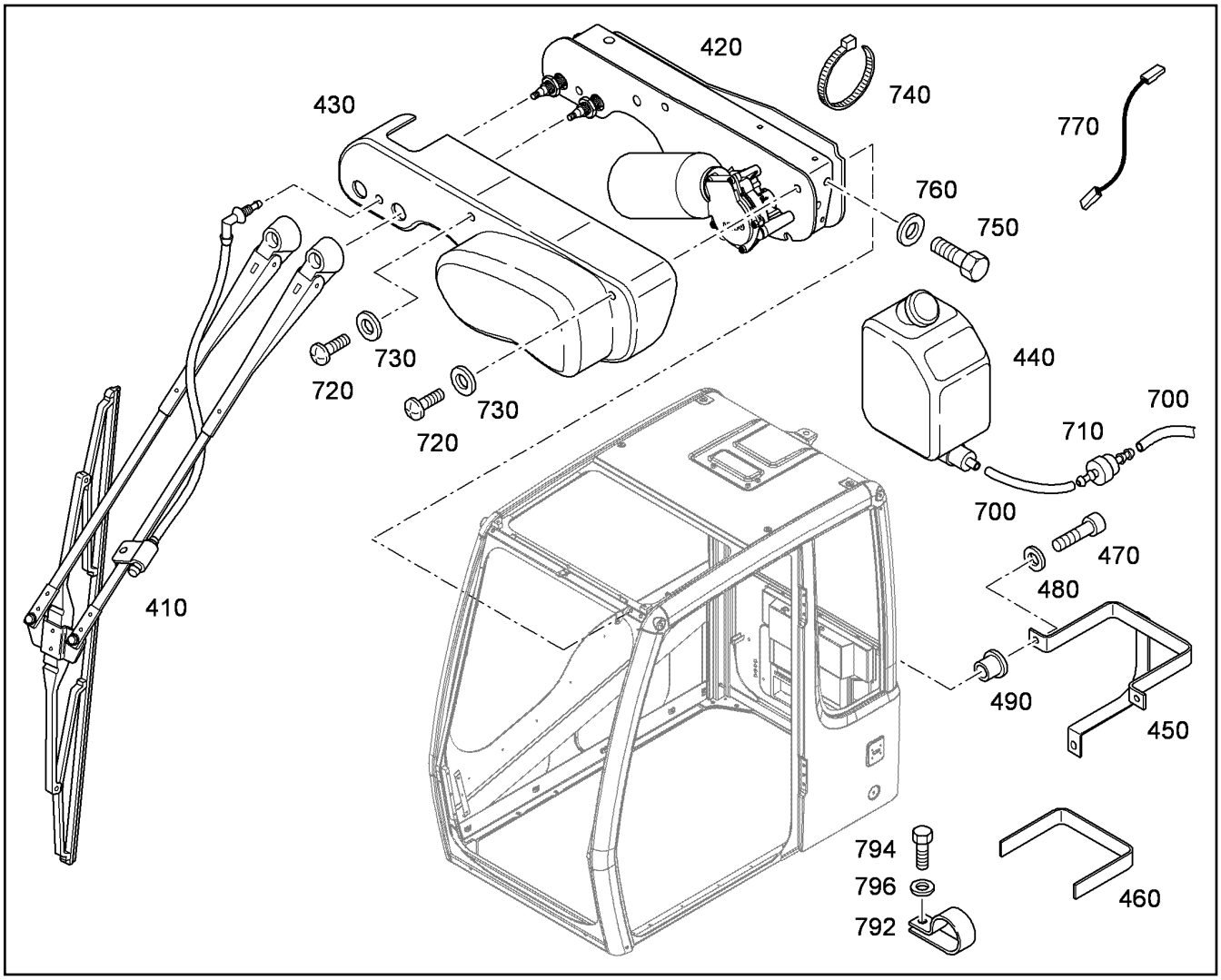

Pos.	Item	Quantity	Description	Descripción	Serie	K
410		1	WINDSHIELD WIPER ⇨ ❑ 481	LIMPIAPARABRISAS		
420	7028884	1	WIPER MOTOR ⇨ ❑ 480	MOTOR LIMPIAPARABRISAS		2
430	7028865	1	LID	TAPA		
440	10009208	1	WATER BASIN ⇨ ❑ 492	DEPÓSITO DE AGUA		1
450	7028872	1	BRACKET	ESTRIBO		
460	7024455	1	SEAL	JUNTA		1
470	4600079	3	CYLINDER SCREW ISO 4762 M8x20 8.8 A2C	TORNILLO CILINDRICO		
480	10289803	3	WASHER ISO 7089 8 300HV	ARANDELA		
490	10044343	3	THREADED INSERT	SUPLEMENTO ROSCADO		
700	6200461	5m	HOSE	TUBO GOMA		
710	7017201	2	NON-RETURN VALVE	VALVULA DE RETENCION		2
720	4600723	3	PAN-HEAD SCREW ISO 7045 M6X16 4.8 H	TORNILLO ROSCACHAPA		
730	10289802	3	WASHER ISO 7089 6 300HV	ARANDELA		
740	7028864	8	TIE WRAP	CINTA PARA CABLES		
750	4000704	3	HEX BOLT ISO 4017 M8X20 10.9 A2C	TORNILLO DE CABEZA HEXAGO		
760	10289803	3	WASHER ISO 7089 8 300HV	ARANDELA		
770	10009024	1	EARTH CABLE	CABLE DE TIERRA		2
792	10044344	1	CABLE CLIP D 16	BRIDA DE CABLES		
794	4002308	1	PAN-HEAD SCREW ISO 7045 M6X12 4.8 H	TORNILLO ROSCACHAPA		
796	10289802	1	WASHER ISO 7089 6 300HV	ARANDELA		

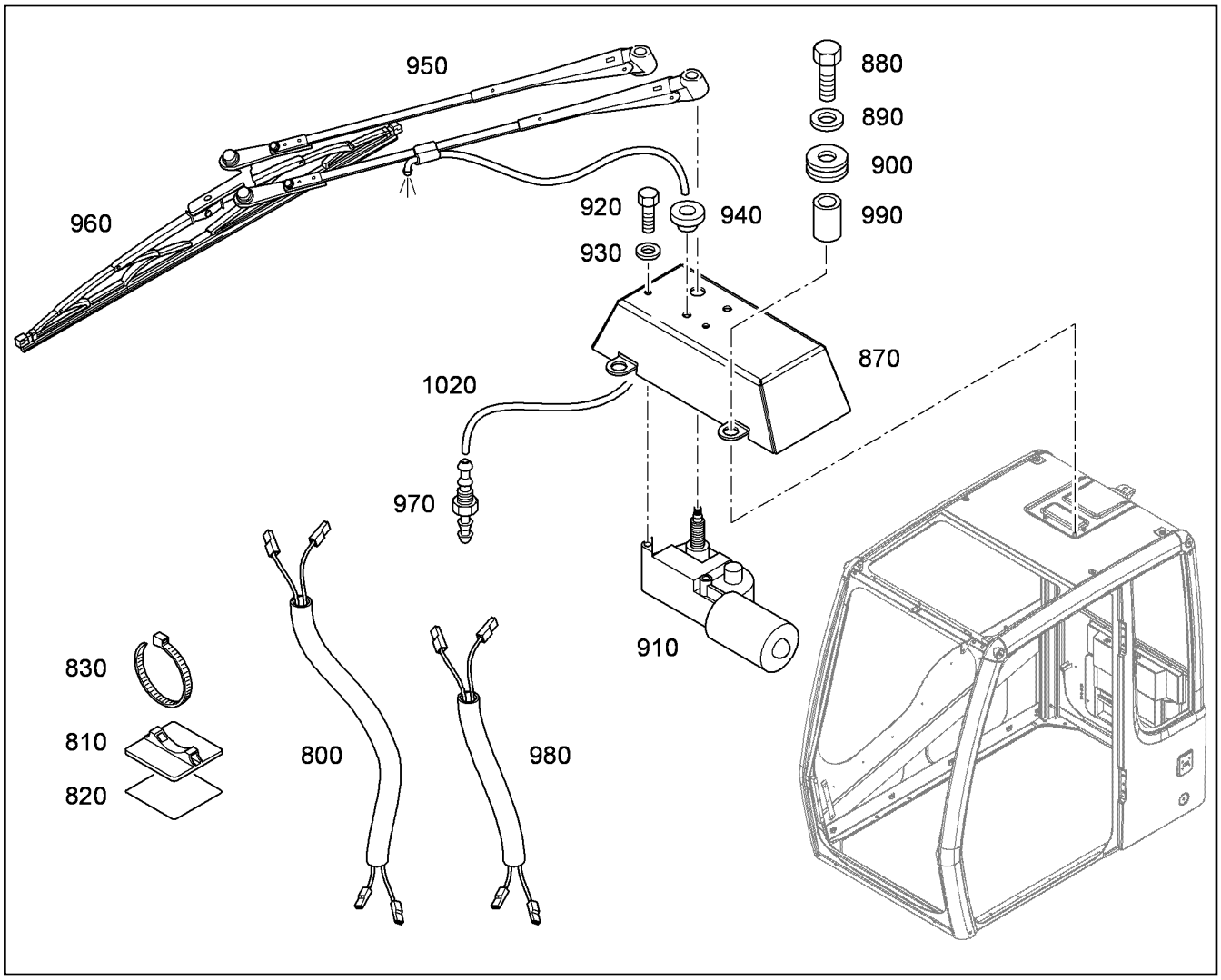

Pos.	Item	Quantity	Description	Descripción	Serie	K
800	10009043	1	WIRE HARNESS	JC LIMPIADOR TECHO		2
810	10009044	2	HOLDER	FIJADOR		
820	10009045	0.1m	ADHESIVE TAPE	CINTA ADHESIVA		
830	7028864	2	TIE WRAP	CINTA PARA CABLES		
870	10044347	1	COVER	CUBIERTA		
880	4001606	3	HEX BOLT ISO 4017 M8X16 10.9 A2C	TORNILLO DE CABEZA HEXAGO		
890	10289803	3	WASHER ISO 7089 8 300HV	ARANDELA		
900	7028906	4	SPOUT	BOQUILLA		
910	7019184	1	WINDSHIELD WIPER MOTOR	MOTOR LIMPIAPARABRISAS		2
920	4065099	2	HEX BOLT ISO 4017 M6x16 8.8 A2C	TORNILLO DE CABEZA HEXAGO		
930	10289802	2	WASHER ISO 7089 6 300HV	ARANDELA		
940	7019160	1	SPOUT 6/10/13	BOQUILLA		
950	10291146	1	WIPER ARM ⇨ ❑ 482	BRAZO DEL LIMPIAPARABRISAS		1
960	7019186	1	WIPER BLADE	GOMA LIMPIAPARABRISAS		1
970	10009055	1	HOSE NIPPLE	BOQUILLA MANGUERA		
980	10009058	1	WIRE HARNESS	JC BOMBA TECHO		2
990	7028907	4	SPACER BUSH	CASQUILLO DISTANCIADOR		1
1020	10013970	2.2m	HOSE	TUBO GOMA		

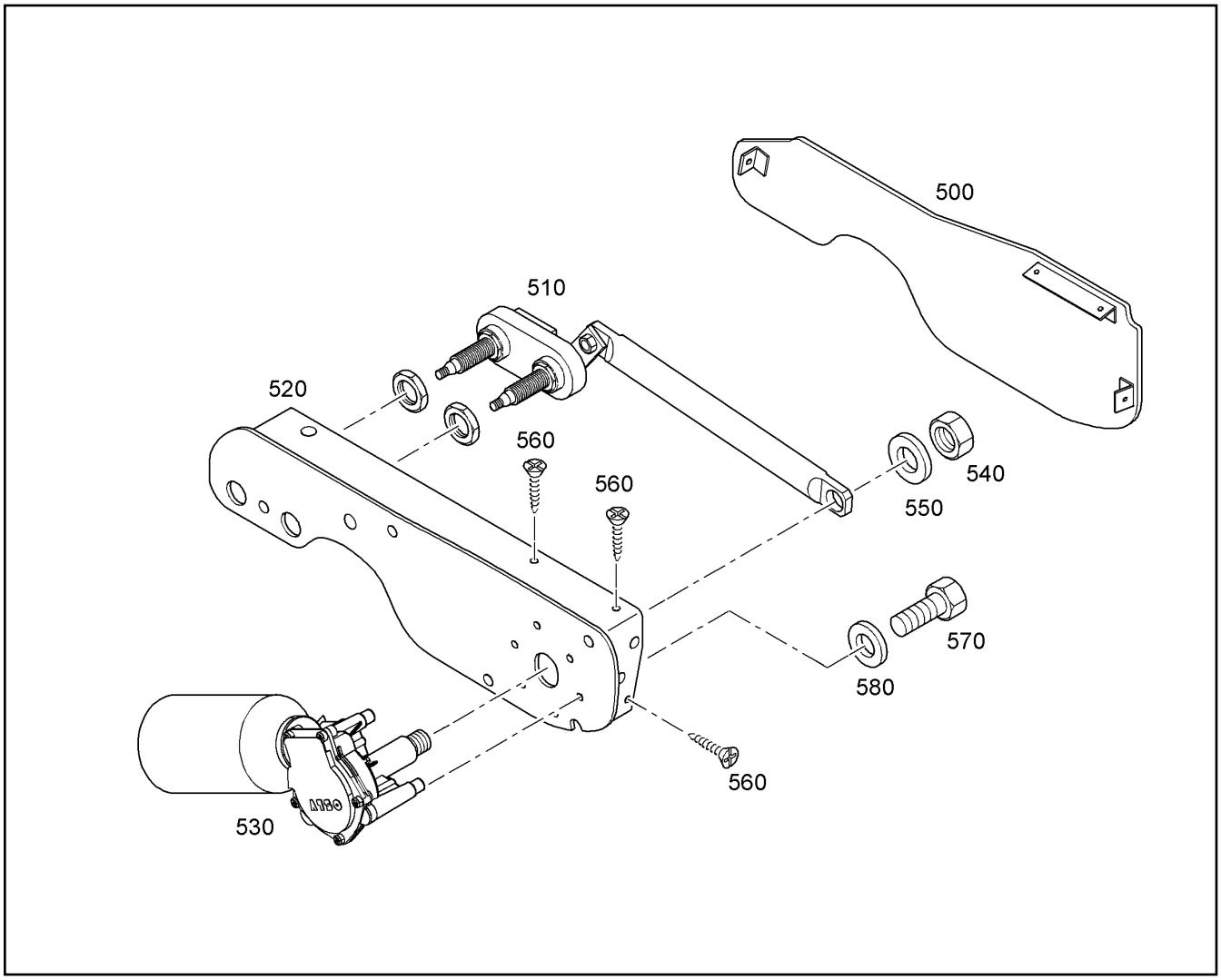

Pos.	Item	Quantity	Description	Descripción	Serie	K
500	7028881	1	LID	TAPA		
510	7028883	1	GEARBOX	REDUCTOR		
520	7028878	1	SHEET	PLACA		
530	7028879	1	WIPER MOTOR	MOTOR LIMPIAPARABRISAS		2
540	4000381	1	HEX NUT M8	TUERCA HEXAGONAL		
550	10289803	1	WASHER ISO 7089 8 300HV	ARANDELA		
560	408286100	4	SHEET-METAL SCREW ISO 7050 ST3,5X13 S	TORNILLO ROSCACHAPAS		
570	4065099	3	HEX BOLT ISO 4017 M6x16 8.8 A2C	TORNILLO DE CABEZA HEXAGO		
580	10289802	3	WASHER ISO 7089 6 300HV	ARANDELA		

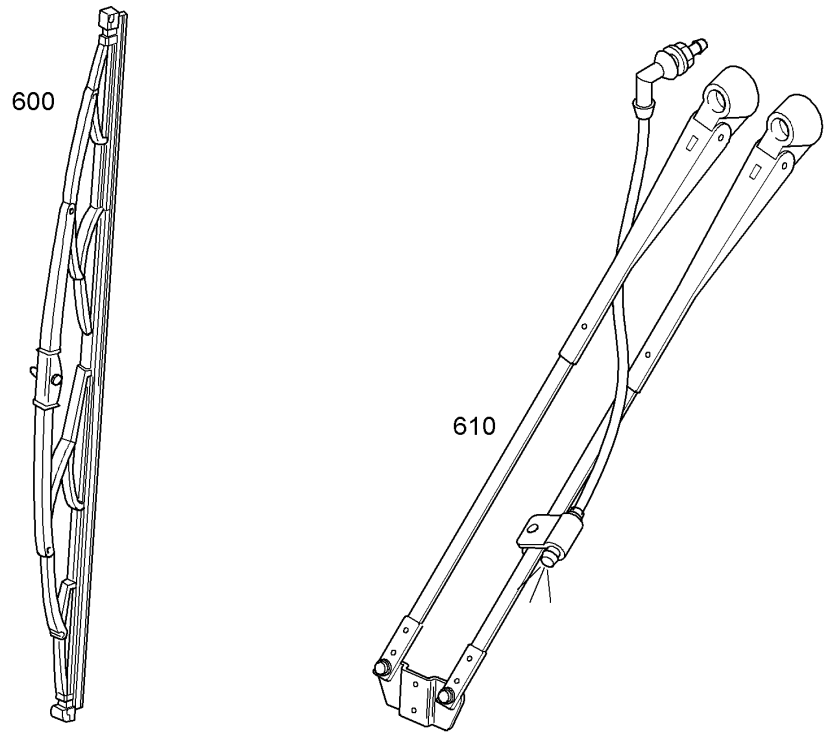

Pos.	Item	Quantity	Description	Descripción	Serie	K
600	7028869	1	WIPER BLADE 800	ESCOBILLA DE LIMPIAPARABRI		1
610	7028866	1	WIPER ARM ⇨ ❑ 483	BRAZO DEL LIMPIAPARABRISAS		1

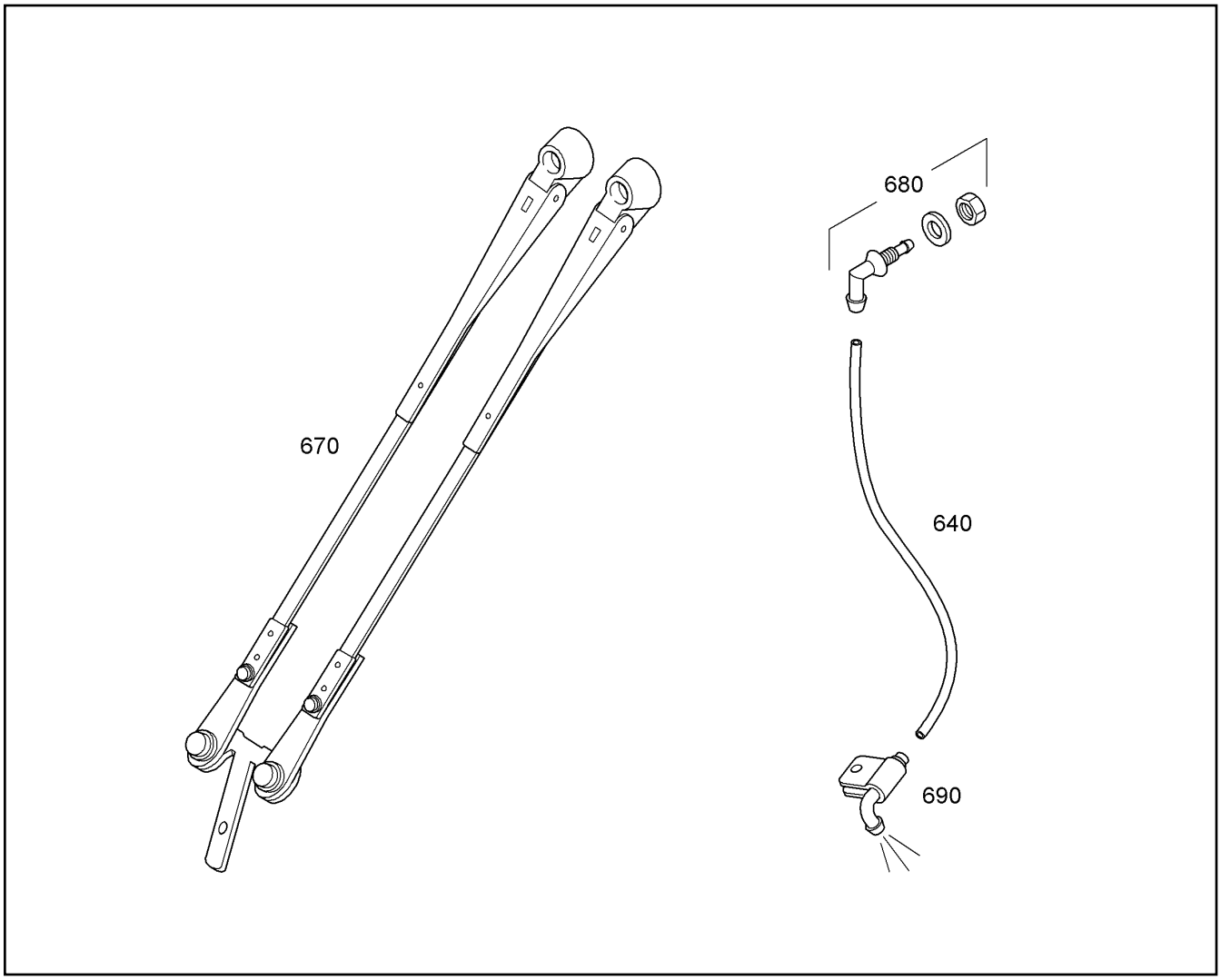

Pos.	Item	Quantity	Description	Descripción	Serie	K
640	6200461	0.5m	HOSE	TUBO GOMA		
670		1	WIPER ARM	BRAZO DEL LIMPIAPARABRISAS		1
680		1	NIPPLE	BOQUILLA ROSCADA		
690		1	SPRAY NOZZLE	TOBERA INYECCION		2

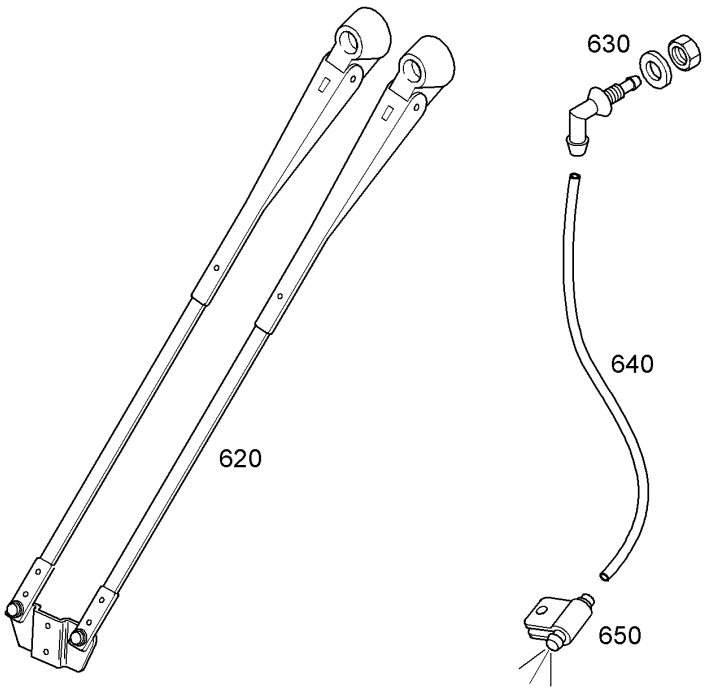

Pos.	Item	Quantity	Description	Descripción	Serie	K
620		1	WIPER ARM	BRAZO DE LIMPIAPARABRISAS		
630	7028868	1	PIPE ELBOW	TUBO ACODADO		
640	7029428	1	HOSE	TUBO GOMA		
650	7028867	1	SPRAY NOZZLE	TOBERA INYECCION		2

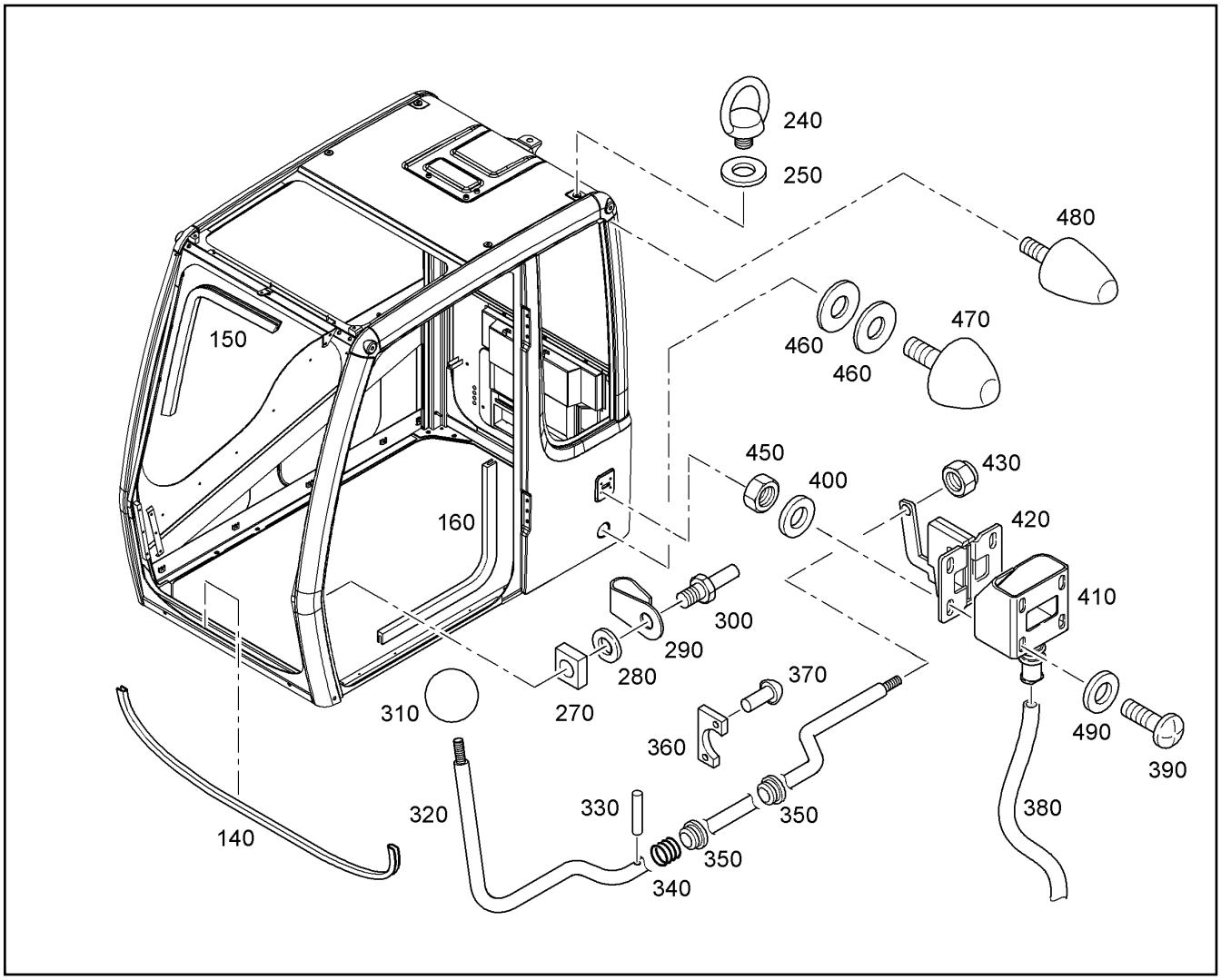

Pos.	Item	Quantity	Description	Descripción	Serie	K
140	7028934	1	SEAL	JUNTA		2
150	10044355	1	SEAL	JUNTA		1
160	7028892	1	SEAL	JUNTA		1
240	7028912	4	EYELET	ESLABON		1
250	10289804	4	WASHER ISO 7089 12 300HV	ARANDELA		
270	7028898	1	SHEET	PLACA		
280	10289804	1	WASHER ISO 7089 12 300HV	ARANDELA		
290	9408711	1	BRACKET	ESTRIBO DEFENSA		
300	7028896	1	CLOSING PIN	BULON DE CIERRE		1
310	7019167	1	KUGELKOPF-SCHRAUBENDREHER	DESTORN.BOTÓN ESFÉRICO		
320	7028919	1	LEVER	PALANCA		
330	4900372	1	DOWEL PIN ISO 8752 A 3 X 20 ST	PASADOR ELASTICO		
340	7028901	1	SPRING	MUELLE		
350	7019122	2	BUSH	CASQUILLO		1
360	7020611	2	SHEET	PLACA		
370	7020612	4	RIVET	REMACHE		
380	7028899	1	PLASTIC TUBE	TUBO DE PLASTICO		
390	4002612	4	PAN-HEAD SCREW ISO 7045 M6X20 4.8 H	TORNILLO ROSCACHAPA		
400	10289802	8	WASHER ISO 7089 6 300HV	ARANDELA		
410	7019165	1	PROTECTING CAP	TAPÓN PROT.TRANSP.SSW		1
420	7019164	1	DOOR STOPPER	INMOVILIZADOR DE PUERTA		
430	4600783	1	HEX NUT M8	TUERCA HEXAGONAL		
450	4000379	4	HEX NUT M6	TUERCA HEXAGONAL		
460	10013965	2	WASHER	ARANDELA		
470	7019129	1	METALASTIC BUFFER	AMORTIGUADOR METALLASTIK		
480	7021047	1	METALASTIC BUFFER	AMORTIGUADOR METALLASTIK		

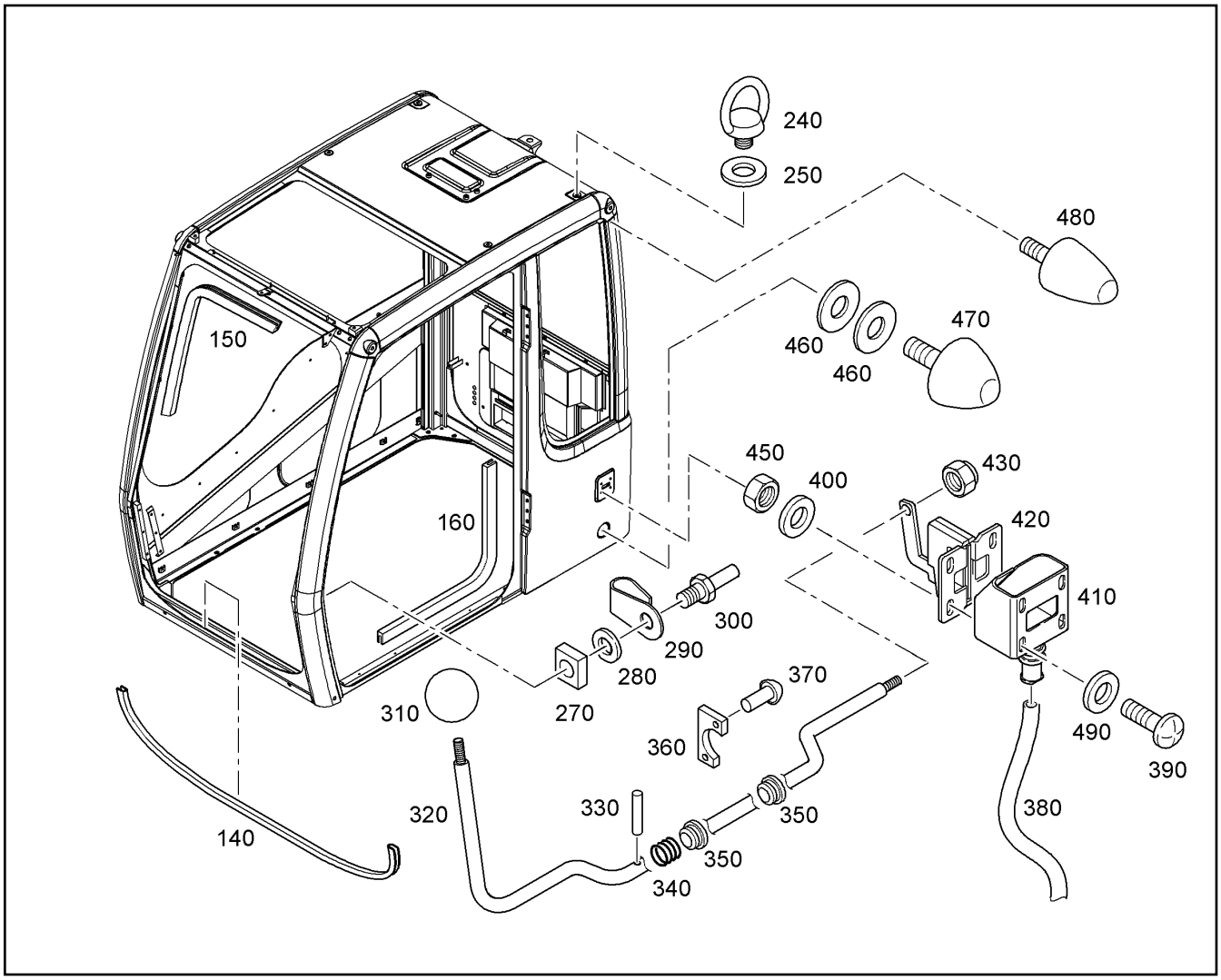

Pos.	Item	Quantity	Description	Descripción	Serie	K
490	4600198	4	WASHER DIN 9021 6,4 ST A3C	ARANDELA		

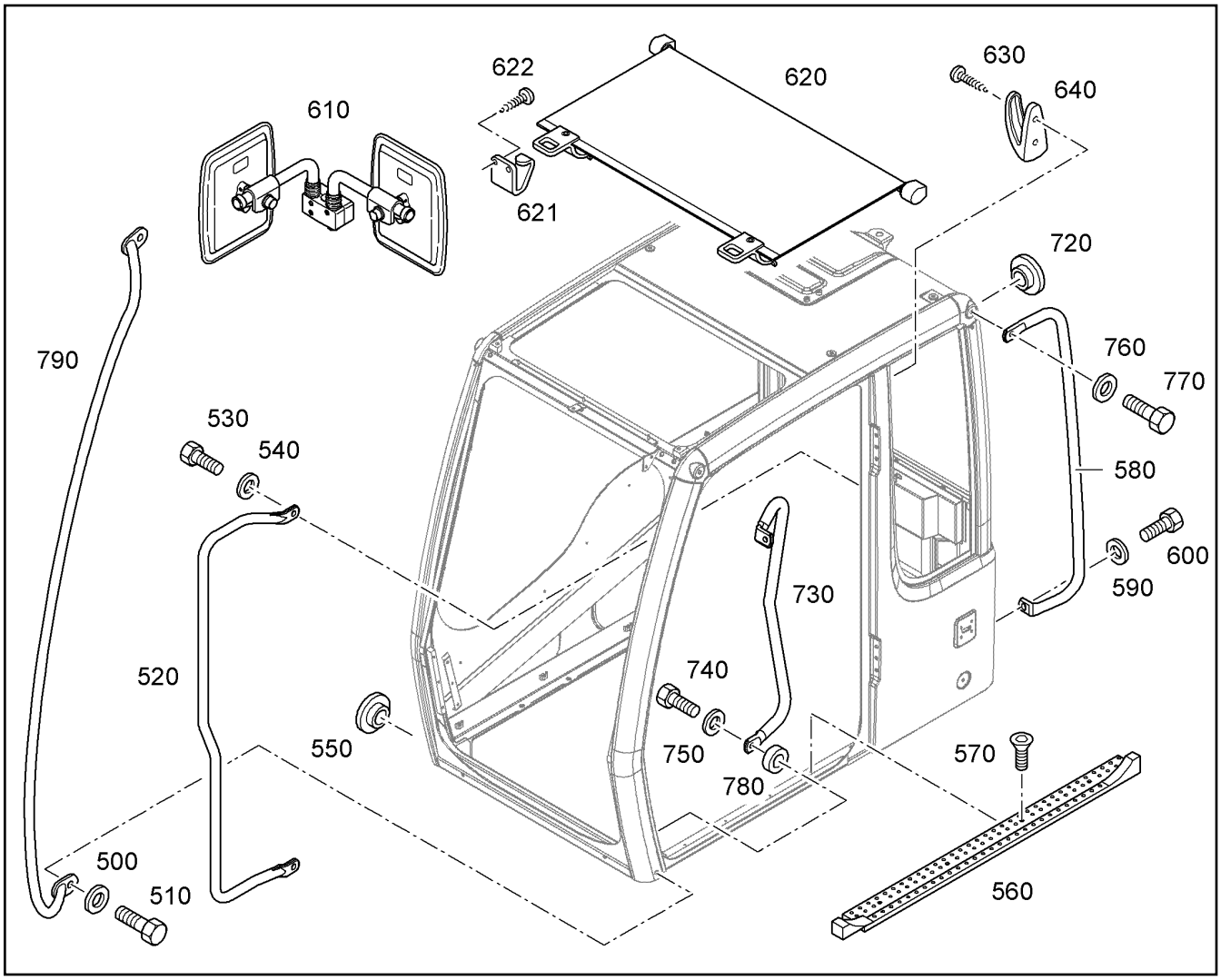

Pos.	Item	Quantity	Description	Descripción	Serie	K
500	10289804	2	WASHER ISO 7089 12 300HV	ARANDELA		
510	4600184	2	HEX BOLT ISO 4017 M12X25 10.9 A3C	TORNILLO DE CABEZA HEXAGO		
520	7028903	1	HANDLE	TIRADOR DE MANO		
530	4066098	2	HEX BOLT ISO 4017 M10X30 10.9 A3C	TORNILLO DE CABEZA HEXAGO		
540	10289795	2	WASHER ISO 7089 10 300HV	ARANDELA		
550	10220397	8	STOP PLUG	TAPON		
560	7028910	1	PROTECTION GUARD	CHAPA PROTECCION		2
570	240127002	3	COUNTERSUNK SCREW DIN 7991 M6X12 8.	TORNILLO AVELLANADO		
580	10013966	1	HANDLE	TIRADOR DE MANO		
590	10289795	2	WASHER ISO 7089 10 300HV	ARANDELA		
600	4001696	2	HEX BOLT ISO 4017 M10X20 10.9 A3C	TORNILLO DE CABEZA HEXAGO		
610	10044353	1	OUTSIDE MIRROR ⇨ ❑ 487	ESPEJO EXTERIOR		1
620	7028933	1	SUNHALDE SET	JUEGO PARASOLES		
621	10039678	2	-HOLDER	-FIJADOR		
622	408252101	4	SHEET-METAL SCREW ISO 7049 ST2,9X6,5	TORNILLO ROSCACHAPAS		
630	408286100	2	SHEET-METAL SCREW ISO 7050 ST3,5X13 S	TORNILLO ROSCACHAPAS		
640	7019131	1	COAT HOOK	PERCHA		
720	7020615	6	STOP PLUG	TAPON		
730	10009025	1	HANDLE	TIRADOR DE MANO		
740	4900112	2	HEX BOLT ISO 4017 M10X35 8.8 A3C	TORNILLO DE CABEZA HEXAGO		
750	10289795	2	WASHER ISO 7089 10 300HV	ARANDELA		
760	10289804	1	WASHER ISO 7089 12 300HV	ARANDELA		
770	4066122	1	HEX BOLT ISO 4017 M12X35 10.9 A3C	TORNILLO DE CABEZA HEXAGO		
780	10013971	1	SPACER BUSH	CASQUILLO DISTANCIADOR		1
790	7028902	1	HANDLE	TIRADOR DE MANO		

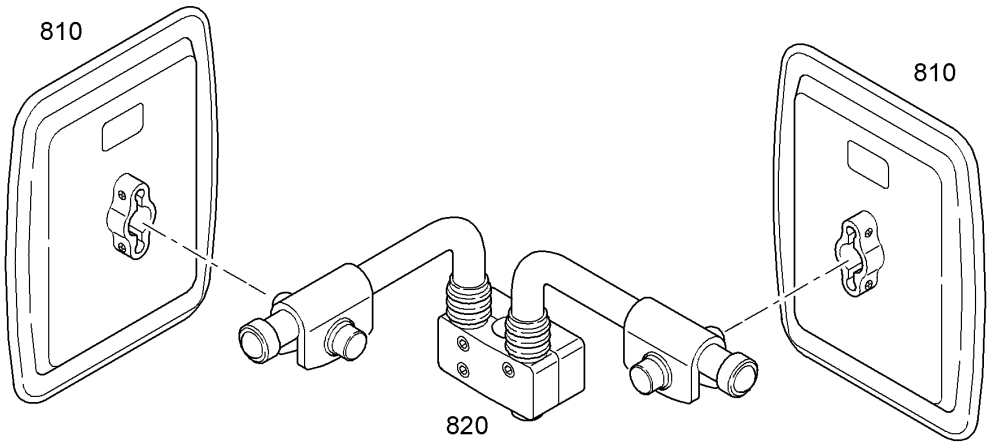

Pos.	Item	Quantity	Description	Descripción	Serie	K
810	7019140	2	OUTSIDE MIRROR	ESPEJO EXTERIOR		1
820	7019141	1	MIRROT SUPPORT	BRAZO DE ESPEJO		1

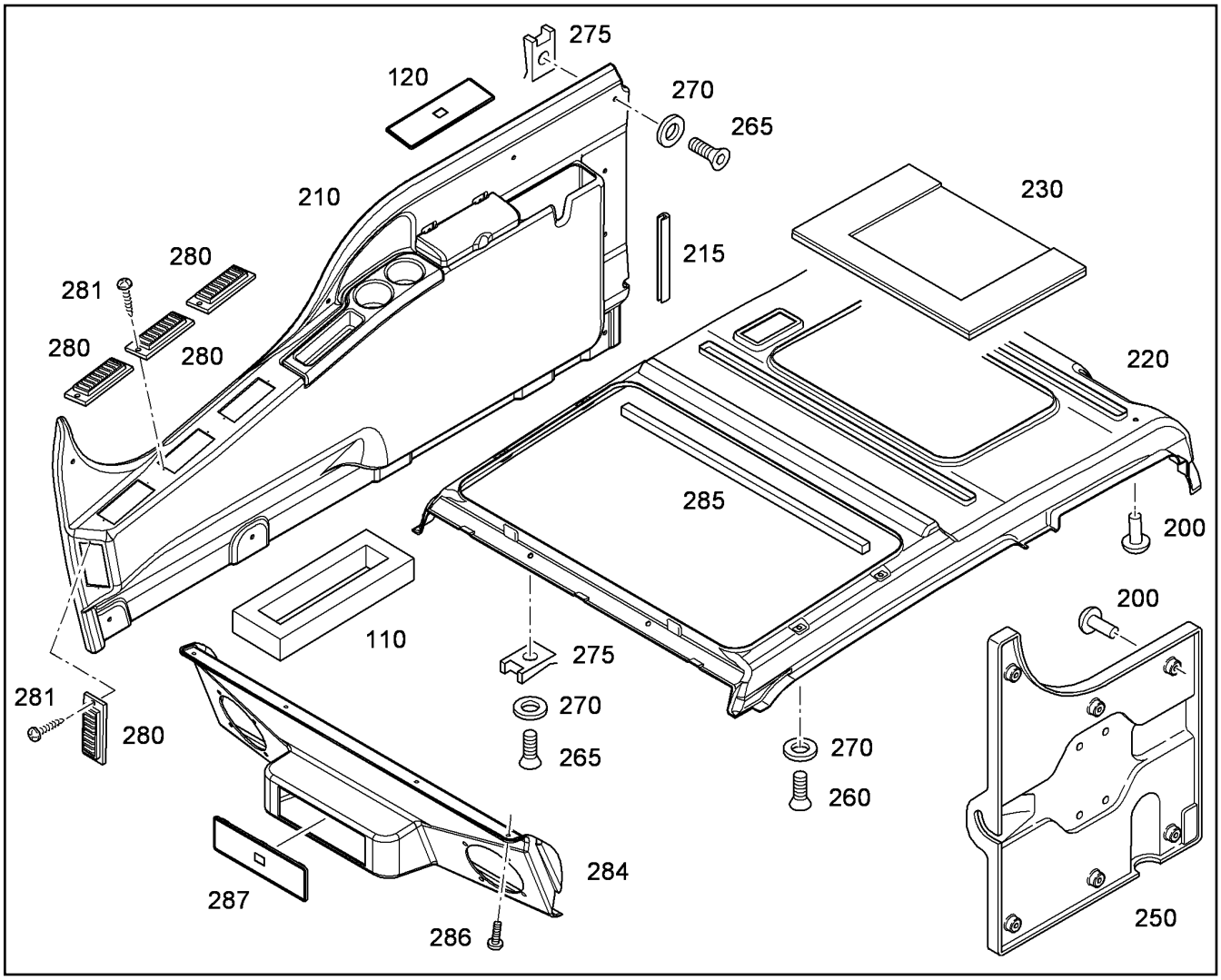

Pos.	Item	Quantity	Description	Descripción	Serie	K
110	10216004	1	SEAL	JUNTA		1
120	7618883	1	BLANK LID	TAPA POSTIZA		
200	7024438	12	BODY-BOUND RIVET	REMACHE EXPANSIBLE		
210		1	PANELLING ⇨ ❑ 490	REVESTIMIENTO		
215	10216006	1	PROFILE	PERFIL		
220	10488100	1	INSULATING MAT	ESTERA AISLANTE		
230	10290261	1	ABSORPTION PANEL	PLACA AISLANTE		
250	10470128	1	CASING, CPL ⇨ ❑ 491			
260	4901294	6	COUNTERSUNK SCREW ISO 7047 M6X16 4.	TORNILLO AVELLANADO		
265	4601379	3	COUNTERSUNK SCREW ISO 7047 M6X20 4.	TORNILLO AVELLANADO		
270	10023245	6	ROSE	ROSETA		
275	10009189	3	SHEET METAL NUT M6	TUERCA PARA CHAPA		
280	7024446	4	AIR FEED-THROUGH	PASO AIRE		
281	7024447	8	SCREW	TORNILLO		
284	10488101	1	PANELLING	REVESTIMIENTO		
285	10042111	1	RUBBER PROFILE	PERFIL GOMA		
286	10215970	4	FIXING SCREW	TORNILLO DE SUJECION		
287	7618883	1	BLANK LID	TAPA POSTIZA		

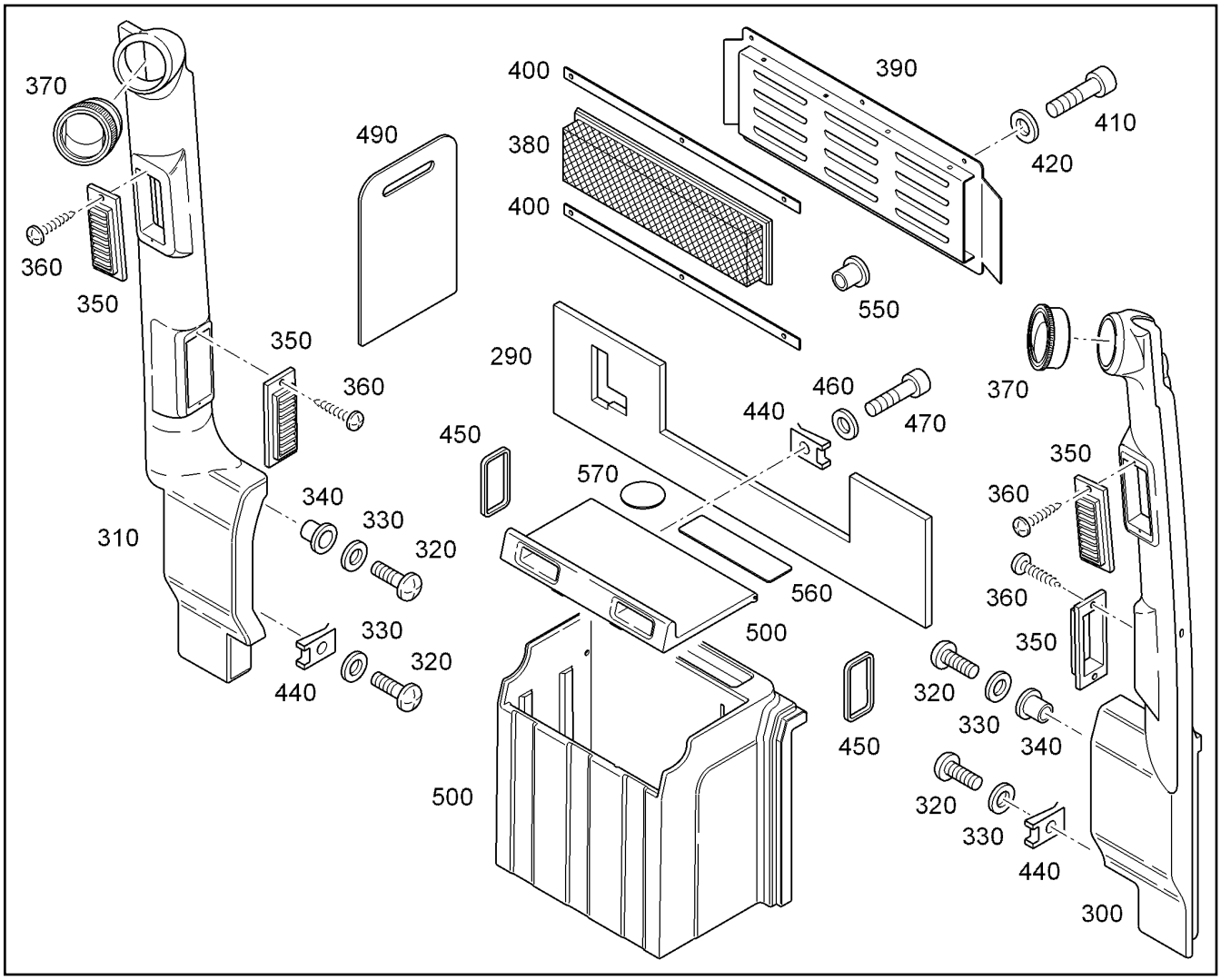

Pos.	Item	Quantity	Description	Descripción	Serie	K
290	10009228	1	ABSORPTION PANEL	PLACA AISLANTE		
300	10009183	1	CHANNEL	CANAL		
310	10009229	1	CHANNEL	CANAL		
320	4600723	4	PAN-HEAD SCREW ISO 7045 M6X16 4.8 H	TORNILLO ROSCACHAPA		
330	4600198	4	WASHER DIN 9021 6,4 ST A3C	ARANDELA		
340	7020610	2	THREADED INSERT	SUPLEMENTO ROSCADO		
350	7024446	4	AIR FEED-THROUGH	PASO AIRE		
360	7024447	8	SCREW	TORNILLO		
370	7028950	2	AIR NOZZLE	BOQUILLA CORRIENTE		
380	7028951	1	AIR FILTER	FILTRO DEL AIRE		1
390	10009188	1	LID	TAPA		
400	7028953	2	SEAL	JUNTA		2
410	4600580	6	PAN-HEAD SCREW ISO 7045 M6X25 4.8 H	TORNILLO ROSCACHAPA		
420	10289802	6	WASHER ISO 7089 6 300HV	ARANDELA		
440	10009189	4	SHEET METAL NUT M6	TUERCA PARA CHAPA		
450	10009027	2	SEAL	JUNTA		1
460	4600198	2	WASHER DIN 9021 6,4 ST A3C	ARANDELA		
470	4600580	2	PAN-HEAD SCREW ISO 7045 M6X25 4.8 H	TORNILLO ROSCACHAPA		
490	10009201	1	PARTITION	TABIQUE SEPARACION		
500	10024192	1	CHANNEL	CANAL ASPIRACIÓN		1
550	10044359	1	THREADED INSERT M6	SUPLEMENTO ROSCADO		
560	10289996	1	MAT	ESTERILLA		
570	10289997	1	MAT	ESTERILLA		

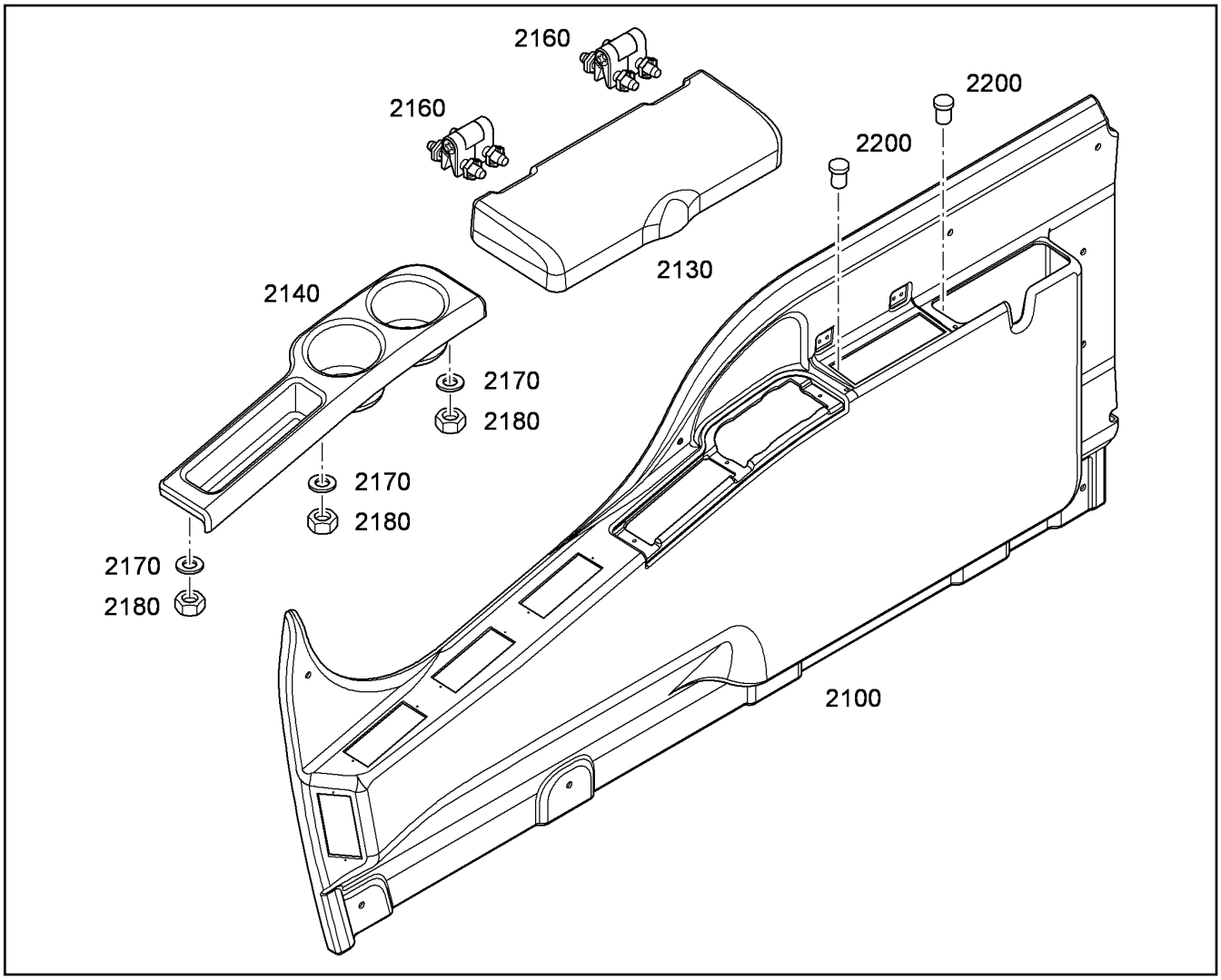

Pos.	Item	Quantity	Description	Descripción	Serie	K
2100	10291137	1	PANELLING	REVESTIMIENTO		
2130	10291066	1	COVER	CUBIERTA		
2140	10291090	1	BOTTLE HOLDER	SOPORTE DE BOTELLA		
2160	10291123	2	HINGE	BISAGRA		
2170	4001645	3	WASHER DIN 125 B 4,3 ST A3C	ARANDELA		
2180	4000376	3	HEX NUT M4	TUERCA HEXAGONAL		
2200	10216002	2	RUBBER BUMPER	TOPE GOMA		

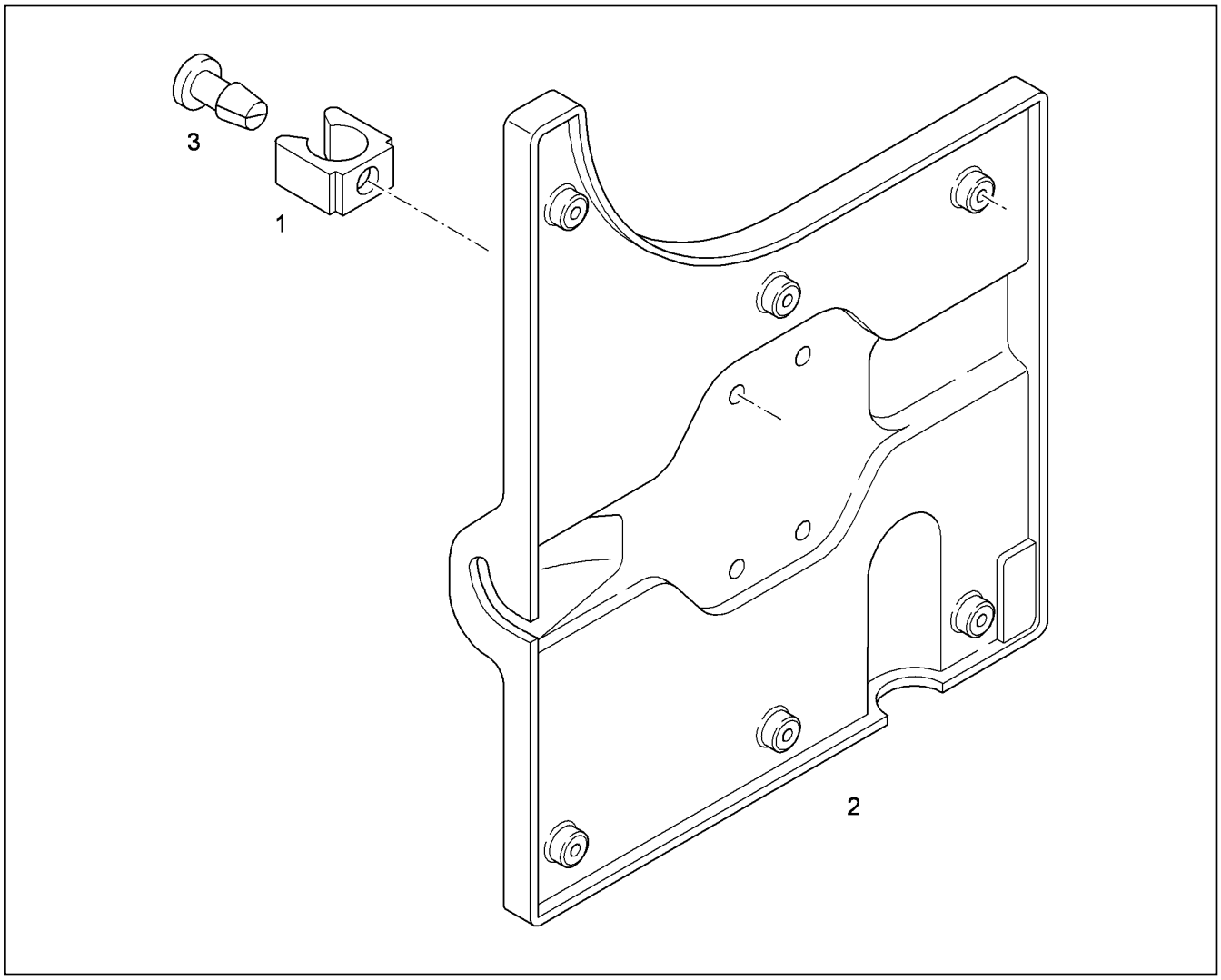

Pos.	Item	Quantity	Description	Descripción	Serie	K
1	7373592	4	CLAMP	CORCHETE		
2		1	PANELLING	REVESTIMIENTO		
3	10470127	4	RIVET	REMACHE		

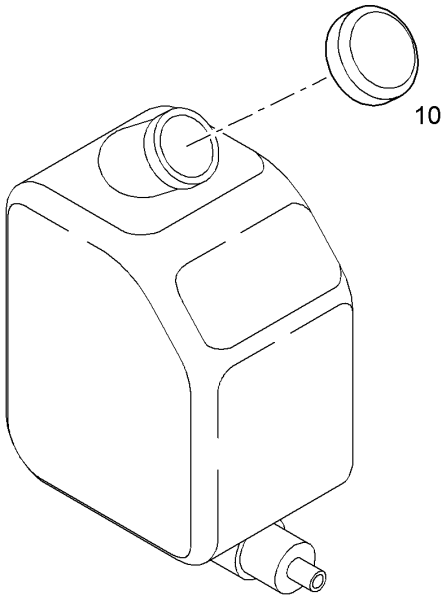

Pos.	Item	Quantity	Description	Descripción	Serie	K
10	7025845	1	LID	TAPA		

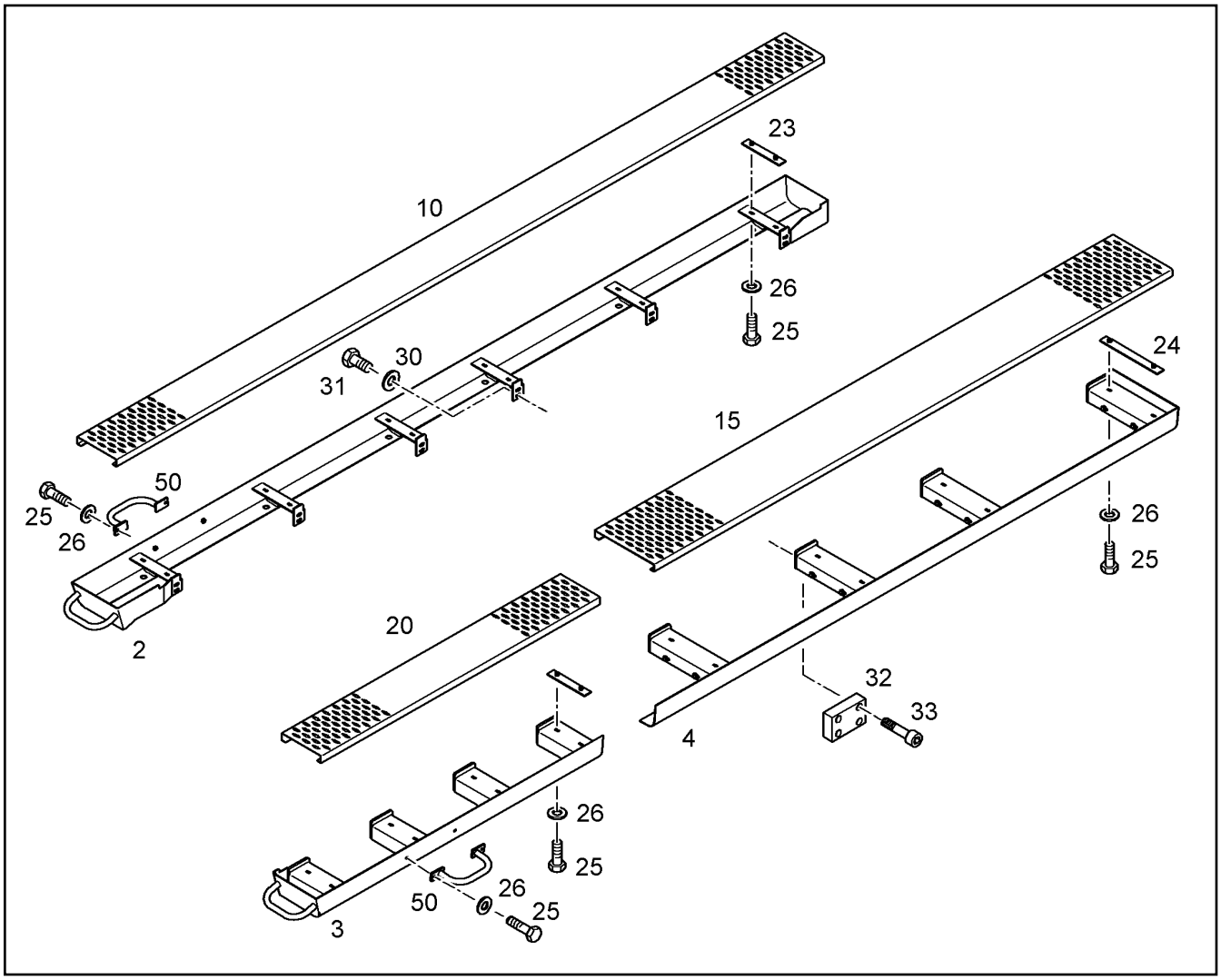

Pos.	Item	Quantity	Description	Descripción	Serie	K
2	10058895	1	CATWALK RIGHT	PASARELA DCHA.		
3	10498156	1	CAB ELEVATION 1200MM ⇨ 794	ELEVACIÓN CABINA CONDUCTO		
4	10498156	1	CAB ELEVATION 1200MM ⇨ 794	ELEVACIÓN CABINA CONDUCTO		
10	10066219	1	GRATING	REJILLA		1
15	10059938	1	GRATING	REJILLA		
20	10498156	1	CAB ELEVATION 1200MM ⇨ 794	ELEVACIÓN CABINA CONDUCTO		
23	10358295	10	PLATE CPL.	PLACA COMPL.		1
23	10498156	1	CAB ELEVATION 1200MM ⇨ 794	ELEVACIÓN CABINA CONDUCTO		
24	10358292	4	PLATE CPL.	PLACA COMPL.		1
25	4001246	32	HEX BOLT ISO 4017 M10X35 10.9 A3C	TORNILLO DE CABEZA HEXAGO		
26	10289795	32	WASHER ISO 7089 10 300HV	ARANDELA		
30	10006370	12	WASHER DIN 7349 13	ARANDELA		
31	4066124	12	HEX BOLT ISO 4017 M12X30 10.9 A3C	TORNILLO DE CABEZA HEXAGO		
32	10054772	8	PLATE	CHAPA		1
33	4000784	32	CYLINDER SCREW ISO 4762 M12X50 10.9	TORNILLO CILINDRICO		
50	9699421	2	GRIP	TIRADOR		
50	10498156	1	CAB ELEVATION 1200MM ⇨ 794	ELEVACIÓN CABINA CONDUCTO		

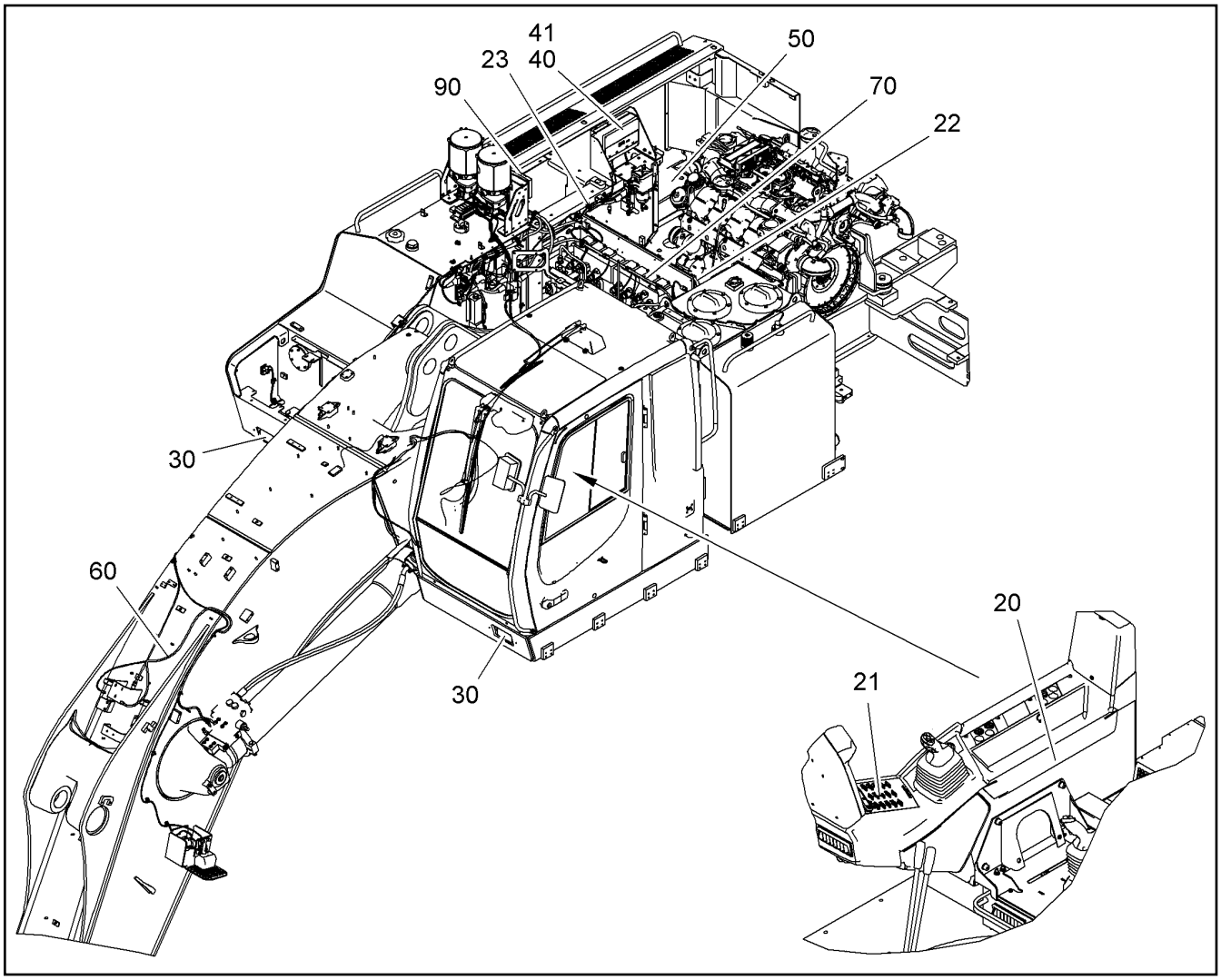

Pos.	Item	Quantity	Description	Descripción	Serie	K
20	9988842	1	CODING PLUG	ENCHUFE CODIF.		1
21	975857701	1	CODING PLUG	ENCHUFE CODIF.		2
22	10094996	1	WIRING HARNESS ROTATING DECK	JC PLATAFORMA GIRAT.	-99998	
22	10498156	1	CAB ELEVATION 1200MM ⇨ ❑ 794	ELEVACIÓN CABINA CONDUCTO		
23	10498156	1	CAB ELEVATION 1200MM ⇨ ❑ 794	ELEVACIÓN CABINA CONDUCTO		
30	9941040	2	FLOODLIGHT INSTALLATION ⇨ ❑ 499	MONTAJE FARO		1
40	10094990	1	ELECTRIC BOX CPL. E50 ⇨ ❑ 502	CAJA EL.COMPL.		1
41	4600067	4	CYLINDER SCREW ISO 4762 M6X35 10.9 A2	TORNILLO CILINDRICO		
50	10358758	1	BATTERY INSTALLATION ⇨ ❑ 506	MONTAJE BATERÍAS		1
60	10358762	1	ELECTR.INST.BOOM ⇨ ❑ 512	INST.EL. MONOBLOQUE	-99998	1
60	10498376	1	ELECTR.INST.BOOM ⇨ ❑ 513	INST.EL. MONOBLOQUE	99999-	1
70	10062228	1	ELECTR.SYSTEM CONTROL VALVES ⇨ ❑ 515	INST.EL.CORREDERA DISTR.		1
90	10358763	1	ELECTR.SYSTEM FUEL TANK ⇨ ❑ 522	INST.EL.DEP. COMBUSTIBLE	-99998	1
90	10498377	1	ELECTR.SYSTEM FUEL TANK ⇨ ❑ 529	INST.EL.DEP. COMBUSTIBLE	99999-	1

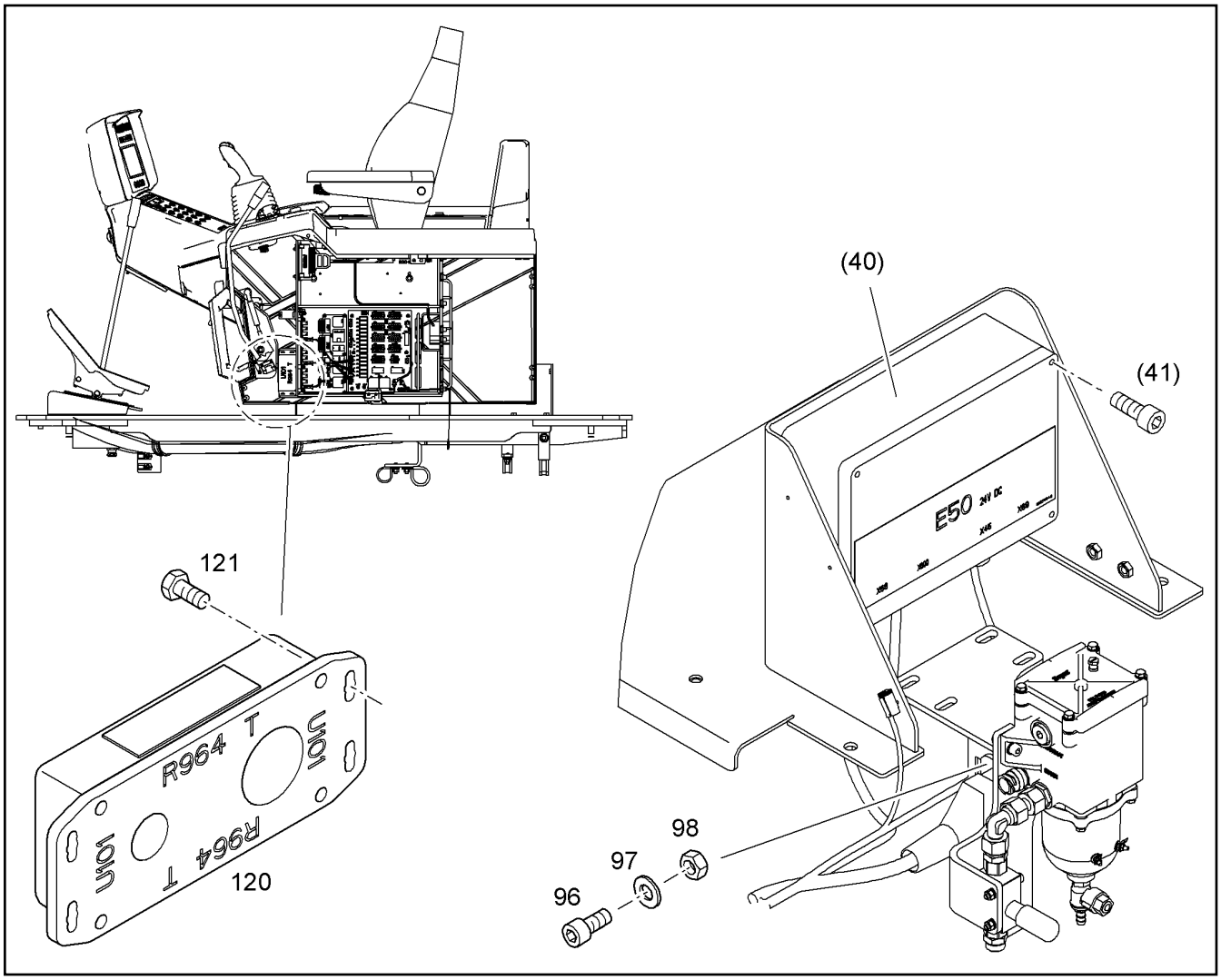

Pos.	Item	Quantity	Description	Descripción	Serie	K
96	4600337	4	CYLINDER SCREW ISO 4762 M4x16 8.8 A2C	TORNILLO CILINDRICO		
97	4001645	4	WASHER DIN 125 B 4,3 ST A3C	ARANDELA		
98	4000376	4	HEX NUT M4	TUERCA HEXAGONAL		
120	10077072	1	ELECTRIC BOX CPL. U101/R964 ⇨ ❑ 315	CAJA EL.COMPL.		1
121	4001514	4	COUNTERSUNK SCREW DIN 7991 M4X16 8.	TORNILLO AVELLANADO		

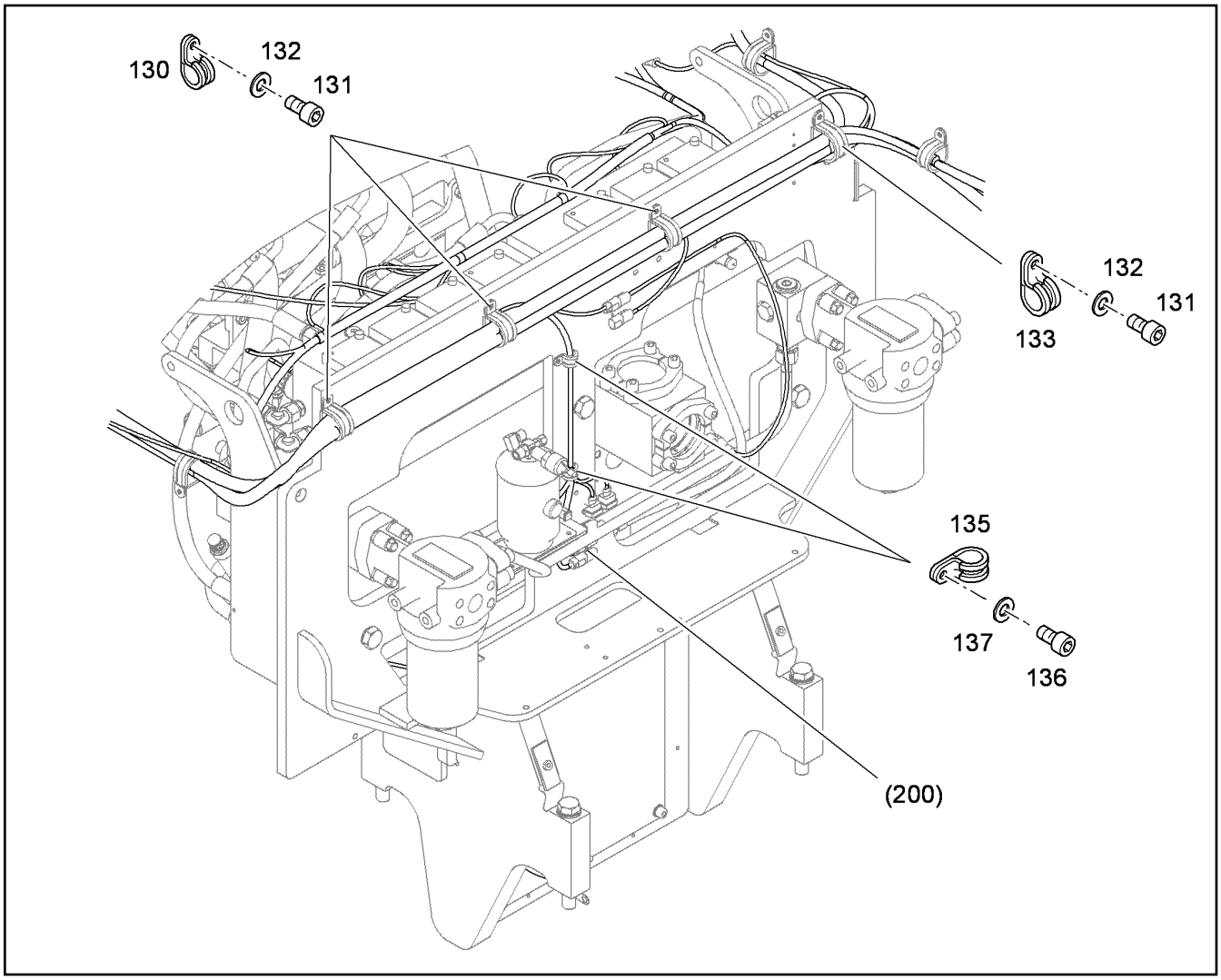

Pos.	Item	Quantity	Description	Descripción	Serie	K
130	7362551	3	CLAMP DIN 3016 D1- 38 X 20 W1-2-CR	ABRAZADERA		
131	4902231	4	CYLINDER SCREW ISO 4762 M8X16 10.9 A2	TORNILLO CILINDRICO		
132	10289803	4	WASHER ISO 7089 8 300HV	ARANDELA		
133	7365080	1	CLAMP DIN 3016 D1- 45 X 20 W1-2-CR	ABRAZADERA		
135	7363002	2	CLAMP DIN 3016 D1- 27 X 20 W1-2-CR	ABRAZADERA		
136	4902231	2	CYLINDER SCREW ISO 4762 M8X16 10.9 A2	TORNILLO CILINDRICO		
137	10289803	2	WASHER ISO 7089 8 300HV	ARANDELA		

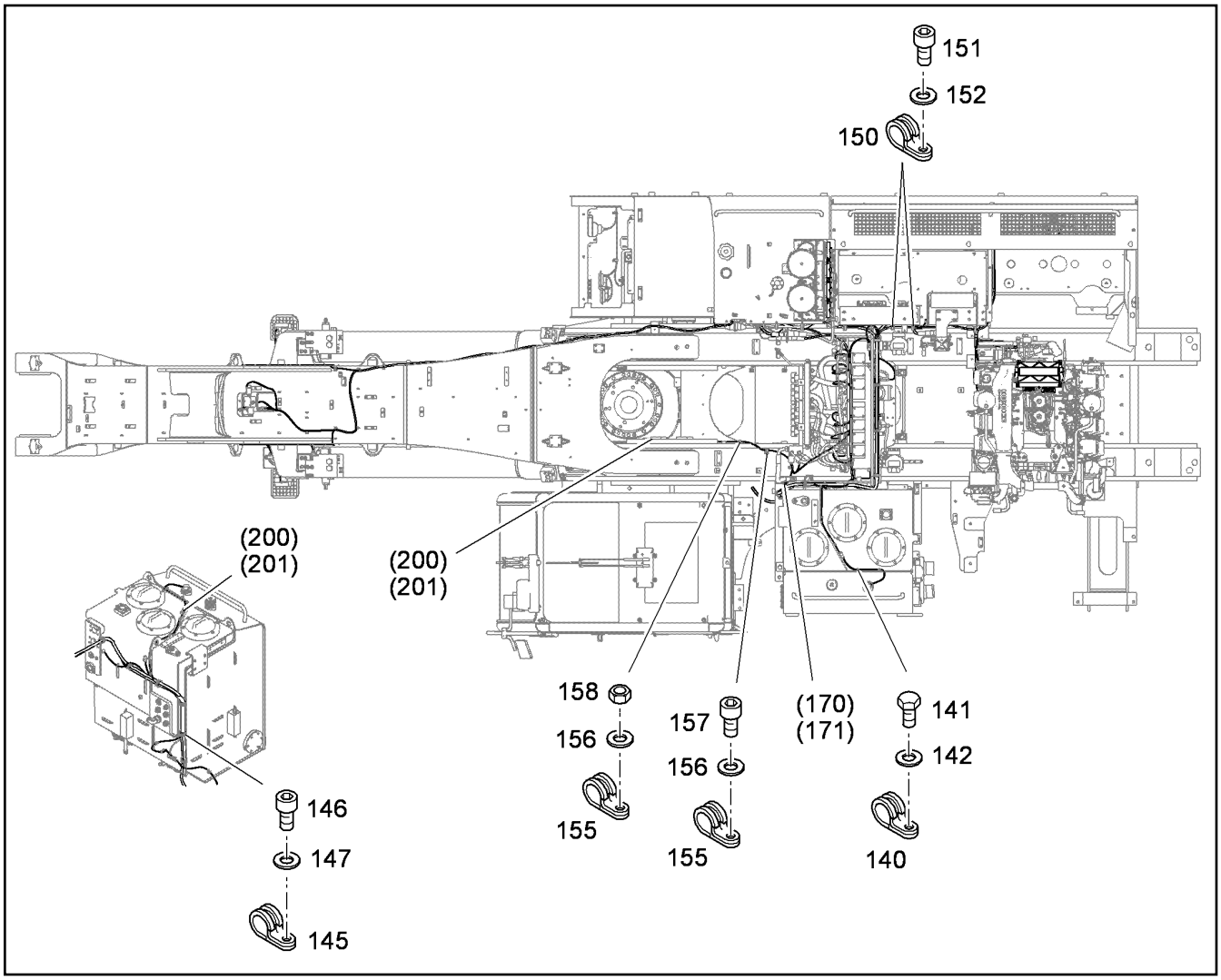

Pos.	Item	Quantity	Description	Descripción	Serie	K
140	7362563	5	CLAMP DIN 3016 D1- 8 X 15 W1-2-CR	ABRAZADERA		
141	4901607	5	HEX BOLT ISO 4017 M6X16 10.9 A2C	TORNILLO DE CABEZA HEXAGO		
142	10289802	5	WASHER ISO 7089 6 300HV	ARANDELA		
145	7365080	4	CLAMP DIN 3016 D1- 45 X 20 W1-2-CR	ABRAZADERA		
146	4902231	4	CYLINDER SCREW ISO 4762 M8X16 10.9 A2	TORNILLO CILINDRICO		
147	10289803	4	WASHER ISO 7089 8 300HV	ARANDELA		
150	7366260	3	CLAMP DIN 3016 D1- 34 X 20 W1-2-CR	ABRAZADERA		
151	4902231	3	CYLINDER SCREW ISO 4762 M8X16 10.9 A2	TORNILLO CILINDRICO		
152	10289803	3	WASHER ISO 7089 8 300HV	ARANDELA		
155	7363004	4	CLAMP DIN 3016 D1- 10 X 20 W1-2-CR	ABRAZADERA		
156	10289803	4	WASHER ISO 7089 8 300HV	ARANDELA		
157	4902231	2	CYLINDER SCREW ISO 4762 M8X16 10.9 A2	TORNILLO CILINDRICO		
158	4000381	2	HEX NUT M8	TUERCA HEXAGONAL		

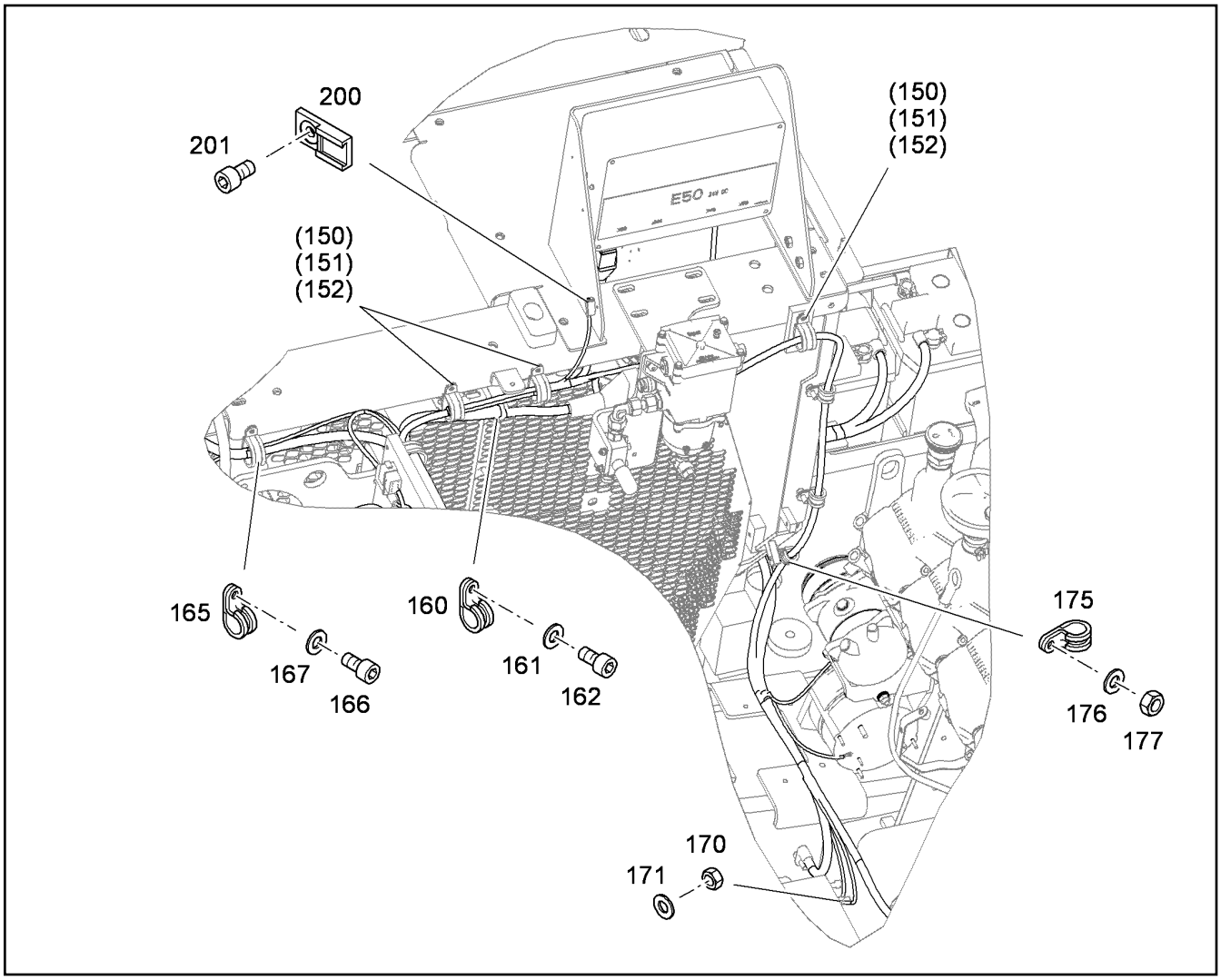

Pos.	Item	Quantity	Description	Descripción	Serie	K
160	7363002	1	CLAMP DIN 3016 D1- 27 X 20 W1-2-CR	ABRAZADERA		
161	10289803	1	WASHER ISO 7089 8 300HV	ARANDELA		
162	4902231	1	CYLINDER SCREW ISO 4762 M8X16 10.9 A2	TORNILLO CILINDRICO		
165	7362551	1	CLAMP DIN 3016 D1- 38 X 20 W1-2-CR	ABRAZADERA		
166	4902231	1	CYLINDER SCREW ISO 4762 M8X16 10.9 A2	TORNILLO CILINDRICO		
167	10289803	1	WASHER ISO 7089 8 300HV	ARANDELA		
170	4000381	2	HEX NUT M8	TUERCA HEXAGONAL		
171	10289803	2	WASHER ISO 7089 8 300HV	ARANDELA		
175	7362602	3	CLAMP DIN 3016 D1- 18 X 20 W1-2-CR	ABRAZADERA		
176	10289803	3	WASHER ISO 7089 8 300HV	ARANDELA		
177	4000381	3	HEX NUT M8	TUERCA HEXAGONAL		
200	6203497	6	FASTENER	ELEMENTO DE FIJACION		
201	10471469	6	CYLINDER SCREW BN 1206 M5X10 10.9	TORNILLO CILINDRICO		

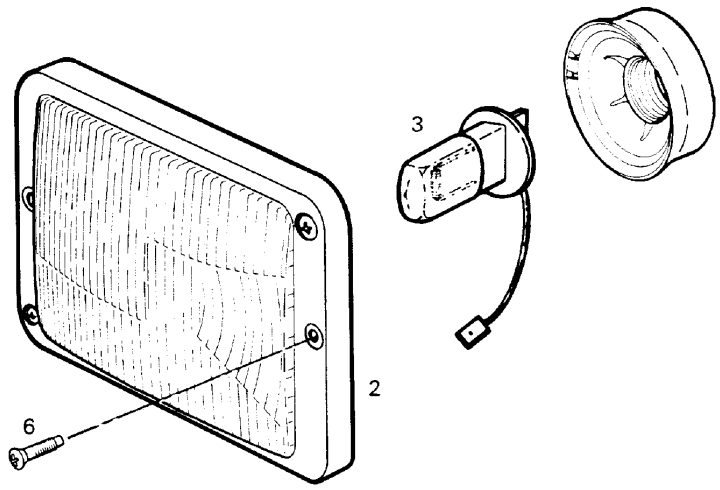

Pos.	Item	Quantity	Description	Descripción	Serie	K
2	10007848	1	WORK LIGHT	FARO DE TRABAJO		1
3	6200685	2	LIGHT BULB	BOMBILLA		1
6	4901530	2	SELF-TAPPING SCREW AEHNL.DIN 7516 AE	TORNILLO ROSCA CORTANTE		

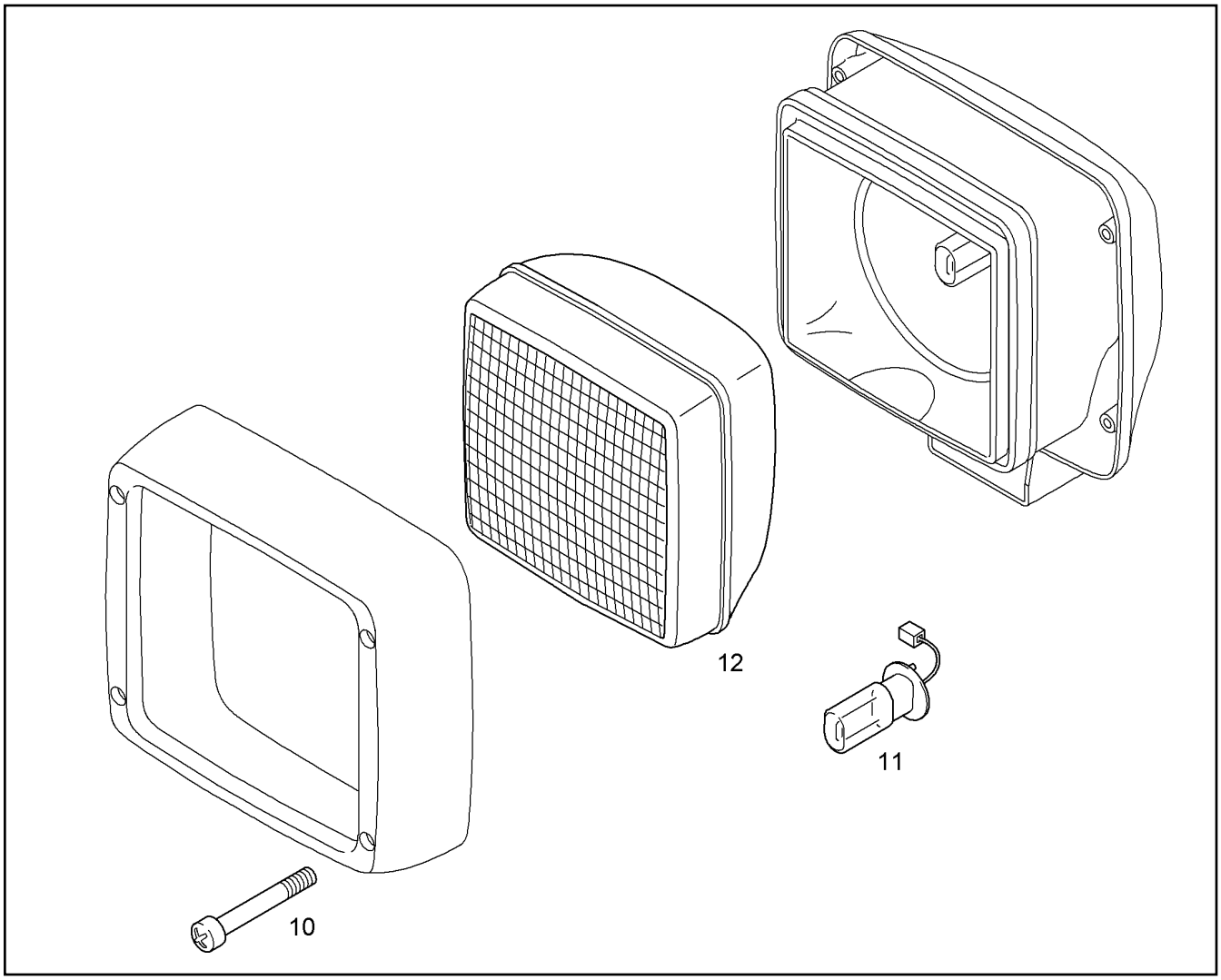

Pos.	Item	Quantity	Description	Descripción	Serie	K
10	4002838	4	SHEET-METAL SCREW DIN 7981 ST3,9X50 S	TORNILLO ROSCACHAPAS		
11	6200685	1	LIGHT BULB	BOMBILLA		1
12	10286644	1	HEAD LIGHT INSERT	INSERTO DE FARO		

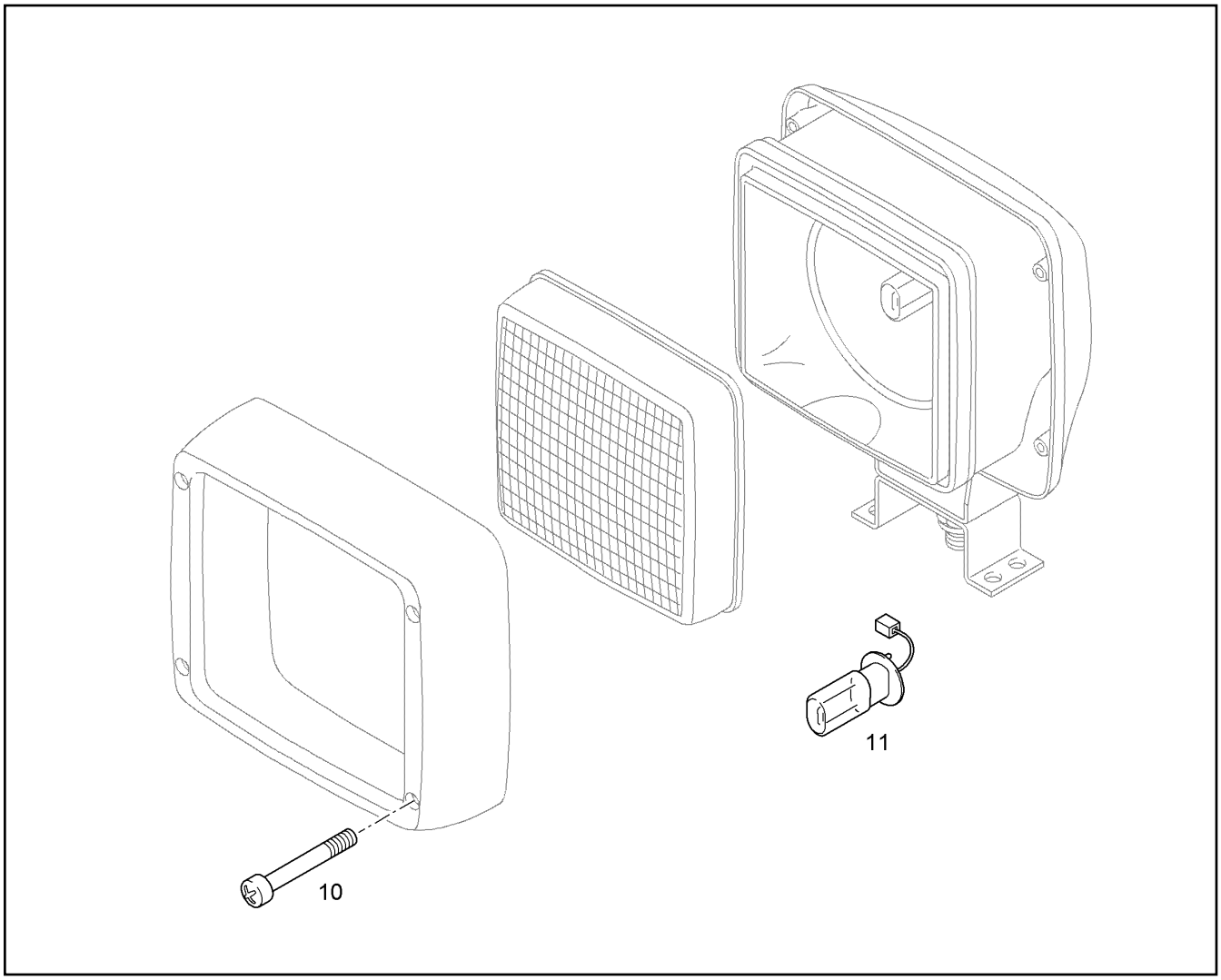

Pos.	Item	Quantity	Description	Descripción	Serie	K
10	4002838	4	SHEET-METAL SCREW DIN 7981 ST3,9X50 S	TORNILLO ROSCACHAPAS		
11	6200685	1	LIGHT BULB	BOMBILLA		1

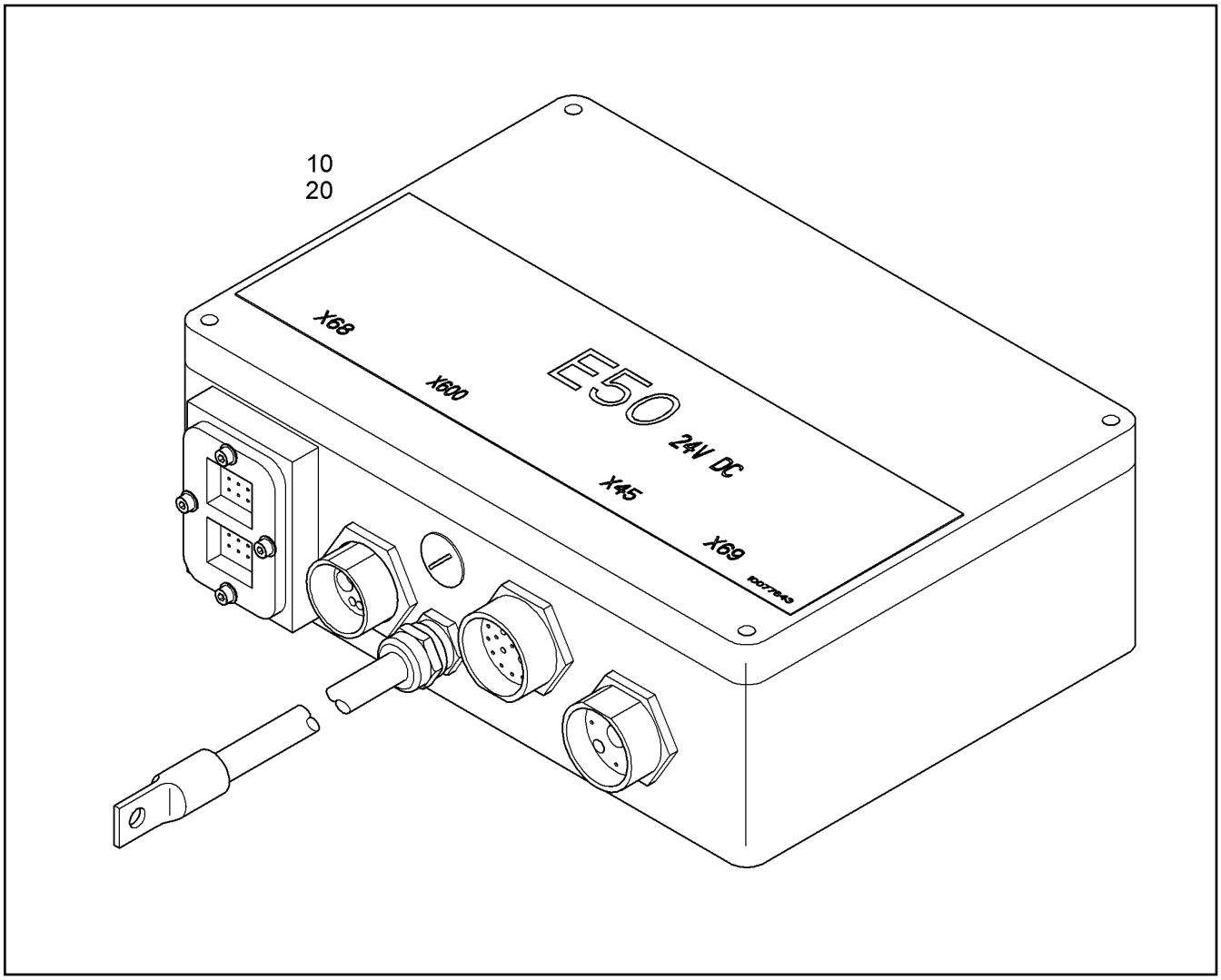

Pos.	Item	Quantity	Description	Descripción	Serie	K
10	10062226	1	ELECTRIC BOX E50	CAJA ELÉCTRICA		1
20	10094992	1	ELECTRIC MATERIAL LIST ⇨ ❑ 503	RELACIÓN MATERIAL EL.		1

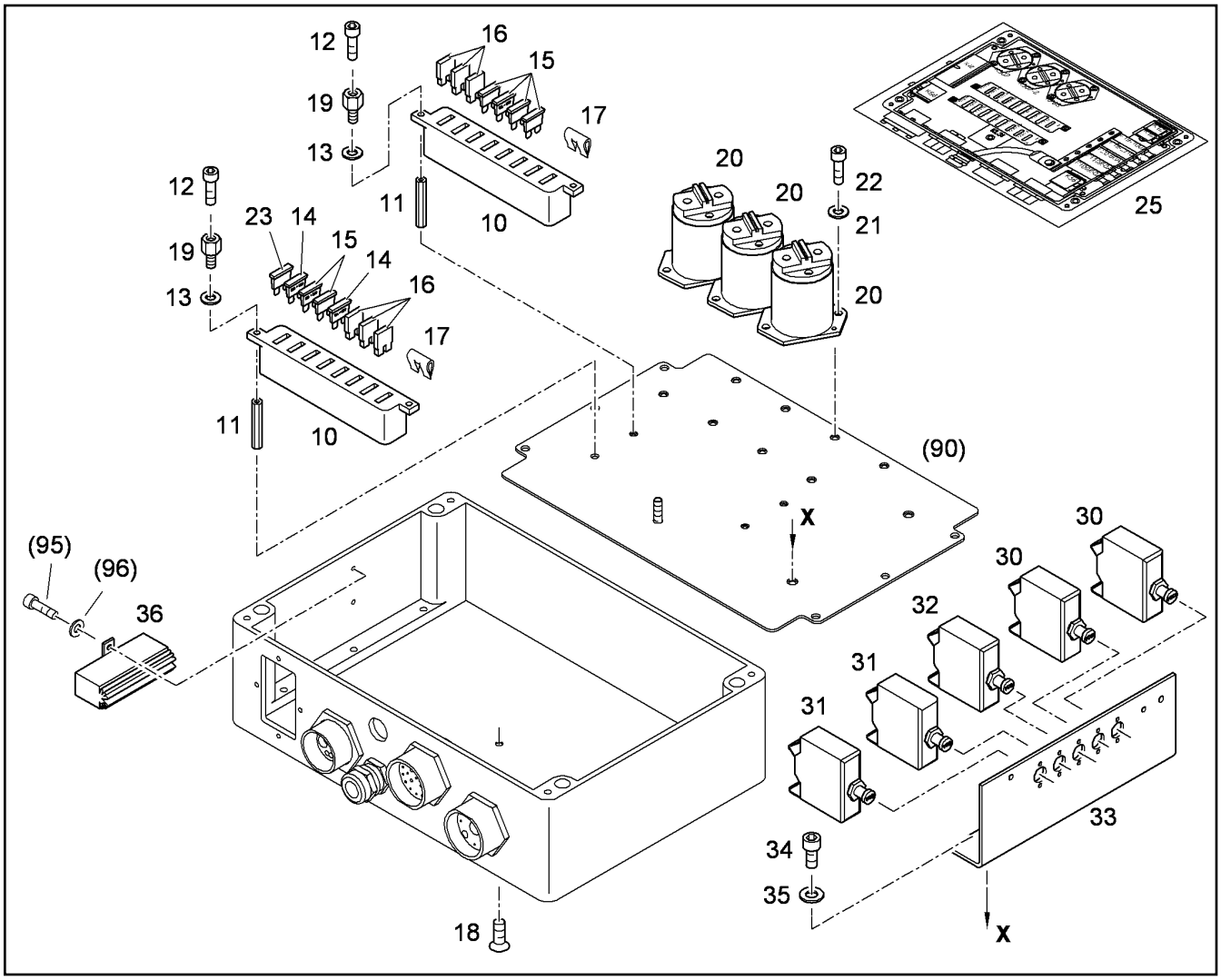

Pos.	Item	Quantity	Description	Descripción	Serie	K
10	6000783	2	BLADE-TYPE ELECT. FUSE SOCKET	CAJETÍN DE FUSIBLE PLANO		
11	7016412	4	HEX SPACER PIN M4	PERNO DISTANCIADOR HEX.		1
12	4600337	4	CYLINDER SCREW ISO 4762 M4x16 8.8 A2C	TORNILLO CILINDRICO		
13	4001645	4	WASHER DIN 125 B 4,3 ST A3C	ARANDELA		
14	6001472	2	FUSE CARTRIDGE 20A 32 C	CARTUCHO DE FUSIBLE		1
15	4901512	6	FUSE CARTRIDGE C 15A 32 FKS	CARTUCHO DE FUSIBLE		1
16	4901513	6	FUSE CARTRIDGE C 7,5A 32/56 FKS	CARTUCHO DE FUSIBLE		1
17	6001474	11	GANTRY 2 FACH	PUENTE		
18	4980801	1	COUNTERSUNK SCREW DIN 7991 M5X12 1	TORNILLO AVELLANADO		
19	10027643	4	HEX SPACER PIN M4X20X8 MESSING VER	PERNO DISTANCIADOR HEX.		1
20	10009888	3	PERFORMANCE RELAY	RELÉ DE POTENCIA		1
21	4600305	6	WASHER DIN 125 B 5,3 ST A3C	ARANDELA		
22	4042062	6	CYLINDER SCREW ISO 4762 M5x16 8.8 A2C	TORNILLO CILINDRICO		
23	6001471	1	FUSE CARTRIDGE 25A 32 C	CARTUCHO DE FUSIBLE		1
25	10087065	1	LABEL	ETIQUETA		1
30	6203687	2	CABLE PROTECTION SWITCH	INTERRUPTOR CONMUTADOR LI		2
31	6202944	2	CABLE PROTECTION SWITCH	INTERRUPTOR CONMUTADOR LI		2
32	6202945	1	CABLE PROTECTION SWITCH	INTERRUPTOR CONMUTADOR LI		2
33	10076346	1	PLATE	CHAPA		1
34	4902250	2	CYLINDER SCREW ISO 4762 M6X10 10.9 A2	TORNILLO CILINDRICO		
35	10289802	2	WASHER ISO 7089 6 300HV	ARANDELA		
36	9873999	1	HEATING 20W/24V F.EL.BOX.	CALEF.20W/24V P.CAJA EL.		1
			⇨ ❑ 783			

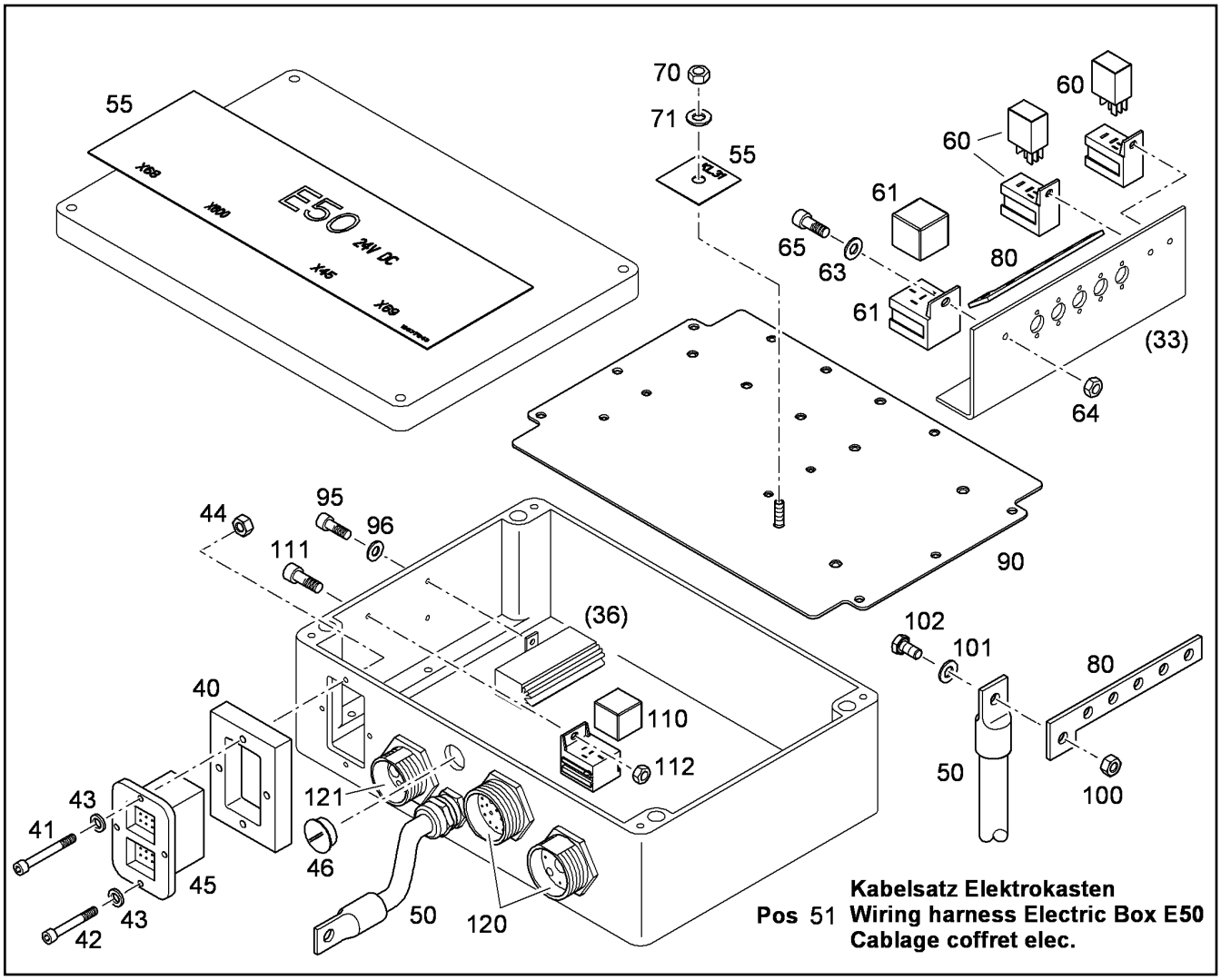

Kabelsatz Elektrokasten
Pos 51 Wiring harness Electric Box E50
Cablage coffret elec.

Pos.	Item	Quantity	Description	Descripción	Serie	K
40	9874651	1	INTERMEDIATE PLATE	PLACA INTERMEDIA		1
41	067738450	3	CYLINDER SCREW ISO 4762 M4X35 8.8 A2C	TORNILLO CILINDRICO		
42	4901205	1	CYLINDER SCREW ISO 4762 M4x30 8.8 A2C	TORNILLO CILINDRICO		
43	4001645	4	WASHER DIN 125 B 4,3 ST A3C	ARANDELA		
44	4000376	3	HEX NUT M4	TUERCA HEXAGONAL		
45	6203486	1	PIN HOUSING	CAJA DE CLAVIJAS		
46	602514201	1	STOPPER PLUG M20X1,5	TAPON CIEGO		
50	10066008	1	CABLE LOOM F112 - E50	KIT DE CABLES		1
51	10095054	1	WIRING HARNESS ELECTRIC BOX E50	JC CAJA ELÉCTRICA		
55	10077643	1	LABEL	ETIQUETA		1
60	6001921	2	RELAY	RELE		2
61	6200906	1	RELAY	RELE		2
63	4600305	2	WASHER DIN 125 B 5,3 ST A3C	ARANDELA		
64	4000466	2	HEX NUT M5	TUERCA HEXAGONAL		
65	4001308	2	CYLINDER SCREW ISO 4762 M5x12 8.8 A2C	TORNILLO CILINDRICO		
70	4901651	1	HEX NUT ISO 4032 M 6 LH -10 A3C	TUERCA HEXAGONAL		
71	4229911	1	LOCK WASHER	ARANDELA SEGURIDAD		
80	10066253	1	ROD	VARILLA		1
90	10066158	1	SUBPLATE	PLACA MONTAJE		1
95	4600337	2	CYLINDER SCREW ISO 4762 M4x16 8.8 A2C	TORNILLO CILINDRICO		
96	4001645	2	WASHER DIN 125 B 4,3 ST A3C	ARANDELA		
100	4000379	1	HEX NUT M6	TUERCA HEXAGONAL		
101	10289802	1	WASHER ISO 7089 6 300HV	ARANDELA		
102	4900605	1	HEX BOLT ISO 4017 M6x12 8.8 A2C	TORNILLO DE CABEZA HEXAGO		
110	10220436	1	HD RELAY	RELÉ DE ALTA POTENCIA		2
111	4001308	1	CYLINDER SCREW ISO 4762 M5x12 8.8 A2C	TORNILLO CILINDRICO		

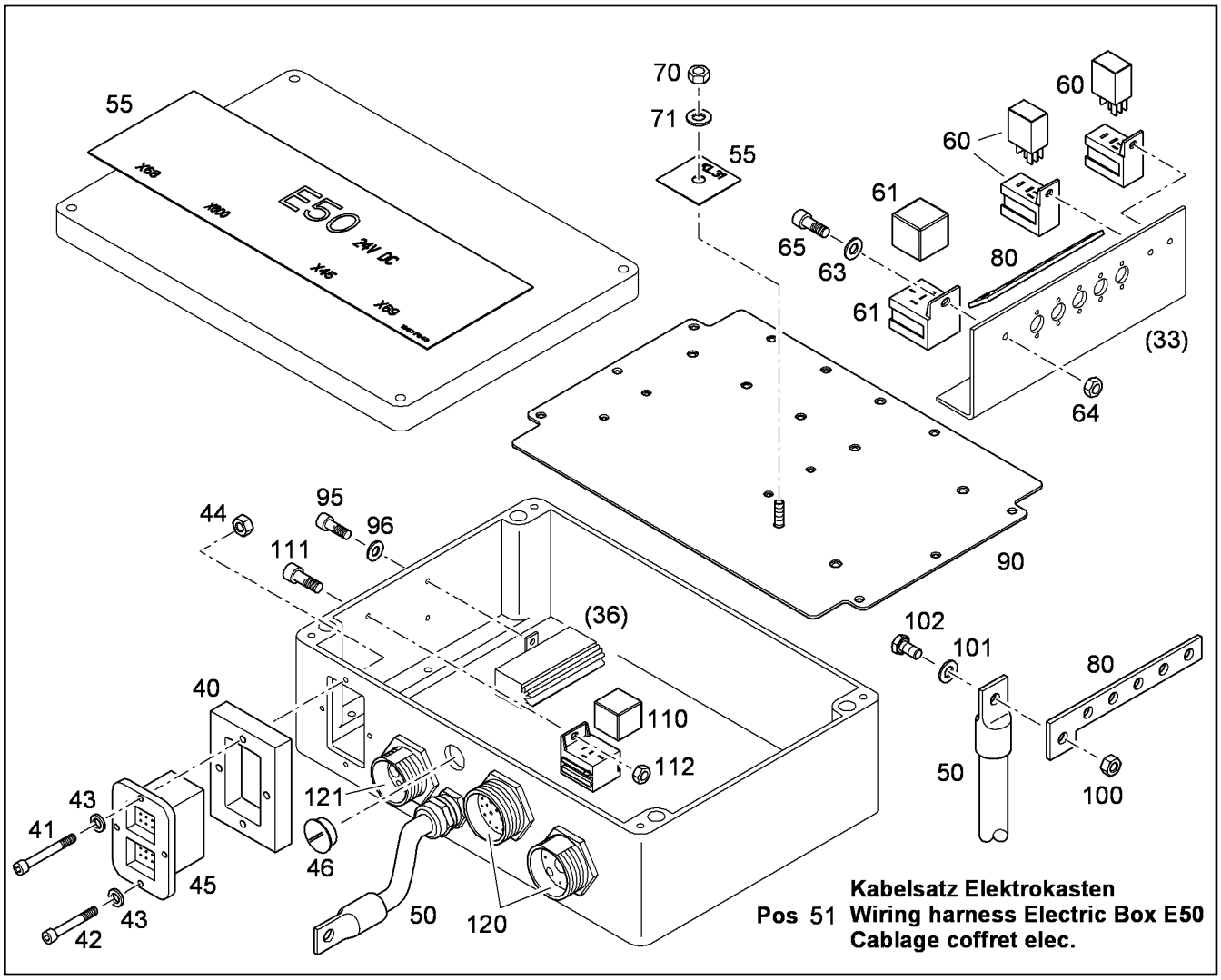

Pos.	Item	Quantity	Description	Descripción	Serie	K
112	4000466	1	HEX NUT M5	TUERCA HEXAGONAL		
120	7026772	2	SEAL	JUNTA		1
121	10454840	1	SEAL	JUNTA		

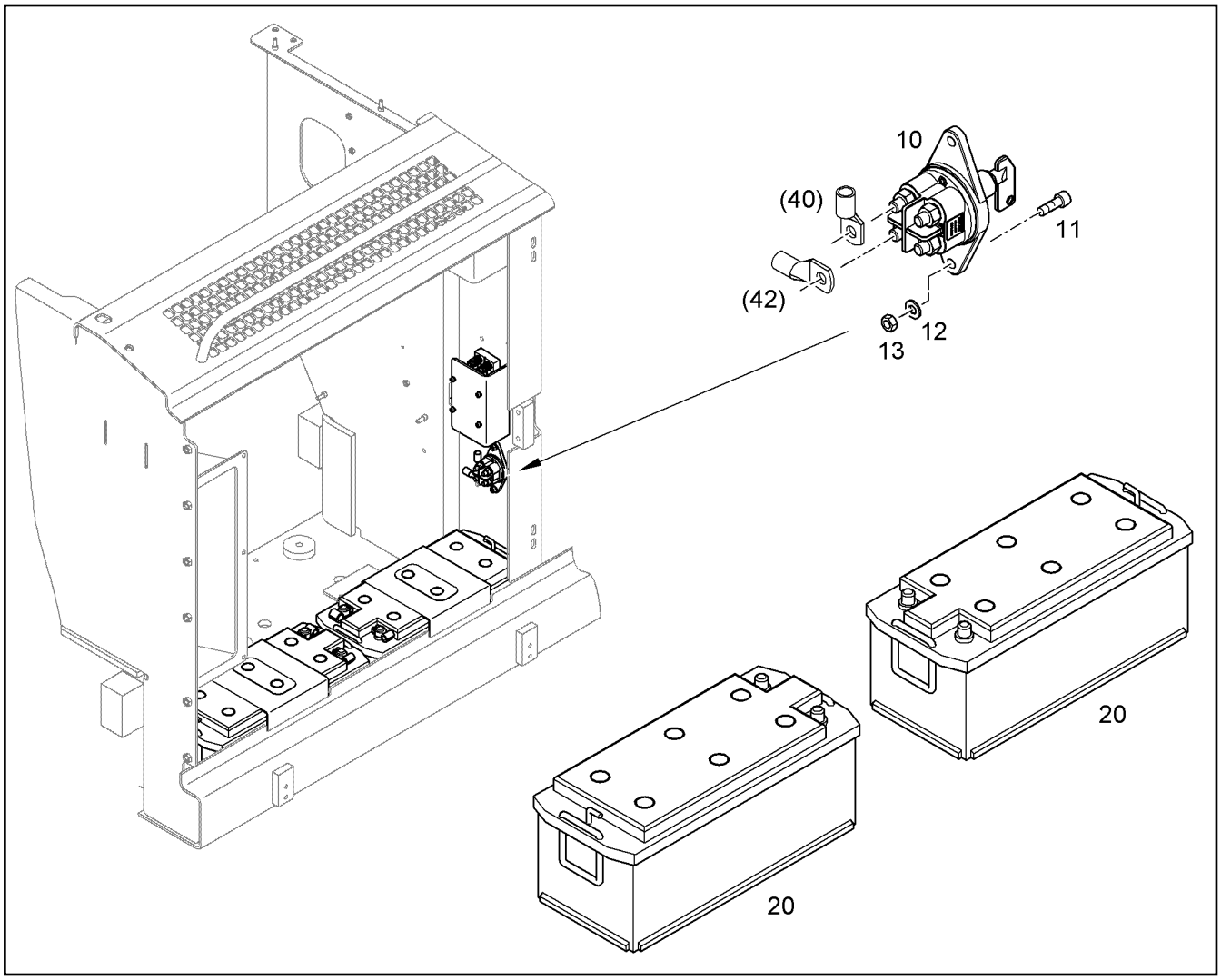

Pos.	Item	Quantity	Description	Descripción	Serie	K
10	10012119	1	BATTERY MAIN SWITCH ⇨ ❑ 514	INTERRUPTOR PRINCIPAL BATE		2
11	4901217	2	CYLINDER SCREW ISO 4762 M8X25 10.9 A2	TORNILLO CILINDRICO		
12	10289803	2	WASHER ISO 7089 8 300HV	ARANDELA		
13	4000381	2	HEX NUT M8	TUERCA HEXAGONAL		
20	6205121	2	BATTERY DRY CHARGED	BATTERÍA SECA CARGADO		2

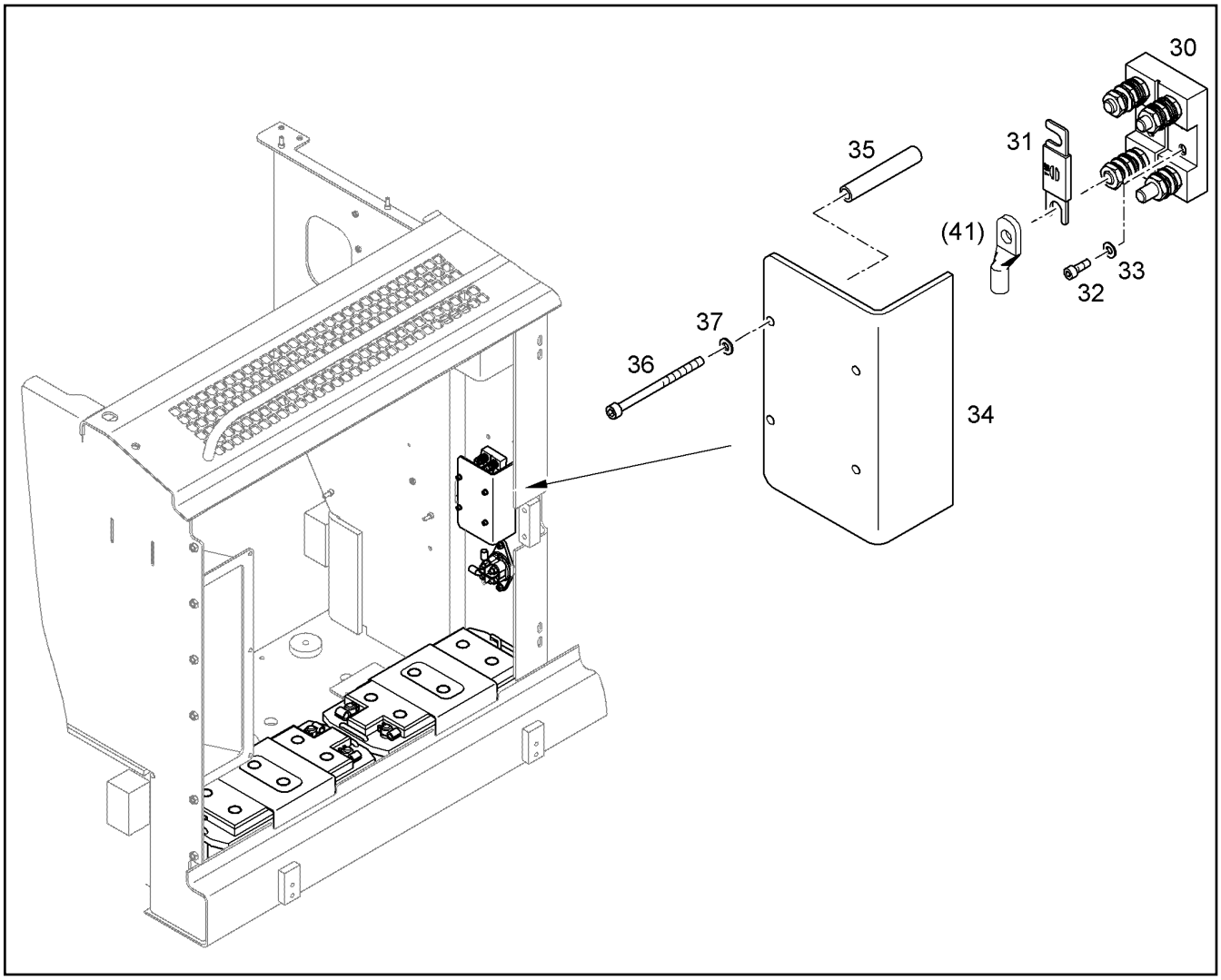

Pos.	Item	Quantity	Description	Descripción	Serie	K
30	10332352	1	FUSE HOLDER	PORTAFUSIBLES		
31	10220613	1	FUSE CARTRIDGE 250A 80VAC/DC	CARTUCHO DE FUSIBLE		2
32	404200701	4	CYLINDER SCREW ISO 4762 M4x20 8.8 A2C	TORNILLO CILINDRICO		
33	4001645	4	WASHER DIN 125 B 4,3 ST A3C	ARANDELA		
34	10084986	1	COVER	CUBIERTA		1
35	10084989	4	DISTANCE SLEEVE	CASQUILLO DISTANCIADOR		1
36	4600731	4	HEX HEAD SCREW ISO 4014 M 6 X 100 8.8	TORNILLO HEXAGONAL		
37	10289802	4	WASHER ISO 7089 6 300HV	ARANDELA		

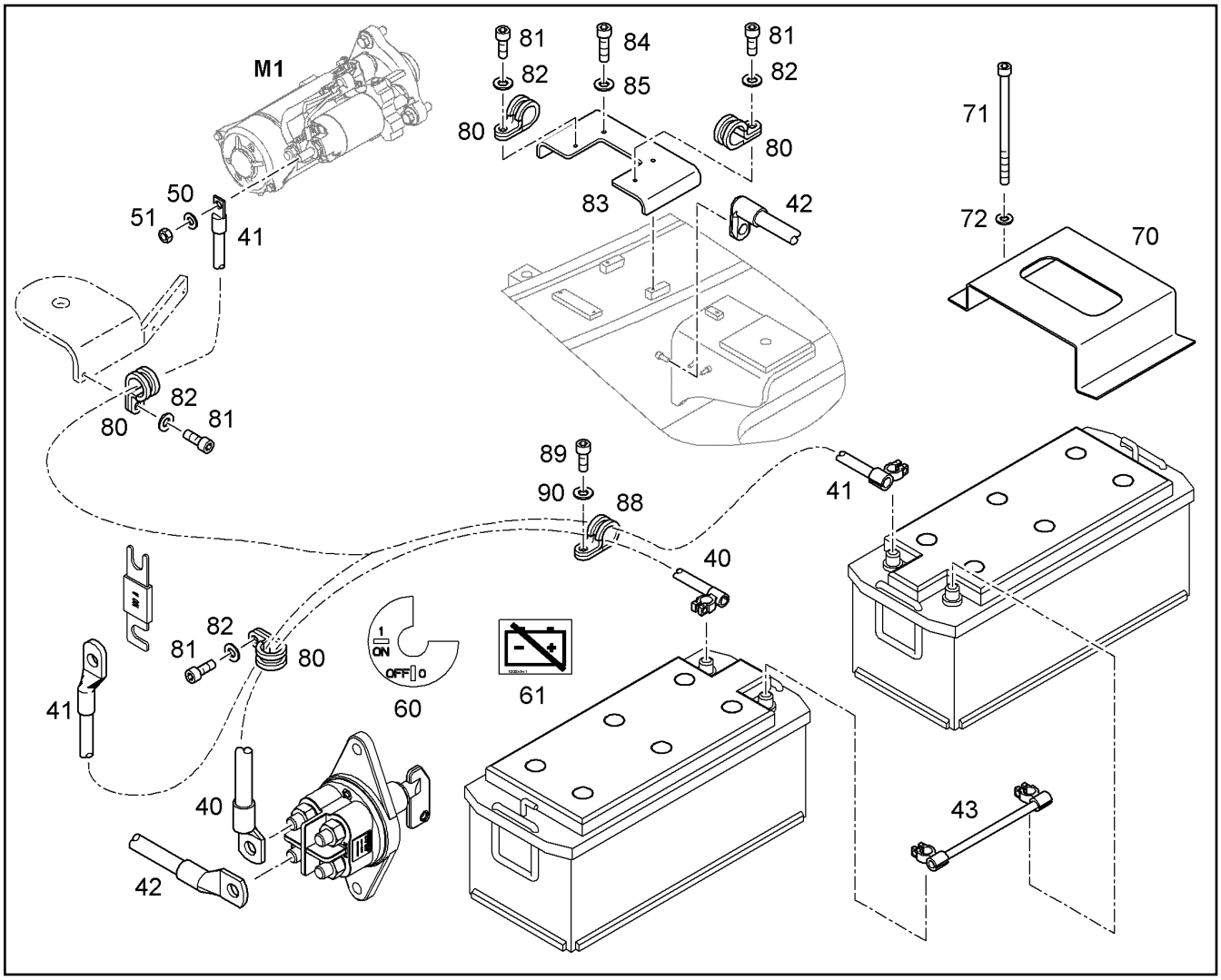

Pos.	Item	Quantity	Description	Descripción	Serie	K
40	10076111	1	WIRING HARN.BATTERY SHUT-OFF	JC DESCONEXIÓN BATERÍA		
41	10066009	1	WIRING HARN.BATTERY-STARTER ⇨ ❑ 510	JC BAT.- MOTOR ARRANQUE		1
42	10066010	1	WIRING HARNESS SHUT-OFF/MASS	JC DESCONEXIÓN - TIERRA		1
43	10066267	1	BATTERY CONNECTION CABLE	CABLE CONEXIÓN BATERÍA		
50	4900531	1	WASHER ISO 7093-1 10 200HV	ARANDELA		
51	4000383	1	HEX NUT ISO 4032 M 10 -10 A3C	TUERCA HEXAGONAL		
60	10086392	1	LABEL S9	ETIQUETA		1
61	10084941	1	LABEL	ETIQUETA		1
70	10067796	2	CONSOLE	CONSOLA		1
71	4002442	2	CYLINDER SCREW ISO 4762 M10X130 10.9	TORNILLO CILINDRICO		
72	4900531	2	WASHER ISO 7093-1 10 200HV	ARANDELA		
80	7363002	8	CLAMP DIN 3016 D1- 27 X 20 W1-2-CR	ABRAZADERA		
81	4043082	8	CYLINDER SCREW ISO 4762 M8X20 10.9 A2	TORNILLO CILINDRICO		
82	10289803	8	WASHER ISO 7089 8 300HV	ARANDELA		
83	10380512	1	CONSOLE	CONSOLA		1
84	4901217	2	CYLINDER SCREW ISO 4762 M8X25 10.9 A2	TORNILLO CILINDRICO		
85	10289803	2	WASHER ISO 7089 8 300HV	ARANDELA		
88	7366260	2	CLAMP DIN 3016 D1- 34 X 20 W1-2-CR	ABRAZADERA		
89	4043082	2	CYLINDER SCREW ISO 4762 M8X20 10.9 A2	TORNILLO CILINDRICO		
90	10289803	2	WASHER ISO 7089 8 300HV	ARANDELA		

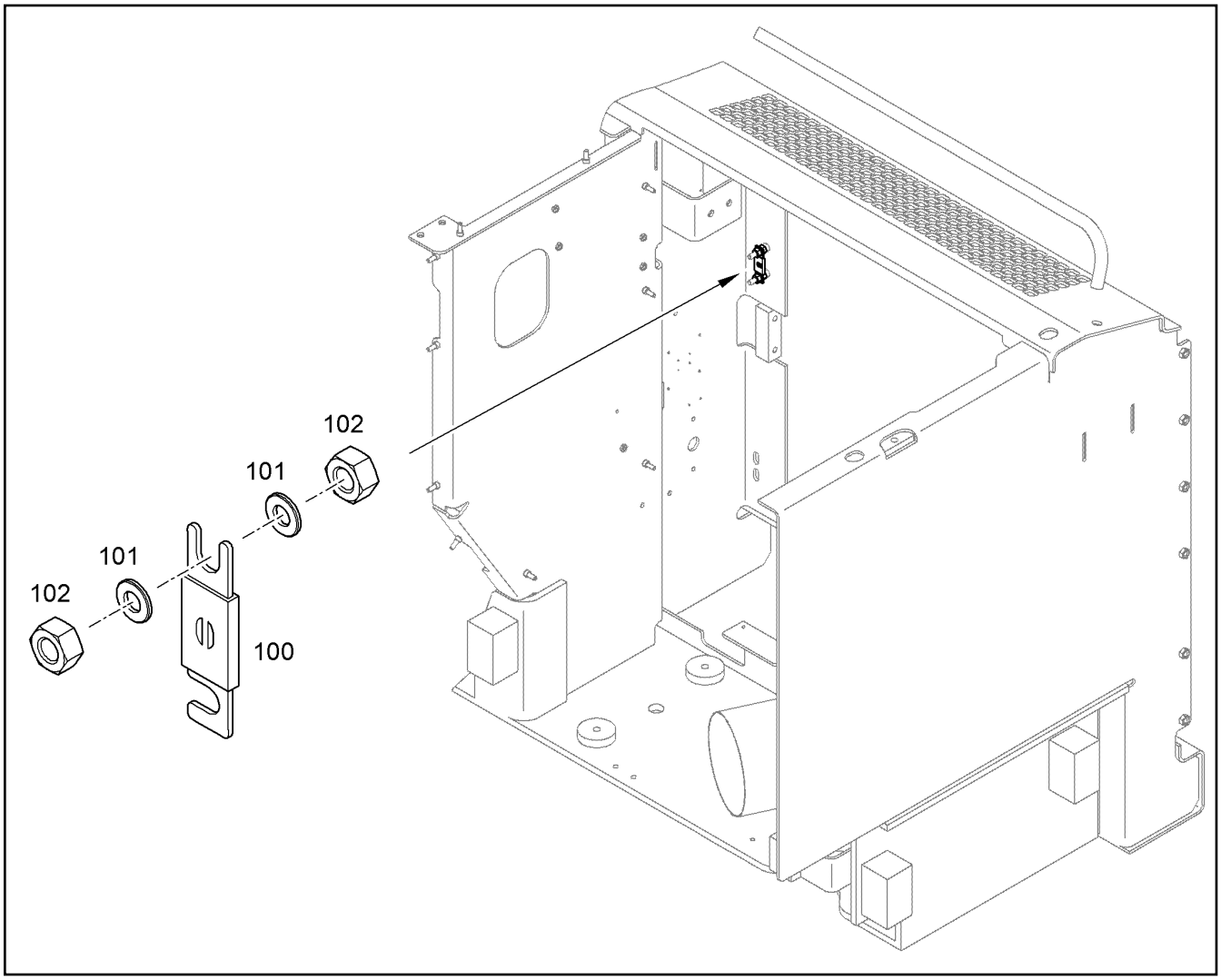

Pos.	Item	Quantity	Description	Descripción	Serie	K
100	10220613	1	FUSE CARTRIDGE 250A 80VAC/DC	CARTUCHO DE FUSIBLE		2
101	10289803	4	WASHER ISO 7089 8 300HV	ARANDELA		
102	4000383	4	HEX NUT ISO 4032 M 10 -10 A3C	TUERCA HEXAGONAL		

Pos.	Item	Quantity	Description	Descripción	Serie	K
996	7623221	1	PROTECTING CAP	CAPUCHON DE PROTECCION		

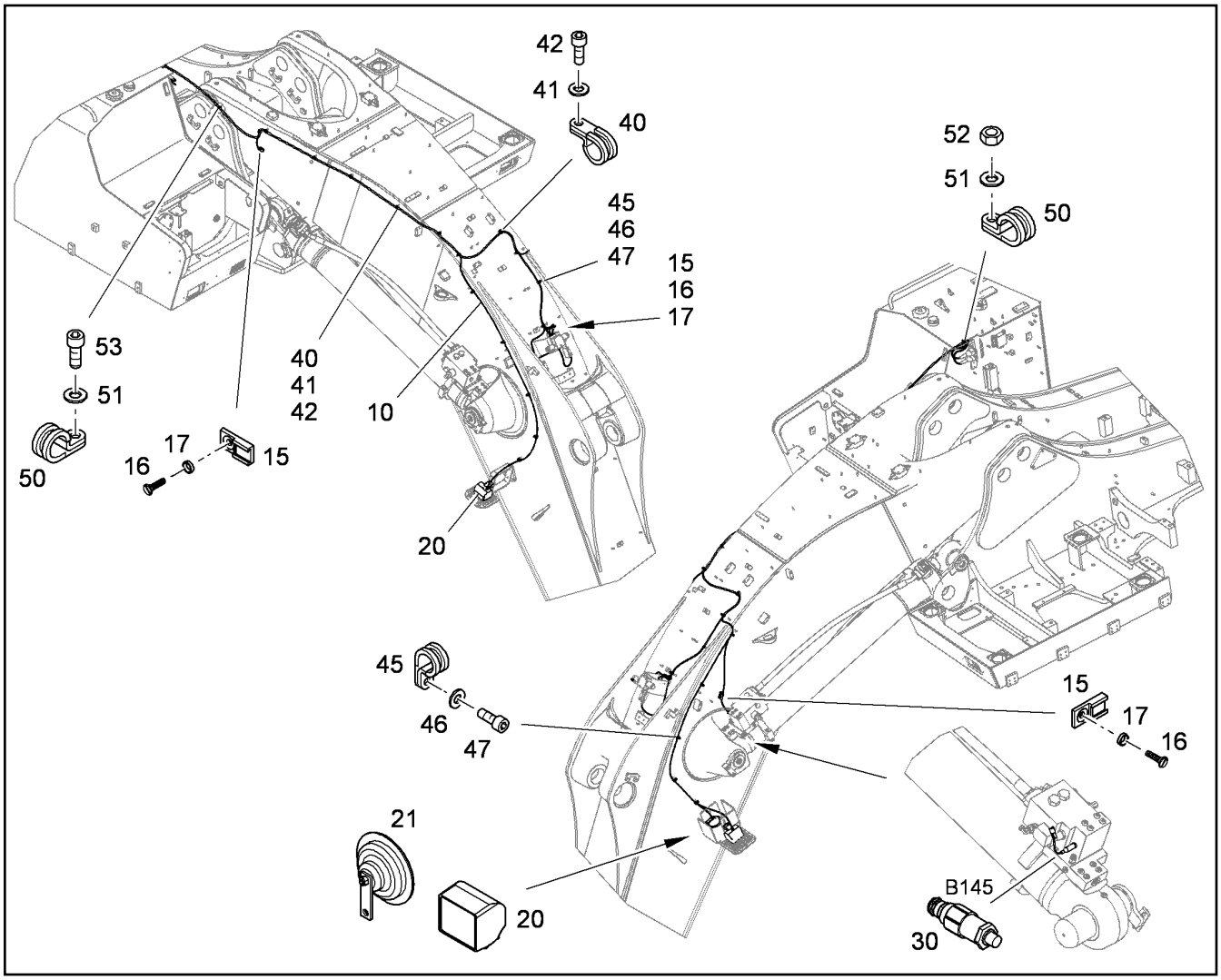

Pos.	Item	Quantity	Description	Descripción	Serie	K
10	10062223	1	WIRING HARNESS ON GOOSEN.BOOM	JUEGO CABLES EN MONOBLO		1
15	6203497	4	FASTENER	ELEMENTO DE FIJACION		
16	4004022	4	COUNTERSUNK SCREW ISO 2009 M5X12 4.	TORNILLO AVELLANADO		
17	7361965	4	LOCK WASHER	ARANDELA SEGURIDAD		
20	10045530	2	WORK LIGHT ⇨ ❑ 500	FARO DE TRABAJO		1
21	6205045	1	SUPERTONE HORN	BOCINA ALTA INTENSIDAD		
30	10280390	1	PRESSURE TRANSMITTER	IMPULSOR MANOMETRICO		2
40	7381770	12	CLAMP DIN 3016 D1- 10 X 15 W1-2-MVQ	ABRAZADERA		
41	10289802	12	WASHER ISO 7089 6 300HV	ARANDELA		
42	4600048	12	CYLINDER SCREW ISO 4762 M6x16 8.8 A2C	TORNILLO CILINDRICO		
45	7362563	16	CLAMP DIN 3016 D1- 8 X 15 W1-2-CR	ABRAZADERA		
46	10289802	16	WASHER ISO 7089 6 300HV	ARANDELA		
47	4600048	16	CYLINDER SCREW ISO 4762 M6x16 8.8 A2C	TORNILLO CILINDRICO		
50	7364299	2	CLAMP DIN 3016-1 D1 30X20 W1-2-CR	ABRAZADERA		
51	10289803	2	WASHER ISO 7089 8 300HV	ARANDELA		
52	4000381	1	HEX NUT M8	TUERCA HEXAGONAL		
53	4902231	1	CYLINDER SCREW ISO 4762 M8X16 10.9 A2	TORNILLO CILINDRICO		

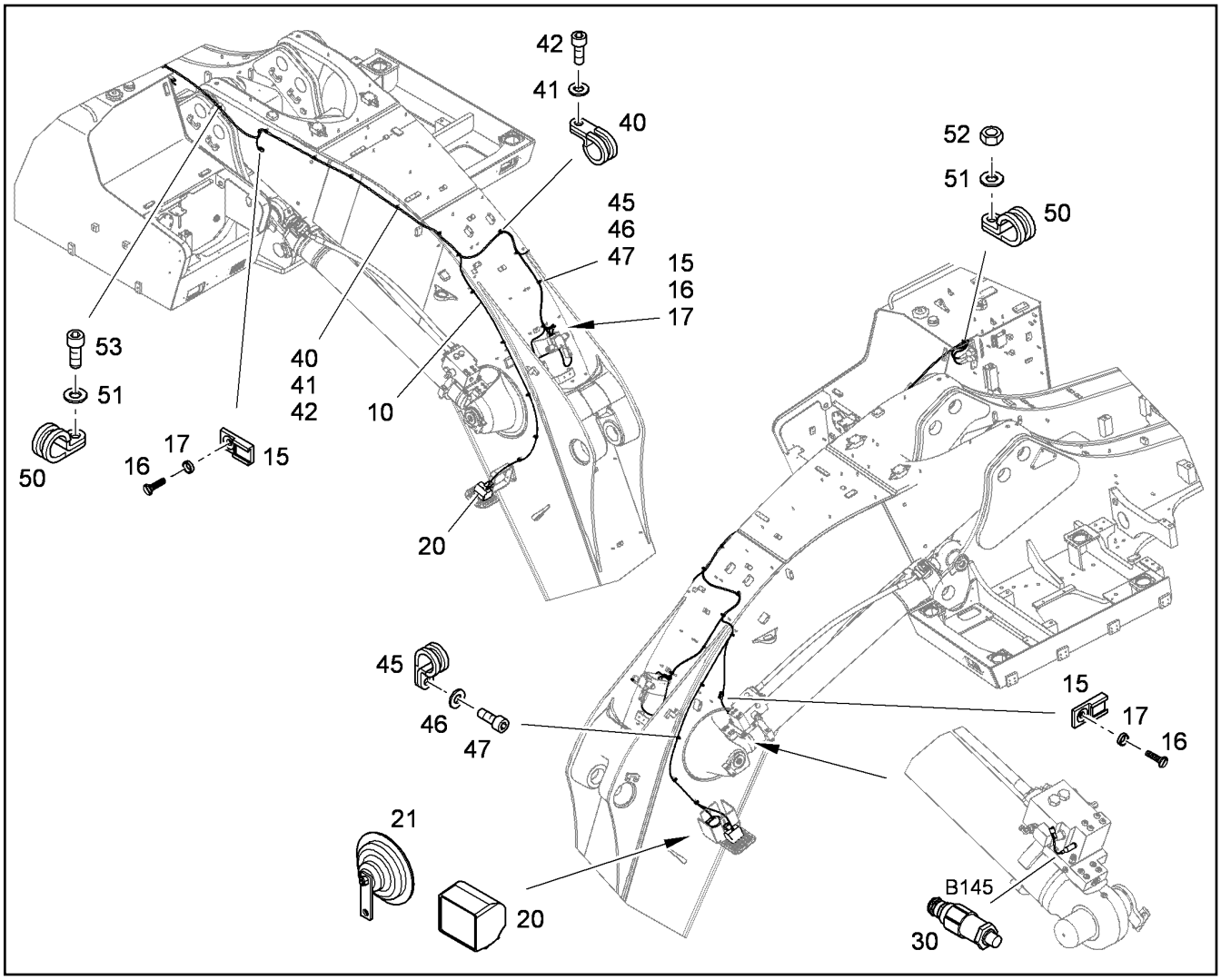

Pos.	Item	Quantity	Description	Descripción	Serie	K
10	10062223	1	WIRING HARNESS ON GOOSEN.BOOM	JUEGO CABLES EN MONOBLO		1
15	6203497	4	FASTENER	ELEMENTO DE FIJACION		
16	4004022	4	COUNTERSUNK SCREW ISO 2009 M5X12 4.	TORNILLO AVELLANADO		
17	7361965	4	LOCK WASHER	ARANDELA SEGURIDAD		
20	10045530	2	WORK LIGHT ⇨ ❑ 500	FARO DE TRABAJO		1
21	6205045	1	SUPERTONE HORN	BOCINA ALTA INTENSIDAD		
30	10280390	1	PRESSURE TRANSMITTER	IMPULSOR MANOMETRICO		2
40	7381770	9	CLAMP DIN 3016 D1- 10 X 15 W1-2-MVQ	ABRAZADERA		
41	10289802	9	WASHER ISO 7089 6 300HV	ARANDELA		
42	4600048	9	CYLINDER SCREW ISO 4762 M6x16 8.8 A2C	TORNILLO CILINDRICO		
45	7362563	13	CLAMP DIN 3016 D1- 8 X 15 W1-2-CR	ABRAZADERA		
46	10289802	13	WASHER ISO 7089 6 300HV	ARANDELA		
47	4600048	13	CYLINDER SCREW ISO 4762 M6x16 8.8 A2C	TORNILLO CILINDRICO		
50	7364299	2	CLAMP DIN 3016-1 D1 30X20 W1-2-CR	ABRAZADERA		
51	10289803	2	WASHER ISO 7089 8 300HV	ARANDELA		
52	4000381	1	HEX NUT M8	TUERCA HEXAGONAL		
53	4902231	1	CYLINDER SCREW ISO 4762 M8X16 10.9 A2	TORNILLO CILINDRICO		

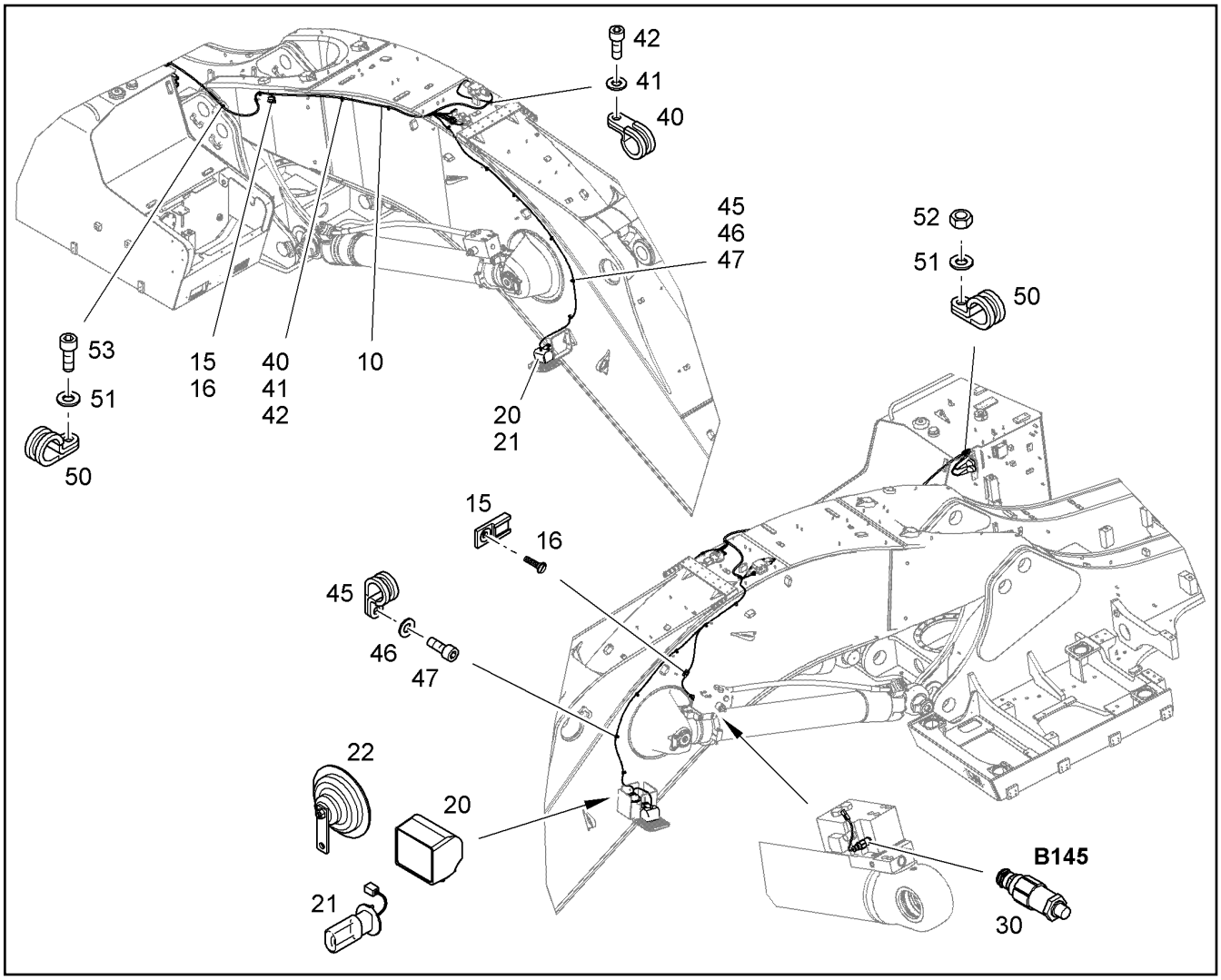

Pos.	Item	Quantity	Description	Descripción	Serie	K
10	10402126	1	WIRING HARNESS ON GOOSEN.BOOM	JUEGO CABLES EN MONOBLO		1
15	6203497	5	FASTENER	ELEMENTO DE FIJACION		
16	10471469	5	CYLINDER SCREW BN 1206 M5X10 10.9	TORNILLO CILINDRICO		
20	10045530	2	WORK LIGHT ⇨ ❑ 500	FARO DE TRABAJO		1
21	6200685	2	LIGHT BULB	BOMBILLA		1
22	6205045	1	SUPERTONE HORN	BOCINA ALTA INTENSIDAD		
30	10280390	1	PRESSURE TRANSMITTER	IMPULSOR MANOMETRICO		2
40	7381770	7	CLAMP DIN 3016 D1- 10 X 15 W1-2-MVQ	ABRAZADERA		
41	10289802	7	WASHER ISO 7089 6 300HV	ARANDELA		
42	4001596	7	CYLINDER SCREW ISO 4762 M6X16 10.9 A2	TORNILLO CILINDRICO		
45	7362563	12	CLAMP DIN 3016 D1- 8 X 15 W1-2-CR	ABRAZADERA		
46	10289802	12	WASHER ISO 7089 6 300HV	ARANDELA		
47	4001596	12	CYLINDER SCREW ISO 4762 M6X16 10.9 A2	TORNILLO CILINDRICO		
50	7364299	2	CLAMP DIN 3016-1 D1 30X20 W1-2-CR	ABRAZADERA		
51	10289803	2	WASHER ISO 7089 8 300HV	ARANDELA		
52	4000381	1	HEX NUT M8	TUERCA HEXAGONAL		
53	4902231	1	CYLINDER SCREW ISO 4762 M8X16 10.9 A2	TORNILLO CILINDRICO		

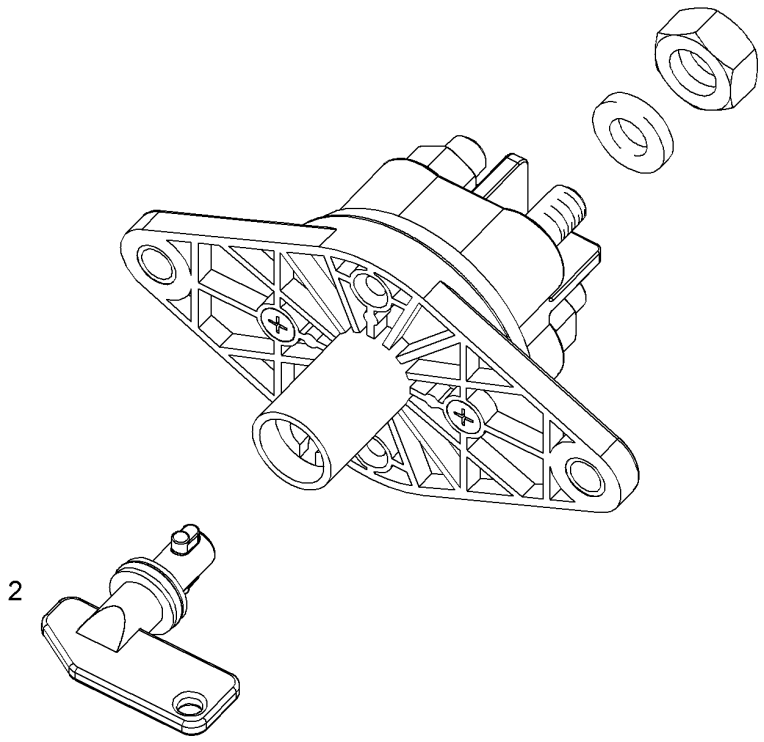

Pos.	Item	Quantity	Description	Descripción	Serie	K
2	10024214	1	SWITCH LEVER	PALANCA DE CAMBIO		

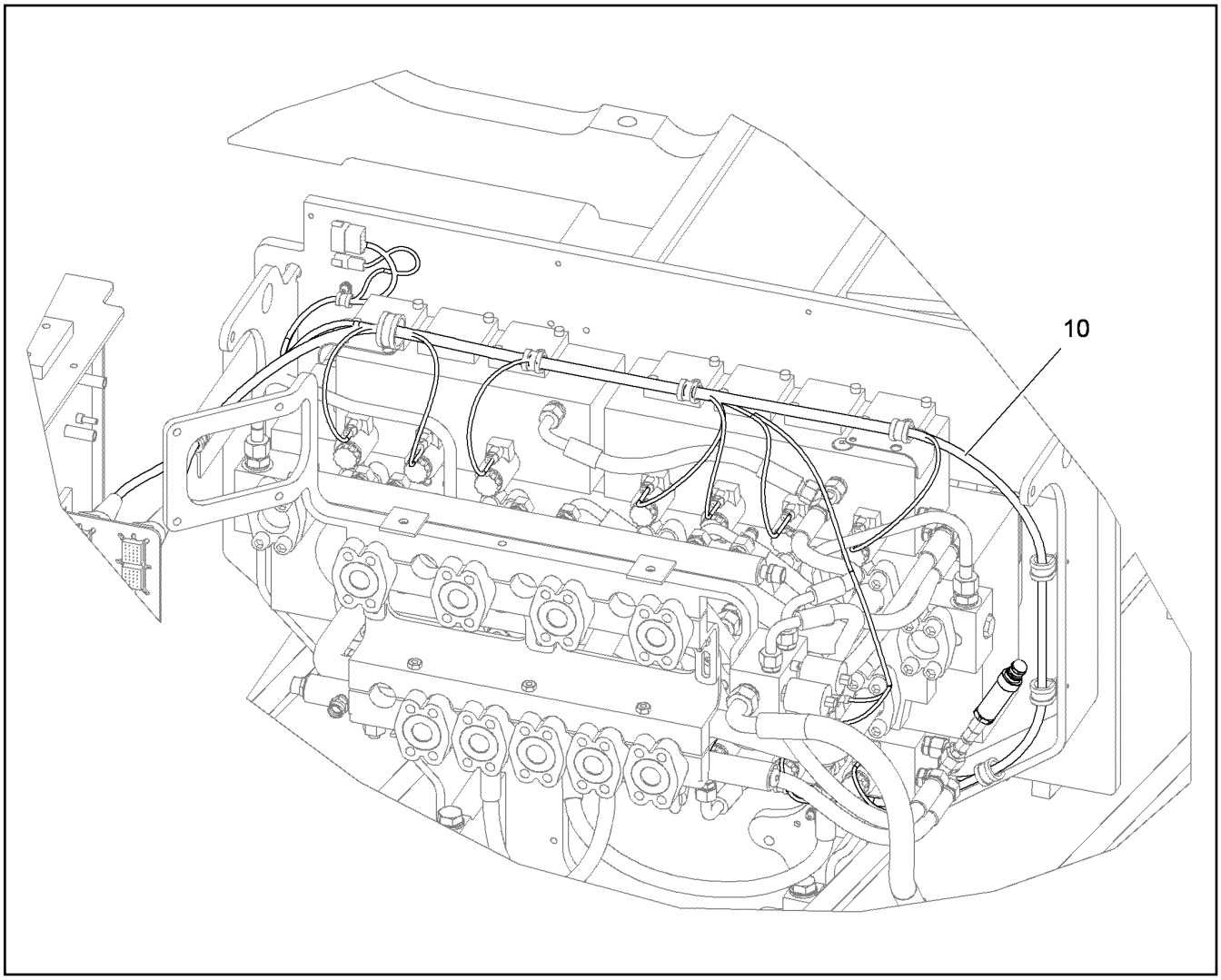

Pos.	Item	Quantity	Description	Descripción	Serie	K
10	10062229	1	WIRING HARNESS CONTROL VALVE	JC CORR.DISTR.		1

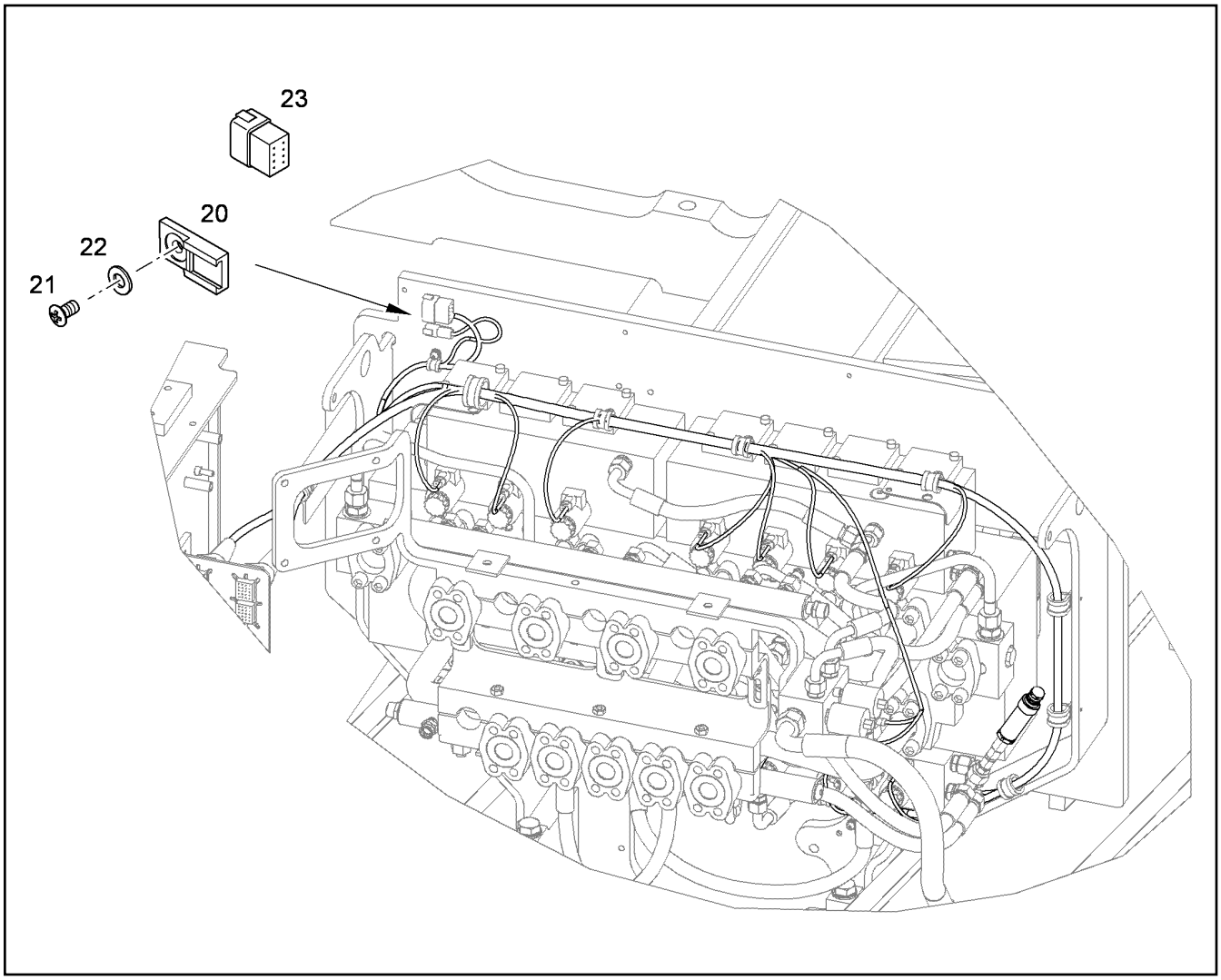

Pos.	Item	Quantity	Description	Descripción	Serie	K
20	6203497	3	FASTENER	ELEMENTO DE FIJACION		
21	4980801	4	COUNTERSUNK SCREW DIN 7991 M5X12 1	TORNILLO AVELLANADO		
22	7361965	4	LOCK WASHER	ARANDELA SEGURIDAD		
23	6905671	1	HOLDER	FIJADOR		

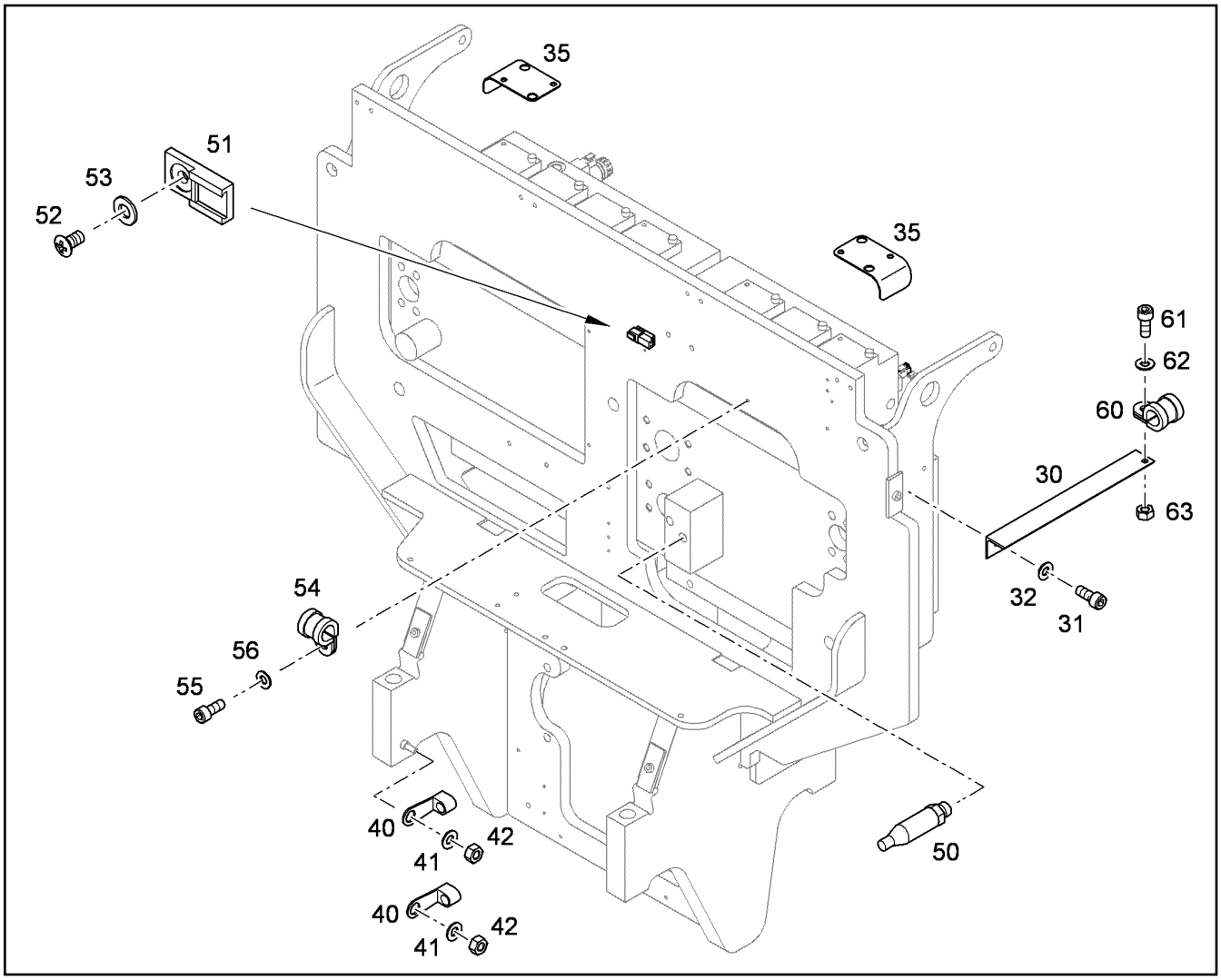

Pos.	Item	Quantity	Description	Descripción	Serie	K
30	10085121	1	CONSOLE	CONSOLA		1
31	4043082	2	CYLINDER SCREW ISO 4762 M8X20 10.9 A2	TORNILLO CILINDRICO		
32	10289803	2	WASHER ISO 7089 8 300HV	ARANDELA		
35	10084481	2	CONSOLE	CONSOLA		1
40	6204632	1	EARTH STRAP	CINTA CONEXION A MASA		2
41	10289803	2	WASHER ISO 7089 8 300HV	ARANDELA		
42	4000381	2	HEX NUT M8	TUERCA HEXAGONAL		
50	10280390	1	PRESSURE TRANSMITTER	IMPULSOR MANOMETRICO		2
51	6203497	1	FASTENER	ELEMENTO DE FIJACION		
52	4004022	1	COUNTERSUNK SCREW ISO 2009 M5X12 4.	TORNILLO AVELLANADO		
53	7361965	1	LOCK WASHER	ARANDELA SEGURIDAD		
54	7362563	1	CLAMP DIN 3016 D1- 8 X 15 W1-2-CR	ABRAZADERA		
55	4001596	1	CYLINDER SCREW ISO 4762 M6X16 10.9 A2	TORNILLO CILINDRICO		
56	10289802	1	WASHER ISO 7089 6 300HV	ARANDELA		
60	7362603	1	CLAMP DIN 3016-1 D1 15X20 W1-2-CR	ABRAZADERA		
61	4043082	1	CYLINDER SCREW ISO 4762 M8X20 10.9 A2	TORNILLO CILINDRICO		
62	10289803	1	WASHER ISO 7089 8 300HV	ARANDELA		
63	4000381	1	HEX NUT M8	TUERCA HEXAGONAL		

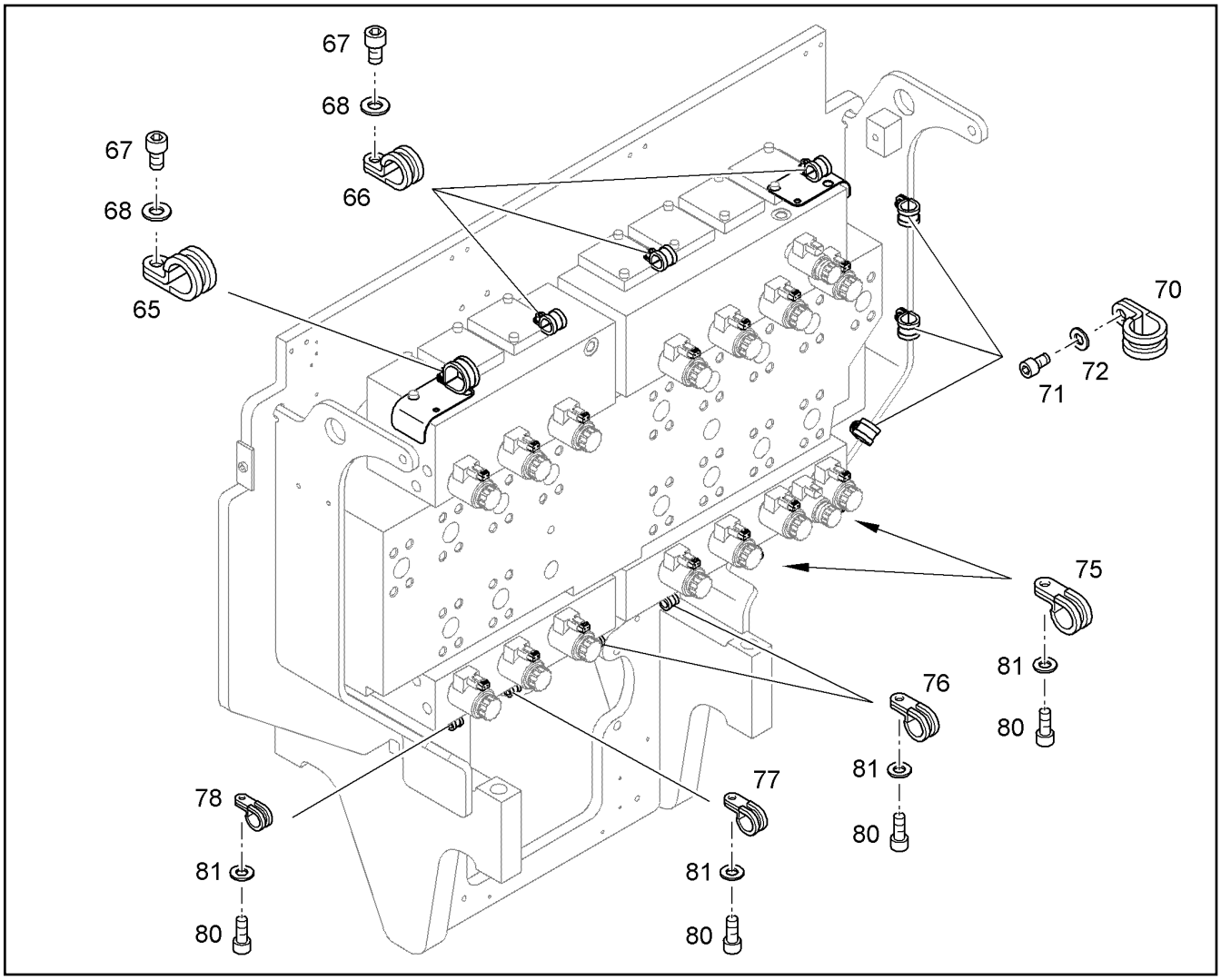

Pos.	Item	Quantity	Description	Descripción	Serie	K
65	7362551	1	CLAMP DIN 3016 D1- 38 X 20 W1-2-CR	ABRAZADERA		
66	7362665	3	CLAMP DIN 3016 D1- 20 X 20 W1-2-CR	ABRAZADERA		
67	4902231	4	CYLINDER SCREW ISO 4762 M8X16 10.9 A2	TORNILLO CILINDRICO		
68	10289803	4	WASHER ISO 7089 8 300HV	ARANDELA		
70	7362545	3	CLAMP DIN 3016-1 D1 22X20 W1-2-CR	ABRAZADERA		
71	4902250	5	CYLINDER SCREW ISO 4762 M6X10 10.9 A2	TORNILLO CILINDRICO		
72	10289802	5	WASHER ISO 7089 6 300HV	ARANDELA		
75	7361498	2	CLAMP DIN 3016 D1- 15 X 15 W1-2-CR	ABRAZADERA		
76	7362546	2	CLAMP DIN 3016-1 D1 12X15 W1-2-CR	ABRAZADERA		
77	7381770	3	CLAMP DIN 3016 D1- 10 X 15 W1-2-MVQ	ABRAZADERA		
78	7362563	1	CLAMP DIN 3016 D1- 8 X 15 W1-2-CR	ABRAZADERA		
80	4001596	6	CYLINDER SCREW ISO 4762 M6X16 10.9 A2	TORNILLO CILINDRICO		
81	10289802	6	WASHER ISO 7089 6 300HV	ARANDELA		

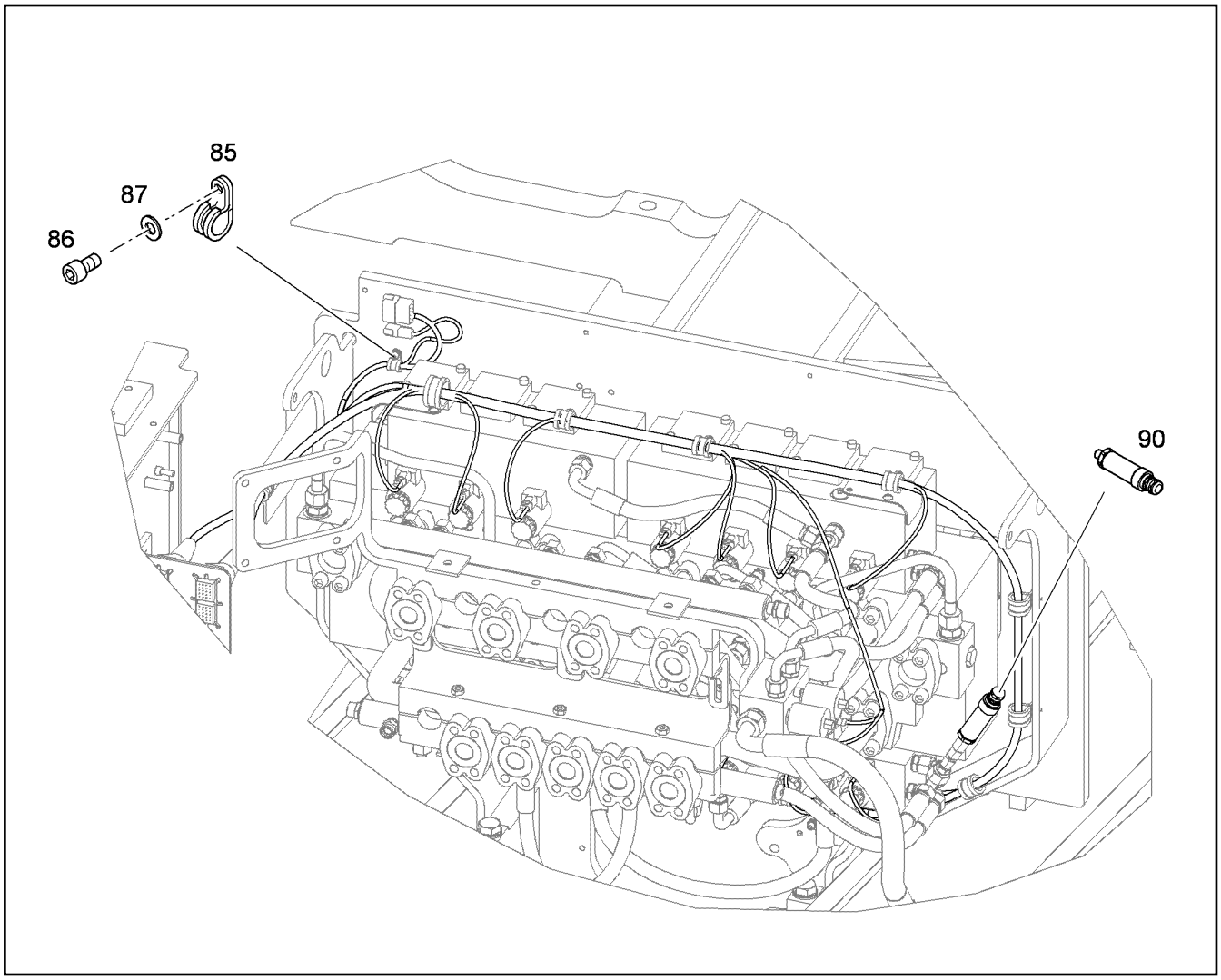

Pos.	Item	Quantity	Description	Descripción	Serie	K
85	7381770	1	CLAMP DIN 3016 D1- 10 X 15 W1-2-MVQ	ABRAZADERA		
86	4901161	1	CYLINDER SCREW ISO 4762 M6X20 10.9 A2	TORNILLO CILINDRICO		
87	10289802	1	WASHER ISO 7089 6 300HV	ARANDELA		
90	10467727	1	PRESSURE SWITCH	CABEZA BOTON GIRATORIO		2

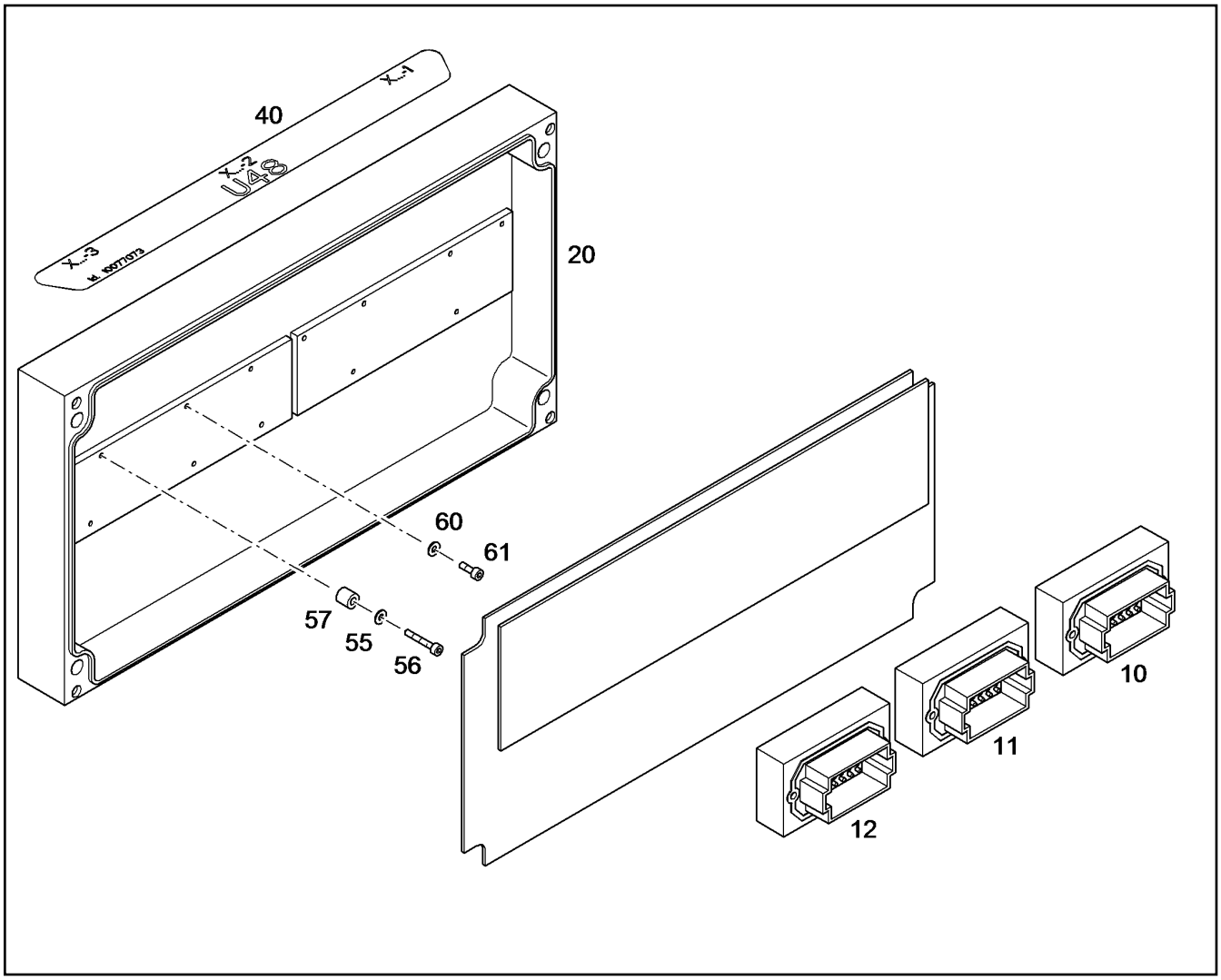

Pos.	Item	Quantity	Description	Descripción	Serie	K
2	10291541	1	OUTPUT STAGE	ETAPA FINAL		2
10	10323535	1	SOCKET	CAJA ENCHUFE		
11	10323530	1	SOCKET	CAJA ENCHUFE		
12	10323529	1	SOCKET	CAJA ENCHUFE		
20	10389036	1	ELECTRIC BOX	CAJA ELÉCTRICA		
40	10395431	1	LABEL U48	ETIQUETA		1
55	10326564	2	WASHER DIN 125 A 2,5 ST A3C	ARANDELA		
56	10326562	2	CYLINDER SCREW ISO 4762 M2,5X16 12.9	TORNILLO CILINDRICO		
57	10326567	2	SLEEVE	CASQUILLO.		
60	10326564	11	WASHER DIN 125 A 2,5 ST A3C	ARANDELA		
61	10326550	11	CYLINDER SCREW ISO 4762 M2,5X8 12.9	TORNILLO CILINDRICO		

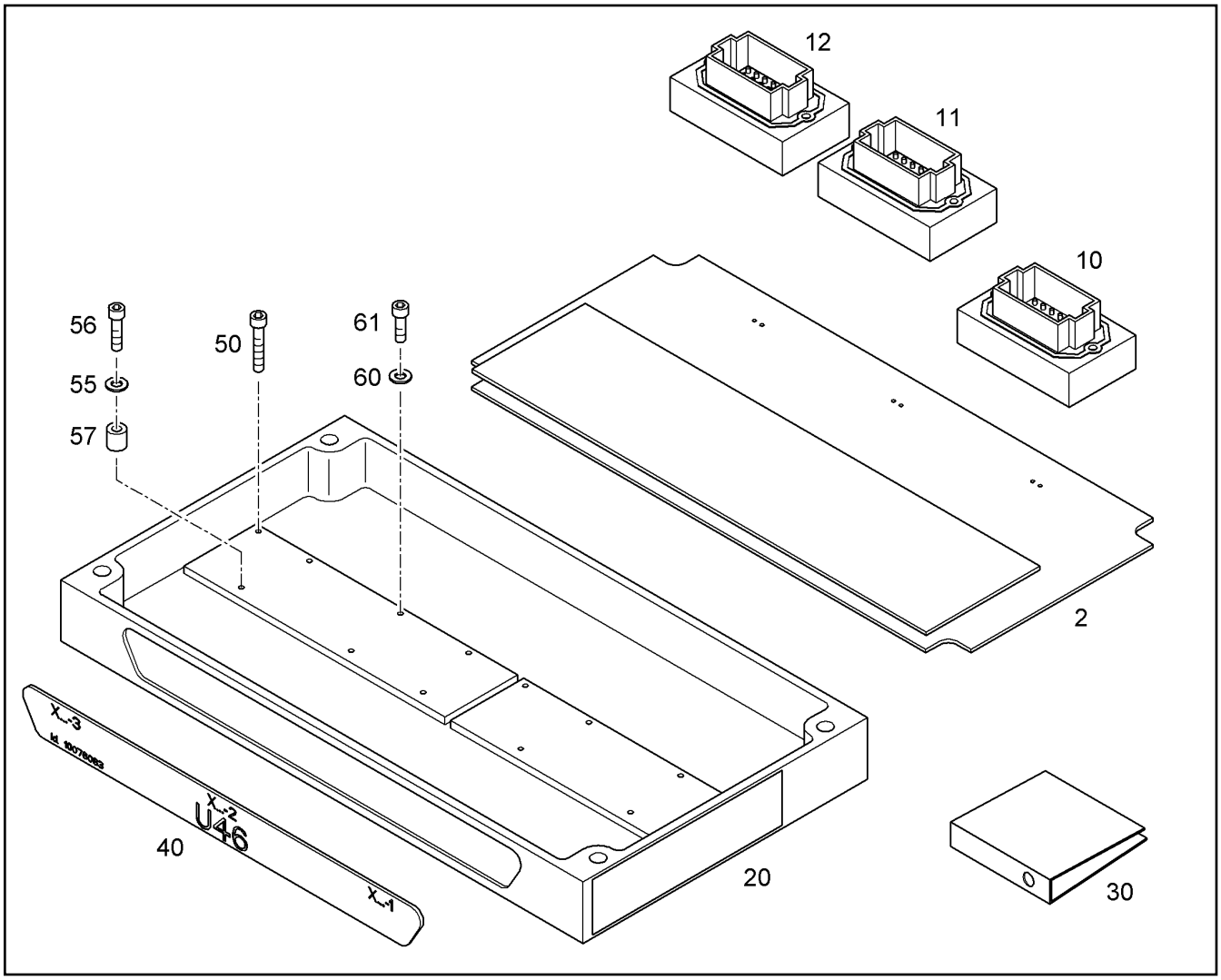

Pos.	Item	Quantity	Description	Descripción	Serie	K
2	10291540	1	OUTPUT STAGE	ETAPA FINAL		2
10	10323535	1	SOCKET	CAJA ENCHUFE		
11	10323530	1	SOCKET	CAJA ENCHUFE		
12	10323529	1	SOCKET	CAJA ENCHUFE		
20	10389036	1	ELECTRIC BOX	CAJA ELÉCTRICA		
30	10076085	1	TECHNICAL DESCR	DESCRIPCIÓN TÉCNICA		1
40	10395385	1	LABEL U46	ETIQUETA		1
50	10326563	1	CYLINDER SCREW ISO 4762 M2,5X20 12.9	TORNILLO CILINDRICO		
55	10326564	2	WASHER DIN 125 A 2,5 ST A3C	ARANDELA		
56	10326562	2	CYLINDER SCREW ISO 4762 M2,5X16 12.9	TORNILLO CILINDRICO		
57	10326567	2	SLEEVE	CASQUILLO.		
60	10326564	10	WASHER DIN 125 A 2,5 ST A3C	ARANDELA		
61	10326550	10	CYLINDER SCREW ISO 4762 M2,5X8 12.9	TORNILLO CILINDRICO		

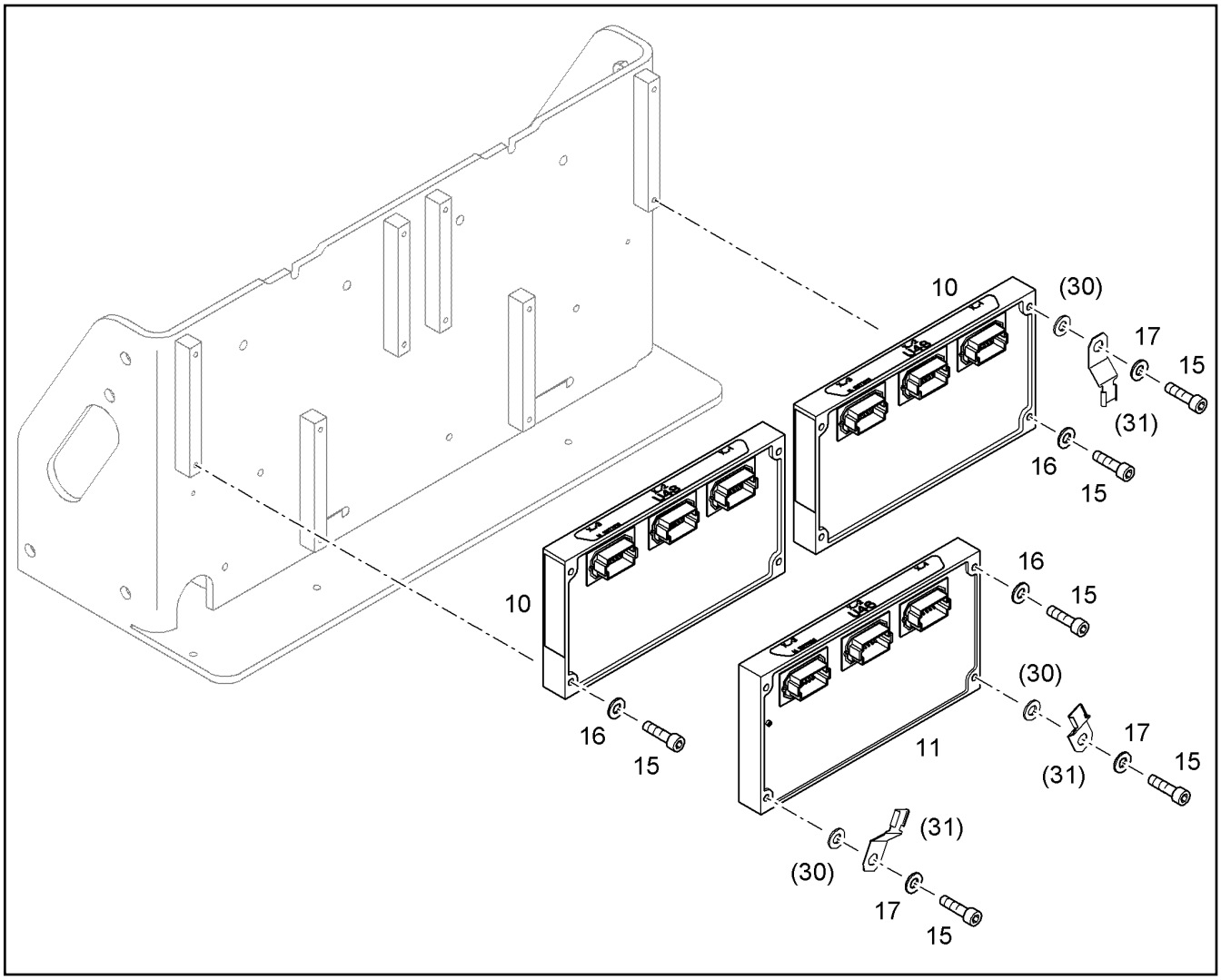

Pos.	Item	Quantity	Description	Descripción	Serie	K
15	4600340	12	CYLINDER SCREW ISO 4762 M6X40 10.9 A2	TORNILLO CILINDRICO		
16	10289802	9	WASHER ISO 7089 6 300HV	ARANDELA		

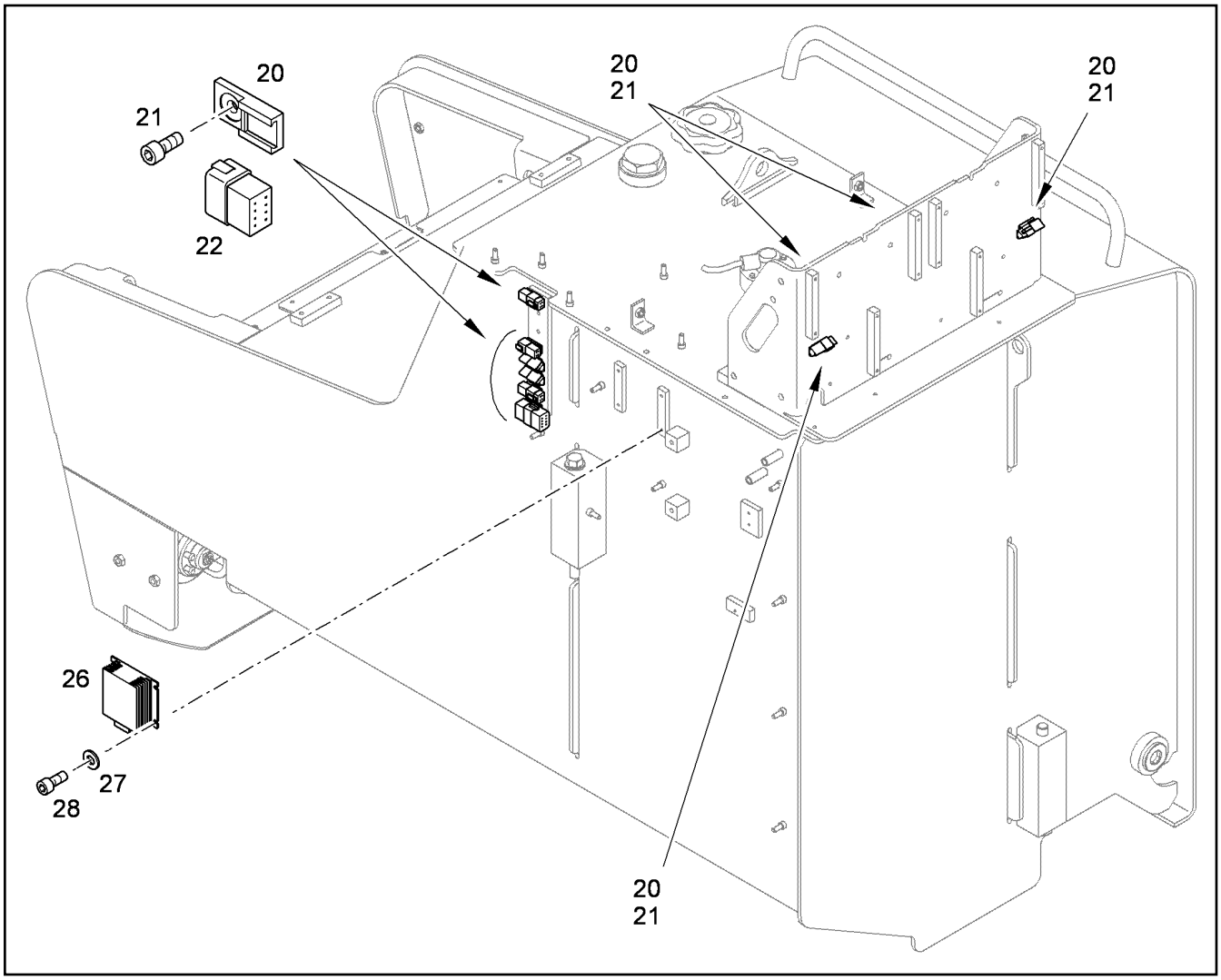

Pos.	Item	Quantity	Description	Descripción	Serie	K
20	6203497	14	FASTENER	ELEMENTO DE FIJACION		
21	10471469	15	CYLINDER SCREW BN 1206 M5X10 10.9	TORNILLO CILINDRICO		
22	6905671	1	HOLDER	FIJADOR		
27	10289802	4	WASHER ISO 7089 6 300HV	ARANDELA		
28	4001596	4	CYLINDER SCREW ISO 4762 M6X16 10.9 A2	TORNILLO CILINDRICO		

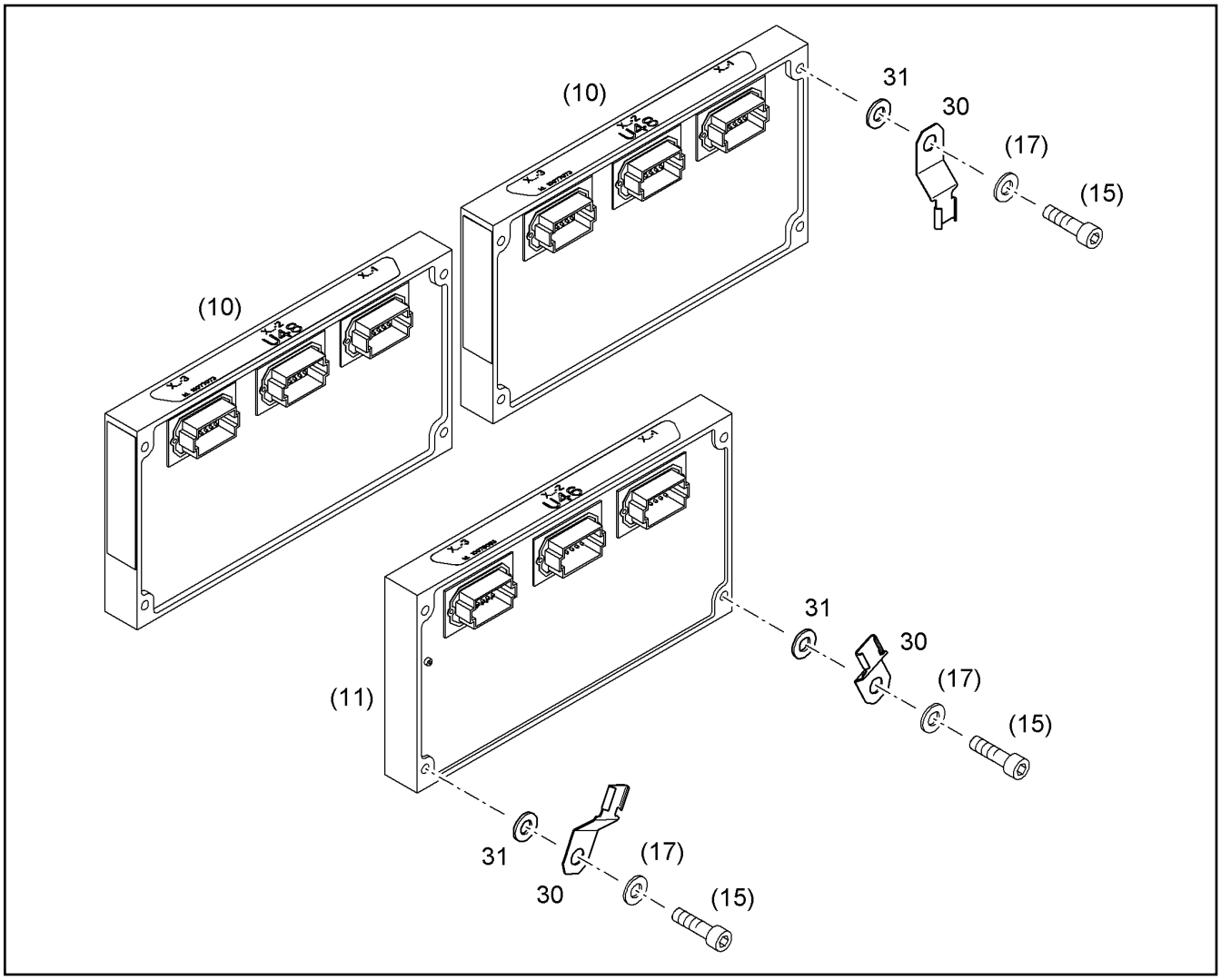

Pos.	Item	Quantity	Description	Descripción	Serie	K
30	10041876	3	HOLDER	FIJADOR		
31	4600198	3	WASHER DIN 9021 6,4 ST A3C	ARANDELA		

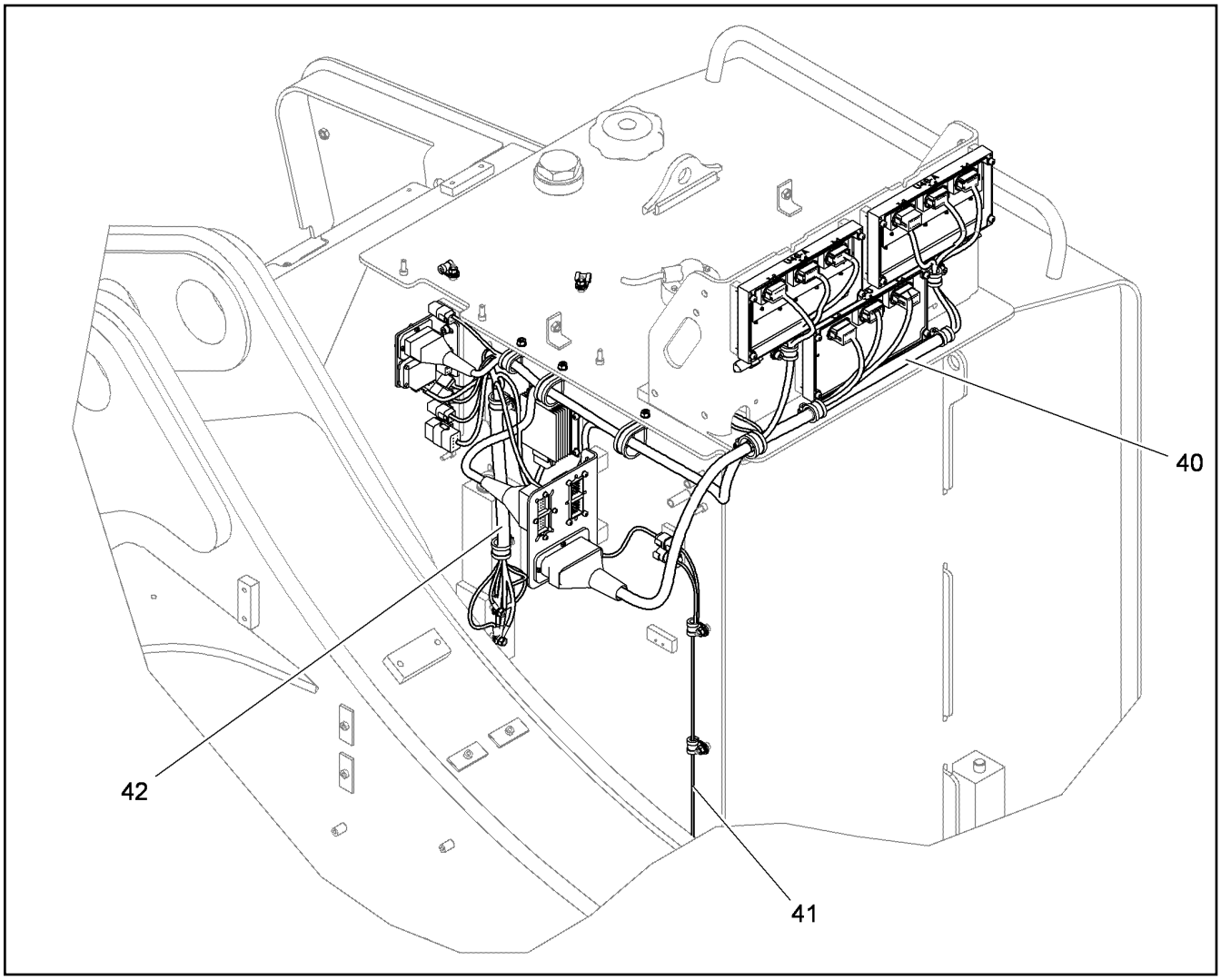

Pos.	Item	Quantity	Description	Descripción	Serie	K
40	10094995	1	WIRING HARNESS FUEL TANK	JUEGO CABLES DEP. COMBUST		
41	10066099	1	CABLE LOOM E4 - H9	KIT DE CABLES		1
42	10086421	1	EARTH CABLE	CABLE DE TIERRA		1

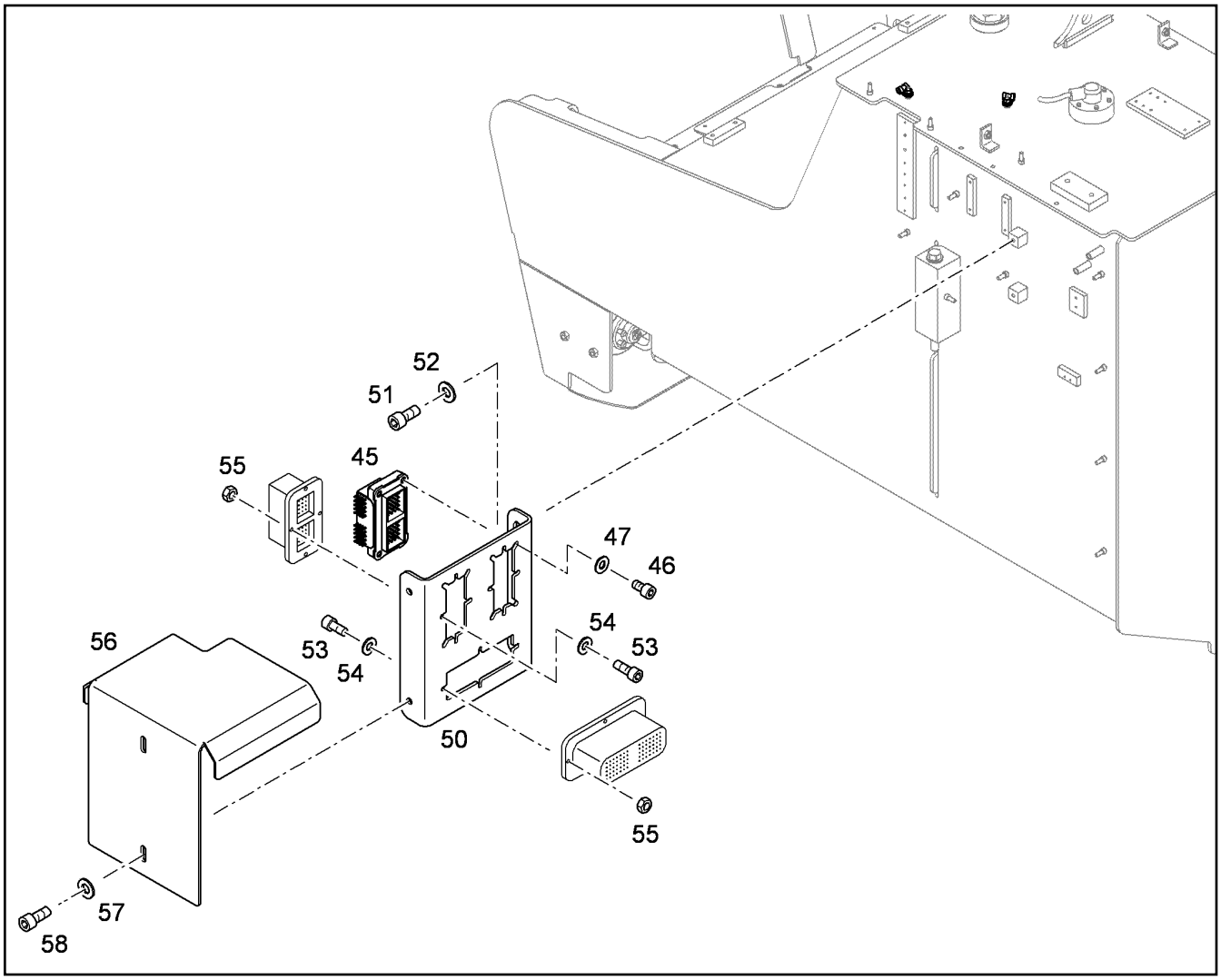

Pos.	Item	Quantity	Description	Descripción	Serie	K
45	989185601	1	E-BOARD	PLACA E		2
46	4001308	4	CYLINDER SCREW ISO 4762 M5x12 8.8 A2C	TORNILLO CILINDRICO		
47	7361965	4	LOCK WASHER	ARANDELA SEGURIDAD		
50	10396657	1	CONSOLE	CONSOLA		
51	4902231	2	CYLINDER SCREW ISO 4762 M8X16 10.9 A2	TORNILLO CILINDRICO		
52	10289803	2	WASHER ISO 7089 8 300HV	ARANDELA		
53	4600337	12	CYLINDER SCREW ISO 4762 M4x16 8.8 A2C	TORNILLO CILINDRICO		
54	4001645	12	WASHER DIN 125 B 4,3 ST A3C	ARANDELA		
55	4000376	12	HEX NUT M4	TUERCA HEXAGONAL		
56	10396395	1	COVER PLATE	CHAPA COBERTURA		1
57	4600198	2	WASHER DIN 9021 6,4 ST A3C	ARANDELA		
58	4001596	2	CYLINDER SCREW ISO 4762 M6X16 10.9 A2	TORNILLO CILINDRICO		

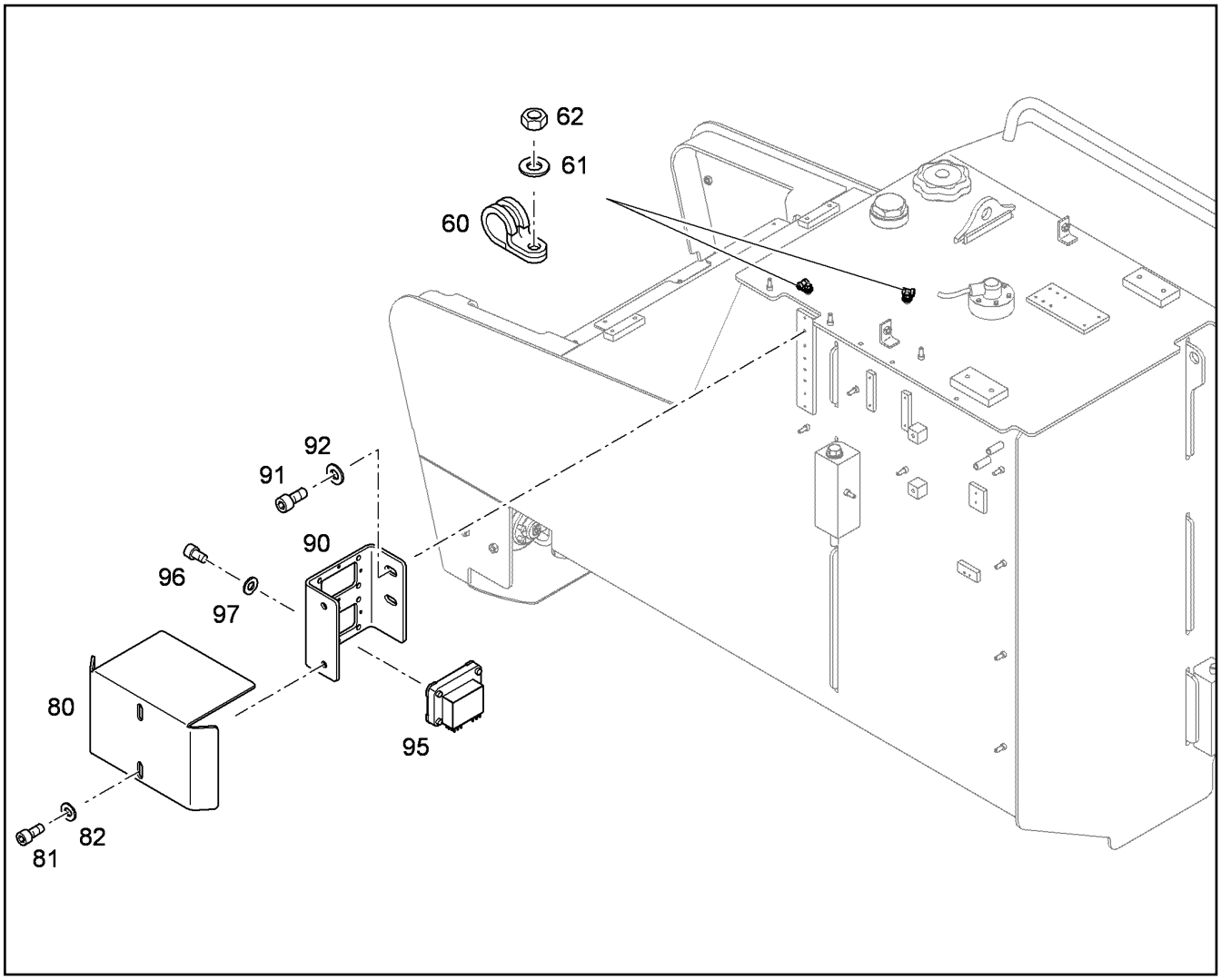

Pos.	Item	Quantity	Description	Descripción	Serie	K
60	7381565	2	CLAMP DIN 3016 D1- 6 X 20 W1-2-CR	ABRAZADERA		
61	10289803	2	WASHER ISO 7089 8 300HV	ARANDELA		
62	4000381	2	HEX NUT M8	TUERCA HEXAGONAL		
80	10396615	1	COVER PLATE	CHAPA COBERTURA		1
81	4001596	2	CYLINDER SCREW ISO 4762 M6X16 10.9 A2	TORNILLO CILINDRICO		
82	4600198	2	WASHER DIN 9021 6,4 ST A3C	ARANDELA		
90	10396658	1	CONSOLE	CONSOLA		
91	4902231	2	CYLINDER SCREW ISO 4762 M8X16 10.9 A2	TORNILLO CILINDRICO		
92	10289803	2	WASHER ISO 7089 8 300HV	ARANDELA		
95	975827701	1	E-BOARD	PLACA E		
96	4001308	4	CYLINDER SCREW ISO 4762 M5x12 8.8 A2C	TORNILLO CILINDRICO		
97	7361965	4	LOCK WASHER	ARANDELA SEGURIDAD		

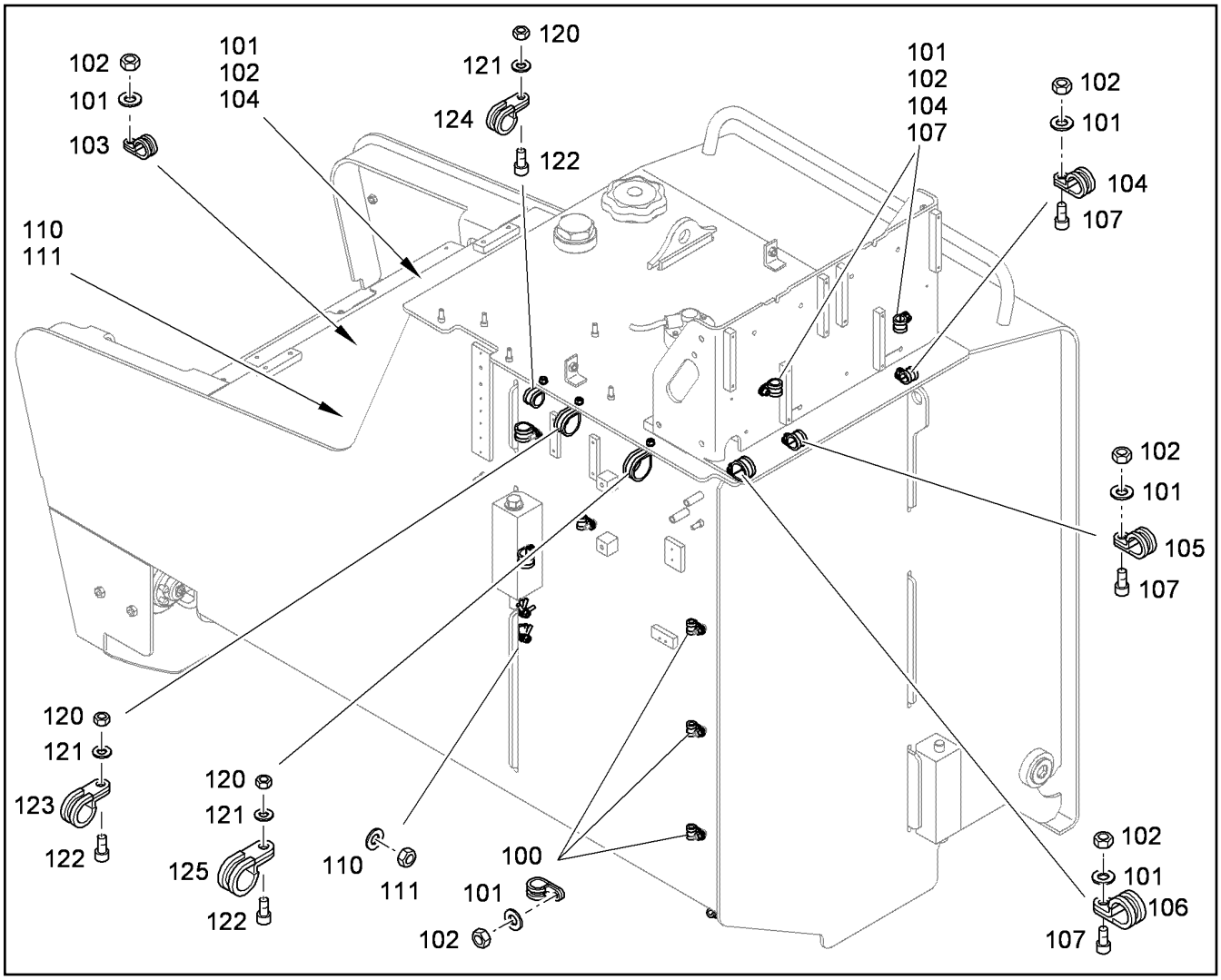

Pos.	Item	Quantity	Description	Descripción	Serie	K
100	7381628	14	CLAMP DIN 3016 D1- 10 X 20 W1-2-MVQ	ABRAZADERA		
101	10289803	24	WASHER ISO 7089 8 300HV	ARANDELA		
102	4000381	19	HEX NUT M8	TUERCA HEXAGONAL		
103	7362603	3	CLAMP DIN 3016-1 D1 15X20 W1-2-CR	ABRAZADERA		
104	7362602	3	CLAMP DIN 3016 D1- 18 X 20 W1-2-CR	ABRAZADERA		
105	7362547	1	CLAMP DIN 3016 D1- 24 X 20 W1-2-CR	ABRAZADERA		
106	7366260	1	CLAMP DIN 3016 D1- 34 X 20 W1-2-CR	ABRAZADERA		
107	4902231	5	CYLINDER SCREW ISO 4762 M8X16 10.9 A2	TORNILLO CILINDRICO		
110	10289803	3	WASHER ISO 7089 8 300HV	ARANDELA		
111	4000381	3	HEX NUT M8	TUERCA HEXAGONAL		
120	4000381	3	HEX NUT M8	TUERCA HEXAGONAL		
121	10289803	3	WASHER ISO 7089 8 300HV	ARANDELA		
122	4901217	3	CYLINDER SCREW ISO 4762 M8X25 10.9 A2	TORNILLO CILINDRICO		
123	7362551	1	CLAMP DIN 3016 D1- 38 X 20 W1-2-CR	ABRAZADERA		
124	7362547	3	CLAMP DIN 3016 D1- 24 X 20 W1-2-CR	ABRAZADERA		
125	7365080	1	CLAMP DIN 3016 D1- 45 X 20 W1-2-CR	ABRAZADERA		

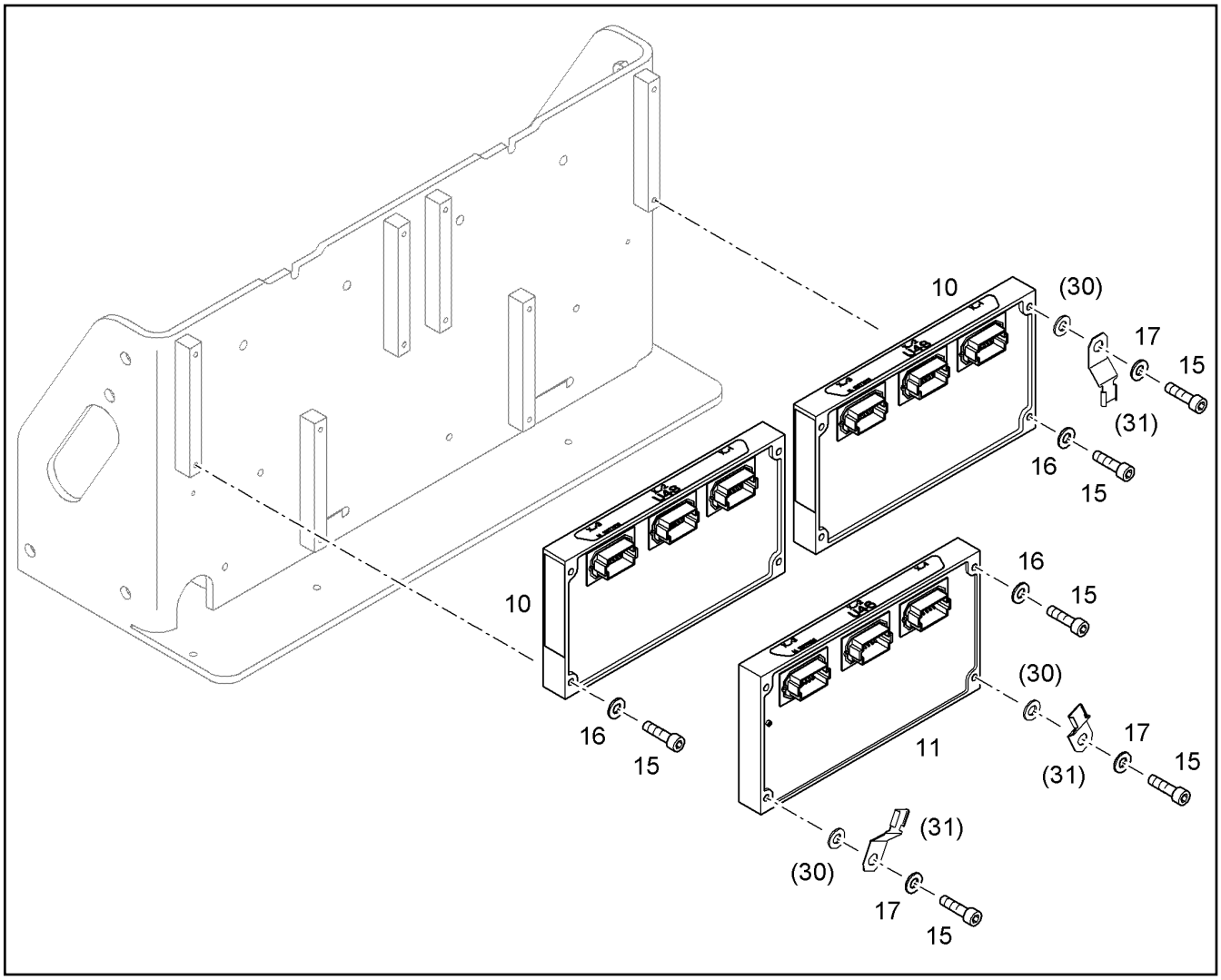

Pos.	Item	Quantity	Description	Descripción	Serie	K
10	10077073	2	ELECTRIC BOX CPL. U48-A ⇨ ❑ 520	CAJA EL.COMPL.		
11	10076083	1	ELECTRIC BOX CPL. U46 ⇨ ❑ 521	CAJA EL.COMPL.		
15	4600340	12	CYLINDER SCREW ISO 4762 M6X40 10.9 A2	TORNILLO CILINDRICO		
16	10289802	9	WASHER ISO 7089 6 300HV	ARANDELA		
17	4600198	3	WASHER DIN 9021 6,4 ST A3C	ARANDELA		

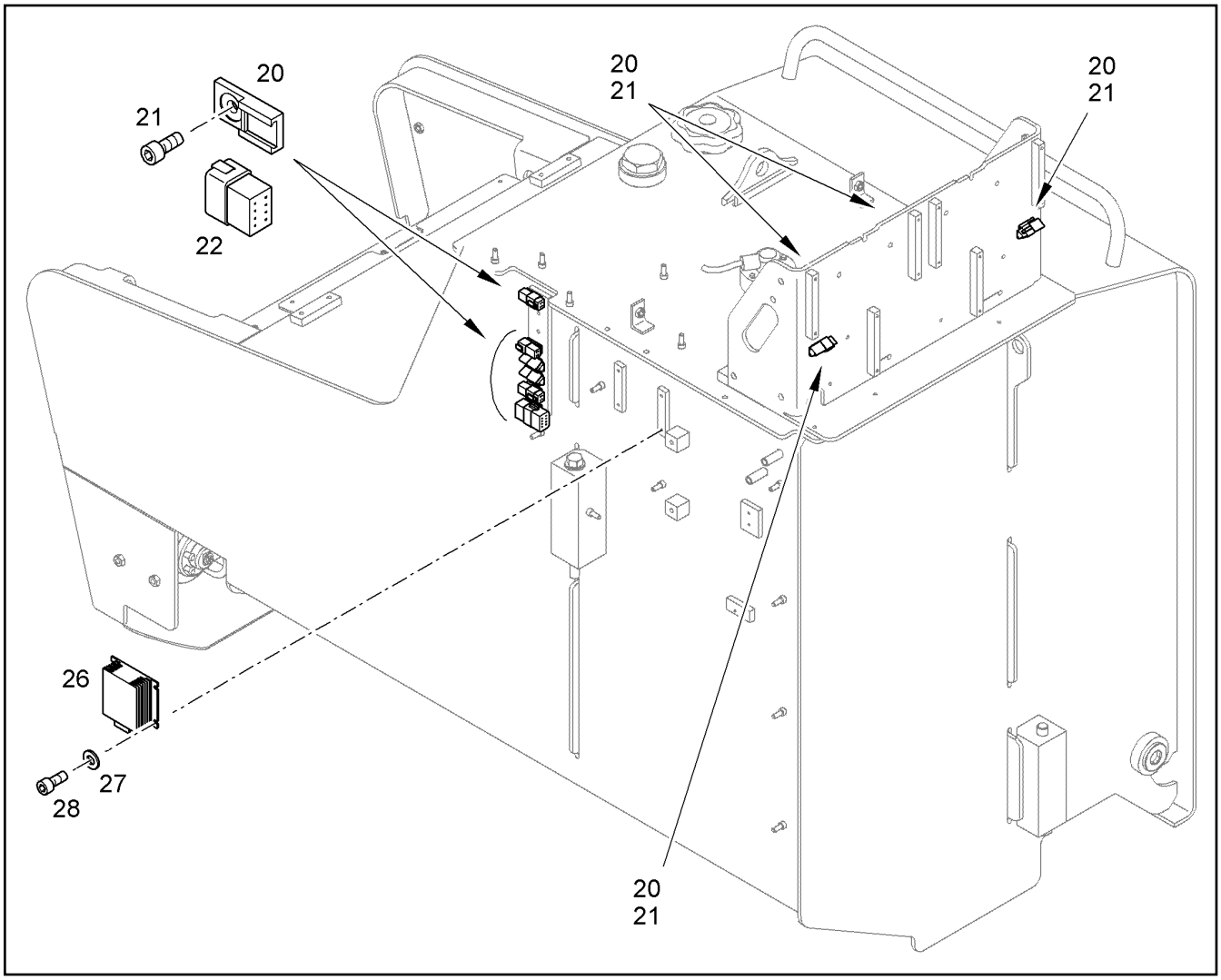

Pos.	Item	Quantity	Description	Descripción	Serie	K
20	6203497	14	FASTENER	ELEMENTO DE FIJACION		
21	10471469	15	CYLINDER SCREW BN 1206 M5X10 10.9	TORNILLO CILINDRICO		
22	6905671	1	HOLDER	FIJADOR		
26	10065774	1	POWER MODULE CPL ⇨ ❑ 537	MÓDULO DE POTENCIA COMPL.		
27	10289802	4	WASHER ISO 7089 6 300HV	ARANDELA		
28	4001596	4	CYLINDER SCREW ISO 4762 M6X16 10.9 A2	TORNILLO CILINDRICO		

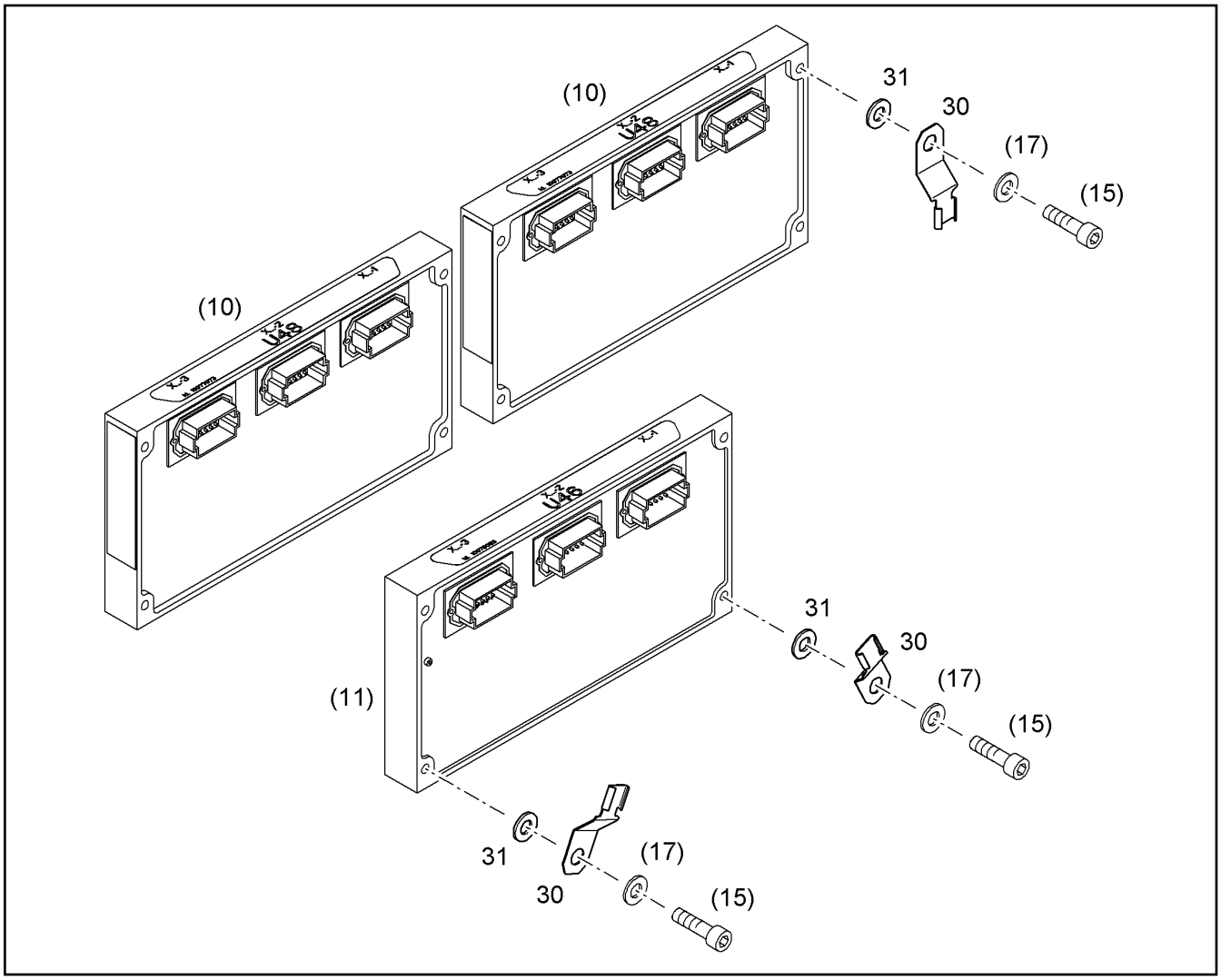

Pos.	Item	Quantity	Description	Descripción	Serie	K
30	10041876	3	HOLDER	FIJADOR		
31	4600198	3	WASHER DIN 9021 6,4 ST A3C	ARANDELA		

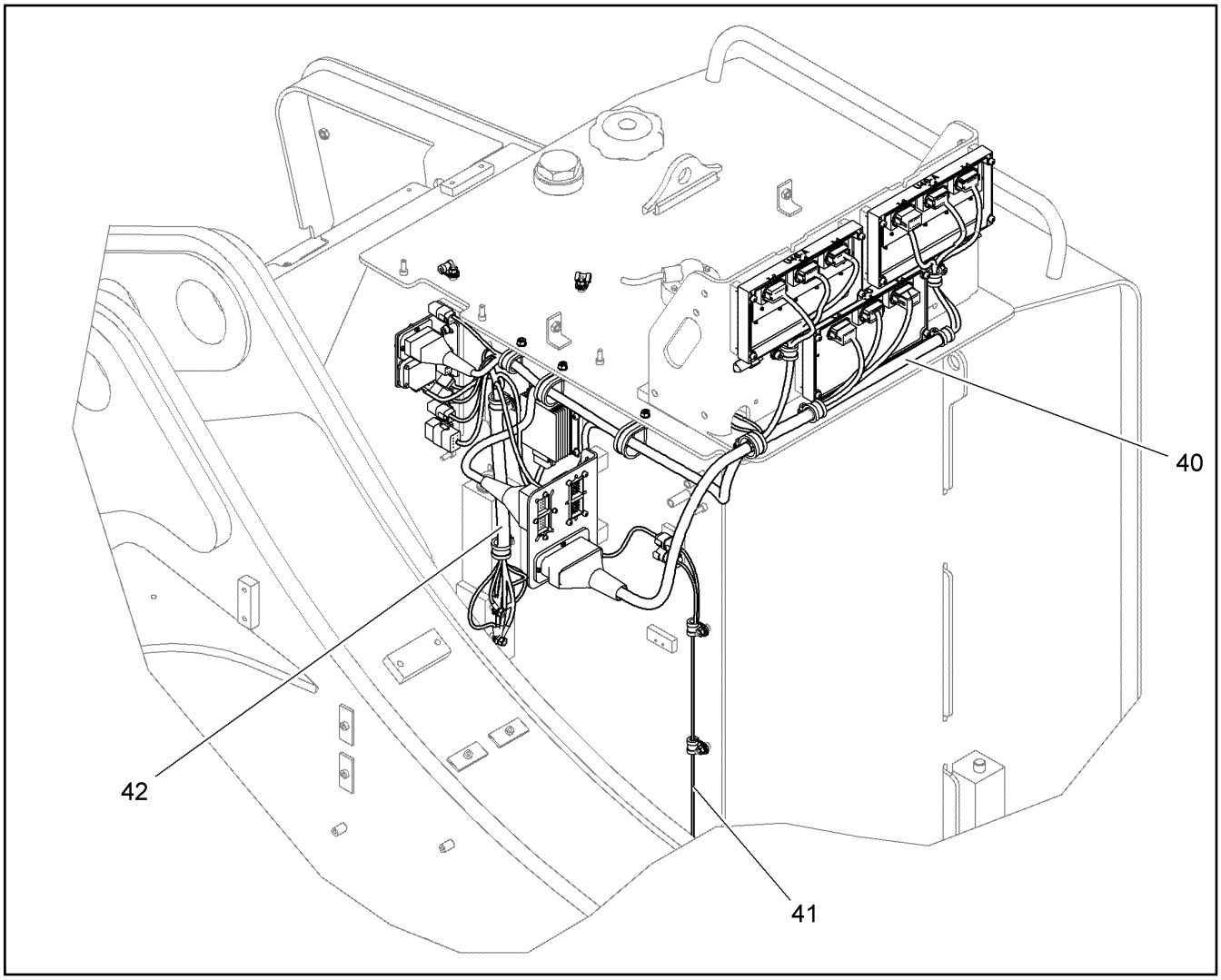

Pos.	Item	Quantity	Description	Descripción	Serie	K
40	10402127	1	WIRING HARNESS FUEL TANK	JUEGO CABLES DEP. COMBUST		
41	10066099	1	CABLE LOOM E4 - H9	KIT DE CABLES		1
42	10086421	1	EARTH CABLE	CABLE DE TIERRA		1

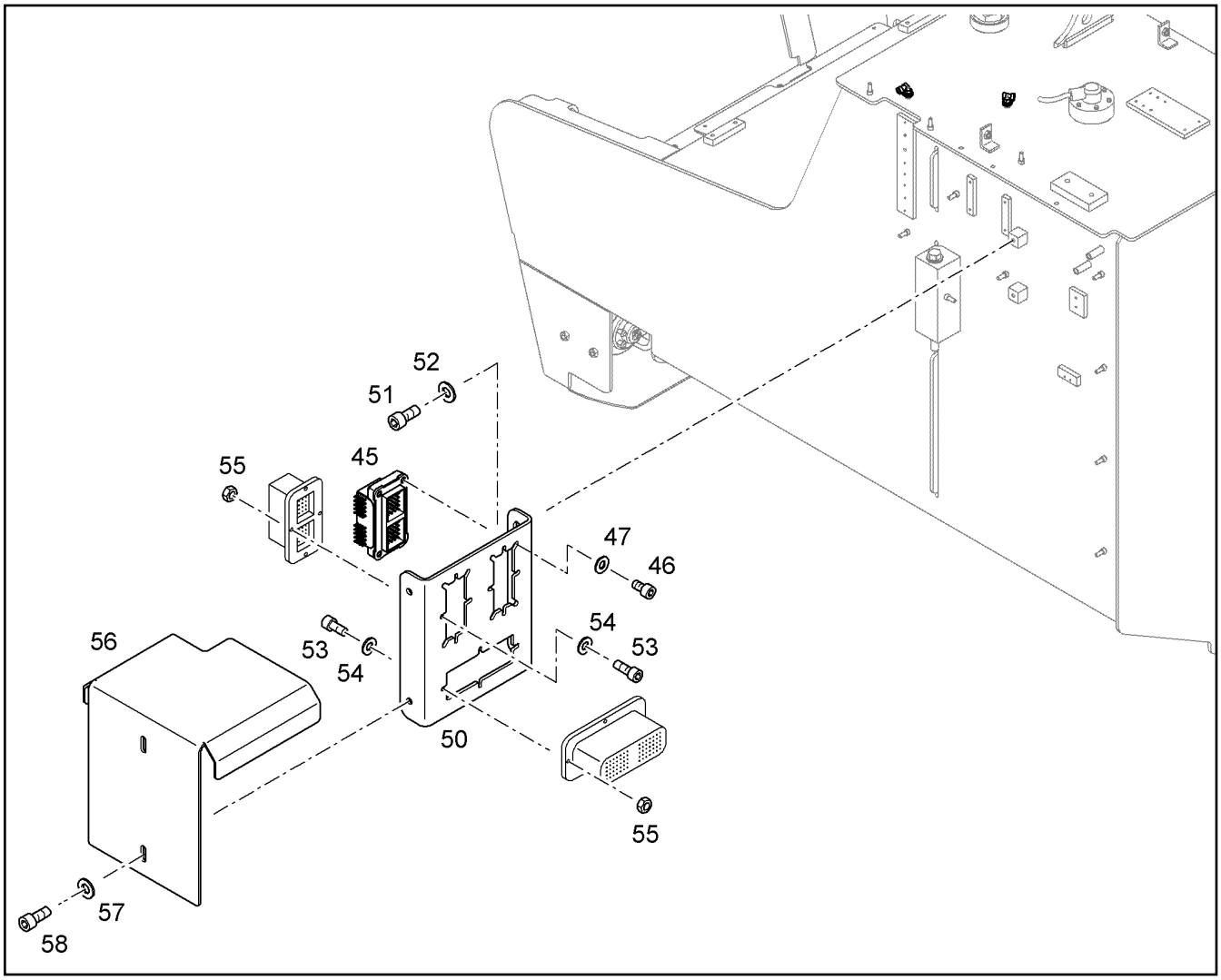

Pos.	Item	Quantity	Description	Descripción	Serie	K
45	989185601	1	E-BOARD	PLACA E		2
46	4001308	4	CYLINDER SCREW ISO 4762 M5x12 8.8 A2C	TORNILLO CILINDRICO		
47	7361965	4	LOCK WASHER	ARANDELA SEGURIDAD		
50	10396657	1	CONSOLE	CONSOLA		
51	4902231	2	CYLINDER SCREW ISO 4762 M8X16 10.9 A2	TORNILLO CILINDRICO		
52	10289803	2	WASHER ISO 7089 8 300HV	ARANDELA		
53	404200701	12	CYLINDER SCREW ISO 4762 M4x20 8.8 A2C	TORNILLO CILINDRICO		
54	4001645	12	WASHER DIN 125 B 4,3 ST A3C	ARANDELA		
55	4000376	12	HEX NUT M4	TUERCA HEXAGONAL		
56	10396395	1	COVER PLATE	CHAPA COBERTURA		1
57	4600198	2	WASHER DIN 9021 6,4 ST A3C	ARANDELA		
58	4001596	2	CYLINDER SCREW ISO 4762 M6X16 10.9 A2	TORNILLO CILINDRICO		

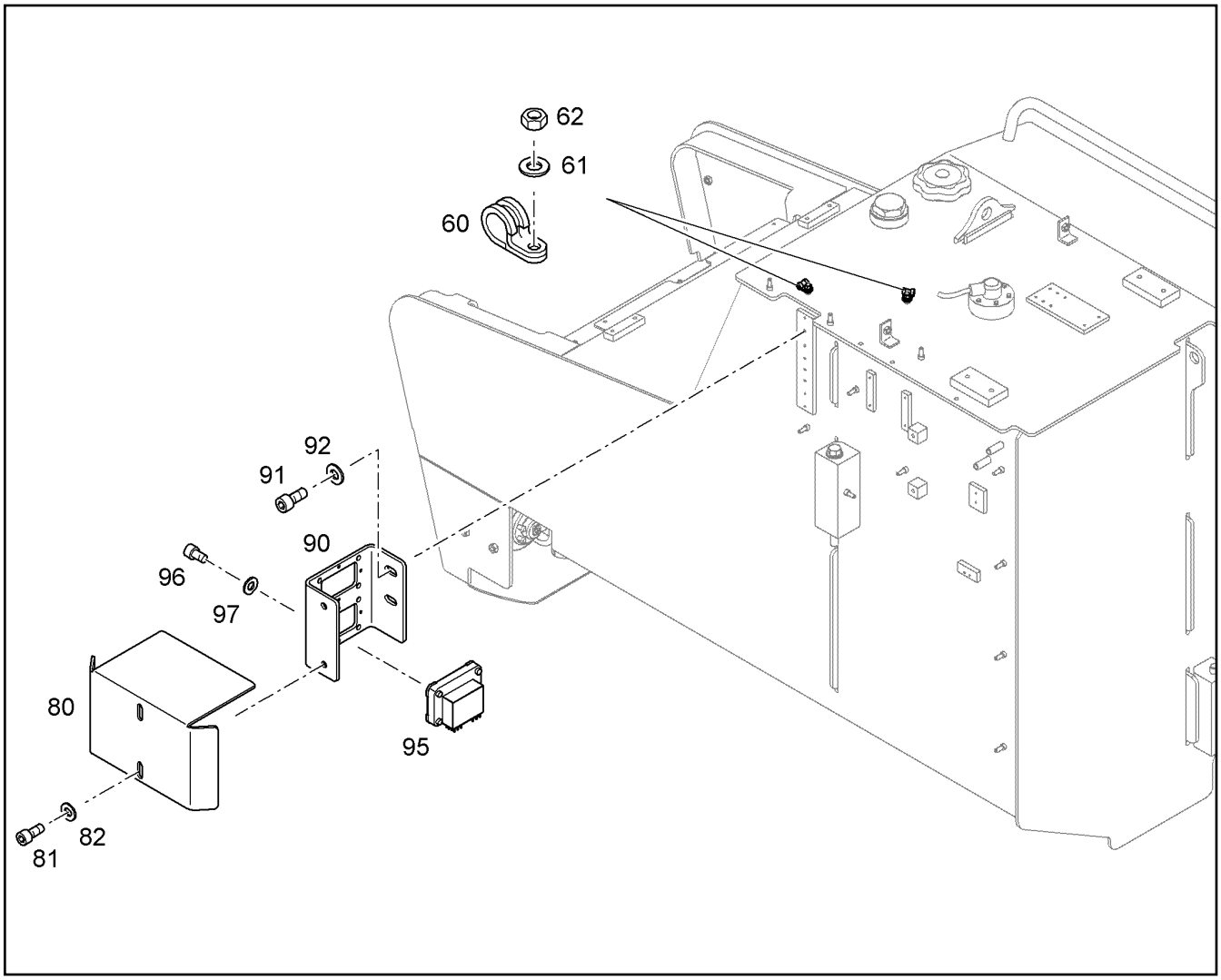

Pos.	Item	Quantity	Description	Descripción	Serie	K
60	7381565	2	CLAMP DIN 3016 D1- 6 X 20 W1-2-CR	ABRAZADERA		
61	10289803	2	WASHER ISO 7089 8 300HV	ARANDELA		
62	4000381	2	HEX NUT M8	TUERCA HEXAGONAL		
80	10396615	1	COVER PLATE	CHAPA COBERTURA		1
81	4001596	2	CYLINDER SCREW ISO 4762 M6X16 10.9 A2	TORNILLO CILINDRICO		
82	4600198	2	WASHER DIN 9021 6,4 ST A3C	ARANDELA		
90	10396658	1	CONSOLE	CONSOLA		
91	4902231	2	CYLINDER SCREW ISO 4762 M8X16 10.9 A2	TORNILLO CILINDRICO		
92	10289803	2	WASHER ISO 7089 8 300HV	ARANDELA		
95	975827701	1	E-BOARD	PLACA E		
96	4001308	4	CYLINDER SCREW ISO 4762 M5x12 8.8 A2C	TORNILLO CILINDRICO		
97	7361965	4	LOCK WASHER	ARANDELA SEGURIDAD		

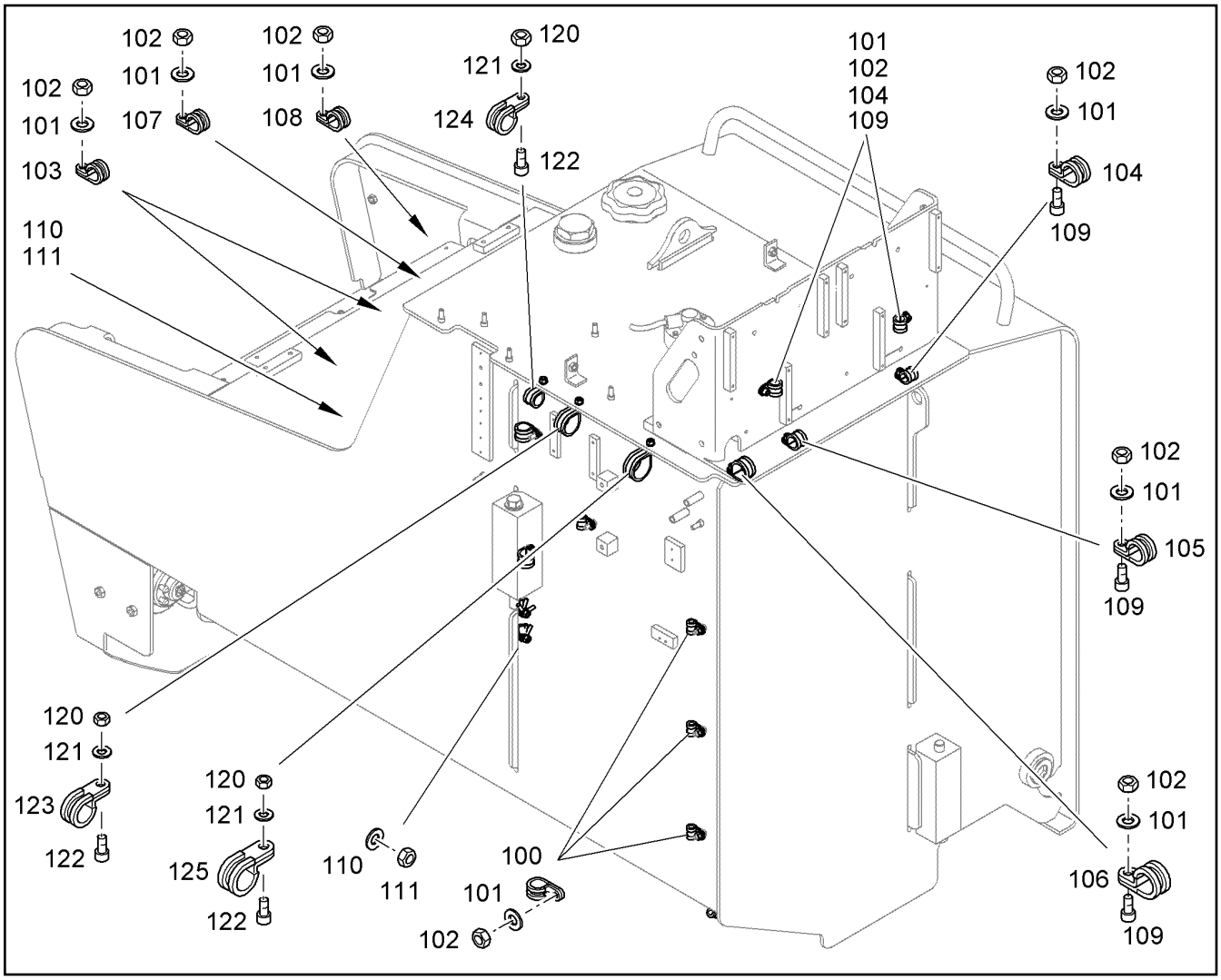

Pos.	Item	Quantity	Description	Descripción	Serie	K
100	7381628	14	CLAMP DIN 3016 D1- 10 X 20 W1-2-MVQ	ABRAZADERA		
101	10289803	21	WASHER ISO 7089 8 300HV	ARANDELA		
102	4000381	21	HEX NUT M8	TUERCA HEXAGONAL		
103	7362603	2	CLAMP DIN 3016-1 D1 15X20 W1-2-CR	ABRAZADERA		
104	7362602	3	CLAMP DIN 3016 D1- 18 X 20 W1-2-CR	ABRAZADERA		
105	7362547	1	CLAMP DIN 3016 D1- 24 X 20 W1-2-CR	ABRAZADERA		
106	7366260	1	CLAMP DIN 3016 D1- 34 X 20 W1-2-CR	ABRAZADERA		
107	7362734	1	CLAMP DIN 3016 D1- 13 X 20 W1-2-CR	ABRAZADERA		
108	7363002	1	CLAMP DIN 3016 D1- 27 X 20 W1-2-CR	ABRAZADERA		
109	4902231	5	CYLINDER SCREW ISO 4762 M8X16 10.9 A2	TORNILLO CILINDRICO		
110	10289803	3	WASHER ISO 7089 8 300HV	ARANDELA		
111	4000381	3	HEX NUT M8	TUERCA HEXAGONAL		
120	4000381	3	HEX NUT M8	TUERCA HEXAGONAL		
121	10289803	3	WASHER ISO 7089 8 300HV	ARANDELA		
122	4901217	3	CYLINDER SCREW ISO 4762 M8X25 10.9 A2	TORNILLO CILINDRICO		
123	7362551	1	CLAMP DIN 3016 D1- 38 X 20 W1-2-CR	ABRAZADERA		
124	7362547	3	CLAMP DIN 3016 D1- 24 X 20 W1-2-CR	ABRAZADERA		
125	7365080	1	CLAMP DIN 3016 D1- 45 X 20 W1-2-CR	ABRAZADERA		

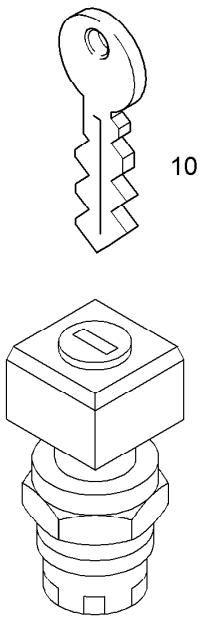

Pos.	Item	Quantity	Description	Descripción	Serie	K
10	7022336	1	KEY	LLAVE		

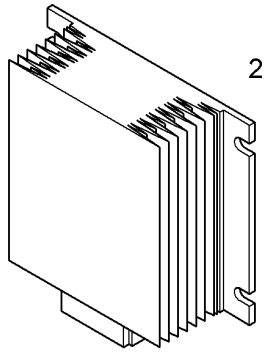

Pos.	Item	Quantity	Description	Descripción	Serie	K
2	10099925	1	POWER MODULE	MODULO DE POTENCIA		2

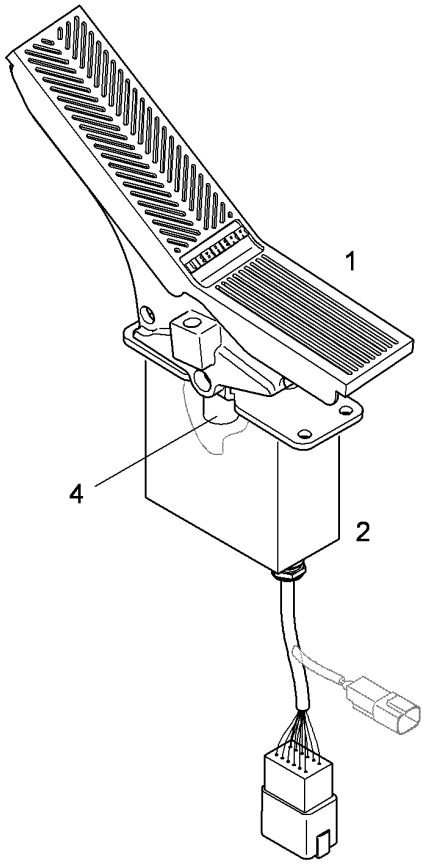

Pos.	Item	Quantity	Description	Descripción	Serie	K
1	9266411	1	OPERATING EQUIPMENT (LEFT) ⇨ ❑ 772	PEDAL DE TRASLACION DE ACE		1
2	5616697	1	JACKET	RECUBRIMIENTO		
4	10014078	2	HOISTING TRANSMITTER ⇨ ❑ 471	SENSOR DE CARRERA		2

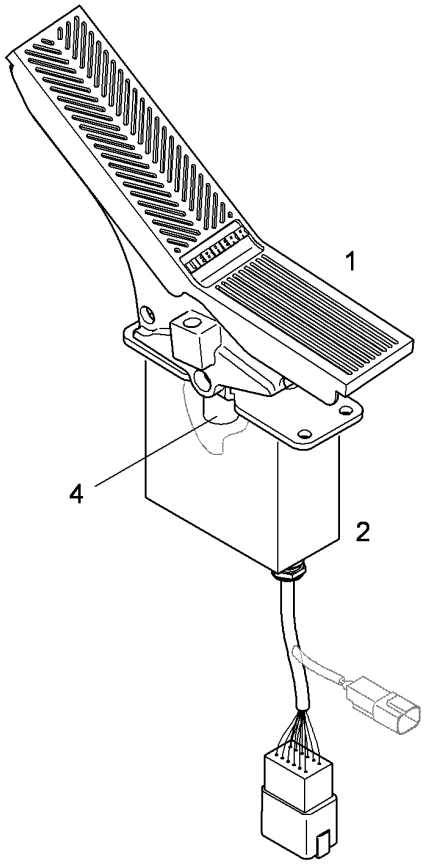

Pos.	Item	Quantity	Description	Descripción	Serie	K
1	9266412	1	OPERATING EQUIPMENT (RIGHT) ⇨ ❑ 773	ACC.P.SENSOR EL. DCHA.		1
2	5616697	1	JACKET	RECUBRIMIENTO		
4	10014078	1	HOISTING TRANSMITTER ⇨ ❑ 471	SENSOR DE CARRERA		2

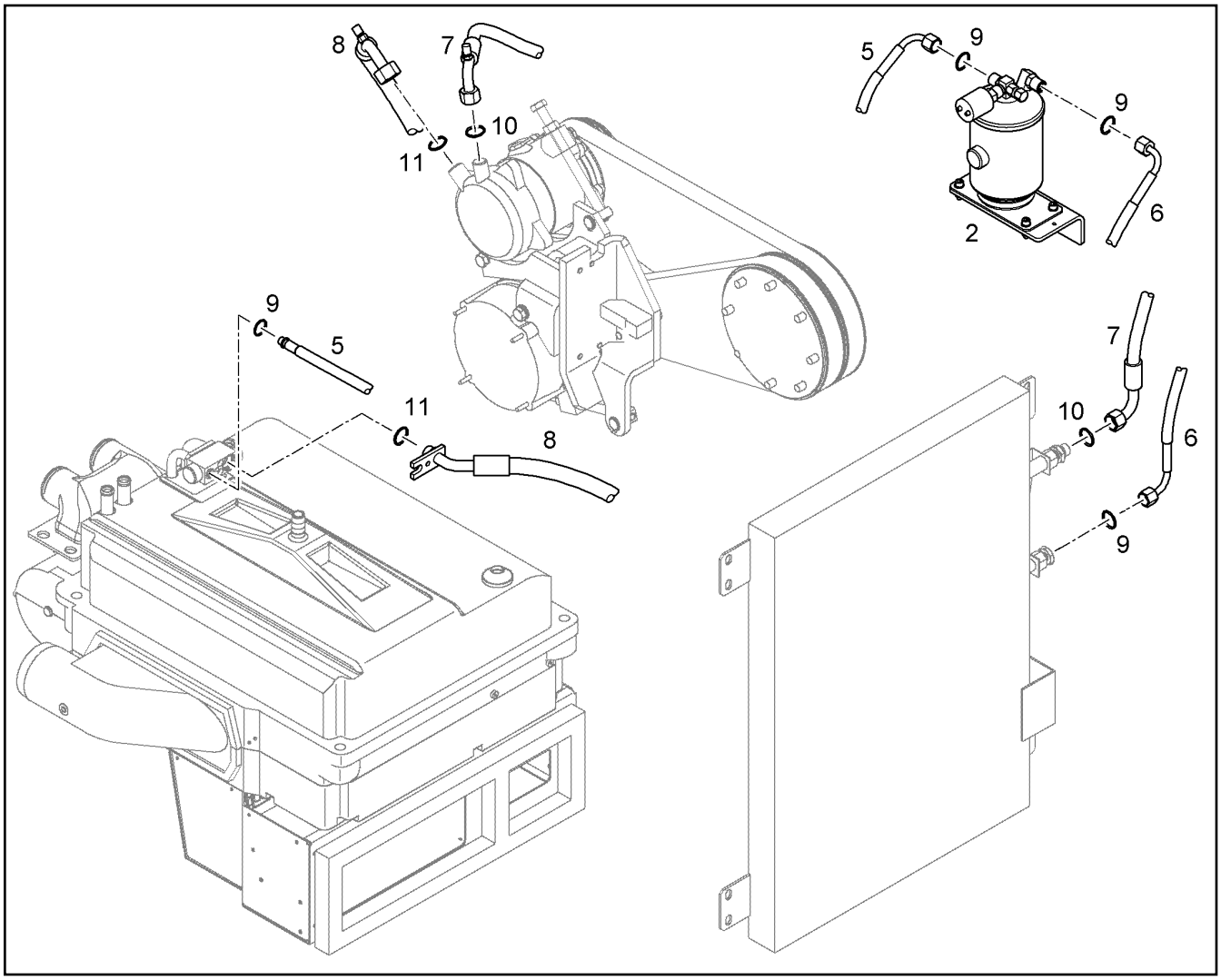

Pos.	Item	Quantity	Description	Descripción	Serie	K
2	10053190	1	DRIER INSTALLATION ⇨ ❑ 543	MONTAJE SECADOR		1
5	10289321	1	HOSE	TUBO GOMA		
6	10289322	1	HOSE	TUBO GOMA		2
7	10289323	1	HOSE	TUBO GOMA		
8	10289324	1	HOSE	TUBO GOMA		2
9	7411821	4	O-RING	JUNTA TORICA		1
10	5610999	2	O-RING 10,82X1,78	JUNTA TORICA		1
11	7411823	2	O-RING 14,00X1,78	JUNTA TORICA		1

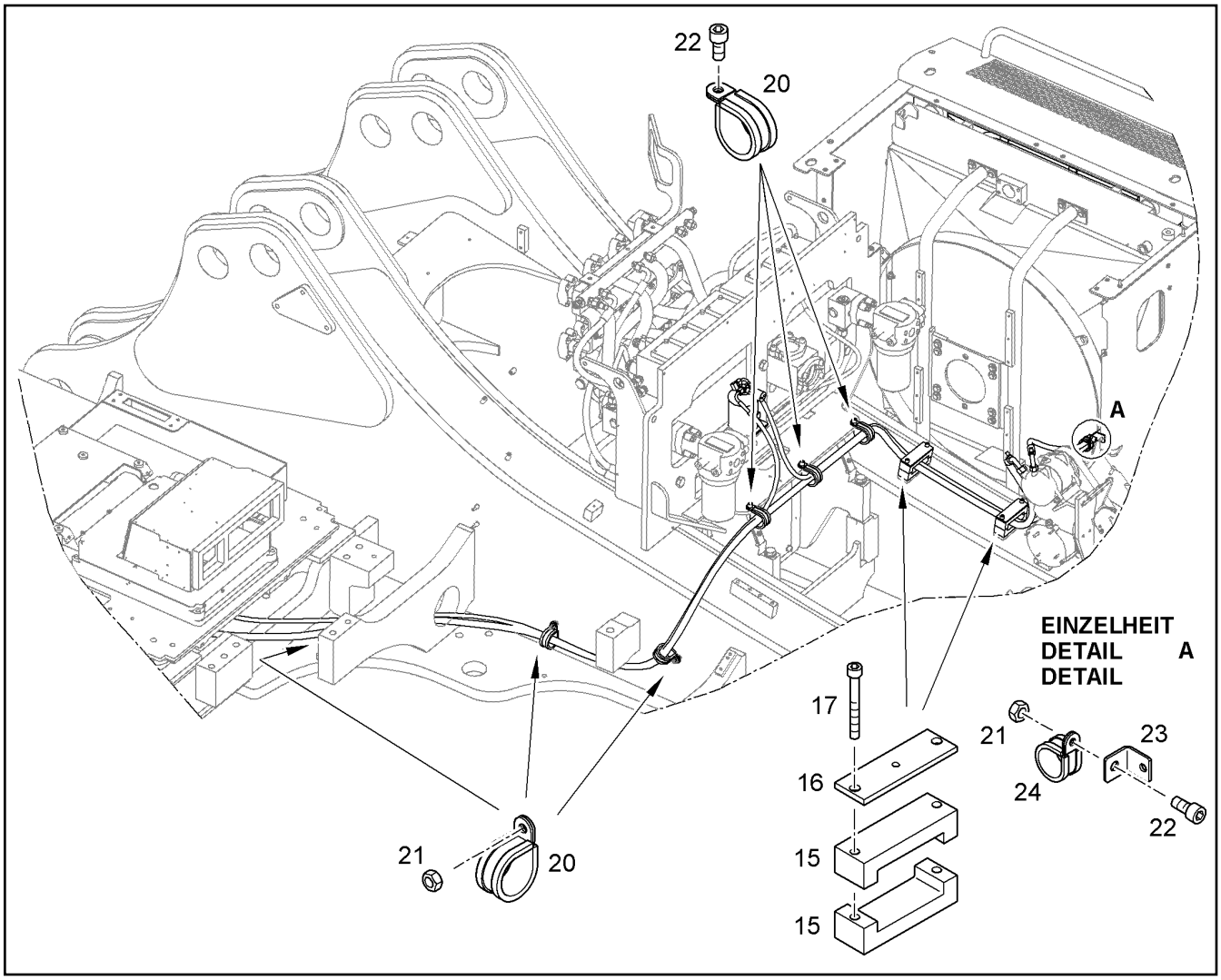

Pos.	Item	Quantity	Description	Descripción	Serie	K
15	10067588	4	HALF CLAMP COLLAR	SEMI-ABRAZADERA		1
16	10358249	2	SHEET	PLACA		1
17	4980784	4	CYLINDER SCREW ISO 4762 M8X75 10.9 A2	TORNILLO CILINDRICO		
20	7364298	6	CLAMP DIN 3016 D1- 47 X 25 W1-2-CR	ABRAZADERA		
21	4000383	4	HEX NUT ISO 4032 M 10 -10 A3C	TUERCA HEXAGONAL		
22	4043122	4	CYLINDER SCREW ISO 4762 M10X20 10.9	TORNILLO CILINDRICO		
23	9573442	1	ANGLE	ANGULAR		
24	7366260	1	CLAMP DIN 3016 D1- 34 X 20 W1-2-CR	ABRAZADERA		

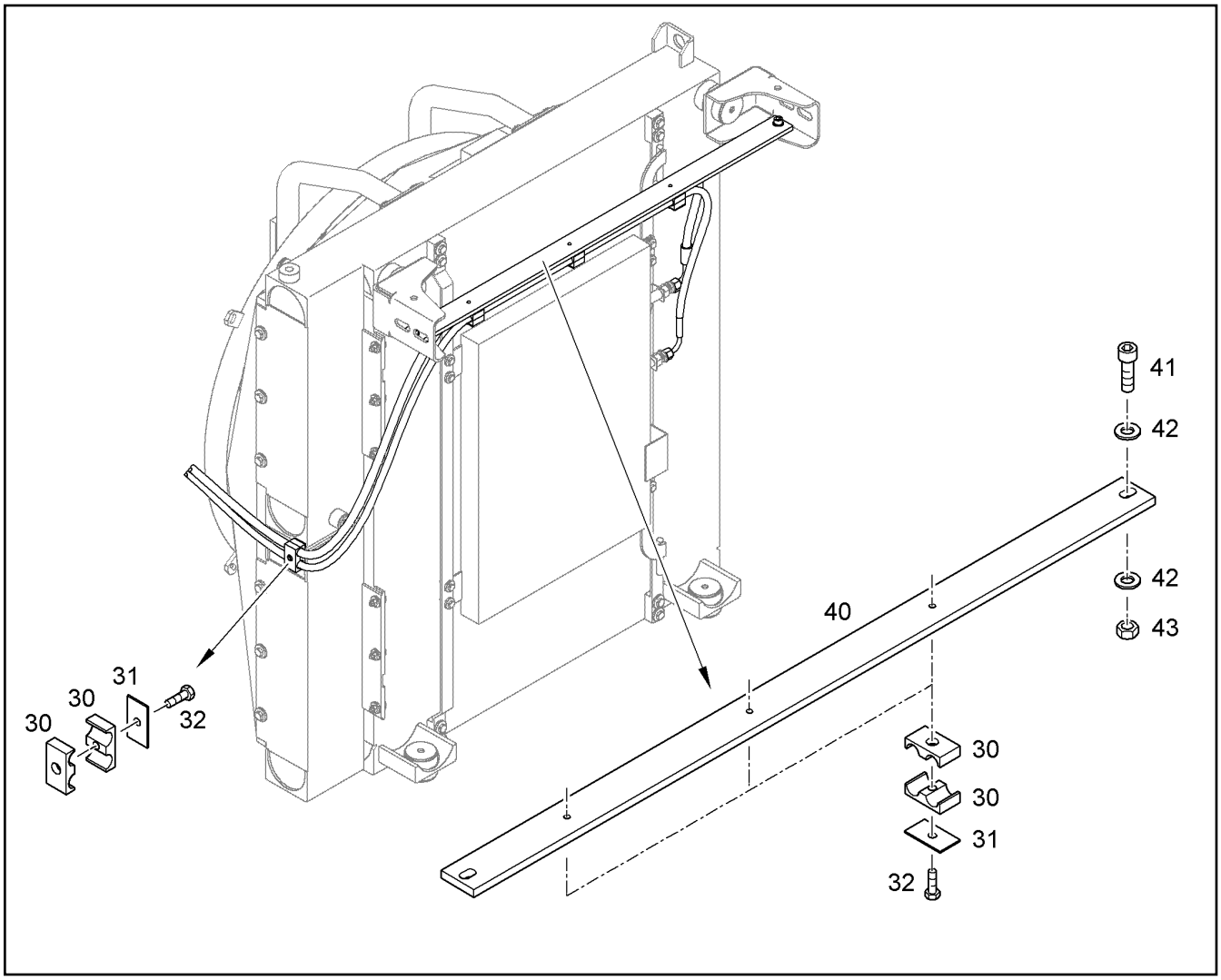

Pos.	Item	Quantity	Description	Descripción	Serie	K
30	7363276	8	CLAMP-HALF DIN 3015-3 Z 2 R 18 18 PP SW	MEDIA BRIDA		
31	7362606	4	LID PLATE DIN 3015 Z-DP 2 W1-ZN	PLACA CUBIERTA		
32	4001648	4	HEX BOLT ISO 4017 M8X45 10.9 A2C	TORNILLO DE CABEZA HEXAGO		
40	10358270	1	FLAT STEEL	PLETINA DE ACERO		1
41	4900855	2	CYLINDER SCREW ISO 4762 M10X35 10.9	TORNILLO CILINDRICO		
42	10289795	4	WASHER ISO 7089 10 300HV	ARANDELA		
43	4600579	2	HEX NUT ISO 7040 M 10 -10 A3C	TUERCA HEXAGONAL		

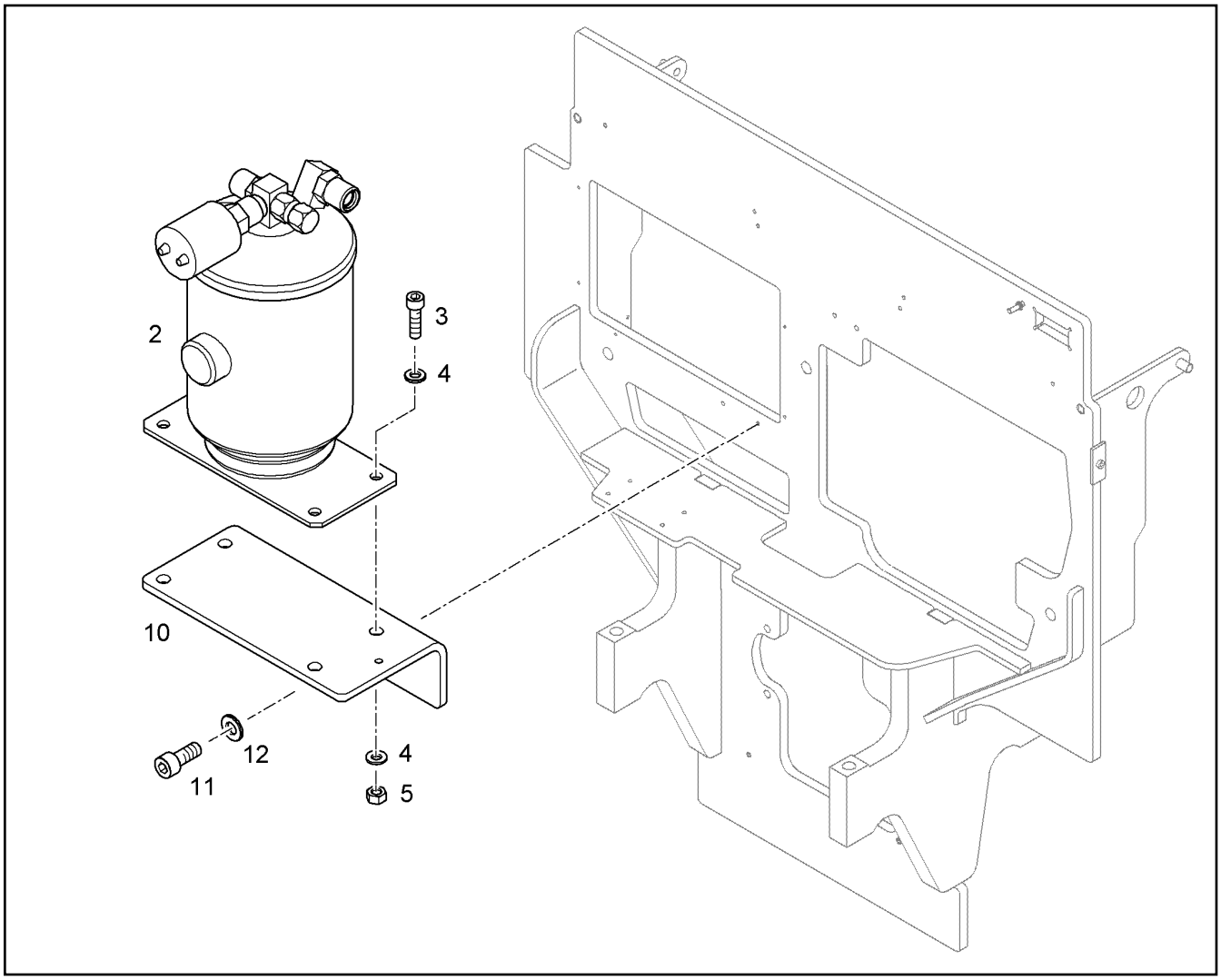

Pos.	Item	Quantity	Description	Descripción	Serie	K
2	10292660	1	UNIT RECEIVER-DRYER ⇨ ❑ 544	COLECTOR DEL SECADOR		
3	4600068	4	CYLINDER SCREW ISO 4762 M6X22 10.9 A2	TORNILLO CILINDRICO		
4	10289802	8	WASHER ISO 7089 6 300HV	ARANDELA		
5	4000379	4	HEX NUT M6	TUERCA HEXAGONAL		
10	10081364	1	CONSOLE	CONSOLA		1
11	4043082	2	CYLINDER SCREW ISO 4762 M8X20 10.9 A2	TORNILLO CILINDRICO		
12	10289803	2	WASHER ISO 7089 8 300HV	ARANDELA		

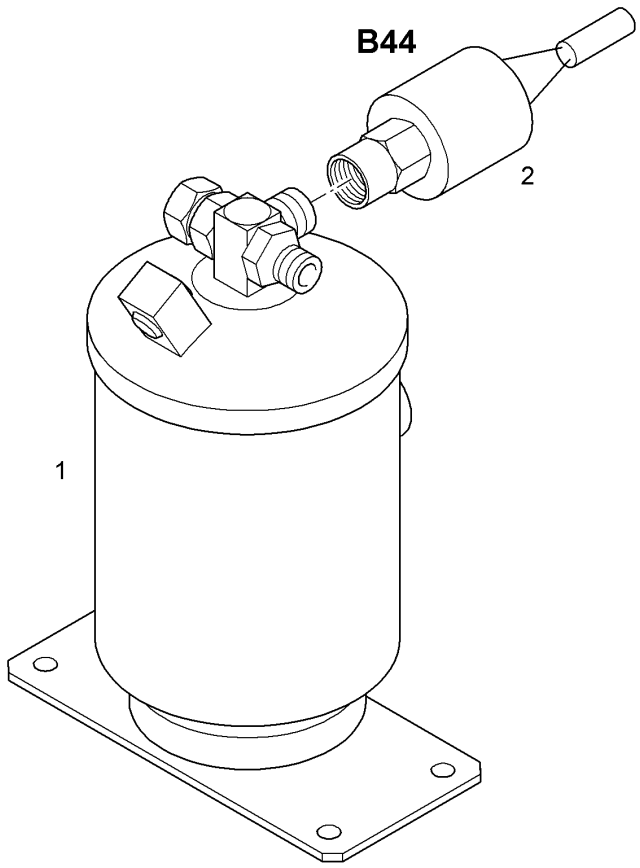

Pos.	Item	Quantity	Description	Descripción	Serie	K
1	5611990	1	RECEIVER-DRIER	SECADOR-COLECTOR		
2	10292659	1	PRESSURE SWITCH	CABEZA BOTON GIRATORIO		2

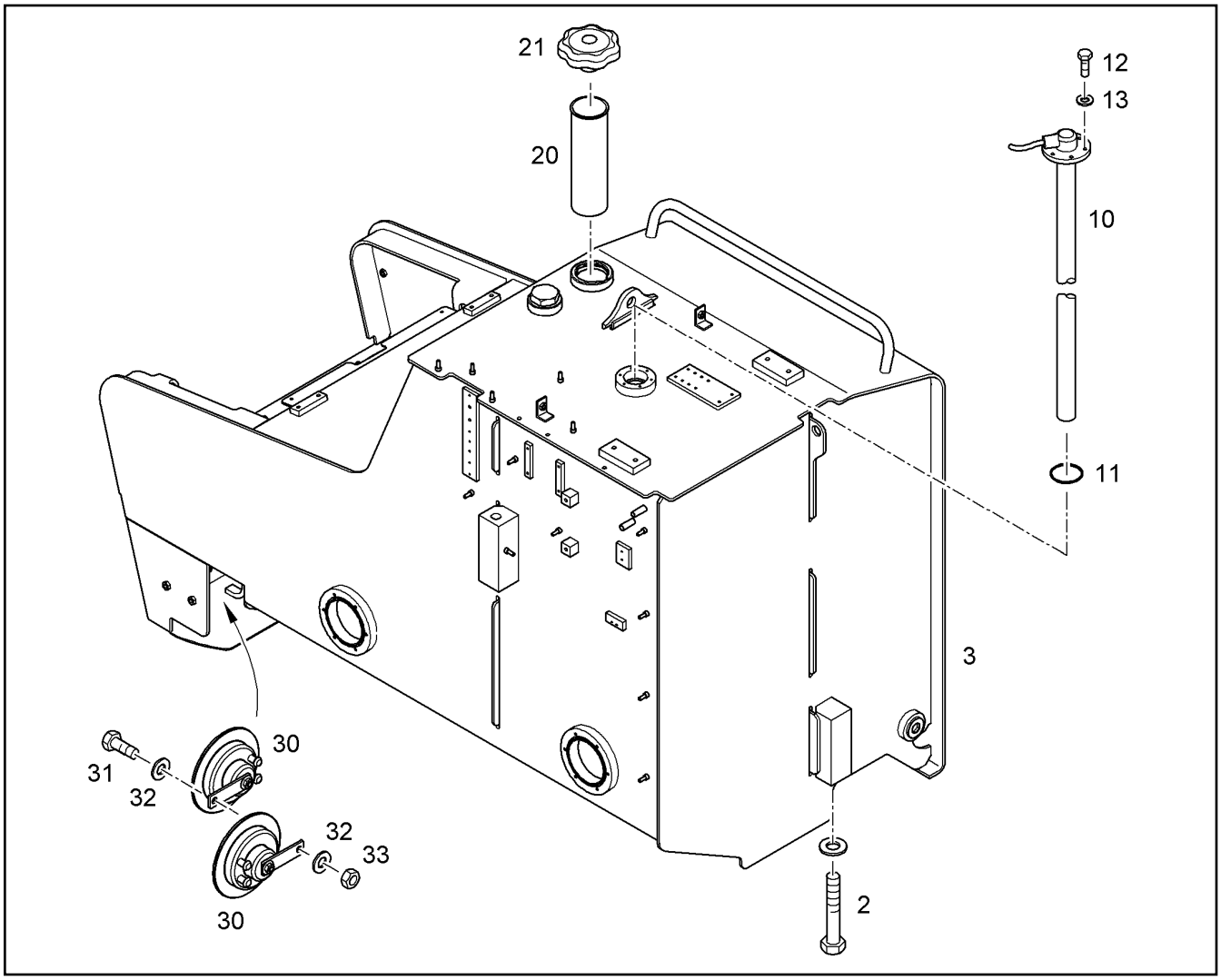

Pos.	Item	Quantity	Description	Descripción	Serie	K
2	10054532	1	MOUNTING PARTS ⇨ ❑ 547	PIEZAS MONTAJE		1
3	10358215	1	FUEL TANK ⇨ ❑ 548	DEPOSITO COMBUSTIBLE		1
10	6204327	1	LEVEL SENSOR	SENSOR NIVEL		2
11	7264085	1	O-RING 63X3	JUNTA TORICA		1
12	4901742	6	HEX HEAD SCREW ISO 4017 M 5 X 16 A4-80	TORNILLO HEXAGONAL		
13	4229911	6	LOCK WASHER	ARANDELA SEGURIDAD		
20	10296919	1	FILLER SIEVE	TAMIZ DE RELLENO		1
21	10498313	1	FUEL COUPLING WIGGINS ⇨ ❑ 787	ACOP.RAP.WIGGINS P.COMBU		
30	6204593	1	SUPERTONE HORN	BOCINA ALTA INTENSIDAD		
31	4001246	1	HEX BOLT ISO 4017 M10X35 10.9 A3C	TORNILLO DE CABEZA HEXAGO		
32	10289795	2	WASHER ISO 7089 10 300HV	ARANDELA		
33	4000383	1	HEX NUT ISO 4032 M 10 -10 A3C	TUERCA HEXAGONAL		

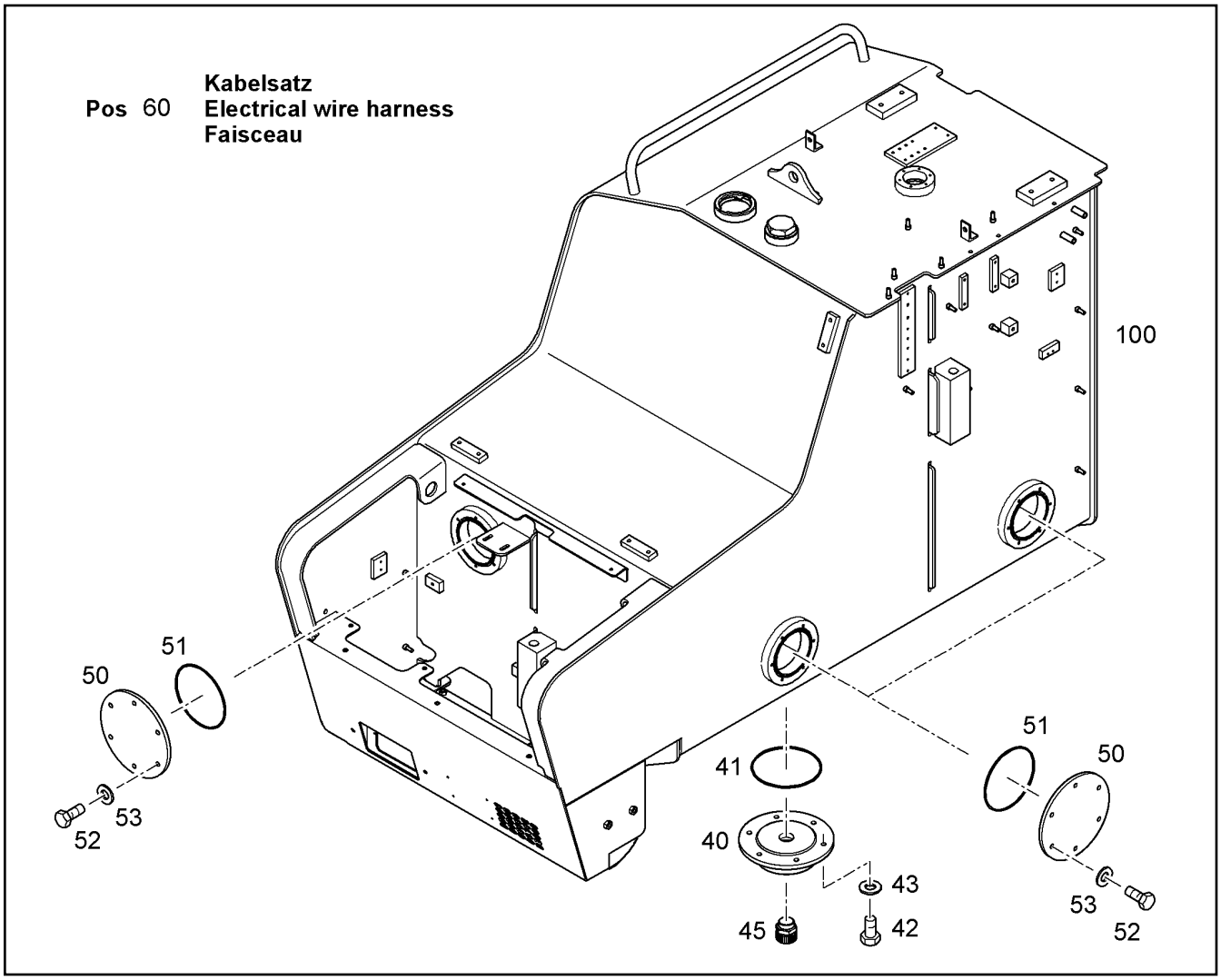

Pos.	Item	Quantity	Description	Descripción	Serie	K
40	10059839	1	LID	TAPA		
41	7380073	1	O-RING	JUNTA TORICA		1
42	4001606	6	HEX BOLT ISO 4017 M8X16 10.9 A2C	TORNILLO DE CABEZA HEXAGO		
43	4229912	6	LOCK WASHER /13X1,6 VS	ARANDELA SEGURIDAD		
45	5004624	1	OIL DRAIN PLUG ⇨ ❑ 584	TORNILLO PURGA ACEITE		
50	9767890	3	LID	TAPA		1
50	10498313	1	FUEL COUPLING WIGGINS ⇨ ❑ 787	ACOP.RAP.WIGGINS P.COMBU		
51	7380073	3	O-RING	JUNTA TORICA		1
52	4001606	18	HEX BOLT ISO 4017 M8X16 10.9 A2C	TORNILLO DE CABEZA HEXAGO		
53	4229912	18	LOCK WASHER /13X1,6 VS	ARANDELA SEGURIDAD		
60	10066099	1	CABLE LOOM E4 - H9	KIT DE CABLES		1
100	10358684	1	FUEL TANK FOR EXCHANGE	SUST.DEP. COMBUSTIBLE		

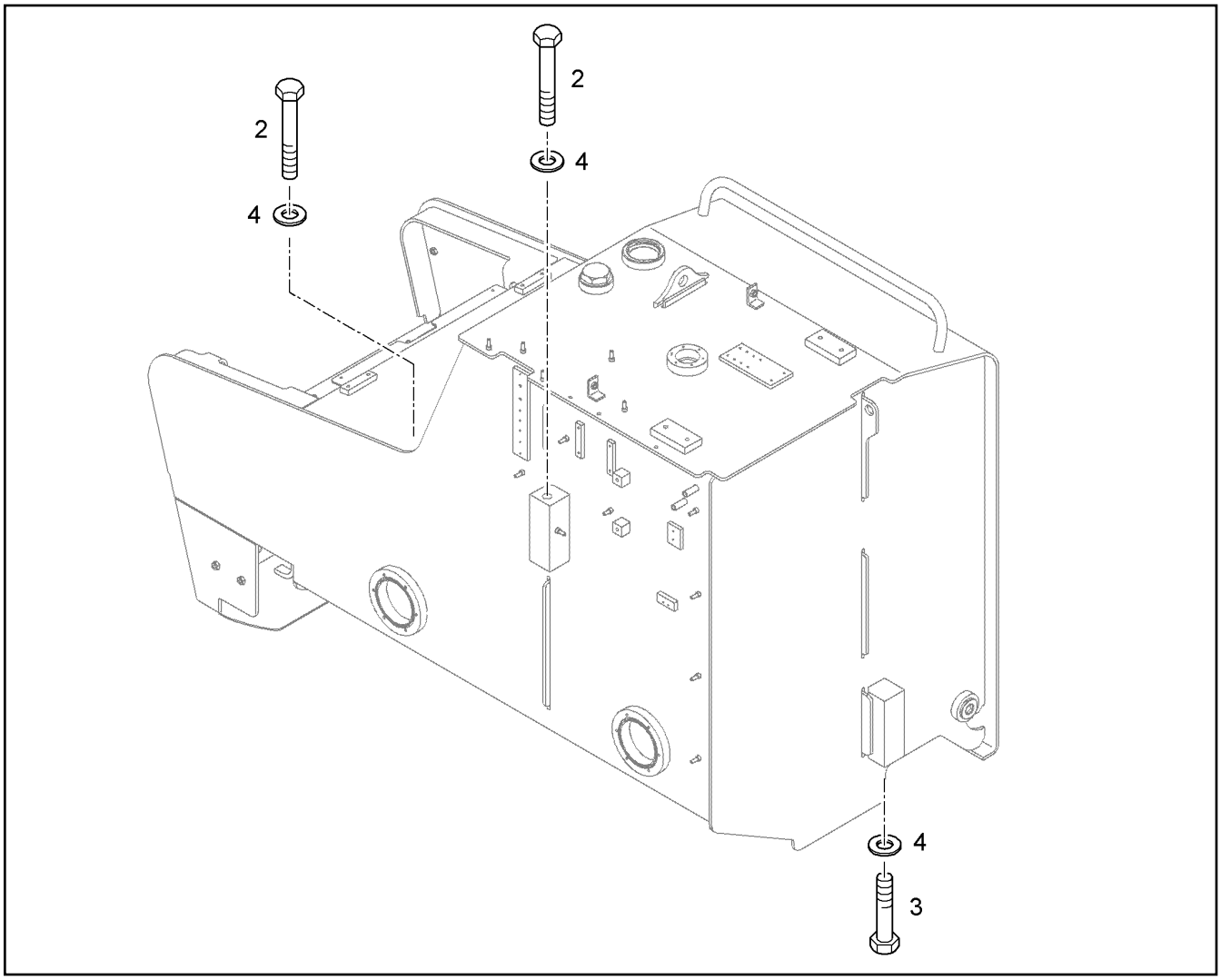

Pos.	Item	Quantity	Description	Descripción	Serie	K
2	10294867	3	HEX BOLT ISO 4014 M20X240 10.9 FLZN 100	TORNILLO DE CABEZA HEXAGO		
3	9918229	3	WASHER 20,5/34X5	ARANDELA		
4	4600222	3	WASHER DIN 6916 21 DAC	ARANDELA		

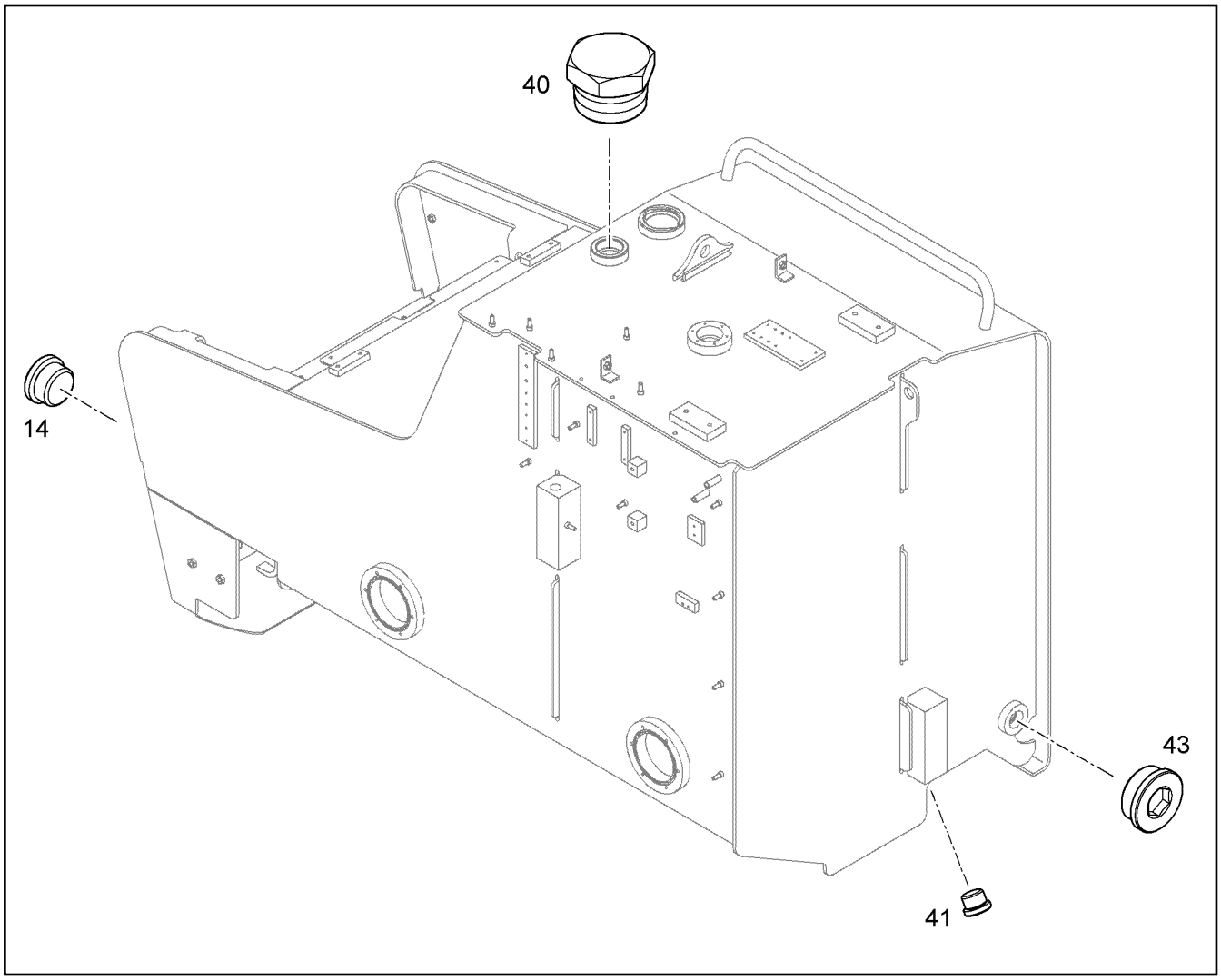

Pos.	Item	Quantity	Description	Descripción	Serie	K
14	7363717	1	SCREW PLUG	TORNILLO DE CIERRE		
40	10498313	1	FUEL COUPLING WIGGINS ⇨ ❑ 787	ACOP.RAP.WIGGINS P.COMBU		
41	7361961	1	SCREW PLUG VSTI	TORNILLO DE CIERRE		
43	7363177	1	SCREW PLUG VSTI	TORNILLO DE CIERRE		

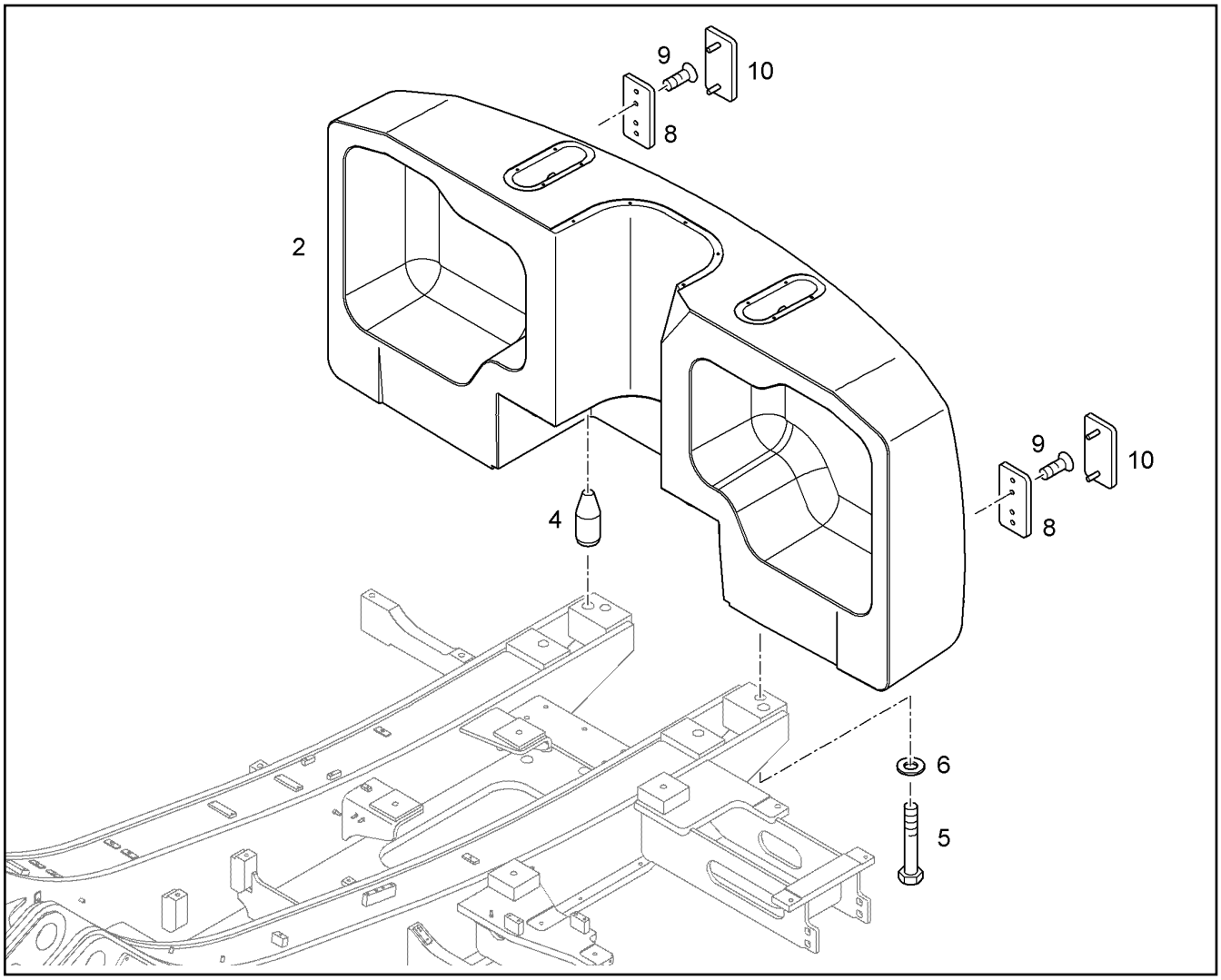

Pos.	Item	Quantity	Description	Descripción	Serie	K
2	10450081	1	COUNTERWEIGHT 11,3T	PESO DEL LASTRE	99999-	
4	10358171	2	CENTERING PIN	BULON DE CENTRAJE		1
5	4901329	4	HEX BOLT ISO 4014 M42X320 10.9	TORNILLO DE CABEZA HEXAGO		
6	9602353	4	WASHER 43/72X10	ARANDELA		
8	9892073	2	PLATE	CHAPA		
9	4001907	4	SELF-TAPPING SCREW DIN 7516 AE M5X16	TORNILLO ROSCA CORTANTE		
10	6204631	2	REAR REFLECTOR D196X88 ROT	CATADIOPTRICO POSTERIOR		1

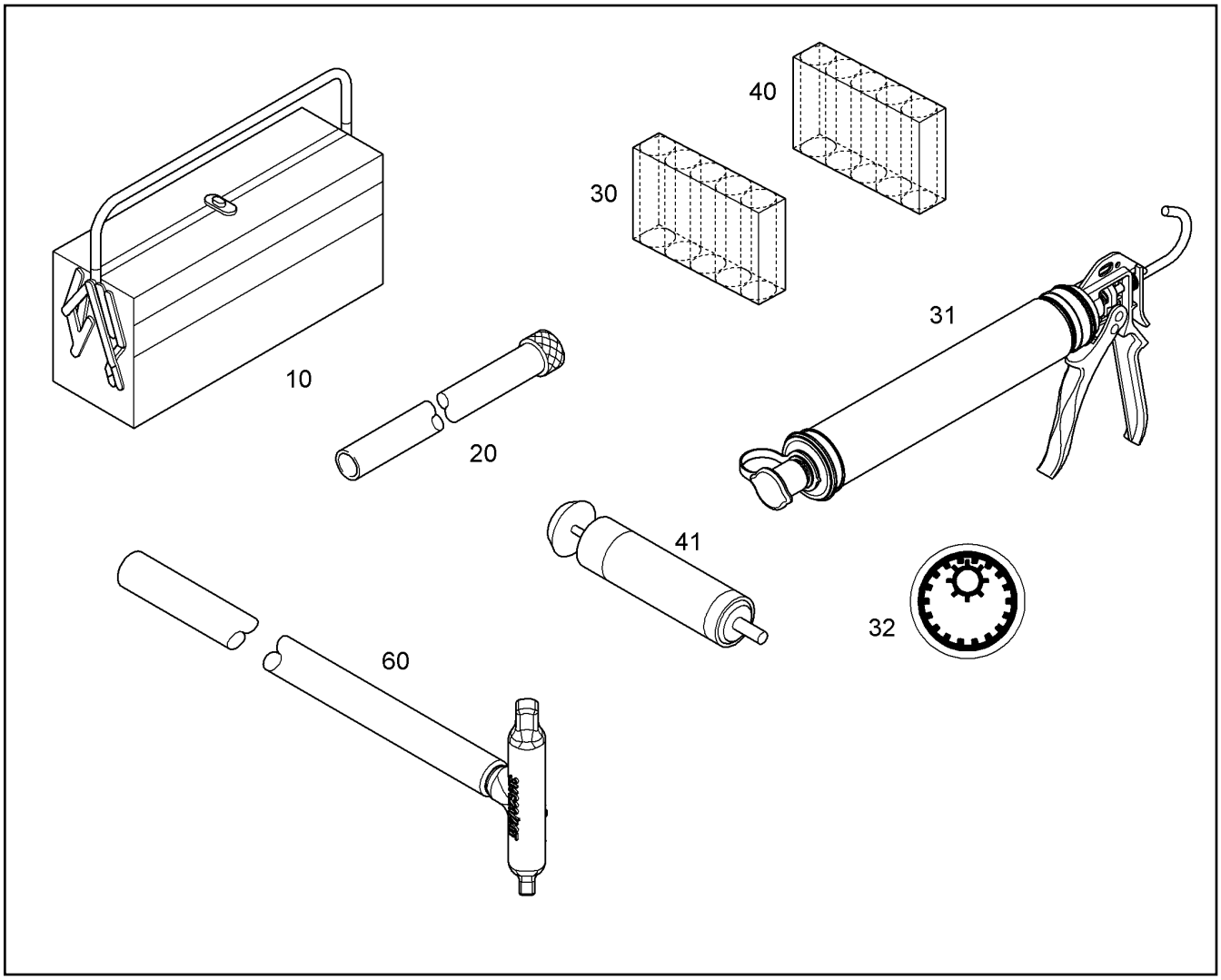

Pos.	Item	Quantity	Description	Descripción	Serie	K
10	10084285	1	TOOL EQUIPMENT ⇨ ❑ 551	HERRAMIENTAS DE EQUIPAMIE		1
20	10088112	1	OIL DRAIN HOSE ⇨ ❑ 553	TUBO FLEX.PURGA ACEITE		1
30	8503279	1	SPECIAL COMPOUND CRL/5x0,4kg	PASTA ESPECIAL		
31	10342798	1	FILLING PUMP	BOMBA LLENADO		2
32	9384072	1	ADHESIVE SIGN	LETRERO PEGATINA		
40	8501565	1	PASTE	LUBRIFICADOR		
41	10009239	1	FILLING PUMP	BOMBA LLENADO		2
60	10451202	1	EXTRACTOR	EXTRACTOR		1

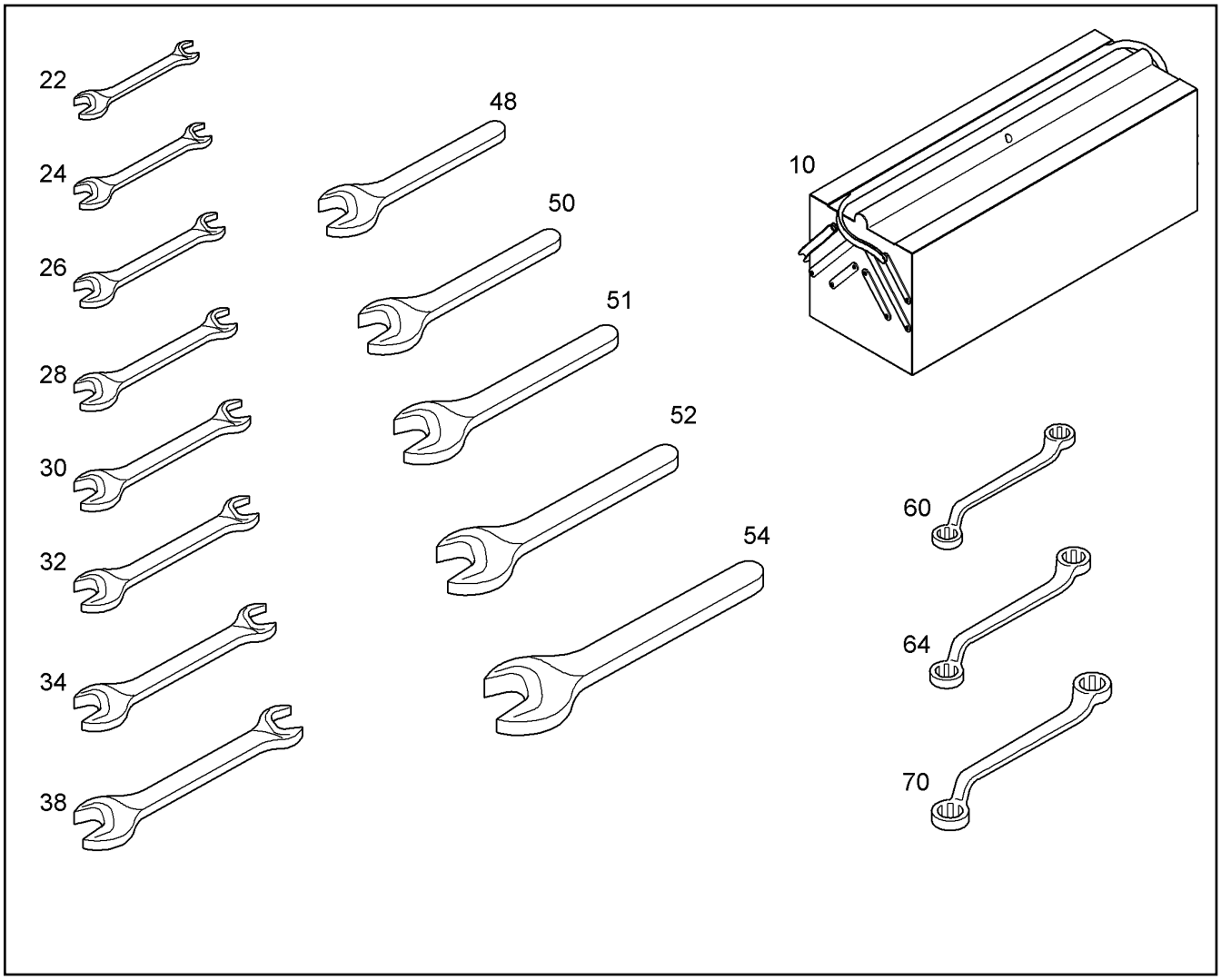

Pos.	Item	Quantity	Description	Descripción	Serie	K
10	7016002	1	TOOL BOX	CAJA HERRAMIENTAS		
22	10451493	1	DOUBLE-HEADED SPANNER	LLAVE DE BOCA DOBLE		
24	10451494	1	DOUBLE-HEADED SPANNER	LLAVE DE BOCA DOBLE		
26	10451496	1	DOUBLE-HEADED SPANNER	LLAVE DE BOCA DOBLE		
28	10455469	1	DOUBLE-HEADED SPANNER	LLAVE DE BOCA DOBLE		
30	10455470	1	DOUBLE-HEADED SPANNER	LLAVE DE BOCA DOBLE		
32	10455471	1	DOUBLE-HEADED SPANNER	LLAVE DE BOCA DOBLE		
34	10451499	1	DOUBLE-HEADED SPANNER	LLAVE DE BOCA DOBLE		
38	10451500	1	DOUBLE-HEADED SPANNER	LLAVE DE BOCA DOBLE		
48	10455472	1	SINGLE-END SPANNER	LLAVE DE UNA BOCA		
50	8000770	1	SINGLE-END SPANNER	LLAVE DE UNA BOCA		
51	8121783	1	OPEN-END WRENCH	LLAVE BOCA SIMPLE		
52	7900708	1	SINGLE-END SPANNER	LLAVE DE UNA BOCA		
54	4002012	1	SINGLE-END SPANNER	LLAVE DE UNA BOCA		
60	10455473	1	DOUBLE RING SPANNER	LLAVE ESTRELLA DE DOS BOCA		
64	10455474	1	DOUBLE RING SPANNER	LLAVE ESTRELLA DE DOS BOCA		
70	10455475	1	DOUBLE RING SPANNER	LLAVE ESTRELLA DE DOS BOCA		

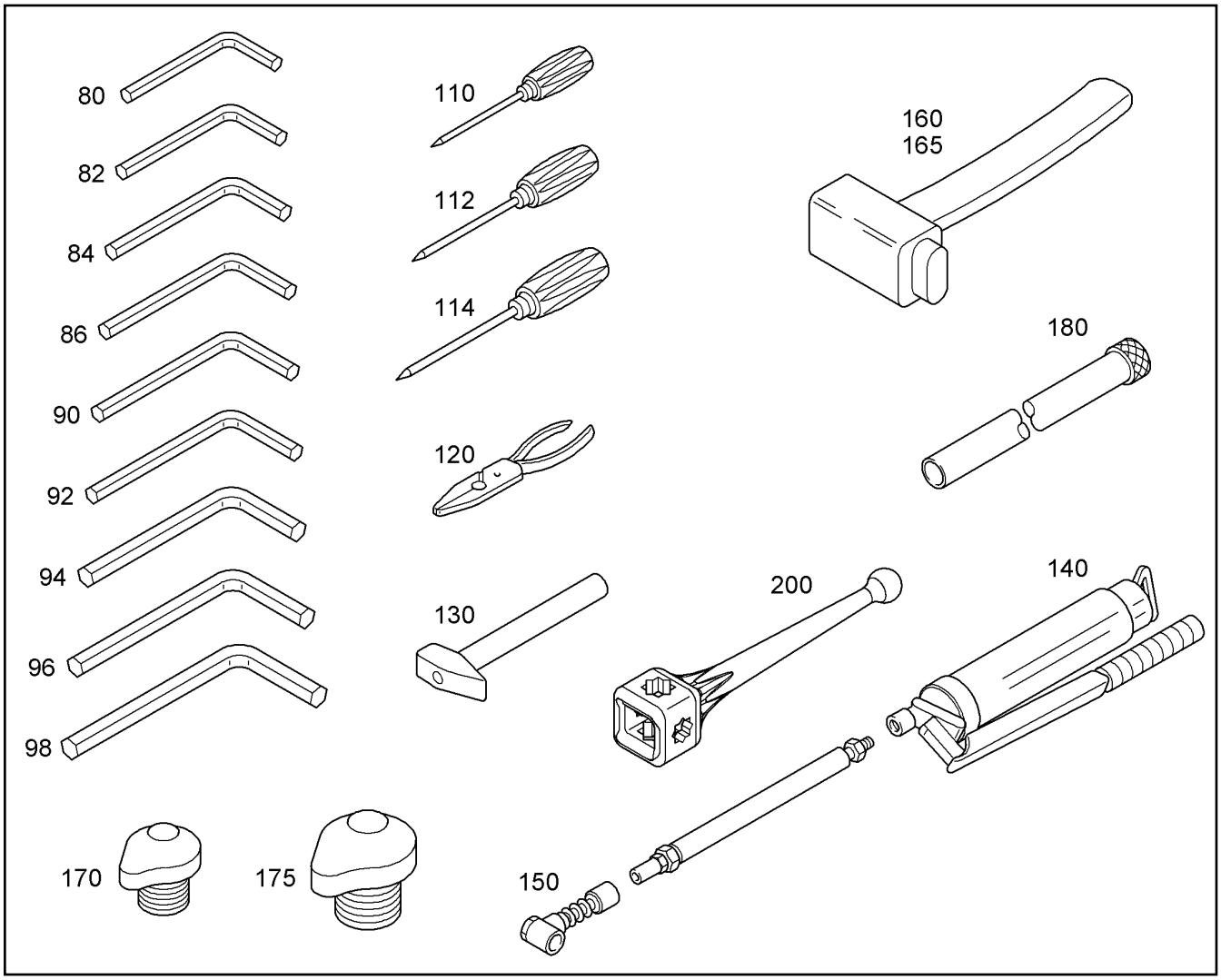

Pos.	Item	Quantity	Description	Descripción	Serie	K
80	10451512	1	ANGLE SCREW DRIVER 3	LLAVE ALLEN		
82	10451513	1	ANGLE SCREW DRIVER 4	LLAVE ALLEN		
84	000204750	1	HEXAGON SCREWDRIVER 5	DESTORNILLADOR EXAGONAL		
86	10451519	1	ANGLE SCREW DRIVER 6	LLAVE ALLEN		
90	10451531	1	ANGLE SCREW DRIVER 8	LLAVE ALLEN		
92	10451532	1	ANGLE SCREW DRIVER 10	LLAVE ALLEN		
94	8000993	1	ANGLE SCREW DRIVER 12x45/125	LLAVE ALLEN		
96	10451534	1	ANGLE SCREW DRIVER 14	LLAVE ALLEN		
98	10451535	1	ANGLE SCREW DRIVER 17	LLAVE ALLEN		
110	8000982	1	SCREW DRIVER A1X5,5X200 DIN 5265	DESTORNILLADOR		
112	10451537	1	SCREW DRIVER 2x210	DESTORNILLADOR		
114	279307502	1	SCREW DRIVER 1,6x10x300	DESTORNILLADOR		
120	10451540	1	COMBI PLIERS	ALICATE UNIVERSAL		
130	8000622	1	HAMMER 1500	MARTILLO		
140	7900280	1	LEVER TYPE HAND GREASE GUN	BOMBA DE ENGRASE MANUAL		
150	7900836	1	NOZZLE PIPE	TUBO DE TOBERA		
160	3001286	1	WEDGE DRIVE OUT	CUÑA ESTRACTORA		
165	3001289	1	WEDGE DRIVE OUT	CUÑA ESTRACTORA		
170	9103255	1	DRIVE-SCREW M36	DESTORNILL.PERCUTOR M36		
175	7361276	1	MOUNTING PIN	BULÓN EMBUTIR		
180	9358137	1	OIL DRAIN HOSE ⇨ ❑ 554	TUBO FLEX.PURGA ACEITE		1
200	10359147	1	GRIP SW9,12,14,17 GEKROEPFT	TIRADOR		

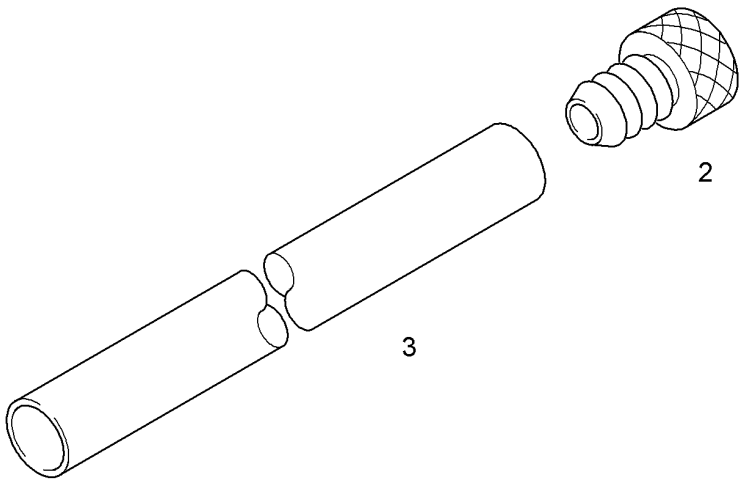

Pos.	Item	Quantity	Description	Descripción	Serie	K
2	10301774	1	CONNECTOR ⇨ ❑ 555	ENGANCHE ELECTRICO		
3	10341848	1	PVC HOSE	MANGUERA DE PVC		

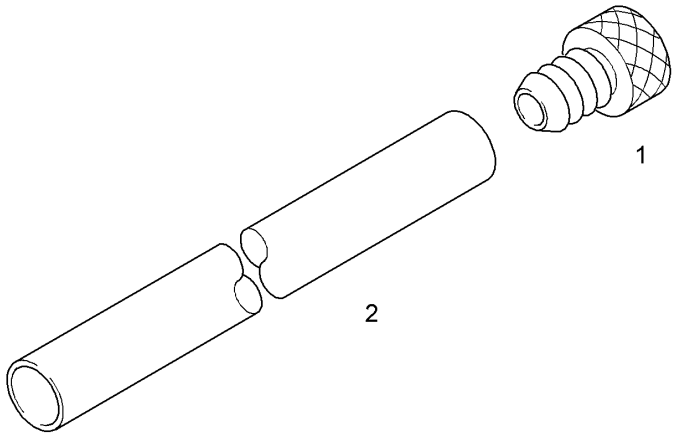

Pos.	Item	Quantity	Description	Descripción	Serie	K
1	7402657	1	HOSE SECTION	TROZO DE LATIGUILLO		
2	7402658	1m	OIL DRAIN HOSE DN18X3	TUBO FLEX.PURGA ACEITE		

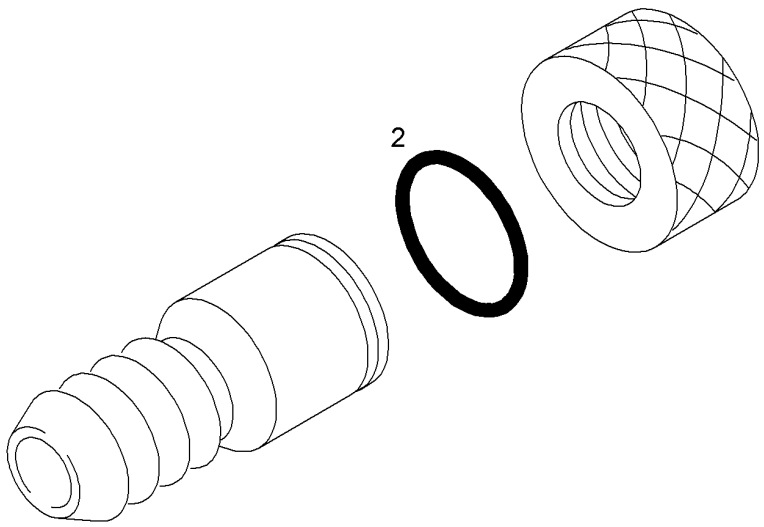

Pos.	Item	Quantity	Description	Descripción	Serie	K
2	7018253	1	O-RING 35x2	JUNTA TORICA		1

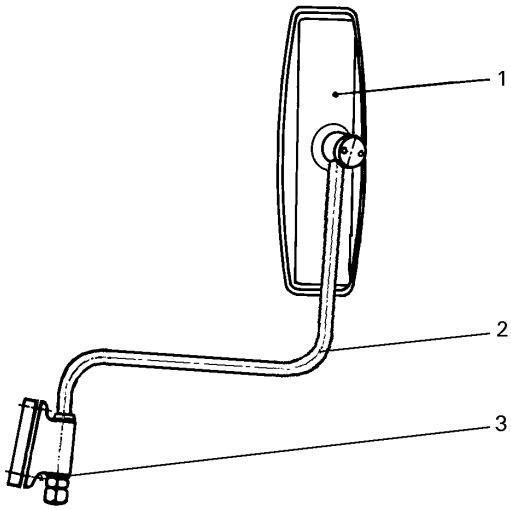

Pos.	Item	Quantity	Description	Descripción	Serie	K
1	7005028	1	MIRROR TOP PART	PARTE SUP.ESPEJO		1
2	7017443	1	MIRROR SUPPORT	SOPORTE ESPEJO		1
3	4600157	2	COUNTERSUNK SCREW DIN 7991 M8X20 8.	TORNILLO AVELLANADO		

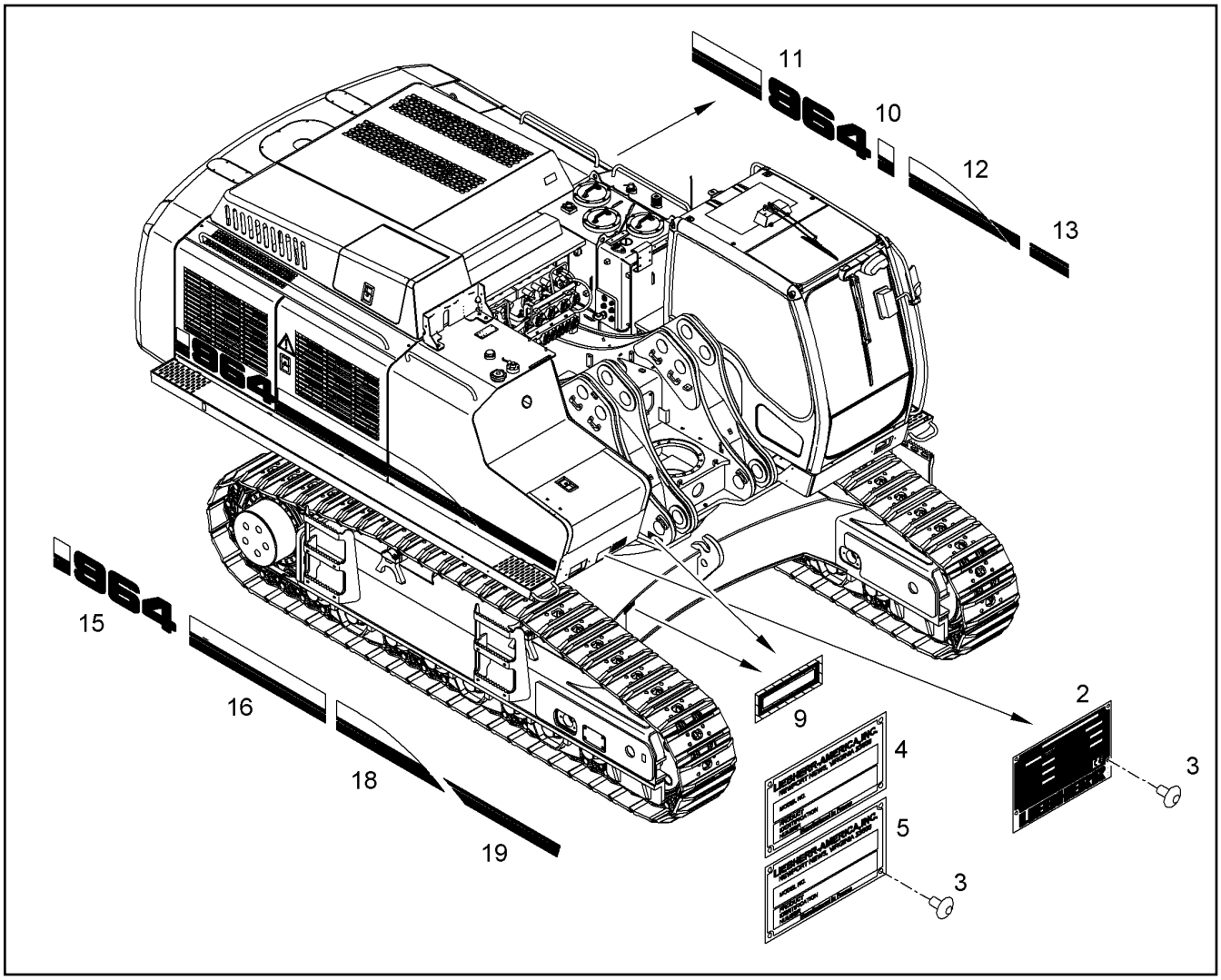

Pos.	Item	Quantity	Description	Descripción	Serie	K
2	10405887	1	TYPEPLATE LFR	PLACA DE CARACTERÍSTICAS		1
3	4900053	4	BLIND RIVET	REMACHE CIEGO		
4	10498223	1	TYPE PLATE LBR	LETRERO IDENTIFICACION		1
5	9354303	1	NAMEPLATE	PLACA CARACT.LAM		
9	9350400	2	STICKER	ADHESIVO		
10	10071618	1	STICKER	ADHESIVO		1
11	10071620	1	STICKER	ADHESIVO		1
12	10071665	1	STICKER	ADHESIVO		1
13	10071668	1	STICKER	ADHESIVO		1
15	10071669	1	STICKER	ADHESIVO		1
16	10071670	1	STICKER	ADHESIVO		1
18	10096203	1	STICKER	ADHESIVO		1
19	10096204	1	STICKER	ADHESIVO		1

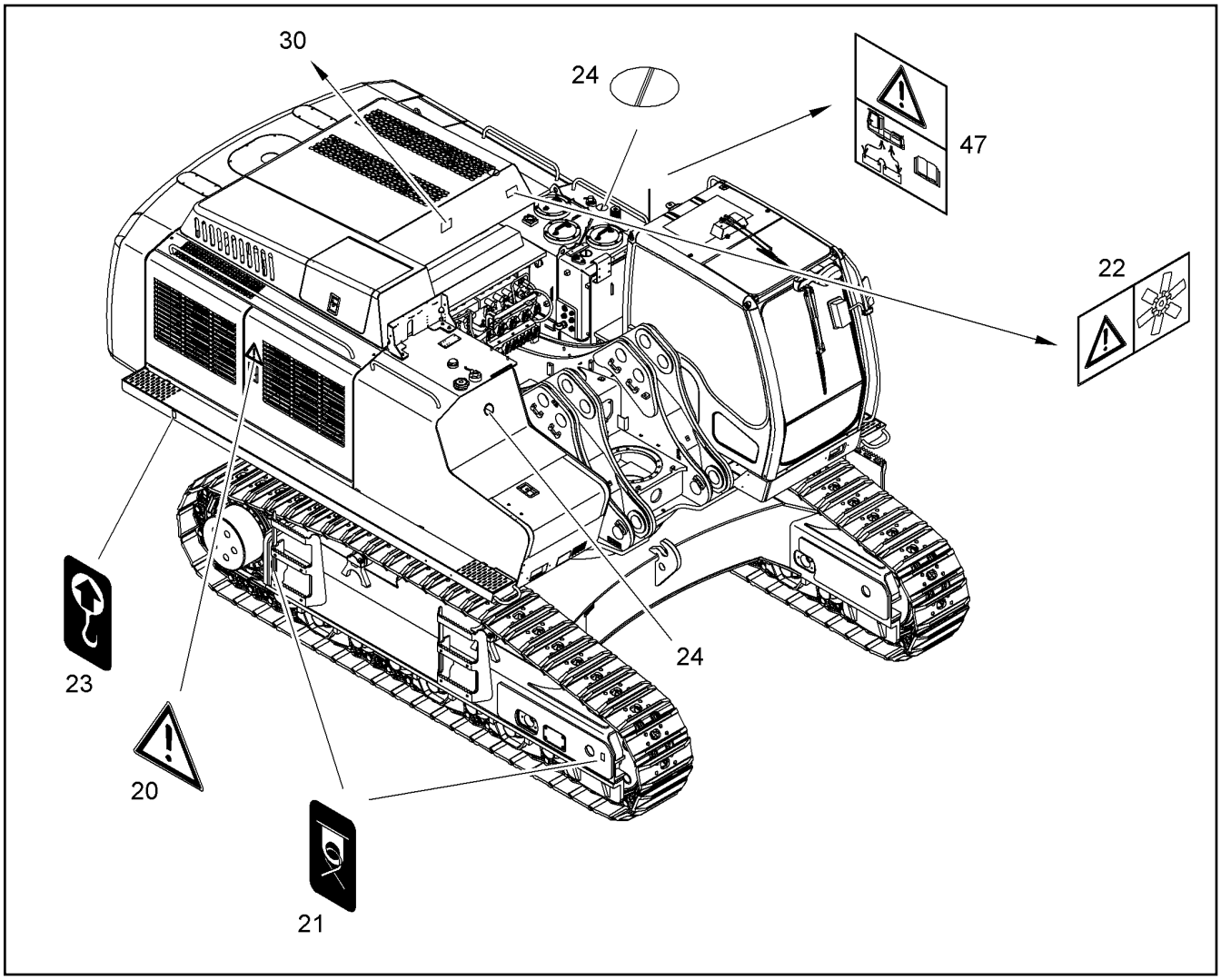

Pos.	Item	Quantity	Description	Descripción	Serie	K
20	9910464	2	DANGER SIGN DANGER SPOT 200mmX17	LETRERO ADV.ZONA PELIGROS		
21	9402376	4	REFERENCE PLATE	LETRERO INDICACIÓN PTO.EL		
22	9619934	2	NAMEPLATE MOTOR STOP	LETRERO PARADA MOTOR		
23	9402377	2	REFERENCE PLATE	LETRERO INDIC.PTO.TOPE ELEV		
24	7366794	2	PROHIBITION SIGN	PLACA DE PROHIBICION		
30	10340222	1	STICKER 132X115	ADHESIVO		
47	9909254	1	NAMEPLATE REMOTE START	PLACA DISP.EXT.ARRANQUE		

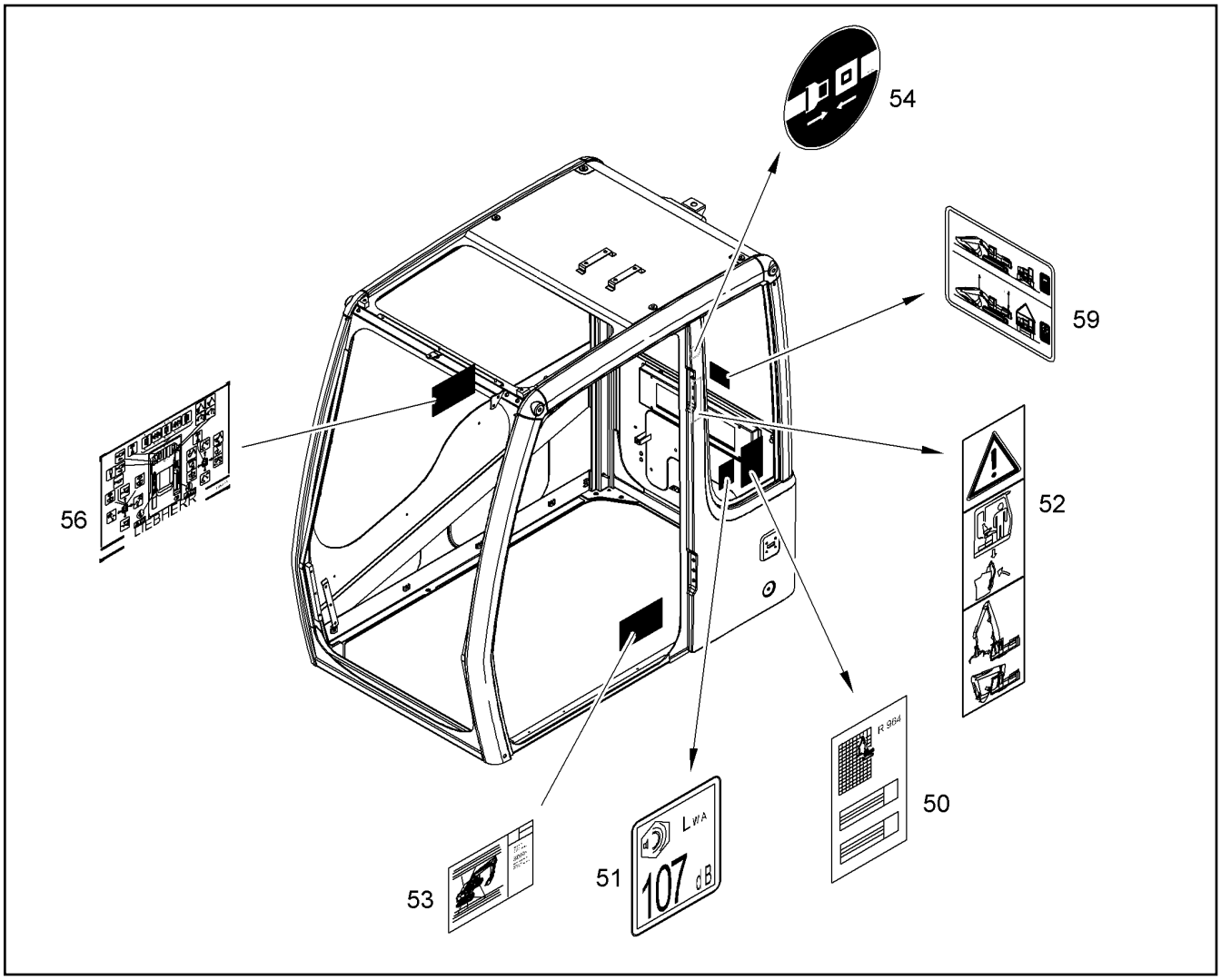

Pos.	Item	Quantity	Description	Descripción	Serie	K
50	9392835	1	LOAD DIAGRAM CONF.TO ISO 1056710567	TABLA CAP.CARGA SEGÚN ISO		
51	9874356	1	STICKER SOUND VOLUME LEVEL 107DB	ADHESIVO NIVEL INTENS.ACÚS		
52	9581113	1	WARNING SIGN	LETRERO ADVERTENCIAS		
53	10070310	1	LUBRICATION DIAGRAM	ESQUEMA DE ENGRASE		
54	10066101	1	LABEL SAFETY BELT	LETRERO CINT.SEGURIDAD		
56	10393873	1	CONTROL PLATE	PLACA EXPLICATIVA		1
59	10382738	1	HOIST FIXING POINTS	PUNTOS CARGA Y ANCLAJE		1

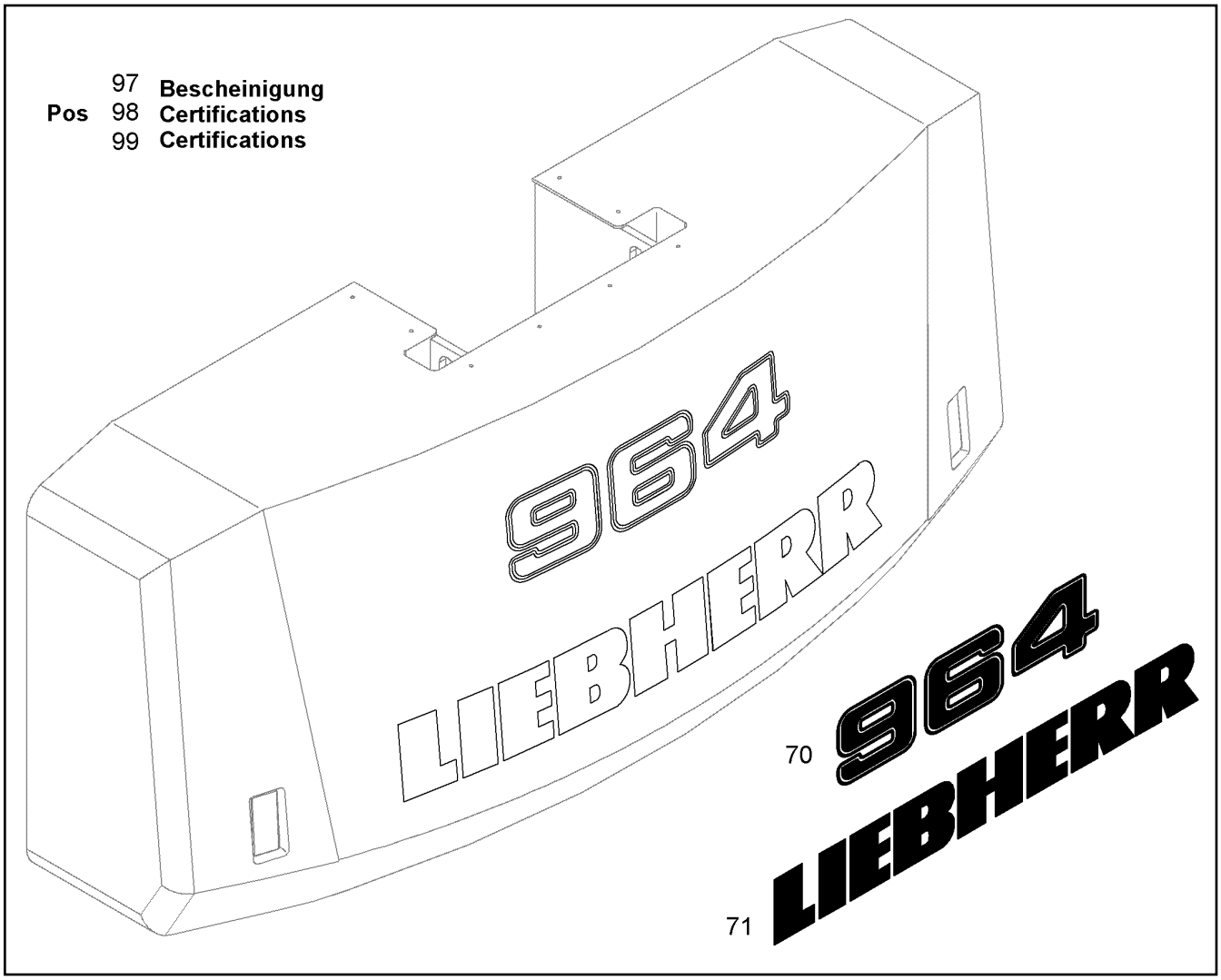

Pos.	Item	Quantity	Description	Descripción	Serie	K
70	10402369	1	SIGN	LETRERO		1
71	9613673	1	STICKER 1853mmX250mm	ADHESIVO		1
97	9399606	1	EEC CERTIFICATE	CERTIF. CEE		
98	9399607	1	EU CONFORMITY DECLARATION	DECLARACIÓN CONFORMIDAD		
99	9399608	1	EU MANUFACTURER DECLARATION	DECLARACIÓN FABRICANTE CE		

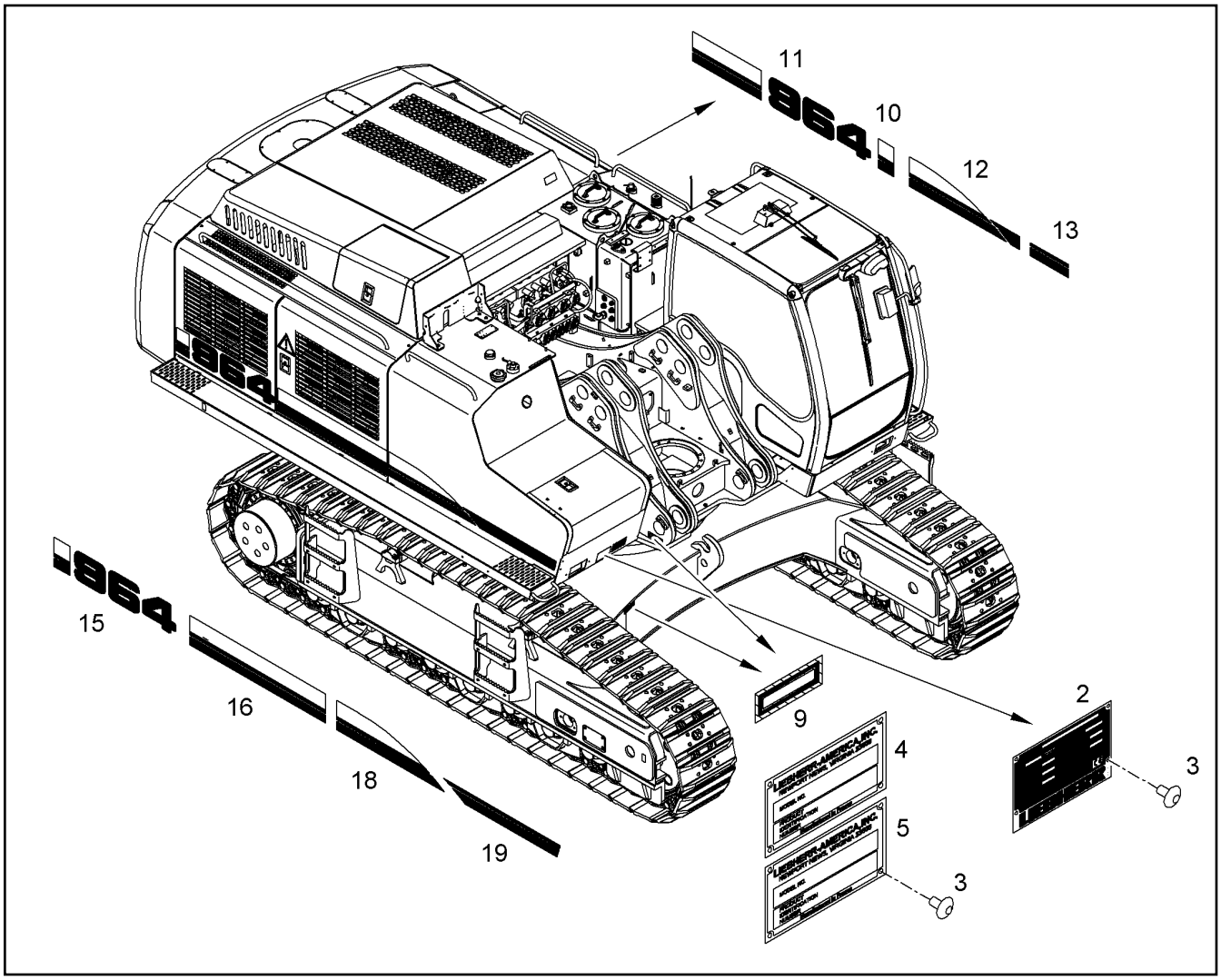

Pos.	Item	Quantity	Description	Descripción	Serie	K
2	10405887	1	TYPEPLATE LFR	PLACA DE CARACTERÍSTICAS		1
3	4900053	4	BLIND RIVET	REMACHE CIEGO		
4	10498223	1	TYPE PLATE LBR	LETRERO IDENTIFICACION		1
5	9354303	1	NAMEPLATE	PLACA CARACT.LAM		
8	10358767	1	MARKING TYPE PLATE	MARCA PLACA CARACTERÍSTI		1
9	9350400	2	STICKER	ADHESIVO		
10	10071618	1	STICKER	ADHESIVO		1
11	10071620	1	STICKER	ADHESIVO		1
12	10071665	1	STICKER	ADHESIVO		1
13	10071668	1	STICKER	ADHESIVO		1
15	10071669	1	STICKER	ADHESIVO		1
16	10071670	1	STICKER	ADHESIVO		1
18	10096203	1	STICKER	ADHESIVO		1
19	10096204	1	STICKER	ADHESIVO		1

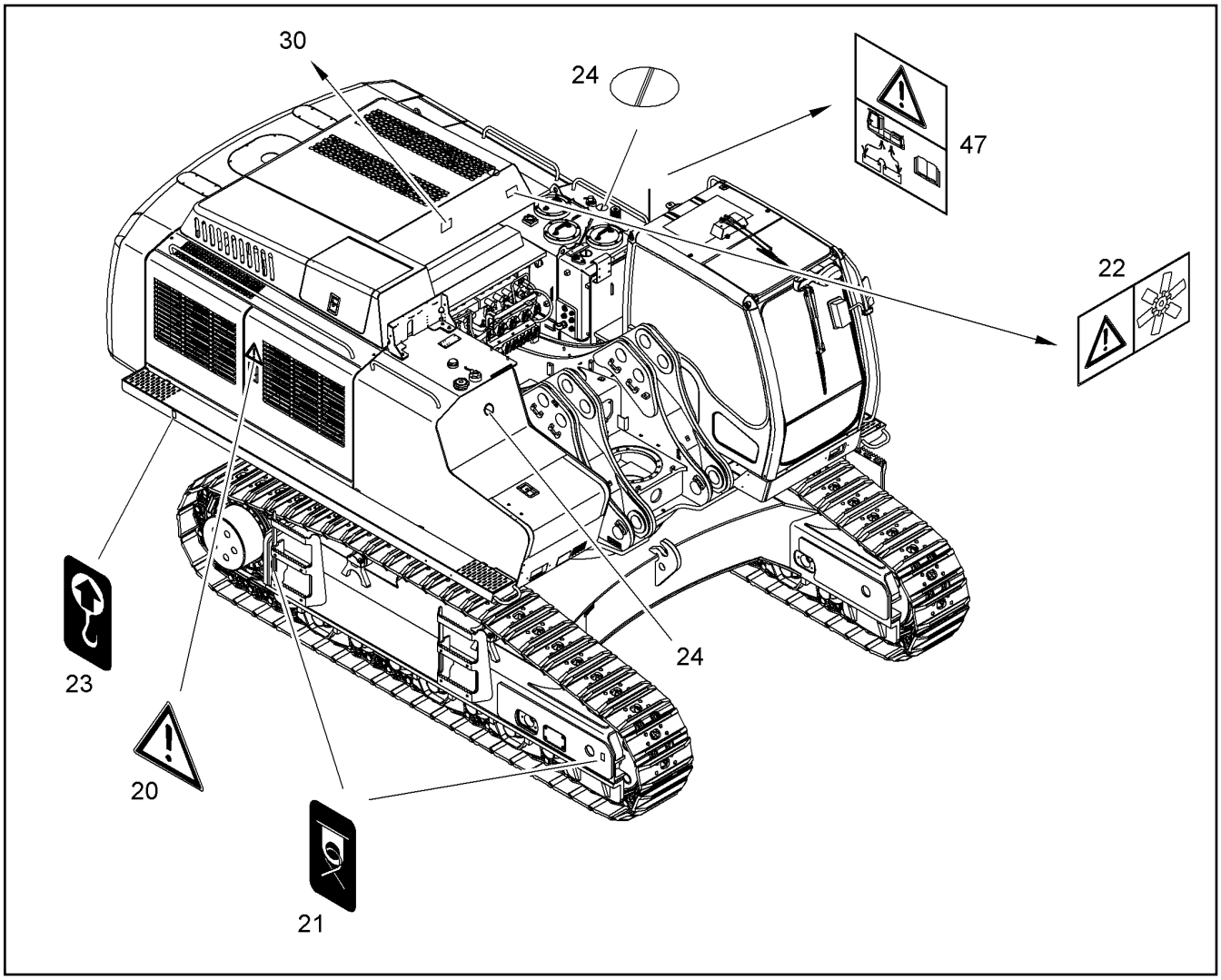

Pos.	Item	Quantity	Description	Descripción	Serie	K
20	9910464	2	DANGER SIGN DANGER SPOT 200mmX17	LETRERO ADV.ZONA PELIGROS		
21	9402376	4	REFERENCE PLATE	LETRERO INDICACIÓN PTO.EL		
22	9619934	2	NAMEPLATE MOTOR STOP	LETRERO PARADA MOTOR		
23	9402377	2	REFERENCE PLATE	LETRERO INDIC.PTO.TOPE ELEV		
24	7366794	2	PROHIBITION SIGN	PLACA DE PROHIBICION		
30	11060174	1	STICKER 132mmX115mm	ADHESIVO		
47	9909254	1	NAMEPLATE REMOTE START	PLACA DISP.EXT.ARRANQUE		

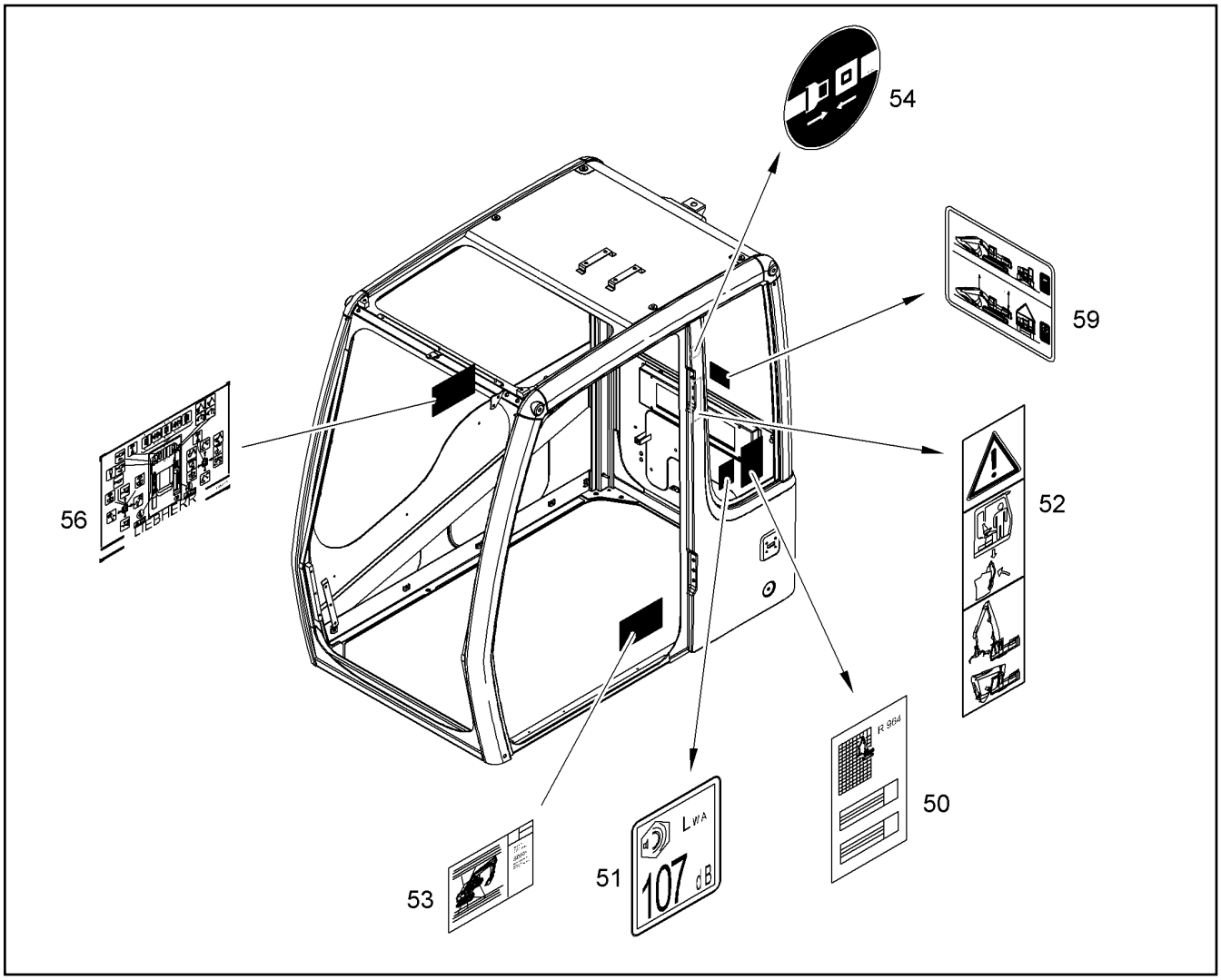

Pos.	Item	Quantity	Description	Descripción	Serie	K
50	9392835	1	LOAD DIAGRAM CONF.TO ISO 1056710567	TABLA CAP.CARGA SEGÚN ISO		
51	9874356	1	STICKER SOUND VOLUME LEVEL 107DB	ADHESIVO NIVEL INTENS.ACÚS		
52	9581113	1	WARNING SIGN	LETRERO ADVERTENCIAS		
53	10070310	1	LUBRICATION DIAGRAM	ESQUEMA DE ENGRASE		
54	10066101	1	LABEL SAFETY BELT	LETRERO CINT.SEGURIDAD		
56	10393873	1	CONTROL PLATE	PLACA EXPLICATIVA		1
59	10382738	1	HOIST FIXING POINTS	PUNTOS CARGA Y ANCLAJE		1

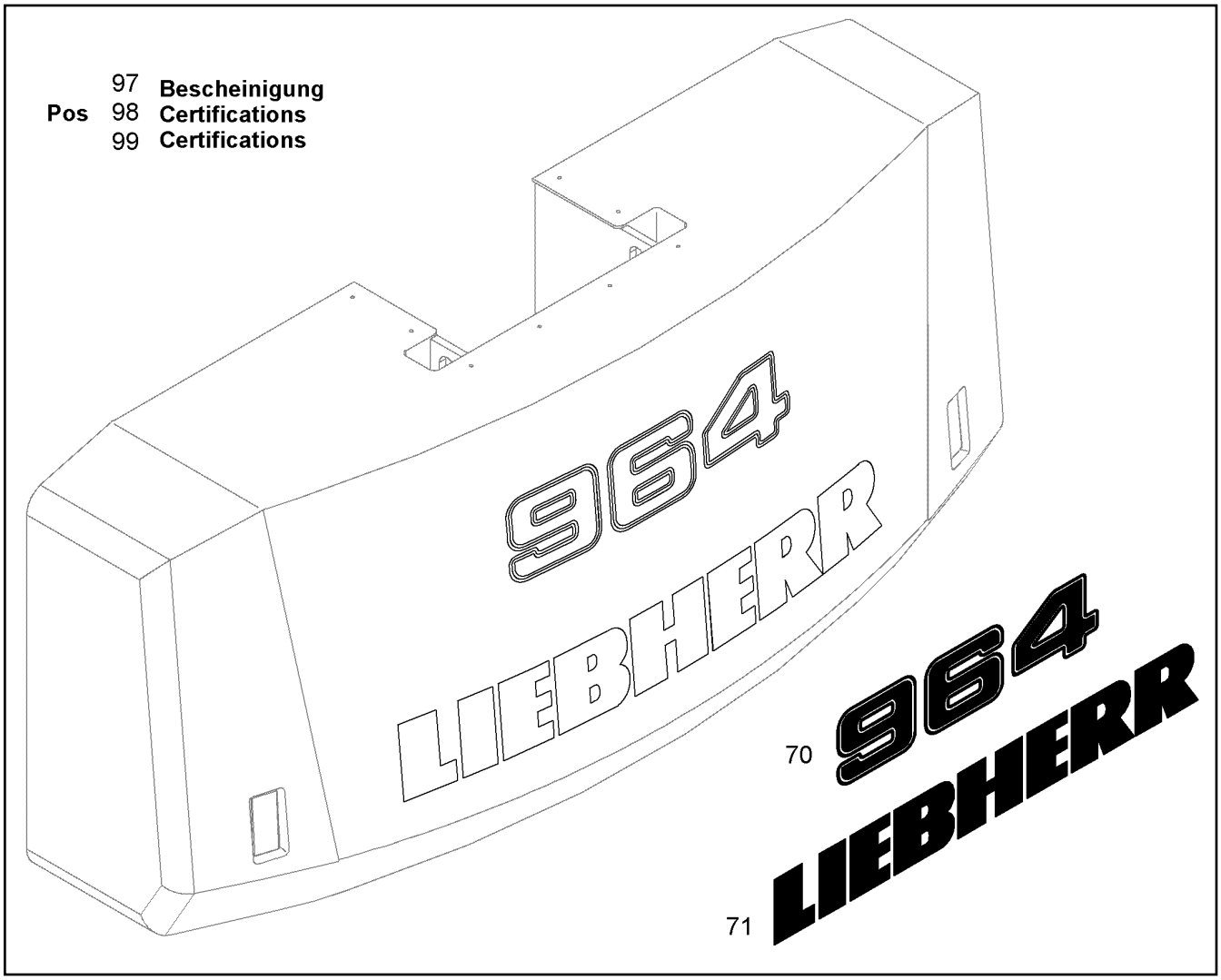

Pos.	Item	Quantity	Description	Descripción	Serie	K
70	10402369	1	SIGN	LETRERO		1
71	9613673	1	STICKER 1853mmX250mm	ADHESIVO		1
97	9399606	1	EEC CERTIFICATE	CERTIF. CEE		
98	9399607	1	EU CONFORMITY DECLARATION	DECLARACIÓN CONFORMIDAD		
99	9399608	1	EU MANUFACTURER DECLARATION	DECLARACIÓN FABRICANTE CE		

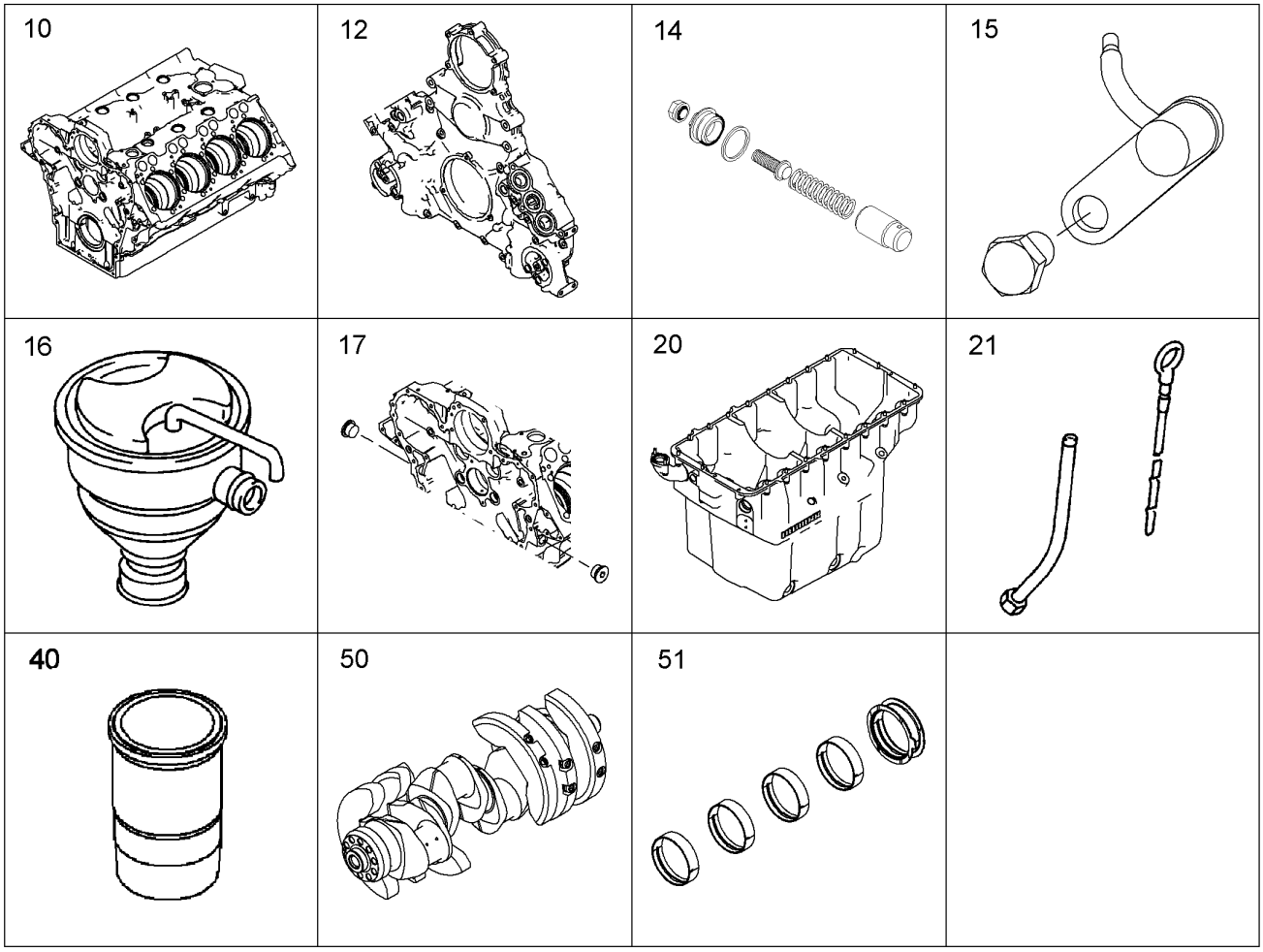

Pos.	Item	Quantity	Description	Descripción	Serie	K
10		1	CRANKCASE CPL. ⇨ ❑ 572	CAJA DEL CIGÜEÑAL COMPL.		1
12		1	POWER UNIT SUPPORT ATTACHMENT ⇨ ❑ 581	MONTAJE SOPORTE GRUPO		
14		1	FINAL CONTROL VALVE ⇨ ❑ 610	VALVULA REGULACION TERMI		
15		8	PISTON COOLING ⇨ ❑ 574	REFRIGERACION PISTON		
16		1	PIPELINE INSTALLATION ⇨ ❑ 578	ANEJO TUBERIA		
17		1	LOCKING PIECES ⇨ ❑ 575	PIEZAS DE CIERRE		
20		1	OIL SUMP WITH FASTENING ⇨ ❑ 582	CUBETA ACEITE C.SUJECIÓN		1
21		1	OIL DIPSTICK WITH PIPE ⇨ ❑ 583	VARILLA NIVEL ACEITE C.TUBO		
40		8	CYLINDER ⇨ ❑ 577	CILINDRO		
50		1	CRANKSHAFT WITH GEAR ⇨ ❑ 587	EJE CIGUEÑAL CON RUEDA DEN		1
51		1	CRANKSHAFT BEARINGS ⇨ ❑ 589	DISPOSITIVO COJINETES CIGÜ		1

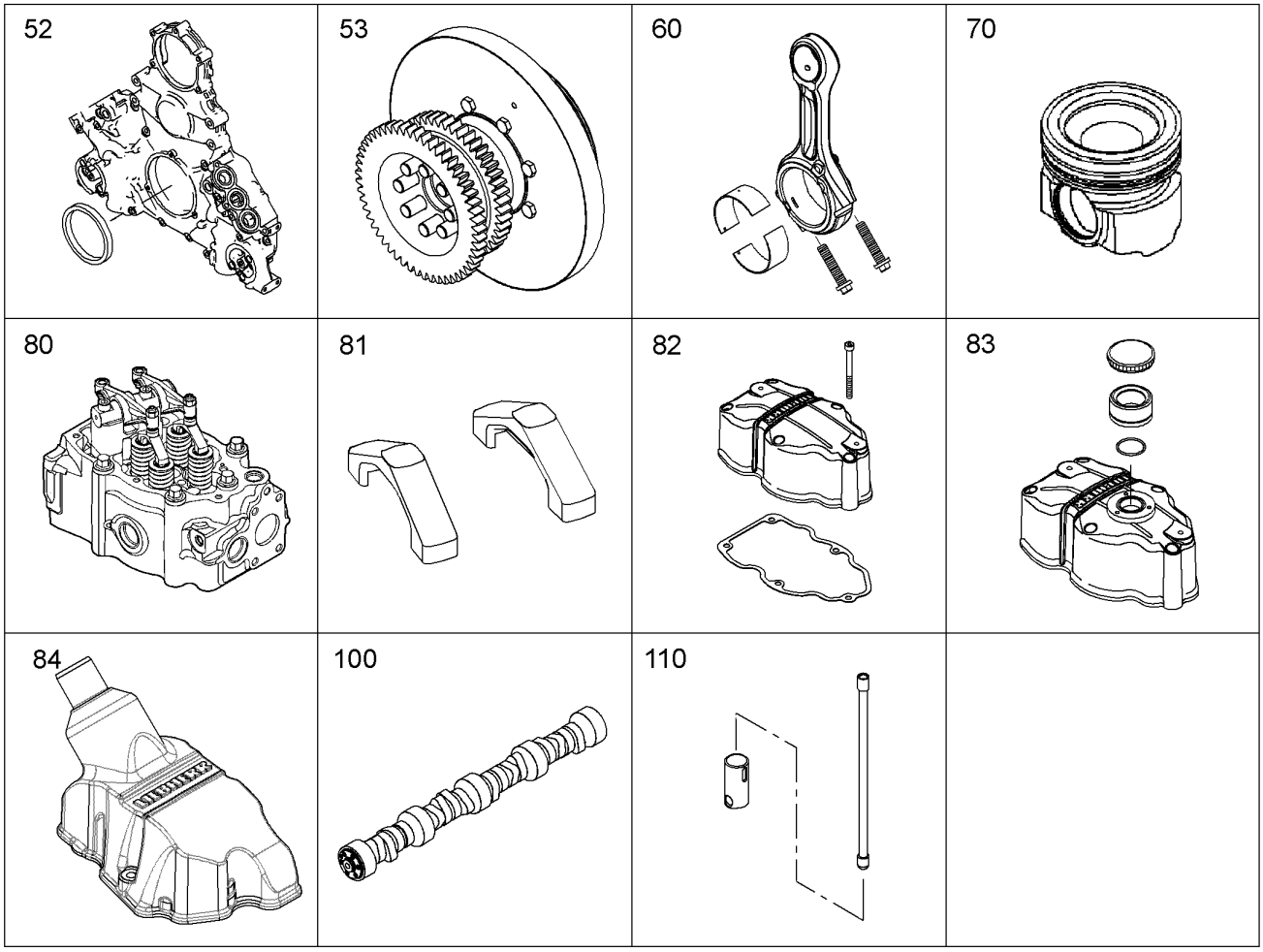

Pos.	Item	Quantity	Description	Descripción	Serie	K
52	10121346	1	RK CRANKSHAFT SEAL D9508 ⇨ ❑ 590	J. REP. JUNTA DE CIGÜEÑAL		
53		1	DRIVING PARTS ⇨ ❑ 588	PIEZAS ACC.CON AMORT. VIBR.		
60		8	MAIN ROD ⇨ ❑ 592	BIELA		1
70	10131546	8	PISTON CPL. d=128 ⇨ ❑ 643	ÉMBOLO COMPL.		1
80		8	CYLINDER HEAD ASSEMBLY ⇨ ❑ 593	CULATA MONTAJE		
81		8	ROCKER ARMS DEVICE CPL. OHNE ZBS ⇨ ❑ 595	MEC. COMPL. PALANCA BASCUL		
82		5	CYLINDER HEAD COVER ASSEMBLY ⇨ ❑ 597	MONT. TAPA CULATA		
83		1	CYLINDER HEAD COVER ASSEMBLY ⇨ ❑ 596	MONT. TAPA CULATA		
84		1	CYLINDER HEAD COVER ASSEMBLY ⇨ ❑ 598	MONT. TAPA CULATA		
85		1	CYLINDER HEAD COVER ASSEMBLY ⇨ ❑ 599	MONT. TAPA CULATA		
100		1	CAMSHAFT CPL. ⇨ ❑ 601	ÁRBOL LEVAS COMPL.		
110		8	CONTROL PARTS ⇨ ❑ 603	ELEMENTOS DE MANDO		

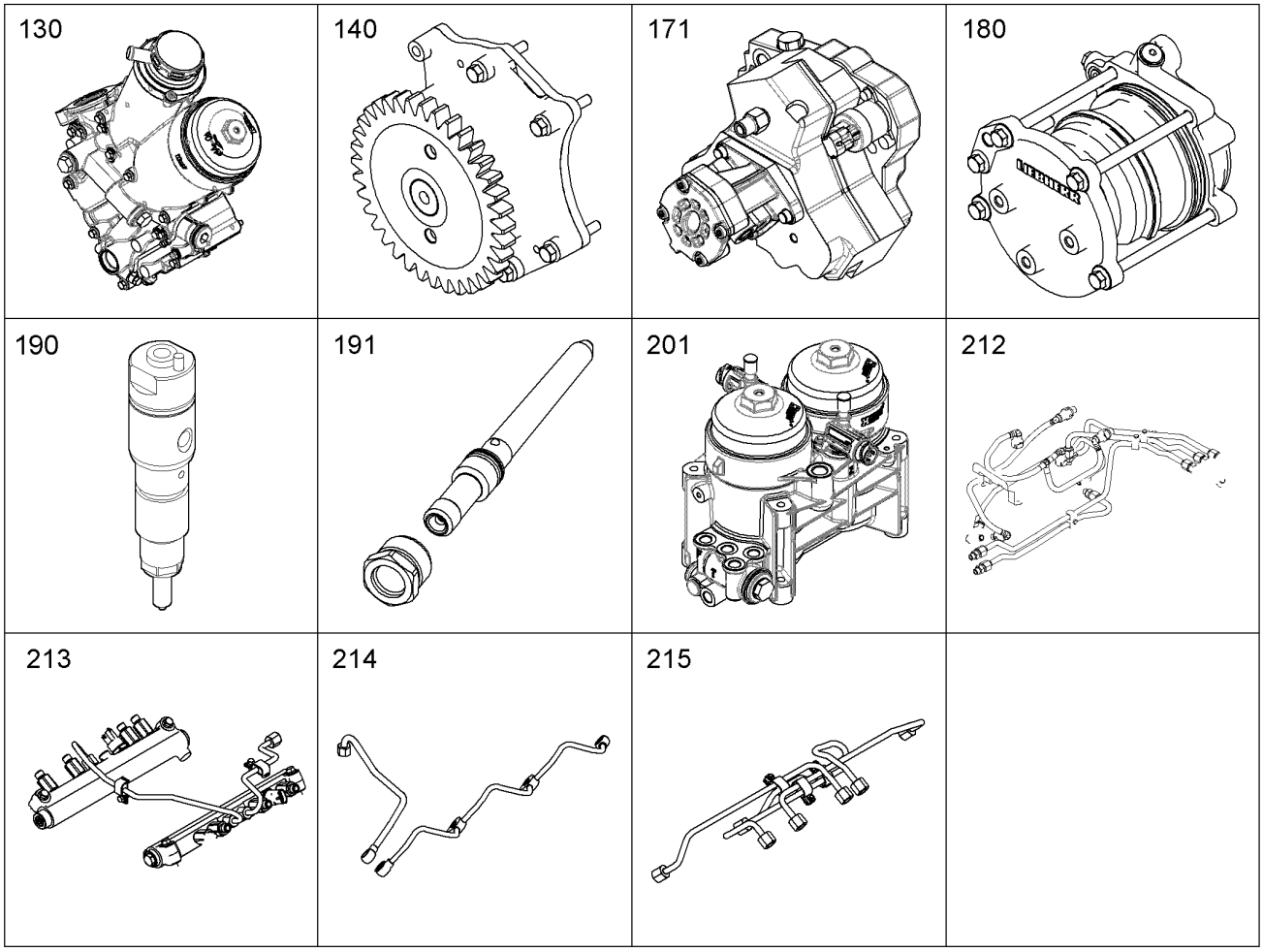

Pos.	Item	Quantity	Description	Descripción	Serie	K
130		1	OIL MODULE ASSEMBLY ⇨ ❑ 604	MONTAJE MÓDULO ACEITE		
140		1	LUBE OIL PUMP ASSY B=24 I=1.472 ⇨ ❑ 609	BOMBA ACEITE LUBR.C.SUJEC		
171		1	HIGH PRESSURE PUMP W.FASTENINGCP3 ⇨ ❑ 620	BOMBA ALTA PRESIÓN C.SUJEC		
180		1	DRIVE FOR HIGH PRESSURE PUMP ⇨ ❑ 611	ACC. P. BOMBA ALTA PRESIÓN		
190		8	INJECTION NOZZLE W.FASTENING ⇨ ❑ 613	TOBERA INYECCIÓN C.SUJECIÓ		
191		8	PRESSURE ADAPTER ASS. ⇨ ❑ 616	MONTAJE RACOR TUBO PRESIÓ		
201		1	FUEL FINE-FILTER ASSEMBLY ⇨ ❑ 617	MONT.FILTRO FINO COMBUSTI	99999-	
212		1	FUEL LINES ⇨ ❑ 623	TUBERIAS DE COMBUSTIBLE	-99998	
213		1	HIGH PRESSURE PIPE ASSEMBLY ⇨ ❑ 625	MONTAJE TUBERÍA DE IMPULS		
214		1	LEAK OIL LINE ADD-ON ⇨ ❑ 621	MONTAJE TUBERÍA A.FUGA		
215	10119367	1	INJECTION LINES	TUBERIAS DE INYECCION		

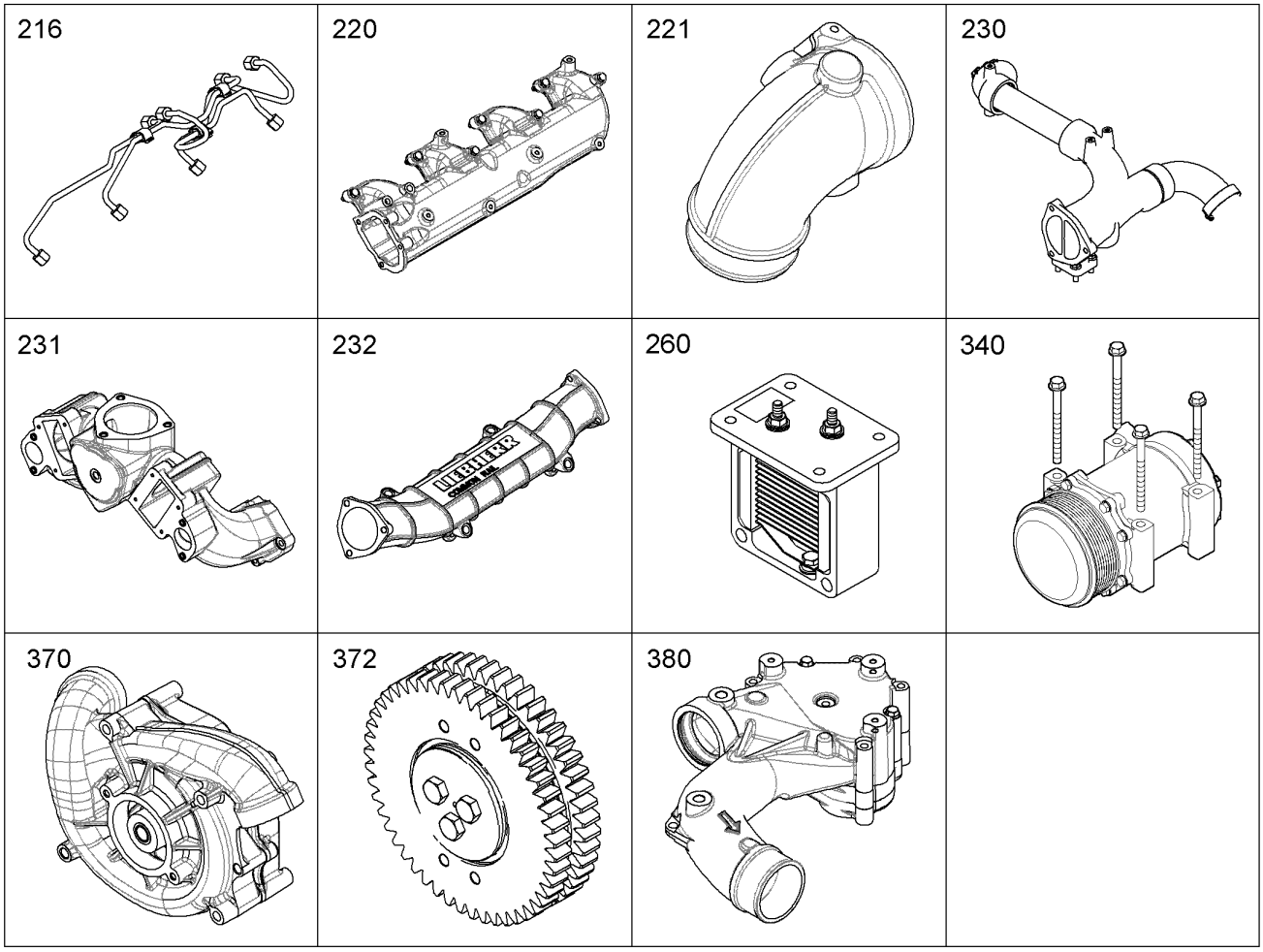

Pos.	Item	Quantity	Description	Descripción	Serie	K
216	10119368	1	INJECTION LINES	TUBERIAS DE INYECCION		
220		1	AIR INTAKE ASSEMBLY ⇨ ❑ 626	MONTAJE ASPIRACIÓN DE AIRE		
221		1	SUCTION NOZZLE ADD-ON ⇨ ❑ 629	TUBO ASPIRADOR ANEJO		
230		1	CONNECTING LINE ADD-ON ⇨ ❑ 631	ANEJO DE LINEA DE CONEXIÓN		
231		1	CONNECTING LINE ADD-ON ⇨ ❑ 632	ANEJO DE LINEA DE CONEXIÓN		
232		1	CHARGE AIR PIPE ASSEMBLY ⇨ ❑ 630	MONTAJE TUBO AIRE ADMISIÓN		
260		2	HEATING FLANGE ADD-ON ⇨ ❑ 633	MONTAJE BRIDA CALEFACCIÓN		
340		1	AIR COND. COMPRESSOR ADD-ON ⇨ ❑ 635	MONT.COMPR.AIRE AC.		
370		1	AT-WATER PUMP WITH FASTENING V-MO ⇨ ❑ 637	BOMBA DE AGUA C.SUJECIÓN		
372		1	INTERMEDIATE GEAR ASSEMBLY I=1.678 ⇨ ❑ 634	MONT. RUEDA INTERMEDIA		
380		1	THERMOSTAT HOUSING ASSEMBLY ⇨ ❑ 639	MONT.CARCASA DE TERMOST		

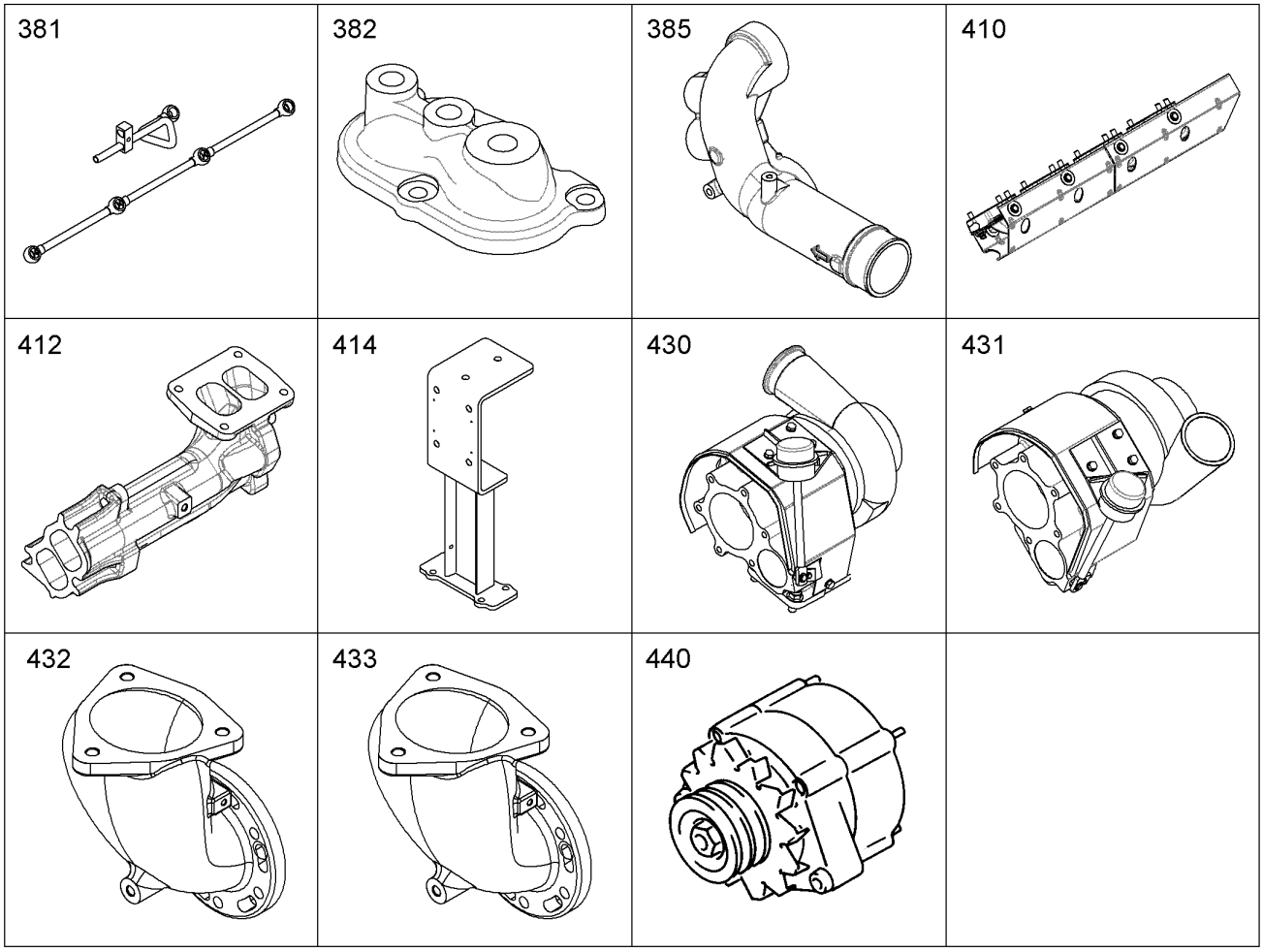

Pos.	Item	Quantity	Description	Descripción	Serie	K
381		1	VENT TUBE ASSEMBLY ⇨ ❑ 641	MONT.TUBERÍA DE PURGA		
382		1	COOLANT PIPE BEND ADD-ON ⇨ ❑ 642	CODO DE REFRIGERANTE MO		
385		1	CONNECTION F.WATER PIPE ⇨ ❑ 638	CONEXIÓN CONDUCTOS AGUA		
410		1	EXHAUST PIPE ASSEMBLY ⇨ ❑ 644	MONTAJE TUBO DE ESCAPE		
412		1	OUTLET MANIFOLD ADD-ON ⇨ ❑ 647	CODO DE ESCAPE MONTAJE A		1
414		1	BRACKET ADD-ON ⇨ ❑ 646	CONSOLA MONTAJE		
430		1	ATL ATTACHMENT ⇨ ❑ 650	MONTAJE ATL		
431		1	ATL ATTACHMENT ⇨ ❑ 649	MONTAJE ATL		
432		1	EXHAUST ADAPTER ASSEMBLY LEFT ⇨ ❑ 651	MONTAJE TUBUL.ESCAPE GAS I		
433		1	EXHAUST ADAPTER ASSEMBLY RIGHT ⇨ ❑ 652	MONTAJE TUBUL.ESCAPE GAS		
440		1	ALTERNATOR ASSY. 28V 10-100A ⇨ ❑ 653	GENERADOR PREMONT.		

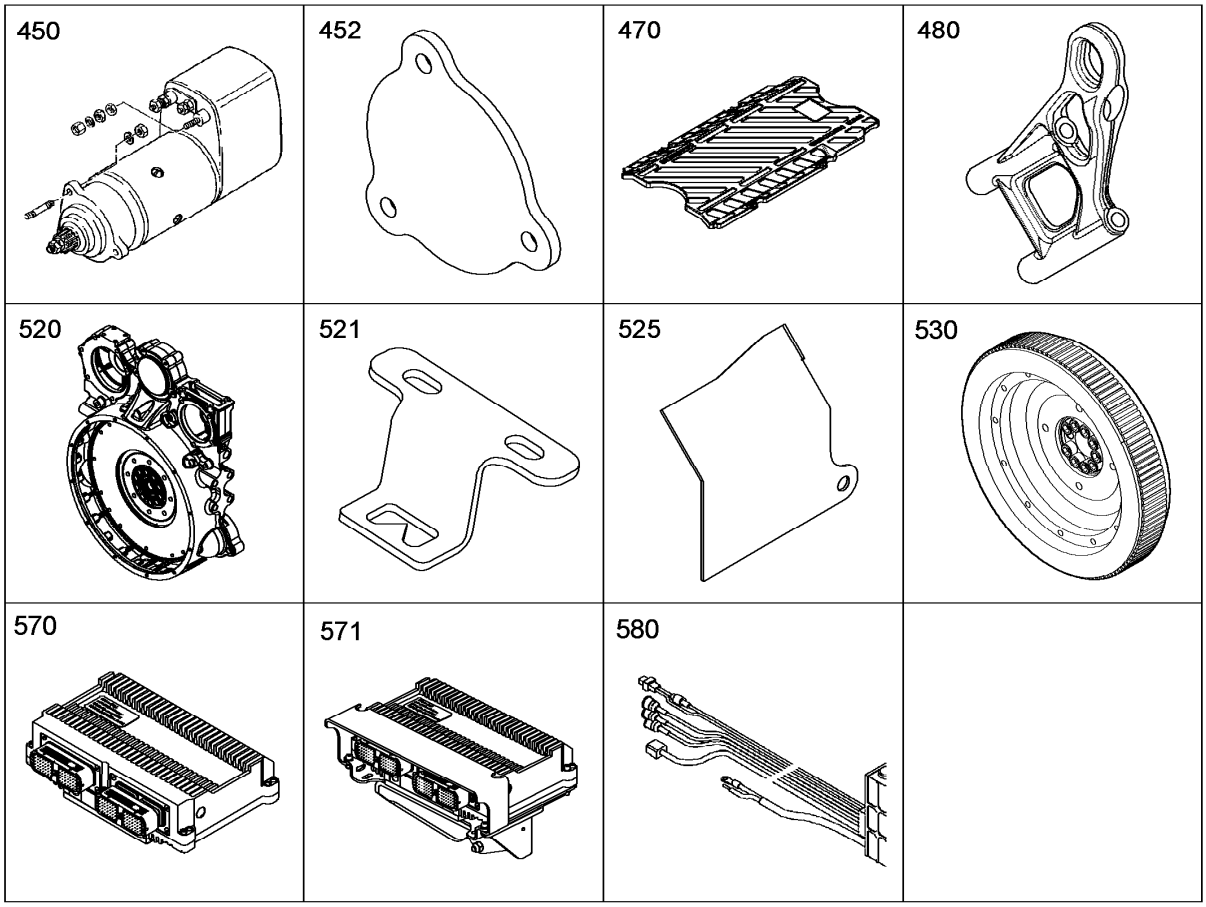

Pos.	Item	Quantity	Description	Descripción	Serie	K
450		1	STARTER INSTALLATION ⇨ ❑ 654	MONTAJE ARRANQUE MOTOR		
452		1	LOCKING PIECES ⇨ ❑ 655	PIEZAS DE CIERRE		
470		1	PROTECTION PLATE ASSEMBLY ⇨ ❑ 656	MONTAJE PLACA DE COBERTUR		
480		1	LIFTING DEVICE BS 3 SERIE ⇨ ❑ 657	DISPOSITIVO DE ELEVACION		
520		1	FLYWHEEL HOUSING MOUNTING SAE1 ⇨ ❑ 664	MONT. CARCASA VOLANTE IMP		
521		1	CONTROL PLATE ASSEMBLY ⇨ ❑ 665	MONT. CHAPA AJUSTE		
525		1	HEAT PROTECTION SHEET ⇨ ❑ 666	CHAPA DE PROTECCION TERM		
530		1	FLYWHEEL ASSEMBLY SAE1 ⇨ ❑ 667	MONT. VOLANTE IMUPLS.		
570		1	MOTOR CONTROL DEVICE ⇨ ❑ 670	APARATO DE MANDO DE MOTO		
571		1	CONTROL BOX ANNEXE ⇨ ❑ 669	MONT.APARATO MANDO		
580		1	CABLE BOOM MOUNTING ⇨ ❑ 671	MONT.MAZO CABLES		

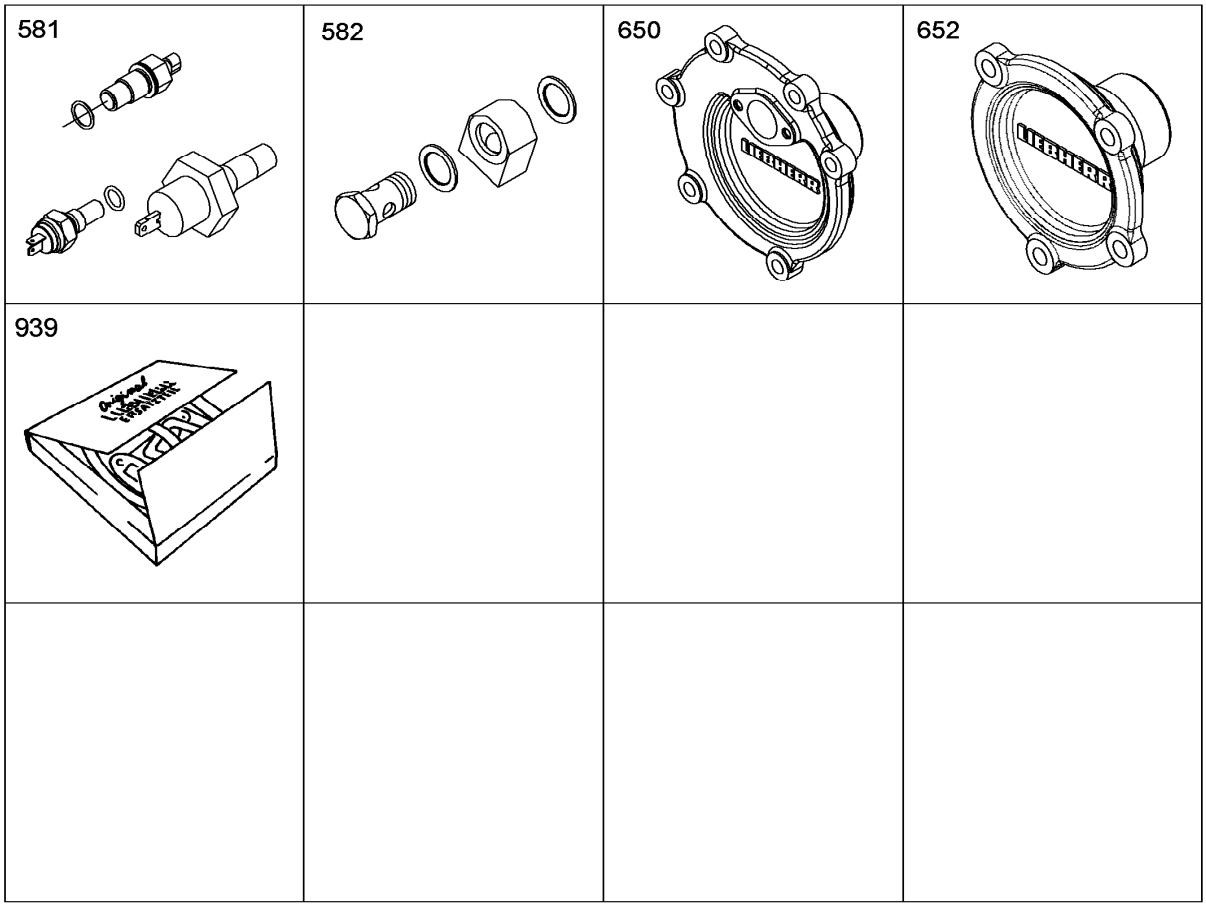

Pos.	Item	Quantity	Description	Descripción	Serie	K
581		1	ENGINE CONTROL SENSORS ⇨ ❑ 658	SENSOR REGULACION MOTOR		
582		1	CONNECTING PIECE PRE-ASS. ⇨ ❑ 672	PIEZA DE EMPALME PREMONT.		
650		1	LOCKING PIECES ⇨ ❑ 677	PIEZAS DE CIERRE		
652		1	LOCKING PIECES ⇨ ❑ 676	PIEZAS DE CIERRE		
939	10121160	1	SEAL KIT DIESEL ENGINE ⇨ ❑ 678	JJ MOTOR DIESEL		1

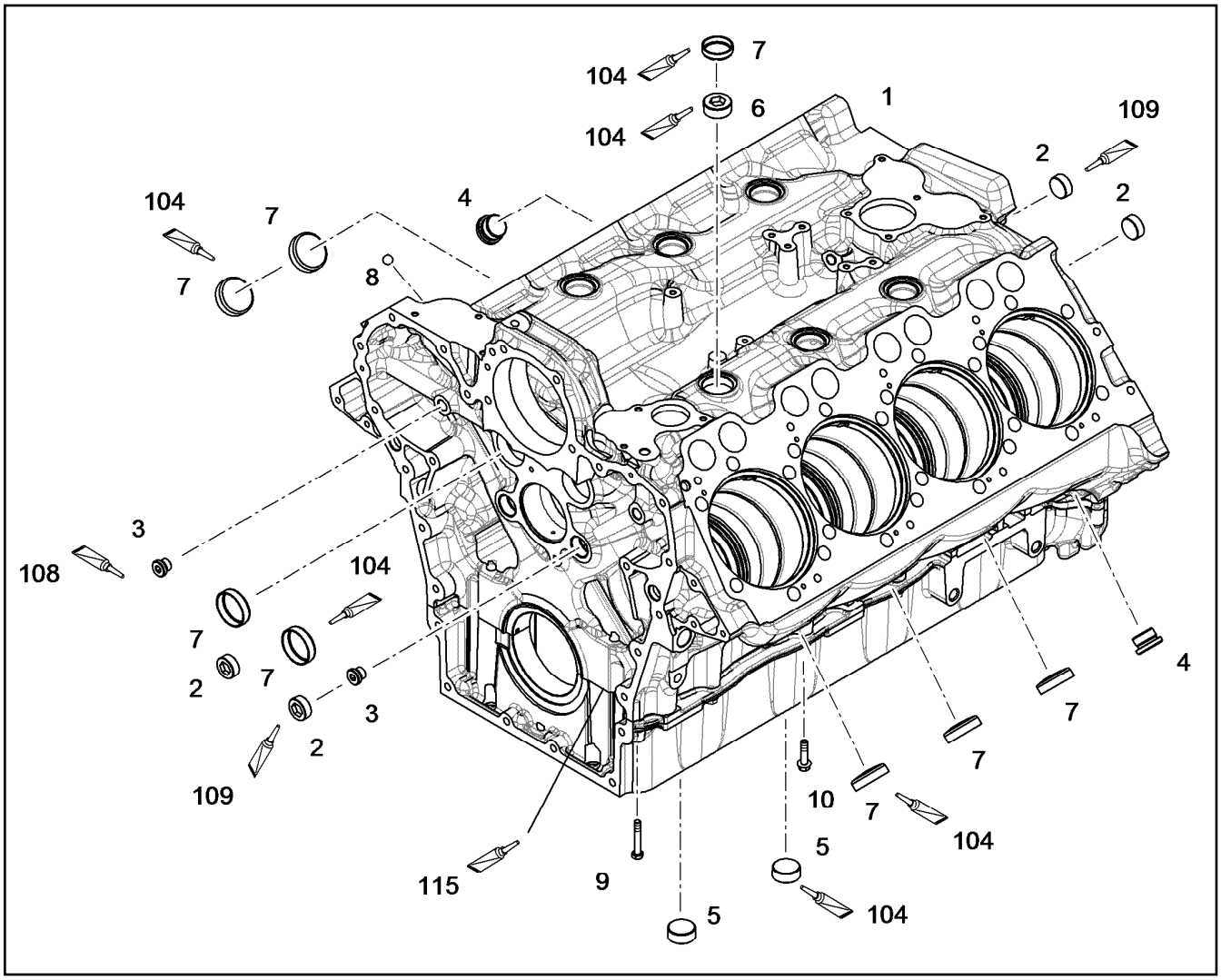

Pos.	Item	Quantity	Description	Descripción	Serie	K
1	10129072	1	CRANKCASE PRE-ASS. ⇨ ❑ 573	PREMONT. CÁRTER CIGÜEÑAL		1
2	240042802	4	SCREW PLUG DIN 906 M30X1,50 ST	TORNILLO DE CIERRE		
3	7382203	2	SCREW PLUG VSTI	TORNILLO DE CIERRE		
4	7382204	2	SCREW PLUG VSTI	TORNILLO DE CIERRE		
5	10288773	2	THREAD.PLUG DIN 906 M 36 X1,5 ST A3C	TORNILLO VSL		
6	10652552	6	SCREW PLUG DIN 906 M48X1,5 ST	TORNILLO DE CIERRE		
7	10036401	13	END COVER	TAPA DE CIERRE		1
8	10036651	2	BALL DIN 5401-1 d=12,7 - G20	ESFERA		1
9	4980747	4	HEX BOLT ISO 4014 M8X50 10.9 A2C	TORNILLO DE CABEZA HEXAGO		
10	10037518	8	HEX BOLT EN 1665 M8x35 10.9 A3C	TORNILLO DE CABEZA HEXAGO		
104	8655023	1	GLUE	PEGAMENTO		
108	8622905	1	LOCTITE	LOCTITE		
109	811205708	1	SCREW LOCKING	SEGURO PARA TORNILLO		
115	10354595	1	SURFACE SEALING	OBTURACION DE SUPERFICIE		

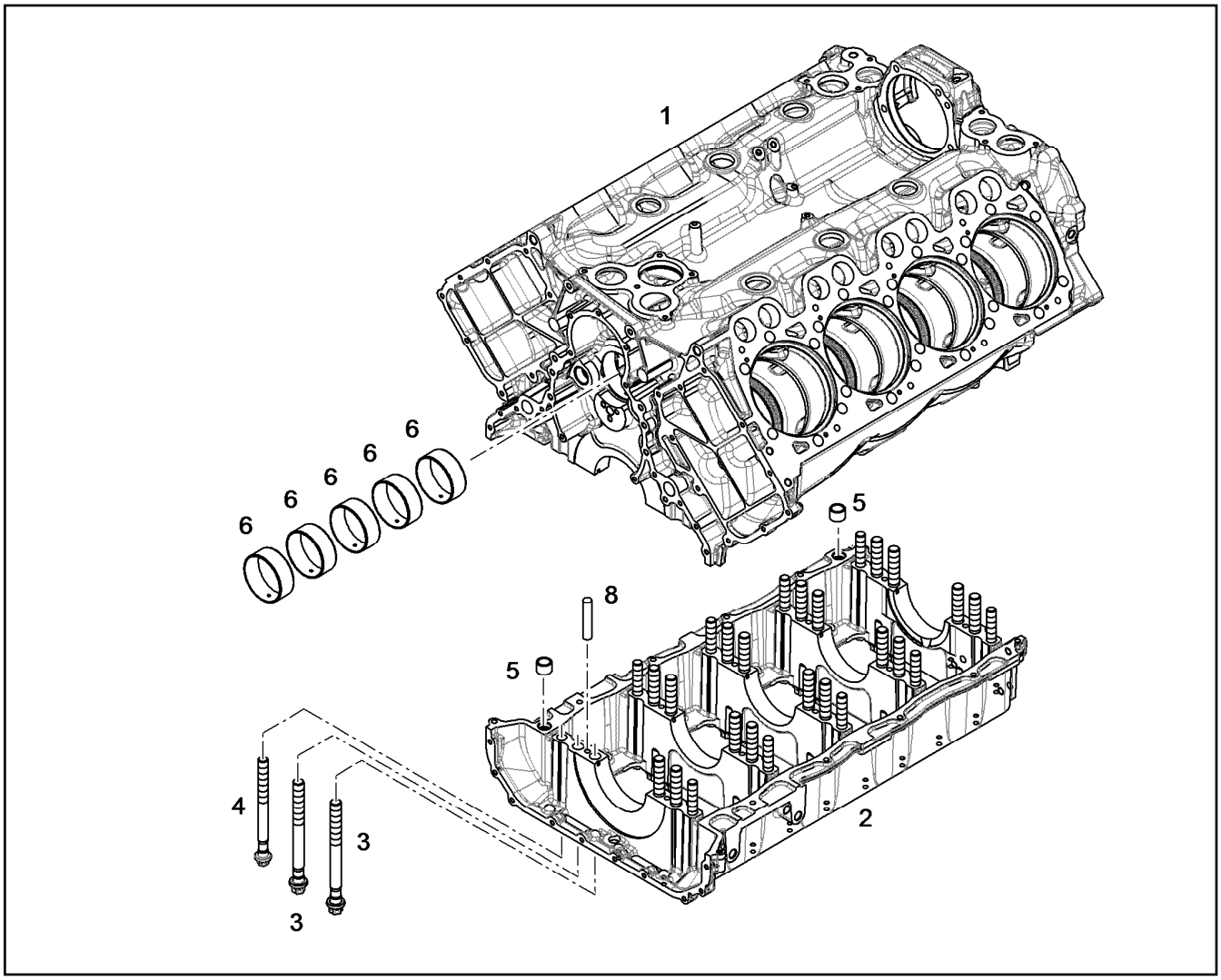

Pos.	Item	Quantity	Description	Descripción	Serie	K
1	10129073	1	CRANKCASE	CARTER DEL CIGÜEÑAL		1
2	10129074	1	BEDPLATE	PLACA DE ASIENTO		1
3	9077748	20	SCREW M 182,0X200X55 10.9 ZN PH	TORNILLO		
4	9077749	10	SCREW M 161,5X192X45 10.9 ZN PH	TORNILLO		
5	9178018	2	TIGHT FIT SLEEVE	CASQUILLO DE AJUSTE		1
6	9078390	5	CAMS SHAFT BEARING	COJINETE ARBOL DE LEVAS		
8	4980995	10	PARALLEL PIN ISO 8734 A 8 X 26 ST	PASADOR CILINDRICO		

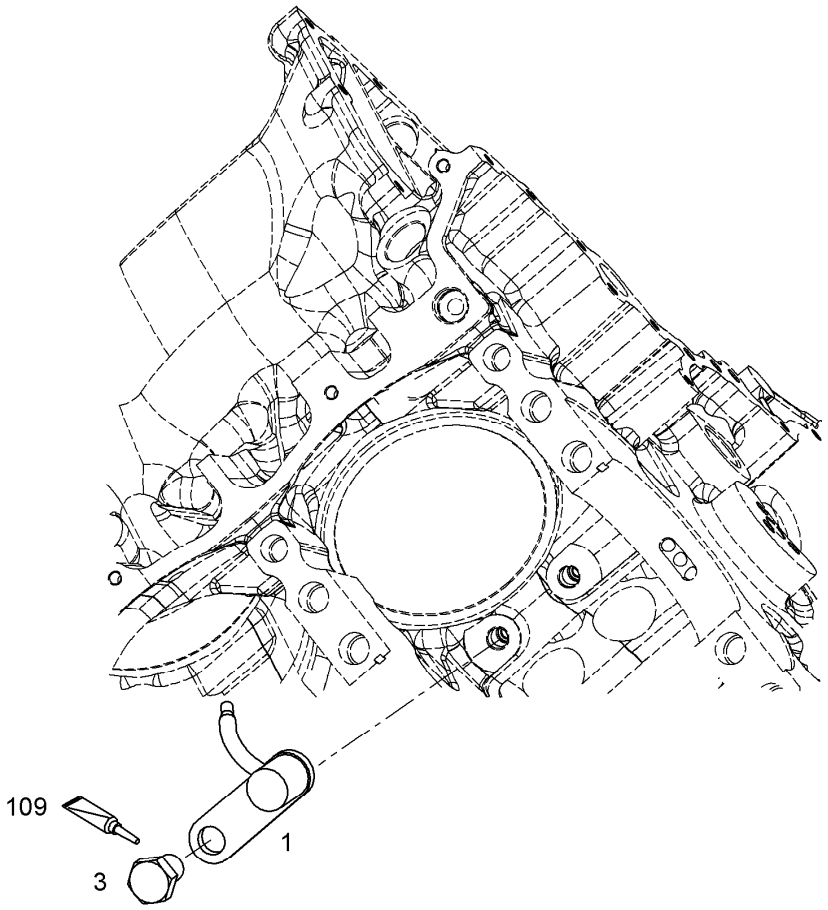

Pos.	Item	Quantity	Description	Descripción	Serie	K
1	10116083	1	SPRAY NOZZLE	TOBERA INYECCION		
3	10037101	1	HEX BOLT ISO 4017 M14X20 10.9	TORNILLO DE CABEZA HEXAGO		
109	8628192	1	LOCTITE	LOCTITE		

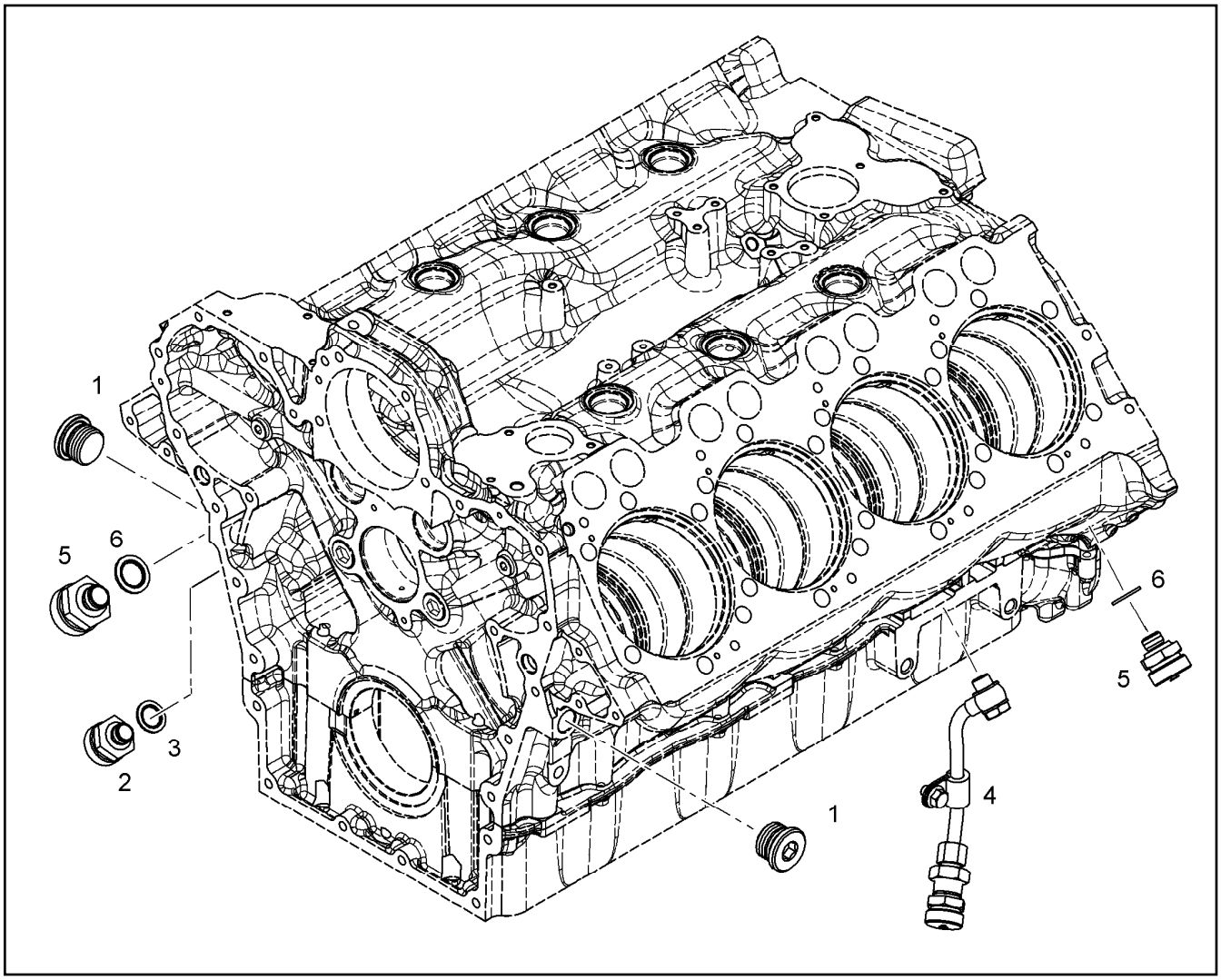

Pos.	Item	Quantity	Description	Descripción	Serie	K
1	7381457	2	SCREW PLUG VSTI	TORNILLO DE CIERRE		
2	10011832	1	VALVE M14X1,5	VALVULA		
3	10011866	1	SEALING RING 14,7X22,00X1,5	JUNTA ANULAR		1
4	10118748	1	PIPELINE INSTALLATION ⇨ ❑ 576	ANEJO TUBERIA		
5	10032906	2	DRAIN VALVE	VALVULA DE DESCARGA		
6	10011870	2	SEALING RING 26,7X34,93X2	JUNTA ANULAR		1

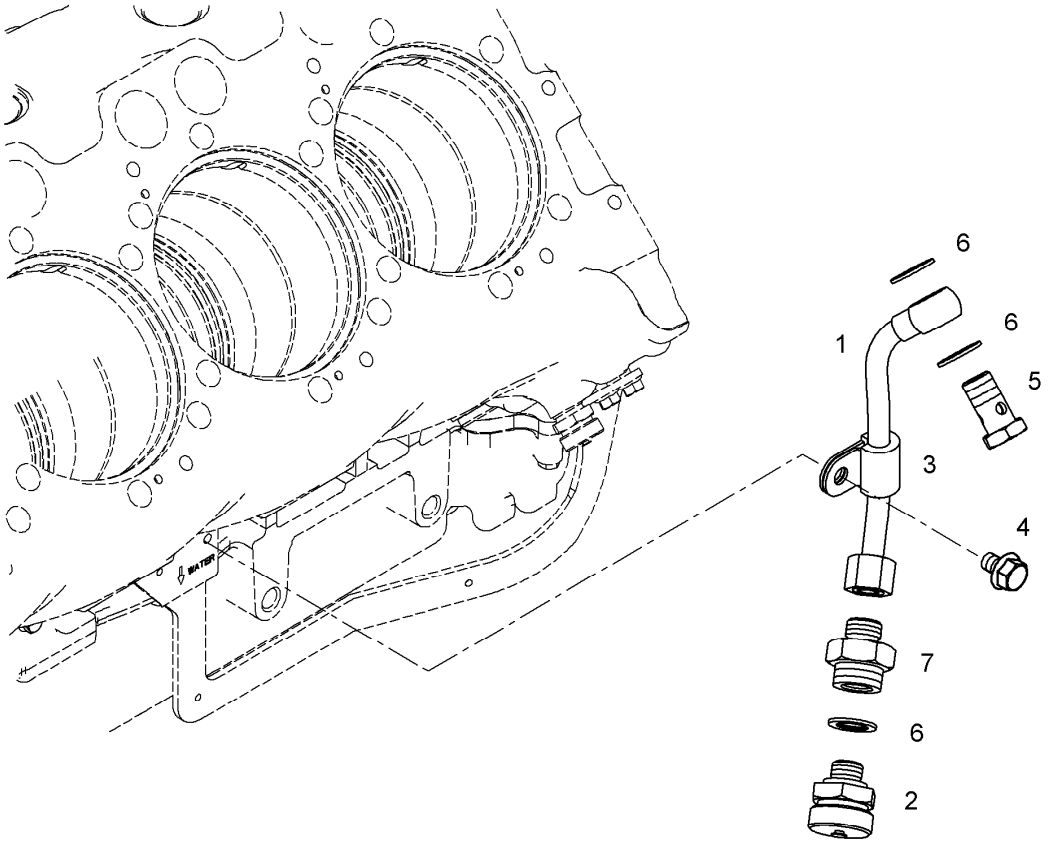

Pos.	Item	Quantity	Description	Descripción	Serie	K
1	10118747	1	PIPELINE	TUBERIA		
2	10011832	1	VALVE M14X1,5	VALVULA		
3	7381628	1	CLAMP DIN 3016 D1- 10 X 20 W1-2-MVQ	ABRAZADERA		
4	10024115	1	HEX BOLT EN 1665 M8x12 8.8 A3C	TORNILLO DE CABEZA HEXAGO		
5	4001439	1	HOLLOW SCREW 10X3	TORNILLO HUECO		
6	10011866	3	SEALING RING 14,7X22,00X1,5	JUNTA ANULAR		1
7	10119357	1	LUG 9SMNPB28K3	ESPIGA		

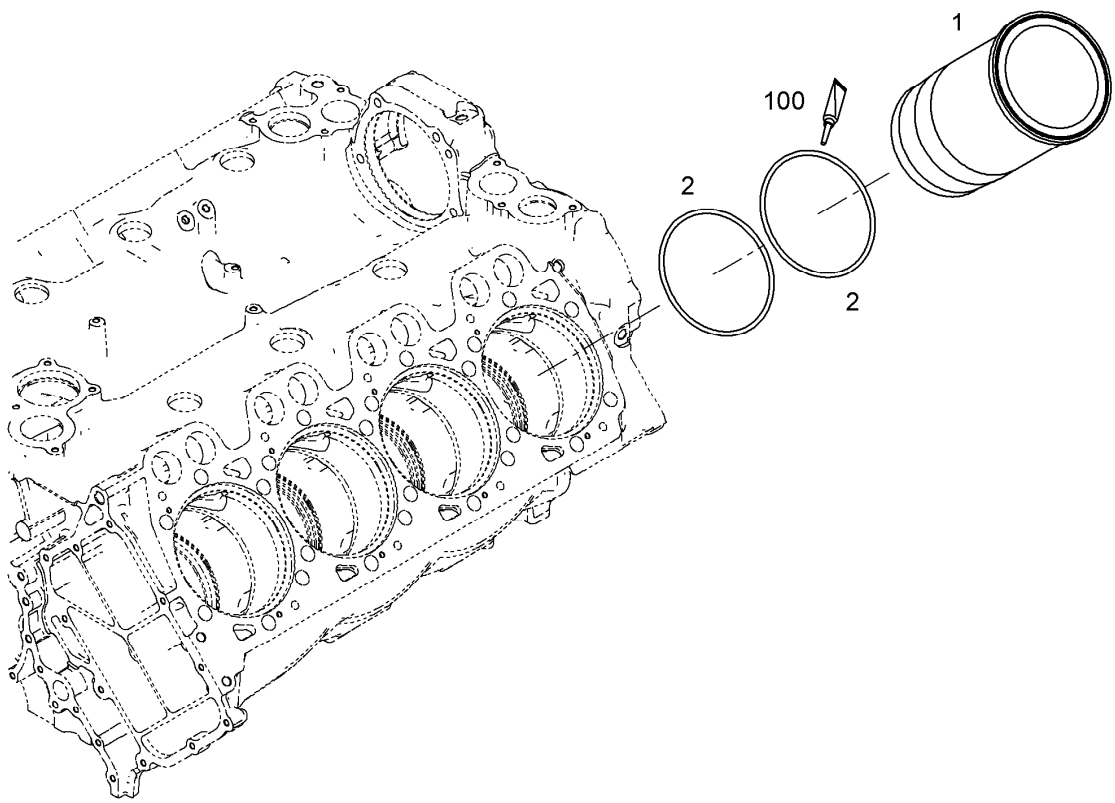

Pos.	Item	Quantity	Description	Descripción	Serie	K
1	9078050	1	CYLINDER BUSH D9500 - D=128	CAMISA CILINDRO		
2	10036521	2	O-RING 150,0X4,0	JUNTA TORICA		1
100	10285708	1	GREASE NBU 30/1kg	GRASA		

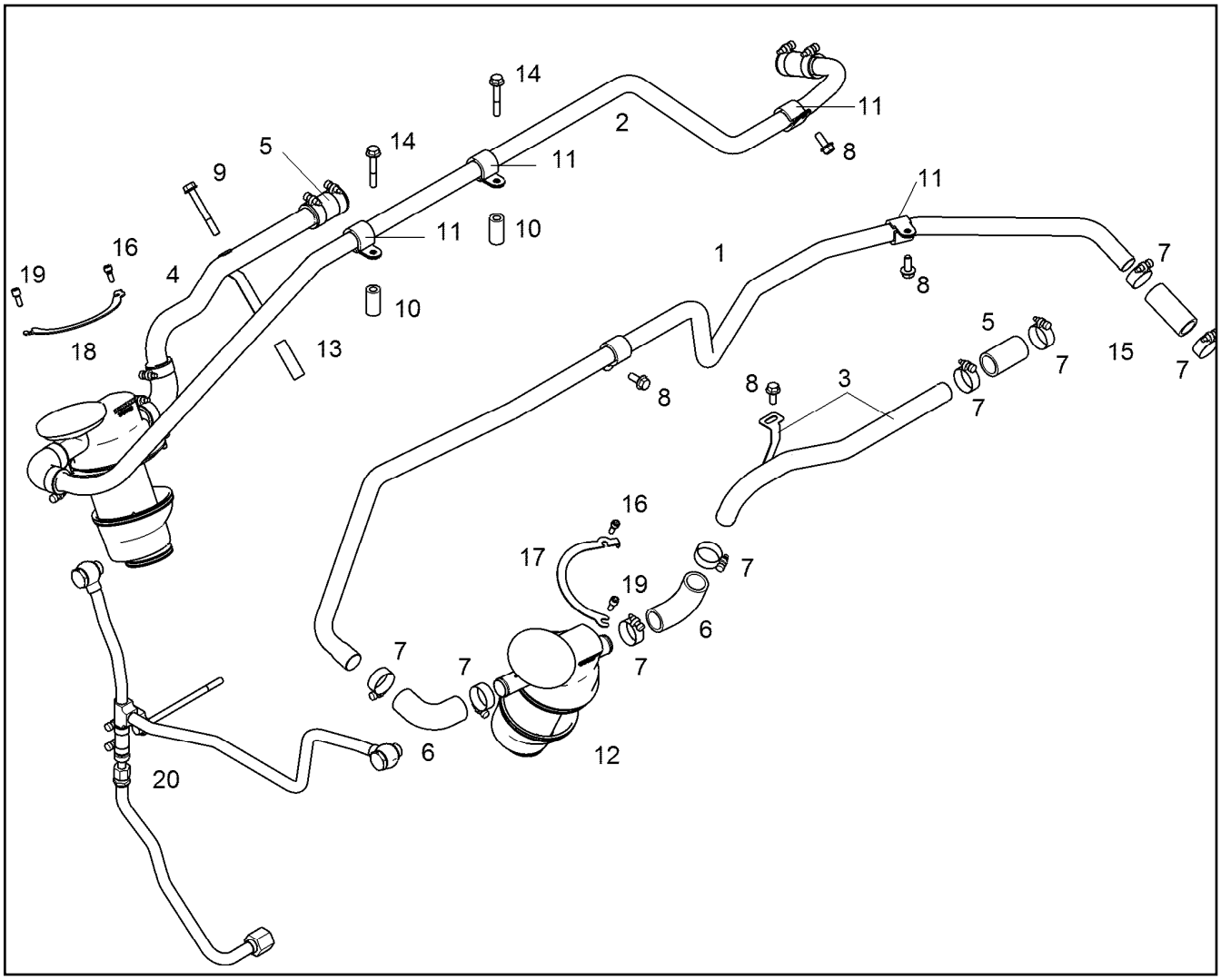

Pos.	Item	Quantity	Description	Descripción	Serie	K
1	10125038	1	PIPELINE	TUBERIA		
2	10125039	1	PIPELINE	TUBERIA		
3	10125170	1	PIPELINE ASSEMBLY LEFT SIDE	MONT.TUBERÍA IZDA.		
4	10125172	1	PIPELINE ASSEMBLY RIGHT SIDE	MONT.TUBERÍA DCHA.		
5	9271340	2	RUBBER CONNECTION	MANGUITO DE GOMA		
6	10123918	4	RUBBER CONNECTION	MANGUITO DE GOMA		
7	4900778	16	HOSE CLAMP DIN 3017 A 20 - 32 X 13 W2-2	ABRAZADERA MANGUERA		
8	10016906	3	HEX BOLT EN 1665 M8x20 8.8 A3C	TORNILLO DE CABEZA HEXAGO		
9	10100304	1	HEX HEAD SCREW EN 1665 M 8 X 65 8.8 A3	TORNILLO HEXAGONAL		
10	9275161	2	SPACER PIECE	PIEZA DISTANCIADOR		
11	7381630	5	CLAMP DIN 3016-1 D1 22X20 W1-2-MVQ	ABRAZADERA		
12	10125182	2	OIL SEPARATOR OEL ⇨ ❑ 580	SEPARADOR ACEITE		1
13	9078946	1	DISTANCE SLEEVE 9.0X15,0X50	CASQUILLO DISTANCIADOR		
14	10005073	2	HEX HEAD SCREW EN 1665 M 8 X 50 8.8 A3	TORNILLO HEXAGONAL		
15	9273161	2	RUBBER CONNECTION	MANGUITO DE GOMA		
16	10127499	2	SCREW ST RM>800N/MM2	TORNILLO		
17	10127458	1	HOLDER	FIJADOR		
18	10127459	1	HOLDER	FIJADOR		
19	10127691	2	SCREW ST RM>800N/MM2	TORNILLO		
20	10123759	1	OIL LINE PRE-ASSEMBLY ⇨ ❑ 579	TUBERIA DE ACEITE PREMONT		

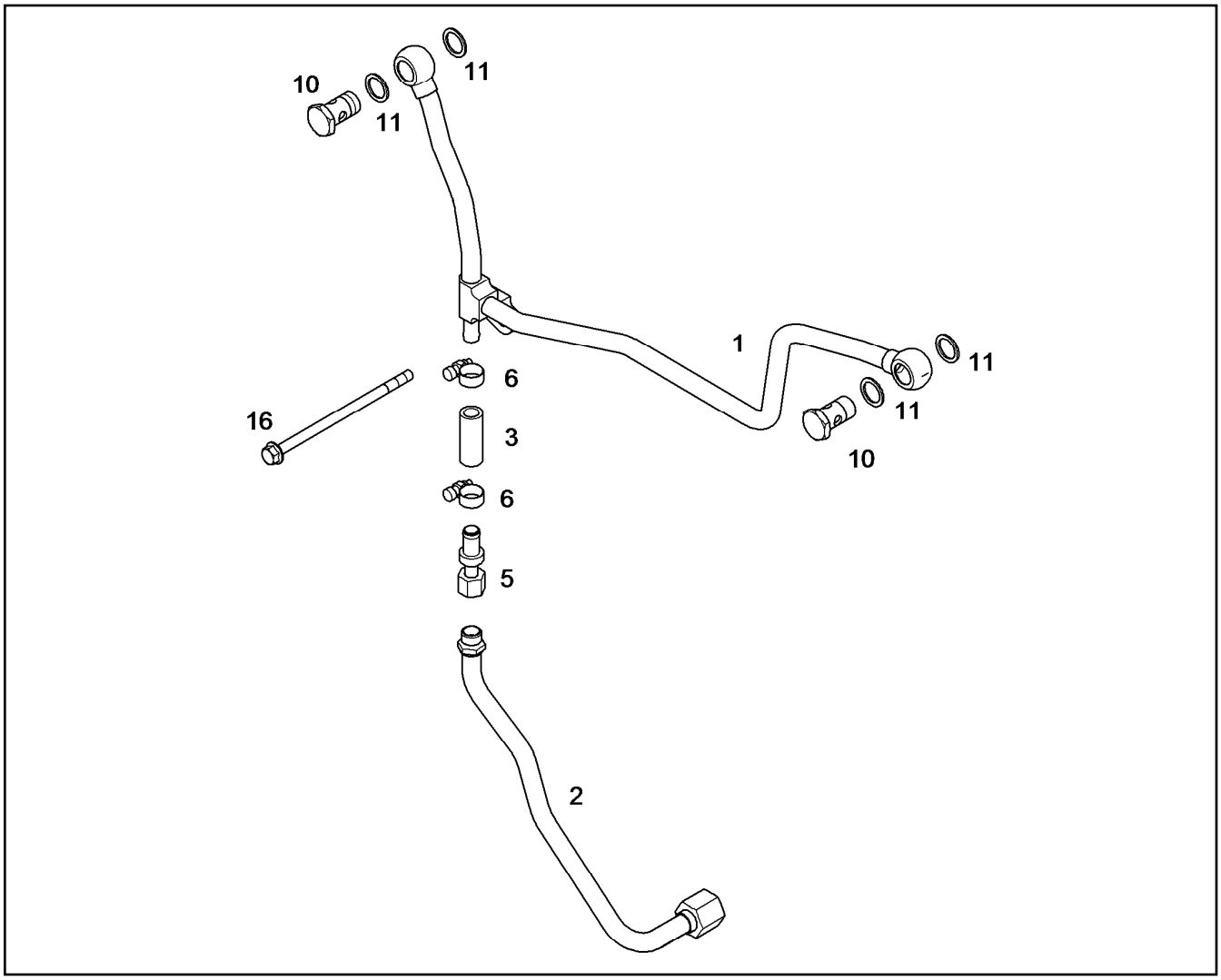

Pos.	Item	Quantity	Description	Descripción	Serie	K
1	10123760	1	HYDT.TUBE	TUBERÍA DE RETORNO DE ACE		
2	10123764	1	HYDT.TUBE 15X1,5	TUBERÍA DE RETORNO DE ACE		
3	10132412	1	RUBBER CONNECTION	MANGUITO DE GOMA		
5	10119971	1	NON-RETURN VALVE	VALVULA DE RETENCION		
6	4901138	2	HOSE CLAMP DIN 3017 A 16 - 27 X 9 W2-2	ABRAZADERA MANGUERA		
10	4981226	2	HOLLOW SCREW 15	TORNILLO HUECO		
11	4000935	4	SEALING RING DIN 7603 A 18 X 24 CU	JUNTA ANULAR		1
16	10037106	1	HEX BOLT DIN 6921 M8X150 10.9 A2C	TORNILLO DE CABEZA HEXAGO		

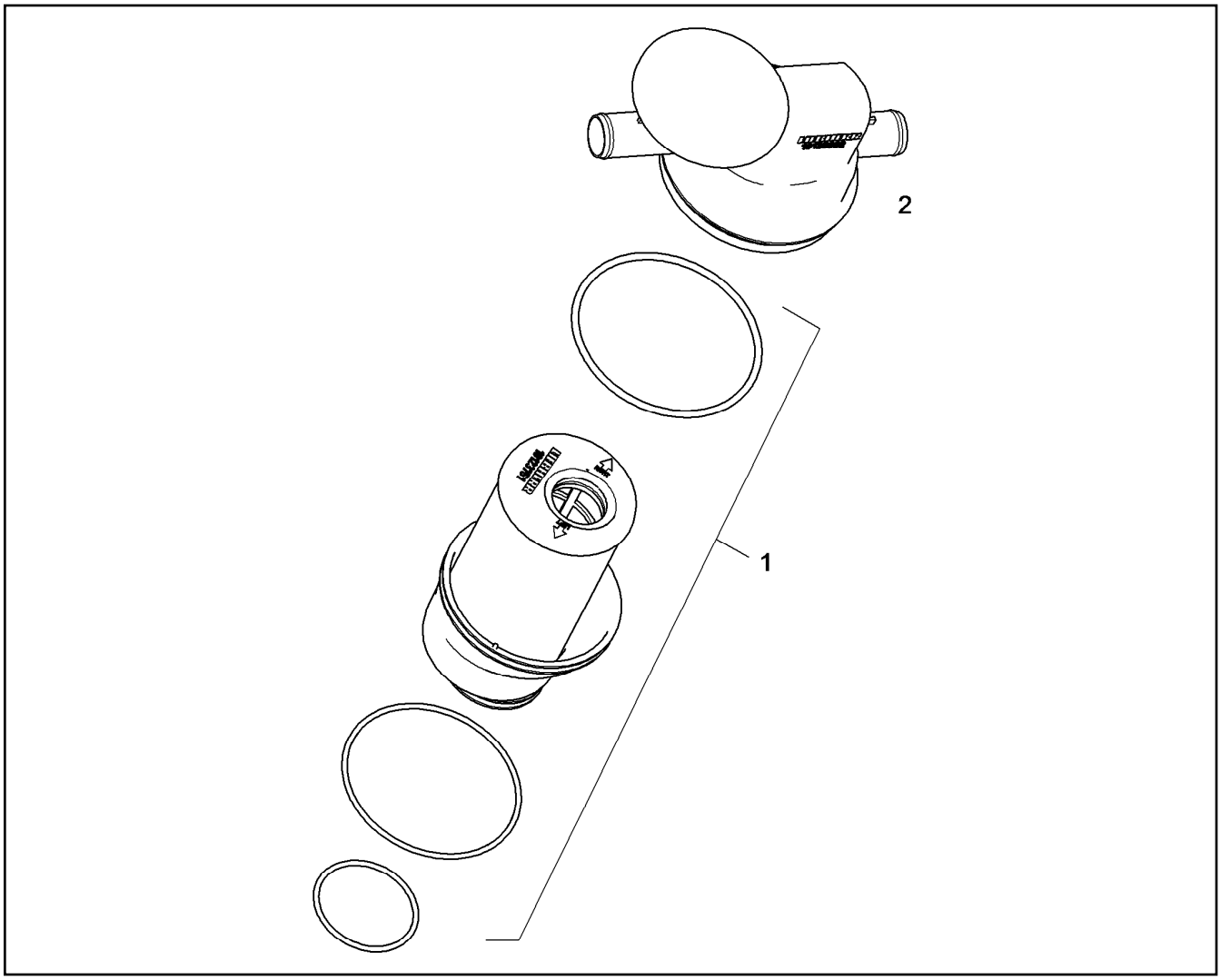

Pos.	Item	Quantity	Description	Descripción	Serie	K
1	10123751	2	FILTER INSERT 4µm	CARTUCHO DE FILTRO		1
2	10125692	2	REGULATING VALVE	VALVULA DE REGULACION		

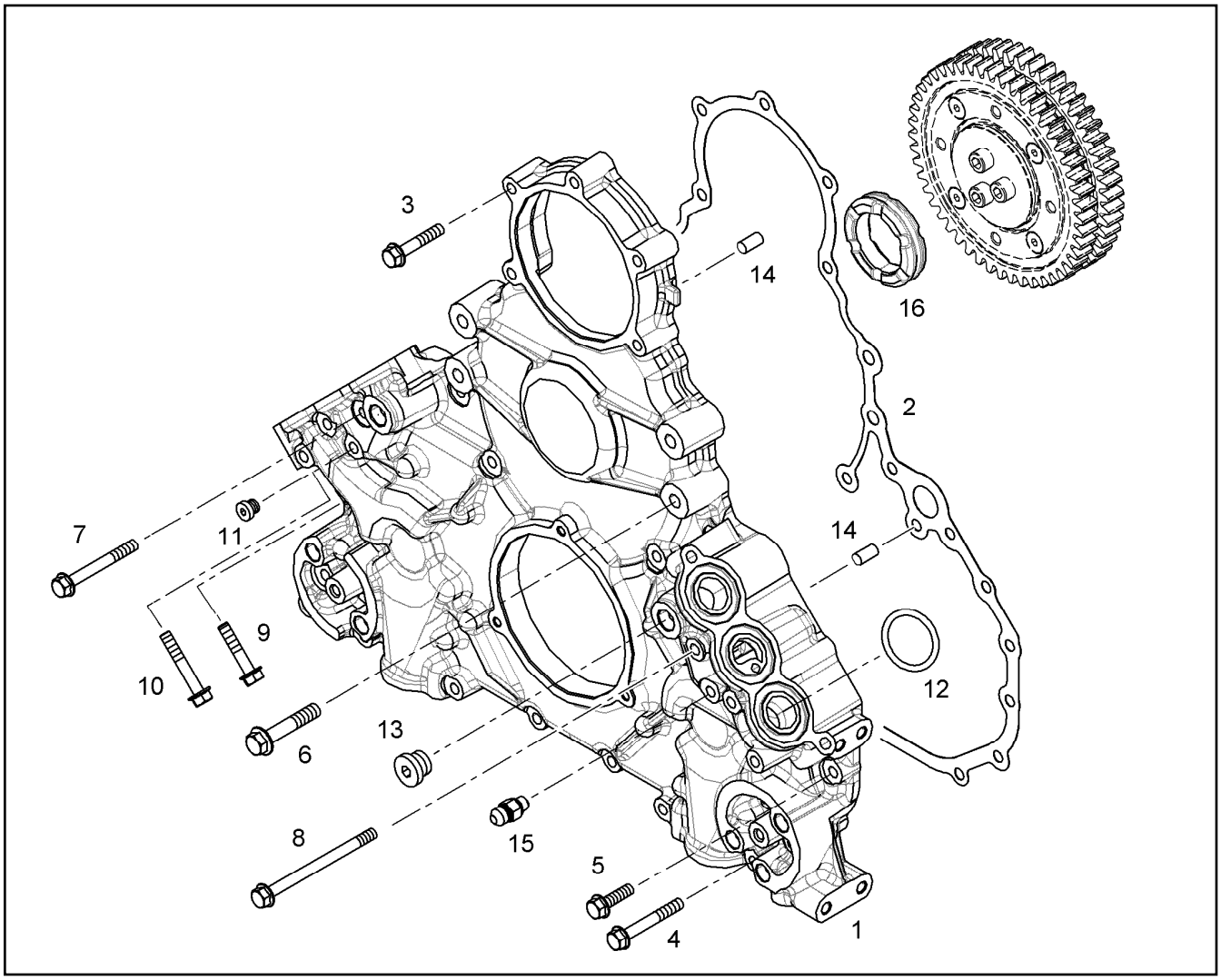

Pos.	Item	Quantity	Description	Descripción	Serie	K
1	10119410	1	POWER UNIT SUPPORT ATTACHMENT	MONTAJE SOPORTE GRUPO		
2	9080032	1	SEAL	JUNTA		
3	10037071	9	HEX BOLT EN 1665 M8x45 10.9 A3C	TORNILLO DE CABEZA HEXAGO		
4	10035594	6	HEX BOLT EN 1665 M8X60 10.9 A3C	TORNILLO DE CABEZA HEXAGO		
5	10035593	4	HEX BOLT EN 1665 M8X30 10.9 A3C	TORNILLO DE CABEZA HEXAGO		
6	10037108	4	HEX BOLT EN 1665 M10x55 10.9 A3C	TORNILLO DE CABEZA HEXAGO		
7	10037072	3	HEX BOLT EN 1665 M8x70 10.9 A3C	TORNILLO DE CABEZA HEXAGO		
8	10037073	3	HEX BOLT DIN 6921 M8X110 10.9 A2C	TORNILLO DE CABEZA HEXAGO		
9	10035575	2	HEX BOLT EN 1665 M8x40 10.9 A3C	TORNILLO DE CABEZA HEXAGO		
10	10037107	2	HEX HEAD SCREW WITH FLANGE EN 1665	TORNILLO HEXAGONAL CON BR		
11	7381638	1	SCREW PLUG VSTI	TORNILLO DE CIERRE		
12	10294497	6	O-RING DIN 3771 38,00X4,50	JUNTA TORICA		1
13	7380688	1	SCREW PLUG VSTI	TORNILLO DE CIERRE		
14	4980853	2	PARALLEL PIN ISO 8734 A 8 X 22	PASADOR CILINDRICO		
15	10295884	1	SCREW FITTING GE 8	ATORNILLAMIENTO		
16	10119412	1	DAMPING ELEMENT	ELEMENTO DE AMORTIG.		

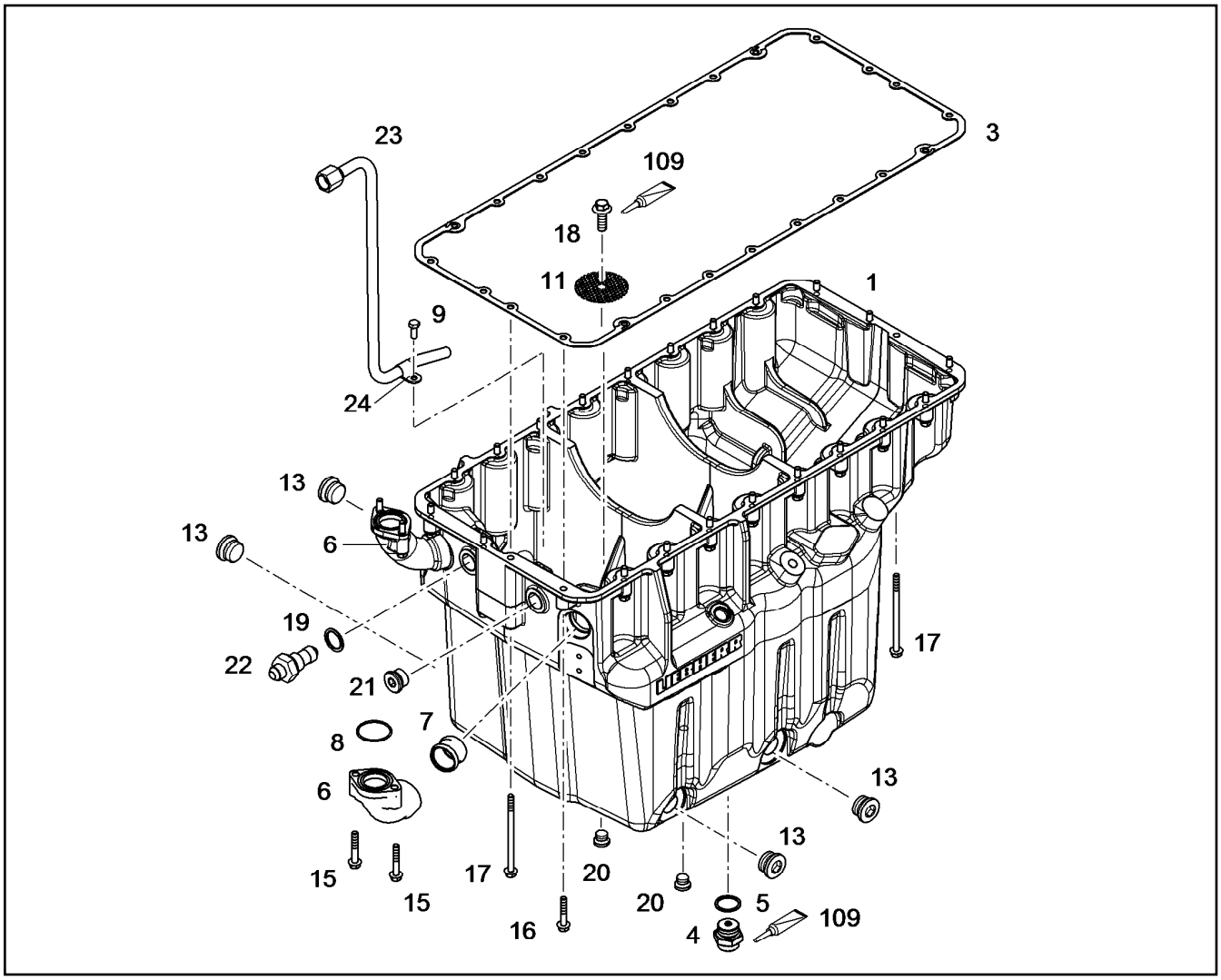

Pos.	Item	Quantity	Description	Descripción	Serie	K
1	10126368	1	OIL SUMP	BANDEJA ACEITE		1
3	10117862	1	SEAL	JUNTA		
4	5004624	1	OIL DRAIN PLUG ⇨ ❑ 584	TORNILLO PURGA ACEITE		
5	7101021	1	SEALING RING DIN 7603 A 30 X 36 CU	JUNTA ANULAR		1
6	9078438	2	ELBOW	CODO		
7	10354600	2	PLUG-IN PIPE DMR42X32	TUBO ENCHUFABLE		
8	10036913	2	O-RING 44,60X2,40	JUNTA TORICA		1
9	4900089	1	HEX BOLT ISO 4017 M8x20 8.8 A2C	TORNILLO DE CABEZA HEXAGO		
11	9080377	2	PERFORATED PLATE	CHAPA PERFORADA		
13	7382204	4	SCREW PLUG VSTI	TORNILLO DE CIERRE		
15	10005073	4	HEX HEAD SCREW EN 1665 M 8 X 50 8.8 A3	TORNILLO HEXAGONAL		
16	10037071	20	HEX BOLT EN 1665 M8x45 10.9 A3C	TORNILLO DE CABEZA HEXAGO		
17	10037309	4	HEX BOLT EN 1665 M8x130 10.9 A3C	TORNILLO DE CABEZA HEXAGO		
18	10493455	2	HEX BOLT DIN 6921 M12X20 8.8	TORNILLO DE CABEZA HEXAGO		
19	10011870	1	SEALING RING 26,7X34,93X2	JUNTA ANULAR		1
20	7382203	3	SCREW PLUG VSTI	TORNILLO DE CIERRE		
21	7381457	1	SCREW PLUG VSTI	TORNILLO DE CIERRE		
22	10126587	1	LUG	ESPIGA		
23	10126762	1	HYDT.TUBE 15X1,5	TUBERÍA DE RETORNO DE ACE		
24	10491040	1	CLAMP DIN 3016-1 A1 15X20 W1-2	ABRAZADERA		
109	811205708	1	SCREW LOCKING	SEGURO PARA TORNILLO		

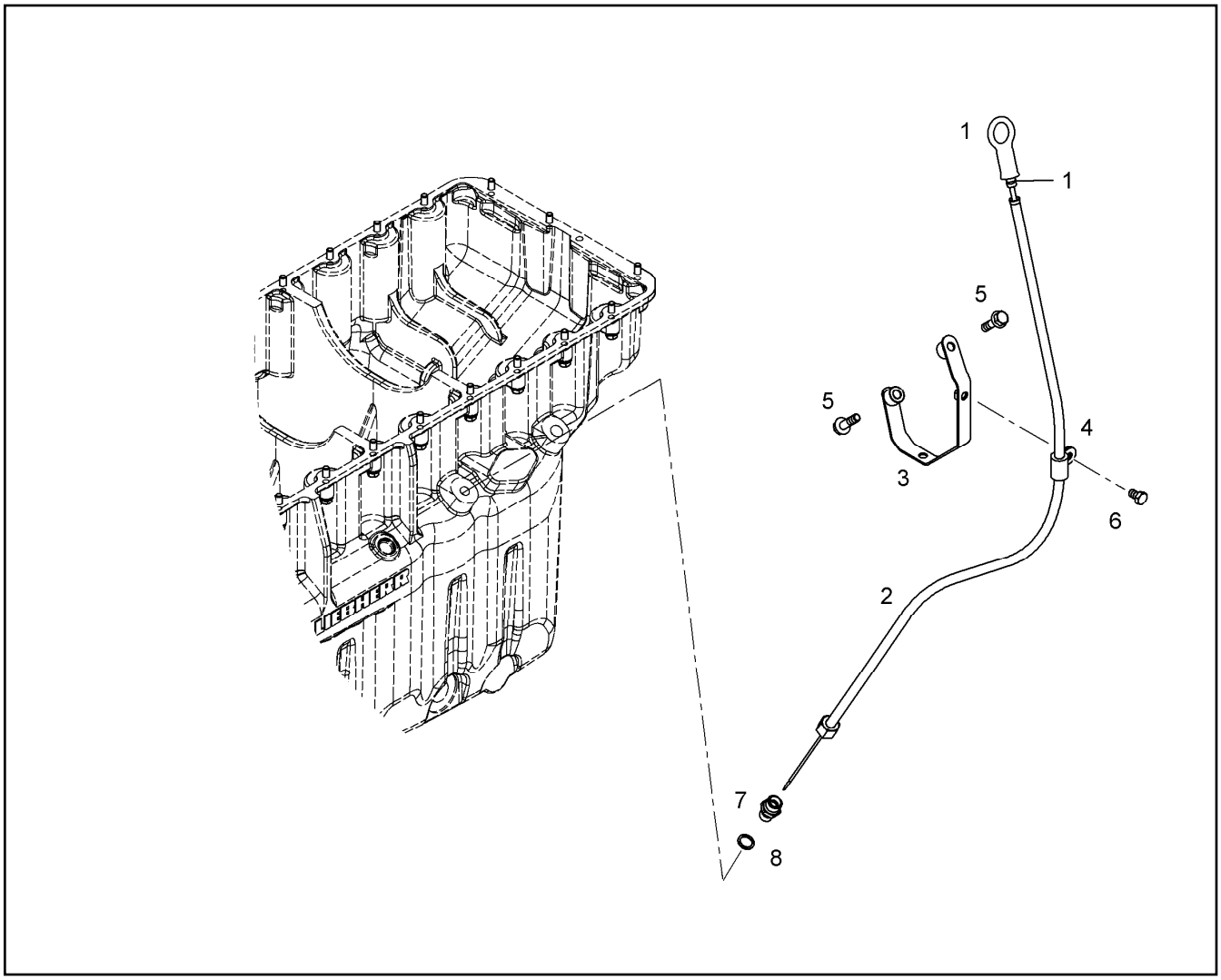

Pos.	Item	Quantity	Description	Descripción	Serie	K
1	10116946	1	OIL DIPSTICK	VARILLA NIVEL ACEITE C.ANILL		
1	10215824	1	O-RING	JUNTA TORICA		1
2	10116947	1	GUIDING PIPE	TUBO GUIA		
3	9080695	1	SUPPORT SYSTEM	APUNTALADO		
4	7381628	1	CLAMP DIN 3016 D1- 10 X 20 W1-2-MVQ	ABRAZADERA		
5	10035593	2	HEX BOLT EN 1665 M8X30 10.9 A3C	TORNILLO DE CABEZA HEXAGO		
6	4065136	1	HEX BOLT ISO 4017 M8X12 8.8 A2C	TORNILLO DE CABEZA HEXAGO		
7	9131612	1	LUG	ESPIGA		
8	7101008	1	SEALING RING DIN 7603 A 14 X 18 CU	JUNTA ANULAR		1

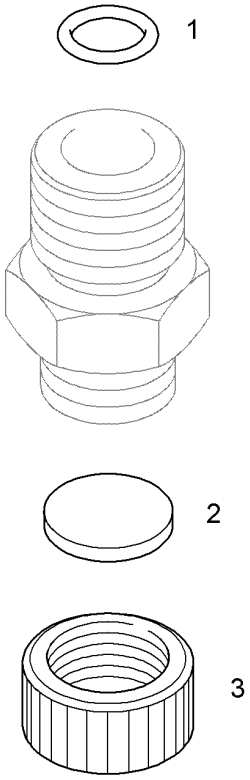

Pos.	Item	Quantity	Description	Descripción	Serie	K
1	7264625	1	O-RING 15x2	JUNTA TORICA		1
2	7011131	1	SEAL	JUNTA		1
3	7013456	1	PROTECTING CAP	CAPUCHON DE PROTECCION		1

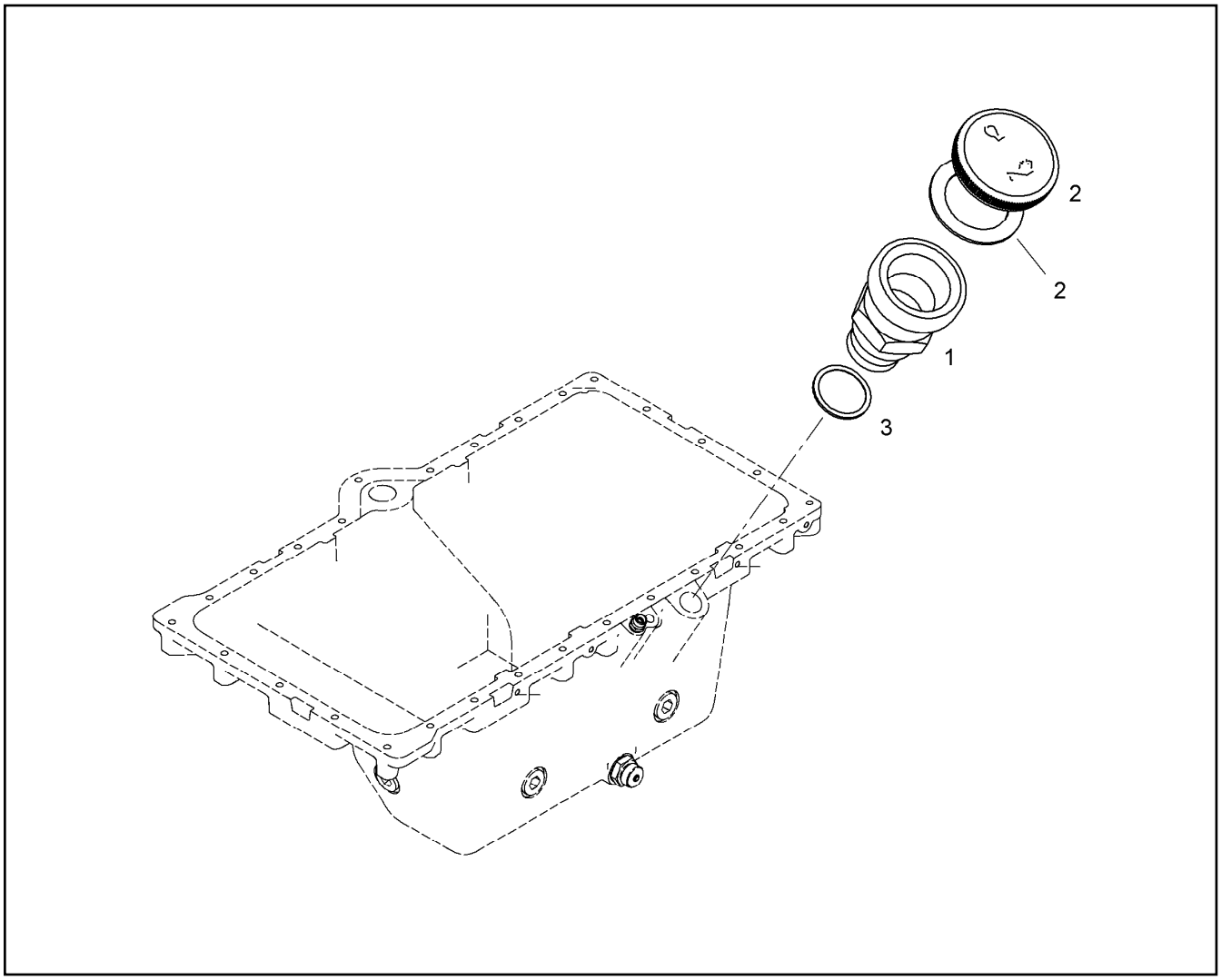

Pos.	Item	Quantity	Description	Descripción	Serie	K
1	10118838	1	FILLER NECK CPL.	BOCA TUBO CARGA COMPL.		
2	9144757	1	END COVER	TAPA DE CIERRE		1
2	9144757	1	END COVER	TAPA DE CIERRE		1
3	10335629	1	PROFILE PACKING 33	JUNTA ANULAR DE PERFIL		1

OHNE BILD

WITHOUT ILLUSTRATION

SANS PLANCHE

Pos.	Item	Quantity	Description	Descripción	Serie	K
1	10122630	1	OIL FILLER INLET	LLENADO DE ACEITE		
2	10118839	1	OIL FILLER INLET ⇨ ❑ 585	LLENADO DE ACEITE		
109	8655016	1	SCREW LOCKING	SEGURO PARA TORNILLO		

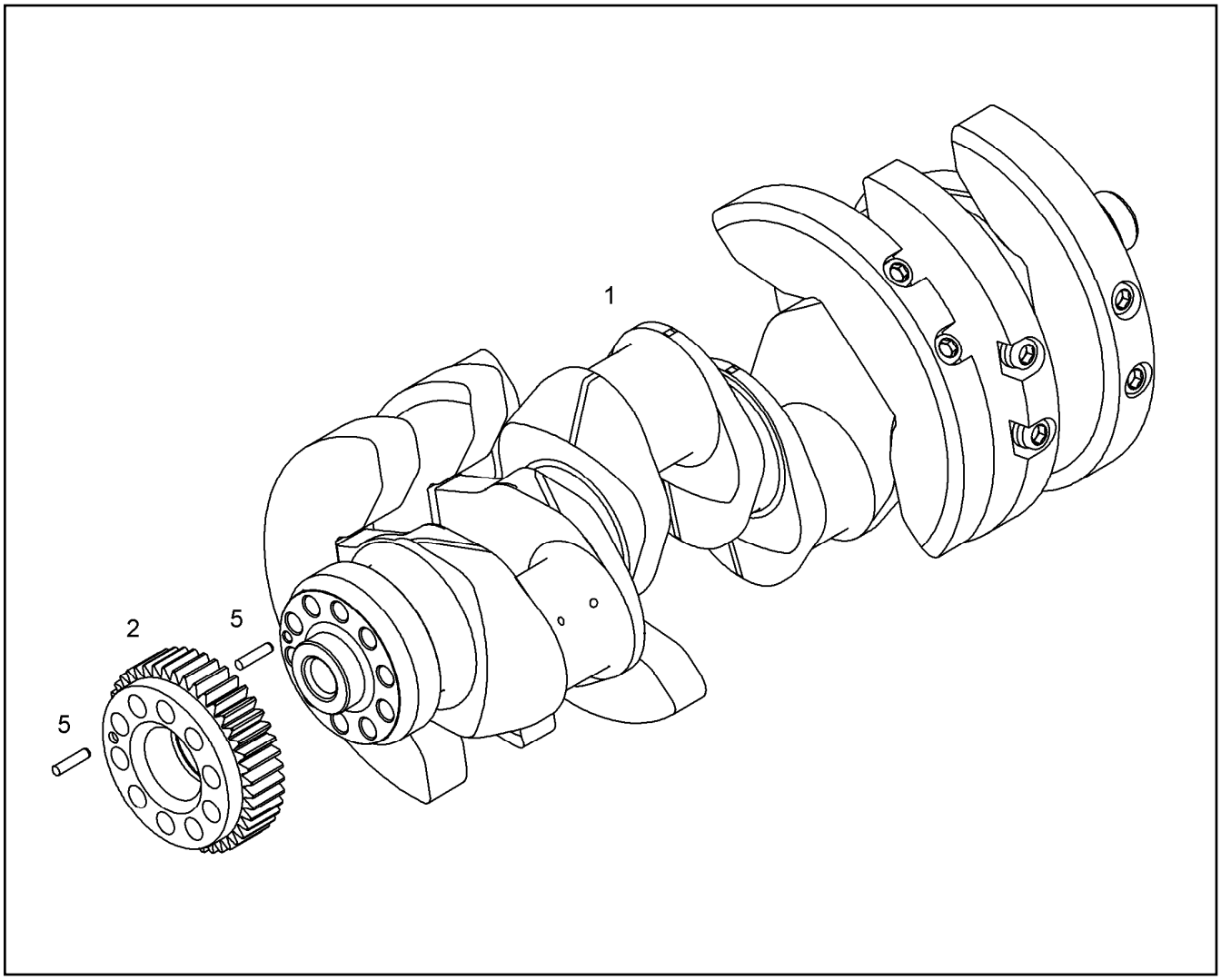

Pos.	Item	Quantity	Description	Descripción	Serie	K
1	10128914	1	CRANKSHAFT PRE-ASS.	EJE DE CIGÜEÑAL PREM.		1
2	10119847	1	GEAR WHEEL	ENGRANAJE PREMONTADO		
5	10011783	2	-SPIRAL DOWEL PIN 8	-PASADOR ESPIRAL DE SUJEC		

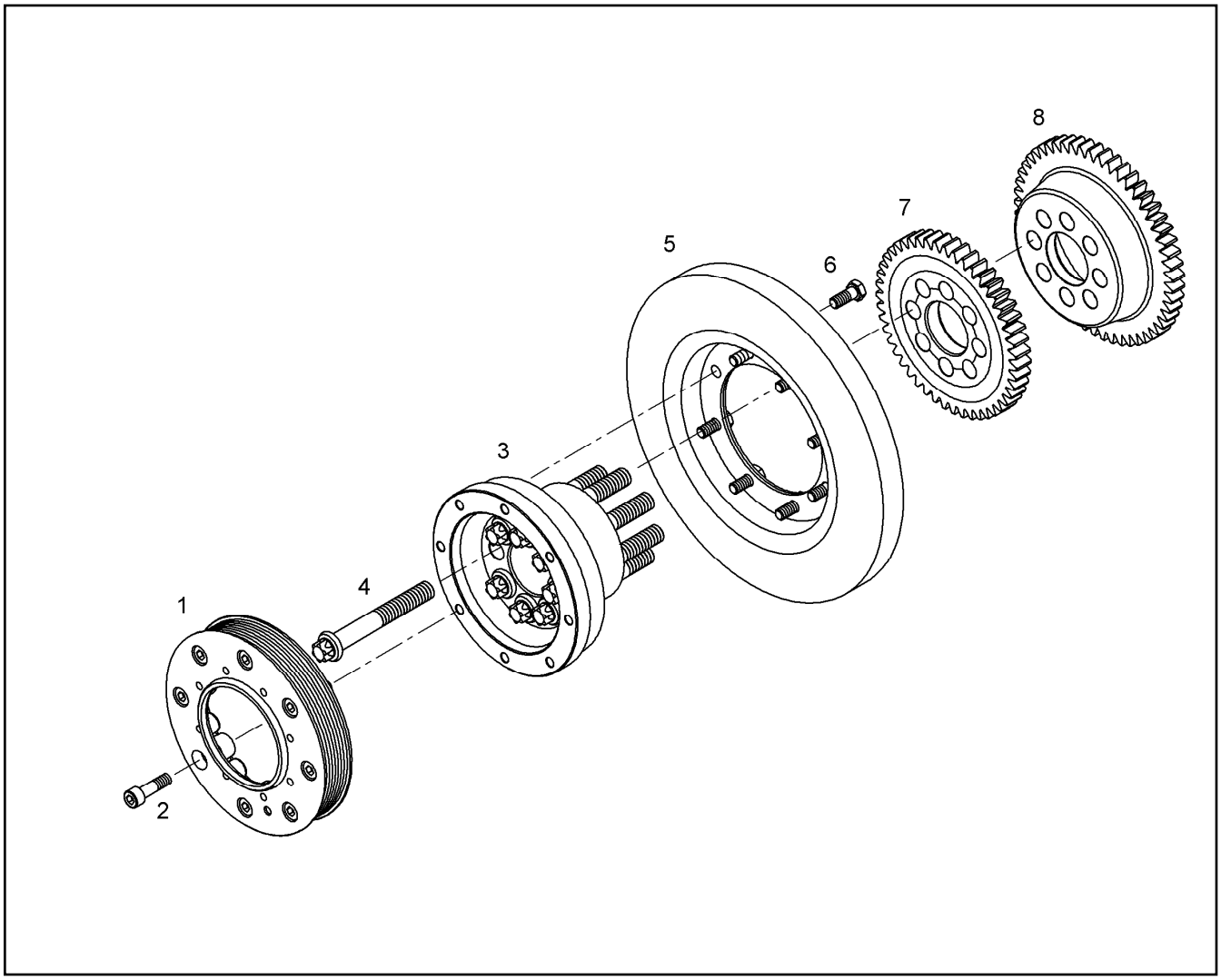

Pos.	Item	Quantity	Description	Descripción	Serie	K
1	9077281	1	BELT PULLEY DA=186.8	POLEA DE TRANSMISION		
2	4900855	8	CYLINDER SCREW ISO 4762 M10X35 10.9	TORNILLO CILINDRICO		
3	9077280	1	HUB	MOYU		
4	9077282	8	HEXALOBULAR HEAD SCREW M16X1,5X117	TORNILLO ALLEN		
5	9077223	1	VISCOSE DAMPER	VAPORIZADOR VISCOSO		
6	4066093	8	HEX BOLT ISO 4017 M10X25 10.9 A3C	TORNILLO DE CABEZA HEXAGO		
7	9077283	1	GEAR WHEEL Z=47 M=3,5	RUEDA DENTADA		
8	9077285	1	GEAR WHEEL Z=53 M=3.5	RUEDA DENTADA		

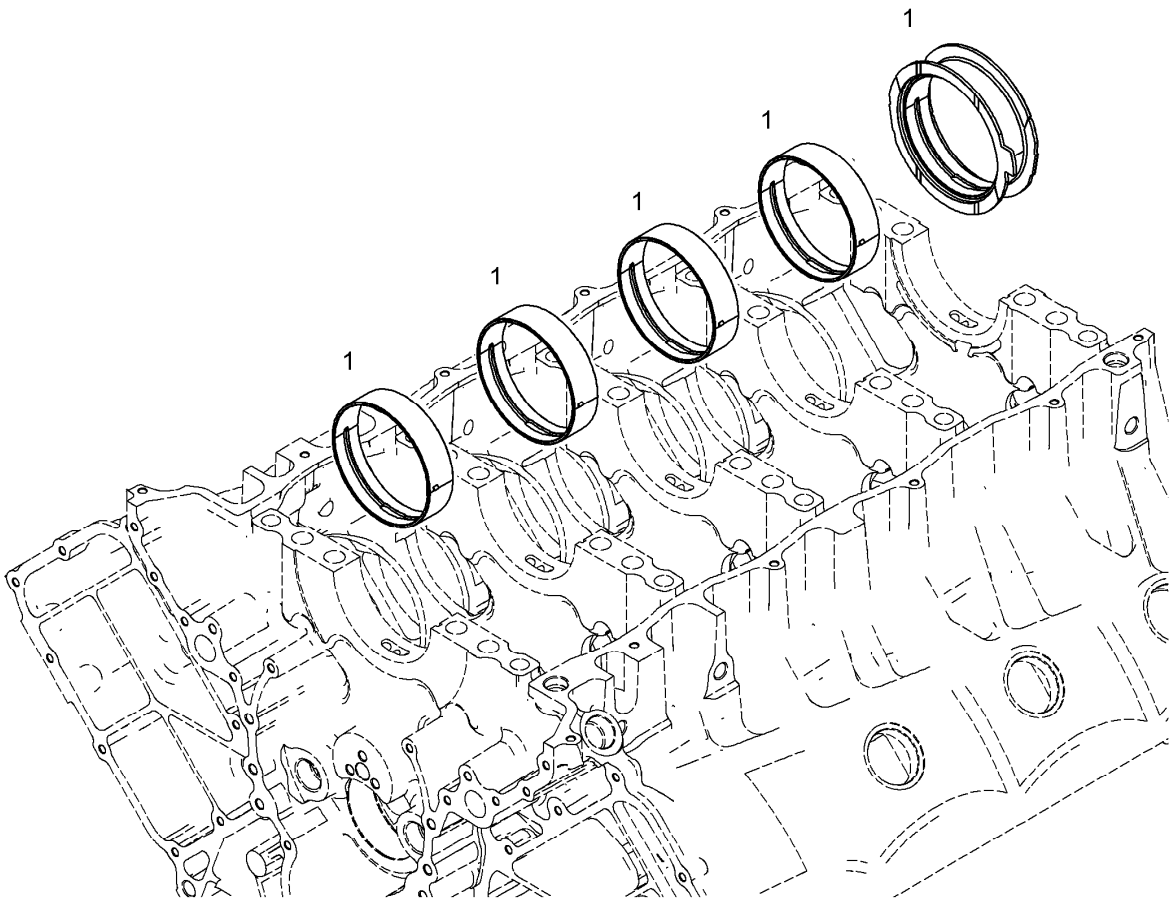

Pos.	Item	Quantity	Description	Descripción	Serie	K
1	10128593	1	RS CRANKSHAFT BEARING KPL.	JR DISP.COJ.CIGÜEÑAL COMPL.		

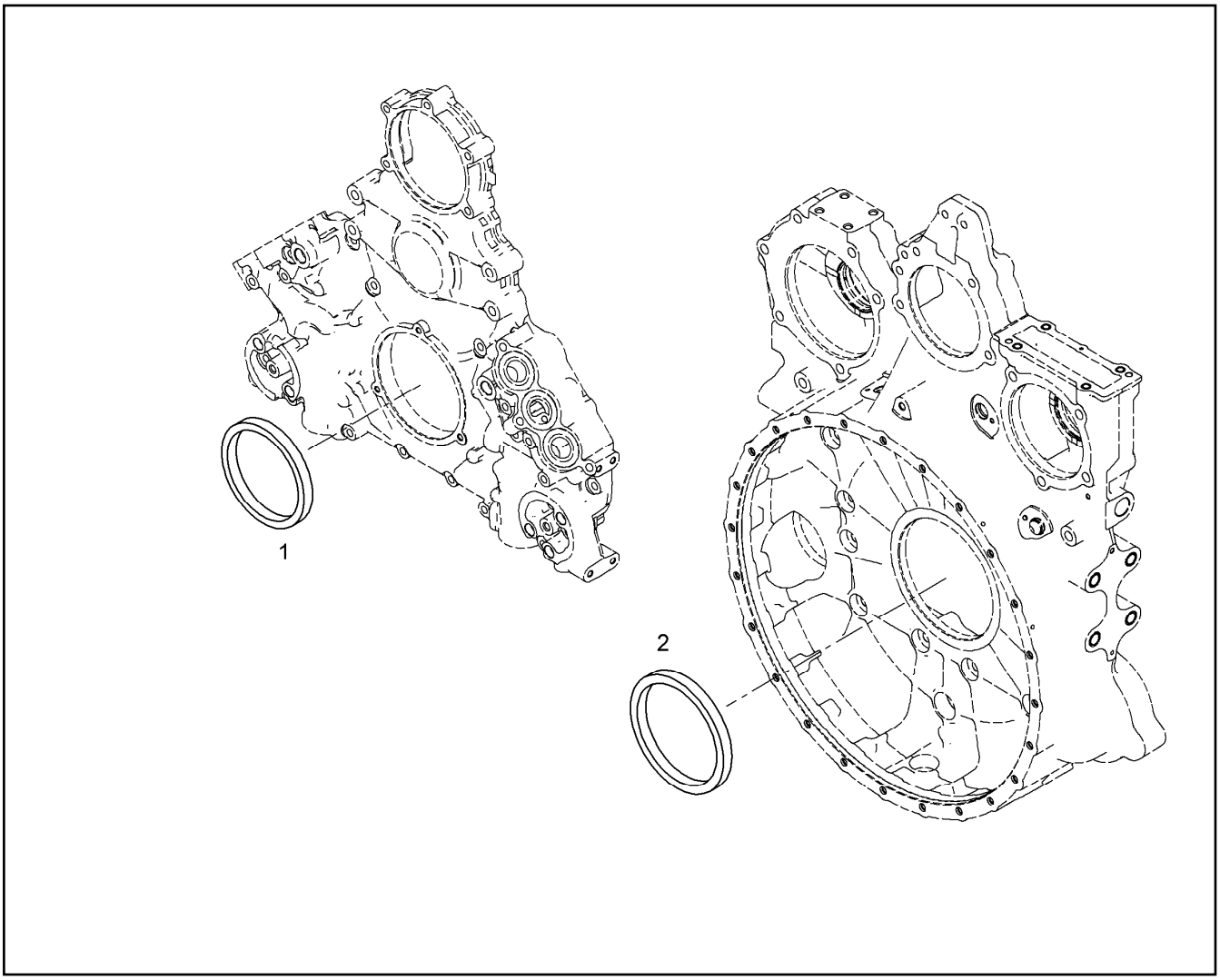

Pos.	Item	Quantity	Description	Descripción	Serie	K
1	10121952	1	RK CRANKSHAFT SEAL	J. REP. JUNTA DE CIGÜEÑAL		
2	10121954	1	RK CRANKSHAFT SEAL	J. REP. JUNTA DE CIGÜEÑAL		

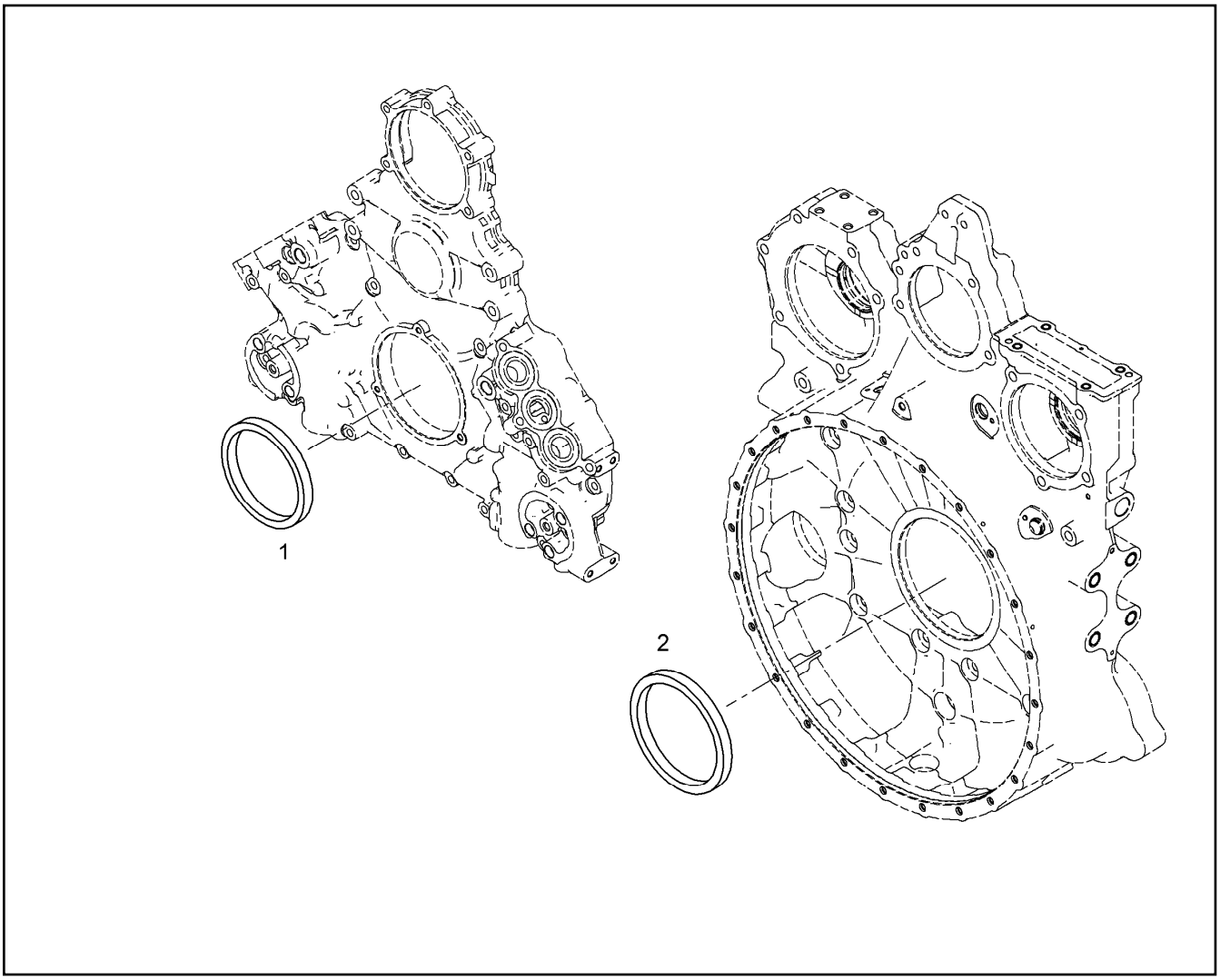

Pos.	Item	Quantity	Description	Descripción	Serie	K
1	10006550	1	ROTARY SHAFT LIP SEAL 110X130X12,0	RETEN RADIAL		1
2	10030062	1	ROTARY SHAFT LIP SEAL 139X164X12	RETEN RADIAL		

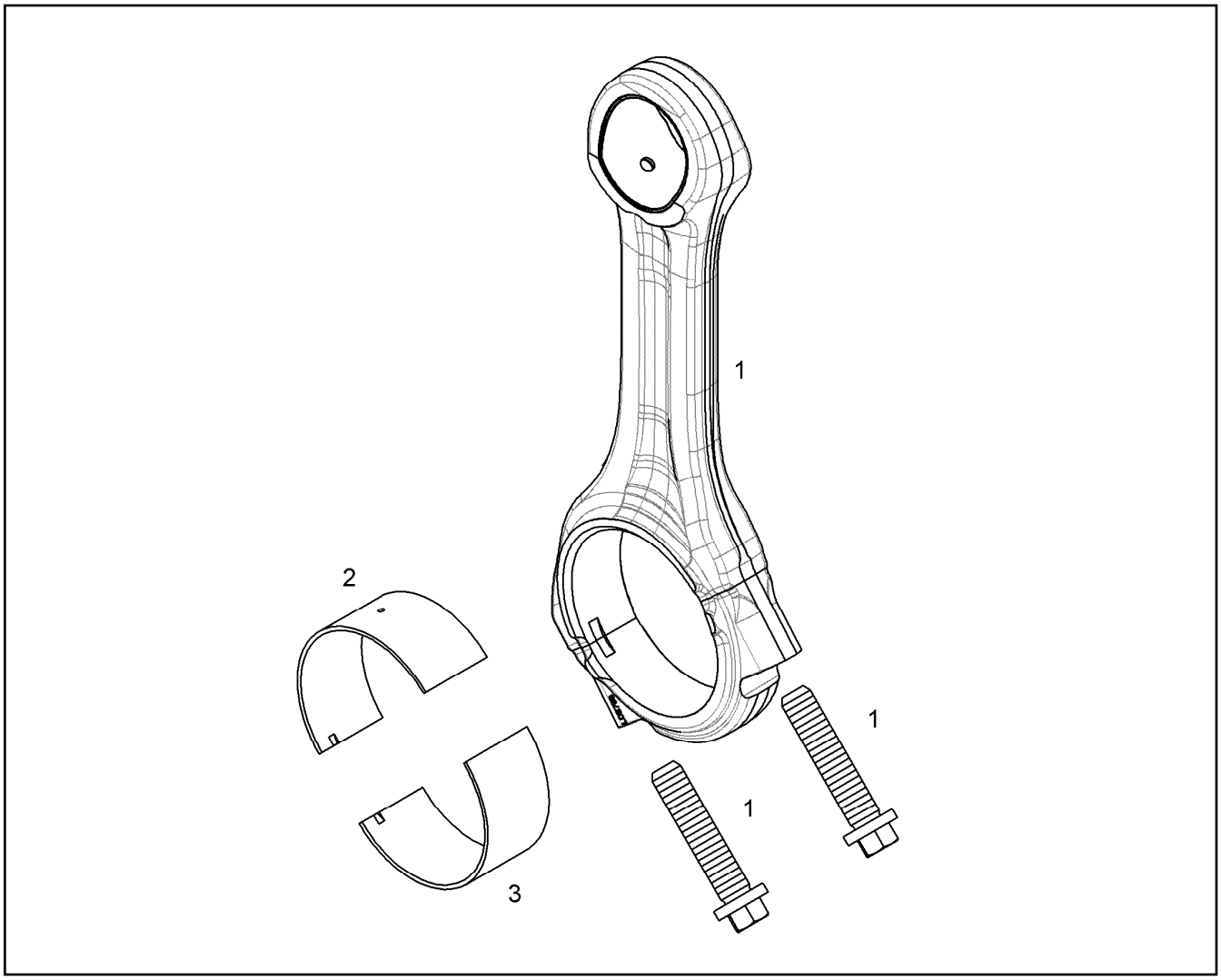

Pos.	Item	Quantity	Description	Descripción	Serie	K
1	10116877	1	MAIN ROD	BIELA		1
1	9077199	2	BEARING CAP BOLT NACH DIN 34800	TORNILLO DE BIELA		
2	10116879	1	CONNECTING ROD BEARING	COJINETE DE BIELA		
3	10116880	1	CONNECTING ROD BEARING	COJINETE DE BIELA		

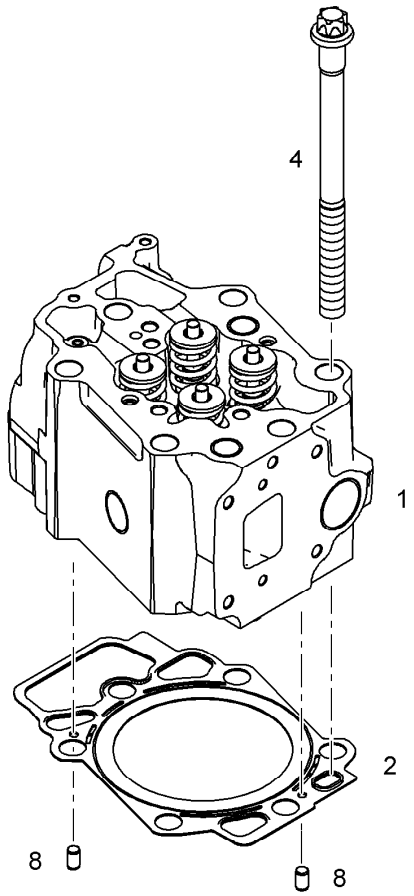

Pos.	Item	Quantity	Description	Descripción	Serie	K
1	10118051	1	CYLINDER HEAD PRE-ASS. D9508 ⇨ ❑ 594	CULATA PREMONT.	-99997	
1	10131939	1	CYLINDER HEAD PRE-ASS.	CULATA PREMONT.	99999-	1
2	10118055	1	CYLINDER HEAD GASKET	JUNTA DE CULATA		
4	9080476	6	CYLINDER SCREW M18X2X246	TORNILLO DE CULATA		
8	10470574	2	PARALLEL PIN 6h6	PASADOR CILINDRICO		

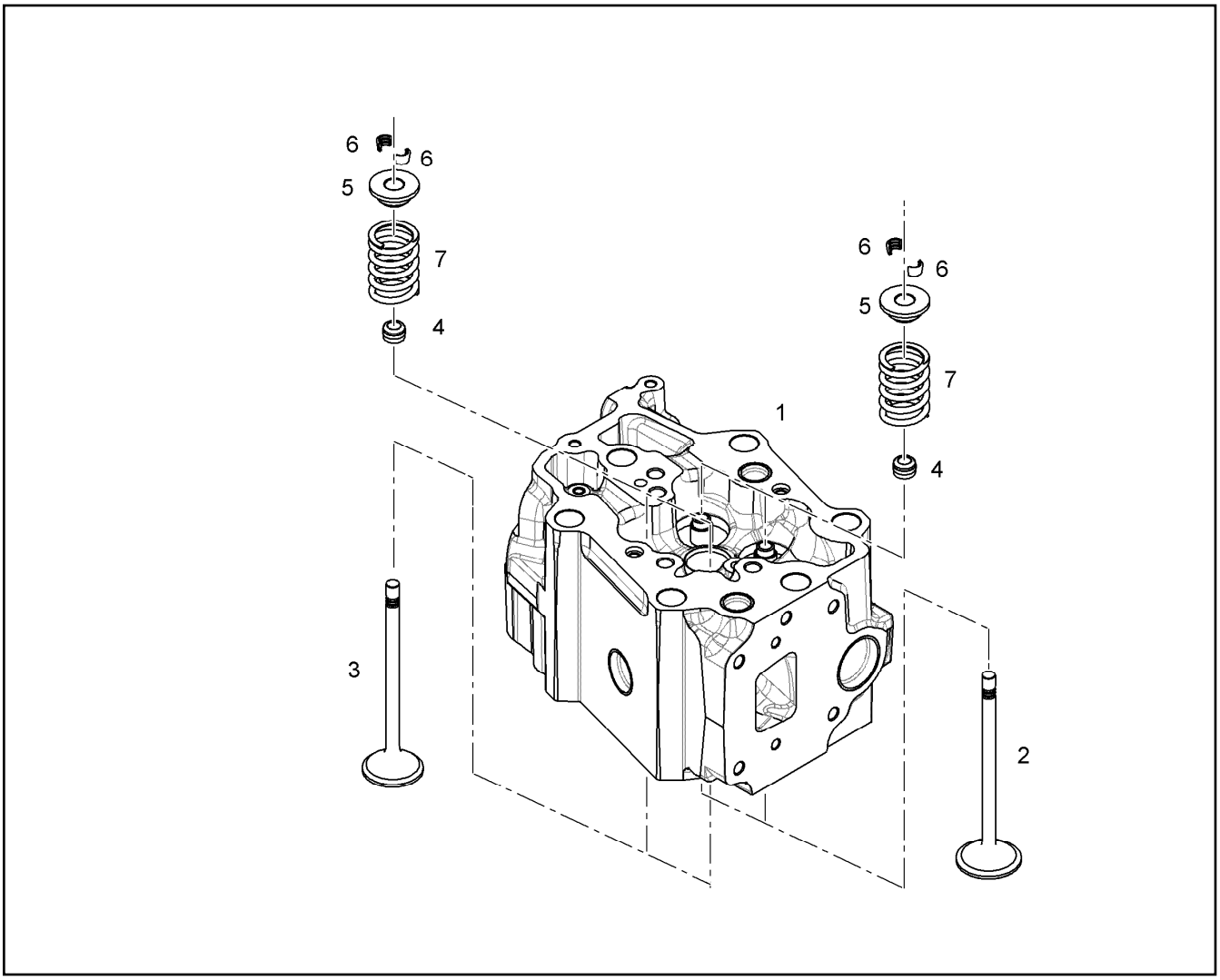

Pos.	Item	Quantity	Description	Descripción	Serie	K
1	10118052	1	CYLINDER HEAD D9508 ⇨ ❑ 600	CULATA		
2	9078513	2	INLET VALVE	VALVULA DE ADMISION		
3	9078514	2	OUTLET VALVE	VALVULA DE ESCAPE		
4	10012247	4	VALVE STEM SEAL	JUNTA DEL VASTAGO DE VALV		
5	9078515	4	SPRING SUPPORT	PLATILLO DE RESORTES		
6	10101649	8	VALVE COLLET MK9	CONO DE VALVULA		
7	10012210	4	VALVE SPRING	RESORTE DE VALVULA		

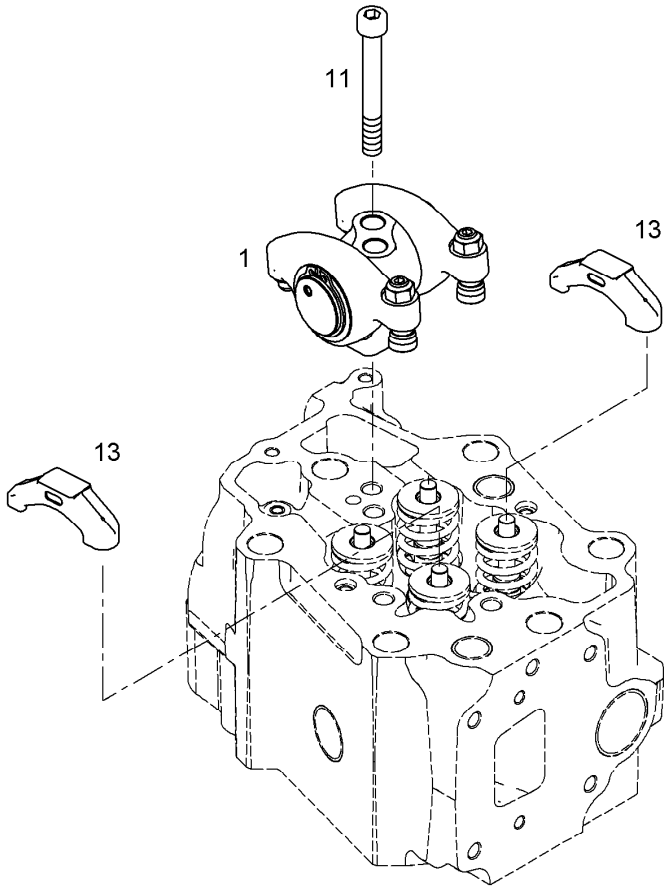

Pos.	Item	Quantity	Description	Descripción	Serie	K
1	10122503	1	ROCKER ARM BRACKET PRE-ASS.	CABALLETE PAL.BASC.PREMON		1
11	4043173	2	CYLINDER SCREW ISO 4762 M12X80 10.9	TORNILLO CILINDRICO		
13	10119695	2	VALVE BRIDGE	ARANDELA DE VALVULA		

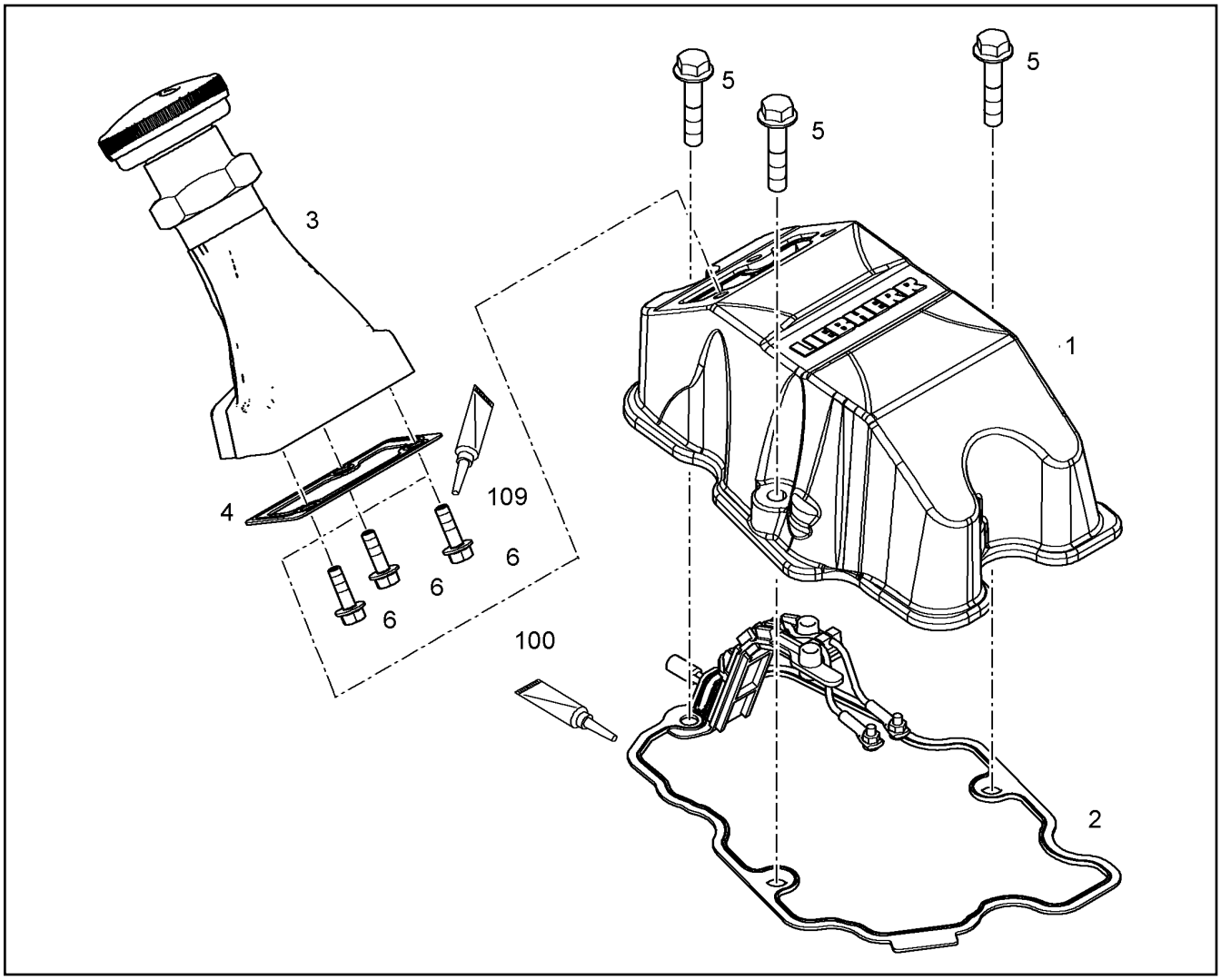

Pos.	Item	Quantity	Description	Descripción	Serie	K
1	10122220	1	CYLINDER HEAD COVER	TAPA DE CULATA		
2	9079885	1	SEAL	JUNTA		
3	10122632	1	OIL FILLER INLET ⇨ ❑ 586	LLENADO DE ACEITE		
4	10122635	1	SEAL	JUNTA		1
5	10440788	3	HEX BOLT DIN 6921 M8X40 8.8 A2C	TORNILLO DE CABEZA HEXAGO		
6	10018711	3	HEX BOLT EN 1665 M6x20 8.8 A2C	TORNILLO DE CABEZA HEXAGO		
100	040710450	1	LUBRICANT PASTE OPTIMOLY WHITE T	PASTA LUBRICANTE		
109	8655016	1	SCREW LOCKING	SEGURO PARA TORNILLO		

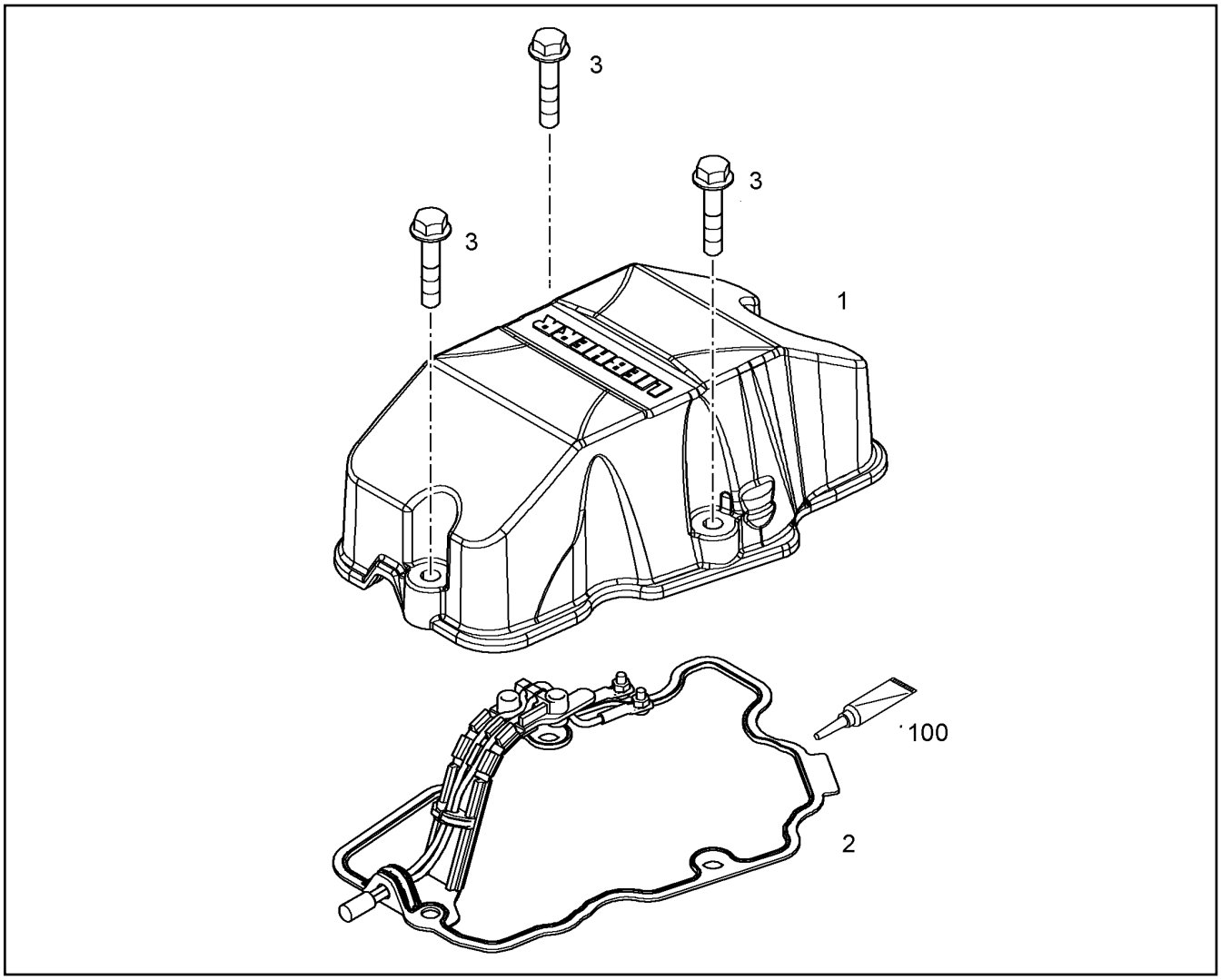

Pos.	Item	Quantity	Description	Descripción	Serie	K
1	10122266	7	CYLINDER HEAD COVER	TAPA DE CULATA		
2	9079885	7	SEAL	JUNTA		
3	10440788	21	HEX BOLT DIN 6921 M8X40 8.8 A2C	TORNILLO DE CABEZA HEXAGO		
100	040710450	1	LUBRICANT PASTE OPTIMOLY WHITE T	PASTA LUBRICANTE		

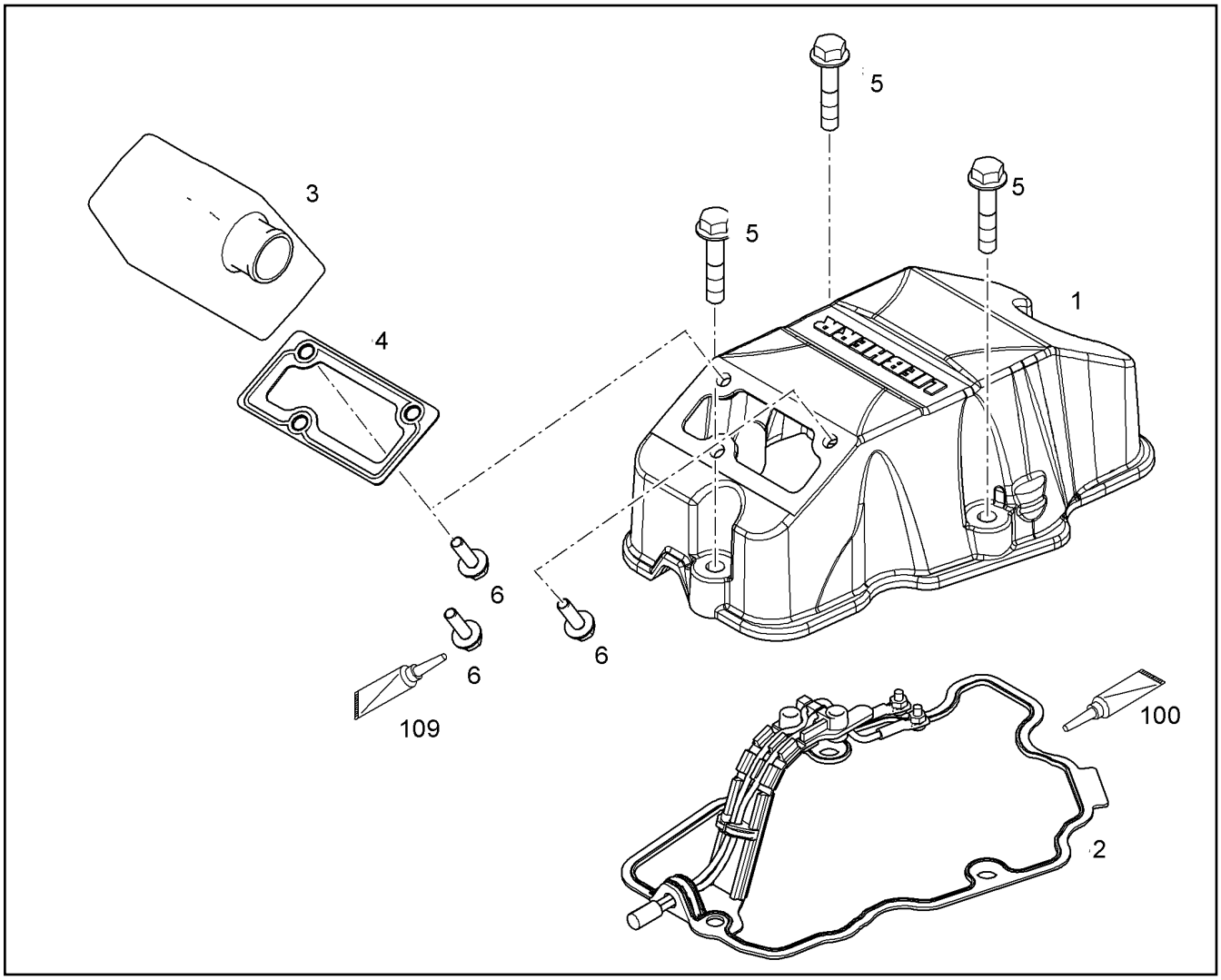

Pos.	Item	Quantity	Description	Descripción	Serie	K
1	10122220	2	CYLINDER HEAD COVER	TAPA DE CULATA		
2	9079885	2	SEAL	JUNTA		
3	10122637	2	CONNECTION PIECE	PIEZA DE EMPALME		
4	10122635	2	SEAL	JUNTA		1
5	10440788	6	HEX BOLT DIN 6921 M8X40 8.8 A2C	TORNILLO DE CABEZA HEXAGO		
6	10018711	6	HEX BOLT EN 1665 M6x20 8.8 A2C	TORNILLO DE CABEZA HEXAGO		
100	040710450	1	LUBRICANT PASTE OPTIMOLY WHITE T	PASTA LUBRICANTE		
109	8655016	1	SCREW LOCKING	SEGURO PARA TORNILLO		

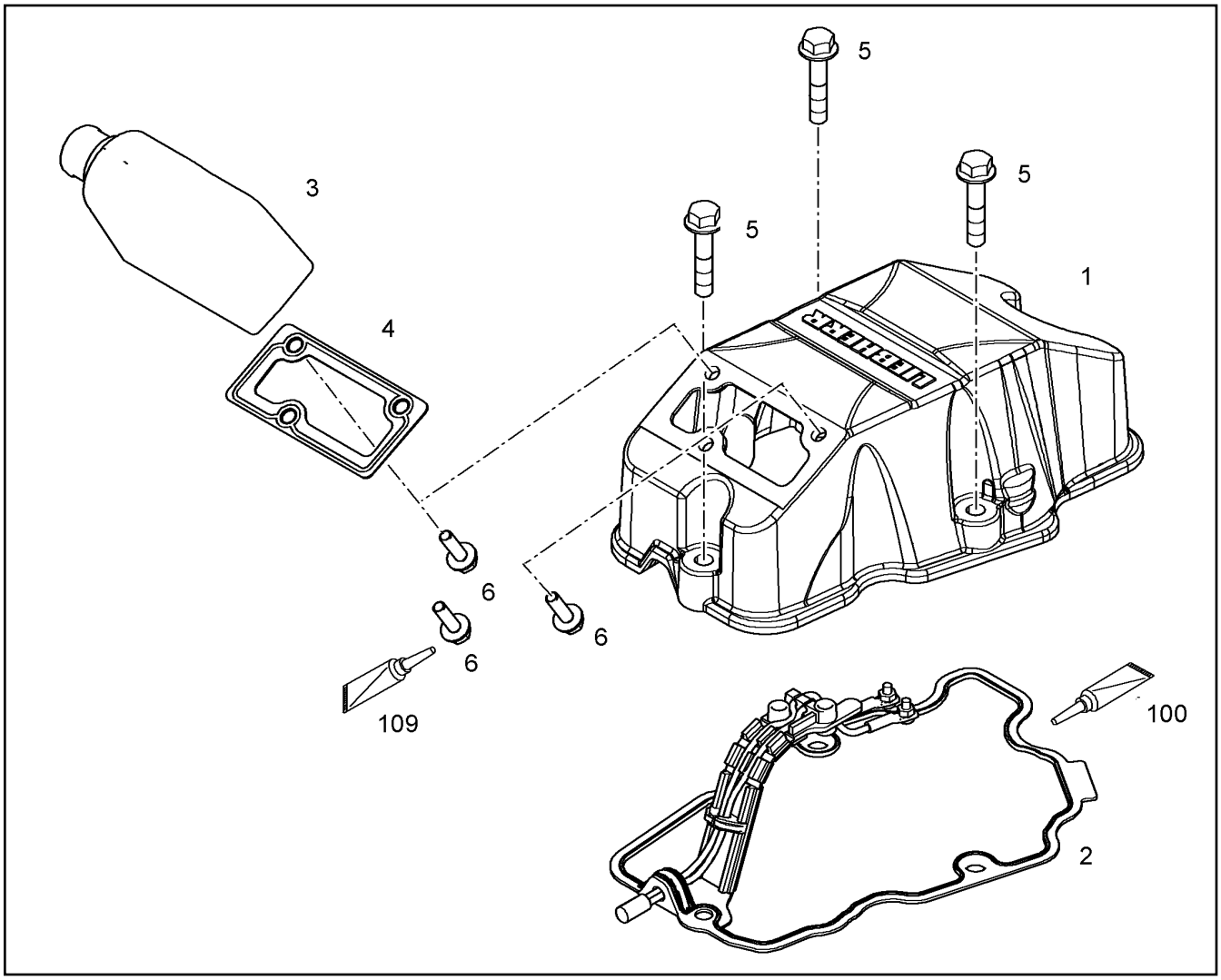

Pos.	Item	Quantity	Description	Descripción	Serie	K
1	10122220	2	CYLINDER HEAD COVER	TAPA DE CULATA		
2	9079885	2	SEAL	JUNTA		
3	10122637	2	CONNECTION PIECE	PIEZA DE EMPALME		
4	10122635	2	SEAL	JUNTA		1
5	10440788	6	HEX BOLT DIN 6921 M8X40 8.8 A2C	TORNILLO DE CABEZA HEXAGO		
6	10018711	6	HEX BOLT EN 1665 M6x20 8.8 A2C	TORNILLO DE CABEZA HEXAGO		
100	040710450	1	LUBRICANT PASTE OPTIMOLY WHITE T	PASTA LUBRICANTE		
109	8655016	1	SCREW LOCKING	SEGURO PARA TORNILLO		

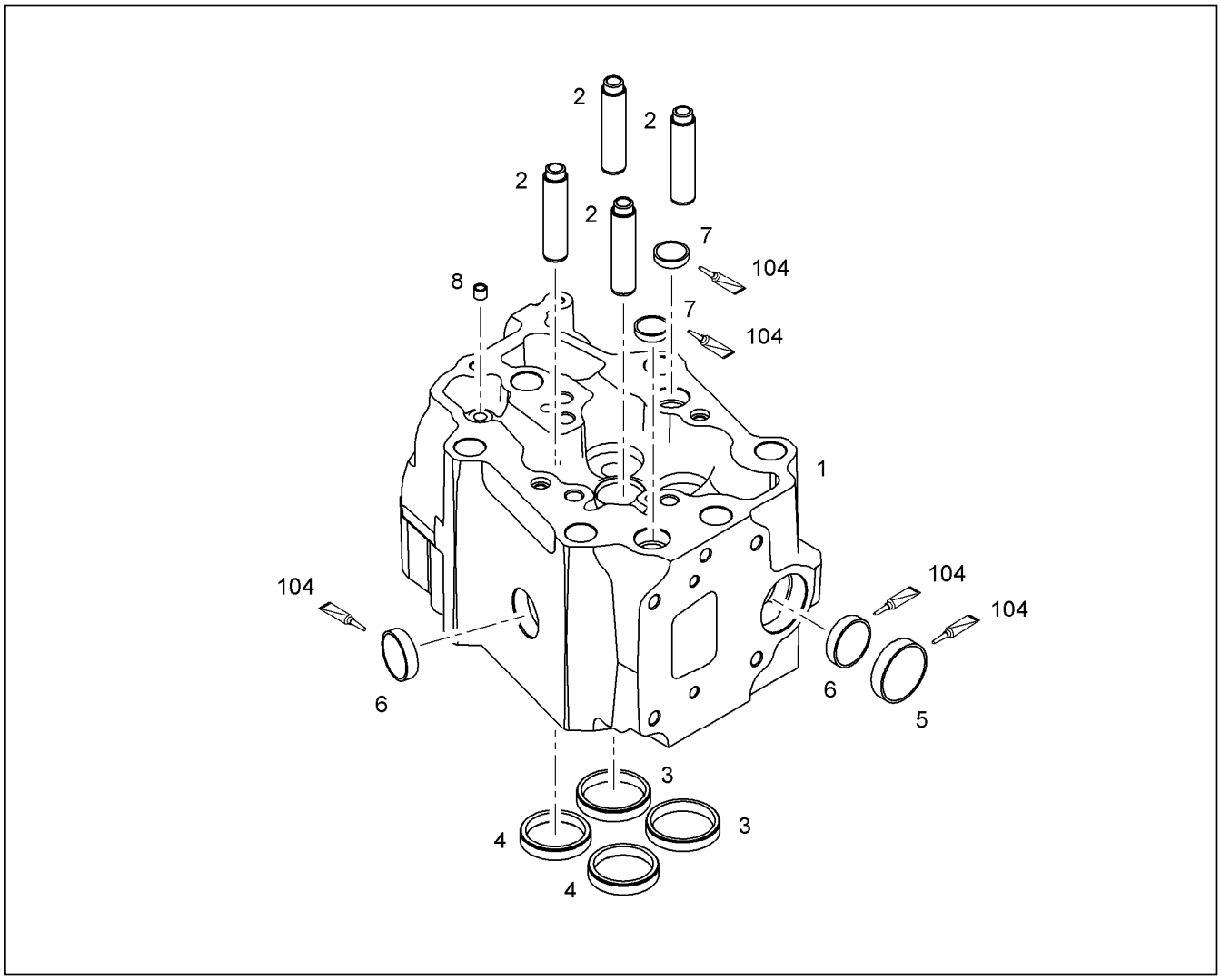

Pos.	Item	Quantity	Description	Descripción	Serie	K
1	10118053	1	CYLINDER HEAD 4 VENTILE	CULATA		
2	9078510	4	VALVE STEM GUIDE	GUIA DE VALVULA		
3	9078511	2	SEAT INSERT RING INLET	ANILLO ASIENTO VALV. ENTRAD		
4	9078512	2	SEAT INSERT RING EXHAUST	ANILLO ASIENTO VALV. SALIDA		
5	4980786	1	END COVER	TAPA DE CIERRE		1
6	4980362	2	PLUG DIN 443 B 32 A3C	TAPA VSL		1
7	4980375	2	PLUG DIN 443 B 22 A3C	TAPA VSL		1
8	10036326	1	SEALING PLUG	TAPON ESTANCO		
104	8655023	1	GLUE	PEGAMENTO		

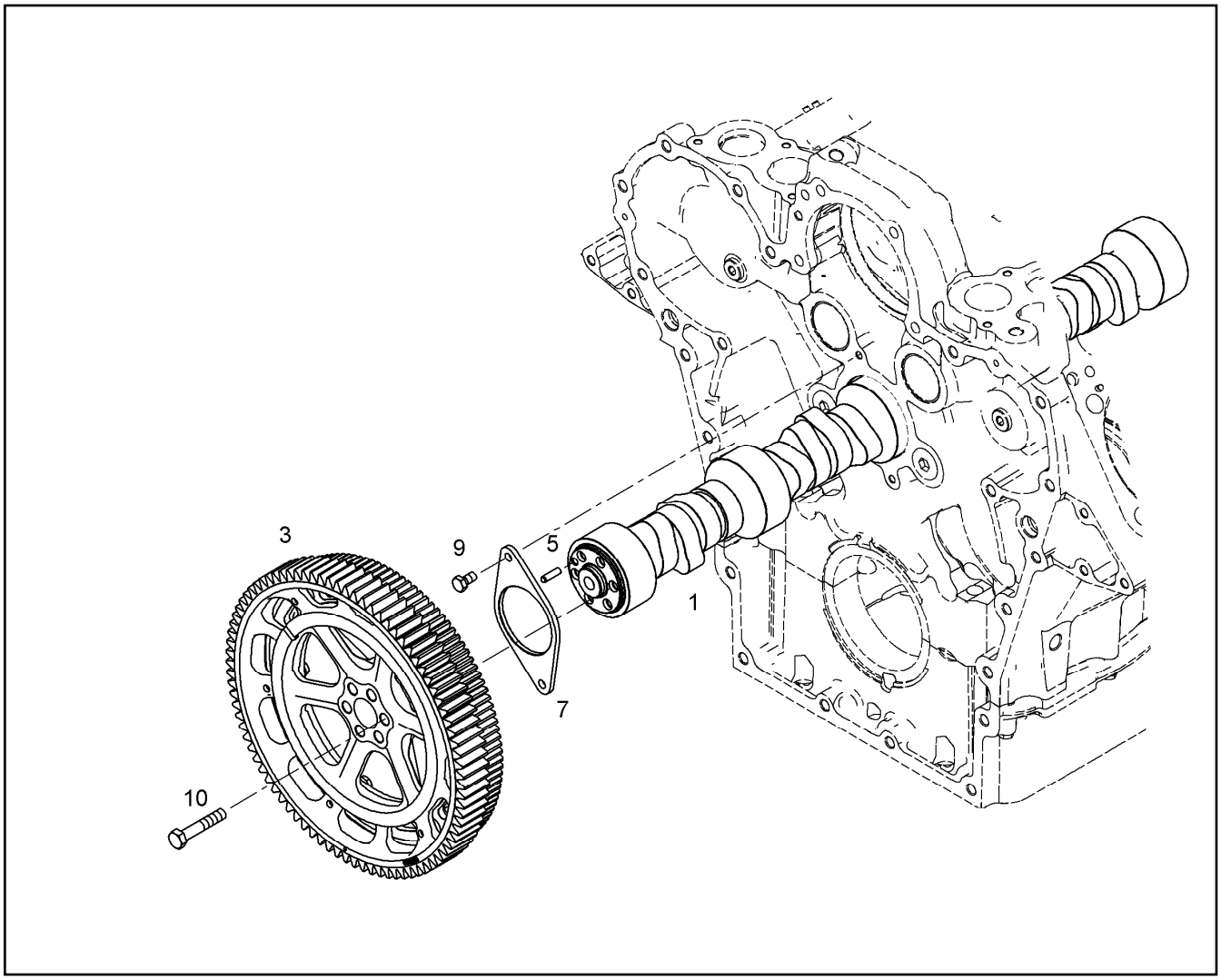

Pos.	Item	Quantity	Description	Descripción	Serie	K
1	10117032	1	CAMS SHAFT	ARBOL DE LEVAS		
3	10118023	1	GEAR WHEEL ⇨ ❑ 602	ENGRANAJE PREMONTADO		
5	4980736	1	PARALLEL PIN 6m6	PASADOR CILINDRICO		
7	9078058	1	BEARING FLANGE	BRIDA COJINETE		
9	4900188	2	HEX BOLT ISO 4017 M8x16 8.8 A2C	TORNILLO DE CABEZA HEXAGO		
10	4002133	6	HEX BOLT ISO 4014 M10X55 10.9 A3C	TORNILLO DE CABEZA HEXAGO		

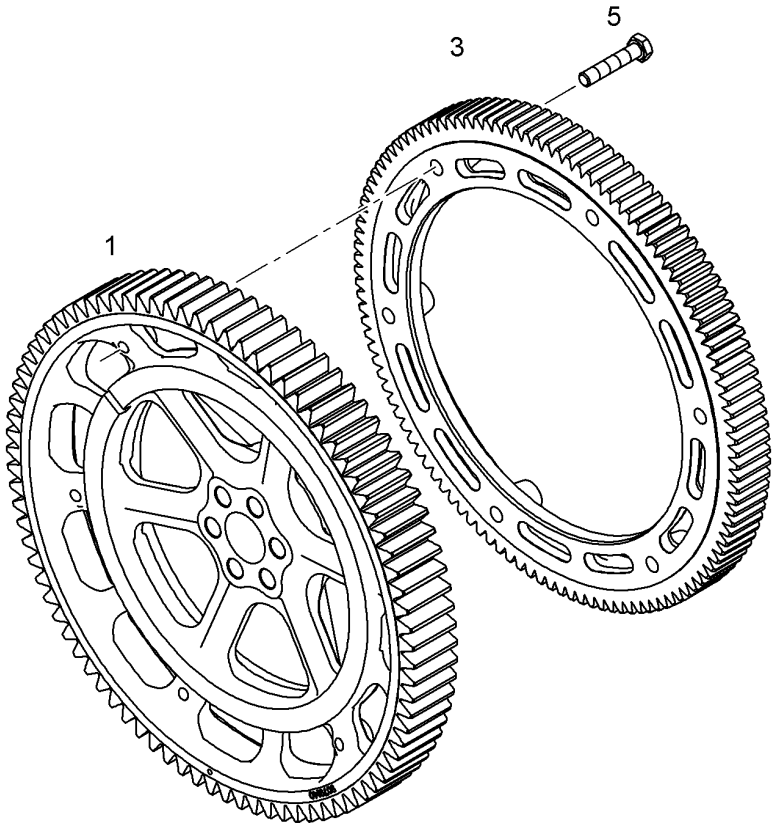

Pos.	Item	Quantity	Description	Descripción	Serie	K
1	9079140	1	GEAR WHEEL Z=86 M=3.5	RUEDA DENTADA		
3	10116095	1	GEAR WHEEL Z=110 M=2.6	RUEDA DENTADA	-2007140597	
3	10119848	0	GEAR WHEEL	RUEDA DENTADA	2007140598-	
5	4601406	6	HEX BOLT ISO 4017 M8X40 10.9 A2C	TORNILLO DE CABEZA HEXAGO		

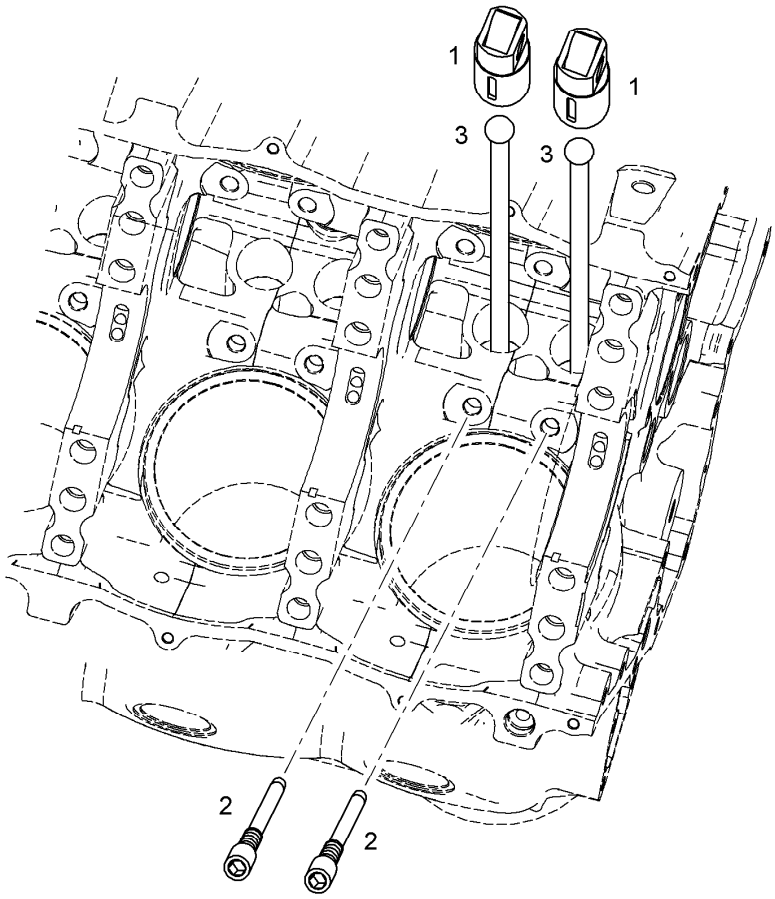

Pos.	Item	Quantity	Description	Descripción	Serie	K
1	9078257	2	ROLLER TAPPET 39MM	TAQUÉ DE RODILLOS		
2	10116319	2	LOCKING SCREW M8X1 10.9 / WW 12.9	TORNILLO SEGURIDAD		
3	9078259	2	TAPPET PUSH ROD	LEVANTAVALVULAS		

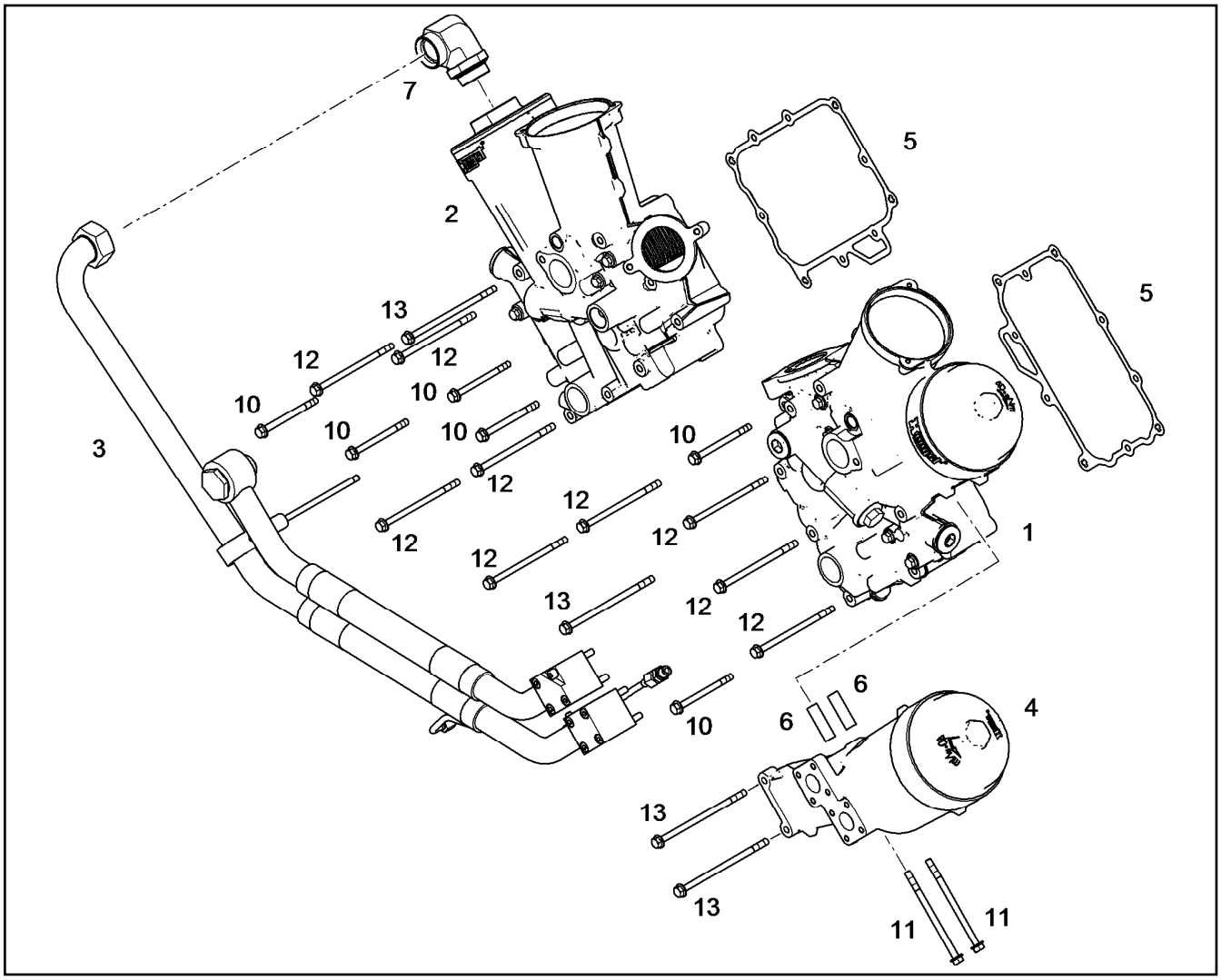

Pos.	Item	Quantity	Description	Descripción	Serie	K
1	10124756	1	OIL MODULE LEFT ⇨ ❑ 607	MÓDULO ACEITE IZDA.		
2	10124757	1	OIL MODULE RIGHT ⇨ ❑ 608	MODULO ACEITE DCHA.		
3	10120023	1	OIL LINE ASSEMBLY ⇨ ❑ 605	TUBERIA DE ACEITE MONTAJE		
4	10120027	1	OIL FILTER ⇨ ❑ 606	FILTRO DE ACEITE		
5	10117681	2	SEAL	JUNTA		1
6	9078946	2	DISTANCE SLEEVE 9.0X15,0X50	CASQUILLO DISTANCIADOR		
7	10217714	1	SCREW FITTING WEE 35L	ATORNILLAMIENTO		
10	10014042	6	HEX BOLT EN 1665 M8X100 8.8 A2C	TORNILLO DE CABEZA HEXAGO		
11	10440661	2	HEX BOLT DIN 6921 M8X130 8.8 A2C	TORNILLO DE CABEZA HEXAGO		
12	10101543	9	HEX BOLT EN 1665 M8x140 8.8 A3C	TORNILLO DE CABEZA HEXAGO		
13	11002217	4	HEX BOLT DIN 6921 M8X160 8.8 A2C	TORNILLO DE CABEZA HEXAGO		

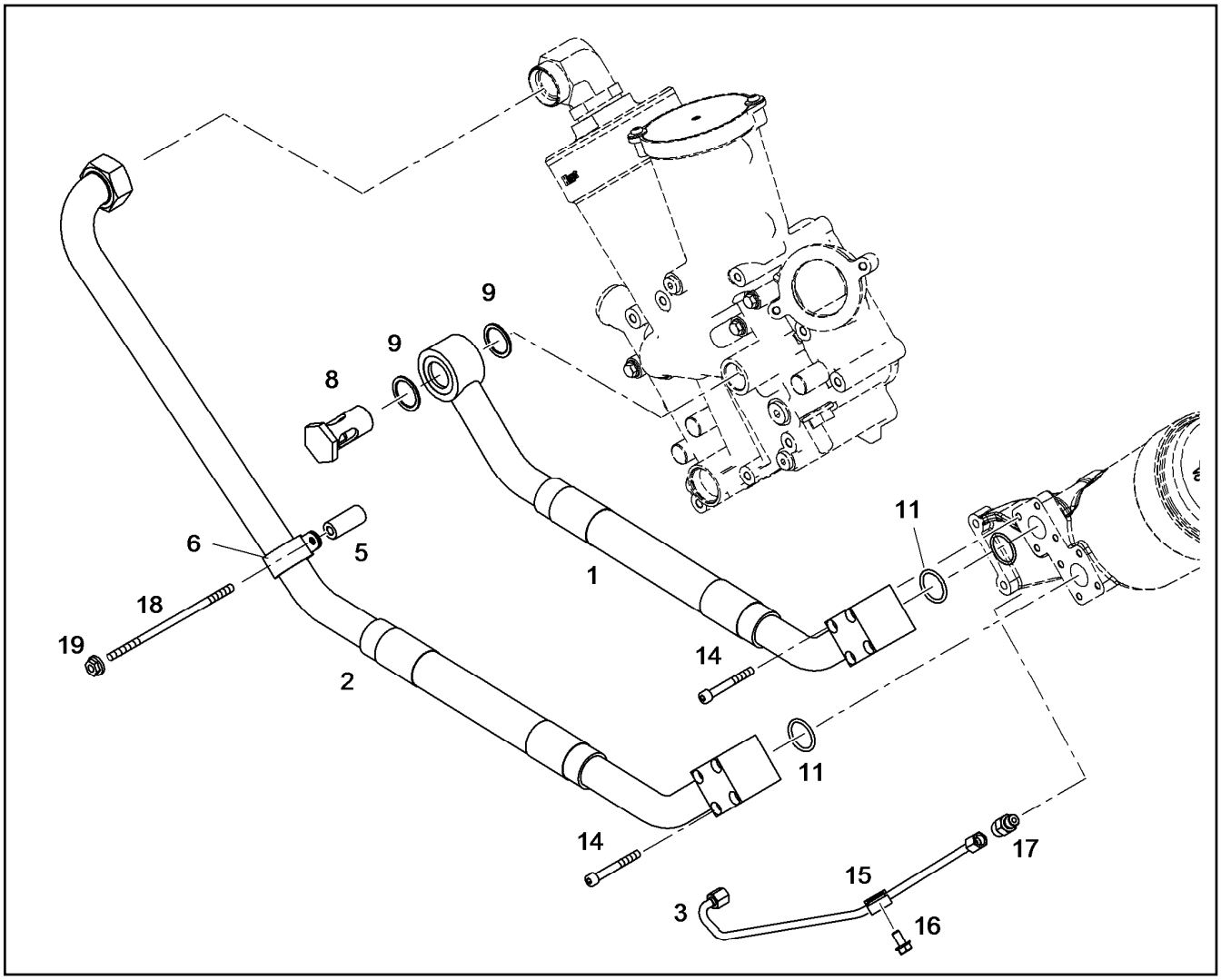

Pos.	Item	Quantity	Description	Descripción	Serie	K
1	10121738	1	OIL LINE	TUBERIA DE ACEITE		
2	10121739	1	OIL LINE	TUBERIA DE ACEITE		
3	10121098	1	PIPELINE	TUBERIA		
5	9279359	1	SPACER PIECE	PIEZA DISTANCIADOR		
6	7381632	1	CLAMP DIN 3016-1 D1 35X20 W1-2-MVQ	ABRAZADERA		
8	10120098	1	HOLLOW SCREW 30X3	TORNILLO HUECO		
9	10113731	2	SEALING RING 30,7X39X2	JUNTA ANULAR		1
11	10412354	2	O-RING DIN 3771 32x2,5	JUNTA TORICA		1
14	4600578	8	CYLINDER SCREW ISO 4762 M8x70 8.8 A2C	TORNILLO CILINDRICO		
15	7382090	1	CLAMP DIN 3016 D1- 8X 20 W1-2-MVQ	ABRAZADERA		
16	10005078	1	HEX BOLT DIN 6921 M8X16 8.8 A2C	TORNILLO DE CABEZA HEXAGO		
17	10813936	1	SCREW FITTING GE 10	ATORNILLAMIENTO		
18	10467006	1	DOUBLE-ENDED STUD DIN 939 M8X190 8.8	TORNILLO ESPARRAGO		
19	10424333	1	HEX NUT M8	TUERCA HEXAGONAL		

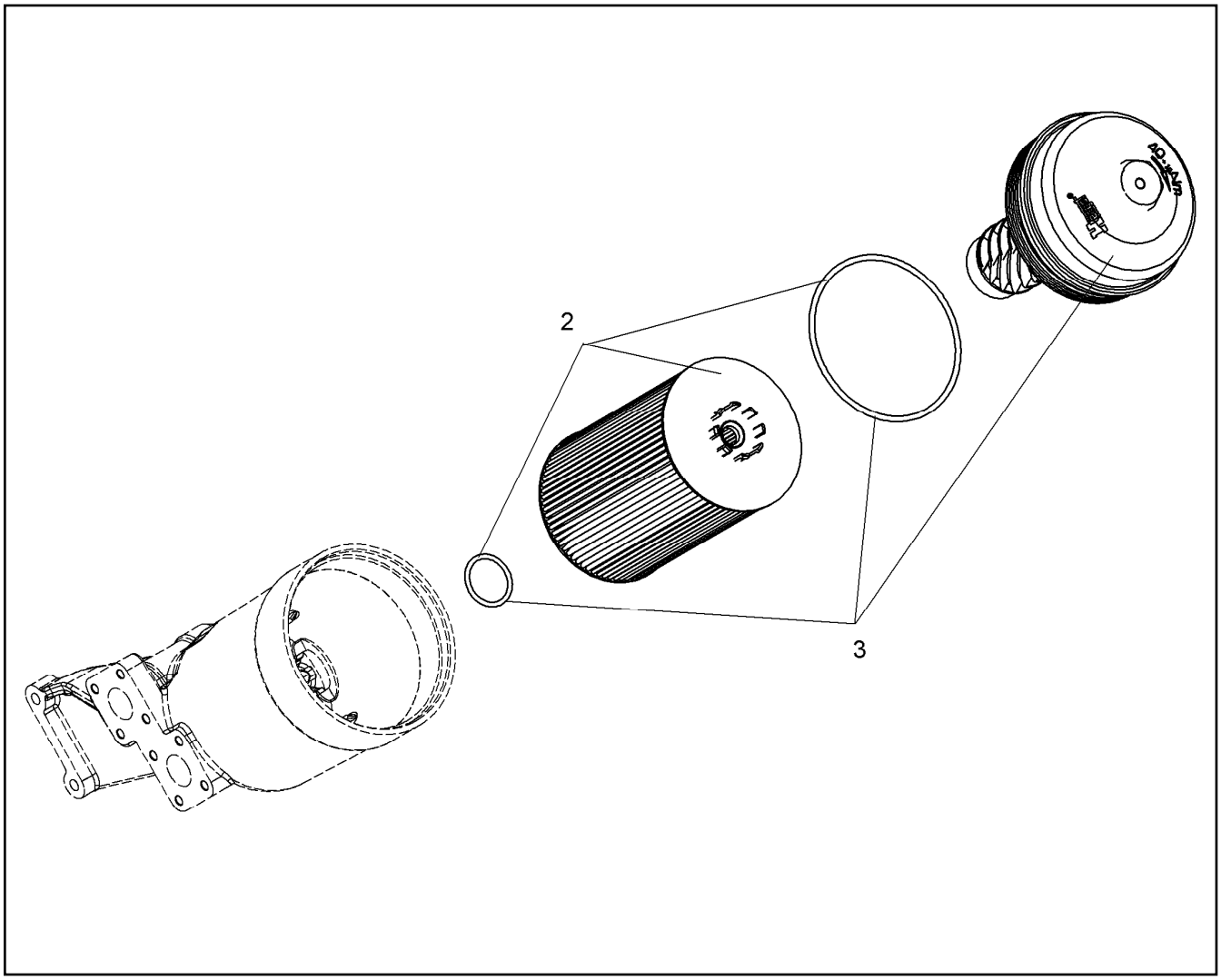

Pos.	Item	Quantity	Description	Descripción	Serie	K
2	10044373	1	OIL FILTER INSERT 17µ	CARTUCHO FILTRO ACEITE		
3	10124766	1	LID	TAPA		

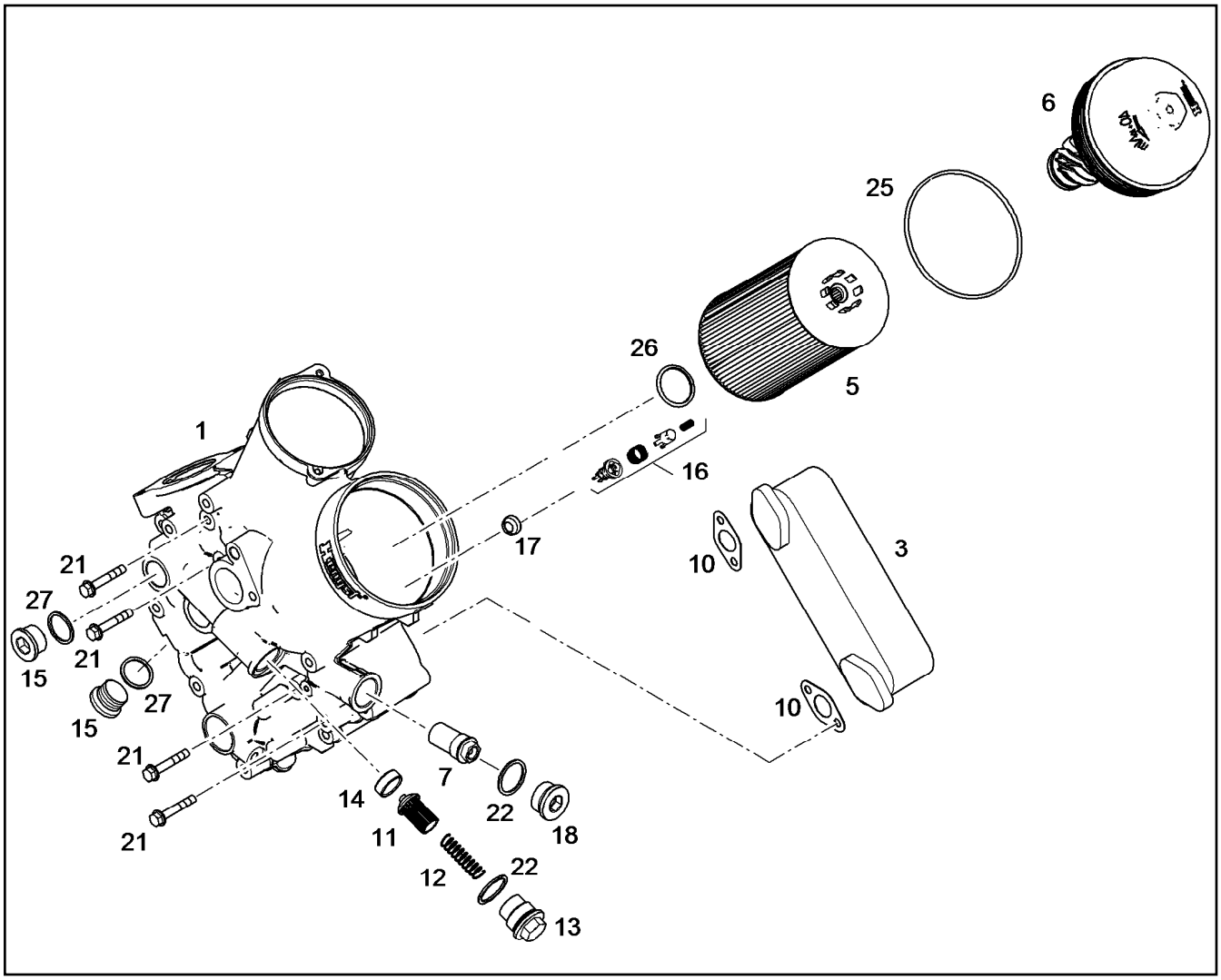

Pos.	Item	Quantity	Description	Descripción	Serie	K
1	10124773	1	OIL COOLER HOUSING	CARCASA RADIADOR ACEITE		
3	9078344	1	OIL COOLER	REFRIGERADOR DE ACEITE		
5	10044373	1	OIL FILTER INSERT 17µ	CARTUCHO FILTRO ACEITE		
6	10124766	1	LID	TAPA		
7	10118610	1	PRESSURE LIMITING VALVE	VALVULA LIMITADORA DE PRES		
10	10118717	2	SEAL	JUNTA		
11	10120102	1	NON-RETURN VALVE	VALVULA DE RETENCION		2
12	10120103	1	PRESSURE SPRING	MUELLE COMPRESION		
13	10120104	1	LOCKING PIECES	PIEZAS DE CIERRE		
14	10120109	1	VALVE SEAT	ASIENTO DE VALVULA		
15	4041209	2	SCREW PLUG DIN 908 M30X1,50 ST	TORNILLO DE CIERRE		
16	10120100	1	DRAIN VALVE	VALVULA DE DESCARGA		2
17	10120108	1	VALVE SEAT	ASIENTO DE VALVULA		
18	10043136	1	SCREW PLUG VSTI	TORNILLO DE CIERRE		
21	10037107	4	HEX HEAD SCREW WITH FLANGE EN 1665	TORNILLO HEXAGONAL CON BR		
22	7101022	2	SEALING RING DIN 7603 A 33X39X2	JUNTA ANULAR		1
25	10120092	1	O-RING 128X4,2	JUNTA TORICA		1
26	10120093	1	O-RING 37,5X3,55	JUNTA TORICA		1
27	7101021	2	SEALING RING DIN 7603 A 30 X 36 CU	JUNTA ANULAR		1

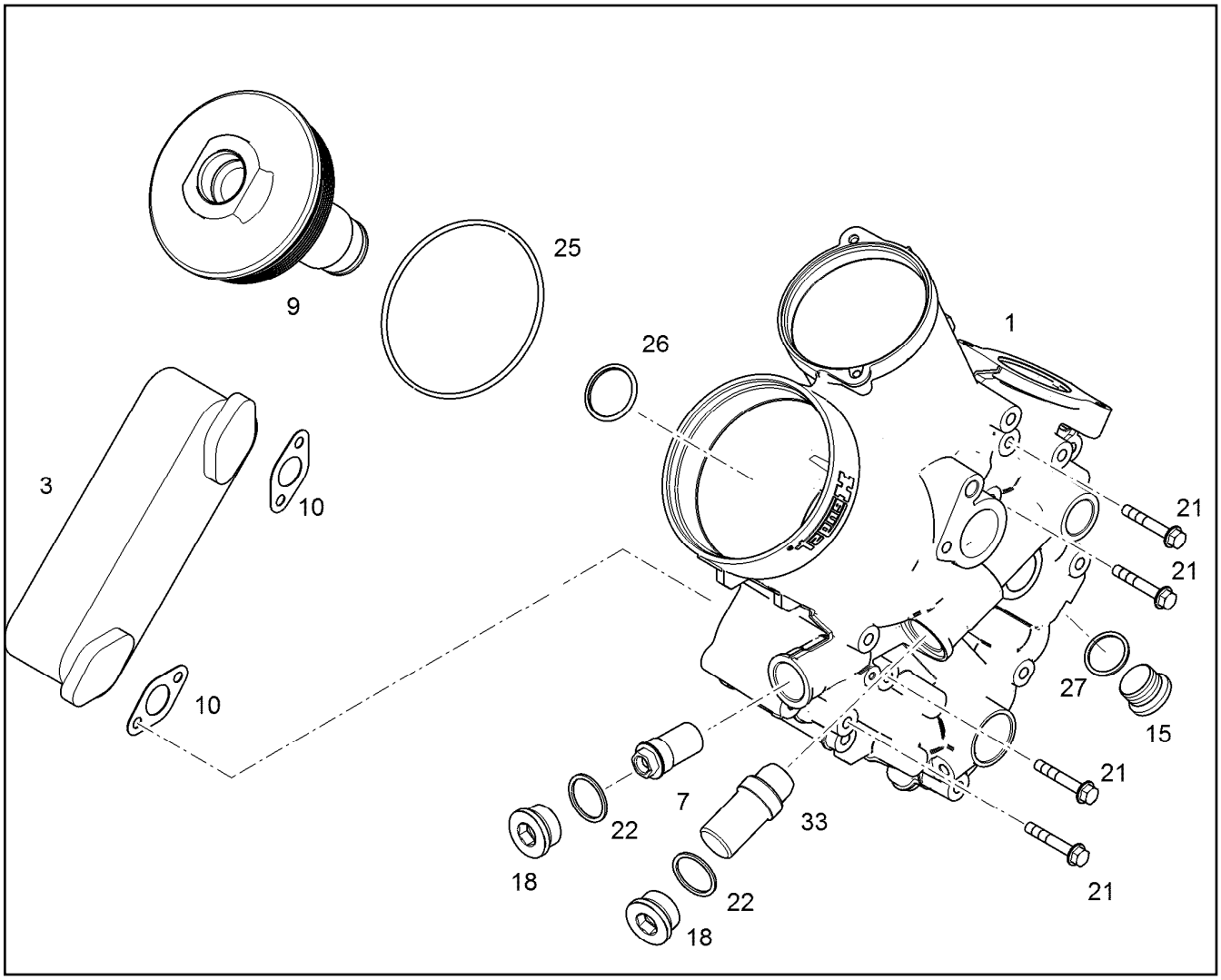

Pos.	Item	Quantity	Description	Descripción	Serie	K
1	10124775	1	OIL COOLER HOUSING	CARCASA RADIADOR ACEITE		
3	9078344	1	OIL COOLER	REFRIGERADOR DE ACEITE		
7	10118610	1	PRESSURE LIMITING VALVE	VALVULA LIMITADORA DE PRES		
9	9999999	1	SEE REMARK (BOTTOM)	VÉASE COMENTARIO (DEBAJO)		1
10	10118717	2	SEAL	JUNTA		
15	4041209	1	SCREW PLUG DIN 908 M30X1,50 ST	TORNILLO DE CIERRE		
18	10043136	2	SCREW PLUG VSTI	TORNILLO DE CIERRE		
21	10037107	4	HEX HEAD SCREW WITH FLANGE EN 1665	TORNILLO HEXAGONAL CON BR		
22	7101022	1	SEALING RING DIN 7603 A 33X39X2	JUNTA ANULAR		1
25	10120092	1	O-RING 128X4,2	JUNTA TORICA		1
26	10120093	1	O-RING 37,5X3,55	JUNTA TORICA		1
27	7101021	1	SEALING RING DIN 7603 A 30 X 36 CU	JUNTA ANULAR		1
33	10120094	1	BLANKING PLUG	TAPON DE CIERRE		

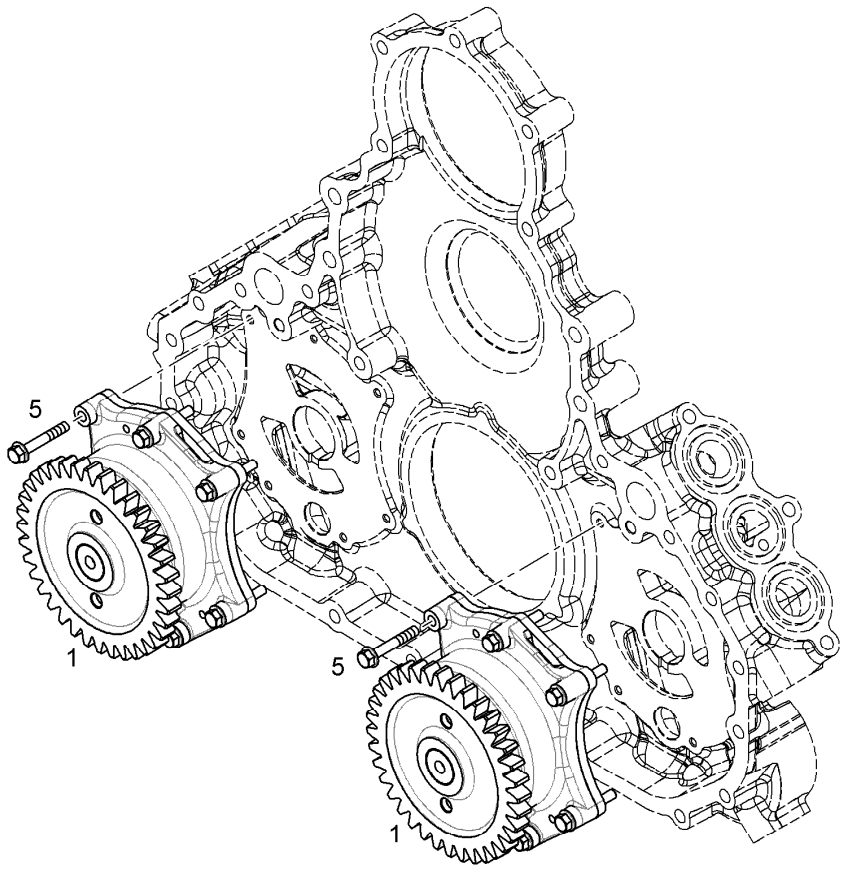

Pos.	Item	Quantity	Description	Descripción	Serie	K
1	10116166	2	LUBE OIL PUMP PREASS. B=24 I=1.472	BOMBA ACEITE LUBR.PREMONT		6
5	10289164	14	HEX BOLT EN 1665 M6x40 10.9 A2C	TORNILLO DE CABEZA HEXAGO		

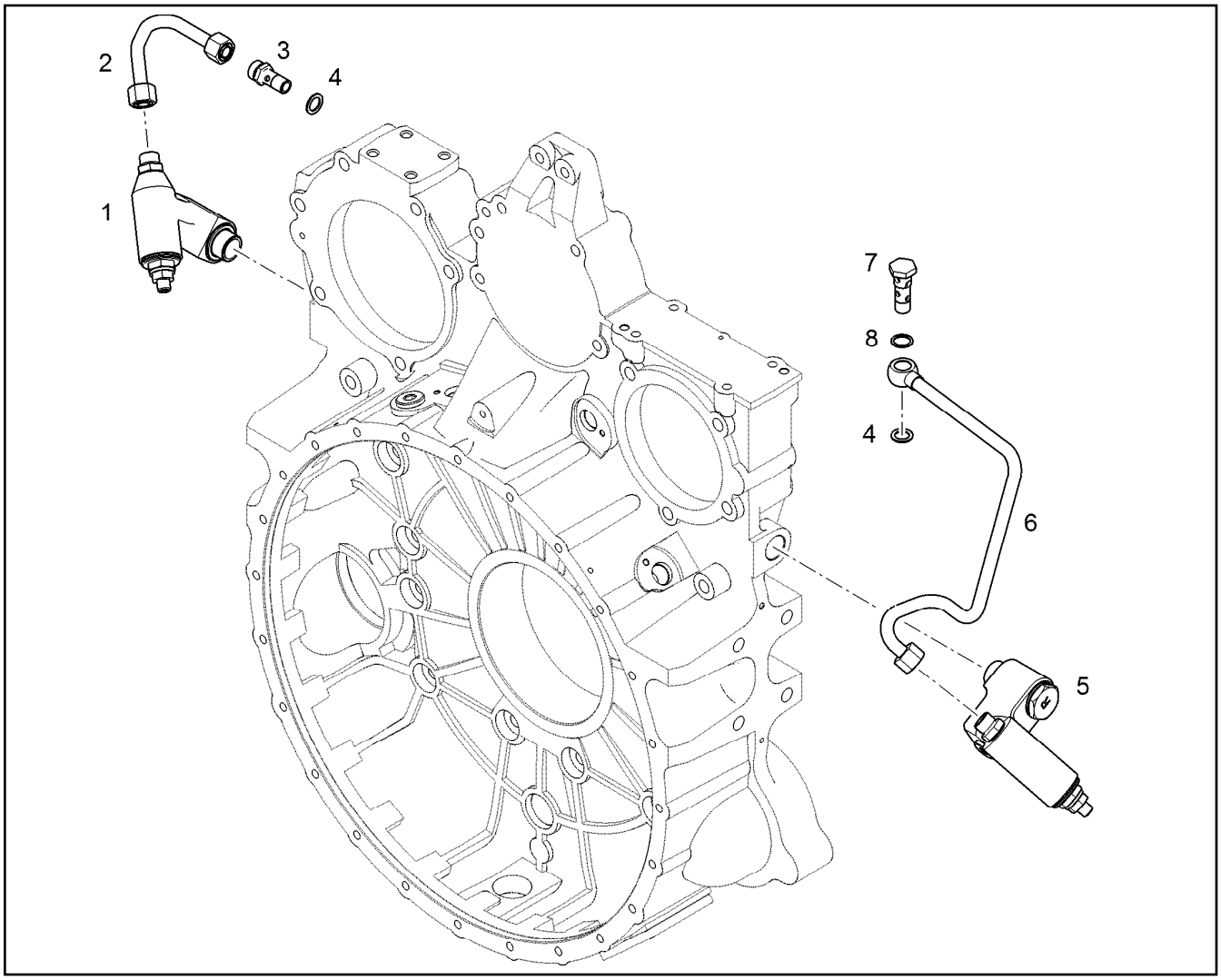

Pos.	Item	Quantity	Description	Descripción	Serie	K
1	10132049	1	PRESSURE CUT-OFF STAGE	ETAPA INTERRUPTOR PRESIÓN		
2	10132100	1	PIPELINE 12X1	TUBERIA		
3	10131786	1	LUG	ESPIGA		
4	7101011	2	SEALING RING DIN 7603 A 16 X 20 CU	JUNTA ANULAR		1
5	10132052	1	PRESSURE CUT-OFF STAGE	ETAPA INTERRUPTOR PRESIÓN		
6	10132067	1	PIPELINE 12X1	TUBERIA		
7	10132193	1	HOLLOW SCREW 14X4	TORNILLO HUECO		
8	4900262	1	SEALING RING DIN 7603 A 14 X 20 CU	JUNTA ANULAR		1

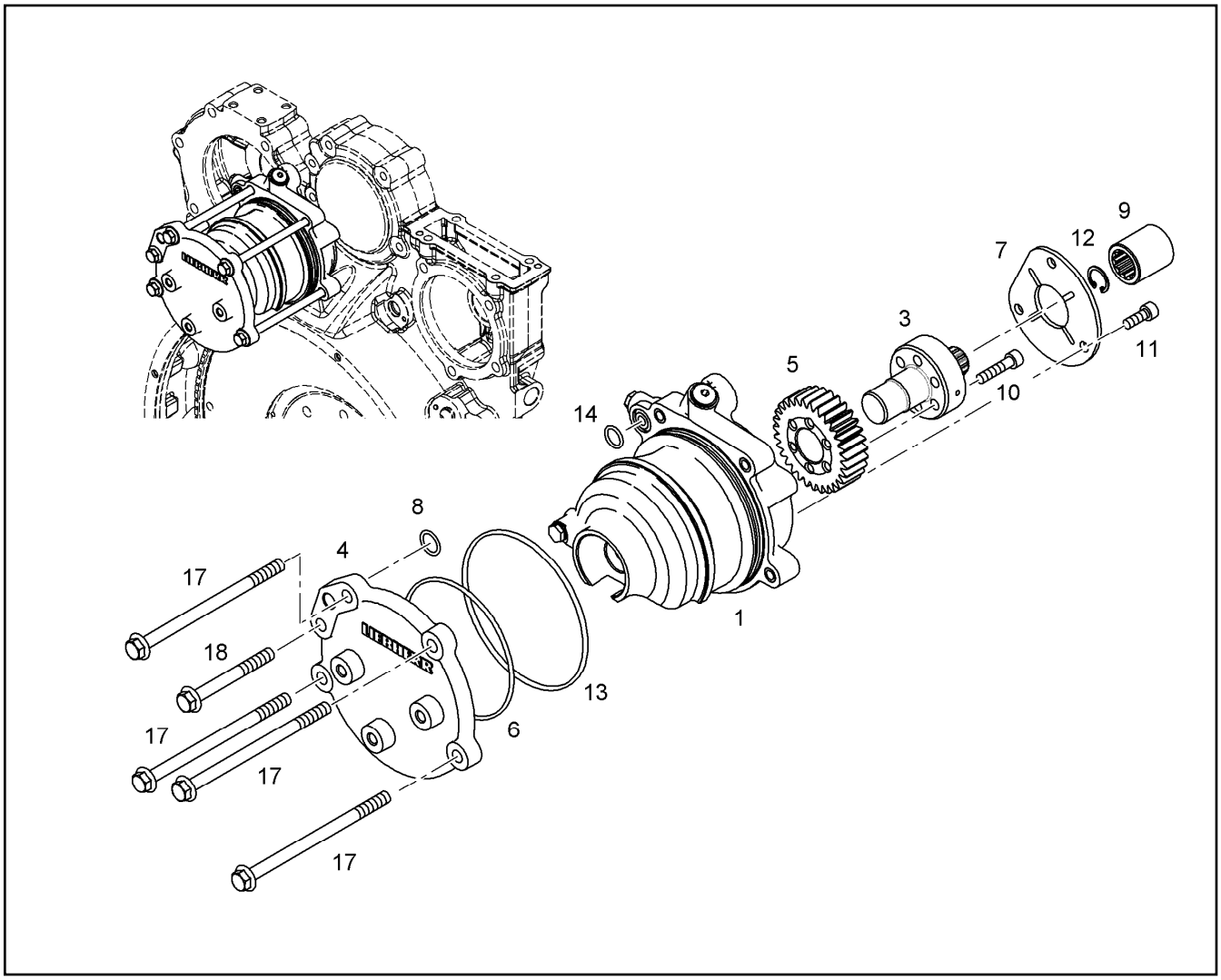

Pos.	Item	Quantity	Description	Descripción	Serie	K
1	10116150	1	HOUSING PRE-ASSEMBLED ⇨ ❑ 612	CÁRTER/CARCASA PREM.		
3	9080600	1	DRIVE SHAFT	EJE MOTRIZ		
4	9080083	1	LID	TAPA		
5	10116096	1	GEAR WHEEL Z=30 M=2.6	RUEDA DENTADA		
5	10119855	0	GEAR WHEEL	RUEDA DENTADA	2007140598-	
6	7380604	1	O-RING	JUNTA TORICA	-2007140597	1
7	9080599	1	THRUST WASHER	ARANDELA TOPE		
8	10003192	1	O-RING 18,00X2,00	JUNTA TORICA		1
9	9078269	1	COUPLING FERRULE	CASQUILLO ACOPLAMIENTO		
10	4980388	6	CYLINDER SCREW ISO 4762 M8X35 10.9	TORNILLO CILINDRICO		
11	404306808	3	CYLINDER SCREW ISO 4762 M8X22 10.9 A2	TORNILLO CILINDRICO		
12	4001209	1	LOCKING RING DIN 472 22 X1	ANILLO SEGURIDAD		
13	7006516	1	O-RING 125x3	JUNTA TORICA		1
14	7380619	1	O-RING	JUNTA TORICA		1
17	10112718	4	HEX BOLT EN 1665 M10x160 10.9 A3C	TORNILLO DE CABEZA HEXAGO		
18	10006131	1	HEX BOLT EN 1665 M10X90 10.9	TORNILLO DE CABEZA HEXAGO		

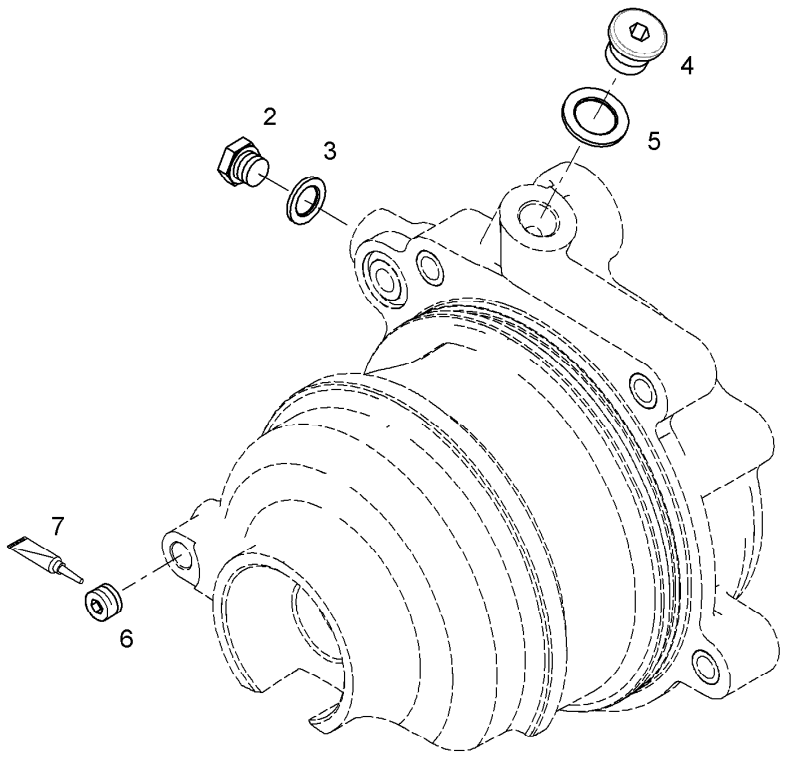

Pos.	Item	Quantity	Description	Descripción	Serie	K
2	4600134	1	SCREW PLUG DIN 7604 A M10X1,00 ST A3C	TORNILLO DE CIERRE		
3	10011864	1	SEALING RING 10,7X16,00X1,5	JUNTA ANULAR		1
4	4041202	1	SCREW PLUG DIN 908 M14X1,50 ST	TORNILLO DE CIERRE		
5	10011866	1	SEALING RING 14,7X22,00X1,5	JUNTA ANULAR		1
6	4901108	1	THREAD.PLUG DIN 906 M 10 X1 ST A3C	TORNILLO VSL		
7	8627609	1	SEALANT	AGENTE OBTURADOR		

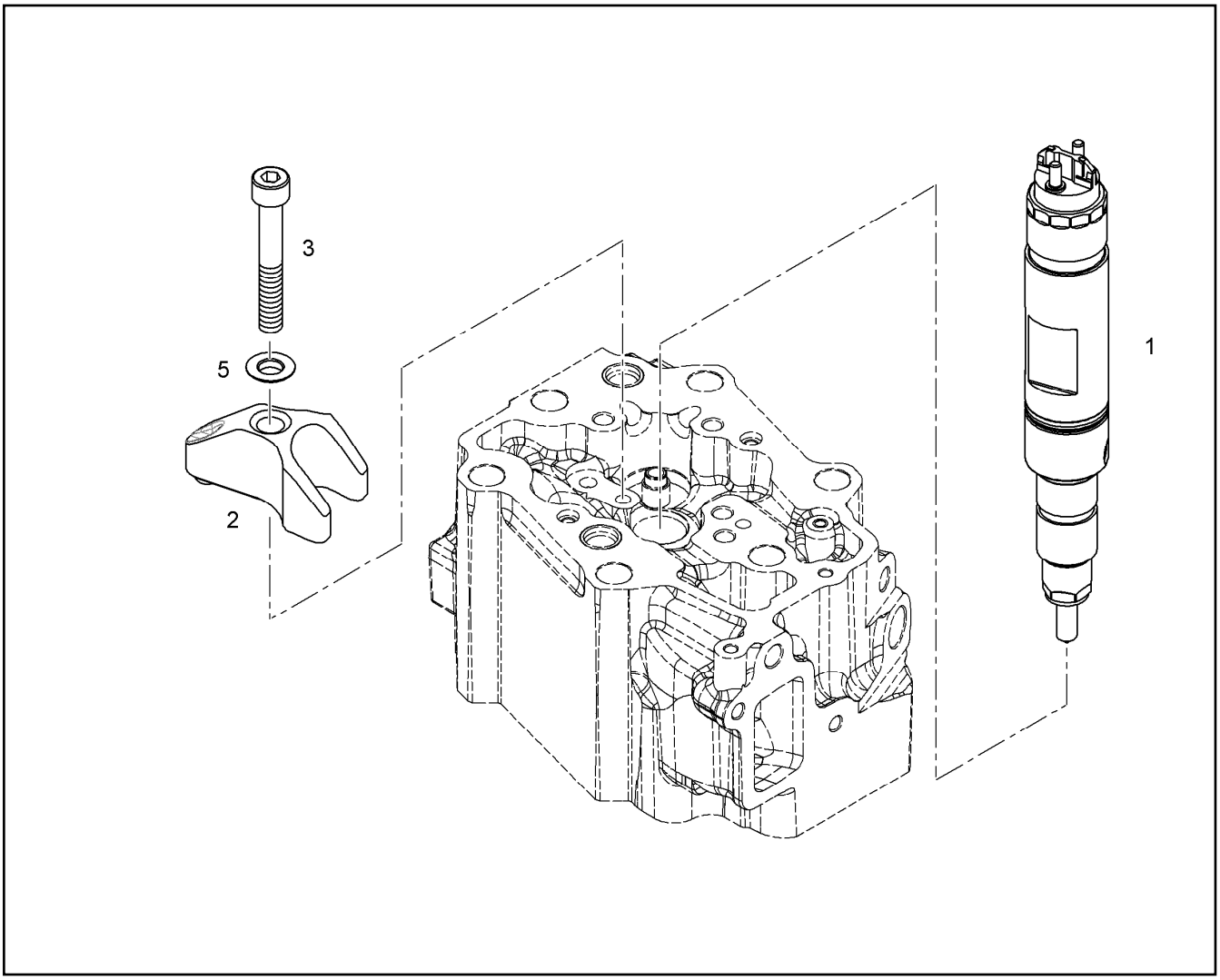

Pos.	Item	Quantity	Description	Descripción	Serie	K
1	10428694	1	INJECTOR ⇨ ❑ 614	TOBERA DE INYECCION	-99998	
1	10490018	0	INJECTOR ⇨ ❑ 615	TOBERA DE INYECCION	99999-	2
2	9078321	1	JAW	GARRA		
3	4980273	1	CYLINDER SCREW ISO 4762 M8X55 10.9	TORNILLO CILINDRICO		
5	10036473	1	SPHERICAL WASHER DIN 6319 C 8,4	DISCO ESFERICO		

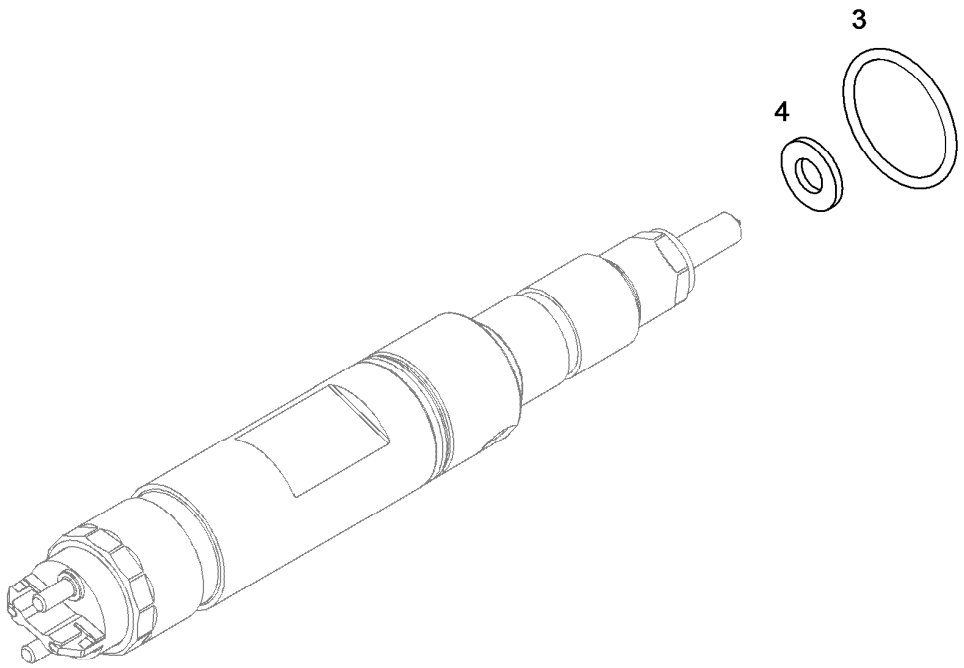

Pos.	Item	Quantity	Description	Descripción	Serie	K
3	10217777	1	O-RING	JUNTA TORICA		1
4	10217776	1	SEALING RING	JUNTA ANULAR		1

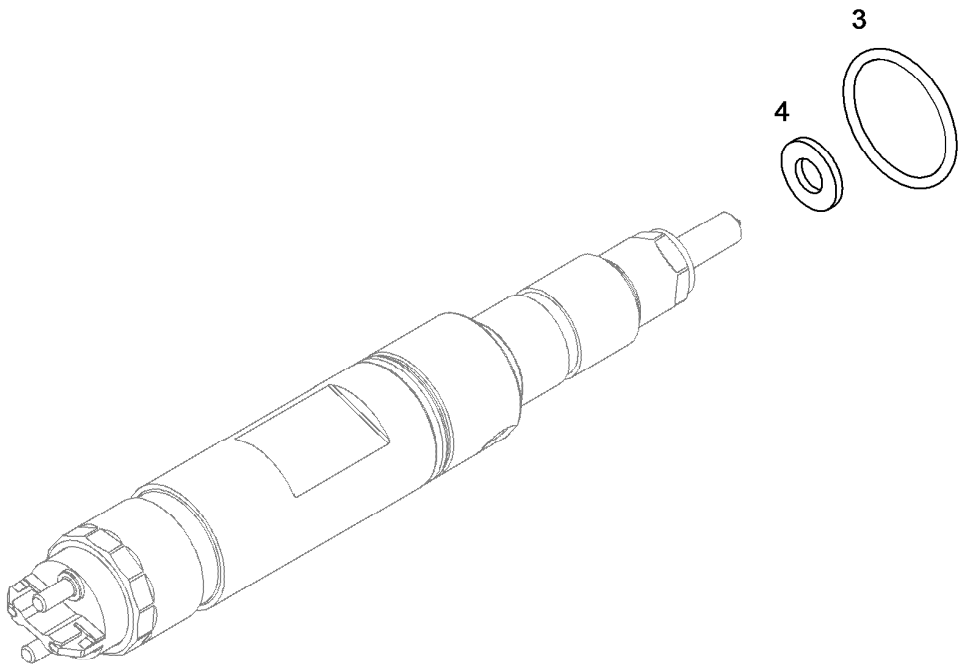

Pos.	Item	Quantity	Description	Descripción	Serie	K
3	10217777	1	O-RING	JUNTA TORICA		1
4	10442984	1	SHEET GASKET 7X14,4X1,5	ARANDELA RETEN		1

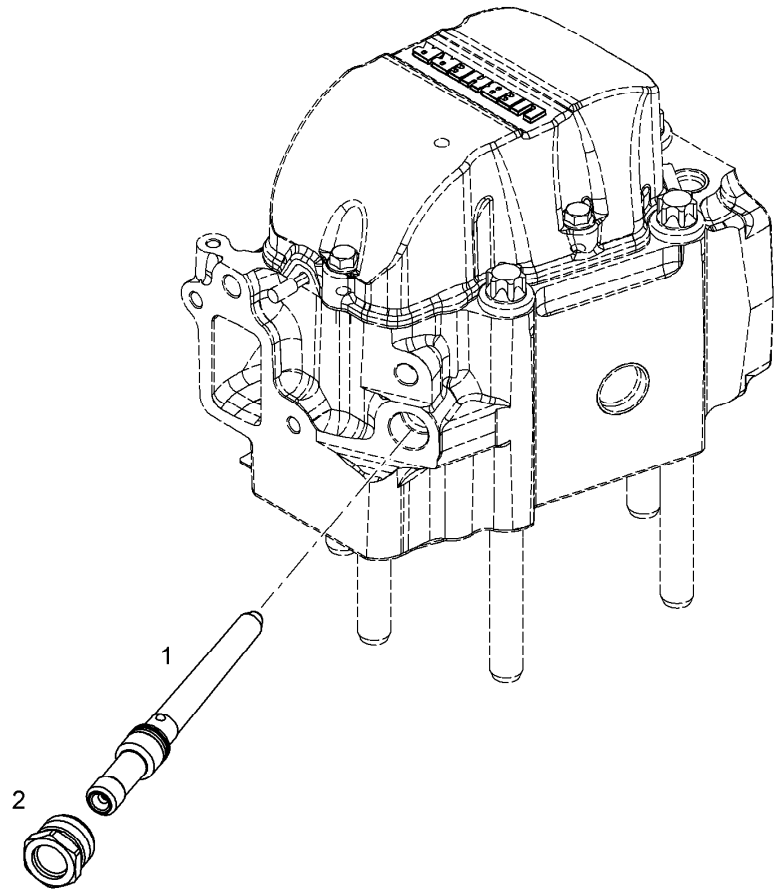

Pos.	Item	Quantity	Description	Descripción	Serie	K
1	9078325	1	PRESSURE ADAPTER	RACOR TUBO PRESIÓN		
2	9078326	1	BOX NUT M24X1.5	TUERCA RACOR		

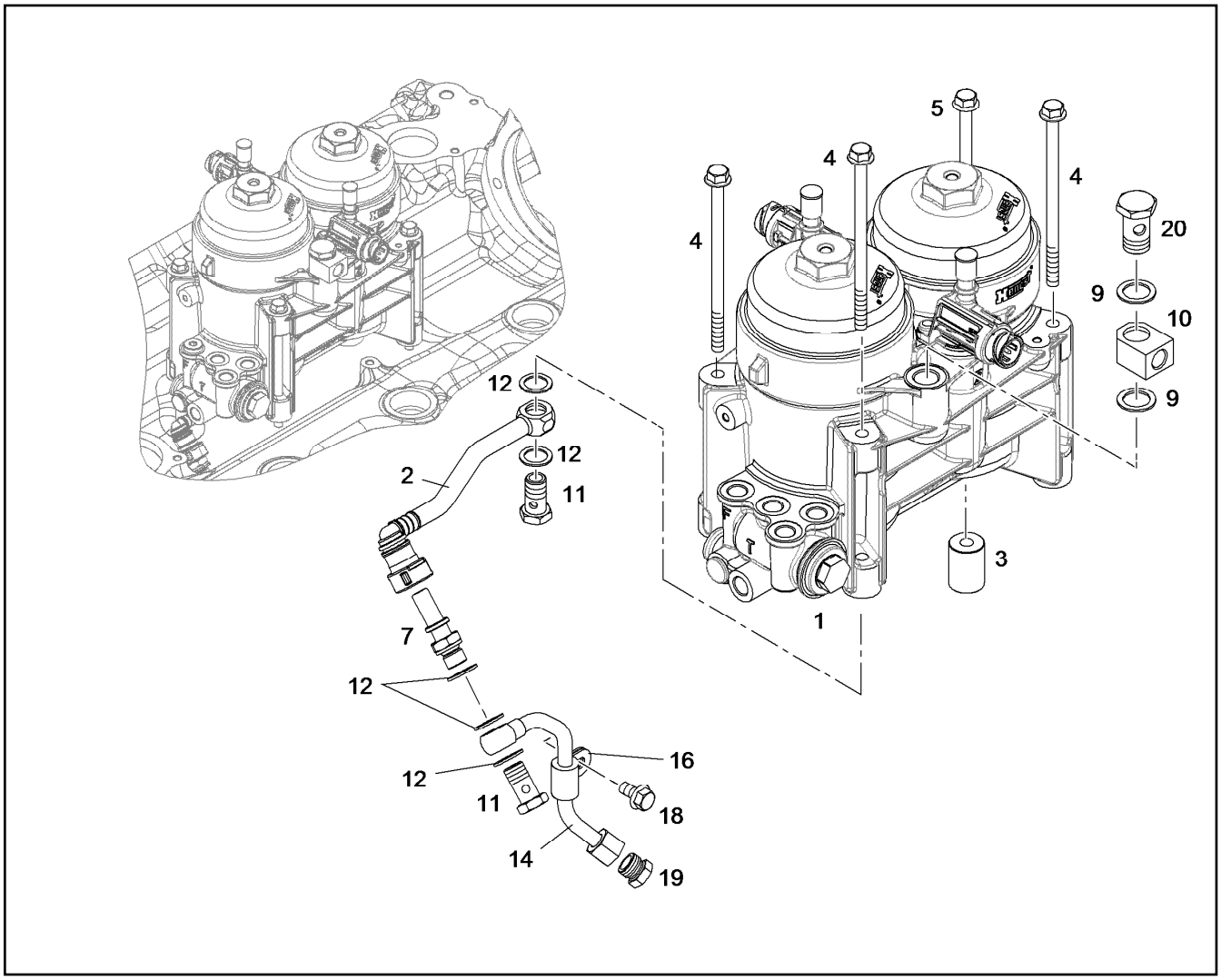

Pos.	Item	Quantity	Description	Descripción	Serie	K
1	10122824	1	FUEL FILTER MODULE ⇨ ❑ 618	MÓDULO P/FILTRO DE COMBU		
2	10119000	1	FUEL LINE	TUBERIA COMBUSTIBLE		
3	10115863	1	DISTANCE SLEEVE 9,0X24,0X34	CASQUILLO DISTANCIADOR		
4	10101543	3	HEX BOLT EN 1665 M8x140 8.8 A3C	TORNILLO DE CABEZA HEXAGO		
5	10287572	1	HEX BOLT EN 1665 M8x175 10.9 A2C	TORNILLO DE CABEZA HEXAGO		
7	10037655	1	SCREW-ON CONNECTION DN 12	ESPIGA MACHO		
9	10011868	2	SEALING RING 18,7X26,00X1,5	JUNTA ANULAR		1
10	10117507	1	CONNECTION PIECE	PIEZA DE EMPALME		
11	4001439	2	HOLLOW SCREW 10X3	TORNILLO HUECO		
12	10011866	5	SEALING RING 14,7X22,00X1,5	JUNTA ANULAR		1
14	10117635	1	PIPELINE	TUBERIA		
16	7381628	1	CLAMP DIN 3016 D1- 10 X 20 W1-2-MVQ	ABRAZADERA		
18	10009007	1	HEX HEAD SCREW WITH FLANGE EN 1665	TORNILLO HEXAGONAL CON BR		
19	10300881	1	SCREW FITTING ROV10L M 16X1,5 ST CFX	ATORNILLAMIENTO		
20	4981226	1	HOLLOW SCREW 15	TORNILLO HUECO		

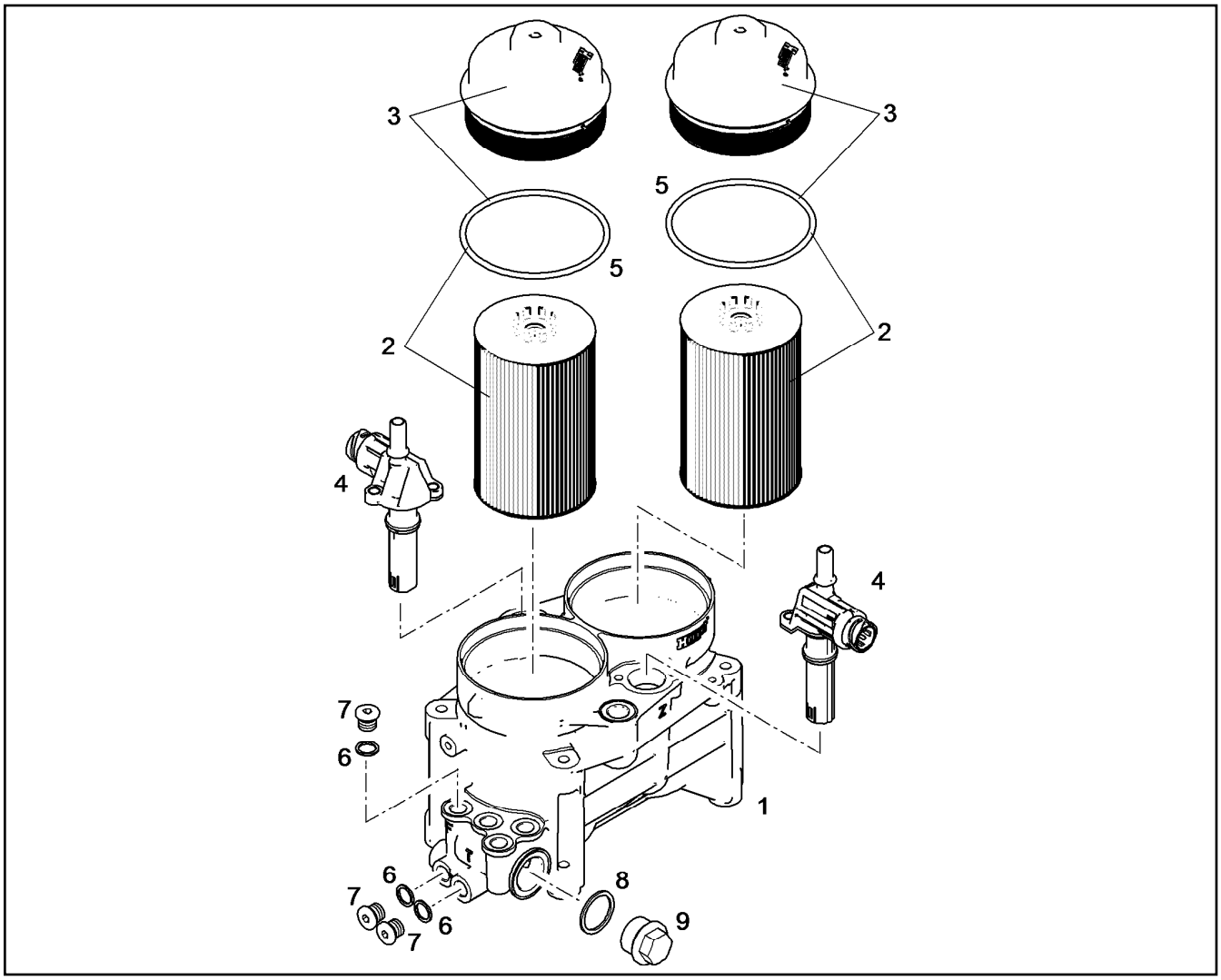

Pos.	Item	Quantity	Description	Descripción	Serie	K
1	10121011	1	HOUSING	CARCASA		
2	10289138	2	FUEL FILTER INSERT PRE-ASS. 3-5µ BEI 98	PREMONT. CARTUCHO FILTRO		
3	10039124	2	LID	TAPA		
4	10488927	2	FUEL HEATER	CALENTADOR DEL COMBUSTIBL		
5	10289140	2	O-RING 100,00X4,00	JUNTA TORICA		
6	4900262	3	SEALING RING DIN 7603 A 14 X 20 CU	JUNTA ANULAR		1
7	4041202	3	SCREW PLUG DIN 908 M14X1,50 ST	TORNILLO DE CIERRE		
8	7101021	1	SEALING RING DIN 7603 A 30 X 36 CU	JUNTA ANULAR		1
9	500920508	1	SCREW PLUG DIN 7604 C M30X1,5X22,5X12	TORNILLO DE CIERRE		

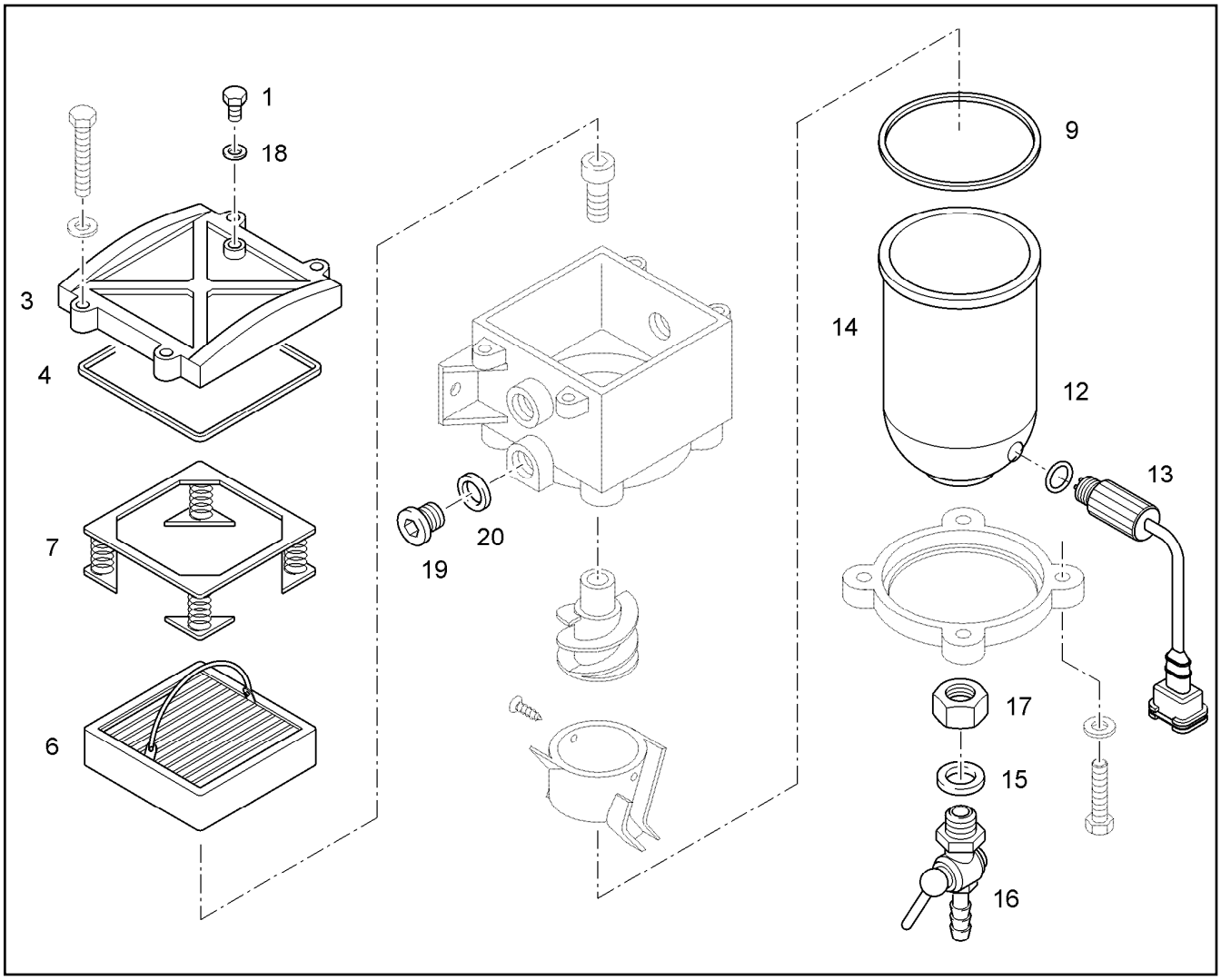

Pos.	Item	Quantity	Description	Descripción	Serie	K
1	7412942	1	VENTILATION SCREW	TORNILLO PURGADOR		
3	7027755	1	LID	TAPA		
4	10294171	1	LID SEAL	JUNTA TAPA DE BORNES		1
6	553183708	1	FILTER ELEMENT	ELEMENTO FILTRADOR		1
7	10032001	1	SPRING CASSETTE	CASETE DE RESORTE		1
9	10294170	1	BOWLEN SEALING	JUNTA BOWLEN		1
12	7380986	1	O-RING	JUNTA TORICA		1
13	10331335	1	WATER SOUND	SONDA DE AGUA		2
14	10331395	1	BOWL	BOWLE		
15	7412937	1	O-RING 12X2,5	JUNTA TORICA		1
16	7412936	1	DRAIN TAP	GRIFO DE PURGA		1
17	11005554	1	TWO-HOLE NUT	TUERCA DE DOS AGUJEROS		
18	7412935	1	SEAL	JUNTA		1
19	10340236	2	SCREW PLUG M22X1,5	TORNILLO DE CIERRE		
20	10340226	2	O-RING 19,4X2,5	JUNTA TORICA		1

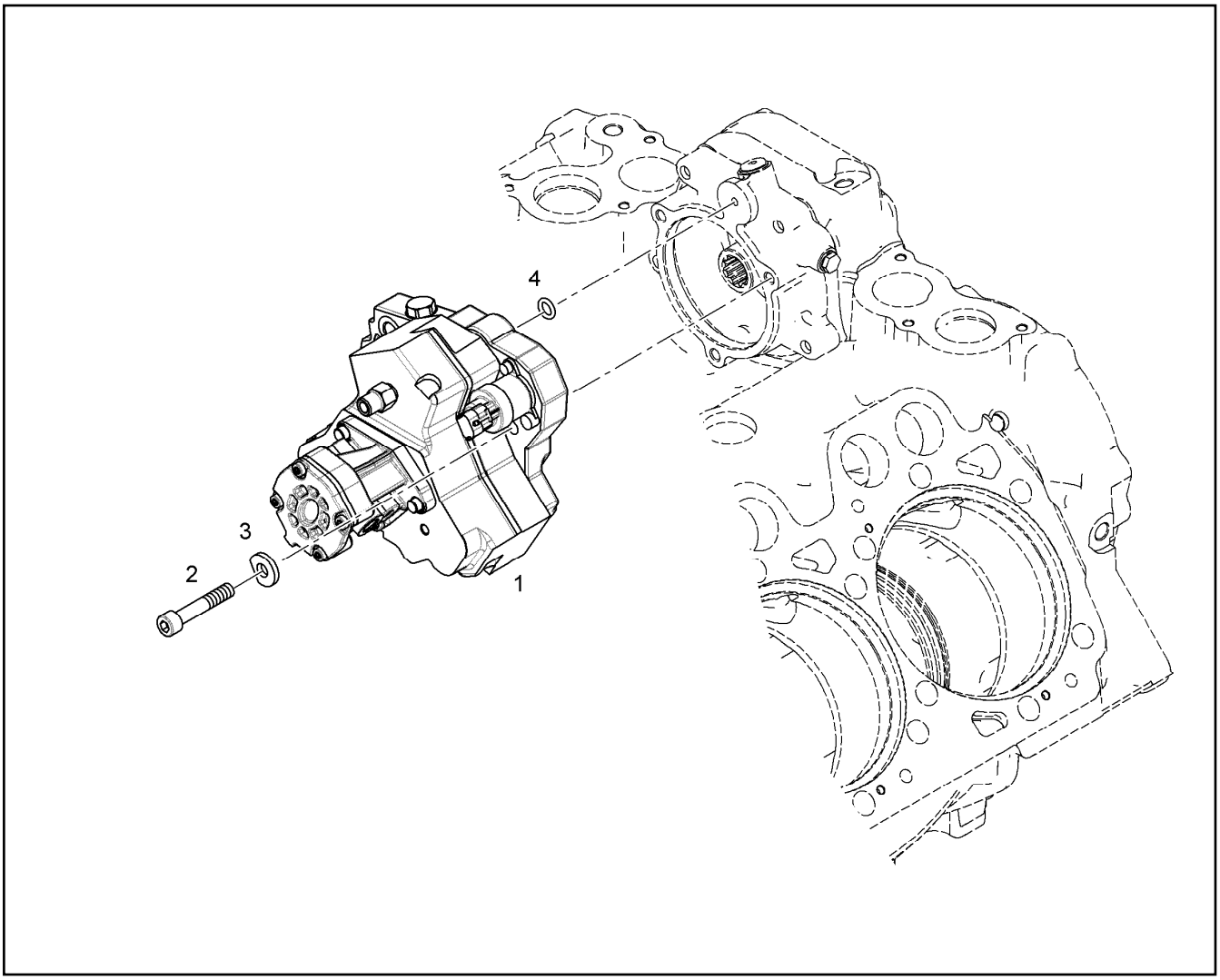

Pos.	Item	Quantity	Description	Descripción	Serie	K
1	10117814	1	HIGH PRESSURE PUMP PRE-ASS. ⇨ ❑ 622	BOMBA DE ALTA PRES.PREMO		
2	4001622	3	CYLINDER SCREW ISO 4762 M10X55 10.9	TORNILLO CILINDRICO		
3	9134374	3	WASHER	ARANDELA		
4	7381417	1	O-RING DIN 3771 10,00X3,00	JUNTA TORICA		1

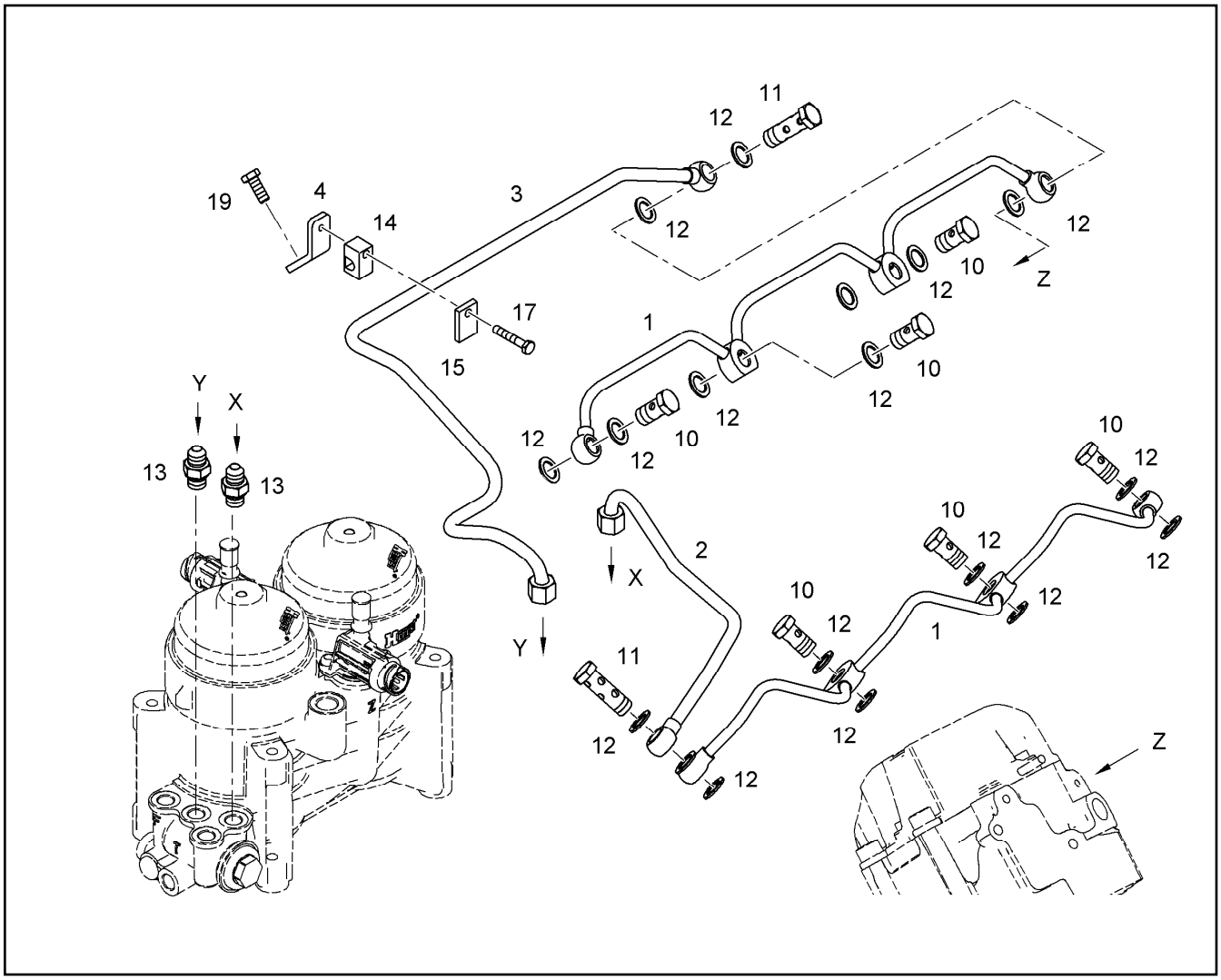

Pos.	Item	Quantity	Description	Descripción	Serie	K
1	9078555	2	OVERFLOW-OIL LINE	TUBERIA DE ACEITE DE FUGA		1
2	9078557	1	OVERFLOW-OIL LINE 10X1,5	TUBERIA DE ACEITE DE FUGA		
3	9078559	1	OVERFLOW-OIL LINE	TUBERIA DE ACEITE DE FUGA		
4	9078884	1	HOLDER	FIJADOR		
10	4001439	6	HOLLOW SCREW 10X3	TORNILLO HUECO		
11	7381797	2	DOUBLE BANJO BOLT M14X1,5	TORNILLO HUECO DOBLE		
12	10011866	18	SEALING RING 14,7X22,00X1,5	JUNTA ANULAR		1
13	10021563	2	SCREW FITTING GE 10	ATORNILLAMIENTO		
14	7381175	1	PIPE CLAMP	ABRAZADERA TUBO		
15	9276996	1	SUPPORT PLATE	CHAPA APOYO		
17	4900595	1	HEX BOLT ISO 4017 M6x35 8.8 A2C	TORNILLO DE CABEZA HEXAGO		
19	4900089	1	HEX BOLT ISO 4017 M8x20 8.8 A2C	TORNILLO DE CABEZA HEXAGO		

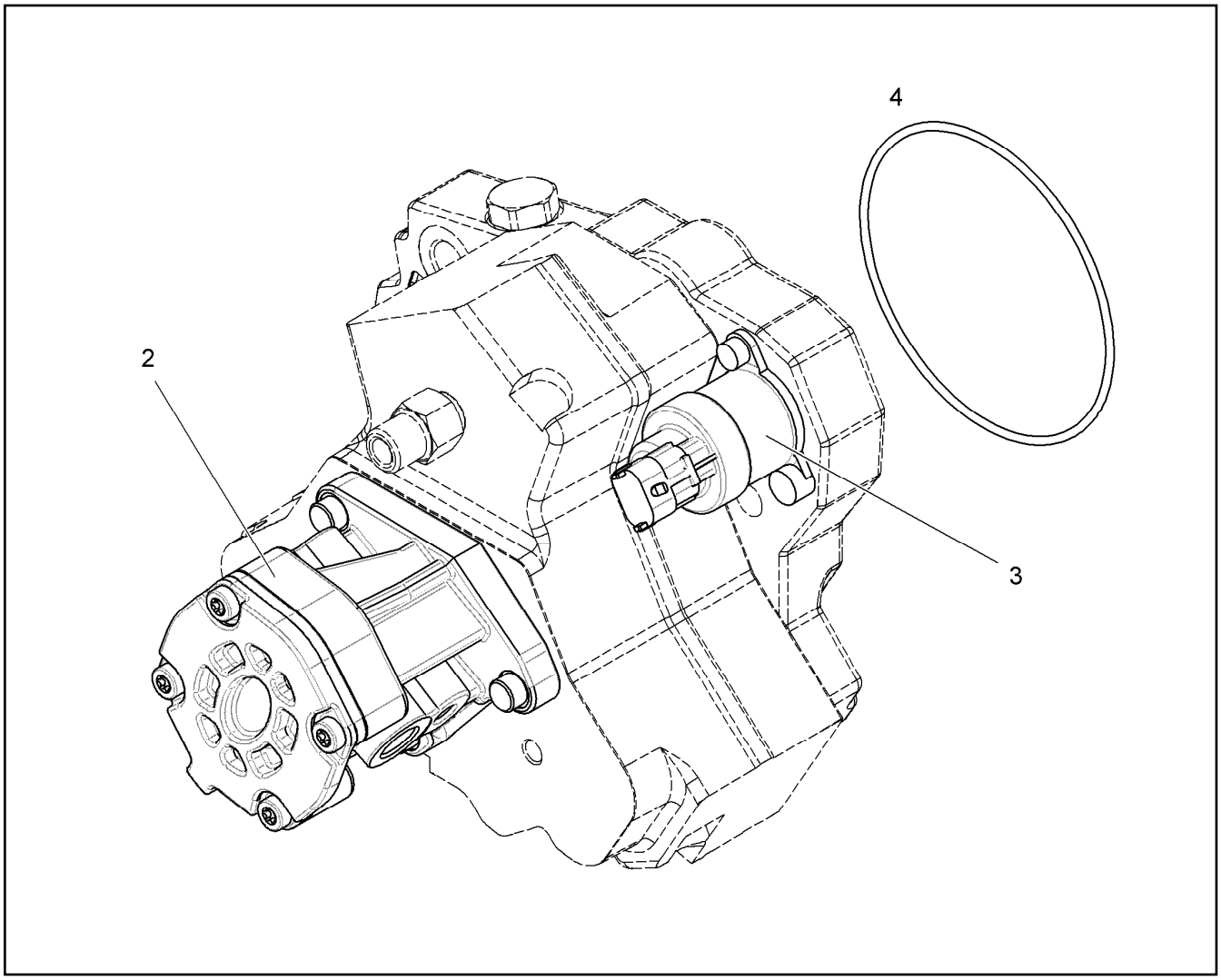

Pos.	Item	Quantity	Description	Descripción	Serie	K
2	10116343	1	PREFEEDING PUMP	BOMBA PREVIA DE ALIMENTAC		2
2	4042002	4	-CYLINDER SCREW ISO 4762 M6x20 8.8 A2	-TORNILLO CILINDRICO		
2	10040400	1	-O-RING	-JUNTA TORICA		1
3	10331907	1	DOSING VALVE	VALVULA DOSIFICADORA		2
4	7381192	1	O-RING DIN 3771 100,00X3,00	JUNTA TORICA		1

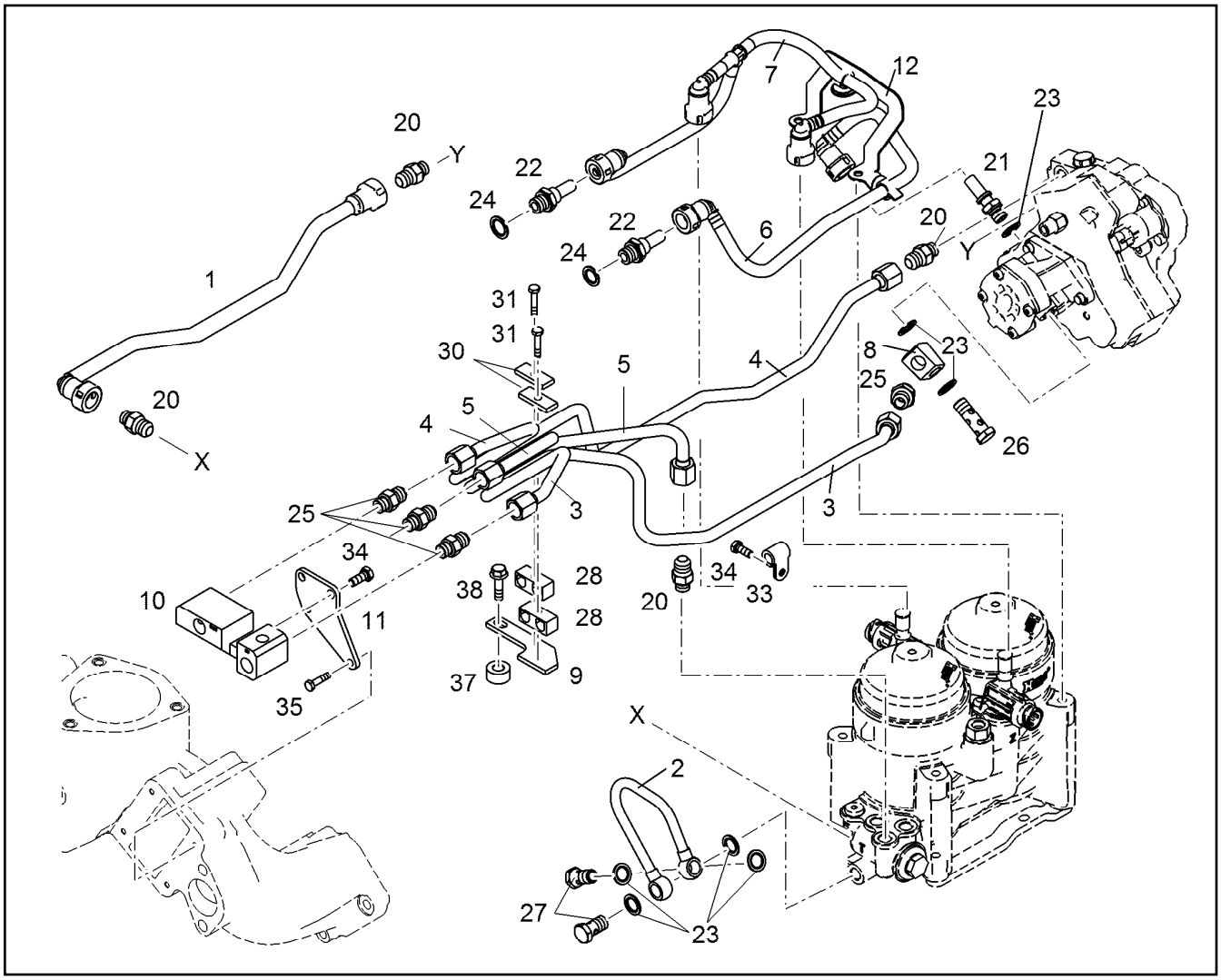

Pos.	Item	Quantity	Description	Descripción	Serie	K
1	10117241	1	PIPELINE 12X1	TUBERIA		
2	9078870	1	FUEL LINE RAIL-KSC	TUBERIA COMBUSTIBLE		
3	9080724	1	FUEL LINE MOTOR-FPPE	TUBERIA COMBUSTIBLE		
4	9080725	1	FUEL LINE 12X1	TUBERIA COMBUSTIBLE		
5	9080726	1	FUEL LINE 12X1	TUBERIA COMBUSTIBLE		
6	10121096	1	FUEL LINE	TUBERIA COMBUSTIBLE		
7	9079085	1	FUEL LINE EDC-KSC	TUBERIA COMBUSTIBLE		
8	9078874	1	LUG	ESPIGA		
9	9080841	1	HOLDER	FIJADOR		
10	9079113	1	CONNECTION PIECE	PIEZA DE EMPALME		
11	9080727	1	HOLDER	FIJADOR		
12	9080635	1	FASTENER	SOPORTE FIJADOR		
20	10813939	4	SCREW FITTING GE 12	ATORNILLAMIENTO		
21	10037655	1	SCREW-ON CONNECTION DN 12	ESPIGA MACHO		
22	10115830	2	SCREW-ON CONNECTION	ESPIGA MACHO		
23	10011866	7	SEALING RING 14,7X22,00X1,5	JUNTA ANULAR		1
24	10011867	2	SEALING RING 16,7X24,00X1,5	JUNTA ANULAR		1
25	10813940	4	SCREW FITTING GE 12	ATORNILLAMIENTO		
26	7381797	1	DOUBLE BANJO BOLT M14X1,5	TORNILLO HUECO DOBLE		
27	4001439	2	HOLLOW SCREW 10X3	TORNILLO HUECO		
28	7382216	2	PIPE CLAMP	ABRAZADERA TUBO		
30	9073190	2	SUPPORT PLATE	CHAPA APOYO		
31	4600102	2	HEX BOLT ISO 4017 M6X30 8.8 A2C	TORNILLO DE CABEZA HEXAGO		
33	7002957	1	CLAMP DIN 3016-1 D1 12x20 W1-2-CR	ABRAZADERA		
34	4900089	3	HEX BOLT ISO 4017 M8x20 8.8 A2C	TORNILLO DE CABEZA HEXAGO		
35	4980857	2	HEX HEAD SCREW ISO 4017 M 6 X 25 10.9	TORNILLO HEXAGONAL		

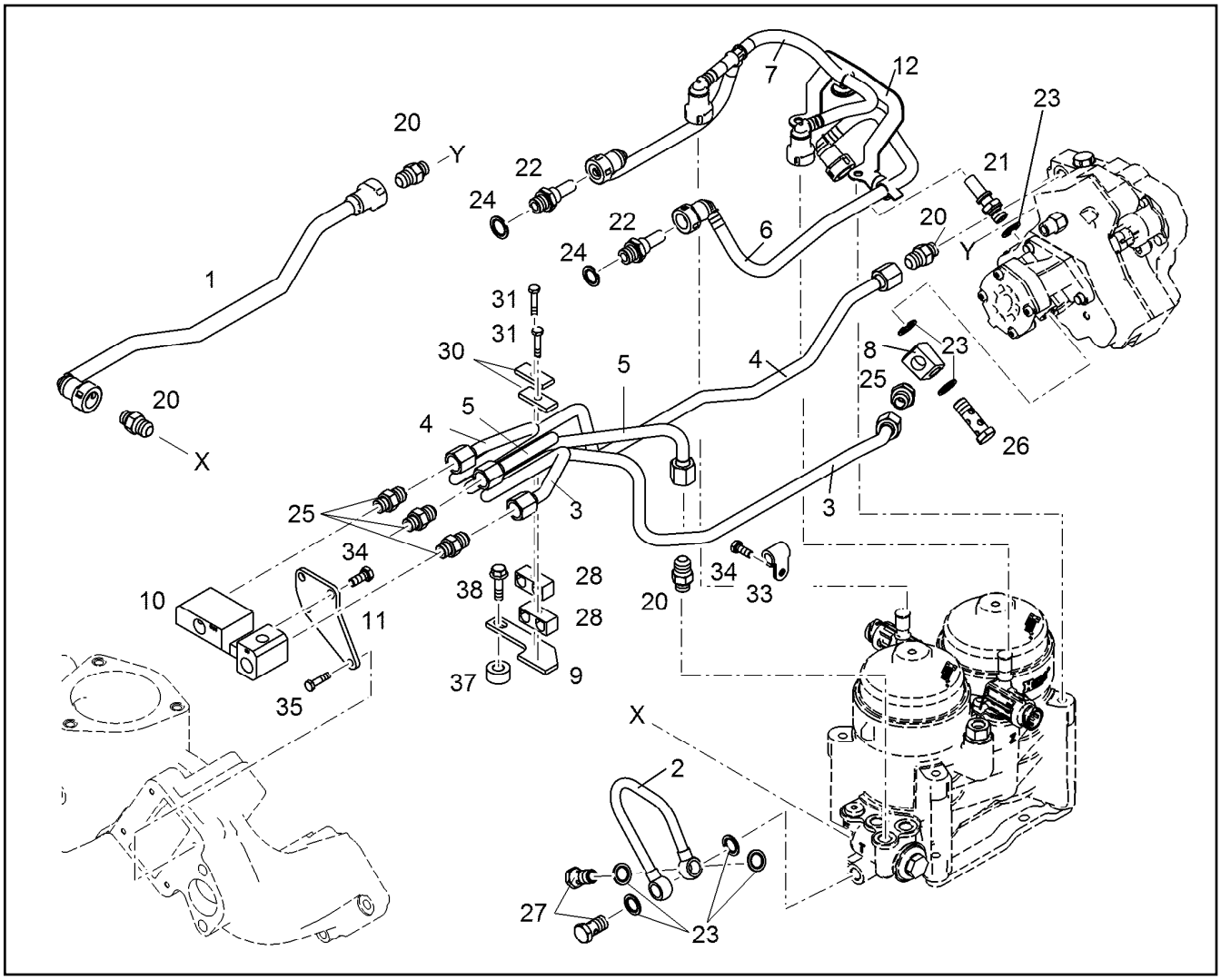

Pos.	Item	Quantity	Description	Descripción	Serie	K
37	9277034	1	SPACER PIECE	PIEZA DISTANCIADOR		
38	10007782	1	HEX BOLT EN 1665 M8x30 8.8 A3C	TORNILLO DE CABEZA HEXAGO		

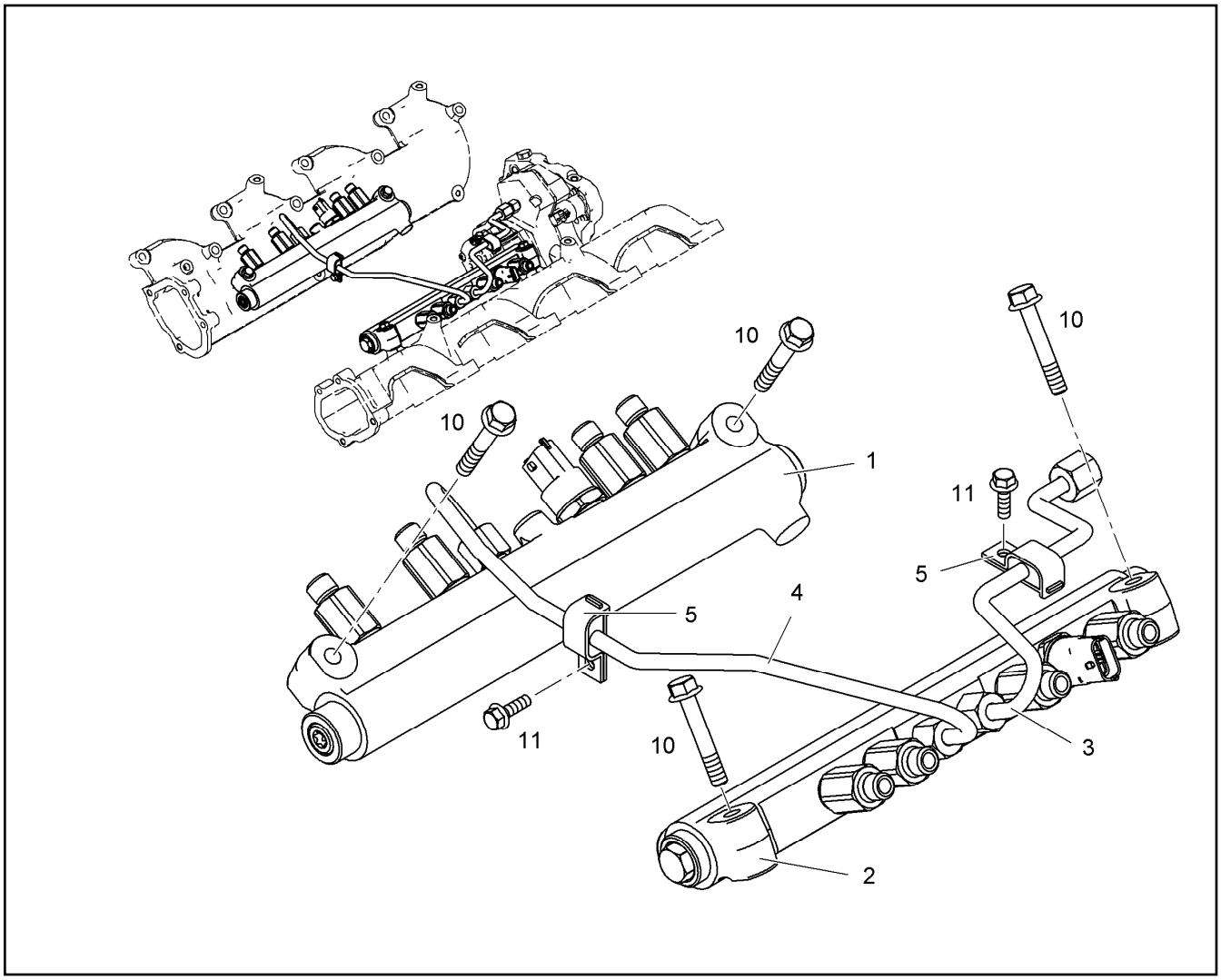

Pos.	Item	Quantity	Description	Descripción	Serie	K
1	10116119	1	HIGH PRESSURE RAIL LEFT	TUBO PRESIÓN RAIL IZDO.		
2	10116120	1	HIGH PRESSURE RAIL RIGHT	TUBO PRESIÓN RAIL DCHO.		1
3	10119365	1	PRESSURE LINE	TUBERÍA IMPULSIÓN		
4	10119366	1	PRESSURE LINE	TUBERÍA IMPULSIÓN		
5	10222743	2	PIPE CLAMP	ABRAZADERA TUBO		
10	10037107	4	HEX HEAD SCREW WITH FLANGE EN 1665	TORNILLO HEXAGONAL CON BR		
11	10018711	2	HEX BOLT EN 1665 M6x20 8.8 A2C	TORNILLO DE CABEZA HEXAGO		

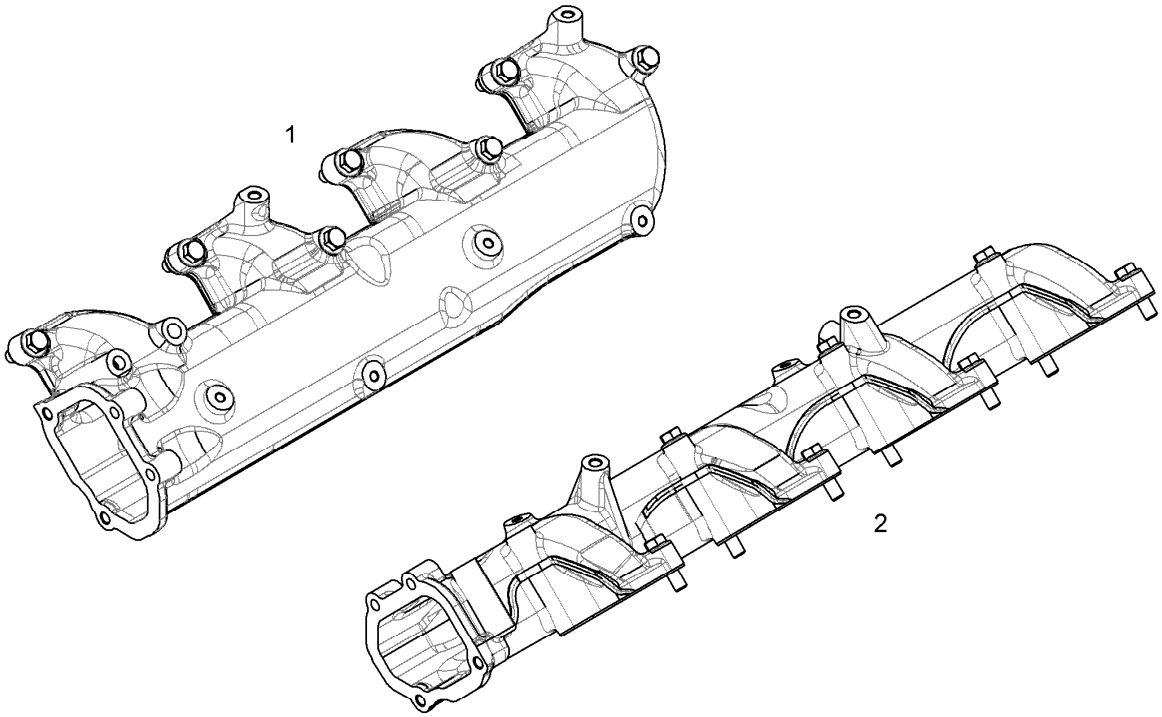

Pos.	Item	Quantity	Description	Descripción	Serie	K
1	9079075	1	AIR INTAKE RIGHT ⇨ ❑ 627	ASPIRACIÓN DE AIRE DCHA.		
2	9079076	1	AIR SUCTION ⇨ ❑ 628	ASPIRACION DE AIRE		

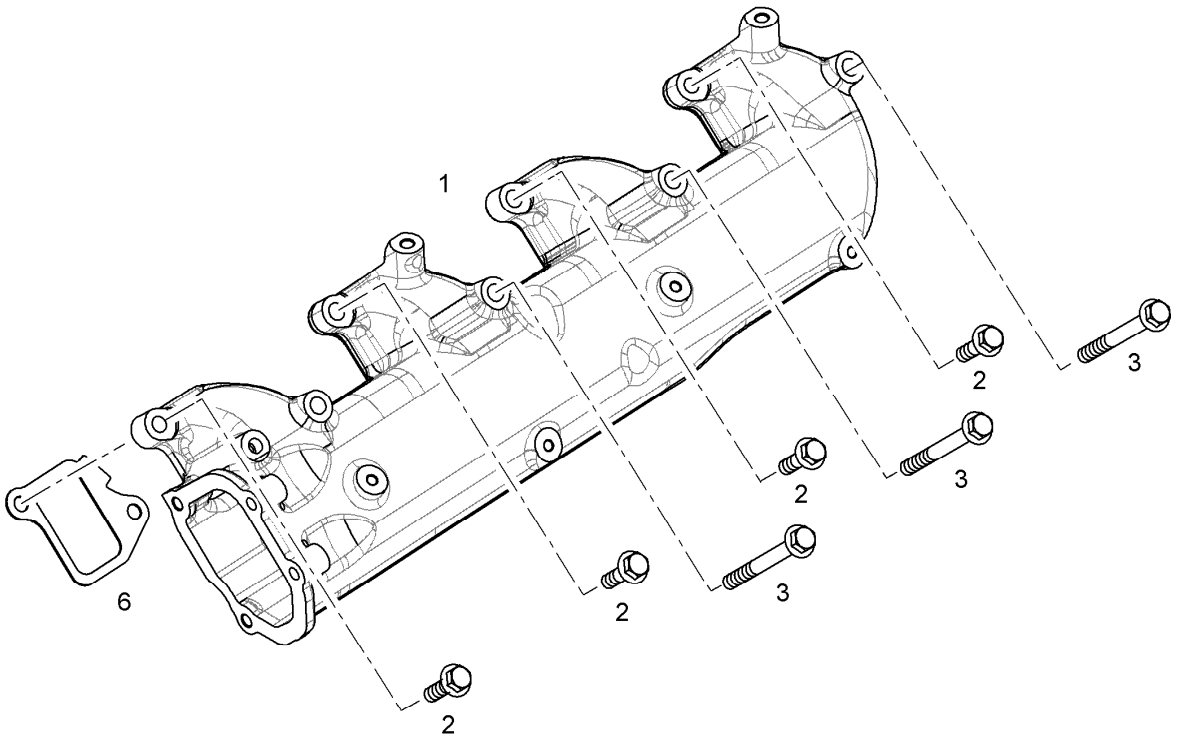

Pos.	Item	Quantity	Description	Descripción	Serie	K
1	9079036	1	AIR SUCTION PIPE	TUBO PARA ASPIRACION DE AIR		
2	10035578	4	HEX BOLT EN 1665 M10X35 10.9 A3C	TORNILLO DE CABEZA HEXAGO		
3	10035581	3	HEX BOLT EN 1665 M10X100 10.9 A3C	TORNILLO DE CABEZA HEXAGO		
6	9078337	4	SEAL 1.5MM	JUNTA		

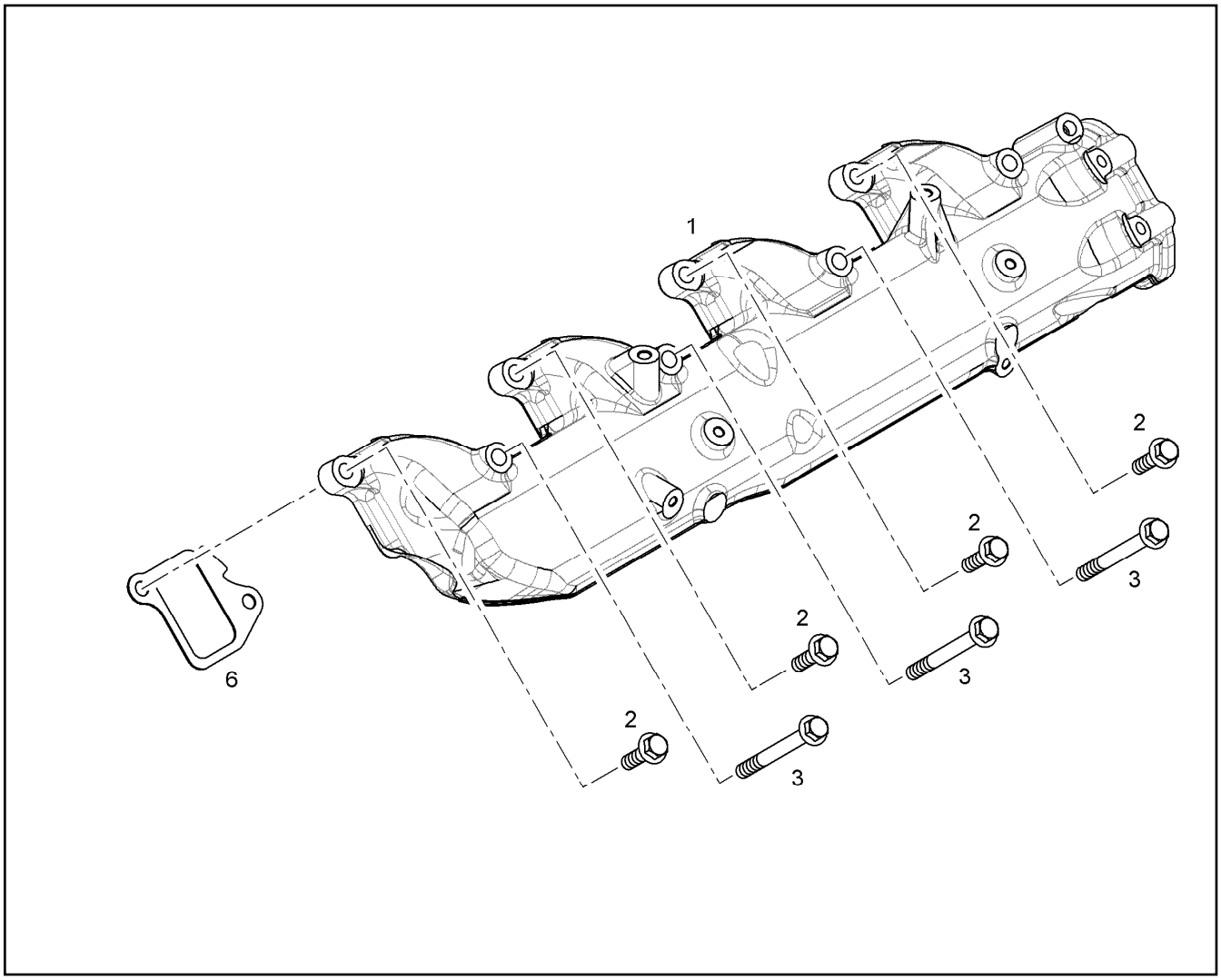

Pos.	Item	Quantity	Description	Descripción	Serie	K
1	9079037	1	AIR SUCTION PIPE	TUBO PARA ASPIRACION DE AIR		
2	10035578	4	HEX BOLT EN 1665 M10X35 10.9 A3C	TORNILLO DE CABEZA HEXAGO		
3	10035581	3	HEX BOLT EN 1665 M10X100 10.9 A3C	TORNILLO DE CABEZA HEXAGO		
6	9078337	4	SEAL 1.5MM	JUNTA		

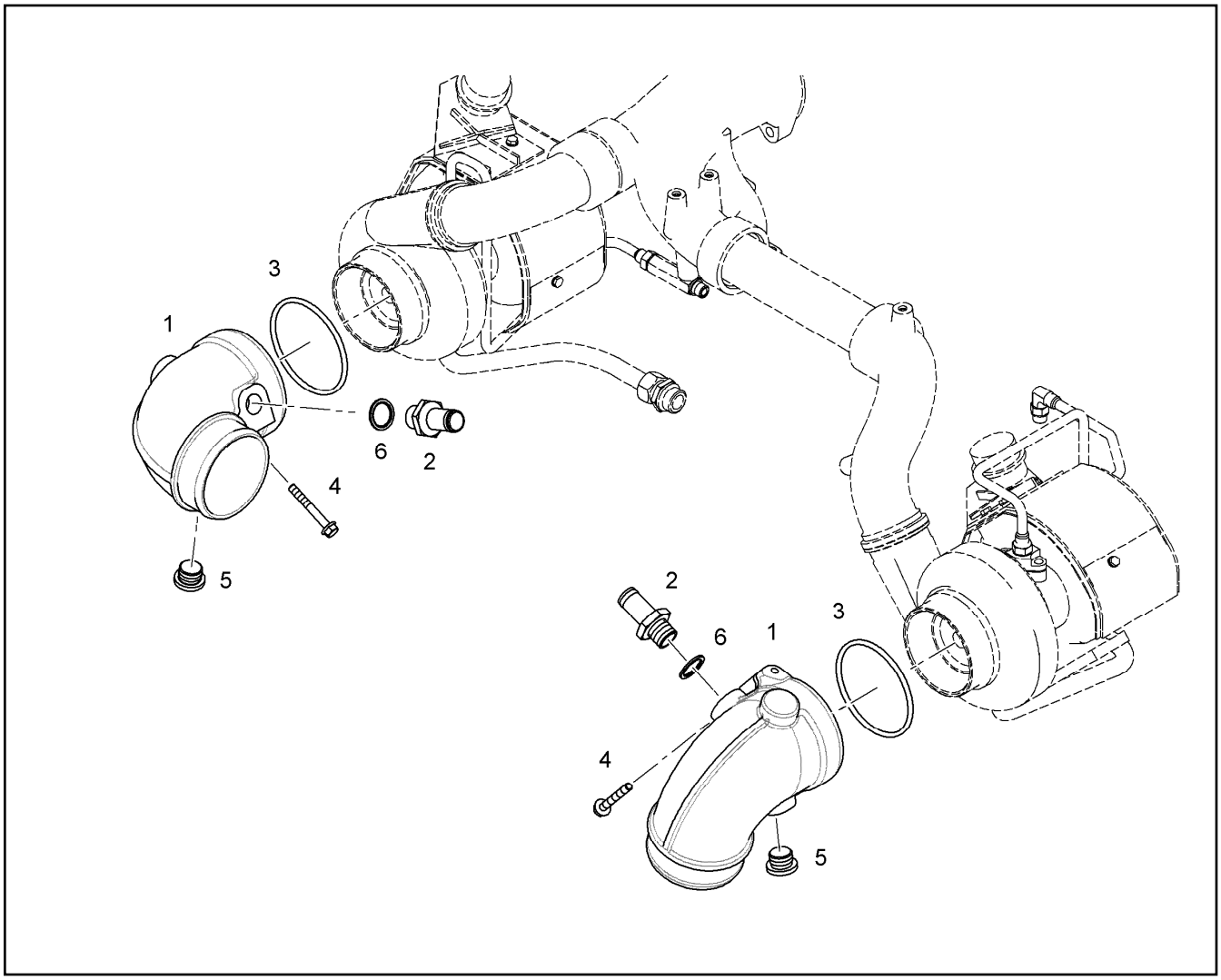

Pos.	Item	Quantity	Description	Descripción	Serie	K
1	9080428	2	INTAKE NOZZLE	RACOR ASPIRACION	-2007140058	
1	10119863	2	INTAKE NOZZLE	RACOR ASPIRACION	2007140059-	1
2	9080429	2	LUG M24X1,5	ESPIGA	-2007140058	
2	9140351	2	HOSE NIPPLE	BOQUILLA MANGUERA	2007140059-	
3	10022101	2	O-RING 100,00X5,0	JUNTA TORICA		1
4	10035594	2	HEX BOLT EN 1665 M8X60 10.9 A3C	TORNILLO DE CABEZA HEXAGO		
5	10041903	2	SCREW PLUG VSTI	TORNILLO DE CIERRE	-2007140058	
5	7381457	2	SCREW PLUG VSTI	TORNILLO DE CIERRE	2007140059-	
6	10011842	2	SEALING RING 24,7X32X2	JUNTA ANULAR	-2007140058	1
6	10011870	2	SEALING RING 26,7X34,93X2	JUNTA ANULAR	2007140059-	1

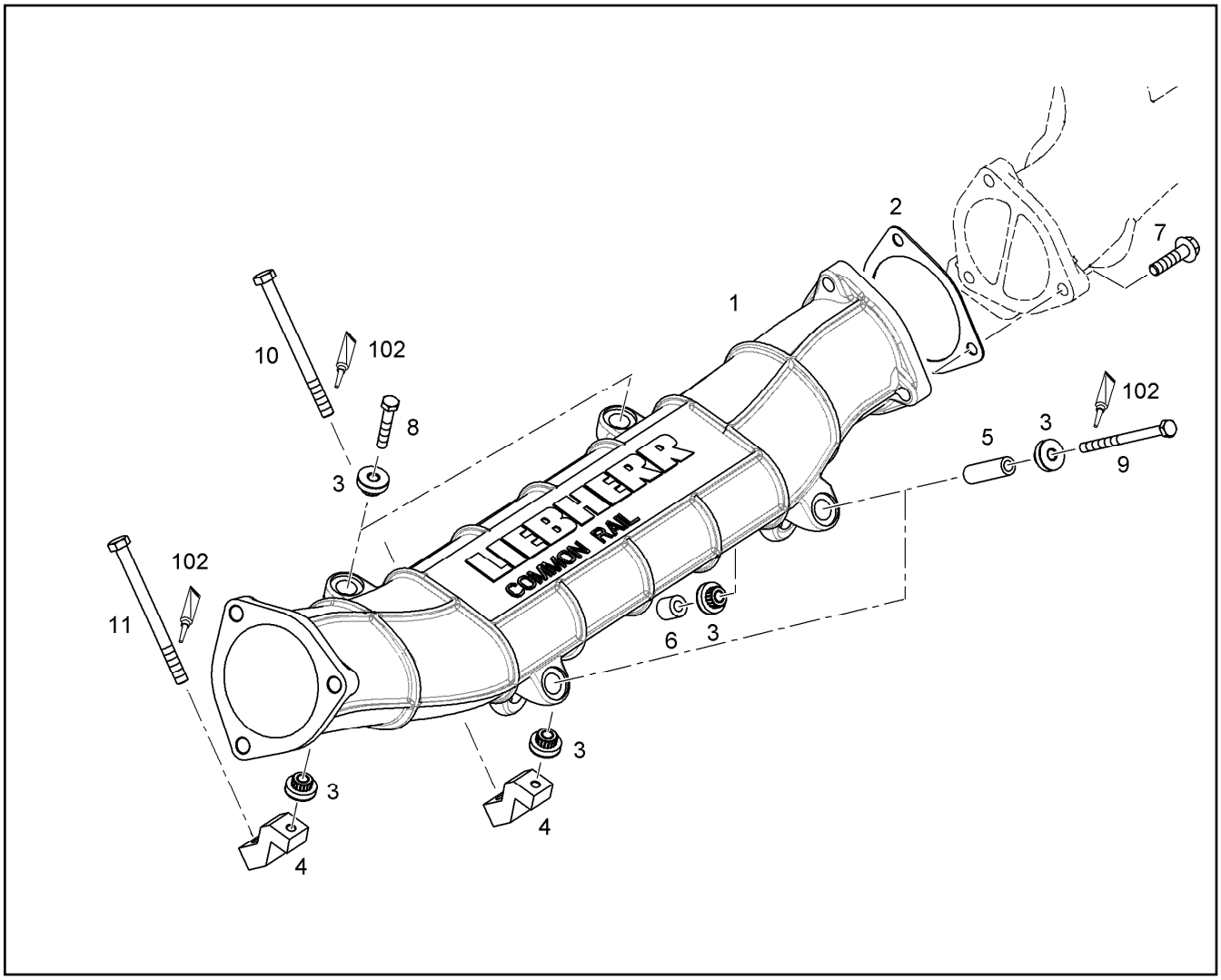

Pos.	Item	Quantity	Description	Descripción	Serie	K
1	9077697	1	CHARGE AIR PIPE PRE-ASS.	PREMONT. TUBO AIRE ADMISIÓ		
2	10118558	2	SEAL	JUNTA		1
3	10116274	8	RUBBER BUMPER	TOPE GOMA		
4	9078837	2	HOLDER	FIJADOR		
5	9078946	2	DISTANCE SLEEVE 9.0X15,0X50	CASQUILLO DISTANCIADOR		
6	9078947	2	DISTANCE SLEEVE 9,0X18,0X17,5	CASQUILLO DISTANCIADOR		
7	10112497	3	HEX BOLT EN 1665 M10x40 8.8 A3C	TORNILLO DE CABEZA HEXAGO		
8	4001667	2	HEX BOLT ISO 4017 M8X45 8.8 A2C	TORNILLO DE CABEZA HEXAGO		
9	4600183	2	HEX HEAD SCREW ISO 4014 M 8 X 110 8.8	TORNILLO HEXAGONAL		
10	4061044	1	HEX BOLT ISO 4014 M10x120 8.8 A3C	TORNILLO DE CABEZA HEXAGO		
11	10041304	1	HEX BOLT DIN 931 M10X125 8.8 A3C	TORNILLO DE CABEZA HEXAGO		
102	8700011	1	LOCTITE	LOCTITE		

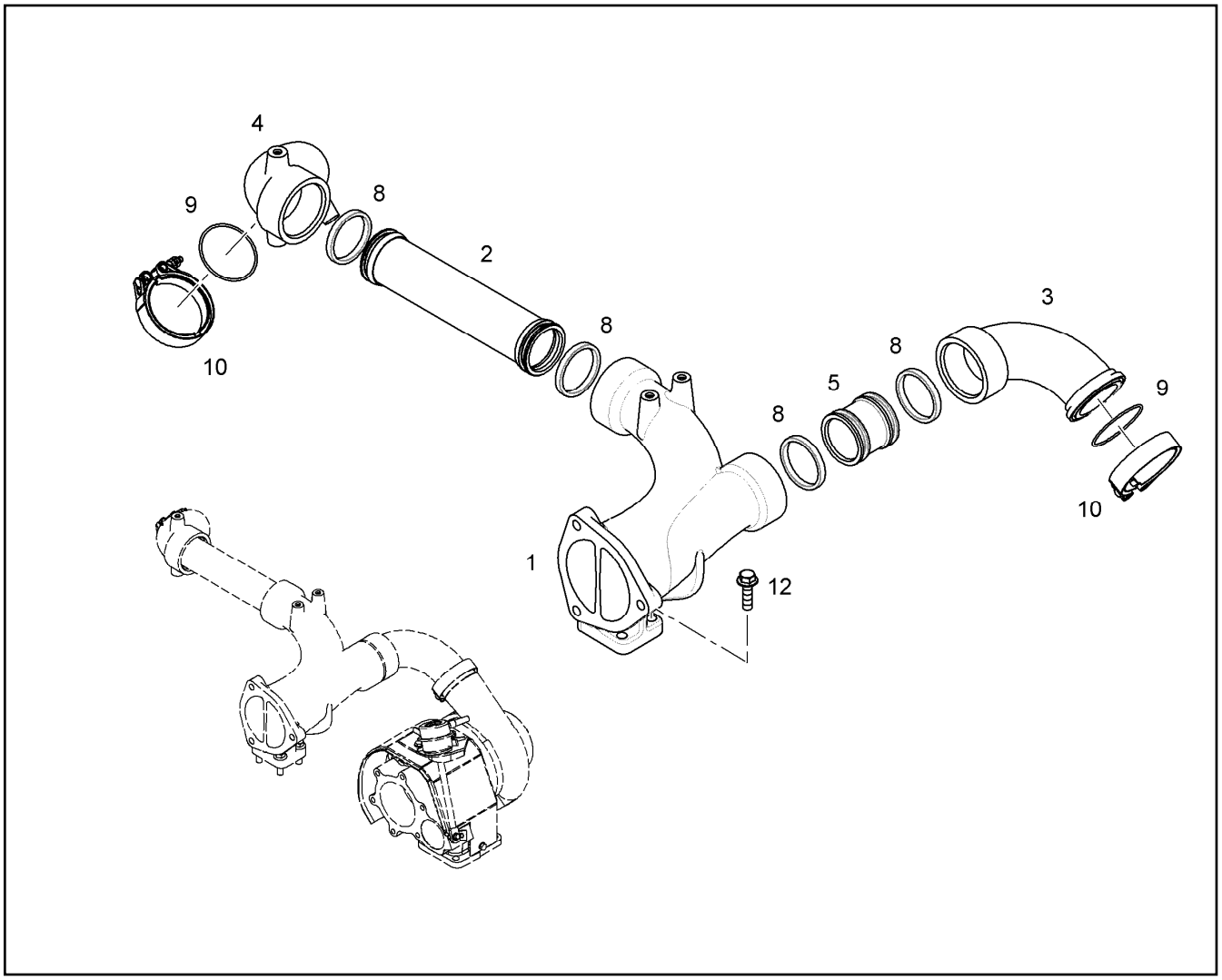

Pos.	Item	Quantity	Description	Descripción	Serie	K
1	9078418	1	CONNECTING LINE	CABLE DE UNION		
2	9078452	1	CONNECTING LINE K27	CABLE DE UNION		
3	10115702	1	CHARGE AIR ELBOW LEFT			
4	10115701	1	CHARGE AIR ELBOW RIGHT			
5	9078422	1	CONNECTING PIECE K27	PIEZA UNION		
8	7381567	4	O-RING	JUNTA TORICA		1
9	7380970	2	O-RING	JUNTA TORICA		1
10	10027937	2	RETAINER CLIP 74-78/20	ABRAZADERA DE APRIETE		
12	10035578	4	HEX BOLT EN 1665 M10X35 10.9 A3C	TORNILLO DE CABEZA HEXAGO		

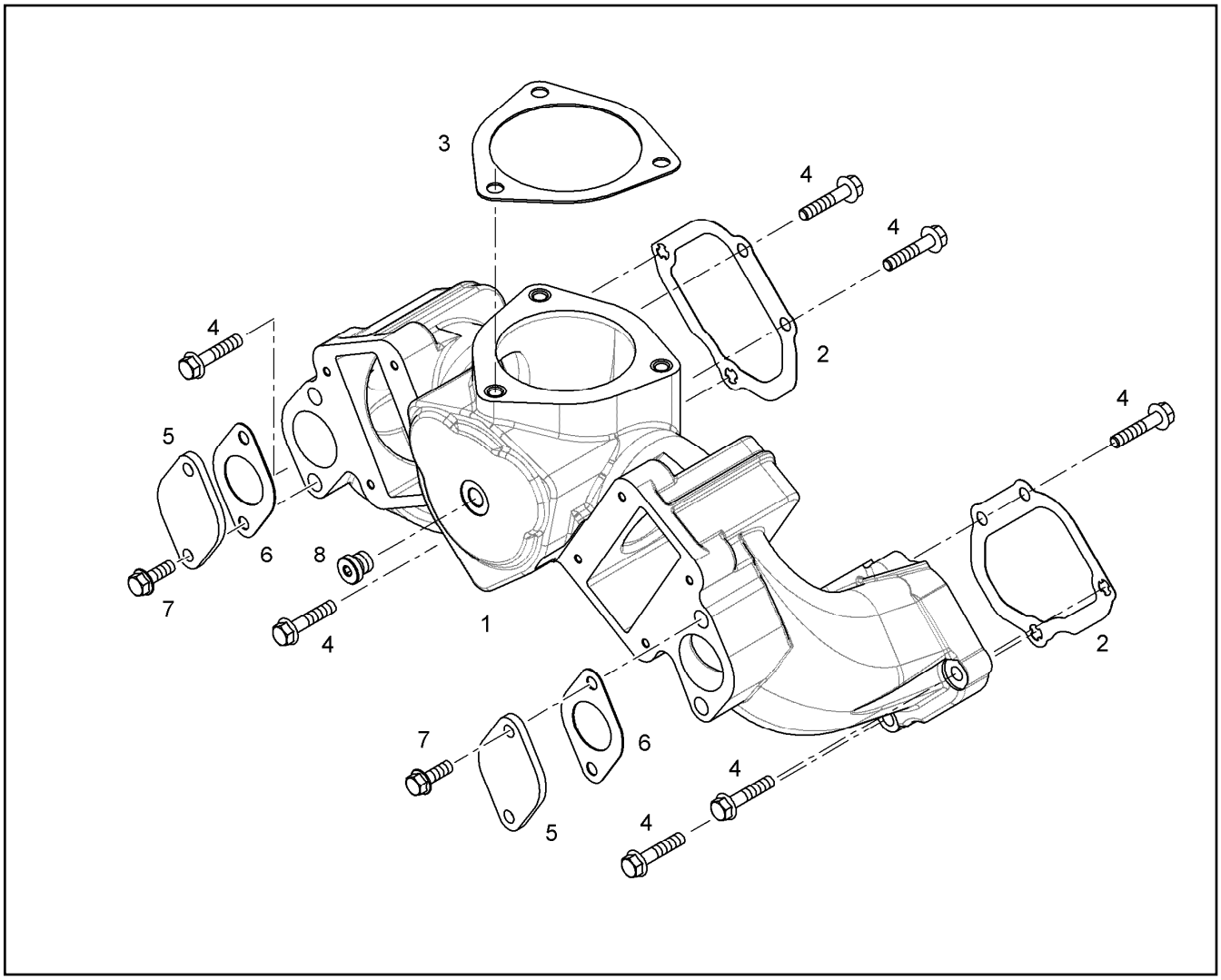

Pos.	Item	Quantity	Description	Descripción	Serie	K
1	10120151	1	CONNECTING PIPE PRE-ASS.	LÍNEA DE CONEXIÓN PREMONT		
2	10119342	2	SEAL	JUNTA		1
3	10118558	1	SEAL	JUNTA		1
4	10035575	8	HEX BOLT EN 1665 M8x40 10.9 A3C	TORNILLO DE CABEZA HEXAGO		
5	10116392	2	LID	TAPA		
6	10116848	2	SEAL	JUNTA		
7	10009007	4	HEX HEAD SCREW WITH FLANGE EN 1665	TORNILLO HEXAGONAL CON BR		
8	7380566	1	SCREW PLUG VSTI	TORNILLO DE CIERRE		

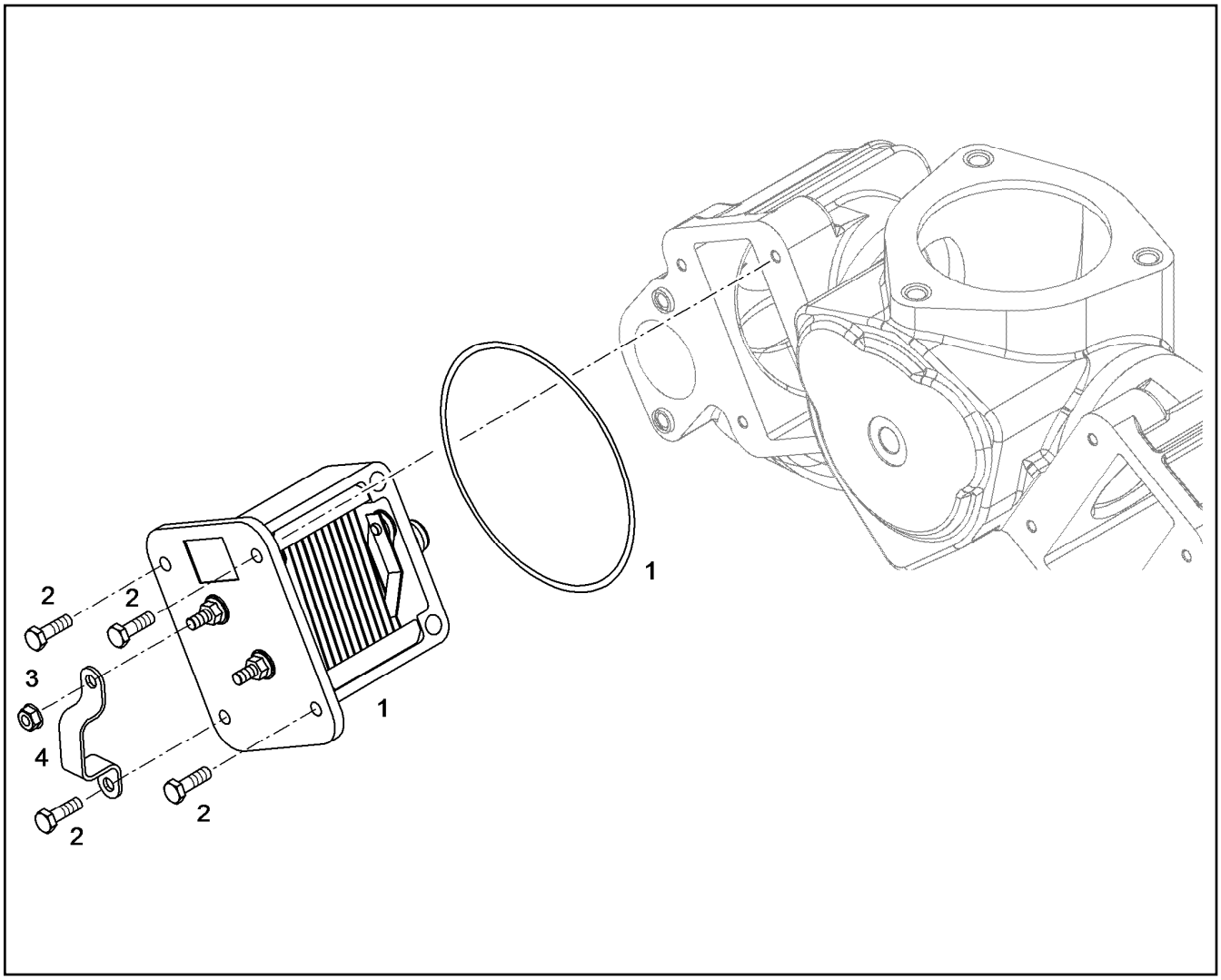

Pos.	Item	Quantity	Description	Descripción	Serie	K
1	10299988	1	HEATING FLANGE	BRIDA DE CALEFACCION		
1	10116255	1	-O-RING DIN 3771 94,50X3,00	-JUNTA TORICA		1
2	10018711	4	HEX BOLT EN 1665 M6x20 8.8 A2C	TORNILLO DE CABEZA HEXAGO		
3	10003366	1	HEX NUT	TUERCA HEXAGONAL		
4	9080911	1	STRIP	MASA		

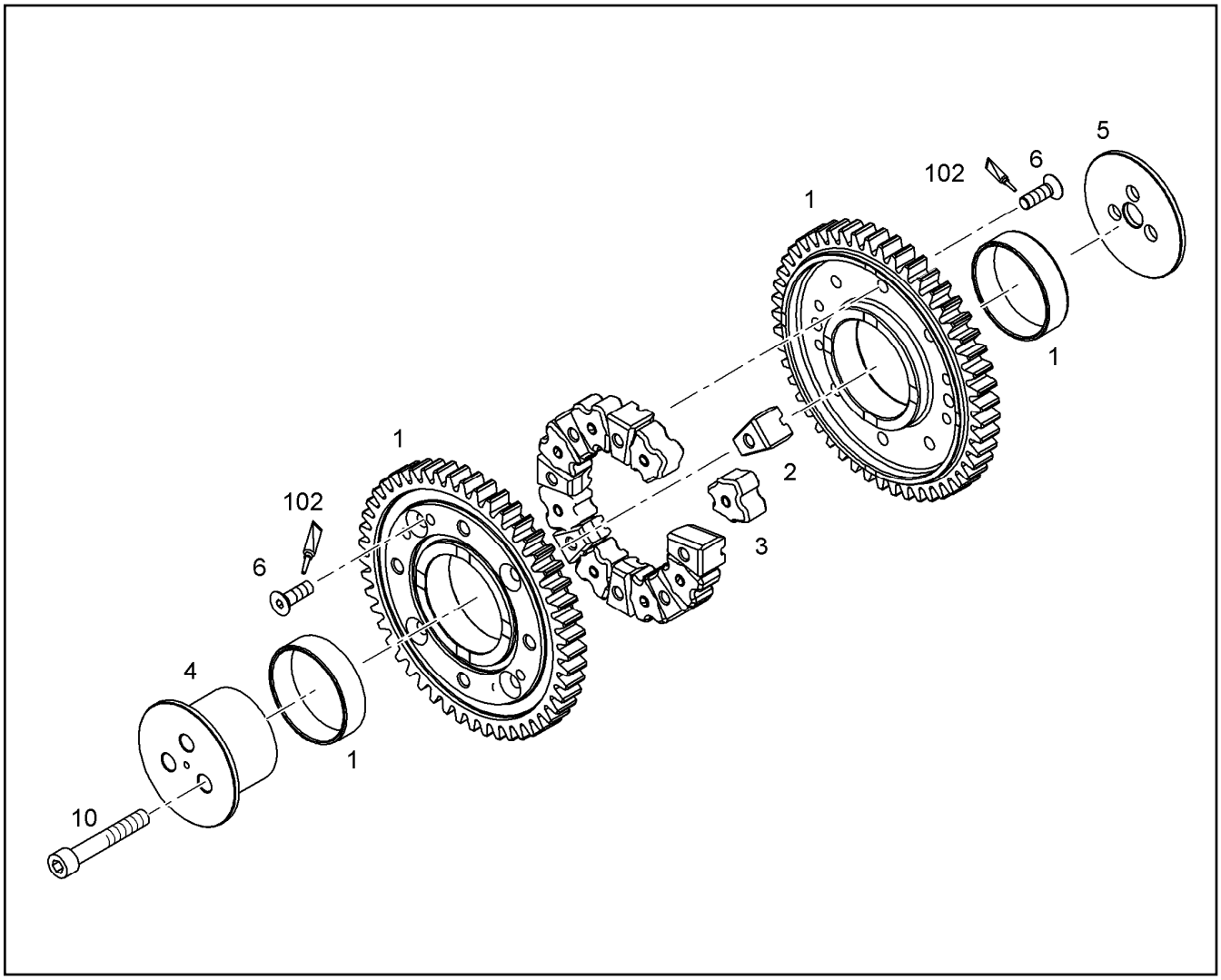

Pos.	Item	Quantity	Description	Descripción	Serie	K
1	10118224	2	INTERMEDIATE GEAR PRE-ASS.	RUEDA INTERMEDIA PREMONT.		
1	9078584	1	BEARING BUSH 60X65X17,5	CASQUILLO DE COJINETE		
2	10118226	8	COMPRESSION PAD	SUPLEMENTO APRISIONADOR		
3	9078589	8	DAMPING ELEMENT	ELEMENTO DE AMORTIG.		
4	9078590	1	INTERMEDIATE WHEEL AXLE	EJE DE RUEDA INTERMEDIA		
5	9078591	1	THRUST WASHER 82/16X4	ARANDELA TOPE		
6	10330625	8	COUNTERSUNK SCREW ISO 10642 M8X25 1	TORNILLO AVELLANADO		
10	4002117	3	HEX BOLT ISO 4014 M10X65 10.9 A3C	TORNILLO DE CABEZA HEXAGO		
102	8700011	1	LOCTITE	LOCTITE		

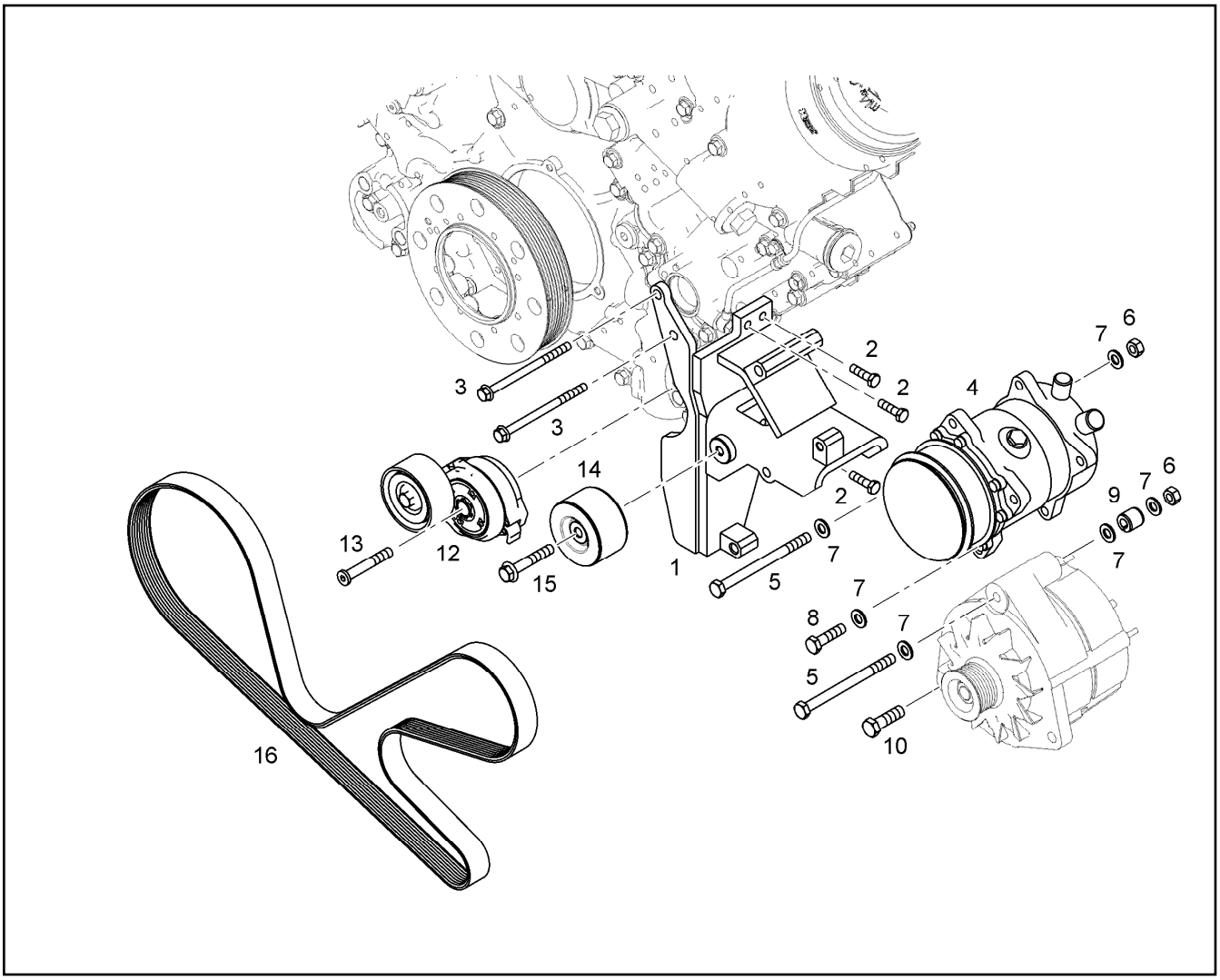

Pos.	Item	Quantity	Description	Descripción	Serie	K
1	10119062	1	CONSOLE	CONSOLA		
2	4900111	4	HEX BOLT ISO 4017 M8x30 8.8 A2C	TORNILLO DE CABEZA HEXAGO		
3	4002051	2	HEX HEAD SCREW ISO 4014 M 8 X 120 8.8	TORNILLO HEXAGONAL		
4	10116767	1	AIR CONDITIONING COMPRESSOR [2888006034]	COMPRESOR AIRE AC.		
4	10115770	1	-COUPLING	-EMBRAGUE		2
4	10040064	1	-DUST-PROF COVER	-PROTECCION ANTIPOLVO		
5	4980370	2	HEX BOLT ISO 4014 M10X130 10.9 A3C	TORNILLO DE CABEZA HEXAGO		
6	4000383	2	HEX NUT ISO 4032 M 10 -10 A3C	TUERCA HEXAGONAL		
7	10289795	6	WASHER ISO 7089 10 300HV	ARANDELA		
8	4600122	1	HEX BOLT ISO 4017 M10x40 8.8 A3C	TORNILLO DE CABEZA HEXAGO		
9	9273849	1	BUSH	CASQUILLO		
10	4601426	1	HEX HEAD SCREW EN 1665 M 12 X 40 8.8	TORNILLO HEXAGONAL		
12	10044692	1	FASTENING DEVICE 39NM/28°	MONTAJE FIJACION		
13	9079596	1	COUNTERSUNK SCREW M 10X 70 10.9	TORNILLO AVELLANADO		
14	9077708	1	DEFLECTION PULLEY ⇨ ❑ 636	POLEA INVERSION		
15	10014638	1	HEX HEAD SCREW WITH FLANGE EN 1665	TORNILLO HEXAGONAL CON BR		
16	4981124	1	RIPPENRIEMEN DIN 7867 8 PK 1890	CORREA DENTADA		2

OHNE BILD

WITHOUT ILLUSTRATION

SANS PLANCHE

Pos.	Item	Quantity	Description	Descripción	Serie	K
1	7382028	1	DEFLECTION PULLEY	POLEA INVERSION		
2	9076986	2	COVER DISC D930	DISCO PROTECTOR		
3	9077709	1	TIGHT FIT SLEEVE	CASQUILLO DE AJUSTE		1
4	9076985	1	DISTANCE SLEEVE	CASQUILLO DISTANCIADOR		

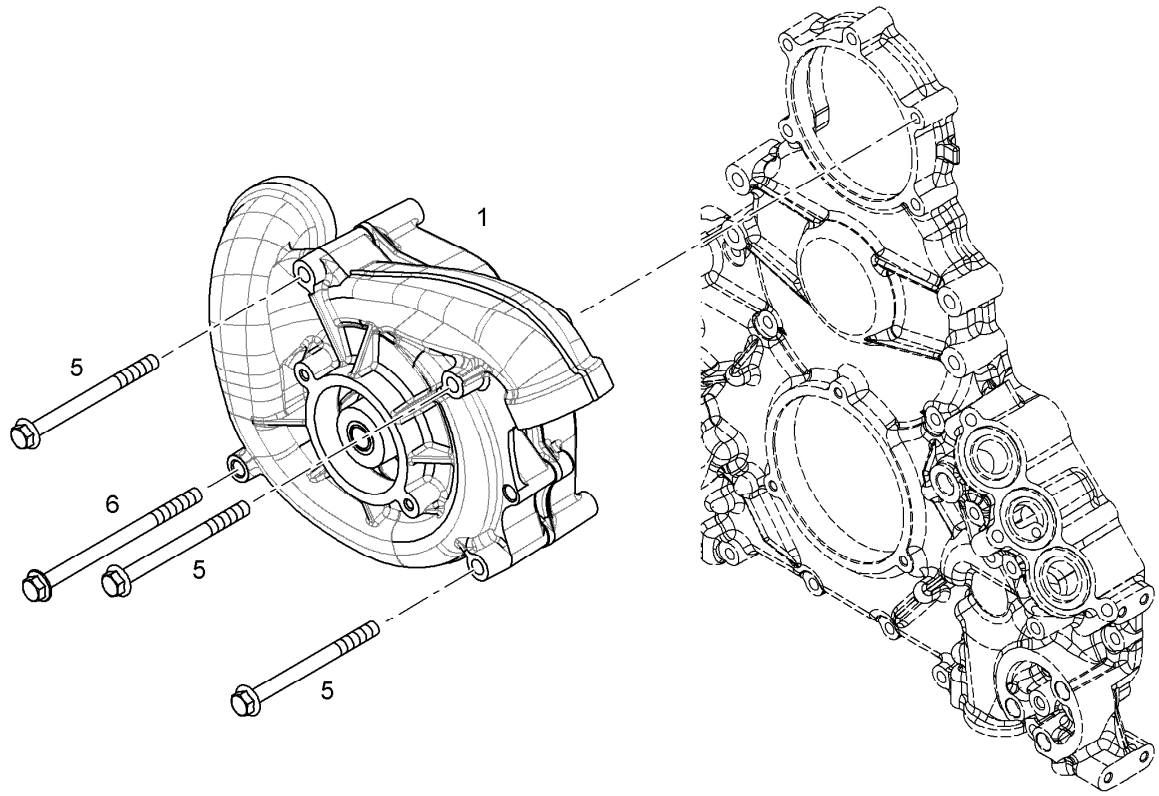

Pos.	Item	Quantity	Description	Descripción	Serie	K
1	10120034	1	WATER PUMP, PRE-ASSEMBLED	BOMBA DE AGUA PREMONTAD		6
5	10037312	3	HEX HEAD SCREW WITH FLANGE EN 1665	TORNILLO HEXAGONAL CON BR		
6	10037313	1	HEX HEAD SCREW WITH FLANGE EN 1665	TORNILLO HEXAGONAL CON BR		

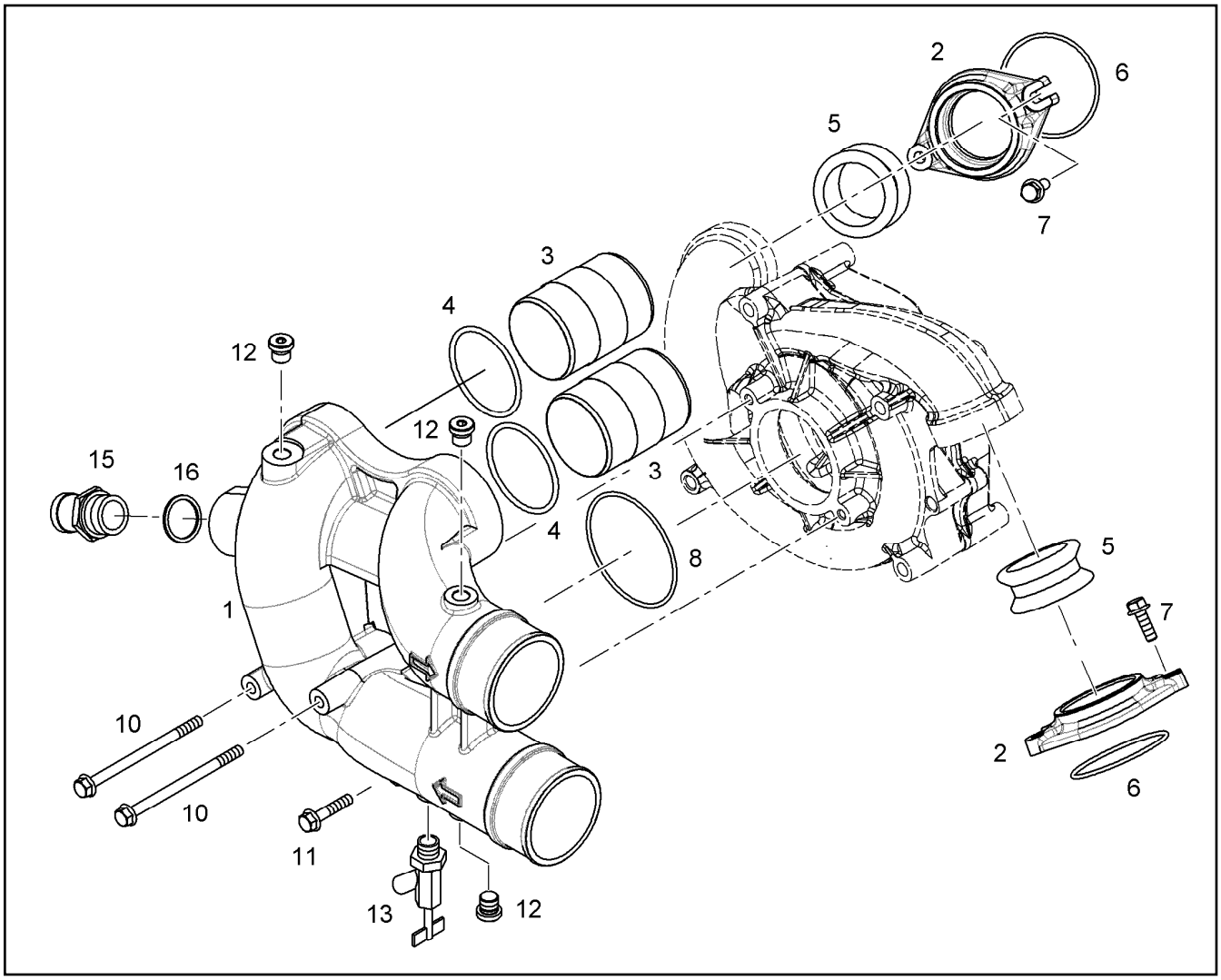

Pos.	Item	Quantity	Description	Descripción	Serie	K
1	10117370	1	COOLANT PIPE BEND	CODO LÍQUIDO REFRIGERANTE		
2	10116734	2	INTERMEDIATE FLANGE	BRIDA INTERMEDIA		
3	9078800	2	PLUG-IN PIPE	TUBO ENCHUFABLE		
4	10040387	2	O-RING 67,50X4,00	JUNTA TORICA		1
5	10354601	2	PLUG-IN PIPE DR 61X32 70 EPDM	TUBO ENCHUFABLE		
6	7264455	2	O-RING DIN 3771 74,00X3,00	JUNTA TORICA		1
7	10035593	4	HEX BOLT EN 1665 M8X30 10.9 A3C	TORNILLO DE CABEZA HEXAGO		
8	10040386	1	O-RING 90,00X3,00	JUNTA TORICA		1
10	10035577	2	HEX HEAD SCREW WITH FLANGE EN 1665	TORNILLO HEXAGONAL CON BR		
11	10035575	1	HEX BOLT EN 1665 M8x40 10.9 A3C	TORNILLO DE CABEZA HEXAGO		
12	7380566	3	SCREW PLUG VSTI	TORNILLO DE CIERRE		
13	7001072	1	WATER COCK	GRIFO DE AGUA		1
15	9272900	1	HOSE NIPPLE	BOQUILLA MANGUERA		
16	7101021	1	SEALING RING DIN 7603 A 30 X 36 CU	JUNTA ANULAR		1

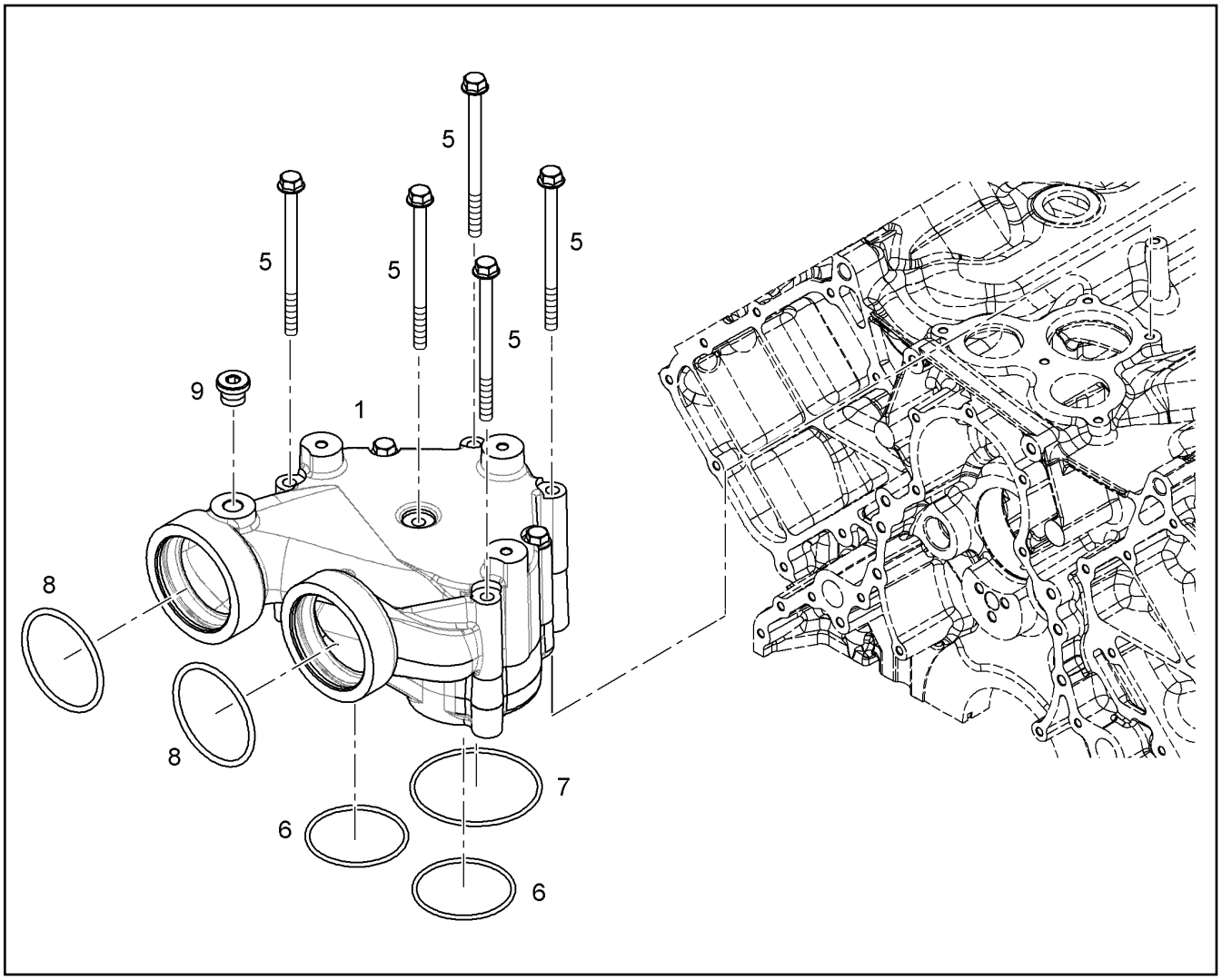

Pos.	Item	Quantity	Description	Descripción	Serie	K
1	10117530	1	THERMOSTAT HOUSING PRE-ASS. ⇨ ❑ 640	CARCASA DE TERMOSTATO PR		
5	10017158	5	HEX BOLT EN 1665 M8X120 8.8 A2C	TORNILLO DE CABEZA HEXAGO		
6	10037224	2	O-RING 63,00X3,00	JUNTA TORICA		1
7	7380296	1	O-RING	JUNTA TORICA		1
8	10040387	2	O-RING 67,50X4,00	JUNTA TORICA		1
9	7380566	1	SCREW PLUG VSTI	TORNILLO DE CIERRE		

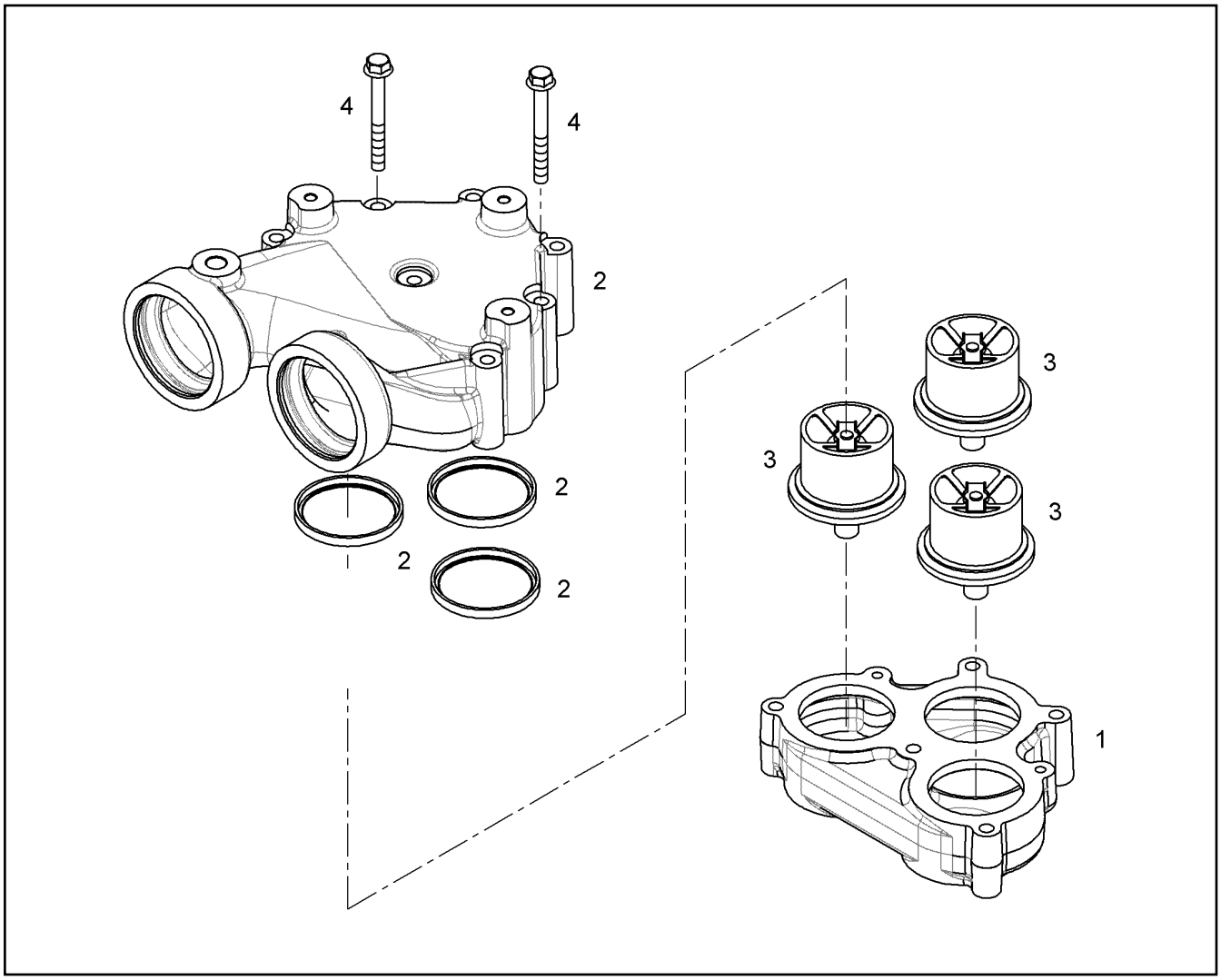

Pos.	Item	Quantity	Description	Descripción	Serie	K
1	10116610	1	THERMOSTAT HOUSING	CARCASA DE TERMOSTATO		
2	10117531	1	THERMOSTAT HOUSING PRE-ASS.	CARCASA DE TERMOSTATO PR		
2	10043255	3	SEALING RING 57,70X67,59X6,35	JUNTA ANULAR		
3	10117576	3	THERMOSTAT	TERMOSTATO		
4	10035576	2	HEX HEAD SCREW WITH FLANGE EN 1665	TORNILLO HEXAGONAL CON BR		

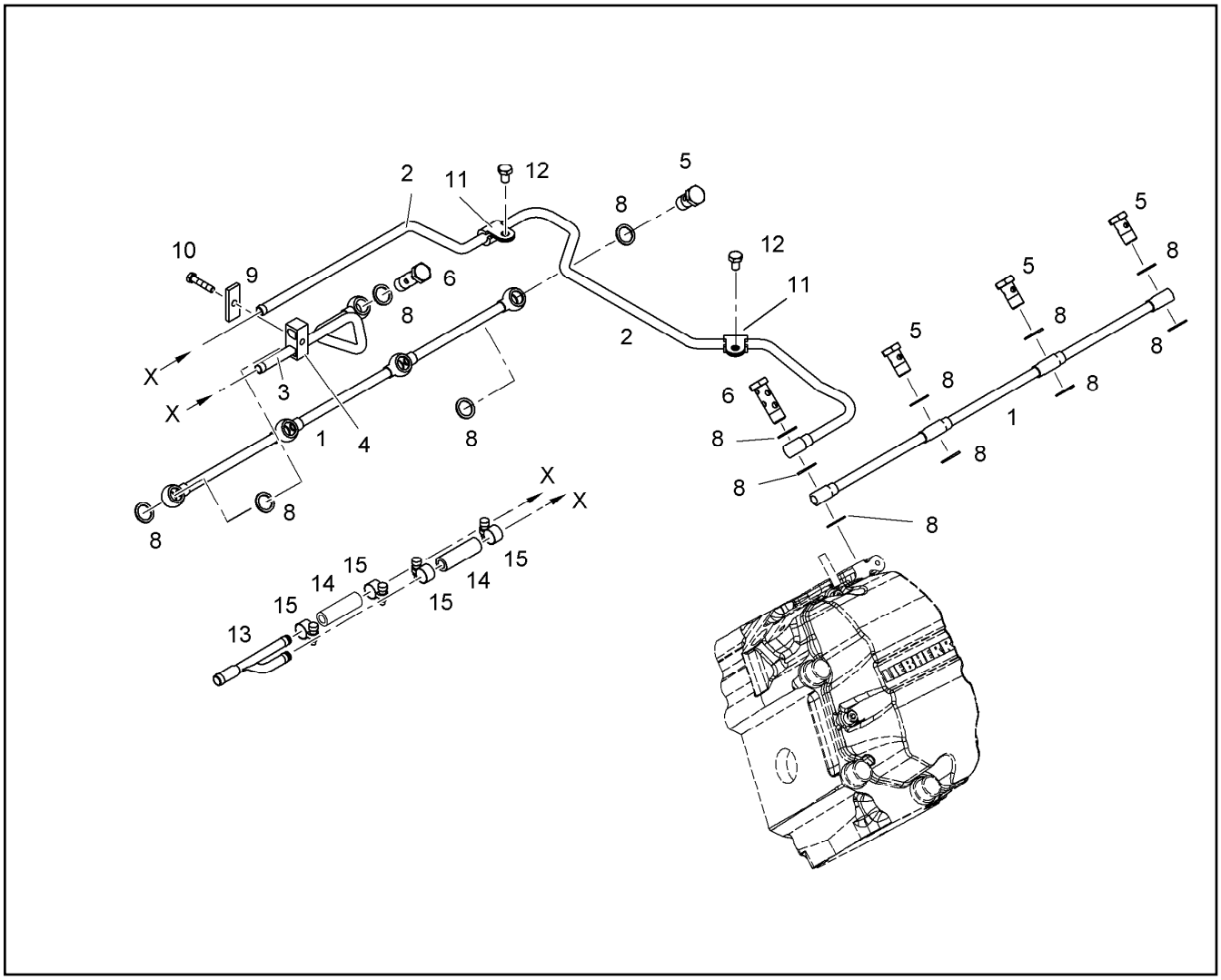

Pos.	Item	Quantity	Description	Descripción	Serie	K
1	10120020	2	VENTILATION LINE	TUBERIA PURGADORA		
2	10116692	1	PIPELINE 10X1	TUBERIA		
3	10116691	1	PIPELINE 10X1	TUBERIA		
4	7382215	1	PIPE CLAMP	ABRAZADERA TUBO		
5	4001439	6	HOLLOW SCREW 10X3	TORNILLO HUECO		
6	7381797	2	DOUBLE BANJO BOLT M14X1,5	TORNILLO HUECO DOBLE		
8	10011866	18	SEALING RING 14,7X22,00X1,5	JUNTA ANULAR		1
9	9073190	1	SUPPORT PLATE	CHAPA APOYO		
10	4600102	1	HEX BOLT ISO 4017 M6X30 8.8 A2C	TORNILLO DE CABEZA HEXAGO		
11	7381628	2	CLAMP DIN 3016 D1- 10 X 20 W1-2-MVQ	ABRAZADERA		
12	4065136	2	HEX BOLT ISO 4017 M8X12 8.8 A2C	TORNILLO DE CABEZA HEXAGO		
13	10119307	1	PIPELINE	TUBERIA		
14	7381649	0.11m	WATER HOSE	MANGUERA DE AGUA		
15	4981029	4	CLAMP DIN 3017 B1- 17 X 12 W1-2	ABRAZADERA		

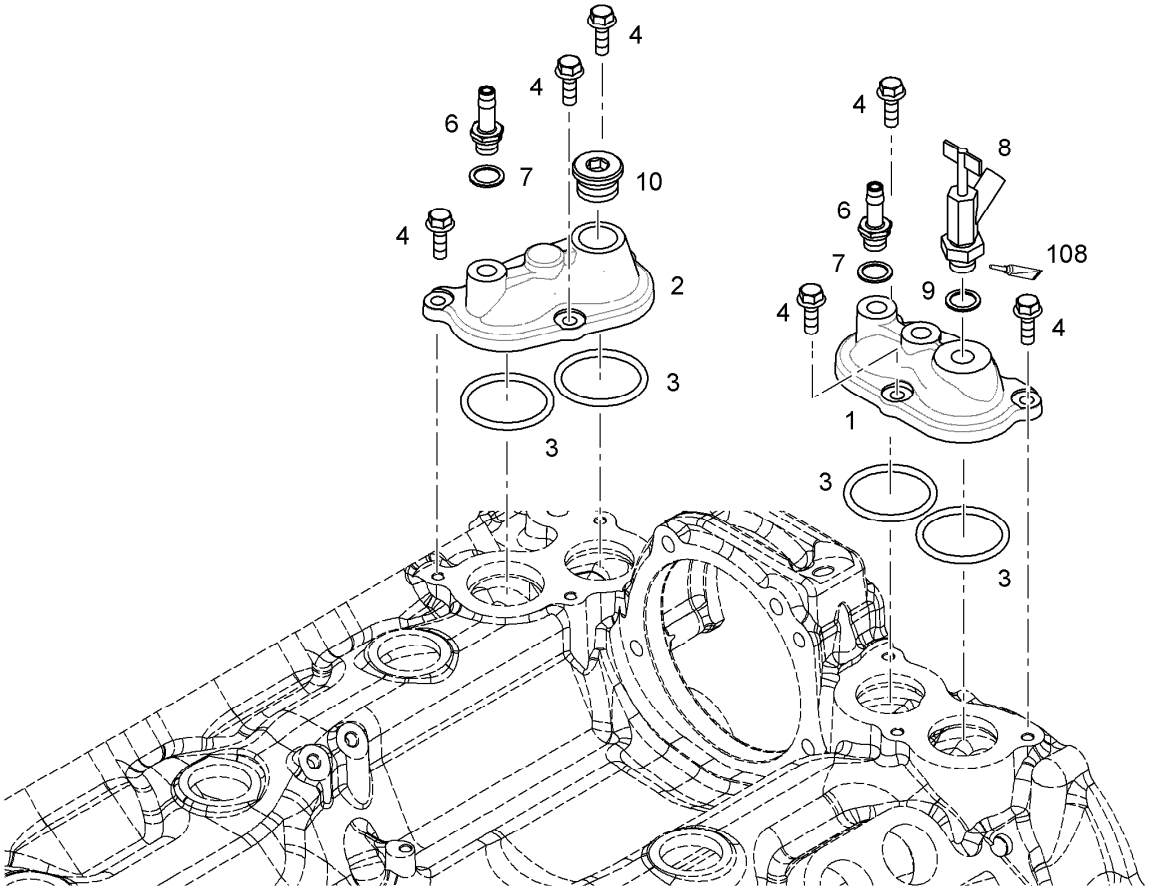

Pos.	Item	Quantity	Description	Descripción	Serie	K
1	9078876	1	COOLANT PIPE BEND	CODO LÍQUIDO REFRIGERANTE		
2	9078875	1	COOLANT PIPE BEND	CODO LÍQUIDO REFRIGERANTE		
3	10038573	4	O-RING 51,00X5,00	JUNTA TORICA		1
4	10016906	6	HEX BOLT EN 1665 M8x20 8.8 A3C	TORNILLO DE CABEZA HEXAGO		
6	10115608	2	HOSE NIPPLE	BOQUILLA MANGUERA		
7	10011866	2	SEALING RING 14,7X22,00X1,5	JUNTA ANULAR		1
8	7001072	1	WATER COCK	GRIFO DE AGUA		1
9	10011867	1	SEALING RING 16,7X24,00X1,5	JUNTA ANULAR		1
10	7381457	1	SCREW PLUG VSTI	TORNILLO DE CIERRE		
108	8622905	1	LOCTITE	LOCTITE		

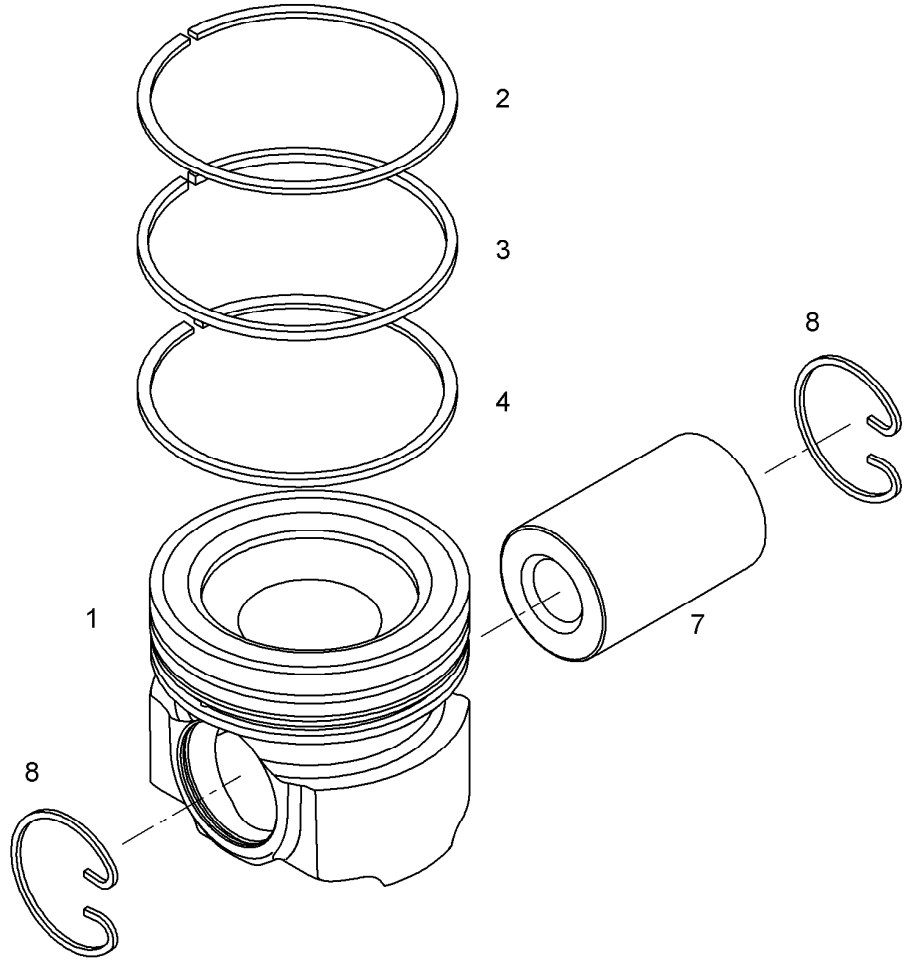

Pos.	Item	Quantity	Description	Descripción	Serie	K
1		1	PISTON d=128	EMBOLO		1
2	10029877	1	KB-RING 118,7X128	ANILLO KB		1
3	10131564	1	PISTON RING MG 128X117,8X2,5	ARO DE EMBOLO LIGERAM. CON		1
4	10029880	1	DSF RING	ANILLO DSF		
7		1	PISTON BOLT DIN 73126 55X80	BULON DEL PISTON		1
8		2	SNAP RING 55	ANILLO MUELLE		

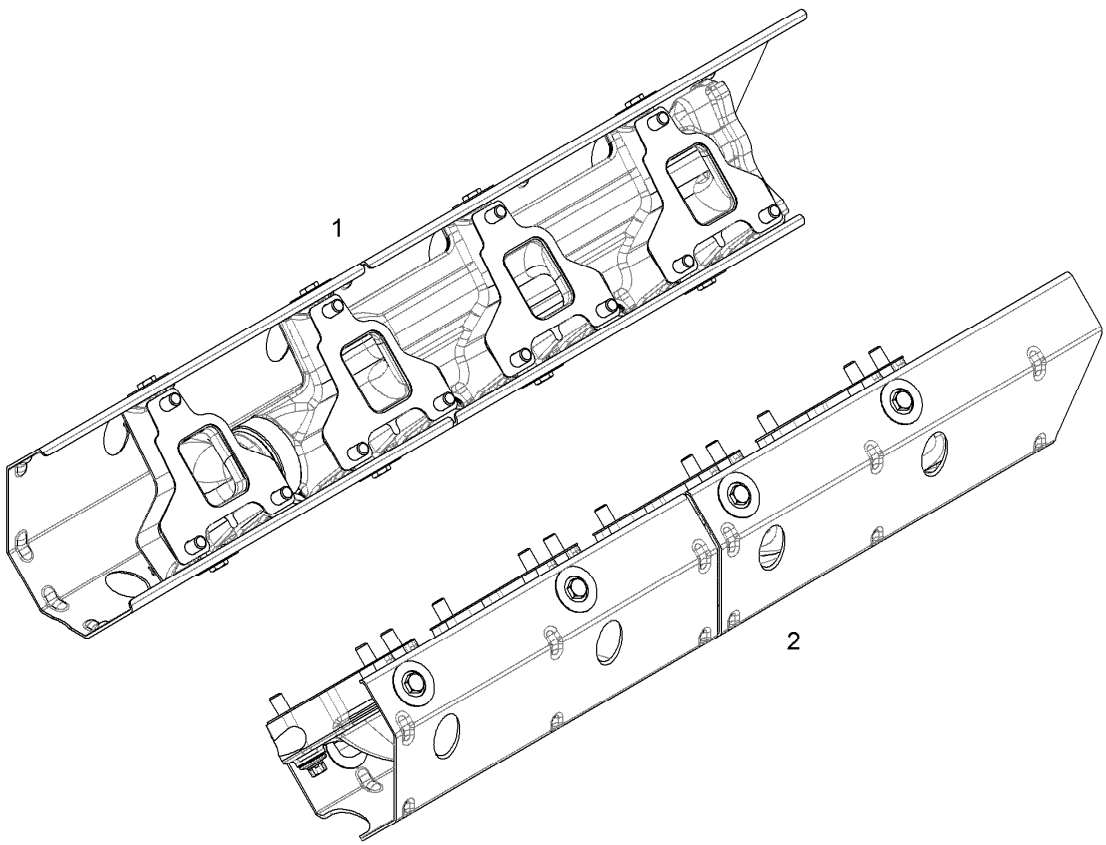

Pos.	Item	Quantity	Description	Descripción	Serie	K
1	10115667	1	EXHAUST PIPE RIGHT ⇨ ❑ 645	TUBO DE ESCAPE DERECHA		
2	10115668	1	EXHAUST PIPE LEFT ⇨ ❑ 648	TUBO DE ESCAPE IZQUIERDA		

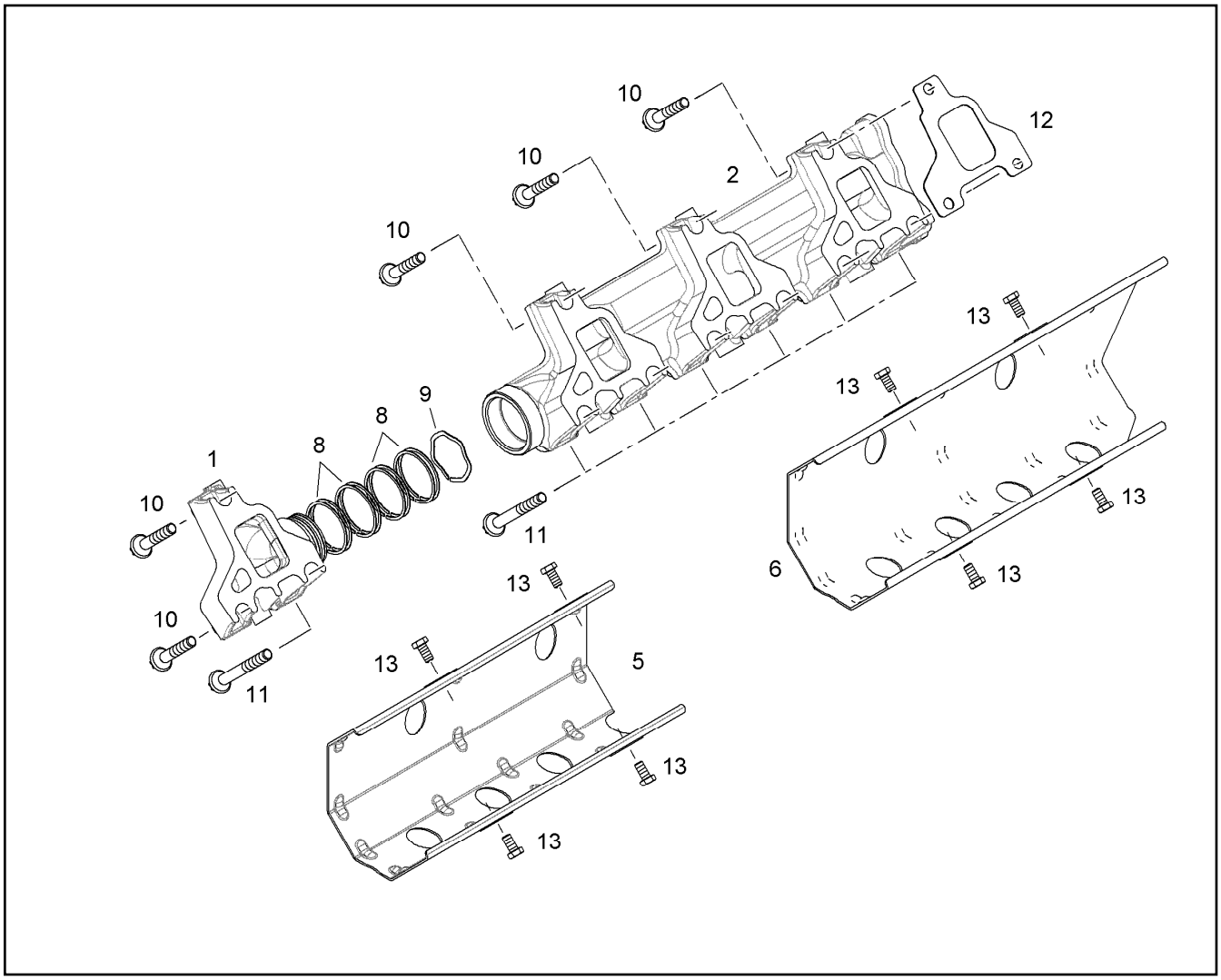

Pos.	Item	Quantity	Description	Descripción	Serie	K
1	9079026	1	EXHAUST PIPE	TUBO DE ESCAPE		
2	10115612	1	EXHAUST PIPE	TUBO DE ESCAPE		
5	9080041	1	HEAT INSULATION PLATE	CHAPA PROTECCION TERMICA		
6	9080042	1	HEAT INSULATION PLATE	CHAPA PROTECCION TERMICA		
8	10030741	2	LAMELLAR DISK KIT 52,0/46,7X2,9	JUEGO DE ANILLOS DE LÁMINA		
9	10030768	2	CURVED SPRING 43.9/51.5/0.81	ARANDELA ONDULADA		
10	10030346	5	HEXALOBULAR HEAD SCREW M 10X 55	TORNILLO ALLEN		
11	10012550	7	FLANGED BOLT	TORNILLO CON COLLAR		
12	9078308	4	SEAL	JUNTA		
13	4900188	8	HEX BOLT ISO 4017 M8x16 8.8 A2C	TORNILLO DE CABEZA HEXAGO		

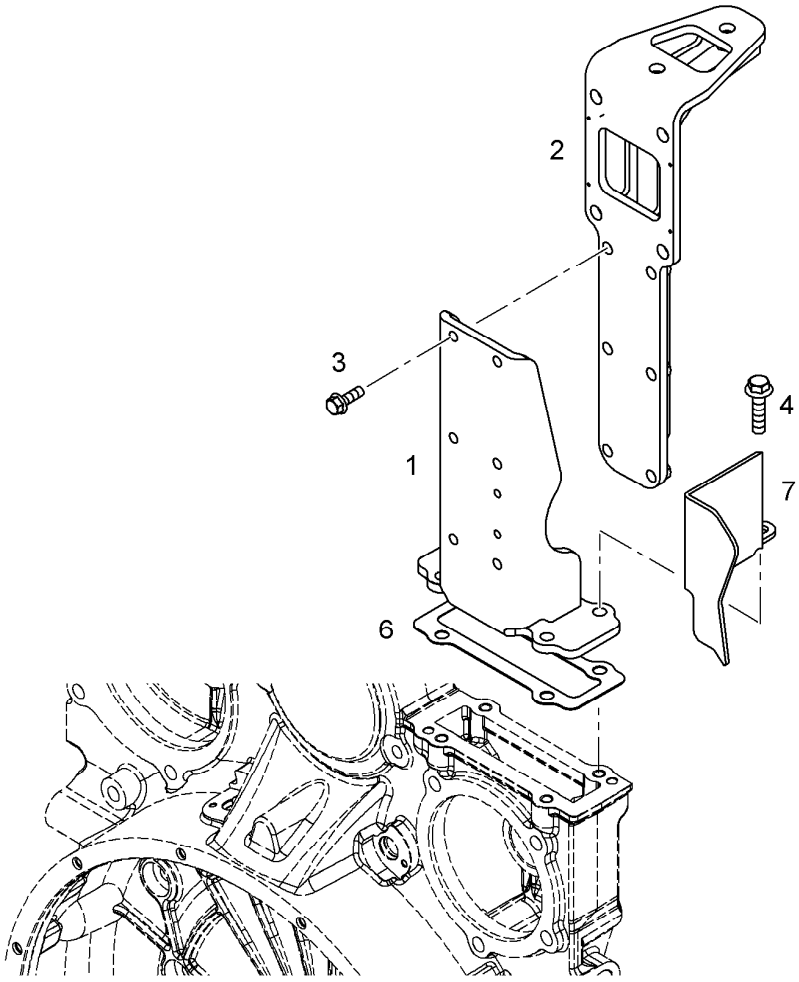

Pos.	Item	Quantity	Description	Descripción	Serie	K
1	10119596	1	CONSOLE	CONSOLA		
2	10119595	1	CONSOLE	CONSOLA		
3	10009007	4	HEX HEAD SCREW WITH FLANGE EN 1665	TORNILLO HEXAGONAL CON BR		
4	4000828	4	HEX BOLT ISO 4017 M10x30 8.8 A3C	TORNILLO DE CABEZA HEXAGO		
6	10115786	1	SEAL 1MM	JUNTA		
7	10130223	1	PROTECTION GUARD	CHAPA PROTECCION		

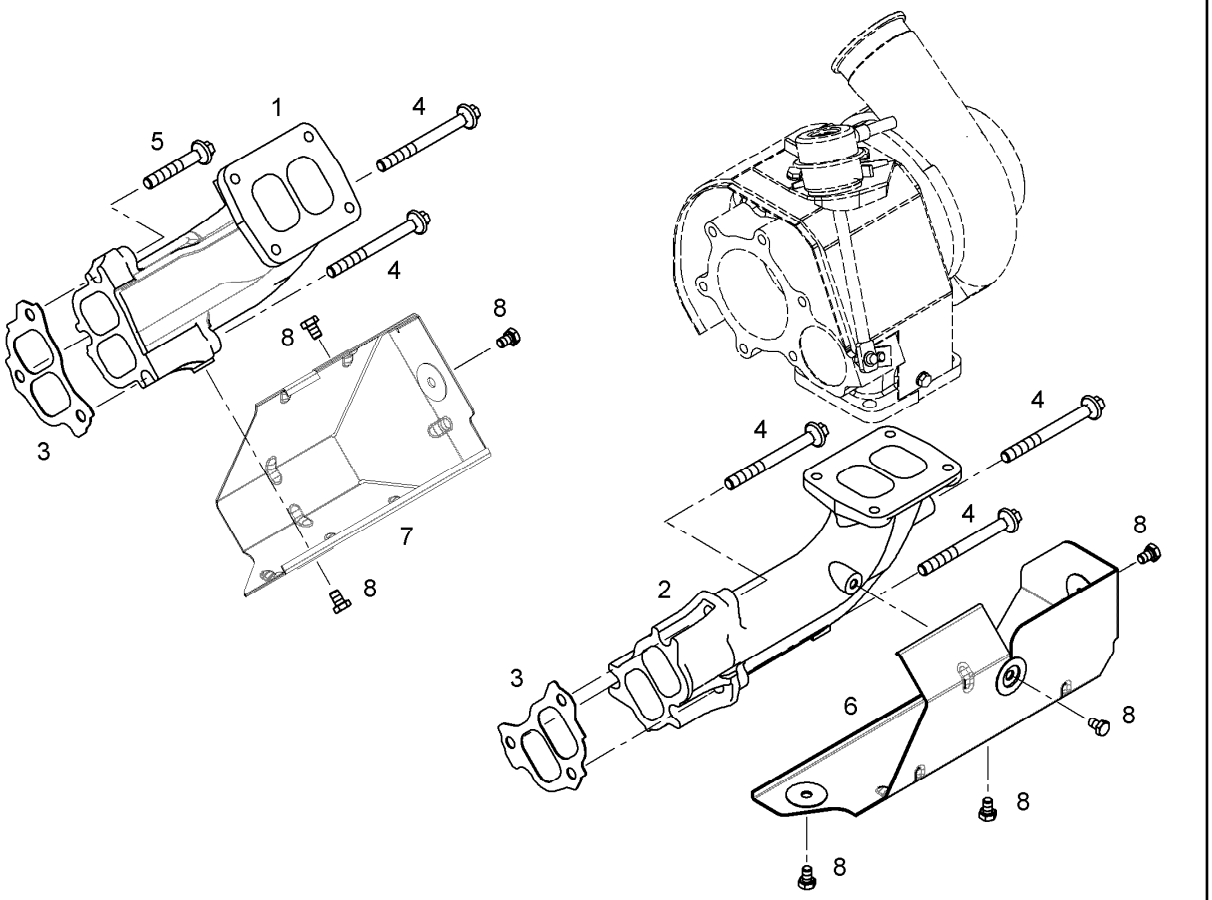

Pos.	Item	Quantity	Description	Descripción	Serie	K
1	10115561	1	OUTLET MANIFOLD	CODO DE ESCAPE		
2	10115562	1	OUTLET MANIFOLD	CODO DE ESCAPE		
3	10119343	2	SEAL	JUNTA		
4	10332846	5	HEXALOBULAR HEAD SCREW M10X103 X5	TORNILLO ALLEN		
5	10332845	1	HEXALOBULAR HEAD SCREW M 10X 64	TORNILLO ALLEN		
6	10132729	1	HEAT INSULATION PLATE	CHAPA PROTECCION TERMICA		
7	10132737	1	HEAT INSULATION PLATE	CHAPA PROTECCION TERMICA		1
8	4065136	7	HEX BOLT ISO 4017 M8X12 8.8 A2C	TORNILLO DE CABEZA HEXAGO		

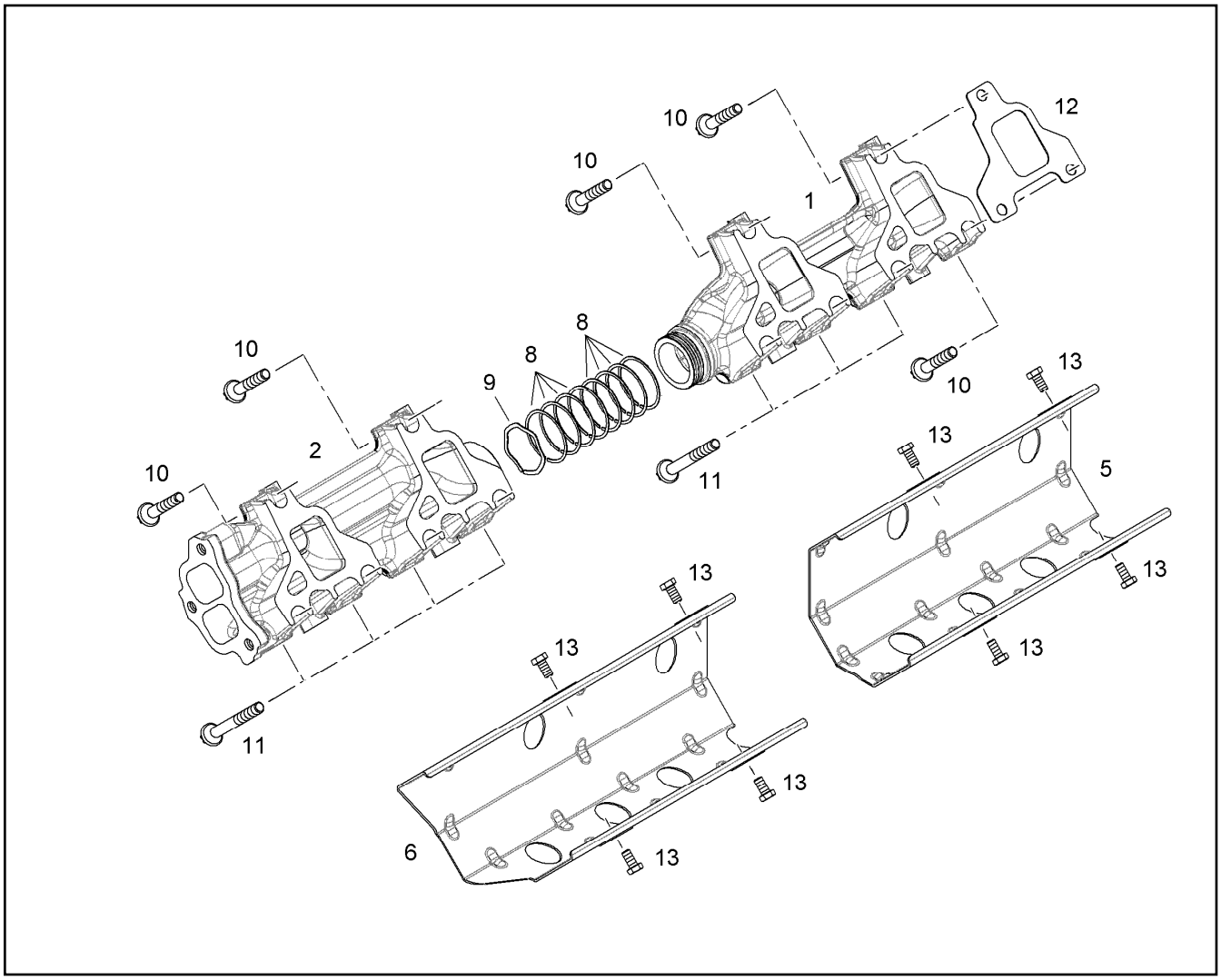

Pos.	Item	Quantity	Description	Descripción	Serie	K
1	9079024	1	EXHAUST PIPE	TUBO DE ESCAPE		
2	10115614	1	EXHAUST PIPE	TUBO DE ESCAPE		
5	9080041	1	HEAT INSULATION PLATE	CHAPA PROTECCION TERMICA		
6	9080043	1	HEAT INSULATION PLATE	CHAPA PROTECCION TERMICA		
8	10030741	2	LAMELLAR DISK KIT 52,0/46,7X2,9	JUEGO DE ANILLOS DE LÁMINA		
9	10030768	1	CURVED SPRING 43.9/51.5/0.81	ARANDELA ONDULADA		
10	10030346	5	HEXALOBULAR HEAD SCREW M 10X 55	TORNILLO ALLEN		
11	10012550	7	FLANGED BOLT	TORNILLO CON COLLAR		
12	9078308	4	SEAL	JUNTA		
13	4900188	8	HEX BOLT ISO 4017 M8x16 8.8 A2C	TORNILLO DE CABEZA HEXAGO		

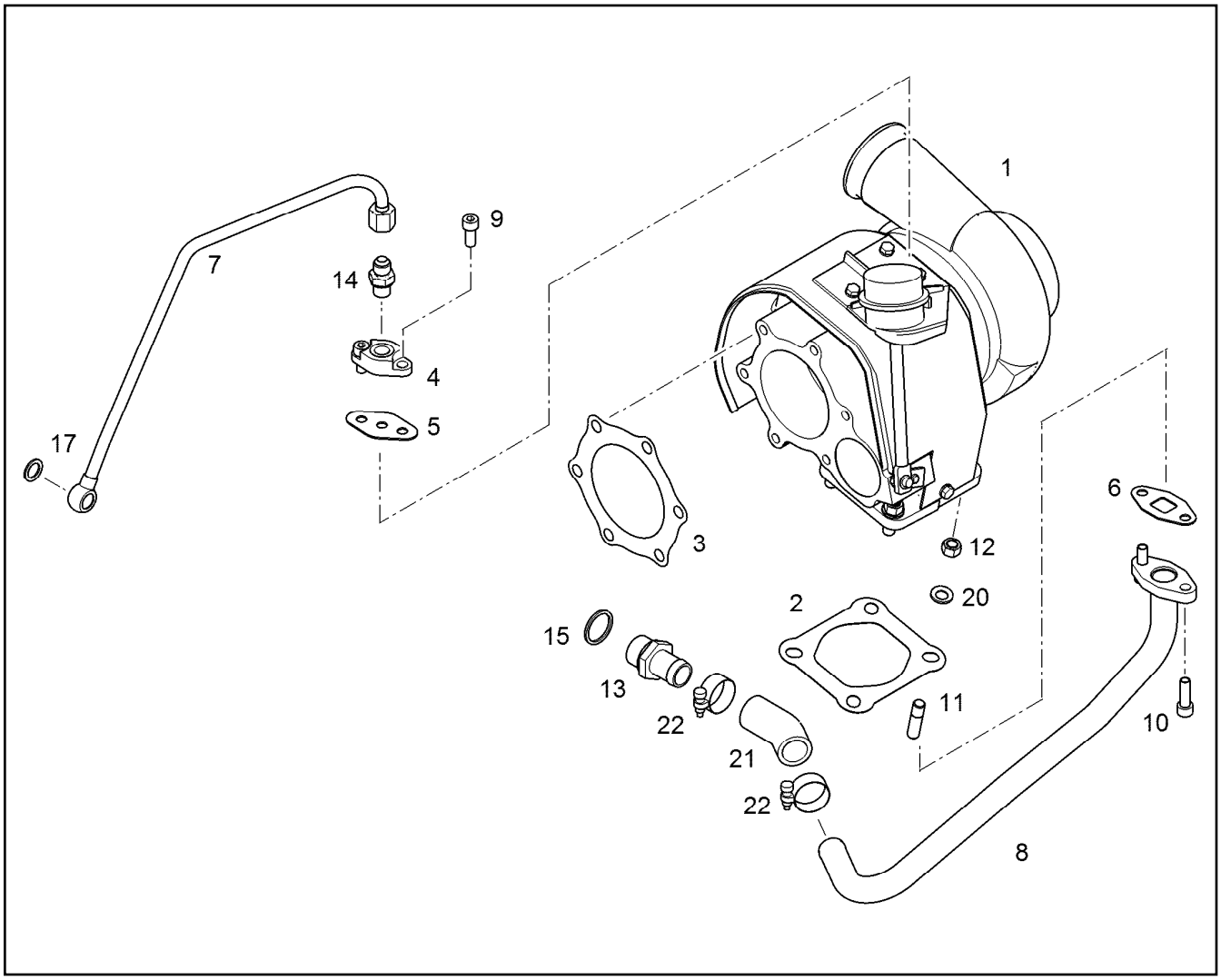

Pos.	Item	Quantity	Description	Descripción	Serie	K
1	10331034	1	EXHAUST GAS TURBOCHARGER [21E100727] [29I10077]	TURBOCOMPRESOR DE ESCAP	-99999	
2	10220813	1	SEAL	JUNTA		
3	10220814	1	SEAL	JUNTA		
4	10115621	1	FLANGE	BRIDA		
5	9268130	1	SEAL	JUNTA		1
6	10115623	1	SEAL	JUNTA		
7	10119570	1	LUBRICATING OIL LINE	TUBERIA ACEITE LUBRICANTE		
8	10130203	1	HYDT.TUBE	TUBERÍA DE RETORNO DE ACE		
9	4600377	2	CYLINDER SCREW ISO 4762 M8x18 8.8 A2C	TORNILLO CILINDRICO		
10	4600175	2	CYLINDER SCREW ISO 4762 M8x25 8.8 A2C	TORNILLO CILINDRICO		
11	4981172	4	DOUBLE-ENDED STUD DIN 939 M 10FOX 25	TORNILLO ESPARRAGO		
12	10120639	4	NUT M10X1,5	TUERCA		
13	9140351	1	HOSE NIPPLE	BOQUILLA MANGUERA		
14	10813936	1	SCREW FITTING GE 10	ATORNILLAMIENTO		
15	7101019	1	SEALING RING DIN 7603 A 26 X 31 CU	JUNTA ANULAR		1
17	4900262	1	SEALING RING DIN 7603 A 14 X 20 CU	JUNTA ANULAR		1
20	9076638	4	WASHER	ARANDELA		
21	10123540	1	RUBBER CONNECTION	MANGUITO DE GOMA		
22	4900778	2	HOSE CLAMP DIN 3017 A 20 - 32 X 13 W2-2	ABRAZADERA MANGUERA		

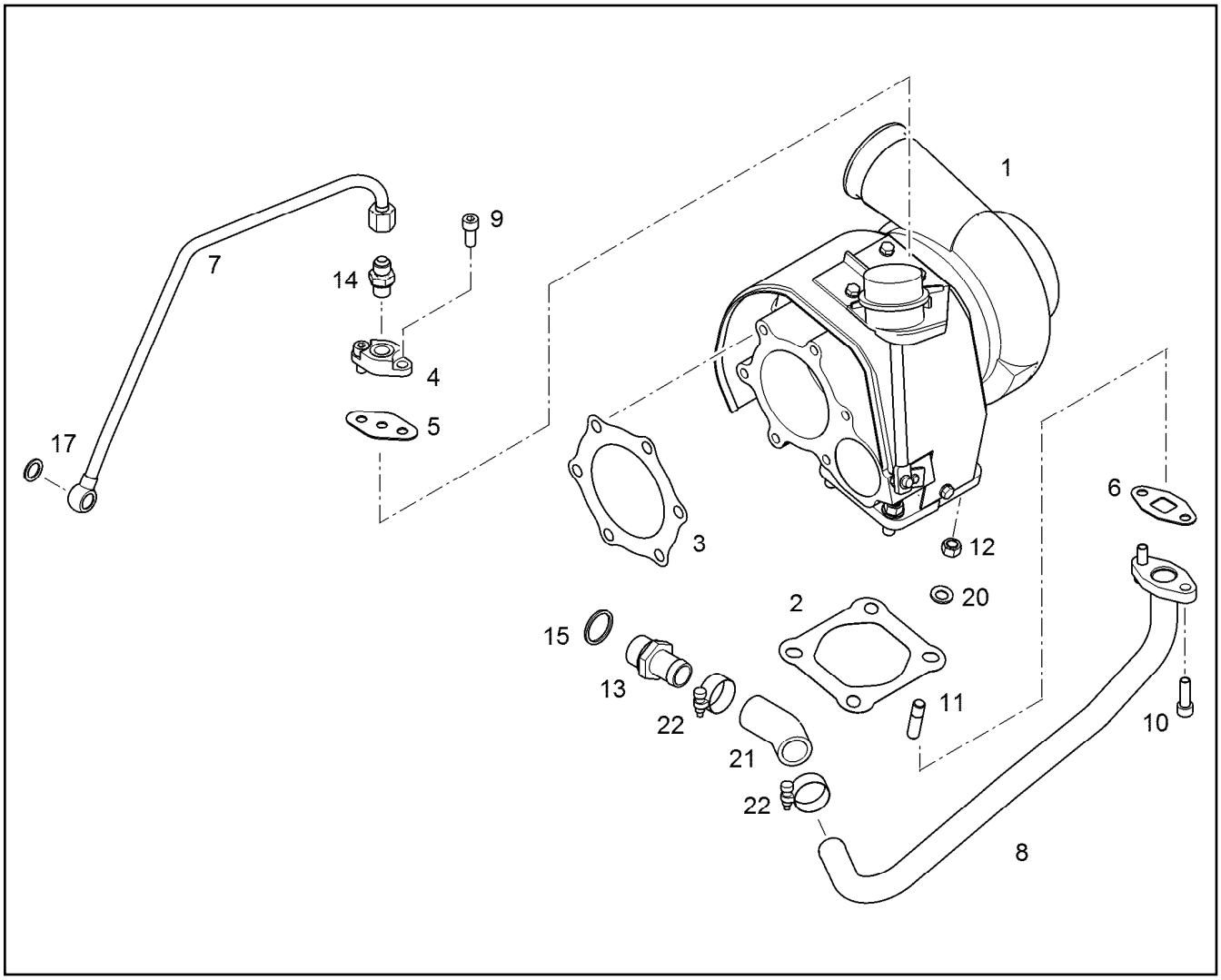

Pos.	Item	Quantity	Description	Descripción	Serie	K
1	10331034	1	EXHAUST GAS TURBOCHARGER	TURBOCOMPRESOR DE ESCAP	-99999	
2	10220813	1	SEAL	JUNTA		
3	10220814	1	SEAL	JUNTA		
4	10115621	1	FLANGE	BRIDA		
5	9268130	1	SEAL	JUNTA		1
6	10115623	1	SEAL	JUNTA		
7	10132112	1	LUBRICATING OIL LINE 10X1	TUBERIA ACEITE LUBRICANTE		
8	10130209	1	HYDT.TUBE	TUBERÍA DE RETORNO DE ACE		
9	4600377	2	CYLINDER SCREW ISO 4762 M8x18 8.8 A2C	TORNILLO CILINDRICO		
10	4600175	2	CYLINDER SCREW ISO 4762 M8x25 8.8 A2C	TORNILLO CILINDRICO		
11	4981172	4	DOUBLE-ENDED STUD DIN 939 M 10FOX 25	TORNILLO ESPARRAGO		
12	10120639	4	NUT M10X1,5	TUERCA		
13	9140351	1	HOSE NIPPLE	BOQUILLA MANGUERA		
14	10813936	1	SCREW FITTING GE 10	ATORNILLAMIENTO		
15	7101019	1	SEALING RING DIN 7603 A 26 X 31 CU	JUNTA ANULAR		1
17	4900262	1	SEALING RING DIN 7603 A 14 X 20 CU	JUNTA ANULAR		1
20	9076638	4	WASHER	ARANDELA		
21	10123540	1	RUBBER CONNECTION	MANGUITO DE GOMA		
22	4900778	2	HOSE CLAMP DIN 3017 A 20 - 32 X 13 W2-2	ABRAZADERA MANGUERA		

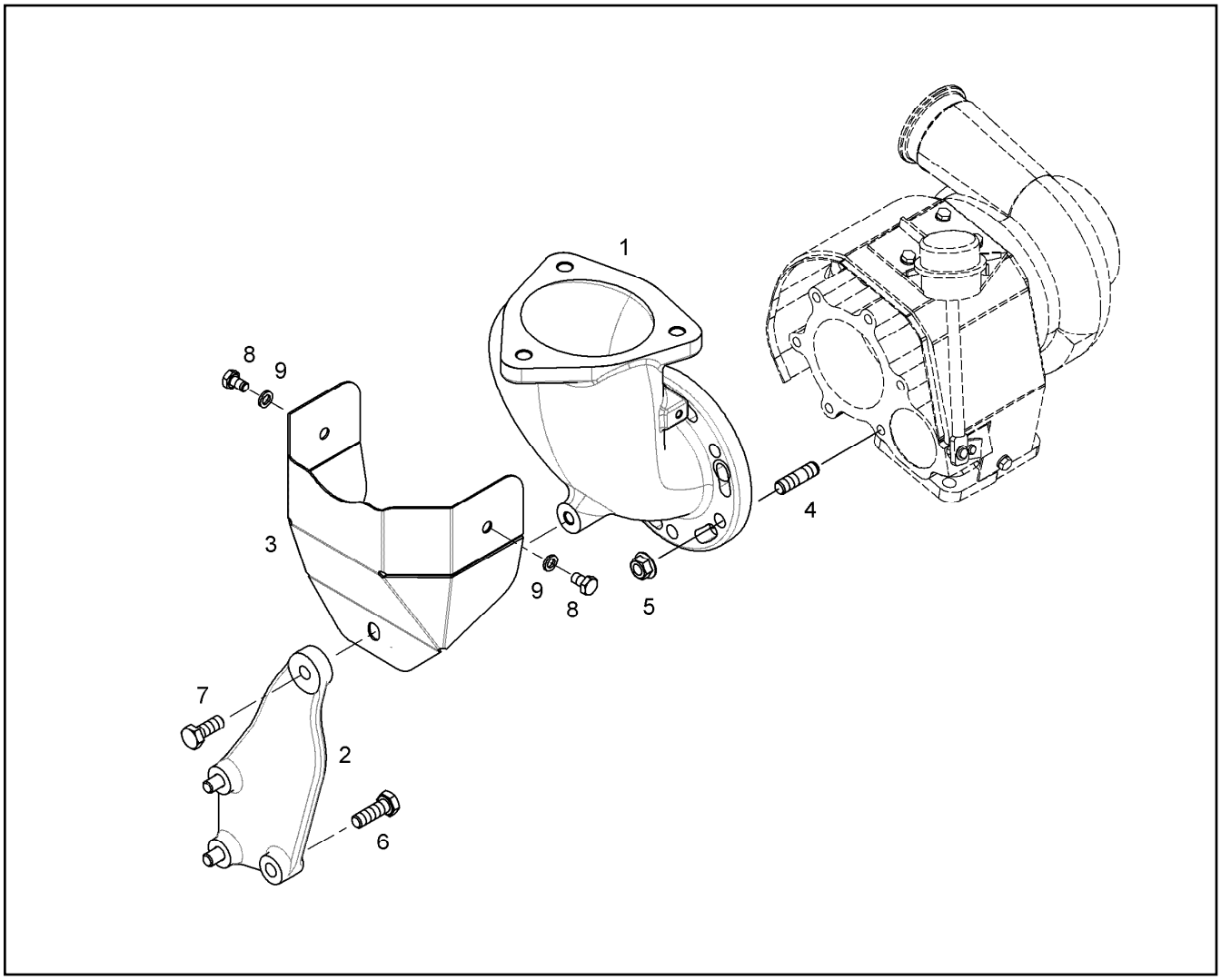

Pos.	Item	Quantity	Description	Descripción	Serie	K
1	10115549	1	EXHAUST NOZZLE	ESPIGA ESCAPE		
2	9077655	1	HOLDER	FIJADOR		
3	10115584	1	HEAT PROTECTION SHEET	CHAPA DE PROTECCION TERM		
4	4980221	6	DOUBLE-ENDED STUD DIN 939 M 10FOX 25	TORNILLO ESPARRAGO		
5	10044430	6	RIBBED HEX NUT M10	TUERCA HEXAGONAL TRIPPEN		
6	4900112	3	HEX BOLT ISO 4017 M10X35 8.8 A3C	TORNILLO DE CABEZA HEXAGO		
7	4065164	1	HEX BOLT ISO 4017 M10X25 8.8 A3C	TORNILLO DE CABEZA HEXAGO		
8	4065103	2	HEX BOLT ISO 4017 M6X10 8.8 A2C	TORNILLO DE CABEZA HEXAGO		
9	4901089	2	SPRING WASHER DIN 137 B 6 A3C	ARANDELA DE MUELLE		

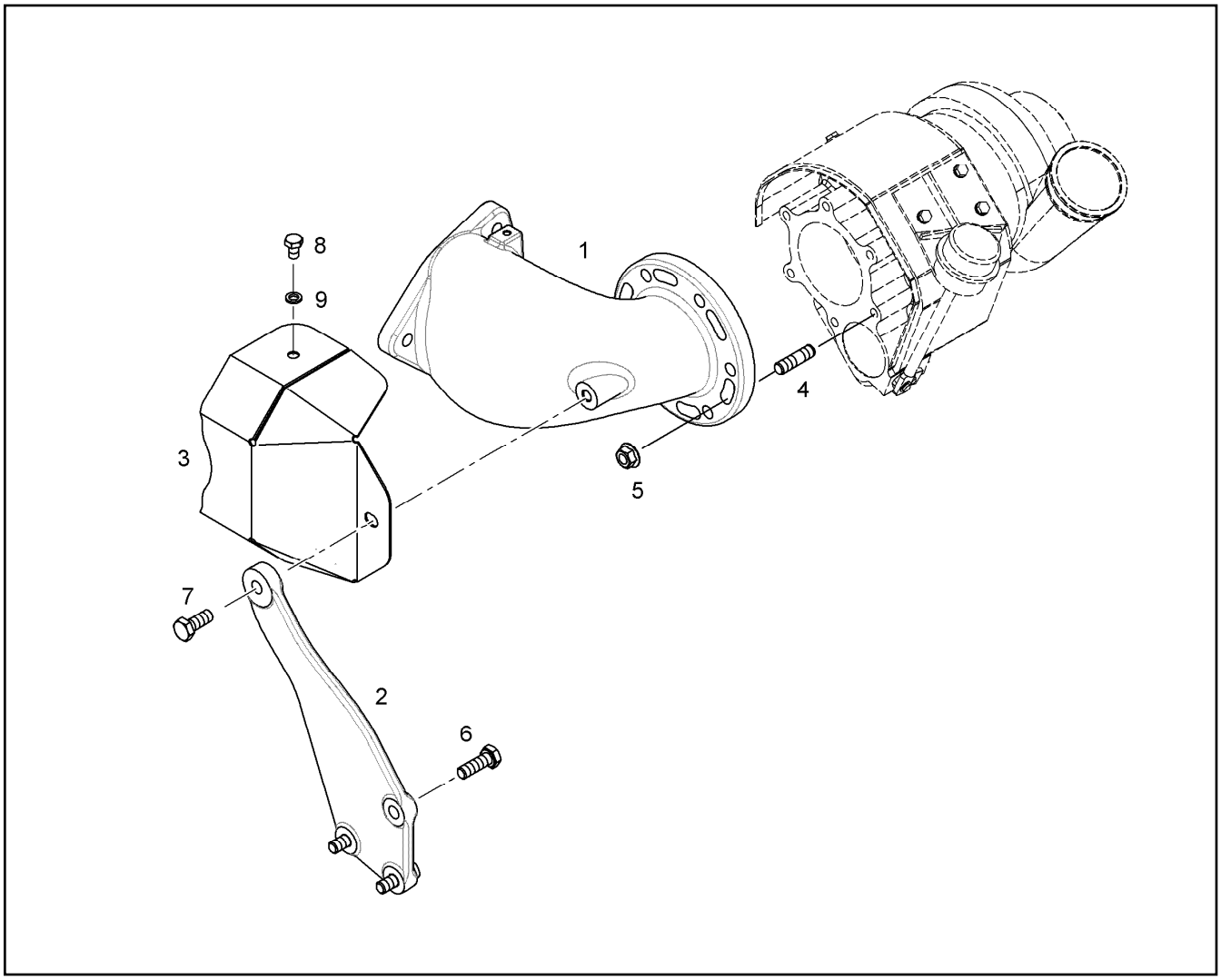

Pos.	Item	Quantity	Description	Descripción	Serie	K
1	10115549	1	EXHAUST NOZZLE	ESPIGA ESCAPE		
2	9077656	1	HOLDER	FIJADOR		
3	10115584	1	HEAT PROTECTION SHEET	CHAPA DE PROTECCION TERM		
4	4980221	6	DOUBLE-ENDED STUD DIN 939 M 10FOX 25	TORNILLO ESPARRAGO		
5	10044430	6	RIBBED HEX NUT M10	TUERCA HEXAGONAL TRIPPEN		
6	4000828	3	HEX BOLT ISO 4017 M10x30 8.8 A3C	TORNILLO DE CABEZA HEXAGO		
7	4065164	1	HEX BOLT ISO 4017 M10X25 8.8 A3C	TORNILLO DE CABEZA HEXAGO		
8	4065103	2	HEX BOLT ISO 4017 M6X10 8.8 A2C	TORNILLO DE CABEZA HEXAGO		
9	4901089	2	SPRING WASHER DIN 137 B 6 A3C	ARANDELA DE MUELLE		

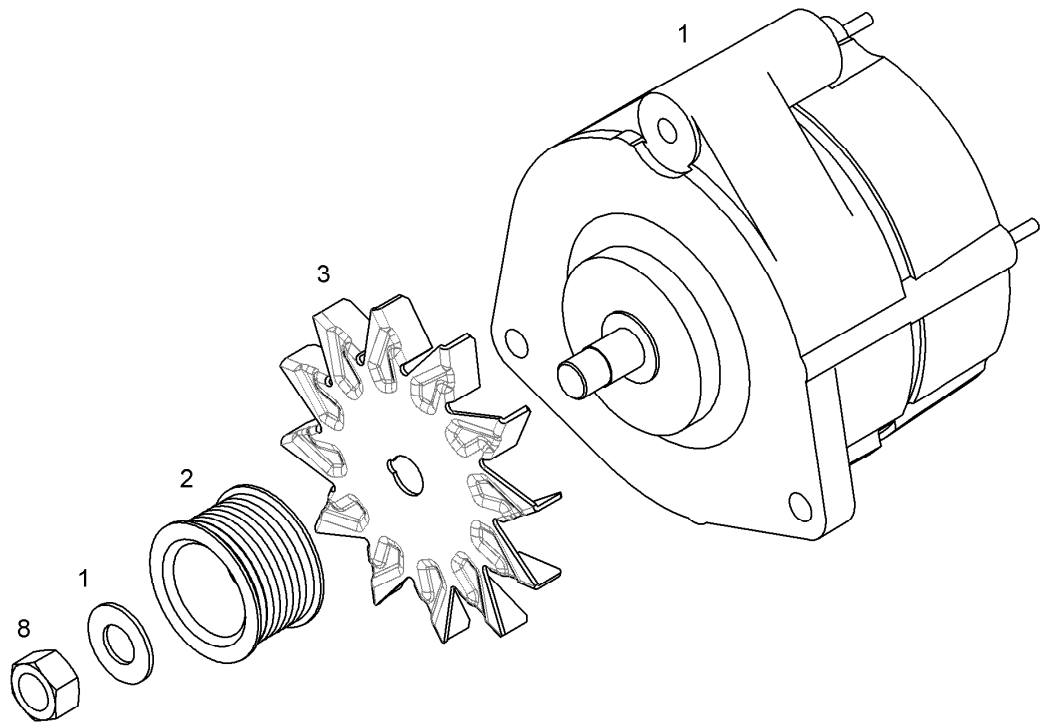

Pos.	Item	Quantity	Description	Descripción	Serie	K
1	10018258	1	THREE PHASE CURRENT GENERATOR	GENERADOR TRIFASICO		6
2	9080391	1	BELT PULLEY DA=51.7 DW=54.2	POLEA DE TRANSMISION		
3	5005641	1	FAN / BLOWER	AIREADOR		1
8	4980478	1	HEX NUT ISO 8673 M 16 X1,5 -08 A3C	TUERCA HEXAGONAL		

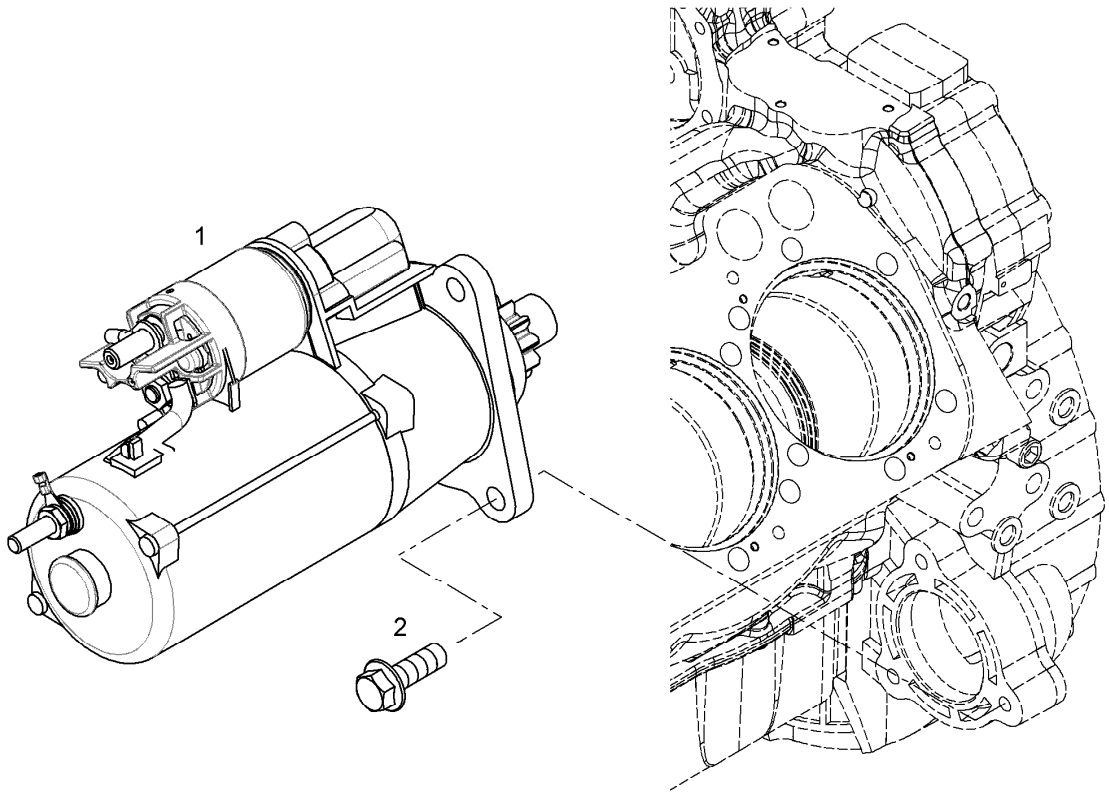

Pos.	Item	Quantity	Description	Descripción	Serie	K
1	10218368	1	STARTER PRE-ASS.	ENCENDEDOR PREMONTADO		6
2	10036129	3	HEX HEAD SCREW EN 1665 M 12 X 35 10.9	TORNILLO HEXAGONAL		

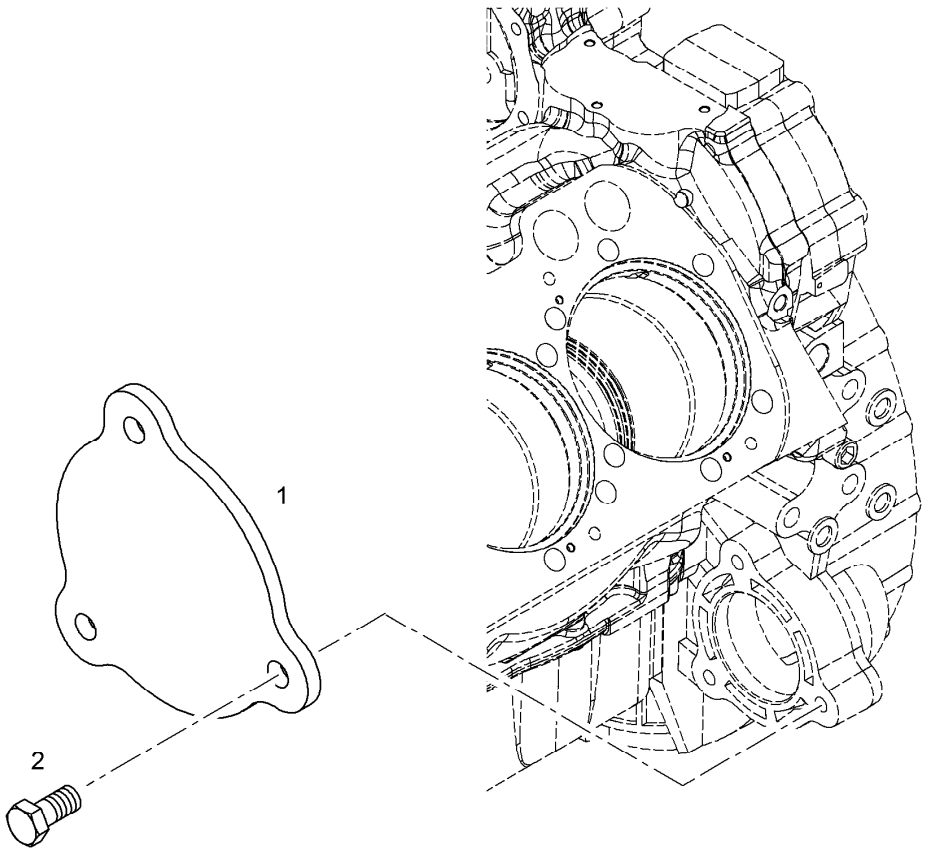

Pos.	Item	Quantity	Description	Descripción	Serie	K
1	9078565	1	LID	TAPA		
2	4600184	3	HEX BOLT ISO 4017 M12X25 10.9 A3C	TORNILLO DE CABEZA HEXAGO		

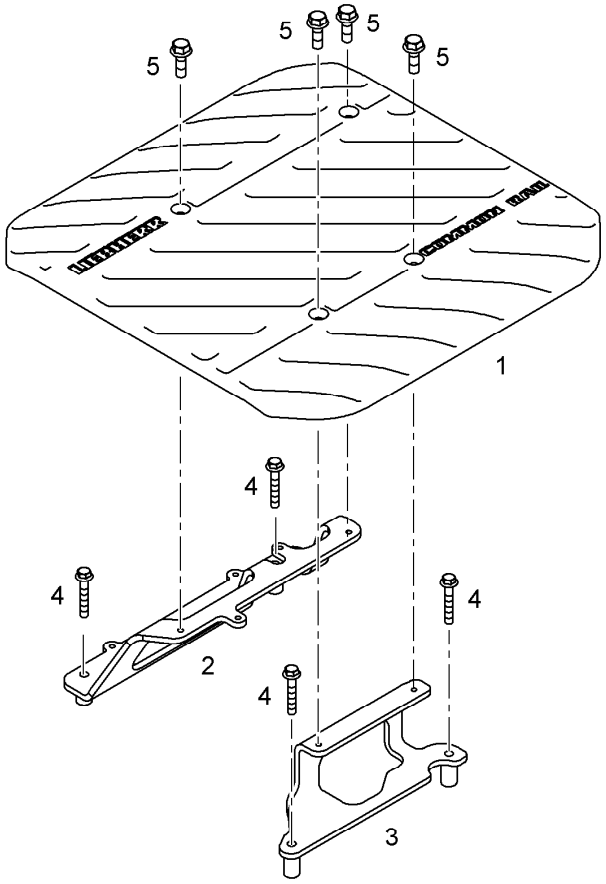

Pos.	Item	Quantity	Description	Descripción	Serie	K
1	3022159	1	COVER PLATE	PLACA DE COBERTURA		
2	9080669	1	CONSOLE	CONSOLA		
3	9080670	1	CONSOLE	CONSOLA		
4	10014638	4	HEX HEAD SCREW WITH FLANGE EN 1665	TORNILLO HEXAGONAL CON BR		
5	10009007	4	HEX HEAD SCREW WITH FLANGE EN 1665	TORNILLO HEXAGONAL CON BR		

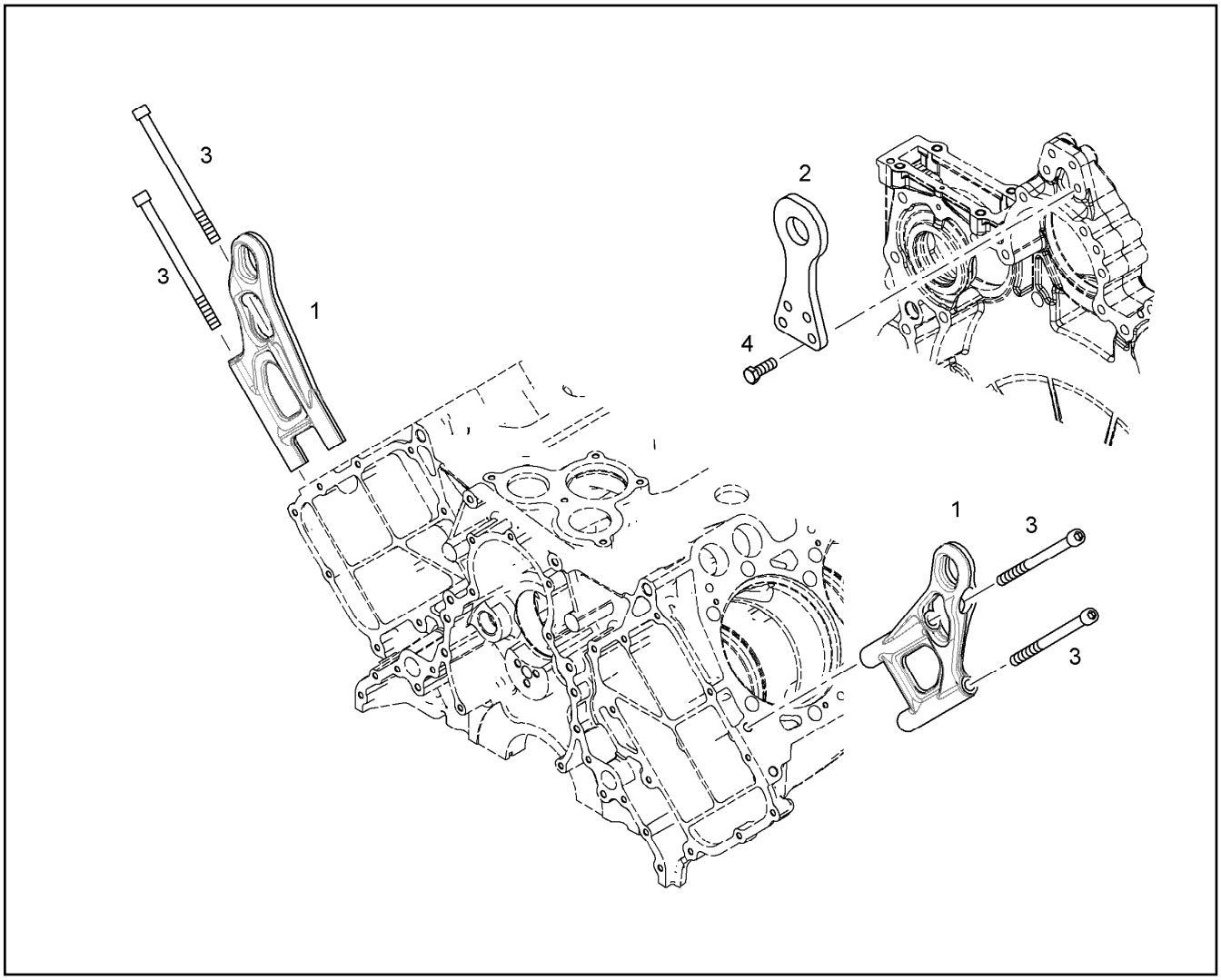

Pos.	Item	Quantity	Description	Descripción	Serie	K
1	10116068	2	LIFTING HOOK	GANCHO ELEVADOR		
2	9079977	1	LIFTING HOOK	GANCHO ELEVADOR		
3	404313701	4	CYLINDER SCREW ISO 4762 M12X170 10.9	TORNILLO CILINDRICO		
4	4066122	4	HEX BOLT ISO 4017 M12X35 10.9 A3C	TORNILLO DE CABEZA HEXAGO		

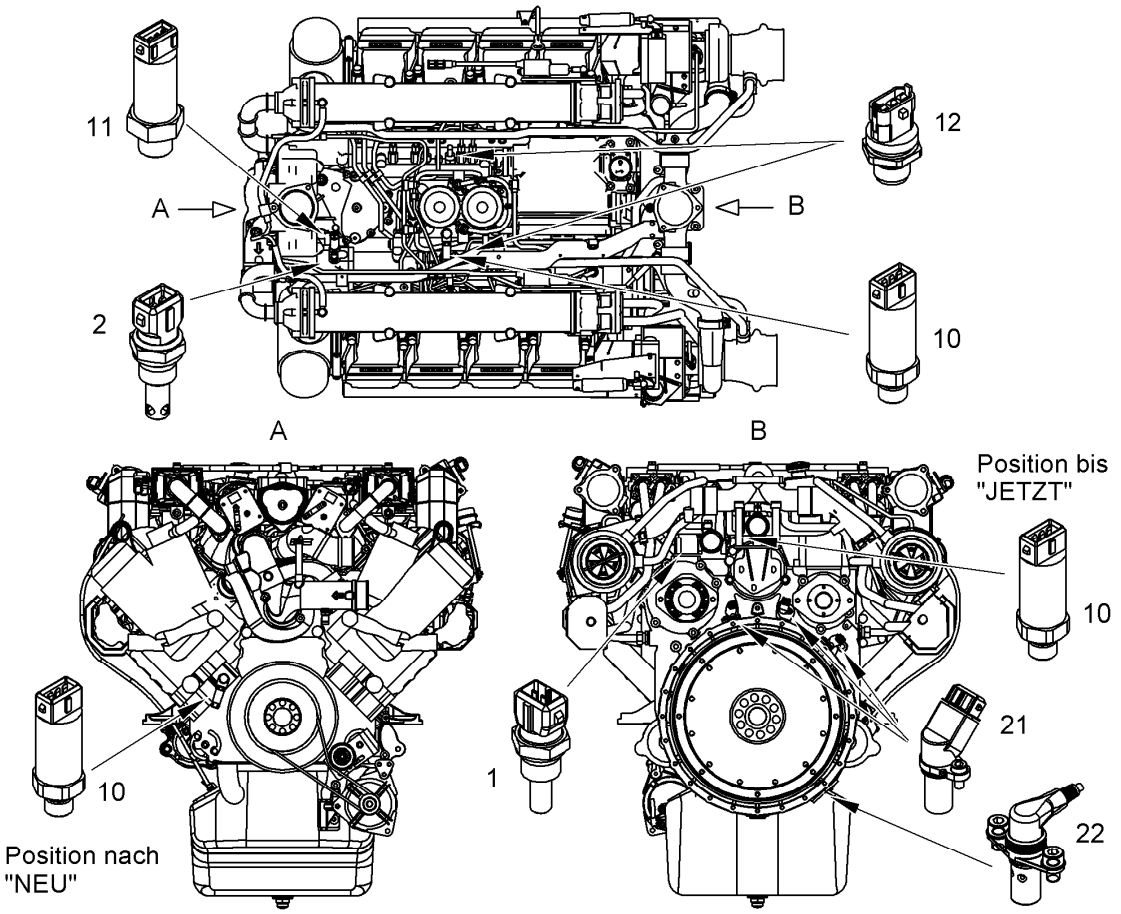

Pos.	Item	Quantity	Description	Descripción	Serie	K
1	6290130	1	TEMPERATURE SENSOR	DETECTOR DE TEMPERATURA		2
2	9076530	1	TEMPERATURE SENSOR ⇨ ❑ 659	PALPADOR DE TEMPERATURA		2
10	9076531	2	PRESSURE TRANSMITTER M 14X1,5 ⇨ ❑ 660	IMPULSOR MANOMETRICO		
11	9076550	1	PRESSURE TRANSMITTER M18X1,5 ⇨ ❑ 661	IMPULSOR MANOMETRICO		2
12	10100782	2	PRESSURE TRANSMITTER M 18X1,5	IMPULSOR MANOMETRICO		
21	9079206	3	ROTATIONAL SPEED SENSOR ⇨ ❑ 662	GENERADOR TACOMETRICO		
22	9885618	1	ROTATIONAL SPEED SENSOR ATTACH ⇨ ❑ 663	MONTAJE TACOMETRO		

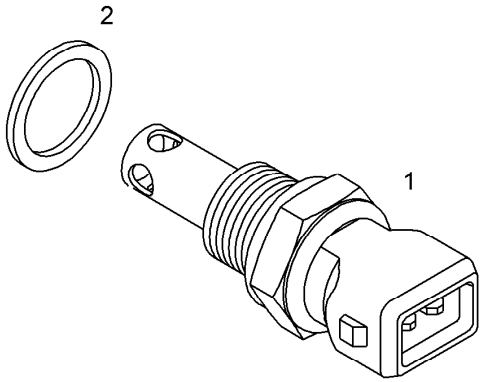

Pos.	Item	Quantity	Description	Descripción	Serie	K
1	691180608	1	TEMPERATURE SENSOR	PALPADOR DE TEMPERATURA		2
2	10040984	1	SEALING RING 0 3869 11,6X16,5X 1,5 -85-FP	JUNTA ANULAR		1

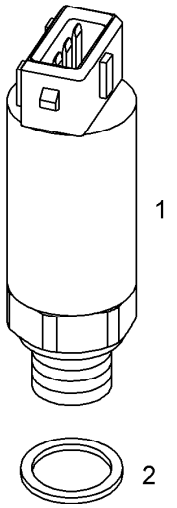

Pos.	Item	Quantity	Description	Descripción	Serie	K
1	10025124	1	PRESSURE TRANSMITTER	IMPULSOR MANOMETRICO		2
2	10040984	1	SEALING RING 0 3869 11,6X16,5X 1,5 -85-FP	JUNTA ANULAR		1

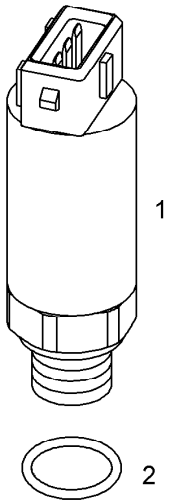

Pos.	Item	Quantity	Description	Descripción	Serie	K
1	10100781	1	PRESSURE TRANSMITTER	IMPULSOR MANOMETRICO		
2	10113975	1	O-RING	JUNTA TORICA		1

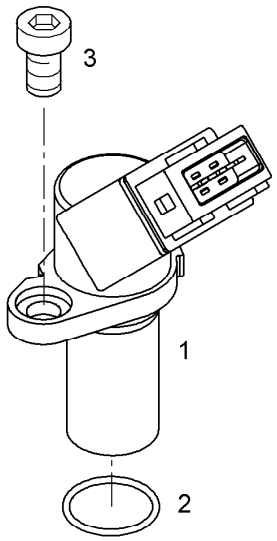

Pos.	Item	Quantity	Description	Descripción	Serie	K
1	10117898	1	ROTATIONAL SPEED SENSOR	GENERADOR TACOMETRICO		1
2	7381103	1	O-RING	JUNTA TORICA		1
3	4600048	1	CYLINDER SCREW ISO 4762 M6x16 8.8 A2C	TORNILLO CILINDRICO		

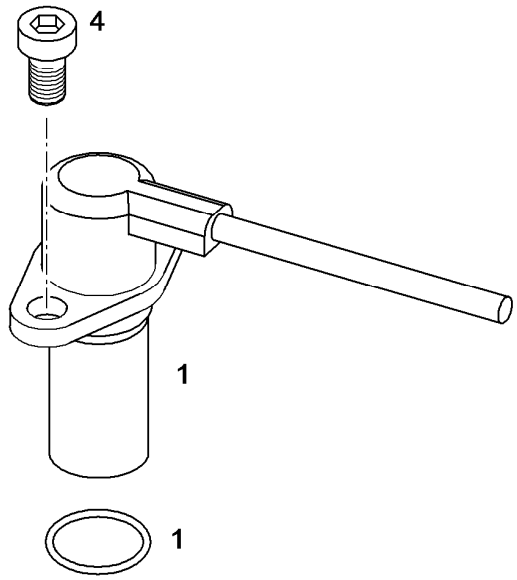

Pos.	Item	Quantity	Description	Descripción	Serie	K
1	635867001	1	SENSOR	SENSOR		2
4	10024115	2	HEX BOLT EN 1665 M8x12 8.8 A3C	TORNILLO DE CABEZA HEXAGO		

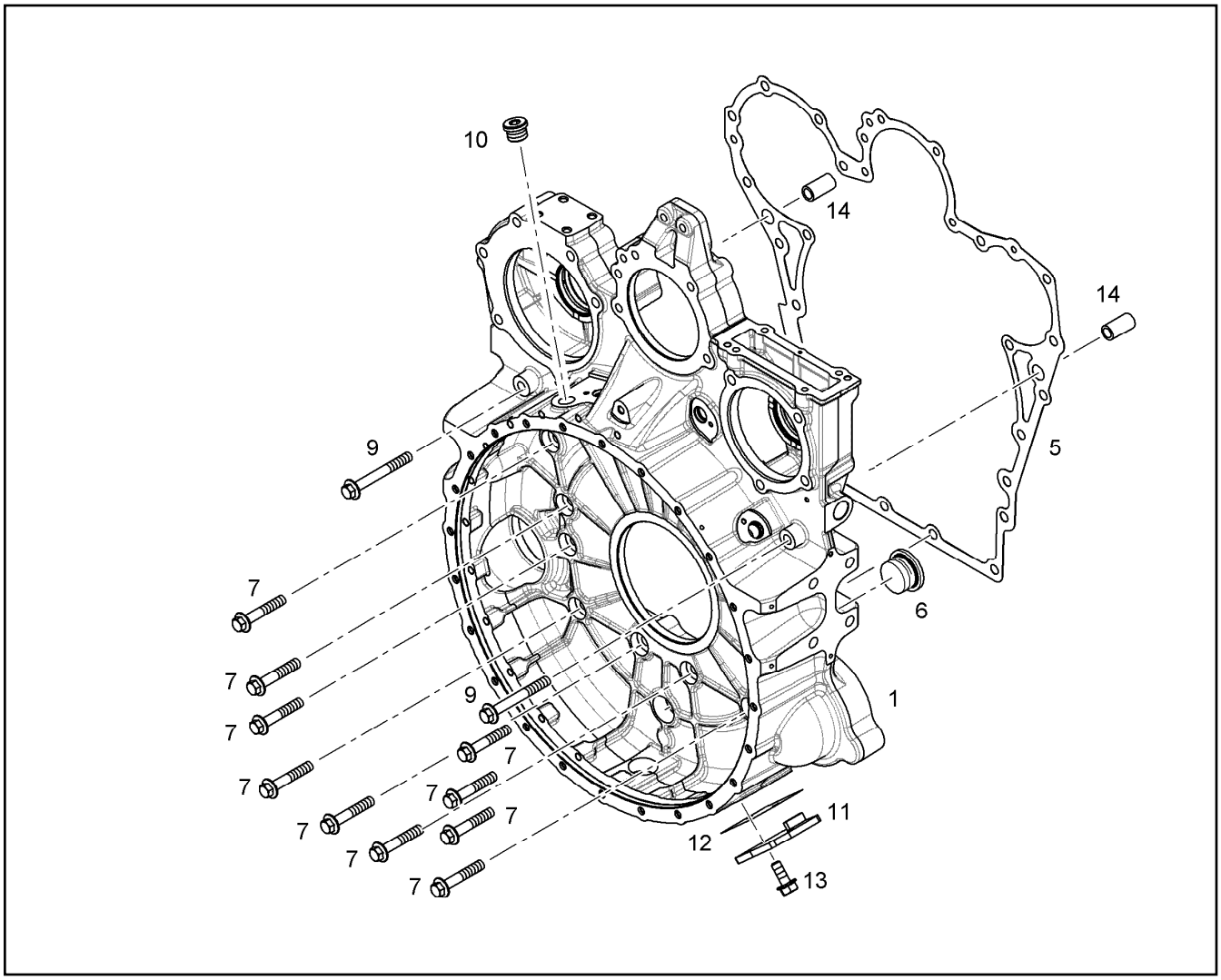

Pos.	Item	Quantity	Description	Descripción	Serie	K
1	10120321	1	FLYWHEEL HOUSING PRE-ASS. SAE1	CARCASA VOLANTE IMPUL.PR		
5	10120356	1	SEAL	JUNTA		
6	7382202	1	SCREW PLUG VSTI	TORNILLO DE CIERRE		
7	10035583	10	HEX BOLT EN 1665 M12X70 10.9 A3C	TORNILLO DE CABEZA HEXAGO		
9	10035584	2	HEX BOLT EN 1665 M12X100 10.9 A3C	TORNILLO DE CABEZA HEXAGO		
10	7380177	1	SCREW PLUG VSTI	TORNILLO DE CIERRE		
11	10115670	1	LID	TAPA		
12	9080503	1	SEAL ASBESTFREI	JUNTA		
13	10016906	2	HEX BOLT EN 1665 M8x20 8.8 A3C	TORNILLO DE CABEZA HEXAGO		
14	9178018	2	TIGHT FIT SLEEVE	CASQUILLO DE AJUSTE		1

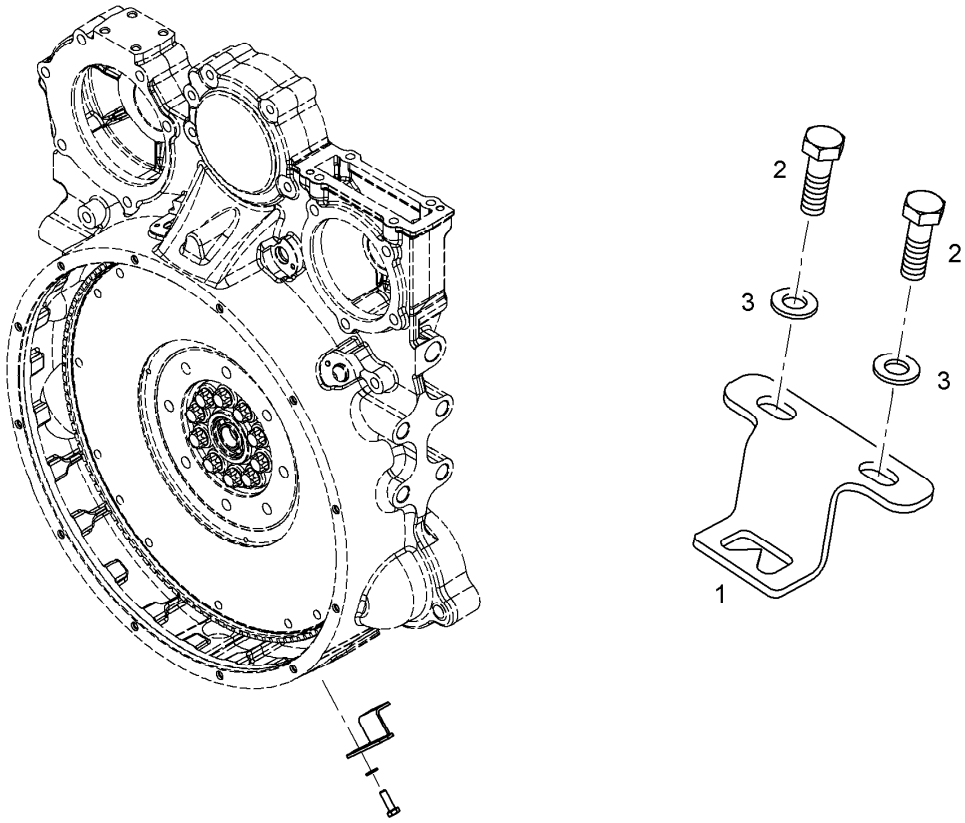

Pos.	Item	Quantity	Description	Descripción	Serie	K
1	9078622	1	AJDUSTING PLATE	CHAPA AJUSTE		
2	240091102	2	HEX BOLT ISO 4017 M5X16 8.8	TORNILLO DE CABEZA HEXAGO		
3	4980230	2	WASHER ISO 7089 5 -200HV A3C	ARANDELA		

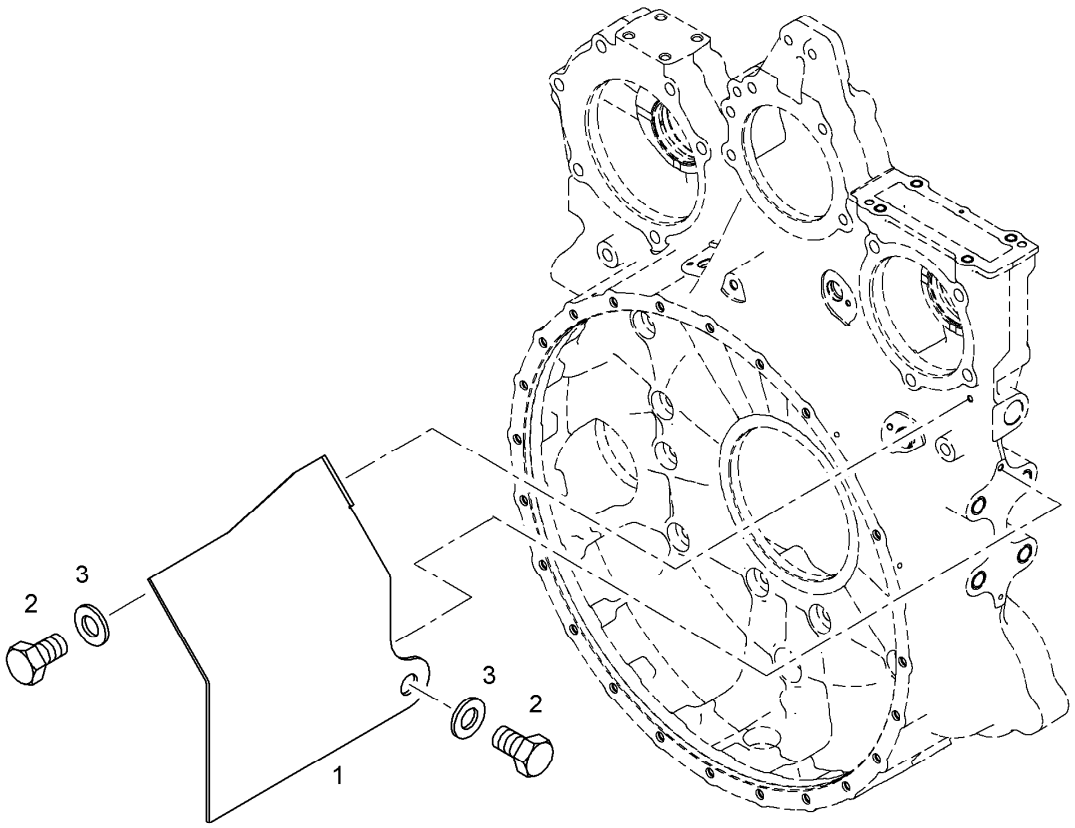

Pos.	Item	Quantity	Description	Descripción	Serie	K
1	10116902	1	HEAT PROTECTION SHEET	CHAPA DE PROTECCION TERM		
2	4065099	2	HEX BOLT ISO 4017 M6x16 8.8 A2C	TORNILLO DE CABEZA HEXAGO		
3	10289802	2	WASHER ISO 7089 6 300HV	ARANDELA		

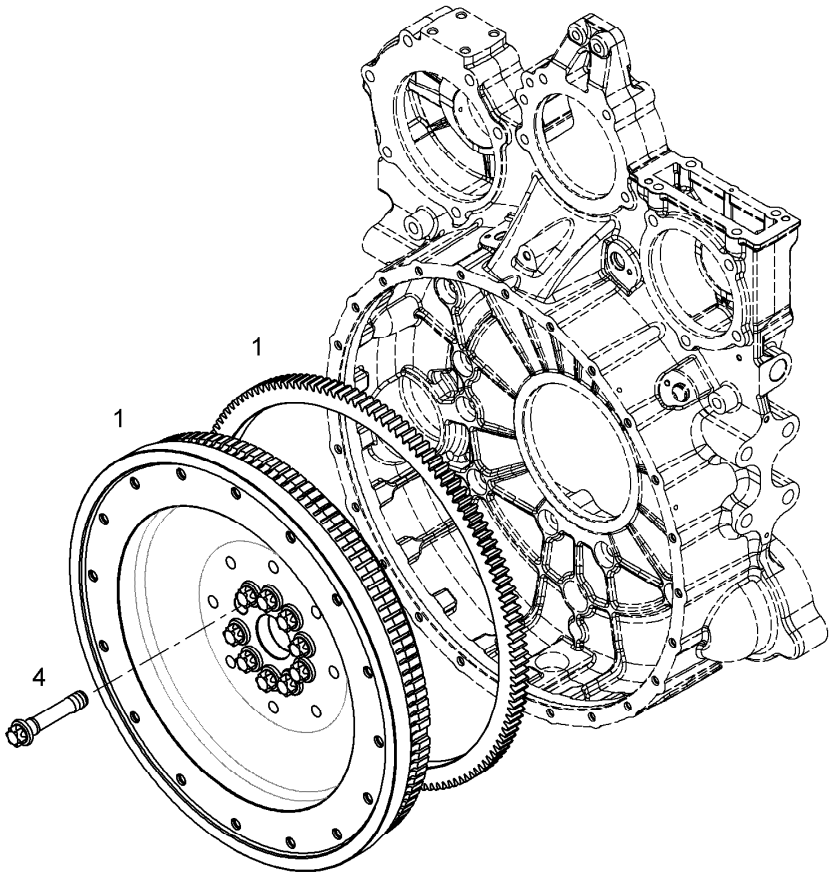

Pos.	Item	Quantity	Description	Descripción	Serie	K
1	10120078	1	FLYWHEEL PRE-ASS. SAE1	VOLANTE IMPUL.PREMONT.		
1	9080734	1	CROWN GEAR	CORONA DENTADA		
4	10119794	10	HEXALOBULAR HEAD SCREW M18X1,5X91	TORNILLO ALLEN		

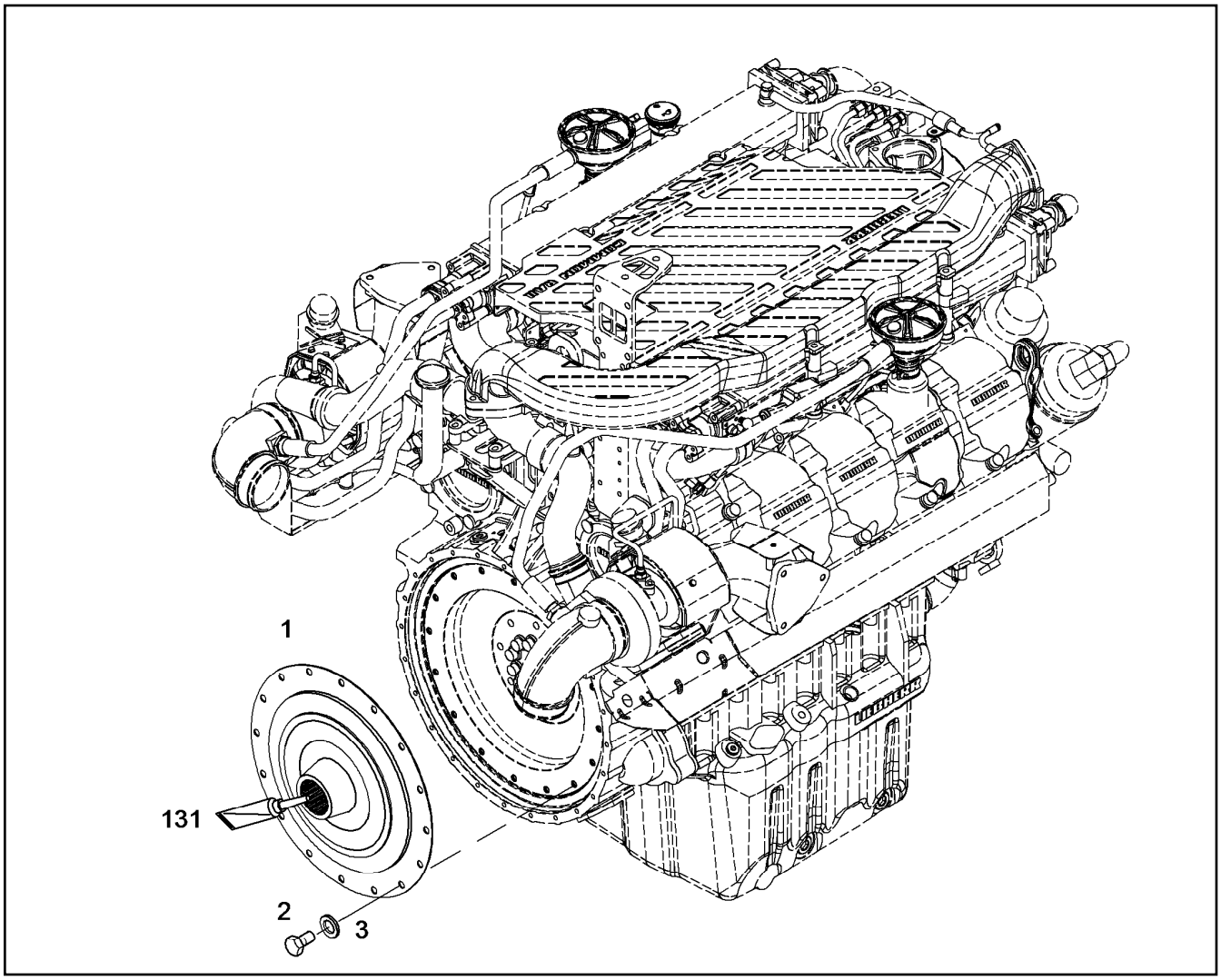

Pos.	Item	Quantity	Description	Descripción	Serie	K
1	5610755	1	TORSIONAL VIBRATION DAMPER	AMORTIGUADOR DE TORSION		2
2	4600184	16	HEX BOLT ISO 4017 M12X25 10.9 A3C	TORNILLO DE CABEZA HEXAGO		
3	10289804	16	WASHER ISO 7089 12 300HV	ARANDELA		
131	8655037	1	GREASE AL/1kg	GRASA		

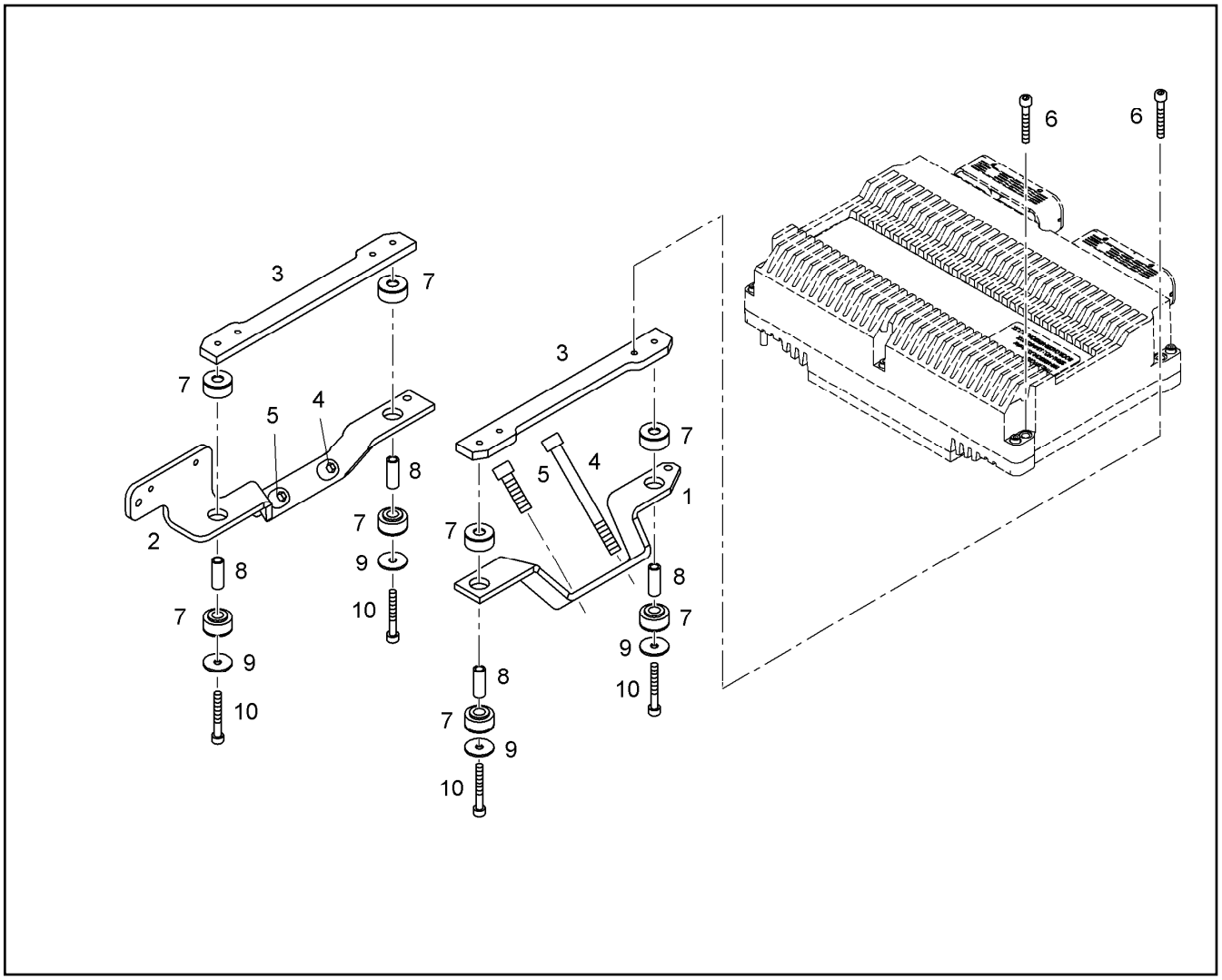

Pos.	Item	Quantity	Description	Descripción	Serie	K
1	10116694	1	HOLDER S235JR	FIJADOR		
2	10116693	1	HOLDER	FIJADOR		
3	10116074	2	SHEET	PLACA		
4	4001883	2	CYLINDER SCREW ISO 4762 M10X105 10.9	TORNILLO CILINDRICO		
5	4900855	2	CYLINDER SCREW ISO 4762 M10X35 10.9	TORNILLO CILINDRICO		
6	4600384	4	CYLINDER SCREW ISO 4762 M6x40 8.8 A2C	TORNILLO CILINDRICO		
7	9076605	8	RUBBER BUMPER	TOPE GOMA		
8	9078949	4	DISTANCE SLEEVE 7,0X10,0X27,5	CASQUILLO DISTANCIADOR		
9	7381835	4	WASHER 6X25	ARANDELA		
10	4042109	4	CYLINDER SCREW ISO 4762 M6x45 8.8 A2C	TORNILLO CILINDRICO		

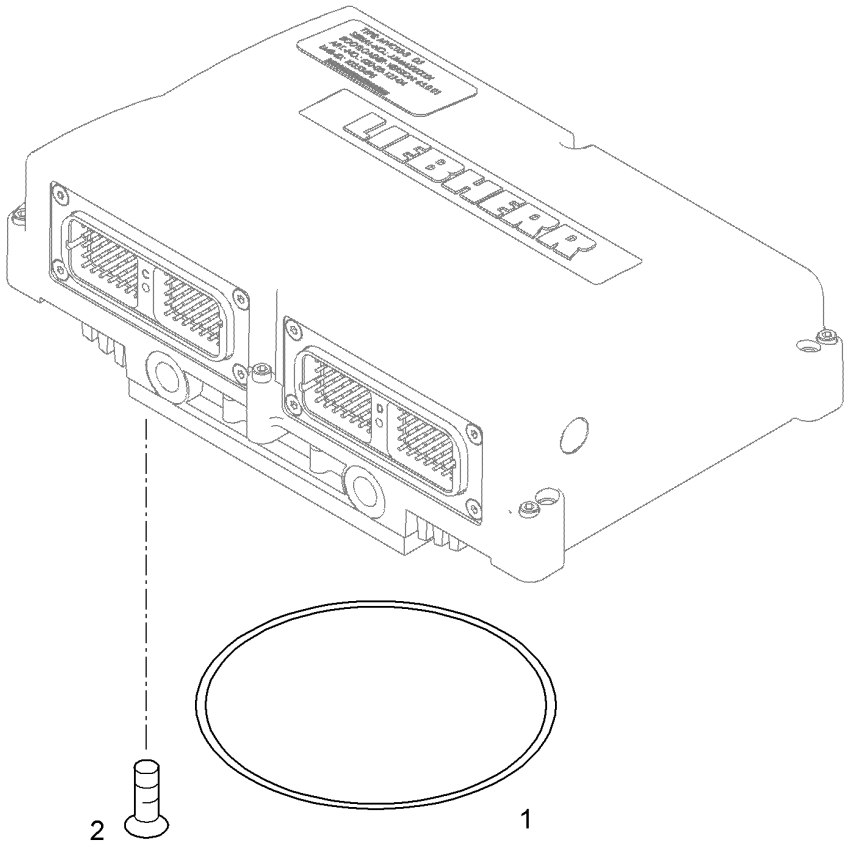

Pos.	Item	Quantity	Description	Descripción	Serie	K
1	11067315	1	O-RING 200X4	JUNTA TORICA		1
2	11067312	14	COUNTERSUNK SCREW M5X20 8.8 A2B	TORNILLO AVELLANADO		

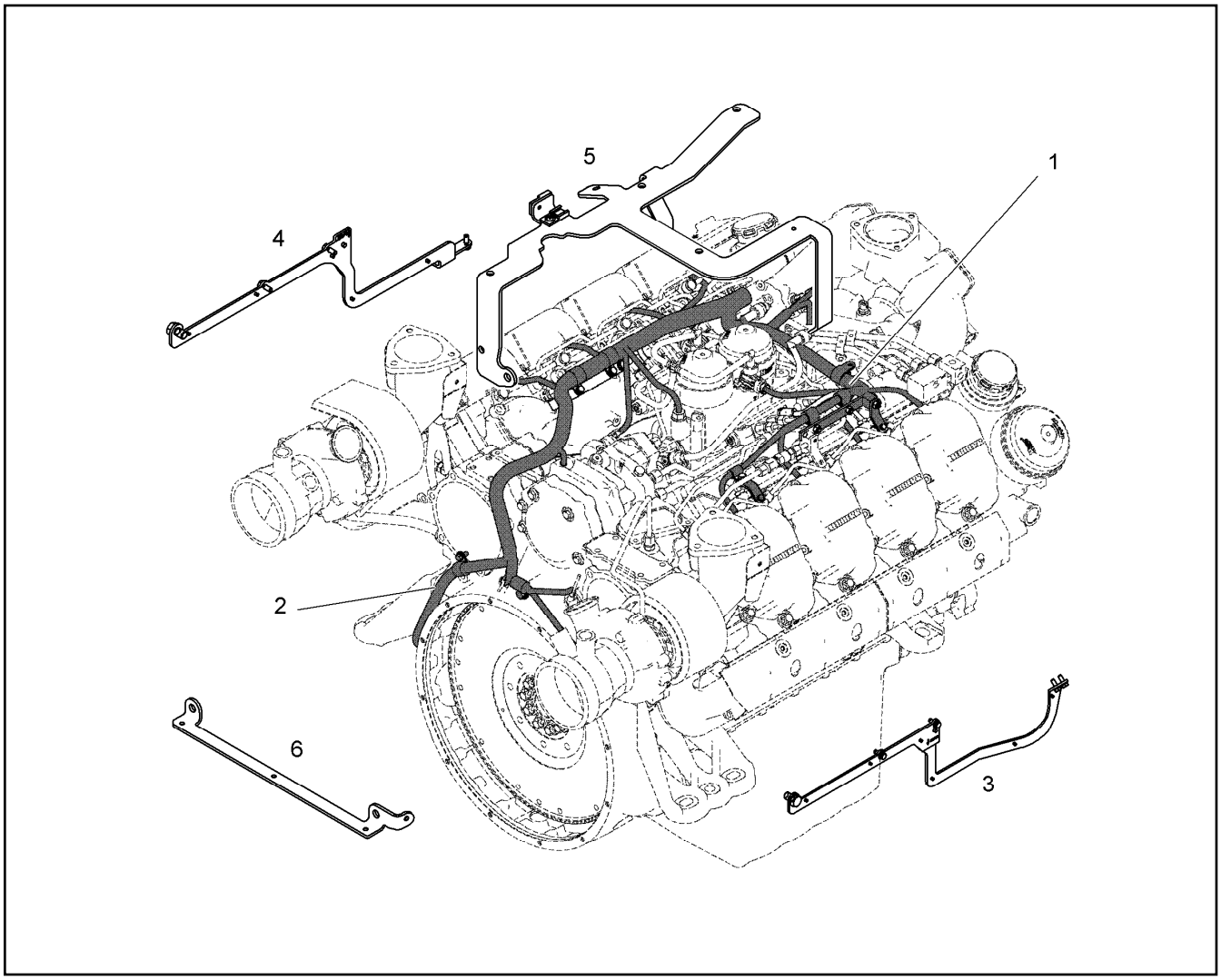

Pos.	Item	Quantity	Description	Descripción	Serie	K
1	10300863	1	LOOM	KIT CABLE		
2	10346187	1	CABLE LOOM	KIT DE CABLES		
3	10119353	1	CONSOLE ⇨ ❑ 673	CONSOLA		
4	10119356	1	CONSOLE ⇨ ❑ 674	CONSOLA		
5	10119038	1	CONSOLE ⇨ ❑ 675	CONSOLA		
6	10119105	1	PLATE	CHAPA		

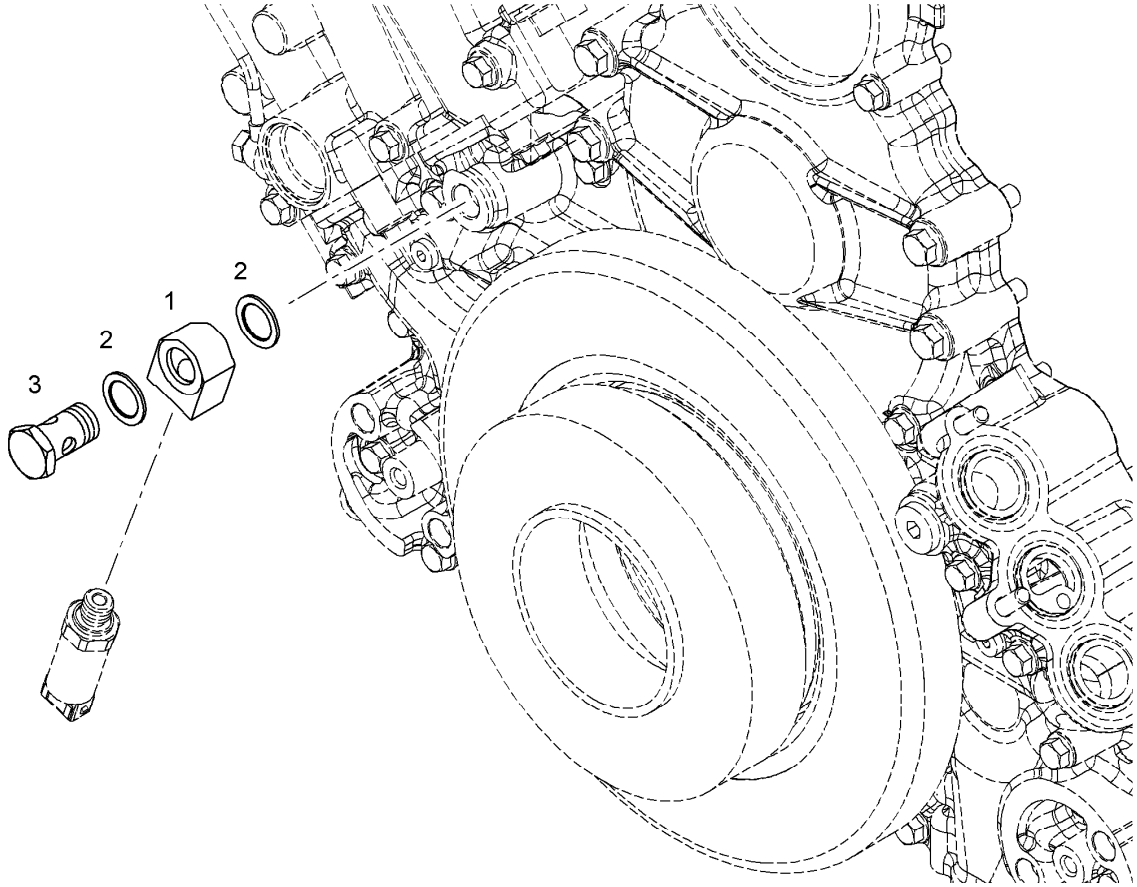

Pos.	Item	Quantity	Description	Descripción	Serie	K
1	10117507	1	CONNECTION PIECE	PIEZA DE EMPALME		
2	10011868	2	SEALING RING 18,7X26,00X1,5	JUNTA ANULAR		1
3	4981226	1	HOLLOW SCREW 15	TORNILLO HUECO		

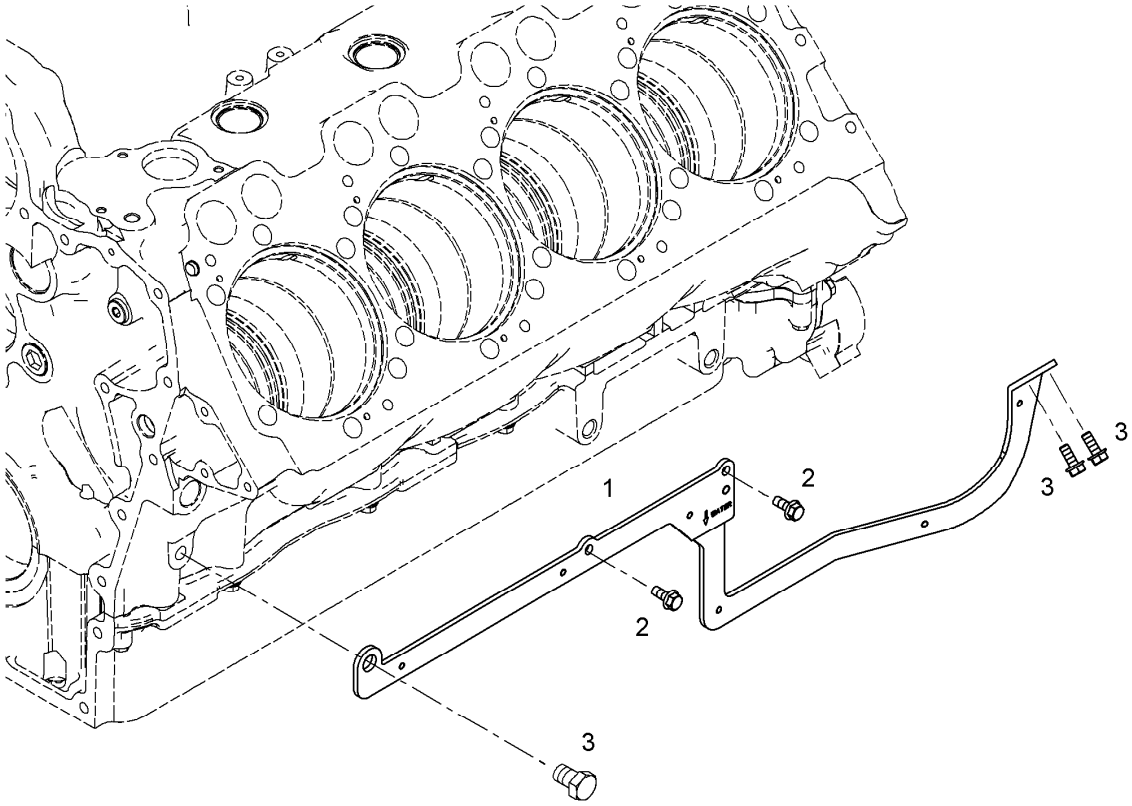

Pos.	Item	Quantity	Description	Descripción	Serie	K
1	10129490	1	CLAMP - ADD-ON UNIT	MONTAJE SOPORTE		
2	10016906	4	HEX BOLT EN 1665 M8x20 8.8 A3C	TORNILLO DE CABEZA HEXAGO		
3	10006362	1	HEX HEAD SCREW ISO 4017 M 16 X 25 8.8	TORNILLO HEXAGONAL		

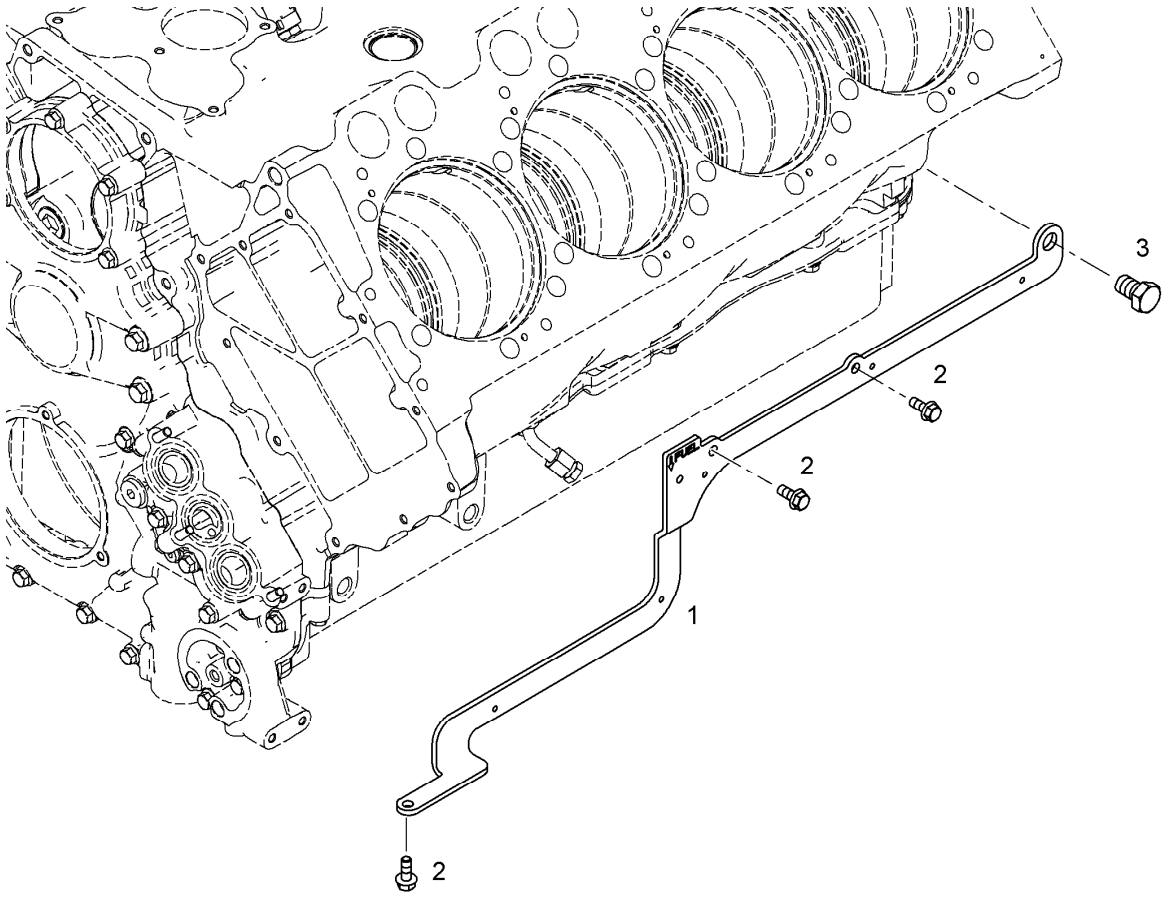

Pos.	Item	Quantity	Description	Descripción	Serie	K
1	10129494	1	CLAMP - ADD-ON UNIT	MONTAJE SOPORTE		
2	10016906	3	HEX BOLT EN 1665 M8x20 8.8 A3C	TORNILLO DE CABEZA HEXAGO		
3	10006362	1	HEX HEAD SCREW ISO 4017 M 16 X 25 8.8	TORNILLO HEXAGONAL		

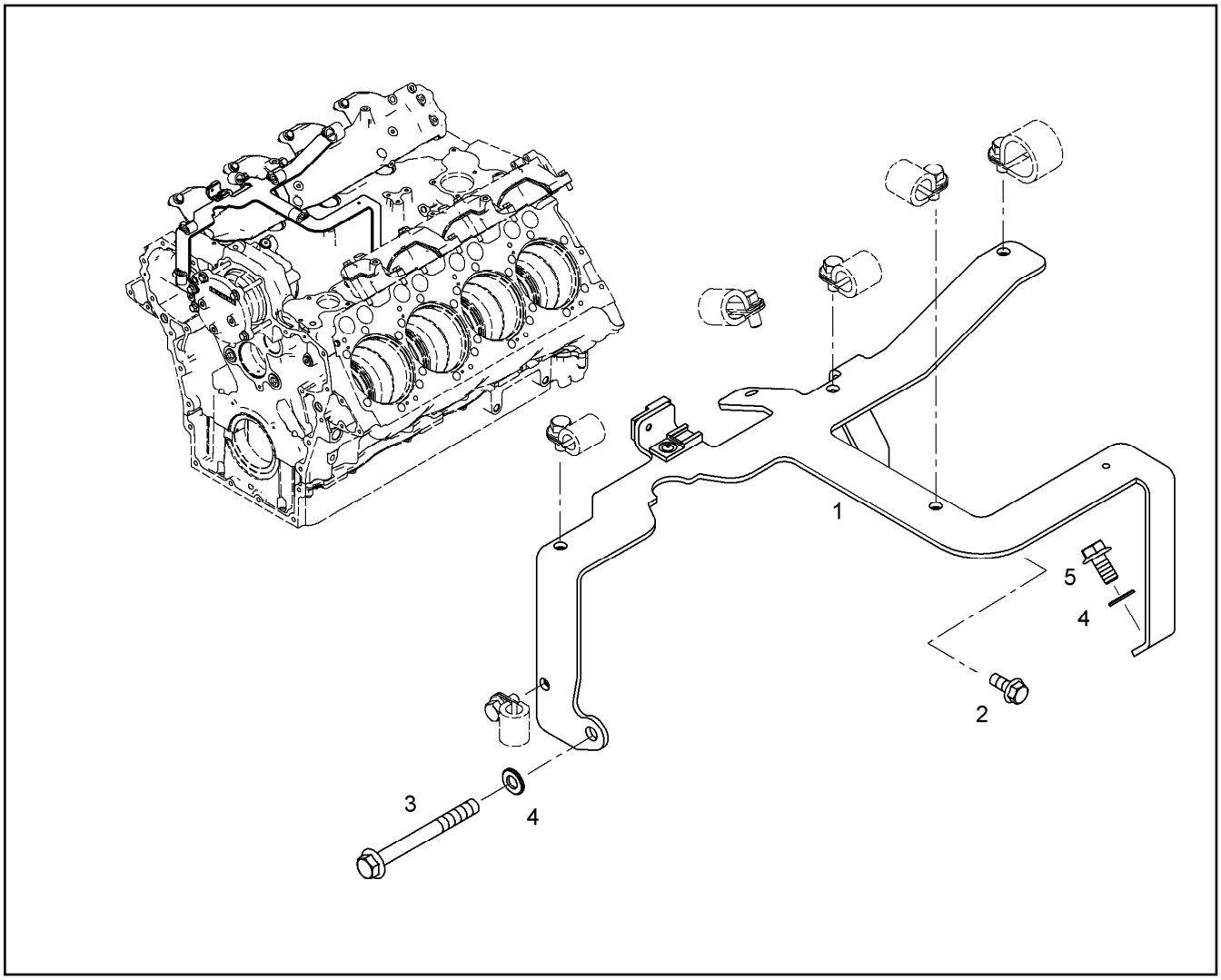

Pos.	Item	Quantity	Description	Descripción	Serie	K
1	10119037	1	CONSOLE	CONSOLA		
2	10030519	1	HEX BOLT EN 1665 M8X20 8.8	TORNILLO DE CABEZA HEXAGO		
3	10035581	1	HEX BOLT EN 1665 M10X100 10.9 A3C	TORNILLO DE CABEZA HEXAGO		
4	10289795	2	WASHER ISO 7089 10 300HV	ARANDELA		
5	10045356	1	HEX HEAD SCREW WITH FLANGE EN 1665	TORNILLO HEXAGONAL CON BR		

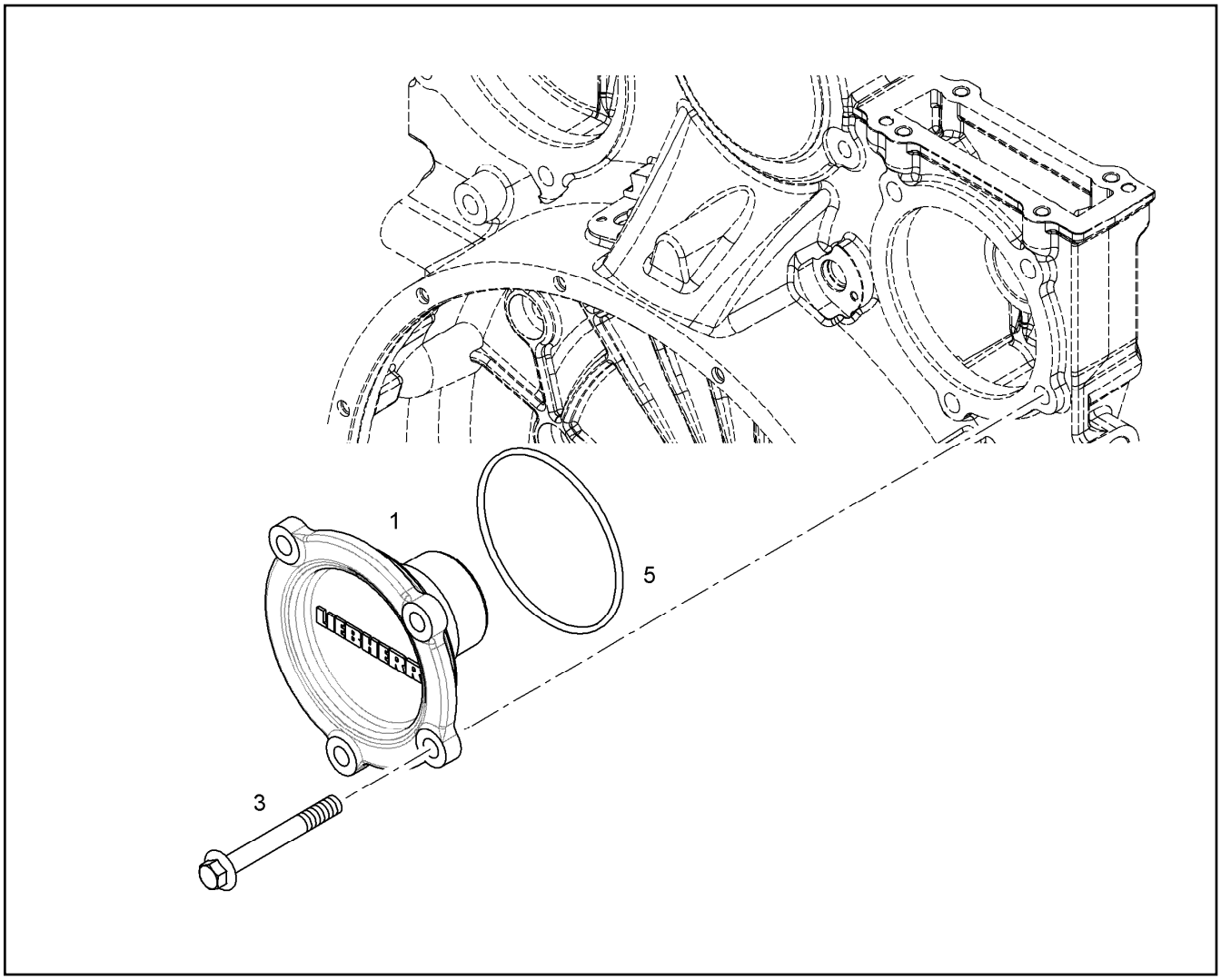

Pos.	Item	Quantity	Description	Descripción	Serie	K
1	9080443	1	LID	TAPA		
3	10035584	4	HEX BOLT EN 1665 M12X100 10.9 A3C	TORNILLO DE CABEZA HEXAGO		
5	7380604	1	O-RING	JUNTA TORICA		1

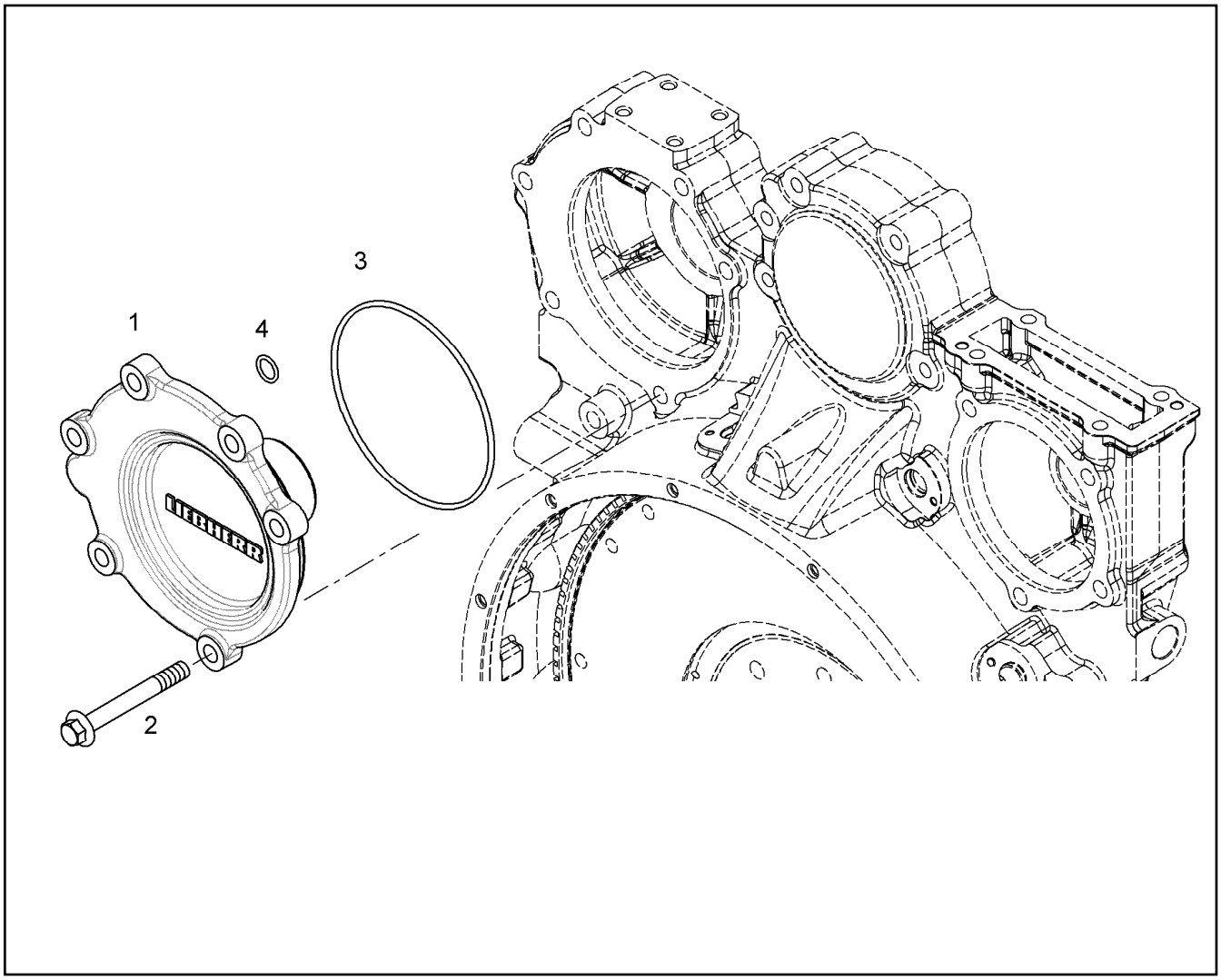

Pos.	Item	Quantity	Description	Descripción	Serie	K
1	10120392	1	LID	TAPA		
2	10035584	6	HEX BOLT EN 1665 M12X100 10.9 A3C	TORNILLO DE CABEZA HEXAGO		
3	7380154	1	O-RING	JUNTA TORICA		1
4	7380619	1	O-RING	JUNTA TORICA		1

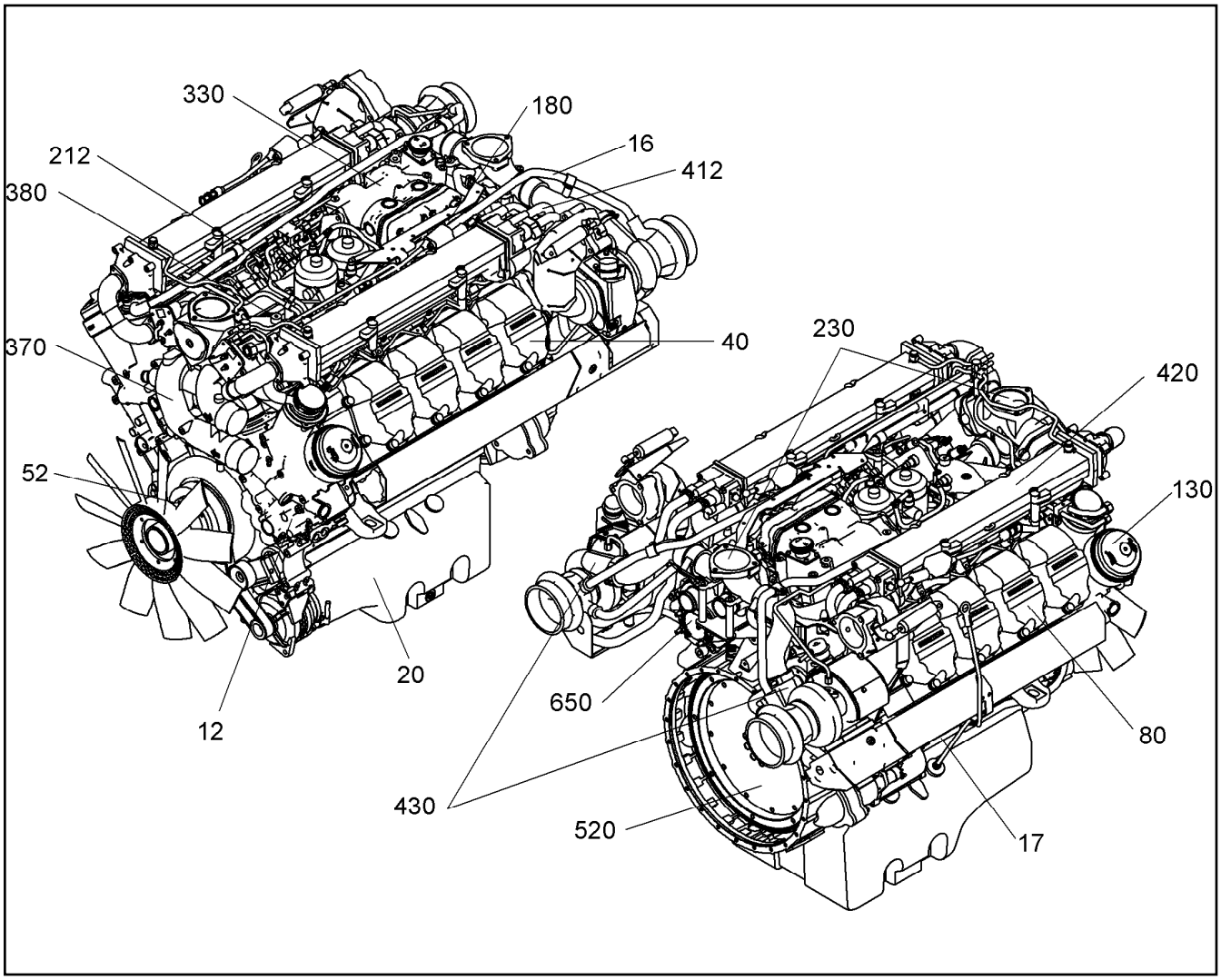

Pos.	Item	Quantity	Description	Descripción	Serie	K
12	10120855	1	SEAL KIT AGGREGATE CARRIER ⇨ ❑ 680	JJ SOPORTE GRUPO		1
16	10120869	1	SEAL KIT CRANKCASE BREATHER ⇨ ❑ 681	J. JUNTAS PURGA CAJA CIGÜE		1
17	10120870	1	SEAL KIT LOCKING PARTS ⇨ ❑ 682	JUEGO JUNTAS PIEZAS DE CIE		1
20	10120871	1	SEAL KIT OIL SUMP ⇨ ❑ 683	JJ CUBETA ACEITE		1
40	10120873	1	SEAL KIT CYLINDER ⇨ ❑ 684	JJ CILINDRO		1
52	9077696	1	CRANKSHAFT SEALING ⇨ ❑ 591	JUNTA DEL CIGÜEÑAL		
80	10120896	8	SEAL KIT ZYLINDER HEAD CPL. ⇨ ❑ 687	J. J. CABEZA CILINDRO COMPL.		1
130	10120875	1	SEAL KIT OIL MODULE ⇨ ❑ 685	JUEGO JUNTAS MÓDULO DE A		1
180	10120878	1	SEAL KIT HIGH PRESSURE PUMP ⇨ ❑ 686	JUEGO JUNTAS BOMBA ALTA PR		1
212	10121183	1	SEAL KIT FUEL LINE ⇨ ❑ 697	J. J. TUBERÍA DE COMBUSTIBLE		1
230	10120937	1	SEAL KIT CONNECTING LINE ⇨ ❑ 688	JUEGO JUNTAS LÍNEA DE CONE		1
330	10120944	1	SEAL KIT AIR COMPRESSOR ⇨ ❑ 689	JUEGO JUNTAS COMPRESOR D		1
370	10120973	1	SEALING SET WATER PUMP ⇨ ❑ 691	JJ BOMBA AGUA		1

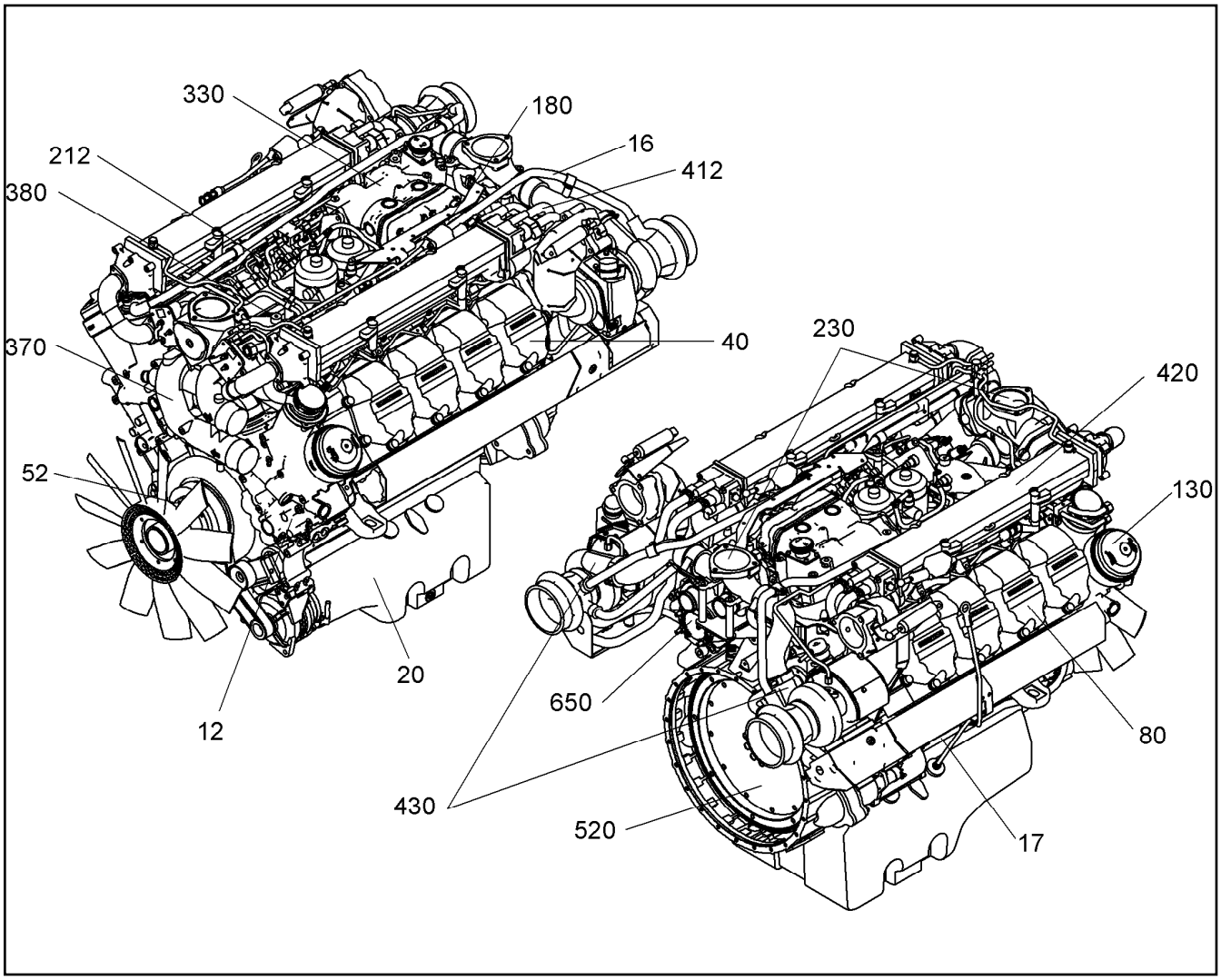

Pos.	Item	Quantity	Description	Descripción	Serie	K
380	10120962	1	SEAL KIT THERMOSTAT HOUSING ⇨ ❑ 690	J. J. CARCASA DEL TERMOSTAT		1
412	10120976	1	SEAL KIT EXHAUST MANIFOLD ⇨ ❑ 692	JUEGO JUNTAS CODO DE ESC		1
420	10120982	1	SEAL KIT EXHAUST GAS RECIRCUL. ⇨ ❑ 693	JUEGO JUNTAS RETORNO ESC		1
430	10120993	1	SEAL KIT TURBOCHARGER MOUNTING ⇨ ❑ 694	JJ ATL MONTAJE		1
520	10120996	1	SEAL KIT FLYWHEEL HOUSING ⇨ ❑ 695	J. JUNTAS CARCASA DEL VOLA		1
650	10121003	1	SEAL KIT OUTPUT SHAFT ⇨ ❑ 696	JJ ACCIONAMIENTO SECUNDARI		1

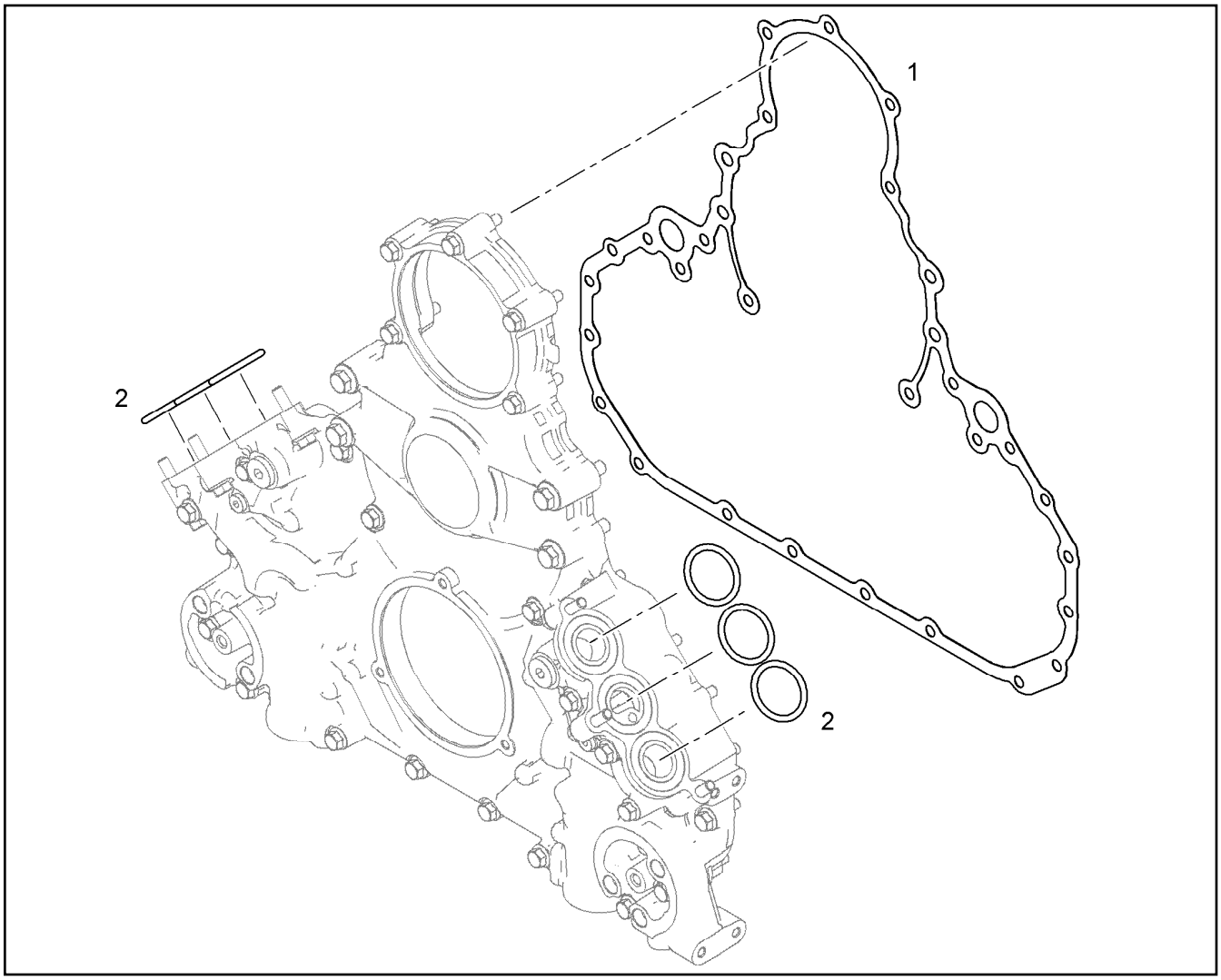

Pos.	Item	Quantity	Description	Descripción	Serie	K
1	9080032	1	SEAL	JUNTA		
2	10294497	6	O-RING DIN 3771 38,00X4,50	JUNTA TORICA		1

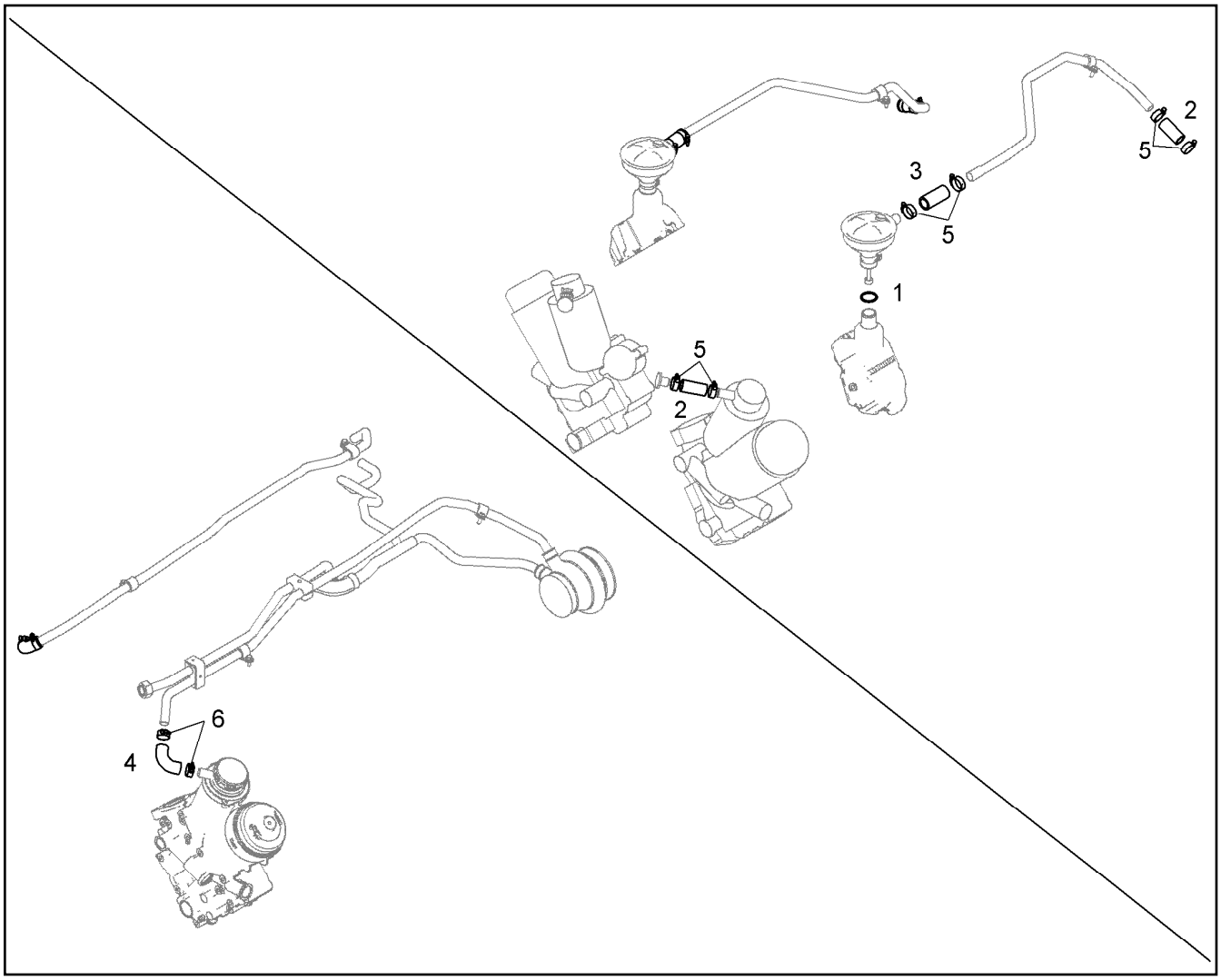

Pos.	Item	Quantity	Description	Descripción	Serie	K
1	7381254	2	O-RING	JUNTA TORICA		1
2	9273161	4	RUBBER CONNECTION	MANGUITO DE GOMA		
3	9273158	2	RUBBER CONNECTION	MANGUITO DE GOMA		
4	9078621	2	RUBBER CONNECTION 22 X 30 X 90GRAD	MANGUITO DE GOMA		
5	5004927	12	HOSE CLAMP DIN 3017-1 A 32 25-40x13 W2-	ABRAZADERA MANGUERA		
6	4900778	4	HOSE CLAMP DIN 3017 A 20 - 32 X 13 W2-2	ABRAZADERA MANGUERA		

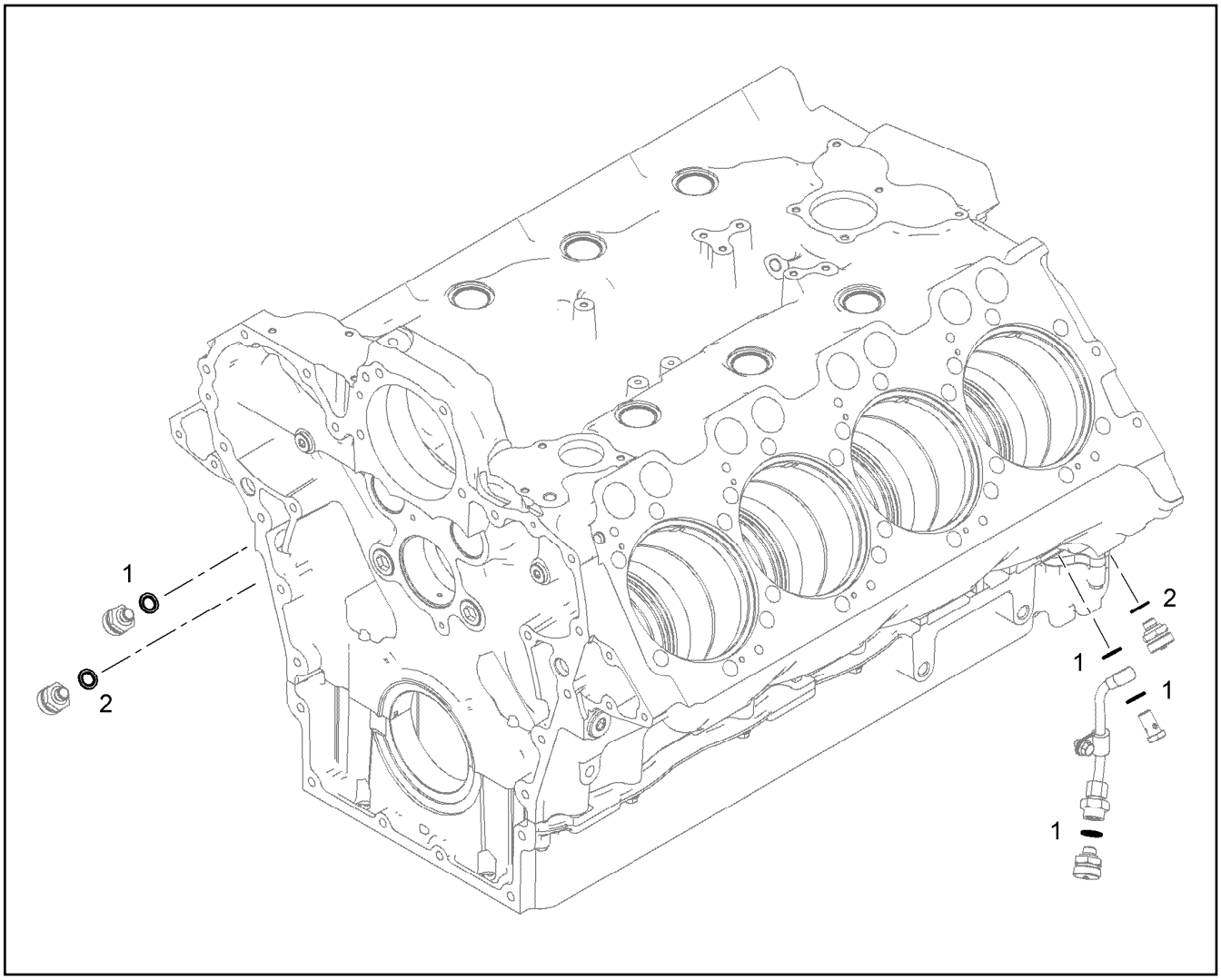

Pos.	Item	Quantity	Description	Descripción	Serie	K
1	10011866	4	SEALING RING 14,7X22,00X1,5	JUNTA ANULAR		1
2	10011870	2	SEALING RING 26,7X34,93X2	JUNTA ANULAR		1

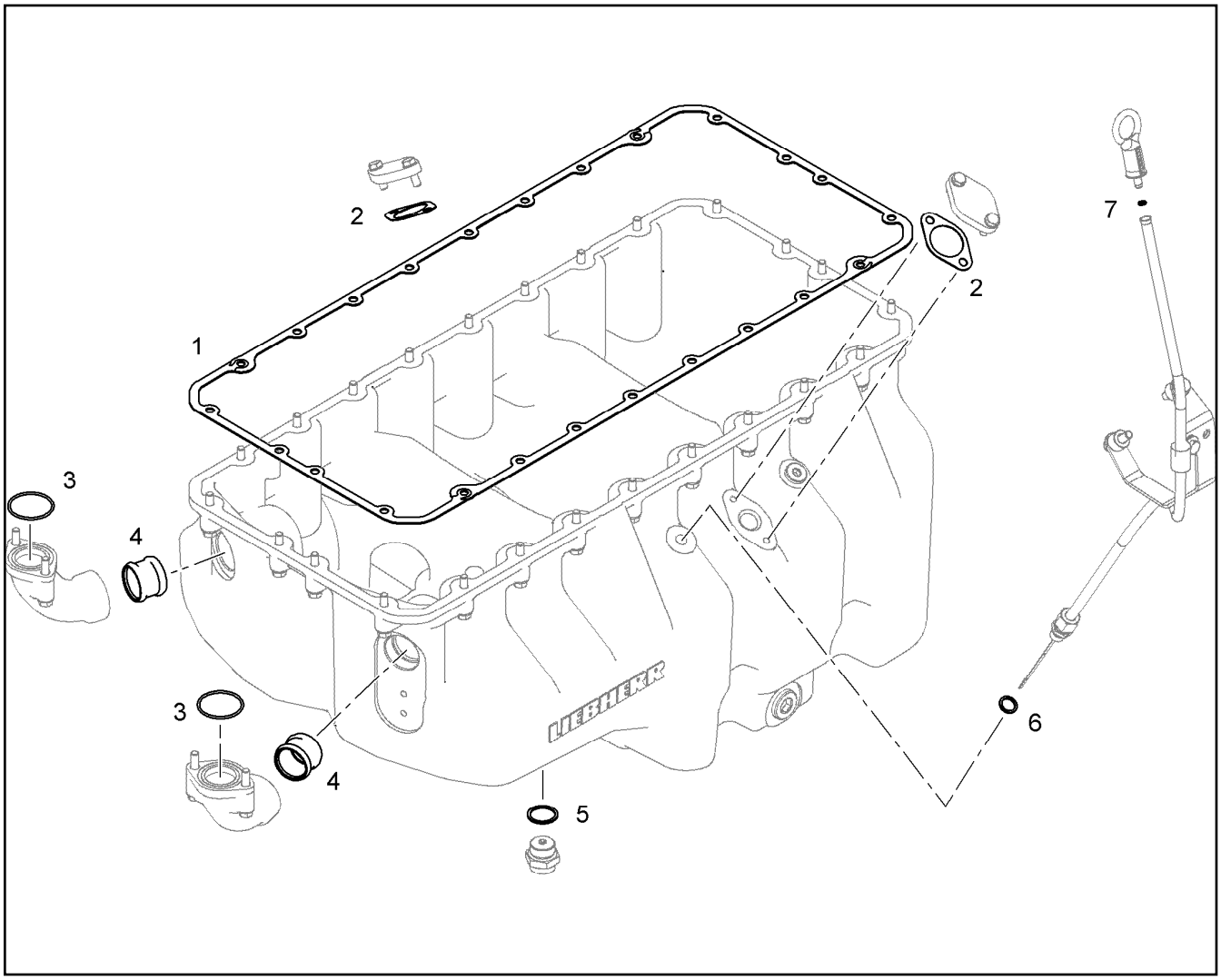

Pos.	Item	Quantity	Description	Descripción	Serie	K
1	10117862	1	SEAL	JUNTA		
2	9275766	2	SEAL	JUNTA		1
3	10036913	2	O-RING 44,60X2,40	JUNTA TORICA		1
4	10354600	2	PLUG-IN PIPE DMR42X32	TUBO ENCHUFABLE		
5	7101021	1	SEALING RING DIN 7603 A 30 X 36 CU	JUNTA ANULAR		1
6	7101008	1	SEALING RING DIN 7603 A 14 X 18 CU	JUNTA ANULAR		1
7	10215824	1	O-RING	JUNTA TORICA		1

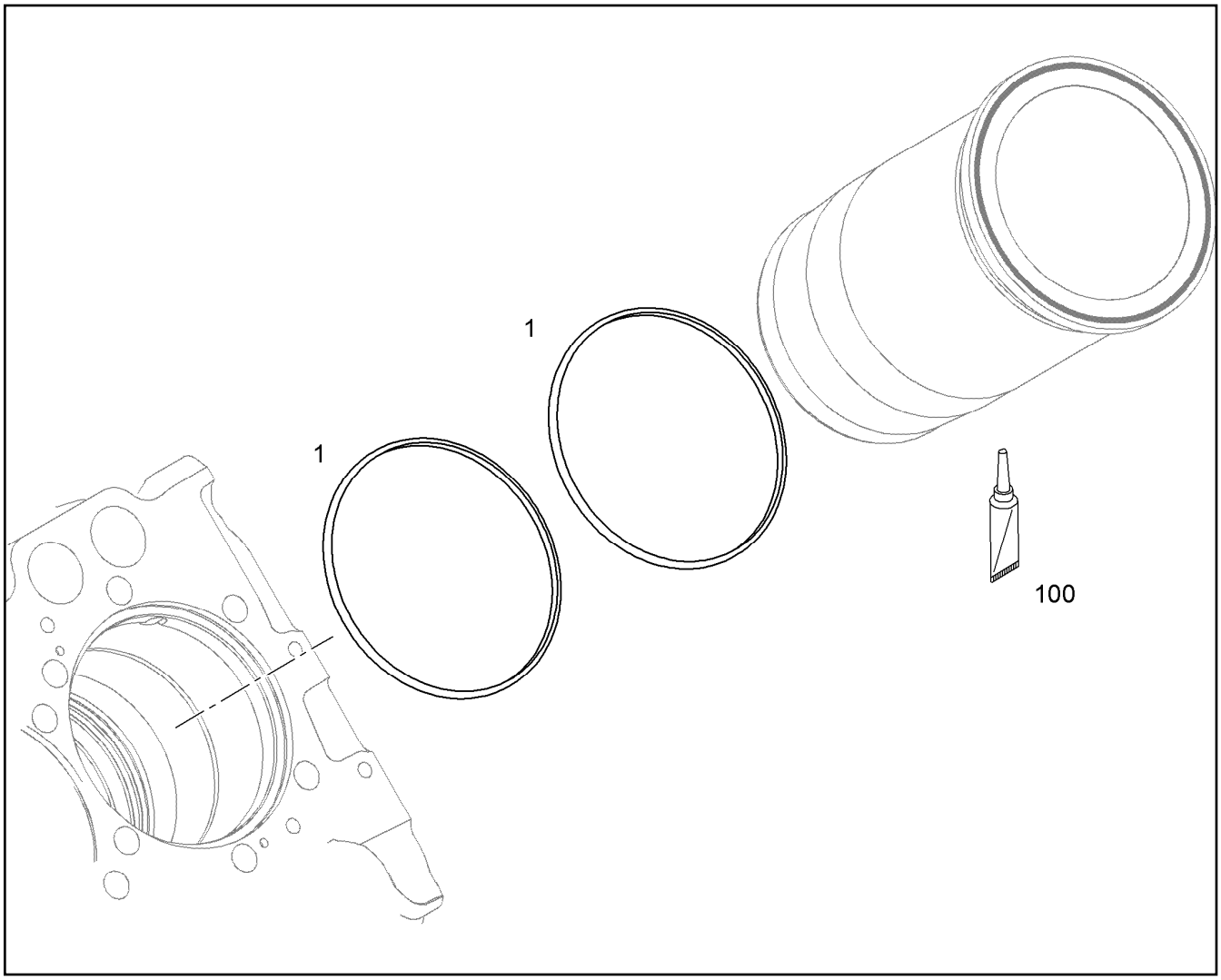

Pos.	Item	Quantity	Description	Descripción	Serie	K
1	10036521	16	O-RING 150,0X4,0	JUNTA TORICA		1
100	10282622	1	GREASE	GRASA		

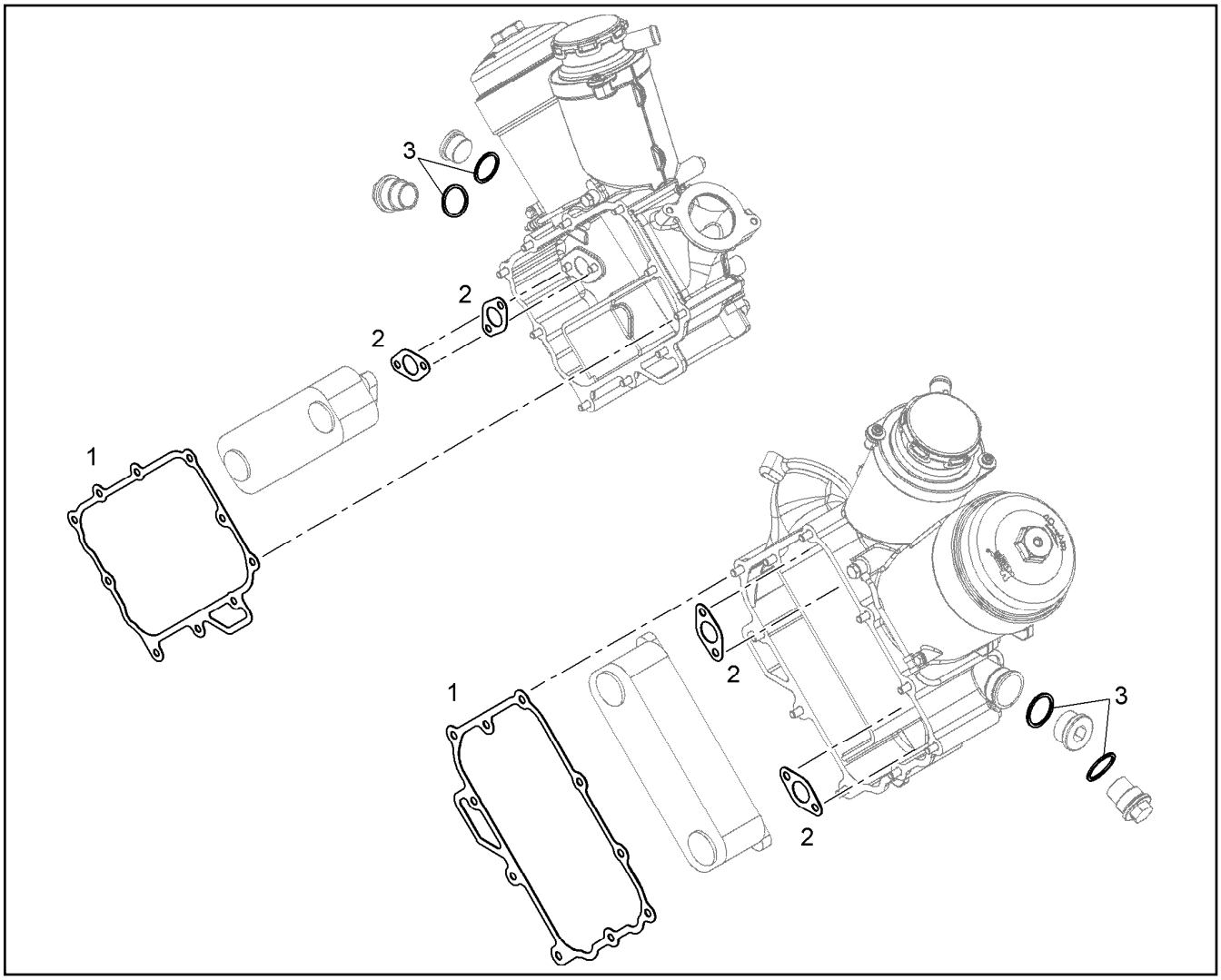

Pos.	Item	Quantity	Description	Descripción	Serie	K
1	10117680	2	SEAL 1,0MM	JUNTA		
2	10118717	4	SEAL	JUNTA		
3	7101022	4	SEALING RING DIN 7603 A 33X39X2	JUNTA ANULAR		1

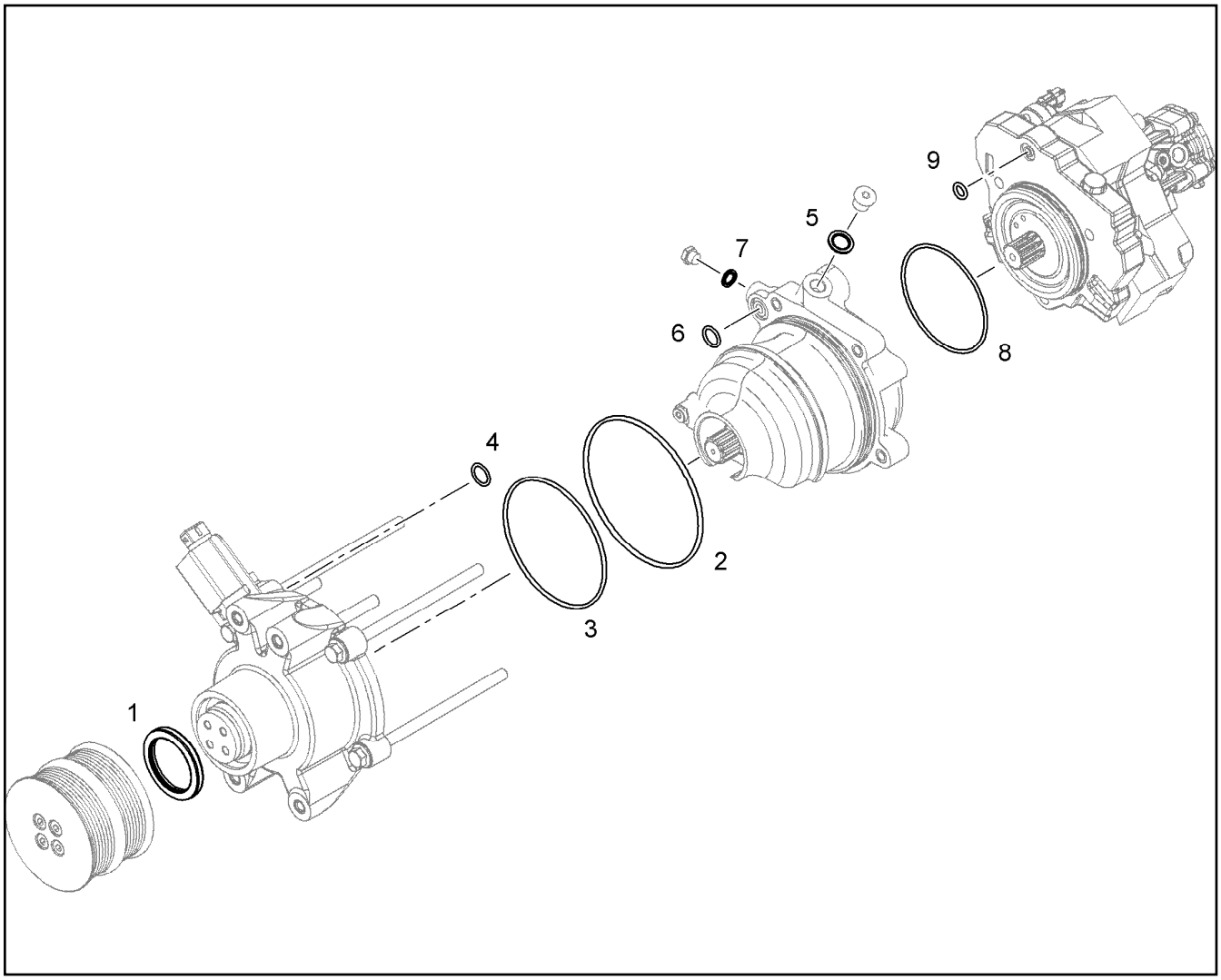

Pos.	Item	Quantity	Description	Descripción	Serie	K
1	10014510	1	ROTARY SHAFT LIP SEAL 50X65X7,0	RETEN RADIAL		1
2	7006516	1	O-RING 125x3	JUNTA TORICA		1
3	7380604	1	O-RING	JUNTA TORICA		1
4	10003192	1	O-RING 18,00X2,00	JUNTA TORICA		1
5	10011866	1	SEALING RING 14,7X22,00X1,5	JUNTA ANULAR		1
6	7380619	1	O-RING	JUNTA TORICA		1
7	10011864	1	SEALING RING 10,7X16,00X1,5	JUNTA ANULAR		1
8	7381192	1	O-RING DIN 3771 100,00X3,00	JUNTA TORICA		1
9	7381417	1	O-RING DIN 3771 10,00X3,00	JUNTA TORICA		1

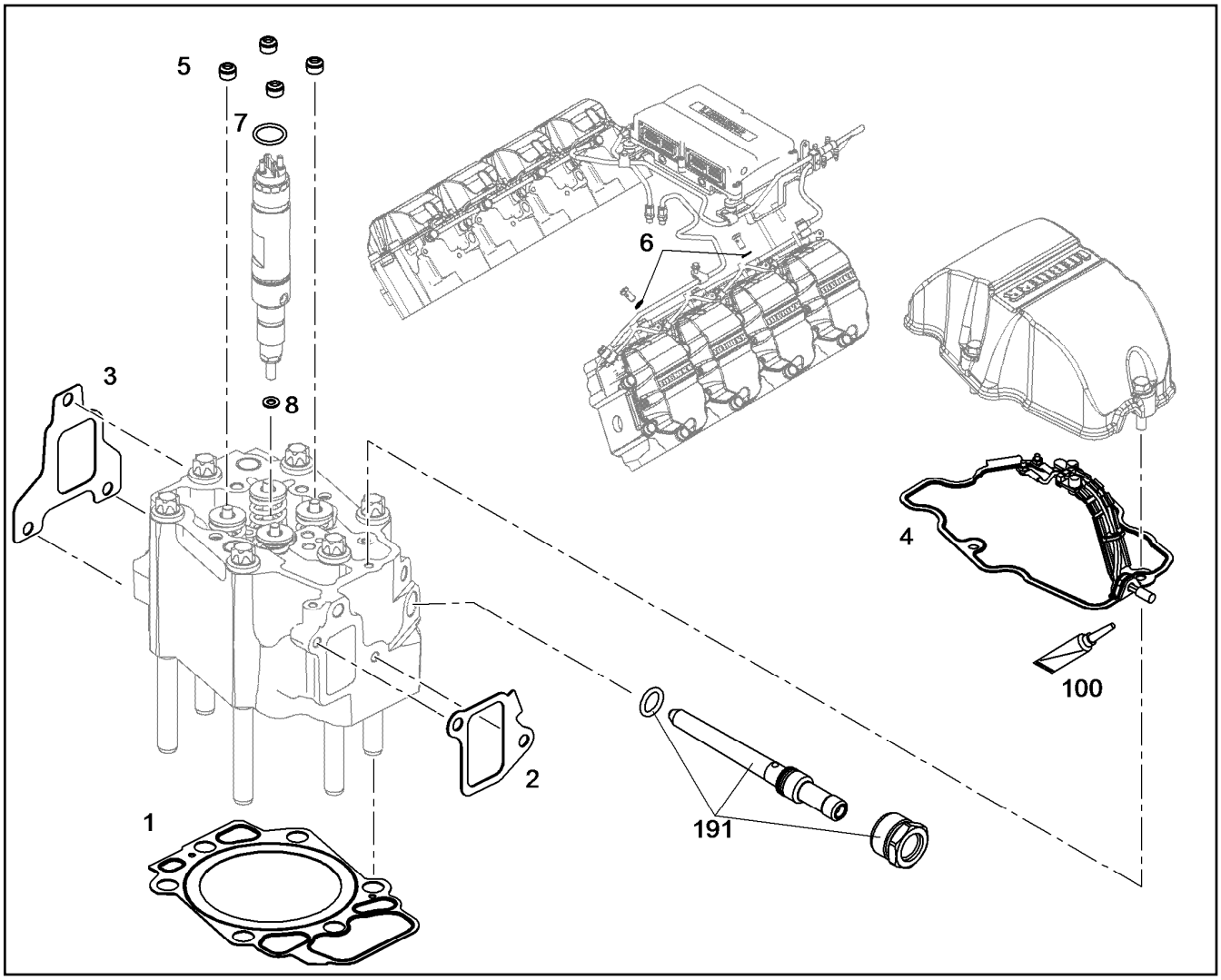

Pos.	Item	Quantity	Description	Descripción	Serie	K
1	10118055	1	CYLINDER HEAD GASKET	JUNTA DE CULATA		
2	10118991	1	SEAL	JUNTA		1
3	9078308	1	SEAL	JUNTA		
4	9079885	1	SEAL	JUNTA		
5	10012247	4	VALVE STEM SEAL	JUNTA DEL VASTAGO DE VALV	-2007140643	
5	10120334	4	VALVE STEM SEAL RING	RETEN DEL VASTAGO DE VALV	2007140644-	1
6	10011866	5	SEALING RING 14,7X22,00X1,5	JUNTA ANULAR		1
7	10217777	1	O-RING	JUNTA TORICA		1
8	10442984	1	SHEET GASKET 7X14,4X1,5	ARANDELA RETEN		1
100	040710450	1	LUBRICANT PASTE OPTIMOLY WHITE T	PASTA LUBRICANTE		
191	9078324	1	PRESSURE ADAPTER ASS.	MONTAJE RACOR TUBO PRESIÓ		
			⇨ ❑ 616			

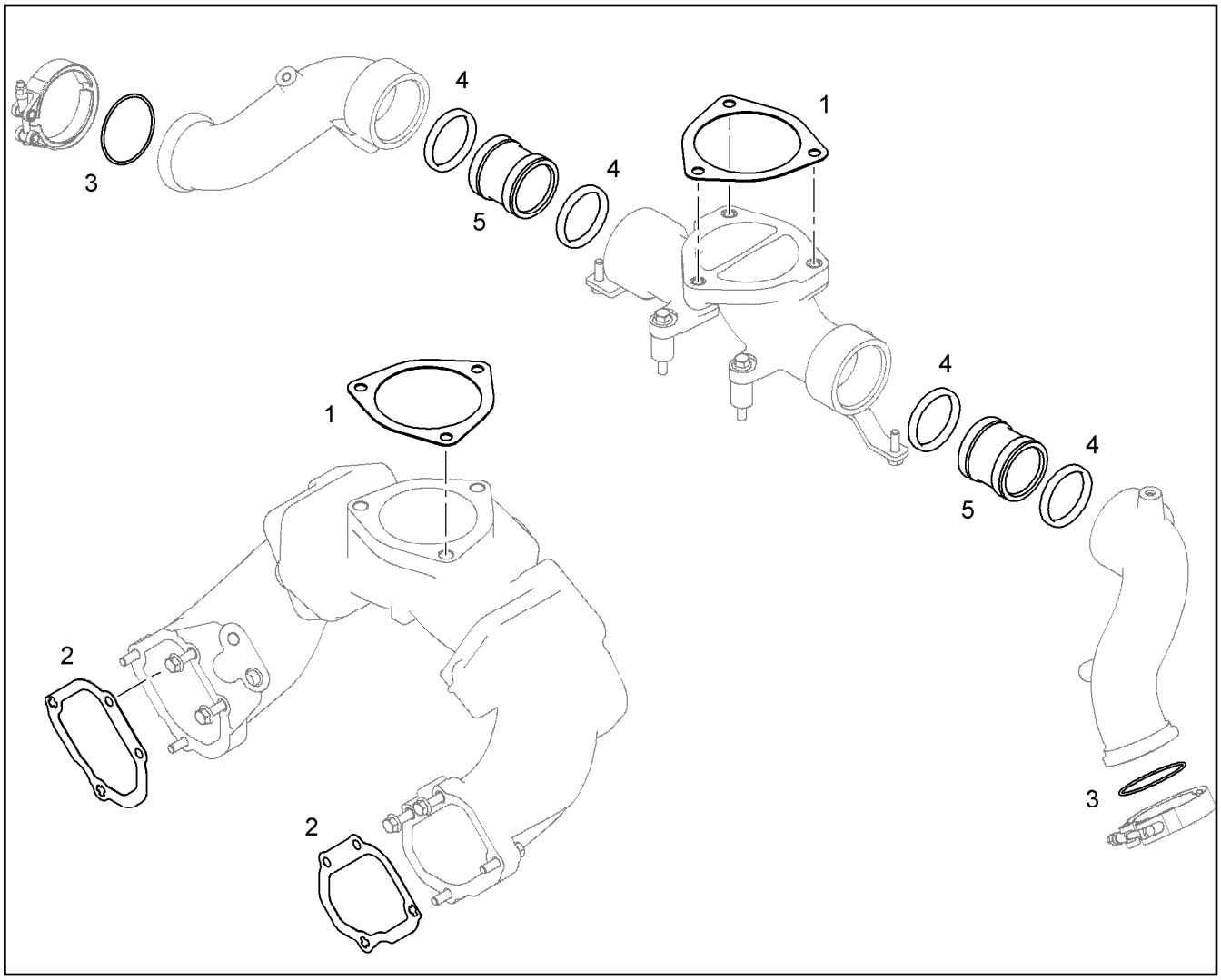

Pos.	Item	Quantity	Description	Descripción	Serie	K
1	10118558	2	SEAL	JUNTA		1
2	10119342	2	SEAL	JUNTA		1
3	7380970	2	O-RING	JUNTA TORICA		1
4	7381567	4	O-RING	JUNTA TORICA		1
5	10120090	2	CONNECTING PIECE	PIEZA UNION		

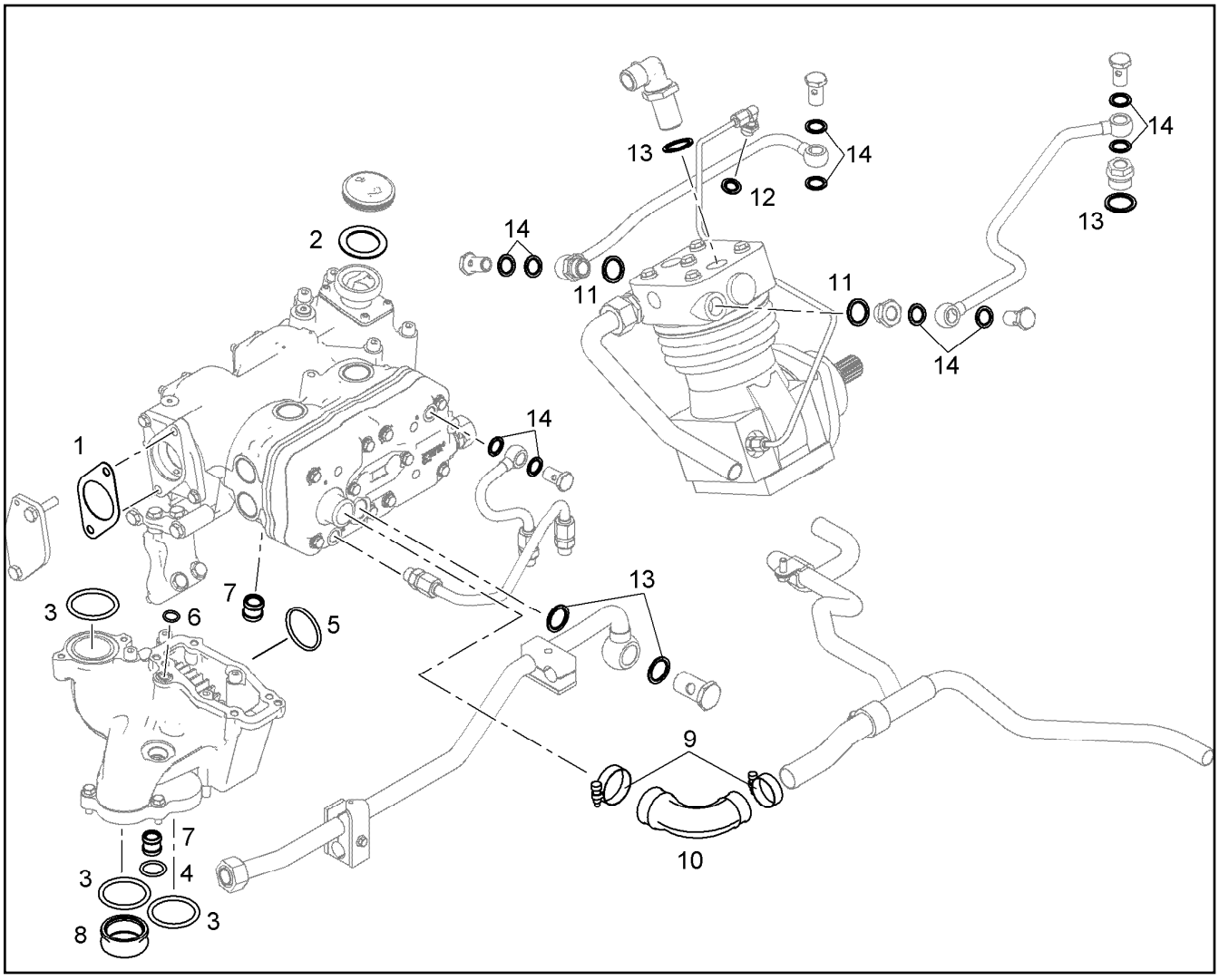

Pos.	Item	Quantity	Description	Descripción	Serie	K
1	9080281	1	SEAL	JUNTA		1
2	9144757	1	END COVER	TAPA DE CIERRE		1
3	10038573	3	O-RING 51,00X5,00	JUNTA TORICA		1
4	7380865	1	O-RING	JUNTA TORICA		1
5	726419601	1	O-RING 46X3	JUNTA TORICA		1
6	7380619	1	O-RING	JUNTA TORICA		1
7	10354599	2	PLUG-IN PIPE	TUBO ENCHUFABLE		
8	10037030	1	PLUG-IN PIPE	TUBO ENCHUFABLE		
9	5700024	2	HOSE CLAMP DIN 3017-1 A 50 40-60X13 W2-	ABRAZADERA MANGUERA		
10	9078925	1	RUBBER CONNECTION	MANGUITO DE GOMA		
11	10011869	2	SEALING RING 22,7X30X2	JUNTA ANULAR		1
12	10356531	2	SEALING RING 14,7x22,00x1,5	JUNTA ANULAR		1
13	10011870	4	SEALING RING 26,7X34,93X2	JUNTA ANULAR		1
14	10011867	10	SEALING RING 16,7X24,00X1,5	JUNTA ANULAR		1

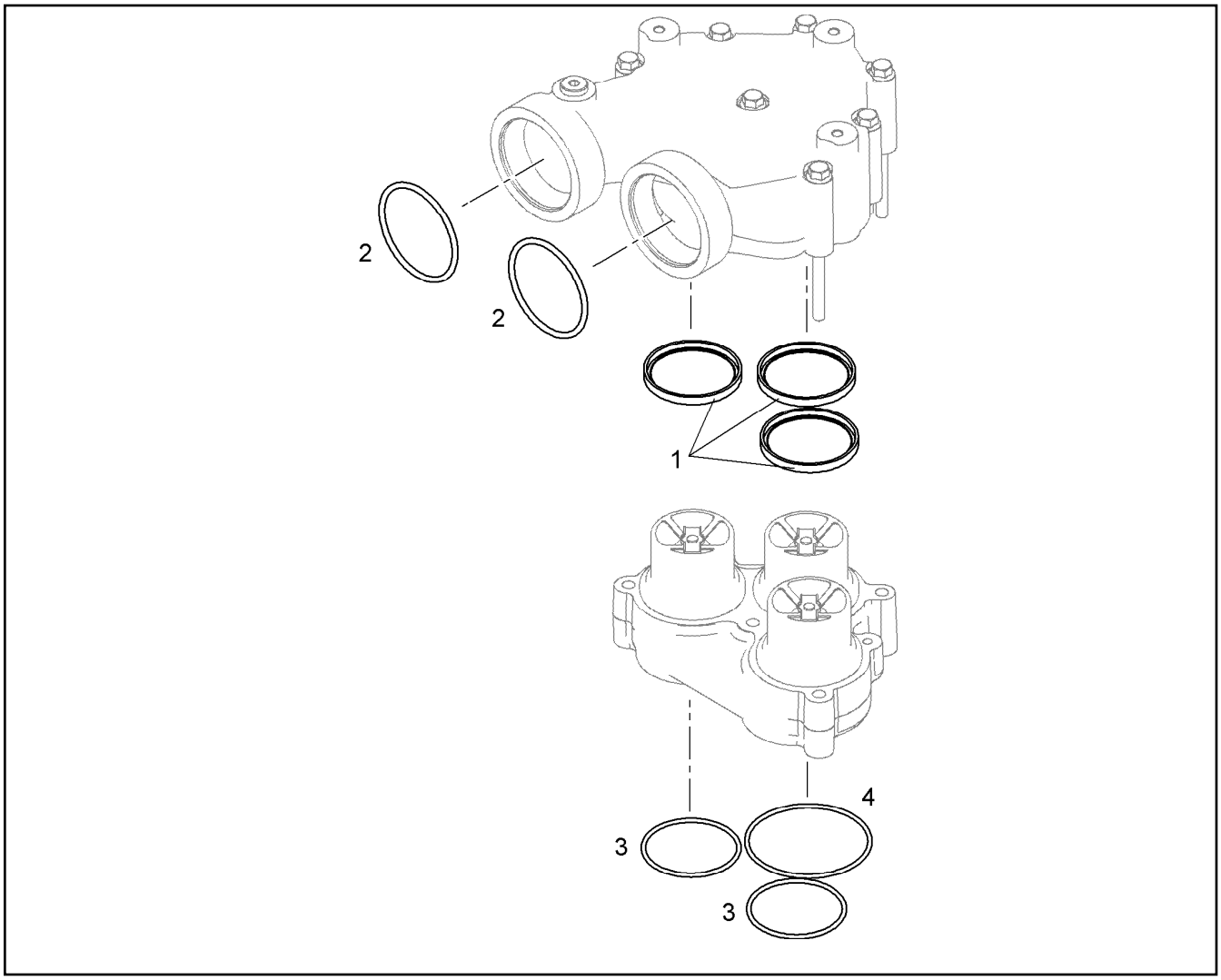

Pos.	Item	Quantity	Description	Descripción	Serie	K
1	10043255	3	SEALING RING 57,70X67,59X6,35	JUNTA ANULAR		
2	10040387	2	O-RING 67,50X4,00	JUNTA TORICA		1
3	10037224	2	O-RING 63,00X3,00	JUNTA TORICA		1
4	7380296	1	O-RING	JUNTA TORICA		1

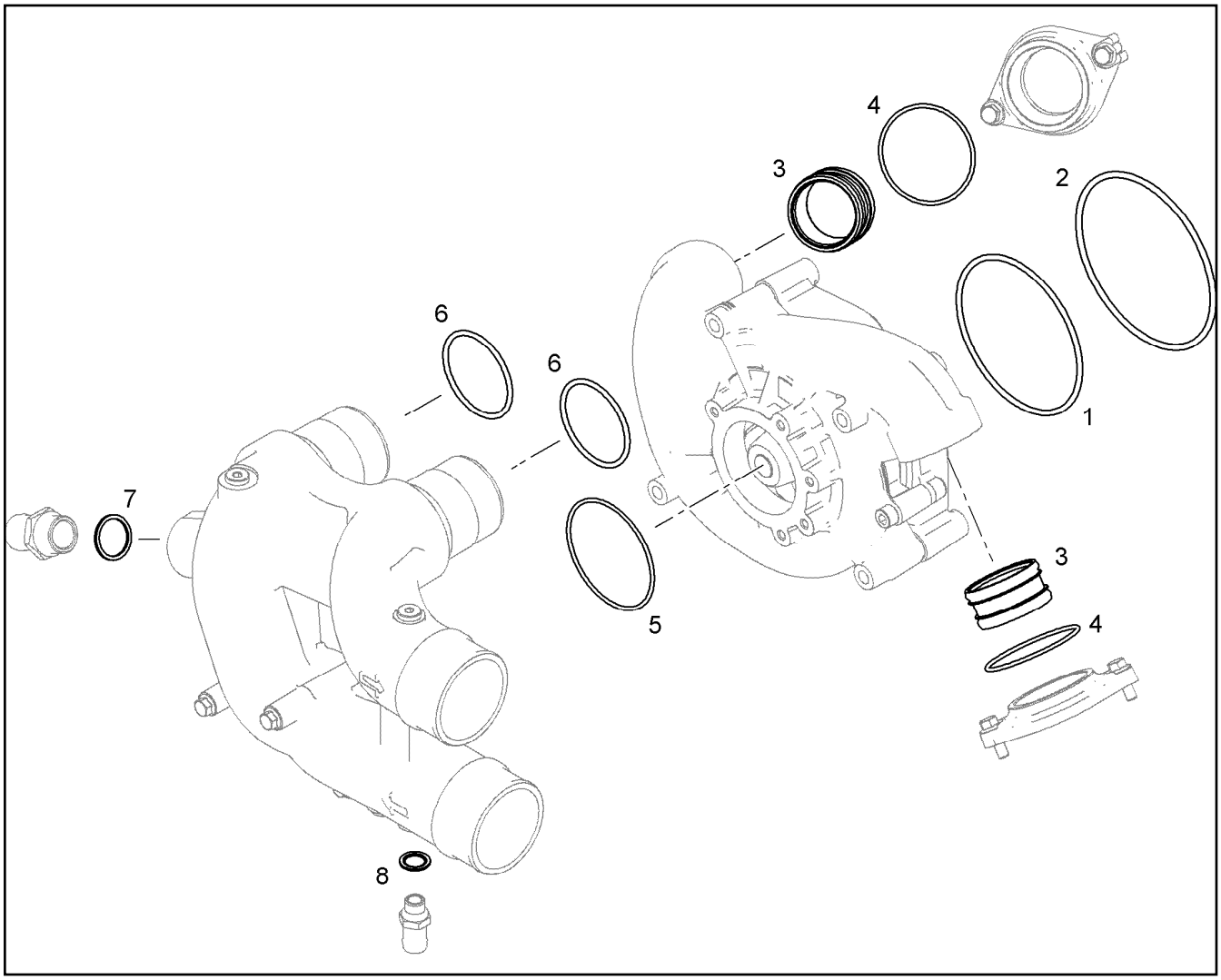

Pos.	Item	Quantity	Description	Descripción	Serie	K
1	10425261	1	O-RING DIN 3771 115x2,5	JUNTA TORICA		1
2	10425260	1	O-RING DIN 3771 140x3	JUNTA TORICA		1
3	10354601	2	PLUG-IN PIPE DR 61X32 70 EPDM	TUBO ENCHUFABLE		
4	7264455	2	O-RING DIN 3771 74,00X3,00	JUNTA TORICA		1
5	10040386	1	O-RING 90,00X3,00	JUNTA TORICA		1
6	10040387	2	O-RING 67,50X4,00	JUNTA TORICA		1
7	7101021	1	SEALING RING DIN 7603 A 30 X 36 CU	JUNTA ANULAR		1
8	10011867	1	SEALING RING 16,7X24,00X1,5	JUNTA ANULAR		1

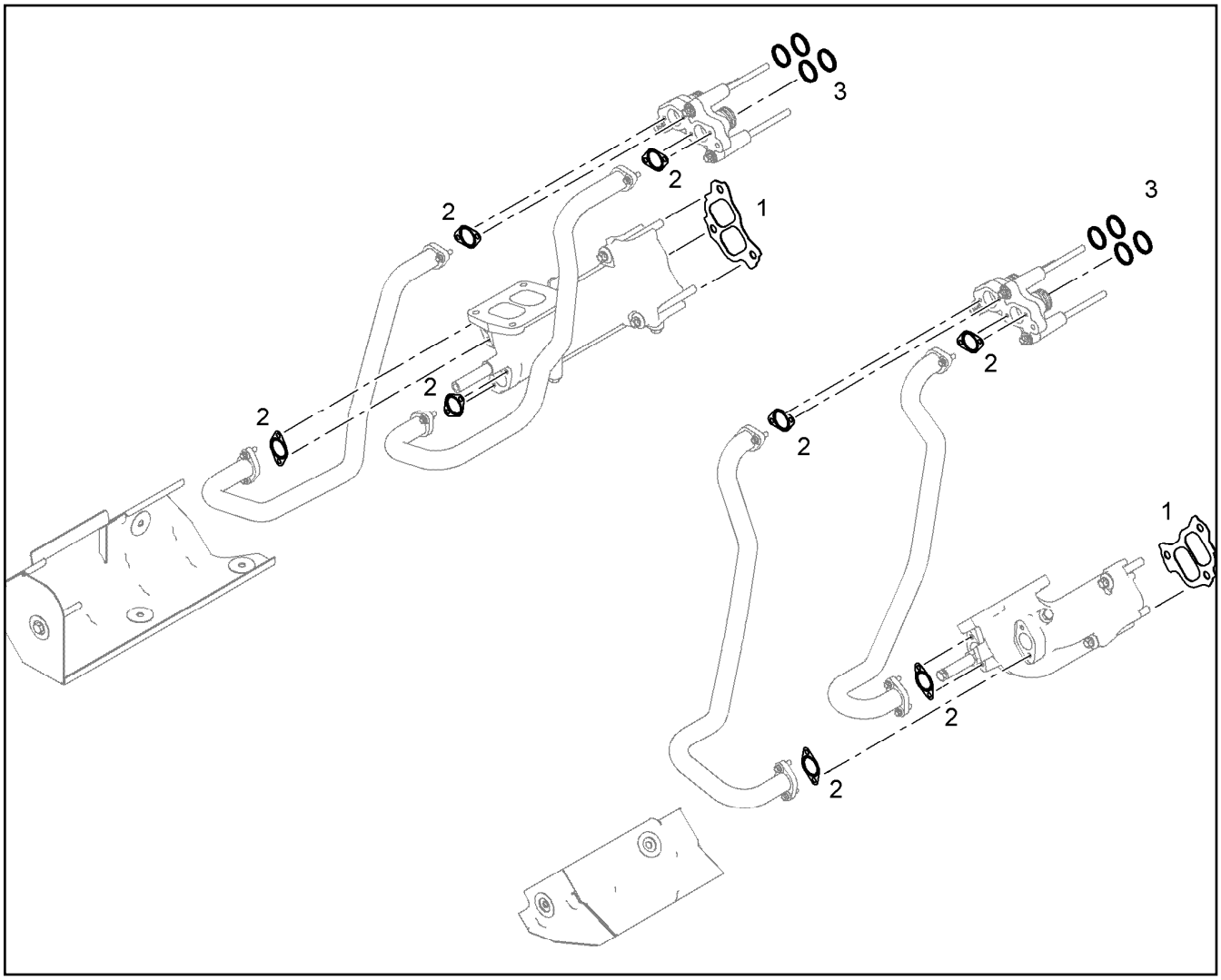

Pos.	Item	Quantity	Description	Descripción	Serie	K
1	10119343	2	SEAL	JUNTA		
2	9080532	8	SEAL	JUNTA		2
3	10116755	32	LEAF RING	ANILLO DE DISCO		

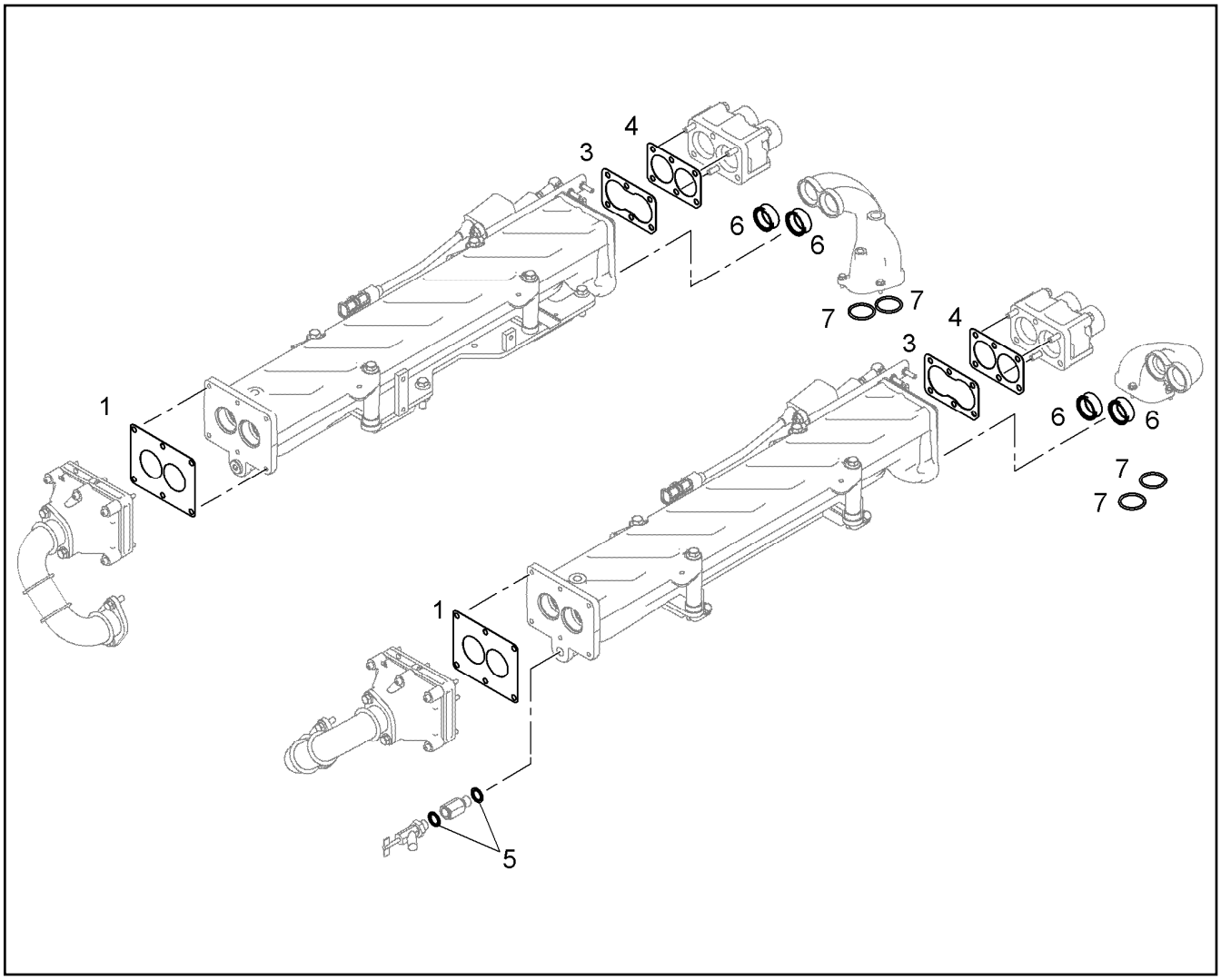

Pos.	Item	Quantity	Description	Descripción	Serie	K
1	10116794	2	SEAL 0,3MM DICK	JUNTA		2
3	10116793	2	SEAL 1,0MM DICK	JUNTA		2
4	10116792	2	SEAL 0,9MM DICK	JUNTA		2
5	10011867	2	SEALING RING 16,7X24,00X1,5	JUNTA ANULAR		1
6	10037030	4	PLUG-IN PIPE	TUBO ENCHUFABLE		
7	10038573	4	O-RING 51,00X5,00	JUNTA TORICA		1

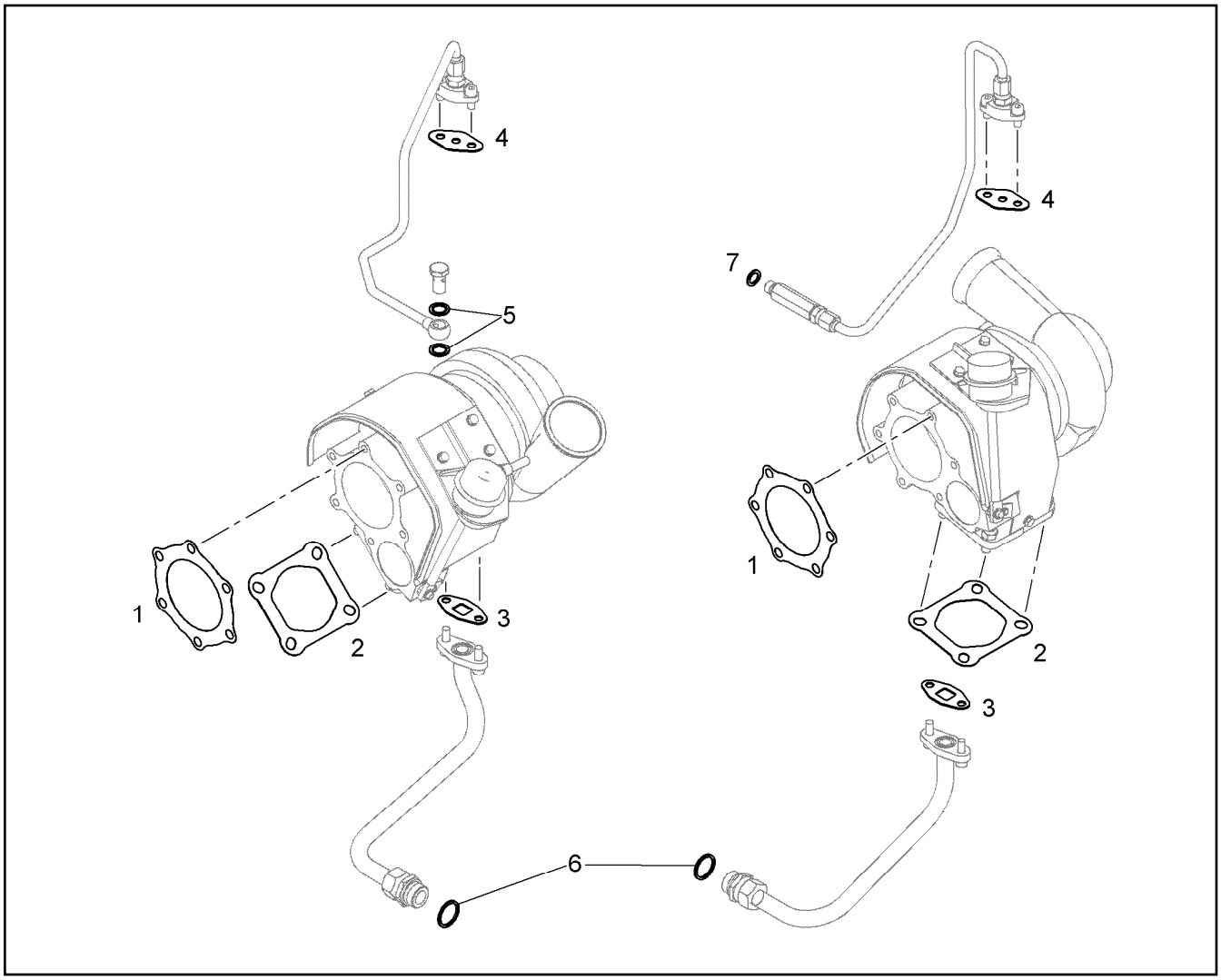

Pos.	Item	Quantity	Description	Descripción	Serie	K
1	10220814	2	SEAL	JUNTA		
2	10220813	2	SEAL	JUNTA		
3	10115623	2	SEAL	JUNTA		
4	9268130	2	SEAL	JUNTA		1
5	10011866	2	SEALING RING 14,7X22,00X1,5	JUNTA ANULAR		1
6	7101019	2	SEALING RING DIN 7603 A 26 X 31 CU	JUNTA ANULAR		1
7	4900262	1	SEALING RING DIN 7603 A 14 X 20 CU	JUNTA ANULAR		1

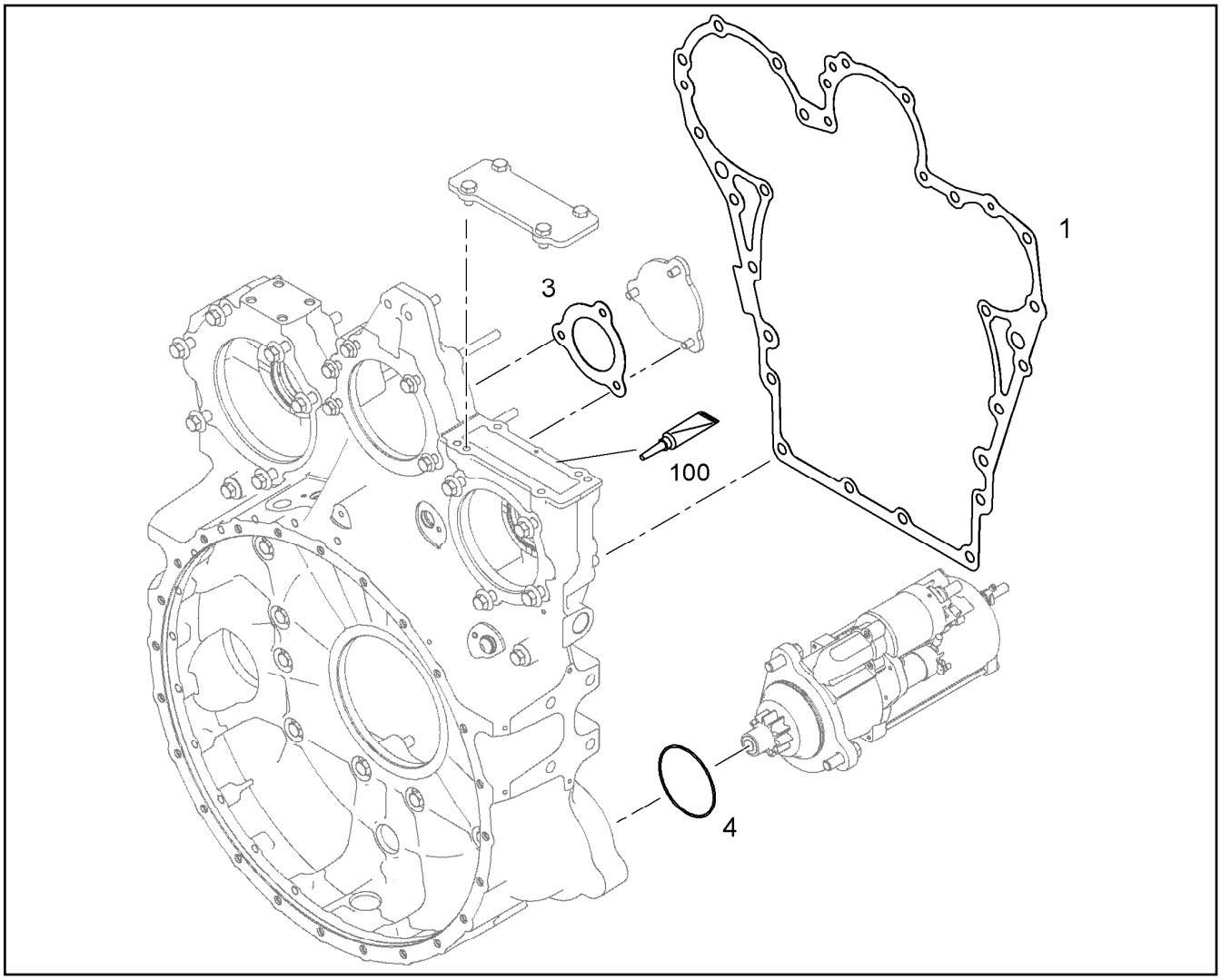

Pos.	Item	Quantity	Description	Descripción	Serie	K
1	10120356	1	SEAL	JUNTA		
3	10118715	1	SEAL	JUNTA		
4	10218370	1	O-RING	JUNTA TORICA		1
100	10011172	1	SURFACE SEALING	OBTURACION DE SUPERFICIE		

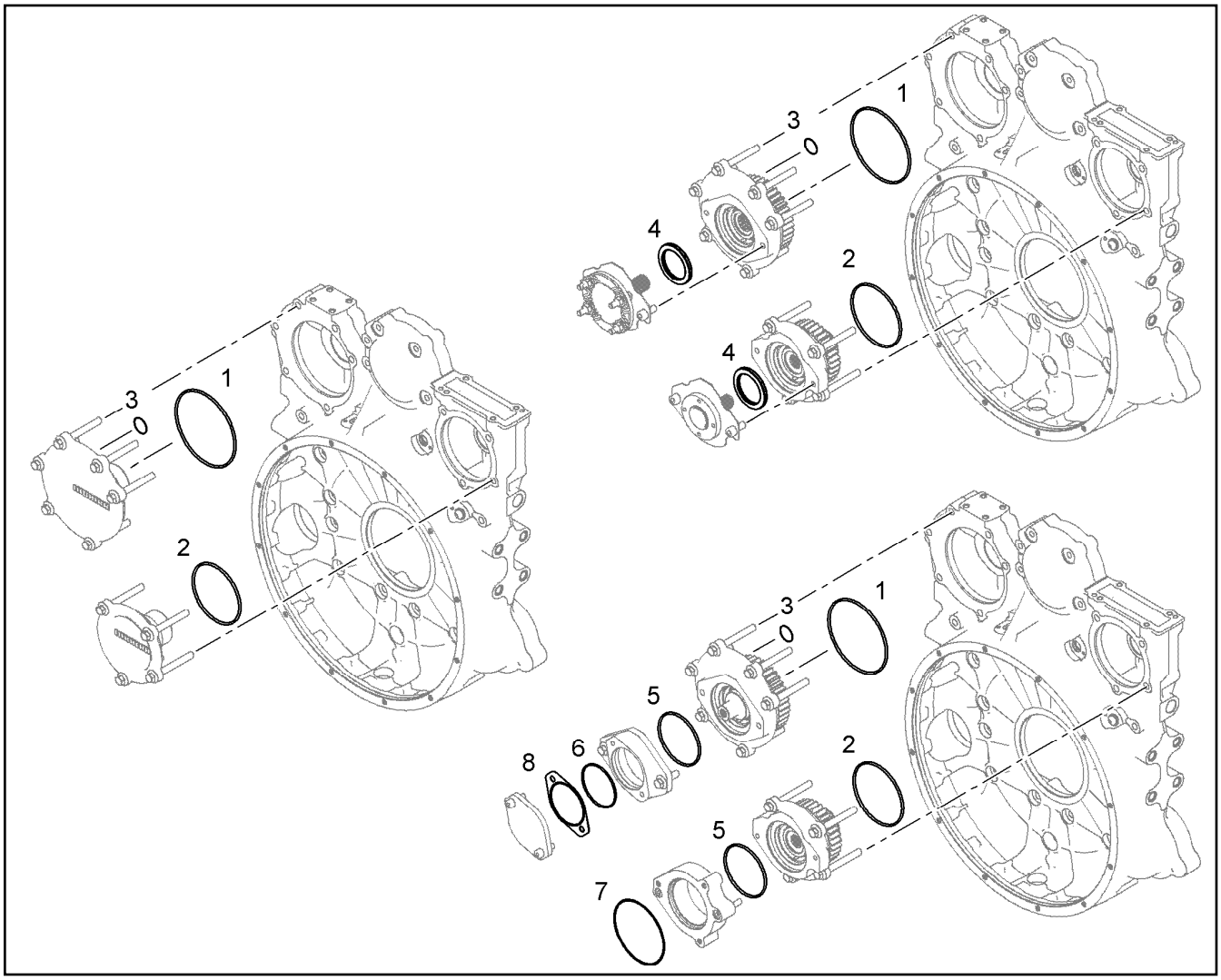

Pos.	Item	Quantity	Description	Descripción	Serie	K
1	7000329	1	O-RING	JUNTA TORICA		1
2	7380604	1	O-RING	JUNTA TORICA		1
3	7380619	1	O-RING	JUNTA TORICA		1
4	7380068	2	SHAFT SEAL	ANILLO DE RETÉN		1
5	7380401	2	O-RING	JUNTA TORICA		1
6	7380712	1	O-RING	JUNTA TORICA		1
7	10002310	1	O-RING 125,00X2,0	JUNTA TORICA		1
8	9077329	1	SEAL	JUNTA		1

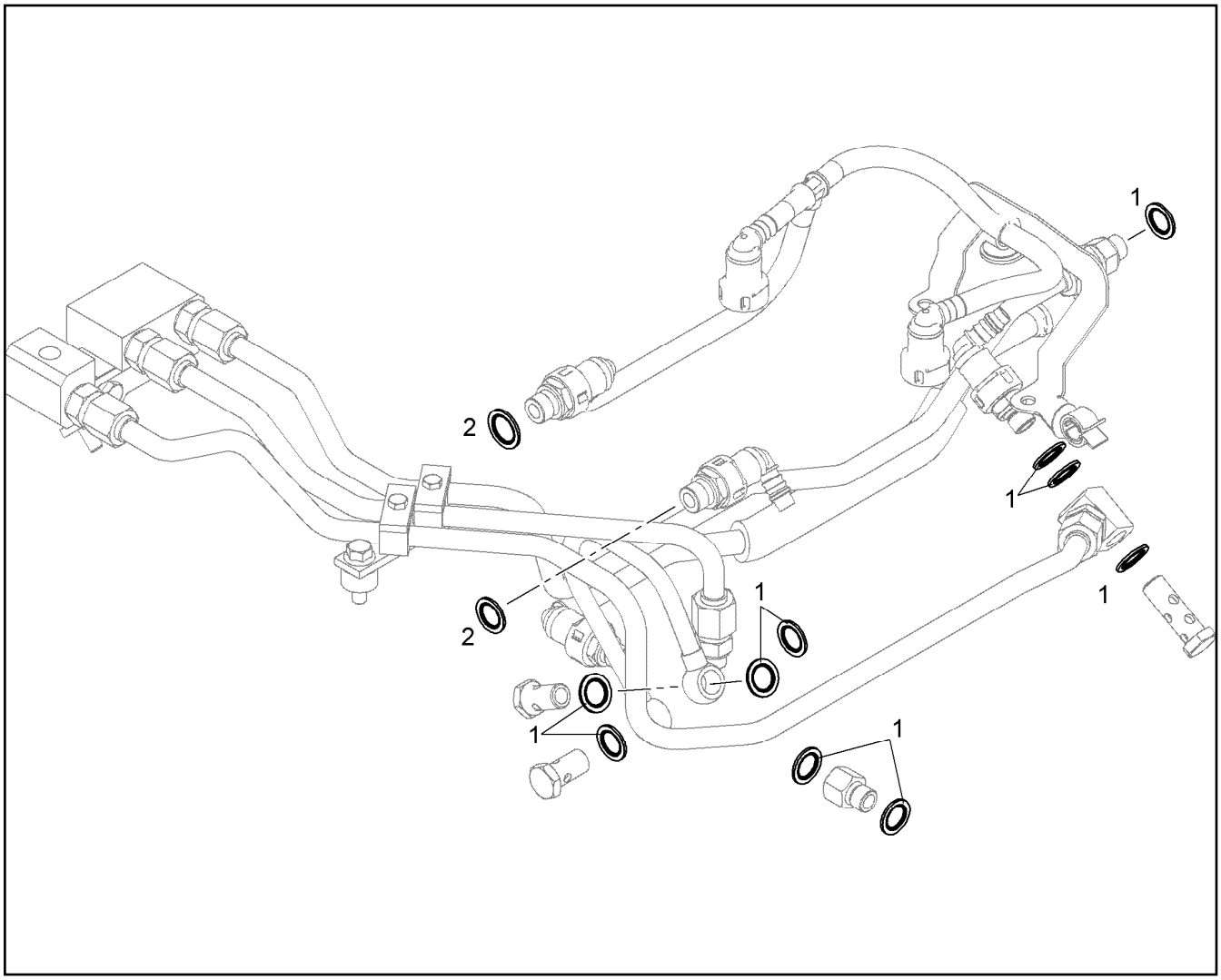

Pos.	Item	Quantity	Description	Descripción	Serie	K
1		10	SEALING RING 14,7X22,00X1,5	JUNTA ANULAR		1
2		2	SEALING RING 16,7X24,00X1,5	JUNTA ANULAR		1

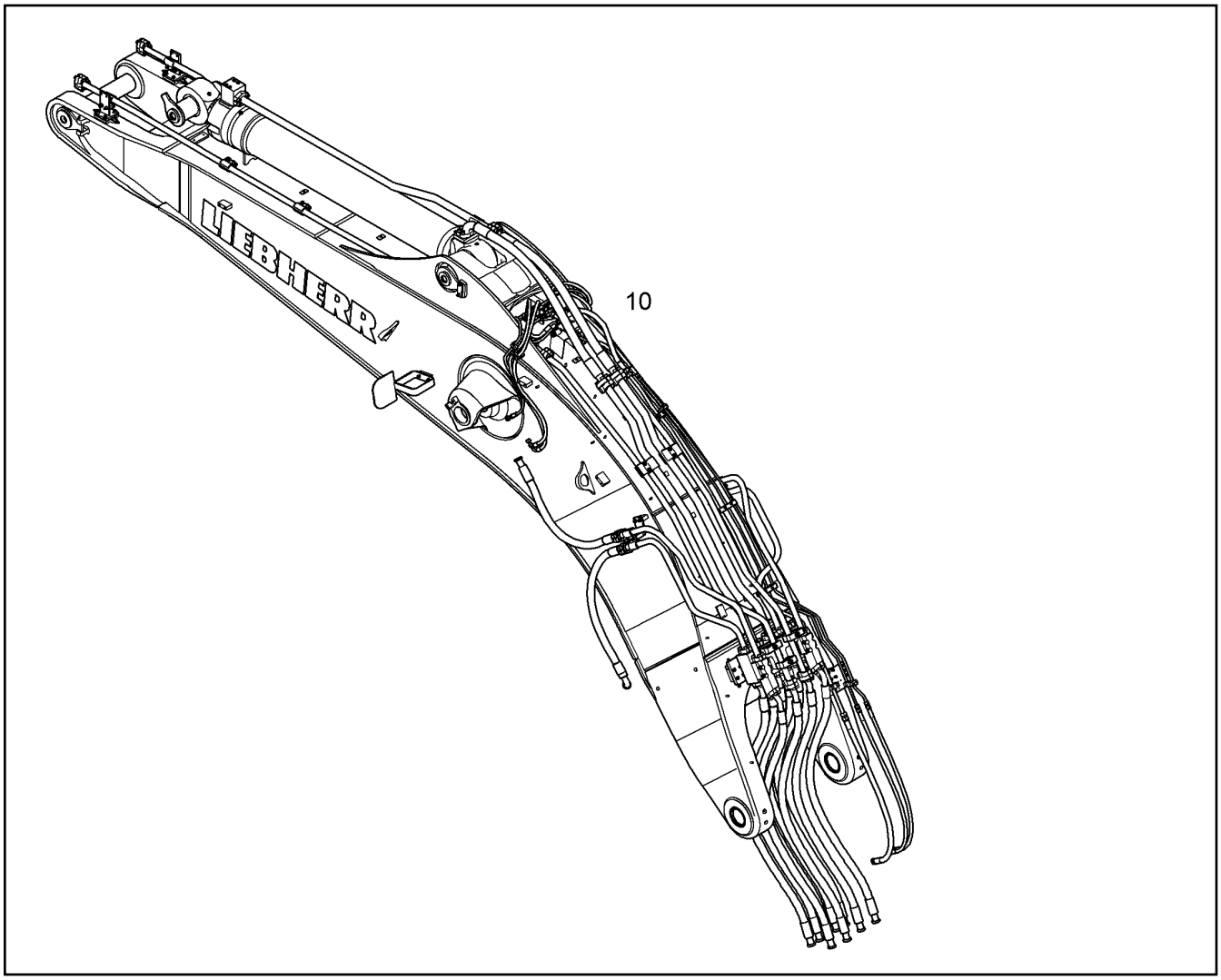

Pos.	Item	Quantity	Description	Descripción	Serie	K
10	10358725	1	GOOSENECK BOOM 7,00M ⇨ ❑ 700	PLUMA MONOBLOC		1

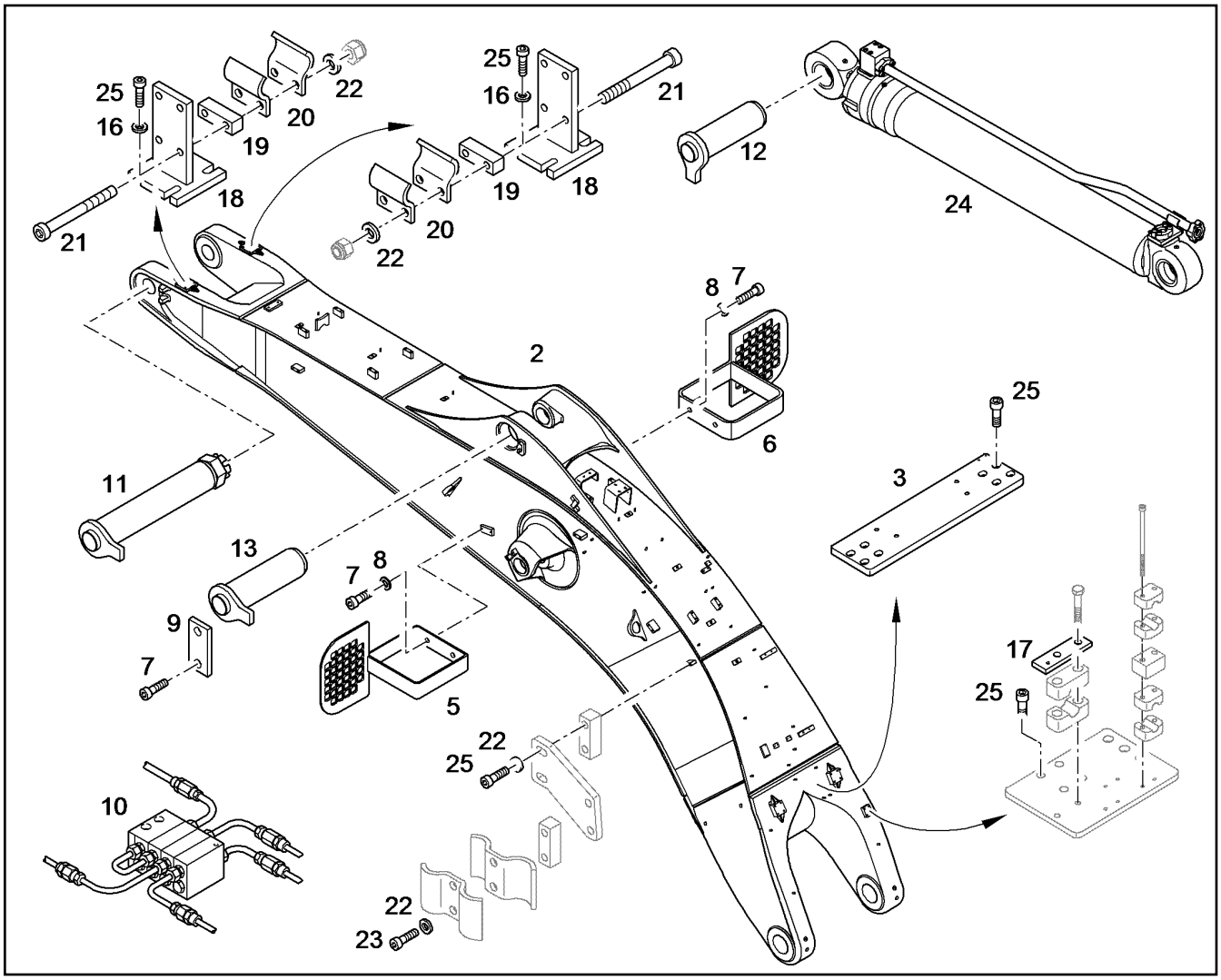

Pos.	Item	Quantity	Description	Descripción	Serie	K
2	10358359	1	GOOSENECK BOOM 7,00M ⇨ ❑ 709	PLUMA MONOBLOC		1
3	10066036	1	CONSOLE	CONSOLA		1
5	10357919	1	CONSOLE	CONSOLA		1
6	10357940	1	CONSOLE	CONSOLA		1
7	4043163	6	CYLINDER SCREW ISO 4762 M12X30 10.9	TORNILLO CILINDRICO		
8	4901498	6	SHIM RING DIN 988 12 X 18X 1,8	ARANDELA AJUSTE		
9	9830148	1	SHEET	PLACA		1
10	10388624	1	CENTRAL LUBRICATING SYSTEM ⇨ ❑ 711	ENGRASE CENTRALIZADO	99999-	1
11	9935245	1	PIN ⇨ ❑ 739	BULON		1
12	9375349	1	PIN COMPL.	BULON CPL.		1
13	9375036	1	PIN	BULON		1
16	10006370	8	WASHER DIN 7349 13	ARANDELA		
17	10358269	1	CONSOLE	CONSOLA		1
18	10498678	2	CONSOLE	CONSOLA		1
19	9872047	2	INTERMEDIATE PIECE H=25	PIEZA INTERMEDIA		1
20	7373875	16	HALF FLANGE	SEMI-BRIDA		
21	4600150	16	CYLINDER SCREW ISO 4762 M12X80 10.9	TORNILLO CILINDRICO		
22	10289804	28	WASHER ISO 7089 12 300HV	ARANDELA		
23	4043176	4	CYLINDER SCREW ISO 4762 M12X110 10.9	TORNILLO CILINDRICO		
24	10064774	1	HYDR.CYLINDER W/ADDITION.PARTS ⇨ ❑ 706	CILINDRO HIDROLICO+ADICION		1
25	4043164	28	CYLINDER SCREW ISO 4762 M12X35 10.9	TORNILLO CILINDRICO		

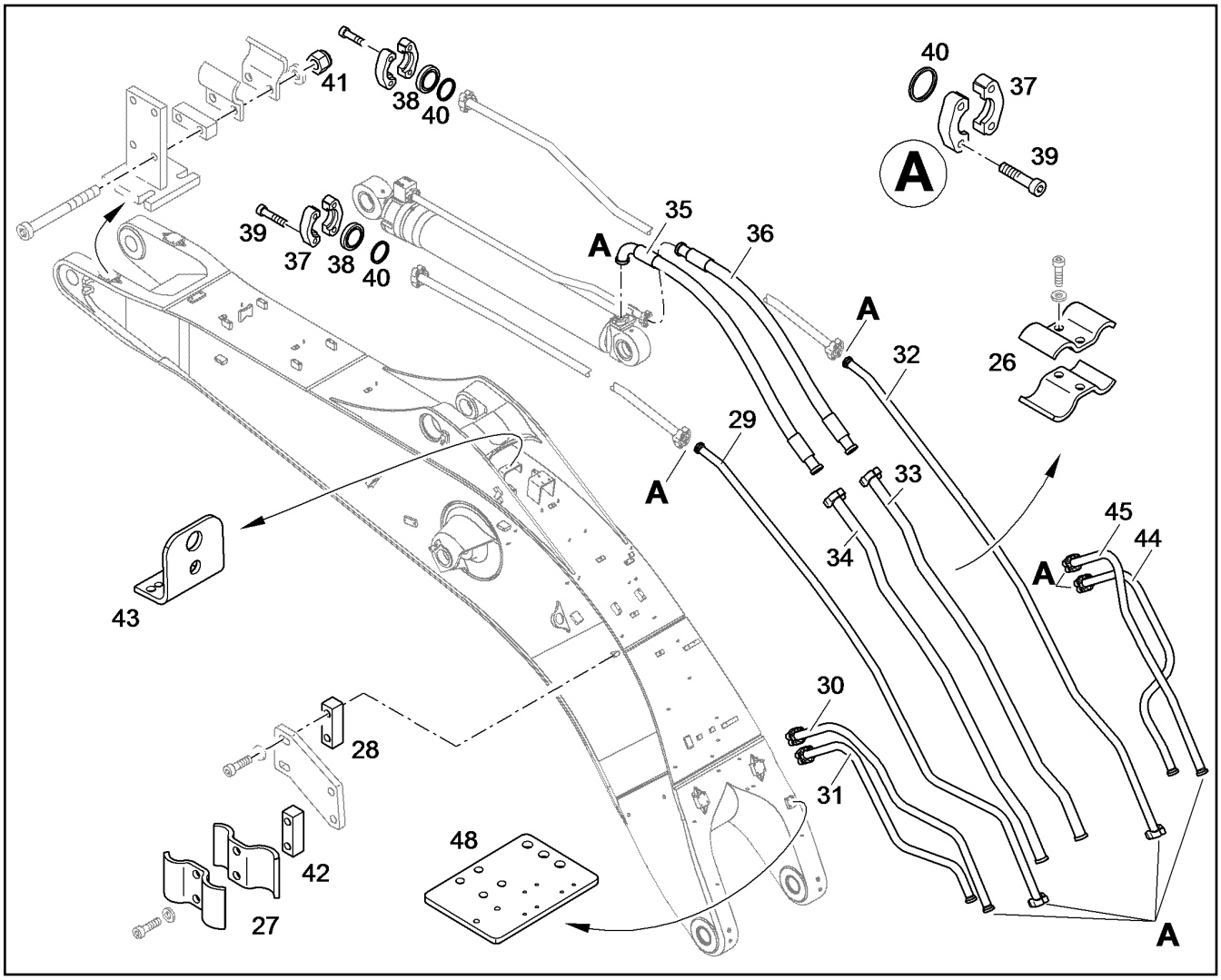

Pos.	Item	Quantity	Description	Descripción	Serie	K
26	9927399	4	HALF CLAMP COLLAR	SEMI-ABRAZADERA		1
27	9927398	2	HALF CLAMP COLLAR	SEMI-ABRAZADERA		1
28	10065942	2	INTERMEDIATE PIECE	PIEZA INTERMEDIA		1
29	10065827	1	PRESSURE LINE CPL	TUB.IMPULS.COMPL.		1
30	10065863	1	PRESSURE LINE CPL	TUB.IMPULS.COMPL.		1
31	10065850	1	PRESSURE LINE CPL	TUB.IMPULS.COMPL.		1
32	10065821	1	PRESSURE LINE CPL	TUB.IMPULS.COMPL.		1
33	10065846	1	PRESSURE LINE CPL	TUB.IMPULS.COMPL.		1
34	10065842	1	PRESSURE LINE CPL	TUB.IMPULS.COMPL.		1
35	10003862	1	HOSE	TUBO GOMA		2
36	5616558	1	HOSE	TUBO GOMA		2
37	10286361	58	FLANGE HALF	MITAD DE BRIDA		
38	9429965	4	SHUTTER DISK	DISCO CIERRE		1
39	4902327	116	CYLINDER SCREW ISO 4762 M14X45 10.9	TORNILLO CILINDRICO		
40	10290518	29	PLAIN COMPRESSION RING 45,05x3,40x2,8	ARO DE SECCION RECTANGULA		1
41	4000619	8	HEX NUT M12	TUERCA HEXAGONAL		
42	9935392	2	INTERMEDIATE PIECE H=60	PIEZA INTERMEDIA		1
43	9013056	1	CONSOLE	CONSOLA		1
44	10065955	1	PRESSURE LINE CPL	TUB.IMPULS.COMPL.		1
45	10065951	1	PRESSURE LINE CPL	TUB.IMPULS.COMPL.		1
48	10066456	1	CONSOLE	CONSOLA		1

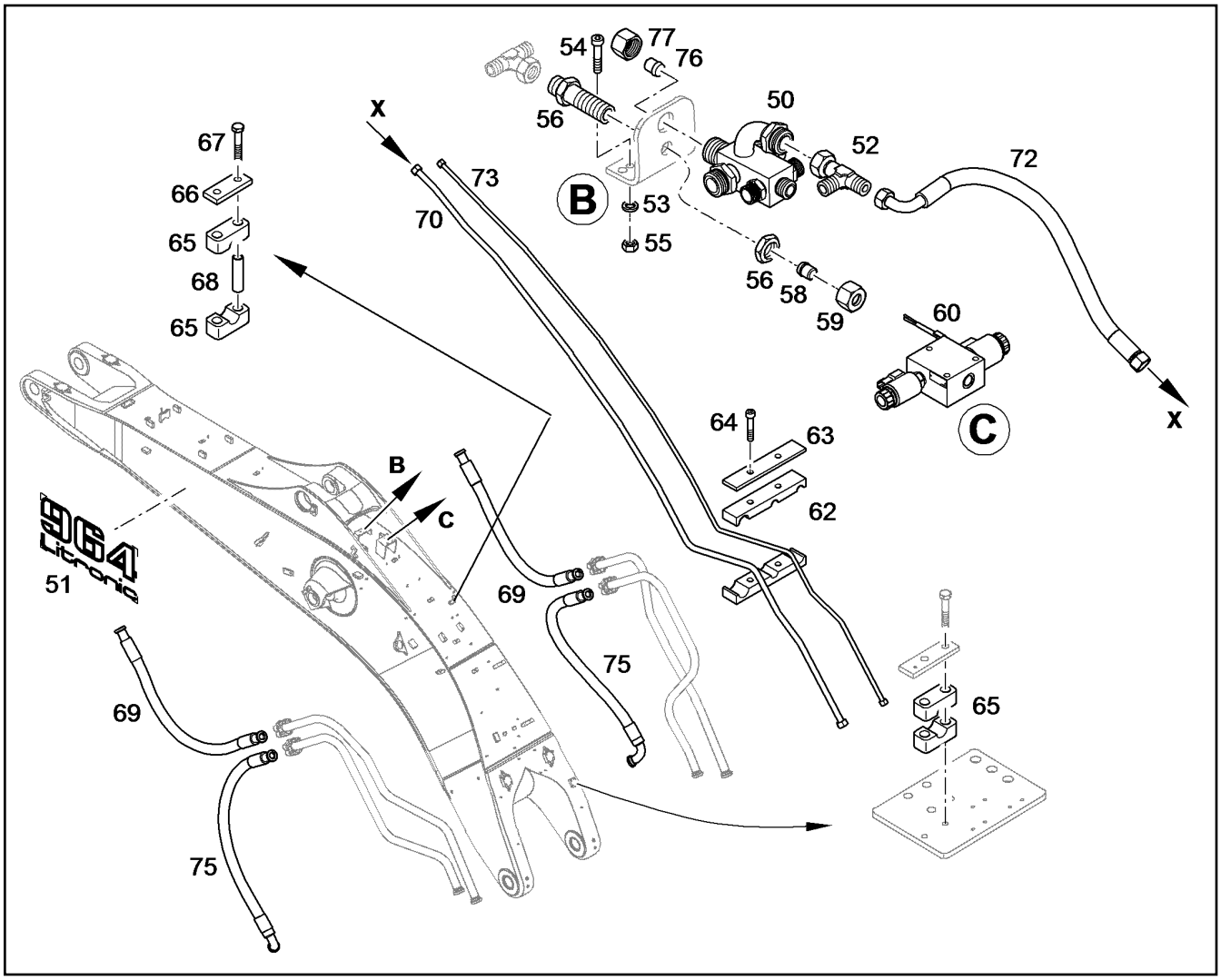

Pos.	Item	Quantity	Description	Descripción	Serie	K
50	10290156	1	CONTROL A.RETURN DISTRIBUTOR	DISTR.MANDO Y RETORNO		
51	9378603	1	STICKER	ADHESIVO		
52	247138602	1	SCREW FITTING EL 22L	ATORNILLAMIENTO		
53	4901879	4	WASHER ISO 7090 10 - 200HV A4	ARANDELA		
54	4043127	2	CYLINDER SCREW ISO 4762 M10X40 10.9	TORNILLO CILINDRICO		
55	4600579	2	HEX NUT ISO 7040 M 10 -10 A3C	TUERCA HEXAGONAL		
56	4901150	1	BULKHEAD STUD SV 12S	RACOR DE MAMPARO		
58	477700514	1	TAPER COLLET VKA 12L/S	CONO DE CIERRE		
59	4774010	1	UNION NUT DIN 3870 A S 12 A3C	TUERCA UEWF		
60	10291353	1	CONTROL MODULE ⇨ ❑ 751	MÓDULO MANDO		2
62	10057335	4	HALF CLAMP COLLAR	SEMI-ABRAZADERA		
63	10057336	2	SHEET	PLACA		
64	4600335	4	CYLINDER SCREW ISO 4762 M8X45 10.9 A2	TORNILLO CILINDRICO		
65	7367233	4	CLAMP-HALF AEHNL.DIN 3015 S 2 R 22 PP H	MEDIA BRIDA		
66	5004586	1	LID PLATE DIN 3015-2 S-DP-A 2 W1-ZN	PLACA CUBIERTA		
67	4002117	4	HEX BOLT ISO 4014 M10X65 10.9 A3C	TORNILLO DE CABEZA HEXAGO		
68	7367235	4	SLEEVE 11x14x46,5	CASQUILLO.		
69	10297579	2	HOSE	TUBO GOMA		2
70	10066843	1	PRESSURE LINE CPL	TUB.IMPULS.COMPL.		1
72	5603339	1	HOSE	TUBO GOMA		2
73	10066841	1	PRESSURE LINE CPL	TUB.IMPULS.COMPL.		1
75	10297581	2	HOSE	TUBO GOMA		2
76	4772028	1	TAPER COLLET VKA 22L	CONO DE CIERRE		
77	4774011	1	UNION NUT DIN 3870 A L 22 A3C	TUERCA UEWF		

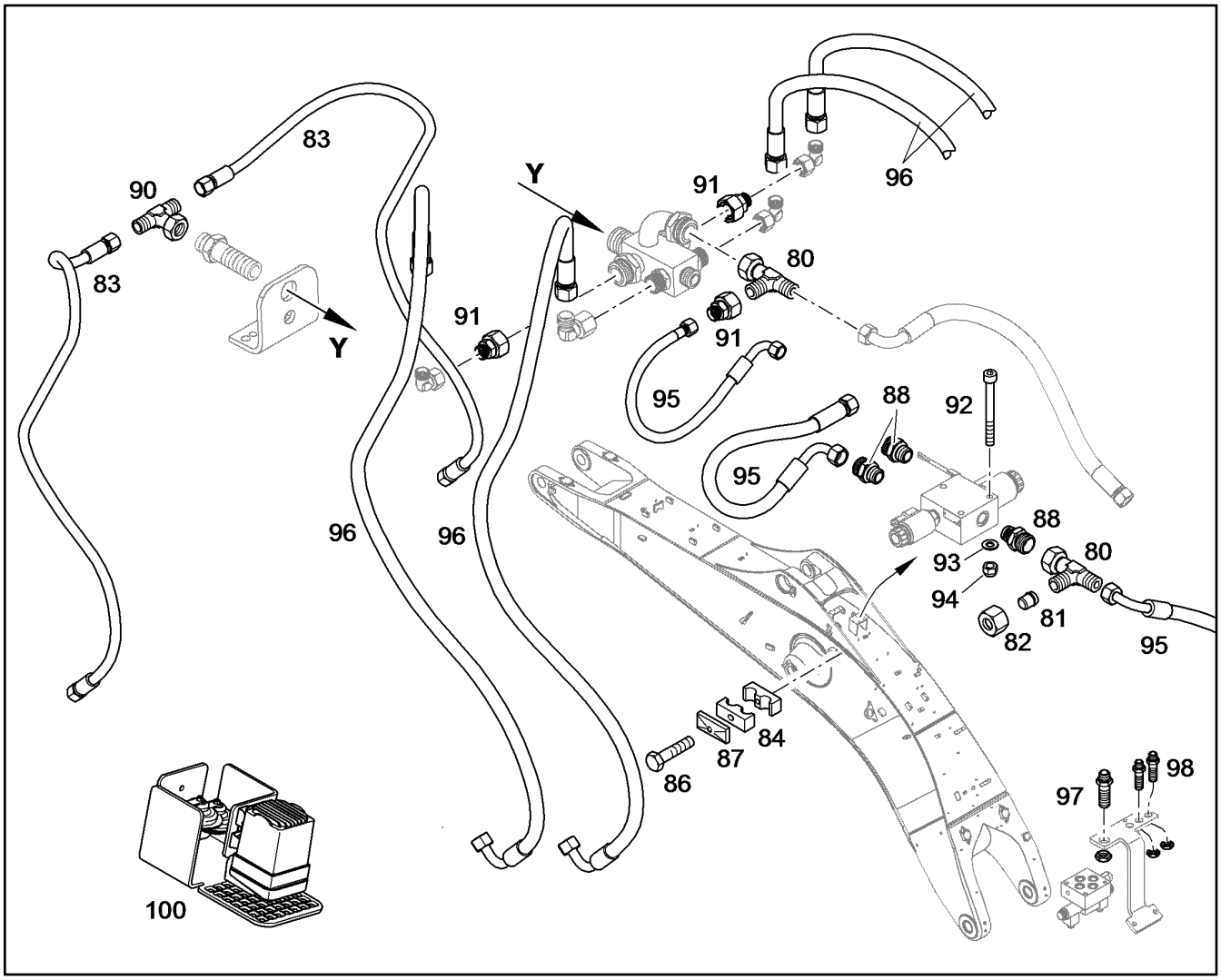

Pos.	Item	Quantity	Description	Descripción	Serie	K
80	472300414	2	SCREW FITTING EL 15L	ATORNILLAMIENTO		
81	4772024	2	TAPER COLLET VKA 15L	CONO DE CIERRE		
82	4774003	2	UNION NUT DIN 3870 A L 15 A3C	TUERCA UEWF		
83	10297576	2	HOSE	TUBO GOMA		2
84	248016802	8	CLAMP-HALF DIN 3015-3 Z 3 G 20 20 PP SW	MEDIA BRIDA		
86	4980771	4	HEX BOLT ISO 4014 M8X55 10.9 A2C	TORNILLO DE CABEZA HEXAGO		
87	7401349	4	LID PLATE DIN 3015-3 Z-DP 3 W1-ZN	PLACA CUBIERTA		
88	7003570	3	SCREW FITTING GE 15L	ATORNILLAMIENTO		
90	482431414	1	SCREW FITTING ET 12S	ATORNILLAMIENTO		
91	7616913	3	SCREW FITTING RED 22/15L	ATORNILLAMIENTO		
92	4600790	3	CYLINDER SCREW ISO 4762 M8X80 10.9 A2	TORNILLO CILINDRICO		
93	4901768	3	WASHER 8	ARANDELA		
94	4901573	3	HEX NUT M8	TUERCA HEXAGONAL		
95	7012265	3	HOSE	TUBO GOMA		2
96	10298516	4	HOSE	TUBO GOMA		2
97	4901131	1	BULKHEAD STUD	RACOR DE MAMPARO		
98	4901130	2	SCREW FITTING SV 15L	ATORNILLAMIENTO		
100	10062216	1	ELECTR.INST.BOOM	INST.EL. MONOBLOQUE		1
			⇨ ❑ 511			

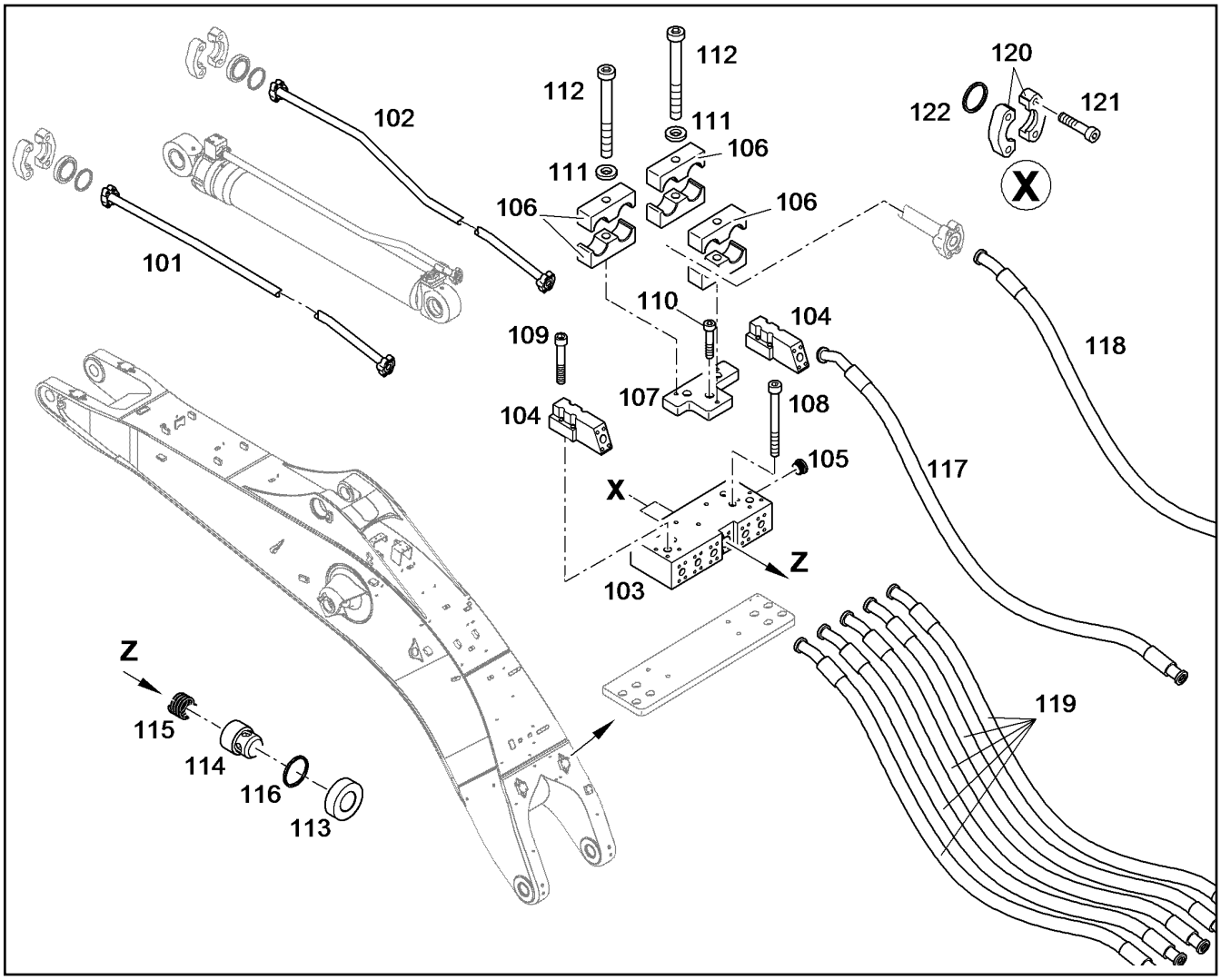

Pos.	Item	Quantity	Description	Descripción	Serie	K
101	10065825	1	PRESSURE LINE CPL	TUB.IMPULS.COMPL.		1
102	10065818	1	PRESSURE LINE CPL	TUB.IMPULS.COMPL.		1
103	10064775	1	DISTRIBUTOR	DISTRIBUIDOR		1
104	10384501	2	DISTRIBUTOR 1 1/4"	DISTRIBUIDOR		1
105	7361329	4	SCREW PLUG	TORNILLO DE CIERRE		
106	10064900	6	PIPE CLAMP	ABRAZADERA TUBO		1
107	10064899	1	INTERMEDIATE PIECE	PIEZA INTERMEDIA		1
108	4901471	4	CYLINDER SCREW ISO 4762 M14X130 10.9	TORNILLO CILINDRICO		
109	4600513	8	CYLINDER SCREW ISO 4762 M14X40 10.9	TORNILLO CILINDRICO		
110	10001076	3	CYLINDER SCREW ISO 4762 M16X45 10.9	TORNILLO CILINDRICO		
111	10289806	3	WASHER ISO 7089 16 300HV	ARANDELA		
112	10001080	3	CYLINDER SCREW ISO 4762 M16X100 10.9	TORNILLO CILINDRICO		
113	9494115	1	LID	TAPA		1
114	4600741	4	CYLINDER SCREW ISO 4762 M14X65 10.9	TORNILLO CILINDRICO		
116	10290517	1	PLAIN COMPRESSION RING 54,40x3,40x2,8	ARO DE SECCION RECTANGULA		1
117	10290524	2	HOSE	TUBO GOMA		2
118	10290523	2	HOSE	TUBO GOMA		2
119	10290522	5	HOSE	TUBO GOMA		2
120	5602407	4	FLANGE HALF	MITAD DE BRIDA		
121	10001077	8	CYLINDER SCREW ISO 4762 M16X50 10.9	TORNILLO CILINDRICO		
122	10290517	2	PLAIN COMPRESSION RING 54,40x3,40x2,8	ARO DE SECCION RECTANGULA		1

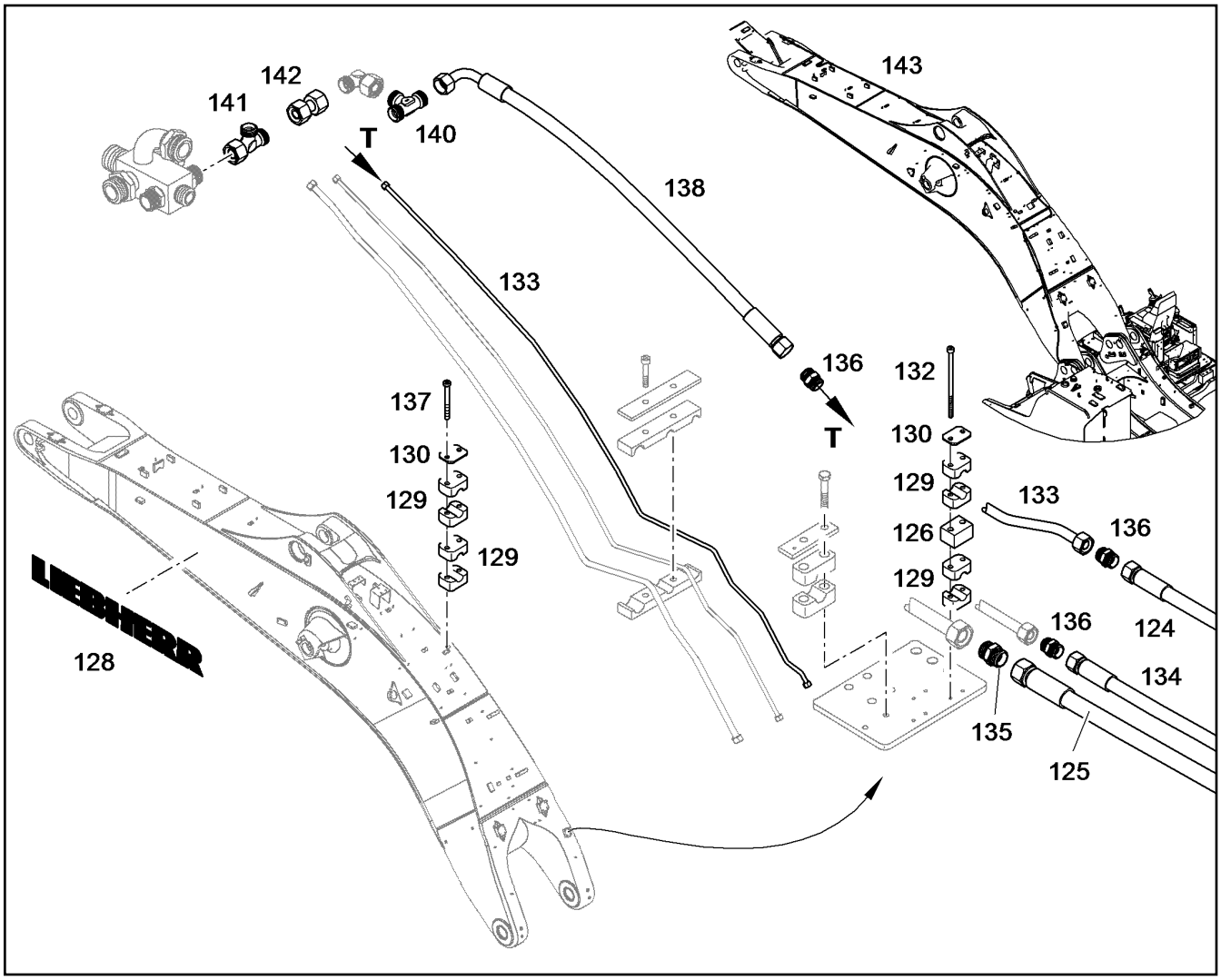

Pos.	Item	Quantity	Description	Descripción	Serie	K
124	10000947	1	HOSE	TUBO GOMA		2
125	5618392	1	HOSE	TUBO GOMA		2
126	10059208	1	INTERMEDIATE PLATE	PLACA INTERMEDIA		
128	9874049	2	STICKER	ADHESIVO		1
129	248002602	8	CLAMP-HALF DIN 3015-1 L 2 R 15 PP SW	MEDIA BRIDA		
130	7362949	3	LID PLATE DIN 3015-1 L-DP 2 W1-ZN	PLACA CUBIERTA		
132	4601461	2	CYLINDER SCREW ISO 4762 M6X110 10.9	TORNILLO CILINDRICO		
133	10074636	1	PRESSURE LINE CPL	TUB.IMPULS.COMPL.		1
134	10000947	1	HOSE	TUBO GOMA		2
135	7362408	1	SCREW FITTING G 22L	ATORNILLAMIENTO		
136	7362107	4	SCREW FITTING G 15L	ATORNILLAMIENTO		
137	4000362	2	CYLINDER SCREW ISO 4762 M6X70 10.9 A2	TORNILLO CILINDRICO		
138	5615647	1	HOSE	TUBO GOMA		2
140	7372762	1	SHUTTLE VALVE	VALVULA SELECTORA		2
141	7615379	4	SCREW FITTING EW 15L	ATORNILLAMIENTO		
142	7410213	1	SCREW FITTING GZ 15L	ATORNILLAMIENTO		
143	10498271	1	STICK CYLINDER CONTROL STOP ⇨ ❑ 748	DESCONEXION CILIND.DE BALA		1

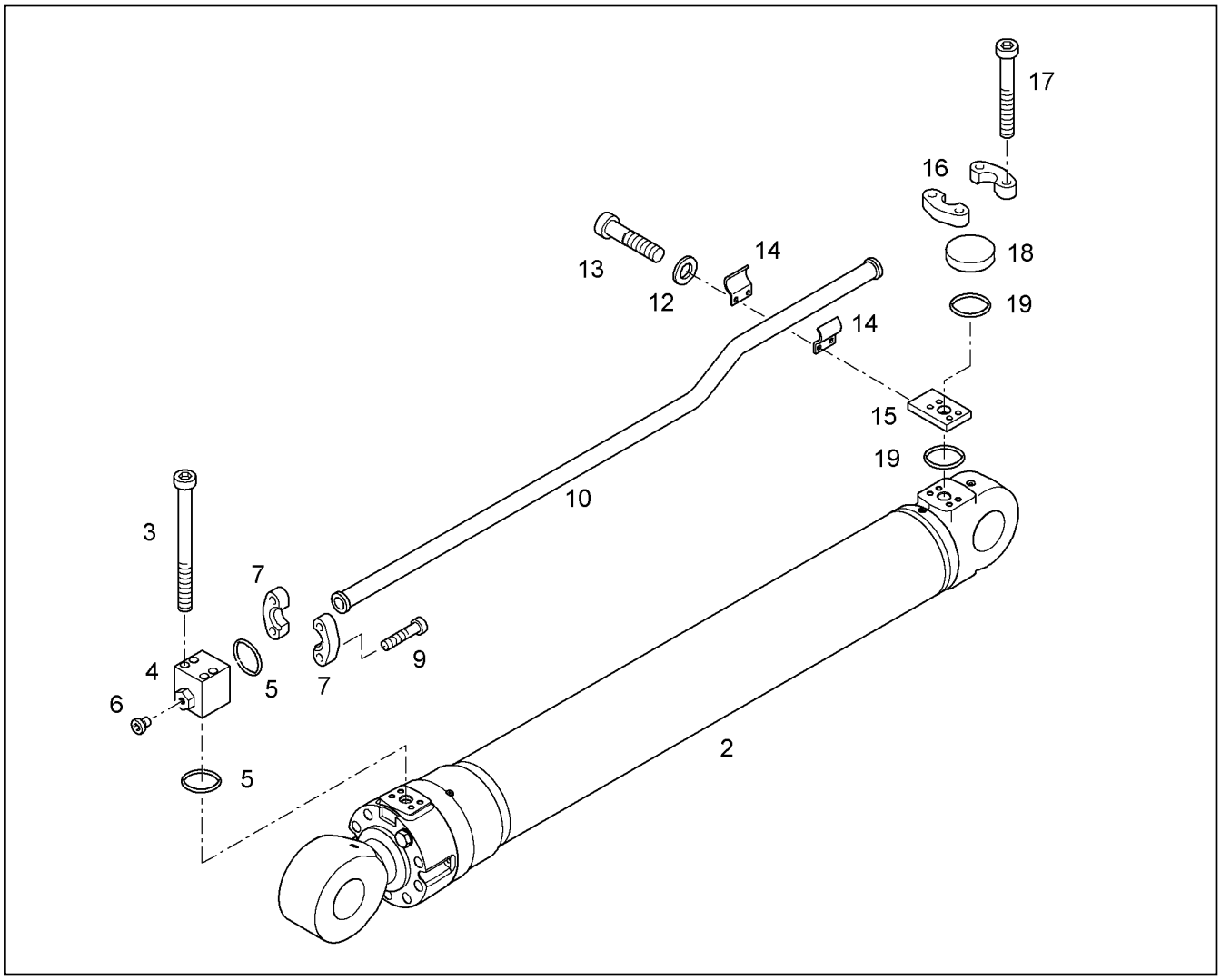

Pos.	Item	Quantity	Description	Descripción	Serie	K
2		1	HYDRAULIC CYLINDER [00961 M01] ⇨ ❑ 755	CILINDRO HIDRAULICO	29704-	
3	10001472	4	CYLINDER SCREW ISO 4762 M16X130 10.9	TORNILLO CILINDRICO		
4		1	FLOW REGULATING CHECK VALVE ⇨ ❑ 768	VALVULA REGULADORA		2
5	10290517	2	PLAIN COMPRESSION RING 54,40x3,40x2,8	ARO DE SECCION RECTANGULA		1
6	7361553	1	SCREW PLUG VSTI	TORNILLO DE CIERRE		
7	5602407	2	FLANGE HALF	MITAD DE BRIDA		
9	10001077	4	CYLINDER SCREW ISO 4762 M16X50 10.9	TORNILLO CILINDRICO		
10	10066281	1	PRESSURE LINE CPL ⇨ ❑ 6	TUB.IMPULS.COMPL.		1
12	10289804	2	WASHER ISO 7089 12 300HV	ARANDELA		
13	4043164	2	CYLINDER SCREW ISO 4762 M12X35 10.9	TORNILLO CILINDRICO		
14	9008760	2	HALF CLAMP COLLAR	SEMI-ABRAZADERA		
15	10066383	1	BLOCK	BLOQUE BLANCO COMBINADO		1
16	5602407	2	FLANGE HALF	MITAD DE BRIDA		
17	4902329	4	CYLINDER SCREW ISO 4762 M16X70 10.9	TORNILLO CILINDRICO		
18	9491026	1	SAE BLIND FLANGE SAE 1 1/2" CODE 62	BRIDA CIEGA SAE		1
19	10290517	2	PLAIN COMPRESSION RING 54,40x3,40x2,8	ARO DE SECCION RECTANGULA		1

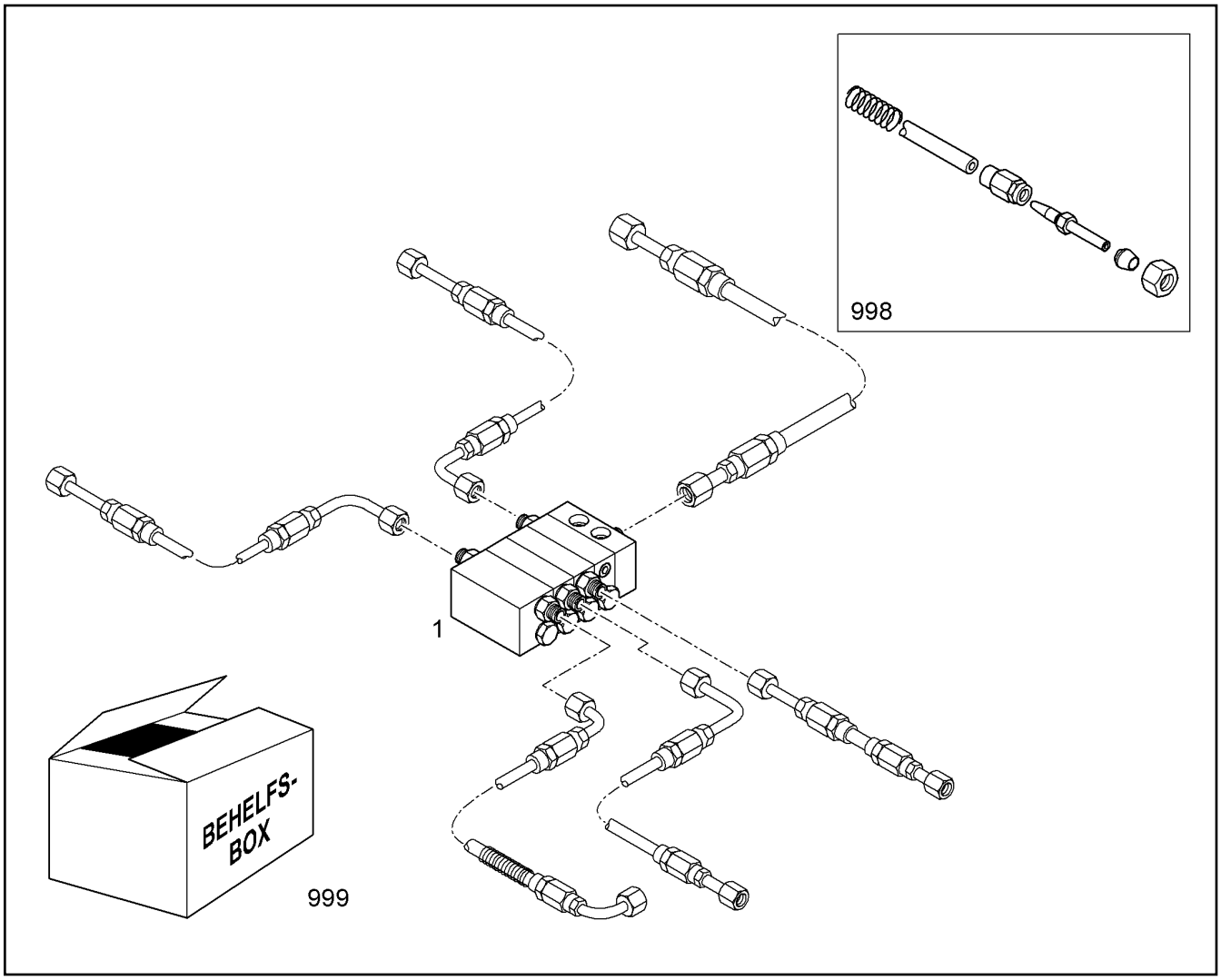

Pos.	Item	Quantity	Description	Descripción	Serie	K
1	10008789	1	DISTRIBUTION BLOCK MX-F 3/5 ⇨ ❑ 708	COMBINACIÓN DE DISTRIB.		2
998		1	CONNECTING ELEMENT ⇨ ❑ 255	BASE DE FIJACION		
999	10014611	1	AUXILIARY BOX ⇨ ❑ 257	CAJA AUXILIAR		

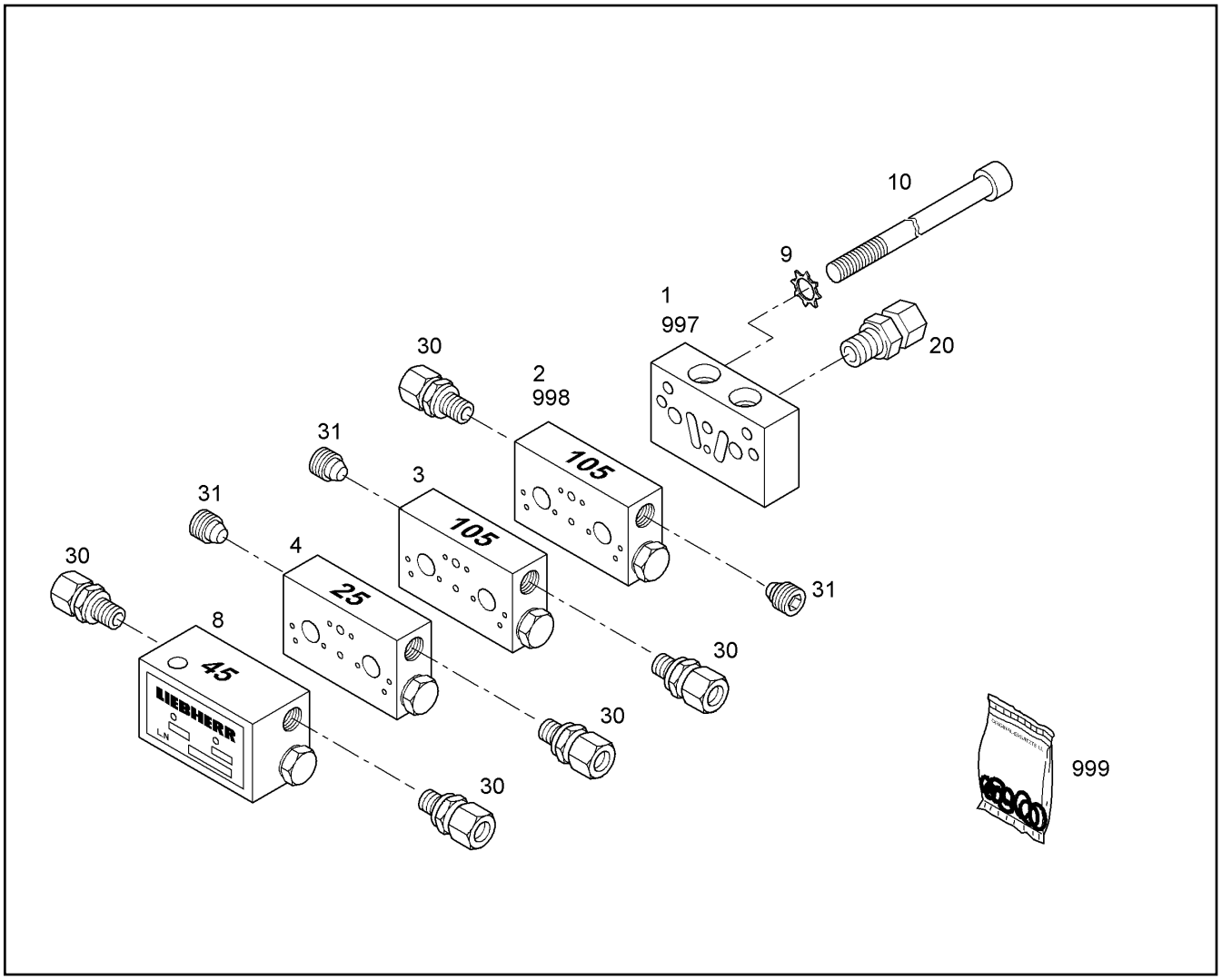

Pos.	Item	Quantity	Description	Descripción	Serie	K
1	7027937	1	STARTING ELEMENT MX-F	ELEMENTO INICIAL		2
2	7027941	1	CENTRAL ELEMENT MX-F 105	ELEMENTO INTERMEDIO		2
3	7027941	1	CENTRAL ELEMENT MX-F 105	ELEMENTO INTERMEDIO		2
4	7027938	1	CENTRAL ELEMENT MX-F 25	ELEMENTO INTERMEDIO		2
8	7027943	1	END ELEMENT MX-F 45	ELEMENTO FINAL		2
9	4002259	2	TOOTH LOCK WASHER DIN 6797 A 6,2 A3C	ARANDELA DENTADA		
10	4002418	2	CYLINDER SCREW ISO 4762 M6x65 8.8 A2C	TORNILLO CILINDRICO		
20	10009053	1	PIPE UNION GE8 10X1	RACOR PARA ENROSCAR		
30	7622803	5	NON-RETURN VALVE	VALVULA DE RETENCION		2
31	774378208	3	SCREW PLUG	TORNILLO DE CIERRE		
997	10021311	1	SEAL KIT ⇨ ❑ 260	JUEGO DE JUNTAS		1
998	10021310	1	SEAL KIT ⇨ ❑ 259	JUEGO DE JUNTAS		1
999	10021308	1	O-RING	JUEGO ANILLOS TÓRICOS		1

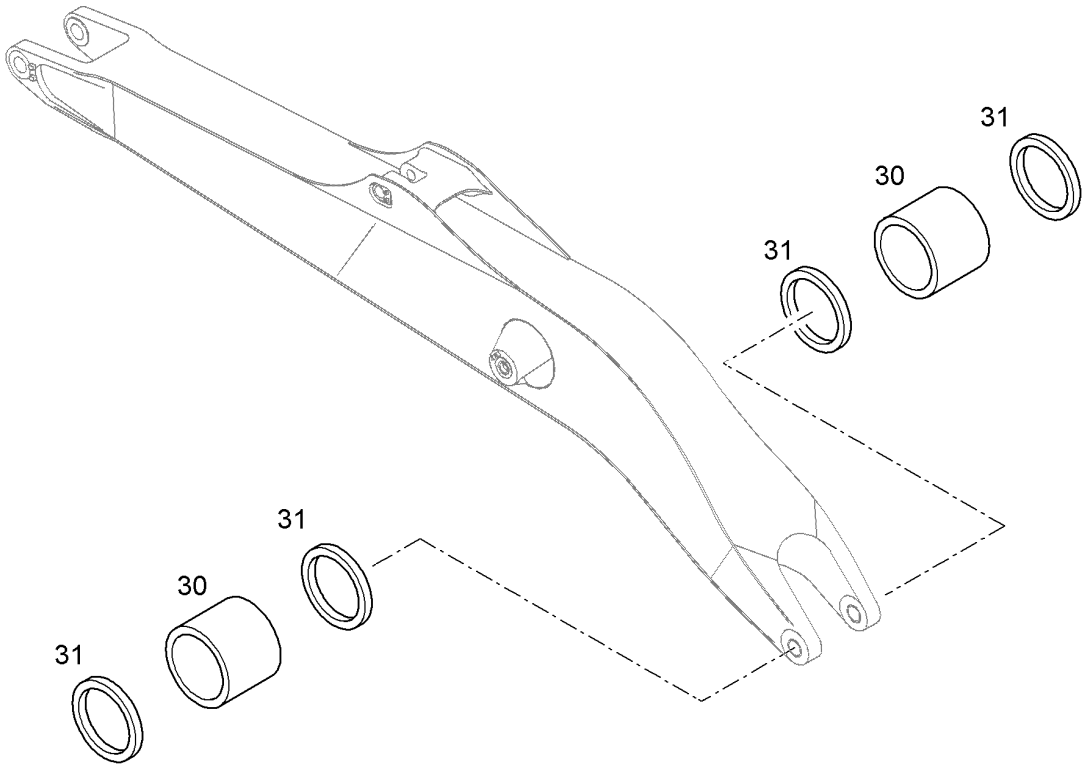

Pos.	Item	Quantity	Description	Descripción	Serie	K
30	10820659	2	STEEL BUSHING	CASQUILLO DE ACERO		1
31	7362184	4	RADIAL SEAL X120X150X12	ANILLO JUNTA RADIAL		1

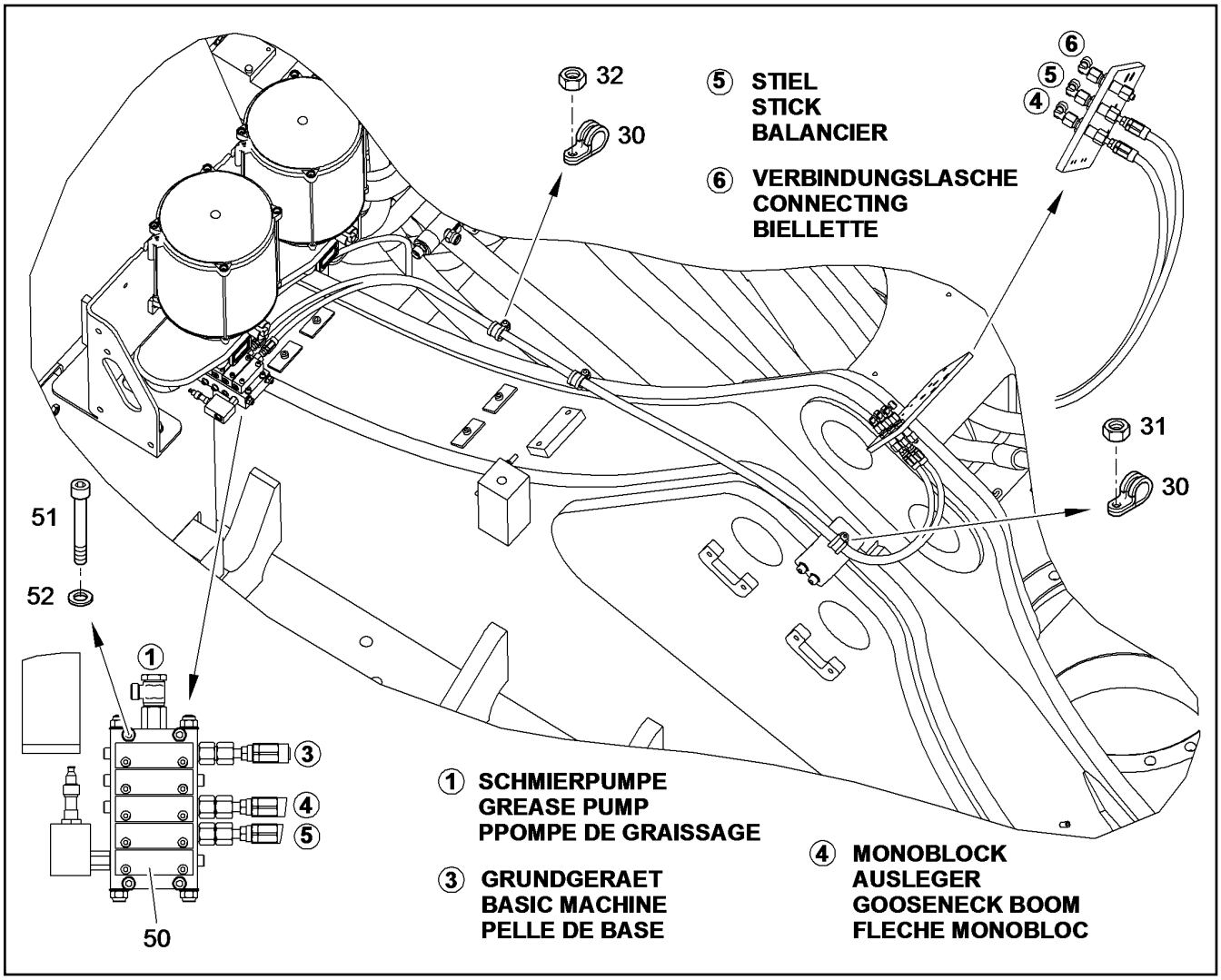

Pos.	Item	Quantity	Description	Descripción	Serie	K
30	7362665	3	CLAMP DIN 3016 D1- 20 X 20 W1-2-CR	ABRAZADERA		
31	4902254	1	CYLINDER SCREW ISO 4762 M8X12 10.9 A2	TORNILLO CILINDRICO		
32	4901573	2	HEX NUT M8	TUERCA HEXAGONAL		
50		1	DISTRIBUTION BLOCK SXE-2 5/3 ⇨ ❑ 251	COMBINACIÓN DE DISTRIB.		2
51	10289802	4	WASHER ISO 7089 6 300HV	ARANDELA		
52	4600340	4	CYLINDER SCREW ISO 4762 M6X40 10.9 A2	TORNILLO CILINDRICO		

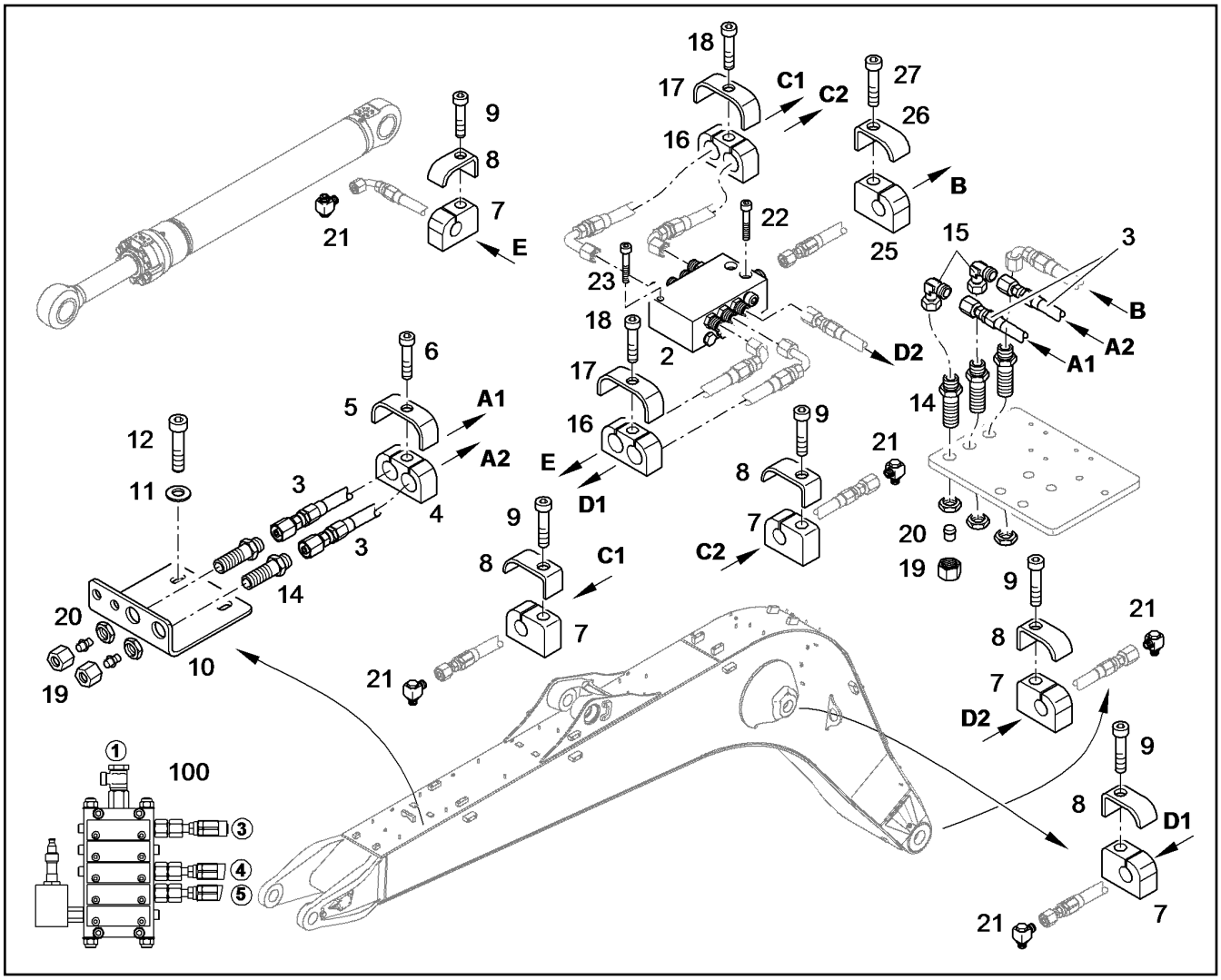

Pos.	Item	Quantity	Description	Descripción	Serie	K
2	10303317	1	DISTRIBUTION BLOCK MX-F 4/5 ⇨ ❑ 707	COMBINACIÓN DE DISTRIB.		2
3	10298807	2	HOSE	TUBO GOMA		2
4	10037724	12	CLAMP	ABRAZADERA		
5	10037722	12	BRACKET	ESTRIBO		
6	4902250	12	CYLINDER SCREW ISO 4762 M6X10 10.9 A2	TORNILLO CILINDRICO		
7	10037728	19	CLAMP	ABRAZADERA		
8	10037723	19	BRACKET	ESTRIBO		
9	4902250	19	CYLINDER SCREW ISO 4762 M6X10 10.9 A2	TORNILLO CILINDRICO		
10	9928151	1	CONSOLE	CONSOLA		1
11	10289804	2	WASHER ISO 7089 12 300HV	ARANDELA		
12	4043160	2	CYLINDER SCREW ISO 4762 M12X20 10.9	TORNILLO CILINDRICO		
14	7368106	5	BULKHEAD STUD	RACOR DE MAMPARO		
15	247021802	3	SCREW FITTING EW 8L	ATORNILLAMIENTO		
16	10037726	4	CLAMP	ABRAZADERA		
17	10037722	4	BRACKET	ESTRIBO		
18	4902250	4	CYLINDER SCREW ISO 4762 M6X10 10.9 A2	TORNILLO CILINDRICO		
19	4900507	3	UNION NUT DIN 3870 A L 8 A3C	TUERCA UEWF		
20	4900305	3	TAPER COLLET VKA 8	CONO DE CIERRE		
21	7368426	5	SCREW FITTING WH 6L M10X1	ATORNILLAMIENTO		
22	4000899	2	CYLINDER SCREW ISO 4762 M5x30 8.8 A2C	TORNILLO CILINDRICO		
23	404202508	1	CYLINDER SCREW ISO 4762 M5X35 8.8 A2C	TORNILLO CILINDRICO		
25	10037727	2	CLAMP	ABRAZADERA		
26	10037723	2	BRACKET	ESTRIBO		
27	4902250	2	CYLINDER SCREW ISO 4762 M6X10 10.9 A2	TORNILLO CILINDRICO		

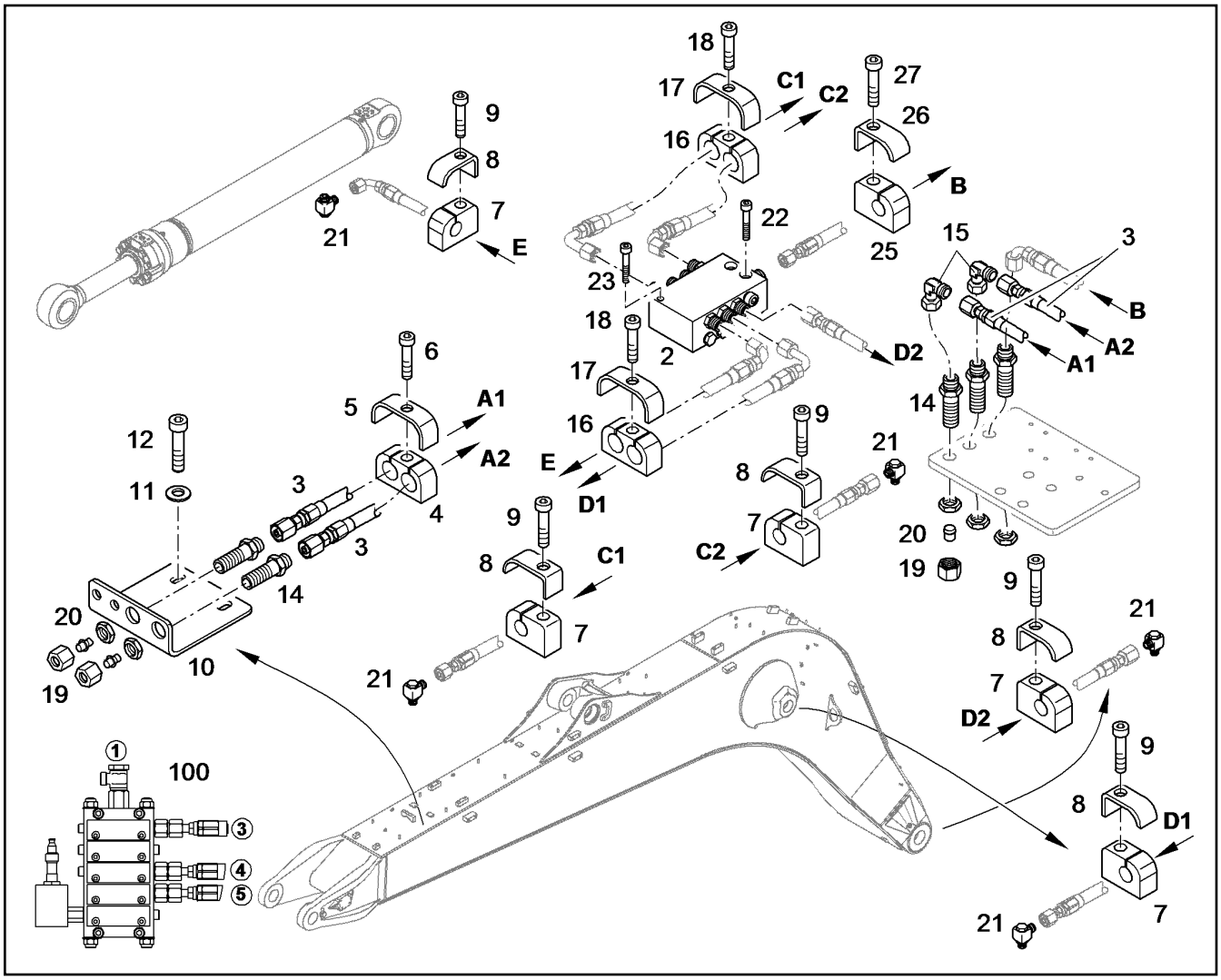

Pos.	Item	Quantity	Description	Descripción	Serie	K
100	10388393	1	CENTRAL LUBRICATING SYSTEM ⇨ ❑ 710	ENGRASE CENTRALIZADO		1

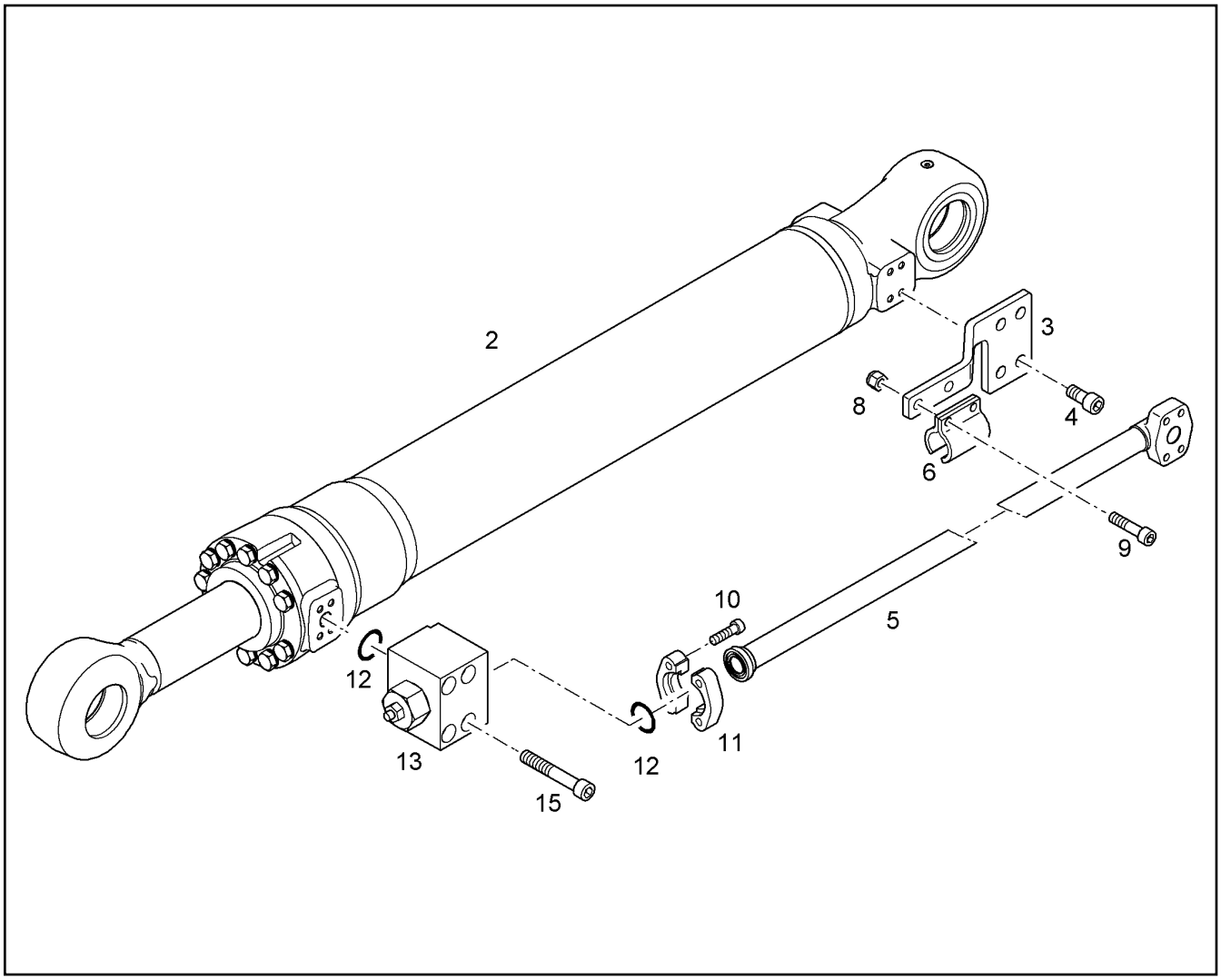

Pos.	Item	Quantity	Description	Descripción	Serie	K
2	9593590	1	HYDRAULIC CYLINDER [20635 L10] ⇨ ❑ 756	CILINDRO HIDRAULICO	-99998	
3	10063991	1	CONSOLE	CONSOLA		1
4	10001468	4	CYLINDER SCREW ISO 4762 M14X30 10.9	TORNILLO CILINDRICO		
5	10059814	1	PRESSURE LINE CPL	TUB.IMPULS.COMPL.		1
6	7373875	1	HALF FLANGE	SEMI-BRIDA		
8	4000619	2	HEX NUT M12	TUERCA HEXAGONAL		
9	4000784	2	CYLINDER SCREW ISO 4762 M12X50 10.9	TORNILLO CILINDRICO		
10	10286361	2	FLANGE HALF	MITAD DE BRIDA		
11	4902327	4	CYLINDER SCREW ISO 4762 M14X45 10.9	TORNILLO CILINDRICO		
12	10290518	2	PLAIN COMPRESSION RING 45,05x3,40x2,8	ARO DE SECCION RECTANGULA		1
13	9270387	1	FLOW REGULATING CHECK VALVE ⇨ ❑ 759	VALVULA REGULADORA		2
15	10001079	4	CYLINDER SCREW ISO 4762 M14X90 10.9	TORNILLO CILINDRICO		

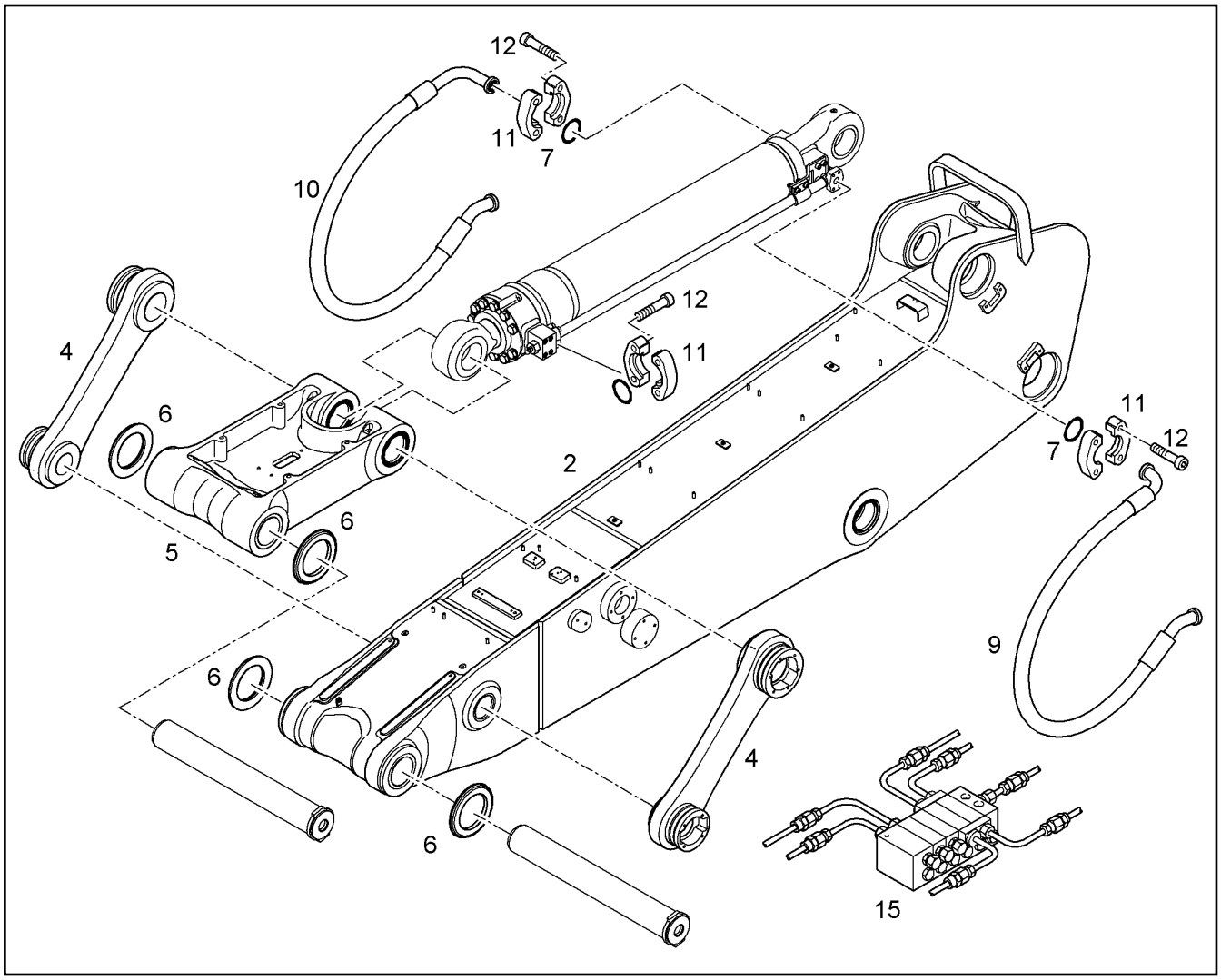

Pos.	Item	Quantity	Description	Descripción	Serie	K
2	10358400	1	STICK 2,60M [M00027614] ⇨ ❑ 717	MANGO DE LA PALA		1
4	10498755	2	SHIFT LEVER	PALANCA REENVIO		1
5	10498252	1	CONNECTING LINK ⇨ ❑ 731	OREJETA DE UNION		1
6	10050913	4	RING ⇨ ❑ 718	ANILLO		1
9	10300878	1	HOSE	TUBO GOMA		2
10	10300879	1	HOSE	TUBO GOMA		2
11	10286361	6	FLANGE HALF	MITAD DE BRIDA		
12	4902327	12	CYLINDER SCREW ISO 4762 M14X45 10.9	TORNILLO CILINDRICO		
15	10358720	1	CENTRAL LUBRICATING SYSTEM ⇨ ❑ 719	ENGRASE CENTRALIZADO		1

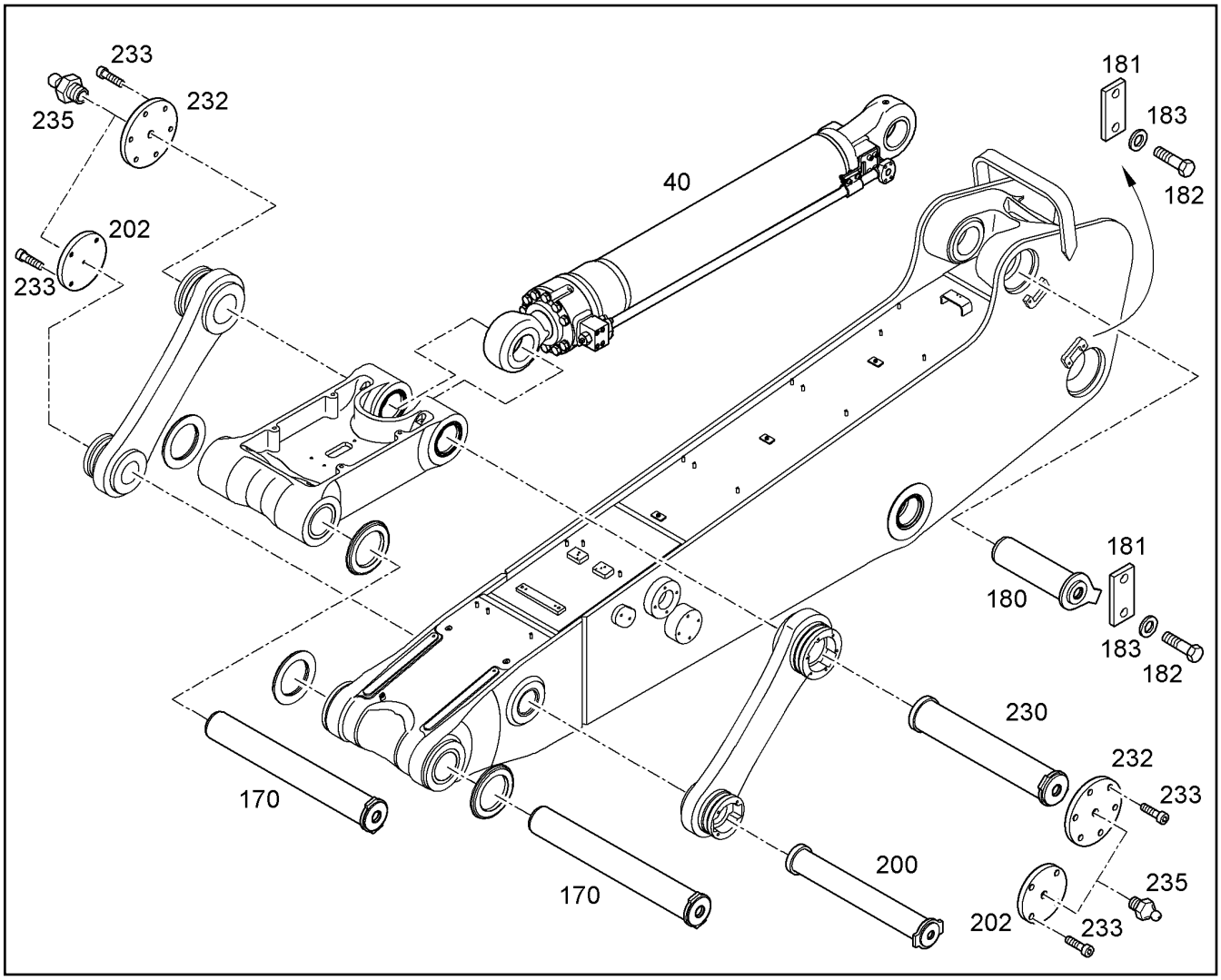

Pos.	Item	Quantity	Description	Descripción	Serie	K
40	10071628	1	HYDR.CYLINDER W/ADDITION.PARTS ⇨ ❑ 713	CILINDRO HIDROLICO+ADICION		1
170	10058975	2	PIN	BULON		
180	9577845	1	PIN	BULON		1
181	9830148	2	SHEET	PLACA		1
182	4066124	4	HEX BOLT ISO 4017 M12X30 10.9 A3C	TORNILLO DE CABEZA HEXAGO		
183	9918226	4	WASHER 12,5/21X3,5	ARANDELA		
200	10358723	1	PIN ⇨ ❑ 737	BULON		
202	10066285	2	LID	TAPA		1
230	10056468	1	PIN ⇨ ❑ 736	BULON		
232	10056519	2	LID	TAPA		1
233	4043164	20	CYLINDER SCREW ISO 4762 M12X35 10.9	TORNILLO CILINDRICO		
235	10005440	4	GREASE NIPPLE	ENGRASADOR		

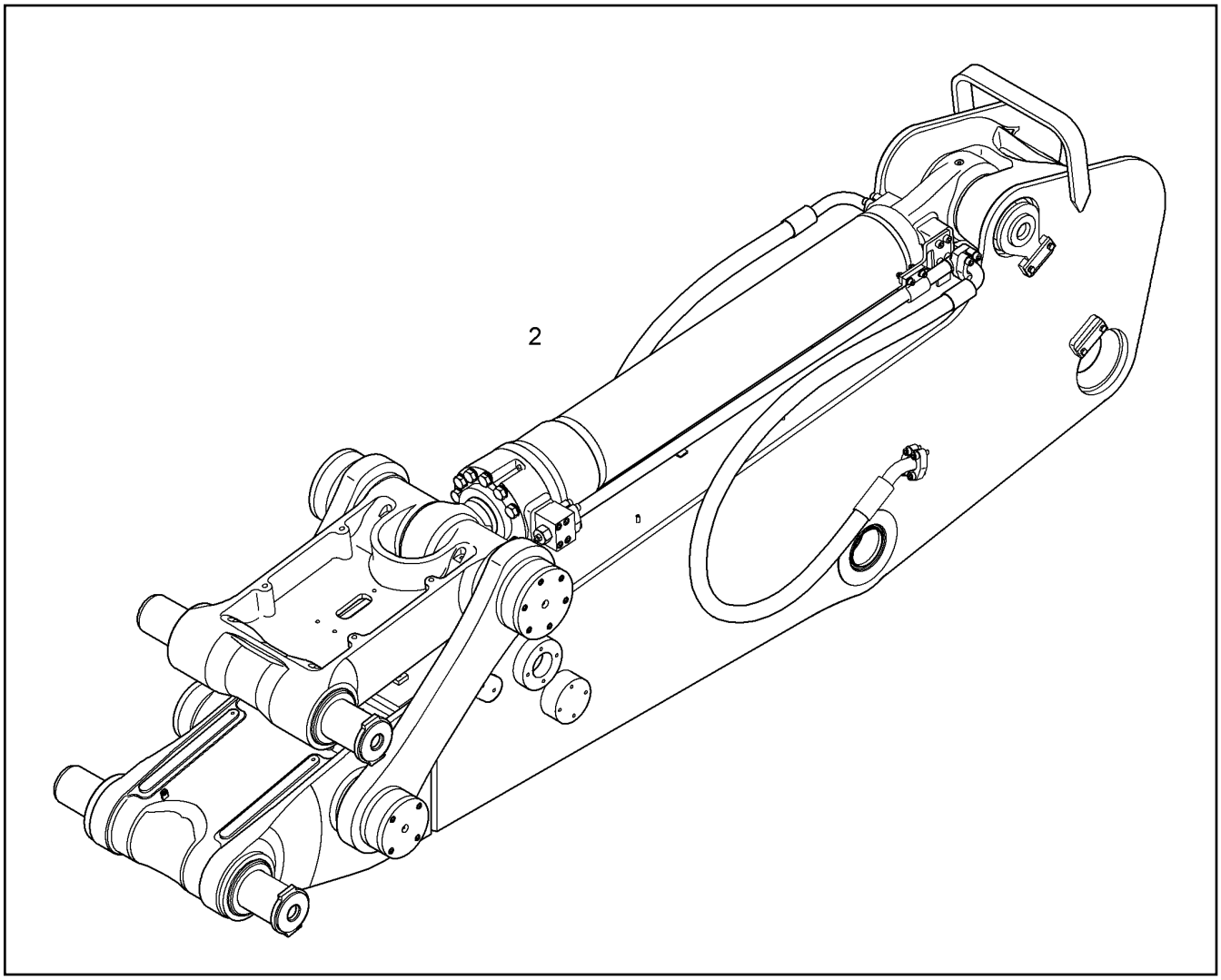

Pos.	Item	Quantity	Description	Descripción	Serie	K
10	10358721	1	STICK 2,60M ⇨ ❑ 714	MANGO DE LA PALA		1

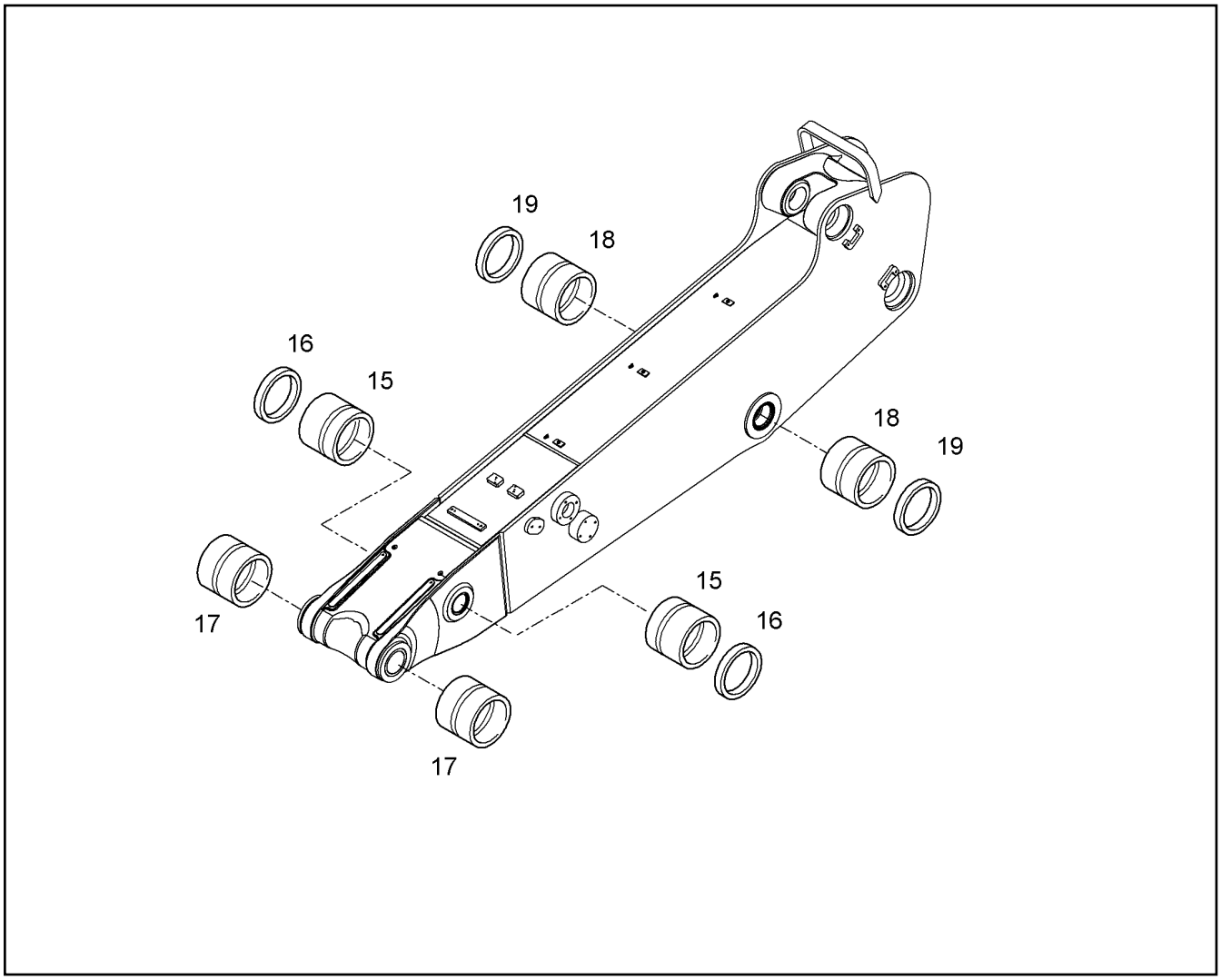

Pos.	Item	Quantity	Description	Descripción	Serie	K
15	10399732	2	BUSH ⇨ ❑ 6	CASQUILLO		1
16	7362182	2	RADIAL SEAL X100X120X8	ANILLO JUNTA RADIAL		1
17	10399731	2	BUSH ⇨ ❑ 6	CASQUILLO		1
18	10409084	2	BUSH	CASQUILLO		1
19	7362184	2	RADIAL SEAL X120X150X12	ANILLO JUNTA RADIAL		1

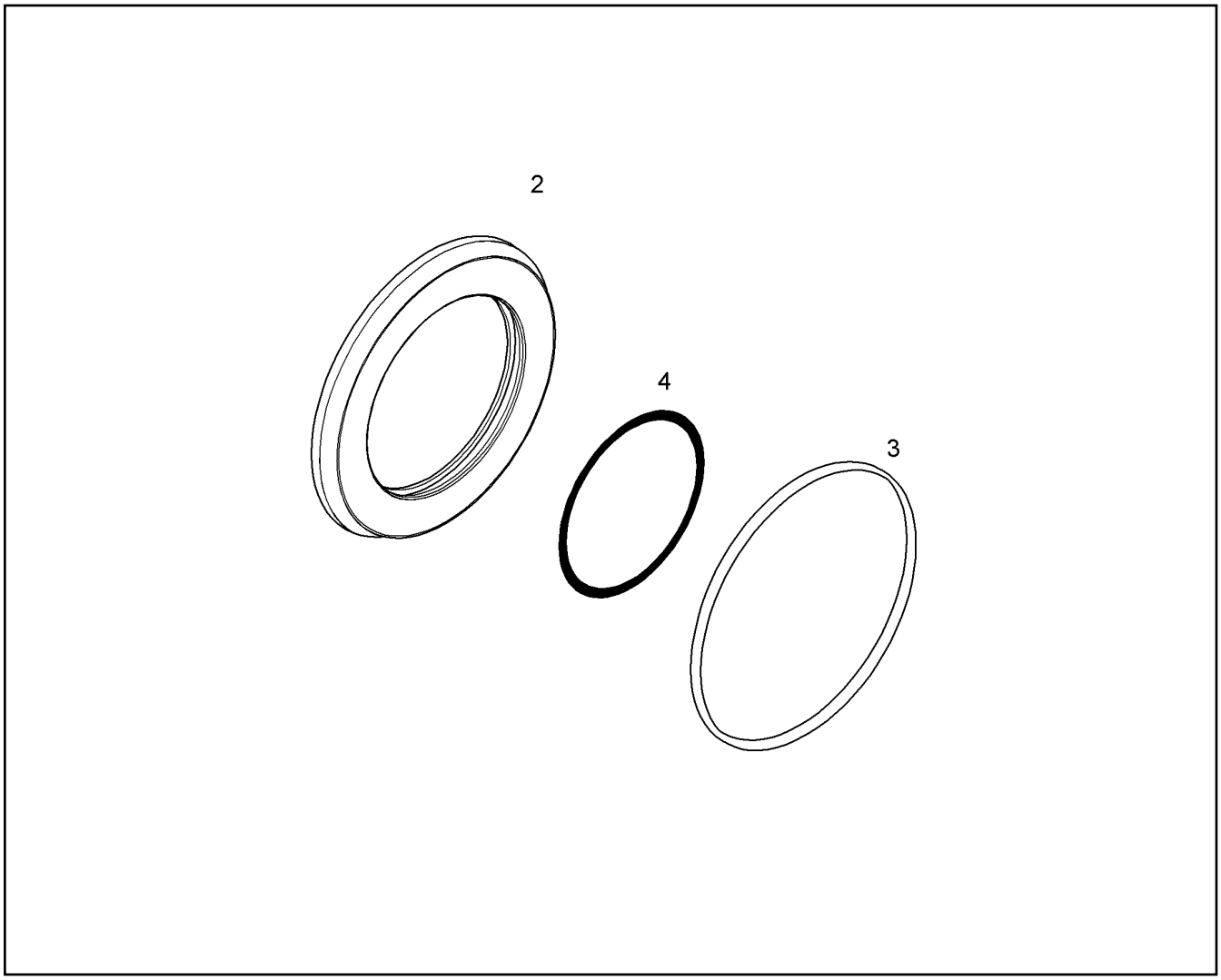

Pos.	Item	Quantity	Description	Descripción	Serie	K
2	10050911	1	RING	ANILLO		1
3	7017928	1	O-RING 158,12X7	JUNTA TORICA		1
4	7019832	1	O-RING 120,02X5,33	JUNTA TORICA		1

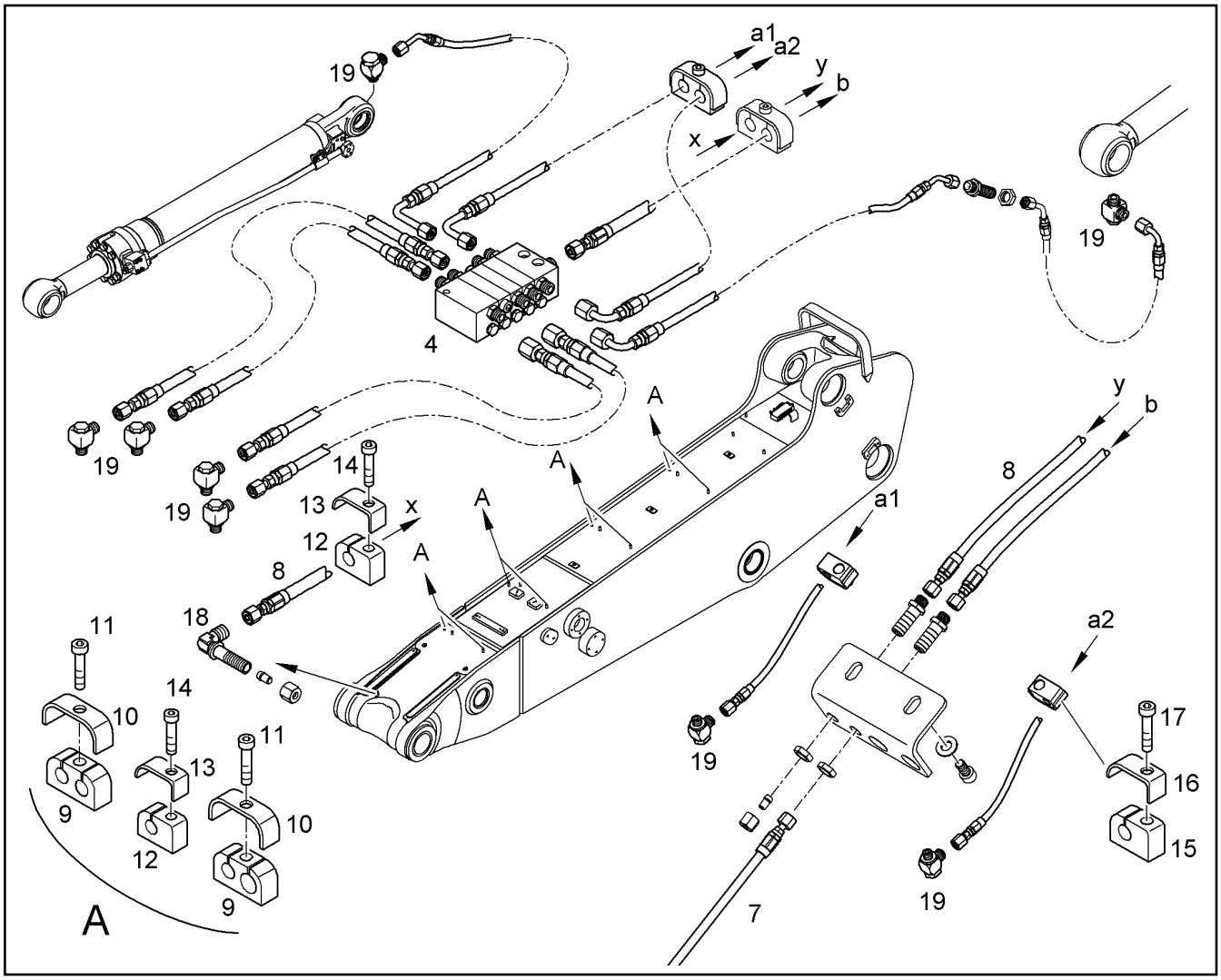

Pos.	Item	Quantity	Description	Descripción	Serie	K
4	10303368	1	DISTRIBUTION BLOCK MX-F 5/8 ⇨ ❑ 721	COMBINACIÓN DE DISTRIB.		2
7	10303382	1	HOSE	TUBO GOMA		2
8	10041726	1	HOSE	TUBO GOMA		2
9	10037726	14	CLAMP	ABRAZADERA		
10	10037722	14	BRACKET	ESTRIBO		
11	4902250	14	CYLINDER SCREW ISO 4762 M6X10 10.9 A2	TORNILLO CILINDRICO		
12	10037727	5	CLAMP	ABRAZADERA		
13	10037723	5	BRACKET	ESTRIBO		
14	4902250	5	CYLINDER SCREW ISO 4762 M6X10 10.9 A2	TORNILLO CILINDRICO		
15	10037728	2	CLAMP	ABRAZADERA		
16	10037723	2	BRACKET	ESTRIBO		
17	4902250	2	CYLINDER SCREW ISO 4762 M6X10 10.9 A2	TORNILLO CILINDRICO		
18	7368115	1	ANGLE BULKHEAD NECK	RACOR DE MAMPARO EN ANG		
19	7368426	8	SCREW FITTING WH 6L M10X1	ATORNILLAMIENTO		

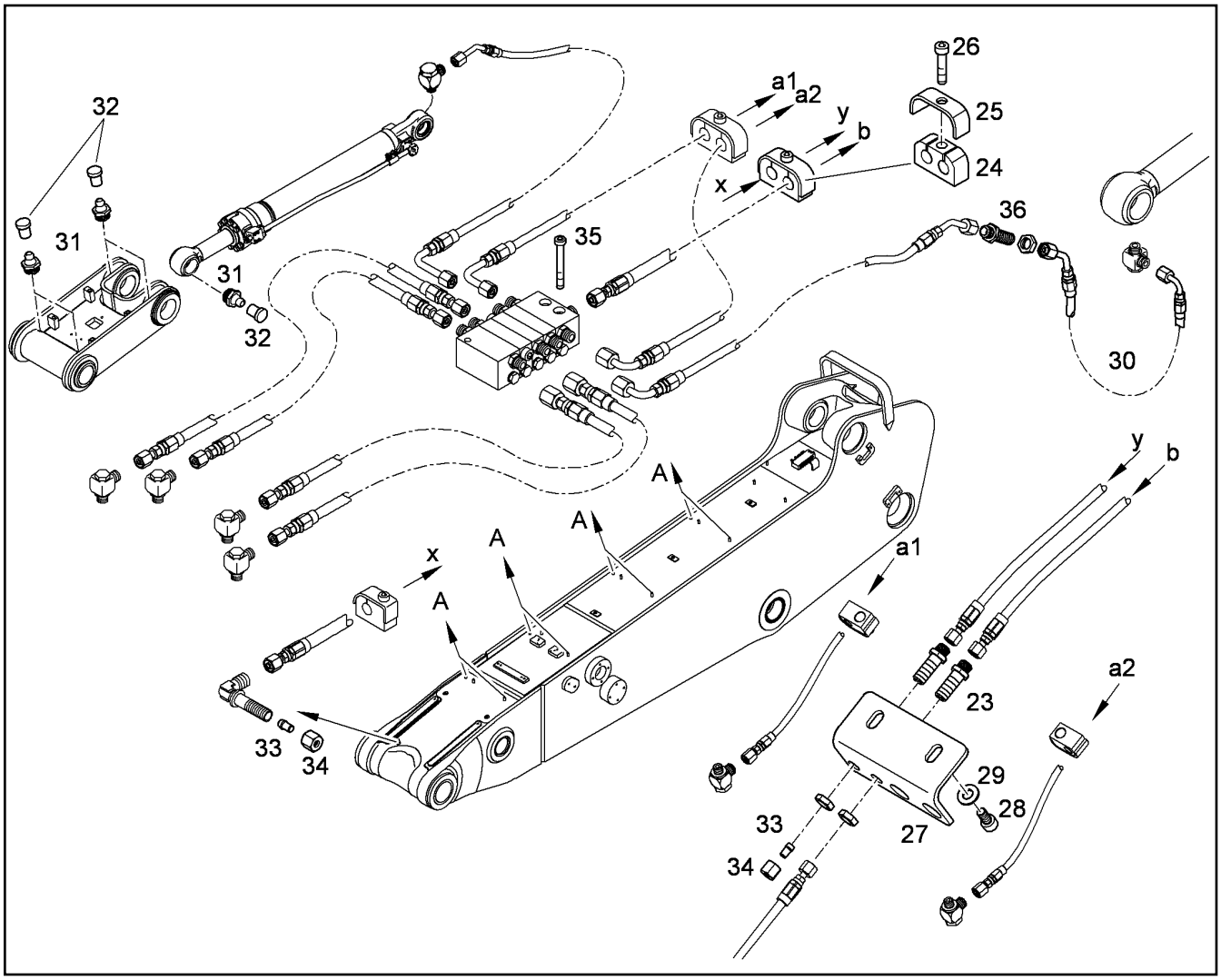

Pos.	Item	Quantity	Description	Descripción	Serie	K
23	7368106	2	BULKHEAD STUD	RACOR DE MAMPARO		
24	10037724	4	CLAMP	ABRAZADERA		
25	10037722	4	BRACKET	ESTRIBO		
26	4902250	4	CYLINDER SCREW ISO 4762 M6X10 10.9 A2	TORNILLO CILINDRICO		
27	9928771	1	CONSOLE	CONSOLA		1
28	4043163	2	CYLINDER SCREW ISO 4762 M12X30 10.9	TORNILLO CILINDRICO		
29	10006370	2	WASHER DIN 7349 13	ARANDELA		
30	10303383	1	HOSE	TUBO GOMA		2
31	10005440	5	GREASE NIPPLE	ENGRASADOR		
32	8500251	5	GREASE NIPPLE CAP	TAPAS DE ENGRASADOR		
33	4900305	2	TAPER COLLET VKA 8	CONO DE CIERRE		
34	4900507	2	UNION NUT DIN 3870 A L 8 A3C	TUERCA UEWF		
35	4902262	2	CYLINDER SCREW ISO 4762 M5X35 10.9 A2	TORNILLO CILINDRICO		
36	7368105	1	BULKHEAD STUD	RACOR DE MAMPARO		

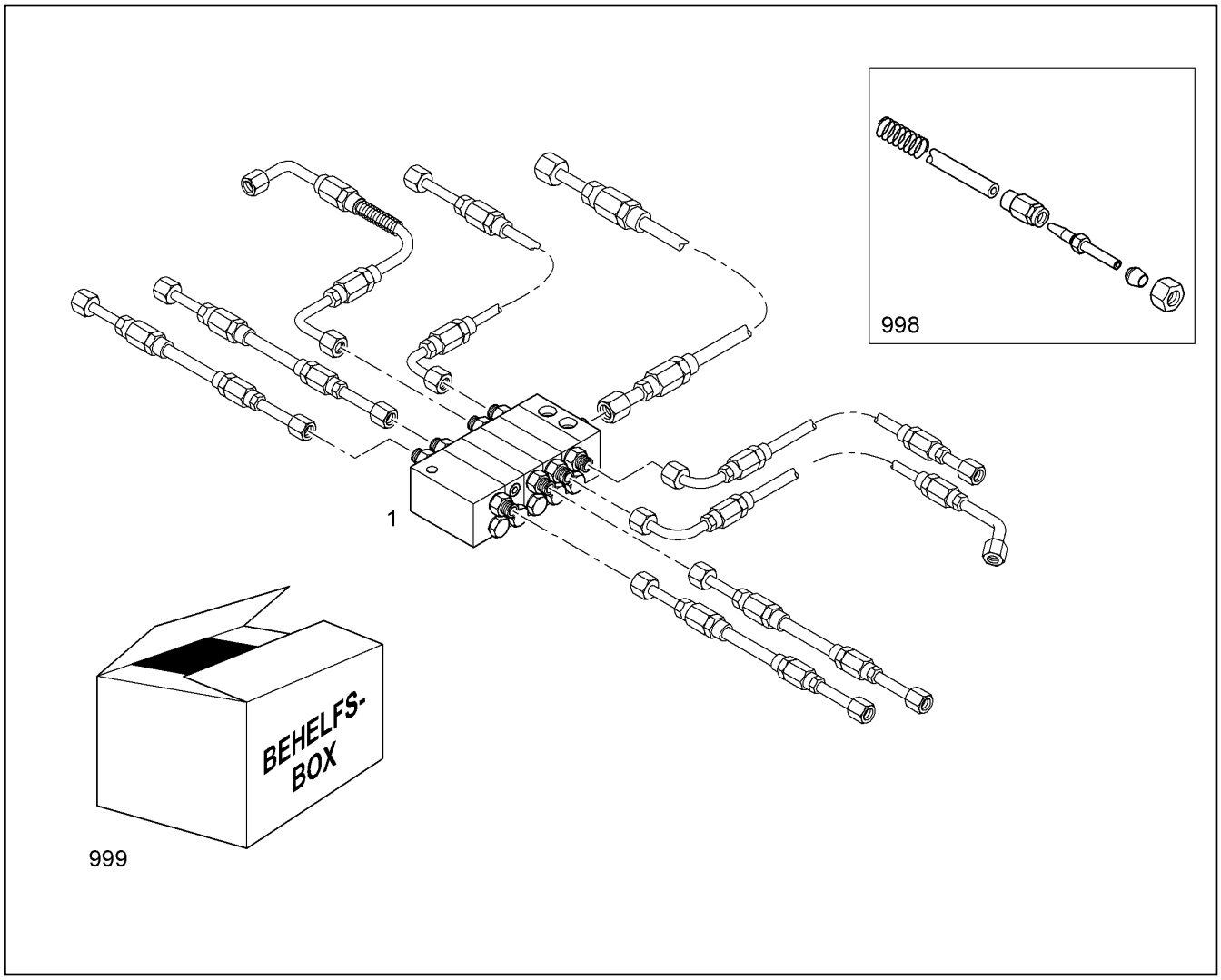

Pos.	Item	Quantity	Description	Descripción	Serie	K
1	10303369	1	DISTRIBUTION BLOCK MX-F 5/8 ⇨ ❑ 722	COMBINACIÓN DE DISTRIB.		2
998		1	CONNECTING ELEMENT ⇨ ❑ 255	BASE DE FIJACION		
999	10014611	1	AUXILIARY BOX ⇨ ❑ 257	CAJA AUXILIAR		

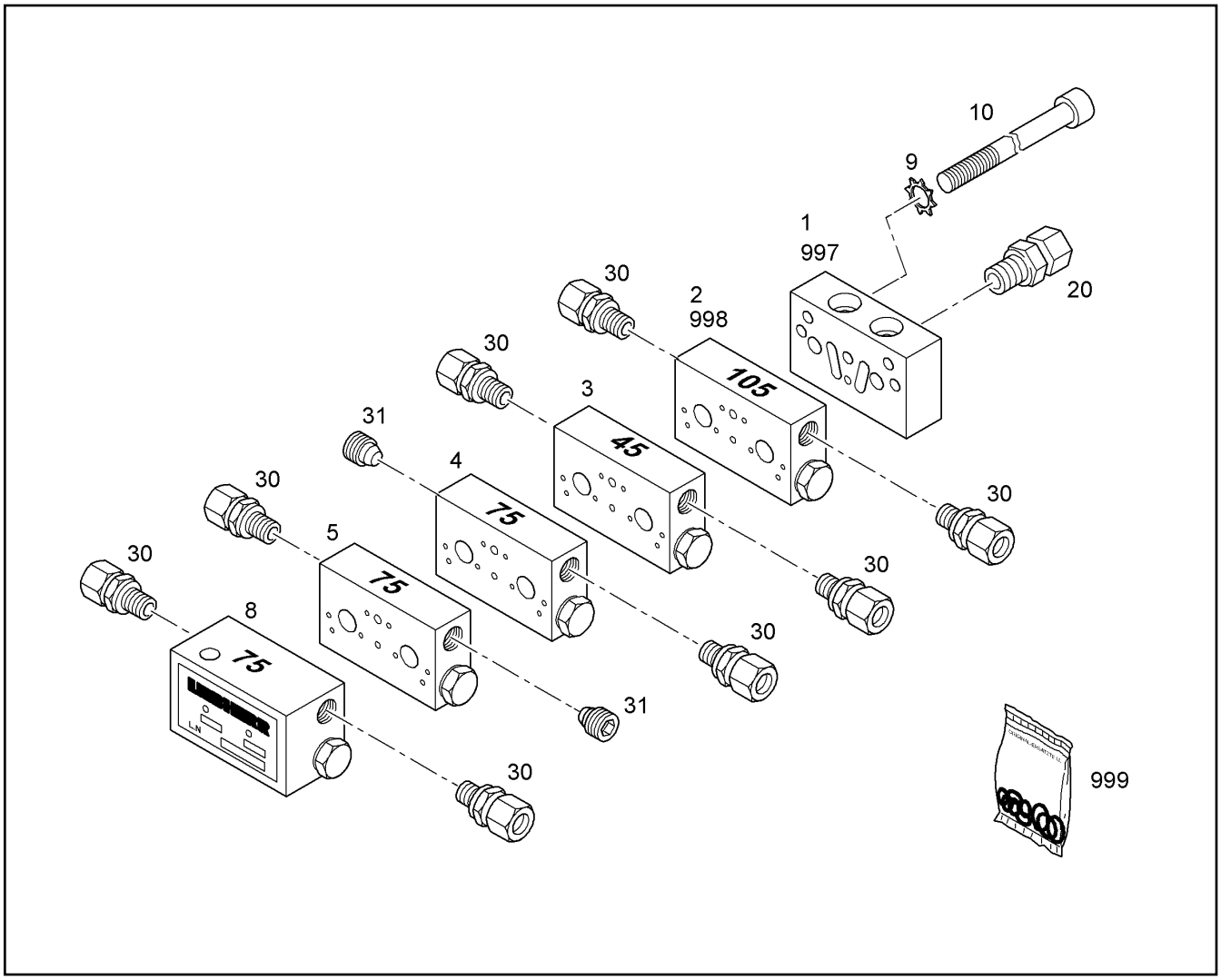

Pos.	Item	Quantity	Description	Descripción	Serie	K
1	7027937	1	STARTING ELEMENT MX-F	ELEMENTO INICIAL		2
2	7027941	1	CENTRAL ELEMENT MX-F 105	ELEMENTO INTERMEDIO		2
3	7027939	1	CENTRAL ELEMENT MX-F 45	ELEMENTO INTERMEDIO		2
4	7027940	1	CENTRAL ELEMENT MX-F 75	ELEMENTO INTERMEDIO		2
5	7027940	1	CENTRAL ELEMENT MX-F 75	ELEMENTO INTERMEDIO		2
8	7027944	1	END ELEMENT MX-F 75	ELEMENTO FINAL		2
9	4002259	2	TOOTH LOCK WASHER DIN 6797 A 6,2 A3C	ARANDELA DENTADA		
10	404205408	2	CYLINDER SCREW ISO 4762 M6x80 8.8 A2C	TORNILLO CILINDRICO		
20	10009053	1	PIPE UNION GE8 10X1	RACOR PARA ENROSCAR		
30	7622803	8	NON-RETURN VALVE	VALVULA DE RETENCION		2
31	774378208	2	SCREW PLUG	TORNILLO DE CIERRE		
997	10021311	1	SEAL KIT ⇨ ❑ 260	JUEGO DE JUNTAS		1
998	10021310	1	SEAL KIT ⇨ ❑ 259	JUEGO DE JUNTAS		1
999	10021308	1	O-RING	JUEGO ANILLOS TÓRICOS		1

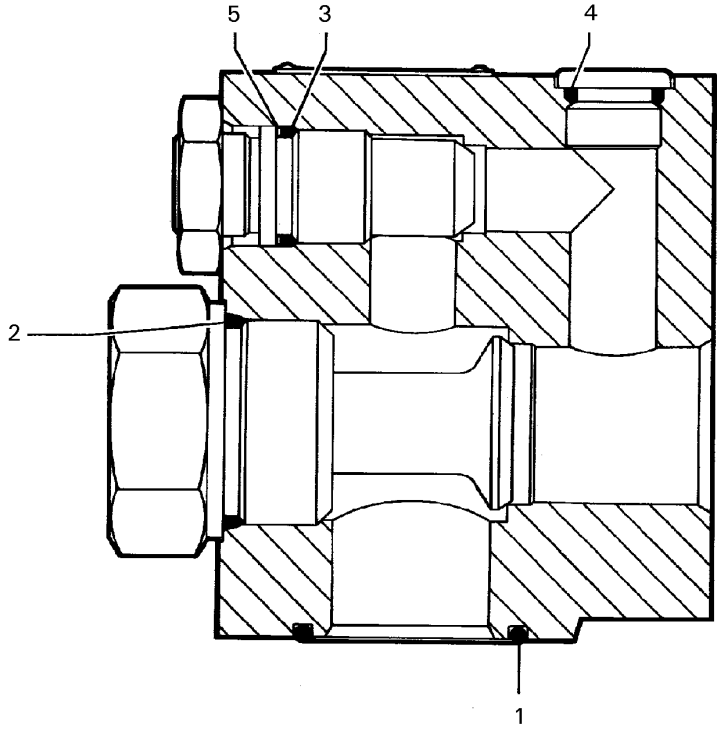

Pos.	Item	Quantity	Description	Descripción	Serie	K
1		1	O-RING 47,22x3,53	JUNTA TORICA		1
2		1	O-RING 44x3	JUNTA TORICA		1
3		1	O-RING 23,47X2,62	JUNTA TORICA		1
4		1	O-RING 19,3x2,4	JUNTA TORICA		1
5		1	SUPPORTING RING	ANILLO SOPORTE		1

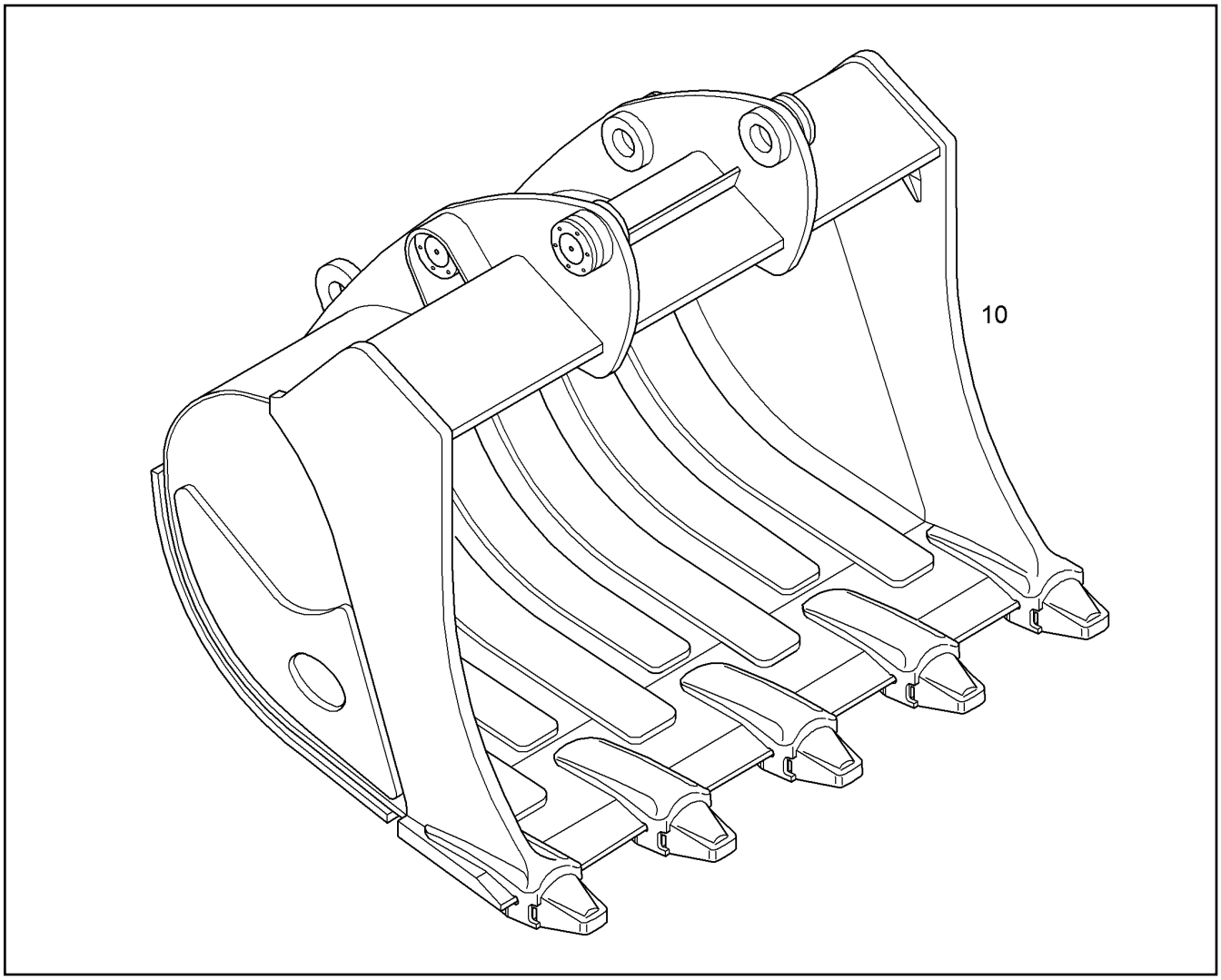

Pos.	Item	Quantity	Description	Descripción	Serie	K
10	10498498	1	BACKHOE BUCKET HD 1950MM 4.30M3 ⇨ ❑ 725	CUCHARA RETRO HD		1

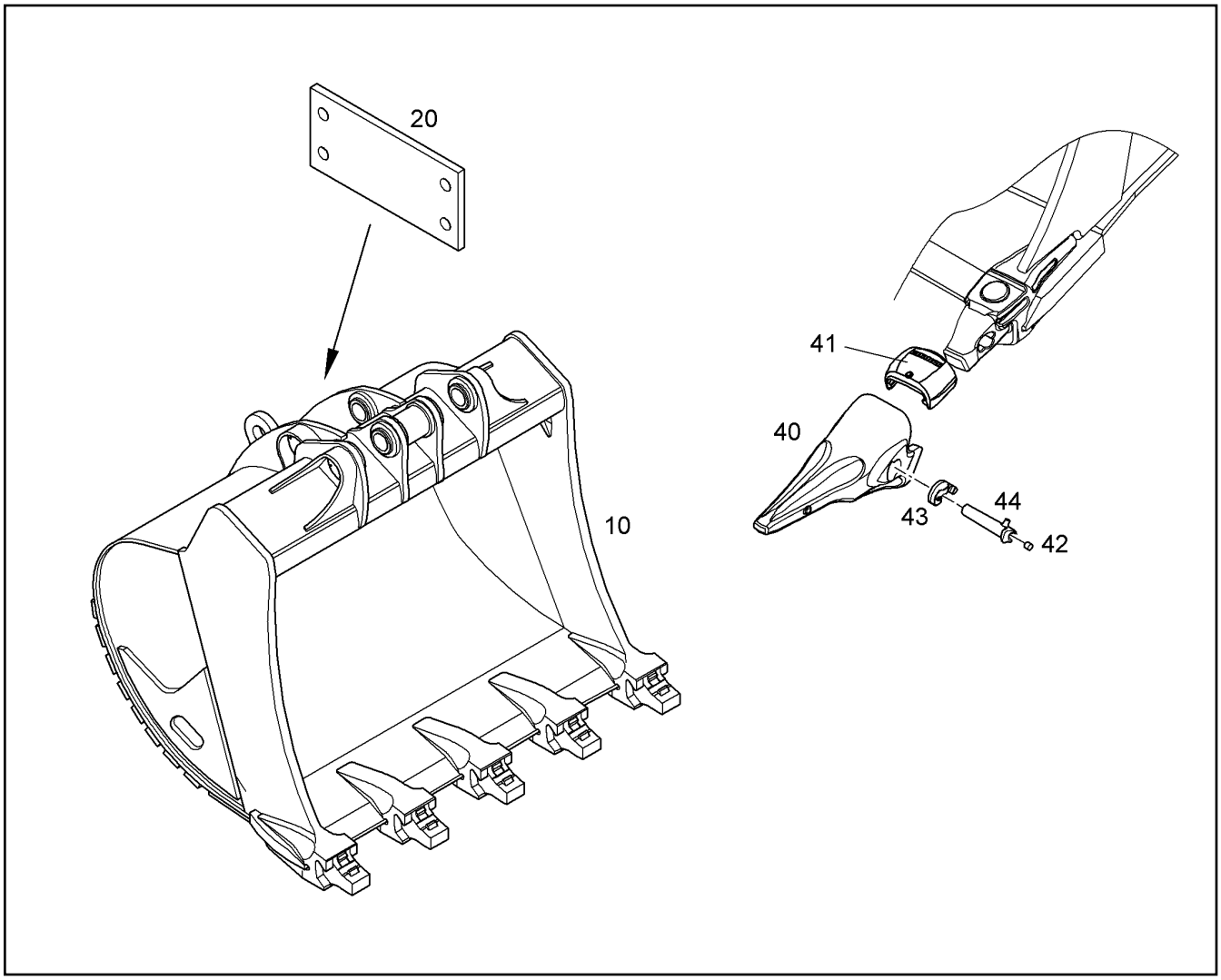

Pos.	Item	Quantity	Description	Descripción	Serie	K
10	10498499	1	BACKHOE BUCKET HD 1950MM 4.30M3 [.....] ⇨ ❑ 726	CUCHARA RETRO HD		1
40	10451155	5	TOOTH	DIENTE		1
41	10451152	5	WEARING CAP	TAPA DESGASTE		1
42	10451201	5	EXPANDED FOAM PLUG	TAPON DE GOMAESPUMA		1
43	10451188	5	BLOCK PART	PIEZA DE BLOQUEO		1
44	10451150	5	LOCKING BOLT	BULON DE SEGURIDAD		1

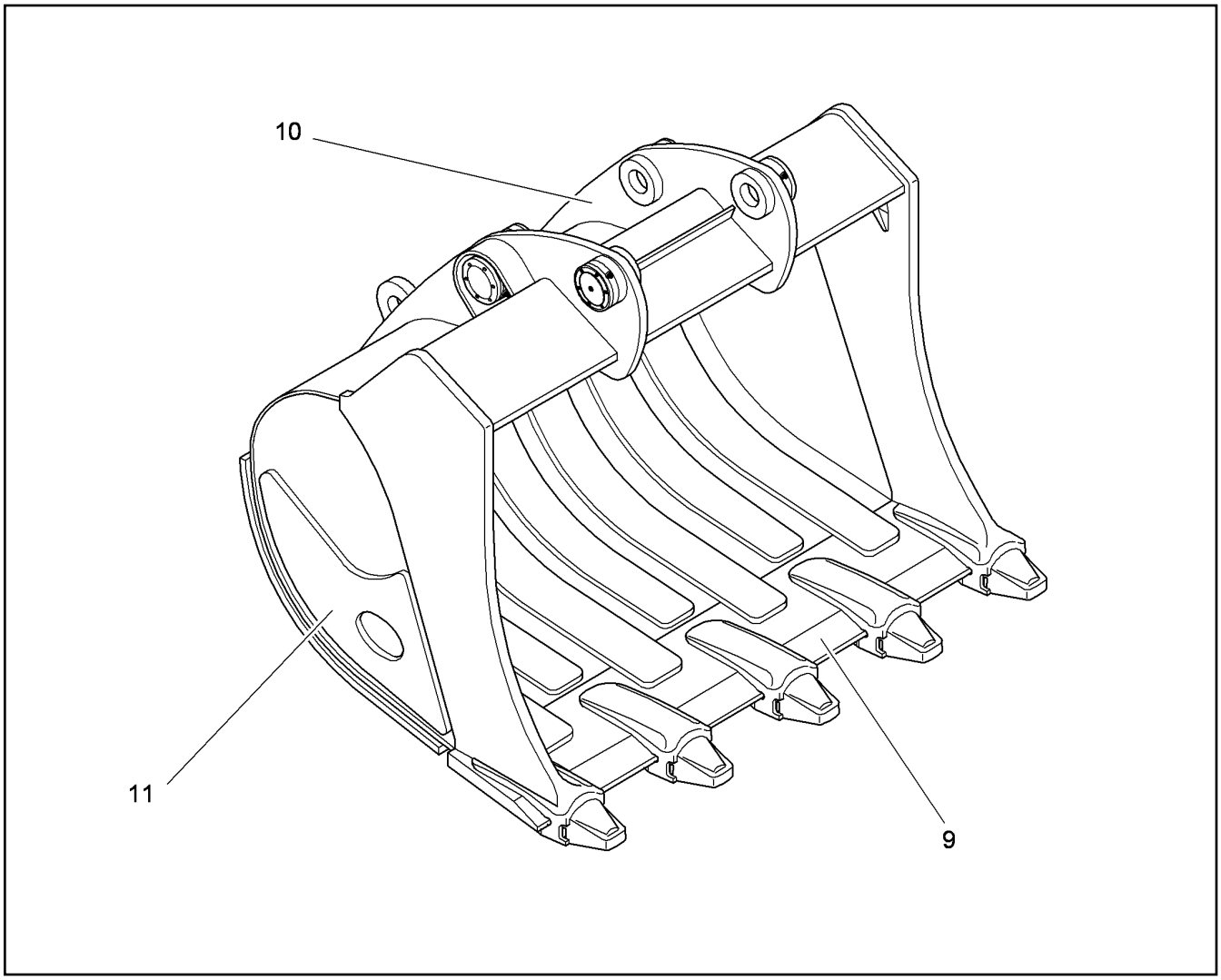

Pos.	Item	Quantity	Description	Descripción	Serie	K
9	10498500	1	SPOON BIT ⇨ ❑ 727	BOCA DE CUCHARA		1
10	10498387	1	BEARING PILLOW BLOCK ⇨ ❑ 729	SOPORTE DE EJE	-99998	1
10	10498576	1	BEARING PILLOW BLOCK ⇨ ❑ 730	SOPORTE DE EJE	99999-	1
11	10498501	1	WEARING PARTS SET ⇨ ❑ 728	JP DESGASTE		1

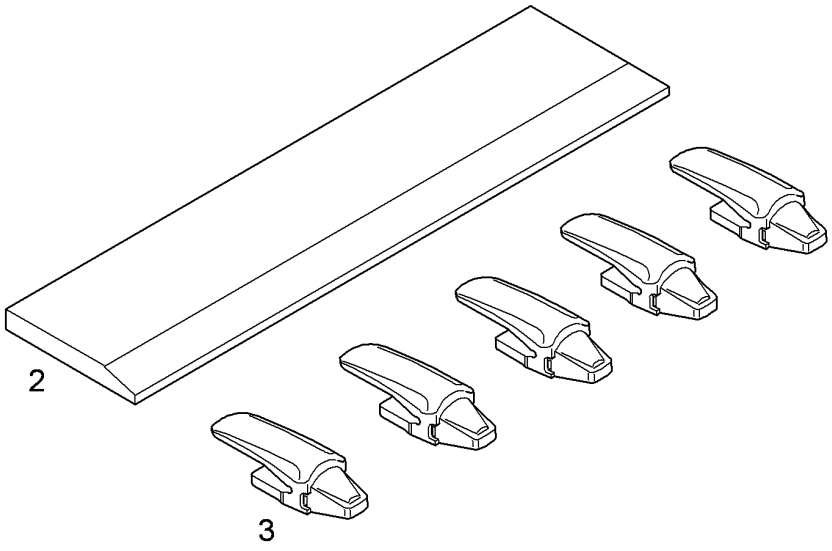

Pos.	Item	Quantity	Description	Descripción	Serie	K
2	10498506	1	KNIFE	CUCHILLA		1
3	10451151	5	ADAPTOR	ADAPTADOR		1

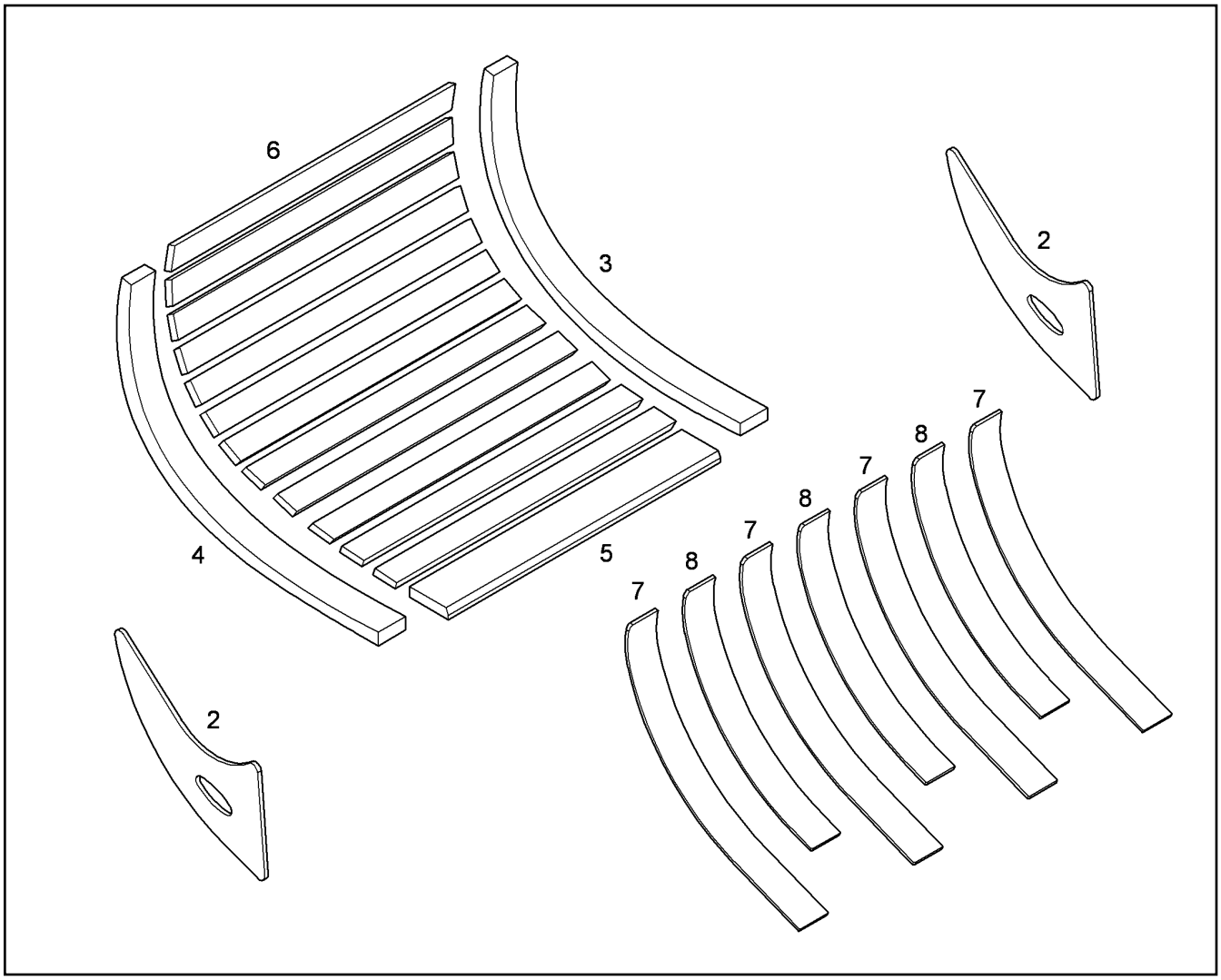

Pos.	Item	Quantity	Description	Descripción	Serie	K
2	10498512	2	SIDE WEARING PART	PIEZA DE DESGASTE LAT.		1
3	10498507	1	WEARING PLATE RIGHT	PLACA DESGASTE DCHA.		1
4	10498508	1	WEARING PLATE LEFT	PLACA DESGASTE IZDA.		1
5	10498509	1	WEARING PLATE	PLACA DE DESGASTE		1
6	10498578	12	WEARING PLATE	PLACA DE DESGASTE		1
7	10498510	4	WEARING PLATE	PLACA DE DESGASTE		1
8	10498511	3	WEARING PLATE	PLACA DE DESGASTE		1

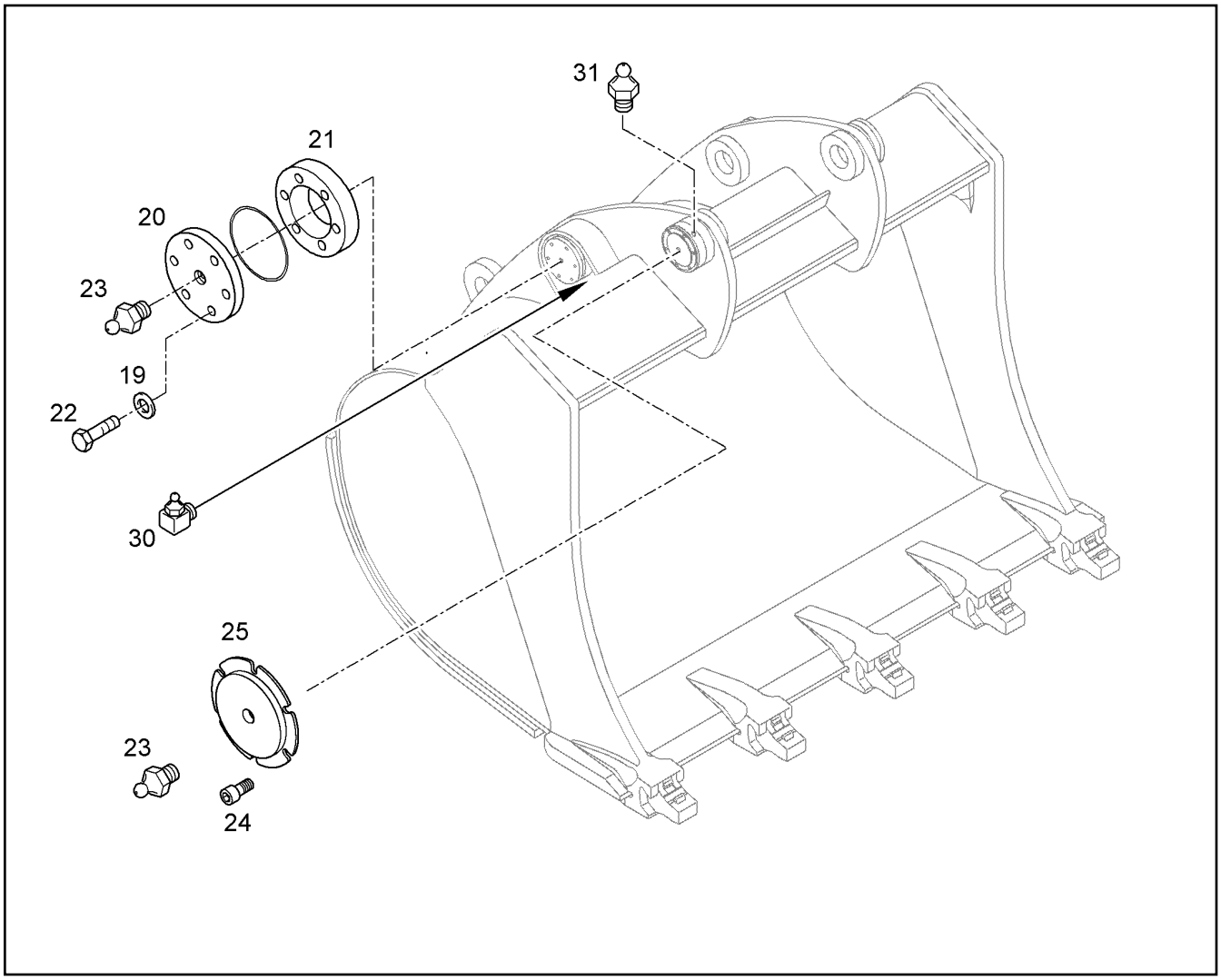

Pos.	Item	Quantity	Description	Descripción	Serie	K
19	9918228	12	WASHER 16,5/28X4	ARANDELA		
20	10498381	2	LID	TAPA		1
21	10498382	2	WASHER	ARANDELA		1
22	4000483	12	HEX BOLT ISO 4014 M16X75 10.9 DAC	TORNILLO DE CABEZA HEXAGO		
23	10005440	4	GREASE NIPPLE	ENGRASADOR		
24	4043002	12	CYLINDER SCREW ISO 4762 M12X25 10.9	TORNILLO CILINDRICO		
25	10368116	2	LID	TAPA		1
30	7001046	2	HYDRAULIC-TYPE LUBRICATING NIPDIN 71	ENGRASADOR CONICO		
31	10005440	2	GREASE NIPPLE	ENGRASADOR		

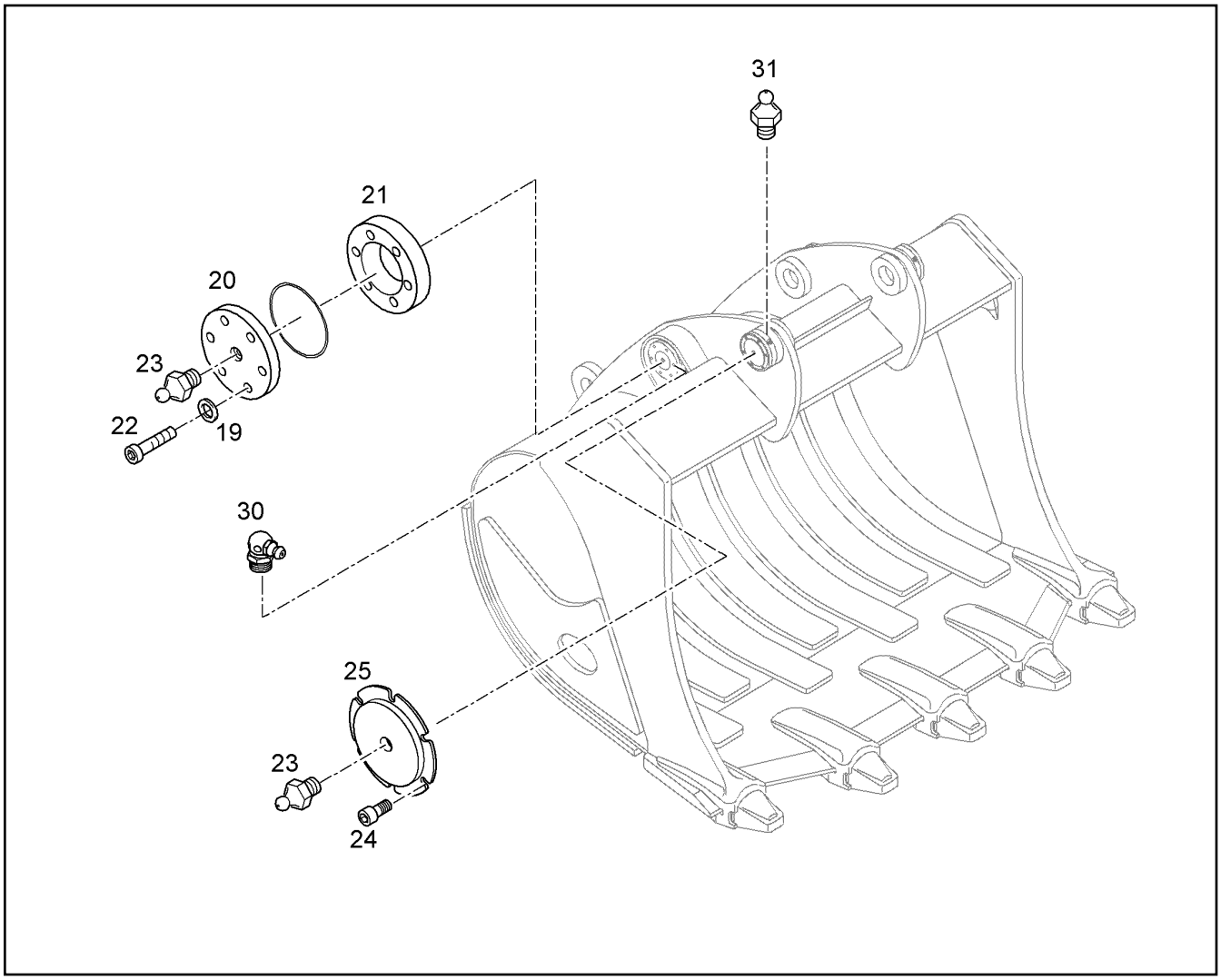

Pos.	Item	Quantity	Description	Descripción	Serie	K
19	9918228	12	WASHER 16,5/28X4	ARANDELA		
20	10498381	2	LID	TAPA		1
21	10498382	2	WASHER	ARANDELA		1
22	4000483	12	HEX BOLT ISO 4014 M16X75 10.9 DAC	TORNILLO DE CABEZA HEXAGO		
23	10005440	4	GREASE NIPPLE	ENGRASADOR		
24	4043002	12	CYLINDER SCREW ISO 4762 M12X25 10.9	TORNILLO CILINDRICO		
25	10368116	2	LID	TAPA		1
30	7001046	2	HYDRAULIC-TYPE LUBRICATING NIPDIN 71	ENGRASADOR CONICO		
31	10005440	2	GREASE NIPPLE	ENGRASADOR		

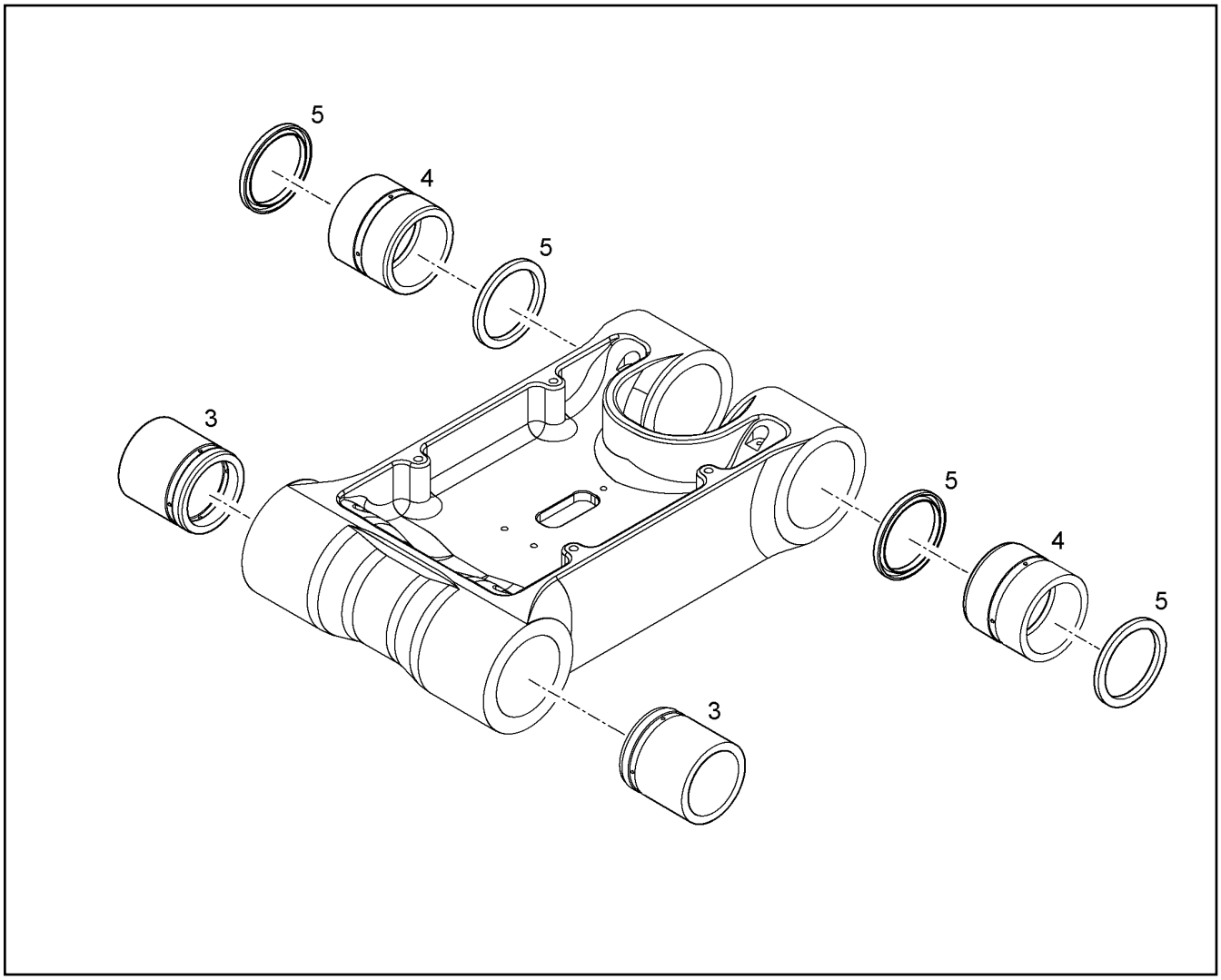

Pos.	Item	Quantity	Description	Descripción	Serie	K
3	10399731	2	BUSH ⇨ ❑ 6	CASQUILLO		1
4	10408514	2	BUSH	CASQUILLO		1
5	7362184	4	RADIAL SEAL X120X150X12	ANILLO JUNTA RADIAL		1

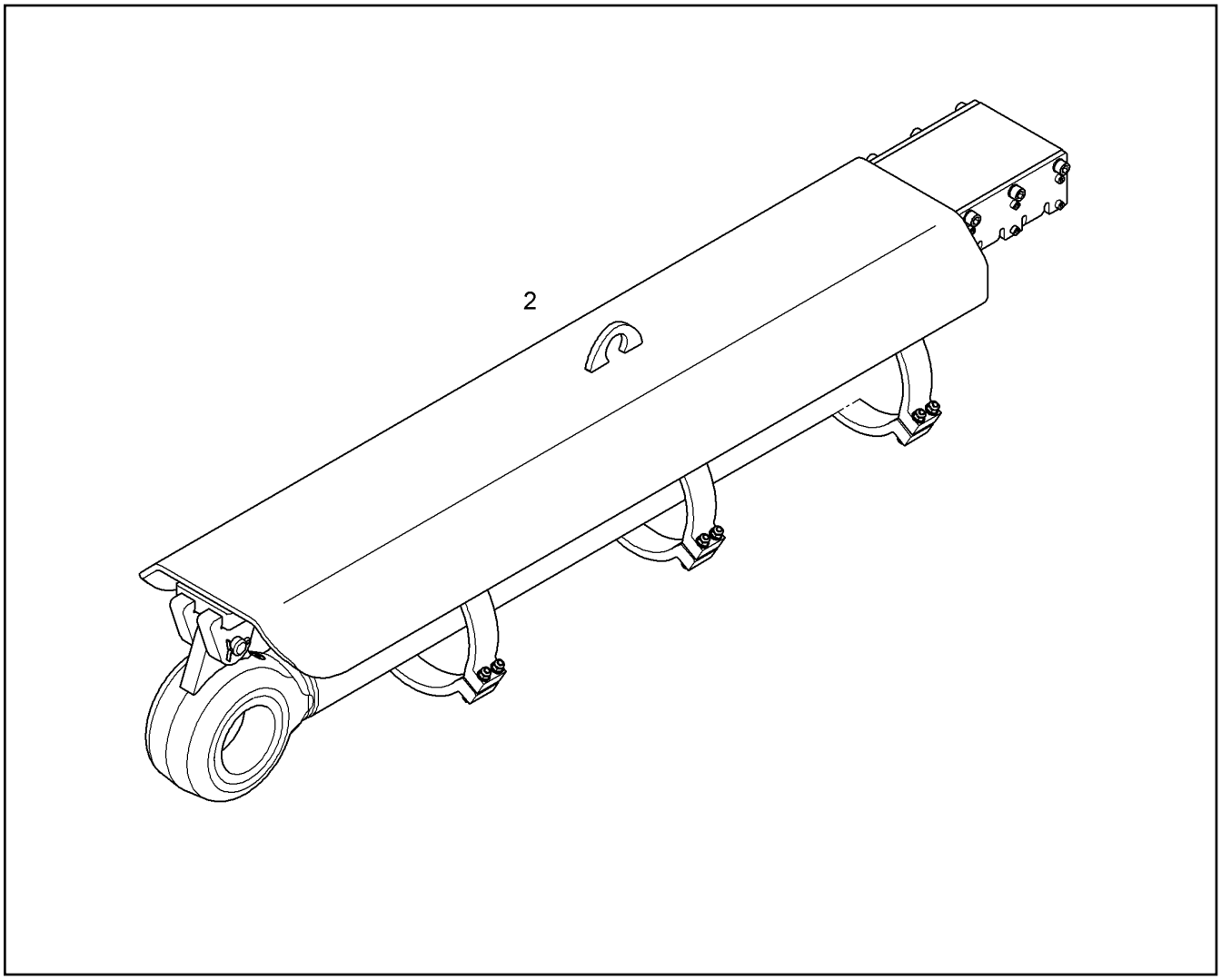

Pos.	Item	Quantity	Description	Descripción	Serie	K
10	10358737	1	PISTON ROD COVER BUCKET CYL ⇨ ❑ 733	ÉMBOLO PROT.VÁST.P.CIL.CUC		1

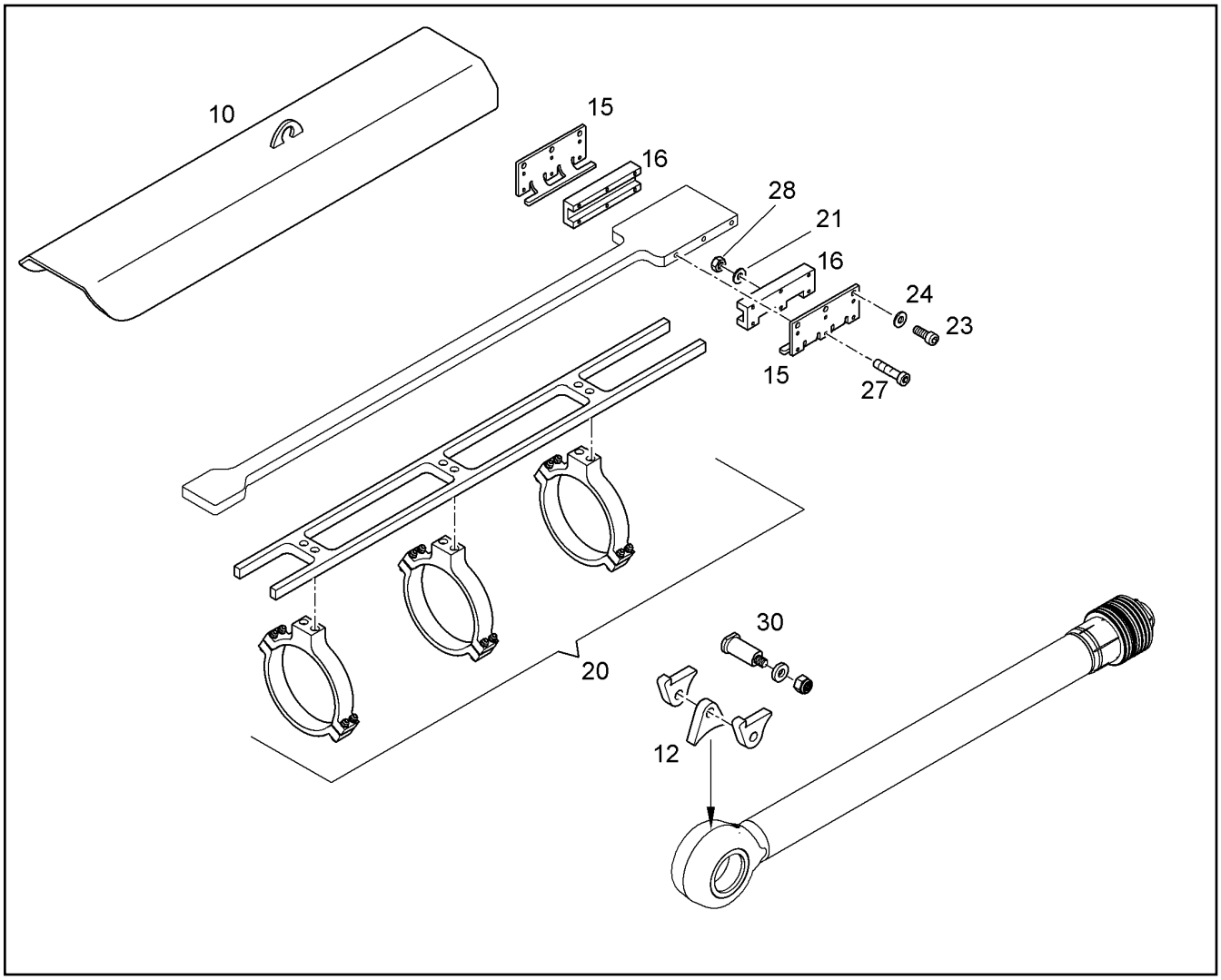

Pos.	Item	Quantity	Description	Descripción	Serie	K
10	10498365	1	PROTECTION	PROTECCION		1
12	10498366	1	MODIF.CYLINDER	MODIF.CILINDRO		1
15	10082605	2	ATTACHMENT PLATE	PLACA FIJACION		1
16	10082606	2	RUNNER	PATIN		1
20	10086853	1	SLIDING RAIL ⇨ ❑ 734	VIA DESLIZAMIENTO		1
21	10289803	12	WASHER ISO 7089 8 300HV	ARANDELA		
23	4601243	6	CYLINDER SCREW ISO 4762 M14X35 10.9	TORNILLO CILINDRICO		
24	10289805	6	WASHER ISO 7089 14 300HV	ARANDELA		
27	4043090	12	CYLINDER SCREW ISO 4762 M8X60 10.9 A2	TORNILLO CILINDRICO		
28	4901573	12	HEX NUT M8	TUERCA HEXAGONAL		
30	10498335	1	PIN ⇨ ❑ 738	BULON		1

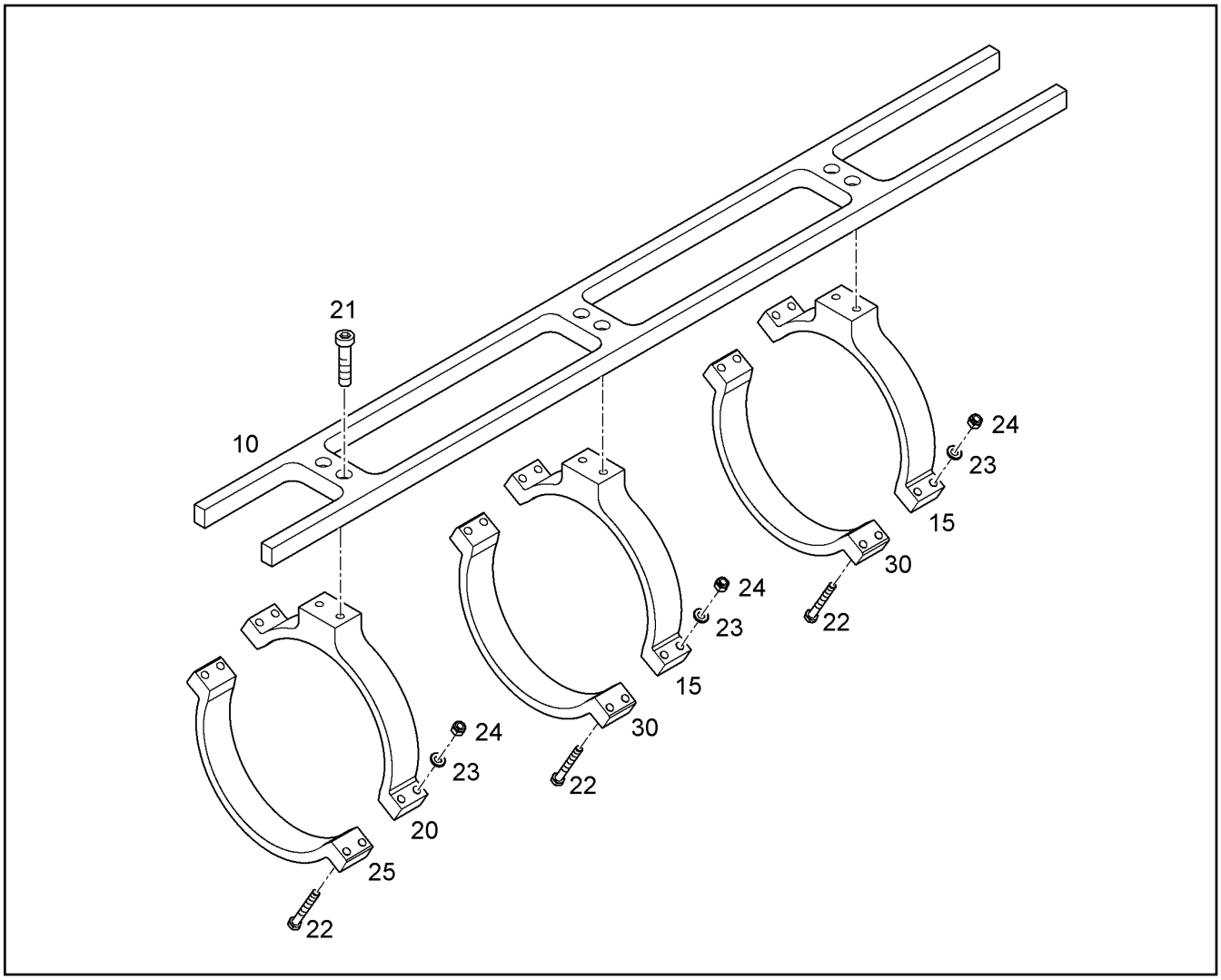

Pos.	Item	Quantity	Description	Descripción	Serie	K
10	10086360	1	SLIDING RAIL	VIA DESLIZAMIENTO		1
15	10086854	2	HALF CLAMP COLLAR DIA 238,4	SEMI-ABRAZADERA		1
20	10086855	1	HALF CLAMP COLLAR DIA 260	SEMI-ABRAZADERA		1
21	7406028	6	CYLINDER SCREW ISO 4762 M12X45 10.9	TORNILLO CILINDRICO		
22	4002163	12	HEX BOLT ISO 4014 M10X80 10.9 A3C	TORNILLO DE CABEZA HEXAGO		
23	4901879	12	WASHER ISO 7090 10 - 200HV A4	ARANDELA		
24	4600579	12	HEX NUT ISO 7040 M 10 -10 A3C	TUERCA HEXAGONAL		
25	10086857	1	HALF CLAMP COLLAR DIA 260	SEMI-ABRAZADERA		1
30	10086856	2	HALF CLAMP COLLAR DIA 238.4	SEMI-ABRAZADERA		1

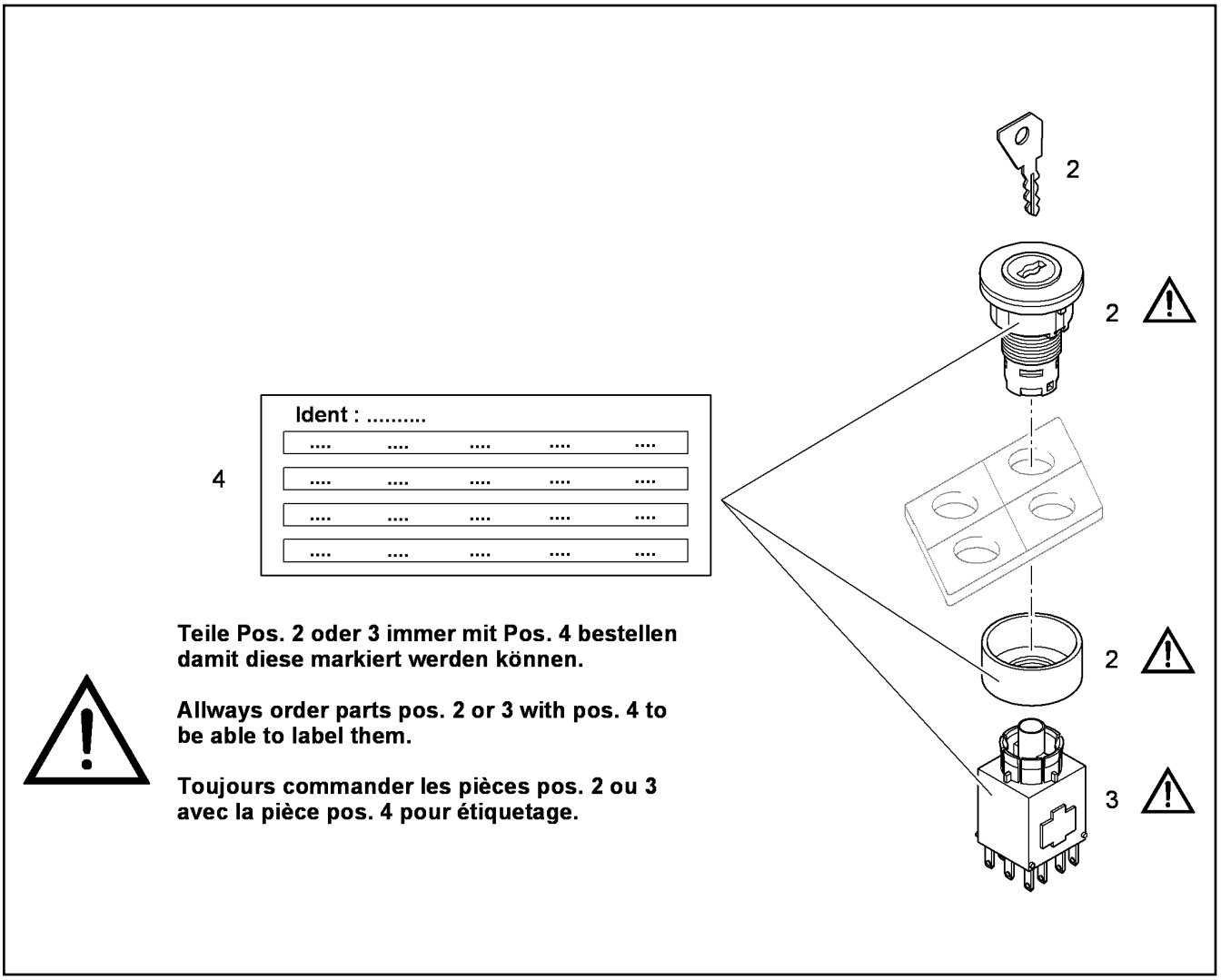

Teile Pos. 2 oder 3 immer mit Pos. 4 bestellen damit diese markiert werden können.

Allways order parts pos. 2 or 3 with pos. 4 to be able to label them.

Toujours commander les pièces pos. 2 ou 3 avec la pièce pos. 4 pour étiquetage.

Pos.	Item	Quantity	Description	Descripción	Serie	K
2	6204743	1	KEY SWITCH ⇨ ❑ 536	INTERRUPTOR LLAVE		2
3	6204371	1	TOUCH CONTACT TRANSMITTER	CONTACTOR PALPADOR		2
4	9989180	1	LABEL	ETIQUETA		1

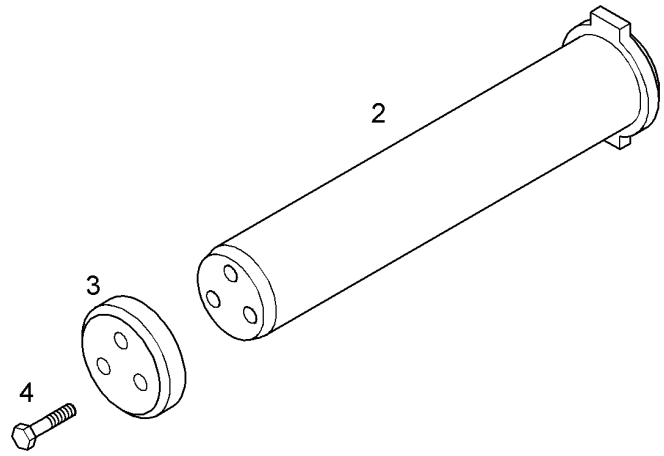

Pos.	Item	Quantity	Description	Descripción	Serie	K
2	10056474	1	PIN	BULON		1
3	9929365	1	WASHER	ARANDELA		1
4	10425724	3	HEX BOLT ISO 4014 M20X100 10.9 FLZN 100	TORNILLO DE CABEZA HEXAGO		

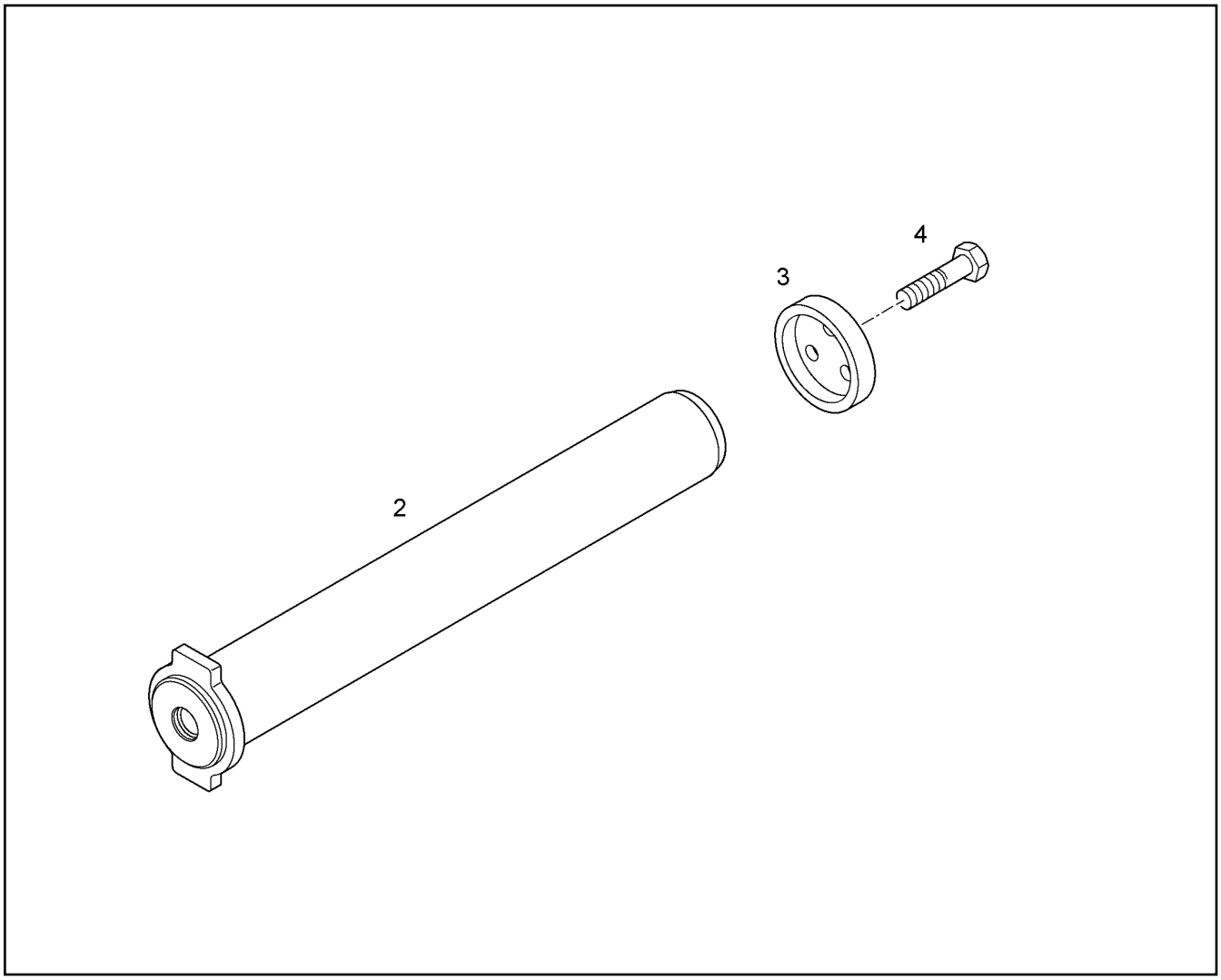

Pos.	Item	Quantity	Description	Descripción	Serie	K
2	10056475	1	PIN	BULON		1
3	10358263	1	SPACER BUSH	CASQUILLO DISTANCIADOR		1
4	4600149	3	HEX BOLT ISO 4014 M16X85 10.9 DAC	TORNILLO DE CABEZA HEXAGO		

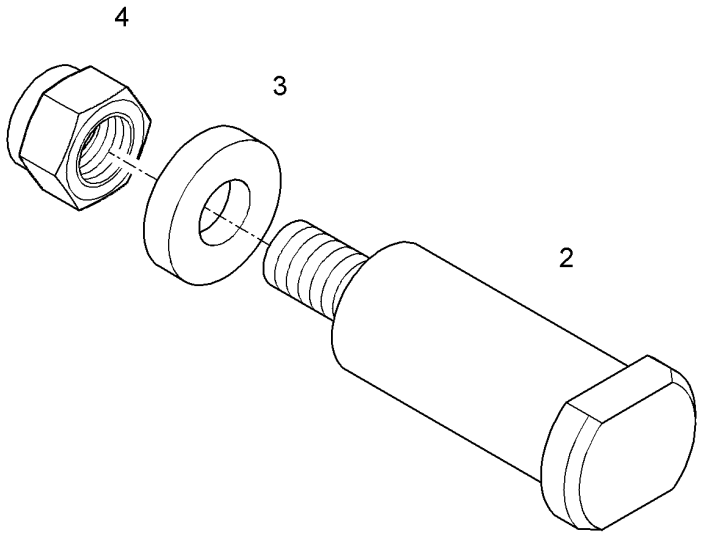

Pos.	Item	Quantity	Description	Descripción	Serie	K
2	10498336	1	PIN	BULON		1
3	4600701	1	WASHER 25	ARANDELA		
4	4902214	1	HEX NUT ISO 7040 M 24 -10 A3C	TUERCA HEXAGONAL		

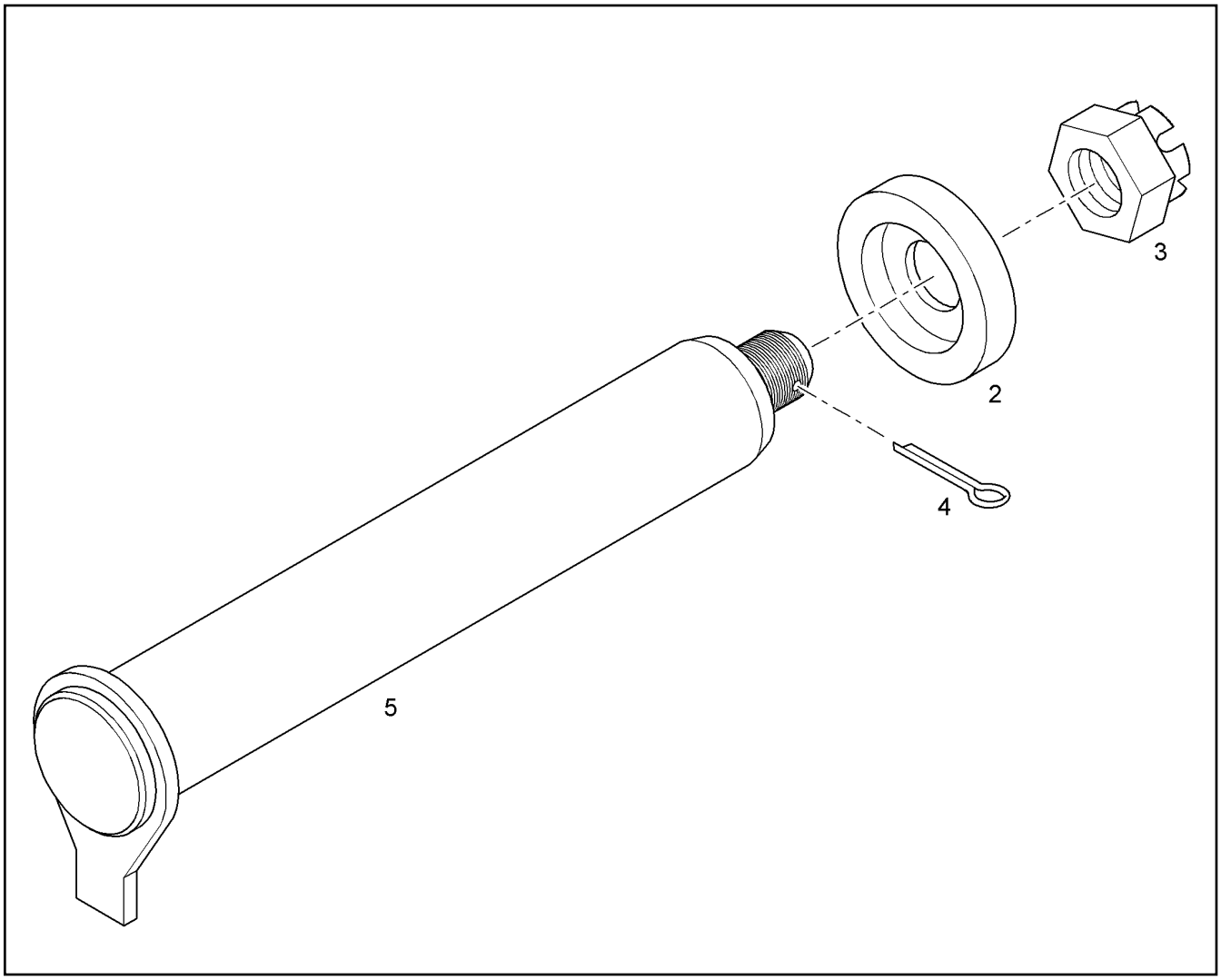

Pos.	Item	Quantity	Description	Descripción	Serie	K
2	3001590	1	WASHER	ARANDELA		
3	9161348	1	CROWN NUT	TUERCA ALMENADA		
4	4330049	1	SPLIT PIN ISO 1234 10 X 100 ST	PASADOR ALETAS		
5	9935246	1	PIN	BULON		1

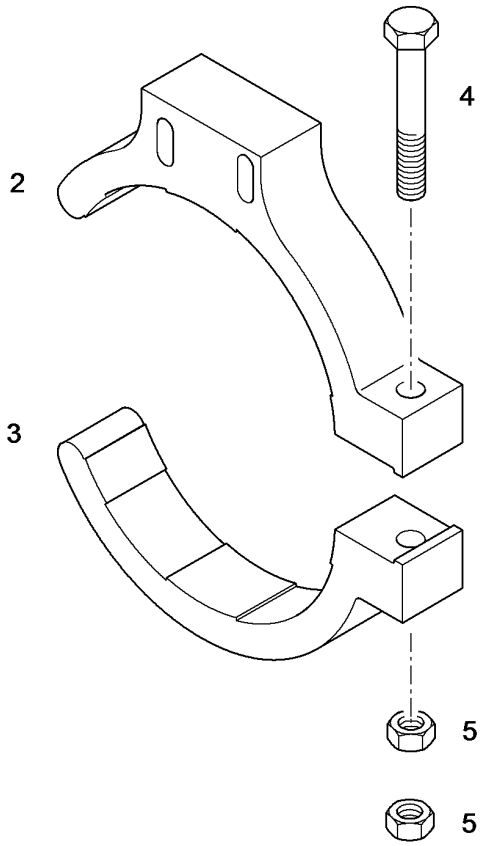

Pos.	Item	Quantity	Description	Descripción	Serie	K
2	10070620	1	HALF CLAMP COLLAR	SEMI-ABRAZADERA		1
3	10070621	1	HALF CLAMP COLLAR	SEMI-ABRAZADERA		1
4	4062068	1	HEX BOLT ISO 4014 M16X120 10.9 DAC	TORNILLO DE CABEZA HEXAGO		
5	4000420	2	HEX NUT M16	TUERCA HEXAGONAL		

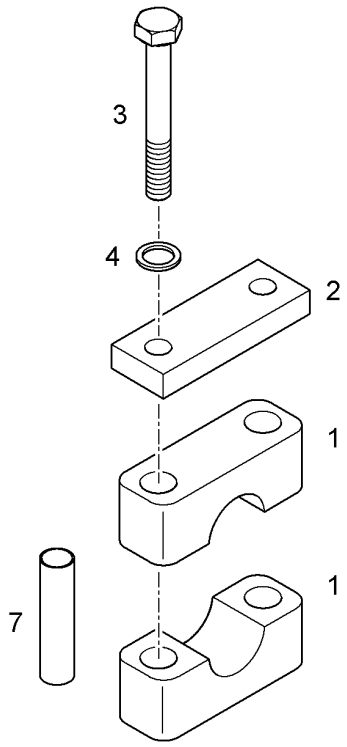

Pos.	Item	Quantity	Description	Descripción	Serie	K
1	7367214	2	CLAMP-HALF AEHNL.DIN 3015 S 3 R 35 PP H	MEDIA BRIDA		
2	7401443	1	LID PLATE DIN 3015-2 S-DP-A 3 W1-ZN	PLACA CUBIERTA		
3	4002163	2	HEX BOLT ISO 4014 M10X80 10.9 A3C	TORNILLO DE CABEZA HEXAGO		
4	4229913	2	LOCK WASHER 10,5/16X2 VS 10	ARANDELA SEGURIDAD		
7	7367212	2	SLEEVE 11x14x58	CASQUILLO.		

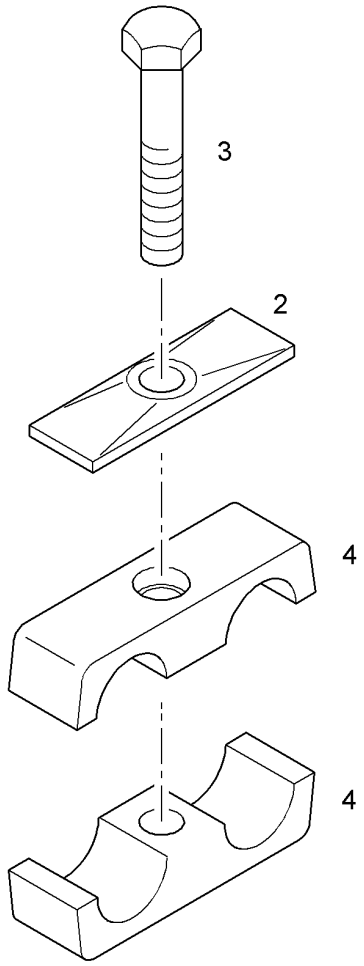

Pos.	Item	Quantity	Description	Descripción	Serie	K
2	7401349	1	LID PLATE DIN 3015-3 Z-DP 3 W1-ZN	PLACA CUBIERTA		
3	4001648	1	HEX BOLT ISO 4017 M8X45 10.9 A2C	TORNILLO DE CABEZA HEXAGO		
4	7029979	2	CLAMP-HALF DIN 3015-3 Z 3 G 23 23 PP SW	MEDIA BRIDA		

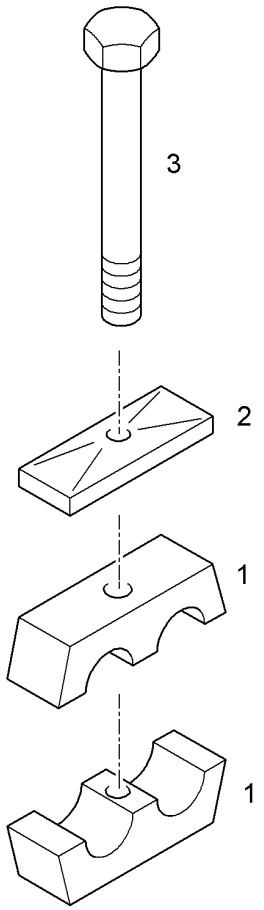

Pos.	Item	Quantity	Description	Descripción	Serie	K
1	7368705	2	CLAMP-HALF DIN 3015-3 Z 3 G 21,3 21,3 PP	MEDIA BRIDA		
2	7401349	1	LID PLATE DIN 3015-3 Z-DP 3 W1-ZN	PLACA CUBIERTA		
3	4001648	1	HEX BOLT ISO 4017 M8X45 10.9 A2C	TORNILLO DE CABEZA HEXAGO		

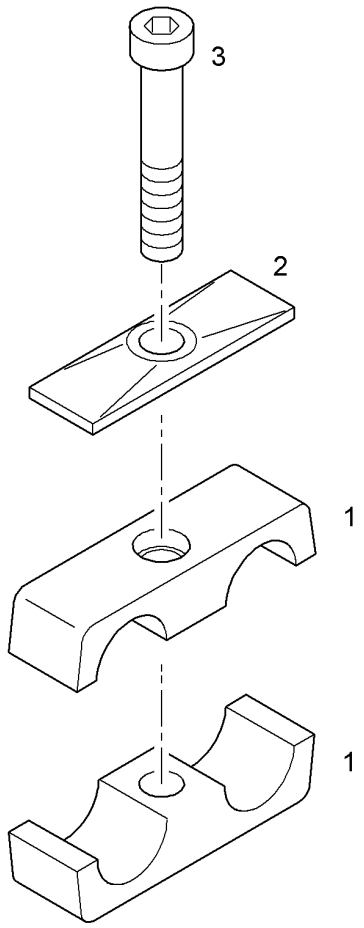

Pos.	Item	Quantity	Description	Descripción	Serie	K
1	7029979	2	CLAMP-HALF DIN 3015-3 Z 3 G 23 23 PP SW	MEDIA BRIDA		
2	7401349	1	LID PLATE DIN 3015-3 Z-DP 3 W1-ZN	PLACA CUBIERTA		
3	4601316	1	HEX BOLT ISO 4017 M8X50 10.9 A2C	TORNILLO DE CABEZA HEXAGO		

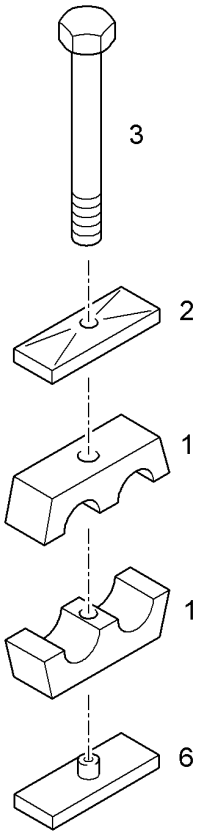

Pos.	Item	Quantity	Description	Descripción	Serie	K
1	7363276	2	CLAMP-HALF DIN 3015-3 Z 2 R 18 18 PP SW	MEDIA BRIDA		
2	7362606	1	LID PLATE DIN 3015 Z-DP 2 W1-ZN	PLACA CUBIERTA		
3	4001650	1	HEX BOLT ISO 4017 M8X35 10.9 A2C	TORNILLO DE CABEZA HEXAGO		
6	5004988	1	WELD PLATE DIN 3015-3 Z-AP 2 W1	BASE ABRAZADERA		

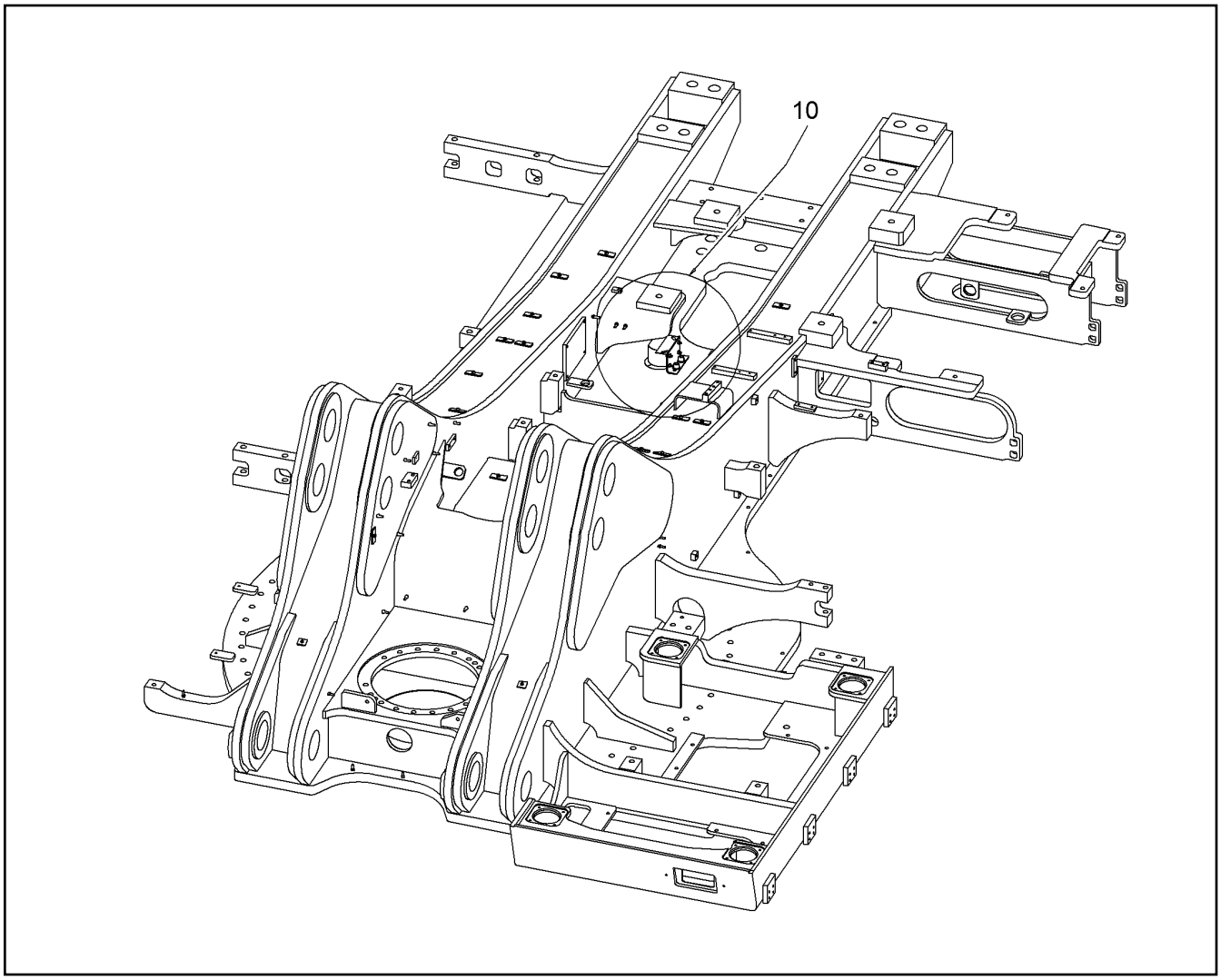

Pos.	Item	Quantity	Description	Descripción	Serie	K
10	10368398	1	TRAVEL ALARM ⇨ ❑ 747	DISP.ALARMA MARCHA	22613-	1

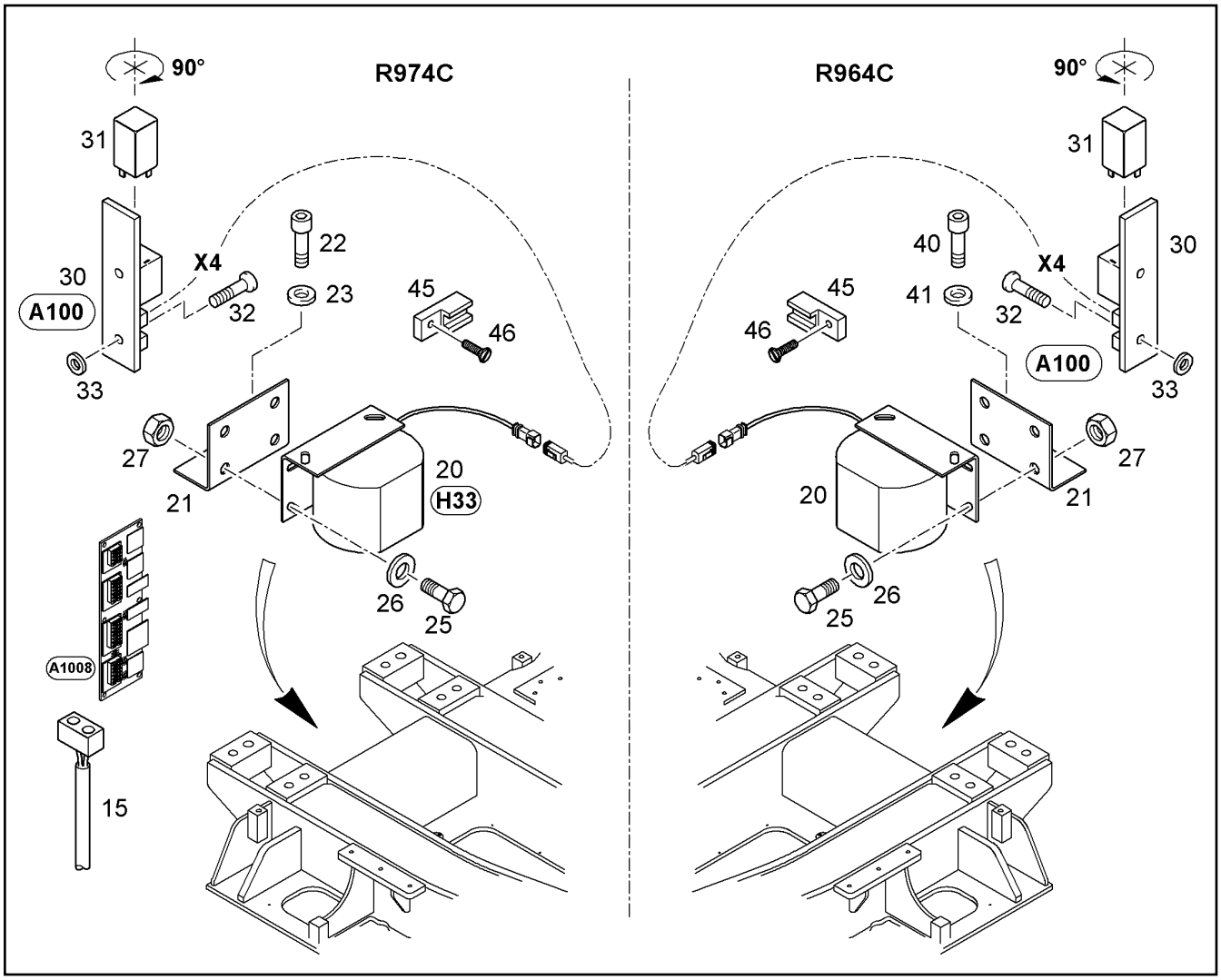

Pos.	Item	Quantity	Description	Descripción	Serie	K
20	10288438	1	BACK UP ALARM	ALARMA BACK UP		
21	9758750	1	CONSOLE	CONSOLA		1
22	4002519	2	CYLINDER SCREW ISO 4762 M16X25 10.9	TORNILLO CILINDRICO		
23	4901893	2	WASHER ISO 7090 16 - 200HV A4	ARANDELA		
25	4900089	4	HEX BOLT ISO 4017 M8x20 8.8 A2C	TORNILLO DE CABEZA HEXAGO		
26	10289803	10	WASHER ISO 7089 8 300HV	ARANDELA		
27	4000381	4	HEX NUT M8	TUERCA HEXAGONAL		
30	9202120	1	PLATINE	PLETINA (AMÉRICA)		2
31	6001418	1	TIME RELAY	RELE TIEMPO		2
32	4901886	2	PAN-HEAD SCREW ISO 7045 M4X6 4.8 H A2	TORNILLO ROSCACHAPA		
33	4001645	2	WASHER DIN 125 B 4,3 ST A3C	ARANDELA		
40	4043122	2	CYLINDER SCREW ISO 4762 M10X20 10.9	TORNILLO CILINDRICO		
41	10289803	2	WASHER ISO 7089 8 300HV	ARANDELA		
45	6203497	1	FASTENER	ELEMENTO DE FIJACION		
46	4601375	1	COUNTERSUNK SCREW ISO 7047 M5X10 4.	TORNILLO AVELLANADO		

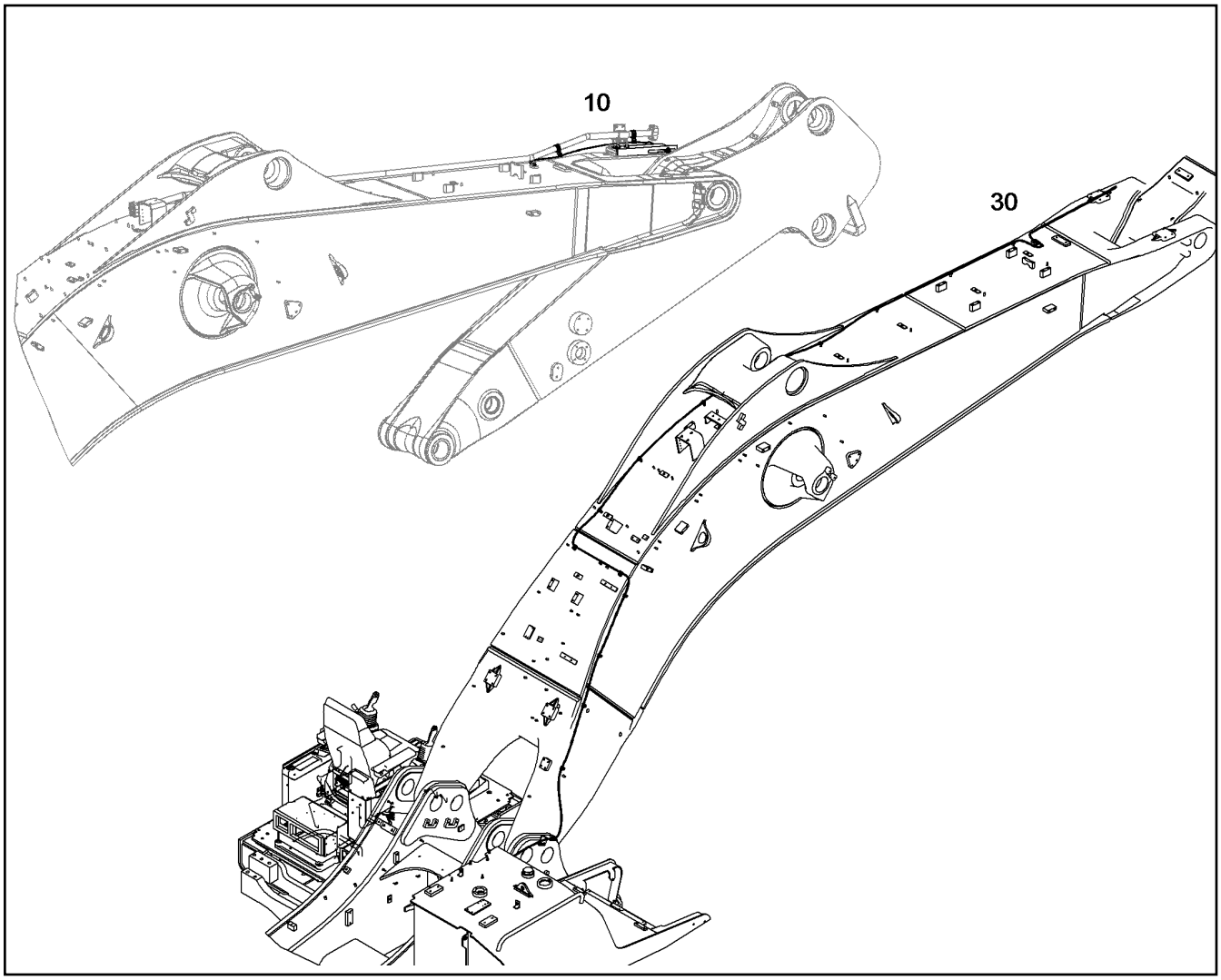

Pos.	Item	Quantity	Description	Descripción	Serie	K
10	10498274	1	ATTACHMENTS MOUNTING PARTS ⇨ ❑ 750	PIEZAS MONTAJE EQUIPAMIENT		1
30	10393720	1	ELECTRICAL SYSTEM ⇨ ❑ 749	INST.EL.		1

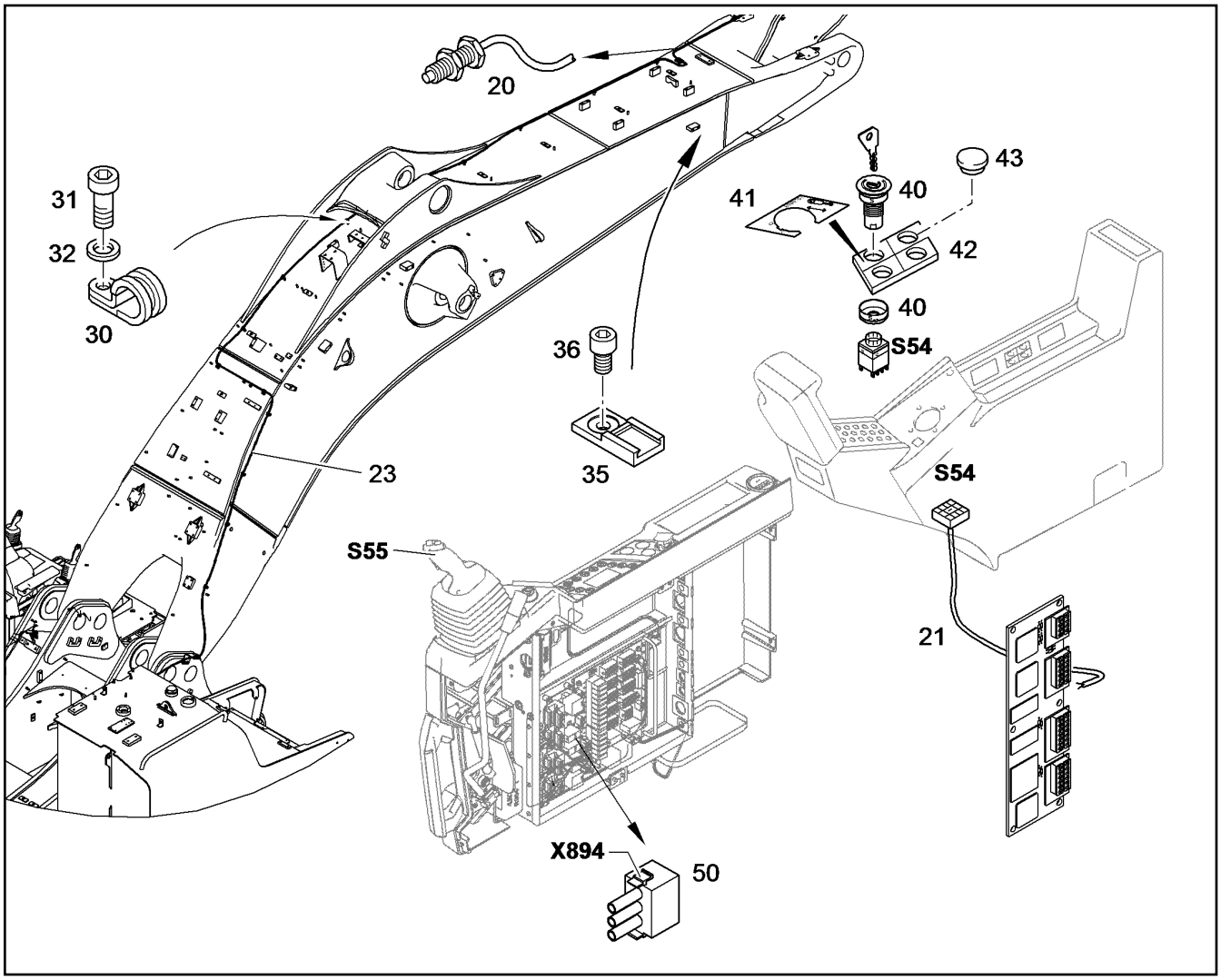

Pos.	Item	Quantity	Description	Descripción	Serie	K
20	9937495	1	PROXIMITY SWITCH W/ CONNECT.	DETECTOR PROXIMIDAD C.EN		1
21	10366624	1	WIRING HARNESS CAB S54-S55	JC CABINA		1
23	9864694	1	CABLE LOOM X148-B55	KIT DE CABLES		2
30	7362563	9	CLAMP DIN 3016 D1- 8 X 15 W1-2-CR	ABRAZADERA		
31	4902252	9	CYLINDER SCREW ISO 4762 M6X12 10.9 A2	TORNILLO CILINDRICO		
32	10289802	9	WASHER ISO 7089 6 300HV	ARANDELA		
35	6203497	1	FASTENER	ELEMENTO DE FIJACION		
36	10471469	1	CYLINDER SCREW BN 1206 M5X10 10.9	TORNILLO CILINDRICO		
40	9989179	1	SWITCH INSTALLATION ⇨ ❑ 735	MONTAJE INTERR.		1
41	9989151	1	ADHESIVE FOIL	LAMINA ADHESIVA		
42	7371141	1	SWITCH MODULE	MÓDULO CONMUT.		2
43	7371142	3	STOPPER PLUG	TAPON CIEGO		
50	10366248	1	CODING PLUG X894	ENCHUFE CODIF.		1

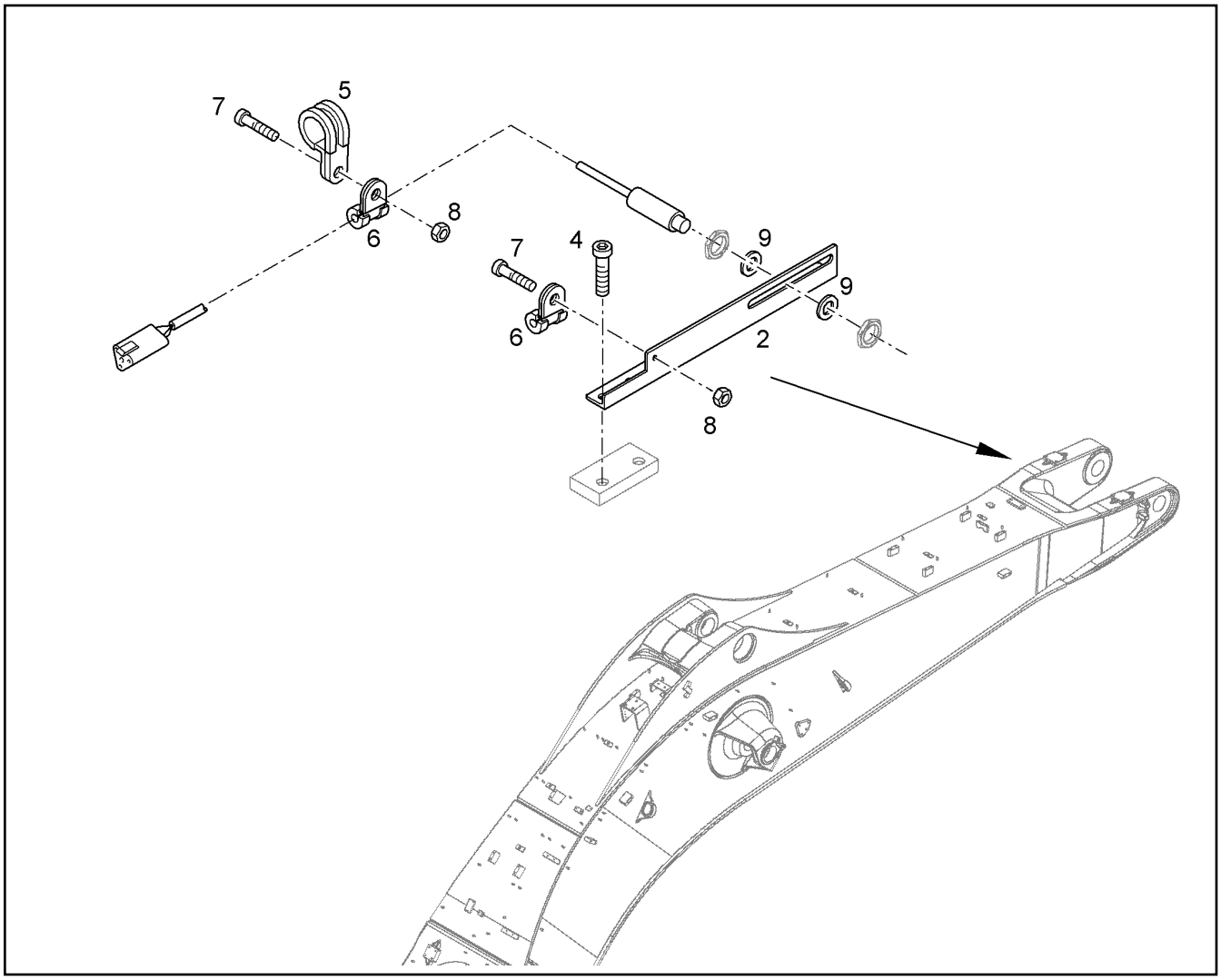

Pos.	Item	Quantity	Description	Descripción	Serie	K
2	10498769	1	CONSOLE	CONSOLA		1
4	7406028	2	CYLINDER SCREW ISO 4762 M12X45 10.9	TORNILLO CILINDRICO		
5	7362551	1	CLAMP DIN 3016 D1- 38 X 20 W1-2-CR	ABRAZADERA		
6	7381565	2	CLAMP DIN 3016 D1- 6 X 20 W1-2-CR	ABRAZADERA		
7	4901217	2	CYLINDER SCREW ISO 4762 M8X25 10.9 A2	TORNILLO CILINDRICO		
8	4901573	2	HEX NUT M8	TUERCA HEXAGONAL		
9	9586492	2	WASHER 18,5/31X5	ARANDELA		

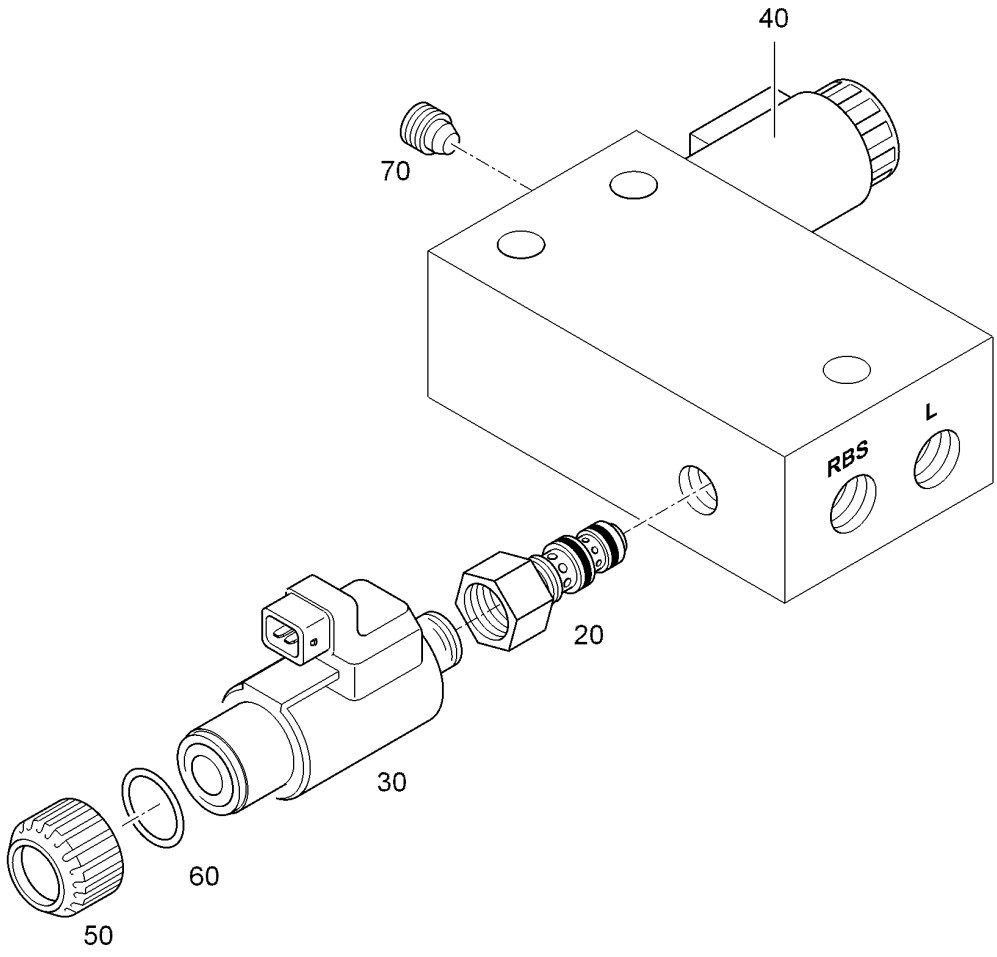

Pos.	Item	Quantity	Description	Descripción	Serie	K
20	10296042	1	2/2 WAY SEAT VALVE	VALVULA ASIENTO PASO 2/2		2
30	10011749	1	COIL	BOBINA		1
40	10475942	1	PRESSURE REDUCTION VALVE ⇨ ❑ 409	VALVULA REDUCTORA DE PRES		2
50	10332836	1	NUT	TUERCA MOLETEADA		1
60	10219619	1	O-RING	JUNTA TORICA		1
70	7624277	1	NOZZLE	BOQUILLA		

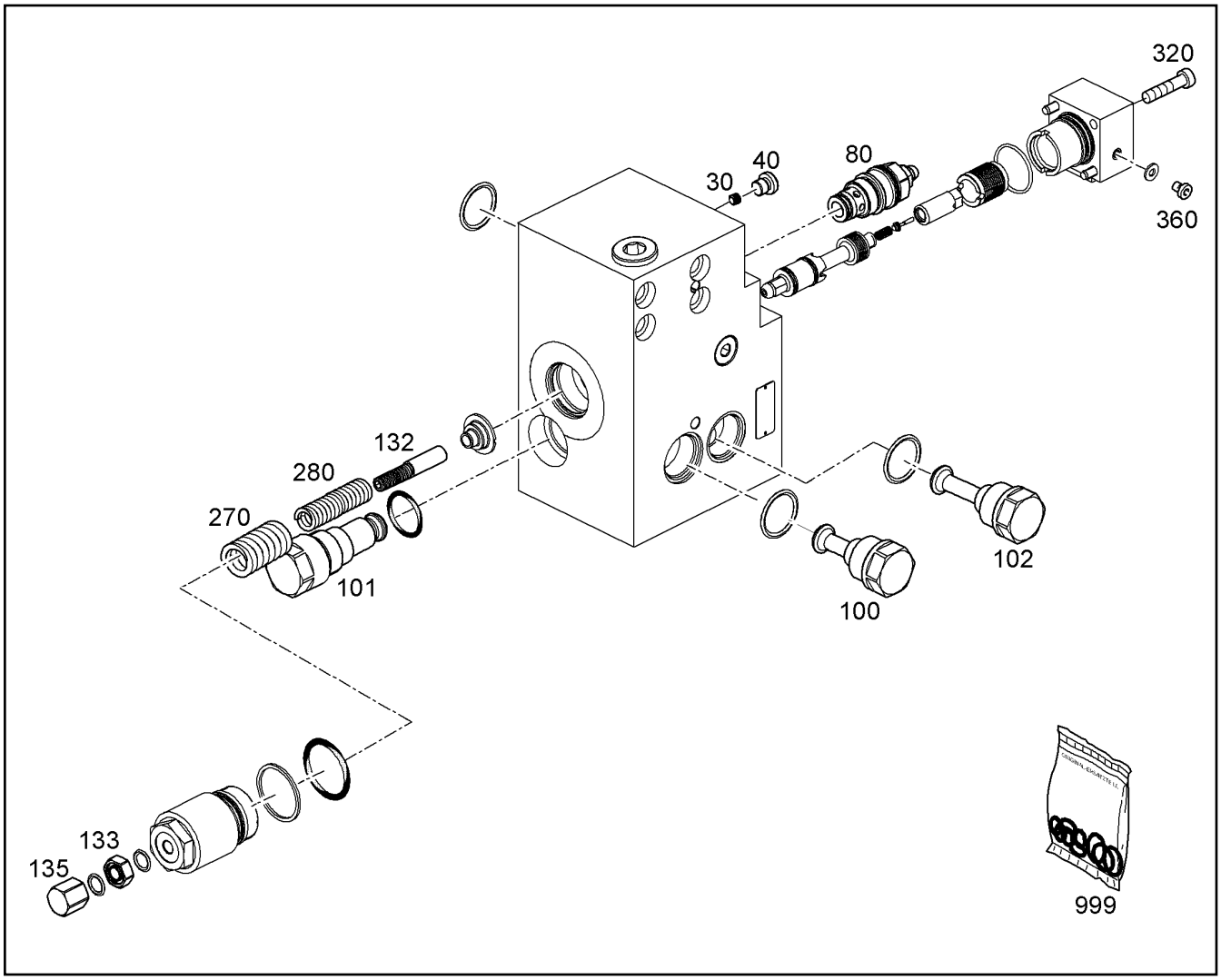

Pos.	Item	Quantity	Description	Descripción	Serie	K
30	10006191	1	NOZZLE	BOQUILLA		2
40	7013032	1	SCREW PLUG	TORNILLO DE CIERRE		
80	10289183	1	PRESSURE FEEDER VALVE ⇨ ❑ 754	VÁLVULA ALIM.PRESIÓN		2
100	5610135	1	SUPPLY VALVE ⇨ ❑ 412	VÁLVULA ALIM.		2
101	10294984	1	NON-RETURN VALVE	VALVULA DE RETENCION		2
102	10289185	1	NON-RETURN VALVE	VALVULA DE RETENCION		1
132	10278641	1	CHECK SCREW	TORNILLO DE AJUSTE		
133	7024940	1	HEX NUT	TUERCA HEXAGONAL		
135	10278642	1	CAP NUT	TUERCA DE SOMBRERETE		
270	10278643	1	PRESSURE SPRING	MUELLE COMPRESION		
280	10278644	1	PRESSURE SPRING	MUELLE COMPRESION		
320	4600335	4	CYLINDER SCREW ISO 4762 M8X45 10.9 A2	TORNILLO CILINDRICO		
360	7361391	1	VENTILATION SCREW M6x8 8.8	TORNILLO PURGADOR		
999	10278595	1	SEAL KIT	JUEGO JUNTAS		1

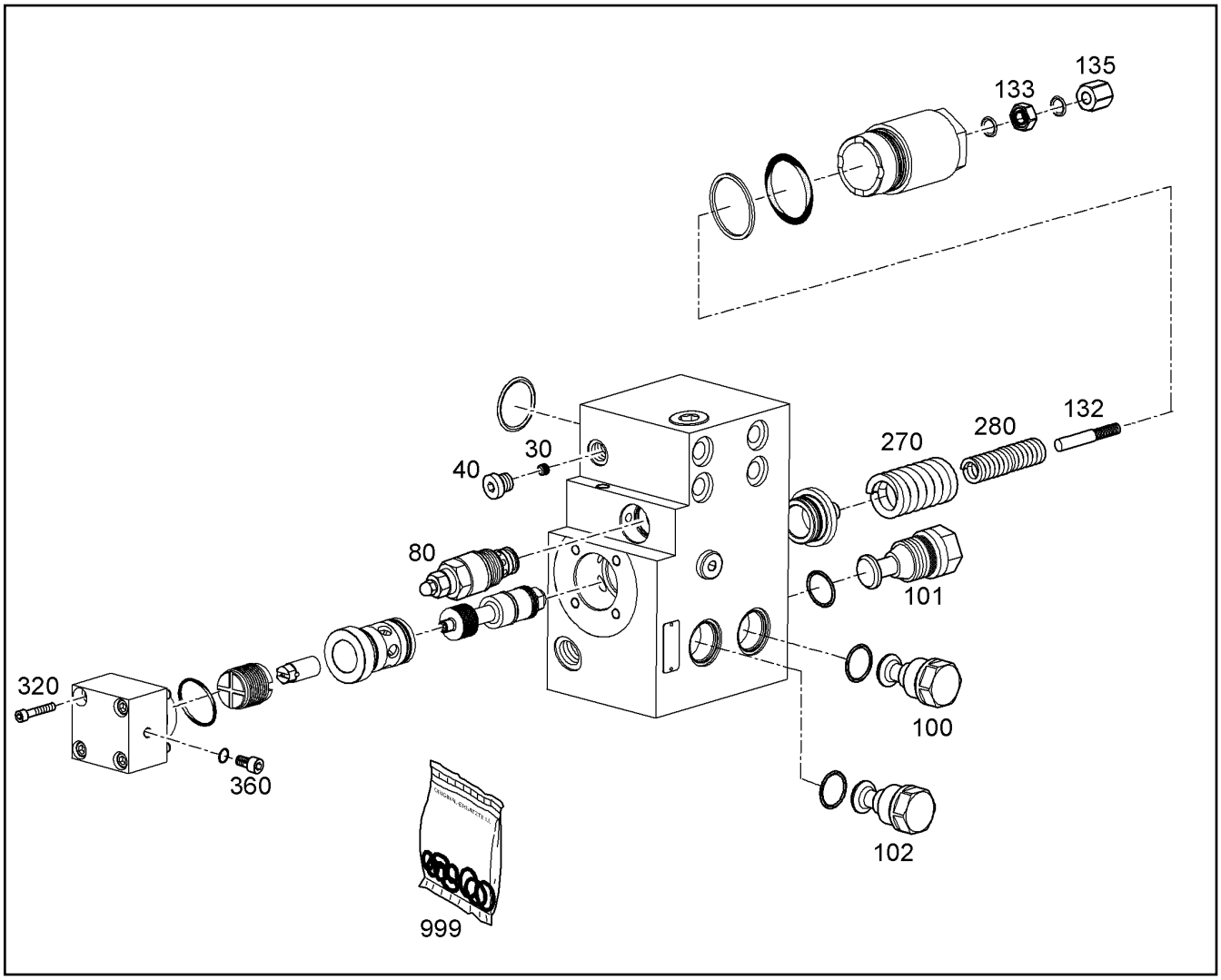

Pos.	Item	Quantity	Description	Descripción	Serie	K
30	10006191	1	NOZZLE	BOQUILLA		2
40	7013032	1	SCREW PLUG	TORNILLO DE CIERRE		
80	10289183	1	PRESSURE FEEDER VALVE ⇨ ❑ 754	VÁLVULA ALIM.PRESIÓN		2
100	5610135	1	SUPPLY VALVE ⇨ ❑ 412	VÁLVULA ALIM.		2
101	10294984	1	NON-RETURN VALVE	VALVULA DE RETENCION		2
102	10289185	1	NON-RETURN VALVE	VALVULA DE RETENCION		1
132	10278641	1	CHECK SCREW	TORNILLO DE AJUSTE		
133	7024940	1	HEX NUT	TUERCA HEXAGONAL		
135	10278642	1	CAP NUT	TUERCA DE SOMBRERETE		
270	10278643	1	PRESSURE SPRING	MUELLE COMPRESION		
280	10278644	1	PRESSURE SPRING	MUELLE COMPRESION		
320	4600335	4	CYLINDER SCREW ISO 4762 M8X45 10.9 A2	TORNILLO CILINDRICO		
360	7361391	1	VENTILATION SCREW M6x8 8.8	TORNILLO PURGADOR		
999	10278595	1	SEAL KIT	JUEGO JUNTAS		1

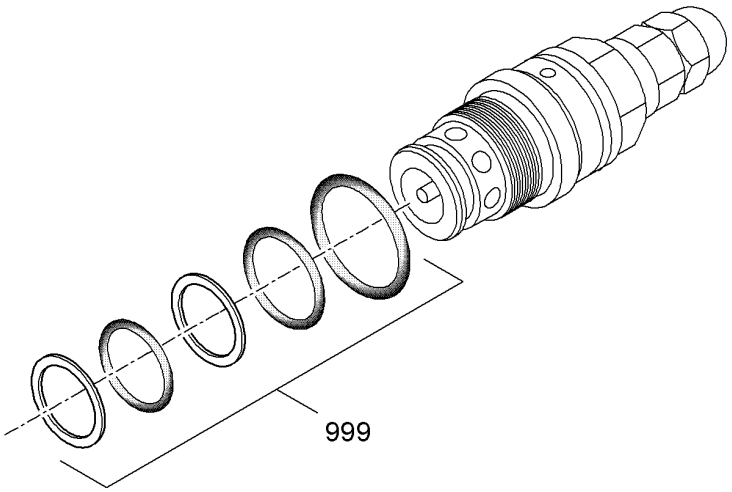

Pos.	Item	Quantity	Description	Descripción	Serie	K
999	10332087	1	SEAL KIT PRESSURE VALVE	JJ VÁLVULA PRESIÓN		1

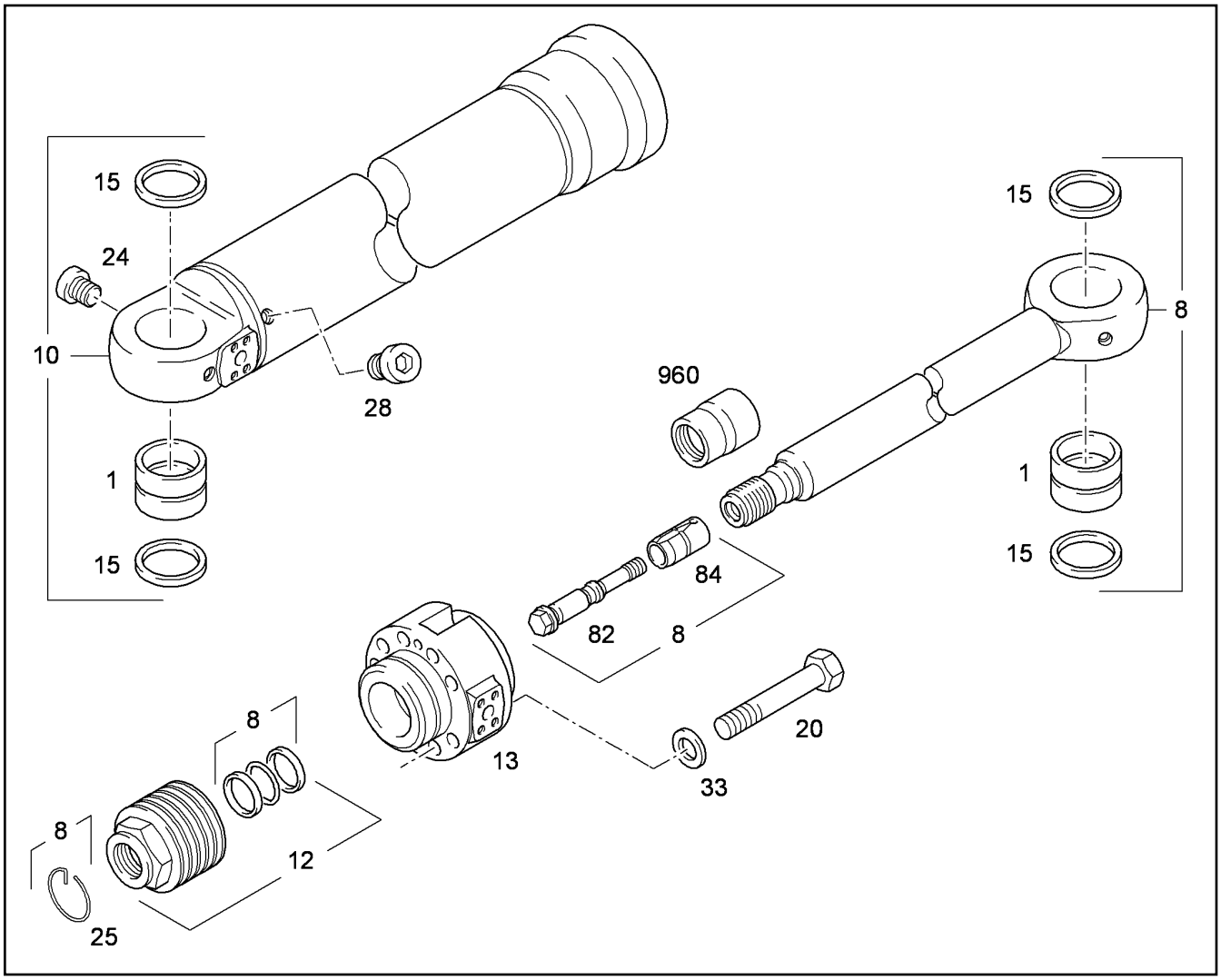

Pos.	Item	Quantity	Description	Descripción	Serie	K
1	9827152	2	BUSH	CASQUILLO		1
8	94020365	1	PISTON ROD	BIELA		
10	94020204	1	CYLINDER	CILINDRO		
12	9588147	1	PISTON 220MM ⇨ ❑ 761	EMBOLO		
13	9631985	1	PISTON ROD BEARING 150/220 ⇨ ❑ 764	ALOJAMIENTO DE BIELA		
15	7017199	4	RADIAL SEAL X130X160X12	ANILLO JUNTA RADIAL		1
20	10425632	9	HEX BOLT ISO 4014 M30X180 10.9 FLZN 100	TORNILLO DE CABEZA HEXAGO		
24	7362674	1	SCREW PLUG	TORNILLO DE CIERRE		
25	4000777	1	RING DIN 70951 109	ANILLO		
28	9613452	1	VENTILATION SCREW G 1/4'X15 ⇨ ❑ 766	TORNILLO PURGADOR		
33	9918231	9	WASHER 31/52X6	ARANDELA		
82	9926801	1	SCREW	TORNILLO		
84	9926802	1	SLEEVE	CASQUILLO.		2
960	94020571	1	MOUNTING SLEEVE	CASQUILLO DE MONTAJE		

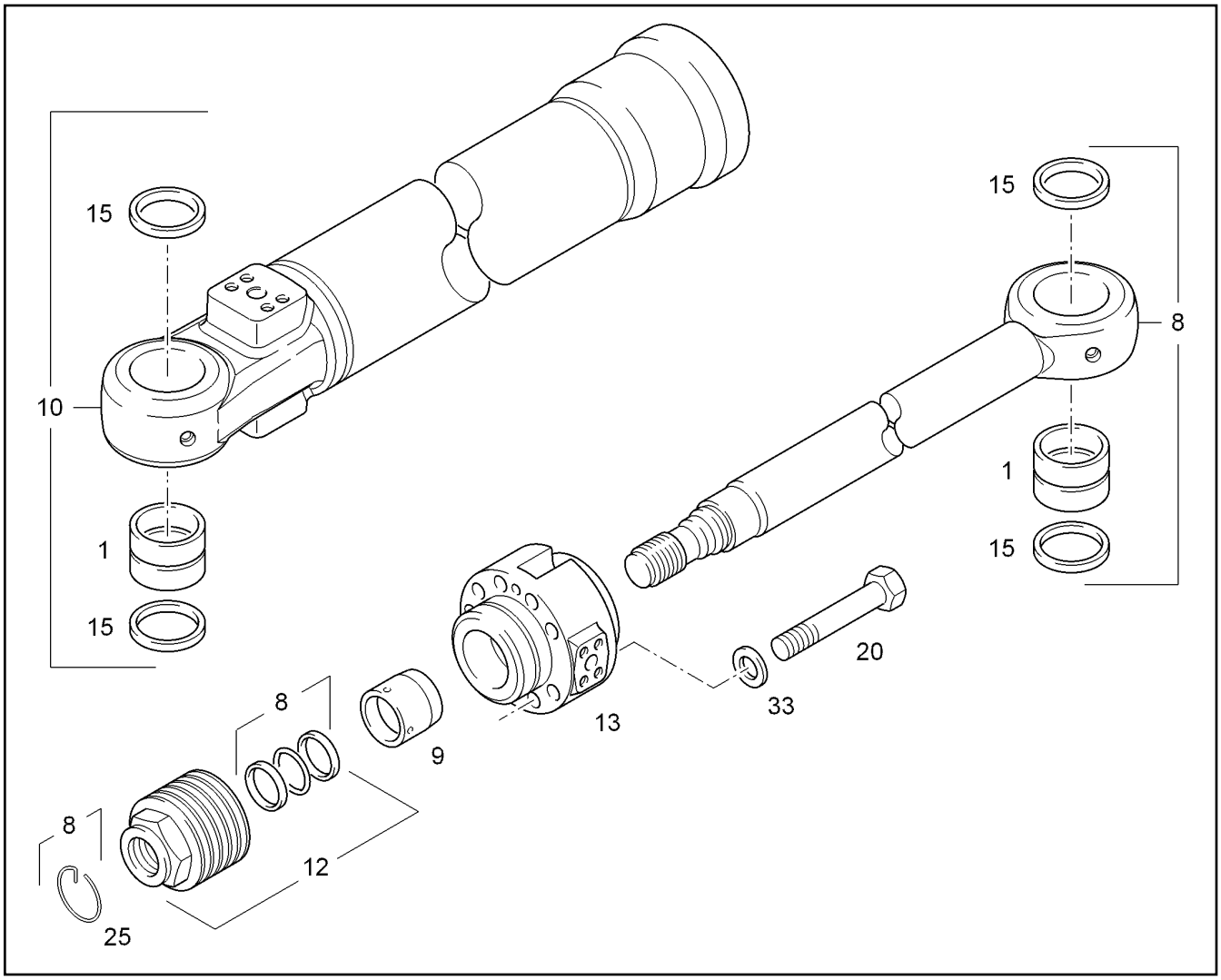

Pos.	Item	Quantity	Description	Descripción	Serie	K
1	9589092	2	BUSH RAUTE 120/150X105	CASQUILLO		
8	9593854	1	PISTON ROD	BIELA		
9	9907856	1	SLEEVE	CASQUILLO.		2
10	9593856	1	CYLINDER	CILINDRO		
12	9589256	1	PISTON 190MM ⇨ ❑ 762	EMBOLO		
13	9907890	1	PISTON ROD BEARING 125/190 ⇨ ❑ 765	ALOJAMIENTO DE BIELA		
15	7362184	4	RADIAL SEAL X120X150X12	ANILLO JUNTA RADIAL		1
20	4000563	11	HEX BOLT ISO 4014 M24X160 10.9	TORNILLO DE CABEZA HEXAGO		
25	4001869	1	RING DIN 70951 89	ANILLO		
33	9918230	11	WASHER 24,5/40X5	ARANDELA		

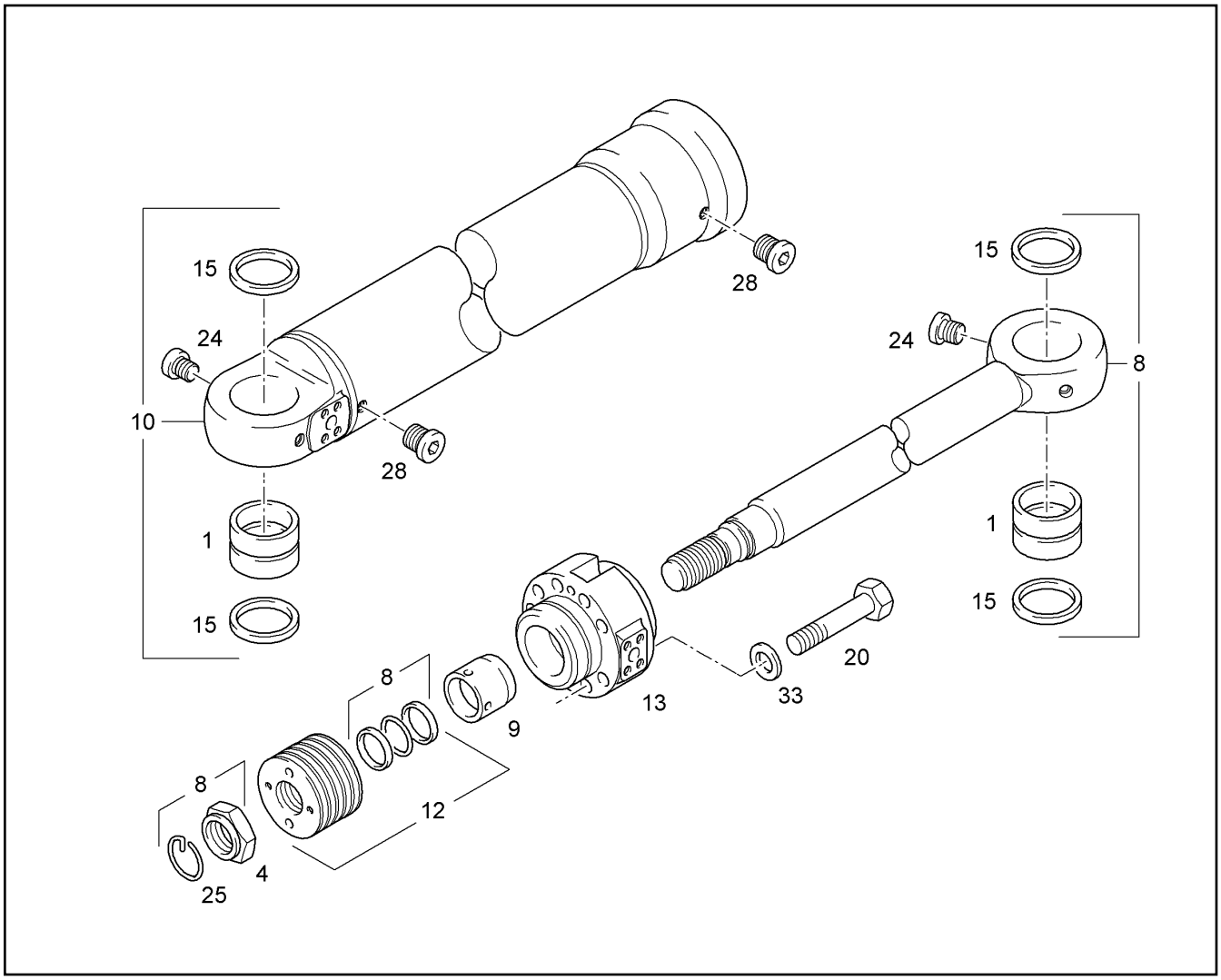

Pos.	Item	Quantity	Description	Descripción	Serie	K
1	9233882	2	BUSH SPIRAL 120/150X105	CASQUILLO		1
4	9101411	1	PISTON NUT	TUERCA DE PISTON		
8	9064092	1	PISTON ROD	BIELA		2
9	9907856	1	SLEEVE	CASQUILLO.		2
10	9064093	1	CYLINDER	CILINDRO		2
12	9907680	1	PISTON 190 MM ⇨ ❑ 763	EMBOLO		2
13	9907890	1	PISTON ROD BEARING 125/190 ⇨ ❑ 765	ALOJAMIENTO DE BIELA		
15	7362184	4	RADIAL SEAL X120X150X12	ANILLO JUNTA RADIAL		1
20	4000563	11	HEX BOLT ISO 4014 M24X160 10.9	TORNILLO DE CABEZA HEXAGO		
24	7362674	2	SCREW PLUG	TORNILLO DE CIERRE		
25	4242028	1	RING DIN 70951 93	ANILLO		
28	9613452	2	VENTILATION SCREW G 1/4'X15 ⇨ ❑ 766	TORNILLO PURGADOR		
33	9918230	11	WASHER 24,5/40X5	ARANDELA		

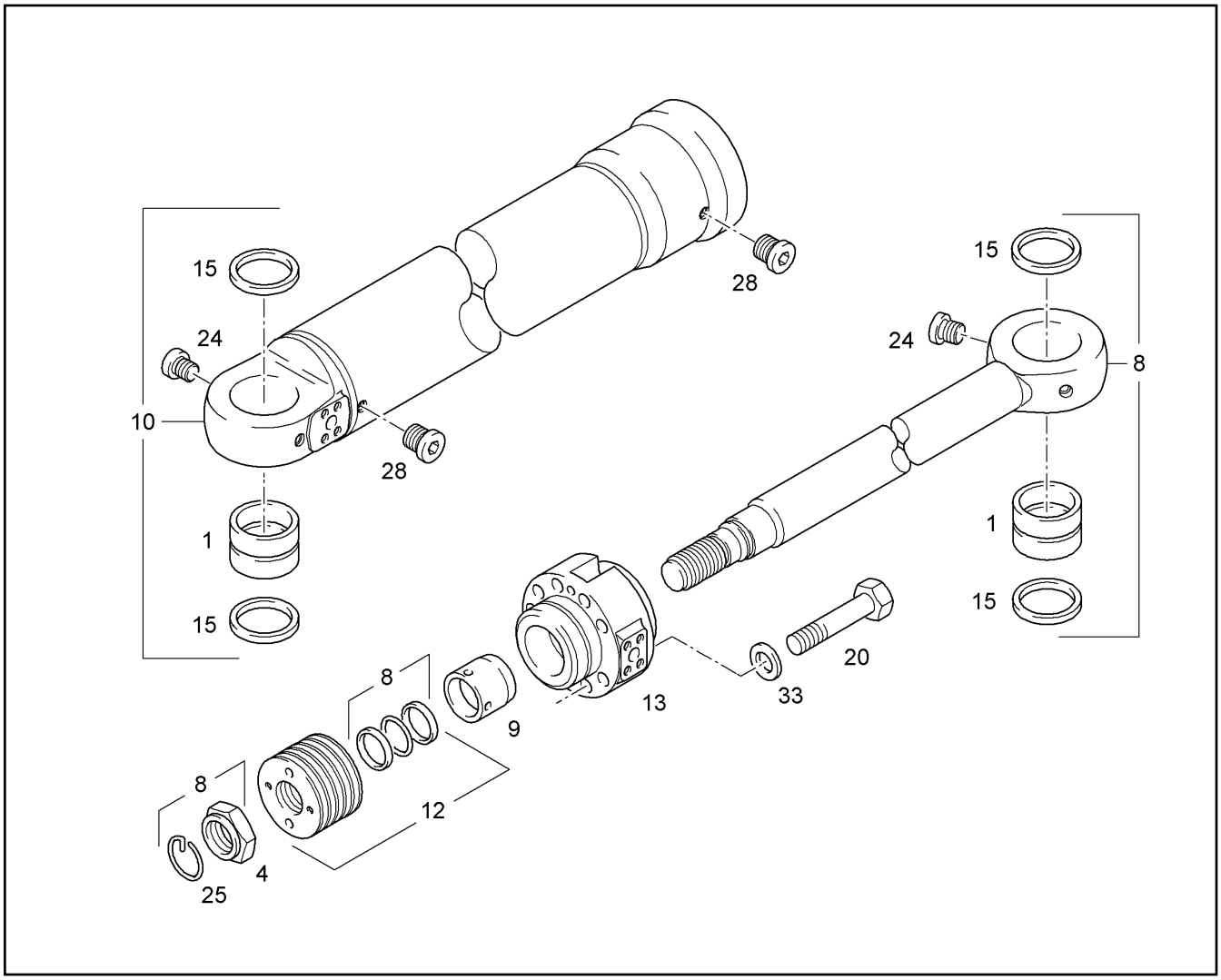

Pos.	Item	Quantity	Description	Descripción	Serie	K
1	9233882	2	BUSH SPIRAL 120/150X105	CASQUILLO		1
4	9101411	1	PISTON NUT	TUERCA DE PISTON		
8	9064092	1	PISTON ROD	BIELA		2
9	9907856	1	SLEEVE	CASQUILLO.		2
10	9064093	1	CYLINDER	CILINDRO		2
12	9907680	1	PISTON 190 MM ⇨ ❑ 763	EMBOLO		2
13	9907890	1	PISTON ROD BEARING 125/190 ⇨ ❑ 765	ALOJAMIENTO DE BIELA		
15	7362184	4	RADIAL SEAL X120X150X12	ANILLO JUNTA RADIAL		1
20	4000563	11	HEX BOLT ISO 4014 M24X160 10.9	TORNILLO DE CABEZA HEXAGO		
24	7362674	2	SCREW PLUG	TORNILLO DE CIERRE		
25	4242028	1	RING DIN 70951 93	ANILLO		
28	9613452	2	VENTILATION SCREW G 1/4'X15 ⇨ ❑ 766	TORNILLO PURGADOR		
33	9918230	11	WASHER 24,5/40X5	ARANDELA		

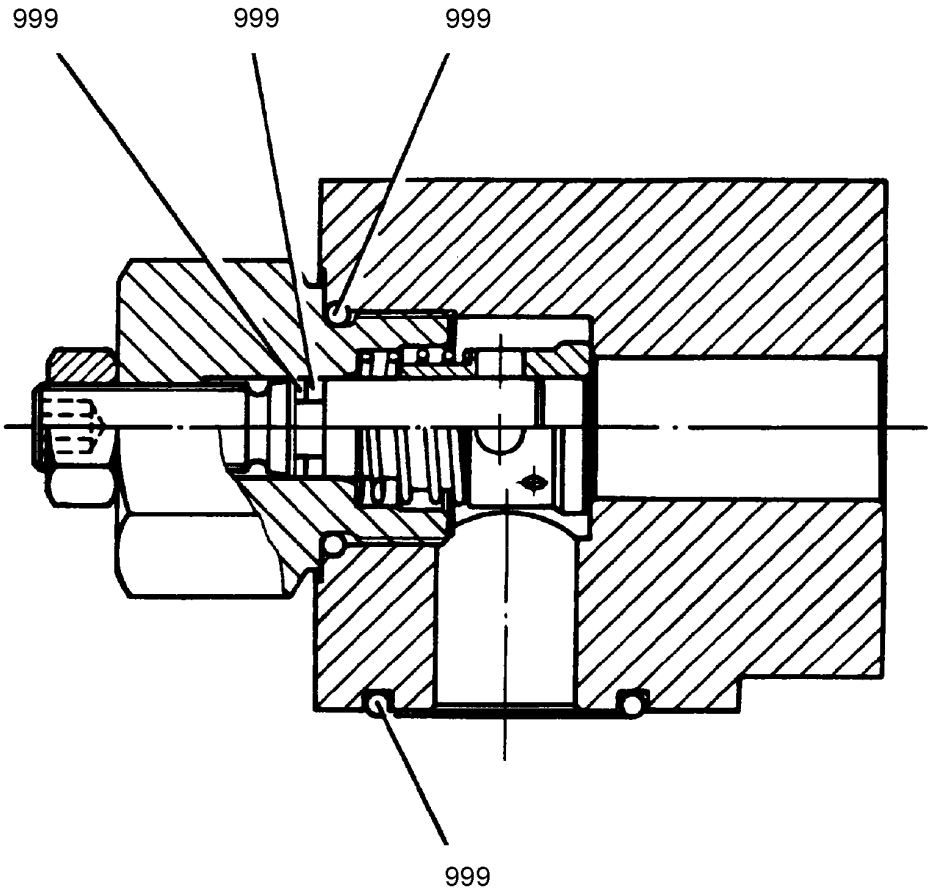

Pos.	Item	Quantity	Description	Descripción	Serie	K
999	9270390	1	SEAL KIT DRV	JJ VÁLVULA RETENCIÓN ESTRA		1

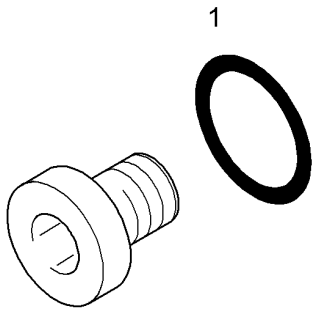

Pos.	Item	Quantity	Description	Descripción	Serie	K
1	5602583	1	SEALING RING DIN 3869 11,6X16,5X 1,5 -14-	JUNTA ANULAR		1

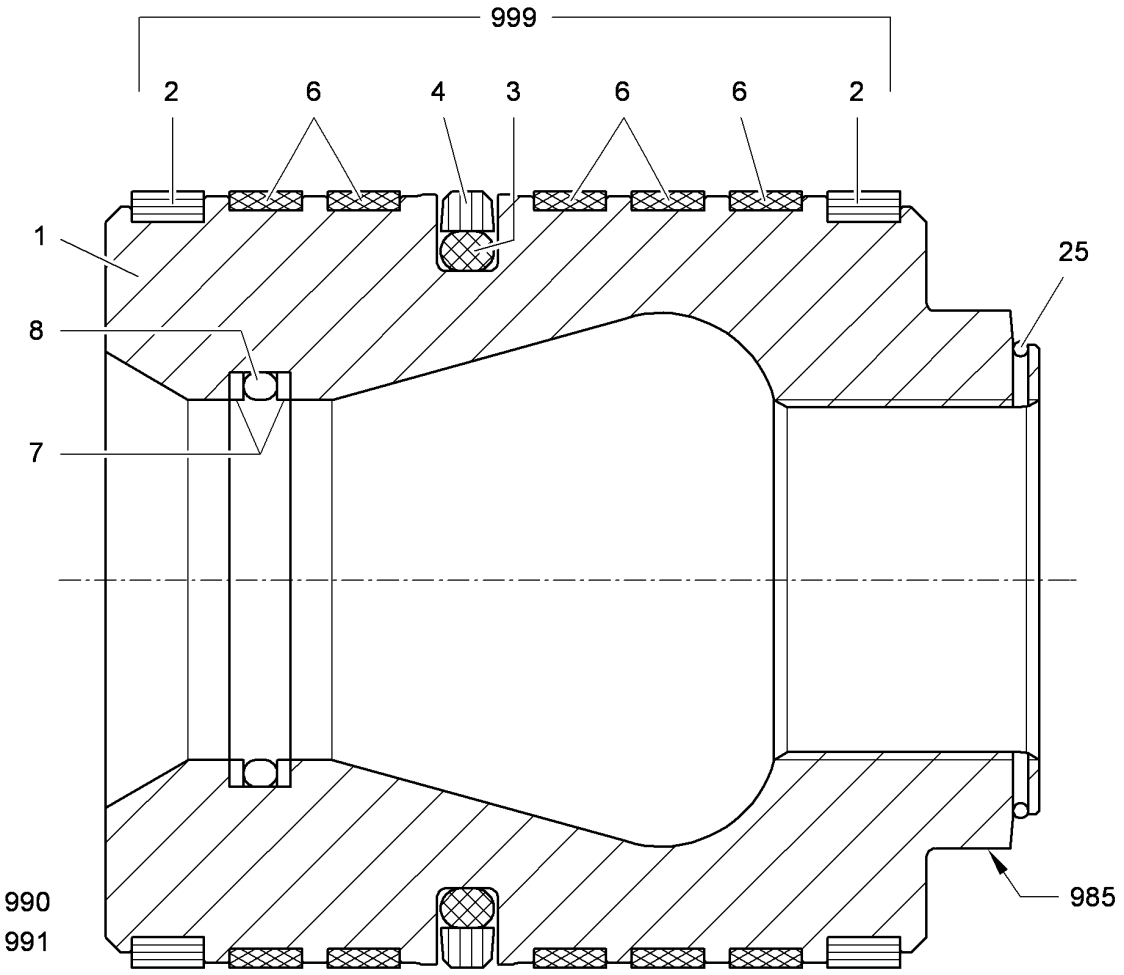

Pos.	Item	Quantity	Description	Descripción	Serie	K
1		1	PISTON	EMBOLO		
2	9177720	2	PISTON GUIDE RING 220X212X9,7	ANILLO DE GUIA DE EMBOLO		1
3	7002056	1	O-RING 196,22X7	JUNTA TORICA		1
4	7002063	1	TURCON GLYD RING 220X199X8,1	GLYDRING TURCON		1
6	7002939	5	PISTON GUIDE RING	ANILLO DE GUIA DE EMBOLO		1
7	7004043	2	SUPPORTING RING	ANILLO SOPORTE		1
8	7000563	1	O-RING	JUNTA TORICA		1
25	4000777	1	RING DIN 70951 109	ANILLO		
985	9281614	1	PISTON WRENCH SW150	LLAVE MONTAJE ÉMBOLO		
990	9113008	1	MOUNTING SLEEVE	CASQUILLO DE MONTAJE		
991	9113009	1	EXPANDING BUSH	CASQUILLO EXTENSIBLE		
999	9114437	1	SEALING SET FOR PISTON 220MM	JJ ÉMBOLO		1

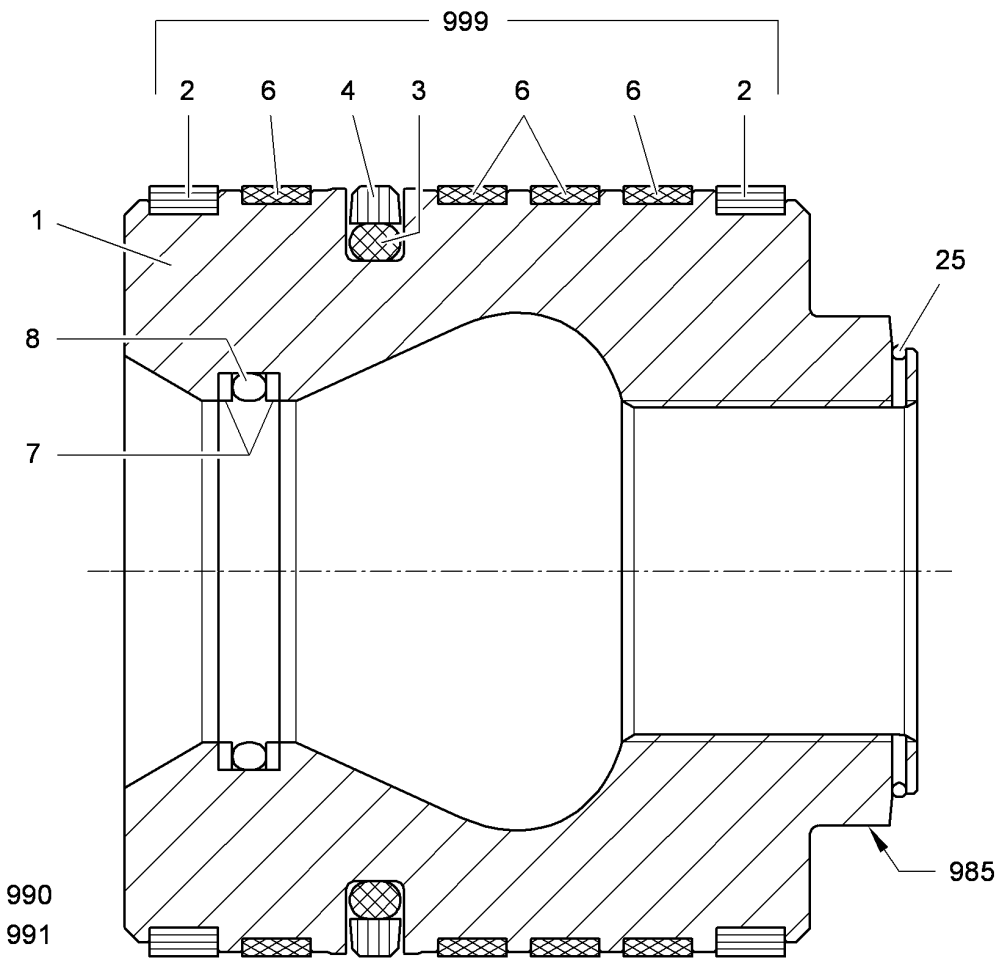

Pos.	Item	Quantity	Description	Descripción	Serie	K
	9589257	1	PISTON	EMBOLO		
2	9177723	2	PISTON GUIDE RING 190X182X9,7	ANILLO DE GUIA DE EMBOLO		1
3	7023698	1	O-RING 170,82X7	JUNTA TORICA		1
4	7023699	1	TURCON GLYD RING 190X169X8,1	GLYDRING TURCON		1
6	7003455	4	PISTON GUIDE RING	ANILLO DE GUIA DE EMBOLO		1
7	7006870	2	SUPPORTING RING	ANILLO SOPORTE		1
8	7264087	1	O-RING 88X3	JUNTA TORICA		1
25	4001869	1	RING DIN 70951 89	ANILLO		
985	9600769	1	PISTON WRENCH SW 120	LLAVE MONTAJE ÉMBOLO		
990	9907684	1	MOUNTING SLEEVE	CASQUILLO DE MONTAJE		
991	9907701	1	EXPANDING BUSH	CASQUILLO EXTENSIBLE		2
999	9064090	1	SEALING SET FOR PISTON 190MM	JJ ÉMBOLO		1

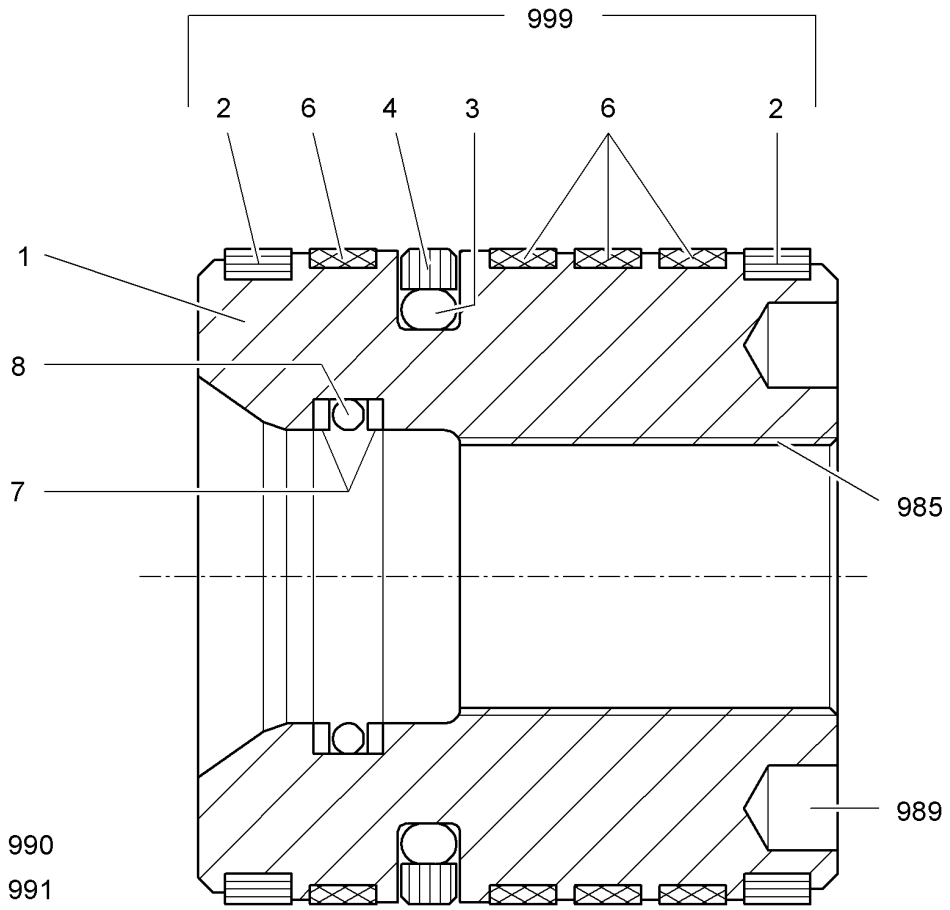

Pos.	Item	Quantity	Description	Descripción	Serie	K
1	9907679	1	PISTON	EMBOLO		1
2	9177723	2	PISTON GUIDE RING 190X182X9,7	ANILLO DE GUIA DE EMBOLO		1
3	7023698	1	O-RING 170,82X7	JUNTA TORICA		1
4	7023699	1	TURCON GLYD RING 190X169X8,1	GLYDRING TURCON		1
6	7003455	4	PISTON GUIDE RING	ANILLO DE GUIA DE EMBOLO		1
7	7003559	2	SUPPORTING RING	ANILLO SOPORTE		1
8	7264091	1	O-RING	JUNTA TORICA		1
985	9921126	1	MOUNTING KEY PISTON NUT	LLAVE MONTAJE TUERCA ÉMB		
989	8007367	1	MOUNTING SPANNER	LLAVE DE MONTAJE		
990	9907684	1	MOUNTING SLEEVE	CASQUILLO DE MONTAJE		
991	9907701	1	EXPANDING BUSH	CASQUILLO EXTENSIBLE		2
999	9064090	1	SEALING SET FOR PISTON 190MM	JJ ÉMBOLO		1

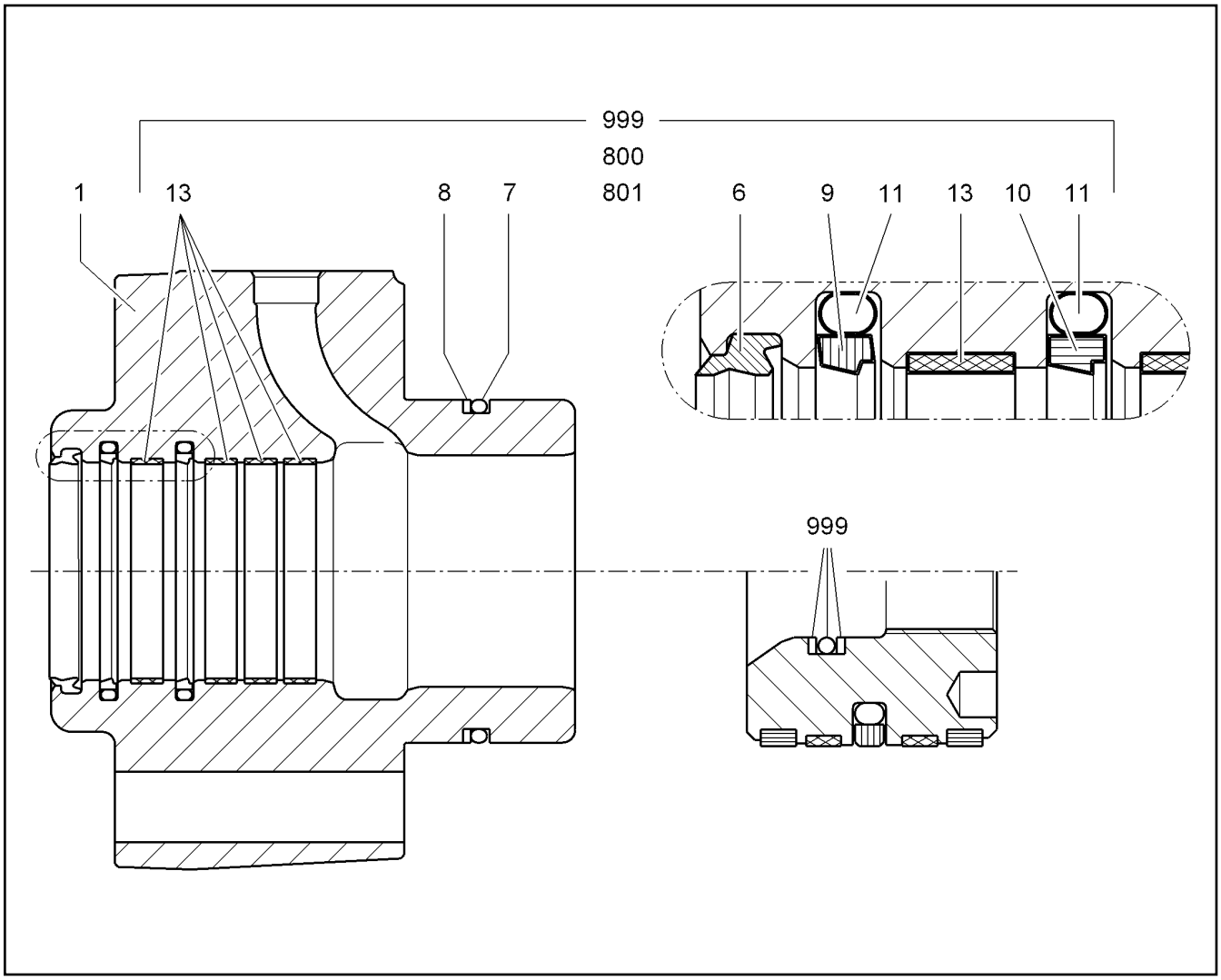

Pos.	Item	Quantity	Description	Descripción	Serie	K
1		1	BEARING HEAD	CABEZA DE COJINETE		
6	10410984	1	SCRAPER RING 150x166x9,5	ANILLO RASCADOR		1
7	7000583	1	O-RING	JUNTA TORICA		1
8	7002239	1	SUPPORTING RING 210X220X2,5	ANILLO SOPORTE		1
9	7014467	1	RIMSEAL 150,0x170,5x8,1	JUNTA RIM		1
10	7014466	1	TURCON-STEPSEAL K 150,0x170,5x8,1	TURCON-STEPSEAL		1
11	7264438	2	O-RING 158,12X7	JUNTA TORICA		1
13	7011356	4	GUIDE RING 150X155X15	ANILLO GUIA		1
800	8300004	1	LH-MOLYKOTE LONGTERM	PASTA LUBR.ALTA EFICACIA LH		
801	8300005	1	LH-RUST PROTECTION	PROT.ANTICORR. LH		
999	9631986	1	SEAL KIT F.PISTON ROD BEARING 150/220	JJ SOPORTE VÁSTAGO PISTÓN		2

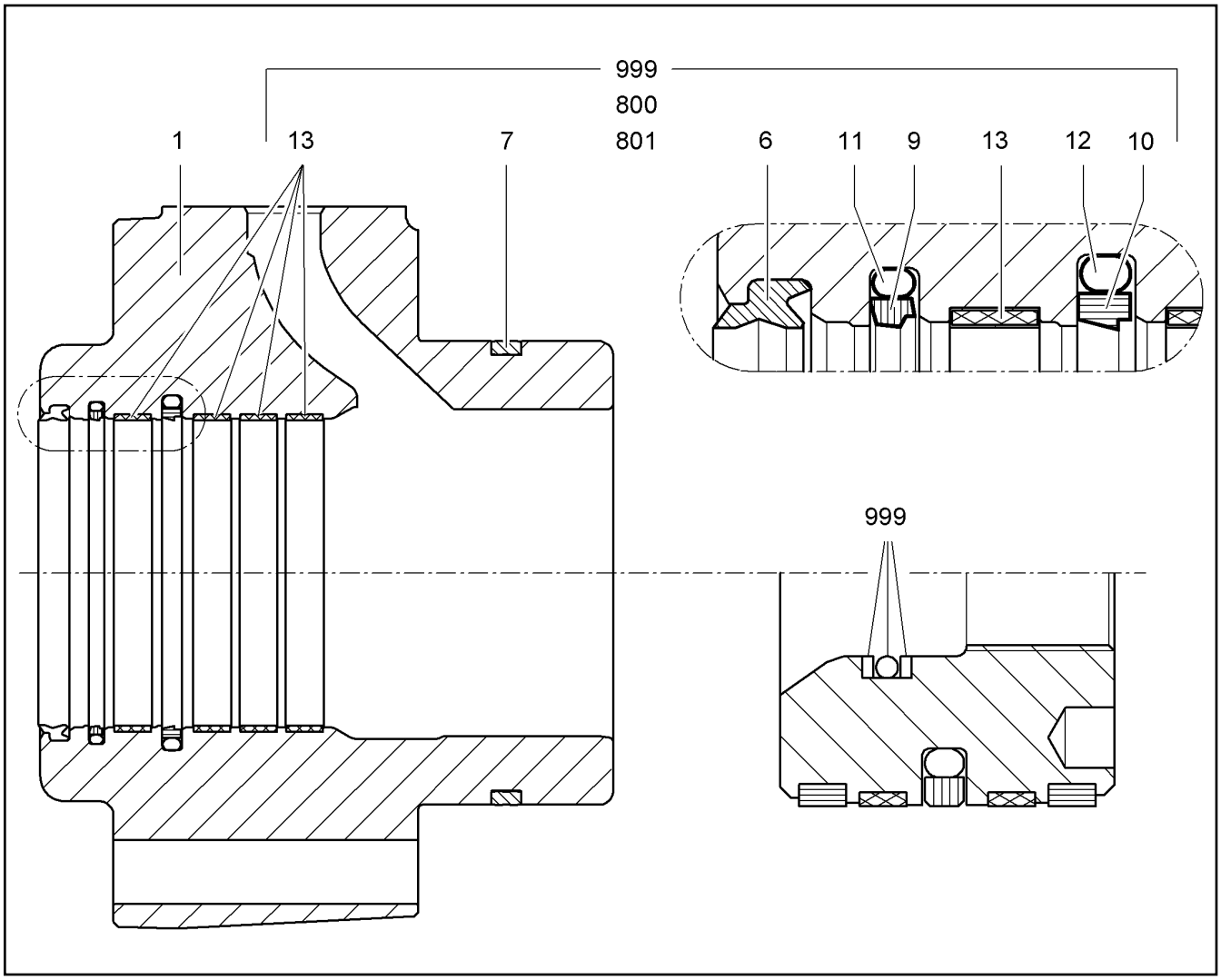

Pos.	Item	Quantity	Description	Descripción	Serie	K
1		1	BEARING HEAD	CABEZA DE COJINETE		2
6	7023590	1	SCRAPER RING 125X137,2X8,1	ANILLO RASCADOR		1
7	7023589	1	SEALING RING 190X178,4X12,3	JUNTA ANULAR		1
9	7010659	1	RIMSEAL 125,0x140,1x6,3	JUNTA RIM		1
10	7017712	1	TURCON-STEPSEAL K 125,0x145,5x8,1	TURCON-STEPSEAL		1
11	7001609	1	O-RING	JUNTA TORICA		1
12	7264422	1	O-RING 132,7X7,00	JUNTA TORICA		1
13	7005250	4	GUIDE RING	ANILLO GUIA		1
800	8300004	1	LH-MOLYKOTE LONGTERM	PASTA LUBR.ALTA EFICACIA LH		
801	8300005	1	LH-RUST PROTECTION	PROT.ANTICORR. LH		
999	9064091	1	SEAL KIT F.PISTON ROD BEARING 125/190	JJ SOPORTE VÁSTAGO PISTÓN		1

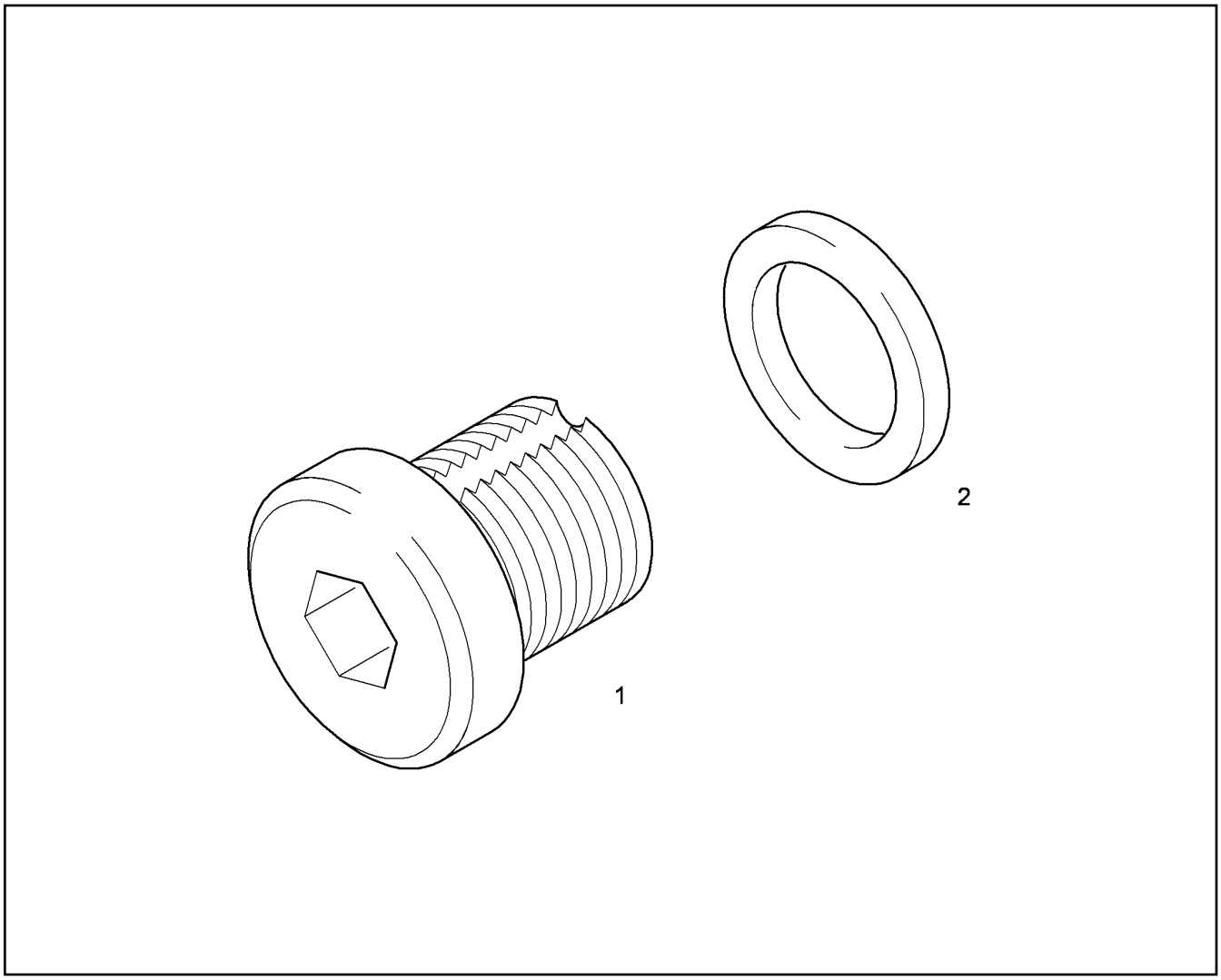

Pos.	Item	Quantity	Description	Descripción	Serie	K
1		1	VENTILATION SCREW	TORNILLO PURGADOR		
2	5602583	1	SEALING RING DIN 3869 11,6X16,5X 1,5 -14-	JUNTA ANULAR		1

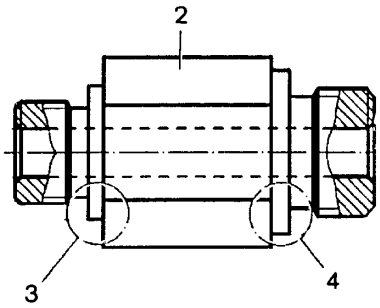

Pos.	Item	Quantity	Description	Descripción	Serie	K
2		1	INTERMEDIATE FITTING	RACOR INTERMEDIO		1
3	7371654	1	SEALING RING DIN 3869 14,7X18,9X 1,5 -17-	JUNTA ANULAR		1
4	7371651	1	SEALING RING 21	JUNTA ANULAR		1

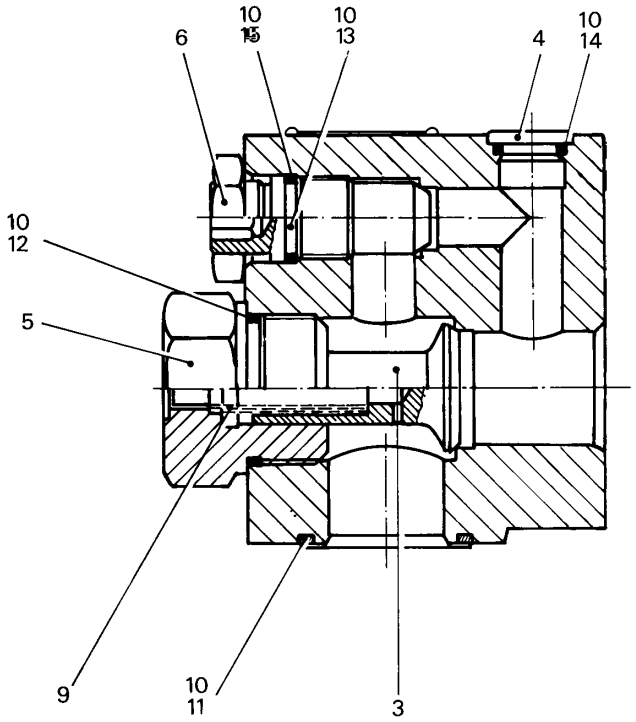

Pos.	Item	Quantity	Description	Descripción	Serie	K
3	7362135	1	TAPER d=38x66	CONO		1
4	7004178	1	SCREW PLUG	TORNILLO DE CIERRE		
5	7016136	1	SCREW PLUG	TORNILLO DE CIERRE		
6	4117027	1	HEX NUT ISO 8675 M 24 X1,5 -10	TUERCA HEXAGONAL		
9	7361568	1	PRESSURE SPRING 2x15x68	MUELLE COMPRESION		
10	5604377	1	SEALING SET VALVE ⇨ ❑ 723	JJ VÁLVULA		1
11	7360048	1	O-RING 47,22X3,53	JUNTA TORICA		1
12	7264509	1	O-RING 44X3	JUNTA TORICA		1
13	7001891	1	O-RING 23,47X2,62	JUNTA TORICA		1
14	7363015	1	LOCKING PLUG	TAPON DE CIERRE		
15	7007838	1	SUPPORTING RING	ANILLO SOPORTE		1

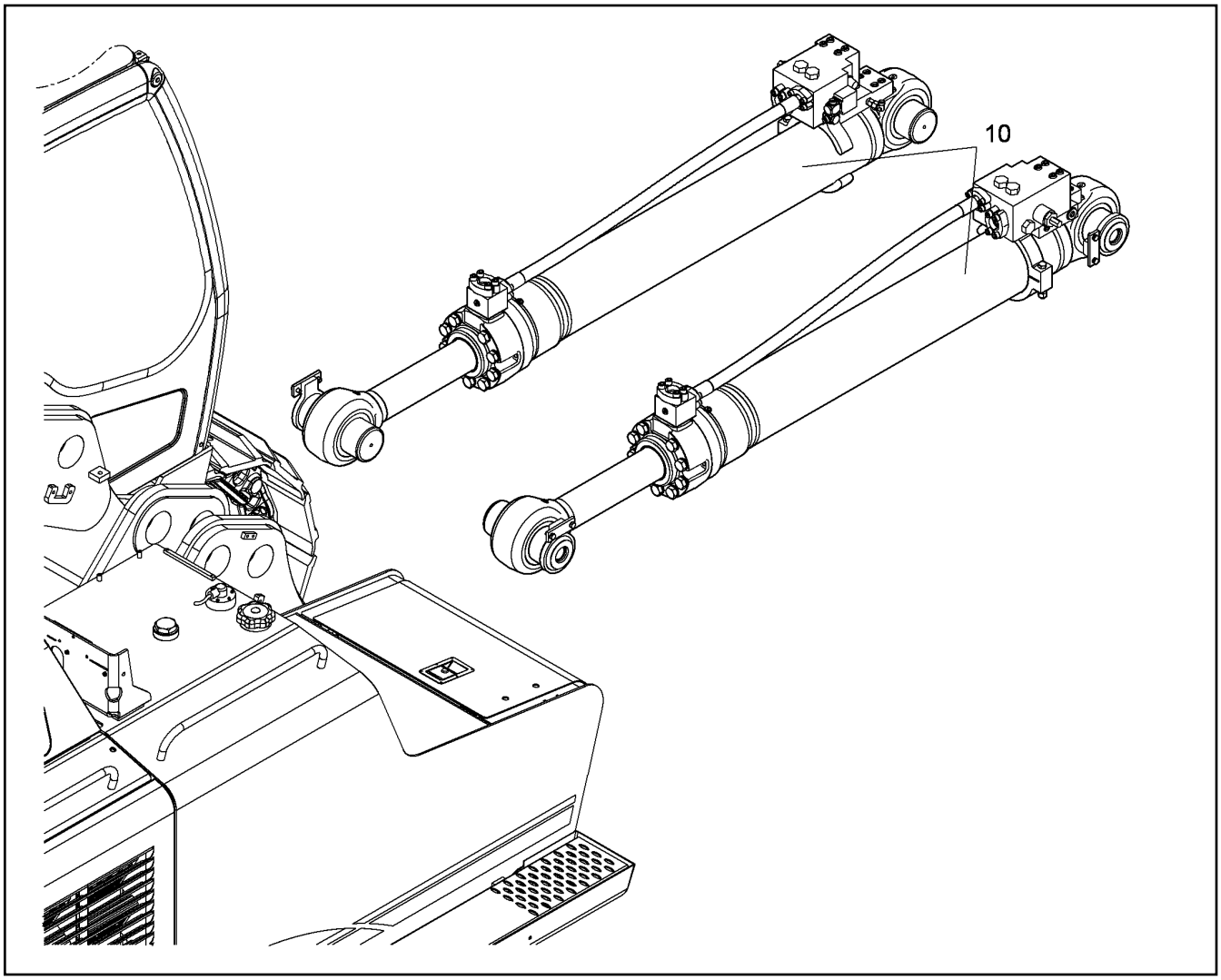

Pos.	Item	Quantity	Description	Descripción	Serie	K
10	10358731	1	HOIST CYLINDERS DIA.190 ⇨ ❑ 770	CILINDRO ELEVADOR		1

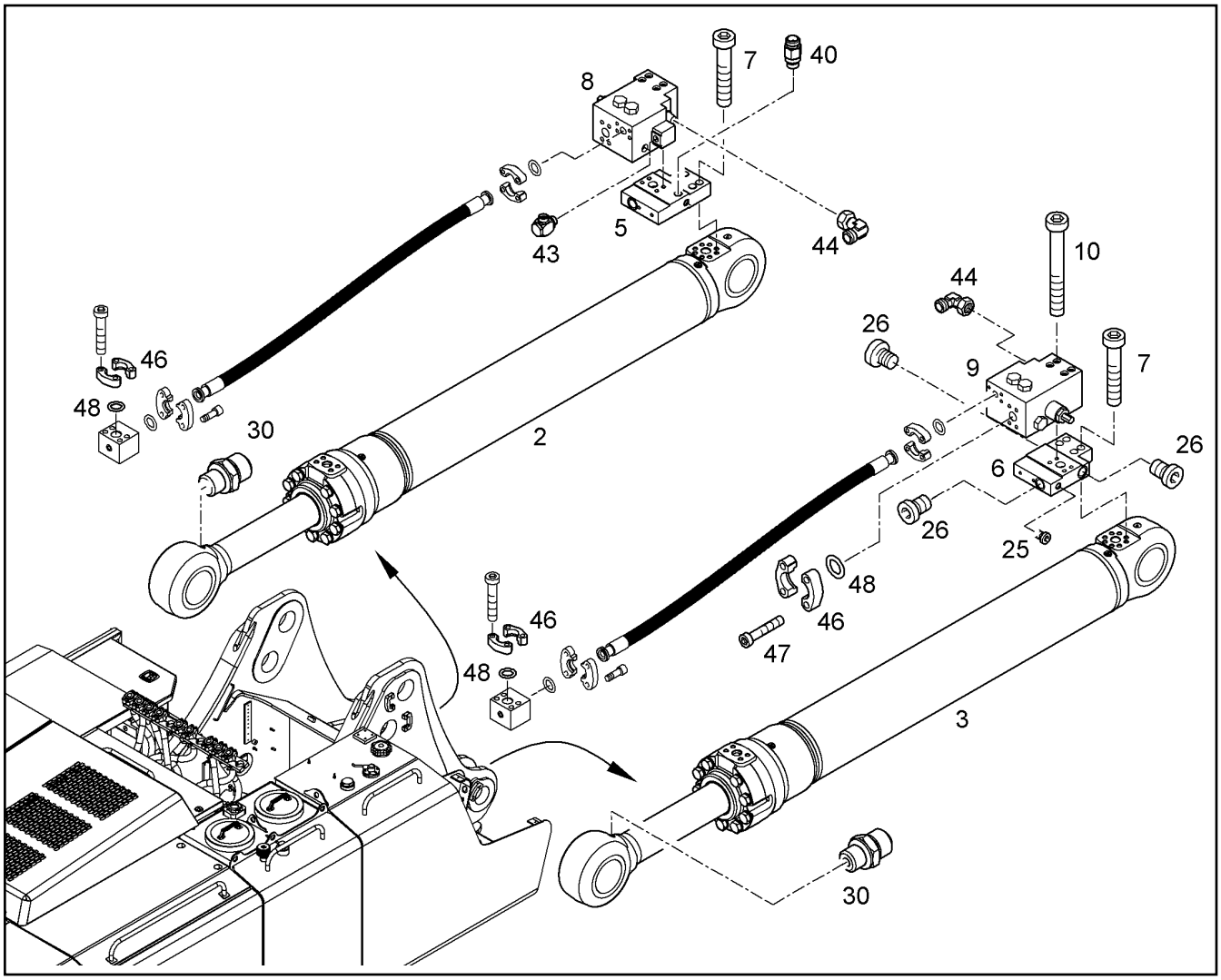

Pos.	Item	Quantity	Description	Descripción	Serie	K
2	9906383	1	HYDRAULIC CYLINDER [19683 L10] ⇨ ❑ 757	CILINDRO HIDRAULICO		2
3	9906576	1	HYDRAULIC CYLINDER [22158 L11] ⇨ ❑ 758	CILINDRO HIDRAULICO		
5	9006345	1	INTERMEDIATE BLOCK	BLOQUE INTERMEDIA		1
6	9988764	1	INTERMEDIATE BLOCK	BLOQUE INTERMEDIA		1
7	4601191	8	CYLINDER SCREW ISO 4762 M14X55 10.9	TORNILLO CILINDRICO		
8	10340806	1	PIPE FRACTION SAFETY VALVE ⇨ ❑ 752	SEGURO CONTRA ROTURA TU		2
9	10340812	1	PIPE FRACTION SAFETY VALVE ⇨ ❑ 753	SEGURO CONTRA ROTURA TU		2
10	4902068	8	CYLINDER SCREW ISO 4762 M14X160 10.9	TORNILLO CILINDRICO		
25	4900609	4	SCREW PLUG VSTI G3/8	TORNILLO DE CIERRE		
26	7361329	6	SCREW PLUG	TORNILLO DE CIERRE		
30	7362169	2	SCREW FITTING GE 6L	ATORNILLAMIENTO		
40	9008618	2	SCREW FITTING	ATORNILLAMIENTO		1
43	4600518	4	SCREW FITTING GE 15L	ATORNILLAMIENTO		
44	7615379	2	SCREW FITTING EW 15L	ATORNILLAMIENTO		
46	10286361	8	FLANGE HALF	MITAD DE BRIDA		
47	4902327	8	CYLINDER SCREW ISO 4762 M14X45 10.9	TORNILLO CILINDRICO		
48	10290518	4	PLAIN COMPRESSION RING 45,05x3,40x2,8	ARO DE SECCION RECTANGULA		1

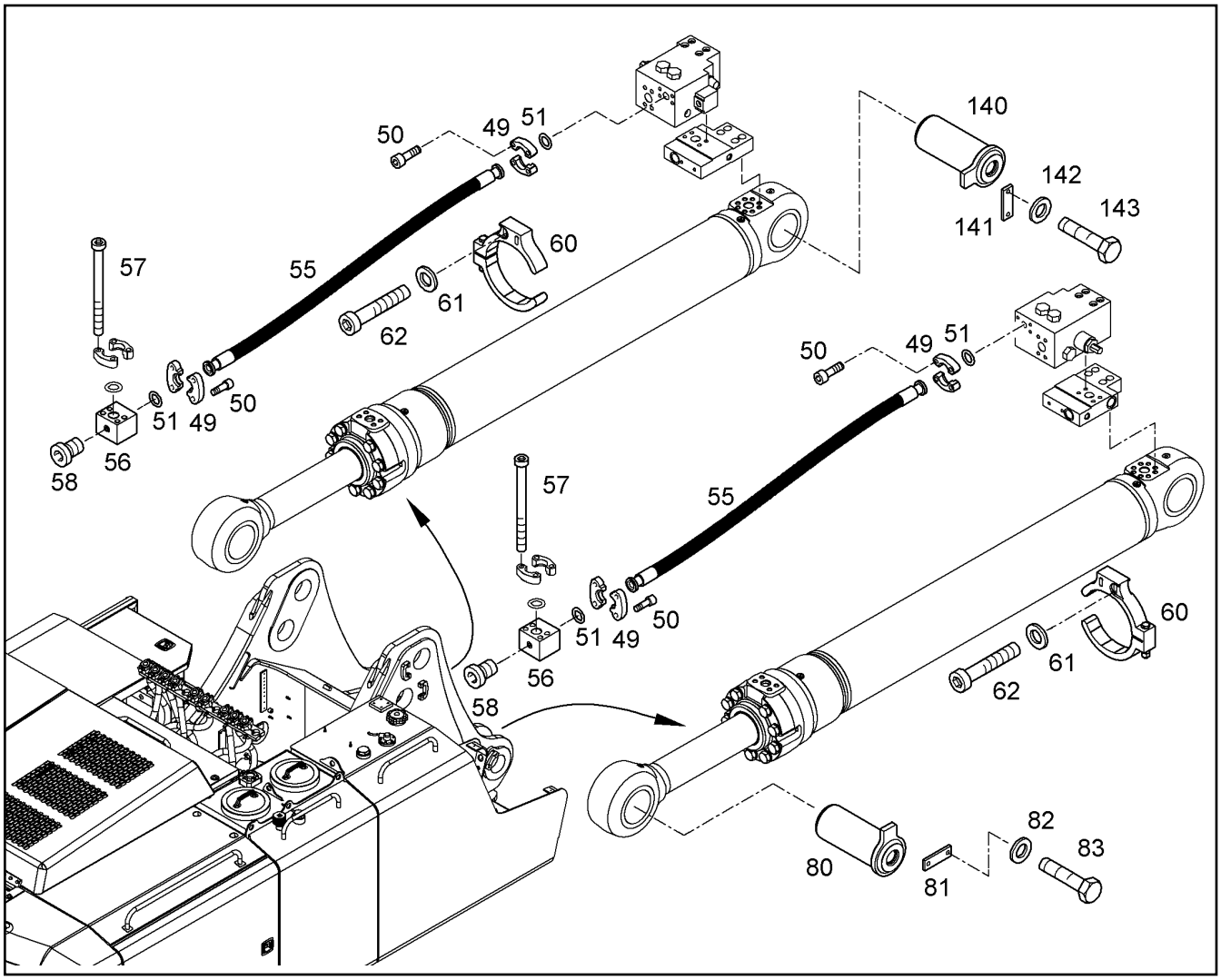

Pos.	Item	Quantity	Description	Descripción	Serie	K
49	10286360	8	FLANGE HALF	MITAD DE BRIDA		
50	4043003	16	CYLINDER SCREW ISO 4762 M12X40 10.9	TORNILLO CILINDRICO		
51	10290519	4	PLAIN COMPRESSION RING 40,15x3,40x2,8	ARO DE SECCION RECTANGULA		1
55	10409574	2	HOSE	TUBO GOMA		2
56	9392953	2	INTERMEDIATE BLOCK	BLOQUE INTERMEDIA		1
57	4901471	8	CYLINDER SCREW ISO 4762 M14X130 10.9	TORNILLO CILINDRICO		
58	7363125	2	SCREW PLUG ⇨ ❑ 760	TORNILLO DE CIERRE		
60	10070615	2	CLAMP ⇨ ❑ 740	ABRAZADERA		1
61	10289804	4	WASHER ISO 7089 12 300HV	ARANDELA		
62	4600505	4	CYLINDER SCREW ISO 4762 M12X70 10.9	TORNILLO CILINDRICO		
80	9374747	2	PIN	BULON		1
81	9830148	2	SHEET	PLACA		1
82	4900093	4	LOCK WASHER 12 VS	ARANDELA SEGURIDAD		
83	4600184	4	HEX BOLT ISO 4017 M12X25 10.9 A3C	TORNILLO DE CABEZA HEXAGO		
140	9375560	2	PIN COMPL.	BULON CPL.		1
141	9830148	2	SHEET	PLACA		1
142	4900093	4	LOCK WASHER 12 VS	ARANDELA SEGURIDAD		
143	4600184	4	HEX BOLT ISO 4017 M12X25 10.9 A3C	TORNILLO DE CABEZA HEXAGO		

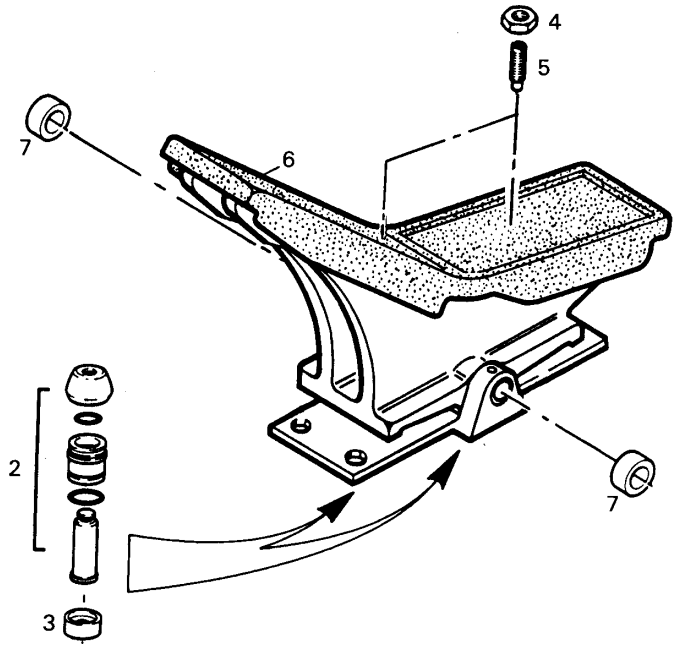

Pos.	Item	Quantity	Description	Descripción	Serie	K
2	9265665	2	RK PILOT DEVICE ⇨ ❑ 313	JR AP.CONTROL PILOT.		2
3	9265395	2	SPRING SUPPORT	PLATILLO DE RESORTES		
4	4901096	2	HEX NUT ISO 4035 M 8 -04 A3C	TUERCA HEXAGONAL		
5	4900984	2	GRUB SCREW DIN 915 M 8 X 45 45H	TORNILLO PRISIONERO		
6	9480295	1	FOOT BOARD COVERING	REVEST. P.PLACA REPOSAPIÉS		
7	7362583	2	BUSH	CASQUILLO		1

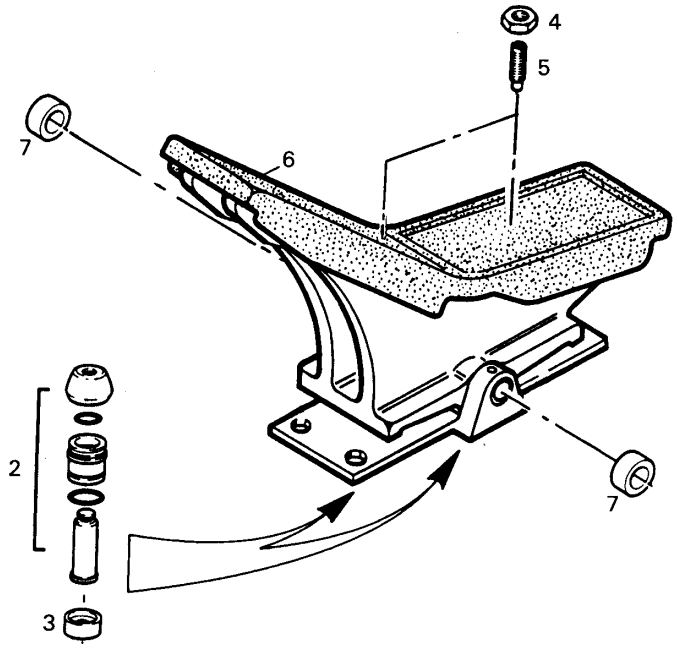

Pos.	Item	Quantity	Description	Descripción	Serie	K
2	9265665	2	RK PILOT DEVICE ⇨ ❑ 313	JR AP.CONTROL PILOT.		2
3	9265395	2	SPRING SUPPORT	PLATILLO DE RESORTES		
4	4901096	2	HEX NUT ISO 4035 M 8 -04 A3C	TUERCA HEXAGONAL		
5	4900984	2	GRUB SCREW DIN 915 M 8 X 45 45H	TORNILLO PRISIONERO		
6	9480295	1	FOOT BOARD COVERING	REVEST. P.PLACA REPOSAPIÉS		
7	7362583	2	BUSH	CASQUILLO		1

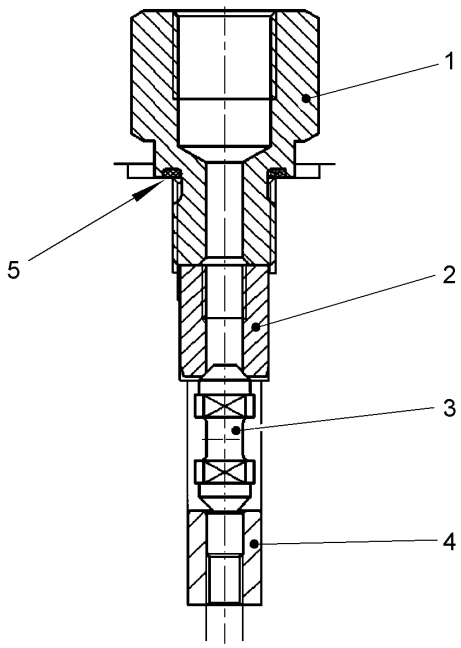

Pos.	Item	Quantity	Description	Descripción	Serie	K
1		1	CONNECTION PIECE	PIEZA DE EMPALME		1
2		1	VALVE BUSH	CASQUILLO DE VALVULA		1
3		1	VALVE CONE	CONO DE VALVULA		1
4		1	VALVE BUSH	CASQUILLO DE VALVULA		1
5	7373435	1	SEALING RING	JUNTA ANULAR		1

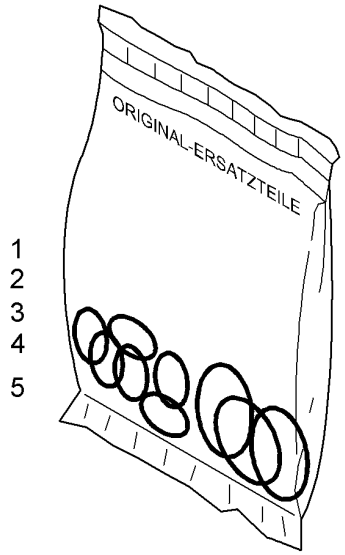

Pos.	Item	Quantity	Description	Descripción	Serie	K
1	10290519	12	PLAIN COMPRESSION RING 40,15x3,40x2,8	ARO DE SECCION RECTANGULA		1
2	10290518	12	PLAIN COMPRESSION RING 45,05x3,40x2,8	ARO DE SECCION RECTANGULA		1
3	10290517	6	PLAIN COMPRESSION RING 54,40x3,40x2,8	ARO DE SECCION RECTANGULA		1
4	10290521	6	PLAIN COMPRESSION RING 25,85x3,40x2,8	ARO DE SECCION RECTANGULA		1
5	10290516	6	PLAIN COMPRESSION RING 63,9x3,4x2,8	ARO DE SECCION RECTANGULA		1

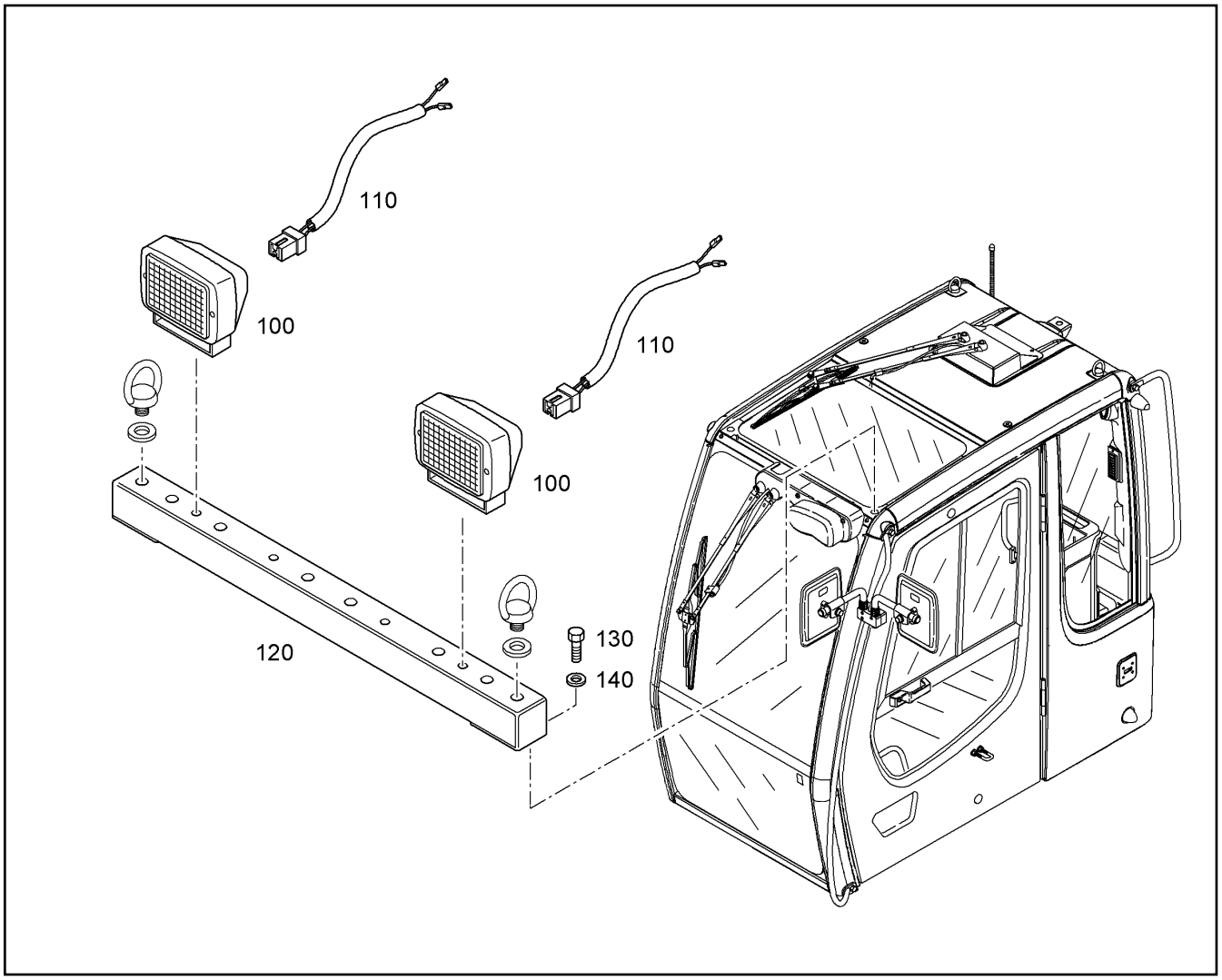

Pos.	Item	Quantity	Description	Descripción	Serie	K
100	7027205	2	FLOODLIGHT ⇨ ❑ 501	FARO		1
110	10017344	2	WIRE HARNESS ADDITIONAL HEAD	JC FAROS ADICIONALES		2
120	10220135	1	CROSS BEAM	VIGA TESTERA		
130	4066120	2	HEX BOLT ISO 4017 M12X20 10.9 A3C	TORNILLO DE CABEZA HEXAGO		
140	10289804	2	WASHER ISO 7089 12 300HV	ARANDELA		

6

Ident : 9.....				
S ..	S ..	S ..	S ..	S ..
S ..	S ..	S ..	S ..	S ..
S ..	S ..	S ..	S ..	S ..
S ..	S ..	S ..	S ..	S ..

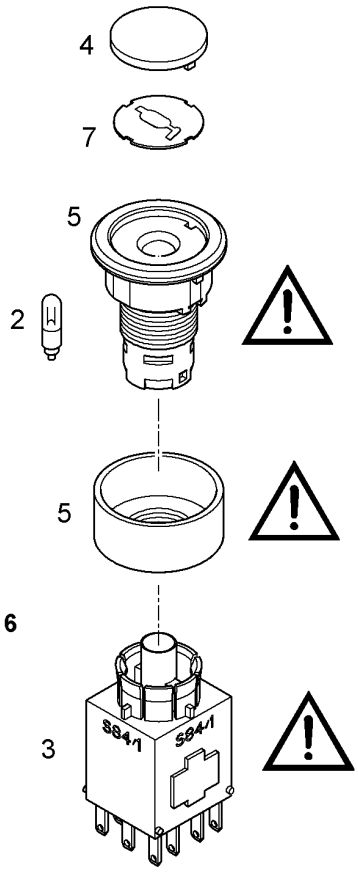

Diese Teile immer mit Pos. 6 bestellen damit diese markiert werden können.
Allways order this parts with pos. 6 to be able to label them.
Toujours commander ces pièces avec la pièce pos. 6 pour étiquetage,

Pos.	Item	Quantity	Description	Descripción	Serie	K
2	6001713	1	LIGHT BULB 30V/1,2W/T3	BOMBILLA		1
3	6204372	1	LUMINOUS PUSH BUTTON CONTACTOR	SENSOR CONTADOR PULSO LU		2
4	6204368	1	SPHERICAL CAP	CAZOLETA		
5	6204367	1	ACTUATOR	ACCIONADOR		2
6	9989643	1	LABEL	ETIQUETA		
7	9836704	1	LABEL	ETIQUETA		

6

Ident : 9.....				
S ..	S ..	S ..	S ..	S ..
S ..	S ..	S ..	S ..	S ..
S ..	S ..	S ..	S ..	S ..
S ..	S ..	S ..	S ..	S ..

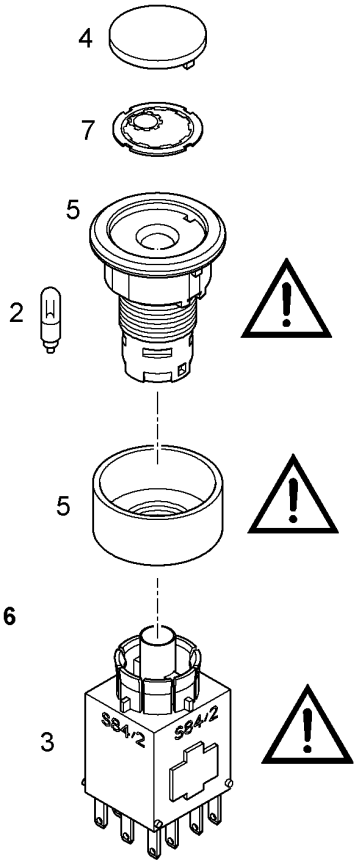

Diese Teile immer mit Pos. 6 bestellen damit diese markiert werden können.
Allways order this parts with pos. 6 to be able to label them.
Toujours commander ces pièces avec la pièce pos. 6 pour étiquetage,

Pos.	Item	Quantity	Description	Descripción	Serie	K
2	6001713	1	LIGHT BULB 30V/1,2W/T3	BOMBILLA		1
3	6204372	1	LUMINOUS PUSH BUTTON CONTACTOR	SENSOR CONTADOR PULSO LU		2
4	6204368	1	SPHERICAL CAP	CAZOLETA		
5	6204367	1	ACTUATOR	ACCIONADOR		2
6	9989644	1	LABEL	ETIQUETA		
7	9836702	1	LABEL	ETIQUETA		

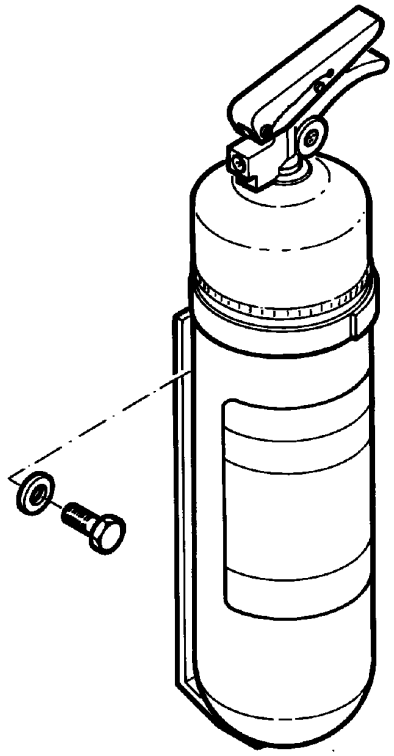

Pos.	Item	Quantity	Description	Descripción	Serie	K
10	10498332	1	FIRE EXTINGUISHER ⇨ ❑ 781	EXTINTOR		1

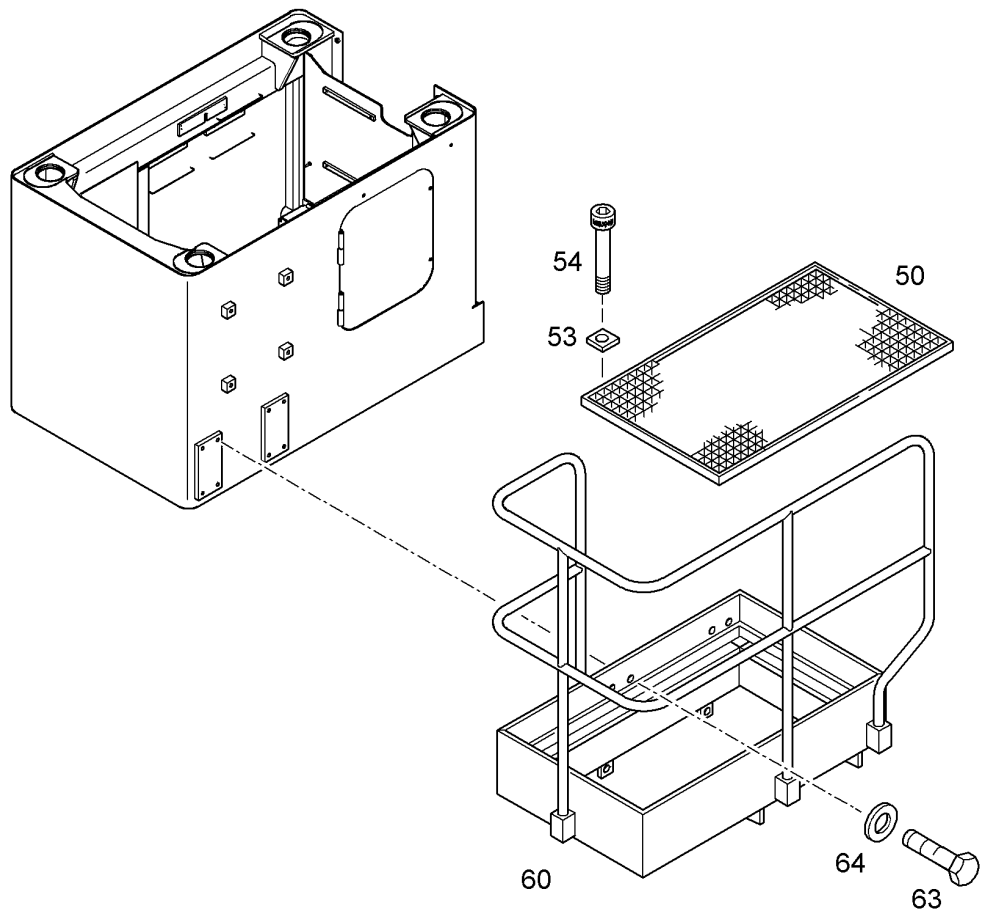

Pos.	Item	Quantity	Description	Descripción	Serie	K
50	9903847	1	GRATING	REJILLA		
53	9903888	4	SHEET	PLACA		
54	4600335	4	CYLINDER SCREW ISO 4762 M8X45 10.9 A2	TORNILLO CILINDRICO		
60	10358136	1	PLATFORM	PLATAFORMA		1
63	4600805	8	HEX BOLT ISO 4017 M16X30 10.9 DAC	TORNILLO DE CABEZA HEXAGO		
64	9918228	8	WASHER 16,5/28X4	ARANDELA		

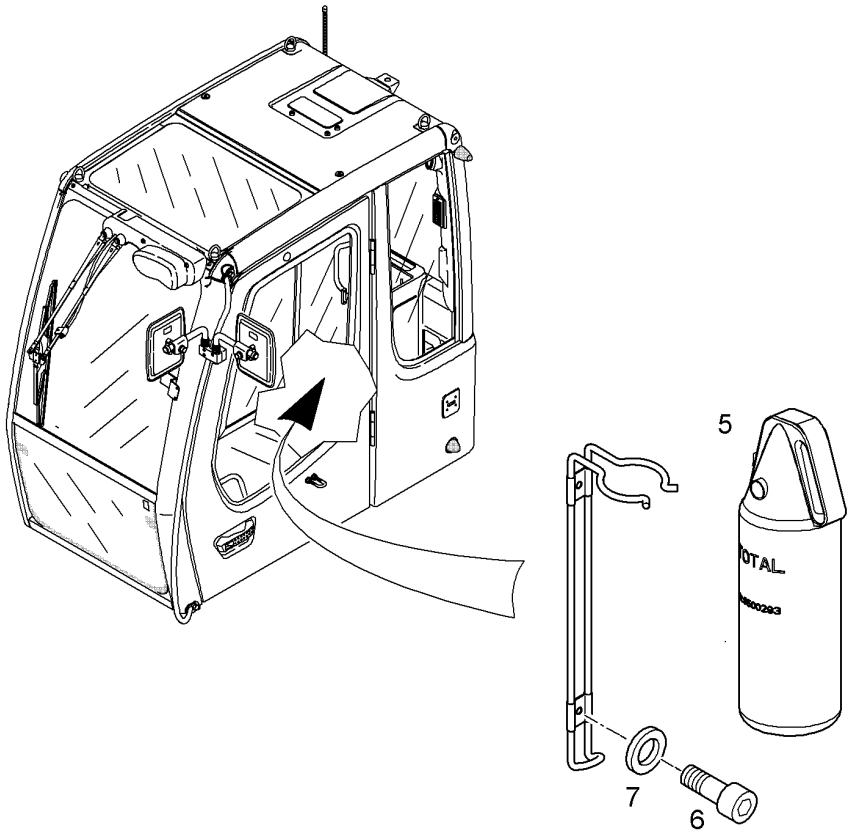

Pos.	Item	Quantity	Description	Descripción	Serie	K
5	890100716	1	FIRE EXTINGUISHER EBR1	EXTINTOR		1
6	4001596	2	CYLINDER SCREW ISO 4762 M6X16 10.9 A2	TORNILLO CILINDRICO		
7	10289802	2	WASHER ISO 7089 6 300HV	ARANDELA		

OHNE BILD

WITHOUT DRAWING

SANS DESSIN

Pos.	Item	Quantity	Description	Descripción	Serie	K
2	10358064	1	ELEVATION ⇨ ❑ 785	SUPLEMENTO SUPERIOR		1
4	9014915	1	HANDLE	TIRADOR DE MANO		1
5	10289804	2	WASHER ISO 7089 12 300HV	ARANDELA		
6	4043163	2	CYLINDER SCREW ISO 4762 M12X30 10.9	TORNILLO CILINDRICO		
13	10358079	1	PLATE	CHAPA		1
14	10289804	6	WASHER ISO 7089 12 300HV	ARANDELA		
15	4043163	6	CYLINDER SCREW ISO 4762 M12X30 10.9	TORNILLO CILINDRICO		
20	4600146	6	WASHER DIN 6916 25 DAC	ARANDELA		
21	10425616	6	HEX BOLT ISO 4014 M24X240 10.9 FLZN 100	TORNILLO DE CABEZA HEXAGO		
35	9490985	2	STEP	PELDAÑO (LO 3259 B)		1
36	4900850	4	DURLOCK SCREW M16X35 12.9 FLZN 10021	TORNILLO DURLOK		

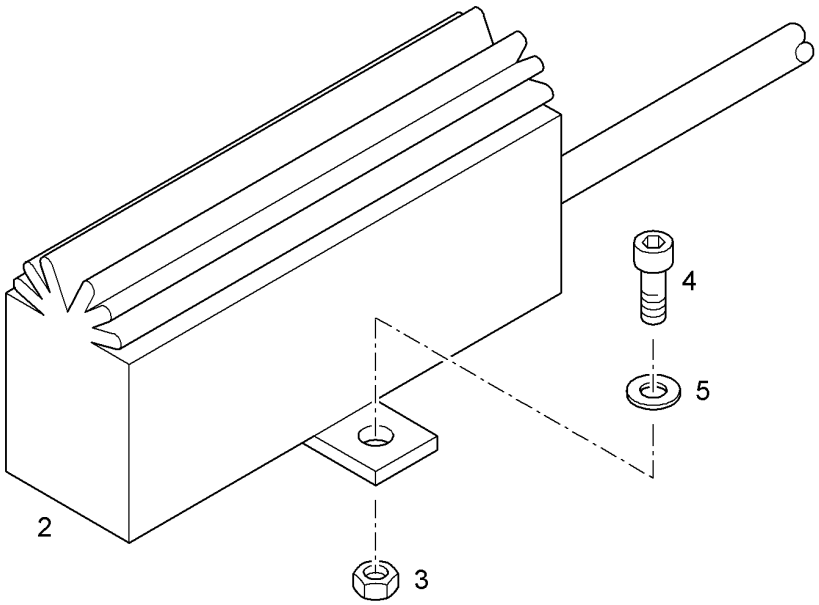

Pos.	Item	Quantity	Description	Descripción	Serie	K
2	6205235	1	HEATING RESISTANCE	RESISTENCIA CALEFACTORA		1
3	4000376	2	HEX NUT M4	TUERCA HEXAGONAL		
4	4001025	2	CYL HEAD STUD ISO 1207 M 4 X 10 5.8 A3C	TORNILLO CIL.		
5	4001645	4	WASHER DIN 125 B 4,3 ST A3C	ARANDELA		

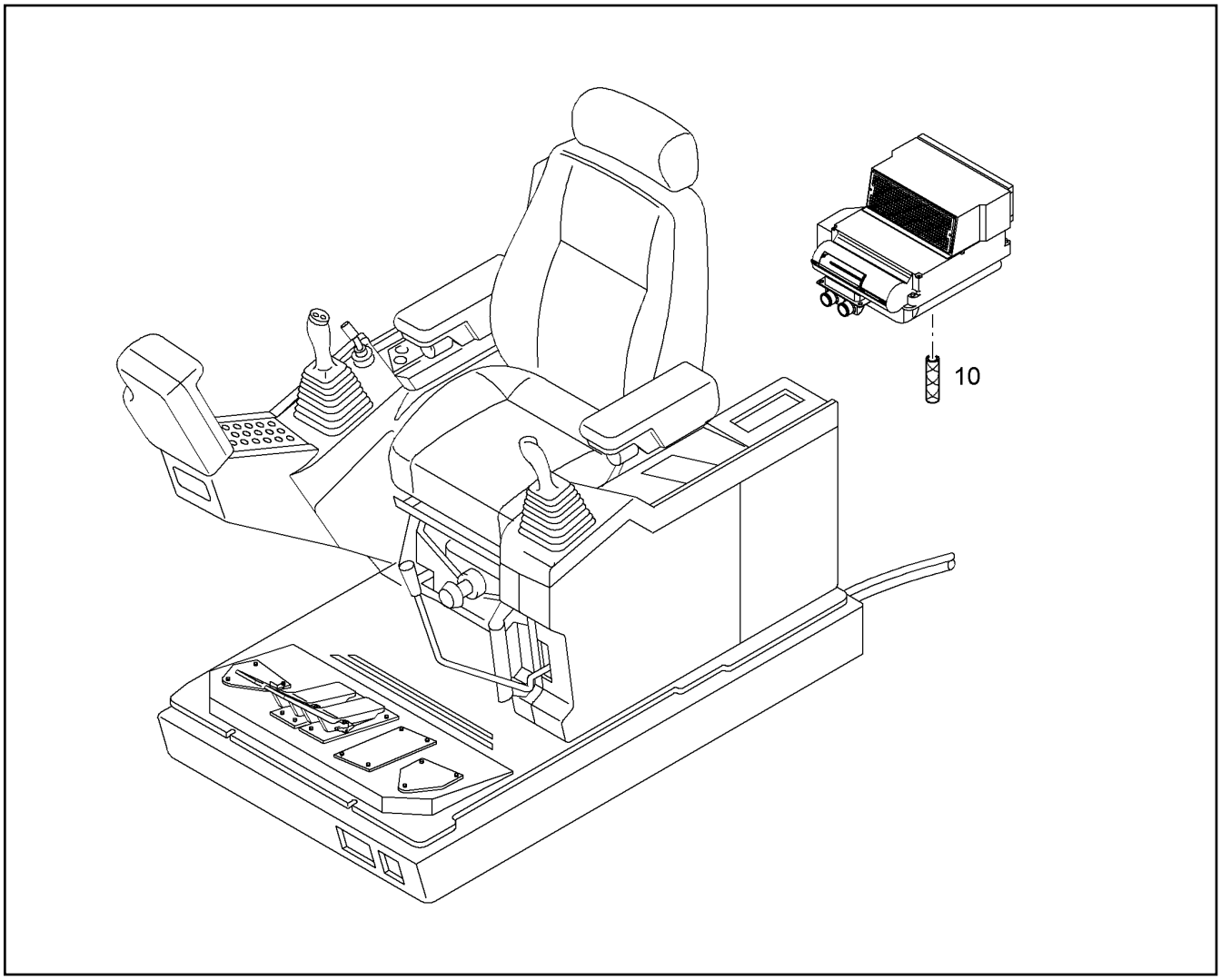

Pos.	Item	Quantity	Description	Descripción	Serie	K
10	7361679	1.825m	HOSE DIN 73411 A 15 X3,5	TUBO GOMA		

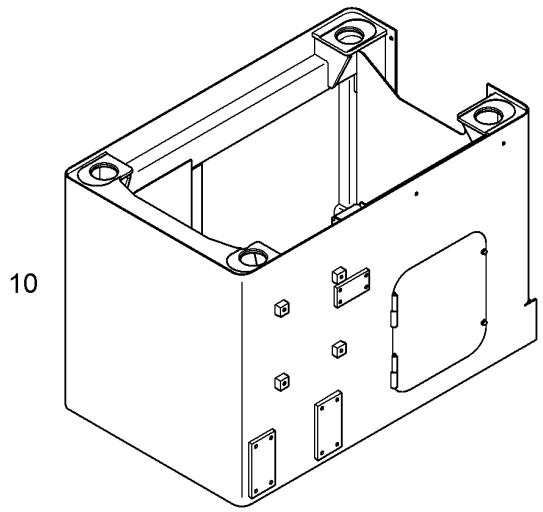

Pos.	Item	Quantity	Description	Descripción	Serie	K
10	10358065	1	ELEVATION ⇨ ❑ 786	SUPLEMENTO SUPERIOR		1

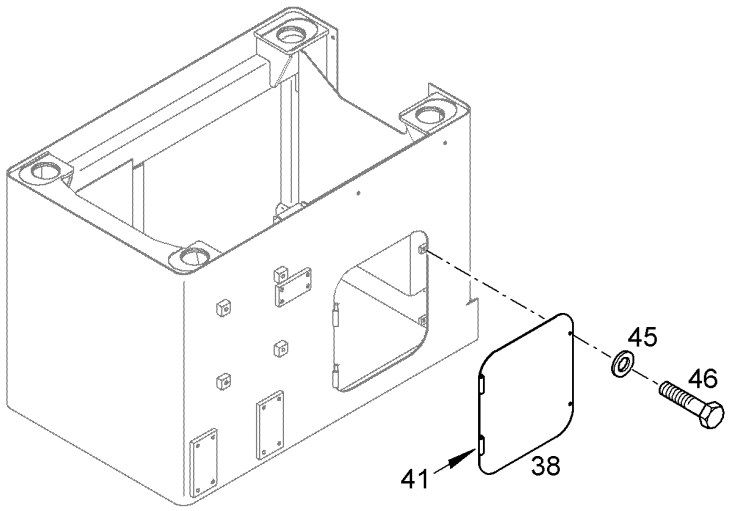

Pos.	Item	Quantity	Description	Descripción	Serie	K
38	9927518	1	DOOR	PUERTA		1
41	9751573	2	MODIFICATION HINGE	MODIF.BISAGRA		
45	10289804	2	WASHER ISO 7089 12 300HV	ARANDELA		
46	4066124	2	HEX BOLT ISO 4017 M12X30 10.9 A3C	TORNILLO DE CABEZA HEXAGO		

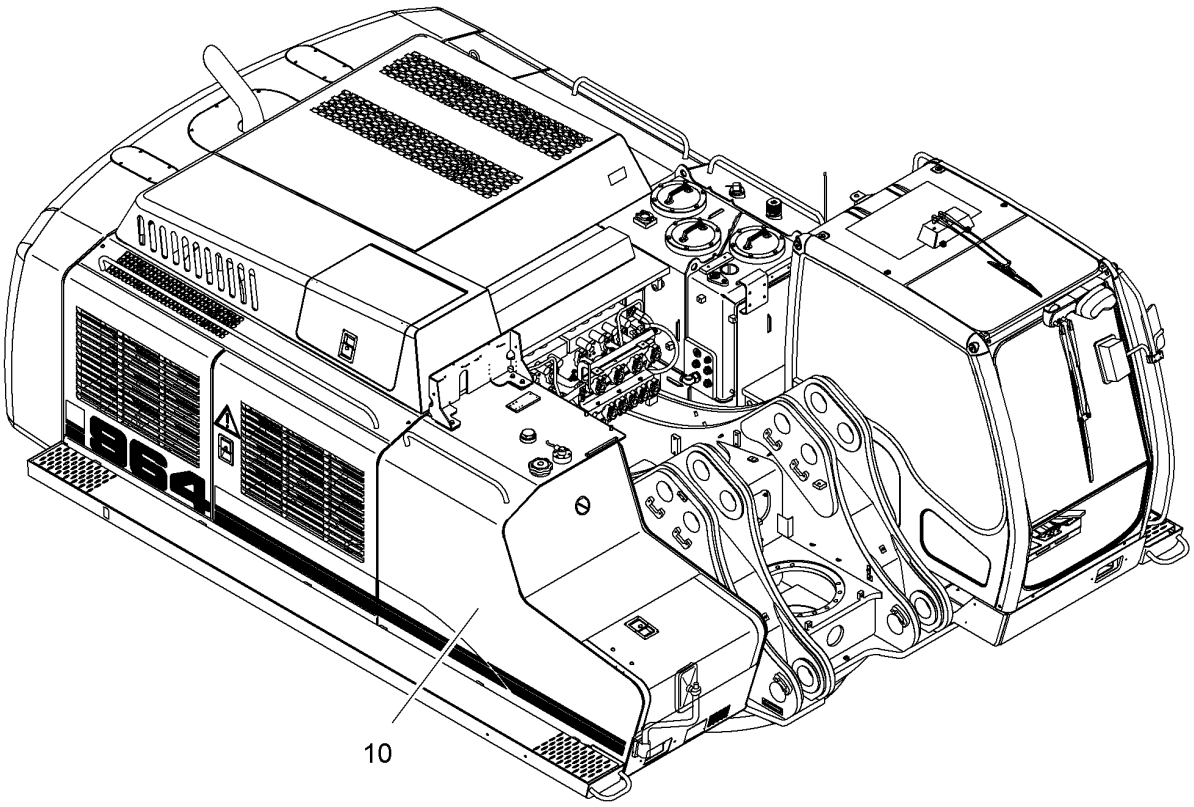

Pos.	Item	Quantity	Description	Descripción	Serie	K
10	10498314	1	FUEL COUPLING WIGGINS ⇨ ❑ 788	ACOP.RAP.WIGGINS P.COMBU		1

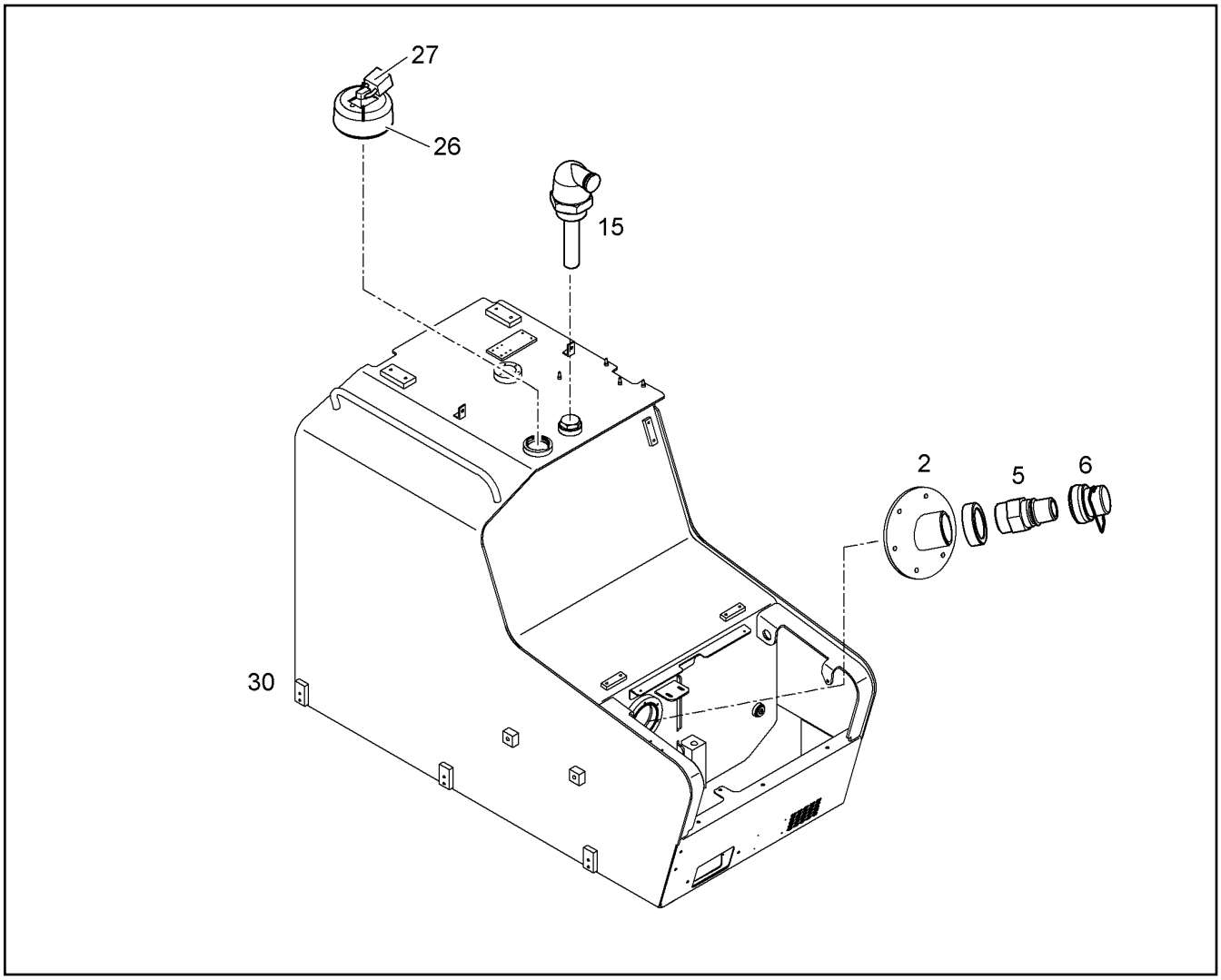

Pos.	Item	Quantity	Description	Descripción	Serie	K
2	10498316	1	FILLER NECK	CONEXION DE LLENADO		1
5	6426763	1	FILLER NECK	CONEXION DE LLENADO		
6	6426764	1	STOP PLUG	TAPON		
15	6426450	1	TANK VENTILATION	PURGA DE DEPÓSITO		1
26	7369407	1	LOCKABLE TANK CAP	CIERRE DEL TANQUE		
27	704206616	1	PADLOCK 40	CANDADO		1
30	10498315	1	MODIFICATION FUEL TANK	MODIF.DEPÓSITO COMBUSTIBL		1

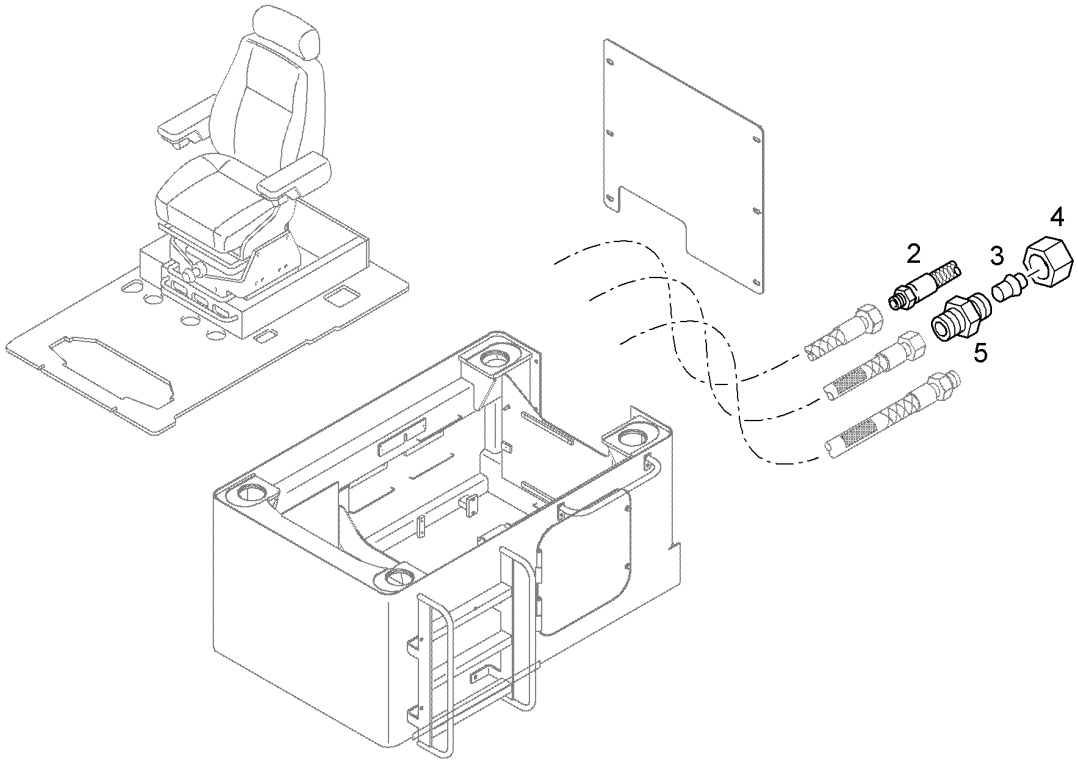

Pos.	Item	Quantity	Description	Descripción	Serie	K
2	10296022	3	HOSE	TUBO GOMA		2
3	477700514	6	TAPER COLLET VKA 12L/S	CONO DE CIERRE		
4	4774026	6	UNION NUT DIN 3870 A L 12 A3C	TUERCA UEWF		
5	4600747	3	SCREW FITTING G 12L	ATORNILLAMIENTO		

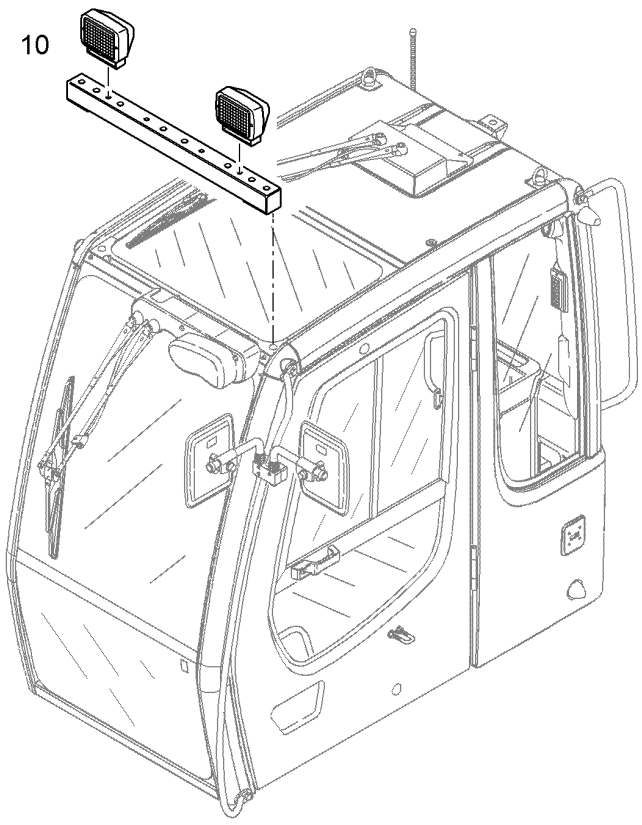

Pos.	Item	Quantity	Description	Descripción	Serie	K
10	10021387	1	ADDIT.HEAD LIGHTS ON CAB ⇨ ❑ 776	FARO ADICIONALE CABINA		1

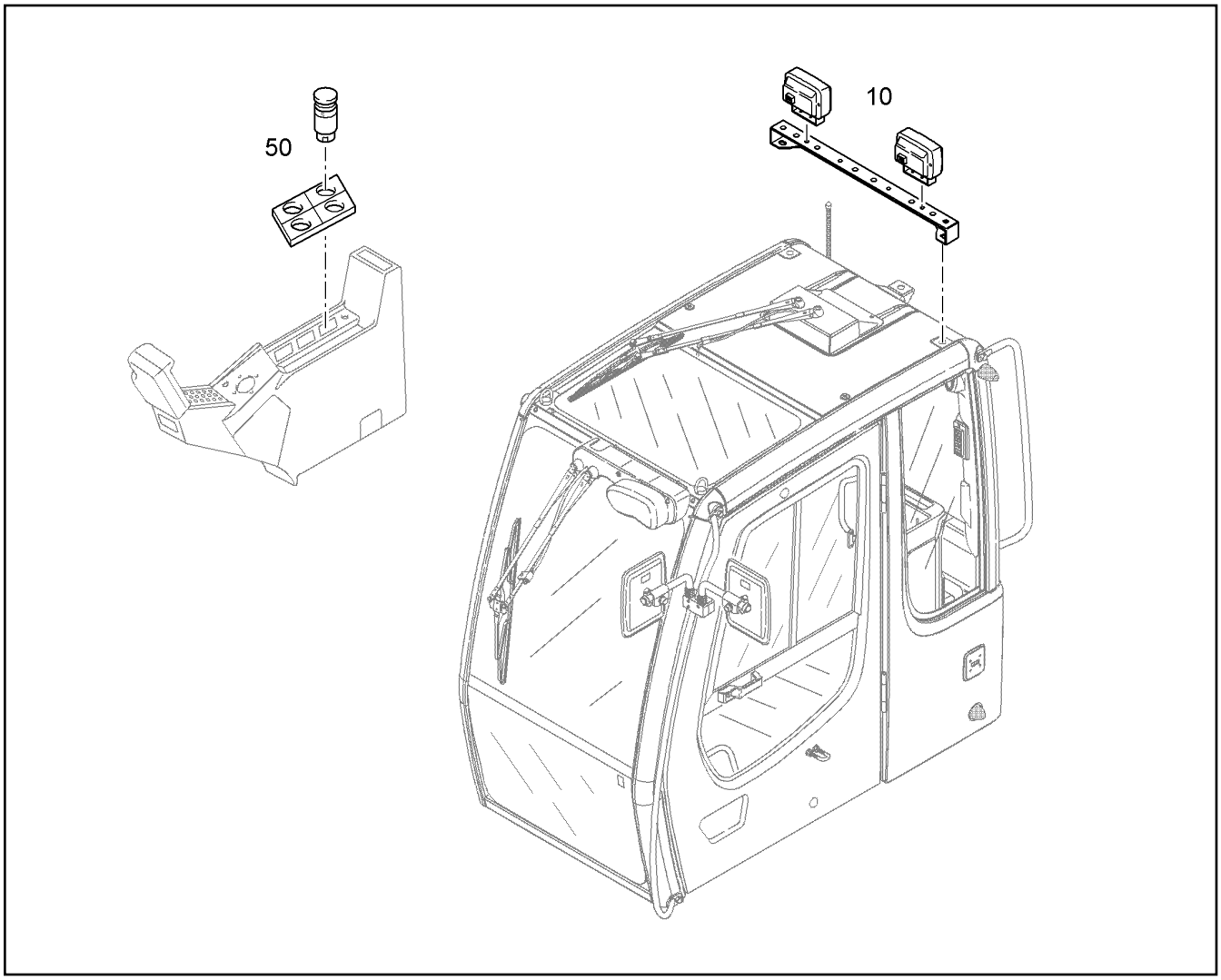

Pos.	Item	Quantity	Description	Descripción	Serie	K
10	10021387	1	ADDIT.HEAD LIGHTS ON CAB ⇨ ❑ 776	FARO ADICIONALE CABINA		1
50	9599236	1	ELECTRIC INSTALLATION ⇨ ❑ 792	INSTALACION ELECTRICA		1

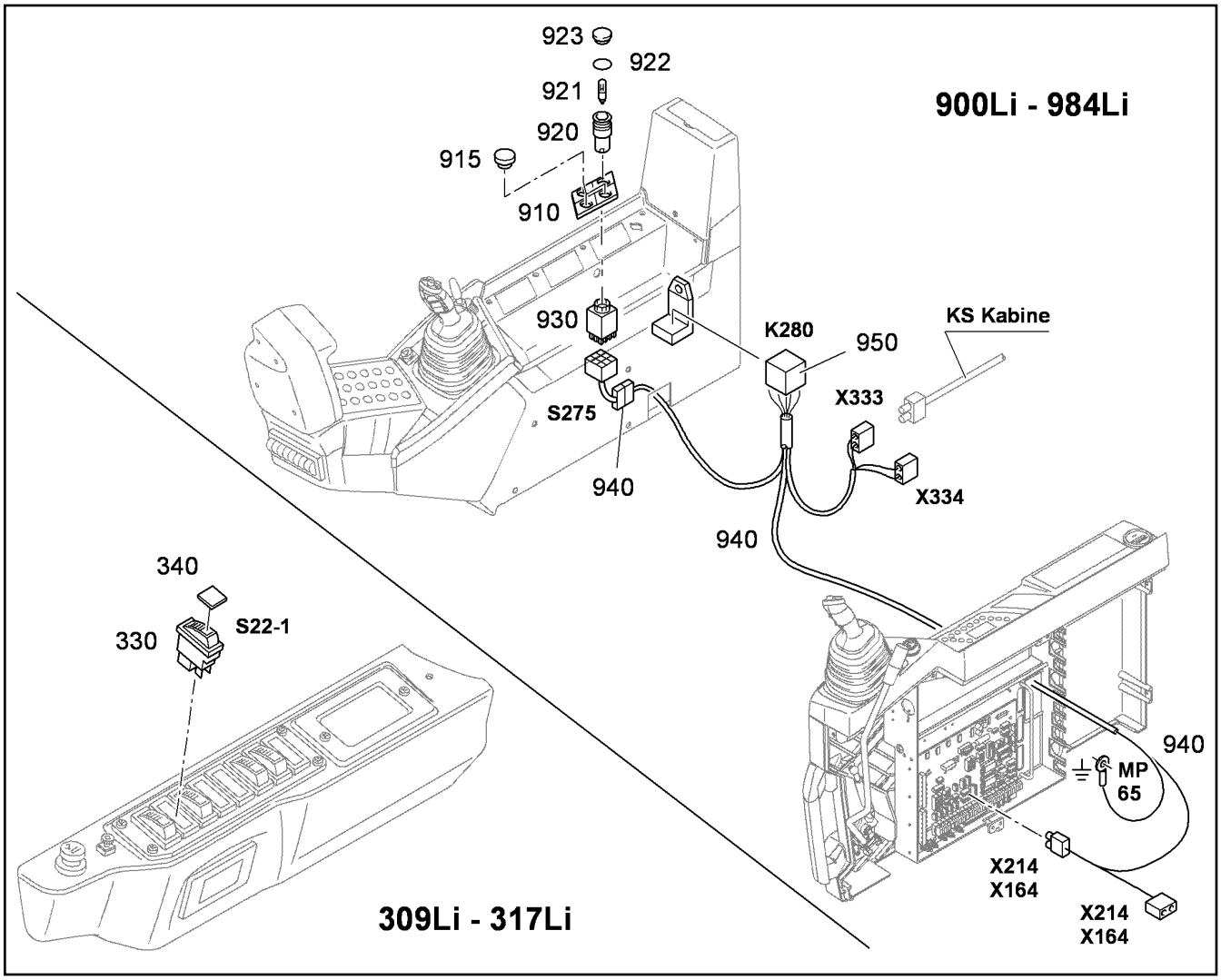

Pos.	Item	Quantity	Description	Descripción	Serie	K
330	7027927	1	ROCKER SWITCH ⇨ ❑ 330	INTERRUPTOR BASCULANTE		2
340	7364467	1	INSERT	SUPLEMENTO		2
910	7371141	1	SWITCH MODULE	MÓDULO CONMUT.		2
915	7371142	3	STOPPER PLUG	TAPON CIEGO		
920	6204367	1	ACTUATOR	ACCIONADOR		2
921	6001713	1	LIGHT BULB 30V/1,2W/T3	BOMBILLA		1
922	9911690	1	SYMBOL WORK LAMP RXJ	SÍMBOLO FOCO DE TRABAJO		
923	6204368	1	SPHERICAL CAP	CAZOLETA		
930	6001257	1	CONTAKT MAKER	SENSOR CONTACTO CONMUT.		2
940	9954432	1	WIRE HARNESS	JC CONSOLA		
950	7029139	1	RELAY	RELE		2

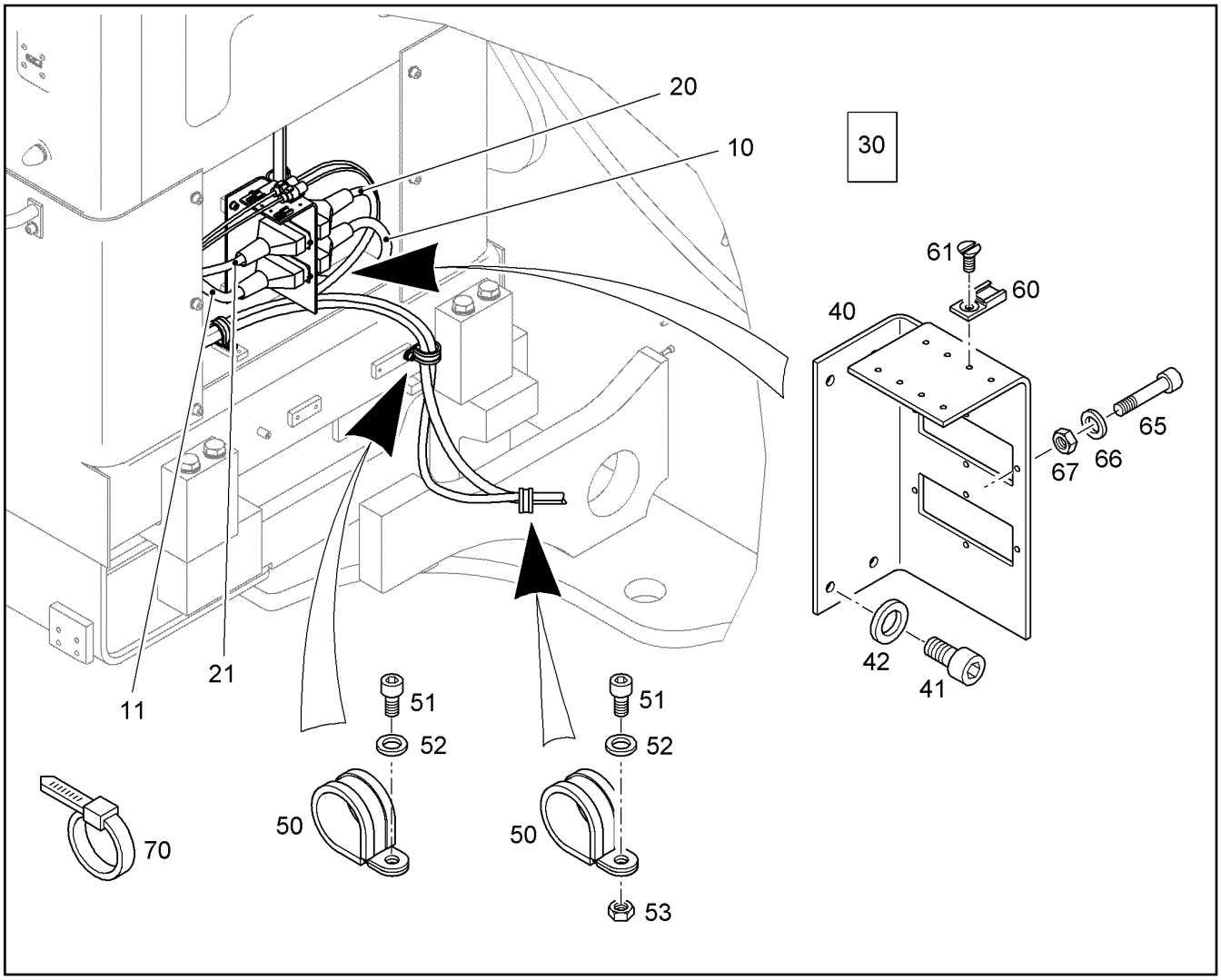

Pos.	Item	Quantity	Description	Descripción	Serie	K
10	10823905	1	WIRING HARNESS ROTAT.DECK-CAB	JC CABINA PLAT.GIRAT.	99999-	
11	10823906	1	WIRING HARNESS ROTATING DECK	JC PLATAFORMA GIRAT.	99999-	
20	10080583	1	WIRING HARNESS CAB-MOTOR	JC CABINA -MOTOR		1
21	10096412	1	WIRING HARNESS ENGINE X1063	JUEGO CABLES MOTOR		
30	9805364	1	ELONGAT.WIRING HARNESS H.LIGHT	PROL.JC FARO		2
40	10084451	1	CONSOLE	CONSOLA		1
41	4902231	4	CYLINDER SCREW ISO 4762 M8X16 10.9 A2	TORNILLO CILINDRICO		
42	10289803	4	WASHER ISO 7089 8 300HV	ARANDELA		
50	7362551	5	CLAMP DIN 3016 D1- 38 X 20 W1-2-CR	ABRAZADERA		
51	4902231	4	CYLINDER SCREW ISO 4762 M8X16 10.9 A2	TORNILLO CILINDRICO		
52	10289803	5	WASHER ISO 7089 8 300HV	ARANDELA		
53	4000381	1	HEX NUT M8	TUERCA HEXAGONAL		
60	6203497	4	FASTENER	ELEMENTO DE FIJACION		
61	10471469	4	CYLINDER SCREW BN 1206 M5X10 10.9	TORNILLO CILINDRICO		
65	404200701	8	CYLINDER SCREW ISO 4762 M4x20 8.8 A2C	TORNILLO CILINDRICO		
66	4001645	8	WASHER DIN 125 B 4,3 ST A3C	ARANDELA		
67	4000376	8	HEX NUT M4	TUERCA HEXAGONAL		
70	7001877	5	TIE WRAP	CINTA PARA CABLES		

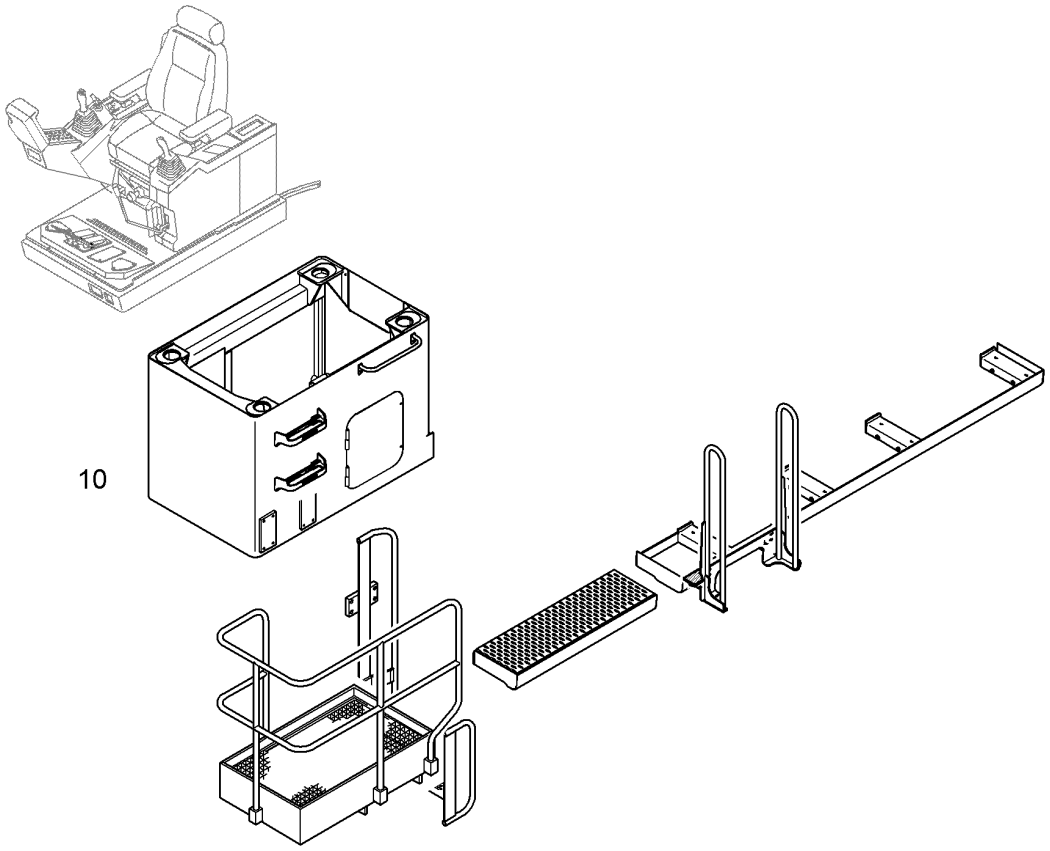

Pos.	Item	Quantity	Description	Descripción	Serie	K
10	10498155	1	CAB ELEVATION 1200MM ⇨ ❑ 795	ELEVACIÓN CABINA CONDUCTO		1

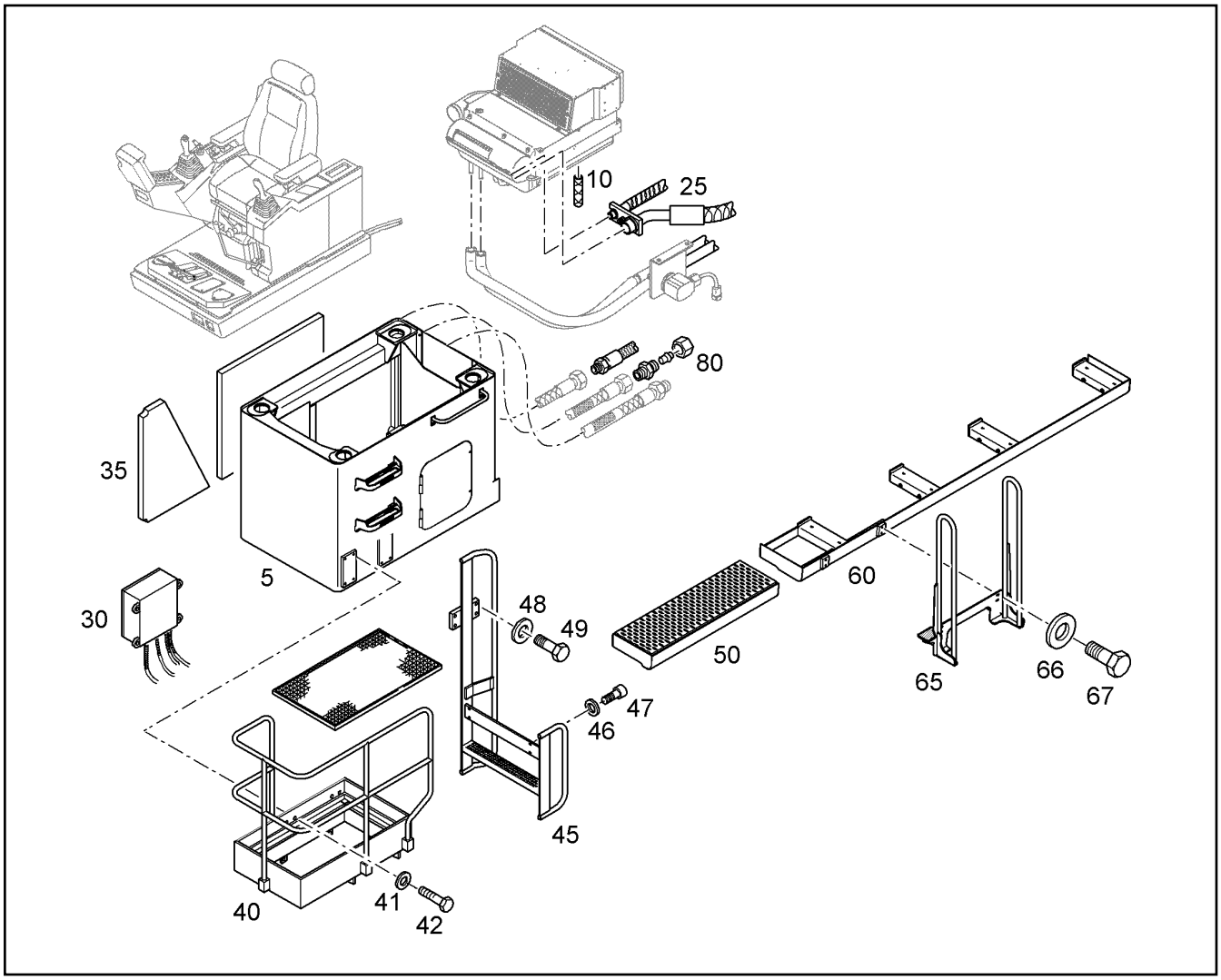

Pos.	Item	Quantity	Description	Descripción	Serie	K
5	10358063	1	ELEVATION 1200MM ⇨ ❑ 782	SUPLEMENTO SUPERIOR		1
10	9927352	1	MODIF.CONTROL CAB ⇨ ❑ 784	MODIF.PUESTO CONDUCTOR		1
25	10094067	1	HEATING+AIR-CONDITION.HOSES ⇨ ❑ 797	TUBOS FLEX.CALEF.Y CLIMATIZ		1
30	10823904	1	ELECTR.SYSTEM ELEVATION 1200MM ⇨ ❑ 793	INST.EL.ELEVACIÓN	99999-	1
35	10373187	1	SOUND PROOFING ⇨ ❑ 798	AISLAMIENTO ACUSTICO		1
40	10358135	1	PLAT FORM IF ELEVATION 1200MM ⇨ ❑ 780	PLATAFORM.C.CAB.ELEVADA RI		1
41	4600180	8	WASHER DIN 6340 17 DAC	ARANDELA		
42	4600805	8	HEX BOLT ISO 4017 M16X30 10.9 DAC	TORNILLO DE CABEZA HEXAGO		
45	10357863	1	LADDER	ESCALERA		1
46	9918226	4	WASHER 12,5/21X3,5	ARANDELA		
47	4043163	4	CYLINDER SCREW ISO 4762 M12X30 10.9	TORNILLO CILINDRICO		
48	9918228	4	WASHER 16,5/28X4	ARANDELA		
49	4902331	4	HEX BOLT ISO 4017 M16X45 10.9 DAC	TORNILLO DE CABEZA HEXAGO		
50	10498154	1	CATWALK LEFT IN FRONT ⇨ ❑ 800	PASARELA		1
60	10498153	1	CATWALK LEFT REAR ⇨ ❑ 799	PASARELA		1
65	10498140	1	HANDLE	TIRADOR DE MANO		1
66	10006370	6	WASHER DIN 7349 13	ARANDELA		
67	4066124	6	HEX BOLT ISO 4017 M12X30 10.9 A3C	TORNILLO DE CABEZA HEXAGO		

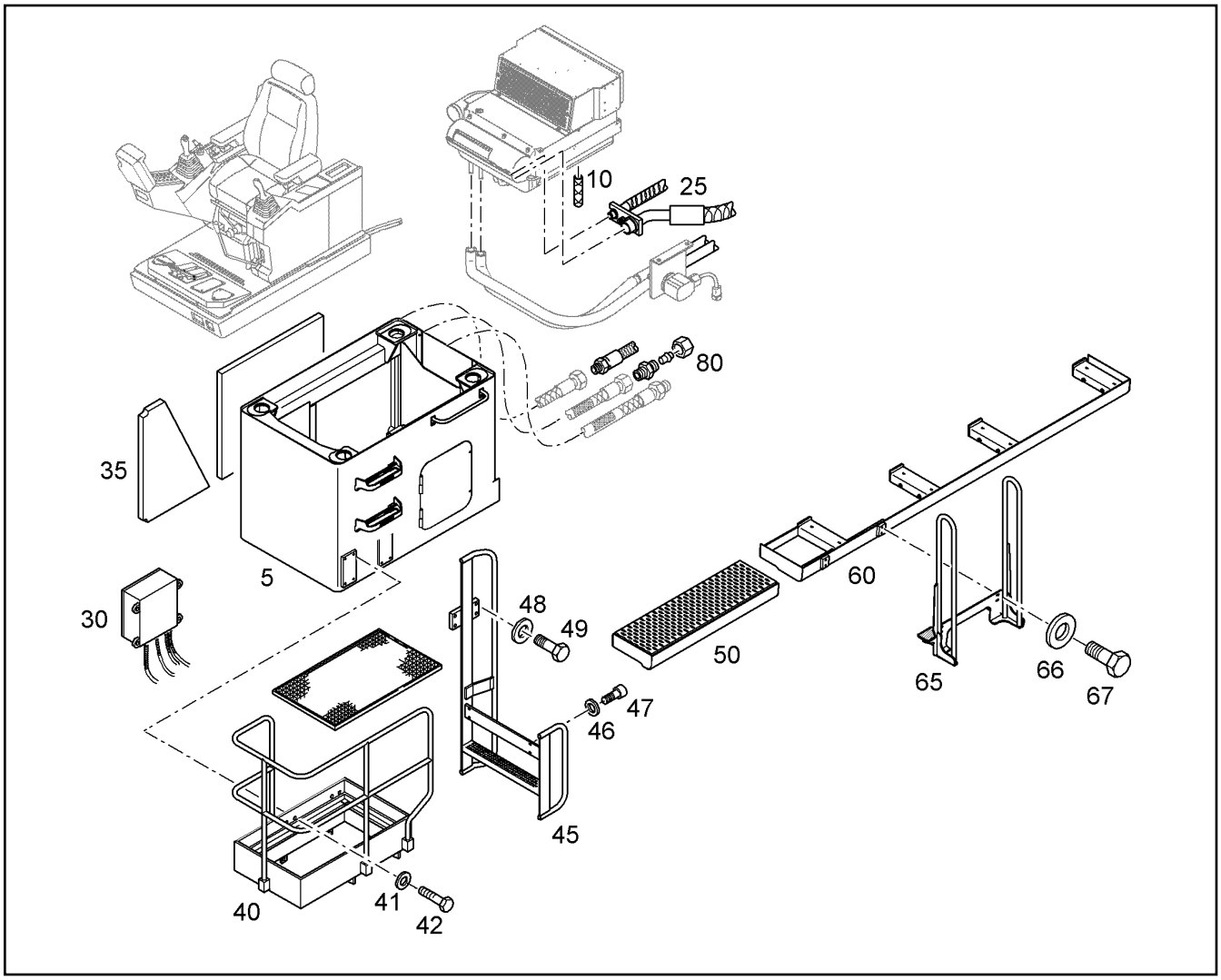

Pos.	Item	Quantity	Description	Descripción	Serie	K
70	10498553	1	MODIFICATION CHASSIS	MODIF.ESTRUC.INF.		1
80	10372967	1	HOSES ELONGATION ⇨ ❑ 789	PROLONGACIÓN TUBOS FLEX.		1

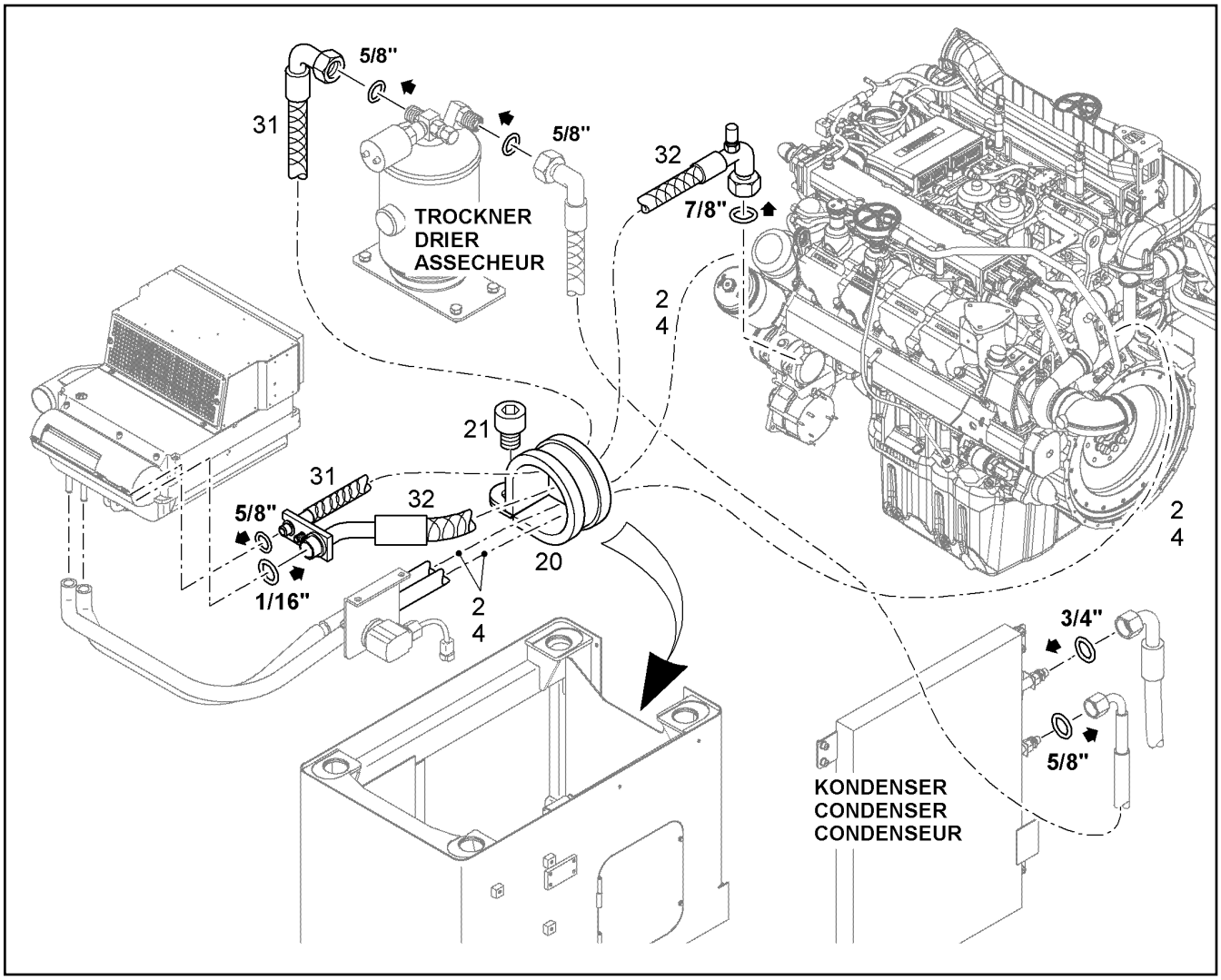

Pos.	Item	Quantity	Description	Descripción	Serie	K
2	7361679	14m	HOSE DIN 73411 A 15 X3,5	TUBO GOMA		
4	4901138	4	HOSE CLAMP DIN 3017 A 16 - 27 X 9 W2-2	ABRAZADERA MANGUERA		
20	7364298	5	CLAMP DIN 3016 D1- 47 X 25 W1-2-CR	ABRAZADERA		
21	4902177	5	CYL HEAD STUD ISO 4762 M 8 X 10 A4-80	TORNILLO CIL.		
31	10353608	1	HOSE	TUBO GOMA		2
32	10353607	1	HOSE	TUBO GOMA		2

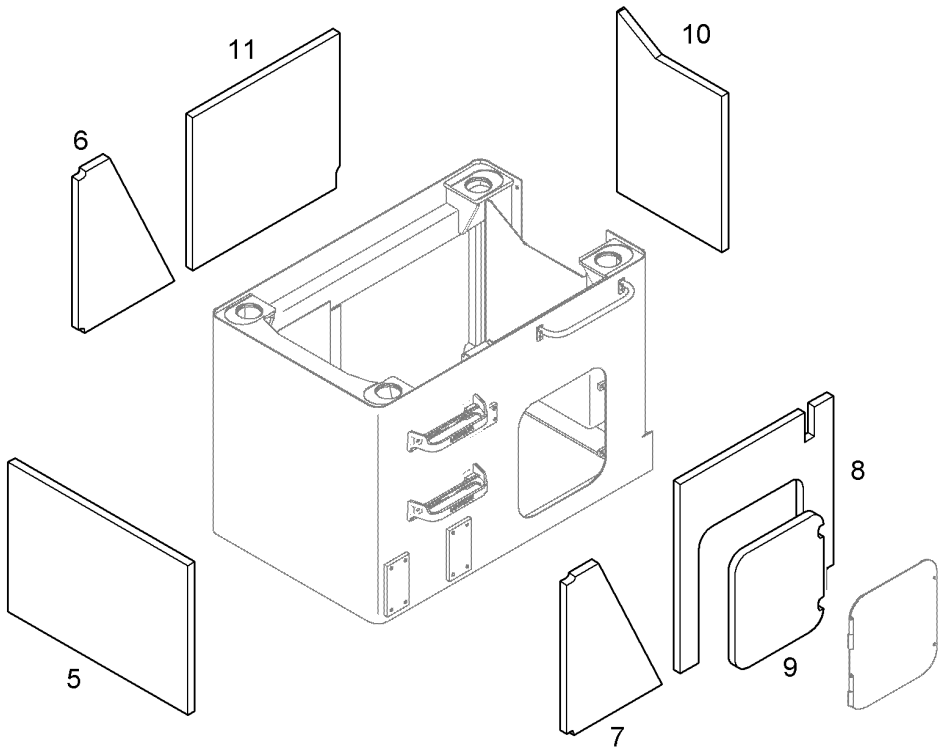

Pos.	Item	Quantity	Description	Descripción	Serie	K
5	10373190	1	INSULATING MAT	ESTERA AISLANTE		1
6	10373191	1	INSULATING MAT	ESTERA AISLANTE		1
7	10373192	1	INSULATING MAT	ESTERA AISLANTE		1
8	10373193	1	INSULATING MAT	ESTERA AISLANTE		1
9	10373194	1	INSULATING MAT	ESTERA AISLANTE		1
10	10373195	1	INSULATING MAT	ESTERA AISLANTE		1
11	10373196	1	INSULATING MAT	ESTERA AISLANTE		1

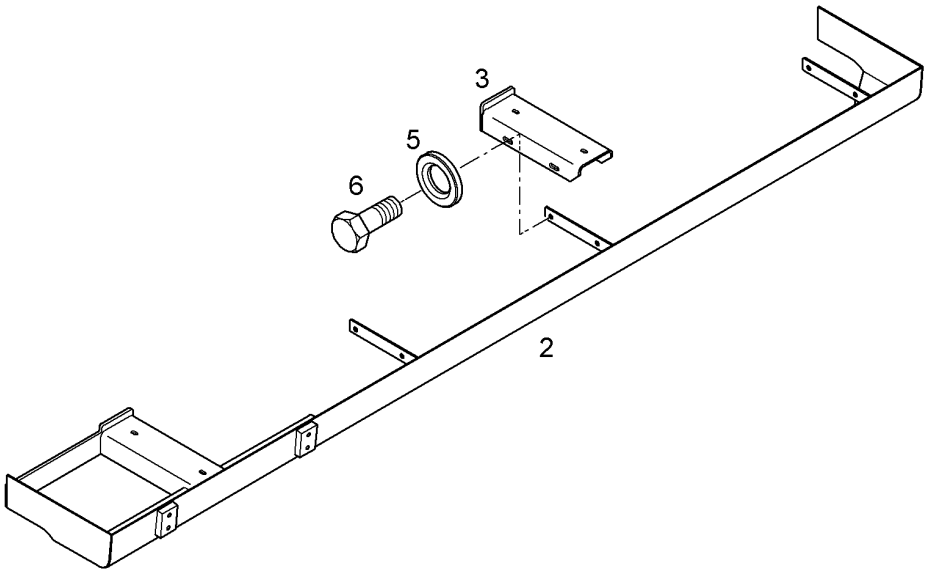

Pos.	Item	Quantity	Description	Descripción	Serie	K
2	10498138	1	GANGWAY	PASILLO MALLA		1
3	10059473	3	BEAM	VIGA		
5	9918226	6	WASHER 12,5/21X3,5	ARANDELA		
6	4066124	6	HEX BOLT ISO 4017 M12X30 10.9 A3C	TORNILLO DE CABEZA HEXAGO		

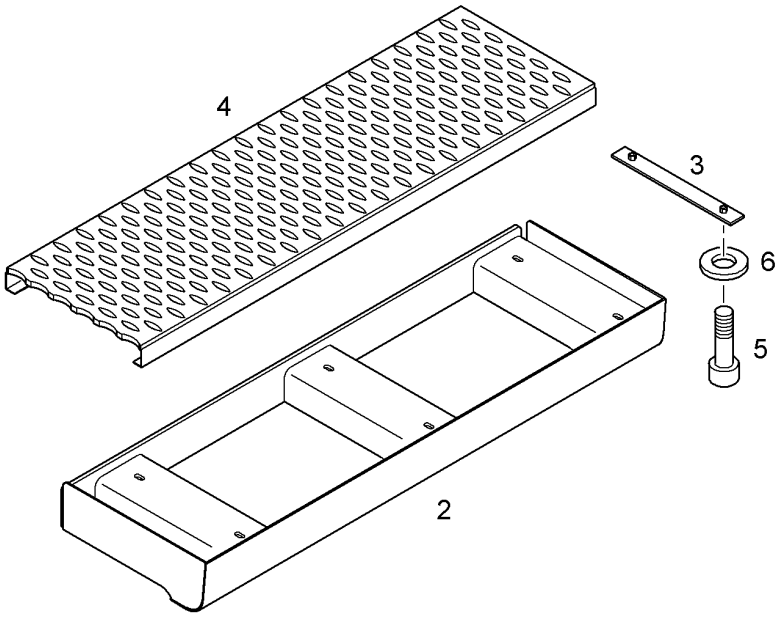

Pos.	Item	Quantity	Description	Descripción	Serie	K
2	10094083	1	CATWALK LEFT IN FRONT	PASARELA		
3	10358292	3	PLATE CPL.	PLACA COMPL.		1
4	9683738	1	GRATING	REJILLA		1
5	4900855	6	CYLINDER SCREW ISO 4762 M10X35 10.9	TORNILLO CILINDRICO		
6	10289795	6	WASHER ISO 7089 10 300HV	ARANDELA		

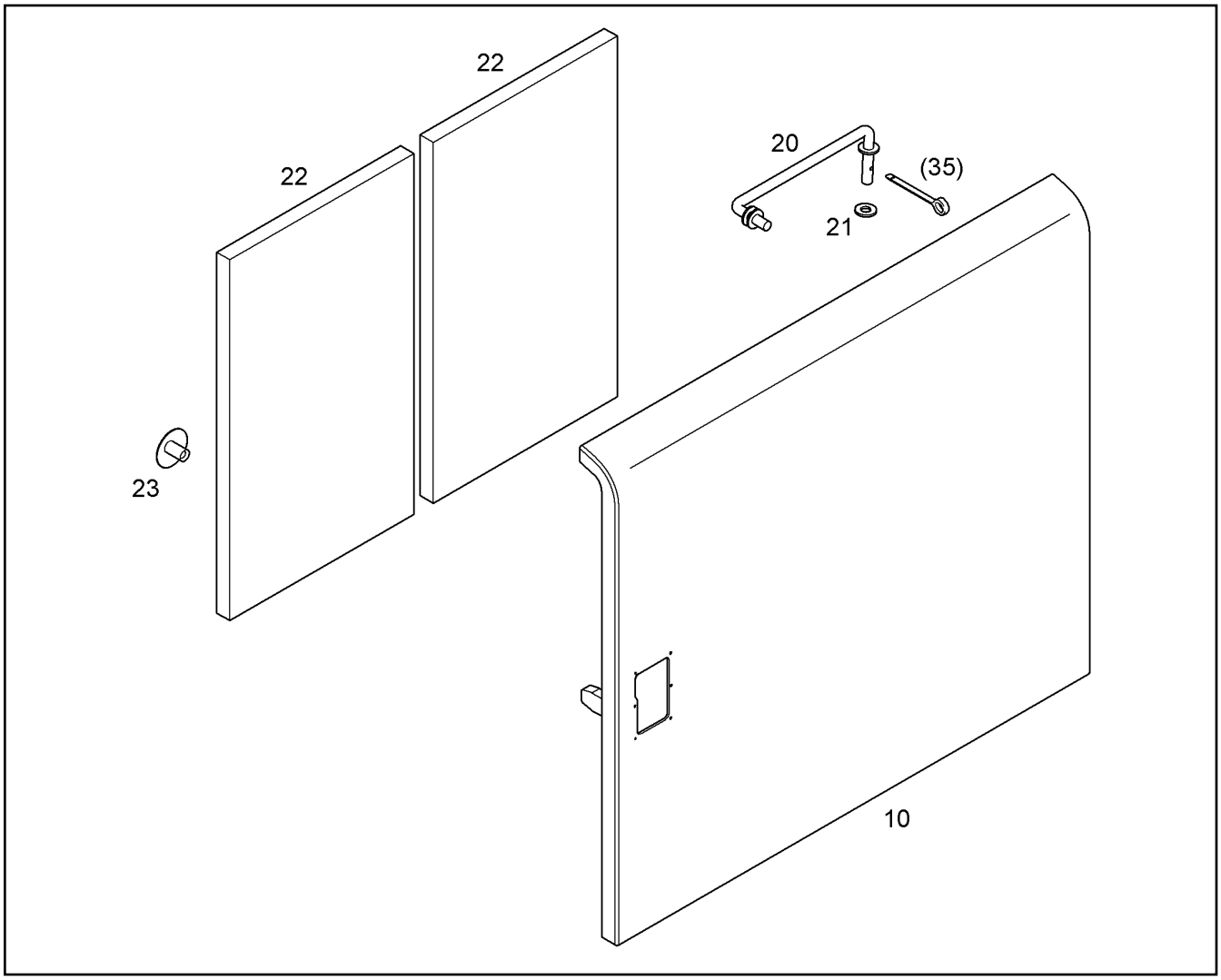

Pos.	Item	Quantity	Description	Descripción	Serie	K
10	10055393	1	SIDE DOOR LEFT	PUERTA LATERAL IZDA.		1
20	10055394	1	ROD	VARILLA		1
21	10289795	1	WASHER ISO 7089 10 300HV	ARANDELA		
22	10055395	2	INSULATING MAT	ESTERA AISLANTE		1
23	10412536	30	CLIP	CLIP		

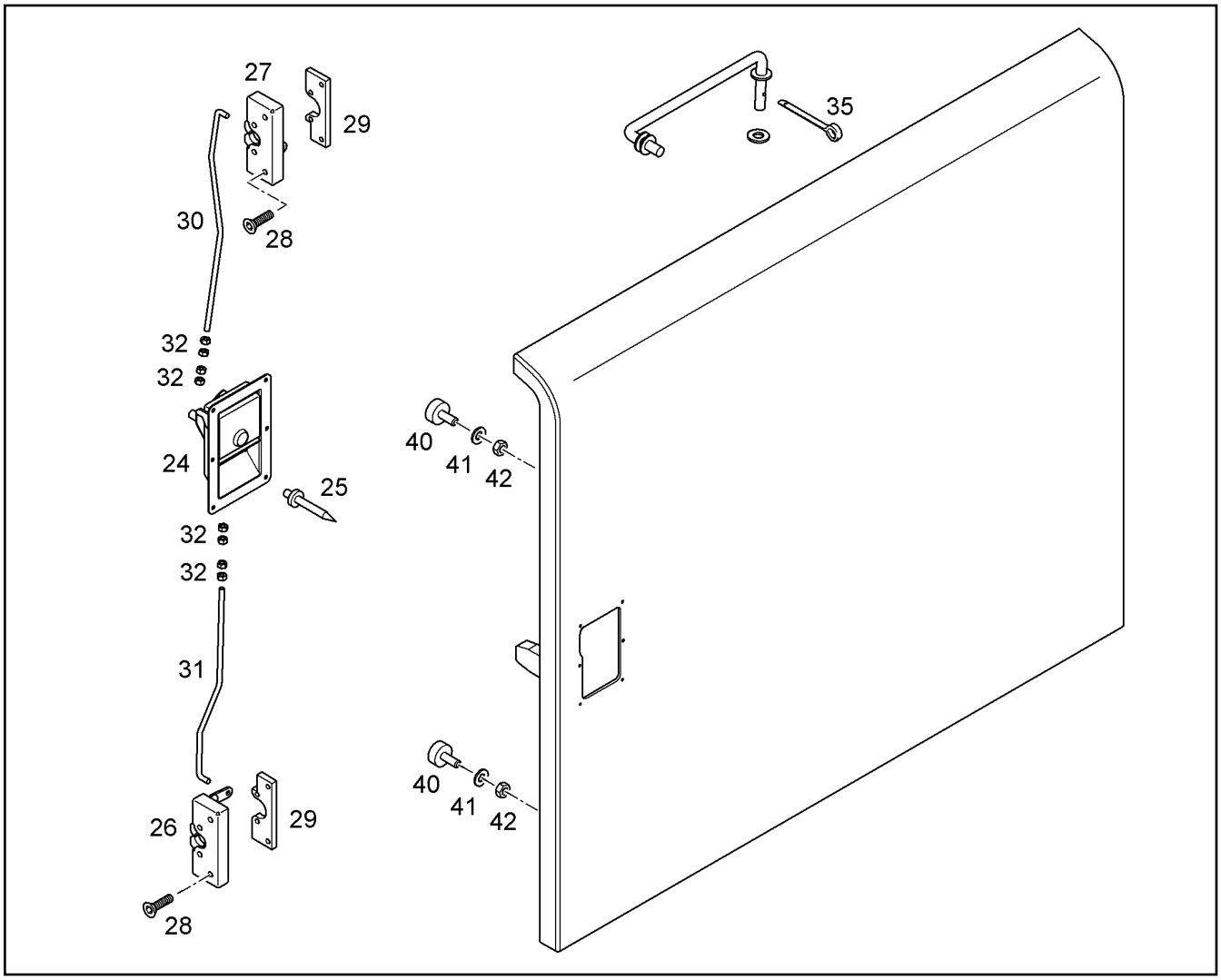

Pos.	Item	Quantity	Description	Descripción	Serie	K
24	7372348	1	LOCK ⇨ ❑ 459	CERRADURA		
25	7009867	6	4			
26	7371008	1	LOCK	CERRADURA		
27	7371009	1	LOCK	CERRADURA		
28	4002419	8	COUNTERSUNK SCREW DIN 7991 M6X35 8.	TORNILLO AVELLANADO		
29	9867368	2	THREADED PLATE	PLACA ROSCADA		1
30	9688995	1	ROD RIGHT	BARRA DCHA.		
31	10067843	1	ROD LEFT	BARRA IZDA.		1
32	4000379	8	HEX NUT M6	TUERCA HEXAGONAL		
35	4330011	1	SPLIT PIN ISO 1234 3,2X 25 ST	PASADOR ALETAS		
40	5004748	2	BUFFER	AMORTIGUADOR GMT		
41	10289802	2	WASHER ISO 7089 6 300HV	ARANDELA		
42	4000379	2	HEX NUT M6	TUERCA HEXAGONAL		

Item	Page	Assembly	Pos.	Quantity	Item	Page	Assembly	Pos.	Quantity
000204750	552	10 08 428 5	84	1	10005078	605	10 12 002 3	16	1
040710450	596	10 12 264 0	100	1	10005440	715	10 35 872 1	235	4
040710450	597	10 12 264 5	100	1	10005440	720	10 35 872 0	31	5
040710450	598	10 12 264 6	100	1	10005440	729	10 49 838 7	23	4
040710450	599	10 12 265 9	100	1	10005440	729	10 49 838 7	31	2
040710450	687	10 12 089 6	100	1	10005440	730	10 49 857 6	23	4
067738450	504	10 09 499 2	41	3	10005440	730	10 49 857 6	31	2
10000269	346	10 05 312 6	22	1	10005670	208	10 42 538 5	9	1
10000277	247	10 07 675 7	60	1	10005672	322	11 00 359 4	1	1
10000292	358	10 35 875 1	61	1	10005674	320	10 02 208 3	2	1
10000362	43	10 35 874 0	76	12	10005675	322	11 00 359 4	7	1
10000362	194	10 49 867 7	29	4	10005677	320	10 02 208 3	1	1
10000362	196	10 49 873 2	29	4	10005679	322	11 00 359 4	8	1
10000362	413	10 05 303 6	4	1	10005863	280	10 16 576 6	1	1
10000362	428	10 49 857 1	4	1	10006131	611	10 11 802 5	18	1
10000380	89	10 07 444 8	14	2	10006191	752	10 34 080 6	30	1
10000463	346	10 05 312 6	24	1	10006191	753	10 34 081 2	30	1
10000465	118	10 35 873 4	9	2.06m	10006354	343	10 35 875 5	24	8
10000797	150	10 33 307 1	13	2	10006362	673	10 11 935 3	3	1
10000811	156	10 33 323 8	2	1	10006362	674	10 11 935 6	3	1
10000815	156	10 33 323 8	3	1	10006370	103	10 05 300 8	8	6
10000896	352	10 05 312 9	25	1	10006370	104	10 05 300 8	22	6
10000947	705	10 35 872 5	124	1	10006370	114	10 35 873 3	4	4
10000947	705	10 35 872 5	134	1	10006370	192	98 89 161	28	2
10000954	350	10 05 312 6	65	1	10006370	422	10 05 303 6	257	1
10001073	41	10 35 874 0	11	3	10006370	437	10 49 857 1	257	1
10001073	122	10 35 879 9	68	8	10006370	493	10 35 876 4	30	12
10001073	413	10 05 303 6	3	3	10006370	700	10 35 872 5	16	8
10001073	416	10 05 303 6	83	2	10006370	720	10 35 872 0	29	2
10001073	428	10 49 857 1	3	3	10006370	795	10 49 815 5	66	6
10001073	431	10 49 857 1	83	2	10006372	221	90 01 781 7	22	2
10001074	134	90 72 922	20	8	10006374	395	10 35 874 4	24	3
10001074	136	90 77 452	20	8	10006550	591	90 77 696	1	1
10001076	704	10 35 872 5	110	3	10006617	316	10 40 689 8	80	1
10001077	221	90 01 781 7	28	6	10007193	300	10 08 576 7	5	1
10001077	704	10 35 872 5	121	8	10007782	624	10 12 720 8	38	1
10001077	706	10 06 477 4	9	4	10007848	499	99 41 040	2	1
10001079	713	10 07 162 8	15	4	10007866	149	10 33 307 0	2	9
10001080	704	10 35 872 5	112	3	10007867	149	10 33 307 0	12	1
10001464	124	10 35 879 9	92	2	10007874	149	10 33 307 0	14	1
10001464	353	10 35 875 1	4	2	10007876	149	10 33 307 0	16	1
10001466	130	10 21 593 5	25	4	10007878	149	10 33 307 0	20	1
10001466	335	10 38 698 2	33	8	10007879	149	10 33 307 0	20	1
10001466	338	10 49 804 4	33	8	10007879	149	10 33 307 0	21	1
10001468	713	10 07 162 8	4	4	10007880	149	10 33 307 0	11	1
10001472	706	10 06 477 4	3	4	10007939	149	10 33 307 0	20	1
10001473	41	10 35 874 0	21	3	10007942	149	10 33 307 0	20	1
10001473	44	10 05 149 1	25	2	10007943	149	10 33 307 0	24	1
10001685	114	10 35 873 3	5	1	10007945	149	10 33 307 0	30	2
10002310	696	10 12 100 3	7	1	10007956	130	10 21 593 5	5	1
10002428	448	10 05 535 4	42	0.613m	10007990	149	10 33 307 0	32	1
10003140	284	73 73 807	26	2	10007991	149	10 33 307 0	38	1
10003192	611	10 11 802 5	8	1	10008049	264	10 33 323 7	11	1
10003192	686	10 12 087 8	4	1	10008109	150	10 33 307 1	10	1
10003366	633	90 78 314	3	1	10008118	156	10 33 323 8	5	1
10003614	361	10 35 875 4	11	1	10008154	174	10 00 795 6	2	1
10003614	368	10 82 438 0	11	1	10008155	174	10 00 795 6	1	1
10003862	701	10 35 872 5	35	1	10008156	174	10 00 795 6	2	1
10005073	578	10 12 503 7	14	2	10008157	174	10 00 795 6	2	1
10005073	582	10 12 593 7	15	4	10008158	174	10 00 795 6	2	1

Item	Page	Assembly	Pos.	Quantity	Item	Page	Assembly	Pos.	Quantity
10008160	174	10 00 795 6	2	1	10011749	751	10 29 135 3	30	1
10008165	174	10 00 795 6	3	1	10011783	587	10 13 080 8	5	2
10008444	316	10 40 689 8	15	1	10011832	575	10 12 016 8	2	1
10008649	316	10 40 689 8	16	0.28m	10011832	576	10 11 874 8	2	1
10008789	707	10 30 331 7	1	1	10011842	629	90 80 436	6	2
10009007	617	10 12 314 1	18	1	10011864	612	10 11 615 0	3	1
10009007	632	90 79 077	7	4	10011864	686	10 12 087 8	7	1
10009007	646	10 11 899 9	3	4	10011866	575	10 12 016 8	3	1
10009007	656	90 80 668	5	4	10011866	576	10 11 874 8	6	3
10009014	472	10 04 678 8	120	1	10011866	612	10 11 615 0	5	1
10009023	477	10 48 809 7	270	2	10011866	617	10 12 314 1	12	5
10009024	478	10 48 809 7	770	1	10011866	621	90 78 554	12	18
10009025	486	70 28 778	730	1	10011866	623	10 12 720 8	23	7
10009027	489	10 48 809 9	450	2	10011866	641	10 11 930 6	8	18
10009043	479	10 48 809 7	800	1	10011866	642	10 11 978 1	7	2
10009044	479	10 48 809 7	810	2	10011866	682	10 12 087 0	1	4
10009045	479	10 48 809 7	820	0.1m	10011866	686	10 12 087 8	5	1
10009053	245	10 29 302 0	20	1	10011866	687	10 12 089 6	6	5
10009053	708	10 00 878 9	20	1	10011866	694	10 12 099 3	5	2
10009053	722	10 30 336 9	20	1	10011866	697	10 12 118 3	1	10
10009054	254	10 29 301 8	21	1	10011867	623	10 12 720 8	24	2
10009055	479	10 48 809 7	970	1	10011867	642	10 11 978 1	9	1
10009056	473	10 04 678 8	480	1	10011867	689	10 12 094 4	14	10
10009058	479	10 48 809 7	980	1	10011867	691	10 12 097 3	8	1
10009079	477	10 48 809 7	260	8	10011867	693	10 12 098 2	5	2
10009090	340	10 05 314 4	2	1	10011867	697	10 12 118 3	2	2
10009183	489	10 48 809 9	300	1	10011868	617	10 12 314 1	9	2
10009188	489	10 48 809 9	390	1	10011868	672	10 11 883 5	2	2
10009189	488	10 48 809 9	275	3	10011869	689	10 12 094 4	11	2
10009189	489	10 48 809 9	440	4	10011870	575	10 12 016 8	6	2
10009201	489	10 48 809 9	490	1	10011870	582	10 12 593 7	19	1
10009208	478	10 48 809 7	440	1	10011870	629	90 80 436	6	2
10009211	482	10 29 114 6	680	1	10011870	682	10 12 087 0	2	2
10009212	482	10 29 114 6	690	1	10011870	689	10 12 094 4	13	4
10009223	469	70 28 774	160	1	10011995	256	90 64 786	110	1
10009225	473	10 04 678 8	400	1	10011995	258	10 01 461 1	110	6
10009228	489	10 48 809 9	290	1	10011996	255	90 64 786	66	1m
10009229	489	10 48 809 9	310	1	10011996	256	90 64 786	166	1m
10009239	550	10 49 815 2	41	1	10012024	256	90 64 786	100	1
10009330	246	10 07 675 7	19	1	10012024	258	10 01 461 1	100	6
10009330	252	10 48 927 7	20	1	10012119	506	10 35 875 8	10	1
10009596	252	10 48 927 7	19	1	10012210	594	10 11 805 1	7	4
10009602	252	10 48 927 7	10	1	10012247	594	10 11 805 1	4	4
10009606	252	10 48 927 7	14	3	10012247	687	10 12 089 6	5	4
10009630	54	10 49 867 0	8	1	10012550	645	10 11 566 7	11	7
10009676	56	10 00 963 0	999	1	10012550	648	10 11 566 8	11	7
10009781	271	10 05 311 8	121	0.9m	10012889	392	10 22 239 3	20	1
10009888	503	10 09 499 2	20	3	10013545	256	90 64 786	161	1
10010154	286	10 05 879 2	30	1	10013545	258	10 01 461 1	161	10
10010154	299	10 05 879 4	30	1	10013550	256	90 64 786	151	1
10010205	465	10 35 876 0	61	30	10013550	258	10 01 461 1	151	10
10010205	466	10 49 857 4	61	30	10013573	331	98 79 063	5	4
10011098	83	98 88 123	31	26	10013635	271	10 05 311 8	90	1
10011098	172	98 88 321	31	26	10013835	252	10 48 927 7	1	1
10011172	695	10 12 099 6	100	1	10013837	252	10 48 927 7	2	3
10011395	56	10 00 963 0	1	1	10013839	252	10 48 927 7	3	1
10011396	56	10 00 963 0	2	1	10013840	252	10 48 927 7	101	1
10011397	56	10 00 963 0	4	1	10013840	252	10 48 927 7	104	1
10011398	56	10 00 963 0	11	2	10013841	252	10 48 927 7	102	1
10011398	58	10 00 967 6	11	2	10013842	252	10 48 927 7	103	1

Item	Page	Assembly	Pos.	Quantity	Item	Page	Assembly	Pos.	Quantity
10013853	252	10 48 927 7	105	1	10016620	438	10 49 857 1	280	1
10013858	252	10 48 927 7	6	2	10016655	250	10 34 071 7	34	1
10013879	471	10 01 407 8	2	1	10016656	250	10 34 071 7	36	4
10013884	253	10 00 933 0	10	1	10016657	250	10 34 071 7	35	1
10013965	484	70 28 778	460	2	10016657	250	10 34 071 7	41	1
10013966	486	70 28 778	580	1	10016658	250	10 34 071 7	39	1
10013970	479	10 48 809 7	1020	2.2m	10016659	250	10 34 071 7	40	1
10013971	486	70 28 778	780	1	10016660	250	10 34 071 7	40	1
10014042	604	10 12 476 3	10	6	10016661	250	10 34 071 7	38	4
10014078	538	10 03 864 3	4	2	10016663	250	10 34 071 7	42	1
10014078	539	10 03 864 4	4	1	10016664	250	10 34 071 7	43	1
10014508	229	92 68 011	35	1	10016665	250	10 34 071 7	45	4
10014508	267	98 82 882	35	1	10016714	47	10 07 535 3	4	1
10014510	73	92 68 751	35	1	10016715	47	10 07 535 3	6	1
10014510	84	98 88 124	35	1	10016716	47	10 07 535 3	5	1
10014510	141	98 86 679	35	1	10016906	578	10 12 503 7	8	3
10014510	173	98 89 282	35	1	10016906	642	10 11 978 1	4	6
10014510	686	10 12 087 8	1	1	10016906	664	10 12 032 2	13	2
10014575	256	90 64 786	140	1	10016906	673	10 11 935 3	2	4
10014575	258	10 01 461 1	140	3	10016906	674	10 11 935 6	2	3
10014589	253	10 00 933 0	10	1	10017158	639	10 11 752 9	5	5
10014611	244	10 29 301 9	999	1	10017322	349	10 05 312 6	55	1
10014611	248	10 29 301 6	999	1	10017344	776	10 02 138 7	110	2
10014611	251	10 48 927 6	999	1	10017824	289	99 68 625	150	1
10014611	707	10 30 331 7	999	1	10017824	304	99 68 611	150	1
10014611	721	10 30 336 8	999	1	10017926	289	99 68 625	160	2
10014638	635	10 11 865 5	15	1	10017926	304	99 68 611	160	2
10014638	656	90 80 668	4	4	10018258	653	10 11 602 6	1	1
10014682	249	10 34 071 7	5	1	10018373	252	10 48 927 7	998	1
10014683	249	10 34 071 7	4	1	10018375	252	10 48 927 7	999	1
10014687	249	10 34 071 7	2	1	10018711	596	10 12 264 0	6	3
10014691	249	10 34 071 7	6	1	10018711	598	10 12 264 6	6	6
10014692	249	10 34 071 7	7	1	10018711	599	10 12 265 9	6	6
10014693	249	10 34 071 7	8	1	10018711	625	10 11 941 3	11	2
10014694	249	10 34 071 7	9	1	10018711	633	90 78 314	2	4
10014697	249	10 34 071 7	13	2	10019101	60	10 07 498 7	12	4
10014701	249	10 34 071 7	18	1	10019101	220	10 05 311 7	5	2
10014729	249	10 34 071 7	11	1	10020735	146	10 10 206 4	3	1
10014730	249	10 34 071 7	12	1	10020738	180	10 44 299 8	2	1
10014777	288	10 46 993 3	55	1	10020738	774	10 02 073 5	2	1
10014778	288	10 46 993 3	50	1	10020739	152	10 33 307 8	1	1
10014779	302	10 46 993 2	55	1	10021308	245	10 29 302 0	999	1
10014780	302	10 46 993 2	50	1	10021308	254	10 29 301 8	999	1
10014790	289	99 68 625	200	1	10021308	708	10 00 878 9	999	1
10014790	304	99 68 611	200	1	10021308	722	10 30 336 9	999	1
10015159	421	10 05 303 6	241	2	10021310	245	10 29 302 0	998	1
10015159	436	10 49 857 1	241	2	10021310	254	10 29 301 8	998	1
10015470	71	56 16 688	999	1	10021310	708	10 00 878 9	998	1
10015471	71	56 16 688	250	2	10021310	722	10 30 336 9	998	1
10015472	71	56 16 688	210	2	10021311	245	10 29 302 0	997	1
10015473	71	56 16 688	110	1	10021311	254	10 29 301 8	997	1
10015474	71	56 16 688	100	1	10021311	708	10 00 878 9	997	1
10015475	71	56 16 688	30	1	10021311	722	10 30 336 9	997	1
10015495	289	99 68 625	100	1	10021387	790	10 09 294 6	10	1
10015495	304	99 68 611	100	1	10021387	791	10 09 294 8	10	1
10015533	71	56 16 688	140	2	10021563	621	90 78 554	13	2
10015712	287	10 46 991 7	10	2	10021823	316	10 40 689 8	72	1
10015712	301	10 46 991 8	10	2	10021882	303	90 16 516	2	1
10016540	308	10 05 798 5	5	2	10022048	322	11 00 359 4	2	1
10016620	423	10 05 303 6	280	1	10022049	322	11 00 359 4	9	2

Item	Page	Assembly	Pos.	Quantity	Item	Page	Assembly	Pos.	Quantity
10022051	322	11 00 359 4	16	1	10029026	204	10 35 873 9	61	1
10022052	323	11 00 359 4	26	1	10029370	276	70 24 996	10	1
10022063	323	11 00 359 4	30	1	10029626	38	90 66 466	11	1
10022067	322	11 00 359 4	11	1	10029863	643	10 13 154 6	7	1
10022068	322	11 00 359 4	18	1	10029877	643	10 13 154 6	2	1
10022069	322	11 00 359 4	15	1	10029880	643	10 13 154 6	4	1
10022070	322	11 00 359 4	17	1	10030062	591	90 77 696	2	1
10022077	322	11 00 359 4	12	1	10030346	645	10 11 566 7	10	5
10022078	322	11 00 359 4	6	1	10030346	648	10 11 566 8	10	5
10022083	322	11 00 359 4	14	1	10030519	675	10 11 903 8	2	1
10022101	629	90 80 436	3	2	10030591	221	90 01 781 7	12	1
10022117	318	10 81 666 6	2	1	10030592	221	90 01 781 7	3	1
10022119	316	10 40 689 8	20	1	10030593	221	90 01 781 7	4	1
10022119	318	10 81 666 6	3	1	10030741	645	10 11 566 7	8	2
10022635	318	10 81 666 6	5	1	10030741	648	10 11 566 8	8	2
10022636	318	10 81 666 6	6	1	10030768	645	10 11 566 7	9	2
10022653	323	11 00 359 4	31	3	10030768	648	10 11 566 8	9	1
10022656	322	11 00 359 4	10	4	10030866	45	10 22 121 2	5	2
10022766	320	10 02 208 3	3	1	10030891	244	10 29 301 9	5	1
10022766	321	10 02 211 7	7	2	10031940	201	10 35 873 9	38	6
10022766	324	10 02 207 8	2	1	10032001	619	10 30 300 7	7	1
10022767	321	10 02 211 7	3	2	10032752	364	10 35 875 4	26	1
10022767	326	10 02 277 7	5	2	10032752	371	10 82 438 0	26	1
10022768	326	10 02 277 7	4	2	10032906	575	10 12 016 8	5	2
10022769	321	10 02 211 7	2	2	10035541	165	10 41 064 0	20	1
10022769	326	10 02 277 7	3	2	10035542	165	10 41 064 0	20	1
10022770	97	10 36 190 7	8	1	10035543	165	10 41 064 0	20	1
10022770	326	10 02 277 7	2	1	10035544	165	10 41 064 0	20	1
10022771	326	10 02 277 7	1	1	10035575	581	10 12 021 3	9	2
10022772	325	10 02 211 9	2	1	10035575	632	90 79 077	4	8
10022773	319	10 02 206 9	5	1	10035575	638	10 11 763 3	11	1
10022774	319	10 02 206 9	3	1	10035576	640	10 11 753 0	4	2
10022775	319	10 02 206 9	2	2	10035577	638	10 11 763 3	10	2
10022776	321	10 02 211 7	20	1	10035578	627	90 79 075	2	4
10022777	321	10 02 211 7	19	1	10035578	628	90 79 076	2	4
10022778	321	10 02 211 7	18	1	10035578	631	10 11 570 0	12	4
10022779	321	10 02 211 7	16	2	10035581	627	90 79 075	3	3
10022780	321	10 02 211 7	15	1	10035581	628	90 79 076	3	3
10022781	321	10 02 211 7	13	2	10035581	675	10 11 903 8	3	1
10022782	321	10 02 211 7	12	2	10035583	664	10 12 032 2	7	10
10022783	321	10 02 211 7	5	6	10035584	664	10 12 032 2	9	2
10022785	321	10 02 211 7	4	2	10035584	676	90 80 459	3	4
10022787	321	10 02 211 7	1	1	10035584	677	10 12 039 3	2	6
10023106	321	10 02 211 7	11	2	10035593	581	10 12 021 3	5	4
10023245	488	10 48 809 9	270	6	10035593	583	10 11 694 5	5	2
10024115	576	10 11 874 8	4	1	10035593	638	10 11 763 3	7	4
10024115	663	98 85 618	4	2	10035594	581	10 12 021 3	4	6
10024192	489	10 48 809 9	500	1	10035594	629	90 80 436	4	2
10024214	514	10 01 211 9	2	1	10036129	654	90 80 641	2	3
10024583	408	10 11 355 7	61	2	10036326	600	10 11 805 2	8	1
10024675	372	10 00 909 0	11	3	10036401	572	10 12 907 1	7	13
10024864	312	99 37 443	2	1	10036473	613	10 11 716 7	5	1
10025124	660	90 76 531	1	1	10036521	577	90 78 049	2	2
10027260	255	90 64 786	26	1	10036521	684	10 12 087 3	1	16
10027260	257	10 01 461 1	26	4	10036533	306	90 13 811	3	1
10027438	470	70 28 775	251	2	10036651	572	10 12 907 1	8	2
10027643	503	10 09 499 2	19	4	10036913	582	10 12 593 7	8	2
10027648	643	10 13 154 6	8	2	10036913	683	10 12 087 1	3	2
10027937	631	10 11 570 0	10	2	10037030	689	10 12 094 4	8	1
10028013	467	10 35 876 8	21	4	10037030	693	10 12 098 2	6	4

Item	Page	Assembly	Pos.	Quantity	Item	Page	Assembly	Pos.	Quantity
10037071	581	10 12 021 3	3	9	10040324	287	10 46 991 7	30	1
10037071	582	10 12 593 7	16	20	10040324	301	10 46 991 8	30	1
10037072	581	10 12 021 3	7	3	10040326	301	10 46 991 8	20	1
10037073	581	10 12 021 3	8	3	10040327	287	10 46 991 7	20	1
10037101	574	90 78 548	3	1	10040386	638	10 11 763 3	8	1
10037106	579	10 12 375 9	16	1	10040386	691	10 12 097 3	5	1
10037107	581	10 12 021 3	10	2	10040387	638	10 11 763 3	4	2
10037107	607	10 12 475 6	21	4	10040387	639	10 11 752 9	8	2
10037107	608	10 12 475 7	21	4	10040387	690	10 12 096 2	2	2
10037107	625	10 11 941 3	10	4	10040387	691	10 12 097 3	6	2
10037108	581	10 12 021 3	6	4	10040400	622	10 11 781 4	2	1
10037204	447	10 05 535 4	24	1	10040776	256	90 64 786	120	1
10037209	415	10 05 303 6	80	1	10040776	258	10 01 461 1	120	2
10037209	430	10 49 857 1	80	1	10040777	256	90 64 786	125	1
10037214	413	10 05 303 6	27	1	10040777	258	10 01 461 1	125	2
10037214	428	10 49 857 1	27	1	10040778	256	90 64 786	126	1
10037224	639	10 11 752 9	6	2	10040778	258	10 01 461 1	126	2
10037224	690	10 12 096 2	3	2	10040779	256	90 64 786	127	1
10037309	582	10 12 593 7	17	4	10040779	258	10 01 461 1	127	2
10037312	637	90 79 863	5	3	10040984	659	90 76 530	2	1
10037313	637	90 79 863	6	1	10040984	660	90 76 531	2	1
10037518	572	10 12 907 1	10	8	10041304	630	90 78 417	11	1
10037583	149	10 33 307 0	26	1	10041726	719	10 35 872 0	8	1
10037594	154	10 33 322 7	3	2	10041876	316	10 40 689 8	45	1
10037617	96	10 09 107 4	8	1	10041876	524	10 35 876 3	30	3
10037617	340	10 05 314 4	13	1	10041876	531	10 49 837 7	30	3
10037617	341	10 82 438 9	13	1	10041903	629	90 80 436	5	2
10037617	342	56 09 948	10	1	10042111	488	10 48 809 9	285	1
10037655	617	10 12 314 1	7	1	10043136	607	10 12 475 6	18	1
10037655	623	10 12 720 8	21	1	10043136	608	10 12 475 7	18	2
10037722	711	10 38 862 4	5	12	10043180	279	10 05 736 2	20	1
10037722	711	10 38 862 4	17	4	10043180	467	10 35 876 8	30	1
10037722	719	10 35 872 0	10	14	10043241	378	10 22 099 7	27	1
10037722	720	10 35 872 0	25	4	10043255	640	10 11 753 0	2	3
10037723	247	10 07 675 7	57	3	10043255	690	10 12 096 2	1	3
10037723	711	10 38 862 4	8	19	10043525	256	90 64 786	170	1m
10037723	711	10 38 862 4	26	2	10043525	258	10 01 461 1	170	10m
10037723	719	10 35 872 0	13	5	10043631	270	10 05 311 8	51	1
10037723	719	10 35 872 0	16	2	10043632	269	10 05 311 8	50	1
10037724	711	10 38 862 4	4	12	10044326	470	70 28 775	170	1
10037724	720	10 35 872 0	24	4	10044328	470	70 28 775	1060	1
10037726	711	10 38 862 4	16	4	10044330	472	10 04 678 8	310	6
10037726	719	10 35 872 0	9	14	10044343	478	10 48 809 7	490	3
10037727	711	10 38 862 4	25	2	10044344	478	10 48 809 7	792	1
10037727	719	10 35 872 0	12	5	10044347	479	10 48 809 7	870	1
10037728	247	10 07 675 7	58	3	10044353	486	70 28 778	610	1
10037728	711	10 38 862 4	7	19	10044355	484	70 28 778	150	1
10037728	719	10 35 872 0	15	2	10044359	489	10 48 809 9	550	1
10038573	642	10 11 978 1	3	4	10044373	96	10 09 107 4	1	2
10038573	689	10 12 094 4	3	3	10044373	606	10 12 002 7	2	1
10038573	693	10 12 098 2	7	4	10044373	607	10 12 475 6	5	1
10038643	309	10 08 142 4	10	1	10044430	651	10 11 558 7	5	6
10038644	310	10 08 142 6	10	1	10044430	652	10 11 678 0	5	6
10039124	618	10 12 282 4	3	2	10044692	635	10 11 865 5	12	1
10039562	469	70 28 774	830	1	10045356	675	10 11 903 8	5	1
10039678	486	70 28 778	621	2	10045530	511	10 06 221 6	20	2
10040064	635	10 11 865 5	4	1	10045530	512	10 35 876 2	20	2
10040134	133	10 44 145 6	26	1	10045530	513	10 49 837 6	20	2
10040322	287	10 46 991 7	25	2	10046783	474	10 04 678 9	2010	2
10040322	301	10 46 991 8	25	2	10046788	468	10 47 616 7	50	1

Item	Page	Assembly	Pos.	Quantity	Item	Page	Assembly	Pos.	Quantity
10046789	472	10 04 678 8	110	1	10055381	430	10 49 857 1	70	1
10049759	465	10 35 876 0	35	1	10055382	452	10 05 538 1	10	1
10049759	466	10 49 857 4	35	1	10055392	415	10 05 303 6	60	1
10050911	718	10 05 091 3	2	1	10055392	430	10 49 857 1	60	1
10050913	714	10 35 872 1	6	4	10055393	801	10 05 539 2	10	1
10051238	44	10 05 149 1	20	1	10055394	456	10 05 541 0	30	1
10051491	41	10 35 874 0	20	1	10055394	801	10 05 539 2	20	1
10051492	44	10 05 149 1	10	1	10055395	801	10 05 539 2	22	2
10051671	116	10 35 873 3	30	1	10055410	416	10 05 303 6	110	1
10052716	104	10 05 300 8	10	1	10055410	431	10 49 857 1	110	1
10053008	91	10 35 874 2	165	1	10055411	456	10 05 541 0	10	1
10053008	93	10 49 853 2	165	1	10055413	456	10 05 541 0	20	1
10053024	91	10 35 874 2	700	1	10055414	457	10 05 541 0	32	1
10053024	93	10 49 853 2	700	1	10055415	457	10 05 541 0	40	1
10053025	91	10 35 874 2	6000	1	10055416	457	10 05 541 0	41	1
10053036	92	10 35 874 2	8500	1	10055417	453	10 05 543 3	21	6
10053036	93	10 49 853 2	8500	1	10055417	456	10 05 541 0	21	9
10053109	108	10 35 873 5	555	1	10055433	416	10 05 303 6	85	1
10053117	219	10 05 302 4	2	1	10055433	431	10 49 857 1	85	1
10053118	268	10 05 302 5	20	1	10055434	453	10 05 543 3	10	1
10053126	332	10 35 874 7	60	1	10055436	453	10 05 543 3	20	1
10053126	333	10 49 853 7	60	1	10055437	454	10 05 543 3	30	1
10053129	332	10 35 874 7	70	1	10055439	453	10 05 543 3	22	3
10053129	333	10 49 853 7	70	1	10055440	454	10 05 543 3	32	1
10053143	394	10 35 874 4	5	1	10055453	417	10 05 303 6	125	1
10053144	332	10 35 874 7	25	1	10055453	432	10 49 857 1	125	1
10053190	540	10 35 875 6	2	1	10055455	455	10 05 545 3	10	1
10054419	202	10 35 873 9	40	2	10055456	455	10 05 545 3	20	1
10054420	201	10 35 873 9	35	1	10055464	413	10 05 303 6	20	1
10054421	201	10 35 873 9	36	1	10055464	428	10 49 857 1	20	1
10054422	201	10 35 873 9	37	1	10055465	451	10 05 546 4	10	1
10054423	201	10 35 873 9	30	1	10055466	451	10 05 546 4	20	1
10054532	545	10 35 868 3	2	1	10055481	413	10 05 303 6	11	1
10054772	493	10 35 876 4	32	8	10055481	428	10 49 857 1	11	1
10054797	110	10 49 845 5	2	1	10056468	715	10 35 872 1	230	1
10054800	110	10 49 845 5	3	1	10056474	736	10 05 646 8	2	1
10054811	110	10 49 845 5	5	1	10056475	737	10 35 872 3	2	1
10055117	117	10 35 873 3	51	1	10056519	715	10 35 872 1	232	2
10055118	117	10 35 873 3	50	1	10057335	702	10 35 872 5	62	4
10055303	413	10 05 303 6	10	1	10057336	702	10 35 872 5	63	2
10055303	428	10 49 857 1	10	1	10057362	277	10 05 798 3	10	1
10055304	443	10 05 530 3	10	1	10057651	7	.	5	1
10055305	443	10 05 530 3	20	1	10057656	7	.	3	1
10055306	422	10 05 303 6	250	1	10057978	104	10 05 300 8	20	1
10055306	437	10 49 857 1	250	1	10057983	269	10 05 311 8	20	1
10055309	444	10 05 530 3	30	1	10057985	269	10 05 311 8	40	1
10055310	444	10 05 530 3	31	1	10057988	308	10 05 798 5	2	1
10055311	444	10 05 530 3	32	1	10058016	105	10 05 797 8	2	1
10055312	444	10 05 530 3	33	1	10058018	105	10 05 797 8	3	1
10055313	444	10 05 530 3	34	2	10058048	103	10 05 300 8	2	1
10055317	444	10 05 530 3	38	3	10058095	105	10 05 797 8	9	1
10055318	443	10 05 530 3	23	2	10058104	194	10 49 867 7	22	2
10055352	452	10 05 538 1	11	1	10058351	199	10 35 873 9	10	4
10055354	413	10 05 303 6	2	1	10058506	100	10 35 875 3	6	1
10055354	428	10 49 857 1	2	1	10058623	423	10 05 303 6	270	1
10055355	447	10 05 535 4	10	1	10058623	438	10 49 857 1	270	1
10055357	448	10 05 535 4	31	1	10058792	285	10 06 804 1	3	1
10055358	448	10 05 535 4	32	1	10058794	298	10 06 804 5	3	1
10055359	448	10 05 535 4	33	1	10058895	493	10 35 876 4	2	1
10055381	415	10 05 303 6	70	1	10058949	286	10 05 879 2	15	1

Item	Page	Assembly	Pos.	Quantity	Item	Page	Assembly	Pos.	Quantity
10058949	299	10 05 879 4	15	1	10065437	344	10 35 875 5	30	1
10058975	715	10 35 872 1	170	2	10065439	124	10 35 879 9	90	1
10059208	705	10 35 872 5	126	1	10065440	344	10 35 875 5	32	1
10059445	117	10 35 873 3	70	1	10065571	334	10 38 698 2	15	1
10059473	799	10 49 815 3	3	3	10065571	337	10 49 804 4	15	1
10059814	713	10 07 162 8	5	1	10065774	530	10 49 837 7	26	1
10059839	546	10 35 868 3	40	1	10065818	704	10 35 872 5	102	1
10059938	493	10 35 876 4	15	1	10065821	701	10 35 872 5	32	1
10059995	466	10 49 857 4	45	1	10065825	704	10 35 872 5	101	1
10060891	199	10 35 873 9	15	8	10065827	701	10 35 872 5	29	1
10060949	116	10 35 873 3	40	1	10065842	701	10 35 872 5	34	1
10061167	354	10 35 875 1	15	1	10065846	701	10 35 872 5	33	1
10061171	354	10 35 875 1	16	1	10065850	701	10 35 872 5	31	1
10062216	703	10 35 872 5	100	1	10065863	701	10 35 872 5	30	1
10062223	511	10 06 221 6	10	1	10065942	701	10 35 872 5	28	2
10062223	512	10 35 876 2	10	1	10065951	701	10 35 872 5	45	1
10062226	502	10 09 499 0	10	1	10065955	701	10 35 872 5	44	1
10062228	494	10 35 875 7	70	1	10065983	444	10 05 530 3	40	2
10062229	515	10 06 222 8	10	1	10066004	212	10 49 800 0	16	1
10062253	421	10 05 303 6	212	1	10066005	212	10 49 800 0	13	1
10062253	436	10 49 857 1	212	1	10066006	212	10 49 800 0	14	1
10062288	465	10 35 876 0	2	1	10066007	212	10 49 800 0	15	1
10062288	466	10 49 857 4	2	1	10066008	504	10 09 499 2	50	1
10062296	465	10 35 876 0	10	1	10066009	508	10 35 875 8	41	1
10062296	466	10 49 857 4	10	1	10066010	508	10 35 875 8	42	1
10062299	465	10 35 876 0	15	1	10066011	278	10 05 798 3	42	1
10062299	466	10 49 857 4	15	1	10066036	700	10 35 872 5	3	1
10062300	465	10 35 876 0	20	1	10066076	278	10 05 798 3	41	1
10062300	466	10 49 857 4	20	1	10066099	525	10 35 876 3	41	1
10062306	465	10 35 876 0	25	1	10066099	532	10 49 837 7	41	1
10062306	466	10 49 857 4	25	1	10066099	546	10 35 868 3	60	1
10062308	465	10 35 876 0	45	1	10066101	559	10 35 876 6	54	1
10063553	418	10 05 303 6	150	1	10066101	563	10 49 863 6	54	1
10063553	433	10 49 857 1	150	1	10066158	504	10 09 499 2	90	1
10063555	462	10 06 355 3	2	1	10066219	493	10 35 876 4	10	1
10063605	447	10 05 535 4	11	1	10066253	504	10 09 499 2	80	1
10063606	450	10 06 360 5	2	1	10066267	508	10 35 875 8	43	1
10063611	450	10 06 360 5	20	1	10066281	706	10 06 477 4	10	1
10063755	420	10 05 303 6	200	1	10066285	715	10 35 872 1	202	2
10063755	435	10 49 857 1	200	1	10066360	396	10 35 874 4	32	8
10063756	460	10 06 375 5	10	1	10066383	706	10 06 477 4	15	1
10063758	460	10 06 375 5	20	1	10066456	701	10 35 872 5	48	1
10063818	448	10 05 535 4	34	1	10066484	271	10 05 311 8	70	1
10063827	461	10 06 375 5	35	1	10066497	458	10 05 541 1	2	1
10063957	212	10 49 800 0	12	1	10066550	352	10 05 312 9	21	1
10063991	713	10 07 162 8	3	1	10066552	346	10 05 312 6	15	1
10064100	344	10 35 875 5	41	1	10066832	110	10 49 845 5	28	1
10064480	203	10 35 873 9	50	1	10066841	702	10 35 872 5	73	1
10064585	203	10 35 873 9	55	1	10066843	702	10 35 872 5	70	1
10064613	207	10 35 873 9	110	1	10066863	217	10 49 800 0	100	1
10064616	210	10 06 461 3	10	1	10066930	454	10 05 543 3	34	2
10064617	210	10 06 461 3	20	1	10067588	541	10 35 875 6	15	4
10064709	397	10 35 874 4	56	1	10067637	115	10 35 873 3	20	1
10064774	700	10 35 872 5	24	1	10067638	115	10 35 873 3	19	1
10064775	704	10 35 872 5	103	1	10067717	396	10 35 874 4	35	1
10064888	242	10 07 604 7	30	1	10067722	403	10 06 771 7	2	1
10064899	704	10 35 872 5	107	1	10067724	403	10 06 771 7	3	1
10064900	704	10 35 872 5	106	6	10067726	403	10 06 771 7	4	1
10065182	206	10 35 873 9	90	1	10067728	403	10 06 771 7	5	1
10065428	351	10 05 312 9	4	1	10067730	403	10 06 771 7	6	1

Item	Page	Assembly	Pos.	Quantity	Item	Page	Assembly	Pos.	Quantity
10067732	403	10 06 771 7	7	1	10074987	41	10 35 874 0	13	1
10067734	403	10 06 771 7	8	1	10075352	47	10 07 535 3	3	1
10067736	403	10 06 771 7	9	1	10075353	43	10 35 874 0	62	2
10067738	403	10 06 771 7	10	1	10075356	47	10 07 535 3	2	1
10067754	269	10 05 311 8	10	1	10076042	329	10 82 924 8	10	1
10067796	508	10 35 875 8	70	2	10076047	91	10 35 874 2	1400	1
10067843	802	10 05 539 2	31	1	10076047	93	10 49 853 2	1400	1
10067869	271	10 05 311 8	100	1	10076083	529	10 49 837 7	11	1
10067947	101	10 35 875 3	15	1	10076085	521	10 07 608 3	30	1
10067961	421	10 05 303 6	217	1	10076111	508	10 35 875 8	40	1
10067961	436	10 49 857 1	217	1	10076219	210	10 06 461 3	30	1
10068038	465	10 35 876 0	50	1	10076271	7	.	13	1
10068038	466	10 49 857 4	50	1	10076346	503	10 09 499 2	33	1
10068041	278	10 05 798 3	50	1	10076756	242	10 07 604 7	10	1
10068045	291	10 82 277 5	52	1	10076757	242	10 07 604 7	20	1
10068163	403	10 06 771 7	20	2	10076826	334	10 38 698 2	11	1
10068164	403	10 06 771 7	21	2	10076826	337	10 49 804 4	11	1
10068165	403	10 06 771 7	25	1	10076829	425	10 05 303 6	300	1
10068167	403	10 06 771 7	26	1	10076829	440	10 49 857 1	300	1
10068169	403	10 06 771 7	30	1	10077072	495	10 35 875 7	120	1
10068170	403	10 06 771 7	31	1	10077073	529	10 49 837 7	10	2
10068187	403	10 06 771 7	35	1	10077268	362	10 35 875 4	12	1
10068188	403	10 06 771 7	36	1	10077268	369	10 82 438 0	12	1
10068223	396	10 35 874 4	26	1	10077643	504	10 09 499 2	55	1
10070310	559	10 35 876 6	53	1	10077900	278	10 05 798 3	43	1
10070310	563	10 49 863 6	53	1	10077922	465	10 35 876 0	55	1
10070615	771	10 35 873 1	60	2	10077922	466	10 49 857 4	55	1
10070620	740	10 07 061 5	2	1	10078627	419	10 05 303 6	186	1
10070621	740	10 07 061 5	3	1	10078627	434	10 49 857 1	186	1
10071345	200	10 35 873 9	20	1	10079008	278	10 05 798 3	92	1
10071592	419	10 05 303 6	180	1	10079010	292	10 82 277 5	93	1
10071592	434	10 49 857 1	180	1	10079148	314	10 06 648 4	10	1
10071618	557	10 35 876 6	10	1	10079187	445	10 05 530 3	50	1
10071618	561	10 49 863 6	10	1	10079194	445	10 05 530 3	53	1
10071620	557	10 35 876 6	11	1	10079251	327	10 06 786 9	10	1
10071620	561	10 49 863 6	11	1	10079252	327	10 06 786 9	15	1
10071628	715	10 35 872 1	40	1	10079253	327	10 06 786 9	20	1
10071665	557	10 35 876 6	12	1	10079307	327	10 06 786 9	25	1
10071665	561	10 49 863 6	12	1	10079999	41	10 35 874 0	26	1
10071668	557	10 35 876 6	13	1	10080000	41	10 35 874 0	27	1
10071668	561	10 49 863 6	13	1	10080466	278	10 05 798 3	91	1
10071669	557	10 35 876 6	15	1	10080490	290	10 08 046 6	8	1
10071669	561	10 49 863 6	15	1	10080491	290	10 08 046 6	9	1
10071670	557	10 35 876 6	16	1	10080583	793	10 82 390 4	20	1
10071670	561	10 49 863 6	16	1	10080708	207	10 35 873 9	100	1
10071836	354	10 35 875 1	10	1	10081306	116	10 35 873 3	35	1
10072141	353	10 35 875 1	6	1	10081307	116	10 35 873 3	38	1
10072148	350	10 05 312 6	61	1	10081364	543	10 05 319 0	10	1
10072165	356	10 35 875 1	45	2	10081424	308	10 05 798 5	10	1
10072416	200	10 35 873 9	25	2	10081426	308	10 05 798 5	20	1
10072688	247	10 07 675 7	77	1	10082560	308	10 05 798 5	40	1
10073043	419	10 05 303 6	185	1	10082605	733	10 35 873 7	15	2
10073043	434	10 49 857 1	185	1	10082606	733	10 35 873 7	16	2
10073300	41	10 35 874 0	24	1	10083506	193	10 49 867 7	6	1
10073303	41	10 35 874 0	25	1	10083506	195	10 49 873 2	6	1
10073593	107	10 35 875 9	21	1	10083630	278	10 05 798 3	100	1
10073622	355	10 35 875 1	20	1	10084285	550	10 49 815 2	10	1
10074448	41	10 35 874 0	14	1	10084451	793	10 82 390 4	40	1
10074612	397	10 35 874 4	57	1	10084481	517	10 06 222 8	35	2
10074636	705	10 35 872 5	133	1	10084941	508	10 35 875 8	61	1

Item	Page	Assembly	Pos.	Quantity	Item	Page	Assembly	Pos.	Quantity
10084986	507	10 35 875 8	34	1	10096412	793	10 82 390 4	21	1
10084989	507	10 35 875 8	35	4	10096670	102	10 35 875 3	30	1
10085121	517	10 06 222 8	30	1	10096795	102	10 35 875 3	41	2
10085767	293	10 82 277 5	146	1	10097983	45	10 22 121 2	3	1
10085768	300	10 08 576 7	4	1	10097983	46	10 29 067 4	3	1
10085769	300	10 08 576 7	6	1	10099876	49	10 47 076 9	2	1
10086265	291	10 82 277 5	78	1	10099877	49	10 47 076 9	3	2
10086360	734	10 08 685 3	10	1	10099878	49	10 47 076 9	5	4
10086392	508	10 35 875 8	60	1	10099879	49	10 47 076 9	7	2
10086421	525	10 35 876 3	42	1	10099881	49	10 47 076 9	9	2
10086421	532	10 49 837 7	42	1	10099925	537	10 06 577 4	2	1
10086853	733	10 35 873 7	20	1	10100304	578	10 12 503 7	9	1
10086854	734	10 08 685 3	15	2	10100620	117	10 35 873 3	55	5
10086855	734	10 08 685 3	20	1	10100680	150	10 33 307 1	19	2
10086856	734	10 08 685 3	30	2	10100781	661	90 76 550	1	1
10086857	734	10 08 685 3	25	1	10100782	658	90 79 187	12	2
10087065	503	10 09 499 2	25	1	10100944	346	10 05 312 6	10	1
10087958	381	10 35 874 5	20	1	10100946	352	10 05 312 9	20	1
10088112	550	10 49 815 2	20	1	10101225	474	10 04 678 9	600	1
10089716	455	10 05 545 3	21	1	10101543	604	10 12 476 3	12	9
10091073	94	10 36 190 5	1	1	10101543	617	10 12 314 1	4	3
10091074	94	10 36 190 5	3	1	10101649	594	10 11 805 1	6	8
10091074	95	10 09 107 3	1	1	10101654	130	10 21 593 5	27	2
10091074	97	10 36 190 7	1	1	10102064	130	10 21 593 5	3	1
10092096	343	10 35 875 5	5	2	10102066	150	10 33 307 1	1	1
10092371	421	10 05 303 6	231	1	10102067	146	10 10 206 4	2	1
10092371	436	10 49 857 1	231	1	10102068	146	10 10 206 4	10	1
10092431	421	10 05 303 6	210	1	10112497	630	90 78 417	7	3
10092431	436	10 49 857 1	210	1	10112718	611	10 11 802 5	17	4
10092451	421	10 05 303 6	232	1	10113557	395	10 35 874 4	20	1
10092451	436	10 49 857 1	232	1	10113731	605	10 12 002 3	9	2
10092471	421	10 05 303 6	230	1	10113975	661	90 76 550	2	1
10092471	436	10 49 857 1	230	1	10115005	264	10 33 323 7	3	1
10092946	7	.	7	1	10115007	264	10 33 323 7	4	1
10092948	7	.	8	1	10115009	264	10 33 323 7	6	1
10093284	344	10 35 875 5	40	1	10115013	264	10 33 323 7	7	1
10093804	193	10 49 867 7	2	1	10115014	131	10 42 845 9	22	3
10093804	195	10 49 873 2	2	1	10115018	176	10 34 668 4	14	3
10093805	193	10 49 867 7	3	1	10115021	176	10 34 668 4	13	1
10093805	195	10 49 873 2	3	1	10115022	264	10 33 323 7	8	1
10093806	193	10 49 867 7	4	1	10115023	157	10 33 324 2	15	1
10093806	195	10 49 873 2	4	1	10115072	153	10 33 322 6	26	2
10093807	193	10 49 867 7	5	1	10115072	176	10 34 668 4	16	2
10093807	195	10 49 873 2	5	1	10115072	178	10 40 975 1	19	1
10093820	446	10 05 530 3	70	1	10115237	130	10 21 593 5	24	4
10093901	446	10 05 530 3	71	1	10115237	131	10 42 845 9	35	4
10094067	795	10 49 815 5	25	1	10115549	651	10 11 558 7	1	1
10094083	800	10 49 815 4	2	1	10115549	652	10 11 678 0	1	1
10094990	494	10 35 875 7	40	1	10115561	647	10 13 274 6	1	1
10094992	502	10 09 499 0	20	1	10115562	647	10 13 274 6	2	1
10094995	525	10 35 876 3	40	1	10115584	651	10 11 558 7	3	1
10094996	494	10 35 875 7	22	1	10115584	652	10 11 678 0	3	1
10095054	504	10 09 499 2	51	1	10115587	569	10 12 595 9	432	1
10095387	112	10 36 623 6	2	1	10115608	642	10 11 978 1	6	2
10095388	113	10 09 538 7	2	1	10115612	645	10 11 566 7	2	1
10096203	557	10 35 876 6	18	1	10115614	648	10 11 566 8	2	1
10096203	561	10 49 863 6	18	1	10115621	649	10 13 273 9	4	1
10096204	557	10 35 876 6	19	1	10115621	650	10 13 274 0	4	1
10096204	561	10 49 863 6	19	1	10115623	649	10 13 273 9	6	1
10096391	394	10 35 874 4	6	1	10115623	650	10 13 274 0	6	1

Item	Page	Assembly	Pos.	Quantity	Item	Page	Assembly	Pos.	Quantity
10115623	694	10 12 099 3	3	2	10117529	568	10 12 595 9	380	1
10115667	644	10 11 566 9	1	1	10117530	639	10 11 752 9	1	1
10115668	644	10 11 566 9	2	1	10117531	640	10 11 753 0	2	1
10115669	569	10 12 595 9	410	1	10117568	117	10 35 873 3	52	2
10115670	664	10 12 032 2	11	1	10117576	640	10 11 753 0	3	3
10115700	568	10 12 595 9	230	1	10117633	569	10 12 595 9	385	1
10115701	631	10 11 570 0	4	1	10117635	617	10 12 314 1	14	1
10115702	631	10 11 570 0	3	1	10117680	685	10 12 087 5	1	2
10115770	635	10 11 865 5	4	1	10117681	604	10 12 476 3	5	2
10115786	646	10 11 899 9	6	1	10117766	192	98 89 161	24	1
10115830	623	10 12 720 8	22	2	10117814	620	90 78 260	1	1
10115863	617	10 12 314 1	3	1	10117862	582	10 12 593 7	3	1
10116026	569	10 12 595 9	440	1	10117862	683	10 12 087 1	1	1
10116067	570	10 12 595 9	480	1	10117898	662	90 79 206	1	1
10116068	657	10 11 606 7	1	2	10118022	566	10 12 595 9	100	1
10116074	669	10 11 671 8	3	2	10118023	601	10 11 802 2	3	1
10116083	574	90 78 548	1	1	10118025	567	10 12 595 9	180	1
10116095	602	10 11 802 3	3	1	10118050	566	10 12 595 9	80	8
10116096	611	10 11 802 5	5	1	10118051	593	10 11 805 0	1	1
10116119	625	10 11 941 3	1	1	10118052	594	10 11 805 1	1	1
10116120	625	10 11 941 3	2	1	10118053	600	10 11 805 2	1	1
10116150	611	10 11 802 5	1	1	10118055	593	10 11 805 0	2	1
10116165	567	10 12 595 9	140	1	10118055	687	10 12 089 6	1	1
10116166	609	10 11 616 5	1	2	10118060	566	10 12 595 9	81	8
10116255	633	90 78 314	1	1	10118125	214	10 49 800 0	30	1
10116274	630	90 78 417	3	8	10118125	215	10 49 800 0	51	1
10116319	603	10 11 632 0	2	2	10118178	175	10 11 837 4	10	1
10116320	566	10 12 595 9	110	8	10118223	568	10 12 595 9	372	1
10116343	622	10 11 781 4	2	1	10118224	634	10 11 822 3	1	2
10116392	632	90 79 077	5	2	10118226	634	10 11 822 3	2	8
10116610	640	10 11 753 0	1	1	10118374	134	90 72 922	4	1
10116691	641	10 11 930 6	3	1	10118374	136	90 77 452	4	1
10116692	641	10 11 930 6	2	1	10118558	630	90 78 417	2	2
10116693	669	10 11 671 8	2	1	10118558	632	90 79 077	3	1
10116694	669	10 11 671 8	1	1	10118558	688	10 12 093 7	1	2
10116718	570	10 12 595 9	571	1	10118610	607	10 12 475 6	7	1
10116734	638	10 11 763 3	2	2	10118610	608	10 12 475 7	7	1
10116755	692	10 12 097 6	3	32	10118655	568	10 12 595 9	340	1
10116767	635	10 11 865 5	4	1	10118715	695	10 12 099 6	3	1
10116780	569	10 12 595 9	433	1	10118717	607	10 12 475 6	10	2
10116792	693	10 12 098 2	4	2	10118717	608	10 12 475 7	10	2
10116793	693	10 12 098 2	3	2	10118717	685	10 12 087 5	2	4
10116794	693	10 12 098 2	1	2	10118747	576	10 11 874 8	1	1
10116848	632	90 79 077	6	2	10118748	575	10 12 016 8	4	1
10116876	566	10 12 595 9	60	8	10118835	571	10 12 595 9	582	1
10116877	592	10 11 687 6	1	1	10118838	585	10 11 883 9	1	1
10116879	592	10 11 687 6	2	1	10118839	586	10 12 263 2	2	1
10116880	592	10 11 687 6	3	1	10118991	687	10 12 089 6	2	1
10116902	666	10 11 721 3	1	1	10118999	569	10 12 595 9	414	1
10116945	565	10 12 595 9	21	1	10119000	617	10 12 314 1	2	1
10116946	583	10 11 694 5	1	1	10119037	675	10 11 903 8	1	1
10116947	583	10 11 694 5	2	1	10119038	671	10 11 948 7	5	1
10116989	570	10 12 595 9	570	1	10119062	635	10 11 865 5	1	1
10117032	601	10 11 802 2	1	1	10119105	671	10 11 948 7	6	1
10117167	567	10 12 595 9	190	8	10119306	569	10 12 595 9	381	1
10117213	570	10 12 595 9	525	1	10119307	641	10 11 930 6	13	1
10117241	623	10 12 720 8	1	1	10119342	632	90 79 077	2	2
10117370	638	10 11 763 3	1	1	10119342	688	10 12 093 7	2	2
10117507	617	10 12 314 1	10	1	10119343	647	10 13 274 6	3	2
10117507	672	10 11 883 5	1	1	10119343	692	10 12 097 6	1	2

Item	Page	Assembly	Pos.	Quantity	Item	Page	Assembly	Pos.	Quantity
10119353	671	10 11 948 7	3	1	10120878	678	10 12 116 0	180	1
10119356	671	10 11 948 7	4	1	10120896	678	10 12 116 0	80	8
10119357	576	10 11 874 8	7	1	10120937	678	10 12 116 0	230	1
10119365	625	10 11 941 3	3	1	10120944	678	10 12 116 0	330	1
10119366	625	10 11 941 3	4	1	10120962	679	10 12 116 0	380	1
10119367	567	10 12 595 9	215	1	10120973	678	10 12 116 0	370	1
10119368	568	10 12 595 9	216	1	10120976	679	10 12 116 0	412	1
10119410	581	10 12 021 3	1	1	10120982	679	10 12 116 0	420	1
10119412	581	10 12 021 3	16	1	10120993	679	10 12 116 0	430	1
10119413	567	10 12 595 9	213	1	10120996	679	10 12 116 0	520	1
10119482	128	90 80 120	96	1	10121003	679	10 12 116 0	650	1
10119487	570	10 12 595 9	580	1	10121011	618	10 12 282 4	1	1
10119570	649	10 13 273 9	7	1	10121096	623	10 12 720 8	6	1
10119595	646	10 11 899 9	2	1	10121098	605	10 12 002 3	3	1
10119596	646	10 11 899 9	1	1	10121160	571	10 12 595 9	939	1
10119695	595	10 11 806 0	13	2	10121183	678	10 12 116 0	212	1
10119781	569	10 12 595 9	382	1	10121346	566	10 12 595 9	52	1
10119794	667	10 12 007 7	4	10	10121738	605	10 12 002 3	1	1
10119847	587	10 13 080 8	2	1	10121739	605	10 12 002 3	2	1
10119848	602	10 11 802 3	3	0	10121952	590	10 12 134 6	1	1
10119855	611	10 11 802 5	5	0	10121954	590	10 12 134 6	2	1
10119863	629	90 80 436	1	2	10122220	596	10 12 264 0	1	1
10119971	579	10 12 375 9	5	1	10122220	598	10 12 264 6	1	2
10120020	641	10 11 930 6	1	2	10122220	599	10 12 265 9	1	2
10120023	604	10 12 476 3	3	1	10122266	597	10 12 264 5	1	7
10120027	604	10 12 476 3	4	1	10122503	595	10 11 806 0	1	1
10120034	637	90 79 863	1	1	10122630	586	10 12 263 2	1	1
10120077	570	10 12 595 9	530	1	10122632	596	10 12 264 0	3	1
10120078	667	10 12 007 7	1	1	10122635	596	10 12 264 0	4	1
10120090	688	10 12 093 7	5	2	10122635	598	10 12 264 6	4	2
10120092	607	10 12 475 6	25	1	10122635	599	10 12 265 9	4	2
10120092	608	10 12 475 7	25	1	10122637	598	10 12 264 6	3	2
10120093	607	10 12 475 6	26	1	10122637	599	10 12 265 9	3	2
10120093	608	10 12 475 7	26	1	10122640	566	10 12 595 9	83	1
10120094	608	10 12 475 7	33	1	10122645	566	10 12 595 9	82	5
10120098	605	10 12 002 3	8	1	10122646	566	10 12 595 9	84	1
10120100	607	10 12 475 6	16	1	10122659	566	10 12 595 9	85	1
10120102	607	10 12 475 6	11	1	10122824	617	10 12 314 1	1	1
10120103	607	10 12 475 6	12	1	10123141	567	10 12 595 9	201	1
10120104	607	10 12 475 6	13	1	10123540	649	10 13 273 9	21	1
10120108	607	10 12 475 6	17	1	10123540	650	10 13 274 0	21	1
10120109	607	10 12 475 6	14	1	101236050	249	10 34 071 7	3	4
10120151	632	90 79 077	1	1	10123751	97	10 36 190 7	9	2
10120168	565	10 12 595 9	17	1	10123751	580	10 12 518 2	1	2
10120213	565	10 12 595 9	12	1	10123759	578	10 12 503 7	20	1
10120321	664	10 12 032 2	1	1	10123760	579	10 12 375 9	1	1
10120322	570	10 12 595 9	520	1	10123764	579	10 12 375 9	2	1
10120334	687	10 12 089 6	5	4	10123918	578	10 12 503 7	6	4
10120356	664	10 12 032 2	5	1	10124756	604	10 12 476 3	1	1
10120356	695	10 12 099 6	1	1	10124757	604	10 12 476 3	2	1
10120392	677	10 12 039 3	1	1	10124763	567	10 12 595 9	130	1
10120393	571	10 12 595 9	650	1	10124766	606	10 12 002 7	3	1
10120639	649	10 13 273 9	12	4	10124766	607	10 12 475 6	6	1
10120639	650	10 13 274 0	12	4	10124773	607	10 12 475 6	1	1
10120855	678	10 12 116 0	12	1	10124775	608	10 12 475 7	1	1
10120869	678	10 12 116 0	16	1	10125037	565	10 12 595 9	16	1
10120870	678	10 12 116 0	17	1	10125038	578	10 12 503 7	1	1
10120871	678	10 12 116 0	20	1	10125039	578	10 12 503 7	2	1
10120873	678	10 12 116 0	40	1	10125042	194	10 49 867 7	20	2
10120875	678	10 12 116 0	130	1	10125170	578	10 12 503 7	3	1

Item	Page	Assembly	Pos.	Quantity	Item	Page	Assembly	Pos.	Quantity
10125172	578	10 12 503 7	4	1	10216694	133	10 44 145 6	13	1
10125182	578	10 12 503 7	12	2	10216718	133	10 44 145 6	36	1
10125692	580	10 12 518 2	2	2	10216719	133	10 44 145 6	37	2
10125937	565	10 12 595 9	20	1	10216810	262	10 29 792 9	5	1
10125959	109	10 12 605 7	1	1	10217714	604	10 12 476 3	7	1
10126057	108	10 35 873 5	505	1	10217750	204	10 35 873 9	60	1
10126368	582	10 12 593 7	1	1	10217776	614	10 42 869 4	4	1
10126587	582	10 12 593 7	22	1	10217777	614	10 42 869 4	3	1
10126762	582	10 12 593 7	23	1	10217777	615	10 49 001 8	3	1
10127208	567	10 12 595 9	212	1	10217777	687	10 12 089 6	7	1
10127458	578	10 12 503 7	17	1	10217803	194	10 49 867 7	15	2
10127459	578	10 12 503 7	18	1	10217803	196	10 49 873 2	15	2
10127499	578	10 12 503 7	16	2	10218215	397	10 35 874 4	51	1
10127691	578	10 12 503 7	19	2	10218368	654	90 80 641	1	1
10128540	565	10 12 595 9	51	1	10218370	695	10 12 099 6	4	1
10128593	589	10 12 854 0	1	1	10219619	751	10 29 135 3	60	1
10128914	587	10 13 080 8	1	1	10219863	397	10 35 874 4	50	2
10129071	565	10 12 595 9	10	1	10220135	776	10 02 138 7	120	1
10129072	572	10 12 907 1	1	1	10220397	486	70 28 778	550	8
10129073	573	10 12 907 2	1	1	10220436	504	10 09 499 2	110	1
10129074	573	10 12 907 2	2	1	10220613	507	10 35 875 8	31	1
10129490	673	10 11 935 3	1	1	10220613	509	10 35 875 8	100	1
10129494	674	10 11 935 6	1	1	10220639	150	10 33 307 1	20	2
10130203	649	10 13 273 9	8	1	10220646	262	10 29 792 9	1	1
10130209	650	10 13 274 0	8	1	10220647	262	10 29 792 9	2	1
10130223	646	10 11 899 9	7	1	10220662	157	10 33 324 2	6	1
10130808	565	10 12 595 9	50	1	10220664	157	10 33 324 2	8	2
10131546	566	10 12 595 9	70	8	10220693	158	10 33 325 9	7	1
10131550	643	10 13 154 6	1	1	10220694	158	10 33 325 9	8	1
10131564	643	10 13 154 6	3	1	10220702	161	10 33 327 0	2	1
10131786	610	10 13 273 8	3	1	10220705	96	10 09 107 4	10	1
10131939	593	10 11 805 0	1	1	10220705	161	10 33 327 0	3	1
10132049	610	10 13 273 8	1	1	10220706	161	10 33 327 0	7	1
10132052	610	10 13 273 8	5	1	10220707	96	10 09 107 4	11	1
10132067	610	10 13 273 8	6	1	10220707	161	10 33 327 0	10	1
10132100	610	10 13 273 8	2	1	10220813	649	10 13 273 9	2	1
10132112	650	10 13 274 0	7	1	10220813	650	10 13 274 0	2	1
10132193	610	10 13 273 8	7	1	10220813	694	10 12 099 3	2	2
10132412	579	10 12 375 9	3	1	10220814	649	10 13 273 9	3	1
10132663	233	98 80 521	2	1	10220814	650	10 13 274 0	3	1
10132729	647	10 13 274 6	6	1	10220814	694	10 12 099 3	1	2
10132737	647	10 13 274 6	7	1	10220817	163	10 33 327 3	2	1
10132738	565	10 12 595 9	14	1	10220818	163	10 33 327 3	3	1
10132739	569	10 12 595 9	431	1	10220821	163	10 33 327 3	5	1
10132740	569	10 12 595 9	430	1	10220950	256	90 64 786	145	1
10132746	569	10 12 595 9	412	1	10220951	256	90 64 786	146	1
10165637	274	10 04 363 2	65	1	10220997	376	10 28 046 1	999	1
10165766	279	10 05 736 2	10	1	10221073	291	10 82 277 5	76	1
10171583	65	94 43 970	39	3	10221073	475	70 25 758	10	1
10215824	583	10 11 694 5	1	1	10221212	43	10 35 874 0	50	16
10215824	683	10 12 087 1	7	1	10222393	98	10 36 190 8	4	1
10215888	219	10 05 302 4	25	0.07	10222393	382	10 35 874 5	30	1
10215935	119	10 35 879 9	20	1	10222743	625	10 11 941 3	5	2
10215970	488	10 48 809 9	286	4	10228151	291	10 82 277 5	75	1
10216002	490	10 29 113 8	2200	2	10228539	41	10 35 874 0	29	4
10216004	488	10 48 809 9	110	1	10278595	752	10 34 080 6	999	1
10216006	488	10 48 809 9	215	1	10278595	753	10 34 081 2	999	1
10216340	249	10 34 071 7	14	1	10278641	752	10 34 080 6	132	1
10216441	114	10 35 873 3	2	1	10278641	753	10 34 081 2	132	1
10216667	131	10 42 845 9	13	2	10278642	752	10 34 080 6	135	1

Item	Page	Assembly	Pos.	Quantity	Item	Page	Assembly	Pos.	Quantity
10278642	753	10 34 081 2	135	1	10289138	618	10 12 282 4	2	2
10278643	752	10 34 080 6	270	1	10289140	618	10 12 282 4	5	2
10278643	753	10 34 081 2	270	1	10289156	359	10 35 875 4	3	1
10278644	752	10 34 080 6	280	1	10289157	359	10 35 875 4	2	1
10278644	753	10 34 081 2	280	1	10289157	366	10 82 438 0	2	1
10280039	298	10 06 804 5	2	1	10289158	357	10 35 875 1	52	1
10280279	340	10 05 314 4	5	2	10289159	347	10 05 312 6	35	1
10280279	341	10 82 438 9	5	1	10289164	609	10 11 616 5	5	14
10280390	511	10 06 221 6	30	1	10289183	752	10 34 080 6	80	1
10280390	512	10 35 876 2	30	1	10289183	753	10 34 081 2	80	1
10280390	513	10 49 837 6	30	1	10289185	752	10 34 080 6	102	1
10280390	517	10 06 222 8	50	1	10289185	753	10 34 081 2	102	1
10280461	372	10 00 909 0	2	1	10289190	208	10 42 538 5	1	1
10282622	684	10 12 087 3	100	1	10289191	208	10 42 538 5	2	1
10285271	352	10 05 312 9	26	1	10289306	259	10 02 131 0	10	2
10285639	26	10 35 682 7	5	1	10289307	335	10 38 698 2	40	2
10285640	29	10 35 683 1	5	1	10289307	338	10 49 804 4	40	2
10285702	28	10 35 682 9	210	1	10289308	259	10 02 131 0	20	7
10285708	577	90 78 049	100	1	10289308	260	10 02 131 1	30	1
10286279	21	10 35 679 3	1000	1	10289310	260	10 02 131 1	10	2
10286280	28	10 35 682 9	1000	1	10289311	260	10 02 131 1	20	2
10286294	407	10 11 355 7	57	1	10289313	351	10 05 312 9	2	1
10286359	356	10 35 875 1	32	2	10289314	351	10 05 312 9	3	1
10286359	356	10 35 875 1	42	4	10289321	540	10 35 875 6	5	1
10286359	357	10 35 875 1	56	14	10289322	540	10 35 875 6	6	1
10286360	343	10 35 875 5	21	12	10289323	540	10 35 875 6	7	1
10286360	771	10 35 873 1	49	8	10289324	540	10 35 875 6	8	1
10286361	89	10 07 444 8	4	16	10289376	219	10 05 302 4	17	2
10286361	334	10 38 698 2	20	8	10289630	408	10 11 355 7	998	1
10286361	335	10 38 698 2	41	4	10289795	54	10 49 867 0	12	2
10286361	337	10 49 804 4	20	8	10289795	105	10 05 797 8	23	4
10286361	338	10 49 804 4	41	4	10289795	117	10 35 873 3	57	8
10286361	343	10 35 875 5	11	16	10289795	194	10 49 867 7	23	2
10286361	343	10 35 875 5	15	4	10289795	210	10 06 461 3	23	7
10286361	396	10 35 874 4	31	4	10289795	219	10 05 302 4	15	4
10286361	396	10 35 874 4	36	4	10289795	247	10 07 675 7	79	2
10286361	403	10 06 771 7	15	18	10289795	269	10 05 311 8	22	4
10286361	701	10 35 872 5	37	58	10289795	269	10 05 311 8	32	4
10286361	713	10 07 162 8	10	2	10289795	269	10 05 311 8	42	3
10286361	714	10 35 872 1	11	6	10289795	291	10 82 277 5	17	4
10286361	770	10 35 873 1	46	8	10289795	331	98 79 063	21	16
10286362	384	10 35 874 5	70	4	10289795	334	10 38 698 2	13	2
10286644	500	10 04 553 0	12	1	10289795	336	10 38 698 2	62	4
10287118	283	98 74 988	2	1	10289795	337	10 49 804 4	13	2
10287498	344	10 35 875 5	45	4Pair	10289795	339	10 49 804 4	62	4
10287499	344	10 35 875 5	44	4Pair	10289795	341	10 82 438 9	30	2
10287572	617	10 12 314 1	5	1	10289795	369	10 82 438 0	13	2
10288438	747	10 36 839 8	20	1	10289795	394	10 35 874 4	8	4
10288773	572	10 12 907 1	5	2	10289795	418	10 05 303 6	146	2
10288921	396	10 35 874 4	33	4	10289795	422	10 05 303 6	264	2
10288922	396	10 35 874 4	34	4	10289795	424	10 05 303 6	287	8
10289035	343	10 35 875 5	7	1	10289795	433	10 49 857 1	146	2
10289036	343	10 35 875 5	8	1	10289795	437	10 49 857 1	264	2
10289037	343	10 35 875 5	9	1	10289795	439	10 49 857 1	287	8
10289038	343	10 35 875 5	10	1	10289795	454	10 05 543 3	31	1
10289039	345	10 05 312 6	3	1	10289795	456	10 05 541 0	31	1
10289040	355	10 35 875 1	25	1	10289795	465	10 35 876 0	63	12
10289045	343	10 35 875 5	2	2	10289795	466	10 49 857 4	63	12
10289138	96	10 09 107 4	6	2	10289795	472	10 04 678 8	130	6
10289138	99	10 35 983 0	10	8	10289795	486	70 28 778	540	2

Item	Page	Assembly	Pos.	Quantity	Item	Page	Assembly	Pos.	Quantity
10289795	486	70 28 778	590	2	10289803	252	10 48 927 7	7	4
10289795	486	70 28 778	750	2	10289803	271	10 05 311 8	72	3
10289795	493	10 35 876 4	26	32	10289803	271	10 05 311 8	89	4
10289795	542	10 35 875 6	42	4	10289803	272	10 05 311 8	132	2
10289795	545	10 35 868 3	32	2	10289803	282	97 58 815 01	74	2
10289795	635	10 11 865 5	7	6	10289803	311	10 08 256 0	22	2
10289795	675	10 11 903 8	4	2	10289803	314	10 06 648 4	12	3
10289795	800	10 49 815 4	6	6	10289803	316	10 40 689 8	42	1
10289795	801	10 05 539 2	21	1	10289803	317	10 40 689 8	102	1
10289802	113	10 09 538 7	20	4	10289803	327	10 06 786 9	12	4
10289802	269	10 05 311 8	34	2	10289803	327	10 06 786 9	17	2
10289802	282	97 58 815 01	73	4	10289803	327	10 06 786 9	22	2
10289802	291	10 82 277 5	32	1	10289803	328	10 06 786 9	55	20
10289802	292	10 82 277 5	87	2	10289803	334	10 38 698 2	17	2
10289802	308	10 05 798 5	7	4	10289803	337	10 49 804 4	17	2
10289802	314	10 06 648 4	4	4	10289803	346	10 05 312 6	27	1
10289802	316	10 40 689 8	73	1	10289803	443	10 05 530 3	21	10
10289802	321	10 02 211 7	14	6	10289803	445	10 05 530 3	51	4
10289802	388	56 17 689	18	2	10289803	447	10 05 535 4	21	4
10289802	457	10 05 541 0	51	2	10289803	461	10 06 375 5	37	3
10289802	472	10 04 678 8	280	1	10289803	465	10 35 876 0	76	2
10289802	478	10 48 809 7	730	3	10289803	466	10 49 857 4	76	2
10289802	478	10 48 809 7	796	1	10289803	470	70 28 775	180	6
10289802	479	10 48 809 7	930	2	10289803	470	70 28 775	230	10
10289802	480	70 28 884	580	3	10289803	472	10 04 678 8	180	2
10289802	484	70 28 778	400	8	10289803	472	10 04 678 8	200	2
10289802	489	10 48 809 9	420	6	10289803	478	10 48 809 7	480	3
10289802	497	10 35 875 7	142	5	10289803	478	10 48 809 7	760	3
10289802	503	10 09 499 2	35	2	10289803	479	10 48 809 7	890	3
10289802	504	10 09 499 2	101	1	10289803	480	70 28 884	550	1
10289802	507	10 35 875 8	37	4	10289803	496	10 35 875 7	132	4
10289802	511	10 06 221 6	41	12	10289803	496	10 35 875 7	137	2
10289802	511	10 06 221 6	46	16	10289803	497	10 35 875 7	147	4
10289802	512	10 35 876 2	41	9	10289803	497	10 35 875 7	152	3
10289802	512	10 35 876 2	46	13	10289803	497	10 35 875 7	156	4
10289802	513	10 49 837 6	41	7	10289803	498	10 35 875 7	161	1
10289802	513	10 49 837 6	46	12	10289803	498	10 35 875 7	167	1
10289802	517	10 06 222 8	56	1	10289803	498	10 35 875 7	171	2
10289802	518	10 06 222 8	72	5	10289803	498	10 35 875 7	176	3
10289802	518	10 06 222 8	81	6	10289803	506	10 35 875 8	12	2
10289802	519	10 06 222 8	87	1	10289803	508	10 35 875 8	82	8
10289802	522	10 35 876 3	16	9	10289803	508	10 35 875 8	85	2
10289802	523	10 35 876 3	27	4	10289803	508	10 35 875 8	90	2
10289802	529	10 49 837 7	16	9	10289803	509	10 35 875 8	101	4
10289802	530	10 49 837 7	27	4	10289803	511	10 06 221 6	51	2
10289802	543	10 05 319 0	4	8	10289803	512	10 35 876 2	51	2
10289802	666	10 11 721 3	3	2	10289803	513	10 49 837 6	51	2
10289802	710	10 38 839 3	51	4	10289803	517	10 06 222 8	32	2
10289802	749	10 39 372 0	32	9	10289803	517	10 06 222 8	41	2
10289802	781	10 49 833 2	7	2	10289803	517	10 06 222 8	62	1
10289802	802	10 05 539 2	41	2	10289803	518	10 06 222 8	68	4
10289803	102	10 35 875 3	43	4	10289803	526	10 35 876 3	52	2
10289803	105	10 05 797 8	10	10	10289803	527	10 35 876 3	61	2
10289803	107	10 35 875 9	6	6	10289803	527	10 35 876 3	92	2
10289803	112	10 36 623 6	23	2	10289803	528	10 35 876 3	101	24
10289803	113	10 09 538 7	23	4	10289803	528	10 35 876 3	110	3
10289803	214	10 49 800 0	31	1	10289803	528	10 35 876 3	121	3
10289803	214	10 49 800 0	40	3	10289803	533	10 49 837 7	52	2
10289803	215	10 49 800 0	53	1	10289803	534	10 49 837 7	61	2
10289803	216	10 49 800 0	62	13	10289803	534	10 49 837 7	92	2

Item	Page	Assembly	Pos.	Quantity	Item	Page	Assembly	Pos.	Quantity
10289803	535	10 49 837 7	101	21	10289988	273	10 04 363 1	2	1
10289803	535	10 49 837 7	110	3	10289988	274	10 04 363 2	2	1
10289803	535	10 49 837 7	121	3	10289989	274	10 04 363 2	71	1
10289803	543	10 05 319 0	12	2	10289990	273	10 04 363 1	70	1
10289803	733	10 35 873 7	21	12	10289990	274	10 04 363 2	70	1
10289803	747	10 36 839 8	26	10	10289993	273	10 04 363 1	50	1
10289803	747	10 36 839 8	41	2	10289993	274	10 04 363 2	50	1
10289803	793	10 82 390 4	42	4	10289994	275	10 28 999 3	55	1
10289803	793	10 82 390 4	52	5	10289996	489	10 48 809 9	560	1
10289804	100	10 35 875 3	7	4	10289997	489	10 48 809 9	570	1
10289804	102	10 35 875 3	36	2	10290156	702	10 35 872 5	50	1
10289804	106	10 39 589 3	6	4	10290254	334	10 38 698 2	2	1
10289804	199	10 35 873 9	17	8	10290254	337	10 49 804 4	2	1
10289804	271	10 05 311 8	82	4	10290261	488	10 48 809 9	230	1
10289804	311	10 08 256 0	12	4	10290506	21	10 35 679 3	5	1
10289804	316	10 40 689 8	22	4	10290516	200	10 35 873 9	21	1
10289804	327	10 06 786 9	27	1	10290516	351	10 05 312 9	14	4
10289804	327	10 06 786 9	32	1	10290516	355	10 35 875 1	26	2
10289804	344	10 35 875 5	28	2	10290516	775	72 64 501 16	5	6
10289804	344	10 35 875 5	46	8	10290517	384	10 35 874 5	72	2
10289804	350	10 05 312 6	63	2	10290517	704	10 35 872 5	116	1
10289804	354	10 35 875 1	11	6	10290517	704	10 35 872 5	122	2
10289804	381	10 35 874 5	18	18	10290517	706	10 06 477 4	5	2
10289804	417	10 05 303 6	134	3	10290517	706	10 06 477 4	19	2
10289804	421	10 05 303 6	214	2	10290517	775	72 64 501 16	3	6
10289804	421	10 05 303 6	219	2	10290518	89	10 07 444 8	6	8
10289804	423	10 05 303 6	273	4	10290518	334	10 38 698 2	21	4
10289804	432	10 49 857 1	134	3	10290518	335	10 38 698 2	32	2
10289804	436	10 49 857 1	214	2	10290518	335	10 38 698 2	42	2
10289804	436	10 49 857 1	219	2	10290518	337	10 49 804 4	21	4
10289804	438	10 49 857 1	273	4	10290518	338	10 49 804 4	32	2
10289804	484	70 28 778	250	4	10290518	338	10 49 804 4	42	2
10289804	484	70 28 778	280	1	10290518	343	10 35 875 5	12	8
10289804	486	70 28 778	500	2	10290518	343	10 35 875 5	16	2
10289804	486	70 28 778	760	1	10290518	396	10 35 874 4	28	2
10289804	668	90 80 481	3	16	10290518	396	10 35 874 4	39	5
10289804	700	10 35 872 5	22	28	10290518	403	10 06 771 7	17	9
10289804	706	10 06 477 4	12	2	10290518	701	10 35 872 5	40	29
10289804	711	10 38 862 4	11	2	10290518	713	10 07 162 8	12	2
10289804	771	10 35 873 1	61	4	10290518	770	10 35 873 1	48	4
10289804	776	10 02 138 7	140	2	10290518	775	72 64 501 16	2	12
10289804	782	10 35 806 3	5	2	10290519	343	10 35 875 5	22	10
10289804	782	10 35 806 3	14	6	10290519	771	10 35 873 1	51	4
10289804	786	10 35 806 5	45	2	10290519	775	72 64 501 16	1	12
10289805	733	10 35 873 7	24	6	10290520	355	10 35 875 1	21	1
10289806	105	10 05 797 8	20	1	10290520	356	10 35 875 1	31	1
10289806	124	10 35 879 9	91	2	10290520	356	10 35 875 1	41	2
10289806	128	90 80 120	54	8	10290520	357	10 35 875 1	55	7
10289806	217	10 49 800 0	85	1	10290521	775	72 64 501 16	4	6
10289806	352	10 05 312 9	23	2	10290522	704	10 35 872 5	119	5
10289806	353	10 35 875 1	3	2	10290523	704	10 35 872 5	118	2
10289806	704	10 35 872 5	111	3	10290524	704	10 35 872 5	117	2
10289808	128	90 80 120	55	2	10290674	43	10 35 874 0	55	4
10289808	422	10 05 303 6	254	1	10291066	490	10 29 113 8	2130	1
10289973	273	10 04 363 1	41	1	10291090	490	10 29 113 8	2140	1
10289973	274	10 04 363 2	41	1	10291123	490	10 29 113 8	2160	2
10289975	273	10 04 363 1	43	4	10291137	490	10 29 113 8	2100	1
10289975	274	10 04 363 2	43	4	10291138	488	10 48 809 9	210	1
10289976	273	10 04 363 1	72	1	10291144	482	10 29 114 6	670	1
10289976	274	10 04 363 2	72	1	10291146	479	10 48 809 7	950	1

Item	Page	Assembly	Pos.	Quantity	Item	Page	Assembly	Pos.	Quantity
10291353	702	10 35 872 5	60	1	10296919	545	10 35 868 3	20	1
10291540	521	10 07 608 3	2	1	10297307	208	10 42 538 5	12	12
10291541	520	10 07 707 3	2	1	10297576	703	10 35 872 5	83	2
10292071	150	10 33 307 1	1	1	10297579	702	10 35 872 5	69	2
10292073	261	10 10 206 7	2	1	10297581	702	10 35 872 5	75	2
10292443	295	56 18 923	6	1	10297929	153	10 33 322 6	2	1
10292659	544	10 29 266 0	2	1	10297934	178	10 40 975 1	5	2
10292660	543	10 05 319 0	2	1	10297942	177	10 40 974 7	16	1
10292661	316	10 40 689 8	40	1	10298516	703	10 35 872 5	96	4
10293016	247	10 07 675 7	50	1	10298629	166	10 44 145 8	1	1
10293018	248	10 29 301 6	1	1	10298630	166	10 44 145 8	2	1
10293019	243	10 07 675 6	10	1	10298633	166	10 44 145 8	10	1
10293020	244	10 29 301 9	1	1	10298634	166	10 44 145 8	14	1
10293162	248	10 29 301 6	6	1	10298634	264	10 33 323 7	18	1
10293163	248	10 29 301 6	7	1	10298635	166	10 44 145 8	17	2
10293164	248	10 29 301 6	8	1	10298636	148	10 29 866 3	3	1
10293165	248	10 29 301 6	9	1	10298637	148	10 29 866 3	2	1
10293166	248	10 29 301 6	10	1	10298663	160	10 33 326 8	5	1
10293169	248	10 29 301 6	11	1	10298680	176	10 34 668 4	9	2
10293172	244	10 29 301 9	6	1	10298807	711	10 38 862 4	3	2
10294170	619	10 30 300 7	9	1	10299988	633	90 78 314	1	1
10294171	96	10 09 107 4	5	1	10300122	7	.	2	2
10294171	99	10 35 983 0	30	4	10300122	43	10 35 874 0	102	2
10294171	619	10 30 300 7	4	1	10300127	48	10 30 012 2	1	1
10294466	101	10 35 875 3	20	3	10300127	48	10 30 012 2	1	1
10294466	210	10 06 461 3	60	5	10300863	671	10 11 948 7	1	1
10294497	581	10 12 021 3	12	6	10300878	714	10 35 872 1	9	1
10294497	680	10 12 085 5	2	6	10300879	714	10 35 872 1	10	1
10294787	133	10 44 145 6	14	1	10300881	617	10 12 314 1	19	1
10294867	386	10 08 795 8	2	2	10300920	158	10 33 325 9	20	1
10294867	547	10 05 453 2	2	3	10300923	264	10 33 323 7	5	1
10294984	752	10 34 080 6	101	1	10301213	36	10 35 905 6	20	1
10294984	753	10 34 081 2	101	1	10301215	30	10 35 683 2	5	1
10295884	581	10 12 021 3	15	1	10301680	26	10 35 682 7	210	1
10296022	789	10 37 296 7	2	3	10301737	285	10 06 804 1	2	1
10296042	751	10 29 135 3	20	1	10301774	553	10 08 811 2	2	1
10296116	271	10 05 311 8	95	2	10301776	383	10 35 874 5	63	1
10296477	25	10 35 682 6	1000	1	10301921	45	10 22 121 2	1	1
10296478	24	10 35 682 5	1000	1	10301922	45	10 22 121 2	4	1
10296479	24	10 35 682 5	5	1	10301923	45	10 22 121 2	8	2
10296480	18	10 35 630 3	5	1	10301924	45	10 22 121 2	6	2
10296481	18	10 35 630 3	1000	1	10301925	45	10 22 121 2	7	2
10296482	27	10 35 682 8	1000	1	10302978	46	10 29 067 4	1	1
10296500	407	10 11 355 7	55	1	10302997	46	10 29 067 4	2	2
10296502	408	10 11 355 7	123	1	10302998	46	10 29 067 4	4	1
10296810	33	10 35 894 9	180	1	10303000	46	10 29 067 4	5	2
10296811	33	10 35 894 9	50	1	10303001	46	10 29 067 4	7	2
10296812	33	10 35 894 9	25	1	10303003	46	10 29 067 4	8	2
10296813	33	10 35 894 9	10	1	10303006	46	10 29 067 4	9	2
10296815	33	10 35 894 9	2	1	10303007	113	10 09 538 7	3	1
10296816	33	10 35 894 9	1	1	10303056	356	10 35 875 1	30	1
10296820	31	10 35 894 7	2	1	10303270	150	10 33 307 1	17	3
10296822	32	10 35 894 8	180	1	10303317	711	10 38 862 4	2	1
10296823	32	10 35 894 8	50	1	10303368	719	10 35 872 0	4	1
10296824	32	10 35 894 8	25	1	10303369	721	10 30 336 8	1	1
10296825	32	10 35 894 8	10	1	10303382	719	10 35 872 0	7	1
10296827	32	10 35 894 8	2	1	10303383	720	10 35 872 0	30	1
10296828	32	10 35 894 8	1	1	10323529	520	10 07 707 3	12	1
10296854	405	10 21 821 5	13	1	10323529	521	10 07 608 3	12	1
10296854	406	10 21 986 3	13	1	10323530	520	10 07 707 3	11	1

Item	Page	Assembly	Pos.	Quantity	Item	Page	Assembly	Pos.	Quantity
10323530	521	10 07 608 3	11	1	10331335	619	10 30 300 7	13	1
10323535	520	10 07 707 3	10	1	10331395	619	10 30 300 7	14	1
10323535	521	10 07 608 3	10	1	10331756	208	10 42 538 5	5	1
10323710	364	10 35 875 4	24	1	10331758	208	10 42 538 5	4	1
10326110	22	10 35 679 7	1000	1	10331873	243	10 07 675 6	13	1
10326111	22	10 35 679 7	210	1	10331873	245	10 29 302 0	33	1
10326112	22	10 35 679 7	20	1	10331907	622	10 11 781 4	3	1
10326113	22	10 35 679 7	5	1	10332087	754	10 28 918 3	999	1
10326232	43	10 35 874 0	67	2	10332352	507	10 35 875 8	30	1
10326460	115	10 35 873 3	22	0.26m	10332836	751	10 29 135 3	50	1
10326550	520	10 07 707 3	61	11	10332845	647	10 13 274 6	5	1
10326550	521	10 07 608 3	61	10	10332846	647	10 13 274 6	4	5
10326562	520	10 07 707 3	56	2	10333044	375	56 15 344	2	1
10326562	521	10 07 608 3	56	2	10333070	130	10 21 593 5	1	1
10326563	521	10 07 608 3	50	1	10333071	130	10 21 593 5	2	1
10326564	520	10 07 707 3	55	2	10333073	130	10 21 593 5	7	1
10326564	520	10 07 707 3	60	11	10333074	130	10 21 593 5	10	1
10326564	521	10 07 608 3	55	2	10333075	130	10 21 593 5	26	1
10326564	521	10 07 608 3	60	10	10333078	130	10 21 593 5	40	1
10326567	520	10 07 707 3	57	2	10333079	149	10 33 307 0	1	1
10326567	521	10 07 608 3	57	2	10333081	149	10 33 307 0	25	1
10326658	418	10 05 303 6	175	1	10333083	150	10 33 307 1	2	1
10326658	433	10 49 857 1	175	1	10333086	156	10 33 323 8	1	1
10327169	334	10 38 698 2	3	1	10333087	151	10 33 307 3	1	1
10327169	337	10 49 804 4	3	1	10333224	177	10 40 974 7	3	1
10330239	21	10 35 679 3	20	1	10333225	177	10 40 974 7	4	1
10330246	21	10 35 679 3	210	1	10333226	131	10 42 845 9	3	1
10330255	23	10 35 680 0	5	1	10333227	131	10 42 845 9	4	1
10330258	23	10 35 680 0	20	1	10333228	131	10 42 845 9	6	1
10330259	23	10 35 680 0	210	1	10333229	177	10 40 974 7	31	2
10330260	23	10 35 680 0	1000	1	10333230	131	10 42 845 9	10	1
10330266	20	10 35 679 1	5	1	10333231	178	10 40 975 1	2	1
10330268	20	10 35 679 1	20	1	10333232	131	10 42 845 9	25	1
10330270	20	10 35 679 1	210	1	10333232	264	10 33 323 7	17	1
10330271	20	10 35 679 1	1000	1	10333235	178	10 40 975 1	23	2
10330272	18	10 35 630 3	20	1	10333237	153	10 33 322 6	1	2
10330276	18	10 35 630 3	210	1	10333238	130	10 21 593 5	4	1
10330277	24	10 35 682 5	20	1	10333239	131	10 42 845 9	46	1
10330278	24	10 35 682 5	210	1	10333242	153	10 33 322 6	3	1
10330280	27	10 35 682 8	5	1	10333245	153	10 33 322 6	9	1
10330282	27	10 35 682 8	20	1	10333246	133	10 44 145 6	12	1
10330283	27	10 35 682 8	210	1	10333248	264	10 33 323 7	1	1
10330285	25	10 35 682 6	5	1	10333250	264	10 33 323 7	9	1
10330287	25	10 35 682 6	20	1	10333251	264	10 33 323 7	10	1
10330288	25	10 35 682 6	210	1	10333252	264	10 33 323 7	2	1
10330291	26	10 35 682 7	20	1	10333253	264	10 33 323 7	13	1
10330292	26	10 35 682 7	1000	1	10333254	157	10 33 324 2	1	1
10330294	29	10 35 683 1	20	1	10333256	157	10 33 324 2	2	1
10330295	28	10 35 682 9	5	1	10333258	157	10 33 324 2	3	1
10330296	28	10 35 682 9	20	1	10333259	154	10 33 322 7	1	1
10330306	35	10 35 899 2	2	1	10333262	154	10 33 322 7	2	1
10330308	34	10 35 895 0	1	1	10333263	158	10 33 325 9	1	1
10330310	34	10 35 895 0	2	1	10333264	158	10 33 325 9	5	1
10330311	34	10 35 895 0	5	1	10333265	158	10 33 325 9	12	1
10330318	48	10 30 012 2	2	50	10333265	159	10 33 326 2	3	1
10330318	48	10 30 012 2	2	50	10333267	159	10 33 326 2	1	1
10330614	256	90 64 786	146	1	10333268	155	10 33 322 8	2	1
10330625	634	10 11 822 3	6	8	10333269	155	10 33 322 8	13	3
10331034	649	10 13 273 9	1	1	10333270	160	10 33 326 8	1	1
10331034	650	10 13 274 0	1	1	10333271	161	10 33 327 0	1	1

Item	Page	Assembly	Pos.	Quantity	Item	Page	Assembly	Pos.	Quantity
10333272	162	10 33 327 1	1	1	10356667	407	10 11 355 7	17	1
10333273	162	10 33 327 1	2	1	10356668	408	10 11 355 7	200	1
10333276	163	10 33 327 3	4	1	10356670	408	10 11 355 7	201	1
10333660	112	10 36 623 6	16	1	10356671	408	10 11 355 7	202	1
10333662	112	10 36 623 6	10	1	10356672	408	10 11 355 7	203	1
10333665	112	10 36 623 6	11	1	10356673	408	10 11 355 7	206	1
10335629	585	10 11 883 9	3	1	10356674	408	10 11 355 7	207	7
10337545	176	10 34 668 4	6	1	10356675	408	10 11 355 7	999	1
10337550	176	10 34 668 4	7	1	10356676	408	10 11 355 7	220	14
10340098	246	10 07 675 7	20	1	10356789	13	90 70 362	20	1l
10340222	558	10 35 876 6	30	1	10356791	13	90 70 362	30	1l
10340226	113	10 09 538 7	15	2	10356793	12	90 70 361	20	1l
10340226	619	10 30 300 7	20	2	10356797	12	90 70 361	30	1l
10340236	113	10 09 538 7	14	2	10356800	13	90 70 362	10	1l
10340236	619	10 30 300 7	19	2	10356825	14	90 70 363	20	1l
10340717	243	10 07 675 6	2	1	10356826	16	90 70 365	10	1l
10340717	246	10 07 675 7	10	1	10356827	16	90 70 365	20	1l
10340806	770	10 35 873 1	8	1	10356828	16	90 70 365	30	1l
10340812	770	10 35 873 1	9	1	10356829	15	90 70 364	10	1l
10341848	553	10 08 811 2	3	1	10356831	15	90 70 364	20	1l
10341869	120	10 35 879 9	32	1	10356832	11	90 66 465	10	1l
10341869	213	10 49 800 0	25	1	10356833	30	10 35 683 2	1000	1
10341929	176	10 34 668 4	3	2	10357863	795	10 49 815 5	45	1
10342221	256	90 64 786	145	1	10357919	700	10 35 872 5	5	1
10342561	407	10 11 355 7	12	1	10357940	700	10 35 872 5	6	1
10342562	407	10 11 355 7	13	1	10357979	467	10 35 876 8	10	1
10342563	407	10 11 355 7	14	1	10358063	795	10 49 815 5	5	1
10342563	407	10 11 355 7	18	1	10358064	782	10 35 806 3	2	1
10342565	407	10 11 355 7	15	1	10358065	785	10 35 806 4	10	1
10342567	407	10 11 355 7	19	1	10358079	782	10 35 806 3	13	1
10342569	407	10 11 355 7	16	1	10358135	795	10 49 815 5	40	1
10342798	550	10 49 815 2	31	1	10358136	780	10 35 813 5	60	1
10344024	19	10 35 678 9	5	1	10358171	549	10 35 876 5	4	2
10344025	19	10 35 678 9	20	1	10358202	381	10 35 874 5	10	1
10344026	19	10 35 678 9	210	1	10358215	545	10 35 868 3	3	1
10344027	19	10 35 678 9	1000	1	10358242	397	10 35 874 4	55	1
10346187	671	10 11 948 7	2	1	10358246	118	10 35 873 4	2	1
10346618	356	10 35 875 1	40	1	10358248	118	10 35 873 4	3	1
10346684	131	10 42 845 9	5	1	10358249	541	10 35 875 6	16	2
10347900	292	10 82 277 5	100	1	10358263	737	10 35 872 3	3	1
10353605	343	10 35 875 5	3	2	10358267	107	10 35 875 9	5	1
10353606	343	10 35 875 5	4	2	10358268	353	10 35 875 1	2	1
10353607	797	10 09 406 7	32	1	10358269	700	10 35 872 5	17	1
10353608	797	10 09 406 7	31	1	10358270	542	10 35 875 6	40	1
10354595	572	10 12 907 1	115	1	10358292	493	10 35 876 4	24	4
10354599	689	10 12 094 4	7	2	10358292	800	10 49 815 4	3	3
10354600	582	10 12 593 7	7	2	10358295	493	10 35 876 4	23	10
10354600	683	10 12 087 1	4	2	10358359	700	10 35 872 5	2	1
10354601	638	10 11 763 3	5	2	10358369	92	10 35 874 2	8200	1
10354601	691	10 12 097 3	3	2	10358387	41	10 35 874 0	2	1
10354822	387	10 30 177 6	1	1	10358400	714	10 35 872 1	2	1
10354823	387	10 30 177 6	2	1	10358447	205	10 35 873 9	80	3
10354824	387	10 30 177 6	3	1	10358600	100	10 35 875 3	2	1
10355486	121	10 35 879 9	50	1	10358683	92	10 35 874 2	9300	1
10355809	208	10 42 538 5	6	0.3	10358684	546	10 35 868 3	100	1
10355810	208	10 42 538 5	7	1	10358720	714	10 35 872 1	15	1
10355811	208	10 42 538 5	8	1	10358721	716	10 35 872 2	10	1
10355813	208	10 42 538 5	10	12	10358722	7	.	12	1
10356303	14	90 70 363	10	1l	10358723	715	10 35 872 1	200	1
10356531	689	10 12 094 4	12	2	10358724	7	.	11	1

Item	Page	Assembly	Pos.	Quantity	Item	Page	Assembly	Pos.	Quantity
10358725	699	10 35 872 4	10	1	10368116	729	10 49 838 7	25	2
10358730	7	.	4	1	10368116	730	10 49 857 6	25	2
10358731	769	10 35 873 0	10	1	10368398	746	10 05 765 1	10	1
10358733	108	10 35 873 5	530	1	10369606	426	10 05 303 6	310	1
10358734	115	10 35 873 3	25	1	10369606	441	10 49 857 1	310	1
10358735	91	10 35 874 2	500	1	10372282	194	10 49 867 7	18	2
10358736	7	.	15	1	10372967	796	10 49 815 5	80	1
10358737	732	10 35 873 6	10	1	10373187	795	10 49 815 5	35	1
10358739	108	10 35 873 5	560	1	10373190	798	10 37 318 7	5	1
10358740	9	10 35 874 1	200	1	10373191	798	10 37 318 7	6	1
10358741	7	.	1	1	10373192	798	10 37 318 7	7	1
10358742	9	10 35 874 1	100	1	10373193	798	10 37 318 7	8	1
10358744	91	10 35 874 2	7600	1	10373194	798	10 37 318 7	9	1
10358745	91	10 35 874 2	7100	1	10373195	798	10 37 318 7	10	1
10358746	384	10 35 874 5	100	1	10373196	798	10 37 318 7	11	1
10358747	91	10 35 874 2	7000	1	10378152	424	10 05 303 6	285	1
10358751	332	10 35 874 7	75	1	10380512	508	10 35 875 8	83	1
10358751	333	10 49 853 7	75	1	10382738	559	10 35 876 6	59	1
10358753	91	10 35 874 2	160	1	10382738	563	10 49 863 6	59	1
10358754	332	10 35 874 7	80	1	10384501	704	10 35 872 5	104	2
10358755	332	10 35 874 7	40	1	10385890	114	10 35 873 3	10	1
10358755	333	10 49 853 7	40	1	10386982	332	10 35 874 7	20	1
10358756	92	10 35 874 2	9200	1	10386999	336	10 38 698 2	52	1
10358757	92	10 35 874 2	9000	1	10386999	339	10 49 804 4	52	1
10358758	494	10 35 875 7	50	1	10387001	336	10 38 698 2	56	2
10358759	91	10 35 874 2	180	1	10387001	339	10 49 804 4	56	2
10358760	92	10 35 874 2	8600	1	10388393	712	10 38 862 4	100	1
10358762	494	10 35 875 7	60	1	10388624	700	10 35 872 5	10	1
10358763	494	10 35 875 7	90	1	10389036	520	10 07 707 3	20	1
10358764	92	10 35 874 2	8900	1	10389036	521	10 07 608 3	20	1
10358765	92	10 35 874 2	9500	1	10389225	105	10 05 797 8	30	2
10358766	92	10 35 874 2	9900	1	10389374	105	10 05 797 8	8	2
10358767	561	10 49 863 6	8	1	10393720	748	10 49 827 1	30	1
10358768	92	10 35 874 2	8700	1	10393873	559	10 35 876 6	56	1
10358772	91	10 35 874 2	800	1	10393873	563	10 49 863 6	56	1
10358799	108	10 35 873 5	540	1	10395385	521	10 07 608 3	40	1
10358890	469	70 28 774	140	1	10395431	520	10 07 707 3	40	1
10358947	17	90 70 366	30	1kg	10395893	91	10 35 874 2	170	1
10358948	17	90 70 366	20	1kg	10395893	93	10 49 853 2	170	1
10358949	17	90 70 366	10	1kg	10396395	526	10 35 876 3	56	1
10358950	17	90 70 366	40	1kg	10396395	533	10 49 837 7	56	1
10358992	17	90 70 366	50	1kg	10396615	527	10 35 876 3	80	1
10359056	11	90 66 465	20	1l	10396615	534	10 49 837 7	80	1
10359147	552	10 08 428 5	200	1	10396657	526	10 35 876 3	50	1
10359703	9	10 35 874 1	9999	1	10396657	533	10 49 837 7	50	1
10359830	40	10 35 970 3	110	1	10396658	527	10 35 876 3	90	1
10361905	40	10 35 970 3	100	1	10396658	534	10 49 837 7	90	1
10361907	94	10 36 190 5	2	1	10399731	717	10 35 840 0	17	2
10361907	98	10 36 190 8	1	1	10399731	731	10 49 825 2	3	2
10361908	94	10 36 190 5	4	1	10399732	717	10 35 840 0	15	2
10364395	102	10 35 875 3	45	1	10401819	272	10 05 311 8	140	1
10364457	271	10 05 311 8	73	1	10401821	271	10 05 311 8	73	1
10364488	212	10 49 800 0	11	1	10402126	513	10 49 837 6	10	1
10365325	465	10 35 876 0	41	1	10402127	532	10 49 837 7	40	1
10365325	466	10 49 857 4	41	1	10402369	560	10 35 876 6	70	1
10366236	108	10 35 873 5	520	1	10402369	564	10 49 863 6	70	1
10366248	749	10 39 372 0	50	1	10405887	557	10 35 876 6	2	1
10366624	749	10 39 372 0	21	1	10405887	561	10 49 863 6	2	1
10367531	465	10 35 876 0	4	2	10406679	416	10 05 303 6	89	1
10367531	466	10 49 857 4	4	2	10406679	416	10 05 303 6	114	1

Item	Page	Assembly	Pos.	Quantity	Item	Page	Assembly	Pos.	Quantity
10406898	271	10 05 311 8	80	1	10425632	755	94 02 020 2	20	9
10408514	731	10 49 825 2	4	2	10425650	120	10 35 879 9	27	2
10409084	717	10 35 840 0	18	2	10425650	395	10 35 874 4	23	3
10409574	771	10 35 873 1	55	2	10425656	115	10 35 873 3	27	1
10409747	131	10 42 845 9	2	1	10425662	60	10 07 498 7	3	48
10409751	177	10 40 974 7	1	1	10425681	60	10 07 498 7	11	4
10409752	176	10 34 668 4	1	1	10425681	220	10 05 311 7	4	2
10409753	179	10 40 975 2	1	1	10425682	219	10 05 302 4	3	18
10409754	179	10 40 975 2	15	20	10425687	126	90 80 120	48	2
10409845	176	10 34 668 4	4	2	10425688	110	10 49 845 5	26	8
10410639	131	10 42 845 9	24	1	10425711	12	90 70 361	10	1l
10410640	133	10 44 145 6	1	1	10425712	37	10 42 571 1	5	1
10410641	165	10 41 064 0	2	9	10425713	37	10 42 571 1	20	1
10410642	165	10 41 064 0	24	1	10425715	37	10 42 571 1	210	1
10410643	165	10 41 064 0	25	1	10425719	37	10 42 571 1	1000	1
10410644	165	10 41 064 0	29	1	10425724	736	10 05 646 8	4	3
10410653	133	10 44 145 6	2	1	10425734	241	10 35 877 2	10	60
10410654	165	10 41 064 0	1	1	10427532	277	10 05 798 3	32	1
10410655	165	10 41 064 0	27	2	10428410	30	10 35 683 2	20	1
10410656	165	10 41 064 0	41	1	10428411	30	10 35 683 2	210	1
10410673	165	10 41 064 0	11	1	10428459	120	10 35 879 9	25	1
10410984	764	96 31 985	6	1	10428572	180	10 44 299 8	5	1
10412354	605	10 12 002 3	11	2	10428694	613	10 11 716 7	1	1
10412536	443	10 05 530 3	25	56	10428776	477	10 48 809 7	140	1
10412536	444	10 05 530 3	39	137	10428947	208	10 42 538 5	3	1
10412536	445	10 05 530 3	54	5	10440661	604	10 12 476 3	11	2
10412536	448	10 05 535 4	35	114	10440724	131	10 42 845 9	37	1
10412536	450	10 06 360 5	15	28	10440788	596	10 12 264 0	5	3
10412536	451	10 05 546 4	21	20	10440788	597	10 12 264 5	3	21
10412536	452	10 05 538 1	12	6	10440788	598	10 12 264 6	5	6
10412536	453	10 05 543 3	25	24	10440788	599	10 12 265 9	5	6
10412536	454	10 05 543 3	33	18	10441154	413	10 05 303 6	15	2
10412536	455	10 05 545 3	30	14	10441154	428	10 49 857 1	15	2
10412536	456	10 05 541 0	22	27	10441456	131	10 42 845 9	1	1
10412536	457	10 05 541 0	33	20	10441458	132	10 42 845 9	83	1
10412536	801	10 05 539 2	23	30	10441464	166	10 44 145 8	20	1
10412844	256	90 64 786	115	1	10442984	615	10 49 001 8	4	1
10412844	258	10 01 461 1	115	2	10442984	687	10 12 089 6	8	1
10423776	102	10 35 875 3	35	1	10442998	146	10 10 206 4	3	1
10424333	605	10 12 002 3	19	1	10450081	549	10 35 876 5	2	1
10424588	249	10 34 071 7	16	1	10450748	112	10 36 623 6	15	1
10424598	249	10 34 071 7	1	1	10451150	725	10 49 849 8	44	5
10424599	249	10 34 071 7	15	1	10451151	727	10 49 850 0	3	5
10425216	102	10 35 875 3	40	2	10451152	725	10 49 849 8	41	5
10425260	691	10 12 097 3	2	1	10451155	725	10 49 849 8	40	5
10425261	691	10 12 097 3	1	1	10451188	725	10 49 849 8	43	5
10425385	199	10 35 873 9	2	1	10451201	725	10 49 849 8	42	5
10425592	43	10 35 874 0	63	8	10451202	550	10 49 815 2	60	1
10425592	104	10 05 300 8	11	2	10451493	551	10 08 428 5	22	1
10425592	115	10 35 873 3	28	2	10451494	551	10 08 428 5	24	1
10425597	386	10 08 795 8	3	1	10451496	551	10 08 428 5	26	1
10425597	401	93 75 164	1	4	10451499	551	10 08 428 5	34	1
10425599	100	10 35 875 3	4	5	10451500	551	10 08 428 5	38	1
10425604	60	10 07 498 7	6	48	10451512	552	10 08 428 5	80	1
10425607	41	10 35 874 0	41	24	10451513	552	10 08 428 5	82	1
10425607	43	10 35 874 0	51	64	10451519	552	10 08 428 5	86	1
10425613	110	10 49 845 5	24	2	10451531	552	10 08 428 5	90	1
10425616	110	10 49 845 5	25	2	10451532	552	10 08 428 5	92	1
10425616	782	10 35 806 3	21	6	10451534	552	10 08 428 5	96	1
10425623	241	10 35 877 2	15	60	10451535	552	10 08 428 5	98	1

Item	Page	Assembly	Pos.	Quantity	Item	Page	Assembly	Pos.	Quantity
10451537	552	10 08 428 5	112	1	10498152	92	10 35 874 2	9620	1
10451540	552	10 08 428 5	120	1	10498152	93	10 49 853 2	9620	1
10454840	505	10 09 499 2	121	1	10498153	795	10 49 815 5	60	1
10455143	411	10 34 192 9	10	1	10498154	795	10 49 815 5	50	1
10455469	551	10 08 428 5	28	1	10498155	794	10 49 815 6	10	1
10455470	551	10 08 428 5	30	1	10498156	7	.	10	1
10455471	551	10 08 428 5	32	1	10498156	493	10 35 876 4	3	1
10455472	551	10 08 428 5	48	1	10498156	493	10 35 876 4	4	1
10455473	551	10 08 428 5	60	1	10498156	493	10 35 876 4	20	1
10455474	551	10 08 428 5	64	1	10498156	493	10 35 876 4	23	1
10455475	551	10 08 428 5	70	1	10498156	493	10 35 876 4	50	1
10467006	605	10 12 002 3	18	1	10498156	494	10 35 875 7	22	1
10467727	519	10 06 222 8	90	1	10498156	494	10 35 875 7	23	1
10469917	289	99 68 625	10	1	10498223	557	10 35 876 6	4	1
10469918	304	99 68 611	10	1	10498223	561	10 49 863 6	4	1
10469932	304	99 68 611	50	1	10498252	714	10 35 872 1	5	1
10469933	289	99 68 625	50	1	10498271	705	10 35 872 5	143	1
10470100	402	56 15 220	4	1	10498274	748	10 49 827 1	10	1
10470127	491	10 47 012 8	3	4	10498313	7	.	6	1
10470128	488	10 48 809 9	250	1	10498313	545	10 35 868 3	21	1
10470574	593	10 11 805 0	8	2	10498313	546	10 35 868 3	50	1
10470769	43	10 35 874 0	61	2	10498313	548	10 35 821 5	40	1
10471469	217	10 49 800 0	81	2	10498314	787	10 49 831 3	10	1
10471469	498	10 35 875 7	201	6	10498315	788	10 49 831 4	30	1
10471469	513	10 49 837 6	16	5	10498316	788	10 49 831 4	2	1
10471469	523	10 35 876 3	21	15	10498331	7	.	9	1
10471469	530	10 49 837 7	21	15	10498332	779	10 49 833 1	10	1
10471469	749	10 39 372 0	36	1	10498335	733	10 35 873 7	30	1
10471469	793	10 82 390 4	61	4	10498336	738	10 49 833 5	2	1
10471614	211	10 21 775 0	1	1	10498365	733	10 35 873 7	10	1
10471615	211	10 21 775 0	2	1	10498366	733	10 35 873 7	12	1
10471616	211	10 21 775 0	3	1	10498376	494	10 35 875 7	60	1
10472666	399	10 35 874 4	100	1	10498377	494	10 35 875 7	90	1
10475119	49	10 47 076 9	8	2	10498381	729	10 49 838 7	20	2
10475942	408	10 11 355 7	119	14	10498381	730	10 49 857 6	20	2
10475942	751	10 29 135 3	40	1	10498382	729	10 49 838 7	21	2
10476167	467	10 35 876 8	20	1	10498382	730	10 49 857 6	21	2
10488090	477	10 48 809 7	182	1	10498387	726	10 49 849 9	10	1
10488097	468	10 47 616 7	60	1	10498454	110	10 49 845 5	4	1
10488099	468	10 47 616 7	80	1	10498455	108	10 35 873 5	510	1
10488100	488	10 48 809 9	220	1	10498497	7	.	16	1
10488101	488	10 48 809 9	284	1	10498498	724	10 49 849 7	10	1
10488707	477	10 48 809 7	150	1	10498499	725	10 49 849 8	10	1
10488927	618	10 12 282 4	4	2	10498500	726	10 49 849 9	9	1
10489276	710	10 38 839 3	50	1	10498501	726	10 49 849 9	11	1
10489277	251	10 48 927 6	1	1	10498506	727	10 49 850 0	2	1
10489538	409	10 47 594 2	999	1	10498507	728	10 49 850 1	3	1
10489539	409	10 47 594 2	998	1	10498508	728	10 49 850 1	4	1
10490018	613	10 11 716 7	1	0	10498509	728	10 49 850 1	5	1
10491040	582	10 12 593 7	24	1	10498510	728	10 49 850 1	7	4
10492230	444	10 05 530 3	44	3	10498511	728	10 49 850 1	8	3
10493087	316	10 40 689 8	70	1	10498512	728	10 49 850 1	2	2
10493088	316	10 40 689 8	71	1	10498532	9	10 35 874 1	100	1
10493089	322	11 00 359 4	13	1	10498537	93	10 49 853 2	7000	1
10493455	582	10 12 593 7	18	2	10498553	796	10 49 815 5	70	1
10498000	108	10 35 873 5	580	1	10498568	431	10 49 857 1	89	1
10498044	332	10 35 874 7	20	1	10498568	431	10 49 857 1	114	1
10498044	333	10 49 853 7	20	1	10498570	439	10 49 857 1	285	1
10498138	799	10 49 815 3	2	1	10498571	93	10 49 853 2	8500	1
10498140	795	10 49 815 5	65	1	10498574	93	10 49 853 2	8600	1

Item	Page	Assembly	Pos.	Quantity	Item	Page	Assembly	Pos.	Quantity
10498576	726	10 49 849 9	10	1	247117702	371	10 82 438 0	22	1
10498578	728	10 49 850 1	6	12	247138602	702	10 35 872 5	52	1
10498636	93	10 49 853 2	9900	1	247242302	123	10 35 879 9	83	1
10498640	7	.	14	1	247242302	398	10 35 874 4	72	1
10498670	41	10 35 874 0	10	1	248002602	705	10 35 872 5	129	8
10498677	108	10 35 873 5	550	1	248016802	703	10 35 872 5	84	8
10498678	700	10 35 872 5	18	2	279307502	552	10 08 428 5	114	1
10498732	108	10 35 873 5	550	1	3001286	552	10 08 428 5	160	1
10498755	714	10 35 872 1	4	2	3001289	552	10 08 428 5	165	1
10498769	750	10 49 827 4	2	1	3001590	739	99 35 245	2	1
10652159	280	10 16 576 6	20	1	3022159	656	90 80 668	1	1
10652552	572	10 12 907 1	6	6	4000282	145	98 88 308	15	4
10677204	294	10 82 196 4	2	1	4000362	60	10 07 498 7	16	4
10677206	296	10 82 196 3	2	1	4000362	705	10 35 872 5	137	2
10677645	297	10 82 674 4	2	1	4000363	71	56 16 688	490	2
10800585	51	56 18 003	40	2	4000363	340	10 05 314 4	6	2
10813936	605	10 12 002 3	17	1	4000376	277	10 05 798 3	38	16
10813936	649	10 13 273 9	14	1	4000376	292	10 82 277 5	105	1
10813936	650	10 13 274 0	14	1	4000376	293	10 82 277 5	121	2
10813939	623	10 12 720 8	20	4	4000376	324	10 02 207 8	5	3
10813940	623	10 12 720 8	25	4	4000376	490	10 29 113 8	2180	3
10816666	316	10 40 689 8	10	1	4000376	495	10 35 875 7	98	4
10820659	709	10 35 835 9	30	2	4000376	504	10 09 499 2	44	3
10821963	291	10 82 277 5	40	1	4000376	526	10 35 876 3	55	12
10821964	291	10 82 277 5	30	1	4000376	533	10 49 837 7	55	12
10822179	292	10 82 277 5	91	1	4000376	783	98 73 999	3	2
10822775	269	10 05 311 8	30	1	4000376	793	10 82 390 4	67	8
10823904	795	10 49 815 5	30	1	4000379	71	56 16 688	480	2
10823905	793	10 82 390 4	10	1	4000379	113	10 09 538 7	22	2
10823906	793	10 82 390 4	11	1	4000379	126	90 80 120	46	2
10824380	333	10 49 853 7	80	1	4000379	282	97 58 815 01	64	2
10824389	333	10 49 853 7	25	1	4000379	292	10 82 277 5	86	2
10826744	292	10 82 277 5	85	1	4000379	316	10 40 689 8	75	1
10829248	314	10 06 648 4	2	1	4000379	414	10 05 303 6	39	2
10841515	196	10 49 873 2	18	2	4000379	416	10 05 303 6	99	2
10841516	196	10 49 873 2	19	2	4000379	417	10 05 303 6	140	2
11002217	604	10 12 476 3	13	4	4000379	418	10 05 303 6	172	2
11002474	323	11 00 359 4	35	8	4000379	429	10 49 857 1	39	2
11002881	211	10 21 775 0	105	1	4000379	431	10 49 857 1	99	2
11003425	271	10 05 311 8	87	1	4000379	432	10 49 857 1	140	2
11003594	318	10 81 666 6	1	1	4000379	433	10 49 857 1	172	2
11003600	323	11 00 359 4	32	1	4000379	450	10 06 360 5	12	2
11005554	619	10 30 300 7	17	1	4000379	457	10 05 541 0	42	8
11007768	388	56 17 689	16	2	4000379	457	10 05 541 0	52	2
11007770	388	56 17 689	7	1	4000379	472	10 04 678 8	300	1
11060174	562	10 49 863 6	30	1	4000379	484	70 28 778	450	4
11067312	670	10 11 698 9	2	14	4000379	504	10 09 499 2	100	1
11067315	670	10 11 698 9	1	1	4000379	543	10 05 319 0	5	4
11080307	459	73 72 348	10	2	4000379	802	10 05 539 2	32	8
226016702	271	10 05 311 8	120	0.7m	4000379	802	10 05 539 2	42	2
226016702	271	10 05 311 8	122	0.2m	4000381	107	10 35 875 9	14	3
240042802	572	10 12 907 1	2	4	4000381	112	10 36 623 6	24	1
240091102	665	90 78 467	2	2	4000381	113	10 09 538 7	25	2
240122602	70	98 88 126	28	2	4000381	115	10 35 873 3	17	4
240127002	486	70 28 778	570	3	4000381	205	10 35 873 9	85	5
242005302	209	10 42 538 5	30	24	4000381	206	10 35 873 9	95	1
247021702	247	10 07 675 7	61	1	4000381	209	10 42 538 5	40	20
247021802	711	10 38 862 4	15	3	4000381	214	10 49 800 0	32	1
247117702	54	10 49 867 0	10	1	4000381	214	10 49 800 0	41	3
247117702	365	10 35 875 4	33	2	4000381	215	10 49 800 0	54	1

Item	Page	Assembly	Pos.	Quantity	Item	Page	Assembly	Pos.	Quantity
4000381	216	10 49 800 0	63	1	4000498	316	10 40 689 8	74	1
4000381	272	10 05 311 8	131	2	4000498	323	11 00 359 4	20	11
4000381	328	10 06 786 9	56	20	4000505	102	10 35 875 3	31	2
4000381	349	10 05 312 6	54	1	4000505	209	10 42 538 5	36	20
4000381	350	10 05 312 6	71	6	4000505	453	10 05 543 3	28	10
4000381	418	10 05 303 6	167	4	4000505	456	10 05 541 0	25	8
4000381	418	10 05 303 6	178	2	4000508	70	98 88 126	29	2
4000381	433	10 49 857 1	167	4	4000523	69	90 72 026	17	4
4000381	433	10 49 857 1	178	2	4000529	131	10 42 845 9	26	1
4000381	447	10 05 535 4	22	4	4000563	756	95 93 590	20	11
4000381	461	10 06 375 5	38	1	4000563	757	99 06 383	20	11
4000381	472	10 04 678 8	170	4	4000563	758	99 06 576	20	11
4000381	477	10 48 809 7	160	1	4000613	222	90 01 781 7	77	6
4000381	480	70 28 884	540	1	4000619	344	10 35 875 5	37	4
4000381	497	10 35 875 7	158	2	4000619	422	10 05 303 6	258	1
4000381	498	10 35 875 7	170	2	4000619	432	10 49 857 1	137	1
4000381	498	10 35 875 7	177	3	4000619	437	10 49 857 1	258	1
4000381	506	10 35 875 8	13	2	4000619	701	10 35 872 5	41	8
4000381	511	10 06 221 6	52	1	4000619	713	10 07 162 8	8	2
4000381	512	10 35 876 2	52	1	4000648	283	98 74 988	6	2
4000381	513	10 49 837 6	52	1	4000704	460	10 06 375 5	22	5
4000381	517	10 06 222 8	42	2	4000704	461	10 06 375 5	31	2
4000381	517	10 06 222 8	63	1	4000704	470	70 28 775	190	6
4000381	527	10 35 876 3	62	2	4000704	470	70 28 775	240	10
4000381	528	10 35 876 3	102	19	4000704	478	10 48 809 7	750	3
4000381	528	10 35 876 3	111	3	4000746	463	10 03 720 9	10	2
4000381	528	10 35 876 3	120	3	4000750	199	10 35 873 9	12	8
4000381	534	10 49 837 7	62	2	4000777	755	94 02 020 2	25	1
4000381	535	10 49 837 7	102	21	4000777	761	95 88 147	25	1
4000381	535	10 49 837 7	111	3	4000779	115	10 35 873 3	16	8
4000381	535	10 49 837 7	120	3	4000779	193	10 49 867 7	8	18
4000381	747	10 36 839 8	27	4	4000779	193	10 49 867 7	11	10
4000381	793	10 82 390 4	53	1	4000779	193	10 49 867 7	14	6
4000383	105	10 05 797 8	40	4	4000779	195	10 49 873 2	8	18
4000383	203	10 35 873 9	58	2	4000779	195	10 49 873 2	11	10
4000383	209	10 42 538 5	41	20	4000779	195	10 49 873 2	14	6
4000383	291	10 82 277 5	16	4	4000779	316	10 40 689 8	43	1
4000383	414	10 05 303 6	34	2	4000779	418	10 05 303 6	166	4
4000383	422	10 05 303 6	265	2	4000779	433	10 49 857 1	166	4
4000383	429	10 49 857 1	34	2	4000779	454	10 05 543 3	37	4
4000383	437	10 49 857 1	265	2	4000784	493	10 35 876 4	33	32
4000383	508	10 35 875 8	51	1	4000784	713	10 07 162 8	9	2
4000383	509	10 35 875 8	102	4	4000828	646	10 11 899 9	4	4
4000383	541	10 35 875 6	21	4	4000828	652	10 11 678 0	6	3
4000383	545	10 35 868 3	33	1	4000877	352	10 05 312 9	22	2
4000383	635	10 11 865 5	6	2	4000899	711	10 38 862 4	22	2
4000420	42	10 35 874 0	48	8	4000900	388	56 17 689	17	2
4000420	80	92 78 174	17	1	4000905	102	10 35 875 3	46	1
4000420	127	90 80 120	49	8	4000906	347	10 05 312 6	38	4
4000420	407	10 11 355 7	49	5	4000935	579	10 12 375 9	11	4
4000420	740	10 07 061 5	5	2	4001025	783	98 73 999	4	2
4000445	352	10 05 312 9	32	1	4001209	611	10 11 802 5	12	1
4000466	278	10 05 798 3	47	2	4001246	109	10 12 605 7	11	12
4000466	282	97 58 815 01	63	2	4001246	209	10 42 538 5	28	8
4000466	283	98 74 988	8	2	4001246	418	10 05 303 6	147	2
4000466	293	10 82 277 5	112	1	4001246	433	10 49 857 1	147	2
4000466	504	10 09 499 2	64	2	4001246	493	10 35 876 4	25	32
4000466	505	10 09 499 2	112	1	4001246	545	10 35 868 3	31	1
4000483	729	10 49 838 7	22	12	4001308	217	10 49 800 0	82	2
4000483	730	10 49 857 6	22	12	4001308	504	10 09 499 2	65	2

Item	Page	Assembly	Pos.	Quantity	Item	Page	Assembly	Pos.	Quantity
4001308	504	10 09 499 2	111	1	4001648	742	93 68 905	3	1
4001308	526	10 35 876 3	46	4	4001648	743	93 85 073	3	1
4001308	527	10 35 876 3	96	4	4001650	243	10 07 675 6	7	2
4001308	533	10 49 837 7	46	4	4001650	246	10 07 675 7	12	2
4001308	534	10 49 837 7	96	4	4001650	418	10 05 303 6	176	2
4001314	199	10 35 873 9	16	8	4001650	745	95 77 441	3	1
4001439	576	10 11 874 8	5	1	4001667	630	90 78 417	8	2
4001439	617	10 12 314 1	11	2	4001696	209	10 42 538 5	25	8
4001439	621	90 78 554	10	6	4001696	210	10 06 461 3	22	7
4001439	623	10 12 720 8	27	2	4001696	334	10 38 698 2	12	2
4001439	641	10 11 930 6	5	6	4001696	337	10 49 804 4	12	2
4001446	340	10 05 314 4	21	2	4001696	421	10 05 303 6	223	4
4001446	341	10 82 438 9	21	2	4001696	424	10 05 303 6	286	8
4001447	221	90 01 781 7	38	4	4001696	436	10 49 857 1	223	4
4001514	495	10 35 875 7	121	4	4001696	439	10 49 857 1	286	8
4001596	323	11 00 359 4	23	1	4001696	453	10 05 543 3	27	10
4001596	513	10 49 837 6	42	7	4001696	456	10 05 541 0	24	8
4001596	513	10 49 837 6	47	12	4001696	486	70 28 778	600	2
4001596	517	10 06 222 8	55	1	4001704	417	10 05 303 6	136	1
4001596	518	10 06 222 8	80	6	4001704	432	10 49 857 1	136	1
4001596	523	10 35 876 3	28	4	4001866	282	97 58 815 01	66	2
4001596	526	10 35 876 3	58	2	4001869	756	95 93 590	25	1
4001596	527	10 35 876 3	81	2	4001869	762	95 89 256	25	1
4001596	530	10 49 837 7	28	4	4001880	451	10 05 546 4	34	1
4001596	533	10 49 837 7	58	2	4001883	669	10 11 671 8	4	2
4001596	534	10 49 837 7	81	2	4001907	549	10 35 876 5	9	4
4001596	781	10 49 833 2	6	2	4001927	289	99 68 625	105	1
4001606	101	10 35 875 3	17	6	4001927	304	99 68 611	105	1
4001606	383	10 35 874 5	52	24	4001928	241	10 35 877 2	47	3
4001606	443	10 05 530 3	22	10	4001961	349	10 05 312 6	53	1
4001606	445	10 05 530 3	52	4	4002003	193	10 49 867 7	10	5
4001606	454	10 05 543 3	36	4	4002003	195	10 49 873 2	10	5
4001606	479	10 48 809 7	880	3	4002012	551	10 08 428 5	54	1
4001606	546	10 35 868 3	42	6	4002051	635	10 11 865 5	3	2
4001606	546	10 35 868 3	52	18	4002080	222	90 01 781 7	56	3
4001622	620	90 78 260	2	3	4002104	422	10 05 303 6	256	3
4001645	120	10 35 879 9	33	2	4002104	437	10 49 857 1	256	3
4001645	217	10 49 800 0	102	2	4002117	421	10 05 303 6	240	2
4001645	277	10 05 798 3	37	16	4002117	436	10 49 857 1	240	2
4001645	278	10 05 798 3	101	3	4002117	634	10 11 822 3	10	3
4001645	292	10 82 277 5	84	4	4002117	702	10 35 872 5	67	4
4001645	292	10 82 277 5	106	1	4002133	194	10 49 867 7	24	2
4001645	293	10 82 277 5	122	2	4002133	601	10 11 802 2	10	6
4001645	321	10 02 211 7	9	6	4002163	734	10 08 685 3	22	12
4001645	324	10 02 207 8	3	3	4002163	741	93 63 937	3	2
4001645	490	10 29 113 8	2170	3	4002172	422	10 05 303 6	263	1
4001645	495	10 35 875 7	97	4	4002185	396	10 35 874 4	29	8
4001645	503	10 09 499 2	13	4	4002195	340	10 05 314 4	31	2
4001645	504	10 09 499 2	43	4	4002195	341	10 82 438 9	31	2
4001645	504	10 09 499 2	96	2	4002259	245	10 29 302 0	9	2
4001645	507	10 35 875 8	33	4	4002259	254	10 29 301 8	9	2
4001645	526	10 35 876 3	54	12	4002259	708	10 00 878 9	9	2
4001645	533	10 49 837 7	54	12	4002259	722	10 30 336 9	9	2
4001645	747	10 36 839 8	33	2	4002308	478	10 48 809 7	794	1
4001645	783	98 73 999	5	4	4002386	270	10 05 311 8	61	1
4001645	793	10 82 390 4	66	8	4002417	372	10 00 909 0	10	4
4001648	107	10 35 875 9	26	3	4002418	176	10 34 668 4	11	4
4001648	219	10 05 302 4	21	3	4002418	254	10 29 301 8	10	2
4001648	241	10 35 877 2	42	1	4002418	708	10 00 878 9	10	2
4001648	542	10 35 875 6	32	4	4002419	451	10 05 546 4	32	4

Item	Page	Assembly	Pos.	Quantity	Item	Page	Assembly	Pos.	Quantity
4002419	457	10 05 541 0	39	8	4043003	66	94 43 970	82	8
4002419	802	10 05 539 2	28	8	4043003	343	10 35 875 5	23	24
4002442	508	10 35 875 8	71	2	4043003	348	10 05 312 6	45	4
4002477	282	97 58 815 01	67	2	4043003	354	10 35 875 1	18	4
4002478	64	94 43 970	18	5	4043003	771	10 35 873 1	50	16
4002519	747	10 36 839 8	22	2	4043050	113	10 09 538 7	21	2
4002563	207	10 35 873 9	104	2	4043052	111	73 67 136	2	2
4002563	219	10 05 302 4	16	4	4043052	341	10 82 438 9	6	2
4002564	417	10 05 303 6	137	1	404306808	611	10 11 802 5	11	3
4002612	484	70 28 778	390	4	4043082	107	10 35 875 9	7	3
4002613	292	10 82 277 5	81	6	4043082	177	10 40 974 7	17	8
4002698	246	10 07 675 7	17	4	4043082	205	10 35 873 9	84	4
4002729	130	10 21 593 5	28	2	4043082	243	10 07 675 6	27	2
4002828	131	10 42 845 9	31	2	4043082	243	10 07 675 6	29	1
4002831	264	10 33 323 7	11	1	4043082	247	10 07 675 7	36	2
4002838	500	10 04 553 0	10	4	4043082	247	10 07 675 7	38	1
4002838	501	70 27 205	10	4	4043082	346	10 05 312 6	28	1
4002875	410	10 28 629 4	46	1	4043082	508	10 35 875 8	81	8
4002887	322	11 00 359 4	3	7	4043082	508	10 35 875 8	89	2
4004022	511	10 06 221 6	16	4	4043082	517	10 06 222 8	31	2
4004022	512	10 35 876 2	16	4	4043082	517	10 06 222 8	61	1
4004022	517	10 06 222 8	52	1	4043082	543	10 05 319 0	11	2
4041102	249	10 34 071 7	19	1	4043089	410	10 28 629 4	50	4
4041117	208	10 42 538 5	15	1	4043090	381	10 35 874 5	3	8
4041202	612	10 11 615 0	4	1	4043090	733	10 35 873 7	27	12
4041202	618	10 12 282 4	7	3	4043122	121	10 35 879 9	51	2
4041209	607	10 12 475 6	15	2	4043122	247	10 07 675 7	78	2
4041209	608	10 12 475 7	15	1	4043122	336	10 38 698 2	63	10
4042002	622	10 11 781 4	2	4	4043122	339	10 49 804 4	63	10
4042003	249	10 34 071 7	10	3	4043122	394	10 35 874 4	7	4
4042003	323	11 00 359 4	22	3	4043122	421	10 05 303 6	247	8
404200701	166	10 44 145 8	11	4	4043122	436	10 49 857 1	247	8
404200701	217	10 49 800 0	101	2	4043122	541	10 35 875 6	22	4
404200701	250	10 34 071 7	37	4	4043122	747	10 36 839 8	40	2
404200701	507	10 35 875 8	32	4	4043124	105	10 05 797 8	17	2
404200701	533	10 49 837 7	53	12	4043124	134	90 72 922	22	12
404200701	793	10 82 390 4	65	8	4043124	136	90 77 452	22	12
404202508	252	10 48 927 7	13	10	4043124	269	10 05 311 8	21	4
404202508	711	10 38 862 4	23	1	4043124	353	10 35 875 1	8	2
404204405	146	10 10 206 4	50	5	4043124	419	10 05 303 6	182	6
404205008	181	90 78 788	52	4	4043124	419	10 05 303 6	187	10
404205308	323	11 00 359 4	19	7	4043124	421	10 05 303 6	244	2
404205408	722	10 30 336 9	10	2	4043124	434	10 49 857 1	182	6
4042062	204	10 35 873 9	62	4	4043124	434	10 49 857 1	187	10
4042062	288	10 46 993 3	90	2	4043124	436	10 49 857 1	244	2
4042062	302	10 46 993 2	90	2	4043127	66	94 43 970	52	24
4042062	503	10 09 499 2	22	6	4043127	269	10 05 311 8	31	4
4042109	669	10 11 671 8	10	4	4043127	702	10 35 872 5	54	2
404212008	158	10 33 325 9	10	4	4043136	356	10 35 875 1	47	2
4043000	203	10 35 873 9	56	4	404313701	395	10 35 874 4	13	4
4043000	207	10 35 873 9	102	2	404313701	657	10 11 606 7	3	4
4043000	269	10 05 311 8	41	3	4043160	316	10 40 689 8	21	4
4043000	351	10 05 312 9	5	2	4043160	711	10 38 862 4	12	2
4043000	472	10 04 678 8	140	6	4043163	199	10 35 873 9	11	8
4043002	80	92 78 174	26	4	4043163	200	10 35 873 9	26	4
4043002	242	10 07 604 7	31	4	4043163	201	10 35 873 9	31	2
4043002	327	10 06 786 9	26	1	4043163	203	10 35 873 9	51	7
4043002	327	10 06 786 9	31	1	4043163	354	10 35 875 1	12	2
4043002	729	10 49 838 7	24	12	4043163	384	10 35 874 5	73	8
4043002	730	10 49 857 6	24	12	4043163	395	10 35 874 4	14	4

Item	Page	Assembly	Pos.	Quantity	Item	Page	Assembly	Pos.	Quantity
4043163	700	10 35 872 5	7	6	4066120	776	10 02 138 7	130	2
4043163	720	10 35 872 0	28	2	4066122	114	10 35 873 3	3	4
4043163	782	10 35 806 3	6	2	4066122	117	10 35 873 3	53	6
4043163	782	10 35 806 3	15	6	4066122	119	10 35 879 9	22	2
4043163	795	10 49 815 5	47	4	4066122	413	10 05 303 6	12	15
4043164	71	56 16 688	160	4	4066122	428	10 49 857 1	12	15
4043164	200	10 35 873 9	22	4	4066122	486	70 28 778	770	1
4043164	311	10 08 256 0	11	2	4066122	657	10 11 606 7	4	4
4043164	351	10 05 312 9	15	16	4066124	103	10 05 300 8	7	4
4043164	355	10 35 875 1	28	8	4066124	105	10 05 797 8	22	4
4043164	700	10 35 872 5	25	28	4066124	116	10 35 873 3	42	5
4043164	706	10 06 477 4	13	2	4066124	344	10 35 875 5	47	6
4043164	715	10 35 872 1	233	20	4066124	350	10 05 312 6	64	2
404316801	64	94 43 970	11	8	4066124	414	10 05 303 6	45	4
404316901	221	90 01 781 7	21	2	4066124	415	10 05 303 6	62	5
4043173	595	10 11 806 0	11	2	4066124	415	10 05 303 6	72	4
4043176	700	10 35 872 5	23	4	4066124	415	10 05 303 6	76	2
404339601	66	94 43 970	72	12	4066124	416	10 05 303 6	119	4
4061044	630	90 78 417	10	1	4066124	429	10 49 857 1	45	4
4062002	41	10 35 874 0	36	8	4066124	430	10 49 857 1	62	5
4062002	115	10 35 873 3	15	4	4066124	430	10 49 857 1	72	4
4062002	196	10 49 873 2	17	16	4066124	430	10 49 857 1	76	2
4062002	209	10 42 538 5	21	12	4066124	431	10 49 857 1	119	4
4062002	461	10 06 375 5	39	1	4066124	493	10 35 876 4	31	12
4062068	740	10 07 061 5	4	1	4066124	715	10 35 872 1	182	4
4062072	114	10 35 873 3	11	5	4066124	786	10 35 806 5	46	2
4065060	54	10 49 867 0	19	4	4066124	795	10 49 815 5	67	6
4065060	293	10 82 277 5	111	1	4066124	799	10 49 815 3	6	6
4065099	57	91 41 597	60	3	4066202	331	98 79 063	10	4
4065099	176	10 34 668 4	8	2	4068019	328	10 06 786 9	50	11
4065099	479	10 48 809 7	920	2	4068085	344	10 35 875 5	36	4
4065099	480	70 28 884	570	3	4068556	126	90 80 120	44	8
4065099	666	10 11 721 3	2	2	408252101	486	70 28 778	622	4
4065103	651	10 11 558 7	8	2	408286100	480	70 28 884	560	4
4065103	652	10 11 678 0	8	2	408286100	486	70 28 778	630	2
4065136	583	10 11 694 5	6	1	409710601	66	94 43 970	54	3
4065136	641	10 11 930 6	12	2	4097529	222	90 01 781 7	79	2
4065136	647	10 13 274 6	8	7	4097530	221	90 01 781 7	2	1
4065164	651	10 11 558 7	7	1	4100003	102	10 35 875 3	37	1
4065164	652	10 11 678 0	7	1	411508001	282	97 58 815 01	65	1
4066042	209	10 42 538 5	20	8	4117027	768	56 02 932	6	1
4066042	243	10 07 675 6	6	1	413412301	250	10 34 071 7	44	4
4066042	246	10 07 675 7	11	1	4202002	101	10 35 875 3	16	6
4066042	308	10 05 798 5	11	4	4202014	293	10 82 277 5	113	1
4066042	308	10 05 798 5	21	4	4211007	417	10 05 303 6	128	2
4066042	461	10 06 375 5	36	1	4211012	243	10 07 675 6	8	5
4066042	472	10 04 678 8	210	2	4211012	246	10 07 675 7	13	5
4066093	117	10 35 873 3	71	2	4216025	102	10 35 875 3	47	2
4066093	209	10 42 538 5	26	8	4216025	209	10 42 538 5	35	12
4066093	331	98 79 063	20	16	4216025	460	10 06 375 5	23	5
4066093	403	10 06 771 7	28	3	421802008	321	10 02 211 7	6	12
4066093	418	10 05 303 6	152	3	421802008	323	11 00 359 4	33	4
4066093	433	10 49 857 1	152	3	4229911	128	90 80 120	50	2
4066093	446	10 05 530 3	76	4	4229911	278	10 05 798 3	56	4
4066093	465	10 35 876 0	64	4	4229911	282	97 58 815 01	70	4
4066093	466	10 49 857 4	64	4	4229911	291	10 82 277 5	56	4
4066093	588	90 77 286	6	8	4229911	414	10 05 303 6	38	2
4066098	209	10 42 538 5	27	13	4229911	416	10 05 303 6	98	2
4066098	486	70 28 778	530	2	4229911	417	10 05 303 6	139	2
4066120	447	10 05 535 4	25	4	4229911	418	10 05 303 6	171	2

Item	Page	Assembly	Pos.	Quantity	Item	Page	Assembly	Pos.	Quantity
4229911	429	10 49 857 1	38	2	4600036	322	11 00 359 4	4	10
4229911	431	10 49 857 1	98	2	4600036	324	10 02 207 8	4	3
4229911	432	10 49 857 1	139	2	4600048	511	10 06 221 6	42	12
4229911	433	10 49 857 1	171	2	4600048	511	10 06 221 6	47	16
4229911	450	10 06 360 5	13	2	4600048	512	10 35 876 2	42	9
4229911	504	10 09 499 2	71	1	4600048	512	10 35 876 2	47	13
4229911	545	10 35 868 3	13	6	4600048	662	90 79 206	3	1
4229912	41	10 35 874 0	37	8	4600067	494	10 35 875 7	41	4
4229912	241	10 35 877 2	32	2	4600068	111	73 67 136	3	2
4229912	270	10 05 311 8	53	4	4600068	543	10 05 319 0	3	4
4229912	282	97 58 815 01	71	2	4600079	478	10 48 809 7	470	3
4229912	308	10 05 798 5	12	4	4600091	245	10 29 302 0	10	2
4229912	308	10 05 798 5	22	4	4600102	623	10 12 720 8	31	2
4229912	308	10 05 798 5	32	6	4600102	641	10 11 930 6	10	1
4229912	308	10 05 798 5	37	4	4600122	635	10 11 865 5	8	1
4229912	381	10 35 874 5	4	8	4600134	612	10 11 615 0	2	1
4229912	381	10 35 874 5	8	8	4600143	105	10 05 797 8	19	4
4229912	383	10 35 874 5	53	24	4600146	432	10 49 857 1	128	2
4229912	546	10 35 868 3	43	6	4600146	782	10 35 806 3	20	6
4229912	546	10 35 868 3	53	18	4600149	55	95 66 869	10	4
4229913	109	10 12 605 7	12	12	4600149	110	10 49 845 5	11	16
4229913	340	10 05 314 4	30	2	4600149	413	10 05 303 6	5	2
4229913	351	10 05 312 9	6	2	4600149	428	10 49 857 1	5	2
4229913	403	10 06 771 7	22	6	4600149	737	10 35 872 3	4	3
4229913	403	10 06 771 7	27	3	4600150	700	10 35 872 5	21	16
4229913	741	93 63 937	4	2	4600157	556	96 87 016	3	2
4239000	293	10 82 277 5	123	2	4600169	71	56 16 688	150	4
423910801	194	10 49 867 7	16	16	4600175	649	10 13 273 9	10	2
423910801	196	10 49 873 2	16	16	4600175	650	10 13 274 0	10	2
423911601	64	94 43 970	12	8	4600180	413	10 05 303 6	6	6
423911601	66	94 43 970	53	12	4600180	428	10 49 857 1	6	6
4242028	757	99 06 383	25	1	4600180	795	10 49 815 5	41	8
4242028	758	99 06 576	25	1	4600183	630	90 78 417	9	2
4280008	166	10 44 145 8	13	1	4600184	210	10 06 461 3	12	4
4280027	149	10 33 307 0	36	1	4600184	344	10 35 875 5	29	2
4280027	267	98 82 882	41	1	4600184	381	10 35 874 5	17	18
4280034	84	98 88 124	41	1	4600184	413	10 05 303 6	22	3
4280034	141	98 86 679	41	1	4600184	416	10 05 303 6	87	6
4280034	173	98 89 282	41	1	4600184	416	10 05 303 6	112	6
4280089	64	94 43 970	28	3	4600184	421	10 05 303 6	213	2
4281006	145	98 88 308	18	1	4600184	421	10 05 303 6	218	2
4281006	192	98 89 161	18	1	4600184	423	10 05 303 6	272	4
4281007	178	10 40 975 1	15	2	4600184	425	10 05 303 6	301	4
4281013	149	10 33 307 0	37	1	4600184	426	10 05 303 6	312	3
4281013	267	98 82 882	40	1	4600184	428	10 49 857 1	22	3
4281016	61	50 20 370 01	10	1	4600184	431	10 49 857 1	87	6
4281023	84	98 88 124	40	1	4600184	431	10 49 857 1	112	6
4281023	141	98 86 679	40	1	4600184	436	10 49 857 1	213	2
4281023	173	98 89 282	40	1	4600184	436	10 49 857 1	218	2
428110201	66	94 43 970	66	1	4600184	438	10 49 857 1	272	4
429612001	64	94 43 970	32	1	4600184	440	10 49 857 1	301	4
4330011	454	10 05 543 3	38	1	4600184	441	10 49 857 1	312	3
4330011	457	10 05 541 0	43	1	4600184	486	70 28 778	510	2
4330011	802	10 05 539 2	35	1	4600184	655	90 78 564	2	3
4330012	105	10 05 797 8	25	1	4600184	668	90 80 481	2	16
4330049	739	99 35 245	4	1	4600184	771	10 35 873 1	83	4
4451001	319	10 02 206 9	4	4	4600184	771	10 35 873 1	143	4
4600021	55	95 66 869	11	4	4600189	66	94 43 970	51	12
4600031	57	91 41 597	70	3	4600198	277	10 05 798 3	22	4
4600036	320	10 02 208 3	4	3	4600198	485	70 28 778	490	4

Item	Page	Assembly	Pos.	Quantity	Item	Page	Assembly	Pos.	Quantity
4600198	489	10 48 809 9	330	4	4600578	605	10 12 002 3	14	8
4600198	489	10 48 809 9	460	2	4600579	347	10 05 312 6	39	4
4600198	524	10 35 876 3	31	3	4600579	356	10 35 875 1	48	2
4600198	526	10 35 876 3	57	2	4600579	421	10 05 303 6	243	2
4600198	527	10 35 876 3	82	2	4600579	436	10 49 857 1	243	2
4600198	529	10 49 837 7	17	3	4600579	542	10 35 875 6	43	2
4600198	531	10 49 837 7	31	3	4600579	702	10 35 872 5	55	2
4600198	533	10 49 837 7	57	2	4600579	734	10 08 685 3	24	12
4600198	534	10 49 837 7	82	2	4600580	489	10 48 809 9	410	6
4600200	278	10 05 798 3	46	2	4600580	489	10 48 809 9	470	2
4600200	283	98 74 988	7	4	4600613	382	10 35 874 5	44	4
4600218	111	73 67 136	4	4	4600625	321	10 02 211 7	10	6
4600222	401	93 75 164	2	4	4600687	210	10 06 461 3	13	4
4600222	547	10 05 453 2	4	3	4600687	447	10 05 535 4	26	4
4600236	408	10 11 355 7	217	2	4600701	738	10 49 833 5	3	1
4600305	278	10 05 798 3	49	1	4600706	102	10 35 875 3	38	1
4600305	503	10 09 499 2	21	6	4600706	417	10 05 303 6	133	1
4600305	504	10 09 499 2	63	2	4600706	432	10 49 857 1	133	1
4600328	422	10 05 303 6	255	1	4600723	478	10 48 809 7	720	3
4600328	437	10 49 857 1	255	1	4600723	489	10 48 809 9	320	4
4600335	702	10 35 872 5	64	4	4600728	403	10 06 771 7	23	6
4600335	752	10 34 080 6	320	4	4600731	507	10 35 875 8	36	4
4600335	753	10 34 081 2	320	4	4600741	704	10 35 872 5	114	4
4600335	780	10 35 813 5	54	4	4600747	789	10 37 296 7	5	3
4600337	320	10 02 208 3	5	3	4600783	243	10 07 675 6	9	3
4600337	322	11 00 359 4	5	10	4600783	246	10 07 675 7	14	3
4600337	324	10 02 207 8	6	3	4600783	282	97 58 815 01	68	1
4600337	495	10 35 875 7	96	4	4600783	484	70 28 778	430	1
4600337	503	10 09 499 2	12	4	4600790	703	10 35 872 5	92	3
4600337	504	10 09 499 2	95	2	4600791	113	10 09 538 7	24	2
4600337	526	10 35 876 3	53	12	4600791	271	10 05 311 8	71	3
4600340	314	10 06 648 4	3	4	4600805	217	10 49 800 0	86	1
4600340	522	10 35 876 3	15	12	4600805	780	10 35 813 5	63	8
4600340	529	10 49 837 7	15	12	4600805	795	10 49 815 5	42	8
4600340	710	10 38 839 3	52	4	4600814	284	73 73 807	24	2
4600341	255	90 64 786	61	1	4600815	284	73 73 807	25	2
4600341	257	10 01 461 1	61	10	4600830	351	10 05 312 9	9	2
4600342	255	90 64 786	51	1	4600856	224	93 36 053 01	9	1
4600342	257	10 01 461 1	51	10	4600947	420	10 05 303 6	203	2
4600356	188	98 84 140	40	2	4600947	435	10 49 857 1	203	2
4600366	100	10 35 875 3	8	4	4601134	414	10 05 303 6	32	2
4600366	104	10 05 300 8	21	6	4601163	246	10 07 675 7	18	4
4600366	112	10 36 623 6	3	4	4601173	117	10 35 873 3	72	4
4600377	649	10 13 273 9	9	2	4601173	207	10 35 873 9	103	4
4600377	650	10 13 274 0	9	2	4601173	414	10 05 303 6	33	4
4600384	669	10 11 671 8	6	4	4601173	414	10 05 303 6	52	2
4600387	120	10 35 879 9	34	2	4601173	416	10 05 303 6	104	4
4600387	166	10 44 145 8	15	2	4601173	418	10 05 303 6	153	3
4600387	278	10 05 798 3	102	3	4601173	419	10 05 303 6	183	6
4600387	470	70 28 775	260	2	4601173	419	10 05 303 6	188	10
4600388	416	10 05 303 6	92	8	4601173	421	10 05 303 6	242	12
4600388	431	10 49 857 1	92	8	4601173	429	10 49 857 1	33	4
4600505	199	10 35 873 9	13	4	4601173	429	10 49 857 1	52	2
4600505	771	10 35 873 1	62	4	4601173	431	10 49 857 1	104	4
4600513	704	10 35 872 5	109	8	4601173	433	10 49 857 1	153	3
4600516	105	10 05 797 8	11	4	4601173	434	10 49 857 1	183	6
4600518	340	10 05 314 4	25	2	4601173	434	10 49 857 1	188	10
4600518	341	10 82 438 9	25	2	4601173	436	10 49 857 1	242	12
4600518	770	10 35 873 1	43	4	4601173	446	10 05 530 3	75	4
4600544	252	10 48 927 7	11	1	4601191	770	10 35 873 1	7	8

Item	Page	Assembly	Pos.	Quantity	Item	Page	Assembly	Pos.	Quantity
4601243	60	10 07 498 7	23	4	4771020	256	90 64 786	160	1
4601243	733	10 35 873 7	23	6	4771020	258	10 01 461 1	160	10
4601302	427	10 05 303 6	332	8	4772024	403	10 06 771 7	38	7
4601302	442	10 49 857 1	332	8	4772024	703	10 35 872 5	81	2
4601308	381	10 35 874 5	7	8	4772028	702	10 35 872 5	76	1
4601316	744	93 88 597	3	1	4774001	122	10 35 879 9	63	1
4601319	103	10 05 300 8	5	6	4774003	112	10 36 623 6	6	2
4601319	344	10 35 875 5	48	2	4774003	403	10 06 771 7	37	7
4601324	465	10 35 876 0	62	8	4774003	703	10 35 872 5	82	2
4601324	466	10 49 857 4	62	8	4774010	702	10 35 872 5	59	1
4601375	243	10 07 675 6	33	3	4774011	702	10 35 872 5	77	1
4601375	246	10 07 675 7	16	3	4774024	255	90 64 786	50	1
4601375	747	10 36 839 8	46	1	4774024	257	10 01 461 1	50	10
4601379	488	10 48 809 9	265	3	4774026	789	10 37 296 7	4	6
4601386	477	10 48 809 7	340	8	477700514	702	10 35 872 5	58	1
4601406	241	10 35 877 2	31	2	477700514	789	10 37 296 7	3	6
4601406	602	10 11 802 3	5	6	4782008	117	10 35 873 3	61	2
4601426	635	10 11 865 5	10	1	480405605	205	10 35 873 9	82	4
4601461	705	10 35 872 5	132	2	4820018	345	10 05 312 6	7	4
4601513	283	98 74 988	5	2	482430314	123	10 35 879 9	82	4
4635044	117	10 35 873 3	64	4	482431414	703	10 35 872 5	90	1
4635142	149	10 33 307 0	47	4	482530914	384	10 35 874 5	80	1
4635197	308	10 05 798 5	25	4	4900038	122	10 35 879 9	64	1
4635246	158	10 33 325 9	9	1	4900053	557	10 35 876 6	3	4
4635283	116	10 35 873 3	41	5	4900053	561	10 49 863 6	3	4
4635283	242	10 07 604 7	32	4	4900089	126	90 80 120	38	2
4635283	413	10 05 303 6	13	15	4900089	582	10 12 593 7	9	1
4635283	413	10 05 303 6	23	3	4900089	621	90 78 554	19	1
4635283	414	10 05 303 6	46	4	4900089	623	10 12 720 8	34	3
4635283	415	10 05 303 6	63	5	4900089	747	10 36 839 8	25	4
4635283	415	10 05 303 6	73	4	4900093	66	94 43 970	84	8
4635283	415	10 05 303 6	77	2	4900093	103	10 05 300 8	6	4
4635283	416	10 05 303 6	88	1	4900093	351	10 05 312 9	10	2
4635283	416	10 05 303 6	113	1	4900093	771	10 35 873 1	82	4
4635283	416	10 05 303 6	120	4	4900093	771	10 35 873 1	142	4
4635283	425	10 05 303 6	302	4	4900094	106	10 39 589 3	5	4
4635283	426	10 05 303 6	311	3	4900111	635	10 11 865 5	2	4
4635283	428	10 49 857 1	13	15	4900112	486	70 28 778	740	2
4635283	428	10 49 857 1	23	3	4900112	651	10 11 558 7	6	3
4635283	429	10 49 857 1	46	4	4900125	286	10 05 879 2	12	1
4635283	430	10 49 857 1	63	5	4900125	299	10 05 879 4	12	1
4635283	430	10 49 857 1	73	4	4900128	282	97 58 815 01	62	1
4635283	430	10 49 857 1	77	2	4900169	117	10 35 873 3	62	2
4635283	431	10 49 857 1	88	1	4900188	601	10 11 802 2	9	2
4635283	431	10 49 857 1	113	1	4900188	645	10 11 566 7	13	8
4635283	431	10 49 857 1	120	4	4900188	648	10 11 566 8	13	8
4635283	440	10 49 857 1	302	4	4900262	610	10 13 273 8	8	1
4635283	441	10 49 857 1	311	3	4900262	618	10 12 282 4	6	3
4635318	105	10 05 797 8	14	2	4900262	649	10 13 273 9	17	1
4635318	194	10 49 867 7	17	16	4900262	650	10 13 274 0	17	1
4635318	433	10 49 857 1	176	2	4900262	694	10 12 099 3	7	1
4635377	192	98 89 161	15	4	4900305	711	10 38 862 4	20	3
472300414	397	10 35 874 4	60	1	4900305	720	10 35 872 0	33	2
472300414	399	10 35 874 4	112	1	4900313	407	10 11 355 7	37	2
472300414	703	10 35 872 5	80	2	4900323	408	10 11 355 7	218	12
472430408	399	10 35 874 4	117	1	4900336	278	10 05 798 3	45	1
472531508	120	10 35 879 9	36	1	4900336	282	97 58 815 01	60	2
4771000	255	90 64 786	60	1	4900372	474	10 04 678 9	630	2
4771000	257	10 01 461 1	60	10	4900372	484	70 28 778	330	1
4771003	112	10 36 623 6	7	2	4900486	120	10 35 879 9	31	1

Item	Page	Assembly	Pos.	Quantity	Item	Page	Assembly	Pos.	Quantity
4900486	384	10 35 874 5	79	1	4901138	316	10 40 689 8	32	4
4900507	256	90 64 786	150	1	4901138	579	10 12 375 9	6	2
4900507	258	10 01 461 1	150	10	4901138	797	10 09 406 7	4	4
4900507	711	10 38 862 4	19	3	4901150	702	10 35 872 5	56	1
4900507	720	10 35 872 0	34	2	4901161	291	10 82 277 5	31	1
4900531	105	10 05 797 8	16	2	4901161	519	10 06 222 8	86	1
4900531	362	10 35 875 4	13	2	4901166	120	10 35 879 9	35	1
4900531	418	10 05 303 6	177	4	4901205	504	10 09 499 2	42	1
4900531	421	10 05 303 6	224	4	4901217	155	10 33 322 8	12	4
4900531	433	10 49 857 1	177	4	4901217	314	10 06 648 4	11	3
4900531	436	10 49 857 1	224	4	4901217	316	10 40 689 8	41	2
4900531	508	10 35 875 8	50	1	4901217	327	10 06 786 9	11	4
4900531	508	10 35 875 8	72	2	4901217	327	10 06 786 9	16	2
4900539	282	97 58 815 01	61	2	4901217	327	10 06 786 9	21	2
4900546	192	98 89 161	27	2	4901217	506	10 35 875 8	11	2
4900546	311	10 08 256 0	13	2	4901217	508	10 35 875 8	84	2
4900546	417	10 05 303 6	135	1	4901217	528	10 35 876 3	122	3
4900546	432	10 49 857 1	135	1	4901217	535	10 49 837 7	122	3
4900595	621	90 78 554	17	1	4901217	750	10 49 827 4	7	2
4900605	277	10 05 798 3	21	4	4901251	219	10 05 302 4	14	4
4900605	504	10 09 499 2	102	1	4901251	414	10 05 303 6	51	2
4900609	770	10 35 873 1	25	4	4901251	416	10 05 303 6	103	4
4900641	41	10 35 874 0	28	20	4901253	196	10 49 873 2	21	2
4900654	48	10 30 012 2	3	200	4901269	356	10 35 875 1	43	4
4900654	48	10 30 012 2	3	200	4901294	488	10 48 809 9	260	6
4900778	578	10 12 503 7	7	16	4901329	549	10 35 876 5	5	4
4900778	649	10 13 273 9	22	2	4901362	308	10 05 798 5	31	6
4900778	650	10 13 274 0	22	2	4901362	308	10 05 798 5	36	4
4900778	681	10 12 086 9	6	4	4901395	284	73 73 807	23	2
4900850	419	10 05 303 6	192	2	4901429	117	10 35 873 3	56	10
4900850	434	10 49 857 1	192	2	4901437	116	10 35 873 3	31	4
4900850	782	10 35 806 3	36	4	4901443	43	10 35 874 0	56	16
4900855	356	10 35 875 1	33	4	4901471	704	10 35 872 5	108	4
4900855	356	10 35 875 1	44	4	4901471	771	10 35 873 1	57	8
4900855	357	10 35 875 1	57	28	4901498	700	10 35 872 5	8	6
4900855	542	10 35 875 6	41	2	4901512	282	97 58 815 01	40	9
4900855	588	90 77 286	2	8	4901512	503	10 09 499 2	15	6
4900855	669	10 11 671 8	5	2	4901513	282	97 58 815 01	41	5
4900855	800	10 49 815 4	5	6	4901513	503	10 09 499 2	16	6
4900973	60	10 07 498 7	22	12	4901530	499	99 41 040	6	2
4900981	429	10 49 857 1	32	2	4901531	376	10 28 046 1	19	4
4900981	429	10 49 857 1	51	2	4901572	115	10 35 873 3	21	5
4900981	431	10 49 857 1	103	4	4901573	105	10 05 797 8	12	2
4900984	772	92 66 411	5	2	4901573	193	10 49 867 7	12	5
4900984	773	92 66 412	5	2	4901573	193	10 49 867 7	13	6
4901067	271	10 05 311 8	81	4	4901573	195	10 49 873 2	12	5
4901089	651	10 11 558 7	9	2	4901573	195	10 49 873 2	13	6
4901089	652	10 11 678 0	9	2	4901573	243	10 07 675 6	23	1
4901096	360	10 35 875 4	8	3	4901573	247	10 07 675 7	23	1
4901096	367	10 82 438 0	8	3	4901573	247	10 07 675 7	49	1
4901096	772	92 66 411	4	2	4901573	252	10 48 927 7	8	4
4901096	773	92 66 412	4	2	4901573	461	10 06 375 5	40	1
4901108	612	10 11 615 0	6	1	4901573	703	10 35 872 5	94	3
4901130	364	10 35 875 4	25	2	4901573	710	10 38 839 3	32	2
4901130	703	10 35 872 5	98	2	4901573	733	10 35 873 7	28	12
4901131	350	10 05 312 6	62	1	4901573	750	10 49 827 4	8	2
4901131	703	10 35 872 5	97	1	4901606	54	10 49 867 0	18	2
4901138	107	10 35 875 9	4	4	4901606	102	10 35 875 3	32	2
4901138	205	10 35 873 9	75	12	4901606	362	10 35 875 4	14	3
4901138	219	10 05 302 4	18	2	4901606	369	10 82 438 0	14	3

Item	Page	Assembly	Pos.	Quantity	Item	Page	Assembly	Pos.	Quantity
4901607	497	10 35 875 7	141	5	4902250	711	10 38 862 4	6	12
4901651	504	10 09 499 2	70	1	4902250	711	10 38 862 4	9	19
4901690	407	10 11 355 7	48	5	4902250	711	10 38 862 4	18	4
4901732	105	10 05 797 8	13	2	4902250	711	10 38 862 4	27	2
4901742	545	10 35 868 3	12	6	4902250	719	10 35 872 0	11	14
4901768	703	10 35 872 5	93	3	4902250	719	10 35 872 0	14	5
4901870	292	10 82 277 5	102	4	4902250	719	10 35 872 0	17	2
4901878	323	11 00 359 4	21	11	4902250	720	10 35 872 0	26	4
4901879	353	10 35 875 1	7	2	4902252	151	10 33 307 3	3	2
4901879	356	10 35 875 1	46	4	4902252	749	10 39 372 0	31	9
4901879	702	10 35 872 5	53	4	4902254	215	10 49 800 0	52	1
4901879	734	10 08 685 3	23	12	4902254	247	10 07 675 7	54	2
4901886	277	10 05 798 3	36	18	4902254	247	10 07 675 7	56	1
4901886	292	10 82 277 5	83	4	4902254	311	10 08 256 0	21	2
4901886	747	10 36 839 8	32	2	4902254	317	10 40 689 8	101	1
4901893	747	10 36 839 8	23	2	4902254	710	10 38 839 3	31	1
4902030	153	10 33 322 6	7	4	4902255	399	10 35 874 4	101	2
4902068	770	10 35 873 1	10	8	4902260	422	10 05 303 6	252	1
4902073	284	73 73 807	15	2	4902260	437	10 49 857 1	252	1
4902177	797	10 09 406 7	21	5	4902262	243	10 07 675 6	11	2
4902209	420	10 05 303 6	202	1	4902262	247	10 07 675 7	51	2
4902209	435	10 49 857 1	202	1	4902262	323	11 00 359 4	25	2
4902214	738	10 49 833 5	4	1	4902262	720	10 35 872 0	35	2
4902231	102	10 35 875 3	42	4	4902267	247	10 07 675 7	59	3
4902231	112	10 36 623 6	25	1	4902267	269	10 05 311 8	33	2
4902231	193	10 49 867 7	7	18	4902267	278	10 05 798 3	55	4
4902231	195	10 49 873 2	7	18	4902267	291	10 82 277 5	55	4
4902231	206	10 35 873 9	94	1	4902277	427	10 05 303 6	333	8
4902231	216	10 49 800 0	61	13	4902277	442	10 49 857 1	333	8
4902231	270	10 05 311 8	52	4	4902325	42	10 35 874 0	47	8
4902231	270	10 05 311 8	54	2	4902327	89	10 07 444 8	5	32
4902231	271	10 05 311 8	88	4	4902327	334	10 38 698 2	22	16
4902231	360	10 35 875 4	9	1	4902327	335	10 38 698 2	43	8
4902231	367	10 82 438 0	9	1	4902327	337	10 49 804 4	22	16
4902231	465	10 35 876 0	75	2	4902327	338	10 49 804 4	43	8
4902231	466	10 49 857 4	75	2	4902327	343	10 35 875 5	13	32
4902231	496	10 35 875 7	131	4	4902327	343	10 35 875 5	17	8
4902231	496	10 35 875 7	136	2	4902327	396	10 35 874 4	38	8
4902231	497	10 35 875 7	146	4	4902327	403	10 06 771 7	16	36
4902231	497	10 35 875 7	151	3	4902327	701	10 35 872 5	39	116
4902231	497	10 35 875 7	157	2	4902327	713	10 07 162 8	11	4
4902231	498	10 35 875 7	162	1	4902327	714	10 35 872 1	12	12
4902231	498	10 35 875 7	166	1	4902327	770	10 35 873 1	47	8
4902231	511	10 06 221 6	53	1	4902328	43	10 35 874 0	80	4
4902231	512	10 35 876 2	53	1	4902329	706	10 06 477 4	17	4
4902231	513	10 49 837 6	53	1	4902331	795	10 49 815 5	49	4
4902231	518	10 06 222 8	67	4	491035414	256	90 64 786	185	1
4902231	526	10 35 876 3	51	2	4980036	264	10 33 323 7	11	1
4902231	527	10 35 876 3	91	2	4980073	192	98 89 161	29	2
4902231	528	10 35 876 3	107	5	4980080	192	98 89 161	25	1
4902231	533	10 49 837 7	51	2	4980221	651	10 11 558 7	4	6
4902231	534	10 49 837 7	91	2	4980221	652	10 11 678 0	4	6
4902231	535	10 49 837 7	109	5	4980222	126	90 80 120	43	2
4902231	793	10 82 390 4	41	4	4980223	126	90 80 120	30	1
4902231	793	10 82 390 4	51	4	4980223	169	90 80 196	30	1
4902239	334	10 38 698 2	16	2	4980224	126	90 80 120	31	5
4902239	337	10 49 804 4	16	2	4980224	169	90 80 196	31	1
4902250	308	10 05 798 5	6	4	4980230	282	97 58 815 01	72	4
4902250	503	10 09 499 2	34	2	4980230	665	90 78 467	3	2
4902250	518	10 06 222 8	71	5	4980273	613	10 11 716 7	3	1

Item	Page	Assembly	Pos.	Quantity	Item	Page	Assembly	Pos.	Quantity
4980362	600	10 11 805 2	6	2	5004748	432	10 49 857 1	138	2
4980370	635	10 11 865 5	5	2	5004748	433	10 49 857 1	170	2
4980375	600	10 11 805 2	7	2	5004748	450	10 06 360 5	11	2
4980378	229	92 68 011	44	1	5004748	457	10 05 541 0	50	2
4980388	175	10 11 837 4	20	4	5004748	802	10 05 539 2	40	2
4980388	611	10 11 802 5	10	6	5004927	115	10 35 873 3	23	2
4980434	198	90 77 032	20	4	5004927	206	10 35 873 9	91	2
4980478	653	10 11 602 6	8	1	5004927	681	10 12 086 9	5	12
4980490	79	92 70 598	12	1	5004988	745	95 77 441	6	1
4980670	437	10 49 857 1	263	1	5005641	653	10 11 602 6	3	1
4980687	126	90 80 120	32	2	5008169	405	10 21 821 5	12	1
4980736	601	10 11 802 2	5	1	5008169	406	10 21 986 3	12	1
4980747	572	10 12 907 1	9	4	500920508	618	10 12 282 4	9	1
4980771	703	10 35 872 5	86	4	5009562	373	10 28 027 9	999	1
4980784	541	10 35 875 6	17	4	5009562	375	56 15 344	999	1
4980786	600	10 11 805 2	5	1	5009565	372	10 00 909 0	5	1
4980801	145	98 88 308	21	4	502037001	66	94 43 970	70	1
4980801	192	98 89 161	21	4	510160916	7	.	19	1
4980801	328	10 06 786 9	61	18	510363416	7	.	20	1
4980801	503	10 09 499 2	18	1	511701914	255	90 64 786	27	1
4980801	516	10 06 222 8	21	4	511701914	257	10 01 461 1	27	4
4980853	581	10 12 021 3	14	2	514507808	150	10 33 307 1	16	1
4980857	623	10 12 720 8	35	2	514586508	133	10 44 145 6	17	1
4980944	139	92 71 648	21	8	514588908	150	10 33 307 1	14	1
4980965	126	90 80 120	40	4	5209400	43	10 35 874 0	69	2
4980995	573	10 12 907 2	8	10	553183708	96	10 09 107 4	4	1
4981019	400	93 70 592	6	1	553183708	99	10 35 983 0	20	4
4981029	641	10 11 930 6	15	4	553183708	619	10 30 300 7	6	1
4981085	181	90 78 788	65	1	5602407	704	10 35 872 5	120	4
4981088	134	90 72 922	29	4	5602407	706	10 06 477 4	7	2
4981088	136	90 77 452	29	4	5602407	706	10 06 477 4	16	2
4981124	98	10 36 190 8	3	1	5602583	89	10 07 444 8	23	4
4981124	635	10 11 865 5	16	1	5602583	760	73 63 125	1	1
4981146	188	98 84 140	39	2	5602583	766	96 13 452	2	1
4981153	126	90 80 120	41	2	5602640	348	10 05 312 6	44	2
4981172	649	10 13 273 9	11	4	5602640	395	10 35 874 4	15	4
4981172	650	10 13 274 0	11	4	5602647	346	10 05 312 6	20	1
4981218	167	90 73 751	43	5	5602932	706	10 06 477 4	4	1
4981218	191	98 88 122	43	5	5603339	702	10 35 872 5	72	1
4981218	227	98 86 678	43	5	5603839	122	10 35 879 9	69	4
4981226	579	10 12 375 9	10	2	5604252	89	10 07 444 8	3	2
4981226	617	10 12 314 1	20	1	5604377	768	56 02 932	10	1
4981226	672	10 11 883 5	3	1	5604682	97	10 36 190 7	5	2
4981259	321	10 02 211 7	8	6	5604682	118	10 35 873 4	4	2
4981277	126	90 80 120	19	1	5604683	98	10 36 190 8	8	2
5002070	351	10 05 312 9	13	8	5604683	118	10 35 873 4	6	2
5002070	355	10 35 875 1	27	4	5605365	340	10 05 314 4	12	1
5004586	702	10 35 872 5	66	1	5605365	341	10 82 438 9	12	1
5004624	128	90 80 120	84	1	5605365	342	56 09 948	12	1
5004624	219	10 05 302 4	5	1	5606650	402	56 15 220	5	1
5004624	383	10 35 874 5	64	2	5607616	120	10 35 879 9	37	1
5004624	546	10 35 868 3	45	1	5607671	404	10 06 771 7	39	1
5004624	582	10 12 593 7	4	1	5607889	269	10 05 311 8	38	1
5004748	102	10 35 875 3	33	2	5608035	402	56 15 220	3	1
5004748	414	10 05 303 6	37	2	5608314	418	10 05 303 6	159	2
5004748	416	10 05 303 6	97	2	5608314	433	10 49 857 1	159	2
5004748	417	10 05 303 6	138	2	5608327	372	10 00 909 0	6	1
5004748	418	10 05 303 6	170	2	5609144	275	10 28 999 3	53	1
5004748	429	10 49 857 1	37	2	5609395	366	10 82 438 0	3	1
5004748	431	10 49 857 1	97	2	5609594	51	56 18 003	20	1

Item	Page	Assembly	Pos.	Quantity	Item	Page	Assembly	Pos.	Quantity
5609948	340	10 05 314 4	11	1	571578608	249	10 34 071 7	17	1
5609948	341	10 82 438 9	11	1	6000167	477	10 48 809 7	130	1
5610046	348	10 05 312 6	40	1	6000578	269	10 05 311 8	37	1
5610135	407	10 11 355 7	54	6	6000783	503	10 09 499 2	10	2
5610135	752	10 34 080 6	100	1	6001027	284	73 73 807	19	1
5610135	753	10 34 081 2	100	1	6001254	281	10 42 753 2	2	1
5610704	115	10 35 873 3	14	1	6001257	792	95 99 236	930	1
5610755	668	90 80 481	1	1	6001418	747	10 36 839 8	31	1
5610999	323	11 00 359 4	28	1	6001471	503	10 09 499 2	23	1
5610999	540	10 35 875 6	10	2	6001472	503	10 09 499 2	14	2
5611326	117	10 35 873 3	60	2	6001474	503	10 09 499 2	17	11
5611369	89	10 07 444 8	2	2	6001556	477	10 48 809 7	180	1
5611480	271	10 05 311 8	99	3	6001682	307	10 34 790 0	10	2
5611480	291	10 82 277 5	25	1	6001713	290	10 08 046 6	2	1
5611648	71	56 16 688	350	1	6001713	777	99 89 645	2	1
5611990	544	10 29 266 0	1	1	6001713	778	99 89 646	2	1
5612243	399	10 35 874 4	125	1	6001713	792	95 99 236	921	1
5612659	123	10 35 879 9	84	4	6001921	504	10 09 499 2	60	2
5612659	124	10 35 879 9	93	1	6001963	291	10 82 277 5	77	1
5613500	363	10 35 875 4	21	3	6002233	330	70 27 927	20	1
5613500	370	10 82 438 0	21	3	6002381	282	97 58 815 01	32	2
5615135	357	10 35 875 1	50	1	602514201	504	10 09 499 2	46	1
5615220	396	10 35 874 4	25	2	6040008	282	97 58 815 01	42	1
5615344	372	10 00 909 0	3	4	604521501	282	97 58 815 01	46	15
5615647	705	10 35 872 5	138	1	6200461	478	10 48 809 7	700	5m
5616117	71	56 16 688	220	4	6200461	482	10 29 114 6	640	0.5m
5616211	363	10 35 875 4	20	1	6200685	499	99 41 040	3	2
5616211	370	10 82 438 0	20	1	6200685	500	10 04 553 0	11	1
5616231	408	10 11 355 7	60	8	6200685	501	70 27 205	11	1
5616232	408	10 11 355 7	62	4	6200685	513	10 49 837 6	21	2
5616558	701	10 35 872 5	36	1	6200906	293	10 82 277 5	110	1
5616688	60	10 07 498 7	15	2	6200906	504	10 09 499 2	61	1
5616689	71	56 16 688	20	1	6201058	330	70 27 927	10	1
5616697	538	10 03 864 3	2	1	6201379	278	10 05 798 3	80	1
5616697	539	10 03 864 4	2	1	6202646	281	10 42 753 2	1	1
5616901	53	56 16 231	999	1	6202646	282	97 58 815 01	30	2
5617689	381	10 35 874 5	2	2	6202703	277	10 05 798 3	23	2
5617780	340	10 05 314 4	3	1	6202944	503	10 09 499 2	31	2
5618003	50	10 30 012 7	10	1	6202945	503	10 09 499 2	32	1
5618024	52	73 71 456	20	1	6203129	309	10 08 142 4	13	1
5618025	52	73 71 456	10	1	6203129	310	10 08 142 6	13	1
5618131	61	50 20 370 01	1	1	6203136	285	10 06 804 1	310	1
5618132	61	50 20 370 01	3	1	6203136	298	10 06 804 5	310	1
5618265	358	10 35 875 1	60	1	6203136	315	10 07 707 2	310	1
5618388	352	10 05 312 9	28	1	620321216	7	.	17	1
5618392	705	10 35 872 5	125	1	6203433	283	98 74 988	10	1
5618412	399	10 35 874 4	115	1	6203486	504	10 09 499 2	45	1
5618453	397	10 35 874 4	66	3	6203497	217	10 49 800 0	80	2
5618677	397	10 35 874 4	65	2	6203497	243	10 07 675 6	32	3
5618801	350	10 05 312 6	60	1	6203497	246	10 07 675 7	15	3
5618881	349	10 05 312 6	50	1	6203497	328	10 06 786 9	60	18
5618922	295	56 18 923	1	1	6203497	498	10 35 875 7	200	6
5618923	291	10 82 277 5	10	1	6203497	511	10 06 221 6	15	4
5619289	399	10 35 874 4	105	1	6203497	512	10 35 876 2	15	4
5619289	399	10 35 874 4	110	1	6203497	513	10 49 837 6	15	5
5700024	271	10 05 311 8	96	4	6203497	516	10 06 222 8	20	3
5700024	689	10 12 094 4	9	2	6203497	517	10 06 222 8	51	1
570036608	264	10 33 323 7	12	1	6203497	523	10 35 876 3	20	14
570118208	149	10 33 307 0	31	1	6203497	530	10 49 837 7	20	14
570319508	164	10 35 548 6	3	1	6203497	747	10 36 839 8	45	1

Item	Page	Assembly	Pos.	Quantity	Item	Page	Assembly	Pos.	Quantity
6203497	749	10 39 372 0	35	1	7001338	252	10 48 927 7	15	7
6203497	793	10 82 390 4	60	4	7001454	49	10 47 076 9	11	1
6203687	503	10 09 499 2	30	2	7001609	765	99 07 890	11	1
6203735	290	10 08 046 6	6	1	7001877	117	10 35 873 3	65	10
6203735	300	10 08 576 7	8	1	7001877	272	10 05 311 8	145	10
6204186	213	10 49 800 0	20	1	7001877	292	10 82 277 5	96	10
6204327	545	10 35 868 3	10	1	7001877	316	10 40 689 8	33	2
6204367	290	10 08 046 6	5	1	7001877	793	10 82 390 4	70	5
6204367	300	10 08 576 7	2	1	7001891	723	56 04 377	3	1
6204367	777	99 89 645	5	1	7001891	768	56 02 932	13	1
6204367	778	99 89 646	5	1	7002008	271	10 05 311 8	91	2
6204367	792	95 99 236	920	1	7002056	761	95 88 147	3	1
6204368	777	99 89 645	4	1	7002063	761	95 88 147	4	1
6204368	778	99 89 646	4	1	7002199	52	73 71 456	30	1
6204368	792	95 99 236	923	1	7002239	764	96 31 985	8	1
6204370	290	10 08 046 6	4	1	7002480	89	10 07 444 8	25	4
6204371	300	10 08 576 7	3	1	7002480	286	10 05 879 2	20	1
6204371	303	90 16 516	3	1	7002480	299	10 05 879 4	20	1
6204371	735	99 89 179	3	1	7002641	380	70 25 142	14	1
6204372	290	10 08 046 6	3	1	7002773	465	10 35 876 0	70	5
6204372	777	99 89 645	3	1	7002773	466	10 49 857 4	70	5
6204372	778	99 89 646	3	1	7002939	761	95 88 147	6	5
6204404	272	10 05 311 8	135	1	7002957	623	10 12 720 8	33	1
6204593	545	10 35 868 3	30	1	7003394	61	50 20 370 01	11	1
6204631	549	10 35 876 5	10	2	7003455	762	95 89 256	6	4
6204632	272	10 05 311 8	130	1	7003455	763	99 07 680	6	4
6204632	517	10 06 222 8	40	1	7003559	763	99 07 680	7	2
6204634	278	10 05 798 3	44	1	7003570	112	10 36 623 6	17	2
6204694	382	10 35 874 5	40	1	7003570	113	10 09 538 7	13	2
6204743	735	99 89 179	2	1	7003570	128	90 80 120	75	3
6205045	511	10 06 221 6	21	1	7003570	352	10 05 312 9	33	2
6205045	512	10 35 876 2	21	1	7003570	358	10 35 875 1	62	2
6205045	513	10 49 837 6	22	1	7003570	397	10 35 874 4	67	4
6205121	506	10 35 875 8	20	2	7003570	399	10 35 874 4	106	2
6205235	783	98 73 999	2	1	7003570	404	10 06 771 7	40	3
6290073	220	10 05 311 7	6	1	7003570	703	10 35 872 5	88	3
6290073	232	92 78 623	10	1	7003800	89	10 07 444 8	16	3
6290130	658	90 79 187	1	1	7003800	121	10 35 879 9	60	2
630165901	281	10 42 753 2	3	3	7003800	220	10 05 311 7	8	1
635867001	213	10 49 800 0	21	1	7003800	349	10 05 312 6	56	1
635867001	663	98 85 618	1	1	7003800	384	10 35 874 5	76	3
6426450	788	10 49 831 4	15	1	7003814	89	10 07 444 8	12	2
6426763	788	10 49 831 4	5	1	7003814	122	10 35 879 9	62	1
6426764	788	10 49 831 4	6	1	7003814	123	10 35 879 9	80	3
6718632	89	10 07 444 8	11	2	7003814	241	10 35 877 2	36	4
6905303	309	10 08 142 4	11	1	7004043	761	95 88 147	7	2
6905303	310	10 08 142 6	11	1	7004178	768	56 02 932	4	1
6905304	309	10 08 142 4	12	1	7004246	66	94 43 970	91	1
6905304	310	10 08 142 6	12	1	7004246	222	90 01 781 7	91	2
6905671	516	10 06 222 8	23	1	7004296	57	91 41 597	80	8
6905671	523	10 35 876 3	22	1	7004971	43	10 35 874 0	70	2
6905671	530	10 49 837 7	22	1	7004971	395	10 35 874 4	21	2
691180608	659	90 76 530	1	1	7005028	556	96 87 016	1	1
7000329	696	10 12 100 3	1	1	7005047	89	10 07 444 8	21	2
7000563	761	95 88 147	8	1	7005097	349	10 05 312 6	52	1
7000583	764	96 31 985	7	1	7005098	107	10 35 875 9	28	1
7001046	729	10 49 838 7	30	2	7005098	219	10 05 302 4	22	1
7001046	730	10 49 857 6	30	2	7005103	349	10 05 312 6	51	2
7001072	638	10 11 763 3	13	1	7005250	765	99 07 890	13	4
7001072	642	10 11 978 1	8	1	7005314	398	10 35 874 4	70	1

Item	Page	Assembly	Pos.	Quantity	Item	Page	Assembly	Pos.	Quantity
7005587	204	10 35 873 9	66	8	7017201	478	10 48 809 7	710	2
7005587	242	10 07 604 7	35	3	7017443	556	96 87 016	2	1
7005587	247	10 07 675 7	40	2	7017668	378	10 22 099 7	31	1
7005587	247	10 07 675 7	65	6	7017682	56	10 00 963 0	12	2
7005587	346	10 05 312 6	31	2	7017682	58	10 00 967 6	12	2
7005867	723	56 04 377	4	1	7017685	56	10 00 963 0	3	2
7005971	410	10 28 629 4	20	3	7017685	58	10 00 967 6	3	2
7006516	611	10 11 802 5	13	1	7017712	765	99 07 890	10	1
7006516	686	10 12 087 8	2	1	7017766	149	10 33 307 0	39	1
7006870	762	95 89 256	7	2	7017766	177	10 40 974 7	20	2
7007476	412	56 10 135	2	1	7017928	718	10 05 091 3	3	1
7007835	723	56 04 377	1	1	7018253	555	10 30 177 4	2	1
7007836	723	56 04 377	2	1	7018368	38	90 66 466	12	1
7007838	723	56 04 377	5	1	7018369	38	90 66 466	13	1
7007838	768	56 02 932	15	1	7018370	397	10 35 874 4	52	6
7008082	361	10 35 875 4	10	1	7019068	39	90 66 466	40	1
7008082	368	10 82 438 0	10	1	7019122	484	70 28 778	350	2
7008755	400	93 70 592	5	1	7019129	484	70 28 778	470	1
7009088	286	10 05 879 2	31	1	7019131	486	70 28 778	640	1
7009088	299	10 05 879 4	31	1	7019140	487	10 04 435 3	810	2
7009357	131	10 42 845 9	21	1	7019141	487	10 04 435 3	820	1
7009358	131	10 42 845 9	32	3	7019153	472	10 04 678 8	260	1
7009358	153	10 33 322 6	35	3	7019154	472	10 04 678 8	240	1
7009366	166	10 44 145 8	12	1	7019155	472	10 04 678 8	250	1
7009366	176	10 34 668 4	15	1	7019160	473	10 04 678 8	370	1
7009369	131	10 42 845 9	47	1	7019160	479	10 48 809 7	940	1
7009867	450	10 06 360 5	10	6	7019164	484	70 28 778	420	1
7009867	457	10 05 541 0	35	6	7019165	484	70 28 778	410	1
7009867	460	10 06 375 5	28	6	7019167	484	70 28 778	310	1
7009867	462	10 06 355 3	6	6	7019171	477	10 48 809 7	110	9
7009867	802	10 05 539 2	25	6	7019184	479	10 48 809 7	910	1
7010659	765	99 07 890	9	1	7019186	479	10 48 809 7	960	1
7011131	584	50 04 624	2	1	7019794	473	10 04 678 8	350	2
7011356	764	96 31 985	13	4	7019801	472	10 04 678 8	150	2
7011398	345	10 05 312 6	2	1	7019832	718	10 05 091 3	4	1
7012265	703	10 35 872 5	95	3	7019891	120	10 35 879 9	30	1
7012972	150	10 33 307 1	12	1	7020608	477	10 48 809 7	190	2
7013032	752	10 34 080 6	40	1	7020610	489	10 48 809 9	340	2
7013032	753	10 34 081 2	40	1	7020611	484	70 28 778	360	2
7013115	228	70 04 971	1	1	7020612	473	10 04 678 8	390	2
7013245	379	50 09 562	10	1	7020612	484	70 28 778	370	4
7013456	584	50 04 624	3	1	7020613	473	10 04 678 8	360	1
7014466	764	96 31 985	10	1	7020615	486	70 28 778	720	6
7014467	764	96 31 985	9	1	7021047	484	70 28 778	480	1
7014524	210	10 06 461 3	50	4	7021767	71	56 16 688	300	1
7014524	426	10 05 303 6	313	2	7021980	71	56 16 688	70	2
7014524	441	10 49 857 1	313	2	7021984	71	56 16 688	200	2
7014524	448	10 05 535 4	40	2	7021984	71	56 16 688	230	2
7014529	262	10 29 792 9	9	1	7022120	405	10 21 821 5	16	1
7014560	277	10 05 798 3	35	18	7022120	406	10 21 986 3	16	1
7014560	292	10 82 277 5	82	4	7022127	146	10 10 206 4	52	9
7015407	392	10 22 239 3	10	1	7022127	150	10 33 307 1	11	4
7015616	84	98 88 124	36	1	7022336	536	62 04 743	10	1
7015616	173	98 89 282	36	1	7022708	382	10 35 874 5	31	1
7016002	551	10 08 428 5	10	1	7023359	39	90 66 466	50	1
7016136	768	56 02 932	5	1	7023589	765	99 07 890	7	1
7016180	59	92 65 064	4	1	7023590	765	99 07 890	6	1
7016208	227	98 86 678	106	1	7023646	130	10 21 593 5	11	2
7016412	503	10 09 499 2	11	4	7023698	762	95 89 256	3	1
7017199	755	94 02 020 2	15	4	7023698	763	99 07 680	3	1

Item	Page	Assembly	Pos.	Quantity	Item	Page	Assembly	Pos.	Quantity
7023699	762	95 89 256	4	1	7026493	293	10 82 277 5	120	1
7023699	763	99 07 680	4	1	7026654	255	90 64 786	36	1
7023702	150	10 33 307 1	22	1	7026772	505	10 09 499 2	120	2
7023708	261	10 10 206 7	6	1	7026817	38	90 66 466	20	1
7023765	261	10 10 206 7	12	1	7027038	284	73 73 807	22	1
7023927	379	50 09 562	5	1	7027205	776	10 02 138 7	100	2
7023928	379	50 09 562	6	1	7027480	113	10 09 538 7	4	1
7023929	377	73 71 025	12	2	7027675	255	90 64 786	2	1
7023930	378	10 22 099 7	28	1	7027714	255	90 64 786	35	1
7023930	379	50 09 562	8	1	7027755	619	10 30 300 7	3	1
7023931	379	50 09 562	9	1	7027927	792	95 99 236	330	1
7023934	375	56 15 344	6	1	7027937	245	10 29 302 0	1	1
7024438	472	10 04 678 8	220	2	7027937	254	10 29 301 8	1	1
7024438	488	10 48 809 9	200	12	7027937	708	10 00 878 9	1	1
7024446	488	10 48 809 9	280	4	7027937	722	10 30 336 9	1	1
7024446	489	10 48 809 9	350	4	7027938	254	10 29 301 8	2	1
7024447	488	10 48 809 9	281	8	7027938	254	10 29 301 8	3	1
7024447	489	10 48 809 9	360	8	7027938	254	10 29 301 8	4	1
7024455	478	10 48 809 7	460	1	7027938	708	10 00 878 9	4	1
7024500	380	70 25 142	13	1	7027939	722	10 30 336 9	3	1
7024629	376	10 28 046 1	25	1	7027940	722	10 30 336 9	4	1
7024630	376	10 28 046 1	26	1	7027940	722	10 30 336 9	5	1
7024631	376	10 28 046 1	27	1	7027941	245	10 29 302 0	2	1
7024940	752	10 34 080 6	133	1	7027941	245	10 29 302 0	3	1
7024940	753	10 34 081 2	133	1	7027941	708	10 00 878 9	2	1
7024958	410	10 28 629 4	49	1	7027941	708	10 00 878 9	3	1
7024981	273	10 04 363 1	12	1	7027941	722	10 30 336 9	2	1
7024981	274	10 04 363 2	12	1	7027943	708	10 00 878 9	8	1
7024982	273	10 04 363 1	90	1	7027944	722	10 30 336 9	8	1
7024982	274	10 04 363 2	90	1	7027945	245	10 29 302 0	8	1
7024983	273	10 04 363 1	91	1	7027945	254	10 29 301 8	8	1
7024983	274	10 04 363 2	91	1	7027946	255	90 64 786	3	1
7024985	273	10 04 363 1	2	1	7028089	149	10 33 307 0	17	2
7024985	274	10 04 363 2	2	1	7028148	262	10 29 792 9	3	1
7024986	273	10 04 363 1	12	1	7028149	262	10 29 792 9	4	1
7024986	274	10 04 363 2	12	1	7028151	262	10 29 792 9	8	1
7024996	273	10 04 363 1	15	1	7028151	264	10 33 323 7	16	1
7024996	274	10 04 363 2	15	1	7028158	157	10 33 324 2	10	1
7025004	273	10 04 363 1	40	1	7028192	148	10 29 866 3	1	1
7025004	274	10 04 363 2	40	1	7028342	388	56 17 689	4	1
7025005	276	70 24 996	17	1	7028343	388	56 17 689	9	1
7025006	276	70 24 996	20	1	7028346	388	56 17 689	8	1
7025007	276	70 24 996	23	1	7028347	388	56 17 689	13	1
7025009	275	10 28 999 3	59	1	7028348	388	56 17 689	14	1
7025110	323	11 00 359 4	24	1	7028349	388	56 17 689	12	1
7025121	321	10 02 211 7	21	2	7028351	388	56 17 689	15	1
7025142	374	50 09 565	999	1	7028768	477	10 48 809 7	240	9
7025347	284	73 73 807	21	1	7028774	468	10 47 616 7	20	1
7025515	263	10 29 207 1	3	1	7028775	468	10 47 616 7	30	1
7025644	305	73 69 377	1	1	7028778	468	10 47 616 7	70	1
7025676	357	10 35 875 1	51	2	7028790	469	70 28 774	130	1
7025758	472	10 04 678 8	270	1	7028793	469	70 28 774	110	1
7025845	492	10 00 920 8	10	1	7028795	469	70 28 774	170	1
7025993	273	10 04 363 1	90	1	7028801	470	70 28 775	200	2
7025993	274	10 04 363 2	90	1	7028812	477	10 48 809 7	250	11
7025994	273	10 04 363 1	91	1	7028820	470	70 28 775	210	1
7025994	274	10 04 363 2	91	1	7028821	470	70 28 775	220	1.44m
7026041	379	50 09 562	7	2	7028826	470	70 28 775	250	1
7026088	38	90 66 466	22	1	7028833	472	10 04 678 8	330	1
7026127	71	56 16 688	40	1	7028834	473	10 04 678 8	340	1

Item	Page	Assembly	Pos.	Quantity	Item	Page	Assembly	Pos.	Quantity
7028835	473	10 04 678 8	380	1	7029979	744	93 88 597	1	2
7028836	472	10 04 678 8	230	1	7030315	469	70 28 774	120	1
7028837	472	10 04 678 8	320	1	7030512	470	70 28 775	110	1
7028838	472	10 04 678 8	160	1	704206616	788	10 49 831 4	27	1
7028839	472	10 04 678 8	190	1	7101003	252	10 48 927 7	16	7
7028840	474	10 04 678 9	620	2	7101008	241	10 35 877 2	37	4
7028844	473	10 04 678 8	420	1	7101008	583	10 11 694 5	8	1
7028846	473	10 04 678 8	410	1	7101008	683	10 12 087 1	6	1
7028847	473	10 04 678 8	430	1	7101011	610	10 13 273 8	4	2
7028855	477	10 48 809 7	170	1	7101012	128	90 80 120	58	1
7028864	478	10 48 809 7	740	8	7101015	119	10 35 879 9	9	2
7028864	479	10 48 809 7	830	2	7101015	128	90 80 120	56	1
7028865	478	10 48 809 7	430	1	7101019	199	10 35 873 9	6	2
7028866	481	70 29 426	610	1	7101019	649	10 13 273 9	15	1
7028867	483	70 28 866	650	1	7101019	650	10 13 274 0	15	1
7028868	483	70 28 866	630	1	7101019	694	10 12 099 3	6	2
7028869	481	70 29 426	600	1	7101021	128	90 80 120	57	1
7028872	478	10 48 809 7	450	1	7101021	219	10 05 302 4	6	1
7028878	480	70 28 884	520	1	7101021	582	10 12 593 7	5	1
7028879	480	70 28 884	530	1	7101021	607	10 12 475 6	27	2
7028881	480	70 28 884	500	1	7101021	608	10 12 475 7	27	1
7028883	480	70 28 884	510	1	7101021	618	10 12 282 4	8	1
7028884	478	10 48 809 7	420	1	7101021	638	10 11 763 3	16	1
7028892	484	70 28 778	160	1	7101021	683	10 12 087 1	5	1
7028896	484	70 28 778	300	1	7101021	691	10 12 097 3	7	1
7028898	484	70 28 778	270	1	7101022	607	10 12 475 6	22	2
7028899	484	70 28 778	380	1	7101022	608	10 12 475 7	22	1
7028901	484	70 28 778	340	1	7101022	685	10 12 087 5	3	4
7028902	486	70 28 778	790	1	7101064	208	10 42 538 5	16	1
7028903	486	70 28 778	520	1	710950001	62	93 21 804 01	14	1
7028906	479	10 48 809 7	900	4	710951501	62	93 21 804 01	15	1
7028907	479	10 48 809 7	990	4	7264028	96	10 09 107 4	9	1
7028910	486	70 28 778	560	1	7264028	340	10 05 314 4	14	1
7028912	484	70 28 778	240	4	7264028	341	10 82 438 9	14	1
7028919	484	70 28 778	320	1	7264028	342	56 09 948	14	1
7028933	486	70 28 778	620	1	726403201	66	94 43 970	83	2
7028934	484	70 28 778	140	1	7264085	545	10 35 868 3	11	1
7028950	489	10 48 809 9	370	2	7264087	762	95 89 256	8	1
7028951	97	10 36 190 7	7	1	7264091	763	99 07 680	8	1
7028951	489	10 48 809 9	380	1	726419601	689	10 12 094 4	5	1
7028953	489	10 48 809 9	400	2	726428001	66	94 43 970	71	2
7028963	491	10 47 012 8	2	1	726428201	66	94 43 970	81	1
7029139	792	95 99 236	950	1	7264360	49	10 47 076 9	10	1
7029283	249	10 34 071 7	22	1	7264404	379	50 09 562	20	1
7029402	469	70 28 774	180	1	7264422	765	99 07 890	12	1
7029409	474	10 04 678 9	640	2	7264438	764	96 31 985	11	2
7029410	476	70 28 844	500	1	7264455	638	10 11 763 3	6	2
7029411	476	70 28 844	510	1	7264455	691	10 12 097 3	4	2
7029412	476	70 28 844	520	1	726450116	7	.	18	1
7029413	476	70 28 844	530	2	7264509	768	56 02 932	12	1
7029415	476	70 28 844	550	1	726457301	221	90 01 781 7	26	1
7029416	476	70 28 844	560	1	726457301	239	90 00 386 4	26	1
7029426	478	10 48 809 7	410	1	7264625	584	50 04 624	1	1
7029427	483	70 28 866	620	1	7264687	60	10 07 498 7	21	4
7029428	483	70 28 866	640	1	7264906	183	92 65 783	11	1
7029459	410	10 28 629 4	48	1	7360048	768	56 02 932	11	1
7029651	113	10 09 538 7	10	2	7360075	117	10 35 873 3	63	2m
7029979	107	10 35 875 9	27	6	7360171	207	10 35 873 9	101	1m
7029979	219	10 05 302 4	19	6	7360171	277	10 05 798 3	25	1.38m
7029979	742	93 68 905	4	2	7360171	425	10 05 303 6	303	0.27m

Item	Page	Assembly	Pos.	Quantity	Item	Page	Assembly	Pos.	Quantity
7360171	440	10 49 857 1	303	0.27m	7362135	768	56 02 932	3	1
7360171	460	10 06 375 5	25	1.5m	7362169	770	10 35 873 1	30	2
7360563	405	10 21 821 5	14	1	7362182	717	10 35 840 0	16	2
7360563	406	10 21 986 3	14	1	7362184	709	10 35 835 9	31	4
7360734	448	10 05 535 4	41	0.418m	7362184	717	10 35 840 0	19	2
7361276	552	10 08 428 5	175	1	7362184	731	10 49 825 2	5	4
7361329	68	90 72 024	17	1	7362184	756	95 93 590	15	4
7361329	80	92 78 174	14	2	7362184	757	99 06 383	15	4
7361329	88	92 78 179	14	2	7362184	758	99 06 576	15	4
7361329	134	90 72 922	16	3	7362408	705	10 35 872 5	135	1
7361329	143	98 88 041	17	1	7362507	292	10 82 277 5	97	4
7361329	184	92 74 199	26	1	7362515	120	10 35 879 9	29	2
7361329	704	10 35 872 5	105	4	7362515	384	10 35 874 5	78	1
7361329	770	10 35 873 1	26	6	7362515	399	10 35 874 4	126	1
7361391	752	10 34 080 6	360	1	7362545	107	10 35 875 9	15	4
7361391	753	10 34 081 2	360	1	7362545	112	10 36 623 6	22	2
7361498	243	10 07 675 6	28	1	7362545	360	10 35 875 4	4	1
7361498	247	10 07 675 7	37	1	7362545	367	10 82 438 0	4	1
7361498	518	10 06 222 8	75	2	7362545	518	10 06 222 8	70	3
7361513	328	10 06 786 9	40	4	7362546	518	10 06 222 8	76	2
7361549	111	73 67 136	1	1	7362547	328	10 06 786 9	43	1
7361553	340	10 05 314 4	28	2	7362547	528	10 35 876 3	105	1
7361553	341	10 82 438 9	28	2	7362547	528	10 35 876 3	124	3
7361553	706	10 06 477 4	6	1	7362547	535	10 49 837 7	105	1
7361568	768	56 02 932	9	1	7362547	535	10 49 837 7	124	3
7361600	187	98 82 875	57	2	7362551	206	10 35 873 9	93	2
7361601	374	50 09 565	8	1	7362551	346	10 05 312 6	26	1
7361679	107	10 35 875 9	2	6.4m	7362551	496	10 35 875 7	130	3
7361679	107	10 35 875 9	3	4.4m	7362551	498	10 35 875 7	165	1
7361679	784	99 27 352	10	1.825m	7362551	518	10 06 222 8	65	1
7361679	797	10 09 406 7	2	14m	7362551	528	10 35 876 3	123	1
7361960	197	10 12 504 2	17	1	7362551	535	10 49 837 7	123	1
7361960	384	10 35 874 5	77	2	7362551	750	10 49 827 4	5	1
7361960	398	10 35 874 4	88	4	7362551	793	10 82 390 4	50	5
7361960	399	10 35 874 4	102	2	7362563	497	10 35 875 7	140	5
7361960	404	10 06 771 7	41	1	7362563	511	10 06 221 6	45	16
7361961	57	91 41 597	90	1	7362563	512	10 35 876 2	45	13
7361961	184	92 74 199	24	2	7362563	513	10 49 837 6	45	12
7361961	548	10 35 821 5	41	1	7362563	517	10 06 222 8	54	1
7361965	54	10 49 867 0	13	4	7362563	518	10 06 222 8	78	1
7361965	204	10 35 873 9	63	4	7362563	749	10 39 372 0	30	9
7361965	278	10 05 798 3	48	1	7362583	772	92 66 411	7	2
7361965	282	97 58 815 01	69	4	7362583	773	92 66 412	7	2
7361965	382	10 35 874 5	45	4	7362602	328	10 06 786 9	44	5
7361965	511	10 06 221 6	17	4	7362602	498	10 35 875 7	175	3
7361965	512	10 35 876 2	17	4	7362602	528	10 35 876 3	104	3
7361965	516	10 06 222 8	22	4	7362602	535	10 49 837 7	104	3
7361965	517	10 06 222 8	53	1	7362603	216	10 49 800 0	67	7
7361965	526	10 35 876 3	47	4	7362603	247	10 07 675 7	55	1
7361965	527	10 35 876 3	97	4	7362603	517	10 06 222 8	60	1
7361965	533	10 49 837 7	47	4	7362603	528	10 35 876 3	103	3
7361965	534	10 49 837 7	97	4	7362603	535	10 49 837 7	103	2
7362091	340	10 05 314 4	20	3	7362606	241	10 35 877 2	41	1
7362091	341	10 82 438 9	20	4	7362606	542	10 35 875 6	31	4
7362101	89	10 07 444 8	13	1	7362606	745	95 77 441	2	1
7362103	54	10 49 867 0	16	1	7362665	243	10 07 675 6	26	2
7362107	705	10 35 872 5	136	4	7362665	247	10 07 675 7	35	2
7362109	112	10 36 623 6	5	2	7362665	247	10 07 675 7	48	1
7362117	340	10 05 314 4	26	2	7362665	247	10 07 675 7	53	2
7362117	341	10 82 438 9	26	1	7362665	358	10 35 875 1	65	3

Item	Page	Assembly	Pos.	Quantity	Item	Page	Assembly	Pos.	Quantity
7362665	518	10 06 222 8	66	3	7364901	241	10 35 877 2	45	6
7362665	710	10 38 839 3	30	3	7364904	241	10 35 877 2	46	3
7362674	755	94 02 020 2	24	1	7365026	400	93 70 592	3	1
7362674	757	99 06 383	24	2	7365034	199	10 35 873 9	5	2
7362674	758	99 06 576	24	2	7365069	241	10 35 877 2	40	2
7362734	216	10 49 800 0	60	2	7365080	205	10 35 873 9	83	1
7362734	535	10 49 837 7	107	1	7365080	496	10 35 875 7	133	1
7362752	270	10 05 311 8	62	1	7365080	497	10 35 875 7	145	4
7362752	292	10 82 277 5	103	4	7365080	528	10 35 876 3	125	1
7362816	107	10 35 875 9	16	1	7365080	535	10 49 837 7	125	1
7362949	705	10 35 872 5	130	3	7365293	464	73 72 093	1	1
7362986	277	10 05 798 3	24	6	7365297	211	10 21 775 0	4	2
7363002	216	10 49 800 0	68	3	7365626	225	94 42 350	5	1
7363002	496	10 35 875 7	135	2	7365626	464	73 72 093	2	1
7363002	498	10 35 875 7	160	1	7365704	316	10 40 689 8	35	1
7363002	508	10 35 875 8	80	8	7366260	243	10 07 675 6	22	1
7363002	535	10 49 837 7	108	1	7366260	247	10 07 675 7	22	1
7363004	328	10 06 786 9	45	6	7366260	328	10 06 786 9	42	6
7363004	497	10 35 875 7	155	4	7366260	497	10 35 875 7	150	3
7363015	768	56 02 932	14	1	7366260	508	10 35 875 8	88	2
7363060	204	10 35 873 9	65	2.4m	7366260	528	10 35 876 3	106	1
7363073	383	10 35 874 5	68	3	7366260	535	10 49 837 7	106	1
7363121	84	98 88 124	33	1	7366260	541	10 35 875 6	24	1
7363121	141	98 86 679	33	1	7366427	382	10 35 874 5	43	1
7363121	173	98 89 282	33	1	7366620	273	10 04 363 1	42	1
7363125	66	94 43 970	89	1	7366620	274	10 04 363 2	42	1
7363125	71	56 16 688	320	1	7366731	278	10 05 798 3	75	1
7363125	88	92 78 179	20	1	7366794	558	10 35 876 6	24	2
7363125	134	90 72 922	14	1	7366794	562	10 49 863 6	24	2
7363125	136	90 77 452	14	1	7366804	269	10 05 311 8	36	1
7363125	146	10 10 206 4	55	2	7366851	465	10 35 876 0	60	30
7363125	147	10 10 206 6	14	1	7366851	466	10 49 857 4	60	29
7363125	198	90 77 032	24	2	7366862	280	10 16 576 6	10	1
7363125	240	92 68 642	20	1	7367136	121	10 35 879 9	53	1
7363125	263	10 29 207 1	14	1	7367137	205	10 35 873 9	81	3
7363125	266	98 89 003	20	1	7367211	344	10 35 875 5	35	4
7363125	771	10 35 873 1	58	2	7367212	741	93 63 937	7	2
7363177	383	10 35 874 5	65	2	7367214	741	93 63 937	1	2
7363177	548	10 35 821 5	43	1	7367233	702	10 35 872 5	65	4
7363276	542	10 35 875 6	30	8	7367235	702	10 35 872 5	68	4
7363276	745	95 77 441	1	2	7367236	344	10 35 875 5	34	4
7363283	344	10 35 875 5	33	2	7367448	360	10 35 875 4	6	3
7363410	116	10 35 873 3	32	2	7367448	367	10 82 438 0	6	3
7363717	548	10 35 821 5	14	1	7367691	316	10 40 689 8	100	1
7363744	418	10 05 303 6	160	2	7367691	328	10 06 786 9	41	1
7363744	433	10 49 857 1	160	2	7367691	352	10 05 312 9	31	1
7363759	122	10 35 879 9	67	2	7367729	400	93 70 592	4	1
7363883	105	10 05 797 8	4	1	7367730	400	93 70 592	2	1
7363930	444	10 05 530 3	43	2	7367750	122	10 35 879 9	66	1
7364276	118	10 35 873 4	5	2	7367993	122	10 35 879 9	65	1
7364298	541	10 35 875 6	20	6	7368081	383	10 35 874 5	58	1
7364298	797	10 09 406 7	20	5	7368105	720	10 35 872 0	36	1
7364299	328	10 06 786 9	46	1	7368106	711	10 38 862 4	14	5
7364299	350	10 05 312 6	70	3	7368106	720	10 35 872 0	23	2
7364299	511	10 06 221 6	50	2	7368115	719	10 35 872 0	18	1
7364299	512	10 35 876 2	50	2	7368241	309	10 08 142 4	14	1
7364299	513	10 49 837 6	50	2	7368241	310	10 08 142 6	14	1
7364303	66	94 43 970	49	1	7368253	285	10 06 804 1	374	4
7364467	792	95 99 236	340	1	7368253	298	10 06 804 5	374	4
7364696	397	10 35 874 4	63	1	7368253	309	10 08 142 4	15	11

Item	Page	Assembly	Pos.	Quantity	Item	Page	Assembly	Pos.	Quantity
7368253	310	10 08 142 6	15	11	7370924	389	73 68 771	1	1
7368253	315	10 07 707 2	374	12	7370947	153	10 33 322 6	11	1
7368426	711	10 38 862 4	21	5	7371008	457	10 05 541 0	36	1
7368426	719	10 35 872 0	19	8	7371008	802	10 05 539 2	26	1
7368507	71	56 16 688	420	1	7371009	451	10 05 546 4	30	1
7368545	241	10 35 877 2	38	4	7371009	457	10 05 541 0	37	1
7368545	243	10 07 675 6	30	1	7371009	802	10 05 539 2	27	1
7368691	48	10 30 012 2	4	200	7371025	372	10 00 909 0	8	1
7368691	48	10 30 012 2	4	200	7371115	451	10 05 546 4	35	1
7368705	743	93 85 073	1	2	7371141	278	10 05 798 3	90	1
7368721	110	10 49 845 5	20	4	7371141	293	10 82 277 5	140	1
7368771	381	10 35 874 5	12	3	7371141	293	10 82 277 5	150	1
7368993	95	10 09 107 3	3	3	7371141	749	10 39 372 0	42	1
7368993	97	10 36 190 7	3	3	7371141	792	95 99 236	910	1
7368993	389	73 68 771	2	1	7371142	278	10 05 798 3	95	3
7368994	389	73 68 771	4	1	7371142	293	10 82 277 5	145	2
7368995	389	73 68 771	5	1	7371142	293	10 82 277 5	155	2
7368996	389	73 68 771	3	6	7371142	749	10 39 372 0	43	3
7369128	407	10 11 355 7	24	1	7371142	792	95 99 236	915	3
7369134	407	10 11 355 7	50	5	7371358	412	56 10 135	3	1
7369135	407	10 11 355 7	46	1	7371359	412	56 10 135	4	1
7369266	390	73 73 880	1	1	7371360	412	56 10 135	1	1
7369266	391	73 73 881	1	1	7371456	51	56 18 003	10	1
7369271	114	10 35 873 3	6	1	7371577	280	10 16 576 6	7	10
7369286	390	73 73 880	2	1	7371577	295	56 18 923	10	9
7369286	391	73 73 881	2	1	7371590	372	10 00 909 0	6	1
7369377	278	10 05 798 3	70	1	7371651	767	93 99 179	4	1
7369397	364	10 35 875 4	30	1m	7371654	767	93 99 179	3	1
7369397	371	10 82 438 0	30	1m	7371746	273	10 04 363 1	80	1
7369399	346	10 05 312 6	30	0.18m	7371746	274	10 04 363 2	80	1
7369407	788	10 49 831 4	26	1	7371759	157	10 33 324 2	7	1
7369456	385	73 68 081	1	4	7371926	351	10 05 312 9	7	2
7369886	157	10 33 324 2	9	1	7372093	450	10 06 360 5	5	1
7369934	130	10 21 593 5	22	2	7372093	460	10 06 375 5	27	1
7369938	153	10 33 322 6	13	4	7372093	462	10 06 355 3	5	1
7369939	131	10 42 845 9	20	2	7372147	208	10 42 538 5	11	6
7369951	261	10 10 206 7	1	1	7372158	295	56 18 923	11	2
7369959	261	10 10 206 7	8	1	7372237	372	10 00 909 0	7	1
7369966	153	10 33 322 6	48	1	7372252	157	10 33 324 2	14	1
7369967	130	10 21 593 5	20	1	7372252	261	10 10 206 7	11	1
7370096	291	10 82 277 5	42	1	7372254	261	10 10 206 7	5	1
7370432	71	56 16 688	310	1	7372258	261	10 10 206 7	3	2
7370556	45	10 22 121 2	2	2	7372317	402	56 15 220	6	1
7370581	274	10 04 363 2	73	1	7372318	402	56 15 220	2	1
7370689	269	10 05 311 8	44	2	7372319	402	56 15 220	1	1
7370883	280	10 16 576 6	13	7	7372348	457	10 05 541 0	34	1
7370883	295	56 18 923	12	11	7372348	802	10 05 539 2	24	1
7370888	280	10 16 576 6	9	4	7372353	284	73 73 807	16	1
7370889	280	10 16 576 6	8	2	7372354	284	73 73 807	17	1
7370889	295	56 18 923	13	4	7372355	284	73 73 807	18	1
7370890	295	56 18 923	5	3	7372418	105	10 05 797 8	6	1
7370891	295	56 18 923	3	1	7372622	408	10 11 355 7	213	8
7370892	295	56 18 923	4	1	7372747	408	10 11 355 7	82	6
7370893	295	56 18 923	14	1	7372762	705	10 35 872 5	140	1
7370894	295	56 18 923	2	1	7373198	241	10 35 877 2	6	1
7370895	280	10 16 576 6	3	1	7373199	241	10 35 877 2	5	1
7370896	280	10 16 576 6	2	1	7373241	180	10 44 299 8	4	1
7370897	280	10 16 576 6	4	1	7373241	774	10 02 073 5	4	1
7370899	280	10 16 576 6	6	1	7373268	295	56 18 923	20	1
7370910	43	10 35 874 0	66	2	7373405	449	10 05 530 6	5	2

Item	Page	Assembly	Pos.	Quantity	Item	Page	Assembly	Pos.	Quantity
7373411	178	10 40 975 1	5	2	7380401	696	10 12 100 3	5	2
7373412	178	10 40 975 1	5	2	7380512	128	90 80 120	63	3
7373413	178	10 40 975 1	5	2	7380512	218	90 80 195	63	3
7373414	178	10 40 975 1	5	2	7380531	73	92 68 751	44	1
7373415	178	10 40 975 1	5	2	7380566	632	90 79 077	8	1
7373416	178	10 40 975 1	5	2	7380566	638	10 11 763 3	12	3
7373417	178	10 40 975 1	5	2	7380566	639	10 11 752 9	9	1
7373418	178	10 40 975 1	5	2	7380574	85	92 66 089	27	1
7373420	178	10 40 975 1	6	2	7380576	80	92 78 174	20	1
7373434	180	10 44 299 8	1	1	7380576	88	92 78 179	19	1
7373434	774	10 02 073 5	1	1	7380577	86	92 66 231	18	1
7373435	774	10 02 073 5	5	1	7380592	69	90 72 026	18	1
7373437	180	10 44 299 8	3	1	7380592	88	92 78 179	18	1
7373437	774	10 02 073 5	3	1	7380592	145	98 88 308	14	2
7373500	61	50 20 370 01	17	24	7380592	171	92 71 657	28	2
7373501	61	50 20 370 01	18	24	7380592	184	92 74 199	18	1
7373502	61	50 20 370 01	19	24	7380592	192	98 89 161	14	2
7373503	61	50 20 370 01	4	1	7380593	88	92 78 179	25	1
7373504	61	50 20 370 01	5	1	7380593	143	98 88 041	25	1
7373505	61	50 20 370 01	8	8	7380593	184	92 74 199	25	1
7373505	63	93 21 805 01	5	8	7380594	73	92 68 751	36	1
7373506	61	50 20 370 01	7	9	7380594	141	98 86 679	36	1
7373506	63	93 21 805 01	4	9	7380599	229	92 68 011	36	1
7373507	61	50 20 370 01	14	1	7380599	267	98 82 882	36	1
7373508	61	50 20 370 01	15	1	7380600	218	90 80 195	65	1
7373509	61	50 20 370 01	12	1	7380601	128	90 80 120	65	1
7373509	62	93 21 804 01	12	1	7380601	230	92 68 786	25	1
7373592	491	10 47 012 8	1	4	7380604	611	10 11 802 5	6	1
7373759	372	10 00 909 0	9	1	7380604	676	90 80 459	5	1
7373807	280	10 16 576 6	14	1	7380604	686	10 12 087 8	3	1
7373825	284	73 73 807	20	1	7380604	696	10 12 100 3	2	1
7373873	354	10 35 875 1	17	8	7380605	192	98 89 161	26	1
7373875	700	10 35 872 5	20	16	7380605	198	90 77 032	18	1
7373875	713	10 07 162 8	6	1	7380605	230	92 68 786	18	1
7373880	381	10 35 874 5	14	3	7380615	240	92 68 642	17	1
7373881	95	10 09 107 3	2	3	7380615	266	98 89 003	17	1
7373881	97	10 36 190 7	2	3	7380617	87	92 66 232	19	1
7373881	381	10 35 874 5	15	3	7380618	87	92 66 232	20	1
7380002	59	92 65 064	1	1	7380619	87	92 66 232	22	1
7380004	59	92 65 064	3	1	7380619	611	10 11 802 5	14	1
7380021	267	98 82 882	33	1	7380619	677	10 12 039 3	4	1
7380038	59	92 65 064	2	5	7380619	686	10 12 087 8	6	1
7380068	696	10 12 100 3	4	2	7380619	689	10 12 094 4	6	1
7380073	383	10 35 874 5	51	4	7380619	696	10 12 100 3	3	1
7380073	546	10 35 868 3	41	1	7380620	86	92 66 231	19	1
7380073	546	10 35 868 3	51	3	7380621	86	92 66 231	20	1
7380090	267	98 82 882	32	1	7380626	128	90 80 120	64	1
7380123	181	90 78 788	66	2	7380626	169	90 80 196	64	1
7380134	313	92 65 665	3	1	7380626	218	90 80 195	64	1
7380135	313	92 65 665	4	1	7380647	138	92 68 441	11	1
7380154	677	10 12 039 3	3	1	7380648	69	90 72 026	22	1
7380172	136	90 77 452	16	3	7380648	88	92 78 179	22	1
7380177	664	10 12 032 2	10	1	7380648	145	98 88 308	22	1
7380212	78	92 67 554	31	1	7380648	170	92 71 653	19	2
7380232	72	92 67 037	23	5	7380648	171	92 71 657	64	8
7380296	639	10 11 752 9	7	1	7380648	175	10 11 837 4	68	5
7380296	690	10 12 096 2	4	1	7380648	181	90 78 788	68	1
7380326	84	98 88 124	32	1	7380648	187	98 82 875	68	8
7380326	141	98 86 679	32	1	7380648	192	98 89 161	22	1
7380326	173	98 89 282	32	1	7380684	187	98 82 875	16	1

Item	Page	Assembly	Pos.	Quantity	Item	Page	Assembly	Pos.	Quantity
7380688	581	10 12 021 3	13	1	7381204	169	90 80 196	60	1
7380712	696	10 12 100 3	6	1	7381204	218	90 80 195	60	1
7380830	151	10 33 307 3	5	1	7381250	80	92 78 174	29	1
7380831	145	98 88 308	17	1	7381250	88	92 78 179	29	1
7380831	171	92 71 657	35	1	7381250	170	92 71 653	18	1
7380831	192	98 89 161	17	1	7381250	171	92 71 657	32	1
7380865	689	10 12 094 4	4	1	7381254	681	10 12 086 9	1	2
7380866	81	90 77 412	23	1	7381298	69	90 72 026	20	1
7380866	88	92 78 179	23	1	7381415	181	90 78 788	73	1
7380867	171	92 71 657	68	1	7381415	187	98 82 875	73	1
7380868	185	92 75 443	70	1	7381417	620	90 78 260	4	1
7380883	87	92 66 232	21	1	7381417	686	10 12 087 8	9	1
7380884	87	92 66 232	23	1	7381442	187	98 82 875	15	1
7380888	171	92 71 657	61	1	7381448	140	98 81 609	11	1
7380888	175	10 11 837 4	69	1	7381457	575	10 12 016 8	1	2
7380888	187	98 82 875	69	1	7381457	582	10 12 593 7	21	1
7380905	85	92 66 089	28	2	7381457	629	90 80 436	5	2
7380954	128	90 80 120	71	1	7381457	642	10 11 978 1	10	1
7380955	128	90 80 120	61	1	7381499	80	92 78 174	15	1
7380955	218	90 80 195	61	1	7381501	81	90 77 412	24	1
7380970	631	10 11 570 0	9	2	7381501	88	92 78 179	24	2
7380970	688	10 12 093 7	3	2	7381525	80	92 78 174	28	2
7380973	134	90 72 922	18	2	7381562	187	98 82 875	43	2
7380973	136	90 77 452	18	2	7381565	527	10 35 876 3	60	2
7380973	171	92 71 657	18	2	7381565	534	10 49 837 7	60	2
7380974	189	98 85 932	10	1	7381565	750	10 49 827 4	6	2
7380975	189	98 85 932	20	1	7381567	631	10 11 570 0	8	4
7380976	189	98 85 932	30	1	7381567	688	10 12 093 7	4	4
7380977	182	90 79 347	13	2	7381628	528	10 35 876 3	100	14
7380979	80	92 78 174	22	1	7381628	535	10 49 837 7	100	14
7380979	88	92 78 179	21	1	7381628	576	10 11 874 8	3	1
7380979	170	92 71 653	16	2	7381628	583	10 11 694 5	4	1
7380979	171	92 71 657	31	2	7381628	617	10 12 314 1	16	1
7380982	82	90 77 481	25	1	7381628	641	10 11 930 6	11	2
7380982	88	92 78 179	26	1	7381630	578	10 12 503 7	11	5
7380982	168	90 79 811	25	1	7381632	605	10 12 002 3	6	1
7380982	170	92 71 653	25	1	7381638	581	10 12 021 3	11	1
7380983	82	90 77 481	21	1	7381640	70	98 88 126	27	1
7380983	88	92 78 179	27	1	7381649	641	10 11 930 6	14	0.11m
7380983	168	90 79 811	26	1	7381770	511	10 06 221 6	40	12
7380983	170	92 71 653	26	1	7381770	512	10 35 876 2	40	9
7380986	187	98 82 875	17	1	7381770	513	10 49 837 6	40	7
7380986	619	10 30 300 7	12	1	7381770	518	10 06 222 8	77	3
7380987	187	98 82 875	71	2	7381770	519	10 06 222 8	85	1
7380991	85	92 66 089	25	2	7381797	621	90 78 554	11	2
7380992	85	92 66 089	24	1	7381797	623	10 12 720 8	26	1
7381018	232	92 78 623	11	1	7381797	641	10 11 930 6	6	2
7381018	238	62 90 073	10	1	7381835	669	10 11 671 8	9	4
7381019	181	90 78 788	47	1	7381855	188	98 84 140	15	4
7381019	187	98 82 875	47	1	7381861	188	98 84 140	61	2
7381025	168	90 79 811	28	1	7381861	265	10 11 948 2	61	2
7381028	168	90 79 811	23	1	7381903	188	98 84 140	60	1
7381028	170	92 71 653	23	1	7381903	265	10 11 948 2	60	1
7381029	168	90 79 811	24	1	7381949	80	92 78 174	27	1
7381029	170	92 71 653	24	1	7381949	88	92 78 179	30	1
7381103	662	90 79 206	2	1	7382028	636	90 77 708	1	1
7381175	621	90 78 554	14	1	7382063	266	98 89 003	14	1
7381192	622	10 11 781 4	4	1	7382090	605	10 12 002 3	15	1
7381192	686	10 12 087 8	8	1	7382202	664	10 12 032 2	6	1
7381204	128	90 80 120	60	1	7382203	572	10 12 907 1	3	2

Item	Page	Assembly	Pos.	Quantity	Item	Page	Assembly	Pos.	Quantity
7382203	582	10 12 593 7	20	3	7415239	414	10 05 303 6	47	1
7382204	572	10 12 907 1	4	2	7415239	429	10 49 857 1	47	1
7382204	582	10 12 593 7	13	4	747005901	64	94 43 970	3	96
7382215	641	10 11 930 6	4	1	747191901	77	94 44 453	3	1
7382216	623	10 12 720 8	28	2	749072914	71	56 16 688	170	1
7401288	321	10 02 211 7	17	4	7610034	76	94 44 418	5	1
7401349	107	10 35 875 9	25	3	7610037	223	93 33 329 01	5	1
7401349	219	10 05 302 4	20	3	7610039	75	94 44 414	5	1
7401349	703	10 35 872 5	87	4	7610091	77	94 44 453	2	1
7401349	742	93 68 905	2	1	7610107	224	93 36 053 01	6	26
7401349	743	93 85 073	2	1	7610108	224	93 36 053 01	7	26
7401349	744	93 88 597	2	1	7610132	224	93 36 053 01	13	26
7401443	741	93 63 937	2	1	7610186	66	94 43 970	61	1
7401897	43	10 35 874 0	68	2	7610202	224	93 36 053 01	3	1
7402296	121	10 35 879 9	52	1	7610202	239	90 00 386 4	3	1
7402657	554	93 58 137	1	1	7610225	225	94 42 350	6	1
7402658	554	93 58 137	2	1m	7610244	66	94 43 970	58	1
7403083	112	10 36 623 6	9	2	7610289	221	90 01 781 7	11	2
7403083	352	10 05 312 9	30	1	7610289	239	90 00 386 4	11	2
7403149	118	10 35 873 4	8	4	7610341	222	90 01 781 7	74	1
7405399	54	10 49 867 0	9	1	7610341	239	90 00 386 4	74	1
7405399	220	10 05 311 7	7	1	7610378	66	94 43 970	57	1
7405399	365	10 35 875 4	32	1	7610521	224	93 36 053 01	2	1
7406028	734	10 08 685 3	21	6	7610521	239	90 00 386 4	2	1
7406028	750	10 49 827 4	4	2	7610523	224	93 36 053 01	8	1
7406699	340	10 05 314 4	19	1	7610523	239	90 00 386 4	8	1
7406864	398	10 35 874 4	75	1	7610551	224	93 36 053 01	11	1
7407071	119	10 35 879 9	23	1	7610551	239	90 00 386 4	13	1
7407071	120	10 35 879 9	28	1	7610552	224	93 36 053 01	12	1
7407120	350	10 05 312 6	66	1	7610552	239	90 00 386 4	12	1
7407122	89	10 07 444 8	17	1	7610617	64	94 43 970	6	1
7409720	335	10 38 698 2	44	2	7610819	64	94 43 970	8	2
7409720	338	10 49 804 4	44	2	7610825	225	94 42 350	5	1
7409720	340	10 05 314 4	27	2	7610826	219	10 05 302 4	11	1
7409720	341	10 82 438 9	27	2	7615379	112	10 36 623 6	8	2
7409720	343	10 35 875 5	6	2	7615379	113	10 09 538 7	12	1
7409720	356	10 35 875 1	34	1	7615379	128	90 80 120	76	1
7409720	396	10 35 874 4	45	2	7615379	358	10 35 875 1	63	2
7410211	397	10 35 874 4	62	1	7615379	362	10 35 875 4	18	3
7410213	113	10 09 538 7	11	1	7615379	369	10 82 438 0	18	2
7410213	705	10 35 872 5	142	1	7615379	397	10 35 874 4	68	4
7410394	399	10 35 874 4	111	2	7615379	705	10 35 872 5	141	4
7410394	399	10 35 874 4	116	2	7615379	770	10 35 873 1	44	2
7410480	348	10 05 312 6	41	2	7615603	147	10 10 206 6	2	1
7410480	395	10 35 874 4	19	2	7615603	263	10 29 207 1	2	1
7410773	342	56 09 948	15	1	7615604	147	10 10 206 6	1	1
7411760	397	10 35 874 4	59	1	7615604	263	10 29 207 1	1	1
7411821	540	10 35 875 6	9	4	7615635	416	10 05 303 6	91	2
7411823	323	11 00 359 4	29	1	7615635	427	10 05 303 6	330	4
7411823	540	10 35 875 6	11	2	7615635	431	10 49 857 1	91	2
7412734	252	10 48 927 7	9	1	7615635	442	10 49 857 1	330	4
7412935	619	10 30 300 7	18	1	7615636	416	10 05 303 6	90	2
7412936	619	10 30 300 7	16	1	7615636	427	10 05 303 6	331	4
7412937	619	10 30 300 7	15	1	7615636	431	10 49 857 1	90	2
7412942	619	10 30 300 7	1	1	7615636	442	10 49 857 1	331	4
7413022	346	10 05 312 6	21	1	7615768	422	10 05 303 6	262	1
7413028	399	10 35 874 4	120	1	7615768	437	10 49 857 1	262	1
7413201	352	10 05 312 9	27	1	7616910	346	10 05 312 6	25	1
7414500	152	10 33 307 8	2	1	7616910	399	10 35 874 4	127	1
7414522	71	56 16 688	50	2	7616913	340	10 05 314 4	22	1

Item	Page	Assembly	Pos.	Quantity	Item	Page	Assembly	Pos.	Quantity
7616913	341	10 82 438 9	22	1	774373808	256	90 64 786	180	1
7616913	703	10 35 872 5	91	3	774374208	255	90 64 786	40	1
7616915	397	10 35 874 4	61	1	774374208	257	10 01 461 1	40	6
7616949	374	50 09 565	9	1	774376008	255	90 64 786	1	1
7617261	340	10 05 314 4	23	1	774376008	257	10 01 461 1	1	31
7617261	341	10 82 438 9	23	1	774376108	255	90 64 786	70	1m
7617262	340	10 05 314 4	18	1	774376108	257	10 01 461 1	70	15m
7617351	220	10 05 311 7	9	2	774376508	256	90 64 786	185	1
7617460	397	10 35 874 4	69	1	774378008	245	10 29 302 0	32	2
7617520	275	10 28 999 3	51	2	774378208	245	10 29 302 0	31	1
7617714	123	10 35 879 9	81	6	774378208	254	10 29 301 8	31	1
7617714	241	10 35 877 2	35	4	774378208	708	10 00 878 9	31	3
7617714	398	10 35 874 4	71	2	774378208	722	10 30 336 9	31	2
7618568	162	10 33 327 1	7	2	774383508	255	90 64 786	65	1m
7618601	132	10 42 845 9	49	1	774383508	256	90 64 786	165	1m
7618605	133	10 44 145 6	31	1	779016501	222	90 01 781 7	96	1
7618883	488	10 48 809 9	120	1	789000601	219	10 05 302 4	4	2
7618883	488	10 48 809 9	287	1	7900280	552	10 08 428 5	140	1
7620752	133	10 44 145 6	38	1	7900708	551	10 08 428 5	52	1
7620786	346	10 05 312 6	23	1	7900836	552	10 08 428 5	150	1
7621949	147	10 10 206 6	3	1	7981194	209	10 42 538 5	31	30
7621957	178	10 40 975 1	7	2	8000622	552	10 08 428 5	130	1
7621958	178	10 40 975 1	10	2	8000770	551	10 08 428 5	50	1
7621959	178	10 40 975 1	11	2	8000982	552	10 08 428 5	110	1
7622254	164	10 35 548 6	800	1	8000993	552	10 08 428 5	94	1
7622803	245	10 29 302 0	30	1	8007367	763	99 07 680	989	1
7622803	254	10 29 301 8	30	7	811205708	145	98 88 308	103	1
7622803	708	10 00 878 9	30	5	811205708	572	10 12 907 1	109	1
7622803	722	10 30 336 9	30	8	811205708	582	10 12 593 7	109	1
7622886	178	10 40 975 1	1	1	8121783	551	10 08 428 5	51	1
7623221	510	10 06 600 9	996	1	8145660	38	90 66 466	10	1
7623427	130	10 21 593 5	21	1	8145666	39	90 66 466	30	1
7623606	146	10 10 206 4	56	1	8300004	764	96 31 985	800	1
7623704	255	90 64 786	25	1	8300004	765	99 07 890	800	1
7623704	257	10 01 461 1	25	4	8300005	764	96 31 985	801	1
7623705	255	90 64 786	20	1	8300005	765	99 07 890	801	1
7623705	257	10 01 461 1	20	6	8500251	720	10 35 872 0	32	5
7623707	255	90 64 786	28	1	8501565	550	10 49 815 2	40	1
7623707	257	10 01 461 1	28	2	8501674	470	70 28 775	2000	1
7623775	153	10 33 322 6	5	1	8503279	550	10 49 815 2	30	1
7623776	153	10 33 322 6	43	1	8503598	446	10 05 530 3	60	0.01
7623777	153	10 33 322 6	44	1	8610230	35	10 35 899 2	1	1
7623779	153	10 33 322 6	6	1	861303608	31	10 35 894 7	25	1
7623779	158	10 33 325 9	3	1	861304208	31	10 35 894 7	10	1
7623835	133	10 44 145 6	32	1	861305508	31	10 35 894 7	1	1
7623863	177	10 40 974 7	30	2	861305608	31	10 35 894 7	50	1
7624177	255	90 64 786	11	1	8622905	572	10 12 907 1	108	1
7624177	257	10 01 461 1	11	5	8622905	642	10 11 978 1	108	1
7624222	157	10 33 324 2	4	1	8624636	192	98 89 161	110	1
7624223	157	10 33 324 2	5	1	8627609	141	98 86 679	123	1
7624277	751	10 29 135 3	70	1	8627609	612	10 11 615 0	7	1
7738704	463	10 03 720 9	20	2	8628192	192	98 89 161	103	1
774252314	202	10 35 873 9	41	8	8628192	194	10 49 867 7	25	0.001
7743245	474	10 04 678 9	610	2	8628192	196	10 49 873 2	25	0.001
774371808	255	90 64 786	10	1	8628192	574	90 78 548	109	1
774371808	257	10 01 461 1	10	10	8655008	73	92 68 751	126	1
774373408	255	90 64 786	35	1	8655008	84	98 88 124	126	1
774373408	256	90 64 786	135	1	8655008	141	98 86 679	126	1
774373608	255	90 64 786	4	1	8655008	173	98 89 282	126	1
774373708	255	90 64 786	75	1m	8655008	229	92 68 011	126	1

Item	Page	Assembly	Pos.	Quantity	Item	Page	Assembly	Pos.	Quantity
8655016	586	10 12 263 2	109	1	9072996	126	90 80 120	18	1
8655016	596	10 12 264 0	109	1	9073074	126	90 80 120	20	1
8655016	598	10 12 264 6	109	1	9073190	623	10 12 720 8	30	2
8655016	599	10 12 265 9	109	1	9073190	641	10 11 930 6	9	1
8655023	69	90 72 026	118	1	9073639	188	98 84 140	20	1
8655023	572	10 12 907 1	104	1	9073751	172	98 88 321	2	1
8655023	600	10 11 805 2	104	1	9075124	145	98 88 308	10	1
8655037	668	90 80 481	131	1	9075124	192	98 89 161	10	1
8700011	630	90 78 417	102	1	9076052	198	90 77 032	1	1
8700011	634	10 11 822 3	102	1	9076311	167	90 73 751	2	1
8700012	167	90 73 751	106	1	9076530	658	90 79 187	2	1
8700012	191	98 88 122	106	1	9076531	658	90 79 187	10	2
8716533	319	10 02 206 9	6	1	9076550	658	90 79 187	11	1
890100716	781	10 49 833 2	5	1	9076605	669	10 11 671 8	7	8
90003864	222	90 01 781 7	910	1	9076638	649	10 13 273 9	20	4
90011490	222	90 01 781 7	45	1	9076638	650	10 13 274 0	20	4
90011580	222	90 01 781 7	47	3	9076985	636	90 77 708	4	1
90011582	222	90 01 781 7	48	3	9076986	636	90 77 708	2	2
90017817	220	10 05 311 7	2	1	9077028	198	90 77 032	10	1
9006345	770	10 35 873 1	5	1	9077032	197	10 12 504 2	3	1
9008100	344	10 35 875 5	42	1	9077199	592	10 11 687 6	1	2
9008530	316	10 40 689 8	30	2	9077223	588	90 77 286	5	1
9008618	770	10 35 873 1	40	2	9077280	588	90 77 286	3	1
9008760	706	10 06 477 4	14	2	9077281	588	90 77 286	1	1
9011050	115	10 35 873 3	18	1	9077282	588	90 77 286	4	8
9012222	461	10 06 375 5	32	1	9077283	588	90 77 286	7	1
9012477	461	10 06 375 5	30	1	9077285	588	90 77 286	8	1
9013056	701	10 35 872 5	43	1	9077286	566	10 12 595 9	53	1
9013811	292	10 82 277 5	104	1	9077329	696	10 12 100 3	8	1
9014915	782	10 35 806 3	4	1	9077412	80	92 78 174	80	1
9016187	465	10 35 876 0	3	1	9077452	125	90 80 165	3	1
9016187	466	10 49 857 4	3	1	9077481	80	92 78 174	81	1
9016516	293	10 82 277 5	151	1	9077655	651	10 11 558 7	2	1
9016517	293	10 82 277 5	152	1	9077656	652	10 11 678 0	2	1
9016551	292	10 82 277 5	95	1	9077696	678	10 12 116 0	52	1
9018026	122	10 35 879 9	61	1	9077697	630	90 78 417	1	1
9051252	119	10 35 879 9	21	2	9077708	635	10 11 865 5	14	1
9064090	762	95 89 256	999	1	9077709	636	90 77 708	3	1
9064090	763	99 07 680	999	1	9077748	573	10 12 907 2	3	20
9064091	765	99 07 890	999	1	9077749	573	10 12 907 2	4	10
9064092	757	99 06 383	8	1	9077975	126	90 80 120	1	1
9064092	758	99 06 576	8	1	9078049	565	10 12 595 9	40	8
9064093	757	99 06 383	10	1	9078050	577	90 78 049	1	1
9064093	758	99 06 576	10	1	9078058	601	10 11 802 2	7	1
9064786	251	10 48 927 6	998	1	9078145	126	90 80 120	5	1
9064786	707	10 30 331 7	998	1	9078257	603	10 11 632 0	1	2
9064786	721	10 30 336 8	998	1	9078259	603	10 11 632 0	3	2
9066460	40	10 35 970 3	500	1	9078260	567	10 12 595 9	171	1
9066465	10	90 66 460	70	1	9078269	611	10 11 802 5	9	1
9066466	10	90 66 460	100	1	9078308	645	10 11 566 7	12	4
9070361	10	90 66 460	10	1	9078308	648	10 11 566 8	12	4
9070362	10	90 66 460	20	1	9078308	687	10 12 089 6	3	1
9070363	10	90 66 460	30	1	9078314	568	10 12 595 9	260	2
9070364	10	90 66 460	40	1	9078321	613	10 11 716 7	2	1
9070365	10	90 66 460	50	1	9078324	567	10 12 595 9	191	8
9070366	10	90 66 460	60	1	9078324	687	10 12 089 6	191	1
9072024	60	10 07 498 7	10	2	9078325	616	90 78 324	1	1
9072026	68	90 72 024	3	1	9078326	616	90 78 324	2	1
9072808	190	98 88 119	1	1	9078337	627	90 79 075	6	4
9072922	125	90 80 165	2	1	9078337	628	90 79 076	6	4

Item	Page	Assembly	Pos.	Quantity	Item	Page	Assembly	Pos.	Quantity
9078344	607	10 12 475 6	3	1	9079863	568	10 12 595 9	370	1
9078344	608	10 12 475 7	3	1	9079885	97	10 36 190 7	6	8
9078390	573	10 12 907 2	6	5	9079885	596	10 12 264 0	2	1
9078417	568	10 12 595 9	232	1	9079885	597	10 12 264 5	2	7
9078418	631	10 11 570 0	1	1	9079885	598	10 12 264 6	2	2
9078422	631	10 11 570 0	5	1	9079885	599	10 12 265 9	2	2
9078438	582	10 12 593 7	6	2	9079885	687	10 12 089 6	4	1
9078452	631	10 11 570 0	2	1	9079977	657	10 11 606 7	2	1
9078467	570	10 12 595 9	521	1	9080032	581	10 12 021 3	2	1
9078510	600	10 11 805 2	2	4	9080032	680	10 12 085 5	1	1
9078511	600	10 11 805 2	3	2	9080041	645	10 11 566 7	5	1
9078512	600	10 11 805 2	4	2	9080041	648	10 11 566 8	5	1
9078513	594	10 11 805 1	2	2	9080042	645	10 11 566 7	6	1
9078514	594	10 11 805 1	3	2	9080043	648	10 11 566 8	6	1
9078515	594	10 11 805 1	5	4	9080083	611	10 11 802 5	4	1
9078548	565	10 12 595 9	15	8	9080120	125	90 80 165	1	1
9078554	567	10 12 595 9	214	1	9080121	169	90 80 196	10	1
9078555	621	90 78 554	1	2	9080165	109	10 12 605 7	10	1
9078557	621	90 78 554	2	1	9080175	126	90 80 120	11	2
9078559	621	90 78 554	3	1	9080176	126	90 80 120	14	1
9078564	570	10 12 595 9	452	1	9080189	126	90 80 120	13	1
9078565	655	90 78 564	1	1	9080192	126	90 80 120	10	1
9078584	634	10 11 822 3	1	1	9080193	126	90 80 120	23	1
9078589	634	10 11 822 3	3	8	9080195	128	90 80 120	97	1
9078590	634	10 11 822 3	4	1	9080196	128	90 80 120	98	1
9078591	634	10 11 822 3	5	1	9080197	126	90 80 120	6	1
9078621	681	10 12 086 9	4	2	9080198	126	90 80 120	26	1
9078622	665	90 78 467	1	1	9080210	126	90 80 120	4	1
9078788	134	90 72 922	86	1	9080211	126	90 80 120	3	1
9078788	136	90 77 452	86	1	9080281	689	10 12 094 4	1	1
9078800	638	10 11 763 3	3	2	9080377	582	10 12 593 7	11	2
9078837	630	90 78 417	4	2	9080391	653	10 11 602 6	2	1
9078870	623	10 12 720 8	2	1	9080428	629	90 80 436	1	2
9078874	623	10 12 720 8	8	1	9080429	629	90 80 436	2	2
9078875	642	10 11 978 1	2	1	9080436	568	10 12 595 9	221	1
9078876	642	10 11 978 1	1	1	9080443	676	90 80 459	1	1
9078884	621	90 78 554	4	1	9080459	571	10 12 595 9	652	1
9078925	689	10 12 094 4	10	1	9080476	593	10 11 805 0	4	6
9078946	578	10 12 503 7	13	1	9080481	109	10 12 605 7	2	1
9078946	604	10 12 476 3	6	2	9080503	664	10 12 032 2	12	1
9078946	630	90 78 417	5	2	9080532	692	10 12 097 6	2	8
9078947	630	90 78 417	6	2	9080599	611	10 11 802 5	7	1
9078949	669	10 11 671 8	8	4	9080600	611	10 11 802 5	3	1
9079024	648	10 11 566 8	1	1	9080635	623	10 12 720 8	12	1
9079026	645	10 11 566 7	1	1	9080641	570	10 12 595 9	450	1
9079036	627	90 79 075	1	1	9080668	570	10 12 595 9	470	1
9079037	628	90 79 076	1	1	9080669	656	90 80 668	2	1
9079074	568	10 12 595 9	220	1	9080670	656	90 80 668	3	1
9079075	626	90 79 074	1	1	9080695	583	10 11 694 5	3	1
9079076	626	90 79 074	2	1	9080724	623	10 12 720 8	3	1
9079077	568	10 12 595 9	231	1	9080725	623	10 12 720 8	4	1
9079085	623	10 12 720 8	7	1	9080726	623	10 12 720 8	5	1
9079113	623	10 12 720 8	10	1	9080727	623	10 12 720 8	11	1
9079140	602	10 11 802 3	1	1	9080734	667	10 12 007 7	1	1
9079187	571	10 12 595 9	581	1	9080841	623	10 12 720 8	9	1
9079206	658	90 79 187	21	3	9080911	633	90 78 314	4	1
9079347	172	98 88 321	16	1	9101411	757	99 06 383	4	1
9079596	635	10 11 865 5	13	1	9101411	758	99 06 576	4	1
9079756	181	90 78 788	61	1	9103255	552	10 08 428 5	170	1
9079811	139	92 71 648	2	1	9113008	761	95 88 147	990	1

Item	Page	Assembly	Pos.	Quantity	Item	Page	Assembly	Pos.	Quantity
9113009	761	95 88 147	991	1	9266641	142	98 86 680	30	20
9114437	761	95 88 147	999	1	9267037	236	98 83 996	1	1
9131612	583	10 11 694 5	7	1	9267554	69	90 72 026	1	2
9134374	620	90 78 260	3	3	9267943	235	98 80 619	1	1
9140351	629	90 80 436	2	2	9268011	197	10 12 504 2	96	1
9140351	649	10 13 273 9	13	1	9268011	230	92 68 786	96	1
9140351	650	10 13 274 0	13	1	9268130	649	10 13 273 9	5	1
9141597	54	10 49 867 0	7	1	9268130	650	10 13 274 0	5	1
9141600	57	91 41 597	40	1	9268130	694	10 12 099 3	4	2
9144757	585	10 11 883 9	2	1	9268441	68	90 72 024	7	3
9144757	585	10 11 883 9	2	1	9268441	69	90 72 026	7	2
9144757	689	10 12 094 4	2	1	9268441	88	92 78 179	7	5
9161348	739	99 35 245	3	1	9268441	187	98 82 875	5	4
9171589	308	10 05 798 5	30	2	9268642	184	92 74 199	98	1
9177720	761	95 88 147	2	2	9268642	198	90 77 032	98	1
9177723	762	95 89 256	2	2	9268642	266	98 89 003	97	1
9177723	763	99 07 680	2	2	9268642	393	98 89 008	97	1
9178018	573	10 12 907 2	5	2	9268747	142	98 86 680	31	20
9178018	664	10 12 032 2	14	2	9268751	68	90 72 024	96	1
9201724	418	10 05 303 6	165	1	9268751	88	92 78 179	96	1
9201724	433	10 49 857 1	165	1	9268751	134	90 72 922	93	1
9202120	747	10 36 839 8	30	1	9268751	136	90 77 452	93	1
921618116	43	10 35 874 0	75	4	9268751	143	98 88 041	96	1
9230122	447	10 05 535 4	20	1	9268751	171	92 71 657	17	1
9233882	757	99 06 383	1	2	9268751	184	92 74 199	17	1
9233882	758	99 06 576	1	2	9268776	83	98 88 123	30	26
9265049	229	92 68 011	17	1	9268776	172	98 88 321	30	26
9265049	267	98 82 882	17	1	9268786	197	10 12 504 2	98	1
9265050	231	92 71 427	30	15	9268999	83	98 88 123	15	1
9265064	57	91 41 597	11	1	9269686	79	92 70 598	10	1
9265104	231	92 71 427	15	1	9270387	713	10 07 162 8	13	1
9265128	235	98 80 619	2	1	9270390	759	92 70 387	999	1
9265394	313	92 65 665	2	1	9270598	69	90 72 026	6	2
9265395	772	92 66 411	3	2	9270599	79	92 70 598	11	1
9265395	773	92 66 412	3	2	9271340	578	10 12 503 7	5	2
9265404	72	92 67 037	15	1	9271427	197	10 12 504 2	94	1
9265409	313	92 65 665	1	1	9271441	126	90 80 120	21	2
9265414	313	92 65 665	5	1	9271462	129	90 80 211	2	1
9265665	772	92 66 411	2	2	9271552	267	98 82 882	10	1
9265665	773	92 66 412	2	2	9271648	134	90 72 922	5	1
9265783	145	98 88 308	1	1	9271648	136	90 77 452	5	1
9265783	170	92 71 653	1	2	9271653	139	92 71 648	92	1
9265783	171	92 71 657	2	5	9271657	135	90 72 922	98	1
9265783	192	98 89 161	1	1	9271657	136	90 77 452	98	1
9266087	78	92 67 554	20	1	9271663	139	92 71 648	11	1
9266088	78	92 67 554	21	1	9271664	139	92 71 648	12	1
9266089	78	92 67 554	999	1	9271740	145	98 88 308	12	1
9266089	184	92 74 199	99	1	9272221	168	90 79 811	2	1
9266089	198	90 77 032	99	1	9272511	192	98 89 161	23	1
9266231	72	92 67 037	98	1	9272900	638	10 11 763 3	15	1
9266231	144	98 88 041	97	1	9273158	681	10 12 086 9	3	2
9266232	74	92 75 505	98	1	9273161	578	10 12 503 7	15	2
9266232	143	98 88 041	95	1	9273161	681	10 12 086 9	2	4
9266233	72	92 67 037	12	1	9273491	134	90 72 922	13	1
9266234	72	92 67 037	11	1	9273491	136	90 77 452	13	1
9266235	72	92 67 037	10	1	9273849	635	10 11 865 5	9	1
9266411	538	10 03 864 3	1	1	9274199	144	98 88 041	98	1
9266412	539	10 03 864 4	1	1	9274279	234	98 80 601	1	9
9266471	129	90 80 211	1	1	9275004	145	98 88 308	20	2
9266567	190	98 88 119	2	1	9275004	192	98 89 161	20	2

Item	Page	Assembly	Pos.	Quantity	Item	Page	Assembly	Pos.	Quantity
9275161	578	10 12 503 7	10	2	9352130	468	10 47 616 7	10	1
9275309	145	98 88 308	11	1	9354303	557	10 35 876 6	5	1
9275309	192	98 89 161	11	1	9354303	561	10 49 863 6	5	1
9275428	185	92 75 443	76	1	9354942	55	95 66 869	1	1
9275429	185	92 75 443	72	1	9358137	552	10 08 428 5	180	1
9275443	134	90 72 922	85	1	9358887	89	10 07 444 8	24	6
9275505	237	98 84 008	1	1	9361947	205	10 35 873 9	71	1
9275766	683	10 12 087 1	2	2	9363937	356	10 35 875 1	35	2
9276174	197	10 12 504 2	10	1	9368905	352	10 05 312 9	29	3
9276996	621	90 78 554	15	1	9370414	400	93 70 592	1	1
9277007	64	94 43 970	26	1	9370592	395	10 35 874 4	10	1
9277034	624	10 12 720 8	37	1	9374747	771	10 35 873 1	80	2
9277636	134	90 72 922	10	1	9375036	700	10 35 872 5	13	1
9277636	136	90 77 452	10	1	9375104	241	10 35 877 2	21	1
9278153	68	90 72 024	500	1	9375105	241	10 35 877 2	22	1
9278153	69	90 72 026	500	1	9375106	241	10 35 877 2	23	1
9278153	80	92 78 174	500	1	9375107	241	10 35 877 2	24	1
9278153	88	92 78 179	500	1	9375164	394	10 35 874 4	2	1
9278153	135	90 72 922	500	1	9375276	241	10 35 877 2	30	1
9278153	137	90 77 452	500	1	9375349	700	10 35 872 5	12	1
9278153	197	10 12 504 2	500	1	9375560	771	10 35 873 1	140	2
9278174	68	90 72 024	5	1	9376779	103	10 05 300 8	4	2
9278179	68	90 72 024	98	1	9376780	103	10 05 300 8	3	2
9278186	69	90 72 026	11	1	9378603	702	10 35 872 5	51	1
9278187	82	90 77 481	10	1	9379235	60	10 07 498 7	2	2
9278188	81	90 77 412	11	1	9384072	243	10 07 675 6	40	1
9278189	80	92 78 174	12	1	9384072	550	10 49 815 2	32	1
9278190	80	92 78 174	13	1	9384967	205	10 35 873 9	72	1
9278553	80	92 78 174	19	2	9385073	358	10 35 875 1	66	1
9278623	143	98 88 041	90	1	9385073	362	10 35 875 4	15	8
9278653	80	92 78 174	18	2	9385073	369	10 82 438 0	15	5
9278805	192	98 89 161	12	1	9385349	110	10 49 845 5	27	3
9279359	605	10 12 002 3	5	1	9386212	335	10 38 698 2	31	1
9279374	73	92 68 751	17	1	9386212	338	10 49 804 4	31	1
9279374	84	98 88 124	17	1	9388597	112	10 36 623 6	20	1
9279374	141	98 86 679	17	1	9388848	291	10 82 277 5	41	1
9279374	173	98 89 282	17	1	9392646	291	10 82 277 5	15	1
9279836	134	90 72 922	12	2	9392650	270	10 05 311 8	60	1
9279836	136	90 77 452	12	2	9392651	277	10 05 798 3	20	1
9281614	761	95 88 147	985	1	9392835	559	10 35 876 6	50	1
932180401	67	94 43 970	901	1	9392835	563	10 49 863 6	50	1
932180501	67	94 43 970	960	1	9392953	771	10 35 873 1	56	2
9325867	106	10 39 589 3	2	2	9394442	308	10 05 798 5	35	1
932719401	221	90 01 781 7	5	1	9397081	41	10 35 874 0	35	2
932719601	221	90 01 781 7	13	1	9399179	340	10 05 314 4	4	1
932720701	222	90 01 781 7	55	1	9399179	341	10 82 438 9	4	1
9327516	55	95 66 869	3	4	9399606	560	10 35 876 6	97	1
932856101	222	90 01 781 7	61	2	9399606	564	10 49 863 6	97	1
933330801	221	90 01 781 7	35	1	9399607	560	10 35 876 6	98	1
933332901	221	90 01 781 7	37	4	9399607	564	10 49 863 6	98	1
933333001	223	93 33 329 01	1	1	9399608	560	10 35 876 6	99	1
933333101	221	90 01 781 7	40	1	9399608	564	10 49 863 6	99	1
933604101	221	90 01 781 7	10	1	94020202	706	10 06 477 4	2	1
933605101	221	90 01 781 7	20	1	94020204	755	94 02 020 2	10	1
933605201	222	90 01 781 7	60	1	94020365	755	94 02 020 2	8	1
933605301	222	90 01 781 7	70	1	94020571	755	94 02 020 2	960	1
933605401	224	93 36 053 01	1	1	9402376	558	10 35 876 6	21	4
934174716	396	10 35 874 4	37	2	9402376	562	10 49 863 6	21	4
9350400	557	10 35 876 6	9	2	9402377	558	10 35 876 6	23	2
9350400	561	10 49 863 6	9	2	9402377	562	10 49 863 6	23	2

Item	Page	Assembly	Pos.	Quantity	Item	Page	Assembly	Pos.	Quantity
9408711	484	70 28 778	290	1	9566869	91	10 35 874 2	5	1
9429965	396	10 35 874 4	30	2	9566869	93	10 49 853 2	5	1
9429965	701	10 35 872 5	38	4	9569943	345	10 05 312 6	5	1
9441377	222	90 01 781 7	62	7	9570013	345	10 05 312 6	6	1
9441377	226	96 85 802 01	37	7	9573442	193	10 49 867 7	9	1
9441436	224	93 36 053 01	5	1	9573442	195	10 49 873 2	9	1
9441557	222	90 01 781 7	46	1	9573442	206	10 35 873 9	92	1
9442198	221	90 01 781 7	36	1	9573442	215	10 49 800 0	50	2
9442231	64	94 43 970	2	32	9573442	360	10 35 875 4	5	1
9442284	66	94 43 970	56	1	9573442	367	10 82 438 0	5	1
9442287	66	94 43 970	60	1	9573442	541	10 35 875 6	23	1
9442350	128	90 80 120	85	1	9577407	395	10 35 874 4	18	1
9442359	225	94 42 350	1	1	9577441	362	10 35 875 4	16	2
9442439	64	94 43 970	5	1	9577441	369	10 82 438 0	16	2
9442507	222	90 01 781 7	63	6	9577845	715	10 35 872 1	180	1
9442507	226	96 85 802 01	36	6	9581113	559	10 35 876 6	52	1
9443033	64	94 43 970	36	1	9581113	563	10 49 863 6	52	1
9443229	224	93 36 053 01	10	1	9586492	43	10 35 874 0	57	16
9443344	64	94 43 970	38	1	9586492	750	10 49 827 4	9	2
9443970	60	10 07 498 7	5	2	9586495	241	10 35 877 2	11	60
9444408	64	94 43 970	16	1	9588147	755	94 02 020 2	12	1
9444412	64	94 43 970	1	1	9588148	761	95 88 147	1	1
9444413	64	94 43 970	10	1	9589092	756	95 93 590	1	2
9444414	64	94 43 970	17	5	9589256	756	95 93 590	12	1
9444415	75	94 44 414	1	1	9589257	762	95 89 256	1	1
9444416	64	94 43 970	20	1	9591327	107	10 35 875 9	20	1
9444417	64	94 43 970	25	1	9593590	713	10 07 162 8	2	1
9444418	64	94 43 970	27	3	9593854	756	95 93 590	8	1
9444419	76	94 44 418	1	1	9593856	756	95 93 590	10	1
9444422	64	94 43 970	30	1	9599236	791	10 09 294 8	50	1
9444429	66	94 43 970	50	1	9600769	762	95 89 256	985	1
9444452	64	94 43 970	35	1	9602353	549	10 35 876 5	6	4
9444453	64	94 43 970	37	3	9613451	766	96 13 452	1	1
9444454	77	94 44 453	1	1	9613452	755	94 02 020 2	28	1
9444455	65	94 43 970	40	1	9613452	757	99 06 383	28	2
9444456	65	94 43 970	45	1	9613452	758	99 06 576	28	2
9444457	66	94 43 970	80	1	9613673	560	10 35 876 6	71	1
9444467	66	94 43 970	65	1	9613673	564	10 49 863 6	71	1
9476811	344	10 35 875 5	31	1	9619934	558	10 35 876 6	22	2
9476811	351	10 05 312 9	8	1	9619934	562	10 49 863 6	22	2
9480295	308	10 05 798 5	50	1	9620078	764	96 31 985	1	1
9480295	772	92 66 411	6	1	9631985	755	94 02 020 2	13	1
9480295	773	92 66 412	6	1	9631986	764	96 31 985	999	1
9480332	417	10 05 303 6	127	2	9681272	335	10 38 698 2	30	1
9480332	432	10 49 857 1	127	2	9681272	338	10 49 804 4	30	1
9480525	269	10 05 311 8	43	2	9683738	800	10 49 815 4	4	1
9483466	347	10 05 312 6	37	2	968461801	219	10 05 302 4	12	1
9485739	54	10 49 867 0	2	1	9684904	60	10 07 498 7	20	2
9490631	54	10 49 867 0	1	1	968580201	222	90 01 781 7	960	1
9490985	419	10 05 303 6	190	1	9686594	414	10 05 303 6	50	1
9490985	434	10 49 857 1	190	1	9686594	416	10 05 303 6	102	2
9490985	782	10 35 806 3	35	2	9686594	429	10 49 857 1	50	1
9491026	706	10 06 477 4	18	1	9686594	431	10 49 857 1	102	2
9492506	347	10 05 312 6	36	4	9687016	92	10 35 874 2	9700	1
9494115	704	10 35 872 5	113	1	9688482	105	10 05 797 8	7	1
9496454	418	10 05 303 6	158	1	968868001	219	10 05 302 4	10	1
9496454	433	10 49 857 1	158	1	9688995	802	10 05 539 2	30	1
9561312	105	10 05 797 8	21	4	9689583	292	10 82 277 5	98	1
9563951	241	10 35 877 2	16	60	9690616	292	10 82 277 5	80	1
9566165	384	10 35 874 5	71	2	9691297	451	10 05 546 4	33	1

Item	Page	Assembly	Pos.	Quantity	Item	Page	Assembly	Pos.	Quantity
9693923	41	10 35 874 0	40	6	9873999	503	10 09 499 2	36	1
9697208	465	10 35 876 0	73	1	9874049	705	10 35 872 5	128	2
9697208	466	10 49 857 4	73	1	9874356	559	10 35 876 6	51	1
9697359	271	10 05 311 8	85	1	9874356	563	10 49 863 6	51	1
9699421	418	10 05 303 6	145	1	9874651	504	10 09 499 2	40	1
9699421	433	10 49 857 1	145	1	9874961	283	98 74 988	3	1
9699421	493	10 35 876 4	50	2	9874988	277	10 05 798 3	33	1
970643101	221	90 01 781 7	1	1	9879063	268	10 05 302 5	30	1
970643201	221	90 01 781 7	25	1	9879754	268	10 05 302 5	5	1
9751573	786	10 35 806 5	41	2	9880132	80	92 78 174	30	2
9752281	119	10 35 879 9	8	1	9880236	80	92 78 174	16	1
9757423	89	10 07 444 8	22	4	9880521	231	92 71 427	79	1
9757779	269	10 05 311 8	35	1	9880601	231	92 71 427	77	1
9758230	292	10 82 277 5	101	1	9880604	83	98 88 123	77	1
975827701	527	10 35 876 3	95	1	9880604	142	98 86 680	77	1
975827701	534	10 49 837 7	95	1	9880604	143	98 88 041	77	1
975857701	494	10 35 875 7	21	1	9880604	172	98 88 321	1	1
9758750	747	10 36 839 8	21	1	9880619	231	92 71 427	78	1
975881501	277	10 05 798 3	30	1	9881230	181	90 78 788	18	1
9767890	383	10 35 874 5	50	4	9881231	181	90 78 788	19	1
9767890	546	10 35 868 3	50	3	9881232	181	90 78 788	20	1
9768247	291	10 82 277 5	38	1	9881233	181	90 78 788	21	1
9768248	291	10 82 277 5	27	1	9881609	187	98 82 875	8	1
9805113	381	10 35 874 5	5	1	9882204	171	92 71 657	11	1
9805114	381	10 35 874 5	6	1	9882407	70	98 88 126	16	1
9805364	793	10 82 390 4	30	1	9882408	70	98 88 126	20	1
9806352	293	10 82 277 5	143	1	9882563	186	98 80 604	1	9
9808622	205	10 35 873 9	73	1	9882817	78	92 67 554	17	1
9820573	414	10 05 303 6	43	2	9882875	134	90 72 922	88	1
9820573	416	10 05 303 6	117	2	9882875	136	90 77 452	88	1
9820573	429	10 49 857 1	43	2	9882882	197	10 12 504 2	95	1
9820573	431	10 49 857 1	117	2	9882889	68	90 72 024	10	1
9821638	41	10 35 874 0	45	4	9882892	68	90 72 024	4	1
9827152	755	94 02 020 2	1	2	9883996	143	98 88 041	91	1
982720001	241	10 35 877 2	2	1	9884008	143	98 88 041	92	1
9827870	417	10 05 303 6	132	1	9884135	188	98 84 140	1	1
9827870	432	10 49 857 1	132	1	9884136	188	98 84 140	2	1
9830148	106	10 39 589 3	4	2	9884137	188	98 84 140	3	1
9830148	700	10 35 872 5	9	1	9884138	188	98 84 140	10	1
9830148	715	10 35 872 1	181	2	9884139	188	98 84 140	11	1
9830148	771	10 35 873 1	81	2	9884140	128	90 80 120	80	1
9830148	771	10 35 873 1	141	2	9885618	658	90 79 187	22	1
9836526	422	10 05 303 6	261	1	9885919	231	92 71 427	39	1
9836526	437	10 49 857 1	261	1	9885920	83	98 88 123	39	1
9836528	422	10 05 303 6	253	1	9885920	142	98 86 680	39	1
9836528	437	10 49 857 1	253	1	9885920	172	98 88 321	39	1
9836702	778	99 89 646	7	1	9885932	182	90 79 347	22	2
9836704	777	99 89 645	7	1	9886662	233	98 80 521	1	1
9864694	749	10 39 372 0	23	1	9886675	143	98 88 041	1	1
9866763	105	10 05 797 8	5	1	9886676	143	98 88 041	3	1
9867368	451	10 05 546 4	31	1	9886677	143	98 88 041	10	1
9867368	457	10 05 541 0	38	2	9886678	142	98 86 680	79	1
9867368	802	10 05 539 2	29	2	9886678	143	98 88 041	79	1
9869072	414	10 05 303 6	31	1	9886679	143	98 88 041	93	1
9869072	414	10 05 303 6	44	2	9886680	143	98 88 041	94	1
9869072	416	10 05 303 6	118	2	9886682	227	98 86 678	1	1
9869072	429	10 49 857 1	31	1	9886684	141	98 86 679	10	1
9869072	429	10 49 857 1	44	2	9886688	142	98 86 680	19	1
9869072	431	10 49 857 1	118	2	9888041	220	10 05 311 7	3	1
9872047	700	10 35 872 5	19	2	9888119	83	98 88 123	78	1

Item	Page	Assembly	Pos.	Quantity	Item	Page	Assembly	Pos.	Quantity
9888119	142	98 86 680	78	1	9918226	200	10 35 873 9	23	8
9888119	143	98 88 041	78	1	9918226	201	10 35 873 9	32	2
9888119	172	98 88 321	14	1	9918226	203	10 35 873 9	52	7
9888120	167	90 73 751	1	1	9918226	715	10 35 872 1	183	4
9888120	191	98 88 122	1	1	9918226	795	10 49 815 5	46	4
9888121	84	98 88 124	10	1	9918226	799	10 49 815 3	5	6
9888122	83	98 88 123	79	1	9918228	41	10 35 874 0	12	3
9888123	68	90 72 024	94	1	9918228	42	10 35 874 0	46	16
9888123	70	98 88 126	94	1	9918228	43	10 35 874 0	77	12
9888124	70	98 88 126	95	1	9918228	110	10 49 845 5	15	16
9888126	68	90 72 024	1	1	9918228	114	10 35 873 3	12	5
9888133	182	90 79 347	12	1	9918228	194	10 49 867 7	30	4
9888308	134	90 72 922	3	1	9918228	196	10 49 873 2	30	4
9888314	173	98 89 282	10	1	9918228	331	98 79 063	11	4
9888315	182	90 79 347	10	1	9918228	416	10 05 303 6	82	2
9888321	134	90 72 922	94	1	9918228	420	10 05 303 6	204	3
9888321	136	90 77 452	94	1	9918228	431	10 49 857 1	82	2
9888536	182	90 79 347	11	1	9918228	435	10 49 857 1	204	3
9888546	191	98 88 122	2	1	9918228	729	10 49 838 7	19	12
9888546	227	98 86 678	2	1	9918228	730	10 49 857 6	19	12
9889003	393	98 89 008	1	1	9918228	780	10 35 813 5	64	8
9889004	266	98 89 003	10	1	9918228	795	10 49 815 5	48	4
9889005	266	98 89 003	11	1	9918229	43	10 35 874 0	64	8
9889008	198	90 77 032	2	1	9918229	100	10 35 875 3	3	5
9889161	136	90 77 452	3	1	9918229	104	10 05 300 8	12	2
9889282	172	98 88 321	10	1	9918229	115	10 35 873 3	26	3
9890958	767	93 99 179	2	1	9918229	120	10 35 879 9	26	2
989165301	277	10 05 798 3	31	1	9918229	386	10 08 795 8	4	3
989185601	526	10 35 876 3	45	1	9918229	437	10 49 857 1	254	1
989185601	533	10 49 837 7	45	1	9918229	547	10 05 453 2	3	3
9892073	549	10 35 876 5	8	2	9918230	41	10 35 874 0	42	24
9893072	278	10 05 798 3	40	1	9918230	43	10 35 874 0	52	64
9898321	205	10 35 873 9	74	1	9918230	60	10 07 498 7	4	48
9898335	205	10 35 873 9	76	2	9918230	60	10 07 498 7	7	48
9903847	780	10 35 813 5	50	1	9918230	756	95 93 590	33	11
9903888	780	10 35 813 5	53	4	9918230	757	99 06 383	33	11
9906383	770	10 35 873 1	2	1	9918230	758	99 06 576	33	11
9906576	770	10 35 873 1	3	1	9918231	755	94 02 020 2	33	9
9907679	763	99 07 680	1	1	9921126	763	99 07 680	985	1
9907680	757	99 06 383	12	1	9926801	755	94 02 020 2	82	1
9907680	758	99 06 576	12	1	9926802	755	94 02 020 2	84	1
9907684	762	95 89 256	990	1	9927352	795	10 49 815 5	10	1
9907684	763	99 07 680	990	1	9927398	701	10 35 872 5	27	2
9907701	762	95 89 256	991	1	9927399	701	10 35 872 5	26	4
9907701	763	99 07 680	991	1	9927518	786	10 35 806 5	38	1
9907784	765	99 07 890	1	1	9928151	711	10 38 862 4	10	1
9907856	756	95 93 590	9	1	9928771	720	10 35 872 0	27	1
9907856	757	99 06 383	9	1	9929365	736	10 05 646 8	3	1
9907856	758	99 06 576	9	1	9935245	700	10 35 872 5	11	1
9907890	756	95 93 590	13	1	9935246	739	99 35 245	5	1
9907890	757	99 06 383	13	1	9935392	701	10 35 872 5	42	2
9907890	758	99 06 576	13	1	9935645	205	10 35 873 9	70	1
9909254	558	10 35 876 6	47	1	9937443	311	10 08 256 0	40	2
9909254	562	10 49 863 6	47	1	9937495	749	10 39 372 0	20	1
9910464	558	10 35 876 6	20	2	9941036	465	10 35 876 0	30	1
9910464	562	10 49 863 6	20	2	9941036	466	10 49 857 4	30	1
9911690	792	95 99 236	922	1	9941040	494	10 35 875 7	30	2
9918225	203	10 35 873 9	57	6	9941043	465	10 35 876 0	40	1
9918226	112	10 36 623 6	4	4	9941043	466	10 49 857 4	40	1
9918226	117	10 35 873 3	54	6	9943041	122	10 35 879 9	70	1

Item	Page	Assembly	Pos.	Quantity	Item	Page	Assembly	Pos.	Quantity
9943105	311	10 08 256 0	31	1					
9943165	311	10 08 256 0	20	2					
9943365	311	10 08 256 0	30	1					
9946134	311	10 08 256 0	10	2					
9949686	292	10 82 277 5	94	1					
9950357	327	10 06 786 9	30	1					
9954432	792	95 99 236	940	1					
9968546	289	99 68 625	70	1					
9968570	304	99 68 611	70	1					
9968578	289	99 68 625	40	1					
9968580	304	99 68 611	40	1					
9968591	289	99 68 625	80	1					
9968591	304	99 68 611	80	1					
9968611	299	10 05 879 4	10	1					
9968625	286	10 05 879 2	10	1					
9988206	414	10 05 303 6	30	1					
9988206	429	10 49 857 1	30	1					
9988683	303	90 16 516	4	1					
9988764	770	10 35 873 1	6	1					
9988842	494	10 35 875 7	20	1					
9989151	749	10 39 372 0	41	1					
9989179	749	10 39 372 0	40	1					
9989180	735	99 89 179	4	1					
9989643	777	99 89 645	6	1					
9989644	778	99 89 646	6	1					
9989645	293	10 82 277 5	141	1					
9989646	293	10 82 277 5	142	1					
9999997	36	10 35 905 6	1000	1					
9999999	145	98 88 308	23	1					
9999999	608	10 12 475 7	9	1					

Description	Item	Pos.	Quantity	Page	Assembly	Description
	10498640	14	1	7	.	
	620321216	17	1	7	.	
4	7009867	10	6	450	10 06 360 5	LID
4	7009867	35	6	457	10 05 541 0	SIDE DOOR FRONT RIGHT
4	7009867	28	6	460	10 06 375 5	BOX CPL
4	7009867	6	6	462	10 06 355 3	LID
4	7009867	25	6	802	10 05 539 2	SIDE DOOR LEFT
2/2 WAY SEAT VALVE	10296042	20	1	751	10 29 135 3	CONTROL MODULE
2/2 WAY VALVE	10409845	4	2	176	10 34 668 4	CONTROL UNIT
ABSORPTION PANEL	10009228	290	1	489	10 48 809 9	INTERNAL LINING
ABSORPTION PANEL	10290261	230	1	488	10 48 809 9	INTERNAL LINING
ACCESS	9821638	45	4	41	10 35 874 0	UNDERCARRIAGE CPL
ACCESSORIES	9066466	100	1	10	90 66 460	LUBRICANTS
ACTUATOR	6204367	5	1	290	10 08 046 6	SWITCH INSTALLATION S42
ACTUATOR	6204367	2	1	300	10 08 576 7	SWITCH INSTALLATION S248
ACTUATOR	6204367	5	1	777	99 89 645	SWITCH INSTALLATION
ACTUATOR	6204367	5	1	778	99 89 646	SWITCH INSTALLATION S84-2
ACTUATOR	6204367	920	1	792	95 99 236	ELECTRIC INSTALLATION
ADAPTOR	10451151	3	5	727	10 49 850 0	SPOON BIT
ADD BOARD	10427532	32	1	277	10 05 798 3	ARM REST LEFT
ADD-ON FLANGE	9273491	13	1	134	90 72 922	HYDRAULIC VARIABLE DISPLA
ADD-ON FLANGE	9273491	13	1	136	90 77 452	HYDRAULIC VARIABLE DISPLA
ADDIT.HEAD LIGHTS F.CAB V	10092946	7	1	7	.	
ADDIT.HEAD LIGHTS F.CAB V	10092948	8	1	7	.	
ADDIT.HEAD LIGHTS ON CAB	10021387	10	1	790	10 09 294 6	ADDIT.HEAD LIGHTS F.CAB V
ADDIT.HEAD LIGHTS ON CAB	10021387	10	1	791	10 09 294 8	ADDIT.HEAD LIGHTS F.CAB V
ADDITIONAL KIT	10358890	140	1	469	70 28 774	GLASS PANES
ADHESIVE FOIL	9016517	152	1	293	10 82 277 5	ARM REST RIGHT
ADHESIVE FOIL	9989151	41	1	749	10 39 372 0	ELECTRICAL SYSTEM
ADHESIVE SIGN	9384072	40	1	243	10 07 675 6	SWING GEAR PINION GREAS
ADHESIVE SIGN	9384072	32	1	550	10 49 815 2	TOOL EQUIPMENT
ADHESIVE TAPE	10009045	820	0.1m	479	10 48 809 7	ELECTRICAL INSTALLATION
ADJUSTING LEVER	9278189	12	1	80	92 78 174	ADJUSTMENT
ADJUSTING PISTON	10333086	1	1	156	10 33 323 8	HYDRAULIC ADJUSTMENT
ADJUSTING PISTON	10409751	1	1	177	10 40 974 7	REGULATION
ADJUSTING PISTON	7622886	1	1	178	10 40 975 1	ADJUSTING PISTON
ADJUSTING PISTON	9278188	11	1	81	90 77 412	REPAIR KIT FMV 165
ADJUSTING SCREW	10220647	2	1	262	10 29 792 9	PRESSURE LIMITING VALVE
ADJUSTING SCREW	7369886	9	1	157	10 33 324 2	SHUTDOWN VALVE
ADJUSTMENT	10007956	5	1	130	10 21 593 5	PUMP
ADJUSTMENT	9271648	5	1	134	90 72 922	HYDRAULIC VARIABLE DISPLA
ADJUSTMENT	9271648	5	1	136	90 77 452	HYDRAULIC VARIABLE DISPLA
ADJUSTMENT	9278174	5	1	68	90 72 024	HYDR.MOTOR VAR.FMV 165
AERATION FILTER	10222393	4	1	98	10 36 190 8	SERVICE KIT ALLE 2000H
AERATION FILTER	10222393	30	1	382	10 35 874 5	HYDRAULIC TANK INSTALLAT
AGITATOR PADDLE	10016658	39	1	250	10 34 071 7	LUBRICATION PUMP
AIR AND EXHAUST INSTALLAT	10358733	530	1	108	10 35 873 5	MOTOR INSTALLATION
AIR CIRCULATION CASE	10022117	2	1	318	10 81 666 6	EVAPORATOR
AIR CIRCULATION CASE	10022787	1	1	321	10 02 211 7	AIR CIRCULATION CASE
AIR CIRCULATION PART	10005677	1	1	320	10 02 208 3	AIR CONNECTION PART
AIR COND. COMPRESSOR A	10118655	340	1	568	10 12 595 9	DIESEL ENGINE D9508 A7 320k
AIR CONDITION HOSES INSTA	10358756	9200	1	92	10 35 874 2	UPPERCARRIAGE
AIR CONDITIONING COMPRES	10116767	4	1	635	10 11 865 5	AIR COND. COMPRESSOR A
AIR CONDITIONING UNIT	10406898	80	1	271	10 05 311 8	DRIVER STAND BASE SECTIO
AIR CONNECTION PART	10022083	14	1	322	11 00 359 4	HOUSING
AIR CONNECTION PART D=8	11003425	87	1	271	10 05 311 8	DRIVER STAND BASE SECTIO
AIR DEFLECTING SHEET	10369606	310	1	426	10 05 303 6	PANELLING
AIR DEFLECTING SHEET	10369606	310	1	441	10 49 857 1	PANELLING
AIR EJECTION NOZZLE	5611480	99	3	271	10 05 311 8	DRIVER STAND BASE SECTIO
AIR EJECTION NOZZLE	5611480	25	1	291	10 82 277 5	ARM REST RIGHT

Description	Item	Pos.	Quantity	Page	Assembly	Description
AIR FEED-THROUGH	7024446	280	4	488	10 48 809 9	INTERNAL LINING
AIR FEED-THROUGH	7024446	350	4	489	10 48 809 9	INTERNAL LINING
AIR FILTER	7028951	7	1	97	10 36 190 7	SERVICE KIT 1000H
AIR FILTER	7028951	380	1	489	10 48 809 9	INTERNAL LINING
AIR FILTER BOX	10358246	2	1	118	10 35 873 4	AIR FILTER INSTALLATION
AIR FILTER INSTALLATION	10358734	25	1	115	10 35 873 3	AIR AND EXHAUST INSTALLAT
AIR FLAP	10005674	2	1	320	10 02 208 3	AIR CONNECTION PART
AIR FLAP	10005675	7	1	322	11 00 359 4	HOUSING
AIR FLAP	10022778	18	1	321	10 02 211 7	AIR CIRCULATION CASE
AIR FLAP	10022780	15	1	321	10 02 211 7	AIR CIRCULATION CASE
AIR HOSE	10013635	90	1	271	10 05 311 8	DRIVER STAND BASE SECTIO
AIR HOSE	10051671	30	1	116	10 35 873 3	AIR AND EXHAUST INSTALLAT
AIR HOSE	10054419	40	2	202	10 35 873 9	COOLER INSTALLATION
AIR HOSE	10067637	20	1	115	10 35 873 3	AIR AND EXHAUST INSTALLAT
AIR HOSE	10067638	19	1	115	10 35 873 3	AIR AND EXHAUST INSTALLAT
AIR HOSE	10081306	35	1	116	10 35 873 3	AIR AND EXHAUST INSTALLAT
AIR HOSE	10081307	38	1	116	10 35 873 3	AIR AND EXHAUST INSTALLAT
AIR HOSE	10296116	95	2	271	10 05 311 8	DRIVER STAND BASE SECTIO
AIR HOSE	10326460	22	0.26m	115	10 35 873 3	AIR AND EXHAUST INSTALLAT
AIR INTAKE ASSEMBLY	9079074	220	1	568	10 12 595 9	DIESEL ENGINE D9508 A7 320k
AIR INTAKE RIGHT	9079075	1	1	626	90 79 074	AIR INTAKE ASSEMBLY
AIR NOZZLE	10016540	5	2	308	10 05 798 5	FOOT BOARD INSTALLATION
AIR NOZZLE	7028950	370	2	489	10 48 809 9	INTERNAL LINING
AIR PIPE	10060949	40	1	116	10 35 873 3	AIR AND EXHAUST INSTALLAT
AIR SUCTION	9079076	2	1	626	90 79 074	AIR INTAKE ASSEMBLY
AIR SUCTION PIPE	9079036	1	1	627	90 79 075	AIR INTAKE RIGHT
AIR SUCTION PIPE	9079037	1	1	628	90 79 076	AIR SUCTION
AJDUSTING PLATE	9078622	1	1	665	90 78 467	CONTROL PLATE ASSEMBLY
ALTERNATOR ASSY. 28V 10-1	10116026	440	1	569	10 12 595 9	DIESEL ENGINE D9508 A7 320k
ANGLE	10358447	80	3	205	10 35 873 9	COOLER INSTALLATION
ANGLE	9376779	4	2	103	10 05 300 8	PUMPS BOX PARTS
ANGLE	9573442	9	1	193	10 49 867 7	FAN INSTALLATION
ANGLE	9573442	9	1	195	10 49 873 2	FAN INSTALLATION
ANGLE	9573442	92	1	206	10 35 873 9	COOLER INSTALLATION
ANGLE	9573442	50	2	215	10 49 800 0	MOTOR-ELEKTRIK
ANGLE	9573442	5	1	360	10 35 875 4	HYDR.INSTAL.CONTROL TUBE
ANGLE	9573442	5	1	367	10 82 438 0	HYDR.INSTAL.CONTROL TUBE
ANGLE	9573442	23	1	541	10 35 875 6	AIR CONDITION HOSES INSTA
ANGLE BULKHEAD NECK	7368115	18	1	719	10 35 872 0	CENTRAL LUBRICATING SYS
ANGLE SCREW DRIVER 10	10451532	92	1	552	10 08 428 5	TOOL EQUIPMENT
ANGLE SCREW DRIVER 12x45/	8000993	94	1	552	10 08 428 5	TOOL EQUIPMENT
ANGLE SCREW DRIVER 14	10451534	96	1	552	10 08 428 5	TOOL EQUIPMENT
ANGLE SCREW DRIVER 17	10451535	98	1	552	10 08 428 5	TOOL EQUIPMENT
ANGLE SCREW DRIVER 3	10451512	80	1	552	10 08 428 5	TOOL EQUIPMENT
ANGLE SCREW DRIVER 4	10451513	82	1	552	10 08 428 5	TOOL EQUIPMENT
ANGLE SCREW DRIVER 6	10451519	86	1	552	10 08 428 5	TOOL EQUIPMENT
ANGLE SCREW DRIVER 8	10451531	90	1	552	10 08 428 5	TOOL EQUIPMENT
ANNULAR PISTON	9441436	5	1	224	93 36 053 01	BRAKE
ANTENNA	6001556	180	1	477	10 48 809 7	ELECTRICAL INSTALLATION
ANTENNA CABLE	10488090	182	1	477	10 48 809 7	ELECTRICAL INSTALLATION
ANTI-KINK DEVICE SPIRAL	10011996	66	1m	255	90 64 786	CONNECTING ELEMENT
ANTI-KINK DEVICE SPIRAL	10011996	166	1m	256	90 64 786	CONNECTING ELEMENT
ANTICORROSION ANTIFREEZE	10301213	20	1	36	10 35 905 6	ANTICORROSION ANTIFREEZE
ANTICORROSION ANTIFREEZE	10301215	5	1	30	10 35 683 2	ANTICORROSION ANTIFREEZE
ANTICORROSION ANTIFREEZE	10356832	10	1l	11	90 66 465	COOLANT
ANTICORROSION ANTIFREEZE	10356833	1000	1	30	10 35 683 2	ANTICORROSION ANTIFREEZE
ANTICORROSION ANTIFREEZE	10359056	20	1l	11	90 66 465	COOLANT
ANTICORROSION ANTIFREEZE	10428410	20	1	30	10 35 683 2	ANTICORROSION ANTIFREEZE
ANTICORROSION ANTIFREEZE	10428411	210	1	30	10 35 683 2	ANTICORROSION ANTIFREEZE
ARM REST LEFT	10057983	20	1	269	10 05 311 8	DRIVER STAND BASE SECTIO

Description	Item	Pos.	Quantity	Page	Assembly	Description
ARM REST LEFT	7024982	90	1	273	10 04 363 1	DRIVERS SEAT
ARM REST LEFT	7024982	90	1	274	10 04 363 2	DRIVERS SEAT
ARM REST RIGHT	10822775	30	1	269	10 05 311 8	DRIVER STAND BASE SECTIO
ARM REST RIGHT	7024983	91	1	273	10 04 363 1	DRIVERS SEAT
ARM REST RIGHT	7024983	91	1	274	10 04 363 2	DRIVERS SEAT
ASH TRAY	7366731	75	1	278	10 05 798 3	ARM REST LEFT
ASSEMBLY BRACKET	10022078	6	1	322	11 00 359 4	HOUSING
ASSY. PARTS	7028778	70	1	468	10 47 616 7	CAB
AT-WATER PUMP WITH FAST	9079863	370	1	568	10 12 595 9	DIESEL ENGINE D9508 A7 320k
ATL ATTACHMENT	10132739	431	1	569	10 12 595 9	DIESEL ENGINE D9508 A7 320k
ATL ATTACHMENT	10132740	430	1	569	10 12 595 9	DIESEL ENGINE D9508 A7 320k
ATTACHMENT PLATE	10082605	15	2	733	10 35 873 7	PISTON ROD COVER BUCKET
ATTACHMENTS MOUNTING PA	10395893	170	1	91	10 35 874 2	UPPERCARRIAGE
ATTACHMENTS MOUNTING PA	10395893	170	1	93	10 49 853 2	UPPERCARRIAGE
ATTACHMENTS MOUNTING PA	10498274	10	1	748	10 49 827 1	STICK CYLINDER CONTROL S
AUXILIARY BOX	10014611	999	1	244	10 29 301 9	DISTRIBUTION BLOCK MX-F 3/
AUXILIARY BOX	10014611	999	1	248	10 29 301 6	DISTRIBUTION BLOCK MX-F 4/
AUXILIARY BOX	10014611	999	1	251	10 48 927 6	DISTRIBUTION BLOCK SXE-2
AUXILIARY BOX	10014611	999	1	707	10 30 331 7	DISTRIBUTION BLOCK MX-F 4/
AUXILIARY BOX	10014611	999	1	721	10 30 336 8	DISTRIBUTION BLOCK MX-F 5/
AXIAL FACE SEAL	10030866	5	2	45	10 22 121 2	TRACK ROLLER
AXIAL FACE SEAL	10099878	5	4	49	10 47 076 9	GUIDE WHEEL D8K
AXIAL FACE SEAL	7610244	58	1	66	94 43 970	TRAVEL DRIVE FAT 500P005
AXLE	10099876	2	1	49	10 47 076 9	GUIDE WHEEL D8K
AXLE	10301922	4	1	45	10 22 121 2	TRACK ROLLER
AXLE	10302998	4	1	46	10 29 067 4	CARRYING ROLLER D8K
AXLE AND GEAR-OIL	9070364	40	1	10	90 66 460	LUBRICANTS
AXLE AND GEAR-OIL LIEBHE	10356829	10	1l	15	90 70 364	AXLE AND GEAR-OIL
AXLE AND GEAR-OIL LIEBHE	10286280	1000	1	28	10 35 682 9	AXLE AND GEAR-OIL LIEBHE
AXLE AND GEAR-OIL LIEBHE	10330296	20	1	28	10 35 682 9	AXLE AND GEAR-OIL LIEBHE
AXLE AND GEAR-OIL LIEBHER	10285702	210	1	28	10 35 682 9	AXLE AND GEAR-OIL LIEBHE
AXLE AND GEAR-OIL LIEBHER	10330295	5	1	28	10 35 682 9	AXLE AND GEAR-OIL LIEBHE
AXLE-OIL LIEBHERR/20W-40	10356831	20	1l	15	90 70 364	AXLE AND GEAR-OIL
AXLE-OIL LIEBHERR/20W-40/20	10330294	20	1	29	10 35 683 1	AXLE-OIL LIEBHERR/20W-40
AXLE-OIL LIEBHERR/20W-40/5	10285640	5	1	29	10 35 683 1	AXLE-OIL LIEBHERR/20W-40
BACK FLOW HOSE HYDR.OIL	9570013	6	1	345	10 05 312 6	HYDR.SUCT.+RETURN OIL HO
BACK PART	10289988	2	1	273	10 04 363 1	DRIVERS SEAT
BACK PART	10289988	2	1	274	10 04 363 2	DRIVERS SEAT
BACK UP ALARM	10288438	20	1	747	10 36 839 8	TRAVEL ALARM
BACK-UP RING CUT 13,5/18X1,	7381949	27	1	80	92 78 174	ADJUSTMENT
BACK-UP RING CUT 13,5/18X1,	7381949	30	1	88	92 78 179	SEAL KIT
BACKHOE BUCKET HD 1950	10498497	16	1	7	.	
BACKHOE BUCKET HD 1950	10498498	10	1	724	10 49 849 7	BACKHOE BUCKET HD 1950
BACKHOE BUCKET HD 1950	10498499	10	1	725	10 49 849 8	BACKHOE BUCKET HD 1950
BALL REPAIR SET	9880619	78	1	231	92 71 427	REPAIR KIT DRIVING MECHAN
BALL SLEWING RING 1910X150	982720001	2	1	241	10 35 877 2	SLEWING RING INSTALLATIO
BANJO COUPLING WSV 8LL	10009054	21	1	254	10 29 301 8	DISTRIBUTION BLOCK MX-F 4/
BASE PLATE	10389374	8	2	105	10 05 797 8	LOOCK BRACKET
BASIC BODY	10005863	1	1	280	10 16 576 6	CONTROL CONSOLE LEFT
BASIC BODY	5618922	1	1	295	56 18 923	CONTROL CONSOLE RIGHT
BASIC MACHINE R964C HD LI	10358741	1	1	7	.	
BATTERY CONNECTION CABL	10066267	43	1	508	10 35 875 8	BATTERY INSTALLATION
BATTERY DRY CHARGED	6205121	20	2	506	10 35 875 8	BATTERY INSTALLATION
BATTERY INSTALLATION	10358758	50	1	494	10 35 875 7	ELECTR.SYST.UPPERCARRI
BATTERY MAIN SWITCH	10012119	10	1	506	10 35 875 8	BATTERY INSTALLATION
BEAM	10059473	3	3	799	10 49 815 3	CATWALK LEFT REAR
BEARING	10030591	12	1	221	90 01 781 7	SLEWING DRIVE SAT 375/253
BEARING	7025009	59	1	275	10 28 999 3	VIBRATING SYSTEM
BEARING	7610091	2	1	77	94 44 453	PLANET WHEEL M=3,75 Z=34
BEARING BOXES-PAIR	10037583	26	1	149	10 33 307 0	DRIVING GEAR

Description	Item	Pos.	Quantity	Page	Assembly	Description
BEARING BOXES-PAIR	10040134	26	1	133	10 44 145 6	DRIVING GEAR
BEARING BUSH	7381855	15	4	188	98 84 140	COOLING CIRCUIT PUMP
BEARING BUSH	7623777	44	1	153	10 33 322 6	CONNECTING PLATE
BEARING BUSH	7623779	6	1	153	10 33 322 6	CONNECTING PLATE
BEARING BUSH	7623779	3	1	158	10 33 325 9	GEAR PUMP
BEARING BUSH 60X65X17,5	9078584	1	1	634	10 11 822 3	INTERMEDIATE GEAR ASSEM
BEARING CAP BOLT NACH DI	9077199	1	2	592	10 11 687 6	MAIN ROD
BEARING COVER	9078145	5	1	126	90 80 120	PUMP DISTRIBUTION GEAR
BEARING FLANGE	9078058	7	1	601	10 11 802 2	CAMSHAFT CPL.
BEARING FLANGE	9080197	6	1	126	90 80 120	PUMP DISTRIBUTION GEAR
BEARING FLANGE	9882408	20	1	70	98 88 126	DRIVING GEAR
BEARING HEAD	9620078	1	1	764	96 31 985	PISTON ROD BEARING 150/22
BEARING HEAD	9907784	1	1	765	99 07 890	PISTON ROD BEARING 125/19
BEARING PILLOW BLOCK	10498387	10	1	726	10 49 849 9	BACKHOE BUCKET HD 1950
BEARING PILLOW BLOCK	10498576	10	1	726	10 49 849 9	BACKHOE BUCKET HD 1950
BEARING RING	9442439	5	1	64	94 43 970	TRAVEL DRIVE FAT 500P005
BEDPLATE	10129074	2	1	573	10 12 907 2	CRANKCASE PRE-ASS.
BELT PULLEY DA=186.8	9077281	1	1	588	90 77 286	DRIVING PARTS
BELT PULLEY DA=51.7 DW=54.	9080391	2	1	653	10 11 602 6	ALTERNATOR ASSY. 28V 10-1
BIO-OIL-ANALYSIS SET	510363416	20	1	7	.	
BIO-OIL-ANALYSIS SET	7026088	22	1	38	90 66 466	ACCESSORIES
BIO-OIL-ANALYSIS SET	7026817	20	1	38	90 66 466	ACCESSORIES
BIODEGRADABLE HYDRAULIC-	9070363	30	1	10	90 66 460	LUBRICANTS
BIT-PASTE LIEBHERR	10358992	50	1kg	17	90 70 366	GREASES
BIT-PASTE LIEBHERR/0,5kg	8610230	1	1	35	10 35 899 2	BIT-PASTE LIEBHERR
BIT-PASTE LIEBHERR/20X0,5k	10330306	2	1	35	10 35 899 2	BIT-PASTE LIEBHERR
BLADE-TYPE ELECT. FUSE S	6000783	10	2	503	10 09 499 2	ELECTRIC MATERIAL LIST
BLANK LID	7370890	5	3	295	56 18 923	CONTROL CONSOLE RIGHT
BLANK LID	7370899	6	1	280	10 16 576 6	CONTROL CONSOLE LEFT
BLANK LID	7618883	120	1	488	10 48 809 9	INTERNAL LINING
BLANK LID	7618883	287	1	488	10 48 809 9	INTERNAL LINING
BLANKING END	4900641	28	20	41	10 35 874 0	UNDERCARRIAGE CPL
BLANKING END	7366804	36	1	269	10 05 311 8	DRIVER STAND BASE SECTIO
BLANKING END M16X25 DAC	10010205	61	30	465	10 35 876 0	LOWER COVERING
BLANKING END M16X25 DAC	10010205	61	30	466	10 49 857 4	LOWER COVERING
BLANKING PLUG	10022774	3	1	319	10 02 206 9	EVAPORATOR HOUSING
BLANKING PLUG	10120094	33	1	608	10 12 475 7	OIL MODULE RIGHT
BLANKING PLUG	10409754	15	20	179	10 40 975 2	VALVE HOUSING
BLANKING PLUG	7002773	70	5	465	10 35 876 0	LOWER COVERING
BLANKING PLUG	7002773	70	5	466	10 49 857 4	LOWER COVERING
BLIND RIVET	10022656	10	4	322	11 00 359 4	HOUSING
BLIND RIVET	10044330	310	6	472	10 04 678 8	DRIVER'S CAB DOOR
BLIND RIVET	4900053	3	4	557	10 35 876 6	SIGNS
BLIND RIVET	4900053	3	4	561	10 49 863 6	SIGNS
BLOCK	10066383	15	1	706	10 06 477 4	HYDR.CYLINDER W/ADDITION.
BLOCK	10073622	20	1	355	10 35 875 1	HYDR.INSTALLATION FAN DR
BLOCK	10092096	5	2	343	10 35 875 5	HYDR.ROTARY CONNEC.+SWI
BLOCK	9370414	1	1	400	93 70 592	NON-RETURN VALVE
BLOCK PART	10451188	43	5	725	10 49 849 8	BACKHOE BUCKET HD 1950
BOARD	10389225	30	2	105	10 05 797 8	LOOCK BRACKET
BODY	10075352	3	1	47	10 07 535 3	GREASE TENSIONER
BODY-BOUND RIVET	7024438	220	2	472	10 04 678 8	DRIVER'S CAB DOOR
BODY-BOUND RIVET	7024438	200	12	488	10 48 809 9	INTERNAL LINING
BONNET LEFT	10055464	20	1	413	10 05 303 6	PANELLING
BONNET LEFT	10055464	20	1	428	10 49 857 1	PANELLING
BONNET LEFT	10055465	10	1	451	10 05 546 4	BONNET LEFT
BOTTLE HOLDER	10291090	2140	1	490	10 29 113 8	PANELLING
BOTTOM PLATE MOUNTING	9879063	30	1	268	10 05 302 5	DRIVER STAND
BOW-TYPE CLAMP	7369271	6	1	114	10 35 873 3	AIR AND EXHAUST INSTALLAT
BOW-TYPE CLAMP 105 S235JR	10100620	55	5	117	10 35 873 3	AIR AND EXHAUST INSTALLAT

Description	Item	Pos.	Quantity	Page	Assembly	Description
BOWL	10331395	14	1	619	10 30 300 7	FUEL PREFILTER
BOWLEN SEALING	10294170	9	1	619	10 30 300 7	FUEL PREFILTER
BOX CPL	10063755	200	1	420	10 05 303 6	PANELLING
BOX CPL	10063755	200	1	435	10 49 857 1	PANELLING
BOX NUT M24X1.5	9078326	2	1	616	90 78 324	PRESSURE ADAPTER ASS.
BRACKET	10037722	5	12	711	10 38 862 4	CENTRAL LUBRICATING SYS
BRACKET	10037722	17	4	711	10 38 862 4	CENTRAL LUBRICATING SYS
BRACKET	10037722	10	14	719	10 35 872 0	CENTRAL LUBRICATING SYS
BRACKET	10037722	25	4	720	10 35 872 0	CENTRAL LUBRICATING SYS
BRACKET	10037723	57	3	247	10 07 675 7	CENTRALIZED LUBRICATION
BRACKET	10037723	8	19	711	10 38 862 4	CENTRAL LUBRICATING SYS
BRACKET	10037723	26	2	711	10 38 862 4	CENTRAL LUBRICATING SYS
BRACKET	10037723	13	5	719	10 35 872 0	CENTRAL LUBRICATING SYS
BRACKET	10037723	16	2	719	10 35 872 0	CENTRAL LUBRICATING SYS
BRACKET	10289976	72	1	273	10 04 363 1	DRIVERS SEAT
BRACKET	10289976	72	1	274	10 04 363 2	DRIVERS SEAT
BRACKET	7028838	160	1	472	10 04 678 8	DRIVER'S CAB DOOR
BRACKET	7028872	450	1	478	10 48 809 7	ELECTRICAL INSTALLATION
BRACKET	7415239	47	1	414	10 05 303 6	PANELLING
BRACKET	7415239	47	1	429	10 49 857 1	PANELLING
BRACKET	9012477	30	1	461	10 06 375 5	BOX CPL
BRACKET	9201724	165	1	418	10 05 303 6	PANELLING
BRACKET	9201724	165	1	433	10 49 857 1	PANELLING
BRACKET	9230122	20	1	447	10 05 535 4	COOLER COWL
BRACKET	9408711	290	1	484	70 28 778	ASSY. PARTS
BRACKET	9943105	31	1	311	10 08 256 0	PROXIMITY SWITCH INSTALL
BRACKET	9943365	30	1	311	10 08 256 0	PROXIMITY SWITCH INSTALL
BRACKET ADD-ON	10118999	414	1	569	10 12 595 9	DIESEL ENGINE D9508 A7 320k
BRACKET FRONT LEFT	10054797	2	1	110	10 49 845 5	MOTOR SUPPORT
BRACKET FRONT RIGHT	10054800	3	1	110	10 49 845 5	MOTOR SUPPORT
BRACKET REAR LEFT	10498454	4	1	110	10 49 845 5	MOTOR SUPPORT
BRACKET REAR RIGHT	10054811	5	1	110	10 49 845 5	MOTOR SUPPORT
BRAKE	933605301	70	1	222	90 01 781 7	SLEWING DRIVE SAT 375/253
BRAKE HOUSING	933605401	1	1	224	93 36 053 01	BRAKE
BRAKE MULTI-DISC SET	932180501	960	1	67	94 43 970	TRAVEL DRIVE FAT 500P005
BRAKE MULTI-DISC SET	968580201	960	1	222	90 01 781 7	SLEWING DRIVE SAT 375/253
BRAKE PACKING SET	932180401	901	1	67	94 43 970	TRAVEL DRIVE FAT 500P005
BREECH PLATE	7371025	8	1	372	10 00 909 0	OIL PILOT VALVE
BRICK	9820573	43	2	414	10 05 303 6	PANELLING
BRICK	9820573	117	2	416	10 05 303 6	PANELLING
BRICK	9820573	43	2	429	10 49 857 1	PANELLING
BRICK	9820573	117	2	431	10 49 857 1	PANELLING
BRICK	9988206	30	1	414	10 05 303 6	PANELLING
BRICK	9988206	30	1	429	10 49 857 1	PANELLING
BUFFER	5004748	33	2	102	10 35 875 3	RADIATOR BOX INSTALLATIO
BUFFER	5004748	37	2	414	10 05 303 6	PANELLING
BUFFER	5004748	97	2	416	10 05 303 6	PANELLING
BUFFER	5004748	138	2	417	10 05 303 6	PANELLING
BUFFER	5004748	170	2	418	10 05 303 6	PANELLING
BUFFER	5004748	37	2	429	10 49 857 1	PANELLING
BUFFER	5004748	97	2	431	10 49 857 1	PANELLING
BUFFER	5004748	138	2	432	10 49 857 1	PANELLING
BUFFER	5004748	170	2	433	10 49 857 1	PANELLING
BUFFER	5004748	11	2	450	10 06 360 5	LID
BUFFER	5004748	50	2	457	10 05 541 0	SIDE DOOR FRONT RIGHT
BUFFER	5004748	40	2	802	10 05 539 2	SIDE DOOR LEFT
BULKHEAD STUD	4901131	62	1	350	10 05 312 6	HYDR.SUCT.+RETURN OIL HO
BULKHEAD STUD	4901131	97	1	703	10 35 872 5	GOOSENECK BOOM 7,00M
BULKHEAD STUD	7368105	36	1	720	10 35 872 0	CENTRAL LUBRICATING SYS
BULKHEAD STUD	7368106	14	5	711	10 38 862 4	CENTRAL LUBRICATING SYS

Description	Item	Pos.	Quantity	Page	Assembly	Description
BULKHEAD STUD	7368106	23	2	720	10 35 872 0	CENTRAL LUBRICATING SYS
BULKHEAD STUD SV 12S	4901150	56	1	702	10 35 872 5	GOOSENECK BOOM 7,00M
BURR FASTENING TAPE	10022776	20	1	321	10 02 211 7	AIR CIRCULATION CASE
BUSH	10008118	5	1	156	10 33 323 8	HYDRAULIC ADJUSTMENT
BUSH	10022782	12	2	321	10 02 211 7	AIR CIRCULATION CASE
BUSH	10302997	2	2	46	10 29 067 4	CARRYING ROLLER D8K
BUSH	10399731	17	2	717	10 35 840 0	STICK 2,60M
BUSH	10399731	3	2	731	10 49 825 2	CONNECTING LINK
BUSH	10399732	15	2	717	10 35 840 0	STICK 2,60M
BUSH	10408514	4	2	731	10 49 825 2	CONNECTING LINK
BUSH	10409084	18	2	717	10 35 840 0	STICK 2,60M
BUSH	7019122	350	2	484	70 28 778	ASSY. PARTS
BUSH	7362583	7	2	772	92 66 411	OPERATING EQUIPMENT (LE
BUSH	7362583	7	2	773	92 66 412	OPERATING EQUIPMENT (RIG
BUSH	7367729	4	1	400	93 70 592	NON-RETURN VALVE
BUSH	7369135	46	1	407	10 11 355 7	CONTROL BLOCK
BUSH	7623776	43	1	153	10 33 322 6	CONNECTING PLATE
BUSH	9265394	2	1	313	92 65 665	RK PILOT DEVICE
BUSH	9266235	10	1	72	92 67 037	PRESSURE LIMITING VALVE
BUSH	9273849	9	1	635	10 11 865 5	AIR COND. COMPRESSOR A
BUSH	9827152	1	2	755	94 02 020 2	HYDRAULIC CYLINDER
BUSH 100mm	10099877	3	2	49	10 47 076 9	GUIDE WHEEL D8K
BUSH HOUSING	6203136	310	1	285	10 06 804 1	MANIPULATOR LEFT CPL CAN
BUSH HOUSING	6203136	310	1	298	10 06 804 5	MANIPULATOR RIGHT CPL CA
BUSH HOUSING	6203136	310	1	315	10 07 707 2	ELECTRIC BOX CPL. U101/R96
BUSH RAUTE 120/150X105	9589092	1	2	756	95 93 590	HYDRAULIC CYLINDER
BUSH SPIRAL 120/150X105	9233882	1	2	757	99 06 383	HYDRAULIC CYLINDER
BUSH SPIRAL 120/150X105	9233882	1	2	758	99 06 576	HYDRAULIC CYLINDER
BUTTON	10289975	43	4	273	10 04 363 1	DRIVERS SEAT
BUTTON	10289975	43	4	274	10 04 363 2	DRIVERS SEAT
BUTTON 1	10040322	25	2	287	10 46 991 7	PUSH-BUTTON COVER LEFT
BUTTON 1	10040322	25	2	301	10 46 991 8	PUSH-BUTTON COVER RIGHT
BUTTON 2	10040324	30	1	287	10 46 991 7	PUSH-BUTTON COVER LEFT
BUTTON 2	10040324	30	1	301	10 46 991 8	PUSH-BUTTON COVER RIGHT
BUZZER	6000578	37	1	269	10 05 311 8	DRIVER STAND BASE SECTIO
CAB	10358768	8700	1	92	10 35 874 2	UPPERCARRIAGE
CAB	10476167	20	1	467	10 35 876 8	CAB
CAB BOTTOM PLATE	10067754	10	1	269	10 05 311 8	DRIVER STAND BASE SECTIO
CAB ELEVATION 1200MM	10498155	10	1	794	10 49 815 6	CAB ELEVATION 1200MM
CAB ELEVATION 1200MM	10498156	10	1	7	.	
CAB ELEVATION 1200MM	10498156	3	1	493	10 35 876 4	GANGWAY
CAB ELEVATION 1200MM	10498156	4	1	493	10 35 876 4	GANGWAY
CAB ELEVATION 1200MM	10498156	20	1	493	10 35 876 4	GANGWAY
CAB ELEVATION 1200MM	10498156	23	1	493	10 35 876 4	GANGWAY
CAB ELEVATION 1200MM	10498156	50	1	493	10 35 876 4	GANGWAY
CAB ELEVATION 1200MM	10498156	22	1	494	10 35 875 7	ELECTR.SYST.UPPERCARRI
CAB ELEVATION 1200MM	10498156	23	1	494	10 35 875 7	ELECTR.SYST.UPPERCARRI
CABLE ANTENNA EXTENSION	6204404	135	1	272	10 05 311 8	DRIVER STAND BASE SECTIO
CABLE BOOM MOUNTING	10119487	580	1	570	10 12 595 9	DIESEL ENGINE D9508 A7 320k
CABLE CHANNEL	9392650	60	1	270	10 05 311 8	DRIVER STAND BASE SECTIO
CABLE CLAMP	10023106	11	2	321	10 02 211 7	AIR CIRCULATION CASE
CABLE CLAMP	10083506	6	1	193	10 49 867 7	FAN INSTALLATION
CABLE CLAMP	10083506	6	1	195	10 49 873 2	FAN INSTALLATION
CABLE CLIP	7362507	97	4	292	10 82 277 5	ARM REST RIGHT
CABLE CLIP D 16	10044344	792	1	478	10 48 809 7	ELECTRICAL INSTALLATION
CABLE LOOM	10006617	80	1	316	10 40 689 8	AIR CONDITIONING UNIT
CABLE LOOM	10346187	2	1	671	10 11 948 7	CABLE BOOM MOUNTING
CABLE LOOM	6204634	44	1	278	10 05 798 3	ARM REST LEFT
CABLE LOOM A1010-A1001	10822179	91	1	292	10 82 277 5	ARM REST RIGHT
CABLE LOOM A1010-A1011	9893072	40	1	278	10 05 798 3	ARM REST LEFT

Description	Item	Pos.	Quantity	Page	Assembly	Description
CABLE LOOM A1010-U16	9949686	94	1	292	10 82 277 5	ARM REST RIGHT
CABLE LOOM CAN U47	10364457	73	1	271	10 05 311 8	DRIVER STAND BASE SECTIO
CABLE LOOM CAN U47	10401821	73	1	271	10 05 311 8	DRIVER STAND BASE SECTIO
CABLE LOOM E4 - H9	10066099	41	1	525	10 35 876 3	ELECTR.SYSTEM FUEL TANK
CABLE LOOM E4 - H9	10066099	41	1	532	10 49 837 7	ELECTR.SYSTEM FUEL TANK
CABLE LOOM E4 - H9	10066099	60	1	546	10 35 868 3	FUEL SYSTEM
CABLE LOOM ESP01-BBT	9768247	38	1	291	10 82 277 5	ARM REST RIGHT
CABLE LOOM F112 - E50	10066008	50	1	504	10 09 499 2	ELECTRIC MATERIAL LIST
CABLE LOOM MP1-MP61-1	10077900	43	1	278	10 05 798 3	ARM REST LEFT
CABLE LOOM MP65 - MP61/1	10066076	41	1	278	10 05 798 3	ARM REST LEFT
CABLE LOOM MP66 - MP61/2	10066011	42	1	278	10 05 798 3	ARM REST LEFT
CABLE LOOM S218-K34-X348	9016551	95	1	292	10 82 277 5	ARM REST RIGHT
CABLE LOOM S42	10079008	92	1	278	10 05 798 3	ARM REST LEFT
CABLE LOOM S84-1/2	9806352	143	1	293	10 82 277 5	ARM REST RIGHT
CABLE LOOM U32-E50	10063957	12	1	212	10 49 800 0	MOTOR-ELEKTRIK
CABLE LOOM X1/U16-X1/A100	10079010	93	1	292	10 82 277 5	ARM REST RIGHT
CABLE LOOM X148-B55	9864694	23	1	749	10 39 372 0	ELECTRICAL SYSTEM
CABLE PROTECTION SWITCH	6202944	31	2	503	10 09 499 2	ELECTRIC MATERIAL LIST
CABLE PROTECTION SWITCH	6202945	32	1	503	10 09 499 2	ELECTRIC MATERIAL LIST
CABLE PROTECTION SWITCH	6203687	30	2	503	10 09 499 2	ELECTRIC MATERIAL LIST
CABLE SHEATHING	5608314	159	2	418	10 05 303 6	PANELLING
CABLE SHEATHING	5608314	159	2	433	10 49 857 1	PANELLING
CABLE SLEEVE 14,0/15,7/19	6202703	23	2	277	10 05 798 3	ARM REST LEFT
CABLE SLEEVE 8,5/14/20	7362986	24	6	277	10 05 798 3	ARM REST LEFT
CABLE TIE	11002474	35	8	323	11 00 359 4	HOUSING
CABLE TIE	7002480	25	4	89	10 07 444 8	HYDR.INSTALLATION UNDER
CABLE TIE	7002480	20	1	286	10 05 879 2	MANIPULATOR LEFT
CABLE TIE	7002480	20	1	299	10 05 879 4	MANIPULATOR RIGHT
CABLE TIE	7005587	66	8	204	10 35 873 9	COOLER INSTALLATION
CABLE TIE	7005587	35	3	242	10 07 604 7	CENTRALIZED LUBRICATION
CABLE TIE	7005587	40	2	247	10 07 675 7	CENTRALIZED LUBRICATION
CABLE TIE	7005587	65	6	247	10 07 675 7	CENTRALIZED LUBRICATION
CABLE TIE	7005587	31	2	346	10 05 312 6	HYDR.SUCT.+RETURN OIL HO
CABLE TIE	7009088	31	1	286	10 05 879 2	MANIPULATOR LEFT
CABLE TIE	7009088	31	1	299	10 05 879 4	MANIPULATOR RIGHT
CAGE PAIR	10007990	32	1	149	10 33 307 0	DRIVING GEAR
CAGE PAIR	7623835	32	1	133	10 44 145 6	DRIVING GEAR
CAM	9566869	5	1	91	10 35 874 2	UPPERCARRIAGE
CAM	9566869	5	1	93	10 49 853 2	UPPERCARRIAGE
CAMS SHAFT	10117032	1	1	601	10 11 802 2	CAMSHAFT CPL.
CAMS SHAFT BEARING	9078390	6	5	573	10 12 907 2	CRANKCASE PRE-ASS.
CAMSHAFT CPL.	10118022	100	1	566	10 12 595 9	DIESEL ENGINE D9508 A7 320k
CAP	10040326	20	1	301	10 46 991 8	PUSH-BUTTON COVER RIGHT
CAP	10040327	20	1	287	10 46 991 7	PUSH-BUTTON COVER LEFT
CAP	10046783	2010	2	474	10 04 678 9	DOOR FRAME
CAP NUT	10278642	135	1	752	10 34 080 6	PIPE FRACTION SAFETY VALV
CAP NUT	10278642	135	1	753	10 34 081 2	PIPE FRACTION SAFETY VALV
CAPACITOR	10005670	9	1	208	10 42 538 5	COMBINED OIL COOLER
CARRIER RAIL	9874961	3	1	283	98 74 988	PLATINES INSTALLATION A101
CARRYING ROLLER D8K	10290674	55	4	43	10 35 874 0	UNDERCARRIAGE CPL
CASE	10022119	20	1	316	10 40 689 8	AIR CONDITIONING UNIT
CASE	10022119	3	1	318	10 81 666 6	EVAPORATOR
CASE	10063756	10	1	460	10 06 375 5	BOX CPL
CASING, CPL	10470128	250	1	488	10 48 809 9	INTERNAL LINING
CATWALK LEFT IN FRONT	10094083	2	1	800	10 49 815 4	CATWALK LEFT IN FRONT
CATWALK LEFT IN FRONT	10498154	50	1	795	10 49 815 5	CAB ELEVATION 1200MM
CATWALK LEFT REAR	10498153	60	1	795	10 49 815 5	CAB ELEVATION 1200MM
CATWALK RIGHT	10058895	2	1	493	10 35 876 4	GANGWAY
CENTERING PIN	10358171	4	2	549	10 35 876 5	COUNTERWEIGHT INSTALLAT
CENTRAL ELEMENT MX-F 105	7027941	2	1	245	10 29 302 0	DISTRIBUTION BLOCK MX-F 3/

Description	Item	Pos.	Quantity	Page	Assembly	Description
CENTRAL ELEMENT MX-F 105	7027941	3	1	245	10 29 302 0	DISTRIBUTION BLOCK MX-F 3/
CENTRAL ELEMENT MX-F 105	7027941	2	1	708	10 00 878 9	DISTRIBUTION BLOCK MX-F 3/
CENTRAL ELEMENT MX-F 105	7027941	3	1	708	10 00 878 9	DISTRIBUTION BLOCK MX-F 3/
CENTRAL ELEMENT MX-F 105	7027941	2	1	722	10 30 336 9	DISTRIBUTION BLOCK MX-F 5/
CENTRAL ELEMENT MX-F 25	7027938	2	1	254	10 29 301 8	DISTRIBUTION BLOCK MX-F 4/
CENTRAL ELEMENT MX-F 25	7027938	3	1	254	10 29 301 8	DISTRIBUTION BLOCK MX-F 4/
CENTRAL ELEMENT MX-F 25	7027938	4	1	254	10 29 301 8	DISTRIBUTION BLOCK MX-F 4/
CENTRAL ELEMENT MX-F 25	7027938	4	1	708	10 00 878 9	DISTRIBUTION BLOCK MX-F 3/
CENTRAL ELEMENT MX-F 45	7027939	3	1	722	10 30 336 9	DISTRIBUTION BLOCK MX-F 5/
CENTRAL ELEMENT MX-F 75	7027940	4	1	722	10 30 336 9	DISTRIBUTION BLOCK MX-F 5/
CENTRAL ELEMENT MX-F 75	7027940	5	1	722	10 30 336 9	DISTRIBUTION BLOCK MX-F 5/
CENTRAL ELEMENT SXE-2	10013837	2	3	252	10 48 927 7	DISTRIBUTION BLOCK SXE-2
CENTRAL LUBRICATING SYS	10358720	15	1	714	10 35 872 1	STICK 2,60M
CENTRAL LUBRICATING SYS	10388393	100	1	712	10 38 862 4	CENTRAL LUBRICATING SYS
CENTRAL LUBRICATING SYS	10388624	10	1	700	10 35 872 5	GOOSENECK BOOM 7,00M
CENTRALIZED LUBRICATION	10076047	1400	1	91	10 35 874 2	UPPERCARRIAGE
CENTRALIZED LUBRICATION	10076047	1400	1	93	10 49 853 2	UPPERCARRIAGE
CENTRALIZED LUBRICATION	10076757	20	1	242	10 07 604 7	CENTRALIZED LUBRICATION
CHAIN	7024630	26	1	376	10 28 046 1	CONTROL SOLENOID VALVE
CHAIN END LINK	5618003	10	1	50	10 30 012 7	CRAWLER CHAIN
CHAIN GUIDE	9693923	40	6	41	10 35 874 0	UNDERCARRIAGE CPL
CHANNEL	10009183	300	1	489	10 48 809 9	INTERNAL LINING
CHANNEL	10009229	310	1	489	10 48 809 9	INTERNAL LINING
CHANNEL	10024192	500	1	489	10 48 809 9	INTERNAL LINING
CHARGE AIR ELBOW LEFT	10115702	3	1	631	10 11 570 0	CONNECTING LINE ADD-ON
CHARGE AIR ELBOW RIGHT	10115701	4	1	631	10 11 570 0	CONNECTING LINE ADD-ON
CHARGE AIR LINE	10053109	555	1	108	10 35 873 5	MOTOR INSTALLATION
CHARGE AIR PIPE ASSEMBLY	9078417	232	1	568	10 12 595 9	DIESEL ENGINE D9508 A7 320k
CHARGE AIR PIPE PRE-ASS.	9077697	1	1	630	90 78 417	CHARGE AIR PIPE ASSEMBLY
CHECK SCREW	10278641	132	1	752	10 34 080 6	PIPE FRACTION SAFETY VALV
CHECK SCREW	10278641	132	1	753	10 34 081 2	PIPE FRACTION SAFETY VALV
CIGAR LIGHTER	7369377	70	1	278	10 05 798 3	ARM REST LEFT
CIRCULATING AIR GRID	10022771	1	1	326	10 02 277 7	CIRCULATING AIR GRID
CIRCULATING AIR GRID	10022777	19	1	321	10 02 211 7	AIR CIRCULATION CASE
CLAMP	10037724	4	12	711	10 38 862 4	CENTRAL LUBRICATING SYS
CLAMP	10037724	24	4	720	10 35 872 0	CENTRAL LUBRICATING SYS
CLAMP	10037726	16	4	711	10 38 862 4	CENTRAL LUBRICATING SYS
CLAMP	10037726	9	14	719	10 35 872 0	CENTRAL LUBRICATING SYS
CLAMP	10037727	25	2	711	10 38 862 4	CENTRAL LUBRICATING SYS
CLAMP	10037727	12	5	719	10 35 872 0	CENTRAL LUBRICATING SYS
CLAMP	10037728	58	3	247	10 07 675 7	CENTRALIZED LUBRICATION
CLAMP	10037728	7	19	711	10 38 862 4	CENTRAL LUBRICATING SYS
CLAMP	10037728	15	2	719	10 35 872 0	CENTRAL LUBRICATING SYS
CLAMP	10070615	60	2	771	10 35 873 1	HOIST CYLINDERS DIA.190
CLAMP	7373592	1	4	491	10 47 012 8	CASING, CPL
CLAMP - ADD-ON UNIT	10129490	1	1	673	10 11 935 3	CONSOLE
CLAMP - ADD-ON UNIT	10129494	1	1	674	10 11 935 6	CONSOLE
CLAMP-HALF AEHNL.DIN 3015	7367233	65	4	702	10 35 872 5	GOOSENECK BOOM 7,00M
CLAMP-HALF AEHNL.DIN 3015	7367214	1	2	741	93 63 937	PIPE CLAMP
CLAMP-HALF AEHNL.DIN 3015	7367236	34	4	344	10 35 875 5	HYDR.ROTARY CONNEC.+SWI
CLAMP-HALF AEHNL.DIN 3015	7365069	40	2	241	10 35 877 2	SLEWING RING INSTALLATIO
CLAMPING BRACKET	9388848	41	1	291	10 82 277 5	ARM REST RIGHT
CLAMPING PROFILE	7014524	50	4	210	10 06 461 3	COOLER SEALING
CLAMPING PROFILE	7014524	313	2	426	10 05 303 6	PANELLING
CLAMPING PROFILE	7014524	313	2	441	10 49 857 1	PANELLING
CLAMPING PROFILE	7014524	40	2	448	10 05 535 4	COOLER COWL
CLAMPING PROFILE	9591327	20	1	107	10 35 875 9	HEATING HOSES INSTALLATIO
CLAMPING RING	9278553	19	2	80	92 78 174	ADJUSTMENT
CLAMPING SLEEVE	10099881	9	2	49	10 47 076 9	GUIDE WHEEL D8K
CLIP	10412536	25	56	443	10 05 530 3	ENGINE BONNET

Description	Item	Pos.	Quantity	Page	Assembly	Description
CLIP	10412536	39	137	444	10 05 530 3	ENGINE BONNET
CLIP	10412536	54	5	445	10 05 530 3	ENGINE BONNET
CLIP	10412536	35	114	448	10 05 535 4	COOLER COWL
CLIP	10412536	15	28	450	10 06 360 5	LID
CLIP	10412536	21	20	451	10 05 546 4	BONNET LEFT
CLIP	10412536	12	6	452	10 05 538 1	DOOR AIR FILTER LEFT
CLIP	10412536	25	24	453	10 05 543 3	SIDE DOOR BACK RIGHT
CLIP	10412536	33	18	454	10 05 543 3	SIDE DOOR BACK RIGHT
CLIP	10412536	30	14	455	10 05 545 3	COVER MIDDLE
CLIP	10412536	22	27	456	10 05 541 0	SIDE DOOR FRONT RIGHT
CLIP	10412536	33	20	457	10 05 541 0	SIDE DOOR FRONT RIGHT
CLIP	10412536	23	30	801	10 05 539 2	SIDE DOOR LEFT
CLOSING PIN	7028896	300	1	484	70 28 778	ASSY. PARTS
CLOSING RING	10007876	16	1	149	10 33 307 0	DRIVING GEAR
CLOSING RING	9265049	17	1	229	92 68 011	REPAIR KIT LOCK RING
CLOSING RING	9265049	17	1	267	98 82 882	REPAIR KIT SHAFT
CLOSING RING	9272511	23	1	192	98 89 161	CONNECTING PLATE
CLOSING RING	9279374	17	1	73	92 68 751	REPAIR KIT LOCK RING
CLOSING RING	9279374	17	1	84	98 88 124	REPAIR KIT SHAFT
CLOSING RING	9279374	17	1	141	98 86 679	REPAIR KIT SHAFT
CLOSING RING	9279374	17	1	173	98 89 282	REPAIR KIT SHAFT
CLOSING RING	9443229	10	1	224	93 36 053 01	BRAKE
CLUTCH ASSEMBLY	9080481	2	1	109	10 12 605 7	DRIVE UNIT AG 9508 M 076
CLUTCH RING	9073639	20	1	188	98 84 140	COOLING CIRCUIT PUMP
COAT HOOK	7019131	640	1	486	70 28 778	ASSY. PARTS
CODING PLUG	975857701	21	1	494	10 35 875 7	ELECTR.SYST.UPPERCARRI
CODING PLUG	9988842	20	1	494	10 35 875 7	ELECTR.SYST.UPPERCARRI
CODING PLUG X894	10366248	50	1	749	10 39 372 0	ELECTRICAL SYSTEM
COIL	10011749	30	1	751	10 29 135 3	CONTROL MODULE
COLD STAR VALVE	10333273	2	1	162	10 33 327 1	FILTER HEAD
COLLAR JOINT	7028342	4	1	388	56 17 689	SHUT OFF DEVICE DN 100
COLLAR NUT	7369934	22	2	130	10 21 593 5	PUMP
COLLECTING PIPE	10068187	35	1	403	10 06 771 7	HYDR.TUBES INSTALLATION
COLLECTING PIPE	10068188	36	1	403	10 06 771 7	HYDR.TUBES INSTALLATION
COLLER BUSH	7370556	2	2	45	10 22 121 2	TRACK ROLLER
COMBI PLIERS	10451540	120	1	552	10 08 428 5	TOOL EQUIPMENT
COMBINED OIL COOLER	10425385	2	1	199	10 35 873 9	COOLER INSTALLATION
COMPRESSION PAD	10118226	2	8	634	10 11 822 3	INTERMEDIATE GEAR ASSEM
COMPRESSION RING 10X343/	932856101	61	2	222	90 01 781 7	SLEWING DRIVE SAT 375/253
COMPRESSION WASHER	7373504	5	1	61	50 20 370 01	SPRING LOADED MULTI-DISC
CONNECTING ELEMENT	9064786	998	1	251	10 48 927 6	DISTRIBUTION BLOCK SXE-2
CONNECTING ELEMENT	9064786	998	1	707	10 30 331 7	DISTRIBUTION BLOCK MX-F 4/
CONNECTING ELEMENT	9064786	998	1	721	10 30 336 8	DISTRIBUTION BLOCK MX-F 5/
CONNECTING LINE	9078418	1	1	631	10 11 570 0	CONNECTING LINE ADD-ON
CONNECTING LINE 3X2,5 0,80	10014589	10	1	253	10 00 933 0	PROXIMITY SWITCH
CONNECTING LINE 3X2,5 5m	10013884	10	1	253	10 00 933 0	PROXIMITY SWITCH
CONNECTING LINE ADD-ON	10115700	230	1	568	10 12 595 9	DIESEL ENGINE D9508 A7 320k
CONNECTING LINE ADD-ON	9079077	231	1	568	10 12 595 9	DIESEL ENGINE D9508 A7 320k
CONNECTING LINE K27	9078452	2	1	631	10 11 570 0	CONNECTING LINE ADD-ON
CONNECTING LINK	10498252	5	1	714	10 35 872 1	STICK 2,60M
CONNECTING PIECE	10120090	5	2	688	10 12 093 7	SEAL KIT CONNECTING LINE
CONNECTING PIECE K27	9078422	5	1	631	10 11 570 0	CONNECTING LINE ADD-ON
CONNECTING PIECE PRE-ASS	10118835	582	1	571	10 12 595 9	DIESEL ENGINE D9508 A7 320k
CONNECTING PIPE PRE-ASS.	10120151	1	1	632	90 79 077	CONNECTING LINE ADD-ON
CONNECTING PLATE	10333071	2	1	130	10 21 593 5	PUMP
CONNECTING PLATE	10333083	2	1	150	10 33 307 1	CONNECTING PLATE
CONNECTING PLATE	10333226	3	1	131	10 42 845 9	SWING PUMP
CONNECTING PLATE	7623775	5	1	153	10 33 322 6	CONNECTING PLATE
CONNECTING PLATE	9075124	10	1	145	98 88 308	CONNECTING PLATE
CONNECTING PLATE	9075124	10	1	192	98 89 161	CONNECTING PLATE

Description	Item	Pos.	Quantity	Page	Assembly	Description
CONNECTING PLATE	9077028	10	1	198	90 77 032	CONNECTING PLATE NG 045
CONNECTING PLATE	9278186	11	1	69	90 72 026	CONNECTING PLATE NG 165
CONNECTING PLATE	9888308	3	1	134	90 72 922	HYDRAULIC VARIABLE DISPLA
CONNECTING PLATE	9889161	3	1	136	90 77 452	HYDRAULIC VARIABLE DISPLA
CONNECTING PLATE NG 045	9077032	3	1	197	10 12 504 2	HYDRAULIC INSTALLATION
CONNECTING PLATE NG 165	9072026	3	1	68	90 72 024	HYDR.MOTOR VAR.FMV 165
CONNECTING PLATE NG 165	9886676	3	1	143	98 88 041	HYDR.MOTOR FIX FMF 165
CONNECTING ROD BEARING	10116879	2	1	592	10 11 687 6	MAIN ROD
CONNECTING ROD BEARING	10116880	3	1	592	10 11 687 6	MAIN ROD
CONNECTING SLEEVE 3	10015495	100	1	289	99 68 625	LH-JOYSTICK LEFT
CONNECTING SLEEVE 3	10015495	100	1	304	99 68 611	LH-JOYSTICK RIGHT
CONNECTION CABLE	9768248	27	1	291	10 82 277 5	ARM REST RIGHT
CONNECTION CARRIER	9444412	1	1	64	94 43 970	TRAVEL DRIVE FAT 500P005
CONNECTION F.WATER PIPE	10117633	385	1	569	10 12 595 9	DIESEL ENGINE D9508 A7 320k
CONNECTION HOUSING	9884135	1	1	188	98 84 140	COOLING CIRCUIT PUMP
CONNECTION HOUSING	9884137	3	1	188	98 84 140	COOLING CIRCUIT PUMP
CONNECTION PIECE	10117507	10	1	617	10 12 314 1	FUEL FINE-FILTER ASSEMBLY
CONNECTION PIECE	10117507	1	1	672	10 11 883 5	CONNECTING PIECE PRE-ASS
CONNECTION PIECE	10122637	3	2	598	10 12 264 6	CYLINDER HEAD COVER ASS
CONNECTION PIECE	10122637	3	2	599	10 12 265 9	CYLINDER HEAD COVER ASS
CONNECTION PIECE	7373434	1	1	180	10 44 299 8	SHUTTLE VALVE
CONNECTION PIECE	7373434	1	1	774	10 02 073 5	SHUTTLE VALVE
CONNECTION PIECE	9079113	10	1	623	10 12 720 8	FUEL LINES
CONNECTOR	10301774	2	1	553	10 08 811 2	OIL DRAIN HOSE
CONSOLE	10052716	10	1	104	10 05 300 8	PUMPS BOX PARTS
CONSOLE	10058018	3	1	105	10 05 797 8	LOOCK BRACKET
CONSOLE	10058351	10	4	199	10 35 873 9	COOLER INSTALLATION
CONSOLE	10060891	15	8	199	10 35 873 9	COOLER INSTALLATION
CONSOLE	10062253	212	1	421	10 05 303 6	PANELLING
CONSOLE	10062253	212	1	436	10 49 857 1	PANELLING
CONSOLE	10063991	3	1	713	10 07 162 8	HYDR.CYLINDER W/ADDITION.
CONSOLE	10064480	50	1	203	10 35 873 9	COOLER INSTALLATION
CONSOLE	10064585	55	1	203	10 35 873 9	COOLER INSTALLATION
CONSOLE	10064888	30	1	242	10 07 604 7	CENTRALIZED LUBRICATION
CONSOLE	10065428	4	1	351	10 05 312 9	HYDR.AND GEAR OIL COOLIN
CONSOLE	10065437	30	1	344	10 35 875 5	HYDR.ROTARY CONNEC.+SWI
CONSOLE	10065439	90	1	124	10 35 879 9	PUMPS INSTALLATION
CONSOLE	10065440	32	1	344	10 35 875 5	HYDR.ROTARY CONNEC.+SWI
CONSOLE	10066036	3	1	700	10 35 872 5	GOOSENECK BOOM 7,00M
CONSOLE	10066456	48	1	701	10 35 872 5	GOOSENECK BOOM 7,00M
CONSOLE	10066550	21	1	352	10 05 312 9	HYDR.AND GEAR OIL COOLIN
CONSOLE	10066552	15	1	346	10 05 312 6	HYDR.SUCT.+RETURN OIL HO
CONSOLE	10066863	100	1	217	10 49 800 0	MOTOR-ELEKTRIK
CONSOLE	10066930	34	2	454	10 05 543 3	SIDE DOOR BACK RIGHT
CONSOLE	10067796	70	2	508	10 35 875 8	BATTERY INSTALLATION
CONSOLE	10071836	10	1	354	10 35 875 1	HYDR.INSTALLATION FAN DR
CONSOLE	10072141	6	1	353	10 35 875 1	HYDR.INSTALLATION FAN DR
CONSOLE	10072148	61	1	350	10 05 312 6	HYDR.SUCT.+RETURN OIL HO
CONSOLE	10072688	77	1	247	10 07 675 7	CENTRALIZED LUBRICATION
CONSOLE	10076826	11	1	334	10 38 698 2	HYDR.PUMPS TO SPOOL VALV
CONSOLE	10076826	11	1	337	10 49 804 4	HYDR.PUMPS TO SPOOL VALV
CONSOLE	10077268	12	1	362	10 35 875 4	HYDR.INSTAL.CONTROL TUBE
CONSOLE	10077268	12	1	369	10 82 438 0	HYDR.INSTAL.CONTROL TUBE
CONSOLE	10079148	10	1	314	10 06 648 4	ELECTRIC BOX INSTALLATIO
CONSOLE	10081364	10	1	543	10 05 319 0	DRIER INSTALLATION
CONSOLE	10084451	40	1	793	10 82 390 4	ELECTR.SYSTEM ELEVATION
CONSOLE	10084481	35	2	517	10 06 222 8	ELECTR.SYSTEM CONTROL V
CONSOLE	10085121	30	1	517	10 06 222 8	ELECTR.SYSTEM CONTROL V
CONSOLE	10095388	2	1	113	10 09 538 7	FUEL FILTER INSTALLATION
CONSOLE	10119037	1	1	675	10 11 903 8	CONSOLE

Description	Item	Pos.	Quantity	Page	Assembly	Description
CONSOLE	10119038	5	1	671	10 11 948 7	CABLE BOOM MOUNTING
CONSOLE	10119062	1	1	635	10 11 865 5	AIR COND. COMPRESSOR A
CONSOLE	10119353	3	1	671	10 11 948 7	CABLE BOOM MOUNTING
CONSOLE	10119356	4	1	671	10 11 948 7	CABLE BOOM MOUNTING
CONSOLE	10119595	2	1	646	10 11 899 9	BRACKET ADD-ON
CONSOLE	10119596	1	1	646	10 11 899 9	BRACKET ADD-ON
CONSOLE	10357919	5	1	700	10 35 872 5	GOOSENECK BOOM 7,00M
CONSOLE	10357940	6	1	700	10 35 872 5	GOOSENECK BOOM 7,00M
CONSOLE	10358269	17	1	700	10 35 872 5	GOOSENECK BOOM 7,00M
CONSOLE	10380512	83	1	508	10 35 875 8	BATTERY INSTALLATION
CONSOLE	10385890	10	1	114	10 35 873 3	AIR AND EXHAUST INSTALLAT
CONSOLE	10396657	50	1	526	10 35 876 3	ELECTR.SYSTEM FUEL TANK
CONSOLE	10396657	50	1	533	10 49 837 7	ELECTR.SYSTEM FUEL TANK
CONSOLE	10396658	90	1	527	10 35 876 3	ELECTR.SYSTEM FUEL TANK
CONSOLE	10396658	90	1	534	10 49 837 7	ELECTR.SYSTEM FUEL TANK
CONSOLE	10498678	18	2	700	10 35 872 5	GOOSENECK BOOM 7,00M
CONSOLE	10498769	2	1	750	10 49 827 4	ATTACHMENTS MOUNTING PA
CONSOLE	9013056	43	1	701	10 35 872 5	GOOSENECK BOOM 7,00M
CONSOLE	9080669	2	1	656	90 80 668	PROTECTION PLATE ASSEM
CONSOLE	9080670	3	1	656	90 80 668	PROTECTION PLATE ASSEM
CONSOLE	9690616	80	1	292	10 82 277 5	ARM REST RIGHT
CONSOLE	9758750	21	1	747	10 36 839 8	TRAVEL ALARM
CONSOLE	9928151	10	1	711	10 38 862 4	CENTRAL LUBRICATING SYS
CONSOLE	9928771	27	1	720	10 35 872 0	CENTRAL LUBRICATING SYS
CONTACT LOCK	6905304	12	1	309	10 08 142 4	FOOT PILOT VALVE LEFT
CONTACT LOCK	6905304	12	1	310	10 08 142 6	FOOT PILOT VALVE RIGHT
CONTACT LOCK DT-STECKD	7368241	14	1	309	10 08 142 4	FOOT PILOT VALVE LEFT
CONTACT LOCK DT-STECKD	7368241	14	1	310	10 08 142 6	FOOT PILOT VALVE RIGHT
CONTAINER COVER	10016663	42	1	250	10 34 071 7	LUBRICATION PUMP
CONTAKT MAKER	6001257	930	1	792	95 99 236	ELECTRIC INSTALLATION
CONTROL	10036533	3	1	306	90 13 811	EMERGENCY CONTROL CPL
CONTROL A.RETURN DISTRI	10290156	50	1	702	10 35 872 5	GOOSENECK BOOM 7,00M
CONTROL BLOCK	10113557	20	1	395	10 35 874 4	CONTROL VALVE INSTALLAT
CONTROL BOX ANNEXE	10116718	571	1	570	10 12 595 9	DIESEL ENGINE D9508 A7 320k
CONTROL BRACKET LEFT IN	10057362	10	1	277	10 05 798 3	ARM REST LEFT
CONTROL CONSOLE LEFT	10165766	10	1	279	10 05 736 2	CONTROL BRACKET LEFT IN
CONTROL CONSOLE RIGHT	5618923	10	1	291	10 82 277 5	ARM REST RIGHT
CONTROL ELEMENT	10493089	13	1	322	11 00 359 4	HOUSING
CONTROL HOSE	5609395	3	1	366	10 82 438 0	HYDR.INSTAL.CONTROL TUBE
CONTROL HOSE	6718632	11	2	89	10 07 444 8	HYDR.INSTALLATION UNDER
CONTROL HOSE	7005047	21	2	89	10 07 444 8	HYDR.INSTALLATION UNDER
CONTROL HOSE	7005314	70	1	398	10 35 874 4	CONTROL VALVE INSTALLAT
CONTROL MODULE	10291353	60	1	702	10 35 872 5	GOOSENECK BOOM 7,00M
CONTROL PARTS	10116320	110	8	566	10 12 595 9	DIESEL ENGINE D9508 A7 320k
CONTROL PLATE	10393873	56	1	559	10 35 876 6	SIGNS
CONTROL PLATE	10393873	56	1	563	10 49 863 6	SIGNS
CONTROL PLATE ASSEMBLY	9078467	521	1	570	10 12 595 9	DIESEL ENGINE D9508 A7 320k
CONTROL SOLENOID VALVE	10280461	2	1	372	10 00 909 0	OIL PILOT VALVE
CONTROL UNIT	10346684	5	1	131	10 42 845 9	SWING PUMP
CONTROL VALVE INSTALLAT	10358744	7600	1	91	10 35 874 2	UPPERCARRIAGE
CONTROL VALVE LEFT	10301737	2	1	285	10 06 804 1	MANIPULATOR LEFT CPL CAN
CONTROL VALVES BRACKET	10053143	5	1	394	10 35 874 4	CONTROL VALVE INSTALLAT
COOLANT	9066465	70	1	10	90 66 460	LUBRICANTS
COOLANT PIPE BEND	10117370	1	1	638	10 11 763 3	CONNECTION F.WATER PIPE
COOLANT PIPE BEND	9078875	2	1	642	10 11 978 1	COOLANT PIPE BEND ADD-ON
COOLANT PIPE BEND	9078876	1	1	642	10 11 978 1	COOLANT PIPE BEND ADD-ON
COOLANT PIPE BEND ADD-ON	10119781	382	1	569	10 12 595 9	DIESEL ENGINE D9508 A7 320k
COOLER COWL	10055354	2	1	413	10 05 303 6	PANELLING
COOLER COWL	10055354	2	1	428	10 49 857 1	PANELLING
COOLER COWL	10055355	10	1	447	10 05 535 4	COOLER COWL

Description	Item	Pos.	Quantity	Page	Assembly	Description
COOLER INSTALLATION	10358739	560	1	108	10 35 873 5	MOTOR INSTALLATION
COOLER SEALING	10064613	110	1	207	10 35 873 9	COOLER INSTALLATION
COOLING CIRCUIT PUMP	9884140	80	1	128	90 80 120	PUMP DISTRIBUTION GEAR
COOLING WATER HOSE	10471616	3	1	211	10 21 775 0	EQUALIZING RESERVOIR
CORNER PROTECT.PROFILE	7360171	101	1m	207	10 35 873 9	COOLER INSTALLATION
CORNER PROTECT.PROFILE	7360171	25	1.38m	277	10 05 798 3	ARM REST LEFT
CORNER PROTECT.PROFILE	7360171	303	0.27m	425	10 05 303 6	PANELLING
CORNER PROTECT.PROFILE	7360171	303	0.27m	440	10 49 857 1	PANELLING
CORNER PROTECT.PROFILE	7360171	25	1.5m	460	10 06 375 5	BOX CPL
COUNTERSUNK SCREW M 10	9079596	13	1	635	10 11 865 5	AIR COND. COMPRESSOR A
COUNTERSUNK SCREW M5X2	11067312	2	14	670	10 11 698 9	MOTOR CONTROL DEVICE
COUNTERWEIGHT 11,3T	10450081	2	1	549	10 35 876 5	COUNTERWEIGHT INSTALLAT
COUNTERWEIGHT INSTALLAT	10358765	9500	1	92	10 35 874 2	UPPERCARRIAGE
COUPLING	10115770	4	1	635	10 11 865 5	AIR COND. COMPRESSOR A
COUPLING FERRULE	10117766	24	1	192	98 89 161	CONNECTING PLATE
COUPLING FERRULE	9078269	9	1	611	10 11 802 5	DRIVE FOR HIGH PRESSURE P
COVER	10009596	19	1	252	10 48 927 7	DISTRIBUTION BLOCK SXE-2
COVER	10016665	45	4	250	10 34 071 7	LUBRICATION PUMP
COVER	10022051	16	1	322	11 00 359 4	HOUSING
COVER	10044347	870	1	479	10 48 809 7	ELECTRICAL INSTALLATION
COVER	10084986	34	1	507	10 35 875 8	BATTERY INSTALLATION
COVER	10291066	2130	1	490	10 29 113 8	PANELLING
COVER	604521501	46	15	282	97 58 815 01	E-BOARD
COVER DISC D930	9076986	2	2	636	90 77 708	DEFLECTION PULLEY
COVER FILTER BOX	10062299	15	1	465	10 35 876 0	LOWER COVERING
COVER FILTER BOX	10062299	15	1	466	10 49 857 4	LOWER COVERING
COVER FILTER BOX	10062300	20	1	465	10 35 876 0	LOWER COVERING
COVER FILTER BOX	10062300	20	1	466	10 49 857 4	LOWER COVERING
COVER FUEL TANK	10068038	50	1	465	10 35 876 0	LOWER COVERING
COVER FUEL TANK	10068038	50	1	466	10 49 857 4	LOWER COVERING
COVER FUEL TANK	10077922	55	1	465	10 35 876 0	LOWER COVERING
COVER FUEL TANK	10077922	55	1	466	10 49 857 4	LOWER COVERING
COVER GREASE TENSIONER	9397081	35	2	41	10 35 874 0	UNDERCARRIAGE CPL
COVER HOOD	7370892	4	1	295	56 18 923	CONTROL CONSOLE RIGHT
COVER HYDRAULIC TANK	10062296	10	1	465	10 35 876 0	LOWER COVERING
COVER HYDRAULIC TANK	10062296	10	1	466	10 49 857 4	LOWER COVERING
COVER LEFT	10073303	25	1	41	10 35 874 0	UNDERCARRIAGE CPL
COVER LID	7025005	17	1	276	70 24 996	SEAT FRAME
COVER LID NBR80	968461801	12	1	219	10 05 302 4	SWING GEAR INSTALLATION
COVER MIDDLE	10055453	125	1	417	10 05 303 6	PANELLING
COVER MIDDLE	10055453	125	1	432	10 49 857 1	PANELLING
COVER MIDDLE	10055455	10	1	455	10 05 545 3	COVER MIDDLE
COVER NG 165 165	9881230	18	1	181	90 78 788	REPAIR KIT LR/SD/DA
COVER PLATE	10008444	15	1	316	10 40 689 8	AIR CONDITIONING UNIT
COVER PLATE	10396395	56	1	526	10 35 876 3	ELECTR.SYSTEM FUEL TANK
COVER PLATE	10396395	56	1	533	10 49 837 7	ELECTR.SYSTEM FUEL TANK
COVER PLATE	10396615	80	1	527	10 35 876 3	ELECTR.SYSTEM FUEL TANK
COVER PLATE	10396615	80	1	534	10 49 837 7	ELECTR.SYSTEM FUEL TANK
COVER PLATE	3022159	1	1	656	90 80 668	PROTECTION PLATE ASSEM
COVER PLATE	9697208	73	1	465	10 35 876 0	LOWER COVERING
COVER PLATE	9697208	73	1	466	10 49 857 4	LOWER COVERING
COVER RIGHT	10073300	24	1	41	10 35 874 0	UNDERCARRIAGE CPL
COVER TOOL BOX	10096670	30	1	102	10 35 875 3	RADIATOR BOX INSTALLATIO
COVER WITH ACCESSORIES	10333073	7	1	130	10 21 593 5	PUMP
COVERING	7024985	2	1	273	10 04 363 1	DRIVERS SEAT
COVERING	7024985	2	1	274	10 04 363 2	DRIVERS SEAT
COVERING	7024986	12	1	273	10 04 363 1	DRIVERS SEAT
COVERING	7024986	12	1	274	10 04 363 2	DRIVERS SEAT
CRADLE	10007867	12	1	149	10 33 307 0	DRIVING GEAR
CRADLE	10333246	12	1	133	10 44 145 6	DRIVING GEAR

Description	Item	Pos.	Quantity	Page	Assembly	Description
CRANKCASE	10129073	1	1	573	10 12 907 2	CRANKCASE PRE-ASS.
CRANKCASE CPL.	10129071	10	1	565	10 12 595 9	DIESEL ENGINE D9508 A7 320k
CRANKCASE PRE-ASS.	10129072	1	1	572	10 12 907 1	CRANKCASE CPL.
CRANKSHAFT BEARINGS	10128540	51	1	565	10 12 595 9	DIESEL ENGINE D9508 A7 320k
CRANKSHAFT PRE-ASS.	10128914	1	1	587	10 13 080 8	CRANKSHAFT WITH GEAR
CRANKSHAFT SEALING	9077696	52	1	678	10 12 116 0	SEAL KIT DIESEL ENGINE
CRANKSHAFT WITH GEAR	10130808	50	1	565	10 12 595 9	DIESEL ENGINE D9508 A7 320k
CRAWLER CHAIN	10300127	1	1	48	10 30 012 2	CRAWLER CHAIN 600mm
CRAWLER CHAIN	10300127	1	1	48	10 30 012 2	CRAWLER CHAIN 600mm
CRAWLER CHAIN 600mm	10300122	2	2	7	.	
CRAWLER CHAIN 600mm	10300122	102	2	43	10 35 874 0	UNDERCARRIAGE CPL
CROSS BEAM	10220135	120	1	776	10 02 138 7	ADDIT.HEAD LIGHTS ON CAB
CROWN GEAR	9080734	1	1	667	10 12 007 7	FLYWHEEL ASSEMBLY SAE1
CROWN NUT	9161348	3	1	739	99 35 245	PIN
CUP SPRING PILLAR	10007880	11	1	149	10 33 307 0	DRIVING GEAR
CUP SPRING PILLAR	10410673	11	1	165	10 41 064 0	DRIVING GEAR
CURVED SPRING 43.9/51.5/0.8	10030768	9	2	645	10 11 566 7	EXHAUST PIPE RIGHT
CURVED SPRING 43.9/51.5/0.8	10030768	9	1	648	10 11 566 8	EXHAUST PIPE LEFT
CUTTING RING	10013545	161	1	256	90 64 786	CONNECTING ELEMENT
CUTTING RING	10013545	161	10	258	10 01 461 1	AUXILIARY BOX
CYL.ROL.BEARING	10008109	10	1	150	10 33 307 1	CONNECTING PLATE
CYLINDER	10410654	1	1	165	10 41 064 0	DRIVING GEAR
CYLINDER	9064093	10	1	757	99 06 383	HYDRAULIC CYLINDER
CYLINDER	9064093	10	1	758	99 06 576	HYDRAULIC CYLINDER
CYLINDER	9078049	40	8	565	10 12 595 9	DIESEL ENGINE D9508 A7 320k
CYLINDER	94020204	10	1	755	94 02 020 2	HYDRAULIC CYLINDER
CYLINDER	9593856	10	1	756	95 93 590	HYDRAULIC CYLINDER
CYLINDER BUSH D9500 - D=12	9078050	1	1	577	90 78 049	CYLINDER
CYLINDER COVER	7373503	4	1	61	50 20 370 01	SPRING LOADED MULTI-DISC
CYLINDER HEAD 4 VENTILE	10118053	1	1	600	10 11 805 2	CYLINDER HEAD D9508
CYLINDER HEAD ASSEMBLY	10118050	80	8	566	10 12 595 9	DIESEL ENGINE D9508 A7 320k
CYLINDER HEAD COVER	10122220	1	1	596	10 12 264 0	CYLINDER HEAD COVER ASS
CYLINDER HEAD COVER	10122220	1	2	598	10 12 264 6	CYLINDER HEAD COVER ASS
CYLINDER HEAD COVER	10122220	1	2	599	10 12 265 9	CYLINDER HEAD COVER ASS
CYLINDER HEAD COVER	10122266	1	7	597	10 12 264 5	CYLINDER HEAD COVER ASS
CYLINDER HEAD COVER ASS	10122640	83	1	566	10 12 595 9	DIESEL ENGINE D9508 A7 320k
CYLINDER HEAD COVER ASS	10122645	82	5	566	10 12 595 9	DIESEL ENGINE D9508 A7 320k
CYLINDER HEAD COVER ASS	10122646	84	1	566	10 12 595 9	DIESEL ENGINE D9508 A7 320k
CYLINDER HEAD COVER ASS	10122659	85	1	566	10 12 595 9	DIESEL ENGINE D9508 A7 320k
CYLINDER HEAD D9508	10118052	1	1	594	10 11 805 1	CYLINDER HEAD PRE-ASS. D9
CYLINDER HEAD GASKET	10118055	2	1	593	10 11 805 0	CYLINDER HEAD ASSEMBLY
CYLINDER HEAD GASKET	10118055	1	1	687	10 12 089 6	SEAL KIT ZYLINDER HEAD CPL
CYLINDER HEAD PRE-ASS.	10131939	1	1	593	10 11 805 0	CYLINDER HEAD ASSEMBLY
CYLINDER HEAD PRE-ASS. D9	10118051	1	1	593	10 11 805 0	CYLINDER HEAD ASSEMBLY
CYLINDER SCREW BN 1206 M	10471469	81	2	217	10 49 800 0	MOTOR-ELEKTRIK
CYLINDER SCREW BN 1206 M	10471469	201	6	498	10 35 875 7	ELECTR.SYST.UPPERCARRI
CYLINDER SCREW BN 1206 M	10471469	16	5	513	10 49 837 6	ELECTR.INST.BOOM
CYLINDER SCREW BN 1206 M	10471469	21	15	523	10 35 876 3	ELECTR.SYSTEM FUEL TANK
CYLINDER SCREW BN 1206 M	10471469	21	15	530	10 49 837 7	ELECTR.SYSTEM FUEL TANK
CYLINDER SCREW BN 1206 M	10471469	36	1	749	10 39 372 0	ELECTRICAL SYSTEM
CYLINDER SCREW BN 1206 M	10471469	61	4	793	10 82 390 4	ELECTR.SYSTEM ELEVATION
CYLINDER SCREW M18X2X24	9080476	4	6	593	10 11 805 0	CYLINDER HEAD ASSEMBLY
CYLINDER W.CONTROL PLAT	10333079	1	1	149	10 33 307 0	DRIVING GEAR
CYLINDER WITH BUSH	9886662	1	1	233	98 80 521	RK CYLINDER+CONTROL PLAT
CYLINDER WITH BUSH	9886682	1	1	227	98 86 678	RK CYLINDER+CONTROL PLAT
CYLINDER WITH BUSH	9888120	1	1	167	90 73 751	RK CYLINDER+CONTROL PLAT
CYLINDER WITH BUSH	9888120	1	1	191	98 88 122	RK CYLINDER+CONTROL PLAT
CYLINDRICAL ROLLER BEARIN	570118208	31	1	149	10 33 307 0	DRIVING GEAR
CYLINDRICAL ROLLER BEARIN	7363121	33	1	84	98 88 124	REPAIR KIT SHAFT
CYLINDRICAL ROLLER BEARIN	7363121	33	1	141	98 86 679	REPAIR KIT SHAFT

Description	Item	Pos.	Quantity	Page	Assembly	Description
CYLINDRICAL ROLLER BEARIN	7363121	33	1	173	98 89 282	REPAIR KIT SHAFT
CYLINDRICAL ROLLER BEARIN	7380021	33	1	267	98 82 882	REPAIR KIT SHAFT
CYLINDRICAL ROLLER BEARIN	7380090	32	1	267	98 82 882	REPAIR KIT SHAFT
CYLINDRICAL ROLLER BEARIN	7380326	32	1	84	98 88 124	REPAIR KIT SHAFT
CYLINDRICAL ROLLER BEARIN	7380326	32	1	141	98 86 679	REPAIR KIT SHAFT
CYLINDRICAL ROLLER BEARIN	7380326	32	1	173	98 89 282	REPAIR KIT SHAFT
CYLINDRICAL ROLLER BEARIN	7380977	13	2	182	90 79 347	REPAIR SET SWIVEL YOKE LP
CYLINDRICAL ROLLER BEARIN	7610037	5	1	223	93 33 329 01	PLANET WHEEL M=4 Z=35
CYLINDRICAL ROLLER BEARIN	7610039	5	1	75	94 44 414	PLANET WHEEL M=5 Z=30
CYLINDRICAL ROLLER BEARIN	7618605	31	1	133	10 44 145 6	DRIVING GEAR
DAMPING ELEMENT	10119412	16	1	581	10 12 021 3	POWER UNIT SUPPORT ATT
DAMPING ELEMENT	9078589	3	8	634	10 11 822 3	INTERMEDIATE GEAR ASSEM
DANGER SIGN DANGER SPOT	9910464	20	2	558	10 35 876 6	SIGNS
DANGER SIGN DANGER SPOT	9910464	20	2	562	10 49 863 6	SIGNS
DEFINITED ON FIRST MONTAG	9352130	10	1	468	10 47 616 7	CAB
DEFLECTION PULLEY	7382028	1	1	636	90 77 708	DEFLECTION PULLEY
DEFLECTION PULLEY	9077708	14	1	635	10 11 865 5	AIR COND. COMPRESSOR A
DEFLECTOR	10076829	300	1	425	10 05 303 6	PANELLING
DEFLECTOR	10076829	300	1	440	10 49 857 1	PANELLING
DIAPHRAGM ACCUMULATOR	5617780	3	1	340	10 05 314 4	OIL PILOT VALVE INSTALLATIO
DIAPHRAGM GROMMET 16/22	5607889	38	1	269	10 05 311 8	DRIVER STAND BASE SECTIO
DIESEL ENGINE D9508 A7 320k	10125959	1	1	109	10 12 605 7	DRIVE UNIT AG 9508 M 076
DIRECT-CURRENT MOTOR 24	10014691	6	1	249	10 34 071 7	LUBRICATION PUMP
DIRT SCRAPER	7610551	11	1	224	93 36 053 01	BRAKE
DIRT SCRAPER	7610551	13	1	239	90 00 386 4	SEAL KIT
DIRT SCRAPER 274X285X3,5	7610552	12	1	224	93 36 053 01	BRAKE
DIRT SCRAPER 274X285X3,5	7610552	12	1	239	90 00 386 4	SEAL KIT
DISC INSIDE TOOTHED	9442507	63	6	222	90 01 781 7	SLEWING DRIVE SAT 375/253
DISC INSIDE TOOTHED	9442507	36	6	226	96 85 802 01	BRAKE MULTI-DISC SET
DISC SPRING	4002104	256	3	422	10 05 303 6	PANELLING
DISC SPRING	4002104	256	3	437	10 49 857 1	PANELLING
DISK SEGMENT	9275004	20	2	145	98 88 308	CONNECTING PLATE
DISK SEGMENT	9275004	20	2	192	98 89 161	CONNECTING PLATE
DISPLAY CPL. R5.2/V6.2	10821964	30	1	291	10 82 277 5	ARM REST RIGHT
DISPLAY SUPPORT	7373268	20	1	295	56 18 923	CONTROL CONSOLE RIGHT
DISTANCE RING	10800585	40	2	51	56 18 003	CHAIN END LINK
DISTANCE SLEEVE	10084989	35	4	507	10 35 875 8	BATTERY INSTALLATION
DISTANCE SLEEVE	7372147	11	6	208	10 42 538 5	COMBINED OIL COOLER
DISTANCE SLEEVE	9076985	4	1	636	90 77 708	DEFLECTION PULLEY
DISTANCE SLEEVE 7,0X10,0X2	9078949	8	4	669	10 11 671 8	CONTROL BOX ANNEXE
DISTANCE SLEEVE 9,0X18,0X1	9078947	6	2	630	90 78 417	CHARGE AIR PIPE ASSEMBLY
DISTANCE SLEEVE 9,0X24,0X3	10115863	3	1	617	10 12 314 1	FUEL FINE-FILTER ASSEMBLY
DISTANCE SLEEVE 9.0X15,0X5	9078946	13	1	578	10 12 503 7	PIPELINE INSTALLATION
DISTANCE SLEEVE 9.0X15,0X5	9078946	6	2	604	10 12 476 3	OIL MODULE ASSEMBLY
DISTANCE SLEEVE 9.0X15,0X5	9078946	5	2	630	90 78 417	CHARGE AIR PIPE ASSEMBLY
DISTANCE WASHER	10841516	19	2	196	10 49 873 2	FAN INSTALLATION
DISTRIBUTION BLOCK MX-F 3/	10293019	10	1	243	10 07 675 6	SWING GEAR PINION GREAS
DISTRIBUTION BLOCK MX-F 3/	10293020	1	1	244	10 29 301 9	DISTRIBUTION BLOCK MX-F 3/
DISTRIBUTION BLOCK MX-F 3/	10008789	1	1	707	10 30 331 7	DISTRIBUTION BLOCK MX-F 4/
DISTRIBUTION BLOCK MX-F 4/	10303317	2	1	711	10 38 862 4	CENTRAL LUBRICATING SYS
DISTRIBUTION BLOCK MX-F 4/	10293016	50	1	247	10 07 675 7	CENTRALIZED LUBRICATION
DISTRIBUTION BLOCK MX-F 4/	10293018	1	1	248	10 29 301 6	DISTRIBUTION BLOCK MX-F 4/
DISTRIBUTION BLOCK MX-F 5/	10303368	4	1	719	10 35 872 0	CENTRAL LUBRICATING SYS
DISTRIBUTION BLOCK MX-F 5/	10303369	1	1	721	10 30 336 8	DISTRIBUTION BLOCK MX-F 5/
DISTRIBUTION BLOCK SXE-2	10489276	50	1	710	10 38 839 3	CENTRAL LUBRICATING SYS
DISTRIBUTION BLOCK SXE-2	10489277	1	1	251	10 48 927 6	DISTRIBUTION BLOCK SXE-2
DISTRIBUTOR	10064775	103	1	704	10 35 872 5	GOOSENECK BOOM 7,00M
DISTRIBUTOR	10100944	10	1	346	10 05 312 6	HYDR.SUCT.+RETURN OIL HO
DISTRIBUTOR	10100946	20	1	352	10 05 312 9	HYDR.AND GEAR OIL COOLIN
DISTRIBUTOR 1 1/4"	10384501	104	2	704	10 35 872 5	GOOSENECK BOOM 7,00M

Description	Item	Pos.	Quantity	Page	Assembly	Description
DISTRIBUTOR BLOCK	9386212	31	1	335	10 38 698 2	HYDR.PUMPS TO SPOOL VALV
DISTRIBUTOR BLOCK	9386212	31	1	338	10 49 804 4	HYDR.PUMPS TO SPOOL VALV
DISTRIBUTOR BLOCK	9681272	30	1	335	10 38 698 2	HYDR.PUMPS TO SPOOL VALV
DISTRIBUTOR BLOCK	9681272	30	1	338	10 49 804 4	HYDR.PUMPS TO SPOOL VALV
DOOR	9927518	38	1	786	10 35 806 5	ELEVATION
DOOR AIR FILTER LEFT	10055381	70	1	415	10 05 303 6	PANELLING
DOOR AIR FILTER LEFT	10055381	70	1	430	10 49 857 1	PANELLING
DOOR AIR FILTER LEFT	10055382	10	1	452	10 05 538 1	DOOR AIR FILTER LEFT
DOOR FRAME	10046789	110	1	472	10 04 678 8	DRIVER'S CAB DOOR
DOOR STOPPER	7019164	420	1	484	70 28 778	ASSY. PARTS
DOSING VALVE	10331907	3	1	622	10 11 781 4	HIGH PRESSURE PUMP PRE-A
DOUBLE BANJO BOLT M14X1,	7381797	11	2	621	90 78 554	LEAK OIL LINE ADD-ON
DOUBLE BANJO BOLT M14X1,	7381797	26	1	623	10 12 720 8	FUEL LINES
DOUBLE BANJO BOLT M14X1,	7381797	6	2	641	10 11 930 6	VENT TUBE ASSEMBLY
DOUBLE BLOWER	10022052	26	1	323	11 00 359 4	HOUSING
DOUBLE CHECK VALVE	10472666	100	1	399	10 35 874 4	CONTROL VALVE INSTALLAT
DOUBLE GROUSER PLATE 60	10330318	2	50	48	10 30 012 2	CRAWLER CHAIN 600mm
DOUBLE GROUSER PLATE 60	10330318	2	50	48	10 30 012 2	CRAWLER CHAIN 600mm
DOUBLE PLUG	7012972	12	1	150	10 33 307 1	CONNECTING PLATE
DOUBLE PLUG	7369966	48	1	153	10 33 322 6	CONNECTING PLATE
DOUBLE PLUG	7618568	7	2	162	10 33 327 1	FILTER HEAD
DOUBLE RING SPANNER	10455473	60	1	551	10 08 428 5	TOOL EQUIPMENT
DOUBLE RING SPANNER	10455474	64	1	551	10 08 428 5	TOOL EQUIPMENT
DOUBLE RING SPANNER	10455475	70	1	551	10 08 428 5	TOOL EQUIPMENT
DOUBLE TAPER RING DKR 6	7027946	3	1	255	90 64 786	CONNECTING ELEMENT
DOUBLE-HEADED SPANNER	10451493	22	1	551	10 08 428 5	TOOL EQUIPMENT
DOUBLE-HEADED SPANNER	10451494	24	1	551	10 08 428 5	TOOL EQUIPMENT
DOUBLE-HEADED SPANNER	10451496	26	1	551	10 08 428 5	TOOL EQUIPMENT
DOUBLE-HEADED SPANNER	10451499	34	1	551	10 08 428 5	TOOL EQUIPMENT
DOUBLE-HEADED SPANNER	10451500	38	1	551	10 08 428 5	TOOL EQUIPMENT
DOUBLE-HEADED SPANNER	10455469	28	1	551	10 08 428 5	TOOL EQUIPMENT
DOUBLE-HEADED SPANNER	10455470	30	1	551	10 08 428 5	TOOL EQUIPMENT
DOUBLE-HEADED SPANNER	10455471	32	1	551	10 08 428 5	TOOL EQUIPMENT
DOWEL PIN	10298633	10	1	166	10 44 145 8	SWIVELLING ANGLE SENSOR
DOWEL PIN	10301923	8	2	45	10 22 121 2	TRACK ROLLER
DRAIN TAP	7412936	16	1	619	10 30 300 7	FUEL PREFILTER
DRAIN VALVE	10032906	5	2	575	10 12 016 8	LOCKING PIECES
DRAIN VALVE	10120100	16	1	607	10 12 475 6	OIL MODULE LEFT
DRAIN VALVE	10301776	63	1	383	10 35 874 5	HYDRAULIC TANK INSTALLAT
DRIER INSTALLATION	10053190	2	1	540	10 35 875 6	AIR CONDITION HOSES INSTA
DRIVE FOR HIGH PRESSURE P	10118025	180	1	567	10 12 595 9	DIESEL ENGINE D9508 A7 320k
DRIVE SHAFT	9080600	3	1	611	10 11 802 5	DRIVE FOR HIGH PRESSURE P
DRIVE SHAFT M=3,75 Z=21	9444455	40	1	65	94 43 970	TRAVEL DRIVE FAT 500P005
DRIVE SHAFT Z=12 M=1.75	9884138	10	1	188	98 84 140	COOLING CIRCUIT PUMP
DRIVE SHAFT Z=59 M=3,5	9080121	10	1	169	90 80 196	REPAIR KIT DRIVE SHAFT
DRIVE UNIT AG 9508 M 076	10126057	505	1	108	10 35 873 5	MOTOR INSTALLATION
DRIVE-SCREW M36	9103255	170	1	552	10 08 428 5	TOOL EQUIPMENT
DRIVE-THROUGH SHAFT	10333264	5	1	158	10 33 325 9	GEAR PUMP
DRIVER	10014729	11	1	249	10 34 071 7	LUBRICATION PUMP
DRIVER	9354942	1	1	55	95 66 869	CAM
DRIVER STAND	10053025	6000	1	91	10 35 874 2	UPPERCARRIAGE
DRIVER STAND BASE SECTIO	10053118	20	1	268	10 05 302 5	DRIVER STAND
DRIVER'S CAB DOOR	10046788	50	1	468	10 47 616 7	CAB
DRIVERS SEAT	10043631	51	1	270	10 05 311 8	DRIVER STAND BASE SECTIO
DRIVERS SEAT	10043632	50	1	269	10 05 311 8	DRIVER STAND BASE SECTIO
DRIVING GEAR	10333070	1	1	130	10 21 593 5	PUMP
DRIVING GEAR	10410640	1	1	133	10 44 145 6	DRIVING GEAR
DRIVING GEAR	10441456	1	1	131	10 42 845 9	SWING PUMP
DRIVING GEAR	9886675	1	1	143	98 88 041	HYDR.MOTOR FIX FMF 165
DRIVING GEAR	9888126	1	1	68	90 72 024	HYDR.MOTOR VAR.FMV 165

Description	Item	Pos.	Quantity	Page	Assembly	Description
DRIVING PARTS	9077286	53	1	566	10 12 595 9	DIESEL ENGINE D9508 A7 320k
DRIVING SHAFT	10007874	14	1	149	10 33 307 0	DRIVING GEAR
DRIVING SHAFT	10294787	14	1	133	10 44 145 6	DRIVING GEAR
DRIVING SHAFT	9271552	10	1	267	98 82 882	REPAIR KIT SHAFT
DRIVING SHAFT	9886684	10	1	141	98 86 679	REPAIR KIT SHAFT
DRIVING SHAFT	9888121	10	1	84	98 88 124	REPAIR KIT SHAFT
DRIVING SHAFT	9888314	10	1	173	98 89 282	REPAIR KIT SHAFT
DSF RING	10029880	4	1	643	10 13 154 6	PISTON CPL. d=128
DURLOCK SCREW M16X35 12.	4900850	192	2	419	10 05 303 6	PANELLING
DURLOCK SCREW M16X35 12.	4900850	192	2	434	10 49 857 1	PANELLING
DURLOCK SCREW M16X35 12.	4900850	36	4	782	10 35 806 3	ELEVATION 1200MM
DUST-PROF COVER	10040064	4	1	635	10 11 865 5	AIR COND. COMPRESSOR A
E-BOARD	975827701	95	1	527	10 35 876 3	ELECTR.SYSTEM FUEL TANK
E-BOARD	975827701	95	1	534	10 49 837 7	ELECTR.SYSTEM FUEL TANK
E-BOARD	975881501	30	1	277	10 05 798 3	ARM REST LEFT
E-BOARD	989165301	31	1	277	10 05 798 3	ARM REST LEFT
E-BOARD	989185601	45	1	526	10 35 876 3	ELECTR.SYSTEM FUEL TANK
E-BOARD	989185601	45	1	533	10 49 837 7	ELECTR.SYSTEM FUEL TANK
EARTH CABLE	10009024	770	1	478	10 48 809 7	ELECTRICAL INSTALLATION
EARTH CABLE	10066007	15	1	212	10 49 800 0	MOTOR-ELEKTRIK
EARTH CABLE	10086421	42	1	525	10 35 876 3	ELECTR.SYSTEM FUEL TANK
EARTH CABLE	10086421	42	1	532	10 49 837 7	ELECTR.SYSTEM FUEL TANK
EARTH CABLE	9689583	98	1	292	10 82 277 5	ARM REST RIGHT
EARTH STRAP	6204632	130	1	272	10 05 311 8	DRIVER STAND BASE SECTIO
EARTH STRAP	6204632	40	1	517	10 06 222 8	ELECTR.SYSTEM CONTROL V
ECCENTRIC SCREW	10333239	46	1	131	10 42 845 9	SWING PUMP
EDGE SEALING RING	10303270	17	3	150	10 33 307 1	CONNECTING PLATE
EEC CERTIFICATE	9399606	97	1	560	10 35 876 6	SIGNS
EEC CERTIFICATE	9399606	97	1	564	10 49 863 6	SIGNS
ELASTOMER INSERT S EL 4 3	7363283	33	2	344	10 35 875 5	HYDR.ROTARY CONNEC.+SWI
ELBOW	9078438	6	2	582	10 12 593 7	OIL SUMP WITH FASTENING
ELECTR.INST.BOOM	10062216	100	1	703	10 35 872 5	GOOSENECK BOOM 7,00M
ELECTR.INST.BOOM	10358762	60	1	494	10 35 875 7	ELECTR.SYST.UPPERCARRI
ELECTR.INST.BOOM	10498376	60	1	494	10 35 875 7	ELECTR.SYST.UPPERCARRI
ELECTR.SYST.UPPERCARRI	10358757	9000	1	92	10 35 874 2	UPPERCARRIAGE
ELECTR.SYSTEM CONTROL V	10062228	70	1	494	10 35 875 7	ELECTR.SYST.UPPERCARRI
ELECTR.SYSTEM ELEVATION	10823904	30	1	795	10 49 815 5	CAB ELEVATION 1200MM
ELECTR.SYSTEM FUEL TANK	10358763	90	1	494	10 35 875 7	ELECTR.SYST.UPPERCARRI
ELECTR.SYSTEM FUEL TANK	10498377	90	1	494	10 35 875 7	ELECTR.SYST.UPPERCARRI
ELECTRIC BOX	10389036	20	1	520	10 07 707 3	ELECTRIC BOX CPL. U48-A
ELECTRIC BOX	10389036	20	1	521	10 07 608 3	ELECTRIC BOX CPL. U46
ELECTRIC BOX	9392651	20	1	277	10 05 798 3	ARM REST LEFT
ELECTRIC BOX CPL. E50	10094990	40	1	494	10 35 875 7	ELECTR.SYST.UPPERCARRI
ELECTRIC BOX CPL. U101/R96	10077072	120	1	495	10 35 875 7	ELECTR.SYST.UPPERCARRI
ELECTRIC BOX CPL. U46	10076083	11	1	529	10 49 837 7	ELECTR.SYSTEM FUEL TANK
ELECTRIC BOX CPL. U47	10076042	10	1	329	10 82 924 8	ELECTRIC BOX CPL. U47-V1.5
ELECTRIC BOX CPL. U47-V1.5	10829248	2	1	314	10 06 648 4	ELECTRIC BOX INSTALLATIO
ELECTRIC BOX CPL. U48-A	10077073	10	2	529	10 49 837 7	ELECTR.SYSTEM FUEL TANK
ELECTRIC BOX E50	10062226	10	1	502	10 09 499 0	ELECTRIC BOX CPL. E50
ELECTRIC BOX INSTALLATIO	10066484	70	1	271	10 05 311 8	DRIVER STAND BASE SECTIO
ELECTRIC INSTALLATION	9599236	50	1	791	10 09 294 8	ADDIT.HEAD LIGHTS F.CAB V
ELECTRIC MATERIAL LIST	10094992	20	1	502	10 09 499 0	ELECTRIC BOX CPL. E50
ELECTRICAL INSTALLATION	10488097	60	1	468	10 47 616 7	CAB
ELECTRICAL SYSTEM	10393720	30	1	748	10 49 827 1	STICK CYLINDER CONTROL S
ELEVATION	10358064	2	1	782	10 35 806 3	ELEVATION 1200MM
ELEVATION	10358065	10	1	785	10 35 806 4	ELEVATION
ELEVATION 1200MM	10358063	5	1	795	10 49 815 5	CAB ELEVATION 1200MM
ELONGAT.WIRING HARNESS	9805364	30	1	793	10 82 390 4	ELECTR.SYSTEM ELEVATION
EMERGENCY CONTROL CPL	9013811	104	1	292	10 82 277 5	ARM REST RIGHT
END BUSHING	7002199	30	1	52	73 71 456	MASTER LINK ASSY

Description	Item	Pos.	Quantity	Page	Assembly	Description
END COVER	10036401	7	13	572	10 12 907 1	CRANKCASE CPL.
END COVER	10333087	1	1	151	10 33 307 3	COVER WITH ACCESSORIES
END COVER	10471614	1	1	211	10 21 775 0	EQUALIZING RESERVOIR
END COVER	10471615	2	1	211	10 21 775 0	EQUALIZING RESERVOIR
END COVER	4980786	5	1	600	10 11 805 2	CYLINDER HEAD D9508
END COVER	9144757	2	1	585	10 11 883 9	OIL FILLER INLET
END COVER	9144757	2	1	585	10 11 883 9	OIL FILLER INLET
END COVER	9144757	2	1	689	10 12 094 4	SEAL KIT AIR COMPRESSOR
END COVER	9444456	45	1	65	94 43 970	TRAVEL DRIVE FAT 500P005
END ELEMENT MX-F 105	7027945	8	1	245	10 29 302 0	DISTRIBUTION BLOCK MX-F 3/
END ELEMENT MX-F 105	7027945	8	1	254	10 29 301 8	DISTRIBUTION BLOCK MX-F 4/
END ELEMENT MX-F 45	7027943	8	1	708	10 00 878 9	DISTRIBUTION BLOCK MX-F 3/
END ELEMENT MX-F 75	7027944	8	1	722	10 30 336 9	DISTRIBUTION BLOCK MX-F 5/
END ELEMENT SXE-2	10013839	3	1	252	10 48 927 7	DISTRIBUTION BLOCK SXE-2
END PIECE	10301925	7	2	45	10 22 121 2	TRACK ROLLER
END PIECE	10303003	8	2	46	10 29 067 4	CARRYING ROLLER D8K
END PIN	5609594	20	1	51	56 18 003	CHAIN END LINK
ENGINE BONNET	10055303	10	1	413	10 05 303 6	PANELLING
ENGINE BONNET	10055303	10	1	428	10 49 857 1	PANELLING
ENGINE BONNET	10055304	10	1	443	10 05 530 3	ENGINE BONNET
ENGINE CONTROL SENSORS	9079187	581	1	571	10 12 595 9	DIESEL ENGINE D9508 A7 320k
ENGINE FUEL SYSTEM	10366236	520	1	108	10 35 873 5	MOTOR INSTALLATION
ENGINE OIL LIEBHERR LOW A	10356797	30	1l	12	90 70 361	MOTOR OIL
ENGINE OIL LIEBHERR LOW A	10326110	1000	1	22	10 35 679 7	ENGINE OIL LIEBHERR LOW A
ENGINE OIL LIEBHERR LOW A	10326112	20	1	22	10 35 679 7	ENGINE OIL LIEBHERR LOW A
ENGINE OIL LIEBHERR LOW	10326111	210	1	22	10 35 679 7	ENGINE OIL LIEBHERR LOW A
ENGINE OIL LIEBHERR LOW	10326113	5	1	22	10 35 679 7	ENGINE OIL LIEBHERR LOW A
ENGINE OIL LIEBHERR/10W-4	10356793	20	1l	12	90 70 361	MOTOR OIL
ENGINE OIL LIEBHERR/10W-4	10286279	1000	1	21	10 35 679 3	ENGINE OIL LIEBHERR/10W-4
ENGINE OIL LIEBHERR/10W-4	10330239	20	1	21	10 35 679 3	ENGINE OIL LIEBHERR/10W-4
ENGINE OIL LIEBHERR/10W-40	10330246	210	1	21	10 35 679 3	ENGINE OIL LIEBHERR/10W-4
ENGINE OIL LIEBHERR/10W-40	10290506	5	1	21	10 35 679 3	ENGINE OIL LIEBHERR/10W-4
ENGINE OIL LIEBHERR/5W-30	10425711	10	1l	12	90 70 361	MOTOR OIL
ENGINE OIL LIEBHERR/5W-30/	10425719	1000	1	37	10 42 571 1	ENGINE OIL LIEBHERR/5W-30
ENGINE OIL LIEBHERR/5W-30/	10425713	20	1	37	10 42 571 1	ENGINE OIL LIEBHERR/5W-30
ENGINE OIL LIEBHERR/5W-30	10425715	210	1	37	10 42 571 1	ENGINE OIL LIEBHERR/5W-30
ENGINE OIL LIEBHERR/5W-30	10425712	5	1	37	10 42 571 1	ENGINE OIL LIEBHERR/5W-30
EQUALIZING RESERVOIR	10217750	60	1	204	10 35 873 9	COOLER INSTALLATION
EU CONFORMITY DECLARAT	9399607	98	1	560	10 35 876 6	SIGNS
EU CONFORMITY DECLARAT	9399607	98	1	564	10 49 863 6	SIGNS
EU MANUFACTURER DECLAR	9399608	99	1	560	10 35 876 6	SIGNS
EU MANUFACTURER DECLAR	9399608	99	1	564	10 49 863 6	SIGNS
EVAPORATOR	10816666	10	1	316	10 40 689 8	AIR CONDITIONING UNIT
EVAPORATOR HOUSING	10005672	1	1	322	11 00 359 4	HOUSING
EVAPORATOR HOUSING	10005679	8	1	322	11 00 359 4	HOUSING
EVAPORATOR HOUSING	10022069	15	1	322	11 00 359 4	HOUSING
EXCAVATOR CONTROL	10677645	2	1	297	10 82 674 4	PUMPS CONTROL CPL. R5.8/V
EXCAVATOR DISPLAY	10677204	2	1	294	10 82 196 4	DISPLAY CPL. R5.2/V6.2
EXHAUST ADAPTER ASSEMB	10115587	432	1	569	10 12 595 9	DIESEL ENGINE D9508 A7 320k
EXHAUST ADAPTER ASSEMBL	10116780	433	1	569	10 12 595 9	DIESEL ENGINE D9508 A7 320k
EXHAUST GAS TURBOCHAR	10331034	1	1	649	10 13 273 9	ATL ATTACHMENT
EXHAUST GAS TURBOCHAR	10331034	1	1	650	10 13 274 0	ATL ATTACHMENT
EXHAUST NOZZLE	10115549	1	1	651	10 11 558 7	EXHAUST ADAPTER ASSEMB
EXHAUST NOZZLE	10115549	1	1	652	10 11 678 0	EXHAUST ADAPTER ASSEMBL
EXHAUST PIPE	10115612	2	1	645	10 11 566 7	EXHAUST PIPE RIGHT
EXHAUST PIPE	10115614	2	1	648	10 11 566 8	EXHAUST PIPE LEFT
EXHAUST PIPE	9079024	1	1	648	10 11 566 8	EXHAUST PIPE LEFT
EXHAUST PIPE	9079026	1	1	645	10 11 566 7	EXHAUST PIPE RIGHT
EXHAUST PIPE ASSEMBLY	10115669	410	1	569	10 12 595 9	DIESEL ENGINE D9508 A7 320k
EXHAUST PIPE LEFT	10115668	2	1	644	10 11 566 9	EXHAUST PIPE ASSEMBLY

Description	Item	Pos.	Quantity	Page	Assembly	Description
EXHAUST PIPE LINE	10055117	51	1	117	10 35 873 3	AIR AND EXHAUST INSTALLAT
EXHAUST PIPE LINE	10055118	50	1	117	10 35 873 3	AIR AND EXHAUST INSTALLAT
EXHAUST PIPE RIGHT	10115667	1	1	644	10 11 566 9	EXHAUST PIPE ASSEMBLY
EXHAUST SILENCER	10216441	2	1	114	10 35 873 3	AIR AND EXHAUST INSTALLAT
EXPANDED FOAM PLUG	10451201	42	5	725	10 49 849 8	BACKHOE BUCKET HD 1950
EXPANDING BUSH	9113009	991	1	761	95 88 147	PISTON 220MM
EXPANDING BUSH	9907701	991	1	762	95 89 256	PISTON 190MM
EXPANDING BUSH	9907701	991	1	763	99 07 680	PISTON 190 MM
EXTENSION	10009602	10	1	252	10 48 927 7	DISTRIBUTION BLOCK SXE-2
EXTENSION	7027714	35	1	255	90 64 786	CONNECTING ELEMENT
EXTENSION M10X1K-M10X1	774373408	35	1	255	90 64 786	CONNECTING ELEMENT
EXTENSION M10X1K-M10X1	774373408	135	1	256	90 64 786	CONNECTING ELEMENT
EXTERNAL BODY	5618131	1	1	61	50 20 370 01	SPRING LOADED MULTI-DISC
EXTRACTION VALVE	7019068	40	1	39	90 66 466	ACCESSORIES
EXTRACTOR	10451202	60	1	550	10 49 815 2	TOOL EQUIPMENT
EYELET	7028912	240	4	484	70 28 778	ASSY. PARTS
FAN / BLOWER	10217803	15	2	194	10 49 867 7	FAN INSTALLATION
FAN / BLOWER	10217803	15	2	196	10 49 873 2	FAN INSTALLATION
FAN / BLOWER	5005641	3	1	653	10 11 602 6	ALTERNATOR ASSY. 28V 10-1
FAN COWL	10331758	4	1	208	10 42 538 5	COMBINED OIL COOLER
FAN INSTALLATION	10498677	550	1	108	10 35 873 5	MOTOR INSTALLATION
FAN INSTALLATION	10498732	550	1	108	10 35 873 5	MOTOR INSTALLATION
FASTENER	6203497	80	2	217	10 49 800 0	MOTOR-ELEKTRIK
FASTENER	6203497	32	3	243	10 07 675 6	SWING GEAR PINION GREAS
FASTENER	6203497	15	3	246	10 07 675 7	CENTRALIZED LUBRICATION
FASTENER	6203497	60	18	328	10 06 786 9	FIXING PARTS
FASTENER	6203497	200	6	498	10 35 875 7	ELECTR.SYST.UPPERCARRI
FASTENER	6203497	15	4	511	10 06 221 6	ELECTR.INST.BOOM
FASTENER	6203497	15	4	512	10 35 876 2	ELECTR.INST.BOOM
FASTENER	6203497	15	5	513	10 49 837 6	ELECTR.INST.BOOM
FASTENER	6203497	20	3	516	10 06 222 8	ELECTR.SYSTEM CONTROL V
FASTENER	6203497	51	1	517	10 06 222 8	ELECTR.SYSTEM CONTROL V
FASTENER	6203497	20	14	523	10 35 876 3	ELECTR.SYSTEM FUEL TANK
FASTENER	6203497	20	14	530	10 49 837 7	ELECTR.SYSTEM FUEL TANK
FASTENER	6203497	45	1	747	10 36 839 8	TRAVEL ALARM
FASTENER	6203497	35	1	749	10 39 372 0	ELECTRICAL SYSTEM
FASTENER	6203497	60	4	793	10 82 390 4	ELECTR.SYSTEM ELEVATION
FASTENER	9080635	12	1	623	10 12 720 8	FUEL LINES
FASTENERS SET	10289973	41	1	273	10 04 363 1	DRIVERS SEAT
FASTENERS SET	10289973	41	1	274	10 04 363 2	DRIVERS SEAT
FASTENING DEVICE 39NM/28°	10044692	12	1	635	10 11 865 5	AIR COND. COMPRESSOR A
FEEDER PLATE	9686594	50	1	414	10 05 303 6	PANELLING
FEEDER PLATE	9686594	102	2	416	10 05 303 6	PANELLING
FEEDER PLATE	9686594	50	1	429	10 49 857 1	PANELLING
FEEDER PLATE	9686594	102	2	431	10 49 857 1	PANELLING
FELT RING	7016180	4	1	59	92 65 064	SEALINGSET ROTARY TRAN
FIBRE GLASS FILTER INSERT	7373880	14	3	381	10 35 874 5	HYDRAULIC TANK INSTALLAT
FIBRE GLASS FILTER INSERT	7373881	2	3	95	10 09 107 3	SERVICE KIT ERSTE 500H
FIBRE GLASS FILTER INSERT	7373881	2	3	97	10 36 190 7	SERVICE KIT 1000H
FIBRE GLASS FILTER INSERT	7373881	15	3	381	10 35 874 5	HYDRAULIC TANK INSTALLAT
FILLER NECK	10498316	2	1	788	10 49 831 4	FUEL COUPLING WIGGINS
FILLER NECK	6426763	5	1	788	10 49 831 4	FUEL COUPLING WIGGINS
FILLER NECK	9442359	1	1	225	94 42 350	OIL FILLER NECK
FILLER NECK CPL.	10118838	1	1	585	10 11 883 9	OIL FILLER INLET
FILLER SIEVE	10296919	20	1	545	10 35 868 3	FUEL SYSTEM
FILLING CONNECTION	7029283	22	1	249	10 34 071 7	LUBRICATION PUMP
FILLING PUMP	10009239	41	1	550	10 49 815 2	TOOL EQUIPMENT
FILLING PUMP	10342798	31	1	550	10 49 815 2	TOOL EQUIPMENT
FILTER	10333228	6	1	131	10 42 845 9	SWING PUMP
FILTER	10333268	2	1	155	10 33 322 8	FILTER

Description	Item	Pos.	Quantity	Page	Assembly	Description
FILTER DISK	10337550	7	1	176	10 34 668 4	CONTROL UNIT
FILTER ELEMENT	10220705	10	1	96	10 09 107 4	SERVICE KIT 1500H/2500H
FILTER ELEMENT	10220705	3	1	161	10 33 327 0	FILTER HEAD
FILTER ELEMENT	553183708	4	1	96	10 09 107 4	SERVICE KIT 1500H/2500H
FILTER ELEMENT	553183708	20	4	99	10 35 983 0	SERVICE KIT FUEL FILTER
FILTER ELEMENT	553183708	6	1	619	10 30 300 7	FUEL PREFILTER
FILTER HEAD	10333270	1	1	160	10 33 326 8	FILTER
FILTER HEAD	10333271	1	1	161	10 33 327 0	FILTER HEAD
FILTER HEAD	10333272	1	1	162	10 33 327 1	FILTER HEAD
FILTER HOUSING	10220702	2	1	161	10 33 327 0	FILTER HEAD
FILTER INSERT	10037617	8	1	96	10 09 107 4	SERVICE KIT 1500H/2500H
FILTER INSERT	10037617	13	1	340	10 05 314 4	OIL PILOT VALVE INSTALLATIO
FILTER INSERT	10037617	13	1	341	10 82 438 9	OIL PILOT VALVE INSTALLATIO
FILTER INSERT	10037617	10	1	342	56 09 948	OIL FILTER SET
FILTER INSERT	10470100	4	1	402	56 15 220	HIGH PRESSURE FILTER
FILTER INSERT 4µm	10123751	9	2	97	10 36 190 7	SERVICE KIT 1000H
FILTER INSERT 4µm	10123751	1	2	580	10 12 518 2	OIL SEPARATOR OEL
FILTER MAT	10022770	8	1	97	10 36 190 7	SERVICE KIT 1000H
FILTER MAT	10022770	2	1	326	10 02 277 7	CIRCULATING AIR GRID
FINAL CONTROL VALVE	10132738	14	1	565	10 12 595 9	DIESEL ENGINE D9508 A7 320k
FINGER GUARD	10093804	2	1	193	10 49 867 7	FAN INSTALLATION
FINGER GUARD	10093804	2	1	195	10 49 873 2	FAN INSTALLATION
FINGER GUARD	10093805	3	1	193	10 49 867 7	FAN INSTALLATION
FINGER GUARD	10093805	3	1	195	10 49 873 2	FAN INSTALLATION
FINGER GUARD	10093806	4	1	193	10 49 867 7	FAN INSTALLATION
FINGER GUARD	10093806	4	1	195	10 49 873 2	FAN INSTALLATION
FINGER GUARD	10093807	5	1	193	10 49 867 7	FAN INSTALLATION
FINGER GUARD	10093807	5	1	195	10 49 873 2	FAN INSTALLATION
FIRE EXTINGUISHER	10498331	9	1	7	.	
FIRE EXTINGUISHER	10498332	10	1	779	10 49 833 1	FIRE EXTINGUISHER
FIRE EXTINGUISHER EBR1	890100716	5	1	781	10 49 833 2	FIRE EXTINGUISHER
FITTING KEY	10220694	8	1	158	10 33 325 9	GEAR PUMP
FIXING BRACKET	10022049	9	2	322	11 00 359 4	HOUSING
FIXING BRACKET	6203433	10	1	283	98 74 988	PLATINES INSTALLATION A101
FIXING PARTS	10067869	100	1	271	10 05 311 8	DRIVER STAND BASE SECTIO
FIXING PARTS CAB	10357979	10	1	467	10 35 876 8	CAB
FIXING PARTS CONTROL VALV	9375164	2	1	394	10 35 874 4	CONTROL VALVE INSTALLAT
FIXING PARTS HYDRAULIC T	10087958	20	1	381	10 35 874 5	HYDRAULIC TANK INSTALLAT
FIXING SCREW	10215970	286	4	488	10 48 809 9	INTERNAL LINING
FLANGE	10115621	4	1	649	10 13 273 9	ATL ATTACHMENT
FLANGE	10115621	4	1	650	10 13 274 0	ATL ATTACHMENT
FLANGE	9279836	12	2	134	90 72 922	HYDRAULIC VARIABLE DISPLA
FLANGE	9279836	12	2	136	90 77 452	HYDRAULIC VARIABLE DISPLA
FLANGE HALF	10286359	32	2	356	10 35 875 1	HYDR.INSTALLATION FAN DR
FLANGE HALF	10286359	42	4	356	10 35 875 1	HYDR.INSTALLATION FAN DR
FLANGE HALF	10286359	56	14	357	10 35 875 1	HYDR.INSTALLATION FAN DR
FLANGE HALF	10286360	21	12	343	10 35 875 5	HYDR.ROTARY CONNEC.+SWI
FLANGE HALF	10286360	49	8	771	10 35 873 1	HOIST CYLINDERS DIA.190
FLANGE HALF	10286361	4	16	89	10 07 444 8	HYDR.INSTALLATION UNDER
FLANGE HALF	10286361	20	8	334	10 38 698 2	HYDR.PUMPS TO SPOOL VALV
FLANGE HALF	10286361	41	4	335	10 38 698 2	HYDR.PUMPS TO SPOOL VALV
FLANGE HALF	10286361	20	8	337	10 49 804 4	HYDR.PUMPS TO SPOOL VALV
FLANGE HALF	10286361	41	4	338	10 49 804 4	HYDR.PUMPS TO SPOOL VALV
FLANGE HALF	10286361	11	16	343	10 35 875 5	HYDR.ROTARY CONNEC.+SWI
FLANGE HALF	10286361	15	4	343	10 35 875 5	HYDR.ROTARY CONNEC.+SWI
FLANGE HALF	10286361	31	4	396	10 35 874 4	CONTROL VALVE INSTALLAT
FLANGE HALF	10286361	36	4	396	10 35 874 4	CONTROL VALVE INSTALLAT
FLANGE HALF	10286361	15	18	403	10 06 771 7	HYDR.TUBES INSTALLATION
FLANGE HALF	10286361	37	58	701	10 35 872 5	GOOSENECK BOOM 7,00M
FLANGE HALF	10286361	10	2	713	10 07 162 8	HYDR.CYLINDER W/ADDITION.

Description	Item	Pos.	Quantity	Page	Assembly	Description
FLANGE HALF	10286361	11	6	714	10 35 872 1	STICK 2,60M
FLANGE HALF	10286361	46	8	770	10 35 873 1	HOIST CYLINDERS DIA.190
FLANGE HALF	10286362	70	4	384	10 35 874 5	HYDRAULIC TANK INSTALLAT
FLANGE HALF	5602407	120	4	704	10 35 872 5	GOOSENECK BOOM 7,00M
FLANGE HALF	5602407	7	2	706	10 06 477 4	HYDR.CYLINDER W/ADDITION.
FLANGE HALF	5602407	16	2	706	10 06 477 4	HYDR.CYLINDER W/ADDITION.
FLANGE HALF	5602640	44	2	348	10 05 312 6	HYDR.SUCT.+RETURN OIL HO
FLANGE HALF	5602640	15	4	395	10 35 874 4	CONTROL VALVE INSTALLAT
FLANGE HALF	5603839	69	4	122	10 35 879 9	PUMPS INSTALLATION
FLANGE HALF SAE 2" FLACH	5002070	13	8	351	10 05 312 9	HYDR.AND GEAR OIL COOLIN
FLANGE HALF SAE 2" FLACH	5002070	27	4	355	10 35 875 1	HYDR.INSTALLATION FAN DR
FLANGED BOLT	10012550	11	7	645	10 11 566 7	EXHAUST PIPE RIGHT
FLANGED BOLT	10012550	11	7	648	10 11 566 8	EXHAUST PIPE LEFT
FLAT STEEL	10055481	11	1	413	10 05 303 6	PANELLING
FLAT STEEL	10055481	11	1	428	10 49 857 1	PANELLING
FLAT STEEL	10358270	40	1	542	10 35 875 6	AIR CONDITION HOSES INSTA
FLAT STEEL	10406679	89	1	416	10 05 303 6	PANELLING
FLAT STEEL	10406679	114	1	416	10 05 303 6	PANELLING
FLAT STEEL	10498568	89	1	431	10 49 857 1	PANELLING
FLAT STEEL	10498568	114	1	431	10 49 857 1	PANELLING
FLOAT SWITCH	10029026	61	1	204	10 35 873 9	COOLER INSTALLATION
FLOAT SWITCH	6204694	40	1	382	10 35 874 5	HYDRAULIC TANK INSTALLAT
FLOODLIGHT	7027205	100	2	776	10 02 138 7	ADDIT.HEAD LIGHTS ON CAB
FLOODLIGHT INSTALLATION	9941040	30	2	494	10 35 875 7	ELECTR.SYST.UPPERCARRI
FLOOR COVERING	9879754	5	1	268	10 05 302 5	DRIVER STAND
FLOW REGULATING CHECK	5602932	4	1	706	10 06 477 4	HYDR.CYLINDER W/ADDITION.
FLOW REGULATING CHECK	9270387	13	1	713	10 07 162 8	HYDR.CYLINDER W/ADDITION.
FLUID BEARING	10013573	5	4	331	98 79 063	BOTTOM PLATE MOUNTING
FLYWHEEL ASSEMBLY SAE1	10120077	530	1	570	10 12 595 9	DIESEL ENGINE D9508 A7 320k
FLYWHEEL HOUSING MOUNTI	10120322	520	1	570	10 12 595 9	DIESEL ENGINE D9508 A7 320k
FLYWHEEL HOUSING PRE-AS	10120321	1	1	664	10 12 032 2	FLYWHEEL HOUSING MOUNTI
FLYWHEEL PRE-ASS. SAE1	10120078	1	1	667	10 12 007 7	FLYWHEEL ASSEMBLY SAE1
FOAM RUBBER INSULATION	10022772	2	1	325	10 02 211 9	CASE
FOLDING LID	7370893	14	1	295	56 18 923	CONTROL CONSOLE RIGHT
FOOT BOARD COVERING	9480295	50	1	308	10 05 798 5	FOOT BOARD INSTALLATION
FOOT BOARD COVERING	9480295	6	1	772	92 66 411	OPERATING EQUIPMENT (LE
FOOT BOARD COVERING	9480295	6	1	773	92 66 412	OPERATING EQUIPMENT (RIG
FOOT BOARD INSTALLATION	10057985	40	1	269	10 05 311 8	DRIVER STAND BASE SECTIO
FOOT PILOT VALVE LEFT	10081424	10	1	308	10 05 798 5	FOOT BOARD INSTALLATION
FOOT PILOT VALVE RIGHT	10081426	20	1	308	10 05 798 5	FOOT BOARD INSTALLATION
FOOT SWITCH	10038643	10	1	309	10 08 142 4	FOOT PILOT VALVE LEFT
FOOT SWITCH	10038644	10	1	310	10 08 142 6	FOOT PILOT VALVE RIGHT
FOOTBOARD	10092431	210	1	421	10 05 303 6	PANELLING
FOOTBOARD	10092431	210	1	436	10 49 857 1	PANELLING
FRAME	10101225	600	1	474	10 04 678 9	DOOR FRAME
FRAME	7029411	510	1	476	70 28 844	SLIDING WINDOW
FRONT PANE TOP	7030512	110	1	470	70 28 775	FRONT WINDOW
FRONT WINDOW	7028775	30	1	468	10 47 616 7	CAB
FRONT WINDOW BOTTOM	7028820	210	1	470	70 28 775	FRONT WINDOW
FUEL COOLER	10428947	3	1	208	10 42 538 5	COMBINED OIL COOLER
FUEL COUPLING WIGGINS	10498313	6	1	7	.	
FUEL COUPLING WIGGINS	10498313	21	1	545	10 35 868 3	FUEL SYSTEM
FUEL COUPLING WIGGINS	10498313	50	1	546	10 35 868 3	FUEL SYSTEM
FUEL COUPLING WIGGINS	10498313	40	1	548	10 35 821 5	FUEL TANK
FUEL COUPLING WIGGINS	10498314	10	1	787	10 49 831 3	FUEL COUPLING WIGGINS
FUEL FILTER INSERT PRE-AS	10289138	6	2	96	10 09 107 4	SERVICE KIT 1500H/2500H
FUEL FILTER INSERT PRE-AS	10289138	10	8	99	10 35 983 0	SERVICE KIT FUEL FILTER
FUEL FILTER INSERT PRE-AS	10289138	2	2	618	10 12 282 4	FUEL FILTER MODULE
FUEL FILTER INSTALLATION	10095387	2	1	112	10 36 623 6	ENGINE FUEL SYSTEM
FUEL FILTER MODULE	10122824	1	1	617	10 12 314 1	FUEL FINE-FILTER ASSEMBLY

Description	Item	Pos.	Quantity	Page	Assembly	Description
FUEL FINE-FILTER ASSEMBLY	10123141	201	1	567	10 12 595 9	DIESEL ENGINE D9508 A7 320k
FUEL HAND PUMP	7027480	4	1	113	10 09 538 7	FUEL FILTER INSTALLATION
FUEL HEATER	10488927	4	2	618	10 12 282 4	FUEL FILTER MODULE
FUEL HOSE	10333660	16	1	112	10 36 623 6	ENGINE FUEL SYSTEM
FUEL HOSE	10333662	10	1	112	10 36 623 6	ENGINE FUEL SYSTEM
FUEL HOSE	10333665	11	1	112	10 36 623 6	ENGINE FUEL SYSTEM
FUEL HOSE	10450748	15	1	112	10 36 623 6	ENGINE FUEL SYSTEM
FUEL LINE	10119000	2	1	617	10 12 314 1	FUEL FINE-FILTER ASSEMBLY
FUEL LINE	10121096	6	1	623	10 12 720 8	FUEL LINES
FUEL LINE 12X1	9080725	4	1	623	10 12 720 8	FUEL LINES
FUEL LINE 12X1	9080726	5	1	623	10 12 720 8	FUEL LINES
FUEL LINE EDC-KSC	9079085	7	1	623	10 12 720 8	FUEL LINES
FUEL LINE MOTOR-FPPE	9080724	3	1	623	10 12 720 8	FUEL LINES
FUEL LINE RAIL-KSC	9078870	2	1	623	10 12 720 8	FUEL LINES
FUEL LINES	10127208	212	1	567	10 12 595 9	DIESEL ENGINE D9508 A7 320k
FUEL PREFILTER	10303007	3	1	113	10 09 538 7	FUEL FILTER INSTALLATION
FUEL SYSTEM	10358683	9300	1	92	10 35 874 2	UPPERCARRIAGE
FUEL TANK	10358215	3	1	545	10 35 868 3	FUEL SYSTEM
FUEL TANK FOR EXCHANGE	10358684	100	1	546	10 35 868 3	FUEL SYSTEM
FUSE	7027038	22	1	284	73 73 807	SAFETY LEVER
FUSE CARTRIDGE 20A 32 C	6001472	14	2	503	10 09 499 2	ELECTRIC MATERIAL LIST
FUSE CARTRIDGE 250A 80VAC	10220613	31	1	507	10 35 875 8	BATTERY INSTALLATION
FUSE CARTRIDGE 250A 80VAC	10220613	100	1	509	10 35 875 8	BATTERY INSTALLATION
FUSE CARTRIDGE 25A 32 C	6001471	23	1	503	10 09 499 2	ELECTRIC MATERIAL LIST
FUSE CARTRIDGE C 15A 32 FK	4901512	40	9	282	97 58 815 01	E-BOARD
FUSE CARTRIDGE C 15A 32 FK	4901512	15	6	503	10 09 499 2	ELECTRIC MATERIAL LIST
FUSE CARTRIDGE C 7,5A 32/5	4901513	41	5	282	97 58 815 01	E-BOARD
FUSE CARTRIDGE C 7,5A 32/5	4901513	16	6	503	10 09 499 2	ELECTRIC MATERIAL LIST
FUSE HOLDER	10332352	30	1	507	10 35 875 8	BATTERY INSTALLATION
GANGWAY	10358764	8900	1	92	10 35 874 2	UPPERCARRIAGE
GANGWAY	10498138	2	1	799	10 49 815 3	CATWALK LEFT REAR
GANTRY 2 FACH	6001474	17	11	503	10 09 499 2	ELECTRIC MATERIAL LIST
GAS SPRING	10037204	24	1	447	10 05 535 4	COOLER COWL
GAS SPRING	10037209	80	1	415	10 05 303 6	PANELLING
GAS SPRING	10037209	80	1	430	10 49 857 1	PANELLING
GAS SPRING	10037214	27	1	413	10 05 303 6	PANELLING
GAS SPRING	10037214	27	1	428	10 49 857 1	PANELLING
GAS SPRING	10441154	15	2	413	10 05 303 6	PANELLING
GAS SPRING	10441154	15	2	428	10 49 857 1	PANELLING
GAS SPRING	7372354	17	1	284	73 73 807	SAFETY LEVER
GAUGE CONNECTION	5607616	37	1	120	10 35 879 9	PUMPS INSTALLATION
GAUGE CONNECTION	7019891	30	1	120	10 35 879 9	PUMPS INSTALLATION
GAUGE CONNECTION	7406864	75	1	398	10 35 874 4	CONTROL VALVE INSTALLAT
GAUGE CONNECTION 15L	5607671	39	1	404	10 06 771 7	HYDR.TUBES INSTALLATION
GEAR OIL	9070365	50	1	10	90 66 460	LUBRICANTS
GEAR OIL LIEBHERR/75W-90	10356826	10	1l	16	90 70 365	GEAR OIL
GEAR OIL LIEBHERR/75W-90/	10296477	1000	1	25	10 35 682 6	GEAR OIL LIEBHERR/75W-90
GEAR OIL LIEBHERR/75W-90/	10330287	20	1	25	10 35 682 6	GEAR OIL LIEBHERR/75W-90
GEAR OIL LIEBHERR/75W-90/2	10330288	210	1	25	10 35 682 6	GEAR OIL LIEBHERR/75W-90
GEAR OIL LIEBHERR/75W-90/5	10330285	5	1	25	10 35 682 6	GEAR OIL LIEBHERR/75W-90
GEAR OIL LIEBHERR/85W-140	10356827	20	1l	16	90 70 365	GEAR OIL
GEAR OIL LIEBHERR/85W-140/	10330292	1000	1	26	10 35 682 7	GEAR OIL LIEBHERR/85W-140
GEAR OIL LIEBHERR/85W-140/	10330291	20	1	26	10 35 682 7	GEAR OIL LIEBHERR/85W-140
GEAR OIL LIEBHERR/85W-140	10301680	210	1	26	10 35 682 7	GEAR OIL LIEBHERR/85W-140
GEAR OIL LIEBHERR/85W-140	10285639	5	1	26	10 35 682 7	GEAR OIL LIEBHERR/85W-140
GEAR PUMP	10333227	4	1	131	10 42 845 9	SWING PUMP
GEAR PUMP	10333259	1	1	154	10 33 322 7	GEAR PUMP
GEAR PUMP	10355486	50	1	121	10 35 879 9	PUMPS INSTALLATION
GEAR WHEEL	10118023	3	1	601	10 11 802 2	CAMSHAFT CPL.
GEAR WHEEL	10119847	2	1	587	10 13 080 8	CRANKSHAFT WITH GEAR

Description	Item	Pos.	Quantity	Page	Assembly	Description
GEAR WHEEL	10119848	3	0	602	10 11 802 3	GEAR WHEEL
GEAR WHEEL	10119855	5	0	611	10 11 802 5	DRIVE FOR HIGH PRESSURE P
GEAR WHEEL	9884139	11	1	188	98 84 140	COOLING CIRCUIT PUMP
GEAR WHEEL Z=110 M=2.6	10116095	3	1	602	10 11 802 3	GEAR WHEEL
GEAR WHEEL Z=30 M=2.6	10116096	5	1	611	10 11 802 5	DRIVE FOR HIGH PRESSURE P
GEAR WHEEL Z=47 M=3,5	9077283	7	1	588	90 77 286	DRIVING PARTS
GEAR WHEEL Z=53 M=3.5	9077285	8	1	588	90 77 286	DRIVING PARTS
GEAR WHEEL Z=86 M=3.5	9079140	1	1	602	10 11 802 3	GEAR WHEEL
GEARBOX	7028883	510	1	480	70 28 884	WIPER MOTOR
GEARBOX OIL COOLER	10289191	2	1	208	10 42 538 5	COMBINED OIL COOLER
GIRDER	10058016	2	1	105	10 05 797 8	LOOCK BRACKET
GLASS PANES	7028774	20	1	468	10 47 616 7	CAB
GLUE	8624636	110	1	192	98 89 161	CONNECTING PLATE
GLUE	8655023	118	1	69	90 72 026	CONNECTING PLATE NG 165
GLUE	8655023	104	1	572	10 12 907 1	CRANKCASE CPL.
GLUE	8655023	104	1	600	10 11 805 2	CYLINDER HEAD D9508
GLYD RING 12	7381019	47	1	181	90 78 788	REPAIR KIT LR/SD/DA
GLYD RING 12	7381019	47	1	187	98 82 875	SEAL KIT REGULATING VALVE
GLYD RING 35X27,5X3,2	7381029	24	1	168	90 79 811	RK PISTON
GLYD RING 35X27,5X3,2	7381029	24	1	170	92 71 653	SEAL KIT ADJUSTMENT
GLYD RING 52X41X4,2	7380982	25	1	82	90 77 481	REPAIR KIT FMV 165
GLYD RING 52X41X4,2	7380982	26	1	88	92 78 179	SEAL KIT
GLYD RING 52X41X4,2	7380982	25	1	168	90 79 811	RK PISTON
GLYD RING 52X41X4,2	7380982	25	1	170	92 71 653	SEAL KIT ADJUSTMENT
GOOSENECK BOOM 7,00M	10358359	2	1	700	10 35 872 5	GOOSENECK BOOM 7,00M
GOOSENECK BOOM 7,00M	10358724	11	1	7	.	
GOOSENECK BOOM 7,00M	10358725	10	1	699	10 35 872 4	GOOSENECK BOOM 7,00M
GOVERNOR HOUSING	10102068	10	1	146	10 10 206 4	REGULATOR
GRATING	10059938	15	1	493	10 35 876 4	GANGWAY
GRATING	10066219	10	1	493	10 35 876 4	GANGWAY
GRATING	9683738	4	1	800	10 49 815 4	CATWALK LEFT IN FRONT
GRATING	9903847	50	1	780	10 35 813 5	PLAT FORM IF ELEVATION 120
GREASE	10282622	100	1	684	10 12 087 3	SEAL KIT CYLINDER
GREASE	8655008	126	1	73	92 68 751	REPAIR KIT LOCK RING
GREASE	8655008	126	1	84	98 88 124	REPAIR KIT SHAFT
GREASE	8655008	126	1	141	98 86 679	REPAIR KIT SHAFT
GREASE	8655008	126	1	173	98 89 282	REPAIR KIT SHAFT
GREASE	8655008	126	1	229	92 68 011	REPAIR KIT LOCK RING
GREASE AL/1kg	8655037	131	1	668	90 80 481	CLUTCH ASSEMBLY
GREASE HOUSING	933605101	20	1	221	90 01 781 7	SLEWING DRIVE SAT 375/253
GREASE NBU 30/1kg	10285708	100	1	577	90 78 049	CYLINDER
GREASE NIPPLE	10005440	235	4	715	10 35 872 1	STICK 2,60M
GREASE NIPPLE	10005440	31	5	720	10 35 872 0	CENTRAL LUBRICATING SYS
GREASE NIPPLE	10005440	23	4	729	10 49 838 7	BEARING PILLOW BLOCK
GREASE NIPPLE	10005440	31	2	729	10 49 838 7	BEARING PILLOW BLOCK
GREASE NIPPLE	10005440	23	4	730	10 49 857 6	BEARING PILLOW BLOCK
GREASE NIPPLE	10005440	31	2	730	10 49 857 6	BEARING PILLOW BLOCK
GREASE NIPPLE CAP	10014701	18	1	249	10 34 071 7	LUBRICATION PUMP
GREASE NIPPLE CAP	8500251	32	5	720	10 35 872 0	CENTRAL LUBRICATING SYS
GREASE NIPPLE TR/A M 16X1,	7401897	68	2	43	10 35 874 0	UNDERCARRIAGE CPL
GREASE TENSIONER	10075353	62	2	43	10 35 874 0	UNDERCARRIAGE CPL
GREASE TUBE CPL.	9375104	21	1	241	10 35 877 2	SLEWING RING INSTALLATIO
GREASE TUBE CPL.	9375105	22	1	241	10 35 877 2	SLEWING RING INSTALLATIO
GREASE TUBE CPL.	9375106	23	1	241	10 35 877 2	SLEWING RING INSTALLATIO
GREASE TUBE CPL.	9375107	24	1	241	10 35 877 2	SLEWING RING INSTALLATIO
GREASES	9070366	60	1	10	90 66 460	LUBRICANTS
GRIP	7019153	260	1	472	10 04 678 8	DRIVER'S CAB DOOR
GRIP	7025006	20	1	276	70 24 996	SEAT FRAME
GRIP	7370897	4	1	280	10 16 576 6	CONTROL CONSOLE LEFT
GRIP	9691297	33	1	451	10 05 546 4	BONNET LEFT

Description	Item	Pos.	Quantity	Page	Assembly	Description
GRIP	9699421	145	1	418	10 05 303 6	PANELLING
GRIP	9699421	145	1	433	10 49 857 1	PANELLING
GRIP	9699421	50	2	493	10 35 876 4	GANGWAY
GRIP F.DRIVERS	7025758	270	1	472	10 04 678 8	DRIVER'S CAB DOOR
GRIP SHELL	10014777	55	1	288	10 46 993 3	HANDLES LEFT
GRIP SHELL	10014778	50	1	288	10 46 993 3	HANDLES LEFT
GRIP SHELL	10014779	55	1	302	10 46 993 2	HANDLES RIGHT
GRIP SHELL	10014780	50	1	302	10 46 993 2	HANDLES RIGHT
GRIP SW9,12,14,17 GEKROEPF	10359147	200	1	552	10 08 428 5	TOOL EQUIPMENT
GRUB SCREW	7369967	20	1	130	10 21 593 5	PUMP
GRUB SCREW M10X68	7623427	21	1	130	10 21 593 5	PUMP
GRUB SCREW M8	7369959	8	1	261	10 10 206 7	REGULATOR ELEMENT
GUIDE	10015472	210	2	71	56 16 688	WHEEL BRAKE VALVE
GUIDE BUSH	10115007	4	1	264	10 33 323 7	PRESSURE LIMITING VALVE
GUIDE FOR OIL DIPSTICK CPL	9080211	3	1	126	90 80 120	PUMP DISTRIBUTION GEAR
GUIDE PLATE	10132663	2	1	233	98 80 521	RK CYLINDER+CONTROL PLAT
GUIDE PLATE	10410653	2	1	133	10 44 145 6	DRIVING GEAR
GUIDE PLATE	9076311	2	1	167	90 73 751	RK CYLINDER+CONTROL PLAT
GUIDE PLATE	9888546	2	1	191	98 88 122	RK CYLINDER+CONTROL PLAT
GUIDE PLATE	9888546	2	1	227	98 86 678	RK CYLINDER+CONTROL PLAT
GUIDE RING	7005250	13	4	765	99 07 890	PISTON ROD BEARING 125/19
GUIDE RING	7623863	30	2	177	10 40 974 7	REGULATION
GUIDE RING 150X155X15	7011356	13	4	764	96 31 985	PISTON ROD BEARING 150/22
GUIDE WHEEL D8K	10470769	61	2	43	10 35 874 0	UNDERCARRIAGE CPL
GUIDING PIPE	10116947	2	1	583	10 11 694 5	OIL DIPSTICK WITH PIPE
GUIDING PIPE	9271462	2	1	129	90 80 211	GUIDE FOR OIL DIPSTICK CPL
GUIDING RAIL	10055306	250	1	422	10 05 303 6	PANELLING
GUIDING RAIL	10055306	250	1	437	10 49 857 1	PANELLING
HALF CLAMP COLLAR	10057335	62	4	702	10 35 872 5	GOOSENECK BOOM 7,00M
HALF CLAMP COLLAR	10067588	15	4	541	10 35 875 6	AIR CONDITION HOSES INSTA
HALF CLAMP COLLAR	10068163	20	2	403	10 06 771 7	HYDR.TUBES INSTALLATION
HALF CLAMP COLLAR	10068164	21	2	403	10 06 771 7	HYDR.TUBES INSTALLATION
HALF CLAMP COLLAR	10070620	2	1	740	10 07 061 5	CLAMP
HALF CLAMP COLLAR	10070621	3	1	740	10 07 061 5	CLAMP
HALF CLAMP COLLAR	10072165	45	2	356	10 35 875 1	HYDR.INSTALLATION FAN DR
HALF CLAMP COLLAR	9008760	14	2	706	10 06 477 4	HYDR.CYLINDER W/ADDITION.
HALF CLAMP COLLAR	9492506	36	4	347	10 05 312 6	HYDR.SUCT.+RETURN OIL HO
HALF CLAMP COLLAR	9927398	27	2	701	10 35 872 5	GOOSENECK BOOM 7,00M
HALF CLAMP COLLAR	9927399	26	4	701	10 35 872 5	GOOSENECK BOOM 7,00M
HALF CLAMP COLLAR DIA 238,	10086854	15	2	734	10 08 685 3	SLIDING RAIL
HALF CLAMP COLLAR DIA 238.	10086856	30	2	734	10 08 685 3	SLIDING RAIL
HALF CLAMP COLLAR DIA 260	10086855	20	1	734	10 08 685 3	SLIDING RAIL
HALF CLAMP COLLAR DIA 260	10086857	25	1	734	10 08 685 3	SLIDING RAIL
HALF FLANGE	7373873	17	8	354	10 35 875 1	HYDR.INSTALLATION FAN DR
HALF FLANGE	7373875	20	16	700	10 35 872 5	GOOSENECK BOOM 7,00M
HALF FLANGE	7373875	6	1	713	10 07 162 8	HYDR.CYLINDER W/ADDITION.
HAMMER 1500	8000622	130	1	552	10 08 428 5	TOOL EQUIPMENT
HAND LEVER	7028347	13	1	388	56 17 689	SHUT OFF DEVICE DN 100
HAND PUMP	510160916	19	1	7	.	
HAND PUMP	8145666	30	1	39	90 66 466	ACCESSORIES
HANDLE	10009025	730	1	486	70 28 778	ASSY. PARTS
HANDLE	10013966	580	1	486	70 28 778	ASSY. PARTS
HANDLE	10016620	280	1	423	10 05 303 6	PANELLING
HANDLE	10016620	280	1	438	10 49 857 1	PANELLING
HANDLE	10498140	65	1	795	10 49 815 5	CAB ELEVATION 1200MM
HANDLE	7028902	790	1	486	70 28 778	ASSY. PARTS
HANDLE	7028903	520	1	486	70 28 778	ASSY. PARTS
HANDLE	7372418	6	1	105	10 05 797 8	LOOCK BRACKET
HANDLE	9014915	4	1	782	10 35 806 3	ELEVATION 1200MM
HANDLE	9496454	158	1	418	10 05 303 6	PANELLING

Description	Item	Pos.	Quantity	Page	Assembly	Description
HANDLE	9496454	158	1	433	10 49 857 1	PANELLING
HANDLE CAP	7025347	21	1	284	73 73 807	SAFETY LEVER
HANDLE COVER	7370924	1	1	389	73 68 771	RETURN FILTER
HANDLES LEFT	10469933	50	1	289	99 68 625	LH-JOYSTICK LEFT
HANDLES RIGHT	10469932	50	1	304	99 68 611	LH-JOYSTICK RIGHT
HANDWHEEL	5609144	53	1	275	10 28 999 3	VIBRATING SYSTEM
HD RELAY	10220436	110	1	504	10 09 499 2	ELECTRIC MATERIAL LIST
HEAD LIGHT INSERT	10286644	12	1	500	10 04 553 0	WORK LIGHT
HEAD PART	7372319	1	1	402	56 15 220	HIGH PRESSURE FILTER
HEAD-TYPE WASHER S=0,2	10022769	2	2	321	10 02 211 7	AIR CIRCULATION CASE
HEAD-TYPE WASHER S=0,2	10022769	3	2	326	10 02 277 7	CIRCULATING AIR GRID
HEAT EXCHANGER	10022068	18	1	322	11 00 359 4	HOUSING
HEAT INSULATION PLATE	10132729	6	1	647	10 13 274 6	OUTLET MANIFOLD ADD-ON
HEAT INSULATION PLATE	10132737	7	1	647	10 13 274 6	OUTLET MANIFOLD ADD-ON
HEAT INSULATION PLATE	9080041	5	1	645	10 11 566 7	EXHAUST PIPE RIGHT
HEAT INSULATION PLATE	9080041	5	1	648	10 11 566 8	EXHAUST PIPE LEFT
HEAT INSULATION PLATE	9080042	6	1	645	10 11 566 7	EXHAUST PIPE RIGHT
HEAT INSULATION PLATE	9080043	6	1	648	10 11 566 8	EXHAUST PIPE LEFT
HEAT PROTECTION	10059445	70	1	117	10 35 873 3	AIR AND EXHAUST INSTALLAT
HEAT PROTECTION SHEET	10115584	3	1	651	10 11 558 7	EXHAUST ADAPTER ASSEMB
HEAT PROTECTION SHEET	10115584	3	1	652	10 11 678 0	EXHAUST ADAPTER ASSEMBL
HEAT PROTECTION SHEET	10116902	1	1	666	10 11 721 3	HEAT PROTECTION SHEET
HEAT PROTECTION SHEET	10117213	525	1	570	10 12 595 9	DIESEL ENGINE D9508 A7 320k
HEATER STARTER SWITCH	10228151	75	1	291	10 82 277 5	ARM REST RIGHT
HEATING 20W/24V F.EL.BOX.	9873999	36	1	503	10 09 499 2	ELECTRIC MATERIAL LIST
HEATING BATTERY	10022070	17	1	322	11 00 359 4	HOUSING
HEATING FLANGE	10299988	1	1	633	90 78 314	HEATING FLANGE ADD-ON
HEATING FLANGE ADD-ON	9078314	260	2	568	10 12 595 9	DIESEL ENGINE D9508 A7 320k
HEATING HOSES INSTALLATIO	10358759	180	1	91	10 35 874 2	UPPERCARRIAGE
HEATING RESISTANCE	6205235	2	1	783	98 73 999	HEATING 20W/24V F.EL.BOX.
HEATING+AIR-CONDITION.HO	10094067	25	1	795	10 49 815 5	CAB ELEVATION 1200MM
HEX BOLT EN 1665 M10X100 1	10035581	3	3	627	90 79 075	AIR INTAKE RIGHT
HEX BOLT EN 1665 M10X100 1	10035581	3	3	628	90 79 076	AIR SUCTION
HEX BOLT EN 1665 M10X100 1	10035581	3	1	675	10 11 903 8	CONSOLE
HEX BOLT EN 1665 M10X35 10.	10035578	2	4	627	90 79 075	AIR INTAKE RIGHT
HEX BOLT EN 1665 M10X35 10.	10035578	2	4	628	90 79 076	AIR SUCTION
HEX BOLT EN 1665 M10X35 10.	10035578	12	4	631	10 11 570 0	CONNECTING LINE ADD-ON
HEX BOLT EN 1665 M10X90 10.	10006131	18	1	611	10 11 802 5	DRIVE FOR HIGH PRESSURE P
HEX BOLT EN 1665 M10x160 1	10112718	17	4	611	10 11 802 5	DRIVE FOR HIGH PRESSURE P
HEX BOLT EN 1665 M10x40 8.8	10112497	7	3	630	90 78 417	CHARGE AIR PIPE ASSEMBLY
HEX BOLT EN 1665 M10x55 10.	10037108	6	4	581	10 12 021 3	POWER UNIT SUPPORT ATT
HEX BOLT EN 1665 M12X100 1	10035584	9	2	664	10 12 032 2	FLYWHEEL HOUSING MOUNTI
HEX BOLT EN 1665 M12X100 1	10035584	3	4	676	90 80 459	LOCKING PIECES
HEX BOLT EN 1665 M12X100 1	10035584	2	6	677	10 12 039 3	LOCKING PIECES
HEX BOLT EN 1665 M12X70 10.	10035583	7	10	664	10 12 032 2	FLYWHEEL HOUSING MOUNTI
HEX BOLT EN 1665 M6x20 8.8	10018711	6	3	596	10 12 264 0	CYLINDER HEAD COVER ASS
HEX BOLT EN 1665 M6x20 8.8	10018711	6	6	598	10 12 264 6	CYLINDER HEAD COVER ASS
HEX BOLT EN 1665 M6x20 8.8	10018711	6	6	599	10 12 265 9	CYLINDER HEAD COVER ASS
HEX BOLT EN 1665 M6x20 8.8	10018711	11	2	625	10 11 941 3	HIGH PRESSURE PIPE ASSEM
HEX BOLT EN 1665 M6x20 8.8	10018711	2	4	633	90 78 314	HEATING FLANGE ADD-ON
HEX BOLT EN 1665 M6x40 10.9	10289164	5	14	609	10 11 616 5	LUBE OIL PUMP ASSY B=24 l=
HEX BOLT EN 1665 M8X100 8.	10014042	10	6	604	10 12 476 3	OIL MODULE ASSEMBLY
HEX BOLT EN 1665 M8X120 8.	10017158	5	5	639	10 11 752 9	THERMOSTAT HOUSING ASS
HEX BOLT EN 1665 M8X20 8.8	10030519	2	1	675	10 11 903 8	CONSOLE
HEX BOLT EN 1665 M8X30 10.	10035593	5	4	581	10 12 021 3	POWER UNIT SUPPORT ATT
HEX BOLT EN 1665 M8X30 10.	10035593	5	2	583	10 11 694 5	OIL DIPSTICK WITH PIPE
HEX BOLT EN 1665 M8X30 10.	10035593	7	4	638	10 11 763 3	CONNECTION F.WATER PIPE
HEX BOLT EN 1665 M8X60 10.	10035594	4	6	581	10 12 021 3	POWER UNIT SUPPORT ATT
HEX BOLT EN 1665 M8X60 10.	10035594	4	2	629	90 80 436	SUCTION NOZZLE ADD-ON
HEX BOLT EN 1665 M8x12 8.8	10024115	4	1	576	10 11 874 8	PIPELINE INSTALLATION

Description	Item	Pos.	Quantity	Page	Assembly	Description
HEX BOLT EN 1665 M8x12 8.8	10024115	4	2	663	98 85 618	ROTATIONAL SPEED SENSOR
HEX BOLT EN 1665 M8x130 10.	10037309	17	4	582	10 12 593 7	OIL SUMP WITH FASTENING
HEX BOLT EN 1665 M8x140 8.8	10101543	12	9	604	10 12 476 3	OIL MODULE ASSEMBLY
HEX BOLT EN 1665 M8x140 8.8	10101543	4	3	617	10 12 314 1	FUEL FINE-FILTER ASSEMBLY
HEX BOLT EN 1665 M8x175 10.	10287572	5	1	617	10 12 314 1	FUEL FINE-FILTER ASSEMBLY
HEX BOLT EN 1665 M8x20 8.8	10016906	8	3	578	10 12 503 7	PIPELINE INSTALLATION
HEX BOLT EN 1665 M8x20 8.8	10016906	4	6	642	10 11 978 1	COOLANT PIPE BEND ADD-ON
HEX BOLT EN 1665 M8x20 8.8	10016906	13	2	664	10 12 032 2	FLYWHEEL HOUSING MOUNTI
HEX BOLT EN 1665 M8x20 8.8	10016906	2	4	673	10 11 935 3	CONSOLE
HEX BOLT EN 1665 M8x20 8.8	10016906	2	3	674	10 11 935 6	CONSOLE
HEX BOLT EN 1665 M8x30 8.8	10007782	38	1	624	10 12 720 8	FUEL LINES
HEX BOLT EN 1665 M8x35 10.9	10037518	10	8	572	10 12 907 1	CRANKCASE CPL.
HEX BOLT EN 1665 M8x40 10.9	10035575	9	2	581	10 12 021 3	POWER UNIT SUPPORT ATT
HEX BOLT EN 1665 M8x40 10.9	10035575	4	8	632	90 79 077	CONNECTING LINE ADD-ON
HEX BOLT EN 1665 M8x40 10.9	10035575	11	1	638	10 11 763 3	CONNECTION F.WATER PIPE
HEX BOLT EN 1665 M8x45 10.9	10037071	3	9	581	10 12 021 3	POWER UNIT SUPPORT ATT
HEX BOLT EN 1665 M8x45 10.9	10037071	16	20	582	10 12 593 7	OIL SUMP WITH FASTENING
HEX BOLT EN 1665 M8x70 10.9	10037072	7	3	581	10 12 021 3	POWER UNIT SUPPORT ATT
HEX HEAD SCREW	10001473	21	3	41	10 35 874 0	UNDERCARRIAGE CPL
HEX HEAD SCREW	10001473	25	2	44	10 05 149 1	LID
HEX HEAD SCREW EN 1665 M	10036129	2	3	654	90 80 641	STARTER INSTALLATION
HEX HEAD SCREW EN 1665 M	4601426	10	1	635	10 11 865 5	AIR COND. COMPRESSOR A
HEX HEAD SCREW EN 1665 M	10005073	14	2	578	10 12 503 7	PIPELINE INSTALLATION
HEX HEAD SCREW EN 1665 M	10005073	15	4	582	10 12 593 7	OIL SUMP WITH FASTENING
HEX HEAD SCREW EN 1665 M	10100304	9	1	578	10 12 503 7	PIPELINE INSTALLATION
HEX HEAD SCREW WITH FLAN	10037312	5	3	637	90 79 863	AT-WATER PUMP WITH FAST
HEX HEAD SCREW WITH FLAN	10037313	6	1	637	90 79 863	AT-WATER PUMP WITH FAST
HEX HEAD SCREW WITH FLA	10045356	5	1	675	10 11 903 8	CONSOLE
HEX HEAD SCREW WITH FLAN	10014638	15	1	635	10 11 865 5	AIR COND. COMPRESSOR A
HEX HEAD SCREW WITH FLAN	10014638	4	4	656	90 80 668	PROTECTION PLATE ASSEM
HEX HEAD SCREW WITH FLA	10035577	10	2	638	10 11 763 3	CONNECTION F.WATER PIPE
HEX HEAD SCREW WITH FLA	10009007	18	1	617	10 12 314 1	FUEL FINE-FILTER ASSEMBLY
HEX HEAD SCREW WITH FLA	10009007	7	4	632	90 79 077	CONNECTING LINE ADD-ON
HEX HEAD SCREW WITH FLA	10009007	3	4	646	10 11 899 9	BRACKET ADD-ON
HEX HEAD SCREW WITH FLA	10009007	5	4	656	90 80 668	PROTECTION PLATE ASSEM
HEX HEAD SCREW WITH FLAN	10037107	10	2	581	10 12 021 3	POWER UNIT SUPPORT ATT
HEX HEAD SCREW WITH FLAN	10037107	21	4	607	10 12 475 6	OIL MODULE LEFT
HEX HEAD SCREW WITH FLAN	10037107	21	4	608	10 12 475 7	OIL MODULE RIGHT
HEX HEAD SCREW WITH FLAN	10037107	10	4	625	10 11 941 3	HIGH PRESSURE PIPE ASSEM
HEX HEAD SCREW WITH FLAN	10035576	4	2	640	10 11 753 0	THERMOSTAT HOUSING PRE
HEX NUT	10003366	3	1	633	90 78 314	HEATING FLANGE ADD-ON
HEX NUT	10297942	16	1	177	10 40 974 7	REGULATION
HEX NUT	7024940	133	1	752	10 34 080 6	PIPE FRACTION SAFETY VALV
HEX NUT	7024940	133	1	753	10 34 081 2	PIPE FRACTION SAFETY VALV
HEX NUT M10	4002563	104	2	207	10 35 873 9	COOLER INSTALLATION
HEX NUT M10	4002563	16	4	219	10 05 302 4	SWING GEAR INSTALLATION
HEX NUT M10	4901429	56	10	117	10 35 873 3	AIR AND EXHAUST INSTALLAT
HEX NUT M10	7370889	8	2	280	10 16 576 6	CONTROL CONSOLE LEFT
HEX NUT M10	7370889	13	4	295	56 18 923	CONTROL CONSOLE RIGHT
HEX NUT M12	4000619	37	4	344	10 35 875 5	HYDR.ROTARY CONNEC.+SWI
HEX NUT M12	4000619	258	1	422	10 05 303 6	PANELLING
HEX NUT M12	4000619	137	1	432	10 49 857 1	PANELLING
HEX NUT M12	4000619	258	1	437	10 49 857 1	PANELLING
HEX NUT M12	4000619	41	8	701	10 35 872 5	GOOSENECK BOOM 7,00M
HEX NUT M12	4000619	8	2	713	10 07 162 8	HYDR.CYLINDER W/ADDITION.
HEX NUT M12	4900125	12	1	286	10 05 879 2	MANIPULATOR LEFT
HEX NUT M12	4900125	12	1	299	10 05 879 4	MANIPULATOR RIGHT
HEX NUT M16	4000420	48	8	42	10 35 874 0	UNDERCARRIAGE CPL
HEX NUT M16	4000420	17	1	80	92 78 174	ADJUSTMENT
HEX NUT M16	4000420	49	8	127	90 80 120	PUMP DISTRIBUTION GEAR

Description	Item	Pos.	Quantity	Page	Assembly	Description
HEX NUT M16	4000420	49	5	407	10 11 355 7	CONTROL BLOCK
HEX NUT M16	4000420	5	2	740	10 07 061 5	CLAMP
HEX NUT M20 10021432-006	10425687	48	2	126	90 80 120	PUMP DISTRIBUTION GEAR
HEX NUT M24 10021432-006	10425688	26	8	110	10 49 845 5	MOTOR SUPPORT
HEX NUT M4	4000376	38	16	277	10 05 798 3	ARM REST LEFT
HEX NUT M4	4000376	105	1	292	10 82 277 5	ARM REST RIGHT
HEX NUT M4	4000376	121	2	293	10 82 277 5	ARM REST RIGHT
HEX NUT M4	4000376	5	3	324	10 02 207 8	ASSEMBLY BRACKET
HEX NUT M4	4000376	2180	3	490	10 29 113 8	PANELLING
HEX NUT M4	4000376	98	4	495	10 35 875 7	ELECTR.SYST.UPPERCARRI
HEX NUT M4	4000376	44	3	504	10 09 499 2	ELECTRIC MATERIAL LIST
HEX NUT M4	4000376	55	12	526	10 35 876 3	ELECTR.SYSTEM FUEL TANK
HEX NUT M4	4000376	55	12	533	10 49 837 7	ELECTR.SYSTEM FUEL TANK
HEX NUT M4	4000376	3	2	783	98 73 999	HEATING 20W/24V F.EL.BOX.
HEX NUT M4	4000376	67	8	793	10 82 390 4	ELECTR.SYSTEM ELEVATION
HEX NUT M4	413412301	44	4	250	10 34 071 7	LUBRICATION PUMP
HEX NUT M4	4600625	10	6	321	10 02 211 7	AIR CIRCULATION CASE
HEX NUT M5	4000466	47	2	278	10 05 798 3	ARM REST LEFT
HEX NUT M5	4000466	63	2	282	97 58 815 01	E-BOARD
HEX NUT M5	4000466	8	2	283	98 74 988	PLATINES INSTALLATION A101
HEX NUT M5	4000466	112	1	293	10 82 277 5	ARM REST RIGHT
HEX NUT M5	4000466	64	2	504	10 09 499 2	ELECTRIC MATERIAL LIST
HEX NUT M5	4000466	112	1	505	10 09 499 2	ELECTRIC MATERIAL LIST
HEX NUT M5	4001866	66	2	282	97 58 815 01	E-BOARD
HEX NUT M6	4000379	480	2	71	56 16 688	WHEEL BRAKE VALVE
HEX NUT M6	4000379	22	2	113	10 09 538 7	FUEL FILTER INSTALLATION
HEX NUT M6	4000379	46	2	126	90 80 120	PUMP DISTRIBUTION GEAR
HEX NUT M6	4000379	64	2	282	97 58 815 01	E-BOARD
HEX NUT M6	4000379	86	2	292	10 82 277 5	ARM REST RIGHT
HEX NUT M6	4000379	75	1	316	10 40 689 8	AIR CONDITIONING UNIT
HEX NUT M6	4000379	39	2	414	10 05 303 6	PANELLING
HEX NUT M6	4000379	99	2	416	10 05 303 6	PANELLING
HEX NUT M6	4000379	140	2	417	10 05 303 6	PANELLING
HEX NUT M6	4000379	172	2	418	10 05 303 6	PANELLING
HEX NUT M6	4000379	39	2	429	10 49 857 1	PANELLING
HEX NUT M6	4000379	99	2	431	10 49 857 1	PANELLING
HEX NUT M6	4000379	140	2	432	10 49 857 1	PANELLING
HEX NUT M6	4000379	172	2	433	10 49 857 1	PANELLING
HEX NUT M6	4000379	12	2	450	10 06 360 5	LID
HEX NUT M6	4000379	42	8	457	10 05 541 0	SIDE DOOR FRONT RIGHT
HEX NUT M6	4000379	52	2	457	10 05 541 0	SIDE DOOR FRONT RIGHT
HEX NUT M6	4000379	300	1	472	10 04 678 8	DRIVER'S CAB DOOR
HEX NUT M6	4000379	450	4	484	70 28 778	ASSY. PARTS
HEX NUT M6	4000379	100	1	504	10 09 499 2	ELECTRIC MATERIAL LIST
HEX NUT M6	4000379	5	4	543	10 05 319 0	DRIER INSTALLATION
HEX NUT M6	4000379	32	8	802	10 05 539 2	SIDE DOOR LEFT
HEX NUT M6	4000379	42	2	802	10 05 539 2	SIDE DOOR LEFT
HEX NUT M6	4002477	67	2	282	97 58 815 01	E-BOARD
HEX NUT M8	10424333	19	1	605	10 12 002 3	OIL LINE ASSEMBLY
HEX NUT M8	4000381	14	3	107	10 35 875 9	HEATING HOSES INSTALLATIO
HEX NUT M8	4000381	24	1	112	10 36 623 6	ENGINE FUEL SYSTEM
HEX NUT M8	4000381	25	2	113	10 09 538 7	FUEL FILTER INSTALLATION
HEX NUT M8	4000381	17	4	115	10 35 873 3	AIR AND EXHAUST INSTALLAT
HEX NUT M8	4000381	85	5	205	10 35 873 9	COOLER INSTALLATION
HEX NUT M8	4000381	95	1	206	10 35 873 9	COOLER INSTALLATION
HEX NUT M8	4000381	40	20	209	10 42 538 5	COMBINED OIL COOLER
HEX NUT M8	4000381	32	1	214	10 49 800 0	MOTOR-ELEKTRIK
HEX NUT M8	4000381	41	3	214	10 49 800 0	MOTOR-ELEKTRIK
HEX NUT M8	4000381	54	1	215	10 49 800 0	MOTOR-ELEKTRIK
HEX NUT M8	4000381	63	1	216	10 49 800 0	MOTOR-ELEKTRIK

Description	Item	Pos.	Quantity	Page	Assembly	Description
HEX NUT M8	4000381	131	2	272	10 05 311 8	DRIVER STAND BASE SECTIO
HEX NUT M8	4000381	56	20	328	10 06 786 9	FIXING PARTS
HEX NUT M8	4000381	54	1	349	10 05 312 6	HYDR.SUCT.+RETURN OIL HO
HEX NUT M8	4000381	71	6	350	10 05 312 6	HYDR.SUCT.+RETURN OIL HO
HEX NUT M8	4000381	167	4	418	10 05 303 6	PANELLING
HEX NUT M8	4000381	178	2	418	10 05 303 6	PANELLING
HEX NUT M8	4000381	167	4	433	10 49 857 1	PANELLING
HEX NUT M8	4000381	178	2	433	10 49 857 1	PANELLING
HEX NUT M8	4000381	22	4	447	10 05 535 4	COOLER COWL
HEX NUT M8	4000381	38	1	461	10 06 375 5	BOX CPL
HEX NUT M8	4000381	170	4	472	10 04 678 8	DRIVER'S CAB DOOR
HEX NUT M8	4000381	160	1	477	10 48 809 7	ELECTRICAL INSTALLATION
HEX NUT M8	4000381	540	1	480	70 28 884	WIPER MOTOR
HEX NUT M8	4000381	158	2	497	10 35 875 7	ELECTR.SYST.UPPERCARRI
HEX NUT M8	4000381	170	2	498	10 35 875 7	ELECTR.SYST.UPPERCARRI
HEX NUT M8	4000381	177	3	498	10 35 875 7	ELECTR.SYST.UPPERCARRI
HEX NUT M8	4000381	13	2	506	10 35 875 8	BATTERY INSTALLATION
HEX NUT M8	4000381	52	1	511	10 06 221 6	ELECTR.INST.BOOM
HEX NUT M8	4000381	52	1	512	10 35 876 2	ELECTR.INST.BOOM
HEX NUT M8	4000381	52	1	513	10 49 837 6	ELECTR.INST.BOOM
HEX NUT M8	4000381	42	2	517	10 06 222 8	ELECTR.SYSTEM CONTROL V
HEX NUT M8	4000381	63	1	517	10 06 222 8	ELECTR.SYSTEM CONTROL V
HEX NUT M8	4000381	62	2	527	10 35 876 3	ELECTR.SYSTEM FUEL TANK
HEX NUT M8	4000381	102	19	528	10 35 876 3	ELECTR.SYSTEM FUEL TANK
HEX NUT M8	4000381	111	3	528	10 35 876 3	ELECTR.SYSTEM FUEL TANK
HEX NUT M8	4000381	120	3	528	10 35 876 3	ELECTR.SYSTEM FUEL TANK
HEX NUT M8	4000381	62	2	534	10 49 837 7	ELECTR.SYSTEM FUEL TANK
HEX NUT M8	4000381	102	21	535	10 49 837 7	ELECTR.SYSTEM FUEL TANK
HEX NUT M8	4000381	111	3	535	10 49 837 7	ELECTR.SYSTEM FUEL TANK
HEX NUT M8	4000381	120	3	535	10 49 837 7	ELECTR.SYSTEM FUEL TANK
HEX NUT M8	4000381	27	4	747	10 36 839 8	TRAVEL ALARM
HEX NUT M8	4000381	53	1	793	10 82 390 4	ELECTR.SYSTEM ELEVATION
HEX NUT M8	411508001	65	1	282	97 58 815 01	E-BOARD
HEX NUT M8	4600783	9	3	243	10 07 675 6	SWING GEAR PINION GREAS
HEX NUT M8	4600783	14	3	246	10 07 675 7	CENTRALIZED LUBRICATION
HEX NUT M8	4600783	68	1	282	97 58 815 01	E-BOARD
HEX NUT M8	4600783	430	1	484	70 28 778	ASSY. PARTS
HEX NUT M8	4901573	12	2	105	10 05 797 8	LOOCK BRACKET
HEX NUT M8	4901573	12	5	193	10 49 867 7	FAN INSTALLATION
HEX NUT M8	4901573	13	6	193	10 49 867 7	FAN INSTALLATION
HEX NUT M8	4901573	12	5	195	10 49 873 2	FAN INSTALLATION
HEX NUT M8	4901573	13	6	195	10 49 873 2	FAN INSTALLATION
HEX NUT M8	4901573	23	1	243	10 07 675 6	SWING GEAR PINION GREAS
HEX NUT M8	4901573	23	1	247	10 07 675 7	CENTRALIZED LUBRICATION
HEX NUT M8	4901573	49	1	247	10 07 675 7	CENTRALIZED LUBRICATION
HEX NUT M8	4901573	8	4	252	10 48 927 7	DISTRIBUTION BLOCK SXE-2
HEX NUT M8	4901573	40	1	461	10 06 375 5	BOX CPL
HEX NUT M8	4901573	94	3	703	10 35 872 5	GOOSENECK BOOM 7,00M
HEX NUT M8	4901573	32	2	710	10 38 839 3	CENTRAL LUBRICATING SYS
HEX NUT M8	4901573	28	12	733	10 35 873 7	PISTON ROD COVER BUCKET
HEX NUT M8	4901573	8	2	750	10 49 827 4	ATTACHMENTS MOUNTING PA
HEX NUT M8	4901732	13	2	105	10 05 797 8	LOOCK BRACKET
HEX SPACER PIN M4	7016412	11	4	503	10 09 499 2	ELECTRIC MATERIAL LIST
HEX SPACER PIN M4X20X8 M	10027643	19	4	503	10 09 499 2	ELECTRIC MATERIAL LIST
HEXAGON SCREWDRIVER 5	000204750	84	1	552	10 08 428 5	TOOL EQUIPMENT
HEXALOBULAR HEAD SCREW	10030346	10	5	645	10 11 566 7	EXHAUST PIPE RIGHT
HEXALOBULAR HEAD SCREW	10030346	10	5	648	10 11 566 8	EXHAUST PIPE LEFT
HEXALOBULAR HEAD SCREW	10332845	5	1	647	10 13 274 6	OUTLET MANIFOLD ADD-ON
HEXALOBULAR HEAD SCREW	10332846	4	5	647	10 13 274 6	OUTLET MANIFOLD ADD-ON
HEXALOBULAR HEAD SCREW	9077282	4	8	588	90 77 286	DRIVING PARTS

Description	Item	Pos.	Quantity	Page	Assembly	Description
HEXALOBULAR HEAD SCREW	10119794	4	10	667	10 12 007 7	FLYWHEEL ASSEMBLY SAE1
HIGH PRESSURE FILTER	5615220	25	2	396	10 35 874 4	CONTROL VALVE INSTALLAT
HIGH PRESSURE HOSE	774376108	70	1m	255	90 64 786	CONNECTING ELEMENT
HIGH PRESSURE HOSE	774376108	70	15m	257	10 01 461 1	AUXILIARY BOX
HIGH PRESSURE PIPE ASSEM	10119413	213	1	567	10 12 595 9	DIESEL ENGINE D9508 A7 320k
HIGH PRESSURE PUMP PRE-A	10117814	1	1	620	90 78 260	HIGH PRESSURE PUMP W.FA
HIGH PRESSURE PUMP W.FA	9078260	171	1	567	10 12 595 9	DIESEL ENGINE D9508 A7 320k
HIGH PRESSURE RAIL LEFT	10116119	1	1	625	10 11 941 3	HIGH PRESSURE PIPE ASSEM
HIGH PRESSURE RAIL RIGHT	10116120	2	1	625	10 11 941 3	HIGH PRESSURE PIPE ASSEM
HINGE	10066497	2	1	458	10 05 541 1	SIDE DOOR FRONT RIGHT
HINGE	10291123	2160	2	490	10 29 113 8	PANELLING
HINGE	7029409	640	2	474	10 04 678 9	DOOR FRAME
HINGED THREADED UNION	7412734	9	1	252	10 48 927 7	DISTRIBUTION BLOCK SXE-2
HINGED THREADED UNION	7617261	23	1	340	10 05 314 4	OIL PILOT VALVE INSTALLATIO
HINGED THREADED UNION	7617261	23	1	341	10 82 438 9	OIL PILOT VALVE INSTALLATIO
HINGED THREADED UNION W	7617714	81	6	123	10 35 879 9	PUMPS INSTALLATION
HINGED THREADED UNION W	7617714	35	4	241	10 35 877 2	SLEWING RING INSTALLATIO
HINGED THREADED UNION W	7617714	71	2	398	10 35 874 4	CONTROL VALVE INSTALLAT
HIP BELT	7371746	80	1	273	10 04 363 1	DRIVERS SEAT
HIP BELT	7371746	80	1	274	10 04 363 2	DRIVERS SEAT
HOIST CYLINDERS DIA.190	10358730	4	1	7	.	
HOIST CYLINDERS DIA.190	10358731	10	1	769	10 35 873 0	HOIST CYLINDERS DIA.190
HOIST FIXING POINTS	10382738	59	1	559	10 35 876 6	SIGNS
HOIST FIXING POINTS	10382738	59	1	563	10 49 863 6	SIGNS
HOISTING TRANSMITTER	10014078	4	2	538	10 03 864 3	FOOT SWITCH
HOISTING TRANSMITTER	10014078	4	1	539	10 03 864 4	FOOT SWITCH
HOLDER	10009023	270	2	477	10 48 809 7	ELECTRICAL INSTALLATION
HOLDER	10009044	810	2	479	10 48 809 7	ELECTRICAL INSTALLATION
HOLDER	10027438	251	2	470	70 28 775	FRONT WINDOW
HOLDER	10039678	621	2	486	70 28 778	ASSY. PARTS
HOLDER	10041876	45	1	316	10 40 689 8	AIR CONDITIONING UNIT
HOLDER	10041876	30	3	524	10 35 876 3	ELECTR.SYSTEM FUEL TANK
HOLDER	10041876	30	3	531	10 49 837 7	ELECTR.SYSTEM FUEL TANK
HOLDER	10067961	217	1	421	10 05 303 6	PANELLING
HOLDER	10067961	217	1	436	10 49 857 1	PANELLING
HOLDER	10068165	25	1	403	10 06 771 7	HYDR.TUBES INSTALLATION
HOLDER	10068167	26	1	403	10 06 771 7	HYDR.TUBES INSTALLATION
HOLDER	10079251	10	1	327	10 06 786 9	FIXING PARTS
HOLDER	10079252	15	1	327	10 06 786 9	FIXING PARTS
HOLDER	10079253	20	1	327	10 06 786 9	FIXING PARTS
HOLDER	10079307	25	1	327	10 06 786 9	FIXING PARTS
HOLDER	10092471	230	1	421	10 05 303 6	PANELLING
HOLDER	10092471	230	1	436	10 49 857 1	PANELLING
HOLDER	10116693	2	1	669	10 11 671 8	CONTROL BOX ANNEXE
HOLDER	10118125	30	1	214	10 49 800 0	MOTOR-ELEKTRIK
HOLDER	10118125	51	1	215	10 49 800 0	MOTOR-ELEKTRIK
HOLDER	10127458	17	1	578	10 12 503 7	PIPELINE INSTALLATION
HOLDER	10127459	18	1	578	10 12 503 7	PIPELINE INSTALLATION
HOLDER	10386999	52	1	336	10 38 698 2	HYDR.PUMPS TO SPOOL VALV
HOLDER	10386999	52	1	339	10 49 804 4	HYDR.PUMPS TO SPOOL VALV
HOLDER	10387001	56	2	336	10 38 698 2	HYDR.PUMPS TO SPOOL VALV
HOLDER	10387001	56	2	339	10 49 804 4	HYDR.PUMPS TO SPOOL VALV
HOLDER	6905671	23	1	516	10 06 222 8	ELECTR.SYSTEM CONTROL V
HOLDER	6905671	22	1	523	10 35 876 3	ELECTR.SYSTEM FUEL TANK
HOLDER	6905671	22	1	530	10 49 837 7	ELECTR.SYSTEM FUEL TANK
HOLDER	7028768	240	9	477	10 48 809 7	ELECTRICAL INSTALLATION
HOLDER	7028801	200	2	470	70 28 775	FRONT WINDOW
HOLDER	7028812	250	11	477	10 48 809 7	ELECTRICAL INSTALLATION
HOLDER	7372355	18	1	284	73 73 807	SAFETY LEVER
HOLDER	7373825	20	1	284	73 73 807	SAFETY LEVER

Description	Item	Pos.	Quantity	Page	Assembly	Description
HOLDER	7615636	90	2	416	10 05 303 6	PANELLING
HOLDER	7615636	331	4	427	10 05 303 6	PANELLING
HOLDER	7615636	90	2	431	10 49 857 1	PANELLING
HOLDER	7615636	331	4	442	10 49 857 1	PANELLING
HOLDER	9077655	2	1	651	10 11 558 7	EXHAUST ADAPTER ASSEMB
HOLDER	9077656	2	1	652	10 11 678 0	EXHAUST ADAPTER ASSEMBL
HOLDER	9078837	4	2	630	90 78 417	CHARGE AIR PIPE ASSEMBLY
HOLDER	9078884	4	1	621	90 78 554	LEAK OIL LINE ADD-ON
HOLDER	9080727	11	1	623	10 12 720 8	FUEL LINES
HOLDER	9080841	9	1	623	10 12 720 8	FUEL LINES
HOLDER	9950357	30	1	327	10 06 786 9	FIXING PARTS
HOLDER LEFT	10355810	7	1	208	10 42 538 5	COMBINED OIL COOLER
HOLDER RIGHT	10355811	8	1	208	10 42 538 5	COMBINED OIL COOLER
HOLDER S235JR	10116694	1	1	669	10 11 671 8	CONTROL BOX ANNEXE
HOLDING PIN	10115022	8	1	264	10 33 323 7	PRESSURE LIMITING VALVE
HOLDING RING 170X90X5	9444408	16	1	64	94 43 970	TRAVEL DRIVE FAT 500P005
HOLDING SEGMENT	10007945	30	2	149	10 33 307 0	DRIVING GEAR
HOLLOW SCREW 10X3	4001439	5	1	576	10 11 874 8	PIPELINE INSTALLATION
HOLLOW SCREW 10X3	4001439	11	2	617	10 12 314 1	FUEL FINE-FILTER ASSEMBLY
HOLLOW SCREW 10X3	4001439	10	6	621	90 78 554	LEAK OIL LINE ADD-ON
HOLLOW SCREW 10X3	4001439	27	2	623	10 12 720 8	FUEL LINES
HOLLOW SCREW 10X3	4001439	5	6	641	10 11 930 6	VENT TUBE ASSEMBLY
HOLLOW SCREW 14X4	10132193	7	1	610	10 13 273 8	FINAL CONTROL VALVE
HOLLOW SCREW 15	4981226	10	2	579	10 12 375 9	OIL LINE PRE-ASSEMBLY
HOLLOW SCREW 15	4981226	20	1	617	10 12 314 1	FUEL FINE-FILTER ASSEMBLY
HOLLOW SCREW 15	4981226	3	1	672	10 11 883 5	CONNECTING PIECE PRE-ASS
HOLLOW SCREW 30X3	10120098	8	1	605	10 12 002 3	OIL LINE ASSEMBLY
HOOK	10096795	41	2	102	10 35 875 3	RADIATOR BOX INSTALLATIO
HOSE	10000269	22	1	346	10 05 312 6	HYDR.SUCT.+RETURN OIL HO
HOSE	10000292	61	1	358	10 35 875 1	HYDR.INSTALLATION FAN DR
HOSE	10000380	14	2	89	10 07 444 8	HYDR.INSTALLATION UNDER
HOSE	10000463	24	1	346	10 05 312 6	HYDR.SUCT.+RETURN OIL HO
HOSE	10000811	2	1	156	10 33 323 8	HYDRAULIC ADJUSTMENT
HOSE	10000896	25	1	352	10 05 312 9	HYDR.AND GEAR OIL COOLIN
HOSE	10000947	124	1	705	10 35 872 5	GOOSENECK BOOM 7,00M
HOSE	10000947	134	1	705	10 35 872 5	GOOSENECK BOOM 7,00M
HOSE	10000954	65	1	350	10 05 312 6	HYDR.SUCT.+RETURN OIL HO
HOSE	10003614	11	1	361	10 35 875 4	HYDR.INSTAL.CONTROL TUBE
HOSE	10003614	11	1	368	10 82 438 0	HYDR.INSTAL.CONTROL TUBE
HOSE	10003862	35	1	701	10 35 872 5	GOOSENECK BOOM 7,00M
HOSE	10013970	1020	2.2m	479	10 48 809 7	ELECTRICAL INSTALLATION
HOSE	10017322	55	1	349	10 05 312 6	HYDR.SUCT.+RETURN OIL HO
HOSE	10030891	5	1	244	10 29 301 9	DISTRIBUTION BLOCK MX-F 3/
HOSE	10032752	26	1	364	10 35 875 4	HYDR.INSTAL.CONTROL TUBE
HOSE	10032752	26	1	371	10 82 438 0	HYDR.INSTAL.CONTROL TUBE
HOSE	10041726	8	1	719	10 35 872 0	CENTRAL LUBRICATING SYS
HOSE	10285271	26	1	352	10 05 312 9	HYDR.AND GEAR OIL COOLIN
HOSE	10289035	7	1	343	10 35 875 5	HYDR.ROTARY CONNEC.+SWI
HOSE	10289036	8	1	343	10 35 875 5	HYDR.ROTARY CONNEC.+SWI
HOSE	10289037	9	1	343	10 35 875 5	HYDR.ROTARY CONNEC.+SWI
HOSE	10289038	10	1	343	10 35 875 5	HYDR.ROTARY CONNEC.+SWI
HOSE	10289039	3	1	345	10 05 312 6	HYDR.SUCT.+RETURN OIL HO
HOSE	10289040	25	1	355	10 35 875 1	HYDR.INSTALLATION FAN DR
HOSE	10289045	2	2	343	10 35 875 5	HYDR.ROTARY CONNEC.+SWI
HOSE	10289156	3	1	359	10 35 875 4	HYDR.INSTAL.CONTROL TUBE
HOSE	10289157	2	1	359	10 35 875 4	HYDR.INSTAL.CONTROL TUBE
HOSE	10289157	2	1	366	10 82 438 0	HYDR.INSTAL.CONTROL TUBE
HOSE	10289158	52	1	357	10 35 875 1	HYDR.INSTALLATION FAN DR
HOSE	10289159	35	1	347	10 05 312 6	HYDR.SUCT.+RETURN OIL HO
HOSE	10289307	40	2	335	10 38 698 2	HYDR.PUMPS TO SPOOL VALV

Description	Item	Pos.	Quantity	Page	Assembly	Description
HOSE	10289307	40	2	338	10 49 804 4	HYDR.PUMPS TO SPOOL VALV
HOSE	10289313	2	1	351	10 05 312 9	HYDR.AND GEAR OIL COOLIN
HOSE	10289314	3	1	351	10 05 312 9	HYDR.AND GEAR OIL COOLIN
HOSE	10289321	5	1	540	10 35 875 6	AIR CONDITION HOSES INSTA
HOSE	10289322	6	1	540	10 35 875 6	AIR CONDITION HOSES INSTA
HOSE	10289323	7	1	540	10 35 875 6	AIR CONDITION HOSES INSTA
HOSE	10289324	8	1	540	10 35 875 6	AIR CONDITION HOSES INSTA
HOSE	10289376	17	2	219	10 05 302 4	SWING GEAR INSTALLATION
HOSE	10290254	2	1	334	10 38 698 2	HYDR.PUMPS TO SPOOL VALV
HOSE	10290254	2	1	337	10 49 804 4	HYDR.PUMPS TO SPOOL VALV
HOSE	10290522	119	5	704	10 35 872 5	GOOSENECK BOOM 7,00M
HOSE	10290523	118	2	704	10 35 872 5	GOOSENECK BOOM 7,00M
HOSE	10290524	117	2	704	10 35 872 5	GOOSENECK BOOM 7,00M
HOSE	10293162	6	1	248	10 29 301 6	DISTRIBUTION BLOCK MX-F 4/
HOSE	10293163	7	1	248	10 29 301 6	DISTRIBUTION BLOCK MX-F 4/
HOSE	10293164	8	1	248	10 29 301 6	DISTRIBUTION BLOCK MX-F 4/
HOSE	10293165	9	1	248	10 29 301 6	DISTRIBUTION BLOCK MX-F 4/
HOSE	10293166	10	1	248	10 29 301 6	DISTRIBUTION BLOCK MX-F 4/
HOSE	10293169	11	1	248	10 29 301 6	DISTRIBUTION BLOCK MX-F 4/
HOSE	10293172	6	1	244	10 29 301 9	DISTRIBUTION BLOCK MX-F 3/
HOSE	10296022	2	3	789	10 37 296 7	HOSES ELONGATION
HOSE	10297576	83	2	703	10 35 872 5	GOOSENECK BOOM 7,00M
HOSE	10297579	69	2	702	10 35 872 5	GOOSENECK BOOM 7,00M
HOSE	10297581	75	2	702	10 35 872 5	GOOSENECK BOOM 7,00M
HOSE	10298516	96	4	703	10 35 872 5	GOOSENECK BOOM 7,00M
HOSE	10298807	3	2	711	10 38 862 4	CENTRAL LUBRICATING SYS
HOSE	10300878	9	1	714	10 35 872 1	STICK 2,60M
HOSE	10300879	10	1	714	10 35 872 1	STICK 2,60M
HOSE	10303056	30	1	356	10 35 875 1	HYDR.INSTALLATION FAN DR
HOSE	10303382	7	1	719	10 35 872 0	CENTRAL LUBRICATING SYS
HOSE	10303383	30	1	720	10 35 872 0	CENTRAL LUBRICATING SYS
HOSE	10323710	24	1	364	10 35 875 4	HYDR.INSTAL.CONTROL TUBE
HOSE	10327169	3	1	334	10 38 698 2	HYDR.PUMPS TO SPOOL VALV
HOSE	10327169	3	1	337	10 49 804 4	HYDR.PUMPS TO SPOOL VALV
HOSE	10340098	20	1	246	10 07 675 7	CENTRALIZED LUBRICATION
HOSE	10346618	40	1	356	10 35 875 1	HYDR.INSTALLATION FAN DR
HOSE	10353605	3	2	343	10 35 875 5	HYDR.ROTARY CONNEC.+SWI
HOSE	10353606	4	2	343	10 35 875 5	HYDR.ROTARY CONNEC.+SWI
HOSE	10353607	32	1	797	10 09 406 7	HEATING+AIR-CONDITION.HO
HOSE	10353608	31	1	797	10 09 406 7	HEATING+AIR-CONDITION.HO
HOSE	10409574	55	2	771	10 35 873 1	HOIST CYLINDERS DIA.190
HOSE	5602647	20	1	346	10 05 312 6	HYDR.SUCT.+RETURN OIL HO
HOSE	5603339	72	1	702	10 35 872 5	GOOSENECK BOOM 7,00M
HOSE	5604252	3	2	89	10 07 444 8	HYDR.INSTALLATION UNDER
HOSE	5610046	40	1	348	10 05 312 6	HYDR.SUCT.+RETURN OIL HO
HOSE	5611369	2	2	89	10 07 444 8	HYDR.INSTALLATION UNDER
HOSE	5612243	125	1	399	10 35 874 4	CONTROL VALVE INSTALLAT
HOSE	5612659	84	4	123	10 35 879 9	PUMPS INSTALLATION
HOSE	5612659	93	1	124	10 35 879 9	PUMPS INSTALLATION
HOSE	5613500	21	3	363	10 35 875 4	HYDR.INSTAL.CONTROL TUBE
HOSE	5613500	21	3	370	10 82 438 0	HYDR.INSTAL.CONTROL TUBE
HOSE	5615135	50	1	357	10 35 875 1	HYDR.INSTALLATION FAN DR
HOSE	5615647	138	1	705	10 35 872 5	GOOSENECK BOOM 7,00M
HOSE	5616211	20	1	363	10 35 875 4	HYDR.INSTAL.CONTROL TUBE
HOSE	5616211	20	1	370	10 82 438 0	HYDR.INSTAL.CONTROL TUBE
HOSE	5616558	36	1	701	10 35 872 5	GOOSENECK BOOM 7,00M
HOSE	5618265	60	1	358	10 35 875 1	HYDR.INSTALLATION FAN DR
HOSE	5618388	28	1	352	10 05 312 9	HYDR.AND GEAR OIL COOLIN
HOSE	5618392	125	1	705	10 35 872 5	GOOSENECK BOOM 7,00M
HOSE	5618412	115	1	399	10 35 874 4	CONTROL VALVE INSTALLAT

Description	Item	Pos.	Quantity	Page	Assembly	Description
HOSE	5618453	66	3	397	10 35 874 4	CONTROL VALVE INSTALLAT
HOSE	5618677	65	2	397	10 35 874 4	CONTROL VALVE INSTALLAT
HOSE	5618801	60	1	350	10 05 312 6	HYDR.SUCT.+RETURN OIL HO
HOSE	5618881	50	1	349	10 05 312 6	HYDR.SUCT.+RETURN OIL HO
HOSE	5619289	105	1	399	10 35 874 4	CONTROL VALVE INSTALLAT
HOSE	5619289	110	1	399	10 35 874 4	CONTROL VALVE INSTALLAT
HOSE	6200461	700	5m	478	10 48 809 7	ELECTRICAL INSTALLATION
HOSE	6200461	640	0.5m	482	10 29 114 6	WIPER ARM
HOSE	7008082	10	1	361	10 35 875 4	HYDR.INSTAL.CONTROL TUBE
HOSE	7008082	10	1	368	10 82 438 0	HYDR.INSTAL.CONTROL TUBE
HOSE	7011398	2	1	345	10 05 312 6	HYDR.SUCT.+RETURN OIL HO
HOSE	7012265	95	3	703	10 35 872 5	GOOSENECK BOOM 7,00M
HOSE	7025676	51	2	357	10 35 875 1	HYDR.INSTALLATION FAN DR
HOSE	7029428	640	1	483	70 28 866	WIPER ARM
HOSE	7360075	63	2m	117	10 35 873 3	AIR AND EXHAUST INSTALLAT
HOSE	7413022	21	1	346	10 05 312 6	HYDR.SUCT.+RETURN OIL HO
HOSE	7413028	120	1	399	10 35 874 4	CONTROL VALVE INSTALLAT
HOSE	7413201	27	1	352	10 05 312 9	HYDR.AND GEAR OIL COOLIN
HOSE	7620786	23	1	346	10 05 312 6	HYDR.SUCT.+RETURN OIL HO
HOSE CLAMP	10031940	38	6	201	10 35 873 9	COOLER INSTALLATION
HOSE CLAMP	774252314	41	8	202	10 35 873 9	COOLER INSTALLATION
HOSE CLAMP	9368905	29	3	352	10 05 312 9	HYDR.AND GEAR OIL COOLIN
HOSE CLAMP	9385073	66	1	358	10 35 875 1	HYDR.INSTALLATION FAN DR
HOSE CLAMP	9385073	15	8	362	10 35 875 4	HYDR.INSTAL.CONTROL TUBE
HOSE CLAMP	9385073	15	5	369	10 82 438 0	HYDR.INSTAL.CONTROL TUBE
HOSE CLAMP	9388597	20	1	112	10 36 623 6	ENGINE FUEL SYSTEM
HOSE GUIDE	10073593	21	1	107	10 35 875 9	HEATING HOSES INSTALLATIO
HOSE GUIDE	9358887	24	6	89	10 07 444 8	HYDR.INSTALLATION UNDER
HOSE HOLDER	10065571	15	1	334	10 38 698 2	HYDR.PUMPS TO SPOOL VALV
HOSE HOLDER	10065571	15	1	337	10 49 804 4	HYDR.PUMPS TO SPOOL VALV
HOSE NIPPLE	10009055	970	1	479	10 48 809 7	ELECTRICAL INSTALLATION
HOSE NIPPLE	10115608	6	2	642	10 11 978 1	COOLANT PIPE BEND ADD-ON
HOSE NIPPLE	9140351	2	2	629	90 80 436	SUCTION NOZZLE ADD-ON
HOSE NIPPLE	9140351	13	1	649	10 13 273 9	ATL ATTACHMENT
HOSE NIPPLE	9140351	13	1	650	10 13 274 0	ATL ATTACHMENT
HOSE NIPPLE	9272900	15	1	638	10 11 763 3	CONNECTION F.WATER PIPE
HOSE NW 6,5	10043525	170	1m	256	90 64 786	CONNECTING ELEMENT
HOSE NW 6,5	10043525	170	10m	258	10 01 461 1	AUXILIARY BOX
HOSE SECTION	7402657	1	1	554	93 58 137	OIL DRAIN HOSE
HOSE UNION DN6 STAHL	774371808	10	1	255	90 64 786	CONNECTING ELEMENT
HOSE UNION DN6 STAHL	774371808	10	10	257	10 01 461 1	AUXILIARY BOX
HOSES ELONGATION	10372967	80	1	796	10 49 815 5	CAB ELEVATION 1200MM
HOUSING	10121011	1	1	618	10 12 282 4	FUEL FILTER MODULE
HOUSING	10298629	1	1	166	10 44 145 8	SWIVELLING ANGLE SENSOR
HOUSING	10333074	10	1	130	10 21 593 5	PUMP
HOUSING	10333230	10	1	131	10 42 845 9	SWING PUMP
HOUSING	10409753	1	1	179	10 40 975 2	VALVE HOUSING
HOUSING	11003594	1	1	318	10 81 666 6	EVAPORATOR
HOUSING	5605365	12	1	340	10 05 314 4	OIL PILOT VALVE INSTALLATIO
HOUSING	5605365	12	1	341	10 82 438 9	OIL PILOT VALVE INSTALLATIO
HOUSING	5605365	12	1	342	56 09 948	OIL FILTER SET
HOUSING	7372318	2	1	402	56 15 220	HIGH PRESSURE FILTER
HOUSING	9077975	1	1	126	90 80 120	PUMP DISTRIBUTION GEAR
HOUSING	9276174	10	1	197	10 12 504 2	HYDRAULIC INSTALLATION
HOUSING	9277007	26	1	64	94 43 970	TRAVEL DRIVE FAT 500P005
HOUSING	9277636	10	1	134	90 72 922	HYDRAULIC VARIABLE DISPLA
HOUSING	9277636	10	1	136	90 77 452	HYDRAULIC VARIABLE DISPLA
HOUSING	9886677	10	1	143	98 88 041	HYDR.MOTOR FIX FMF 165
HOUSING FMV 165	9882889	10	1	68	90 72 024	HYDR.MOTOR VAR.FMV 165
HOUSING PRE-ASSEMBLED	10116150	1	1	611	10 11 802 5	DRIVE FOR HIGH PRESSURE P

Description	Item	Pos.	Quantity	Page	Assembly	Description
HUB	10372282	18	2	194	10 49 867 7	FAN INSTALLATION
HUB	10841515	18	2	196	10 49 873 2	FAN INSTALLATION
HUB	9077280	3	1	588	90 77 286	DRIVING PARTS
HYDR.AND GEAR OIL COOLIN	10053129	70	1	332	10 35 874 7	HYDRAULIC INSTALLATION UP
HYDR.AND GEAR OIL COOLIN	10053129	70	1	333	10 49 853 7	HYDRAULIC INSTALLATION UP
HYDR.CYLINDER W/ADDITION.	10064774	24	1	700	10 35 872 5	GOOSENECK BOOM 7,00M
HYDR.CYLINDER W/ADDITION.	10071628	40	1	715	10 35 872 1	STICK 2,60M
HYDR.INSTAL.CONTROL TUBE	10358754	80	1	332	10 35 874 7	HYDRAULIC INSTALLATION UP
HYDR.INSTAL.CONTROL TUBE	10824380	80	1	333	10 49 853 7	HYDRAULIC INSTALLATION UP
HYDR.INSTALLATION FAN DR	10358751	75	1	332	10 35 874 7	HYDRAULIC INSTALLATION UP
HYDR.INSTALLATION FAN DR	10358751	75	1	333	10 49 853 7	HYDRAULIC INSTALLATION UP
HYDR.INSTALLATION UNDER	10074448	14	1	41	10 35 874 0	UNDERCARRIAGE CPL
HYDR.MOTOR FIX FMF 165	9888041	3	1	220	10 05 311 7	SLEWING GEAR
HYDR.MOTOR VAR.FMV 165	9072024	10	2	60	10 07 498 7	TRAVEL DRIVE
HYDR.PUMPS TO SPOOL VALV	10386982	20	1	332	10 35 874 7	HYDRAULIC INSTALLATION UP
HYDR.PUMPS TO SPOOL VALV	10498044	20	1	332	10 35 874 7	HYDRAULIC INSTALLATION UP
HYDR.PUMPS TO SPOOL VALV	10498044	20	1	333	10 49 853 7	HYDRAULIC INSTALLATION UP
HYDR.ROTARY CONNEC.+SWI	10358755	40	1	332	10 35 874 7	HYDRAULIC INSTALLATION UP
HYDR.ROTARY CONNEC.+SWI	10358755	40	1	333	10 49 853 7	HYDRAULIC INSTALLATION UP
HYDR.SUCT.+RETURN OIL HO	10053126	60	1	332	10 35 874 7	HYDRAULIC INSTALLATION UP
HYDR.SUCT.+RETURN OIL HO	10053126	60	1	333	10 49 853 7	HYDRAULIC INSTALLATION UP
HYDR.TUBES INSTALLATION	10067717	35	1	396	10 35 874 4	CONTROL VALVE INSTALLAT
HYDRAULIC ADJUSTMENT	10333238	4	1	130	10 21 593 5	PUMP
HYDRAULIC CYLINDER	94020202	2	1	706	10 06 477 4	HYDR.CYLINDER W/ADDITION.
HYDRAULIC CYLINDER	9593590	2	1	713	10 07 162 8	HYDR.CYLINDER W/ADDITION.
HYDRAULIC CYLINDER	9906383	2	1	770	10 35 873 1	HOIST CYLINDERS DIA.190
HYDRAULIC CYLINDER	9906576	3	1	770	10 35 873 1	HOIST CYLINDERS DIA.190
HYDRAULIC INSTALLATION	10125042	20	2	194	10 49 867 7	FAN INSTALLATION
HYDRAULIC INSTALLATION UP	10358747	7000	1	91	10 35 874 2	UPPERCARRIAGE
HYDRAULIC INSTALLATION UP	10498537	7000	1	93	10 49 853 2	UPPERCARRIAGE
HYDRAULIC OIL	9070362	20	1	10	90 66 460	LUBRICANTS
HYDRAULIC OIL LIEBHERR/ISO	10356825	20	1l	14	90 70 363	BIODEGRADABLE HYDRAULIC-
HYDRAULIC OIL LIEBHERR/ISO	10296478	1000	1	24	10 35 682 5	HYDRAULIC OIL LIEBHERR/ISO
HYDRAULIC OIL LIEBHERR/ISO	10330277	20	1	24	10 35 682 5	HYDRAULIC OIL LIEBHERR/ISO
HYDRAULIC OIL LIEBHERR/IS	10330278	210	1	24	10 35 682 5	HYDRAULIC OIL LIEBHERR/ISO
HYDRAULIC OIL LIEBHERR/IS	10296479	5	1	24	10 35 682 5	HYDRAULIC OIL LIEBHERR/ISO
HYDRAULIC OIL LIEBHERR/IS	10356791	30	1l	13	90 70 362	HYDRAULIC OIL
HYDRAULIC OIL LIEBHERR/IS	10330271	1000	1	20	10 35 679 1	HYDRAULIC OIL LIEBHERR/IS
HYDRAULIC OIL LIEBHERR/IS	10330268	20	1	20	10 35 679 1	HYDRAULIC OIL LIEBHERR/IS
HYDRAULIC OIL LIEBHERR/ISO	10330270	210	1	20	10 35 679 1	HYDRAULIC OIL LIEBHERR/IS
HYDRAULIC OIL LIEBHERR/ISO	10330266	5	1	20	10 35 679 1	HYDRAULIC OIL LIEBHERR/IS
HYDRAULIC OIL LIEBHERR/IS	10356800	10	1l	13	90 70 362	HYDRAULIC OIL
HYDRAULIC OIL LIEBHERR/IS	10330260	1000	1	23	10 35 680 0	HYDRAULIC OIL LIEBHERR/IS
HYDRAULIC OIL LIEBHERR/IS	10330258	20	1	23	10 35 680 0	HYDRAULIC OIL LIEBHERR/IS
HYDRAULIC OIL LIEBHERR/ISO	10330259	210	1	23	10 35 680 0	HYDRAULIC OIL LIEBHERR/IS
HYDRAULIC OIL LIEBHERR/ISO	10330255	5	1	23	10 35 680 0	HYDRAULIC OIL LIEBHERR/IS
HYDRAULIC OIL LIEBHERR/ISO	10356789	20	1l	13	90 70 362	HYDRAULIC OIL
HYDRAULIC OIL LIEBHERR/ISO	10344027	1000	1	19	10 35 678 9	HYDRAULIC OIL LIEBHERR/ISO
HYDRAULIC OIL LIEBHERR/ISO	10344025	20	1	19	10 35 678 9	HYDRAULIC OIL LIEBHERR/ISO
HYDRAULIC OIL LIEBHERR/IS	10344026	210	1	19	10 35 678 9	HYDRAULIC OIL LIEBHERR/ISO
HYDRAULIC OIL LIEBHERR/IS	10344024	5	1	19	10 35 678 9	HYDRAULIC OIL LIEBHERR/ISO
HYDRAULIC OIL LIEBHERR/IS	10356303	10	1l	14	90 70 363	BIODEGRADABLE HYDRAULIC-
HYDRAULIC OIL LIEBHERR/IS	10296481	1000	1	18	10 35 630 3	HYDRAULIC OIL LIEBHERR/IS
HYDRAULIC OIL LIEBHERR/IS	10330272	20	1	18	10 35 630 3	HYDRAULIC OIL LIEBHERR/IS
HYDRAULIC OIL LIEBHERR/ISO	10330276	210	1	18	10 35 630 3	HYDRAULIC OIL LIEBHERR/IS
HYDRAULIC OIL LIEBHERR/ISO	10296480	5	1	18	10 35 630 3	HYDRAULIC OIL LIEBHERR/IS
HYDRAULIC TANK	10358202	10	1	381	10 35 874 5	HYDRAULIC TANK INSTALLAT
HYDRAULIC TANK FOR EXCHA	10358746	100	1	384	10 35 874 5	HYDRAULIC TANK INSTALLAT
HYDRAULIC TANK INSTALLAT	10358745	7100	1	91	10 35 874 2	UPPERCARRIAGE
HYDRAULIC VARIABLE DISPLA	9072922	2	1	125	90 80 165	MULTIPLE CIRCUIT AGGREG

Description	Item	Pos.	Quantity	Page	Assembly	Description
HYDRAULIC VARIABLE DISPLA	9077452	3	1	125	90 80 165	MULTIPLE CIRCUIT AGGREG
HYDRAULIC+GEAR-OIL LIEBH	10356828	30	1l	16	90 70 365	GEAR OIL
HYDRAULIC+GEAR-OIL LIEBH	10296482	1000	1	27	10 35 682 8	HYDRAULIC+GEAR-OIL LIEBH
HYDRAULIC+GEAR-OIL LIEBH	10330282	20	1	27	10 35 682 8	HYDRAULIC+GEAR-OIL LIEBH
HYDRAULIC+GEAR-OIL LIEBHE	10330283	210	1	27	10 35 682 8	HYDRAULIC+GEAR-OIL LIEBH
HYDRAULIC+GEAR-OIL LIEBHE	10330280	5	1	27	10 35 682 8	HYDRAULIC+GEAR-OIL LIEBH
HYDT.TUBE	10123760	1	1	579	10 12 375 9	OIL LINE PRE-ASSEMBLY
HYDT.TUBE	10130203	8	1	649	10 13 273 9	ATL ATTACHMENT
HYDT.TUBE	10130209	8	1	650	10 13 274 0	ATL ATTACHMENT
HYDT.TUBE 15X1,5	10123764	2	1	579	10 12 375 9	OIL LINE PRE-ASSEMBLY
HYDT.TUBE 15X1,5	10126762	23	1	582	10 12 593 7	OIL SUMP WITH FASTENING
IGNITION KEY	10221073	76	1	291	10 82 277 5	ARM REST RIGHT
IGNITION KEY	10221073	10	1	475	70 25 758	GRIP F.DRIVERS
INJECTION LINES	10119367	215	1	567	10 12 595 9	DIESEL ENGINE D9508 A7 320k
INJECTION LINES	10119368	216	1	568	10 12 595 9	DIESEL ENGINE D9508 A7 320k
INJECTION NOZZLE W.FASTEN	10117167	190	8	567	10 12 595 9	DIESEL ENGINE D9508 A7 320k
INJECTOR	10428694	1	1	613	10 11 716 7	INJECTION NOZZLE W.FASTEN
INJECTOR	10490018	1	0	613	10 11 716 7	INJECTION NOZZLE W.FASTEN
INLET VALVE	9078513	2	2	594	10 11 805 1	CYLINDER HEAD PRE-ASS. D9
INSERT	7364467	340	1	792	95 99 236	ELECTRIC INSTALLATION
INSULATING MAT	10022773	5	1	319	10 02 206 9	EVAPORATOR HOUSING
INSULATING MAT	10055309	30	1	444	10 05 530 3	ENGINE BONNET
INSULATING MAT	10055310	31	1	444	10 05 530 3	ENGINE BONNET
INSULATING MAT	10055311	32	1	444	10 05 530 3	ENGINE BONNET
INSULATING MAT	10055312	33	1	444	10 05 530 3	ENGINE BONNET
INSULATING MAT	10055313	34	2	444	10 05 530 3	ENGINE BONNET
INSULATING MAT	10055317	38	3	444	10 05 530 3	ENGINE BONNET
INSULATING MAT	10055318	23	2	443	10 05 530 3	ENGINE BONNET
INSULATING MAT	10055352	11	1	452	10 05 538 1	DOOR AIR FILTER LEFT
INSULATING MAT	10055357	31	1	448	10 05 535 4	COOLER COWL
INSULATING MAT	10055358	32	1	448	10 05 535 4	COOLER COWL
INSULATING MAT	10055359	33	1	448	10 05 535 4	COOLER COWL
INSULATING MAT	10055395	22	2	801	10 05 539 2	SIDE DOOR LEFT
INSULATING MAT	10055414	32	1	457	10 05 541 0	SIDE DOOR FRONT RIGHT
INSULATING MAT	10055417	21	6	453	10 05 543 3	SIDE DOOR BACK RIGHT
INSULATING MAT	10055417	21	9	456	10 05 541 0	SIDE DOOR FRONT RIGHT
INSULATING MAT	10055439	22	3	453	10 05 543 3	SIDE DOOR BACK RIGHT
INSULATING MAT	10055440	32	1	454	10 05 543 3	SIDE DOOR BACK RIGHT
INSULATING MAT	10055456	20	1	455	10 05 545 3	COVER MIDDLE
INSULATING MAT	10055466	20	1	451	10 05 546 4	BONNET LEFT
INSULATING MAT	10063611	20	1	450	10 06 360 5	LID
INSULATING MAT	10063818	34	1	448	10 05 535 4	COOLER COWL
INSULATING MAT	10079194	53	1	445	10 05 530 3	ENGINE BONNET
INSULATING MAT	10089716	21	1	455	10 05 545 3	COVER MIDDLE
INSULATING MAT	10365325	41	1	465	10 35 876 0	LOWER COVERING
INSULATING MAT	10365325	41	1	466	10 49 857 4	LOWER COVERING
INSULATING MAT	10373190	5	1	798	10 37 318 7	SOUND PROOFING
INSULATING MAT	10373191	6	1	798	10 37 318 7	SOUND PROOFING
INSULATING MAT	10373192	7	1	798	10 37 318 7	SOUND PROOFING
INSULATING MAT	10373193	8	1	798	10 37 318 7	SOUND PROOFING
INSULATING MAT	10373194	9	1	798	10 37 318 7	SOUND PROOFING
INSULATING MAT	10373195	10	1	798	10 37 318 7	SOUND PROOFING
INSULATING MAT	10373196	11	1	798	10 37 318 7	SOUND PROOFING
INSULATING MAT	10488100	220	1	488	10 48 809 9	INTERNAL LINING
INSULATION WALL	10079187	50	1	445	10 05 530 3	ENGINE BONNET
INTAKE NOZZLE	10119863	1	2	629	90 80 436	SUCTION NOZZLE ADD-ON
INTAKE NOZZLE	9018026	61	1	122	10 35 879 9	PUMPS INSTALLATION
INTAKE NOZZLE	9080428	1	2	629	90 80 436	SUCTION NOZZLE ADD-ON
INTAKE NOZZLE	9805113	5	1	381	10 35 874 5	HYDRAULIC TANK INSTALLAT
INTAKE NOZZLE	9805114	6	1	381	10 35 874 5	HYDRAULIC TANK INSTALLAT

Description	Item	Pos.	Quantity	Page	Assembly	Description
INTAKE NOZZLE	9943041	70	1	122	10 35 879 9	PUMPS INSTALLATION
INTERMEDIATE BLOCK	9006345	5	1	770	10 35 873 1	HOIST CYLINDERS DIA.190
INTERMEDIATE BLOCK	9392953	56	2	771	10 35 873 1	HOIST CYLINDERS DIA.190
INTERMEDIATE BLOCK	9988764	6	1	770	10 35 873 1	HOIST CYLINDERS DIA.190
INTERMEDIATE COUPLING	9399179	4	1	340	10 05 314 4	OIL PILOT VALVE INSTALLATIO
INTERMEDIATE COUPLING	9399179	4	1	341	10 82 438 9	OIL PILOT VALVE INSTALLATIO
INTERMEDIATE FITTING	9890958	2	1	767	93 99 179	INTERMEDIATE COUPLING
INTERMEDIATE FLANGE	10016655	34	1	250	10 34 071 7	LUBRICATION PUMP
INTERMEDIATE FLANGE	10116734	2	2	638	10 11 763 3	CONNECTION F.WATER PIPE
INTERMEDIATE FLANGE	10333263	1	1	158	10 33 325 9	GEAR PUMP
INTERMEDIATE FLANGE	9278805	12	1	192	98 89 161	CONNECTING PLATE
INTERMEDIATE FLANGE	934174716	37	2	396	10 35 874 4	CONTROL VALVE INSTALLAT
INTERMEDIATE FLANGE	9684904	20	2	60	10 07 498 7	TRAVEL DRIVE
INTERMEDIATE GEAR ASSEM	10118223	372	1	568	10 12 595 9	DIESEL ENGINE D9508 A7 320k
INTERMEDIATE GEAR PRE-A	10118224	1	2	634	10 11 822 3	INTERMEDIATE GEAR ASSEM
INTERMEDIATE LEDGE	10072416	25	2	200	10 35 873 9	COOLER INSTALLATION
INTERMEDIATE PIECE	10064899	107	1	704	10 35 872 5	GOOSENECK BOOM 7,00M
INTERMEDIATE PIECE	10065942	28	2	701	10 35 872 5	GOOSENECK BOOM 7,00M
INTERMEDIATE PIECE	7365704	35	1	316	10 40 689 8	AIR CONDITIONING UNIT
INTERMEDIATE PIECE	9836528	253	1	422	10 05 303 6	PANELLING
INTERMEDIATE PIECE	9836528	253	1	437	10 49 857 1	PANELLING
INTERMEDIATE PIECE H=20	9008100	42	1	344	10 35 875 5	HYDR.ROTARY CONNEC.+SWI
INTERMEDIATE PIECE H=25	9872047	19	2	700	10 35 872 5	GOOSENECK BOOM 7,00M
INTERMEDIATE PIECE H=60	9935392	42	2	701	10 35 872 5	GOOSENECK BOOM 7,00M
INTERMEDIATE PLATE	10059208	126	1	705	10 35 872 5	GOOSENECK BOOM 7,00M
INTERMEDIATE PLATE	10356668	200	1	408	10 11 355 7	CONTROL BLOCK
INTERMEDIATE PLATE	10356670	201	1	408	10 11 355 7	CONTROL BLOCK
INTERMEDIATE PLATE	9874651	40	1	504	10 09 499 2	ELECTRIC MATERIAL LIST
INTERMEDIATE RING	10014730	12	1	249	10 34 071 7	LUBRICATION PUMP
INTERMEDIATE WHEEL AXLE	9072996	18	1	126	90 80 120	PUMP DISTRIBUTION GEAR
INTERMEDIATE WHEEL AXLE	9078590	4	1	634	10 11 822 3	INTERMEDIATE GEAR ASSEM
INTERMEDIATE WHEEL Z=45	9080189	13	1	126	90 80 120	PUMP DISTRIBUTION GEAR
INTERNAL GEAR WHEEL M=3,	9444429	50	1	66	94 43 970	TRAVEL DRIVE FAT 500P005
INTERNAL GEAR WHEEL M=3,7	970643201	25	1	221	90 01 781 7	SLEWING DRIVE SAT 375/253
INTERNAL GEAR WHEEL M=5	9444413	10	1	64	94 43 970	TRAVEL DRIVE FAT 500P005
INTERNAL LINING	10488099	80	1	468	10 47 616 7	CAB
INTERNAL MULTI-DISC	7373505	8	8	61	50 20 370 01	SPRING LOADED MULTI-DISC
INTERNAL MULTI-DISC	7373505	5	8	63	93 21 805 01	BRAKE MULTI-DISC SET
JACKET	5616697	2	1	538	10 03 864 3	FOOT SWITCH
JACKET	5616697	2	1	539	10 03 864 4	FOOT SWITCH
JAW	9078321	2	1	613	10 11 716 7	INJECTION NOZZLE W.FASTEN
KANTSIL SEAL KIT	726450116	18	1	7	.	
KB-RING 118,7X128	10029877	2	1	643	10 13 154 6	PISTON CPL. d=128
KEY	7022336	10	1	536	62 04 743	KEY SWITCH
KEY	7365626	5	1	225	94 42 350	OIL FILLER NECK
KEY	7365626	2	1	464	73 72 093	LOCK
KEY SWITCH	6204743	2	1	735	99 89 179	SWITCH INSTALLATION
KEYBOARD	10677206	2	1	296	10 82 196 3	KEYBOARD CPL. R5.1/V6.2
KEYBOARD CPL. R5.1/V6.2	10821963	40	1	291	10 82 277 5	ARM REST RIGHT
KIT DISTANCE RINGS	9885932	22	2	182	90 79 347	REPAIR SET SWIVEL YOKE LP
KNIFE	10498506	2	1	727	10 49 850 0	SPOON BIT
KUGELKOPF-SCHRAUBENDRE	7019167	310	1	484	70 28 778	ASSY. PARTS
L RING	7381025	28	1	168	90 79 811	RK PISTON
L RING JL50	429612001	32	1	64	94 43 970	TRAVEL DRIVE FAT 500P005
LABEL	10077643	55	1	504	10 09 499 2	ELECTRIC MATERIAL LIST
LABEL	10080490	8	1	290	10 08 046 6	SWITCH INSTALLATION S42
LABEL	10080491	9	1	290	10 08 046 6	SWITCH INSTALLATION S42
LABEL	10084941	61	1	508	10 35 875 8	BATTERY INSTALLATION
LABEL	10085768	4	1	300	10 08 576 7	SWITCH INSTALLATION S248
LABEL	10085769	6	1	300	10 08 576 7	SWITCH INSTALLATION S248

Description	Item	Pos.	Quantity	Page	Assembly	Description
LABEL	10086265	78	1	291	10 82 277 5	ARM REST RIGHT
LABEL	10087065	25	1	503	10 09 499 2	ELECTRIC MATERIAL LIST
LABEL	9836702	7	1	778	99 89 646	SWITCH INSTALLATION S84-2
LABEL	9836704	7	1	777	99 89 645	SWITCH INSTALLATION
LABEL	9988683	4	1	303	90 16 516	SWITCH INSTALLATION S218
LABEL	9989180	4	1	735	99 89 179	SWITCH INSTALLATION
LABEL	9989643	6	1	777	99 89 645	SWITCH INSTALLATION
LABEL	9989644	6	1	778	99 89 646	SWITCH INSTALLATION S84-2
LABEL EMERGENCY EXIT	10039562	830	1	469	70 28 774	GLASS PANES
LABEL S9	10086392	60	1	508	10 35 875 8	BATTERY INSTALLATION
LABEL SAFETY BELT	10066101	54	1	559	10 35 876 6	SIGNS
LABEL SAFETY BELT	10066101	54	1	563	10 49 863 6	SIGNS
LABEL U46	10395385	40	1	521	10 07 608 3	ELECTRIC BOX CPL. U46
LABEL U48	10395431	40	1	520	10 07 707 3	ELECTRIC BOX CPL. U48-A
LADDER	10357863	45	1	795	10 49 815 5	CAB ELEVATION 1200MM
LAMELLAR DISK KIT 52,0/46,7X	10030741	8	2	645	10 11 566 7	EXHAUST PIPE RIGHT
LAMELLAR DISK KIT 52,0/46,7X	10030741	8	2	648	10 11 566 8	EXHAUST PIPE LEFT
LAMP	6002233	20	1	330	70 27 927	ROCKER SWITCH
LEAF RING	10116755	3	32	692	10 12 097 6	SEAL KIT EXHAUST MANIFOL
LEAK OIL LINE ADD-ON	9078554	214	1	567	10 12 595 9	DIESEL ENGINE D9508 A7 320k
LEVEL SENSOR	6204327	10	1	545	10 35 868 3	FUEL SYSTEM
LEVER	7028348	14	1	388	56 17 689	SHUT OFF DEVICE DN 100
LEVER	7028919	320	1	484	70 28 778	ASSY. PARTS
LEVER	7372353	16	1	284	73 73 807	SAFETY LEVER
LEVER	9278653	18	2	80	92 78 174	ADJUSTMENT
LEVER HANDLE	7370689	44	2	269	10 05 311 8	DRIVER STAND BASE SECTIO
LEVER TYPE HAND GREASE	7900280	140	1	552	10 08 428 5	TOOL EQUIPMENT
LH-JOYSTICK LEFT	9968625	10	1	286	10 05 879 2	MANIPULATOR LEFT
LH-JOYSTICK RIGHT	9968611	10	1	299	10 05 879 4	MANIPULATOR RIGHT
LH-MOLYKOTE LONGTERM	8300004	800	1	764	96 31 985	PISTON ROD BEARING 150/22
LH-MOLYKOTE LONGTERM	8300004	800	1	765	99 07 890	PISTON ROD BEARING 125/19
LH-RUST PROTECTION	8300005	801	1	764	96 31 985	PISTON ROD BEARING 150/22
LH-RUST PROTECTION	8300005	801	1	765	99 07 890	PISTON ROD BEARING 125/19
LID	10009188	390	1	489	10 48 809 9	INTERNAL LINING
LID	10015473	110	1	71	56 16 688	WHEEL BRAKE VALVE
LID	10015474	100	1	71	56 16 688	WHEEL BRAKE VALVE
LID	10039124	3	2	618	10 12 282 4	FUEL FILTER MODULE
LID	10049759	35	1	465	10 35 876 0	LOWER COVERING
LID	10049759	35	1	466	10 49 857 4	LOWER COVERING
LID	10051238	20	1	44	10 05 149 1	LID
LID	10051491	20	1	41	10 35 874 0	UNDERCARRIAGE CPL
LID	10051492	10	1	44	10 05 149 1	LID
LID	10056519	232	2	715	10 35 872 1	STICK 2,60M
LID	10058623	270	1	423	10 05 303 6	PANELLING
LID	10058623	270	1	438	10 49 857 1	PANELLING
LID	10059839	40	1	546	10 35 868 3	FUEL SYSTEM
LID	10062288	2	1	465	10 35 876 0	LOWER COVERING
LID	10062288	2	1	466	10 49 857 4	LOWER COVERING
LID	10062306	25	1	465	10 35 876 0	LOWER COVERING
LID	10062306	25	1	466	10 49 857 4	LOWER COVERING
LID	10062308	45	1	465	10 35 876 0	LOWER COVERING
LID	10063553	150	1	418	10 05 303 6	PANELLING
LID	10063553	150	1	433	10 49 857 1	PANELLING
LID	10063555	2	1	462	10 06 355 3	LID
LID	10063605	11	1	447	10 05 535 4	COOLER COWL
LID	10063606	2	1	450	10 06 360 5	LID
LID	10063758	20	1	460	10 06 375 5	BOX CPL
LID	10066285	202	2	715	10 35 872 1	STICK 2,60M
LID	10073043	185	1	419	10 05 303 6	PANELLING
LID	10073043	185	1	434	10 49 857 1	PANELLING

Description	Item	Pos.	Quantity	Page	Assembly	Description
LID	10078627	186	1	419	10 05 303 6	PANELLING
LID	10078627	186	1	434	10 49 857 1	PANELLING
LID	10096391	6	1	394	10 35 874 4	CONTROL VALVE INSTALLAT
LID	10115670	11	1	664	10 12 032 2	FLYWHEEL HOUSING MOUNTI
LID	10116392	5	2	632	90 79 077	CONNECTING LINE ADD-ON
LID	10120392	1	1	677	10 12 039 3	LOCKING PIECES
LID	10124766	3	1	606	10 12 002 7	OIL FILTER
LID	10124766	6	1	607	10 12 475 6	OIL MODULE LEFT
LID	10333224	3	1	177	10 40 974 7	REGULATION
LID	10333225	4	1	177	10 40 974 7	REGULATION
LID	10356671	202	1	408	10 11 355 7	CONTROL BLOCK
LID	10356672	203	1	408	10 11 355 7	CONTROL BLOCK
LID	10356673	206	1	408	10 11 355 7	CONTROL BLOCK
LID	10356674	207	7	408	10 11 355 7	CONTROL BLOCK
LID	10367531	4	2	465	10 35 876 0	LOWER COVERING
LID	10367531	4	2	466	10 49 857 4	LOWER COVERING
LID	10368116	25	2	729	10 49 838 7	BEARING PILLOW BLOCK
LID	10368116	25	2	730	10 49 857 6	BEARING PILLOW BLOCK
LID	10378152	285	1	424	10 05 303 6	PANELLING
LID	10498381	20	2	729	10 49 838 7	BEARING PILLOW BLOCK
LID	10498381	20	2	730	10 49 857 6	BEARING PILLOW BLOCK
LID	10498570	285	1	439	10 49 857 1	PANELLING
LID	7020608	190	2	477	10 48 809 7	ELECTRICAL INSTALLATION
LID	7025845	10	1	492	10 00 920 8	WATER BASIN
LID	7027755	3	1	619	10 30 300 7	FUEL PREFILTER
LID	7028349	12	1	388	56 17 689	SHUT OFF DEVICE DN 100
LID	7028836	230	1	472	10 04 678 8	DRIVER'S CAB DOOR
LID	7028865	430	1	478	10 48 809 7	ELECTRICAL INSTALLATION
LID	7028881	500	1	480	70 28 884	WIPER MOTOR
LID	7370895	3	1	280	10 16 576 6	CONTROL CONSOLE LEFT
LID	7370896	2	1	280	10 16 576 6	CONTROL CONSOLE LEFT
LID	7372237	7	1	372	10 00 909 0	OIL PILOT VALVE
LID	9016187	3	1	465	10 35 876 0	LOWER COVERING
LID	9016187	3	1	466	10 49 857 4	LOWER COVERING
LID	9078565	1	1	655	90 78 564	LOCKING PIECES
LID	9080083	4	1	611	10 11 802 5	DRIVE FOR HIGH PRESSURE P
LID	9080443	1	1	676	90 80 459	LOCKING PIECES
LID	9141600	40	1	57	91 41 597	ROTARY FEED THROUGH
LID	9171589	30	2	308	10 05 798 5	FOOT BOARD INSTALLATION
LID	9271663	11	1	139	92 71 648	ADJUSTMENT
LID	9271664	12	1	139	92 71 648	ADJUSTMENT
LID	9271740	12	1	145	98 88 308	CONNECTING PLATE
LID	9275429	72	1	185	92 75 443	REPAIR SET LID
LID	9278190	13	1	80	92 78 174	ADJUSTMENT
LID	9394442	35	1	308	10 05 798 5	FOOT BOARD INSTALLATION
LID	9494115	113	1	704	10 35 872 5	GOOSENECK BOOM 7,00M
LID	9767890	50	4	383	10 35 874 5	HYDRAULIC TANK INSTALLAT
LID	9767890	50	3	546	10 35 868 3	FUEL SYSTEM
LID	9941036	30	1	465	10 35 876 0	LOWER COVERING
LID	9941036	30	1	466	10 49 857 4	LOWER COVERING
LID	9941043	40	1	465	10 35 876 0	LOWER COVERING
LID	9941043	40	1	466	10 49 857 4	LOWER COVERING
LID CPL	10079999	26	1	41	10 35 874 0	UNDERCARRIAGE CPL
LID CPL	10080000	27	1	41	10 35 874 0	UNDERCARRIAGE CPL
LID SEAL	10294171	5	1	96	10 09 107 4	SERVICE KIT 1500H/2500H
LID SEAL	10294171	30	4	99	10 35 983 0	SERVICE KIT FUEL FILTER
LID SEAL	10294171	4	1	619	10 30 300 7	FUEL PREFILTER
LIFETIME SEAL	10303000	5	2	46	10 29 067 4	CARRYING ROLLER D8K
LIFTING DEVICE BS 3 SERIE	10116067	480	1	570	10 12 595 9	DIESEL ENGINE D9508 A7 320k
LIFTING HOOK	10116068	1	2	657	10 11 606 7	LIFTING DEVICE BS 3 SERIE

Description	Item	Pos.	Quantity	Page	Assembly	Description
LIFTING HOOK	9079977	2	1	657	10 11 606 7	LIFTING DEVICE BS 3 SERIE
LIGHT	10428776	140	1	477	10 48 809 7	ELECTRICAL INSTALLATION
LIGHT BULB	6200685	3	2	499	99 41 040	FLOODLIGHT INSTALLATION
LIGHT BULB	6200685	11	1	500	10 04 553 0	WORK LIGHT
LIGHT BULB	6200685	11	1	501	70 27 205	FLOODLIGHT
LIGHT BULB	6200685	21	2	513	10 49 837 6	ELECTR.INST.BOOM
LIGHT BULB 30V/1,2W/T3	6001713	2	1	290	10 08 046 6	SWITCH INSTALLATION S42
LIGHT BULB 30V/1,2W/T3	6001713	2	1	777	99 89 645	SWITCH INSTALLATION
LIGHT BULB 30V/1,2W/T3	6001713	2	1	778	99 89 646	SWITCH INSTALLATION S84-2
LIGHT BULB 30V/1,2W/T3	6001713	921	1	792	95 99 236	ELECTRIC INSTALLATION
LIMIT STOP	9485739	2	1	54	10 49 867 0	ROTARY CONNECTION INSTA
LIMIT STOP BUFFER	10492230	44	3	444	10 05 530 3	ENGINE BONNET
LIMIT STOP BUFFER	7363930	43	2	444	10 05 530 3	ENGINE BONNET
LIMIT STOP SCREW NG 165	9880236	16	1	80	92 78 174	ADJUSTMENT
LIP SEAL RING	10016715	6	1	47	10 07 535 3	GREASE TENSIONER
LIP SEAL RING	7610523	8	1	224	93 36 053 01	BRAKE
LIP SEAL RING	7610523	8	1	239	90 00 386 4	SEAL KIT
LIP SEAL RING 291X281,4X5,5	7610521	2	1	224	93 36 053 01	BRAKE
LIP SEAL RING 291X281,4X5,5	7610521	2	1	239	90 00 386 4	SEAL KIT
LOAD DIAGRAM CONF.TO ISO	9392835	50	1	559	10 35 876 6	SIGNS
LOAD DIAGRAM CONF.TO ISO	9392835	50	1	563	10 49 863 6	SIGNS
LOCATING BOLT DIA.30MM	7373198	6	1	241	10 35 877 2	SLEWING RING INSTALLATIO
LOCATING BOLT DIA.30MM	7373199	5	1	241	10 35 877 2	SLEWING RING INSTALLATIO
LOCK	7028833	330	1	472	10 04 678 8	DRIVER'S CAB DOOR
LOCK	7363883	4	1	105	10 05 797 8	LOOCK BRACKET
LOCK	7365293	1	1	464	73 72 093	LOCK
LOCK	7371008	36	1	457	10 05 541 0	SIDE DOOR FRONT RIGHT
LOCK	7371008	26	1	802	10 05 539 2	SIDE DOOR LEFT
LOCK	7371009	30	1	451	10 05 546 4	BONNET LEFT
LOCK	7371009	37	1	457	10 05 541 0	SIDE DOOR FRONT RIGHT
LOCK	7371009	27	1	802	10 05 539 2	SIDE DOOR LEFT
LOCK	7372093	5	1	450	10 06 360 5	LID
LOCK	7372093	27	1	460	10 06 375 5	BOX CPL
LOCK	7372093	5	1	462	10 06 355 3	LID
LOCK	7372348	34	1	457	10 05 541 0	SIDE DOOR FRONT RIGHT
LOCK	7372348	24	1	802	10 05 539 2	SIDE DOOR LEFT
LOCK WASHER	10006374	24	3	395	10 35 874 4	CONTROL VALVE INSTALLAT
LOCK WASHER	4229911	50	2	128	90 80 120	PUMP DISTRIBUTION GEAR
LOCK WASHER	4229911	56	4	278	10 05 798 3	ARM REST LEFT
LOCK WASHER	4229911	70	4	282	97 58 815 01	E-BOARD
LOCK WASHER	4229911	56	4	291	10 82 277 5	ARM REST RIGHT
LOCK WASHER	4229911	38	2	414	10 05 303 6	PANELLING
LOCK WASHER	4229911	98	2	416	10 05 303 6	PANELLING
LOCK WASHER	4229911	139	2	417	10 05 303 6	PANELLING
LOCK WASHER	4229911	171	2	418	10 05 303 6	PANELLING
LOCK WASHER	4229911	38	2	429	10 49 857 1	PANELLING
LOCK WASHER	4229911	98	2	431	10 49 857 1	PANELLING
LOCK WASHER	4229911	139	2	432	10 49 857 1	PANELLING
LOCK WASHER	4229911	171	2	433	10 49 857 1	PANELLING
LOCK WASHER	4229911	13	2	450	10 06 360 5	LID
LOCK WASHER	4229911	71	1	504	10 09 499 2	ELECTRIC MATERIAL LIST
LOCK WASHER	4229911	13	6	545	10 35 868 3	FUEL SYSTEM
LOCK WASHER	4239000	123	2	293	10 82 277 5	ARM REST RIGHT
LOCK WASHER	7361965	13	4	54	10 49 867 0	ROTARY CONNECTION INSTA
LOCK WASHER	7361965	63	4	204	10 35 873 9	COOLER INSTALLATION
LOCK WASHER	7361965	48	1	278	10 05 798 3	ARM REST LEFT
LOCK WASHER	7361965	69	4	282	97 58 815 01	E-BOARD
LOCK WASHER	7361965	45	4	382	10 35 874 5	HYDRAULIC TANK INSTALLAT
LOCK WASHER	7361965	17	4	511	10 06 221 6	ELECTR.INST.BOOM
LOCK WASHER	7361965	17	4	512	10 35 876 2	ELECTR.INST.BOOM

Description	Item	Pos.	Quantity	Page	Assembly	Description
LOCK WASHER	7361965	22	4	516	10 06 222 8	ELECTR.SYSTEM CONTROL V
LOCK WASHER	7361965	53	1	517	10 06 222 8	ELECTR.SYSTEM CONTROL V
LOCK WASHER	7361965	47	4	526	10 35 876 3	ELECTR.SYSTEM FUEL TANK
LOCK WASHER	7361965	97	4	527	10 35 876 3	ELECTR.SYSTEM FUEL TANK
LOCK WASHER	7361965	47	4	533	10 49 837 7	ELECTR.SYSTEM FUEL TANK
LOCK WASHER	7361965	97	4	534	10 49 837 7	ELECTR.SYSTEM FUEL TANK
LOCK WASHER /13X1,6 VS	4229912	37	8	41	10 35 874 0	UNDERCARRIAGE CPL
LOCK WASHER /13X1,6 VS	4229912	32	2	241	10 35 877 2	SLEWING RING INSTALLATIO
LOCK WASHER /13X1,6 VS	4229912	53	4	270	10 05 311 8	DRIVER STAND BASE SECTIO
LOCK WASHER /13X1,6 VS	4229912	71	2	282	97 58 815 01	E-BOARD
LOCK WASHER /13X1,6 VS	4229912	12	4	308	10 05 798 5	FOOT BOARD INSTALLATION
LOCK WASHER /13X1,6 VS	4229912	22	4	308	10 05 798 5	FOOT BOARD INSTALLATION
LOCK WASHER /13X1,6 VS	4229912	32	6	308	10 05 798 5	FOOT BOARD INSTALLATION
LOCK WASHER /13X1,6 VS	4229912	37	4	308	10 05 798 5	FOOT BOARD INSTALLATION
LOCK WASHER /13X1,6 VS	4229912	4	8	381	10 35 874 5	HYDRAULIC TANK INSTALLAT
LOCK WASHER /13X1,6 VS	4229912	8	8	381	10 35 874 5	HYDRAULIC TANK INSTALLAT
LOCK WASHER /13X1,6 VS	4229912	53	24	383	10 35 874 5	HYDRAULIC TANK INSTALLAT
LOCK WASHER /13X1,6 VS	4229912	43	6	546	10 35 868 3	FUEL SYSTEM
LOCK WASHER /13X1,6 VS	4229912	53	18	546	10 35 868 3	FUEL SYSTEM
LOCK WASHER 10,5/16X2 VS 1	4229913	12	12	109	10 12 605 7	DRIVE UNIT AG 9508 M 076
LOCK WASHER 10,5/16X2 VS 1	4229913	30	2	340	10 05 314 4	OIL PILOT VALVE INSTALLATIO
LOCK WASHER 10,5/16X2 VS 1	4229913	6	2	351	10 05 312 9	HYDR.AND GEAR OIL COOLIN
LOCK WASHER 10,5/16X2 VS 1	4229913	22	6	403	10 06 771 7	HYDR.TUBES INSTALLATION
LOCK WASHER 10,5/16X2 VS 1	4229913	27	3	403	10 06 771 7	HYDR.TUBES INSTALLATION
LOCK WASHER 10,5/16X2 VS 1	4229913	4	2	741	93 63 937	PIPE CLAMP
LOCK WASHER 12 VS	4900093	84	8	66	94 43 970	TRAVEL DRIVE FAT 500P005
LOCK WASHER 12 VS	4900093	6	4	103	10 05 300 8	PUMPS BOX PARTS
LOCK WASHER 12 VS	4900093	10	2	351	10 05 312 9	HYDR.AND GEAR OIL COOLIN
LOCK WASHER 12 VS	4900093	82	4	771	10 35 873 1	HOIST CYLINDERS DIA.190
LOCK WASHER 12 VS	4900093	142	4	771	10 35 873 1	HOIST CYLINDERS DIA.190
LOCK WASHER 17/24X2,6 VS	423911601	12	8	64	94 43 970	TRAVEL DRIVE FAT 500P005
LOCK WASHER 17/24X2,6 VS	423911601	53	12	66	94 43 970	TRAVEL DRIVE FAT 500P005
LOCK WASHER 8,4/13X1,7 VS	423910801	16	16	194	10 49 867 7	FAN INSTALLATION
LOCK WASHER 8,4/13X1,7 VS	423910801	16	16	196	10 49 873 2	FAN INSTALLATION
LOCK WASHER VS 16	10006372	22	2	221	90 01 781 7	SLEWING DRIVE SAT 375/253
LOCKABLE TANK CAP	7369407	26	1	788	10 49 831 4	FUEL COUPLING WIGGINS
LOCKABLE TANK CAP	7610825	5	1	225	94 42 350	OIL FILLER NECK
LOCKABLE TANK CAP d=45	7610826	11	1	219	10 05 302 4	SWING GEAR INSTALLATION
LOCKING	921618116	75	4	43	10 35 874 0	UNDERCARRIAGE CPL
LOCKING BAR	9836526	261	1	422	10 05 303 6	PANELLING
LOCKING BAR	9836526	261	1	437	10 49 857 1	PANELLING
LOCKING BOLT	10451150	44	5	725	10 49 849 8	BACKHOE BUCKET HD 1950
LOCKING PIECES	10120104	13	1	607	10 12 475 6	OIL MODULE LEFT
LOCKING PIECES	10120168	17	1	565	10 12 595 9	DIESEL ENGINE D9508 A7 320k
LOCKING PIECES	10120393	650	1	571	10 12 595 9	DIESEL ENGINE D9508 A7 320k
LOCKING PIECES	9078564	452	1	570	10 12 595 9	DIESEL ENGINE D9508 A7 320k
LOCKING PIECES	9080459	652	1	571	10 12 595 9	DIESEL ENGINE D9508 A7 320k
LOCKING PLUG	4097529	79	2	222	90 01 781 7	SLEWING DRIVE SAT 375/253
LOCKING PLUG	4097530	2	1	221	90 01 781 7	SLEWING DRIVE SAT 375/253
LOCKING PLUG	7004246	91	1	66	94 43 970	TRAVEL DRIVE FAT 500P005
LOCKING PLUG	7004246	91	2	222	90 01 781 7	SLEWING DRIVE SAT 375/253
LOCKING PLUG	7363015	14	1	768	56 02 932	FLOW REGULATING CHECK
LOCKING PLUG	7373405	5	2	449	10 05 530 6	GUIDING RAIL
LOCKING PLUG	779016501	96	1	222	90 01 781 7	SLEWING DRIVE SAT 375/253
LOCKING PLUG	789000601	4	2	219	10 05 302 4	SWING GEAR INSTALLATION
LOCKING RING	10216718	36	1	133	10 44 145 6	DRIVING GEAR
LOCKING RING	10216719	37	2	133	10 44 145 6	DRIVING GEAR
LOCKING RING	10303006	9	2	46	10 29 067 4	CARRYING ROLLER D8K
LOCKING RING	10410656	41	1	165	10 41 064 0	DRIVING GEAR
LOCKING RING	7019794	350	2	473	10 04 678 8	DRIVER'S CAB DOOR

Description	Item	Pos.	Quantity	Page	Assembly	Description
LOCKING SCREW M8X1 10.9 /	10116319	2	2	603	10 11 632 0	CONTROL PARTS
LOCKING SET	10333078	40	1	130	10 21 593 5	PUMP
LOCTITE	8503598	60	0.01	446	10 05 530 3	ENGINE BONNET
LOCTITE	8622905	108	1	572	10 12 907 1	CRANKCASE CPL.
LOCTITE	8622905	108	1	642	10 11 978 1	COOLANT PIPE BEND ADD-ON
LOCTITE	8628192	103	1	192	98 89 161	CONNECTING PLATE
LOCTITE	8628192	25	0.001	194	10 49 867 7	FAN INSTALLATION
LOCTITE	8628192	25	0.001	196	10 49 873 2	FAN INSTALLATION
LOCTITE	8628192	109	1	574	90 78 548	PISTON COOLING
LOCTITE	8700011	102	1	630	90 78 417	CHARGE AIR PIPE ASSEMBLY
LOCTITE	8700011	102	1	634	10 11 822 3	INTERMEDIATE GEAR ASSEM
LOOCK BRACKET	10057978	20	1	104	10 05 300 8	PUMPS BOX PARTS
LOOCK BRACKET	10093820	70	1	446	10 05 530 3	ENGINE BONNET
LOOCK BRACKET	10093901	71	1	446	10 05 530 3	ENGINE BONNET
LOOM	10300863	1	1	671	10 11 948 7	CABLE BOOM MOUNTING
LOW TEMPERATURE GREASE	10358948	20	1kg	17	90 70 366	GREASES
LOW TEMPERATURE GREASE	10296828	1	1	32	10 35 894 8	LOW TEMPERATURE GREASE
LOW TEMPERATURE GREASE	10296825	10	1	32	10 35 894 8	LOW TEMPERATURE GREASE
LOW TEMPERATURE GREASE	10296822	180	1	32	10 35 894 8	LOW TEMPERATURE GREASE
LOW TEMPERATURE GREASE	10296827	2	1	32	10 35 894 8	LOW TEMPERATURE GREASE
LOW TEMPERATURE GREASE	10296824	25	1	32	10 35 894 8	LOW TEMPERATURE GREASE
LOW TEMPERATURE GREASE	10296823	50	1	32	10 35 894 8	LOW TEMPERATURE GREASE
LOWER COVERING	10358760	8600	1	92	10 35 874 2	UPPERCARRIAGE
LOWER COVERING	10498574	8600	1	93	10 49 853 2	UPPERCARRIAGE
LUBE OIL PUMP ASSY B=24 I=	10116165	140	1	567	10 12 595 9	DIESEL ENGINE D9508 A7 320k
LUBE OIL PUMP PREASS. B=2	10116166	1	2	609	10 11 616 5	LUBE OIL PUMP ASSY B=24 I=
LUBRICANT PASTE OPTIMOLY	040710450	100	1	596	10 12 264 0	CYLINDER HEAD COVER ASS
LUBRICANT PASTE OPTIMOLY	040710450	100	1	597	10 12 264 5	CYLINDER HEAD COVER ASS
LUBRICANT PASTE OPTIMOLY	040710450	100	1	598	10 12 264 6	CYLINDER HEAD COVER ASS
LUBRICANT PASTE OPTIMOLY	040710450	100	1	599	10 12 265 9	CYLINDER HEAD COVER ASS
LUBRICANT PASTE OPTIMOLY	040710450	100	1	687	10 12 089 6	SEAL KIT ZYLINDER HEAD CPL
LUBRICANTS	9066460	500	1	40	10 35 970 3	SERVICE MATERIAL
LUBRICATING OIL LINE	10119570	7	1	649	10 13 273 9	ATL ATTACHMENT
LUBRICATING OIL LINE 10X1	10132112	7	1	650	10 13 274 0	ATL ATTACHMENT
LUBRICATING PAD	9375276	30	1	241	10 35 877 2	SLEWING RING INSTALLATIO
LUBRICATION DIAGRAM	10070310	53	1	559	10 35 876 6	SIGNS
LUBRICATION DIAGRAM	10070310	53	1	563	10 49 863 6	SIGNS
LUBRICATION PUMP	10340717	2	1	243	10 07 675 6	SWING GEAR PINION GREAS
LUBRICATION PUMP	10340717	10	1	246	10 07 675 7	CENTRALIZED LUBRICATION
LUBRISEAL TRANSPARENT	8501674	2000	1	470	70 28 775	FRONT WINDOW
LUG	10126587	22	1	582	10 12 593 7	OIL SUMP WITH FASTENING
LUG	10131786	3	1	610	10 13 273 8	FINAL CONTROL VALVE
LUG	9078874	8	1	623	10 12 720 8	FUEL LINES
LUG	9080193	23	1	126	90 80 120	PUMP DISTRIBUTION GEAR
LUG	9131612	7	1	583	10 11 694 5	OIL DIPSTICK WITH PIPE
LUG	9752281	8	1	119	10 35 879 9	PUMPS INSTALLATION
LUG	9757423	22	4	89	10 07 444 8	HYDR.INSTALLATION UNDER
LUG 9SMNPB28K3	10119357	7	1	576	10 11 874 8	PIPELINE INSTALLATION
LUG GE 10L	7003814	12	2	89	10 07 444 8	HYDR.INSTALLATION UNDER
LUG GE 10L	7003814	62	1	122	10 35 879 9	PUMPS INSTALLATION
LUG GE 10L	7003814	80	3	123	10 35 879 9	PUMPS INSTALLATION
LUG GE 10L	7003814	36	4	241	10 35 877 2	SLEWING RING INSTALLATIO
LUG GE 22L G3/4A	4001446	21	2	340	10 05 314 4	OIL PILOT VALVE INSTALLATIO
LUG GE 22L G3/4A	4001446	21	2	341	10 82 438 9	OIL PILOT VALVE INSTALLATIO
LUG GE 6S	4901166	35	1	120	10 35 879 9	PUMPS INSTALLATION
LUG M24X1,5	9080429	2	2	629	90 80 436	SUCTION NOZZLE ADD-ON
LUG T 10L	7362101	13	1	89	10 07 444 8	HYDR.INSTALLATION UNDER
LUMINOUS PUSH BUTTON CO	6204372	3	1	290	10 08 046 6	SWITCH INSTALLATION S42
LUMINOUS PUSH BUTTON CO	6204372	3	1	777	99 89 645	SWITCH INSTALLATION
LUMINOUS PUSH BUTTON CO	6204372	3	1	778	99 89 646	SWITCH INSTALLATION S84-2

Description	Item	Pos.	Quantity	Page	Assembly	Description
MAGNET COIL	10333044	2	1	375	56 15 344	SOLENOID VALVE
MAGNET COIL	10455143	10	1	411	10 34 192 9	PRESSURE REDUCTION VALV
MAIN ELEMENT	5604682	5	2	97	10 36 190 7	SERVICE KIT 1000H
MAIN ELEMENT	5604682	4	2	118	10 35 873 4	AIR FILTER INSTALLATION
MAIN ROD	10116876	60	8	566	10 12 595 9	DIESEL ENGINE D9508 A7 320k
MAIN ROD	10116877	1	1	592	10 11 687 6	MAIN ROD
MAINTENANCE INDICATOR	7364276	5	2	118	10 35 873 4	AIR FILTER INSTALLATION
MALE FITTING FOR PIPES M1	7027675	2	1	255	90 64 786	CONNECTING ELEMENT
MANIPULATOR LEFT	10058792	3	1	285	10 06 804 1	MANIPULATOR LEFT CPL CAN
MANIPULATOR LEFT CPL CAN	10068041	50	1	278	10 05 798 3	ARM REST LEFT
MANIPULATOR RIGHT	10058794	3	1	298	10 06 804 5	MANIPULATOR RIGHT CPL CA
MANIPULATOR RIGHT CPL CA	10068045	52	1	291	10 82 277 5	ARM REST RIGHT
MARKING TYPE PLATE	10358767	8	1	561	10 49 863 6	SIGNS
MASTER LINK	5618024	20	1	52	73 71 456	MASTER LINK ASSY
MASTER LINK	5618025	10	1	52	73 71 456	MASTER LINK ASSY
MASTER LINK ASSY	7371456	10	1	51	56 18 003	CHAIN END LINK
MAT	10289996	560	1	489	10 48 809 9	INTERNAL LINING
MAT	10289997	570	1	489	10 48 809 9	INTERNAL LINING
METALASTIC BUFFER	7019129	470	1	484	70 28 778	ASSY. PARTS
METALASTIC BUFFER	7021047	480	1	484	70 28 778	ASSY. PARTS
MIDDLE HOUSING	9884136	2	1	188	98 84 140	COOLING CIRCUIT PUMP
MINERAL-OIL-ANALYSIS SET	10029626	11	1	38	90 66 466	ACCESSORIES
MINERAL-OIL-ANALYSIS SET	7018368	12	1	38	90 66 466	ACCESSORIES
MINERAL-OIL-ANALYSIS SET	7018369	13	1	38	90 66 466	ACCESSORIES
MINERAL-OIL-ANALYSIS SET	8145660	10	1	38	90 66 466	ACCESSORIES
MIRROR SUPPORT	7017443	2	1	556	96 87 016	OUTSIDE MIRROR ASSEMBLY
MIRROR TOP PART	7005028	1	1	556	96 87 016	OUTSIDE MIRROR ASSEMBLY
MIRROT SUPPORT	7019141	820	1	487	10 04 435 3	OUTSIDE MIRROR
MODIF.CONTROL CAB	9927352	10	1	795	10 49 815 5	CAB ELEVATION 1200MM
MODIF.CYLINDER	10498366	12	1	733	10 35 873 7	PISTON ROD COVER BUCKET
MODIFICATION CHASSIS	10498553	70	1	796	10 49 815 5	CAB ELEVATION 1200MM
MODIFICATION FUEL TANK	10498315	30	1	788	10 49 831 4	FUEL COUPLING WIGGINS
MODIFICATION HINGE	9751573	41	2	786	10 35 806 5	ELEVATION
MODULE	10287118	2	1	283	98 74 988	PLATINES INSTALLATION A101
MOTOR CONTROL DEVICE	10116989	570	1	570	10 12 595 9	DIESEL ENGINE D9508 A7 320k
MOTOR FLANGE	9444457	80	1	66	94 43 970	TRAVEL DRIVE FAT 500P005
MOTOR HOUSING	10014692	7	1	249	10 34 071 7	LUBRICATION PUMP
MOTOR HOUSING	10424598	1	1	249	10 34 071 7	LUBRICATION PUMP
MOTOR INSTALLATION	10358735	500	1	91	10 35 874 2	UPPERCARRIAGE
MOTOR MOUNTING	10331756	5	1	208	10 42 538 5	COMBINED OIL COOLER
MOTOR OIL	9070361	10	1	10	90 66 460	LUBRICANTS
MOTOR SUPPORT	10498455	510	1	108	10 35 873 5	MOTOR INSTALLATION
MOTOR-ELEKTRIK	10498000	580	1	108	10 35 873 5	MOTOR INSTALLATION
MOUNTING BASE	11003600	32	1	323	11 00 359 4	HOUSING
MOUNTING BRACKET	10021823	72	1	316	10 40 689 8	AIR CONDITIONING UNIT
MOUNTING KEY PISTON NUT	9921126	985	1	763	99 07 680	PISTON 190 MM
MOUNTING PARTS	10054532	2	1	545	10 35 868 3	FUEL SYSTEM
MOUNTING PIN	7361276	175	1	552	10 08 428 5	TOOL EQUIPMENT
MOUNTING SLEEVE	9113008	990	1	761	95 88 147	PISTON 220MM
MOUNTING SLEEVE	94020571	960	1	755	94 02 020 2	HYDRAULIC CYLINDER
MOUNTING SLEEVE	9907684	990	1	762	95 89 256	PISTON 190MM
MOUNTING SLEEVE	9907684	990	1	763	99 07 680	PISTON 190 MM
MOUNTING SPANNER	8007367	989	1	763	99 07 680	PISTON 190 MM
MULTI-DISC CARRIER	932720701	55	1	222	90 01 781 7	SLEWING DRIVE SAT 375/253
MULTI-DISC CARRIER	9444467	65	1	66	94 43 970	TRAVEL DRIVE FAT 500P005
MULTIPLE CIRCUIT AGGREG	9080165	10	1	109	10 12 605 7	DRIVE UNIT AG 9508 M 076
NAMEPLATE	9354303	5	1	557	10 35 876 6	SIGNS
NAMEPLATE	9354303	5	1	561	10 49 863 6	SIGNS
NAMEPLATE MOTOR STOP	9619934	22	2	558	10 35 876 6	SIGNS
NAMEPLATE MOTOR STOP	9619934	22	2	562	10 49 863 6	SIGNS

Description	Item	Pos.	Quantity	Page	Assembly	Description
NAMEPLATE REMOTE START	9909254	47	1	558	10 35 876 6	SIGNS
NAMEPLATE REMOTE START	9909254	47	1	562	10 49 863 6	SIGNS
NILOS RING	10030593	4	1	221	90 01 781 7	SLEWING DRIVE SAT 375/253
NIPPLE	10009211	680	1	482	10 29 114 6	WIPER ARM
NIPPLE	4782008	61	2	117	10 35 873 3	AIR AND EXHAUST INSTALLAT
NIPPLE	4900169	62	2	117	10 35 873 3	AIR AND EXHAUST INSTALLAT
NO LONGER AVAILABLE	9999997	1000	1	36	10 35 905 6	ANTICORROSION ANTIFREEZE
NON-RETURN VALVE	10119971	5	1	579	10 12 375 9	OIL LINE PRE-ASSEMBLY
NON-RETURN VALVE	10120102	11	1	607	10 12 475 6	OIL MODULE LEFT
NON-RETURN VALVE	10218215	51	1	397	10 35 874 4	CONTROL VALVE INSTALLAT
NON-RETURN VALVE	10219863	50	2	397	10 35 874 4	CONTROL VALVE INSTALLAT
NON-RETURN VALVE	10289185	102	1	752	10 34 080 6	PIPE FRACTION SAFETY VALV
NON-RETURN VALVE	10289185	102	1	753	10 34 081 2	PIPE FRACTION SAFETY VALV
NON-RETURN VALVE	10294984	101	1	752	10 34 080 6	PIPE FRACTION SAFETY VALV
NON-RETURN VALVE	10294984	101	1	753	10 34 081 2	PIPE FRACTION SAFETY VALV
NON-RETURN VALVE	10296500	55	1	407	10 11 355 7	CONTROL BLOCK
NON-RETURN VALVE	5008169	12	1	405	10 21 821 5	NON-RETURN VALVE
NON-RETURN VALVE	5008169	12	1	406	10 21 986 3	NON-RETURN VALVE
NON-RETURN VALVE	5608327	6	1	372	10 00 909 0	OIL PILOT VALVE
NON-RETURN VALVE	7017201	710	2	478	10 48 809 7	ELECTRICAL INSTALLATION
NON-RETURN VALVE	7622803	30	1	245	10 29 302 0	DISTRIBUTION BLOCK MX-F 3/
NON-RETURN VALVE	7622803	30	7	254	10 29 301 8	DISTRIBUTION BLOCK MX-F 4/
NON-RETURN VALVE	7622803	30	5	708	10 00 878 9	DISTRIBUTION BLOCK MX-F 3/
NON-RETURN VALVE	7622803	30	8	722	10 30 336 9	DISTRIBUTION BLOCK MX-F 5/
NON-RETURN VALVE	9270598	6	2	69	90 72 026	CONNECTING PLATE NG 165
NON-RETURN VALVE	9370592	10	1	395	10 35 874 4	CONTROL VALVE INSTALLAT
NON-RETURN VALVE RV	9889003	1	1	393	98 89 008	REPAIR KIT
NOZZLE	10006191	30	1	752	10 34 080 6	PIPE FRACTION SAFETY VALV
NOZZLE	10006191	30	1	753	10 34 081 2	PIPE FRACTION SAFETY VALV
NOZZLE	7023702	22	1	150	10 33 307 1	CONNECTING PLATE
NOZZLE	7381298	20	1	69	90 72 026	CONNECTING PLATE NG 165
NOZZLE	7618601	49	1	132	10 42 845 9	SWING PUMP
NOZZLE	7624277	70	1	751	10 29 135 3	CONTROL MODULE
NOZZLE PIPE	7900836	150	1	552	10 08 428 5	TOOL EQUIPMENT
NUT	10011397	4	1	56	10 00 963 0	ROTARY FEED THROUGH
NUT	10066360	32	8	396	10 35 874 4	CONTROL VALVE INSTALLAT
NUT	10332836	50	1	751	10 29 135 3	CONTROL MODULE
NUT	10489539	998	1	409	10 47 594 2	PRESSURE REDUCTION VALV
NUT	7023934	6	1	375	56 15 344	SOLENOID VALVE
NUT M10X1,5	10120639	12	4	649	10 13 273 9	ATL ATTACHMENT
NUT M10X1,5	10120639	12	4	650	10 13 274 0	ATL ATTACHMENT
O-RING	10018373	998	1	252	10 48 927 7	DISTRIBUTION BLOCK SXE-2
O-RING	10018375	999	1	252	10 48 927 7	DISTRIBUTION BLOCK SXE-2
O-RING	10021308	999	1	245	10 29 302 0	DISTRIBUTION BLOCK MX-F 3/
O-RING	10021308	999	1	254	10 29 301 8	DISTRIBUTION BLOCK MX-F 4/
O-RING	10021308	999	1	708	10 00 878 9	DISTRIBUTION BLOCK MX-F 3/
O-RING	10021308	999	1	722	10 30 336 9	DISTRIBUTION BLOCK MX-F 5/
O-RING	10040400	2	1	622	10 11 781 4	HIGH PRESSURE PUMP PRE-A
O-RING	10113975	2	1	661	90 76 550	PRESSURE TRANSMITTER M1
O-RING	10115072	26	2	153	10 33 322 6	CONNECTING PLATE
O-RING	10115072	16	2	176	10 34 668 4	CONTROL UNIT
O-RING	10115072	19	1	178	10 40 975 1	ADJUSTING PISTON
O-RING	10215824	1	1	583	10 11 694 5	OIL DIPSTICK WITH PIPE
O-RING	10215824	7	1	683	10 12 087 1	SEAL KIT OIL SUMP
O-RING	10217777	3	1	614	10 42 869 4	INJECTOR
O-RING	10217777	3	1	615	10 49 001 8	INJECTOR
O-RING	10217777	7	1	687	10 12 089 6	SEAL KIT ZYLINDER HEAD CPL
O-RING	10218370	4	1	695	10 12 099 6	SEAL KIT FLYWHEEL HOUSIN
O-RING	10219619	60	1	751	10 29 135 3	CONTROL MODULE
O-RING	10298634	14	1	166	10 44 145 8	SWIVELLING ANGLE SENSOR

Description	Item	Pos.	Quantity	Page	Assembly	Description
O-RING	10298634	18	1	264	10 33 323 7	PRESSURE LIMITING VALVE
O-RING	10298636	3	1	148	10 29 866 3	SCREW PLUG
O-RING	10300920	20	1	158	10 33 325 9	GEAR PUMP
O-RING	10301924	6	2	45	10 22 121 2	TRACK ROLLER
O-RING	10303001	7	2	46	10 29 067 4	CARRYING ROLLER D8K
O-RING	10333075	26	1	130	10 21 593 5	PUMP
O-RING	10333245	9	1	153	10 33 322 6	CONNECTING PLATE
O-RING	10333265	12	1	158	10 33 325 9	GEAR PUMP
O-RING	10333265	3	1	159	10 33 326 2	WEARING PLATE
O-RING	10333269	13	3	155	10 33 322 8	FILTER
O-RING	10333276	4	1	163	10 33 327 3	COLD STAR VALVE
O-RING	10354824	3	1	387	10 30 177 6	DRAIN VALVE
O-RING	5608035	3	1	402	56 15 220	HIGH PRESSURE FILTER
O-RING	7000329	1	1	696	10 12 100 3	SEAL KIT OUTPUT SHAFT
O-RING	7000563	8	1	761	95 88 147	PISTON 220MM
O-RING	7000583	7	1	764	96 31 985	PISTON ROD BEARING 150/22
O-RING	7001609	11	1	765	99 07 890	PISTON ROD BEARING 125/19
O-RING	7002641	14	1	380	70 25 142	SEAL KIT
O-RING	7017766	39	1	149	10 33 307 0	DRIVING GEAR
O-RING	7017766	20	2	177	10 40 974 7	REGULATION
O-RING	7028346	8	1	388	56 17 689	SHUT OFF DEVICE DN 100
O-RING	7264028	9	1	96	10 09 107 4	SERVICE KIT 1500H/2500H
O-RING	7264028	14	1	340	10 05 314 4	OIL PILOT VALVE INSTALLATIO
O-RING	7264028	14	1	341	10 82 438 9	OIL PILOT VALVE INSTALLATIO
O-RING	7264028	14	1	342	56 09 948	OIL FILTER SET
O-RING	726403201	83	2	66	94 43 970	TRAVEL DRIVE FAT 500P005
O-RING	7264091	8	1	763	99 07 680	PISTON 190 MM
O-RING	726428001	71	2	66	94 43 970	TRAVEL DRIVE FAT 500P005
O-RING	7361549	1	1	111	73 67 136	SCREW FITTING BFW 35L
O-RING	7363759	67	2	122	10 35 879 9	PUMPS INSTALLATION
O-RING	7364303	49	1	66	94 43 970	TRAVEL DRIVE FAT 500P005
O-RING	7366427	43	1	382	10 35 874 5	HYDRAULIC TANK INSTALLAT
O-RING	7369266	1	1	390	73 73 880	FIBRE GLASS FILTER INSERT
O-RING	7369266	1	1	391	73 73 881	FIBRE GLASS FILTER INSERT
O-RING	7369286	2	1	390	73 73 880	FIBRE GLASS FILTER INSERT
O-RING	7369286	2	1	391	73 73 881	FIBRE GLASS FILTER INSERT
O-RING	7369456	1	4	385	73 68 081	SIGHT GLASS
O-RING	7380073	51	4	383	10 35 874 5	HYDRAULIC TANK INSTALLAT
O-RING	7380073	41	1	546	10 35 868 3	FUEL SYSTEM
O-RING	7380073	51	3	546	10 35 868 3	FUEL SYSTEM
O-RING	7380135	4	1	313	92 65 665	RK PILOT DEVICE
O-RING	7380154	3	1	677	10 12 039 3	LOCKING PIECES
O-RING	7380296	7	1	639	10 11 752 9	THERMOSTAT HOUSING ASS
O-RING	7380296	4	1	690	10 12 096 2	SEAL KIT THERMOSTAT HOUS
O-RING	7380401	5	2	696	10 12 100 3	SEAL KIT OUTPUT SHAFT
O-RING	7380512	63	3	128	90 80 120	PUMP DISTRIBUTION GEAR
O-RING	7380512	63	3	218	90 80 195	SEAL KIT
O-RING	7380574	27	1	85	92 66 089	SEALING SET VALVE
O-RING	7380576	20	1	80	92 78 174	ADJUSTMENT
O-RING	7380576	19	1	88	92 78 179	SEAL KIT
O-RING	7380577	18	1	86	92 66 231	SEAL KIT SHUTTLE VALVE
O-RING	7380592	18	1	69	90 72 026	CONNECTING PLATE NG 165
O-RING	7380592	18	1	88	92 78 179	SEAL KIT
O-RING	7380592	14	2	145	98 88 308	CONNECTING PLATE
O-RING	7380592	28	2	171	92 71 657	SEAL KIT
O-RING	7380592	18	1	184	92 74 199	SEAL KIT
O-RING	7380592	14	2	192	98 89 161	CONNECTING PLATE
O-RING	7380593	25	1	88	92 78 179	SEAL KIT
O-RING	7380593	25	1	143	98 88 041	HYDR.MOTOR FIX FMF 165
O-RING	7380593	25	1	184	92 74 199	SEAL KIT

Description	Item	Pos.	Quantity	Page	Assembly	Description
O-RING	7380594	36	1	73	92 68 751	REPAIR KIT LOCK RING
O-RING	7380594	36	1	141	98 86 679	REPAIR KIT SHAFT
O-RING	7380599	36	1	229	92 68 011	REPAIR KIT LOCK RING
O-RING	7380599	36	1	267	98 82 882	REPAIR KIT SHAFT
O-RING	7380600	65	1	218	90 80 195	SEAL KIT
O-RING	7380601	65	1	128	90 80 120	PUMP DISTRIBUTION GEAR
O-RING	7380601	25	1	230	92 68 786	SEAL KIT
O-RING	7380604	6	1	611	10 11 802 5	DRIVE FOR HIGH PRESSURE P
O-RING	7380604	5	1	676	90 80 459	LOCKING PIECES
O-RING	7380604	3	1	686	10 12 087 8	SEAL KIT HIGH PRESSURE P
O-RING	7380604	2	1	696	10 12 100 3	SEAL KIT OUTPUT SHAFT
O-RING	7380605	26	1	192	98 89 161	CONNECTING PLATE
O-RING	7380605	18	1	198	90 77 032	CONNECTING PLATE NG 045
O-RING	7380605	18	1	230	92 68 786	SEAL KIT
O-RING	7380615	17	1	240	92 68 642	SEAL KIT SHUTTLE VALVE
O-RING	7380615	17	1	266	98 89 003	NON-RETURN VALVE RV
O-RING	7380617	19	1	87	92 66 232	SEAL KIT SHUTTLE VALVE
O-RING	7380618	20	1	87	92 66 232	SEAL KIT SHUTTLE VALVE
O-RING	7380619	22	1	87	92 66 232	SEAL KIT SHUTTLE VALVE
O-RING	7380619	14	1	611	10 11 802 5	DRIVE FOR HIGH PRESSURE P
O-RING	7380619	4	1	677	10 12 039 3	LOCKING PIECES
O-RING	7380619	6	1	686	10 12 087 8	SEAL KIT HIGH PRESSURE P
O-RING	7380619	6	1	689	10 12 094 4	SEAL KIT AIR COMPRESSOR
O-RING	7380619	3	1	696	10 12 100 3	SEAL KIT OUTPUT SHAFT
O-RING	7380620	19	1	86	92 66 231	SEAL KIT SHUTTLE VALVE
O-RING	7380621	20	1	86	92 66 231	SEAL KIT SHUTTLE VALVE
O-RING	7380626	64	1	128	90 80 120	PUMP DISTRIBUTION GEAR
O-RING	7380626	64	1	169	90 80 196	REPAIR KIT DRIVE SHAFT
O-RING	7380626	64	1	218	90 80 195	SEAL KIT
O-RING	7380647	11	1	138	92 68 441	SCREW PLUG M6X6
O-RING	7380648	22	1	69	90 72 026	CONNECTING PLATE NG 165
O-RING	7380648	22	1	88	92 78 179	SEAL KIT
O-RING	7380648	22	1	145	98 88 308	CONNECTING PLATE
O-RING	7380648	19	2	170	92 71 653	SEAL KIT ADJUSTMENT
O-RING	7380648	64	8	171	92 71 657	SEAL KIT
O-RING	7380648	68	5	175	10 11 837 4	REGULATING VALVE
O-RING	7380648	68	1	181	90 78 788	REPAIR KIT LR/SD/DA
O-RING	7380648	68	8	187	98 82 875	SEAL KIT REGULATING VALVE
O-RING	7380648	22	1	192	98 89 161	CONNECTING PLATE
O-RING	7380712	6	1	696	10 12 100 3	SEAL KIT OUTPUT SHAFT
O-RING	7380830	5	1	151	10 33 307 3	COVER WITH ACCESSORIES
O-RING	7380865	4	1	689	10 12 094 4	SEAL KIT AIR COMPRESSOR
O-RING	7380866	23	1	81	90 77 412	REPAIR KIT FMV 165
O-RING	7380866	23	1	88	92 78 179	SEAL KIT
O-RING	7380867	68	1	171	92 71 657	SEAL KIT
O-RING	7380868	70	1	185	92 75 443	REPAIR SET LID
O-RING	7380888	61	1	171	92 71 657	SEAL KIT
O-RING	7380888	69	1	175	10 11 837 4	REGULATING VALVE
O-RING	7380888	69	1	187	98 82 875	SEAL KIT REGULATING VALVE
O-RING	7380955	61	1	128	90 80 120	PUMP DISTRIBUTION GEAR
O-RING	7380955	61	1	218	90 80 195	SEAL KIT
O-RING	7380970	9	2	631	10 11 570 0	CONNECTING LINE ADD-ON
O-RING	7380970	3	2	688	10 12 093 7	SEAL KIT CONNECTING LINE
O-RING	7380973	18	2	134	90 72 922	HYDRAULIC VARIABLE DISPLA
O-RING	7380973	18	2	136	90 77 452	HYDRAULIC VARIABLE DISPLA
O-RING	7380973	18	2	171	92 71 657	SEAL KIT
O-RING	7380979	22	1	80	92 78 174	ADJUSTMENT
O-RING	7380979	21	1	88	92 78 179	SEAL KIT
O-RING	7380979	16	2	170	92 71 653	SEAL KIT ADJUSTMENT
O-RING	7380979	31	2	171	92 71 657	SEAL KIT

Description	Item	Pos.	Quantity	Page	Assembly	Description
O-RING	7380983	21	1	82	90 77 481	REPAIR KIT FMV 165
O-RING	7380983	27	1	88	92 78 179	SEAL KIT
O-RING	7380983	26	1	168	90 79 811	RK PISTON
O-RING	7380983	26	1	170	92 71 653	SEAL KIT ADJUSTMENT
O-RING	7380986	17	1	187	98 82 875	SEAL KIT REGULATING VALVE
O-RING	7380986	12	1	619	10 30 300 7	FUEL PREFILTER
O-RING	7380987	71	2	187	98 82 875	SEAL KIT REGULATING VALVE
O-RING	7380991	25	2	85	92 66 089	SEALING SET VALVE
O-RING	7381018	11	1	232	92 78 623	RK SPEED SENSOR
O-RING	7381018	10	1	238	62 90 073	SPEED SENSOR
O-RING	7381028	23	1	168	90 79 811	RK PISTON
O-RING	7381028	23	1	170	92 71 653	SEAL KIT ADJUSTMENT
O-RING	7381103	2	1	662	90 79 206	ROTATIONAL SPEED SENSOR
O-RING	7381254	1	2	681	10 12 086 9	SEAL KIT CRANKCASE BREAT
O-RING	7381415	73	1	181	90 78 788	REPAIR KIT LR/SD/DA
O-RING	7381415	73	1	187	98 82 875	SEAL KIT REGULATING VALVE
O-RING	7381442	15	1	187	98 82 875	SEAL KIT REGULATING VALVE
O-RING	7381448	11	1	140	98 81 609	SCREW PLUG M8X1X8,5
O-RING	7381562	43	2	187	98 82 875	SEAL KIT REGULATING VALVE
O-RING	7381567	8	4	631	10 11 570 0	CONNECTING LINE ADD-ON
O-RING	7381567	4	4	688	10 12 093 7	SEAL KIT CONNECTING LINE
O-RING	7381861	61	2	188	98 84 140	COOLING CIRCUIT PUMP
O-RING	7381861	61	2	265	10 11 948 2	SEAL KIT COOLING PUMP
O-RING	7381903	60	1	188	98 84 140	COOLING CIRCUIT PUMP
O-RING	7381903	60	1	265	10 11 948 2	SEAL KIT COOLING PUMP
O-RING	7410480	41	2	348	10 05 312 6	HYDR.SUCT.+RETURN OIL HO
O-RING	7410480	19	2	395	10 35 874 4	CONTROL VALVE INSTALLAT
O-RING	7411821	9	4	540	10 35 875 6	AIR CONDITION HOSES INSTA
O-RING	7610202	3	1	224	93 36 053 01	BRAKE
O-RING	7610202	3	1	239	90 00 386 4	SEAL KIT
O-RING 10,82X1,78	10115018	14	3	176	10 34 668 4	CONTROL UNIT
O-RING 10,82X1,78	5610999	28	1	323	11 00 359 4	HOUSING
O-RING 10,82X1,78	5610999	10	2	540	10 35 875 6	AIR CONDITION HOSES INSTA
O-RING 10,82X1,78	7023930	28	1	378	10 22 099 7	SEAL KIT
O-RING 10,82X1,78	7023930	8	1	379	50 09 562	SEAL KIT DIRECTIONAL VALV
O-RING 100,00X4,00	10289140	5	2	618	10 12 282 4	FUEL FILTER MODULE
O-RING 100,00X5,0	10022101	3	2	629	90 80 436	SUCTION NOZZLE ADD-ON
O-RING 11,5X1,5	10289306	10	2	259	10 02 131 0	SEAL KIT
O-RING 113.89X3.53	7015616	36	1	84	98 88 124	REPAIR KIT SHAFT
O-RING 113.89X3.53	7015616	36	1	173	98 89 282	REPAIR KIT SHAFT
O-RING 12,37X2,62	7028158	10	1	157	10 33 324 2	SHUTDOWN VALVE
O-RING 12,42X1,78	7023931	9	1	379	50 09 562	SEAL KIT DIRECTIONAL VALV
O-RING 120,02X5,33	7019832	4	1	718	10 05 091 3	RING
O-RING 125,00X2,0	10002310	7	1	696	10 12 100 3	SEAL KIT OUTPUT SHAFT
O-RING 125x3	7006516	13	1	611	10 11 802 5	DRIVE FOR HIGH PRESSURE P
O-RING 125x3	7006516	2	1	686	10 12 087 8	SEAL KIT HIGH PRESSURE P
O-RING 128X4,2	10120092	25	1	607	10 12 475 6	OIL MODULE LEFT
O-RING 128X4,2	10120092	25	1	608	10 12 475 7	OIL MODULE RIGHT
O-RING 12X2,5	7412937	15	1	619	10 30 300 7	FUEL PREFILTER
O-RING 132,7X7,00	7264422	12	1	765	99 07 890	PISTON ROD BEARING 125/19
O-RING 13x2,5	7005971	20	3	410	10 28 629 4	SHUTTLE VALVE BLOCK
O-RING 14,00X1,78	7411823	29	1	323	11 00 359 4	HOUSING
O-RING 14,00X1,78	7411823	11	2	540	10 35 875 6	AIR CONDITION HOSES INSTA
O-RING 140X3	10014694	9	1	249	10 34 071 7	LUBRICATION PUMP
O-RING 150,0X4,0	10036521	2	2	577	90 78 049	CYLINDER
O-RING 150,0X4,0	10036521	1	16	684	10 12 087 3	SEAL KIT CYLINDER
O-RING 158,12X7	7017928	3	1	718	10 05 091 3	RING
O-RING 158,12X7	7264438	11	2	764	96 31 985	PISTON ROD BEARING 150/22
O-RING 15x2	7264625	1	1	584	50 04 624	OIL DRAIN PLUG
O-RING 16,0X1,5	7371590	6	1	372	10 00 909 0	OIL PILOT VALVE

Description	Item	Pos.	Quantity	Page	Assembly	Description
O-RING 16x2	7026041	7	2	379	50 09 562	SEAL KIT DIRECTIONAL VALV
O-RING 17,17X1,78	7013245	10	1	379	50 09 562	SEAL KIT DIRECTIONAL VALV
O-RING 170,82X7	7023698	3	1	762	95 89 256	PISTON 190MM
O-RING 170,82X7	7023698	3	1	763	99 07 680	PISTON 190 MM
O-RING 18,00X2,00	10003192	8	1	611	10 11 802 5	DRIVE FOR HIGH PRESSURE P
O-RING 18,00X2,00	10003192	4	1	686	10 12 087 8	SEAL KIT HIGH PRESSURE P
O-RING 18,72X2,62	7023765	12	1	261	10 10 206 7	REGULATOR ELEMENT
O-RING 19,3x2,4	7005867	4	1	723	56 04 377	SEALING SET VALVE
O-RING 19,4X2,5	10340226	15	2	113	10 09 538 7	FUEL FILTER INSTALLATION
O-RING 19,4X2,5	10340226	20	2	619	10 30 300 7	FUEL PREFILTER
O-RING 196,22X7	7002056	3	1	761	95 88 147	PISTON 220MM
O-RING 200X4	11067315	1	1	670	10 11 698 9	MOTOR CONTROL DEVICE
O-RING 209,14X3,53	10016657	35	1	250	10 34 071 7	LUBRICATION PUMP
O-RING 209,14X3,53	10016657	41	1	250	10 34 071 7	LUBRICATION PUMP
O-RING 21,89X2,62	7264404	20	1	379	50 09 562	SEAL KIT DIRECTIONAL VALV
O-RING 21,95x1,78	7024500	13	1	380	70 25 142	SEAL KIT
O-RING 23,47X2,62	7001891	3	1	723	56 04 377	SEALING SET VALVE
O-RING 23,47X2,62	7001891	13	1	768	56 02 932	FLOW REGULATING CHECK
O-RING 23,47X2,62	7028151	8	1	262	10 29 792 9	PRESSURE LIMITING VALVE
O-RING 23,47X2,62	7028151	16	1	264	10 33 323 7	PRESSURE LIMITING VALVE
O-RING 23,52X1,78	7017668	31	1	378	10 22 099 7	SEAL KIT
O-RING 25x3,53	7015407	10	1	392	10 22 239 3	AERATION FILTER
O-RING 29,82	10333232	25	1	131	10 42 845 9	SWING PUMP
O-RING 29,82	10333232	17	1	264	10 33 323 7	PRESSURE LIMITING VALVE
O-RING 29,87X1,78	10115021	13	1	176	10 34 668 4	CONTROL UNIT
O-RING 2X1,5	10289308	20	7	259	10 02 131 0	SEAL KIT
O-RING 2X1,5	10289308	30	1	260	10 02 131 1	SEAL KIT
O-RING 34,59x2,62	7007476	2	1	412	56 10 135	SUPPLY VALVE
O-RING 340X4	7610341	74	1	222	90 01 781 7	SLEWING DRIVE SAT 375/253
O-RING 340X4	7610341	74	1	239	90 00 386 4	SEAL KIT
O-RING 35x2	7018253	2	1	555	10 30 177 4	CONNECTOR
O-RING 37,5X3,55	10120093	26	1	607	10 12 475 6	OIL MODULE LEFT
O-RING 37,5X3,55	10120093	26	1	608	10 12 475 7	OIL MODULE RIGHT
O-RING 37,69X3,53	7264687	21	4	60	10 07 498 7	TRAVEL DRIVE
O-RING 37,69x3,53	7022120	16	1	405	10 21 821 5	NON-RETURN VALVE
O-RING 37,69x3,53	7022120	16	1	406	10 21 986 3	NON-RETURN VALVE
O-RING 400X5	7610378	57	1	66	94 43 970	TRAVEL DRIVE FAT 500P005
O-RING 44,60X2,40	10036913	8	2	582	10 12 593 7	OIL SUMP WITH FASTENING
O-RING 44,60X2,40	10036913	3	2	683	10 12 087 1	SEAL KIT OIL SUMP
O-RING 44X3	7264509	12	1	768	56 02 932	FLOW REGULATING CHECK
O-RING 44x3	7007836	2	1	723	56 04 377	SEALING SET VALVE
O-RING 46X3	726419601	5	1	689	10 12 094 4	SEAL KIT AIR COMPRESSOR
O-RING 47,22X3,53	7360048	11	1	768	56 02 932	FLOW REGULATING CHECK
O-RING 47,22x3,53	7007835	1	1	723	56 04 377	SEALING SET VALVE
O-RING 470x5	7610617	6	1	64	94 43 970	TRAVEL DRIVE FAT 500P005
O-RING 51,00X5,00	10038573	3	4	642	10 11 978 1	COOLANT PIPE BEND ADD-ON
O-RING 51,00X5,00	10038573	3	3	689	10 12 094 4	SEAL KIT AIR COMPRESSOR
O-RING 51,00X5,00	10038573	7	4	693	10 12 098 2	SEAL KIT EXHAUST GAS RECI
O-RING 6,07X1,78	10115023	15	1	157	10 33 324 2	SHUTDOWN VALVE
O-RING 63,00X3,00	10037224	6	2	639	10 11 752 9	THERMOSTAT HOUSING ASS
O-RING 63,00X3,00	10037224	3	2	690	10 12 096 2	SEAL KIT THERMOSTAT HOUS
O-RING 63X3	7264085	11	1	545	10 35 868 3	FUEL SYSTEM
O-RING 66,00X3,00	7008755	5	1	400	93 70 592	NON-RETURN VALVE
O-RING 67,50X4,00	10040387	4	2	638	10 11 763 3	CONNECTION F.WATER PIPE
O-RING 67,50X4,00	10040387	8	2	639	10 11 752 9	THERMOSTAT HOUSING ASS
O-RING 67,50X4,00	10040387	2	2	690	10 12 096 2	SEAL KIT THERMOSTAT HOUS
O-RING 67,50X4,00	10040387	6	2	691	10 12 097 3	SEALING SET WATER PUMP
O-RING 6X1,5	10289311	20	2	260	10 02 131 1	SEAL KIT
O-RING 7,5X1,5	10289310	10	2	260	10 02 131 1	SEAL KIT
O-RING 7,65X1,78	7264360	10	1	49	10 47 076 9	GUIDE WHEEL D8K

Description	Item	Pos.	Quantity	Page	Assembly	Description
O-RING 7,65x1,78	10024675	11	3	372	10 00 909 0	OIL PILOT VALVE
O-RING 78,97X3,53	10220707	11	1	96	10 09 107 4	SERVICE KIT 1500H/2500H
O-RING 78,97X3,53	10220707	10	1	161	10 33 327 0	FILTER HEAD
O-RING 88X3	7264087	8	1	762	95 89 256	PISTON 190MM
O-RING 9,25X1,78	7023929	12	2	377	73 71 025	BREECH PLATE
O-RING 9,25x1,78	10043241	27	1	378	10 22 099 7	SEAL KIT
O-RING 9,25x1,78	7009366	12	1	166	10 44 145 8	SWIVELLING ANGLE SENSOR
O-RING 9,25x1,78	7009366	15	1	176	10 34 668 4	CONTROL UNIT
O-RING 90,00X3,00	10040386	8	1	638	10 11 763 3	CONNECTION F.WATER PIPE
O-RING 90,00X3,00	10040386	5	1	691	10 12 097 3	SEALING SET WATER PUMP
O-RING AEHNL. DIN 3771 380X	726457301	26	1	221	90 01 781 7	SLEWING DRIVE SAT 375/253
O-RING AEHNL. DIN 3771 380X	726457301	26	1	239	90 00 386 4	SEAL KIT
O-RING ARP 568 45,69X2,62	514507808	16	1	150	10 33 307 1	CONNECTING PLATE
OIL ACCIDENT CASE ZW	7023359	50	1	39	90 66 466	ACCESSORIES
OIL COOLER	9078344	3	1	607	10 12 475 6	OIL MODULE LEFT
OIL COOLER	9078344	3	1	608	10 12 475 7	OIL MODULE RIGHT
OIL COOLER HOUSING	10124773	1	1	607	10 12 475 6	OIL MODULE LEFT
OIL COOLER HOUSING	10124775	1	1	608	10 12 475 7	OIL MODULE RIGHT
OIL COOLING SYSTEM	10289190	1	1	208	10 42 538 5	COMBINED OIL COOLER
OIL DIPSTICK	10116946	1	1	583	10 11 694 5	OIL DIPSTICK WITH PIPE
OIL DIPSTICK	9080210	4	1	126	90 80 120	PUMP DISTRIBUTION GEAR
OIL DIPSTICK WITH PIPE	10116945	21	1	565	10 12 595 9	DIESEL ENGINE D9508 A7 320k
OIL DRAIN HOSE	10088112	20	1	550	10 49 815 2	TOOL EQUIPMENT
OIL DRAIN HOSE	9358137	180	1	552	10 08 428 5	TOOL EQUIPMENT
OIL DRAIN HOSE DN18X3	7402658	2	1m	554	93 58 137	OIL DRAIN HOSE
OIL DRAIN PLUG	5004624	84	1	128	90 80 120	PUMP DISTRIBUTION GEAR
OIL DRAIN PLUG	5004624	5	1	219	10 05 302 4	SWING GEAR INSTALLATION
OIL DRAIN PLUG	5004624	64	2	383	10 35 874 5	HYDRAULIC TANK INSTALLAT
OIL DRAIN PLUG	5004624	45	1	546	10 35 868 3	FUEL SYSTEM
OIL DRAIN PLUG	5004624	4	1	582	10 12 593 7	OIL SUMP WITH FASTENING
OIL DRAIN PLUG M26X1,5	7365034	5	2	199	10 35 873 9	COOLER INSTALLATION
OIL FILLER INLET	10118839	2	1	586	10 12 263 2	OIL FILLER INLET
OIL FILLER INLET	10122630	1	1	586	10 12 263 2	OIL FILLER INLET
OIL FILLER INLET	10122632	3	1	596	10 12 264 0	CYLINDER HEAD COVER ASS
OIL FILLER NECK	9442350	85	1	128	90 80 120	PUMP DISTRIBUTION GEAR
OIL FILTER	10120027	4	1	604	10 12 476 3	OIL MODULE ASSEMBLY
OIL FILTER INSERT 17µ	10044373	1	2	96	10 09 107 4	SERVICE KIT 1500H/2500H
OIL FILTER INSERT 17µ	10044373	2	1	606	10 12 002 7	OIL FILTER
OIL FILTER INSERT 17µ	10044373	5	1	607	10 12 475 6	OIL MODULE LEFT
OIL FILTER SET	5609948	11	1	340	10 05 314 4	OIL PILOT VALVE INSTALLATIO
OIL FILTER SET	5609948	11	1	341	10 82 438 9	OIL PILOT VALVE INSTALLATIO
OIL LINE	10121738	1	1	605	10 12 002 3	OIL LINE ASSEMBLY
OIL LINE	10121739	2	1	605	10 12 002 3	OIL LINE ASSEMBLY
OIL LINE ASSEMBLY	10120023	3	1	604	10 12 476 3	OIL MODULE ASSEMBLY
OIL LINE PRE-ASSEMBLY	10123759	20	1	578	10 12 503 7	PIPELINE INSTALLATION
OIL MODULE ASSEMBLY	10124763	130	1	567	10 12 595 9	DIESEL ENGINE D9508 A7 320k
OIL MODULE LEFT	10124756	1	1	604	10 12 476 3	OIL MODULE ASSEMBLY
OIL MODULE RIGHT	10124757	2	1	604	10 12 476 3	OIL MODULE ASSEMBLY
OIL PILOT VALVE	10009090	2	1	340	10 05 314 4	OIL PILOT VALVE INSTALLATIO
OIL PILOT VALVE INSTALLATIO	10053144	25	1	332	10 35 874 7	HYDRAULIC INSTALLATION UP
OIL PILOT VALVE INSTALLATIO	10824389	25	1	333	10 49 853 7	HYDRAULIC INSTALLATION UP
OIL SEPARATOR OEL	10125182	12	2	578	10 12 503 7	PIPELINE INSTALLATION
OIL SUMP	10126368	1	1	582	10 12 593 7	OIL SUMP WITH FASTENING
OIL SUMP WITH FASTENING	10125937	20	1	565	10 12 595 9	DIESEL ENGINE D9508 A7 320k
OIL TANK	968868001	10	1	219	10 05 302 4	SWING GEAR INSTALLATION
OMNIFIT	7016208	106	1	227	98 86 678	RK CYLINDER+CONTROL PLAT
OPEN-END WRENCH	8121783	51	1	551	10 08 428 5	TOOL EQUIPMENT
OPERATING ELEMENT	10493087	70	1	316	10 40 689 8	AIR CONDITIONING UNIT
OPERATING ELEMENT	10493088	71	1	316	10 40 689 8	AIR CONDITIONING UNIT
OPERATING EQUIPMENT (LE	9266411	1	1	538	10 03 864 3	FOOT SWITCH

Description	Item	Pos.	Quantity	Page	Assembly	Description
OPERATING EQUIPMENT (RIG	9266412	1	1	539	10 03 864 4	FOOT SWITCH
OUTER MULTI-DISC	7373506	7	9	61	50 20 370 01	SPRING LOADED MULTI-DISC
OUTER MULTI-DISC	7373506	4	9	63	93 21 805 01	BRAKE MULTI-DISC SET
OUTER MULTI-DISC	9441377	62	7	222	90 01 781 7	SLEWING DRIVE SAT 375/253
OUTER MULTI-DISC	9441377	37	7	226	96 85 802 01	BRAKE MULTI-DISC SET
OUTLET MANIFOLD	10115561	1	1	647	10 13 274 6	OUTLET MANIFOLD ADD-ON
OUTLET MANIFOLD	10115562	2	1	647	10 13 274 6	OUTLET MANIFOLD ADD-ON
OUTLET MANIFOLD ADD-ON	10132746	412	1	569	10 12 595 9	DIESEL ENGINE D9508 A7 320k
OUTLET VALVE	9078514	3	2	594	10 11 805 1	CYLINDER HEAD PRE-ASS. D9
OUTPUT SHAFT HOUSING	970643101	1	1	221	90 01 781 7	SLEWING DRIVE SAT 375/253
OUTPUT SHAFT M=16 Z=13	933604101	10	1	221	90 01 781 7	SLEWING DRIVE SAT 375/253
OUTPUT STAGE	10291540	2	1	521	10 07 608 3	ELECTRIC BOX CPL. U46
OUTPUT STAGE	10291541	2	1	520	10 07 707 3	ELECTRIC BOX CPL. U48-A
OUTPUT STAGE	10347900	100	1	292	10 82 277 5	ARM REST RIGHT
OUTSIDE MIRROR	10044353	610	1	486	70 28 778	ASSY. PARTS
OUTSIDE MIRROR	7019140	810	2	487	10 04 435 3	OUTSIDE MIRROR
OUTSIDE MIRROR ASSEMBLY	9687016	9700	1	92	10 35 874 2	UPPERCARRIAGE
OVERFLOW-OIL LINE	9078555	1	2	621	90 78 554	LEAK OIL LINE ADD-ON
OVERFLOW-OIL LINE	9078559	3	1	621	90 78 554	LEAK OIL LINE ADD-ON
OVERFLOW-OIL LINE 10X1,5	9078557	2	1	621	90 78 554	LEAK OIL LINE ADD-ON
OVERPRESSURE VALVE	10424599	15	1	249	10 34 071 7	LUBRICATION PUMP
PACKING CORD	10215888	25	0.07	219	10 05 302 4	SWING GEAR INSTALLATION
PADLOCK 40	704206616	27	1	788	10 49 831 4	FUEL COUPLING WIGGINS
PANELLING	10053036	8500	1	92	10 35 874 2	UPPERCARRIAGE
PANELLING	10053036	8500	1	93	10 49 853 2	UPPERCARRIAGE
PANELLING	10291137	2100	1	490	10 29 113 8	PANELLING
PANELLING	10291138	210	1	488	10 48 809 9	INTERNAL LINING
PANELLING	10488101	284	1	488	10 48 809 9	INTERNAL LINING
PANELLING	10498571	8500	1	93	10 49 853 2	UPPERCARRIAGE
PANELLING	7028837	320	1	472	10 04 678 8	DRIVER'S CAB DOOR
PANELLING	7028963	2	1	491	10 47 012 8	CASING, CPL
PARALLEL PIN 5M6	514588908	14	1	150	10 33 307 1	CONNECTING PLATE
PARALLEL PIN 6h6	10470574	8	2	593	10 11 805 0	CYLINDER HEAD ASSEMBLY
PARALLEL PIN 6m6	4980736	5	1	601	10 11 802 2	CAMSHAFT CPL.
PARALLEL PIN 8M6	10000797	13	2	150	10 33 307 1	CONNECTING PLATE
PARTITION	10009201	490	1	489	10 48 809 9	INTERNAL LINING
PASTE	8501565	40	1	550	10 49 815 2	TOOL EQUIPMENT
PERFORATED PLATE	9080377	11	2	582	10 12 593 7	OIL SUMP WITH FASTENING
PERFORMANCE RELAY	10009888	20	3	503	10 09 499 2	ELECTRIC MATERIAL LIST
PILOT CONTROL UNIT	10280039	2	1	298	10 06 804 5	MANIPULATOR RIGHT CPL CA
PILOT VALVE NG 165	9882892	4	1	68	90 72 024	HYDR.MOTOR VAR.FMV 165
PIN	10015475	30	1	71	56 16 688	WHEEL BRAKE VALVE
PIN	10020739	1	1	152	10 33 307 8	LOCKING SET
PIN	10022781	13	2	321	10 02 211 7	AIR CIRCULATION CASE
PIN	10056468	230	1	715	10 35 872 1	STICK 2,60M
PIN	10056474	2	1	736	10 05 646 8	PIN
PIN	10056475	2	1	737	10 35 872 3	PIN
PIN	10058975	170	2	715	10 35 872 1	STICK 2,60M
PIN	10065983	40	2	444	10 05 530 3	ENGINE BONNET
PIN	10358723	200	1	715	10 35 872 1	STICK 2,60M
PIN	10498335	30	1	733	10 35 873 7	PISTON ROD COVER BUCKET
PIN	10498336	2	1	738	10 49 833 5	PIN
PIN	11080307	10	2	459	73 72 348	LOCK
PIN	7025515	3	1	263	10 29 207 1	REGULATOR ELEMENT
PIN	7028351	15	1	388	56 17 689	SHUT OFF DEVICE DN 100
PIN	7028840	620	2	474	10 04 678 9	DOOR FRAME
PIN	7621949	3	1	147	10 10 206 6	REGULATOR ELEMENT
PIN	9325867	2	2	106	10 39 589 3	ATTACHMENTS MOUNTING PA
PIN	9374747	80	2	771	10 35 873 1	HOIST CYLINDERS DIA.190
PIN	9375036	13	1	700	10 35 872 5	GOOSENECK BOOM 7,00M

Description	Item	Pos.	Quantity	Page	Assembly	Description
PIN	9442284	56	1	66	94 43 970	TRAVEL DRIVE FAT 500P005
PIN	9577845	180	1	715	10 35 872 1	STICK 2,60M
PIN	9869072	31	1	414	10 05 303 6	PANELLING
PIN	9869072	44	2	414	10 05 303 6	PANELLING
PIN	9869072	118	2	416	10 05 303 6	PANELLING
PIN	9869072	31	1	429	10 49 857 1	PANELLING
PIN	9869072	44	2	429	10 49 857 1	PANELLING
PIN	9869072	118	2	431	10 49 857 1	PANELLING
PIN	9888133	12	1	182	90 79 347	REPAIR SET SWIVEL YOKE LP
PIN	9935245	11	1	700	10 35 872 5	GOOSENECK BOOM 7,00M
PIN	9935246	5	1	739	99 35 245	PIN
PIN 8X16	7738704	20	2	463	10 03 720 9	GAS SPRING
PIN COMPL.	9375349	12	1	700	10 35 872 5	GOOSENECK BOOM 7,00M
PIN COMPL.	9375560	140	2	771	10 35 873 1	HOIST CYLINDERS DIA.190
PIN HOUSING	6203486	45	1	504	10 09 499 2	ELECTRIC MATERIAL LIST
PIN HOUSING	6905303	11	1	309	10 08 142 4	FOOT PILOT VALVE LEFT
PIN HOUSING	6905303	11	1	310	10 08 142 6	FOOT PILOT VALVE RIGHT
PIN HOUSING DT 2-POL 13A 15	6203129	13	1	309	10 08 142 4	FOOT PILOT VALVE LEFT
PIN HOUSING DT 2-POL 13A 15	6203129	13	1	310	10 08 142 6	FOOT PILOT VALVE RIGHT
PIPE BRIDGE	774378008	32	2	245	10 29 302 0	DISTRIBUTION BLOCK MX-F 3/
PIPE CLAMP	10064900	106	6	704	10 35 872 5	GOOSENECK BOOM 7,00M
PIPE CLAMP	10222743	5	2	625	10 11 941 3	HIGH PRESSURE PIPE ASSEM
PIPE CLAMP	7381175	14	1	621	90 78 554	LEAK OIL LINE ADD-ON
PIPE CLAMP	7382215	4	1	641	10 11 930 6	VENT TUBE ASSEMBLY
PIPE CLAMP	7382216	28	2	623	10 12 720 8	FUEL LINES
PIPE CLAMP	9363937	35	2	356	10 35 875 1	HYDR.INSTALLATION FAN DR
PIPE CLAMP	9577441	16	2	362	10 35 875 4	HYDR.INSTAL.CONTROL TUBE
PIPE CLAMP	9577441	16	2	369	10 82 438 0	HYDR.INSTAL.CONTROL TUBE
PIPE CLAMP HSRS 42X80 W1-Z	10287499	44	4Pair	344	10 35 875 5	HYDR.ROTARY CONNEC.+SWI
PIPE ELBOW	7028868	630	1	483	70 28 866	WIPER ARM
PIPE FRACTION SAFETY VALV	10340806	8	1	770	10 35 873 1	HOIST CYLINDERS DIA.190
PIPE FRACTION SAFETY VALV	10340812	9	1	770	10 35 873 1	HOIST CYLINDERS DIA.190
PIPE SOCKET 15°D8	10412844	115	1	256	90 64 786	CONNECTING ELEMENT
PIPE SOCKET 15°D8	10412844	115	2	258	10 01 461 1	AUXILIARY BOX
PIPE SOCKET 45° D6	7623705	20	1	255	90 64 786	CONNECTING ELEMENT
PIPE SOCKET 45° D6	7623705	20	6	257	10 01 461 1	AUXILIARY BOX
PIPE SOCKET 45° D8	10040776	120	1	256	90 64 786	CONNECTING ELEMENT
PIPE SOCKET 45° D8	10040776	120	2	258	10 01 461 1	AUXILIARY BOX
PIPE SOCKET 90°-21MM D6	7623704	25	1	255	90 64 786	CONNECTING ELEMENT
PIPE SOCKET 90°-21MM D6	7623704	25	4	257	10 01 461 1	AUXILIARY BOX
PIPE SOCKET 90°-33MM D6	10027260	26	1	255	90 64 786	CONNECTING ELEMENT
PIPE SOCKET 90°-33MM D6	10027260	26	4	257	10 01 461 1	AUXILIARY BOX
PIPE SOCKET 90°-38MM D6	511701914	27	1	255	90 64 786	CONNECTING ELEMENT
PIPE SOCKET 90°-38MM D6	511701914	27	4	257	10 01 461 1	AUXILIARY BOX
PIPE SOCKET 90°-50MM D6	7623707	28	1	255	90 64 786	CONNECTING ELEMENT
PIPE SOCKET 90°-50MM D6	7623707	28	2	257	10 01 461 1	AUXILIARY BOX
PIPE SOCKET DN6	7624177	11	1	255	90 64 786	CONNECTING ELEMENT
PIPE SOCKET DN6	7624177	11	5	257	10 01 461 1	AUXILIARY BOX
PIPE SOCKET DN8	10011995	110	1	256	90 64 786	CONNECTING ELEMENT
PIPE SOCKET DN8	10011995	110	6	258	10 01 461 1	AUXILIARY BOX
PIPE SOCKET DN8	10040777	125	1	256	90 64 786	CONNECTING ELEMENT
PIPE SOCKET DN8	10040777	125	2	258	10 01 461 1	AUXILIARY BOX
PIPE SOCKET DN8	10040778	126	1	256	90 64 786	CONNECTING ELEMENT
PIPE SOCKET DN8	10040778	126	2	258	10 01 461 1	AUXILIARY BOX
PIPE SOCKET DN8	10040779	127	1	256	90 64 786	CONNECTING ELEMENT
PIPE SOCKET DN8	10040779	127	2	258	10 01 461 1	AUXILIARY BOX
PIPE UNION GE8 10X1	10009053	20	1	245	10 29 302 0	DISTRIBUTION BLOCK MX-F 3/
PIPE UNION GE8 10X1	10009053	20	1	708	10 00 878 9	DISTRIBUTION BLOCK MX-F 3/
PIPE UNION GE8 10X1	10009053	20	1	722	10 30 336 9	DISTRIBUTION BLOCK MX-F 5/
PIPE UNION M10X1K	774376508	185	1	256	90 64 786	CONNECTING ELEMENT

Description	Item	Pos.	Quantity	Page	Assembly	Description
PIPELINE	10117635	14	1	617	10 12 314 1	FUEL FINE-FILTER ASSEMBLY
PIPELINE	10118747	1	1	576	10 11 874 8	PIPELINE INSTALLATION
PIPELINE	10119307	13	1	641	10 11 930 6	VENT TUBE ASSEMBLY
PIPELINE	10121098	3	1	605	10 12 002 3	OIL LINE ASSEMBLY
PIPELINE	10125038	1	1	578	10 12 503 7	PIPELINE INSTALLATION
PIPELINE	10125039	2	1	578	10 12 503 7	PIPELINE INSTALLATION
PIPELINE 10X1	10116691	3	1	641	10 11 930 6	VENT TUBE ASSEMBLY
PIPELINE 10X1	10116692	2	1	641	10 11 930 6	VENT TUBE ASSEMBLY
PIPELINE 12X1	10117241	1	1	623	10 12 720 8	FUEL LINES
PIPELINE 12X1	10132067	6	1	610	10 13 273 8	FINAL CONTROL VALVE
PIPELINE 12X1	10132100	2	1	610	10 13 273 8	FINAL CONTROL VALVE
PIPELINE ASSEMBLY LEFT SID	10125170	3	1	578	10 12 503 7	PIPELINE INSTALLATION
PIPELINE ASSEMBLY RIGHT S	10125172	4	1	578	10 12 503 7	PIPELINE INSTALLATION
PIPELINE INSTALLATION	10118748	4	1	575	10 12 016 8	LOCKING PIECES
PIPELINE INSTALLATION	10125037	16	1	565	10 12 595 9	DIESEL ENGINE D9508 A7 320k
PISTON	10075356	2	1	47	10 07 535 3	GREASE TENSIONER
PISTON	10333252	2	1	264	10 33 323 7	PRESSURE LIMITING VALVE
PISTON	10356667	17	1	407	10 11 355 7	CONTROL BLOCK
PISTON	5616689	20	1	71	56 16 688	WHEEL BRAKE VALVE
PISTON	5618132	3	1	61	50 20 370 01	SPRING LOADED MULTI-DISC
PISTON	7624222	4	1	157	10 33 324 2	SHUTDOWN VALVE
PISTON	9079756	61	1	181	90 78 788	REPAIR KIT LR/SD/DA
PISTON	9266234	11	1	72	92 67 037	PRESSURE LIMITING VALVE
PISTON	9588148	1	1	761	95 88 147	PISTON 220MM
PISTON	9589257	1	1	762	95 89 256	PISTON 190MM
PISTON	9907679	1	1	763	99 07 680	PISTON 190 MM
PISTON 190 MM	9907680	12	1	757	99 06 383	HYDRAULIC CYLINDER
PISTON 190 MM	9907680	12	1	758	99 06 576	HYDRAULIC CYLINDER
PISTON 190MM	9589256	12	1	756	95 93 590	HYDRAULIC CYLINDER
PISTON 220MM	9588147	12	1	755	94 02 020 2	HYDRAULIC CYLINDER
PISTON COOLING	9078548	15	8	565	10 12 595 9	DIESEL ENGINE D9508 A7 320k
PISTON CPL.	10342561	12	1	407	10 11 355 7	CONTROL BLOCK
PISTON CPL.	10342562	13	1	407	10 11 355 7	CONTROL BLOCK
PISTON CPL.	10342563	14	1	407	10 11 355 7	CONTROL BLOCK
PISTON CPL.	10342563	18	1	407	10 11 355 7	CONTROL BLOCK
PISTON CPL.	10342565	15	1	407	10 11 355 7	CONTROL BLOCK
PISTON CPL.	10342567	19	1	407	10 11 355 7	CONTROL BLOCK
PISTON CPL.	10342569	16	1	407	10 11 355 7	CONTROL BLOCK
PISTON CPL. d=128	10131546	70	8	566	10 12 595 9	DIESEL ENGINE D9508 A7 320k
PISTON GLR NG 165 165	9881231	19	1	181	90 78 788	REPAIR KIT LR/SD/DA
PISTON GUIDE RING	7002939	6	5	761	95 88 147	PISTON 220MM
PISTON GUIDE RING	7003455	6	4	762	95 89 256	PISTON 190MM
PISTON GUIDE RING	7003455	6	4	763	99 07 680	PISTON 190 MM
PISTON GUIDE RING 190X182X	9177723	2	2	762	95 89 256	PISTON 190MM
PISTON GUIDE RING 190X182X	9177723	2	2	763	99 07 680	PISTON 190 MM
PISTON GUIDE RING 220X212X	9177720	2	2	761	95 88 147	PISTON 220MM
PISTON NUT	9101411	4	1	757	99 06 383	HYDRAULIC CYLINDER
PISTON NUT	9101411	4	1	758	99 06 576	HYDRAULIC CYLINDER
PISTON RING MG 128X117,8X	10131564	3	1	643	10 13 154 6	PISTON CPL. d=128
PISTON ROD	9064092	8	1	757	99 06 383	HYDRAULIC CYLINDER
PISTON ROD	9064092	8	1	758	99 06 576	HYDRAULIC CYLINDER
PISTON ROD	94020365	8	1	755	94 02 020 2	HYDRAULIC CYLINDER
PISTON ROD	9593854	8	1	756	95 93 590	HYDRAULIC CYLINDER
PISTON ROD BEARING 125/19	9907890	13	1	756	95 93 590	HYDRAULIC CYLINDER
PISTON ROD BEARING 125/19	9907890	13	1	757	99 06 383	HYDRAULIC CYLINDER
PISTON ROD BEARING 125/19	9907890	13	1	758	99 06 576	HYDRAULIC CYLINDER
PISTON ROD BEARING 150/22	9631985	13	1	755	94 02 020 2	HYDRAULIC CYLINDER
PISTON ROD COVER BUCKET	10358736	15	1	7	.	
PISTON ROD COVER BUCKET	10358737	10	1	732	10 35 873 6	PISTON ROD COVER BUCKET
PISTON SD NG 165 165	9881232	20	1	181	90 78 788	REPAIR KIT LR/SD/DA

Description	Item	Pos.	Quantity	Page	Assembly	Description
PISTON W.SLIDING	10007866	2	9	149	10 33 307 0	DRIVING GEAR
PISTON W.SLIDING	10410641	2	9	165	10 41 064 0	DRIVING GEAR
PISTON WITH GUIDE SHOE	9274279	1	9	234	98 80 601	RK PISTON WITH GUIDE SHO
PISTON WITH GUIDE SHOE	9882563	1	9	186	98 80 604	RK PISTON WITH GUIDE SHOE
PISTON WRENCH SW 120	9600769	985	1	762	95 89 256	PISTON 190MM
PISTON WRENCH SW150	9281614	985	1	761	95 88 147	PISTON 220MM
PISTON d=128	10131550	1	1	643	10 13 154 6	PISTON CPL. d=128
PIVOT PIN	10216667	13	2	131	10 42 845 9	SWING PUMP
PIVOT PIN	7023646	11	2	130	10 21 593 5	PUMP
PLAIN COMPRESSION RING 2	10290521	4	6	775	72 64 501 16	KANTSIL SEAL KIT
PLAIN COMPRESSION RING 3	10290520	21	1	355	10 35 875 1	HYDR.INSTALLATION FAN DR
PLAIN COMPRESSION RING 3	10290520	31	1	356	10 35 875 1	HYDR.INSTALLATION FAN DR
PLAIN COMPRESSION RING 3	10290520	41	2	356	10 35 875 1	HYDR.INSTALLATION FAN DR
PLAIN COMPRESSION RING 3	10290520	55	7	357	10 35 875 1	HYDR.INSTALLATION FAN DR
PLAIN COMPRESSION RING 4	10290519	22	10	343	10 35 875 5	HYDR.ROTARY CONNEC.+SWI
PLAIN COMPRESSION RING 4	10290519	51	4	771	10 35 873 1	HOIST CYLINDERS DIA.190
PLAIN COMPRESSION RING 4	10290519	1	12	775	72 64 501 16	KANTSIL SEAL KIT
PLAIN COMPRESSION RING 4	10290518	6	8	89	10 07 444 8	HYDR.INSTALLATION UNDER
PLAIN COMPRESSION RING 4	10290518	21	4	334	10 38 698 2	HYDR.PUMPS TO SPOOL VALV
PLAIN COMPRESSION RING 4	10290518	32	2	335	10 38 698 2	HYDR.PUMPS TO SPOOL VALV
PLAIN COMPRESSION RING 4	10290518	42	2	335	10 38 698 2	HYDR.PUMPS TO SPOOL VALV
PLAIN COMPRESSION RING 4	10290518	21	4	337	10 49 804 4	HYDR.PUMPS TO SPOOL VALV
PLAIN COMPRESSION RING 4	10290518	32	2	338	10 49 804 4	HYDR.PUMPS TO SPOOL VALV
PLAIN COMPRESSION RING 4	10290518	42	2	338	10 49 804 4	HYDR.PUMPS TO SPOOL VALV
PLAIN COMPRESSION RING 4	10290518	12	8	343	10 35 875 5	HYDR.ROTARY CONNEC.+SWI
PLAIN COMPRESSION RING 4	10290518	16	2	343	10 35 875 5	HYDR.ROTARY CONNEC.+SWI
PLAIN COMPRESSION RING 4	10290518	28	2	396	10 35 874 4	CONTROL VALVE INSTALLAT
PLAIN COMPRESSION RING 4	10290518	39	5	396	10 35 874 4	CONTROL VALVE INSTALLAT
PLAIN COMPRESSION RING 4	10290518	17	9	403	10 06 771 7	HYDR.TUBES INSTALLATION
PLAIN COMPRESSION RING 4	10290518	40	29	701	10 35 872 5	GOOSENECK BOOM 7,00M
PLAIN COMPRESSION RING 4	10290518	12	2	713	10 07 162 8	HYDR.CYLINDER W/ADDITION.
PLAIN COMPRESSION RING 4	10290518	48	4	770	10 35 873 1	HOIST CYLINDERS DIA.190
PLAIN COMPRESSION RING 4	10290518	2	12	775	72 64 501 16	KANTSIL SEAL KIT
PLAIN COMPRESSION RING 5	10290517	72	2	384	10 35 874 5	HYDRAULIC TANK INSTALLAT
PLAIN COMPRESSION RING 5	10290517	116	1	704	10 35 872 5	GOOSENECK BOOM 7,00M
PLAIN COMPRESSION RING 5	10290517	122	2	704	10 35 872 5	GOOSENECK BOOM 7,00M
PLAIN COMPRESSION RING 5	10290517	5	2	706	10 06 477 4	HYDR.CYLINDER W/ADDITION.
PLAIN COMPRESSION RING 5	10290517	19	2	706	10 06 477 4	HYDR.CYLINDER W/ADDITION.
PLAIN COMPRESSION RING 5	10290517	3	6	775	72 64 501 16	KANTSIL SEAL KIT
PLAIN COMPRESSION RING 6	10290516	21	1	200	10 35 873 9	COOLER INSTALLATION
PLAIN COMPRESSION RING 6	10290516	14	4	351	10 05 312 9	HYDR.AND GEAR OIL COOLIN
PLAIN COMPRESSION RING 6	10290516	26	2	355	10 35 875 1	HYDR.INSTALLATION FAN DR
PLAIN COMPRESSION RING 6	10290516	5	6	775	72 64 501 16	KANTSIL SEAL KIT
PLANET WHEEL	90011580	47	3	222	90 01 781 7	SLEWING DRIVE SAT 375/253
PLANET WHEEL M=3,75 Z=34	9444453	37	3	64	94 43 970	TRAVEL DRIVE FAT 500P005
PLANET WHEEL M=3,75 Z=34	9444454	1	1	77	94 44 453	PLANET WHEEL M=3,75 Z=34
PLANET WHEEL M=4 Z=35	933332901	37	4	221	90 01 781 7	SLEWING DRIVE SAT 375/253
PLANET WHEEL M=4 Z=35	933333001	1	1	223	93 33 329 01	PLANET WHEEL M=4 Z=35
PLANET WHEEL M=5 Z=30	9444414	17	5	64	94 43 970	TRAVEL DRIVE FAT 500P005
PLANET WHEEL M=5 Z=30	9444415	1	1	75	94 44 414	PLANET WHEEL M=5 Z=30
PLANET WHEEL M=5 Z=33	9444418	27	3	64	94 43 970	TRAVEL DRIVE FAT 500P005
PLANET WHEEL M=5 Z=33	9444419	1	1	76	94 44 418	PLANET WHEEL M=5 Z=33
PLANETARY CARRIER	90011490	45	1	222	90 01 781 7	SLEWING DRIVE SAT 375/253
PLANETARY CARRIER	933330801	35	1	221	90 01 781 7	SLEWING DRIVE SAT 375/253
PLANETARY CARRIER	9444417	25	1	64	94 43 970	TRAVEL DRIVE FAT 500P005
PLANETARY CARRIER	9444452	35	1	64	94 43 970	TRAVEL DRIVE FAT 500P005
PLASTIC PROTECTION SPRIN	7369397	30	1m	364	10 35 875 4	HYDR.INSTAL.CONTROL TUBE
PLASTIC PROTECTION SPRIN	7369397	30	1m	371	10 82 438 0	HYDR.INSTAL.CONTROL TUBE
PLASTIC PROTECTION SPRIN	7369399	30	0.18m	346	10 05 312 6	HYDR.SUCT.+RETURN OIL HO
PLASTIC TUBE	7028899	380	1	484	70 28 778	ASSY. PARTS

Description	Item	Pos.	Quantity	Page	Assembly	Description
PLAT FORM IF ELEVATION 120	10358135	40	1	795	10 49 815 5	CAB ELEVATION 1200MM
PLATE	10054772	32	8	493	10 35 876 4	GANGWAY
PLATE	10059995	45	1	466	10 49 857 4	LOWER COVERING
PLATE	10064616	10	1	210	10 06 461 3	COOLER SEALING
PLATE	10064617	20	1	210	10 06 461 3	COOLER SEALING
PLATE	10066832	28	1	110	10 49 845 5	MOTOR SUPPORT
PLATE	10068169	30	1	403	10 06 771 7	HYDR.TUBES INSTALLATION
PLATE	10068170	31	1	403	10 06 771 7	HYDR.TUBES INSTALLATION
PLATE	10076219	30	1	210	10 06 461 3	COOLER SEALING
PLATE	10076346	33	1	503	10 09 499 2	ELECTRIC MATERIAL LIST
PLATE	10080708	100	1	207	10 35 873 9	COOLER INSTALLATION
PLATE	10083630	100	1	278	10 05 798 3	ARM REST LEFT
PLATE	10092371	231	1	421	10 05 303 6	PANELLING
PLATE	10092371	231	1	436	10 49 857 1	PANELLING
PLATE	10092451	232	1	421	10 05 303 6	PANELLING
PLATE	10092451	232	1	436	10 49 857 1	PANELLING
PLATE	10119105	6	1	671	10 11 948 7	CABLE BOOM MOUNTING
PLATE	10358079	13	1	782	10 35 806 3	ELEVATION 1200MM
PLATE	10358248	3	1	118	10 35 873 4	AIR FILTER INSTALLATION
PLATE	10364395	45	1	102	10 35 875 3	RADIATOR BOX INSTALLATIO
PLATE	9758230	101	1	292	10 82 277 5	ARM REST RIGHT
PLATE	9892073	8	2	549	10 35 876 5	COUNTERWEIGHT INSTALLAT
PLATE	9943165	20	2	311	10 08 256 0	PROXIMITY SWITCH INSTALL
PLATE	9946134	10	2	311	10 08 256 0	PROXIMITY SWITCH INSTALL
PLATE CPL.	10358292	24	4	493	10 35 876 4	GANGWAY
PLATE CPL.	10358292	3	3	800	10 49 815 4	CATWALK LEFT IN FRONT
PLATE CPL.	10358295	23	10	493	10 35 876 4	GANGWAY
PLATE LEFT	10044326	170	1	470	70 28 775	FRONT WINDOW
PLATE RIGHT	10044328	1060	1	470	70 28 775	FRONT WINDOW
PLATFORM	10358136	60	1	780	10 35 813 5	PLAT FORM IF ELEVATION 120
PLATINE	9202120	30	1	747	10 36 839 8	TRAVEL ALARM
PLATINES INSTALLATION A101	9874988	33	1	277	10 05 798 3	ARM REST LEFT
PLUG	10012889	20	1	392	10 22 239 3	AERATION FILTER
PLUG	7022127	52	9	146	10 10 206 4	REGULATOR
PLUG	7022127	11	4	150	10 33 307 1	CONNECTING PLATE
PLUG	7025644	1	1	305	73 69 377	CIGAR LIGHTER
PLUG	7370947	11	1	153	10 33 322 6	CONNECTING PLATE
PLUG-IN PIPE	10037030	8	1	689	10 12 094 4	SEAL KIT AIR COMPRESSOR
PLUG-IN PIPE	10037030	6	4	693	10 12 098 2	SEAL KIT EXHAUST GAS RECI
PLUG-IN PIPE	10354599	7	2	689	10 12 094 4	SEAL KIT AIR COMPRESSOR
PLUG-IN PIPE	9078800	3	2	638	10 11 763 3	CONNECTION F.WATER PIPE
PLUG-IN PIPE DMR42X32	10354600	7	2	582	10 12 593 7	OIL SUMP WITH FASTENING
PLUG-IN PIPE DMR42X32	10354600	4	2	683	10 12 087 1	SEAL KIT OIL SUMP
PLUG-IN PIPE DR 61X32 70 E	10354601	5	2	638	10 11 763 3	CONNECTION F.WATER PIPE
PLUG-IN PIPE DR 61X32 70 E	10354601	3	2	691	10 12 097 3	SEALING SET WATER PUMP
POWER MODULE	10099925	2	1	537	10 06 577 4	POWER MODULE CPL
POWER MODULE CPL	10065774	26	1	530	10 49 837 7	ELECTR.SYSTEM FUEL TANK
POWER UNIT SUPPORT ATT	10119410	1	1	581	10 12 021 3	POWER UNIT SUPPORT ATT
POWER UNIT SUPPORT ATT	10120213	12	1	565	10 12 595 9	DIESEL ENGINE D9508 A7 320k
PREFEEDING PUMP	10116343	2	1	622	10 11 781 4	HIGH PRESSURE PUMP PRE-A
PREFILTER	5610704	14	1	115	10 35 873 3	AIR AND EXHAUST INSTALLAT
PRESSURE ADAPTER	9078325	1	1	616	90 78 324	PRESSURE ADAPTER ASS.
PRESSURE ADAPTER ASS.	9078324	191	8	567	10 12 595 9	DIESEL ENGINE D9508 A7 320k
PRESSURE ADAPTER ASS.	9078324	191	1	687	10 12 089 6	SEAL KIT ZYLINDER HEAD CPL
PRESSURE CUT-OFF STAGE	10132049	1	1	610	10 13 273 8	FINAL CONTROL VALVE
PRESSURE CUT-OFF STAGE	10132052	5	1	610	10 13 273 8	FINAL CONTROL VALVE
PRESSURE FEEDER VALVE	10289183	80	1	752	10 34 080 6	PIPE FRACTION SAFETY VALV
PRESSURE FEEDER VALVE	10289183	80	1	753	10 34 081 2	PIPE FRACTION SAFETY VALV
PRESSURE FEEDER VALVE	5616231	60	8	408	10 11 355 7	CONTROL BLOCK
PRESSURE LIMITING CARTRI	5009565	5	1	372	10 00 909 0	OIL PILOT VALVE

Description	Item	Pos.	Quantity	Page	Assembly	Description
PRESSURE LIMITING VALVE	10118610	7	1	607	10 12 475 6	OIL MODULE LEFT
PRESSURE LIMITING VALVE	10118610	7	1	608	10 12 475 7	OIL MODULE RIGHT
PRESSURE LIMITING VALVE	10297929	2	1	153	10 33 322 6	CONNECTING PLATE
PRESSURE LIMITING VALVE	10333237	1	2	153	10 33 322 6	CONNECTING PLATE
PRESSURE LIMITING VALVE	9267037	1	1	236	98 83 996	REPAIR SET PRESSURE CON
PRESSURE LIMITING VALVE	9267554	1	2	69	90 72 026	CONNECTING PLATE NG 165
PRESSURE LINE	10064100	41	1	344	10 35 875 5	HYDR.ROTARY CONNEC.+SWI
PRESSURE LINE	10093284	40	1	344	10 35 875 5	HYDR.ROTARY CONNEC.+SWI
PRESSURE LINE	10119365	3	1	625	10 11 941 3	HIGH PRESSURE PIPE ASSEM
PRESSURE LINE	10119366	4	1	625	10 11 941 3	HIGH PRESSURE PIPE ASSEM
PRESSURE LINE CPL	10059814	5	1	713	10 07 162 8	HYDR.CYLINDER W/ADDITION.
PRESSURE LINE CPL	10065818	102	1	704	10 35 872 5	GOOSENECK BOOM 7,00M
PRESSURE LINE CPL	10065821	32	1	701	10 35 872 5	GOOSENECK BOOM 7,00M
PRESSURE LINE CPL	10065825	101	1	704	10 35 872 5	GOOSENECK BOOM 7,00M
PRESSURE LINE CPL	10065827	29	1	701	10 35 872 5	GOOSENECK BOOM 7,00M
PRESSURE LINE CPL	10065842	34	1	701	10 35 872 5	GOOSENECK BOOM 7,00M
PRESSURE LINE CPL	10065846	33	1	701	10 35 872 5	GOOSENECK BOOM 7,00M
PRESSURE LINE CPL	10065850	31	1	701	10 35 872 5	GOOSENECK BOOM 7,00M
PRESSURE LINE CPL	10065863	30	1	701	10 35 872 5	GOOSENECK BOOM 7,00M
PRESSURE LINE CPL	10065951	45	1	701	10 35 872 5	GOOSENECK BOOM 7,00M
PRESSURE LINE CPL	10065955	44	1	701	10 35 872 5	GOOSENECK BOOM 7,00M
PRESSURE LINE CPL	10066281	10	1	706	10 06 477 4	HYDR.CYLINDER W/ADDITION.
PRESSURE LINE CPL	10066841	73	1	702	10 35 872 5	GOOSENECK BOOM 7,00M
PRESSURE LINE CPL	10066843	70	1	702	10 35 872 5	GOOSENECK BOOM 7,00M
PRESSURE LINE CPL	10067722	2	1	403	10 06 771 7	HYDR.TUBES INSTALLATION
PRESSURE LINE CPL	10067724	3	1	403	10 06 771 7	HYDR.TUBES INSTALLATION
PRESSURE LINE CPL	10067726	4	1	403	10 06 771 7	HYDR.TUBES INSTALLATION
PRESSURE LINE CPL	10067728	5	1	403	10 06 771 7	HYDR.TUBES INSTALLATION
PRESSURE LINE CPL	10067730	6	1	403	10 06 771 7	HYDR.TUBES INSTALLATION
PRESSURE LINE CPL	10067732	7	1	403	10 06 771 7	HYDR.TUBES INSTALLATION
PRESSURE LINE CPL	10067734	8	1	403	10 06 771 7	HYDR.TUBES INSTALLATION
PRESSURE LINE CPL	10067736	9	1	403	10 06 771 7	HYDR.TUBES INSTALLATION
PRESSURE LINE CPL	10067738	10	1	403	10 06 771 7	HYDR.TUBES INSTALLATION
PRESSURE LINE CPL	10074636	133	1	705	10 35 872 5	GOOSENECK BOOM 7,00M
PRESSURE LINE CPL	10358242	55	1	397	10 35 874 4	CONTROL VALVE INSTALLAT
PRESSURE LINE CPL	9490631	1	1	54	10 49 867 0	ROTARY CONNECTION INSTA
PRESSURE REDUCTION VALV	10341929	3	2	176	10 34 668 4	CONTROL UNIT
PRESSURE REDUCTION VALV	10475942	119	14	408	10 11 355 7	CONTROL BLOCK
PRESSURE REDUCTION VALV	10475942	40	1	751	10 29 135 3	CONTROL MODULE
PRESSURE SPRING	10008165	3	1	174	10 00 795 6	ADJUSTMENT
PRESSURE SPRING	10120103	12	1	607	10 12 475 6	OIL MODULE LEFT
PRESSURE SPRING	10216810	5	1	262	10 29 792 9	PRESSURE LIMITING VALVE
PRESSURE SPRING	10220821	5	1	163	10 33 327 3	COLD STAR VALVE
PRESSURE SPRING	10278643	270	1	752	10 34 080 6	PIPE FRACTION SAFETY VALV
PRESSURE SPRING	10278643	270	1	753	10 34 081 2	PIPE FRACTION SAFETY VALV
PRESSURE SPRING	10278644	280	1	752	10 34 080 6	PIPE FRACTION SAFETY VALV
PRESSURE SPRING	10278644	280	1	753	10 34 081 2	PIPE FRACTION SAFETY VALV
PRESSURE SPRING	10333253	13	1	264	10 33 323 7	PRESSURE LIMITING VALVE
PRESSURE SPRING	10410644	29	1	165	10 41 064 0	DRIVING GEAR
PRESSURE SPRING	5606650	5	1	402	56 15 220	HIGH PRESSURE FILTER
PRESSURE SPRING	5616117	220	4	71	56 16 688	WHEEL BRAKE VALVE
PRESSURE SPRING	570036608	12	1	264	10 33 323 7	PRESSURE LIMITING VALVE
PRESSURE SPRING	7023708	6	1	261	10 10 206 7	REGULATOR ELEMENT
PRESSURE SPRING	7371358	3	1	412	56 10 135	SUPPLY VALVE
PRESSURE SPRING	7371759	7	1	157	10 33 324 2	SHUTDOWN VALVE
PRESSURE SPRING	7372254	5	1	261	10 10 206 7	REGULATOR ELEMENT
PRESSURE SPRING	749072914	170	1	71	56 16 688	WHEEL BRAKE VALVE
PRESSURE SPRING	7610107	6	26	224	93 36 053 01	BRAKE
PRESSURE SPRING	7610108	7	26	224	93 36 053 01	BRAKE
PRESSURE SPRING	7610132	13	26	224	93 36 053 01	BRAKE

Description	Item	Pos.	Quantity	Page	Assembly	Description
PRESSURE SPRING	7621958	10	2	178	10 40 975 1	ADJUSTING PISTON
PRESSURE SPRING	7621959	11	2	178	10 40 975 1	ADJUSTING PISTON
PRESSURE SPRING	9265404	15	1	72	92 67 037	PRESSURE LIMITING VALVE
PRESSURE SPRING	9266641	30	20	142	98 86 680	REPAIR KIT DRIVING MECHAN
PRESSURE SPRING	9268747	31	20	142	98 86 680	REPAIR KIT DRIVING MECHAN
PRESSURE SPRING 0,80/ 6,30x	7382063	14	1	266	98 89 003	NON-RETURN VALVE RV
PRESSURE SPRING 0,8X3,06X	10011098	31	26	83	98 88 123	REPAIR KIT DRIVING MECHAN
PRESSURE SPRING 0,8X3,06X	10011098	31	26	172	98 88 321	REPAIR KIT DRIVING MECHAN
PRESSURE SPRING 1,25X5,1	9265050	30	15	231	92 71 427	REPAIR KIT DRIVING MECHAN
PRESSURE SPRING 13,6X29,1	7373500	17	24	61	50 20 370 01	SPRING LOADED MULTI-DISC
PRESSURE SPRING 2,25X8,0	9266088	21	1	78	92 67 554	PRESSURE LIMITING VALVE
PRESSURE SPRING 2x15x68	7361568	9	1	768	56 02 932	FLOW REGULATING CHECK
PRESSURE SPRING 4,5X31,1X	7373502	19	24	61	50 20 370 01	SPRING LOADED MULTI-DISC
PRESSURE SPRING 5,6/1,4X19	9268776	30	26	83	98 88 123	REPAIR KIT DRIVING MECHAN
PRESSURE SPRING 5,6/1,4X19	9268776	30	26	172	98 88 321	REPAIR KIT DRIVING MECHAN
PRESSURE SPRING 5/37X54,5/	7381499	15	1	80	92 78 174	ADJUSTMENT
PRESSURE SPRING 51,7/ 5,3	7365026	3	1	400	93 70 592	NON-RETURN VALVE
PRESSURE SPRING 6,8/1,2X2	9266087	20	1	78	92 67 554	PRESSURE LIMITING VALVE
PRESSURE SPRING 8,2X29,1X	7373501	18	24	61	50 20 370 01	SPRING LOADED MULTI-DISC
PRESSURE SWITCH	10292659	2	1	544	10 29 266 0	UNIT RECEIVER-DRYER
PRESSURE SWITCH	10467727	90	1	519	10 06 222 8	ELECTR.SYSTEM CONTROL V
PRESSURE TRANSMITTER	10025124	1	1	660	90 76 531	PRESSURE TRANSMITTER M 1
PRESSURE TRANSMITTER	10100781	1	1	661	90 76 550	PRESSURE TRANSMITTER M1
PRESSURE TRANSMITTER	10280390	30	1	511	10 06 221 6	ELECTR.INST.BOOM
PRESSURE TRANSMITTER	10280390	30	1	512	10 35 876 2	ELECTR.INST.BOOM
PRESSURE TRANSMITTER	10280390	30	1	513	10 49 837 6	ELECTR.INST.BOOM
PRESSURE TRANSMITTER	10280390	50	1	517	10 06 222 8	ELECTR.SYSTEM CONTROL V
PRESSURE TRANSMITTER M 1	9076531	10	2	658	90 79 187	ENGINE CONTROL SENSORS
PRESSURE TRANSMITTER M 1	10100782	12	2	658	90 79 187	ENGINE CONTROL SENSORS
PRESSURE TRANSMITTER M1	9076550	11	1	658	90 79 187	ENGINE CONTROL SENSORS
PRIMARY SHAFT CPL. Z=59 M=	9080192	10	1	126	90 80 120	PUMP DISTRIBUTION GEAR
PROFILE	10002428	42	0.613m	448	10 05 535 4	COOLER COWL
PROFILE	10022653	31	3	323	11 00 359 4	HOUSING
PROFILE	10216006	215	1	488	10 48 809 9	INTERNAL LINING
PROFILE	10294466	20	3	101	10 35 875 3	RADIATOR BOX INSTALLATIO
PROFILE	10294466	60	5	210	10 06 461 3	COOLER SEALING
PROFILE	7360734	41	0.418m	448	10 05 535 4	COOLER COWL
PROFILE PACKING 33	10335629	3	1	585	10 11 883 9	OIL FILLER INLET
PROHIBITION SIGN	7366794	24	2	558	10 35 876 6	SIGNS
PROHIBITION SIGN	7366794	24	2	562	10 49 863 6	SIGNS
PROPORTIONAL PRESSURE	7623606	56	1	146	10 10 206 4	REGULATOR
PROPORTIONING ELEMENT	10013840	101	1	252	10 48 927 7	DISTRIBUTION BLOCK SXE-2
PROPORTIONING ELEMENT	10013840	104	1	252	10 48 927 7	DISTRIBUTION BLOCK SXE-2
PROPORTIONING ELEMENT	10013841	102	1	252	10 48 927 7	DISTRIBUTION BLOCK SXE-2
PROPORTIONING ELEMENT	10013842	103	1	252	10 48 927 7	DISTRIBUTION BLOCK SXE-2
PROPORTIONING ELEMENT	10013853	105	1	252	10 48 927 7	DISTRIBUTION BLOCK SXE-2
PROTECTING CAP	10354822	1	1	387	10 30 177 6	DRAIN VALVE
PROTECTING CAP	7013456	3	1	584	50 04 624	OIL DRAIN PLUG
PROTECTING CAP	7019165	410	1	484	70 28 778	ASSY. PARTS
PROTECTING CAP	7616949	9	1	374	50 09 565	PRESSURE LIMITING CARTRI
PROTECTING CAP	7623221	996	1	510	10 06 600 9	WIRING HARN.BATTERY-STAR
PROTECTING CAP	9882817	17	1	78	92 67 554	PRESSURE LIMITING VALVE
PROTECTING SLEEVE 8/8/2,2	10010154	30	1	286	10 05 879 2	MANIPULATOR LEFT
PROTECTING SLEEVE 8/8/2,2	10010154	30	1	299	10 05 879 4	MANIPULATOR RIGHT
PROTECTION	10498365	10	1	733	10 35 873 7	PISTON ROD COVER BUCKET
PROTECTION F.STICK 2,60M	10076271	13	1	7	.	
PROTECTION GUARD	10130223	7	1	646	10 11 899 9	BRACKET ADD-ON
PROTECTION GUARD	7028910	560	1	486	70 28 778	ASSY. PARTS
PROTECTION PLATE ASSEM	9080668	470	1	570	10 12 595 9	DIESEL ENGINE D9508 A7 320k
PROTECTIVE COVER	6203735	6	1	290	10 08 046 6	SWITCH INSTALLATION S42

Description	Item	Pos.	Quantity	Page	Assembly	Description
PROTECTIVE COVER	6203735	8	1	300	10 08 576 7	SWITCH INSTALLATION S248
PROXIMITY SWITCH	10009330	19	1	246	10 07 675 7	CENTRALIZED LUBRICATION
PROXIMITY SWITCH	10009330	20	1	252	10 48 927 7	DISTRIBUTION BLOCK SXE-2
PROXIMITY SWITCH	10024864	2	1	312	99 37 443	PROXIMITY SWITCH W/ CON
PROXIMITY SWITCH	10331873	13	1	243	10 07 675 6	SWING GEAR PINION GREAS
PROXIMITY SWITCH	10331873	33	1	245	10 29 302 0	DISTRIBUTION BLOCK MX-F 3/
PROXIMITY SWITCH INSTALL	10082560	40	1	308	10 05 798 5	FOOT BOARD INSTALLATION
PROXIMITY SWITCH W/ CON	9937443	40	2	311	10 08 256 0	PROXIMITY SWITCH INSTALL
PROXIMITY SWITCH W/ CON	9937495	20	1	749	10 39 372 0	ELECTRICAL SYSTEM
PULL ROD	10016661	38	4	250	10 34 071 7	LUBRICATION PUMP
PULL ROD M8X163	10013858	6	2	252	10 48 927 7	DISTRIBUTION BLOCK SXE-2
PULL-BACK BALL	10333081	25	1	149	10 33 307 0	DRIVING GEAR
PULL-BACK BALL	10410643	25	1	165	10 41 064 0	DRIVING GEAR
PULL-BACK BALL	9267943	1	1	235	98 80 619	BALL REPAIR SET
PULL-BACK BALL NG 165	9072808	1	1	190	98 88 119	REPAIR KIT NG 165
PULL-BACK PLATE	10007943	24	1	149	10 33 307 0	DRIVING GEAR
PULL-BACK PLATE	10410642	24	1	165	10 41 064 0	DRIVING GEAR
PULL-BACK PLATE	9265128	2	1	235	98 80 619	BALL REPAIR SET
PULL-BACK PLATE	9266567	2	1	190	98 88 119	REPAIR KIT NG 165
PUMP	10215935	20	1	119	10 35 879 9	PUMPS INSTALLATION
PUMP DISTRIBUTION GEAR	9080120	1	1	125	90 80 165	MULTIPLE CIRCUIT AGGREG
PUMP ELEMENT PE-120	10216340	14	1	249	10 34 071 7	LUBRICATION PUMP
PUMP HOUSING	10014693	8	1	249	10 34 071 7	LUBRICATION PUMP
PUMPS BOX PARTS	10053008	165	1	91	10 35 874 2	UPPERCARRIAGE
PUMPS BOX PARTS	10053008	165	1	93	10 49 853 2	UPPERCARRIAGE
PUMPS CONTROL CPL. R5.8/V	10826744	85	1	292	10 82 277 5	ARM REST RIGHT
PUMPS INSTALLATION	10358799	540	1	108	10 35 873 5	MOTOR INSTALLATION
PUSH BUTTON LINKS	9968578	40	1	289	99 68 625	LH-JOYSTICK LEFT
PUSH BUTTON RECHTS	9968580	40	1	304	99 68 611	LH-JOYSTICK RIGHT
PUSH-BUTTON COVER LEFT	10469917	10	1	289	99 68 625	LH-JOYSTICK LEFT
PUSH-BUTTON COVER RIGHT	10469918	10	1	304	99 68 611	LH-JOYSTICK RIGHT
PVC HOSE	10341848	3	1	553	10 08 811 2	OIL DRAIN HOSE
QUICK LOCK	10022768	4	2	326	10 02 277 7	CIRCULATING AIR GRID
QUICK LOCK	10022785	4	2	321	10 02 211 7	AIR CIRCULATION CASE
RADIAL SEAL X100X120X8	7362182	16	2	717	10 35 840 0	STICK 2,60M
RADIAL SEAL X120X150X12	7362184	31	4	709	10 35 835 9	GOOSENECK BOOM 7,00M
RADIAL SEAL X120X150X12	7362184	19	2	717	10 35 840 0	STICK 2,60M
RADIAL SEAL X120X150X12	7362184	5	4	731	10 49 825 2	CONNECTING LINK
RADIAL SEAL X120X150X12	7362184	15	4	756	95 93 590	HYDRAULIC CYLINDER
RADIAL SEAL X120X150X12	7362184	15	4	757	99 06 383	HYDRAULIC CYLINDER
RADIAL SEAL X120X150X12	7362184	15	4	758	99 06 576	HYDRAULIC CYLINDER
RADIAL SEAL X130X160X12	7017199	15	4	755	94 02 020 2	HYDRAULIC CYLINDER
RADIATOR BOX	10358600	2	1	100	10 35 875 3	RADIATOR BOX INSTALLATIO
RADIATOR BOX INSTALLATIO	10358753	160	1	91	10 35 874 2	UPPERCARRIAGE
RAIL	10063827	35	1	461	10 06 375 5	BOX CPL
RAIL	9827870	132	1	417	10 05 303 6	PANELLING
RAIL	9827870	132	1	432	10 49 857 1	PANELLING
RAIL STIRRUP	7370581	73	1	274	10 04 363 2	DRIVERS SEAT
RAILING	10071592	180	1	419	10 05 303 6	PANELLING
RAILING	10071592	180	1	434	10 49 857 1	PANELLING
REAR REFLECTOR D196X88	6204631	10	2	549	10 35 876 5	COUNTERWEIGHT INSTALLAT
REAR SILENCER	10001685	5	1	114	10 35 873 3	AIR AND EXHAUST INSTALLAT
RECEIVER-DRIER	5611990	1	1	544	10 29 266 0	UNIT RECEIVER-DRYER
REDUCING SCREW	10424588	16	1	249	10 34 071 7	LUBRICATION PUMP
REDUCING STUD RI	7022708	31	1	382	10 35 874 5	HYDRAULIC TANK INSTALLAT
REFERENCE PLATE	9402376	21	4	558	10 35 876 6	SIGNS
REFERENCE PLATE	9402376	21	4	562	10 49 863 6	SIGNS
REFERENCE PLATE	9402377	23	2	558	10 35 876 6	SIGNS
REFERENCE PLATE	9402377	23	2	562	10 49 863 6	SIGNS
REGEL PISTON PRE-ASS.	9272221	2	1	168	90 79 811	RK PISTON

Description	Item	Pos.	Quantity	Page	Assembly	Description
REGULATING VALVE	10118374	4	1	134	90 72 922	HYDRAULIC VARIABLE DISPLA
REGULATING VALVE	10118374	4	1	136	90 77 452	HYDRAULIC VARIABLE DISPLA
REGULATING VALVE	10125692	2	2	580	10 12 518 2	OIL SEPARATOR OEL
REGULATION	10409747	2	1	131	10 42 845 9	SWING PUMP
REGULATION DEVICE SEAT B	7025007	23	1	276	70 24 996	SEAT FRAME
REGULATOR	10102064	3	1	130	10 21 593 5	PUMP
REGULATOR	10118178	10	1	175	10 11 837 4	REGULATING VALVE
REGULATOR ELEMENT	10102066	1	1	150	10 33 307 1	CONNECTING PLATE
REGULATOR ELEMENT	10102067	2	1	146	10 10 206 4	REGULATOR
REGULATOR ELEMENT	10292071	1	1	150	10 33 307 1	CONNECTING PLATE
REINFORCING SECTION	10022779	16	2	321	10 02 211 7	AIR CIRCULATION CASE
RELAY	6001254	2	1	281	10 42 753 2	ADD BOARD
RELAY	6001682	10	2	307	10 34 790 0	OUTPUT STAGE
RELAY	6001921	60	2	504	10 09 499 2	ELECTRIC MATERIAL LIST
RELAY	6002381	32	2	282	97 58 815 01	E-BOARD
RELAY	6200906	110	1	293	10 82 277 5	ARM REST RIGHT
RELAY	6200906	61	1	504	10 09 499 2	ELECTRIC MATERIAL LIST
RELAY	6202646	1	1	281	10 42 753 2	ADD BOARD
RELAY	6202646	30	2	282	97 58 815 01	E-BOARD
RELAY	630165901	3	3	281	10 42 753 2	ADD BOARD
RELAY	7029139	950	1	792	95 99 236	ELECTRIC INSTALLATION
REPAIR KIT	9889008	2	1	198	90 77 032	CONNECTING PLATE NG 045
REPAIR KIT DRIVE SHAFT	9080196	98	1	128	90 80 120	PUMP DISTRIBUTION GEAR
REPAIR KIT DRIVING MECHAN	9271427	94	1	197	10 12 504 2	HYDRAULIC INSTALLATION
REPAIR KIT DRIVING MECHAN	9886680	94	1	143	98 88 041	HYDR.MOTOR FIX FMF 165
REPAIR KIT DRIVING MECHAN	9888123	94	1	68	90 72 024	HYDR.MOTOR VAR.FMV 165
REPAIR KIT DRIVING MECHAN	9888123	94	1	70	98 88 126	DRIVING GEAR
REPAIR KIT DRIVING MECHAN	9888321	94	1	134	90 72 922	HYDRAULIC VARIABLE DISPLA
REPAIR KIT DRIVING MECHAN	9888321	94	1	136	90 77 452	HYDRAULIC VARIABLE DISPLA
REPAIR KIT FMV 165	9077412	80	1	80	92 78 174	ADJUSTMENT
REPAIR KIT FMV 165	9077481	81	1	80	92 78 174	ADJUSTMENT
REPAIR KIT LOCK RING	9268011	96	1	197	10 12 504 2	HYDRAULIC INSTALLATION
REPAIR KIT LOCK RING	9268011	96	1	230	92 68 786	SEAL KIT
REPAIR KIT LOCK RING	9268751	96	1	68	90 72 024	HYDR.MOTOR VAR.FMV 165
REPAIR KIT LOCK RING	9268751	96	1	88	92 78 179	SEAL KIT
REPAIR KIT LOCK RING	9268751	93	1	134	90 72 922	HYDRAULIC VARIABLE DISPLA
REPAIR KIT LOCK RING	9268751	93	1	136	90 77 452	HYDRAULIC VARIABLE DISPLA
REPAIR KIT LOCK RING	9268751	96	1	143	98 88 041	HYDR.MOTOR FIX FMF 165
REPAIR KIT LOCK RING	9268751	17	1	171	92 71 657	SEAL KIT
REPAIR KIT LOCK RING	9268751	17	1	184	92 74 199	SEAL KIT
REPAIR KIT LR/SD/DA	9078788	86	1	134	90 72 922	HYDRAULIC VARIABLE DISPLA
REPAIR KIT LR/SD/DA	9078788	86	1	136	90 77 452	HYDRAULIC VARIABLE DISPLA
REPAIR KIT NG 165	9888119	78	1	83	98 88 123	REPAIR KIT DRIVING MECHAN
REPAIR KIT NG 165	9888119	78	1	142	98 86 680	REPAIR KIT DRIVING MECHAN
REPAIR KIT NG 165	9888119	78	1	143	98 88 041	HYDR.MOTOR FIX FMF 165
REPAIR KIT NG 165	9888119	14	1	172	98 88 321	REPAIR KIT DRIVING MECHAN
REPAIR KIT SHAFT	9882882	95	1	197	10 12 504 2	HYDRAULIC INSTALLATION
REPAIR KIT SHAFT	9886679	93	1	143	98 88 041	HYDR.MOTOR FIX FMF 165
REPAIR KIT SHAFT	9888124	95	1	70	98 88 126	DRIVING GEAR
REPAIR KIT SHAFT	9889282	10	1	172	98 88 321	REPAIR KIT DRIVING MECHAN
REPAIR SET LID	9275443	85	1	134	90 72 922	HYDRAULIC VARIABLE DISPLA
REPAIR SET PRESSURE CON	9076052	1	1	198	90 77 032	CONNECTING PLATE NG 045
REPAIR SET PRESSURE CON	9883996	91	1	143	98 88 041	HYDR.MOTOR FIX FMF 165
REPAIR SET SWIVEL YOKE LP	9079347	16	1	172	98 88 321	REPAIR KIT DRIVING MECHAN
RESET PISTON	10008155	1	1	174	10 00 795 6	ADJUSTMENT
RESET ROD	10008154	2	1	174	10 00 795 6	ADJUSTMENT
RESET ROD	10008156	2	1	174	10 00 795 6	ADJUSTMENT
RESET ROD	10008157	2	1	174	10 00 795 6	ADJUSTMENT
RESET ROD	10008158	2	1	174	10 00 795 6	ADJUSTMENT
RESET ROD	10008160	2	1	174	10 00 795 6	ADJUSTMENT

Description	Item	Pos.	Quantity	Page	Assembly	Description
REST	10043180	20	1	279	10 05 736 2	CONTROL BRACKET LEFT IN
REST	10043180	30	1	467	10 35 876 8	CAB
RESTRICTOR PIN	10015533	140	2	71	56 16 688	WHEEL BRAKE VALVE
RETAINER CLIP 74-78/20	10027937	10	2	631	10 11 570 0	CONNECTING LINE ADD-ON
RETAINING DISK	9441557	46	1	222	90 01 781 7	SLEWING DRIVE SAT 375/253
RETAINING DISK	9443033	36	1	64	94 43 970	TRAVEL DRIVE FAT 500P005
RETAINING DISK	9443344	38	1	64	94 43 970	TRAVEL DRIVE FAT 500P005
RETAINING DISK 125X6	9442198	36	1	221	90 01 781 7	SLEWING DRIVE SAT 375/253
RETAINING PLUG	10037594	3	2	154	10 33 322 7	GEAR PUMP
RETAINING RING	7373420	6	2	178	10 40 975 1	ADJUSTING PISTON
RETURN FILTER	7368771	12	3	381	10 35 874 5	HYDRAULIC TANK INSTALLAT
RETURN PIPE	7368995	5	1	389	73 68 771	RETURN FILTER
RIBBED HEX NUT M10	10044430	5	6	651	10 11 558 7	EXHAUST ADAPTER ASSEMB
RIBBED HEX NUT M10	10044430	5	6	652	10 11 678 0	EXHAUST ADAPTER ASSEMBL
RIMSEAL 125,0x140,1x6,3	7010659	9	1	765	99 07 890	PISTON ROD BEARING 125/19
RIMSEAL 150,0x170,5x8,1	7014467	9	1	764	96 31 985	PISTON ROD BEARING 150/22
RING	10050911	2	1	718	10 05 091 3	RING
RING	10050913	6	4	714	10 35 872 1	STICK 2,60M
RING	10297934	5	2	178	10 40 975 1	ADJUSTING PISTON
RING	10333251	10	1	264	10 33 323 7	PRESSURE LIMITING VALVE
RING	10337545	6	1	176	10 34 668 4	CONTROL UNIT
RING	7369134	50	5	407	10 11 355 7	CONTROL BLOCK
RING	7373411	5	2	178	10 40 975 1	ADJUSTING PISTON
RING	7373412	5	2	178	10 40 975 1	ADJUSTING PISTON
RING	7373413	5	2	178	10 40 975 1	ADJUSTING PISTON
RING	7373414	5	2	178	10 40 975 1	ADJUSTING PISTON
RING	7373415	5	2	178	10 40 975 1	ADJUSTING PISTON
RING	7373416	5	2	178	10 40 975 1	ADJUSTING PISTON
RING	7373417	5	2	178	10 40 975 1	ADJUSTING PISTON
RING	7373418	5	2	178	10 40 975 1	ADJUSTING PISTON
RIVET	10470127	3	4	491	10 47 012 8	CASING, CPL
RIVET	4451001	4	4	319	10 02 206 9	EVAPORATOR HOUSING
RIVET	7020612	390	2	473	10 04 678 8	DRIVER'S CAB DOOR
RIVET	7020612	370	4	484	70 28 778	ASSY. PARTS
RK CRANKSHAFT SEAL	10121952	1	1	590	10 12 134 6	RK CRANKSHAFT SEAL D9508
RK CRANKSHAFT SEAL	10121954	2	1	590	10 12 134 6	RK CRANKSHAFT SEAL D9508
RK CRANKSHAFT SEAL D9508	10121346	52	1	566	10 12 595 9	DIESEL ENGINE D9508 A7 320k
RK CYLINDER+CONTROL PLAT	9073751	2	1	172	98 88 321	REPAIR KIT DRIVING MECHAN
RK CYLINDER+CONTROL PLAT	9880521	79	1	231	92 71 427	REPAIR KIT DRIVING MECHAN
RK CYLINDER+CONTROL PLAT	9886678	79	1	142	98 86 680	REPAIR KIT DRIVING MECHAN
RK CYLINDER+CONTROL PLAT	9886678	79	1	143	98 88 041	HYDR.MOTOR FIX FMF 165
RK CYLINDER+CONTROL PLAT	9888122	79	1	83	98 88 123	REPAIR KIT DRIVING MECHAN
RK PILOT DEVICE	9265665	2	2	772	92 66 411	OPERATING EQUIPMENT (LE
RK PILOT DEVICE	9265665	2	2	773	92 66 412	OPERATING EQUIPMENT (RIG
RK PISTON	9079811	2	1	139	92 71 648	ADJUSTMENT
RK PISTON WITH GUIDE SHO	9880601	77	1	231	92 71 427	REPAIR KIT DRIVING MECHAN
RK PISTON WITH GUIDE SHOE	9880604	77	1	83	98 88 123	REPAIR KIT DRIVING MECHAN
RK PISTON WITH GUIDE SHOE	9880604	77	1	142	98 86 680	REPAIR KIT DRIVING MECHAN
RK PISTON WITH GUIDE SHOE	9880604	77	1	143	98 88 041	HYDR.MOTOR FIX FMF 165
RK PISTON WITH GUIDE SHOE	9880604	1	1	172	98 88 321	REPAIR KIT DRIVING MECHAN
RK SPEED SENSOR	9278623	90	1	143	98 88 041	HYDR.MOTOR FIX FMF 165
ROCKER ARM BRACKET PRE	10122503	1	1	595	10 11 806 0	ROCKER ARMS DEVICE CPL.
ROCKER ARMS DEVICE CPL.	10118060	81	8	566	10 12 595 9	DIESEL ENGINE D9508 A7 320k
ROCKER SWITCH	7027927	330	1	792	95 99 236	ELECTRIC INSTALLATION
ROD	10055394	30	1	456	10 05 541 0	SIDE DOOR FRONT RIGHT
ROD	10055394	20	1	801	10 05 539 2	SIDE DOOR LEFT
ROD	10055415	40	1	457	10 05 541 0	SIDE DOOR FRONT RIGHT
ROD	10055416	41	1	457	10 05 541 0	SIDE DOOR FRONT RIGHT
ROD	10055437	30	1	454	10 05 543 3	SIDE DOOR BACK RIGHT
ROD	10058095	9	1	105	10 05 797 8	LOOCK BRACKET

Description	Item	Pos.	Quantity	Page	Assembly	Description
ROD	10066253	80	1	504	10 09 499 2	ELECTRIC MATERIAL LIST
ROD	10333231	2	1	178	10 40 975 1	ADJUSTING PISTON
ROD	7028834	340	1	473	10 04 678 8	DRIVER'S CAB DOOR
ROD	9480525	43	2	269	10 05 311 8	DRIVER STAND BASE SECTIO
ROD	9866763	5	1	105	10 05 797 8	LOOCK BRACKET
ROD LEFT	10067843	31	1	802	10 05 539 2	SIDE DOOR LEFT
ROD PACKING	7373507	14	1	61	50 20 370 01	SPRING LOADED MULTI-DISC
ROD PACKING	7373508	15	1	61	50 20 370 01	SPRING LOADED MULTI-DISC
ROD PACKING 140	710951501	15	1	62	93 21 804 01	BRAKE PACKING SET
ROD PACKING 186	710950001	14	1	62	93 21 804 01	BRAKE PACKING SET
ROD RIGHT	9688995	30	1	802	10 05 539 2	SIDE DOOR LEFT
ROLLER CAGE	9442231	2	32	64	94 43 970	TRAVEL DRIVE FAT 500P005
ROLLER CORE	10301921	1	1	45	10 22 121 2	TRACK ROLLER
ROLLER CORE	10302978	1	1	46	10 29 067 4	CARRYING ROLLER D8K
ROLLER TAPPET 39MM	9078257	1	2	603	10 11 632 0	CONTROL PARTS
ROSE	10023245	270	6	488	10 48 809 9	INTERNAL LINING
ROSE	7362752	62	1	270	10 05 311 8	DRIVER STAND BASE SECTIO
ROSE	7362752	103	4	292	10 82 277 5	ARM REST RIGHT
ROTARY CONNECTION INSTA	10498670	10	1	41	10 35 874 0	UNDERCARRIAGE CPL
ROTARY FEED THROUGH	10009630	8	1	54	10 49 867 0	ROTARY CONNECTION INSTA
ROTARY FEED THROUGH	9141597	7	1	54	10 49 867 0	ROTARY CONNECTION INSTA
ROTARY SHAFT LIP SEAL	7380831	17	1	145	98 88 308	CONNECTING PLATE
ROTARY SHAFT LIP SEAL	7380831	35	1	171	92 71 657	SEAL KIT
ROTARY SHAFT LIP SEAL	7380831	17	1	192	98 89 161	CONNECTING PLATE
ROTARY SHAFT LIP SEAL	7381204	60	1	128	90 80 120	PUMP DISTRIBUTION GEAR
ROTARY SHAFT LIP SEAL	7381204	60	1	169	90 80 196	REPAIR KIT DRIVE SHAFT
ROTARY SHAFT LIP SEAL	7381204	60	1	218	90 80 195	SEAL KIT
ROTARY SHAFT LIP SEAL 110	10006550	1	1	591	90 77 696	CRANKSHAFT SEALING
ROTARY SHAFT LIP SEAL 139	10030062	2	1	591	90 77 696	CRANKSHAFT SEALING
ROTARY SHAFT LIP SEAL 50X6	10014510	35	1	73	92 68 751	REPAIR KIT LOCK RING
ROTARY SHAFT LIP SEAL 50X6	10014510	35	1	84	98 88 124	REPAIR KIT SHAFT
ROTARY SHAFT LIP SEAL 50X6	10014510	35	1	141	98 86 679	REPAIR KIT SHAFT
ROTARY SHAFT LIP SEAL 50X6	10014510	35	1	173	98 89 282	REPAIR KIT SHAFT
ROTARY SHAFT LIP SEAL 50X6	10014510	1	1	686	10 12 087 8	SEAL KIT HIGH PRESSURE P
ROTARY SHAFT LIP SEAL ASX	10014508	35	1	229	92 68 011	REPAIR KIT LOCK RING
ROTARY SHAFT LIP SEAL ASX	10014508	35	1	267	98 82 882	REPAIR KIT SHAFT
ROTATING DECK	10358369	8200	1	92	10 35 874 2	UPPERCARRIAGE
ROTATIONAL SPEED SENSOR	10117898	1	1	662	90 79 206	ROTATIONAL SPEED SENSOR
ROTATIONAL SPEED SENSOR	9079206	21	3	658	90 79 187	ENGINE CONTROL SENSORS
ROTATIONAL SPEED SENSOR	9885618	22	1	658	90 79 187	ENGINE CONTROL SENSORS
ROTOR	10011395	1	1	56	10 00 963 0	ROTARY FEED THROUGH
ROTOR GASKET	10011398	11	2	56	10 00 963 0	ROTARY FEED THROUGH
ROTOR GASKET	10011398	11	2	58	10 00 967 6	SEALINGSET ROTARY TRANS
ROTOR GASKET	7380002	1	1	59	92 65 064	SEALINGSET ROTARY TRAN
ROTOR GASKET	7380004	3	1	59	92 65 064	SEALINGSET ROTARY TRAN
ROTOR GASKET	7380038	2	5	59	92 65 064	SEALINGSET ROTARY TRAN
ROTOR GASKET 10X13,6X2,3	7380134	3	1	313	92 65 665	RK PILOT DEVICE
RS CRANKSHAFT BEARING K	10128593	1	1	589	10 12 854 0	CRANKSHAFT BEARINGS
RUBBER BEARING	10015159	241	2	421	10 05 303 6	PANELLING
RUBBER BEARING	10015159	241	2	436	10 49 857 1	PANELLING
RUBBER BELLOWS	10014790	200	1	289	99 68 625	LH-JOYSTICK LEFT
RUBBER BELLOWS	10014790	200	1	304	99 68 611	LH-JOYSTICK RIGHT
RUBBER BELLOWS	7025004	40	1	273	10 04 363 1	DRIVERS SEAT
RUBBER BELLOWS	7025004	40	1	274	10 04 363 2	DRIVERS SEAT
RUBBER BELLOWS	7366620	42	1	273	10 04 363 1	DRIVERS SEAT
RUBBER BELLOWS	7366620	42	1	274	10 04 363 2	DRIVERS SEAT
RUBBER BUMPER	10116274	3	8	630	90 78 417	CHARGE AIR PIPE ASSEMBLY
RUBBER BUMPER	10216002	2200	2	490	10 29 113 8	PANELLING
RUBBER BUMPER	10355813	10	12	208	10 42 538 5	COMBINED OIL COOLER
RUBBER BUMPER	7014560	35	18	277	10 05 798 3	ARM REST LEFT

Description	Item	Pos.	Quantity	Page	Assembly	Description
RUBBER BUMPER	7014560	82	4	292	10 82 277 5	ARM REST RIGHT
RUBBER BUMPER	7368721	20	4	110	10 49 845 5	MOTOR SUPPORT
RUBBER BUMPER	9076605	7	8	669	10 11 671 8	CONTROL BOX ANNEXE
RUBBER CAP	9265414	5	1	313	92 65 665	RK PILOT DEVICE
RUBBER CONNECTION	10123540	21	1	649	10 13 273 9	ATL ATTACHMENT
RUBBER CONNECTION	10123540	21	1	650	10 13 274 0	ATL ATTACHMENT
RUBBER CONNECTION	10123918	6	4	578	10 12 503 7	PIPELINE INSTALLATION
RUBBER CONNECTION	10132412	3	1	579	10 12 375 9	OIL LINE PRE-ASSEMBLY
RUBBER CONNECTION	9078925	10	1	689	10 12 094 4	SEAL KIT AIR COMPRESSOR
RUBBER CONNECTION	9271340	5	2	578	10 12 503 7	PIPELINE INSTALLATION
RUBBER CONNECTION	9273158	3	2	681	10 12 086 9	SEAL KIT CRANKCASE BREAT
RUBBER CONNECTION	9273161	15	2	578	10 12 503 7	PIPELINE INSTALLATION
RUBBER CONNECTION	9273161	2	4	681	10 12 086 9	SEAL KIT CRANKCASE BREAT
RUBBER CONNECTION 22 X 30	9078621	4	2	681	10 12 086 9	SEAL KIT CRANKCASE BREAT
RUBBER INSERT 30/42X88	10287498	45	4Pair	344	10 35 875 5	HYDR.ROTARY CONNEC.+SWI
RUBBER PROFILE	10042111	285	1	488	10 48 809 9	INTERNAL LINING
RUBBER PROFILE	7029410	500	1	476	70 28 844	SLIDING WINDOW
RUNNER	10082606	16	2	733	10 35 873 7	PISTON ROD COVER BUCKET
SAE BLIND FLANGE	9566165	71	2	384	10 35 874 5	HYDRAULIC TANK INSTALLAT
SAE BLIND FLANGE	9577407	18	1	395	10 35 874 4	CONTROL VALVE INSTALLAT
SAE BLIND FLANGE SAE 1 1/2"	9491026	18	1	706	10 06 477 4	HYDR.CYLINDER W/ADDITION.
SAFETY ELEMENT	5604683	8	2	98	10 36 190 8	SERVICE KIT ALLE 2000H
SAFETY ELEMENT	5604683	6	2	118	10 35 873 4	AIR FILTER INSTALLATION
SAFETY LEVER	7373807	14	1	280	10 16 576 6	CONTROL CONSOLE LEFT
SCOOP	10055305	20	1	443	10 05 530 3	ENGINE BONNET
SCOOP	10055413	20	1	456	10 05 541 0	SIDE DOOR FRONT RIGHT
SCOOP	10055436	20	1	453	10 05 543 3	SIDE DOOR BACK RIGHT
SCRAPER	10016714	4	1	47	10 07 535 3	GREASE TENSIONER
SCRAPER RING 125X137,2X8,	7023590	6	1	765	99 07 890	PISTON ROD BEARING 125/19
SCRAPER RING 150x166x9,5	10410984	6	1	764	96 31 985	PISTON ROD BEARING 150/22
SCREW	10015712	10	2	287	10 46 991 7	PUSH-BUTTON COVER LEFT
SCREW	10015712	10	2	301	10 46 991 8	PUSH-BUTTON COVER RIGHT
SCREW	7024447	281	8	488	10 48 809 9	INTERNAL LINING
SCREW	7024447	360	8	489	10 48 809 9	INTERNAL LINING
SCREW	7024631	27	1	376	10 28 046 1	CONTROL SOLENOID VALVE
SCREW	7368996	3	6	389	73 68 771	RETURN FILTER
SCREW	7370888	9	4	280	10 16 576 6	CONTROL CONSOLE LEFT
SCREW	7372158	11	2	295	56 18 923	CONTROL CONSOLE RIGHT
SCREW	9266471	1	1	129	90 80 211	GUIDE FOR OIL DIPSTICK CPL
SCREW	9480332	127	2	417	10 05 303 6	PANELLING
SCREW	9480332	127	2	432	10 49 857 1	PANELLING
SCREW	9926801	82	1	755	94 02 020 2	HYDRAULIC CYLINDER
SCREW 22X6	10017926	160	2	289	99 68 625	LH-JOYSTICK LEFT
SCREW 22X6	10017926	160	2	304	99 68 611	LH-JOYSTICK RIGHT
SCREW COUPLING	7026654	36	1	255	90 64 786	CONNECTING ELEMENT
SCREW COUPLING G1/4	7409720	44	2	335	10 38 698 2	HYDR.PUMPS TO SPOOL VALV
SCREW COUPLING G1/4	7409720	44	2	338	10 49 804 4	HYDR.PUMPS TO SPOOL VALV
SCREW COUPLING G1/4	7409720	27	2	340	10 05 314 4	OIL PILOT VALVE INSTALLATIO
SCREW COUPLING G1/4	7409720	27	2	341	10 82 438 9	OIL PILOT VALVE INSTALLATIO
SCREW COUPLING G1/4	7409720	6	2	343	10 35 875 5	HYDR.ROTARY CONNEC.+SWI
SCREW COUPLING G1/4	7409720	34	1	356	10 35 875 1	HYDR.INSTALLATION FAN DR
SCREW COUPLING G1/4	7409720	45	2	396	10 35 874 4	CONTROL VALVE INSTALLAT
SCREW COUPLING M12X1,5	7407071	23	1	119	10 35 879 9	PUMPS INSTALLATION
SCREW COUPLING M12X1,5	7407071	28	1	120	10 35 879 9	PUMPS INSTALLATION
SCREW DRIVER 1,6x10x300	279307502	114	1	552	10 08 428 5	TOOL EQUIPMENT
SCREW DRIVER 2x210	10451537	112	1	552	10 08 428 5	TOOL EQUIPMENT
SCREW DRIVER A1X5,5X200 D	8000982	110	1	552	10 08 428 5	TOOL EQUIPMENT
SCREW EXTENSION TUBE	7364696	63	1	397	10 35 874 4	CONTROL VALVE INSTALLAT
SCREW FITTING	9008618	40	2	770	10 35 873 1	HOIST CYLINDERS DIA.190
SCREW FITTING 6L	10220950	145	1	256	90 64 786	CONNECTING ELEMENT

Description	Item	Pos.	Quantity	Page	Assembly	Description
SCREW FITTING 6LL	10342221	145	1	256	90 64 786	CONNECTING ELEMENT
SCREW FITTING 8L	10220951	146	1	256	90 64 786	CONNECTING ELEMENT
SCREW FITTING 8LL	10330614	146	1	256	90 64 786	CONNECTING ELEMENT
SCREW FITTING BFW 15L	7402296	52	1	121	10 35 879 9	PUMPS INSTALLATION
SCREW FITTING BFW 35L	7367136	53	1	121	10 35 879 9	PUMPS INSTALLATION
SCREW FITTING EGE 10L	7617262	18	1	340	10 05 314 4	OIL PILOT VALVE INSTALLATIO
SCREW FITTING EGE 28L	7367993	65	1	122	10 35 879 9	PUMPS INSTALLATION
SCREW FITTING EL 10L	247242302	83	1	123	10 35 879 9	PUMPS INSTALLATION
SCREW FITTING EL 10L	247242302	72	1	398	10 35 874 4	CONTROL VALVE INSTALLAT
SCREW FITTING EL 15L	472300414	60	1	397	10 35 874 4	CONTROL VALVE INSTALLAT
SCREW FITTING EL 15L	472300414	112	1	399	10 35 874 4	CONTROL VALVE INSTALLAT
SCREW FITTING EL 15L	472300414	80	2	703	10 35 872 5	GOOSENECK BOOM 7,00M
SCREW FITTING EL 22L	247138602	52	1	702	10 35 872 5	GOOSENECK BOOM 7,00M
SCREW FITTING EL 28L	7407120	66	1	350	10 05 312 6	HYDR.SUCT.+RETURN OIL HO
SCREW FITTING ET 10L	482430314	82	4	123	10 35 879 9	PUMPS INSTALLATION
SCREW FITTING ET 12S	482431414	90	1	703	10 35 872 5	GOOSENECK BOOM 7,00M
SCREW FITTING ET 15L	472430408	117	1	399	10 35 874 4	CONTROL VALVE INSTALLAT
SCREW FITTING ET 28L	7407122	17	1	89	10 07 444 8	HYDR.INSTALLATION UNDER
SCREW FITTING EW 12L	247117702	10	1	54	10 49 867 0	ROTARY CONNECTION INSTA
SCREW FITTING EW 12L	247117702	33	2	365	10 35 875 4	HYDR.INSTAL.CONTROL TUBE
SCREW FITTING EW 12L	247117702	22	1	371	10 82 438 0	HYDR.INSTAL.CONTROL TUBE
SCREW FITTING EW 15L	7615379	8	2	112	10 36 623 6	ENGINE FUEL SYSTEM
SCREW FITTING EW 15L	7615379	12	1	113	10 09 538 7	FUEL FILTER INSTALLATION
SCREW FITTING EW 15L	7615379	76	1	128	90 80 120	PUMP DISTRIBUTION GEAR
SCREW FITTING EW 15L	7615379	63	2	358	10 35 875 1	HYDR.INSTALLATION FAN DR
SCREW FITTING EW 15L	7615379	18	3	362	10 35 875 4	HYDR.INSTAL.CONTROL TUBE
SCREW FITTING EW 15L	7615379	18	2	369	10 82 438 0	HYDR.INSTAL.CONTROL TUBE
SCREW FITTING EW 15L	7615379	68	4	397	10 35 874 4	CONTROL VALVE INSTALLAT
SCREW FITTING EW 15L	7615379	141	4	705	10 35 872 5	GOOSENECK BOOM 7,00M
SCREW FITTING EW 15L	7615379	44	2	770	10 35 873 1	HOIST CYLINDERS DIA.190
SCREW FITTING EW 16S	7617460	69	1	397	10 35 874 4	CONTROL VALVE INSTALLAT
SCREW FITTING EW 35L	482530914	80	1	384	10 35 874 5	HYDRAULIC TANK INSTALLAT
SCREW FITTING EW 6L	247021702	61	1	247	10 07 675 7	CENTRALIZED LUBRICATION
SCREW FITTING EW 6S	472531508	36	1	120	10 35 879 9	PUMPS INSTALLATION
SCREW FITTING EW 8L	247021802	15	3	711	10 38 862 4	CENTRAL LUBRICATING SYS
SCREW FITTING G 12L	4600747	5	3	789	10 37 296 7	HOSES ELONGATION
SCREW FITTING G 15L	7362107	136	4	705	10 35 872 5	GOOSENECK BOOM 7,00M
SCREW FITTING G 22L	7362408	135	1	705	10 35 872 5	GOOSENECK BOOM 7,00M
SCREW FITTING G 6LL	774374208	40	1	255	90 64 786	CONNECTING ELEMENT
SCREW FITTING G 6LL	774374208	40	6	257	10 01 461 1	AUXILIARY BOX
SCREW FITTING GE 10	10021563	13	2	621	90 78 554	LEAK OIL LINE ADD-ON
SCREW FITTING GE 10	10813936	17	1	605	10 12 002 3	OIL LINE ASSEMBLY
SCREW FITTING GE 10	10813936	14	1	649	10 13 273 9	ATL ATTACHMENT
SCREW FITTING GE 10	10813936	14	1	650	10 13 274 0	ATL ATTACHMENT
SCREW FITTING GE 10L	7362091	20	3	340	10 05 314 4	OIL PILOT VALVE INSTALLATIO
SCREW FITTING GE 10L	7362091	20	4	341	10 82 438 9	OIL PILOT VALVE INSTALLATIO
SCREW FITTING GE 10S	7362103	16	1	54	10 49 867 0	ROTARY CONNECTION INSTA
SCREW FITTING GE 12	10813939	20	4	623	10 12 720 8	FUEL LINES
SCREW FITTING GE 12	10813940	25	4	623	10 12 720 8	FUEL LINES
SCREW FITTING GE 12L G1/4A	7362117	26	2	340	10 05 314 4	OIL PILOT VALVE INSTALLATIO
SCREW FITTING GE 12L G1/4A	7362117	26	1	341	10 82 438 9	OIL PILOT VALVE INSTALLATIO
SCREW FITTING GE 12L M14X	7405399	9	1	54	10 49 867 0	ROTARY CONNECTION INSTA
SCREW FITTING GE 12L M14X	7405399	7	1	220	10 05 311 7	SLEWING GEAR
SCREW FITTING GE 12L M14X	7405399	32	1	365	10 35 875 4	HYDR.INSTAL.CONTROL TUBE
SCREW FITTING GE 15L	4600518	25	2	340	10 05 314 4	OIL PILOT VALVE INSTALLATIO
SCREW FITTING GE 15L	4600518	25	2	341	10 82 438 9	OIL PILOT VALVE INSTALLATIO
SCREW FITTING GE 15L	4600518	43	4	770	10 35 873 1	HOIST CYLINDERS DIA.190
SCREW FITTING GE 15L	7003570	17	2	112	10 36 623 6	ENGINE FUEL SYSTEM
SCREW FITTING GE 15L	7003570	13	2	113	10 09 538 7	FUEL FILTER INSTALLATION
SCREW FITTING GE 15L	7003570	75	3	128	90 80 120	PUMP DISTRIBUTION GEAR

Description	Item	Pos.	Quantity	Page	Assembly	Description
SCREW FITTING GE 15L	7003570	33	2	352	10 05 312 9	HYDR.AND GEAR OIL COOLIN
SCREW FITTING GE 15L	7003570	62	2	358	10 35 875 1	HYDR.INSTALLATION FAN DR
SCREW FITTING GE 15L	7003570	67	4	397	10 35 874 4	CONTROL VALVE INSTALLAT
SCREW FITTING GE 15L	7003570	106	2	399	10 35 874 4	CONTROL VALVE INSTALLAT
SCREW FITTING GE 15L	7003570	40	3	404	10 06 771 7	HYDR.TUBES INSTALLATION
SCREW FITTING GE 15L	7003570	88	3	703	10 35 872 5	GOOSENECK BOOM 7,00M
SCREW FITTING GE 15L	7403083	9	2	112	10 36 623 6	ENGINE FUEL SYSTEM
SCREW FITTING GE 15L	7403083	30	1	352	10 05 312 9	HYDR.AND GEAR OIL COOLIN
SCREW FITTING GE 15L	7411760	59	1	397	10 35 874 4	CONTROL VALVE INSTALLAT
SCREW FITTING GE 16S	7018370	52	6	397	10 35 874 4	CONTROL VALVE INSTALLAT
SCREW FITTING GE 22L	7362515	29	2	120	10 35 879 9	PUMPS INSTALLATION
SCREW FITTING GE 22L	7362515	78	1	384	10 35 874 5	HYDRAULIC TANK INSTALLAT
SCREW FITTING GE 22L	7362515	126	1	399	10 35 874 4	CONTROL VALVE INSTALLAT
SCREW FITTING GE 28L	7003800	16	3	89	10 07 444 8	HYDR.INSTALLATION UNDER
SCREW FITTING GE 28L	7003800	60	2	121	10 35 879 9	PUMPS INSTALLATION
SCREW FITTING GE 28L	7003800	8	1	220	10 05 311 7	SLEWING GEAR
SCREW FITTING GE 28L	7003800	56	1	349	10 05 312 6	HYDR.SUCT.+RETURN OIL HO
SCREW FITTING GE 28L	7003800	76	3	384	10 35 874 5	HYDRAULIC TANK INSTALLAT
SCREW FITTING GE 35L	4900486	31	1	120	10 35 879 9	PUMPS INSTALLATION
SCREW FITTING GE 35L	4900486	79	1	384	10 35 874 5	HYDRAULIC TANK INSTALLAT
SCREW FITTING GE 6L	7362169	30	2	770	10 35 873 1	HOIST CYLINDERS DIA.190
SCREW FITTING GE 8	10295884	15	1	581	10 12 021 3	POWER UNIT SUPPORT ATT
SCREW FITTING GEO 15L	7029651	10	2	113	10 09 538 7	FUEL FILTER INSTALLATION
SCREW FITTING GR 15/10L	7406699	19	1	340	10 05 314 4	OIL PILOT VALVE INSTALLATIO
SCREW FITTING GZ 10L	7410211	62	1	397	10 35 874 4	CONTROL VALVE INSTALLAT
SCREW FITTING GZ 15L	7410213	11	1	113	10 09 538 7	FUEL FILTER INSTALLATION
SCREW FITTING GZ 15L	7410213	142	1	705	10 35 872 5	GOOSENECK BOOM 7,00M
SCREW FITTING M10X1K-M10X	774373608	4	1	255	90 64 786	CONNECTING ELEMENT
SCREW FITTING M6K	491035414	185	1	256	90 64 786	CONNECTING ELEMENT
SCREW FITTING RED 15/10L	7616915	61	1	397	10 35 874 4	CONTROL VALVE INSTALLAT
SCREW FITTING RED 22/15L	7616913	22	1	340	10 05 314 4	OIL PILOT VALVE INSTALLATIO
SCREW FITTING RED 22/15L	7616913	22	1	341	10 82 438 9	OIL PILOT VALVE INSTALLATIO
SCREW FITTING RED 22/15L	7616913	91	3	703	10 35 872 5	GOOSENECK BOOM 7,00M
SCREW FITTING RED 28/22L	7616910	25	1	346	10 05 312 6	HYDR.SUCT.+RETURN OIL HO
SCREW FITTING RED 28/22L	7616910	127	1	399	10 35 874 4	CONTROL VALVE INSTALLAT
SCREW FITTING RED 35/28L	7367750	66	1	122	10 35 879 9	PUMPS INSTALLATION
SCREW FITTING ROV10L M 16	10300881	19	1	617	10 12 314 1	FUEL FINE-FILTER ASSEMBLY
SCREW FITTING SV 15L	4901130	25	2	364	10 35 875 4	HYDR.INSTAL.CONTROL TUBE
SCREW FITTING SV 15L	4901130	98	2	703	10 35 872 5	GOOSENECK BOOM 7,00M
SCREW FITTING WE 6LL	774373808	180	1	256	90 64 786	CONNECTING ELEMENT
SCREW FITTING WEE 35L	10217714	7	1	604	10 12 476 3	OIL MODULE ASSEMBLY
SCREW FITTING WH 18L	7617351	9	2	220	10 05 311 7	SLEWING GEAR
SCREW FITTING WH 6L M10X1	7368426	21	5	711	10 38 862 4	CENTRAL LUBRICATING SYS
SCREW FITTING WH 6L M10X1	7368426	19	8	719	10 35 872 0	CENTRAL LUBRICATING SYS
SCREW FMV 075 075	9880132	30	2	80	92 78 174	ADJUSTMENT
SCREW LOCKING	811205708	103	1	145	98 88 308	CONNECTING PLATE
SCREW LOCKING	811205708	109	1	572	10 12 907 1	CRANKCASE CPL.
SCREW LOCKING	811205708	109	1	582	10 12 593 7	OIL SUMP WITH FASTENING
SCREW LOCKING	8655016	109	1	586	10 12 263 2	OIL FILLER INLET
SCREW LOCKING	8655016	109	1	596	10 12 264 0	CYLINDER HEAD COVER ASS
SCREW LOCKING	8655016	109	1	598	10 12 264 6	CYLINDER HEAD COVER ASS
SCREW LOCKING	8655016	109	1	599	10 12 265 9	CYLINDER HEAD COVER ASS
SCREW LOCKING	8700012	106	1	167	90 73 751	RK CYLINDER+CONTROL PLAT
SCREW LOCKING	8700012	106	1	191	98 88 122	RK CYLINDER+CONTROL PLAT
SCREW M 161,5X192X45 10.9	9077749	4	10	573	10 12 907 2	CRANKCASE PRE-ASS.
SCREW M 182,0X200X55 10.9	9077748	3	20	573	10 12 907 2	CRANKCASE PRE-ASS.
SCREW PLUG	10015471	250	2	71	56 16 688	WHEEL BRAKE VALVE
SCREW PLUG	10097983	3	1	45	10 22 121 2	TRACK ROLLER
SCREW PLUG	10097983	3	1	46	10 29 067 4	CARRYING ROLLER D8K
SCREW PLUG	10100680	19	2	150	10 33 307 1	CONNECTING PLATE

Description	Item	Pos.	Quantity	Page	Assembly	Description
SCREW PLUG	10101654	27	2	130	10 21 593 5	PUMP
SCREW PLUG	10220639	20	2	150	10 33 307 1	CONNECTING PLATE
SCREW PLUG	10220646	1	1	262	10 29 792 9	PRESSURE LIMITING VALVE
SCREW PLUG	10298663	5	1	160	10 33 326 8	FILTER
SCREW PLUG	10333250	9	1	264	10 33 323 7	PRESSURE LIMITING VALVE
SCREW PLUG	10333254	1	1	157	10 33 324 2	SHUTDOWN VALVE
SCREW PLUG	10410639	24	1	131	10 42 845 9	SWING PUMP
SCREW PLUG	10440724	37	1	131	10 42 845 9	SWING PUMP
SCREW PLUG	7001454	11	1	49	10 47 076 9	GUIDE WHEEL D8K
SCREW PLUG	7004178	4	1	768	56 02 932	FLOW REGULATING CHECK
SCREW PLUG	7009357	21	1	131	10 42 845 9	SWING PUMP
SCREW PLUG	7013032	40	1	752	10 34 080 6	PIPE FRACTION SAFETY VALV
SCREW PLUG	7013032	40	1	753	10 34 081 2	PIPE FRACTION SAFETY VALV
SCREW PLUG	7016136	5	1	768	56 02 932	FLOW REGULATING CHECK
SCREW PLUG	7028192	1	1	148	10 29 866 3	SCREW PLUG
SCREW PLUG	7360563	14	1	405	10 21 821 5	NON-RETURN VALVE
SCREW PLUG	7360563	14	1	406	10 21 986 3	NON-RETURN VALVE
SCREW PLUG	7361329	17	1	68	90 72 024	HYDR.MOTOR VAR.FMV 165
SCREW PLUG	7361329	14	2	80	92 78 174	ADJUSTMENT
SCREW PLUG	7361329	14	2	88	92 78 179	SEAL KIT
SCREW PLUG	7361329	16	3	134	90 72 922	HYDRAULIC VARIABLE DISPLA
SCREW PLUG	7361329	17	1	143	98 88 041	HYDR.MOTOR FIX FMF 165
SCREW PLUG	7361329	26	1	184	92 74 199	SEAL KIT
SCREW PLUG	7361329	105	4	704	10 35 872 5	GOOSENECK BOOM 7,00M
SCREW PLUG	7361329	26	6	770	10 35 873 1	HOIST CYLINDERS DIA.190
SCREW PLUG	7362674	24	1	755	94 02 020 2	HYDRAULIC CYLINDER
SCREW PLUG	7362674	24	2	757	99 06 383	HYDRAULIC CYLINDER
SCREW PLUG	7362674	24	2	758	99 06 576	HYDRAULIC CYLINDER
SCREW PLUG	7363073	68	3	383	10 35 874 5	HYDRAULIC TANK INSTALLAT
SCREW PLUG	7363125	89	1	66	94 43 970	TRAVEL DRIVE FAT 500P005
SCREW PLUG	7363125	320	1	71	56 16 688	WHEEL BRAKE VALVE
SCREW PLUG	7363125	20	1	88	92 78 179	SEAL KIT
SCREW PLUG	7363125	14	1	134	90 72 922	HYDRAULIC VARIABLE DISPLA
SCREW PLUG	7363125	14	1	136	90 77 452	HYDRAULIC VARIABLE DISPLA
SCREW PLUG	7363125	55	2	146	10 10 206 4	REGULATOR
SCREW PLUG	7363125	14	1	147	10 10 206 6	REGULATOR ELEMENT
SCREW PLUG	7363125	24	2	198	90 77 032	CONNECTING PLATE NG 045
SCREW PLUG	7363125	20	1	240	92 68 642	SEAL KIT SHUTTLE VALVE
SCREW PLUG	7363125	14	1	263	10 29 207 1	REGULATOR ELEMENT
SCREW PLUG	7363125	20	1	266	98 89 003	NON-RETURN VALVE RV
SCREW PLUG	7363125	58	2	771	10 35 873 1	HOIST CYLINDERS DIA.190
SCREW PLUG	7363717	14	1	548	10 35 821 5	FUEL TANK
SCREW PLUG	7368507	420	1	71	56 16 688	WHEEL BRAKE VALVE
SCREW PLUG	7369938	13	4	153	10 33 322 6	CONNECTING PLATE
SCREW PLUG	7369939	20	2	131	10 42 845 9	SWING PUMP
SCREW PLUG	7369951	1	1	261	10 10 206 7	REGULATOR ELEMENT
SCREW PLUG	7370432	310	1	71	56 16 688	WHEEL BRAKE VALVE
SCREW PLUG	7371360	1	1	412	56 10 135	SUPPLY VALVE
SCREW PLUG	7414500	2	1	152	10 33 307 8	LOCKING SET
SCREW PLUG	774378208	31	1	245	10 29 302 0	DISTRIBUTION BLOCK MX-F 3/
SCREW PLUG	774378208	31	1	254	10 29 301 8	DISTRIBUTION BLOCK MX-F 4/
SCREW PLUG	774378208	31	3	708	10 00 878 9	DISTRIBUTION BLOCK MX-F 3/
SCREW PLUG	774378208	31	2	722	10 30 336 9	DISTRIBUTION BLOCK MX-F 5/
SCREW PLUG 32	10024583	61	2	408	10 11 355 7	CONTROL BLOCK
SCREW PLUG G 1/4	7024958	49	1	410	10 28 629 4	SHUTTLE VALVE BLOCK
SCREW PLUG M10X1	10115237	24	4	130	10 21 593 5	PUMP
SCREW PLUG M10X1	10115237	35	4	131	10 42 845 9	SWING PUMP
SCREW PLUG M14X1,5	7372622	213	8	408	10 11 355 7	CONTROL BLOCK
SCREW PLUG M16X1,5	10115014	22	3	131	10 42 845 9	SWING PUMP
SCREW PLUG M18X1,5X11,5	9266233	12	1	72	92 67 037	PRESSURE LIMITING VALVE

Description	Item	Pos.	Quantity	Page	Assembly	Description
SCREW PLUG M18X1,5X17 A3	7361960	17	1	197	10 12 504 2	HYDRAULIC INSTALLATION
SCREW PLUG M18X1,5X17 A3	7361960	77	2	384	10 35 874 5	HYDRAULIC TANK INSTALLAT
SCREW PLUG M18X1,5X17 A3	7361960	88	4	398	10 35 874 4	CONTROL VALVE INSTALLAT
SCREW PLUG M18X1,5X17 A3	7361960	102	2	399	10 35 874 4	CONTROL VALVE INSTALLAT
SCREW PLUG M18X1,5X17 A3	7361960	41	1	404	10 06 771 7	HYDR.TUBES INSTALLATION
SCREW PLUG M20X1,5X19	10296854	13	1	405	10 21 821 5	NON-RETURN VALVE
SCREW PLUG M20X1,5X19	10296854	13	1	406	10 21 986 3	NON-RETURN VALVE
SCREW PLUG M22X1,5	10340236	14	2	113	10 09 538 7	FUEL FILTER INSTALLATION
SCREW PLUG M22X1,5	10340236	19	2	619	10 30 300 7	FUEL PREFILTER
SCREW PLUG M6X6	9265783	1	1	145	98 88 308	CONNECTING PLATE
SCREW PLUG M6X6	9265783	1	2	170	92 71 653	SEAL KIT ADJUSTMENT
SCREW PLUG M6X6	9265783	2	5	171	92 71 657	SEAL KIT
SCREW PLUG M6X6	9265783	1	1	192	98 89 161	CONNECTING PLATE
SCREW PLUG M6X6	9268441	7	3	68	90 72 024	HYDR.MOTOR VAR.FMV 165
SCREW PLUG M6X6	9268441	7	2	69	90 72 026	CONNECTING PLATE NG 165
SCREW PLUG M6X6	9268441	7	5	88	92 78 179	SEAL KIT
SCREW PLUG M6X6	9268441	5	4	187	98 82 875	SEAL KIT REGULATING VALVE
SCREW PLUG M8X1X8,5	9881609	8	1	187	98 82 875	SEAL KIT REGULATING VALVE
SCREW PLUG NG165	9881233	21	1	181	90 78 788	REPAIR KIT LR/SD/DA
SCREW PLUG VSTI	10041903	5	2	629	90 80 436	SUCTION NOZZLE ADD-ON
SCREW PLUG VSTI	10043136	18	1	607	10 12 475 6	OIL MODULE LEFT
SCREW PLUG VSTI	10043136	18	2	608	10 12 475 7	OIL MODULE RIGHT
SCREW PLUG VSTI	7004296	80	8	57	91 41 597	ROTARY FEED THROUGH
SCREW PLUG VSTI	7004971	70	2	43	10 35 874 0	UNDERCARRIAGE CPL
SCREW PLUG VSTI	7004971	21	2	395	10 35 874 4	CONTROL VALVE INSTALLAT
SCREW PLUG VSTI	7009358	32	3	131	10 42 845 9	SWING PUMP
SCREW PLUG VSTI	7009358	35	3	153	10 33 322 6	CONNECTING PLATE
SCREW PLUG VSTI	7361553	28	2	340	10 05 314 4	OIL PILOT VALVE INSTALLATIO
SCREW PLUG VSTI	7361553	28	2	341	10 82 438 9	OIL PILOT VALVE INSTALLATIO
SCREW PLUG VSTI	7361553	6	1	706	10 06 477 4	HYDR.CYLINDER W/ADDITION.
SCREW PLUG VSTI	7361961	90	1	57	91 41 597	ROTARY FEED THROUGH
SCREW PLUG VSTI	7361961	24	2	184	92 74 199	SEAL KIT
SCREW PLUG VSTI	7361961	41	1	548	10 35 821 5	FUEL TANK
SCREW PLUG VSTI	7363177	65	2	383	10 35 874 5	HYDRAULIC TANK INSTALLAT
SCREW PLUG VSTI	7363177	43	1	548	10 35 821 5	FUEL TANK
SCREW PLUG VSTI	7380172	16	3	136	90 77 452	HYDRAULIC VARIABLE DISPLA
SCREW PLUG VSTI	7380177	10	1	664	10 12 032 2	FLYWHEEL HOUSING MOUNTI
SCREW PLUG VSTI	7380566	8	1	632	90 79 077	CONNECTING LINE ADD-ON
SCREW PLUG VSTI	7380566	12	3	638	10 11 763 3	CONNECTION F.WATER PIPE
SCREW PLUG VSTI	7380566	9	1	639	10 11 752 9	THERMOSTAT HOUSING ASS
SCREW PLUG VSTI	7380688	13	1	581	10 12 021 3	POWER UNIT SUPPORT ATT
SCREW PLUG VSTI	7381457	1	2	575	10 12 016 8	LOCKING PIECES
SCREW PLUG VSTI	7381457	21	1	582	10 12 593 7	OIL SUMP WITH FASTENING
SCREW PLUG VSTI	7381457	5	2	629	90 80 436	SUCTION NOZZLE ADD-ON
SCREW PLUG VSTI	7381457	10	1	642	10 11 978 1	COOLANT PIPE BEND ADD-ON
SCREW PLUG VSTI	7381638	11	1	581	10 12 021 3	POWER UNIT SUPPORT ATT
SCREW PLUG VSTI	7382202	6	1	664	10 12 032 2	FLYWHEEL HOUSING MOUNTI
SCREW PLUG VSTI	7382203	3	2	572	10 12 907 1	CRANKCASE CPL.
SCREW PLUG VSTI	7382203	20	3	582	10 12 593 7	OIL SUMP WITH FASTENING
SCREW PLUG VSTI	7382204	4	2	572	10 12 907 1	CRANKCASE CPL.
SCREW PLUG VSTI	7382204	13	4	582	10 12 593 7	OIL SUMP WITH FASTENING
SCREW PLUG VSTI G1/8A	7001338	15	7	252	10 48 927 7	DISTRIBUTION BLOCK SXE-2
SCREW PLUG VSTI G3/8	4900609	25	4	770	10 35 873 1	HOIST CYLINDERS DIA.190
SCREW SLEEVE DN6	774376008	1	1	255	90 64 786	CONNECTING ELEMENT
SCREW SLEEVE DN6	774376008	1	31	257	10 01 461 1	AUXILIARY BOX
SCREW SLEEVE DN6,5 ST	10012024	100	1	256	90 64 786	CONNECTING ELEMENT
SCREW SLEEVE DN6,5 ST	10012024	100	6	258	10 01 461 1	AUXILIARY BOX
SCREW ST RM>800N/MM2	10127499	16	2	578	10 12 503 7	PIPELINE INSTALLATION
SCREW ST RM>800N/MM2	10127691	19	2	578	10 12 503 7	PIPELINE INSTALLATION
SCREW-ON CONNECTION	10000277	60	1	247	10 07 675 7	CENTRALIZED LUBRICATION

Description	Item	Pos.	Quantity	Page	Assembly	Description
SCREW-ON CONNECTION	10115830	22	2	623	10 12 720 8	FUEL LINES
SCREW-ON CONNECTION	7368545	38	4	241	10 35 877 2	SLEWING RING INSTALLATIO
SCREW-ON CONNECTION	7368545	30	1	243	10 07 675 6	SWING GEAR PINION GREAS
SCREW-ON CONNECTION DN	10037655	7	1	617	10 12 314 1	FUEL FINE-FILTER ASSEMBLY
SCREW-ON CONNECTION DN	10037655	21	1	623	10 12 720 8	FUEL LINES
SCREW-ON CONNECTION GE	7410394	111	2	399	10 35 874 4	CONTROL VALVE INSTALLAT
SCREW-ON CONNECTION GE	7410394	116	2	399	10 35 874 4	CONTROL VALVE INSTALLAT
SEAL	10009014	120	1	472	10 04 678 8	DRIVER'S CAB DOOR
SEAL	10009027	450	2	489	10 48 809 9	INTERNAL LINING
SEAL	10014682	5	1	249	10 34 071 7	LUBRICATION PUMP
SEAL	10044355	150	1	484	70 28 778	ASSY. PARTS
SEAL	10099879	7	2	49	10 47 076 9	GUIDE WHEEL D8K
SEAL	10115623	6	1	649	10 13 273 9	ATL ATTACHMENT
SEAL	10115623	6	1	650	10 13 274 0	ATL ATTACHMENT
SEAL	10115623	3	2	694	10 12 099 3	SEAL KIT TURBOCHARGER M
SEAL	10116848	6	2	632	90 79 077	CONNECTING LINE ADD-ON
SEAL	10117568	52	2	117	10 35 873 3	AIR AND EXHAUST INSTALLAT
SEAL	10117681	5	2	604	10 12 476 3	OIL MODULE ASSEMBLY
SEAL	10117862	3	1	582	10 12 593 7	OIL SUMP WITH FASTENING
SEAL	10117862	1	1	683	10 12 087 1	SEAL KIT OIL SUMP
SEAL	10118558	2	2	630	90 78 417	CHARGE AIR PIPE ASSEMBLY
SEAL	10118558	3	1	632	90 79 077	CONNECTING LINE ADD-ON
SEAL	10118558	1	2	688	10 12 093 7	SEAL KIT CONNECTING LINE
SEAL	10118715	3	1	695	10 12 099 6	SEAL KIT FLYWHEEL HOUSIN
SEAL	10118717	10	2	607	10 12 475 6	OIL MODULE LEFT
SEAL	10118717	10	2	608	10 12 475 7	OIL MODULE RIGHT
SEAL	10118717	2	4	685	10 12 087 5	SEAL KIT OIL MODULE
SEAL	10118991	2	1	687	10 12 089 6	SEAL KIT ZYLINDER HEAD CPL
SEAL	10119342	2	2	632	90 79 077	CONNECTING LINE ADD-ON
SEAL	10119342	2	2	688	10 12 093 7	SEAL KIT CONNECTING LINE
SEAL	10119343	3	2	647	10 13 274 6	OUTLET MANIFOLD ADD-ON
SEAL	10119343	1	2	692	10 12 097 6	SEAL KIT EXHAUST MANIFOL
SEAL	10120356	5	1	664	10 12 032 2	FLYWHEEL HOUSING MOUNTI
SEAL	10120356	1	1	695	10 12 099 6	SEAL KIT FLYWHEEL HOUSIN
SEAL	10122635	4	1	596	10 12 264 0	CYLINDER HEAD COVER ASS
SEAL	10122635	4	2	598	10 12 264 6	CYLINDER HEAD COVER ASS
SEAL	10122635	4	2	599	10 12 265 9	CYLINDER HEAD COVER ASS
SEAL	10216004	110	1	488	10 48 809 9	INTERNAL LINING
SEAL	10220813	2	1	649	10 13 273 9	ATL ATTACHMENT
SEAL	10220813	2	1	650	10 13 274 0	ATL ATTACHMENT
SEAL	10220813	2	2	694	10 12 099 3	SEAL KIT TURBOCHARGER M
SEAL	10220814	3	1	649	10 13 273 9	ATL ATTACHMENT
SEAL	10220814	3	1	650	10 13 274 0	ATL ATTACHMENT
SEAL	10220814	1	2	694	10 12 099 3	SEAL KIT TURBOCHARGER M
SEAL	10454840	121	1	505	10 09 499 2	ELECTRIC MATERIAL LIST
SEAL	7011131	2	1	584	50 04 624	OIL DRAIN PLUG
SEAL	7019154	240	1	472	10 04 678 8	DRIVER'S CAB DOOR
SEAL	7019155	250	1	472	10 04 678 8	DRIVER'S CAB DOOR
SEAL	7024455	460	1	478	10 48 809 7	ELECTRICAL INSTALLATION
SEAL	7026772	120	2	505	10 09 499 2	ELECTRIC MATERIAL LIST
SEAL	7028343	9	1	388	56 17 689	SHUT OFF DEVICE DN 100
SEAL	7028790	130	1	469	70 28 774	GLASS PANES
SEAL	7028795	170	1	469	70 28 774	GLASS PANES
SEAL	7028846	410	1	473	10 04 678 8	DRIVER'S CAB DOOR
SEAL	7028847	430	1	473	10 04 678 8	DRIVER'S CAB DOOR
SEAL	7028892	160	1	484	70 28 778	ASSY. PARTS
SEAL	7028934	140	1	484	70 28 778	ASSY. PARTS
SEAL	7028953	400	2	489	10 48 809 9	INTERNAL LINING
SEAL	7029412	520	1	476	70 28 844	SLIDING WINDOW
SEAL	7029413	530	2	476	70 28 844	SLIDING WINDOW

Description	Item	Pos.	Quantity	Page	Assembly	Description
SEAL	7264906	11	1	183	92 65 783	SCREW PLUG M6X6
SEAL	7368993	3	3	95	10 09 107 3	SERVICE KIT ERSTE 500H
SEAL	7368993	3	3	97	10 36 190 7	SERVICE KIT 1000H
SEAL	7368993	2	1	389	73 68 771	RETURN FILTER
SEAL	7368994	4	1	389	73 68 771	RETURN FILTER
SEAL	7412935	18	1	619	10 30 300 7	FUEL PREFILTER
SEAL	9077329	8	1	696	10 12 100 3	SEAL KIT OUTPUT SHAFT
SEAL	9078308	12	4	645	10 11 566 7	EXHAUST PIPE RIGHT
SEAL	9078308	12	4	648	10 11 566 8	EXHAUST PIPE LEFT
SEAL	9078308	3	1	687	10 12 089 6	SEAL KIT ZYLINDER HEAD CPL
SEAL	9079885	6	8	97	10 36 190 7	SERVICE KIT 1000H
SEAL	9079885	2	1	596	10 12 264 0	CYLINDER HEAD COVER ASS
SEAL	9079885	2	7	597	10 12 264 5	CYLINDER HEAD COVER ASS
SEAL	9079885	2	2	598	10 12 264 6	CYLINDER HEAD COVER ASS
SEAL	9079885	2	2	599	10 12 265 9	CYLINDER HEAD COVER ASS
SEAL	9079885	4	1	687	10 12 089 6	SEAL KIT ZYLINDER HEAD CPL
SEAL	9080032	2	1	581	10 12 021 3	POWER UNIT SUPPORT ATT
SEAL	9080032	1	1	680	10 12 085 5	SEAL KIT AGGREGATE CARR
SEAL	9080281	1	1	689	10 12 094 4	SEAL KIT AIR COMPRESSOR
SEAL	9080532	2	8	692	10 12 097 6	SEAL KIT EXHAUST MANIFOL
SEAL	9268130	5	1	649	10 13 273 9	ATL ATTACHMENT
SEAL	9268130	5	1	650	10 13 274 0	ATL ATTACHMENT
SEAL	9268130	4	2	694	10 12 099 3	SEAL KIT TURBOCHARGER M
SEAL	9275428	76	1	185	92 75 443	REPAIR SET LID
SEAL	9275766	2	2	683	10 12 087 1	SEAL KIT OIL SUMP
SEAL	9882204	11	1	171	92 71 657	SEAL KIT
SEAL 0,3MM DICK	10116794	1	2	693	10 12 098 2	SEAL KIT EXHAUST GAS RECI
SEAL 0,9MM DICK	10116792	4	2	693	10 12 098 2	SEAL KIT EXHAUST GAS RECI
SEAL 1,0MM	10117680	1	2	685	10 12 087 5	SEAL KIT OIL MODULE
SEAL 1,0MM DICK	10116793	3	2	693	10 12 098 2	SEAL KIT EXHAUST GAS RECI
SEAL 1.5MM	9078337	6	4	627	90 79 075	AIR INTAKE RIGHT
SEAL 1.5MM	9078337	6	4	628	90 79 076	AIR SUCTION
SEAL 1MM	10115786	6	1	646	10 11 899 9	BRACKET ADD-ON
SEAL ASBESTFREI	9080503	12	1	664	10 12 032 2	FLYWHEEL HOUSING MOUNTI
SEAL KIT	10015470	999	1	71	56 16 688	WHEEL BRAKE VALVE
SEAL KIT	10021310	998	1	245	10 29 302 0	DISTRIBUTION BLOCK MX-F 3/
SEAL KIT	10021310	998	1	254	10 29 301 8	DISTRIBUTION BLOCK MX-F 4/
SEAL KIT	10021310	998	1	708	10 00 878 9	DISTRIBUTION BLOCK MX-F 3/
SEAL KIT	10021310	998	1	722	10 30 336 9	DISTRIBUTION BLOCK MX-F 5/
SEAL KIT	10021311	997	1	245	10 29 302 0	DISTRIBUTION BLOCK MX-F 3/
SEAL KIT	10021311	997	1	254	10 29 301 8	DISTRIBUTION BLOCK MX-F 4/
SEAL KIT	10021311	997	1	708	10 00 878 9	DISTRIBUTION BLOCK MX-F 3/
SEAL KIT	10021311	997	1	722	10 30 336 9	DISTRIBUTION BLOCK MX-F 5/
SEAL KIT	10220997	999	1	376	10 28 046 1	CONTROL SOLENOID VALVE
SEAL KIT	10278595	999	1	752	10 34 080 6	PIPE FRACTION SAFETY VALV
SEAL KIT	10278595	999	1	753	10 34 081 2	PIPE FRACTION SAFETY VALV
SEAL KIT	10356675	999	1	408	10 11 355 7	CONTROL BLOCK
SEAL KIT	10489538	999	1	409	10 47 594 2	PRESSURE REDUCTION VALV
SEAL KIT	7025142	999	1	374	50 09 565	PRESSURE LIMITING CARTRI
SEAL KIT	7622254	800	1	164	10 35 548 6	GEAR PUMP
SEAL KIT	90003864	910	1	222	90 01 781 7	SLEWING DRIVE SAT 375/253
SEAL KIT	9080195	97	1	128	90 80 120	PUMP DISTRIBUTION GEAR
SEAL KIT	9268786	98	1	197	10 12 504 2	HYDRAULIC INSTALLATION
SEAL KIT	9271657	98	1	135	90 72 922	HYDRAULIC VARIABLE DISPLA
SEAL KIT	9271657	98	1	136	90 77 452	HYDRAULIC VARIABLE DISPLA
SEAL KIT	9274199	98	1	144	98 88 041	HYDR.MOTOR FIX FMF 165
SEAL KIT	9278179	98	1	68	90 72 024	HYDR.MOTOR VAR.FMV 165
SEAL KIT ADJUSTMENT	9271653	92	1	139	92 71 648	ADJUSTMENT
SEAL KIT AGGREGATE CARR	10120855	12	1	678	10 12 116 0	SEAL KIT DIESEL ENGINE
SEAL KIT AIR COMPRESSOR	10120944	330	1	678	10 12 116 0	SEAL KIT DIESEL ENGINE

Description	Item	Pos.	Quantity	Page	Assembly	Description
SEAL KIT CONNECTING LINE	10120937	230	1	678	10 12 116 0	SEAL KIT DIESEL ENGINE
SEAL KIT COOLING PUMP	10119482	96	1	128	90 80 120	PUMP DISTRIBUTION GEAR
SEAL KIT CRANKCASE BREAT	10120869	16	1	678	10 12 116 0	SEAL KIT DIESEL ENGINE
SEAL KIT CYLINDER	10120873	40	1	678	10 12 116 0	SEAL KIT DIESEL ENGINE
SEAL KIT DIESEL ENGINE	10121160	939	1	571	10 12 595 9	DIESEL ENGINE D9508 A7 320k
SEAL KIT DIRECTIONAL VALV	5009562	999	1	373	10 28 027 9	VALVE
SEAL KIT DIRECTIONAL VALV	5009562	999	1	375	56 15 344	SOLENOID VALVE
SEAL KIT DRV	9270390	999	1	759	92 70 387	FLOW REGULATING CHECK
SEAL KIT EXHAUST GAS RECI	10120982	420	1	679	10 12 116 0	SEAL KIT DIESEL ENGINE
SEAL KIT EXHAUST MANIFOL	10120976	412	1	679	10 12 116 0	SEAL KIT DIESEL ENGINE
SEAL KIT F.PISTON ROD BEAR	9064091	999	1	765	99 07 890	PISTON ROD BEARING 125/19
SEAL KIT F.PISTON ROD BEAR	9631986	999	1	764	96 31 985	PISTON ROD BEARING 150/22
SEAL KIT FLYWHEEL HOUSIN	10120996	520	1	679	10 12 116 0	SEAL KIT DIESEL ENGINE
SEAL KIT FUEL LINE	10121183	212	1	678	10 12 116 0	SEAL KIT DIESEL ENGINE
SEAL KIT HIGH PRESSURE P	10120878	180	1	678	10 12 116 0	SEAL KIT DIESEL ENGINE
SEAL KIT HOUSING	10289630	998	1	408	10 11 355 7	CONTROL BLOCK
SEAL KIT LOCKING PARTS	10120870	17	1	678	10 12 116 0	SEAL KIT DIESEL ENGINE
SEAL KIT OIL MODULE	10120875	130	1	678	10 12 116 0	SEAL KIT DIESEL ENGINE
SEAL KIT OIL SUMP	10120871	20	1	678	10 12 116 0	SEAL KIT DIESEL ENGINE
SEAL KIT OUTPUT SHAFT	10121003	650	1	679	10 12 116 0	SEAL KIT DIESEL ENGINE
SEAL KIT PRESSURE VALVE	10332087	999	1	754	10 28 918 3	PRESSURE FEEDER VALVE
SEAL KIT PRESSURE VALVE	5616901	999	1	53	56 16 231	PRESSURE FEEDER VALVE
SEAL KIT REGULATING VALVE	9882875	88	1	134	90 72 922	HYDRAULIC VARIABLE DISPLA
SEAL KIT REGULATING VALVE	9882875	88	1	136	90 77 452	HYDRAULIC VARIABLE DISPLA
SEAL KIT SHUTTLE VALVE	9266231	98	1	72	92 67 037	PRESSURE LIMITING VALVE
SEAL KIT SHUTTLE VALVE	9266231	97	1	144	98 88 041	HYDR.MOTOR FIX FMF 165
SEAL KIT SHUTTLE VALVE	9266232	98	1	74	92 75 505	VALVE WV 10
SEAL KIT SHUTTLE VALVE	9266232	95	1	143	98 88 041	HYDR.MOTOR FIX FMF 165
SEAL KIT SHUTTLE VALVE	9268642	98	1	184	92 74 199	SEAL KIT
SEAL KIT SHUTTLE VALVE	9268642	98	1	198	90 77 032	CONNECTING PLATE NG 045
SEAL KIT SHUTTLE VALVE	9268642	97	1	266	98 89 003	NON-RETURN VALVE RV
SEAL KIT SHUTTLE VALVE	9268642	97	1	393	98 89 008	REPAIR KIT
SEAL KIT THERMOSTAT HOUS	10120962	380	1	679	10 12 116 0	SEAL KIT DIESEL ENGINE
SEAL KIT TURBOCHARGER M	10120993	430	1	679	10 12 116 0	SEAL KIT DIESEL ENGINE
SEAL KIT ZYLINDER HEAD CPL	10120896	80	8	678	10 12 116 0	SEAL KIT DIESEL ENGINE
SEAL LOCK NUT M8	7372252	14	1	157	10 33 324 2	SHUTDOWN VALVE
SEAL LOCK NUT M8	7372252	11	1	261	10 10 206 7	REGULATOR ELEMENT
SEAL-LOCK-SHOULDER NUT	7014529	9	1	262	10 29 792 9	PRESSURE LIMITING VALVE
SEAL-LOCK-SHOULDER NUT	7009369	47	1	131	10 42 845 9	SWING PUMP
SEAL-LOCK-SHOULDER NUT M	7361600	57	2	187	98 82 875	SEAL KIT REGULATING VALVE
SEAL-LOCK-SHOULDER NUT M	7361601	8	1	374	50 09 565	PRESSURE LIMITING CARTRI
SEALANT	8627609	123	1	141	98 86 679	REPAIR KIT SHAFT
SEALANT	8627609	7	1	612	10 11 615 0	HOUSING PRE-ASSEMBLED
SEALING COMPOUND	7029402	180	1	469	70 28 774	GLASS PANES
SEALING PLUG	10036326	8	1	600	10 11 805 2	CYLINDER HEAD D9508
SEALING PLUG	7380123	66	2	181	90 78 788	REPAIR KIT LR/SD/DA
SEALING PLUG D= 9,00MM	7610819	8	2	64	94 43 970	TRAVEL DRIVE FAT 500P005
SEALING PROFILE	10000465	9	2.06m	118	10 35 873 4	AIR FILTER INSTALLATION
SEALING PROFILE	10008649	16	0.28m	316	10 40 689 8	AIR CONDITIONING UNIT
SEALING PROFILE	10355809	6	0.3	208	10 42 538 5	COMBINED OIL COOLER
SEALING PROFILE	7028821	220	1.44m	470	70 28 775	FRONT WINDOW
SEALING PUTTY	10022063	30	1	323	11 00 359 4	HOUSING
SEALING RING	10014697	13	2	249	10 34 071 7	LUBRICATION PUMP
SEALING RING	10217776	4	1	614	10 42 869 4	INJECTOR
SEALING RING	10298637	2	1	148	10 29 866 3	SCREW PLUG
SEALING RING	7373435	5	1	774	10 02 073 5	SHUTTLE VALVE
SEALING RING	7610225	6	1	225	94 42 350	OIL FILLER NECK
SEALING RING 0 3869 11,6X16	10040984	2	1	659	90 76 530	TEMPERATURE SENSOR
SEALING RING 0 3869 11,6X16	10040984	2	1	660	90 76 531	PRESSURE TRANSMITTER M 1
SEALING RING 10,7X16,00X1,5	10011864	3	1	612	10 11 615 0	HOUSING PRE-ASSEMBLED

Description	Item	Pos.	Quantity	Page	Assembly	Description
SEALING RING 10,7X16,00X1,5	10011864	7	1	686	10 12 087 8	SEAL KIT HIGH PRESSURE P
SEALING RING 14	10428572	5	1	180	10 44 299 8	SHUTTLE VALVE
SEALING RING 14,7X22,00X1,5	10011866	3	1	575	10 12 016 8	LOCKING PIECES
SEALING RING 14,7X22,00X1,5	10011866	6	3	576	10 11 874 8	PIPELINE INSTALLATION
SEALING RING 14,7X22,00X1,5	10011866	5	1	612	10 11 615 0	HOUSING PRE-ASSEMBLED
SEALING RING 14,7X22,00X1,5	10011866	12	5	617	10 12 314 1	FUEL FINE-FILTER ASSEMBLY
SEALING RING 14,7X22,00X1,5	10011866	12	18	621	90 78 554	LEAK OIL LINE ADD-ON
SEALING RING 14,7X22,00X1,5	10011866	23	7	623	10 12 720 8	FUEL LINES
SEALING RING 14,7X22,00X1,5	10011866	8	18	641	10 11 930 6	VENT TUBE ASSEMBLY
SEALING RING 14,7X22,00X1,5	10011866	7	2	642	10 11 978 1	COOLANT PIPE BEND ADD-ON
SEALING RING 14,7X22,00X1,5	10011866	1	4	682	10 12 087 0	SEAL KIT LOCKING PARTS
SEALING RING 14,7X22,00X1,5	10011866	5	1	686	10 12 087 8	SEAL KIT HIGH PRESSURE P
SEALING RING 14,7X22,00X1,5	10011866	6	5	687	10 12 089 6	SEAL KIT ZYLINDER HEAD CPL
SEALING RING 14,7X22,00X1,5	10011866	5	2	694	10 12 099 3	SEAL KIT TURBOCHARGER M
SEALING RING 14,7X22,00X1,5	10011866	1	10	697	10 12 118 3	SEAL KIT FUEL LINE
SEALING RING 14,7x22,00x1,5	10356531	12	2	689	10 12 094 4	SEAL KIT AIR COMPRESSOR
SEALING RING 16,7X24,00X1,5	10011867	24	2	623	10 12 720 8	FUEL LINES
SEALING RING 16,7X24,00X1,5	10011867	9	1	642	10 11 978 1	COOLANT PIPE BEND ADD-ON
SEALING RING 16,7X24,00X1,5	10011867	14	10	689	10 12 094 4	SEAL KIT AIR COMPRESSOR
SEALING RING 16,7X24,00X1,5	10011867	8	1	691	10 12 097 3	SEALING SET WATER PUMP
SEALING RING 16,7X24,00X1,5	10011867	5	2	693	10 12 098 2	SEAL KIT EXHAUST GAS RECI
SEALING RING 16,7X24,00X1,5	10011867	2	2	697	10 12 118 3	SEAL KIT FUEL LINE
SEALING RING 18,7X26,00X1,5	10011868	9	2	617	10 12 314 1	FUEL FINE-FILTER ASSEMBLY
SEALING RING 18,7X26,00X1,5	10011868	2	2	672	10 11 883 5	CONNECTING PIECE PRE-ASS
SEALING RING 190X178,4X12,	7023589	7	1	765	99 07 890	PISTON ROD BEARING 125/19
SEALING RING 21	7371651	4	1	767	93 99 179	INTERMEDIATE COUPLING
SEALING RING 22,7X30X2	10011869	11	2	689	10 12 094 4	SEAL KIT AIR COMPRESSOR
SEALING RING 24,7X32X2	10011842	6	2	629	90 80 436	SUCTION NOZZLE ADD-ON
SEALING RING 26,7X34,93X2	10011870	6	2	575	10 12 016 8	LOCKING PIECES
SEALING RING 26,7X34,93X2	10011870	19	1	582	10 12 593 7	OIL SUMP WITH FASTENING
SEALING RING 26,7X34,93X2	10011870	6	2	629	90 80 436	SUCTION NOZZLE ADD-ON
SEALING RING 26,7X34,93X2	10011870	2	2	682	10 12 087 0	SEAL KIT LOCKING PARTS
SEALING RING 26,7X34,93X2	10011870	13	4	689	10 12 094 4	SEAL KIT AIR COMPRESSOR
SEALING RING 30,7X39X2	10113731	9	2	605	10 12 002 3	OIL LINE ASSEMBLY
SEALING RING 4X8X1	10016656	36	4	250	10 34 071 7	LUBRICATION PUMP
SEALING RING 57,70X67,59X6	10043255	2	3	640	10 11 753 0	THERMOSTAT HOUSING PRE
SEALING RING 57,70X67,59X6	10043255	1	3	690	10 12 096 2	SEAL KIT THERMOSTAT HOUS
SEALING SET FOR PISTON 19	9064090	999	1	762	95 89 256	PISTON 190MM
SEALING SET FOR PISTON 19	9064090	999	1	763	99 07 680	PISTON 190 MM
SEALING SET FOR PISTON 22	9114437	999	1	761	95 88 147	PISTON 220MM
SEALING SET VALVE	5604377	10	1	768	56 02 932	FLOW REGULATING CHECK
SEALING SET VALVE	9266089	999	1	78	92 67 554	PRESSURE LIMITING VALVE
SEALING SET VALVE	9266089	99	1	184	92 74 199	SEAL KIT
SEALING SET VALVE	9266089	99	1	198	90 77 032	CONNECTING PLATE NG 045
SEALING SET WATER PUMP	10120973	370	1	678	10 12 116 0	SEAL KIT DIESEL ENGINE
SEALINGSET ROTARY TRANS	10009676	999	1	56	10 00 963 0	ROTARY FEED THROUGH
SEALINGSET ROTARY TRAN	9265064	11	1	57	91 41 597	ROTARY FEED THROUGH
SEAT FRAME	10029370	10	1	276	70 24 996	SEAT FRAME
SEAT FRAME	7024996	15	1	273	10 04 363 1	DRIVERS SEAT
SEAT FRAME	7024996	15	1	274	10 04 363 2	DRIVERS SEAT
SEAT INSERT RING EXHAUST	9078512	4	2	600	10 11 805 2	CYLINDER HEAD D9508
SEAT INSERT RING INLET	9078511	3	2	600	10 11 805 2	CYLINDER HEAD D9508
SEAT PART	7024981	12	1	273	10 04 363 1	DRIVERS SEAT
SEAT PART	7024981	12	1	274	10 04 363 2	DRIVERS SEAT
SEAT VAT	10165637	65	1	274	10 04 363 2	DRIVERS SEAT
SECTION	10009781	121	0.9m	271	10 05 311 8	DRIVER STAND BASE SECTIO
SECTION	226016702	120	0.7m	271	10 05 311 8	DRIVER STAND BASE SECTIO
SECTION	226016702	122	0.2m	271	10 05 311 8	DRIVER STAND BASE SECTIO
SEE REMARK (BOTTOM)	9999999	23	1	145	98 88 308	CONNECTING PLATE
SEE REMARK (BOTTOM)	9999999	9	1	608	10 12 475 7	OIL MODULE RIGHT

Description	Item	Pos.	Quantity	Page	Assembly	Description
SELF-TAPPING SCREW AEHN	4901530	6	2	499	99 41 040	FLOODLIGHT INSTALLATION
SENSOR	635867001	21	1	213	10 49 800 0	MOTOR-ELEKTRIK
SENSOR	635867001	1	1	663	98 85 618	ROTATIONAL SPEED SENSOR
SENSORIC	10017824	150	1	289	99 68 625	LH-JOYSTICK LEFT
SENSORIC	10017824	150	1	304	99 68 611	LH-JOYSTICK RIGHT
SERVICE HOUR METER	6201379	80	1	278	10 05 798 3	ARM REST LEFT
SERVICE KIT 0-2000H	10361905	100	1	40	10 35 970 3	SERVICE MATERIAL
SERVICE KIT 1000H	10361907	2	1	94	10 36 190 5	SERVICE KIT 0-2000H
SERVICE KIT 1000H	10361907	1	1	98	10 36 190 8	SERVICE KIT ALLE 2000H
SERVICE KIT 1500H/2500H	10091074	3	1	94	10 36 190 5	SERVICE KIT 0-2000H
SERVICE KIT 1500H/2500H	10091074	1	1	95	10 09 107 3	SERVICE KIT ERSTE 500H
SERVICE KIT 1500H/2500H	10091074	1	1	97	10 36 190 7	SERVICE KIT 1000H
SERVICE KIT ALLE 2000H	10361908	4	1	94	10 36 190 5	SERVICE KIT 0-2000H
SERVICE KIT ERSTE 500H	10091073	1	1	94	10 36 190 5	SERVICE KIT 0-2000H
SERVICE KIT FUEL FILTER	10359830	110	1	40	10 35 970 3	SERVICE MATERIAL
SERVICE MATERIAL	10359703	9999	1	9	10 35 874 1	BASIC MACHINE R964C HD LI
SERVOMOTOR	10022766	3	1	320	10 02 208 3	AIR CONNECTION PART
SERVOMOTOR	10022766	7	2	321	10 02 211 7	AIR CIRCULATION CASE
SERVOMOTOR	10022766	2	1	324	10 02 207 8	ASSEMBLY BRACKET
SHAFT	10298630	2	1	166	10 44 145 8	SWIVELLING ANGLE SENSOR
SHAFT REPAIR KIT	9884008	92	1	143	98 88 041	HYDR.MOTOR FIX FMF 165
SHAFT SEAL	7380068	4	2	696	10 12 100 3	SEAL KIT OUTPUT SHAFT
SHAFT SEAL 50X80X7/5	7620752	38	1	133	10 44 145 6	DRIVING GEAR
SHAFT SEAL X17X30X7	570319508	3	1	164	10 35 548 6	GEAR PUMP
SHAFT SEAL X40X55X7	10007991	38	1	149	10 33 307 0	DRIVING GEAR
SHEET	10057336	63	2	702	10 35 872 5	GOOSENECK BOOM 7,00M
SHEET	10057988	2	1	308	10 05 798 5	FOOT BOARD INSTALLATION
SHEET	10058949	15	1	286	10 05 879 2	MANIPULATOR LEFT
SHEET	10058949	15	1	299	10 05 879 4	MANIPULATOR RIGHT
SHEET	10116074	3	2	669	10 11 671 8	CONTROL BOX ANNEXE
SHEET	10358249	16	2	541	10 35 875 6	AIR CONDITION HOSES INSTA
SHEET	10358267	5	1	107	10 35 875 9	HEATING HOSES INSTALLATIO
SHEET	10358268	2	1	353	10 35 875 1	HYDR.INSTALLATION FAN DR
SHEET	10652159	20	1	280	10 16 576 6	CONTROL CONSOLE LEFT
SHEET	7020611	360	2	484	70 28 778	ASSY. PARTS
SHEET	7028839	190	1	472	10 04 678 8	DRIVER'S CAB DOOR
SHEET	7028878	520	1	480	70 28 884	WIPER MOTOR
SHEET	7028898	270	1	484	70 28 778	ASSY. PARTS
SHEET	9012222	32	1	461	10 06 375 5	BOX CPL
SHEET	9392646	15	1	291	10 82 277 5	ARM REST RIGHT
SHEET	9476811	31	1	344	10 35 875 5	HYDR.ROTARY CONNEC.+SWI
SHEET	9476811	8	1	351	10 05 312 9	HYDR.AND GEAR OIL COOLIN
SHEET	9483466	37	2	347	10 05 312 6	HYDR.SUCT.+RETURN OIL HO
SHEET	9757779	35	1	269	10 05 311 8	DRIVER STAND BASE SECTIO
SHEET	9830148	4	2	106	10 39 589 3	ATTACHMENTS MOUNTING PA
SHEET	9830148	9	1	700	10 35 872 5	GOOSENECK BOOM 7,00M
SHEET	9830148	181	2	715	10 35 872 1	STICK 2,60M
SHEET	9830148	81	2	771	10 35 873 1	HOIST CYLINDERS DIA.190
SHEET	9830148	141	2	771	10 35 873 1	HOIST CYLINDERS DIA.190
SHEET	9903888	53	4	780	10 35 813 5	PLAT FORM IF ELEVATION 120
SHEET GASKET	10354823	2	1	387	10 30 177 6	DRAIN VALVE
SHEET GASKET	11007770	7	1	388	56 17 689	SHUT OFF DEVICE DN 100
SHEET GASKET 7X14,4X1,5	10442984	4	1	615	10 49 001 8	INJECTOR
SHEET GASKET 7X14,4X1,5	10442984	8	1	687	10 12 089 6	SEAL KIT ZYLINDER HEAD CPL
SHEET KPL	9688482	7	1	105	10 05 797 8	LOOCK BRACKET
SHEET METAL NUT	7366862	10	1	280	10 16 576 6	CONTROL CONSOLE LEFT
SHEET METAL NUT	7370883	13	7	280	10 16 576 6	CONTROL CONSOLE LEFT
SHEET METAL NUT	7370883	12	11	295	56 18 923	CONTROL CONSOLE RIGHT
SHEET METAL NUT M6	10009189	275	3	488	10 48 809 9	INTERNAL LINING
SHEET METAL NUT M6	10009189	440	4	489	10 48 809 9	INTERNAL LINING

Description	Item	Pos.	Quantity	Page	Assembly	Description
SHELL	7370891	3	1	295	56 18 923	CONTROL CONSOLE RIGHT
SHIFT LEVER	10498755	4	2	714	10 35 872 1	STICK 2,60M
SHIM RING	10007878	20	1	149	10 33 307 0	DRIVING GEAR
SHIM RING	10007879	20	1	149	10 33 307 0	DRIVING GEAR
SHIM RING	10007879	21	1	149	10 33 307 0	DRIVING GEAR
SHIM RING	10007939	20	1	149	10 33 307 0	DRIVING GEAR
SHIM RING	10007942	20	1	149	10 33 307 0	DRIVING GEAR
SHIM RING	10035541	20	1	165	10 41 064 0	DRIVING GEAR
SHIM RING	10035542	20	1	165	10 41 064 0	DRIVING GEAR
SHIM RING	10035543	20	1	165	10 41 064 0	DRIVING GEAR
SHIM RING	10035544	20	1	165	10 41 064 0	DRIVING GEAR
SHIM RING	90011582	48	3	222	90 01 781 7	SLEWING DRIVE SAT 375/253
SHIM WASHER	10410655	27	2	165	10 41 064 0	DRIVING GEAR
SHOCK ABSORBER	10289994	55	1	275	10 28 999 3	VIBRATING SYSTEM
SHUT OFF DEVICE DN 100	5617689	2	2	381	10 35 874 5	HYDRAULIC TANK INSTALLAT
SHUTDOWN VALVE	10333242	3	1	153	10 33 322 6	CONNECTING PLATE
SHUTTER DISK	9429965	30	2	396	10 35 874 4	CONTROL VALVE INSTALLAT
SHUTTER DISK	9429965	38	4	701	10 35 872 5	GOOSENECK BOOM 7,00M
SHUTTLE VALVE	10020735	3	1	146	10 10 206 4	REGULATOR
SHUTTLE VALVE	10442998	3	1	146	10 10 206 4	REGULATOR
SHUTTLE VALVE	7021767	300	1	71	56 16 688	WHEEL BRAKE VALVE
SHUTTLE VALVE	7372762	140	1	705	10 35 872 5	GOOSENECK BOOM 7,00M
SHUTTLE VALVE BLOCK	10286294	57	1	407	10 11 355 7	CONTROL BLOCK
SIDE DOOR BACK RIGHT	10055433	85	1	416	10 05 303 6	PANELLING
SIDE DOOR BACK RIGHT	10055433	85	1	431	10 49 857 1	PANELLING
SIDE DOOR BACK RIGHT	10055434	10	1	453	10 05 543 3	SIDE DOOR BACK RIGHT
SIDE DOOR FRONT RIGHT	10055410	110	1	416	10 05 303 6	PANELLING
SIDE DOOR FRONT RIGHT	10055410	110	1	431	10 49 857 1	PANELLING
SIDE DOOR FRONT RIGHT	10055411	10	1	456	10 05 541 0	SIDE DOOR FRONT RIGHT
SIDE DOOR LEFT	10055392	60	1	415	10 05 303 6	PANELLING
SIDE DOOR LEFT	10055392	60	1	430	10 49 857 1	PANELLING
SIDE DOOR LEFT	10055393	10	1	801	10 05 539 2	SIDE DOOR LEFT
SIDE WEARING PART	10498512	2	2	728	10 49 850 1	WEARING PARTS SET
SIGHT GLASS	7368081	58	1	383	10 35 874 5	HYDRAULIC TANK INSTALLAT
SIGN	10022635	5	1	318	10 81 666 6	EVAPORATOR
SIGN	10022636	6	1	318	10 81 666 6	EVAPORATOR
SIGN	10402369	70	1	560	10 35 876 6	SIGNS
SIGN	10402369	70	1	564	10 49 863 6	SIGNS
SIGNS	10358766	9900	1	92	10 35 874 2	UPPERCARRIAGE
SIGNS	10498636	9900	1	93	10 49 853 2	UPPERCARRIAGE
SINGLE-END SPANNER	10455472	48	1	551	10 08 428 5	TOOL EQUIPMENT
SINGLE-END SPANNER	4002012	54	1	551	10 08 428 5	TOOL EQUIPMENT
SINGLE-END SPANNER	7900708	52	1	551	10 08 428 5	TOOL EQUIPMENT
SINGLE-END SPANNER	8000770	50	1	551	10 08 428 5	TOOL EQUIPMENT
SIPHON PIPE	9569943	5	1	345	10 05 312 6	HYDR.SUCT.+RETURN OIL HO
SLECT BUTTON	10021882	2	1	303	90 16 516	SWITCH INSTALLATION S218
SLEEVE	10326567	57	2	520	10 07 707 3	ELECTRIC BOX CPL. U48-A
SLEEVE	10326567	57	2	521	10 07 608 3	ELECTRIC BOX CPL. U46
SLEEVE	9327516	3	4	55	95 66 869	CAM
SLEEVE	9563951	16	60	241	10 35 877 2	SLEWING RING INSTALLATIO
SLEEVE	9907856	9	1	756	95 93 590	HYDRAULIC CYLINDER
SLEEVE	9907856	9	1	757	99 06 383	HYDRAULIC CYLINDER
SLEEVE	9907856	9	1	758	99 06 576	HYDRAULIC CYLINDER
SLEEVE	9926802	84	1	755	94 02 020 2	HYDRAULIC CYLINDER
SLEEVE 11x14x46,5	7367235	68	4	702	10 35 872 5	GOOSENECK BOOM 7,00M
SLEEVE 11x14x58	7367212	7	2	741	93 63 937	PIPE CLAMP
SLEEVE 12,4x16x87	7367211	35	4	344	10 35 875 5	HYDR.ROTARY CONNEC.+SWI
SLEEVE 21,8X28	7373759	9	1	372	10 00 909 0	OIL PILOT VALVE
SLEWING ANGLE SENSOR	10341869	32	1	120	10 35 879 9	PUMPS INSTALLATION
SLEWING ANGLE SENSOR	10341869	25	1	213	10 49 800 0	MOTOR-ELEKTRIK

Description	Item	Pos.	Quantity	Page	Assembly	Description
SLEWING ANGLE SENSOR	10441464	20	1	166	10 44 145 8	SWIVELLING ANGLE SENSOR
SLEWING DRIVE SAT 375/253	90017817	2	1	220	10 05 311 7	SLEWING GEAR
SLEWING GEAR	10053117	2	1	219	10 05 302 4	SWING GEAR INSTALLATION
SLEWING RING INSTALLATIO	10358772	800	1	91	10 35 874 2	UPPERCARRIAGE
SLIDE SEAT GUIDE	10289989	71	1	274	10 04 363 2	DRIVERS SEAT
SLIDE SEAT GUIDE	10289990	70	1	273	10 04 363 1	DRIVERS SEAT
SLIDE SEAT GUIDE	10289990	70	1	274	10 04 363 2	DRIVERS SEAT
SLIDER	10475119	8	2	49	10 47 076 9	GUIDE WHEEL D8K
SLIDING DISC	9265104	15	1	231	92 71 427	REPAIR KIT DRIVING MECHAN
SLIDING DISC	9268999	15	1	83	98 88 123	REPAIR KIT DRIVING MECHAN
SLIDING DISC	9886688	19	1	142	98 86 680	REPAIR KIT DRIVING MECHAN
SLIDING DISC	9888536	11	1	182	90 79 347	REPAIR SET SWIVEL YOKE LP
SLIDING PAD	10216694	13	1	133	10 44 145 6	DRIVING GEAR
SLIDING RAIL	10086360	10	1	734	10 08 685 3	SLIDING RAIL
SLIDING RAIL	10086853	20	1	733	10 35 873 7	PISTON ROD COVER BUCKET
SLIDING WINDOW	7028844	420	1	473	10 04 678 8	DRIVER'S CAB DOOR
SLOTTED NUT	932719601	13	1	221	90 01 781 7	SLEWING DRIVE SAT 375/253
SNAP RING	7373509	12	1	61	50 20 370 01	SPRING LOADED MULTI-DISC
SNAP RING	7373509	12	1	62	93 21 804 01	BRAKE PACKING SET
SNAP RING	7380954	71	1	128	90 80 120	PUMP DISTRIBUTION GEAR
SNAP RING 55	10027648	8	2	643	10 13 154 6	PISTON CPL. d=128
SNAP RING SB143	7003394	11	1	61	50 20 370 01	SPRING LOADED MULTI-DISC
SNAP SWITCH	6001027	19	1	284	73 73 807	SAFETY LEVER
SOCKET	10323529	12	1	520	10 07 707 3	ELECTRIC BOX CPL. U48-A
SOCKET	10323529	12	1	521	10 07 608 3	ELECTRIC BOX CPL. U46
SOCKET	10323530	11	1	520	10 07 707 3	ELECTRIC BOX CPL. U48-A
SOCKET	10323530	11	1	521	10 07 608 3	ELECTRIC BOX CPL. U46
SOCKET	10323535	10	1	520	10 07 707 3	ELECTRIC BOX CPL. U48-A
SOCKET	10323535	10	1	521	10 07 608 3	ELECTRIC BOX CPL. U46
SOCKET	6001963	77	1	291	10 82 277 5	ARM REST RIGHT
SOLENOID VALVE	5615344	3	4	372	10 00 909 0	OIL PILOT VALVE
SOUND PROOFING	10373187	35	1	795	10 49 815 5	CAB ELEVATION 1200MM
SPACER BUSH	10013971	780	1	486	70 28 778	ASSY. PARTS
SPACER BUSH	10022783	5	6	321	10 02 211 7	AIR CIRCULATION CASE
SPACER BUSH	10358263	3	1	737	10 35 872 3	PIN
SPACER BUSH	7028907	990	4	479	10 48 809 7	ELECTRICAL INSTALLATION
SPACER PIECE	10068223	26	1	396	10 35 874 4	CONTROL VALVE INSTALLAT
SPACER PIECE	9275161	10	2	578	10 12 503 7	PIPELINE INSTALLATION
SPACER PIECE	9277034	37	1	624	10 12 720 8	FUEL LINES
SPACER PIECE	9279359	5	1	605	10 12 002 3	OIL LINE ASSEMBLY
SPARE HOLE PLATE	10067947	15	1	101	10 35 875 3	RADIATOR BOX INSTALLATIO
SPECIAL COMPOUND CRL/5x0,	8503279	30	1	550	10 49 815 2	TOOL EQUIPMENT
SPECIAL GREASE LIEBHERR	10358947	30	1kg	17	90 70 366	GREASES
SPECIAL GREASE LIEBHERR/	861305508	1	1	31	10 35 894 7	SPECIAL GREASE LIEBHERR
SPECIAL GREASE LIEBHERR/1	861304208	10	1	31	10 35 894 7	SPECIAL GREASE LIEBHERR
SPECIAL GREASE LIEBHERR/2	10296820	2	1	31	10 35 894 7	SPECIAL GREASE LIEBHERR
SPECIAL GREASE LIEBHERR/2	861303608	25	1	31	10 35 894 7	SPECIAL GREASE LIEBHERR
SPECIAL GREASE LIEBHERR/5	861305608	50	1	31	10 35 894 7	SPECIAL GREASE LIEBHERR
SPEED SENSOR	6290073	6	1	220	10 05 311 7	SLEWING GEAR
SPEED SENSOR	6290073	10	1	232	92 78 623	RK SPEED SENSOR
SPHERICAL CAP	10007193	5	1	300	10 08 576 7	SWITCH INSTALLATION S248
SPHERICAL CAP	6204368	4	1	777	99 89 645	SWITCH INSTALLATION
SPHERICAL CAP	6204368	4	1	778	99 89 646	SWITCH INSTALLATION S84-2
SPHERICAL CAP	6204368	923	1	792	95 99 236	ELECTRIC INSTALLATION
SPHERICAL CAP	6204370	4	1	290	10 08 046 6	SWITCH INSTALLATION S42
SPIRAL DOWEL PIN 8	10011783	5	2	587	10 13 080 8	CRANKSHAFT WITH GEAR
SPOOL	10292073	2	1	261	10 10 206 7	REGULATOR ELEMENT
SPOOL	10333258	3	1	157	10 33 324 2	SHUTDOWN VALVE
SPOOL	9278187	10	1	82	90 77 481	REPAIR KIT FMV 165
SPOON BIT	10498500	9	1	726	10 49 849 9	BACKHOE BUCKET HD 1950

Description	Item	Pos.	Quantity	Page	Assembly	Description
SPOUT	7020613	360	1	473	10 04 678 8	DRIVER'S CAB DOOR
SPOUT	7028906	900	4	479	10 48 809 7	ELECTRICAL INSTALLATION
SPOUT 5/16/20	7019171	110	9	477	10 48 809 7	ELECTRICAL INSTALLATION
SPOUT 6/10/13	7019160	370	1	473	10 04 678 8	DRIVER'S CAB DOOR
SPOUT 6/10/13	7019160	940	1	479	10 48 809 7	ELECTRICAL INSTALLATION
SPRAY NOZZLE	10009212	690	1	482	10 29 114 6	WIPER ARM
SPRAY NOZZLE	10116083	1	1	574	90 78 548	PISTON COOLING
SPRAY NOZZLE	7028867	650	1	483	70 28 866	WIPER ARM
SPRAY STICKER	8716533	6	1	319	10 02 206 9	EVAPORATOR HOUSING
SPRAY-PASTE LIEBHERR	10358950	40	1kg	17	90 70 366	GREASES
SPRAY-PASTE LIEBHERR/0,95	10330308	1	1	34	10 35 895 0	SPRAY-PASTE LIEBHERR
SPRAY-PASTE LIEBHERR/10X	10330310	2	1	34	10 35 895 0	SPRAY-PASTE LIEBHERR
SPRAY-PASTE LIEBHERR/5kg	10330311	5	1	34	10 35 895 0	SPRAY-PASTE LIEBHERR
SPRING	10013879	2	1	471	10 01 407 8	HOISTING TRANSMITTER
SPRING	10220706	7	1	161	10 33 327 0	FILTER HEAD
SPRING	10296502	123	1	408	10 11 355 7	CONTROL BLOCK
SPRING	7024629	25	1	376	10 28 046 1	CONTROL SOLENOID VALVE
SPRING	7028835	380	1	473	10 04 678 8	DRIVER'S CAB DOOR
SPRING	7028901	340	1	484	70 28 778	ASSY. PARTS
SPRING	7369128	24	1	407	10 11 355 7	CONTROL BLOCK
SPRING	7370910	66	2	43	10 35 874 0	UNDERCARRIAGE CPL
SPRING	7372747	82	6	408	10 11 355 7	CONTROL BLOCK
SPRING CASSETTE	10032001	7	1	619	10 30 300 7	FUEL PREFILTER
SPRING CLIPS	10022775	2	2	319	10 02 206 9	EVAPORATOR HOUSING
SPRING LOADED MULTI-DISC	502037001	70	1	66	94 43 970	TRAVEL DRIVE FAT 500P005
SPRING SUPPORT	10115009	6	1	264	10 33 323 7	PRESSURE LIMITING VALVE
SPRING SUPPORT	10115013	7	1	264	10 33 323 7	PRESSURE LIMITING VALVE
SPRING SUPPORT	10220664	8	2	157	10 33 324 2	SHUTDOWN VALVE
SPRING SUPPORT	10326232	67	2	43	10 35 874 0	UNDERCARRIAGE CPL
SPRING SUPPORT	10333235	23	2	178	10 40 975 1	ADJUSTING PISTON
SPRING SUPPORT	7021980	70	2	71	56 16 688	WHEEL BRAKE VALVE
SPRING SUPPORT	7028149	4	1	262	10 29 792 9	PRESSURE LIMITING VALVE
SPRING SUPPORT	7372258	3	2	261	10 10 206 7	REGULATOR ELEMENT
SPRING SUPPORT	7621957	7	2	178	10 40 975 1	ADJUSTING PISTON
SPRING SUPPORT	9078515	5	4	594	10 11 805 1	CYLINDER HEAD PRE-ASS. D9
SPRING SUPPORT	9265395	3	2	772	92 66 411	OPERATING EQUIPMENT (LE
SPRING SUPPORT	9265395	3	2	773	92 66 412	OPERATING EQUIPMENT (RIG
SPRING WASHER	7025121	21	2	321	10 02 211 7	AIR CIRCULATION CASE
SPUR WHEEL Z=39 M=3.5	9080176	14	1	126	90 80 120	PUMP DISTRIBUTION GEAR
SPUR WHEEL Z=43 M=3.5	9080175	11	2	126	90 80 120	PUMP DISTRIBUTION GEAR
STARTER INSTALLATION	9080641	450	1	570	10 12 595 9	DIESEL ENGINE D9508 A7 320k
STARTER PRE-ASS.	10218368	1	1	654	90 80 641	STARTER INSTALLATION
STARTING ELEMENT MX-F	7027937	1	1	245	10 29 302 0	DISTRIBUTION BLOCK MX-F 3/
STARTING ELEMENT MX-F	7027937	1	1	254	10 29 301 8	DISTRIBUTION BLOCK MX-F 4/
STARTING ELEMENT MX-F	7027937	1	1	708	10 00 878 9	DISTRIBUTION BLOCK MX-F 3/
STARTING ELEMENT MX-F	7027937	1	1	722	10 30 336 9	DISTRIBUTION BLOCK MX-F 5/
STARTING ELEMENT SXE-2	10013835	1	1	252	10 48 927 7	DISTRIBUTION BLOCK SXE-2
STATOR	10011396	2	1	56	10 00 963 0	ROTARY FEED THROUGH
STEEL BUSHING	10820659	30	2	709	10 35 835 9	GOOSENECK BOOM 7,00M
STEP	9490985	190	1	419	10 05 303 6	PANELLING
STEP	9490985	190	1	434	10 49 857 1	PANELLING
STEP	9490985	35	2	782	10 35 806 3	ELEVATION 1200MM
STICK 2,60M	10358400	2	1	714	10 35 872 1	STICK 2,60M
STICK 2,60M	10358721	10	1	716	10 35 872 2	STICK 2,6M
STICK 2,6M	10358722	12	1	7	.	
STICK CYLINDER CONTROL S	10498271	143	1	705	10 35 872 5	GOOSENECK BOOM 7,00M
STICKER	10016660	40	1	250	10 34 071 7	LUBRICATION PUMP
STICKER	10071618	10	1	557	10 35 876 6	SIGNS
STICKER	10071618	10	1	561	10 49 863 6	SIGNS
STICKER	10071620	11	1	557	10 35 876 6	SIGNS

Description	Item	Pos.	Quantity	Page	Assembly	Description
STICKER	10071620	11	1	561	10 49 863 6	SIGNS
STICKER	10071665	12	1	557	10 35 876 6	SIGNS
STICKER	10071665	12	1	561	10 49 863 6	SIGNS
STICKER	10071668	13	1	557	10 35 876 6	SIGNS
STICKER	10071668	13	1	561	10 49 863 6	SIGNS
STICKER	10071669	15	1	557	10 35 876 6	SIGNS
STICKER	10071669	15	1	561	10 49 863 6	SIGNS
STICKER	10071670	16	1	557	10 35 876 6	SIGNS
STICKER	10071670	16	1	561	10 49 863 6	SIGNS
STICKER	10096203	18	1	557	10 35 876 6	SIGNS
STICKER	10096203	18	1	561	10 49 863 6	SIGNS
STICKER	10096204	19	1	557	10 35 876 6	SIGNS
STICKER	10096204	19	1	561	10 49 863 6	SIGNS
STICKER	9350400	9	2	557	10 35 876 6	SIGNS
STICKER	9350400	9	2	561	10 49 863 6	SIGNS
STICKER	9378603	51	1	702	10 35 872 5	GOOSENECK BOOM 7,00M
STICKER	9874049	128	2	705	10 35 872 5	GOOSENECK BOOM 7,00M
STICKER 132X115	10340222	30	1	558	10 35 876 6	SIGNS
STICKER 132mmX115mm	11060174	30	1	562	10 49 863 6	SIGNS
STICKER 1853mmX250mm	9613673	71	1	560	10 35 876 6	SIGNS
STICKER 1853mmX250mm	9613673	71	1	564	10 49 863 6	SIGNS
STICKER SOUND VOLUME LE	9874356	51	1	559	10 35 876 6	SIGNS
STICKER SOUND VOLUME LE	9874356	51	1	563	10 49 863 6	SIGNS
STOP PLUG	10220397	550	8	486	70 28 778	ASSY. PARTS
STOP PLUG	10228539	29	4	41	10 35 874 0	UNDERCARRIAGE CPL
STOP PLUG	10292443	6	1	295	56 18 923	CONTROL CONSOLE RIGHT
STOP PLUG	10300923	5	1	264	10 33 323 7	PRESSURE LIMITING VALVE
STOP PLUG	6426764	6	1	788	10 49 831 4	FUEL COUPLING WIGGINS
STOP PLUG	7020615	720	6	486	70 28 778	ASSY. PARTS
STOP PLUG	9898335	76	2	205	10 35 873 9	COOLER INSTALLATION
STOPPER PLUG	7368253	374	4	285	10 06 804 1	MANIPULATOR LEFT CPL CAN
STOPPER PLUG	7368253	374	4	298	10 06 804 5	MANIPULATOR RIGHT CPL CA
STOPPER PLUG	7368253	15	11	309	10 08 142 4	FOOT PILOT VALVE LEFT
STOPPER PLUG	7368253	15	11	310	10 08 142 6	FOOT PILOT VALVE RIGHT
STOPPER PLUG	7368253	374	12	315	10 07 707 2	ELECTRIC BOX CPL. U101/R96
STOPPER PLUG	7371142	95	3	278	10 05 798 3	ARM REST LEFT
STOPPER PLUG	7371142	145	2	293	10 82 277 5	ARM REST RIGHT
STOPPER PLUG	7371142	155	2	293	10 82 277 5	ARM REST RIGHT
STOPPER PLUG	7371142	43	3	749	10 39 372 0	ELECTRICAL SYSTEM
STOPPER PLUG	7371142	915	3	792	95 99 236	ELECTRIC INSTALLATION
STOPPER PLUG M20X1,5	602514201	46	1	504	10 09 499 2	ELECTRIC MATERIAL LIST
STRAIGHT COUPLING G8 L	10014575	140	1	256	90 64 786	CONNECTING ELEMENT
STRAIGHT COUPLING G8 L	10014575	140	3	258	10 01 461 1	AUXILIARY BOX
STRIP	9080911	4	1	633	90 78 314	HEATING FLANGE ADD-ON
SUBPLATE	10066158	90	1	504	10 09 499 2	ELECTRIC MATERIAL LIST
SUCTION BASKET	10000815	3	1	156	10 33 323 8	HYDRAULIC ADJUSTMENT
SUCTION NOZZLE ADD-ON	9080436	221	1	568	10 12 595 9	DIESEL ENGINE D9508 A7 320k
SUCTION PIPE	9080198	26	1	126	90 80 120	PUMP DISTRIBUTION GEAR
SUN WHEEL M=3,75 Z=18	933605201	60	1	222	90 01 781 7	SLEWING DRIVE SAT 375/253
SUN WHEEL M=4 Z=18	933333101	40	1	221	90 01 781 7	SLEWING DRIVE SAT 375/253
SUN WHEEL M=5 Z=19	9444422	30	1	64	94 43 970	TRAVEL DRIVE FAT 500P005
SUN WHEEL M=5 Z=24	9444416	20	1	64	94 43 970	TRAVEL DRIVE FAT 500P005
SUNHALDE SET	7028826	250	1	470	70 28 775	FRONT WINDOW
SUNHALDE SET	7028933	620	1	486	70 28 778	ASSY. PARTS
SUPERTONE HORN	6204593	30	1	545	10 35 868 3	FUEL SYSTEM
SUPERTONE HORN	6205045	21	1	511	10 06 221 6	ELECTR.INST.BOOM
SUPERTONE HORN	6205045	21	1	512	10 35 876 2	ELECTR.INST.BOOM
SUPERTONE HORN	6205045	22	1	513	10 49 837 6	ELECTR.INST.BOOM
SUPPLY VALVE	5610135	54	6	407	10 11 355 7	CONTROL BLOCK
SUPPLY VALVE	5610135	100	1	752	10 34 080 6	PIPE FRACTION SAFETY VALV

Description	Item	Pos.	Quantity	Page	Assembly	Description
SUPPLY VALVE	5610135	100	1	753	10 34 081 2	PIPE FRACTION SAFETY VALV
SUPPLY VALVE	5616232	62	4	408	10 11 355 7	CONTROL BLOCK
SUPPORT LEFT	7025993	90	1	273	10 04 363 1	DRIVERS SEAT
SUPPORT LEFT	7025993	90	1	274	10 04 363 2	DRIVERS SEAT
SUPPORT PLATE	9073190	30	2	623	10 12 720 8	FUEL LINES
SUPPORT PLATE	9073190	9	1	641	10 11 930 6	VENT TUBE ASSEMBLY
SUPPORT PLATE	9276996	15	1	621	90 78 554	LEAK OIL LINE ADD-ON
SUPPORT RIGHT	7025994	91	1	273	10 04 363 1	DRIVERS SEAT
SUPPORT RIGHT	7025994	91	1	274	10 04 363 2	DRIVERS SEAT
SUPPORT SYSTEM	9080695	3	1	583	10 11 694 5	OIL DIPSTICK WITH PIPE
SUPPORTING RING	10016716	5	1	47	10 07 535 3	GREASE TENSIONER
SUPPORTING RING	7003559	7	2	763	99 07 680	PISTON 190 MM
SUPPORTING RING	7004043	7	2	761	95 88 147	PISTON 220MM
SUPPORTING RING	7006870	7	2	762	95 89 256	PISTON 190MM
SUPPORTING RING	7007838	5	1	723	56 04 377	SEALING SET VALVE
SUPPORTING RING	7007838	15	1	768	56 02 932	FLOW REGULATING CHECK
SUPPORTING RING	7372317	6	1	402	56 15 220	HIGH PRESSURE FILTER
SUPPORTING RING	7380684	16	1	187	98 82 875	SEAL KIT REGULATING VALVE
SUPPORTING RING	7380883	21	1	87	92 66 232	SEAL KIT SHUTTLE VALVE
SUPPORTING RING	7380884	23	1	87	92 66 232	SEAL KIT SHUTTLE VALVE
SUPPORTING RING	7380905	28	2	85	92 66 089	SEALING SET VALVE
SUPPORTING RING	7381250	29	1	80	92 78 174	ADJUSTMENT
SUPPORTING RING	7381250	29	1	88	92 78 179	SEAL KIT
SUPPORTING RING	7381250	18	1	170	92 71 653	SEAL KIT ADJUSTMENT
SUPPORTING RING	7381250	32	1	171	92 71 657	SEAL KIT
SUPPORTING RING	7410773	15	1	342	56 09 948	OIL FILTER SET
SUPPORTING RING 10,7X1,45X	7023928	6	1	379	50 09 562	SEAL KIT DIRECTIONAL VALV
SUPPORTING RING 210X220X	7002239	8	1	764	96 31 985	PISTON ROD BEARING 150/22
SUPPORTING RING 9,4X1,45X	7023927	5	1	379	50 09 562	SEAL KIT DIRECTIONAL VALV
SURFACE SEALING	10011172	100	1	695	10 12 099 6	SEAL KIT FLYWHEEL HOUSIN
SURFACE SEALING	10354595	115	1	572	10 12 907 1	CRANKCASE CPL.
SWING GEAR INSTALLATION	10053024	700	1	91	10 35 874 2	UPPERCARRIAGE
SWING GEAR INSTALLATION	10053024	700	1	93	10 49 853 2	UPPERCARRIAGE
SWING GEAR PINION GREAS	10076756	10	1	242	10 07 604 7	CENTRALIZED LUBRICATION
SWING PUMP	10428459	25	1	120	10 35 879 9	PUMPS INSTALLATION
SWING ROCKER	9882407	16	1	70	98 88 126	DRIVING GEAR
SWITCH INSTALLATION	9989179	40	1	749	10 39 372 0	ELECTRICAL SYSTEM
SWITCH INSTALLATION	9989645	141	1	293	10 82 277 5	ARM REST RIGHT
SWITCH INSTALLATION S218	9016516	151	1	293	10 82 277 5	ARM REST RIGHT
SWITCH INSTALLATION S248	10085767	146	1	293	10 82 277 5	ARM REST RIGHT
SWITCH INSTALLATION S42	10080466	91	1	278	10 05 798 3	ARM REST LEFT
SWITCH INSTALLATION S84-2	9989646	142	1	293	10 82 277 5	ARM REST RIGHT
SWITCH LEVER	10024214	2	1	514	10 01 211 9	BATTERY MAIN SWITCH
SWITCH MODULE	7371141	90	1	278	10 05 798 3	ARM REST LEFT
SWITCH MODULE	7371141	140	1	293	10 82 277 5	ARM REST RIGHT
SWITCH MODULE	7371141	150	1	293	10 82 277 5	ARM REST RIGHT
SWITCH MODULE	7371141	42	1	749	10 39 372 0	ELECTRICAL SYSTEM
SWITCH MODULE	7371141	910	1	792	95 99 236	ELECTRIC INSTALLATION
SWITCH R-R	9968570	70	1	304	99 68 611	LH-JOYSTICK RIGHT
SWITCH T-0-T	9968546	70	1	289	99 68 625	LH-JOYSTICK LEFT
SWIVELLING ANGLE SENSOR	10441458	83	1	132	10 42 845 9	SWING PUMP
SYMBOL WORK LAMP RXJ	9911690	922	1	792	95 99 236	ELECTRIC INSTALLATION
SYNTHETIC HOSE	7363060	65	2.4m	204	10 35 873 9	COOLER INSTALLATION
TABLE ORDER	9278153	500	1	68	90 72 024	HYDR.MOTOR VAR.FMV 165
TABLE ORDER	9278153	500	1	69	90 72 026	CONNECTING PLATE NG 165
TABLE ORDER	9278153	500	1	80	92 78 174	ADJUSTMENT
TABLE ORDER	9278153	500	1	88	92 78 179	SEAL KIT
TABLE ORDER	9278153	500	1	135	90 72 922	HYDRAULIC VARIABLE DISPLA
TABLE ORDER	9278153	500	1	137	90 77 452	HYDRAULIC VARIABLE DISPLA
TABLE ORDER	9278153	500	1	197	10 12 504 2	HYDRAULIC INSTALLATION

Description	Item	Pos.	Quantity	Page	Assembly	Description
TANK VENTILATION	6426450	15	1	788	10 49 831 4	FUEL COUPLING WIGGINS
TAPER	7021984	200	2	71	56 16 688	WHEEL BRAKE VALVE
TAPER	7021984	230	2	71	56 16 688	WHEEL BRAKE VALVE
TAPER	7367730	2	1	400	93 70 592	NON-RETURN VALVE
TAPER	7371359	4	1	412	56 10 135	SUPPLY VALVE
TAPER	9889004	10	1	266	98 89 003	NON-RETURN VALVE RV
TAPER COLLET	4900038	64	1	122	10 35 879 9	PUMPS INSTALLATION
TAPER COLLET VKA 12L/S	477700514	58	1	702	10 35 872 5	GOOSENECK BOOM 7,00M
TAPER COLLET VKA 12L/S	477700514	3	6	789	10 37 296 7	HOSES ELONGATION
TAPER COLLET VKA 15L	4772024	38	7	403	10 06 771 7	HYDR.TUBES INSTALLATION
TAPER COLLET VKA 15L	4772024	81	2	703	10 35 872 5	GOOSENECK BOOM 7,00M
TAPER COLLET VKA 22L	4772028	76	1	702	10 35 872 5	GOOSENECK BOOM 7,00M
TAPER COLLET VKA 8	4900305	20	3	711	10 38 862 4	CENTRAL LUBRICATING SYS
TAPER COLLET VKA 8	4900305	33	2	720	10 35 872 0	CENTRAL LUBRICATING SYS
TAPER d=38x66	7362135	3	1	768	56 02 932	FLOW REGULATING CHECK
TAPERED ROLLER BEARING	10030592	3	1	221	90 01 781 7	SLEWING DRIVE SAT 375/253
TAPPET	9265409	1	1	313	92 65 665	RK PILOT DEVICE
TAPPET PUSH ROD	9078259	3	2	603	10 11 632 0	CONTROL PARTS
TECHNICAL DESCR	10076085	30	1	521	10 07 608 3	ELECTRIC BOX CPL. U46
TEMPERATURE SENSOR	10022067	11	1	322	11 00 359 4	HOUSING
TEMPERATURE SENSOR	10022077	12	1	322	11 00 359 4	HOUSING
TEMPERATURE SENSOR	6290130	1	1	658	90 79 187	ENGINE CONTROL SENSORS
TEMPERATURE SENSOR	691180608	1	1	659	90 76 530	TEMPERATURE SENSOR
TEMPERATURE SENSOR	9076530	2	1	658	90 79 187	ENGINE CONTROL SENSORS
TEMPERATURE SWITCH	6204186	20	1	213	10 49 800 0	MOTOR-ELEKTRIK
TENSION LEVER	7615635	91	2	416	10 05 303 6	PANELLING
TENSION LEVER	7615635	330	4	427	10 05 303 6	PANELLING
TENSION LEVER	7615635	91	2	431	10 49 857 1	PANELLING
TENSION LEVER	7615635	330	4	442	10 49 857 1	PANELLING
TENSION PIN	7381640	27	1	70	98 88 126	DRIVING GEAR
TENSION SPRING	7615768	262	1	422	10 05 303 6	PANELLING
TENSION SPRING	7615768	262	1	437	10 49 857 1	PANELLING
TENSION SPRING	7617520	51	2	275	10 28 999 3	VIBRATING SYSTEM
TENSION SPRING 1,6X9,6X75,	7371115	35	1	451	10 05 546 4	BONNET LEFT
TERMINAL RING	9442287	60	1	66	94 43 970	TRAVEL DRIVE FAT 500P005
THERMOSTAT	10022048	2	1	322	11 00 359 4	HOUSING
THERMOSTAT	10117576	3	3	640	10 11 753 0	THERMOSTAT HOUSING PRE
THERMOSTAT HOUSING	10116610	1	1	640	10 11 753 0	THERMOSTAT HOUSING PRE
THERMOSTAT HOUSING ASS	10117529	380	1	568	10 12 595 9	DIESEL ENGINE D9508 A7 320k
THERMOSTAT HOUSING PRE	10117530	1	1	639	10 11 752 9	THERMOSTAT HOUSING ASS
THERMOSTAT HOUSING PRE	10117531	2	1	640	10 11 753 0	THERMOSTAT HOUSING PRE
THREADED INSERT	10044343	490	3	478	10 48 809 7	ELECTRICAL INSTALLATION
THREADED INSERT	7020610	340	2	489	10 48 809 9	INTERNAL LINING
THREADED INSERT M6	10044359	550	1	489	10 48 809 9	INTERNAL LINING
THREADED PLATE	9376780	3	2	103	10 05 300 8	PUMPS BOX PARTS
THREADED PLATE	9867368	31	1	451	10 05 546 4	BONNET LEFT
THREADED PLATE	9867368	38	2	457	10 05 541 0	SIDE DOOR FRONT RIGHT
THREADED PLATE	9867368	29	2	802	10 05 539 2	SIDE DOOR LEFT
THREE PHASE CURRENT GE	10018258	1	1	653	10 11 602 6	ALTERNATOR ASSY. 28V 10-1
THROTTLE SCREW	7615603	2	1	147	10 10 206 6	REGULATOR ELEMENT
THROTTLE SCREW	7615603	2	1	263	10 29 207 1	REGULATOR ELEMENT
THROTTLE SCREW	7615604	1	1	147	10 10 206 6	REGULATOR ELEMENT
THROTTLE SCREW	7615604	1	1	263	10 29 207 1	REGULATOR ELEMENT
THRUST WASHER	7017685	3	2	56	10 00 963 0	ROTARY FEED THROUGH
THRUST WASHER	7017685	3	2	58	10 00 967 6	SEALINGSET ROTARY TRANS
THRUST WASHER	9080599	7	1	611	10 11 802 5	DRIVE FOR HIGH PRESSURE P
THRUST WASHER 82/16X4	9078591	5	1	634	10 11 822 3	INTERMEDIATE GEAR ASSEM
TIE WRAP	7001877	65	10	117	10 35 873 3	AIR AND EXHAUST INSTALLAT
TIE WRAP	7001877	145	10	272	10 05 311 8	DRIVER STAND BASE SECTIO
TIE WRAP	7001877	96	10	292	10 82 277 5	ARM REST RIGHT

Description	Item	Pos.	Quantity	Page	Assembly	Description
TIE WRAP	7001877	33	2	316	10 40 689 8	AIR CONDITIONING UNIT
TIE WRAP	7001877	70	5	793	10 82 390 4	ELECTR.SYSTEM ELEVATION
TIE WRAP	7028864	740	8	478	10 48 809 7	ELECTRICAL INSTALLATION
TIE WRAP	7028864	830	2	479	10 48 809 7	ELECTRICAL INSTALLATION
TIGHT FIT SLEEVE	9077709	3	1	636	90 77 708	DEFLECTION PULLEY
TIGHT FIT SLEEVE	9178018	5	2	573	10 12 907 2	CRANKCASE PRE-ASS.
TIGHT FIT SLEEVE	9178018	14	2	664	10 12 032 2	FLYWHEEL HOUSING MOUNTI
TIGTENING STRAP 300 20	10425216	40	2	102	10 35 875 3	RADIATOR BOX INSTALLATIO
TIME RELAY	6001418	31	1	747	10 36 839 8	TRAVEL ALARM
TOOL BOX	7016002	10	1	551	10 08 428 5	TOOL EQUIPMENT
TOOL EQUIPMENT	10084285	10	1	550	10 49 815 2	TOOL EQUIPMENT
TOOL EQUIPMENT	10498152	9620	1	92	10 35 874 2	UPPERCARRIAGE
TOOL EQUIPMENT	10498152	9620	1	93	10 49 853 2	UPPERCARRIAGE
TOOTH	10451155	40	5	725	10 49 849 8	BACKHOE BUCKET HD 1950
TOOTH LOCK WASHER	7028855	170	1	477	10 48 809 7	ELECTRICAL INSTALLATION
TOOTH LOCK WASHER	7363744	160	2	418	10 05 303 6	PANELLING
TOOTH LOCK WASHER	7363744	160	2	433	10 49 857 1	PANELLING
TORSIONAL VIBRATION DAM	5610755	1	1	668	90 80 481	CLUTCH ASSEMBLY
TOUCH CONTACT TRANSMIT	6204371	3	1	300	10 08 576 7	SWITCH INSTALLATION S248
TOUCH CONTACT TRANSMIT	6204371	3	1	303	90 16 516	SWITCH INSTALLATION S218
TOUCH CONTACT TRANSMIT	6204371	3	1	735	99 89 179	SWITCH INSTALLATION
TRACK PAD NUT 1"-14UNS	7368691	4	200	48	10 30 012 2	CRAWLER CHAIN 600mm
TRACK PAD NUT 1"-14UNS	7368691	4	200	48	10 30 012 2	CRAWLER CHAIN 600mm
TRACK PAD SCREW	4900654	3	200	48	10 30 012 2	CRAWLER CHAIN 600mm
TRACK PAD SCREW	4900654	3	200	48	10 30 012 2	CRAWLER CHAIN 600mm
TRACK ROLLER	10221212	50	16	43	10 35 874 0	UNDERCARRIAGE CPL
TRANSPARENT CONTAINER	10016659	40	1	250	10 34 071 7	LUBRICATION PUMP
TRAVEL ALARM	10057651	5	1	7	.	
TRAVEL ALARM	10368398	10	1	746	10 05 765 1	TRAVEL ALARM
TRAVEL DRIVE	10074987	13	1	41	10 35 874 0	UNDERCARRIAGE CPL
TRAVEL DRIVE FAT 500P005	9443970	5	2	60	10 07 498 7	TRAVEL DRIVE
TRAVEL WHEEL	9275309	11	1	145	98 88 308	CONNECTING PLATE
TRAVEL WHEEL	9275309	11	1	192	98 89 161	CONNECTING PLATE
TROPICAL EXECUTION	10057656	3	1	7	.	
TUBE	10061167	15	1	354	10 35 875 1	HYDR.INSTALLATION FAN DR
TUBE	10061171	16	1	354	10 35 875 1	HYDR.INSTALLATION FAN DR
TUBE	10064709	56	1	397	10 35 874 4	CONTROL VALVE INSTALLAT
TUBE	10071345	20	1	200	10 35 873 9	COOLER INSTALLATION
TUBE	10074612	57	1	397	10 35 874 4	CONTROL VALVE INSTALLAT
TUBE	774373708	75	1m	255	90 64 786	CONNECTING ELEMENT
TUBE BEND	11002881	105	1	211	10 21 775 0	EQUALIZING RESERVOIR
TUBE BEND	9011050	18	1	115	10 35 873 3	AIR AND EXHAUST INSTALLAT
TUBING COIL	774383508	65	1m	255	90 64 786	CONNECTING ELEMENT
TUBING COIL	774383508	165	1m	256	90 64 786	CONNECTING ELEMENT
TUMBLER WHEEL D8K	9379235	2	2	60	10 07 498 7	TRAVEL DRIVE
TURCON GLYD RING	10333229	31	2	177	10 40 974 7	REGULATION
TURCON GLYD RING 16,5X26X	7381501	24	1	81	90 77 412	REPAIR KIT FMV 165
TURCON GLYD RING 16,5X26X	7381501	24	2	88	92 78 179	SEAL KIT
TURCON GLYD RING 190X16	7023699	4	1	762	95 89 256	PISTON 190MM
TURCON GLYD RING 190X16	7023699	4	1	763	99 07 680	PISTON 190 MM
TURCON GLYD RING 220X19	7002063	4	1	761	95 88 147	PISTON 220MM
TURCON-STEPSEAL K 125,0x	7017712	10	1	765	99 07 890	PISTON ROD BEARING 125/19
TURCON-STEPSEAL K 150,0x	7014466	10	1	764	96 31 985	PISTON ROD BEARING 150/22
TWIST HANDLE	7370096	42	1	291	10 82 277 5	ARM REST RIGHT
TWO-HOLE NUT	11005554	17	1	619	10 30 300 7	FUEL PREFILTER
TYPE PLATE LBR	10498223	4	1	557	10 35 876 6	SIGNS
TYPE PLATE LBR	10498223	4	1	561	10 49 863 6	SIGNS
TYPEPLATE LFR	10405887	2	1	557	10 35 876 6	SIGNS
TYPEPLATE LFR	10405887	2	1	561	10 49 863 6	SIGNS
U-BEAM	10058048	2	1	103	10 05 300 8	PUMPS BOX PARTS

Description	Item	Pos.	Quantity	Page	Assembly	Description
U-PLATE	10058506	6	1	100	10 35 875 3	RADIATOR BOX INSTALLATIO
U-WASHER	10022767	3	2	321	10 02 211 7	AIR CIRCULATION CASE
U-WASHER	10022767	5	2	326	10 02 277 7	CIRCULATING AIR GRID
UNDERCARRIAGE	10358387	2	1	41	10 35 874 0	UNDERCARRIAGE CPL
UNDERCARRIAGE CPL	10358740	200	1	9	10 35 874 1	BASIC MACHINE R964C HD LI
UNION NUT	10013550	151	1	256	90 64 786	CONNECTING ELEMENT
UNION NUT	10013550	151	10	258	10 01 461 1	AUXILIARY BOX
UNIT RECEIVER-DRYER	10292660	2	1	543	10 05 319 0	DRIER INSTALLATION
UNIVERSAL GREASE LIEBHER	10358949	10	1kg	17	90 70 366	GREASES
UNIVERSAL GREASE LIEBHER	10296816	1	1	33	10 35 894 9	UNIVERSAL GREASE LIEBHER
UNIVERSAL GREASE LIEBHE	10296813	10	1	33	10 35 894 9	UNIVERSAL GREASE LIEBHER
UNIVERSAL GREASE LIEBHER	10296810	180	1	33	10 35 894 9	UNIVERSAL GREASE LIEBHER
UNIVERSAL GREASE LIEBHE	10296815	2	1	33	10 35 894 9	UNIVERSAL GREASE LIEBHER
UNIVERSAL GREASE LIEBHE	10296812	25	1	33	10 35 894 9	UNIVERSAL GREASE LIEBHER
UNIVERSAL GREASE LIEBHE	10296811	50	1	33	10 35 894 9	UNIVERSAL GREASE LIEBHER
UPPERCARRIAGE	10358742	100	1	9	10 35 874 1	BASIC MACHINE R964C HD LI
UPPERCARRIAGE	10498532	100	1	9	10 35 874 1	BASIC MACHINE R964C HD LI
USIT RING	5209400	69	2	43	10 35 874 0	UNDERCARRIAGE CPL
V-RING	7381525	28	2	80	92 78 174	ADJUSTMENT
V-SEALING	7017682	12	2	56	10 00 963 0	ROTARY FEED THROUGH
V-SEALING	7017682	12	2	58	10 00 967 6	SEALINGSET ROTARY TRANS
VACUUM INDICATOR	5611326	60	2	117	10 35 873 3	AIR AND EXHAUST INSTALLAT
VALVE	10280279	5	2	340	10 05 314 4	OIL PILOT VALVE INSTALLATIO
VALVE	10280279	5	1	341	10 82 438 9	OIL PILOT VALVE INSTALLATIO
VALVE	5611648	350	1	71	56 16 688	WHEEL BRAKE VALVE
VALVE	7025110	24	1	323	11 00 359 4	HOUSING
VALVE BRIDGE	10119695	13	2	595	10 11 806 0	ROCKER ARMS DEVICE CPL.
VALVE BUSH	10020738	2	1	180	10 44 299 8	SHUTTLE VALVE
VALVE BUSH	10020738	2	1	774	10 02 073 5	SHUTTLE VALVE
VALVE BUSH	10333248	1	1	264	10 33 323 7	PRESSURE LIMITING VALVE
VALVE BUSH	10333256	2	1	157	10 33 324 2	SHUTDOWN VALVE
VALVE BUSH	7373241	4	1	180	10 44 299 8	SHUTTLE VALVE
VALVE BUSH	7373241	4	1	774	10 02 073 5	SHUTTLE VALVE
VALVE BUSH	7414522	50	2	71	56 16 688	WHEEL BRAKE VALVE
VALVE COLLET MK9	10101649	6	8	594	10 11 805 1	CYLINDER HEAD PRE-ASS. D9
VALVE CONE	7373437	3	1	180	10 44 299 8	SHUTTLE VALVE
VALVE CONE	7373437	3	1	774	10 02 073 5	SHUTTLE VALVE
VALVE COVER	9270599	11	1	79	92 70 598	NON-RETURN VALVE
VALVE GUIDE	10009606	14	3	252	10 48 927 7	DISTRIBUTION BLOCK SXE-2
VALVE HOUSING	10409752	1	1	176	10 34 668 4	CONTROL UNIT
VALVE M14X1,5	10011832	2	1	575	10 12 016 8	LOCKING PIECES
VALVE M14X1,5	10011832	2	1	576	10 11 874 8	PIPELINE INSTALLATION
VALVE PISTON	10115005	3	1	264	10 33 323 7	PRESSURE LIMITING VALVE
VALVE PISTON	10220817	2	1	163	10 33 327 3	COLD STAR VALVE
VALVE PISTON	7028148	3	1	262	10 29 792 9	PRESSURE LIMITING VALVE
VALVE PISTON	7624223	5	1	157	10 33 324 2	SHUTDOWN VALVE
VALVE SEAT	10120108	17	1	607	10 12 475 6	OIL MODULE LEFT
VALVE SEAT	10120109	14	1	607	10 12 475 6	OIL MODULE LEFT
VALVE SEAT	10220662	6	1	157	10 33 324 2	SHUTDOWN VALVE
VALVE SEAT	10220818	3	1	163	10 33 327 3	COLD STAR VALVE
VALVE SEAT	7026127	40	1	71	56 16 688	WHEEL BRAKE VALVE
VALVE SEAT	7029459	48	1	410	10 28 629 4	SHUTTLE VALVE BLOCK
VALVE SLEEVE	9269686	10	1	79	92 70 598	NON-RETURN VALVE
VALVE SPRING	10012210	7	4	594	10 11 805 1	CYLINDER HEAD PRE-ASS. D9
VALVE STEM GUIDE	9078510	2	4	600	10 11 805 2	CYLINDER HEAD D9508
VALVE STEM SEAL	10012247	4	4	594	10 11 805 1	CYLINDER HEAD PRE-ASS. D9
VALVE STEM SEAL	10012247	5	4	687	10 12 089 6	SEAL KIT ZYLINDER HEAD CPL
VALVE STEM SEAL RING	10120334	5	4	687	10 12 089 6	SEAL KIT ZYLINDER HEAD CPL
VALVE WV 10	9275505	1	1	237	98 84 008	SHAFT REPAIR KIT
VENT TUBE ASSEMBLY	10119306	381	1	569	10 12 595 9	DIESEL ENGINE D9508 A7 320k

Description	Item	Pos.	Quantity	Page	Assembly	Description
VENTILATION LINE	10120020	1	2	641	10 11 930 6	VENT TUBE ASSEMBLY
VENTILATION SCREW	7412942	1	1	619	10 30 300 7	FUEL PREFILTER
VENTILATION SCREW	9613451	1	1	766	96 13 452	VENTILATION SCREW G 1/4'X1
VENTILATION SCREW G 1/4'X1	9613452	28	1	755	94 02 020 2	HYDRAULIC CYLINDER
VENTILATION SCREW G 1/4'X1	9613452	28	2	757	99 06 383	HYDRAULIC CYLINDER
VENTILATION SCREW G 1/4'X1	9613452	28	2	758	99 06 576	HYDRAULIC CYLINDER
VENTILATION SCREW M6x8 8.	7361391	360	1	752	10 34 080 6	PIPE FRACTION SAFETY VALV
VENTILATION SCREW M6x8 8.	7361391	360	1	753	10 34 081 2	PIPE FRACTION SAFETY VALV
VENTILATION TUBE	10016664	43	1	250	10 34 071 7	LUBRICATION PUMP
VERBUS-RIPP SCREW	7366851	60	30	465	10 35 876 0	LOWER COVERING
VERBUS-RIPP SCREW	7366851	60	29	466	10 49 857 4	LOWER COVERING
VIBRATING SYSTEM	10289993	50	1	273	10 04 363 1	DRIVERS SEAT
VIBRATING SYSTEM	10289993	50	1	274	10 04 363 2	DRIVERS SEAT
VISCOSE DAMPER	9077223	5	1	588	90 77 286	DRIVING PARTS
VISIT COVER	7370894	2	1	295	56 18 923	CONTROL CONSOLE RIGHT
VOLTAGE TRANSFORMER	7026493	120	1	293	10 82 277 5	ARM REST RIGHT
VSL-SCREW	9889005	11	1	266	98 89 003	NON-RETURN VALVE RV
WARNING SIGN	9581113	52	1	559	10 35 876 6	SIGNS
WARNING SIGN	9581113	52	1	563	10 49 863 6	SIGNS
WASHER	10013965	460	2	484	70 28 778	ASSY. PARTS
WASHER	10058104	22	2	194	10 49 867 7	FAN INSTALLATION
WASHER	10297307	12	12	208	10 42 538 5	COMBINED OIL COOLER
WASHER	10298635	17	2	166	10 44 145 8	SWIVELLING ANGLE SENSOR
WASHER	10298680	9	2	176	10 34 668 4	CONTROL UNIT
WASHER	10498382	21	2	729	10 49 838 7	BEARING PILLOW BLOCK
WASHER	10498382	21	2	730	10 49 857 6	BEARING PILLOW BLOCK
WASHER	3001590	2	1	739	99 35 245	PIN
WASHER	7019801	150	2	472	10 04 678 8	DRIVER'S CAB DOOR
WASHER	7380974	10	1	189	98 85 932	KIT DISTANCE RINGS
WASHER	9051252	21	2	119	10 35 879 9	PUMPS INSTALLATION
WASHER	9073074	20	1	126	90 80 120	PUMP DISTRIBUTION GEAR
WASHER	9076638	20	4	649	10 13 273 9	ATL ATTACHMENT
WASHER	9076638	20	4	650	10 13 274 0	ATL ATTACHMENT
WASHER	9134374	3	3	620	90 78 260	HIGH PRESSURE PUMP W.FA
WASHER	9271441	21	2	126	90 80 120	PUMP DISTRIBUTION GEAR
WASHER	932719401	5	1	221	90 01 781 7	SLEWING DRIVE SAT 375/253
WASHER	9385349	27	3	110	10 49 845 5	MOTOR SUPPORT
WASHER	9561312	21	4	105	10 05 797 8	LOOCK BRACKET
WASHER	9929365	3	1	736	10 05 646 8	PIN
WASHER 10,5	4601173	72	4	117	10 35 873 3	AIR AND EXHAUST INSTALLAT
WASHER 10,5	4601173	103	4	207	10 35 873 9	COOLER INSTALLATION
WASHER 10,5	4601173	33	4	414	10 05 303 6	PANELLING
WASHER 10,5	4601173	52	2	414	10 05 303 6	PANELLING
WASHER 10,5	4601173	104	4	416	10 05 303 6	PANELLING
WASHER 10,5	4601173	153	3	418	10 05 303 6	PANELLING
WASHER 10,5	4601173	183	6	419	10 05 303 6	PANELLING
WASHER 10,5	4601173	188	10	419	10 05 303 6	PANELLING
WASHER 10,5	4601173	242	12	421	10 05 303 6	PANELLING
WASHER 10,5	4601173	33	4	429	10 49 857 1	PANELLING
WASHER 10,5	4601173	52	2	429	10 49 857 1	PANELLING
WASHER 10,5	4601173	104	4	431	10 49 857 1	PANELLING
WASHER 10,5	4601173	153	3	433	10 49 857 1	PANELLING
WASHER 10,5	4601173	183	6	434	10 49 857 1	PANELLING
WASHER 10,5	4601173	188	10	434	10 49 857 1	PANELLING
WASHER 10,5	4601173	242	12	436	10 49 857 1	PANELLING
WASHER 10,5	4601173	75	4	446	10 05 530 3	ENGINE BONNET
WASHER 10,5/18X3	9918225	57	6	203	10 35 873 9	COOLER INSTALLATION
WASHER 12,5/21X3,5	9918226	4	4	112	10 36 623 6	ENGINE FUEL SYSTEM
WASHER 12,5/21X3,5	9918226	54	6	117	10 35 873 3	AIR AND EXHAUST INSTALLAT
WASHER 12,5/21X3,5	9918226	23	8	200	10 35 873 9	COOLER INSTALLATION

Description	Item	Pos.	Quantity	Page	Assembly	Description
WASHER 12,5/21X3,5	9918226	32	2	201	10 35 873 9	COOLER INSTALLATION
WASHER 12,5/21X3,5	9918226	52	7	203	10 35 873 9	COOLER INSTALLATION
WASHER 12,5/21X3,5	9918226	183	4	715	10 35 872 1	STICK 2,60M
WASHER 12,5/21X3,5	9918226	46	4	795	10 49 815 5	CAB ELEVATION 1200MM
WASHER 12,5/21X3,5	9918226	5	6	799	10 49 815 3	CATWALK LEFT REAR
WASHER 13	4600687	13	4	210	10 06 461 3	COOLER SEALING
WASHER 13	4600687	26	4	447	10 05 535 4	COOLER COWL
WASHER 16,5/28X4	9918228	12	3	41	10 35 874 0	UNDERCARRIAGE CPL
WASHER 16,5/28X4	9918228	46	16	42	10 35 874 0	UNDERCARRIAGE CPL
WASHER 16,5/28X4	9918228	77	12	43	10 35 874 0	UNDERCARRIAGE CPL
WASHER 16,5/28X4	9918228	15	16	110	10 49 845 5	MOTOR SUPPORT
WASHER 16,5/28X4	9918228	12	5	114	10 35 873 3	AIR AND EXHAUST INSTALLAT
WASHER 16,5/28X4	9918228	30	4	194	10 49 867 7	FAN INSTALLATION
WASHER 16,5/28X4	9918228	30	4	196	10 49 873 2	FAN INSTALLATION
WASHER 16,5/28X4	9918228	11	4	331	98 79 063	BOTTOM PLATE MOUNTING
WASHER 16,5/28X4	9918228	82	2	416	10 05 303 6	PANELLING
WASHER 16,5/28X4	9918228	204	3	420	10 05 303 6	PANELLING
WASHER 16,5/28X4	9918228	82	2	431	10 49 857 1	PANELLING
WASHER 16,5/28X4	9918228	204	3	435	10 49 857 1	PANELLING
WASHER 16,5/28X4	9918228	19	12	729	10 49 838 7	BEARING PILLOW BLOCK
WASHER 16,5/28X4	9918228	19	12	730	10 49 857 6	BEARING PILLOW BLOCK
WASHER 16,5/28X4	9918228	64	8	780	10 35 813 5	PLAT FORM IF ELEVATION 120
WASHER 16,5/28X4	9918228	48	4	795	10 49 815 5	CAB ELEVATION 1200MM
WASHER 18,5/31X5	9586492	57	16	43	10 35 874 0	UNDERCARRIAGE CPL
WASHER 18,5/31X5	9586492	9	2	750	10 49 827 4	ATTACHMENTS MOUNTING PA
WASHER 20,5/34X5	9918229	64	8	43	10 35 874 0	UNDERCARRIAGE CPL
WASHER 20,5/34X5	9918229	3	5	100	10 35 875 3	RADIATOR BOX INSTALLATIO
WASHER 20,5/34X5	9918229	12	2	104	10 05 300 8	PUMPS BOX PARTS
WASHER 20,5/34X5	9918229	26	3	115	10 35 873 3	AIR AND EXHAUST INSTALLAT
WASHER 20,5/34X5	9918229	26	2	120	10 35 879 9	PUMPS INSTALLATION
WASHER 20,5/34X5	9918229	4	3	386	10 08 795 8	FIXING PARTS HYDRAULIC T
WASHER 20,5/34X5	9918229	254	1	437	10 49 857 1	PANELLING
WASHER 20,5/34X5	9918229	3	3	547	10 05 453 2	MOUNTING PARTS
WASHER 24,5/40X5	9918230	42	24	41	10 35 874 0	UNDERCARRIAGE CPL
WASHER 24,5/40X5	9918230	52	64	43	10 35 874 0	UNDERCARRIAGE CPL
WASHER 24,5/40X5	9918230	4	48	60	10 07 498 7	TRAVEL DRIVE
WASHER 24,5/40X5	9918230	7	48	60	10 07 498 7	TRAVEL DRIVE
WASHER 24,5/40X5	9918230	33	11	756	95 93 590	HYDRAULIC CYLINDER
WASHER 24,5/40X5	9918230	33	11	757	99 06 383	HYDRAULIC CYLINDER
WASHER 24,5/40X5	9918230	33	11	758	99 06 576	HYDRAULIC CYLINDER
WASHER 25	4600701	3	1	738	10 49 833 5	PIN
WASHER 27,5/45X6	9586495	11	60	241	10 35 877 2	SLEWING RING INSTALLATIO
WASHER 31/52X6	9918231	33	9	755	94 02 020 2	HYDRAULIC CYLINDER
WASHER 4	421802008	6	12	321	10 02 211 7	AIR CIRCULATION CASE
WASHER 4	421802008	33	4	323	11 00 359 4	HOUSING
WASHER 43/72X10	9602353	6	4	549	10 35 876 5	COUNTERWEIGHT INSTALLAT
WASHER 6X25	7381835	9	4	669	10 11 671 8	CONTROL BOX ANNEXE
WASHER 8	4901768	93	3	703	10 35 872 5	GOOSENECK BOOM 7,00M
WASHER 8,4X23X4	242005302	30	24	209	10 42 538 5	COMBINED OIL COOLER
WASHER A 24	10019101	12	4	60	10 07 498 7	TRAVEL DRIVE
WASHER A 24	10019101	5	2	220	10 05 311 7	SLEWING GEAR
WASHER S= 0,20	7380975	20	1	189	98 85 932	KIT DISTANCE RINGS
WASHER S= 0,30	7380976	30	1	189	98 85 932	KIT DISTANCE RINGS
WASHER S= 0,50	7380212	31	1	78	92 67 554	PRESSURE LIMITING VALVE
WASHER S= 0,50	7380232	23	5	72	92 67 037	PRESSURE LIMITING VALVE
WASHER S=4	4000505	31	2	102	10 35 875 3	RADIATOR BOX INSTALLATIO
WASHER S=4	4000505	36	20	209	10 42 538 5	COMBINED OIL COOLER
WASHER S=4	4000505	28	10	453	10 05 543 3	SIDE DOOR BACK RIGHT
WASHER S=4	4000505	25	8	456	10 05 541 0	SIDE DOOR FRONT RIGHT
WASHER SET	9885919	39	1	231	92 71 427	REPAIR KIT DRIVING MECHAN

Description	Item	Pos.	Quantity	Page	Assembly	Description
WASHER SET	9885920	39	1	83	98 88 123	REPAIR KIT DRIVING MECHAN
WASHER SET	9885920	39	1	142	98 86 680	REPAIR KIT DRIVING MECHAN
WASHER SET	9885920	39	1	172	98 88 321	REPAIR KIT DRIVING MECHAN
WATER BASIN	10009208	440	1	478	10 48 809 7	ELECTRICAL INSTALLATION
WATER COCK	7001072	13	1	638	10 11 763 3	CONNECTION F.WATER PIPE
WATER COCK	7001072	8	1	642	10 11 978 1	COOLANT PIPE BEND ADD-ON
WATER HOSE	10054420	35	1	201	10 35 873 9	COOLER INSTALLATION
WATER HOSE	10054421	36	1	201	10 35 873 9	COOLER INSTALLATION
WATER HOSE	10054422	37	1	201	10 35 873 9	COOLER INSTALLATION
WATER HOSE	10065182	90	1	206	10 35 873 9	COOLER INSTALLATION
WATER HOSE	7381649	14	0.11m	641	10 11 930 6	VENT TUBE ASSEMBLY
WATER HOSE	9008530	30	2	316	10 40 689 8	AIR CONDITIONING UNIT
WATER HOSE	9361947	71	1	205	10 35 873 9	COOLER INSTALLATION
WATER HOSE	9384967	72	1	205	10 35 873 9	COOLER INSTALLATION
WATER HOSE	9697359	85	1	271	10 05 311 8	DRIVER STAND BASE SECTIO
WATER HOSE	9808622	73	1	205	10 35 873 9	COOLER INSTALLATION
WATER HOSE	9898321	74	1	205	10 35 873 9	COOLER INSTALLATION
WATER HOSE	9935645	70	1	205	10 35 873 9	COOLER INSTALLATION
WATER PIPE	10054423	30	1	201	10 35 873 9	COOLER INSTALLATION
WATER PUMP, PRE-ASSEMB	10120034	1	1	637	90 79 863	AT-WATER PUMP WITH FAST
WATER SOUND	10331335	13	1	619	10 30 300 7	FUEL PREFILTER
WATER VALVE	10292661	40	1	316	10 40 689 8	AIR CONDITIONING UNIT
WEARING CAP	10451152	41	5	725	10 49 849 8	BACKHOE BUCKET HD 1950
WEARING PARTS SET	10498501	11	1	726	10 49 849 9	BACKHOE BUCKET HD 1950
WEARING PLATE	10333262	2	1	154	10 33 322 7	GEAR PUMP
WEARING PLATE	10333267	1	1	159	10 33 326 2	WEARING PLATE
WEARING PLATE	10498509	5	1	728	10 49 850 1	WEARING PARTS SET
WEARING PLATE	10498510	7	4	728	10 49 850 1	WEARING PARTS SET
WEARING PLATE	10498511	8	3	728	10 49 850 1	WEARING PARTS SET
WEARING PLATE	10498578	6	12	728	10 49 850 1	WEARING PARTS SET
WEARING PLATE LEFT	10498508	4	1	728	10 49 850 1	WEARING PARTS SET
WEARING PLATE RIGHT	10498507	3	1	728	10 49 850 1	WEARING PARTS SET
WEDGE DRIVE OUT	3001286	160	1	552	10 08 428 5	TOOL EQUIPMENT
WEDGE DRIVE OUT	3001289	165	1	552	10 08 428 5	TOOL EQUIPMENT
WHEEL BRAKE VALVE	5616688	15	2	60	10 07 498 7	TRAVEL DRIVE
WHEEL SET	10220693	7	1	158	10 33 325 9	GEAR PUMP
WINDOW	10014683	4	1	249	10 34 071 7	LUBRICATION PUMP
WINDOW	7029415	550	1	476	70 28 844	SLIDING WINDOW
WINDOW	7029416	560	1	476	70 28 844	SLIDING WINDOW
WINDOW FRAME	10014687	2	1	249	10 34 071 7	LUBRICATION PUMP
WINDOW GLASS	10009056	480	1	473	10 04 678 8	DRIVER'S CAB DOOR
WINDOW GLASS	10009223	160	1	469	70 28 774	GLASS PANES
WINDOW GLASS	10009225	400	1	473	10 04 678 8	DRIVER'S CAB DOOR
WINDOW GLASS	7028793	110	1	469	70 28 774	GLASS PANES
WINDOW GLASS	7030315	120	1	469	70 28 774	GLASS PANES
WINDSHIELD WIPER	7029426	410	1	478	10 48 809 7	ELECTRICAL INSTALLATION
WINDSHIELD WIPER MOTOR	7019184	910	1	479	10 48 809 7	ELECTRICAL INSTALLATION
WING NUT	7403149	8	4	118	10 35 873 4	AIR FILTER INSTALLATION
WIPER ARM	10291144	670	1	482	10 29 114 6	WIPER ARM
WIPER ARM	10291146	950	1	479	10 48 809 7	ELECTRICAL INSTALLATION
WIPER ARM	7028866	610	1	481	70 29 426	WINDSHIELD WIPER
WIPER ARM	7029427	620	1	483	70 28 866	WIPER ARM
WIPER BLADE	7019186	960	1	479	10 48 809 7	ELECTRICAL INSTALLATION
WIPER BLADE 800	7028869	600	1	481	70 29 426	WINDSHIELD WIPER
WIPER MOTOR	7028879	530	1	480	70 28 884	WIPER MOTOR
WIPER MOTOR	7028884	420	1	478	10 48 809 7	ELECTRICAL INSTALLATION
WIR.HARNESS UNDER CONT	10401819	140	1	272	10 05 311 8	DRIVER STAND BASE SECTIO
WIRE	514586508	17	1	133	10 44 145 6	DRIVING GEAR
WIRE	7028089	17	2	149	10 33 307 0	DRIVING GEAR
WIRE HARNESS	10009043	800	1	479	10 48 809 7	ELECTRICAL INSTALLATION

Description	Item	Pos.	Quantity	Page	Assembly	Description
WIRE HARNESS	10009058	980	1	479	10 48 809 7	ELECTRICAL INSTALLATION
WIRE HARNESS	9954432	940	1	792	95 99 236	ELECTRIC INSTALLATION
WIRE HARNESS - CABIN	10488707	150	1	477	10 48 809 7	ELECTRICAL INSTALLATION
WIRE HARNESS ADDITIONAL	10017344	110	2	776	10 02 138 7	ADDIT.HEAD LIGHTS ON CAB
WIRE HARNESS HANDLE	9968591	80	1	289	99 68 625	LH-JOYSTICK LEFT
WIRE HARNESS HANDLE	9968591	80	1	304	99 68 611	LH-JOYSTICK RIGHT
WIRE ROPE	10326658	175	1	418	10 05 303 6	PANELLING
WIRE ROPE	10326658	175	1	433	10 49 857 1	PANELLING
WIRING HARN.BATTERY SHU	10076111	40	1	508	10 35 875 8	BATTERY INSTALLATION
WIRING HARN.BATTERY-STAR	10066009	41	1	508	10 35 875 8	BATTERY INSTALLATION
WIRING HARNESS CAB S54-S5	10366624	21	1	749	10 39 372 0	ELECTRICAL SYSTEM
WIRING HARNESS CAB-MOTO	10080583	20	1	793	10 82 390 4	ELECTR.SYSTEM ELEVATION
WIRING HARNESS CONTROL	10062229	10	1	515	10 06 222 8	ELECTR.SYSTEM CONTROL V
WIRING HARNESS DYNAMO G	10066006	14	1	212	10 49 800 0	MOTOR-ELEKTRIK
WIRING HARNESS ELECTRIC	10095054	51	1	504	10 09 499 2	ELECTRIC MATERIAL LIST
WIRING HARNESS ENGINE X1	10096412	21	1	793	10 82 390 4	ELECTR.SYSTEM ELEVATION
WIRING HARNESS FUEL TANK	10094995	40	1	525	10 35 876 3	ELECTR.SYSTEM FUEL TANK
WIRING HARNESS FUEL TANK	10402127	40	1	532	10 49 837 7	ELECTR.SYSTEM FUEL TANK
WIRING HARNESS ON GOOS	10062223	10	1	511	10 06 221 6	ELECTR.INST.BOOM
WIRING HARNESS ON GOOS	10062223	10	1	512	10 35 876 2	ELECTR.INST.BOOM
WIRING HARNESS ON GOOS	10402126	10	1	513	10 49 837 6	ELECTR.INST.BOOM
WIRING HARNESS PUMP	10364488	11	1	212	10 49 800 0	MOTOR-ELEKTRIK
WIRING HARNESS ROTAT.DEC	10823905	10	1	793	10 82 390 4	ELECTR.SYSTEM ELEVATION
WIRING HARNESS ROTATING	10094996	22	1	494	10 35 875 7	ELECTR.SYST.UPPERCARRI
WIRING HARNESS ROTATING	10823906	11	1	793	10 82 390 4	ELECTR.SYSTEM ELEVATION
WIRING HARNESS SHUT-OFF	10066010	42	1	508	10 35 875 8	BATTERY INSTALLATION
WIRING HARNESS STARTER D	10066004	16	1	212	10 49 800 0	MOTOR-ELEKTRIK
WIRING HARNESS STARTER M	10066005	13	1	212	10 49 800 0	MOTOR-ELEKTRIK
WORK LIGHT	10007848	2	1	499	99 41 040	FLOODLIGHT INSTALLATION
WORK LIGHT	10045530	20	2	511	10 06 221 6	ELECTR.INST.BOOM
WORK LIGHT	10045530	20	2	512	10 35 876 2	ELECTR.INST.BOOM
WORK LIGHT	10045530	20	2	513	10 49 837 6	ELECTR.INST.BOOM
YOKE	9888315	10	1	182	90 79 347	REPAIR SET SWIVEL YOKE LP
YOKE G 8X16	4000746	10	2	463	10 03 720 9	GAS SPRING

Descripción	Artículo	Pos.	Cantid	Página	Grupo	Descripción
	10022775	2	2	319	10 02 206 9	CAJA DE EVAPORADOR
	10115701	4	1	631	10 11 570 0	ANEJO DE LINEA DE CONEXIÓ
	10115702	3	1	631	10 11 570 0	ANEJO DE LINEA DE CONEXIÓ
	10289973	41	1	273	10 04 363 1	ASIENTO CONDUCTOR
	10289973	41	1	274	10 04 363 2	ASIENTO CONDUCTOR
	10469917	10	1	289	99 68 625	MANILLA DEL SENSOR LH IZ
	10469918	10	1	304	99 68 611	MANILLA DEL SENSOR LH DC
	10469932	50	1	304	99 68 611	MANILLA DEL SENSOR LH DC
	10469933	50	1	289	99 68 625	MANILLA DEL SENSOR LH IZ
	10470128	250	1	488	10 48 809 9	REVESTIMIENTO INTERIOR
	10498640	14	1	7	.	
	620321216	17	1	7	.	
	726450116	18	1	7	.	
	9080211	3	1	126	90 80 120	ENGRANAJE DISTRIBUCION
	9272221	2	1	168	90 79 811	JR PISTÓN AJUSTE
	9278623	90	1	143	98 88 041	MOTOR HIDR. INCORP. FIX FM
	9885932	22	2	182	90 79 347	JR YUGO BASC. LPV 165
4	7009867	10	6	450	10 06 360 5	TAPA
4	7009867	35	6	457	10 05 541 0	PUERTA LATERAL ANT.DCHA.
4	7009867	28	6	460	10 06 375 5	CAJA COMPL.
4	7009867	6	6	462	10 06 355 3	TAPA
4	7009867	25	6	802	10 05 539 2	PUERTA LATERAL IZDA.
ABRAZADERA	10037724	4	12	711	10 38 862 4	ENGRASE CENTRALIZADO
ABRAZADERA	10037724	24	4	720	10 35 872 0	ENGRASE CENTRALIZADO
ABRAZADERA	10037726	16	4	711	10 38 862 4	ENGRASE CENTRALIZADO
ABRAZADERA	10037726	9	14	719	10 35 872 0	ENGRASE CENTRALIZADO
ABRAZADERA	10037727	25	2	711	10 38 862 4	ENGRASE CENTRALIZADO
ABRAZADERA	10037727	12	5	719	10 35 872 0	ENGRASE CENTRALIZADO
ABRAZADERA	10037728	58	3	247	10 07 675 7	LUBR.CENTR.CARRO SUPER
ABRAZADERA	10037728	7	19	711	10 38 862 4	ENGRASE CENTRALIZADO
ABRAZADERA	10037728	15	2	719	10 35 872 0	ENGRASE CENTRALIZADO
ABRAZADERA	10070615	60	2	771	10 35 873 1	CILINDRO ELEVADOR DIA.190
ABRAZADERA DE APRIETE 74-	10027937	10	2	631	10 11 570 0	ANEJO DE LINEA DE CONEXIÓ
ABRAZADERA MANGUERA	10031940	38	6	201	10 35 873 9	MONTAJE DE RADIADOR
ABRAZADERA MANGUERA	774252314	41	8	202	10 35 873 9	MONTAJE DE RADIADOR
ABRAZADERA MANGUERA	9368905	29	3	352	10 05 312 9	REFRIG.ACEITE TRANS.E HI
ABRAZADERA MANGUERA	9385073	66	1	358	10 35 875 1	INST.HIDR.ACC. VENTILADOR
ABRAZADERA MANGUERA	9385073	15	8	362	10 35 875 4	INST.HIDR.CONDUCTOS MAND
ABRAZADERA MANGUERA	9385073	15	5	369	10 82 438 0	INST.HIDR.CONDUCTOS MAND
ABRAZADERA MANGUERA	9388597	20	1	112	10 36 623 6	INST.COMBUSTIBLE MOTOR
ABRAZADERA TUBO	10064900	106	6	704	10 35 872 5	PLUMA MONOBLOC 7,00M
ABRAZADERA TUBO	10222743	5	2	625	10 11 941 3	MONTAJE TUBERÍA DE IMPU
ABRAZADERA TUBO	7381175	14	1	621	90 78 554	MONTAJE TUBERÍA A.FUGA
ABRAZADERA TUBO	7382215	4	1	641	10 11 930 6	MONT.TUBERÍA DE PURGA
ABRAZADERA TUBO	7382216	28	2	623	10 12 720 8	TUBERIAS DE COMBUSTIBLE
ABRAZADERA TUBO	9363937	35	2	356	10 35 875 1	INST.HIDR.ACC. VENTILADOR
ABRAZADERA TUBO	9577441	16	2	362	10 35 875 4	INST.HIDR.CONDUCTOS MAND
ABRAZADERA TUBO	9577441	16	2	369	10 82 438 0	INST.HIDR.CONDUCTOS MAND
ABRAZADERA TUBO HSRS 42	10287499	44	4	344	10 35 875 5	EJEC.GIRADA HIDR.+MEC.GIR
ACC. EMERGENCIA COMPL.	9013811	104	1	292	10 82 277 5	REPOSABRAZOS DERECHA
ACC. P. BOMBA ALTA PRESIÓ	10118025	180	1	567	10 12 595 9	MOTOR DIESEL D9508 A7 320k
ACC.P.SENSOR EL. DCHA.	9266412	1	1	539	10 03 864 4	INTERUPTOR DE PEDAL
ACCESORIOS	9066466	100	1	10	90 66 460	LUBRICANTES
ACCIONADOR	6204367	5	1	290	10 08 046 6	MONTAJE INTERR. S42
ACCIONADOR	6204367	2	1	300	10 08 576 7	MONTAJE INTERR. S248
ACCIONADOR	6204367	5	1	777	99 89 645	MONTAJE INTERR.
ACCIONADOR	6204367	5	1	778	99 89 646	MONTAJE INTERR. S84-2
ACCIONADOR	6204367	920	1	792	95 99 236	INSTALACION ELECTRICA
ACCIONAMIENTO DE TRASL	10074987	13	1	41	10 35 874 0	ESTRUC.INF.COMPL.
ACCIONAMIENTO DE TRASL	9443970	5	2	60	10 07 498 7	ACCIONAMIENTO DE TRASL

Descripción	Artículo	Pos.	Cantid	Página	Grupo	Descripción
ACCIONAMIENTO GIRATORIO	90017817	2	1	220	10 05 311 7	MEC. GIRO
ACEITE DE EJE LIEBHERR/2	10356831	20	1	15	90 70 364	ACEITE P.EJE Y TRANS.
ACEITE DE EJE LIEBHERR/2	10330294	20	1	29	10 35 683 1	ACEITE DE EJE LIEBHERR/2
ACEITE DE EJE LIEBHERR/20	10285640	5	1	29	10 35 683 1	ACEITE DE EJE LIEBHERR/2
ACEITE DE MOTOR	9070361	10	1	10	90 66 460	LUBRICANTES
ACEITE DE MOTOR LIEBHERR	10356797	30	1	12	90 70 361	ACEITE DE MOTOR
ACEITE DE MOTOR LIEBHERR	10326110	1000	1	22	10 35 679 7	ACEITE DE MOTOR LIEBHERR
ACEITE DE MOTOR LIEBHERR	10326112	20	1	22	10 35 679 7	ACEITE DE MOTOR LIEBHERR
ACEITE DE MOTOR LIEBHERR	10326111	210	1	22	10 35 679 7	ACEITE DE MOTOR LIEBHERR
ACEITE DE MOTOR LIEBHERR	10326113	5	1	22	10 35 679 7	ACEITE DE MOTOR LIEBHERR
ACEITE DE MOTOR LIEBHERR	10356793	20	1	12	90 70 361	ACEITE DE MOTOR
ACEITE DE MOTOR LIEBHERR	10286279	1000	1	21	10 35 679 3	ACEITE DE MOTOR LIEBHERR
ACEITE DE MOTOR LIEBHERR	10330239	20	1	21	10 35 679 3	ACEITE DE MOTOR LIEBHERR
ACEITE DE MOTOR LIEBHERR/	10330246	210	1	21	10 35 679 3	ACEITE DE MOTOR LIEBHERR
ACEITE DE MOTOR LIEBHERR/	10290506	5	1	21	10 35 679 3	ACEITE DE MOTOR LIEBHERR
ACEITE DE MOTOR LIEBHERR/	10425711	10	1	12	90 70 361	ACEITE DE MOTOR
ACEITE DE MOTOR LIEBHERR/	10425719	1000	1	37	10 42 571 1	ACEITE DE MOTOR LIEBHERR/
ACEITE DE MOTOR LIEBHERR/	10425713	20	1	37	10 42 571 1	ACEITE DE MOTOR LIEBHERR/
ACEITE DE MOTOR LIEBHERR	10425715	210	1	37	10 42 571 1	ACEITE DE MOTOR LIEBHERR/
ACEITE DE MOTOR LIEBHERR	10425712	5	1	37	10 42 571 1	ACEITE DE MOTOR LIEBHERR/
ACEITE HIDRAULICO	9070362	20	1	10	90 66 460	LUBRICANTES
ACEITE HIDRAULICO ECOLOG	9070363	30	1	10	90 66 460	LUBRICANTES
ACEITE HIDRAULICO LIEBHE	10356825	20	1	14	90 70 363	ACEITE HIDRAULICO ECOLOG
ACEITE HIDRAULICO LIEBHE	10296478	1000	1	24	10 35 682 5	ACEITE HIDRAULICO LIEBHE
ACEITE HIDRAULICO LIEBHE	10330277	20	1	24	10 35 682 5	ACEITE HIDRAULICO LIEBHE
ACEITE HIDRAULICO LIEBHER	10330278	210	1	24	10 35 682 5	ACEITE HIDRAULICO LIEBHE
ACEITE HIDRAULICO LIEBHER	10296479	5	1	24	10 35 682 5	ACEITE HIDRAULICO LIEBHE
ACEITE HIDRAULICO LIEBHER	10356791	30	1	13	90 70 362	ACEITE HIDRAULICO
ACEITE HIDRAULICO LIEBHER	10330271	1000	1	20	10 35 679 1	ACEITE HIDRAULICO LIEBHER
ACEITE HIDRAULICO LIEBHER	10330268	20	1	20	10 35 679 1	ACEITE HIDRAULICO LIEBHER
ACEITE HIDRAULICO LIEBHE	10330270	210	1	20	10 35 679 1	ACEITE HIDRAULICO LIEBHER
ACEITE HIDRAULICO LIEBHE	10330266	5	1	20	10 35 679 1	ACEITE HIDRAULICO LIEBHER
ACEITE HIDRAULICO LIEBHER	10356800	10	1	13	90 70 362	ACEITE HIDRAULICO
ACEITE HIDRAULICO LIEBHER	10330260	1000	1	23	10 35 680 0	ACEITE HIDRAULICO LIEBHER
ACEITE HIDRAULICO LIEBHER	10330258	20	1	23	10 35 680 0	ACEITE HIDRAULICO LIEBHER
ACEITE HIDRAULICO LIEBHE	10330259	210	1	23	10 35 680 0	ACEITE HIDRAULICO LIEBHER
ACEITE HIDRAULICO LIEBHE	10330255	5	1	23	10 35 680 0	ACEITE HIDRAULICO LIEBHER
ACEITE HIDRAULICO LIEBHE	10356789	20	1	13	90 70 362	ACEITE HIDRAULICO
ACEITE HIDRAULICO LIEBHE	10344027	1000	1	19	10 35 678 9	ACEITE HIDRAULICO LIEBHE
ACEITE HIDRAULICO LIEBHE	10344025	20	1	19	10 35 678 9	ACEITE HIDRAULICO LIEBHE
ACEITE HIDRAULICO LIEBHER	10344026	210	1	19	10 35 678 9	ACEITE HIDRAULICO LIEBHE
ACEITE HIDRAULICO LIEBHER	10344024	5	1	19	10 35 678 9	ACEITE HIDRAULICO LIEBHE
ACEITE HIDRAULICO LIEBHER	10356303	10	1	14	90 70 363	ACEITE HIDRAULICO ECOLOG
ACEITE HIDRAULICO LIEBHER	10296481	1000	1	18	10 35 630 3	ACEITE HIDRAULICO LIEBHER
ACEITE HIDRAULICO LIEBHER	10330272	20	1	18	10 35 630 3	ACEITE HIDRAULICO LIEBHER
ACEITE HIDRAULICO LIEBHE	10330276	210	1	18	10 35 630 3	ACEITE HIDRAULICO LIEBHER
ACEITE HIDRAULICO LIEBHE	10296480	5	1	18	10 35 630 3	ACEITE HIDRAULICO LIEBHER
ACEITE P.EJE Y TRANS.	9070364	40	1	10	90 66 460	LUBRICANTES
ACEITE P.EJE Y TRANS. LIEB	10356829	10	1	15	90 70 364	ACEITE P.EJE Y TRANS.
ACEITE P.EJE Y TRANS. LIEB	10286280	1000	1	28	10 35 682 9	ACEITE P.EJE Y TRANS. LIEB
ACEITE P.EJE Y TRANS. LIEB	10330296	20	1	28	10 35 682 9	ACEITE P.EJE Y TRANS. LIEB
ACEITE P.EJE Y TRANS. LIEBH	10285702	210	1	28	10 35 682 9	ACEITE P.EJE Y TRANS. LIEB
ACEITE P.EJE Y TRANS. LIEBH	10330295	5	1	28	10 35 682 9	ACEITE P.EJE Y TRANS. LIEB
ACEITE P.SIST.HIDR.+ENGRA	10356828	30	1	16	90 70 365	ACEITE PARA ENGRANAJES
ACEITE P.SIST.HIDR.+ENGRA	10296482	1000	1	27	10 35 682 8	ACEITE P.SIST.HIDR.+ENGRA
ACEITE P.SIST.HIDR.+ENGRA	10330282	20	1	27	10 35 682 8	ACEITE P.SIST.HIDR.+ENGRA
ACEITE P.SIST.HIDR.+ENGRAN	10330283	210	1	27	10 35 682 8	ACEITE P.SIST.HIDR.+ENGRA
ACEITE P.SIST.HIDR.+ENGRAN	10330280	5	1	27	10 35 682 8	ACEITE P.SIST.HIDR.+ENGRA
ACEITE PARA ENGRANAJES	9070365	50	1	10	90 66 460	LUBRICANTES
ACEITE PARA ENGRANAJES LI	10356826	10	1	16	90 70 365	ACEITE PARA ENGRANAJES

Descripción	Artículo	Pos.	Cantid	Página	Grupo	Descripción
ACEITE PARA ENGRANAJES LI	10296477	1000	1	25	10 35 682 6	ACEITE PARA ENGRANAJES LI
ACEITE PARA ENGRANAJES LI	10330287	20	1	25	10 35 682 6	ACEITE PARA ENGRANAJES LI
ACEITE PARA ENGRANAJES L	10330288	210	1	25	10 35 682 6	ACEITE PARA ENGRANAJES LI
ACEITE PARA ENGRANAJES L	10330285	5	1	25	10 35 682 6	ACEITE PARA ENGRANAJES LI
ACEITE PARA ENGRANAJES L	10356827	20	1	16	90 70 365	ACEITE PARA ENGRANAJES
ACEITE PARA ENGRANAJES L	10330292	1000	1	26	10 35 682 7	ACEITE PARA ENGRANAJES L
ACEITE PARA ENGRANAJES L	10330291	20	1	26	10 35 682 7	ACEITE PARA ENGRANAJES L
ACEITE PARA ENGRANAJES LI	10301680	210	1	26	10 35 682 7	ACEITE PARA ENGRANAJES L
ACEITE PARA ENGRANAJES LI	10285639	5	1	26	10 35 682 7	ACEITE PARA ENGRANAJES L
ACOP.RAP.WIGGINS P.COMB	10498313	6	1	7	.	
ACOP.RAP.WIGGINS P.COMB	10498313	21	1	545	10 35 868 3	INSTALACION CARBURANTE
ACOP.RAP.WIGGINS P.COMB	10498313	50	1	546	10 35 868 3	INSTALACION CARBURANTE
ACOP.RAP.WIGGINS P.COMB	10498313	40	1	548	10 35 821 5	DEPOSITO COMBUSTIBLE
ACOP.RAP.WIGGINS P.COMB	10498314	10	1	787	10 49 831 3	ACOP.RAP.WIGGINS P.COMB
ACOPLAMIENTO ROSCADO G	7409720	44	2	335	10 38 698 2	INST.HIDR.BOMBAS A CORR.D
ACOPLAMIENTO ROSCADO G	7409720	44	2	338	10 49 804 4	INST.HIDR.BOMBAS A CORR.D
ACOPLAMIENTO ROSCADO G	7409720	27	2	340	10 05 314 4	MONTAJE UNIDAD ACEITE MA
ACOPLAMIENTO ROSCADO G	7409720	27	2	341	10 82 438 9	MONTAJE UNIDAD ACEITE MA
ACOPLAMIENTO ROSCADO G	7409720	6	2	343	10 35 875 5	EJEC.GIRADA HIDR.+MEC.GIR
ACOPLAMIENTO ROSCADO G	7409720	34	1	356	10 35 875 1	INST.HIDR.ACC. VENTILADOR
ACOPLAMIENTO ROSCADO G	7409720	45	2	396	10 35 874 4	MONTAJE CORREDERA DISTR
ACOPLAMIENTO ROSCADO M1	7407071	23	1	119	10 35 879 9	MONTAJE BOMBAS
ACOPLAMIENTO ROSCADO M1	7407071	28	1	120	10 35 879 9	MONTAJE BOMBAS
ACUMULADOR DE MEMBRAN	5617780	3	1	340	10 05 314 4	MONTAJE UNIDAD ACEITE MA
ADAPTADOR	10451151	3	5	727	10 49 850 0	BOCA DE CUCHARA
ADHESIVO	10016660	40	1	250	10 34 071 7	ENGRASADORA
ADHESIVO	10071618	10	1	557	10 35 876 6	LETREROS
ADHESIVO	10071618	10	1	561	10 49 863 6	LETREROS
ADHESIVO	10071620	11	1	557	10 35 876 6	LETREROS
ADHESIVO	10071620	11	1	561	10 49 863 6	LETREROS
ADHESIVO	10071665	12	1	557	10 35 876 6	LETREROS
ADHESIVO	10071665	12	1	561	10 49 863 6	LETREROS
ADHESIVO	10071668	13	1	557	10 35 876 6	LETREROS
ADHESIVO	10071668	13	1	561	10 49 863 6	LETREROS
ADHESIVO	10071669	15	1	557	10 35 876 6	LETREROS
ADHESIVO	10071669	15	1	561	10 49 863 6	LETREROS
ADHESIVO	10071670	16	1	557	10 35 876 6	LETREROS
ADHESIVO	10071670	16	1	561	10 49 863 6	LETREROS
ADHESIVO	10096203	18	1	557	10 35 876 6	LETREROS
ADHESIVO	10096203	18	1	561	10 49 863 6	LETREROS
ADHESIVO	10096204	19	1	557	10 35 876 6	LETREROS
ADHESIVO	10096204	19	1	561	10 49 863 6	LETREROS
ADHESIVO	9350400	9	2	557	10 35 876 6	LETREROS
ADHESIVO	9350400	9	2	561	10 49 863 6	LETREROS
ADHESIVO	9378603	51	1	702	10 35 872 5	PLUMA MONOBLOC 7,00M
ADHESIVO	9874049	128	2	705	10 35 872 5	PLUMA MONOBLOC 7,00M
ADHESIVO 132X115	10340222	30	1	558	10 35 876 6	LETREROS
ADHESIVO 132mmX115mm	11060174	30	1	562	10 49 863 6	LETREROS
ADHESIVO 1853mmX250mm	9613673	71	1	560	10 35 876 6	LETREROS
ADHESIVO 1853mmX250mm	9613673	71	1	564	10 49 863 6	LETREROS
ADHESIVO NIVEL INTENS.AC	9874356	51	1	559	10 35 876 6	LETREROS
ADHESIVO NIVEL INTENS.AC	9874356	51	1	563	10 49 863 6	LETREROS
ADHESIVO SPRAY	8716533	6	1	319	10 02 206 9	CAJA DE EVAPORADOR
AGENTE OBTURADOR	8627609	123	1	141	98 86 679	JR ÁRBOL
AGENTE OBTURADOR	8627609	7	1	612	10 11 615 0	CÁRTER/CARCASA PREM.
AGENTE REFRIGERANTE	9066465	70	1	10	90 66 460	LUBRICANTES
AIRE ACONDICIONADO	10406898	80	1	271	10 05 311 8	BASE PUESTO CONDUCTOR
AIRE Y SISTEMA ESCAPE	10358733	530	1	108	10 35 873 5	MOTOR MONTAJE
AIREADOR	10217803	15	2	194	10 49 867 7	MONTAJE VENTILADOR
AIREADOR	10217803	15	2	196	10 49 873 2	MONTAJE VENTILADOR

Descripción	Artículo	Pos.	Cantid	Página	Grupo	Descripción
AIREADOR	5005641	3	1	653	10 11 602 6	GENERADOR PREMONT. 28V
AISLAMIENTO ACUSTICO	10373187	35	1	795	10 49 815 5	ELEVACIÓN CABINA CONDU
ALARMA BACK UP	10288438	20	1	747	10 36 839 8	DISP.ALARMA MARCHA
ALICATE UNIVERSAL	10451540	120	1	552	10 08 428 5	HERRAMIENTAS DE EQUIPAM
ALOJAMIENTO DE BIELA 125/	9907890	13	1	756	95 93 590	CILINDRO HIDRAULICO
ALOJAMIENTO DE BIELA 125/	9907890	13	1	757	99 06 383	CILINDRO HIDRAULICO
ALOJAMIENTO DE BIELA 125/	9907890	13	1	758	99 06 576	CILINDRO HIDRAULICO
ALOJAMIENTO DE BIELA 150/	9631985	13	1	755	94 02 020 2	CILINDRO HIDRAULICO
ALOJAMIENTO DE MOTOR	10498455	510	1	108	10 35 873 5	MOTOR MONTAJE
AMORTIGUADOR	10289994	55	1	275	10 28 999 3	SISTEMA OSCIL.
AMORTIGUADOR DE TOPE	10492230	44	3	444	10 05 530 3	CAPOT DEL MOTOR
AMORTIGUADOR DE TOPE	7363930	43	2	444	10 05 530 3	CAPOT DEL MOTOR
AMORTIGUADOR DE TORSIO	5610755	1	1	668	90 80 481	MONTAJE DE EMBRAGUE
AMORTIGUADOR GMT	5004748	33	2	102	10 35 875 3	MONTAJE CAJA RADIADOR
AMORTIGUADOR GMT	5004748	37	2	414	10 05 303 6	REVESTIMIENTO
AMORTIGUADOR GMT	5004748	97	2	416	10 05 303 6	REVESTIMIENTO
AMORTIGUADOR GMT	5004748	138	2	417	10 05 303 6	REVESTIMIENTO
AMORTIGUADOR GMT	5004748	170	2	418	10 05 303 6	REVESTIMIENTO
AMORTIGUADOR GMT	5004748	37	2	429	10 49 857 1	REVESTIMIENTO
AMORTIGUADOR GMT	5004748	97	2	431	10 49 857 1	REVESTIMIENTO
AMORTIGUADOR GMT	5004748	138	2	432	10 49 857 1	REVESTIMIENTO
AMORTIGUADOR GMT	5004748	170	2	433	10 49 857 1	REVESTIMIENTO
AMORTIGUADOR GMT	5004748	11	2	450	10 06 360 5	TAPA
AMORTIGUADOR GMT	5004748	50	2	457	10 05 541 0	PUERTA LATERAL ANT.DCHA.
AMORTIGUADOR GMT	5004748	40	2	802	10 05 539 2	PUERTA LATERAL IZDA.
AMORTIGUADOR METALLASTI	7019129	470	1	484	70 28 778	PIEZAS DE MONTAJE
AMORTIGUADOR METALLASTI	7021047	480	1	484	70 28 778	PIEZAS DE MONTAJE
ANEJO DE LINEA DE CONEXIÓ	10115700	230	1	568	10 12 595 9	MOTOR DIESEL D9508 A7 320k
ANEJO DE LINEA DE CONEXIÓ	9079077	231	1	568	10 12 595 9	MOTOR DIESEL D9508 A7 320k
ANEJO TUBERIA	10118748	4	1	575	10 12 016 8	PIEZAS DE CIERRE
ANEJO TUBERIA	10125037	16	1	565	10 12 595 9	MOTOR DIESEL D9508 A7 320k
ANGULAR	10358447	80	3	205	10 35 873 9	MONTAJE DE RADIADOR
ANGULAR	9376779	4	2	103	10 05 300 8	COMPART.BOMBA PIEZAS
ANGULAR	9573442	9	1	193	10 49 867 7	MONTAJE VENTILADOR
ANGULAR	9573442	9	1	195	10 49 873 2	MONTAJE VENTILADOR
ANGULAR	9573442	92	1	206	10 35 873 9	MONTAJE DE RADIADOR
ANGULAR	9573442	50	2	215	10 49 800 0	MOTOR - SISTEMA ELÉCTRIC
ANGULAR	9573442	5	1	360	10 35 875 4	INST.HIDR.CONDUCTOS MAND
ANGULAR	9573442	5	1	367	10 82 438 0	INST.HIDR.CONDUCTOS MAND
ANGULAR	9573442	23	1	541	10 35 875 6	MONTAJE TUBOS FLEX. AIRE
ANILLO	10050911	2	1	718	10 05 091 3	ANILLO
ANILLO	10050913	6	4	714	10 35 872 1	MANGO DE LA PALA 2,60M
ANILLO	10297934	5	2	178	10 40 975 1	CILINDRO TRANSPORTADOR
ANILLO	10337545	6	1	176	10 34 668 4	SERVOMANDO
ANILLO	7369134	50	5	407	10 11 355 7	BLOQUE MANDO
ANILLO	7373411	5	2	178	10 40 975 1	CILINDRO TRANSPORTADOR
ANILLO	7373412	5	2	178	10 40 975 1	CILINDRO TRANSPORTADOR
ANILLO	7373413	5	2	178	10 40 975 1	CILINDRO TRANSPORTADOR
ANILLO	7373414	5	2	178	10 40 975 1	CILINDRO TRANSPORTADOR
ANILLO	7373415	5	2	178	10 40 975 1	CILINDRO TRANSPORTADOR
ANILLO	7373416	5	2	178	10 40 975 1	CILINDRO TRANSPORTADOR
ANILLO	7373417	5	2	178	10 40 975 1	CILINDRO TRANSPORTADOR
ANILLO	7373418	5	2	178	10 40 975 1	CILINDRO TRANSPORTADOR
ANILLO ASIENTO VALV. ENTR	9078511	3	2	600	10 11 805 2	CULATA D9508
ANILLO ASIENTO VALV. SALID	9078512	4	2	600	10 11 805 2	CULATA D9508
ANILLO COJINETE	9442439	5	1	64	94 43 970	ACCIONAMIENTO DE TRASL
ANILLO COMPRESION 10X343/	932856101	61	2	222	90 01 781 7	ACCIONAMIENTO GIRATORIO
ANILLO CORTANTE	10013545	161	1	256	90 64 786	BASE DE FIJACION
ANILLO CORTANTE	10013545	161	10	258	10 01 461 1	CAJA AUXILIAR
ANILLO DE APOYO CERRADO	7381949	27	1	80	92 78 174	REGULACIÓN

Descripción	Artículo	Pos.	Cantid	Página	Grupo	Descripción
ANILLO DE APOYO CERRADO	7381949	30	1	88	92 78 179	JUEGO JUNTAS
ANILLO DE APRIETE	9278553	19	2	80	92 78 174	REGULACIÓN
ANILLO DE ASIENTO	7373420	6	2	178	10 40 975 1	CILINDRO TRANSPORTADOR
ANILLO DE CIERRE	10007876	16	1	149	10 33 307 0	MECANISMO DE ACCIONAMIE
ANILLO DE CIERRE	9265049	17	1	229	92 68 011	JR ARO CIERRE
ANILLO DE CIERRE	9265049	17	1	267	98 82 882	JR ÁRBOL
ANILLO DE CIERRE	9272511	23	1	192	98 89 161	PLACA DE CONEXION
ANILLO DE CIERRE	9279374	17	1	73	92 68 751	JR ARO CIERRE
ANILLO DE CIERRE	9279374	17	1	84	98 88 124	JR ÁRBOL
ANILLO DE CIERRE	9279374	17	1	141	98 86 679	JR ÁRBOL
ANILLO DE CIERRE	9279374	17	1	173	98 89 282	JR ÁRBOL
ANILLO DE CIERRE	9443229	10	1	224	93 36 053 01	FRENO
ANILLO DE DISCO	10116755	3	32	692	10 12 097 6	JUEGO JUNTAS CODO DE ESC
ANILLO DE EMBRAGUE	9073639	20	1	188	98 84 140	BOMBA CTO.REFRIG.
ANILLO DE FIELTRO	7016180	4	1	59	92 65 064	JJ DISTRIBUIDOR GIRATORIO
ANILLO DE GUIA DE EMBOLO	7002939	6	5	761	95 88 147	EMBOLO 220MM
ANILLO DE GUIA DE EMBOLO	7003455	6	4	762	95 89 256	EMBOLO 190MM
ANILLO DE GUIA DE EMBOLO	7003455	6	4	763	99 07 680	EMBOLO 190 MM
ANILLO DE GUIA DE EMBOLO	9177723	2	2	762	95 89 256	EMBOLO 190MM
ANILLO DE GUIA DE EMBOLO	9177723	2	2	763	99 07 680	EMBOLO 190 MM
ANILLO DE GUIA DE EMBOLO	9177720	2	2	761	95 88 147	EMBOLO 220MM
ANILLO DE RETÉN	7380068	4	2	696	10 12 100 3	JJ ACCIONAMIENTO SECUNDA
ANILLO DE RETÉN 50X80X7/5	7620752	38	1	133	10 44 145 6	MECANISMO DE ACCIONAMIE
ANILLO DE RETÉN X17X30X7	570319508	3	1	164	10 35 548 6	BOMBA DE ENGRANAJES
ANILLO DE RETÉN X40X55X7	10007991	38	1	149	10 33 307 0	MECANISMO DE ACCIONAMIE
ANILLO DISTANCIADOR	10800585	40	2	51	56 18 003	ESLABON FINAL
ANILLO DSF	10029880	4	1	643	10 13 154 6	ÉMBOLO COMPL. d=128
ANILLO EN V SEEGER	10333251	10	1	264	10 33 323 7	VALVULA LIMITADORA DE PR
ANILLO FINAL	9442287	60	1	66	94 43 970	ACCIONAMIENTO DE TRASL
ANILLO GLYD 12	7381019	47	1	181	90 78 788	JR (TAPA DEL REGUL.) LR/SD
ANILLO GLYD 12	7381019	47	1	187	98 82 875	JJ VÁLVULA REGULADORA
ANILLO GLYD 35X27,5X3,2	7381029	24	1	168	90 79 811	JR PISTÓN AJUSTE
ANILLO GLYD 35X27,5X3,2	7381029	24	1	170	92 71 653	JJ REGUL.
ANILLO GLYD 52X41X4,2	7380982	25	1	82	90 77 481	JR (PISTÓN AJUSTE) FMV 165
ANILLO GLYD 52X41X4,2	7380982	26	1	88	92 78 179	JUEGO JUNTAS
ANILLO GLYD 52X41X4,2	7380982	25	1	168	90 79 811	JR PISTÓN AJUSTE
ANILLO GLYD 52X41X4,2	7380982	25	1	170	92 71 653	JJ REGUL.
ANILLO GLYD TURCON 16,5X2	7381501	24	1	81	90 77 412	JR (PISTÓN AJUSTE) FMV 165
ANILLO GLYD TURCON 16,5X2	7381501	24	2	88	92 78 179	JUEGO JUNTAS
ANILLO GUIA	7005250	13	4	765	99 07 890	ALOJAMIENTO DE BIELA 125/
ANILLO GUIA	7623863	30	2	177	10 40 974 7	REGULACIÓN HIDR.
ANILLO GUIA 150X155X15	7011356	13	4	764	96 31 985	ALOJAMIENTO DE BIELA 150/
ANILLO INTERMEDIO	10014730	12	1	249	10 34 071 7	ENGRASADORA
ANILLO JUNTA DE BORDES	10303270	17	3	150	10 33 307 1	PLACA DE CONEXION
ANILLO JUNTA RADIAL X100X	7362182	16	2	717	10 35 840 0	MANGO DE LA PALA 2,60M
ANILLO JUNTA RADIAL X120X1	7362184	31	4	709	10 35 835 9	PLUMA MONOBLOC 7,00M
ANILLO JUNTA RADIAL X120X1	7362184	19	2	717	10 35 840 0	MANGO DE LA PALA 2,60M
ANILLO JUNTA RADIAL X120X1	7362184	5	4	731	10 49 825 2	OREJETA DE UNION
ANILLO JUNTA RADIAL X120X1	7362184	15	4	756	95 93 590	CILINDRO HIDRAULICO
ANILLO JUNTA RADIAL X120X1	7362184	15	4	757	99 06 383	CILINDRO HIDRAULICO
ANILLO JUNTA RADIAL X120X1	7362184	15	4	758	99 06 576	CILINDRO HIDRAULICO
ANILLO JUNTA RADIAL X130X1	7017199	15	4	755	94 02 020 2	CILINDRO HIDRAULICO
ANILLO KB 118,7X128	10029877	2	1	643	10 13 154 6	ÉMBOLO COMPL. d=128
ANILLO L	7381025	28	1	168	90 79 811	JR PISTÓN AJUSTE
ANILLO L JL50	429612001	32	1	64	94 43 970	ACCIONAMIENTO DE TRASL
ANILLO MUELLE	7373509	12	1	61	50 20 370 01	FRENO DISCOS MULT.PRESI
ANILLO MUELLE	7373509	12	1	62	93 21 804 01	JUEGO JUNTAS FRENO
ANILLO MUELLE	7380954	71	1	128	90 80 120	ENGRANAJE DISTRIBUCION
ANILLO MUELLE 55	10027648	8	2	643	10 13 154 6	ÉMBOLO COMPL. d=128
ANILLO MUELLE SB143	7003394	11	1	61	50 20 370 01	FRENO DISCOS MULT.PRESI

Descripción	Artículo	Pos.	Cantid	Página	Grupo	Descripción
ANILLO RASCADOR 125X137,	7023590	6	1	765	99 07 890	ALOJAMIENTO DE BIELA 125/
ANILLO RASCADOR 150x166x9,	10410984	6	1	764	96 31 985	ALOJAMIENTO DE BIELA 150/
ANILLO SEGURIDAD	10216718	36	1	133	10 44 145 6	MECANISMO DE ACCIONAMIE
ANILLO SEGURIDAD	10216719	37	2	133	10 44 145 6	MECANISMO DE ACCIONAMIE
ANILLO SEGURIDAD	10303006	9	2	46	10 29 067 4	RODILLO APOYO D8K
ANILLO SEGURIDAD	10410656	41	1	165	10 41 064 0	MECANISMO DE ACCIONAMIE
ANILLO SEGURIDAD	7019794	350	2	473	10 04 678 8	PUERTA CABINA CONDUCTO
ANILLO SOPORTE	10016716	5	1	47	10 07 535 3	TENSOR GRASA
ANILLO SOPORTE	7003559	7	2	763	99 07 680	EMBOLO 190 MM
ANILLO SOPORTE	7004043	7	2	761	95 88 147	EMBOLO 220MM
ANILLO SOPORTE	7006870	7	2	762	95 89 256	EMBOLO 190MM
ANILLO SOPORTE	7007838	5	1	723	56 04 377	JJ VÁLVULA
ANILLO SOPORTE	7007838	15	1	768	56 02 932	VALVULA REGULADORA
ANILLO SOPORTE	7372317	6	1	402	56 15 220	FILTRO DE ALTA PRESION
ANILLO SOPORTE	7380684	16	1	187	98 82 875	JJ VÁLVULA REGULADORA
ANILLO SOPORTE	7380883	21	1	87	92 66 232	JJ VÁLVULA MÚLTIPLES VÍAS
ANILLO SOPORTE	7380884	23	1	87	92 66 232	JJ VÁLVULA MÚLTIPLES VÍAS
ANILLO SOPORTE	7380905	28	2	85	92 66 089	JJ VÁLVULA
ANILLO SOPORTE	7381250	29	1	80	92 78 174	REGULACIÓN
ANILLO SOPORTE	7381250	29	1	88	92 78 179	JUEGO JUNTAS
ANILLO SOPORTE	7381250	18	1	170	92 71 653	JJ REGUL.
ANILLO SOPORTE	7381250	32	1	171	92 71 657	JUEGO JUNTAS
ANILLO SOPORTE	7410773	15	1	342	56 09 948	KIT FILTRO P.ACEITE
ANILLO SOPORTE 10,7X1,45X	7023928	6	1	379	50 09 562	JJ VÁLVULA DE PASO
ANILLO SOPORTE 210X220X2,	7002239	8	1	764	96 31 985	ALOJAMIENTO DE BIELA 150/
ANILLO SOPORTE 9,4X1,45X1,	7023927	5	1	379	50 09 562	JJ VÁLVULA DE PASO
ANILLO TURCON-GLYD	10333229	31	2	177	10 40 974 7	REGULACIÓN HIDR.
ANILLO USIT	5209400	69	2	43	10 35 874 0	ESTRUC.INF.COMPL.
ANILLOS EN V	7381525	28	2	80	92 78 174	REGULACIÓN
ANTENA	6001556	180	1	477	10 48 809 7	INST.ELÉCTRICA
ANTICORROSIVO	10301213	20	1	36	10 35 905 6	ANTICORROSIVO
ANTICORROSIVO	10301215	5	1	30	10 35 683 2	ANTICORROSIVO
ANTICORROSIVO	10356832	10	1	11	90 66 465	AGENTE REFRIGERANTE
ANTICORROSIVO	10356833	1000	1	30	10 35 683 2	ANTICORROSIVO
ANTICORROSIVO	10359056	20	1	11	90 66 465	AGENTE REFRIGERANTE
ANTICORROSIVO	10428410	20	1	30	10 35 683 2	ANTICORROSIVO
ANTICORROSIVO	10428411	210	1	30	10 35 683 2	ANTICORROSIVO
AP.CONTR.PILOT. IZDO.	10301737	2	1	285	10 06 804 1	MANIPULATOR LADO CPL CA
AP.CONTR.PILOT.PED.DCHO.	10081426	20	1	308	10 05 798 5	MONTAJE PLACA REPOSAPIÉ
AP.CONTR.PILOT.PEDAL IZDO	10081424	10	1	308	10 05 798 5	MONTAJE PLACA REPOSAPIÉ
APARATO DE MANDO DE MO	10116989	570	1	570	10 12 595 9	MOTOR DIESEL D9508 A7 320k
APARATO DE MANDO PREVIO	10280039	2	1	298	10 06 804 5	APARATO MANDO MAN. DCHA.
APARATO MANDO MAN. DCHA.	10068045	52	1	291	10 82 277 5	REPOSABRAZOS DERECHA
APOYO DE CIZALLA	7025009	59	1	275	10 28 999 3	SISTEMA OSCIL.
APOYO DE TUBO 15°D8	10412844	115	1	256	90 64 786	BASE DE FIJACION
APOYO DE TUBO 15°D8	10412844	115	2	258	10 01 461 1	CAJA AUXILIAR
APOYO DE TUBO 45° D6	7623705	20	1	255	90 64 786	BASE DE FIJACION
APOYO DE TUBO 45° D6	7623705	20	6	257	10 01 461 1	CAJA AUXILIAR
APOYO DE TUBO 45° D8	10040776	120	1	256	90 64 786	BASE DE FIJACION
APOYO DE TUBO 45° D8	10040776	120	2	258	10 01 461 1	CAJA AUXILIAR
APOYO DE TUBO 90°-21MM D	7623704	25	1	255	90 64 786	BASE DE FIJACION
APOYO DE TUBO 90°-21MM D	7623704	25	4	257	10 01 461 1	CAJA AUXILIAR
APOYO DE TUBO 90°-33MM D	10027260	26	1	255	90 64 786	BASE DE FIJACION
APOYO DE TUBO 90°-33MM D	10027260	26	4	257	10 01 461 1	CAJA AUXILIAR
APOYO DE TUBO 90°-38MM D	511701914	27	1	255	90 64 786	BASE DE FIJACION
APOYO DE TUBO 90°-38MM D	511701914	27	4	257	10 01 461 1	CAJA AUXILIAR
APOYO DE TUBO 90°-50MM D	7623707	28	1	255	90 64 786	BASE DE FIJACION
APOYO DE TUBO 90°-50MM D	7623707	28	2	257	10 01 461 1	CAJA AUXILIAR
APOYO DE TUBO DN6	7624177	11	1	255	90 64 786	BASE DE FIJACION
APOYO DE TUBO DN6	7624177	11	5	257	10 01 461 1	CAJA AUXILIAR

Descripción	Artículo	Pos.	Cantid	Página	Grupo	Descripción
APOYO DE TUBO DN8	10011995	110	1	256	90 64 786	BASE DE FIJACION
APOYO DE TUBO DN8	10011995	110	6	258	10 01 461 1	CAJA AUXILIAR
APOYO DE TUBO DN8	10040777	125	1	256	90 64 786	BASE DE FIJACION
APOYO DE TUBO DN8	10040777	125	2	258	10 01 461 1	CAJA AUXILIAR
APOYO DE TUBO DN8	10040778	126	1	256	90 64 786	BASE DE FIJACION
APOYO DE TUBO DN8	10040778	126	2	258	10 01 461 1	CAJA AUXILIAR
APOYO DE TUBO DN8	10040779	127	1	256	90 64 786	BASE DE FIJACION
APOYO DE TUBO DN8	10040779	127	2	258	10 01 461 1	CAJA AUXILIAR
APOYO FLUIDO	10013573	5	4	331	98 79 063	SUJ.PLACA FONDO CABINA
APUNTALADO	9080695	3	1	583	10 11 694 5	VARILLA NIVEL ACEITE C.TUB
ARANDELA	10013965	460	2	484	70 28 778	PIEZAS DE MONTAJE
ARANDELA	10058104	22	2	194	10 49 867 7	MONTAJE VENTILADOR
ARANDELA	10297307	12	12	208	10 42 538 5	RADIADOR ACEITE COMB.
ARANDELA	10298635	17	2	166	10 44 145 8	SENSOR DE ÁNGULO DE GIR
ARANDELA	10298680	9	2	176	10 34 668 4	SERVOMANDO
ARANDELA	10498382	21	2	729	10 49 838 7	SOPORTE DE EJE
ARANDELA	10498382	21	2	730	10 49 857 6	SOPORTE DE EJE
ARANDELA	3001590	2	1	739	99 35 245	BULON
ARANDELA	7019801	150	2	472	10 04 678 8	PUERTA CABINA CONDUCTO
ARANDELA	7380974	10	1	189	98 85 932	
ARANDELA	9051252	21	2	119	10 35 879 9	MONTAJE BOMBAS
ARANDELA	9073074	20	1	126	90 80 120	ENGRANAJE DISTRIBUCION
ARANDELA	9076638	20	4	649	10 13 273 9	MONTAJE ATL
ARANDELA	9076638	20	4	650	10 13 274 0	MONTAJE ATL
ARANDELA	9134374	3	3	620	90 78 260	BOMBA ALTA PRESIÓN C.SU
ARANDELA	9271441	21	2	126	90 80 120	ENGRANAJE DISTRIBUCION
ARANDELA	932719401	5	1	221	90 01 781 7	ACCIONAMIENTO GIRATORIO
ARANDELA	9385349	27	3	110	10 49 845 5	ALOJAMIENTO DE MOTOR
ARANDELA	9561312	21	4	105	10 05 797 8	CONSOLA CIERRE
ARANDELA	9929365	3	1	736	10 05 646 8	BULON
ARANDELA 10,5	4601173	72	4	117	10 35 873 3	AIRE Y SISTEMA ESCAPE
ARANDELA 10,5	4601173	103	4	207	10 35 873 9	MONTAJE DE RADIADOR
ARANDELA 10,5	4601173	33	4	414	10 05 303 6	REVESTIMIENTO
ARANDELA 10,5	4601173	52	2	414	10 05 303 6	REVESTIMIENTO
ARANDELA 10,5	4601173	104	4	416	10 05 303 6	REVESTIMIENTO
ARANDELA 10,5	4601173	153	3	418	10 05 303 6	REVESTIMIENTO
ARANDELA 10,5	4601173	183	6	419	10 05 303 6	REVESTIMIENTO
ARANDELA 10,5	4601173	188	10	419	10 05 303 6	REVESTIMIENTO
ARANDELA 10,5	4601173	242	12	421	10 05 303 6	REVESTIMIENTO
ARANDELA 10,5	4601173	33	4	429	10 49 857 1	REVESTIMIENTO
ARANDELA 10,5	4601173	52	2	429	10 49 857 1	REVESTIMIENTO
ARANDELA 10,5	4601173	104	4	431	10 49 857 1	REVESTIMIENTO
ARANDELA 10,5	4601173	153	3	433	10 49 857 1	REVESTIMIENTO
ARANDELA 10,5	4601173	183	6	434	10 49 857 1	REVESTIMIENTO
ARANDELA 10,5	4601173	188	10	434	10 49 857 1	REVESTIMIENTO
ARANDELA 10,5	4601173	242	12	436	10 49 857 1	REVESTIMIENTO
ARANDELA 10,5	4601173	75	4	446	10 05 530 3	CAPOT DEL MOTOR
ARANDELA 10,5/18X3	9918225	57	6	203	10 35 873 9	MONTAJE DE RADIADOR
ARANDELA 12,5/21X3,5	9918226	4	4	112	10 36 623 6	INST.COMBUSTIBLE MOTOR
ARANDELA 12,5/21X3,5	9918226	54	6	117	10 35 873 3	AIRE Y SISTEMA ESCAPE
ARANDELA 12,5/21X3,5	9918226	23	8	200	10 35 873 9	MONTAJE DE RADIADOR
ARANDELA 12,5/21X3,5	9918226	32	2	201	10 35 873 9	MONTAJE DE RADIADOR
ARANDELA 12,5/21X3,5	9918226	52	7	203	10 35 873 9	MONTAJE DE RADIADOR
ARANDELA 12,5/21X3,5	9918226	183	4	715	10 35 872 1	MANGO DE LA PALA 2,60M
ARANDELA 12,5/21X3,5	9918226	46	4	795	10 49 815 5	ELEVACIÓN CABINA CONDU
ARANDELA 12,5/21X3,5	9918226	5	6	799	10 49 815 3	PASARELA
ARANDELA 13	4600687	13	4	210	10 06 461 3	JUNTA HERMET.RADIADOR
ARANDELA 13	4600687	26	4	447	10 05 535 4	CAPOT
ARANDELA 16,5/28X4	9918228	12	3	41	10 35 874 0	ESTRUC.INF.COMPL.
ARANDELA 16,5/28X4	9918228	46	16	42	10 35 874 0	ESTRUC.INF.COMPL.

Descripción	Artículo	Pos.	Cantid	Página	Grupo	Descripción
ARANDELA 16,5/28X4	9918228	77	12	43	10 35 874 0	ESTRUC.INF.COMPL.
ARANDELA 16,5/28X4	9918228	15	16	110	10 49 845 5	ALOJAMIENTO DE MOTOR
ARANDELA 16,5/28X4	9918228	12	5	114	10 35 873 3	AIRE Y SISTEMA ESCAPE
ARANDELA 16,5/28X4	9918228	30	4	194	10 49 867 7	MONTAJE VENTILADOR
ARANDELA 16,5/28X4	9918228	30	4	196	10 49 873 2	MONTAJE VENTILADOR
ARANDELA 16,5/28X4	9918228	11	4	331	98 79 063	SUJ.PLACA FONDO CABINA
ARANDELA 16,5/28X4	9918228	82	2	416	10 05 303 6	REVESTIMIENTO
ARANDELA 16,5/28X4	9918228	204	3	420	10 05 303 6	REVESTIMIENTO
ARANDELA 16,5/28X4	9918228	82	2	431	10 49 857 1	REVESTIMIENTO
ARANDELA 16,5/28X4	9918228	204	3	435	10 49 857 1	REVESTIMIENTO
ARANDELA 16,5/28X4	9918228	19	12	729	10 49 838 7	SOPORTE DE EJE
ARANDELA 16,5/28X4	9918228	19	12	730	10 49 857 6	SOPORTE DE EJE
ARANDELA 16,5/28X4	9918228	64	8	780	10 35 813 5	PLATAFORM.C.CAB.ELEVADA
ARANDELA 16,5/28X4	9918228	48	4	795	10 49 815 5	ELEVACIÓN CABINA CONDU
ARANDELA 18,5/31X5	9586492	57	16	43	10 35 874 0	ESTRUC.INF.COMPL.
ARANDELA 18,5/31X5	9586492	9	2	750	10 49 827 4	PIEZAS MONTAJE EQUIPAMIE
ARANDELA 20,5/34X5	9918229	64	8	43	10 35 874 0	ESTRUC.INF.COMPL.
ARANDELA 20,5/34X5	9918229	3	5	100	10 35 875 3	MONTAJE CAJA RADIADOR
ARANDELA 20,5/34X5	9918229	12	2	104	10 05 300 8	COMPART.BOMBA PIEZAS
ARANDELA 20,5/34X5	9918229	26	3	115	10 35 873 3	AIRE Y SISTEMA ESCAPE
ARANDELA 20,5/34X5	9918229	26	2	120	10 35 879 9	MONTAJE BOMBAS
ARANDELA 20,5/34X5	9918229	4	3	386	10 08 795 8	PIEZAS SUJ.DEPÓSITO HIDR.
ARANDELA 20,5/34X5	9918229	254	1	437	10 49 857 1	REVESTIMIENTO
ARANDELA 20,5/34X5	9918229	3	3	547	10 05 453 2	PIEZAS MONTAJE
ARANDELA 24,5/40X5	9918230	42	24	41	10 35 874 0	ESTRUC.INF.COMPL.
ARANDELA 24,5/40X5	9918230	52	64	43	10 35 874 0	ESTRUC.INF.COMPL.
ARANDELA 24,5/40X5	9918230	4	48	60	10 07 498 7	ACCIONAMIENTO DE TRASL
ARANDELA 24,5/40X5	9918230	7	48	60	10 07 498 7	ACCIONAMIENTO DE TRASL
ARANDELA 24,5/40X5	9918230	33	11	756	95 93 590	CILINDRO HIDRAULICO
ARANDELA 24,5/40X5	9918230	33	11	757	99 06 383	CILINDRO HIDRAULICO
ARANDELA 24,5/40X5	9918230	33	11	758	99 06 576	CILINDRO HIDRAULICO
ARANDELA 25	4600701	3	1	738	10 49 833 5	BULON
ARANDELA 27,5/45X6	9586495	11	60	241	10 35 877 2	MONTAJE CORONA ROTACIÓ
ARANDELA 31/52X6	9918231	33	9	755	94 02 020 2	CILINDRO HIDRAULICO
ARANDELA 4	421802008	6	12	321	10 02 211 7	CAJA CONDUCTO AIRE
ARANDELA 4	421802008	33	4	323	11 00 359 4	CARCASA
ARANDELA 43/72X10	9602353	6	4	549	10 35 876 5	MONTAJE LASTRE
ARANDELA 6X25	7381835	9	4	669	10 11 671 8	MONT.APARATO MANDO
ARANDELA 8	4901768	93	3	703	10 35 872 5	PLUMA MONOBLOC 7,00M
ARANDELA 8,4X23X4	242005302	30	24	209	10 42 538 5	RADIADOR ACEITE COMB.
ARANDELA A 24	10019101	12	4	60	10 07 498 7	ACCIONAMIENTO DE TRASL
ARANDELA A 24	10019101	5	2	220	10 05 311 7	MEC. GIRO
ARANDELA AJUSTE	10007878	20	1	149	10 33 307 0	MECANISMO DE ACCIONAMIE
ARANDELA AJUSTE	10007879	20	1	149	10 33 307 0	MECANISMO DE ACCIONAMIE
ARANDELA AJUSTE	10007879	21	1	149	10 33 307 0	MECANISMO DE ACCIONAMIE
ARANDELA AJUSTE	10007939	20	1	149	10 33 307 0	MECANISMO DE ACCIONAMIE
ARANDELA AJUSTE	10007942	20	1	149	10 33 307 0	MECANISMO DE ACCIONAMIE
ARANDELA AJUSTE	10035541	20	1	165	10 41 064 0	MECANISMO DE ACCIONAMIE
ARANDELA AJUSTE	10035542	20	1	165	10 41 064 0	MECANISMO DE ACCIONAMIE
ARANDELA AJUSTE	10035543	20	1	165	10 41 064 0	MECANISMO DE ACCIONAMIE
ARANDELA AJUSTE	10035544	20	1	165	10 41 064 0	MECANISMO DE ACCIONAMIE
ARANDELA AJUSTE	90011582	48	3	222	90 01 781 7	ACCIONAMIENTO GIRATORIO
ARANDELA DE CABECERA S=	10022769	2	2	321	10 02 211 7	CAJA CONDUCTO AIRE
ARANDELA DE CABECERA S=	10022769	3	2	326	10 02 277 7	REJILLA CIRCUL.AIRE
ARANDELA DE MUELLE	7025121	21	2	321	10 02 211 7	CAJA CONDUCTO AIRE
ARANDELA DE VALVULA	10119695	13	2	595	10 11 806 0	MEC. COMPL. PALANCA BAS
ARANDELA DENTADA	7028855	170	1	477	10 48 809 7	INST.ELÉCTRICA
ARANDELA DENTADA	7363744	160	2	418	10 05 303 6	REVESTIMIENTO
ARANDELA DENTADA	7363744	160	2	433	10 49 857 1	REVESTIMIENTO
ARANDELA DISTANCIADORA	10841516	19	2	196	10 49 873 2	MONTAJE VENTILADOR

Descripción	Artículo	Pos.	Cantid	Página	Grupo	Descripción
ARANDELA ONDULADA 43.9/51	10030768	9	2	645	10 11 566 7	TUBO DE ESCAPE DERECHA
ARANDELA ONDULADA 43.9/51	10030768	9	1	648	10 11 566 8	TUBO DE ESCAPE IZQUIERDA
ARANDELA PRESION	7373504	5	1	61	50 20 370 01	FRENO DISCOS MULT.PRESI
ARANDELA RETEN	10354823	2	1	387	10 30 177 6	VALVULA DE DESCARGA
ARANDELA RETEN	11007770	7	1	388	56 17 689	DISPOSITIVO DE CIERRE DN
ARANDELA RETEN 7X14,4X1,5	10442984	4	1	615	10 49 001 8	TOBERA DE INYECCION
ARANDELA RETEN 7X14,4X1,5	10442984	8	1	687	10 12 089 6	J. J. CABEZA CILINDRO COM
ARANDELA S= 0,20	7380975	20	1	189	98 85 932	
ARANDELA S= 0,30	7380976	30	1	189	98 85 932	
ARANDELA S= 0,50	7380212	31	1	78	92 67 554	VALVULA LIMITADORA DE PR
ARANDELA S= 0,50	7380232	23	5	72	92 67 037	VALVULA LIMITADORA DE PR
ARANDELA S=4	4000505	31	2	102	10 35 875 3	MONTAJE CAJA RADIADOR
ARANDELA S=4	4000505	36	20	209	10 42 538 5	RADIADOR ACEITE COMB.
ARANDELA S=4	4000505	28	10	453	10 05 543 3	PUERTA LATERAL POST.DCHA
ARANDELA S=4	4000505	25	8	456	10 05 541 0	PUERTA LATERAL ANT.DCHA.
ARANDELA SEGURIDAD	10006374	24	3	395	10 35 874 4	MONTAJE CORREDERA DISTR
ARANDELA SEGURIDAD	4229911	50	2	128	90 80 120	ENGRANAJE DISTRIBUCION
ARANDELA SEGURIDAD	4229911	56	4	278	10 05 798 3	REPOSABRAZOS IZQUIERDA
ARANDELA SEGURIDAD	4229911	70	4	282	97 58 815 01	PLACA E
ARANDELA SEGURIDAD	4229911	56	4	291	10 82 277 5	REPOSABRAZOS DERECHA
ARANDELA SEGURIDAD	4229911	38	2	414	10 05 303 6	REVESTIMIENTO
ARANDELA SEGURIDAD	4229911	98	2	416	10 05 303 6	REVESTIMIENTO
ARANDELA SEGURIDAD	4229911	139	2	417	10 05 303 6	REVESTIMIENTO
ARANDELA SEGURIDAD	4229911	171	2	418	10 05 303 6	REVESTIMIENTO
ARANDELA SEGURIDAD	4229911	38	2	429	10 49 857 1	REVESTIMIENTO
ARANDELA SEGURIDAD	4229911	98	2	431	10 49 857 1	REVESTIMIENTO
ARANDELA SEGURIDAD	4229911	139	2	432	10 49 857 1	REVESTIMIENTO
ARANDELA SEGURIDAD	4229911	171	2	433	10 49 857 1	REVESTIMIENTO
ARANDELA SEGURIDAD	4229911	13	2	450	10 06 360 5	TAPA
ARANDELA SEGURIDAD	4229911	71	1	504	10 09 499 2	RELACIÓN MATERIAL EL.
ARANDELA SEGURIDAD	4229911	13	6	545	10 35 868 3	INSTALACION CARBURANTE
ARANDELA SEGURIDAD	4239000	123	2	293	10 82 277 5	REPOSABRAZOS DERECHA
ARANDELA SEGURIDAD	7361965	13	4	54	10 49 867 0	MONTAJE CONEXIÓN GIRATO
ARANDELA SEGURIDAD	7361965	63	4	204	10 35 873 9	MONTAJE DE RADIADOR
ARANDELA SEGURIDAD	7361965	48	1	278	10 05 798 3	REPOSABRAZOS IZQUIERDA
ARANDELA SEGURIDAD	7361965	69	4	282	97 58 815 01	PLACA E
ARANDELA SEGURIDAD	7361965	45	4	382	10 35 874 5	MONTAJE DEPÓSITO HIDR.
ARANDELA SEGURIDAD	7361965	17	4	511	10 06 221 6	INST.EL. MONOBLOQUE
ARANDELA SEGURIDAD	7361965	17	4	512	10 35 876 2	INST.EL. MONOBLOQUE
ARANDELA SEGURIDAD	7361965	22	4	516	10 06 222 8	INST.EL.CORREDERA DISTR.
ARANDELA SEGURIDAD	7361965	53	1	517	10 06 222 8	INST.EL.CORREDERA DISTR.
ARANDELA SEGURIDAD	7361965	47	4	526	10 35 876 3	INST.EL.DEP. COMBUSTIBLE
ARANDELA SEGURIDAD	7361965	97	4	527	10 35 876 3	INST.EL.DEP. COMBUSTIBLE
ARANDELA SEGURIDAD	7361965	47	4	533	10 49 837 7	INST.EL.DEP. COMBUSTIBLE
ARANDELA SEGURIDAD	7361965	97	4	534	10 49 837 7	INST.EL.DEP. COMBUSTIBLE
ARANDELA SEGURIDAD /13X1	4229912	37	8	41	10 35 874 0	ESTRUC.INF.COMPL.
ARANDELA SEGURIDAD /13X1	4229912	32	2	241	10 35 877 2	MONTAJE CORONA ROTACIÓ
ARANDELA SEGURIDAD /13X1	4229912	53	4	270	10 05 311 8	BASE PUESTO CONDUCTOR
ARANDELA SEGURIDAD /13X1	4229912	71	2	282	97 58 815 01	PLACA E
ARANDELA SEGURIDAD /13X1	4229912	12	4	308	10 05 798 5	MONTAJE PLACA REPOSAPIÉ
ARANDELA SEGURIDAD /13X1	4229912	22	4	308	10 05 798 5	MONTAJE PLACA REPOSAPIÉ
ARANDELA SEGURIDAD /13X1	4229912	32	6	308	10 05 798 5	MONTAJE PLACA REPOSAPIÉ
ARANDELA SEGURIDAD /13X1	4229912	37	4	308	10 05 798 5	MONTAJE PLACA REPOSAPIÉ
ARANDELA SEGURIDAD /13X1	4229912	4	8	381	10 35 874 5	MONTAJE DEPÓSITO HIDR.
ARANDELA SEGURIDAD /13X1	4229912	8	8	381	10 35 874 5	MONTAJE DEPÓSITO HIDR.
ARANDELA SEGURIDAD /13X1	4229912	53	24	383	10 35 874 5	MONTAJE DEPÓSITO HIDR.
ARANDELA SEGURIDAD /13X1	4229912	43	6	546	10 35 868 3	INSTALACION CARBURANTE
ARANDELA SEGURIDAD /13X1	4229912	53	18	546	10 35 868 3	INSTALACION CARBURANTE
ARANDELA SEGURIDAD 10,5/1	4229913	12	12	109	10 12 605 7	GRUPO DE ACCIONAMIENTO
ARANDELA SEGURIDAD 10,5/1	4229913	30	2	340	10 05 314 4	MONTAJE UNIDAD ACEITE MA

Descripción	Artículo	Pos.	Cantid	Página	Grupo	Descripción
ARANDELA SEGURIDAD 10,5/1	4229913	6	2	351	10 05 312 9	REFRIG.ACEITE TRANS.E HI
ARANDELA SEGURIDAD 10,5/1	4229913	22	6	403	10 06 771 7	MONTAJE TUBERÍAS IMPULS.
ARANDELA SEGURIDAD 10,5/1	4229913	27	3	403	10 06 771 7	MONTAJE TUBERÍAS IMPULS.
ARANDELA SEGURIDAD 10,5/1	4229913	4	2	741	93 63 937	ABRAZADERA TUBO
ARANDELA SEGURIDAD 12 VS	4900093	84	8	66	94 43 970	ACCIONAMIENTO DE TRASL
ARANDELA SEGURIDAD 12 VS	4900093	6	4	103	10 05 300 8	COMPART.BOMBA PIEZAS
ARANDELA SEGURIDAD 12 VS	4900093	10	2	351	10 05 312 9	REFRIG.ACEITE TRANS.E HI
ARANDELA SEGURIDAD 12 VS	4900093	82	4	771	10 35 873 1	CILINDRO ELEVADOR DIA.190
ARANDELA SEGURIDAD 12 VS	4900093	142	4	771	10 35 873 1	CILINDRO ELEVADOR DIA.190
ARANDELA SEGURIDAD 17/24	423911601	12	8	64	94 43 970	ACCIONAMIENTO DE TRASL
ARANDELA SEGURIDAD 17/24	423911601	53	12	66	94 43 970	ACCIONAMIENTO DE TRASL
ARANDELA SEGURIDAD 8,4/13	423910801	16	16	194	10 49 867 7	MONTAJE VENTILADOR
ARANDELA SEGURIDAD 8,4/13	423910801	16	16	196	10 49 873 2	MONTAJE VENTILADOR
ARANDELA SEGURIDAD VS 16	10006372	22	2	221	90 01 781 7	ACCIONAMIENTO GIRATORIO
ARANDELA SOPORTE	9441557	46	1	222	90 01 781 7	ACCIONAMIENTO GIRATORIO
ARANDELA SOPORTE	9443033	36	1	64	94 43 970	ACCIONAMIENTO DE TRASL
ARANDELA SOPORTE	9443344	38	1	64	94 43 970	ACCIONAMIENTO DE TRASL
ARANDELA SOPORTE 125X6	9442198	36	1	221	90 01 781 7	ACCIONAMIENTO GIRATORIO
ARANDELA TOPE	7017685	3	2	56	10 00 963 0	TRANSMISION ROTATIVO
ARANDELA TOPE	7017685	3	2	58	10 00 967 6	JJ DISTRIBUIDOR GIRATORIO
ARANDELA TOPE	9080599	7	1	611	10 11 802 5	ACC. P. BOMBA ALTA PRESIÓ
ARANDELA TOPE 82/16X4	9078591	5	1	634	10 11 822 3	MONT. RUEDA INTERMEDIA I=
ARANDELA U	10022767	3	2	321	10 02 211 7	CAJA CONDUCTO AIRE
ARANDELA U	10022767	5	2	326	10 02 277 7	REJILLA CIRCUL.AIRE
ARBOL DE LEVAS	10117032	1	1	601	10 11 802 2	ÁRBOL LEVAS COMPL.
ARBOL DE PASO	10333264	5	1	158	10 33 325 9	BOMBA DE ENGRANAJES
ARO CONICO DOBLE DKR 6	7027946	3	1	255	90 64 786	BASE DE FIJACION
ARO DE EMBOLO LIGERAM. C	10131564	3	1	643	10 13 154 6	ÉMBOLO COMPL. d=128
ARO DE SECCION RECTANG	10290521	4	6	775	72 64 501 16	
ARO DE SECCION RECTANG	10290520	21	1	355	10 35 875 1	INST.HIDR.ACC. VENTILADOR
ARO DE SECCION RECTANG	10290520	31	1	356	10 35 875 1	INST.HIDR.ACC. VENTILADOR
ARO DE SECCION RECTANG	10290520	41	2	356	10 35 875 1	INST.HIDR.ACC. VENTILADOR
ARO DE SECCION RECTANG	10290520	55	7	357	10 35 875 1	INST.HIDR.ACC. VENTILADOR
ARO DE SECCION RECTANG	10290519	22	10	343	10 35 875 5	EJEC.GIRADA HIDR.+MEC.GIR
ARO DE SECCION RECTANG	10290519	51	4	771	10 35 873 1	CILINDRO ELEVADOR DIA.190
ARO DE SECCION RECTANG	10290519	1	12	775	72 64 501 16	
ARO DE SECCION RECTANG	10290518	6	8	89	10 07 444 8	INST.HIDR.ESTRUC.INF.
ARO DE SECCION RECTANG	10290518	21	4	334	10 38 698 2	INST.HIDR.BOMBAS A CORR.D
ARO DE SECCION RECTANG	10290518	32	2	335	10 38 698 2	INST.HIDR.BOMBAS A CORR.D
ARO DE SECCION RECTANG	10290518	42	2	335	10 38 698 2	INST.HIDR.BOMBAS A CORR.D
ARO DE SECCION RECTANG	10290518	21	4	337	10 49 804 4	INST.HIDR.BOMBAS A CORR.D
ARO DE SECCION RECTANG	10290518	32	2	338	10 49 804 4	INST.HIDR.BOMBAS A CORR.D
ARO DE SECCION RECTANG	10290518	42	2	338	10 49 804 4	INST.HIDR.BOMBAS A CORR.D
ARO DE SECCION RECTANG	10290518	12	8	343	10 35 875 5	EJEC.GIRADA HIDR.+MEC.GIR
ARO DE SECCION RECTANG	10290518	16	2	343	10 35 875 5	EJEC.GIRADA HIDR.+MEC.GIR
ARO DE SECCION RECTANG	10290518	28	2	396	10 35 874 4	MONTAJE CORREDERA DISTR
ARO DE SECCION RECTANG	10290518	39	5	396	10 35 874 4	MONTAJE CORREDERA DISTR
ARO DE SECCION RECTANG	10290518	17	9	403	10 06 771 7	MONTAJE TUBERÍAS IMPULS.
ARO DE SECCION RECTANG	10290518	40	29	701	10 35 872 5	PLUMA MONOBLOC 7,00M
ARO DE SECCION RECTANG	10290518	12	2	713	10 07 162 8	CILINDRO HIDROLICO+ADICIO
ARO DE SECCION RECTANG	10290518	48	4	770	10 35 873 1	CILINDRO ELEVADOR DIA.190
ARO DE SECCION RECTANG	10290518	2	12	775	72 64 501 16	
ARO DE SECCION RECTANG	10290517	72	2	384	10 35 874 5	MONTAJE DEPÓSITO HIDR.
ARO DE SECCION RECTANG	10290517	116	1	704	10 35 872 5	PLUMA MONOBLOC 7,00M
ARO DE SECCION RECTANG	10290517	122	2	704	10 35 872 5	PLUMA MONOBLOC 7,00M
ARO DE SECCION RECTANG	10290517	5	2	706	10 06 477 4	CILINDRO HIDROLICO+ADICIO
ARO DE SECCION RECTANG	10290517	19	2	706	10 06 477 4	CILINDRO HIDROLICO+ADICIO
ARO DE SECCION RECTANG	10290517	3	6	775	72 64 501 16	
ARO DE SECCION RECTANG	10290516	21	1	200	10 35 873 9	MONTAJE DE RADIADOR
ARO DE SECCION RECTANG	10290516	14	4	351	10 05 312 9	REFRIG.ACEITE TRANS.E HI

Descripción	Artículo	Pos.	Cantid	Página	Grupo	Descripción
ARO DE SECCION RECTANG	10290516	26	2	355	10 35 875 1	INST.HIDR.ACC. VENTILADOR
ARO DE SECCION RECTANG	10290516	5	6	775	72 64 501 16	
ARO SOPORTE 170X90X5	9444408	16	1	64	94 43 970	ACCIONAMIENTO DE TRASL
ARRASTRE	10014729	11	1	249	10 34 071 7	ENGRASADORA
ARRASTRE	9354942	1	1	55	95 66 869	MONTAJE ELEMENTO ARRAS
ASIENTO CONDUCTOR	10043631	51	1	270	10 05 311 8	BASE PUESTO CONDUCTOR
ASIENTO CONDUCTOR	10043632	50	1	269	10 05 311 8	BASE PUESTO CONDUCTOR
ASIENTO DE VALVULA	10120108	17	1	607	10 12 475 6	MÓDULO ACEITE IZDA.
ASIENTO DE VALVULA	10120109	14	1	607	10 12 475 6	MÓDULO ACEITE IZDA.
ASIENTO DE VALVULA	10220662	6	1	157	10 33 324 2	VALVULA DE DESCONEXION
ASIENTO DE VALVULA	10220818	3	1	163	10 33 327 3	VÁLVULA ARRANQUE EN FRÍ
ASIENTO DE VALVULA	7026127	40	1	71	56 16 688	VÁLVULA FRENO MARCHA
ASIENTO DE VALVULA	7029459	48	1	410	10 28 629 4	BLOQUE DE VALVULAS SELEC
ASPIRACION DE AIRE	9079076	2	1	626	90 79 074	MONTAJE ASPIRACIÓN DE AIR
ASPIRACIÓN DE AIRE DCHA.	9079075	1	1	626	90 79 074	MONTAJE ASPIRACIÓN DE AIR
ATORNILLAMIENTO	9008618	40	2	770	10 35 873 1	CILINDRO ELEVADOR DIA.190
ATORNILLAMIENTO 6L	10220950	145	1	256	90 64 786	BASE DE FIJACION
ATORNILLAMIENTO 6LL	10342221	145	1	256	90 64 786	BASE DE FIJACION
ATORNILLAMIENTO 8L	10220951	146	1	256	90 64 786	BASE DE FIJACION
ATORNILLAMIENTO 8LL	10330614	146	1	256	90 64 786	BASE DE FIJACION
ATORNILLAMIENTO BFW 15L	7402296	52	1	121	10 35 879 9	MONTAJE BOMBAS
ATORNILLAMIENTO BFW 35L	7367136	53	1	121	10 35 879 9	MONTAJE BOMBAS
ATORNILLAMIENTO EGE 10L	7617262	18	1	340	10 05 314 4	MONTAJE UNIDAD ACEITE MA
ATORNILLAMIENTO EGE 28L	7367993	65	1	122	10 35 879 9	MONTAJE BOMBAS
ATORNILLAMIENTO EL 10L	247242302	83	1	123	10 35 879 9	MONTAJE BOMBAS
ATORNILLAMIENTO EL 10L	247242302	72	1	398	10 35 874 4	MONTAJE CORREDERA DISTR
ATORNILLAMIENTO EL 15L	472300414	60	1	397	10 35 874 4	MONTAJE CORREDERA DISTR
ATORNILLAMIENTO EL 15L	472300414	112	1	399	10 35 874 4	MONTAJE CORREDERA DISTR
ATORNILLAMIENTO EL 15L	472300414	80	2	703	10 35 872 5	PLUMA MONOBLOC 7,00M
ATORNILLAMIENTO EL 22L	247138602	52	1	702	10 35 872 5	PLUMA MONOBLOC 7,00M
ATORNILLAMIENTO EL 28L	7407120	66	1	350	10 05 312 6	TUBOS FLEX.HIDR./ASPIR.+R
ATORNILLAMIENTO ET 10L	482430314	82	4	123	10 35 879 9	MONTAJE BOMBAS
ATORNILLAMIENTO ET 12S	482431414	90	1	703	10 35 872 5	PLUMA MONOBLOC 7,00M
ATORNILLAMIENTO ET 15L	472430408	117	1	399	10 35 874 4	MONTAJE CORREDERA DISTR
ATORNILLAMIENTO ET 28L	7407122	17	1	89	10 07 444 8	INST.HIDR.ESTRUC.INF.
ATORNILLAMIENTO EW 12L	247117702	10	1	54	10 49 867 0	MONTAJE CONEXIÓN GIRATO
ATORNILLAMIENTO EW 12L	247117702	33	2	365	10 35 875 4	INST.HIDR.CONDUCTOS MAND
ATORNILLAMIENTO EW 12L	247117702	22	1	371	10 82 438 0	INST.HIDR.CONDUCTOS MAND
ATORNILLAMIENTO EW 15L	7615379	8	2	112	10 36 623 6	INST.COMBUSTIBLE MOTOR
ATORNILLAMIENTO EW 15L	7615379	12	1	113	10 09 538 7	MONTAJE FILTRO COMBUSTI
ATORNILLAMIENTO EW 15L	7615379	76	1	128	90 80 120	ENGRANAJE DISTRIBUCION
ATORNILLAMIENTO EW 15L	7615379	63	2	358	10 35 875 1	INST.HIDR.ACC. VENTILADOR
ATORNILLAMIENTO EW 15L	7615379	18	3	362	10 35 875 4	INST.HIDR.CONDUCTOS MAND
ATORNILLAMIENTO EW 15L	7615379	18	2	369	10 82 438 0	INST.HIDR.CONDUCTOS MAND
ATORNILLAMIENTO EW 15L	7615379	68	4	397	10 35 874 4	MONTAJE CORREDERA DISTR
ATORNILLAMIENTO EW 15L	7615379	141	4	705	10 35 872 5	PLUMA MONOBLOC 7,00M
ATORNILLAMIENTO EW 15L	7615379	44	2	770	10 35 873 1	CILINDRO ELEVADOR DIA.190
ATORNILLAMIENTO EW 16S	7617460	69	1	397	10 35 874 4	MONTAJE CORREDERA DISTR
ATORNILLAMIENTO EW 35L	482530914	80	1	384	10 35 874 5	MONTAJE DEPÓSITO HIDR.
ATORNILLAMIENTO EW 6L	247021702	61	1	247	10 07 675 7	LUBR.CENTR.CARRO SUPER
ATORNILLAMIENTO EW 6S	472531508	36	1	120	10 35 879 9	MONTAJE BOMBAS
ATORNILLAMIENTO EW 8L	247021802	15	3	711	10 38 862 4	ENGRASE CENTRALIZADO
ATORNILLAMIENTO G 12L	4600747	5	3	789	10 37 296 7	PROLONGACIÓN TUBOS FLEX
ATORNILLAMIENTO G 15L	7362107	136	4	705	10 35 872 5	PLUMA MONOBLOC 7,00M
ATORNILLAMIENTO G 22L	7362408	135	1	705	10 35 872 5	PLUMA MONOBLOC 7,00M
ATORNILLAMIENTO G 6LL	774374208	40	1	255	90 64 786	BASE DE FIJACION
ATORNILLAMIENTO G 6LL	774374208	40	6	257	10 01 461 1	CAJA AUXILIAR
ATORNILLAMIENTO GE 10	10021563	13	2	621	90 78 554	MONTAJE TUBERÍA A.FUGA
ATORNILLAMIENTO GE 10	10813936	17	1	605	10 12 002 3	TUBERIA DE ACEITE MONTAJ
ATORNILLAMIENTO GE 10	10813936	14	1	649	10 13 273 9	MONTAJE ATL

Descripción	Artículo	Pos.	Cantid	Página	Grupo	Descripción
ATORNILLAMIENTO GE 10	10813936	14	1	650	10 13 274 0	MONTAJE ATL
ATORNILLAMIENTO GE 10L	7362091	20	3	340	10 05 314 4	MONTAJE UNIDAD ACEITE MA
ATORNILLAMIENTO GE 10L	7362091	20	4	341	10 82 438 9	MONTAJE UNIDAD ACEITE MA
ATORNILLAMIENTO GE 10S	7362103	16	1	54	10 49 867 0	MONTAJE CONEXIÓN GIRATO
ATORNILLAMIENTO GE 12	10813939	20	4	623	10 12 720 8	TUBERIAS DE COMBUSTIBLE
ATORNILLAMIENTO GE 12	10813940	25	4	623	10 12 720 8	TUBERIAS DE COMBUSTIBLE
ATORNILLAMIENTO GE 12L G1	7362117	26	2	340	10 05 314 4	MONTAJE UNIDAD ACEITE MA
ATORNILLAMIENTO GE 12L G1	7362117	26	1	341	10 82 438 9	MONTAJE UNIDAD ACEITE MA
ATORNILLAMIENTO GE 12L M1	7405399	9	1	54	10 49 867 0	MONTAJE CONEXIÓN GIRATO
ATORNILLAMIENTO GE 12L M1	7405399	7	1	220	10 05 311 7	MEC. GIRO
ATORNILLAMIENTO GE 12L M1	7405399	32	1	365	10 35 875 4	INST.HIDR.CONDUCTOS MAND
ATORNILLAMIENTO GE 15L	4600518	25	2	340	10 05 314 4	MONTAJE UNIDAD ACEITE MA
ATORNILLAMIENTO GE 15L	4600518	25	2	341	10 82 438 9	MONTAJE UNIDAD ACEITE MA
ATORNILLAMIENTO GE 15L	4600518	43	4	770	10 35 873 1	CILINDRO ELEVADOR DIA.190
ATORNILLAMIENTO GE 15L	7003570	17	2	112	10 36 623 6	INST.COMBUSTIBLE MOTOR
ATORNILLAMIENTO GE 15L	7003570	13	2	113	10 09 538 7	MONTAJE FILTRO COMBUSTI
ATORNILLAMIENTO GE 15L	7003570	75	3	128	90 80 120	ENGRANAJE DISTRIBUCION
ATORNILLAMIENTO GE 15L	7003570	33	2	352	10 05 312 9	REFRIG.ACEITE TRANS.E HI
ATORNILLAMIENTO GE 15L	7003570	62	2	358	10 35 875 1	INST.HIDR.ACC. VENTILADOR
ATORNILLAMIENTO GE 15L	7003570	67	4	397	10 35 874 4	MONTAJE CORREDERA DISTR
ATORNILLAMIENTO GE 15L	7003570	106	2	399	10 35 874 4	MONTAJE CORREDERA DISTR
ATORNILLAMIENTO GE 15L	7003570	40	3	404	10 06 771 7	MONTAJE TUBERÍAS IMPULS.
ATORNILLAMIENTO GE 15L	7003570	88	3	703	10 35 872 5	PLUMA MONOBLOC 7,00M
ATORNILLAMIENTO GE 15L	7403083	9	2	112	10 36 623 6	INST.COMBUSTIBLE MOTOR
ATORNILLAMIENTO GE 15L	7403083	30	1	352	10 05 312 9	REFRIG.ACEITE TRANS.E HI
ATORNILLAMIENTO GE 15L	7411760	59	1	397	10 35 874 4	MONTAJE CORREDERA DISTR
ATORNILLAMIENTO GE 16S	7018370	52	6	397	10 35 874 4	MONTAJE CORREDERA DISTR
ATORNILLAMIENTO GE 22L	7362515	29	2	120	10 35 879 9	MONTAJE BOMBAS
ATORNILLAMIENTO GE 22L	7362515	78	1	384	10 35 874 5	MONTAJE DEPÓSITO HIDR.
ATORNILLAMIENTO GE 22L	7362515	126	1	399	10 35 874 4	MONTAJE CORREDERA DISTR
ATORNILLAMIENTO GE 28L	7003800	16	3	89	10 07 444 8	INST.HIDR.ESTRUC.INF.
ATORNILLAMIENTO GE 28L	7003800	60	2	121	10 35 879 9	MONTAJE BOMBAS
ATORNILLAMIENTO GE 28L	7003800	8	1	220	10 05 311 7	MEC. GIRO
ATORNILLAMIENTO GE 28L	7003800	56	1	349	10 05 312 6	TUBOS FLEX.HIDR./ASPIR.+R
ATORNILLAMIENTO GE 28L	7003800	76	3	384	10 35 874 5	MONTAJE DEPÓSITO HIDR.
ATORNILLAMIENTO GE 35L	4900486	31	1	120	10 35 879 9	MONTAJE BOMBAS
ATORNILLAMIENTO GE 35L	4900486	79	1	384	10 35 874 5	MONTAJE DEPÓSITO HIDR.
ATORNILLAMIENTO GE 6L	7362169	30	2	770	10 35 873 1	CILINDRO ELEVADOR DIA.190
ATORNILLAMIENTO GE 8	10295884	15	1	581	10 12 021 3	MONTAJE SOPORTE GRUPO
ATORNILLAMIENTO GEO 15L	7029651	10	2	113	10 09 538 7	MONTAJE FILTRO COMBUSTI
ATORNILLAMIENTO GR 15/10L	7406699	19	1	340	10 05 314 4	MONTAJE UNIDAD ACEITE MA
ATORNILLAMIENTO GZ 10L	7410211	62	1	397	10 35 874 4	MONTAJE CORREDERA DISTR
ATORNILLAMIENTO GZ 15L	7410213	11	1	113	10 09 538 7	MONTAJE FILTRO COMBUSTI
ATORNILLAMIENTO GZ 15L	7410213	142	1	705	10 35 872 5	PLUMA MONOBLOC 7,00M
ATORNILLAMIENTO M10X1K-	774373608	4	1	255	90 64 786	BASE DE FIJACION
ATORNILLAMIENTO M6K	491035414	185	1	256	90 64 786	BASE DE FIJACION
ATORNILLAMIENTO ORIENTA	7412734	9	1	252	10 48 927 7	COMBINACIÓN DE DISTRIB. SX
ATORNILLAMIENTO ORIENTA	7617261	23	1	340	10 05 314 4	MONTAJE UNIDAD ACEITE MA
ATORNILLAMIENTO ORIENTA	7617261	23	1	341	10 82 438 9	MONTAJE UNIDAD ACEITE MA
ATORNILLAMIENTO ORIENTAB	7617714	81	6	123	10 35 879 9	MONTAJE BOMBAS
ATORNILLAMIENTO ORIENTAB	7617714	35	4	241	10 35 877 2	MONTAJE CORONA ROTACIÓ
ATORNILLAMIENTO ORIENTAB	7617714	71	2	398	10 35 874 4	MONTAJE CORREDERA DISTR
ATORNILLAMIENTO RED 15/10	7616915	61	1	397	10 35 874 4	MONTAJE CORREDERA DISTR
ATORNILLAMIENTO RED 22/15	7616913	22	1	340	10 05 314 4	MONTAJE UNIDAD ACEITE MA
ATORNILLAMIENTO RED 22/15	7616913	22	1	341	10 82 438 9	MONTAJE UNIDAD ACEITE MA
ATORNILLAMIENTO RED 22/15	7616913	91	3	703	10 35 872 5	PLUMA MONOBLOC 7,00M
ATORNILLAMIENTO RED 28/22	7616910	25	1	346	10 05 312 6	TUBOS FLEX.HIDR./ASPIR.+R
ATORNILLAMIENTO RED 28/22	7616910	127	1	399	10 35 874 4	MONTAJE CORREDERA DISTR
ATORNILLAMIENTO RED 35/28	7367750	66	1	122	10 35 879 9	MONTAJE BOMBAS
ATORNILLAMIENTO REDUCC	10424588	16	1	249	10 34 071 7	ENGRASADORA

Descripción	Artículo	Pos.	Cantid	Página	Grupo	Descripción
ATORNILLAMIENTO ROV10L M	10300881	19	1	617	10 12 314 1	MONT.FILTRO FINO COMBUS
ATORNILLAMIENTO SV 15L	4901130	25	2	364	10 35 875 4	INST.HIDR.CONDUCTOS MAND
ATORNILLAMIENTO SV 15L	4901130	98	2	703	10 35 872 5	PLUMA MONOBLOC 7,00M
ATORNILLAMIENTO WE 6LL	774373808	180	1	256	90 64 786	BASE DE FIJACION
ATORNILLAMIENTO WEE 35L	10217714	7	1	604	10 12 476 3	MONTAJE MÓDULO ACEITE
ATORNILLAMIENTO WH 18L	7617351	9	2	220	10 05 311 7	MEC. GIRO
ATORNILLAMIENTO WH 6L M1	7368426	21	5	711	10 38 862 4	ENGRASE CENTRALIZADO
ATORNILLAMIENTO WH 6L M1	7368426	19	8	719	10 35 872 0	ENGRASE CENTRALIZADO
BANDEJA	10043180	20	1	279	10 05 736 2	MONTAJE CONSOLA MANDO
BANDEJA	10043180	30	1	467	10 35 876 8	CABINA DEL CONDUCTOR
BANDEJA ACEITE	10126368	1	1	582	10 12 593 7	CUBETA ACEITE C.SUJECIÓN
BARANDILLA	10071592	180	1	419	10 05 303 6	REVESTIMIENTO
BARANDILLA	10071592	180	1	434	10 49 857 1	REVESTIMIENTO
BARRA DCHA.	9688995	30	1	802	10 05 539 2	PUERTA LATERAL IZDA.
BARRA DE RETORNO	10008154	2	1	174	10 00 795 6	REGULACIÓN
BARRA DE RETORNO	10008156	2	1	174	10 00 795 6	REGULACIÓN
BARRA DE RETORNO	10008157	2	1	174	10 00 795 6	REGULACIÓN
BARRA DE RETORNO	10008158	2	1	174	10 00 795 6	REGULACIÓN
BARRA DE RETORNO	10008160	2	1	174	10 00 795 6	REGULACIÓN
BARRA IZDA.	10067843	31	1	802	10 05 539 2	PUERTA LATERAL IZDA.
BARRA TRACCION	10016661	38	4	250	10 34 071 7	ENGRASADORA
BARRA TRACCION M8X163	10013858	6	2	252	10 48 927 7	COMBINACIÓN DE DISTRIB. SX
BASE DE FIJACION	9064786	998	1	251	10 48 927 6	COMBINACIÓN DE DISTRIB. SX
BASE DE FIJACION	9064786	998	1	707	10 30 331 7	COMBINACIÓN DE DISTRIB. M
BASE DE FIJACION	9064786	998	1	721	10 30 336 8	COMBINACIÓN DE DISTRIB. M
BASE DISPLAY	7373268	20	1	295	56 18 923	CONSOLA DE MANDO A LA DE
BASE FIJACION	11003600	32	1	323	11 00 359 4	CARCASA
BASE PUESTO CONDUCTOR	10053118	20	1	268	10 05 302 5	PUESTO DEL CONDUCTOR
BASTIDOR	10101225	600	1	474	10 04 678 9	MARCO DE LA PUERTA
BASTIDOR	7029411	510	1	476	70 28 844	VENTANA DE CORREDERA
BASTIDOR DE ASIENTO	10029370	10	1	276	70 24 996	BASTIDOR DE ASIENTO
BASTIDOR DE ASIENTO	7024996	15	1	273	10 04 363 1	ASIENTO CONDUCTOR
BASTIDOR DE ASIENTO	7024996	15	1	274	10 04 363 2	ASIENTO CONDUCTOR
BATERÍA CALEFACCIÓN	10022070	17	1	322	11 00 359 4	CARCASA
BATTERÍA SECA CARGADO	6205121	20	2	506	10 35 875 8	MONTAJE BATERÍAS
BIELA	10116876	60	8	566	10 12 595 9	MOTOR DIESEL D9508 A7 320k
BIELA	10116877	1	1	592	10 11 687 6	BIELA
BIELA	9064092	8	1	757	99 06 383	CILINDRO HIDRAULICO
BIELA	9064092	8	1	758	99 06 576	CILINDRO HIDRAULICO
BIELA	94020365	8	1	755	94 02 020 2	CILINDRO HIDRAULICO
BIELA	9593854	8	1	756	95 93 590	CILINDRO HIDRAULICO
BISAGRA	10066497	2	1	458	10 05 541 1	PUERTA LATERAL ANT.DCHA.
BISAGRA	10291123	2160	2	490	10 29 113 8	REVESTIMIENTO
BISAGRA	7029409	640	2	474	10 04 678 9	MARCO DE LA PUERTA
BLOQUE	9820573	43	2	414	10 05 303 6	REVESTIMIENTO
BLOQUE	9820573	117	2	416	10 05 303 6	REVESTIMIENTO
BLOQUE	9820573	43	2	429	10 49 857 1	REVESTIMIENTO
BLOQUE	9820573	117	2	431	10 49 857 1	REVESTIMIENTO
BLOQUE	9988206	30	1	414	10 05 303 6	REVESTIMIENTO
BLOQUE	9988206	30	1	429	10 49 857 1	REVESTIMIENTO
BLOQUE BLANCO COMBINA	10066383	15	1	706	10 06 477 4	CILINDRO HIDROLICO+ADICIO
BLOQUE BLANCO COMBINA	10073622	20	1	355	10 35 875 1	INST.HIDR.ACC. VENTILADOR
BLOQUE BLANCO COMBINA	10092096	5	2	343	10 35 875 5	EJEC.GIRADA HIDR.+MEC.GIR
BLOQUE BLANCO COMBINA	9370414	1	1	400	93 70 592	VALVULA DE RETENCION
BLOQUE DE VALVULAS SELEC	10286294	57	1	407	10 11 355 7	BLOQUE MANDO
BLOQUE DESLIZANTE	10216694	13	1	133	10 44 145 6	MECANISMO DE ACCIONAMIE
BLOQUE DISTRIBUIDOR	9386212	31	1	335	10 38 698 2	INST.HIDR.BOMBAS A CORR.D
BLOQUE DISTRIBUIDOR	9386212	31	1	338	10 49 804 4	INST.HIDR.BOMBAS A CORR.D
BLOQUE DISTRIBUIDOR	9681272	30	1	335	10 38 698 2	INST.HIDR.BOMBAS A CORR.D
BLOQUE DISTRIBUIDOR	9681272	30	1	338	10 49 804 4	INST.HIDR.BOMBAS A CORR.D

Descripción	Artículo	Pos.	Cantid	Página	Grupo	Descripción
BLOQUE INTERMEDIA	9006345	5	1	770	10 35 873 1	CILINDRO ELEVADOR DIA.190
BLOQUE INTERMEDIA	9392953	56	2	771	10 35 873 1	CILINDRO ELEVADOR DIA.190
BLOQUE INTERMEDIA	9988764	6	1	770	10 35 873 1	CILINDRO ELEVADOR DIA.190
BLOQUE MANDO	10113557	20	1	395	10 35 874 4	MONTAJE CORREDERA DISTR
BLOQUEO	921618116	75	4	43	10 35 874 0	ESTRUC.INF.COMPL.
BLOQUEO DE CONTACTO	6905304	12	1	309	10 08 142 4	AP.CONTR.PILOT.PEDAL IZDO
BLOQUEO DE CONTACTO	6905304	12	1	310	10 08 142 6	AP.CONTR.PILOT.PED.DCHO.
BLOQUEO DE CONTACTO DT-	7368241	14	1	309	10 08 142 4	AP.CONTR.PILOT.PEDAL IZDO
BLOQUEO DE CONTACTO DT-	7368241	14	1	310	10 08 142 6	AP.CONTR.PILOT.PED.DCHO.
BOBINA	10011749	30	1	751	10 29 135 3	MÓDULO MANDO
BOBINA ELECTROIMAN	10333044	2	1	375	56 15 344	VÁLVULA SOLENOIDE
BOBINA ELECTROIMAN	10455143	10	1	411	10 34 192 9	VALVULA REDUCTORA DE PR
BOCA DE CUCHARA	10498500	9	1	726	10 49 849 9	CUCHARA RETRO HD 1950MM
BOCA MEDIDA	5607616	37	1	120	10 35 879 9	MONTAJE BOMBAS
BOCA MEDIDA	7019891	30	1	120	10 35 879 9	MONTAJE BOMBAS
BOCA MEDIDA	7406864	75	1	398	10 35 874 4	MONTAJE CORREDERA DISTR
BOCA MEDIDA 15L	5607671	39	1	404	10 06 771 7	MONTAJE TUBERÍAS IMPULS.
BOCA TUBO CARGA COMPL.	10118838	1	1	585	10 11 883 9	LLENADO DE ACEITE
BOCINA ALTA INTENSIDAD	6204593	30	1	545	10 35 868 3	INSTALACION CARBURANTE
BOCINA ALTA INTENSIDAD	6205045	21	1	511	10 06 221 6	INST.EL. MONOBLOQUE
BOCINA ALTA INTENSIDAD	6205045	21	1	512	10 35 876 2	INST.EL. MONOBLOQUE
BOCINA ALTA INTENSIDAD	6205045	22	1	513	10 49 837 6	INST.EL. MONOBLOQUE
BOLSA P.ACCIDENTE C.ACEI	7023359	50	1	39	90 66 466	ACCESORIOS
BOMBA	10215935	20	1	119	10 35 879 9	MONTAJE BOMBAS
BOMBA ACEITE LUBR.C.SUJE	10116165	140	1	567	10 12 595 9	MOTOR DIESEL D9508 A7 320k
BOMBA ACEITE LUBR.PREM	10116166	1	2	609	10 11 616 5	BOMBA ACEITE LUBR.C.SUJE
BOMBA ALTA PRESIÓN C.SU	9078260	171	1	567	10 12 595 9	MOTOR DIESEL D9508 A7 320k
BOMBA CIL. VAR. HIDR.	9072922	2	1	125	90 80 165	GRUPO MULTICIRC.
BOMBA CIL. VAR. HIDR.	9077452	3	1	125	90 80 165	GRUPO MULTICIRC.
BOMBA CTO.REFRIG.	9884140	80	1	128	90 80 120	ENGRANAJE DISTRIBUCION
BOMBA DE AGUA C.SUJECIÓ	9079863	370	1	568	10 12 595 9	MOTOR DIESEL D9508 A7 320k
BOMBA DE AGUA PREMONT	10120034	1	1	637	90 79 863	BOMBA DE AGUA C.SUJECIÓ
BOMBA DE ALTA PRES.PRE	10117814	1	1	620	90 78 260	BOMBA ALTA PRESIÓN C.SU
BOMBA DE ENGRANAJES	10333227	4	1	131	10 42 845 9	BOMBA MEC. GIRO
BOMBA DE ENGRANAJES	10333259	1	1	154	10 33 322 7	BOMBA DE ENGRANAJES
BOMBA DE ENGRANAJES	10355486	50	1	121	10 35 879 9	MONTAJE BOMBAS
BOMBA DE ENGRASE MANUA	7900280	140	1	552	10 08 428 5	HERRAMIENTAS DE EQUIPAM
BOMBA LLENADO	10009239	41	1	550	10 49 815 2	HERRAMIENTAS DE EQUIPAM
BOMBA LLENADO	10342798	31	1	550	10 49 815 2	HERRAMIENTAS DE EQUIPAM
BOMBA MANUAL	510160916	19	1	7	.	
BOMBA MANUAL	8145666	30	1	39	90 66 466	ACCESORIOS
BOMBA MANUAL COMBUSTIBL	7027480	4	1	113	10 09 538 7	MONTAJE FILTRO COMBUSTI
BOMBA MEC. GIRO	10428459	25	1	120	10 35 879 9	MONTAJE BOMBAS
BOMBA PREVIA DE ALIMENT	10116343	2	1	622	10 11 781 4	BOMBA DE ALTA PRES.PRE
BOMBILLA	6200685	3	2	499	99 41 040	MONTAJE FARO
BOMBILLA	6200685	11	1	500	10 04 553 0	FARO DE TRABAJO
BOMBILLA	6200685	11	1	501	70 27 205	FARO
BOMBILLA	6200685	21	2	513	10 49 837 6	INST.EL. MONOBLOQUE
BOMBILLA 30V/1,2W/T3	6001713	2	1	290	10 08 046 6	MONTAJE INTERR. S42
BOMBILLA 30V/1,2W/T3	6001713	2	1	777	99 89 645	MONTAJE INTERR.
BOMBILLA 30V/1,2W/T3	6001713	2	1	778	99 89 646	MONTAJE INTERR. S84-2
BOMBILLA 30V/1,2W/T3	6001713	921	1	792	95 99 236	INSTALACION ELECTRICA
BOQUILLA	10006191	30	1	752	10 34 080 6	SEGURO CONTRA ROTURA TU
BOQUILLA	10006191	30	1	753	10 34 081 2	SEGURO CONTRA ROTURA TU
BOQUILLA	7020613	360	1	473	10 04 678 8	PUERTA CABINA CONDUCTO
BOQUILLA	7023702	22	1	150	10 33 307 1	PLACA DE CONEXION
BOQUILLA	7028906	900	4	479	10 48 809 7	INST.ELÉCTRICA
BOQUILLA	7381298	20	1	69	90 72 026	PLACA DE CONEXION NG 165
BOQUILLA	7618601	49	1	132	10 42 845 9	BOMBA MEC. GIRO
BOQUILLA	7624277	70	1	751	10 29 135 3	MÓDULO MANDO

Descripción	Artículo	Pos.	Cantid	Página	Grupo	Descripción
BOQUILLA 5/16/20	7019171	110	9	477	10 48 809 7	INST.ELÉCTRICA
BOQUILLA 6/10/13	7019160	370	1	473	10 04 678 8	PUERTA CABINA CONDUCTO
BOQUILLA 6/10/13	7019160	940	1	479	10 48 809 7	INST.ELÉCTRICA
BOQUILLA CORRIENTE	10016540	5	2	308	10 05 798 5	MONTAJE PLACA REPOSAPIÉ
BOQUILLA CORRIENTE	7028950	370	2	489	10 48 809 9	REVESTIMIENTO INTERIOR
BOQUILLA MANGUERA	10009055	970	1	479	10 48 809 7	INST.ELÉCTRICA
BOQUILLA MANGUERA	10115608	6	2	642	10 11 978 1	CODO DE REFRIGERANTE MO
BOQUILLA MANGUERA	9140351	2	2	629	90 80 436	TUBO ASPIRADOR ANEJO
BOQUILLA MANGUERA	9140351	13	1	649	10 13 273 9	MONTAJE ATL
BOQUILLA MANGUERA	9140351	13	1	650	10 13 274 0	MONTAJE ATL
BOQUILLA MANGUERA	9272900	15	1	638	10 11 763 3	CONEXIÓN CONDUCTOS AGU
BOQUILLA PASO DE MEMBRA	5607889	38	1	269	10 05 311 8	BASE PUESTO CONDUCTOR
BOQUILLA ROSCADA	10009211	680	1	482	10 29 114 6	BRAZO DEL LIMPIAPARABRISA
BOQUILLA ROSCADA	4782008	61	2	117	10 35 873 3	AIRE Y SISTEMA ESCAPE
BOQUILLA ROSCADA	4900169	62	2	117	10 35 873 3	AIRE Y SISTEMA ESCAPE
BOTON	10289975	43	4	273	10 04 363 1	ASIENTO CONDUCTOR
BOTON	10289975	43	4	274	10 04 363 2	ASIENTO CONDUCTOR
BOTON 1	10040322	25	2	287	10 46 991 7	
BOTON 1	10040322	25	2	301	10 46 991 8	
BOTON 2	10040324	30	1	287	10 46 991 7	
BOTON 2	10040324	30	1	301	10 46 991 8	
BOWLE	10331395	14	1	619	10 30 300 7	PREFILTRO COMBUSTIBLE
BRAZO DE ESPEJO	7019141	820	1	487	10 04 435 3	ESPEJO EXTERIOR
BRAZO DE LIMPIAPARABRISA	7029427	620	1	483	70 28 866	BRAZO DEL LIMPIAPARABRISA
BRAZO DEL LIMPIAPARABRISA	10291144	670	1	482	10 29 114 6	BRAZO DEL LIMPIAPARABRISA
BRAZO DEL LIMPIAPARABRISA	10291146	950	1	479	10 48 809 7	INST.ELÉCTRICA
BRAZO DEL LIMPIAPARABRISA	7028866	610	1	481	70 29 426	LIMPIAPARABRISAS
BRAZO PLANETARIO	90011490	45	1	222	90 01 781 7	ACCIONAMIENTO GIRATORIO
BRAZO PLANETARIO	933330801	35	1	221	90 01 781 7	ACCIONAMIENTO GIRATORIO
BRAZO PLANETARIO	9444417	25	1	64	94 43 970	ACCIONAMIENTO DE TRASL
BRAZO PLANETARIO	9444452	35	1	64	94 43 970	ACCIONAMIENTO DE TRASL
BRIDA	10115621	4	1	649	10 13 273 9	MONTAJE ATL
BRIDA	10115621	4	1	650	10 13 274 0	MONTAJE ATL
BRIDA	9279836	12	2	134	90 72 922	BOMBA CIL. VAR. HIDR.
BRIDA	9279836	12	2	136	90 77 452	BOMBA CIL. VAR. HIDR.
BRIDA ABIERTA	7369271	6	1	114	10 35 873 3	AIRE Y SISTEMA ESCAPE
BRIDA ABIERTA 105 S235JR;E	10100620	55	5	117	10 35 873 3	AIRE Y SISTEMA ESCAPE
BRIDA CIEGA SAE	9566165	71	2	384	10 35 874 5	MONTAJE DEPÓSITO HIDR.
BRIDA CIEGA SAE	9577407	18	1	395	10 35 874 4	MONTAJE CORREDERA DISTR
BRIDA CIEGA SAE SAE 1 1/2"	9491026	18	1	706	10 06 477 4	CILINDRO HIDROLICO+ADICIO
BRIDA COJINETE	9078058	7	1	601	10 11 802 2	ÁRBOL LEVAS COMPL.
BRIDA COJINETE	9080197	6	1	126	90 80 120	ENGRANAJE DISTRIBUCION
BRIDA COJINETE	9882408	20	1	70	98 88 126	MECANISMO DE ACCIONAMIE
BRIDA DE CABLES	7362507	97	4	292	10 82 277 5	REPOSABRAZOS DERECHA
BRIDA DE CABLES D 16	10044344	792	1	478	10 48 809 7	INST.ELÉCTRICA
BRIDA DE CALEFACCION	10299988	1	1	633	90 78 314	MONTAJE BRIDA CALEFACCIÓ
BRIDA DE MONTAJE	9273491	13	1	134	90 72 922	BOMBA CIL. VAR. HIDR.
BRIDA DE MONTAJE	9273491	13	1	136	90 77 452	BOMBA CIL. VAR. HIDR.
BRIDA DE MOTOR	9444457	80	1	66	94 43 970	ACCIONAMIENTO DE TRASL
BRIDA INTERMEDIA	10016655	34	1	250	10 34 071 7	ENGRASADORA
BRIDA INTERMEDIA	10116734	2	2	638	10 11 763 3	CONEXIÓN CONDUCTOS AGU
BRIDA INTERMEDIA	10333263	1	1	158	10 33 325 9	BOMBA DE ENGRANAJES
BRIDA INTERMEDIA	9278805	12	1	192	98 89 161	PLACA DE CONEXION
BRIDA INTERMEDIA	934174716	37	2	396	10 35 874 4	MONTAJE CORREDERA DISTR
BRIDA INTERMEDIA	9684904	20	2	60	10 07 498 7	ACCIONAMIENTO DE TRASL
BRIDAS	11002474	35	8	323	11 00 359 4	CARCASA
BRIDAS	7002480	25	4	89	10 07 444 8	INST.HIDR.ESTRUC.INF.
BRIDAS	7002480	20	1	286	10 05 879 2	SENSOR CONTR.PILOT.PREV
BRIDAS	7002480	20	1	299	10 05 879 4	SENSOR CONTR.PILOT.PREV
BRIDAS	7005587	66	8	204	10 35 873 9	MONTAJE DE RADIADOR

Descripción	Artículo	Pos.	Cantid	Página	Grupo	Descripción
BRIDAS	7005587	35	3	242	10 07 604 7	LUBR.CENTR.CARRO SUPER
BRIDAS	7005587	40	2	247	10 07 675 7	LUBR.CENTR.CARRO SUPER
BRIDAS	7005587	65	6	247	10 07 675 7	LUBR.CENTR.CARRO SUPER
BRIDAS	7005587	31	2	346	10 05 312 6	TUBOS FLEX.HIDR./ASPIR.+R
BRIDAS	7009088	31	1	286	10 05 879 2	SENSOR CONTR.PILOT.PREV
BRIDAS	7009088	31	1	299	10 05 879 4	SENSOR CONTR.PILOT.PREV
BULON	10015475	30	1	71	56 16 688	VÁLVULA FRENO MARCHA
BULON	10020739	1	1	152	10 33 307 8	PIEZA DE CIERRE
BULON	10022781	13	2	321	10 02 211 7	CAJA CONDUCTO AIRE
BULON	10056468	230	1	715	10 35 872 1	MANGO DE LA PALA 2,60M
BULON	10056474	2	1	736	10 05 646 8	BULON
BULON	10056475	2	1	737	10 35 872 3	BULON
BULON	10058975	170	2	715	10 35 872 1	MANGO DE LA PALA 2,60M
BULON	10065983	40	2	444	10 05 530 3	CAPOT DEL MOTOR
BULON	10358723	200	1	715	10 35 872 1	MANGO DE LA PALA 2,60M
BULON	10498335	30	1	733	10 35 873 7	ÉMBOLO PROT.VÁST.P.CIL.CU
BULON	10498336	2	1	738	10 49 833 5	BULON
BULON	11080307	10	2	459	73 72 348	CERRADURA
BULON	7028840	620	2	474	10 04 678 9	MARCO DE LA PUERTA
BULON	9325867	2	2	106	10 39 589 3	PIEZAS MONTAJE EQUIPAMIE
BULON	9374747	80	2	771	10 35 873 1	CILINDRO ELEVADOR DIA.190
BULON	9375036	13	1	700	10 35 872 5	PLUMA MONOBLOC 7,00M
BULON	9577845	180	1	715	10 35 872 1	MANGO DE LA PALA 2,60M
BULON	9869072	31	1	414	10 05 303 6	REVESTIMIENTO
BULON	9869072	44	2	414	10 05 303 6	REVESTIMIENTO
BULON	9869072	118	2	416	10 05 303 6	REVESTIMIENTO
BULON	9869072	31	1	429	10 49 857 1	REVESTIMIENTO
BULON	9869072	44	2	429	10 49 857 1	REVESTIMIENTO
BULON	9869072	118	2	431	10 49 857 1	REVESTIMIENTO
BULON	9935245	11	1	700	10 35 872 5	PLUMA MONOBLOC 7,00M
BULON	9935246	5	1	739	99 35 245	BULON
BULON 8X16	7738704	20	2	463	10 03 720 9	MUELLE DE GAS
BULON CPL.	9375349	12	1	700	10 35 872 5	PLUMA MONOBLOC 7,00M
BULON CPL.	9375560	140	2	771	10 35 873 1	CILINDRO ELEVADOR DIA.190
BULON DE CENTRAJE	10358171	4	2	549	10 35 876 5	MONTAJE LASTRE
BULON DE CIERRE	7028896	300	1	484	70 28 778	PIEZAS DE MONTAJE
BULON DE SEGURIDAD	10451150	44	5	725	10 49 849 8	CUCHARA RETRO HD 1950MM
BULON DE SUJECION DIA.30M	7373198	6	1	241	10 35 877 2	MONTAJE CORONA ROTACIÓ
BULON DE SUJECION DIA.30M	7373199	5	1	241	10 35 877 2	MONTAJE CORONA ROTACIÓ
BULON ESTRANGULADOR	10015533	140	2	71	56 16 688	VÁLVULA FRENO MARCHA
BULON FINAL	5609594	20	1	51	56 18 003	ESLABON FINAL
BULÓN EMBUTIR	7361276	175	1	552	10 08 428 5	HERRAMIENTAS DE EQUIPAM
CABALLETE PAL.BASC.PREM	10122503	1	1	595	10 11 806 0	MEC. COMPL. PALANCA BAS
CABEZA BOTON GIRATORIO	10292659	2	1	544	10 29 266 0	COLECTOR DEL SECADOR
CABEZA BOTON GIRATORIO	10467727	90	1	519	10 06 222 8	INST.EL.CORREDERA DISTR.
CABEZA DE COJINETE	9620078	1	1	764	96 31 985	ALOJAMIENTO DE BIELA 150/
CABEZA DE COJINETE	9907784	1	1	765	99 07 890	ALOJAMIENTO DE BIELA 125/
CABEZA FILTRO	10333270	1	1	160	10 33 326 8	FILTRO
CABEZA FILTRO	10333271	1	1	161	10 33 327 0	CABEZA FILTRO
CABEZA FILTRO	10333272	1	1	162	10 33 327 1	CABEZA FILTRO
CABEZAL	9265409	1	1	313	92 65 665	JR AP.CONTROL PILOT.
CABINA DEL CONDUCTOR	10358768	8700	1	92	10 35 874 2	SUPERESTRUCTURA
CABINA DEL CONDUCTOR	10476167	20	1	467	10 35 876 8	CABINA DEL CONDUCTOR
CABLE CONEXIÓN BATERÍA	10066267	43	1	508	10 35 875 8	MONTAJE BATERÍAS
CABLE DE ANTENA	10488090	182	1	477	10 48 809 7	INST.ELÉCTRICA
CABLE DE ANTENA	6204404	135	1	272	10 05 311 8	BASE PUESTO CONDUCTOR
CABLE DE CONEXION 3X2,5 0,	10014589	10	1	253	10 00 933 0	DETECTOR DE PROXIMIDAD
CABLE DE CONEXION 3X2,5 5	10013884	10	1	253	10 00 933 0	DETECTOR DE PROXIMIDAD
CABLE DE TIERRA	10009024	770	1	478	10 48 809 7	INST.ELÉCTRICA
CABLE DE TIERRA	10066007	15	1	212	10 49 800 0	MOTOR - SISTEMA ELÉCTRIC

Descripción	Artículo	Pos.	Cantid	Página	Grupo	Descripción
CABLE DE TIERRA	10086421	42	1	525	10 35 876 3	INST.EL.DEP. COMBUSTIBLE
CABLE DE TIERRA	10086421	42	1	532	10 49 837 7	INST.EL.DEP. COMBUSTIBLE
CABLE DE TIERRA	9689583	98	1	292	10 82 277 5	REPOSABRAZOS DERECHA
CABLE DE UNION	9078418	1	1	631	10 11 570 0	ANEJO DE LINEA DE CONEXIÓ
CABLE DE UNION K27	9078452	2	1	631	10 11 570 0	ANEJO DE LINEA DE CONEXIÓ
CABLE METALICO	10326658	175	1	418	10 05 303 6	REVESTIMIENTO
CABLE METALICO	10326658	175	1	433	10 49 857 1	REVESTIMIENTO
CACHA	10014777	55	1	288	10 46 993 3	
CACHA	10014778	50	1	288	10 46 993 3	
CACHA	10014779	55	1	302	10 46 993 2	
CACHA	10014780	50	1	302	10 46 993 2	
CADENA	7024630	26	1	376	10 28 046 1	VÁLVULA MAGNÉTICA REGUL
CADENA DE ORUGA	10300127	1	1	48	10 30 012 2	CADENA DE ORUGA 600mm
CADENA DE ORUGA	10300127	1	1	48	10 30 012 2	CADENA DE ORUGA 600mm
CADENA DE ORUGA 600mm	10300122	2	2	7	.	
CADENA DE ORUGA 600mm	10300122	102	2	43	10 35 874 0	ESTRUC.INF.COMPL.
CAJA AUXILIAR	10014611	999	1	244	10 29 301 9	COMBINACIÓN DE DISTRIB. M
CAJA AUXILIAR	10014611	999	1	248	10 29 301 6	COMBINACIÓN DE DISTRIB. M
CAJA AUXILIAR	10014611	999	1	251	10 48 927 6	COMBINACIÓN DE DISTRIB. SX
CAJA AUXILIAR	10014611	999	1	707	10 30 331 7	COMBINACIÓN DE DISTRIB. M
CAJA AUXILIAR	10014611	999	1	721	10 30 336 8	COMBINACIÓN DE DISTRIB. M
CAJA COMPL.	10063755	200	1	420	10 05 303 6	REVESTIMIENTO
CAJA COMPL.	10063755	200	1	435	10 49 857 1	REVESTIMIENTO
CAJA CONDUCTO AIRE	10022117	2	1	318	10 81 666 6	EVAPORADOR
CAJA CONDUCTO AIRE	10022787	1	1	321	10 02 211 7	CAJA CONDUCTO AIRE
CAJA DE CLAVIJAS	6203486	45	1	504	10 09 499 2	RELACIÓN MATERIAL EL.
CAJA DE CLAVIJAS	6905303	11	1	309	10 08 142 4	AP.CONTR.PILOT.PEDAL IZDO
CAJA DE CLAVIJAS	6905303	11	1	310	10 08 142 6	AP.CONTR.PILOT.PED.DCHO.
CAJA DE CLAVIJAS DT 2-POL	6203129	13	1	309	10 08 142 4	AP.CONTR.PILOT.PEDAL IZDO
CAJA DE CLAVIJAS DT 2-POL	6203129	13	1	310	10 08 142 6	AP.CONTR.PILOT.PED.DCHO.
CAJA DE CONEXION	9884135	1	1	188	98 84 140	BOMBA CTO.REFRIG.
CAJA DE CONEXION	9884137	3	1	188	98 84 140	BOMBA CTO.REFRIG.
CAJA DE EVAPORADOR	10005672	1	1	322	11 00 359 4	CARCASA
CAJA DE EVAPORADOR	10005679	8	1	322	11 00 359 4	CARCASA
CAJA DE EVAPORADOR	10022069	15	1	322	11 00 359 4	CARCASA
CAJA DE RODILLOS	9442231	2	32	64	94 43 970	ACCIONAMIENTO DE TRASL
CAJA DE VALVULA	10409752	1	1	176	10 34 668 4	SERVOMANDO
CAJA DEL CASQUILLO	6203136	310	1	285	10 06 804 1	MANIPULATOR LADO CPL CA
CAJA DEL CASQUILLO	6203136	310	1	298	10 06 804 5	APARATO MANDO MAN. DCHA.
CAJA DEL CASQUILLO	6203136	310	1	315	10 07 707 2	CAJA EL.COMPL. U101/R964
CAJA DEL CIGÜEÑAL COMPL.	10129071	10	1	565	10 12 595 9	MOTOR DIESEL D9508 A7 320k
CAJA DEL REFRIGERADOR	10358600	2	1	100	10 35 875 3	MONTAJE CAJA RADIADOR
CAJA EL.COMPL. E50	10094990	40	1	494	10 35 875 7	INST.EL.CARRO SUPERIOR
CAJA EL.COMPL. U101/R964	10077072	120	1	495	10 35 875 7	INST.EL.CARRO SUPERIOR
CAJA EL.COMPL. U46	10076083	11	1	529	10 49 837 7	INST.EL.DEP. COMBUSTIBLE
CAJA EL.COMPL. U47	10076042	10	1	329	10 82 924 8	CAJA EL.COMPL. U47-V1.5
CAJA EL.COMPL. U47-V1.5	10829248	2	1	314	10 06 648 4	MONTAJE CAJA ELÉCTRICA
CAJA EL.COMPL. U48-A	10077073	10	2	529	10 49 837 7	INST.EL.DEP. COMBUSTIBLE
CAJA ELÉCTRICA	10389036	20	1	520	10 07 707 3	CAJA EL.COMPL. U48-A
CAJA ELÉCTRICA	10389036	20	1	521	10 07 608 3	CAJA EL.COMPL. U46
CAJA ELÉCTRICA	9392651	20	1	277	10 05 798 3	REPOSABRAZOS IZQUIERDA
CAJA ELÉCTRICA E50	10062226	10	1	502	10 09 499 0	CAJA EL.COMPL. E50
CAJA ENCHUFE	10323529	12	1	520	10 07 707 3	CAJA EL.COMPL. U48-A
CAJA ENCHUFE	10323529	12	1	521	10 07 608 3	CAJA EL.COMPL. U46
CAJA ENCHUFE	10323530	11	1	520	10 07 707 3	CAJA EL.COMPL. U48-A
CAJA ENCHUFE	10323530	11	1	521	10 07 608 3	CAJA EL.COMPL. U46
CAJA ENCHUFE	10323535	10	1	520	10 07 707 3	CAJA EL.COMPL. U48-A
CAJA ENCHUFE	10323535	10	1	521	10 07 608 3	CAJA EL.COMPL. U46
CAJA ENCHUFE	6001963	77	1	291	10 82 277 5	REPOSABRAZOS DERECHA
CAJA FILTRO DE AIRE	10358246	2	1	118	10 35 873 4	MONTAJE FILTRO AIRE

Descripción	Artículo	Pos.	Cantid	Página	Grupo	Descripción
CAJA HERRAMIENTAS	7016002	10	1	551	10 08 428 5	HERRAMIENTAS DE EQUIPAM
CAJETÍN DE FUSIBLE PLANO	6000783	10	2	503	10 09 499 2	RELACIÓN MATERIAL EL.
CAJON	10022119	20	1	316	10 40 689 8	AIRE ACONDICIONADO
CAJON	10022119	3	1	318	10 81 666 6	EVAPORADOR
CAJON	10063756	10	1	460	10 06 375 5	CAJA COMPL.
CALEF.20W/24V P.CAJA EL.	9873999	36	1	503	10 09 499 2	RELACIÓN MATERIAL EL.
CALENTADOR DEL COMBUSTI	10488927	4	2	618	10 12 282 4	MÓDULO P/FILTRO DE COMBU
CAMARA DE AIRE	10013635	90	1	271	10 05 311 8	BASE PUESTO CONDUCTOR
CAMARA DE AIRE	10051671	30	1	116	10 35 873 3	AIRE Y SISTEMA ESCAPE
CAMARA DE AIRE	10054419	40	2	202	10 35 873 9	MONTAJE DE RADIADOR
CAMARA DE AIRE	10067637	20	1	115	10 35 873 3	AIRE Y SISTEMA ESCAPE
CAMARA DE AIRE	10067638	19	1	115	10 35 873 3	AIRE Y SISTEMA ESCAPE
CAMARA DE AIRE	10081306	35	1	116	10 35 873 3	AIRE Y SISTEMA ESCAPE
CAMARA DE AIRE	10081307	38	1	116	10 35 873 3	AIRE Y SISTEMA ESCAPE
CAMARA DE AIRE	10296116	95	2	271	10 05 311 8	BASE PUESTO CONDUCTOR
CAMARA DE AIRE	10326460	22	0.26	115	10 35 873 3	AIRE Y SISTEMA ESCAPE
CAMISA CILINDRO D9500 - D=	9078050	1	1	577	90 78 049	CILINDRO
CANAL	10009183	300	1	489	10 48 809 9	REVESTIMIENTO INTERIOR
CANAL	10009229	310	1	489	10 48 809 9	REVESTIMIENTO INTERIOR
CANAL ASPIRACIÓN	10024192	500	1	489	10 48 809 9	REVESTIMIENTO INTERIOR
CANAL DE CABLE	9392650	60	1	270	10 05 311 8	BASE PUESTO CONDUCTOR
CANDADO 40	704206616	27	1	788	10 49 831 4	ACOP.RAP.WIGGINS P.COMB
CAPERUZA DE EMPUÑADURA	7025347	21	1	284	73 73 807	PALANCA SEG.
CAPOT	10055354	2	1	413	10 05 303 6	REVESTIMIENTO
CAPOT	10055354	2	1	428	10 49 857 1	REVESTIMIENTO
CAPOT	10055355	10	1	447	10 05 535 4	CAPOT
CAPOT DEL MOTOR	10055303	10	1	413	10 05 303 6	REVESTIMIENTO
CAPOT DEL MOTOR	10055303	10	1	428	10 49 857 1	REVESTIMIENTO
CAPOT DEL MOTOR	10055304	10	1	443	10 05 530 3	CAPOT DEL MOTOR
CAPUCHON	10040326	20	1	301	10 46 991 8	
CAPUCHON	10040327	20	1	287	10 46 991 7	
CAPUCHON	10046783	2010	2	474	10 04 678 9	MARCO DE LA PUERTA
CAPUCHON DE PROTECCION	10354822	1	1	387	10 30 177 6	VALVULA DE DESCARGA
CAPUCHON DE PROTECCION	7013456	3	1	584	50 04 624	TORNILLO PURGA ACEITE
CAPUCHON DE PROTECCION	7616949	9	1	374	50 09 565	CARTUCHO LIM.PRESIÓN
CAPUCHON DE PROTECCION	7623221	996	1	510	10 06 600 9	JC BAT.- MOTOR ARRANQUE
CAPUCHON DE PROTECCION	9882817	17	1	78	92 67 554	VALVULA LIMITADORA DE PR
CARCASA	10121011	1	1	618	10 12 282 4	MÓDULO P/FILTRO DE COMBU
CARCASA	10298629	1	1	166	10 44 145 8	SENSOR DE ÁNGULO DE GIR
CARCASA	10333074	10	1	130	10 21 593 5	BOMBA
CARCASA	10333230	10	1	131	10 42 845 9	BOMBA MEC. GIRO
CARCASA	10409753	1	1	179	10 40 975 2	CAJA DE VALVULA
CARCASA	11003594	1	1	318	10 81 666 6	EVAPORADOR
CARCASA	5605365	12	1	340	10 05 314 4	MONTAJE UNIDAD ACEITE MA
CARCASA	5605365	12	1	341	10 82 438 9	MONTAJE UNIDAD ACEITE MA
CARCASA	5605365	12	1	342	56 09 948	KIT FILTRO P.ACEITE
CARCASA	7372318	2	1	402	56 15 220	FILTRO DE ALTA PRESION
CARCASA	9077975	1	1	126	90 80 120	ENGRANAJE DISTRIBUCION
CARCASA	9276174	10	1	197	10 12 504 2	MOTOR INCORP.HIDR.
CARCASA	9277007	26	1	64	94 43 970	ACCIONAMIENTO DE TRASL
CARCASA	9277636	10	1	134	90 72 922	BOMBA CIL. VAR. HIDR.
CARCASA	9277636	10	1	136	90 77 452	BOMBA CIL. VAR. HIDR.
CARCASA	9886677	10	1	143	98 88 041	MOTOR HIDR. INCORP. FIX FM
CARCASA ACCTO.	970643101	1	1	221	90 01 781 7	ACCIONAMIENTO GIRATORIO
CARCASA DE TERMOSTATO	10116610	1	1	640	10 11 753 0	CARCASA DE TERMOSTATO P
CARCASA DE TERMOSTATO P	10117530	1	1	639	10 11 752 9	MONT.CARCASA DE TERMOST
CARCASA DE TERMOSTATO P	10117531	2	1	640	10 11 753 0	CARCASA DE TERMOSTATO P
CARCASA FILTRO	10220702	2	1	161	10 33 327 0	CABEZA FILTRO
CARCASA FMV 165	9882889	10	1	68	90 72 024	MOTOR HIDR. INCORP. VAR.
CARCASA FRENO	933605401	1	1	224	93 36 053 01	FRENO

Descripción	Artículo	Pos.	Cantid	Página	Grupo	Descripción
CARCASA MOTOR	10014692	7	1	249	10 34 071 7	ENGRASADORA
CARCASA MOTOR	10424598	1	1	249	10 34 071 7	ENGRASADORA
CARCASA RADIADOR ACEITE	10124773	1	1	607	10 12 475 6	MÓDULO ACEITE IZDA.
CARCASA RADIADOR ACEITE	10124775	1	1	608	10 12 475 7	MODULO ACEITE DCHA.
CARCASA REGUL.	10102068	10	1	146	10 10 206 4	REGULADOR
CARCASA VOLANTE IMPUL.P	10120321	1	1	664	10 12 032 2	MONT. CARCASA VOLANTE IM
CARCASAS CENTRALES	9884136	2	1	188	98 84 140	BOMBA CTO.REFRIG.
CARRETON	10358387	2	1	41	10 35 874 0	ESTRUC.INF.COMPL.
CARRIL	10063827	35	1	461	10 06 375 5	CAJA COMPL.
CARRIL	9827870	132	1	417	10 05 303 6	REVESTIMIENTO
CARRIL	9827870	132	1	432	10 49 857 1	REVESTIMIENTO
CARRIL DE GUIA	10055306	250	1	422	10 05 303 6	REVESTIMIENTO
CARRIL DE GUIA	10055306	250	1	437	10 49 857 1	REVESTIMIENTO
CARTER DE BOMBA	10014693	8	1	249	10 34 071 7	ENGRASADORA
CARTER DEL CIGÜEÑAL	10129073	1	1	573	10 12 907 2	PREMONT. CÁRTER CIGÜEÑA
CARTUCHO DE FILTRO	10037617	8	1	96	10 09 107 4	PAQUETE SERV. 1500H/2500H
CARTUCHO DE FILTRO	10037617	13	1	340	10 05 314 4	MONTAJE UNIDAD ACEITE MA
CARTUCHO DE FILTRO	10037617	13	1	341	10 82 438 9	MONTAJE UNIDAD ACEITE MA
CARTUCHO DE FILTRO	10037617	10	1	342	56 09 948	KIT FILTRO P.ACEITE
CARTUCHO DE FILTRO	10470100	4	1	402	56 15 220	FILTRO DE ALTA PRESION
CARTUCHO DE FILTRO 4µm	10123751	9	2	97	10 36 190 7	PAQUETE SERV. 1000H
CARTUCHO DE FILTRO 4µm	10123751	1	2	580	10 12 518 2	SEPARADOR ACEITE OEL
CARTUCHO DE FILTRO FIBR	7373880	14	3	381	10 35 874 5	MONTAJE DEPÓSITO HIDR.
CARTUCHO DE FILTRO FIBR	7373881	2	3	95	10 09 107 3	PAQUETE SERV. ERSTE 500H
CARTUCHO DE FILTRO FIBR	7373881	2	3	97	10 36 190 7	PAQUETE SERV. 1000H
CARTUCHO DE FILTRO FIBR	7373881	15	3	381	10 35 874 5	MONTAJE DEPÓSITO HIDR.
CARTUCHO DE FUSIBLE 20A 3	6001472	14	2	503	10 09 499 2	RELACIÓN MATERIAL EL.
CARTUCHO DE FUSIBLE 250A	10220613	31	1	507	10 35 875 8	MONTAJE BATERÍAS
CARTUCHO DE FUSIBLE 250A	10220613	100	1	509	10 35 875 8	MONTAJE BATERÍAS
CARTUCHO DE FUSIBLE 25A 3	6001471	23	1	503	10 09 499 2	RELACIÓN MATERIAL EL.
CARTUCHO DE FUSIBLE C 15A	4901512	40	9	282	97 58 815 01	PLACA E
CARTUCHO DE FUSIBLE C 15A	4901512	15	6	503	10 09 499 2	RELACIÓN MATERIAL EL.
CARTUCHO DE FUSIBLE C 7,5	4901513	41	5	282	97 58 815 01	PLACA E
CARTUCHO DE FUSIBLE C 7,5	4901513	16	6	503	10 09 499 2	RELACIÓN MATERIAL EL.
CARTUCHO FILTRO ACEITE 17	10044373	1	2	96	10 09 107 4	PAQUETE SERV. 1500H/2500H
CARTUCHO FILTRO ACEITE 17	10044373	2	1	606	10 12 002 7	FILTRO DE ACEITE
CARTUCHO FILTRO ACEITE 17	10044373	5	1	607	10 12 475 6	MÓDULO ACEITE IZDA.
CARTUCHO LIM.PRESIÓN	5009565	5	1	372	10 00 909 0	UNIDAD ACEITE MANDO
CASETE DE RESORTE	10032001	7	1	619	10 30 300 7	PREFILTRO COMBUSTIBLE
CASQUILLO	10008118	5	1	156	10 33 323 8	REGUL.HIDR.
CASQUILLO	10022782	12	2	321	10 02 211 7	CAJA CONDUCTO AIRE
CASQUILLO	10302997	2	2	46	10 29 067 4	RODILLO APOYO D8K
CASQUILLO	10399731	17	2	717	10 35 840 0	MANGO DE LA PALA 2,60M
CASQUILLO	10399731	3	2	731	10 49 825 2	OREJETA DE UNION
CASQUILLO	10399732	15	2	717	10 35 840 0	MANGO DE LA PALA 2,60M
CASQUILLO	10408514	4	2	731	10 49 825 2	OREJETA DE UNION
CASQUILLO	10409084	18	2	717	10 35 840 0	MANGO DE LA PALA 2,60M
CASQUILLO	7019122	350	2	484	70 28 778	PIEZAS DE MONTAJE
CASQUILLO	7362583	7	2	772	92 66 411	PEDAL DE TRASLACION DE A
CASQUILLO	7362583	7	2	773	92 66 412	ACC.P.SENSOR EL. DCHA.
CASQUILLO	7367729	4	1	400	93 70 592	VALVULA DE RETENCION
CASQUILLO	7369135	46	1	407	10 11 355 7	BLOQUE MANDO
CASQUILLO	7623776	43	1	153	10 33 322 6	PLACA DE CONEXION
CASQUILLO	9265394	2	1	313	92 65 665	JR AP.CONTROL PILOT.
CASQUILLO	9266235	10	1	72	92 67 037	VALVULA LIMITADORA DE PR
CASQUILLO	9273849	9	1	635	10 11 865 5	MONT.COMPR.AIRE AC.
CASQUILLO	9827152	1	2	755	94 02 020 2	CILINDRO HIDRAULICO
CASQUILLO 100mm	10099877	3	2	49	10 47 076 9	RUEDA DIRECTRIZ D8K
CASQUILLO ACOPLAMIENTO	10117766	24	1	192	98 89 161	PLACA DE CONEXION
CASQUILLO ACOPLAMIENTO	9078269	9	1	611	10 11 802 5	ACC. P. BOMBA ALTA PRESIÓ

Descripción	Artículo	Pos.	Cantid	Página	Grupo	Descripción
CASQUILLO CON BORDE	7370556	2	2	45	10 22 121 2	POLEA RODADURA
CASQUILLO DE ACERO	10820659	30	2	709	10 35 835 9	PLUMA MONOBLOC 7,00M
CASQUILLO DE AJUSTE	9077709	3	1	636	90 77 708	POLEA INVERSION
CASQUILLO DE AJUSTE	9178018	5	2	573	10 12 907 2	PREMONT. CÁRTER CIGÜEÑA
CASQUILLO DE AJUSTE	9178018	14	2	664	10 12 032 2	MONT. CARCASA VOLANTE IM
CASQUILLO DE COJINETE	7381855	15	4	188	98 84 140	BOMBA CTO.REFRIG.
CASQUILLO DE COJINETE	7623777	44	1	153	10 33 322 6	PLACA DE CONEXION
CASQUILLO DE COJINETE	7623779	6	1	153	10 33 322 6	PLACA DE CONEXION
CASQUILLO DE COJINETE	7623779	3	1	158	10 33 325 9	BOMBA DE ENGRANAJES
CASQUILLO DE COJINETE 60X	9078584	1	1	634	10 11 822 3	MONT. RUEDA INTERMEDIA I=
CASQUILLO DE MONTAJE	9113008	990	1	761	95 88 147	EMBOLO 220MM
CASQUILLO DE MONTAJE	94020571	960	1	755	94 02 020 2	CILINDRO HIDRAULICO
CASQUILLO DE MONTAJE	9907684	990	1	762	95 89 256	EMBOLO 190MM
CASQUILLO DE MONTAJE	9907684	990	1	763	99 07 680	EMBOLO 190 MM
CASQUILLO DE UNION 3	10015495	100	1	289	99 68 625	MANILLA DEL SENSOR LH IZ
CASQUILLO DE UNION 3	10015495	100	1	304	99 68 611	MANILLA DEL SENSOR LH DC
CASQUILLO DE VALVULA	10020738	2	1	180	10 44 299 8	VALVULA SELECTORA
CASQUILLO DE VALVULA	10020738	2	1	774	10 02 073 5	VALVULA SELECTORA
CASQUILLO DE VALVULA	10333248	1	1	264	10 33 323 7	VALVULA LIMITADORA DE PR
CASQUILLO DE VALVULA	10333256	2	1	157	10 33 324 2	VALVULA DE DESCONEXION
CASQUILLO DE VALVULA	7373241	4	1	180	10 44 299 8	VALVULA SELECTORA
CASQUILLO DE VALVULA	7373241	4	1	774	10 02 073 5	VALVULA SELECTORA
CASQUILLO DE VALVULA	7414522	50	2	71	56 16 688	VÁLVULA FRENO MARCHA
CASQUILLO DE VALVULA	9269686	10	1	79	92 70 598	VALVULA DE RETENCION
CASQUILLO DISTANCIADOR	10013971	780	1	486	70 28 778	PIEZAS DE MONTAJE
CASQUILLO DISTANCIADOR	10022783	5	6	321	10 02 211 7	CAJA CONDUCTO AIRE
CASQUILLO DISTANCIADOR	10084989	35	4	507	10 35 875 8	MONTAJE BATERÍAS
CASQUILLO DISTANCIADOR	10358263	3	1	737	10 35 872 3	BULON
CASQUILLO DISTANCIADOR	7028907	990	4	479	10 48 809 7	INST.ELÉCTRICA
CASQUILLO DISTANCIADOR	7372147	11	6	208	10 42 538 5	RADIADOR ACEITE COMB.
CASQUILLO DISTANCIADOR	9076985	4	1	636	90 77 708	POLEA INVERSION
CASQUILLO DISTANCIADOR 7,	9078949	8	4	669	10 11 671 8	MONT.APARATO MANDO
CASQUILLO DISTANCIADOR 9,	9078947	6	2	630	90 78 417	MONTAJE TUBO AIRE ADMISIÓ
CASQUILLO DISTANCIADOR 9,	10115863	3	1	617	10 12 314 1	MONT.FILTRO FINO COMBUS
CASQUILLO DISTANCIADOR 9.	9078946	13	1	578	10 12 503 7	ANEJO TUBERIA
CASQUILLO DISTANCIADOR 9.	9078946	6	2	604	10 12 476 3	MONTAJE MÓDULO ACEITE
CASQUILLO DISTANCIADOR 9.	9078946	5	2	630	90 78 417	MONTAJE TUBO AIRE ADMISIÓ
CASQUILLO EXTENSIBLE	9113009	991	1	761	95 88 147	EMBOLO 220MM
CASQUILLO EXTENSIBLE	9907701	991	1	762	95 89 256	EMBOLO 190MM
CASQUILLO EXTENSIBLE	9907701	991	1	763	99 07 680	EMBOLO 190 MM
CASQUILLO FINAL	7002199	30	1	52	73 71 456	SEGMENTO TERMINAL CADEN
CASQUILLO GUIA	10115007	4	1	264	10 33 323 7	VALVULA LIMITADORA DE PR
CASQUILLO RAUTE 120/150X	9589092	1	2	756	95 93 590	CILINDRO HIDRAULICO
CASQUILLO SPIRAL 120/150X	9233882	1	2	757	99 06 383	CILINDRO HIDRAULICO
CASQUILLO SPIRAL 120/150X	9233882	1	2	758	99 06 576	CILINDRO HIDRAULICO
CASQUILLO.	10326567	57	2	520	10 07 707 3	CAJA EL.COMPL. U48-A
CASQUILLO.	10326567	57	2	521	10 07 608 3	CAJA EL.COMPL. U46
CASQUILLO.	9327516	3	4	55	95 66 869	MONTAJE ELEMENTO ARRAS
CASQUILLO.	9563951	16	60	241	10 35 877 2	MONTAJE CORONA ROTACIÓ
CASQUILLO.	9907856	9	1	756	95 93 590	CILINDRO HIDRAULICO
CASQUILLO.	9907856	9	1	757	99 06 383	CILINDRO HIDRAULICO
CASQUILLO.	9907856	9	1	758	99 06 576	CILINDRO HIDRAULICO
CASQUILLO.	9926802	84	1	755	94 02 020 2	CILINDRO HIDRAULICO
CASQUILLO. 11x14x46,5	7367235	68	4	702	10 35 872 5	PLUMA MONOBLOC 7,00M
CASQUILLO. 11x14x58	7367212	7	2	741	93 63 937	ABRAZADERA TUBO
CASQUILLO. 12,4x16x87	7367211	35	4	344	10 35 875 5	EJEC.GIRADA HIDR.+MEC.GIR
CASQUILLO. 21,8X28	7373759	9	1	372	10 00 909 0	UNIDAD ACEITE MANDO
CATADIOPTRICO POSTERIOR	6204631	10	2	549	10 35 876 5	MONTAJE LASTRE
CAZOLETA	10007193	5	1	300	10 08 576 7	MONTAJE INTERR. S248
CAZOLETA	6204368	4	1	777	99 89 645	MONTAJE INTERR.

Descripción	Artículo	Pos.	Cantid	Página	Grupo	Descripción
CAZOLETA	6204368	4	1	778	99 89 646	MONTAJE INTERR. S84-2
CAZOLETA	6204368	923	1	792	95 99 236	INSTALACION ELECTRICA
CAZOLETA	6204370	4	1	290	10 08 046 6	MONTAJE INTERR. S42
CENICERO	7366731	75	1	278	10 05 798 3	REPOSABRAZOS IZQUIERDA
CERRADURA	7028833	330	1	472	10 04 678 8	PUERTA CABINA CONDUCTO
CERRADURA	7363883	4	1	105	10 05 797 8	CONSOLA CIERRE
CERRADURA	7365293	1	1	464	73 72 093	CERRADURA
CERRADURA	7371008	36	1	457	10 05 541 0	PUERTA LATERAL ANT.DCHA.
CERRADURA	7371008	26	1	802	10 05 539 2	PUERTA LATERAL IZDA.
CERRADURA	7371009	30	1	451	10 05 546 4	CUBIERTA IZQUIERDA
CERRADURA	7371009	37	1	457	10 05 541 0	PUERTA LATERAL ANT.DCHA.
CERRADURA	7371009	27	1	802	10 05 539 2	PUERTA LATERAL IZDA.
CERRADURA	7372093	5	1	450	10 06 360 5	TAPA
CERRADURA	7372093	27	1	460	10 06 375 5	CAJA COMPL.
CERRADURA	7372093	5	1	462	10 06 355 3	TAPA
CERRADURA	7372348	34	1	457	10 05 541 0	PUERTA LATERAL ANT.DCHA.
CERRADURA	7372348	24	1	802	10 05 539 2	PUERTA LATERAL IZDA.
CERTIF. CEE	9399606	97	1	560	10 35 876 6	LETREROS
CERTIF. CEE	9399606	97	1	564	10 49 863 6	LETREROS
CHAPA	10054772	32	8	493	10 35 876 4	PASILLO MALLA
CHAPA	10059995	45	1	466	10 49 857 4	CUBIERTA INF.
CHAPA	10064616	10	1	210	10 06 461 3	JUNTA HERMET.RADIADOR
CHAPA	10064617	20	1	210	10 06 461 3	JUNTA HERMET.RADIADOR
CHAPA	10066832	28	1	110	10 49 845 5	ALOJAMIENTO DE MOTOR
CHAPA	10068169	30	1	403	10 06 771 7	MONTAJE TUBERÍAS IMPULS.
CHAPA	10068170	31	1	403	10 06 771 7	MONTAJE TUBERÍAS IMPULS.
CHAPA	10076219	30	1	210	10 06 461 3	JUNTA HERMET.RADIADOR
CHAPA	10076346	33	1	503	10 09 499 2	RELACIÓN MATERIAL EL.
CHAPA	10080708	100	1	207	10 35 873 9	MONTAJE DE RADIADOR
CHAPA	10083630	100	1	278	10 05 798 3	REPOSABRAZOS IZQUIERDA
CHAPA	10092371	231	1	421	10 05 303 6	REVESTIMIENTO
CHAPA	10092371	231	1	436	10 49 857 1	REVESTIMIENTO
CHAPA	10092451	232	1	421	10 05 303 6	REVESTIMIENTO
CHAPA	10092451	232	1	436	10 49 857 1	REVESTIMIENTO
CHAPA	10119105	6	1	671	10 11 948 7	MONT.MAZO CABLES
CHAPA	10358079	13	1	782	10 35 806 3	SUPLEMENTO SUPERIOR 120
CHAPA	10358248	3	1	118	10 35 873 4	MONTAJE FILTRO AIRE
CHAPA	10364395	45	1	102	10 35 875 3	MONTAJE CAJA RADIADOR
CHAPA	9758230	101	1	292	10 82 277 5	REPOSABRAZOS DERECHA
CHAPA	9892073	8	2	549	10 35 876 5	MONTAJE LASTRE
CHAPA	9943165	20	2	311	10 08 256 0	MONTAJE DETECTOR PROXI
CHAPA	9946134	10	2	311	10 08 256 0	MONTAJE DETECTOR PROXI
CHAPA AJUSTE	9078622	1	1	665	90 78 467	MONT. CHAPA AJUSTE
CHAPA APOYO	9073190	30	2	623	10 12 720 8	TUBERIAS DE COMBUSTIBLE
CHAPA APOYO	9073190	9	1	641	10 11 930 6	MONT.TUBERÍA DE PURGA
CHAPA APOYO	9276996	15	1	621	90 78 554	MONTAJE TUBERÍA A.FUGA
CHAPA COBERTURA	10008444	15	1	316	10 40 689 8	AIRE ACONDICIONADO
CHAPA COBERTURA	10396395	56	1	526	10 35 876 3	INST.EL.DEP. COMBUSTIBLE
CHAPA COBERTURA	10396395	56	1	533	10 49 837 7	INST.EL.DEP. COMBUSTIBLE
CHAPA COBERTURA	10396615	80	1	527	10 35 876 3	INST.EL.DEP. COMBUSTIBLE
CHAPA COBERTURA	10396615	80	1	534	10 49 837 7	INST.EL.DEP. COMBUSTIBLE
CHAPA COBERTURA	9697208	73	1	465	10 35 876 0	CUBIERTA INF.
CHAPA COBERTURA	9697208	73	1	466	10 49 857 4	CUBIERTA INF.
CHAPA CONDUCTO AIRE	10369606	310	1	426	10 05 303 6	REVESTIMIENTO
CHAPA CONDUCTO AIRE	10369606	310	1	441	10 49 857 1	REVESTIMIENTO
CHAPA DE GUIA	10076829	300	1	425	10 05 303 6	REVESTIMIENTO
CHAPA DE GUIA	10076829	300	1	440	10 49 857 1	REVESTIMIENTO
CHAPA DE PROTECCION TE	10115584	3	1	651	10 11 558 7	MONTAJE TUBUL.ESCAPE GA
CHAPA DE PROTECCION TE	10115584	3	1	652	10 11 678 0	MONTAJE TUBUL.ESCAPE GA
CHAPA DE PROTECCION TE	10116902	1	1	666	10 11 721 3	CHAPA DE PROTECCION TE

Descripción	Artículo	Pos.	Cantid	Página	Grupo	Descripción
CHAPA DE PROTECCION TE	10117213	525	1	570	10 12 595 9	MOTOR DIESEL D9508 A7 320k
CHAPA EN U	10058506	6	1	100	10 35 875 3	MONTAJE CAJA RADIADOR
CHAPA PERFORADA	9080377	11	2	582	10 12 593 7	CUBETA ACEITE C.SUJECIÓN
CHAPA PERFORADA CUADR	10067947	15	1	101	10 35 875 3	MONTAJE CAJA RADIADOR
CHAPA PROTECCION	10130223	7	1	646	10 11 899 9	CONSOLA MONTAJE
CHAPA PROTECCION	7028910	560	1	486	70 28 778	PIEZAS DE MONTAJE
CHAPA PROTECCION TERMIC	10132729	6	1	647	10 13 274 6	CODO DE ESCAPE MONTAJE
CHAPA PROTECCION TERMIC	10132737	7	1	647	10 13 274 6	CODO DE ESCAPE MONTAJE
CHAPA PROTECCION TERMIC	9080041	5	1	645	10 11 566 7	TUBO DE ESCAPE DERECHA
CHAPA PROTECCION TERMIC	9080041	5	1	648	10 11 566 8	TUBO DE ESCAPE IZQUIERDA
CHAPA PROTECCION TERMIC	9080042	6	1	645	10 11 566 7	TUBO DE ESCAPE DERECHA
CHAPA PROTECCION TERMIC	9080043	6	1	648	10 11 566 8	TUBO DE ESCAPE IZQUIERDA
CHAPALETA DE AIRE	10005674	2	1	320	10 02 208 3	TUBULADURA AIRE
CHAPALETA DE AIRE	10005675	7	1	322	11 00 359 4	CARCASA
CHAPALETA DE AIRE	10022778	18	1	321	10 02 211 7	CAJA CONDUCTO AIRE
CHAPALETA DE AIRE	10022780	15	1	321	10 02 211 7	CAJA CONDUCTO AIRE
CHAVETA	10220694	8	1	158	10 33 325 9	BOMBA DE ENGRANAJES
CIERRE DEL TANQUE	7369407	26	1	788	10 49 831 4	ACOP.RAP.WIGGINS P.COMB
CIERRE DEL TANQUE	7610825	5	1	225	94 42 350	CODO DE LLENADO DE ACEIT
CIERRE DEL TANQUE d=45	7610826	11	1	219	10 05 302 4	MONTAJE MEC. GIRO
CILINDRO	10410654	1	1	165	10 41 064 0	MECANISMO DE ACCIONAMIE
CILINDRO	9064093	10	1	757	99 06 383	CILINDRO HIDRAULICO
CILINDRO	9064093	10	1	758	99 06 576	CILINDRO HIDRAULICO
CILINDRO	9078049	40	8	565	10 12 595 9	MOTOR DIESEL D9508 A7 320k
CILINDRO	94020204	10	1	755	94 02 020 2	CILINDRO HIDRAULICO
CILINDRO	9593856	10	1	756	95 93 590	CILINDRO HIDRAULICO
CILINDRO C.PLACA MANDO	10333079	1	1	149	10 33 307 0	MECANISMO DE ACCIONAMIE
CILINDRO CON CASQUILLO	9886662	1	1	233	98 80 521	JR CIL.+PLACA MANDO
CILINDRO CON CASQUILLO	9886682	1	1	227	98 86 678	JR CIL.+PLACA MANDO
CILINDRO CON CASQUILLO	9888120	1	1	167	90 73 751	JR CIL.+PLACA MANDO
CILINDRO CON CASQUILLO	9888120	1	1	191	98 88 122	JR CIL.+PLACA MANDO
CILINDRO DE CIERRE	7025758	270	1	472	10 04 678 8	PUERTA CABINA CONDUCTO
CILINDRO ELEVADOR DIA.190	10358730	4	1	7	.	
CILINDRO ELEVADOR DIA.190	10358731	10	1	769	10 35 873 0	CILINDRO ELEVADOR DIA.190
CILINDRO HIDRAULICO	94020202	2	1	706	10 06 477 4	CILINDRO HIDROLICO+ADICIO
CILINDRO HIDRAULICO	9593590	2	1	713	10 07 162 8	CILINDRO HIDROLICO+ADICIO
CILINDRO HIDRAULICO	9906383	2	1	770	10 35 873 1	CILINDRO ELEVADOR DIA.190
CILINDRO HIDRAULICO	9906576	3	1	770	10 35 873 1	CILINDRO ELEVADOR DIA.190
CILINDRO HIDROLICO+ADICIO	10064774	24	1	700	10 35 872 5	PLUMA MONOBLOC 7,00M
CILINDRO HIDROLICO+ADICIO	10071628	40	1	715	10 35 872 1	MANGO DE LA PALA 2,60M
CILINDRO TRANSPORTADOR	10333086	1	1	156	10 33 323 8	REGUL.HIDR.
CILINDRO TRANSPORTADOR	10409751	1	1	177	10 40 974 7	REGULACIÓN HIDR.
CILINDRO TRANSPORTADOR	7622886	1	1	178	10 40 975 1	CILINDRO TRANSPORTADOR
CILINDRO TRANSPORTADOR	9278188	11	1	81	90 77 412	JR (PISTÓN AJUSTE) FMV 165
CINTA ADHESIVA	10009045	820	0.1	479	10 48 809 7	INST.ELÉCTRICA
CINTA CONEXION A MASA	6204632	130	1	272	10 05 311 8	BASE PUESTO CONDUCTOR
CINTA CONEXION A MASA	6204632	40	1	517	10 06 222 8	INST.EL.CORREDERA DISTR.
CINTA PARA CABLES	7001877	65	10	117	10 35 873 3	AIRE Y SISTEMA ESCAPE
CINTA PARA CABLES	7001877	145	10	272	10 05 311 8	BASE PUESTO CONDUCTOR
CINTA PARA CABLES	7001877	96	10	292	10 82 277 5	REPOSABRAZOS DERECHA
CINTA PARA CABLES	7001877	33	2	316	10 40 689 8	AIRE ACONDICIONADO
CINTA PARA CABLES	7001877	70	5	793	10 82 390 4	INST.EL.ELEVACIÓN 1200MM
CINTA PARA CABLES	7028864	740	8	478	10 48 809 7	INST.ELÉCTRICA
CINTA PARA CABLES	7028864	830	2	479	10 48 809 7	INST.ELÉCTRICA
CINTA SUJECION 300 20	10425216	40	2	102	10 35 875 3	MONTAJE CAJA RADIADOR
CINTURON PELVICO	7371746	80	1	273	10 04 363 1	ASIENTO CONDUCTOR
CINTURON PELVICO	7371746	80	1	274	10 04 363 2	ASIENTO CONDUCTOR
CINTURÓN PROT.INF.P.BALAN	10076271	13	1	7	.	
CLIP	10412536	25	56	443	10 05 530 3	CAPOT DEL MOTOR
CLIP	10412536	39	137	444	10 05 530 3	CAPOT DEL MOTOR

Descripción	Artículo	Pos.	Cantid	Página	Grupo	Descripción
CLIP	10412536	54	5	445	10 05 530 3	CAPOT DEL MOTOR
CLIP	10412536	35	114	448	10 05 535 4	CAPOT
CLIP	10412536	15	28	450	10 06 360 5	TAPA
CLIP	10412536	21	20	451	10 05 546 4	CUBIERTA IZQUIERDA
CLIP	10412536	12	6	452	10 05 538 1	PUERTA FILTRO AIRE IZD.
CLIP	10412536	25	24	453	10 05 543 3	PUERTA LATERAL POST.DCHA
CLIP	10412536	33	18	454	10 05 543 3	PUERTA LATERAL POST.DCHA
CLIP	10412536	30	14	455	10 05 545 3	TAPA CENTRO
CLIP	10412536	22	27	456	10 05 541 0	PUERTA LATERAL ANT.DCHA.
CLIP	10412536	33	20	457	10 05 541 0	PUERTA LATERAL ANT.DCHA.
CLIP	10412536	23	30	801	10 05 539 2	PUERTA LATERAL IZDA.
CODO	9078438	6	2	582	10 12 593 7	CUBETA ACEITE C.SUJECIÓN
CODO DE ESCAPE	10115561	1	1	647	10 13 274 6	CODO DE ESCAPE MONTAJE
CODO DE ESCAPE	10115562	2	1	647	10 13 274 6	CODO DE ESCAPE MONTAJE
CODO DE ESCAPE MONTAJE	10132746	412	1	569	10 12 595 9	MOTOR DIESEL D9508 A7 320k
CODO DE LLENADO DE ACEIT	9442350	85	1	128	90 80 120	ENGRANAJE DISTRIBUCION
CODO DE REFRIGERANTE MO	10119781	382	1	569	10 12 595 9	MOTOR DIESEL D9508 A7 320k
CODO LÍQUIDO REFRIGERANT	10117370	1	1	638	10 11 763 3	CONEXIÓN CONDUCTOS AGU
CODO LÍQUIDO REFRIGERANT	9078875	2	1	642	10 11 978 1	CODO DE REFRIGERANTE MO
CODO LÍQUIDO REFRIGERANT	9078876	1	1	642	10 11 978 1	CODO DE REFRIGERANTE MO
COJINETE	10030591	12	1	221	90 01 781 7	ACCIONAMIENTO GIRATORIO
COJINETE	7610091	2	1	77	94 44 453	PIÑON PLANETARIA M=3,75 Z
COJINETE ARBOL DE LEVAS	9078390	6	5	573	10 12 907 2	PREMONT. CÁRTER CIGÜEÑA
COJINETE DE BIELA	10116879	2	1	592	10 11 687 6	BIELA
COJINETE DE BIELA	10116880	3	1	592	10 11 687 6	BIELA
COJINETE ROD.CIL.	10008109	10	1	150	10 33 307 1	PLACA DE CONEXION
COLECTOR DEL SECADOR	10292660	2	1	543	10 05 319 0	MONTAJE SECADOR
COLLARIN HIDRAULICO	10016715	6	1	47	10 07 535 3	TENSOR GRASA
COLLARIN HIDRAULICO	7610523	8	1	224	93 36 053 01	FRENO
COLLARIN HIDRAULICO	7610523	8	1	239	90 00 386 4	JUEGO DE JUNTAS
COLLARIN HIDRAULICO 291X	7610521	2	1	224	93 36 053 01	FRENO
COLLARIN HIDRAULICO 291X	7610521	2	1	239	90 00 386 4	JUEGO DE JUNTAS
COLUMNA DE RESORTE DE DI	10007880	11	1	149	10 33 307 0	MECANISMO DE ACCIONAMIE
COLUMNA DE RESORTE DE DI	10410673	11	1	165	10 41 064 0	MECANISMO DE ACCIONAMIE
COMBINACIÓN DE DISTRIB. M	10293019	10	1	243	10 07 675 6	LUBR.PIÑÓN MEC. GIRO
COMBINACIÓN DE DISTRIB. M	10293020	1	1	244	10 29 301 9	COMBINACIÓN DE DISTRIB. M
COMBINACIÓN DE DISTRIB. M	10008789	1	1	707	10 30 331 7	COMBINACIÓN DE DISTRIB. M
COMBINACIÓN DE DISTRIB. M	10303317	2	1	711	10 38 862 4	ENGRASE CENTRALIZADO
COMBINACIÓN DE DISTRIB. M	10293016	50	1	247	10 07 675 7	LUBR.CENTR.CARRO SUPER
COMBINACIÓN DE DISTRIB. M	10293018	1	1	248	10 29 301 6	COMBINACIÓN DE DISTRIB. M
COMBINACIÓN DE DISTRIB. M	10303368	4	1	719	10 35 872 0	ENGRASE CENTRALIZADO
COMBINACIÓN DE DISTRIB. M	10303369	1	1	721	10 30 336 8	COMBINACIÓN DE DISTRIB. M
COMBINACIÓN DE DISTRIB. SX	10489276	50	1	710	10 38 839 3	ENGRASE CENTRALIZADO
COMBINACIÓN DE DISTRIB. SX	10489277	1	1	251	10 48 927 6	COMBINACIÓN DE DISTRIB. SX
COMPART.BOMBA PIEZAS	10053008	165	1	91	10 35 874 2	SUPERESTRUCTURA
COMPART.BOMBA PIEZAS	10053008	165	1	93	10 49 853 2	SUPERESTRUCTURA
COMPRESOR AIRE AC.	10116767	4	1	635	10 11 865 5	MONT.COMPR.AIRE AC.
CONDENSADOR	10005670	9	1	208	10 42 538 5	RADIADOR ACEITE COMB.
CONDUCTO AIRE SOBREALIM	10053109	555	1	108	10 35 873 5	MOTOR MONTAJE
CONDUCTO DE LUBRICACIÓN	9375104	21	1	241	10 35 877 2	MONTAJE CORONA ROTACIÓ
CONDUCTO DE LUBRICACIÓN	9375105	22	1	241	10 35 877 2	MONTAJE CORONA ROTACIÓ
CONDUCTO DE LUBRICACIÓN	9375106	23	1	241	10 35 877 2	MONTAJE CORONA ROTACIÓ
CONDUCTO DE LUBRICACIÓN	9375107	24	1	241	10 35 877 2	MONTAJE CORONA ROTACIÓ
CONEXION DE LLENADO	10498316	2	1	788	10 49 831 4	ACOP.RAP.WIGGINS P.COMB
CONEXION DE LLENADO	6426763	5	1	788	10 49 831 4	ACOP.RAP.WIGGINS P.COMB
CONEXION DE LLENADO	7029283	22	1	249	10 34 071 7	ENGRASADORA
CONEXION DE LLENADO	9442359	1	1	225	94 42 350	CODO DE LLENADO DE ACEIT
CONEXION RAPIDA	10022768	4	2	326	10 02 277 7	REJILLA CIRCUL.AIRE
CONEXION RAPIDA	10022785	4	2	321	10 02 211 7	CAJA CONDUCTO AIRE
CONEXIÓN CONDUCTOS AGU	10117633	385	1	569	10 12 595 9	MOTOR DIESEL D9508 A7 320k

Descripción	Artículo	Pos.	Cantid	Página	Grupo	Descripción
CONMUTADOR DE RESORTE	6001027	19	1	284	73 73 807	PALANCA SEG.
CONO	7021984	200	2	71	56 16 688	VÁLVULA FRENO MARCHA
CONO	7021984	230	2	71	56 16 688	VÁLVULA FRENO MARCHA
CONO	7367730	2	1	400	93 70 592	VALVULA DE RETENCION
CONO	7371359	4	1	412	56 10 135	VÁLVULA ALIM.
CONO	9889004	10	1	266	98 89 003	VALVULA DE RETENCION RV
CONO DE CIERRE	4900038	64	1	122	10 35 879 9	MONTAJE BOMBAS
CONO DE CIERRE VKA 12L/S	477700514	58	1	702	10 35 872 5	PLUMA MONOBLOC 7,00M
CONO DE CIERRE VKA 12L/S	477700514	3	6	789	10 37 296 7	PROLONGACIÓN TUBOS FLEX
CONO DE CIERRE VKA 15L	4772024	38	7	403	10 06 771 7	MONTAJE TUBERÍAS IMPULS.
CONO DE CIERRE VKA 15L	4772024	81	2	703	10 35 872 5	PLUMA MONOBLOC 7,00M
CONO DE CIERRE VKA 22L	4772028	76	1	702	10 35 872 5	PLUMA MONOBLOC 7,00M
CONO DE CIERRE VKA 8	4900305	20	3	711	10 38 862 4	ENGRASE CENTRALIZADO
CONO DE CIERRE VKA 8	4900305	33	2	720	10 35 872 0	ENGRASE CENTRALIZADO
CONO DE VALVULA	7373437	3	1	180	10 44 299 8	VALVULA SELECTORA
CONO DE VALVULA	7373437	3	1	774	10 02 073 5	VALVULA SELECTORA
CONO DE VALVULA MK9	10101649	6	8	594	10 11 805 1	CULATA PREMONT. D9508
CONO d=38x66	7362135	3	1	768	56 02 932	VALVULA REGULADORA
CONSOLA	10052716	10	1	104	10 05 300 8	COMPART.BOMBA PIEZAS
CONSOLA	10058018	3	1	105	10 05 797 8	CONSOLA CIERRE
CONSOLA	10058351	10	4	199	10 35 873 9	MONTAJE DE RADIADOR
CONSOLA	10060891	15	8	199	10 35 873 9	MONTAJE DE RADIADOR
CONSOLA	10062253	212	1	421	10 05 303 6	REVESTIMIENTO
CONSOLA	10062253	212	1	436	10 49 857 1	REVESTIMIENTO
CONSOLA	10063991	3	1	713	10 07 162 8	CILINDRO HIDROLICO+ADICIO
CONSOLA	10064480	50	1	203	10 35 873 9	MONTAJE DE RADIADOR
CONSOLA	10064585	55	1	203	10 35 873 9	MONTAJE DE RADIADOR
CONSOLA	10064888	30	1	242	10 07 604 7	LUBR.CENTR.CARRO SUPER
CONSOLA	10065428	4	1	351	10 05 312 9	REFRIG.ACEITE TRANS.E HI
CONSOLA	10065437	30	1	344	10 35 875 5	EJEC.GIRADA HIDR.+MEC.GIR
CONSOLA	10065439	90	1	124	10 35 879 9	MONTAJE BOMBAS
CONSOLA	10065440	32	1	344	10 35 875 5	EJEC.GIRADA HIDR.+MEC.GIR
CONSOLA	10066036	3	1	700	10 35 872 5	PLUMA MONOBLOC 7,00M
CONSOLA	10066456	48	1	701	10 35 872 5	PLUMA MONOBLOC 7,00M
CONSOLA	10066550	21	1	352	10 05 312 9	REFRIG.ACEITE TRANS.E HI
CONSOLA	10066552	15	1	346	10 05 312 6	TUBOS FLEX.HIDR./ASPIR.+R
CONSOLA	10066863	100	1	217	10 49 800 0	MOTOR - SISTEMA ELÉCTRIC
CONSOLA	10066930	34	2	454	10 05 543 3	PUERTA LATERAL POST.DCHA
CONSOLA	10067796	70	2	508	10 35 875 8	MONTAJE BATERÍAS
CONSOLA	10071836	10	1	354	10 35 875 1	INST.HIDR.ACC. VENTILADOR
CONSOLA	10072141	6	1	353	10 35 875 1	INST.HIDR.ACC. VENTILADOR
CONSOLA	10072148	61	1	350	10 05 312 6	TUBOS FLEX.HIDR./ASPIR.+R
CONSOLA	10072688	77	1	247	10 07 675 7	LUBR.CENTR.CARRO SUPER
CONSOLA	10076826	11	1	334	10 38 698 2	INST.HIDR.BOMBAS A CORR.D
CONSOLA	10076826	11	1	337	10 49 804 4	INST.HIDR.BOMBAS A CORR.D
CONSOLA	10077268	12	1	362	10 35 875 4	INST.HIDR.CONDUCTOS MAND
CONSOLA	10077268	12	1	369	10 82 438 0	INST.HIDR.CONDUCTOS MAND
CONSOLA	10079148	10	1	314	10 06 648 4	MONTAJE CAJA ELÉCTRICA
CONSOLA	10081364	10	1	543	10 05 319 0	MONTAJE SECADOR
CONSOLA	10084451	40	1	793	10 82 390 4	INST.EL.ELEVACIÓN 1200MM
CONSOLA	10084481	35	2	517	10 06 222 8	INST.EL.CORREDERA DISTR.
CONSOLA	10085121	30	1	517	10 06 222 8	INST.EL.CORREDERA DISTR.
CONSOLA	10095388	2	1	113	10 09 538 7	MONTAJE FILTRO COMBUSTI
CONSOLA	10119037	1	1	675	10 11 903 8	CONSOLA
CONSOLA	10119038	5	1	671	10 11 948 7	MONT.MAZO CABLES
CONSOLA	10119062	1	1	635	10 11 865 5	MONT.COMPR.AIRE AC.
CONSOLA	10119353	3	1	671	10 11 948 7	MONT.MAZO CABLES
CONSOLA	10119356	4	1	671	10 11 948 7	MONT.MAZO CABLES
CONSOLA	10119595	2	1	646	10 11 899 9	CONSOLA MONTAJE
CONSOLA	10119596	1	1	646	10 11 899 9	CONSOLA MONTAJE

Descripción	Artículo	Pos.	Cantid	Página	Grupo	Descripción
CONSOLA	10357919	5	1	700	10 35 872 5	PLUMA MONOBLOC 7,00M
CONSOLA	10357940	6	1	700	10 35 872 5	PLUMA MONOBLOC 7,00M
CONSOLA	10358269	17	1	700	10 35 872 5	PLUMA MONOBLOC 7,00M
CONSOLA	10380512	83	1	508	10 35 875 8	MONTAJE BATERÍAS
CONSOLA	10385890	10	1	114	10 35 873 3	AIRE Y SISTEMA ESCAPE
CONSOLA	10396657	50	1	526	10 35 876 3	INST.EL.DEP. COMBUSTIBLE
CONSOLA	10396657	50	1	533	10 49 837 7	INST.EL.DEP. COMBUSTIBLE
CONSOLA	10396658	90	1	527	10 35 876 3	INST.EL.DEP. COMBUSTIBLE
CONSOLA	10396658	90	1	534	10 49 837 7	INST.EL.DEP. COMBUSTIBLE
CONSOLA	10498678	18	2	700	10 35 872 5	PLUMA MONOBLOC 7,00M
CONSOLA	10498769	2	1	750	10 49 827 4	PIEZAS MONTAJE EQUIPAMIE
CONSOLA	9013056	43	1	701	10 35 872 5	PLUMA MONOBLOC 7,00M
CONSOLA	9080669	2	1	656	90 80 668	MONTAJE PLACA DE COBERT
CONSOLA	9080670	3	1	656	90 80 668	MONTAJE PLACA DE COBERT
CONSOLA	9690616	80	1	292	10 82 277 5	REPOSABRAZOS DERECHA
CONSOLA	9758750	21	1	747	10 36 839 8	DISP.ALARMA MARCHA
CONSOLA	9928151	10	1	711	10 38 862 4	ENGRASE CENTRALIZADO
CONSOLA	9928771	27	1	720	10 35 872 0	ENGRASE CENTRALIZADO
CONSOLA ANT.DCHA.	10054800	3	1	110	10 49 845 5	ALOJAMIENTO DE MOTOR
CONSOLA CIERRE	10057978	20	1	104	10 05 300 8	COMPART.BOMBA PIEZAS
CONSOLA CIERRE	10093820	70	1	446	10 05 530 3	CAPOT DEL MOTOR
CONSOLA CIERRE	10093901	71	1	446	10 05 530 3	CAPOT DEL MOTOR
CONSOLA CORR.DISTR.	10053143	5	1	394	10 35 874 4	MONTAJE CORREDERA DISTR
CONSOLA DE MANDO A LA DE	5618923	10	1	291	10 82 277 5	REPOSABRAZOS DERECHA
CONSOLA IZDA.ANT.	10054797	2	1	110	10 49 845 5	ALOJAMIENTO DE MOTOR
CONSOLA MANDO IZDA.	10165766	10	1	279	10 05 736 2	MONTAJE CONSOLA MANDO
CONSOLA MONTAJE	10118999	414	1	569	10 12 595 9	MOTOR DIESEL D9508 A7 320k
CONSOLA POST.DCHA.	10054811	5	1	110	10 49 845 5	ALOJAMIENTO DE MOTOR
CONSOLA POST.IZDA.	10498454	4	1	110	10 49 845 5	ALOJAMIENTO DE MOTOR
CONTACTOR PALPADOR	6204371	3	1	300	10 08 576 7	MONTAJE INTERR. S248
CONTACTOR PALPADOR	6204371	3	1	303	90 16 516	MONTAJE INTERR. S218
CONTACTOR PALPADOR	6204371	3	1	735	99 89 179	MONTAJE INTERR.
CONTADOR HORAS DE SERVI	6201379	80	1	278	10 05 798 3	REPOSABRAZOS IZQUIERDA
CORCHETE	7373592	1	4	491	10 47 012 8	
CORDON HERMETIZANTE	10215888	25	0.07	219	10 05 302 4	MONTAJE MEC. GIRO
CORONA DENTADA	9080734	1	1	667	10 12 007 7	MONT. VOLANTE IMUPLS. SAE
CORREDERA	10092431	210	1	421	10 05 303 6	REVESTIMIENTO
CORREDERA	10092431	210	1	436	10 49 857 1	REVESTIMIENTO
CUBETA	7370891	3	1	295	56 18 923	CONSOLA DE MANDO A LA DE
CUBETA ACEITE C.SUJECIÓN	10125937	20	1	565	10 12 595 9	MOTOR DIESEL D9508 A7 320k
CUBETA DE ASIENTO	10165637	65	1	274	10 04 363 2	ASIENTO CONDUCTOR
CUBIERTA	10009596	19	1	252	10 48 927 7	COMBINACIÓN DE DISTRIB. SX
CUBIERTA	10016665	45	4	250	10 34 071 7	ENGRASADORA
CUBIERTA	10022051	16	1	322	11 00 359 4	CARCASA
CUBIERTA	10044347	870	1	479	10 48 809 7	INST.ELÉCTRICA
CUBIERTA	10084986	34	1	507	10 35 875 8	MONTAJE BATERÍAS
CUBIERTA	10291066	2130	1	490	10 29 113 8	REVESTIMIENTO
CUBIERTA	604521501	46	15	282	97 58 815 01	PLACA E
CUBIERTA GOMA	9265414	5	1	313	92 65 665	JR AP.CONTROL PILOT.
CUBIERTA INF.	10358760	8600	1	92	10 35 874 2	SUPERESTRUCTURA
CUBIERTA INF.	10498574	8600	1	93	10 49 853 2	SUPERESTRUCTURA
CUBIERTA IZQUIERDA	10055464	20	1	413	10 05 303 6	REVESTIMIENTO
CUBIERTA IZQUIERDA	10055464	20	1	428	10 49 857 1	REVESTIMIENTO
CUBIERTA IZQUIERDA	10055465	10	1	451	10 05 546 4	CUBIERTA IZQUIERDA
CUCHARA RETRO HD 1950MM	10498497	16	1	7	.	
CUCHARA RETRO HD 1950MM	10498498	10	1	724	10 49 849 7	CUCHARA RETRO HD 1950MM
CUCHARA RETRO HD 1950MM	10498499	10	1	725	10 49 849 8	CUCHARA RETRO HD 1950MM
CUCHILLA	10498506	2	1	727	10 49 850 0	BOCA DE CUCHARA
CUERPO	10075352	3	1	47	10 07 535 3	TENSOR GRASA
CUERPO BASE	10005863	1	1	280	10 16 576 6	CONSOLA MANDO IZDA.

Descripción	Artículo	Pos.	Cantid	Página	Grupo	Descripción
CUERPO BASE	5618922	1	1	295	56 18 923	CONSOLA DE MANDO A LA DE
CUERPO DE POLEA	10301921	1	1	45	10 22 121 2	POLEA RODADURA
CUERPO DE POLEA	10302978	1	1	46	10 29 067 4	RODILLO APOYO D8K
CUERPO EXTERIOR	5618131	1	1	61	50 20 370 01	FRENO DISCOS MULT.PRESI
CULATA 4 VENTILE	10118053	1	1	600	10 11 805 2	CULATA D9508
CULATA D9508	10118052	1	1	594	10 11 805 1	CULATA PREMONT. D9508
CULATA MONTAJE	10118050	80	8	566	10 12 595 9	MOTOR DIESEL D9508 A7 320k
CULATA PREMONT.	10131939	1	1	593	10 11 805 0	CULATA MONTAJE
CULATA PREMONT. D9508	10118051	1	1	593	10 11 805 0	CULATA MONTAJE
CUNA	10007867	12	1	149	10 33 307 0	MECANISMO DE ACCIONAMIE
CUNA	10333246	12	1	133	10 44 145 6	MECANISMO DE ACCIONAMIE
CUNA BASC.	9882407	16	1	70	98 88 126	MECANISMO DE ACCIONAMIE
CURVA	11002881	105	1	211	10 21 775 0	RECIPIENTE DE COMPENSAC
CURVA	9011050	18	1	115	10 35 873 3	AIRE Y SISTEMA ESCAPE
CUÑA ESTRACTORA	3001286	160	1	552	10 08 428 5	HERRAMIENTAS DE EQUIPAM
CUÑA ESTRACTORA	3001289	165	1	552	10 08 428 5	HERRAMIENTAS DE EQUIPAM
CÁRTER/CARCASA PREM.	10116150	1	1	611	10 11 802 5	ACC. P. BOMBA ALTA PRESIÓ
DECLARACIÓN CONFORMID	9399607	98	1	560	10 35 876 6	LETREROS
DECLARACIÓN CONFORMID	9399607	98	1	564	10 49 863 6	LETREROS
DECLARACIÓN FABRICANTE C	9399608	99	1	560	10 35 876 6	LETREROS
DECLARACIÓN FABRICANTE C	9399608	99	1	564	10 49 863 6	LETREROS
DEPOSITO COMBUSTIBLE	10358215	3	1	545	10 35 868 3	INSTALACION CARBURANTE
DEPOSITO DE ACEITE	968868001	10	1	219	10 05 302 4	MONTAJE MEC. GIRO
DEPOSITO HIDRAULICO	10358202	10	1	381	10 35 874 5	MONTAJE DEPÓSITO HIDR.
DEPOSITO TRANSPARENTE	10016659	40	1	250	10 34 071 7	ENGRASADORA
DEPÓSITO DE AGUA	10009208	440	1	478	10 48 809 7	INST.ELÉCTRICA
DESCONEXION CILIND.DE BAL	10498271	143	1	705	10 35 872 5	PLUMA MONOBLOC 7,00M
DESCRIPCIÓN TÉCNICA	10076085	30	1	521	10 07 608 3	CAJA EL.COMPL. U46
DESTORN.BOTÓN ESFÉRICO	7019167	310	1	484	70 28 778	PIEZAS DE MONTAJE
DESTORNILL.PERCUTOR M36	9103255	170	1	552	10 08 428 5	HERRAMIENTAS DE EQUIPAM
DESTORNILLADOR 1,6x10x300	279307502	114	1	552	10 08 428 5	HERRAMIENTAS DE EQUIPAM
DESTORNILLADOR 2x210	10451537	112	1	552	10 08 428 5	HERRAMIENTAS DE EQUIPAM
DESTORNILLADOR A1X5,5X2	8000982	110	1	552	10 08 428 5	HERRAMIENTAS DE EQUIPAM
DESTORNILLADOR EXAGONA	000204750	84	1	552	10 08 428 5	HERRAMIENTAS DE EQUIPAM
DETECTOR DE PROXIMIDAD	10009330	19	1	246	10 07 675 7	LUBR.CENTR.CARRO SUPER
DETECTOR DE PROXIMIDAD	10009330	20	1	252	10 48 927 7	COMBINACIÓN DE DISTRIB. SX
DETECTOR DE PROXIMIDAD	10024864	2	1	312	99 37 443	DETECTOR PROXIMIDAD C.EN
DETECTOR DE PROXIMIDAD	10331873	13	1	243	10 07 675 6	LUBR.PIÑÓN MEC. GIRO
DETECTOR DE PROXIMIDAD	10331873	33	1	245	10 29 302 0	COMBINACIÓN DE DISTRIB. M
DETECTOR DE TEMPERATUR	6290130	1	1	658	90 79 187	SENSOR REGULACION MOTO
DETECTOR PROXIMIDAD C.EN	9937443	40	2	311	10 08 256 0	MONTAJE DETECTOR PROXI
DETECTOR PROXIMIDAD C.EN	9937495	20	1	749	10 39 372 0	INST.EL.
DIENTE	10451155	40	5	725	10 49 849 8	CUCHARA RETRO HD 1950MM
DISCO CIERRE	9429965	30	2	396	10 35 874 4	MONTAJE CORREDERA DISTR
DISCO CIERRE	9429965	38	4	701	10 35 872 5	PLUMA MONOBLOC 7,00M
DISCO DE DESLIZAMIENTO	9265104	15	1	231	92 71 427	JR GRUPO MOTOR
DISCO DE DESLIZAMIENTO	9268999	15	1	83	98 88 123	JR GRUPO MOTOR
DISCO DE DESLIZAMIENTO	9886688	19	1	142	98 86 680	JR GRUPO MOTOR
DISCO DE DESLIZAMIENTO	9888536	11	1	182	90 79 347	JR YUGO BASC. LPV 165
DISCO DE SUPLEMENTO	10410655	27	2	165	10 41 064 0	MECANISMO DE ACCIONAMIE
DISCO FILTRANTE	10337550	7	1	176	10 34 668 4	SERVOMANDO
DISCO INTERIOR	7373505	8	8	61	50 20 370 01	FRENO DISCOS MULT.PRESI
DISCO INTERIOR	7373505	5	8	63	93 21 805 01	JUEGO DE DISCOS DE FRENO
DISCO PROTECTOR D930	9076986	2	2	636	90 77 708	POLEA INVERSION
DISP.ALARMA MARCHA	10057651	5	1	7	.	
DISP.ALARMA MARCHA	10368398	10	1	746	10 05 765 1	DISP.ALARMA MARCHA
DISPLAY EXCAVADORA	10677204	2	1	294	10 82 196 4	DISPLAY EXCAVADORA COM
DISPLAY EXCAVADORA COM	10821964	30	1	291	10 82 277 5	REPOSABRAZOS DERECHA
DISPOSITIVO COJINETES CIG	10128540	51	1	565	10 12 595 9	MOTOR DIESEL D9508 A7 320k
DISPOSITIVO DE CIERRE DN	5617689	2	2	381	10 35 874 5	MONTAJE DEPÓSITO HIDR.

Descripción	Artículo	Pos.	Cantid	Página	Grupo	Descripción
DISPOSITIVO DE ELEVACION	10116067	480	1	570	10 12 595 9	MOTOR DIESEL D9508 A7 320k
DISTR.MANDO Y RETORNO	10290156	50	1	702	10 35 872 5	PLUMA MONOBLOC 7,00M
DISTRIBUIDOR	10064775	103	1	704	10 35 872 5	PLUMA MONOBLOC 7,00M
DISTRIBUIDOR	10100944	10	1	346	10 05 312 6	TUBOS FLEX.HIDR./ASPIR.+R
DISTRIBUIDOR	10100946	20	1	352	10 05 312 9	REFRIG.ACEITE TRANS.E HI
DISTRIBUIDOR 1 1/4"	10384501	104	2	704	10 35 872 5	PLUMA MONOBLOC 7,00M
EJE	10099876	2	1	49	10 47 076 9	RUEDA DIRECTRIZ D8K
EJE	10301922	4	1	45	10 22 121 2	POLEA RODADURA
EJE	10302998	4	1	46	10 29 067 4	RODILLO APOYO D8K
EJE CIGUEÑAL CON RUEDA D	10130808	50	1	565	10 12 595 9	MOTOR DIESEL D9508 A7 320k
EJE DE CIGÜEÑAL PREM.	10128914	1	1	587	10 13 080 8	EJE CIGUEÑAL CON RUEDA D
EJE DE RUEDA INTERMEDIA	9072996	18	1	126	90 80 120	ENGRANAJE DISTRIBUCION
EJE DE RUEDA INTERMEDIA	9078590	4	1	634	10 11 822 3	MONT. RUEDA INTERMEDIA I=
EJE GIRATORIO	10298630	2	1	166	10 44 145 8	SENSOR DE ÁNGULO DE GIR
EJE INDUCIDO M=16 Z=13	933604101	10	1	221	90 01 781 7	ACCIONAMIENTO GIRATORIO
EJE MOTOR	10007874	14	1	149	10 33 307 0	MECANISMO DE ACCIONAMIE
EJE MOTOR	10294787	14	1	133	10 44 145 6	MECANISMO DE ACCIONAMIE
EJE MOTOR	9271552	10	1	267	98 82 882	JR ÁRBOL
EJE MOTOR	9886684	10	1	141	98 86 679	JR ÁRBOL
EJE MOTOR	9888121	10	1	84	98 88 124	JR ÁRBOL
EJE MOTOR	9888314	10	1	173	98 89 282	JR ÁRBOL
EJE MOTRIZ	9080600	3	1	611	10 11 802 5	ACC. P. BOMBA ALTA PRESIÓ
EJE MOTRIZ M=3,75 Z=21	9444455	40	1	65	94 43 970	ACCIONAMIENTO DE TRASL
EJE MOTRIZ Z=12 M=1.75	9884138	10	1	188	98 84 140	BOMBA CTO.REFRIG.
EJE MOTRIZ Z=59 M=3,5	9080121	10	1	169	90 80 196	JR ÁRBOL DE ENTRADA
EJEC.GIRADA HIDR.+MEC.GIR	10358755	40	1	332	10 35 874 7	INST.HIDR.CARRO SUPERIOR
EJEC.GIRADA HIDR.+MEC.GIR	10358755	40	1	333	10 49 853 7	INST.HIDR.CARRO SUPERIOR
ELEMENTO DE AMORTIG.	10119412	16	1	581	10 12 021 3	MONTAJE SOPORTE GRUPO
ELEMENTO DE AMORTIG.	9078589	3	8	634	10 11 822 3	MONT. RUEDA INTERMEDIA I=
ELEMENTO DE BOMBA PE-120	10216340	14	1	249	10 34 071 7	ENGRASADORA
ELEMENTO DE FIJACION	6203497	80	2	217	10 49 800 0	MOTOR - SISTEMA ELÉCTRIC
ELEMENTO DE FIJACION	6203497	32	3	243	10 07 675 6	LUBR.PIÑÓN MEC. GIRO
ELEMENTO DE FIJACION	6203497	15	3	246	10 07 675 7	LUBR.CENTR.CARRO SUPER
ELEMENTO DE FIJACION	6203497	60	18	328	10 06 786 9	PIEZAS DE FIJACION
ELEMENTO DE FIJACION	6203497	200	6	498	10 35 875 7	INST.EL.CARRO SUPERIOR
ELEMENTO DE FIJACION	6203497	15	4	511	10 06 221 6	INST.EL. MONOBLOQUE
ELEMENTO DE FIJACION	6203497	15	4	512	10 35 876 2	INST.EL. MONOBLOQUE
ELEMENTO DE FIJACION	6203497	15	5	513	10 49 837 6	INST.EL. MONOBLOQUE
ELEMENTO DE FIJACION	6203497	20	3	516	10 06 222 8	INST.EL.CORREDERA DISTR.
ELEMENTO DE FIJACION	6203497	51	1	517	10 06 222 8	INST.EL.CORREDERA DISTR.
ELEMENTO DE FIJACION	6203497	20	14	523	10 35 876 3	INST.EL.DEP. COMBUSTIBLE
ELEMENTO DE FIJACION	6203497	20	14	530	10 49 837 7	INST.EL.DEP. COMBUSTIBLE
ELEMENTO DE FIJACION	6203497	45	1	747	10 36 839 8	DISP.ALARMA MARCHA
ELEMENTO DE FIJACION	6203497	35	1	749	10 39 372 0	INST.EL.
ELEMENTO DE FIJACION	6203497	60	4	793	10 82 390 4	INST.EL.ELEVACIÓN 1200MM
ELEMENTO DE MANDO	10493087	70	1	316	10 40 689 8	AIRE ACONDICIONADO
ELEMENTO DE MANDO	10493088	71	1	316	10 40 689 8	AIRE ACONDICIONADO
ELEMENTO DE MANDO	10493089	13	1	322	11 00 359 4	CARCASA
ELEMENTO DE SEGURIDAD	5604683	8	2	98	10 36 190 8	PAQUETE SERV. ALLE 2000H
ELEMENTO DE SEGURIDAD	5604683	6	2	118	10 35 873 4	MONTAJE FILTRO AIRE
ELEMENTO DORSAL	10289988	2	1	273	10 04 363 1	ASIENTO CONDUCTOR
ELEMENTO DORSAL	10289988	2	1	274	10 04 363 2	ASIENTO CONDUCTOR
ELEMENTO DOSIFICADOR SX	10013840	101	1	252	10 48 927 7	COMBINACIÓN DE DISTRIB. SX
ELEMENTO DOSIFICADOR SX	10013840	104	1	252	10 48 927 7	COMBINACIÓN DE DISTRIB. SX
ELEMENTO DOSIFICADOR SX	10013841	102	1	252	10 48 927 7	COMBINACIÓN DE DISTRIB. SX
ELEMENTO DOSIFICADOR SX	10013842	103	1	252	10 48 927 7	COMBINACIÓN DE DISTRIB. SX
ELEMENTO DOSIFICADOR SX	10013853	105	1	252	10 48 927 7	COMBINACIÓN DE DISTRIB. SX
ELEMENTO FILTRADOR	10220705	10	1	96	10 09 107 4	PAQUETE SERV. 1500H/2500H
ELEMENTO FILTRADOR	10220705	3	1	161	10 33 327 0	CABEZA FILTRO
ELEMENTO FILTRADOR	553183708	4	1	96	10 09 107 4	PAQUETE SERV. 1500H/2500H

Descripción	Artículo	Pos.	Cantid	Página	Grupo	Descripción
ELEMENTO FILTRADOR	553183708	20	4	99	10 35 983 0	PAQUETE SERV.FILTRO COM
ELEMENTO FILTRADOR	553183708	6	1	619	10 30 300 7	PREFILTRO COMBUSTIBLE
ELEMENTO FINAL MX-F 105	7027945	8	1	245	10 29 302 0	COMBINACIÓN DE DISTRIB. M
ELEMENTO FINAL MX-F 105	7027945	8	1	254	10 29 301 8	COMBINACIÓN DE DISTRIB. M
ELEMENTO FINAL MX-F 45	7027943	8	1	708	10 00 878 9	COMBINACIÓN DE DISTRIB. M
ELEMENTO FINAL MX-F 75	7027944	8	1	722	10 30 336 9	COMBINACIÓN DE DISTRIB. M
ELEMENTO FINAL SXE-2	10013839	3	1	252	10 48 927 7	COMBINACIÓN DE DISTRIB. SX
ELEMENTO INICIAL MX-F	7027937	1	1	245	10 29 302 0	COMBINACIÓN DE DISTRIB. M
ELEMENTO INICIAL MX-F	7027937	1	1	254	10 29 301 8	COMBINACIÓN DE DISTRIB. M
ELEMENTO INICIAL MX-F	7027937	1	1	708	10 00 878 9	COMBINACIÓN DE DISTRIB. M
ELEMENTO INICIAL MX-F	7027937	1	1	722	10 30 336 9	COMBINACIÓN DE DISTRIB. M
ELEMENTO INICIAL SXE-2	10013835	1	1	252	10 48 927 7	COMBINACIÓN DE DISTRIB. SX
ELEMENTO INTERMEDIO MX-	7027941	2	1	245	10 29 302 0	COMBINACIÓN DE DISTRIB. M
ELEMENTO INTERMEDIO MX-	7027941	3	1	245	10 29 302 0	COMBINACIÓN DE DISTRIB. M
ELEMENTO INTERMEDIO MX-	7027941	2	1	708	10 00 878 9	COMBINACIÓN DE DISTRIB. M
ELEMENTO INTERMEDIO MX-	7027941	3	1	708	10 00 878 9	COMBINACIÓN DE DISTRIB. M
ELEMENTO INTERMEDIO MX-	7027941	2	1	722	10 30 336 9	COMBINACIÓN DE DISTRIB. M
ELEMENTO INTERMEDIO MX-F	7027938	2	1	254	10 29 301 8	COMBINACIÓN DE DISTRIB. M
ELEMENTO INTERMEDIO MX-F	7027938	3	1	254	10 29 301 8	COMBINACIÓN DE DISTRIB. M
ELEMENTO INTERMEDIO MX-F	7027938	4	1	254	10 29 301 8	COMBINACIÓN DE DISTRIB. M
ELEMENTO INTERMEDIO MX-F	7027938	4	1	708	10 00 878 9	COMBINACIÓN DE DISTRIB. M
ELEMENTO INTERMEDIO MX-F	7027939	3	1	722	10 30 336 9	COMBINACIÓN DE DISTRIB. M
ELEMENTO INTERMEDIO MX-F	7027940	4	1	722	10 30 336 9	COMBINACIÓN DE DISTRIB. M
ELEMENTO INTERMEDIO MX-F	7027940	5	1	722	10 30 336 9	COMBINACIÓN DE DISTRIB. M
ELEMENTO INTERMEDIO SXE-	10013837	2	3	252	10 48 927 7	COMBINACIÓN DE DISTRIB. SX
ELEMENTO PRINCIPAL	5604682	5	2	97	10 36 190 7	PAQUETE SERV. 1000H
ELEMENTO PRINCIPAL	5604682	4	2	118	10 35 873 4	MONTAJE FILTRO AIRE
ELEMENTO REGULACION	10102066	1	1	150	10 33 307 1	PLACA DE CONEXION
ELEMENTO REGULACION	10102067	2	1	146	10 10 206 4	REGULADOR
ELEMENTO REGULACION	10292071	1	1	150	10 33 307 1	PLACA DE CONEXION
ELEMENTOS DE MANDO	10116320	110	8	566	10 12 595 9	MOTOR DIESEL D9508 A7 320k
ELEVACIÓN CABINA CONDU	10498155	10	1	794	10 49 815 6	ELEVACIÓN CABINA CONDU
ELEVACIÓN CABINA CONDU	10498156	10	1	7	.	
ELEVACIÓN CABINA CONDU	10498156	3	1	493	10 35 876 4	PASILLO MALLA
ELEVACIÓN CABINA CONDU	10498156	4	1	493	10 35 876 4	PASILLO MALLA
ELEVACIÓN CABINA CONDU	10498156	20	1	493	10 35 876 4	PASILLO MALLA
ELEVACIÓN CABINA CONDU	10498156	23	1	493	10 35 876 4	PASILLO MALLA
ELEVACIÓN CABINA CONDU	10498156	50	1	493	10 35 876 4	PASILLO MALLA
ELEVACIÓN CABINA CONDU	10498156	22	1	494	10 35 875 7	INST.EL.CARRO SUPERIOR
ELEVACIÓN CABINA CONDU	10498156	23	1	494	10 35 875 7	INST.EL.CARRO SUPERIOR
EMBOLO	10075356	2	1	47	10 07 535 3	TENSOR GRASA
EMBOLO	10333252	2	1	264	10 33 323 7	VALVULA LIMITADORA DE PR
EMBOLO	5616689	20	1	71	56 16 688	VÁLVULA FRENO MARCHA
EMBOLO	5618132	3	1	61	50 20 370 01	FRENO DISCOS MULT.PRESI
EMBOLO	7624222	4	1	157	10 33 324 2	VALVULA DE DESCONEXION
EMBOLO	9079756	61	1	181	90 78 788	JR (TAPA DEL REGUL.) LR/SD
EMBOLO	9266234	11	1	72	92 67 037	VALVULA LIMITADORA DE PR
EMBOLO	9588148	1	1	761	95 88 147	EMBOLO 220MM
EMBOLO	9589257	1	1	762	95 89 256	EMBOLO 190MM
EMBOLO	9907679	1	1	763	99 07 680	EMBOLO 190 MM
EMBOLO 190 MM	9907680	12	1	757	99 06 383	CILINDRO HIDRAULICO
EMBOLO 190 MM	9907680	12	1	758	99 06 576	CILINDRO HIDRAULICO
EMBOLO 190MM	9589256	12	1	756	95 93 590	CILINDRO HIDRAULICO
EMBOLO 220MM	9588147	12	1	755	94 02 020 2	CILINDRO HIDRAULICO
EMBOLO ANULAR	9441436	5	1	224	93 36 053 01	FRENO
EMBOLO d=128	10131550	1	1	643	10 13 154 6	ÉMBOLO COMPL. d=128
EMBRAGUE	10115770	4	1	635	10 11 865 5	MONT.COMPR.AIRE AC.
EMBUDO ASPIRACION	10000815	3	1	156	10 33 323 8	REGUL.HIDR.
EMBUDO DE REDUCCION RI	7022708	31	1	382	10 35 874 5	MONTAJE DEPÓSITO HIDR.
ENCENDEDOR	7369377	70	1	278	10 05 798 3	REPOSABRAZOS IZQUIERDA

Descripción	Artículo	Pos.	Cantid	Página	Grupo	Descripción
ENCENDEDOR PREMONTADO	10218368	1	1	654	90 80 641	MONTAJE ARRANQUE MOTO
ENCHUFE	10012889	20	1	392	10 22 239 3	FILTRO AIREAR
ENCHUFE	7025644	1	1	305	73 69 377	ENCENDEDOR
ENCHUFE CODIF.	975857701	21	1	494	10 35 875 7	INST.EL.CARRO SUPERIOR
ENCHUFE CODIF.	9988842	20	1	494	10 35 875 7	INST.EL.CARRO SUPERIOR
ENCHUFE CODIF. X894	10366248	50	1	749	10 39 372 0	INST.EL.
ENCHUFE MULTIPIN	9768248	27	1	291	10 82 277 5	REPOSABRAZOS DERECHA
ENGANCHE DE RESPALDO	7025007	23	1	276	70 24 996	BASTIDOR DE ASIENTO
ENGANCHE ELECTRICO	10301774	2	1	553	10 08 811 2	TUBO FLEX.PURGA ACEITE
ENGRANAJE CILINDRICO Z=3	9080176	14	1	126	90 80 120	ENGRANAJE DISTRIBUCION
ENGRANAJE CILINDRICO Z=4	9080175	11	2	126	90 80 120	ENGRANAJE DISTRIBUCION
ENGRANAJE DISTRIBUCION	9080120	1	1	125	90 80 165	GRUPO MULTICIRC.
ENGRANAJE PREMONTADO	10118023	3	1	601	10 11 802 2	ÁRBOL LEVAS COMPL.
ENGRANAJE PREMONTADO	10119847	2	1	587	10 13 080 8	EJE CIGUEÑAL CON RUEDA D
ENGRASADOR	10005440	235	4	715	10 35 872 1	MANGO DE LA PALA 2,60M
ENGRASADOR	10005440	31	5	720	10 35 872 0	ENGRASE CENTRALIZADO
ENGRASADOR	10005440	23	4	729	10 49 838 7	SOPORTE DE EJE
ENGRASADOR	10005440	31	2	729	10 49 838 7	SOPORTE DE EJE
ENGRASADOR	10005440	23	4	730	10 49 857 6	SOPORTE DE EJE
ENGRASADOR	10005440	31	2	730	10 49 857 6	SOPORTE DE EJE
ENGRASADOR TR/A M 16X1,5	7401897	68	2	43	10 35 874 0	ESTRUC.INF.COMPL.
ENGRASADORA	10340717	2	1	243	10 07 675 6	LUBR.PIÑÓN MEC. GIRO
ENGRASADORA	10340717	10	1	246	10 07 675 7	LUBR.CENTR.CARRO SUPER
ENGRASE CENTRALIZADO	10358720	15	1	714	10 35 872 1	MANGO DE LA PALA 2,60M
ENGRASE CENTRALIZADO	10388393	100	1	712	10 38 862 4	ENGRASE CENTRALIZADO
ENGRASE CENTRALIZADO	10388624	10	1	700	10 35 872 5	PLUMA MONOBLOC 7,00M
ESCALERA	10357863	45	1	795	10 49 815 5	ELEVACIÓN CABINA CONDU
ESCOBILLA DE LIMPIAPARAB	7028869	600	1	481	70 29 426	LIMPIAPARABRISAS
ESCUADRA DE MONTAJE	10022078	6	1	322	11 00 359 4	CARCASA
ESFERA DE RETROCESO	10333081	25	1	149	10 33 307 0	MECANISMO DE ACCIONAMIE
ESFERA DE RETROCESO	10410643	25	1	165	10 41 064 0	MECANISMO DE ACCIONAMIE
ESFERA DE RETROCESO	9267943	1	1	235	98 80 619	JR BOLA RETR.C.PLACA
ESFERA DE RETROCESO NG	9072808	1	1	190	98 88 119	JR (RZ-ESF.+PL) NG 165
ESLABON	7028912	240	4	484	70 28 778	PIEZAS DE MONTAJE
ESLABON FINAL	5618003	10	1	50	10 30 012 7	CADENA DE ORUGA
ESPEJO EXTERIOR	10044353	610	1	486	70 28 778	PIEZAS DE MONTAJE
ESPEJO EXTERIOR	7019140	810	2	487	10 04 435 3	ESPEJO EXTERIOR
ESPIGA	10126587	22	1	582	10 12 593 7	CUBETA ACEITE C.SUJECIÓN
ESPIGA	10131786	3	1	610	10 13 273 8	VALVULA REGULACION TERMI
ESPIGA	9078874	8	1	623	10 12 720 8	TUBERIAS DE COMBUSTIBLE
ESPIGA	9080193	23	1	126	90 80 120	ENGRANAJE DISTRIBUCION
ESPIGA	9131612	7	1	583	10 11 694 5	VARILLA NIVEL ACEITE C.TUB
ESPIGA	9752281	8	1	119	10 35 879 9	MONTAJE BOMBAS
ESPIGA	9757423	22	4	89	10 07 444 8	INST.HIDR.ESTRUC.INF.
ESPIGA 9SMNPB28K3	10119357	7	1	576	10 11 874 8	ANEJO TUBERIA
ESPIGA ARTICULADA	10216667	13	2	131	10 42 845 9	BOMBA MEC. GIRO
ESPIGA ARTICULADA	7023646	11	2	130	10 21 593 5	BOMBA
ESPIGA ESCAPE	10115549	1	1	651	10 11 558 7	MONTAJE TUBUL.ESCAPE GA
ESPIGA ESCAPE	10115549	1	1	652	10 11 678 0	MONTAJE TUBUL.ESCAPE GA
ESPIGA GE 10L	7003814	12	2	89	10 07 444 8	INST.HIDR.ESTRUC.INF.
ESPIGA GE 10L	7003814	62	1	122	10 35 879 9	MONTAJE BOMBAS
ESPIGA GE 10L	7003814	80	3	123	10 35 879 9	MONTAJE BOMBAS
ESPIGA GE 10L	7003814	36	4	241	10 35 877 2	MONTAJE CORONA ROTACIÓ
ESPIGA GE 22L G3/4A	4001446	21	2	340	10 05 314 4	MONTAJE UNIDAD ACEITE MA
ESPIGA GE 22L G3/4A	4001446	21	2	341	10 82 438 9	MONTAJE UNIDAD ACEITE MA
ESPIGA GE 6S	4901166	35	1	120	10 35 879 9	MONTAJE BOMBAS
ESPIGA M24X1,5	9080429	2	2	629	90 80 436	TUBO ASPIRADOR ANEJO
ESPIGA MACHO	10000277	60	1	247	10 07 675 7	LUBR.CENTR.CARRO SUPER
ESPIGA MACHO	10115830	22	2	623	10 12 720 8	TUBERIAS DE COMBUSTIBLE
ESPIGA MACHO	7368545	38	4	241	10 35 877 2	MONTAJE CORONA ROTACIÓ

Descripción	Artículo	Pos.	Cantid	Página	Grupo	Descripción
ESPIGA MACHO	7368545	30	1	243	10 07 675 6	LUBR.PIÑÓN MEC. GIRO
ESPIGA MACHO DN 12	10037655	7	1	617	10 12 314 1	MONT.FILTRO FINO COMBUS
ESPIGA MACHO DN 12	10037655	21	1	623	10 12 720 8	TUBERIAS DE COMBUSTIBLE
ESPIGA MACHO GE 15L M16X	7410394	111	2	399	10 35 874 4	MONTAJE CORREDERA DISTR
ESPIGA MACHO GE 15L M16X	7410394	116	2	399	10 35 874 4	MONTAJE CORREDERA DISTR
ESPIGA MACHO MANGUERA	774371808	10	1	255	90 64 786	BASE DE FIJACION
ESPIGA MACHO MANGUERA	774371808	10	10	257	10 01 461 1	CAJA AUXILIAR
ESPIGA T 10L	7362101	13	1	89	10 07 444 8	INST.HIDR.ESTRUC.INF.
ESPIRAL PROTECTORA DOBL	10011996	66	1	255	90 64 786	BASE DE FIJACION
ESPIRAL PROTECTORA DOBL	10011996	166	1	256	90 64 786	BASE DE FIJACION
ESPUMA PE	10022776	20	1	321	10 02 211 7	CAJA CONDUCTO AIRE
ESQUEMA DE ENGRASE	10070310	53	1	559	10 35 876 6	LETREROS
ESQUEMA DE ENGRASE	10070310	53	1	563	10 49 863 6	LETREROS
ESTATOR	10011396	2	1	56	10 00 963 0	TRANSMISION ROTATIVO
ESTERA AISLANTE	10022773	5	1	319	10 02 206 9	CAJA DE EVAPORADOR
ESTERA AISLANTE	10055309	30	1	444	10 05 530 3	CAPOT DEL MOTOR
ESTERA AISLANTE	10055310	31	1	444	10 05 530 3	CAPOT DEL MOTOR
ESTERA AISLANTE	10055311	32	1	444	10 05 530 3	CAPOT DEL MOTOR
ESTERA AISLANTE	10055312	33	1	444	10 05 530 3	CAPOT DEL MOTOR
ESTERA AISLANTE	10055313	34	2	444	10 05 530 3	CAPOT DEL MOTOR
ESTERA AISLANTE	10055317	38	3	444	10 05 530 3	CAPOT DEL MOTOR
ESTERA AISLANTE	10055318	23	2	443	10 05 530 3	CAPOT DEL MOTOR
ESTERA AISLANTE	10055352	11	1	452	10 05 538 1	PUERTA FILTRO AIRE IZD.
ESTERA AISLANTE	10055357	31	1	448	10 05 535 4	CAPOT
ESTERA AISLANTE	10055358	32	1	448	10 05 535 4	CAPOT
ESTERA AISLANTE	10055359	33	1	448	10 05 535 4	CAPOT
ESTERA AISLANTE	10055395	22	2	801	10 05 539 2	PUERTA LATERAL IZDA.
ESTERA AISLANTE	10055414	32	1	457	10 05 541 0	PUERTA LATERAL ANT.DCHA.
ESTERA AISLANTE	10055417	21	6	453	10 05 543 3	PUERTA LATERAL POST.DCHA
ESTERA AISLANTE	10055417	21	9	456	10 05 541 0	PUERTA LATERAL ANT.DCHA.
ESTERA AISLANTE	10055439	22	3	453	10 05 543 3	PUERTA LATERAL POST.DCHA
ESTERA AISLANTE	10055440	32	1	454	10 05 543 3	PUERTA LATERAL POST.DCHA
ESTERA AISLANTE	10055456	20	1	455	10 05 545 3	TAPA CENTRO
ESTERA AISLANTE	10055466	20	1	451	10 05 546 4	CUBIERTA IZQUIERDA
ESTERA AISLANTE	10063611	20	1	450	10 06 360 5	TAPA
ESTERA AISLANTE	10063818	34	1	448	10 05 535 4	CAPOT
ESTERA AISLANTE	10079194	53	1	445	10 05 530 3	CAPOT DEL MOTOR
ESTERA AISLANTE	10089716	21	1	455	10 05 545 3	TAPA CENTRO
ESTERA AISLANTE	10365325	41	1	465	10 35 876 0	CUBIERTA INF.
ESTERA AISLANTE	10365325	41	1	466	10 49 857 4	CUBIERTA INF.
ESTERA AISLANTE	10373190	5	1	798	10 37 318 7	AISLAMIENTO ACUSTICO
ESTERA AISLANTE	10373191	6	1	798	10 37 318 7	AISLAMIENTO ACUSTICO
ESTERA AISLANTE	10373192	7	1	798	10 37 318 7	AISLAMIENTO ACUSTICO
ESTERA AISLANTE	10373193	8	1	798	10 37 318 7	AISLAMIENTO ACUSTICO
ESTERA AISLANTE	10373194	9	1	798	10 37 318 7	AISLAMIENTO ACUSTICO
ESTERA AISLANTE	10373195	10	1	798	10 37 318 7	AISLAMIENTO ACUSTICO
ESTERA AISLANTE	10373196	11	1	798	10 37 318 7	AISLAMIENTO ACUSTICO
ESTERA AISLANTE	10488100	220	1	488	10 48 809 9	REVESTIMIENTO INTERIOR
ESTERILLA	10289996	560	1	489	10 48 809 9	REVESTIMIENTO INTERIOR
ESTERILLA	10289997	570	1	489	10 48 809 9	REVESTIMIENTO INTERIOR
ESTRIBO	10037722	5	12	711	10 38 862 4	ENGRASE CENTRALIZADO
ESTRIBO	10037722	17	4	711	10 38 862 4	ENGRASE CENTRALIZADO
ESTRIBO	10037722	10	14	719	10 35 872 0	ENGRASE CENTRALIZADO
ESTRIBO	10037722	25	4	720	10 35 872 0	ENGRASE CENTRALIZADO
ESTRIBO	10037723	57	3	247	10 07 675 7	LUBR.CENTR.CARRO SUPER
ESTRIBO	10037723	8	19	711	10 38 862 4	ENGRASE CENTRALIZADO
ESTRIBO	10037723	26	2	711	10 38 862 4	ENGRASE CENTRALIZADO
ESTRIBO	10037723	13	5	719	10 35 872 0	ENGRASE CENTRALIZADO
ESTRIBO	10037723	16	2	719	10 35 872 0	ENGRASE CENTRALIZADO
ESTRIBO	10289976	72	1	273	10 04 363 1	ASIENTO CONDUCTOR

Descripción	Artículo	Pos.	Cantid	Página	Grupo	Descripción
ESTRIBO	10289976	72	1	274	10 04 363 2	ASIENTO CONDUCTOR
ESTRIBO	7028838	160	1	472	10 04 678 8	PUERTA CABINA CONDUCTO
ESTRIBO	7028872	450	1	478	10 48 809 7	INST.ELÉCTRICA
ESTRIBO	9012477	30	1	461	10 06 375 5	CAJA COMPL.
ESTRIBO	9201724	165	1	418	10 05 303 6	REVESTIMIENTO
ESTRIBO	9201724	165	1	433	10 49 857 1	REVESTIMIENTO
ESTRIBO	9230122	20	1	447	10 05 535 4	CAPOT
ESTRIBO	9943105	31	1	311	10 08 256 0	MONTAJE DETECTOR PROXI
ESTRIBO	9943365	30	1	311	10 08 256 0	MONTAJE DETECTOR PROXI
ESTRIBO DE APRIETE	9388848	41	1	291	10 82 277 5	REPOSABRAZOS DERECHA
ESTRIBO DE CARRIL	7370581	73	1	274	10 04 363 2	ASIENTO CONDUCTOR
ESTRIBO DE FIJACION	10021823	72	1	316	10 40 689 8	AIRE ACONDICIONADO
ESTRIBO DEFENSA	7415239	47	1	414	10 05 303 6	REVESTIMIENTO
ESTRIBO DEFENSA	7415239	47	1	429	10 49 857 1	REVESTIMIENTO
ESTRIBO DEFENSA	9408711	290	1	484	70 28 778	PIEZAS DE MONTAJE
ESTRUC.INF.COMPL.	10358740	200	1	9	10 35 874 1	MAQUINA BASE R964C HD LI
ETAPA FINAL	10291540	2	1	521	10 07 608 3	CAJA EL.COMPL. U46
ETAPA FINAL	10291541	2	1	520	10 07 707 3	CAJA EL.COMPL. U48-A
ETAPA FINAL	10347900	100	1	292	10 82 277 5	REPOSABRAZOS DERECHA
ETAPA INTERRUPTOR PRESIÓ	10132049	1	1	610	10 13 273 8	VALVULA REGULACION TERMI
ETAPA INTERRUPTOR PRESIÓ	10132052	5	1	610	10 13 273 8	VALVULA REGULACION TERMI
ETIQUETA	10077643	55	1	504	10 09 499 2	RELACIÓN MATERIAL EL.
ETIQUETA	10080490	8	1	290	10 08 046 6	MONTAJE INTERR. S42
ETIQUETA	10080491	9	1	290	10 08 046 6	MONTAJE INTERR. S42
ETIQUETA	10084941	61	1	508	10 35 875 8	MONTAJE BATERÍAS
ETIQUETA	10085768	4	1	300	10 08 576 7	MONTAJE INTERR. S248
ETIQUETA	10085769	6	1	300	10 08 576 7	MONTAJE INTERR. S248
ETIQUETA	10086265	78	1	291	10 82 277 5	REPOSABRAZOS DERECHA
ETIQUETA	10087065	25	1	503	10 09 499 2	RELACIÓN MATERIAL EL.
ETIQUETA	9836702	7	1	778	99 89 646	MONTAJE INTERR. S84-2
ETIQUETA	9836704	7	1	777	99 89 645	MONTAJE INTERR.
ETIQUETA	9988683	4	1	303	90 16 516	MONTAJE INTERR. S218
ETIQUETA	9989180	4	1	735	99 89 179	MONTAJE INTERR.
ETIQUETA	9989643	6	1	777	99 89 645	MONTAJE INTERR.
ETIQUETA	9989644	6	1	778	99 89 646	MONTAJE INTERR. S84-2
ETIQUETA S9	10086392	60	1	508	10 35 875 8	MONTAJE BATERÍAS
ETIQUETA U46	10395385	40	1	521	10 07 608 3	CAJA EL.COMPL. U46
ETIQUETA U48	10395431	40	1	520	10 07 707 3	CAJA EL.COMPL. U48-A
EVAPORADOR	10816666	10	1	316	10 40 689 8	AIRE ACONDICIONADO
EXTINTOR	10498331	9	1	7	.	
EXTINTOR	10498332	10	1	779	10 49 833 1	EXTINTOR
EXTINTOR EBR1	890100716	5	1	781	10 49 833 2	EXTINTOR
EXTRACTOR	10451202	60	1	550	10 49 815 2	HERRAMIENTAS DE EQUIPAM
FARO	7027205	100	2	776	10 02 138 7	FARO ADICIONALE CABINA
FARO ADICIONALE CABINA	10021387	10	1	790	10 09 294 6	FAROS ADICIONALES EN CABI
FARO ADICIONALE CABINA	10021387	10	1	791	10 09 294 8	FAROS ADICIONALES EN CABI
FARO DE TRABAJO	10007848	2	1	499	99 41 040	MONTAJE FARO
FARO DE TRABAJO	10045530	20	2	511	10 06 221 6	INST.EL. MONOBLOQUE
FARO DE TRABAJO	10045530	20	2	512	10 35 876 2	INST.EL. MONOBLOQUE
FARO DE TRABAJO	10045530	20	2	513	10 49 837 6	INST.EL. MONOBLOQUE
FAROS ADICIONALES EN CABI	10092946	7	1	7	.	
FAROS ADICIONALES EN CABI	10092948	8	1	7	.	
FIJADOR	10009023	270	2	477	10 48 809 7	INST.ELÉCTRICA
FIJADOR	10009044	810	2	479	10 48 809 7	INST.ELÉCTRICA
FIJADOR	10027438	251	2	470	70 28 775	PARABRISAS
FIJADOR	10039678	621	2	486	70 28 778	PIEZAS DE MONTAJE
FIJADOR	10041876	45	1	316	10 40 689 8	AIRE ACONDICIONADO
FIJADOR	10041876	30	3	524	10 35 876 3	INST.EL.DEP. COMBUSTIBLE
FIJADOR	10041876	30	3	531	10 49 837 7	INST.EL.DEP. COMBUSTIBLE
FIJADOR	10067961	217	1	421	10 05 303 6	REVESTIMIENTO

Descripción	Artículo	Pos.	Cantid	Página	Grupo	Descripción
FIJADOR	10067961	217	1	436	10 49 857 1	REVESTIMIENTO
FIJADOR	10068165	25	1	403	10 06 771 7	MONTAJE TUBERÍAS IMPULS.
FIJADOR	10068167	26	1	403	10 06 771 7	MONTAJE TUBERÍAS IMPULS.
FIJADOR	10079251	10	1	327	10 06 786 9	PIEZAS DE FIJACION
FIJADOR	10079252	15	1	327	10 06 786 9	PIEZAS DE FIJACION
FIJADOR	10079253	20	1	327	10 06 786 9	PIEZAS DE FIJACION
FIJADOR	10079307	25	1	327	10 06 786 9	PIEZAS DE FIJACION
FIJADOR	10092471	230	1	421	10 05 303 6	REVESTIMIENTO
FIJADOR	10092471	230	1	436	10 49 857 1	REVESTIMIENTO
FIJADOR	10116693	2	1	669	10 11 671 8	MONT.APARATO MANDO
FIJADOR	10118125	30	1	214	10 49 800 0	MOTOR - SISTEMA ELÉCTRIC
FIJADOR	10118125	51	1	215	10 49 800 0	MOTOR - SISTEMA ELÉCTRIC
FIJADOR	10127458	17	1	578	10 12 503 7	ANEJO TUBERIA
FIJADOR	10127459	18	1	578	10 12 503 7	ANEJO TUBERIA
FIJADOR	10386999	52	1	336	10 38 698 2	INST.HIDR.BOMBAS A CORR.D
FIJADOR	10386999	52	1	339	10 49 804 4	INST.HIDR.BOMBAS A CORR.D
FIJADOR	10387001	56	2	336	10 38 698 2	INST.HIDR.BOMBAS A CORR.D
FIJADOR	10387001	56	2	339	10 49 804 4	INST.HIDR.BOMBAS A CORR.D
FIJADOR	6905671	23	1	516	10 06 222 8	INST.EL.CORREDERA DISTR.
FIJADOR	6905671	22	1	523	10 35 876 3	INST.EL.DEP. COMBUSTIBLE
FIJADOR	6905671	22	1	530	10 49 837 7	INST.EL.DEP. COMBUSTIBLE
FIJADOR	7028768	240	9	477	10 48 809 7	INST.ELÉCTRICA
FIJADOR	7028801	200	2	470	70 28 775	PARABRISAS
FIJADOR	7028812	250	11	477	10 48 809 7	INST.ELÉCTRICA
FIJADOR	7372355	18	1	284	73 73 807	PALANCA SEG.
FIJADOR	7373825	20	1	284	73 73 807	PALANCA SEG.
FIJADOR	7615636	90	2	416	10 05 303 6	REVESTIMIENTO
FIJADOR	7615636	331	4	427	10 05 303 6	REVESTIMIENTO
FIJADOR	7615636	90	2	431	10 49 857 1	REVESTIMIENTO
FIJADOR	7615636	331	4	442	10 49 857 1	REVESTIMIENTO
FIJADOR	9077655	2	1	651	10 11 558 7	MONTAJE TUBUL.ESCAPE GA
FIJADOR	9077656	2	1	652	10 11 678 0	MONTAJE TUBUL.ESCAPE GA
FIJADOR	9078837	4	2	630	90 78 417	MONTAJE TUBO AIRE ADMISIÓ
FIJADOR	9078884	4	1	621	90 78 554	MONTAJE TUBERÍA A.FUGA
FIJADOR	9080727	11	1	623	10 12 720 8	TUBERIAS DE COMBUSTIBLE
FIJADOR	9080841	9	1	623	10 12 720 8	TUBERIAS DE COMBUSTIBLE
FIJADOR	9950357	30	1	327	10 06 786 9	PIEZAS DE FIJACION
FIJADOR CABLE	10023106	11	2	321	10 02 211 7	CAJA CONDUCTO AIRE
FIJADOR CABLE	10083506	6	1	193	10 49 867 7	MONTAJE VENTILADOR
FIJADOR CABLE	10083506	6	1	195	10 49 873 2	MONTAJE VENTILADOR
FIJADOR DERECHO	10355811	8	1	208	10 42 538 5	RADIADOR ACEITE COMB.
FIJADOR IZQUIERDO	10355810	7	1	208	10 42 538 5	RADIADOR ACEITE COMB.
FIJADOR MANGUERA	10065571	15	1	334	10 38 698 2	INST.HIDR.BOMBAS A CORR.D
FIJADOR MANGUERA	10065571	15	1	337	10 49 804 4	INST.HIDR.BOMBAS A CORR.D
FIJADOR S235JR	10116694	1	1	669	10 11 671 8	MONT.APARATO MANDO
FILTRO	10333228	6	1	131	10 42 845 9	BOMBA MEC. GIRO
FILTRO	10333268	2	1	155	10 33 322 8	FILTRO
FILTRO AIREAR	10222393	4	1	98	10 36 190 8	PAQUETE SERV. ALLE 2000H
FILTRO AIREAR	10222393	30	1	382	10 35 874 5	MONTAJE DEPÓSITO HIDR.
FILTRO DE ACEITE	10120027	4	1	604	10 12 476 3	MONTAJE MÓDULO ACEITE
FILTRO DE ALTA PRESION	5615220	25	2	396	10 35 874 4	MONTAJE CORREDERA DISTR
FILTRO DE RETORNO	7368771	12	3	381	10 35 874 5	MONTAJE DEPÓSITO HIDR.
FILTRO DEL AIRE	7028951	7	1	97	10 36 190 7	PAQUETE SERV. 1000H
FILTRO DEL AIRE	7028951	380	1	489	10 48 809 9	REVESTIMIENTO INTERIOR
FRENO	933605301	70	1	222	90 01 781 7	ACCIONAMIENTO GIRATORIO
FRENO DISCOS MULT.PRESI	502037001	70	1	66	94 43 970	ACCIONAMIENTO DE TRASL
FUELLE DOBLADO	10014790	200	1	289	99 68 625	MANILLA DEL SENSOR LH IZ
FUELLE DOBLADO	10014790	200	1	304	99 68 611	MANILLA DEL SENSOR LH DC
FUELLE DOBLADO	7025004	40	1	273	10 04 363 1	ASIENTO CONDUCTOR
FUELLE DOBLADO	7025004	40	1	274	10 04 363 2	ASIENTO CONDUCTOR

Descripción	Artículo	Pos.	Cantid	Página	Grupo	Descripción
FUELLE DOBLADO	7366620	42	1	273	10 04 363 1	ASIENTO CONDUCTOR
FUELLE DOBLADO	7366620	42	1	274	10 04 363 2	ASIENTO CONDUCTOR
FUNDA	7024985	2	1	273	10 04 363 1	ASIENTO CONDUCTOR
FUNDA	7024985	2	1	274	10 04 363 2	ASIENTO CONDUCTOR
FUNDA	7024986	12	1	273	10 04 363 1	ASIENTO CONDUCTOR
FUNDA	7024986	12	1	274	10 04 363 2	ASIENTO CONDUCTOR
FUSIBLE	7027038	22	1	284	73 73 807	PALANCA SEG.
GANCHO	10096795	41	2	102	10 35 875 3	MONTAJE CAJA RADIADOR
GANCHO ELEVADOR	10116068	1	2	657	10 11 606 7	DISPOSITIVO DE ELEVACION
GANCHO ELEVADOR	9079977	2	1	657	10 11 606 7	DISPOSITIVO DE ELEVACION
GARRA	9078321	2	1	613	10 11 716 7	TOBERA INYECCIÓN C.SUJEC
GENERADOR PREMONT. 28V	10116026	440	1	569	10 12 595 9	MOTOR DIESEL D9508 A7 320k
GENERADOR TACOMETRICO	10117898	1	1	662	90 79 206	GENERADOR TACOMETRICO
GENERADOR TACOMETRICO	9079206	21	3	658	90 79 187	SENSOR REGULACION MOTO
GENERADOR TRIFASICO	10018258	1	1	653	10 11 602 6	GENERADOR PREMONT. 28V
GLYDRING TURCON 190X169X	7023699	4	1	762	95 89 256	EMBOLO 190MM
GLYDRING TURCON 190X169X	7023699	4	1	763	99 07 680	EMBOLO 190 MM
GLYDRING TURCON 220X199X	7002063	4	1	761	95 88 147	EMBOLO 220MM
GOMA LIMPIAPARABRISAS	7019186	960	1	479	10 48 809 7	INST.ELÉCTRICA
GRASA	10282622	100	1	684	10 12 087 3	JJ CILINDRO
GRASA	8655008	126	1	73	92 68 751	JR ARO CIERRE
GRASA	8655008	126	1	84	98 88 124	JR ÁRBOL
GRASA	8655008	126	1	141	98 86 679	JR ÁRBOL
GRASA	8655008	126	1	173	98 89 282	JR ÁRBOL
GRASA	8655008	126	1	229	92 68 011	JR ARO CIERRE
GRASA AL/1kg	8655037	131	1	668	90 80 481	MONTAJE DE EMBRAGUE
GRASA ESPECIAL LIEBHERR	10358947	30	1	17	90 70 366	GRASAS
GRASA ESPECIAL LIEBHERR/	861305508	1	1	31	10 35 894 7	GRASA ESPECIAL LIEBHERR
GRASA ESPECIAL LIEBHERR/1	861304208	10	1	31	10 35 894 7	GRASA ESPECIAL LIEBHERR
GRASA ESPECIAL LIEBHERR/2	10296820	2	1	31	10 35 894 7	GRASA ESPECIAL LIEBHERR
GRASA ESPECIAL LIEBHERR/2	861303608	25	1	31	10 35 894 7	GRASA ESPECIAL LIEBHERR
GRASA ESPECIAL LIEBHERR/5	861305608	50	1	31	10 35 894 7	GRASA ESPECIAL LIEBHERR
GRASA NBU 30/1kg	10285708	100	1	577	90 78 049	CILINDRO
GRASA P.BAJAS TEMP. LIEBH	10358948	20	1	17	90 70 366	GRASAS
GRASA P.BAJAS TEMP. LIEBH	10296828	1	1	32	10 35 894 8	GRASA P.BAJAS TEMP. LIEBH
GRASA P.BAJAS TEMP. LIEB	10296825	10	1	32	10 35 894 8	GRASA P.BAJAS TEMP. LIEBH
GRASA P.BAJAS TEMP. LIEBH	10296822	180	1	32	10 35 894 8	GRASA P.BAJAS TEMP. LIEBH
GRASA P.BAJAS TEMP. LIEB	10296827	2	1	32	10 35 894 8	GRASA P.BAJAS TEMP. LIEBH
GRASA P.BAJAS TEMP. LIEB	10296824	25	1	32	10 35 894 8	GRASA P.BAJAS TEMP. LIEBH
GRASA P.BAJAS TEMP. LIEB	10296823	50	1	32	10 35 894 8	GRASA P.BAJAS TEMP. LIEBH
GRASA UNIVERSAL LIEBHER	10358949	10	1	17	90 70 366	GRASAS
GRASA UNIVERSAL LIEBHER	10296816	1	1	33	10 35 894 9	GRASA UNIVERSAL LIEBHER
GRASA UNIVERSAL LIEBHERR	10296813	10	1	33	10 35 894 9	GRASA UNIVERSAL LIEBHER
GRASA UNIVERSAL LIEBHER	10296810	180	1	33	10 35 894 9	GRASA UNIVERSAL LIEBHER
GRASA UNIVERSAL LIEBHERR	10296815	2	1	33	10 35 894 9	GRASA UNIVERSAL LIEBHER
GRASA UNIVERSAL LIEBHERR	10296812	25	1	33	10 35 894 9	GRASA UNIVERSAL LIEBHER
GRASA UNIVERSAL LIEBHERR	10296811	50	1	33	10 35 894 9	GRASA UNIVERSAL LIEBHER
GRASAS	9070366	60	1	10	90 66 460	LUBRICANTES
GRIFO DE AGUA	7001072	13	1	638	10 11 763 3	CONEXIÓN CONDUCTOS AGU
GRIFO DE AGUA	7001072	8	1	642	10 11 978 1	CODO DE REFRIGERANTE MO
GRIFO DE PURGA	7412936	16	1	619	10 30 300 7	PREFILTRO COMBUSTIBLE
GRUPO DE ACCIONAMIENTO	10126057	505	1	108	10 35 873 5	MOTOR MONTAJE
GRUPO MULTICIRC.	9080165	10	1	109	10 12 605 7	GRUPO DE ACCIONAMIENTO
GUIA	10015472	210	2	71	56 16 688	VÁLVULA FRENO MARCHA
GUIA ASIENTO DESPLAZABLE	10289989	71	1	274	10 04 363 2	ASIENTO CONDUCTOR
GUIA ASIENTO DESPLAZABLE	10289990	70	1	273	10 04 363 1	ASIENTO CONDUCTOR
GUIA ASIENTO DESPLAZABLE	10289990	70	1	274	10 04 363 2	ASIENTO CONDUCTOR
GUIA DE CADENA	9693923	40	6	41	10 35 874 0	ESTRUC.INF.COMPL.
GUIA DE MANGUERA	10073593	21	1	107	10 35 875 9	MONTAJE TUBOS FLEX.CALEF
GUIA DE MANGUERA	9358887	24	6	89	10 07 444 8	INST.HIDR.ESTRUC.INF.

Descripción	Artículo	Pos.	Cantid	Página	Grupo	Descripción
GUIA DE VALVULA	9078510	2	4	600	10 11 805 2	CULATA D9508
HERRAMIENTAS DE EQUIPAM	10084285	10	1	550	10 49 815 2	HERRAMIENTAS DE EQUIPAM
HERRAMIENTAS DE EQUIPAM	10498152	9620	1	92	10 35 874 2	SUPERESTRUCTURA
HERRAMIENTAS DE EQUIPAM	10498152	9620	1	93	10 49 853 2	SUPERESTRUCTURA
HILO	514586508	17	1	133	10 44 145 6	MECANISMO DE ACCIONAMIE
HILO	7028089	17	2	149	10 33 307 0	MECANISMO DE ACCIONAMIE
HÉLICE P.PROT.CIZALLA PLÁ	7369397	30	1	364	10 35 875 4	INST.HIDR.CONDUCTOS MAND
HÉLICE P.PROT.CIZALLA PLÁ	7369397	30	1	371	10 82 438 0	INST.HIDR.CONDUCTOS MAND
HÉLICE P.PROT.CIZALLA PLÁ	7369399	30	0.18	346	10 05 312 6	TUBOS FLEX.HIDR./ASPIR.+R
IMPULSOR MANOMETRICO	10025124	1	1	660	90 76 531	IMPULSOR MANOMETRICO M
IMPULSOR MANOMETRICO	10100781	1	1	661	90 76 550	IMPULSOR MANOMETRICO M1
IMPULSOR MANOMETRICO	10280390	30	1	511	10 06 221 6	INST.EL. MONOBLOQUE
IMPULSOR MANOMETRICO	10280390	30	1	512	10 35 876 2	INST.EL. MONOBLOQUE
IMPULSOR MANOMETRICO	10280390	30	1	513	10 49 837 6	INST.EL. MONOBLOQUE
IMPULSOR MANOMETRICO	10280390	50	1	517	10 06 222 8	INST.EL.CORREDERA DISTR.
IMPULSOR MANOMETRICO M	9076531	10	2	658	90 79 187	SENSOR REGULACION MOTO
IMPULSOR MANOMETRICO M	10100782	12	2	658	90 79 187	SENSOR REGULACION MOTO
IMPULSOR MANOMETRICO M1	9076550	11	1	658	90 79 187	SENSOR REGULACION MOTO
INDICADOR DE MANTENIMIE	7364276	5	2	118	10 35 873 4	MONTAJE FILTRO AIRE
INDICADOR PRESION BAJA	5611326	60	2	117	10 35 873 3	AIRE Y SISTEMA ESCAPE
INMOVILIZADOR DE PUERTA	7019164	420	1	484	70 28 778	PIEZAS DE MONTAJE
INSERTO DE FARO	10286644	12	1	500	10 04 553 0	FARO DE TRABAJO
INSERTO GOMA 30/42X88	10287498	45	4	344	10 35 875 5	EJEC.GIRADA HIDR.+MEC.GIR
INST.COMBUSTIBLE MOTOR	10366236	520	1	108	10 35 873 5	MOTOR MONTAJE
INST.EL.	10393720	30	1	748	10 49 827 1	DESCONEXION CILIND.DE BAL
INST.EL. MONOBLOQUE	10062216	100	1	703	10 35 872 5	PLUMA MONOBLOC 7,00M
INST.EL. MONOBLOQUE	10358762	60	1	494	10 35 875 7	INST.EL.CARRO SUPERIOR
INST.EL. MONOBLOQUE	10498376	60	1	494	10 35 875 7	INST.EL.CARRO SUPERIOR
INST.EL.CARRO SUPERIOR	10358757	9000	1	92	10 35 874 2	SUPERESTRUCTURA
INST.EL.CORREDERA DISTR.	10062228	70	1	494	10 35 875 7	INST.EL.CARRO SUPERIOR
INST.EL.DEP. COMBUSTIBLE	10358763	90	1	494	10 35 875 7	INST.EL.CARRO SUPERIOR
INST.EL.DEP. COMBUSTIBLE	10498377	90	1	494	10 35 875 7	INST.EL.CARRO SUPERIOR
INST.EL.ELEVACIÓN 1200MM	10823904	30	1	795	10 49 815 5	ELEVACIÓN CABINA CONDU
INST.ELÉCTRICA	10488097	60	1	468	10 47 616 7	CABINA DEL CONDUCTOR
INST.HIDR.ACC. VENTILADOR	10358751	75	1	332	10 35 874 7	INST.HIDR.CARRO SUPERIOR
INST.HIDR.ACC. VENTILADOR	10358751	75	1	333	10 49 853 7	INST.HIDR.CARRO SUPERIOR
INST.HIDR.BOMBAS A CORR.D	10386982	20	1	332	10 35 874 7	INST.HIDR.CARRO SUPERIOR
INST.HIDR.BOMBAS A CORR.D	10498044	20	1	332	10 35 874 7	INST.HIDR.CARRO SUPERIOR
INST.HIDR.BOMBAS A CORR.D	10498044	20	1	333	10 49 853 7	INST.HIDR.CARRO SUPERIOR
INST.HIDR.CARRO SUPERIOR	10358747	7000	1	91	10 35 874 2	SUPERESTRUCTURA
INST.HIDR.CARRO SUPERIOR	10498537	7000	1	93	10 49 853 2	SUPERESTRUCTURA
INST.HIDR.CONDUCTOS MAND	10358754	80	1	332	10 35 874 7	INST.HIDR.CARRO SUPERIOR
INST.HIDR.CONDUCTOS MAND	10824380	80	1	333	10 49 853 7	INST.HIDR.CARRO SUPERIOR
INST.HIDR.ESTRUC.INF.	10074448	14	1	41	10 35 874 0	ESTRUC.INF.COMPL.
INSTALACION CARBURANTE	10358683	9300	1	92	10 35 874 2	SUPERESTRUCTURA
INSTALACION ELECTRICA	9599236	50	1	791	10 09 294 8	FAROS ADICIONALES EN CABI
INTERCAMBIADOR DE CALOR	10022068	18	1	322	11 00 359 4	CARCASA
INTERRUPTOR ARRANQUE PR	10228151	75	1	291	10 82 277 5	REPOSABRAZOS DERECHA
INTERRUPTOR BASCULANTE	7027927	330	1	792	95 99 236	INSTALACION ELECTRICA
INTERRUPTOR CONMUTADO	6202944	31	2	503	10 09 499 2	RELACIÓN MATERIAL EL.
INTERRUPTOR CONMUTADO	6202945	32	1	503	10 09 499 2	RELACIÓN MATERIAL EL.
INTERRUPTOR CONMUTADO	6203687	30	2	503	10 09 499 2	RELACIÓN MATERIAL EL.
INTERRUPTOR DE FLOTADOR	10029026	61	1	204	10 35 873 9	MONTAJE DE RADIADOR
INTERRUPTOR DE FLOTADOR	6204694	40	1	382	10 35 874 5	MONTAJE DEPÓSITO HIDR.
INTERRUPTOR LLAVE	6204743	2	1	735	99 89 179	MONTAJE INTERR.
INTERRUPTOR MANILLA R-R	9968570	70	1	304	99 68 611	MANILLA DEL SENSOR LH DC
INTERRUPTOR MANILLA T-0-T	9968546	70	1	289	99 68 625	MANILLA DEL SENSOR LH IZ
INTERRUPTOR PRINCIPAL BA	10012119	10	1	506	10 35 875 8	MONTAJE BATERÍAS
INTERRUPTOR SELECTOR	10021882	2	1	303	90 16 516	MONTAJE INTERR. S218
INTERUPTOR DE PEDAL	10038643	10	1	309	10 08 142 4	AP.CONTR.PILOT.PEDAL IZDO

Descripción	Artículo	Pos.	Cantid	Página	Grupo	Descripción
INTERUPTOR DE PEDAL	10038644	10	1	310	10 08 142 6	AP.CONTR.PILOT.PED.DCHO.
J. J. CABEZA CILINDRO COM	10120896	80	8	678	10 12 116 0	JJ MOTOR DIESEL
J. J. CARCASA DEL TERMOST	10120962	380	1	679	10 12 116 0	JJ MOTOR DIESEL
J. J. TUBERÍA DE COMBUSTIBL	10121183	212	1	678	10 12 116 0	JJ MOTOR DIESEL
J. JUNTAS CARCASA DEL VO	10120996	520	1	679	10 12 116 0	JJ MOTOR DIESEL
J. JUNTAS PURGA CAJA CIG	10120869	16	1	678	10 12 116 0	JJ MOTOR DIESEL
J. REP. JUNTA DE CIGÜEÑAL	10121952	1	1	590	10 12 134 6	J. REP. JUNTA DE CIGÜEÑAL
J. REP. JUNTA DE CIGÜEÑAL	10121954	2	1	590	10 12 134 6	J. REP. JUNTA DE CIGÜEÑAL
J. REP. JUNTA DE CIGÜEÑAL	10121346	52	1	566	10 12 595 9	MOTOR DIESEL D9508 A7 320k
JC BAJO PUESTO CONDUCTO	10401819	140	1	272	10 05 311 8	BASE PUESTO CONDUCTOR
JC BAT.- MOTOR ARRANQUE	10066009	41	1	508	10 35 875 8	MONTAJE BATERÍAS
JC BOMBA TECHO	10009058	980	1	479	10 48 809 7	INST.ELÉCTRICA
JC CABINA	10488707	150	1	477	10 48 809 7	INST.ELÉCTRICA
JC CABINA -MOTOR	10080583	20	1	793	10 82 390 4	INST.EL.ELEVACIÓN 1200MM
JC CABINA PLAT.GIRAT.	10823905	10	1	793	10 82 390 4	INST.EL.ELEVACIÓN 1200MM
JC CABINA S54-S55	10366624	21	1	749	10 39 372 0	INST.EL.
JC CAJA ELÉCTRICA E50	10095054	51	1	504	10 09 499 2	RELACIÓN MATERIAL EL.
JC CONSOLA	9954432	940	1	792	95 99 236	INSTALACION ELECTRICA
JC CORR.DISTR.	10062229	10	1	515	10 06 222 8	INST.EL.CORREDERA DISTR.
JC DESCONEXIÓN - TIERRA	10066010	42	1	508	10 35 875 8	MONTAJE BATERÍAS
JC DESCONEXIÓN BATERÍA	10076111	40	1	508	10 35 875 8	MONTAJE BATERÍAS
JC DÍNAMO MOTOR ARRANQU	10066004	16	1	212	10 49 800 0	MOTOR - SISTEMA ELÉCTRIC
JC FAROS ADICIONALES	10017344	110	2	776	10 02 138 7	FARO ADICIONALE CABINA
JC INST.ILUMINACIÓN TIERRA	10066006	14	1	212	10 49 800 0	MOTOR - SISTEMA ELÉCTRIC
JC LIMPIADOR TECHO	10009043	800	1	479	10 48 809 7	INST.ELÉCTRICA
JC MANILLA	9968591	80	1	289	99 68 625	MANILLA DEL SENSOR LH IZ
JC MANILLA	9968591	80	1	304	99 68 611	MANILLA DEL SENSOR LH DC
JC PLATAFORMA GIRAT.	10094996	22	1	494	10 35 875 7	INST.EL.CARRO SUPERIOR
JC PLATAFORMA GIRAT.	10823906	11	1	793	10 82 390 4	INST.EL.ELEVACIÓN 1200MM
JC TIERRA MOTOR ARRANQU	10066005	13	1	212	10 49 800 0	MOTOR - SISTEMA ELÉCTRIC
JJ ACCIONAMIENTO SECUNDA	10121003	650	1	679	10 12 116 0	JJ MOTOR DIESEL
JJ ATL MONTAJE	10120993	430	1	679	10 12 116 0	JJ MOTOR DIESEL
JJ BOMBA AGUA	10120973	370	1	678	10 12 116 0	JJ MOTOR DIESEL
JJ BOMBA REFRIG.	10119482	96	1	128	90 80 120	ENGRANAJE DISTRIBUCION
JJ CARCASA	10289630	998	1	408	10 11 355 7	BLOQUE MANDO
JJ CILINDRO	10120873	40	1	678	10 12 116 0	JJ MOTOR DIESEL
JJ CUBETA ACEITE	10120871	20	1	678	10 12 116 0	JJ MOTOR DIESEL
JJ DISTRIBUIDOR GIRATORIO	10009676	999	1	56	10 00 963 0	TRANSMISION ROTATIVO
JJ DISTRIBUIDOR GIRATORIO	9265064	11	1	57	91 41 597	TRANSMISION ROTATIVO
JJ MOTOR DIESEL	10121160	939	1	571	10 12 595 9	MOTOR DIESEL D9508 A7 320k
JJ REGUL.	9271653	92	1	139	92 71 648	REGULACIÓN
JJ SOPORTE GRUPO	10120855	12	1	678	10 12 116 0	JJ MOTOR DIESEL
JJ SOPORTE VÁSTAGO PISTÓ	9064091	999	1	765	99 07 890	ALOJAMIENTO DE BIELA 125/
JJ SOPORTE VÁSTAGO PISTÓ	9631986	999	1	764	96 31 985	ALOJAMIENTO DE BIELA 150/
JJ VÁLVULA	5604377	10	1	768	56 02 932	VALVULA REGULADORA
JJ VÁLVULA	9266089	999	1	78	92 67 554	VALVULA LIMITADORA DE PR
JJ VÁLVULA	9266089	99	1	184	92 74 199	JUEGO JUNTAS
JJ VÁLVULA	9266089	99	1	198	90 77 032	PLACA DE CONEXION NG 045
JJ VÁLVULA DE PASO	5009562	999	1	373	10 28 027 9	VALVULA
JJ VÁLVULA DE PASO	5009562	999	1	375	56 15 344	VÁLVULA SOLENOIDE
JJ VÁLVULA MÚLTIPLES VÍAS	9266231	98	1	72	92 67 037	VALVULA LIMITADORA DE PR
JJ VÁLVULA MÚLTIPLES VÍAS	9266231	97	1	144	98 88 041	MOTOR HIDR. INCORP. FIX FM
JJ VÁLVULA MÚLTIPLES VÍAS	9266232	98	1	74	92 75 505	VÁLVULA MÚLTIPLES VÍAS WV
JJ VÁLVULA MÚLTIPLES VÍAS	9266232	95	1	143	98 88 041	MOTOR HIDR. INCORP. FIX FM
JJ VÁLVULA MÚLTIPLES VÍAS	9268642	98	1	184	92 74 199	JUEGO JUNTAS
JJ VÁLVULA MÚLTIPLES VÍAS	9268642	98	1	198	90 77 032	PLACA DE CONEXION NG 045
JJ VÁLVULA MÚLTIPLES VÍAS	9268642	97	1	266	98 89 003	VALVULA DE RETENCION RV
JJ VÁLVULA MÚLTIPLES VÍAS	9268642	97	1	393	98 89 008	JR VÁLV.RETENCIÓN
JJ VÁLVULA PRESIÓN	10332087	999	1	754	10 28 918 3	VÁLVULA ALIM.PRESIÓN
JJ VÁLVULA PRESIÓN	5616901	999	1	53	56 16 231	VÁLVULA ALIM.PRESIÓN

Descripción	Artículo	Pos.	Cantid	Página	Grupo	Descripción
JJ VÁLVULA REGULADORA	9882875	88	1	134	90 72 922	BOMBA CIL. VAR. HIDR.
JJ VÁLVULA REGULADORA	9882875	88	1	136	90 77 452	BOMBA CIL. VAR. HIDR.
JJ VÁLVULA RETENCIÓN EST	9270390	999	1	759	92 70 387	VALVULA REGULADORA
JJ ÉMBOLO 190MM	9064090	999	1	762	95 89 256	EMBOLO 190MM
JJ ÉMBOLO 190MM	9064090	999	1	763	99 07 680	EMBOLO 190 MM
JJ ÉMBOLO 220MM	9114437	999	1	761	95 88 147	EMBOLO 220MM
JP DESGASTE	10498501	11	1	726	10 49 849 9	CUCHARA RETRO HD 1950MM
JR	9884008	92	1	143	98 88 041	MOTOR HIDR. INCORP. FIX FM
JR (PISTÓN AJUSTE) FMV 165	9077412	80	1	80	92 78 174	REGULACIÓN
JR (PISTÓN AJUSTE) FMV 165	9077481	81	1	80	92 78 174	REGULACIÓN
JR (RZ-ESF.+PL) NG 165	9888119	78	1	83	98 88 123	JR GRUPO MOTOR
JR (RZ-ESF.+PL) NG 165	9888119	78	1	142	98 86 680	JR GRUPO MOTOR
JR (RZ-ESF.+PL) NG 165	9888119	78	1	143	98 88 041	MOTOR HIDR. INCORP. FIX FM
JR (RZ-ESF.+PL) NG 165	9888119	14	1	172	98 88 321	JR GRUPO MOTOR
JR (TAPA DEL REGUL.) LR/SD	9078788	86	1	134	90 72 922	BOMBA CIL. VAR. HIDR.
JR (TAPA DEL REGUL.) LR/SD	9078788	86	1	136	90 77 452	BOMBA CIL. VAR. HIDR.
JR AP.CONTROL PILOT.	9265665	2	2	772	92 66 411	PEDAL DE TRASLACION DE A
JR AP.CONTROL PILOT.	9265665	2	2	773	92 66 412	ACC.P.SENSOR EL. DCHA.
JR ARO CIERRE	9268011	96	1	197	10 12 504 2	MOTOR INCORP.HIDR.
JR ARO CIERRE	9268011	96	1	230	92 68 786	JUEGO JUNTAS
JR ARO CIERRE	9268751	96	1	68	90 72 024	MOTOR HIDR. INCORP. VAR.
JR ARO CIERRE	9268751	96	1	88	92 78 179	JUEGO JUNTAS
JR ARO CIERRE	9268751	93	1	134	90 72 922	BOMBA CIL. VAR. HIDR.
JR ARO CIERRE	9268751	93	1	136	90 77 452	BOMBA CIL. VAR. HIDR.
JR ARO CIERRE	9268751	96	1	143	98 88 041	MOTOR HIDR. INCORP. FIX FM
JR ARO CIERRE	9268751	17	1	171	92 71 657	JUEGO JUNTAS
JR ARO CIERRE	9268751	17	1	184	92 74 199	JUEGO JUNTAS
JR BOLA RETR.C.PLACA	9880619	78	1	231	92 71 427	JR GRUPO MOTOR
JR CIL.+PLACA MANDO	9073751	2	1	172	98 88 321	JR GRUPO MOTOR
JR CIL.+PLACA MANDO	9880521	79	1	231	92 71 427	JR GRUPO MOTOR
JR CIL.+PLACA MANDO	9886678	79	1	142	98 86 680	JR GRUPO MOTOR
JR CIL.+PLACA MANDO	9886678	79	1	143	98 88 041	MOTOR HIDR. INCORP. FIX FM
JR CIL.+PLACA MANDO	9888122	79	1	83	98 88 123	JR GRUPO MOTOR
JR DISP.COJ.CIGÜEÑAL COM	10128593	1	1	589	10 12 854 0	DISPOSITIVO COJINETES CIG
JR GRUPO MOTOR	9271427	94	1	197	10 12 504 2	MOTOR INCORP.HIDR.
JR GRUPO MOTOR	9886680	94	1	143	98 88 041	MOTOR HIDR. INCORP. FIX FM
JR GRUPO MOTOR	9888123	94	1	68	90 72 024	MOTOR HIDR. INCORP. VAR.
JR GRUPO MOTOR	9888123	94	1	70	98 88 126	MECANISMO DE ACCIONAMIE
JR GRUPO MOTOR	9888321	94	1	134	90 72 922	BOMBA CIL. VAR. HIDR.
JR GRUPO MOTOR	9888321	94	1	136	90 77 452	BOMBA CIL. VAR. HIDR.
JR PISTÓN AJUSTE	9079811	2	1	139	92 71 648	REGULACIÓN
JR TAPA	9275443	85	1	134	90 72 922	BOMBA CIL. VAR. HIDR.
JR VÁLV.RETENCIÓN	9889008	2	1	198	90 77 032	PLACA DE CONEXION NG 045
JR VÁLVULA LIM.PRESIÓN	9076052	1	1	198	90 77 032	PLACA DE CONEXION NG 045
JR VÁLVULA LIM.PRESIÓN	9883996	91	1	143	98 88 041	MOTOR HIDR. INCORP. FIX FM
JR YUGO BASC. LPV 165	9079347	16	1	172	98 88 321	JR GRUPO MOTOR
JR ÁRBOL	9882882	95	1	197	10 12 504 2	MOTOR INCORP.HIDR.
JR ÁRBOL	9886679	93	1	143	98 88 041	MOTOR HIDR. INCORP. FIX FM
JR ÁRBOL	9888124	95	1	70	98 88 126	MECANISMO DE ACCIONAMIE
JR ÁRBOL	9889282	10	1	172	98 88 321	JR GRUPO MOTOR
JR ÁRBOL DE ENTRADA	9080196	98	1	128	90 80 120	ENGRANAJE DISTRIBUCION
JR ÉMBOLO C.PATÍN DESL.	9880601	77	1	231	92 71 427	JR GRUPO MOTOR
JR ÉMBOLO C.PATÍN DESL. N	9880604	77	1	83	98 88 123	JR GRUPO MOTOR
JR ÉMBOLO C.PATÍN DESL. N	9880604	77	1	142	98 86 680	JR GRUPO MOTOR
JR ÉMBOLO C.PATÍN DESL. N	9880604	77	1	143	98 88 041	MOTOR HIDR. INCORP. FIX FM
JR ÉMBOLO C.PATÍN DESL. N	9880604	1	1	172	98 88 321	JR GRUPO MOTOR
JUEGO ANILLOS TÓRICOS	10018373	998	1	252	10 48 927 7	COMBINACIÓN DE DISTRIB. SX
JUEGO ANILLOS TÓRICOS	10018375	999	1	252	10 48 927 7	COMBINACIÓN DE DISTRIB. SX
JUEGO ANILLOS TÓRICOS	10021308	999	1	245	10 29 302 0	COMBINACIÓN DE DISTRIB. M
JUEGO ANILLOS TÓRICOS	10021308	999	1	254	10 29 301 8	COMBINACIÓN DE DISTRIB. M

Descripción	Artículo	Pos.	Cantid	Página	Grupo	Descripción
JUEGO ANILLOS TÓRICOS	10021308	999	1	708	10 00 878 9	COMBINACIÓN DE DISTRIB. M
JUEGO ANILLOS TÓRICOS	10021308	999	1	722	10 30 336 9	COMBINACIÓN DE DISTRIB. M
JUEGO CABLES BOMBA	10364488	11	1	212	10 49 800 0	MOTOR - SISTEMA ELÉCTRIC
JUEGO CABLES DEP. COMBU	10094995	40	1	525	10 35 876 3	INST.EL.DEP. COMBUSTIBLE
JUEGO CABLES DEP. COMBU	10402127	40	1	532	10 49 837 7	INST.EL.DEP. COMBUSTIBLE
JUEGO CABLES EN MONOBLO	10062223	10	1	511	10 06 221 6	INST.EL. MONOBLOQUE
JUEGO CABLES EN MONOBLO	10062223	10	1	512	10 35 876 2	INST.EL. MONOBLOQUE
JUEGO CABLES EN MONOBLO	10402126	10	1	513	10 49 837 6	INST.EL. MONOBLOQUE
JUEGO CABLES MOTOR X106	10096412	21	1	793	10 82 390 4	INST.EL.ELEVACIÓN 1200MM
JUEGO DE ANILLOS DE LÁMI	10030741	8	2	645	10 11 566 7	TUBO DE ESCAPE DERECHA
JUEGO DE ANILLOS DE LÁMI	10030741	8	2	648	10 11 566 8	TUBO DE ESCAPE IZQUIERDA
JUEGO DE DISCOS DE FRENO	932180501	960	1	67	94 43 970	ACCIONAMIENTO DE TRASL
JUEGO DE DISCOS DE FRENO	968580201	960	1	222	90 01 781 7	ACCIONAMIENTO GIRATORIO
JUEGO DE JUNTAS	10021310	998	1	245	10 29 302 0	COMBINACIÓN DE DISTRIB. M
JUEGO DE JUNTAS	10021310	998	1	254	10 29 301 8	COMBINACIÓN DE DISTRIB. M
JUEGO DE JUNTAS	10021310	998	1	708	10 00 878 9	COMBINACIÓN DE DISTRIB. M
JUEGO DE JUNTAS	10021310	998	1	722	10 30 336 9	COMBINACIÓN DE DISTRIB. M
JUEGO DE JUNTAS	10021311	997	1	245	10 29 302 0	COMBINACIÓN DE DISTRIB. M
JUEGO DE JUNTAS	10021311	997	1	254	10 29 301 8	COMBINACIÓN DE DISTRIB. M
JUEGO DE JUNTAS	10021311	997	1	708	10 00 878 9	COMBINACIÓN DE DISTRIB. M
JUEGO DE JUNTAS	10021311	997	1	722	10 30 336 9	COMBINACIÓN DE DISTRIB. M
JUEGO DE JUNTAS	10489538	999	1	409	10 47 594 2	VALVULA REDUCTORA DE PR
JUEGO DE JUNTAS	90003864	910	1	222	90 01 781 7	ACCIONAMIENTO GIRATORIO
JUEGO DE RUEDAS	10220693	7	1	158	10 33 325 9	BOMBA DE ENGRANAJES
JUEGO JUNTAS	10015470	999	1	71	56 16 688	VÁLVULA FRENO MARCHA
JUEGO JUNTAS	10220997	999	1	376	10 28 046 1	VÁLVULA MAGNÉTICA REGUL
JUEGO JUNTAS	10278595	999	1	752	10 34 080 6	SEGURO CONTRA ROTURA TU
JUEGO JUNTAS	10278595	999	1	753	10 34 081 2	SEGURO CONTRA ROTURA TU
JUEGO JUNTAS	10356675	999	1	408	10 11 355 7	BLOQUE MANDO
JUEGO JUNTAS	7025142	999	1	374	50 09 565	CARTUCHO LIM.PRESIÓN
JUEGO JUNTAS	7622254	800	1	164	10 35 548 6	BOMBA DE ENGRANAJES
JUEGO JUNTAS	9080195	97	1	128	90 80 120	ENGRANAJE DISTRIBUCION
JUEGO JUNTAS	9268786	98	1	197	10 12 504 2	MOTOR INCORP.HIDR.
JUEGO JUNTAS	9271657	98	1	135	90 72 922	BOMBA CIL. VAR. HIDR.
JUEGO JUNTAS	9271657	98	1	136	90 77 452	BOMBA CIL. VAR. HIDR.
JUEGO JUNTAS	9274199	98	1	144	98 88 041	MOTOR HIDR. INCORP. FIX FM
JUEGO JUNTAS	9278179	98	1	68	90 72 024	MOTOR HIDR. INCORP. VAR.
JUEGO JUNTAS BOMBA ALTA	10120878	180	1	678	10 12 116 0	JJ MOTOR DIESEL
JUEGO JUNTAS CODO DE ESC	10120976	412	1	679	10 12 116 0	JJ MOTOR DIESEL
JUEGO JUNTAS COMPRESOR	10120944	330	1	678	10 12 116 0	JJ MOTOR DIESEL
JUEGO JUNTAS FRENO	932180401	901	1	67	94 43 970	ACCIONAMIENTO DE TRASL
JUEGO JUNTAS LÍNEA DE CON	10120937	230	1	678	10 12 116 0	JJ MOTOR DIESEL
JUEGO JUNTAS MÓDULO DE A	10120875	130	1	678	10 12 116 0	JJ MOTOR DIESEL
JUEGO JUNTAS PIEZAS DE C	10120870	17	1	678	10 12 116 0	JJ MOTOR DIESEL
JUEGO JUNTAS RETORNO E	10120982	420	1	679	10 12 116 0	JJ MOTOR DIESEL
JUEGO LUNAS	9885919	39	1	231	92 71 427	JR GRUPO MOTOR
JUEGO LUNAS	9885920	39	1	83	98 88 123	JR GRUPO MOTOR
JUEGO LUNAS	9885920	39	1	142	98 86 680	JR GRUPO MOTOR
JUEGO LUNAS	9885920	39	1	172	98 88 321	JR GRUPO MOTOR
JUEGO PARASOLES	7028826	250	1	470	70 28 775	PARABRISAS
JUEGO PARASOLES	7028933	620	1	486	70 28 778	PIEZAS DE MONTAJE
JUNTA	10009014	120	1	472	10 04 678 8	PUERTA CABINA CONDUCTO
JUNTA	10009027	450	2	489	10 48 809 9	REVESTIMIENTO INTERIOR
JUNTA	10014682	5	1	249	10 34 071 7	ENGRASADORA
JUNTA	10044355	150	1	484	70 28 778	PIEZAS DE MONTAJE
JUNTA	10099879	7	2	49	10 47 076 9	RUEDA DIRECTRIZ D8K
JUNTA	10115623	6	1	649	10 13 273 9	MONTAJE ATL
JUNTA	10115623	6	1	650	10 13 274 0	MONTAJE ATL
JUNTA	10115623	3	2	694	10 12 099 3	JJ ATL MONTAJE
JUNTA	10116848	6	2	632	90 79 077	ANEJO DE LINEA DE CONEXIÓ

Descripción	Artículo	Pos.	Cantid	Página	Grupo	Descripción
JUNTA	10117568	52	2	117	10 35 873 3	AIRE Y SISTEMA ESCAPE
JUNTA	10117681	5	2	604	10 12 476 3	MONTAJE MÓDULO ACEITE
JUNTA	10117862	3	1	582	10 12 593 7	CUBETA ACEITE C.SUJECIÓN
JUNTA	10117862	1	1	683	10 12 087 1	JJ CUBETA ACEITE
JUNTA	10118558	2	2	630	90 78 417	MONTAJE TUBO AIRE ADMISIÓ
JUNTA	10118558	3	1	632	90 79 077	ANEJO DE LINEA DE CONEXIÓ
JUNTA	10118558	1	2	688	10 12 093 7	JUEGO JUNTAS LÍNEA DE CON
JUNTA	10118715	3	1	695	10 12 099 6	J. JUNTAS CARCASA DEL VO
JUNTA	10118717	10	2	607	10 12 475 6	MÓDULO ACEITE IZDA.
JUNTA	10118717	10	2	608	10 12 475 7	MODULO ACEITE DCHA.
JUNTA	10118717	2	4	685	10 12 087 5	JUEGO JUNTAS MÓDULO DE A
JUNTA	10118991	2	1	687	10 12 089 6	J. J. CABEZA CILINDRO COM
JUNTA	10119342	2	2	632	90 79 077	ANEJO DE LINEA DE CONEXIÓ
JUNTA	10119342	2	2	688	10 12 093 7	JUEGO JUNTAS LÍNEA DE CON
JUNTA	10119343	3	2	647	10 13 274 6	CODO DE ESCAPE MONTAJE
JUNTA	10119343	1	2	692	10 12 097 6	JUEGO JUNTAS CODO DE ESC
JUNTA	10120356	5	1	664	10 12 032 2	MONT. CARCASA VOLANTE IM
JUNTA	10120356	1	1	695	10 12 099 6	J. JUNTAS CARCASA DEL VO
JUNTA	10122635	4	1	596	10 12 264 0	MONT. TAPA CULATA
JUNTA	10122635	4	2	598	10 12 264 6	MONT. TAPA CULATA
JUNTA	10122635	4	2	599	10 12 265 9	MONT. TAPA CULATA
JUNTA	10216004	110	1	488	10 48 809 9	REVESTIMIENTO INTERIOR
JUNTA	10220813	2	1	649	10 13 273 9	MONTAJE ATL
JUNTA	10220813	2	1	650	10 13 274 0	MONTAJE ATL
JUNTA	10220813	2	2	694	10 12 099 3	JJ ATL MONTAJE
JUNTA	10220814	3	1	649	10 13 273 9	MONTAJE ATL
JUNTA	10220814	3	1	650	10 13 274 0	MONTAJE ATL
JUNTA	10220814	1	2	694	10 12 099 3	JJ ATL MONTAJE
JUNTA	10454840	121	1	505	10 09 499 2	RELACIÓN MATERIAL EL.
JUNTA	7011131	2	1	584	50 04 624	TORNILLO PURGA ACEITE
JUNTA	7019154	240	1	472	10 04 678 8	PUERTA CABINA CONDUCTO
JUNTA	7019155	250	1	472	10 04 678 8	PUERTA CABINA CONDUCTO
JUNTA	7024455	460	1	478	10 48 809 7	INST.ELÉCTRICA
JUNTA	7026772	120	2	505	10 09 499 2	RELACIÓN MATERIAL EL.
JUNTA	7028343	9	1	388	56 17 689	DISPOSITIVO DE CIERRE DN
JUNTA	7028790	130	1	469	70 28 774	LUNAS
JUNTA	7028795	170	1	469	70 28 774	LUNAS
JUNTA	7028846	410	1	473	10 04 678 8	PUERTA CABINA CONDUCTO
JUNTA	7028847	430	1	473	10 04 678 8	PUERTA CABINA CONDUCTO
JUNTA	7028892	160	1	484	70 28 778	PIEZAS DE MONTAJE
JUNTA	7028934	140	1	484	70 28 778	PIEZAS DE MONTAJE
JUNTA	7028953	400	2	489	10 48 809 9	REVESTIMIENTO INTERIOR
JUNTA	7029412	520	1	476	70 28 844	VENTANA DE CORREDERA
JUNTA	7029413	530	2	476	70 28 844	VENTANA DE CORREDERA
JUNTA	7264906	11	1	183	92 65 783	TORNILLO DE CIERRE M6X6
JUNTA	7368993	3	3	95	10 09 107 3	PAQUETE SERV. ERSTE 500H
JUNTA	7368993	3	3	97	10 36 190 7	PAQUETE SERV. 1000H
JUNTA	7368993	2	1	389	73 68 771	FILTRO DE RETORNO
JUNTA	7368994	4	1	389	73 68 771	FILTRO DE RETORNO
JUNTA	7412935	18	1	619	10 30 300 7	PREFILTRO COMBUSTIBLE
JUNTA	9077329	8	1	696	10 12 100 3	JJ ACCIONAMIENTO SECUNDA
JUNTA	9078308	12	4	645	10 11 566 7	TUBO DE ESCAPE DERECHA
JUNTA	9078308	12	4	648	10 11 566 8	TUBO DE ESCAPE IZQUIERDA
JUNTA	9078308	3	1	687	10 12 089 6	J. J. CABEZA CILINDRO COM
JUNTA	9079885	6	8	97	10 36 190 7	PAQUETE SERV. 1000H
JUNTA	9079885	2	1	596	10 12 264 0	MONT. TAPA CULATA
JUNTA	9079885	2	7	597	10 12 264 5	MONT. TAPA CULATA
JUNTA	9079885	2	2	598	10 12 264 6	MONT. TAPA CULATA
JUNTA	9079885	2	2	599	10 12 265 9	MONT. TAPA CULATA
JUNTA	9079885	4	1	687	10 12 089 6	J. J. CABEZA CILINDRO COM

Descripción	Artículo	Pos.	Cantid	Página	Grupo	Descripción
JUNTA	9080032	2	1	581	10 12 021 3	MONTAJE SOPORTE GRUPO
JUNTA	9080032	1	1	680	10 12 085 5	JJ SOPORTE GRUPO
JUNTA	9080281	1	1	689	10 12 094 4	JUEGO JUNTAS COMPRESOR
JUNTA	9080532	2	8	692	10 12 097 6	JUEGO JUNTAS CODO DE ESC
JUNTA	9268130	5	1	649	10 13 273 9	MONTAJE ATL
JUNTA	9268130	5	1	650	10 13 274 0	MONTAJE ATL
JUNTA	9268130	4	2	694	10 12 099 3	JJ ATL MONTAJE
JUNTA	9275428	76	1	185	92 75 443	JR TAPA
JUNTA	9275766	2	2	683	10 12 087 1	JJ CUBETA ACEITE
JUNTA	9882204	11	1	171	92 71 657	JUEGO JUNTAS
JUNTA 0,3MM DICK	10116794	1	2	693	10 12 098 2	JUEGO JUNTAS RETORNO E
JUNTA 0,9MM DICK	10116792	4	2	693	10 12 098 2	JUEGO JUNTAS RETORNO E
JUNTA 1,0MM	10117680	1	2	685	10 12 087 5	JUEGO JUNTAS MÓDULO DE A
JUNTA 1,0MM DICK	10116793	3	2	693	10 12 098 2	JUEGO JUNTAS RETORNO E
JUNTA 1.5MM	9078337	6	4	627	90 79 075	ASPIRACIÓN DE AIRE DCHA.
JUNTA 1.5MM	9078337	6	4	628	90 79 076	ASPIRACION DE AIRE
JUNTA 1MM	10115786	6	1	646	10 11 899 9	CONSOLA MONTAJE
JUNTA ANILLO DESLIZANTE	10030866	5	2	45	10 22 121 2	POLEA RODADURA
JUNTA ANILLO DESLIZANTE	10099878	5	4	49	10 47 076 9	RUEDA DIRECTRIZ D8K
JUNTA ANILLO DESLIZANTE	7610244	58	1	66	94 43 970	ACCIONAMIENTO DE TRASL
JUNTA ANULAR	10014697	13	2	249	10 34 071 7	ENGRASADORA
JUNTA ANULAR	10217776	4	1	614	10 42 869 4	TOBERA DE INYECCION
JUNTA ANULAR	10298637	2	1	148	10 29 866 3	TORNILLO DE CIERRE
JUNTA ANULAR	7373435	5	1	774	10 02 073 5	VALVULA SELECTORA
JUNTA ANULAR	7610225	6	1	225	94 42 350	CODO DE LLENADO DE ACEIT
JUNTA ANULAR 0 3869 11,6X16	10040984	2	1	659	90 76 530	PALPADOR DE TEMPERATUR
JUNTA ANULAR 0 3869 11,6X16	10040984	2	1	660	90 76 531	IMPULSOR MANOMETRICO M
JUNTA ANULAR 10,7X16,00X1,	10011864	3	1	612	10 11 615 0	CÁRTER/CARCASA PREM.
JUNTA ANULAR 10,7X16,00X1,	10011864	7	1	686	10 12 087 8	JUEGO JUNTAS BOMBA ALTA
JUNTA ANULAR 14	10428572	5	1	180	10 44 299 8	VALVULA SELECTORA
JUNTA ANULAR 14,7X22,00X1,	10011866	3	1	575	10 12 016 8	PIEZAS DE CIERRE
JUNTA ANULAR 14,7X22,00X1,	10011866	6	3	576	10 11 874 8	ANEJO TUBERIA
JUNTA ANULAR 14,7X22,00X1,	10011866	5	1	612	10 11 615 0	CÁRTER/CARCASA PREM.
JUNTA ANULAR 14,7X22,00X1,	10011866	12	5	617	10 12 314 1	MONT.FILTRO FINO COMBUS
JUNTA ANULAR 14,7X22,00X1,	10011866	12	18	621	90 78 554	MONTAJE TUBERÍA A.FUGA
JUNTA ANULAR 14,7X22,00X1,	10011866	23	7	623	10 12 720 8	TUBERIAS DE COMBUSTIBLE
JUNTA ANULAR 14,7X22,00X1,	10011866	8	18	641	10 11 930 6	MONT.TUBERÍA DE PURGA
JUNTA ANULAR 14,7X22,00X1,	10011866	7	2	642	10 11 978 1	CODO DE REFRIGERANTE MO
JUNTA ANULAR 14,7X22,00X1,	10011866	1	4	682	10 12 087 0	JUEGO JUNTAS PIEZAS DE C
JUNTA ANULAR 14,7X22,00X1,	10011866	5	1	686	10 12 087 8	JUEGO JUNTAS BOMBA ALTA
JUNTA ANULAR 14,7X22,00X1,	10011866	6	5	687	10 12 089 6	J. J. CABEZA CILINDRO COM
JUNTA ANULAR 14,7X22,00X1,	10011866	5	2	694	10 12 099 3	JJ ATL MONTAJE
JUNTA ANULAR 14,7X22,00X1,	10011866	1	10	697	10 12 118 3	J. J. TUBERÍA DE COMBUSTIBL
JUNTA ANULAR 14,7x22,00x1,5	10356531	12	2	689	10 12 094 4	JUEGO JUNTAS COMPRESOR
JUNTA ANULAR 16,7X24,00X1,	10011867	24	2	623	10 12 720 8	TUBERIAS DE COMBUSTIBLE
JUNTA ANULAR 16,7X24,00X1,	10011867	9	1	642	10 11 978 1	CODO DE REFRIGERANTE MO
JUNTA ANULAR 16,7X24,00X1,	10011867	14	10	689	10 12 094 4	JUEGO JUNTAS COMPRESOR
JUNTA ANULAR 16,7X24,00X1,	10011867	8	1	691	10 12 097 3	JJ BOMBA AGUA
JUNTA ANULAR 16,7X24,00X1,	10011867	5	2	693	10 12 098 2	JUEGO JUNTAS RETORNO E
JUNTA ANULAR 16,7X24,00X1,	10011867	2	2	697	10 12 118 3	J. J. TUBERÍA DE COMBUSTIBL
JUNTA ANULAR 18,7X26,00X1,	10011868	9	2	617	10 12 314 1	MONT.FILTRO FINO COMBUS
JUNTA ANULAR 18,7X26,00X1,	10011868	2	2	672	10 11 883 5	PIEZA DE EMPALME PREMO
JUNTA ANULAR 190X178,4X12,	7023589	7	1	765	99 07 890	ALOJAMIENTO DE BIELA 125/
JUNTA ANULAR 21	7371651	4	1	767	93 99 179	RACOR INTER. P.ACUMULADO
JUNTA ANULAR 22,7X30X2	10011869	11	2	689	10 12 094 4	JUEGO JUNTAS COMPRESOR
JUNTA ANULAR 24,7X32X2	10011842	6	2	629	90 80 436	TUBO ASPIRADOR ANEJO
JUNTA ANULAR 26,7X34,93X2	10011870	6	2	575	10 12 016 8	PIEZAS DE CIERRE
JUNTA ANULAR 26,7X34,93X2	10011870	19	1	582	10 12 593 7	CUBETA ACEITE C.SUJECIÓN
JUNTA ANULAR 26,7X34,93X2	10011870	6	2	629	90 80 436	TUBO ASPIRADOR ANEJO
JUNTA ANULAR 26,7X34,93X2	10011870	2	2	682	10 12 087 0	JUEGO JUNTAS PIEZAS DE C

Descripción	Artículo	Pos.	Cantid	Página	Grupo	Descripción
JUNTA ANULAR 26,7X34,93X2	10011870	13	4	689	10 12 094 4	JUEGO JUNTAS COMPRESOR
JUNTA ANULAR 30,7X39X2	10113731	9	2	605	10 12 002 3	TUBERIA DE ACEITE MONTAJ
JUNTA ANULAR 4X8X1	10016656	36	4	250	10 34 071 7	ENGRASADORA
JUNTA ANULAR 57,70X67,59X6	10043255	2	3	640	10 11 753 0	CARCASA DE TERMOSTATO P
JUNTA ANULAR 57,70X67,59X6	10043255	1	3	690	10 12 096 2	J. J. CARCASA DEL TERMOST
JUNTA ANULAR DE PERFIL 33	10335629	3	1	585	10 11 883 9	LLENADO DE ACEITE
JUNTA ASBESTFREI	9080503	12	1	664	10 12 032 2	MONT. CARCASA VOLANTE IM
JUNTA BOWLEN	10294170	9	1	619	10 30 300 7	PREFILTRO COMBUSTIBLE
JUNTA DE COLLAR	7028342	4	1	388	56 17 689	DISPOSITIVO DE CIERRE DN
JUNTA DE CULATA	10118055	2	1	593	10 11 805 0	CULATA MONTAJE
JUNTA DE CULATA	10118055	1	1	687	10 12 089 6	J. J. CABEZA CILINDRO COM
JUNTA DE ROTOR	10011398	11	2	56	10 00 963 0	TRANSMISION ROTATIVO
JUNTA DE ROTOR	10011398	11	2	58	10 00 967 6	JJ DISTRIBUIDOR GIRATORIO
JUNTA DE ROTOR	7380002	1	1	59	92 65 064	JJ DISTRIBUIDOR GIRATORIO
JUNTA DE ROTOR	7380004	3	1	59	92 65 064	JJ DISTRIBUIDOR GIRATORIO
JUNTA DE ROTOR	7380038	2	5	59	92 65 064	JJ DISTRIBUIDOR GIRATORIO
JUNTA DE ROTOR 10X13,6X2,	7380134	3	1	313	92 65 665	JR AP.CONTROL PILOT.
JUNTA DEL CIGÜEÑAL	9077696	52	1	678	10 12 116 0	JJ MOTOR DIESEL
JUNTA DEL VASTAGO DE VA	10012247	4	4	594	10 11 805 1	CULATA PREMONT. D9508
JUNTA DEL VASTAGO DE VA	10012247	5	4	687	10 12 089 6	J. J. CABEZA CILINDRO COM
JUNTA HERMET.RADIADOR	10064613	110	1	207	10 35 873 9	MONTAJE DE RADIADOR
JUNTA LIFETIME	10303000	5	2	46	10 29 067 4	RODILLO APOYO D8K
JUNTA RIM 125,0x140,1x6,3	7010659	9	1	765	99 07 890	ALOJAMIENTO DE BIELA 125/
JUNTA RIM 150,0x170,5x8,1	7014467	9	1	764	96 31 985	ALOJAMIENTO DE BIELA 150/
JUNTA TAPA DE BORNES	10294171	5	1	96	10 09 107 4	PAQUETE SERV. 1500H/2500H
JUNTA TAPA DE BORNES	10294171	30	4	99	10 35 983 0	PAQUETE SERV.FILTRO COM
JUNTA TAPA DE BORNES	10294171	4	1	619	10 30 300 7	PREFILTRO COMBUSTIBLE
JUNTA TORICA	10040400	2	1	622	10 11 781 4	BOMBA DE ALTA PRES.PRE
JUNTA TORICA	10113975	2	1	661	90 76 550	IMPULSOR MANOMETRICO M1
JUNTA TORICA	10115072	26	2	153	10 33 322 6	PLACA DE CONEXION
JUNTA TORICA	10115072	16	2	176	10 34 668 4	SERVOMANDO
JUNTA TORICA	10115072	19	1	178	10 40 975 1	CILINDRO TRANSPORTADOR
JUNTA TORICA	10215824	1	1	583	10 11 694 5	VARILLA NIVEL ACEITE C.TUB
JUNTA TORICA	10215824	7	1	683	10 12 087 1	JJ CUBETA ACEITE
JUNTA TORICA	10217777	3	1	614	10 42 869 4	TOBERA DE INYECCION
JUNTA TORICA	10217777	3	1	615	10 49 001 8	TOBERA DE INYECCION
JUNTA TORICA	10217777	7	1	687	10 12 089 6	J. J. CABEZA CILINDRO COM
JUNTA TORICA	10218370	4	1	695	10 12 099 6	J. JUNTAS CARCASA DEL VO
JUNTA TORICA	10219619	60	1	751	10 29 135 3	MÓDULO MANDO
JUNTA TORICA	10298634	14	1	166	10 44 145 8	SENSOR DE ÁNGULO DE GIR
JUNTA TORICA	10298634	18	1	264	10 33 323 7	VALVULA LIMITADORA DE PR
JUNTA TORICA	10298636	3	1	148	10 29 866 3	TORNILLO DE CIERRE
JUNTA TORICA	10300920	20	1	158	10 33 325 9	BOMBA DE ENGRANAJES
JUNTA TORICA	10301924	6	2	45	10 22 121 2	POLEA RODADURA
JUNTA TORICA	10303001	7	2	46	10 29 067 4	RODILLO APOYO D8K
JUNTA TORICA	10333075	26	1	130	10 21 593 5	BOMBA
JUNTA TORICA	10333245	9	1	153	10 33 322 6	PLACA DE CONEXION
JUNTA TORICA	10333265	12	1	158	10 33 325 9	BOMBA DE ENGRANAJES
JUNTA TORICA	10333265	3	1	159	10 33 326 2	PLACA DE DESGASTE
JUNTA TORICA	10333269	13	3	155	10 33 322 8	FILTRO
JUNTA TORICA	10333276	4	1	163	10 33 327 3	VÁLVULA ARRANQUE EN FRÍ
JUNTA TORICA	10354824	3	1	387	10 30 177 6	VALVULA DE DESCARGA
JUNTA TORICA	5608035	3	1	402	56 15 220	FILTRO DE ALTA PRESION
JUNTA TORICA	7000329	1	1	696	10 12 100 3	JJ ACCIONAMIENTO SECUNDA
JUNTA TORICA	7000563	8	1	761	95 88 147	EMBOLO 220MM
JUNTA TORICA	7000583	7	1	764	96 31 985	ALOJAMIENTO DE BIELA 150/
JUNTA TORICA	7001609	11	1	765	99 07 890	ALOJAMIENTO DE BIELA 125/
JUNTA TORICA	7002641	14	1	380	70 25 142	JUEGO JUNTAS
JUNTA TORICA	7017766	39	1	149	10 33 307 0	MECANISMO DE ACCIONAMIE
JUNTA TORICA	7017766	20	2	177	10 40 974 7	REGULACIÓN HIDR.

Descripción	Artículo	Pos.	Cantid	Página	Grupo	Descripción
JUNTA TORICA	7028346	8	1	388	56 17 689	DISPOSITIVO DE CIERRE DN
JUNTA TORICA	7264028	9	1	96	10 09 107 4	PAQUETE SERV. 1500H/2500H
JUNTA TORICA	7264028	14	1	340	10 05 314 4	MONTAJE UNIDAD ACEITE MA
JUNTA TORICA	7264028	14	1	341	10 82 438 9	MONTAJE UNIDAD ACEITE MA
JUNTA TORICA	7264028	14	1	342	56 09 948	KIT FILTRO P.ACEITE
JUNTA TORICA	726403201	83	2	66	94 43 970	ACCIONAMIENTO DE TRASL
JUNTA TORICA	7264091	8	1	763	99 07 680	EMBOLO 190 MM
JUNTA TORICA	726428001	71	2	66	94 43 970	ACCIONAMIENTO DE TRASL
JUNTA TORICA	7361549	1	1	111	73 67 136	ATORNILLAMIENTO BFW 35L
JUNTA TORICA	7363759	67	2	122	10 35 879 9	MONTAJE BOMBAS
JUNTA TORICA	7364303	49	1	66	94 43 970	ACCIONAMIENTO DE TRASL
JUNTA TORICA	7366427	43	1	382	10 35 874 5	MONTAJE DEPÓSITO HIDR.
JUNTA TORICA	7369266	1	1	390	73 73 880	CARTUCHO DE FILTRO FIBR
JUNTA TORICA	7369266	1	1	391	73 73 881	CARTUCHO DE FILTRO FIBR
JUNTA TORICA	7369286	2	1	390	73 73 880	CARTUCHO DE FILTRO FIBR
JUNTA TORICA	7369286	2	1	391	73 73 881	CARTUCHO DE FILTRO FIBR
JUNTA TORICA	7369456	1	4	385	73 68 081	MIRILLA
JUNTA TORICA	7380073	51	4	383	10 35 874 5	MONTAJE DEPÓSITO HIDR.
JUNTA TORICA	7380073	41	1	546	10 35 868 3	INSTALACION CARBURANTE
JUNTA TORICA	7380073	51	3	546	10 35 868 3	INSTALACION CARBURANTE
JUNTA TORICA	7380135	4	1	313	92 65 665	JR AP.CONTROL PILOT.
JUNTA TORICA	7380154	3	1	677	10 12 039 3	PIEZAS DE CIERRE
JUNTA TORICA	7380296	7	1	639	10 11 752 9	MONT.CARCASA DE TERMOST
JUNTA TORICA	7380296	4	1	690	10 12 096 2	J. J. CARCASA DEL TERMOST
JUNTA TORICA	7380401	5	2	696	10 12 100 3	JJ ACCIONAMIENTO SECUNDA
JUNTA TORICA	7380512	63	3	128	90 80 120	ENGRANAJE DISTRIBUCION
JUNTA TORICA	7380512	63	3	218	90 80 195	JUEGO JUNTAS
JUNTA TORICA	7380574	27	1	85	92 66 089	JJ VÁLVULA
JUNTA TORICA	7380576	20	1	80	92 78 174	REGULACIÓN
JUNTA TORICA	7380576	19	1	88	92 78 179	JUEGO JUNTAS
JUNTA TORICA	7380577	18	1	86	92 66 231	JJ VÁLVULA MÚLTIPLES VÍAS
JUNTA TORICA	7380592	18	1	69	90 72 026	PLACA DE CONEXION NG 165
JUNTA TORICA	7380592	18	1	88	92 78 179	JUEGO JUNTAS
JUNTA TORICA	7380592	14	2	145	98 88 308	PLACA DE CONEXION
JUNTA TORICA	7380592	28	2	171	92 71 657	JUEGO JUNTAS
JUNTA TORICA	7380592	18	1	184	92 74 199	JUEGO JUNTAS
JUNTA TORICA	7380592	14	2	192	98 89 161	PLACA DE CONEXION
JUNTA TORICA	7380593	25	1	88	92 78 179	JUEGO JUNTAS
JUNTA TORICA	7380593	25	1	143	98 88 041	MOTOR HIDR. INCORP. FIX FM
JUNTA TORICA	7380593	25	1	184	92 74 199	JUEGO JUNTAS
JUNTA TORICA	7380594	36	1	73	92 68 751	JR ARO CIERRE
JUNTA TORICA	7380594	36	1	141	98 86 679	JR ÁRBOL
JUNTA TORICA	7380599	36	1	229	92 68 011	JR ARO CIERRE
JUNTA TORICA	7380599	36	1	267	98 82 882	JR ÁRBOL
JUNTA TORICA	7380600	65	1	218	90 80 195	JUEGO JUNTAS
JUNTA TORICA	7380601	65	1	128	90 80 120	ENGRANAJE DISTRIBUCION
JUNTA TORICA	7380601	25	1	230	92 68 786	JUEGO JUNTAS
JUNTA TORICA	7380604	6	1	611	10 11 802 5	ACC. P. BOMBA ALTA PRESIÓ
JUNTA TORICA	7380604	5	1	676	90 80 459	PIEZAS DE CIERRE
JUNTA TORICA	7380604	3	1	686	10 12 087 8	JUEGO JUNTAS BOMBA ALTA
JUNTA TORICA	7380604	2	1	696	10 12 100 3	JJ ACCIONAMIENTO SECUNDA
JUNTA TORICA	7380605	26	1	192	98 89 161	PLACA DE CONEXION
JUNTA TORICA	7380605	18	1	198	90 77 032	PLACA DE CONEXION NG 045
JUNTA TORICA	7380605	18	1	230	92 68 786	JUEGO JUNTAS
JUNTA TORICA	7380615	17	1	240	92 68 642	JJ VÁLVULA MÚLTIPLES VÍAS
JUNTA TORICA	7380615	17	1	266	98 89 003	VALVULA DE RETENCION RV
JUNTA TORICA	7380617	19	1	87	92 66 232	JJ VÁLVULA MÚLTIPLES VÍAS
JUNTA TORICA	7380618	20	1	87	92 66 232	JJ VÁLVULA MÚLTIPLES VÍAS
JUNTA TORICA	7380619	22	1	87	92 66 232	JJ VÁLVULA MÚLTIPLES VÍAS
JUNTA TORICA	7380619	14	1	611	10 11 802 5	ACC. P. BOMBA ALTA PRESIÓ

Descripción	Artículo	Pos.	Cantid	Página	Grupo	Descripción
JUNTA TORICA	7380619	4	1	677	10 12 039 3	PIEZAS DE CIERRE
JUNTA TORICA	7380619	6	1	686	10 12 087 8	JUEGO JUNTAS BOMBA ALTA
JUNTA TORICA	7380619	6	1	689	10 12 094 4	JUEGO JUNTAS COMPRESOR
JUNTA TORICA	7380619	3	1	696	10 12 100 3	JJ ACCIONAMIENTO SECUNDA
JUNTA TORICA	7380620	19	1	86	92 66 231	JJ VÁLVULA MÚLTIPLES VÍAS
JUNTA TORICA	7380621	20	1	86	92 66 231	JJ VÁLVULA MÚLTIPLES VÍAS
JUNTA TORICA	7380626	64	1	128	90 80 120	ENGRANAJE DISTRIBUCION
JUNTA TORICA	7380626	64	1	169	90 80 196	JR ÁRBOL DE ENTRADA
JUNTA TORICA	7380626	64	1	218	90 80 195	JUEGO JUNTAS
JUNTA TORICA	7380647	11	1	138	92 68 441	TORNILLO DE CIERRE M6X6
JUNTA TORICA	7380648	22	1	69	90 72 026	PLACA DE CONEXION NG 165
JUNTA TORICA	7380648	22	1	88	92 78 179	JUEGO JUNTAS
JUNTA TORICA	7380648	22	1	145	98 88 308	PLACA DE CONEXION
JUNTA TORICA	7380648	19	2	170	92 71 653	JJ REGUL.
JUNTA TORICA	7380648	64	8	171	92 71 657	JUEGO JUNTAS
JUNTA TORICA	7380648	68	5	175	10 11 837 4	VALVULA DE REGULACION
JUNTA TORICA	7380648	68	1	181	90 78 788	JR (TAPA DEL REGUL.) LR/SD
JUNTA TORICA	7380648	68	8	187	98 82 875	JJ VÁLVULA REGULADORA
JUNTA TORICA	7380648	22	1	192	98 89 161	PLACA DE CONEXION
JUNTA TORICA	7380712	6	1	696	10 12 100 3	JJ ACCIONAMIENTO SECUNDA
JUNTA TORICA	7380830	5	1	151	10 33 307 3	TAPA CON ACCESORIOS
JUNTA TORICA	7380865	4	1	689	10 12 094 4	JUEGO JUNTAS COMPRESOR
JUNTA TORICA	7380866	23	1	81	90 77 412	JR (PISTÓN AJUSTE) FMV 165
JUNTA TORICA	7380866	23	1	88	92 78 179	JUEGO JUNTAS
JUNTA TORICA	7380867	68	1	171	92 71 657	JUEGO JUNTAS
JUNTA TORICA	7380868	70	1	185	92 75 443	JR TAPA
JUNTA TORICA	7380888	61	1	171	92 71 657	JUEGO JUNTAS
JUNTA TORICA	7380888	69	1	175	10 11 837 4	VALVULA DE REGULACION
JUNTA TORICA	7380888	69	1	187	98 82 875	JJ VÁLVULA REGULADORA
JUNTA TORICA	7380955	61	1	128	90 80 120	ENGRANAJE DISTRIBUCION
JUNTA TORICA	7380955	61	1	218	90 80 195	JUEGO JUNTAS
JUNTA TORICA	7380970	9	2	631	10 11 570 0	ANEJO DE LINEA DE CONEXIÓ
JUNTA TORICA	7380970	3	2	688	10 12 093 7	JUEGO JUNTAS LÍNEA DE CON
JUNTA TORICA	7380973	18	2	134	90 72 922	BOMBA CIL. VAR. HIDR.
JUNTA TORICA	7380973	18	2	136	90 77 452	BOMBA CIL. VAR. HIDR.
JUNTA TORICA	7380973	18	2	171	92 71 657	JUEGO JUNTAS
JUNTA TORICA	7380979	22	1	80	92 78 174	REGULACIÓN
JUNTA TORICA	7380979	21	1	88	92 78 179	JUEGO JUNTAS
JUNTA TORICA	7380979	16	2	170	92 71 653	JJ REGUL.
JUNTA TORICA	7380979	31	2	171	92 71 657	JUEGO JUNTAS
JUNTA TORICA	7380983	21	1	82	90 77 481	JR (PISTÓN AJUSTE) FMV 165
JUNTA TORICA	7380983	27	1	88	92 78 179	JUEGO JUNTAS
JUNTA TORICA	7380983	26	1	168	90 79 811	JR PISTÓN AJUSTE
JUNTA TORICA	7380983	26	1	170	92 71 653	JJ REGUL.
JUNTA TORICA	7380986	17	1	187	98 82 875	JJ VÁLVULA REGULADORA
JUNTA TORICA	7380986	12	1	619	10 30 300 7	PREFILTRO COMBUSTIBLE
JUNTA TORICA	7380987	71	2	187	98 82 875	JJ VÁLVULA REGULADORA
JUNTA TORICA	7380991	25	2	85	92 66 089	JJ VÁLVULA
JUNTA TORICA	7381018	11	1	232	92 78 623	
JUNTA TORICA	7381018	10	1	238	62 90 073	SENSOR DE REVOLUCIONES
JUNTA TORICA	7381028	23	1	168	90 79 811	JR PISTÓN AJUSTE
JUNTA TORICA	7381028	23	1	170	92 71 653	JJ REGUL.
JUNTA TORICA	7381103	2	1	662	90 79 206	GENERADOR TACOMETRICO
JUNTA TORICA	7381254	1	2	681	10 12 086 9	J. JUNTAS PURGA CAJA CIG
JUNTA TORICA	7381415	73	1	181	90 78 788	JR (TAPA DEL REGUL.) LR/SD
JUNTA TORICA	7381415	73	1	187	98 82 875	JJ VÁLVULA REGULADORA
JUNTA TORICA	7381442	15	1	187	98 82 875	JJ VÁLVULA REGULADORA
JUNTA TORICA	7381448	11	1	140	98 81 609	TORNILLO DE CIERRE M8X1X
JUNTA TORICA	7381562	43	2	187	98 82 875	JJ VÁLVULA REGULADORA
JUNTA TORICA	7381567	8	4	631	10 11 570 0	ANEJO DE LINEA DE CONEXIÓ

Descripción	Artículo	Pos.	Cantid	Página	Grupo	Descripción
JUNTA TORICA	7381567	4	4	688	10 12 093 7	JUEGO JUNTAS LÍNEA DE CON
JUNTA TORICA	7381861	61	2	188	98 84 140	BOMBA CTO.REFRIG.
JUNTA TORICA	7381861	61	2	265	10 11 948 2	JJ BOMBA REFRIG.
JUNTA TORICA	7381903	60	1	188	98 84 140	BOMBA CTO.REFRIG.
JUNTA TORICA	7381903	60	1	265	10 11 948 2	JJ BOMBA REFRIG.
JUNTA TORICA	7410480	41	2	348	10 05 312 6	TUBOS FLEX.HIDR./ASPIR.+R
JUNTA TORICA	7410480	19	2	395	10 35 874 4	MONTAJE CORREDERA DISTR
JUNTA TORICA	7411821	9	4	540	10 35 875 6	MONTAJE TUBOS FLEX. AIRE
JUNTA TORICA	7610202	3	1	224	93 36 053 01	FRENO
JUNTA TORICA	7610202	3	1	239	90 00 386 4	JUEGO DE JUNTAS
JUNTA TORICA 10,82X1,78	10115018	14	3	176	10 34 668 4	SERVOMANDO
JUNTA TORICA 10,82X1,78	5610999	28	1	323	11 00 359 4	CARCASA
JUNTA TORICA 10,82X1,78	5610999	10	2	540	10 35 875 6	MONTAJE TUBOS FLEX. AIRE
JUNTA TORICA 10,82X1,78	7023930	28	1	378	10 22 099 7	JUEGO JUNTAS
JUNTA TORICA 10,82X1,78	7023930	8	1	379	50 09 562	JJ VÁLVULA DE PASO
JUNTA TORICA 100,00X4,00	10289140	5	2	618	10 12 282 4	MÓDULO P/FILTRO DE COMBU
JUNTA TORICA 100,00X5,0	10022101	3	2	629	90 80 436	TUBO ASPIRADOR ANEJO
JUNTA TORICA 11,5X1,5	10289306	10	2	259	10 02 131 0	JUEGO DE JUNTAS
JUNTA TORICA 113.89X3.53	7015616	36	1	84	98 88 124	JR ÁRBOL
JUNTA TORICA 113.89X3.53	7015616	36	1	173	98 89 282	JR ÁRBOL
JUNTA TORICA 12,37X2,62	7028158	10	1	157	10 33 324 2	VALVULA DE DESCONEXION
JUNTA TORICA 12,42X1,78	7023931	9	1	379	50 09 562	JJ VÁLVULA DE PASO
JUNTA TORICA 120,02X5,33	7019832	4	1	718	10 05 091 3	ANILLO
JUNTA TORICA 125,00X2,0	10002310	7	1	696	10 12 100 3	JJ ACCIONAMIENTO SECUNDA
JUNTA TORICA 125x3	7006516	13	1	611	10 11 802 5	ACC. P. BOMBA ALTA PRESIÓ
JUNTA TORICA 125x3	7006516	2	1	686	10 12 087 8	JUEGO JUNTAS BOMBA ALTA
JUNTA TORICA 128X4,2	10120092	25	1	607	10 12 475 6	MÓDULO ACEITE IZDA.
JUNTA TORICA 128X4,2	10120092	25	1	608	10 12 475 7	MODULO ACEITE DCHA.
JUNTA TORICA 12X2,5	7412937	15	1	619	10 30 300 7	PREFILTRO COMBUSTIBLE
JUNTA TORICA 132,7X7,00	7264422	12	1	765	99 07 890	ALOJAMIENTO DE BIELA 125/
JUNTA TORICA 13x2,5	7005971	20	3	410	10 28 629 4	BLOQUE DE VALVULAS SELEC
JUNTA TORICA 14,00X1,78	7411823	29	1	323	11 00 359 4	CARCASA
JUNTA TORICA 14,00X1,78	7411823	11	2	540	10 35 875 6	MONTAJE TUBOS FLEX. AIRE
JUNTA TORICA 140X3	10014694	9	1	249	10 34 071 7	ENGRASADORA
JUNTA TORICA 150,0X4,0	10036521	2	2	577	90 78 049	CILINDRO
JUNTA TORICA 150,0X4,0	10036521	1	16	684	10 12 087 3	JJ CILINDRO
JUNTA TORICA 158,12X7	7017928	3	1	718	10 05 091 3	ANILLO
JUNTA TORICA 158,12X7	7264438	11	2	764	96 31 985	ALOJAMIENTO DE BIELA 150/
JUNTA TORICA 15x2	7264625	1	1	584	50 04 624	TORNILLO PURGA ACEITE
JUNTA TORICA 16,0X1,5	7371590	6	1	372	10 00 909 0	UNIDAD ACEITE MANDO
JUNTA TORICA 16x2	7026041	7	2	379	50 09 562	JJ VÁLVULA DE PASO
JUNTA TORICA 17,17X1,78	7013245	10	1	379	50 09 562	JJ VÁLVULA DE PASO
JUNTA TORICA 170,82X7	7023698	3	1	762	95 89 256	EMBOLO 190MM
JUNTA TORICA 170,82X7	7023698	3	1	763	99 07 680	EMBOLO 190 MM
JUNTA TORICA 18,00X2,00	10003192	8	1	611	10 11 802 5	ACC. P. BOMBA ALTA PRESIÓ
JUNTA TORICA 18,00X2,00	10003192	4	1	686	10 12 087 8	JUEGO JUNTAS BOMBA ALTA
JUNTA TORICA 18,72X2,62	7023765	12	1	261	10 10 206 7	ELEMENTO REGULACION
JUNTA TORICA 19,3x2,4	7005867	4	1	723	56 04 377	JJ VÁLVULA
JUNTA TORICA 19,4X2,5	10340226	15	2	113	10 09 538 7	MONTAJE FILTRO COMBUSTI
JUNTA TORICA 19,4X2,5	10340226	20	2	619	10 30 300 7	PREFILTRO COMBUSTIBLE
JUNTA TORICA 196,22X7	7002056	3	1	761	95 88 147	EMBOLO 220MM
JUNTA TORICA 200X4	11067315	1	1	670	10 11 698 9	APARATO DE MANDO DE MO
JUNTA TORICA 209,14X3,53	10016657	35	1	250	10 34 071 7	ENGRASADORA
JUNTA TORICA 209,14X3,53	10016657	41	1	250	10 34 071 7	ENGRASADORA
JUNTA TORICA 21,89X2,62	7264404	20	1	379	50 09 562	JJ VÁLVULA DE PASO
JUNTA TORICA 21,95x1,78	7024500	13	1	380	70 25 142	JUEGO JUNTAS
JUNTA TORICA 23,47X2,62	7001891	3	1	723	56 04 377	JJ VÁLVULA
JUNTA TORICA 23,47X2,62	7001891	13	1	768	56 02 932	VALVULA REGULADORA
JUNTA TORICA 23,47X2,62	7028151	8	1	262	10 29 792 9	VALVULA LIMITADORA DE PR
JUNTA TORICA 23,47X2,62	7028151	16	1	264	10 33 323 7	VALVULA LIMITADORA DE PR

Descripción	Artículo	Pos.	Cantid	Página	Grupo	Descripción
JUNTA TORICA 23,52X1,78	7017668	31	1	378	10 22 099 7	JUEGO JUNTAS
JUNTA TORICA 25x3,53	7015407	10	1	392	10 22 239 3	FILTRO AIREAR
JUNTA TORICA 29,82	10333232	25	1	131	10 42 845 9	BOMBA MEC. GIRO
JUNTA TORICA 29,82	10333232	17	1	264	10 33 323 7	VALVULA LIMITADORA DE PR
JUNTA TORICA 29,87X1,78	10115021	13	1	176	10 34 668 4	SERVOMANDO
JUNTA TORICA 2X1,5	10289308	20	7	259	10 02 131 0	JUEGO DE JUNTAS
JUNTA TORICA 2X1,5	10289308	30	1	260	10 02 131 1	JUEGO DE JUNTAS
JUNTA TORICA 34,59x2,62	7007476	2	1	412	56 10 135	VÁLVULA ALIM.
JUNTA TORICA 340X4	7610341	74	1	222	90 01 781 7	ACCIONAMIENTO GIRATORIO
JUNTA TORICA 340X4	7610341	74	1	239	90 00 386 4	JUEGO DE JUNTAS
JUNTA TORICA 35x2	7018253	2	1	555	10 30 177 4	ENGANCHE ELECTRICO
JUNTA TORICA 37,5X3,55	10120093	26	1	607	10 12 475 6	MÓDULO ACEITE IZDA.
JUNTA TORICA 37,5X3,55	10120093	26	1	608	10 12 475 7	MODULO ACEITE DCHA.
JUNTA TORICA 37,69X3,53	7264687	21	4	60	10 07 498 7	ACCIONAMIENTO DE TRASL
JUNTA TORICA 37,69x3,53	7022120	16	1	405	10 21 821 5	VALVULA DE RETENCION
JUNTA TORICA 37,69x3,53	7022120	16	1	406	10 21 986 3	VALVULA DE RETENCION
JUNTA TORICA 400X5	7610378	57	1	66	94 43 970	ACCIONAMIENTO DE TRASL
JUNTA TORICA 44,60X2,40	10036913	8	2	582	10 12 593 7	CUBETA ACEITE C.SUJECIÓN
JUNTA TORICA 44,60X2,40	10036913	3	2	683	10 12 087 1	JJ CUBETA ACEITE
JUNTA TORICA 44X3	7264509	12	1	768	56 02 932	VALVULA REGULADORA
JUNTA TORICA 44x3	7007836	2	1	723	56 04 377	JJ VÁLVULA
JUNTA TORICA 46X3	726419601	5	1	689	10 12 094 4	JUEGO JUNTAS COMPRESOR
JUNTA TORICA 47,22X3,53	7360048	11	1	768	56 02 932	VALVULA REGULADORA
JUNTA TORICA 47,22x3,53	7007835	1	1	723	56 04 377	JJ VÁLVULA
JUNTA TORICA 470x5	7610617	6	1	64	94 43 970	ACCIONAMIENTO DE TRASL
JUNTA TORICA 51,00X5,00	10038573	3	4	642	10 11 978 1	CODO DE REFRIGERANTE MO
JUNTA TORICA 51,00X5,00	10038573	3	3	689	10 12 094 4	JUEGO JUNTAS COMPRESOR
JUNTA TORICA 51,00X5,00	10038573	7	4	693	10 12 098 2	JUEGO JUNTAS RETORNO E
JUNTA TORICA 6,07X1,78	10115023	15	1	157	10 33 324 2	VALVULA DE DESCONEXION
JUNTA TORICA 63,00X3,00	10037224	6	2	639	10 11 752 9	MONT.CARCASA DE TERMOST
JUNTA TORICA 63,00X3,00	10037224	3	2	690	10 12 096 2	J. J. CARCASA DEL TERMOST
JUNTA TORICA 63X3	7264085	11	1	545	10 35 868 3	INSTALACION CARBURANTE
JUNTA TORICA 66,00X3,00	7008755	5	1	400	93 70 592	VALVULA DE RETENCION
JUNTA TORICA 67,50X4,00	10040387	4	2	638	10 11 763 3	CONEXIÓN CONDUCTOS AGU
JUNTA TORICA 67,50X4,00	10040387	8	2	639	10 11 752 9	MONT.CARCASA DE TERMOST
JUNTA TORICA 67,50X4,00	10040387	2	2	690	10 12 096 2	J. J. CARCASA DEL TERMOST
JUNTA TORICA 67,50X4,00	10040387	6	2	691	10 12 097 3	JJ BOMBA AGUA
JUNTA TORICA 6X1,5	10289311	20	2	260	10 02 131 1	JUEGO DE JUNTAS
JUNTA TORICA 7,5X1,5	10289310	10	2	260	10 02 131 1	JUEGO DE JUNTAS
JUNTA TORICA 7,65X1,78	7264360	10	1	49	10 47 076 9	RUEDA DIRECTRIZ D8K
JUNTA TORICA 7,65x1,78	10024675	11	3	372	10 00 909 0	UNIDAD ACEITE MANDO
JUNTA TORICA 78,97X3,53	10220707	11	1	96	10 09 107 4	PAQUETE SERV. 1500H/2500H
JUNTA TORICA 78,97X3,53	10220707	10	1	161	10 33 327 0	CABEZA FILTRO
JUNTA TORICA 88X3	7264087	8	1	762	95 89 256	EMBOLO 190MM
JUNTA TORICA 9,25X1,78	7023929	12	2	377	73 71 025	PLACA DE CIERRE
JUNTA TORICA 9,25x1,78	10043241	27	1	378	10 22 099 7	JUEGO JUNTAS
JUNTA TORICA 9,25x1,78	7009366	12	1	166	10 44 145 8	SENSOR DE ÁNGULO DE GIR
JUNTA TORICA 9,25x1,78	7009366	15	1	176	10 34 668 4	SERVOMANDO
JUNTA TORICA 90,00X3,00	10040386	8	1	638	10 11 763 3	CONEXIÓN CONDUCTOS AGU
JUNTA TORICA 90,00X3,00	10040386	5	1	691	10 12 097 3	JJ BOMBA AGUA
JUNTA TORICA AEHNL. DIN 3	726457301	26	1	221	90 01 781 7	ACCIONAMIENTO GIRATORIO
JUNTA TORICA AEHNL. DIN 3	726457301	26	1	239	90 00 386 4	JUEGO DE JUNTAS
JUNTA TORICA ARP 568 45,69	514507808	16	1	150	10 33 307 1	PLACA DE CONEXION
JUNTA VARILLA	7373507	14	1	61	50 20 370 01	FRENO DISCOS MULT.PRESI
JUNTA VARILLA	7373508	15	1	61	50 20 370 01	FRENO DISCOS MULT.PRESI
JUNTA VARILLA 140	710951501	15	1	62	93 21 804 01	JUEGO JUNTAS FRENO
JUNTA VARILLA 186	710950001	14	1	62	93 21 804 01	JUEGO JUNTAS FRENO
KIT ANÁLISIS ACEITE BIO	510363416	20	1	7	.	
KIT ANÁLISIS ACEITE BIO	7026088	22	1	38	90 66 466	ACCESORIOS
KIT ANÁLISIS ACEITE BIO	7026817	20	1	38	90 66 466	ACCESORIOS

Descripción	Artículo	Pos.	Cantid	Página	Grupo	Descripción
KIT ANÁLISIS ACEITE MINERA	10029626	11	1	38	90 66 466	ACCESORIOS
KIT ANÁLISIS ACEITE MINERA	7018368	12	1	38	90 66 466	ACCESORIOS
KIT ANÁLISIS ACEITE MINERA	7018369	13	1	38	90 66 466	ACCESORIOS
KIT ANÁLISIS ACEITE MINERA	8145660	10	1	38	90 66 466	ACCESORIOS
KIT CABLE	10300863	1	1	671	10 11 948 7	MONT.MAZO CABLES
KIT DE CABLES	10006617	80	1	316	10 40 689 8	AIRE ACONDICIONADO
KIT DE CABLES	10346187	2	1	671	10 11 948 7	MONT.MAZO CABLES
KIT DE CABLES	6204634	44	1	278	10 05 798 3	REPOSABRAZOS IZQUIERDA
KIT DE CABLES A1010-A1001	10822179	91	1	292	10 82 277 5	REPOSABRAZOS DERECHA
KIT DE CABLES A1010-A1011	9893072	40	1	278	10 05 798 3	REPOSABRAZOS IZQUIERDA
KIT DE CABLES A1010-U16	9949686	94	1	292	10 82 277 5	REPOSABRAZOS DERECHA
KIT DE CABLES CAN U47	10364457	73	1	271	10 05 311 8	BASE PUESTO CONDUCTOR
KIT DE CABLES CAN U47	10401821	73	1	271	10 05 311 8	BASE PUESTO CONDUCTOR
KIT DE CABLES E4 - H9	10066099	41	1	525	10 35 876 3	INST.EL.DEP. COMBUSTIBLE
KIT DE CABLES E4 - H9	10066099	41	1	532	10 49 837 7	INST.EL.DEP. COMBUSTIBLE
KIT DE CABLES E4 - H9	10066099	60	1	546	10 35 868 3	INSTALACION CARBURANTE
KIT DE CABLES ESP01-BBT	9768247	38	1	291	10 82 277 5	REPOSABRAZOS DERECHA
KIT DE CABLES F112 - E50	10066008	50	1	504	10 09 499 2	RELACIÓN MATERIAL EL.
KIT DE CABLES MP1-MP61-1	10077900	43	1	278	10 05 798 3	REPOSABRAZOS IZQUIERDA
KIT DE CABLES MP65 - MP61/1	10066076	41	1	278	10 05 798 3	REPOSABRAZOS IZQUIERDA
KIT DE CABLES MP66 - MP61/2	10066011	42	1	278	10 05 798 3	REPOSABRAZOS IZQUIERDA
KIT DE CABLES S218-K34-X34	9016551	95	1	292	10 82 277 5	REPOSABRAZOS DERECHA
KIT DE CABLES S42	10079008	92	1	278	10 05 798 3	REPOSABRAZOS IZQUIERDA
KIT DE CABLES S84-1/2	9806352	143	1	293	10 82 277 5	REPOSABRAZOS DERECHA
KIT DE CABLES U32-E50	10063957	12	1	212	10 49 800 0	MOTOR - SISTEMA ELÉCTRIC
KIT DE CABLES X1/U16-X1/A1	10079010	93	1	292	10 82 277 5	REPOSABRAZOS DERECHA
KIT DE CABLES X148-B55	9864694	23	1	749	10 39 372 0	INST.EL.
KIT DE JUNTAS	10022063	30	1	323	11 00 359 4	CARCASA
KIT DE MODIFICACION	10358890	140	1	469	70 28 774	LUNAS
KIT FILTRO P.ACEITE	5609948	11	1	340	10 05 314 4	MONTAJE UNIDAD ACEITE MA
KIT FILTRO P.ACEITE	5609948	11	1	341	10 82 438 9	MONTAJE UNIDAD ACEITE MA
LAMINA ADHESIVA	9016517	152	1	293	10 82 277 5	REPOSABRAZOS DERECHA
LAMINA ADHESIVA	9989151	41	1	749	10 39 372 0	INST.EL.
LAMINA EXTERIOR	7373506	7	9	61	50 20 370 01	FRENO DISCOS MULT.PRESI
LAMINA EXTERIOR	7373506	4	9	63	93 21 805 01	JUEGO DE DISCOS DE FRENO
LAMINA EXTERIOR	9441377	62	7	222	90 01 781 7	ACCIONAMIENTO GIRATORIO
LAMINA EXTERIOR	9441377	37	7	226	96 85 802 01	JUEGO DE DISCOS DE FRENO
LAMINA INTERIOR SINTERIZ	9442507	63	6	222	90 01 781 7	ACCIONAMIENTO GIRATORIO
LAMINA INTERIOR SINTERIZ	9442507	36	6	226	96 85 802 01	JUEGO DE DISCOS DE FRENO
LAMPARA	10428776	140	1	477	10 48 809 7	INST.ELÉCTRICA
LAMPARA	6002233	20	1	330	70 27 927	INTERRUPTOR BASCULANTE
LATIGUILLO DE ASPIRACION	9569943	5	1	345	10 05 312 6	TUBOS FLEX.HIDR./ASPIR.+R
LETRERO	10022635	5	1	318	10 81 666 6	EVAPORADOR
LETRERO	10022636	6	1	318	10 81 666 6	EVAPORADOR
LETRERO	10402369	70	1	560	10 35 876 6	LETREROS
LETRERO	10402369	70	1	564	10 49 863 6	LETREROS
LETRERO ADV.ZONA PELIGR	9910464	20	2	558	10 35 876 6	LETREROS
LETRERO ADV.ZONA PELIGR	9910464	20	2	562	10 49 863 6	LETREROS
LETRERO ADVERTENCIAS	9581113	52	1	559	10 35 876 6	LETREROS
LETRERO ADVERTENCIAS	9581113	52	1	563	10 49 863 6	LETREROS
LETRERO CINT.SEGURIDAD	10066101	54	1	559	10 35 876 6	LETREROS
LETRERO CINT.SEGURIDAD	10066101	54	1	563	10 49 863 6	LETREROS
LETRERO IDENTIFICACION LB	10498223	4	1	557	10 35 876 6	LETREROS
LETRERO IDENTIFICACION LB	10498223	4	1	561	10 49 863 6	LETREROS
LETRERO INDIC.PTO.TOPE EL	9402377	23	2	558	10 35 876 6	LETREROS
LETRERO INDIC.PTO.TOPE EL	9402377	23	2	562	10 49 863 6	LETREROS
LETRERO INDICACIÓN PTO.EL	9402376	21	4	558	10 35 876 6	LETREROS
LETRERO INDICACIÓN PTO.EL	9402376	21	4	562	10 49 863 6	LETREROS
LETRERO PARADA MOTOR	9619934	22	2	558	10 35 876 6	LETREROS
LETRERO PARADA MOTOR	9619934	22	2	562	10 49 863 6	LETREROS

Descripción	Artículo	Pos.	Cantid	Página	Grupo	Descripción
LETRERO PEGATINA	9384072	40	1	243	10 07 675 6	LUBR.PIÑÓN MEC. GIRO
LETRERO PEGATINA	9384072	32	1	550	10 49 815 2	HERRAMIENTAS DE EQUIPAM
LETRERO SALIDA EMERG.	10039562	830	1	469	70 28 774	LUNAS
LETREROS	10358766	9900	1	92	10 35 874 2	SUPERESTRUCTURA
LETREROS	10498636	9900	1	93	10 49 853 2	SUPERESTRUCTURA
LEVANTAVALVULAS	9078259	3	2	603	10 11 632 0	ELEMENTOS DE MANDO
LIMPIAPARABRISAS	7029426	410	1	478	10 48 809 7	INST.ELÉCTRICA
LISTÓN INTERMEDIO	10072416	25	2	200	10 35 873 9	MONTAJE DE RADIADOR
LLAVE	7022336	10	1	536	62 04 743	INTERRUPTOR LLAVE
LLAVE	7365626	5	1	225	94 42 350	CODO DE LLENADO DE ACEIT
LLAVE	7365626	2	1	464	73 72 093	CERRADURA
LLAVE ALLEN 10	10451532	92	1	552	10 08 428 5	HERRAMIENTAS DE EQUIPAM
LLAVE ALLEN 12x45/125	8000993	94	1	552	10 08 428 5	HERRAMIENTAS DE EQUIPAM
LLAVE ALLEN 14	10451534	96	1	552	10 08 428 5	HERRAMIENTAS DE EQUIPAM
LLAVE ALLEN 17	10451535	98	1	552	10 08 428 5	HERRAMIENTAS DE EQUIPAM
LLAVE ALLEN 3	10451512	80	1	552	10 08 428 5	HERRAMIENTAS DE EQUIPAM
LLAVE ALLEN 4	10451513	82	1	552	10 08 428 5	HERRAMIENTAS DE EQUIPAM
LLAVE ALLEN 6	10451519	86	1	552	10 08 428 5	HERRAMIENTAS DE EQUIPAM
LLAVE ALLEN 8	10451531	90	1	552	10 08 428 5	HERRAMIENTAS DE EQUIPAM
LLAVE BOCA SIMPLE	8121783	51	1	551	10 08 428 5	HERRAMIENTAS DE EQUIPAM
LLAVE DE BOCA DOBLE	10451493	22	1	551	10 08 428 5	HERRAMIENTAS DE EQUIPAM
LLAVE DE BOCA DOBLE	10451494	24	1	551	10 08 428 5	HERRAMIENTAS DE EQUIPAM
LLAVE DE BOCA DOBLE	10451496	26	1	551	10 08 428 5	HERRAMIENTAS DE EQUIPAM
LLAVE DE BOCA DOBLE	10451499	34	1	551	10 08 428 5	HERRAMIENTAS DE EQUIPAM
LLAVE DE BOCA DOBLE	10451500	38	1	551	10 08 428 5	HERRAMIENTAS DE EQUIPAM
LLAVE DE BOCA DOBLE	10455469	28	1	551	10 08 428 5	HERRAMIENTAS DE EQUIPAM
LLAVE DE BOCA DOBLE	10455470	30	1	551	10 08 428 5	HERRAMIENTAS DE EQUIPAM
LLAVE DE BOCA DOBLE	10455471	32	1	551	10 08 428 5	HERRAMIENTAS DE EQUIPAM
LLAVE DE CONTACTO	10221073	76	1	291	10 82 277 5	REPOSABRAZOS DERECHA
LLAVE DE CONTACTO	10221073	10	1	475	70 25 758	CILINDRO DE CIERRE
LLAVE DE MONTAJE	8007367	989	1	763	99 07 680	EMBOLO 190 MM
LLAVE DE UNA BOCA	10455472	48	1	551	10 08 428 5	HERRAMIENTAS DE EQUIPAM
LLAVE DE UNA BOCA	4002012	54	1	551	10 08 428 5	HERRAMIENTAS DE EQUIPAM
LLAVE DE UNA BOCA	7900708	52	1	551	10 08 428 5	HERRAMIENTAS DE EQUIPAM
LLAVE DE UNA BOCA	8000770	50	1	551	10 08 428 5	HERRAMIENTAS DE EQUIPAM
LLAVE ESTRELLA DE DOS BO	10455473	60	1	551	10 08 428 5	HERRAMIENTAS DE EQUIPAM
LLAVE ESTRELLA DE DOS BO	10455474	64	1	551	10 08 428 5	HERRAMIENTAS DE EQUIPAM
LLAVE ESTRELLA DE DOS BO	10455475	70	1	551	10 08 428 5	HERRAMIENTAS DE EQUIPAM
LLAVE MONTAJE TUERCA É	9921126	985	1	763	99 07 680	EMBOLO 190 MM
LLAVE MONTAJE ÉMBOLO SW	9600769	985	1	762	95 89 256	EMBOLO 190MM
LLAVE MONTAJE ÉMBOLO SW	9281614	985	1	761	95 88 147	EMBOLO 220MM
LLENADO DE ACEITE	10118839	2	1	586	10 12 263 2	LLENADO DE ACEITE
LLENADO DE ACEITE	10122630	1	1	586	10 12 263 2	LLENADO DE ACEITE
LLENADO DE ACEITE	10122632	3	1	596	10 12 264 0	MONT. TAPA CULATA
LOCTITE	8503598	60	0.01	446	10 05 530 3	CAPOT DEL MOTOR
LOCTITE	8622905	108	1	572	10 12 907 1	CAJA DEL CIGÜEÑAL COMPL.
LOCTITE	8622905	108	1	642	10 11 978 1	CODO DE REFRIGERANTE MO
LOCTITE	8628192	103	1	192	98 89 161	PLACA DE CONEXION
LOCTITE	8628192	25	0.001	194	10 49 867 7	MONTAJE VENTILADOR
LOCTITE	8628192	25	0.001	196	10 49 873 2	MONTAJE VENTILADOR
LOCTITE	8628192	109	1	574	90 78 548	REFRIGERACION PISTON
LOCTITE	8700011	102	1	630	90 78 417	MONTAJE TUBO AIRE ADMISIÓ
LOCTITE	8700011	102	1	634	10 11 822 3	MONT. RUEDA INTERMEDIA I=
LUBR.CENTR.CARRO SUPER	10076047	1400	1	91	10 35 874 2	SUPERESTRUCTURA
LUBR.CENTR.CARRO SUPER	10076047	1400	1	93	10 49 853 2	SUPERESTRUCTURA
LUBR.CENTR.CARRO SUPER	10076757	20	1	242	10 07 604 7	LUBR.CENTR.CARRO SUPER
LUBR.PIÑÓN MEC. GIRO	10076756	10	1	242	10 07 604 7	LUBR.CENTR.CARRO SUPER
LUBRICANTES	9066460	500	1	40	10 35 970 3	MATERIAL SERV.
LUBRIFICADOR	8501565	40	1	550	10 49 815 2	HERRAMIENTAS DE EQUIPAM
LUBRISEAL	8501674	2000	1	470	70 28 775	PARABRISAS

Descripción	Artículo	Pos.	Cantid	Página	Grupo	Descripción
LUNA	10009056	480	1	473	10 04 678 8	PUERTA CABINA CONDUCTO
LUNA	10009223	160	1	469	70 28 774	LUNAS
LUNA	10009225	400	1	473	10 04 678 8	PUERTA CABINA CONDUCTO
LUNA	7028793	110	1	469	70 28 774	LUNAS
LUNA	7030315	120	1	469	70 28 774	LUNAS
LUNAS	7028774	20	1	468	10 47 616 7	CABINA DEL CONDUCTOR
LÍNEA DE CONEXIÓN PREMO	10120151	1	1	632	90 79 077	ANEJO DE LINEA DE CONEXIÓ
MANDO EXCAVADORA	10677645	2	1	297	10 82 674 4	MANDO EXCAVADORA COMPL
MANDO EXCAVADORA COMPL	10826744	85	1	292	10 82 277 5	REPOSABRAZOS DERECHA
MANDO INTERRUPTOR	7370096	42	1	291	10 82 277 5	REPOSABRAZOS DERECHA
MANGO DE LA PALA 2,60M	10358400	2	1	714	10 35 872 1	MANGO DE LA PALA 2,60M
MANGO DE LA PALA 2,60M	10358721	10	1	716	10 35 872 2	MANGO DE LA PALA 2,6M
MANGO DE LA PALA 2,6M	10358722	12	1	7	.	
MANGO PALANCA	7370689	44	2	269	10 05 311 8	BASE PUESTO CONDUCTOR
MANGUERA AGUA REFRIGER	10471616	3	1	211	10 21 775 0	RECIPIENTE DE COMPENSAC
MANGUERA ALTA PRESION	774376108	70	1	255	90 64 786	BASE DE FIJACION
MANGUERA ALTA PRESION	774376108	70	15	257	10 01 461 1	CAJA AUXILIAR
MANGUERA COMBUSTIBLE	10333660	16	1	112	10 36 623 6	INST.COMBUSTIBLE MOTOR
MANGUERA COMBUSTIBLE	10333662	10	1	112	10 36 623 6	INST.COMBUSTIBLE MOTOR
MANGUERA COMBUSTIBLE	10333665	11	1	112	10 36 623 6	INST.COMBUSTIBLE MOTOR
MANGUERA COMBUSTIBLE	10450748	15	1	112	10 36 623 6	INST.COMBUSTIBLE MOTOR
MANGUERA DE AGUA	10054420	35	1	201	10 35 873 9	MONTAJE DE RADIADOR
MANGUERA DE AGUA	10054421	36	1	201	10 35 873 9	MONTAJE DE RADIADOR
MANGUERA DE AGUA	10054422	37	1	201	10 35 873 9	MONTAJE DE RADIADOR
MANGUERA DE AGUA	10065182	90	1	206	10 35 873 9	MONTAJE DE RADIADOR
MANGUERA DE AGUA	7381649	14	0.11	641	10 11 930 6	MONT.TUBERÍA DE PURGA
MANGUERA DE AGUA	9008530	30	2	316	10 40 689 8	AIRE ACONDICIONADO
MANGUERA DE AGUA	9361947	71	1	205	10 35 873 9	MONTAJE DE RADIADOR
MANGUERA DE AGUA	9384967	72	1	205	10 35 873 9	MONTAJE DE RADIADOR
MANGUERA DE AGUA	9697359	85	1	271	10 05 311 8	BASE PUESTO CONDUCTOR
MANGUERA DE AGUA	9808622	73	1	205	10 35 873 9	MONTAJE DE RADIADOR
MANGUERA DE AGUA	9898321	74	1	205	10 35 873 9	MONTAJE DE RADIADOR
MANGUERA DE AGUA	9935645	70	1	205	10 35 873 9	MONTAJE DE RADIADOR
MANGUERA DE PLASTICO	7363060	65	2.4	204	10 35 873 9	MONTAJE DE RADIADOR
MANGUERA DE PVC	10341848	3	1	553	10 08 811 2	TUBO FLEX.PURGA ACEITE
MANGUITO DE GOMA	10123540	21	1	649	10 13 273 9	MONTAJE ATL
MANGUITO DE GOMA	10123540	21	1	650	10 13 274 0	MONTAJE ATL
MANGUITO DE GOMA	10123918	6	4	578	10 12 503 7	ANEJO TUBERIA
MANGUITO DE GOMA	10132412	3	1	579	10 12 375 9	TUBERIA DE ACEITE PREMO
MANGUITO DE GOMA	9078925	10	1	689	10 12 094 4	JUEGO JUNTAS COMPRESOR
MANGUITO DE GOMA	9271340	5	2	578	10 12 503 7	ANEJO TUBERIA
MANGUITO DE GOMA	9273158	3	2	681	10 12 086 9	J. JUNTAS PURGA CAJA CIG
MANGUITO DE GOMA	9273161	15	2	578	10 12 503 7	ANEJO TUBERIA
MANGUITO DE GOMA	9273161	2	4	681	10 12 086 9	J. JUNTAS PURGA CAJA CIG
MANGUITO DE GOMA 22 X 30	9078621	4	2	681	10 12 086 9	J. JUNTAS PURGA CAJA CIG
MANGUITO DE SUJECION	10099881	9	2	49	10 47 076 9	RUEDA DIRECTRIZ D8K
MANGUITO GOMA POR CABL	6202703	23	2	277	10 05 798 3	REPOSABRAZOS IZQUIERDA
MANGUITO GOMA POR CABLE	7362986	24	6	277	10 05 798 3	REPOSABRAZOS IZQUIERDA
MANGUITO PROTECTOR 8/8/2,	10010154	30	1	286	10 05 879 2	SENSOR CONTR.PILOT.PREV
MANGUITO PROTECTOR 8/8/2,	10010154	30	1	299	10 05 879 4	SENSOR CONTR.PILOT.PREV
MANGUITO ROSCADO DN6	774376008	1	1	255	90 64 786	BASE DE FIJACION
MANGUITO ROSCADO DN6	774376008	1	31	257	10 01 461 1	CAJA AUXILIAR
MANGUITO ROSCADO DN6,5 S	10012024	100	1	256	90 64 786	BASE DE FIJACION
MANGUITO ROSCADO DN6,5 S	10012024	100	6	258	10 01 461 1	CAJA AUXILIAR
MANILLA DEL SENSOR LH DC	9968611	10	1	299	10 05 879 4	SENSOR CONTR.PILOT.PREV
MANILLA DEL SENSOR LH IZ	9968625	10	1	286	10 05 879 2	SENSOR CONTR.PILOT.PREV
MANIPULATOR LADO CPL CA	10068041	50	1	278	10 05 798 3	REPOSABRAZOS IZQUIERDA
MAQUINA BASE R964C HD LI	10358741	1	1	7	.	
MARCA PLACA CARACTERÍSTI	10358767	8	1	561	10 49 863 6	LETREROS
MARCO DE LA PUERTA	10046789	110	1	472	10 04 678 8	PUERTA CABINA CONDUCTO

Descripción	Artículo	Pos.	Cantid	Página	Grupo	Descripción
MARCO VENTANA	10014687	2	1	249	10 34 071 7	ENGRASADORA
MARTILLO 1500	8000622	130	1	552	10 08 428 5	HERRAMIENTAS DE EQUIPAM
MASA	9080911	4	1	633	90 78 314	MONTAJE BRIDA CALEFACCIÓ
MATERIAL SERV.	10359703	9999	1	9	10 35 874 1	MAQUINA BASE R964C HD LI
MEC. COMPL. PALANCA BAS	10118060	81	8	566	10 12 595 9	MOTOR DIESEL D9508 A7 320k
MEC. GIRO	10053117	2	1	219	10 05 302 4	MONTAJE MEC. GIRO
MECANISMO DE ACCIONAMIE	10333070	1	1	130	10 21 593 5	BOMBA
MECANISMO DE ACCIONAMIE	10410640	1	1	133	10 44 145 6	MECANISMO DE ACCIONAMIE
MECANISMO DE ACCIONAMIE	10441456	1	1	131	10 42 845 9	BOMBA MEC. GIRO
MECANISMO DE ACCIONAMIE	9886675	1	1	143	98 88 041	MOTOR HIDR. INCORP. FIX FM
MECANISMO DE ACCIONAMIE	9888126	1	1	68	90 72 024	MOTOR HIDR. INCORP. VAR.
MEDIA BRIDA AEHNL.DIN 3015	7367233	65	4	702	10 35 872 5	PLUMA MONOBLOC 7,00M
MEDIA BRIDA AEHNL.DIN 3015	7367214	1	2	741	93 63 937	ABRAZADERA TUBO
MEDIA BRIDA AEHNL.DIN 3015	7367236	34	4	344	10 35 875 5	EJEC.GIRADA HIDR.+MEC.GIR
MEDIA BRIDA AEHNL.DIN 3015	7365069	40	2	241	10 35 877 2	MONTAJE CORONA ROTACIÓ
MIRILLA	7368081	58	1	383	10 35 874 5	MONTAJE DEPÓSITO HIDR.
MITAD DE BRIDA	10286359	32	2	356	10 35 875 1	INST.HIDR.ACC. VENTILADOR
MITAD DE BRIDA	10286359	42	4	356	10 35 875 1	INST.HIDR.ACC. VENTILADOR
MITAD DE BRIDA	10286359	56	14	357	10 35 875 1	INST.HIDR.ACC. VENTILADOR
MITAD DE BRIDA	10286360	21	12	343	10 35 875 5	EJEC.GIRADA HIDR.+MEC.GIR
MITAD DE BRIDA	10286360	49	8	771	10 35 873 1	CILINDRO ELEVADOR DIA.190
MITAD DE BRIDA	10286361	4	16	89	10 07 444 8	INST.HIDR.ESTRUC.INF.
MITAD DE BRIDA	10286361	20	8	334	10 38 698 2	INST.HIDR.BOMBAS A CORR.D
MITAD DE BRIDA	10286361	41	4	335	10 38 698 2	INST.HIDR.BOMBAS A CORR.D
MITAD DE BRIDA	10286361	20	8	337	10 49 804 4	INST.HIDR.BOMBAS A CORR.D
MITAD DE BRIDA	10286361	41	4	338	10 49 804 4	INST.HIDR.BOMBAS A CORR.D
MITAD DE BRIDA	10286361	11	16	343	10 35 875 5	EJEC.GIRADA HIDR.+MEC.GIR
MITAD DE BRIDA	10286361	15	4	343	10 35 875 5	EJEC.GIRADA HIDR.+MEC.GIR
MITAD DE BRIDA	10286361	31	4	396	10 35 874 4	MONTAJE CORREDERA DISTR
MITAD DE BRIDA	10286361	36	4	396	10 35 874 4	MONTAJE CORREDERA DISTR
MITAD DE BRIDA	10286361	15	18	403	10 06 771 7	MONTAJE TUBERÍAS IMPULS.
MITAD DE BRIDA	10286361	37	58	701	10 35 872 5	PLUMA MONOBLOC 7,00M
MITAD DE BRIDA	10286361	10	2	713	10 07 162 8	CILINDRO HIDROLICO+ADICIO
MITAD DE BRIDA	10286361	11	6	714	10 35 872 1	MANGO DE LA PALA 2,60M
MITAD DE BRIDA	10286361	46	8	770	10 35 873 1	CILINDRO ELEVADOR DIA.190
MITAD DE BRIDA	10286362	70	4	384	10 35 874 5	MONTAJE DEPÓSITO HIDR.
MITAD DE BRIDA	5602407	120	4	704	10 35 872 5	PLUMA MONOBLOC 7,00M
MITAD DE BRIDA	5602407	7	2	706	10 06 477 4	CILINDRO HIDROLICO+ADICIO
MITAD DE BRIDA	5602407	16	2	706	10 06 477 4	CILINDRO HIDROLICO+ADICIO
MITAD DE BRIDA	5602640	44	2	348	10 05 312 6	TUBOS FLEX.HIDR./ASPIR.+R
MITAD DE BRIDA	5602640	15	4	395	10 35 874 4	MONTAJE CORREDERA DISTR
MITAD DE BRIDA	5603839	69	4	122	10 35 879 9	MONTAJE BOMBAS
MITAD DE BRIDA SAE 2" FLAC	5002070	13	8	351	10 05 312 9	REFRIG.ACEITE TRANS.E HI
MITAD DE BRIDA SAE 2" FLAC	5002070	27	4	355	10 35 875 1	INST.HIDR.ACC. VENTILADOR
MODIF.BISAGRA	9751573	41	2	786	10 35 806 5	SUPLEMENTO SUPERIOR
MODIF.CILINDRO	10498366	12	1	733	10 35 873 7	ÉMBOLO PROT.VÁST.P.CIL.CU
MODIF.DEPÓSITO COMBUSTI	10498315	30	1	788	10 49 831 4	ACOP.RAP.WIGGINS P.COMB
MODIF.ESTRUC.INF.	10498553	70	1	796	10 49 815 5	ELEVACIÓN CABINA CONDU
MODIF.PUESTO CONDUCTOR	9927352	10	1	795	10 49 815 5	ELEVACIÓN CABINA CONDU
MODULO	10287118	2	1	283	98 74 988	MONTAJE PLETINAS A1016
MODULO ACEITE DCHA.	10124757	2	1	604	10 12 476 3	MONTAJE MÓDULO ACEITE
MODULO DE POTENCIA	10099925	2	1	537	10 06 577 4	MÓDULO DE POTENCIA COM
MONT. CARCASA VOLANTE IM	10120322	520	1	570	10 12 595 9	MOTOR DIESEL D9508 A7 320k
MONT. CHAPA AJUSTE	9078467	521	1	570	10 12 595 9	MOTOR DIESEL D9508 A7 320k
MONT. RUEDA INTERMEDIA I=	10118223	372	1	568	10 12 595 9	MOTOR DIESEL D9508 A7 320k
MONT. TAPA CULATA	10122640	83	1	566	10 12 595 9	MOTOR DIESEL D9508 A7 320k
MONT. TAPA CULATA	10122645	82	5	566	10 12 595 9	MOTOR DIESEL D9508 A7 320k
MONT. TAPA CULATA	10122646	84	1	566	10 12 595 9	MOTOR DIESEL D9508 A7 320k
MONT. TAPA CULATA	10122659	85	1	566	10 12 595 9	MOTOR DIESEL D9508 A7 320k
MONT. VOLANTE IMUPLS. SAE	10120077	530	1	570	10 12 595 9	MOTOR DIESEL D9508 A7 320k

Descripción	Artículo	Pos.	Cantid	Página	Grupo	Descripción
MONT.APARATO MANDO	10116718	571	1	570	10 12 595 9	MOTOR DIESEL D9508 A7 320k
MONT.CARCASA DE TERMOST	10117529	380	1	568	10 12 595 9	MOTOR DIESEL D9508 A7 320k
MONT.COMPR.AIRE AC.	10118655	340	1	568	10 12 595 9	MOTOR DIESEL D9508 A7 320k
MONT.FILTRO FINO COMBUS	10123141	201	1	567	10 12 595 9	MOTOR DIESEL D9508 A7 320k
MONT.MAZO CABLES	10119487	580	1	570	10 12 595 9	MOTOR DIESEL D9508 A7 320k
MONT.TUBERÍA DCHA.	10125172	4	1	578	10 12 503 7	ANEJO TUBERIA
MONT.TUBERÍA DE PURGA	10119306	381	1	569	10 12 595 9	MOTOR DIESEL D9508 A7 320k
MONT.TUBERÍA IZDA.	10125170	3	1	578	10 12 503 7	ANEJO TUBERIA
MONTAJE ARRANQUE MOTO	9080641	450	1	570	10 12 595 9	MOTOR DIESEL D9508 A7 320k
MONTAJE ASPIRACIÓN DE AIR	9079074	220	1	568	10 12 595 9	MOTOR DIESEL D9508 A7 320k
MONTAJE ATL	10132739	431	1	569	10 12 595 9	MOTOR DIESEL D9508 A7 320k
MONTAJE ATL	10132740	430	1	569	10 12 595 9	MOTOR DIESEL D9508 A7 320k
MONTAJE BATERÍAS	10358758	50	1	494	10 35 875 7	INST.EL.CARRO SUPERIOR
MONTAJE BOMBAS	10358799	540	1	108	10 35 873 5	MOTOR MONTAJE
MONTAJE BRIDA CALEFACCIÓ	9078314	260	2	568	10 12 595 9	MOTOR DIESEL D9508 A7 320k
MONTAJE CAJA ELÉCTRICA	10066484	70	1	271	10 05 311 8	BASE PUESTO CONDUCTOR
MONTAJE CAJA RADIADOR	10358753	160	1	91	10 35 874 2	SUPERESTRUCTURA
MONTAJE CONEXIÓN GIRATO	10498670	10	1	41	10 35 874 0	ESTRUC.INF.COMPL.
MONTAJE CONSOLA MANDO	10057362	10	1	277	10 05 798 3	REPOSABRAZOS IZQUIERDA
MONTAJE CORONA ROTACIÓ	10358772	800	1	91	10 35 874 2	SUPERESTRUCTURA
MONTAJE CORREDERA DISTR	10358744	7600	1	91	10 35 874 2	SUPERESTRUCTURA
MONTAJE DE EMBRAGUE	9080481	2	1	109	10 12 605 7	GRUPO DE ACCIONAMIENTO
MONTAJE DE RADIADOR	10358739	560	1	108	10 35 873 5	MOTOR MONTAJE
MONTAJE DEPÓSITO HIDR.	10358745	7100	1	91	10 35 874 2	SUPERESTRUCTURA
MONTAJE DETECTOR PROXI	10082560	40	1	308	10 05 798 5	MONTAJE PLACA REPOSAPIÉ
MONTAJE ELEMENTO ARRAS	9566869	5	1	91	10 35 874 2	SUPERESTRUCTURA
MONTAJE ELEMENTO ARRAS	9566869	5	1	93	10 49 853 2	SUPERESTRUCTURA
MONTAJE FARO	9941040	30	2	494	10 35 875 7	INST.EL.CARRO SUPERIOR
MONTAJE FIJACION 39NM/28°	10044692	12	1	635	10 11 865 5	MONT.COMPR.AIRE AC.
MONTAJE FILTRO AIRE	10358734	25	1	115	10 35 873 3	AIRE Y SISTEMA ESCAPE
MONTAJE FILTRO COMBUSTI	10095387	2	1	112	10 36 623 6	INST.COMBUSTIBLE MOTOR
MONTAJE INTERR.	9989179	40	1	749	10 39 372 0	INST.EL.
MONTAJE INTERR.	9989645	141	1	293	10 82 277 5	REPOSABRAZOS DERECHA
MONTAJE INTERR. S218	9016516	151	1	293	10 82 277 5	REPOSABRAZOS DERECHA
MONTAJE INTERR. S248	10085767	146	1	293	10 82 277 5	REPOSABRAZOS DERECHA
MONTAJE INTERR. S42	10080466	91	1	278	10 05 798 3	REPOSABRAZOS IZQUIERDA
MONTAJE INTERR. S84-2	9989646	142	1	293	10 82 277 5	REPOSABRAZOS DERECHA
MONTAJE LASTRE	10358765	9500	1	92	10 35 874 2	SUPERESTRUCTURA
MONTAJE MEC. GIRO	10053024	700	1	91	10 35 874 2	SUPERESTRUCTURA
MONTAJE MEC. GIRO	10053024	700	1	93	10 49 853 2	SUPERESTRUCTURA
MONTAJE MÓDULO ACEITE	10124763	130	1	567	10 12 595 9	MOTOR DIESEL D9508 A7 320k
MONTAJE PLACA DE COBERT	9080668	470	1	570	10 12 595 9	MOTOR DIESEL D9508 A7 320k
MONTAJE PLACA REPOSAPIÉ	10057985	40	1	269	10 05 311 8	BASE PUESTO CONDUCTOR
MONTAJE PLETINAS A1016	9874988	33	1	277	10 05 798 3	REPOSABRAZOS IZQUIERDA
MONTAJE RACOR TUBO PRES	9078324	191	8	567	10 12 595 9	MOTOR DIESEL D9508 A7 320k
MONTAJE RACOR TUBO PRES	9078324	191	1	687	10 12 089 6	J. J. CABEZA CILINDRO COM
MONTAJE RETROVISOR EXT.	9687016	9700	1	92	10 35 874 2	SUPERESTRUCTURA
MONTAJE SECADOR	10053190	2	1	540	10 35 875 6	MONTAJE TUBOS FLEX. AIRE
MONTAJE SOPORTE	10129490	1	1	673	10 11 935 3	CONSOLA
MONTAJE SOPORTE	10129494	1	1	674	10 11 935 6	CONSOLA
MONTAJE SOPORTE GRUPO	10119410	1	1	581	10 12 021 3	MONTAJE SOPORTE GRUPO
MONTAJE SOPORTE GRUPO	10120213	12	1	565	10 12 595 9	MOTOR DIESEL D9508 A7 320k
MONTAJE TACOMETRO	9885618	22	1	658	90 79 187	SENSOR REGULACION MOTO
MONTAJE TUBERÍA A.FUGA	9078554	214	1	567	10 12 595 9	MOTOR DIESEL D9508 A7 320k
MONTAJE TUBERÍA DE IMPU	10119413	213	1	567	10 12 595 9	MOTOR DIESEL D9508 A7 320k
MONTAJE TUBERÍAS IMPULS.	10067717	35	1	396	10 35 874 4	MONTAJE CORREDERA DISTR
MONTAJE TUBO AIRE ADMISIÓ	9078417	232	1	568	10 12 595 9	MOTOR DIESEL D9508 A7 320k
MONTAJE TUBO DE ESCAPE	10115669	410	1	569	10 12 595 9	MOTOR DIESEL D9508 A7 320k
MONTAJE TUBOS FLEX. AIRE	10358756	9200	1	92	10 35 874 2	SUPERESTRUCTURA
MONTAJE TUBOS FLEX.CALEF	10358759	180	1	91	10 35 874 2	SUPERESTRUCTURA

Descripción	Artículo	Pos.	Cantid	Página	Grupo	Descripción
MONTAJE TUBUL.ESCAPE GA	10116780	433	1	569	10 12 595 9	MOTOR DIESEL D9508 A7 320k
MONTAJE TUBUL.ESCAPE GA	10115587	432	1	569	10 12 595 9	MOTOR DIESEL D9508 A7 320k
MONTAJE UNIDAD ACEITE MA	10053144	25	1	332	10 35 874 7	INST.HIDR.CARRO SUPERIOR
MONTAJE UNIDAD ACEITE MA	10824389	25	1	333	10 49 853 7	INST.HIDR.CARRO SUPERIOR
MONTAJE VENTILADOR	10498677	550	1	108	10 35 873 5	MOTOR MONTAJE
MONTAJE VENTILADOR	10498732	550	1	108	10 35 873 5	MOTOR MONTAJE
MOTOR - SISTEMA ELÉCTRIC	10498000	580	1	108	10 35 873 5	MOTOR MONTAJE
MOTOR AJUSTE	10022766	3	1	320	10 02 208 3	TUBULADURA AIRE
MOTOR AJUSTE	10022766	7	2	321	10 02 211 7	CAJA CONDUCTO AIRE
MOTOR AJUSTE	10022766	2	1	324	10 02 207 8	ESCUADRA DE MONTAJE
MOTOR DE CONTINUA 24V	10014691	6	1	249	10 34 071 7	ENGRASADORA
MOTOR DIESEL D9508 A7 320k	10125959	1	1	109	10 12 605 7	GRUPO DE ACCIONAMIENTO
MOTOR HIDR. INCORP. FIX FM	9888041	3	1	220	10 05 311 7	MEC. GIRO
MOTOR HIDR. INCORP. VAR.	9072024	10	2	60	10 07 498 7	ACCIONAMIENTO DE TRASL
MOTOR INCORP.HIDR.	10125042	20	2	194	10 49 867 7	MONTAJE VENTILADOR
MOTOR LIMPIAPARABRISAS	7019184	910	1	479	10 48 809 7	INST.ELÉCTRICA
MOTOR LIMPIAPARABRISAS	7028879	530	1	480	70 28 884	MOTOR LIMPIAPARABRISAS
MOTOR LIMPIAPARABRISAS	7028884	420	1	478	10 48 809 7	INST.ELÉCTRICA
MOTOR MONTAJE	10358735	500	1	91	10 35 874 2	SUPERESTRUCTURA
MOYU	10372282	18	2	194	10 49 867 7	MONTAJE VENTILADOR
MOYU	10841515	18	2	196	10 49 873 2	MONTAJE VENTILADOR
MOYU	9077280	3	1	588	90 77 286	PIEZAS ACC.CON AMORT. VI
MUELLE	10013879	2	1	471	10 01 407 8	SENSOR DE CARRERA
MUELLE	10220706	7	1	161	10 33 327 0	CABEZA FILTRO
MUELLE	10296502	123	1	408	10 11 355 7	BLOQUE MANDO
MUELLE	7028835	380	1	473	10 04 678 8	PUERTA CABINA CONDUCTO
MUELLE	7028901	340	1	484	70 28 778	PIEZAS DE MONTAJE
MUELLE	7369128	24	1	407	10 11 355 7	BLOQUE MANDO
MUELLE	7370910	66	2	43	10 35 874 0	ESTRUC.INF.COMPL.
MUELLE	7372747	82	6	408	10 11 355 7	BLOQUE MANDO
MUELLE COMPRESION	10008165	3	1	174	10 00 795 6	REGULACIÓN
MUELLE COMPRESION	10120103	12	1	607	10 12 475 6	MÓDULO ACEITE IZDA.
MUELLE COMPRESION	10216810	5	1	262	10 29 792 9	VALVULA LIMITADORA DE PR
MUELLE COMPRESION	10220821	5	1	163	10 33 327 3	VÁLVULA ARRANQUE EN FRÍ
MUELLE COMPRESION	10278643	270	1	752	10 34 080 6	SEGURO CONTRA ROTURA TU
MUELLE COMPRESION	10278643	270	1	753	10 34 081 2	SEGURO CONTRA ROTURA TU
MUELLE COMPRESION	10278644	280	1	752	10 34 080 6	SEGURO CONTRA ROTURA TU
MUELLE COMPRESION	10278644	280	1	753	10 34 081 2	SEGURO CONTRA ROTURA TU
MUELLE COMPRESION	10333253	13	1	264	10 33 323 7	VALVULA LIMITADORA DE PR
MUELLE COMPRESION	10410644	29	1	165	10 41 064 0	MECANISMO DE ACCIONAMIE
MUELLE COMPRESION	5606650	5	1	402	56 15 220	FILTRO DE ALTA PRESION
MUELLE COMPRESION	5616117	220	4	71	56 16 688	VÁLVULA FRENO MARCHA
MUELLE COMPRESION	570036608	12	1	264	10 33 323 7	VALVULA LIMITADORA DE PR
MUELLE COMPRESION	7023708	6	1	261	10 10 206 7	ELEMENTO REGULACION
MUELLE COMPRESION	7371358	3	1	412	56 10 135	VÁLVULA ALIM.
MUELLE COMPRESION	7371759	7	1	157	10 33 324 2	VALVULA DE DESCONEXION
MUELLE COMPRESION	7372254	5	1	261	10 10 206 7	ELEMENTO REGULACION
MUELLE COMPRESION	749072914	170	1	71	56 16 688	VÁLVULA FRENO MARCHA
MUELLE COMPRESION	7610107	6	26	224	93 36 053 01	FRENO
MUELLE COMPRESION	7610108	7	26	224	93 36 053 01	FRENO
MUELLE COMPRESION	7610132	13	26	224	93 36 053 01	FRENO
MUELLE COMPRESION	7621958	10	2	178	10 40 975 1	CILINDRO TRANSPORTADOR
MUELLE COMPRESION	7621959	11	2	178	10 40 975 1	CILINDRO TRANSPORTADOR
MUELLE COMPRESION	9265404	15	1	72	92 67 037	VALVULA LIMITADORA DE PR
MUELLE COMPRESION	9266641	30	20	142	98 86 680	JR GRUPO MOTOR
MUELLE COMPRESION	9268747	31	20	142	98 86 680	JR GRUPO MOTOR
MUELLE COMPRESION 0,80/ 6	7382063	14	1	266	98 89 003	VALVULA DE RETENCION RV
MUELLE COMPRESION 0,8X3,0	10011098	31	26	83	98 88 123	JR GRUPO MOTOR
MUELLE COMPRESION 0,8X3,0	10011098	31	26	172	98 88 321	JR GRUPO MOTOR
MUELLE COMPRESION 1,25X5	9265050	30	15	231	92 71 427	JR GRUPO MOTOR

Descripción	Artículo	Pos.	Cantid	Página	Grupo	Descripción
MUELLE COMPRESION 13,6X	7373500	17	24	61	50 20 370 01	FRENO DISCOS MULT.PRESI
MUELLE COMPRESION 2,25X8	9266088	21	1	78	92 67 554	VALVULA LIMITADORA DE PR
MUELLE COMPRESION 2x15x6	7361568	9	1	768	56 02 932	VALVULA REGULADORA
MUELLE COMPRESION 4,5X31	7373502	19	24	61	50 20 370 01	FRENO DISCOS MULT.PRESI
MUELLE COMPRESION 5,6/1,	9268776	30	26	83	98 88 123	JR GRUPO MOTOR
MUELLE COMPRESION 5,6/1,	9268776	30	26	172	98 88 321	JR GRUPO MOTOR
MUELLE COMPRESION 5/37X5	7381499	15	1	80	92 78 174	REGULACIÓN
MUELLE COMPRESION 51,7/ 5	7365026	3	1	400	93 70 592	VALVULA DE RETENCION
MUELLE COMPRESION 6,8/1,2	9266087	20	1	78	92 67 554	VALVULA LIMITADORA DE PR
MUELLE COMPRESION 8,2X29	7373501	18	24	61	50 20 370 01	FRENO DISCOS MULT.PRESI
MUELLE DE GAS	10037204	24	1	447	10 05 535 4	CAPOT
MUELLE DE GAS	10037209	80	1	415	10 05 303 6	REVESTIMIENTO
MUELLE DE GAS	10037209	80	1	430	10 49 857 1	REVESTIMIENTO
MUELLE DE GAS	10037214	27	1	413	10 05 303 6	REVESTIMIENTO
MUELLE DE GAS	10037214	27	1	428	10 49 857 1	REVESTIMIENTO
MUELLE DE GAS	10441154	15	2	413	10 05 303 6	REVESTIMIENTO
MUELLE DE GAS	10441154	15	2	428	10 49 857 1	REVESTIMIENTO
MUELLE DE GAS	7372354	17	1	284	73 73 807	PALANCA SEG.
MUELLE TRACCION	7615768	262	1	422	10 05 303 6	REVESTIMIENTO
MUELLE TRACCION	7615768	262	1	437	10 49 857 1	REVESTIMIENTO
MUELLE TRACCION	7617520	51	2	275	10 28 999 3	SISTEMA OSCIL.
MUELLE TRACCION 1,6X9,6X7	7371115	35	1	451	10 05 546 4	CUBIERTA IZQUIERDA
MÓDULO ACEITE IZDA.	10124756	1	1	604	10 12 476 3	MONTAJE MÓDULO ACEITE
MÓDULO CONMUT.	7371141	90	1	278	10 05 798 3	REPOSABRAZOS IZQUIERDA
MÓDULO CONMUT.	7371141	140	1	293	10 82 277 5	REPOSABRAZOS DERECHA
MÓDULO CONMUT.	7371141	150	1	293	10 82 277 5	REPOSABRAZOS DERECHA
MÓDULO CONMUT.	7371141	42	1	749	10 39 372 0	INST.EL.
MÓDULO CONMUT.	7371141	910	1	792	95 99 236	INSTALACION ELECTRICA
MÓDULO DE POTENCIA COM	10065774	26	1	530	10 49 837 7	INST.EL.DEP. COMBUSTIBLE
MÓDULO MANDO	10291353	60	1	702	10 35 872 5	PLUMA MONOBLOC 7,00M
MÓDULO P/FILTRO DE COMBU	10122824	1	1	617	10 12 314 1	MONT.FILTRO FINO COMBUS
NO SUMINISTRABLE	9999997	1000	1	36	10 35 905 6	ANTICORROSIVO
OBTURACION DE SUPERFICIE	10011172	100	1	695	10 12 099 6	J. JUNTAS CARCASA DEL VO
OBTURACION DE SUPERFICIE	10354595	115	1	572	10 12 907 1	CAJA DEL CIGÜEÑAL COMPL.
OMNIFIT	7016208	106	1	227	98 86 678	JR CIL.+PLACA MANDO
OREJETA DE UNION	10498252	5	1	714	10 35 872 1	MANGO DE LA PALA 2,60M
PALA LIMPIEZA LATERAL	10016714	4	1	47	10 07 535 3	TENSOR GRASA
PALANCA	7028348	14	1	388	56 17 689	DISPOSITIVO DE CIERRE DN
PALANCA	7028919	320	1	484	70 28 778	PIEZAS DE MONTAJE
PALANCA	7372353	16	1	284	73 73 807	PALANCA SEG.
PALANCA	9278653	18	2	80	92 78 174	REGULACIÓN
PALANCA AJUSTE	9278189	12	1	80	92 78 174	REGULACIÓN
PALANCA DE CAMBIO	10024214	2	1	514	10 01 211 9	INTERRUPTOR PRINCIPAL BA
PALANCA MANUAL	7028347	13	1	388	56 17 689	DISPOSITIVO DE CIERRE DN
PALANCA REENVIO	10498755	4	2	714	10 35 872 1	MANGO DE LA PALA 2,60M
PALANCA SEG.	7373807	14	1	280	10 16 576 6	CONSOLA MANDO IZDA.
PALANCA TENSORA	7615635	91	2	416	10 05 303 6	REVESTIMIENTO
PALANCA TENSORA	7615635	330	4	427	10 05 303 6	REVESTIMIENTO
PALANCA TENSORA	7615635	91	2	431	10 49 857 1	REVESTIMIENTO
PALANCA TENSORA	7615635	330	4	442	10 49 857 1	REVESTIMIENTO
PALETA AGITADORA	10016658	39	1	250	10 34 071 7	ENGRASADORA
PALPADOR DE TEMPERATUR	10022067	11	1	322	11 00 359 4	CARCASA
PALPADOR DE TEMPERATUR	10022077	12	1	322	11 00 359 4	CARCASA
PALPADOR DE TEMPERATUR	691180608	1	1	659	90 76 530	PALPADOR DE TEMPERATUR
PALPADOR DE TEMPERATUR	9076530	2	1	658	90 79 187	SENSOR REGULACION MOTO
PAQUETE SERV. 0-2000H	10361905	100	1	40	10 35 970 3	MATERIAL SERV.
PAQUETE SERV. 1000H	10361907	2	1	94	10 36 190 5	PAQUETE SERV. 0-2000H
PAQUETE SERV. 1000H	10361907	1	1	98	10 36 190 8	PAQUETE SERV. ALLE 2000H
PAQUETE SERV. 1500H/2500H	10091074	3	1	94	10 36 190 5	PAQUETE SERV. 0-2000H
PAQUETE SERV. 1500H/2500H	10091074	1	1	95	10 09 107 3	PAQUETE SERV. ERSTE 500H

Descripción	Artículo	Pos.	Cantid	Página	Grupo	Descripción
PAQUETE SERV. 1500H/2500H	10091074	1	1	97	10 36 190 7	PAQUETE SERV. 1000H
PAQUETE SERV. ALLE 2000H	10361908	4	1	94	10 36 190 5	PAQUETE SERV. 0-2000H
PAQUETE SERV. ERSTE 500H	10091073	1	1	94	10 36 190 5	PAQUETE SERV. 0-2000H
PAQUETE SERV.FILTRO COM	10359830	110	1	40	10 35 970 3	MATERIAL SERV.
PAR DE JAULAS	10007990	32	1	149	10 33 307 0	MECANISMO DE ACCIONAMIE
PAR DE JAULAS	7623835	32	1	133	10 44 145 6	MECANISMO DE ACCIONAMIE
PAR DE SEMICOJINETES	10037583	26	1	149	10 33 307 0	MECANISMO DE ACCIONAMIE
PAR DE SEMICOJINETES	10040134	26	1	133	10 44 145 6	MECANISMO DE ACCIONAMIE
PARABRISAS	7028775	30	1	468	10 47 616 7	CABINA DEL CONDUCTOR
PARABRISAS	7030512	110	1	470	70 28 775	PARABRISAS
PARABRISAS INFERIOR	7028820	210	1	470	70 28 775	PARABRISAS
PARED AISLANTE	10079187	50	1	445	10 05 530 3	CAPOT DEL MOTOR
PARTE DE ASIENTO	7024981	12	1	273	10 04 363 1	ASIENTO CONDUCTOR
PARTE DE ASIENTO	7024981	12	1	274	10 04 363 2	ASIENTO CONDUCTOR
PARTE SUP.ESPEJO	7005028	1	1	556	96 87 016	MONTAJE RETROVISOR EXT.
PASADOR	7028351	15	1	388	56 17 689	DISPOSITIVO DE CIERRE DN
PASADOR	9442284	56	1	66	94 43 970	ACCIONAMIENTO DE TRASL
PASADOR	9888133	12	1	182	90 79 347	JR YUGO BASC. LPV 165
PASADOR AJUSTE	7381640	27	1	70	98 88 126	MECANISMO DE ACCIONAMIE
PASADOR CILINDRICO 5M6	514588908	14	1	150	10 33 307 1	PLACA DE CONEXION
PASADOR CILINDRICO 6h6	10470574	8	2	593	10 11 805 0	CULATA MONTAJE
PASADOR CILINDRICO 6m6	4980736	5	1	601	10 11 802 2	ÁRBOL LEVAS COMPL.
PASADOR CILINDRICO 8M6	10000797	13	2	150	10 33 307 1	PLACA DE CONEXION
PASADOR DE SUJECION	10115022	8	1	264	10 33 323 7	VALVULA LIMITADORA DE PR
PASADOR ELASTICO	10298633	10	1	166	10 44 145 8	SENSOR DE ÁNGULO DE GIR
PASADOR ELASTICO	10301923	8	2	45	10 22 121 2	POLEA RODADURA
PASADOR ESPIRAL DE SUJEC	10011783	5	2	587	10 13 080 8	EJE CIGUEÑAL CON RUEDA D
PASADOR ESTRANGULADOR	7025515	3	1	263	10 29 207 1	ELEMENTO REGULACION
PASADOR ESTRANGULADOR	7621949	3	1	147	10 10 206 6	ELEMENTO REGULACION
PASARELA	10094083	2	1	800	10 49 815 4	PASARELA
PASARELA	10498153	60	1	795	10 49 815 5	ELEVACIÓN CABINA CONDU
PASARELA	10498154	50	1	795	10 49 815 5	ELEVACIÓN CABINA CONDU
PASARELA DCHA.	10058895	2	1	493	10 35 876 4	PASILLO MALLA
PASILLO MALLA	10358764	8900	1	92	10 35 874 2	SUPERESTRUCTURA
PASILLO MALLA	10498138	2	1	799	10 49 815 3	PASARELA
PASO AIRE	7024446	280	4	488	10 48 809 9	REVESTIMIENTO INTERIOR
PASO AIRE	7024446	350	4	489	10 48 809 9	REVESTIMIENTO INTERIOR
PASTA DE CINCEL LIEBHERR	10358992	50	1	17	90 70 366	GRASAS
PASTA DE CINCEL LIEBHERR/	8610230	1	1	35	10 35 899 2	PASTA DE CINCEL LIEBHERR
PASTA DE CINCEL LIEBHERR	10330306	2	1	35	10 35 899 2	PASTA DE CINCEL LIEBHERR
PASTA DE OBTURACION	7029402	180	1	469	70 28 774	LUNAS
PASTA ESPECIAL CRL/5x0,4kg	8503279	30	1	550	10 49 815 2	HERRAMIENTAS DE EQUIPAM
PASTA LUBR.ALTA EFICACIA L	8300004	800	1	764	96 31 985	ALOJAMIENTO DE BIELA 150/
PASTA LUBR.ALTA EFICACIA L	8300004	800	1	765	99 07 890	ALOJAMIENTO DE BIELA 125/
PASTA LUBRICANTE OPTIMOL	040710450	100	1	596	10 12 264 0	MONT. TAPA CULATA
PASTA LUBRICANTE OPTIMOL	040710450	100	1	597	10 12 264 5	MONT. TAPA CULATA
PASTA LUBRICANTE OPTIMOL	040710450	100	1	598	10 12 264 6	MONT. TAPA CULATA
PASTA LUBRICANTE OPTIMOL	040710450	100	1	599	10 12 265 9	MONT. TAPA CULATA
PASTA LUBRICANTE OPTIMOL	040710450	100	1	687	10 12 089 6	J. J. CABEZA CILINDRO COM
PASTA SPRAY LIEBHERR	10358950	40	1	17	90 70 366	GRASAS
PASTA SPRAY LIEBHERR/0,95	10330308	1	1	34	10 35 895 0	PASTA SPRAY LIEBHERR
PASTA SPRAY LIEBHERR/10X	10330310	2	1	34	10 35 895 0	PASTA SPRAY LIEBHERR
PASTA SPRAY LIEBHERR/5kg	10330311	5	1	34	10 35 895 0	PASTA SPRAY LIEBHERR
PATIN	10082606	16	2	733	10 35 873 7	ÉMBOLO PROT.VÁST.P.CIL.CU
PATIN	10475119	8	2	49	10 47 076 9	RUEDA DIRECTRIZ D8K
PATÍN DESLIZANTE ÉMBOLO	10007866	2	9	149	10 33 307 0	MECANISMO DE ACCIONAMIE
PATÍN DESLIZANTE ÉMBOLO	10410641	2	9	165	10 41 064 0	MECANISMO DE ACCIONAMIE
PAVIMIENTO	9879754	5	1	268	10 05 302 5	PUESTO DEL CONDUCTOR
PEDAL DE TRASLACION DE A	9266411	1	1	538	10 03 864 3	INTERUPTOR DE PEDAL
PEGAMENTO	8624636	110	1	192	98 89 161	PLACA DE CONEXION

Descripción	Artículo	Pos.	Cantid	Página	Grupo	Descripción
PEGAMENTO	8655023	118	1	69	90 72 026	PLACA DE CONEXION NG 165
PEGAMENTO	8655023	104	1	572	10 12 907 1	CAJA DEL CIGÜEÑAL COMPL.
PEGAMENTO	8655023	104	1	600	10 11 805 2	CULATA D9508
PELDAÑO (LO 3259 B)	9490985	190	1	419	10 05 303 6	REVESTIMIENTO
PELDAÑO (LO 3259 B)	9490985	190	1	434	10 49 857 1	REVESTIMIENTO
PELDAÑO (LO 3259 B)	9490985	35	2	782	10 35 806 3	SUPLEMENTO SUPERIOR 120
PERCHA	7019131	640	1	486	70 28 778	PIEZAS DE MONTAJE
PERFIL	10002428	42	0.613	448	10 05 535 4	CAPOT
PERFIL	10022653	31	3	323	11 00 359 4	CARCASA
PERFIL	10216006	215	1	488	10 48 809 9	REVESTIMIENTO INTERIOR
PERFIL	10294466	20	3	101	10 35 875 3	MONTAJE CAJA RADIADOR
PERFIL	10294466	60	5	210	10 06 461 3	JUNTA HERMET.RADIADOR
PERFIL	7360734	41	0.418	448	10 05 535 4	CAPOT
PERFIL APRIETE	7014524	50	4	210	10 06 461 3	JUNTA HERMET.RADIADOR
PERFIL APRIETE	7014524	313	2	426	10 05 303 6	REVESTIMIENTO
PERFIL APRIETE	7014524	313	2	441	10 49 857 1	REVESTIMIENTO
PERFIL APRIETE	7014524	40	2	448	10 05 535 4	CAPOT
PERFIL APRIETE	9591327	20	1	107	10 35 875 9	MONTAJE TUBOS FLEX.CALEF
PERFIL CANTONERA	10009781	121	0.9	271	10 05 311 8	BASE PUESTO CONDUCTOR
PERFIL CANTONERA	226016702	120	0.7	271	10 05 311 8	BASE PUESTO CONDUCTOR
PERFIL CANTONERA	226016702	122	0.2	271	10 05 311 8	BASE PUESTO CONDUCTOR
PERFIL DE FIJACION	10022049	9	2	322	11 00 359 4	CARCASA
PERFIL DE FIJACION	6203433	10	1	283	98 74 988	MONTAJE PLETINAS A1016
PERFIL DE REFUERZO	10022779	16	2	321	10 02 211 7	CAJA CONDUCTO AIRE
PERFIL ESTANCO	10000465	9	2.06	118	10 35 873 4	MONTAJE FILTRO AIRE
PERFIL ESTANCO	10008649	16	0.28	316	10 40 689 8	AIRE ACONDICIONADO
PERFIL ESTANCO	10355809	6	0.3	208	10 42 538 5	RADIADOR ACEITE COMB.
PERFIL ESTANCO	7028821	220	1.44	470	70 28 775	PARABRISAS
PERFIL GOMA	10042111	285	1	488	10 48 809 9	REVESTIMIENTO INTERIOR
PERFIL GOMA	7029410	500	1	476	70 28 844	VENTANA DE CORREDERA
PERFIL OBTURACIÓN CANTON	7360171	101	1	207	10 35 873 9	MONTAJE DE RADIADOR
PERFIL OBTURACIÓN CANTON	7360171	25	1.38	277	10 05 798 3	REPOSABRAZOS IZQUIERDA
PERFIL OBTURACIÓN CANTON	7360171	303	0.27	425	10 05 303 6	REVESTIMIENTO
PERFIL OBTURACIÓN CANTON	7360171	303	0.27	440	10 49 857 1	REVESTIMIENTO
PERFIL OBTURACIÓN CANTON	7360171	25	1.5	460	10 06 375 5	CAJA COMPL.
PERNO DISTANCIADOR HEX.	7016412	11	4	503	10 09 499 2	RELACIÓN MATERIAL EL.
PERNO DISTANCIADOR HEX.	10027643	19	4	503	10 09 499 2	RELACIÓN MATERIAL EL.
PESO DEL LASTRE 11,3T	10450081	2	1	549	10 35 876 5	MONTAJE LASTRE
PESTILLO	9836526	261	1	422	10 05 303 6	REVESTIMIENTO
PESTILLO	9836526	261	1	437	10 49 857 1	REVESTIMIENTO
PIEZA DE BLOQUEO	10451188	43	5	725	10 49 849 8	CUCHARA RETRO HD 1950MM
PIEZA DE CABEZA	7372319	1	1	402	56 15 220	FILTRO DE ALTA PRESION
PIEZA DE CIERRE	10333078	40	1	130	10 21 593 5	BOMBA
PIEZA DE DESGASTE LAT.	10498512	2	2	728	10 49 850 1	JP DESGASTE
PIEZA DE EMPALME	10117507	10	1	617	10 12 314 1	MONT.FILTRO FINO COMBUS
PIEZA DE EMPALME	10117507	1	1	672	10 11 883 5	PIEZA DE EMPALME PREMO
PIEZA DE EMPALME	10122637	3	2	598	10 12 264 6	MONT. TAPA CULATA
PIEZA DE EMPALME	10122637	3	2	599	10 12 265 9	MONT. TAPA CULATA
PIEZA DE EMPALME	7373434	1	1	180	10 44 299 8	VALVULA SELECTORA
PIEZA DE EMPALME	7373434	1	1	774	10 02 073 5	VALVULA SELECTORA
PIEZA DE EMPALME	9079113	10	1	623	10 12 720 8	TUBERIAS DE COMBUSTIBLE
PIEZA DE EMPALME PREMO	10118835	582	1	571	10 12 595 9	MOTOR DIESEL D9508 A7 320k
PIEZA DISTANCIADOR	10068223	26	1	396	10 35 874 4	MONTAJE CORREDERA DISTR
PIEZA DISTANCIADOR	9275161	10	2	578	10 12 503 7	ANEJO TUBERIA
PIEZA DISTANCIADOR	9277034	37	1	624	10 12 720 8	TUBERIAS DE COMBUSTIBLE
PIEZA DISTANCIADOR	9279359	5	1	605	10 12 002 3	TUBERIA DE ACEITE MONTAJ
PIEZA FINAL	10301925	7	2	45	10 22 121 2	POLEA RODADURA
PIEZA FINAL	10303003	8	2	46	10 29 067 4	RODILLO APOYO D8K
PIEZA GUIA DE AIRE	10005677	1	1	320	10 02 208 3	TUBULADURA AIRE
PIEZA INTERMEDIA	10064899	107	1	704	10 35 872 5	PLUMA MONOBLOC 7,00M

Descripción	Artículo	Pos.	Cantid	Página	Grupo	Descripción
PIEZA INTERMEDIA	10065942	28	2	701	10 35 872 5	PLUMA MONOBLOC 7,00M
PIEZA INTERMEDIA	7365704	35	1	316	10 40 689 8	AIRE ACONDICIONADO
PIEZA INTERMEDIA	9836528	253	1	422	10 05 303 6	REVESTIMIENTO
PIEZA INTERMEDIA	9836528	253	1	437	10 49 857 1	REVESTIMIENTO
PIEZA INTERMEDIA H=20	9008100	42	1	344	10 35 875 5	EJEC.GIRADA HIDR.+MEC.GIR
PIEZA INTERMEDIA H=25	9872047	19	2	700	10 35 872 5	PLUMA MONOBLOC 7,00M
PIEZA INTERMEDIA H=60	9935392	42	2	701	10 35 872 5	PLUMA MONOBLOC 7,00M
PIEZA SUJ. CORREDERA DIS	9375164	2	1	394	10 35 874 4	MONTAJE CORREDERA DISTR
PIEZA UNION	10120090	5	2	688	10 12 093 7	JUEGO JUNTAS LÍNEA DE CON
PIEZA UNION K27	9078422	5	1	631	10 11 570 0	ANEJO DE LINEA DE CONEXIÓ
PIEZAS ACC.CON AMORT. VI	9077286	53	1	566	10 12 595 9	MOTOR DIESEL D9508 A7 320k
PIEZAS DE CIERRE	10120104	13	1	607	10 12 475 6	MÓDULO ACEITE IZDA.
PIEZAS DE CIERRE	10120168	17	1	565	10 12 595 9	MOTOR DIESEL D9508 A7 320k
PIEZAS DE CIERRE	10120393	650	1	571	10 12 595 9	MOTOR DIESEL D9508 A7 320k
PIEZAS DE CIERRE	9078564	452	1	570	10 12 595 9	MOTOR DIESEL D9508 A7 320k
PIEZAS DE CIERRE	9080459	652	1	571	10 12 595 9	MOTOR DIESEL D9508 A7 320k
PIEZAS DE FIJACION	10067869	100	1	271	10 05 311 8	BASE PUESTO CONDUCTOR
PIEZAS DE MONTAJE	7028778	70	1	468	10 47 616 7	CABINA DEL CONDUCTOR
PIEZAS MONTAJE	10054532	2	1	545	10 35 868 3	INSTALACION CARBURANTE
PIEZAS MONTAJE EQUIPAMIE	10395893	170	1	91	10 35 874 2	SUPERESTRUCTURA
PIEZAS MONTAJE EQUIPAMIE	10395893	170	1	93	10 49 853 2	SUPERESTRUCTURA
PIEZAS MONTAJE EQUIPAMIE	10498274	10	1	748	10 49 827 1	DESCONEXION CILIND.DE BAL
PIEZAS SUJ. CABINA	10357979	10	1	467	10 35 876 8	CABINA DEL CONDUCTOR
PIEZAS SUJ.DEPÓSITO HIDR.	10087958	20	1	381	10 35 874 5	MONTAJE DEPÓSITO HIDR.
PISTA DE GIRO 1910X1503X16	982720001	2	1	241	10 35 877 2	MONTAJE CORONA ROTACIÓ
PISTON DE MANDO	10292073	2	1	261	10 10 206 7	ELEMENTO REGULACION
PISTON DE MANDO	10333258	3	1	157	10 33 324 2	VALVULA DE DESCONEXION
PISTON DE MANDO	9278187	10	1	82	90 77 481	JR (PISTÓN AJUSTE) FMV 165
PISTON DE VALVULA	10115005	3	1	264	10 33 323 7	VALVULA LIMITADORA DE PR
PISTON DE VALVULA	10220817	2	1	163	10 33 327 3	VÁLVULA ARRANQUE EN FRÍ
PISTON DE VALVULA	7028148	3	1	262	10 29 792 9	VALVULA LIMITADORA DE PR
PISTON DE VALVULA	7624223	5	1	157	10 33 324 2	VALVULA DE DESCONEXION
PISTÓN DE RETORNO	10008155	1	1	174	10 00 795 6	REGULACIÓN
PIÑON INTERIOR M=3,75 Z=90	9444429	50	1	66	94 43 970	ACCIONAMIENTO DE TRASL
PIÑON INTERIOR M=3,75/4,0	970643201	25	1	221	90 01 781 7	ACCIONAMIENTO GIRATORIO
PIÑON INTERIOR M=5 Z=86	9444413	10	1	64	94 43 970	ACCIONAMIENTO DE TRASL
PIÑON PLANETARIA	90011580	47	3	222	90 01 781 7	ACCIONAMIENTO GIRATORIO
PIÑON PLANETARIA M=3,75 Z	9444453	37	3	64	94 43 970	ACCIONAMIENTO DE TRASL
PIÑON PLANETARIA M=3,75 Z	9444454	1	1	77	94 44 453	PIÑON PLANETARIA M=3,75 Z
PIÑON PLANETARIA M=4 Z=35	933332901	37	4	221	90 01 781 7	ACCIONAMIENTO GIRATORIO
PIÑON PLANETARIA M=4 Z=35	933333001	1	1	223	93 33 329 01	PIÑON PLANETARIA M=4 Z=35
PIÑON PLANETARIA M=5 Z=30	9444414	17	5	64	94 43 970	ACCIONAMIENTO DE TRASL
PIÑON PLANETARIA M=5 Z=30	9444415	1	1	75	94 44 414	PIÑON PLANETARIA M=5 Z=30
PIÑON PLANETARIA M=5 Z=33	9444418	27	3	64	94 43 970	ACCIONAMIENTO DE TRASL
PIÑON PLANETARIA M=5 Z=33	9444419	1	1	76	94 44 418	PIÑON PLANETARIA M=5 Z=33
PIÑON PRINCIPAL M=3,75 Z=1	933605201	60	1	222	90 01 781 7	ACCIONAMIENTO GIRATORIO
PIÑON PRINCIPAL M=4 Z=18	933333101	40	1	221	90 01 781 7	ACCIONAMIENTO GIRATORIO
PIÑON PRINCIPAL M=5 Z=19	9444422	30	1	64	94 43 970	ACCIONAMIENTO DE TRASL
PIÑON PRINCIPAL M=5 Z=24	9444416	20	1	64	94 43 970	ACCIONAMIENTO DE TRASL
PLACA	10057336	63	2	702	10 35 872 5	PLUMA MONOBLOC 7,00M
PLACA	10057988	2	1	308	10 05 798 5	MONTAJE PLACA REPOSAPIÉ
PLACA	10058949	15	1	286	10 05 879 2	SENSOR CONTR.PILOT.PREV
PLACA	10058949	15	1	299	10 05 879 4	SENSOR CONTR.PILOT.PREV
PLACA	10116074	3	2	669	10 11 671 8	MONT.APARATO MANDO
PLACA	10358249	16	2	541	10 35 875 6	MONTAJE TUBOS FLEX. AIRE
PLACA	10358267	5	1	107	10 35 875 9	MONTAJE TUBOS FLEX.CALEF
PLACA	10358268	2	1	353	10 35 875 1	INST.HIDR.ACC. VENTILADOR
PLACA	10652159	20	1	280	10 16 576 6	CONSOLA MANDO IZDA.
PLACA	7020611	360	2	484	70 28 778	PIEZAS DE MONTAJE
PLACA	7028839	190	1	472	10 04 678 8	PUERTA CABINA CONDUCTO

Descripción	Artículo	Pos.	Cantid	Página	Grupo	Descripción
PLACA	7028878	520	1	480	70 28 884	MOTOR LIMPIAPARABRISAS
PLACA	7028898	270	1	484	70 28 778	PIEZAS DE MONTAJE
PLACA	9012222	32	1	461	10 06 375 5	CAJA COMPL.
PLACA	9392646	15	1	291	10 82 277 5	REPOSABRAZOS DERECHA
PLACA	9476811	31	1	344	10 35 875 5	EJEC.GIRADA HIDR.+MEC.GIR
PLACA	9476811	8	1	351	10 05 312 9	REFRIG.ACEITE TRANS.E HI
PLACA	9483466	37	2	347	10 05 312 6	TUBOS FLEX.HIDR./ASPIR.+R
PLACA	9757779	35	1	269	10 05 311 8	BASE PUESTO CONDUCTOR
PLACA	9830148	4	2	106	10 39 589 3	PIEZAS MONTAJE EQUIPAMIE
PLACA	9830148	9	1	700	10 35 872 5	PLUMA MONOBLOC 7,00M
PLACA	9830148	181	2	715	10 35 872 1	MANGO DE LA PALA 2,60M
PLACA	9830148	81	2	771	10 35 873 1	CILINDRO ELEVADOR DIA.190
PLACA	9830148	141	2	771	10 35 873 1	CILINDRO ELEVADOR DIA.190
PLACA	9903888	53	4	780	10 35 813 5	PLATAFORM.C.CAB.ELEVADA
PLACA AISLANTE	10009228	290	1	489	10 48 809 9	REVESTIMIENTO INTERIOR
PLACA AISLANTE	10290261	230	1	488	10 48 809 9	REVESTIMIENTO INTERIOR
PLACA CARACT.LAM	9354303	5	1	557	10 35 876 6	LETREROS
PLACA CARACT.LAM	9354303	5	1	561	10 49 863 6	LETREROS
PLACA COMPL.	10358292	24	4	493	10 35 876 4	PASILLO MALLA
PLACA COMPL.	10358292	3	3	800	10 49 815 4	PASARELA
PLACA COMPL.	10358295	23	10	493	10 35 876 4	PASILLO MALLA
PLACA COMPL.	9688482	7	1	105	10 05 797 8	CONSOLA CIERRE
PLACA DCHA.	10044328	1060	1	470	70 28 775	PARABRISAS
PLACA DE ASIENTO	10129074	2	1	573	10 12 907 2	PREMONT. CÁRTER CIGÜEÑA
PLACA DE CARACTERÍSTICAS	10405887	2	1	557	10 35 876 6	LETREROS
PLACA DE CARACTERÍSTICAS	10405887	2	1	561	10 49 863 6	LETREROS
PLACA DE CIERRE	7371025	8	1	372	10 00 909 0	UNIDAD ACEITE MANDO
PLACA DE COBERTURA	3022159	1	1	656	90 80 668	MONTAJE PLACA DE COBERT
PLACA DE CONEXION	10333071	2	1	130	10 21 593 5	BOMBA
PLACA DE CONEXION	10333083	2	1	150	10 33 307 1	PLACA DE CONEXION
PLACA DE CONEXION	10333226	3	1	131	10 42 845 9	BOMBA MEC. GIRO
PLACA DE CONEXION	7623775	5	1	153	10 33 322 6	PLACA DE CONEXION
PLACA DE CONEXION	9075124	10	1	145	98 88 308	PLACA DE CONEXION
PLACA DE CONEXION	9075124	10	1	192	98 89 161	PLACA DE CONEXION
PLACA DE CONEXION	9077028	10	1	198	90 77 032	PLACA DE CONEXION NG 045
PLACA DE CONEXION	9278186	11	1	69	90 72 026	PLACA DE CONEXION NG 165
PLACA DE CONEXION	9888308	3	1	134	90 72 922	BOMBA CIL. VAR. HIDR.
PLACA DE CONEXION	9889161	3	1	136	90 77 452	BOMBA CIL. VAR. HIDR.
PLACA DE CONEXION NG 045	9077032	3	1	197	10 12 504 2	MOTOR INCORP.HIDR.
PLACA DE CONEXION NG 165	9072026	3	1	68	90 72 024	MOTOR HIDR. INCORP. VAR.
PLACA DE CONEXION NG 165	9886676	3	1	143	98 88 041	MOTOR HIDR. INCORP. FIX FM
PLACA DE DESGASTE	10333262	2	1	154	10 33 322 7	BOMBA DE ENGRANAJES
PLACA DE DESGASTE	10333267	1	1	159	10 33 326 2	PLACA DE DESGASTE
PLACA DE DESGASTE	10498509	5	1	728	10 49 850 1	JP DESGASTE
PLACA DE DESGASTE	10498510	7	4	728	10 49 850 1	JP DESGASTE
PLACA DE DESGASTE	10498511	8	3	728	10 49 850 1	JP DESGASTE
PLACA DE DESGASTE	10498578	6	12	728	10 49 850 1	JP DESGASTE
PLACA DE LUBRICACIÓN	9375276	30	1	241	10 35 877 2	MONTAJE CORONA ROTACIÓ
PLACA DE PROHIBICION	7366794	24	2	558	10 35 876 6	LETREROS
PLACA DE PROHIBICION	7366794	24	2	562	10 49 863 6	LETREROS
PLACA DE RETROCESO	10007943	24	1	149	10 33 307 0	MECANISMO DE ACCIONAMIE
PLACA DE RETROCESO	10410642	24	1	165	10 41 064 0	MECANISMO DE ACCIONAMIE
PLACA DE RETROCESO	9265128	2	1	235	98 80 619	JR BOLA RETR.C.PLACA
PLACA DE RETROCESO	9266567	2	1	190	98 88 119	JR (RZ-ESF.+PL) NG 165
PLACA DE SUJECION	9686594	50	1	414	10 05 303 6	REVESTIMIENTO
PLACA DE SUJECION	9686594	102	2	416	10 05 303 6	REVESTIMIENTO
PLACA DE SUJECION	9686594	50	1	429	10 49 857 1	REVESTIMIENTO
PLACA DE SUJECION	9686594	102	2	431	10 49 857 1	REVESTIMIENTO
PLACA DESGASTE DCHA.	10498507	3	1	728	10 49 850 1	JP DESGASTE
PLACA DESGASTE IZDA.	10498508	4	1	728	10 49 850 1	JP DESGASTE

Descripción	Artículo	Pos.	Cantid	Página	Grupo	Descripción
PLACA DISP.EXT.ARRANQUE	9909254	47	1	558	10 35 876 6	LETREROS
PLACA DISP.EXT.ARRANQUE	9909254	47	1	562	10 49 863 6	LETREROS
PLACA E	975827701	95	1	527	10 35 876 3	INST.EL.DEP. COMBUSTIBLE
PLACA E	975827701	95	1	534	10 49 837 7	INST.EL.DEP. COMBUSTIBLE
PLACA E	975881501	30	1	277	10 05 798 3	REPOSABRAZOS IZQUIERDA
PLACA E	989165301	31	1	277	10 05 798 3	REPOSABRAZOS IZQUIERDA
PLACA E	989185601	45	1	526	10 35 876 3	INST.EL.DEP. COMBUSTIBLE
PLACA E	989185601	45	1	533	10 49 837 7	INST.EL.DEP. COMBUSTIBLE
PLACA EXPLICATIVA	10393873	56	1	559	10 35 876 6	LETREROS
PLACA EXPLICATIVA	10393873	56	1	563	10 49 863 6	LETREROS
PLACA FIJACION	10082605	15	2	733	10 35 873 7	ÉMBOLO PROT.VÁST.P.CIL.CU
PLACA FONDO CABINA	10067754	10	1	269	10 05 311 8	BASE PUESTO CONDUCTOR
PLACA INTERMEDIA	10059208	126	1	705	10 35 872 5	PLUMA MONOBLOC 7,00M
PLACA INTERMEDIA	10356668	200	1	408	10 11 355 7	BLOQUE MANDO
PLACA INTERMEDIA	10356670	201	1	408	10 11 355 7	BLOQUE MANDO
PLACA INTERMEDIA	9874651	40	1	504	10 09 499 2	RELACIÓN MATERIAL EL.
PLACA IZDA.	10044326	170	1	470	70 28 775	PARABRISAS
PLACA MANDO	10132663	2	1	233	98 80 521	JR CIL.+PLACA MANDO
PLACA MANDO	10410653	2	1	133	10 44 145 6	MECANISMO DE ACCIONAMIE
PLACA MANDO	9076311	2	1	167	90 73 751	JR CIL.+PLACA MANDO
PLACA MANDO	9888546	2	1	191	98 88 122	JR CIL.+PLACA MANDO
PLACA MANDO	9888546	2	1	227	98 86 678	JR CIL.+PLACA MANDO
PLACA MONTAJE	10066158	90	1	504	10 09 499 2	RELACIÓN MATERIAL EL.
PLACA ROSCADA	9376780	3	2	103	10 05 300 8	COMPART.BOMBA PIEZAS
PLACA ROSCADA	9867368	31	1	451	10 05 546 4	CUBIERTA IZQUIERDA
PLACA ROSCADA	9867368	38	2	457	10 05 541 0	PUERTA LATERAL ANT.DCHA.
PLACA ROSCADA	9867368	29	2	802	10 05 539 2	PUERTA LATERAL IZDA.
PLACA SOPORTE	10389374	8	2	105	10 05 797 8	CONSOLA CIERRE
PLACA SUELO 2 PIEZAS 600m	10330318	2	50	48	10 30 012 2	CADENA DE ORUGA 600mm
PLACA SUELO 2 PIEZAS 600m	10330318	2	50	48	10 30 012 2	CADENA DE ORUGA 600mm
PLATAFORM.C.CAB.ELEVADA	10358135	40	1	795	10 49 815 5	ELEVACIÓN CABINA CONDU
PLATAFORMA	10358136	60	1	780	10 35 813 5	PLATAFORM.C.CAB.ELEVADA
PLATAFORMA GIRATORIA	10358369	8200	1	92	10 35 874 2	SUPERESTRUCTURA
PLATILLO DE RESORTES	10115009	6	1	264	10 33 323 7	VALVULA LIMITADORA DE PR
PLATILLO DE RESORTES	10115013	7	1	264	10 33 323 7	VALVULA LIMITADORA DE PR
PLATILLO DE RESORTES	10220664	8	2	157	10 33 324 2	VALVULA DE DESCONEXION
PLATILLO DE RESORTES	10326232	67	2	43	10 35 874 0	ESTRUC.INF.COMPL.
PLATILLO DE RESORTES	10333235	23	2	178	10 40 975 1	CILINDRO TRANSPORTADOR
PLATILLO DE RESORTES	7021980	70	2	71	56 16 688	VÁLVULA FRENO MARCHA
PLATILLO DE RESORTES	7028149	4	1	262	10 29 792 9	VALVULA LIMITADORA DE PR
PLATILLO DE RESORTES	7372258	3	2	261	10 10 206 7	ELEMENTO REGULACION
PLATILLO DE RESORTES	7621957	7	2	178	10 40 975 1	CILINDRO TRANSPORTADOR
PLATILLO DE RESORTES	9078515	5	4	594	10 11 805 1	CULATA PREMONT. D9508
PLATILLO DE RESORTES	9265395	3	2	772	92 66 411	PEDAL DE TRASLACION DE A
PLATILLO DE RESORTES	9265395	3	2	773	92 66 412	ACC.P.SENSOR EL. DCHA.
PLETINA	10389225	30	2	105	10 05 797 8	CONSOLA CIERRE
PLETINA (AMÉRICA)	9202120	30	1	747	10 36 839 8	DISP.ALARMA MARCHA
PLETINA ADICIONAL	10427532	32	1	277	10 05 798 3	REPOSABRAZOS IZQUIERDA
PLETINA DE ACERO	10055481	11	1	413	10 05 303 6	REVESTIMIENTO
PLETINA DE ACERO	10055481	11	1	428	10 49 857 1	REVESTIMIENTO
PLETINA DE ACERO	10358270	40	1	542	10 35 875 6	MONTAJE TUBOS FLEX. AIRE
PLETINA DE ACERO	10406679	89	1	416	10 05 303 6	REVESTIMIENTO
PLETINA DE ACERO	10406679	114	1	416	10 05 303 6	REVESTIMIENTO
PLETINA DE ACERO	10498568	89	1	431	10 49 857 1	REVESTIMIENTO
PLETINA DE ACERO	10498568	114	1	431	10 49 857 1	REVESTIMIENTO
PLUMA MONOBLOC 7,00M	10358359	2	1	700	10 35 872 5	PLUMA MONOBLOC 7,00M
PLUMA MONOBLOC 7,00M	10358724	11	1	7	.	
PLUMA MONOBLOC 7,00M	10358725	10	1	699	10 35 872 4	PLUMA MONOBLOC 7,00M
POLEA DE TRANSMISION DA=	9077281	1	1	588	90 77 286	PIEZAS ACC.CON AMORT. VI
POLEA DE TRANSMISION DA	9080391	2	1	653	10 11 602 6	GENERADOR PREMONT. 28V

Descripción	Artículo	Pos.	Cantid	Página	Grupo	Descripción
POLEA INVERSION	7382028	1	1	636	90 77 708	POLEA INVERSION
POLEA INVERSION	9077708	14	1	635	10 11 865 5	MONT.COMPR.AIRE AC.
POLEA RODADURA	10221212	50	16	43	10 35 874 0	ESTRUC.INF.COMPL.
PORTAFUSIBLES	10332352	30	1	507	10 35 875 8	MONTAJE BATERÍAS
PREFILTRO COMBUSTIBLE	10303007	3	1	113	10 09 538 7	MONTAJE FILTRO COMBUSTI
PREMONT. CARTUCHO FILTR	10289138	6	2	96	10 09 107 4	PAQUETE SERV. 1500H/2500H
PREMONT. CARTUCHO FILTR	10289138	10	8	99	10 35 983 0	PAQUETE SERV.FILTRO COM
PREMONT. CARTUCHO FILTR	10289138	2	2	618	10 12 282 4	MÓDULO P/FILTRO DE COMBU
PREMONT. CÁRTER CIGÜEÑA	10129072	1	1	572	10 12 907 1	CAJA DEL CIGÜEÑAL COMPL.
PREMONT. TUBO AIRE ADMIS	9077697	1	1	630	90 78 417	MONTAJE TUBO AIRE ADMISIÓ
PROL.JC FARO	9805364	30	1	793	10 82 390 4	INST.EL.ELEVACIÓN 1200MM
PROLONGACIÓN TUBOS FLEX	10372967	80	1	796	10 49 815 5	ELEVACIÓN CABINA CONDU
PROLONGADOR	10009602	10	1	252	10 48 927 7	COMBINACIÓN DE DISTRIB. SX
PROLONGADOR	7027714	35	1	255	90 64 786	BASE DE FIJACION
PROLONGADOR M10X1K-M10X	774373408	35	1	255	90 64 786	BASE DE FIJACION
PROLONGADOR M10X1K-M10X	774373408	135	1	256	90 64 786	BASE DE FIJACION
PROT.ANTICORR. LH	8300005	801	1	764	96 31 985	ALOJAMIENTO DE BIELA 150/
PROT.ANTICORR. LH	8300005	801	1	765	99 07 890	ALOJAMIENTO DE BIELA 125/
PROTECCION	10498365	10	1	733	10 35 873 7	ÉMBOLO PROT.VÁST.P.CIL.CU
PROTECCION ANTIPOLVO	10040064	4	1	635	10 11 865 5	MONT.COMPR.AIRE AC.
PROTECCION DEDOS	10093804	2	1	193	10 49 867 7	MONTAJE VENTILADOR
PROTECCION DEDOS	10093804	2	1	195	10 49 873 2	MONTAJE VENTILADOR
PROTECCION DEDOS	10093805	3	1	193	10 49 867 7	MONTAJE VENTILADOR
PROTECCION DEDOS	10093805	3	1	195	10 49 873 2	MONTAJE VENTILADOR
PROTECCION DEDOS	10093806	4	1	193	10 49 867 7	MONTAJE VENTILADOR
PROTECCION DEDOS	10093806	4	1	195	10 49 873 2	MONTAJE VENTILADOR
PROTECCION DEDOS	10093807	5	1	193	10 49 867 7	MONTAJE VENTILADOR
PROTECCION DEDOS	10093807	5	1	195	10 49 873 2	MONTAJE VENTILADOR
PROTECCION TERMICA	10059445	70	1	117	10 35 873 3	AIRE Y SISTEMA ESCAPE
PUENTE 2 FACH	6001474	17	11	503	10 09 499 2	RELACIÓN MATERIAL EL.
PUENTE TUBO	774378008	32	2	245	10 29 302 0	COMBINACIÓN DE DISTRIB. M
PUERTA	9927518	38	1	786	10 35 806 5	SUPLEMENTO SUPERIOR
PUERTA CABINA CONDUCTO	10046788	50	1	468	10 47 616 7	CABINA DEL CONDUCTOR
PUERTA FILTRO AIRE IZD.	10055381	70	1	415	10 05 303 6	REVESTIMIENTO
PUERTA FILTRO AIRE IZD.	10055381	70	1	430	10 49 857 1	REVESTIMIENTO
PUERTA FILTRO AIRE IZD.	10055382	10	1	452	10 05 538 1	PUERTA FILTRO AIRE IZD.
PUERTA LATERAL ANT.DCHA.	10055410	110	1	416	10 05 303 6	REVESTIMIENTO
PUERTA LATERAL ANT.DCHA.	10055410	110	1	431	10 49 857 1	REVESTIMIENTO
PUERTA LATERAL ANT.DCHA.	10055411	10	1	456	10 05 541 0	PUERTA LATERAL ANT.DCHA.
PUERTA LATERAL IZDA.	10055392	60	1	415	10 05 303 6	REVESTIMIENTO
PUERTA LATERAL IZDA.	10055392	60	1	430	10 49 857 1	REVESTIMIENTO
PUERTA LATERAL IZDA.	10055393	10	1	801	10 05 539 2	PUERTA LATERAL IZDA.
PUERTA LATERAL POST.DCHA	10055433	85	1	416	10 05 303 6	REVESTIMIENTO
PUERTA LATERAL POST.DCHA	10055433	85	1	431	10 49 857 1	REVESTIMIENTO
PUERTA LATERAL POST.DCHA	10055434	10	1	453	10 05 543 3	PUERTA LATERAL POST.DCHA
PUESTO DEL CONDUCTOR	10053025	6000	1	91	10 35 874 2	SUPERESTRUCTURA
PUNTOS CARGA Y ANCLAJE	10382738	59	1	559	10 35 876 6	LETREROS
PUNTOS CARGA Y ANCLAJE	10382738	59	1	563	10 49 863 6	LETREROS
PURGA DE DEPÓSITO	6426450	15	1	788	10 49 831 4	ACOP.RAP.WIGGINS P.COMB
RACOR ASPIRACION	10119863	1	2	629	90 80 436	TUBO ASPIRADOR ANEJO
RACOR ASPIRACION	9018026	61	1	122	10 35 879 9	MONTAJE BOMBAS
RACOR ASPIRACION	9080428	1	2	629	90 80 436	TUBO ASPIRADOR ANEJO
RACOR ASPIRACION	9805113	5	1	381	10 35 874 5	MONTAJE DEPÓSITO HIDR.
RACOR ASPIRACION	9805114	6	1	381	10 35 874 5	MONTAJE DEPÓSITO HIDR.
RACOR ASPIRACION	9943041	70	1	122	10 35 879 9	MONTAJE BOMBAS
RACOR ATORNILLABLE	7364696	63	1	397	10 35 874 4	MONTAJE CORREDERA DISTR
RACOR DE MAMPARO	4901131	62	1	350	10 05 312 6	TUBOS FLEX.HIDR./ASPIR.+R
RACOR DE MAMPARO	4901131	97	1	703	10 35 872 5	PLUMA MONOBLOC 7,00M
RACOR DE MAMPARO	7368105	36	1	720	10 35 872 0	ENGRASE CENTRALIZADO
RACOR DE MAMPARO	7368106	14	5	711	10 38 862 4	ENGRASE CENTRALIZADO

Descripción	Artículo	Pos.	Cantid	Página	Grupo	Descripción
RACOR DE MAMPARO	7368106	23	2	720	10 35 872 0	ENGRASE CENTRALIZADO
RACOR DE MAMPARO EN ANG	7368115	18	1	719	10 35 872 0	ENGRASE CENTRALIZADO
RACOR DE MAMPARO SV 12S	4901150	56	1	702	10 35 872 5	PLUMA MONOBLOC 7,00M
RACOR ENCHUFABLE RECTO	7026654	36	1	255	90 64 786	BASE DE FIJACION
RACOR INTER. P.ACUMULADO	9399179	4	1	340	10 05 314 4	MONTAJE UNIDAD ACEITE MA
RACOR INTER. P.ACUMULADO	9399179	4	1	341	10 82 438 9	MONTAJE UNIDAD ACEITE MA
RACOR INTERMEDIO	9890958	2	1	767	93 99 179	RACOR INTER. P.ACUMULADO
RACOR ORIENTABLE EN ANG	10009054	21	1	254	10 29 301 8	COMBINACIÓN DE DISTRIB. M
RACOR PARA ENROSCAR GE8	10009053	20	1	245	10 29 302 0	COMBINACIÓN DE DISTRIB. M
RACOR PARA ENROSCAR GE8	10009053	20	1	708	10 00 878 9	COMBINACIÓN DE DISTRIB. M
RACOR PARA ENROSCAR GE8	10009053	20	1	722	10 30 336 9	COMBINACIÓN DE DISTRIB. M
RACOR PARA ENROSCAR M10	774376508	185	1	256	90 64 786	BASE DE FIJACION
RACOR RECTO G8 L	10014575	140	1	256	90 64 786	BASE DE FIJACION
RACOR RECTO G8 L	10014575	140	3	258	10 01 461 1	CAJA AUXILIAR
RACOR TUBO PRESIÓN	9078325	1	1	616	90 78 324	MONTAJE RACOR TUBO PRES
RADIADOR ACEITE COMB.	10425385	2	1	199	10 35 873 9	MONTAJE DE RADIADOR
RECIPIENTE DE COMPENSAC	10217750	60	1	204	10 35 873 9	MONTAJE DE RADIADOR
RECUBRIMIENTO	5616697	2	1	538	10 03 864 3	INTERUPTOR DE PEDAL
RECUBRIMIENTO	5616697	2	1	539	10 03 864 4	INTERUPTOR DE PEDAL
REDUCTOR	7028883	510	1	480	70 28 884	MOTOR LIMPIAPARABRISAS
REFRIG.ACEITE TRANS.	10289191	2	1	208	10 42 538 5	RADIADOR ACEITE COMB.
REFRIG.ACEITE TRANS.E HI	10053129	70	1	332	10 35 874 7	INST.HIDR.CARRO SUPERIOR
REFRIG.ACEITE TRANS.E HI	10053129	70	1	333	10 49 853 7	INST.HIDR.CARRO SUPERIOR
REFRIG.COMBUSTIBLE	10428947	3	1	208	10 42 538 5	RADIADOR ACEITE COMB.
REFRIGERACION PISTON	9078548	15	8	565	10 12 595 9	MOTOR DIESEL D9508 A7 320k
REFRIGERADOR ACEITE HID	10289190	1	1	208	10 42 538 5	RADIADOR ACEITE COMB.
REFRIGERADOR DE ACEITE	9078344	3	1	607	10 12 475 6	MÓDULO ACEITE IZDA.
REFRIGERADOR DE ACEITE	9078344	3	1	608	10 12 475 7	MODULO ACEITE DCHA.
REGLETA SOPORTE	9874961	3	1	283	98 74 988	MONTAJE PLETINAS A1016
REGUL.HIDR.	10333238	4	1	130	10 21 593 5	BOMBA
REGULACIÓN	10007956	5	1	130	10 21 593 5	BOMBA
REGULACIÓN	9271648	5	1	134	90 72 922	BOMBA CIL. VAR. HIDR.
REGULACIÓN	9271648	5	1	136	90 77 452	BOMBA CIL. VAR. HIDR.
REGULACIÓN	9278174	5	1	68	90 72 024	MOTOR HIDR. INCORP. VAR.
REGULACIÓN HIDR.	10409747	2	1	131	10 42 845 9	BOMBA MEC. GIRO
REGULADOR	10102064	3	1	130	10 21 593 5	BOMBA
REGULADOR	10118178	10	1	175	10 11 837 4	VALVULA DE REGULACION
REJILLA	10059938	15	1	493	10 35 876 4	PASILLO MALLA
REJILLA	10066219	10	1	493	10 35 876 4	PASILLO MALLA
REJILLA	9683738	4	1	800	10 49 815 4	PASARELA
REJILLA	9903847	50	1	780	10 35 813 5	PLATAFORM.C.CAB.ELEVADA
REJILLA CIRCUL.AIRE	10022771	1	1	326	10 02 277 7	REJILLA CIRCUL.AIRE
REJILLA CIRCUL.AIRE	10022777	19	1	321	10 02 211 7	CAJA CONDUCTO AIRE
RELACIÓN MATERIAL EL.	10094992	20	1	502	10 09 499 0	CAJA EL.COMPL. E50
RELE	6001682	10	2	307	10 34 790 0	ETAPA FINAL
RELE	6001921	60	2	504	10 09 499 2	RELACIÓN MATERIAL EL.
RELE	6002381	32	2	282	97 58 815 01	PLACA E
RELE	6200906	110	1	293	10 82 277 5	REPOSABRAZOS DERECHA
RELE	6200906	61	1	504	10 09 499 2	RELACIÓN MATERIAL EL.
RELE	6202646	1	1	281	10 42 753 2	PLETINA ADICIONAL
RELE	6202646	30	2	282	97 58 815 01	PLACA E
RELE	630165901	3	3	281	10 42 753 2	PLETINA ADICIONAL
RELE	7029139	950	1	792	95 99 236	INSTALACION ELECTRICA
RELE TIEMPO	6001418	31	1	747	10 36 839 8	DISP.ALARMA MARCHA
RELÉ CONTACTO CIERRE DO	6001254	2	1	281	10 42 753 2	PLETINA ADICIONAL
RELÉ DE ALTA POTENCIA	10220436	110	1	504	10 09 499 2	RELACIÓN MATERIAL EL.
RELÉ DE POTENCIA	10009888	20	3	503	10 09 499 2	RELACIÓN MATERIAL EL.
REMACHE	10470127	3	4	491	10 47 012 8	
REMACHE	4451001	4	4	319	10 02 206 9	CAJA DE EVAPORADOR
REMACHE	7020612	390	2	473	10 04 678 8	PUERTA CABINA CONDUCTO

Descripción	Artículo	Pos.	Cantid	Página	Grupo	Descripción
REMACHE	7020612	370	4	484	70 28 778	PIEZAS DE MONTAJE
REMACHE CIEGO	10022656	10	4	322	11 00 359 4	CARCASA
REMACHE CIEGO	10044330	310	6	472	10 04 678 8	PUERTA CABINA CONDUCTO
REMACHE CIEGO	4900053	3	4	557	10 35 876 6	LETREROS
REMACHE CIEGO	4900053	3	4	561	10 49 863 6	LETREROS
REMACHE EXPANSIBLE	7024438	220	2	472	10 04 678 8	PUERTA CABINA CONDUCTO
REMACHE EXPANSIBLE	7024438	200	12	488	10 48 809 9	REVESTIMIENTO INTERIOR
REPOSABRAZOS DERECHA	10822775	30	1	269	10 05 311 8	BASE PUESTO CONDUCTOR
REPOSABRAZOS DERECHA	7024983	91	1	273	10 04 363 1	ASIENTO CONDUCTOR
REPOSABRAZOS DERECHA	7024983	91	1	274	10 04 363 2	ASIENTO CONDUCTOR
REPOSABRAZOS IZQUIERDA	10057983	20	1	269	10 05 311 8	BASE PUESTO CONDUCTOR
REPOSABRAZOS IZQUIERDA	7024982	90	1	273	10 04 363 1	ASIENTO CONDUCTOR
REPOSABRAZOS IZQUIERDA	7024982	90	1	274	10 04 363 2	ASIENTO CONDUCTOR
RESISTENCIA CALEFACTORA	6205235	2	1	783	98 73 999	CALEF.20W/24V P.CAJA EL.
RESORTE DE DISCO	4002104	256	3	422	10 05 303 6	REVESTIMIENTO
RESORTE DE DISCO	4002104	256	3	437	10 49 857 1	REVESTIMIENTO
RESORTE DE VALVULA	10012210	7	4	594	10 11 805 1	CULATA PREMONT. D9508
RESORTE INSERCIÓN FRON	7024629	25	1	376	10 28 046 1	VÁLVULA MAGNÉTICA REGUL
RETEN DEL VASTAGO DE VA	10120334	5	4	687	10 12 089 6	J. J. CABEZA CILINDRO COM
RETEN NILOS	10030593	4	1	221	90 01 781 7	ACCIONAMIENTO GIRATORIO
RETEN RADIAL	7380831	17	1	145	98 88 308	PLACA DE CONEXION
RETEN RADIAL	7380831	35	1	171	92 71 657	JUEGO JUNTAS
RETEN RADIAL	7380831	17	1	192	98 89 161	PLACA DE CONEXION
RETEN RADIAL	7381204	60	1	128	90 80 120	ENGRANAJE DISTRIBUCION
RETEN RADIAL	7381204	60	1	169	90 80 196	JR ÁRBOL DE ENTRADA
RETEN RADIAL	7381204	60	1	218	90 80 195	JUEGO JUNTAS
RETEN RADIAL 110X130X12,0	10006550	1	1	591	90 77 696	JUNTA DEL CIGÜEÑAL
RETEN RADIAL 139X164X12	10030062	2	1	591	90 77 696	JUNTA DEL CIGÜEÑAL
RETEN RADIAL 50X65X7,0	10014510	35	1	73	92 68 751	JR ARO CIERRE
RETEN RADIAL 50X65X7,0	10014510	35	1	84	98 88 124	JR ÁRBOL
RETEN RADIAL 50X65X7,0	10014510	35	1	141	98 86 679	JR ÁRBOL
RETEN RADIAL 50X65X7,0	10014510	35	1	173	98 89 282	JR ÁRBOL
RETEN RADIAL 50X65X7,0	10014510	1	1	686	10 12 087 8	JUEGO JUNTAS BOMBA ALTA
RETEN RADIAL ASX35X52X6	10014508	35	1	229	92 68 011	JR ARO CIERRE
RETEN RADIAL ASX35X52X6	10014508	35	1	267	98 82 882	JR ÁRBOL
RETEN RASCADOR EXTERIO	7610551	11	1	224	93 36 053 01	FRENO
RETEN RASCADOR EXTERIO	7610551	13	1	239	90 00 386 4	JUEGO DE JUNTAS
RETEN RASCADOR EXTERIO	7610552	12	1	224	93 36 053 01	FRENO
RETEN RASCADOR EXTERIO	7610552	12	1	239	90 00 386 4	JUEGO DE JUNTAS
RETENEDOR FILTRO	5610704	14	1	115	10 35 873 3	AIRE Y SISTEMA ESCAPE
REVEST. P.PLACA REPOSAPIÉ	9480295	50	1	308	10 05 798 5	MONTAJE PLACA REPOSAPIÉ
REVEST. P.PLACA REPOSAPIÉ	9480295	6	1	772	92 66 411	PEDAL DE TRASLACION DE A
REVEST. P.PLACA REPOSAPIÉ	9480295	6	1	773	92 66 412	ACC.P.SENSOR EL. DCHA.
REVESTIMIENTO	10053036	8500	1	92	10 35 874 2	SUPERESTRUCTURA
REVESTIMIENTO	10053036	8500	1	93	10 49 853 2	SUPERESTRUCTURA
REVESTIMIENTO	10291137	2100	1	490	10 29 113 8	REVESTIMIENTO
REVESTIMIENTO	10291138	210	1	488	10 48 809 9	REVESTIMIENTO INTERIOR
REVESTIMIENTO	10488101	284	1	488	10 48 809 9	REVESTIMIENTO INTERIOR
REVESTIMIENTO	10498571	8500	1	93	10 49 853 2	SUPERESTRUCTURA
REVESTIMIENTO	7028837	320	1	472	10 04 678 8	PUERTA CABINA CONDUCTO
REVESTIMIENTO	7028963	2	1	491	10 47 012 8	
REVESTIMIENTO DE CABLE	5608314	159	2	418	10 05 303 6	REVESTIMIENTO
REVESTIMIENTO DE CABLE	5608314	159	2	433	10 49 857 1	REVESTIMIENTO
REVESTIMIENTO INTERIOR	10488099	80	1	468	10 47 616 7	CABINA DEL CONDUCTOR
RODAMIENTO DE RODILLOS	10030592	3	1	221	90 01 781 7	ACCIONAMIENTO GIRATORIO
RODAMIENTO RODILLO CILIN	570118208	31	1	149	10 33 307 0	MECANISMO DE ACCIONAMIE
RODAMIENTO RODILLO CILIN	7363121	33	1	84	98 88 124	JR ÁRBOL
RODAMIENTO RODILLO CILIN	7363121	33	1	141	98 86 679	JR ÁRBOL
RODAMIENTO RODILLO CILIN	7363121	33	1	173	98 89 282	JR ÁRBOL
RODAMIENTO RODILLO CILIN	7380021	33	1	267	98 82 882	JR ÁRBOL

Descripción	Artículo	Pos.	Cantid	Página	Grupo	Descripción
RODAMIENTO RODILLO CILIN	7380090	32	1	267	98 82 882	JR ÁRBOL
RODAMIENTO RODILLO CILIN	7380326	32	1	84	98 88 124	JR ÁRBOL
RODAMIENTO RODILLO CILIN	7380326	32	1	141	98 86 679	JR ÁRBOL
RODAMIENTO RODILLO CILIN	7380326	32	1	173	98 89 282	JR ÁRBOL
RODAMIENTO RODILLO CILIN	7380977	13	2	182	90 79 347	JR YUGO BASC. LPV 165
RODAMIENTO RODILLO CILIN	7610037	5	1	223	93 33 329 01	PIÑON PLANETARIA M=4 Z=35
RODAMIENTO RODILLO CILIN	7610039	5	1	75	94 44 414	PIÑON PLANETARIA M=5 Z=30
RODAMIENTO RODILLO CILIN	7618605	31	1	133	10 44 145 6	MECANISMO DE ACCIONAMIE
RODILLO APOYO D8K	10290674	55	4	43	10 35 874 0	ESTRUC.INF.COMPL.
ROSETA	10023245	270	6	488	10 48 809 9	REVESTIMIENTO INTERIOR
ROSETA	7362752	62	1	270	10 05 311 8	BASE PUESTO CONDUCTOR
ROSETA	7362752	103	4	292	10 82 277 5	REPOSABRAZOS DERECHA
ROTOR	10011395	1	1	56	10 00 963 0	TRANSMISION ROTATIVO
RUEDA DE CADENA D8K	9379235	2	2	60	10 07 498 7	ACCIONAMIENTO DE TRASL
RUEDA DENTADA	10119848	3	0	602	10 11 802 3	ENGRANAJE PREMONTADO
RUEDA DENTADA	10119855	5	0	611	10 11 802 5	ACC. P. BOMBA ALTA PRESIÓ
RUEDA DENTADA	9884139	11	1	188	98 84 140	BOMBA CTO.REFRIG.
RUEDA DENTADA Z=110 M=2.	10116095	3	1	602	10 11 802 3	ENGRANAJE PREMONTADO
RUEDA DENTADA Z=30 M=2.6	10116096	5	1	611	10 11 802 5	ACC. P. BOMBA ALTA PRESIÓ
RUEDA DENTADA Z=47 M=3,5	9077283	7	1	588	90 77 286	PIEZAS ACC.CON AMORT. VI
RUEDA DENTADA Z=53 M=3.5	9077285	8	1	588	90 77 286	PIEZAS ACC.CON AMORT. VI
RUEDA DENTADA Z=86 M=3.5	9079140	1	1	602	10 11 802 3	ENGRANAJE PREMONTADO
RUEDA DIRECTRIZ D8K	10470769	61	2	43	10 35 874 0	ESTRUC.INF.COMPL.
RUEDA INTERMEDIA PREMO	10118224	1	2	634	10 11 822 3	MONT. RUEDA INTERMEDIA I=
RUEDA INTERMEDIA Z=45 M=	9080189	13	1	126	90 80 120	ENGRANAJE DISTRIBUCION
RUEDA MOTRIZ	9275309	11	1	145	98 88 308	PLACA DE CONEXION
RUEDA MOTRIZ	9275309	11	1	192	98 89 161	PLACA DE CONEXION
SALIDA	10009606	14	3	252	10 48 927 7	COMBINACIÓN DE DISTRIB. SX
SE DETERMINA EN EL 1ER MO	9352130	10	1	468	10 47 616 7	CABINA DEL CONDUCTOR
SECADOR-COLECTOR	5611990	1	1	544	10 29 266 0	COLECTOR DEL SECADOR
SEGMENTO DE DISCO	9275004	20	2	145	98 88 308	PLACA DE CONEXION
SEGMENTO DE DISCO	9275004	20	2	192	98 89 161	PLACA DE CONEXION
SEGMENTO DE LA CADENA	5618024	20	1	52	73 71 456	SEGMENTO TERMINAL CADEN
SEGMENTO DE LA CADENA	5618025	10	1	52	73 71 456	SEGMENTO TERMINAL CADEN
SEGMENTO SUJECIÓN	10007945	30	2	149	10 33 307 0	MECANISMO DE ACCIONAMIE
SEGMENTO TERMINAL CADEN	7371456	10	1	51	56 18 003	ESLABON FINAL
SEGURO CONTRA ROTURA TU	10340806	8	1	770	10 35 873 1	CILINDRO ELEVADOR DIA.190
SEGURO CONTRA ROTURA TU	10340812	9	1	770	10 35 873 1	CILINDRO ELEVADOR DIA.190
SEGURO PARA TORNILLO	811205708	103	1	145	98 88 308	PLACA DE CONEXION
SEGURO PARA TORNILLO	811205708	109	1	572	10 12 907 1	CAJA DEL CIGÜEÑAL COMPL.
SEGURO PARA TORNILLO	811205708	109	1	582	10 12 593 7	CUBETA ACEITE C.SUJECIÓN
SEGURO PARA TORNILLO	8655016	109	1	586	10 12 263 2	LLENADO DE ACEITE
SEGURO PARA TORNILLO	8655016	109	1	596	10 12 264 0	MONT. TAPA CULATA
SEGURO PARA TORNILLO	8655016	109	1	598	10 12 264 6	MONT. TAPA CULATA
SEGURO PARA TORNILLO	8655016	109	1	599	10 12 265 9	MONT. TAPA CULATA
SEGURO PARA TORNILLO	8700012	106	1	167	90 73 751	JR CIL.+PLACA MANDO
SEGURO PARA TORNILLO	8700012	106	1	191	98 88 122	JR CIL.+PLACA MANDO
SEMI-ABRAZADERA	10057335	62	4	702	10 35 872 5	PLUMA MONOBLOC 7,00M
SEMI-ABRAZADERA	10067588	15	4	541	10 35 875 6	MONTAJE TUBOS FLEX. AIRE
SEMI-ABRAZADERA	10068163	20	2	403	10 06 771 7	MONTAJE TUBERÍAS IMPULS.
SEMI-ABRAZADERA	10068164	21	2	403	10 06 771 7	MONTAJE TUBERÍAS IMPULS.
SEMI-ABRAZADERA	10070620	2	1	740	10 07 061 5	ABRAZADERA
SEMI-ABRAZADERA	10070621	3	1	740	10 07 061 5	ABRAZADERA
SEMI-ABRAZADERA	10072165	45	2	356	10 35 875 1	INST.HIDR.ACC. VENTILADOR
SEMI-ABRAZADERA	9008760	14	2	706	10 06 477 4	CILINDRO HIDROLICO+ADICIO
SEMI-ABRAZADERA	9492506	36	4	347	10 05 312 6	TUBOS FLEX.HIDR./ASPIR.+R
SEMI-ABRAZADERA	9927398	27	2	701	10 35 872 5	PLUMA MONOBLOC 7,00M
SEMI-ABRAZADERA	9927399	26	4	701	10 35 872 5	PLUMA MONOBLOC 7,00M
SEMI-ABRAZADERA DIA 238,4	10086854	15	2	734	10 08 685 3	VIA DESLIZAMIENTO
SEMI-ABRAZADERA DIA 238.4	10086856	30	2	734	10 08 685 3	VIA DESLIZAMIENTO

Descripción	Artículo	Pos.	Cantid	Página	Grupo	Descripción
SEMI-ABRAZADERA DIA 260	10086855	20	1	734	10 08 685 3	VIA DESLIZAMIENTO
SEMI-ABRAZADERA DIA 260	10086857	25	1	734	10 08 685 3	VIA DESLIZAMIENTO
SEMI-BRIDA	7373873	17	8	354	10 35 875 1	INST.HIDR.ACC. VENTILADOR
SEMI-BRIDA	7373875	20	16	700	10 35 872 5	PLUMA MONOBLOC 7,00M
SEMI-BRIDA	7373875	6	1	713	10 07 162 8	CILINDRO HIDROLICO+ADICIO
SENSOR	635867001	21	1	213	10 49 800 0	MOTOR - SISTEMA ELÉCTRIC
SENSOR	635867001	1	1	663	98 85 618	MONTAJE TACOMETRO
SENSOR ANGULO DE GIRO	10341869	32	1	120	10 35 879 9	MONTAJE BOMBAS
SENSOR ANGULO DE GIRO	10341869	25	1	213	10 49 800 0	MOTOR - SISTEMA ELÉCTRIC
SENSOR ANGULO DE GIRO	10441464	20	1	166	10 44 145 8	SENSOR DE ÁNGULO DE GIR
SENSOR CONTACTO CONMU	6001257	930	1	792	95 99 236	INSTALACION ELECTRICA
SENSOR CONTADOR PULSO L	6204372	3	1	290	10 08 046 6	MONTAJE INTERR. S42
SENSOR CONTADOR PULSO L	6204372	3	1	777	99 89 645	MONTAJE INTERR.
SENSOR CONTADOR PULSO L	6204372	3	1	778	99 89 646	MONTAJE INTERR. S84-2
SENSOR CONTR.PILOT.PREV	10058794	3	1	298	10 06 804 5	APARATO MANDO MAN. DCHA.
SENSOR CONTR.PILOT.PREV	10058792	3	1	285	10 06 804 1	MANIPULATOR LADO CPL CA
SENSOR DE CARRERA	10014078	4	2	538	10 03 864 3	INTERUPTOR DE PEDAL
SENSOR DE CARRERA	10014078	4	1	539	10 03 864 4	INTERUPTOR DE PEDAL
SENSOR DE REVOLUCIONES	6290073	6	1	220	10 05 311 7	MEC. GIRO
SENSOR DE REVOLUCIONES	6290073	10	1	232	92 78 623	
SENSOR DE ÁNGULO DE GIR	10441458	83	1	132	10 42 845 9	BOMBA MEC. GIRO
SENSOR MANILLA CAPAC.	10017824	150	1	289	99 68 625	MANILLA DEL SENSOR LH IZ
SENSOR MANILLA CAPAC.	10017824	150	1	304	99 68 611	MANILLA DEL SENSOR LH DC
SENSOR NIVEL	6204327	10	1	545	10 35 868 3	INSTALACION CARBURANTE
SENSOR REGULACION MOTO	9079187	581	1	571	10 12 595 9	MOTOR DIESEL D9508 A7 320k
SEPARADOR ACEITE OEL	10125182	12	2	578	10 12 503 7	ANEJO TUBERIA
SERVOMANDO	10346684	5	1	131	10 42 845 9	BOMBA MEC. GIRO
SILENCIADOR	10216441	2	1	114	10 35 873 3	AIRE Y SISTEMA ESCAPE
SILENCIADOR POST.	10001685	5	1	114	10 35 873 3	AIRE Y SISTEMA ESCAPE
SILENTBLOC	10015159	241	2	421	10 05 303 6	REVESTIMIENTO
SILENTBLOC	10015159	241	2	436	10 49 857 1	REVESTIMIENTO
SISTEMA DE CONTROL	10036533	3	1	306	90 13 811	ACC. EMERGENCIA COMPL.
SISTEMA OSCIL.	10289993	50	1	273	10 04 363 1	ASIENTO CONDUCTOR
SISTEMA OSCIL.	10289993	50	1	274	10 04 363 2	ASIENTO CONDUCTOR
SOMBRERETE	9078145	5	1	126	90 80 120	ENGRANAJE DISTRIBUCION
SONDA DE AGUA	10331335	13	1	619	10 30 300 7	PREFILTRO COMBUSTIBLE
SOPLANTE DOBLE	10022052	26	1	323	11 00 359 4	CARCASA
SOPORTE DE BOTELLA	10291090	2140	1	490	10 29 113 8	REVESTIMIENTO
SOPORTE DE CONEXIÓN	9444412	1	1	64	94 43 970	ACCIONAMIENTO DE TRASL
SOPORTE DE EJE	10498387	10	1	726	10 49 849 9	CUCHARA RETRO HD 1950MM
SOPORTE DE EJE	10498576	10	1	726	10 49 849 9	CUCHARA RETRO HD 1950MM
SOPORTE DEL MOTOR	10331756	5	1	208	10 42 538 5	RADIADOR ACEITE COMB.
SOPORTE DERECHA	7025994	91	1	273	10 04 363 1	ASIENTO CONDUCTOR
SOPORTE DERECHA	7025994	91	1	274	10 04 363 2	ASIENTO CONDUCTOR
SOPORTE ESPEJO	7017443	2	1	556	96 87 016	MONTAJE RETROVISOR EXT.
SOPORTE FIJADOR	9080635	12	1	623	10 12 720 8	TUBERIAS DE COMBUSTIBLE
SOPORTE IZQUIERDA	7025993	90	1	273	10 04 363 1	ASIENTO CONDUCTOR
SOPORTE IZQUIERDA	7025993	90	1	274	10 04 363 2	ASIENTO CONDUCTOR
SUBIDA	9821638	45	4	41	10 35 874 0	ESTRUC.INF.COMPL.
SUJ.PLACA FONDO CABINA	9879063	30	1	268	10 05 302 5	PUESTO DEL CONDUCTOR
SUPERESTRUCTURA	10358742	100	1	9	10 35 874 1	MAQUINA BASE R964C HD LI
SUPERESTRUCTURA	10498532	100	1	9	10 35 874 1	MAQUINA BASE R964C HD LI
SUPLEMENTO	7364467	340	1	792	95 99 236	INSTALACION ELECTRICA
SUPLEMENTO APRISIONADO	10118226	2	8	634	10 11 822 3	MONT. RUEDA INTERMEDIA I=
SUPLEMENTO DE ELASTOME	7363283	33	2	344	10 35 875 5	EJEC.GIRADA HIDR.+MEC.GIR
SUPLEMENTO ROSCADO	10044343	490	3	478	10 48 809 7	INST.ELÉCTRICA
SUPLEMENTO ROSCADO	7020610	340	2	489	10 48 809 9	REVESTIMIENTO INTERIOR
SUPLEMENTO ROSCADO M6	10044359	550	1	489	10 48 809 9	REVESTIMIENTO INTERIOR
SUPLEMENTO SUPERIOR	10358064	2	1	782	10 35 806 3	SUPLEMENTO SUPERIOR 120
SUPLEMENTO SUPERIOR	10358065	10	1	785	10 35 806 4	SUPLEMENTO SUPERIOR

Descripción	Artículo	Pos.	Cantid	Página	Grupo	Descripción
SUPLEMENTO SUPERIOR 120	10358063	5	1	795	10 49 815 5	ELEVACIÓN CABINA CONDU
SUST.DEP. COMBUSTIBLE	10358684	100	1	546	10 35 868 3	INSTALACION CARBURANTE
SUST.DEPÓSITO HIDR.	10358746	100	1	384	10 35 874 5	MONTAJE DEPÓSITO HIDR.
SÍMBOLO FOCO DE TRABAJO	9911690	922	1	792	95 99 236	INSTALACION ELECTRICA
TABIQUE SEPARACION	10009201	490	1	489	10 48 809 9	REVESTIMIENTO INTERIOR
TABLA	9278153	500	1	68	90 72 024	MOTOR HIDR. INCORP. VAR.
TABLA	9278153	500	1	69	90 72 026	PLACA DE CONEXION NG 165
TABLA	9278153	500	1	80	92 78 174	REGULACIÓN
TABLA	9278153	500	1	88	92 78 179	JUEGO JUNTAS
TABLA	9278153	500	1	135	90 72 922	BOMBA CIL. VAR. HIDR.
TABLA	9278153	500	1	137	90 77 452	BOMBA CIL. VAR. HIDR.
TABLA	9278153	500	1	197	10 12 504 2	MOTOR INCORP.HIDR.
TABLA CAP.CARGA SEGÚN IS	9392835	50	1	559	10 35 876 6	LETREROS
TABLA CAP.CARGA SEGÚN IS	9392835	50	1	563	10 49 863 6	LETREROS
TAMIZ DE RELLENO	10296919	20	1	545	10 35 868 3	INSTALACION CARBURANTE
TAPA	10009188	390	1	489	10 48 809 9	REVESTIMIENTO INTERIOR
TAPA	10015473	110	1	71	56 16 688	VÁLVULA FRENO MARCHA
TAPA	10015474	100	1	71	56 16 688	VÁLVULA FRENO MARCHA
TAPA	10039124	3	2	618	10 12 282 4	MÓDULO P/FILTRO DE COMBU
TAPA	10049759	35	1	465	10 35 876 0	CUBIERTA INF.
TAPA	10049759	35	1	466	10 49 857 4	CUBIERTA INF.
TAPA	10051238	20	1	44	10 05 149 1	TAPA
TAPA	10051491	20	1	41	10 35 874 0	ESTRUC.INF.COMPL.
TAPA	10051492	10	1	44	10 05 149 1	TAPA
TAPA	10056519	232	2	715	10 35 872 1	MANGO DE LA PALA 2,60M
TAPA	10058623	270	1	423	10 05 303 6	REVESTIMIENTO
TAPA	10058623	270	1	438	10 49 857 1	REVESTIMIENTO
TAPA	10059839	40	1	546	10 35 868 3	INSTALACION CARBURANTE
TAPA	10062288	2	1	465	10 35 876 0	CUBIERTA INF.
TAPA	10062288	2	1	466	10 49 857 4	CUBIERTA INF.
TAPA	10062296	10	1	465	10 35 876 0	CUBIERTA INF.
TAPA	10062296	10	1	466	10 49 857 4	CUBIERTA INF.
TAPA	10062306	25	1	465	10 35 876 0	CUBIERTA INF.
TAPA	10062306	25	1	466	10 49 857 4	CUBIERTA INF.
TAPA	10062308	45	1	465	10 35 876 0	CUBIERTA INF.
TAPA	10063553	150	1	418	10 05 303 6	REVESTIMIENTO
TAPA	10063553	150	1	433	10 49 857 1	REVESTIMIENTO
TAPA	10063555	2	1	462	10 06 355 3	TAPA
TAPA	10063605	11	1	447	10 05 535 4	CAPOT
TAPA	10063606	2	1	450	10 06 360 5	TAPA
TAPA	10063758	20	1	460	10 06 375 5	CAJA COMPL.
TAPA	10066285	202	2	715	10 35 872 1	MANGO DE LA PALA 2,60M
TAPA	10073043	185	1	419	10 05 303 6	REVESTIMIENTO
TAPA	10073043	185	1	434	10 49 857 1	REVESTIMIENTO
TAPA	10078627	186	1	419	10 05 303 6	REVESTIMIENTO
TAPA	10078627	186	1	434	10 49 857 1	REVESTIMIENTO
TAPA	10096391	6	1	394	10 35 874 4	MONTAJE CORREDERA DISTR
TAPA	10115670	11	1	664	10 12 032 2	MONT. CARCASA VOLANTE IM
TAPA	10116392	5	2	632	90 79 077	ANEJO DE LINEA DE CONEXIÓ
TAPA	10120392	1	1	677	10 12 039 3	PIEZAS DE CIERRE
TAPA	10124766	3	1	606	10 12 002 7	FILTRO DE ACEITE
TAPA	10124766	6	1	607	10 12 475 6	MÓDULO ACEITE IZDA.
TAPA	10333224	3	1	177	10 40 974 7	REGULACIÓN HIDR.
TAPA	10333225	4	1	177	10 40 974 7	REGULACIÓN HIDR.
TAPA	10356671	202	1	408	10 11 355 7	BLOQUE MANDO
TAPA	10356672	203	1	408	10 11 355 7	BLOQUE MANDO
TAPA	10356673	206	1	408	10 11 355 7	BLOQUE MANDO
TAPA	10356674	207	7	408	10 11 355 7	BLOQUE MANDO
TAPA	10367531	4	2	465	10 35 876 0	CUBIERTA INF.
TAPA	10367531	4	2	466	10 49 857 4	CUBIERTA INF.

Descripción	Artículo	Pos.	Cantid	Página	Grupo	Descripción
TAPA	10368116	25	2	729	10 49 838 7	SOPORTE DE EJE
TAPA	10368116	25	2	730	10 49 857 6	SOPORTE DE EJE
TAPA	10378152	285	1	424	10 05 303 6	REVESTIMIENTO
TAPA	10498381	20	2	729	10 49 838 7	SOPORTE DE EJE
TAPA	10498381	20	2	730	10 49 857 6	SOPORTE DE EJE
TAPA	10498570	285	1	439	10 49 857 1	REVESTIMIENTO
TAPA	7020608	190	2	477	10 48 809 7	INST.ELÉCTRICA
TAPA	7025845	10	1	492	10 00 920 8	DEPÓSITO DE AGUA
TAPA	7027755	3	1	619	10 30 300 7	PREFILTRO COMBUSTIBLE
TAPA	7028349	12	1	388	56 17 689	DISPOSITIVO DE CIERRE DN
TAPA	7028836	230	1	472	10 04 678 8	PUERTA CABINA CONDUCTO
TAPA	7028865	430	1	478	10 48 809 7	INST.ELÉCTRICA
TAPA	7028881	500	1	480	70 28 884	MOTOR LIMPIAPARABRISAS
TAPA	7370895	3	1	280	10 16 576 6	CONSOLA MANDO IZDA.
TAPA	7370896	2	1	280	10 16 576 6	CONSOLA MANDO IZDA.
TAPA	7372237	7	1	372	10 00 909 0	UNIDAD ACEITE MANDO
TAPA	9016187	3	1	465	10 35 876 0	CUBIERTA INF.
TAPA	9016187	3	1	466	10 49 857 4	CUBIERTA INF.
TAPA	9078565	1	1	655	90 78 564	PIEZAS DE CIERRE
TAPA	9080083	4	1	611	10 11 802 5	ACC. P. BOMBA ALTA PRESIÓ
TAPA	9080443	1	1	676	90 80 459	PIEZAS DE CIERRE
TAPA	9141600	40	1	57	91 41 597	TRANSMISION ROTATIVO
TAPA	9171589	30	2	308	10 05 798 5	MONTAJE PLACA REPOSAPIÉ
TAPA	9271663	11	1	139	92 71 648	REGULACIÓN
TAPA	9271664	12	1	139	92 71 648	REGULACIÓN
TAPA	9271740	12	1	145	98 88 308	PLACA DE CONEXION
TAPA	9275429	72	1	185	92 75 443	JR TAPA
TAPA	9278190	13	1	80	92 78 174	REGULACIÓN
TAPA	9394442	35	1	308	10 05 798 5	MONTAJE PLACA REPOSAPIÉ
TAPA	9494115	113	1	704	10 35 872 5	PLUMA MONOBLOC 7,00M
TAPA	9767890	50	4	383	10 35 874 5	MONTAJE DEPÓSITO HIDR.
TAPA	9767890	50	3	546	10 35 868 3	INSTALACION CARBURANTE
TAPA	9941036	30	1	465	10 35 876 0	CUBIERTA INF.
TAPA	9941036	30	1	466	10 49 857 4	CUBIERTA INF.
TAPA	9941043	40	1	465	10 35 876 0	CUBIERTA INF.
TAPA	9941043	40	1	466	10 49 857 4	CUBIERTA INF.
TAPA ABATIBLE	7370893	14	1	295	56 18 923	CONSOLA DE MANDO A LA DE
TAPA CAJA DE HERRAMIENTA	10096670	30	1	102	10 35 875 3	MONTAJE CAJA RADIADOR
TAPA CAJA FILTRO	10062299	15	1	465	10 35 876 0	CUBIERTA INF.
TAPA CAJA FILTRO	10062299	15	1	466	10 49 857 4	CUBIERTA INF.
TAPA CAJA FILTRO	10062300	20	1	465	10 35 876 0	CUBIERTA INF.
TAPA CAJA FILTRO	10062300	20	1	466	10 49 857 4	CUBIERTA INF.
TAPA CENTRO	10055453	125	1	417	10 05 303 6	REVESTIMIENTO
TAPA CENTRO	10055453	125	1	432	10 49 857 1	REVESTIMIENTO
TAPA CENTRO	10055455	10	1	455	10 05 545 3	TAPA CENTRO
TAPA CON ACCESORIOS	10333073	7	1	130	10 21 593 5	BOMBA
TAPA CON TIRADOR	7370924	1	1	389	73 68 771	FILTRO DE RETORNO
TAPA CPL.	10079999	26	1	41	10 35 874 0	ESTRUC.INF.COMPL.
TAPA CPL.	10080000	27	1	41	10 35 874 0	ESTRUC.INF.COMPL.
TAPA DCHA.	10073300	24	1	41	10 35 874 0	ESTRUC.INF.COMPL.
TAPA DE CIERRE	10036401	7	13	572	10 12 907 1	CAJA DEL CIGÜEÑAL COMPL.
TAPA DE CIERRE	10333087	1	1	151	10 33 307 3	TAPA CON ACCESORIOS
TAPA DE CIERRE	10471614	1	1	211	10 21 775 0	RECIPIENTE DE COMPENSAC
TAPA DE CIERRE	10471615	2	1	211	10 21 775 0	RECIPIENTE DE COMPENSAC
TAPA DE CIERRE	4980786	5	1	600	10 11 805 2	CULATA D9508
TAPA DE CIERRE	9144757	2	1	585	10 11 883 9	LLENADO DE ACEITE
TAPA DE CIERRE	9144757	2	1	585	10 11 883 9	LLENADO DE ACEITE
TAPA DE CIERRE	9144757	2	1	689	10 12 094 4	JUEGO JUNTAS COMPRESOR
TAPA DE CIERRE	9444456	45	1	65	94 43 970	ACCIONAMIENTO DE TRASL
TAPA DE CILINDRO	7373503	4	1	61	50 20 370 01	FRENO DISCOS MULT.PRESI

Descripción	Artículo	Pos.	Cantid	Página	Grupo	Descripción
TAPA DE CULATA	10122220	1	1	596	10 12 264 0	MONT. TAPA CULATA
TAPA DE CULATA	10122220	1	2	598	10 12 264 6	MONT. TAPA CULATA
TAPA DE CULATA	10122220	1	2	599	10 12 265 9	MONT. TAPA CULATA
TAPA DE CULATA	10122266	1	7	597	10 12 264 5	MONT. TAPA CULATA
TAPA DE ENGRASADOR	10014701	18	1	249	10 34 071 7	ENGRASADORA
TAPA DE GRASA LUBR.	933605101	20	1	221	90 01 781 7	ACCIONAMIENTO GIRATORIO
TAPA DE MANTENIMIENTO	7370894	2	1	295	56 18 923	CONSOLA DE MANDO A LA DE
TAPA DE VALVULA	9270599	11	1	79	92 70 598	VALVULA DE RETENCION
TAPA DEP. COMBUSTIBLE	10068038	50	1	465	10 35 876 0	CUBIERTA INF.
TAPA DEP. COMBUSTIBLE	10068038	50	1	466	10 49 857 4	CUBIERTA INF.
TAPA DEP. COMBUSTIBLE	10077922	55	1	465	10 35 876 0	CUBIERTA INF.
TAPA DEP. COMBUSTIBLE	10077922	55	1	466	10 49 857 4	CUBIERTA INF.
TAPA DESGASTE	10451152	41	5	725	10 49 849 8	CUCHARA RETRO HD 1950MM
TAPA IZDA.	10073303	25	1	41	10 35 874 0	ESTRUC.INF.COMPL.
TAPA NG 165	9881230	18	1	181	90 78 788	JR (TAPA DEL REGUL.) LR/SD
TAPA POSTIZA	7370890	5	3	295	56 18 923	CONSOLA DE MANDO A LA DE
TAPA POSTIZA	7370899	6	1	280	10 16 576 6	CONSOLA MANDO IZDA.
TAPA POSTIZA	7618883	120	1	488	10 48 809 9	REVESTIMIENTO INTERIOR
TAPA POSTIZA	7618883	287	1	488	10 48 809 9	REVESTIMIENTO INTERIOR
TAPA PRES. HIDR.	9397081	35	2	41	10 35 874 0	ESTRUC.INF.COMPL.
TAPA PROTECCION	6203735	6	1	290	10 08 046 6	MONTAJE INTERR. S42
TAPA PROTECCION	6203735	8	1	300	10 08 576 7	MONTAJE INTERR. S248
TAPA PROTECCION	7370892	4	1	295	56 18 923	CONSOLA DE MANDO A LA DE
TAPA RECIPIENTE	10016663	42	1	250	10 34 071 7	ENGRASADORA
TAPA VENTILADOR	10331758	4	1	208	10 42 538 5	RADIADOR ACEITE COMB.
TAPAS DE ENGRASADOR	8500251	32	5	720	10 35 872 0	ENGRASE CENTRALIZADO
TAPON	10220397	550	8	486	70 28 778	PIEZAS DE MONTAJE
TAPON	10228539	29	4	41	10 35 874 0	ESTRUC.INF.COMPL.
TAPON	10292443	6	1	295	56 18 923	CONSOLA DE MANDO A LA DE
TAPON	10300923	5	1	264	10 33 323 7	VALVULA LIMITADORA DE PR
TAPON	6426764	6	1	788	10 49 831 4	ACOP.RAP.WIGGINS P.COMB
TAPON	7020615	720	6	486	70 28 778	PIEZAS DE MONTAJE
TAPON	9898335	76	2	205	10 35 873 9	MONTAJE DE RADIADOR
TAPON CIEGO	7368253	374	4	285	10 06 804 1	MANIPULATOR LADO CPL CA
TAPON CIEGO	7368253	374	4	298	10 06 804 5	APARATO MANDO MAN. DCHA.
TAPON CIEGO	7368253	15	11	309	10 08 142 4	AP.CONTR.PILOT.PEDAL IZDO
TAPON CIEGO	7368253	15	11	310	10 08 142 6	AP.CONTR.PILOT.PED.DCHO.
TAPON CIEGO	7368253	374	12	315	10 07 707 2	CAJA EL.COMPL. U101/R964
TAPON CIEGO	7371142	95	3	278	10 05 798 3	REPOSABRAZOS IZQUIERDA
TAPON CIEGO	7371142	145	2	293	10 82 277 5	REPOSABRAZOS DERECHA
TAPON CIEGO	7371142	155	2	293	10 82 277 5	REPOSABRAZOS DERECHA
TAPON CIEGO	7371142	43	3	749	10 39 372 0	INST.EL.
TAPON CIEGO	7371142	915	3	792	95 99 236	INSTALACION ELECTRICA
TAPON CIEGO M20X1,5	602514201	46	1	504	10 09 499 2	RELACIÓN MATERIAL EL.
TAPON COBERTURA	7025005	17	1	276	70 24 996	BASTIDOR DE ASIENTO
TAPON COBERTURA NBR80	968461801	12	1	219	10 05 302 4	MONTAJE MEC. GIRO
TAPON DE CIERRE	10022774	3	1	319	10 02 206 9	CAJA DE EVAPORADOR
TAPON DE CIERRE	10120094	33	1	608	10 12 475 7	MODULO ACEITE DCHA.
TAPON DE CIERRE	10409754	15	20	179	10 40 975 2	CAJA DE VALVULA
TAPON DE CIERRE	4097529	79	2	222	90 01 781 7	ACCIONAMIENTO GIRATORIO
TAPON DE CIERRE	4097530	2	1	221	90 01 781 7	ACCIONAMIENTO GIRATORIO
TAPON DE CIERRE	7002773	70	5	465	10 35 876 0	CUBIERTA INF.
TAPON DE CIERRE	7002773	70	5	466	10 49 857 4	CUBIERTA INF.
TAPON DE CIERRE	7004246	91	1	66	94 43 970	ACCIONAMIENTO DE TRASL
TAPON DE CIERRE	7004246	91	2	222	90 01 781 7	ACCIONAMIENTO GIRATORIO
TAPON DE CIERRE	7363015	14	1	768	56 02 932	VALVULA REGULADORA
TAPON DE CIERRE	7373405	5	2	449	10 05 530 6	CARRIL DE GUIA
TAPON DE CIERRE	779016501	96	1	222	90 01 781 7	ACCIONAMIENTO GIRATORIO
TAPON DE CIERRE	789000601	4	2	219	10 05 302 4	MONTAJE MEC. GIRO
TAPON DE GOMAESPUMA	10451201	42	5	725	10 49 849 8	CUCHARA RETRO HD 1950MM

Descripción	Artículo	Pos.	Cantid	Página	Grupo	Descripción
TAPON ESTANCO	10036326	8	1	600	10 11 805 2	CULATA D9508
TAPON ESTANCO	7380123	66	2	181	90 78 788	JR (TAPA DEL REGUL.) LR/SD
TAPON ESTANCO D= 9,00MM	7610819	8	2	64	94 43 970	ACCIONAMIENTO DE TRASL
TAPON ROSCADO M10X1	7027675	2	1	255	90 64 786	BASE DE FIJACION
TAPÓN PROT.TRANSP.SSW	7019165	410	1	484	70 28 778	PIEZAS DE MONTAJE
TAPÓN ROTURA DOBLE	7012972	12	1	150	10 33 307 1	PLACA DE CONEXION
TAPÓN ROTURA DOBLE	7022127	52	9	146	10 10 206 4	REGULADOR
TAPÓN ROTURA DOBLE	7022127	11	4	150	10 33 307 1	PLACA DE CONEXION
TAPÓN ROTURA DOBLE	7369966	48	1	153	10 33 322 6	PLACA DE CONEXION
TAPÓN ROTURA DOBLE	7370947	11	1	153	10 33 322 6	PLACA DE CONEXION
TAPÓN ROTURA DOBLE	7618568	7	2	162	10 33 327 1	CABEZA FILTRO
TAPÓN SUJECIÓN	10037594	3	2	154	10 33 322 7	BOMBA DE ENGRANAJES
TAQUÉ DE RODILLOS 39MM	9078257	1	2	603	10 11 632 0	ELEMENTOS DE MANDO
TECLA PULSADORA LINKS	9968578	40	1	289	99 68 625	MANILLA DEL SENSOR LH IZ
TECLA PULSADORA RECHTS	9968580	40	1	304	99 68 611	MANILLA DEL SENSOR LH DC
TECLADO EXCAVADORA	10677206	2	1	296	10 82 196 3	TECLADO EXCAVADORA COM
TECLADO EXCAVADORA COM	10821963	40	1	291	10 82 277 5	REPOSABRAZOS DERECHA
TEJIDO DEL FILTRO	10022770	8	1	97	10 36 190 7	PAQUETE SERV. 1000H
TEJIDO DEL FILTRO	10022770	2	1	326	10 02 277 7	REJILLA CIRCUL.AIRE
TENSOR GRASA	10075353	62	2	43	10 35 874 0	ESTRUC.INF.COMPL.
TERMINAL HORQUILLA G 8X1	4000746	10	2	463	10 03 720 9	MUELLE DE GAS
TERMOINTERRUPTOR	6204186	20	1	213	10 49 800 0	MOTOR - SISTEMA ELÉCTRIC
TERMOSTATO	10022048	2	1	322	11 00 359 4	CARCASA
TERMOSTATO	10117576	3	3	640	10 11 753 0	CARCASA DE TERMOSTATO P
TIRA DE ESPUMA	10022772	2	1	325	10 02 211 9	CAJON
TIRADOR	7019153	260	1	472	10 04 678 8	PUERTA CABINA CONDUCTO
TIRADOR	7025006	20	1	276	70 24 996	BASTIDOR DE ASIENTO
TIRADOR	7370897	4	1	280	10 16 576 6	CONSOLA MANDO IZDA.
TIRADOR	9691297	33	1	451	10 05 546 4	CUBIERTA IZQUIERDA
TIRADOR	9699421	145	1	418	10 05 303 6	REVESTIMIENTO
TIRADOR	9699421	145	1	433	10 49 857 1	REVESTIMIENTO
TIRADOR	9699421	50	2	493	10 35 876 4	PASILLO MALLA
TIRADOR DE MANO	10009025	730	1	486	70 28 778	PIEZAS DE MONTAJE
TIRADOR DE MANO	10013966	580	1	486	70 28 778	PIEZAS DE MONTAJE
TIRADOR DE MANO	10016620	280	1	423	10 05 303 6	REVESTIMIENTO
TIRADOR DE MANO	10016620	280	1	438	10 49 857 1	REVESTIMIENTO
TIRADOR DE MANO	10498140	65	1	795	10 49 815 5	ELEVACIÓN CABINA CONDU
TIRADOR DE MANO	7028902	790	1	486	70 28 778	PIEZAS DE MONTAJE
TIRADOR DE MANO	7028903	520	1	486	70 28 778	PIEZAS DE MONTAJE
TIRADOR DE MANO	7372418	6	1	105	10 05 797 8	CONSOLA CIERRE
TIRADOR DE MANO	9014915	4	1	782	10 35 806 3	SUPLEMENTO SUPERIOR 120
TIRADOR DE MANO	9496454	158	1	418	10 05 303 6	REVESTIMIENTO
TIRADOR DE MANO	9496454	158	1	433	10 49 857 1	REVESTIMIENTO
TIRADOR SW9,12,14,17 GEKR	10359147	200	1	552	10 08 428 5	HERRAMIENTAS DE EQUIPAM
TOBERA DE EMPUJE AIRE	5611480	99	3	271	10 05 311 8	BASE PUESTO CONDUCTOR
TOBERA DE EMPUJE AIRE	5611480	25	1	291	10 82 277 5	REPOSABRAZOS DERECHA
TOBERA DE INYECCION	10428694	1	1	613	10 11 716 7	TOBERA INYECCIÓN C.SUJEC
TOBERA DE INYECCION	10490018	1	0	613	10 11 716 7	TOBERA INYECCIÓN C.SUJEC
TOBERA INYECCION	10009212	690	1	482	10 29 114 6	BRAZO DEL LIMPIAPARABRISA
TOBERA INYECCION	10116083	1	1	574	90 78 548	REFRIGERACION PISTON
TOBERA INYECCION	7028867	650	1	483	70 28 866	BRAZO DEL LIMPIAPARABRISA
TOBERA INYECCIÓN C.SUJEC	10117167	190	8	567	10 12 595 9	MOTOR DIESEL D9508 A7 320k
TOMA	10055305	20	1	443	10 05 530 3	CAPOT DEL MOTOR
TOMA	10055413	20	1	456	10 05 541 0	PUERTA LATERAL ANT.DCHA.
TOMA	10055436	20	1	453	10 05 543 3	PUERTA LATERAL POST.DCHA
TOPE	9485739	2	1	54	10 49 867 0	MONTAJE CONEXIÓN GIRATO
TOPE GOMA	10116274	3	8	630	90 78 417	MONTAJE TUBO AIRE ADMISIÓ
TOPE GOMA	10216002	2200	2	490	10 29 113 8	REVESTIMIENTO
TOPE GOMA	10355813	10	12	208	10 42 538 5	RADIADOR ACEITE COMB.
TOPE GOMA	7014560	35	18	277	10 05 798 3	REPOSABRAZOS IZQUIERDA

Descripción	Artículo	Pos.	Cantid	Página	Grupo	Descripción
TOPE GOMA	7014560	82	4	292	10 82 277 5	REPOSABRAZOS DERECHA
TOPE GOMA	7368721	20	4	110	10 49 845 5	ALOJAMIENTO DE MOTOR
TOPE GOMA	9076605	7	8	669	10 11 671 8	MONT.APARATO MANDO
TORNILLO	10015712	10	2	287	10 46 991 7	
TORNILLO	10015712	10	2	301	10 46 991 8	
TORNILLO	7024447	281	8	488	10 48 809 9	REVESTIMIENTO INTERIOR
TORNILLO	7024447	360	8	489	10 48 809 9	REVESTIMIENTO INTERIOR
TORNILLO	7024631	27	1	376	10 28 046 1	VÁLVULA MAGNÉTICA REGUL
TORNILLO	7368996	3	6	389	73 68 771	FILTRO DE RETORNO
TORNILLO	7370888	9	4	280	10 16 576 6	CONSOLA MANDO IZDA.
TORNILLO	7372158	11	2	295	56 18 923	CONSOLA DE MANDO A LA DE
TORNILLO	9266471	1	1	129	90 80 211	
TORNILLO	9480332	127	2	417	10 05 303 6	REVESTIMIENTO
TORNILLO	9480332	127	2	432	10 49 857 1	REVESTIMIENTO
TORNILLO	9926801	82	1	755	94 02 020 2	CILINDRO HIDRAULICO
TORNILLO 22X6	10017926	160	2	289	99 68 625	MANILLA DEL SENSOR LH IZ
TORNILLO 22X6	10017926	160	2	304	99 68 611	MANILLA DEL SENSOR LH DC
TORNILLO ALLEN M 10X 55	10030346	10	5	645	10 11 566 7	TUBO DE ESCAPE DERECHA
TORNILLO ALLEN M 10X 55	10030346	10	5	648	10 11 566 8	TUBO DE ESCAPE IZQUIERDA
TORNILLO ALLEN M 10X 64	10332845	5	1	647	10 13 274 6	CODO DE ESCAPE MONTAJE
TORNILLO ALLEN M10X103 X5	10332846	4	5	647	10 13 274 6	CODO DE ESCAPE MONTAJE
TORNILLO ALLEN M16X1,5X1	9077282	4	8	588	90 77 286	PIEZAS ACC.CON AMORT. VI
TORNILLO ALLEN M18X1,5X91	10119794	4	10	667	10 12 007 7	MONT. VOLANTE IMUPLS. SAE
TORNILLO AVELLANADO M 10	9079596	13	1	635	10 11 865 5	MONT.COMPR.AIRE AC.
TORNILLO AVELLANADO M5X2	11067312	2	14	670	10 11 698 9	APARATO DE MANDO DE MO
TORNILLO CILINDRICO BN 12	10471469	81	2	217	10 49 800 0	MOTOR - SISTEMA ELÉCTRIC
TORNILLO CILINDRICO BN 12	10471469	201	6	498	10 35 875 7	INST.EL.CARRO SUPERIOR
TORNILLO CILINDRICO BN 12	10471469	16	5	513	10 49 837 6	INST.EL. MONOBLOQUE
TORNILLO CILINDRICO BN 12	10471469	21	15	523	10 35 876 3	INST.EL.DEP. COMBUSTIBLE
TORNILLO CILINDRICO BN 12	10471469	21	15	530	10 49 837 7	INST.EL.DEP. COMBUSTIBLE
TORNILLO CILINDRICO BN 12	10471469	36	1	749	10 39 372 0	INST.EL.
TORNILLO CILINDRICO BN 12	10471469	61	4	793	10 82 390 4	INST.EL.ELEVACIÓN 1200MM
TORNILLO CON COLLAR	10012550	11	7	645	10 11 566 7	TUBO DE ESCAPE DERECHA
TORNILLO CON COLLAR	10012550	11	7	648	10 11 566 8	TUBO DE ESCAPE IZQUIERDA
TORNILLO DE AJUSTE	10278641	132	1	752	10 34 080 6	SEGURO CONTRA ROTURA TU
TORNILLO DE AJUSTE	10278641	132	1	753	10 34 081 2	SEGURO CONTRA ROTURA TU
TORNILLO DE BIELA NACH DI	9077199	1	2	592	10 11 687 6	BIELA
TORNILLO DE CABEZA HEXAG	10035581	3	3	627	90 79 075	ASPIRACIÓN DE AIRE DCHA.
TORNILLO DE CABEZA HEXAG	10035581	3	3	628	90 79 076	ASPIRACION DE AIRE
TORNILLO DE CABEZA HEXAG	10035581	3	1	675	10 11 903 8	CONSOLA
TORNILLO DE CABEZA HEXA	10035578	2	4	627	90 79 075	ASPIRACIÓN DE AIRE DCHA.
TORNILLO DE CABEZA HEXA	10035578	2	4	628	90 79 076	ASPIRACION DE AIRE
TORNILLO DE CABEZA HEXA	10035578	12	4	631	10 11 570 0	ANEJO DE LINEA DE CONEXIÓ
TORNILLO DE CABEZA HEXA	10006131	18	1	611	10 11 802 5	ACC. P. BOMBA ALTA PRESIÓ
TORNILLO DE CABEZA HEXAG	10112718	17	4	611	10 11 802 5	ACC. P. BOMBA ALTA PRESIÓ
TORNILLO DE CABEZA HEXAG	10112497	7	3	630	90 78 417	MONTAJE TUBO AIRE ADMISIÓ
TORNILLO DE CABEZA HEXA	10037108	6	4	581	10 12 021 3	MONTAJE SOPORTE GRUPO
TORNILLO DE CABEZA HEXAG	10035584	9	2	664	10 12 032 2	MONT. CARCASA VOLANTE IM
TORNILLO DE CABEZA HEXAG	10035584	3	4	676	90 80 459	PIEZAS DE CIERRE
TORNILLO DE CABEZA HEXAG	10035584	2	6	677	10 12 039 3	PIEZAS DE CIERRE
TORNILLO DE CABEZA HEXA	10035583	7	10	664	10 12 032 2	MONT. CARCASA VOLANTE IM
TORNILLO DE CABEZA HEXA	10018711	6	3	596	10 12 264 0	MONT. TAPA CULATA
TORNILLO DE CABEZA HEXA	10018711	6	6	598	10 12 264 6	MONT. TAPA CULATA
TORNILLO DE CABEZA HEXA	10018711	6	6	599	10 12 265 9	MONT. TAPA CULATA
TORNILLO DE CABEZA HEXA	10018711	11	2	625	10 11 941 3	MONTAJE TUBERÍA DE IMPU
TORNILLO DE CABEZA HEXA	10018711	2	4	633	90 78 314	MONTAJE BRIDA CALEFACCIÓ
TORNILLO DE CABEZA HEXAG	10289164	5	14	609	10 11 616 5	BOMBA ACEITE LUBR.C.SUJE
TORNILLO DE CABEZA HEXAG	10014042	10	6	604	10 12 476 3	MONTAJE MÓDULO ACEITE
TORNILLO DE CABEZA HEXAG	10017158	5	5	639	10 11 752 9	MONT.CARCASA DE TERMOST
TORNILLO DE CABEZA HEXA	10030519	2	1	675	10 11 903 8	CONSOLA

Descripción	Artículo	Pos.	Cantid	Página	Grupo	Descripción
TORNILLO DE CABEZA HEXAG	10035593	5	4	581	10 12 021 3	MONTAJE SOPORTE GRUPO
TORNILLO DE CABEZA HEXAG	10035593	5	2	583	10 11 694 5	VARILLA NIVEL ACEITE C.TUB
TORNILLO DE CABEZA HEXAG	10035593	7	4	638	10 11 763 3	CONEXIÓN CONDUCTOS AGU
TORNILLO DE CABEZA HEXAG	10035594	4	6	581	10 12 021 3	MONTAJE SOPORTE GRUPO
TORNILLO DE CABEZA HEXAG	10035594	4	2	629	90 80 436	TUBO ASPIRADOR ANEJO
TORNILLO DE CABEZA HEXA	10024115	4	1	576	10 11 874 8	ANEJO TUBERIA
TORNILLO DE CABEZA HEXA	10024115	4	2	663	98 85 618	MONTAJE TACOMETRO
TORNILLO DE CABEZA HEXA	10037309	17	4	582	10 12 593 7	CUBETA ACEITE C.SUJECIÓN
TORNILLO DE CABEZA HEXAG	10101543	12	9	604	10 12 476 3	MONTAJE MÓDULO ACEITE
TORNILLO DE CABEZA HEXAG	10101543	4	3	617	10 12 314 1	MONT.FILTRO FINO COMBUS
TORNILLO DE CABEZA HEXA	10287572	5	1	617	10 12 314 1	MONT.FILTRO FINO COMBUS
TORNILLO DE CABEZA HEXA	10016906	8	3	578	10 12 503 7	ANEJO TUBERIA
TORNILLO DE CABEZA HEXA	10016906	4	6	642	10 11 978 1	CODO DE REFRIGERANTE MO
TORNILLO DE CABEZA HEXA	10016906	13	2	664	10 12 032 2	MONT. CARCASA VOLANTE IM
TORNILLO DE CABEZA HEXA	10016906	2	4	673	10 11 935 3	CONSOLA
TORNILLO DE CABEZA HEXA	10016906	2	3	674	10 11 935 6	CONSOLA
TORNILLO DE CABEZA HEXA	10007782	38	1	624	10 12 720 8	TUBERIAS DE COMBUSTIBLE
TORNILLO DE CABEZA HEXAG	10037518	10	8	572	10 12 907 1	CAJA DEL CIGÜEÑAL COMPL.
TORNILLO DE CABEZA HEXAG	10035575	9	2	581	10 12 021 3	MONTAJE SOPORTE GRUPO
TORNILLO DE CABEZA HEXAG	10035575	4	8	632	90 79 077	ANEJO DE LINEA DE CONEXIÓ
TORNILLO DE CABEZA HEXAG	10035575	11	1	638	10 11 763 3	CONEXIÓN CONDUCTOS AGU
TORNILLO DE CABEZA HEXAG	10037071	3	9	581	10 12 021 3	MONTAJE SOPORTE GRUPO
TORNILLO DE CABEZA HEXAG	10037071	16	20	582	10 12 593 7	CUBETA ACEITE C.SUJECIÓN
TORNILLO DE CABEZA HEXAG	10037072	7	3	581	10 12 021 3	MONTAJE SOPORTE GRUPO
TORNILLO DE CIERRE	10015471	250	2	71	56 16 688	VÁLVULA FRENO MARCHA
TORNILLO DE CIERRE	10097983	3	1	45	10 22 121 2	POLEA RODADURA
TORNILLO DE CIERRE	10097983	3	1	46	10 29 067 4	RODILLO APOYO D8K
TORNILLO DE CIERRE	10100680	19	2	150	10 33 307 1	PLACA DE CONEXION
TORNILLO DE CIERRE	10101654	27	2	130	10 21 593 5	BOMBA
TORNILLO DE CIERRE	10220639	20	2	150	10 33 307 1	PLACA DE CONEXION
TORNILLO DE CIERRE	10220646	1	1	262	10 29 792 9	VALVULA LIMITADORA DE PR
TORNILLO DE CIERRE	10298663	5	1	160	10 33 326 8	FILTRO
TORNILLO DE CIERRE	10333250	9	1	264	10 33 323 7	VALVULA LIMITADORA DE PR
TORNILLO DE CIERRE	10333254	1	1	157	10 33 324 2	VALVULA DE DESCONEXION
TORNILLO DE CIERRE	10410639	24	1	131	10 42 845 9	BOMBA MEC. GIRO
TORNILLO DE CIERRE	10440724	37	1	131	10 42 845 9	BOMBA MEC. GIRO
TORNILLO DE CIERRE	7001454	11	1	49	10 47 076 9	RUEDA DIRECTRIZ D8K
TORNILLO DE CIERRE	7004178	4	1	768	56 02 932	VALVULA REGULADORA
TORNILLO DE CIERRE	7009357	21	1	131	10 42 845 9	BOMBA MEC. GIRO
TORNILLO DE CIERRE	7013032	40	1	752	10 34 080 6	SEGURO CONTRA ROTURA TU
TORNILLO DE CIERRE	7013032	40	1	753	10 34 081 2	SEGURO CONTRA ROTURA TU
TORNILLO DE CIERRE	7016136	5	1	768	56 02 932	VALVULA REGULADORA
TORNILLO DE CIERRE	7028192	1	1	148	10 29 866 3	TORNILLO DE CIERRE
TORNILLO DE CIERRE	7360563	14	1	405	10 21 821 5	VALVULA DE RETENCION
TORNILLO DE CIERRE	7360563	14	1	406	10 21 986 3	VALVULA DE RETENCION
TORNILLO DE CIERRE	7361329	17	1	68	90 72 024	MOTOR HIDR. INCORP. VAR.
TORNILLO DE CIERRE	7361329	14	2	80	92 78 174	REGULACIÓN
TORNILLO DE CIERRE	7361329	14	2	88	92 78 179	JUEGO JUNTAS
TORNILLO DE CIERRE	7361329	16	3	134	90 72 922	BOMBA CIL. VAR. HIDR.
TORNILLO DE CIERRE	7361329	17	1	143	98 88 041	MOTOR HIDR. INCORP. FIX FM
TORNILLO DE CIERRE	7361329	26	1	184	92 74 199	JUEGO JUNTAS
TORNILLO DE CIERRE	7361329	105	4	704	10 35 872 5	PLUMA MONOBLOC 7,00M
TORNILLO DE CIERRE	7361329	26	6	770	10 35 873 1	CILINDRO ELEVADOR DIA.190
TORNILLO DE CIERRE	7362674	24	1	755	94 02 020 2	CILINDRO HIDRAULICO
TORNILLO DE CIERRE	7362674	24	2	757	99 06 383	CILINDRO HIDRAULICO
TORNILLO DE CIERRE	7362674	24	2	758	99 06 576	CILINDRO HIDRAULICO
TORNILLO DE CIERRE	7363073	68	3	383	10 35 874 5	MONTAJE DEPÓSITO HIDR.
TORNILLO DE CIERRE	7363125	89	1	66	94 43 970	ACCIONAMIENTO DE TRASL
TORNILLO DE CIERRE	7363125	320	1	71	56 16 688	VÁLVULA FRENO MARCHA
TORNILLO DE CIERRE	7363125	20	1	88	92 78 179	JUEGO JUNTAS

Descripción	Artículo	Pos.	Cantid	Página	Grupo	Descripción
TORNILLO DE CIERRE	7363125	14	1	134	90 72 922	BOMBA CIL. VAR. HIDR.
TORNILLO DE CIERRE	7363125	14	1	136	90 77 452	BOMBA CIL. VAR. HIDR.
TORNILLO DE CIERRE	7363125	55	2	146	10 10 206 4	REGULADOR
TORNILLO DE CIERRE	7363125	14	1	147	10 10 206 6	ELEMENTO REGULACION
TORNILLO DE CIERRE	7363125	24	2	198	90 77 032	PLACA DE CONEXION NG 045
TORNILLO DE CIERRE	7363125	20	1	240	92 68 642	JJ VÁLVULA MÚLTIPLES VÍAS
TORNILLO DE CIERRE	7363125	14	1	263	10 29 207 1	ELEMENTO REGULACION
TORNILLO DE CIERRE	7363125	20	1	266	98 89 003	VALVULA DE RETENCION RV
TORNILLO DE CIERRE	7363125	58	2	771	10 35 873 1	CILINDRO ELEVADOR DIA.190
TORNILLO DE CIERRE	7363717	14	1	548	10 35 821 5	DEPOSITO COMBUSTIBLE
TORNILLO DE CIERRE	7368507	420	1	71	56 16 688	VÁLVULA FRENO MARCHA
TORNILLO DE CIERRE	7369938	13	4	153	10 33 322 6	PLACA DE CONEXION
TORNILLO DE CIERRE	7369939	20	2	131	10 42 845 9	BOMBA MEC. GIRO
TORNILLO DE CIERRE	7369951	1	1	261	10 10 206 7	ELEMENTO REGULACION
TORNILLO DE CIERRE	7370432	310	1	71	56 16 688	VÁLVULA FRENO MARCHA
TORNILLO DE CIERRE	7371360	1	1	412	56 10 135	VÁLVULA ALIM.
TORNILLO DE CIERRE	7414500	2	1	152	10 33 307 8	PIEZA DE CIERRE
TORNILLO DE CIERRE	774378208	31	1	245	10 29 302 0	COMBINACIÓN DE DISTRIB. M
TORNILLO DE CIERRE	774378208	31	1	254	10 29 301 8	COMBINACIÓN DE DISTRIB. M
TORNILLO DE CIERRE	774378208	31	3	708	10 00 878 9	COMBINACIÓN DE DISTRIB. M
TORNILLO DE CIERRE	774378208	31	2	722	10 30 336 9	COMBINACIÓN DE DISTRIB. M
TORNILLO DE CIERRE	9889005	11	1	266	98 89 003	VALVULA DE RETENCION RV
TORNILLO DE CIERRE 32	10024583	61	2	408	10 11 355 7	BLOQUE MANDO
TORNILLO DE CIERRE G 1/4	7024958	49	1	410	10 28 629 4	BLOQUE DE VALVULAS SELEC
TORNILLO DE CIERRE M10X1	10115237	24	4	130	10 21 593 5	BOMBA
TORNILLO DE CIERRE M10X1	10115237	35	4	131	10 42 845 9	BOMBA MEC. GIRO
TORNILLO DE CIERRE M14X1,	7372622	213	8	408	10 11 355 7	BLOQUE MANDO
TORNILLO DE CIERRE M16X1,	10115014	22	3	131	10 42 845 9	BOMBA MEC. GIRO
TORNILLO DE CIERRE M18X1	9266233	12	1	72	92 67 037	VALVULA LIMITADORA DE PR
TORNILLO DE CIERRE M18X1	7361960	17	1	197	10 12 504 2	MOTOR INCORP.HIDR.
TORNILLO DE CIERRE M18X1	7361960	77	2	384	10 35 874 5	MONTAJE DEPÓSITO HIDR.
TORNILLO DE CIERRE M18X1	7361960	88	4	398	10 35 874 4	MONTAJE CORREDERA DISTR
TORNILLO DE CIERRE M18X1	7361960	102	2	399	10 35 874 4	MONTAJE CORREDERA DISTR
TORNILLO DE CIERRE M18X1	7361960	41	1	404	10 06 771 7	MONTAJE TUBERÍAS IMPULS.
TORNILLO DE CIERRE M20X1	10296854	13	1	405	10 21 821 5	VALVULA DE RETENCION
TORNILLO DE CIERRE M20X1	10296854	13	1	406	10 21 986 3	VALVULA DE RETENCION
TORNILLO DE CIERRE M22X1,	10340236	14	2	113	10 09 538 7	MONTAJE FILTRO COMBUSTI
TORNILLO DE CIERRE M22X1,	10340236	19	2	619	10 30 300 7	PREFILTRO COMBUSTIBLE
TORNILLO DE CIERRE M6X6	9265783	1	1	145	98 88 308	PLACA DE CONEXION
TORNILLO DE CIERRE M6X6	9265783	1	2	170	92 71 653	JJ REGUL.
TORNILLO DE CIERRE M6X6	9265783	2	5	171	92 71 657	JUEGO JUNTAS
TORNILLO DE CIERRE M6X6	9265783	1	1	192	98 89 161	PLACA DE CONEXION
TORNILLO DE CIERRE M6X6	9268441	7	3	68	90 72 024	MOTOR HIDR. INCORP. VAR.
TORNILLO DE CIERRE M6X6	9268441	7	2	69	90 72 026	PLACA DE CONEXION NG 165
TORNILLO DE CIERRE M6X6	9268441	7	5	88	92 78 179	JUEGO JUNTAS
TORNILLO DE CIERRE M6X6	9268441	5	4	187	98 82 875	JJ VÁLVULA REGULADORA
TORNILLO DE CIERRE M8X1X	9881609	8	1	187	98 82 875	JJ VÁLVULA REGULADORA
TORNILLO DE CIERRE NG165	9881233	21	1	181	90 78 788	JR (TAPA DEL REGUL.) LR/SD
TORNILLO DE CIERRE VSTI	10041903	5	2	629	90 80 436	TUBO ASPIRADOR ANEJO
TORNILLO DE CIERRE VSTI	10043136	18	1	607	10 12 475 6	MÓDULO ACEITE IZDA.
TORNILLO DE CIERRE VSTI	10043136	18	2	608	10 12 475 7	MODULO ACEITE DCHA.
TORNILLO DE CIERRE VSTI	7004296	80	8	57	91 41 597	TRANSMISION ROTATIVO
TORNILLO DE CIERRE VSTI	7004971	70	2	43	10 35 874 0	ESTRUC.INF.COMPL.
TORNILLO DE CIERRE VSTI	7004971	21	2	395	10 35 874 4	MONTAJE CORREDERA DISTR
TORNILLO DE CIERRE VSTI	7009358	32	3	131	10 42 845 9	BOMBA MEC. GIRO
TORNILLO DE CIERRE VSTI	7009358	35	3	153	10 33 322 6	PLACA DE CONEXION
TORNILLO DE CIERRE VSTI	7361553	28	2	340	10 05 314 4	MONTAJE UNIDAD ACEITE MA
TORNILLO DE CIERRE VSTI	7361553	28	2	341	10 82 438 9	MONTAJE UNIDAD ACEITE MA
TORNILLO DE CIERRE VSTI	7361553	6	1	706	10 06 477 4	CILINDRO HIDROLICO+ADICIO
TORNILLO DE CIERRE VSTI	7361961	90	1	57	91 41 597	TRANSMISION ROTATIVO

Descripción	Artículo	Pos.	Cantid	Página	Grupo	Descripción
TORNILLO DE CIERRE VSTI	7361961	24	2	184	92 74 199	JUEGO JUNTAS
TORNILLO DE CIERRE VSTI	7361961	41	1	548	10 35 821 5	DEPOSITO COMBUSTIBLE
TORNILLO DE CIERRE VSTI	7363177	65	2	383	10 35 874 5	MONTAJE DEPÓSITO HIDR.
TORNILLO DE CIERRE VSTI	7363177	43	1	548	10 35 821 5	DEPOSITO COMBUSTIBLE
TORNILLO DE CIERRE VSTI	7380172	16	3	136	90 77 452	BOMBA CIL. VAR. HIDR.
TORNILLO DE CIERRE VSTI	7380177	10	1	664	10 12 032 2	MONT. CARCASA VOLANTE IM
TORNILLO DE CIERRE VSTI	7380566	8	1	632	90 79 077	ANEJO DE LINEA DE CONEXIÓ
TORNILLO DE CIERRE VSTI	7380566	12	3	638	10 11 763 3	CONEXIÓN CONDUCTOS AGU
TORNILLO DE CIERRE VSTI	7380566	9	1	639	10 11 752 9	MONT.CARCASA DE TERMOST
TORNILLO DE CIERRE VSTI	7380688	13	1	581	10 12 021 3	MONTAJE SOPORTE GRUPO
TORNILLO DE CIERRE VSTI	7381457	1	2	575	10 12 016 8	PIEZAS DE CIERRE
TORNILLO DE CIERRE VSTI	7381457	21	1	582	10 12 593 7	CUBETA ACEITE C.SUJECIÓN
TORNILLO DE CIERRE VSTI	7381457	5	2	629	90 80 436	TUBO ASPIRADOR ANEJO
TORNILLO DE CIERRE VSTI	7381457	10	1	642	10 11 978 1	CODO DE REFRIGERANTE MO
TORNILLO DE CIERRE VSTI	7381638	11	1	581	10 12 021 3	MONTAJE SOPORTE GRUPO
TORNILLO DE CIERRE VSTI	7382202	6	1	664	10 12 032 2	MONT. CARCASA VOLANTE IM
TORNILLO DE CIERRE VSTI	7382203	3	2	572	10 12 907 1	CAJA DEL CIGÜEÑAL COMPL.
TORNILLO DE CIERRE VSTI	7382203	20	3	582	10 12 593 7	CUBETA ACEITE C.SUJECIÓN
TORNILLO DE CIERRE VSTI	7382204	4	2	572	10 12 907 1	CAJA DEL CIGÜEÑAL COMPL.
TORNILLO DE CIERRE VSTI	7382204	13	4	582	10 12 593 7	CUBETA ACEITE C.SUJECIÓN
TORNILLO DE CIERRE VSTI G1	7001338	15	7	252	10 48 927 7	COMBINACIÓN DE DISTRIB. SX
TORNILLO DE CIERRE VSTI G	4900609	25	4	770	10 35 873 1	CILINDRO ELEVADOR DIA.190
TORNILLO DE CULATA M18X	9080476	4	6	593	10 11 805 0	CULATA MONTAJE
TORNILLO DE REGULACION	10220647	2	1	262	10 29 792 9	VALVULA LIMITADORA DE PR
TORNILLO DE REGULACION	7369886	9	1	157	10 33 324 2	VALVULA DE DESCONEXION
TORNILLO DE SEGURIDAD FM	9880132	30	2	80	92 78 174	REGULACIÓN
TORNILLO DE SUJECION	10215970	286	4	488	10 48 809 9	REVESTIMIENTO INTERIOR
TORNILLO DURLOK M16X35 1	4900850	192	2	419	10 05 303 6	REVESTIMIENTO
TORNILLO DURLOK M16X35 1	4900850	192	2	434	10 49 857 1	REVESTIMIENTO
TORNILLO DURLOK M16X35 1	4900850	36	4	782	10 35 806 3	SUPLEMENTO SUPERIOR 120
TORNILLO ESTRANGULADOR	7615603	2	1	147	10 10 206 6	ELEMENTO REGULACION
TORNILLO ESTRANGULADOR	7615603	2	1	263	10 29 207 1	ELEMENTO REGULACION
TORNILLO ESTRANGULADOR	7615604	1	1	147	10 10 206 6	ELEMENTO REGULACION
TORNILLO ESTRANGULADOR	7615604	1	1	263	10 29 207 1	ELEMENTO REGULACION
TORNILLO EXCÉNTRICO	10333239	46	1	131	10 42 845 9	BOMBA MEC. GIRO
TORNILLO HEXAGONAL	10001473	21	3	41	10 35 874 0	ESTRUC.INF.COMPL.
TORNILLO HEXAGONAL	10001473	25	2	44	10 05 149 1	TAPA
TORNILLO HEXAGONAL CON B	10037312	5	3	637	90 79 863	BOMBA DE AGUA C.SUJECIÓ
TORNILLO HEXAGONAL CON B	10037313	6	1	637	90 79 863	BOMBA DE AGUA C.SUJECIÓ
TORNILLO HEXAGONAL CON	10045356	5	1	675	10 11 903 8	CONSOLA
TORNILLO HEXAGONAL CON B	10014638	15	1	635	10 11 865 5	MONT.COMPR.AIRE AC.
TORNILLO HEXAGONAL CON B	10014638	4	4	656	90 80 668	MONTAJE PLACA DE COBERT
TORNILLO HEXAGONAL CON	10035577	10	2	638	10 11 763 3	CONEXIÓN CONDUCTOS AGU
TORNILLO HEXAGONAL CON	10009007	18	1	617	10 12 314 1	MONT.FILTRO FINO COMBUS
TORNILLO HEXAGONAL CON	10009007	7	4	632	90 79 077	ANEJO DE LINEA DE CONEXIÓ
TORNILLO HEXAGONAL CON	10009007	3	4	646	10 11 899 9	CONSOLA MONTAJE
TORNILLO HEXAGONAL CON	10009007	5	4	656	90 80 668	MONTAJE PLACA DE COBERT
TORNILLO HEXAGONAL CON B	10037107	10	2	581	10 12 021 3	MONTAJE SOPORTE GRUPO
TORNILLO HEXAGONAL CON B	10037107	21	4	607	10 12 475 6	MÓDULO ACEITE IZDA.
TORNILLO HEXAGONAL CON B	10037107	21	4	608	10 12 475 7	MODULO ACEITE DCHA.
TORNILLO HEXAGONAL CON B	10037107	10	4	625	10 11 941 3	MONTAJE TUBERÍA DE IMPU
TORNILLO HEXAGONAL CON B	10035576	4	2	640	10 11 753 0	CARCASA DE TERMOSTATO P
TORNILLO HEXAGONAL EN 16	10036129	2	3	654	90 80 641	MONTAJE ARRANQUE MOTO
TORNILLO HEXAGONAL EN 1	4601426	10	1	635	10 11 865 5	MONT.COMPR.AIRE AC.
TORNILLO HEXAGONAL EN 16	10005073	14	2	578	10 12 503 7	ANEJO TUBERIA
TORNILLO HEXAGONAL EN 16	10005073	15	4	582	10 12 593 7	CUBETA ACEITE C.SUJECIÓN
TORNILLO HEXAGONAL EN 16	10100304	9	1	578	10 12 503 7	ANEJO TUBERIA
TORNILLO HEXAGONAL VERB	7366851	60	30	465	10 35 876 0	CUBIERTA INF.
TORNILLO HEXAGONAL VERB	7366851	60	29	466	10 49 857 4	CUBIERTA INF.
TORNILLO HUECO 10X3	4001439	5	1	576	10 11 874 8	ANEJO TUBERIA

Descripción	Artículo	Pos.	Cantid	Página	Grupo	Descripción
TORNILLO HUECO 10X3	4001439	11	2	617	10 12 314 1	MONT.FILTRO FINO COMBUS
TORNILLO HUECO 10X3	4001439	10	6	621	90 78 554	MONTAJE TUBERÍA A.FUGA
TORNILLO HUECO 10X3	4001439	27	2	623	10 12 720 8	TUBERIAS DE COMBUSTIBLE
TORNILLO HUECO 10X3	4001439	5	6	641	10 11 930 6	MONT.TUBERÍA DE PURGA
TORNILLO HUECO 14X4	10132193	7	1	610	10 13 273 8	VALVULA REGULACION TERMI
TORNILLO HUECO 15	4981226	10	2	579	10 12 375 9	TUBERIA DE ACEITE PREMO
TORNILLO HUECO 15	4981226	20	1	617	10 12 314 1	MONT.FILTRO FINO COMBUS
TORNILLO HUECO 15	4981226	3	1	672	10 11 883 5	PIEZA DE EMPALME PREMO
TORNILLO HUECO 30X3	10120098	8	1	605	10 12 002 3	TUBERIA DE ACEITE MONTAJ
TORNILLO HUECO DOBLE M1	7381797	11	2	621	90 78 554	MONTAJE TUBERÍA A.FUGA
TORNILLO HUECO DOBLE M1	7381797	26	1	623	10 12 720 8	TUBERIAS DE COMBUSTIBLE
TORNILLO HUECO DOBLE M1	7381797	6	2	641	10 11 930 6	MONT.TUBERÍA DE PURGA
TORNILLO M 161,5X192X45 10.	9077749	4	10	573	10 12 907 2	PREMONT. CÁRTER CIGÜEÑA
TORNILLO M 182,0X200X55 10.	9077748	3	20	573	10 12 907 2	PREMONT. CÁRTER CIGÜEÑA
TORNILLO PLACA FONDO	4900654	3	200	48	10 30 012 2	CADENA DE ORUGA 600mm
TORNILLO PLACA FONDO	4900654	3	200	48	10 30 012 2	CADENA DE ORUGA 600mm
TORNILLO PRISIONERO	7369967	20	1	130	10 21 593 5	BOMBA
TORNILLO PRISIONERO M10	7623427	21	1	130	10 21 593 5	BOMBA
TORNILLO PRISIONERO M8	7369959	8	1	261	10 10 206 7	ELEMENTO REGULACION
TORNILLO PURGA ACEITE	5004624	84	1	128	90 80 120	ENGRANAJE DISTRIBUCION
TORNILLO PURGA ACEITE	5004624	5	1	219	10 05 302 4	MONTAJE MEC. GIRO
TORNILLO PURGA ACEITE	5004624	64	2	383	10 35 874 5	MONTAJE DEPÓSITO HIDR.
TORNILLO PURGA ACEITE	5004624	45	1	546	10 35 868 3	INSTALACION CARBURANTE
TORNILLO PURGA ACEITE	5004624	4	1	582	10 12 593 7	CUBETA ACEITE C.SUJECIÓN
TORNILLO PURGA ACEITE M2	7365034	5	2	199	10 35 873 9	MONTAJE DE RADIADOR
TORNILLO PURGADOR	7412942	1	1	619	10 30 300 7	PREFILTRO COMBUSTIBLE
TORNILLO PURGADOR	9613451	1	1	766	96 13 452	TORNILLO PURGADOR G 1/4'
TORNILLO PURGADOR G 1/4'	9613452	28	1	755	94 02 020 2	CILINDRO HIDRAULICO
TORNILLO PURGADOR G 1/4'	9613452	28	2	757	99 06 383	CILINDRO HIDRAULICO
TORNILLO PURGADOR G 1/4'	9613452	28	2	758	99 06 576	CILINDRO HIDRAULICO
TORNILLO PURGADOR M6x8 8.	7361391	360	1	752	10 34 080 6	SEGURO CONTRA ROTURA TU
TORNILLO PURGADOR M6x8 8.	7361391	360	1	753	10 34 081 2	SEGURO CONTRA ROTURA TU
TORNILLO ROSCA CORTANTE	4901530	6	2	499	99 41 040	MONTAJE FARO
TORNILLO SEGURIDAD M8X1 1	10116319	2	2	603	10 11 632 0	ELEMENTOS DE MANDO
TORNILLO ST RM>800N/MM2	10127499	16	2	578	10 12 503 7	ANEJO TUBERIA
TORNILLO ST RM>800N/MM2	10127691	19	2	578	10 12 503 7	ANEJO TUBERIA
TORNILLO TOPE NG 165	9880236	16	1	80	92 78 174	REGULACIÓN
TORNILLO VERBUS-RIPP	4900641	28	20	41	10 35 874 0	ESTRUC.INF.COMPL.
TORNILLO VERBUS-RIPP	7366804	36	1	269	10 05 311 8	BASE PUESTO CONDUCTOR
TORNILLO VERBUS-RIPP M16	10010205	61	30	465	10 35 876 0	CUBIERTA INF.
TORNILLO VERBUS-RIPP M16	10010205	61	30	466	10 49 857 4	CUBIERTA INF.
TRANSFORMADOR DE TENSIO	7026493	120	1	293	10 82 277 5	REPOSABRAZOS DERECHA
TRANSMISION ROTATIVO	10009630	8	1	54	10 49 867 0	MONTAJE CONEXIÓN GIRATO
TRANSMISION ROTATIVO	9141597	7	1	54	10 49 867 0	MONTAJE CONEXIÓN GIRATO
TRAVIESA EN U	10058048	2	1	103	10 05 300 8	COMPART.BOMBA PIEZAS
TROZO DE LATIGUILLO	7402657	1	1	554	93 58 137	TUBO FLEX.PURGA ACEITE
TUB.IMPULS.COMPL.	10059814	5	1	713	10 07 162 8	CILINDRO HIDROLICO+ADICIO
TUB.IMPULS.COMPL.	10065818	102	1	704	10 35 872 5	PLUMA MONOBLOC 7,00M
TUB.IMPULS.COMPL.	10065821	32	1	701	10 35 872 5	PLUMA MONOBLOC 7,00M
TUB.IMPULS.COMPL.	10065825	101	1	704	10 35 872 5	PLUMA MONOBLOC 7,00M
TUB.IMPULS.COMPL.	10065827	29	1	701	10 35 872 5	PLUMA MONOBLOC 7,00M
TUB.IMPULS.COMPL.	10065842	34	1	701	10 35 872 5	PLUMA MONOBLOC 7,00M
TUB.IMPULS.COMPL.	10065846	33	1	701	10 35 872 5	PLUMA MONOBLOC 7,00M
TUB.IMPULS.COMPL.	10065850	31	1	701	10 35 872 5	PLUMA MONOBLOC 7,00M
TUB.IMPULS.COMPL.	10065863	30	1	701	10 35 872 5	PLUMA MONOBLOC 7,00M
TUB.IMPULS.COMPL.	10065951	45	1	701	10 35 872 5	PLUMA MONOBLOC 7,00M
TUB.IMPULS.COMPL.	10065955	44	1	701	10 35 872 5	PLUMA MONOBLOC 7,00M
TUB.IMPULS.COMPL.	10066281	10	1	706	10 06 477 4	CILINDRO HIDROLICO+ADICIO
TUB.IMPULS.COMPL.	10066841	73	1	702	10 35 872 5	PLUMA MONOBLOC 7,00M
TUB.IMPULS.COMPL.	10066843	70	1	702	10 35 872 5	PLUMA MONOBLOC 7,00M

Descripción	Artículo	Pos.	Cantid	Página	Grupo	Descripción
TUB.IMPULS.COMPL.	10067722	2	1	403	10 06 771 7	MONTAJE TUBERÍAS IMPULS.
TUB.IMPULS.COMPL.	10067724	3	1	403	10 06 771 7	MONTAJE TUBERÍAS IMPULS.
TUB.IMPULS.COMPL.	10067726	4	1	403	10 06 771 7	MONTAJE TUBERÍAS IMPULS.
TUB.IMPULS.COMPL.	10067728	5	1	403	10 06 771 7	MONTAJE TUBERÍAS IMPULS.
TUB.IMPULS.COMPL.	10067730	6	1	403	10 06 771 7	MONTAJE TUBERÍAS IMPULS.
TUB.IMPULS.COMPL.	10067732	7	1	403	10 06 771 7	MONTAJE TUBERÍAS IMPULS.
TUB.IMPULS.COMPL.	10067734	8	1	403	10 06 771 7	MONTAJE TUBERÍAS IMPULS.
TUB.IMPULS.COMPL.	10067736	9	1	403	10 06 771 7	MONTAJE TUBERÍAS IMPULS.
TUB.IMPULS.COMPL.	10067738	10	1	403	10 06 771 7	MONTAJE TUBERÍAS IMPULS.
TUB.IMPULS.COMPL.	10074636	133	1	705	10 35 872 5	PLUMA MONOBLOC 7,00M
TUB.IMPULS.COMPL.	10358242	55	1	397	10 35 874 4	MONTAJE CORREDERA DISTR
TUB.IMPULS.COMPL.	9490631	1	1	54	10 49 867 0	MONTAJE CONEXIÓN GIRATO
TUBERIA	10117635	14	1	617	10 12 314 1	MONT.FILTRO FINO COMBUS
TUBERIA	10118747	1	1	576	10 11 874 8	ANEJO TUBERIA
TUBERIA	10119307	13	1	641	10 11 930 6	MONT.TUBERÍA DE PURGA
TUBERIA	10121098	3	1	605	10 12 002 3	TUBERIA DE ACEITE MONTAJ
TUBERIA	10125038	1	1	578	10 12 503 7	ANEJO TUBERIA
TUBERIA	10125039	2	1	578	10 12 503 7	ANEJO TUBERIA
TUBERIA 10X1	10116691	3	1	641	10 11 930 6	MONT.TUBERÍA DE PURGA
TUBERIA 10X1	10116692	2	1	641	10 11 930 6	MONT.TUBERÍA DE PURGA
TUBERIA 12X1	10117241	1	1	623	10 12 720 8	TUBERIAS DE COMBUSTIBLE
TUBERIA 12X1	10132067	6	1	610	10 13 273 8	VALVULA REGULACION TERMI
TUBERIA 12X1	10132100	2	1	610	10 13 273 8	VALVULA REGULACION TERMI
TUBERIA ACEITE LUBRICANT	10119570	7	1	649	10 13 273 9	MONTAJE ATL
TUBERIA ACEITE LUBRICANTE	10132112	7	1	650	10 13 274 0	MONTAJE ATL
TUBERIA COMBUSTIBLE	10119000	2	1	617	10 12 314 1	MONT.FILTRO FINO COMBUS
TUBERIA COMBUSTIBLE	10121096	6	1	623	10 12 720 8	TUBERIAS DE COMBUSTIBLE
TUBERIA COMBUSTIBLE 12X1	9080725	4	1	623	10 12 720 8	TUBERIAS DE COMBUSTIBLE
TUBERIA COMBUSTIBLE 12X1	9080726	5	1	623	10 12 720 8	TUBERIAS DE COMBUSTIBLE
TUBERIA COMBUSTIBLE EDC-	9079085	7	1	623	10 12 720 8	TUBERIAS DE COMBUSTIBLE
TUBERIA COMBUSTIBLE MOT	9080724	3	1	623	10 12 720 8	TUBERIAS DE COMBUSTIBLE
TUBERIA COMBUSTIBLE RAIL-	9078870	2	1	623	10 12 720 8	TUBERIAS DE COMBUSTIBLE
TUBERIA DE ACEITE	10121738	1	1	605	10 12 002 3	TUBERIA DE ACEITE MONTAJ
TUBERIA DE ACEITE	10121739	2	1	605	10 12 002 3	TUBERIA DE ACEITE MONTAJ
TUBERIA DE ACEITE DE FUGA	9078555	1	2	621	90 78 554	MONTAJE TUBERÍA A.FUGA
TUBERIA DE ACEITE DE FUGA	9078559	3	1	621	90 78 554	MONTAJE TUBERÍA A.FUGA
TUBERIA DE ACEITE DE FUGA	9078557	2	1	621	90 78 554	MONTAJE TUBERÍA A.FUGA
TUBERIA DE ACEITE MONTAJ	10120023	3	1	604	10 12 476 3	MONTAJE MÓDULO ACEITE
TUBERIA DE ACEITE PREMO	10123759	20	1	578	10 12 503 7	ANEJO TUBERIA
TUBERIA DE ESCAPE	10055117	51	1	117	10 35 873 3	AIRE Y SISTEMA ESCAPE
TUBERIA DE ESCAPE	10055118	50	1	117	10 35 873 3	AIRE Y SISTEMA ESCAPE
TUBERIA PURGADORA	10120020	1	2	641	10 11 930 6	MONT.TUBERÍA DE PURGA
TUBERIAS DE COMBUSTIBLE	10127208	212	1	567	10 12 595 9	MOTOR DIESEL D9508 A7 320k
TUBERIAS DE INYECCION	10119367	215	1	567	10 12 595 9	MOTOR DIESEL D9508 A7 320k
TUBERIAS DE INYECCION	10119368	216	1	568	10 12 595 9	MOTOR DIESEL D9508 A7 320k
TUBERÍA DE RETORNO DE A	10123760	1	1	579	10 12 375 9	TUBERIA DE ACEITE PREMO
TUBERÍA DE RETORNO DE A	10130203	8	1	649	10 13 273 9	MONTAJE ATL
TUBERÍA DE RETORNO DE A	10130209	8	1	650	10 13 274 0	MONTAJE ATL
TUBERÍA DE RETORNO DE AC	10123764	2	1	579	10 12 375 9	TUBERIA DE ACEITE PREMO
TUBERÍA DE RETORNO DE AC	10126762	23	1	582	10 12 593 7	CUBETA ACEITE C.SUJECIÓN
TUBERÍA IMPULSIÓN	10064100	41	1	344	10 35 875 5	EJEC.GIRADA HIDR.+MEC.GIR
TUBERÍA IMPULSIÓN	10093284	40	1	344	10 35 875 5	EJEC.GIRADA HIDR.+MEC.GIR
TUBERÍA IMPULSIÓN	10119365	3	1	625	10 11 941 3	MONTAJE TUBERÍA DE IMPU
TUBERÍA IMPULSIÓN	10119366	4	1	625	10 11 941 3	MONTAJE TUBERÍA DE IMPU
TUBO	10061167	15	1	354	10 35 875 1	INST.HIDR.ACC. VENTILADOR
TUBO	10061171	16	1	354	10 35 875 1	INST.HIDR.ACC. VENTILADOR
TUBO	10064709	56	1	397	10 35 874 4	MONTAJE CORREDERA DISTR
TUBO	10071345	20	1	200	10 35 873 9	MONTAJE DE RADIADOR
TUBO	10074612	57	1	397	10 35 874 4	MONTAJE CORREDERA DISTR
TUBO	774373708	75	1	255	90 64 786	BASE DE FIJACION

Descripción	Artículo	Pos.	Cantid	Página	Grupo	Descripción
TUBO ACODADO	7028868	630	1	483	70 28 866	BRAZO DEL LIMPIAPARABRISA
TUBO AIRE	10060949	40	1	116	10 35 873 3	AIRE Y SISTEMA ESCAPE
TUBO ASPIRADOR ANEJO	9080436	221	1	568	10 12 595 9	MOTOR DIESEL D9508 A7 320k
TUBO COLECTOR	10068187	35	1	403	10 06 771 7	MONTAJE TUBERÍAS IMPULS.
TUBO COLECTOR	10068188	36	1	403	10 06 771 7	MONTAJE TUBERÍAS IMPULS.
TUBO DE AGUA	10054423	30	1	201	10 35 873 9	MONTAJE DE RADIADOR
TUBO DE ASPIRACION	9080198	26	1	126	90 80 120	ENGRANAJE DISTRIBUCION
TUBO DE ESCAPE	10115612	2	1	645	10 11 566 7	TUBO DE ESCAPE DERECHA
TUBO DE ESCAPE	10115614	2	1	648	10 11 566 8	TUBO DE ESCAPE IZQUIERDA
TUBO DE ESCAPE	9079024	1	1	648	10 11 566 8	TUBO DE ESCAPE IZQUIERDA
TUBO DE ESCAPE	9079026	1	1	645	10 11 566 7	TUBO DE ESCAPE DERECHA
TUBO DE ESCAPE DERECHA	10115667	1	1	644	10 11 566 9	MONTAJE TUBO DE ESCAPE
TUBO DE ESCAPE IZQUIERDA	10115668	2	1	644	10 11 566 9	MONTAJE TUBO DE ESCAPE
TUBO DE PLASTICO	7028899	380	1	484	70 28 778	PIEZAS DE MONTAJE
TUBO DE RETORNO	7368995	5	1	389	73 68 771	FILTRO DE RETORNO
TUBO DE TOBERA	7900836	150	1	552	10 08 428 5	HERRAMIENTAS DE EQUIPAM
TUBO ENCHUFABLE	10037030	8	1	689	10 12 094 4	JUEGO JUNTAS COMPRESOR
TUBO ENCHUFABLE	10037030	6	4	693	10 12 098 2	JUEGO JUNTAS RETORNO E
TUBO ENCHUFABLE	10354599	7	2	689	10 12 094 4	JUEGO JUNTAS COMPRESOR
TUBO ENCHUFABLE	9078800	3	2	638	10 11 763 3	CONEXIÓN CONDUCTOS AGU
TUBO ENCHUFABLE DMR42X3	10354600	7	2	582	10 12 593 7	CUBETA ACEITE C.SUJECIÓN
TUBO ENCHUFABLE DMR42X3	10354600	4	2	683	10 12 087 1	JJ CUBETA ACEITE
TUBO ENCHUFABLE DR 61X32	10354601	5	2	638	10 11 763 3	CONEXIÓN CONDUCTOS AGU
TUBO ENCHUFABLE DR 61X32	10354601	3	2	691	10 12 097 3	JJ BOMBA AGUA
TUBO FLEX.MANDO	5609395	3	1	366	10 82 438 0	INST.HIDR.CONDUCTOS MAND
TUBO FLEX.MANDO	6718632	11	2	89	10 07 444 8	INST.HIDR.ESTRUC.INF.
TUBO FLEX.MANDO	7005047	21	2	89	10 07 444 8	INST.HIDR.ESTRUC.INF.
TUBO FLEX.MANDO	7005314	70	1	398	10 35 874 4	MONTAJE CORREDERA DISTR
TUBO FLEX.PURGA ACEITE	10088112	20	1	550	10 49 815 2	HERRAMIENTAS DE EQUIPAM
TUBO FLEX.PURGA ACEITE	9358137	180	1	552	10 08 428 5	HERRAMIENTAS DE EQUIPAM
TUBO FLEX.PURGA ACEITE D	7402658	2	1	554	93 58 137	TUBO FLEX.PURGA ACEITE
TUBO GOMA	10000269	22	1	346	10 05 312 6	TUBOS FLEX.HIDR./ASPIR.+R
TUBO GOMA	10000292	61	1	358	10 35 875 1	INST.HIDR.ACC. VENTILADOR
TUBO GOMA	10000380	14	2	89	10 07 444 8	INST.HIDR.ESTRUC.INF.
TUBO GOMA	10000463	24	1	346	10 05 312 6	TUBOS FLEX.HIDR./ASPIR.+R
TUBO GOMA	10000811	2	1	156	10 33 323 8	REGUL.HIDR.
TUBO GOMA	10000896	25	1	352	10 05 312 9	REFRIG.ACEITE TRANS.E HI
TUBO GOMA	10000947	124	1	705	10 35 872 5	PLUMA MONOBLOC 7,00M
TUBO GOMA	10000947	134	1	705	10 35 872 5	PLUMA MONOBLOC 7,00M
TUBO GOMA	10000954	65	1	350	10 05 312 6	TUBOS FLEX.HIDR./ASPIR.+R
TUBO GOMA	10003614	11	1	361	10 35 875 4	INST.HIDR.CONDUCTOS MAND
TUBO GOMA	10003614	11	1	368	10 82 438 0	INST.HIDR.CONDUCTOS MAND
TUBO GOMA	10003862	35	1	701	10 35 872 5	PLUMA MONOBLOC 7,00M
TUBO GOMA	10013970	1020	2.2	479	10 48 809 7	INST.ELÉCTRICA
TUBO GOMA	10017322	55	1	349	10 05 312 6	TUBOS FLEX.HIDR./ASPIR.+R
TUBO GOMA	10030891	5	1	244	10 29 301 9	COMBINACIÓN DE DISTRIB. M
TUBO GOMA	10032752	26	1	364	10 35 875 4	INST.HIDR.CONDUCTOS MAND
TUBO GOMA	10032752	26	1	371	10 82 438 0	INST.HIDR.CONDUCTOS MAND
TUBO GOMA	10041726	8	1	719	10 35 872 0	ENGRASE CENTRALIZADO
TUBO GOMA	10285271	26	1	352	10 05 312 9	REFRIG.ACEITE TRANS.E HI
TUBO GOMA	10289035	7	1	343	10 35 875 5	EJEC.GIRADA HIDR.+MEC.GIR
TUBO GOMA	10289036	8	1	343	10 35 875 5	EJEC.GIRADA HIDR.+MEC.GIR
TUBO GOMA	10289037	9	1	343	10 35 875 5	EJEC.GIRADA HIDR.+MEC.GIR
TUBO GOMA	10289038	10	1	343	10 35 875 5	EJEC.GIRADA HIDR.+MEC.GIR
TUBO GOMA	10289039	3	1	345	10 05 312 6	TUBOS FLEX.HIDR./ASPIR.+R
TUBO GOMA	10289040	25	1	355	10 35 875 1	INST.HIDR.ACC. VENTILADOR
TUBO GOMA	10289045	2	2	343	10 35 875 5	EJEC.GIRADA HIDR.+MEC.GIR
TUBO GOMA	10289156	3	1	359	10 35 875 4	INST.HIDR.CONDUCTOS MAND
TUBO GOMA	10289157	2	1	359	10 35 875 4	INST.HIDR.CONDUCTOS MAND
TUBO GOMA	10289157	2	1	366	10 82 438 0	INST.HIDR.CONDUCTOS MAND

Descripción	Artículo	Pos.	Cantid	Página	Grupo	Descripción
TUBO GOMA	10289158	52	1	357	10 35 875 1	INST.HIDR.ACC. VENTILADOR
TUBO GOMA	10289159	35	1	347	10 05 312 6	TUBOS FLEX.HIDR./ASPIR.+R
TUBO GOMA	10289307	40	2	335	10 38 698 2	INST.HIDR.BOMBAS A CORR.D
TUBO GOMA	10289307	40	2	338	10 49 804 4	INST.HIDR.BOMBAS A CORR.D
TUBO GOMA	10289313	2	1	351	10 05 312 9	REFRIG.ACEITE TRANS.E HI
TUBO GOMA	10289314	3	1	351	10 05 312 9	REFRIG.ACEITE TRANS.E HI
TUBO GOMA	10289321	5	1	540	10 35 875 6	MONTAJE TUBOS FLEX. AIRE
TUBO GOMA	10289322	6	1	540	10 35 875 6	MONTAJE TUBOS FLEX. AIRE
TUBO GOMA	10289323	7	1	540	10 35 875 6	MONTAJE TUBOS FLEX. AIRE
TUBO GOMA	10289324	8	1	540	10 35 875 6	MONTAJE TUBOS FLEX. AIRE
TUBO GOMA	10289376	17	2	219	10 05 302 4	MONTAJE MEC. GIRO
TUBO GOMA	10290254	2	1	334	10 38 698 2	INST.HIDR.BOMBAS A CORR.D
TUBO GOMA	10290254	2	1	337	10 49 804 4	INST.HIDR.BOMBAS A CORR.D
TUBO GOMA	10290522	119	5	704	10 35 872 5	PLUMA MONOBLOC 7,00M
TUBO GOMA	10290523	118	2	704	10 35 872 5	PLUMA MONOBLOC 7,00M
TUBO GOMA	10290524	117	2	704	10 35 872 5	PLUMA MONOBLOC 7,00M
TUBO GOMA	10293162	6	1	248	10 29 301 6	COMBINACIÓN DE DISTRIB. M
TUBO GOMA	10293163	7	1	248	10 29 301 6	COMBINACIÓN DE DISTRIB. M
TUBO GOMA	10293164	8	1	248	10 29 301 6	COMBINACIÓN DE DISTRIB. M
TUBO GOMA	10293165	9	1	248	10 29 301 6	COMBINACIÓN DE DISTRIB. M
TUBO GOMA	10293166	10	1	248	10 29 301 6	COMBINACIÓN DE DISTRIB. M
TUBO GOMA	10293169	11	1	248	10 29 301 6	COMBINACIÓN DE DISTRIB. M
TUBO GOMA	10293172	6	1	244	10 29 301 9	COMBINACIÓN DE DISTRIB. M
TUBO GOMA	10296022	2	3	789	10 37 296 7	PROLONGACIÓN TUBOS FLEX
TUBO GOMA	10297576	83	2	703	10 35 872 5	PLUMA MONOBLOC 7,00M
TUBO GOMA	10297579	69	2	702	10 35 872 5	PLUMA MONOBLOC 7,00M
TUBO GOMA	10297581	75	2	702	10 35 872 5	PLUMA MONOBLOC 7,00M
TUBO GOMA	10298516	96	4	703	10 35 872 5	PLUMA MONOBLOC 7,00M
TUBO GOMA	10298807	3	2	711	10 38 862 4	ENGRASE CENTRALIZADO
TUBO GOMA	10300878	9	1	714	10 35 872 1	MANGO DE LA PALA 2,60M
TUBO GOMA	10300879	10	1	714	10 35 872 1	MANGO DE LA PALA 2,60M
TUBO GOMA	10303056	30	1	356	10 35 875 1	INST.HIDR.ACC. VENTILADOR
TUBO GOMA	10303382	7	1	719	10 35 872 0	ENGRASE CENTRALIZADO
TUBO GOMA	10303383	30	1	720	10 35 872 0	ENGRASE CENTRALIZADO
TUBO GOMA	10323710	24	1	364	10 35 875 4	INST.HIDR.CONDUCTOS MAND
TUBO GOMA	10327169	3	1	334	10 38 698 2	INST.HIDR.BOMBAS A CORR.D
TUBO GOMA	10327169	3	1	337	10 49 804 4	INST.HIDR.BOMBAS A CORR.D
TUBO GOMA	10340098	20	1	246	10 07 675 7	LUBR.CENTR.CARRO SUPER
TUBO GOMA	10346618	40	1	356	10 35 875 1	INST.HIDR.ACC. VENTILADOR
TUBO GOMA	10353605	3	2	343	10 35 875 5	EJEC.GIRADA HIDR.+MEC.GIR
TUBO GOMA	10353606	4	2	343	10 35 875 5	EJEC.GIRADA HIDR.+MEC.GIR
TUBO GOMA	10353607	32	1	797	10 09 406 7	TUBOS FLEX.CALEF.Y CLIMAT
TUBO GOMA	10353608	31	1	797	10 09 406 7	TUBOS FLEX.CALEF.Y CLIMAT
TUBO GOMA	10409574	55	2	771	10 35 873 1	CILINDRO ELEVADOR DIA.190
TUBO GOMA	5602647	20	1	346	10 05 312 6	TUBOS FLEX.HIDR./ASPIR.+R
TUBO GOMA	5603339	72	1	702	10 35 872 5	PLUMA MONOBLOC 7,00M
TUBO GOMA	5604252	3	2	89	10 07 444 8	INST.HIDR.ESTRUC.INF.
TUBO GOMA	5610046	40	1	348	10 05 312 6	TUBOS FLEX.HIDR./ASPIR.+R
TUBO GOMA	5611369	2	2	89	10 07 444 8	INST.HIDR.ESTRUC.INF.
TUBO GOMA	5612243	125	1	399	10 35 874 4	MONTAJE CORREDERA DISTR
TUBO GOMA	5612659	84	4	123	10 35 879 9	MONTAJE BOMBAS
TUBO GOMA	5612659	93	1	124	10 35 879 9	MONTAJE BOMBAS
TUBO GOMA	5613500	21	3	363	10 35 875 4	INST.HIDR.CONDUCTOS MAND
TUBO GOMA	5613500	21	3	370	10 82 438 0	INST.HIDR.CONDUCTOS MAND
TUBO GOMA	5615135	50	1	357	10 35 875 1	INST.HIDR.ACC. VENTILADOR
TUBO GOMA	5615647	138	1	705	10 35 872 5	PLUMA MONOBLOC 7,00M
TUBO GOMA	5616211	20	1	363	10 35 875 4	INST.HIDR.CONDUCTOS MAND
TUBO GOMA	5616211	20	1	370	10 82 438 0	INST.HIDR.CONDUCTOS MAND
TUBO GOMA	5616558	36	1	701	10 35 872 5	PLUMA MONOBLOC 7,00M
TUBO GOMA	5618265	60	1	358	10 35 875 1	INST.HIDR.ACC. VENTILADOR

Descripción	Artículo	Pos.	Cantid	Página	Grupo	Descripción
TUBO GOMA	5618388	28	1	352	10 05 312 9	REFRIG.ACEITE TRANS.E HI
TUBO GOMA	5618392	125	1	705	10 35 872 5	PLUMA MONOBLOC 7,00M
TUBO GOMA	5618412	115	1	399	10 35 874 4	MONTAJE CORREDERA DISTR
TUBO GOMA	5618453	66	3	397	10 35 874 4	MONTAJE CORREDERA DISTR
TUBO GOMA	5618677	65	2	397	10 35 874 4	MONTAJE CORREDERA DISTR
TUBO GOMA	5618801	60	1	350	10 05 312 6	TUBOS FLEX.HIDR./ASPIR.+R
TUBO GOMA	5618881	50	1	349	10 05 312 6	TUBOS FLEX.HIDR./ASPIR.+R
TUBO GOMA	5619289	105	1	399	10 35 874 4	MONTAJE CORREDERA DISTR
TUBO GOMA	5619289	110	1	399	10 35 874 4	MONTAJE CORREDERA DISTR
TUBO GOMA	6200461	700	5	478	10 48 809 7	INST.ELÉCTRICA
TUBO GOMA	6200461	640	0.5	482	10 29 114 6	BRAZO DEL LIMPIAPARABRISA
TUBO GOMA	7008082	10	1	361	10 35 875 4	INST.HIDR.CONDUCTOS MAND
TUBO GOMA	7008082	10	1	368	10 82 438 0	INST.HIDR.CONDUCTOS MAND
TUBO GOMA	7011398	2	1	345	10 05 312 6	TUBOS FLEX.HIDR./ASPIR.+R
TUBO GOMA	7012265	95	3	703	10 35 872 5	PLUMA MONOBLOC 7,00M
TUBO GOMA	7025676	51	2	357	10 35 875 1	INST.HIDR.ACC. VENTILADOR
TUBO GOMA	7029428	640	1	483	70 28 866	BRAZO DEL LIMPIAPARABRISA
TUBO GOMA	7360075	63	2	117	10 35 873 3	AIRE Y SISTEMA ESCAPE
TUBO GOMA	7413022	21	1	346	10 05 312 6	TUBOS FLEX.HIDR./ASPIR.+R
TUBO GOMA	7413028	120	1	399	10 35 874 4	MONTAJE CORREDERA DISTR
TUBO GOMA	7413201	27	1	352	10 05 312 9	REFRIG.ACEITE TRANS.E HI
TUBO GOMA	7620786	23	1	346	10 05 312 6	TUBOS FLEX.HIDR./ASPIR.+R
TUBO GOMA NW 6,5	10043525	170	1	256	90 64 786	BASE DE FIJACION
TUBO GOMA NW 6,5	10043525	170	10	258	10 01 461 1	CAJA AUXILIAR
TUBO GUIA	10116947	2	1	583	10 11 694 5	VARILLA NIVEL ACEITE C.TUB
TUBO GUIA	9271462	2	1	129	90 80 211	
TUBO HELICOIDAL	774383508	65	1	255	90 64 786	BASE DE FIJACION
TUBO HELICOIDAL	774383508	165	1	256	90 64 786	BASE DE FIJACION
TUBO PARA ASPIRACION DE A	9079036	1	1	627	90 79 075	ASPIRACIÓN DE AIRE DCHA.
TUBO PARA ASPIRACION DE A	9079037	1	1	628	90 79 076	ASPIRACION DE AIRE
TUBO PRESIÓN RAIL DCHO.	10116120	2	1	625	10 11 941 3	MONTAJE TUBERÍA DE IMPU
TUBO PRESIÓN RAIL IZDO.	10116119	1	1	625	10 11 941 3	MONTAJE TUBERÍA DE IMPU
TUBO PURGADOR	10016664	43	1	250	10 34 071 7	ENGRASADORA
TUBO RETORNO ACEITE	9570013	6	1	345	10 05 312 6	TUBOS FLEX.HIDR./ASPIR.+R
TUBOS FLEX.CALEF.Y CLIMAT	10094067	25	1	795	10 49 815 5	ELEVACIÓN CABINA CONDU
TUBOS FLEX.HIDR./ASPIR.+R	10053126	60	1	332	10 35 874 7	INST.HIDR.CARRO SUPERIOR
TUBOS FLEX.HIDR./ASPIR.+R	10053126	60	1	333	10 49 853 7	INST.HIDR.CARRO SUPERIOR
TUBULADURA AIRE	10022083	14	1	322	11 00 359 4	CARCASA
TUBULADURA AIRE D=80MM	11003425	87	1	271	10 05 311 8	BASE PUESTO CONDUCTOR
TUERCA	10011397	4	1	56	10 00 963 0	TRANSMISION ROTATIVO
TUERCA	10066360	32	8	396	10 35 874 4	MONTAJE CORREDERA DISTR
TUERCA	10489539	998	1	409	10 47 594 2	VALVULA REDUCTORA DE PR
TUERCA ALMENADA	9161348	3	1	739	99 35 245	BULON
TUERCA C/RANURA	932719601	13	1	221	90 01 781 7	ACCIONAMIENTO GIRATORIO
TUERCA CON BRIDA	7369934	22	2	130	10 21 593 5	BOMBA
TUERCA CON COLLAR SEALL	7014529	9	1	262	10 29 792 9	VALVULA LIMITADORA DE PR
TUERCA CON COLLAR SEALL	7009369	47	1	131	10 42 845 9	BOMBA MEC. GIRO
TUERCA CON COLLAR SEAL	7361600	57	2	187	98 82 875	JJ VÁLVULA REGULADORA
TUERCA CON COLLAR SEAL	7361601	8	1	374	50 09 565	CARTUCHO LIM.PRESIÓN
TUERCA DE DOS AGUJEROS	11005554	17	1	619	10 30 300 7	PREFILTRO COMBUSTIBLE
TUERCA DE MARIPOSA	7403149	8	4	118	10 35 873 4	MONTAJE FILTRO AIRE
TUERCA DE PISTON	9101411	4	1	757	99 06 383	CILINDRO HIDRAULICO
TUERCA DE PISTON	9101411	4	1	758	99 06 576	CILINDRO HIDRAULICO
TUERCA DE SOMBRERETE	10278642	135	1	752	10 34 080 6	SEGURO CONTRA ROTURA TU
TUERCA DE SOMBRERETE	10278642	135	1	753	10 34 081 2	SEGURO CONTRA ROTURA TU
TUERCA HEXAGONAL	10003366	3	1	633	90 78 314	MONTAJE BRIDA CALEFACCIÓ
TUERCA HEXAGONAL	10297942	16	1	177	10 40 974 7	REGULACIÓN HIDR.
TUERCA HEXAGONAL	7024940	133	1	752	10 34 080 6	SEGURO CONTRA ROTURA TU
TUERCA HEXAGONAL	7024940	133	1	753	10 34 081 2	SEGURO CONTRA ROTURA TU
TUERCA HEXAGONAL M10	4002563	104	2	207	10 35 873 9	MONTAJE DE RADIADOR

Descripción	Artículo	Pos.	Cantid	Página	Grupo	Descripción
TUERCA HEXAGONAL M10	4002563	16	4	219	10 05 302 4	MONTAJE MEC. GIRO
TUERCA HEXAGONAL M10	4901429	56	10	117	10 35 873 3	AIRE Y SISTEMA ESCAPE
TUERCA HEXAGONAL M10	7370889	8	2	280	10 16 576 6	CONSOLA MANDO IZDA.
TUERCA HEXAGONAL M10	7370889	13	4	295	56 18 923	CONSOLA DE MANDO A LA DE
TUERCA HEXAGONAL M12	4000619	37	4	344	10 35 875 5	EJEC.GIRADA HIDR.+MEC.GIR
TUERCA HEXAGONAL M12	4000619	258	1	422	10 05 303 6	REVESTIMIENTO
TUERCA HEXAGONAL M12	4000619	137	1	432	10 49 857 1	REVESTIMIENTO
TUERCA HEXAGONAL M12	4000619	258	1	437	10 49 857 1	REVESTIMIENTO
TUERCA HEXAGONAL M12	4000619	41	8	701	10 35 872 5	PLUMA MONOBLOC 7,00M
TUERCA HEXAGONAL M12	4000619	8	2	713	10 07 162 8	CILINDRO HIDROLICO+ADICIO
TUERCA HEXAGONAL M12	4900125	12	1	286	10 05 879 2	SENSOR CONTR.PILOT.PREV
TUERCA HEXAGONAL M12	4900125	12	1	299	10 05 879 4	SENSOR CONTR.PILOT.PREV
TUERCA HEXAGONAL M16	4000420	48	8	42	10 35 874 0	ESTRUC.INF.COMPL.
TUERCA HEXAGONAL M16	4000420	17	1	80	92 78 174	REGULACIÓN
TUERCA HEXAGONAL M16	4000420	49	8	127	90 80 120	ENGRANAJE DISTRIBUCION
TUERCA HEXAGONAL M16	4000420	49	5	407	10 11 355 7	BLOQUE MANDO
TUERCA HEXAGONAL M16	4000420	5	2	740	10 07 061 5	ABRAZADERA
TUERCA HEXAGONAL M20 100	10425687	48	2	126	90 80 120	ENGRANAJE DISTRIBUCION
TUERCA HEXAGONAL M24 100	10425688	26	8	110	10 49 845 5	ALOJAMIENTO DE MOTOR
TUERCA HEXAGONAL M4	4000376	38	16	277	10 05 798 3	REPOSABRAZOS IZQUIERDA
TUERCA HEXAGONAL M4	4000376	105	1	292	10 82 277 5	REPOSABRAZOS DERECHA
TUERCA HEXAGONAL M4	4000376	121	2	293	10 82 277 5	REPOSABRAZOS DERECHA
TUERCA HEXAGONAL M4	4000376	5	3	324	10 02 207 8	ESCUADRA DE MONTAJE
TUERCA HEXAGONAL M4	4000376	2180	3	490	10 29 113 8	REVESTIMIENTO
TUERCA HEXAGONAL M4	4000376	98	4	495	10 35 875 7	INST.EL.CARRO SUPERIOR
TUERCA HEXAGONAL M4	4000376	44	3	504	10 09 499 2	RELACIÓN MATERIAL EL.
TUERCA HEXAGONAL M4	4000376	55	12	526	10 35 876 3	INST.EL.DEP. COMBUSTIBLE
TUERCA HEXAGONAL M4	4000376	55	12	533	10 49 837 7	INST.EL.DEP. COMBUSTIBLE
TUERCA HEXAGONAL M4	4000376	3	2	783	98 73 999	CALEF.20W/24V P.CAJA EL.
TUERCA HEXAGONAL M4	4000376	67	8	793	10 82 390 4	INST.EL.ELEVACIÓN 1200MM
TUERCA HEXAGONAL M4	413412301	44	4	250	10 34 071 7	ENGRASADORA
TUERCA HEXAGONAL M4	4600625	10	6	321	10 02 211 7	CAJA CONDUCTO AIRE
TUERCA HEXAGONAL M5	4000466	47	2	278	10 05 798 3	REPOSABRAZOS IZQUIERDA
TUERCA HEXAGONAL M5	4000466	63	2	282	97 58 815 01	PLACA E
TUERCA HEXAGONAL M5	4000466	8	2	283	98 74 988	MONTAJE PLETINAS A1016
TUERCA HEXAGONAL M5	4000466	112	1	293	10 82 277 5	REPOSABRAZOS DERECHA
TUERCA HEXAGONAL M5	4000466	64	2	504	10 09 499 2	RELACIÓN MATERIAL EL.
TUERCA HEXAGONAL M5	4000466	112	1	505	10 09 499 2	RELACIÓN MATERIAL EL.
TUERCA HEXAGONAL M5	4001866	66	2	282	97 58 815 01	PLACA E
TUERCA HEXAGONAL M6	4000379	480	2	71	56 16 688	VÁLVULA FRENO MARCHA
TUERCA HEXAGONAL M6	4000379	22	2	113	10 09 538 7	MONTAJE FILTRO COMBUSTI
TUERCA HEXAGONAL M6	4000379	46	2	126	90 80 120	ENGRANAJE DISTRIBUCION
TUERCA HEXAGONAL M6	4000379	64	2	282	97 58 815 01	PLACA E
TUERCA HEXAGONAL M6	4000379	86	2	292	10 82 277 5	REPOSABRAZOS DERECHA
TUERCA HEXAGONAL M6	4000379	75	1	316	10 40 689 8	AIRE ACONDICIONADO
TUERCA HEXAGONAL M6	4000379	39	2	414	10 05 303 6	REVESTIMIENTO
TUERCA HEXAGONAL M6	4000379	99	2	416	10 05 303 6	REVESTIMIENTO
TUERCA HEXAGONAL M6	4000379	140	2	417	10 05 303 6	REVESTIMIENTO
TUERCA HEXAGONAL M6	4000379	172	2	418	10 05 303 6	REVESTIMIENTO
TUERCA HEXAGONAL M6	4000379	39	2	429	10 49 857 1	REVESTIMIENTO
TUERCA HEXAGONAL M6	4000379	99	2	431	10 49 857 1	REVESTIMIENTO
TUERCA HEXAGONAL M6	4000379	140	2	432	10 49 857 1	REVESTIMIENTO
TUERCA HEXAGONAL M6	4000379	172	2	433	10 49 857 1	REVESTIMIENTO
TUERCA HEXAGONAL M6	4000379	12	2	450	10 06 360 5	TAPA
TUERCA HEXAGONAL M6	4000379	42	8	457	10 05 541 0	PUERTA LATERAL ANT.DCHA.
TUERCA HEXAGONAL M6	4000379	52	2	457	10 05 541 0	PUERTA LATERAL ANT.DCHA.
TUERCA HEXAGONAL M6	4000379	300	1	472	10 04 678 8	PUERTA CABINA CONDUCTO
TUERCA HEXAGONAL M6	4000379	450	4	484	70 28 778	PIEZAS DE MONTAJE
TUERCA HEXAGONAL M6	4000379	100	1	504	10 09 499 2	RELACIÓN MATERIAL EL.
TUERCA HEXAGONAL M6	4000379	5	4	543	10 05 319 0	MONTAJE SECADOR

Descripción	Artículo	Pos.	Cantid	Página	Grupo	Descripción
TUERCA HEXAGONAL M6	4000379	32	8	802	10 05 539 2	PUERTA LATERAL IZDA.
TUERCA HEXAGONAL M6	4000379	42	2	802	10 05 539 2	PUERTA LATERAL IZDA.
TUERCA HEXAGONAL M6	4002477	67	2	282	97 58 815 01	PLACA E
TUERCA HEXAGONAL M8	10424333	19	1	605	10 12 002 3	TUBERIA DE ACEITE MONTAJ
TUERCA HEXAGONAL M8	4000381	14	3	107	10 35 875 9	MONTAJE TUBOS FLEX.CALEF
TUERCA HEXAGONAL M8	4000381	24	1	112	10 36 623 6	INST.COMBUSTIBLE MOTOR
TUERCA HEXAGONAL M8	4000381	25	2	113	10 09 538 7	MONTAJE FILTRO COMBUSTI
TUERCA HEXAGONAL M8	4000381	17	4	115	10 35 873 3	AIRE Y SISTEMA ESCAPE
TUERCA HEXAGONAL M8	4000381	85	5	205	10 35 873 9	MONTAJE DE RADIADOR
TUERCA HEXAGONAL M8	4000381	95	1	206	10 35 873 9	MONTAJE DE RADIADOR
TUERCA HEXAGONAL M8	4000381	40	20	209	10 42 538 5	RADIADOR ACEITE COMB.
TUERCA HEXAGONAL M8	4000381	32	1	214	10 49 800 0	MOTOR - SISTEMA ELÉCTRIC
TUERCA HEXAGONAL M8	4000381	41	3	214	10 49 800 0	MOTOR - SISTEMA ELÉCTRIC
TUERCA HEXAGONAL M8	4000381	54	1	215	10 49 800 0	MOTOR - SISTEMA ELÉCTRIC
TUERCA HEXAGONAL M8	4000381	63	1	216	10 49 800 0	MOTOR - SISTEMA ELÉCTRIC
TUERCA HEXAGONAL M8	4000381	131	2	272	10 05 311 8	BASE PUESTO CONDUCTOR
TUERCA HEXAGONAL M8	4000381	56	20	328	10 06 786 9	PIEZAS DE FIJACION
TUERCA HEXAGONAL M8	4000381	54	1	349	10 05 312 6	TUBOS FLEX.HIDR./ASPIR.+R
TUERCA HEXAGONAL M8	4000381	71	6	350	10 05 312 6	TUBOS FLEX.HIDR./ASPIR.+R
TUERCA HEXAGONAL M8	4000381	167	4	418	10 05 303 6	REVESTIMIENTO
TUERCA HEXAGONAL M8	4000381	178	2	418	10 05 303 6	REVESTIMIENTO
TUERCA HEXAGONAL M8	4000381	167	4	433	10 49 857 1	REVESTIMIENTO
TUERCA HEXAGONAL M8	4000381	178	2	433	10 49 857 1	REVESTIMIENTO
TUERCA HEXAGONAL M8	4000381	22	4	447	10 05 535 4	CAPOT
TUERCA HEXAGONAL M8	4000381	38	1	461	10 06 375 5	CAJA COMPL.
TUERCA HEXAGONAL M8	4000381	170	4	472	10 04 678 8	PUERTA CABINA CONDUCTO
TUERCA HEXAGONAL M8	4000381	160	1	477	10 48 809 7	INST.ELÉCTRICA
TUERCA HEXAGONAL M8	4000381	540	1	480	70 28 884	MOTOR LIMPIAPARABRISAS
TUERCA HEXAGONAL M8	4000381	158	2	497	10 35 875 7	INST.EL.CARRO SUPERIOR
TUERCA HEXAGONAL M8	4000381	170	2	498	10 35 875 7	INST.EL.CARRO SUPERIOR
TUERCA HEXAGONAL M8	4000381	177	3	498	10 35 875 7	INST.EL.CARRO SUPERIOR
TUERCA HEXAGONAL M8	4000381	13	2	506	10 35 875 8	MONTAJE BATERÍAS
TUERCA HEXAGONAL M8	4000381	52	1	511	10 06 221 6	INST.EL. MONOBLOQUE
TUERCA HEXAGONAL M8	4000381	52	1	512	10 35 876 2	INST.EL. MONOBLOQUE
TUERCA HEXAGONAL M8	4000381	52	1	513	10 49 837 6	INST.EL. MONOBLOQUE
TUERCA HEXAGONAL M8	4000381	42	2	517	10 06 222 8	INST.EL.CORREDERA DISTR.
TUERCA HEXAGONAL M8	4000381	63	1	517	10 06 222 8	INST.EL.CORREDERA DISTR.
TUERCA HEXAGONAL M8	4000381	62	2	527	10 35 876 3	INST.EL.DEP. COMBUSTIBLE
TUERCA HEXAGONAL M8	4000381	102	19	528	10 35 876 3	INST.EL.DEP. COMBUSTIBLE
TUERCA HEXAGONAL M8	4000381	111	3	528	10 35 876 3	INST.EL.DEP. COMBUSTIBLE
TUERCA HEXAGONAL M8	4000381	120	3	528	10 35 876 3	INST.EL.DEP. COMBUSTIBLE
TUERCA HEXAGONAL M8	4000381	62	2	534	10 49 837 7	INST.EL.DEP. COMBUSTIBLE
TUERCA HEXAGONAL M8	4000381	102	21	535	10 49 837 7	INST.EL.DEP. COMBUSTIBLE
TUERCA HEXAGONAL M8	4000381	111	3	535	10 49 837 7	INST.EL.DEP. COMBUSTIBLE
TUERCA HEXAGONAL M8	4000381	120	3	535	10 49 837 7	INST.EL.DEP. COMBUSTIBLE
TUERCA HEXAGONAL M8	4000381	27	4	747	10 36 839 8	DISP.ALARMA MARCHA
TUERCA HEXAGONAL M8	4000381	53	1	793	10 82 390 4	INST.EL.ELEVACIÓN 1200MM
TUERCA HEXAGONAL M8	411508001	65	1	282	97 58 815 01	PLACA E
TUERCA HEXAGONAL M8	4600783	9	3	243	10 07 675 6	LUBR.PIÑÓN MEC. GIRO
TUERCA HEXAGONAL M8	4600783	14	3	246	10 07 675 7	LUBR.CENTR.CARRO SUPER
TUERCA HEXAGONAL M8	4600783	68	1	282	97 58 815 01	PLACA E
TUERCA HEXAGONAL M8	4600783	430	1	484	70 28 778	PIEZAS DE MONTAJE
TUERCA HEXAGONAL M8	4901573	12	2	105	10 05 797 8	CONSOLA CIERRE
TUERCA HEXAGONAL M8	4901573	12	5	193	10 49 867 7	MONTAJE VENTILADOR
TUERCA HEXAGONAL M8	4901573	13	6	193	10 49 867 7	MONTAJE VENTILADOR
TUERCA HEXAGONAL M8	4901573	12	5	195	10 49 873 2	MONTAJE VENTILADOR
TUERCA HEXAGONAL M8	4901573	13	6	195	10 49 873 2	MONTAJE VENTILADOR
TUERCA HEXAGONAL M8	4901573	23	1	243	10 07 675 6	LUBR.PIÑÓN MEC. GIRO
TUERCA HEXAGONAL M8	4901573	23	1	247	10 07 675 7	LUBR.CENTR.CARRO SUPER
TUERCA HEXAGONAL M8	4901573	49	1	247	10 07 675 7	LUBR.CENTR.CARRO SUPER

Descripción	Artículo	Pos.	Cantid	Página	Grupo	Descripción
TUERCA HEXAGONAL M8	4901573	8	4	252	10 48 927 7	COMBINACIÓN DE DISTRIB. SX
TUERCA HEXAGONAL M8	4901573	40	1	461	10 06 375 5	CAJA COMPL.
TUERCA HEXAGONAL M8	4901573	94	3	703	10 35 872 5	PLUMA MONOBLOC 7,00M
TUERCA HEXAGONAL M8	4901573	32	2	710	10 38 839 3	ENGRASE CENTRALIZADO
TUERCA HEXAGONAL M8	4901573	28	12	733	10 35 873 7	ÉMBOLO PROT.VÁST.P.CIL.CU
TUERCA HEXAGONAL M8	4901573	8	2	750	10 49 827 4	PIEZAS MONTAJE EQUIPAMIE
TUERCA HEXAGONAL M8	4901732	13	2	105	10 05 797 8	CONSOLA CIERRE
TUERCA HEXAGONAL TRIPPE	10044430	5	6	651	10 11 558 7	MONTAJE TUBUL.ESCAPE GA
TUERCA HEXAGONAL TRIPPE	10044430	5	6	652	10 11 678 0	MONTAJE TUBUL.ESCAPE GA
TUERCA M10X1,5	10120639	12	4	649	10 13 273 9	MONTAJE ATL
TUERCA M10X1,5	10120639	12	4	650	10 13 274 0	MONTAJE ATL
TUERCA MOLETEADA	10332836	50	1	751	10 29 135 3	MÓDULO MANDO
TUERCA MOLETEADA	7023934	6	1	375	56 15 344	VÁLVULA SOLENOIDE
TUERCA PARA CHAPA	7366862	10	1	280	10 16 576 6	CONSOLA MANDO IZDA.
TUERCA PARA CHAPA	7370883	13	7	280	10 16 576 6	CONSOLA MANDO IZDA.
TUERCA PARA CHAPA	7370883	12	11	295	56 18 923	CONSOLA DE MANDO A LA DE
TUERCA PARA CHAPA M6	10009189	275	3	488	10 48 809 9	REVESTIMIENTO INTERIOR
TUERCA PARA CHAPA M6	10009189	440	4	489	10 48 809 9	REVESTIMIENTO INTERIOR
TUERCA PLACA FONDO 1"-14	7368691	4	200	48	10 30 012 2	CADENA DE ORUGA 600mm
TUERCA PLACA FONDO 1"-14	7368691	4	200	48	10 30 012 2	CADENA DE ORUGA 600mm
TUERCA RACOR M24X1.5	9078326	2	1	616	90 78 324	MONTAJE RACOR TUBO PRES
TUERCA SEAL-LOCK M8	7372252	14	1	157	10 33 324 2	VALVULA DE DESCONEXION
TUERCA SEAL-LOCK M8	7372252	11	1	261	10 10 206 7	ELEMENTO REGULACION
TUERCA UEWF	10013550	151	1	256	90 64 786	BASE DE FIJACION
TUERCA UEWF	10013550	151	10	258	10 01 461 1	CAJA AUXILIAR
TURBOCOMPRESOR DE ESC	10331034	1	1	649	10 13 273 9	MONTAJE ATL
TURBOCOMPRESOR DE ESC	10331034	1	1	650	10 13 274 0	MONTAJE ATL
TURCON-STEPSEAL 125,0x14	7017712	10	1	765	99 07 890	ALOJAMIENTO DE BIELA 125/
TURCON-STEPSEAL 150,0x17	7014466	10	1	764	96 31 985	ALOJAMIENTO DE BIELA 150/
UNIDAD ACEITE MANDO	10009090	2	1	340	10 05 314 4	MONTAJE UNIDAD ACEITE MA
V-SEAL	7017682	12	2	56	10 00 963 0	TRANSMISION ROTATIVO
V-SEAL	7017682	12	2	58	10 00 967 6	JJ DISTRIBUIDOR GIRATORIO
VALVULA	10280279	5	2	340	10 05 314 4	MONTAJE UNIDAD ACEITE MA
VALVULA	10280279	5	1	341	10 82 438 9	MONTAJE UNIDAD ACEITE MA
VALVULA	5611648	350	1	71	56 16 688	VÁLVULA FRENO MARCHA
VALVULA	7025110	24	1	323	11 00 359 4	CARCASA
VALVULA ASIENTO PASO 2/2	10296042	20	1	751	10 29 135 3	MÓDULO MANDO
VALVULA DE ADMISION	9078513	2	2	594	10 11 805 1	CULATA PREMONT. D9508
VALVULA DE AGUA	10292661	40	1	316	10 40 689 8	AIRE ACONDICIONADO
VALVULA DE DESCARGA	10032906	5	2	575	10 12 016 8	PIEZAS DE CIERRE
VALVULA DE DESCARGA	10120100	16	1	607	10 12 475 6	MÓDULO ACEITE IZDA.
VALVULA DE DESCARGA	10301776	63	1	383	10 35 874 5	MONTAJE DEPÓSITO HIDR.
VALVULA DE DESCONEXION	10333242	3	1	153	10 33 322 6	PLACA DE CONEXION
VALVULA DE ESCAPE	9078514	3	2	594	10 11 805 1	CULATA PREMONT. D9508
VALVULA DE MANDO NG 165	9882892	4	1	68	90 72 024	MOTOR HIDR. INCORP. VAR.
VALVULA DE PASO 2/2	10409845	4	2	176	10 34 668 4	SERVOMANDO
VALVULA DE REGULACION	10118374	4	1	134	90 72 922	BOMBA CIL. VAR. HIDR.
VALVULA DE REGULACION	10118374	4	1	136	90 77 452	BOMBA CIL. VAR. HIDR.
VALVULA DE REGULACION	10125692	2	2	580	10 12 518 2	SEPARADOR ACEITE OEL
VALVULA DE RETENCION	10119971	5	1	579	10 12 375 9	TUBERIA DE ACEITE PREMO
VALVULA DE RETENCION	10120102	11	1	607	10 12 475 6	MÓDULO ACEITE IZDA.
VALVULA DE RETENCION	10218215	51	1	397	10 35 874 4	MONTAJE CORREDERA DISTR
VALVULA DE RETENCION	10219863	50	2	397	10 35 874 4	MONTAJE CORREDERA DISTR
VALVULA DE RETENCION	10289185	102	1	752	10 34 080 6	SEGURO CONTRA ROTURA TU
VALVULA DE RETENCION	10289185	102	1	753	10 34 081 2	SEGURO CONTRA ROTURA TU
VALVULA DE RETENCION	10294984	101	1	752	10 34 080 6	SEGURO CONTRA ROTURA TU
VALVULA DE RETENCION	10294984	101	1	753	10 34 081 2	SEGURO CONTRA ROTURA TU
VALVULA DE RETENCION	10296500	55	1	407	10 11 355 7	BLOQUE MANDO
VALVULA DE RETENCION	5008169	12	1	405	10 21 821 5	VALVULA DE RETENCION
VALVULA DE RETENCION	5008169	12	1	406	10 21 986 3	VALVULA DE RETENCION

Descripción	Artículo	Pos.	Cantid	Página	Grupo	Descripción
VALVULA DE RETENCION	5608327	6	1	372	10 00 909 0	UNIDAD ACEITE MANDO
VALVULA DE RETENCION	7017201	710	2	478	10 48 809 7	INST.ELÉCTRICA
VALVULA DE RETENCION	7622803	30	1	245	10 29 302 0	COMBINACIÓN DE DISTRIB. M
VALVULA DE RETENCION	7622803	30	7	254	10 29 301 8	COMBINACIÓN DE DISTRIB. M
VALVULA DE RETENCION	7622803	30	5	708	10 00 878 9	COMBINACIÓN DE DISTRIB. M
VALVULA DE RETENCION	7622803	30	8	722	10 30 336 9	COMBINACIÓN DE DISTRIB. M
VALVULA DE RETENCION	9270598	6	2	69	90 72 026	PLACA DE CONEXION NG 165
VALVULA DE RETENCION	9370592	10	1	395	10 35 874 4	MONTAJE CORREDERA DISTR
VALVULA DE RETENCION RV	9889003	1	1	393	98 89 008	JR VÁLV.RETENCIÓN
VALVULA DOSIFICADORA	10331907	3	1	622	10 11 781 4	BOMBA DE ALTA PRES.PRE
VALVULA LIMITADORA DE PR	10118610	7	1	607	10 12 475 6	MÓDULO ACEITE IZDA.
VALVULA LIMITADORA DE PR	10118610	7	1	608	10 12 475 7	MODULO ACEITE DCHA.
VALVULA LIMITADORA DE PR	10297929	2	1	153	10 33 322 6	PLACA DE CONEXION
VALVULA LIMITADORA DE PR	10333237	1	2	153	10 33 322 6	PLACA DE CONEXION
VALVULA LIMITADORA DE PR	9267037	1	1	236	98 83 996	JR VÁLVULA LIM.PRESIÓN
VALVULA LIMITADORA DE PR	9267554	1	2	69	90 72 026	PLACA DE CONEXION NG 165
VALVULA M14X1,5	10011832	2	1	575	10 12 016 8	PIEZAS DE CIERRE
VALVULA M14X1,5	10011832	2	1	576	10 11 874 8	ANEJO TUBERIA
VALVULA REDUCTORA DE PR	10341929	3	2	176	10 34 668 4	SERVOMANDO
VALVULA REDUCTORA DE PR	10475942	119	14	408	10 11 355 7	BLOQUE MANDO
VALVULA REDUCTORA DE PR	10475942	40	1	751	10 29 135 3	MÓDULO MANDO
VALVULA REGULACION TERMI	10132738	14	1	565	10 12 595 9	MOTOR DIESEL D9508 A7 320k
VALVULA REGULADORA	5602932	4	1	706	10 06 477 4	CILINDRO HIDROLICO+ADICIO
VALVULA REGULADORA	9270387	13	1	713	10 07 162 8	CILINDRO HIDROLICO+ADICIO
VALVULA SELECTORA	10020735	3	1	146	10 10 206 4	REGULADOR
VALVULA SELECTORA	10442998	3	1	146	10 10 206 4	REGULADOR
VALVULA SELECTORA	7021767	300	1	71	56 16 688	VÁLVULA FRENO MARCHA
VALVULA SELECTORA	7372762	140	1	705	10 35 872 5	PLUMA MONOBLOC 7,00M
VALVULA SOBREPRESION	10424599	15	1	249	10 34 071 7	ENGRASADORA
VAPORIZADOR VISCOSO	9077223	5	1	588	90 77 286	PIEZAS ACC.CON AMORT. VI
VARILLA	10055394	30	1	456	10 05 541 0	PUERTA LATERAL ANT.DCHA.
VARILLA	10055394	20	1	801	10 05 539 2	PUERTA LATERAL IZDA.
VARILLA	10055415	40	1	457	10 05 541 0	PUERTA LATERAL ANT.DCHA.
VARILLA	10055416	41	1	457	10 05 541 0	PUERTA LATERAL ANT.DCHA.
VARILLA	10055437	30	1	454	10 05 543 3	PUERTA LATERAL POST.DCHA
VARILLA	10058095	9	1	105	10 05 797 8	CONSOLA CIERRE
VARILLA	10066253	80	1	504	10 09 499 2	RELACIÓN MATERIAL EL.
VARILLA	10333231	2	1	178	10 40 975 1	CILINDRO TRANSPORTADOR
VARILLA	7028834	340	1	473	10 04 678 8	PUERTA CABINA CONDUCTO
VARILLA	9480525	43	2	269	10 05 311 8	BASE PUESTO CONDUCTOR
VARILLA	9866763	5	1	105	10 05 797 8	CONSOLA CIERRE
VARILLA NIVEL ACEITE C.ANI	10116946	1	1	583	10 11 694 5	VARILLA NIVEL ACEITE C.TUB
VARILLA NIVEL ACEITE C.ANI	9080210	4	1	126	90 80 120	ENGRANAJE DISTRIBUCION
VARILLA NIVEL ACEITE C.TUB	10116945	21	1	565	10 12 595 9	MOTOR DIESEL D9508 A7 320k
VENTANA	10014683	4	1	249	10 34 071 7	ENGRASADORA
VENTANA	7029415	550	1	476	70 28 844	VENTANA DE CORREDERA
VENTANA	7029416	560	1	476	70 28 844	VENTANA DE CORREDERA
VENTANA DE CORREDERA	7028844	420	1	473	10 04 678 8	PUERTA CABINA CONDUCTO
VERSION TROPICAL	10057656	3	1	7	.	
VIA DESLIZAMIENTO	10086360	10	1	734	10 08 685 3	VIA DESLIZAMIENTO
VIA DESLIZAMIENTO	10086853	20	1	733	10 35 873 7	ÉMBOLO PROT.VÁST.P.CIL.CU
VIGA	10059473	3	3	799	10 49 815 3	PASARELA
VIGA APRETADOR	10058016	2	1	105	10 05 797 8	CONSOLA CIERRE
VIGA DE LAMINAS	932720701	55	1	222	90 01 781 7	ACCIONAMIENTO GIRATORIO
VIGA DE LAMINAS	9444467	65	1	66	94 43 970	ACCIONAMIENTO DE TRASL
VIGA TESTERA	10220135	120	1	776	10 02 138 7	FARO ADICIONALE CABINA
VOLANTE IMPUL.PREMONT. S	10120078	1	1	667	10 12 007 7	MONT. VOLANTE IMUPLS. SAE
VOLANTE MANUAL	5609144	53	1	275	10 28 999 3	SISTEMA OSCIL.
VÁLV.REDUC.PRESIÓN PROP	7623606	56	1	146	10 10 206 4	REGULADOR
VÁLVULA ALIM.	5610135	54	6	407	10 11 355 7	BLOQUE MANDO

Descripción	Artículo	Pos.	Cantid	Página	Grupo	Descripción
VÁLVULA ALIM.	5610135	100	1	752	10 34 080 6	SEGURO CONTRA ROTURA TU
VÁLVULA ALIM.	5610135	100	1	753	10 34 081 2	SEGURO CONTRA ROTURA TU
VÁLVULA ALIM.	5616232	62	4	408	10 11 355 7	BLOQUE MANDO
VÁLVULA ALIM.PRESIÓN	10289183	80	1	752	10 34 080 6	SEGURO CONTRA ROTURA TU
VÁLVULA ALIM.PRESIÓN	10289183	80	1	753	10 34 081 2	SEGURO CONTRA ROTURA TU
VÁLVULA ALIM.PRESIÓN	5616231	60	8	408	10 11 355 7	BLOQUE MANDO
VÁLVULA ARRANQUE EN FRÍ	10333273	2	1	162	10 33 327 1	CABEZA FILTRO
VÁLVULA DOBLE RETENCIÓN	10472666	100	1	399	10 35 874 4	MONTAJE CORREDERA DISTR
VÁLVULA EXTRACCIÓN	7019068	40	1	39	90 66 466	ACCESORIOS
VÁLVULA FRENO MARCHA	5616688	15	2	60	10 07 498 7	ACCIONAMIENTO DE TRASL
VÁLVULA MAGNÉTICA REGUL	10280461	2	1	372	10 00 909 0	UNIDAD ACEITE MANDO
VÁLVULA MÚLTIPLES VÍAS WV	9275505	1	1	237	98 84 008	JR
VÁLVULA SOLENOIDE	5615344	3	4	372	10 00 909 0	UNIDAD ACEITE MANDO
VÉASE COMENTARIO (DEBA	9999999	23	1	145	98 88 308	PLACA DE CONEXION
VÉASE COMENTARIO (DEBA	9999999	9	1	608	10 12 475 7	MODULO ACEITE DCHA.
YUGO BASC.	9888315	10	1	182	90 79 347	JR YUGO BASC. LPV 165
ZUMBADOR	6000578	37	1	269	10 05 311 8	BASE PUESTO CONDUCTOR
ÁRBOL DE ENTRADA COMPL.	9080192	10	1	126	90 80 120	ENGRANAJE DISTRIBUCION
ÁRBOL LEVAS COMPL.	10118022	100	1	566	10 12 595 9	MOTOR DIESEL D9508 A7 320k
ÉMBOLO C.PAQUETE RESOR	10356667	17	1	407	10 11 355 7	BLOQUE MANDO
ÉMBOLO COMPL.	10342561	12	1	407	10 11 355 7	BLOQUE MANDO
ÉMBOLO COMPL.	10342562	13	1	407	10 11 355 7	BLOQUE MANDO
ÉMBOLO COMPL.	10342563	14	1	407	10 11 355 7	BLOQUE MANDO
ÉMBOLO COMPL.	10342563	18	1	407	10 11 355 7	BLOQUE MANDO
ÉMBOLO COMPL.	10342565	15	1	407	10 11 355 7	BLOQUE MANDO
ÉMBOLO COMPL.	10342567	19	1	407	10 11 355 7	BLOQUE MANDO
ÉMBOLO COMPL.	10342569	16	1	407	10 11 355 7	BLOQUE MANDO
ÉMBOLO COMPL. d=128	10131546	70	8	566	10 12 595 9	MOTOR DIESEL D9508 A7 320k
ÉMBOLO CON PATÍN DESL.	9274279	1	9	234	98 80 601	JR ÉMBOLO C.PATÍN DESL.
ÉMBOLO CON PATÍN DESL.	9882563	1	9	186	98 80 604	JR ÉMBOLO C.PATÍN DESL. N
ÉMBOLO GLR NG 165	9881231	19	1	181	90 78 788	JR (TAPA DEL REGUL.) LR/SD
ÉMBOLO PROT.VÁST.P.CIL.CU	10358736	15	1	7	.	
ÉMBOLO PROT.VÁST.P.CIL.CU	10358737	10	1	732	10 35 873 6	ÉMBOLO PROT.VÁST.P.CIL.CU
ÉMBOLO SD NG 165	9881232	20	1	181	90 78 788	JR (TAPA DEL REGUL.) LR/SD