RUTHZIL TRATOR COMERCIAL DE PEÇAS LTDA 11 97083-6812 ROLANDO CITRANGULO

*Manitowoc Cranes*

# MACHINE COMPONENT INDEX

**Date: Aug 20, 2009** GROVE RT530E2 **Rev: 001**

| Model Number | Serial Number |
|---|---|
| **RT530E-2 (30 MT)** | **230430** |


| Item | Part | Description | Page |
|---|---|---|---|
| | | **BOOM GROUP** | |
| 2 | **2159210176** | SHAFT INSTALLATION - UPPER & BOOM PIVOT | 3 |
| 3 | **6581100076** | LIGHTS INSTALLATION - BOOM (DOMESTIC) | 5 |
| | **6581100024** | LIGHT ASSEMBLY - MODIFIED BOOM (COMPLETE ASSEMBLY) | 7 |
| | **6246100259** | CABLE ASSEMBLY - BOOM LIGHTS (COMPLETE ASSEMBLY) | 9 |
| 3 | **7826100017** | SOCKET ASSY 5/8" | 11 |
| 5 | **7598100094** | KIT INSTALLATION - iFLEX 5 LMI BOOM | 15 |
| | **9333103873** | CABLE REEL LWG508 - IFLEX 5 | 17 |
| | **9333101437** | ROLLER GUIDE ASSEMBLY | 19 |
| | **9333103565** | BOX ASSEMBLY - JUNCTION | 21 |
| | **9333102633** | FLAG ASSEMBLY - A2B RETAINER (COMPLETE ASSEMBLY) | 23 |
| | **9333102765** | CONNECTOR ASSEMBLY DUMMY PLUG, 2-PIN | 25 |
| 5 | **3486000212** | WEIGHT AND CHAIN ASSEMBLY (COMPLETE ASSEMBLY) | 27 |
| 6 | **7598100004** | KIT - LMI AUXILARY BOOM NOSE | 29 |
| 6 | **3486000212** | WEIGHT AND CHAIN ASSEMBLY (COMPLETE ASSEMBLY) | 31 |
| 8 | **6978100931** | KIT INSTALLATION - iFLEX 5 LMI BOOM (FOR REFERENCE ONLY) | 33 |
| 10 | **6978100041** | LOAD MOMENT INDICATOR KIT INSTALLATION - AUXILIARY BOOM | 35 |
| 10 | **7086100136** | HOOK BLOCK ASSEMBLY - 33 TON (30 MT) (COMPLETE ASSEMBLY) | 37 |
| 11 | **2159910170** | NOSE INSTALLATION - AUXILIARY | 41 |
| | **6718100031** | SHEAVE ASSEMBLY - 5/8" ROPE | 43 |
| 11 | **7826100017** | SOCKET ASSY 5/8" | 45 |
| 12 | **2159910036** | INDICATOR INSTALLATION - BOOM ANGLE | 47 |
| | **2114900861** | POINTER ASSEMBLY | 49 |
| 17 | **2159910104** | SHEAVE INSTALLATION - 2 OVER 3 | 51 |
| | **6718100031** | SHEAVE ASSEMBLY - 5/8" ROPE | 53 |
| | | **CAB GROUP** | |

# *Manitowoc Cranes*
# MACHINE COMPONENT INDEX

**Date: Aug 20, 2009** **Rev: 001**

| Model Number | Serial Number |
|---|---|
| **RT530E-2 (30 MT)** | **230430** |


| Item | Part | Description | Page |
|---|---|---|---|
| 1 | **6245101146** | CAB INSTALLATION | 55 |
| | **6245101147** | CAB ASSEMBLY | 61 |
| | **6245101145** | CAB WELD | 69 |
| | **6245101159** | DOOR INSTALLATION - CAB (NOT AVAILABLE AS ASSEMBLY) | 71 |
| | **7576134398** | KIT - SKYLIGHT WIPER (COMPLETE ASSEMBLY) | 73 |
| | **7576134397** | KIT - FRONT WIPER (COMPLETE ASSEMBLY) | 75 |
| | **7498100022** | SKYLIGHT ASSEMBLY - SLIDING (COMPLETE ASSEMBLY) | 77 |
| | **7498000897** | WINDOW ASSEMBLY - REAR (COMPLETE ASSEMBLY) | 79 |
| | **7498100028** | WINDOW ASSEMBLY - RIGHT HAND (COMPLETE ASSEMBLY) | 81 |
| | **7425100015** | FAN ASSEMBLY - 12 VOLT CAB (COMPLETE ASSEMBLY) | 83 |
| | **7348000667** | EXTINGUISHER, FIRE | 85 |
| 2 | **80003784** | SEAT INSTALLATION - DUAL AXIS CONTROL (WITH AUXILIARY HOIST) | 87 |
| | **80003783** | SEAT ASSEMBLY - DUAL AXIS CONTROL (WITH AUXILIARY HOIST) (NOT AVAILABLE AS ASSEMBLY) | 91 |
| | **6872100045** | SWITCH ASSEMBLY - PROXIMITY (NORMALLY OPEN) (COMPLETE ASSEMBLY) | 95 |
| | **7352100096** | CONTROLLER CAN 12V LH W/AR | 97 |
| | **7352100095** | CONTROLLER CAN 12V RH ARMREST | 99 |
| | **6512100837** | HARNESS ASSEMBLY - SEAT (COMPLETE ASSEMBLY) | 103 |
| 3 | **6001100033** | ACOUSTICS INSTALLATION | 107 |
| 6 | **6245101334** | CONSOLE INSTALLATION - FRONT (RT540E/RT530E2) | 109 |
| | **6245101332** | CONSOLE ASSEMBLY - FRONT (RT540E/RT530E2) (COMPLETE ASSEMBLY) | 113 |
| | **6512101099** | HARNESS ASSEMBLY - FRONT CONSOLE (COMPLETE ASSEMBLY) | 125 |
| | **7486100100** | GAUGE, 12 VOLT TACHOMETER (WITH HOURMETER) | 129 |

# *Manitowoc Cranes*
# MACHINE COMPONENT INDEX

**Date: Aug 20, 2009** **Rev: 001**

| Model Number | Serial Number |
|---|---|
| **RT530E-2 (30 MT)** | **230430** |


| Item | Part | Description | Page |
|---|---|---|---|
| 7 | **6978100900** | ELECTRICAL SYSTEM INSTALLATION - SUPERSTRUCTURE CAB (DOMESTIC) | 133 |
| | **6679100195** | PANEL ASSEMBLY - FUSE AND RELAY (SUPERSTRUCTURE CAB) (COMPLETE ASSEMBLY) | 135 |
| | **6512100914** | HARNESS ASSEMBLY - FUSE AND RELAY PANEL (SUPERSTRUCTURE CAB) (COMPLETE ASSEMBLY) | 141 |
| 9 | **6515100078** | HEATER/COOLER INSTALLATION - CAB | 145 |
| | **80006745** | KIT - CAB HEATER AND AIR CONDITIONER (COMPLETE ASSEMBLY) | 147 |
| 10 | **6942100004** | SCREEN INSTALLATION - SUN | 151 |
| 10 | **6258100005** | BINDER INSTALLATION | 153 |
| 11 | **7598100092** | KIT, LMI S/S IFLEX 5 | 155 |
| 12 | **6978100727** | KIT INSTALLATION - iFLEX 5 LMI SUPERSTRUCTURE | 157 |
| 12 | **80008131** | LMI INTERNAL LIGHT BAR INSTALLATION | 159 |
| 15 | **7598100166** | KIT - iFLEX2 LMI CAB (COMPLETE ASSEMBLY) | 163 |
| 16 | **6978100998** | ELECTRICAL SYSTEM INSTALLATION - SUPERSTRUCTURE (RT540E/RT530E2) | 169 |
| | **6512101098** | HARNESS ASSEMBLY - SUPERSTRUCTURE (COMPLETE ASSEMBLY) | 179 |
| 16 | **80002960** | KIT - iFLEX2 LMI CAB | 185 |
| 17 | **6872100083** | SWITCH INSTALLATION - AIR CONDITIONER | 189 |
| 18 | **6543100143** | LINES INSTALLATION - AIR CONDITIONING (CAB) | 191 |
| | **7576134413** | KIT - AIR CONDITIONER HOSE (COMPLETE ASSEMBLY) | 193 |
| 19 | **6245100997** | COVER INSTALLATION - REAR CAB | 195 |
| 21 | **6872100084** | SWITCH INSTALLATION - BOOM LIGHTS | 197 |
| 22 | **6245100992** | PEDALS INSTALLATION - WITH AUXILIARY HOIST | 199 |
| | **7926100912** | VALVE ASSEMBLY - BRAKE TREADLE (COMPLETE ASSEMBLY) | 201 |
| | **7683100010** | PEDAL ASSEMBLY - ELECTRONIC TELESCOPE (COMPLETE ASSEMBLY) | 203 |

# *Manitowoc Cranes*
# MACHINE COMPONENT INDEX

**Date: Aug 20, 2009** **Rev: 001**

| Model Number | Serial Number |
|---|---|
| **RT530E-2 (30 MT)** | **230430** |


| Item | Part | Description | Page |
|---|---|---|---|
| 23 | **6245100995** | CONTROLS INSTALLATION - STEER AND DRIVE | 205 |
| | **7926100899** | VALVE ASSEMBLY - STEERING CONTROL (COMPLETE ASSEMBLY) | 207 |
| | **6326100001** | COLUMN ASSEMBLY - MODIFIED TILT STEERING (COMPLETE ASSEMBLY) | 209 |
| | **7326100007** | COLUMN ASSEMBLY - TILT STEERING (COMPLETE ASSEMBLY) | 211 |
| | **6512100853** | HARNESS ASSEMBLY - TURN SIGNAL/WASHER (COMPLETE ASSEMBLY) | 213 |
| | **6512100854** | HARNESS ASSEMBLY - SHIFTER (COMPLETE ASSEMBLY) | 215 |
| 30 | **2159210210** | HANDLE INSTALLATION HOIST ACCESS | 217 |
| 39 | **2159110275** | STEP INSTALLATION HOIST ACCESS | 219 |
| | | **CONTROL VALVE GROUP - UPPER** | |
| 6 | **2159610251** | HYDRAULIC LINES INSTALLATION - MAIN AND AUXILIARY HOIST (SUPERSTRUCTURE) | 225 |
| 11 | **2159610145** | HYDRAULIC LINES INSTALLATION - CAB | 233 |
| | | **HOIST GROUP** | |
| 2 | **7782161382** | 16MM DIA HOISTING WIRE ROPE - | 235 |
| 7 | **6974100184** | HOIST INSTALLATION - MAIN AND AUXILIARY | 237 |
| | **7974100043** | HOIST ASSEMBLY - HP15C/17G (COMPLETE ASSEMBLY) | 241 |
| 8 | **2159210000** | MIRROR INSTALLATION - HOIST | 247 |
| 9 | **2159210000** | MIRROR INSTALLATION - HOIST | 249 |
| | | **TURNTABLE GROUP** | |
| 1 | **80014181** | TURNTABLE WELD AND DRIVE INSTALLATION | 251 |
| | **7576134386** | MOTOR ASSEMBLY - SWING DRIVE (COMPLETE ASSEMBLY) | 257 |
| 4 | **6364101750** | SWIVEL INSTALLATION - ELECTRIC, WATER AND HYDRAULIC | 261 |
| | **6364101749** | SWIVEL ASSEMBLY - ELECTRIC, WATER AND HYDRAULIC (COMPLETE ASSEMBLY) | 263 |
| | **7364100165** | SWIVEL ASSEMBLY - 14 PORT HYDRAULIC, WATER AND AIR CONDITIONING (COMPLETE ASSEMBLY) | 265 |

# *Manitowoc Cranes*
# MACHINE COMPONENT INDEX

**Date: Aug 20, 2009** **Rev: 001**

| Model Number | Serial Number |
|---|---|
| **RT530E-2 (30 MT)** | **230430** |


| Item | Part | Description | Page |
|---|---|---|---|
| | **7753100037** | RING ASSEMBLY - SLIP<br>15 CONDUCTOR<br>(COMPLETE ASSEMBLY) | 271 |
| 5 | **80005107** | CONTROL VALVE INSTALLATION -<br>MAIN AND AUXILIARY HOIST | 275 |
| | **7926100986** | VALVE ASSEMBLY - DIRECTIONAL CONTROL<br>4 SECTION<br>(COMPLETE ASSEMBLY) | 277 |
| | **80002486** | VALVE ASSEMBLY - ACCESSORY<br>WITH SWING AND STEER DIRECTIAL CONTROL<br>(COMPLETE ASSEMBLY) | 283 |
| 8 | **2159210143** | BOLT INSTALLATION - BEARING | 287 |
| 10 | **2159210177** | CYLINDER INSTALLATION - LIFT | 289 |
| | **6372100488** | CYLINDER ASSEMBLY - 9" LIFT<br>(COMPLETE ASSEMBLY) | 291 |
| | **7926100925** | VALVE ASSEMBLY - HOLDING<br>(COMPLETE ASSEMBLY) | 295 |
| 13 | **2159310042** | AIR CONDITIONING INSTALLATION -<br>SUPERSTRUCTURE | 297 |
| | **7576134531** | KIT - AIR CONDITIONER CONDENSER<br>(COMPLETE ASSEMBLY) | 299 |
| 13 | **6245101343** | PIN INSTALLATION - TURNTABLE LOCK | 301 |
| 14 | **6258100041** | COVER INSTALLATION - VALVE | 303 |
| 20 | **2159210124** | LUBE INSTALLATION - TURNTABLE BEARING<br>MANUAL | 305 |
| 26 | **2159210134** | LIGHT INSTALLATION - STROBE | 307 |
| | **6581100074** | LIGHT ASSEMBLY - MODIFIED STROBE<br>(COMPLETE ASSEMBLY) | 309 |
| | | **ENGINE GROUP** | |
| 3 | **2159810166** | HOOD INSTALLATION - ENGINE | 311 |
| 23 | **2159810224** | ENGINE INSTALLATION | 313 |
| | **2159810225** | ENGINE ASSEMBLY - CUMMINS QSB6.7<br>(NOT AVAILABLE AS ASSEMBLY) | 317 |
| | **80011908** | TRANSMISSION ASSEMBLY - 6 SPEED<br>12 VOLT<br>(COMPLETE ASSEMBLY) | 323 |
| | **9904110609** | CONVERTER HOUSING GROUP | 325 |
| | **9904109807** | CASE & REAR COVER GROUP | 327 |
| | **9904110611** | TURBINE SHAFT GROUP | 331 |

# *Manitowoc Cranes*
# MACHINE COMPONENT INDEX

**Date: Aug 20, 2009** **Rev: 001**

| Model Number | Serial Number |
|---|---|
| **RT530E-2 (30 MT)** | **230430** |


| Item | Part | Description | Page |
|---|---|---|---|
| | **9904110612** | DRIVE PLATE GROUP | 333 |
| | **9904110613** | TORQUE CONVERTER GROUP | 335 |
| | **9904110614** | GEAR GROUP | 337 |
| | **9904110615** | AUXILIARY PUMP DRIVE GROUP | 339 |
| | **9904110616** | PUMP DRIVE GROUP | 341 |
| | **9904110617** | FORWARD SHAFT GROUP | 343 |
| | **9904110618** | REVERSE & 2ND. SHAFT GROUP | 345 |
| | **9904110619** | REVERSE IDLER GROUP | 347 |
| | **9904110620** | LOW SPEED SHAFT GROUP | 349 |
| | **9904110621** | 3RD. SHAFT GROUP | 351 |
| | **9904110622** | IDLER SHAFT GROUP | 353 |
| | **90015440** | OUTPUT SHAFT GROUP | 355 |
| | **9904110624** | HI/LOW RANGE SHIFT CONT. GROUP | 359 |
| | **9904110625** | DISC BRAKE GROUP | 361 |
| | **9904110626** | CHARGE PUMP & FILTER GROUP | 363 |
| | **9904110627** | CONTROL VALVE MOUNTING GROUP | 365 |
| | **9904110628** | CONTROL VALVE ASSY. GROUP | 367 |
| | **80006812** | BRAKE ASSEMBLY - PARKING (COMPLETE ASSEMBLY) | 369 |
| | **7722100101** | PUMP ASSEMBLY - GEAR (COMPLETE ASSEMBLY) | 373 |
| | **7722100100** | PUMP ASSEMBLY - PISTON (COMPLETE ASSEMBLY) | 375 |
| | **6978100956** | ELECTRICAL SYSTEM INSTALLATION - ENGINE (NOT AVAILABLE AS ASSEMBLY) | 381 |
| | **6512100819** | HARNESS ASSEMBLY - ENGINE (COMPLETE ASSEMBLY) | 385 |
| | **7246100345** | KIT - CABLE (ENGINE) (COMPLETE ASSEMBLY) | 389 |
| 24 | **80014219** | RADIATOR INSTALLATION | 391 |
| | **2159810147** | RADIATOR ASSEMBLY (NOT AVAILABLE AS ASSEMBLY) | 395 |
| | **7726191194** | COOLER ASSEMBLY - RADIATOR/CHARGE AIR (COMPLETE ASSEMBLY) | 397 |
| | **2159810114** | TANK ASSEMBLY - SURGE (NOT AVAILABLE AS ASSEMBLY) | 399 |

# *Manitowoc Cranes*
# MACHINE COMPONENT INDEX

**Date: Aug 20, 2009** **Rev: 001**

| Model Number | Serial Number |
|---|---|
| **RT530E-2 (30 MT)** | **230430** |


| Item | Part | Description | Page |
|---|---|---|---|
| 27 | **2159810115** | SYSTEM INSTALLATION - EXHAUST | 401 |
| 28 | **80009949** | AIR CLEANER INSTALLATION | 403 |
| | **7304100012** | CLEANER ASSEMBLY - AIR (COMPLETE ASSEMBLY) | 405 |
| 29 | **80013440** | OIL COOLER INSTALLATION - HYDRAULIC | 407 |
| 33 | **2159810172** | COMPRESSOR INSTALLATION- AIR CONDITIONER | 409 |
| | **7576134474** | KIT - CUMMINS AIR CONDITIONER COMPRESSOR 12 VOLT (COMPLETE ASSEMBLY) | 411 |
| | **7576134451** | KIT - CARRIER A/C HOSE | 413 |
| 34 | **2159810143** | GRILL INSTALLATION - ENGINE HOOD | 415 |
| 37 | **80001526** | BLOCK HEATER ASSEMBLY - 120V | 417 |
| 38 | **80004881** | FAN INSTALLATION - NON CE | 419 |
| | | **DRIVE TRAIN GROUP** | |
| 22 | **80011142** | DRIVE LINE INSTALLATION | 421 |
| | **80000554** | DRIVE LINE ASSEMBLY WITH CENTER BEARING (COMPLETE ASSEMBLY) | 423 |
| | **80000556** | DRIVE LINE ASSEMBLY (COMPLETE ASSEMBLY) | 425 |
| | **7364100166** | DRIVE LINE ASSEMBLY (COMPLETE ASSEMBLY) | 427 |
| | | **AXLE GROUP** | |
| 20 | **2159510006** | AXLE INSTALLATION - FRONT | 429 |
| | **7049101487** | AXLE ASSEMBLY - DRIVE/STEER (COMPLETE ASSEMBLY) | 431 |
| | **9049112776** | DIFF. CARRIER GROUP | 433 |
| | **9049112778** | HOUSING GROUP | 437 |
| | **9049112780** | HUB & SHAFT GROUP | 441 |
| | **9049112516** | BRAKE GROUP | 445 |
| | **9049112523** | BRAKE ASSEMBLY,GROUP | 447 |
| | **7372100250** | CYLINDER ASSEMBLY - 2 1/2" STEER (COMPLETE ASSEMBLY) | 449 |
| 21 | **6970003421** | TIRE AND WHEEL INSTALLATION 20.5 X 25 | 451 |
| | **6970100151** | T & W ASSY - 20.5 X 25 - GENER | 453 |
| | **6970100153** | WHEEL & DISC ASSY | 455 |

# *Manitowoc Cranes*
# MACHINE COMPONENT INDEX

**Date: Aug 20, 2009** **Rev: 001**

| Model Number | Serial Number |
|---|---|
| **RT530E-2 (30 MT)** | **230430** |


| Item | Part | Description | Page |
|---|---|---|---|
| | **6970100151** | T & W ASSY - 20.5 X 25 - GENER | 457 |
| | **6970100153** | WHEEL & DISC ASSY | 459 |
| | | **OUTRIGGER GROUP** | |
| 4 | **2159110157** | FLOAT INSTALLATION - OUTRIGGER | 461 |
| | **6458100000** | FLOAT ASSEMBLY - OUTRIGGER (COMPLETE ASSEMBLY) | 463 |
| 16 | **2159110160** | COVER INSTALLATION - OUTRIGGER BOX | 465 |
| | | **FRAME GROUP** | |
| 1 | **80020120** | CARRIER FRAME COMPLETE | |
| 1 | **80004508** | DECAL INSTALLATION - RT535/540E (FOREIGN STANDARD) | 469 |
| 2 | **80010008** | FENDER AND DECK INSTALLATION HOIST ACCESS | 471 |
| 2 | **6376206950** | DECAL INSTALLATION - RT530E2 (NOMENCLATURE) | 475 |
| 3 | **2159210227** | COUNTERWEIGHT INSTALLATION | 477 |
| 4 | **80006894** | DECAL INSTALLATION - RT530E2 (SPANISH) | 479 |
| 5 | **2159110262** | LIGHTS INSTALLATION - EXTERIOR (DOMESTIC) (FOR REFERENCE ONLY) | 481 |
| 6 | **2159110098** | TIE DOWN INSTALLATION - HOOK BLOCK | 483 |
| 7 | **2159810191** | COVER INSTALLATION-BATTERY BOX | 485 |
| 9 | **2159100686** | MIRROR INSTALLATION - REAR VIEW | 487 |
| 10 | **2159110216** | STEP INSTALLATION | 489 |
| 11 | **6376100272** | HARDWARE KIT - DECAL | 491 |
| 13 | **6978100997** | ELECTRICAL SYSTEM INSTALLATION - CARRIER (RT540E/RT530E2) | 497 |
| | **6512101096** | HARNESS ASSEMBLY - CARRIER (COMPLETE ASSEMBLY) | 507 |
| | **6679100157** | PANEL ASSEMBLY - ENGINE RELAYS (COMPLETE ASSEMBLY) | 513 |
| | **6512100807** | HARNESS ASSEMBLY - ENGINE RELAY PANEL (COMPLETE ASSEMBLY) | 515 |
| 14 | **2159110182** | TANK INSTALLATION - HYDRAULIC | 517 |
| | **7880100112** | RESERVOIR ASSEMBLY - HYDRAULIC (COMPLETE ASSEMBLY) | 519 |

# *Manitowoc Cranes*
# MACHINE COMPONENT INDEX

**Date: Aug 20, 2009** **Rev: 001**

| Model Number | Serial Number |
|---|---|
| **RT530E-2 (30 MT)** | **230430** |


| Item | Part | Description | Page |
|---|---|---|---|
| | **9437100891** | FILTER ASSY. HYD. RETURN | 521 |
| | **2159110178** | LADDER ASSEMBLY (COMPLETE ASSEMBLY) | 523 |
| 15 | **2159610147** | VALVE INSTALLATION - HYDRAULIC (CARRIER) | 525 |
| | **7926100859** | VALVE ASSEMBLY - OUTRIGGER CONTROL 4 SECTION (COMPLETE ASSEMBLY) | 527 |
| | **7926100911** | VALVE ASSEMBLY - PARK BRAKE RANGE SHIFT (COMPLETE ASSEMBLY) | 529 |
| | **7926100924** | VALVE ASSEMBLY - AXLE LOCKOUT (COMPLETE ASSEMBLY) | 531 |
| | **7926100936** | VALVE ASSEMBLY - OUTRIGGER SELECTOR REAR STEER (COMPLETE ASSEMBLY) | 533 |
| 18 | **2159110149** | TRAY INSTALLATION - STORAGE (WITH MAT) | 537 |
| 25 | **2159110179** | TANK INSTALLATION - FUEL | 539 |
| | **7880100116** | TANK ASSEMBLY - 58 GALLON FUEL (COMPLETE ASSEMBLY) | 543 |
| | **7576001743** | MOUNTING KIT - OIL COOLER | 545 |
| | **2159110178** | LADDER ASSEMBLY (COMPLETE ASSEMBLY) | 547 |
| 26 | **2159810190** | BATTERY INSTALLATION | 549 |
| | **7246100441** | KIT - CABLE (BATTERIES) RT535 | 553 |
| | | **SCHEMATIC** | |
| 17 | **6829104375** | SOFTWARE SPEC RT540E/RT530E-2 | SCHEMATIC |

**Notes**

**Notes**

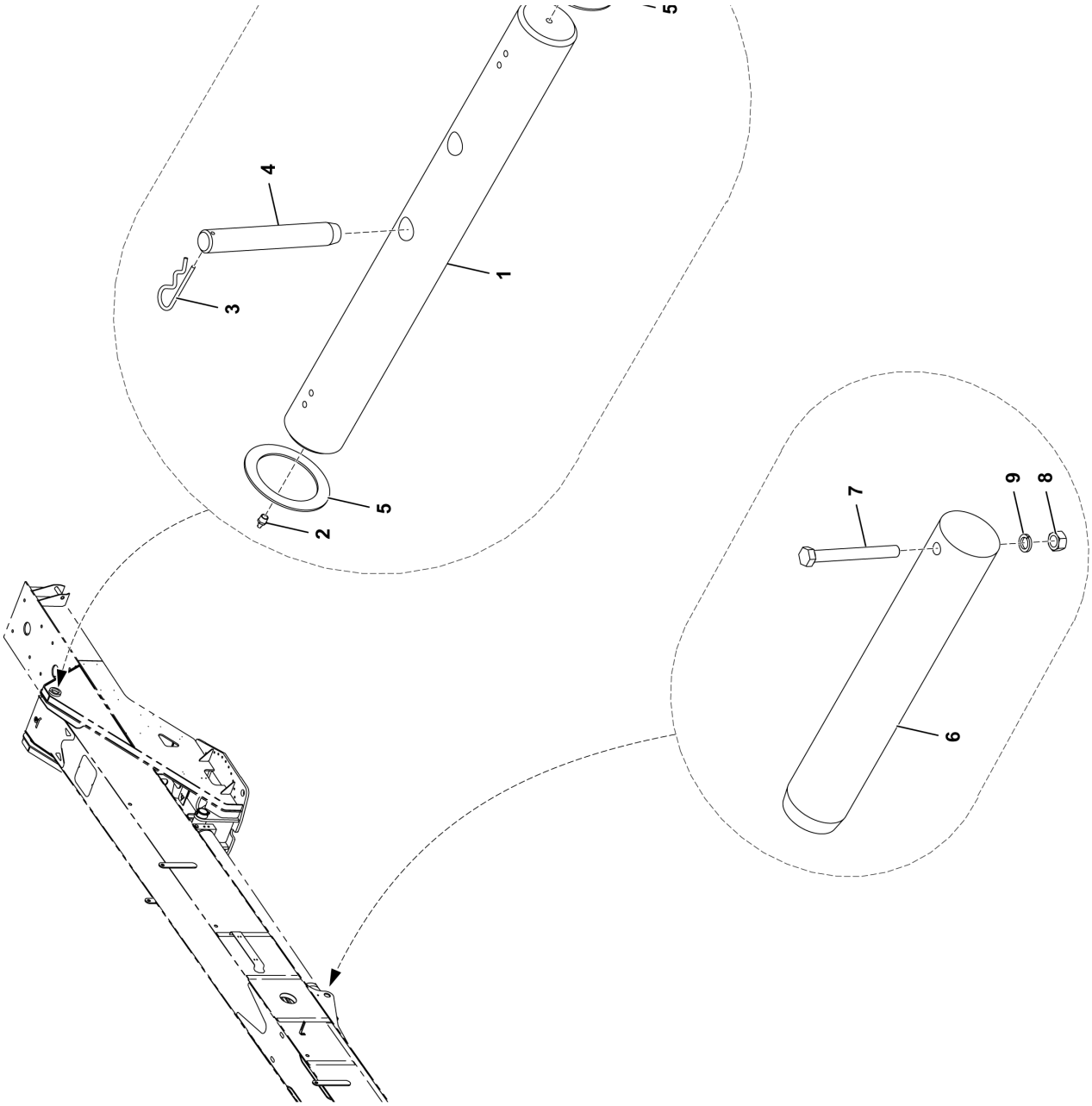


**2159210176**

**(SHEET 1 OF 1)**

Description
**SHAFT INSTALLATION - UPPER & BOOM PIVOT**

Assembly No.
**2159210176**
Revision: #

| Item | FN | Part | Qty | Description |
|---|---|---|---|---|
| 1 | | **6810100067** | 1 | SHAFT, PIVOT |
| 2 | | **7440000000** | 2 | FITTING, 1/8 STRAIGHT GREASE |
| 3 | | **7689000036** | 1 | PIN, CLIP |
| 4 | | **7689100046** | 1 | PIN |
| 5 | | **7949000385** | 2 | WASHER, THRUST |
| 6 | | **7810100139** | 1 | SHAFT, PIVOT |
| 7 | | **7126243150** | 1 | CAP SCREW, M16X150 HEX HEAD |
| 8 | | **7661240003** | 1 | NUT, HEX<br>16MM N.C. |
| 9 | | **7951240210** | 1 | SPRING WASHER, 16MM I.D. |

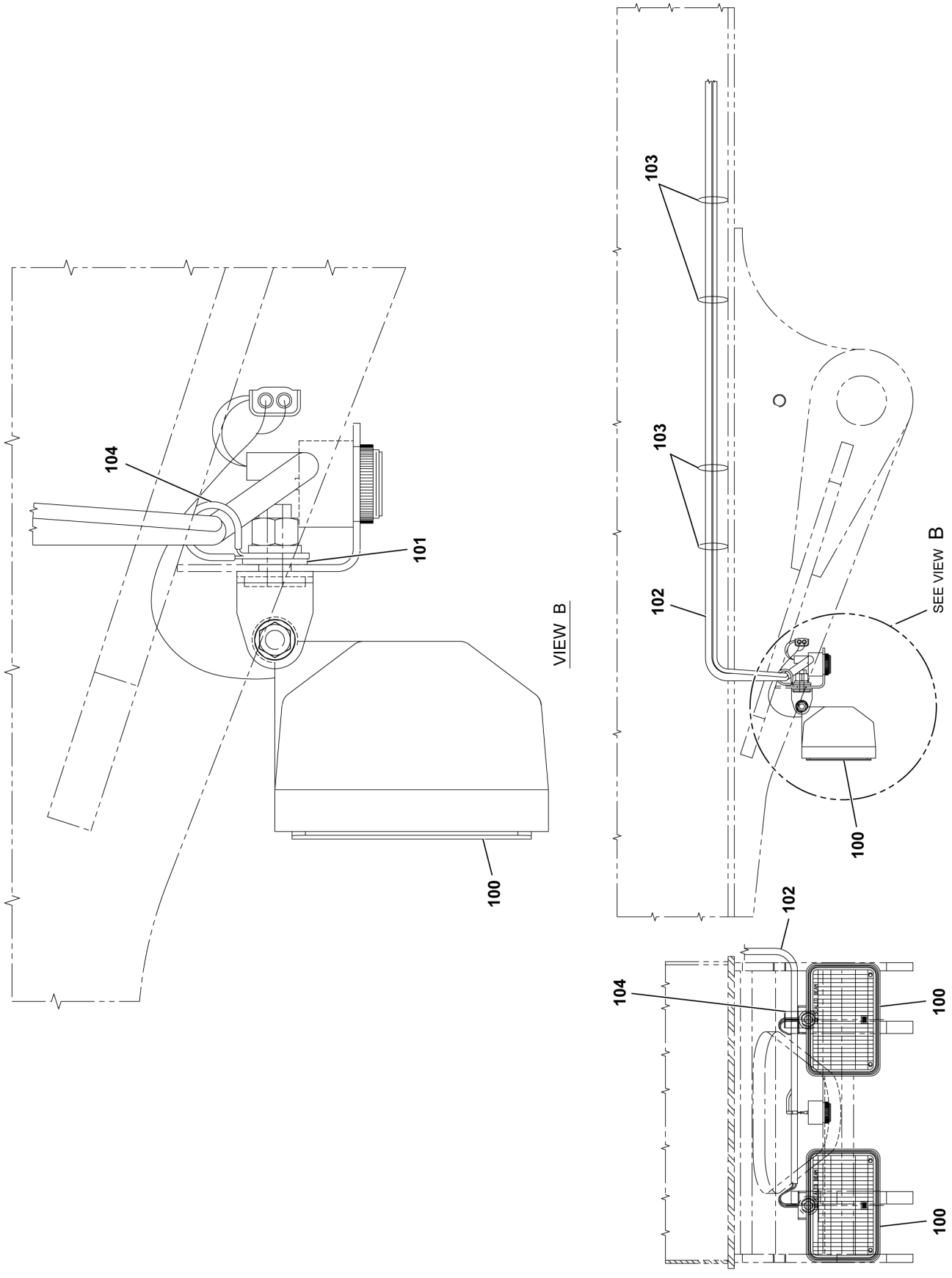


**6581100076**

**(SHEET 1 OF 1)**

Description
**LIGHTS INSTALLATION - BOOM (DOMESTIC)**

Assembly No.
**6581100076**
Revision: **A**

| Item | FN | Part | Qty | Description |
|---|---|---|---|---|
| 100 | + | **6581100024** | 2 | LIGHT ASSEMBLY - MODIFIED BOOM (COMPLETE ASSEMBLY) |
| 101 | | **7950180141** | 2 | WASHER, FLAT 1/2" |
| 102 | += | **6246100015** | 1 | CABLE ASSEMBLY - BOOM FLOODLIGHT |
| 102 | += | **6246100259** | 1 | CABLE ASSEMBLY - BOOM LIGHTS (COMPLETE ASSEMBLY) |
| 103 | | **7850000208** | 42 | CABLE TIE, BLACK |
| 104 | | **7300000243** | 1 | CLAMP, TUBING 3/4" I.D. |

**+ SEE FURTHER BREAKDOWN THIS GROUP** **= REFER TO MCI FOR APPLICABLE NUMBER**

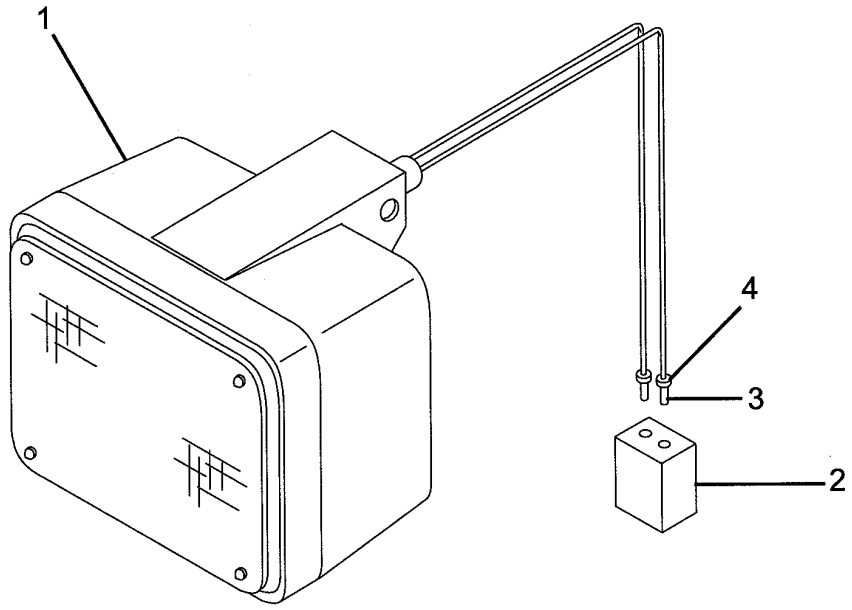


**6581100024**

**(SHEET 1 OF 1)**

Description
**LIGHT ASSEMBLY - MODIFIED BOOM (COMPLETE ASSEMBLY)**

Assembly No.
**6581100024**
Revision: #

| Item | FN | Part | Qty | Description |
|---|---|---|---|---|
| 1 | | **7581100001** | 1 | LIGHT, WORK<br>INCLUDES THE FOLLOWING PARTS |
| | | **9581100391** | 1 | BEAM, SEALED 12 VOLT |
| 2 | | **7364001683** | 1 | CONNECTOR, 2 CONDUCTOR<br>SHROUD |
| 3 | | **7892000252** | 2 | TERMINAL, MALE PIN |
| 4 | | **7892000255** | 2 | TERMINAL, GRAY CABLE SEAL |

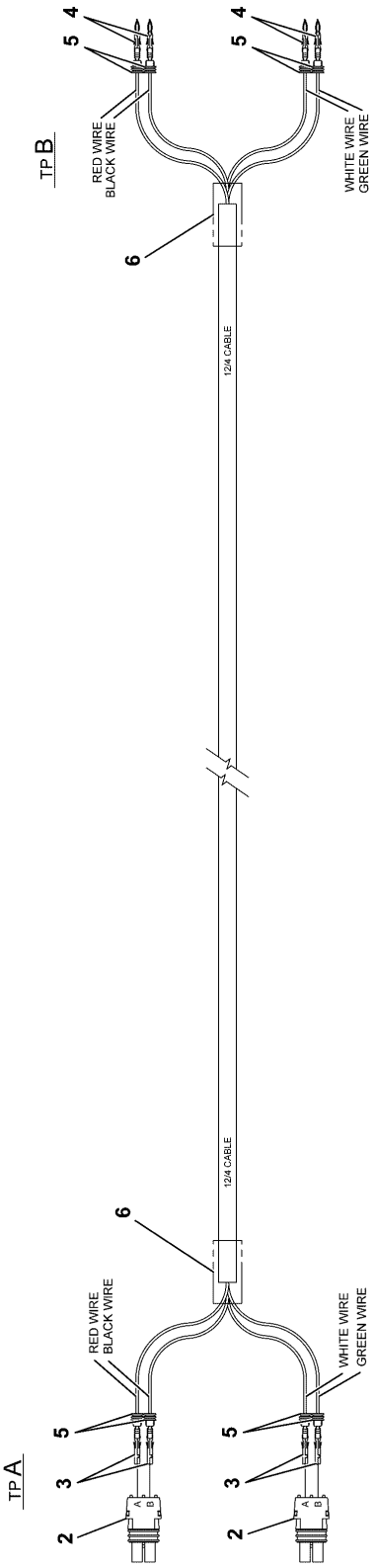


**6246100259**

**(SHEET 1 OF 1)**

Description
**CABLE ASSEMBLY - BOOM LIGHTS (COMPLETE ASSEMBLY)**

Assembly No.
**6246100259**
Revision: **A**

| Item | FN | Part | Qty | Description |
|---|---|---|---|---|
| 2 | | **7364001682** | 2 | CONNECTOR, 2 CONDUCTOR TOWER WITH SEAL |
| 3 | | **7364001847** | 4 | TERMINAL, FEMALE SLEEVE |
| 4 | | **7364001846** | 4 | TERMINAL |
| 5 | | **7892000256** | 8 | TERMINAL, BLUE CABLE SEAL |
| 6 | | **8594100257** | 1 | TUBING, HEAT SHRINK 1/2" I.D. LINER, MELTABLE (QUANTITY IN FEET) |

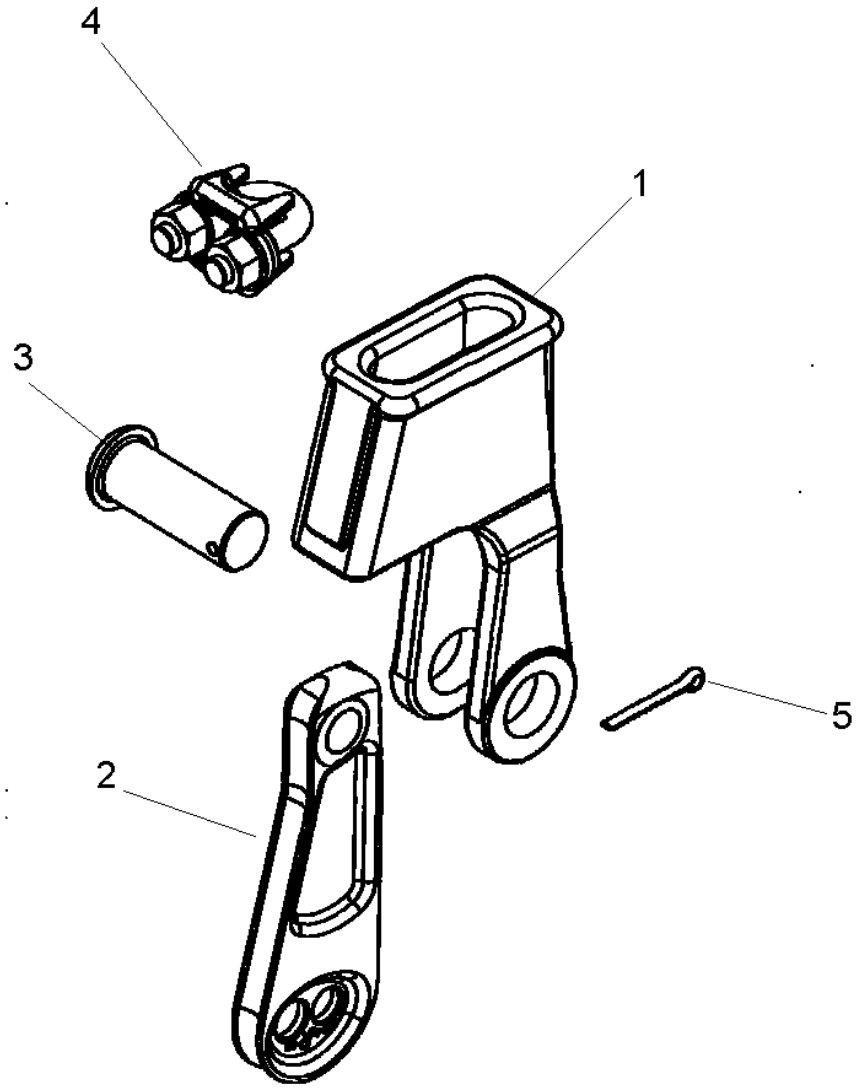


**7826100017**

**(SHEET 1 OF 1)**

Description
**SOCKET ASSY 5/8"**

Assembly No.
**7826100017**
Revision:

| Item | FN | Part | Qty | Description |
|---|---|---|---|---|
| 1 | | **NSS** | 1 | SOCKET |
| 2 | | **9826100007** | 1 | WEDGE |
| 3 | | **9826100008** | 1 | PIN |
| 4 | | **9914100042** | 1 | CLIP |
| 5 | | **9826100009** | 1 | PIN, COTTER |

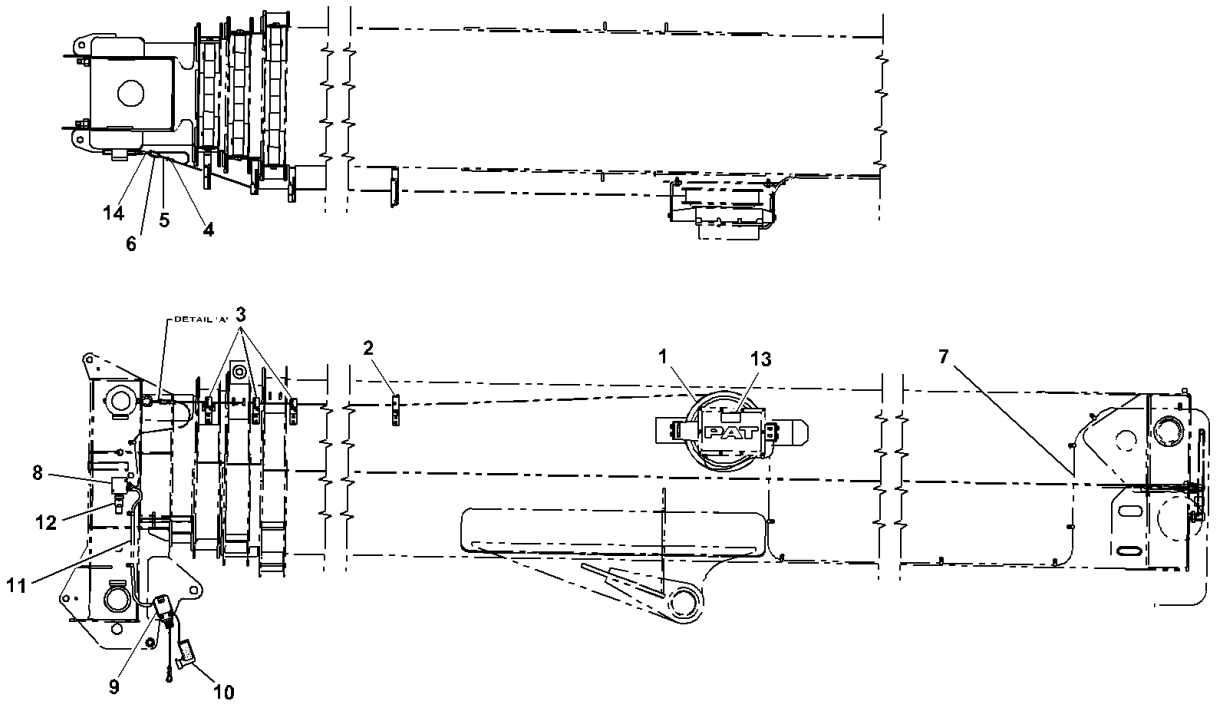


**RT700E AND TMS700E**

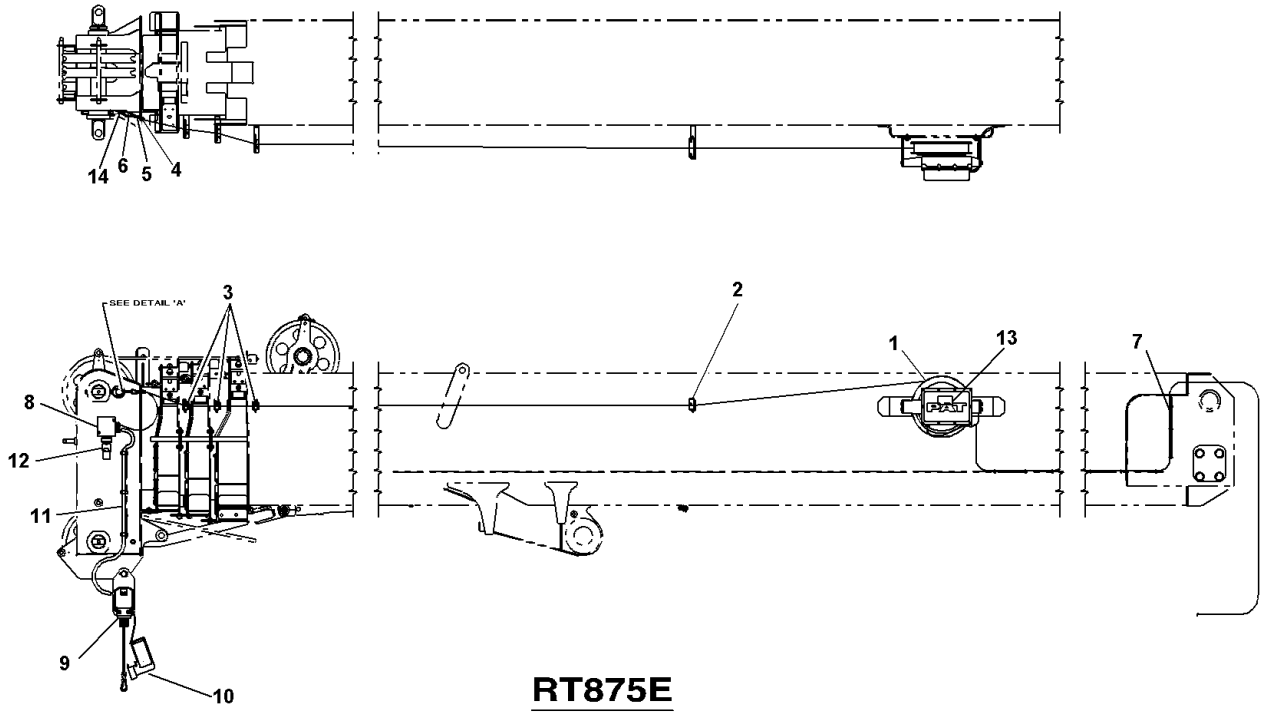


**RT875E**

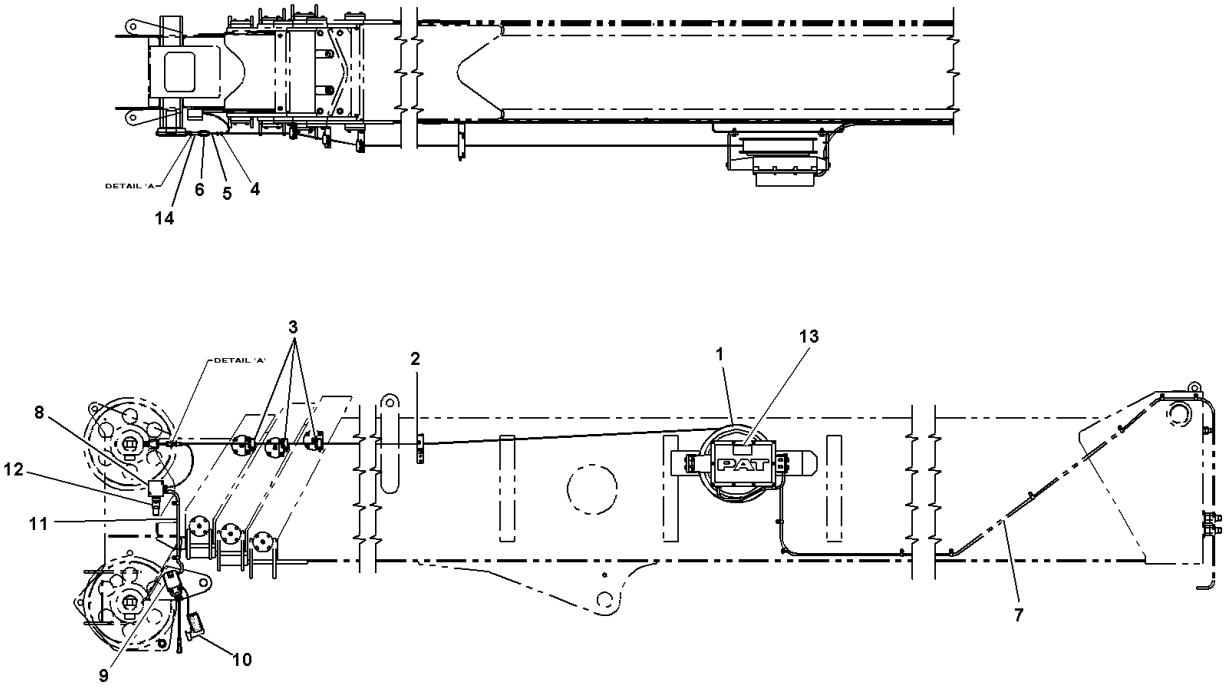


**RT600E**

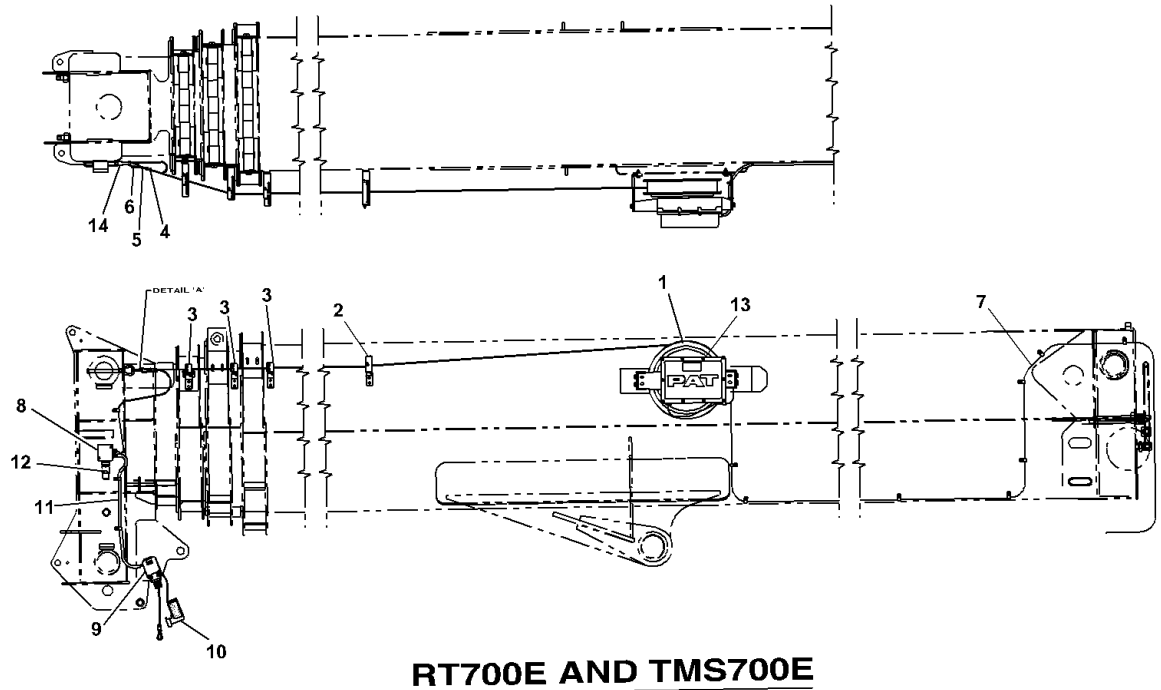


**RT700E AND TMS700E**

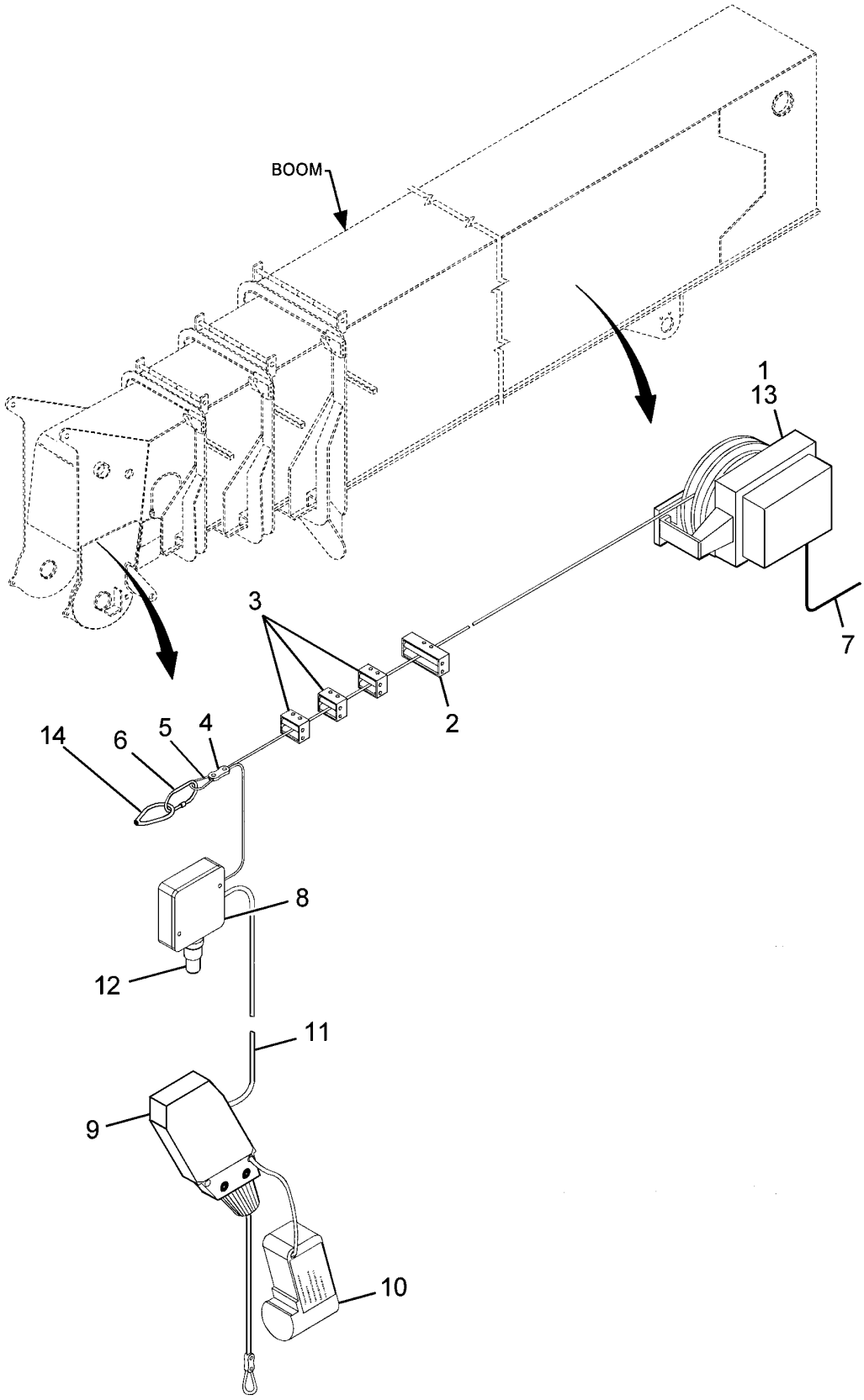


**7598100094**

**(SHEET 1 OF 3)**

Description
**KIT INSTALLATION - iFLEX 5 LMI BOOM**

Assembly No.
**7598100094**
Revision: **A**

| Item | FN | Part | Qty | Description |
|---|---|---|---|---|
| 1 | + | **9333103873** | 1 | CABLE REEL LWG508 - IFLEX 5 |
| 2 | + | **9333101437** | 1 | ROLLER GUIDE ASSEMBLY |
| 3 | | **9333101435** | 3 | GUIDE, CABLE |
| 4 | | **9333103094** | 1 | CLAMP, CABLE |
| 5 | | **9333103697** | 1 | THIMBLE, 1/8" CABLE |
| 6 | | **9333102620** | 1 | CONNECTOR, CHAIN<br>2 7/16" |
| 7 | | **9333103872** | 1 | CABLE, CANBUS 11M W/MOLDED M12 |
| 8 | + | **9333103565** | 1 | BOX ASSEMBLY - JUNCTION |
| 9 | | **9333102230** | 1 | A2B SWITCH - WITH<br>RETAINER CRIMP |
| 10 | + | **9333102633** | 1 | FLAG ASSEMBLY - A2B<br>RETAINER<br>(COMPLETE ASSEMBLY) |
| 11 | | **9333102235** | 2 | CONDUIT<br>(CUT TO LENGTH REQUIRED) |
| 12 | + | **9333102765** | 1 | CONNECTOR ASSEMBLY<br>DUMMY PLUG, 2-PIN |
| 13 | # | **7296000004** | 1 | INHIBITOR, CORROSION<br>VAPOR CONTROL |
| 14 | | **9333103768** | 1 | NUT, EYE |

**+ SEE FURTHER BREAKDOWN THIS GROUP**

**# SERVICED AS AN ASSEMBLY ONLY**

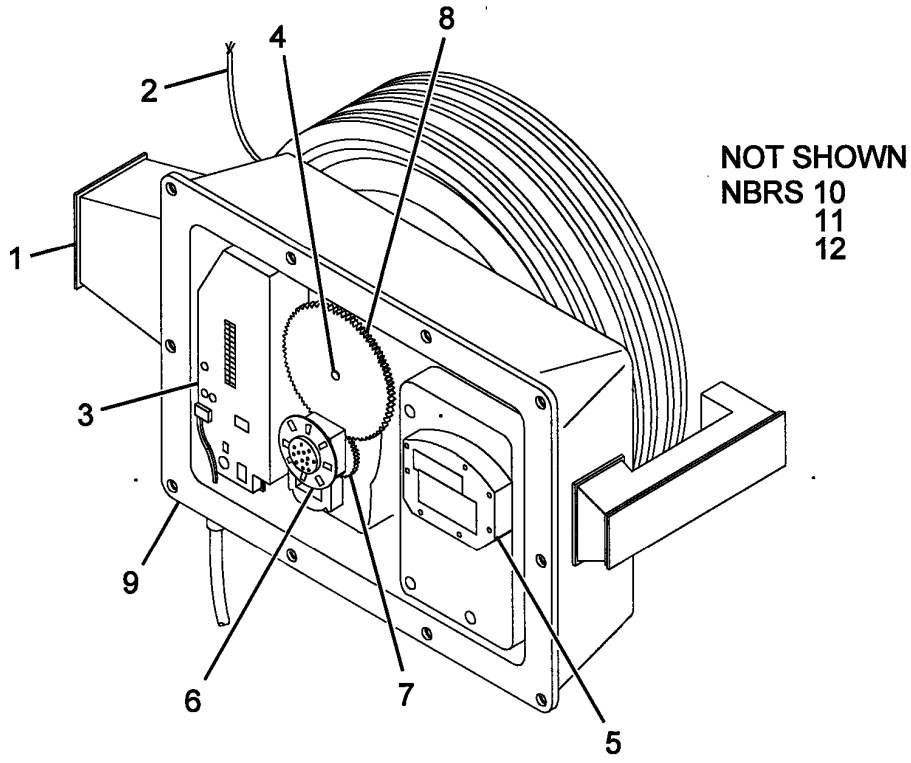
1
2
3
4
5
6
7
8
9
NOT SHOWN
NBRS 10
11
12

Description
**CABLE REEL LWG508 - IFLEX 5**

Assembly No.
**9333103873**
Revision:

| Item | FN | Part | Qty | Description |
|---|---|---|---|---|
| 1 | | **NSS** | 1 | DRUM BODY, CABLE REEL |
| 2 | | **9333102986** | 139 | CABLE, LENGTH SENSOR - 1 CORE W/ SCREEN (BULK) |
| 3 | | **9333103896** | 1 | P.C. BOARD |
| 4 | | **9333103897** | 1 | POTENTIOMETER,LENGTH |
| 5 | | **9333103898** | 1 | SENSOR,ANGLE |
| 6 | | **9333103904** | 1 | SLIP RING ASSY. 2 CONN. |
| 7 | | **9333103905** | 1 | GEAR, 25T |
| 8 | | **9333101625** | 1 | GEAR, 75T |
| 9 | | **9333103906** | 1 | PLUG,CONNECTOR ASSY.5 PIN PASS |
| 10 | | **9333103907** | 1 | COVER |
| 11 | | **9333101565** | 1 | SEAL, COVER |
| 12 | | **9333101566** | 10 | SCREW, COVER |

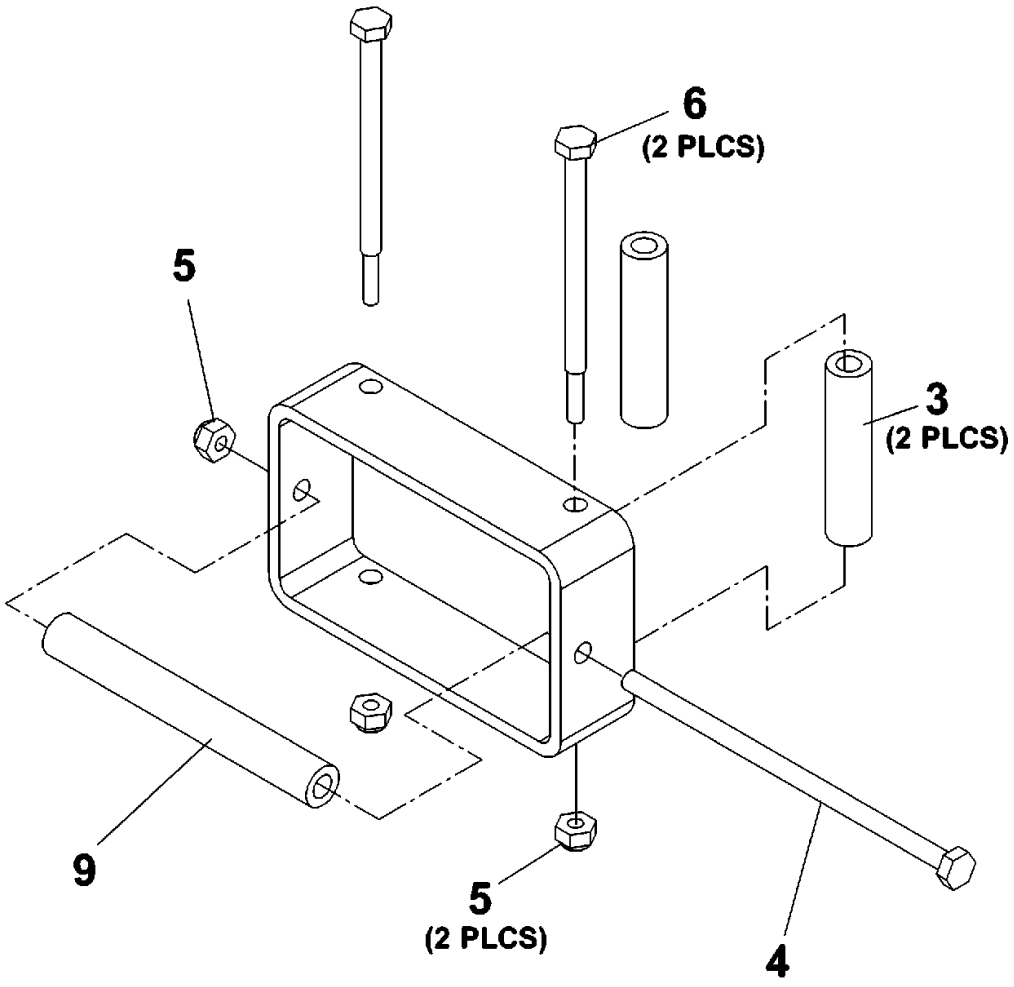


**9333101437**

**(SHEET 1 OF 1)**

Description
**ROLLER GUIDE ASSEMBLY**

Assembly No.
**9333101437**
Revision:

| Item | FN | Part | Qty | Description |
|---|---|---|---|---|
| 1 | | **203582** | 1 | TUBE |
| 2 | | **203583** | 1 | ROLLER |
| 3 | | **203584** | 2 | ROLLER |
| 4 | | **7115144450** | 1 | CAP SCREW, 1/4-20UNC X 5 1/2 |
| 5 | | **846531** | 3 | NUT, SELF-LOCKING |
| 6 | | **7115143250** | 2 | CAP SCREW,<br>1/4" - 20 N.C. X 4"<br>GRADE 5 |

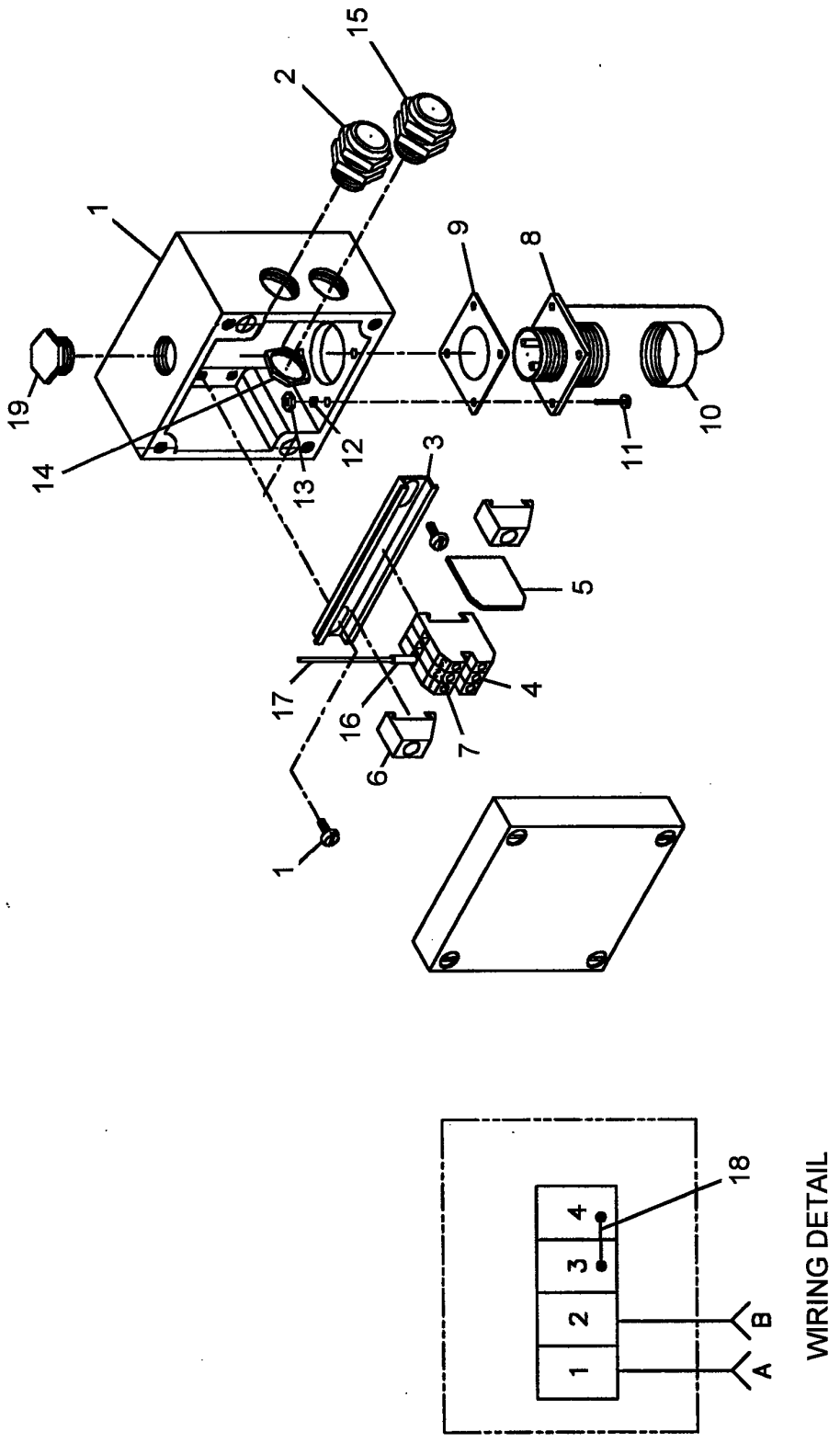


**9333103565**

**(SHEET 1 OF 1)**

Description
**BOX ASSEMBLY - JUNCTION**

Assembly No.
**9333103565**
Revision:

| Item | FN | Part | Qty | Description |
|---|---|---|---|---|
| 1 | | **9333103735** | 1 | BOX, JUNCTION |
| 2 | | **9333102056** | 1 | STRAIN RELIEF<br>WHITE INSERT - PG9 |
| 3 | | **9333102759** | 1 | RAIL, TERMINAL STRIP MOUNTING |
| 4 | | **9333102663** | 4 | BLOCK, TERMINAL STRIP |
| 5 | | **9333102664** | 1 | PLATE, TERMINAL STRIP END |
| 6 | | **9333102665** | 2 | BRACKET, TERMINAL STRIP END |
| 7 | | **9333103044** | 1 | MARKING TAGS, 1-5 |
| 8 | | **9333102792** | 1 | CONNECTOR, CANNON 2-SOCKET<br>RECEPTACLE, |
| 9 | | **9333102482** | 1 | GASKET |
| 10 | | **9333102612** | 1 | COVER, DUST |
| 11 | | **9333102669** | 4 | SCREW #4 |
| 12 | | **9333102266** | 4 | WASHER, LOCK<br>#4 |
| 13 | | **9333102480** | 4 | NUT #4 |
| 14 | | **9333101984** | 1 | LOCKNUT<br>PG9 |
| 15 | | **9333103041** | 1 | RELIEF, VALVE<br>PG9 W/<br>YELLOW INSERT |
| 16 | | **9333103042** | 2 | CRIMP FERRULE, 20 AWG |
| 17 | | **9333102479** | 1 | WIRE |
| 18 | | **9333102717** | 1 | BAR, 2-POLE JUMPER |
| 19 | | **9333102808** | 1 | PLUG, HOLE |

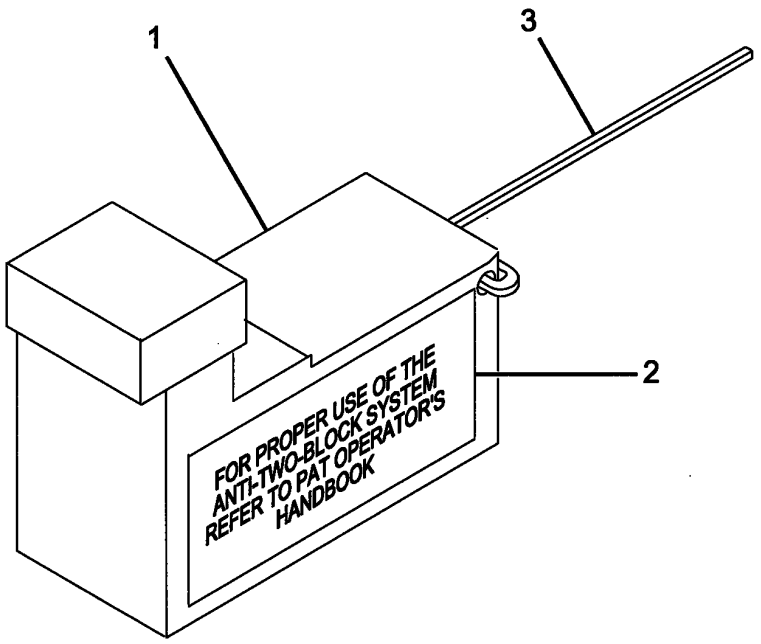


**9333102633**

**(SHEET 1 OF 1)**

Description
**FLAG ASSEMBLY - A2B RETAINER**
**(COMPLETE ASSEMBLY)**

Assembly No.
**9333102633**
Revision:

| Item | FN | Part | Qty | Description |
|---|---|---|---|---|
| 1 | | **9333102373** | 1 | FLAG, RETAINER |
| 2 | | **9333102618** | 1 | DECAL, A2B |
| 3 | | **9333102232** | 1 | LANYARD |

NOTE: SCREW TO HOUSING CONNECTION MUST BE WATER TIGHT.

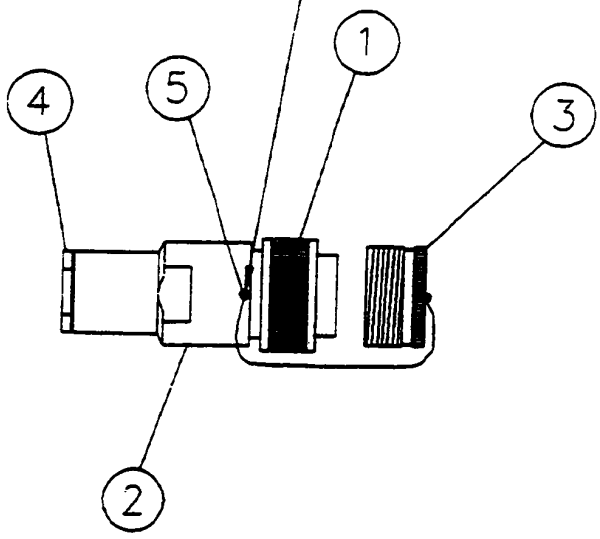


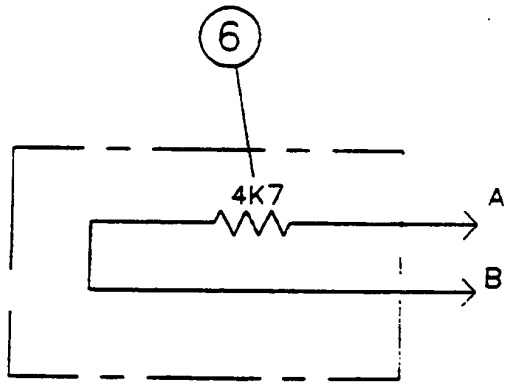


WIRING DETAIL

NOTES:

4K7 = 4.7 kΩ RESISTOR (1/4 W)

NC = NOT CONNECTED

CONNECTOR ASSEMBLY

Description
**CONNECTOR ASSEMBLY DUMMY PLUG, 2-PIN**

Assembly No.
**9333102765**
Revision:

| Item | FN | Part | Qty | Description |
|---|---|---|---|---|
| 1 | | **9333103040** | 1 | CANNON CONNECTOR, 2-PIN PLUG |
| 2 | | **9333102770** | 1 | HOUSING, CANNON CONNECTOR END #16 |
| 3 | | **9333102615** | 1 | COVER, DUST PLUG END |
| 4 | | **9333102047** | 1 | PLUG, HOLE |
| 5 | | **9333102790** | 1 | SCREW, SLOTTED MACHINE |
| 6 | | **9333101465** | 1 | RESISTOR, 4700 OHMS |

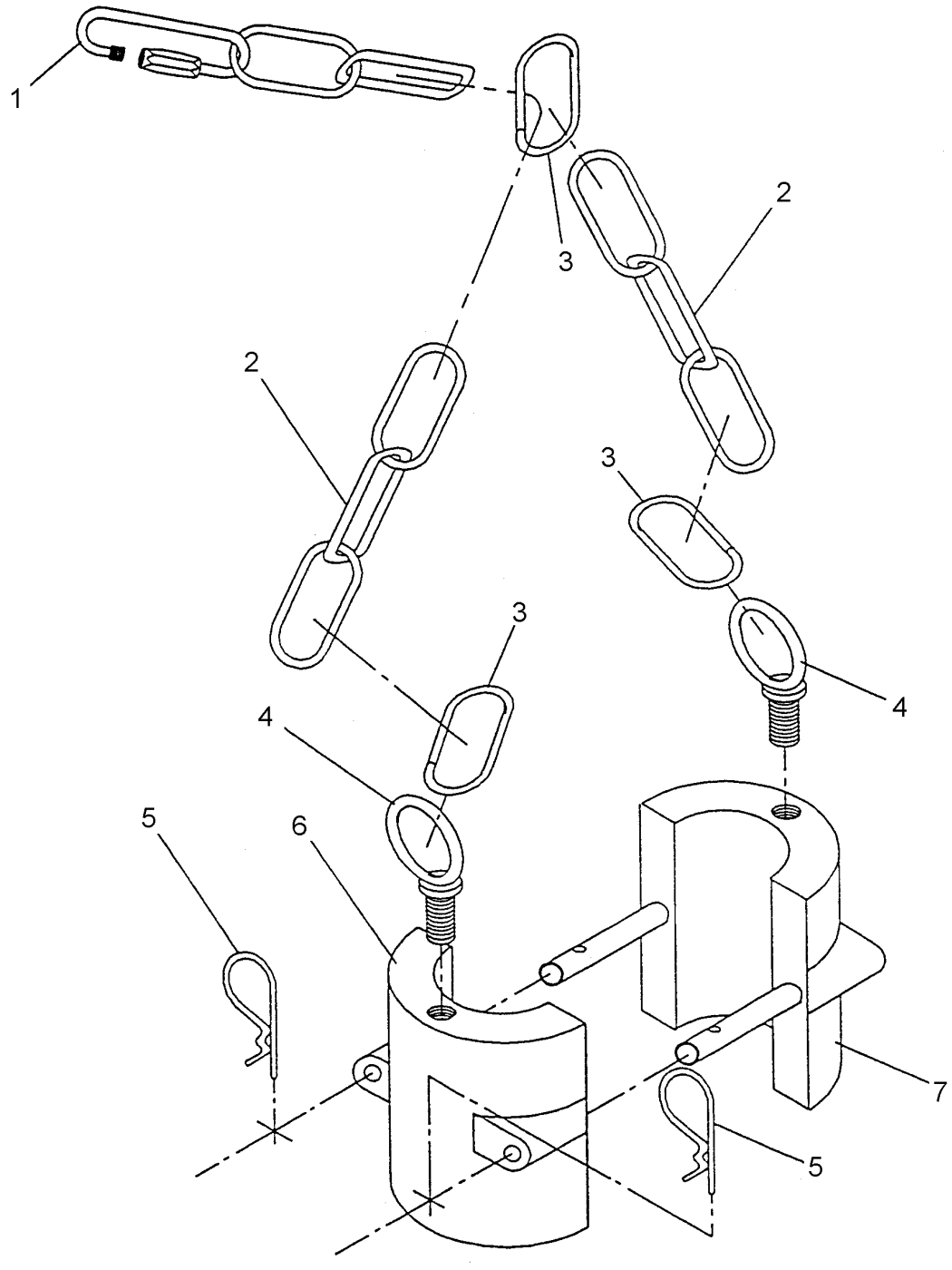


**3486000212**

**(SHEET 1 OF 1)**

Description
**WEIGHT AND CHAIN ASSEMBLY (COMPLETE ASSEMBLY)**

Assembly No.
**3486000212**
Revision:

| Item | FN | Part | Qty | Description |
|---|---|---|---|---|
| 1 | | **9333101840** | 1 | CLEVIS |
| 2 | | **9333101921** | 1 | CHAIN ASSEMBLY |
| 3 | | **9333101922** | 3 | CLAMP, CHAIN |
| 4 | | **9333101923** | 2 | EYEBOLT |
| 5 | | **9333101916** | 2 | PIN, COTTER |
| 6 | | **9333101924** | 1 | WEIGHT, FEMALE |
| 7 | | **9333101925** | 1 | WEIGHT, MALE |

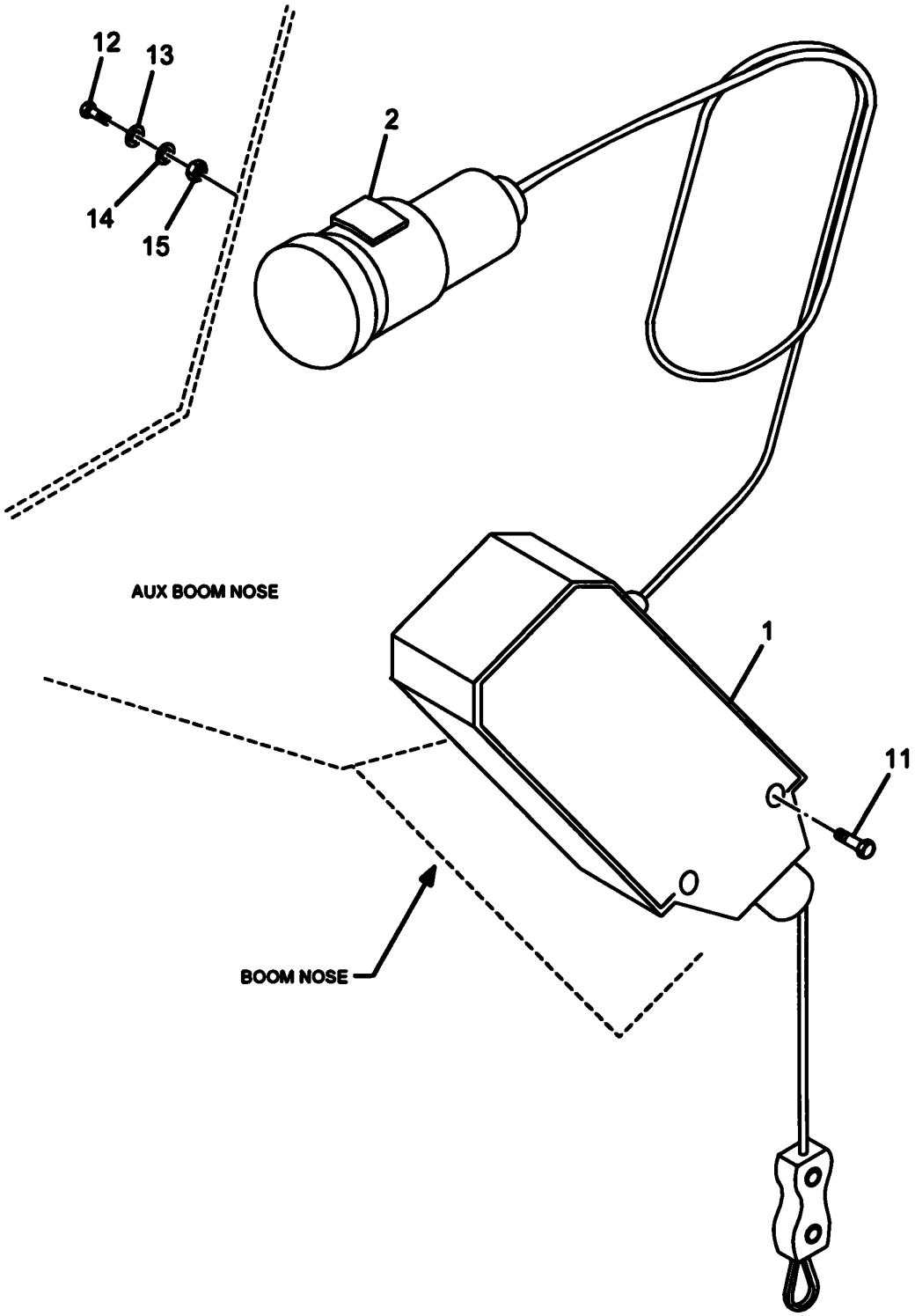


**7598100004**

**(SHEET 1 OF 1)**

Description
**KIT - LMI AUXILARY BOOM NOSE**

Assembly No.
**7598100004**
Revision: #

| Item | FN | Part | Qty | Description |
|---|---|---|---|---|
| 1 | | **9333103729** | 1 | SWITCH ASSEMBLY |
| 2 | | **9333103730** | 1 | CLIP, GRIPPER |
| 11 | | **7110151205** | 1 | CAP SCREW,<br>5/16" - 18 N.C. X 1 1/2"<br>GRADE 1 |
| 12 | | **7115140650** | 1 | CAP SCREW,<br>1/4" - 20 N.C. X 3/4"<br>GRADE 5 |
| 13 | | **7950140141** | 1 | WASHER, FLAT 1/4" PLAIN NARROW |
| 14 | | **7950140050** | 1 | WASHER, LOCK 1/4" I.D. |
| 15 | | **7660140000** | 1 | NUT, HEX<br>1/4" - 20 N.C. |

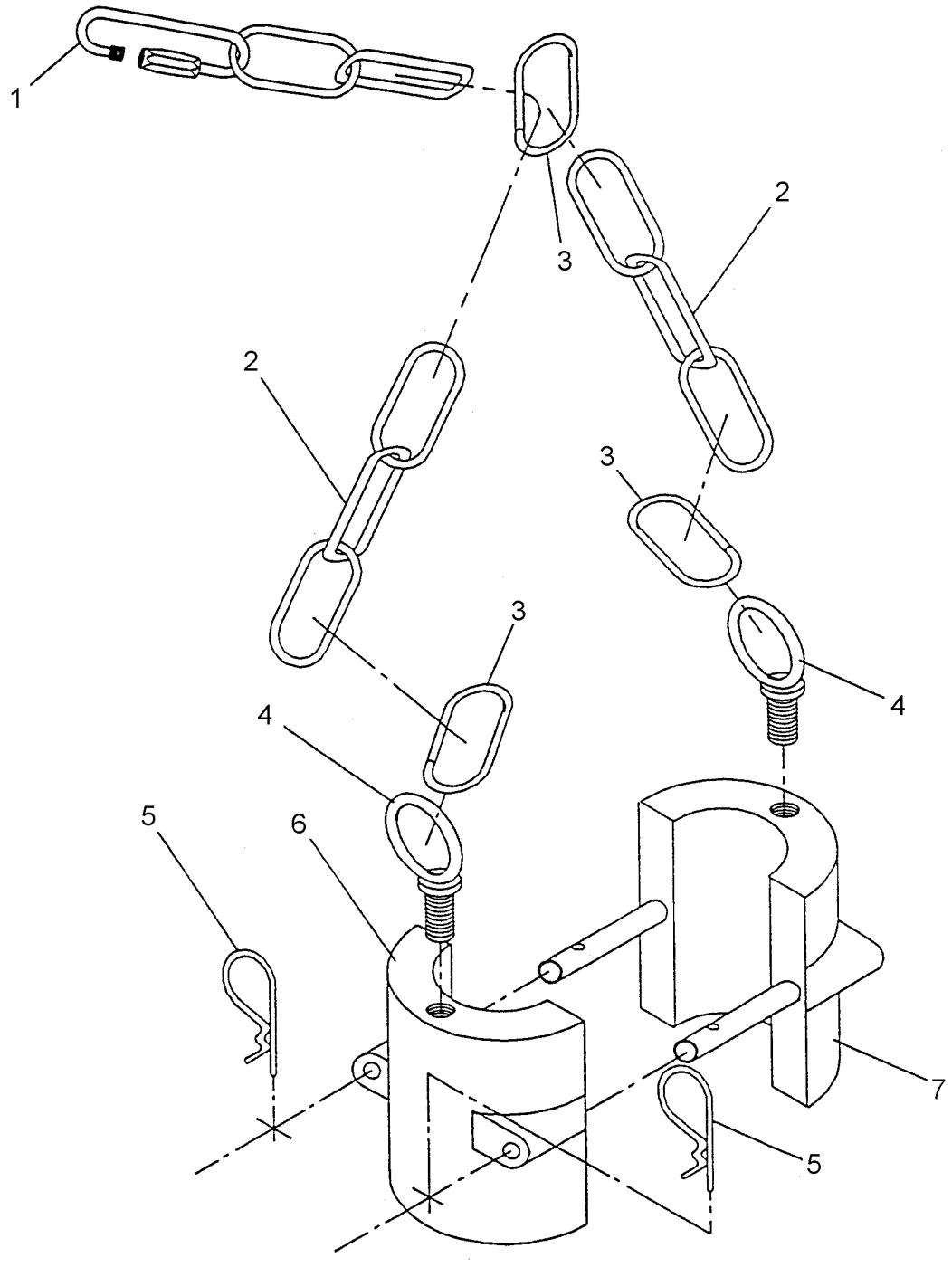


**3486000212**

**(SHEET 1 OF 1)**

Description
**WEIGHT AND CHAIN ASSEMBLY (COMPLETE ASSEMBLY)**

Assembly No.
**3486000212**
Revision:

| Item | FN | Part | Qty | Description |
|---|---|---|---|---|
| 1 | | **9333101840** | 1 | CLEVIS |
| 2 | | **9333101921** | 1 | CHAIN ASSEMBLY |
| 3 | | **9333101922** | 3 | CLAMP, CHAIN |
| 4 | | **9333101923** | 2 | EYEBOLT |
| 5 | | **9333101916** | 2 | PIN, COTTER |
| 6 | | **9333101924** | 1 | WEIGHT, FEMALE |
| 7 | | **9333101925** | 1 | WEIGHT, MALE |

Description
**KIT INSTALLATION - iFLEX 5 LMI BOOM (FOR REFERENCE ONLY)**

Assembly No.
**6978100931**
Revision: **B**

| Item | FN | Part | Qty | Description |
|---|---|---|---|---|
| 61 | | **7115161250** | 4 | CAP SCREW,<br>3/8" - 16 N.C. X 1 1/2"<br>GRADE 5 |
| 62 | | **7950160141** | 8 | WASHER, 3/8" PLAIN NARROW |
| 63 | | **7950160050** | 4 | WASHER, LOCK 3/8" I.D. |
| 64 | | **7660160000** | 4 | NUT, HEX<br>3/8" - 16 N.C. |
| 65 | | **7099100023** | 2 | CAP SCREW - HEX SOCKET HEAD<br>.3125" - 18 UNC-2A X 1 1/2"<br>ZINC COATED |
| 66 | | **7110080605** | 2 | CAP SCREW,<br>5/32" - 32 N.C. X 3/4"<br>GRADE 1 |
| 72 | | **7850000805** | 5 | TIE, CABLE (BLACK)<br>13 3/8" LONG |
| 73 | | **6705017532** | 5 | SHIM, |

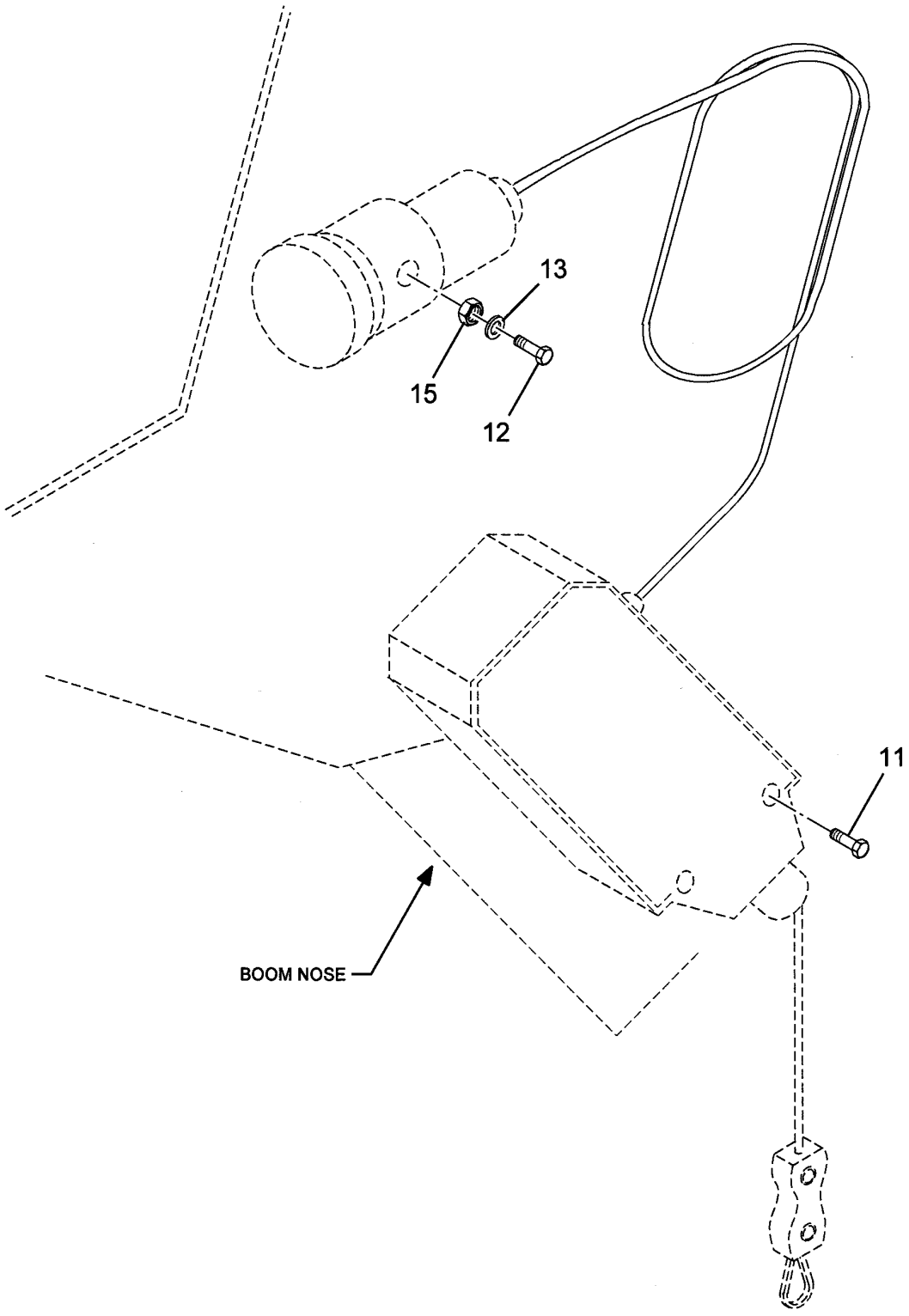


**6978100041**

**(SHEET 1 OF 1)**

Description
**LOAD MOMENT INDICATOR KIT INSTALLATION - AUXILIARY BOOM**

Assembly No.
**6978100041**
Revision: **C**

| Item | FN | Part | Qty | Description |
|---|---|---|---|---|
| 11 | | **7110151205** | 2 | CAP SCREW,<br>5/16" - 18 N.C. X 1 1/2"<br>GRADE 1 |
| 12 | | **7115140650** | 1 | CAP SCREW,<br>1/4" - 20 N.C. X 3/4"<br>GRADE 5 |
| 13 | | **7950140141** | 1 | WASHER, FLAT 1/4" PLAIN NARROW |
| 15 | | **7660140000** | 1 | NUT, HEX<br>1/4" - 20 N.C. |

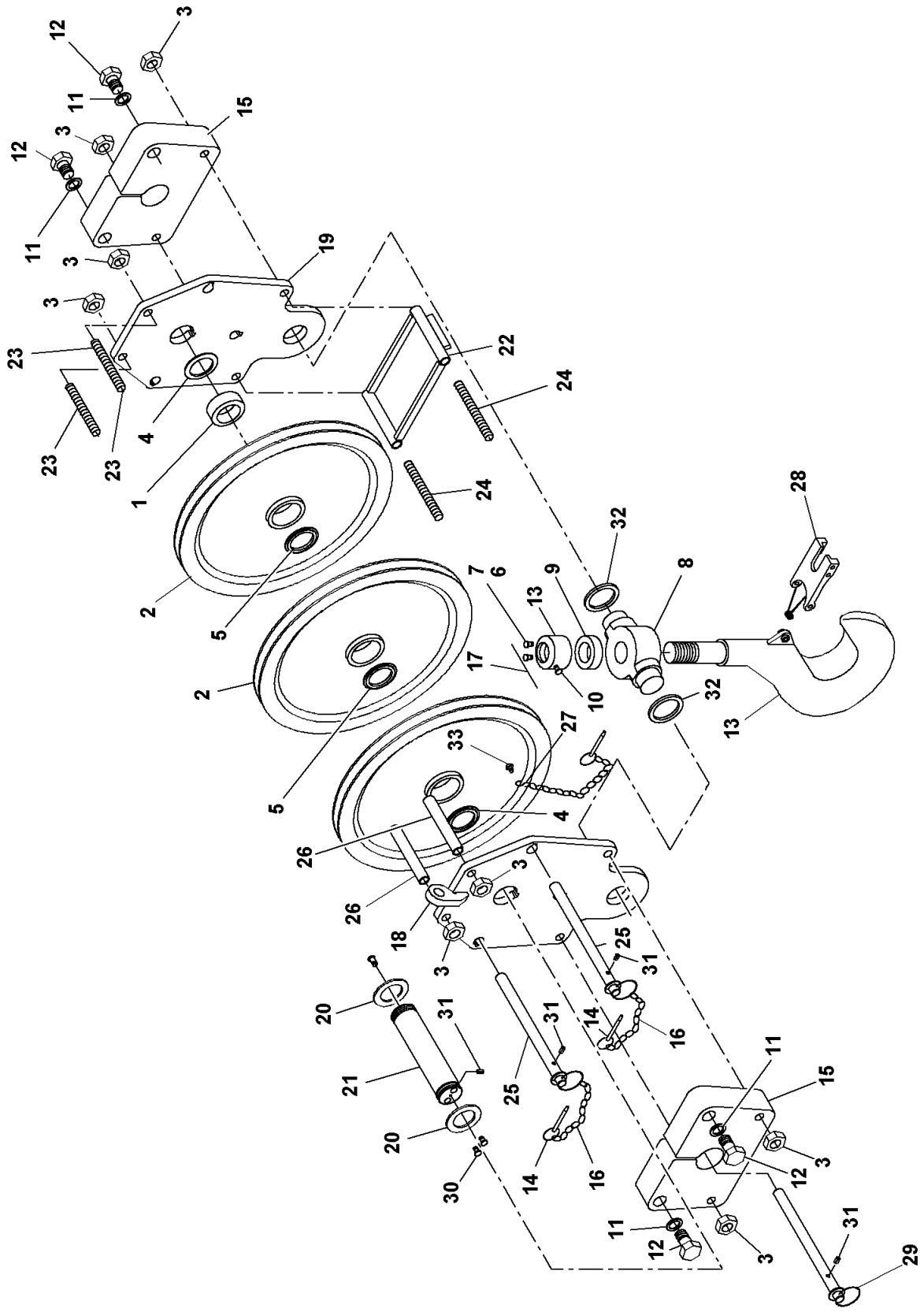


7086100136

(SHEET 1 OF 1)

Description
**HOOK BLOCK ASSEMBLY - 33 TON (30 MT) (COMPLETE ASSEMBLY)**

Assembly No.
**7086100136**
Revision:

| Item | FN | Part | Qty | Description |
|---|---|---|---|---|
| 1 | | **9086100014** | 3 | BEARING, ROLLER |
| 2 | | **9086100800** | 3 | WHEEL, SHEAVE |
| 3 | | **9086100061** | 8 | NUT |
| 4 | | **9086100802** | 2 | WASHER, THRUST |
| 5 | | **9086100803** | 2 | WASHER, THRUST |
| 6 | | **9086100804** | 2 | WASHER, |
| 7 | | **9086100805** | 2 | SCREW |
| 8 | | **9086100929** | 1 | HOUSING |
| 9 | | **9086100088** | 1 | BEARING |
| 10 | | **7440030000** | 1 | FITTING, STRAIGHT GREASE 1/4" N.P.T. |
| 11 | | **9086100705** | 4 | WASHER, LOCK |
| 12 | | **9086100806** | 4 | CAP SCREW, |
| 13 | | **9086100495** | 1 | HOOK & NUT |
| 14 | | **9086100584** | 3 | PIN, QUICK RELEASE |
| 15 | | **9086101008** | 2 | PLATE, SIDE |
| 16 | | **9086100919** | 1 | CHAIN |
| 17 | | **9086100933** | 1 | WIRE, SAFETY |
| 18 | | **NSS** | 1 | PLATE, DEAD END |
| 19 | | **9086101336** | 1 | PLATE, SIDE SET |
| 20 | | **9086100011** | 2 | PIN, ROLL |
| 21 | | **9086100214** | 1 | PIN 2.5" |
| 22 | | **9086101337** | 1 | GUIDE ASSY. |
| 23 | | **9086100809** | 2 | BOLT, TIE |
| 24 | | **9086100810** | 2 | BOLT, TIE |
| 25 | | **9086100811** | 3 | PIN |
| 26 | | **9086100812** | 2 | SPACER |
| 27 | | **9086100813** | 1 | S-HOOK |
| 28 | | **9086100491** | 1 | KIT,LATCH |
| 29 | | **9086100815** | 3 | RING, SPLIT |
| 30 | | **9086100151** | 3 | FITTING |
| 31 | | **9086100204** | 4 | PIN, ROLL |
| 32 | | **9086100567** | 2 | SPACER |

Description
**HOOK BLOCK ASSEMBLY - 33 TON (30 MT) (COMPLETE ASSEMBLY)**

Assembly No.
**7086100136**
Revision:

| Item | FN | Part | Qty | Description |
|---|---|---|---|---|
| 33 | | **9086100801** | 1 | CAP SCREW, |

**Notes**

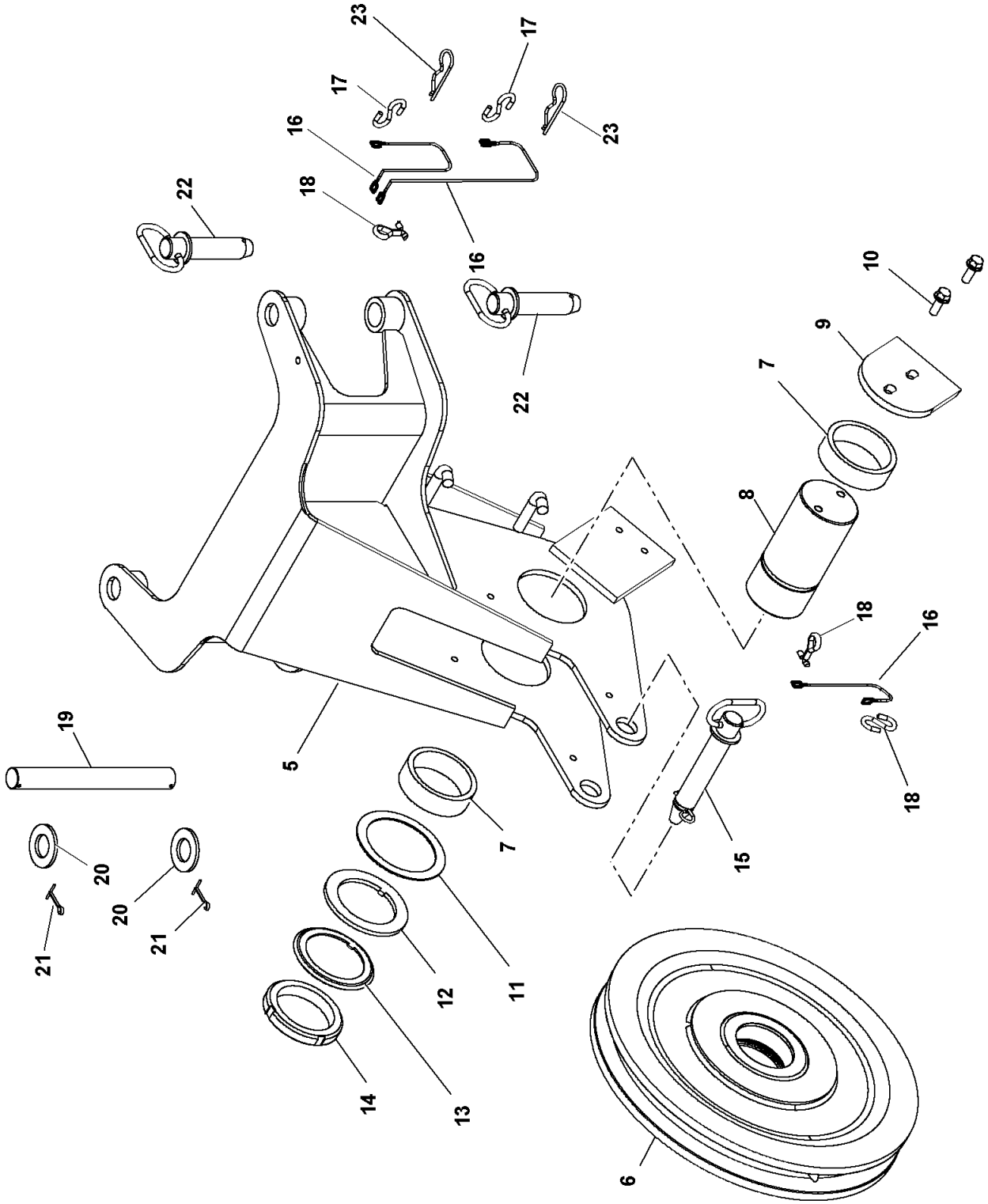


**2159910170**

**(SHEET 1 OF 1)**

Description
**NOSE INSTALLATION - AUXILIARY**

Assembly No.
**2159910170**
Revision: **A**

| Item | FN | Part | Qty | Description |
|---|---|---|---|---|
| 5 | | **2159910022** | 1 | NOSE, AUXILIARY |
| 6 | + | **6718100031** | 1 | SHEAVE ASSEMBLY - 5/8" ROPE |
| 7 | | **6910001855** | 2 | SPACER |
| 8 | | **6810001159** | 1 | SHAFT |
| 9 | | **4159910026** | 1 | CAP, END |
| 10 | | **7115160878** | 2 | SCREW, FLANGE<br>3/8" - 16 N.C. X 1"<br>GRADE 5 |
| 11 | | **4159900304** | 1 | SHIM (.0544") |
| 12 | | **7949000269** | 1 | WASHER, KEYED |
| 13 | | **7949000190** | 1 | WASHER, |
| 14 | | **7659000081** | 1 | LOCKNUT |
| 15 | | **7689000059** | 1 | PIN, HITCH<br>INCLUDES THE FOLLOWING PARTS |
| | | **7689000701** | 1 | CLIP, HITCH PIN |
| 16 | | **9286100001** | 1 | CHAIN<br>3' PC. ( MUST CUT TO LENGTH NEEDED ) |
| 17 | | **7601000955** | 3 | S-HOOK, STANDARD |
| 18 | | **7690152410** | 2 | PIN, COTTER<br>5/16" X 1 1/2" |
| 19 | | **6689100012** | 1 | PIN |
| 20 | | **7950260141** | 2 | WASHER, 1" I.D. |
| 21 | | **7690052410** | 2 | PIN, COTTER<br>1/8" X 1 1/2" |
| 22 | | **7689000721** | 2 | PIN, HITCH |
| 23 | | **7689000053** | 2 | PIN, CLIP |

**+ SEE FURTHER BREAKDOWN THIS GROUP**

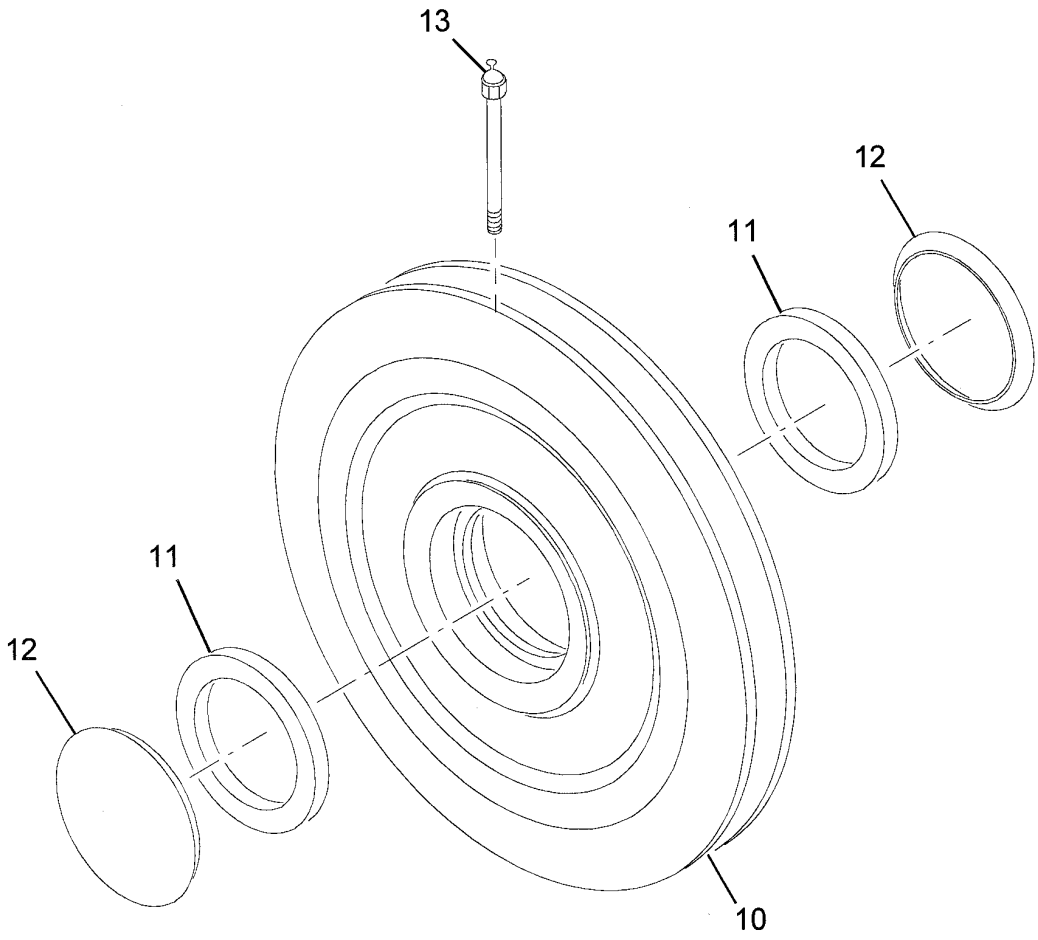


**6718100031**

**(SHEET 1 OF 1)**

Description
**SHEAVE ASSEMBLY - 5/8" ROPE**

Assembly No.
**6718100031**
Revision: **A**

| Item | FN | Part | Qty | Description |
|---|---|---|---|---|
| 10 | | **6718100030** | 1 | WHEEL, 5/8" ROPE SHEAVE<br>INCLUDES THE FOLLOWING PARTS |
| | | **7794000272** | 2 | CUP, BEARING |
| 11 | | **6069001186** | 2 | CONE, BEARING |
| 12 | | **7069000175** | 2 | CLOSURE, BEARING |
| 13 | | **7440000000** | 1 | FITTING, 1/8 STRAIGHT GREASE |

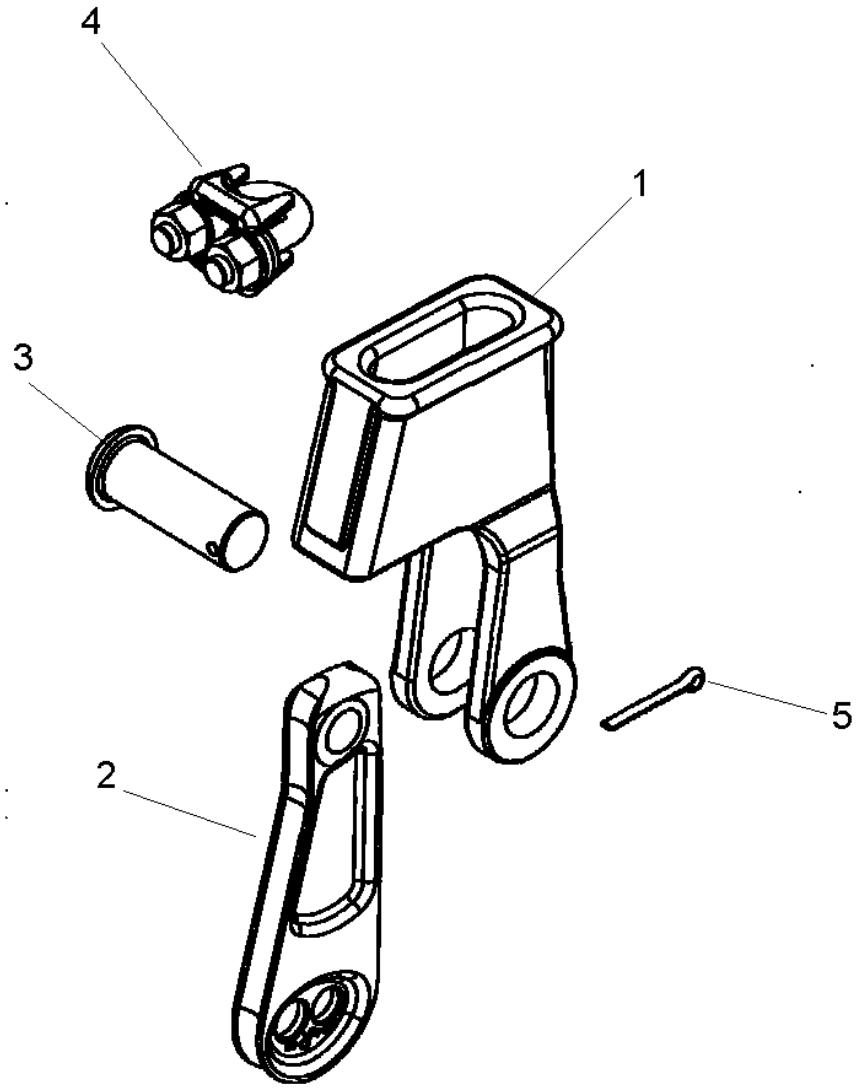


**7826100017**

**(SHEET 1 OF 1)**

Description
**SOCKET ASSY 5/8"**

Assembly No.
**7826100017**
Revision:

| Item | FN | Part | Qty | Description |
|---|---|---|---|---|
| 1 | | **NSS** | 1 | SOCKET |
| 2 | | **9826100007** | 1 | WEDGE |
| 3 | | **9826100008** | 1 | PIN |
| 4 | | **9914100042** | 1 | CLIP |
| 5 | | **9826100009** | 1 | PIN, COTTER |

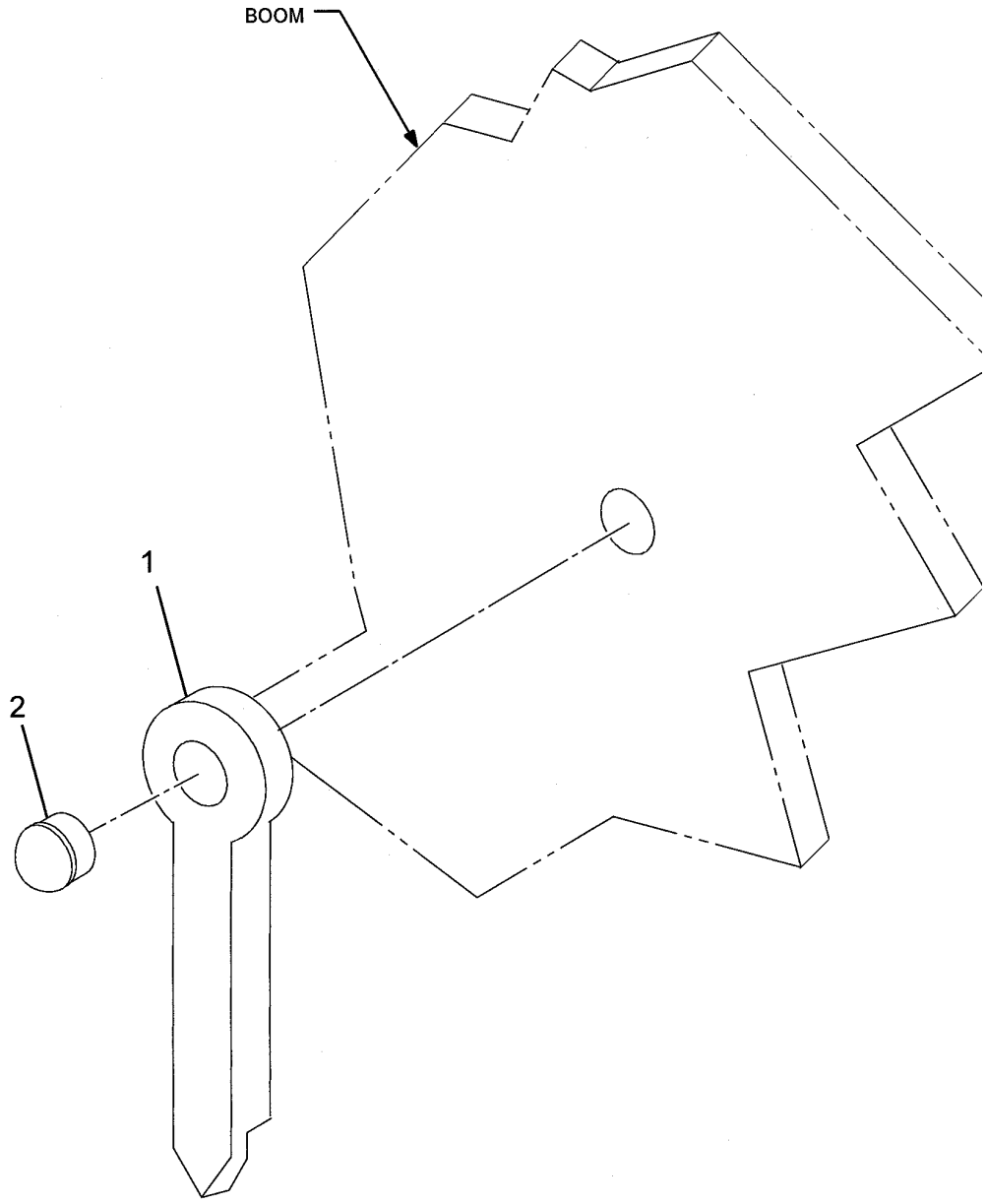


**2159910036**

**(SHEET 1 OF 1)**

Description
**INDICATOR INSTALLATION - BOOM ANGLE**

Assembly No.
**2159910036**
Revision: #

| Item | FN | Part | Qty | Description |
|---|---|---|---|---|
| 1 | + | **2114900861** | 1 | POINTER ASSEMBLY |
| 2 | | **7242000021** | 1 | PLUG, 1" BUTTON |

**+ SEE FURTHER BREAKDOWN THIS GROUP**

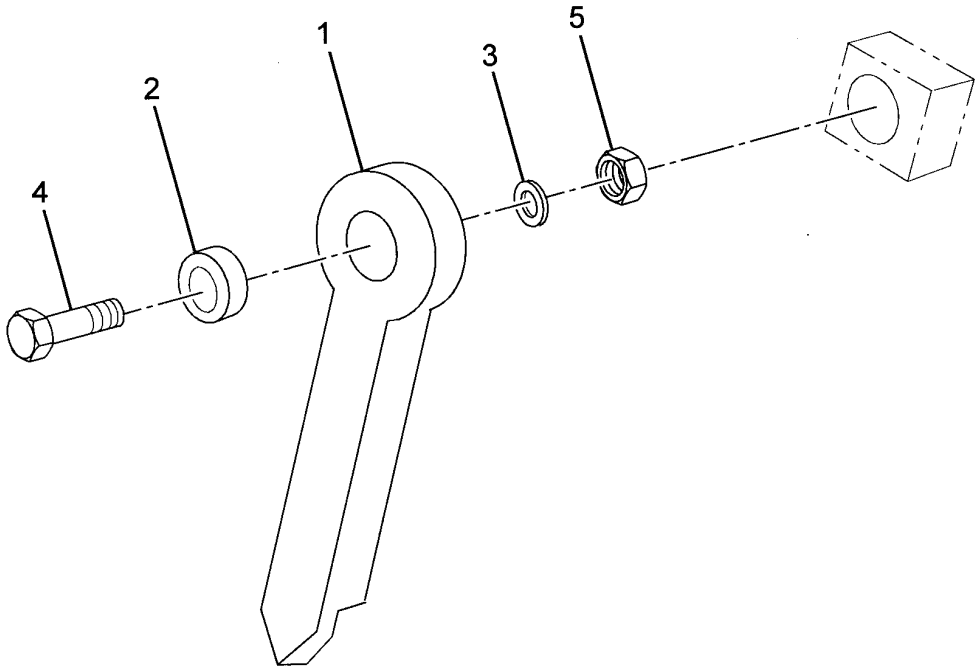


**2114900861**

**(SHEET 1 OF 1)**

Description
**POINTER ASSEMBLY**

Assembly No.
**2114900861**
Revision: **A**

| Item | FN | Part | Qty | Description |
|---|---|---|---|---|
| 1 | | **4195900219** | 1 | POINTER |
| 2 | | **7069000518** | 1 | BEARING |
| 3 | | **6949001154** | 2 | WASHER, |
| 4 | | **7115150850** | 1 | CAP SCREW,<br>5/16" - 18 N.C. X 1"<br>GRADE 5 |
| 5 | | **7660150200** | 1 | NUT, JAM<br>5/16" - 18 N.C.<br>GRADE A |

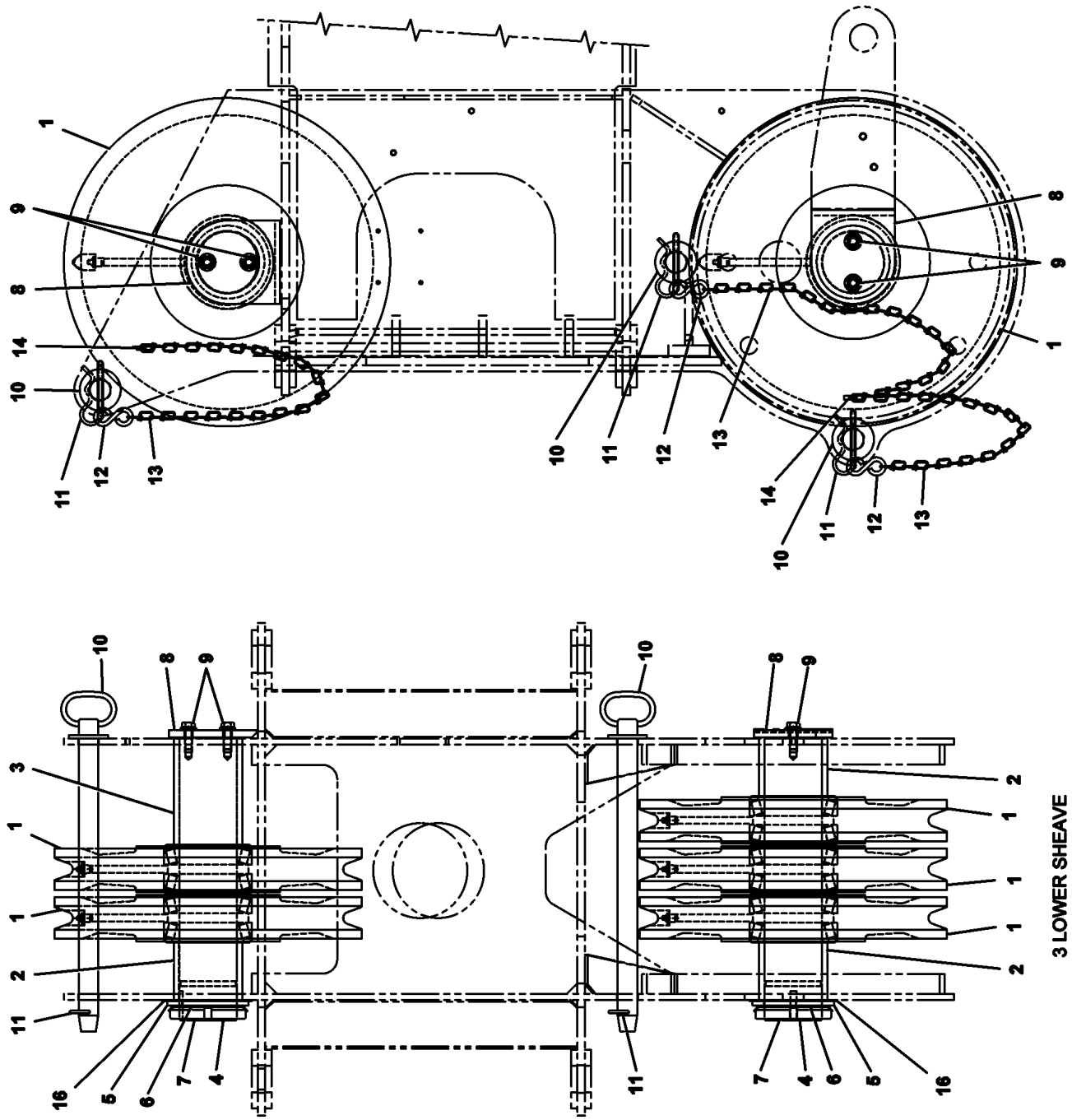


**2159910104**

**(SHEET 1 OF 1)**

Description
**SHEAVE INSTALLATION - 2 OVER 3**

Assembly No.
**2159910104**
Revision: **A**

| Item | FN | Part | Qty | Description |
|---|---|---|---|---|
| 1 | + | **6718100031** | 5 | SHEAVE ASSEMBLY - 5/8" ROPE |
| 2 | | **6910100009** | 3 | SPACER |
| 3 | | **6910010579** | 1 | SPACER |
| 4 | | **6810001156** | 2 | SHAFT |
| 5 | | **7949000269** | 2 | WASHER, KEYED |
| 6 | | **7949000190** | 2 | WASHER, |
| 7 | | **7659000081** | 2 | LOCKNUT |
| 8 | | **4159910026** | 2 | CAP, END |
| 9 | | **7115160878** | 4 | SCREW, FLANGE<br>3/8" - 16 N.C. X 1"<br>GRADE 5 |
| 10 | | **7689000023** | 3 | PIN, LOCK HAIR |
| 11 | | **7689000701** | 3 | CLIP, HITCH PIN |
| 12 | | **7601000955** | 3 | S-HOOK, STANDARD |
| 13 | | **9286100001** | 3 | CHAIN<br>3' PC. ( MUST CUT TO LENGTH NEEDED ) |
| 14 | | **7690101610** | 2 | PIN, COTTER<br>3/16" X 1" |
| 16 | | **4159900304** | 2 | SHIM (.0544") |

**+ SEE FURTHER BREAKDOWN THIS GROUP**

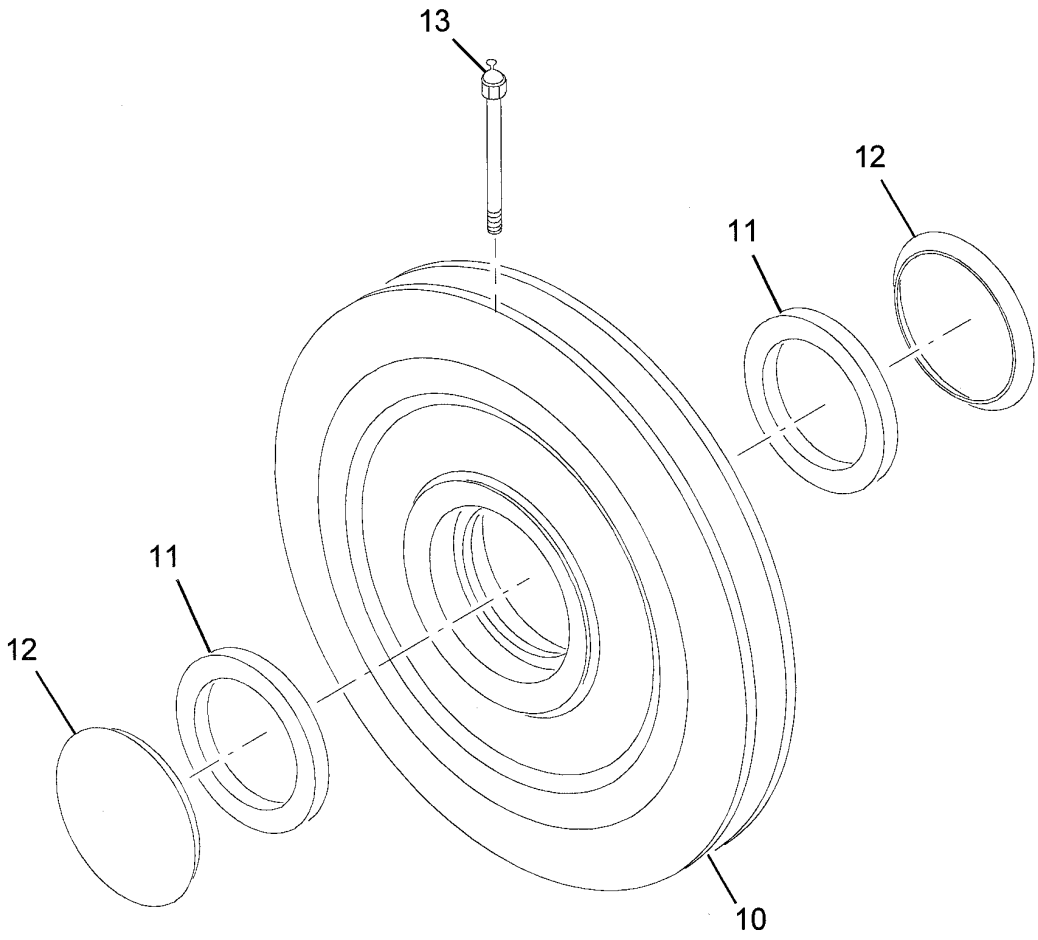


**6718100031**

**(SHEET 1 OF 1)**

Description
**SHEAVE ASSEMBLY - 5/8" ROPE**

Assembly No.
**6718100031**
Revision: **A**

| Item | FN | Part | Qty | Description |
|---|---|---|---|---|
| 10 | | **6718100030** | 1 | WHEEL, 5/8" ROPE SHEAVE<br>INCLUDES THE FOLLOWING PARTS |
| | | **7794000272** | 2 | CUP, BEARING |
| 11 | | **6069001186** | 2 | CONE, BEARING |
| 12 | | **7069000175** | 2 | CLOSURE, BEARING |
| 13 | | **7440000000** | 1 | FITTING, 1/8 STRAIGHT GREASE |

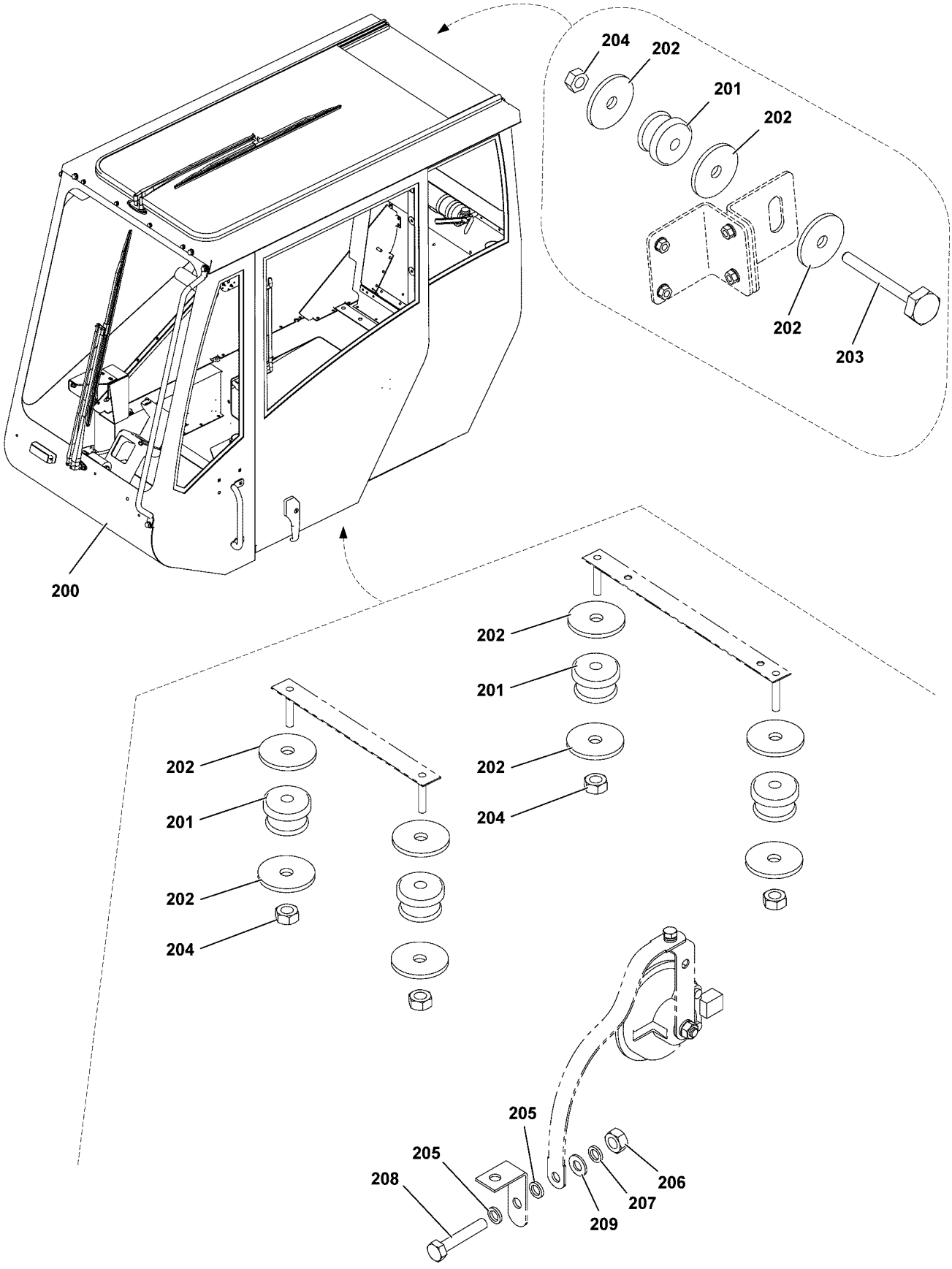


6245101146

(SHEET 1 OF 1)

Description
**CAB INSTALLATION**

Assembly No.
**6245101146**
Revision: #

| Item | FN | Part | Qty | Description |
|---|---|---|---|---|
| 200 | + | **6245101147** | 1 | CAB ASSEMBLY |
| 201 | # | **7638000203** | 5 | MOUNT, SHOCK |
| 202 | | **7949000148** | 12 | WASHER, 5/8" I.D. FLAT |
| 203 | | **7115203050** | 1 | CAP SCREW,<br>5/8" - 11 N.C. X 3 3/4"<br>GRADE 5 |
| 204 | | **7660201600** | 5 | LOCKNUT, HEX<br>5/8" - 11 N.C. |
| 205 | | **7950160350** | 2 | WASHER, LOCK 3/8" I.D. |
| 206 | | **7660160001** | 1 | NUT, HEX<br>3/8" - 16 N.C.<br>GRADE 5 |
| 207 | | **7950160050** | 1 | WASHER, LOCK 3/8" I.D. |
| 208 | | **7115161050** | 1 | CAP SCREW,<br>3/8" - 16 N.C. X 1 1/4"<br>GRADE 5 |
| 209 | | **7950160141** | 1 | WASHER, 3/8" PLAIN NARROW |

**+ SEE FURTHER BREAKDOWN THIS GROUP**

**# SERVICED AS AN ASSEMBLY ONLY**

**Notes**

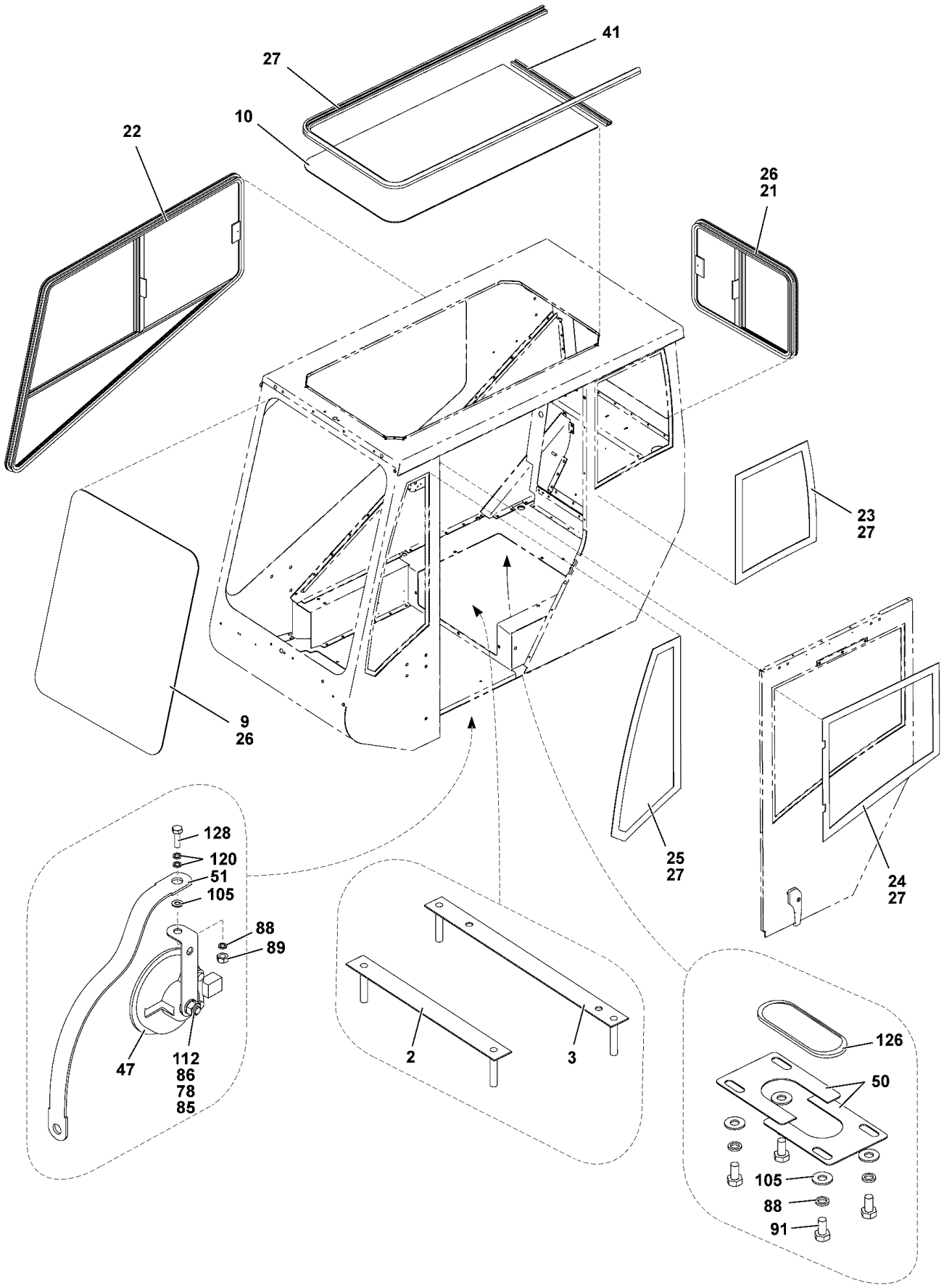


6245101147

(SHEET 4 OF 4)

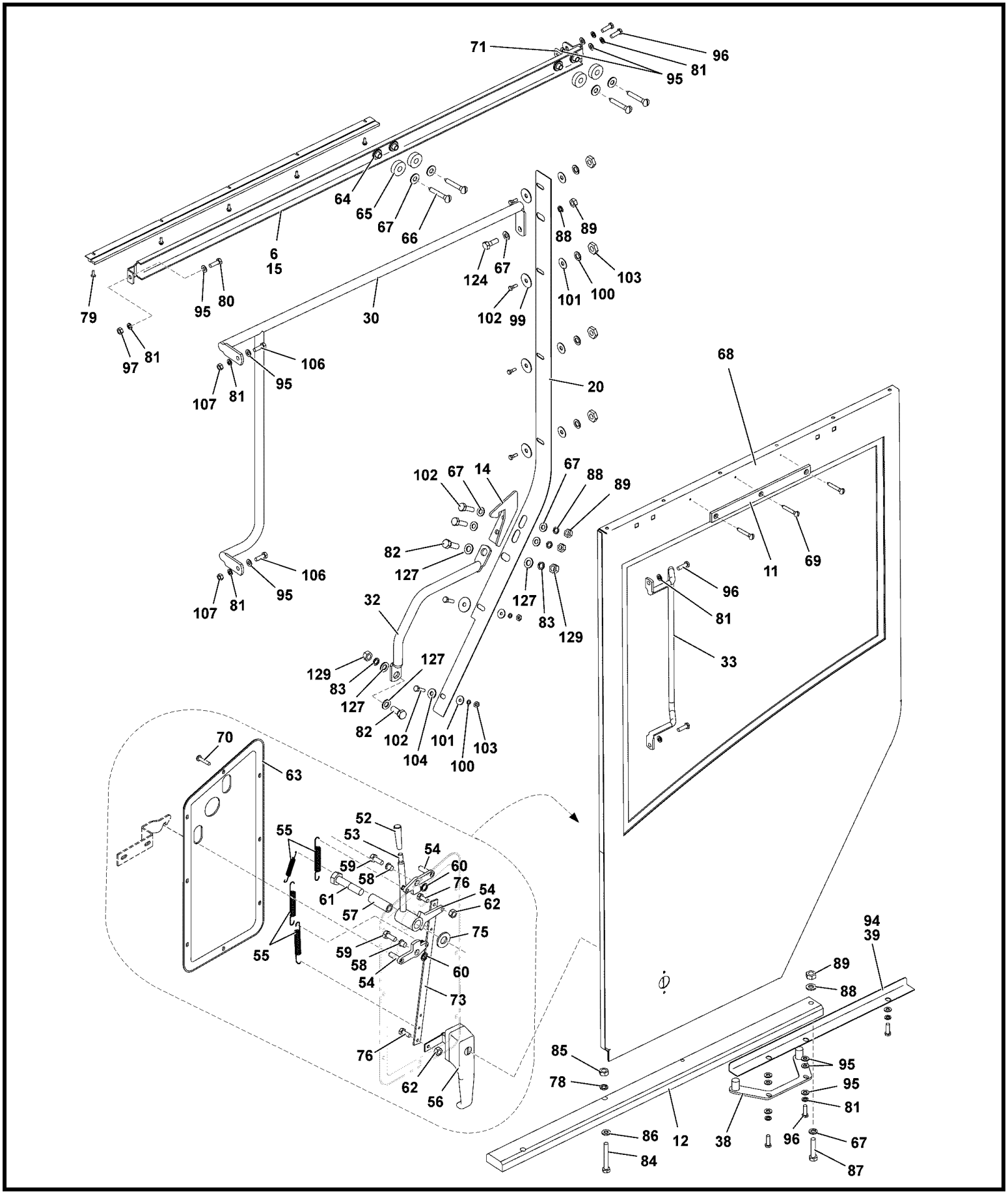


6245101147

(SHEET 3 OF 4)

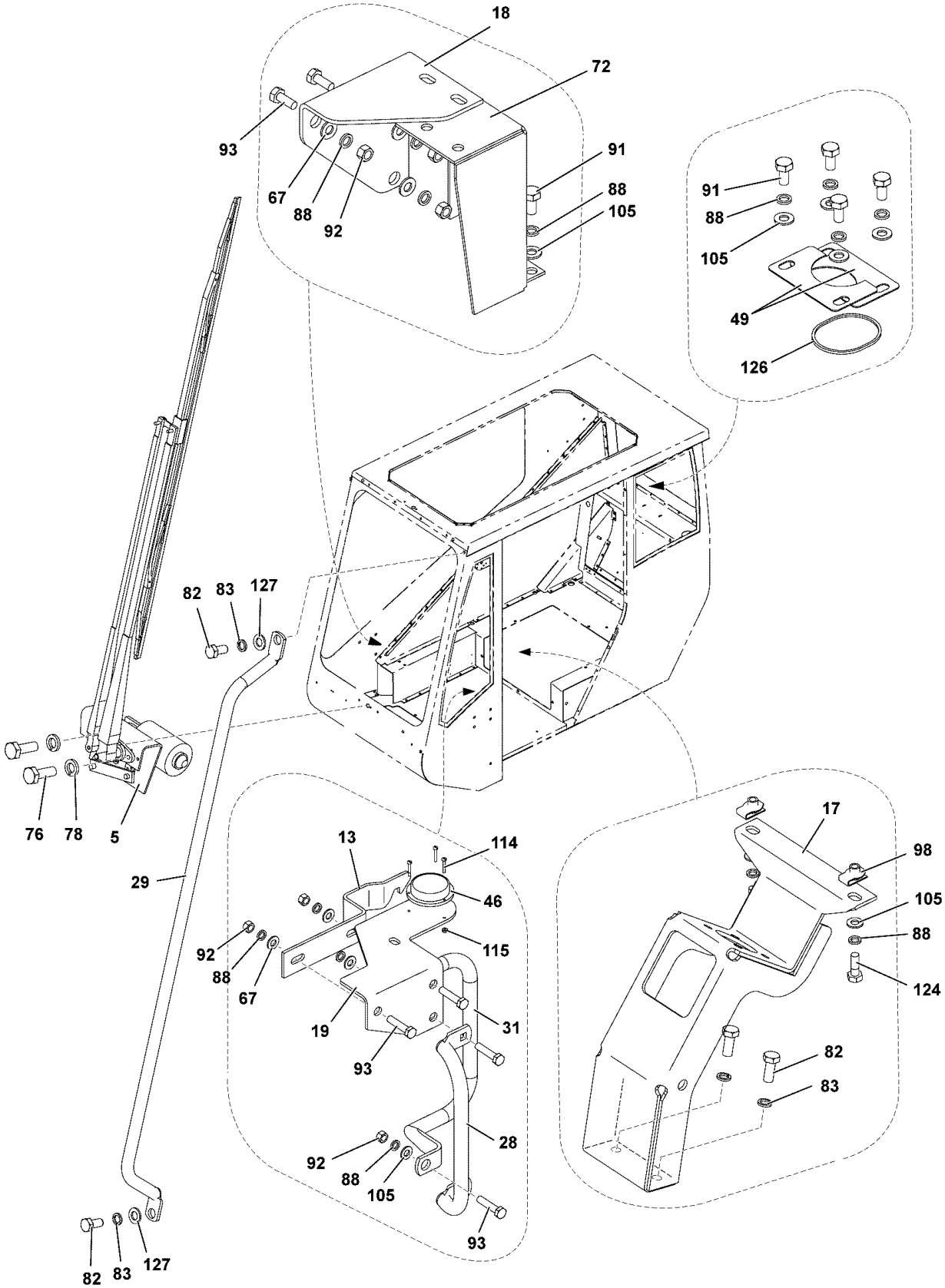


6245101147

(SHEET 2 OF 4)

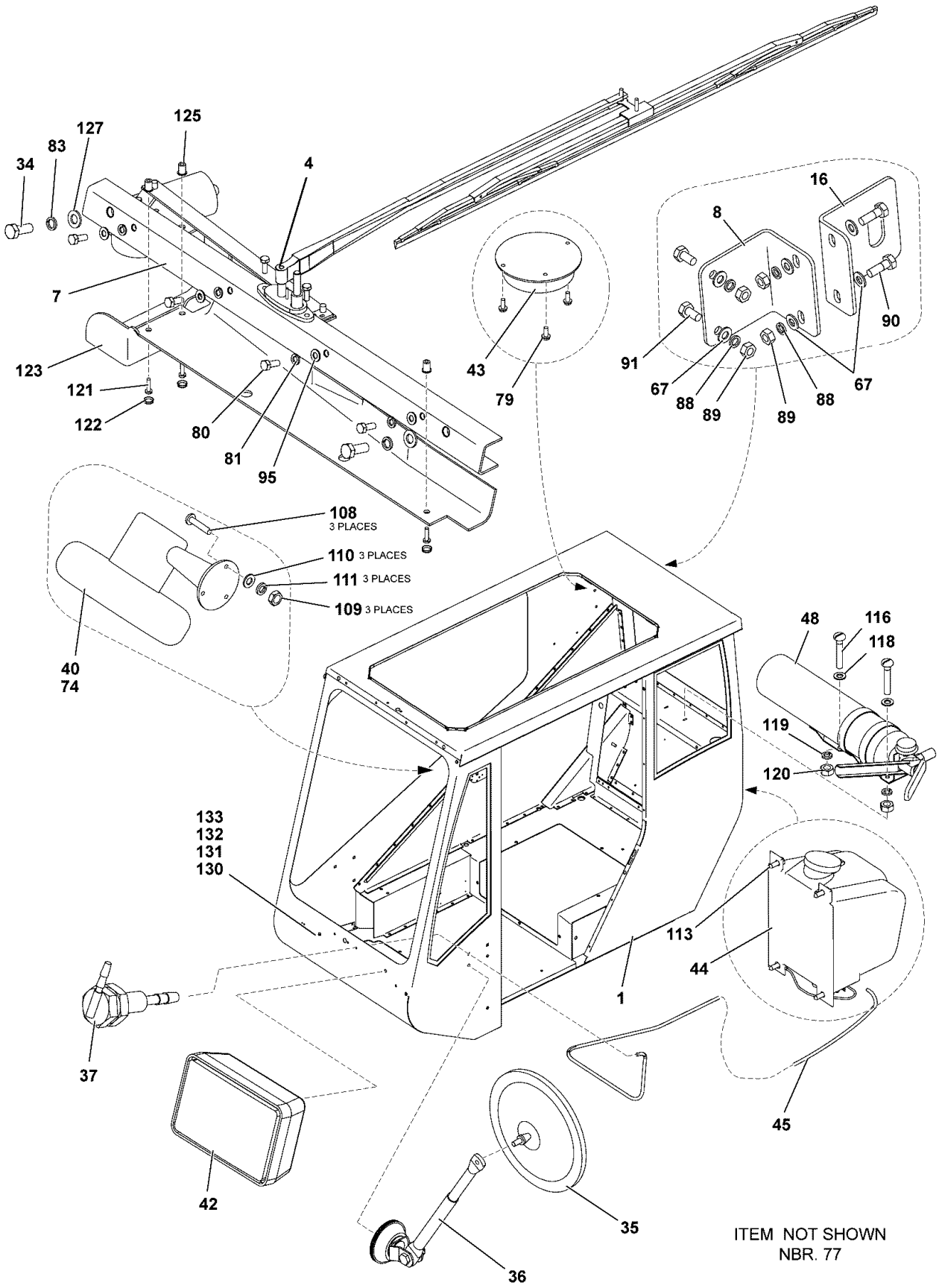


6245101147

(SHEET 1 OF 4)

Description
**CAB ASSEMBLY**

Assembly No.
**6245101147**
Revision: **D**

| Item | FN | Part | Qty | Description |
|---|---|---|---|---|
| 1 | + | **6245101145** | 1 | CAB WELD |
| 2 | | **6705170886** | 1 | PLATE, MOUNTING |
| 3 | | **6705012439** | 1 | PLATE, MOUNTING |
| 4 | + | **7576134398** | 1 | KIT - SKYLIGHT WIPER (COMPLETE ASSEMBLY) |
| 5 | + | **7576134397** | 1 | KIT - FRONT WIPER (COMPLETE ASSEMBLY) |
| 6 | | **6860100000** | 1 | SEAL, MODIFIED |
| 7 | | **6245101061** | 1 | CHANNEL |
| 8 | | **6245101030** | 1 | BRACKET, MOUNTING |
| 9 | | **7498100024** | 1 | GLASS, WINDSHIELD |
| 10 | + | **7498100022** | 1 | SKYLIGHT ASSEMBLY - SLIDING (COMPLETE ASSEMBLY) |
| 11 | | **7086100002** | 1 | BLOCK |
| 12 | | **7086100000** | 1 | BLOCK, SLIDE |
| 13 | | **6585100004** | 1 | CATCH, FRONT LATCH |
| 14 | | **6245101033** | 1 | CATCH, REAR LATCH |
| 15 | | **6245101038** | 1 | CHANNEL, DOOR |
| 16 | | **6245101133** | 1 | BRACKET, MOUNTING |
| 17 | | **6245101005** | 1 | MOUNT, STEERING COLUMN |
| 18 | | **6245101004** | 1 | SUPPORT, CONSOLE |
| 19 | | **6245101002** | 1 | MOUNT, BRACKET LEVEL |
| 20 | | **6245101036** | 1 | JAMB, REAR DOOR |
| 21 | + | **7498000897** | 1 | WINDOW ASSEMBLY - REAR (COMPLETE ASSEMBLY) |
| 22 | + | **7498100028** | 1 | WINDOW ASSEMBLY - RIGHT HAND (COMPLETE ASSEMBLY) |
| 23 | | **7498100026** | 1 | GLASS, LEFT REAR |
| 24 | | **7498100025** | 1 | GLASS, SLIDING DOOR |
| 25 | | **7498100027** | 1 | GLASS, LEFT FRONT |
| 26 | | **8496900043** | 13 | MOULDING (QUANTITY IN FEET) |
| 27 | | **6829015131** | 1 | SEALANT, ADHESIVE |
| 28 | | **7511100046** | 1 | HANDRAIL, GRAB |
| 29 | | **7511001140** | 1 | HANDRAIL, GRAB |
| 30 | | **7511001139** | 1 | HANDRAIL, GRAB |

**+ SEE FURTHER BREAKDOWN THIS GROUP**

Description
**CAB ASSEMBLY**

Assembly No.
**6245101147**
Revision: **D**

| Item | FN | Part | Qty | Description |
|---|---|---|---|---|
| 31 | | **7511100048** | 1 | HANDRAIL, GRAB |
| 32 | | **7511100047** | 1 | HANDRAIL, GRAB |
| 33 | | **7511001255** | 1 | HANDLE, GRAB |
| 34 | | **7126211150** | 4 | CAP SCREW, M12 X 20MM HEX HEAD |
| 35 | | **7628000025** | 1 | MIRROR, 8" CONVEX<br>INCLUDES MOUNTING HARDWARE |
| 36 | # | **7184001014** | 1 | BRACKET, MIRROR ARM<br>INCLUDES MOUNTING HARDWARE |
| 37 | | **7949001149** | 1 | FITTING, WASHER NOZZLE |
| 38 | | **6705100026** | 1 | PLATE, MOUNTING |
| 39 | | **6245101034** | 1 | ANGLE |
| 40 | + | **7425100015** | 1 | FAN ASSEMBLY - 12 VOLT CAB<br>(COMPLETE ASSEMBLY) |
| 41 | | **8496980002** | 12 | MOULDING<br>(QUANTITY IN FEET) |
| 42 | | **7581100001** | 1 | LIGHT, WORK<br>INCLUDES THE FOLLOWING PARTS |
| | | **9581100391** | 1 | BEAM, SEALED 12 VOLT |
| 43 | | **7581000186** | 1 | LIGHT, DOME<br>INCLUDES THE FOLLOWING PARTS |
| | | **9581100048** | 1 | BULB |
| | | **9581100058** | 1 | LENS, MOONSTONE |
| 44 | # | **7576000320** | 1 | PUMP AND CANISTER |
| 45 | | **9543100045** | 1 | HOSE ASSY, 3/8 X 26"<br>25’ PC. ( MUST CUT TO LENGTH NEEDED ) |
| 46 | | **7486000225** | 1 | LEVEL, CIRCULAR |
| 47 | | **7025100013** | 1 | HORN |
| 48 | | **7348000667** | 1 | EXTINGUISHER, FIRE |
| 49 | | **6705016902** | 2 | PLATE, COVER |
| 50 | | **6245101104** | 2 | PLATE, COVER |
| 51 | | **7850000046** | 1 | STRAP, GROUND |
| 52 | | **7511000161** | 1 | HANDLE, TAPERED |
| 53 | | **7585000720** | 1 | HANDLE, LATCH |
| 54 | | **6608001308** | 2 | LUG |
| 55 | | **7834100003** | 4 | SPRING |
| 56 | | **6511100009** | 1 | HANDLE, DOOR (MODIFIED)<br>INCLUDES THE FOLLOWING PARTS |
| | | **9576101074** | 1 | KEY, SET |

**# SERVICED AS AN ASSEMBLY ONLY** **+ SEE FURTHER BREAKDOWN THIS GROUP**

Description
**CAB ASSEMBLY**

Assembly No.
**6245101147**
Revision: **D**

| Item | FN | Part | Qty | Description |
|---|---|---|---|---|
| 57 | | **6810002810** | 1 | SHAFT |
| 58 | | **7069001045** | 2 | BEARING |
| 59 | | **7115160750** | 2 | CAP SCREW,<br>3/8" - 16 N.C. X 7/8"<br>GRADE 5 |
| 60 | | **7949000623** | 2 | WASHER, BLACK PLASTIC |
| 61 | | **7115182250** | 1 | CAP SCREW,<br>1/2" - 13 N.C. X 2 3/4"<br>GRADE 5 |
| 62 | | **7660141601** | 2 | NUT, 1/4-20UNC HEX LOCK |
| 63 | | **7392100011** | 1 | PANEL, INNER DOOR |
| 64 | | **7659000796** | 4 | NUT |
| 65 | | **7069000516** | 4 | BEARING |
| 66 | | **7111161264** | 8 | BOLT, CARRIAGE<br>3/8" - 16 N.C. X 1 1/2"<br>GRADE 1 |
| 67 | | **7951190014** | 19 | FLAT WASHER, 10MM I.D. |
| 68 | | **6245101144** | 1 | DOOR WELDMENT, CAB |
| 69 | | **7790100871** | 3 | SCREW, SELF-TAPPING<br>3/16" - 24 N.C. X 1/2"<br>GRADE 1 |
| 70 | | **7790140853** | 8 | SCREW, SELF-TAPPING<br>1/4" - 20 N.C. X 1/2" |
| 71 | | **6705100083** | 1 | PLATE, TAP |
| 72 | | **6245101009** | 1 | PLATE, RIGHT HAND CONSOLE |
| 73 | | **6245100273** | 1 | BAR, LATCH |
| 74 | | **7506000001** | 1 | GROMMET<br>.38" I.D. |
| 75 | | **7950180141** | 1 | WASHER, FLAT 1/2" |
| 76 | | **7115140650** | 2 | CAP SCREW,<br>1/4" - 20 N.C. X 3/4"<br>GRADE 5 |
| 77 | | **7105140650** | 4 | CAP SCREW,<br>1/4" -28 N.F. X 3/4"<br>GRADE 5 |
| 78 | | **7951150210** | 7 | LOCKWASHER, 6MM I.D. |
| 79 | | **7790100853** | 5 | SCREW, SELF-TAPPING<br>3/16" - 24 N.C. X 1/2" |

Description
**CAB ASSEMBLY**

Assembly No.
**6245101147**
Revision: **D**

| Item | FN | Part | Qty | Description |
|---|---|---|---|---|
| 80 | | **7126171250** | 5 | CAP SCREW, M8X25 HEX HEAD |
| 81 | | **7951170210** | 16 | WASHER, LOCK 8MM |
| 82 | | **7126211353** | 6 | CAP SCREW, M12X30 HEX HEAD |
| 83 | | **7951210210** | 10 | LOCK WASHER, 12MM I.D. |
| 84 | | **7126151650** | 1 | CAP SCREW, M6 X 45MM HEX HEAD |
| 85 | # | **7661150003** | 1 | NUT, HEX |
| 86 | | **7951150014** | 2 | WASHER, 6MM I.D. |
| 87 | | **7126191750** | 1 | CAP SCREW, M10 X 50MM HEX HEAD |
| 88 | | **7951190210** | 28 | LOCK WASHER, 10MM |
| 89 | | **7661190003** | 9 | HEX NUT 10MM I.D. X 1.5 |
| 90 | | **7126191450** | 2 | CAP SCREW, M10 X 35MM HEX HEAD |
| 91 | | **7126191153** | 16 | SCREW, HEX HEAD |
| 92 | | **7660160000** | 7 | NUT, HEX<br>3/8" - 16 N.C. |
| 93 | | **7111161064** | 5 | BOLT, CARRIAGE<br>3/8" - 16 N.C. X 1 1/4"<br>GRADE 1 |
| 94 | | **8496900046** | 21 | MOULDING |
| 95 | | **7951170014** | 15 | FLAT WASHER |
| 96 | | **7115150850** | 7 | CAP SCREW,<br>5/16" - 18 N.C. X 1"<br>GRADE 5 |
| 97 | | **7661170003** | 1 | NUT - 8MM X 1.25 |
| 98 | | **7659190033** | 2 | NUT, RETAINING M10 X 1.50 |
| 99 | | **7949000615** | 6 | WASHER, |
| 100 | | **7950100050** | 6 | WASHER, LOCK #10 |
| 101 | | **7949001165** | 6 | WASHER, FINISHED |
| 102 | | **7099000154** | 6 | SCREW, CABINET |
| 103 | | **7660101130** | 6 | NUT, HEX<br>3/16" - 32 N.F.<br>GRADE 1 |
| 104 | | **7950100141** | 6 | WASHER, FLAT, #10 |
| 105 | | **7951190014** | 9 | FLAT WASHER, 10MM I.D. |
| 106 | | **7111150864** | 2 | BOLT, CARRIAGE<br>5/16" - 18 N.C. X 1/2"<br>GRADE 1 |
| 107 | | **7660150008** | 2 | NUT, HEX<br>5/16" - 18 N.C. |

**# SERVICED AS AN ASSEMBLY ONLY**

Description
**CAB ASSEMBLY**

Assembly No.
**6245101147**
Revision: **D**

| Item | FN | Part | Qty | Description |
|---|---|---|---|---|
| | | | | GRADE 8 |
| 108 | | **7121111101** | 3 | MACHINE SCREW, M4X20 SLOTTED |
| 109 | | **7661110003** | 3 | NUT, HEX<br>4 MM N.C. |
| 110 | | **7951110014** | 3 | WASHER, 4MM I.D. |
| 111 | | **7951110210** | 3 | LOCKWASHER, 4MM I.D. |
| 112 | | **7126151153** | 1 | CAP SCREW, M6X20 HEX HEAD |
| 113 | | **7790140853** | 4 | SCREW, SELF-TAPPING<br>1/4" - 20 N.C. X 1/2" |
| 114 | | **7111040610** | 3 | SCREW, MACHINE<br>7/64" - 40 N.C. X 3/4"<br>GRADE 1 |
| 115 | | **7660041100** | 3 | NUT, HEX<br>7/64" - 40 N.C.<br>GRADE 1 |
| 116 | | **7121131101** | 2 | MACHINE SCREW, M5X20 SLOTTED |
| 117 | | **7661130003** | 2 | NUT, HEX<br>5MM |
| 118 | | **7951130014** | 2 | WASHER, 5MM I.D. |
| 119 | | **7951130210** | 2 | LOCKWASHER, 5MM I.D. |
| 120 | | **7950160350** | 2 | WASHER, LOCK 3/8" I.D. |
| 121 | | **7101100611** | 3 | SCREW, MACHINE<br>3/16" - 32 N.F. X 3/4"<br>GRADE 1 |
| 122 | | **7258001452** | 3 | CAP #8 |
| 123 | | **7245100073** | 1 | COVER, WIPER MOTOR |
| 124 | | **7126191353** | 3 | CAP SCREW, M10 X 30MM HEX HEAD |
| 125 | | **7429000011** | 3 | FASTENER, WELL-NUT |
| 126 | | **8246964300** | 2 | MOULDING<br>(QUANTITY IN FEET) |
| 127 | | **7951210014** | 10 | WASHER, FLAT #12 |
| 128 | | **7126191253** | 3 | CAP SCREW |
| 129 | | **7661210003** | 2 | NUT, HEX 12MM N.C. |
| 130 | | **7121110801** | 3 | MACHINE SCREW, M4X12 SLOTTED |
| 131 | | **7661110003** | 3 | NUT, HEX<br>4 MM N.C. |
| 132 | | **7951110210** | 3 | LOCKWASHER, 4MM I.D. |

Description
**CAB ASSEMBLY**

Assembly No.
**6245101147**
Revision: **D**

| Item | FN | Part | Qty | Description |
|---|---|---|---|---|
| 133 | | **7951110014** | 3 | WASHER, 4MM I.D. |
| 135 | | **7105141250** | 3 | 1/4" - 28 NF X 1 1/2" GRADE 5 |
| 136 | | **7086100144** | 1 | BLOCK, SPACER |
| 137 | | **7822100002** | 2 | SLEEVE, RED VINYL |
| 138 | | **7659190020** | 2 | NUT, RETAINING 8 X 1.25 |
| 139 | | **6245101201** | 1 | PLATE, KICK |
| 140 | | **8637052011** | 1 | MOULDING, TRIM LOCK |

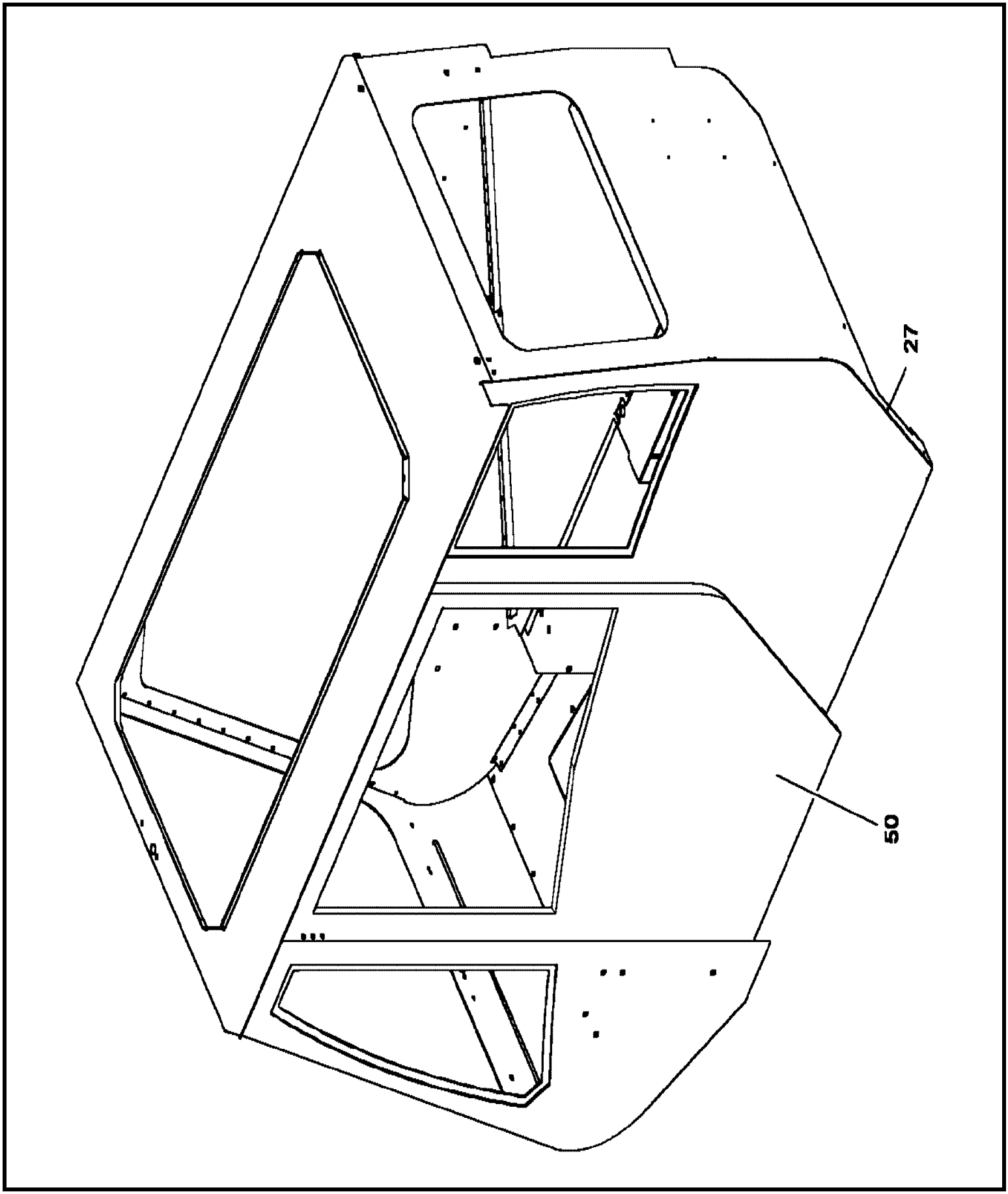


**6245101145**

**(SHEET 1 OF 1)**

Description
**CAB WELD**

Assembly No.
**6245101145**
Revision: **B**

| Item | FN | Part | Qty | Description |
|---|---|---|---|---|
| 27 | | **7115161250** | 1 | CAP SCREW,<br>3/8" - 16 N.C. X 1 1/2"<br>GRADE 5 |
| 50 | + | **6245101159** | 1 | DOOR INSTALLATION - CAB<br>(NOT AVAILABLE AS ASSEMBLY) |

**+ SEE FURTHER BREAKDOWN THIS GROUP**

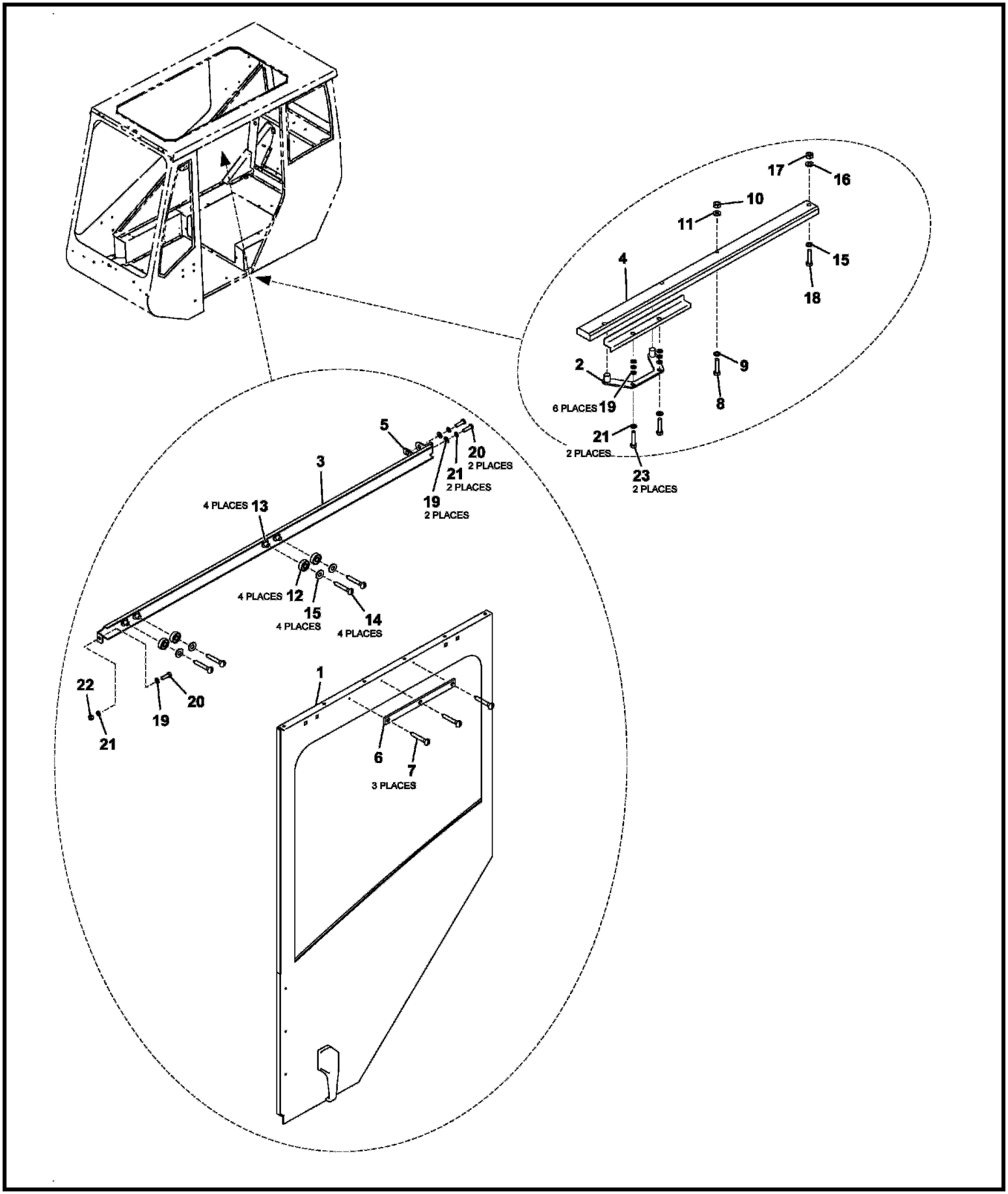


6245101159

(SHEET 1 OF 1)

Description
**DOOR INSTALLATION - CAB (NOT AVAILABLE AS ASSEMBLY)**

Assembly No.
**6245101159**
Revision: **B**

| Item | FN | Part | Qty | Description |
|---|---|---|---|---|
| 1 | | **6245101144** | 1 | DOOR WELDMENT, CAB |
| 2 | | **6705100026** | 1 | PLATE, MOUNTING |
| 3 | | **6245101038** | 1 | CHANNEL, DOOR |
| 4 | | **7086100000** | 1 | BLOCK, SLIDE |
| 5 | | **6705100083** | 1 | PLATE, TAP |
| 6 | | **7086100002** | 1 | BLOCK |
| 7 | | **7790100871** | 3 | SCREW, SELF-TAPPING<br>3/16" - 24 N.C. X 1/2"<br>GRADE 1 |
| 8 | | **7115141450** | 1 | CAP SCREW,<br>1/4" - 20 N.C. X 1 3/4"<br>GRADE 5 |
| 9 | | **7950140141** | 1 | WASHER, FLAT 1/4" PLAIN NARROW |
| 10 | | **7660140000** | 1 | NUT, HEX<br>1/4" - 20 N.C. |
| 11 | | **7950140050** | 1 | WASHER, LOCK 1/4" I.D. |
| 12 | | **7069000516** | 4 | BEARING |
| 13 | | **7659000796** | 4 | NUT |
| 14 | | **7111161264** | 4 | BOLT, CARRIAGE<br>3/8" - 16 N.C. X 1 1/2"<br>GRADE 1 |
| 15 | | **7950160161** | 9 | WASHER, FLAT WIDE 3/8 I.D. |
| 16 | | **7950160050** | 1 | WASHER, LOCK 3/8" I.D. |
| 17 | | **7660160000** | 1 | NUT, HEX<br>3/8" - 16 N.C. |
| 18 | | **7115161450** | 1 | CAP SCREW,<br>3/8" - 16 N.C. X 1 3/4"<br>GRADE 5 |
| 19 | | **7950150141** | 11 | WASHER, FLAT 5/16" |
| 20 | | **7115150850** | 3 | CAP SCREW,<br>5/16" - 18 N.C. X 1"<br>GRADE 5 |
| 21 | | **7950150050** | 5 | WASHER, LOCK 5/16" I.D. |
| 22 | | **7660150008** | 1 | NUT, HEX<br>5/16" - 18 N.C.<br>GRADE 8 |
| 23 | | **7110150818** | 2 | CAP SCREW,<br>5/16" - 18 N.C. X 1"<br>GRADE 1 |

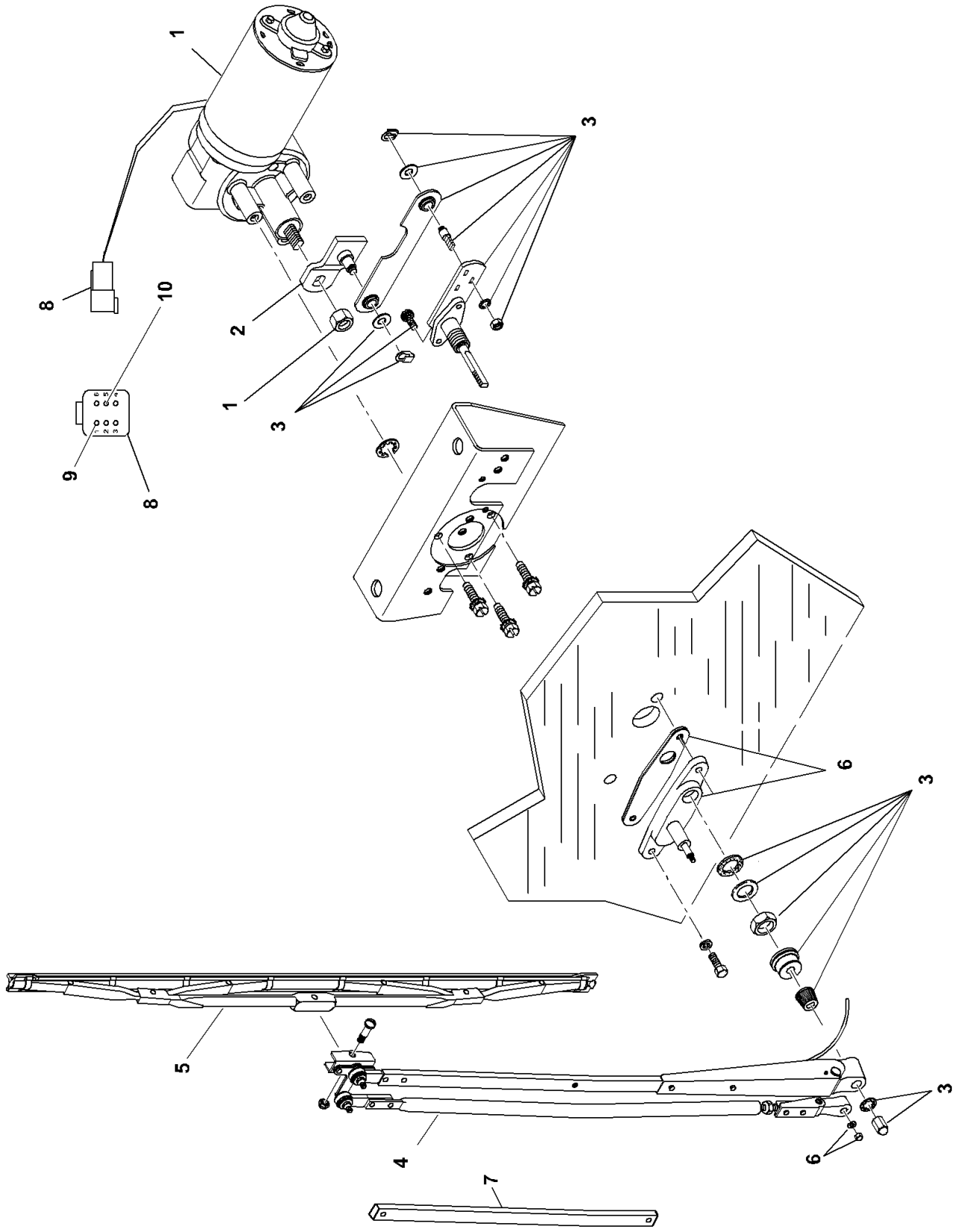


**7576134398**

**(SHEET 1 OF 1)**

Description
**KIT - SKYLIGHT WIPER (COMPLETE ASSEMBLY)**

Assembly No.
**7576134398**
Revision:

| Item | FN | Part | Qty | Description |
|---|---|---|---|---|
| 1 | | **9576101343** | 1 | KIT, MOTOR WITH HARDWARE AND BRACKET (12 VOLT) |
| 2 | | **9576101405** | 1 | ARM, DRIVE 60 DEG |
| 3 | | **9576101345** | 1 | SHAFT, PIVOT |
| 4 | | **9576101406** | 1 | ARM, WIPER 24" |
| 5 | | **9576101347** | 1 | BLADE, WIPER 34" |
| 6 | | **9576101348** | 1 | ADAPTER |
| 7 | | **9576101404** | 1 | BAR, LINK 14.64" |
| 8 | | **7892000824** | 1 | RECEPTACLE, 6 PIN |
| 9 | | **7689000704** | 5 | PIN, 16 - 14 GA |
| 10 | | **7689000503** | 1 | PLUG, SEALING 16 - 12 AWG |

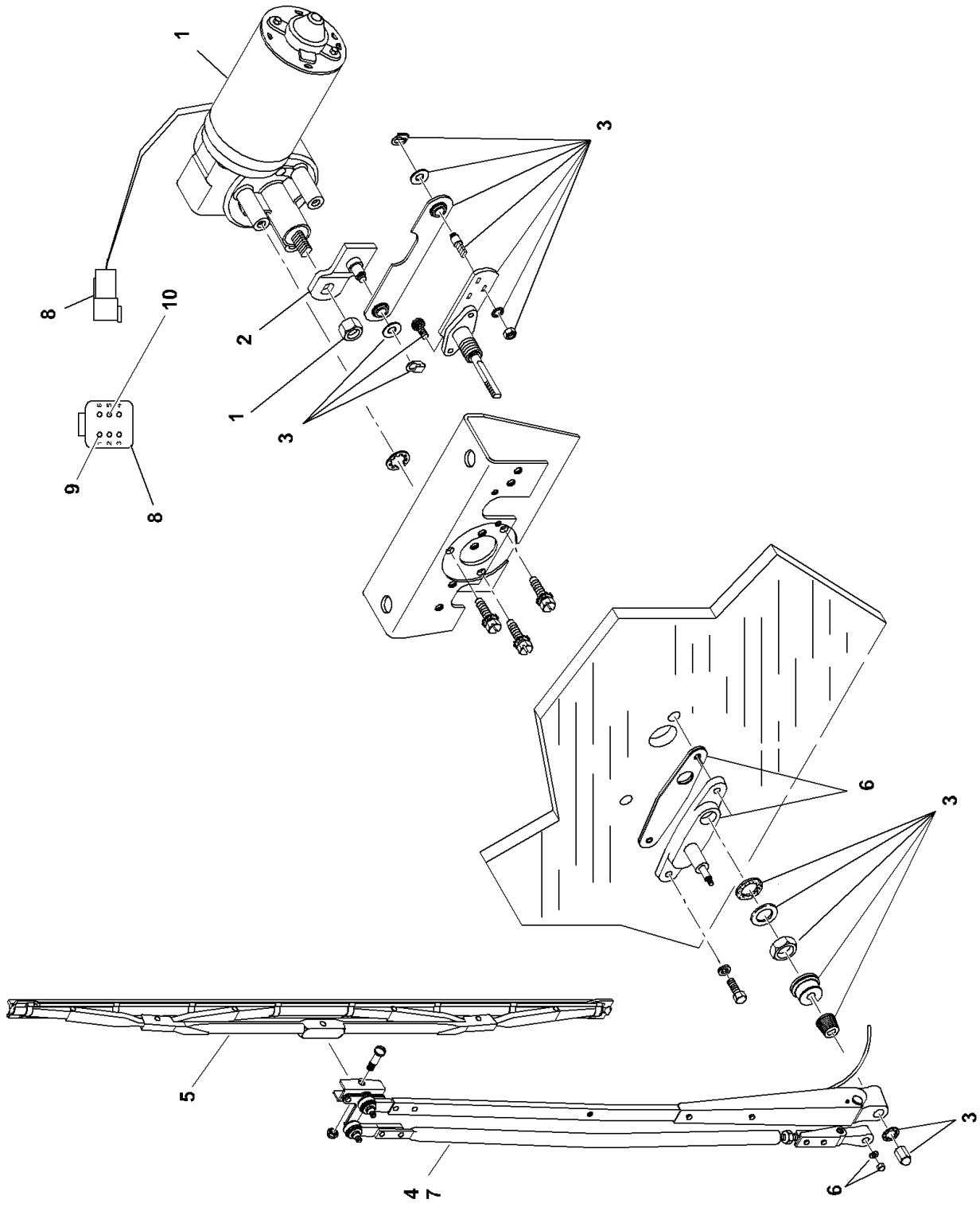


**7576134397**

**(SHEET 1 OF 1)**

Description
**KIT - FRONT WIPER (COMPLETE ASSEMBLY)**

Assembly No.
**7576134397**
Revision:

| Item | FN | Part | Qty | Description |
|---|---|---|---|---|
| 1 | | **9576101343** | 1 | KIT, MOTOR WITH HARDWARE AND BRACKET (12 VOLT) |
| 2 | | **9576101405** | 1 | ARM, DRIVE 60 DEG |
| 3 | | **9576101345** | 1 | SHAFT, PIVOT |
| 4 | | **9576101406** | 1 | ARM, WIPER 24" |
| 5 | | **9576101347** | 1 | BLADE, WIPER 34" |
| 6 | | **9576101348** | 1 | ADAPTER |
| 7 | | **9576101349** | 1 | KIT, WET |
| 8 | | **7892000824** | 1 | RECEPTACLE, 6 PIN |
| 9 | | **7689000704** | 5 | PIN, 16 - 14 GA |
| 10 | | **7689000503** | 1 | PLUG, SEALING 16 - 12 AWG |

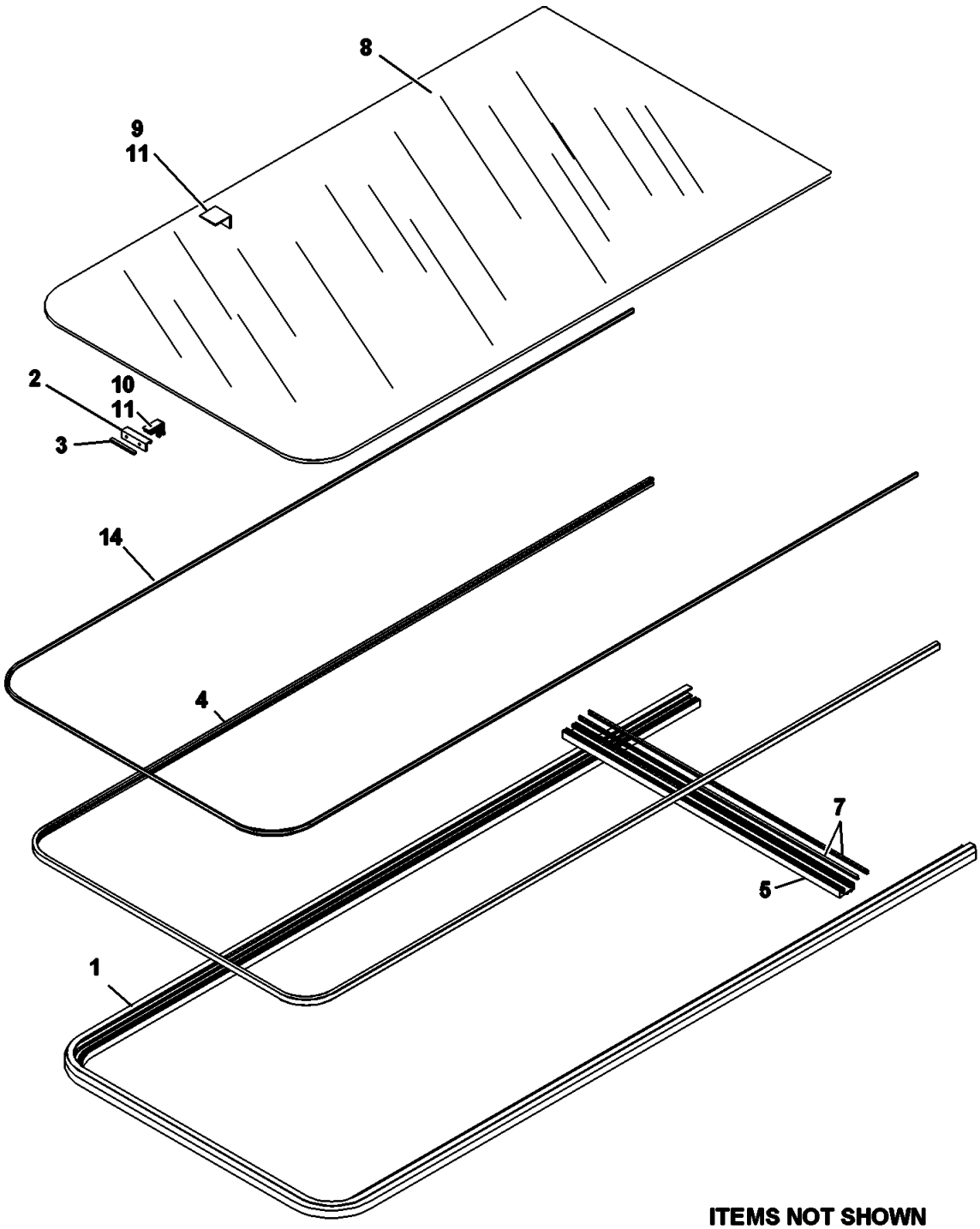


**ITEMS NOT SHOWN**
**NBR 12 LOCTITE**
**NBR 13 BUTYL, LIQUID**
**NBR 15 LOCK,LOTITE SCREW**
**NBR 20 KIT,SERVICE**

Description
**SKYLIGHT ASSEMBLY - SLIDING (COMPLETE ASSEMBLY)**

Assembly No.
**7498100022**
Revision:

| Item | FN | Part | Qty | Description |
|---|---|---|---|---|
| 1 | | **NSS** | 1 | FRAME ASSY. |
| 2 | | **7585000790** | 1 | CATCH |
| 3 | | **7786000539** | 2 | SCREW, CATCH |
| 4 | | **7794001721** | 1 | RUBBER, FLOCKED 154” LONG |
| 5 | | **7714000585** | 1 | EXTENSION, CENTER POST |
| 6 | | **7786000537** | 2 | SCREW, CENTER POST |
| 7 | | **9498100339** | 1 | WEATHERSEAL<br>REQUIRES 52" |
| 8 | * | **NSS** | 1 | GLASS |
| 9 | * | **7846000680** | 1 | STOP, SLIDE |
| 10 | * | **7585000789** | 1 | LOCK |
| 11 | * | **NSS** | 1 | ADHESIVE |
| 12 | * | **NSS** | 1 | LOCTITE |
| 13 | * | **NSS** | 1 | BUTYL, LIQUID |
| 14 | | **9498100337** | 1 | WEATHERSEAL<br>REQUIRES 152" |
| 15 | * | **NSS** | 0 | LOCK, LOCTITE SCREW |
| 20 | * | **7576001696** | 1 | KIT, SERVICE |

*** REPAIR KIT AND/OR PART OF KIT**

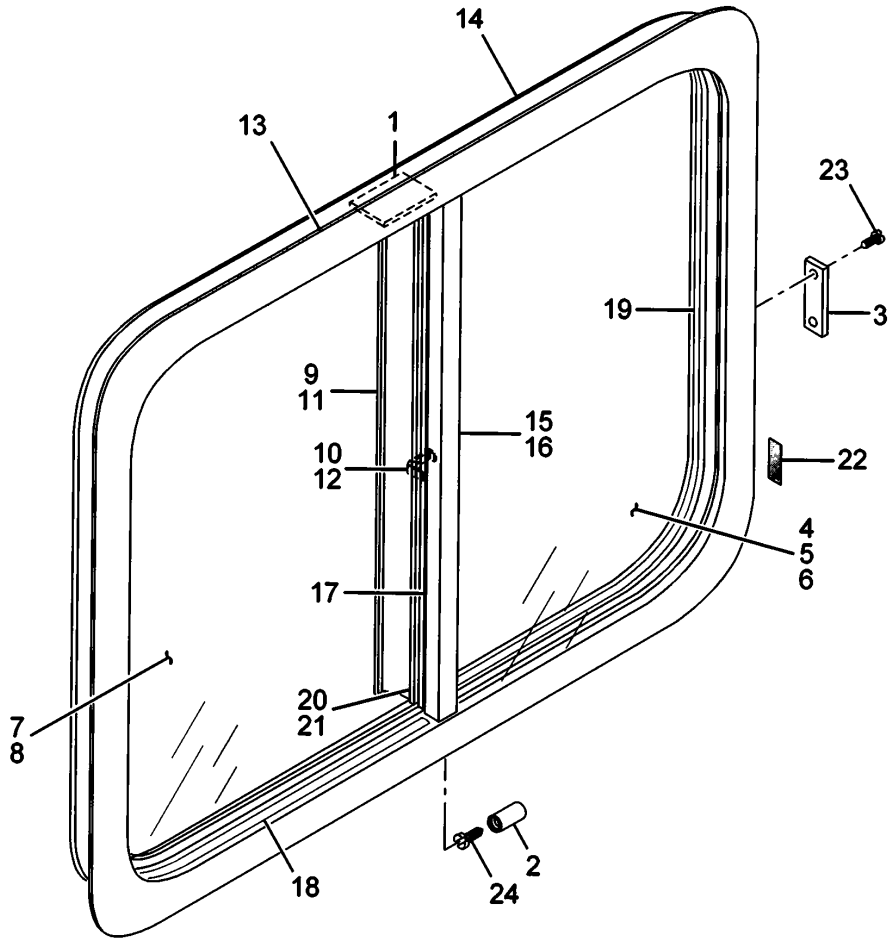


7498000897

(SHEET 1 OF 1)

Description
**WINDOW ASSEMBLY - REAR (COMPLETE ASSEMBLY)**

Assembly No.
**7498000897**
Revision:

| Item | FN | Part | Qty | Description |
|---|---|---|---|---|
| 1 | | **9498100145** | 2 | BRACKET, RAIL |
| 2 | | **9498100121** | 2 | RETAINER, KEEPER |
| 3 | | **9498100122** | 1 | NUT |
| 4 | | **9498100191** | 1 | GLASS ASSEMBLY<br>INCLUDES NBRS 5-6 |
| 5 | | **9498100192** | 1 | GLASS |
| 6 | | **9498100193** | 1 | GLAZING, PVC |
| 7 | | **9498100194** | 1 | GLASS ASSEMBLY<br>INCLUDES NBRS 8 - 12 |
| 8 | | **9498100195** | 1 | GLASS |
| 9 | | **9498100196** | 1 | RAIL |
| 10 | | **9498100156** | 1 | SPRING |
| 11 | | **NSS** | 1 | RAIL, LOCK<br>PART OF NBR 7 |
| 12 | | **9498100155** | 1 | LOCK |
| 13 | | **9498100197** | 1 | FRAME |
| 14 | | **9498100198** | 1 | INNER LINER |
| 15 | | **9498100199** | 1 | RAIL<br>INCLUDES NBRS 16-17 |
| 16 | | **NSS** | 1 | RAIL, KEEPER<br>PART OF NBR 15 |
| 17 | | **9498100200** | 1 | SEAL |
| 18 | | **9498100201** | 1 | TRIM |
| 19 | | **9498100202** | 1 | TRIM |
| 20 | | **9498100203** | 1 | CHANNEL |
| 21 | | **9498100204** | 1 | CHANNEL |
| 22 | | **9498100206** | 1 | TAPE |
| 23 | | **9498100135** | 2 | SCREW<br>5/32" X 3/8" |
| 24 | | **9498100167** | 2 | SCREW, PLASTIC |

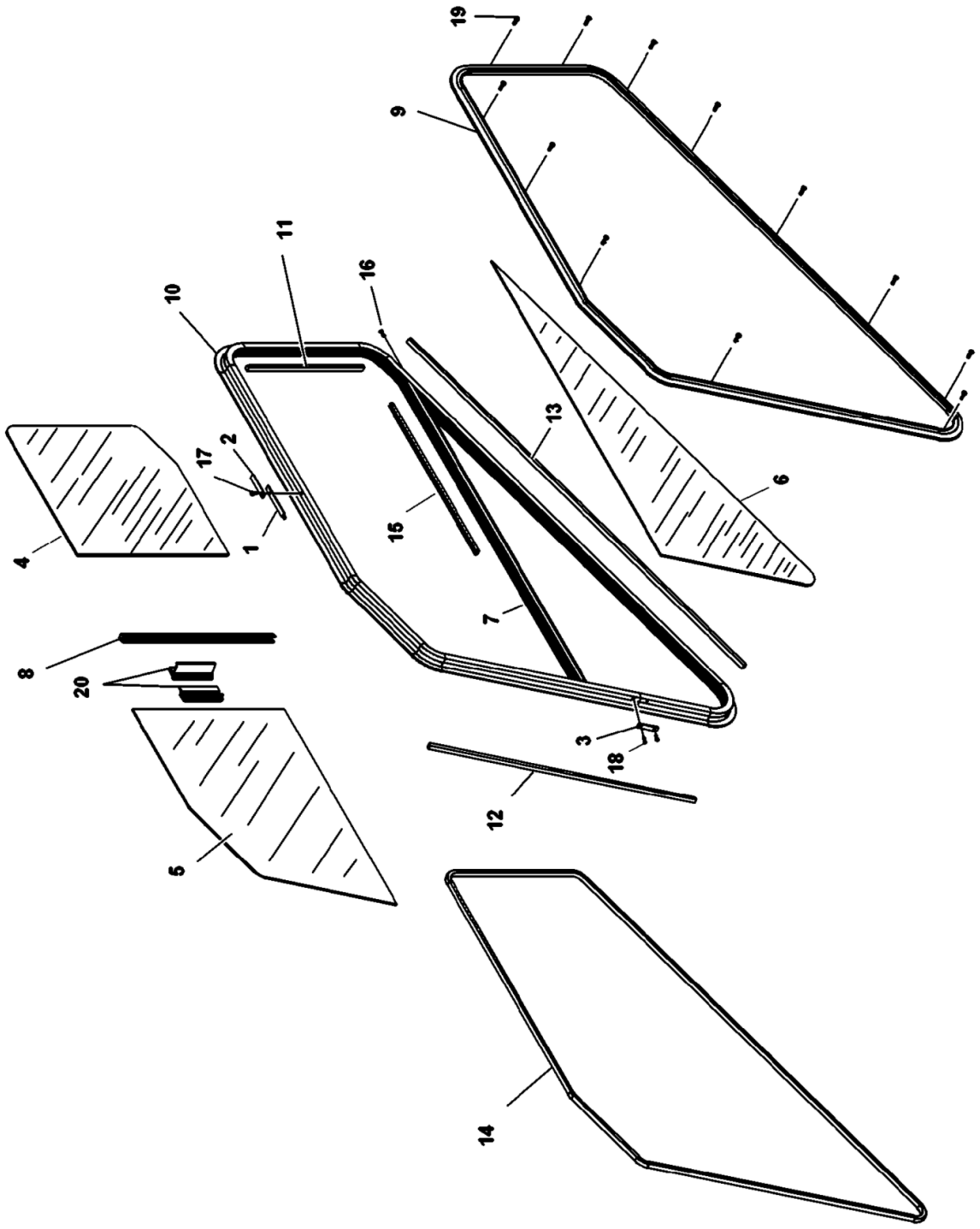


**7498100028**

**(SHEET 1 OF 1)**

Description
**WINDOW ASSEMBLY - RIGHT HAND (COMPLETE ASSEMBLY)**

Assembly No.
**7498100028**
Revision:

| Item | FN | Part | Qty | Description |
|---|---|---|---|---|
| 1 | | **9498100387** | 2 | BAR, RETAINER |
| 2 | | **9498100388** | 2 | RETAINER, KEEPER |
| 3 | | **9498100389** | 1 | NUT |
| 4 | | **9498100390** | 1 | GLASS ASSY.<br>INCLUDES ITEM 20 |
| 5 | | **9498100391** | 1 | GLASS ASSY. |
| 6 | | **9498100392** | 1 | GLASS ASSY. |
| 7 | | **9498100393** | 1 | MULL, BAR |
| 8 | | **9498100394** | 1 | RAIL ASSY. |
| 9 | | **NSS** | 1 | FRANE, MAIN |
| 10 | | **NSS** | 1 | FRANE, INNER |
| 11 | | **9498100395** | 1 | TRIM, STOP |
| 12 | | **9498100396** | 1 | TRIM, COVER |
| 13 | | **9498100397** | 1 | TRIM, COVER |
| 14 | | **9498100398** | 1 | CHANNEL, RUBBER |
| 15 | | **9498100399** | 1 | CHANNEL, RUBBER |
| 16 | | **9498100400** | 2 | SCREW, #8 X 1" |
| 17 | | **9498100167** | 2 | SCREW, PLASTIC |
| 18 | | **9498100401** | 2 | SCREW, #8 X 3/8" |
| 19 | | **9498100402** | 13 | SCREW |
| 20 | | **9498100155** | 1 | LOCK |

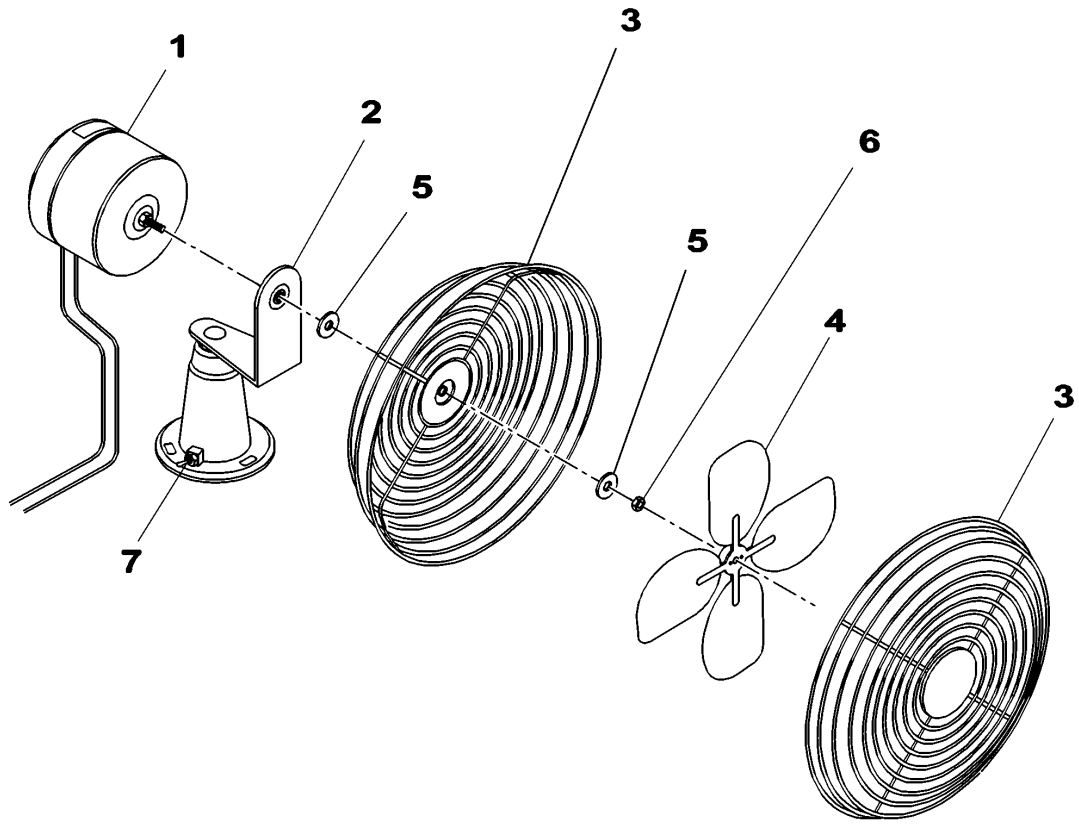


**7425100015**

**(SHEET 1 OF 1)**

Description
**FAN ASSEMBLY - 12 VOLT CAB (COMPLETE ASSEMBLY)**

Assembly No.
**7425100015**
Revision:

| Item | FN | Part | Qty | Description |
|---|---|---|---|---|
| 1 | | **9425100077** | 1 | MOTOR ASSY. 12V. |
| 2 | | **NSS** | 1 | HOUSING, BASE |
| 3 | | **9425100078** | 1 | GUARD, FAN |
| 4 | | **NSS** | 1 | BLADE, FAN |
| 5 | | **7950100141** | 2 | WASHER, FLAT, #10 |
| 6 | | **7660101630** | 1 | LOCKNUT, HEX<br>3/16" - 32 N.F.<br>GRADE 1 |
| 7 | | **9425100079** | 1 | SWITCH ASSY. |

**Notes**

Description
**EXTINGUISHER, FIRE**

Assembly No.
**7348000667**
Revision:

| Item | FN | Part | Qty | Description |
|---|---|---|---|---|
| 1 | | **7348000669** | 1 | BRACKET |

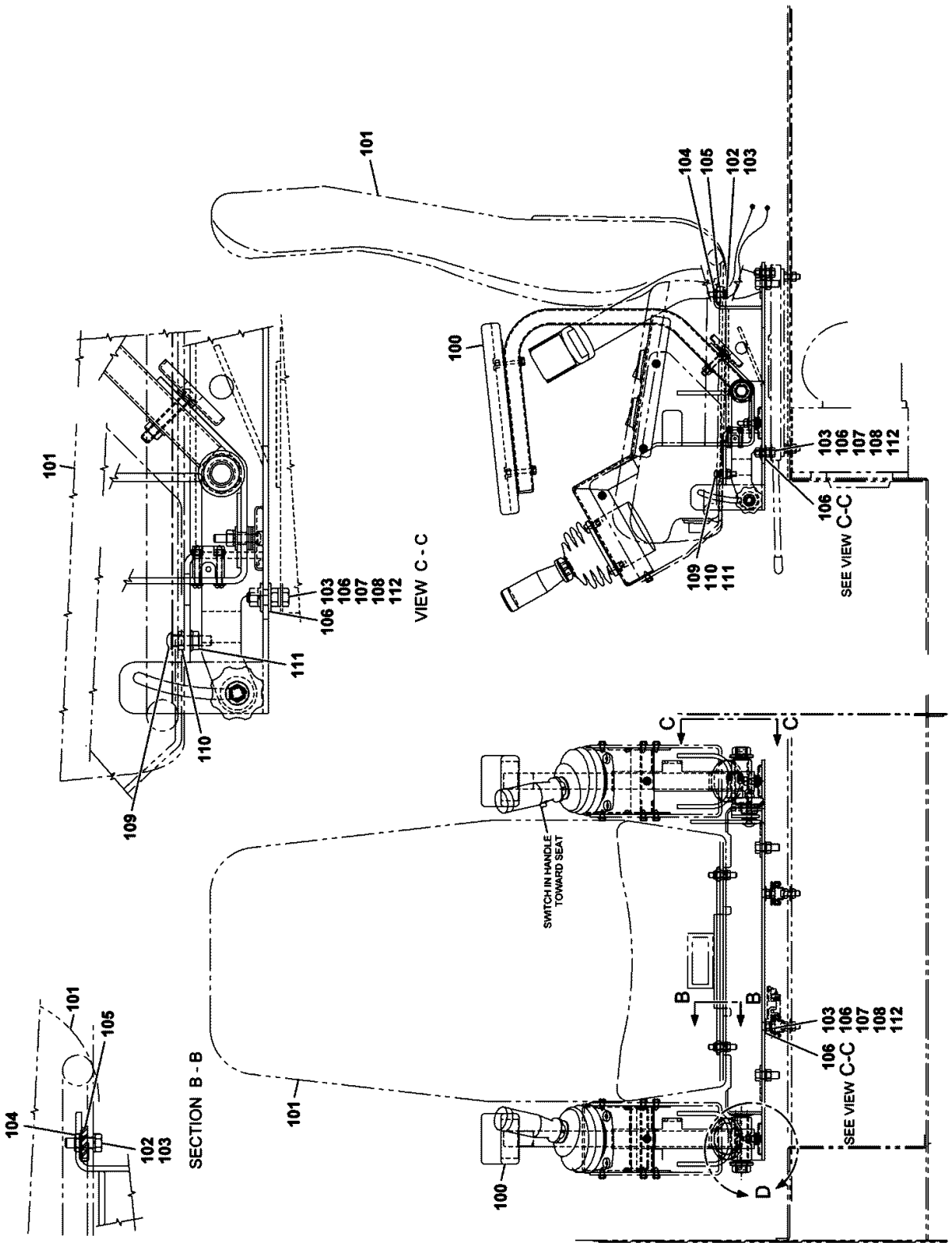


80003784

(SHEET 1 OF 1)

Description
**SEAT INSTALLATION - DUAL AXIS CONTROL (WITH AUXILIARY HOIST)**

Assembly No.
**80003784**
Revision: **A**

| Item | FN | Part | Qty | Description |
|---|---|---|---|---|
| 100 | + | **80003783** | 1 | SEAT ASSEMBLY - DUAL AXIS CONTROL<br>(WITH AUXILIARY HOIST)<br>(NOT AVAILABLE AS ASSEMBLY) |
| 101 | | **7798000843** | 1 | SEAT<br>INCLUDES THE FOLLOWING PARTS |
| | | **9798100584** | 1 | KNOB |
| | | **7872001408** | 1 | SWITCH, SEAT |
| | | **9798100585** | 1 | CONTROL, ADJUST - BACK<br>INCLUDES CABLE |
| 102 | | **7126171253** | 2 | CAP SCREW, M8X25 HEX HEAD |
| 103 | | **7951170210** | 6 | WASHER, LOCK 8MM |
| 104 | | **7659190020** | 2 | NUT, RETAINING 8 X 1.25 |
| 105 | | **6184003088** | 1 | BRACKET, SEAT BAR |
| 106 | | **7951170014** | 8 | FLAT WASHER |
| 107 | | **7661170003** | 8 | NUT - 8MM X 1.25 |
| 108 | | **7126171350** | 4 | CAP SCREW, M8 X 30MM HEX HEAD |
| 109 | | **7128171454** | 2 | CAP SCREW, MM 8 X 35MM SOCKET |
| 110 | | **7661171103** | 2 | NUT, HEX<br>8MM N.C. |
| 111 | | **7661170003** | 2 | NUT - 8MM X 1.25 |
| 112 | | **7951170580** | 4 | WASHER, SHAKE |

**+ SEE FURTHER BREAKDOWN THIS GROUP**

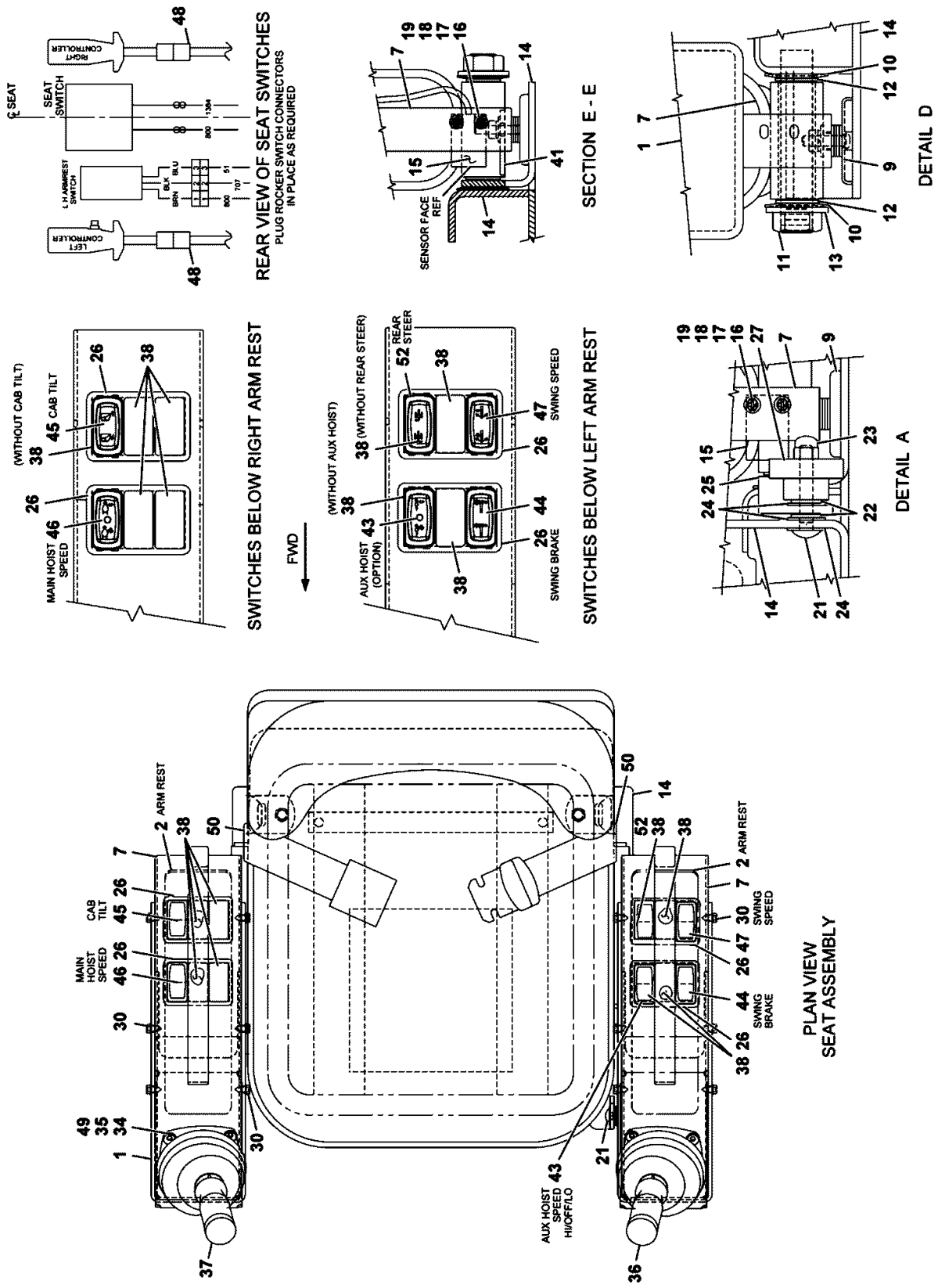


80003783

(SHEET 2 OF 2)

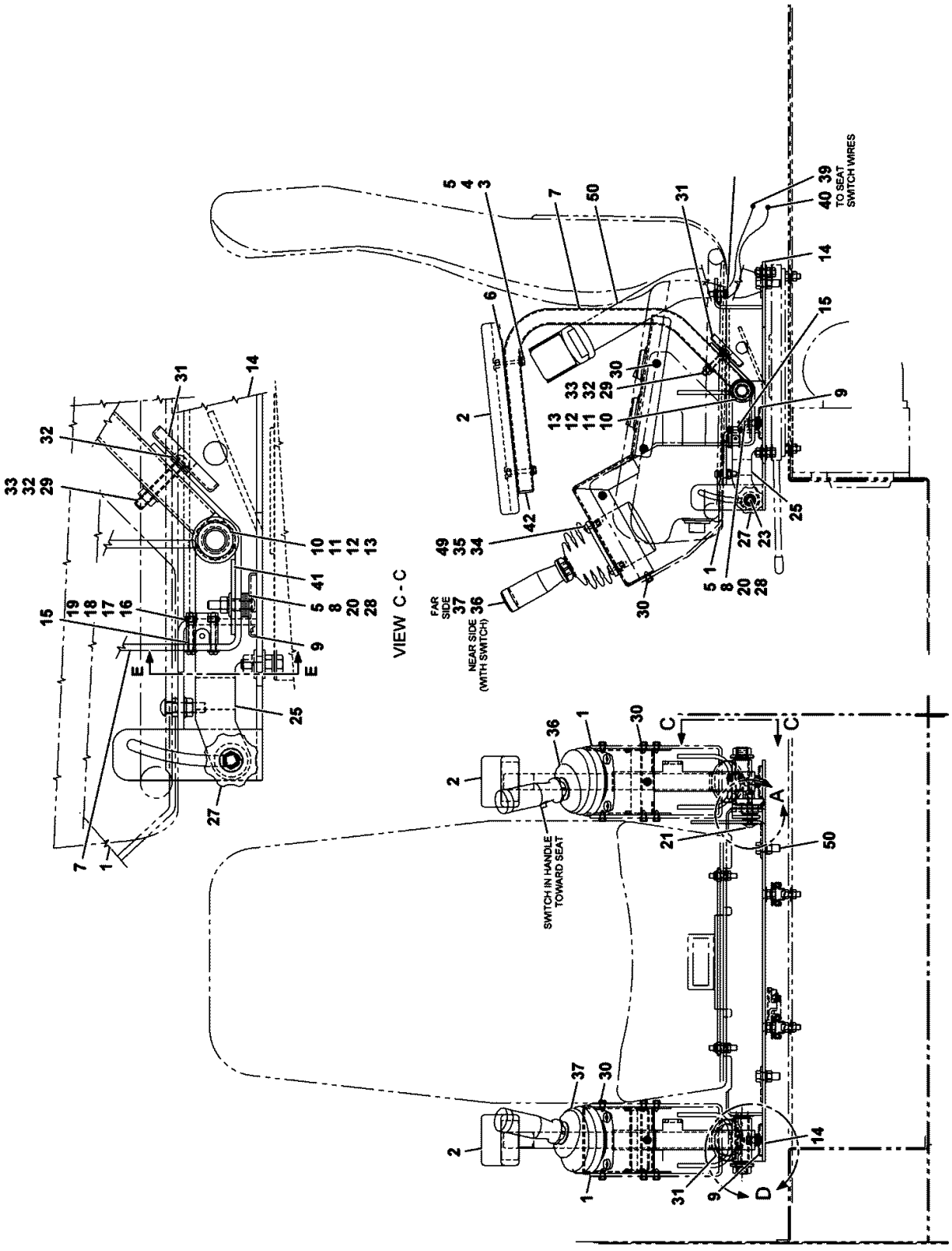


**80003783**

**(SHEET 1 OF 2)**

Description
**SEAT ASSEMBLY - DUAL AXIS CONTROL (WITH AUXILIARY HOIST)**
**(NOT AVAILABLE AS ASSEMBLY)**

Assembly No.
**80003783**
Revision: **A**

| Item | FN | Part | Qty | Description |
|---|---|---|---|---|
| 1 | | **7245100056** | 2 | COVER, ARMREST |
| 2 | | **7033001063** | 2 | PAD, ARMREST |
| 3 | | **7115141450** | 4 | CAP SCREW,<br>1/4" - 20 N.C. X 1 3/4"<br>GRADE 5 |
| 4 | | **7950140141** | 4 | WASHER, FLAT 1/4" PLAIN NARROW |
| 5 | | **7950140050** | 6 | WASHER, LOCK 1/4" I.D. |
| 6 | | **6705018338** | 2 | PLATE |
| 7 | | **6033100018** | 2 | ARMREST |
| 8 | | **7121151401** | 2 | SCREW, M6X35 LONG SLOTTED PAN |
| 9 | | **7616000519** | 2 | MAGNET |
| 10 | | **7949001227** | 4 | WASHER, BEVELED |
| 11 | | **7660220200** | 2 | NUT, HEX JAM<br>3/4" - 10 N.C. |
| 12 | | **7199001289** | 4 | BUSHING |
| 13 | | **7949000236** | 2 | FLAT WASHER, 3/4" |
| 14 | | **6245100081** | 1 | ARM SUPPORT |
| 15 | + | **6872100045** | 1 | SWITCH ASSEMBLY - PROXIMITY<br>(NORMALLY OPEN)<br>(COMPLETE ASSEMBLY) |
| 16 | | **7661110003** | 2 | NUT, HEX<br>4 MM N.C. |
| 17 | | **7121111301** | 2 | SCREW, M4X30 LONG SLOTTED PAN |
| 18 | | **7951110210** | 2 | LOCKWASHER, 4MM I.D. |
| 19 | | **7951110014** | 2 | WASHER, 4MM I.D. |
| 20 | | **7661151103** | 2 | NUT<br>6MM |
| 21 | | **7111151664** | 1 | BOLT, CARRIAGE<br>5/16" -18 N.C. X 2" |
| 22 | | **7950150141** | 2 | WASHER, FLAT 5/16" |
| 23 | | **7660152200** | 1 | NUT, ACORN<br>5/16" - 18 N.C. |
| 24 | | **7949001186** | 3 | WASHER, BLACK NYLON |
| 25 | | **6245100077** | 1 | BRACKET |
| 26 | | **7364100179** | 4 | BEZEL, L-SERIES 3 GANG LM3 |
| 27 | | **7511000093** | 1 | KNOB, FLUTED |
| 28 | | **7951150014** | 10 | WASHER, 6MM I.D. |

**+ SEE FURTHER BREAKDOWN THIS GROUP**

Description
**SEAT ASSEMBLY - DUAL AXIS CONTROL (WITH AUXILIARY HOIST)**
**(NOT AVAILABLE AS ASSEMBLY)**

Assembly No.
**80003783**
Revision: **A**

| Item | FN | Part | Qty | Description |
|---|---|---|---|---|
| 29 | | **7110151618** | 2 | CAP SCREW,<br>5/16" -18 N.C. X 2"<br>GRADE 1 |
| 30 | | **7792151221** | 14 | SCREW |
| 31 | | **7616000517** | 1 | MAGNET, CUP |
| 32 | | **7951170014** | 1 | FLAT WASHER |
| 33 | | **7661171103** | 2 | NUT, HEX<br>8MM N.C. |
| 34 | | **7101101210** | 8 | SCREW, MACHINE<br>3/16" - 32 NF X 1 1/2" |
| 35 | | **7258001451** | 8 | CAP, 1/4" |
| 36 | + | **7352100096** | 1 | CONTROLLER CAN 12V LH W/AR |
| 37 | + | **7352100095** | 1 | CONTROLLER CAN 12V RH ARMREST |
| 38 | | **7242100005** | 6 | PLUG, L SERIES LH1 PANEL |
| 39 | | **7345001746** | 1 | TERMINAL, MALE<br>16 - 14 AWG |
| 40 | | **7345001744** | 1 | TERMINAL, FEMALE<br>16 - 14 AWG |
| 41 | | **6705170914** | 2 | PLATE |
| 42 | | **7242100002** | 2 | BUTTON, SQUARE |
| 43 | | **7872100119** | 1 | SWITCH, L-SERIES AUX HOIST |
| 44 | | **7872100123** | 1 | SWITCH, L-SERIES SWING BRAKE |
| 45 | | **7872100125** | 1 | SWITCH, L-SERIES CAB TILT |
| 46 | | **7872100118** | 1 | SWITCH, L-SERIES MAIN HOIST |
| 47 | | **7872100124** | 1 | SWITCH, L-SERIES SWING SPEED |
| 48 | + | **6512100837** | 1 | HARNESS ASSEMBLY - SEAT<br>(COMPLETE ASSEMBLY) |
| 49 | | **7429000011** | 8 | FASTENER, WELL-NUT |
| 50 | # | **7576000311** | 2 | BELT, SEAT |
| 52 | | **7872100139** | 1 | SWITCH, L-SERIES REAR STEER |

**+ SEE FURTHER BREAKDOWN THIS GROUP**

**# SERVICED AS AN ASSEMBLY ONLY**

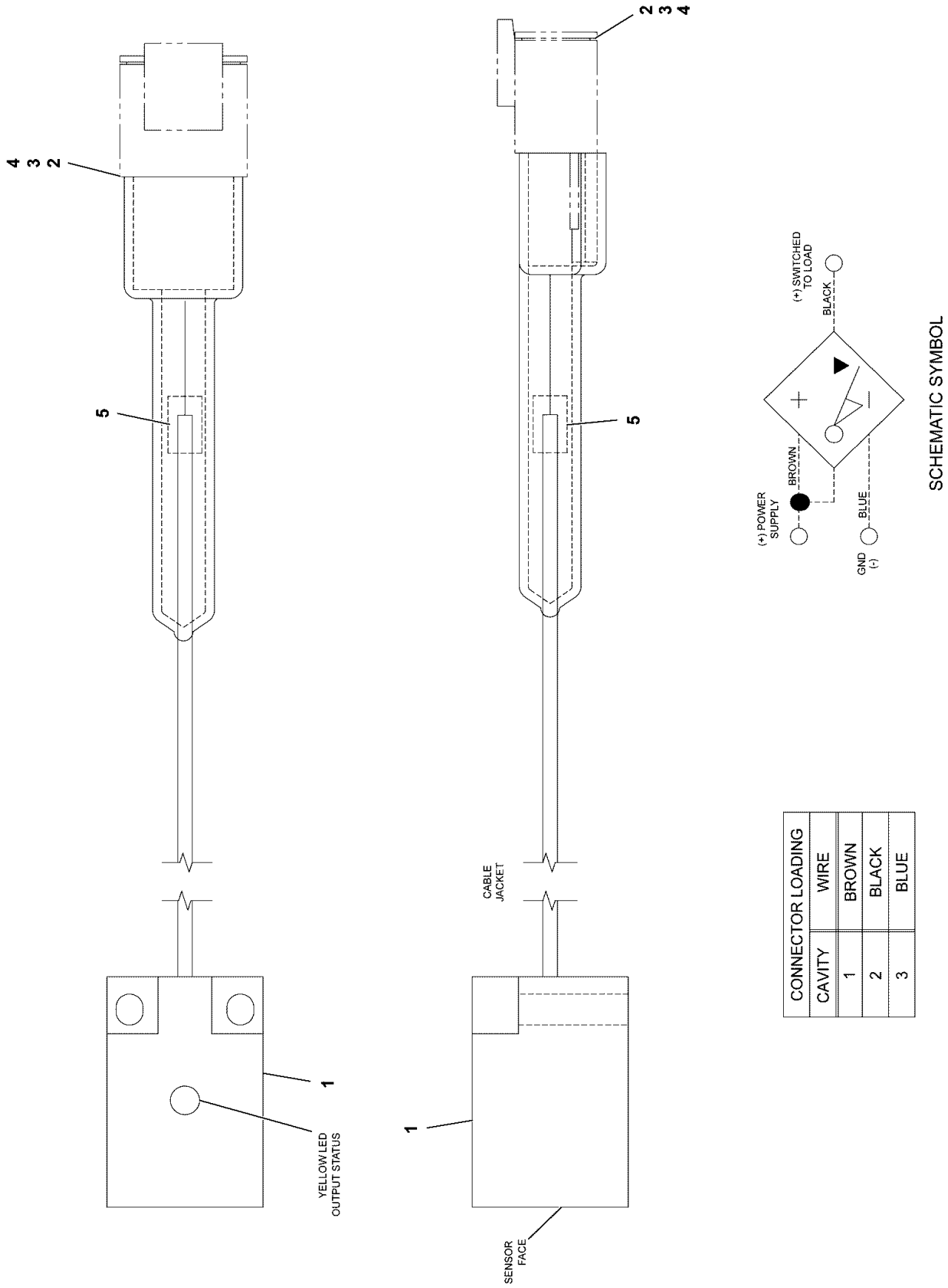


**6872100045**

**(SHEET 1 OF 1)**

Description
**SWITCH ASSEMBLY - PROXIMITY (NORMALLY OPEN)**
**(COMPLETE ASSEMBLY)**

Assembly No.
**6872100045**
Revision: **A**

| Item | FN | Part | Qty | Description |
|---|---|---|---|---|
| 1 | | **7872100062** | 1 | PROXY SENSOR-PNP 10mm RANGE |
| 2 | | **7892100010** | 1 | RECP-DTM-3P |
| 3 | | **7172100003** | 3 | BOOT-DTM3P-RECP |
| 4 | | **7689100033** | 3 | PIN |
| 5 | | **8594100256** | 1 | TUBING, HEAT SHRINK 1/4" I.D.<br>LINER, MELTABLE<br>(QUANTITY IN FEET) |

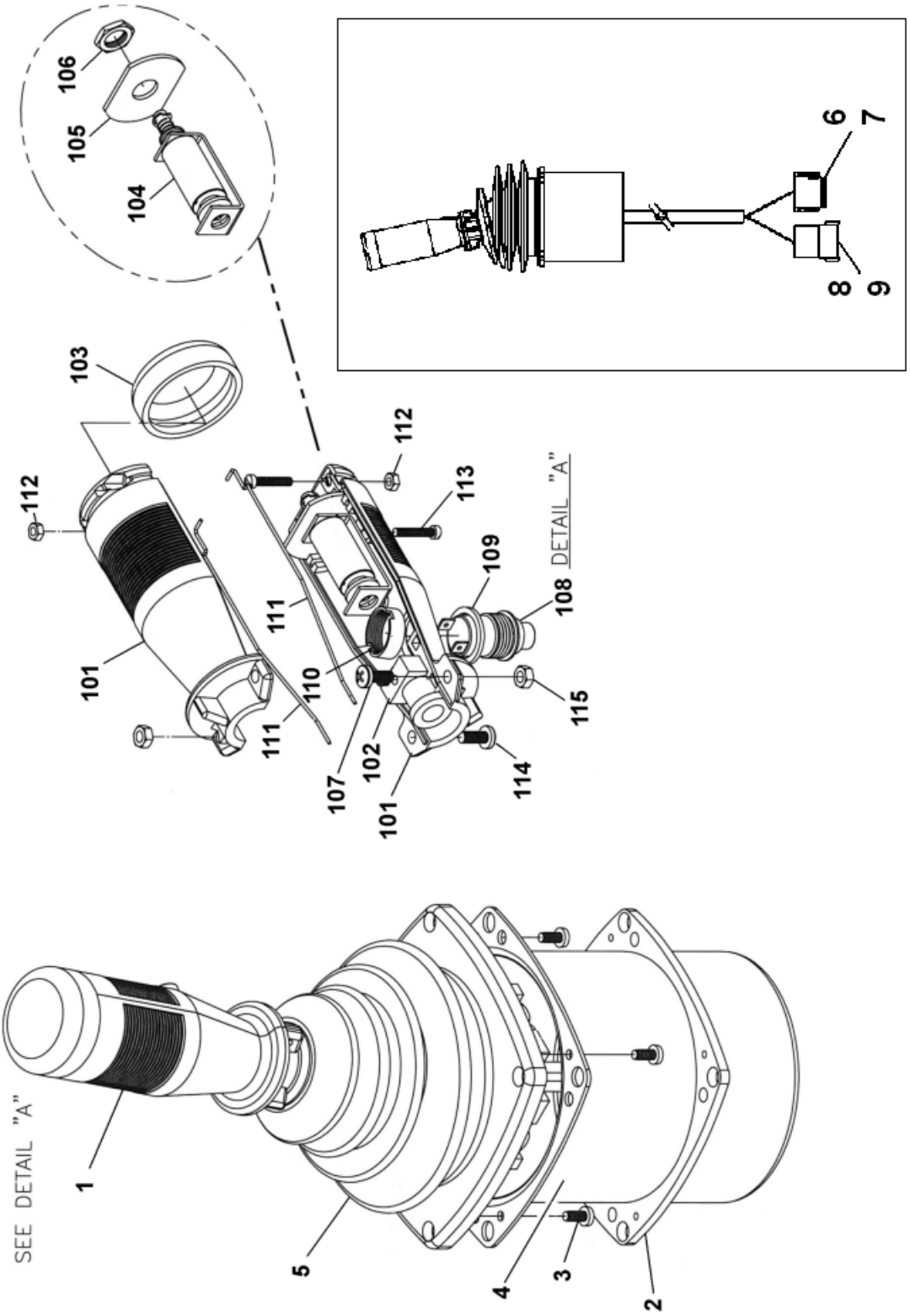


**7352100096**

**(SHEET 1 OF 1)**

Description
**CONTROLLER CAN 12V LH W/AR**

Assembly No.
**7352100096**
Revision:

| Item | FN | Part | Qty | Description |
|---|---|---|---|---|
| 1 | | **9352100784** | 1 | HANDLE ASSY.<br>INCLUDES ITEMS 101 THRU 115 |
| 2 | | **9352100772** | 1 | GASKET |
| 3 | | **90000942** | 4 | SCREW |
| 4 | | **90000943** | 1 | COVER, HOUSING |
| 5 | | **9352100771** | 1 | BOOT |
| 6 | | **7709000812** | 1 | PLUG<br>12 SOCKET |
| 7 | | **7826000087** | 12 | SOCKET, 16-14 GA |
| 8 | | **7892000832** | 1 | RECEPTACLE,<br>12 PIN |
| 9 | | **7689001782** | 12 | PIN, 18 - 16 GAGE |
| 101 | | **9352100786** | 1 | HANDLE, SHELL (BOTH HALVES) |
| 102 | | **9352100787** | 1 | COUPLING |
| 103 | | **9511100017** | 1 | BOOT |
| 104 | | **9352100788** | 1 | SOLENIOD, THUMPER |
| 105 | | **9352100789** | 1 | PLATE, MOUNTING |
| 106 | | **9352100692** | 1 | NUT |
| 107 | | **9352100669** | 2 | SET SCREW |
| 108 | | **9352100790** | 1 | SWITCH, PUSH BUTTON |
| 109 | | **9176100603** | 1 | O-RING |
| 110 | | **9352100676** | 1 | NUT |
| 111 | | **9352100657** | 2 | GASKET |
| 112 | | **9352100528** | 2 | NUT |
| 113 | | **9511100007** | 2 | SCREW |
| 114 | | **9352100777** | 2 | SCREW |
| 115 | | **9352100791** | 2 | NUT |

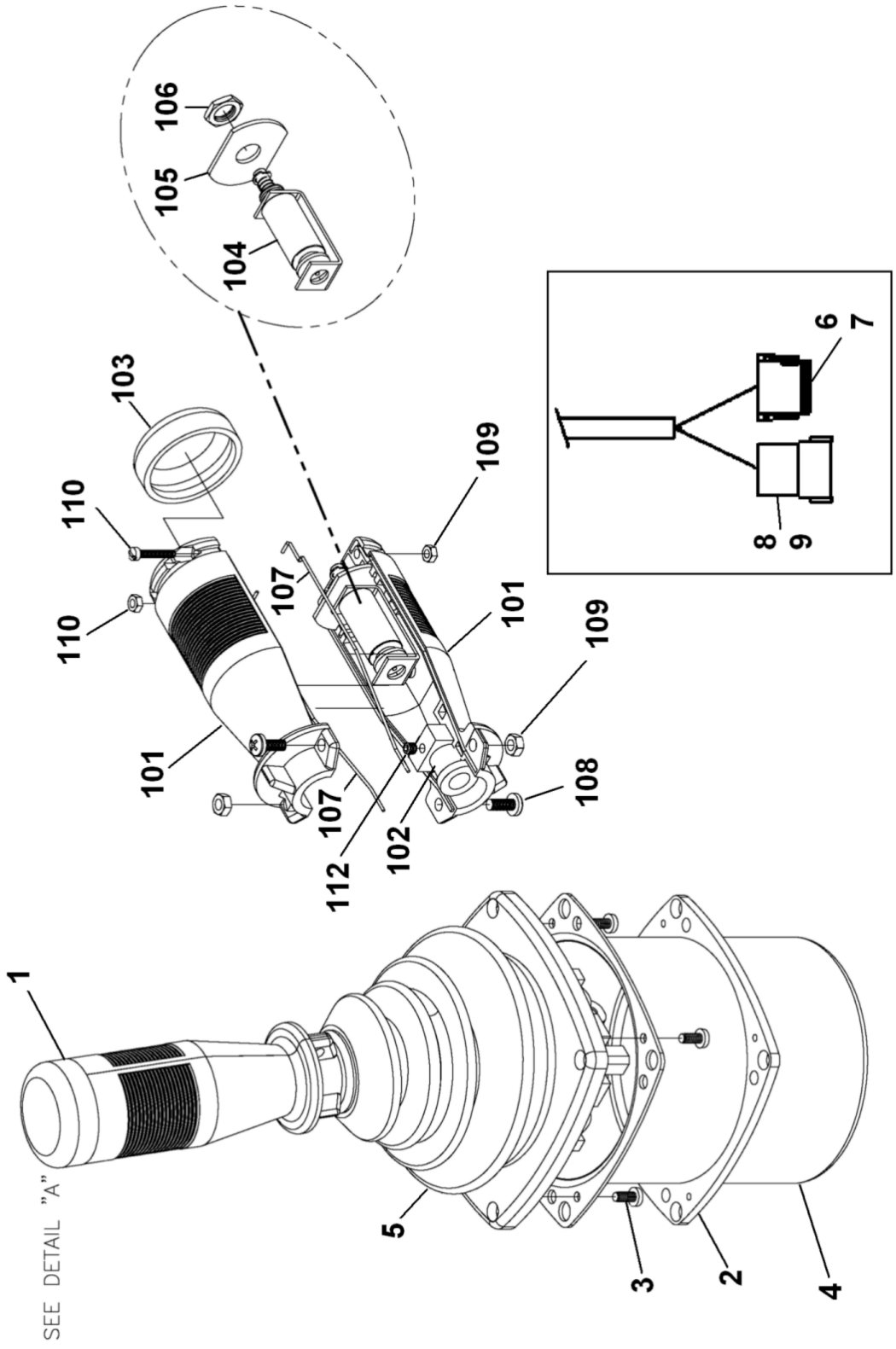


**7352100095**

**(SHEET 1 OF 1)**

Description
**CONTROLLER CAN 12V RH ARMREST**

Assembly No.
**7352100095**
Revision:

| Item | FN | Part | Qty | Description |
|---|---|---|---|---|
| 1 | | **9352100770** | 1 | HANDLE ASSY.<br>INCLUDES ITEMS 101 THRU 112 |
| 2 | | **9352100772** | 1 | GASKET |
| 3 | | **90000942** | 4 | SCREW |
| 4 | | **90000943** | 1 | COVER, HOUSING |
| 5 | | **9352100771** | 1 | BOOT |
| 6 | | **7709000812** | 1 | PLUG<br>12 SOCKET |
| 7 | | **7826000087** | 12 | SOCKET, 16-14 GA |
| 8 | | **7892000832** | 1 | RECEPTACLE,<br>12 PIN |
| 9 | | **7689001782** | 12 | PIN, 18 - 16 GAGE |
| 101 | | **9352100792** | 1 | HANDLE, SHELL (BOTH HALVES) |
| 102 | | **9352100787** | 1 | COUPLING |
| 103 | | **9511100017** | 1 | BOOT |
| 104 | | **9352100788** | 1 | SOLENIOD, THUMPER |
| 105 | | **9352100789** | 1 | PLATE, MOUNTING |
| 106 | | **9352100692** | 1 | NUT |
| 107 | | **9352100657** | 2 | GASKET |
| 108 | | **9352100777** | 2 | SCREW |
| 109 | | **9352100791** | 2 | NUT |
| 110 | | **9352100528** | 2 | NUT |
| 111 | | **9511100007** | 2 | SCREW |
| 112 | | **9352100669** | 2 | SET SCREW |

| WIRE NO | COLOR | TYPE | SAE SIZE | LENGTH INCHES | TP | B/M ITEM # | REMARKS | TP | B/M ITEM NO | REMARKS |
|---|---|---|---|---|---|---|---|---|---|---|
| 479 | WHT | GXL | 18 | 21 | M | 6 | ——— | P | 21 | ——— |
| 506 | | | 18 | 21 | A | 6 | ——— | C | 21 | ——— |
| 518 | | | 18 | 24 | M | 6 | ——— | R | 21 | ——— |
| 707 | | | 18 | 23 | A | 6 | ——— | L | 19 | ——— |
| 792 | | | 18 | 24 | A | 6 | ——— | N | 21 | ——— |
| 793 | | | 18 | 24 | A | 6 | ——— | N | 21 | ——— |
| 800 | | | 20 | 30 | K | 22 | ——— | L | 19 | ——— |
| 1130 | | | 18 | 24 | A | 6 | ——— | H | 21 | ——— |
| 1137A | | | 18 | 21 | A | 6 | ——— | C | STRIP | CRIMP W/1137B |
| 1137B | | | 20 | 3 | C | 20 | CRIMP W/1137A | C | STRIP | CRIMP W/1137C |
| 1137C | | | 20 | 3 | C | 21 | CRIMP W/1137B | C | 21 | ——— |
| 1384A | | | 16 | 42 | V | 18 | ——— | X | 18 | ——— |
| 1384B | | | 18 | 37 | K | 23 | ——— | X | 18 | ——— |
| 1384C | | | 18 | 41 | H | STRIP | CRIMP W/1384D | X | 18 | ——— |
| 1384D | | | 20 | 3 | H | 20 | CRIMP W/1384C | H | STRIP | CRIMP W/1384E |
| 1384E | | | 20 | 3 | H | 21 | CRIMP W/1384D | H | 21 | ——— |
| 1384F | | | 18 | 44 | D | STRIP | CRIMP W/1384G | X | 18 | ——— |
| 1384G | | | 20 | 3 | D | 20 | CRIMP W/1384F | D | STRIP | CRIMP W/1384H |
| 1384H | | | 20 | 3 | D | 21 | CRIMP W/1384G | D | 21 | ——— |
| 1384J | | | 18 | 44 | C | STRIP | CRIMP W/1384K | X | 18 | ——— |
| 1384K | | | 20 | 3 | C | 20 | CRIMP W/1384J | C | STRIP | CRIMP W/1384L |
| 1384L | | | 20 | 3 | C | 21 | CRIMP W/1384K | C | STRIP | CRIMP W/1384M |
| 1384M | | | 20 | 3 | C | 21 | CRIMP W/1384L | C | 21 | ——— |
| 1384N | | | 18 | 17 | T | STRIP | CRIMP W/1384P | X | 18 | ——— |
| 1384P | | | 20 | 3 | T | 20 | CRIMP W/1384N | T | STRIP | CRIMP W/1384Q |
| 1384Q | | | 20 | 3 | T | 21 | CRIMP W/1384P | T | 21 | ——— |
| 1384R | | | 18 | 20 | P | STRIP | CRIMP W/1384T | X | 18 | ——— |
| 1384T | | | 20 | 3 | P | 20 | CRIMP W/1384R | P | STRIP | CRIMP W/1384U |
| 1384U | | | 20 | 3 | P | 21 | CRIMP W/1384T | P | 21 | ——— |
| 1384V | | | 18 | 17 | X | 18 | ——— | R | STRIP | CRIMP W/1384W |
| 1384W | | | 20 | 3 | R | 20 | CRIMP W/1384V | R | STRIP | CRIMP W/1384X |
| 1384X | | | 20 | 3 | R | 21 | CRIMP W/1384W | R | STRIP | CRIMP W/1384Y |
| 1384Y | | | 18 | 52 | R | 20 | CRIMP W/1384X | N | STRIP | CRIMP W/1384Z |
| 1384Z | | | 18 | 3 | N | 20 | CRIMP W/1384Y | Z | STRIP | CRIMP W/1384AA |
| 1384AA | | | 18 | 3 | N | 20 | CRIMP W/1384Z | N | 21 | ——— |
| 1385A | | | 14 | 62 | V | 16 | ——— | S2 | STRIP | SEE DETAIL |
| 1385B | | | 14 | 27 | A | 16 | ——— | S2 | STRIP | SEE DETAIL |
| 1385C | | | 14 | 49 | M | 16 | ——— | S2 | STRIP | SEE DETAIL |
| SHD1 | WHT | GXL | 18 | 3 | V | SEE | CABLE PC1A | V | SEE | CABLE PC1A |

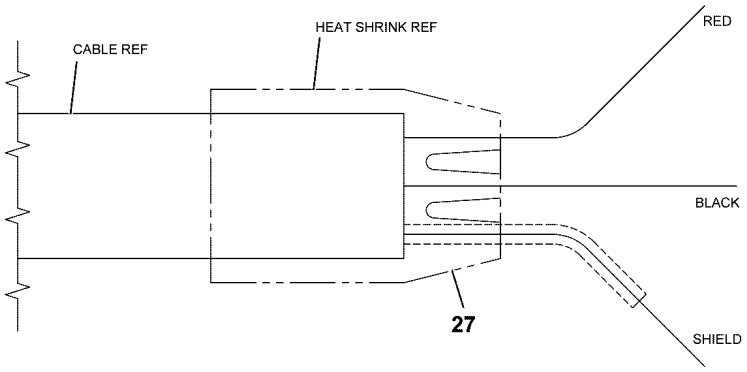


DETAIL CE
CABLE ENDS

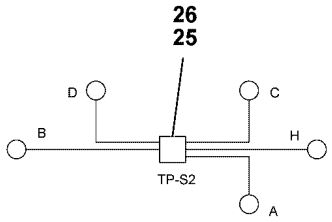


DETAIL 51

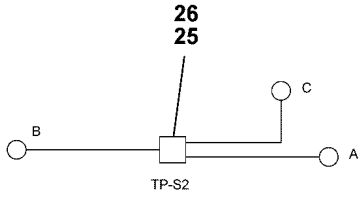


DETAIL 1385

| WIRE NUMBER LABELS FOR USE ON CABLE ASSYS | | | | | | | | | |
|---|---|---|---|---|---|---|---|---|---|
| WIRE NO | CONDUCTOR COLOR | SAE SIZE | LENGTH TOT IN | CABLE ASSY | TP | REMARKS | TP | REMARKS | LABLES REQ'D |
| 1484A | RED | 10 | 5 | PC1A | V | USE INSUL | S1 | USE INSUL | 2 |
| 1484B | RED | | | PC1B | A | | S1 | | 2 |
| 1484C | RED | | | PC1C | M | | S1 | | 2 |
| 1485A | BLK | | | PC1A | V | | S1 | | 2 |
| 1485B | BLK | | | PC1B | A | | S1 | | 2 |
| 1485C | BLK | 10 | 5 | PC1C | M | USE INSUL | S1 | USE INSUL | 2 |

| WIRE NO | COLOR | TYPE | SAE SIZE | LENGTH INCHES | TP | B/M ITEM # | REMARKS | TP | B/M ITEM NO | REMARKS |
|---|---|---|---|---|---|---|---|---|---|---|
| 48 | WHT | GXL | 18 | 21 | A | 6 | ——— | C | 21 | ——— |
| 50 | | | 18 | 21 | A | 6 | ——— | D | 21 | ——— |
| 51A | | | 14 | 61 | V | 16 | ——— | S2 | STRIP | SEE DETAIL |
| 51B | | | 14 | 28 | A | 16 | ——— | S2 | STRIP | SEE DETAIL |
| 51C | | | 14 | 48 | M | 16 | ——— | S2 | STRIP | SEE DETAIL |
| 51D | | | 20 | 16 | H | STRIP | CRIMP W/51E | S2 | STRIP | SEE DETAIL |
| 51E | | | 20 | 15 | H | 21 | CRIMP W/51D | D | STRIP | CRIMP W/51F |
| 51F | | | 20 | 12 | C | STRIP | CRIMP W/51G | D | 21 | CRIMP W/51E |
| 51G | | | 20 | 15 | C | 21 | CRIMP W/51F | L | 19 | ——— |
| 51H | | | 20 | 36 | T | STRIP | CRIMP W/51J | S2 | STRIP | SEE DETAIL |
| 51J | | | 20 | 15 | T | 21 | CRIMP W/51H | P | STRIP | CRIMP W/51K |
| 51K | | | 20 | 15 | P | 21 | CRIMP W/51J | R | STRIP | CRIMP W/51L |
| 51L | | | 20 | 52 | R | 21 | CRIMP W/51K | N | 21 | CRIMP W/51M |
| 51M | | | 20 | 15 | D | 21 | ——— | N | STRIP | CRIMP W/51L |
| 403 | | | 18 | 24 | M | 6 | ——— | T | 21 | ——— |
| 404 | | | 18 | 24 | M | 6 | ——— | T | 21 | ——— |
| 415 | WHT | GXL | 18 | 21 | M | 6 | ——— | P | 21 | ——— |

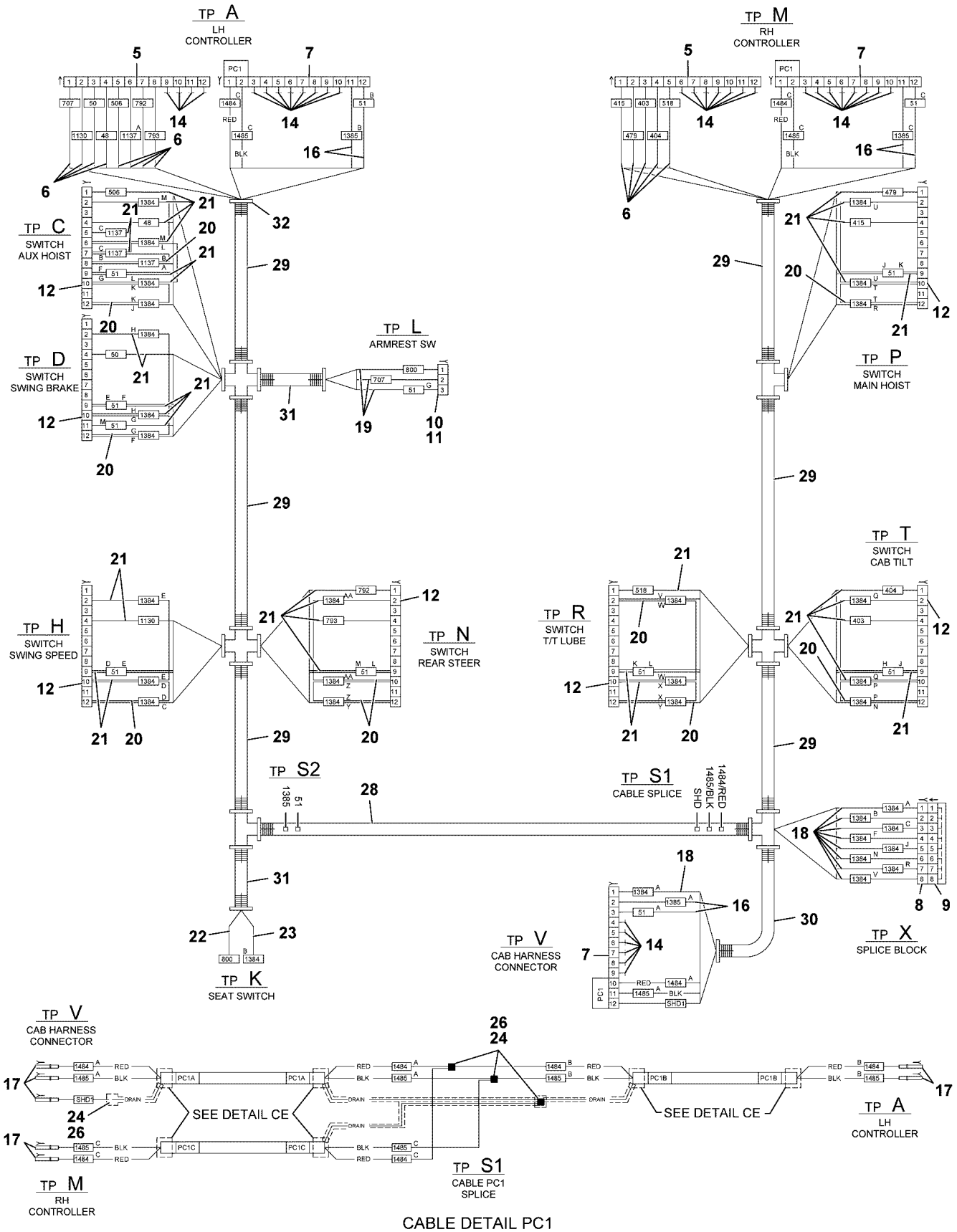


6512100837

(SHEET 1 OF 3)

Description
**HARNESS ASSEMBLY - SEAT (COMPLETE ASSEMBLY)**

Assembly No.
**6512100837**
Revision: **A**

| Item | FN | Part | Qty | Description |
|---|---|---|---|---|
| 5 | | **7892000832** | 2 | RECEPTACLE,<br>12 PIN |
| 6 | | **7689001782** | 13 | PIN, 18 - 16 GAGE |
| 7 | | **7709000812** | 3 | PLUG<br>12 SOCKET |
| 8 | | **7709000811** | 1 | PLUG<br>8 SOCKET |
| 9 | | **7892100026** | 1 | RECEPT, (8P) SPLICE BLOCK |
| 10 | | **7709100877** | 1 | PLUG |
| 11 | | **7172100002** | 1 | BOOT, PLUG |
| 12 | | **7364100184** | 7 | CONNECTOR, L-SERIES SWITCHES |
| 14 | | **7689000503** | 33 | PLUG, SEALING<br>16 - 12 AWG |
| 16 | | **7826000087** | 6 | SOCKET, 16-14 GA |
| 17 | | **7826100004** | 7 | SOCKET, (16 - 18) 30 SERIES |
| 18 | | **7826000626** | 9 | SOCKET,<br>16 - 18 AWG |
| 19 | | **7826100018** | 3 | SOCKET - 20 GAUGE GOLD |
| 20 | | **7892100058** | 10 | TERMINAL, FM MP 630 SERIES |
| 21 | | **7892100059** | 34 | TERMINAL, FM MP 630 SERIES |
| 22 | | **7345001444** | 1 | TERMINAL, FEMALE |
| 23 | | **7345001446** | 1 | TERMINAL, MALE<br>22 - 18 AWG |
| 24 | | **7892000194** | 4 | PARALLEL, NON - INSULATED<br>16 - 14 AWG |
| 25 | | **7892000195** | 2 | PARALLEL, NON - INSULATED<br>12 - 10 AWG |
| 26 | | **8594100256** | 1 | TUBING, HEAT SHRINK 1/4" I.D.<br>LINER, MELTABLE<br>(QUANTITY IN FEET) |
| 27 | | **8594100257** | 1 | TUBING, HEAT SHRINK 1/2" I.D.<br>LINER, MELTABLE<br>(QUANTITY IN FEET) |
| 28 | | **8594000003** | 2 | FLEXGUARD - .625" I.D.<br>(QUANTITY IN FEET) |
| 29 | | **8594000004** | 4 | FLEXGUARD - .500" I.D.<br>(QUANTITY IN FEET) |
| 30 | | **8594000006** | 3 | FLEXGUARD - .350" I.D.<br>(QUANTITY IN FEET) |

Description
**HARNESS ASSEMBLY - SEAT (COMPLETE ASSEMBLY)**

Assembly No.
**6512100837**
Revision: **A**

| Item | FN | Part | Qty | Description |
|---|---|---|---|---|
| 31 | | **8594000019** | 2 | FLEXGUARD, 1/4" I.D.<br>(QUANTITY IN FEET) |
| 32 | | **7850000208** | 30 | CABLE TIE, BLACK |

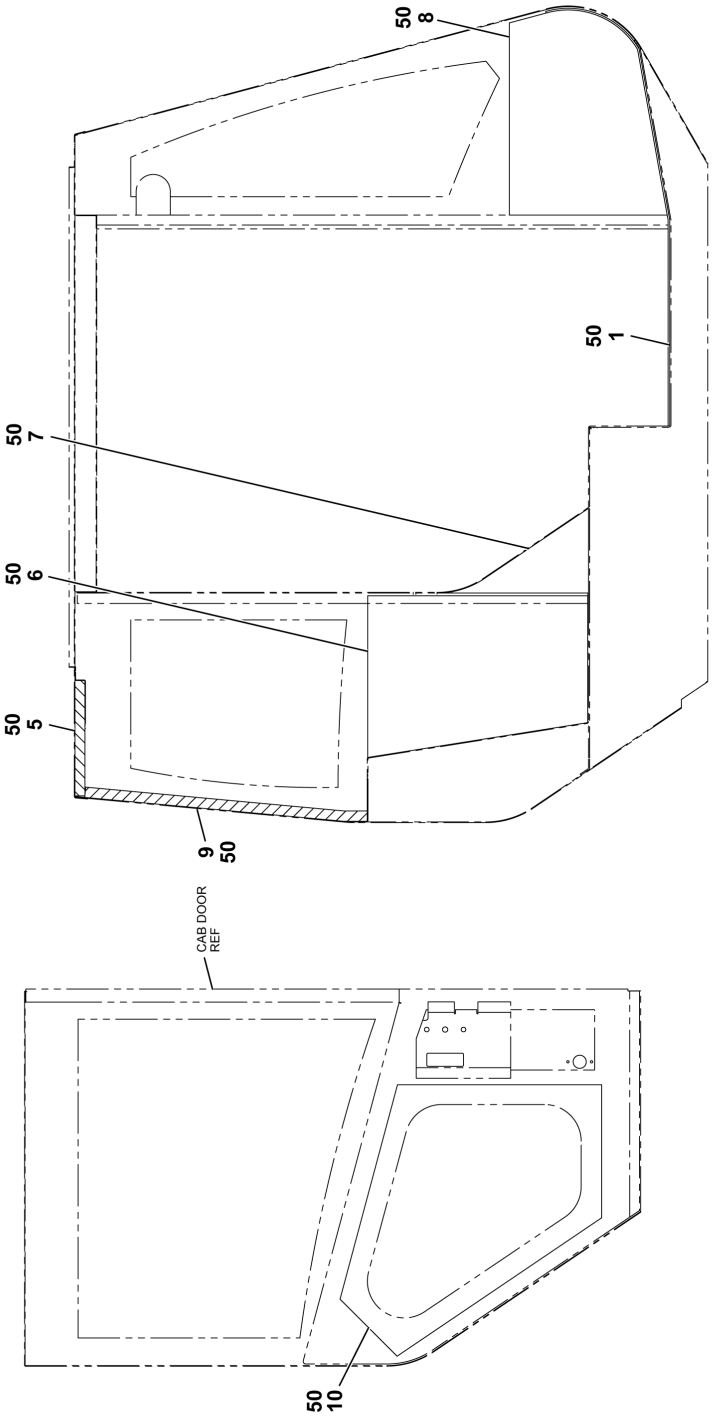
50 8
50 1
50 7
50 6
50 5
9 50
CAB DOOR REF
50 10
VIEW INSIDE CAB LOOKING TOWARD LEFT SIDE
VIEW LOOKING AT INSIDE OF DOOR

6001100033

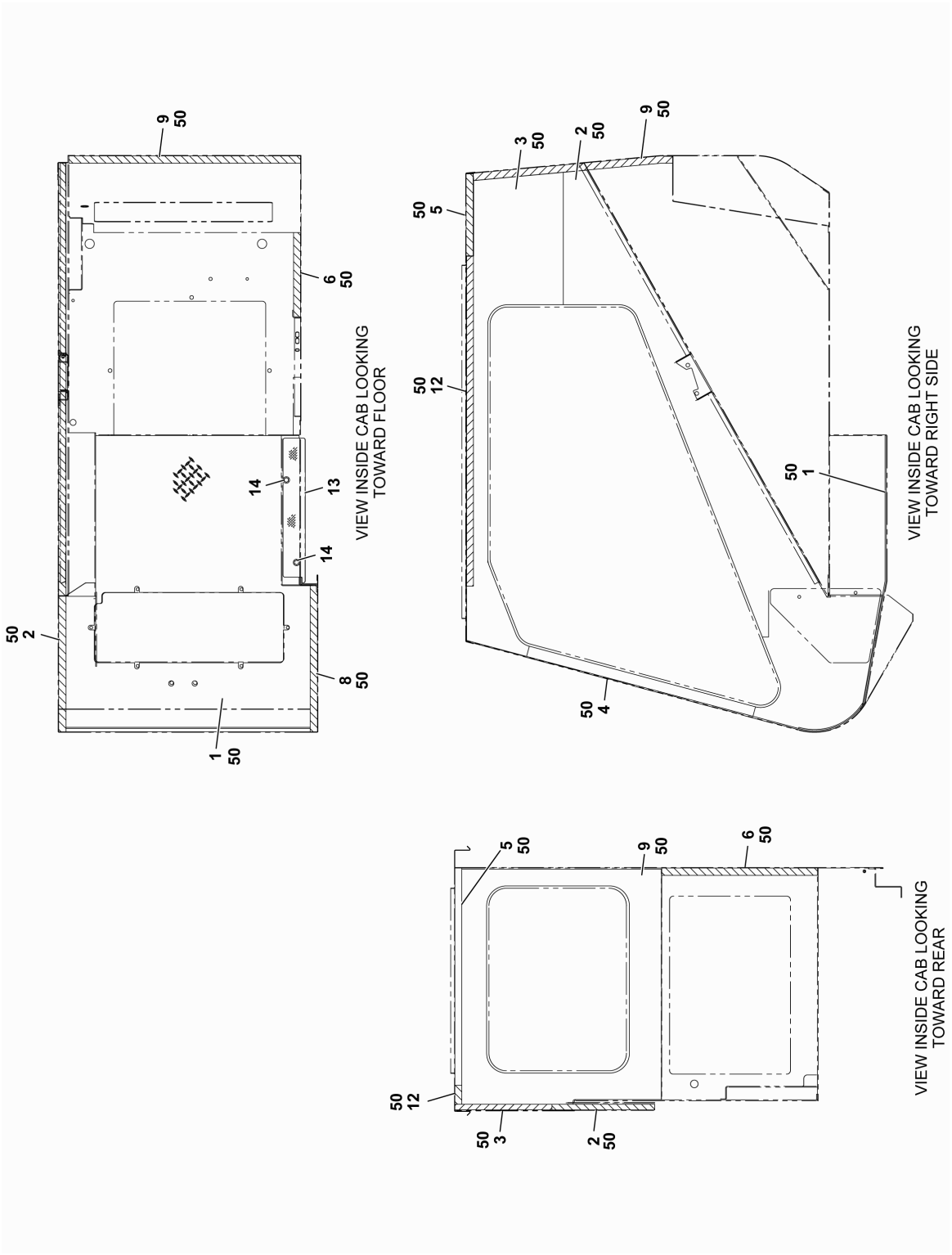


6001100033

(SHEET 1 OF 2)

Description
**ACOUSTICS INSTALLATION**

Assembly No.
**6001100033**
Revision: **B**

| Item | FN | Part | Qty | Description |
|---|---|---|---|---|
| 1 | * | **7001100579** | 1 | MAT, FLOOR |
| 2 | * | **7001100580** | 1 | FOAM, .75 ACOUSTIC |
| 3 | * | **7001100581** | 1 | FOAM, .75 ACOUSTIC |
| 4 | * | **7001100582** | 1 | FOAM, .75 ACOUSTIC |
| 5 | * | **7001100583** | 1 | FOAM, 1.00 ACOUSTIC |
| 6 | * | **7001100584** | 1 | FOAM, 1.00 ACOUSTIC |
| 7 | * | **7001100585** | 1 | FOAM, 1.00 ACOUSTIC |
| 8 | * | **7001100586** | 1 | FOAM, 1.00 ACOUSTIC |
| 9 | * | **7001100587** | 1 | FOAM, 1.00 ACOUSTIC |
| 10 | * | **7001100588** | 1 | FOAM, 1.00 ACOUSTIC |
| 12 | * | **7001100589** | 1 | FOAM, 1.00 ACOUSTIC |
| 13 | | **6245101035** | 1 | SILL, DOOR |
| 14 | | **7790161253** | 2 | SCREW<br>3/8" - 16 N.C. X 3/4" |
| 50 | * | **80004087** | 1 | KIT, ACOUSTICS |

*** REPAIR KIT AND/OR PART OF KIT**

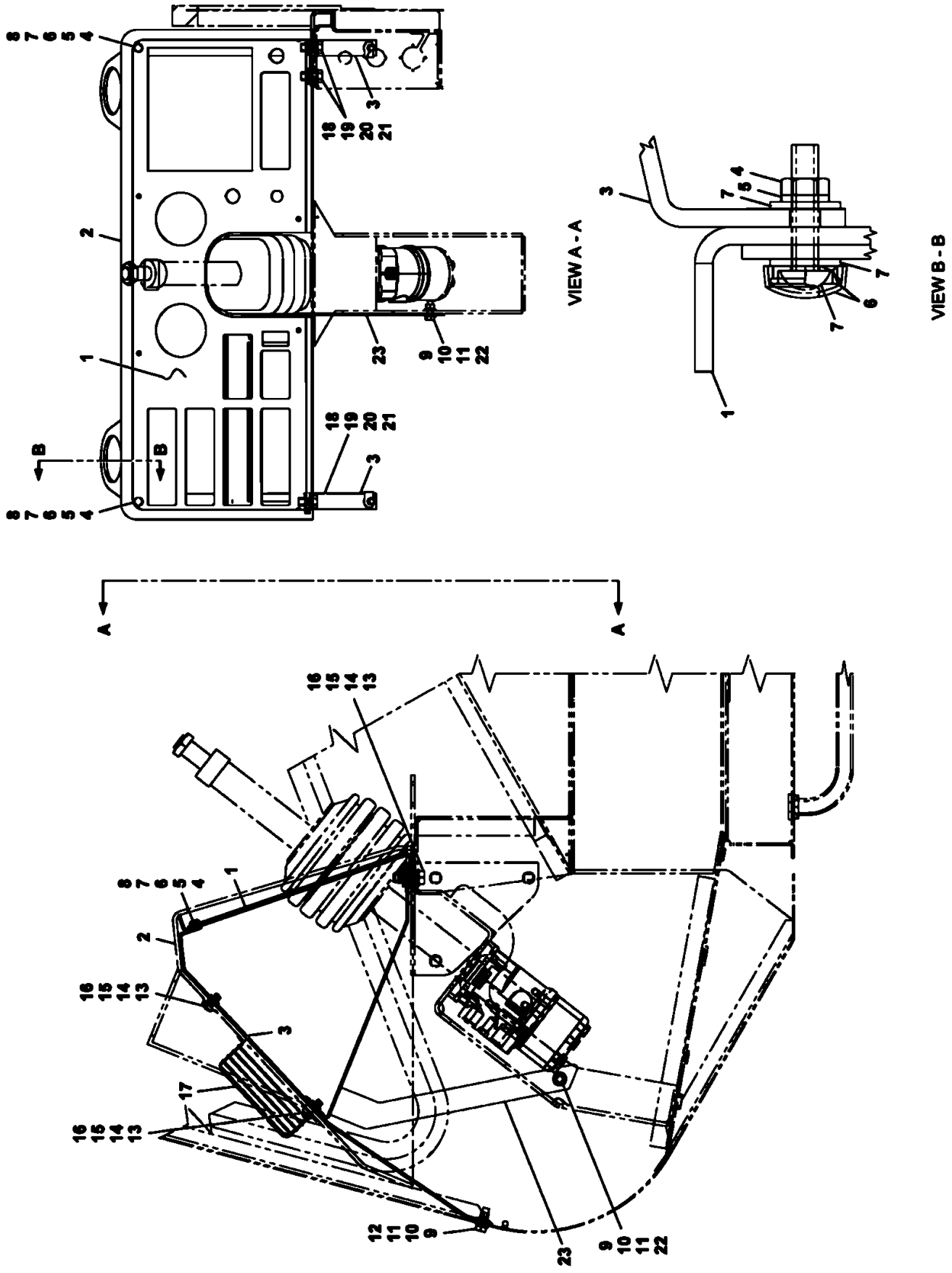


6245101334

(SHEET 1 OF 1)

Description
**CONSOLE INSTALLATION - FRONT (RT540E/RT530E2)**

Assembly No.
**6245101334**
Revision: #

| Item | FN | Part | Qty | Description |
|---|---|---|---|---|
| 1 | + | **6245101332** | 1 | CONSOLE ASSEMBLY - FRONT (RT540E/RT530E2) (COMPLETE ASSEMBLY) |
| 2 | | **7245100069** | 1 | COVER, CONSOLE |
| 3 | | **6184100007** | 2 | BRACE |
| 4 | | **7661110003** | 2 | NUT, HEX 4 MM N.C. |
| 5 | | **7951110210** | 2 | LOCKWASHER, 4MM I.D. |
| 6 | | **7258001452** | 2 | CAP #8 |
| 7 | | **7951110014** | 4 | WASHER, 4MM I.D. |
| 8 | | **01374648** | 2 | SLOTTED CHEESE HEAD SCREW |
| 9 | | **7126171253** | 3 | CAP SCREW, M8X25 HEX HEAD |
| 10 | | **7951170210** | 3 | WASHER, LOCK 8MM |
| 11 | | **7951170014** | 4 | FLAT WASHER |
| 12 | | **7659190020** | 3 | NUT, RETAINING 8 X 1.25 |
| 13 | | **7258001451** | 4 | CAP, 1/4" |
| 14 | | **7121151401** | 4 | SCREW, M6X35 LONG SLOTTED PAN |
| 15 | | **7949001186** | 4 | WASHER, BLACK NYLON |
| 16 | | **7659190019** | 4 | RETAINING NUT M6 |
| 17 | | **7425000007** | 1 | FAN ASSY, DEFROSTER INCLUDES THE FOLLOWING PARTS |
| | | **9425100009** | 1 | SWITCH, 12 VOLT |
| 18 | | **7126191253** | 3 | CAP SCREW |
| 19 | | **7951190210** | 3 | LOCK WASHER, 10MM |
| 20 | | **7951190014** | 3 | FLAT WASHER, 10MM I.D. |
| 21 | | **7659190033** | 3 | NUT, RETAINING M10 X 1.50 |
| 22 | | **7661170003** | 1 | NUT - 8MM X 1.25 |
| 23 | | **6245101003** | 1 | MOUNT, BRACKET MODULE |

**+ SEE FURTHER BREAKDOWN THIS GROUP**

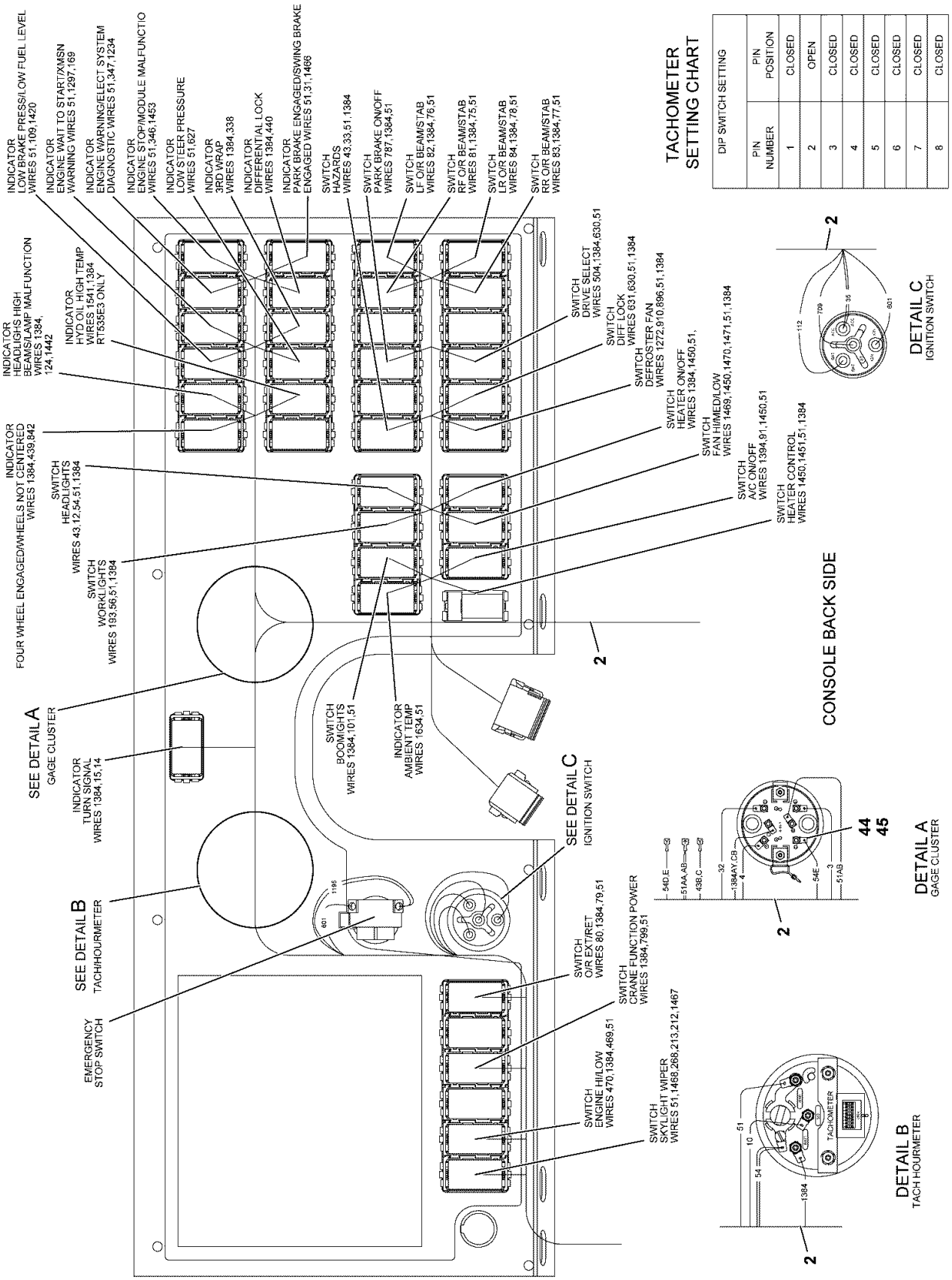


6245101332

(SHEET 2 OF 2)

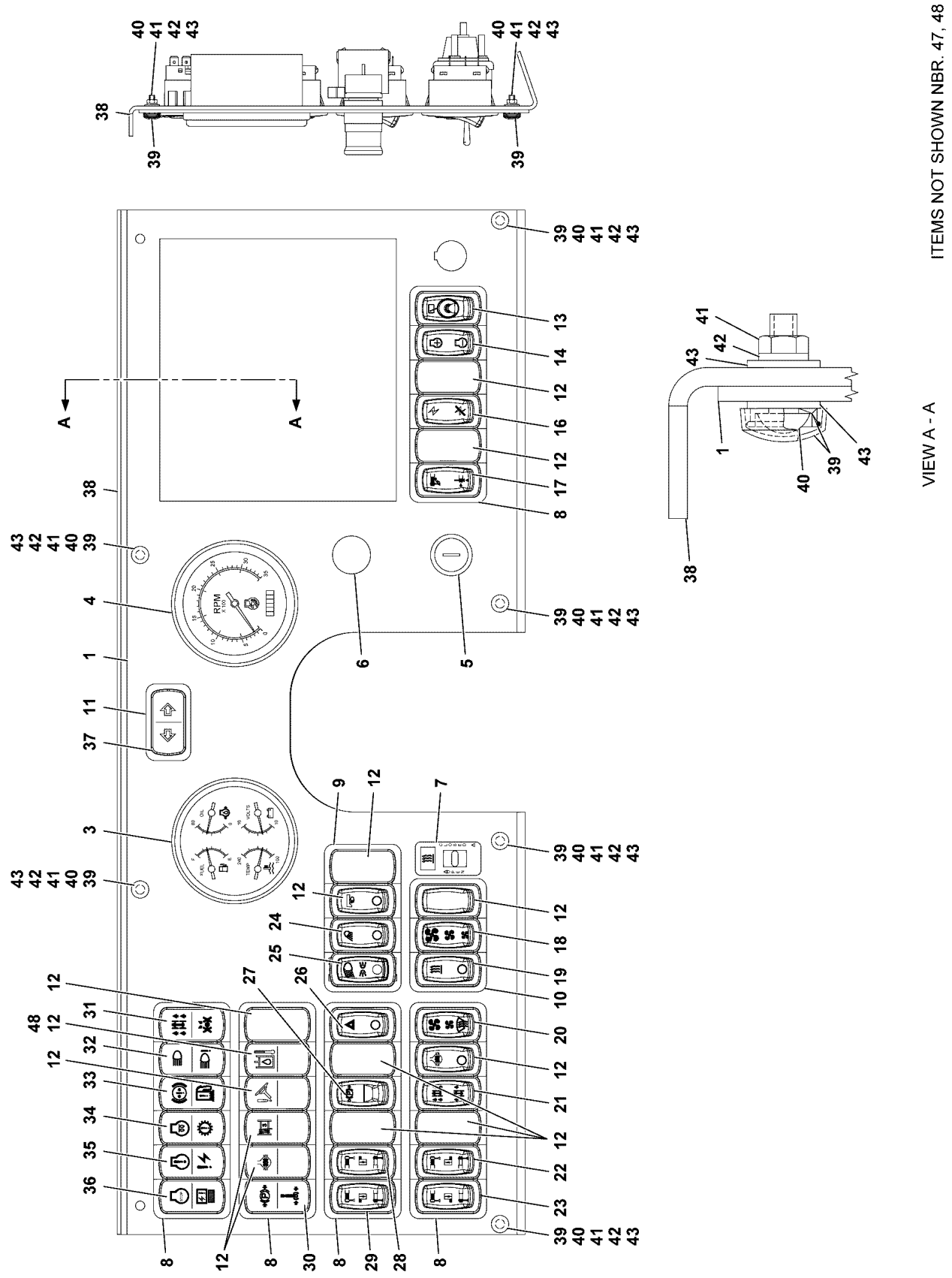


6245101332

(SHEET 1 OF 2)

Description
**CONSOLE ASSEMBLY - FRONT (RT540E/RT530E2)**
**(COMPLETE ASSEMBLY)**

Assembly No.
**6245101332**
Revision: #

| Item | FN | Part | Qty | Description |
|---|---|---|---|---|
| 1 | | **7679100268** | 1 | PANEL, FRONT CONSOLE |
| 2 | + | **6512101099** | 1 | HARNESS ASSEMBLY - FRONT CONSOLE (COMPLETE ASSEMBLY) |
| 3 | | **7486100024** | 1 | GAUGE, CLUSTER 12 VOLT INCLUDES THE FOLLOWING PARTS |
| | | **9581100394** | 1 | SOCKET, |
| | | **9581100405** | 1 | BULB, 12 VOLT |
| 4 | + | **7486100100** | 1 | GAUGE, 12 VOLT TACHOMETER (WITH HOURMETER) |
| 5 | | **7872100051** | 1 | SWITCH, IGNITION INCLUDES THE FOLLOWING PARTS |
| | | **9872100256** | 1 | SET, KEY |
| 6 | | **7872100071** | 1 | SWITCH, EMERGENCY STOP |
| 7 | | **7872100091** | 1 | SWITCH, HEATER CNTRL EATON 12V |
| 8 | | **7364100182** | 5 | BEZEL, L-SERIES 6 GANG LM6 |
| 9 | | **7364100180** | 1 | BEZEL, L-SERIES 4 GANG LM4 |
| 10 | | **7364100179** | 1 | BEZEL, L-SERIES 3 GANG LM3 |
| 11 | | **7364100177** | 1 | BEZEL, L-SERIES SINGLE LMS |
| 12 | | **7242100005** | 13 | PLUG, L SERIES LH1 PANEL |
| 13 | | **7872100108** | 1 | SWITCH,L-SERIES SKYLIGHT WIPER |
| 14 | | **7872100095** | 1 | SWITCH, L-SERIES ENGNE INC/DEC |
| 16 | | **7872100107** | 1 | SWITCH,L-SERIES CRANE FUNC PWR |
| 17 | | **7872100117** | 1 | SWITCH, L-SERIES O/R EXT/RET |
| 18 | | **7872100105** | 1 | SWITCH, L-SERIES FAN HI/MED/LO |
| 19 | | **7872100106** | 1 | SWITCH, L-SERIES HEATER ON/OFF |
| 20 | | **7872100145** | 1 | SWITCH, L-SERIES DEFROST FAN |
| 21 | | **7872100138** | 1 | SWITCH, L-SERIES DRIVE SELECT |
| 22 | | **7872100115** | 1 | SWITCH,L-SERIES RR O/R BM/STAB |
| 23 | | **7872100114** | 1 | SWITCH,L-SERIES LR O/R BM/STAB |
| 24 | | **7872100110** | 1 | SWITCH, L-SERIES WORK LIGHTS |
| 25 | | **7872100210** | 1 | SWITCH L-SERIES HEADLIGHTS |
| 26 | | **7872100100** | 1 | SWITCH, L-SERIES HAZARDS |
| 27 | | **7872100211** | 1 | SWITCH L-SERIES PARK BRAKE |
| 28 | | **7872100113** | 1 | SWITCH,L-SERIES RF O/R BM/STAB |
| 29 | | **7872100112** | 1 | SWITCH,L-SERIES LF O/R BM/STAB |

**+ SEE FURTHER BREAKDOWN THIS GROUP**

Description
**CONSOLE ASSEMBLY - FRONT (RT540E/RT530E2)**
**(COMPLETE ASSEMBLY)**

Assembly No.
**6245101332**
Revision: #

| Item | FN | Part | Qty | Description |
|---|---|---|---|---|
| 30 | # | **7486100110** | 1 | IND LED PARK BRK ENGD/SWG BRK |
| 31 | # | **7486100134** | 1 | IND LED 4WHL ENGED/WHL NOT CNT |
| 32 | # | **7486100114** | 1 | IND LED HI BEAMS/LAMP OUT WARN |
| 33 | # | **7486100104** | 1 | IND LED LOW BRK PRESS/LOW FUEL |
| 34 | # | **7486100103** | 1 | IND LED WAIT TO STR/XMSN WARN |
| 35 | # | **7486100084** | 1 | IND LED ENG WARN/ELECT SYS DIA |
| 36 | # | **7486100083** | 1 | IND LED ENG STOP/MODULE ERROR |
| 37 | # | **7486100115** | 1 | IND LED LEFT TURN/RIGHT TURN |
| 38 | | **6245100947** | 1 | CONSOLE, FRONT FRAME |
| 39 | | **7258001452** | 6 | CAP #8 |
| 40 | | **01374648** | 6 | SLOTTED CHEESE HEAD SCREW |
| 41 | | **7661110003** | 6 | NUT, HEX<br>4 MM N.C. |
| 42 | | **7951110210** | 6 | LOCKWASHER, 4MM I.D. |
| 43 | | **7951110014** | 12 | WASHER, 4MM I.D. |
| 44 | | **7364001457** | 1 | TAB, MALE |
| 45 | | **7660081100** | 1 | NUT, HEX<br>5/32" - 24 N.F.<br>GRADE 1 |
| 46 | | **7345001446** | 2 | TERMINAL, MALE<br>22 - 18 AWG |
| 47 | | **7345001744** | 1 | TERMINAL, FEMALE<br>16 - 14 AWG |
| 48 | # | **7486100128** | 1 | IND LED HYD OIL COOLER TEMP |

**# SERVICED AS AN ASSEMBLY ONLY**

| WIRE NO | COLOR | SAE SIZE | LENGTH TOT IN | TP | B/M ITEM NO | REMARKS | TP | B/M ITEM NO | REMARKS |
|---|---|---|---|---|---|---|---|---|---|
| SHD7 | WHITE | 20 | 3 | BE | SEE DETAIL | CABLE THPD | BE | SEE DETAIL | CABLE THPD |
| SHD8 | | 20 | 3 | BD | SEE DETAIL | CABLE DIAG | DB | SEE DETAIL | CABLE DIAG |
| SHD9 | | 18 | 3 | CH | SEE DETAIL | CABLE SWG | CH | SEE DETAIL | CABLE SWG |
| SHD10 | | 18 | 3 | CJ | SEE DETAIL | CABLE J19 | CJ | SEE DETAIL | CABLE J19 |
| SHD11 | | 18 | 3 | CY | SEE DETAIL | CABLE J19 | CY | SEE DETAIL | CABLE J19 |
| SHD12 | | 18 | 3 | CY | SEE DETAIL | CABLE J19 | CY | SEE DETAIL | CABLE J19 |
| SHD13 | | 18 | 3 | CF | SEE DETAIL | CABLE J19 | CF | SEE DETAIL | CABLE J19 |
| CL6 | | 20 | 8 | CL | 17 | ——— | CL | NO TERM | ——— |
| CL7 | | 20 | 8 | CL | 17 | ——— | CL | NO TERM | ——— |
| CL8 | | 20 | 8 | CL | 17 | ——— | CL | NO TERM | ——— |
| CZ2 | | 20 | 10 | CZ | 6 | ——— | CZ | NO TERM | ——— |

WIRE NUMBER LABELS FOR USE ON CABLE ASSYS

| WIRE NO | CONDUCTOR COLOR | SAE SIZE | LENGTH TOT IN | CABLE ASSY | TP | REMARKS | TP | REMARKS | LABLES REQ'D |
|---|---|---|---|---|---|---|---|---|---|
| 1489 | WHITE | 10 | 5 | TP | CJ | USE INSUL | CT | USE INSUL | 2 |
| 51BG | | 10 | 5 | TP | CJ | USE INSUL | CT | USE INSUL | 2 |
| 1162 | | 10 | 5 | TP | CJ | USE INSUL | CT | USE INSUL | 2 |
| 473 | | 10 | 5 | THPD | ——— | ——— | CR | USE INSUL | 1 |
| 474 | | 10 | 5 | THPD | ——— | ——— | CR | USE INSUL | 1 |
| 475 | | 10 | 5 | THPD | ——— | ——— | CR | USE INSUL | 1 |
| 1289A | | 10 | 5 | J1939 | CJ | USE INSUL | CY | USE INSUL | 2 |
| 1290A | | 10 | 5 | J1939 | CJ | USE INSUL | CY | USE INSUL | 2 |
| 1289B | | 10 | 5 | J1939 | CF | USE INSUL | CY | USE INSUL | 2 |
| 1290B | | 10 | 5 | J1939 | CF | USE INSUL | CY | USE INSUL | 2 |
| 1495 | | 10 | 5 | SWGPED | CH | USE INSUL | CV | USE INSUL | 2 |
| 1496 | | 10 | 5 | SWGPED | CH | USE INSUL | CV | USE INSUL | 2 |
| 1497 | | 10 | 5 | SWGPED | CH | USE INSUL | CV | USE INSUL | 2 |
| 1323 | | 10 | 5 | DIAG | BD | USE INSUL | CF | USE INSUL | 2 |
| 1324 | | 10 | 5 | DIAG | BD | USE INSUL | CF | USE INSUL | 2 |
| 1484A | | 10 | 5 | PC1A | BT | USE INSUL | BD | USE INSUL | 2 |
| 1485A | | 10 | 5 | PC1A | BT | USE INSUL | BD | USE INSUL | 2 |
| 1484B | | 10 | 5 | PC1B | BT | USE INSUL | BH | USE INSUL | 2 |
| 1485B | | 10 | 5 | PC1B | BT | USE INSUL | BH | USE INSUL | 2 |
| 1484C | | 10 | 5 | PC1C | BT | USE INSUL | CH | USE INSUL | 2 |
| 1485C | | 10 | 5 | PC1C | BT | USE INSUL | CH | USE INSUL | 2 |
| 1486A | | 10 | 5 | PC1C | BD | USE INSUL | CH | USE INSUL | 2 |
| 1487A | WHITE | 10 | 5 | PC1C | BD | USE INSUL | CH | USE INSUL | 2 |

| WIRE NO | COLOR | SAE SIZE | LENGTH TOT IN | TP | B/M ITEM NO | REMARKS | TP | B/M ITEM NO | REMARKS |
|---|---|---|---|---|---|---|---|---|---|
| 1384BJ | WHITE | 20 | 3 | CD | 23 | CRIMP W/1384BE | CD | STRIP | CRIMP W/1384BK |
| 1384BK | | 20 | 3 | CD | 23 | CRIMP W/1384BJ | CD | STRIP | CRIMP W/1384BL |
| 1384BL | | 20 | 20 | CD | 23 | CRIMP W/1384BK | CJ | 17 | ——— |
| 1384BM | | 18 | 8 | SB2 | STRIP | SEE DETAIL | BN | STRIP | CRIMP W/1384BN |
| 1384BN | | 20 | 19 | BN | 23 | CRIMP W/1384BM | AZ | STRIP | CRIMP W/1384BP |
| 1384BP | | 20 | 16 | AZ | 23 | CRIMP W/1384BN | AT | STRIP | CRIMP W/1384BR |
| 1384BR | | 20 | 4 | AT | 23 | CRIMP W/1384BP | AW | STRIP | CRIMP W/1384BS |
| 1384BS | | 20 | 14 | AW | 23 | CRIMP W/1384BR | AZ | STRIP | CRIMP W/1384BT |
| 1384BT | | 20 | 19 | AZ | 23 | CRIMP W/1384BS | BN | STRIP | CRIMP W/1384BU |
| 1384BU | | 20 | 11 | BN | 23 | CRIMP W/1384BT | BP | STRIP | CRIMP W/1384BV |
| 1384BV | | 20 | 5 | BP | 26 | CRIMP W/1384BU | SB1 | STRIP | SEE DETAIL |
| 1384BW | | 20 | 17 | BG | 10 | ——— | SB1 | STRIP | SEE DETAIL |
| 1384BX | | 20 | 17 | AAB | STRIP | CRIMP W/1384BY | SB1 | STRIP | SEE DETAIL |
| 1384BY | | 20 | 12 | AAB | 23 | CRIMP W/1384BX | AAA | STRIP | CRIMP W/1384BZ |
| 1384BZ | | 20 | 4 | AAA | 23 | CRIMP W/1384BY | AAA | 23 | ——— |
| 1384CA | | 20 | 22 | BD | 6 | ——— | SB2 | STRIP | SEE DETAIL |
| 1384CB | | 20 | 5 | BK | 23 | CRIMP W/1384AY | SB2 | STRIP | SEE DETAIL |
| 1420 | | 20 | 37 | BE | 6 | ——— | AX | 23 | ——— |
| 1442 | | 20 | 35 | BH | 6 | ——— | AZ | 23 | ——— |
| 1450A | | 20 | 48 | AL | STRIP | CRIMP W/1450B | CJ | 17 | ——— |
| 1450B | | 20 | 3 | AN | STRIP | CRIMP W/1450C | AL | 23 | CRIMP W/1450A |
| 1450C | | 20 | 14 | BB | STRIP | CRIMP W/1450D | AN | 23 | CRIMP W/1450B |
| 1450D | | 20 | 4 | BC | 10 | ——— | BB | 23 | CRIMP W/1450C |
| 1451 | | 20 | 46 | BC | 10 | ——— | CJ | 17 | ——— |
| 1453 | | 20 | 39 | BD | 6 | ——— | AP | 23 | ——— |
| 1466 | | 20 | 39 | BE | 6 | ——— | AR | 23 | ——— |
| 1467 | | 20 | 20 | CE | 23 | ——— | CL | 17 | ——— |
| 1468 | | 20 | 20 | CE | 23 | ——— | CL | 17 | ——— |
| 1469 | | 20 | 28 | BJ | 6 | ——— | AN | 23 | ——— |
| 1470 | | 20 | 28 | BJ | 6 | ——— | AN | 23 | ——— |
| 1471 | | 20 | 28 | BJ | 6 | ——— | AN | 23 | ——— |
| 1511 | | 20 | 56 | BH | 6 | ——— | CH | 17 | ——— |
| 1520 | | 20 | 56 | BE | 6 | ——— | CZ | 17 | ——— |
| 1541 | | 20 | 35 | AAB | 23 | ——— | BH | 6 | ——— |
| 1634 | | 18 | 35 | AAC | 23 | ——— | CZA | 10 | ——— |
| BH8 | | 20 | 10 | BH | 6 | ——— | BH | NO TERM | ——— |
| BJ8 | | 20 | 10 | BJ | 6 | ——— | BJ | NO TERM | ——— |
| BJ10 | | 20 | 10 | BJ | 6 | ——— | BJ | NO TERM | ——— |
| BJ11 | | 20 | 10 | BJ | 6 | ——— | BJ | NO TERM | ——— |
| BJ12 | | 20 | 10 | BJ | 6 | ——— | BJ | NO TERM | ——— |
| BE17 | | 20 | 10 | BE | 6 | ——— | BE | NO TERM | ——— |
| BE37 | | 20 | 10 | BE | 6 | ——— | BE | NO TERM | ——— |
| BE39 | | 20 | 10 | BE | 6 | ——— | BE | NO TERM | ——— |
| BE40 | | 20 | 10 | BE | 6 | ——— | BE | NO TERM | ——— |
| BD27 | | 20 | 10 | BD | 6 | ——— | BD | NO TERM | ——— |
| BD28 | | 20 | 10 | BD | 6 | ——— | BD | NO TERM | ——— |
| BD29 | | 20 | 10 | BD | 6 | ——— | BD | NO TERM | ——— |
| SHD2 | | 20 | 3 | BD | SEE DETAIL | CABLE PC1A | BD | SEE DETAIL | CABLE PC1A |
| SHD5 | | 18 | 3 | CH | SEE DETAIL | CABLE PC1C | CH | SEE DETAIL | CABLE PC1C |
| SHD6 | WHITE | 18 | 3 | CH | SEE DETAIL | CABLE PC2 | CH | SEE DETAIL | CABLE PC2 |

| WIRE NO | COLOR | SAE SIZE | LENGTH TOT IN | TP | B/M ITEM NO | REMARKS | TP | B/M ITEM NO | REMARKS |
|---|---|---|---|---|---|---|---|---|---|
| 1297 | WHITE | 20 | 37 | BE | 6 | ---------- | AV | 23 | ---------- |
| 1384A | | 20 | 24 | SB2 | STRIP | SEE DETAIL | AB | STRIP | CRIMP W/1384B |
| 1384B | | 20 | 3 | AB | 23 | CRIMP W/1384A | AB | STRIP | CRIMP W/1384C |
| 1384C | | 20 | 3 | AB | 23 | CRIMP W/1384B | AB | STRIP | CRIMP W/1384D |
| 1384D | | 20 | 4 | AB | 23 | CRIMP W/1384C | AD | STRIP | CRIMP W/1384E |
| 1384E | | 20 | 3 | AD | 23 | CRIMP W/1384D | AD | STRIP | CRIMP W/1384F |
| 1384F | | 20 | 3 | AD | 23 | CRIMP W/1384E | AD | STRIP | CRIMP W/1384G |
| 1384G | | 20 | 12 | AD | 23 | CRIMP W/1384F | AA | STRIP | CRIMP W/1384H |
| 1384H | | 20 | 3 | AA | 23 | CRIMP W/1384G | AA | STRIP | CRIMP W/1384J |
| 1384J | | 20 | 3 | AA | 23 | CRIMP W/1384H | AA | STRIP | CRIMP W/1384K |
| 1384K | | 20 | 4 | AA | 23 | CRIMP W/1384J | AC | STRIP | CRIMP W/1384L |
| 1384L | | 20 | 3 | AC | 23 | CRIMP W/1384K | AC | STRIP | CRIMP W/1384M |
| 1384M | | 20 | 3 | AC | 23 | CRIMP W/1384L | AC | STRIP | CRIMP W/1384N |
| 1384N | | 20 | 14 | AC | 23 | CRIMP W/1384M | AF | STRIP | CRIMP W/1384P |
| 1384P | | 20 | 3 | AF | 23 | CRIMP W/1384N | AF | STRIP | CRIMP W/1384R |
| 1384R | | 20 | 3 | AF | 23 | CRIMP W/1384P | AF | STRIP | CRIMP W/1384S |
| 1384S | | 20 | 12 | AF | 23 | CRIMP W/1384R | AE | STRIP | CRIMP W/1384T |
| 1384T | | 20 | 3 | AE | 23 | CRIMP W/1384S | AE | STRIP | CRIMP W/1384V |
| 1384V | | 20 | 3 | AE | 23 | CRIMP W/1384T | AE | STRIP | CRIMP W/1384W |
| 1384W | | 20 | 14 | AE | 23 | CRIMP W/1384V | AH | STRIP | CRIMP W/1384X |
| 1384X | | 20 | 3 | AH | 23 | CRIMP W/1384W | AH | STRIP | CRIMP W/1384Y |
| 1384Y | | 20 | 12 | AH | 23 | CRIMP W/1384X | AG | STRIP | CRIMP W/1384Z |
| 1384Z | | 20 | 3 | AG | 23 | CRIMP W/1384Y | AG | STRIP | CRIMP W/1384AA |
| 1384AA | | 20 | 4 | AG | 23 | CRIMP W/1384Z | AJ | STRIP | CRIMP W/1384AB |
| 1384AB | | 20 | 3 | AJ | 23 | CRIMP W/1384AA | AJ | STRIP | CRIMP W/1384AC |
| 1384AC | | 20 | 14 | AJ | 23 | CRIMP W/1384AB | AK | STRIP | CRIMP W/1384AD |
| 1384AD | | 20 | 3 | AK | 23 | CRIMP W/1384AC | AK | STRIP | CRIMP W/1384AE |
| 1384AE | | 20 | 4 | AK | 23 | CRIMP W/1384AD | AM | STRIP | CRIMP W/1384AF |
| 1384AF | | 20 | 3 | AM | 23 | CRIMP W/1384AE | AM | STRIP | CRIMP W/1384AG |
| 1384AG | | 20 | 12 | AM | 23 | CRIMP W/1384AF | AL | STRIP | CRIMP W/1384AH |
| 1384AH | | 20 | 3 | AL | 23 | CRIMP W/1384AG | AL | STRIP | CRIMP W/1384AJ |
| 1384AJ | | 20 | 3 | AL | 23 | CRIMP W/1384AH | AL | STRIP | CRIMP W/1384AK |
| 1384AK | | 20 | 4 | AL | 23 | CRIMP W/1384AJ | AN | STRIP | CRIMP W/1384AL |
| 1384AL | | 20 | 3 | AN | 23 | CRIMP W/1384AK | AN | STRIP | CRIMP W/1384AM |
| 1384AM | | 20 | 14 | AN | 23 | CRIMP W/1384AL | BA | STRIP | CRIMP W/1384AN |
| 1384AN | | 20 | 3 | BA | 23 | CRIMP W/1384AM | BA | STRIP | CRIMP W/1384AP |
| 1384AP | | 20 | 3 | BA | 23 | CRIMP W/1384AN | BA | STRIP | CRIMP W/1384AR |
| 1384AR | | 20 | 12 | BA | 23 | CRIMP W/1384AP | BB | STRIP | CRIMP W/1384AS |
| 1384AS | | 20 | 3 | BB | 23 | CRIMP W/1384AR | BB | STRIP | CRIMP W/1384AT |
| 1384AT | | 20 | 3 | BB | 23 | CRIMP W/1384AS | BB | STRIP | CRIMP W/1384AV |
| 1384AV | | 20 | 3 | BB | 23 | CRIMP W/1384AT | BB | STRIP | CRIMP W/1384AW |
| 1384AW | | 20 | 12 | BB | 23 | CRIMP W/1384AV | SB2 | STRIP | SEE DETAIL |
| 1384AX | | 20 | 12 | BC | 10 | ---------- | SB2 | STRIP | SEE DETAIL |
| 1384AY | | 20 | 25 | CA | 23 | CRIMP W/1384AZ | BK | STRIP | CRIMP W/1384CB |
| 1384AZ | | 20 | 3 | CA | 23 | CRIMP W/1384AY | CA | STRIP | CRIMP W/1384BA |
| 1384BA | | 20 | 3 | CA | 23 | CRIMP W/1384AZ | CA | STRIP | CRIMP W/1384BB |
| 1384BB | | 20 | 4 | CA | 23 | CRIMP W/1384BA | CB | STRIP | CRIMP W/1384BC |
| 1384BC | | 20 | 3 | CB | 23 | CRIMP W/1384BB | CB | STRIP | CRIMP W/1384BD |
| 1384BD | | 20 | 3 | CB | 23 | CRIMP W/1384BC | CB | STRIP | CRIMP W/1384BE |
| 1384BE | WHITE | 20 | 14 | CB | 23 | CRIMP W/1384BD | CD | STRIP | CRIMP W/1384BJ |

| WIRE NO | COLOR | SAE SIZE | LENGTH TOT IN | TP | B/M ITEM NO | REMARKS | TP | B/M ITEM NO | REMARKS |
|---|---|---|---|---|---|---|---|---|---|
| 149A | WHITE | 20 | 6 | CH | 17 | ——— | SC1 | STRIP | SEE DETAIL |
| 149B | | 20 | 50 | BJ | 6 | ——— | SC1 | STRIP | SEE DETAIL |
| 149C | | 20 | 34 | CY | 27 | ——— | SC1 | STRIP | SEE DETAIL |
| 169 | | 20 | 37 | AV | 23 | ——— | BE | 6 | ——— |
| 193 | | 20 | 48 | AM | 23 | ——— | CK | 17 | ——— |
| 194 | | 16 | 13 | CG | 28 | ——— | CK | 17 | ——— |
| 212 | | 18 | 85 | CE | 23 | ——— | CP | 10 | ——— |
| 213 | | 20 | 85 | CE | 23 | ——— | CP | 10 | ——— |
| 214 | | 20 | 79 | CL | 17 | ——— | CP | 10 | ——— |
| 268A | | 20 | 20 | CE | STRIP | CRIMP W/268B | CK | 17 | ——— |
| 268B | | 20 | 3 | CE | 23 | ——— | CE | 23 | CRIMP W/268B |
| 338 | | 20 | 37 | BH | 6 | ——— | AW | 23 | ——— |
| 346 | | 20 | 39 | BD | 6 | ——— | AP | 23 | ——— |
| 347 | | 20 | 39 | BD | 6 | ——— | AS | 23 | ——— |
| 350 | | 20 | 104 | BE | 6 | ——— | CR | 36,37 | ——— |
| 367 | | 20 | 25 | BG | 10 | ——— | BE | 6 | ——— |
| 368 | | 20 | 25 | BG | 10 | ——— | BD | 6 | ——— |
| 371 | | 20 | 25 | BG | 10 | ——— | BE | 6 | ——— |
| 439 | | 20 | 57 | BE | 6 | ——— | AAA | 23 | ——— |
| 440 | | 20 | 39 | BH | 6 | ——— | AT | 23 | ——— |
| 469 | | 20 | 48 | BE | 6 | ——— | CD | 23 | ——— |
| 470 | | 20 | 48 | BE | 6 | ——— | CD | 23 | ——— |
| 473 | | 20 | 4 | BE | STRIP | SEE DETAIL | BE | STRIP | NO TERM |
| 474 | | 20 | 5 | BE | STRIP | SEE DETAIL | BE | STRIP | NO TERM |
| 475 | | 20 | 6 | BE | STRIP | SEE DETAIL | BE | STRIP | NO TERM |
| 504 | | 20 | 32 | AE | 23 | ——— | BJ | 6 | ——— |
| 601A | | 20 | 11 | BR | 30 | ——— | BS | 31 | ——— |
| 609 | | 20 | 25 | BG | 10 | ——— | BE | 6 | ——— |
| 627 | | 20 | 37 | BD | 6 | ——— | AY | 23 | ——— |
| 630 | | 20 | 14 | AE | 23 | ——— | AG | 23 | ——— |
| 631 | | 20 | 30 | AG | 23 | ——— | BJ | 6 | ——— |
| 636A | | 20 | 25 | BG | 10 | ——— | BE | 6 | ——— |
| 652 | | 20 | 56 | BE | 6 | ——— | CK | 17 | ——— |
| 709B | | 20 | 39 | BD | 6 | ——— | BS | 31 | ——— |
| 713 | | 20 | 56 | BE | 6 | ——— | CJ | 17 | ——— |
| 787 | | 20 | 32 | BD | 6 | ——— | AF | 23 | ——— |
| 799 | | 20 | 46 | BD | 6 | ——— | CB | 23 | ——— |
| 842 | | 20 | 35 | BE | 6 | ——— | AAA | 23 | ——— |
| 896 | | 18 | 35 | BM | 27 | ——— | AJ | 23 | ——— |
| 910 | | 18 | 35 | BM | 27 | ——— | AJ | 23 | ——— |
| 1195A | | 20 | 36 | BR | STRIP | CRIMP W/1195B | BD | 6 | ——— |
| 1195B | | 20 | 28 | BR | 58 | CRIMP W/1195A | CL | 17 | ——— |
| 1234 | | 20 | 39 | BD | 6 | ——— | AS | 23 | ——— |
| 1257A | | 18 | 22 | BV | 10 | ——— | BD | 6 | ——— |
| 1257B | | 18 | 22 | BV | 10 | ——— | BE | 6 | ——— |
| 1257C | | 18 | 22 | BV | 10 | ——— | BE | 6 | ——— |
| 1257D | | 14 | 42 | BV | 13 | ——— | CJ | 14 | ——— |
| 1269 | | 20 | 56 | BD | 6 | ——— | CL | 17 | ——— |
| 1272A | | 20 | 50 | CJ | 17 | ——— | AJ | STRIP | CRIMP W/1272B |
| 1272B | WHITE | 20 | 3 | AJ | 23 | CRIMP W/1272A | AJ | 23 | ——— |

| WIRE NO | COLOR | SAE SIZE | LENGTH TOT IN | TP | B/M ITEM NO | REMARKS | TP | B/M ITEM NO | REMARKS |
|---|---|---|---|---|---|---|---|---|---|
| 51AJ | WHITE | 20 | 14 | AR | 23 | CRIMP W/51AH | AY | 23 | ——— |
| 51AN | | 20 | 14 | BL | 10 | ——— | BP | STRIP | CRIMP W/51AP |
| 51AP | | 20 | 22 | BP | 27 | CRIMP W/51AN | CA | STRIP | CRIMP W/51AS |
| 51AS | | 20 | 4 | CA | 23 | CRIMP W/51AP | CB | STRIP | CRIMP W/51AT |
| 51AT | | 20 | 14 | CB | 23 | CRIMP W/51AS | CD | STRIP | CRIMP W/51AW |
| 51AW | | 20 | 4 | CD | 23 | CRIMP W/51AT | CE | 23 | ——— |
| 51AX | | 14 | 10 | CM | 13 | ——— | CG | STRIP | CRIMP W/51AY |
| 51AY | | 18 | 7 | CG | 32 | CRIMP W/51AX | CF | 17 | ——— |
| 51AZ | | 14 | 34 | CM | 13 | ——— | BL | 13 | ——— |
| 51BA | | 14 | 11 | CM | 13 | ——— | CK | 14 | ——— |
| 51BB | | 20 | 136 | CM | 10 | ——— | CN | STRIP | CRIMP W/51BC |
| 51BC | | 20 | 68 | CN | 31 | CRIMP W/51BB | CP | 10 | ——— |
| 51BD | | 18 | 117 | CM | 10 | ——— | CX | STRIP | CRIMP W/51BE |
| 51BE | | 18 | 68 | CX | 26 | CRIMP W/51BD | CW | STRIP | CRIMP W/51BF |
| 51BF | | 18 | 26 | CW | 26 | CRIMP W/51BE | CS | 10 | ——— |
| 51BG | | 18 | 59 | CR | 36,37 | ——— | CM | 10 | ——— |
| 51BH | | 18 | 37 | CY | 53 | ——— | CM | 10 | ——— |
| 51BJ | | 18 | 22 | AAC | 23 | ——— | BL | 10 | ——— |
| 51BK | | 18 | 19 | CZA | 10 | ——— | CM | 10 | ——— |
| 54A | | 20 | 33 | BE | 6 | ——— | BP | STRIP | CRIMP W/54B |
| 54B | | 20 | 25 | BP | 27 | CRIMP W/54A | AK | STRIP | CRIMP W/54C |
| 54C | | 20 | 3 | AK | 23 | CRIMP W/54B | AK | STRIP | CRIMP W/54D |
| 54D | | 20 | 19 | AK | 23 | CRIMP W/54C | BK | STRIP | CRIMP W/54E |
| 54E | | 20 | 3 | BK | 27 | CRIMP W/54D | BK | 27 | ——— |
| 56 | | 18 | 94 | AM | 23 | ——— | CW | 27 | ——— |
| 64 | | 18 | 77 | BF | 10 | ——— | CS | 10 | ——— |
| 65 | | 18 | 77 | BF | 10 | ——— | CS | 10 | ——— |
| 66 | | 18 | 77 | BF | 10 | ——— | CS | 10 | ——— |
| 67 | | 20 | 23 | BF | 10 | ——— | BD | 6 | ——— |
| 68 | | 20 | 43 | BF | 10 | ——— | CK | 17 | ——— |
| 73 | | 20 | 56 | BE | 6 | ——— | CK | 17 | ——— |
| 74 | | 20 | 56 | BE | 6 | ——— | CK | 17 | ——— |
| 75 | | 20 | 34 | BD | 6 | ——— | AD | 23 | ——— |
| 76 | | 20 | 34 | AB | 23 | ——— | BD | 6 | ——— |
| 77 | | 20 | 34 | AC | 23 | ——— | BD | 6 | ——— |
| 78 | | 20 | 34 | AA | 23 | ——— | BE | 6 | ——— |
| 79 | | 20 | 44 | CA | 23 | ——— | BD | 6 | ——— |
| 80 | | 20 | 44 | CA | 23 | ——— | BD | 6 | ——— |
| 81 | | 20 | 34 | AD | 23 | ——— | BD | 6 | ——— |
| 82 | | 20 | 34 | AB | 23 | ——— | BD | 6 | ——— |
| 83 | | 20 | 34 | AC | 23 | ——— | BD | 6 | ——— |
| 84 | | 20 | 34 | AA | 23 | ——— | BD | 6 | ——— |
| 91 | | 20 | 26 | BB | 23 | ——— | BJ | 6 | ——— |
| 97 | | 20 | 27 | BE | 6 | ——— | BG | 27 | ——— |
| 101 | | 20 | 26 | BE | 6 | ——— | BA | 23 | ——— |
| 109 | | 20 | 37 | BE | 6 | ——— | AX | 23 | ——— |
| 112A | | 20 | 25 | CF | 17 | ——— | BS | STRIP | CRIMP W/112B |
| 112B | | 20 | 25 | BS | 31 | CRIMP W/112A | CK | 17 | ——— |
| 113 | | 20 | 120 | CX | 27 | ——— | CK | 17 | ——— |
| 124 | WHITE | 20 | 35 | AZ | 23 | ——— | AZ | 6 | ——— |

| WIRE NO | COLOR | SAE SIZE | LENGTH TOT IN | TP | B/M ITEM NO | REMARKS | TP | B/M ITEM NO | REMARKS |
|---|---|---|---|---|---|---|---|---|---|
| 3 | WHITE | 20 | 27 | BK | 27 | ——— | BE | 6 | ——— |
| 4 | | 20 | 27 | BK | 27 | ——— | BE | 6 | ——— |
| 10 | | 20 | 33 | BP | 27 | ——— | BE | 6 | ——— |
| 12 | | 20 | 28 | AK | 23 | ——— | BE | 6 | ——— |
| 14 | | 20 | 30 | BH | 6 | ——— | BN | 23 | ——— |
| 15 | | 20 | 30 | BH | 6 | ——— | BN | 23 | ——— |
| 16 | | 20 | 23 | BF | 10 | ——— | BD | 6 | ——— |
| 17 | | 20 | 23 | BF | 10 | | BD | 6 | |
| 31 | | 20 | 39 | AR | 23 | | BD | 6 | |
| 32 | | 20 | 27 | BK | 27 | ——— | BE | 6 | ——— |
| 33 | | 20 | 30 | AH | 23 | ——— | BE | 6 | ——— |
| 35A | | 20 | 39 | BS | STRIP | CRIMP W/35B | BD | 6 | ——— |
| 35B | | 20 | 28 | BG | 10 | ——— | BS | 31 | CRIMP W/35A |
| 35C | | 18 | 25 | BS | 61 | CRIMP W/35D | CK | 17 | ——— |
| 35D | | 18 | 15 | BS | STRIP | CRIMP W/35C | CZA | 10 | ——— |
| 43A | | 20 | 139 | CK | 17 | ——— | CN | STRIP | CRIMP W/43B |
| 43B | | 20 | 162 | CN | 27 | CRIMP W/43A | BK | STRIP | CRIMP W/43C |
| 43C | | 20 | 21 | BK | 27 | CRIMP W/43B | AH | STRIP | CRIMP W/43D |
| 43D | | 20 | 4 | AH | 23 | CRIMP W/43C | AK | STRIP | CRIMP W/43E |
| 43E | | 20 | 3 | AK | 23 | CRIMP W/43D | AK | STRIP | CRIMP W/43F |
| 43F | | 20 | 15 | AK | 23 | CRIMP W/43E | BF | 10 | ——— |
| 51A | | 18 | 31 | AB | STRIP | CRIMP W/51B | BL | 10 | ——— |
| 51B | | 20 | 4 | AD | STRIP | CRIMP W/51C | AB | 22 | CRIMP W/51A |
| 51C | | 20 | 12 | AA | STRIP | CRIMP W/51D | AD | 23 | CRIMP W/51B |
| 51D | | 20 | 4 | AC | STRIP | CRIMP W/51E | AA | 23 | CRIMP W/51C |
| 51E | | 20 | 14 | AF | STRIP | CRIMP W/51F | AC | 23 | CRIMP W/51D |
| 51F | | 20 | 12 | AE | STRIP | CRIMP W/51G | AF | 23 | CRIMP W/51E |
| 51G | | 20 | 10 | AG | STRIP | CRIMP W/51H | AE | 23 | CRIMP W/51F |
| 51H | | 20 | 4 | AJ | STRIP | CRIMP W/51J | AG | 23 | CRIMP W/51G |
| 51J | | 20 | 12 | AH | STRIP | CRIMP W/51K | AJ | 23 | CRIMP W/51H |
| 51K | | 20 | 4 | AK | STRIP | CRIMP W/51L | AH | 23 | CRIMP W/51J |
| 51L | | 20 | 4 | AM | STRIP | CRIMP W/51M | AK | 23 | CRIMP W/51K |
| 51M | | 20 | 12 | AL | STRIP | CRIMP W/51N | AM | 23 | CRIMP W/51L |
| 51N | | 20 | 4 | AN | STRIP | CRIMP W/51P | AL | 23 | CRIMP W/51M |
| 51P | | 20 | 14 | BA | STRIP | CRIMP W/51R | AN | 23 | CRIMP W/51N |
| 51R | | 20 | 12 | BB | STRIP | CRIMP W/51S | BA | 23 | CRIMP W/51P |
| 51S | | 20 | 4 | BC | 10 | ——— | BB | 23 | CRIMP W/51R |
| 51T | | 20 | 23 | BL | 10 | ——— | BC | 10 | ——— |
| 51V | | 20 | 33 | BL | 10 | ——— | BD | 6 | ——— |
| 51W | | 20 | 33 | BL | 10 | ——— | BD | 6 | ——— |
| 51X | | 20 | 33 | BL | 10 | ——— | BH | 6 | ——— |
| 51Y | | 20 | 33 | BL | 10 | ——— | BJ | 6 | ——— |
| 51Z | | 20 | 16 | BL | 10 | ——— | BM | STRIP | CRIMP W/51AA |
| 51AA | | 20 | 22 | BM | 53 | CRIMP W/51Z | BK | STRIP | CRIMP W/51AB |
| 51AB | | 20 | 3 | BK | 53 | CRIMP W/51AA | BK | 27 | ——— |
| 51AC | | 20 | 24 | BL | 10 | ——— | AX | STRIP | CRIMP W/51AE |
| 51AE | | 20 | 4 | AX | 23 | CRIMP W/51AC | AV | STRIP | CRIMP W/51AF |
| 51AF | | 20 | 4 | AV | 23 | CRIMP W/51AE | AS | STRIP | CRIMP W/51AG |
| 51AG | | 20 | 4 | AS | 23 | CRIMP W/51AF | AP | STRIP | CRIMP W/51AH |
| 51AH | WHITE | 20 | 12 | AP | 23 | CRIMP W/51AG | AR | STRIP | CRIMP W/51AJ |

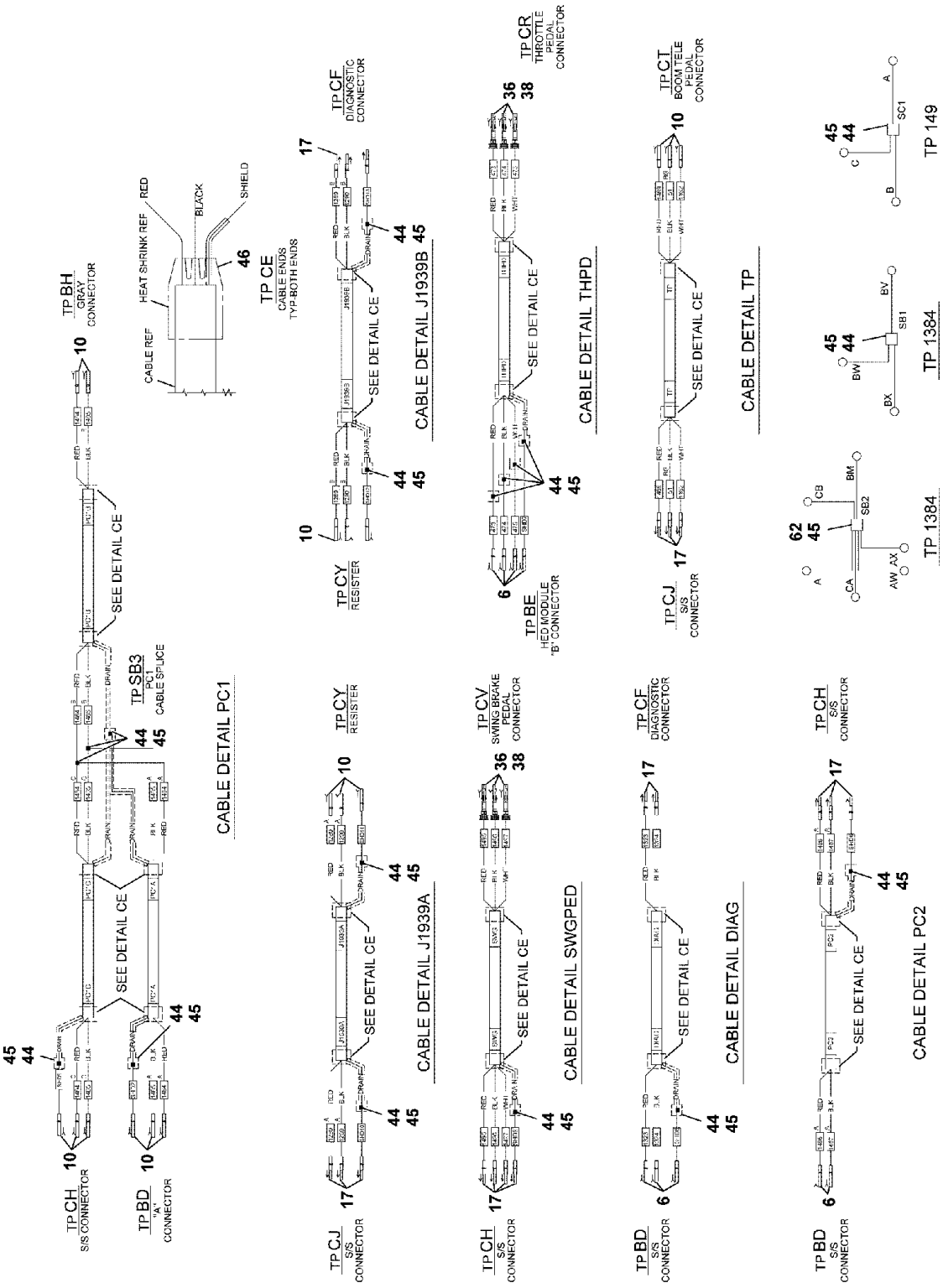


6512101099

(SHEET 4 OF 10)

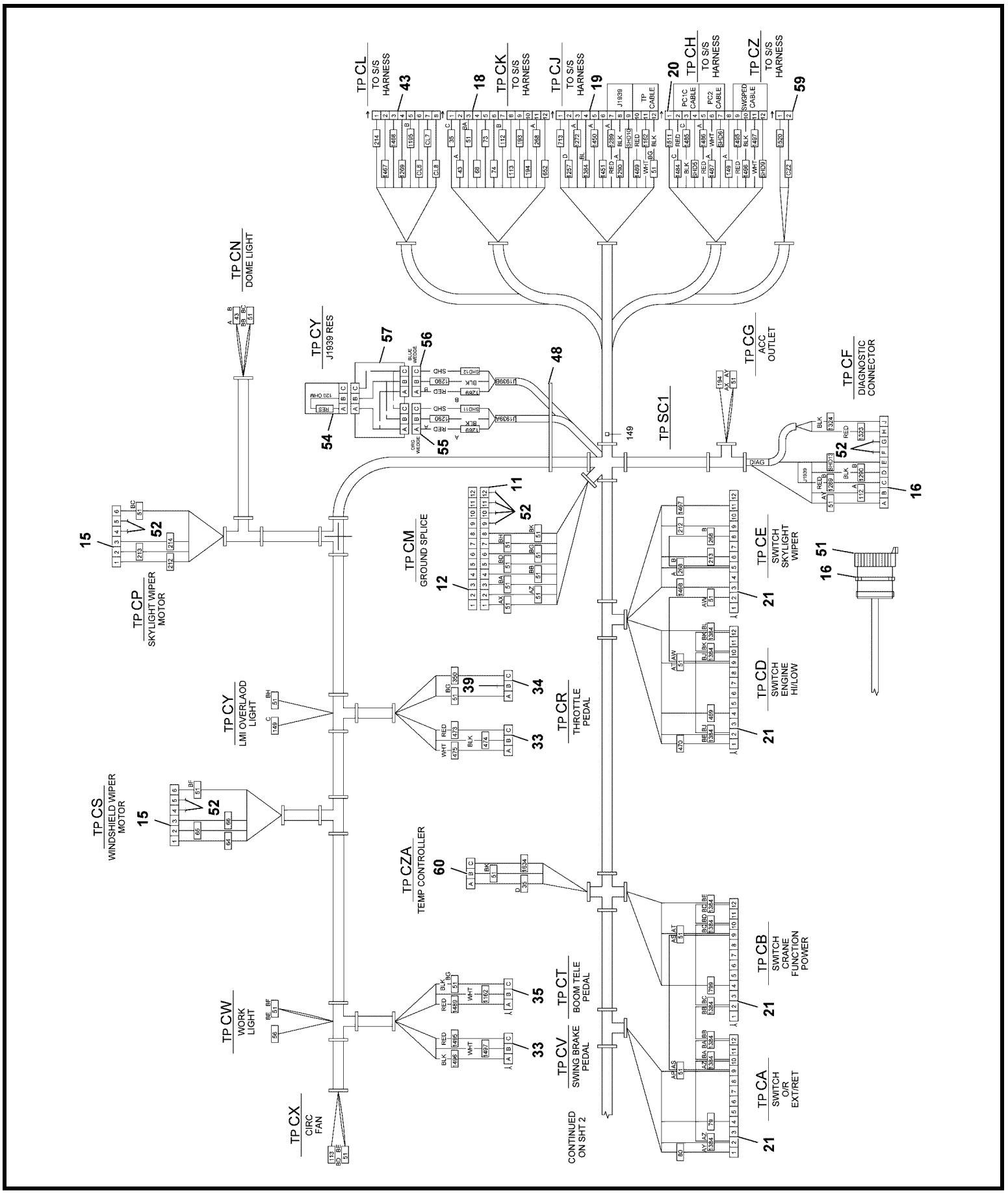
TP CL
TO S/S HARNESS
43
TP CK
TO S/S HARNESS
18
TP CJ
TO S/S HARNESS
19
TP CH
TO S/S HARNESS
20
TP CZ
TO S/S HARNESS
59
PC1C CABLE
PC2 CABLE
SWGPED CABLE
J1939
TP CABLE
TP CN
DOME LIGHT
TP CY
J1939 RES
57
56
54
55
48
TP SC1
TP CG
ACC OUTLET
TP CF
DIAGNOSTIC CONNECTOR
52
16
DIAG
TP CP
SKYLIGHT WIPER MOTOR
15
TP CM
GROUND SPLICE
12
11
TP CE
SWITCH SKYLIGHT WIPER
21
51
TP CD
SWITCH ENGINE HI/LOW
TP CY
LMI OVERLAOD LIGHT
39
34
33
TP CR
THROTTLE PEDAL
TP CS
WINDSHIELD WIPER MOTOR
TP CZA
TEMP CONTROLLER
60
TP CW
WORK LIGHT
35
TP CT
BOOM TELE PEDAL
TP CV
SWING BRAKE PEDAL
TP CB
SWITCH CRANE FUNCTION POWER
TP CA
SWITCH O/R EXT/RET
TP CX
CIRC FAN
CONTINUED ON SHT 2

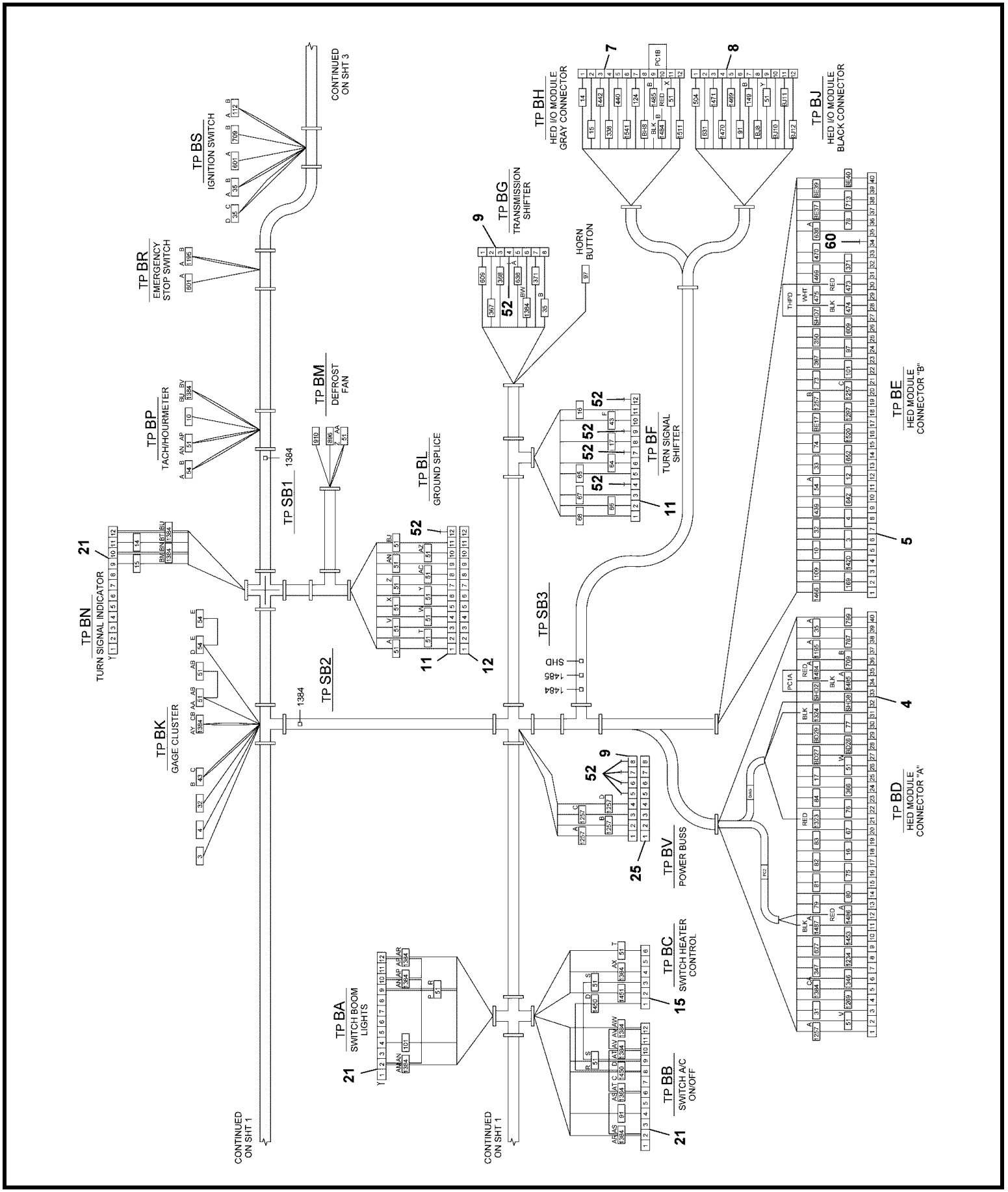


6512101099

(SHEET 2 OF 10)

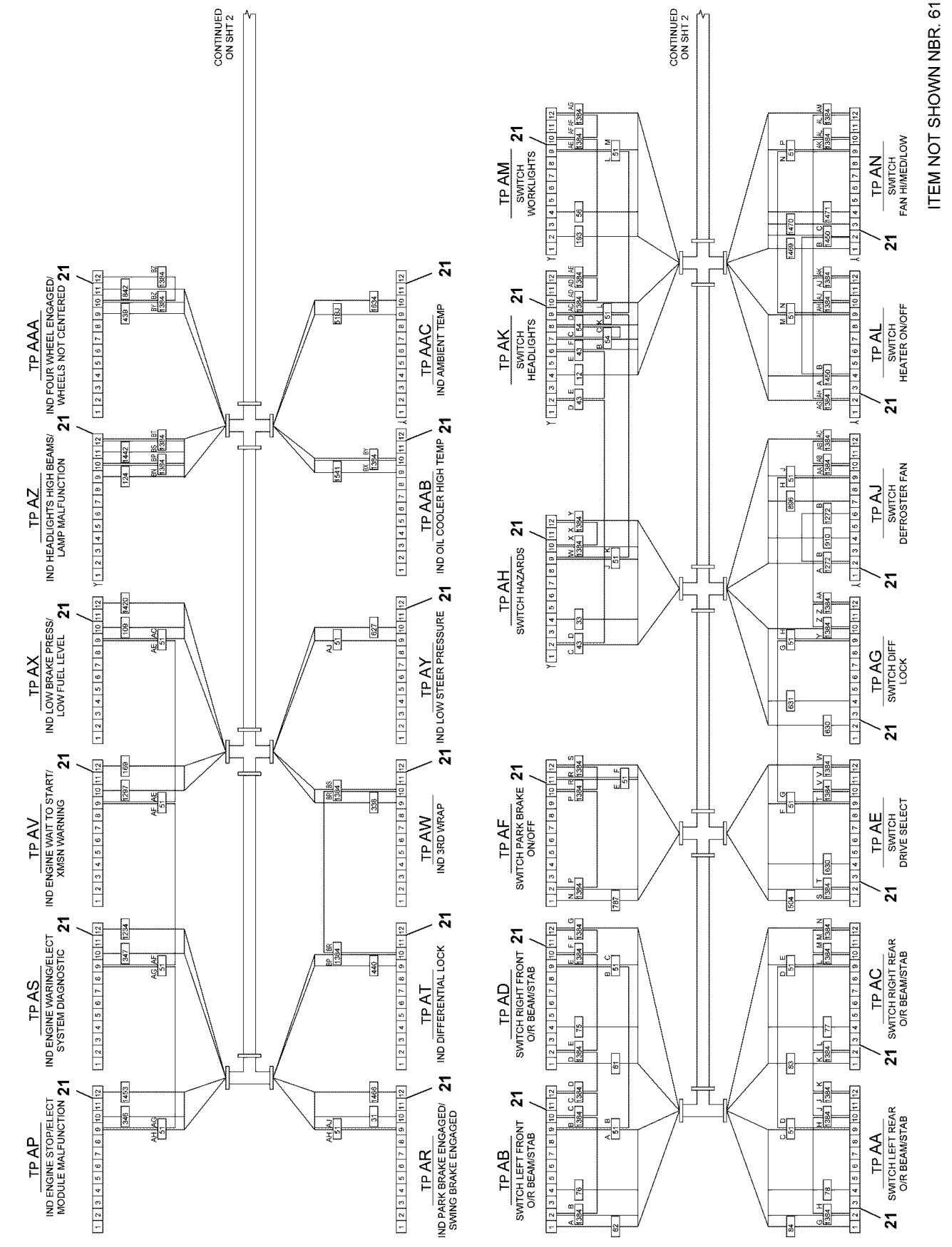


6512101099

(SHEET 1 OF 10)

Description
**HARNESS ASSEMBLY - FRONT CONSOLE (COMPLETE ASSEMBLY)**

Assembly No.
**6512101099**
Revision: **D**

| Item | FN | Part | Qty | Description |
|---|---|---|---|---|
| 4 | | **7709100883** | 1 | PLUG, 40 SOCKET |
| 5 | | **7709100884** | 1 | PLUG, 40 SOCKET |
| 6 | | **7826100018** | 99 | SOCKET - 20 GAUGE GOLD |
| 7 | | **7709100907** | 1 | PLUG DTM06-12SA W/WM-12S WEDGE |
| 8 | | **7709100908** | 1 | PLUG DTM06-12SB W/WM-12S WEDGE |
| 9 | | **7709000845** | 2 | PLUG<br>8 SOCKET |
| 10 | | **7826100004** | 58 | SOCKET, (16 - 18) 30 SERIES |
| 11 | | **7709000846** | 3 | PLUG, 12 SOCKET |
| 12 | | **7892001036** | 2 | RECEPTACLE, SPLICE BLOCK |
| 13 | | **7826000087** | 4 | SOCKET, 16-14 GA |
| 14 | | **7689000704** | 2 | PIN, 16 - 14 GA |
| 15 | | **7709000883** | 3 | PLUG<br>6 SOCKET |
| 16 | | **7892001053** | 1 | RECEPTACLE, 9 PIN |
| 17 | | **7689002053** | 54 | PIN<br>16 - 18 AWG |
| 18 | | **7892000951** | 1 | RECEPTACLE,<br>12 PIN |
| 19 | | **7892100086** | 2 | RECEPT, DTO4-12PB-C015 W/WEDGE |
| 20 | | **7892100087** | 1 | RECEPT, DTO4-12PC-C015 W/WEDGE |
| 21 | | **7364100184** | 32 | CONNECTOR, L-SERIES SWITCHES |
| 22 | | **7892100058** | 1 | TERMINAL, FM MP 630 SERIES |
| 23 | | **7892100059** | 150 | TERMINAL, FM MP 630 SERIES |
| 25 | | **7892100026** | 1 | RECEPT, (8P) SPLICE BLOCK |
| 26 | | **7345001746** | 4 | TERMINAL, MALE<br>16 - 14 AWG |
| 27 | | **7345001444** | 10 | TERMINAL, FEMALE |
| 28 | | **7345001744** | 8 | TERMINAL, FEMALE<br>16 - 14 AWG |
| 30 | | **7892001001** | 1 | FERRULE, SINGLE WIRE<br>(RED) |
| 31 | | **7345211401** | 3 | TERMINAL<br>22 - 18 AWG |
| 32 | | **7345001944** | 1 | TERMINAL, FEMALE<br>12 - 10 AWG |
| 33 | | **7364001684** | 2 | CONNECTOR, 3 CONDUCTOR<br>TOWER WITH SEAL |

Description
**HARNESS ASSEMBLY - FRONT CONSOLE (COMPLETE ASSEMBLY)**

Assembly No.
**6512101099**
Revision: **D**

| Item | FN | Part | Qty | Description |
|---|---|---|---|---|
| 34 | | **7364001685** | 1 | CONNECTOR, 3 CONDUCTOR SHROUD |
| 35 | | **7709000874** | 1 | PLUG 3 SOCKET |
| 36 | | **7892000254** | 8 | TERMINAL, GREEN CABLE SEAL |
| 37 | | **7892000252** | 2 | TERMINAL, MALE PIN |
| 38 | | **7892000253** | 6 | TERMINAL, FEMALE SLEEVE |
| 39 | | **7892000257** | 1 | TERMINAL, GREEN CAVITY SEAL |
| 43 | | **7892000950** | 1 | RECEPTACLE, 8 PIN |
| 44 | | **7892000194** | 18 | PARALLEL, NON - INSULATED 16 - 14 AWG |
| 45 | | **8594100256** | 3 | TUBING, HEAT SHRINK 1/4" I.D. LINER, MELTABLE (QUANTITY IN FEET) |
| 46 | | **8594100257** | 2 | TUBING, HEAT SHRINK 1/2" I.D. LINER, MELTABLE (QUANTITY IN FEET) |
| 48 | | **7850000208** | 50 | CABLE TIE, BLACK |
| 51 | | **7258100154** | 1 | CAP, DEUTSCH HDC16 - 9 DUST |
| 52 | | **7689000503** | 20 | PLUG, SEALING 16 - 12 AWG |
| 53 | | **7345001446** | 1 | TERMINAL, MALE 22 - 18 AWG |
| 54 | | **7709100902** | 1 | PLUG, 3 PIN |
| 55 | | **7709000874** | 1 | PLUG 3 SOCKET |
| 56 | | **7709100911** | 1 | PLUG,DT06-3S-CEO6 W/BLUE WEDGE |
| 57 | | **7892100036** | 1 | RECEPTACLE, 3 WAY |
| 58 | | **7892001002** | 1 | FERRULE, SINGLE WIRE (BLACK) |
| 59 | | **7892000949** | 1 | RECEPTACLE, 2 PIN |
| 60 | | **7709000874** | 1 | PLUG 3 SOCKET |
| 61 | | **7345211701** | 1 | TONGUE, INSULATED RING |
| 61 | | **7345211701** | 4 | TONGUE, INSULATED RING |

Description
**HARNESS ASSEMBLY - FRONT CONSOLE (COMPLETE ASSEMBLY)**

Assembly No.
**6512101099**
Revision: **D**

| Item | FN | Part | Qty | Description |
|---|---|---|---|---|
| 62 | | **7892000195** | 1 | PARALLEL, NON - INSULATED<br>12 - 10 AWG |
| 63 | | **8594000019** | 5 | FLEXGUARD, 1/4" I.D.<br>(QUANTITY IN FEET) |

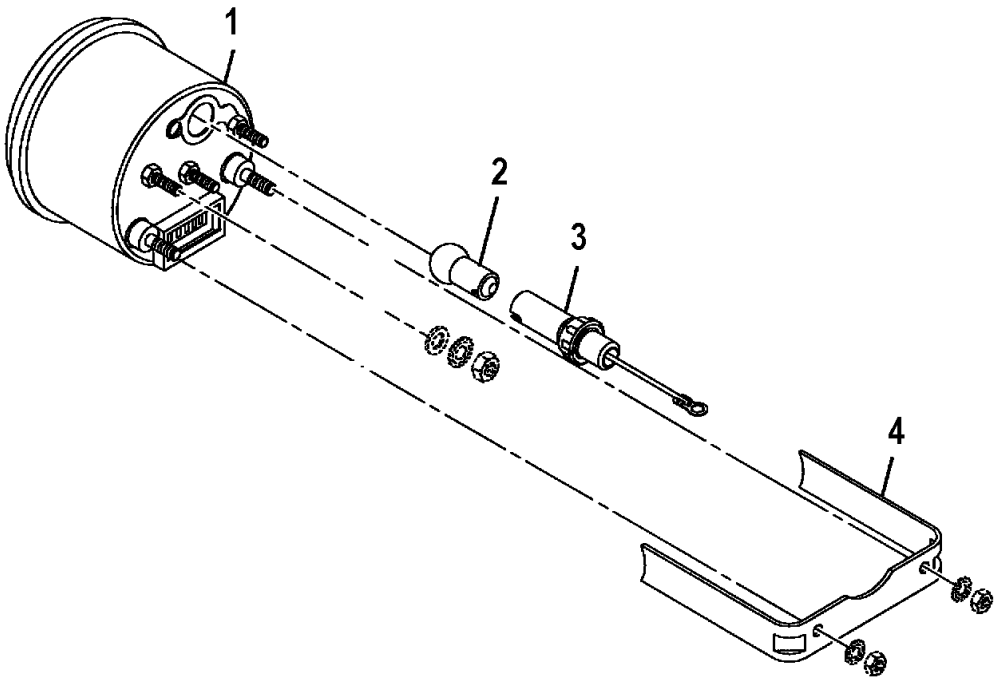


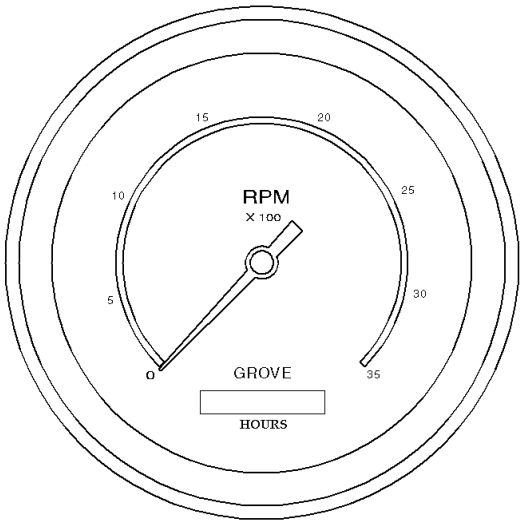


| DIP SWITCH SETTING CODE: 134 | |
|---|---|
| PIN NUMBER | PIN POSITION |
| 1 | CLOSED |
| 2 | CLOSED |
| 3 | OPEN |
| 4 | OPEN |
| 5 | CLOSED |
| 6 | OPEN |
| 7 | CLOSED |
| 8 | OPEN |

Description
**GAUGE, 12 VOLT TACHOMETER (WITH HOURMETER)**

Assembly No.
**7486100100**
Revision:

| Item | FN | Part | Qty | Description |
|---|---|---|---|---|
| 1 | | **NSS** | 1 | GAUGE |
| 2 | | **9581100406** | 1 | BULB, 12 VOLT |
| 3 | | **9581100407** | 1 | SOCKET, |
| 4 | | **9486100290** | 1 | KIT,HARDWARE<br>USE HARDWARE AS REQUIRED |

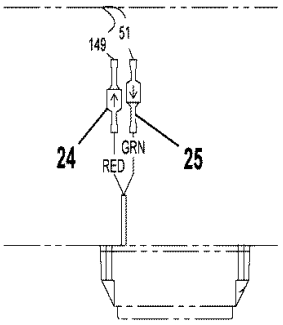


DETAIL-K
LMI WARNING LIGHT (CE)
TAPE & STOW WHEN NOT USED.

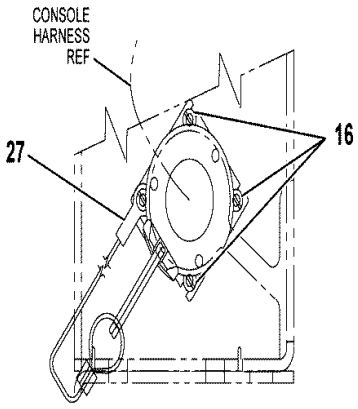


DETAIL-H
DIAGNOSTIC CONNECTOR

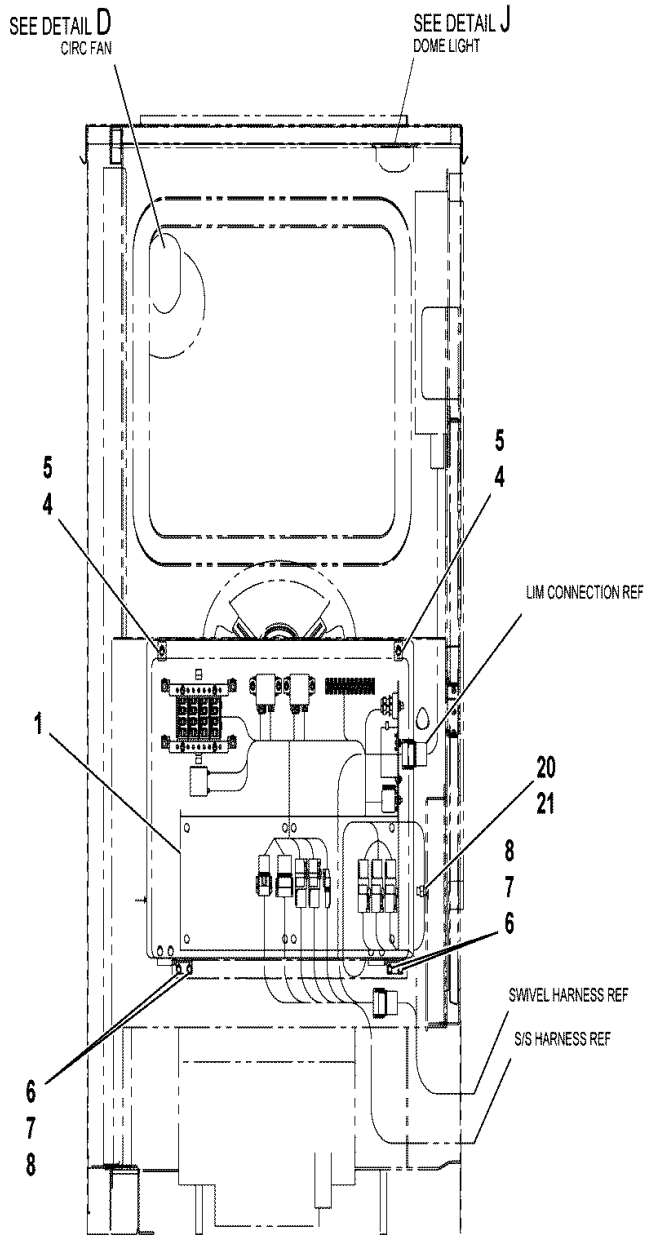


VIEW B-B

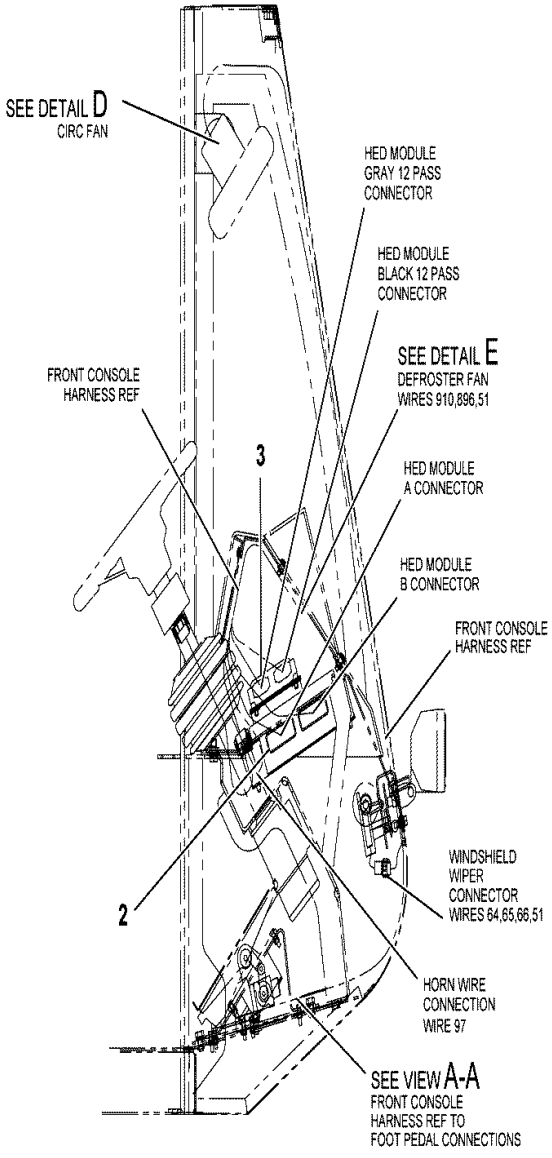


VIEW C-C

6978100900

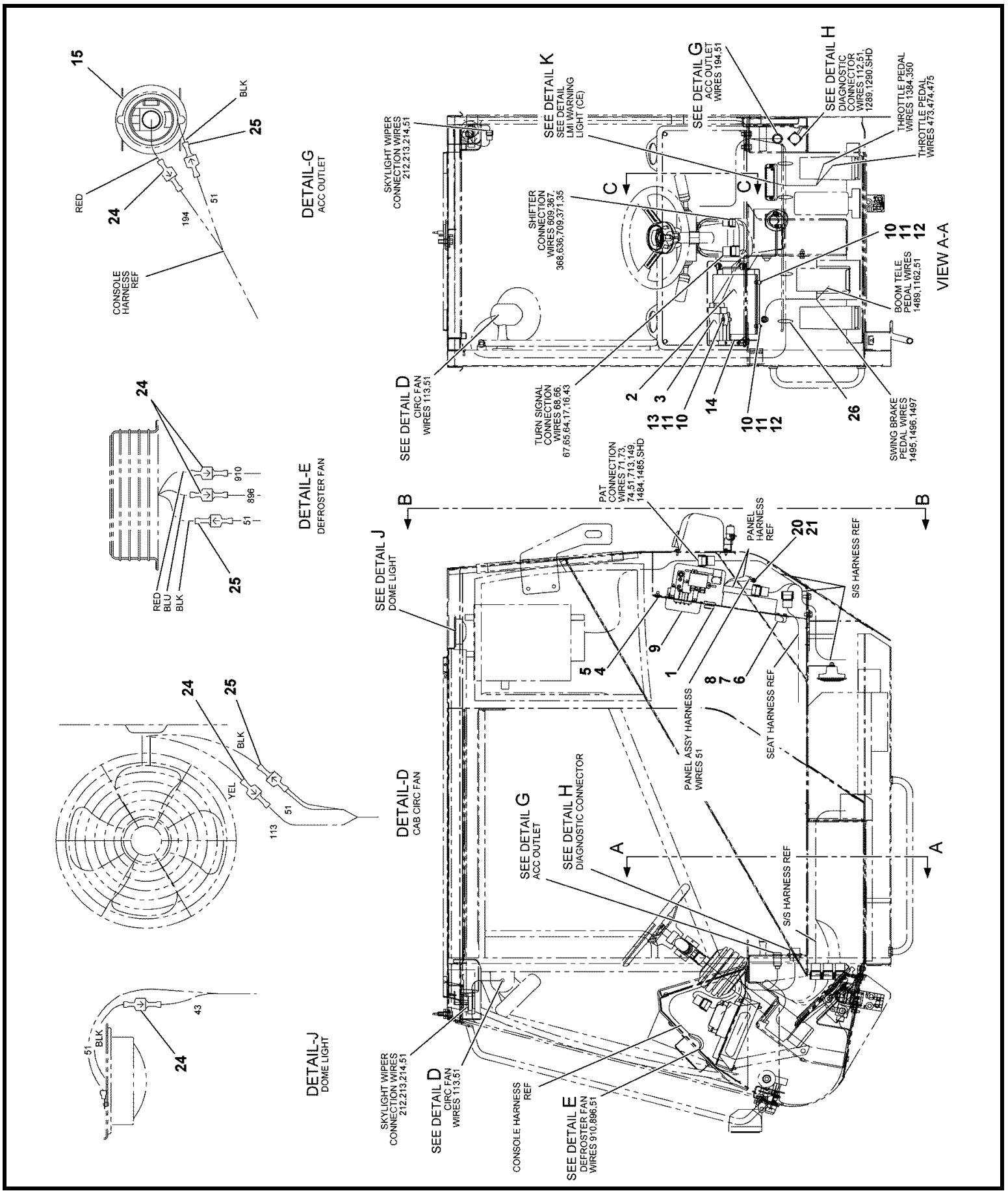


6978100900

(SHEET 1 OF 2)

Description
**ELECTRICAL SYSTEM INSTALLATION - SUPERSTRUCTURE CAB (DOMESTIC)**

Assembly No.
**6978100900**
Revision: #

| Item | FN | Part | Qty | Description |
|---|---|---|---|---|
| 1 | + | **6679100195** | 1 | PANEL ASSEMBLY - FUSE AND RELAY (SUPERSTRUCTURE CAB) (COMPLETE ASSEMBLY) |
| 2 | # | **7352100053** | 1 | MODULE, CONTROL (CAB) |
| 3 | # | **7352100064** | 1 | I/O CONTROL MODULE |
| 4 | | **7099001159** | 2 | SCREW, THUMB |
| 5 | | **7659000256** | 2 | NUT, RETAINING 5/16" - 18 N.C. |
| 6 | | **7115140550** | 8 | CAP SCREW, 1/4" - 20 N.C. X 5/8" GRADE 5 |
| 7 | | **7950140050** | 8 | WASHER, LOCK 1/4" I.D. |
| 8 | | **7519000198** | 2 | NYLON LIFT OFF HINGE - LH |
| 9 | | **7245100058** | 1 | COVER, FUSE |
| 10 | | **7659190019** | 8 | RETAINING NUT M6 |
| 11 | | **7951150014** | 8 | WASHER, 6MM I.D. |
| 12 | | **7126151153** | 6 | CAP SCREW, M6X20 HEX HEAD |
| 13 | | **7126151353** | 2 | CAP SCREW, M6X30 HEX HEAD |
| 14 | | **6245101066** | 1 | BRACKET, MODULE SUPPORT |
| 15 | | **7892000999** | 1 | RECEPTACLE, 12 VOLT DASH MOUNT |
| 16 | | **7790060673** | 4 | SCREW, SELF-TAPPING |
| 20 | | **7660160000** | 1 | NUT, HEX 3/8" - 16 N.C. |
| 21 | | **7950160350** | 2 | WASHER, LOCK 3/8" I.D. |
| 24 | | **7345001446** | 6 | TERMINAL, MALE 22 - 18 AWG |
| 25 | | **7345001444** | 4 | TERMINAL, FEMALE |
| 26 | | **7850000208** | 25 | CABLE TIE, BLACK |
| 27 | | **7246002555** | 1 | CABLE ASSY |

**+ SEE FURTHER BREAKDOWN THIS GROUP**

**# SERVICED AS AN ASSEMBLY ONLY**

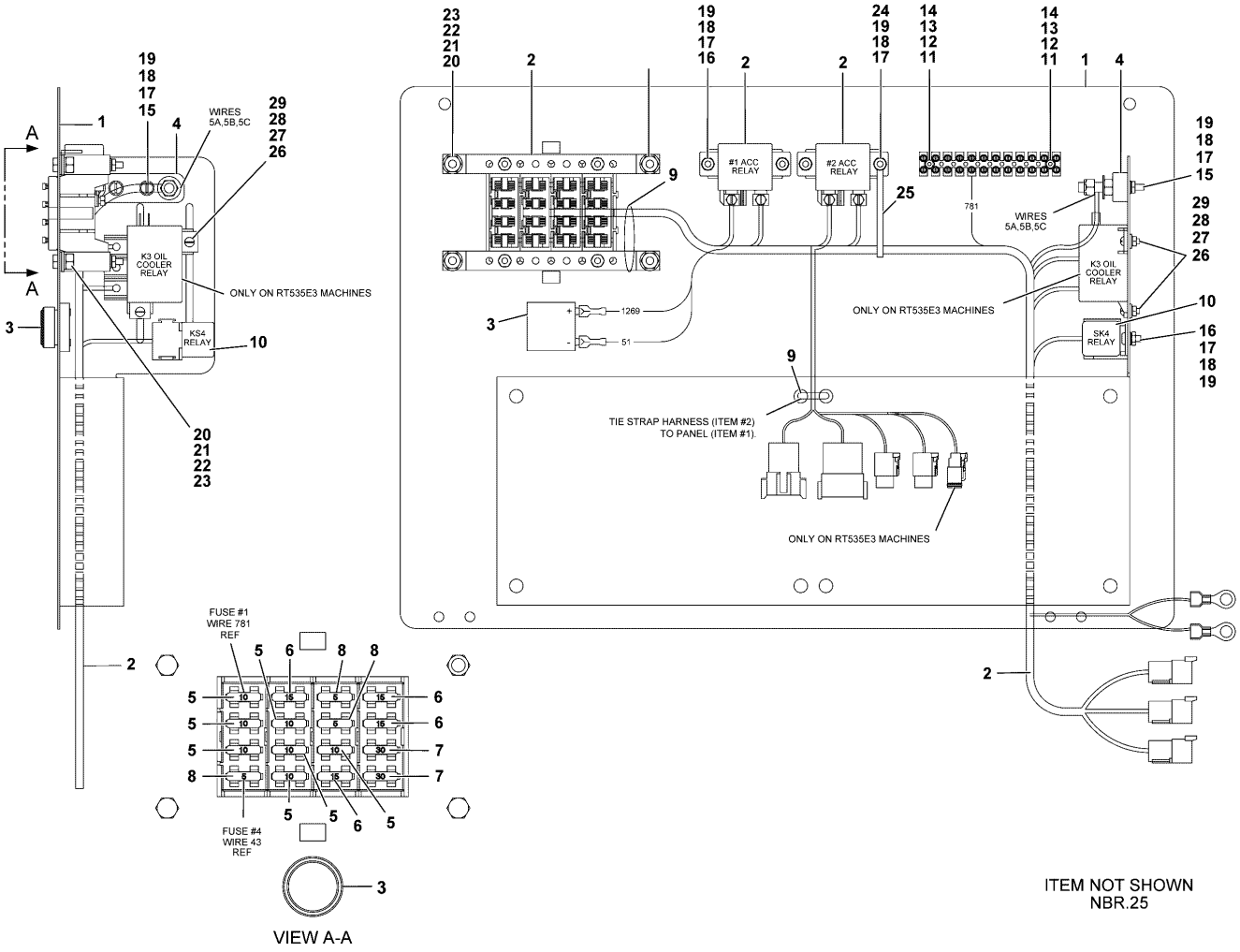


6679100195

(SHEET 1 OF 1)

Description
**PANEL ASSEMBLY - FUSE AND RELAY (SUPERSTRUCTURE CAB)**
**(COMPLETE ASSEMBLY)**

Assembly No.
**6679100195**
Revision: #

| Item | FN | Part | Qty | Description |
|---|---|---|---|---|
| 1 | | **2188410002** | 1 | PANEL |
| 2 | + | **6512100914** | 1 | HARNESS ASSEMBLY - FUSE AND RELAY PANEL (SUPERSTRUCTURE CAB) (COMPLETE ASSEMBLY) |
| 3 | | **7025000821** | 1 | ALARM, FAST PULSE BUZZER |
| 4 | | **7086001082** | 1 | HOLDER, FUSE |
| 5 | | **7482000033** | 7 | FUSE, 10 AMP |
| 6 | | **7482000032** | 4 | FUSE, 15 AMP |
| 7 | | **7482000029** | 2 | FUSE, 30 AMP |
| 8 | | **7482000035** | 3 | FUSE, 5 AMP |
| 9 | | **7850000208** | 2 | CABLE TIE, BLACK |
| 10 | | **7750000055** | 1 | RELAY, 12 VOLT DC |
| 11 | | **7111040610** | 2 | SCREW, MACHINE 7/64" - 40 N.C. X 3/4" GRADE 1 |
| 12 | | **7950040050** | 2 | LOCKWASHER, 7/64" I.D. |
| 13 | | **7950040141** | 2 | WASHER, 7/64" I.D. |
| 14 | | **7660041100** | 2 | NUT, HEX 7/64" - 40 N.C. GRADE 1 |
| 15 | | **7111100807** | 2 | SCREW, MACHINE 3/16" - 24 N.C. X 1" GRADE 1 |
| 16 | | **7111100611** | 4 | SCREW, MACHINE 3/16" - 24 N.C. X 3/4" GRADE 1 |
| 17 | | **7950100141** | 7 | WASHER, FLAT, #10 |
| 18 | | **7950100050** | 7 | WASHER, LOCK #10 |
| 19 | | **7660101100** | 7 | NUT, HEX 3/16" - 32 N.F. GRADE 1 |
| 20 | | **7115140450** | 4 | CAP SCREW, 1/4" - 20 N.C. X 1/2" GRADE 5 |
| 21 | | **7950140141** | 4 | WASHER, FLAT 1/4" PLAIN NARROW |
| 22 | | **7950140050** | 4 | WASHER, LOCK 1/4" I.D. |
| 23 | | **7660140000** | 4 | NUT, HEX 1/4" - 20 N.C. |

**+ SEE FURTHER BREAKDOWN THIS GROUP**

Description
**PANEL ASSEMBLY - FUSE AND RELAY (SUPERSTRUCTURE CAB)**
**(COMPLETE ASSEMBLY)**

Assembly No.
**6679100195**
Revision: #

| Item | FN | Part | Qty | Description |
|---|---|---|---|---|
| 24 | | **7111100811** | 1 | SCREW, MACHINE<br>3/16" - 24 N.C. X 1"<br>GRADE 1 |
| 25 | | **7850000831** | 1 | TIE, 8.14" LONG CABLE (BLACK) |
| 26 | | **7111080410** | 2 | SCREW, MACHINE<br>5/32" - 32 N.C. X 1/2"<br>GRADE 1 |
| 27 | | **7660080000** | 2 | USE 7660081100 |
| 28 | | **7950080050** | 2 | LOCKWASHER, 5/32" I.D. |
| 29 | | **7950080141** | 2 | FLATWASHER, 5/32" I.D. |

| WIRE NO | COLOR | SAE SIZE | LENGTH TOT IN | TP | B/M ITEM NO | REMARKS | TP | B/M ITEM NO | REMARKS |
|---|---|---|---|---|---|---|---|---|---|
| 5A | WHITE GXL | 6 | 26 | AA | 11 | ——— | AC | 19 | ——— |
| 5B | | 10 | 27 | AC | 28 | ——— | AF | STRIP | SEE DETAIL |
| 5C | | 10 | 27 | AC | 28,32 | ——— | AF | STRIP | SEE DETAIL |
| 6A | | 6 | 35 | AA | 11 | ——— | AE | 20 | ——— |
| 35A | | 18 | 13 | AH | 7 | ——— | AE | 22 | ——— |
| 43 | | 18 | 20 | AH | 7 | ——— | AF | 13 | ——— |
| 51A | | 18 | 6 | AE | 22 | ——— | AE | 21 | CRIMP/W 51B |
| 51B | | 18 | 45 | AG | 39 | ——— | AE | STRIP | CRIMP/W 51A |
| 51C | | 18 | 50 | AJ | 31 | ——— | AG | STRIP | CRIMP/W 51D |
| 51D | | 18 | 31 | AK | 53 | ——— | AG | 47 | CRIMP/W 51C |
| 68A | | 16 | 20 | AF | 13 | ——— | AH | 7 | ——— |
| 71 | | 14 | 20 | AH | 7 | ——— | AF | 13 | ——— |
| 112 | | 16 | 20 | AH | 7 | ——— | AF | 13 | ——— |
| 113 | | 18 | 20 | AH | 7 | ——— | AF | 13 | ——— |
| 137 | | 12 | 29 | AH | 48 | ——— | AK | 50 | ——— |
| 180A | | 10 | 17 | AE | 30 | ——— | AF | STRIP | SEE DETAIL |
| 180B | | 12 | 17 | AF | STRIP | SEE DETAIL | AE | 30 | ——— |
| 180C | | 6 | 6 | AE | 43 | ——— | AE | 30 | ——— |
| 193 | | 16 | 20 | AH | 7 | ——— | AF | 13 | ——— |
| 194 | | 16 | 20 | AH | 7 | ——— | AF | 13 | ——— |
| 214 | | 18 | 26 | AH | 7 | ——— | AB | 12 | ——— |
| 268A | | 16 | 30 | AF | 13 | ——— | AB | 12 | CRIMP/W 268B |
| 268B | | 16 | 3 | AB | 12 | CRIMP/W 268C | AB | STRIP | CRIMP/W 268A |
| 268C | | 16 | 26 | AB | STRIP | CRIMP/W 268B | AH | 7 | ——— |
| 280B | | 10 | 17 | AE | 30 | ——— | AF | STRIP | SEE DETAIL |
| 280C | | 10 | 17 | AE | 30 | ——— | AF | STRIP | SEE DETAIL |
| 280 | | 10 | 17 | AF | STRIP | SEE DETAIL | AE | 30 | ——— |
| 520 | | 12 | 27 | AE | 43 | ——— | AK | 50 | ——— |
| 553 | | 18 | 29 | AK | 53 | ——— | AH | 7 | ——— |
| 781 | | 16 | 25 | AD | 29 | ——— | AF | 13 | ——— |
| 1195 | | 18 | 13 | AE | 22 | ——— | AH | 7 | ——— |
| 1257 | | 14 | 20 | AF | 13 | ——— | AH | 6 | ——— |
| 1269 | | 18 | 18 | AH | 7 | ——— | AJ | 31 | ——— |
| 1272 | | 16 | 20 | AH | 7 | ——— | AF | 13 | ——— |
| 1274A | | 6 | 35 | AA | 11 | ——— | AE | 20 | ——— |
| 1385 | | 14 | 20 | AH | 6 | ——— | AF | 13 | ——— |
| 1436A | | 10 | 20 | AH | 10 | ——— | AF | 33 | ——— |
| 1467 | | 16 | 26 | AH | 7 | ——— | AB | 12 | ——— |
| 1468 | | 18 | 26 | AH | 7 | ——— | AB | 12 | ——— |
| 1481A | | 10 | 20 | AH | 10 | ——— | AF | 33 | ——— |
| 1511 | | 16 | 20 | AH | 7 | ——— | AF | 13 | ——— |
| 1516 | WHITE GXL | 16 | 20 | AH | 7 | ——— | AF | 13 | ——— |

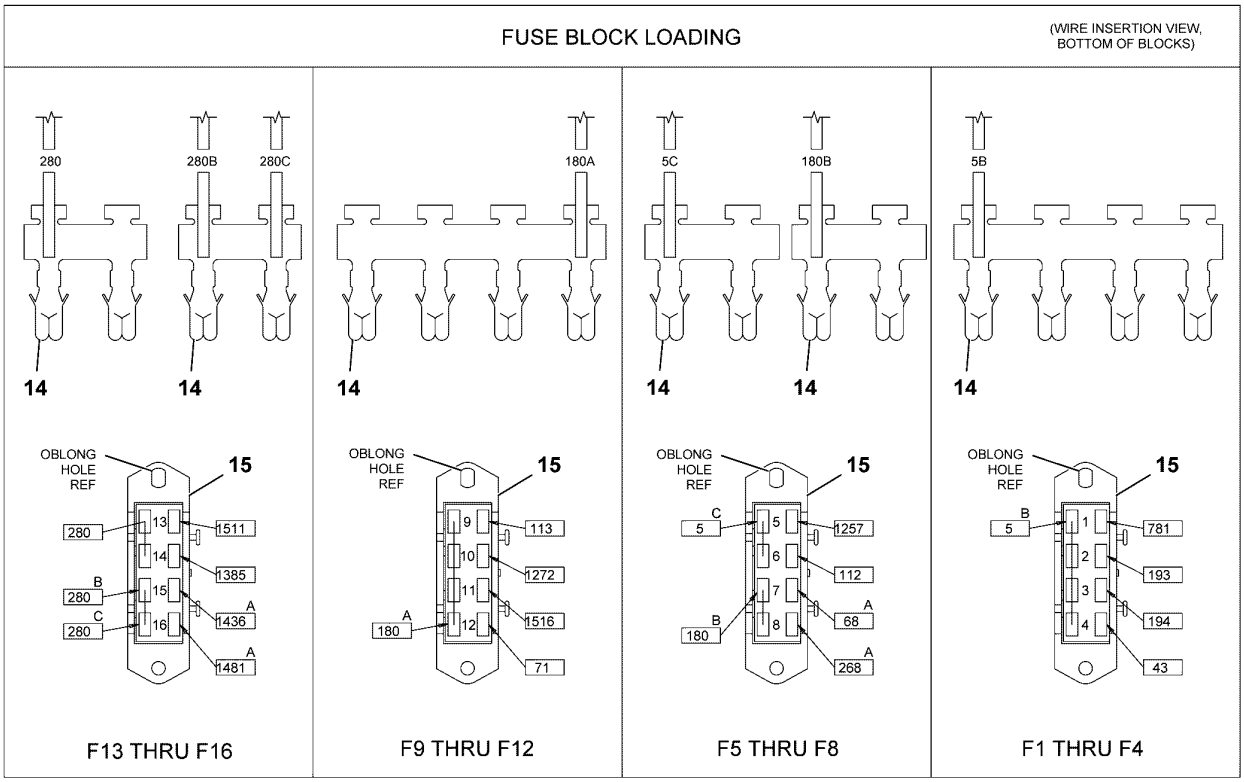
FUSE BLOCK LOADING
(WIRE INSERTION VIEW, BOTTOM OF BLOCKS)
280
280B
280C
180A
5C
180B
5B
14
OBLONG HOLE REF
15
F13 THRU F16
F9 THRU F12
F5 THRU F8
F1 THRU F4

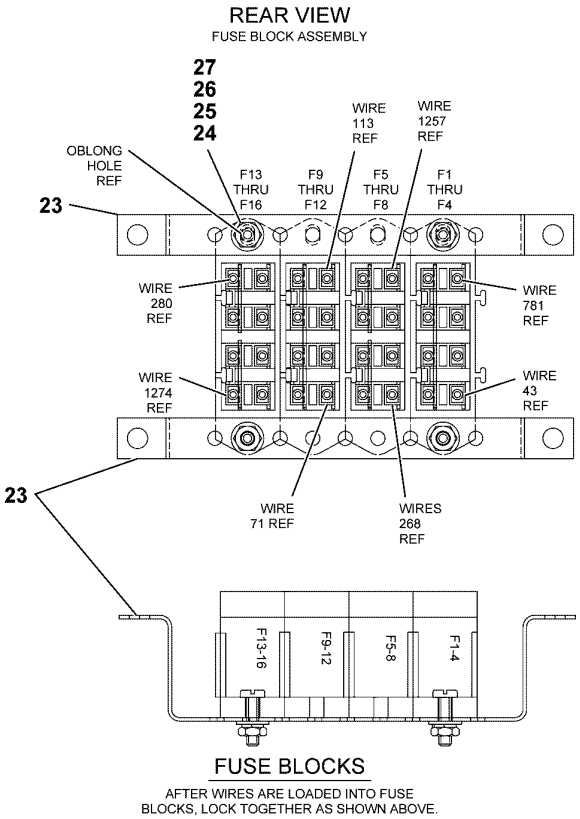
REAR VIEW
FUSE BLOCK ASSEMBLY
27
26
25
24
23
OBLONG HOLE REF
F13 THRU F16
F9 THRU F12
F5 THRU F8
F1 THRU F4
WIRE 113 REF
WIRE 1257 REF
WIRE 280 REF
WIRE 781 REF
WIRE 1274 REF
WIRE 43 REF
WIRE 71 REF
WIRES 268 REF
F13-16
F9-12
F5-8
F1-4
FUSE BLOCKS
AFTER WIRES ARE LOADED INTO FUSE BLOCKS, LOCK TOGETHER AS SHOWN ABOVE.

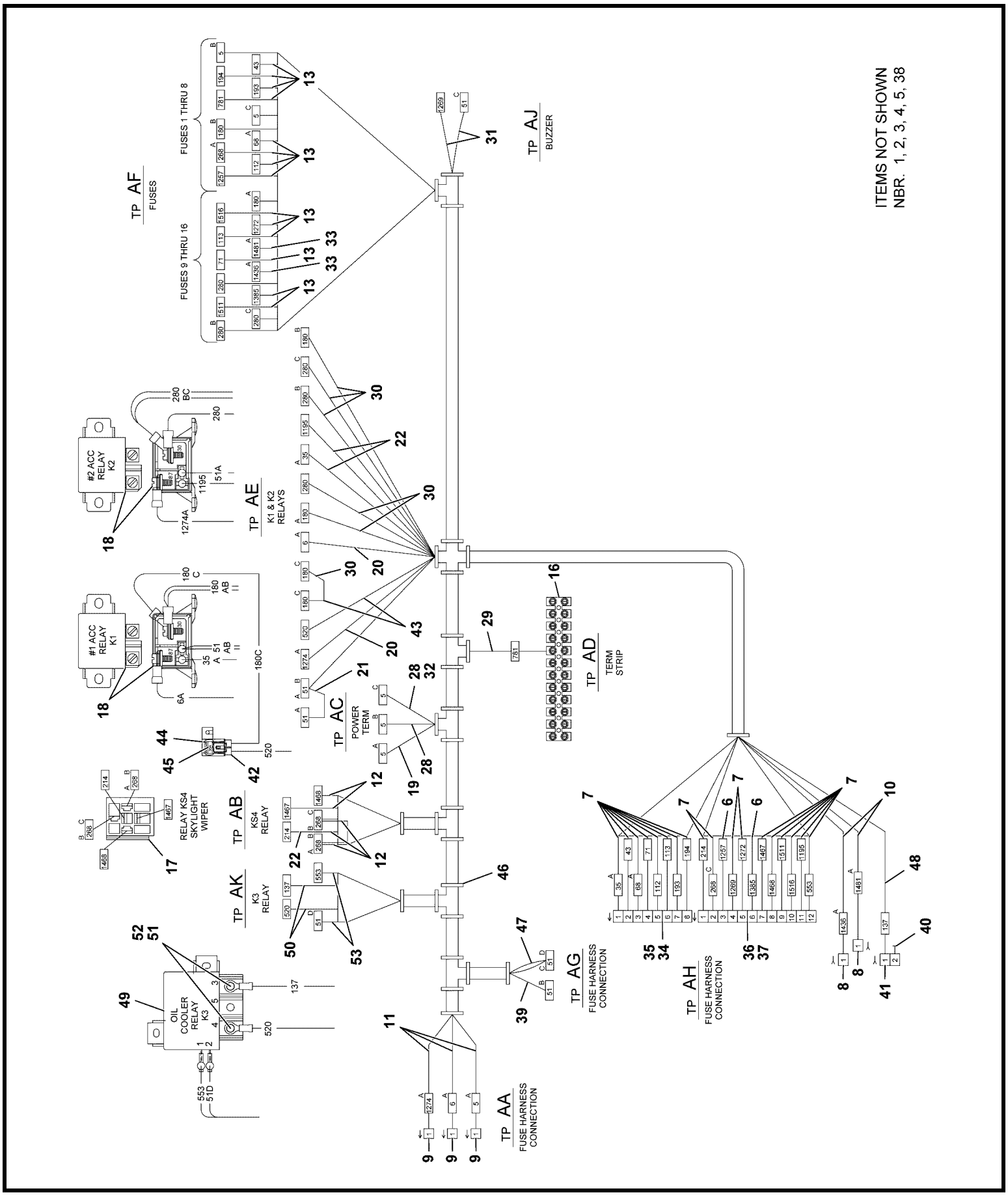


6512100914

(SHEET 1 OF 3)

Description
**HARNESS ASSEMBLY - FUSE AND RELAY PANEL (SUPERSTRUCTURE CAB)**
**(COMPLETE ASSEMBLY)**

Assembly No.
**6512100914**
Revision: #

| Item | FN | Part | Qty | Description |
|---|---|---|---|---|
| 6 | | **7689000704** | 2 | PIN, 16 - 14 GA |
| 7 | | **7689001782** | 18 | PIN, 18 - 16 GAGE |
| 8 | | **7709000876** | 2 | PLUG, 1 SOCKET |
| 9 | | **7892000939** | 3 | RECEPTACLE,<br>1 PIN |
| 10 | | **7826000635** | 2 | SOCKET,<br>8 AWG |
| 11 | | **7689000813** | 3 | PIN<br>4 AWG |
| 12 | | **7345001752** | 5 | TERMINAL<br>16 - 14 AWG |
| 13 | | **7892000218** | 14 | FUSE, TERMINAL<br>16 - 14 AWG |
| 14 | | **7892000220** | 16 | FUSE, BUSS BAR<br>12 - 10 AWG |
| 15 | | **7086000947** | 4 | BLOCK, FUSE |
| 16 | | **7086000875** | 1 | STRIP, TERMINAL |
| 17 | # | **7826000079** | 1 | SOCKET, RELAY |
| 18 | | **7750000056** | 2 | RELAY, 75 AMP |
| 19 | | **7345232101** | 1 | TERMINAL<br>6 AWG |
| 20 | | **7345212101** | 2 | TERMINAL<br>6 AWG |
| 21 | | **7345001744** | 1 | TERMINAL, FEMALE<br>16 - 14 AWG |
| 22 | | **7345001444** | 3 | TERMINAL, FEMALE |
| 23 | | **6184001406** | 2 | BRACKET, FUSE |
| 24 | | **7111100611** | 4 | SCREW, MACHINE<br>3/16" - 24 N.C. X 3/4"<br>GRADE 1 |
| 25 | | **7950100050** | 4 | WASHER, LOCK #10 |
| 26 | | **7950100141** | 4 | WASHER, FLAT, #10 |
| 27 | | **7660101100** | 4 | NUT, HEX<br>3/16" - 32 N.F.<br>GRADE 1 |
| 28 | | **7345231901** | 2 | TERMINAL<br>12 - 10 AWG |
| 29 | | **7892001002** | 1 | FERRULE, SINGLE WIRE<br>(BLACK) |

**# SERVICED AS AN ASSEMBLY ONLY**

Description
**HARNESS ASSEMBLY - FUSE AND RELAY PANEL (SUPERSTRUCTURE CAB)**
**(COMPLETE ASSEMBLY)**

Assembly No.
**6512100914**
Revision: #

| Item | FN | Part | Qty | Description |
|---|---|---|---|---|
| 30 | | **7345211901** | 6 | TERMINAL<br>12 - 10 AWG |
| 31 | | **7364002417** | 2 | RECEPTACLE,<br>22 - 18 AWG |
| 32 | | **7172000558** | 1 | BOOT, TERMINAL |
| 33 | | **7892000219** | 2 | FUSE, TERMINAL<br>12 - 10 AWG |
| 34 | | **7892000950** | 1 | RECEPTACLE,<br>8 PIN |
| 35 | | **7172000549** | 1 | BOOT |
| 36 | | **7892000951** | 1 | RECEPTACLE,<br>12 PIN |
| 37 | | **7172000551** | 1 | BOOT |
| 39 | | **7345241401** | 1 | TERMINAL<br>22 - 18 AWG |
| 40 | | **7689000503** | 1 | PLUG, SEALING<br>16 - 12 AWG |
| 41 | | **7709100891** | 1 | PLUG, 2-PASS DEUTSCH DTP |
| 42 | | **7892100029** | 1 | 2-PASS CONNECTOR/ORANGE SEAL |
| 43 | | **7892100034** | 2 | TERMINAL, FEMALE |
| 44 | | **7892100030** | 1 | CONNECTOR, COVER/SINGLE |
| 45 | | **7482000029** | 1 | FUSE, 30 AMP |
| 46 | | **7850000208** | 11 | CABLE TIE, BLACK |
| 47 | | **7345241701** | 1 | TONGUE, INSULATED RING |
| 48 | | **7826000092** | 1 | SOCKET, (12) 12-14GA |
| 49 | | **7750160021** | 1 | RELAY, 12 VOLT 100AMP |
| 50 | | **7345221901** | 2 | TERMINAL<br>12 - 10 AWG |
| 51 | | **01923998** | 2 | HEX HEAD NUT M6 |
| 52 | | **01925033** | 2 | FLAT WASHER - 6 |
| 53 | | **7345001443** | 2 | TERMINAL, FEMALE<br>22 - 18 AWG |

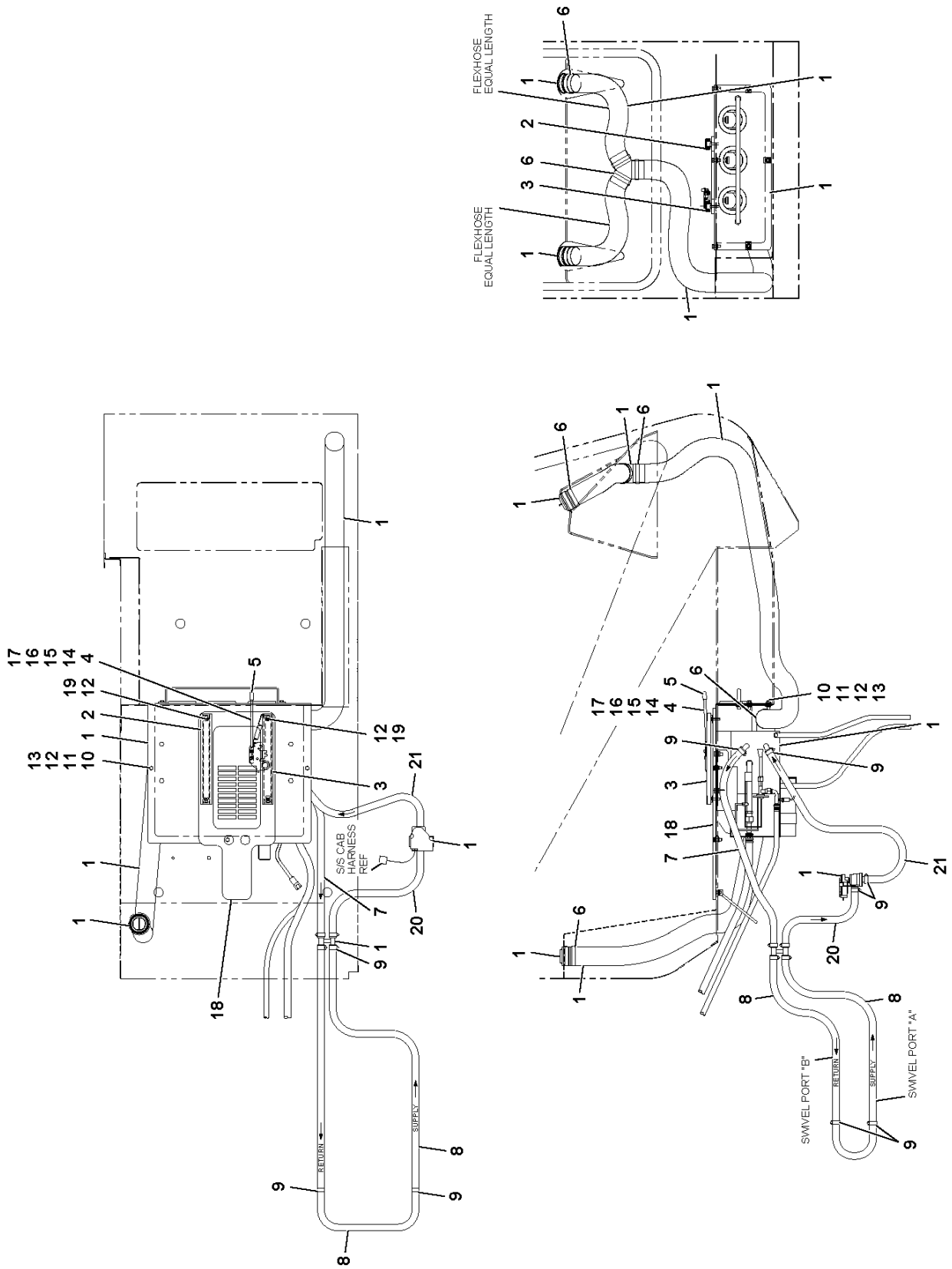


6515100078

(SHEET 1 OF 1)

Description
**HEATER/COOLER INSTALLATION - CAB**

Assembly No.
**6515100078**
Revision: **E**

| Item | FN | Part | Qty | Description |
|---|---|---|---|---|
| 1 | + | **80006745** | 1 | KIT - CAB HEATER AND AIR CONDITIONER (COMPLETE ASSEMBLY) |
| 2 | | **7798100006** | 1 | TRACK, FREE |
| 3 | # | **7798100005** | 1 | TRACK, CONTROL |
| 4 | | **7768003904** | 1 | ARM, LEVER |
| 5 | | **7822000598** | 1 | SLEEVE, VINYL |
| 6 | | **7300000035** | 10 | CLAMP, HOSE 1 13/16" TO 2 3/4" |
| 7 | | **8596902528** | 2 | HOSE, 5/8" I.D. (QUANTITY IN FEET) |
| 8 | | **8596902528** | 8 | HOSE, 5/8" I.D. (QUANTITY IN FEET) |
| 9 | | **7300001061** | 10 | CLAMP, LINER |
| 10 | | **7659190020** | 6 | NUT, RETAINING 8 X 1.25 |
| 11 | | **7126171350** | 6 | CAP SCREW, M8 X 30MM HEX HEAD |
| 12 | | **7951170210** | 10 | WASHER, LOCK 8MM |
| 13 | | **7950140161** | 5 | WASHER, 1/4" I.D. FLAT WIDE |
| 14 | | **7121130801** | 2 | MACHINE SCREW, M5X12 SLOTTED |
| 15 | | **7951130014** | 2 | WASHER, 5MM I.D. |
| 16 | | **7951130210** | 2 | LOCKWASHER, 5MM I.D. |
| 17 | | **7661130003** | 2 | NUT, HEX 5MM |
| 18 | | **6184100027** | 1 | BRACKET, SEAT |
| 19 | | **7128171254** | 4 | CAP SCREW, M8X25 SOCKET HEAD |
| 20 | | **8596902528** | 1 | HOSE, 5/8" I.D. (QUANTITY IN FEET) |
| 21 | | **8596902528** | 3 | HOSE, 5/8" I.D. (QUANTITY IN FEET) |

**+ SEE FURTHER BREAKDOWN THIS GROUP**

**# SERVICED AS AN ASSEMBLY ONLY**

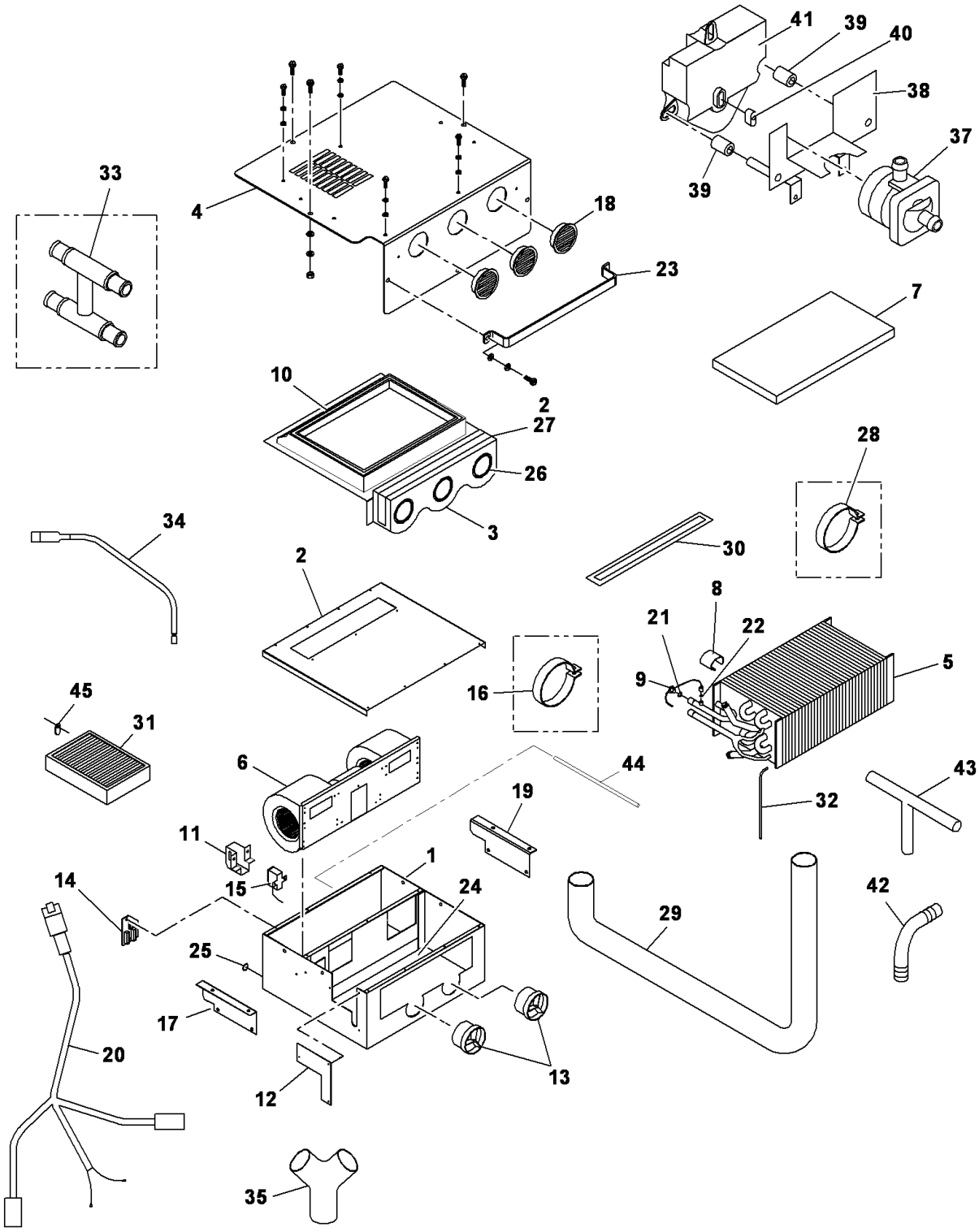


80006745

(SHEET 1 OF 1)

Description
**KIT - CAB HEATER AND AIR CONDITIONER (COMPLETE ASSEMBLY)**

Assembly No.
**80006745**
Revision:

| Item | FN | Part | Qty | Description |
|---|---|---|---|---|
| 1 | | **NSS** | 1 | HOUSING, CASE |
| 2 | | **9515102920** | 1 | COVER, HOUSING |
| 3 | | **90012227** | 1 | ADAPTER, 3 HOLE FRONT ASSY. |
| 4 | | **9515103058** | 1 | COVER, BASE |
| 5 | | **9515102828** | 1 | CORE ASSY, HEATER |
| 6 | | **90012228** | 1 | BLOWER ASSY, 12 VOLT |
| 7 | | **9515102829** | 1 | FOAM |
| 8 | | **9515102830** | 1 | CLAMP |
| 9 | | **9515102831** | 1 | VALVE, EXPANSION |
| 10 | | **9515102833** | 10 | SEALER, FOAM |
| 11 | | **90012229** | 1 | COVER |
| 12 | | **9515102835** | 1 | COVER,TUBE |
| 13 | | **9515103059** | 3 | LOUVER, 2" BALL |
| 14 | | **9515102837** | 1 | RESISTOR ASSY. |
| 15 | | **9515102838** | 1 | THERMOSTAT |
| 16 | | **9515102839** | 1 | CLAMP |
| 17 | | **9515102840** | 1 | MOUNT, LEFT HAND |
| 18 | | **9515102926** | 3 | LOUVER, 4" W/ADAPTER |
| 19 | | **9515102842** | 1 | MOUNT, RIGHT HAND |
| 20 | | **9515103069** | 1 | HARNESS ASSY. |
| 21 | | **9515102844** | 1 | O-RING #8 |
| 22 | | **9515102845** | 1 | O-RING |
| 23 | | **9515102846** | 1 | GUARD,LOUVER |
| 24 | | **9515102847** | 1 | INSULATION |
| 25 | | **9515102848** | 1 | GROMMET |
| 26 | | **90012230** | 3 | FOAM |
| 27 | | **9515102849** | 2 | SEAL |
| 28 | | **9515103061** | 1 | CLAMP |
| 29 | | **9515102852** | 1 | FLEXHOSE |
| 30 | | **9515102853** | 1 | SEAL |
| 31 | | **9515102854** | 1 | FILTER |
| 32 | | **9515102855** | 15 | HOSE, DRAIN |
| 33 | | **9515102921** | 1 | CONNECTOR |

Description
**KIT - CAB HEATER AND AIR CONDITIONER (COMPLETE ASSEMBLY)**

Assembly No.
**80006745**
Revision:

| Item | FN | Part | Qty | Description |
|---|---|---|---|---|
| 34 | | **9576101439** | 1 | HARNESS ASSY. WATER VALVE |
| 35 | | **9515103062** | 1 | CONNECTOR, Y |
| 36 | | **9515102922** | 1 | KIT, VALVE ASSY. WATER<br>INCLUDES ITEMS 37 THRU 41 |
| 37 | | **90001014** | 1 | VALVE, WATER |
| 38 | | **NSS** | 1 | BRACKET |
| 39 | | **90001015** | 2 | SPACER |
| 40 | | **90001016** | 1 | BUSHING |
| 41 | | **90001017** | 1 | MOTOR |
| 42 | | **90012231** | 1 | FITTING, ELBOW |
| 43 | | **90012233** | 2 | FITTING, TEE |
| 44 | | **90012234** | 1 | HOSE |
| 45 | | **9515102927** | 1 | RETAINER, FILTER |

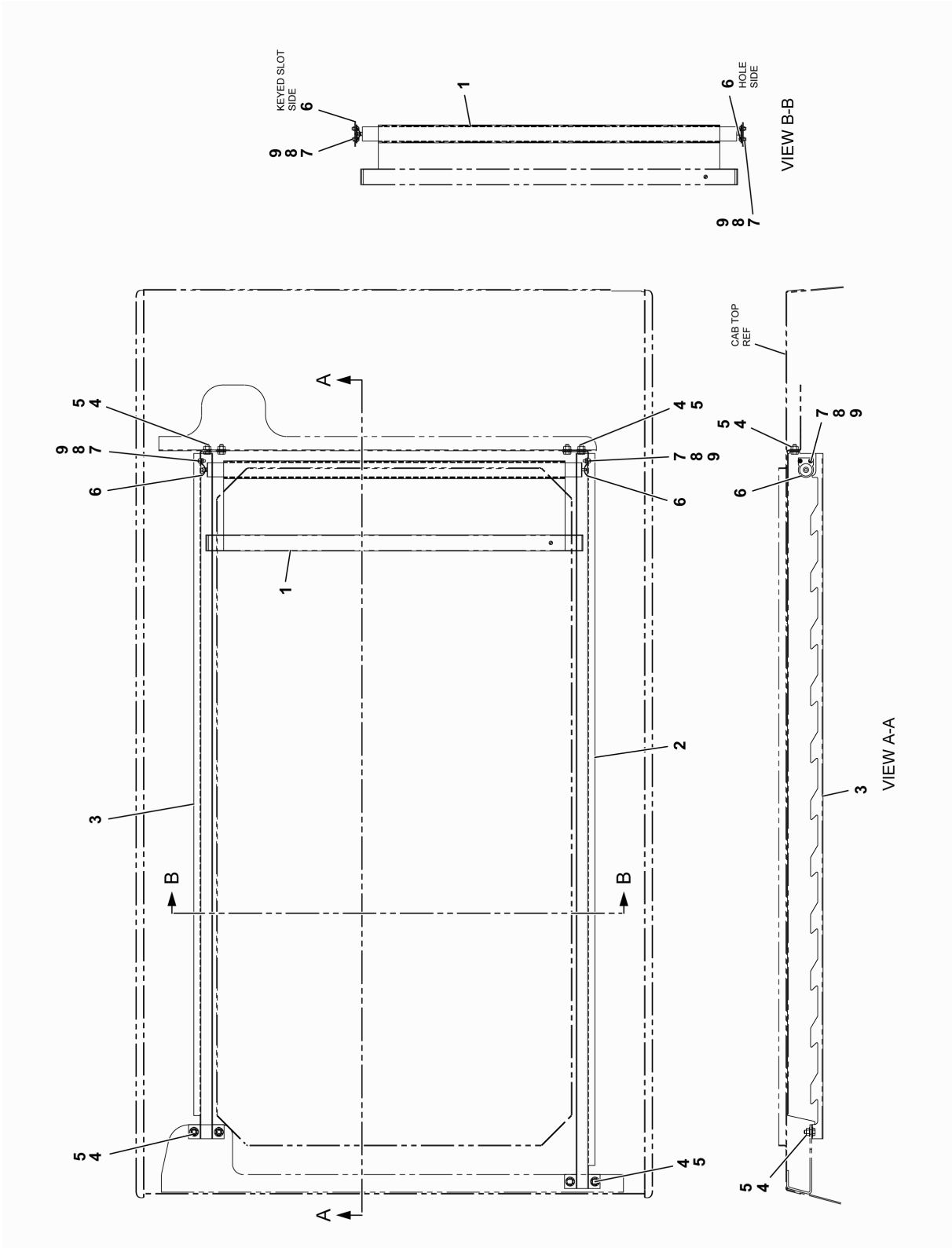


6942100004

(SHEET 1 OF 1)

Description
**SCREEN INSTALLATION - SUN**

Assembly No.
**6942100004**
Revision: **B**

| Item | FN | Part | Qty | Description |
|---|---|---|---|---|
| 1 | | **7942000522** | 1 | MESH, SUNSCREEN |
| 2 | | **6245101062** | 1 | BRACKET, LEFT HAND SUN SCREEN |
| 3 | | **6245101063** | 1 | BRACKET, RIGHT HAND SUN SCREEN |
| 4 | | **7115140478** | 8 | CAP SCREW,<br>1/4" - 20 N.C. X 1/2"<br>GRADE 5 |
| 5 | | **7660142701** | 8 | LOCKNUT, HEX<br>1/4" - 20 N.C. |
| 6 | | **7942000512** | 1 | BRACKET SET, FOOTLESS BLIND |
| 7 | | **7121110801** | 4 | MACHINE SCREW, M4X12 SLOTTED |
| 8 | | **7661110003** | 4 | NUT, HEX<br>4 MM N.C. |
| 9 | | **7951110210** | 4 | LOCKWASHER, 4MM I.D. |

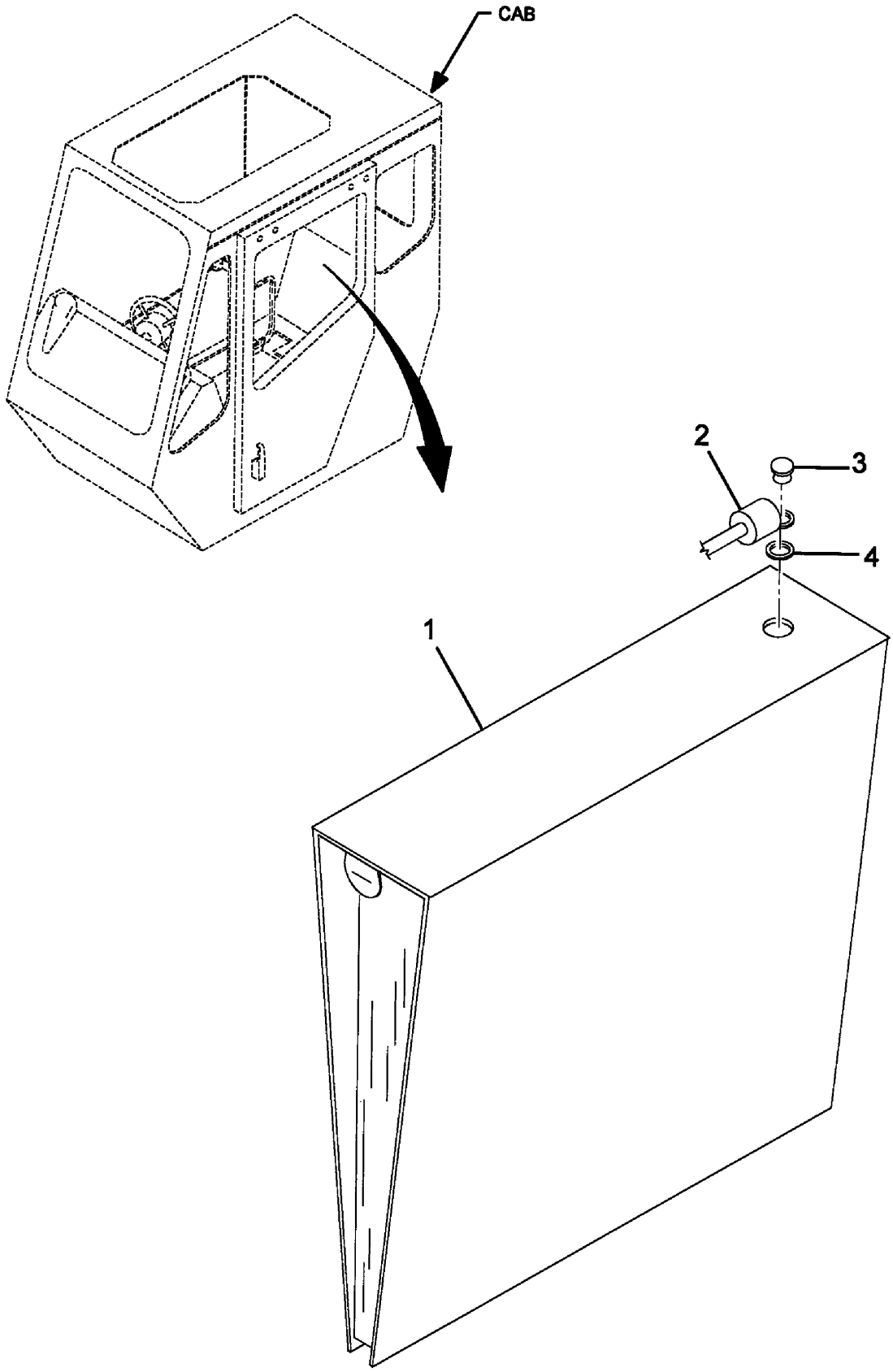


6258100005

(SHEET 1 OF 1)

Description
**BINDER INSTALLATION**

Assembly No.
**6258100005**
Revision: **A**

| Item | FN | Part | Qty | Description |
|---|---|---|---|---|
| 1 | | **7258100138** | 1 | BINDER |
| 2 | | **6246001174** | 1 | LANYARD<br>INCLUDES THE FOLLOWING PARTS |
| | | **7345211901** | 1 | TERMINAL<br>12 - 10 AWG |
| | | **7345221901** | 1 | TERMINAL<br>12 - 10 AWG |
| | | **7892000196** | 2 | PARALLEL, NON - INSULATED<br>8 AWG |
| | | **7364001547** | 1 | SWIVEL |
| 3 | | **7760000008** | 1 | RIVET, POP |
| 4 | | **7950080141** | 1 | FLATWASHER, 5/32" I.D. |

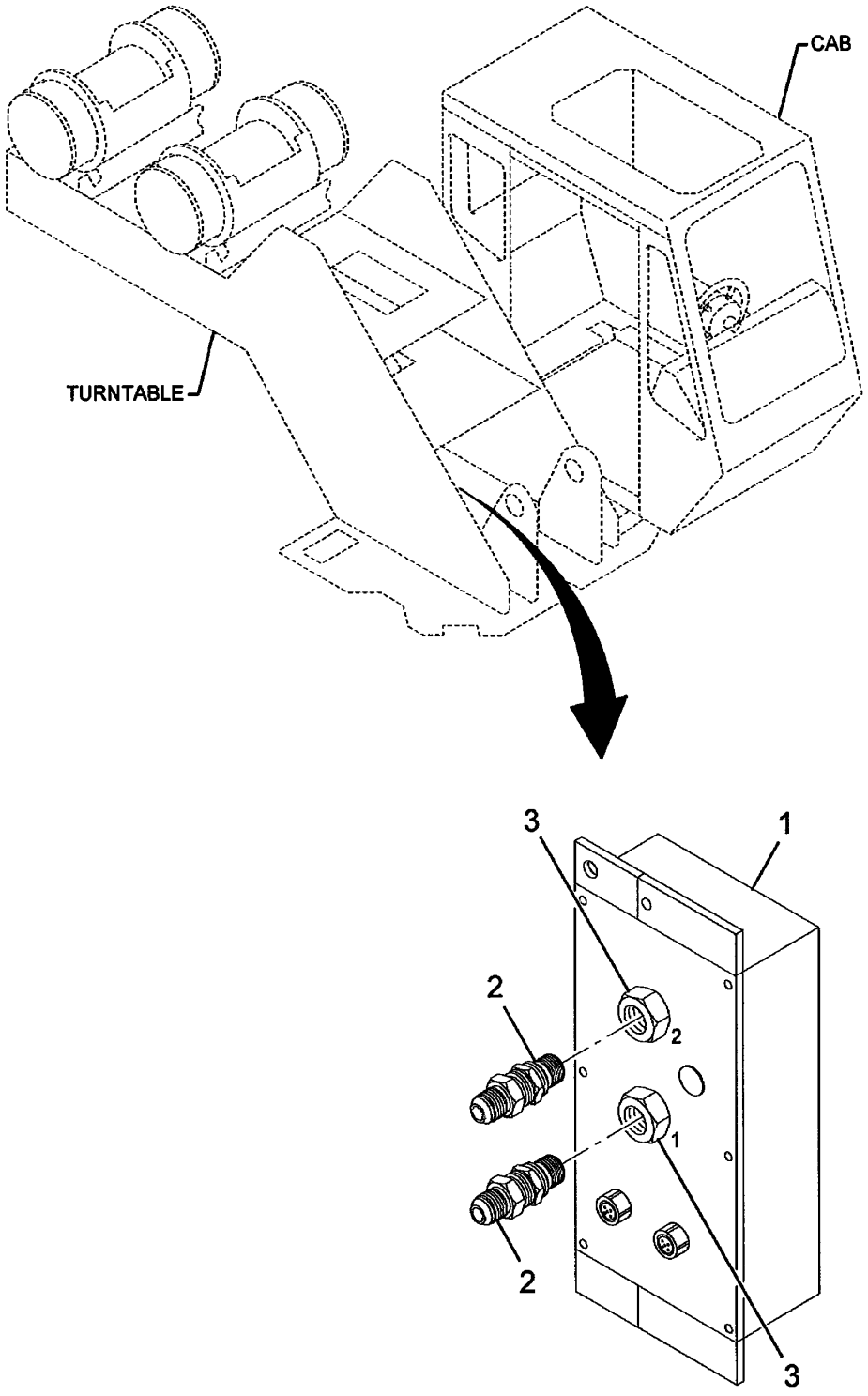


7598100092

(SHEET 1 OF 1)

Description
**KIT, LMI S/S IFLEX 5**

Assembly No.
**7598100092**
Revision: #

| Item | FN | Part | Qty | Description |
|---|---|---|---|---|
| 1 | | **9333103870** | 1 | PRESSURE TRANSDUCER, iFLEX 5 (2 PACK) |
| 2 | | **9333101471** | 2 | FITTING, BULKHEAD ADAPTER 9/16-18 JIC |
| 3 | | **9333101472** | 2 | SEAL, CUTTING |

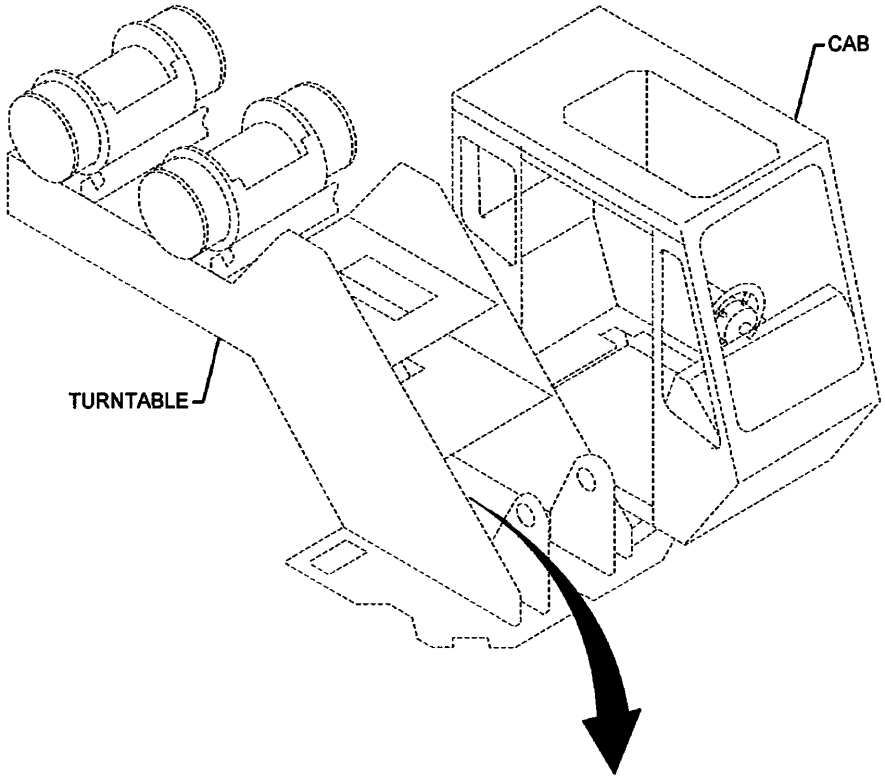


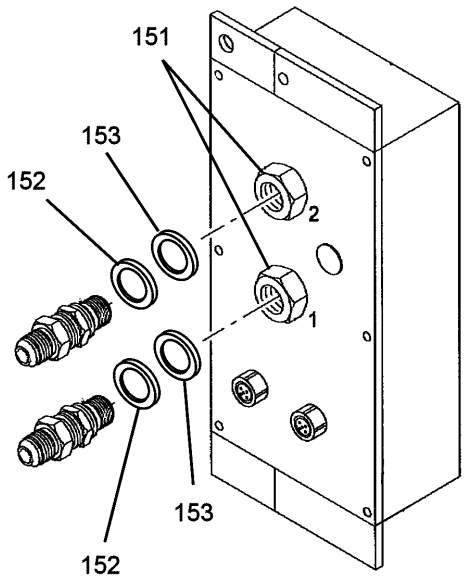


6978100727

(SHEET 1 OF 1)

Description
**KIT INSTALLATION - iFLEX 5 LMI SUPERSTRUCTURE**

Assembly No.
**6978100727**
Revision: **A**

| Item | FN | Part | Qty | Description |
|---|---|---|---|---|
| 151 | | **7660190008** | 2 | NUT, HEX<br>9/16" - 12 N.C. |
| 152 | | **7950190050** | 2 | WASHER, LOCK<br>9/16" I.D. |
| 153 | | **7950220161** | 2 | WASHER, FLAT 3/4" |

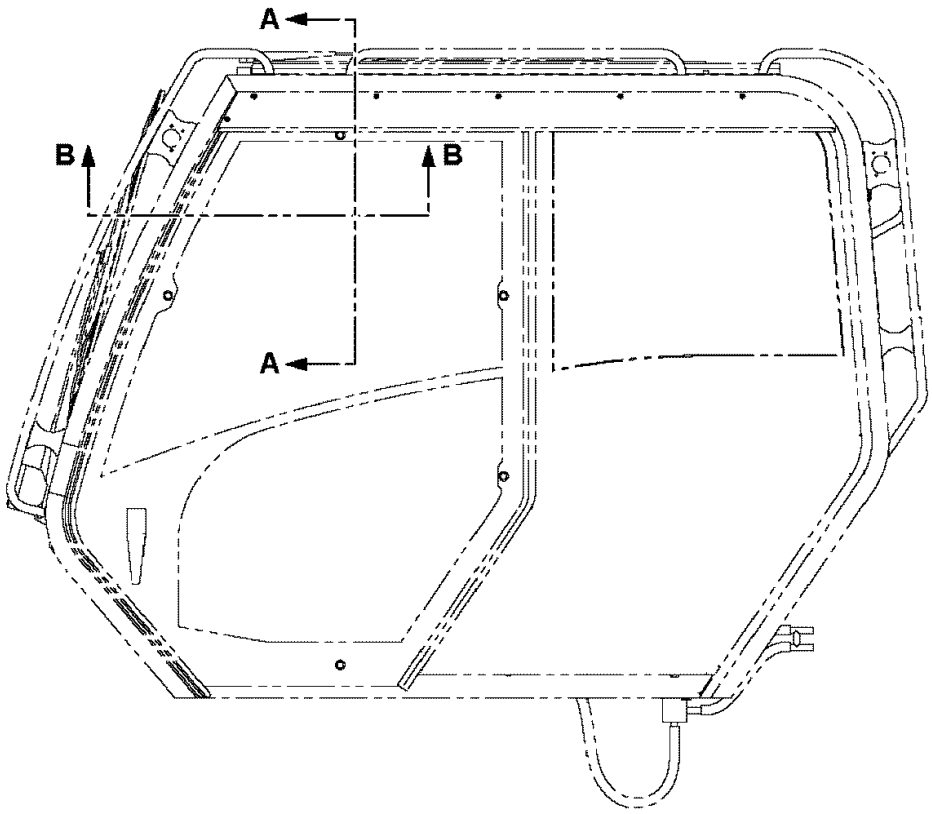


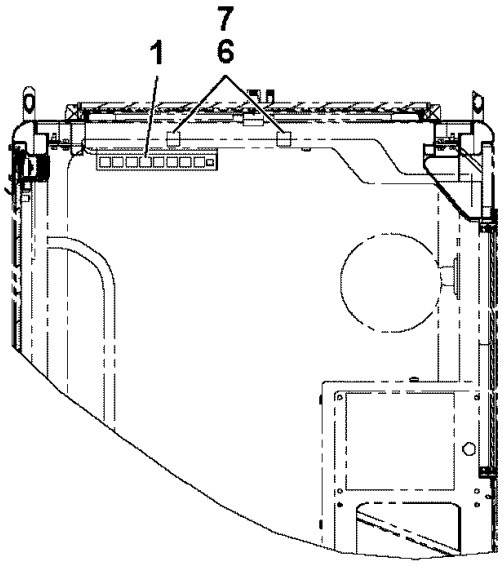


SECTION A-A

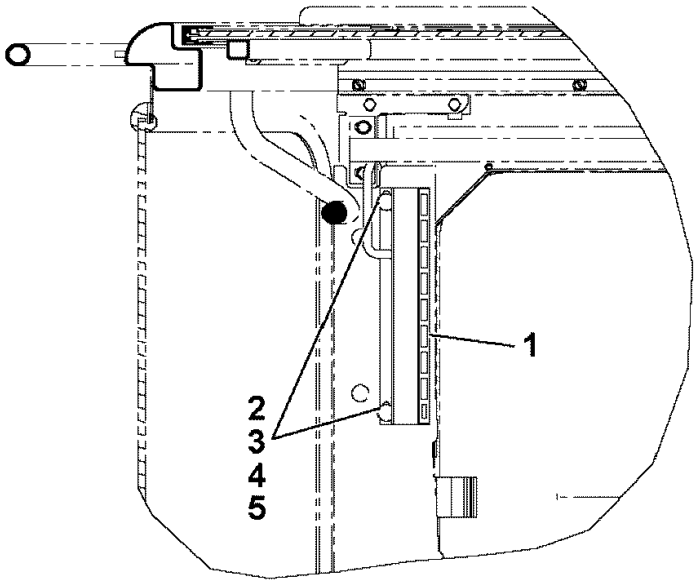


SECTION B-B

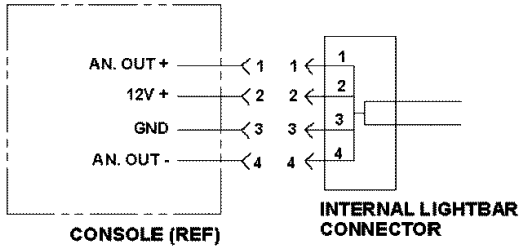


WIRING DETAIL

80008131

(SHEET 1 OF 1)

Description
**LMI INTERNAL LIGHT BAR INSTALLATION**

Assembly No.
**80008131**
Revision: #

| Item | FN | Part | Qty | Description |
|---|---|---|---|---|
| 1 | | **80008129** | 1 | LMI INTERNAL LIGHT BAR |
| 2 | | **7429000542** | 2 | FASTENER, NUT 1/4" - 20 N.C. |
| 3 | | **7111140811** | 2 | SCREW, MACHINE<br>1/4" - 20 N.C. X 1"<br>GRADE 1 |
| 4 | | **7949001186** | 2 | WASHER, BLACK NYLON |
| 5 | | **7258001451** | 2 | CAP, 1/4" |
| 6 | | **7638000750** | 2 | MOUNT, WIRE TIE |
| 7 | | **7850000208** | 2 | CABLE TIE, BLACK |

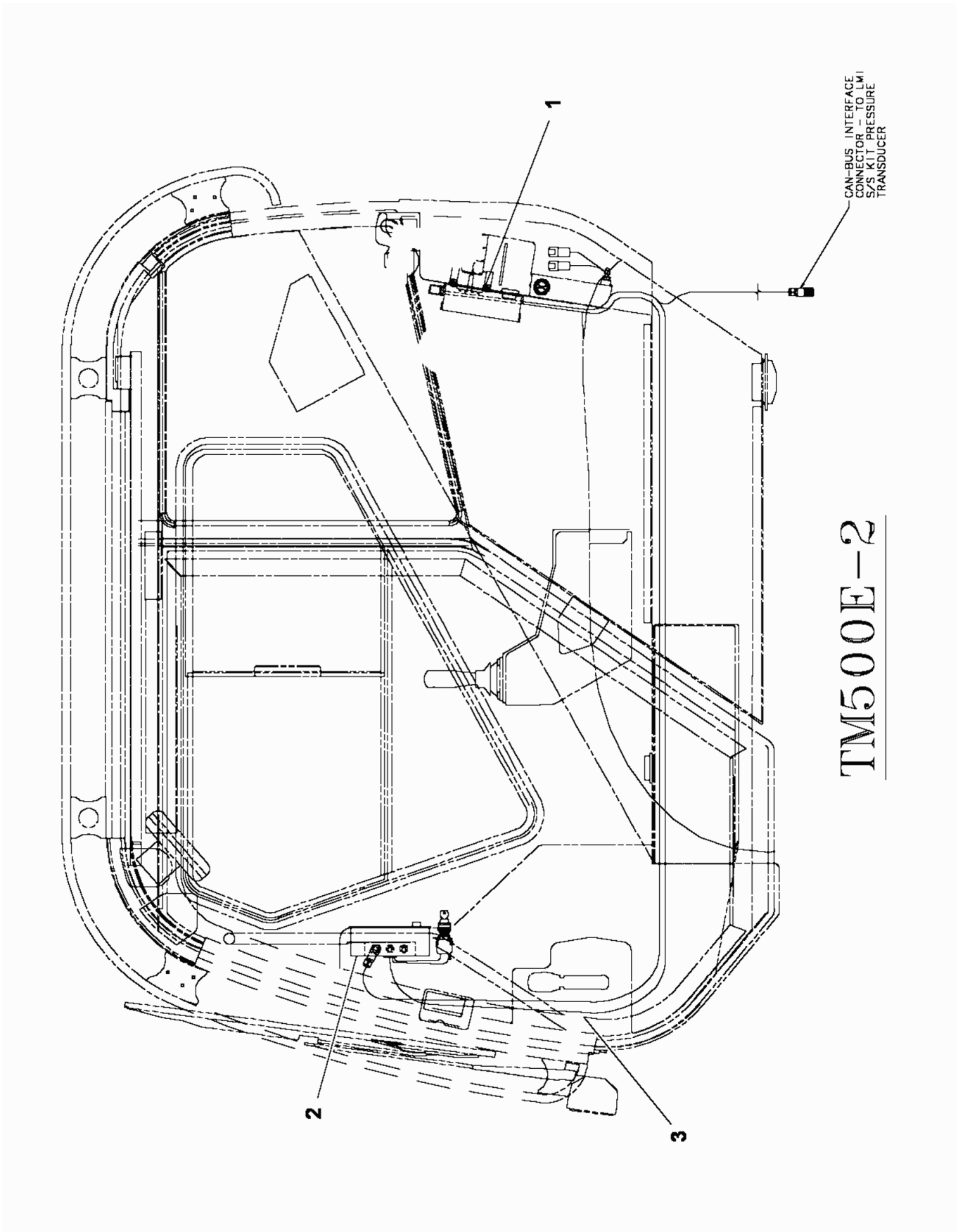


**7598100166**

**(SHEET 3 OF 3)**

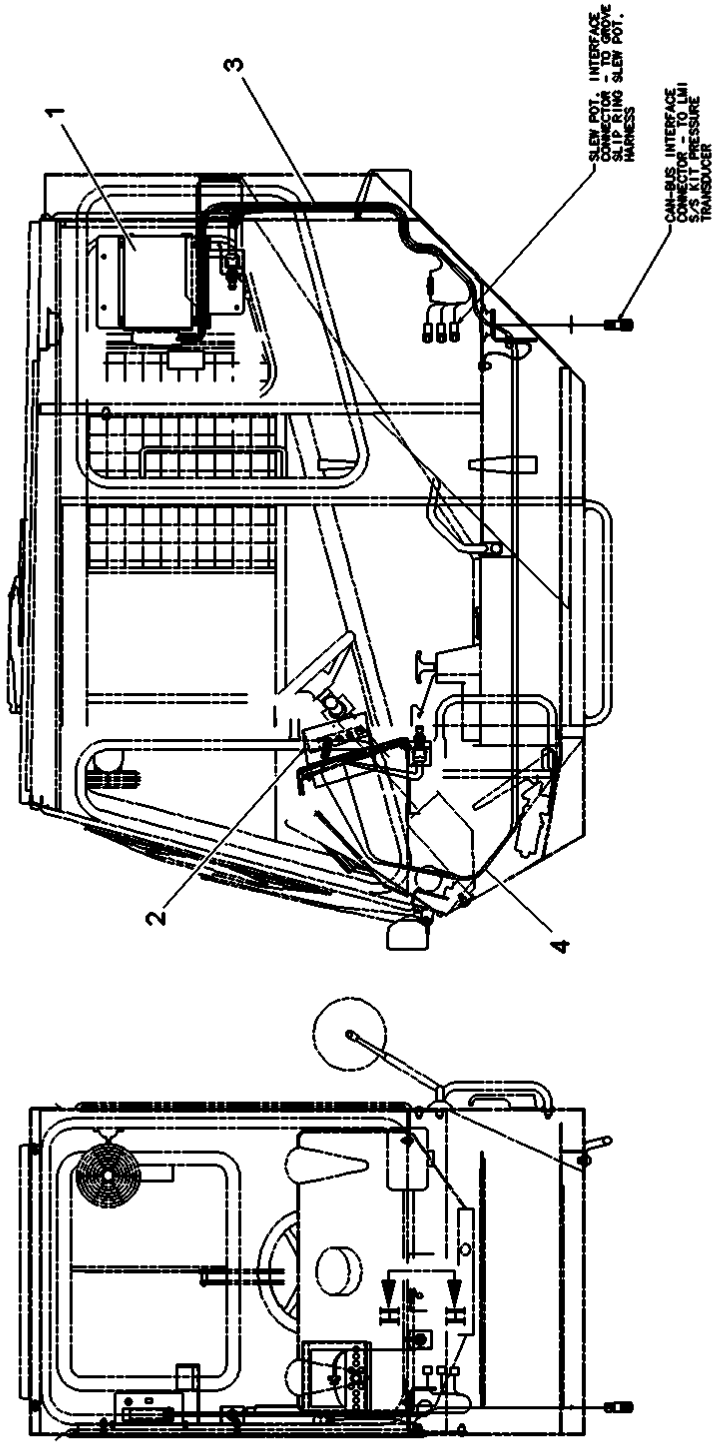


RT600E, RT700E, RT875E

7598100166

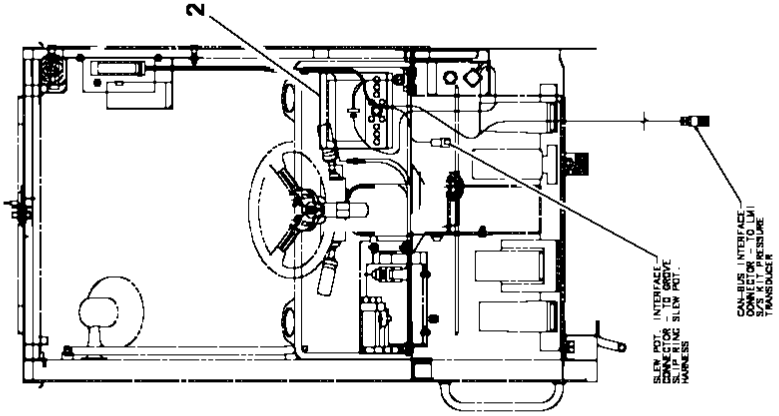


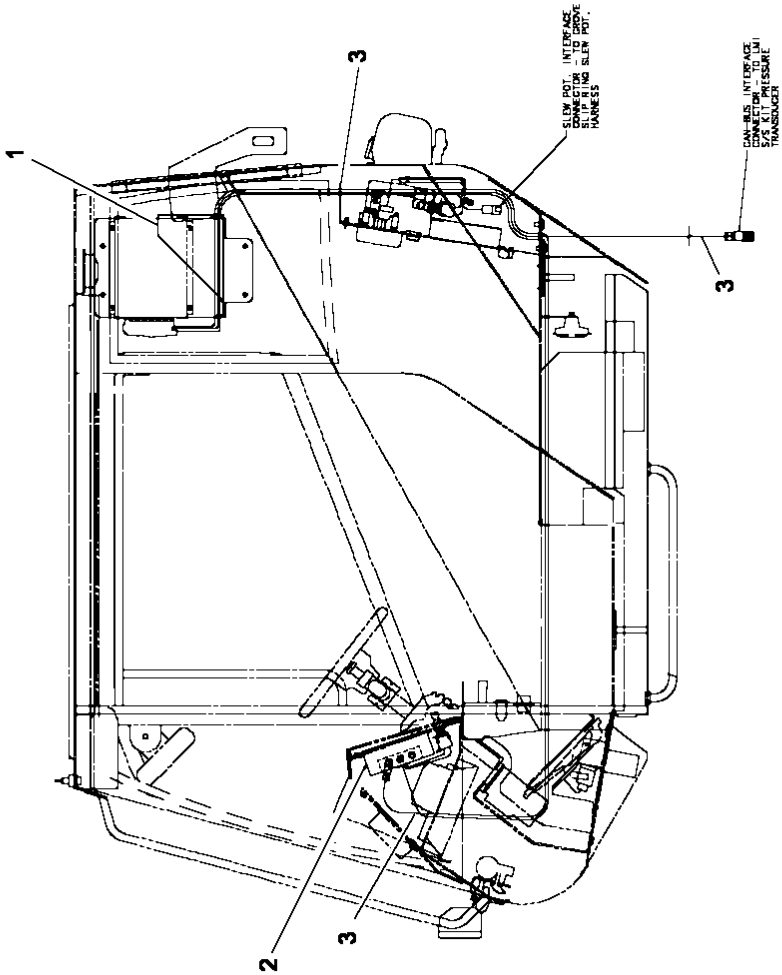


RT530E-2 and RT540E

Description
**KIT - iFLEX2 LMI CAB (COMPLETE ASSEMBLY)**

Assembly No.
**7598100166**
Revision: #

| Item | FN | Part | Qty | Description |
|---|---|---|---|---|
| 1 | | **9333107524** | 1 | CENTERAL UNIT ASSEMBLY - iFLEX2 (COMPLETE ASSEMBLY) |
| | | | | INCLUDES THE FOLLOWING PARTS |
| | | **90011561** | 1 | FUSE,2A |
| | | **90011563** | 1 | FUSE,7.5A |
| | | **90011562** | 1 | FUSE,15A |
| 2 | # | **9333107526** | 1 | CONSOLE ASSEMBLY - GRAPHIC (COLOR) (COMPLETE ASSEMBLY) |
| | | | | INCLUDES THE FOLLOWING PARTS |
| | # | **90016149** | 1 | KNOB |
| 3 | | **9333107525** | 1 | HARNESS ASSY, S/S (IFLEX2) |

**# SERVICED AS AN ASSEMBLY ONLY**

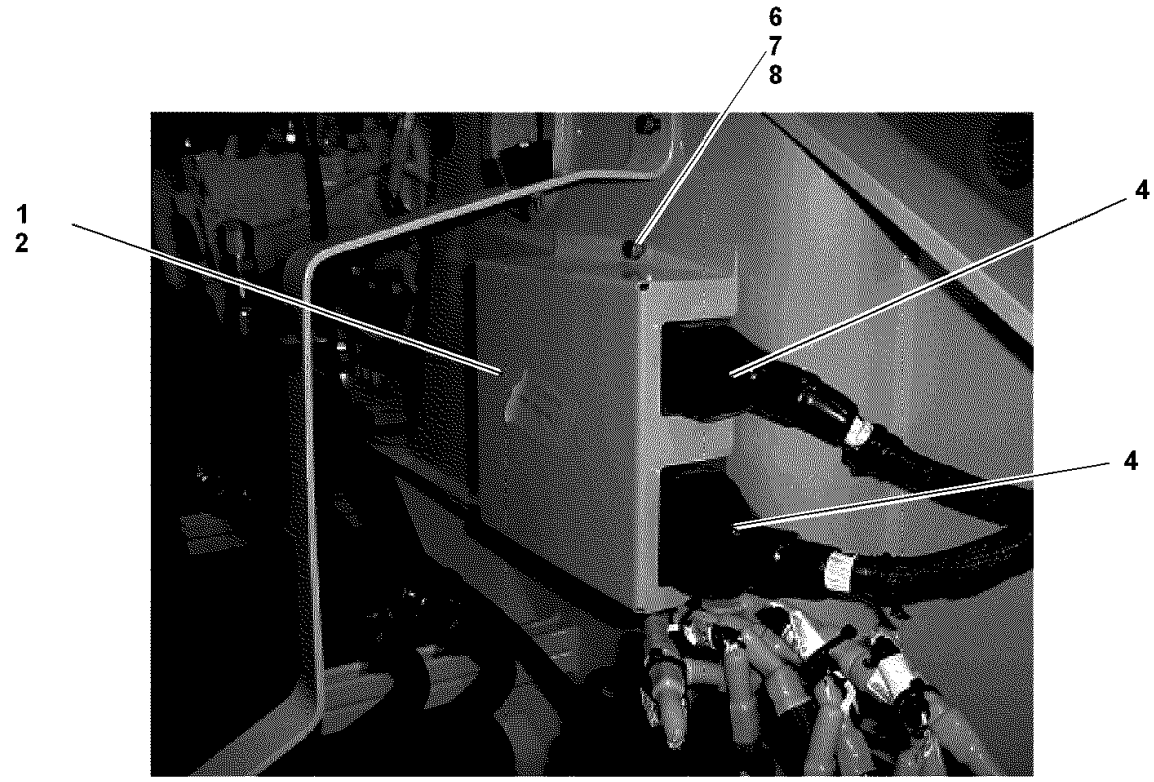


RIGHT TURNTABLE MODULE COVER

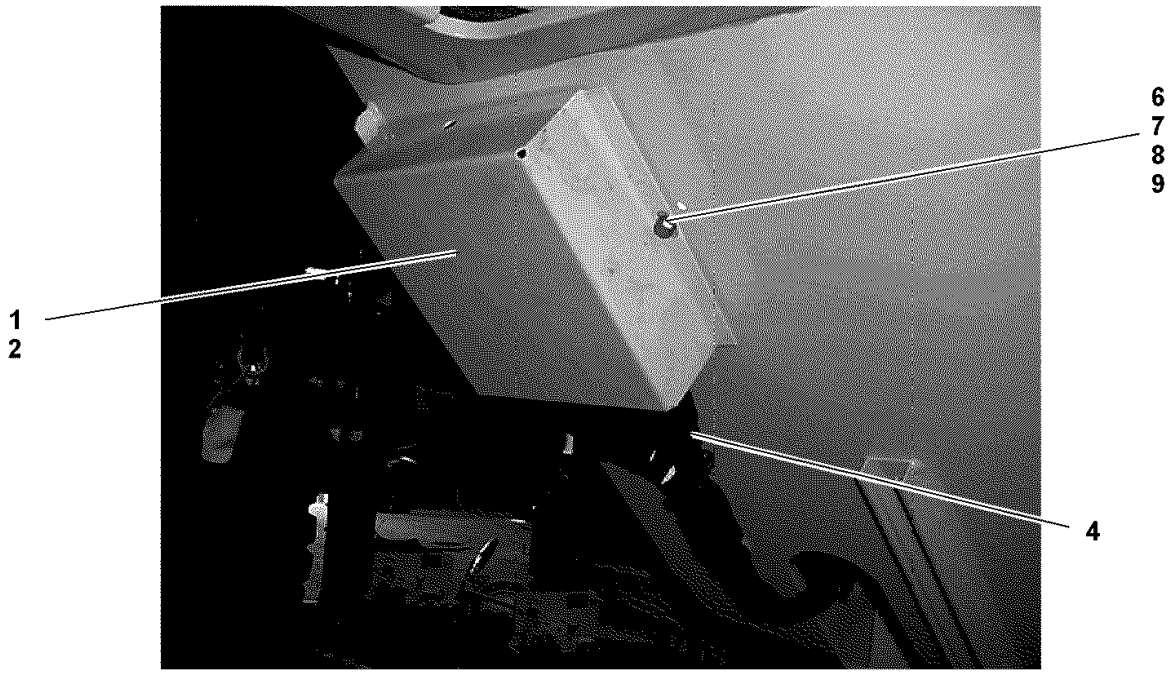


LEFT TURNTABLE MODULE COVER

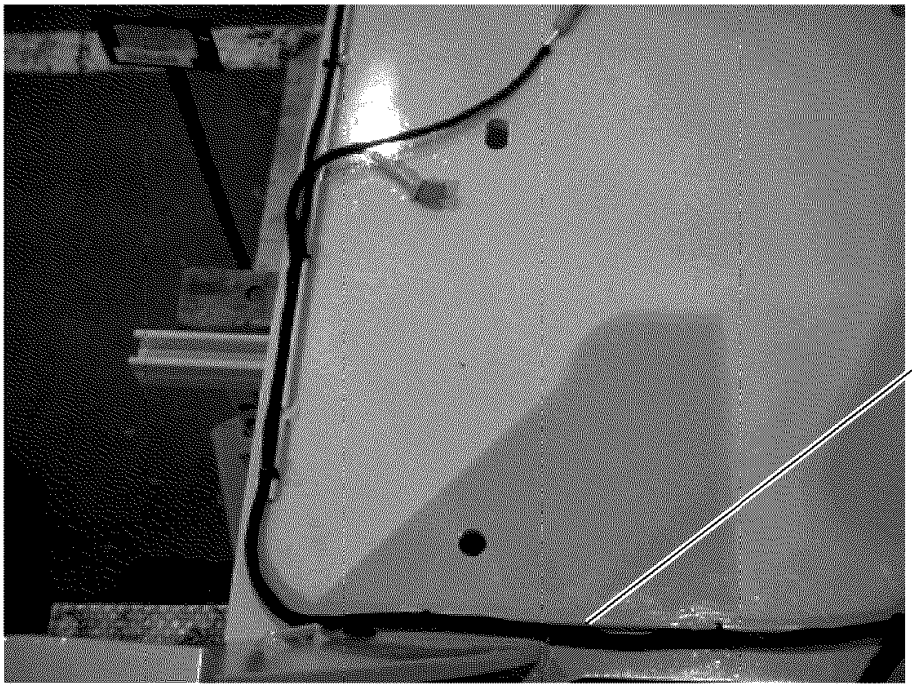


HARNESS ROUTING RIGHT SIDE TURNTABLE

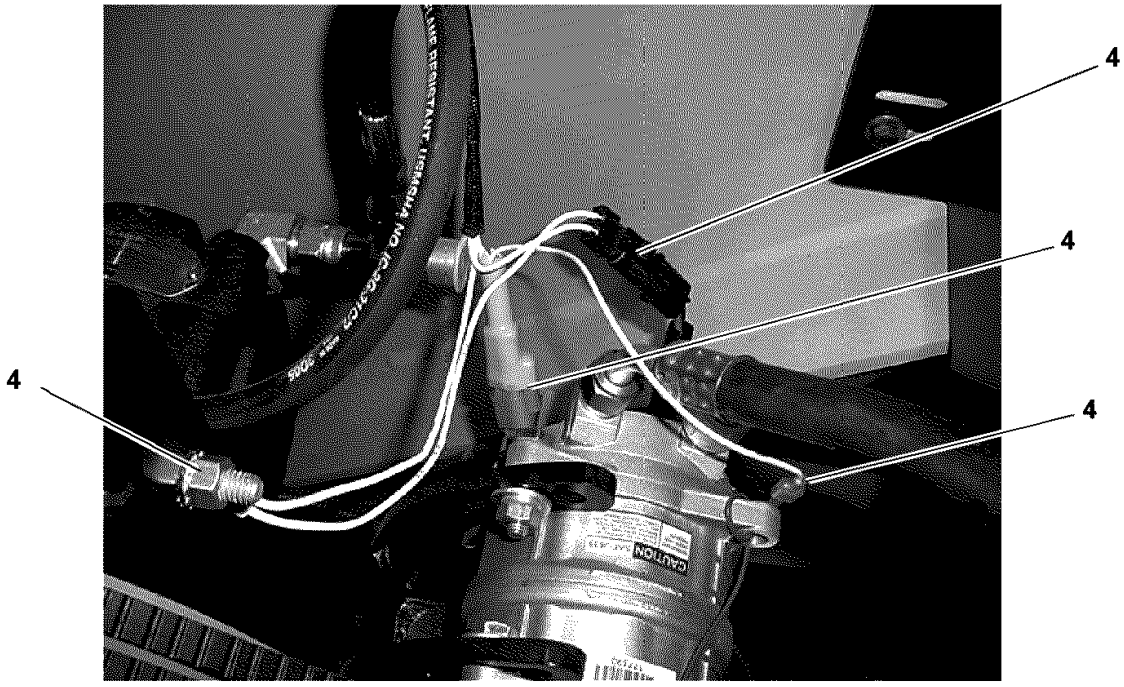


A/C CONNECTIONS

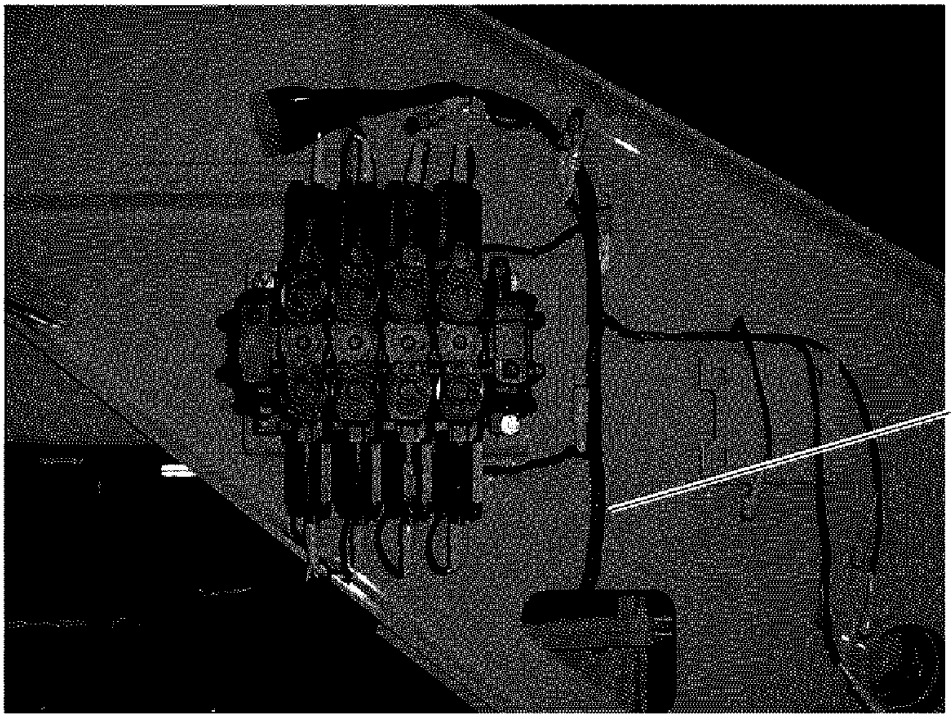


TURNTABLE RIGHT SIDE MAIN DIRECTIONAL VALVE

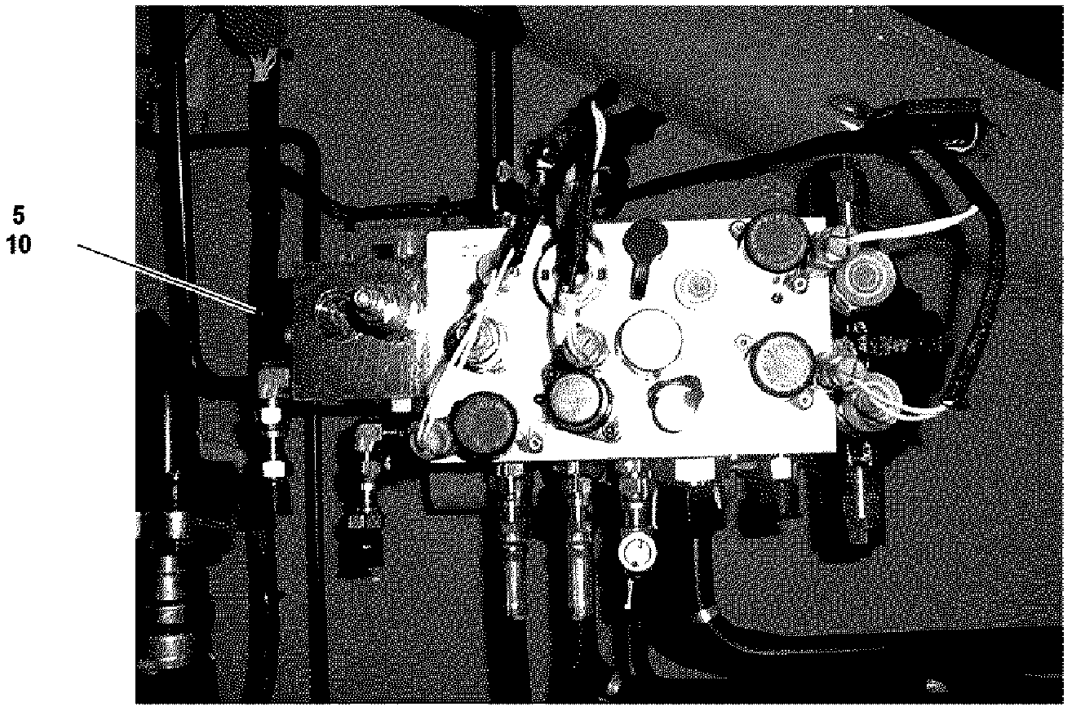


RIGHT SIDE TURNTABLE SWING MANIFOLD

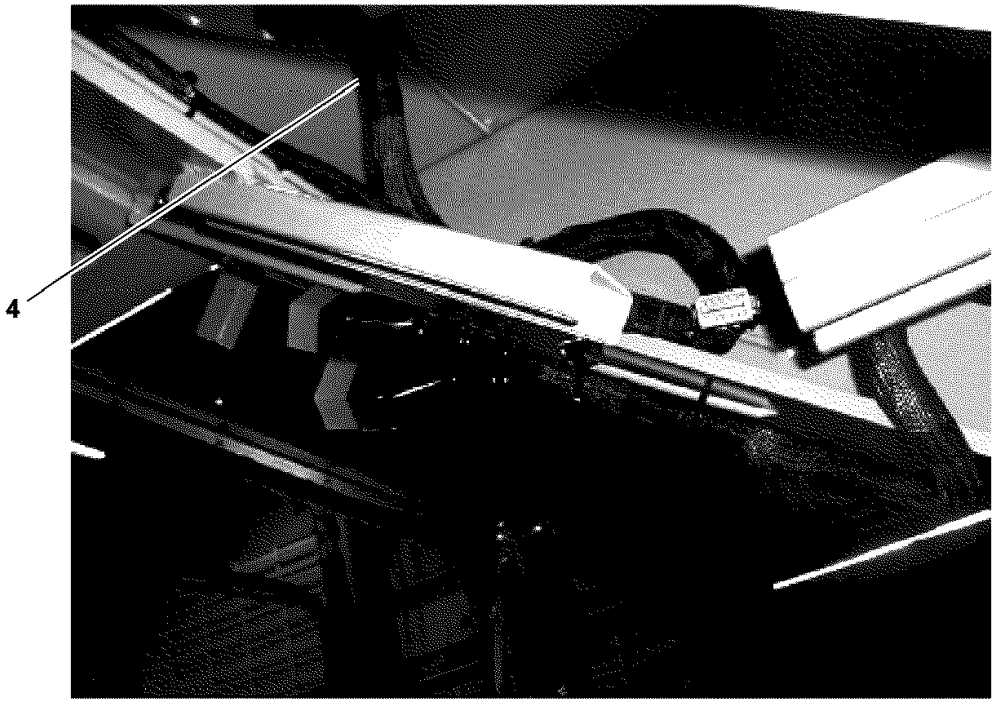


INSIDE TURNTABLE FRAME HARNESS ROUTING

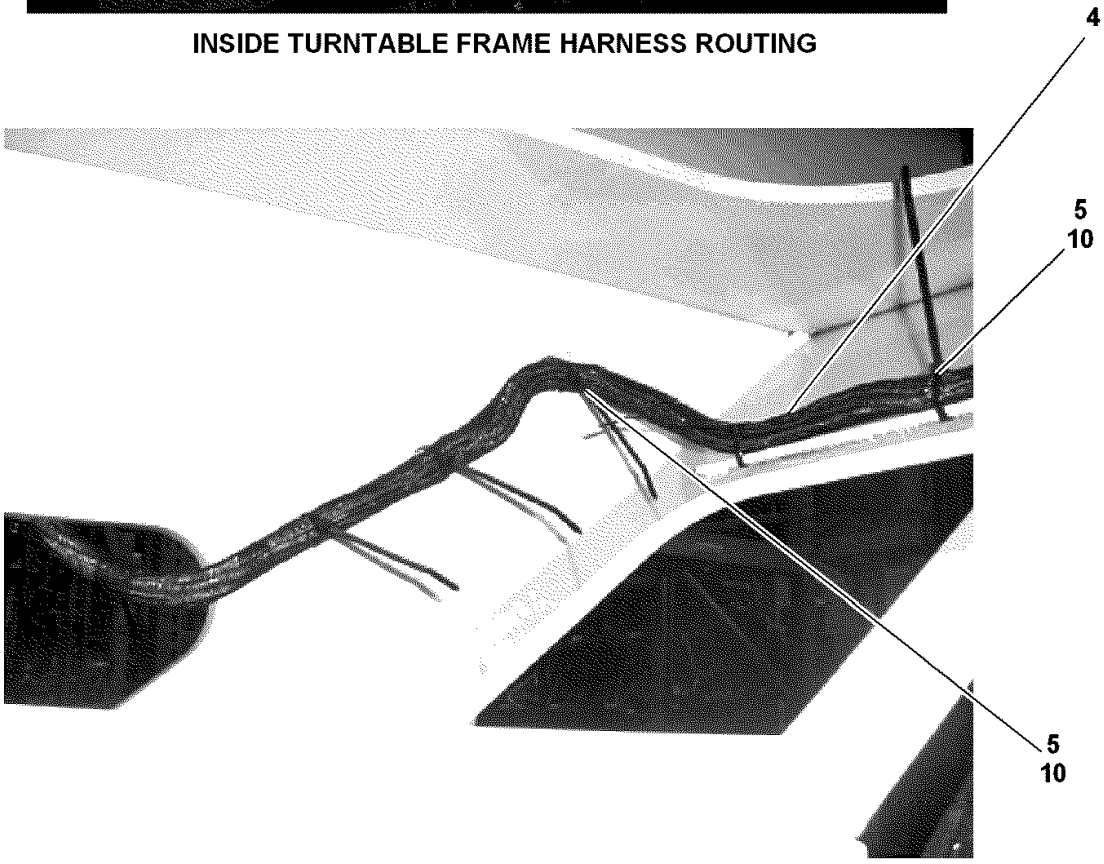


INSIDE RIGHT TURNTABLE HARNESS ROUTING

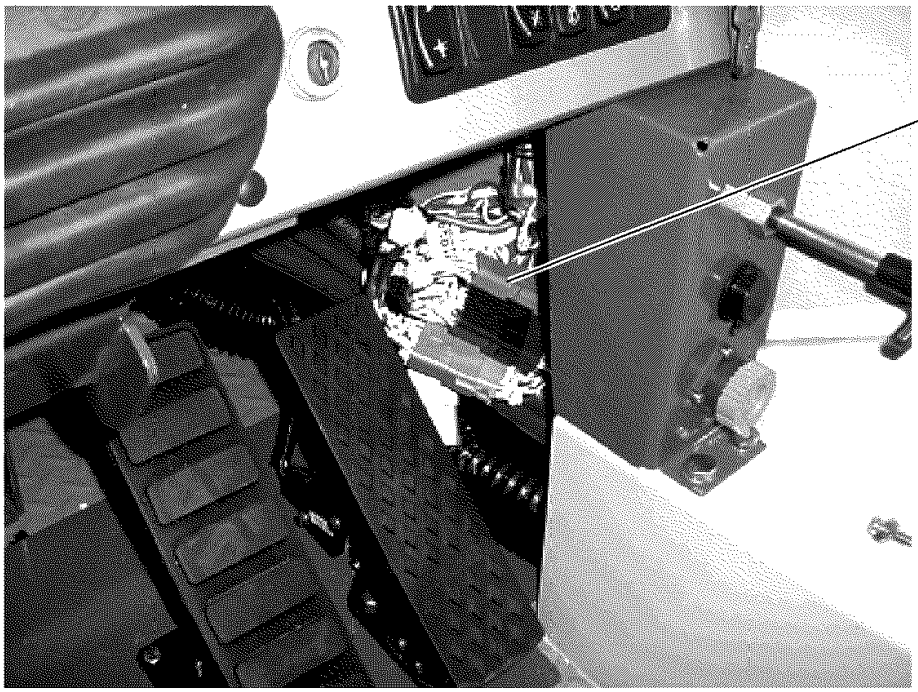


FRONT INSIDE CAB HARNESS CONNECTION

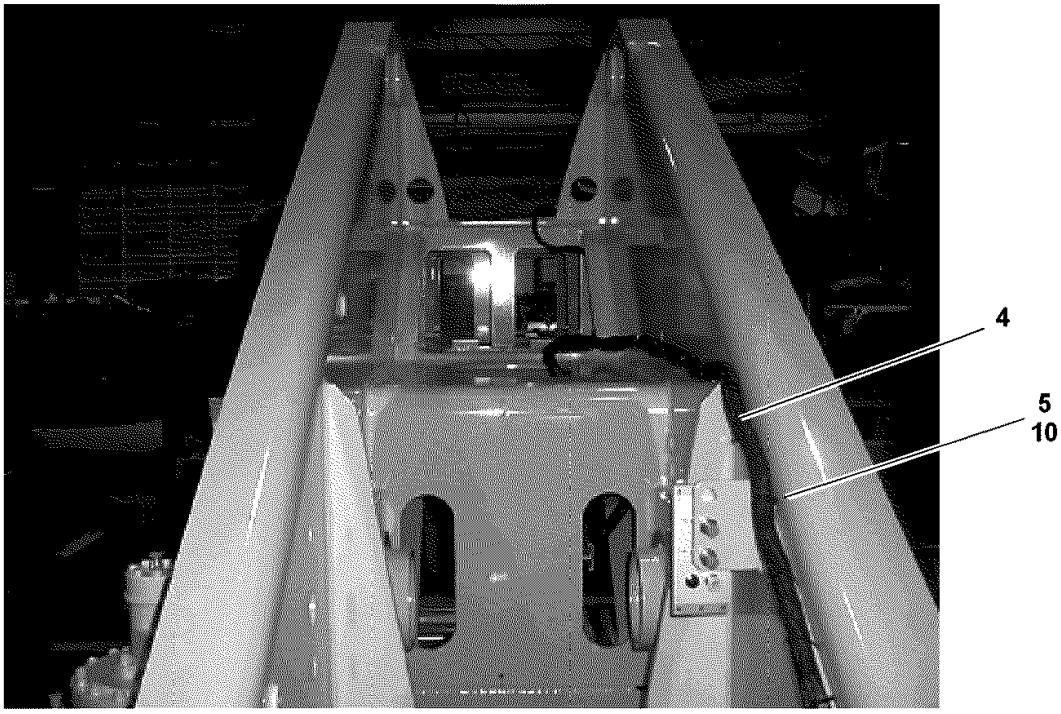


TURNTABLE HARNESS ROUTING

Description
**ELECTRICAL SYSTEM INSTALLATION - SUPERSTRUCTURE (RT540E/RT530E2)**

Assembly No.
**6978100998**
Revision: #

| Item | FN | Part | Qty | Description |
|---|---|---|---|---|
| 1 | # | **7352100070** | 2 | MODULE, CONTROL (FRAME AND TURNTABLE) |
| 2 | | **6258100042** | 2 | COVER |
| 4 | + | **6512101098** | 1 | HARNESS ASSEMBLY - SUPERSTRUCTURE (COMPLETE ASSEMBLY) |
| 5 | | **7850000237** | 30 | TIE, CABLE (BLACK) 7 5/16" LONG |
| 6 | | **7126171253** | 2 | CAP SCREW, M8X25 HEX HEAD |
| 7 | | **7951170014** | 2 | FLAT WASHER |
| 8 | | **7951170210** | 2 | WASHER, LOCK 8MM |
| 9 | | **7661170003** | 1 | NUT - 8MM X 1.25 |
| 10 | | **7850000805** | 20 | TIE, CABLE (BLACK) 13 3/8" LONG |

**# SERVICED AS AN ASSEMBLY ONLY**

**+ SEE FURTHER BREAKDOWN THIS GROUP**

| WIRE NO | COLOR | SAE SIZE | LENGTH TOT IN | TP | B/M ITEM NO | REMARKS | TP | B/M ITEM NO | REMARKS |
|---|---|---|---|---|---|---|---|---|---|
| SHLD7 | WHT | 16 | 4 | AM | STRIP | CABLE PC2B | AM | STRIP | CABLE PC2B |
| SHLD8 | | 16 | 4 | BD | STRIP | CABLE PC2D | BD | STRIP | CABLE PC2D |
| SHLD9 | | 16 | 4 | BC | STRIP | CABLE PC1G | BC | STRIP | CABLE PC1G |
| SHLD10 | | 16 | 4 | BD | STRIP | CABLE PC2E | BD | STRIP | CABLE PC2E |
| SHLD11 | | 16 | 4 | AV | STRIP | CABLE J1939 | AV | STRIP | CABLE J1939 |
| SHLD12 | | 16 | 4 | AM | STRIP | CABLE J1939 | AM | STRIP | CABLE J1939 |
| SHLD13 | WHT | 16 | 4 | AA | STRIP | CABLE SWGPED | AA | STRIP | CABLE SWGPED |

WIRE NUMBER LABELS FOR USE ON CABLE ASSYS

| WIRE NO | CONDUCTOR COLOR | SAE SIZE | LENGTH TOT IN | CABLE ASSY | TP | REMARKS | TP | REMARKS | LABLES REQ'D |
|---|---|---|---|---|---|---|---|---|---|
| 1484A | WHT | 10 | 5 | PC1A | AX | USE INSUL | SA7 | USE INSUL | 2 |
| 1484B | | 10 | 5 | PC1B | AW | USE INSUL | SA7 | USE INSUL | 2 |
| 1484C | | 10 | 5 | PC1C | AV | USE INSUL | SA7 | USE INSUL | 2 |
| 1484D | | 10 | 5 | PC1D | AM | USE INSUL | SA7 | USE INSUL | 2 |
| 1484E | | 10 | 5 | PC1E | AA | USE INSUL | SA7 | USE INSUL | 2 |
| 1484F | | 10 | 5 | PC1F | BC | USE INSUL | SA7 | USE INSUL | 2 |
| 1484G | | 10 | 5 | PC1G | BA | USE INSUL | BC | USE INSUL | 2 |
| 1485A | | 10 | 5 | PC1A | AX | USE INSUL | SA7 | USE INSUL | 2 |
| 1485B | | 10 | 5 | PC1B | AW | USE INSUL | SA7 | USE INSUL | 2 |
| 1485C | | 10 | 5 | PC1C | AV | USE INSUL | SA7 | USE INSUL | 2 |
| 1485D | | 10 | 5 | PC1D | AM | USE INSUL | SA7 | USE INSUL | 2 |
| 1485E | | 10 | 5 | PC1E | AA | USE INSUL | SA7 | USE INSUL | 2 |
| 1485F | | 10 | 5 | PC1F | BC | USE INSUL | SA7 | USE INSUL | 2 |
| 1485G | | 10 | 5 | PC1G | BA | USE INSUL | BC | USE INSUL | 2 |
| 1486A | | 10 | 5 | PC2A | AV | USE INSUL | SA7 | USE INSUL | 2 |
| 1486B | | 10 | 5 | PC2B | AM | USE INSUL | SA7 | USE INSUL | 2 |
| 1486C | | 10 | 5 | PC2C | AD | USE INSUL | SA7 | USE INSUL | 2 |
| 1486D | | 10 | 5 | PC2D | BD | USE INSUL | SA7 | USE INSUL | 2 |
| 1486E | | 10 | 5 | PC2E | BB | USE INSUL | BD | USE INSUL | 2 |
| 1487A | | 10 | 5 | PC2A | AV | USE INSUL | SA7 | USE INSUL | 2 |
| 1487B | | 10 | 5 | PC2B | AM | USE INSUL | SA7 | USE INSUL | 2 |
| 1487C | | 10 | 5 | PC2C | AD | USE INSUL | SA7 | USE INSUL | 2 |
| 1487D | | 10 | 5 | PC2D | BD | USE INSUL | SA7 | USE INSUL | 2 |
| 1487E | | 10 | 5 | PC2E | BB | USE INSUL | BD | USE INSUL | 2 |
| 1495 | | 10 | 5 | SWGPED | AA | USE INSUL | AM | USE INSUL | 2 |
| 1496 | | 10 | 5 | SWGPED | AA | USE INSUL | AM | USE INSUL | 2 |
| 1497 | | 10 | 5 | SWGPED | AA | USE INSUL | AM | USE INSUL | 2 |
| 1498 | | 10 | 5 | TP | AA | USE INSUL | AM | USE INSUL | 2 |
| 51ZZ | | 10 | 5 | TP | AA | USE INSUL | AM | USE INSUL | 2 |
| 1162 | | 10 | 5 | TP | AA | USE INSUL | AM | USE INSUL | 2 |
| 1289 | | 10 | 5 | J1939 | AV | USE INSUL | AM | USE INSUL | 2 |
| 1290 | WHT | 10 | 5 | J1939 | AV | USE INSUL | AM | USE INSUL | 2 |

| WIRE NO | COLOR | SAE SIZE | LENGTH TOT IN | TP | B/M ITEM NO | REMARKS | TP | B/M ITEM NO | REMARKS |
|---|---|---|---|---|---|---|---|---|---|
| 1169A | WHT | 18 | 45 | BB | 8 | ——— | BE | 8 | ——— |
| 1195 | | 18 | 112 | AR | 8 | ——— | AM | 8 | ——— |
| 1257 | | 14 | 112 | AR | 7 | ——— | AM | 7 | ——— |
| 1269 | | 14 | 112 | AR | 7 | ——— | AM | 7 | ——— |
| 1272 | | 18 | 112 | AR | 8 | ——— | AM | 8 | ——— |
| 1384A | | 16 | 31 | AM | 8 | ——— | SA3 | STRIP | SEE DETAIL |
| 1384B | | 18 | 55 | AK | 8 | ——— | SA3 | STRIP | SEE DETAIL |
| 1384C | | 16 | 81 | AX | 42 | ——— | SA3 | STRIP | SEE DETAIL |
| 1385 | | 14 | 30 | AR | 7 | ——— | AX | 42 | ——— |
| 1388A | | 18 | 146 | AA | 8 | ——— | SA2 | STRIP | SEE DETAIL |
| 1388B | | 18 | 113 | AS | 66 | ——— | SA2 | STRIP | SEE DETAIL |
| 1388C | | 18 | 61 | AJ | 8 | ——— | SA2 | STRIP | SEE DETAIL |
| 1388D | | 18 | 69 | AH | 8 | ——— | SA2 | STRIP | SEE DETAIL |
| 1388E | | 16 | 233 | AAG | 8 | ——— | SA2 | STRIP | SEE DETAIL |
| 1436A | | 10 | 290 | AR | 36 | ——— | SB1 | STRIP | SEE DETAIL |
| 1436B | | 14 | 13 | BA | 7 | ——— | SB1 | STRIP | SEE DETAIL |
| 1436C | | 14 | 13 | BA | 7 | ——— | SB1 | STRIP | SEE DETAIL |
| 1436D | | 14 | 13 | BA | 7 | ——— | SB1 | STRIP | SEE DETAIL |
| 1436E | | 14 | 13 | BB | 7 | ——— | SB1 | STRIP | SEE DETAIL |
| 1436G | | 14 | 13 | BB | 7 | ——— | SB1 | STRIP | SEE DETAIL |
| 1436H | | 14 | 13 | BA | 7 | ——— | SB1 | STRIP | SEE DETAIL |
| 1450 | | 18 | 68 | AM | 8 | ——— | AL | 8 | ——— |
| 1451 | | 18 | 68 | AM | 8 | ——— | AL | 8 | ——— |
| 1467 | | 18 | 112 | AM | 8 | ——— | AR | 8 | ——— |
| 1468 | | 18 | 112 | AM | 8 | ——— | AR | 8 | ——— |
| 1472 | | 18 | 215 | AA | 6 | ——— | AP | 27 | ——— |
| 1475 | | 18 | 121 | AD | 8 | ——— | BH | 8 | ——— |
| 1481A | | 10 | 217 | AR | 36 | ——— | SA1 | STRIP | SEE DETAIL |
| 1481B | | 14 | 13 | AD | 7 | ——— | SA1 | STRIP | SEE DETAIL |
| 1481C | | 14 | 13 | AA | 7 | ——— | SA1 | STRIP | SEE DETAIL |
| 1481D | | 14 | 13 | AD | 7 | ——— | SA1 | STRIP | SEE DETAIL |
| 1481E | | 14 | 13 | AA | 7 | ——— | SA1 | STRIP | SEE DETAIL |
| 1481F | | 14 | 13 | AA | 7 | ——— | SA1 | STRIP | SEE DETAIL |
| 1481G | | 14 | 13 | AA | 7 | ——— | SA1 | STRIP | SEE DETAIL |
| 1488 | | 18 | 165 | BA | 6 | ——— | AE | 66 | ——— |
| 1511 | | 14 | 112 | AR | 7 | ——— | AM | 7 | ——— |
| 1516A | | 14 | 215 | SA1 | STRIP | SEE DETAIL | AR | 7 | ——— |
| 1516B | | 14 | 15 | SA1 | STRIP | SEE DETAIL | AD | 7 | ——— |
| 1516C | | 14 | 106 | SA1 | STRIP | SEE DETAIL | BB | 7 | ——— |
| 1520A | | 18 | 105 | SA1 | STRIP | SEE DETAIL | BA | 6 | ——— |
| 1520B | | 18 | 16 | SA1 | STRIP | SEE DETAIL | AA | 6 | ——— |
| 1520C | | 18 | 163 | SA1 | STRIP | SEE DETAIL | AM | 6 | ——— |
| J1 | | 18 | 3 | AB | 41 | ——— | AB | 41 | ——— |
| J2 | | 18 | 3 | AC | 41 | ——— | AC | 41 | ——— |
| SHLD1 | | 16 | 4 | AX | STRIP | CABLE PC1A | AX | STRIP | CABLE PC1A |
| SHLD2 | | 16 | 4 | AW | STRIP | CABLE PC1B | AW | STRIP | CABLE PC1B |
| SHLD3 | | 16 | 4 | AV | STRIP | CABLE PC1C | AV | STRIP | CABLE PC1C |
| SHLD4 | | 16 | 4 | AM | STRIP | CABLE PC1D | AM | STRIP | CABLE PC1D |
| SHLD5 | | 16 | 4 | BC | STRIP | CABLE PC1F | BC | STRIP | CABLE PC1F |
| SHLD6 | WHT | 16 | 4 | AV | STRIP | CABLE PC2A | AV | STRIP | CABLE PC2A |

| WIRE NO | COLOR | SAE SIZE | LENGTH TOT IN | TP | B/M ITEM NO | REMARKS | TP | B/M ITEM NO | REMARKS |
|---|---|---|---|---|---|---|---|---|---|
| 71 | WHT | 14 | 30 | AR | 7 | | AW | 7 | |
| 73 | | 18 | 106 | AW | 6 | | AM | 6 | |
| 74A | | 18 | 106 | AW | 6 | | AM | 6 | |
| 74B | | 16 | 103 | AA | 8 | | AB | 8 | |
| 87A | | 14 | 173 | BA | 7 | | SA6 | STRIP | SEE DETAIL |
| 87B | | 14 | 5 | AF | 7 | | SA6 | STRIP | SEE DETAIL |
| 87C | | 14 | 5 | AF | 7 | | SA6 | STRIP | SEE DETAIL |
| 89A | | 18 | 181 | AAH | 8 | | AD | 6 | |
| 92 | | 18 | 172 | AA | 6 | | AN | 8 | |
| 93 | | 18 | 15 | AN | 8 | | AAH | 8 | |
| 96A | | 18 | 139 | AA | 6 | | AAF | 6 | |
| 99A | | 18 | 205 | AA | 8 | | AT | 8 | |
| 101A | | 14 | 103 | AD | 7 | | AB | 22,23 | |
| 101B | | 14 | 103 | AD | 7 | | AB | 22,23 | |
| 109A | | 18 | 207 | AA | 6 | | AJ | 6 | |
| 112 | | 16 | 112 | AR | 8 | | AM | 8 | |
| 113 | | 18 | 112 | AR | 8 | | AM | 8 | |
| 137 | | 12 | 308 | AAG | 71,74 | | AR | 73 | |
| 149 | | 18 | 106 | AW | 8 | | AM | 8 | |
| 193 | | 16 | 112 | AR | 8 | | AM | 8 | |
| 194 | | 16 | 112 | AR | 8 | | AM | 8 | |
| 200 | | 14 | 172 | AA | 7 | | AN | 7 | |
| 201 | | 14 | 203 | BA | 7 | | AN | 7 | |
| 202A | | 16 | 168 | AA | 7 | | SA4 | STRIP | SEE DETAIL |
| 202B | | 16 | 168 | AA | 7 | | SA4 | STRIP | SEE DETAIL |
| 202C | | 14 | 4 | AN | 7 | | SA4 | STRIP | SEE DETAIL |
| 214 | | 16 | 112 | AR | 8 | | AM | 8 | |
| 215A | | 18 | 127 | BA | 6 | | SA5 | STRIP | SEE DETAIL |
| 215B | | 18 | 19 | AC | 66 | | SA5 | STRIP | SEE DETAIL |
| 215C | | 18 | 7 | AB | 66 | | SA5 | STRIP | SEE DETAIL |
| 268 | | 16 | 112 | AR | 8 | | AM | 8 | |
| 445 | | 16 | 181 | AA | 6 | | AAG | 6 | |
| 505 | | 18 | 146 | BA | 6 | | AC | 66 | |
| 507 | | 18 | 134 | BA | 6 | | AB | 66 | |
| 508 | | 18 | 159 | AD | 6 | | AS | 66 | |
| 509 | | 18 | 165 | BB | 6 | | AE | 66 | |
| 553 | | 18 | 227 | AR | 6 | | AD | 6 | |
| 627 | | 18 | 215 | AA | 6 | | AH | 6 | |
| 652 | | 18 | 86 | AK | 6 | | AM | 6 | |
| 713 | | 18 | 106 | AW | 6 | | AM | 6 | |
| 795 | | 18 | 56 | BA | 8 | | BJ | 8 | |
| 1113 | | 18 | 65 | BB | 8 | | BF | 8 | |
| 1114 | | 18 | 51 | BB | 8 | | BE | 8 | |
| 1127 | | 18 | 115 | AD | 8 | | BE | 8 | |
| 1129 | | 18 | 101 | AD | 8 | | BF | 8 | |
| 1143 | | 18 | 62 | BB | 8 | | BF | 8 | |
| 1144 | | 18 | 48 | BB | 8 | | BE | 8 | |
| 1157 | | 18 | 121 | AD | 8 | | BK | 8 | |
| 1158 | | 18 | 125 | AD | 8 | | BK | 8 | |
| 1167 | WHT | 18 | 59 | BB | 8 | | BF | 8 | |

| WIRE NO | COLOR | SAE SIZE | LENGTH TOT IN | TP | B/M ITEM NO | REMARKS | TP | B/M ITEM NO | REMARKS |
|---|---|---|---|---|---|---|---|---|---|
| 35 | WHT | 18 | 112 | AR | 8 | ——— | AM | 8 | ——— |
| 43 | | 16 | 112 | AR | 8 | ——— | AM | 8 | ——— |
| 47 | | 18 | 174 | BA | 8 | ——— | AE | 8 | ——— |
| 48 | | 18 | 199 | BA | 8 | ——— | AS | 8 | ——— |
| 50 | | 18 | 60 | BA | 8 | ——— | BJ | 8 | ——— |
| 51A | | 10 | 202 | AU | 28 | ——— | SA1 | STRIP | SEE DETAIL |
| 51B | | 14 | 14 | AA | 7 | ——— | SA1 | STRIP | SEE DETAIL |
| 51C | | 14 | 14 | AA | 7 | ——— | SA1 | STRIP | SEE DETAIL |
| 51D | | 14 | 14 | AD | 7 | ——— | SA1 | STRIP | SEE DETAIL |
| 51F | | 14 | 262 | SA6 | STRIP | SEE DETAIL | AU | STRIP | CRIMP W/51BB |
| 51G | | 14 | 4 | SA6 | STRIP | SEE DETAIL | AF | 7 | ——— |
| 51H | | 14 | 4 | SA6 | STRIP | SEE DETAIL | AF | 7 | ——— |
| 51J | | 14 | 15 | AB | 22,23 | ——— | AG | 7 | ——— |
| 51K | | 14 | 15 | AB | 22,23 | ——— | AG | 7 | ——— |
| 51L | | 18 | 15 | AB | 6 | ——— | AG | 6 | ——— |
| 51M | | 18 | 48 | AAF | 6 | ——— | AG | 6 | ——— |
| 51N | | 18 | 71 | AS | 66 | ——— | AG | 8 | ——— |
| 51P | | 18 | 80 | AS | 8 | ——— | AG | 8 | ——— |
| 51R | | 18 | 46 | AE | 66 | ——— | AG | 8 | ——— |
| 51S | | 18 | 55 | AE | 8 | ——— | AG | 8 | ——— |
| 51T | | 14 | 213 | AU | 28 | CRIMP W/51Z | AG | 7 | ——— |
| 51X | | 18 | 29 | AL | 8 | ——— | AY | 8 | ——— |
| 51Y | | 18 | 49 | AP | 27 | ——— | AY | 8 | ——— |
| 51Z | | 14 | 59 | AN | 7 | ——— | AU | STRIP | CRIMP W/51T |
| 51AA | | 18 | 39 | AT | 8 | ——— | AY | 8 | ——— |
| 51AB | | 14 | 98 | AM | 7 | ——— | AU | 28 | CRIMP W/51AE |
| 51AC | | 14 | 56 | AW | 7 | ——— | AU | 28 | CRIMP W/51AD |
| 51AD | | 14 | 56 | AX | 42 | ——— | AU | STRIP | CRIMP W/51AC |
| 51AE | | 14 | 47 | AY | 7 | ——— | AU | STRIP | CRIMP W/51AB |
| 51AF | | 10 | 262 | AU | 28 | ——— | SB1 | STRIP | SEE DETAIL |
| 51AG | | 14 | 14 | BA | 7 | ——— | SB1 | STRIP | SEE DETAIL |
| 51AH | | 14 | 14 | BA | 7 | ——— | SB1 | STRIP | SEE DETAIL |
| 51AJ | | 14 | 14 | BB | 7 | ——— | SB1 | STRIP | SEE DETAIL |
| 51AK | | 14 | 220 | BL | 7 | ——— | AU | 28 | CRIMP W/51AL |
| 51AL | | 14 | 209 | BG | 7 | ——— | AU | STRIP | CRIMP W/51AK |
| 51AM | | 18 | 30 | BF | 8 | ——— | BG | 8 | ——— |
| 51AN | | 18 | 27 | BF | 8 | ——— | BG | 8 | ——— |
| 51AP | | 18 | 24 | BF | 8 | ——— | BG | 8 | ——— |
| 51AR | | 18 | 22 | BF | 8 | ——— | BG | 8 | ——— |
| 51AS | | 18 | 33 | BE | 8 | ——— | BL | 8 | ——— |
| 51AT | | 18 | 30 | BE | 8 | ——— | BL | 8 | ——— |
| 51AU | | 18 | 27 | BE | 8 | ——— | BL | 8 | ——— |
| 51AV | | 18 | 24 | BE | 8 | ——— | BL | 8 | ——— |
| 51AW | | 18 | 41 | BH | 8 | ——— | BG | 8 | ——— |
| 51AX | | 18 | 36 | BJ | 8 | ——— | BL | 8 | ——— |
| 51AY | | 18 | 32 | BJ | 8 | ——— | BL | 8 | ——— |
| 51AZ | | 18 | 36 | BK | 8 | ——— | BL | 8 | ——— |
| 51BA | | 18 | 40 | BK | 8 | ——— | BL | 8 | ——— |
| 51BB | | 12 | 294 | AAG | 71,74 | ——— | AU | 28 | CRIMP W/51F |
| 68A | WHT | 16 | 112 | AR | 8 | ——— | AM | 8 | ——— |

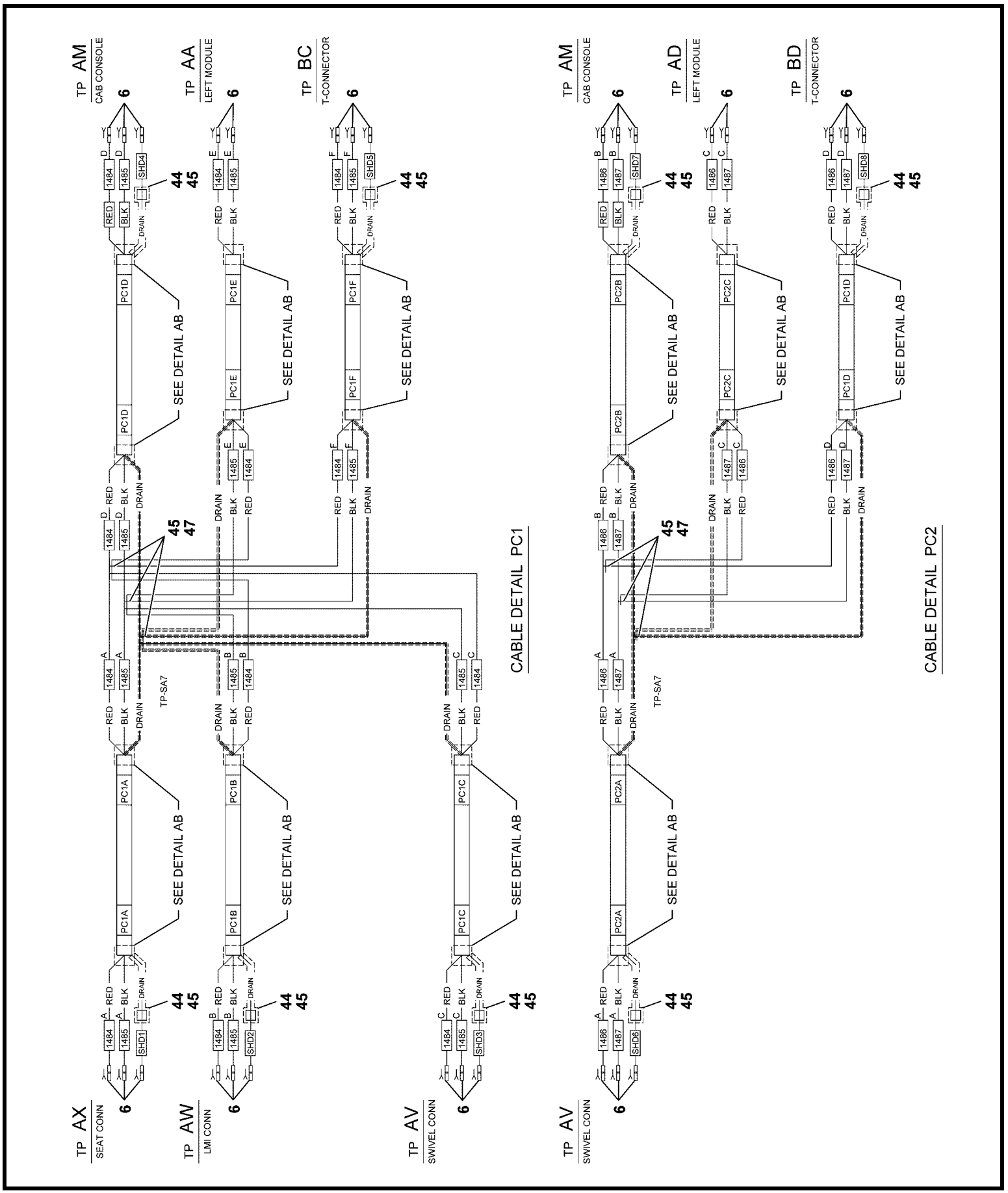
TP AM
CAB CONSOLE
TP AA
LEFT MODULE
TP BC
T-CONNECTOR
TP AX
SEAT CONN
TP AW
LMI CONN
TP AV
SWIVEL CONN
TP AM
CAB CONSOLE
TP AD
LEFT MODULE
TP BD
T-CONNECTOR
TP AV
SWIVEL CONN
TP-SA7
SEE DETAIL AB
CABLE DETAIL PC1
CABLE DETAIL PC2

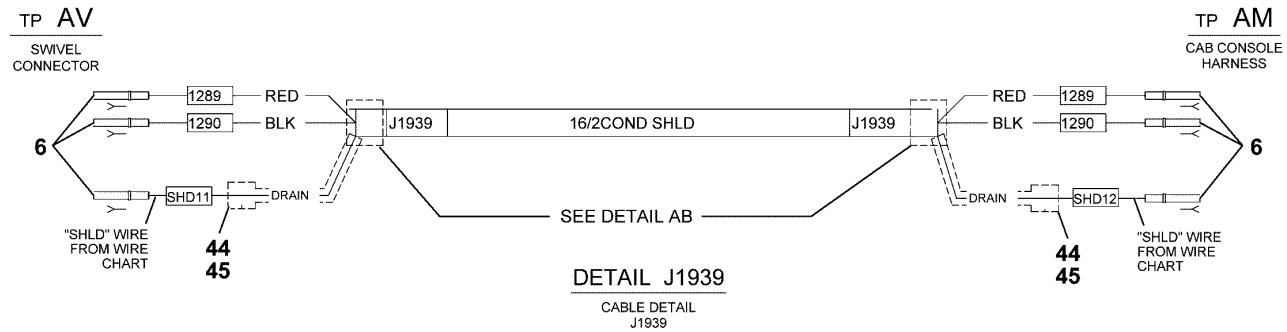


DETAIL J1939

CABLE DETAIL J1939

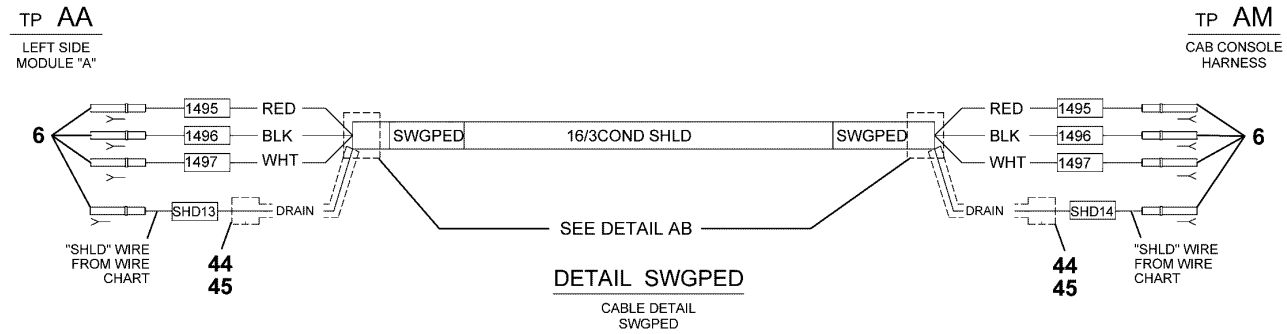


DETAIL SWGPED

CABLE DETAIL SWGPED

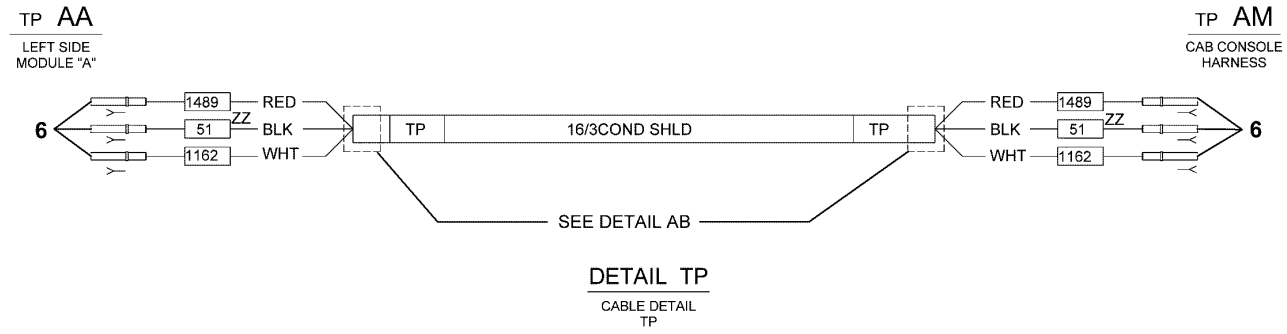


DETAIL TP

CABLE DETAIL TP

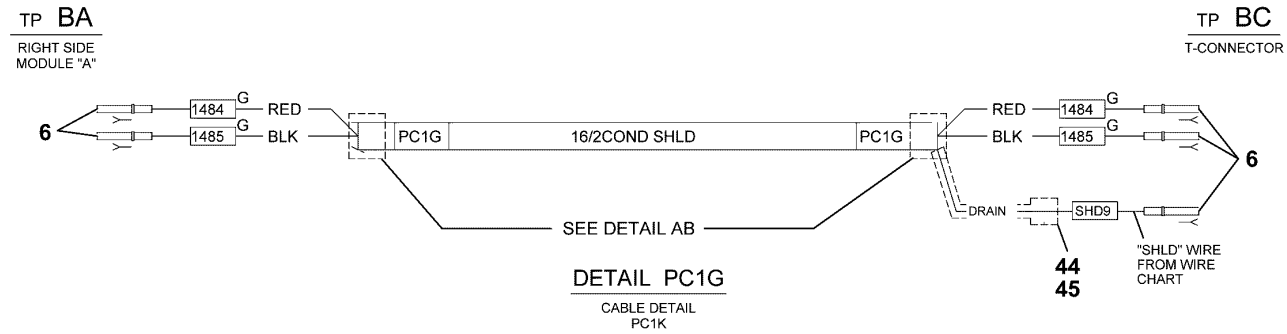


DETAIL PC1G

CABLE DETAIL PC1K

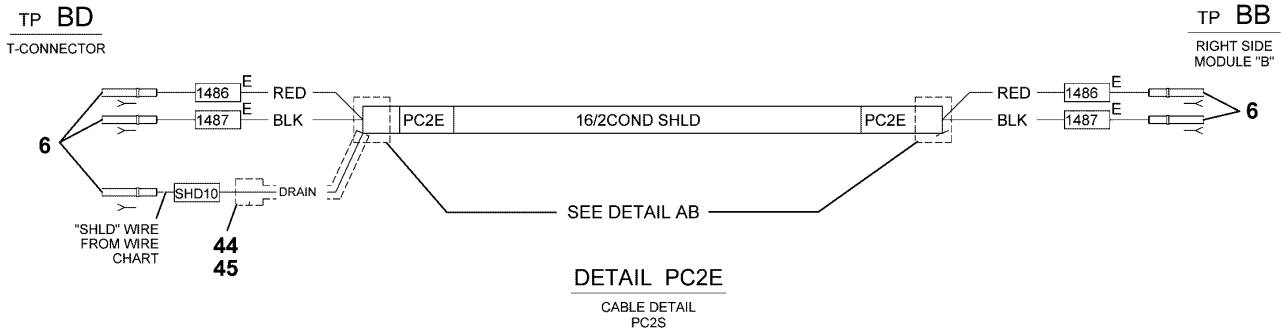


DETAIL PC2E

CABLE DETAIL PC2S

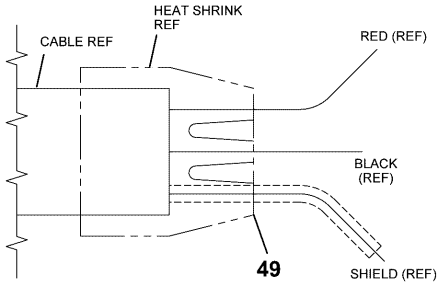


DETAIL AB
CABLE ENDS TYP-BOTH ENDS

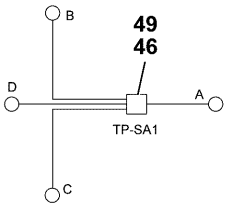


DETAIL 51

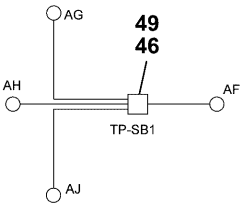


DETAIL 51

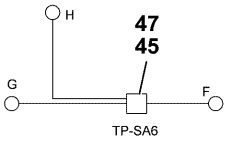


DETAIL 51

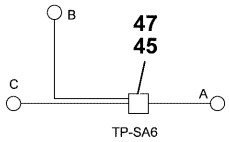


DETAIL 87

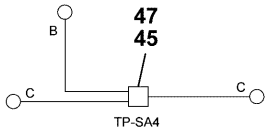


DETAIL 202

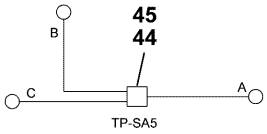


DETAIL 215

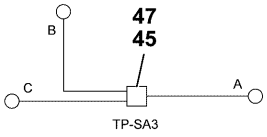


DETAIL 1384

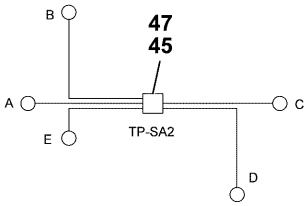


DETAIL 1388

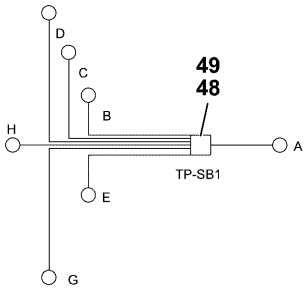


DETAIL 1436

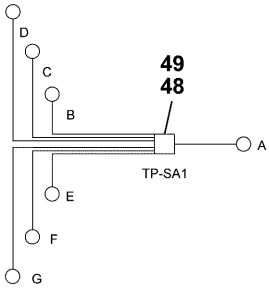


DETAIL 1481

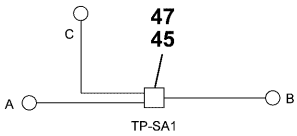


DETAIL 1516

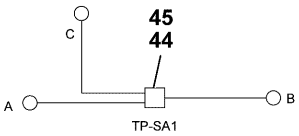


DETAIL 1520

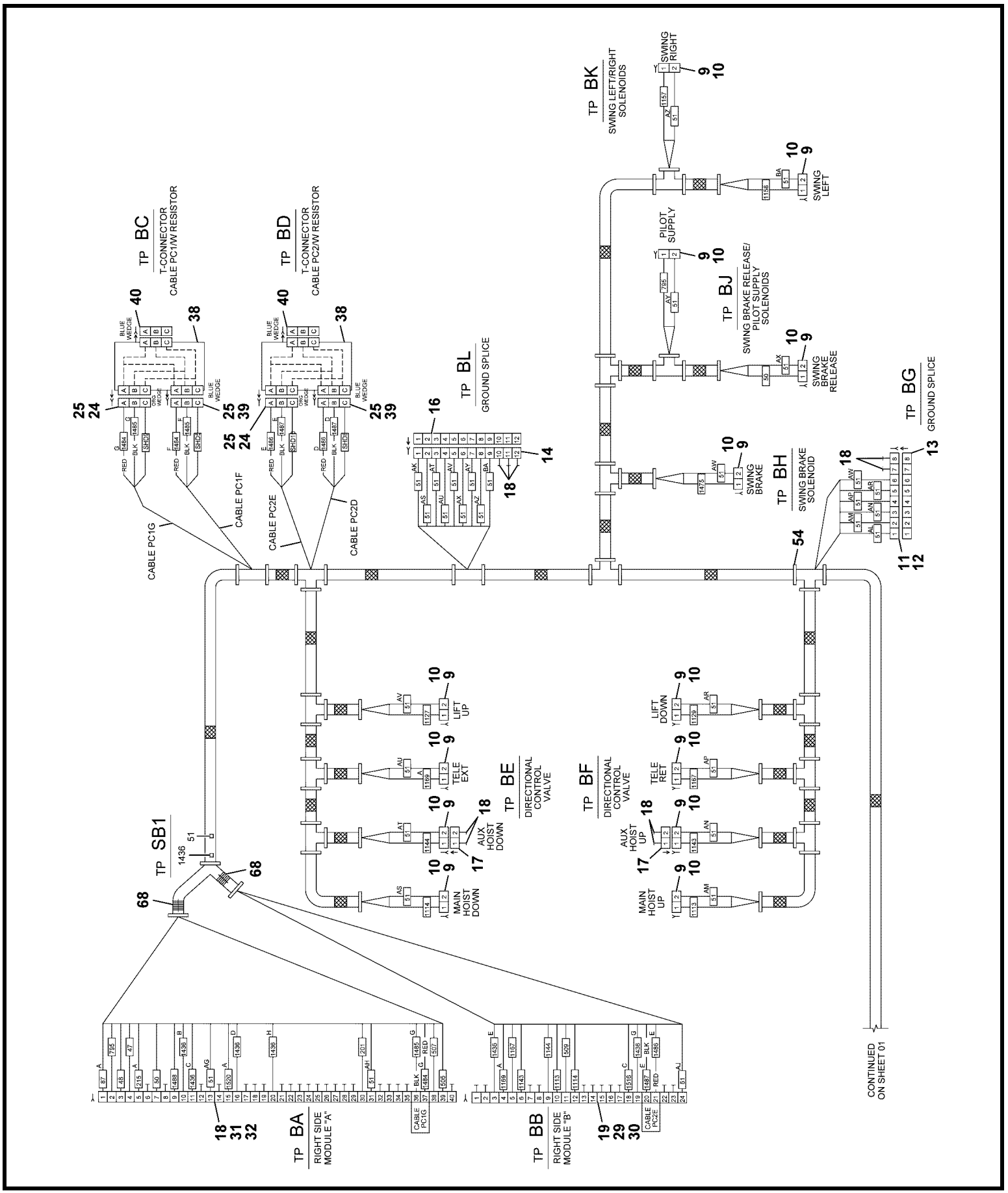


6512101098

(SHEET 2 OF 9)

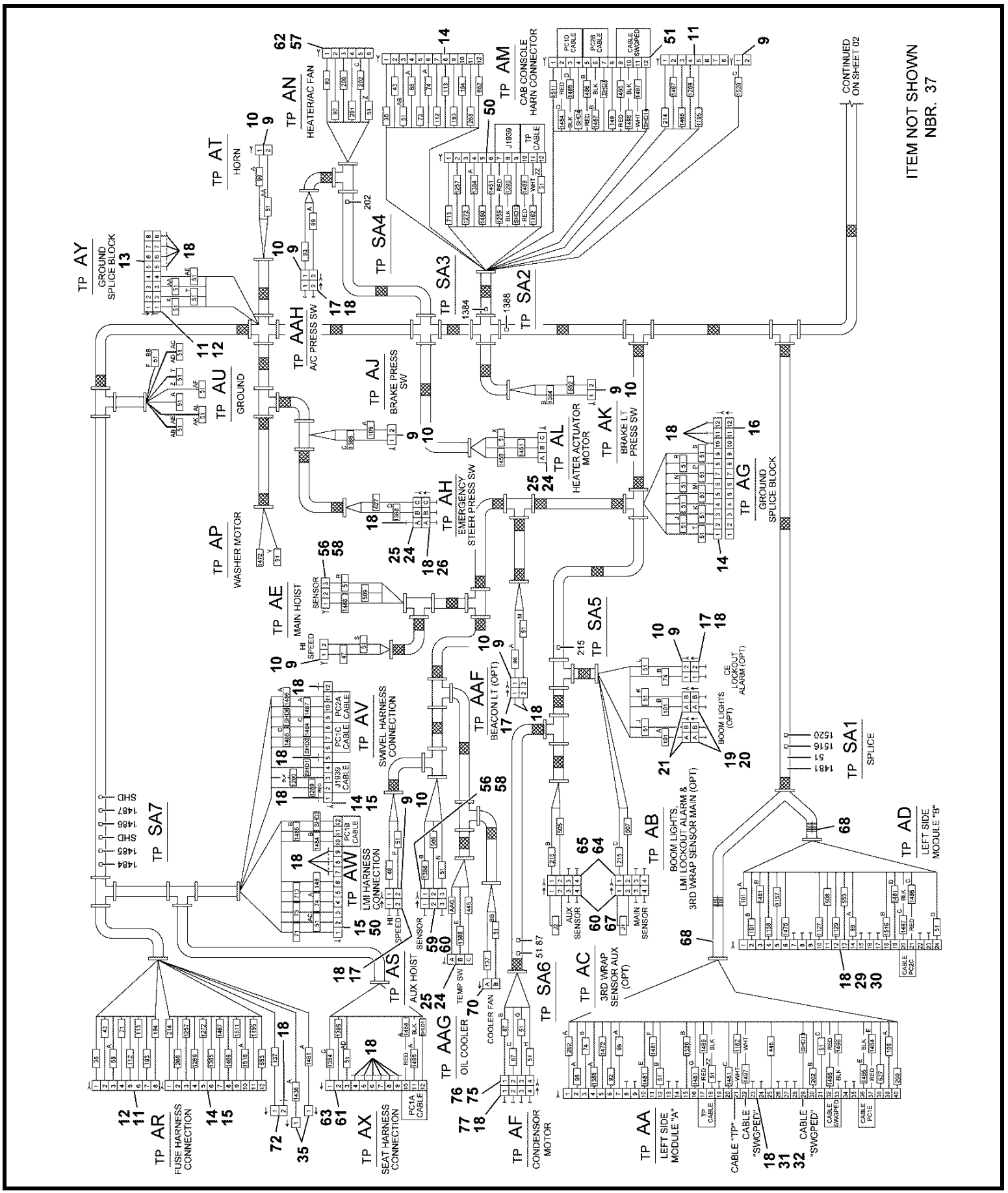


6512101098

(SHEET 1 OF 9)

Description
**HARNESS ASSEMBLY - SUPERSTRUCTURE (COMPLETE ASSEMBLY)**

Assembly No.
**6512101098**
Revision: #

| Item | FN | Part | Qty | Description |
|---|---|---|---|---|
| 6 | | **7826100004** | 87 | SOCKET, (16 - 18) 30 SERIES |
| 7 | | **7826000087** | 47 | SOCKET, 16-14 GA |
| 8 | | **7826000626** | 114 | SOCKET,<br>16 - 18 AWG |
| 9 | | **7709000844** | 22 | PLUG, 2 SOCKET |
| 10 | | **7172000545** | 21 | BOOT, DT2S CONNECTOR |
| 11 | | **7709000845** | 4 | PLUG<br>8 SOCKET |
| 12 | | **7172000550** | 3 | BOOT |
| 13 | | **7892100026** | 2 | RECEPT, (8P) SPLICE BLOCK |
| 14 | | **7709000846** | 4 | PLUG, 12 SOCKET |
| 15 | | **7172000552** | 4 | BOOT |
| 16 | | **7892001036** | 2 | RECEPTACLE, SPLICE BLOCK |
| 17 | | **7892000949** | 6 | RECEPTACLE,<br>2 PIN |
| 18 | | **7689000503** | 98 | PLUG, SEALING<br>16 - 12 AWG |
| 19 | | **7364001683** | 2 | CONNECTOR, 2 CONDUCTOR<br>SHROUD |
| 20 | | **7892000257** | 4 | TERMINAL, GREEN CAVITY<br>SEAL |
| 21 | | **7364001682** | 2 | CONNECTOR, 2 CONDUCTOR<br>TOWER WITH SEAL |
| 22 | | **7892000253** | 4 | TERMINAL, FEMALE SLEEVE |
| 23 | | **7892000254** | 4 | TERMINAL, GREEN CABLE SEAL |
| 24 | | **7709000874** | 4 | PLUG<br>3 SOCKET |
| 25 | | **7172000547** | 6 | BOOT |
| 26 | | **7892000978** | 1 | RECEPTACLE,<br>3 PIN |
| 27 | | **7345001444** | 1 | TERMINAL, FEMALE |
| 28 | | **7345241901** | 5 | TONGUE, INSULATED RING |
| 29 | | **7709000850** | 2 | PLUG<br>24 SOCKET |
| 30 | | **7172000553** | 2 | BOOT |
| 31 | | **7709000849** | 2 | PLUG<br>40 SOCKET |

Description
**HARNESS ASSEMBLY - SUPERSTRUCTURE (COMPLETE ASSEMBLY)**

Assembly No.
**6512101098**
Revision: #

| Item | FN | Part | Qty | Description |
|---|---|---|---|---|
| 32 | | **7172000554** | 2 | BOOT |
| 35 | | **7892000979** | 2 | RECEPTACLE,<br>1 PIN |
| 36 | | **7689001883** | 2 | PIN<br>8 AWG |
| 37 | | **7689002053** | 3 | PIN<br>16 - 18 AWG |
| 38 | | **7892100036** | 2 | RECEPTACLE, 3 WAY |
| 39 | | **7709100911** | 2 | PLUG,DT06-3S-CEO6 W/BLUE WEDGE |
| 40 | | **7709100902** | 2 | PLUG, 3 PIN |
| 41 | | **7689100044** | 4 | PIN, 20GA GOLD |
| 42 | | **7689000704** | 2 | PIN, 16 - 14 GA |
| 44 | | **7892000194** | 37 | PARALLEL, NON - INSULATED<br>16 - 14 AWG |
| 45 | | **8594100256** | 1 | TUBING, HEAT SHRINK 1/4" I.D.<br>LINER, MELTABLE<br>(QUANTITY IN FEET) |
| 46 | | **7892000197** | 2 | PARALLEL, NON - INSULATED<br>6 AWG |
| 47 | | **7892000195** | 6 | PARALLEL, NON - INSULATED<br>12 - 10 AWG |
| 48 | | **7892000198** | 2 | PARALLEL - NON-INSULATED 4 AWG |
| 49 | | **8594100257** | 1 | TUBING, HEAT SHRINK 1/2" I.D.<br>LINER, MELTABLE<br>(QUANTITY IN FEET) |
| 50 | | **7709100929** | 2 | PLUG, DTO6-12SB-C015 W/WEDGE |
| 51 | | **7709100930** | 1 | PLUG, DTO6-12SC-C015 W/WEDGE |
| 54 | | **7850000208** | 100 | CABLE TIE, BLACK |
| 56 | | **7709100877** | 2 | PLUG |
| 57 | | **7172000565** | 1 | BOOT, CONNECTOR |
| 58 | | **7172100002** | 2 | BOOT, PLUG |
| 59 | | **7892100010** | 1 | RECP-DTM-3P |
| 60 | | **7826000650** | 9 | PLUG, SEALING |
| 61 | | **7892000951** | 1 | RECEPTACLE,<br>12 PIN |
| 62 | | **7709000883** | 1 | PLUG<br>6 SOCKET |

Description
**HARNESS ASSEMBLY - SUPERSTRUCTURE (COMPLETE ASSEMBLY)**

Assembly No.
**6512101098**
Revision: #

| Item | FN | Part | Qty | Description |
|---|---|---|---|---|
| 63 | | **7172000551** | 1 | BOOT |
| 64 | | **7709100895** | 4 | PLUG, 4 SOCKET |
| 65 | | **7172000567** | 2 | BOOT, CONNECTOR |
| 66 | | **7826100018** | 12 | SOCKET - 20 GAUGE GOLD |
| 67 | | **7892100039** | 2 | RECEPTACLE |
| 68 | | **8594000003** | 2 | FLEXGUARD - .625" I.D.<br>(QUANTITY IN FEET) |
| 70 | | **7364001683** | 1 | CONNECTOR, 2 CONDUCTOR<br>SHROUD |
| 71 | | **7364001846** | 2 | TERMINAL |
| 72 | | **7892100025** | 1 | DEUTSCH DTP 2-PASS RECEPTACLE |
| 73 | | **7689000797** | 1 | PIN<br>12 AWG |
| 74 | | **7892000256** | 2 | TERMINAL, BLUE CABLE SEAL |
| 75 | | **7709000936** | 1 | PLUG, 4 SOCKET |
| 76 | | **7172000567** | 1 | BOOT, CONNECTOR |
| 77 | | **7892001051** | 1 | RECEPTACLE,<br>4 PIN |

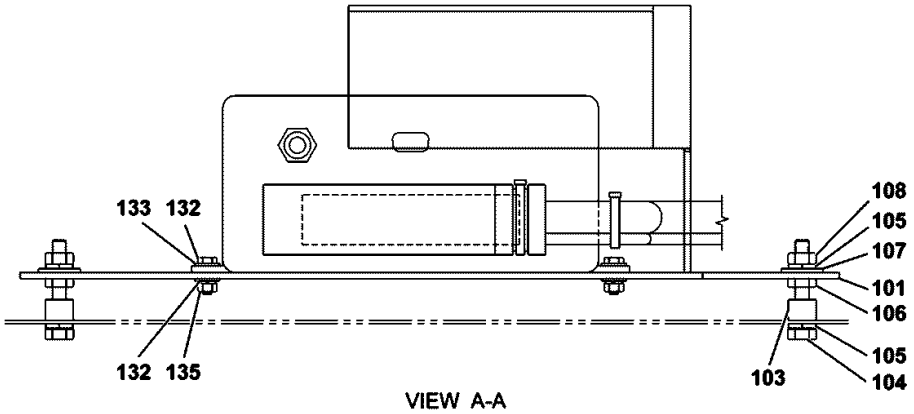


VIEW A-A
CENTRAL UNIT

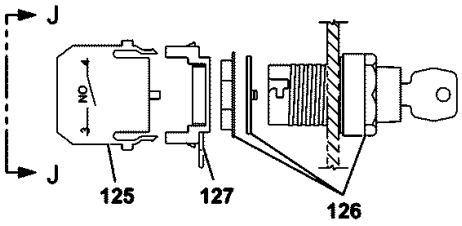


DETAIL G
FRONT BYPASS KEYSWITCH
WIRES NOT SHOWN FOR CLARITY

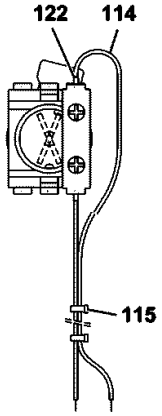


VIEW J-J
FRONT BYPASS KEYSWITCH
WIRE CONNECTIONS

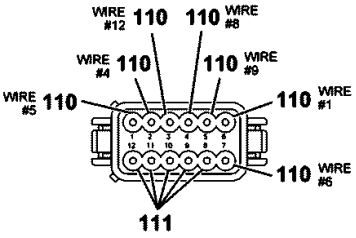


VIEW R-R
CRANE INTERFACE CONN

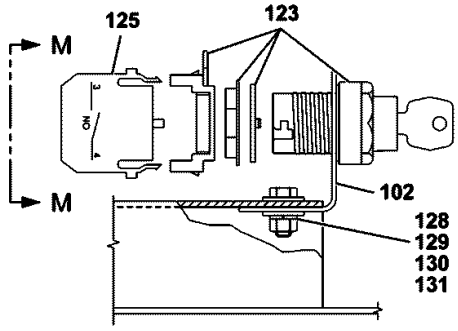


DETAIL K
REAR BYPASS KEYSWITCH
WIRES NOT SHOWN FOR CLARITY

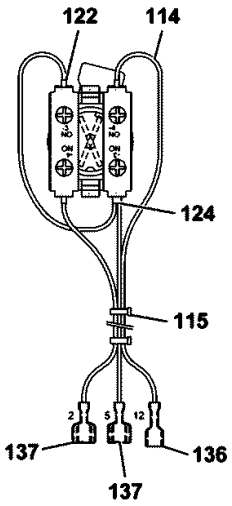


VIEW M-M
REAR BYPASS KEYSWITCH
WIRE CONNECTIONS

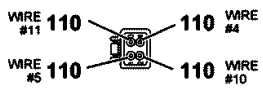


VIEW S-S
SLEW POT INTERFACE CONN

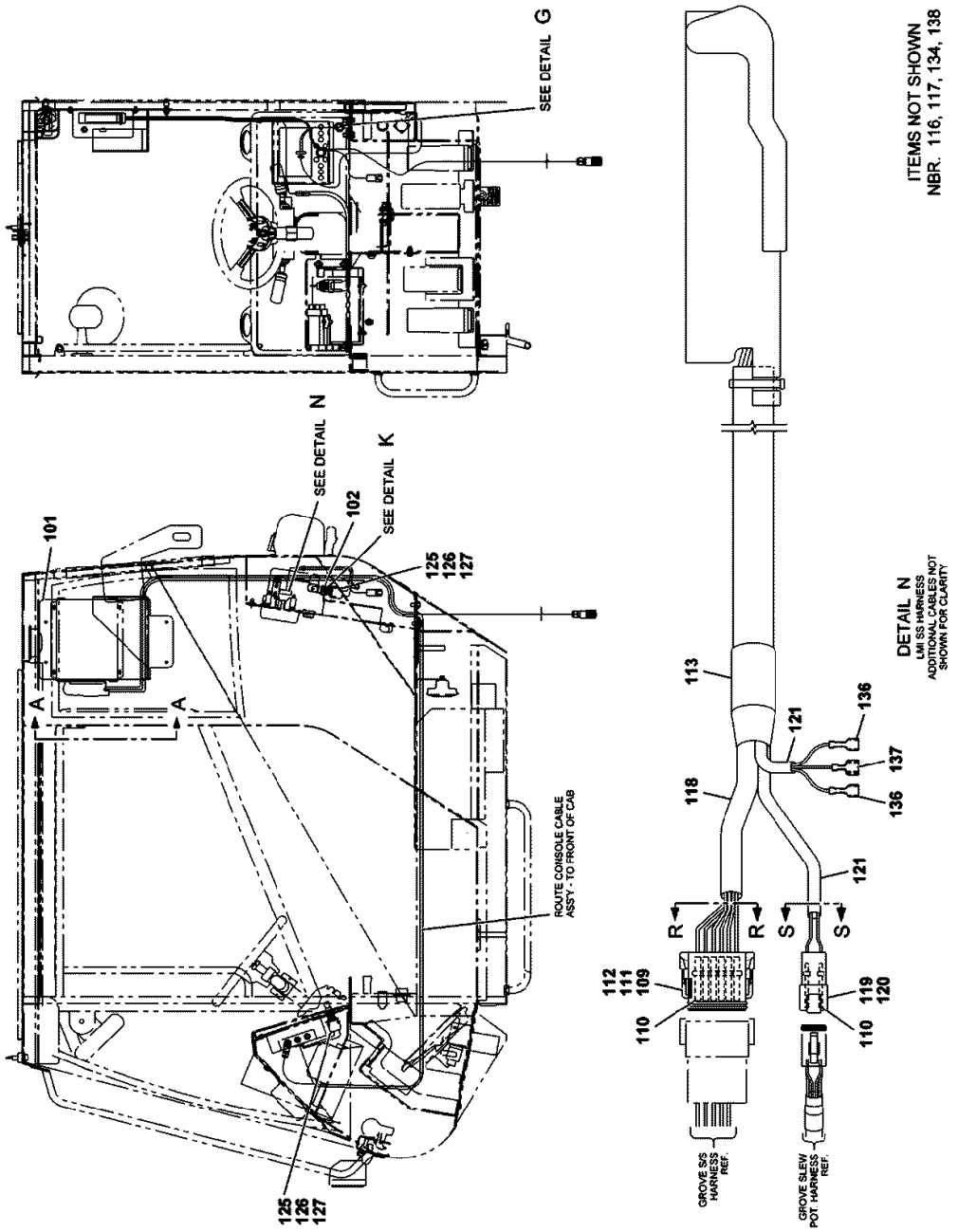


80002960

(SHEET 1 OF 2)

Description
**KIT - iFLEX2 LMI CAB**

Assembly No.
**80002960**
Revision: **E**

| Item | FN | Part | Qty | Description |
|---|---|---|---|---|
| 101 | | **80001639** | 1 | BRACKET WELD |
| 102 | | **6184100242** | 2 | BRACKET, SWITCH |
| 103 | | **7099000399** | 4 | BOLT, STACKING |
| 104 | | **7115140550** | 4 | CAP SCREW,<br>1/4" - 20 N.C. X 5/8"<br>GRADE 5 |
| 105 | | **7950140050** | 8 | WASHER, LOCK 1/4" I.D. |
| 106 | | **7660140200** | 4 | NUT, HEX JAM<br>1/4" - 20 N.C. |
| 107 | | **7950140141** | 4 | WASHER, FLAT 1/4" PLAIN NARROW |
| 108 | | **7660140000** | 5 | NUT, HEX<br>1/4" - 20 N.C. |
| 109 | | **7892100086** | 1 | RECEPT, DTO4-12PB-C015 W/WEDGE |
| 110 | | **7689000704** | 10 | PIN, 16 - 14 GA |
| 111 | | **7689000503** | 7 | PLUG, SEALING<br>16 - 12 AWG |
| 112 | | **7172000551** | 1 | BOOT |
| 113 | | **8594100265** | 1 | TUBING, HEAT SHRINK 3/4 I.D.<br>LINER, MELTABLE |
| 114 | | **8977010300** | 10 | WIRE, 16 GAUGE WHITE |
| 115 | | **7850000237** | 1 | TIE, CABLE (BLACK)<br>7 5/16" LONG |
| 116 | | **7892000821** | 1 | CONNECTOR<br>12 - 10 AWG |
| 117 | | **7345001713** | 3 | CONNECTOR, BUTT |
| 118 | | **8594100257** | 1 | TUBING, HEAT SHRINK 1/2" I.D.<br>LINER, MELTABLE<br>(QUANTITY IN FEET) |
| 119 | | **7172000568** | 1 | BOOT, CONNECTOR |
| 120 | | **7892001051** | 1 | RECEPTACLE,<br>4 PIN |
| 121 | | **8594100256** | 1 | TUBING, HEAT SHRINK 1/4" I.D.<br>LINER, MELTABLE<br>(QUANTITY IN FEET) |
| 122 | | **7892001002** | 5 | FERRULE, SINGLE WIRE<br>(BLACK) |
| 123 | | **7872100132** | 1 | SWITCH, KEY OPERATED 2 POSITION SELECTOR<br>INCLUDES THE FOLLOWING PARTS |
| | | **9872100243** | 1 | KEY |

Description
**KIT - iFLEX2 LMI CAB**

Assembly No.
**80002960**
Revision: **E**

| Item | FN | Part | Qty | Description |
|---|---|---|---|---|
| 124 | | **7892001006** | 3 | FERRULE, DUAL WIRE (BLACK) |
| 126 | | **80008491** | 1 | SWITCH, KEY |
| 128 | | **7115150750** | 1 | CAP SCREW, 5/16" -18 N.C. X 7/8" GRADE 5 |
| 129 | | **7950150141** | 2 | WASHER, FLAT 5/16" |
| 130 | | **7950150050** | 1 | WASHER, LOCK 5/16" I.D. |
| 131 | | **7660150001** | 1 | NUT, HEX 5/16" - 18 N.C. GRADE 5 |
| 132 | | **7111080810** | 4 | SCREW, MACHINE 5/32" - 32 N.C. X 1" GRADE 1 |
| 133 | | **7950080141** | 8 | FLATWASHER, 5/32" I.D. |
| 134 | | **7950080050** | 4 | LOCKWASHER, 5/32" I.D. |
| 135 | | **7660081100** | 4 | NUT, HEX 5/32" - 24 N.F. GRADE 1 |
| 136 | | **7345001744** | 3 | TERMINAL, FEMALE 16 - 14 AWG |
| 137 | | **7345001746** | 3 | TERMINAL, MALE 16 - 14 AWG |
| 138 | | **8594000019** | 3 | FLEXGUARD, 1/4" I.D. (QUANTITY IN FEET) |

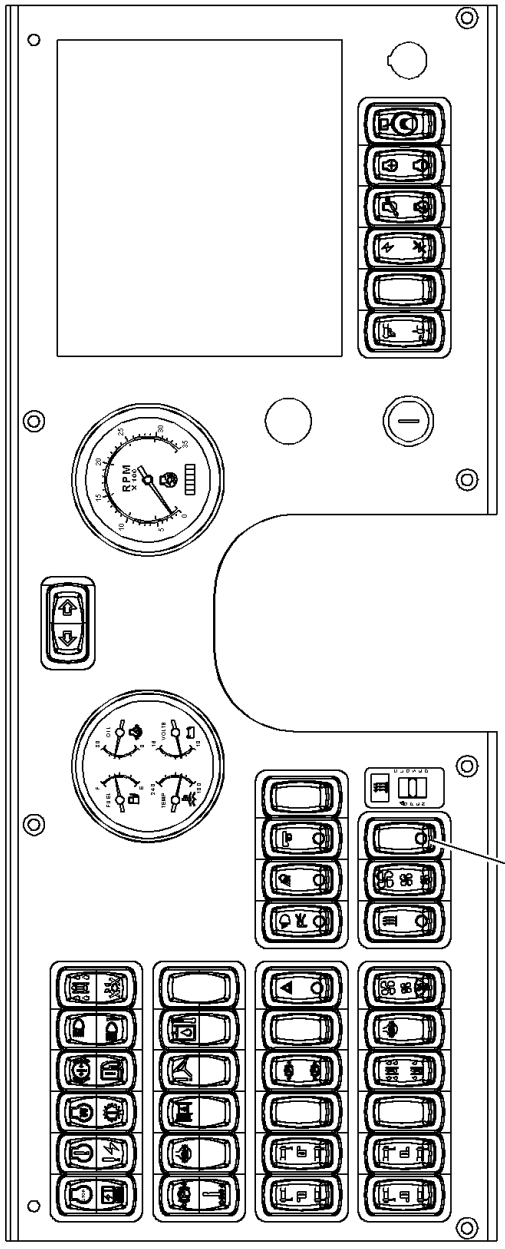


6872100083

(SHEET 1 OF 1)

Description
**SWITCH INSTALLATION - AIR CONDITIONER**

Assembly No.
**6872100083**
Revision: #

| Item | FN | Part | Qty | Description |
|---|---|---|---|---|
| 201 | | **7872100104** | 1 | SWITCH, L-SERIES AIR CONDITION |

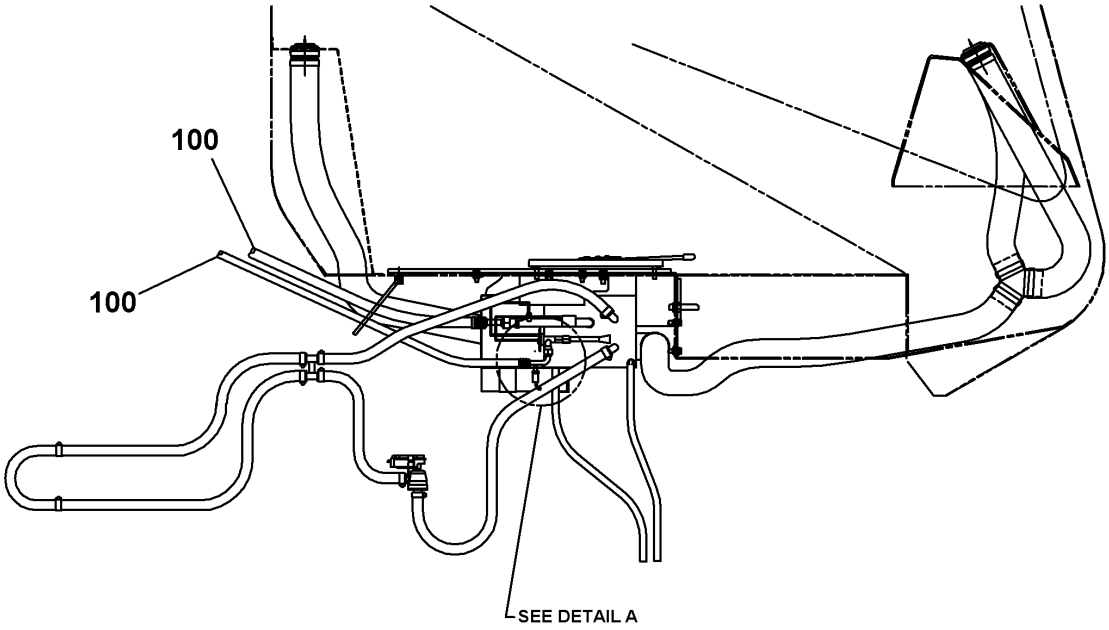


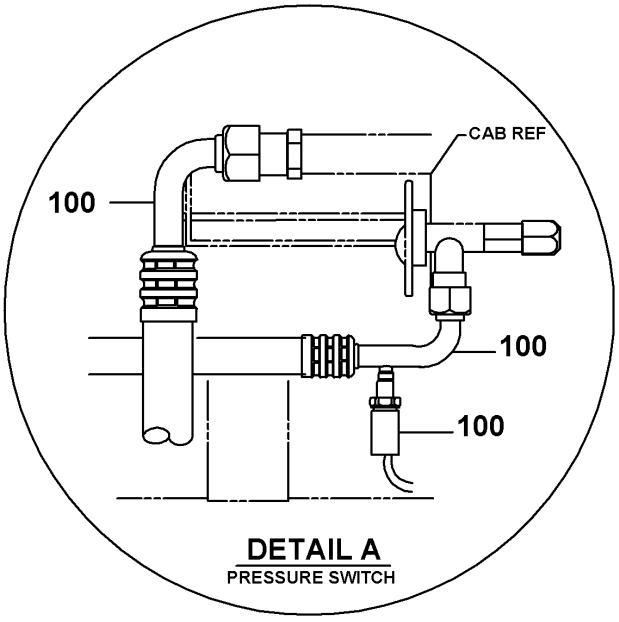


6543100143

(SHEET 1 OF 1)

Description
**LINES INSTALLATION - AIR CONDITIONING (CAB)**

Assembly No.
**6543100143**
Revision: #

| Item | FN | Part | Qty | Description |
|---|---|---|---|---|
| 100 | + | **7576134413** | 1 | KIT - AIR CONDITIONER HOSE (COMPLETE ASSEMBLY) |

**+ SEE FURTHER BREAKDOWN THIS GROUP**

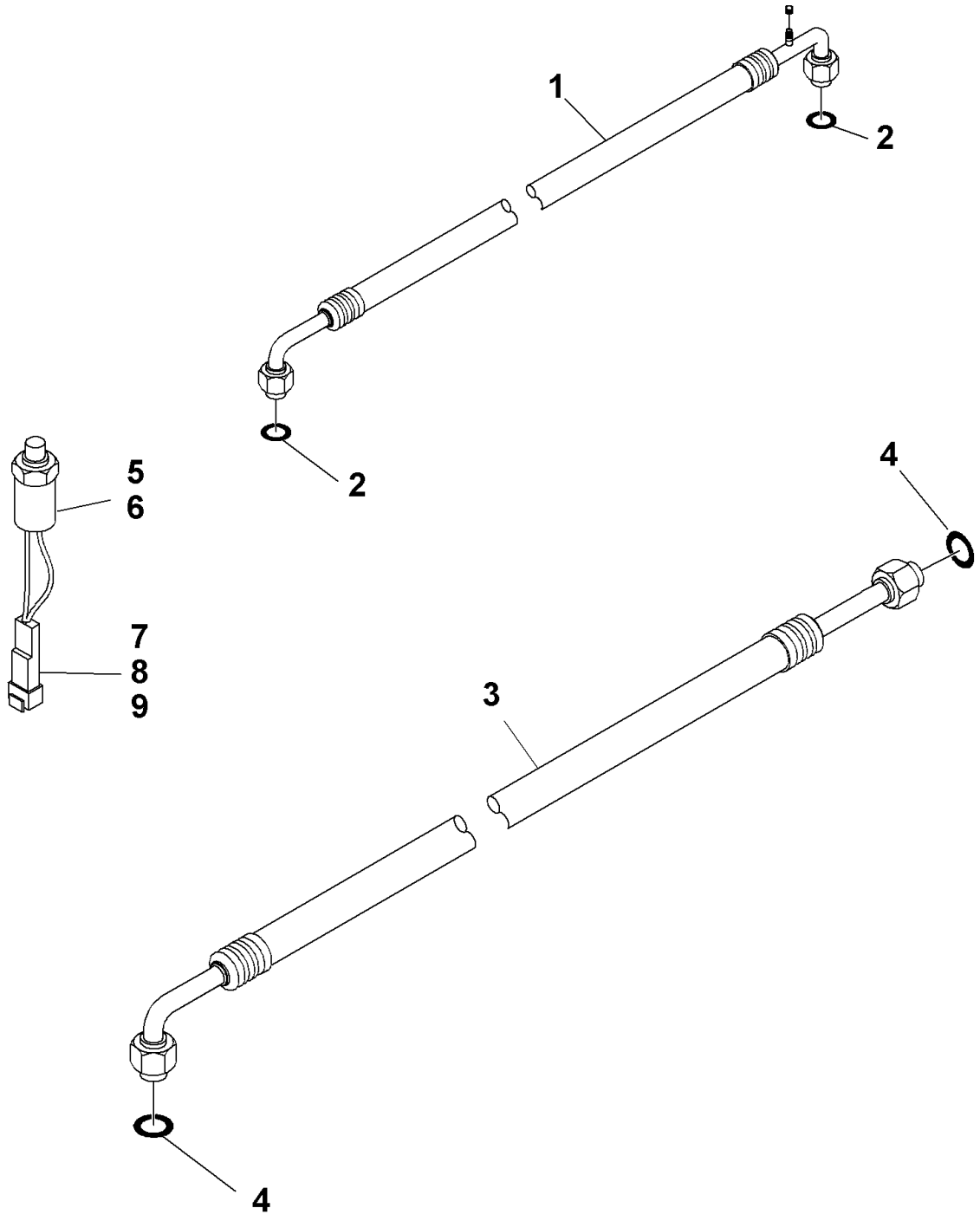


**7576134413**

**(SHEET 1 OF 1)**

Description
**KIT - AIR CONDITIONER HOSE (COMPLETE ASSEMBLY)**

Assembly No.
**7576134413**
Revision:

| Item | FN | Part | Qty | Description |
|---|---|---|---|---|
| 1 | | **9576101402** | 1 | HOSE ASSY. #6 |
| 2 | | **9576101193** | 2 | O-RING #6 |
| 3 | | **9576101200** | 1 | HOSE ASSY. #10 |
| 4 | | **9576101194** | 2 | O-RING #10 |
| 5 | | **9515102865** | 1 | SWITCH,PRESSURE |
| 6 | # | **9576101201** | 1 | HARNESS ASSY. W/ CONNECTOR<br>INCLUDES ITEMS 7 THRU 9 |
| 7 | | **7892000836** | 1 | RECEPTACLE, 2 PIN |
| 8 | | **7689000704** | 2 | PIN, 16 - 14 GA |
| 9 | | **7172000546** | 1 | BOOT |

**# SERVICED AS AN ASSEMBLY ONLY**

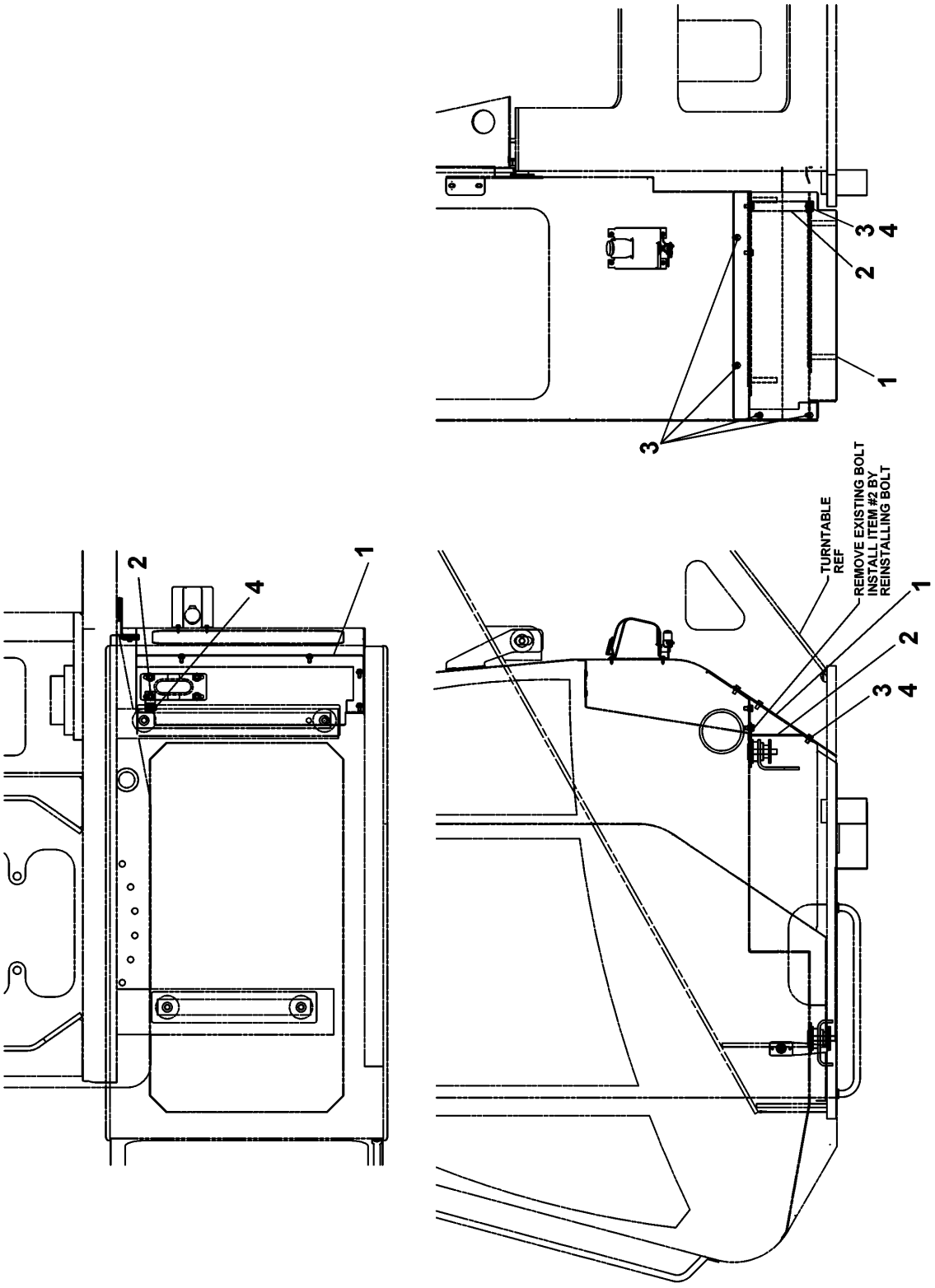


6245100997

(SHEET 1 OF 1)

Description
**COVER INSTALLATION - REAR CAB**

Assembly No.
**6245100997**
Revision: **A**

| Item | FN | Part | Qty | Description |
|---|---|---|---|---|
| 1 | | **6245101025** | 1 | PLATE, COVER |
| 2 | | **6245101026** | 1 | BRACKET, MOUNTING |
| 3 | | **7790161253** | 5 | SCREW<br>3/8" - 16 N.C. X 3/4" |
| 4 | | **7659000862** | 1 | NUT, RETAINING |

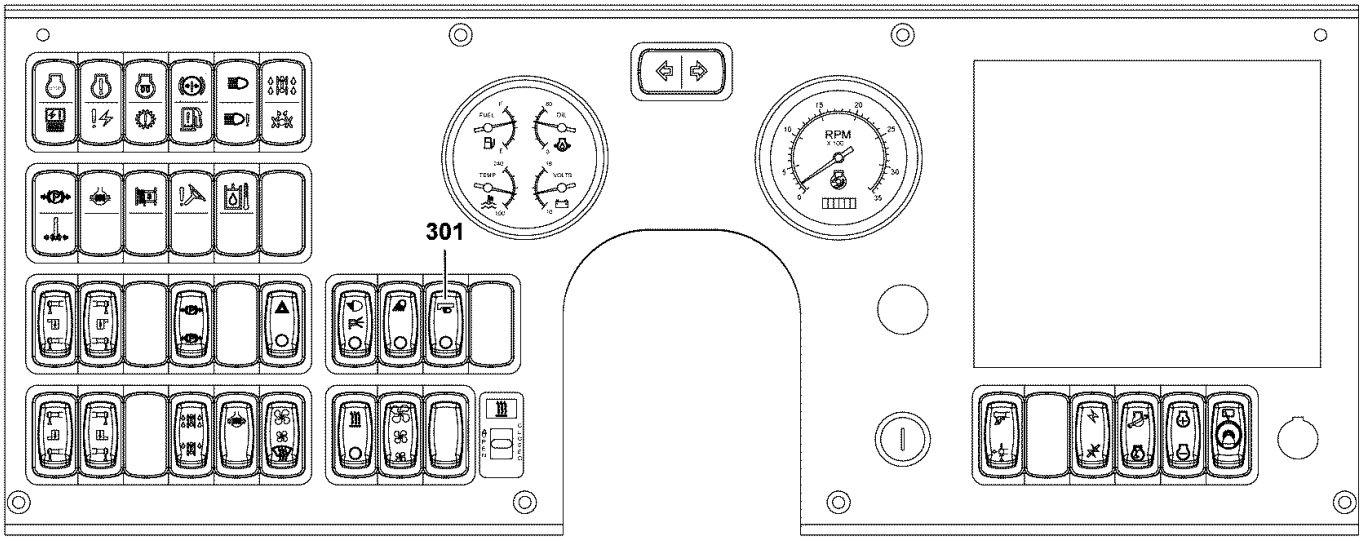


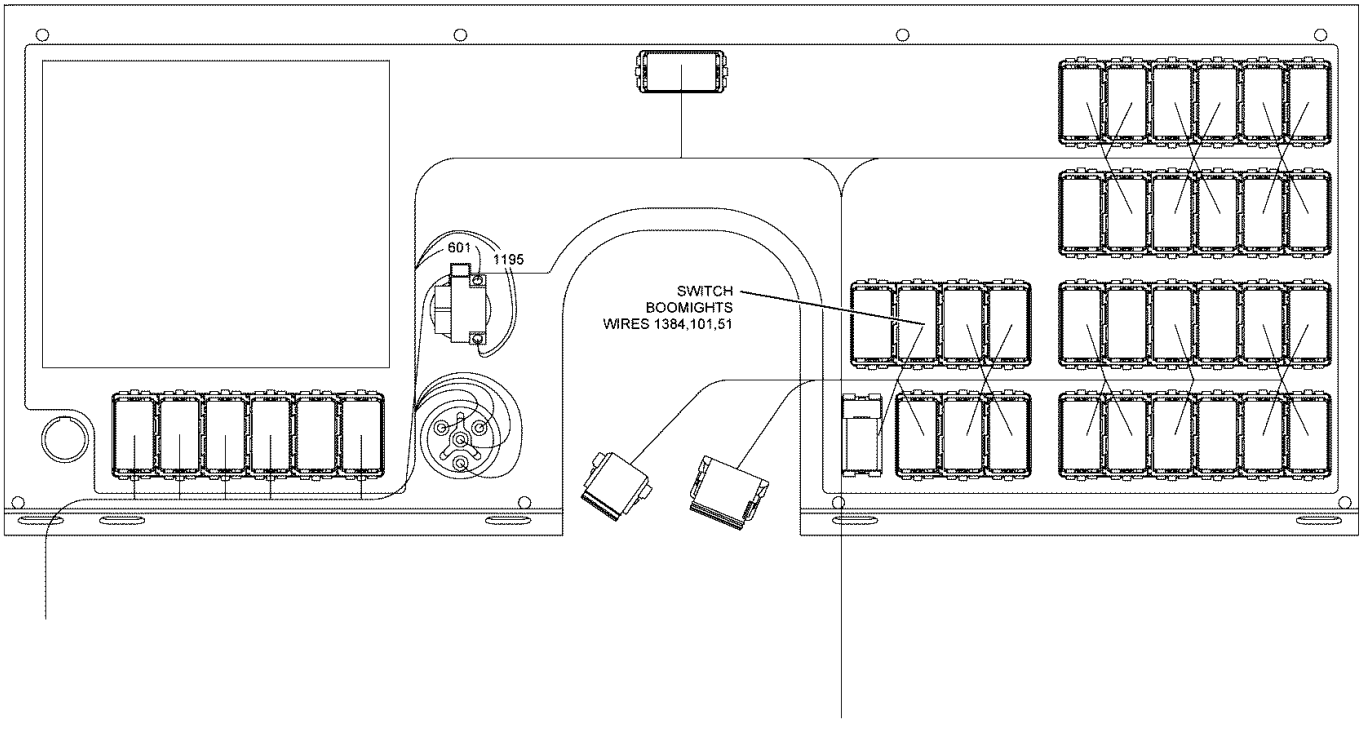


CONSOLE BACK SIDE

Description
**SWITCH INSTALLATION - BOOM LIGHTS**

Assembly No.
**6872100084**
Revision: #

| Item | FN | Part | Qty | Description |
|---|---|---|---|---|
| 301 | | **7872100111** | 1 | SWITCH, L-SERIES BOOM LIGHTS |

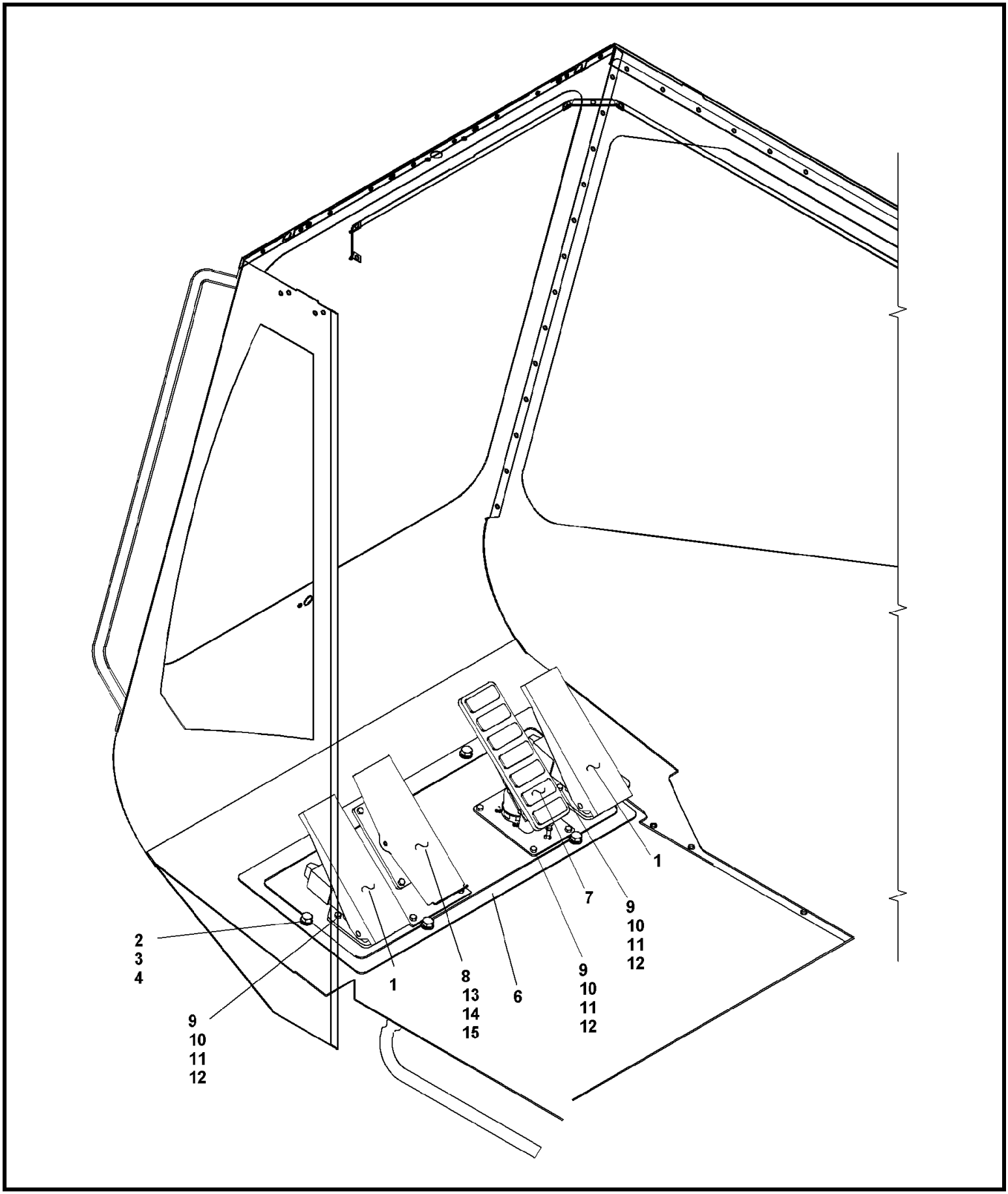


**6245100992**

**(SHEET 1 OF 1)**

Description
**PEDALS INSTALLATION - WITH AUXILIARY HOIST**

Assembly No.
**6245100992**
Revision: **D**

| Item | FN | Part | Qty | Description |
|---|---|---|---|---|
| 1 | # | **80004942** | 2 | CONTROL ASSEMBLY - THROTTLE ELECTRONIC (COMPLETE ASSEMBLY) |
| 2 | | **7126191153** | 6 | SCREW, HEX HEAD |
| 3 | | **7951190014** | 6 | FLAT WASHER, 10MM I.D. |
| 4 | | **7951190210** | 6 | LOCK WASHER, 10MM |
| 6 | | **6245101007** | 1 | PLATE, PEDAL MOUNTING |
| 7 | + | **7926100912** | 1 | VALVE ASSEMBLY - BRAKE TREADLE (COMPLETE ASSEMBLY) |
| 8 | + | **7683100010** | 1 | PEDAL ASSEMBLY - ELECTRONIC TELESCOPE (COMPLETE ASSEMBLY) |
| 9 | | **7126151153** | 19 | CAP SCREW, M6X20 HEX HEAD |
| 10 | | **7951150014** | 19 | WASHER, 6MM I.D. |
| 11 | | **7951150210** | 19 | LOCKWASHER, 6MM I.D. |
| 12 | # | **7661150003** | 19 | NUT, HEX |
| 13 | | **8594000019** | 1 | FLEXGUARD, 1/4" I.D. (QUANTITY IN FEET) |
| 14 | | **7850000208** | 3 | CABLE TIE, BLACK |
| 15 | | **6245100878** | 1 | BRACKET, PEDAL MOUNTING |

**# SERVICED AS AN ASSEMBLY ONLY**

**+ SEE FURTHER BREAKDOWN THIS GROUP**

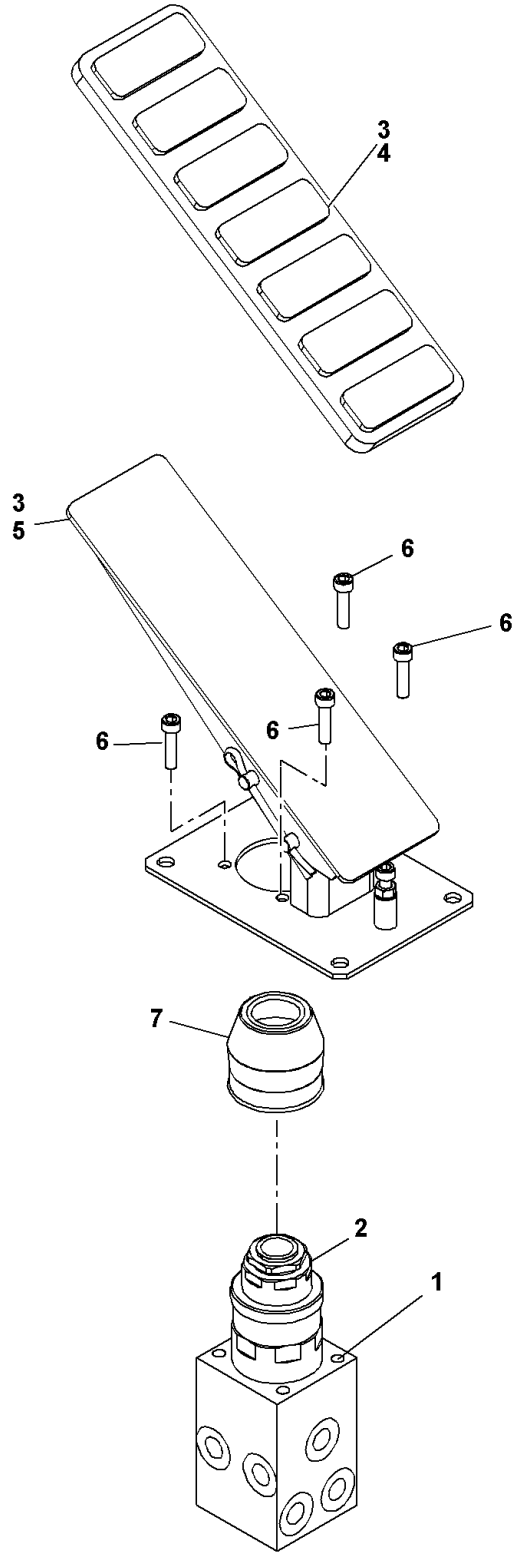


**7926100912**

**(SHEET 1 OF 1)**

Description
**VALVE ASSEMBLY - BRAKE TREADLE (COMPLETE ASSEMBLY)**

Assembly No.
**7926100912**
Revision:

| Item | FN | Part | Qty | Description |
|---|---|---|---|---|
| 1 | | **9926113271** | 1 | VALVE ASSY. BRAKE<br>INCLUDES ITEM 2 |
| 2 | | **NSS** | 1 | VALVE, CARTRIDGE |
| 3 | | **9926113272** | 1 | PEDAL ASSY.<br>INCLUDES ITEMS 4 AND 5 |
| 4 | | **9926113273** | 1 | COVER, RUBBER |
| 5 | | **NSS** | 1 | BASE, PEDAL |
| 6 | | **9926113274** | 4 | SCREW |
| 7 | | **9926113275** | 1 | BOOT, RUBBER |
| 8 | | **9926113276** | 1 | SWITCH ASSY. PRESSURE |
| 9 | | **9926113277** | 1 | FITTING, ADAPTOR |

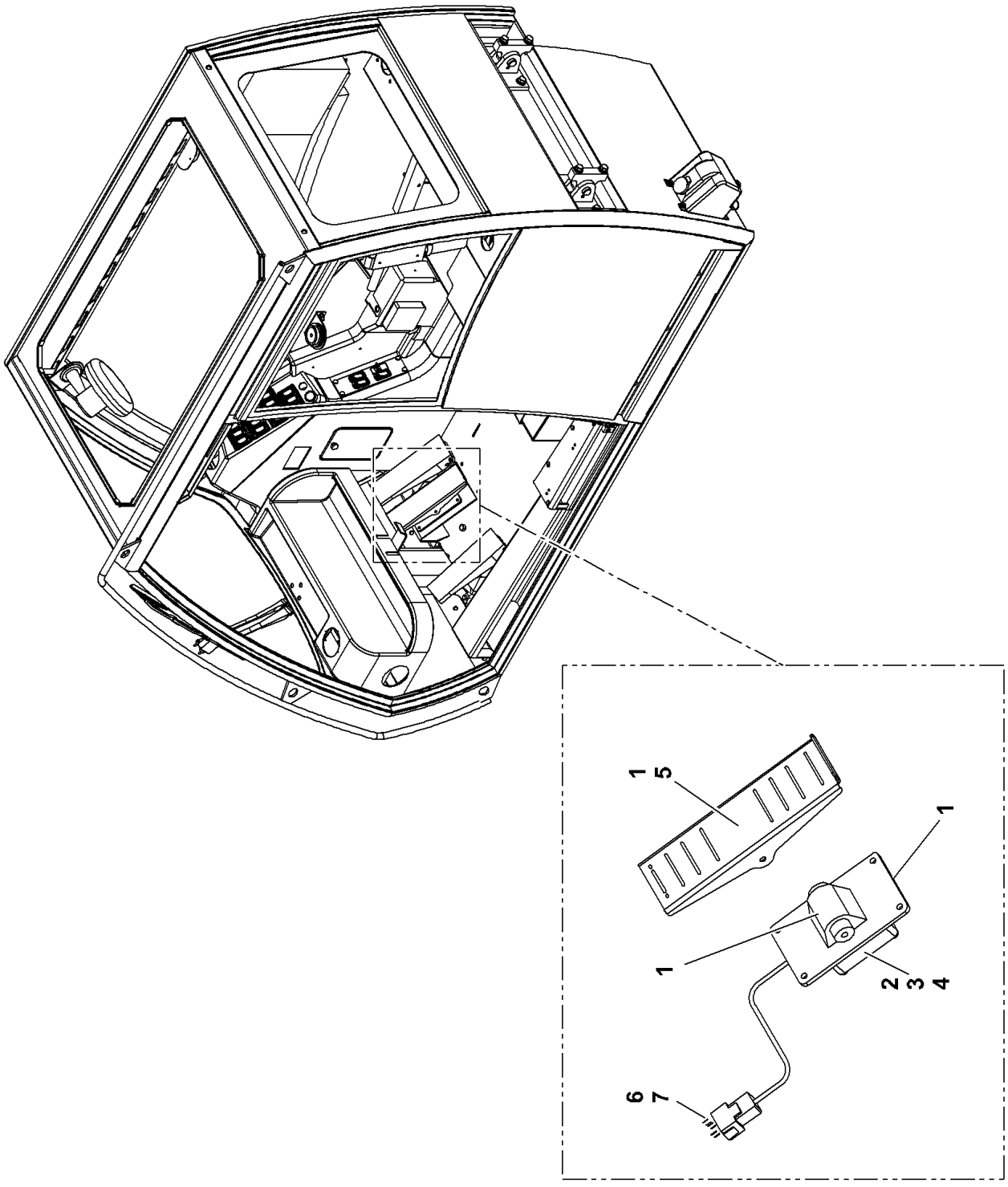


**7683100010**

**(SHEET 1 OF 1)**

Description
**PEDAL ASSEMBLY - ELECTRONIC TELESCOPE (COMPLETE ASSEMBLY)**

Assembly No.
**7683100010**
Revision:

| Item | FN | Part | Qty | Description |
|---|---|---|---|---|
| 1 | | **9683100087** | 1 | KIT, TREADLE ASSY.<br>INCLUDES TREADLE ASSY. AND<br>MOUNTING PLATE ASSY. |
| 2 | | **9683100088** | 1 | KIT, DRIVE ASSY.<br>INCLUDES MOUNTING PLATE FOR<br>P.C.BOARD,W/ MAGNET AND HOLDER |
| 3 | | **9683100089** | 1 | KIT, ELECTRICAL ASSY.<br>INCLUDES P.C. BOARD AND SENSOR |
| 4 | | **9683100090** | 1 | KIT, COVER ASSY.<br>INCLUDES COVER, GASKETS AND<br>STRAIN RELIEF AND HARDWARE |
| 5 | | **9352100665** | 1 | TREADLE |
| 6 | | **7892000947** | 1 | RECEPTACLE,<br>3 PIN |
| 7 | | **7689001782** | 3 | PIN, 18 - 16 GAGE |

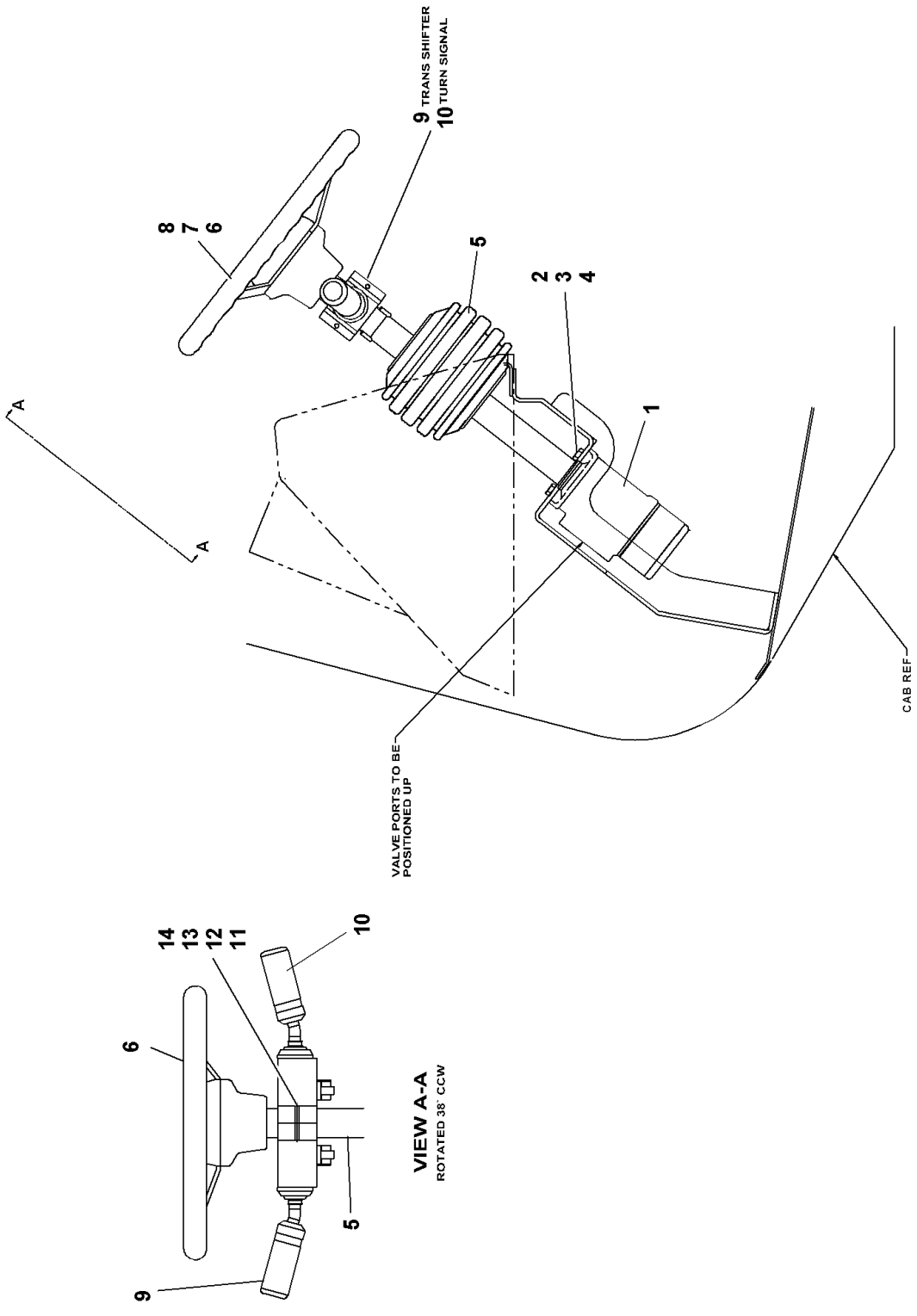


6245100995

(SHEET 1 OF 1)

Description
**CONTROLS INSTALLATION - STEER AND DRIVE**

Assembly No.
**6245100995**
Revision: **C**

| Item | FN | Part | Qty | Description |
|---|---|---|---|---|
| 1 | + | **7926100899** | 1 | VALVE ASSEMBLY - STEERING CONTROL (COMPLETE ASSEMBLY) |
| 2 | | **7115160850** | 4 | CAP SCREW, 3/8" - 16 N.C. X 1" GRADE 5 |
| 3 | | **7950160050** | 4 | WASHER, LOCK 3/8" I.D. |
| 4 | | **7950160141** | 4 | WASHER, 3/8" PLAIN NARROW |
| 5 | += | **7326100007** | 1 | COLUMN ASSEMBLY - TILT STEERING (COMPLETE ASSEMBLY) |
| 5 | += | **6326100001** | 1 | COLUMN ASSEMBLY - MODIFIED TILT STEERING (COMPLETE ASSEMBLY) |
| 6 | | **7970140706** | 1 | WHEEL, STEERING |
| 7 | | **7659000252** | 1 | NUT |
| 8 | # | **7970140707** | 1 | BUTTON, HORN |
| 9 | | **7872001734** | 1 | SWITCH, SHIFTER |
| 10 | | **7872001747** | 1 | SWITCH, TURNSIGNAL/WIPER |
| 11 | | **7121131901** | 2 | Slot PMS M5x60 -4.8 ISO 1580 |
| 12 | | **7951130014** | 2 | WASHER, 5MM I.D. |
| 13 | | **7951130210** | 2 | LOCKWASHER, 5MM I.D. |
| 14 | | **7661130003** | 2 | NUT, HEX 5MM |
| 15 | | **7950160350** | 4 | WASHER, LOCK 3/8" I.D. |

**+ SEE FURTHER BREAKDOWN THIS GROUP**
**= REFER TO MCI FOR APPLICABLE NUMBER**
**# SERVICED AS AN ASSEMBLY ONLY**

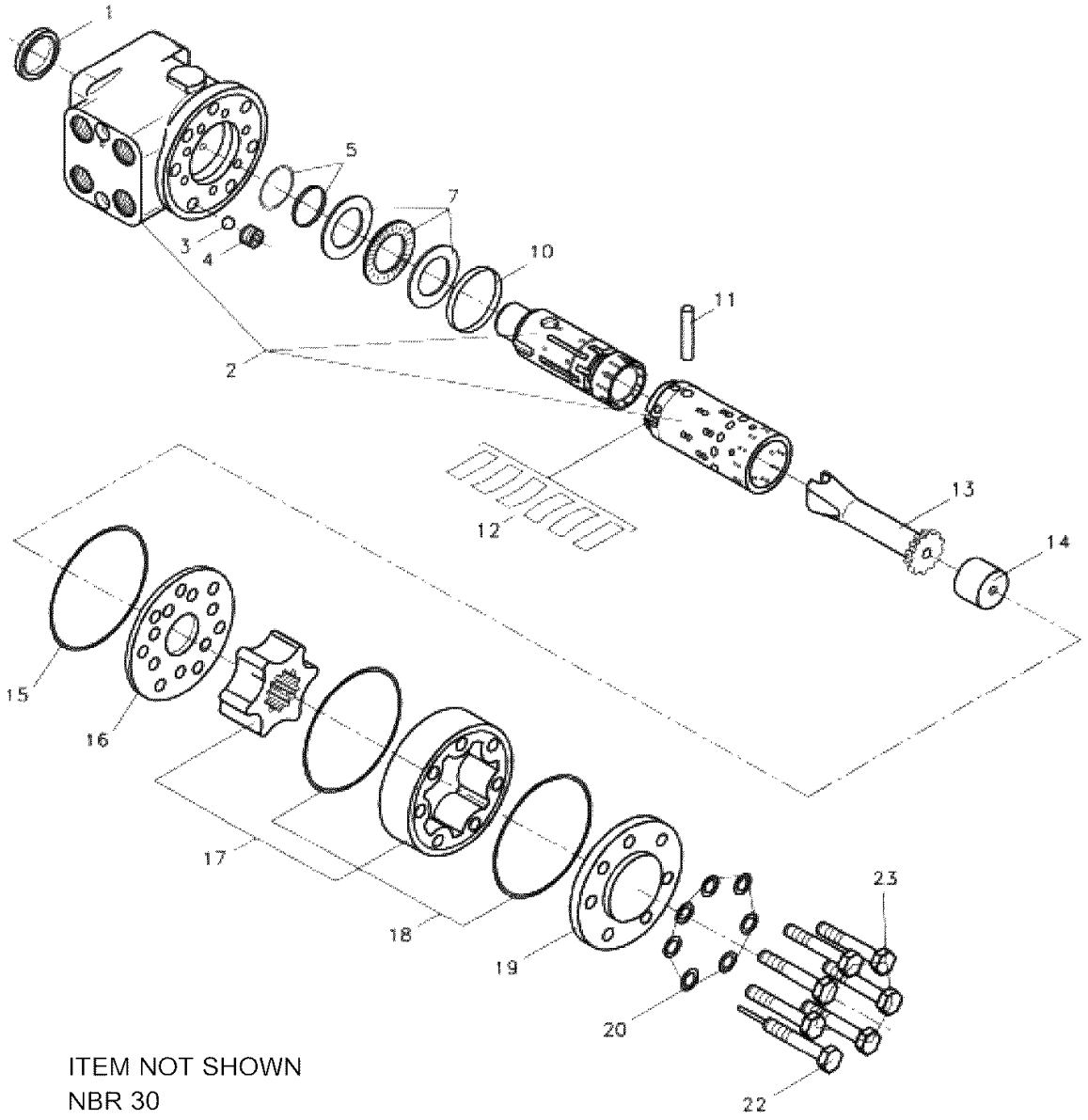


ITEM NOT SHOWN
NBR 30

**7926100899**

**(SHEET 1 OF 1)**

Description
**VALVE ASSEMBLY - STEERING CONTROL (COMPLETE ASSEMBLY)**

Assembly No.
**7926100899**
Revision:

| Item | FN | Part | Qty | Description |
|---|---|---|---|---|
| 1 | * | **9926113110** | 1 | SEAL, DUST RING |
| 2 | | **NSS** | 1 | HOUSING, AND SPOOL W/ SLEEVE |
| 3 | | **9926113111** | 1 | KIT, BUSHING W/BALL<br>INCLUDES ITEMS 4 |
| 4 | | **NSS** | 1 | BUSHING |
| 5 | * | **NSS** | 1 | SEAL, SHAFT |
| 7 | | **9926113112** | 1 | BEARING |
| 10 | | **9926113113** | 1 | KIT, RING W/CROSS PIN<br>INCLUDES ITEM 11 |
| 11 | | **NSS** | 1 | CROSS PIN |
| 12 | | **NSS** | 6 | SPRINGS |
| 13 | | **NSS** | 1 | SHAFT |
| 14 | | **NSS** | 1 | SPACER |
| 15 | * | **NSS** | 1 | O-RING |
| 16 | | **9926110265** | 1 | PLATE,DISTRIBUTOR |
| 17 | | **9926110266** | 1 | GEAR, SET |
| 18 | | **NSS** | 1 | O-RING |
| 19 | | **NSS** | 1 | COVER, END |
| 20 | * | **9632102851** | 7 | WASHER, |
| 22 | | **9926113114** | 1 | CAPSCREW, SPECIAL |
| 23 | | **9926113115** | 6 | CAPSCREW |
| 30 | * | **9926113116** | 1 | KIT, SEAL |

*** REPAIR KIT AND/OR PART OF KIT**

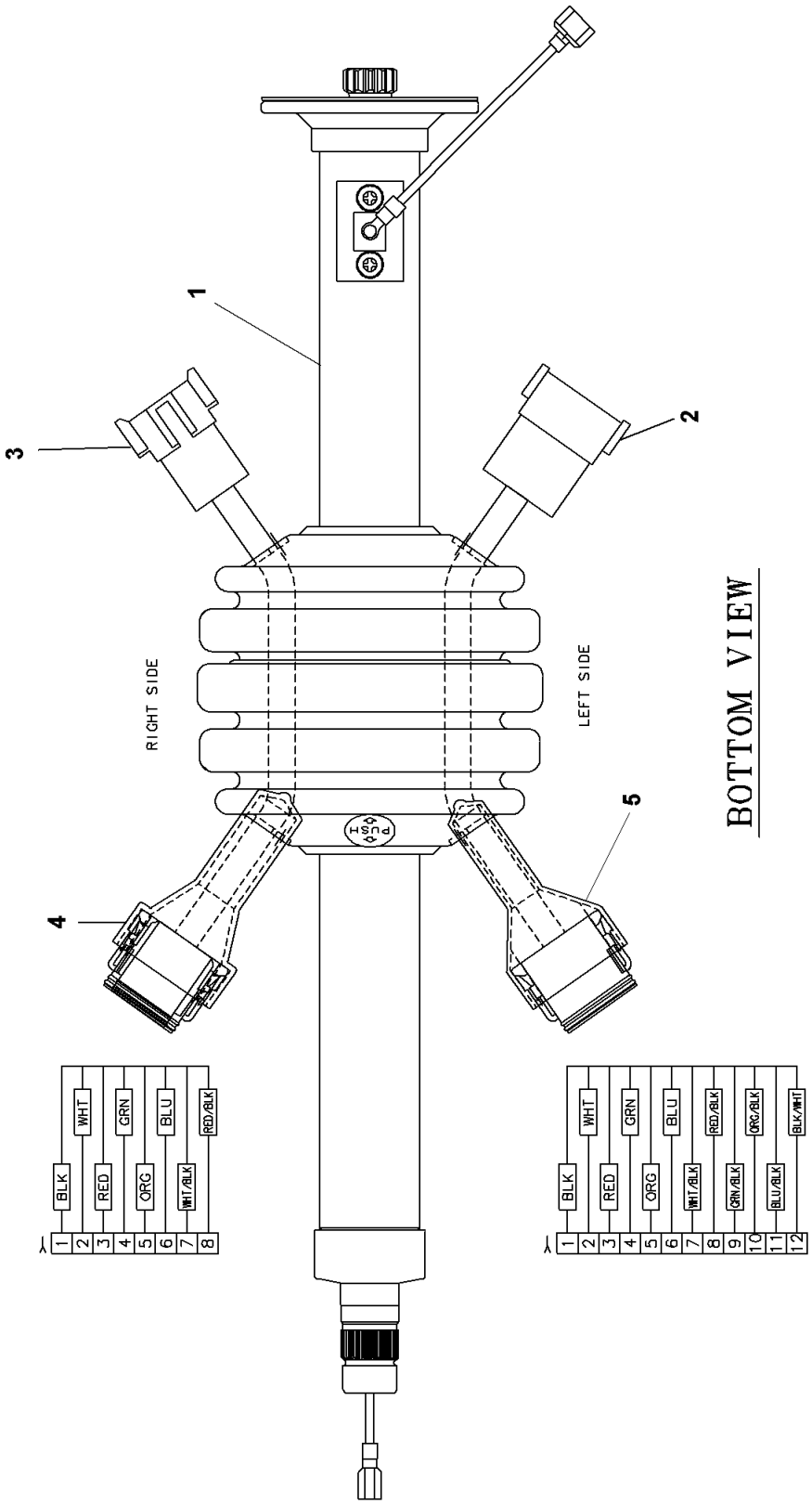


**6326100001**

**(SHEET 1 OF 1)**

Description
**COLUMN ASSEMBLY - MODIFIED TILT STEERING (COMPLETE ASSEMBLY)**

Assembly No.
**6326100001**
Revision: #

| Item | FN | Part | Qty | Description |
|---|---|---|---|---|
| 1 | + | **7326100007** | 1 | COLUMN ASSEMBLY - TILT STEERING (COMPLETE ASSEMBLY) |
| 2 | + | **6512100853** | 1 | HARNESS ASSEMBLY - TURN SIGNAL/WASHER (COMPLETE ASSEMBLY) |
| 3 | + | **6512100854** | 1 | HARNESS ASSEMBLY - SHIFTER (COMPLETE ASSEMBLY) |
| 4 | | **7172000550** | 1 | BOOT |
| 5 | | **7172000552** | 1 | BOOT |

**+ SEE FURTHER BREAKDOWN THIS GROUP**

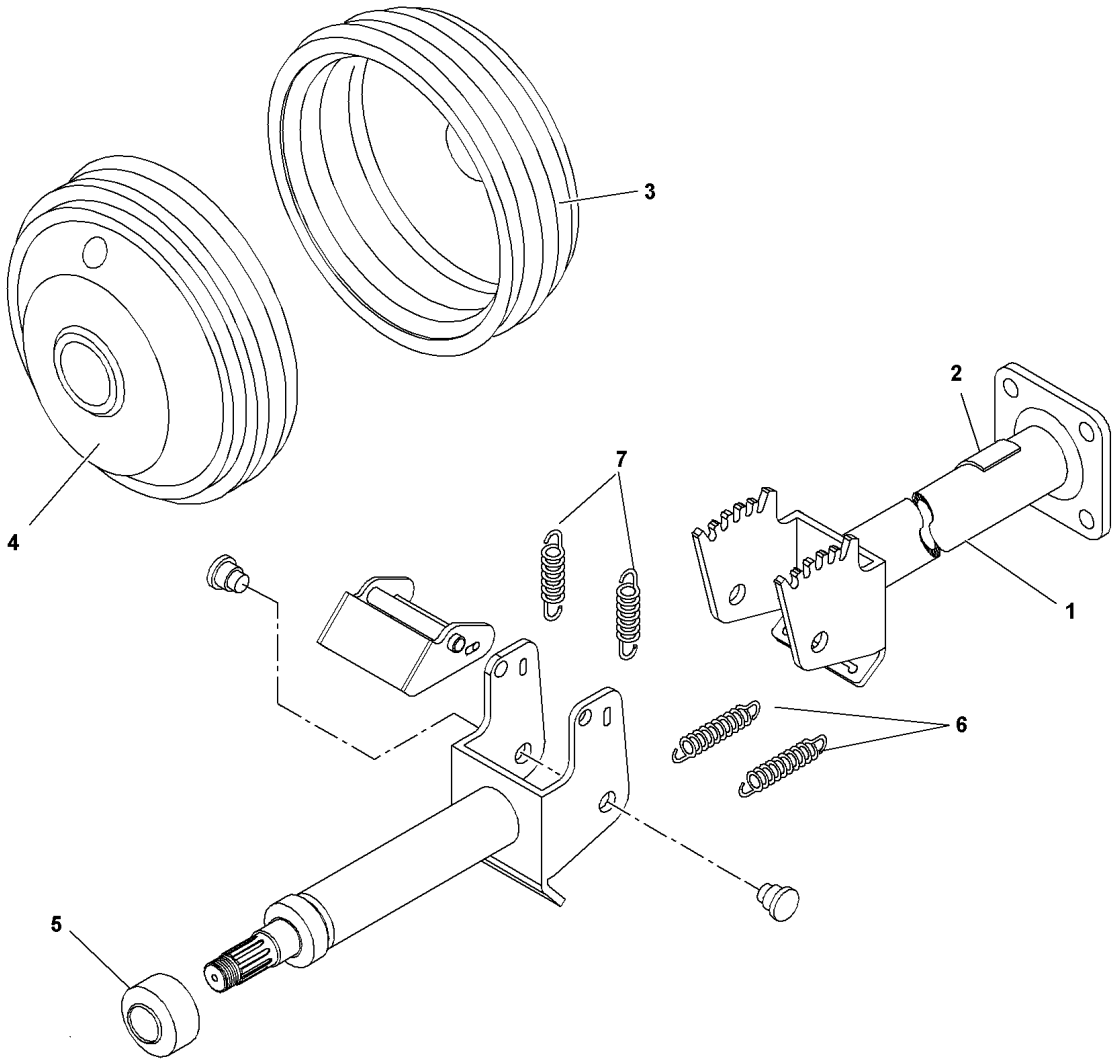


**7326100007**

**(SHEET 1 OF 1)**

Description
**COLUMN ASSEMBLY - TILT STEERING (COMPLETE ASSEMBLY)**

Assembly No.
**7326100007**
Revision:

| Item | FN | Part | Qty | Description |
|---|---|---|---|---|
| 1 | | **NSS** | 1 | HOUSING, TUBE COLUMN |
| 2 | | **9326100494** | 1 | KIT, HORN BRUSH W/GREASE |
| 3 | | **9326100495** | 1 | BOOT, LOWER END |
| 4 | | **9326100496** | 1 | BOOT, UPPER END |
| 5 | | **9326100497** | 1 | CAP |
| 6 | | **9326100498** | 2 | SPRING |
| 7 | | **9326100499** | 2 | SPRING |

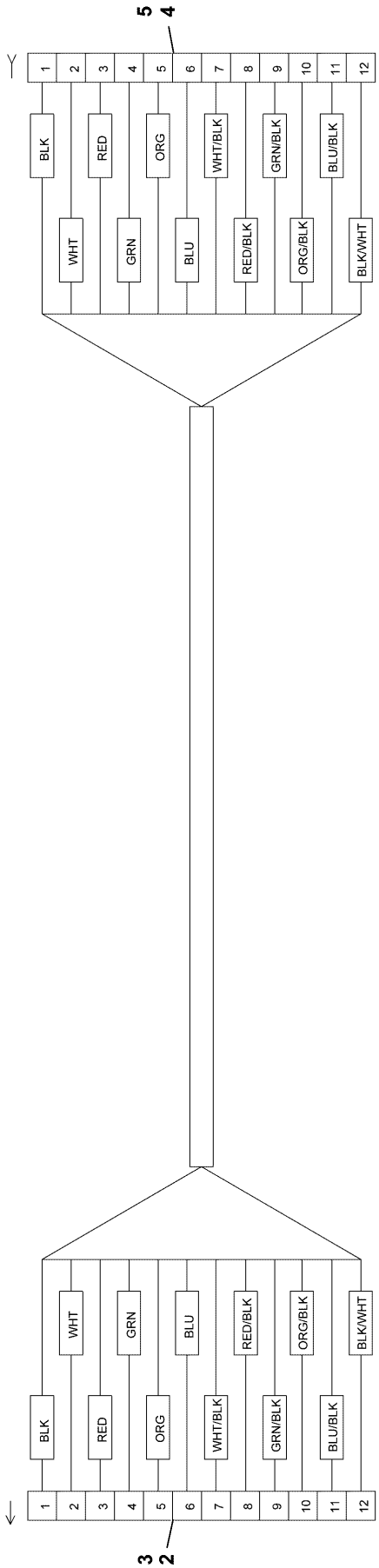


6512100853

(SHEET 1 OF 1)

Description
**HARNESS ASSEMBLY - TURN SIGNAL/WASHER (COMPLETE ASSEMBLY)**

Assembly No.
**6512100853**
Revision: #

| Item | FN | Part | Qty | Description |
|---|---|---|---|---|
| 2 | | **7892000951** | 1 | RECEPTACLE, 12 PIN |
| 3 | | **7689001782** | 12 | PIN, 18 - 16 GAGE |
| 4 | | **7709000846** | 1 | PLUG, 12 SOCKET |
| 5 | | **7826000626** | 12 | SOCKET, 16 - 18 AWG |

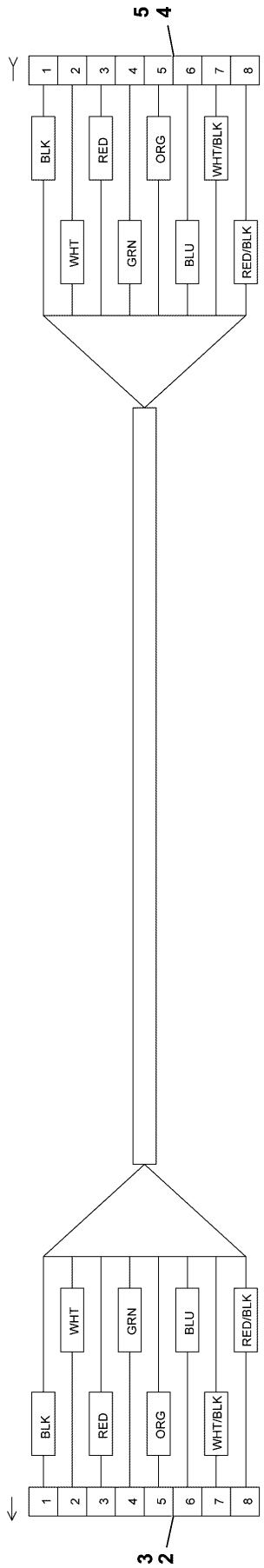


**6512100854**

**(SHEET 1 OF 1)**

Description
**HARNESS ASSEMBLY - SHIFTER (COMPLETE ASSEMBLY)**

Assembly No.
**6512100854**
Revision: **A**

| Item | FN | Part | Qty | Description |
|---|---|---|---|---|
| 2 | | **7892000831** | 1 | RECEPTACLE,<br>8 PIN |
| 3 | | **7689001782** | 12 | PIN, 18 - 16 GAGE |
| 4 | | **7709000811** | 1 | PLUG<br>8 SOCKET |
| 5 | | **7826000626** | 12 | SOCKET,<br>16 - 18 AWG |

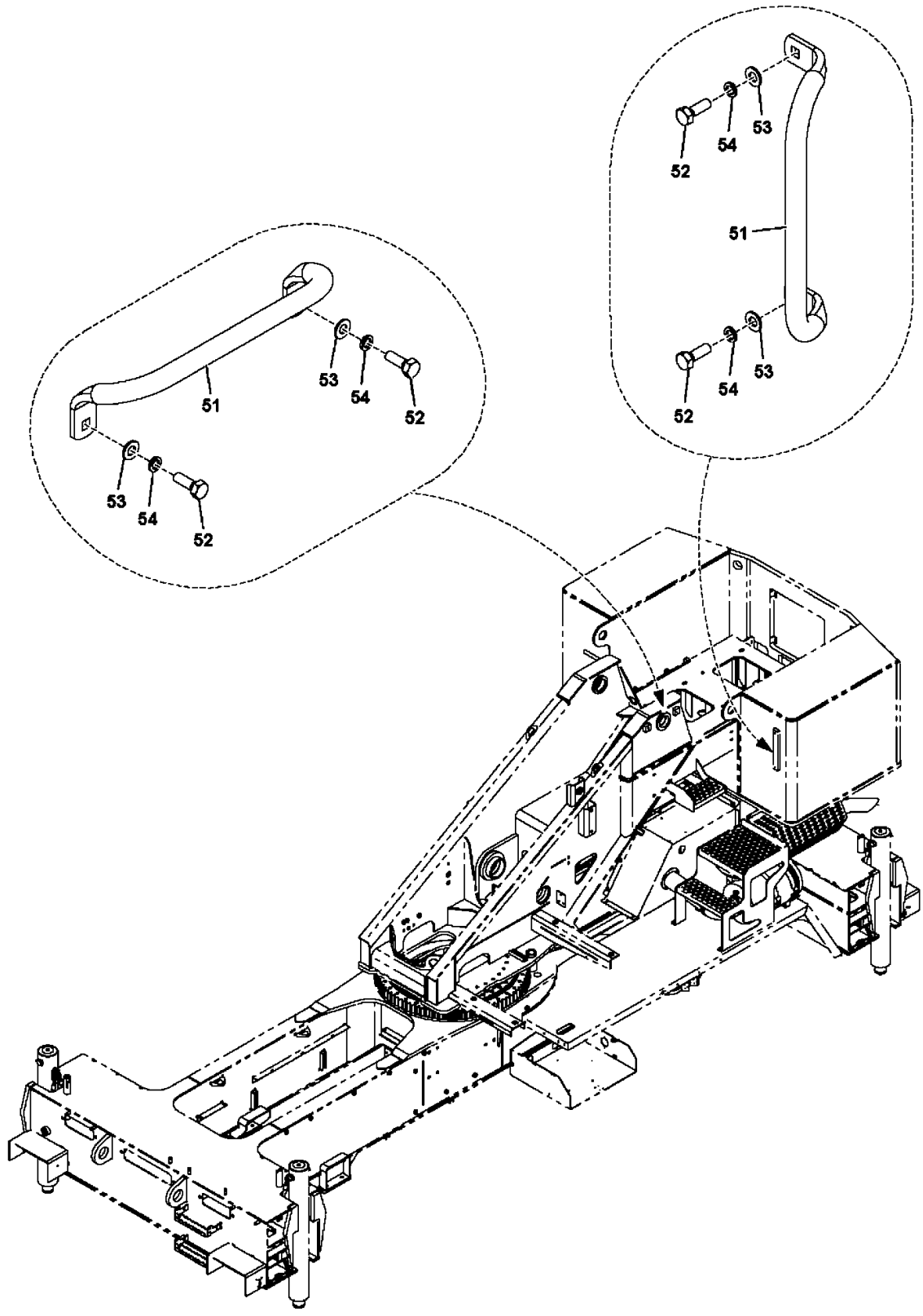


**2159210210**

**(SHEET 1 OF 1)**

Description
**HANDLE INSTALLATION HOIST ACCESS**

Assembly No.
**2159210210**
Revision: #

| Item | FN | Part | Qty | Description |
|---|---|---|---|---|
| 51 | | **7511100015** | 2 | HANDRAIL, GRAB |
| 52 | | **7126191350** | 4 | CAP SCREW, M10X30 HEX HEAD |
| 53 | | **7951190014** | 4 | FLAT WASHER, 10MM I.D. |
| 54 | | **7951190210** | 4 | LOCK WASHER, 10MM |

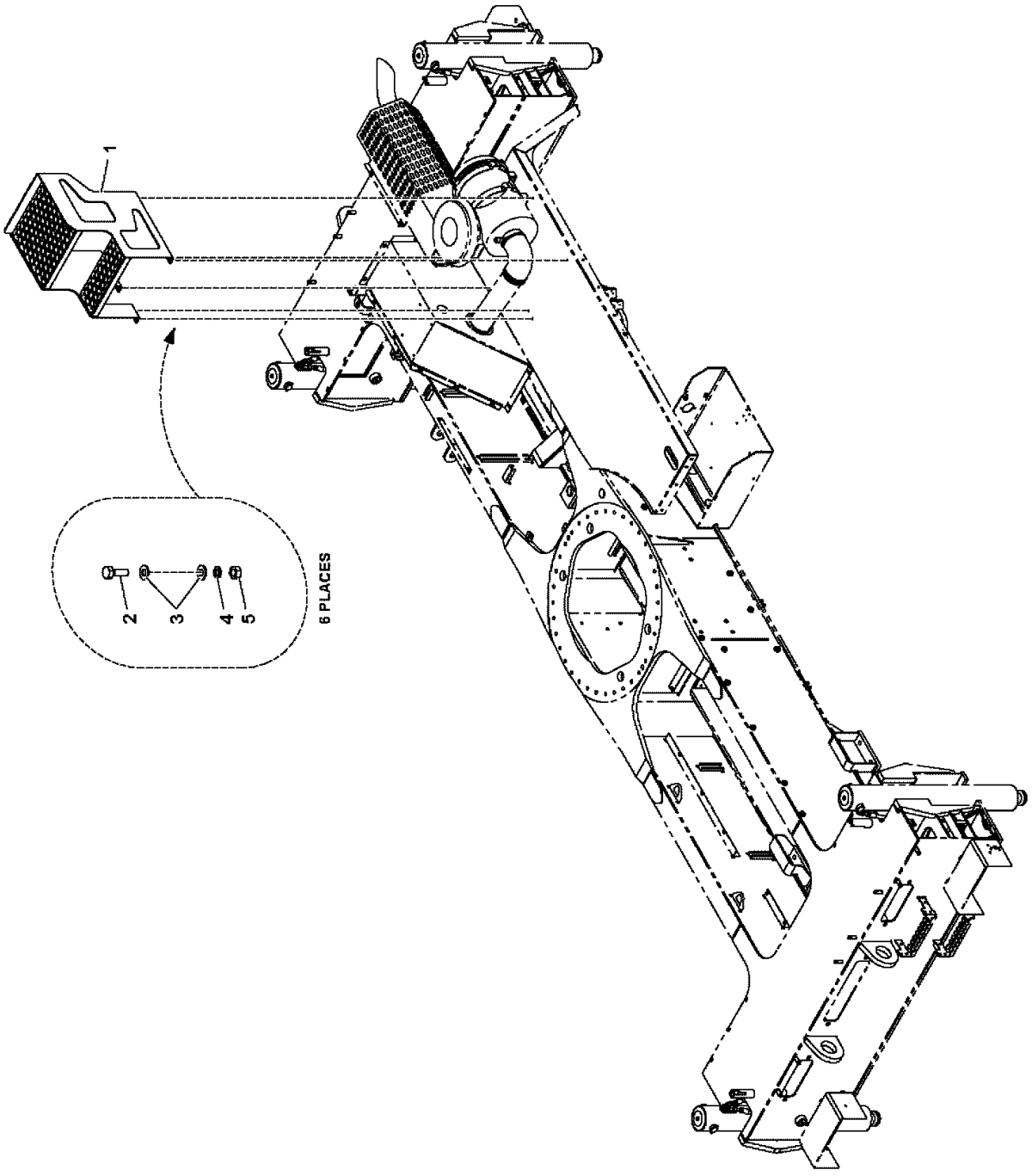


**2159110275**

**(SHEET 1 OF 1)**

Description
**STEP INSTALLATION HOIST ACCESS**

Assembly No.
**2159110275**
Revision: #

| Item | FN | Part | Qty | Description |
|---|---|---|---|---|
| 1 | | **2159110274** | 1 | STEP, CARRIER DECK |
| 2 | | **7126191350** | 6 | CAP SCREW, M10X30 HEX HEAD |
| 3 | | **7951190014** | 12 | FLAT WASHER, 10MM I.D. |
| 4 | | **7951190210** | 6 | LOCK WASHER, 10MM |
| 5 | | **7661190003** | 6 | HEX NUT 10MM I.D. X 1.5 |

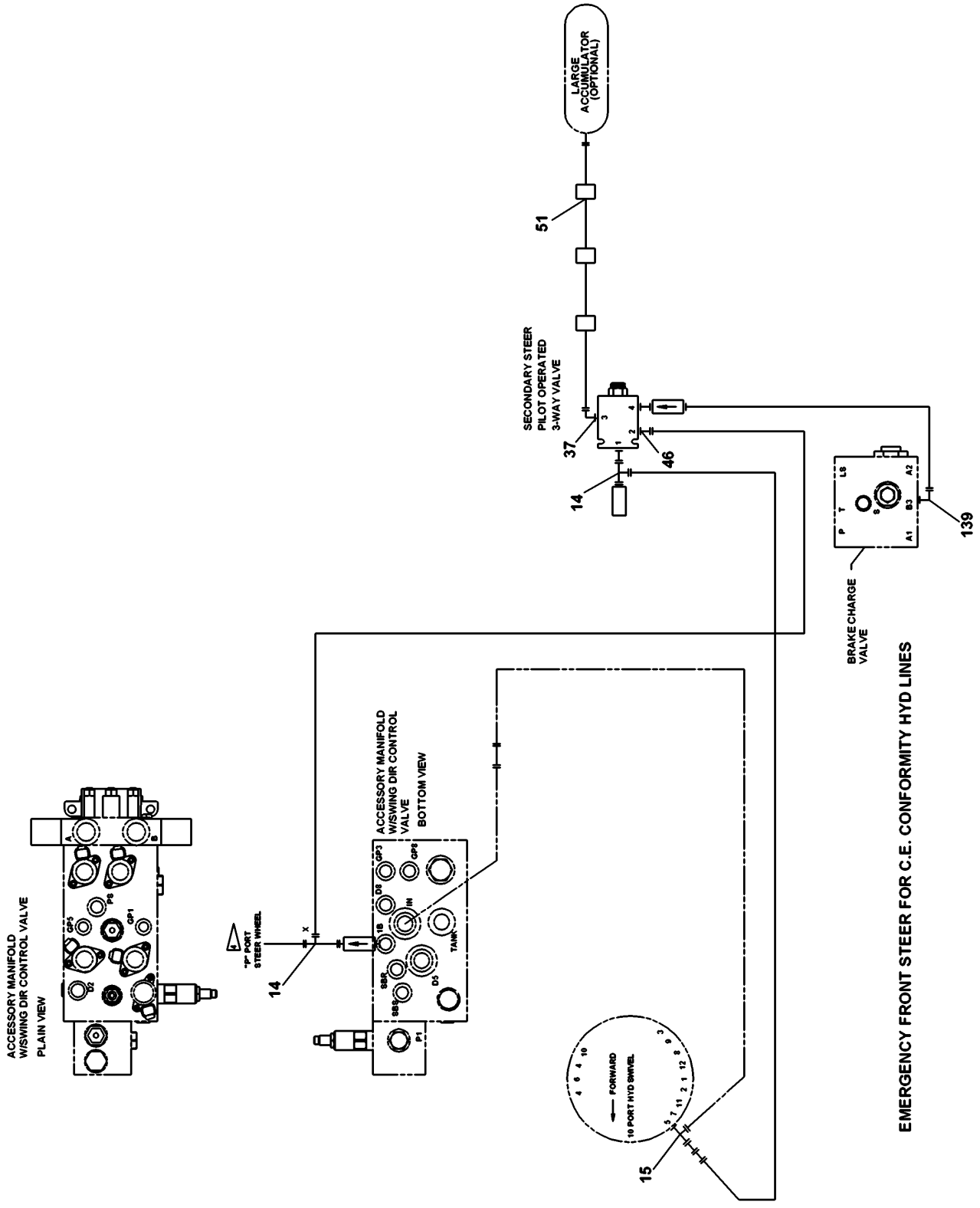


2159610251

(SHEET 5 OF 5)

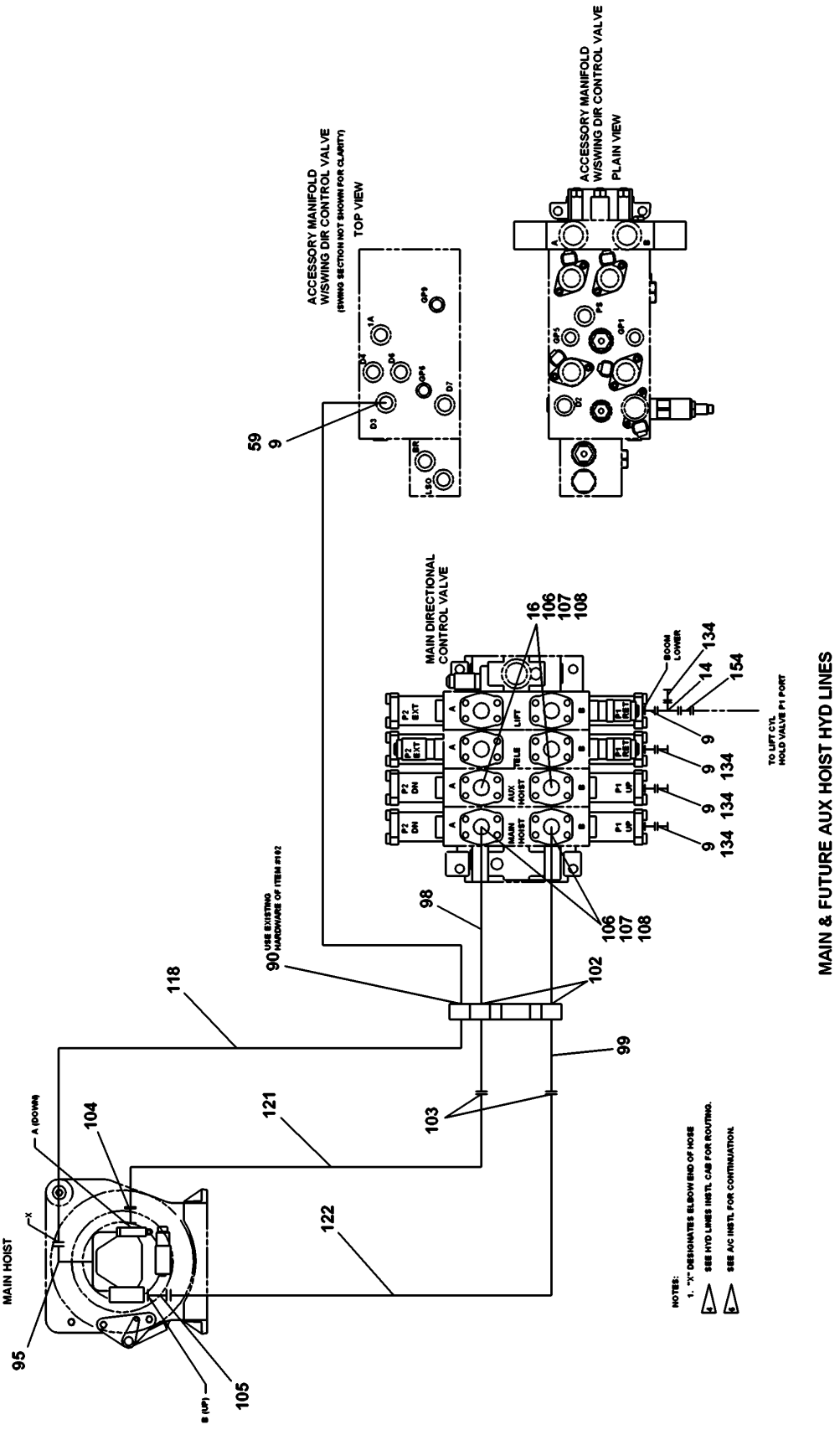
MAIN & FUTURE AUX HOIST HYD LINES
ACCESSORY MANIFOLD W/SWING DIR CONTROL VALVE (SWING SECTION NOT SHOWN FOR CLARITY) TOP VIEW
ACCESSORY MANIFOLD W/SWING DIR CONTROL VALVE PLAIN VIEW
MAIN DIRECTIONAL CONTROL VALVE
MAIN HOIST
TO LIFT CYL HOLD VALVE P1 PORT
BOOM LOWER
NOTES:
1. "X" DESIGNATES ELBOW END OF HOSE
SEE HYD LINES INSTL CAB FOR ROUTING.
SEE A/C INSTL FOR CONTINUATION.
USE EXISTING HARDWARE OF ITEM #102
A (DOWN)
B (UP)
59
9
16
106
107
108
134
14
154
98
90
118
102
99
103
121
122
104
95
105

2159610251

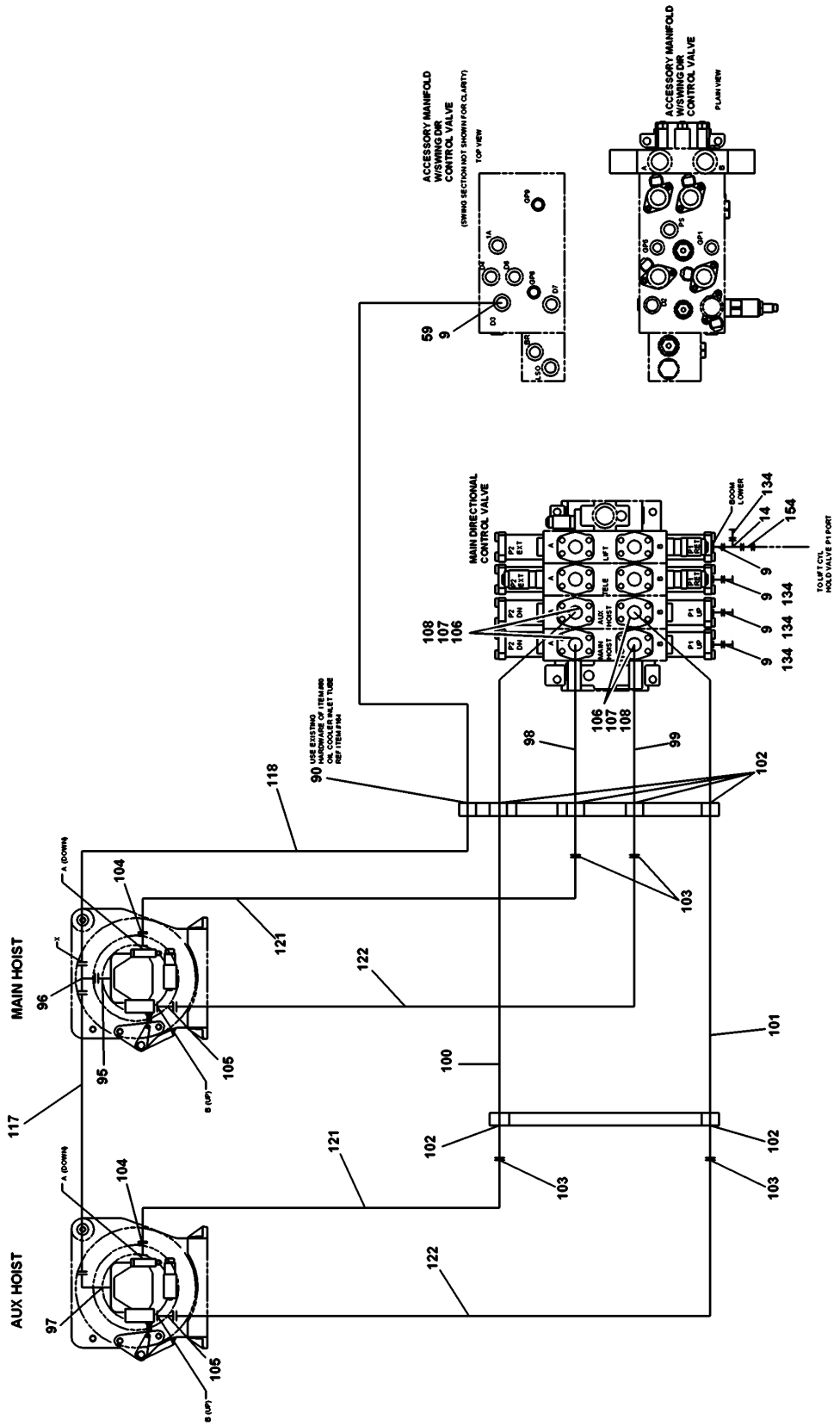


MAIN & AUX HOIST HYD LINES

2159610251

(SHEET 3 OF 5)

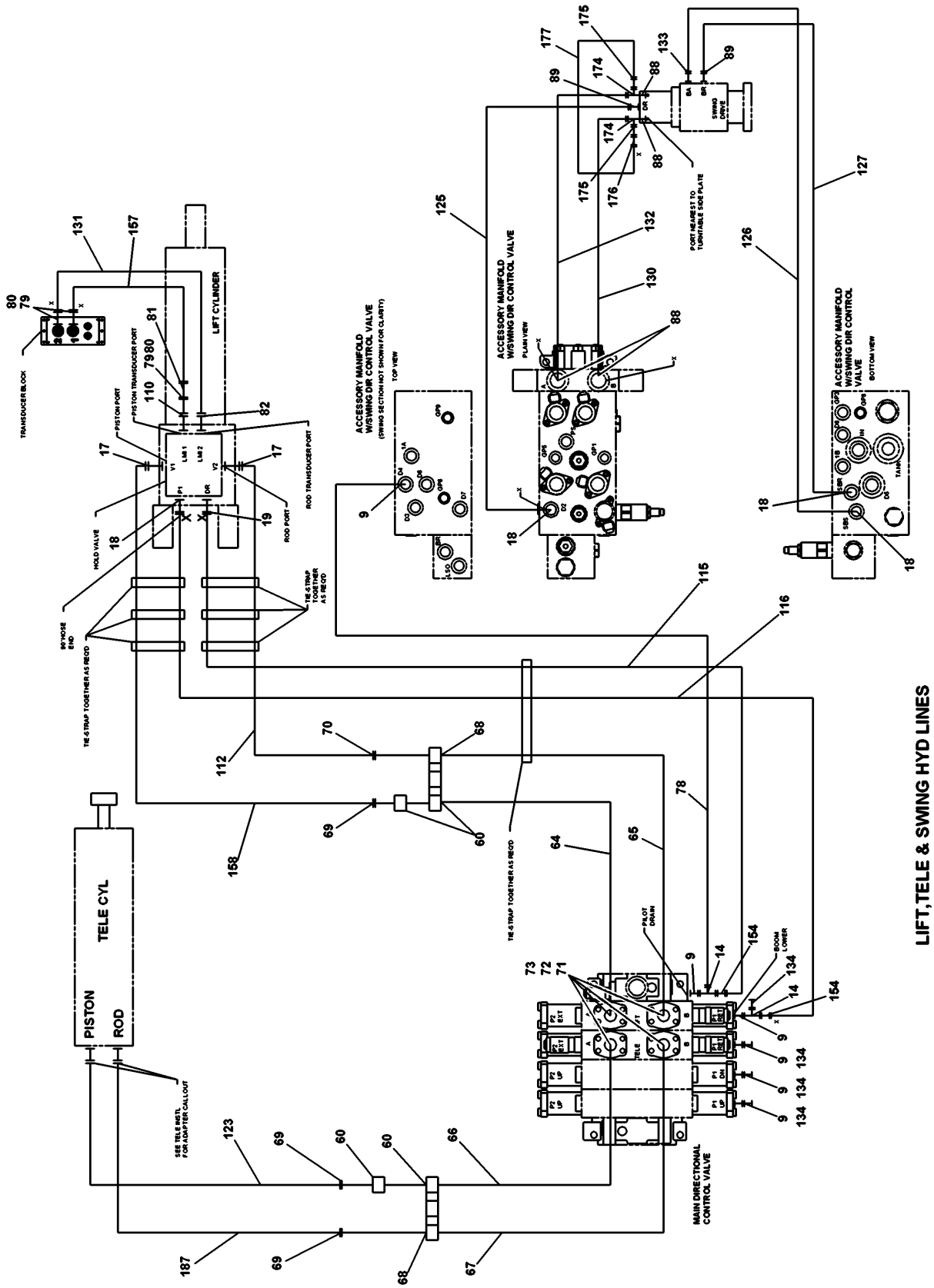


2159610251

(SHEET 2 OF 5)

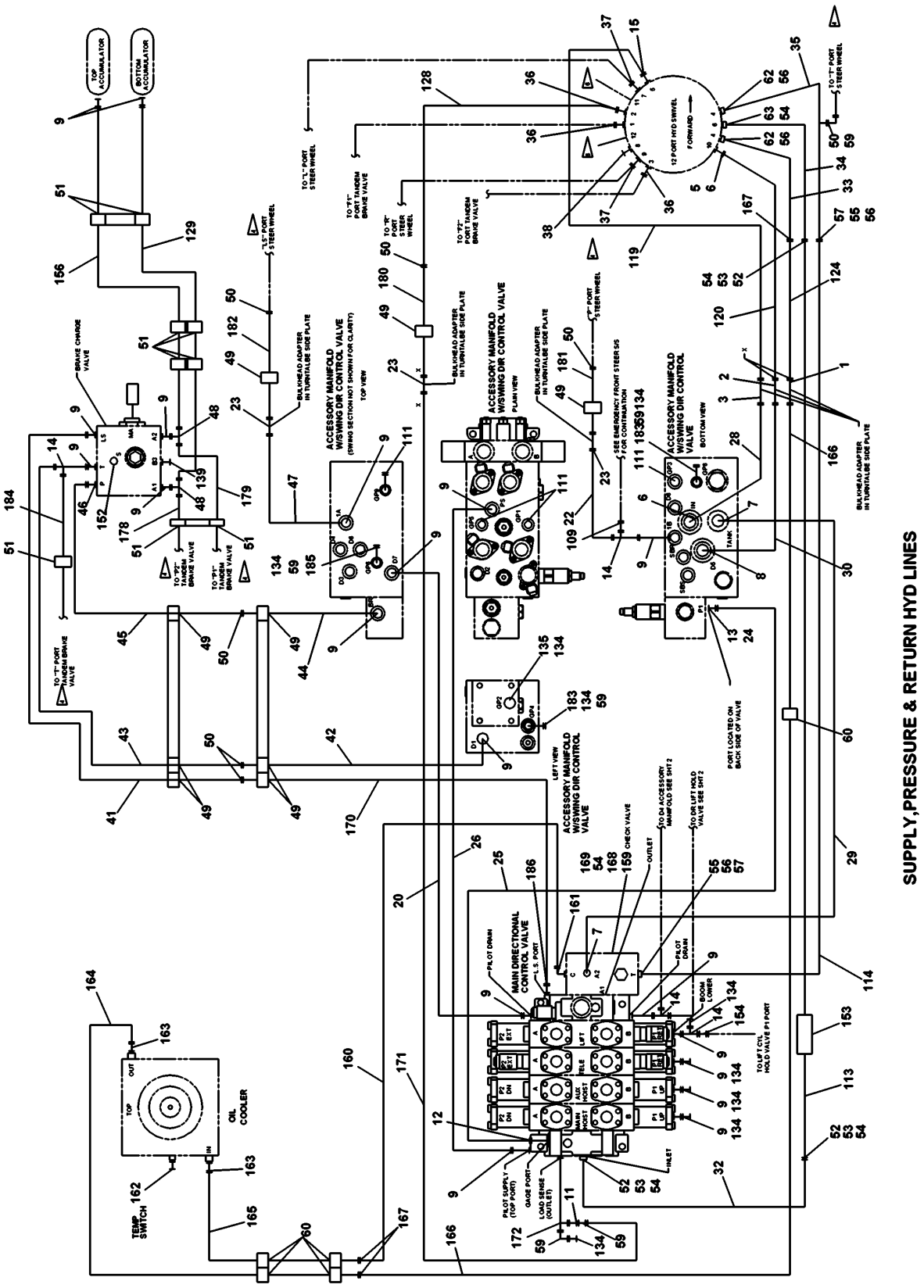


2159610251

(SHEET 1 OF 5)

Description
**HYDRAULIC LINES INSTALLATION - MAIN AND AUXILIARY HOIST (SUPERSTRUCTURE)**

Assembly No.
**2159610251**
Revision: **C**

| Item | FN | Part | Qty | Description |
|---|---|---|---|---|
| 1 | | **7447202032** | 1 | ELBOW, #20 BULKHEAD UNION 90 |
| 2 | | **7447121232** | 1 | ELBOW, #12 BULKHEAD UNION 90 |
| 3 | | **7447121217** | 1 | UNION, BULKHEAD<br>INCLUDES THE FOLLOWING PARTS |
| | | **7755018002** | 1 | O-RING |
| 5 | | **7447121233** | 1 | ELBOW, 90 DEGREE<br>INCLUDES THE FOLLOWING PARTS |
| | | **7755018002** | 1 | O-RING |
| 6 | | **7447121601** | 2 | ADAPTER, STRAIGHT<br>INCLUDES THE FOLLOWING PARTS |
| | | **7755018002** | 1 | O-RING |
| | | **7755916002** | 1 | O-RING |
| 7 | | **7447161601** | 2 | ADAPTER, STRAIGHT<br>INCLUDES THE FOLLOWING PARTS |
| | | **7755021002** | 1 | O-RING |
| | | **7755916002** | 1 | O-RING |
| 8 | | **7926100959** | 1 | VALVE, #12 INLET CHECK |
| 9 | | **7447060601** | 21 | ADAPTER, STRAIGHT MALE<br>INCLUDES THE FOLLOWING PARTS |
| | | **7755012002** | 1 | O-RING |
| | | **7755906002** | 1 | O-RING |
| 11 | | **7013001112** | 1 | ADAPTER |
| 12 | | **7447080601** | 1 | ADAPTER, STRAIGHT<br>INCLUDES THE FOLLOWING PARTS |
| | | **7755014002** | 1 | O-RING |
| | | **7755906002** | 1 | O-RING |
| 13 | | **7447080801** | 1 | ADAPTER, STRAIGHT<br>INCLUDES THE FOLLOWING PARTS |
| | | **7755014002** | 1 | O-RING |
| | | **7755908002** | 1 | O-RING |
| 14 | | **7447060634** | 4 | TEE, FEMALE RUN<br>INCLUDES THE FOLLOWING PARTS |
| | | **7755012002** | 1 | O-RING |
| | | **7755906002** | 1 | O-RING |
| 15 | | **7447121203** | 1 | ELBOW, 90 DEGREE<br>INCLUDES THE FOLLOWING PARTS |
| | | **7755018002** | 1 | O-RING |
| | | **7755912002** | 1 | O-RING |
| 17 | | **7447161638** | 2 | ELBOW, 90 DEGREE LONG<br>INCLUDES THE FOLLOWING PARTS |
| | | **7755021002** | 1 | O-RING |
| | | **7755916002** | 2 | O-RING |

Description
**HYDRAULIC LINES INSTALLATION - MAIN AND AUXILIARY HOIST (SUPERSTRUCTURE)**

Assembly No.
**2159610251**
Revision: **C**

| Item | FN | Part | Qty | Description |
|---|---|---|---|---|
| 18 | | **7447040601** | 4 | ADAPTER, STRAIGHT |
| | | | | INCLUDES THE FOLLOWING PARTS |
| | | **7755011002** | 1 | O-RING |
| | | **7755906002** | 1 | O-RING |
| 19 | | **7447040401** | 1 | ADAPTER, STRAIGHT |
| | | | | INCLUDES THE FOLLOWING PARTS |
| | | **7755011002** | 1 | O-RING |
| | | **7755904002** | 1 | O-RING |
| 20 | | **7910101436** | 1 | TUBE ASSY, D4 MAN TO PD MAIN |
| 22 | | **7910101517** | 1 | TUBE ASSY, 1B MAN TO P STEER |
| 23 | | **7447060617** | 3 | UNION, BULKHEAD |
| | | | | INCLUDES THE FOLLOWING PARTS |
| | | **7755011002** | 1 | O-RING |
| 24 | | **7447080833** | 1 | ELBOW, 90 DEGREE MALE |
| | | | | INCLUDES THE FOLLOWING PARTS |
| | | **7755014002** | 1 | O-RING |
| | | **7755908002** | 1 | O-RING |
| 25 | | **80000423** | 1 | TUBE ASSY, P1 MAN TO P3 MAIN |
| 26 | | **7910101435** | 1 | TUBE ASSY, PS MAN TO PS MAIN |
| 28 | | **7910101433** | 1 | TUBE ASSY, MAN IN TO PORT 5 SW |
| 29 | | **7910101628** | 1 | TUBE ASSY, MAIN TANK TO CHECK |
| 30 | | **7910101618** | 1 | TUBE ASSY, MANIFOLD D5 TO 10 |
| 32 | | **7910101454** | 1 | TUBE ASSY, INLET MAIN VALVE |
| 33 | | **7910101568** | 1 | TUBE ASSY,PORT 4SWIVEL TO TANK |
| 34 | | **7910101566** | 1 | TUBE ASSY, PORT 6 SWIVEL TO IN |
| 35 | | **7910101567** | 1 | TUBE ASSY,PORT 4 SWIVEL TO OUT |
| 36 | | **7447060403** | 3 | ELBOW, 90 DEGREE MALE |
| | | | | INCLUDES THE FOLLOWING PARTS |
| | | **7755012002** | 1 | O-RING |
| | | **7755904002** | 1 | O-RING |
| 37 | | **7447060803** | 2 | ELBOW, 90 DEGREE MALE |
| | | | | INCLUDES THE FOLLOWING PARTS |
| | | **7755012002** | 1 | O-RING |
| | | **7755908002** | 1 | O-RING |
| 38 | | **7709000038** | 1 | PLUG, O-RING |
| | | | | INCLUDES THE FOLLOWING PARTS |
| | | **7755908002** | 1 | O-RING |
| 41 | | **7910101519** | 1 | TUBE ASSY,LS BR CHARGE TO TUBE |
| 42 | | **7910101513** | 1 | TUBE ASSY, D1 MAN TO TANK CHAR |

Description
**HYDRAULIC LINES INSTALLATION - MAIN AND AUXILIARY HOIST (SUPERSTRUCTURE)**

Assembly No.
**2159610251**
Revision: **C**

| Item | FN | Part | Qty | Description |
|---|---|---|---|---|
| 43 | | **7910101520** | 1 | TUBE ASSY, T BR CHARGE TO TUBE |
| 44 | | **7910101515** | 1 | TUBE ASSY, BR MAN TO P CHARGE |
| 45 | | **7910101518** | 1 | TUBE ASSY, P BR CHARGE TO TUBE |
| 46 | | **7447060801** | 1 | ADAPTER, STRAIGHT MALE<br>INCLUDES THE FOLLOWING PARTS |
| | | **7755012002** | 1 | O-RING |
| | | **7755908002** | 1 | O-RING |
| 47 | | **7910101516** | 1 | TUBE ASSY, 1A MAN TO LS STEER |
| 48 | | **7447060635** | 2 | TEE, BRANCH<br>INCLUDES THE FOLLOWING PARTS |
| | | **7755012002** | 1 | O-RING |
| 49 | | **7300000399** | 9 | CLAMP, TUBING<br>3/8" I.D. |
| 50 | | **7755012002** | 7 | O-RING |
| 51 | | **7300000401** | 9 | CLAMP, TUBING<br>5/8" I.D. |
| 52 | # | **7450000188** | 6 | SPLIT FLANGE HALF, 1 1/4" |
| 53 | | **7115171250** | 12 | CAP SCREW,<br>7/16" - 14 N.C. X 1 1/2"<br>GRADE 5 |
| 54 | | **7755222002** | 6 | O-RING |
| 55 | | **7115181250** | 8 | CAP SCREW,<br>1/2" - 13 N.C. X 1 1/2"<br>GRADE 5 |
| 56 | | **7755225002** | 4 | O-RING |
| 57 | # | **7450000102** | 4 | FLANGE, SPLIT |
| 59 | | **7447060633** | 7 | ELBOW, 90 DEGREE MALE<br>INCLUDES THE FOLLOWING PARTS |
| | | **7755012002** | 1 | O-RING |
| 60 | | **7300000405** | 9 | CLAMP, TUBING |
| 62 | | **80010421** | 8 | SHCS M12x70 -8.8 ISO 4762 PLTD |
| 63 | | **80010420** | 4 | SHCS M10x65 -8.8 ISO 4762 PLTD |
| 64 | | **7910101597** | 1 | TUBE ASSY, LIFT A EXT TO HOSE |
| 65 | | **7910101432** | 1 | TUBE ASSY, LIFT B RET TO HOSE |
| 66 | | **7910101706** | 1 | TUBE ASSY, TELE A EXT TO HOSE |
| 67 | | **7910101707** | 1 | TUBE ASSY, TELE B RET TO HOSE |
| 68 | | **7300000404** | 2 | CLAMP, 1" TUBING |
| 69 | | **7755021002** | 3 | O-RING |

**# SERVICED AS AN ASSEMBLY ONLY**

Description
**HYDRAULIC LINES INSTALLATION - MAIN AND AUXILIARY HOIST (SUPERSTRUCTURE)**

Assembly No.
**2159610251**
Revision: **C**

| Item | FN | Part | Qty | Description |
|---|---|---|---|---|
| 70 | | **7755018002** | 1 | O-RING |
| 71 | # | **7450000201** | 8 | FLANGE, SPLIT |
| 72 | | **7115161050** | 16 | CAP SCREW,<br>3/8" - 16 N.C. X 1 1/4"<br>GRADE 5 |
| 73 | | **7755219002** | 4 | O-RING |
| 78 | | **7910101437** | 1 | TUBE ASSY, D6 MAN TO PD MAIN |
| 79 | | **7445060439** | 3 | ADAPTER, REDUCING FEMALE |
| 80 | | **7445060642** | 3 | NUT |
| 81 | | **7445040472** | 1 | ELBOW, 90 DEGREE |
| 82 | | **7445040645** | 1 | ELBOW, 90 DEGREE MALE<br>INCLUDES THE FOLLOWING PARTS |
| | | **7755906002** | 1 | O-RING |
| 88 | | **7447101001** | 4 | ADAPTER, STRAIGHT<br>INCLUDES THE FOLLOWING PARTS |
| | | **7755016002** | 1 | O-RING |
| | | **7755910002** | 1 | O-RING |
| 89 | | **7447040403** | 2 | ELBOW, 90 DEGREE<br>INCLUDES THE FOLLOWING PARTS |
| | | **7755011002** | 1 | O-RING |
| | | **7755904002** | 1 | O-RING |
| 90 | | **7300000102** | 1 | CLAMP, TUBING<br>5/8" I.D. |
| 95 | | **7447061001** | 1 | ADAPTER, STRAIGHT<br>INCLUDES THE FOLLOWING PARTS |
| | | **7755012002** | 1 | O-RING |
| | | **7755910002** | 1 | O-RING |
| 96 | | **7447060635** | 1 | TEE, BRANCH<br>INCLUDES THE FOLLOWING PARTS |
| | | **7755012002** | 1 | O-RING |
| 97 | | **7447061003** | 1 | FITTING, 90 DEGREE<br>INCLUDES THE FOLLOWING PARTS |
| | | **7755012002** | 1 | O-RING |
| | | **7755910002** | 1 | O-RING |
| 98 | | **7910101607** | 1 | TUBE ASSY, MAIN HOIST DOWN M&A |
| 99 | | **7910101608** | 1 | TUBE ASSY, MAIN HOIST UP M&A |
| 100 | | **7910101609** | 1 | TUBE ASSY, AUXILARY HOIST DOWN |
| 101 | | **7910101610** | 1 | TUBE ASSY, AUXILARY HOIST UP |
| 102 | | **7300000405** | 6 | CLAMP, TUBING |

**# SERVICED AS AN ASSEMBLY ONLY**

Description
**HYDRAULIC LINES INSTALLATION - MAIN AND AUXILIARY HOIST (SUPERSTRUCTURE)**

Assembly No.
**2159610251**
Revision: **C**

| Item | FN | Part | Qty | Description |
|---|---|---|---|---|
| 103 | | **7755021002** | 4 | O-RING |
| 104 | | **7447161203** | 2 | ELBOW, 90 DEGREE<br>INCLUDES THE FOLLOWING PARTS |
| | | **7755021002** | 1 | O-RING |
| | | **7755912002** | 1 | O-RING |
| 105 | | **7447161201** | 2 | ADAPTER, STRAIGHT<br>INCLUDES THE FOLLOWING PARTS |
| | | **7755021002** | 1 | O-RING |
| | | **7755912002** | 1 | O-RING |
| 106 | # | **7450000201** | 8 | FLANGE, SPLIT |
| 107 | | **7115161050** | 16 | CAP SCREW,<br>3/8" - 16 N.C. X 1 1/4"<br>GRADE 5 |
| 108 | | **7755219002** | 4 | O-RING |
| 109 | | **7447060616** | 1 | CAP |
| 110 | | **7926003526** | 1 | FUSE, VELOCITY |
| 111 | | **7443100139** | 4 | COUPLING, 1/8" TEST PORT |
| 112 | | **7543109321** | 1 | HOSE ASSY, 3/4" I.D. X 93" |
| 113 | | **7546706470** | 1 | HOSE, 1 1/4" STR S/F X 64" STR |
| 114 | | **7546806493** | 1 | HOSE, 1 1/2" STR S/F X 64" 90 |
| 115 | | **7555107601** | 1 | 1/4" I.D. X 76" |
| 116 | | **7555109005** | 1 | HOSE ASSY, 1/4"I.D. 45 X 90" |
| 117 | | **7910101644** | 1 | TUBE ASSY,HOIST DR TO HOIST DR |
| 118 | | **7555207202** | 1 | HOSE, 3/8" I.D X 72" LONG |
| 119 | | **7555503400** | 1 | HOSE ASSY,3/4" I.D. X 34" LONG |
| 120 | | **7555504201** | 1 | HOSE ASSY,3/4" I.D. X 42" LONG |
| 121 | | **7555602360** | 2 | HOSE ASSY, 1" STR ORFS X 23" |
| 122 | | **7555603062** | 2 | 1" I.D. HYDR HOSE ASSY STR-45 |
| 123 | | **7555604400** | 1 | HOSE ASSY,1" I.D. HYDR STR-STR |
| 124 | | **7555702591** | 1 | HOSE ASSY,1 1/4" STR ORF X 25" |
| 125 | | **7555103203** | 1 | HOSE ASSY, 1/4" I.D. STR X 32" |
| 126 | | **7555103000** | 1 | HOSE ASSY, 1/4"I.DX30"LONG |
| 127 | | **7555103600** | 1 | HOSE ASSY, 3/8 X 26"<br>1/4" I.D. X 36" |
| 128 | | **7555201921** | 1 | HOSE ASSY, 3/8"I.D.X19"LONG |
| 129 | | **7555208900** | 1 | HOSE ASSY, 3/8" I.D. X 89" |
| 130 | | **7555402101** | 1 | HOSE ASSY, 5/8" STR ORFS X 21" |

**# SERVICED AS AN ASSEMBLY ONLY**

Description
**HYDRAULIC LINES INSTALLATION - MAIN AND AUXILIARY HOIST (SUPERSTRUCTURE)**

Assembly No.
**2159610251**
Revision: **C**

| Item | FN | Part | Qty | Description |
|---|---|---|---|---|
| 131 | | **7550104221** | 1 | HOSE ASSY, 1/4" ID STR X 42" |
| 132 | | **7555402403** | 1 | 5/8" X 24" |
| 133 | | **7447040408** | 1 | ELBOW, 45 DEGREE MALE<br>INCLUDES THE FOLLOWING PARTS |
| | | **7755011002** | 1 | O-RING |
| | | **7755904002** | 1 | O-RING |
| 134 | | **7443100140** | 9 | COUPLING, 3/8" TEST PORT |
| 135 | | **7447060403** | 1 | ELBOW, 90 DEGREE MALE<br>INCLUDES THE FOLLOWING PARTS |
| | | **7755012002** | 1 | O-RING |
| | | **7755904002** | 1 | O-RING |
| 139 | | **7709000031** | 1 | PLUG, SAE #6<br>INCLUDES THE FOLLOWING PARTS |
| | | **7755906002** | 1 | O-RING |
| 152 | | **7709000038** | 1 | PLUG, O-RING<br>INCLUDES THE FOLLOWING PARTS |
| | | **7755908002** | 1 | O-RING |
| 153 | | **7814100077** | 1 | GUARD, HOSE |
| 154 | | **7447060413** | 2 | REDUCER |
| 156 | | **7555208900** | 1 | HOSE ASSY, 3/8" I.D. X 89" |
| 157 | | **7550103921** | 1 | HOSE ASSY, 1/4" ID STR X 39" |
| 158 | | **7555604860** | 1 | HOSE ASSY, 1" STR ORFS X 48" |
| 159 | | **7926100948** | 1 | VALVE ASSY, CHECK<br>INCLUDES THE FOLLOWING PARTS |
| | | **9926113293** | 1 | VALVE, CHECK CART. |
| 160 | | **7910101629** | 1 | TUBE ASSY, COOLER IN TO CHECK |
| 161 | | **7447201603** | 1 | ELBOW, 90 DEGREE MALE<br>INCLUDES THE FOLLOWING PARTS |
| | | **7755025002** | 1 | O-RING |
| | | **7755916002** | 1 | O-RING |
| 162 | | **7872100170** | 1 | SWITCH, 120 TEMPERATURE (N.C.) |
| 163 | | **7447202001** | 2 | ADAPTER, STRAIGHT MALE<br>INCLUDES THE FOLLOWING PARTS |
| | | **7755025002** | 1 | O-RING |
| | | **7755920002** | 1 | O-RING |
| 164 | | **7910101614** | 1 | TUBE ASSY, OIL COOLER OUTLET |
| 165 | | **7910101613** | 1 | TUBE ASSY, OIL COOLER INLET |
| 166 | | **7910101616** | 1 | TUBE ASSY, COOLER OUTLET TO 4 |
| 167 | | **7755025002** | 3 | O-RING |

Description
**HYDRAULIC LINES INSTALLATION - MAIN AND AUXILIARY HOIST (SUPERSTRUCTURE)**

Assembly No.
**2159610251**
Revision: **C**

| Item | FN | Part | Qty | Description |
|---|---|---|---|---|
| 168 | | **7115174450** | 4 | CAP SCREW, |
| 169 | | **7950170141** | 4 | WASHER, 7/16" I.D. |
| 170 | | **7910101636** | 1 | TUBE ASSY,LS MAIN TO LS CHARGE |
| 171 | | **7555206001** | 1 | 3/8" I.D. X 60" |
| 172 | | **7447060605** | 1 | TEE, RUN<br>INCLUDES THE FOLLOWING PARTS |
| | | **7755012002** | 1 | O-RING |
| | | **7755906002** | 1 | O-RING |
| 174 | | **7447101034** | 2 | TEE<br>INCLUDES THE FOLLOWING PARTS |
| | | **7755016002** | 1 | O-RING |
| 175 | | **7447100413** | 2 | REDUCER |
| 176 | | **7013100059** | 1 | ADAPTER, 0.062 DIA ORIFICE |
| 177 | | **7555101801** | 1 | HOSE ASSY, 3/8 X 26"<br>1/4" I.D. X 18" |
| 178 | | **7555207203** | 1 | 3/8" X 72" |
| 179 | | **7555207201** | 1 | HOSE ASSY, 3/8" I.D. X 72" |
| 180 | | **7910101638** | 1 | TUBE ASSY, LS MAIN TO PORT 2 |
| 181 | | **7910101641** | 1 | TUBE ASSY, 1B MAN TO P STEER |
| 182 | | **7910101642** | 1 | TUBE ASSY, 1A MAN TO LS STEER |
| 183 | | **7447060401** | 2 | ADAPTER, STRAIGHT MALE<br>INCLUDES THE FOLLOWING PARTS |
| | | **7755012002** | 1 | O-RING |
| | | **7755904002** | 1 | O-RING |
| 184 | | **7555206800** | 1 | 3/8" I.D. X 68" |
| 185 | | **7447060401** | 1 | ADAPTER, STRAIGHT MALE<br>INCLUDES THE FOLLOWING PARTS |
| | | **7755012002** | 1 | O-RING |
| | | **7755904002** | 1 | O-RING |
| 186 | | **7447060603** | 1 | ELBOW, 90 DEGREE<br>INCLUDES THE FOLLOWING PARTS |
| | | **7755012002** | 1 | O-RING |
| | | **7755906002** | 1 | O-RING |
| 187 | | **7555604400** | 1 | HOSE ASSY,1" I.D. HYDR STR-STR |

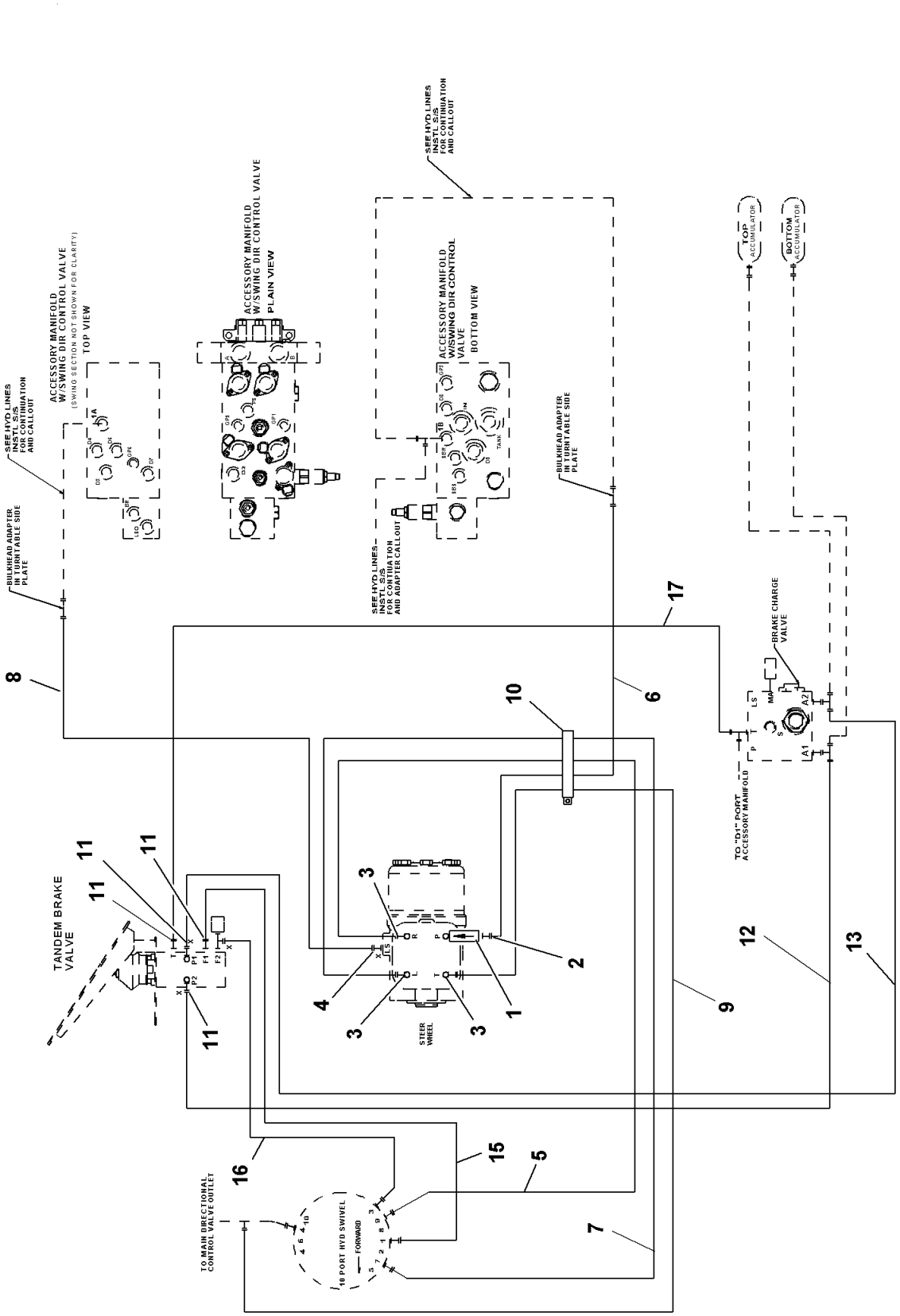


2159610145

(SHEET 1 OF 1)

Description
**HYDRAULIC LINES INSTALLATION - CAB**

Assembly No.
**2159610145**
Revision: **C**

| Item | FN | Part | Qty | Description |
|---|---|---|---|---|
| 1 | | **7926002156** | 1 | VALVE, INLET CHECK<br>INCLUDES THE FOLLOWING PARTS |
| | | **9926103232** | 1 | O-RING |
| | | **9926106646** | 1 | O-RING |
| 2 | | **7447080613** | 1 | REDUCER |
| 3 | | **7447060801** | 3 | ADAPTER, STRAIGHT MALE<br>INCLUDES THE FOLLOWING PARTS |
| | | **7755012002** | 1 | O-RING |
| | | **7755908002** | 1 | O-RING |
| 4 | | **7447060401** | 1 | ADAPTER, STRAIGHT MALE<br>INCLUDES THE FOLLOWING PARTS |
| | | **7755012002** | 1 | O-RING |
| | | **7755904002** | 1 | O-RING |
| 5 | | **7555208203** | 1 | 3/8 HOSE STR ORFS X LG 90 ORFS |
| 6 | | **7555206201** | 1 | 3/8" I.D. X 62" |
| 7 | | **7555207203** | 1 | 3/8" X 72" |
| 8 | | **7555207401** | 1 | 3/8" I.D. X 74" |
| 9 | | **7555207201** | 1 | HOSE ASSY, 3/8" I.D. X 72" |
| 10 | | **7300000251** | 1 | CLAMP, TUBING<br>2" I.D. |
| 11 | | **7447060601** | 4 | ADAPTER, STRAIGHT MALE<br>INCLUDES THE FOLLOWING PARTS |
| | | **7755012002** | 1 | O-RING |
| | | **7755906002** | 1 | O-RING |
| 15 | | **7555204400** | 1 | 3/8” I.D. X 44” |
| 16 | | **7555205301** | 1 | 3/8" I.D. X 53" |

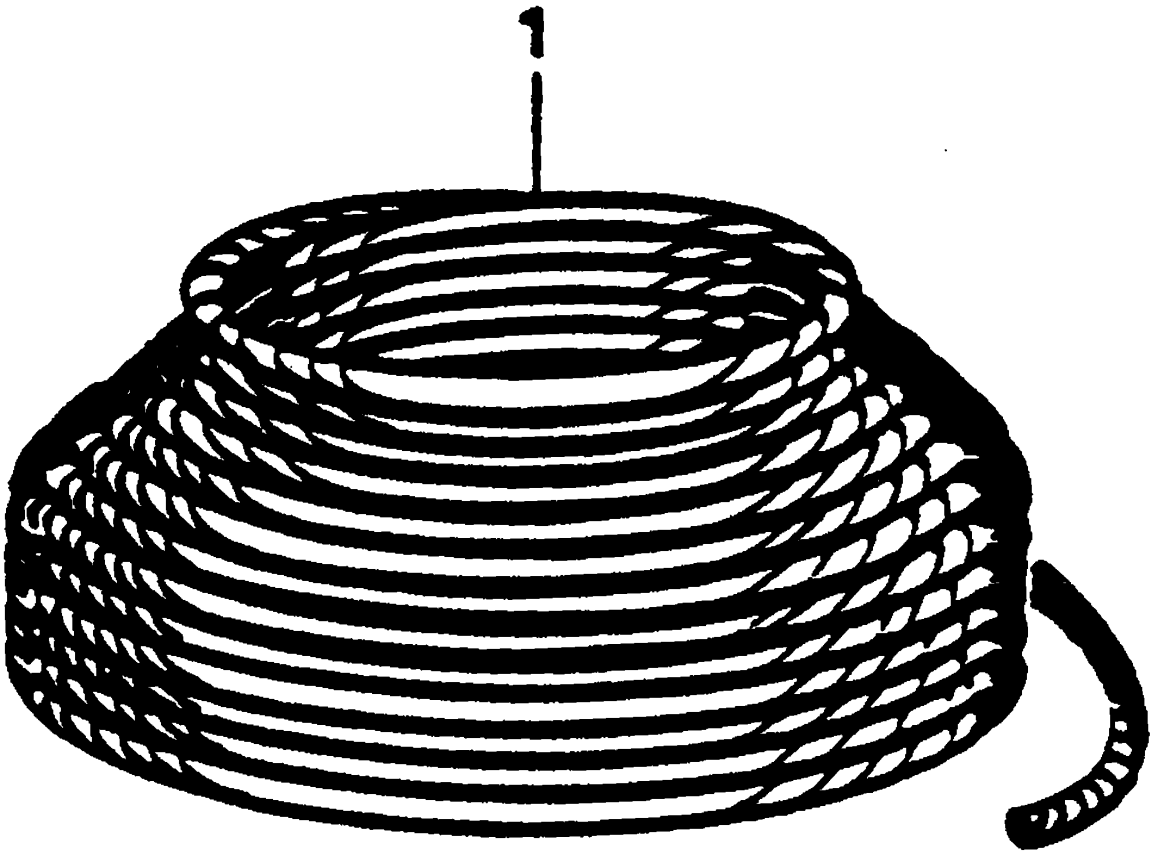


**7782161382**

**(SHEET 1 OF 1)**

Description
**16MM DIA HOISTING WIRE ROPE -**

Assembly No.
**7782161382**
Revision:

| Item | FN | Part | Qty | Description |
|---|---|---|---|---|
| 1 | | **NSS** | 1 | HOIST CABLE - PART NUMBER IS 7782161382 |

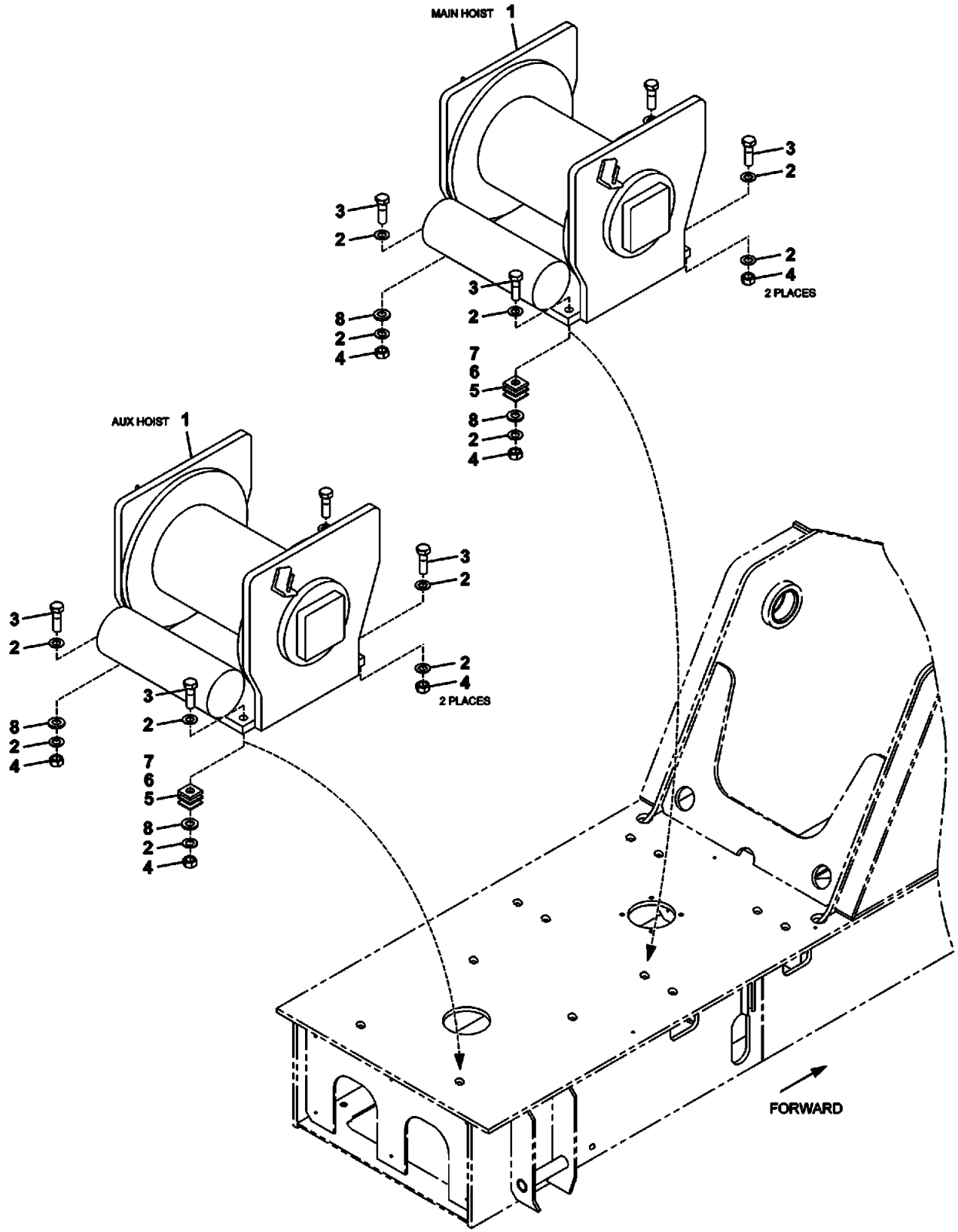


6974100184

(SHEET 1 OF 1)

Description
**HOIST INSTALLATION - MAIN AND AUXILIARY**

Assembly No.
**6974100184**
Revision: **B**

| Item | FN | Part | Qty | Description |
|---|---|---|---|---|
| 1 | + | **7974100043** | 2 | HOIST ASSEMBLY - HP15C/17G (COMPLETE ASSEMBLY) |
| 2 | | **7949000236** | 16 | FLAT WASHER, 3/4" |
| 3 | | **7115222450** | 8 | CAP SCREW, 3/4" - 10 N.C. X 3" GRADE 5 |
| 4 | | **7660220001** | 8 | NUT, HEX 3/4" - 10 N.C. |
| 5 | | **6705004266** | 2 | SHIM (.1250") |
| 6 | | **6705004267** | 2 | SHIM (.0598") |
| 7 | | **6705004268** | 2 | SHIM (.0359") |
| 8 | | **7705100003** | 4 | WASHER, PLATE |

**+ SEE FURTHER BREAKDOWN THIS GROUP**

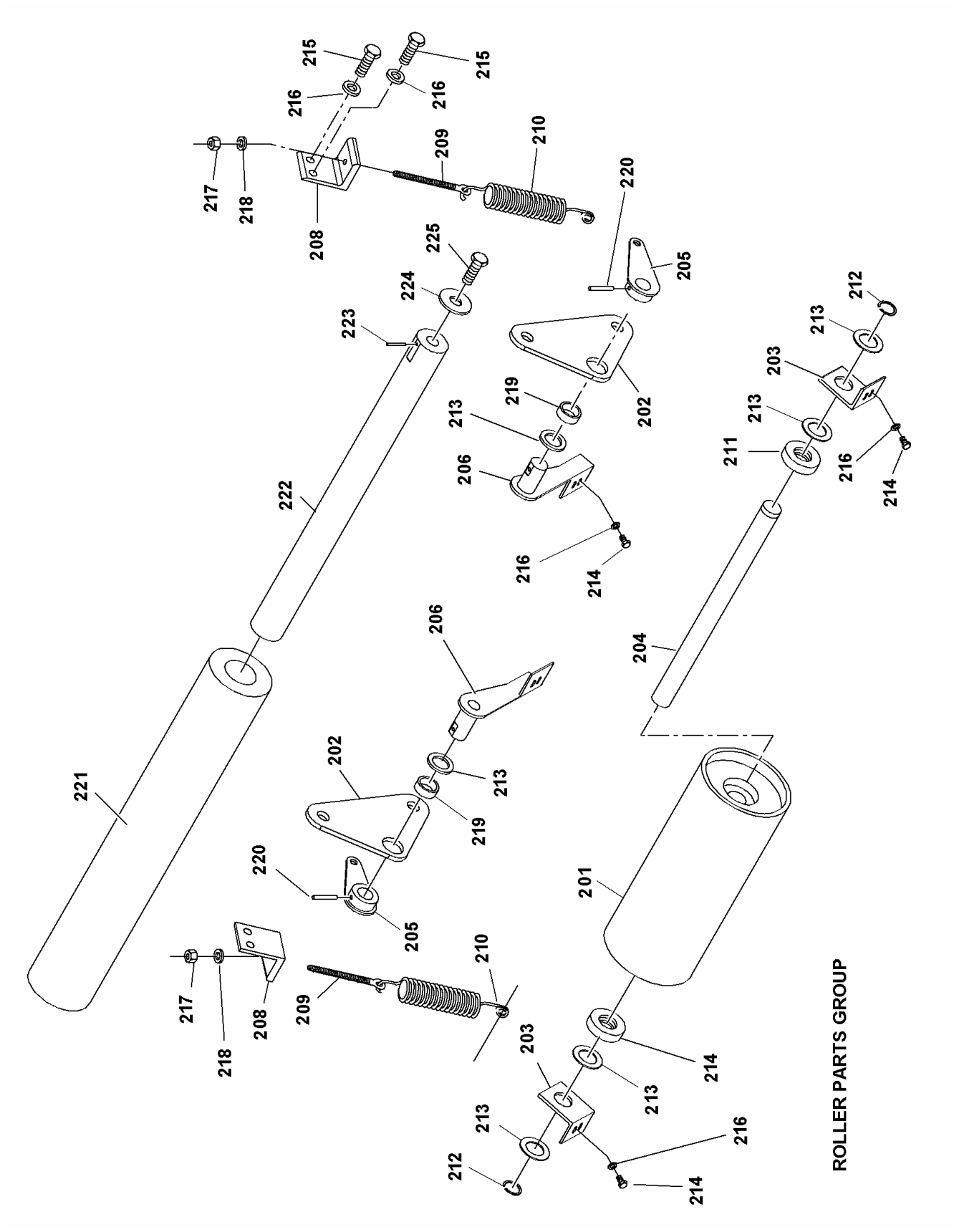


7974100043

(SHEET 3 OF 3)

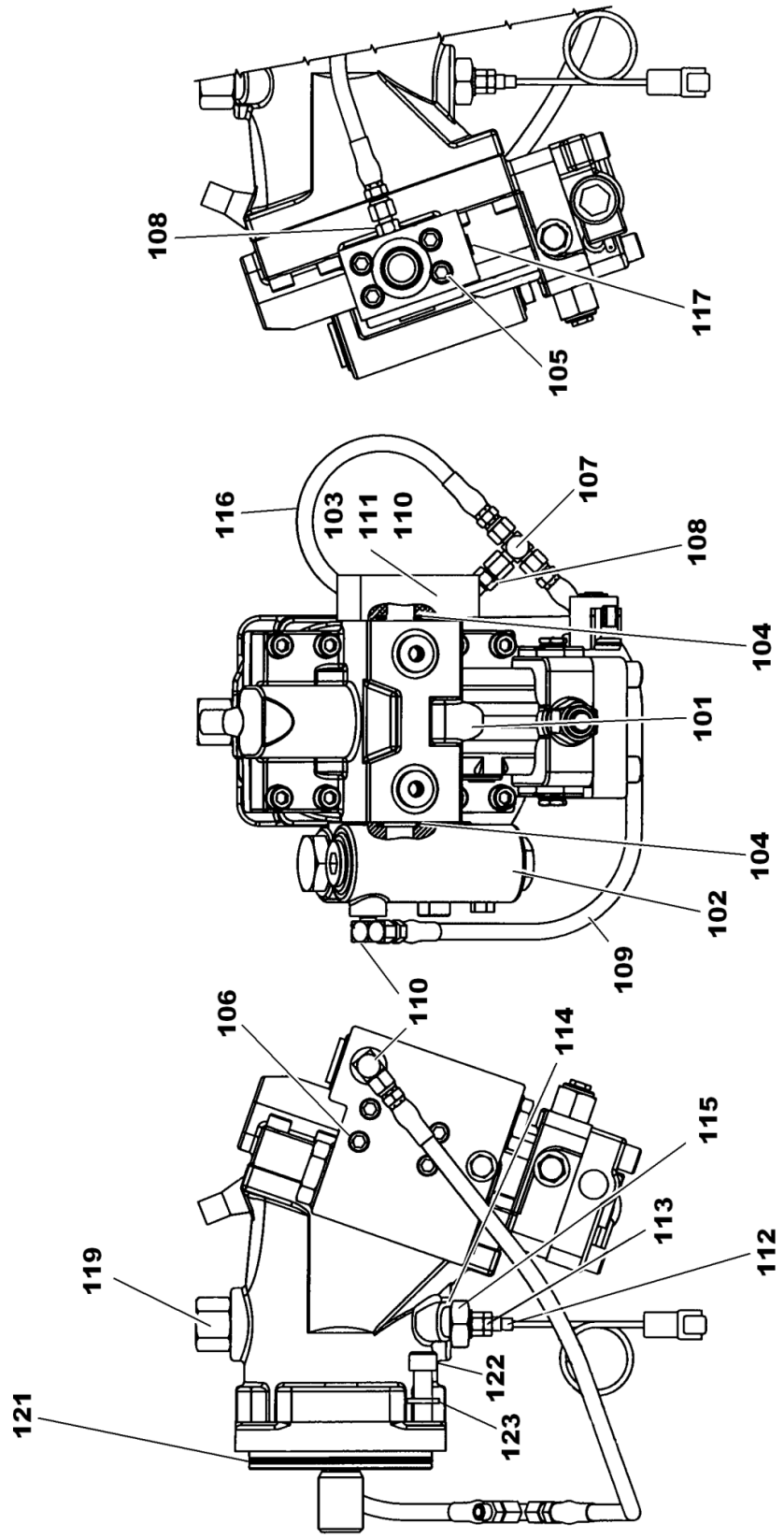


7974100043

(SHEET 2 OF 3)

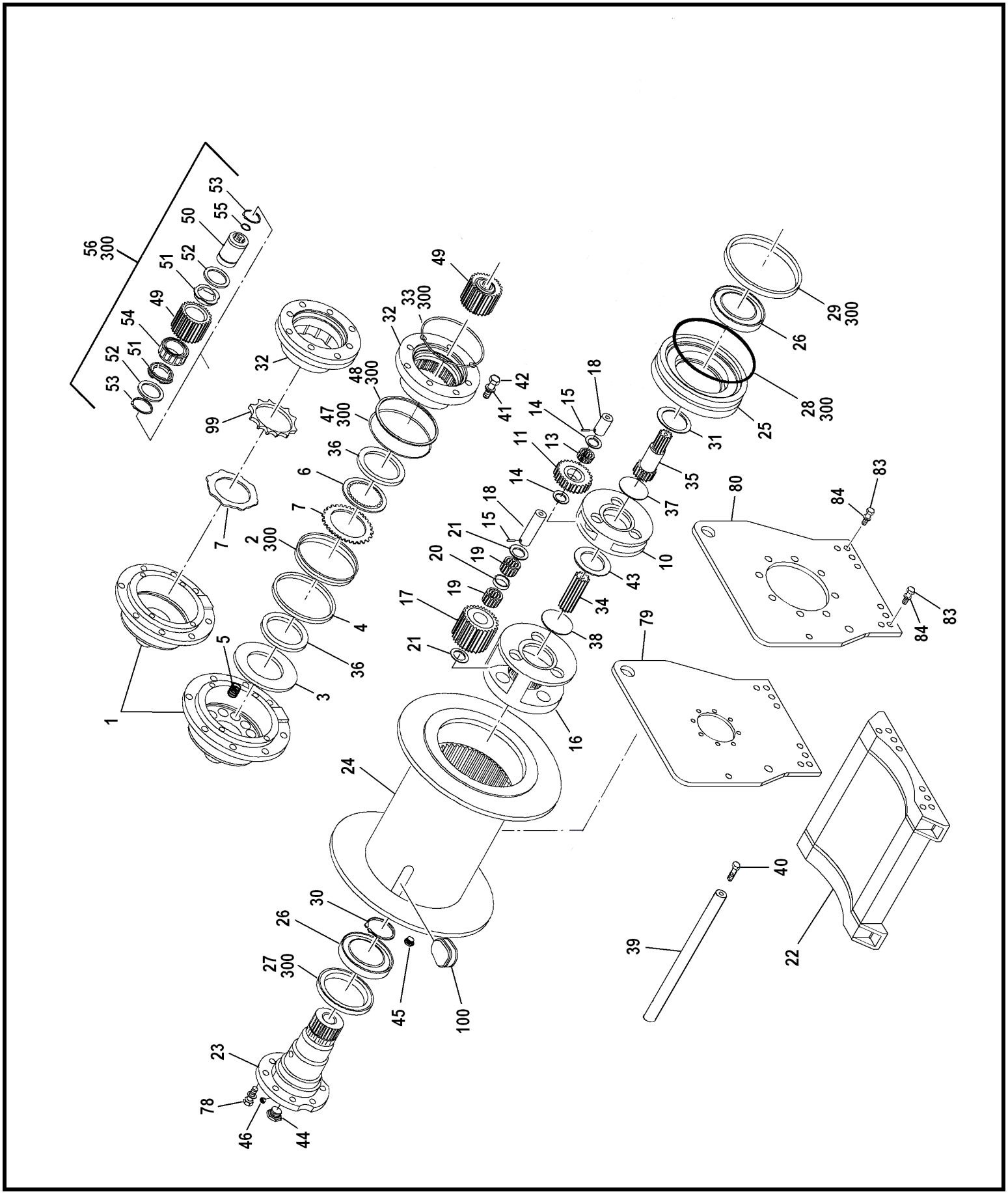


7974100043

(SHEET 1 OF 3)

Description
**HOIST ASSEMBLY - HP15C/17G (COMPLETE ASSEMBLY)**

Assembly No.
**7974100043**
Revision:

| Item | FN | Part | Qty | Description |
|---|---|---|---|---|
| 1 | | **9974102861** | 1 | CYLINDER, BRAKE |
| 2 | * | **9974102176** | 1 | SEAL, PISTON |
| 3 | | **9974102177** | 1 | PLATE, PRESSURE |
| 4 | | **9974102178** | 1 | RING, BACK-UP |
| 5 | | **9974102179** | 12 | SPRING |
| 6 | | **9974100594** | 7 | DISC, FRICTION |
| 7 | | **9974102704** | 8 | DISK, BRAKE |
| 10 | | **9974102666** | 1 | PLANET CARRIER - PRIMARY |
| 11 | | **9974102667** | 3 | GEAR - PLANET |
| 12 | | **9974102180** | 3 | SHAFT |
| 13 | | **9974101182** | 3 | BEARING, ROLLER |
| 14 | | **9974102181** | 6 | WASHER, THRUST |
| 15 | | **9974101183** | 3 | PIN, SPIRAL<br>3/16" X 3/4" |
| 15 | | **9576100517** | 3 | PIN |
| 16 | | **9974102668** | 1 | CARRIER, PLANET |
| 17 | | **9974102671** | 3 | GEAR, PLANET |
| 18 | | **9974102182** | 3 | SHAFT |
| 19 | | **9974102183** | 6 | BEARING |
| 20 | | **9974102672** | 3 | SPACER |
| 21 | | **9974102185** | 6 | WASHER, THRUST |
| 22 | | **9974102942** | 1 | BASE |
| 23 | | **9974102846** | 1 | SUPPORT, BEARING |
| 24 | | **9974102941** | 1 | DRUM |
| 25 | | **9974102676** | 1 | CLOSURE, CABLE DRUM |
| 26 | | **9974101211** | 2 | BEARING, BALL |
| 27 | * | **9974101216** | 1 | SEAL, OIL |
| 28 | * | **9974102868** | 1 | O-RING |
| 29 | * | **9974102190** | 1 | SEAL, OIL |
| 30 | | **9974102191** | 1 | RING, RETAINING |
| 31 | | **9974102849** | 1 | WASHER, THRUST |
| 32 | | **9974102731** | 1 | MOUNT, MOTOR BASE |
| 33 | * | **9974101198** | 1 | O-RING |
| 34 | | **9974102194** | 1 | GEAR, SUN |

*** REPAIR KIT AND/OR PART OF KIT**

Description
**HOIST ASSEMBLY - HP15C/17G (COMPLETE ASSEMBLY)**

Assembly No.
**7974100043**
Revision:

| Item | FN | Part | Qty | Description |
|---|---|---|---|---|
| 35 | | **9974102677** | 1 | PRIMARY SUN GEAR |
| 36 | | **9974102195** | 2 | SPACER |
| 37 | | **9974102196** | 1 | PLATE, THRUST |
| 38 | | **9974102197** | 1 | PLATE, THRUST |
| 39 | | **9974102822** | 1 | BAR, SPACER |
| 40 | | **9974102854** | 14 | CAPSCREW |
| 41 | | **9974100476** | 18 | WASHER, LOCK 1/2" I.D. |
| 42 | | **9974102198** | 4 | CAP SCREW, |
| 43 | | **9974102747** | 1 | WASHER, THRUST |
| 44 | | **9974102855** | 1 | GAUGE, SIGHT |
| 45 | | **9974102201** | 1 | PLUG, FLUSH<br>INCLUDES THE FOLLOWING PARTS |
| | | **7755908002** | 1 | O-RING |
| 46 | | **9974102858** | 1 | PLUG, VENT |
| 47 | * | **9974102922** | 1 | O-RING |
| 48 | * | **9974102226** | 1 | RING, BACK-UP |
| 49 | | **NSS** | 1 | RACE, OUTER BRAKE |
| 50 | | **NSS** | 1 | RACE, INNER BRAKE |
| 51 | | **9974102665** | 2 | BEARING, SPRAG |
| 52 | | **9974102218** | 2 | BEARING, THRUST |
| 53 | | **9974102219** | 2 | RING, RETAINING |
| 54 | | **NSS** | 1 | SPRAG, CLUTCH |
| 55 | | **9974102221** | 1 | RING, RETAINING |
| 56 | | **9974102214** | 1 | CLUTCH SPRAG ASSY. BRAKE<br>INCLUDES ITEMS 49 THRU 55 |
| 78 | | **9974102859** | 8 | CAPSCREW |
| 79 | | **9974102943** | 1 | SIDEPLATE, MOTOR |
| 80 | | **9974102944** | 1 | SIDEPLATE,SUPPORT |
| 83 | | **9974102820** | 16 | CAP SCREW, |
| 84 | | **9974102821** | 16 | WASHER, |
| 99 | | **9974102705** | 1 | SPACER |
| 100 | | **9974103088** | 1 | WEDGE, CABLE 5/8" |
| 101 | | **90000100** | 1 | MOTOR ASSY. HYD. |

*** REPAIR KIT AND/OR PART OF KIT**

Description
**HOIST ASSEMBLY - HP15C/17G (COMPLETE ASSEMBLY)**

Assembly No.
**7974100043**
Revision:

| Item | FN | Part | Qty | Description |
|---|---|---|---|---|
| | | | | INCLUDES THE FOLLOWING PARTS |
| | | **90001131** | 1 | CART. VALVE ASSY. CONTROL 12V. |
| | | **90001067** | 1 | KIT, SEAL |
| 102 | | **9974102885** | 1 | VALVE, BRAKE |
| | | | | INCLUDES THE FOLLOWING PARTS |
| | | **9974101280** | 1 | KIT, SEAL |
| 103 | | **9974103090** | 1 | MANIFOLD |
| 104 | * | **9974102898** | 2 | O-RING |
| 105 | | **9974102684** | 4 | CAP SCREW |
| 106 | | **981134** | 4 | CAPSCREW |
| 107 | | **9974102211** | 1 | TEE, SWIVEL |
| 108 | | **9974102210** | 2 | ADAPTER |
| 109 | | **981786** | 1 | HOSE ASSEMBLY |
| 110 | | **9974102212** | 1 | ELBOW |
| 112 | | **9974103091** | 1 | SENSOR |
| 113 | | **9974103094** | 1 | NUT, JAM |
| 114 | | **9974103092** | 1 | WASHER, SEAL |
| 115 | | **9974103093** | 1 | FITTING |
| 116 | | **9974102208** | 1 | HOSE ASSY, 3/8 X 26" |
| 117 | | **9974102931** | 1 | PLUG |
| | | | | INCLUDES THE FOLLOWING PARTS |
| | | **7755904002** | 1 | O-RING |
| 118 | | **9974102227** | 1 | O-RING |
| 119 | | **90000104** | 1 | ADAPTER |
| 121 | | **90000105** | 1 | O-RING |
| 122 | | **90000125** | 4 | CAPSCREW |
| 123 | | **9974100476** | 4 | WASHER, LOCK 1/2" I.D. |
| 201 | | **9974103083** | 1 | ROLLER |
| 202 | | **9974102825** | 2 | PLATE |
| 203 | | **9974103084** | 2 | BRACKET, ROLLER |
| 204 | | **9974103085** | 1 | SHAFT, ROLLER |
| 205 | | **9974102828** | 2 | LEVER |
| 206 | | **9974102829** | 1 | LEVER, ROLLER R.H. |
| 207 | | **9974102830** | 1 | LEVER,ROLLER L.H. |
| 208 | | **9974102831** | 2 | BRACKET |
| 209 | | **9974102810** | 2 | ROD |

*** REPAIR KIT AND/OR PART OF KIT**

Description
**HOIST ASSEMBLY - HP15C/17G (COMPLETE ASSEMBLY)**

Assembly No.
**7974100043**
Revision:

| Item | FN | Part | Qty | Description |
|---|---|---|---|---|
| 210 | | **9974102832** | 2 | SPRING |
| 211 | | **9974103086** | 2 | BEARING |
| 212 | | **9974103087** | 2 | RING, RETAINER |
| 213 | | **9974102181** | 8 | WASHER, THRUST |
| 214 | | **9974102835** | 4 | CAP SCREW, |
| 215 | | **9974103043** | 4 | CAPSCREW |
| 216 | | **7950160020** | 8 | WASHER, LOCK 3/8" I.D. |
| 217 | | **9974102995** | 2 | NUT |
| 218 | | **9974102839** | 2 | WASHER |
| 219 | | **9974102808** | 2 | BUSHING |
| 220 | | **9974102814** | 2 | ROLLPIN |
| 221 | | **9974102840** | 1 | ROLLER |
| 222 | | **9974102841** | 1 | SHAFT |
| 223 | | **9974102966** | 1 | PIN |
| 224 | | **9974102843** | 1 | WASHER |
| 225 | | **9974103015** | 2 | CAPSCREW |
| 300 | * | **9974102222** | 1 | KIT, SEAL |

*** REPAIR KIT AND/OR PART OF KIT**

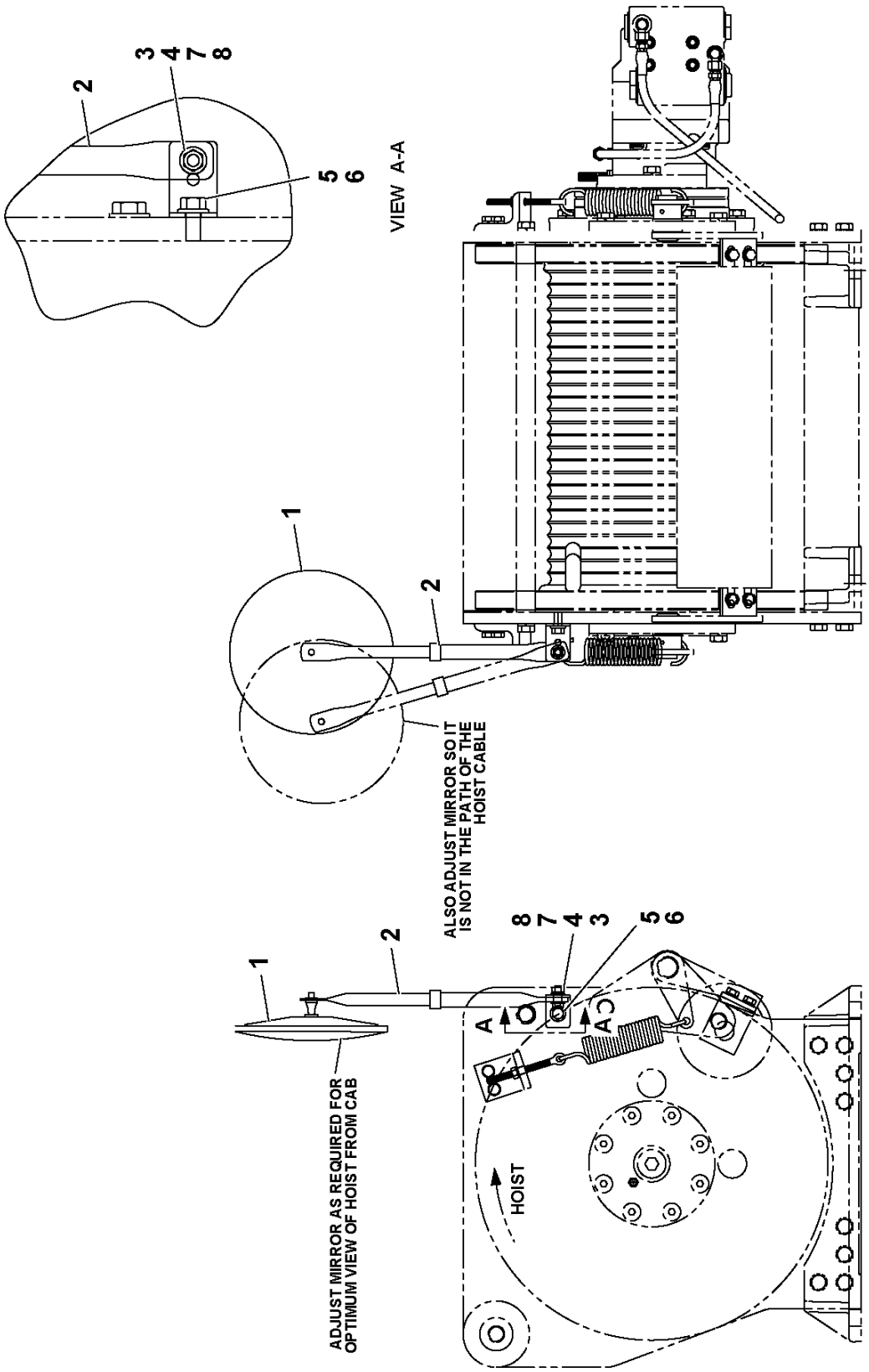


2159210000

(SHEET 1 OF 1)

Description
**MIRROR INSTALLATION - HOIST**

Assembly No.
**2159210000**
Revision: **D**

| Item | FN | Part | Qty | Description |
|---|---|---|---|---|
| 1 | | **7628000025** | 1 | MIRROR, 8" CONVEX<br>INCLUDES MOUNTING HARDWARE |
| 2 | # | **7184001014** | 1 | BRACKET, MIRROR ARM<br>INCLUDES MOUNTING HARDWARE |
| 3 | | **7115150850** | 1 | CAP SCREW,<br>5/16" - 18 N.C. X 1"<br>GRADE 5 |
| 4 | | **7950150051** | 1 | WASHER, LOCK 5/16" I.D. |
| 5 | | **7115160650** | 1 | CAP SCREW,<br>3/8" - 16 N.C. X 3/4"<br>GRADE 5 |
| 6 | | **7950160141** | 1 | WASHER, 3/8" PLAIN NARROW |
| 7 | | **7950150141** | 2 | WASHER, FLAT 5/16" |
| 8 | | **7660150001** | 1 | NUT, HEX<br>5/16" - 18 N.C.<br>GRADE 5 |

**# SERVICED AS AN ASSEMBLY ONLY**

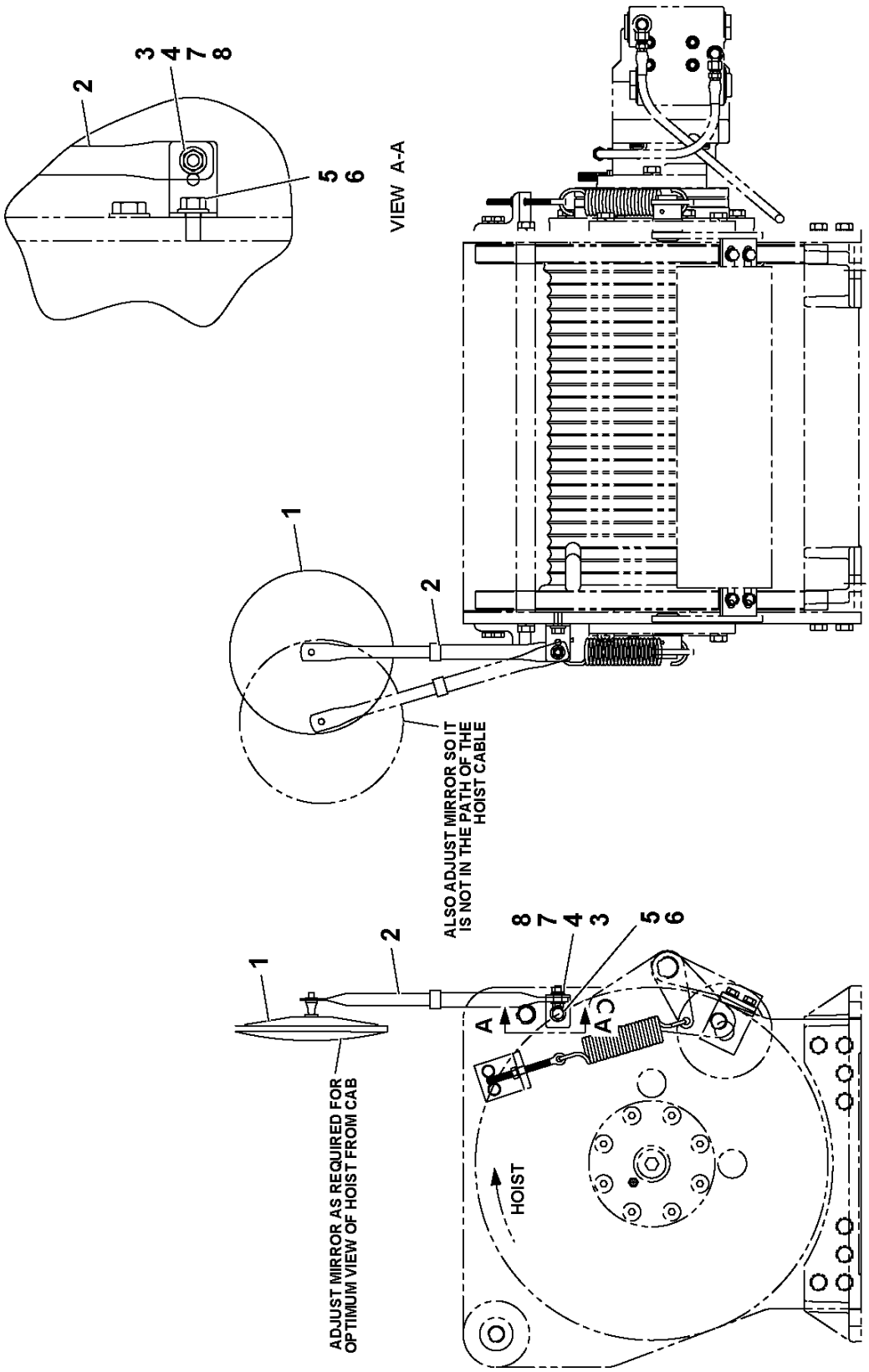


2159210000

(SHEET 1 OF 1)

Description
**MIRROR INSTALLATION - HOIST**

Assembly No.
**2159210000**
Revision: **D**

| Item | FN | Part | Qty | Description |
|---|---|---|---|---|
| 1 | | **7628000025** | 1 | MIRROR, 8" CONVEX<br>INCLUDES MOUNTING HARDWARE |
| 2 | # | **7184001014** | 1 | BRACKET, MIRROR ARM<br>INCLUDES MOUNTING HARDWARE |
| 3 | | **7115150850** | 1 | CAP SCREW,<br>5/16" - 18 N.C. X 1"<br>GRADE 5 |
| 4 | | **7950150051** | 1 | WASHER, LOCK 5/16" I.D. |
| 5 | | **7115160650** | 1 | CAP SCREW,<br>3/8" - 16 N.C. X 3/4"<br>GRADE 5 |
| 6 | | **7950160141** | 1 | WASHER, 3/8" PLAIN NARROW |
| 7 | | **7950150141** | 2 | WASHER, FLAT 5/16" |
| 8 | | **7660150001** | 1 | NUT, HEX<br>5/16" - 18 N.C.<br>GRADE 5 |

**# SERVICED AS AN ASSEMBLY ONLY**

The drawing or bill of material for this installation was not available when this catalog was created. Please contact Rich Rebok at richard.rebok@manitowoc.com for Grove products or Galen Burkholder at galen.burkholder@manitowoc.com for National products to supply us with your mailing information. Once the drawing or bill of material has been completed, we will send you the appropriate pages to be inserted into your manual.

Regards,
Technical Publications Department
Shady Grove, Pennsylvania
www.cranecare.com

Description
**TURNTABLE WELD AND DRIVE INSTALLATION**

Assembly No.
**80014181**
Revision: #

| Item | FN | Part | Qty | Description |
|---|---|---|---|---|
| 1 | | **80014148** | 1 | TURNTABLE WELD |
| 2 | | **7069100081** | 1 | BEARING, TURNTABLE<br>INCLUDES THE FOLLOWING PARTS |
| | | **9069100118** | 1 | SEAL, BEARING 21' |
| 3 | + | **7576134386** | 1 | MOTOR ASSEMBLY - SWING DRIVE (COMPLETE ASSEMBLY) |
| 4 | | **7951170210** | 4 | WASHER, LOCK 8MM |
| 5 | | **7126171150** | 4 | CAP SCREW, M8 X 20MM HEX HEAD |
| 6 | | **7949000359** | 36 | WASHER, 1" I.D. HARDENED ROUND |
| 7 | | **7118264250** | 36 | CAP SCREW,<br>1" - 8 N.C. X 5 1/4"<br>GRADE 8 |
| 8 | | **4159200657** | 1 | GUARD, PINION |
| 20 | | **7126212250** | 10 | CAP SCREW, M12 X 75MM HEX HEAD |
| 21 | | **00437529** | 10 | WASHER, 12 FLAT |
| 22 | | **6199100090** | 10 | BUSHING |

**+ SEE FURTHER BREAKDOWN THIS GROUP**

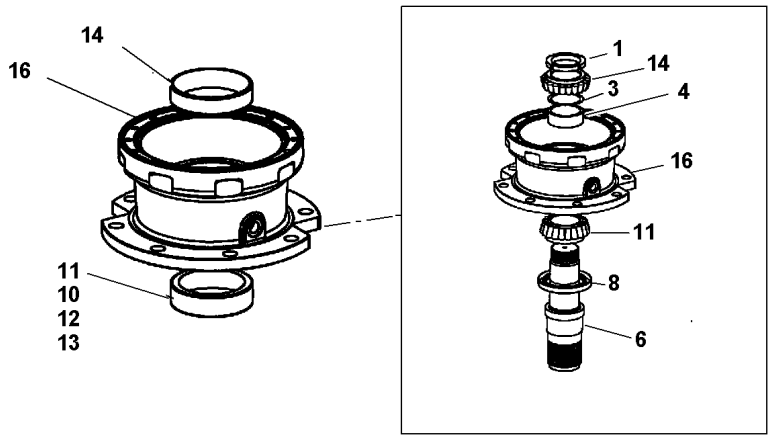


ITEMS NOT SHOWN
NBR 75 PLANET GEAR COMPLETE ASSY SEE PARTS LIST
NBR 76 PLANET GEAR COMPELTE ASSY SEE PARTS LIST
NBR 77 KIT, BRAKE
NBR 80 KIT,SEAL BRAKE
NBR 81 KIT,DISC BRAKE
NBR 82 KIT,SEAL.
NBR 62 PLATE,NAME
NBR 70 KIT, SHIM

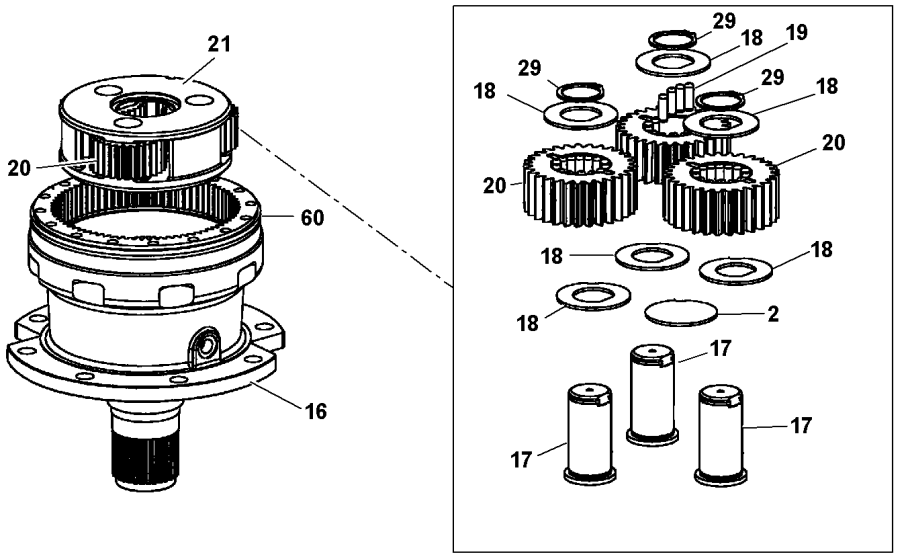
21
20
60
16
29
18
19
29
18
29
18
20
20
18
18
18
2
17
17
17

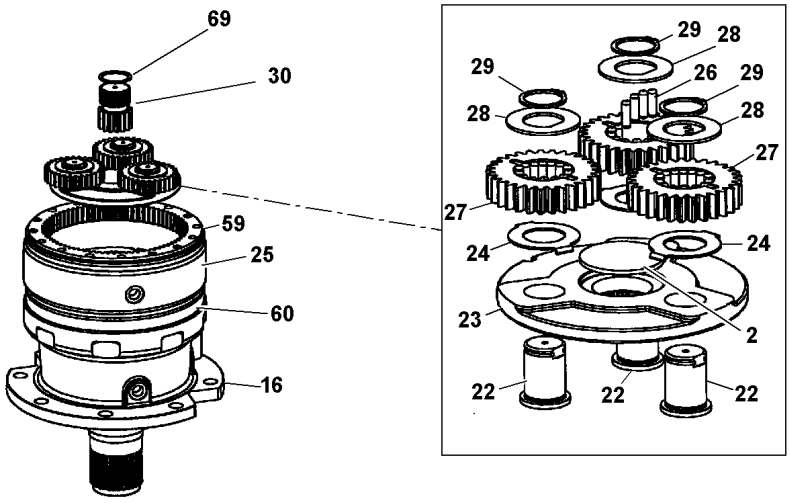
69
30
59
25
60
16
29
28
29
26
29
28
28
27
27
24
24
23
2
22
22
22

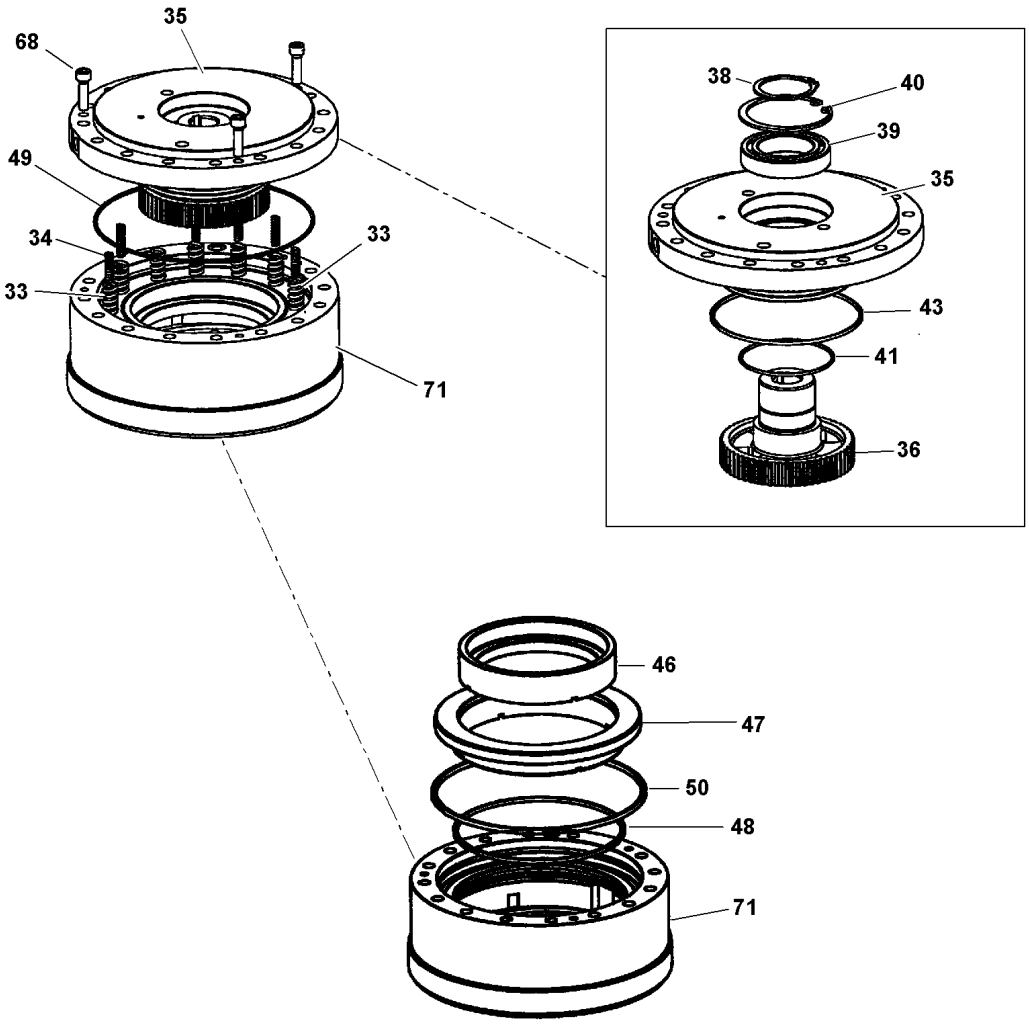


7576134386

(SHEET 2 OF 5)

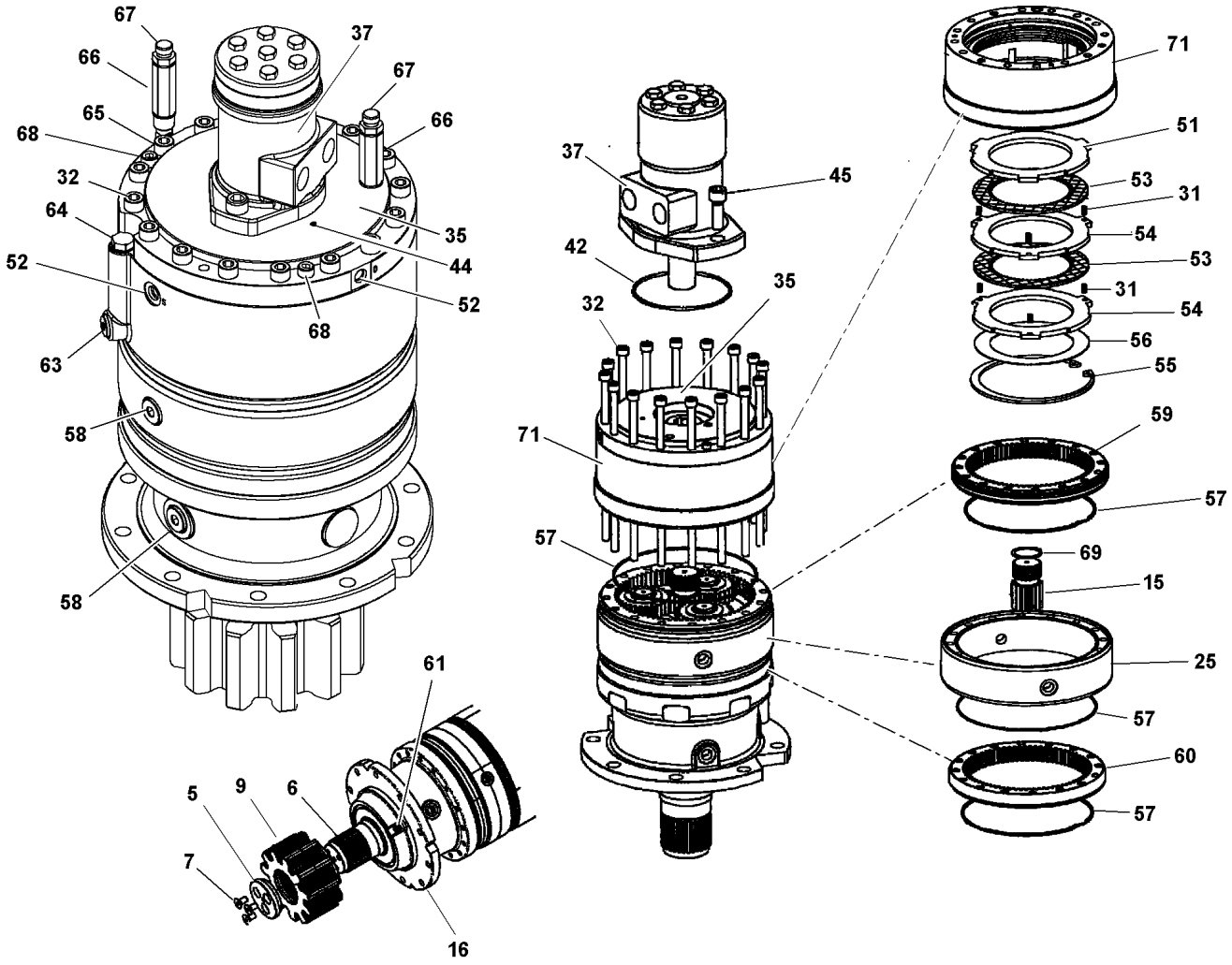


7576134386

(SHEET 1 OF 5)

Description
**MOTOR ASSEMBLY - SWING DRIVE (COMPLETE ASSEMBLY)**

Assembly No.
**7576134386**
Revision:

| Item | FN | Part | Qty | Description |
|---|---|---|---|---|
| 1 | | **9576101173** | 1 | NUT,RING |
| 2 | | **9576101142** | 2 | PLATE,END |
| 3 | | **9576101171** | 1 | KIT,SHIM |
| 4 | | **9576101329** | 1 | SPACER |
| 5 | | **9576101307** | 1 | PLATE, RETAINER |
| 6 | | **9576101330** | 1 | SHAFT, OUTPUT |
| 7 | | **9576101308** | 3 | CAPSCREW |
| 8 | * | **9576101331** | 1 | SEAL, OIL |
| 9 | | **9576101167** | 1 | PINION |
| 10 | | **NSS** | 1 | HOUSING |
| 11 | | **9576101332** | 1 | BEARING |
| 12 | | **9576101333** | 1 | RING, RETAINING |
| 13 | * | **9576101334** | 1 | O-RING |
| 14 | | **9576101335** | 1 | BEARING |
| 15 | | **9576101180** | 1 | GEAR,SUN |
| 16 | | **NSS** | 1 | HOUSING |
| 17 | | **9576101183** | 3 | PIN |
| 18 | | **9576101124** | 6 | WASHER |
| 19 | | **9576101127** | 162 | BEARING,NEEDLE |
| 20 | | **NSS** | 3 | GEAR, PLANET |
| 21 | | **NSS** | 1 | HOUSING, PLANET |
| 22 | | **9576101181** | 3 | PIN |
| 23 | | **NSS** | 1 | HOUSING, CARRIER PLANET |
| 24 | | **9576101124** | 3 | WASHER |
| 25 | | **NSS** | 1 | HOUSING |
| 26 | | **9576101336** | 54 | BEARING, NEEDLE |
| 27 | | **NSS** | 3 | GEAR, PLANET |
| 28 | | **9576101129** | 3 | WASHER |
| 29 | | **9576101130** | 3 | RING,RETAINER |

*** REPAIR KIT AND/OR PART OF KIT**

Description
**MOTOR ASSEMBLY - SWING DRIVE (COMPLETE ASSEMBLY)**

Assembly No.
**7576134386**
Revision:

| Item | FN | Part | Qty | Description |
|---|---|---|---|---|
| 30 | | **9576101176** | 1 | GEAR,SUN |
| 31 | - | **NSS** | 6 | SPRING |
| 32 | | **9576101175** | 16 | CAPSCREW |
| 33 | - | **NSS** | 12 | SPRING |
| 34 | - | **NSS** | 8 | SPRING |
| 35 | | **9576101184** | 1 | HOUSING,FLANGE MTG. |
| 36 | | **9576101136** | 1 | COUPLING |
| 37 | | **9576101395** | 1 | MOTOR ASSY. HYD. INCLUDES THE FOLLOWING PARTS |
| | | **9576101186** | 1 | KIT,SEAL MOTOR |
| 38 | | **9576101137** | 1 | RING,RETAINER |
| 39 | | **9576101135** | 1 | BEARING |
| 40 | | **9576101138** | 1 | RING,RETAINER |
| 41 | @ | **7755245000** | 1 | O-RING |
| 42 | *@ | **7755152000** | 1 | O-RING |
| 43 | @ | **7755251000** | 1 | O-RING |
| 44 | | **9576101185** | 1 | PLUG |
| 45 | | **9576101100** | 2 | CAPSCREW |
| 46 | | **NSS** | 1 | PISTON |
| 47 | | **NSS** | 1 | PISTON |
| 48 | @ | **7755260000** | 1 | O-RING |
| 49 | @ | **7755170000** | 1 | O-RING |
| 50 | @ | **7755265000** | 1 | O-RING |
| 51 | - | **NSS** | 1 | SPACER |
| 52 | | **7709800001** | 2 | PLUG, SAE #4 INCLUDES THE FOLLOWING PARTS |
| | | **7755904002** | 1 | O-RING |
| 53 | - | **NSS** | 2 | DISK, BRAKE |
| 54 | - | **NSS** | 2 | DISK, BRAKE |

**- THIRD REPAIR KIT AND/OR PART OF 3RD KIT**
**@ SECOND REPAIR KIT AND/OR PART OF 2ND KIT**
*** REPAIR KIT AND/OR PART OF KIT**

Description
**MOTOR ASSEMBLY - SWING DRIVE (COMPLETE ASSEMBLY)**

Assembly No.
**7576134386**
Revision:

| Item | FN | Part | Qty | Description |
|---|---|---|---|---|
| 55 | - | **NSS** | 1 | KIT, SHIM |
| 56 | | **9576101140** | 1 | RING,RETAINER |
| 57 | * | **9576101338** | 4 | O-RING |
| 58 | | **9576101141** | 6 | PLUG |
| 59 | | **9576101126** | 1 | GEAR,RING |
| 60 | | **9576101174** | 1 | RING GEAR |
| 61 | | **9576101220** | 1 | PLUG |
| 62 | | **NSS** | 1 | PLATE, NAME |
| 63 | | **9576101154** | 1 | PLUG |
| 64 | | **9576101151** | 1 | DIPSTICK |
| 65 | | **9576101152** | 1 | ELBOW |
| 66 | | **9576101149** | 2 | PIPE |
| 67 | | **9576101189** | 2 | BREATHER |
| 68 | | **9576101148** | 1 | CAPSCREW |
| 69 | | **9576101133** | 2 | RING,RETAINER |
| 70 | | **9576101339** | 1 | KIT, SHIM |
| 71 | | **NSS** | 1 | HOUSING, BRAKE |
| 75 | | **9576101340** | 1 | PLANETARY CARRIER ASSY. INCLUDES ITEMS 2,15,17,19,20, 21,24,60,69 |
| 76 | | **9576101341** | 1 | PLANETARY CARRIER ASSY. INCLUDES ITEMS 2,18,22,23,26, 27,28,29,30,59,69 |
| 77 | | **9576101165** | 1 | KIT,BRAKE ASSY. INCLUDES ITEMS 31,33,34,35,36, 39,41,42,43,44,46 THRU 55 AND 64 THRU 68 ,71 |
| 80 | @ | **9576101101** | 1 | KIT,SEAL BRAKE |
| 81 | - | **9576101102** | 1 | KIT,DISC BRAKE |
| 82 | * | **9576101337** | 1 | KIT, SEAL |

**- THIRD REPAIR KIT AND/OR PART OF 3RD KIT**
**@ SECOND REPAIR KIT AND/OR PART OF 2ND KIT**
*** REPAIR KIT AND/OR PART OF KIT**

| HYD SWIVEL | |
|---|---|
| PORT | FUNCTION |
| 1 | BRAKE-FRONT |
| 2 | LOAD SENSE |
| 3 | BRAKE-REAR |
| 4 | DUAL RETURN |
| 5 | SWING/BRAKE/STEER |
| 6 | HOIST/LIFT/TELE |
| 7 | FRONT STEER-LEFT |
| 8 | NOT USED |
| 9 | FRONT STEER-RIGHT |
| 10 | CASE DRAIN |
| D | INTERNAL DRAIN |
| 11 | A/C-R134a |
| 12 | A/C-R134a |
| WATER SWIVEL | |
| PORT | FUNCTION |
| A | HEATER SUPPLY |
| B | HEATER RETURN |

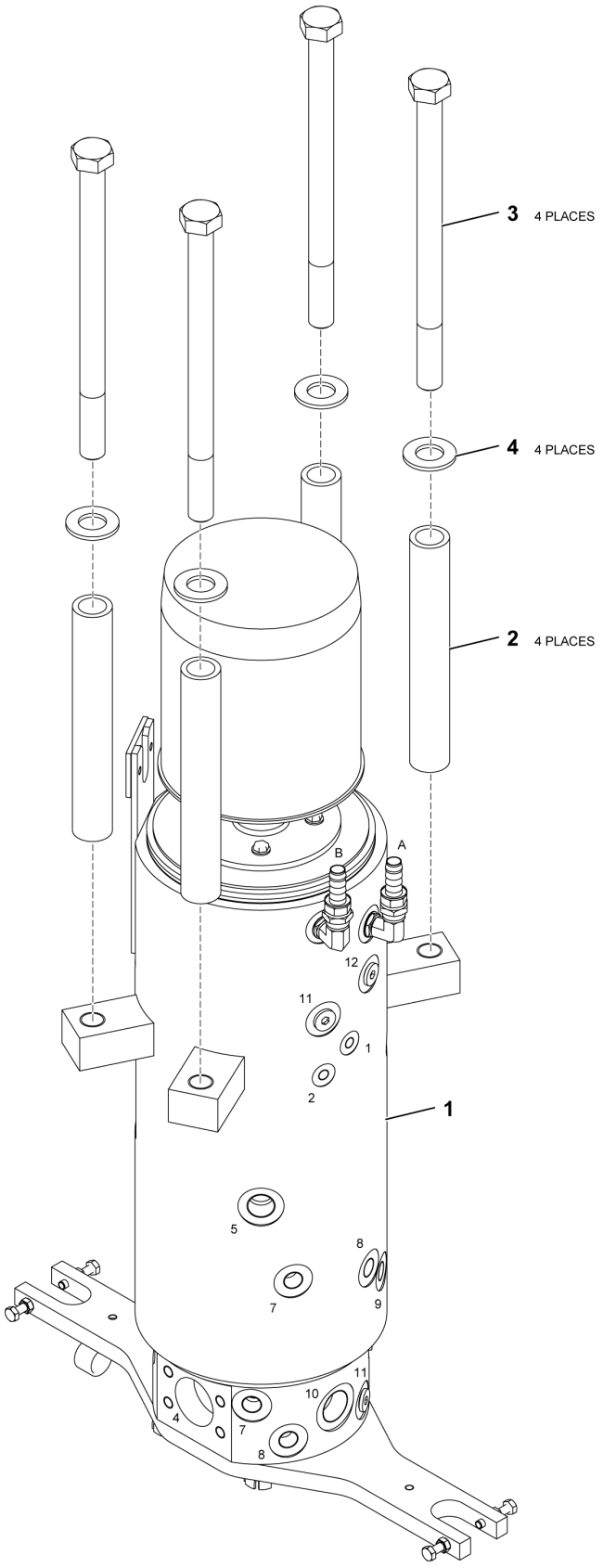

Description
**SWIVEL INSTALLATION - ELECTRIC, WATER AND HYDRAULIC**

Assembly No.
**6364101750**
Revision: **C**

| Item | FN | Part | Qty | Description |
|---|---|---|---|---|
| 1 | + | **6364101749** | 1 | SWIVEL ASSEMBLY - ELECTRIC, WATER AND HYDRAULIC (COMPLETE ASSEMBLY) |
| 2 | | **6199100100** | 4 | BUSHING |
| 3 | | **7126294350** | 4 | CAP SCREW, M24X340 HEX HEAD |
| 4 | | **7949000359** | 4 | WASHER, 1" I.D. HARDENED ROUND |

**+ SEE FURTHER BREAKDOWN THIS GROUP**

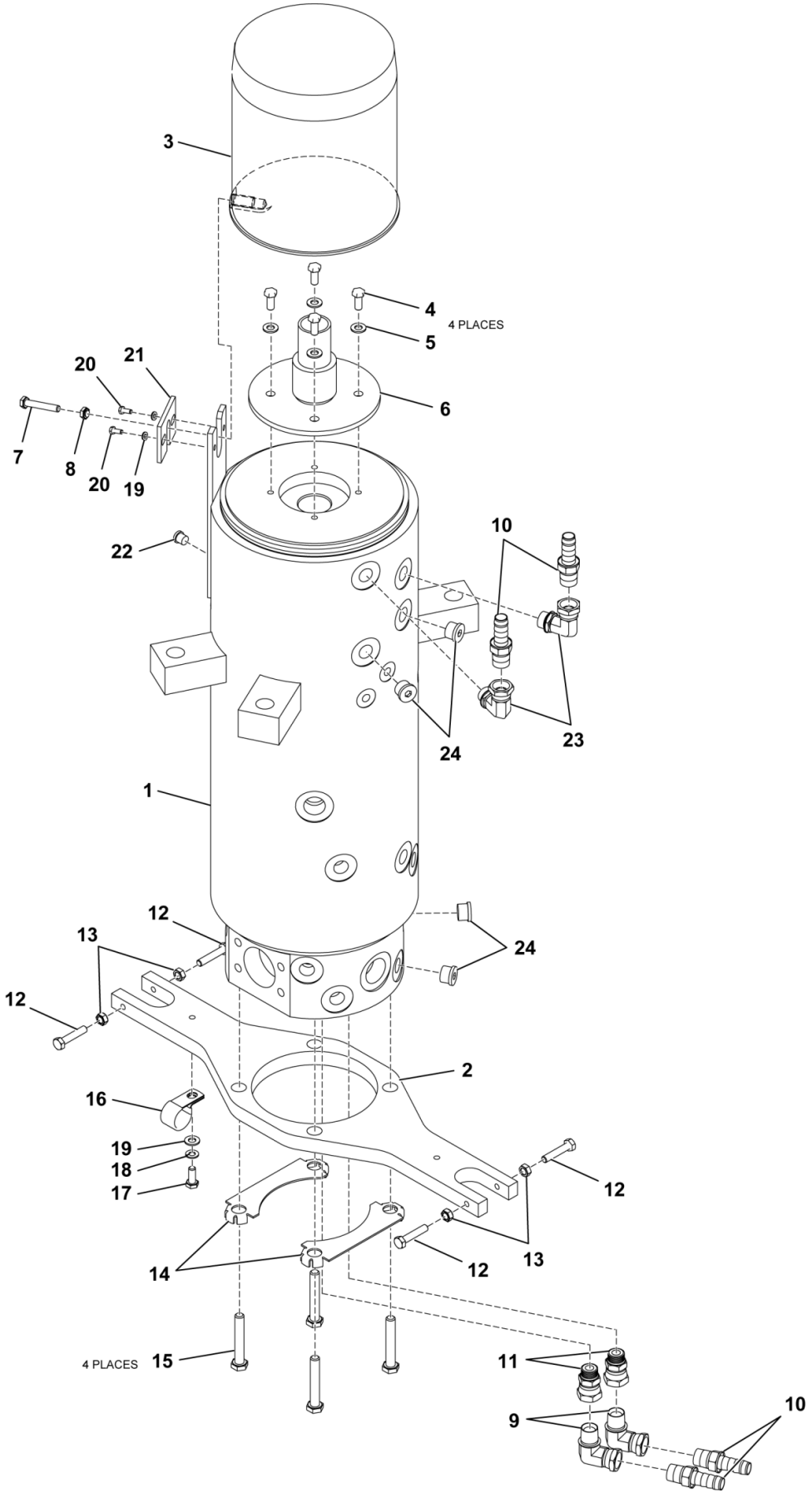


6364101749

(SHEET 1 OF 1)

Description
**SWIVEL ASSEMBLY - ELECTRIC, WATER AND HYDRAULIC (COMPLETE ASSEMBLY)**

Assembly No.
**6364101749**
Revision: **A**

| Item | FN | Part | Qty | Description |
|---|---|---|---|---|
| 1 | + | **7364100165** | 1 | SWIVEL ASSEMBLY - 14 PORT HYDRAULIC, WATER AND AIR CONDITIONING (COMPLETE ASSEMBLY) |
| 2 | | **6705171011** | 1 | PLATE, RETAINER |
| 3 | + | **7753100037** | 1 | RING ASSEMBLY - SLIP 15 CONDUCTOR (COMPLETE ASSEMBLY) |
| 4 | | **7126171150** | 4 | CAP SCREW, M8 X 20MM HEX HEAD |
| 5 | | **7949000534** | 4 | WASHER, HARDENED ROUND |
| 6 | | **6714100004** | 1 | POST, CENTER |
| 7 | | **7115181650** | 1 | CAP SCREW, 1/2"-13UNCX2"LONG |
| 8 | | **7660180200** | 1 | NUT, HEX 1/2" - 13 N.C. |
| 9 | | **7445080804** | 2 | ELBOW, 90 DEGREE |
| 10 | | **7649000059** | 4 | NIPPLE, HOSE 5/8 ID TO 1/2 NPT |
| 11 | | **7445080803** | 2 | ADAPTER, STRAIGHT |
| 12 | | **7126171550** | 4 | CAP SCREW, M8 X 40MM HEX HEAD |
| 13 | | **7661170003** | 4 | NUT - 8MM X 1.25 |
| 14 | | **6705100260** | 2 | PLATE, RETAINER |
| 15 | | **7127241550** | 4 | CAP SCREW, M16 X 40MM HEX HEAD |
| 16 | | **7300000244** | 1 | CLAMP, TUBING 1" I.D. |
| 17 | | **7126171150** | 1 | CAP SCREW, M8 X 20MM HEX HEAD |
| 18 | | **7950150050** | 1 | WASHER, LOCK 5/16" I.D. |
| 19 | | **7950150141** | 3 | WASHER, FLAT 5/16" |
| 20 | | **7126171150** | 2 | CAP SCREW, M8 X 20MM HEX HEAD |
| 21 | | **6705016148** | 1 | PLATE |
| 22 | | **7709800001** | 1 | PLUG, SAE #4 INCLUDES THE FOLLOWING PARTS |
| | | **7755904002** | 1 | O-RING |
| 23 | | **7445080808** | 2 | ADAPTER, SWIVEL |
| 24 | # | **7709800000** | 4 | PLUG, SAE #8 INCLUDES THE FOLLOWING PARTS |
| | | **7755908002** | 1 | O-RING |

**+ SEE FURTHER BREAKDOWN THIS GROUP**

**# SERVICED AS AN ASSEMBLY ONLY**

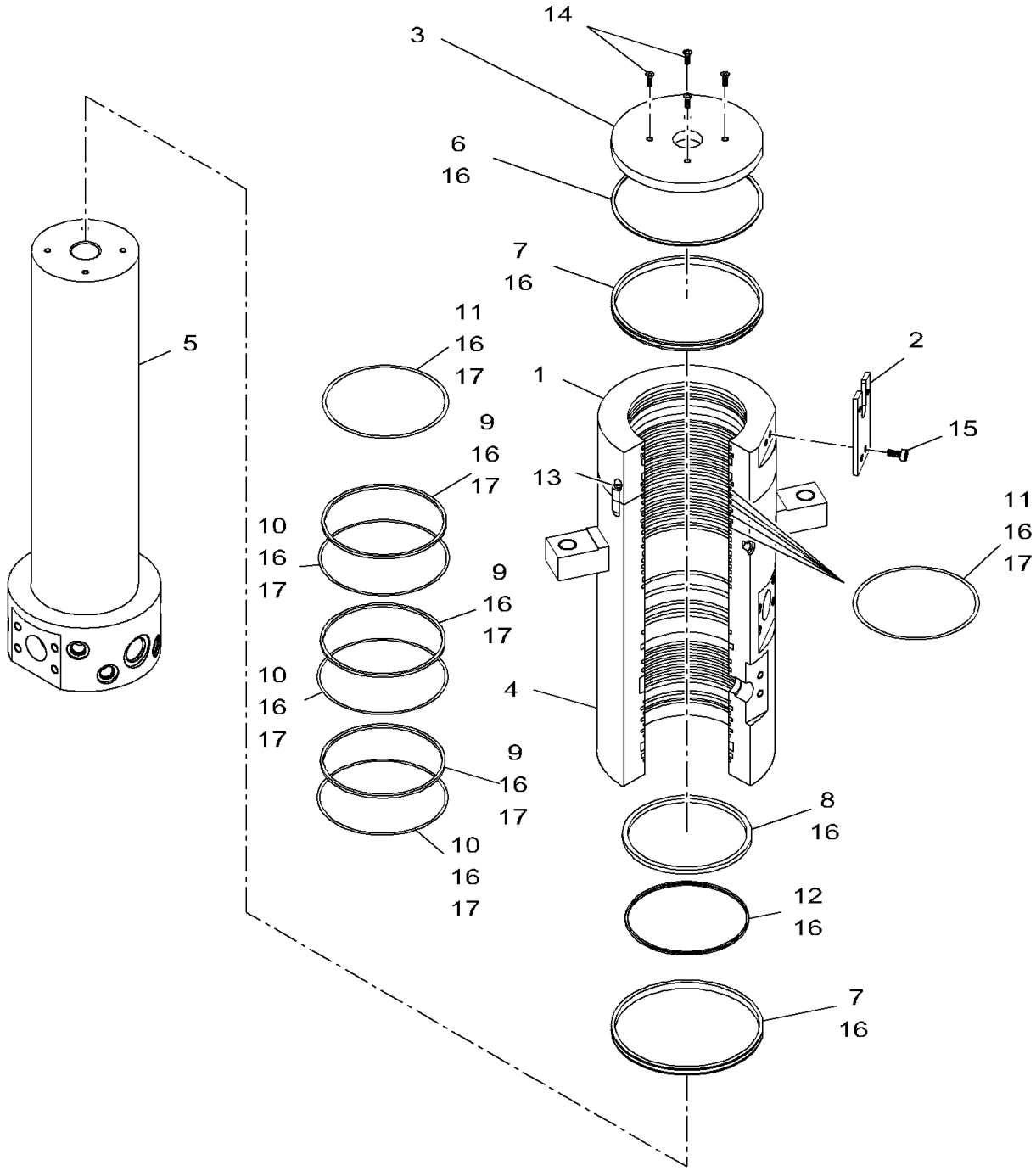


**7364100165**

**(SHEET 1 OF 1)**

Description
**SWIVEL ASSEMBLY - 14 PORT HYDRAULIC, WATER AND AIR CONDITIONING (COMPLETE ASSEMBLY)**

Assembly No.
**7364100165**
Revision:

| Item | FN | Part | Qty | Description |
|---|---|---|---|---|
| 1 | | **9364101826** | 1 | HOUSING, WATER |
| 2 | | **9364101827** | 1 | BRACKET |
| 3 | | **9364101818** | 1 | PLATE, COVER FLANGE |
| 4 | | **9364101828** | 1 | HOUSING, CASE |
| 5 | | **9364101820** | 1 | SPOOL ASSY. HYD./ WATER |
| 6 | * | **NSS** | 2 | RING, ANTI-SEIZURE |
| 7 | * | **NSS** | 2 | V-SEAL |
| 8 | * | **NSS** | 13 | RING, SEAL |
| 9 | * | **NSS** | 3 | O-RING |
| 10 | *@ | **NSS** | 3 | RING, GLYD |
| 11 | *@ | **NSS** | 6 | O-RING |
| 12 | *@ | **NSS** | 1 | O-RING |
| 13 | | **9364101821** | 4 | SCREW, GRUB |
| 14 | | **9364101822** | 4 | CAPSCREW |
| 15 | | **9364101823** | 2 | CAPSCREW, M8 |
| 16 | * | **9364101829** | 1 | KIT, SEAL |
| 17 | @ | **9364101830** | 1 | KIT, SEAL<br>SEAL KIT FOR WATER HOUSING<br>INCLUDES ITEMS 10 QTY. 3, ITEM 11 QTY. 3, AND ITEM 12 QTY.2 |

*** REPAIR KIT AND/OR PART OF KIT**

**@ SECOND REPAIR KIT AND/OR PART OF 2ND KIT**

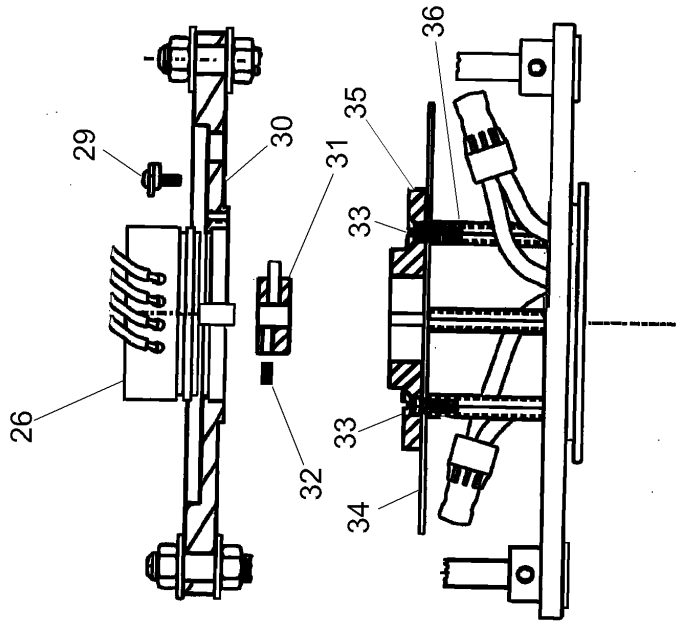


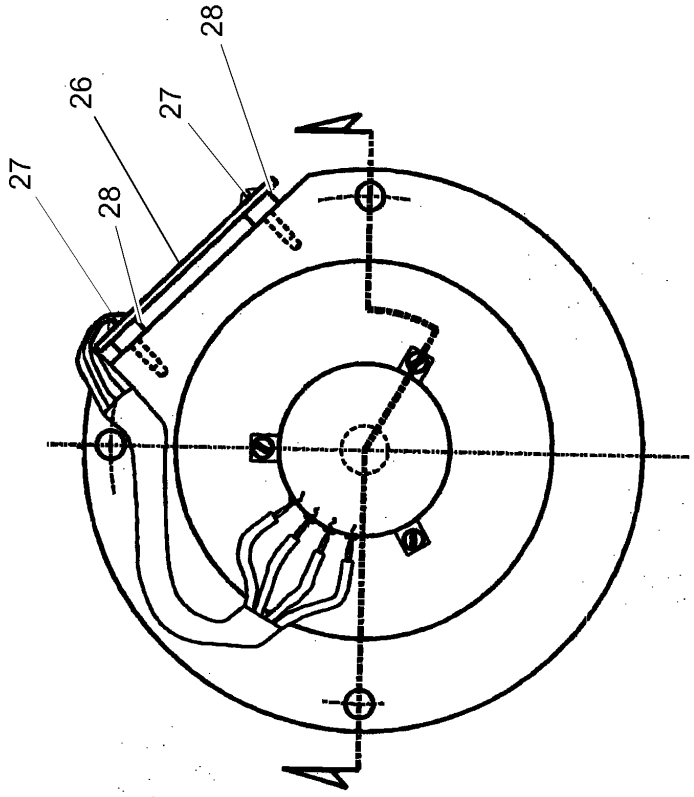


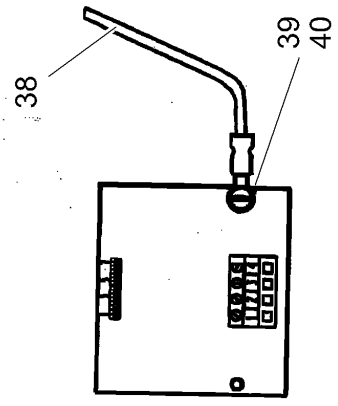


**7753100037**

**(SHEET 4 OF 4)**

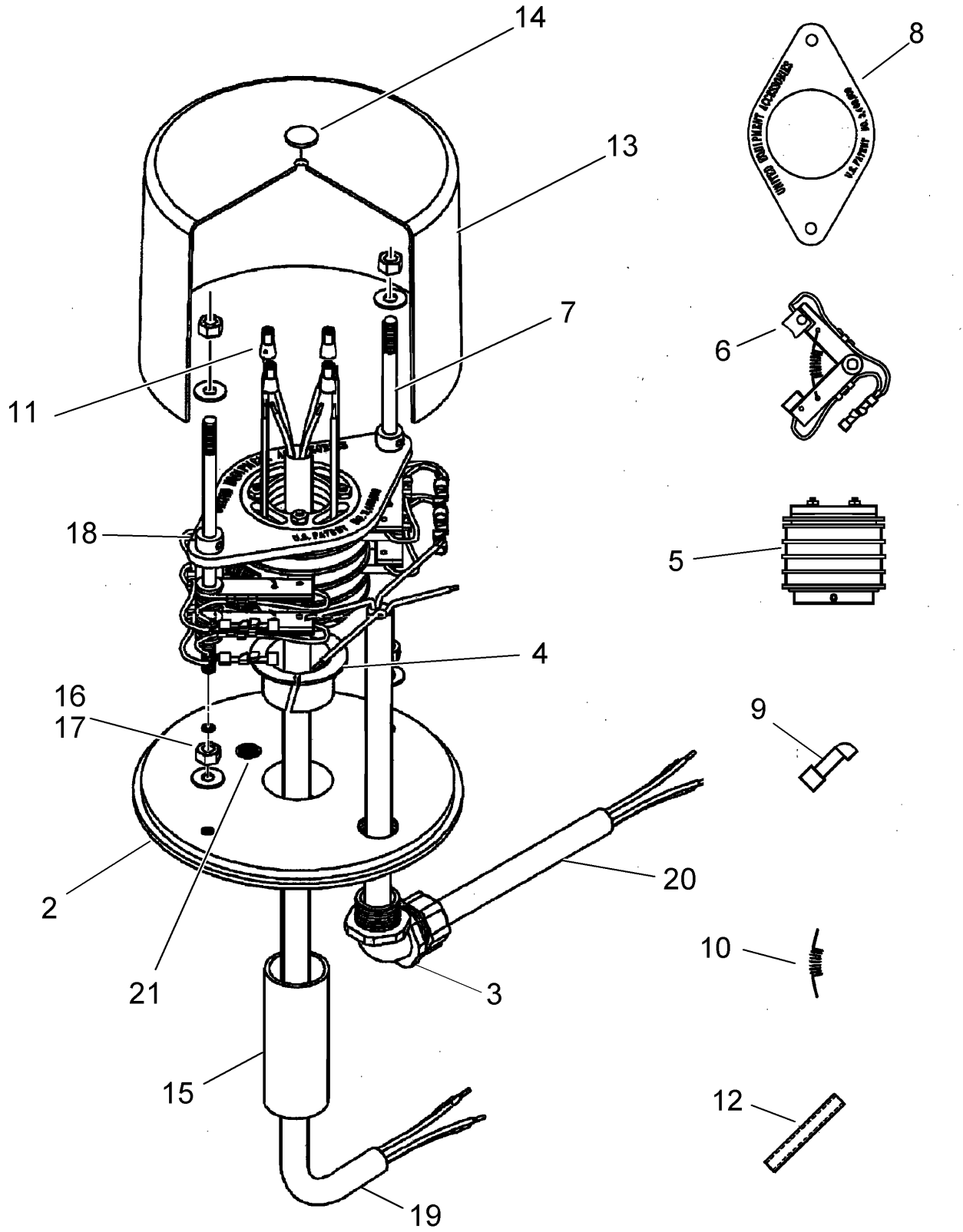


7753100037

(SHEET 3 OF 4)

| SUPERSTRUCTURE HARNESS | | | | | | |
|---|---|---|---|---|---|---|
| HARNESS NUMBER | SLIP RING # | CON-NEC-TOR | CONN. CAVITY | CABLE | CABLE CONDUCTOR COLOR | TERMINAL (SEE CHART) |
| 1 | 01 | A | 1 | — | ——— | R |
| | 02 | A | 2 | — | ——— | R |
| | 03 | A | 3 | — | ——— | R |
| | 04 | A | 4 | — | ——— | R |
| | 05 | A | 5 | — | ——— | R |
| | 06 | A | 6 | B | SHIELD | R |
| | 07 | A | 7 | B | BLACK | R |
| | 08 | A | 8 | B | RED | R |
| | 09 | A | 9 | A | SHIELD | R |
| | 10 | A | 10 | A | BLACK | R |
| | 11 | A | 11 | A | RED | R |
| | — | A | 12 | — | ——— | T |
| 2 | 12 | B | — | — | ——— | Q |
| | 13 | C | — | — | ——— | Q |
| | 14 | D | — | — | ——— | Q |
| | 15 | — | — | — | ——— | N |
| CARRIER HARNESS | | | | | | |
| 4 | 01 | E | 1 | — | ——— | S |
| | 02 | E | 2 | — | ——— | S |
| | 03 | E | 3 | — | ——— | S |
| | 04 | E | 4 | — | ——— | S |
| | 05 | E | 5 | — | ——— | S |
| | — | E | 6 | — | ——— | T |
| | 06 | F | 1 | D | SHIELD | R |
| | 07 | F | 2 | D | BLACK | R |
| | 08 | F | 3 | D | RED | R |
| | 09 | F | 4 | C | SHIELD | R |
| | 10 | F | 5 | C | BLACK | R |
| | 11 | F | 6 | C | RED | R |
| 5 | 12 | G | — | — | ——— | P |
| | 13 | H | — | — | ——— | P |
| | 14 | J | — | — | ——— | P |
| | 15 | — | — | — | ——— | N |

| CONNECTORS/TERMINALS/BOOTS | | | | |
|---|---|---|---|---|
| CONNECTOR/ TERMINAL/ BOOT | GROVE PART NUMBER | PART DESCRIPTION | QTY | PART NUMBER |
| A | 7892001012 | RECEPT 12P FLANGE MOUNT REQUIRES BOOT "K" | 1 | 56 |
| B,C.D | 7709000876 | PLUG 1S-4, NO BOOT REQ'D | 3 | 41 |
| E | 7709000883 | PLUG 6S, REQUIRES BOOT "M" | 1 | 42 |
| F | 7892000824 | RECEPT-6P, REQUIRES BOOT "L" | 2 | 43 |
| G,H,J | 7892000939 | RECEPT-1-4P, NO BOOT REQ'D | 3 | 44 |
| K | 7172000551 | BOOT FOR 12P RECECPTACLE | 1 | 45 |
| L | 7172000564 | BOOT FOR 6P RECEPTACLE | 1 | 46 |
| M | 7172000565 | BOOT FOR 6S PLUG | 1 | 47 |
| N | 7345242101 | 3/8" DIA EYELET, 6 GA | 2 | 48 |
| P | 7689000813 | PIN (4), 6GA NICKEL | 3 | 49 |
| Q | 7826000095 | SOCKET (4), 6GA NICKEL | 3 | 50 |
| R | 7689002053 | PIN (16-18 GA), GOLD PLATED | 17 | 51 |
| S | 7826100004 | SOCKET 16-18 GA GOLD PLATED | 9 | 52 |
| T | 7689000503 | SEAL PLUG (16-12 GA) | 8 | 53 |
| U | 7709000936 | PLUG 4S, REQUIRES BOOT "V" | 1 | 54 |
| V | 7172000567 | BOOT FOR 4S PLUG | 1 | 55 |

ITEMS NOT SHOWN
NBR 22
NBR 37

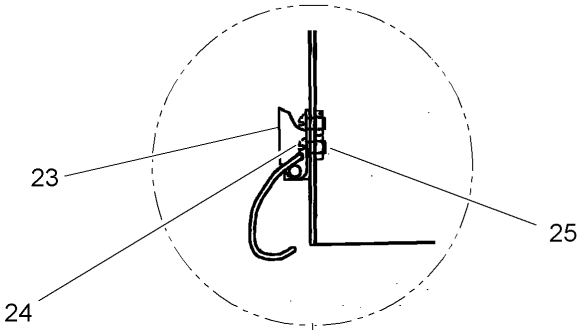


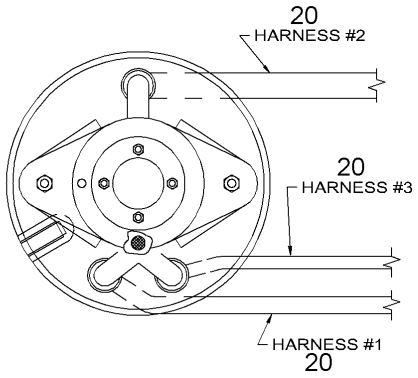


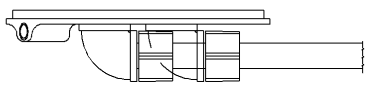

TOP & SIDE VIEW OF SWIVEL TO SHOW HARNESS ROUTING AND LOCATION COVER OMITTED FOR CLARITY

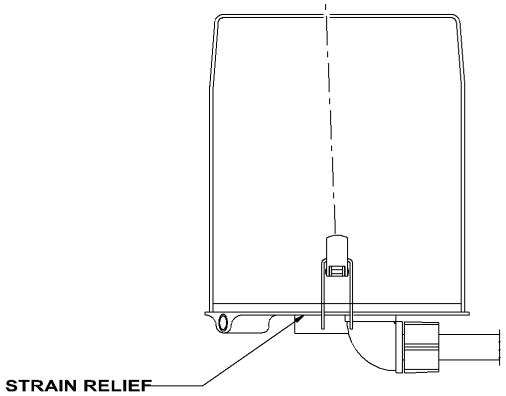

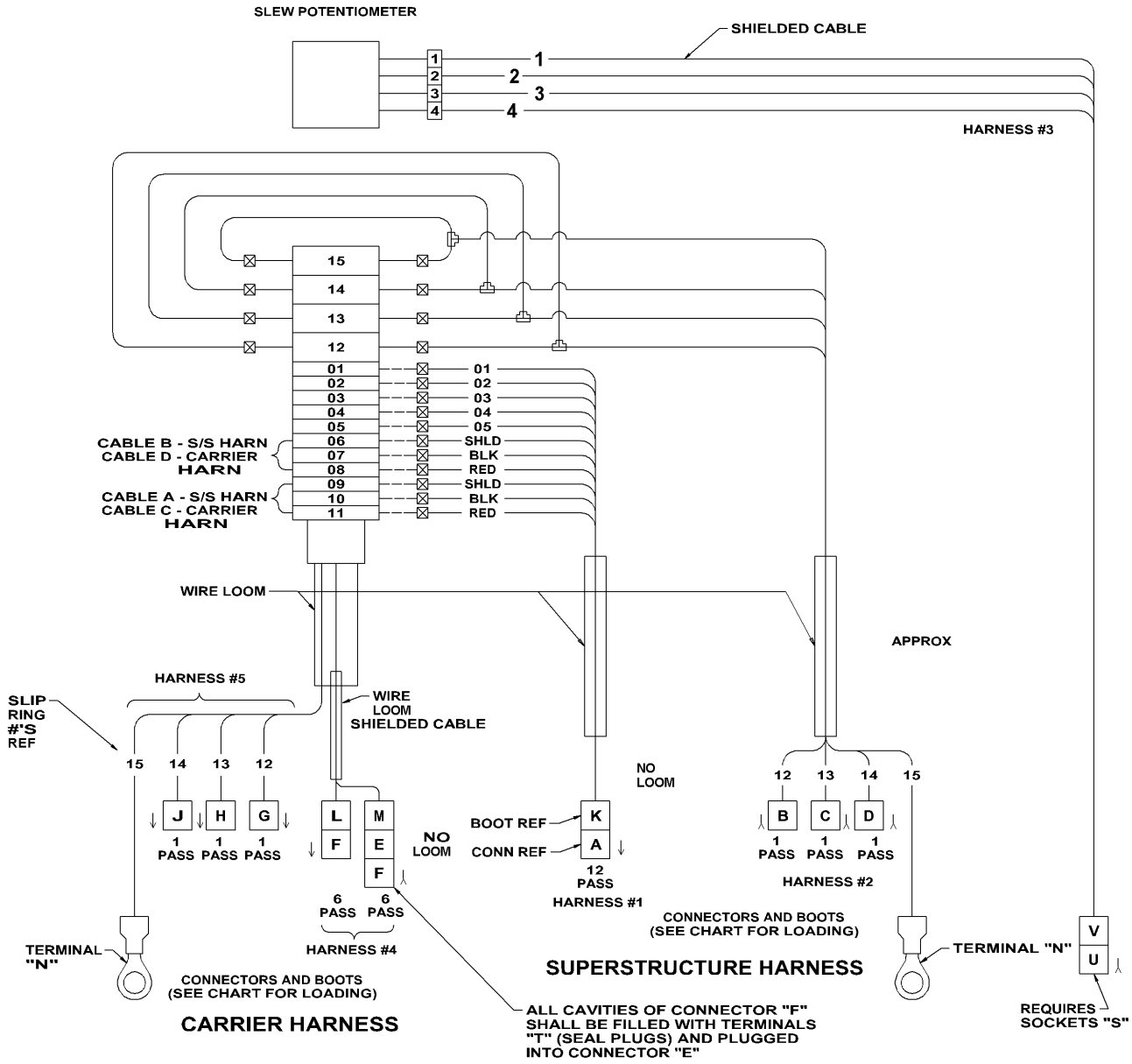


7753100037

(SHEET 1 OF 4)

Description
**RING ASSEMBLY - SLIP 15 CONDUCTOR**
**(COMPLETE ASSEMBLY)**

Assembly No.
**7753100037**
Revision:

| Item | FN | Part | Qty | Description |
|---|---|---|---|---|
| 2 | | **9364101731** | 1 | BRACKET,BASE |
| 3 | | **9364101208** | 1 | CONNECTOR |
| 3 | | **9364100968** | 2 | CONNECTOR, LIQUID TIGHT<br>90 DEGREES<br>3/4" |
| 4 | | **9364100964** | 1 | BEARING, NYLON |
| 5 | | **9364101838** | 1 | CORE ASSY. SLIP RING |
| 6 | | **9364100437** | 8 | BRUSH AND HOLDER ASSEMBLY<br>(45 AMP) |
| 6 | | **9364101733** | 6 | BRUSH & ARM ASSY. (SILVER) |
| 6 | | **9364100340** | 5 | BRUSH AND HOLDER ASSEMBLY<br>(7.5 AMP) |
| 7 | | **9364101839** | 2 | STUD, 7.75" LEVELING |
| 8 | | **9364100180** | 1 | BEARING, NYLON |
| 9 | | **9364100332** | 16 | TERMINAL, JUMBO KNIFE |
| 9 | | **9364100088** | 22 | TERMINAL, SMALL KNIFE |
| 10 | | **9364100333** | 8 | SPRING, BRUSH<br>(FOR 45 AMP) |
| 10 | | **9364101154** | 11 | SPRING, BRUSH<br>(FOR 7.5 AMP) |
| 11 | | **9364100178** | 8 | CONNECTOR, CRIMPED<br>(FOR 10 GAUGE WIRE ) |
| 11 | | **9364101224** | 11 | CONNECTOR, SETSCREW<br>(FOR 16 GAUGE WIRE ) |
| 12 | | **9364100334** | 8 | SLEEVE, 5/16" I.D. X 3" |
| 12 | | **9364100092** | 11 | SLEEVE, 3/16" I.D. X 3" |
| 13 | | **9364101840** | 1 | COVER ASSY. W/LATCHES<br>INCLUDES ITEMS 23 THRU 25 |
| 14 | | **9364101712** | 1 | PLUG, SEAL |
| 16 | | **9364101429** | 9 | NUT, HEX JAM<br>5/16" - 18 N.C. |
| 17 | | **7950150141** | 9 | WASHER, FLAT 5/16" |
| 18 | | **9364101601** | 2 | COLLAR, SET 5/16" |
| 19 | | **9364101841** | 1 | HARNESS ASSY. CENTER |
| 20 | | **9364101842** | 1 | HARNESS ASSY. FRONT |
| 20 | | **9364101843** | 1 | HARNESS ASSY. REAR |
| 20 | | **9364101844** | 1 | HARNESS ASSY. POTENTIOMETER |

Description
**RING ASSEMBLY - SLIP 15 CONDUCTOR (COMPLETE ASSEMBLY)**

Assembly No.
**7753100037**
Revision:

| Item | FN | Part | Qty | Description |
|---|---|---|---|---|
| 21 | | **9364101836** | 1 | BREATHER ASSY. |
| 22 | | **9364101845** | 1 | NUT, LOCK 1/2" |
| 22 | | **9364101397** | 2 | NUT, LOCK 3/4" |
| 23 | | **9364101847** | 2 | LATCH |
| 24 | | **9364101846** | 4 | SCREW |
| 25 | | **9364100658** | 4 | NUT |
| 26 | | **9364101848** | 1 | SERVO POT. & BOARD ASSY. |
| 27 | | **9364101727** | 2 | SCREW |
| 28 | | **9364101594** | 2 | SPACER, NYLON |
| 29 | | **9364101889** | 3 | CLAMP, SERVO W/SCREW |
| 30 | | **9364101849** | 1 | PLATE, MTG. |
| 31 | | **9364101850** | 1 | DRIVE, SHAFT |
| 32 | | **9364101615** | 2 | SET SCREW |
| 33 | | **9364101596** | 4 | SCREW, #10-32 X 5/8" FLATHEAD |
| 34 | | **9364101590** | 1 | DISK, RUB |
| 35 | | **9364101595** | 1 | PLATE |
| 36 | | **9364101588** | 4 | SPACER, STAND-OFF |
| 37 | | **9364101851** | 4 | WASHER, #10 FLAT |
| 38 | | **9364101852** | 1 | WIRE, GROUND |
| 39 | | **9364101853** | 1 | SCREW |
| 40 | | **9352100410** | 1 | NUT, KEPS<br>#6 - 32 N.C. |
| 41 | | **7709000876** | 3 | PLUG, 1 SOCKET |
| 42 | | **7709000883** | 1 | PLUG<br>6 SOCKET |
| 43 | | **7892000824** | 2 | RECEPTACLE,<br>6 PIN |
| 44 | | **7892000939** | 3 | RECEPTACLE,<br>1 PIN |
| 45 | | **7172000551** | 1 | BOOT |
| 46 | | **7172000564** | 1 | BOOT |
| 47 | | **7172000565** | 1 | BOOT, CONNECTOR |
| 48 | | **7345242101** | 2 | TERMINAL<br>6 AWG |
| 49 | | **7689000813** | 3 | PIN<br>4 AWG |

Description
**RING ASSEMBLY - SLIP 15 CONDUCTOR (COMPLETE ASSEMBLY)**

Assembly No.
**7753100037**
Revision:

| Item | FN | Part | Qty | Description |
|---|---|---|---|---|
| 50 | | **7826000095** | 3 | SOCKET,<br>4 AWG |
| 51 | | **7689002053** | 17 | PIN<br>16 - 18 AWG |
| 52 | | **7826100004** | 9 | SOCKET, (16 - 18) 30 SERIES |
| 53 | | **7689000503** | 8 | PLUG, SEALING<br>16 - 12 AWG |
| 54 | | **7709000936** | 1 | PLUG, 4 SOCKET |
| 55 | | **7172000567** | 1 | BOOT, CONNECTOR |
| 56 | | **7892001012** | 1 | RECEPTABLE, 12 P FLANGE |

The drawing or bill of material for this installation was not available when this catalog was created. Please contact Rich Rebok at richard.rebok@manitowoc.com for Grove products or Galen Burkholder at galen.burkholder@manitowoc.com for National products to supply us with your mailing information. Once the drawing or bill of material has been completed, we will send you the appropriate pages to be inserted into your manual.

Regards,
Technical Publications Department
Shady Grove, Pennsylvania
www.cranecare.com

Description
**CONTROL VALVE INSTALLATION - MAIN AND AUXILIARY HOIST**

Assembly No.
**80005107**
Revision: #

| Item | FN | Part | Qty | Description |
|---|---|---|---|---|
| 1 | + | **7926100986** | 1 | VALVE ASSEMBLY - DIRECTIONAL CONTROL<br>4 SECTION<br>(COMPLETE ASSEMBLY) |
| 2 | | **7126212150** | 3 | CAP SCREW, M12 X 70MM HEX HEAD |
| 3 | | **7950180141** | 6 | WASHER, FLAT 1/2" |
| 4 | | **7951210210** | 3 | LOCK WASHER, 12MM I.D. |
| 5 | | **7661210003** | 3 | NUT, HEX 12MM N.C. |
| 6 | + | **80002486** | 1 | VALVE ASSEMBLY - ACCESSORY<br>WITH SWING AND STEER DIRECTIAL CONTROL<br>(COMPLETE ASSEMBLY) |
| 7 | | **7126171150** | 4 | CAP SCREW, M8 X 20MM HEX HEAD |
| 8 | | **7951170210** | 4 | WASHER, LOCK 8MM |
| 9 | | **7950150161** | 4 | WASHER, 5/16" FLAT PLAIN WIDE |
| 10 | | **7926100910** | 1 | VALVE ASSY, DUAL ACCUMULATOR CHARGE<br>INCLUDES THE FOLLOWING PARTS |
| | | **9926113270** | 1 | SWITCH ASSY. PRESSURE |
| 11 | | **7126151153** | 3 | CAP SCREW, M6X20 HEX HEAD |
| 12 | | **7951150210** | 3 | LOCKWASHER, 6MM I.D. |
| 13 | | **7950140141** | 3 | WASHER, FLAT 1/4" PLAIN NARROW |
| 14 | # | **7005100017** | 2 | ACCUMULATOR ASSY,HYDRAULIC OIL<br>INCLUDES THE FOLLOWING PARTS |
| | # | **9005100230** | 1 | VALVE ASSY. GAS |
| | # | **9005100231** | 1 | CAP, VALVE |
| 28 | | **7300100025** | 4 | CLAMP ASSY, 2.38" HYDRA-ZORB |

**+ SEE FURTHER BREAKDOWN THIS GROUP**

**# SERVICED AS AN ASSEMBLY ONLY**

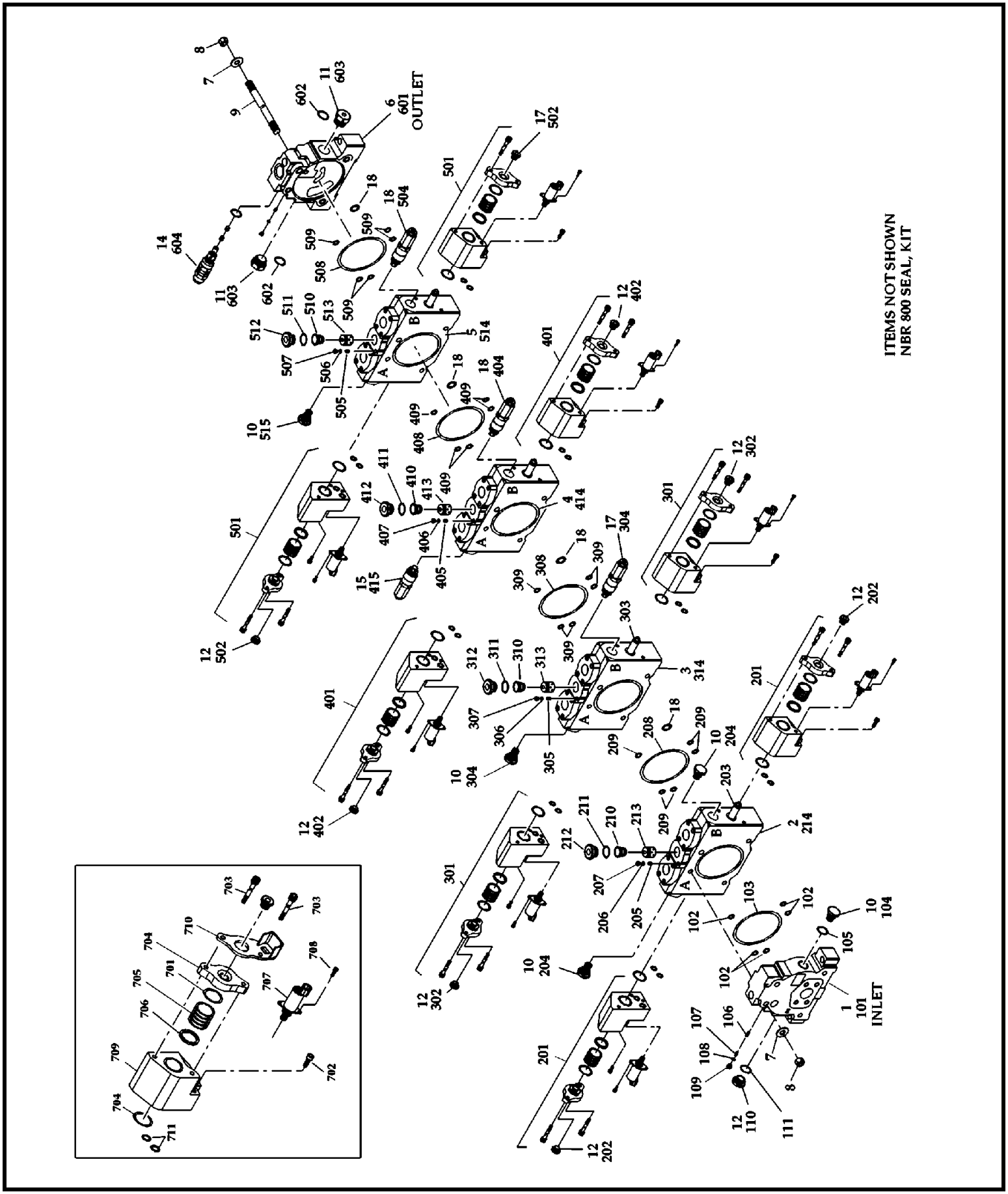


7926100986

(SHEET 1 OF 1)

Description
**VALVE ASSEMBLY - DIRECTIONAL CONTROL 4 SECTION (COMPLETE ASSEMBLY)**

Assembly No.
**7926100986**
Revision:

| Item | FN | Part | Qty | Description |
|---|---|---|---|---|
| 1 | | **9926113280** | 1 | VALVE ASSY. INLET SECTION INCLUDES ITEMS 101 THRU 111 |
| 2 | | **9926113281** | 1 | VALVE ASSY. WORK SECTION FOR MAIN HOIST, INCLUDES ITEMS 201 THRU 203 AND 205 THRU 214 |
| 3 | | **9926113281** | 1 | VALVE ASSY. WORK SECTION FOR AUX. HOIST, INCLUDES ITEMS 301 THRU 303 AND 305 THRU 314 |
| 4 | | **9926113459** | 1 | VALVE ASSY. WORK SECTION TELESCOPE INCLUDES ITEMS 401 THRU 403 AND 405 THRU 414 |
| 5 | | **9926113283** | 1 | VALVE ASSY. WORK SECTION FOR LIFT, INCLUDES ITEMS 501 THRU 503 AND 505 THRU 514 |
| 6 | | **9926113284** | 1 | VALVE ASSY. OUTLET SECTION INCLUDES ITEMS 601 THRU 602 |
| 7 | | **9926111435** | 8 | WASHER, COMPRESSION |
| 8 | | **9926111436** | 8 | NUT |
| 9 | | **9926111533** | 4 | ROD, TIE |
| 10 | | **9926111439** | 6 | PLUG ASSEMBLY, SHUT-OFF INCLUDES THE FOLLOWING PARTS |
| | | **9926111468** | 1 | SEAL-SPECIAL |
| 11 | | **9926111999** | 2 | PLUG ASSY |
| 12 | | **9926112141** | 7 | PLUG |
| 13 | | **9926113285** | 1 | PLUG ASSY. INCLUDES THE FOLLOWING PARTS |
| | | **7755912002** | 1 | O-RING |
| 14 | | **9926113018** | 1 | VALVE,CART. RELIEF @ 4000 PSI INCLUDES THE FOLLOWING PARTS |
| | | **9926111470** | 1 | SEAL-SPECIAL |
| | | **9926111469** | 2 | O-RING |
| 15 | | **9926113286** | 1 | VALVE,CART. RELIEF @ 3500 PSI INCLUDES THE FOLLOWING PARTS |
| | | **9926112013** | 1 | O-RING |
| 16 | | **9926113287** | 1 | VALVE,CART. RELIEF @ 3250 PSI INCLUDES THE FOLLOWING PARTS |
| | | **9926112013** | 1 | O-RING |
| 17 | | **9926113017** | 1 | VALVE,CART. RELIEF @ 4300 PSI INCLUDES THE FOLLOWING PARTS |
| | | **9926112013** | 1 | O-RING |

Description
**VALVE ASSEMBLY - DIRECTIONAL CONTROL 4 SECTION (COMPLETE ASSEMBLY)**

Assembly No.
**7926100986**
Revision:

| Item | FN | Part | Qty | Description |
|---|---|---|---|---|
| 18 | | **9926111438** | 4 | DISK, SHUTTLE |
| 101 | | **NSS** | 1 | HOUSING |
| 102 | * | **NSS** | 5 | O-RING |
| 103 | * | **NSS** | 1 | O-RING |
| 104 | | **9926111439** | 1 | PLUG ASSEMBLY, SHUT-OFF<br>INCLUDES THE FOLLOWING PARTS |
| | | **9926111468** | 1 | SEAL-SPECIAL |
| 105 | | **NSS** | 1 | SEAL, INCLUDED WITH PLUG ASSY. |
| 106 | | **9926112004** | 1 | FILTER |
| 107 | | **9926112003** | 1 | SPRING |
| 108 | * | **NSS** | 1 | O-RING |
| 109 | | **9926112141** | 1 | PLUG |
| 110 | | **9926113285** | 1 | PLUG ASSY.<br>INCLUDES THE FOLLOWING PARTS |
| | | **7755912002** | 1 | O-RING |
| 111 | | **NSS** | 1 | O-RING, INCLUDED WITH ITEM 110 |
| 201 | | **9926113288** | 2 | SOLENOID & CAP ASSY. 12V.<br>INCLUDES ITEMS 701 THRU 711 |
| 202 | | **9926112141** | 2 | PLUG |
| 203 | | **NSS** | 1 | SPOOL |
| 204 | | **9926111439** | 2 | PLUG ASSEMBLY, SHUT-OFF<br>INCLUDES THE FOLLOWING PARTS |
| | | **9926111468** | 1 | SEAL-SPECIAL |
| 205 | | **9926112199** | 1 | SET SCREW |
| 206 | * | **NSS** | 1 | O-RING |
| 207 | | **9926113026** | 1 | PLUG ASSY. |
| 208 | * | **NSS** | 1 | O-RING |
| 209 | * | **NSS** | 5 | O-RING |
| 210 | | **9926112200** | 1 | SPRING |

*** REPAIR KIT AND/OR PART OF KIT**

Description
**VALVE ASSEMBLY - DIRECTIONAL CONTROL 4 SECTION (COMPLETE ASSEMBLY)**

Assembly No.
**7926100986**
Revision:

| Item | FN | Part | Qty | Description |
|---|---|---|---|---|
| 211 | * | **NSS** | 1 | O-RING |
| 212 | | **9926113025** | 1 | PLUG ASSY. |
| 213 | | **NSS** | 1 | SPOOL, COMPENSATOR |
| 214 | | **NSS** | 1 | HOUSING |
| 301 | | **9926113288** | 2 | SOLENOID & CAP ASSY. 12V. INCLUDES ITEMS 701 THRU 711 |
| 302 | | **9926112141** | 2 | PLUG |
| 303 | | **NSS** | 1 | SPOOL |
| 304 | | **9926111439** | 2 | PLUG ASSEMBLY, SHUT-OFF INCLUDES THE FOLLOWING PARTS |
| | | **9926111468** | 1 | SEAL-SPECIAL |
| 305 | | **9926112199** | 1 | SET SCREW |
| 306 | * | **NSS** | 1 | O-RING |
| 307 | | **9926113026** | 1 | PLUG ASSY. |
| 308 | * | **NSS** | 1 | O-RING |
| 309 | * | **NSS** | 5 | O-RING |
| 310 | | **9926112200** | 1 | SPRING |
| 311 | * | **NSS** | 1 | O-RING |
| 312 | | **9926113025** | 1 | PLUG ASSY. |
| 313 | | **NSS** | 1 | SPOOL, COMPENSATOR |
| 314 | | **NSS** | 1 | HOUSING |
| 401 | | **9926113288** | 2 | SOLENOID & CAP ASSY. 12V. INCLUDES ITEMS 701 THRU 711 |
| 402 | | **9926112141** | 2 | PLUG |
| 403 | | **NSS** | 1 | SPOOL |
| 404 | | **9926113287** | 1 | VALVE,CART. RELIEF @ 3250 PSI INCLUDES THE FOLLOWING PARTS |
| | | **9926112013** | 1 | O-RING |

*** REPAIR KIT AND/OR PART OF KIT**

Description
**VALVE ASSEMBLY - DIRECTIONAL CONTROL 4 SECTION (COMPLETE ASSEMBLY)**

Assembly No.
**7926100986**
Revision:

| Item | FN | Part | Qty | Description |
|---|---|---|---|---|
| 405 | | **9926112199** | 1 | SET SCREW |
| 406 | * | **NSS** | 1 | O-RING |
| 407 | | **9926113026** | 1 | PLUG ASSY. |
| 408 | * | **NSS** | 1 | O-RING |
| 409 | * | **NSS** | 5 | O-RING |
| 410 | | **9926112200** | 1 | SPRING |
| 411 | * | **NSS** | 1 | O-RING |
| 412 | | **9926113025** | 1 | PLUG ASSY. |
| 413 | | **NSS** | 1 | SPOOL, COMPENSATOR |
| 414 | | **NSS** | 1 | |
| 415 | | **9926113286** | 1 | VALVE,CART. RELIEF @ 3500 PSI INCLUDES THE FOLLOWING PARTS |
| | | **9926112013** | 1 | O-RING |
| 501 | | **9926113288** | 2 | SOLENOID & CAP ASSY. 12V. INCLUDES ITEMS 701 THRU 711 |
| 502 | | **9926112141** | 1 | PLUG |
| 503 | | **NSS** | 1 | SPOOL |
| 504 | | **9926113017** | 1 | VALVE,CART. RELIEF @ 4300 PSI INCLUDES THE FOLLOWING PARTS |
| | | **9926112013** | 1 | O-RING |
| 505 | | **9926112199** | 1 | SET SCREW |
| 506 | * | **NSS** | 1 | O-RING |
| 507 | | **9926113026** | 1 | PLUG ASSY. |
| 508 | * | **NSS** | 1 | O-RING |
| 509 | * | **NSS** | 5 | O-RING |
| 510 | | **9926112200** | 1 | SPRING |
| 511 | * | **NSS** | 1 | O-RING |
| 512 | | **9926113025** | 1 | PLUG ASSY. |

*** REPAIR KIT AND/OR PART OF KIT**

Description
**VALVE ASSEMBLY - DIRECTIONAL CONTROL 4 SECTION (COMPLETE ASSEMBLY)**

Assembly No.
**7926100986**
Revision:

| Item | FN | Part | Qty | Description |
|---|---|---|---|---|
| 513 | | **NSS** | 1 | SPOOL, COMPENSATOR |
| 514 | | **NSS** | 1 | HOUSING |
| 515 | | **9926111439** | 1 | PLUG ASSEMBLY, SHUT-OFF<br>INCLUDES THE FOLLOWING PARTS |
| | | **9926111468** | 1 | SEAL-SPECIAL |
| 601 | | **NSS** | 1 | HOUSING |
| 602 | * | **NSS** | 2 | O-RING |
| 603 | | **9926111999** | 2 | PLUG ASSY |
| 604 | | **9926113018** | 1 | VALVE,CART. RELIEF @ 4000 PSI<br>INCLUDES THE FOLLOWING PARTS |
| | | **9926111470** | 1 | SEAL-SPECIAL |
| | | **9926111469** | 2 | O-RING |
| 701 | | **7755220000** | 2 | O-RING |
| 702 | | **9926111974** | 1 | SCREW |
| 703 | | **9926111452** | 2 | SCREW-HEX HEAD |
| 704 | | **9926111453** | 1 | CAP |
| 705 | | **9926111456** | 1 | SPRING |
| 706 | | **9926111457** | 1 | WASHER, |
| 707 | | **9926113030** | 1 | CARTRIDGE & COIL ASSY. 12V.<br>INCLUDES THE FOLLOWING PARTS |
| | | **9926113032** | 1 | KIT, SEAL |
| 708 | | **9926113029** | 2 | CAPSCREW |
| 709 | | **NSS** | 1 | CAP, SPOOL |
| 710 | | **9926113289** | 1 | BRACKET |
| 711 | | **7755107002** | 2 | O-RING |
| 800 | * | **9926113031** | 1 | KIT, SEAL |

*** REPAIR KIT AND/OR PART OF KIT**

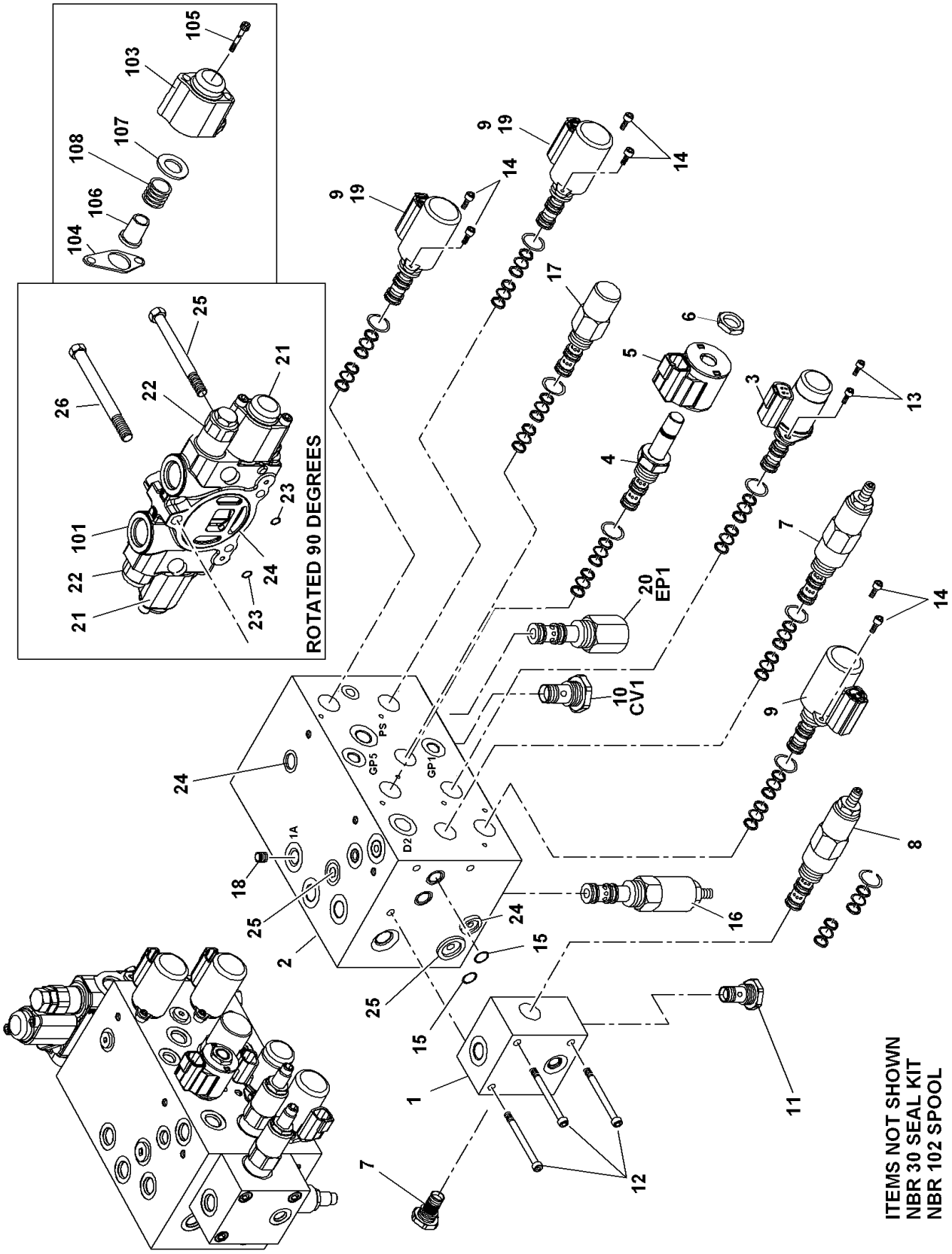


80002486

(SHEET 1 OF 1)

Description
**VALVE ASSEMBLY - ACCESSORY WITH SWING AND STEER DIRECTIAL CONTROL (COMPLETE ASSEMBLY)**

Assembly No.
**80002486**
Revision:

| Item | FN | Part | Qty | Description |
|---|---|---|---|---|
| 1 | | **NSS** | 1 | BODY, VALVE |
| 2 | | **NSS** | 1 | BODY, VALVE |
| 3 | | **9926113045** | 1 | VALVE, CART. & COIL ASSY. 12V. INCLUDES THE FOLLOWING PARTS |
| | | **9926113057** | 1 | KIT, SEAL |
| 4 | | **9926106474** | 1 | VALVE, CARTRIDGE INCLUDES THE FOLLOWING PARTS |
| | | **9926108423** | 1 | KIT, SEAL |
| | | **9926107745** | 1 | NUT |
| 5 | | **9926112931** | 1 | COIL, 12V. |
| 6 | | **9926107745** | 1 | NUT |
| 7 | | **90012924** | 1 | VALVE,PRESS.REDUCING 250 PSI INCLUDES THE FOLLOWING PARTS |
| | | **9926111722** | 1 | KIT, SEAL |
| 8 | | **90012925** | 1 | VALVE,PRESS.REDUCING 2500 PSI INCLUDES THE FOLLOWING PARTS |
| | | **9926113058** | 1 | KIT, SEAL |
| 9 | | **9926113165** | 3 | VALVE,CART/COIL PRESS.REDUCING INCLUDES THE FOLLOWING PARTS |
| | | **9926113057** | 1 | KIT, SEAL |
| 10 | | **9926113049** | 1 | VALVE, CHECK INCLUDES THE FOLLOWING PARTS |
| | | **9926112358** | 1 | KIT, SEAL |
| 11 | | **9926110629** | 1 | CARTRIDGE ASSY. FILTER INCLUDES THE FOLLOWING PARTS |
| | | **9752100994** | 1 | KIT, REPAIR |
| 12 | | **90012926** | 3 | CAPSCREW,SOCKET HEAD 2-1/4" LG |
| 13 | | **90012927** | 2 | CAPSCREW, 8MM LG |
| 14 | | **9926113051** | 6 | CAPSCREW, SOCKET HEAD 10MM |
| 15 | | **7755014000** | 2 | O-RING |
| 16 | | **9926113167** | 1 | VALVE, RELIEF @ 2500 PSI INCLUDES THE FOLLOWING PARTS |
| | | **9926108644** | 1 | KIT, SEAL |
| 17 | | **9926113443** | 1 | VALVE, PRESS. COMPENSATOR INCLUDES THE FOLLOWING PARTS |
| | | **9926110372** | 1 | KIT, SEAL |
| 18 | | **9926113171** | 1 | PLUG, ORIFICE .040" |
| 19 | | **90000899** | 2 | DISC, ORIFICE .015 |

Description
**VALVE ASSEMBLY - ACCESSORY WITH SWING AND STEER DIRECTIAL CONTROL (COMPLETE ASSEMBLY)**

Assembly No.
**80002486**
Revision:

| Item | FN | Part | Qty | Description |
|---|---|---|---|---|
| 20 | | **9926110370** | 1 | CARTRIDGE<br>INCLUDES THE FOLLOWING PARTS |
| | | **9926107747** | 1 | KIT, SEAL |
| 21 | | **90012928** | 1 | KIT, VALVE ASSY. WORK SECTION<br>INCLUDES ITEMS 22 THRU 24<br>AND ITEMS 101 THRU 108 |
| 22 | | **9926113254** | 2 | VALVE, CART. RELIEF @ 1800 PSI<br>INCLUDES THE FOLLOWING PARTS |
| | | **9926111932** | 1 | O-RING, VITON |
| | | **9926111931** | 1 | O-RING, VITON |
| 23 | | **9926112501** | 2 | O-RING,VITON |
| 24 | | **9926113253** | 1 | O-RING SEAL |
| 25 | | **90012929** | 2 | CAPSCREW |
| 26 | | **90012930** | 1 | CAPSCREW |
| 101 | | **NSS** | 1 | HOUSING |
| 102 | | **NSS** | 1 | SPOOL |
| 103 | | **9926113301** | 2 | CAP |
| 104 | | **90000633** | 2 | SEAL, CAP |
| 105 | | **9926113302** | 4 | CAPSCREW |
| 106 | | **9926113298** | 2 | SEAT, SPRING |
| 107 | | **9926113300** | 2 | WASHER |
| 108 | | **9926113299** | 2 | SPRING |

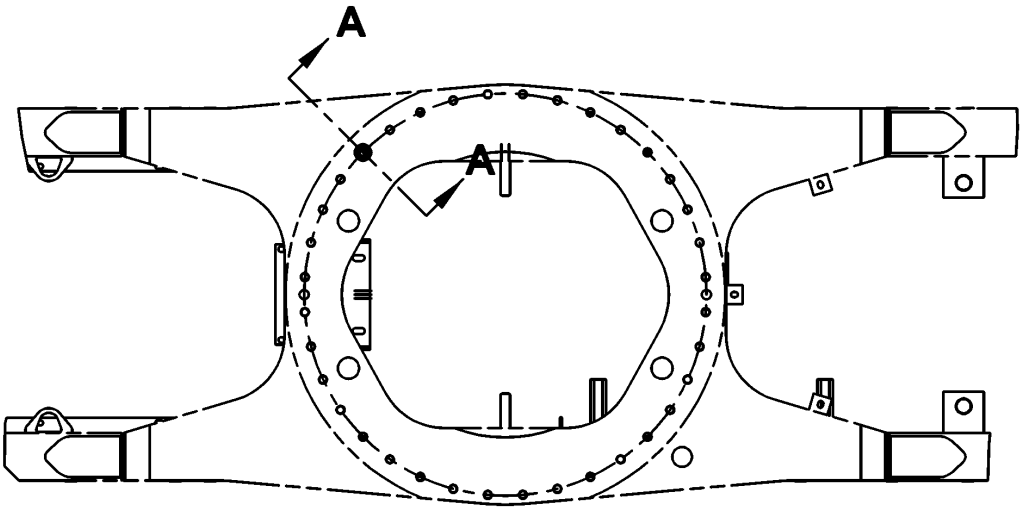


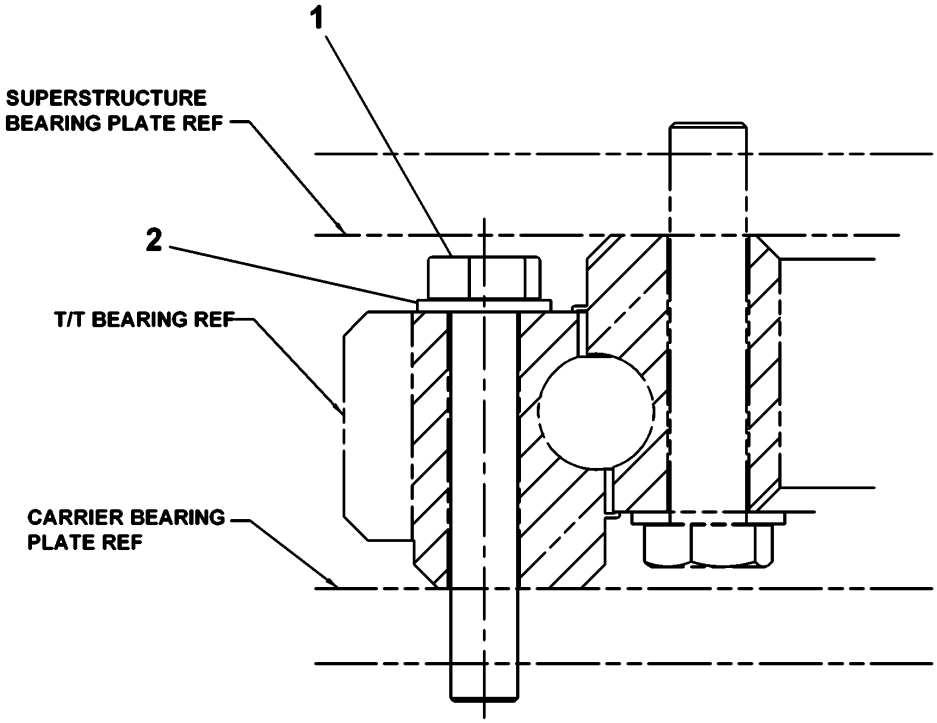


**SECTION A-A**

**2159210143**

**(SHEET 1 OF 1)**

Description
**BOLT INSTALLATION - BEARING**

Assembly No.
**2159210143**
Revision: #

| Item | FN | Part | Qty | Description |
|---|---|---|---|---|
| 1 | | **7118244250** | 36 | CAP SCREW,<br>7/8" - 9 N.C. X 5 1/4"<br>GRADE 8 |
| 2 | | **7949000237** | 36 | WASHER, 7/8" I.D. |

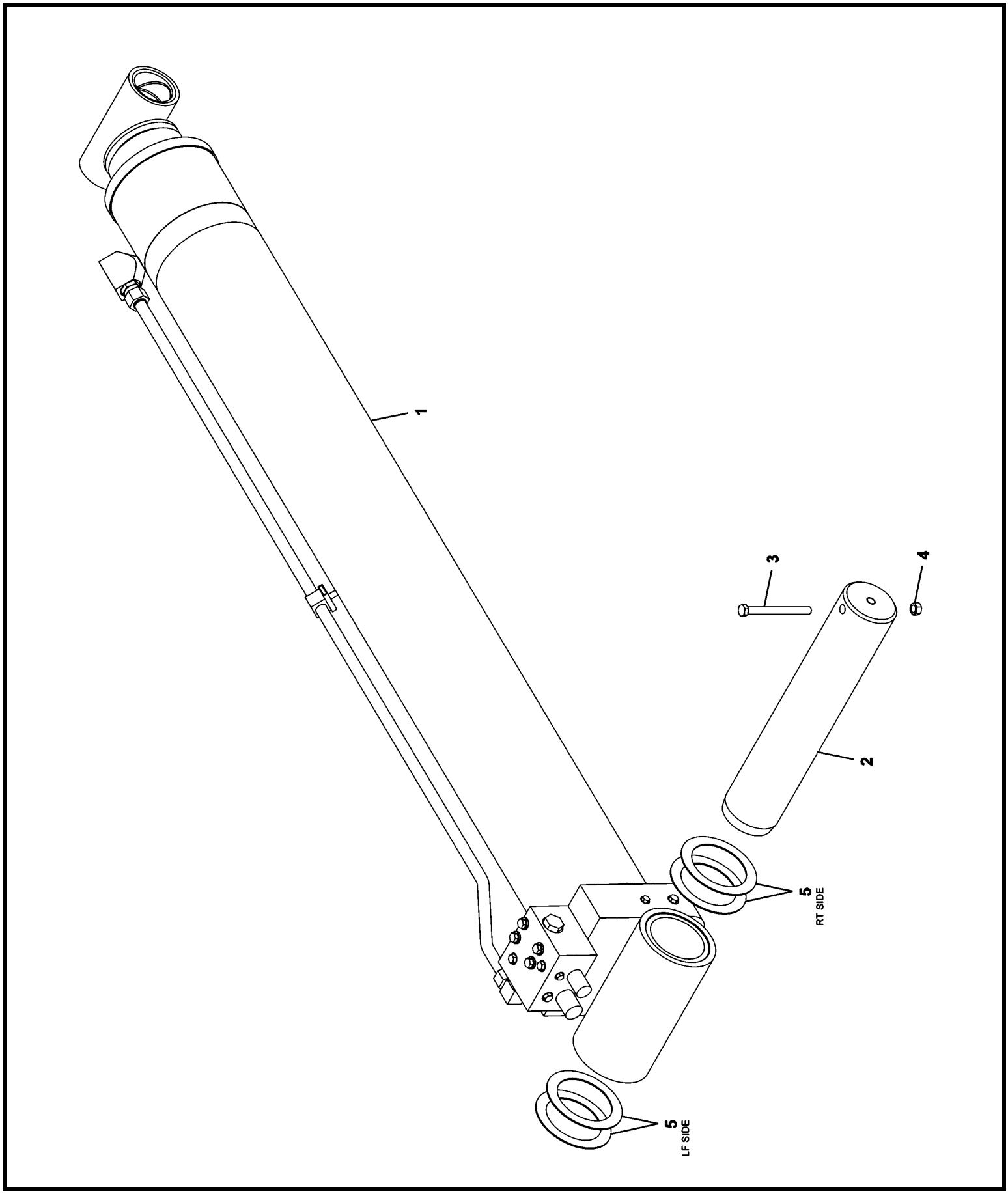


**2159210177**

**(SHEET 1 OF 1)**

Description
**CYLINDER INSTALLATION - LIFT**

Assembly No.
**2159210177**
Revision: **A**

| Item | FN | Part | Qty | Description |
|---|---|---|---|---|
| 1 | + | **6372100488** | 1 | CYLINDER ASSEMBLY - 9" LIFT (COMPLETE ASSEMBLY) |
| 2 | | **7810100133** | 1 | SHAFT, LOWER PIVOT |
| 3 | | **7126243350** | 1 | HHCS M16x170 -8.8 ISO 4017 |
| 4 | | **7661240003** | 1 | NUT, HEX 16MM N.C. |
| 5 | | **7949000383** | 4 | WASHER, THRUST |

**+ SEE FURTHER BREAKDOWN THIS GROUP**

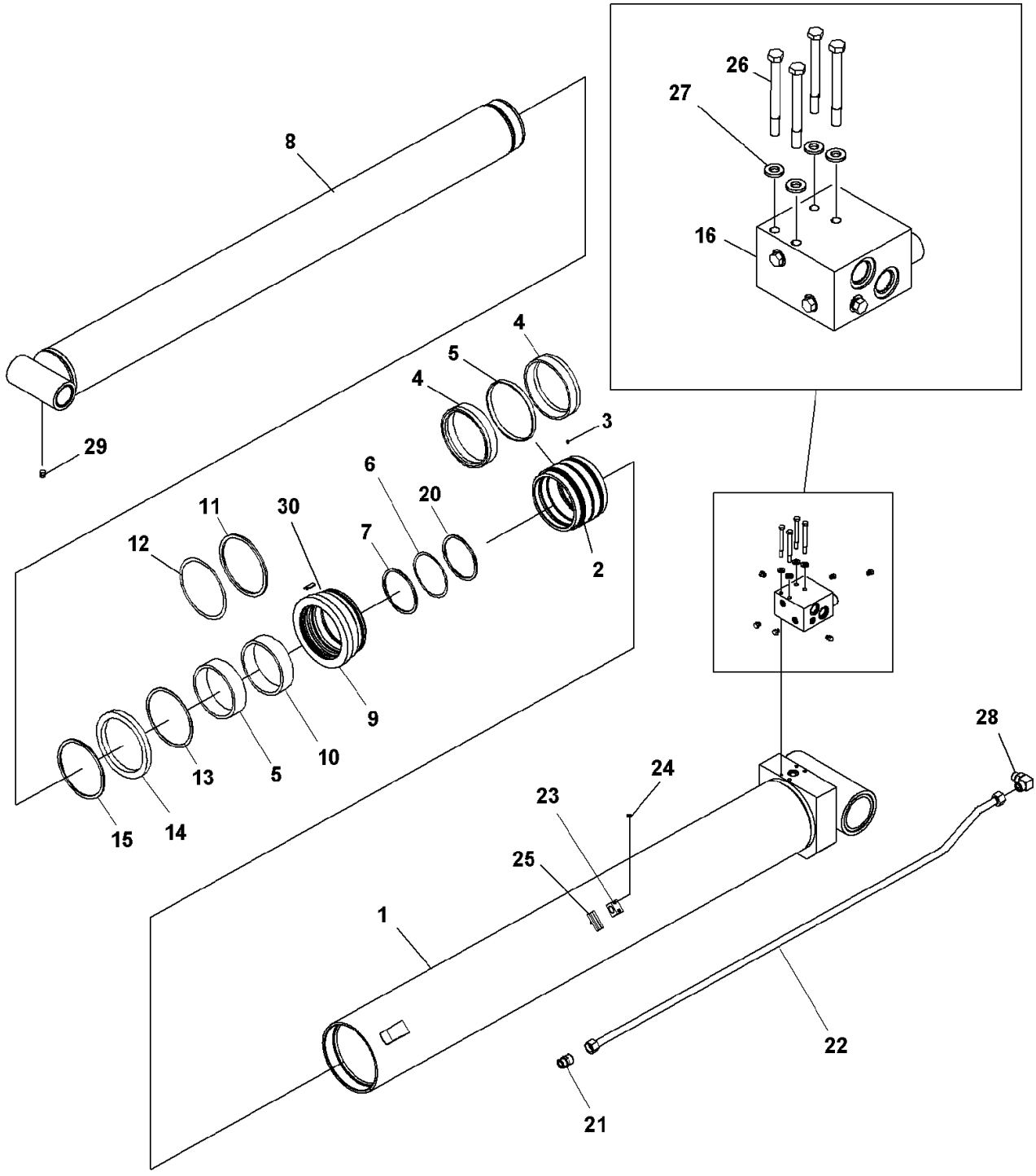


SEE BOM FOR ITEM NBR 300 SEAL KIT

6372100488

(SHEET 1 OF 1)

Description
**CYLINDER ASSEMBLY - 9" LIFT (COMPLETE ASSEMBLY)**

Assembly No.
**6372100488**
Revision: #

| Item | FN | Part | Qty | Description |
|---|---|---|---|---|
| 1 | | **6372100486** | 1 | BARREL, LIFT CYLINDER |
| | | | | INCLUDES THE FOLLOWING PARTS |
| | | **7199100029** | 2 | BUSHING, LINER |
| 2 | | **6701000970** | 1 | PISTON, 9" CYLINDER |
| 3 | | **7099000378** | 1 | SCREW, 3/8" - 16NC X 3/8" SET |
| 4 | * | **7794000577** | 2 | SEAL, PISTON |
| 5 | * | **7753000477** | 1 | RING, WEAR |
| 6 | * | **7754000163** | 1 | O-RING, LOW TEMPERATURE |
| 7 | * | **7753100021** | 1 | BACK-UP RING;7.00 ROD |
| 8 | | **6768100342** | 1 | ROD, 7" CYLINDER |
| | | | | INCLUDES THE FOLLOWING PARTS |
| | | **7199100029** | 2 | BUSHING, LINER |
| 9 | | **7372100268** | 1 | HEAD, CYLINDER |
| 10 | * | **7753000307** | 1 | RING, WEAR |
| 11 | * | **7754000166** | 1 | O-RING, LOW TEMPERATURE |
| 12 | * | **7755445609** | 1 | RING, BACK-UP |
| 13 | * | **7794000544** | 1 | SEAL, BUFFER |
| 14 | * | **7794000642** | 1 | SEAL, DEEP Z ROD |
| 15 | * | **7753000299** | 1 | RING, WIPER |
| 16 | + | **7926100925** | 1 | VALVE ASSEMBLY - HOLDING (COMPLETE ASSEMBLY) |
| 20 | * | **7755365609** | 2 | RING, BACK-UP |
| 21 | | **7447161601** | 1 | ADAPTER, STRAIGHT |
| | | | | INCLUDES THE FOLLOWING PARTS |
| | | **7755021002** | 1 | O-RING |
| | | **7755916002** | 1 | O-RING |
| 22 | | **7910101710** | 1 | TUBE ASSY, LIFT CYLINDER |
| 23 | | **7300000269** | 1 | CLAMP, PIPE |
| 24 | | **01147202** | 2 | CAP SCREW, SOCKET HEAD M6X35 |
| 25 | | **01571750** | 2 | NUT LTM-M6 W1 DIN 3015 |
| 26 | | **7115184050** | 4 | CAP SCREW, 1/2" - 13 N.C. X 5" GRADE 5 |
| 27 | | **7949000235** | 4 | WASHER, 1/2" I.D. FLAT |
| 28 | | **7447161603** | 1 | ELBOW, 90 DEGREE MALE |
| | | | | INCLUDES THE FOLLOWING PARTS |
| | | **7755021002** | 1 | O-RING |

*** REPAIR KIT AND/OR PART OF KIT**

**+ SEE FURTHER BREAKDOWN THIS GROUP**

Description
**CYLINDER ASSEMBLY - 9" LIFT (COMPLETE ASSEMBLY)**

Assembly No.
**6372100488**
Revision: #

| Item | FN | Part | Qty | Description |
|---|---|---|---|---|
| | | **7755916002** | 1 | O-RING |
| 29 | | **7440000000** | 2 | FITTING, 1/8 STRAIGHT GREASE |
| 300 | * | **7373000012** | 1 | KIT, SEAL |

*** REPAIR KIT AND/OR PART OF KIT**

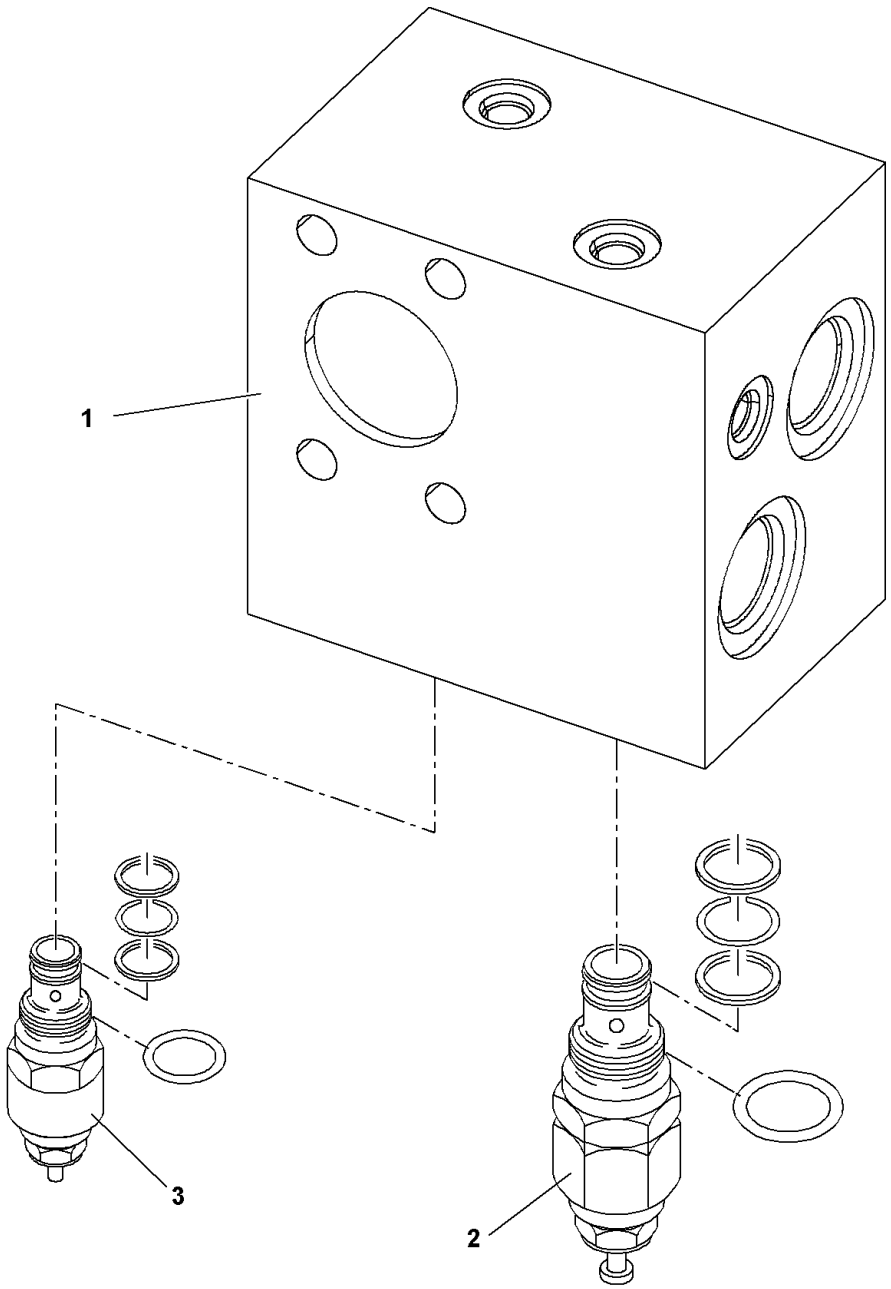


**7926100925**

**(SHEET 1 OF 1)**

Description
**VALVE ASSEMBLY - HOLDING (COMPLETE ASSEMBLY)**

Assembly No.
**7926100925**
Revision:

| Item | FN | Part | Qty | Description |
|---|---|---|---|---|
| 1 | | **NSS** | 1 | BODY, MANIFOLD |
| 2 | | **9926113144** | 1 | VALVE, CART. COUNTER BALANCE<br>INCLUDES THE FOLLOWING PARTS |
| | | **9926113146** | 1 | KIT, SEAL |
| 3 | | **9926113145** | 1 | VALVE, CART.SEQUENCE @4400 PSI<br>INCLUDES THE FOLLOWING PARTS |
| | | **9926113147** | 1 | KIT, SEAL |

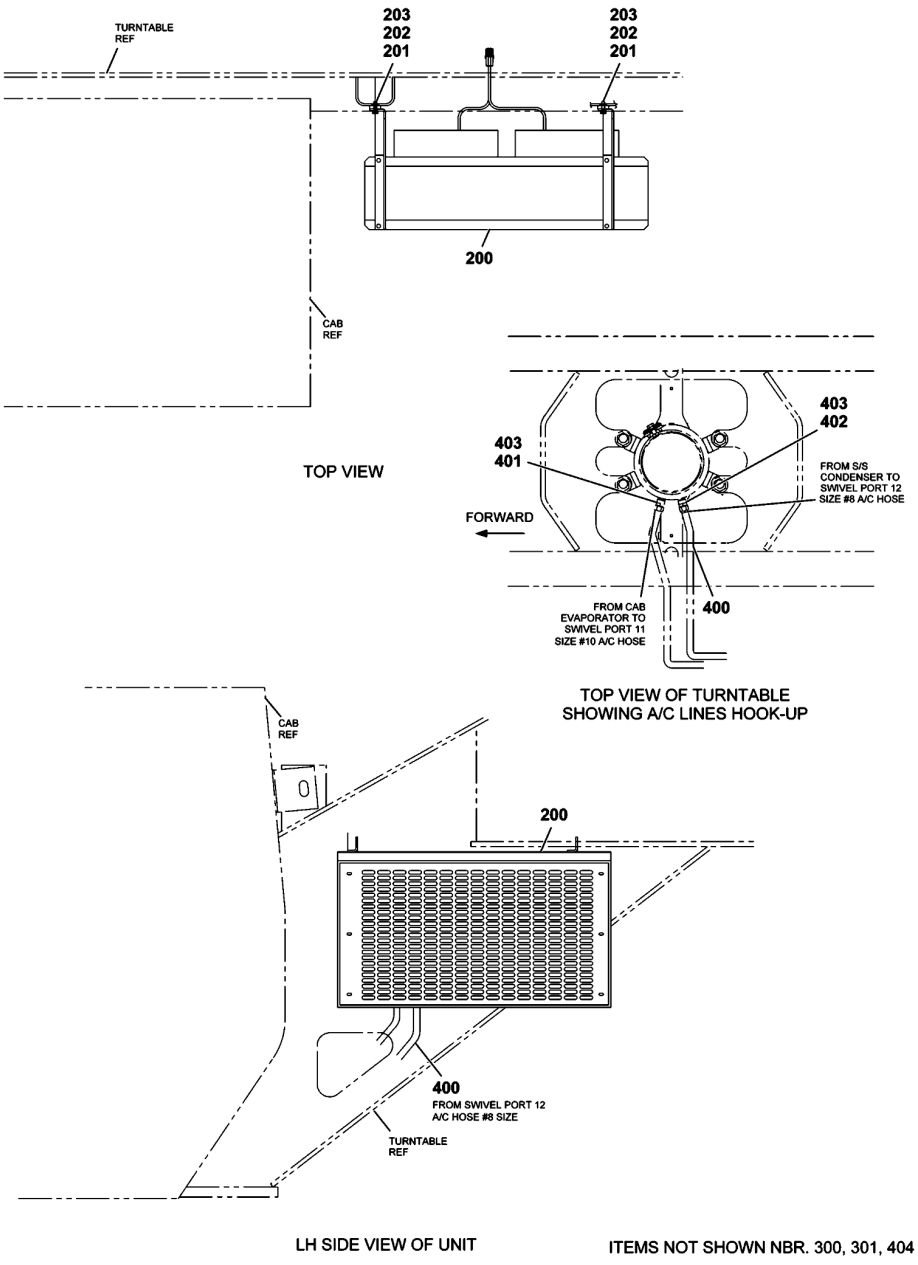


2159310042

(SHEET 1 OF 1)

Description
**AIR CONDITIONING INSTALLATION - SUPERSTRUCTURE**

Assembly No.
**2159310042**
Revision: #

| Item | FN | Part | Qty | Description |
|---|---|---|---|---|
| 200 | + | **7576134531** | 1 | KIT - AIR CONDITIONER CONDENSER (COMPLETE ASSEMBLY) |
| 201 | | **7126171350** | 4 | CAP SCREW, M8 X 30MM HEX HEAD |
| 202 | | **7950150161** | 4 | WASHER, 5/16" FLAT PLAIN WIDE |
| 203 | | **7951170210** | 4 | WASHER, LOCK 8MM |
| 300 | | **8898920005** | 2 | R134A REFRIGERANT (NOT SHOWN) |
| 301 | | **8898920006** | 0 | REFRIGERANT OIL (NOT SHOWN) |
| 400 | | **7576134447** | 1 | KIT - AIR CONDITIONER CONDENSER HOSE INCLUDES THE FOLLOWING PARTS |
| | | **9515102844** | 2 | O-RING #8 |
| 401 | | **7013100030** | 2 | ADAPTER, 08 ORB TO 10 BEADLOCK |
| 402 | | **7013100029** | 2 | ADAPTER, 08 ORB TO 08 BEADLOCK |
| 403 | | **7754100010** | 4 | O-RING |
| 404 | | **7850000208** | 6 | CABLE TIE, BLACK |

**+ SEE FURTHER BREAKDOWN THIS GROUP**

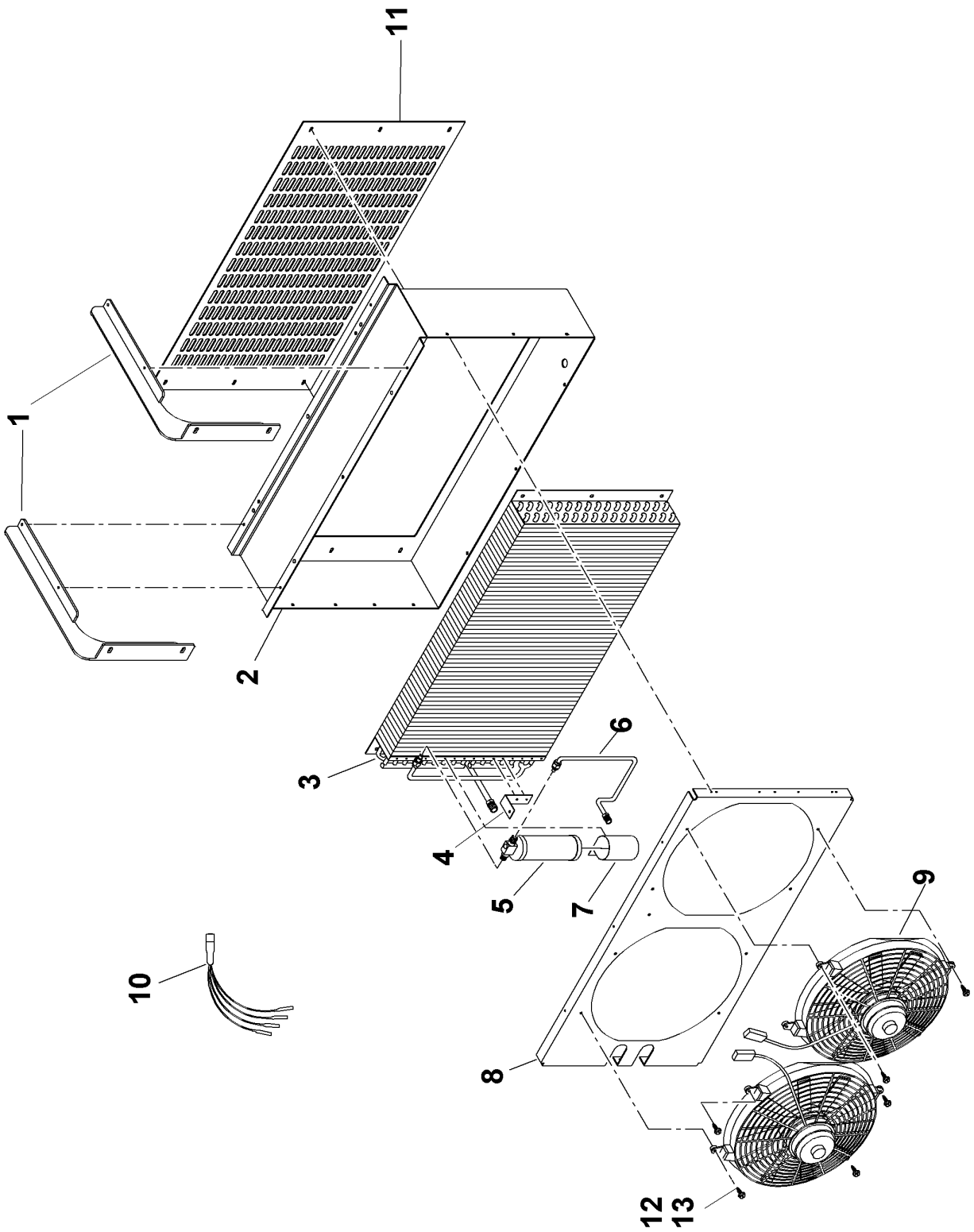


7576134531

(SHEET 1 OF 1)

Description
**KIT - AIR CONDITIONER CONDENSER (COMPLETE ASSEMBLY)**

Assembly No.
**7576134531**
Revision:

| Item | FN | Part | Qty | Description |
|---|---|---|---|---|
| 1 | | **NSS** | 1 | BRACKET, MOUNT |
| 2 | | **NSS** | 1 | HOUSING |
| 3 | | **9576101396** | 1 | COIL ASSY. CONDENSER |
| 4 | | **9576101397** | 1 | BRACKET |
| 5 | | **9576101398** | 1 | DRIER ASSY. |
| 6 | | **9576101399** | 1 | TUBE ASSY. |
| 7 | | **NSS** | 1 | BRACKET |
| 8 | | **NSS** | 1 | PLATE, MOUNTING |
| 9 | | **9576101400** | 2 | FAN ASSY. 12V. |
| 10 | | **9576101401** | 1 | HARNESS ASSY. |
| 11 | | **9576101441** | 1 | GRILL |
| 12 | | **7115140650** | 8 | CAP SCREW, 1/4" - 20 N.C. X 3/4" GRADE 5 |
| 13 | | **9515102872** | 8 | TABS,MOUNTING |

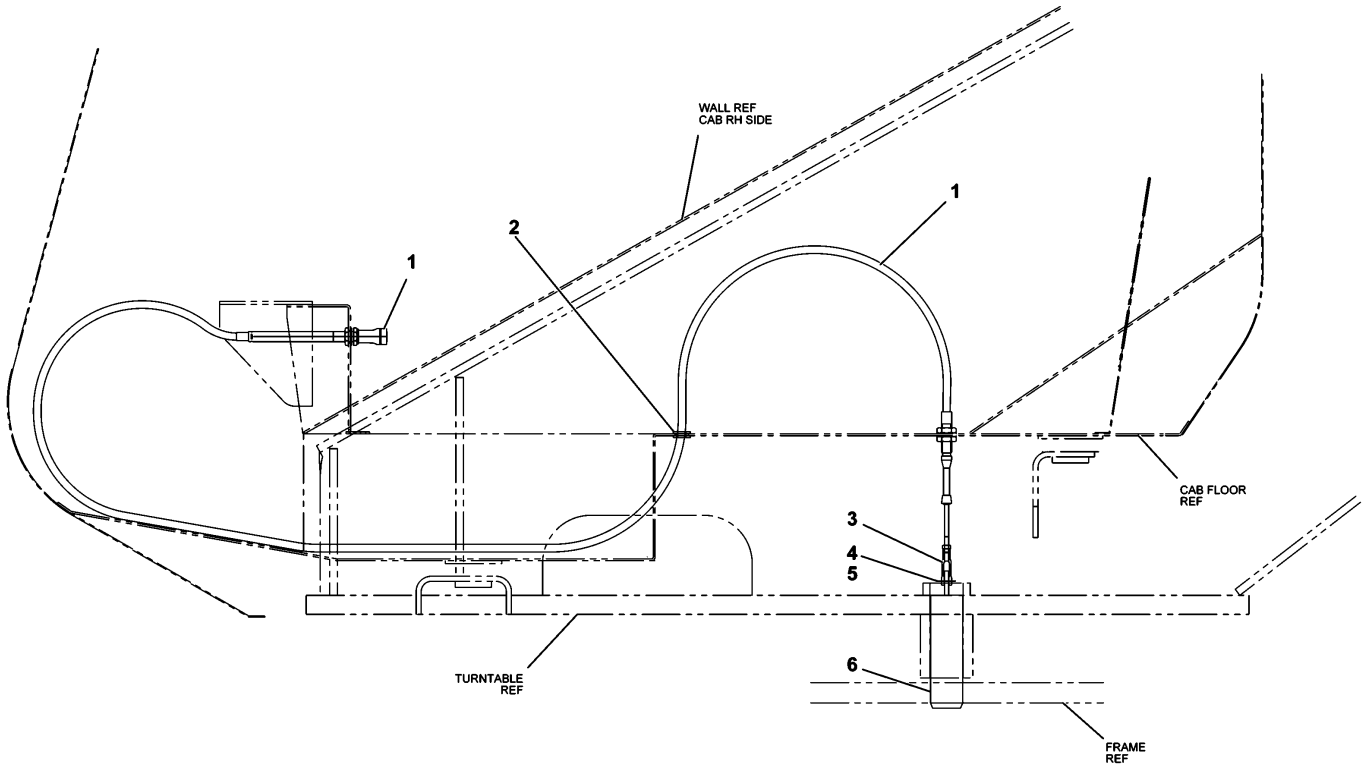


6245101343

(SHEET 1 OF 1)

Description
**PIN INSTALLATION - TURNTABLE LOCK**

Assembly No.
**6245101343**
Revision: #

| Item | FN | Part | Qty | Description |
|---|---|---|---|---|
| 1 | | **7246100476** | 1 | CONTROL CABLE W/LOCK HANDLE<br>INCLUDES THE FOLLOWING PARTS |
| | | **90011630** | 1 | KIT, HANDLE |
| 2 | | **7506000021** | 1 | GROMMET<br>1/2" I.D. |
| 3 | | **7308000042** | 1 | YOKE |
| 4 | | **7690141600** | 1 | PIN, CLEVIS<br>1/4" X 1" |
| 5 | | **7690001210** | 1 | PIN, COTTER<br>1/16" X 3/4" |
| 6 | | **2159210126** | 1 | PIN, SWING LOCK |

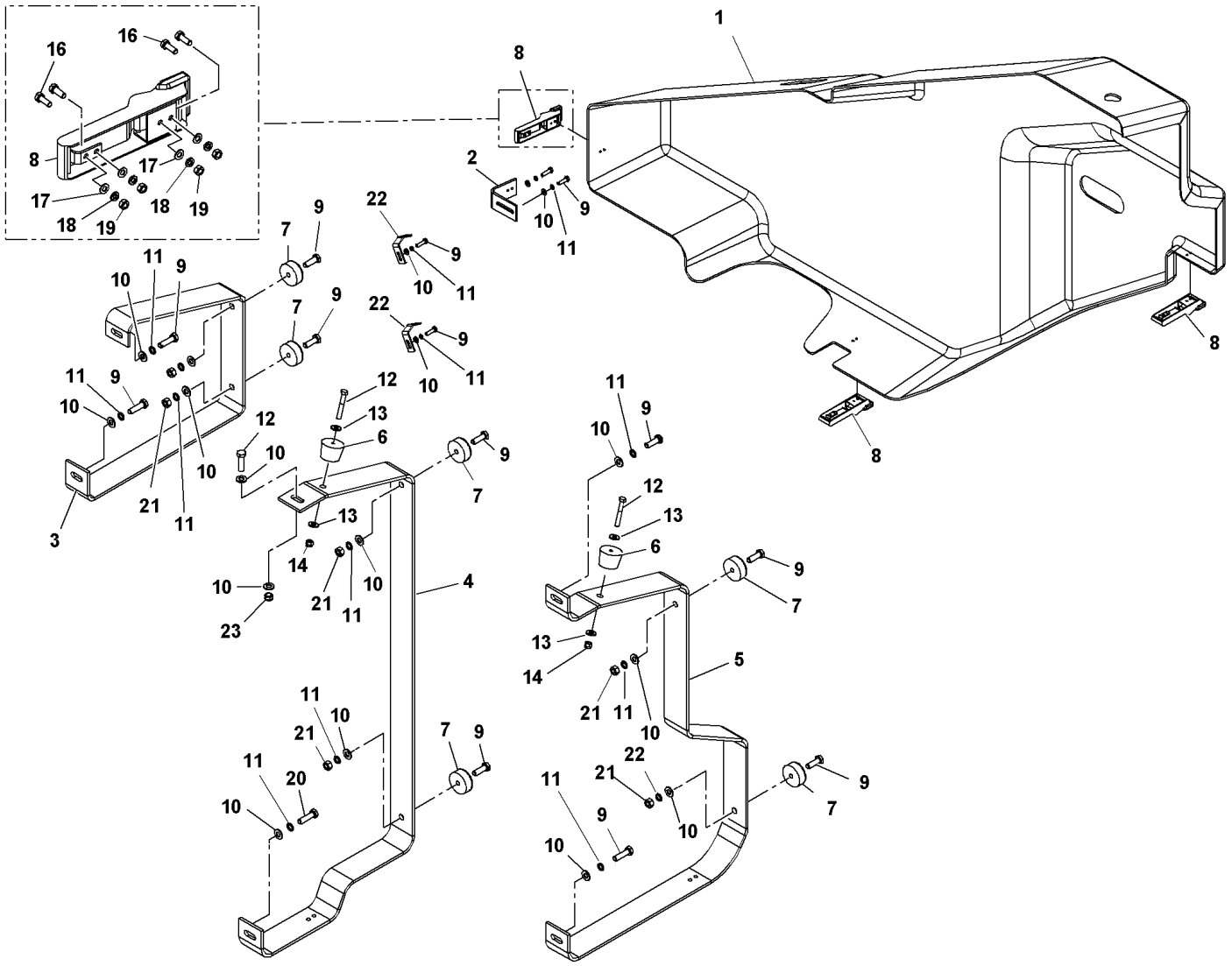


6258100041

(SHEET 1 OF 1)

Description
**COVER INSTALLATION - VALVE**

Assembly No.
**6258100041**
Revision: **D**

| Item | FN | Part | Qty | Description |
|---|---|---|---|---|
| 1 | | **7258100188** | 1 | COVER, VALVE |
| 2 | | **4159210122** | 1 | BRACKET, ANGLE |
| 3 | | **4159210164** | 1 | BRACKET, FRONT |
| 4 | | **4159210165** | 1 | BRACKET, MID |
| 5 | | **4159210166** | 1 | BRACKET, REAR |
| 6 | | **7195100001** | 2 | STOPPER, RUBBER |
| 7 | | **7195000010** | 6 | BUMPER, MOLDED |
| 8 | | **7585000812** | 3 | DRAW LATCH<br>INCLUDES THE FOLLOWING PARTS |
| | | **9585100055** | 1 | KEEPER |
| 9 | | **7126171353** | 9 | CAP SCREW, HEX HEAD M8X30MM |
| 10 | | **7951170014** | 17 | FLAT WASHER |
| 11 | | **7951170210** | 15 | WASHER, LOCK 8MM |
| 12 | | **7126151650** | 2 | CAP SCREW, M6 X 45MM HEX HEAD |
| 13 | | **7950140141** | 4 | WASHER, FLAT 1/4" PLAIN NARROW |
| 14 | | **00437742** | 2 | HEX L NUT M6 8-A2C ISO 7040 |
| 16 | | **7126130953** | 12 | CAP SCREW, M5 X 14MM HEX HEAD |
| 17 | | **7951130014** | 12 | WASHER, 5MM I.D. |
| 18 | | **7951130210** | 12 | LOCKWASHER, 5MM I.D. |
| 19 | | **7661130003** | 12 | NUT, HEX<br>5MM |
| 20 | | **7126171253** | 1 | CAP SCREW, M8X25 HEX HEAD |
| 21 | | **7661170003** | 6 | NUT - 8MM X 1.25 |
| 22 | | **4159210167** | 1 | BRACKET, COVER |
| 23 | | **7661171103** | 1 | NUT, HEX<br>8MM N.C. |

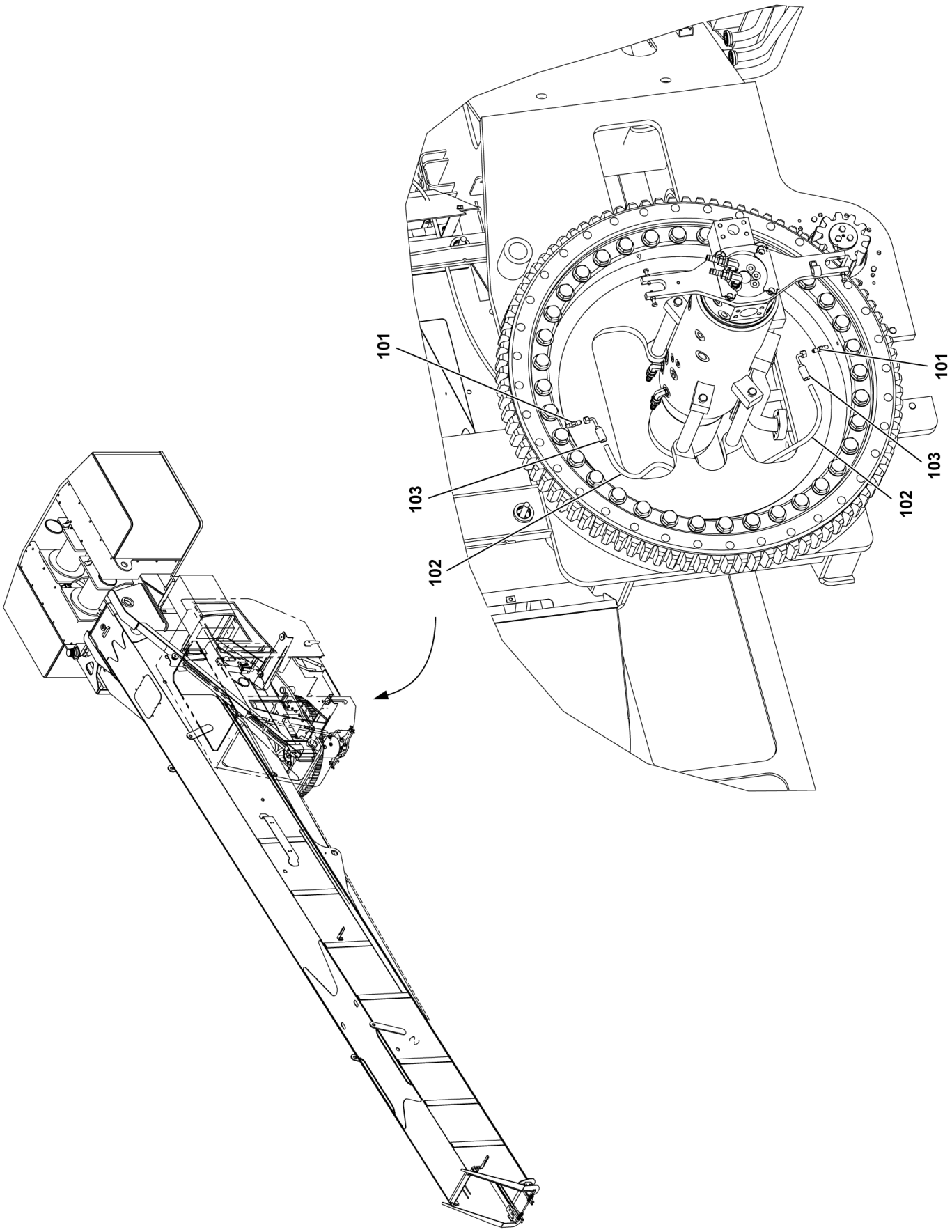


**2159210124**

**(SHEET 1 OF 1)**

Description
**LUBE INSTALLATION - TURNTABLE BEARING MANUAL**

Assembly No.
**2159210124**
Revision: #

| Item | FN | Part | Qty | Description |
|---|---|---|---|---|
| 101 | | **7445040219** | 2 | ADAPTER, STRAIGHT |
| 102 | | **7550103631** | 2 | HOSE ASSY, 3/8 X 26"<br>1/4" X 36" |
| 103 | | **7445040220** | 2 | ELBOW, 90 DEGREE |

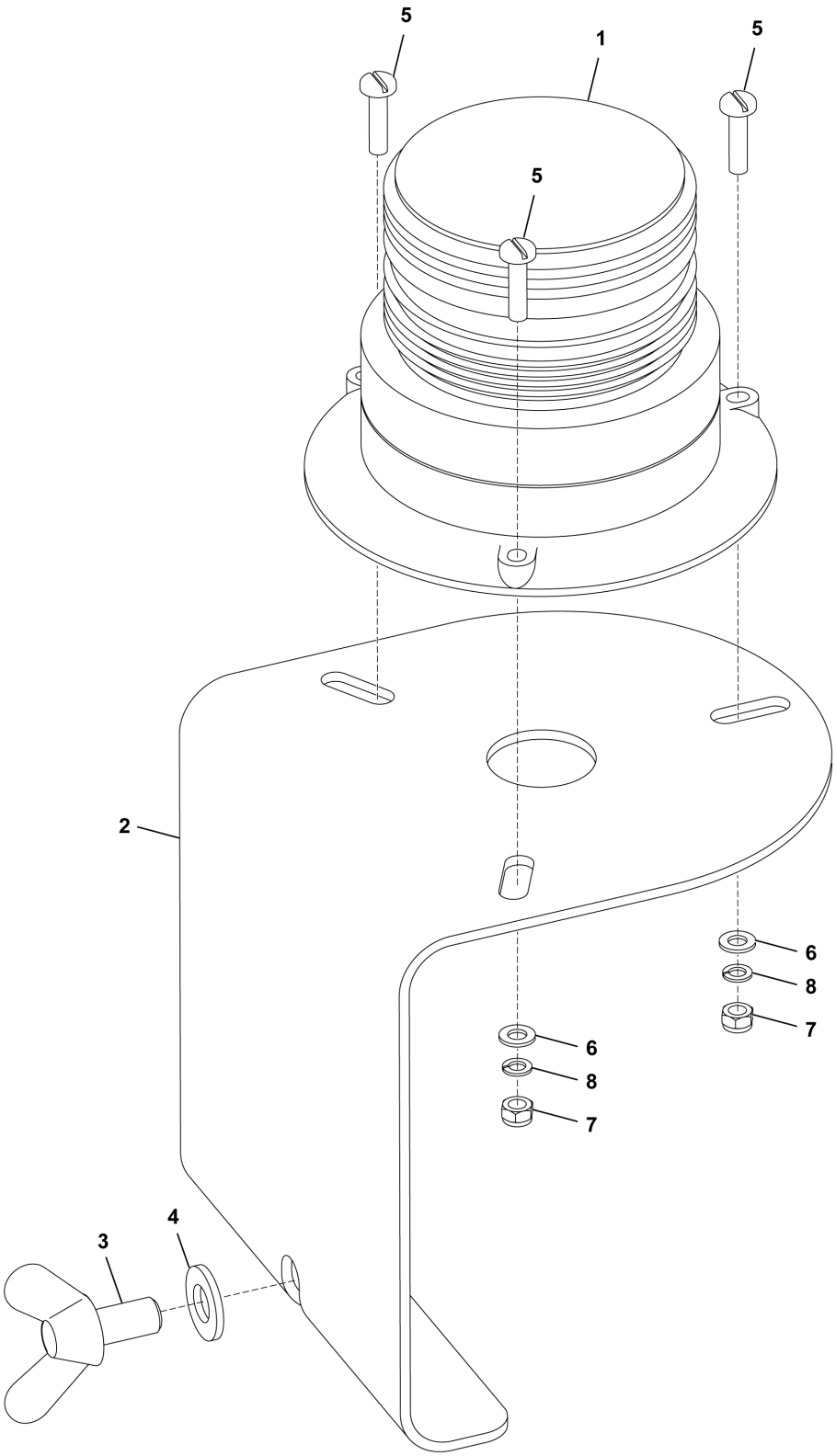


**2159210134**

**(SHEET 1 OF 1)**

Description
**LIGHT INSTALLATION - STROBE**

Assembly No.
**2159210134**
Revision: **B**

| Item | FN | Part | Qty | Description |
|---|---|---|---|---|
| 1 | + | **6581100074** | 1 | LIGHT ASSEMBLY - MODIFIED STROBE (COMPLETE ASSEMBLY) |
| 2 | | **4159210126** | 1 | BRACKET, STROBE LIGHT |
| 3 | | **7099100054** | 1 | SCREW, M10X20 DIN 316 WING |
| 4 | | **7951190014** | 1 | FLAT WASHER, 10MM I.D. |
| 5 | | **7126131250** | 3 | CAP SCREW, M5 X 25MM HEX HEAD |
| 6 | | **7950100141** | 3 | WASHER, FLAT, #10 |
| 7 | | **7661130003** | 3 | NUT, HEX 5MM |
| 8 | | **7951130210** | 3 | LOCKWASHER, 5MM I.D. |

**+ SEE FURTHER BREAKDOWN THIS GROUP**

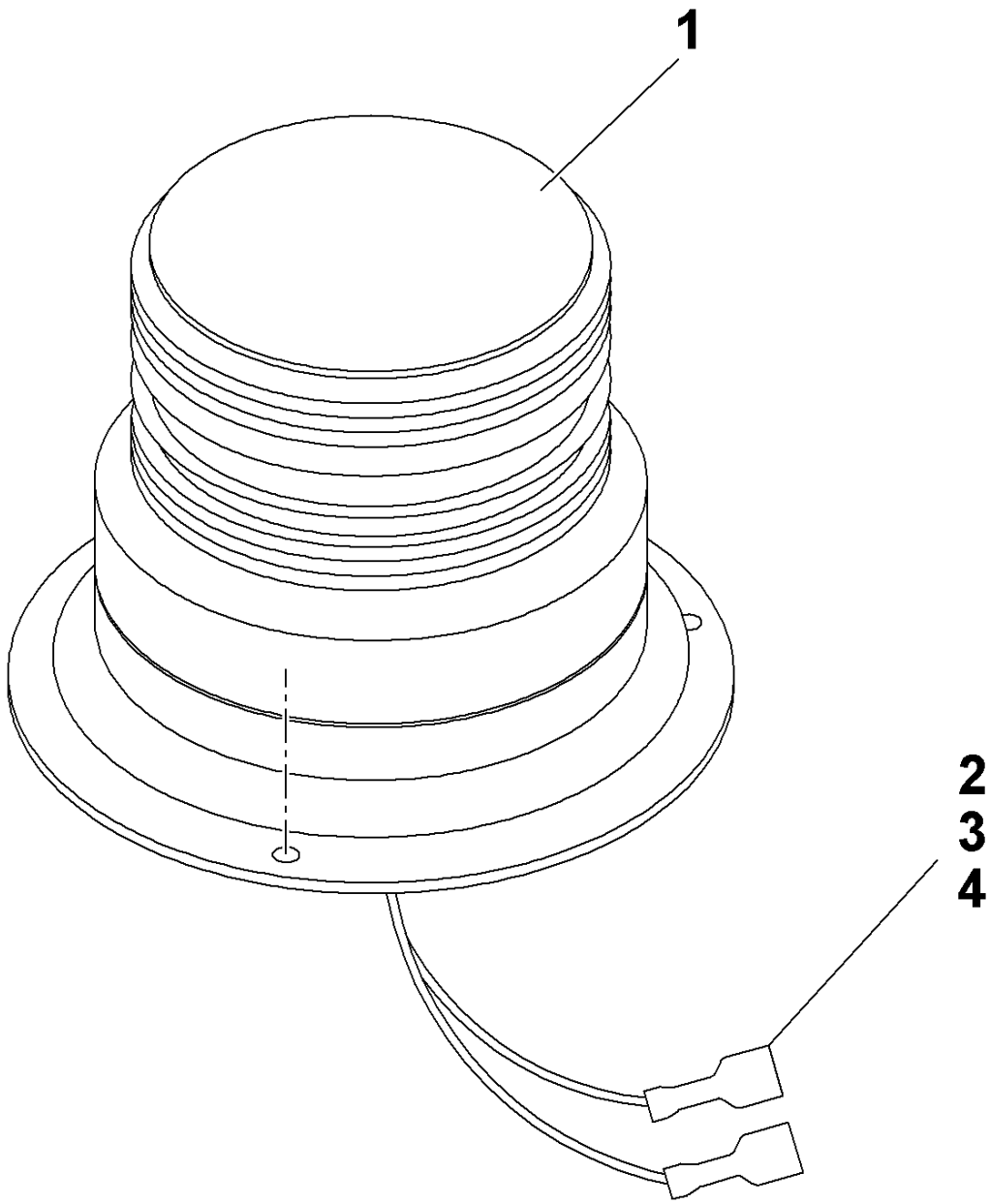


**6581100074**

**(SHEET 1 OF 1)**

Description
**LIGHT ASSEMBLY - MODIFIED STROBE (COMPLETE ASSEMBLY)**

Assembly No.
**6581100074**
Revision: **A**

| Item | FN | Part | Qty | Description |
|---|---|---|---|---|
| 1 | | **7581100000** | 1 | LIGHT, STROBE<br>INCLUDES THE FOLLOWING PARTS |
| | | **9581100389** | 1 | TUBE,STROBE |
| | | **9581100390** | 1 | LENS, AMBER |
| 2 | | **7892000836** | 1 | RECEPTACLE, 2 PIN |
| 3 | | **7172000546** | 1 | BOOT |
| 4 | | **7689000704** | 2 | PIN, 16 - 14 GA |
| 5 | | **8594000019** | 1 | FLEXGUARD, 1/4" I.D.<br>(QUANTITY IN FEET) |

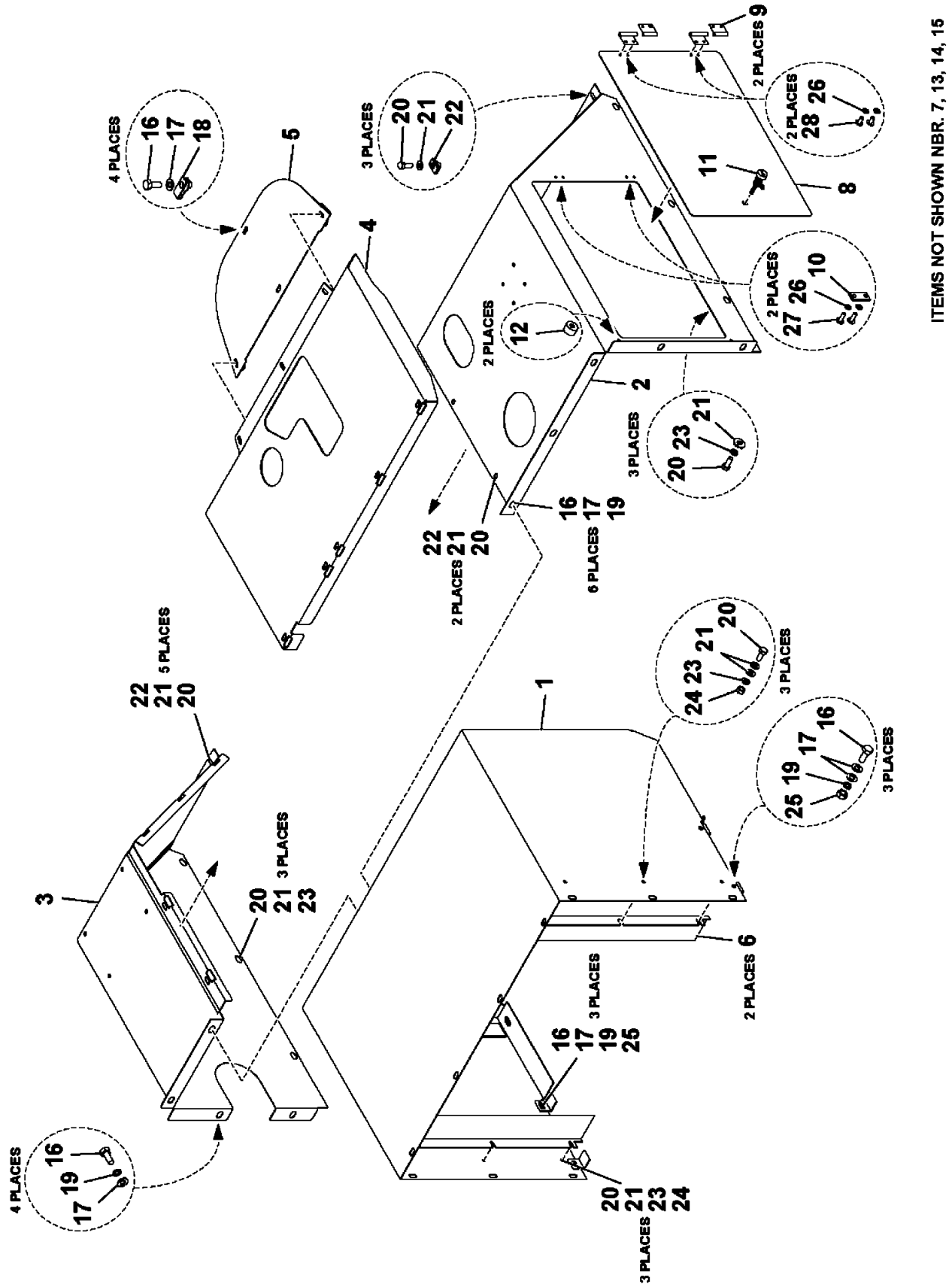


2159810166

(SHEET 1 OF 1)

Description
**HOOD INSTALLATION - ENGINE**

Assembly No.
**2159810166**
Revision: **A**

| Item | FN | Part | Qty | Description |
|---|---|---|---|---|
| 1 | | **2159810140** | 1 | HOOD SECTION, REAR<br>INCLUDES THE FOLLOWING PARTS |
| | | **7662190100** | 13 | WELD NUT, M10X1.5 |
| 2 | | **4159110294** | 1 | COVER, RIGHT SIDE HOOD |
| 3 | | **4159110295** | 1 | COVER, LEFT SIDE HOOD |
| 4 | | **4159110292** | 1 | COVER, TRANSMISSION ACCESS |
| 5 | | **4159110282** | 1 | COVER, TRANSMISSION ACCESS FRONT |
| 6 | | **4159810070** | 2 | BAFFLE |
| 7 | | **8637054001** | 1 | MOULDING<br>(QUANTITY IN FEET) |
| 8 | | **4159110291** | 1 | PANEL, DOOR |
| 9 | | **7519000198** | 2 | NYLON LIFT OFF HINGE - LH |
| 10 | | **7671100005** | 2 | PAD |
| 11 | | **7585000184** | 1 | LATCH, ARROWHEAD |
| 12 | | **7195000032** | 2 | BUMPER, RUBBER |
| 13 | | **8246964300** | 5 | MOULDING<br>(QUANTITY IN FEET) |
| 14 | | **8496900046** | 5 | MOULDING |
| 15 | | **8496980002** | 4 | MOULDING<br>(QUANTITY IN FEET) |
| 16 | | **7126191250** | 19 | CAP SCREW, M10 X 25MM HEX HEAD |
| 17 | | **7950160161** | 23 | WASHER, FLAT WIDE 3/8 I.D. |
| 18 | | **7659190024** | 4 | M10 X 1.50 RETAINING NUT |
| 19 | | **7951190210** | 15 | LOCK WASHER, 10MM |
| 20 | | **7126171150** | 16 | CAP SCREW, M8 X 20MM HEX HEAD |
| 21 | | **7951170014** | 16 | FLAT WASHER |
| 22 | | **7659190020** | 10 | NUT, RETAINING 8 X 1.25 |
| 23 | | **7950150161** | 6 | WASHER, 5/16" FLAT PLAIN WIDE |
| 24 | | **7661170003** | 6 | NUT - 8MM X 1.25 |
| 25 | | **7661190003** | 6 | HEX NUT 10MM I.D. X 1.5 |
| 26 | | **7950140050** | 8 | WASHER, LOCK 1/4" I.D. |
| 27 | | **7111140410** | 4 | SCREW, MACHINE<br>1/4" - 20 N.C. X 1/2"<br>GRADE 1 |
| 28 | | **7111140610** | 4 | SCREW, MACHINE<br>1/4" - 20 N.C. X 3/4"<br>GRADE 1 |

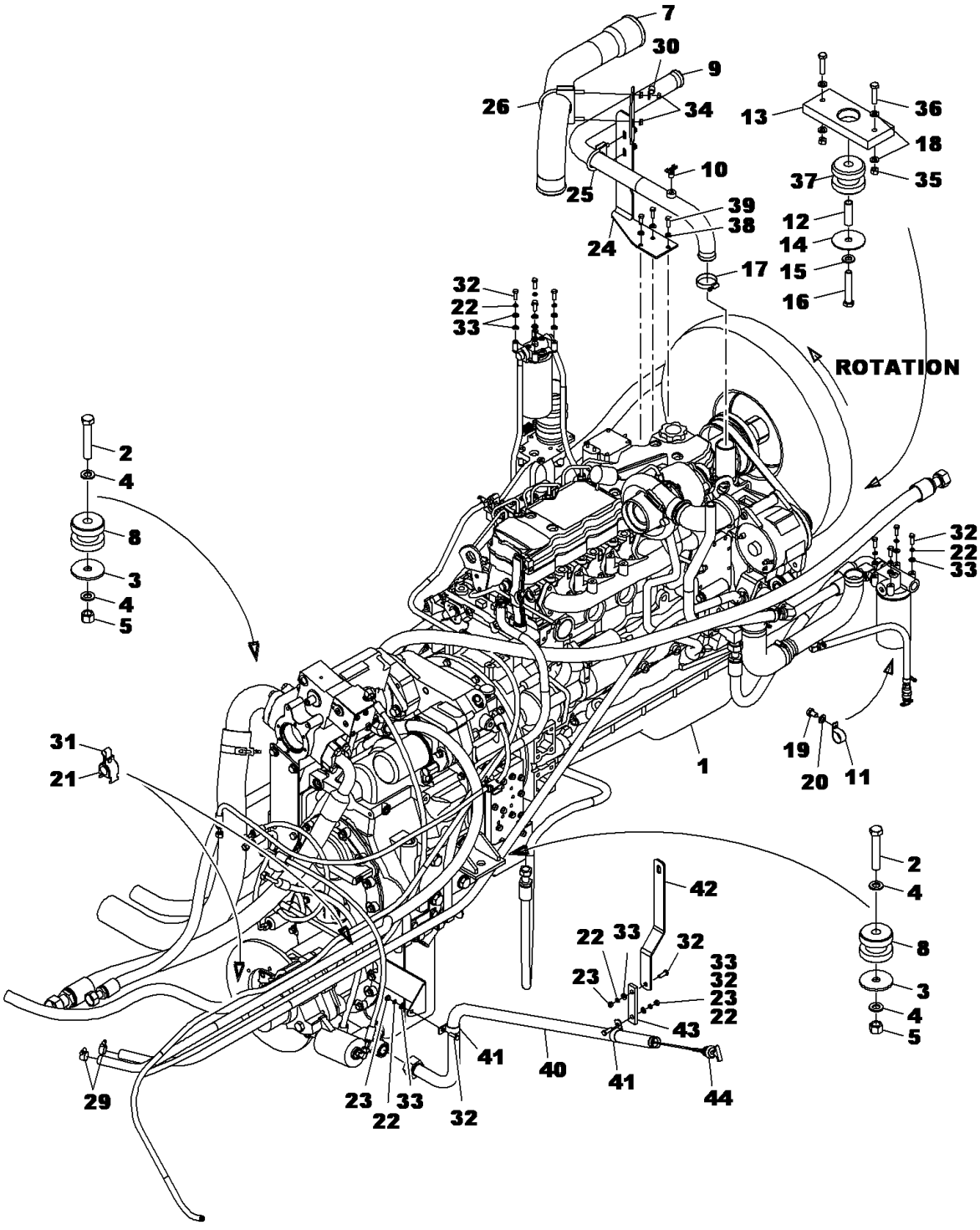


ITEMS NOT SHOWN
NBR. 6, 27, 28

2159810224

(SHEET 1 OF 1)

Description
**ENGINE INSTALLATION**

Assembly No.
**2159810224**
Revision: **A**

| Item | FN | Part | Qty | Description |
|---|---|---|---|---|
| 1 | + | **2159810225** | 1 | ENGINE ASSEMBLY - CUMMINS QSB6.7 (NOT AVAILABLE AS ASSEMBLY) |
| 2 | | **7127272850** | 2 | CAP SCREW, M20X120 HEX HEAD |
| 3 | | **7949180046** | 3 | WASHER, DOCK |
| 4 | | **7949000236** | 4 | FLAT WASHER, 3/4" |
| 5 | | **7661271104** | 2 | NUT, M20-10 HEX LOCK |
| 6 | | **7126191750** | 2 | CAP SCREW, M10 X 50MM HEX HEAD |
| 7 | | **7910101859** | 1 | CAC TUBE |
| 8 | # | **7638100033** | 2 | MOUNT, 2-PC ISOLATOR |
| 9 | | **7910101601** | 1 | TUBE, RADIATOR |
| 10 | | **7926000014** | 1 | VALVE-DRAIN COCK |
| 11 | | **7300000243** | 1 | CLAMP, TUBING 3/4" I.D. |
| 12 | | **6199100104** | 1 | BUSHING |
| 13 | | **6705171095** | 1 | PLATE, MOUNT |
| 14 | | **6949100020** | 1 | WASHER, DOCK |
| 15 | | **7949000259** | 1 | WASHER, 5/8" I.D. |
| 16 | | **7127242653** | 1 | CAP SCREW, M16X100 HEX HEAD |
| 17 | | **7300000006** | 1 | CLAMP, HOSE |
| 18 | | **7949000235** | 4 | WASHER, 1/2" I.D. FLAT |
| 19 | | **7126211150** | 1 | CAP SCREW, M12 X 20MM HEX HEAD |
| 20 | | **7951210014** | 1 | WASHER, FLAT #12 |
| 21 | | **7300000404** | 4 | CLAMP, 1" TUBING |
| 22 | | **7951170210** | 11 | WASHER, LOCK 8MM |
| 23 | | **7661170003** | 3 | NUT - 8MM X 1.25 |
| 24 | | **4159810076** | 1 | BRACKET, CLAMP |
| 25 | | **7300001083** | 1 | CLAMP, MUFFLER |
| 26 | | **7300001018** | 1 | ZINC MUFFLER CLAMP |
| 27 | | **7300000461** | 2 | CLAMP, T-BOLT |
| 28 | | **7406000537** | 1 | BELLOWS |
| 29 | | **7300000040** | 2 | CLAMP, HOSE 29/32" I.D. |
| 30 | | **7300000101** | 1 | CLAMP, TUBING 1/2" I.D. |
| 31 | | **7300100014** | 2 | CLAMP, 5/8" TUBING |

**+ SEE FURTHER BREAKDOWN THIS GROUP** **# SERVICED AS AN ASSEMBLY ONLY**

Description
**ENGINE INSTALLATION**

Assembly No.
**2159810224**
Revision: **A**

| Item | FN | Part | Qty | Description |
|---|---|---|---|---|
| 32 | | **7126171253** | 11 | CAP SCREW, M8X25 HEX HEAD |
| 33 | | **7951170014** | 15 | FLAT WASHER |
| 34 | | **7660152701** | 2 | LOCKNUT<br>5/16" - 18 N.C. |
| 35 | | **7661210003** | 2 | NUT, HEX 12MM N.C. |
| 36 | | **7126211853** | 2 | CAP SCREW, M12X55 HEX HEAD |
| 37 | # | **7638100029** | 1 | MOUNT, 2 PIECE ISOLATOR |
| 38 | | **7949000263** | 3 | WASHER, HARDENED |
| 39 | | **7126191253** | 3 | CAP SCREW |
| 40 | | **7910101627** | 1 | TUBE, DIPSTICK |
| 41 | | **7300000246** | 2 | CLAMP, TUBING 1-1/4" I.D. |
| 42 | | **4159810079** | 1 | BRACKET |
| 43 | | **7418100004** | 1 | STRAP, RUBBER |
| 44 | | **7486100132** | 1 | DIPSTICK |

**# SERVICED AS AN ASSEMBLY ONLY**

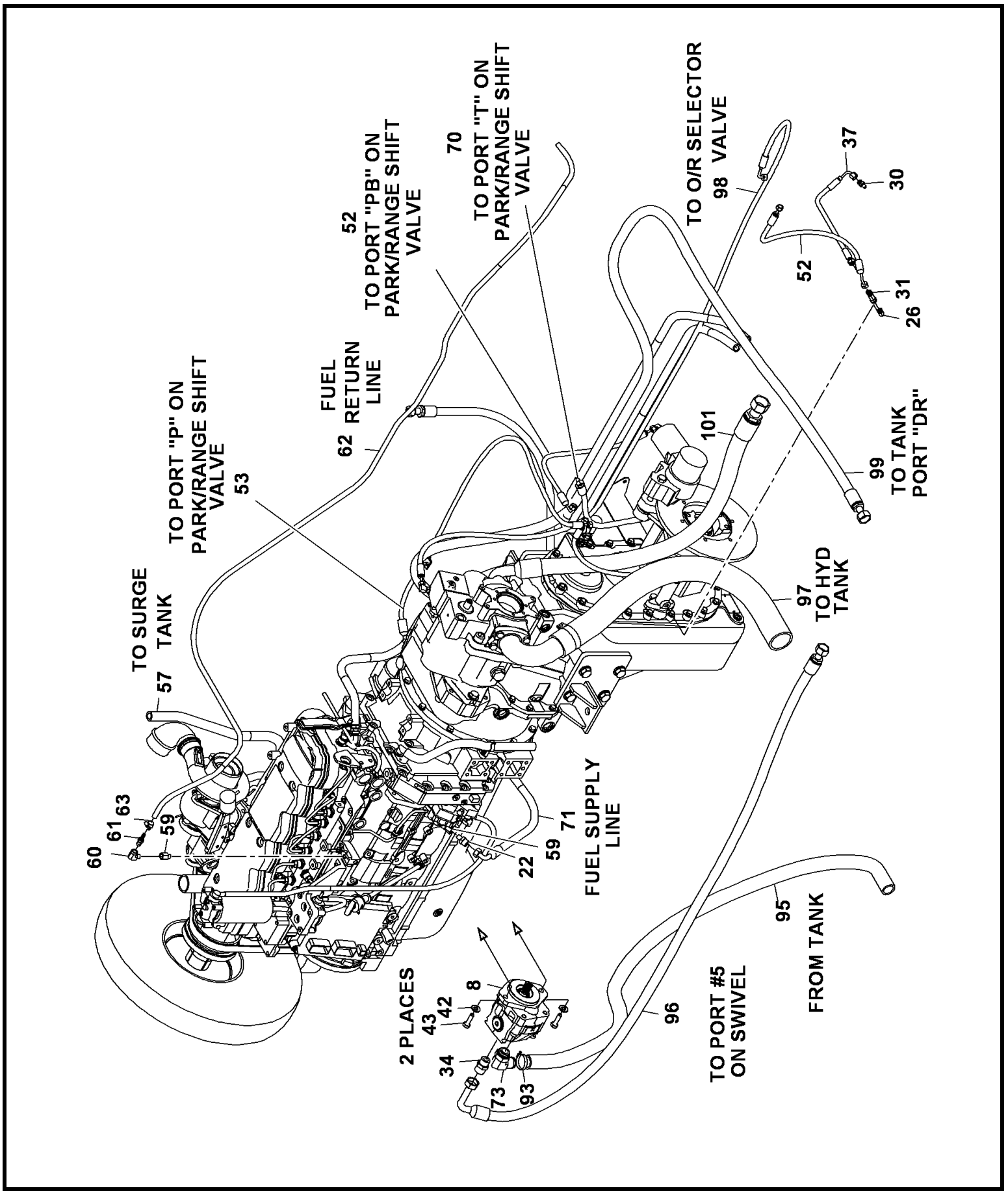


2159810225

(SHEET 2 OF 2)

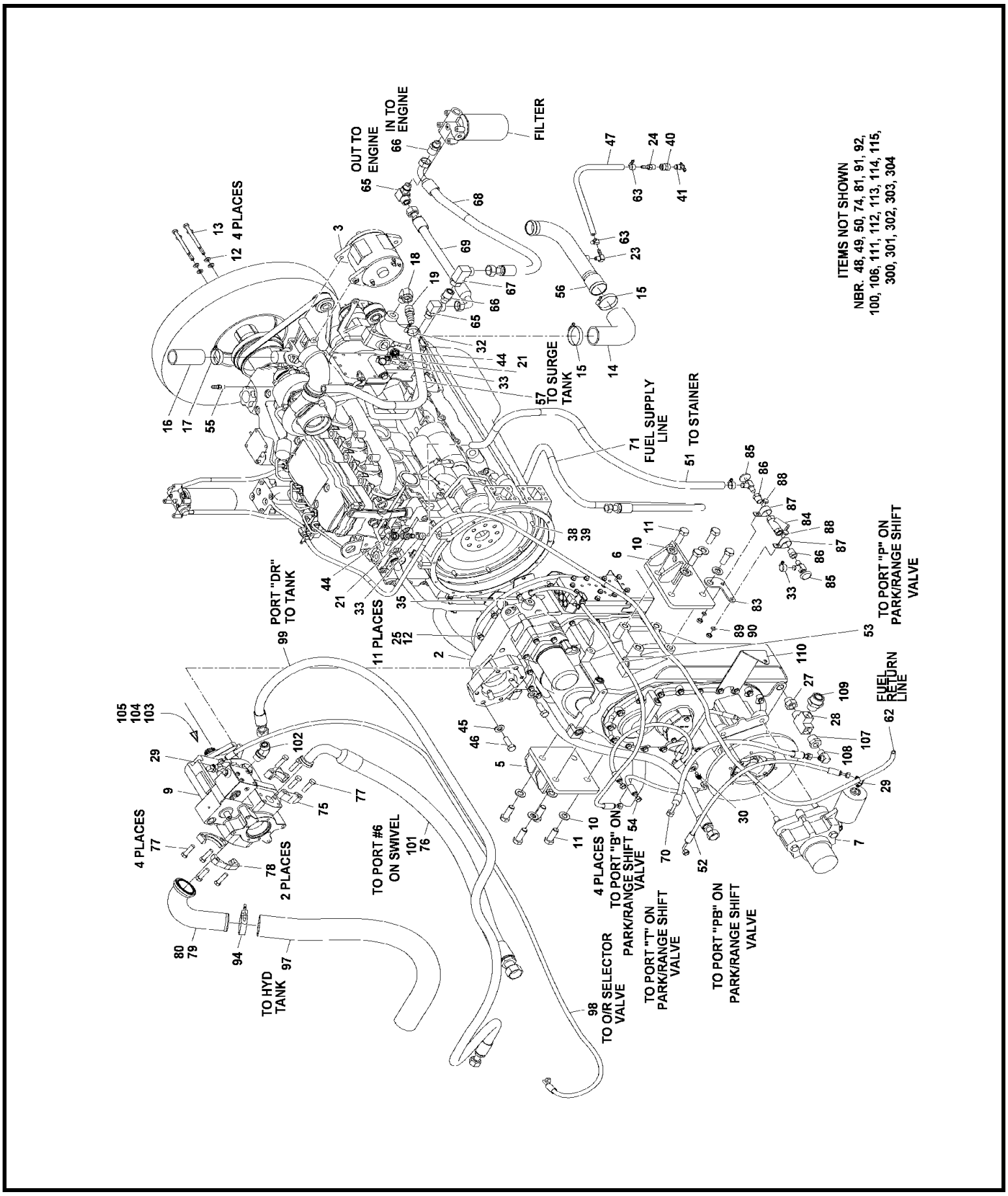


2159810225

(SHEET 1 OF 2)

Description
**ENGINE ASSEMBLY - CUMMINS QSB6.7 (NOT AVAILABLE AS ASSEMBLY)**

Assembly No.
**2159810225**
Revision: **D**

| Item | FN | Part | Qty | Description |
|---|---|---|---|---|
| 2 | + | **80011908** | 1 | TRANSMISSION ASSEMBLY - 6 SPEED<br>12 VOLT<br>(COMPLETE ASSEMBLY) |
| 3 | | **7029100003** | 1 | ALTERNATOR |
| 5 | | **2159810022** | 1 | MOUNT, TRANSMISSION |
| 6 | | **2159810023** | 1 | MOUNT, TRANSMISSION |
| 7 | + | **80006812** | 1 | BRAKE ASSEMBLY - PARKING<br>(COMPLETE ASSEMBLY) |
| 8 | + | **7722100101** | 1 | PUMP ASSEMBLY - GEAR<br>(COMPLETE ASSEMBLY) |
| 9 | + | **7722100100** | 1 | PUMP ASSEMBLY - PISTON<br>(COMPLETE ASSEMBLY) |
| 10 | | **7949000236** | 8 | FLAT WASHER, 3/4" |
| 11 | | **7115221650** | 8 | CAP SCREW,<br>3/4" - 10 N.C. X 2"<br>GRADE 5 |
| 12 | | **7949000263** | 15 | WASHER, HARDENED |
| 13 | | **7126192650** | 4 | CAP SCREW, M10 X 100MM HEX HEAD |
| 14 | | **8596910250** | 1 | HOSE, HEATER 5/8" I.D. - 60.00"<br>(QUANTITY IN FEET) |
| 15 | | **7300000035** | 2 | CLAMP, HOSE<br>1 13/16" TO 2 3/4" |
| 16 | | **8596902521** | 1 | 1.75"ID X 2.13"OD WRAPPED HOSE |
| 17 | | **7300000006** | 1 | CLAMP, HOSE |
| 18 | | **7445121253** | 1 | ELBOW, 90 DEGREE |
| 19 | | **7649000005** | 1 | NIPPLE |
| 21 | | **7649000059** | 2 | NIPPLE, HOSE 5/8 ID TO 1/2 NPT |
| 22 | | **7447080428** | 1 | ADAPTER, STRAIGHT MALE |
| 23 | | **7649000092** | 1 | NIPPLE, HOSE |
| 24 | | **7649000062** | 1 | NIPPLE |
| 25 | | **7126191550** | 11 | CAP SCREW, M10 X 40MM HEX HEAD |
| 26 | | **7447040430** | 1 | ELBOW, 90 DEGREE<br>INCLUDES THE FOLLOWING PARTS |
| | | **7755011002** | 1 | O-RING |
| 27 | | **7445161217** | 1 | REDUCING CONNECTOR |
| 28 | | **7888000045** | 1 | TEE |
| 29 | | **7447040403** | 2 | ELBOW, 90 DEGREE |

**+ SEE FURTHER BREAKDOWN THIS GROUP**

Description
**ENGINE ASSEMBLY - CUMMINS QSB6.7 (NOT AVAILABLE AS ASSEMBLY)**

Assembly No.
**2159810225**
Revision: **D**

| Item | FN | Part | Qty | Description |
|---|---|---|---|---|
| | | | | INCLUDES THE FOLLOWING PARTS |
| | | **7755011002** | 1 | O-RING |
| | | **7755904002** | 1 | O-RING |
| 30 | | **7447040428** | 2 | ADAPTER, STRAIGHT |
| | | | | INCLUDES THE FOLLOWING PARTS |
| | | **7755011002** | 1 | O-RING |
| | | **7755904002** | 1 | O-RING |
| 31 | | **7447040434** | 1 | TEE, MALE RUN |
| | | | | INCLUDES THE FOLLOWING PARTS |
| | | **7755011002** | 1 | O-RING |
| | | **7755904002** | 1 | O-RING |
| 32 | | **7300000167** | 1 | CLAMP, HOSE |
| 33 | | **7300000013** | 5 | CLAMP, HOSE |
| 34 | | **7447121201** | 1 | ADAPTER, STRAIGHT MALE |
| | | | | INCLUDES THE FOLLOWING PARTS |
| | | **7755018002** | 1 | O-RING |
| | | **7755912002** | 1 | O-RING |
| 35 | | **7447040601** | 1 | ADAPTER, STRAIGHT |
| | | | | INCLUDES THE FOLLOWING PARTS |
| | | **7755011002** | 1 | O-RING |
| | | **7755906002** | 1 | O-RING |
| 37 | | **7561101503** | 1 | HOSE ASSY, 1/4"I.D. X 15" LONG |
| 38 | | **7950160050** | 8 | WASHER, LOCK 3/8" I.D. |
| 39 | | **7108161450** | 8 | CAP SCREW,<br>3/8" - 24 N.F. X 1 3/4"<br>GRADE 8 |
| 40 | | **7445060651** | 1 | UNION, STRAIGHT |
| 41 | | **7926000557** | 1 | VALVE, DRAIN |
| 42 | | **7949000235** | 4 | WASHER, 1/2" I.D. FLAT |
| 43 | | **7126211454** | 2 | CAP SCREW, M12X35 SOCKET HEAD |
| 44 | | **7445120809** | 2 | ADAPTER, 45 DEGREE SWIVEL |
| 45 | | **7949000259** | 2 | WASHER, 5/8" I.D. |
| 46 | | **7118201450** | 2 | CAP SCREW,<br>5/8" - 11 N.C. X 1 3/4"<br>GRADE 8 |
| 47 | | **8596902527** | 2 | HOSE, HEATER 3/8 ID X 11/16 OD |
| 48 | | **7542506663** | 1 | HOSE ASSY, 3/8 X 26"<br>7/8" I.D. X 66" |
| 49 | | **7126211253** | 2 | CAP SCREW, M12 X 25MM HEX HEAD |

Description
**ENGINE ASSEMBLY - CUMMINS QSB6.7 (NOT AVAILABLE AS ASSEMBLY)**

Assembly No.
**2159810225**
Revision: **D**

| Item | FN | Part | Qty | Description |
|---|---|---|---|---|
| 50 | | **8596902528** | 17 | HOSE, 5/8" I.D.<br>(QUANTITY IN FEET) |
| 51 | | **8596902528** | 4 | HOSE, 5/8" I.D.<br>(QUANTITY IN FEET) |
| 52 | | **7561103003** | 2 | HOSE ASSY, 1/4"I.D. X 30" LONG |
| 53 | | **7561106003** | 1 | 1/4" I.D. X 60" |
| 54 | | **7561102003** | 1 | 1/4" I.D. X 20" |
| 55 | | **7649000061** | 1 | NIPPLE, HOSE |
| 56 | | **7910101584** | 1 | TUBE, LOWER RADIATOR |
| 57 | | **8596902529** | 4 | .75"ID X 1.12"OD HEATER HOSE ( |
| 59 | | **7013000405** | 2 | ADAPTER |
| 60 | | **7445040453** | 1 | ELBOW, 90 DEGREE |
| 61 | | **7649000042** | 1 | NIPPLE, HOSE |
| 62 | | **8596931250** | 10 | 5/16"WEATHERHEAD HOSE-650'REEL |
| 63 | | **7300000121** | 3 | HOSE CLAMP -0.69"MAX |
| 65 | | **7447121003** | 2 | ELBOW, 90 DEGREE<br>INCLUDES THE FOLLOWING PARTS |
| | | **7755018002** | 1 | O-RING |
| | | **7755910002** | 1 | O-RING |
| 66 | | **7447121001** | 2 | ADAPTER, STRAIGHT<br>INCLUDES THE FOLLOWING PARTS |
| | | **7755018002** | 1 | O-RING |
| | | **7755910002** | 1 | O-RING |
| 67 | | **7447121233** | 1 | ELBOW, 90 DEGREE<br>INCLUDES THE FOLLOWING PARTS |
| | | **7755018002** | 1 | O-RING |
| 68 | | **7561503852** | 1 | HOSE ASSY, 3/4"I.D.X 38" LONG |
| 69 | | **7561502452** | 1 | HOSE ASSY, 3/4"I.D. X 24" LONG |
| 70 | | **7561203017** | 1 | 3/8" I.D. X 30" |
| 71 | | **7561308432** | 1 | HOSE ASSY, 1/2"I.D. X 84" LONG |
| 73 | | **7013100047** | 1 | ADAPTER,ORB TO HOSE BARB 20-16 |
| 74 | | **4159810082** | 1 | SUPPORT, PUMP |
| 75 | # | **7450000254** | 2 | FLANGE, SPLIT |
| 76 | | **7755222002** | 1 | O-RING |
| 77 | | **7115181450** | 8 | CAP SCREW,<br>1/2" - 13 N.C. X 1 3/4" |
| 78 | # | **7450000375** | 2 | FLANGE, SPLIT |

**# SERVICED AS AN ASSEMBLY ONLY**

Description
**ENGINE ASSEMBLY - CUMMINS QSB6.7 (NOT AVAILABLE AS ASSEMBLY)**

Assembly No.
**2159810225**
Revision: **D**

| Item | FN | Part | Qty | Description |
|---|---|---|---|---|
| 79 | | **7755232002** | 1 | O-RING |
| 80 | | **7910101464** | 1 | TUBE ASSY, PUMP INLET |
| 81 | | **6794001567** | 1 | GASKET |
| 83 | | **4159810060** | 1 | PLATE, MOUNTING |
| 84 | | **7437100220** | 1 | STRAINER, MESH |
| 85 | # | **7926002329** | 2 | VALVE, SHUT-OFF |
| 86 | | **7445080650** | 2 | BUSHING, REDUCER |
| 87 | | **7300000246** | 2 | CLAMP, TUBING 1-1/4" I.D. |
| 88 | | **7126191250** | 2 | CAP SCREW, M10 X 25MM HEX HEAD |
| 89 | | **7951190210** | 5 | LOCK WASHER, 10MM |
| 90 | | **7661190003** | 5 | HEX NUT 10MM I.D. X 1.5 |
| 91 | | **8596902528** | 4 | HOSE, 5/8" I.D.<br>(QUANTITY IN FEET) |
| 92 | | **7850000237** | 3 | TIE, CABLE (BLACK)<br>7 5/16" LONG |
| 93 | | **7300100024** | 1 | CLAMP, T-BOLT 1.75" NOM |
| 94 | | **7300100022** | 1 | CLAMP, T-BOLT 3" |
| 95 | | **7566208000** | 1 | HOSE ASSY, 1 1/4" ID |
| 96 | | **7555508503** | 1 | HOSE ASSY, 3/4" ID X 85" |
| 97 | | **7566503700** | 1 | HOSE ASSY |
| 98 | | **7555111021** | 1 | HOSE ASSY, 1/4" ID |
| 99 | | **7555514390** | 1 | HOSE ASSY, 3/4" ID |
| 100 | + | **6978100956** | 1 | ELECTRICAL SYSTEM INSTALLATION<br>- ENGINE<br>(NOT AVAILABLE AS ASSEMBLY) |
| 101 | | **7543109361** | 1 | HOSE ASSY, 1 1/4" HYDRAULIC |
| 102 | | **7447121208** | 1 | ELBOW, 45 DEGREE MALE<br>INCLUDES THE FOLLOWING PARTS |
| | | **7755018002** | 1 | O-RING |
| | | **7755912002** | 1 | O-RING |
| 103 | | **6794100011** | 1 | GASKET, 2 BOLT HOLE |
| 104 | | **6794100012** | 1 | GASKET, 2 BOLT HOLE |
| 105 | | **6794000650** | 1 | GASKET |
| 106 | | **7872100179** | 1 | SWITCH, TEMPERATURE 250 (N.C.) |
| 107 | | **7445160850** | 1 | BUSHING, REDUCER |
| 108 | | **7447060830** | 1 | ELBOW, 90 DEGREE MALE |

**# SERVICED AS AN ASSEMBLY ONLY**

**+ SEE FURTHER BREAKDOWN THIS GROUP**

Description
**ENGINE ASSEMBLY - CUMMINS QSB6.7 (NOT AVAILABLE AS ASSEMBLY)**

Assembly No.
**2159810225**
Revision: **D**

| Item | FN | Part | Qty | Description |
|---|---|---|---|---|
| | | | | INCLUDES THE FOLLOWING PARTS |
| | | **7755014002** | 1 | O-RING |
| | | **7755906002** | 1 | O-RING |
| 109 | | **7447201628** | 1 | ADAPTER, STRAIGHT |
| | | | | INCLUDES THE FOLLOWING PARTS |
| | | **7755025002** | 1 | O-RING |
| | | **7755916002** | 1 | O-RING |
| 110 | | **4159810078** | 1 | BRACKET |
| 111 | | **7542508463** | 1 | HOSE ASSY, 7/8" ID HOT ENG OIL |
| 112 | | **7447161201** | 2 | ADAPTER, STRAIGHT |
| | | | | INCLUDES THE FOLLOWING PARTS |
| | | **7755021002** | 1 | O-RING |
| | | **7755912002** | 1 | O-RING |
| 113 | | **7447161203** | 2 | ELBOW, 90 DEGREE |
| | | | | INCLUDES THE FOLLOWING PARTS |
| | | **7755021002** | 1 | O-RING |
| | | **7755912002** | 1 | O-RING |
| 114 | | **4159810083** | 1 | SUPPORT, PUMP |
| 115 | | **7126191253** | 3 | CAP SCREW |
| 300 | | **9414101679** | 1 | FILTER,OIL |
| 301 | | **9414101755** | 1 | FILTER, PRIMARY FUEL |
| 302 | | **9414101756** | 1 | FILTER, FUEL |
| 303 | | **9414101764** | 1 | BELT, DRIVE |
| 304 | | **9414101731** | 1 | STARTER, 12 VOLT |

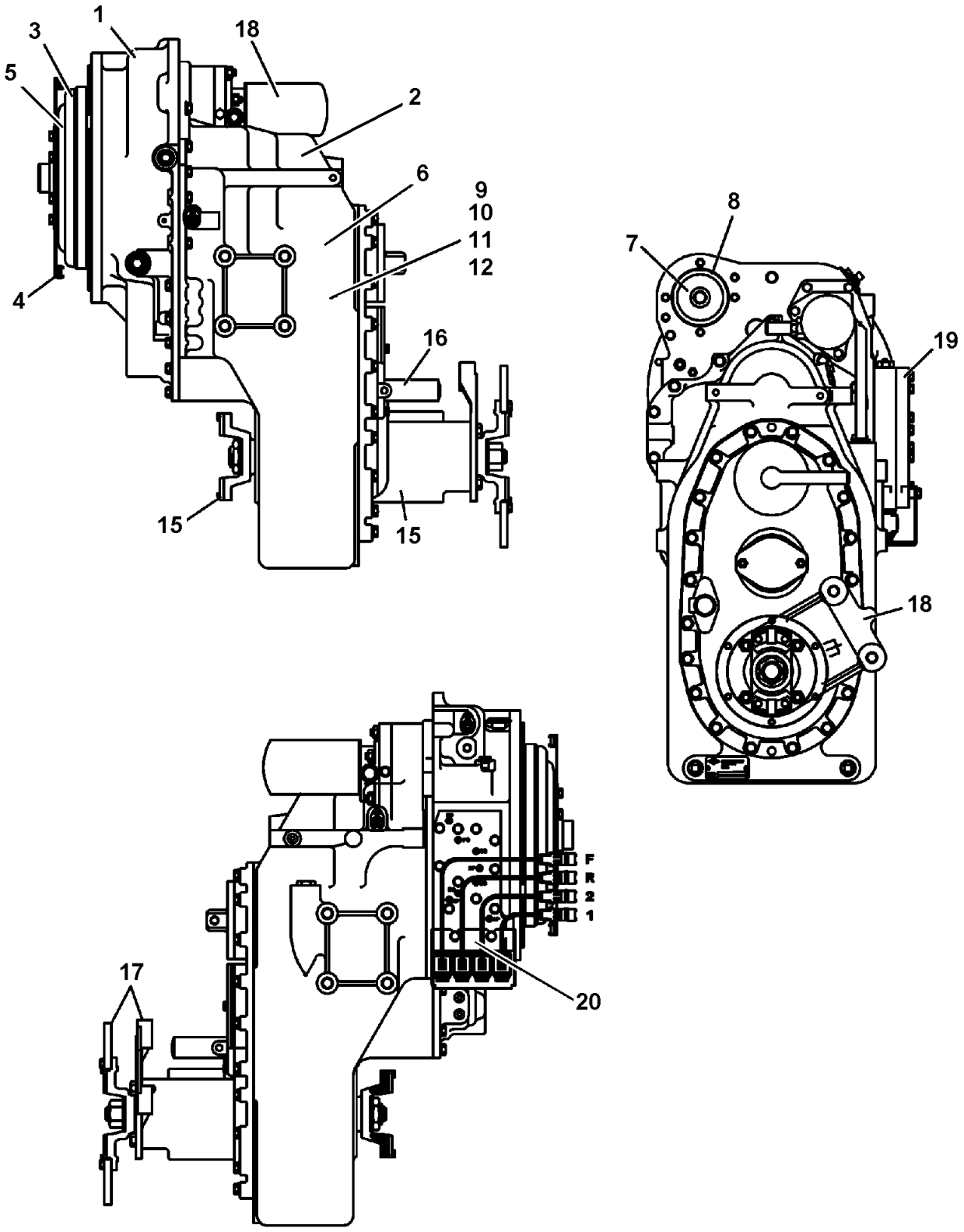


**80011908**

**(SHEET 1 OF 1)**

Description
**TRANSMISSION ASSEMBLY - 6 SPEED 12 VOLT**
**(COMPLETE ASSEMBLY)**

Assembly No.
**80011908**
Revision:

| Item | FN | Part | Qty | Description |
|---|---|---|---|---|
| 1 | + | **9904110609** | 1 | CONVERTER HOUSING GROUP |
| 2 | + | **9904109807** | 1 | CASE & REAR COVER GROUP |
| 3 | + | **9904110611** | 1 | TURBINE SHAFT GROUP |
| 4 | + | **9904110612** | 1 | DRIVE PLATE GROUP |
| 5 | + | **9904110613** | 1 | TORQUE CONVERTER GROUP |
| 6 | + | **9904110614** | 1 | GEAR GROUP |
| 7 | + | **9904110615** | 1 | AUXILIARY PUMP DRIVE GROUP |
| 8 | + | **9904110616** | 1 | PUMP DRIVE GROUP |
| 9 | + | **9904110617** | 1 | FORWARD SHAFT GROUP |
| 10 | + | **9904110618** | 1 | REVERSE & 2ND. SHAFT GROUP |
| 11 | + | **9904110619** | 1 | REVERSE IDLER GROUP |
| 12 | + | **9904110620** | 1 | LOW SPEED SHAFT GROUP |
| 13 | + | **9904110621** | 1 | 3RD. SHAFT GROUP |
| 14 | + | **9904110622** | 1 | IDLER SHAFT GROUP |
| 15 | + | **90015440** | 1 | OUTPUT SHAFT GROUP |
| 16 | + | **9904110624** | 1 | HI/LOW RANGE SHIFT CONT. GROUP |
| 17 | + | **9904110625** | 1 | DISC BRAKE GROUP |
| 18 | + | **9904110626** | 1 | CHARGE PUMP & FILTER GROUP |
| 19 | + | **9904110627** | 1 | CONTROL VALVE MOUNTING GROUP |
| 20 | + | **9904110628** | 1 | CONTROL VALVE ASSY. GROUP |
| 30 | | **9904109671** | 1 | KIT, SEAL<br>SEAL KIT FOR COMPLETE ASSY.<br>NOT SHOWN |

**+ SEE FURTHER BREAKDOWN THIS GROUP**

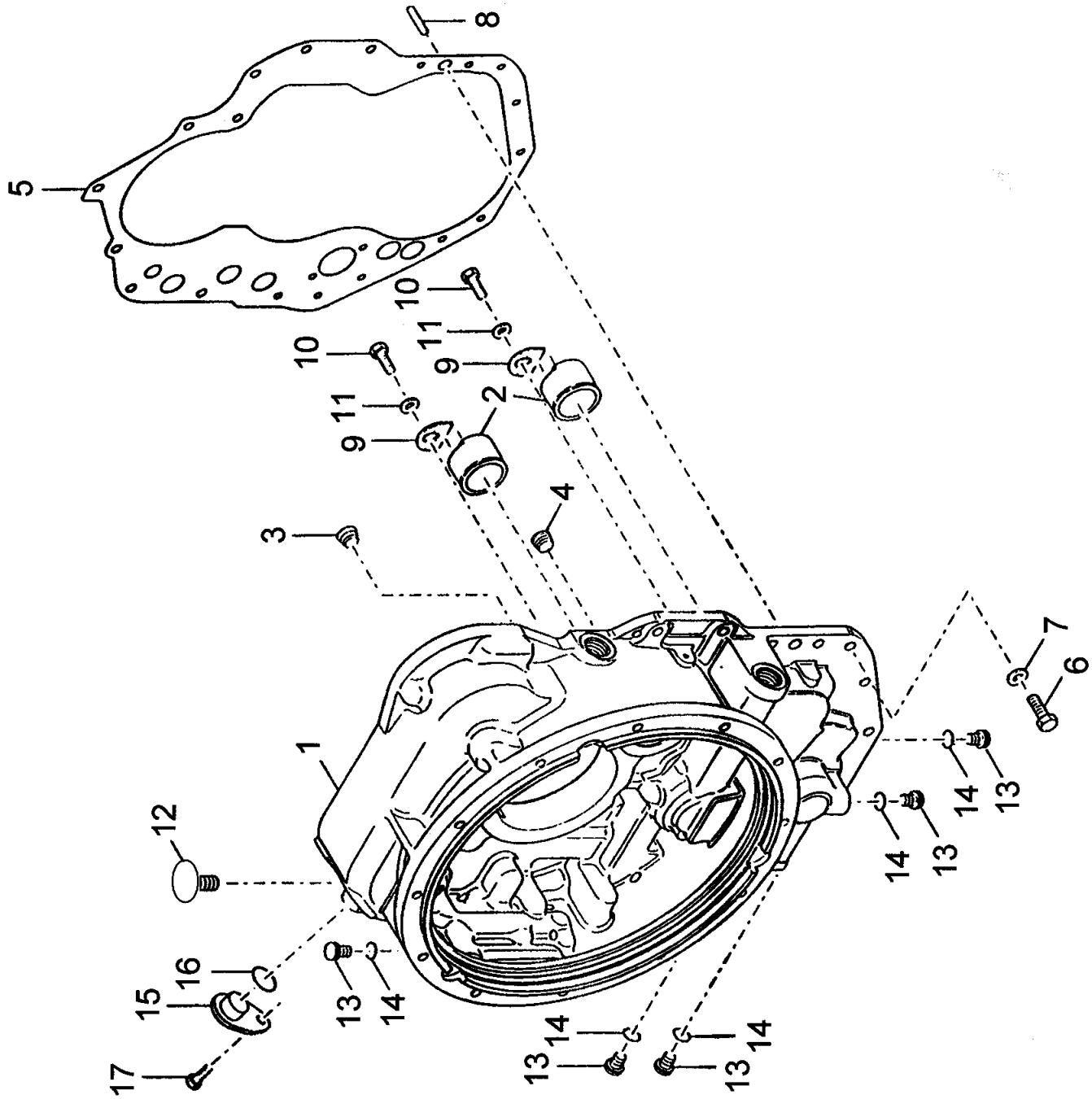


9904110609

(SHEET 1 OF 1)

Description
**CONVERTER HOUSING GROUP**

Assembly No.
**9904110609**
Revision:

| Item | FN | Part | Qty | Description |
|---|---|---|---|---|
| 1 | | **9904109562** | 1 | HOUSING, CONVERTER |
| 2 | | **9904105940** | 2 | SLEEVE |
| 3 | | **9904103913** | 1 | PLUG |
| 4 | | **9904104055** | 1 | PLUG |
| 5 | | **9904109563** | 1 | CASE, GASKET |
| 6 | | **7118171050** | 18 | CAP SCREW, |
| 7 | | **7950170050** | 18 | WASHER, LOCK 7/16" I.D. |
| 8 | | **9904109564** | 1 | PIN, DOWEL |
| 9 | | **9904101298** | 2 | LOCK, PLATE |
| 10 | | **9049101125** | 2 | BOLT, CAP SCREW |
| 11 | | **7950150050** | 2 | WASHER, LOCK 5/16" I.D. |
| 12 | | **9904104050** | 1 | BREATHER |
| 13 | | **9904108396** | 5 | PLUG |
| 14 | | **9904106445** | 5 | O-RING |
| 15 | | **9904109356** | 1 | PLUG |
| 16 | | **9904109357** | 1 | O-RING |
| 17 | | **9904109358** | 1 | CAP SCREW |

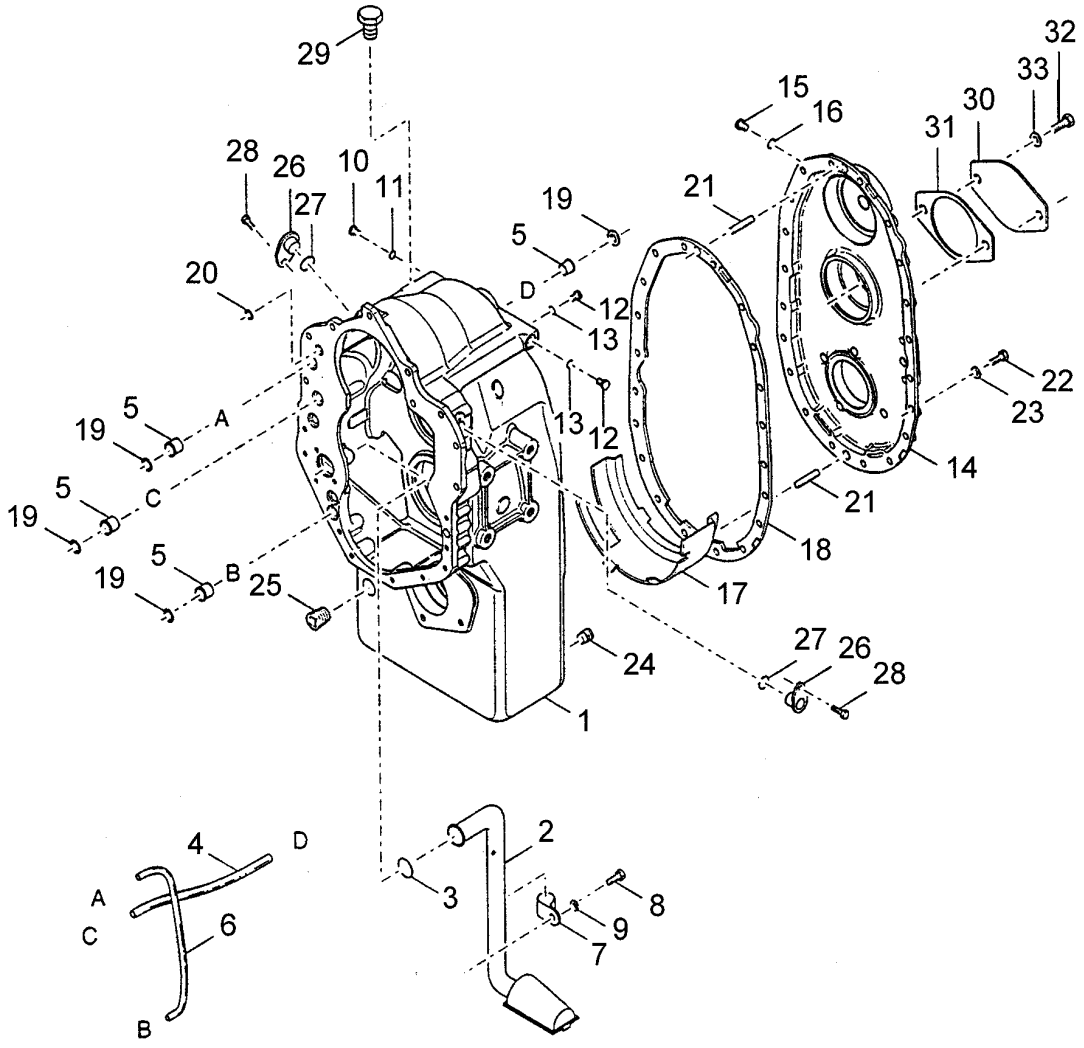


9904109807

(SHEET 1 OF 1)

Description
**CASE & REAR COVER GROUP**

Assembly No.
**9904109807**
Revision:

| Item | FN | Part | Qty | Description |
|---|---|---|---|---|
| 1 | | **9904109567** | 1 | CASE ASSEMBLY<br>INCLUDES NBRS 2 - 9 |
| 2 | | **9904109569** | 1 | TUBE ASSEMBLY, SUCTION |
| 3 | | **9904109570** | 1 | O-RING |
| 4 | | **9904103551** | 1 | TUBE |
| 5 | | **9904100993** | 4 | SLEEVE, TUBE |
| 6 | | **9904109568** | 1 | TUBE, THIRD SPEED |
| 7 | | **9904109571** | 1 | CLIP, TUBE |
| 8 | | **9904103916** | 1 | SCREW |
| 9 | | **7950170050** | 1 | WASHER, LOCK 7/16" I.D. |
| 10 | | **9904108396** | 1 | PLUG |
| 11 | | **9904106445** | 1 | O-RING |
| 12 | | **9904106063** | 2 | PLUG WITH O-RING<br>INCLUDES THE FOLLOWING PARTS |
| | | **9904105336** | 1 | O-RING |
| 13 | | **9904105336** | 2 | O-RING |
| 14 | | **9904109565** | 1 | COVER, REAR AND PLUG ASSEMBLY<br>INCLUDES NBR 15 |
| 15 | | **9904108396** | 1 | PLUG<br>INCLUDES NBR 16 |
| 16 | | **9904106445** | 1 | O-RING |
| 17 | | **9904109572** | 1 | BAFFLE, OIL |
| 18 | | **9904109566** | 1 | CASE, GASKET |
| 19 | | **9904103779** | 4 | O-RING |
| 20 | | **9904103500** | 1 | O-RING |
| 21 | | **9904109564** | 2 | PIN, DOWEL |
| 22 | | **9049101150** | 20 | CAP SCREW, |
| 23 | | **7950170050** | 20 | WASHER, LOCK 7/16" I.D. |
| 24 | | **9904101317** | 2 | PLUG, MAGNETIC |
| 25 | | **9904108964** | 1 | PLUG, DRAIN |
| 26 | | **9904109356** | 2 | PLUG |
| 27 | | **9904109357** | 2 | O-RING |
| 28 | | **9904109358** | 2 | CAP SCREW |
| 29 | | **9049100054** | 1 | PLUG, FILLER |
| 30 | | **9904105442** | 1 | COVER |
| 31 | | **9904105441** | 1 | GASKET |

Description
**CASE & REAR COVER GROUP**

Assembly No.
**9904109807**
Revision:

| Item | FN | Part | Qty | Description |
|---|---|---|---|---|
| 32 | | **9049100263** | 2 | CAPSCREW |
| 33 | | **7950160050** | 2 | WASHER, LOCK 3/8" I.D. |

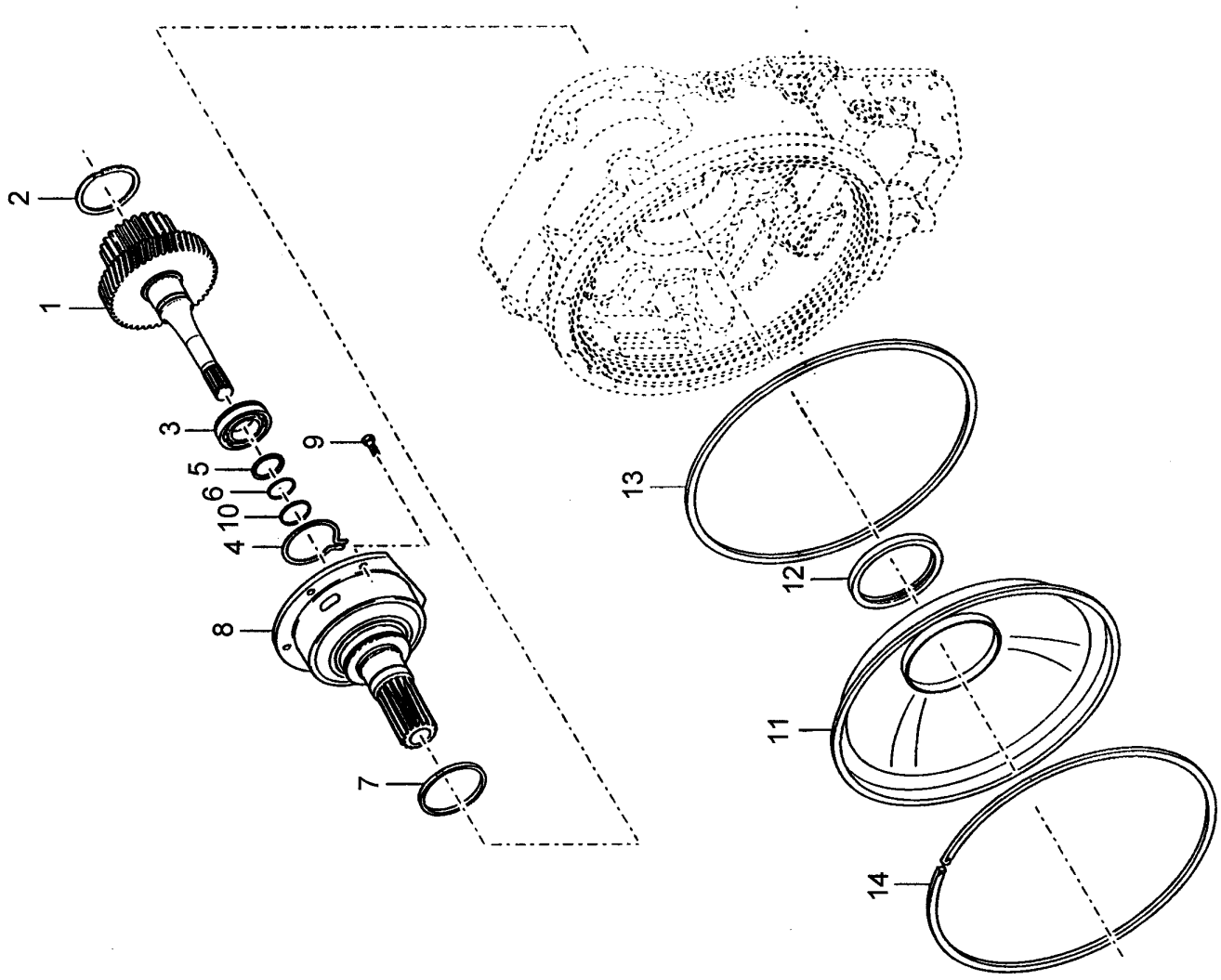


**9904110611**

**(SHEET 1 OF 1)**

Description
**TURBINE SHAFT GROUP**

Assembly No.
**9904110611**
Revision:

| Item | FN | Part | Qty | Description |
|---|---|---|---|---|
| 1 | | **9904109573** | 1 | SHAFT & HUB W/ RETAINING RING<br>INCLUDES ITEM 2 |
| 2 | | **9904105286** | 1 | RING, SNAP |
| 3 | | **9904109574** | 1 | BEARING, SHAFT |
| 4 | | **9904103906** | 1 | RING, SNAP |
| 5 | | **9904103595** | 1 | WASHER |
| 6 | | **9904103621** | 1 | RING, RETAINING |
| 7 | | **9904109575** | 1 | RING, PISTON |
| 8 | | **9904109576** | 1 | STATOR, SUPPORT |
| 9 | | **9904109704** | 6 | SCREW |
| 10 | | **9904109646** | 1 | RING, PISTON |
| 11 | | **9904105958** | 1 | BAFFLE AND SEAL<br>INCLUDES ITEM 12 |
| 12 | | **9904109139** | 1 | SEAL, OIL |
| 13 | | **9904105957** | 1 | RING, SEAL |
| 14 | | **9904106400** | 1 | RING, RETAINING |

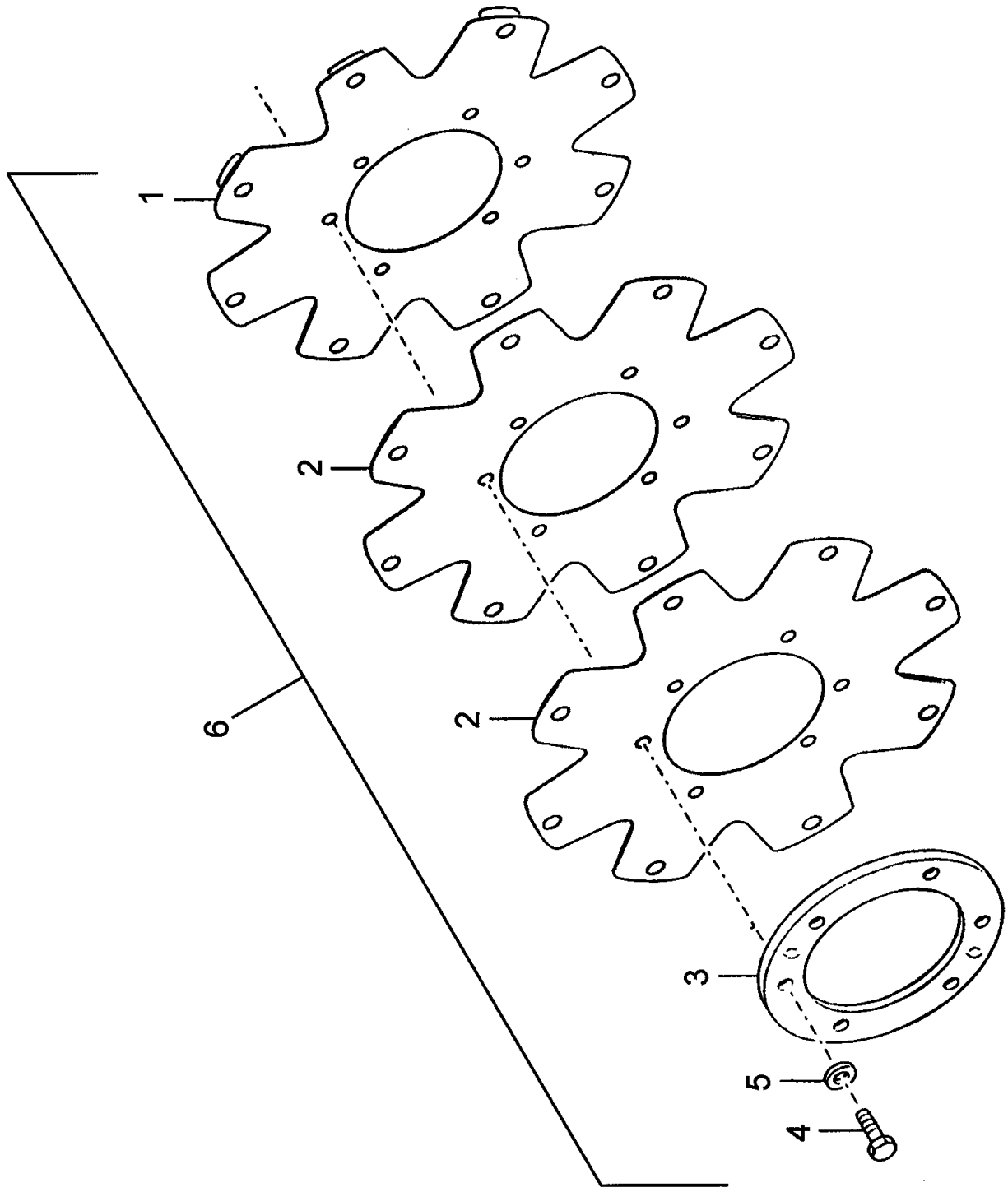


**9904110612**

**(SHEET 1 OF 1)**

Description
**DRIVE PLATE GROUP**

Assembly No.
**9904110612**
Revision:

| Item | FN | Part | Qty | Description |
|---|---|---|---|---|
| 1 | | **NSS** | 1 | DRIVE PLATE |
| 2 | | **NSS** | 1 | FLEX PLATE |
| 3 | | **9904109579** | 1 | RING, BACKING |
| 4 | | **9904110596** | 6 | CAPSCREW |
| 5 | | **9904109352** | 6 | WASHER, LOCK |
| 6 | | **9904109669** | 1 | KIT, DRIVE PLATE<br>INCLUDES ITEMS 1 THRU 5 |

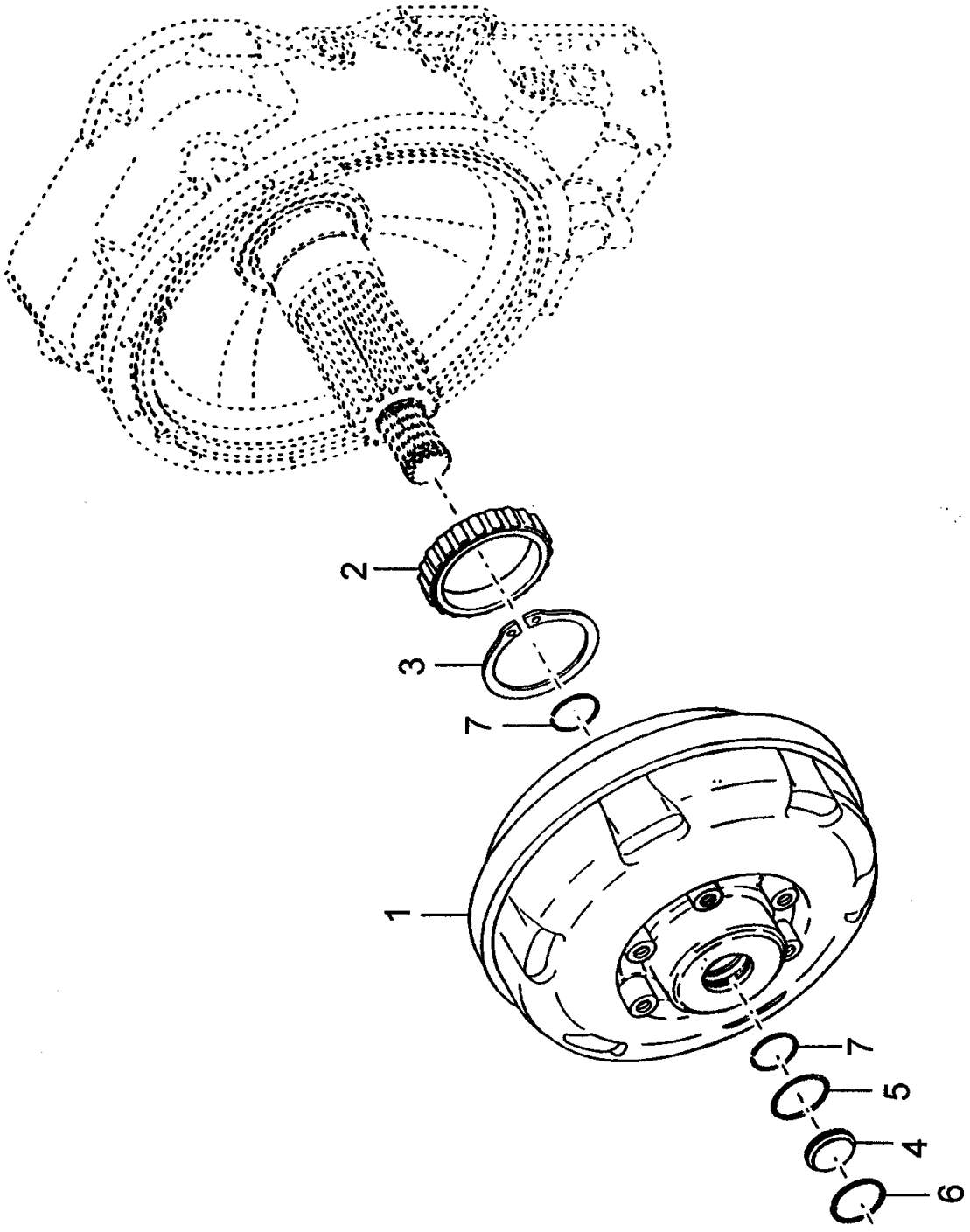


**9904110613**

**(SHEET 1 OF 1)**

Description
**TORQUE CONVERTER GROUP**

Assembly No.
**9904110613**
Revision:

| Item | FN | Part | Qty | Description |
|---|---|---|---|---|
| 1 | | **9904109582** | 1 | CONVERTER ASSEMBLY - TORQUE |
| 2 | | **9904104428** | 1 | BEARING |
| 3 | | **9904109583** | 1 | RING, SNAP |
| 4 | | **9904103528** | 1 | PLUG |
| 5 | | **9904109561** | 1 | O-RING |
| 6 | | **9904106408** | 1 | RING, RETAINING |
| 7 | | **9904109581** | 2 | RING, SNAP |

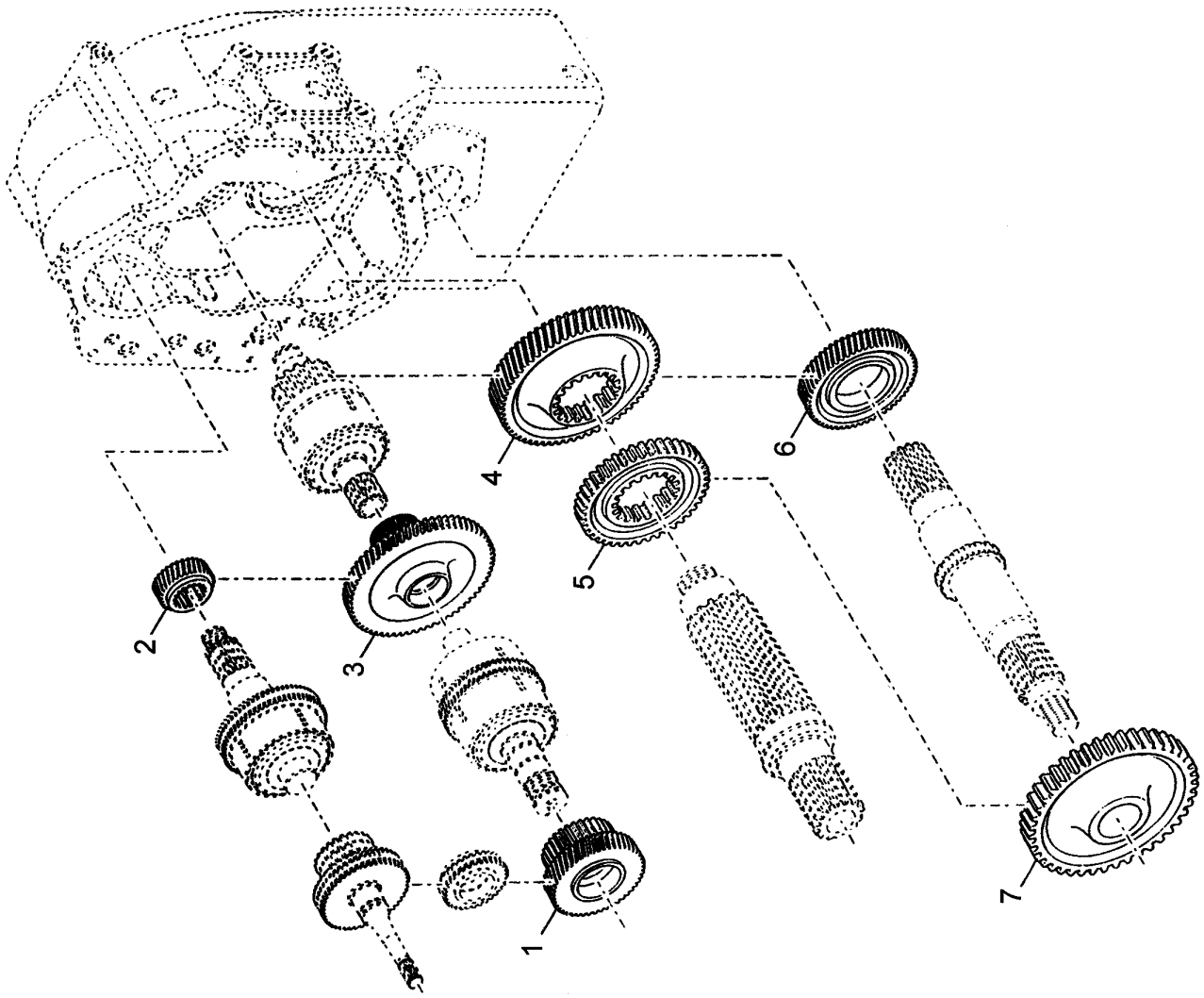


9904110614

(SHEET 1 OF 1)

Description
**GEAR GROUP**

Assembly No.
**9904110614**
Revision:

| Item | FN | Part | Qty | Description |
|---|---|---|---|---|
| 1 | | **9904109649** | 1 | GEAR, REVERSE CLUTCH 43T |
| 2 | | **9904109653** | 1 | GEAR, 1ST DRIVE 29T |
| 3 | | **9904109651** | 1 | GEAR, LOW CLUTCH 63T |
| 4 | | **9904109652** | 1 | GEAR, REAR IDLER 51T |
| 5 | | **9904109815** | 1 | GEAR, IDLER FRONT 21T |
| 6 | | **9904109613** | 1 | GEAR, HIGH RANGE 41T |
| 7 | | **9904109816** | 1 | GEAR, LOW RANGE 42T |

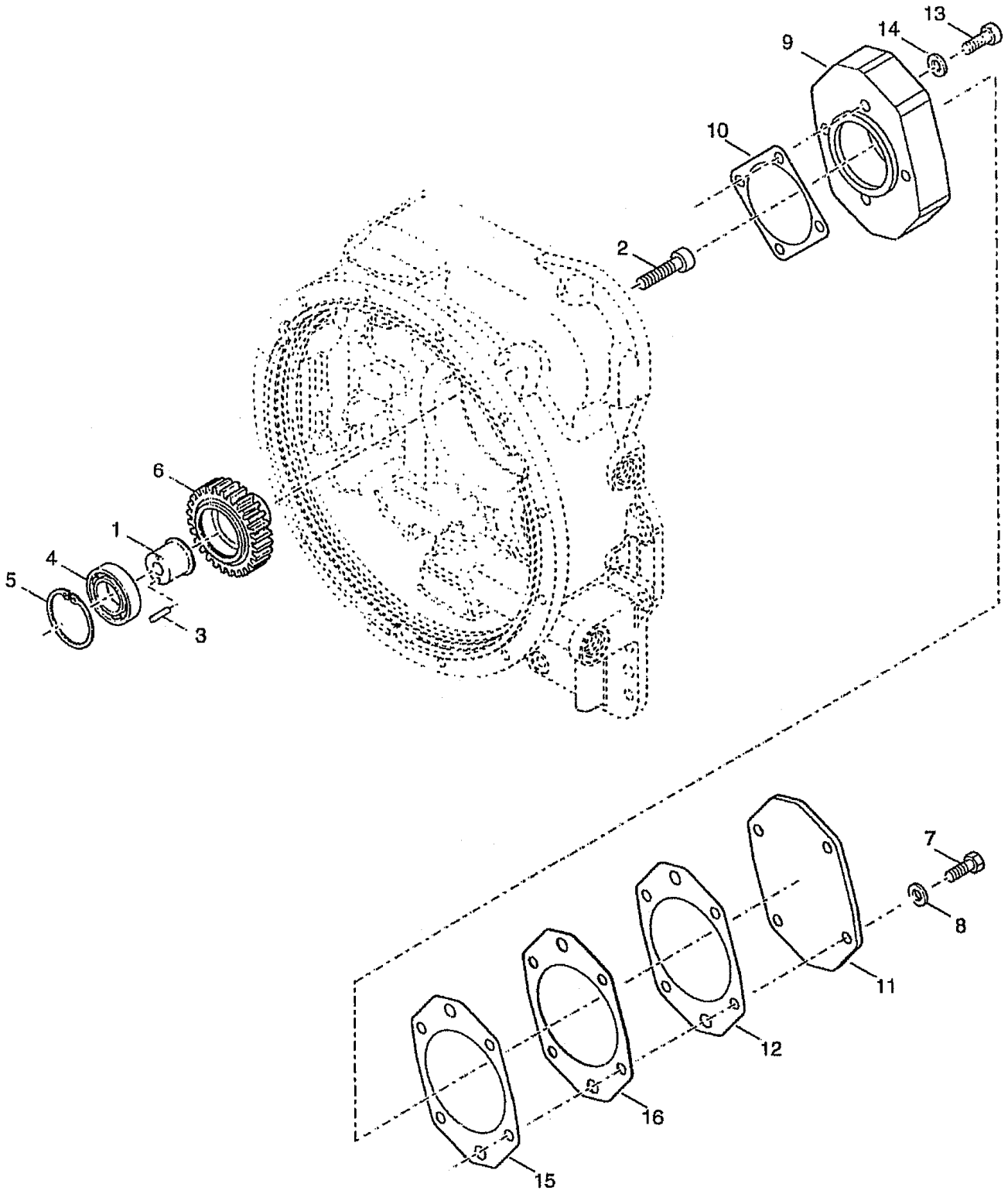


9904110615

(SHEET 1 OF 1)

Description
**AUXILIARY PUMP DRIVE GROUP**

Assembly No.
**9904110615**
Revision:

| Item | FN | Part | Qty | Description |
|---|---|---|---|---|
| 1 | | **9904109585** | 1 | SUPPORT, BEARING |
| 2 | | **9904109584** | 1 | SCREW |
| 3 | | **9904109588** | 1 | PIN |
| 4 | | **9904104432** | 1 | BEARING |
| 5 | | **9904103899** | 1 | RING, RETAINING |
| 6 | | **9904110597** | 1 | GEAR, 37T |
| 7 | | **9904109554** | 4 | CAP SCREW, |
| 8 | | **9049109896** | 4 | WASHER, LOCK |
| 9 | | **9904110598** | 1 | ADAPTER, PUMP MOUNT |
| 10 | | **9904106593** | 1 | GASKET |
| 11 | | **9904110601** | 1 | COVER |
| 12 | | **9904110599** | 1 | GASKET |
| 13 | | **9904110600** | 4 | CAPSCREW |
| 14 | | **9904109676** | 4 | WASHER, LOCK |
| 15 | | **9904110599** | 1 | GASKET |
| 16 | | **9904110602** | 1 | PLATE |

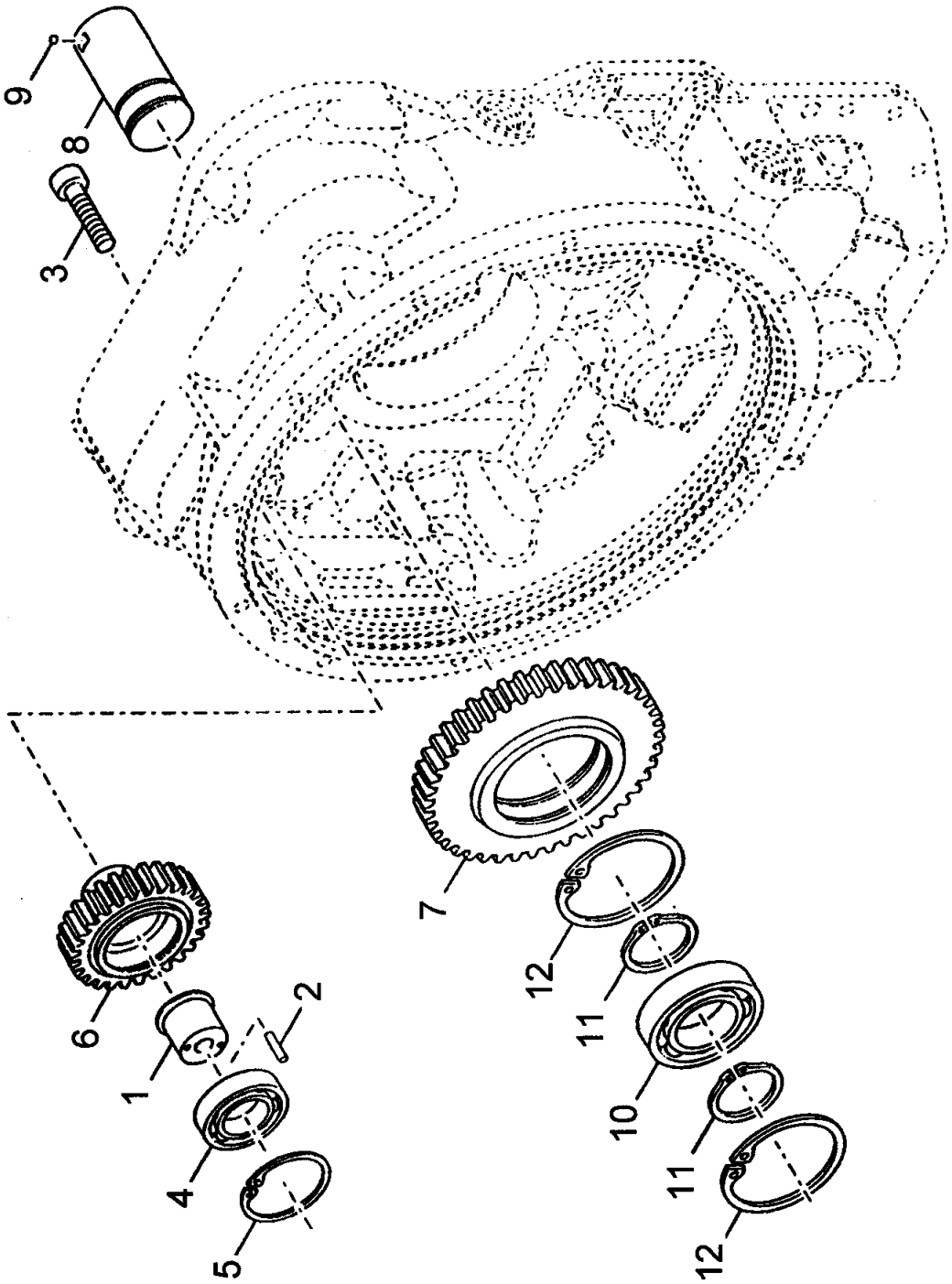


**9904110616**

**(SHEET 1 OF 1)**

Description
**PUMP DRIVE GROUP**

Assembly No.
**9904110616**
Revision:

| Item | FN | Part | Qty | Description |
|---|---|---|---|---|
| 1 | | **9904109590** | 1 | GEAR, IDLER |
| 2 | | **9904109588** | 1 | PIN |
| 3 | | **9904109584** | 1 | SCREW |
| 4 | | **9904104432** | 1 | BEARING |
| 5 | | **9904103899** | 1 | RING, RETAINING |
| 6 | | **9904109705** | 1 | GEAR, PUMP DRIVE |
| 7 | | **9904109590** | 1 | GEAR, IDLER |
| 8 | | **9904104424** | 1 | SHAFT |
| 9 | | **9904101025** | 1 | BALL, LOCK |
| 10 | | **9904104423** | 1 | BEARING |
| 11 | | **9904103893** | 2 | RING, LOCATING |
| 12 | | **9904101354** | 2 | RING, SNAP |

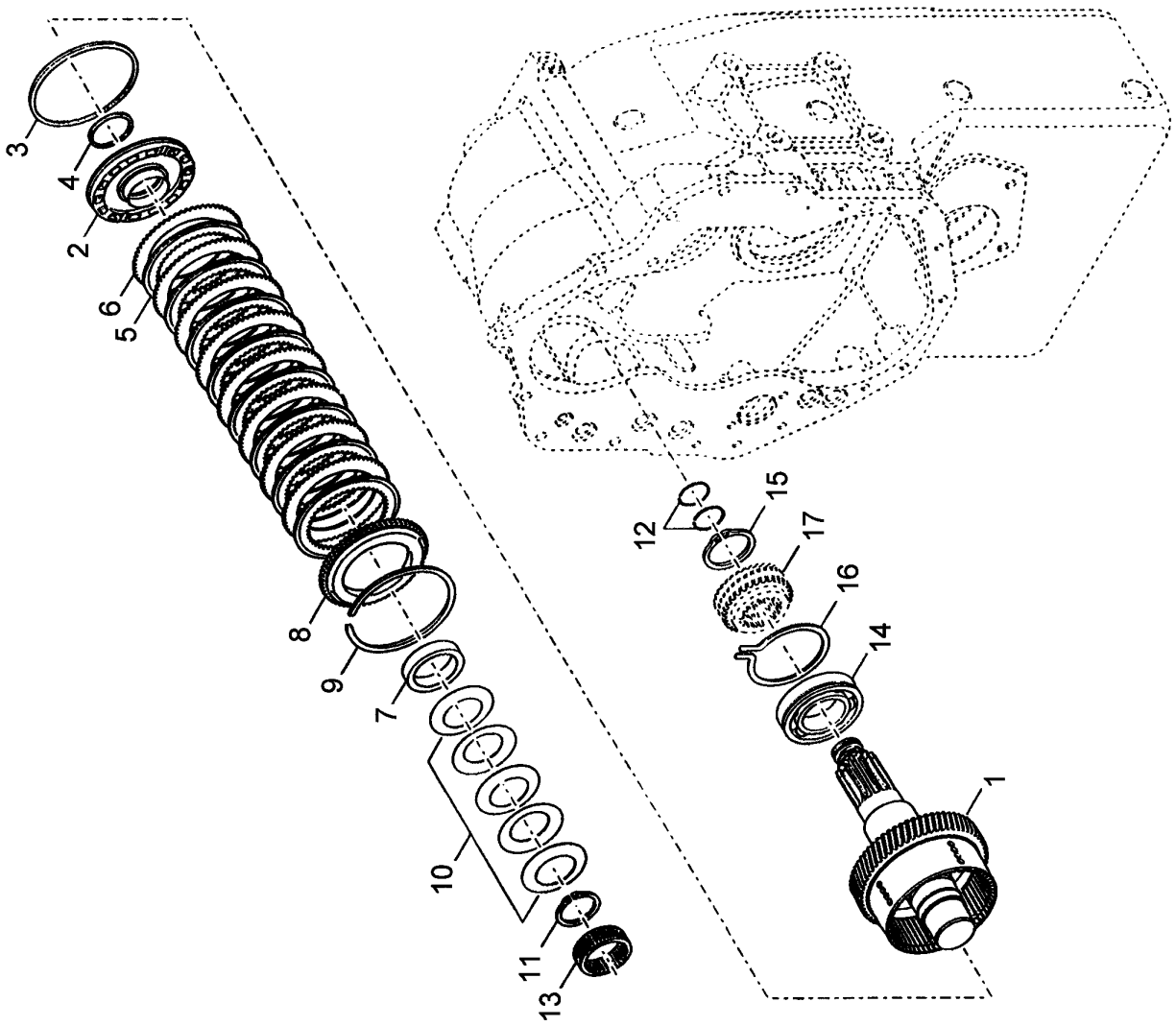


9904110617

(SHEET 1 OF 1)

Description
**FORWARD SHAFT GROUP**

Assembly No.
**9904110617**
Revision:

| Item | FN | Part | Qty | Description |
|---|---|---|---|---|
| 1 | | **9904110463** | 1 | FWD SHAFT & DRUM ASSY. |
| 2 | | **9904108934** | 1 | PISTON ASSY, CLUTCH |
| 3 | | **9904103637** | 1 | SEAL, PISTON |
| 4 | | **9904103638** | 1 | SEAL, PISTON |
| 5 | | **9904103988** | 1 | DISC, CLUTCH |
| 6 | | **9904103635** | 8 | DISC, CLUTCH |
| 7 | | **9904103982** | 1 | SPACER |
| 8 | | **9904110464** | 1 | PLATE, END |
| 9 | | **9904103632** | 1 | RING, SNAP |
| 10 | | **9904107838** | 1 | SPRING ASSY |
| 11 | | **9904103980** | 1 | RING, SNAP |
| 12 | | **9904110465** | 2 | RING, PISTON |
| 13 | | **9904103575** | 1 | BEARING, PILOT |
| 14 | | **9904109592** | 1 | BEARING |
| 15 | | **9904103983** | 1 | RING, SNAP |
| 16 | | **9904109593** | 1 | RING, RETAINING |
| 17 | | **9904109653** | 1 | GEAR, 1ST DRIVE 29T |

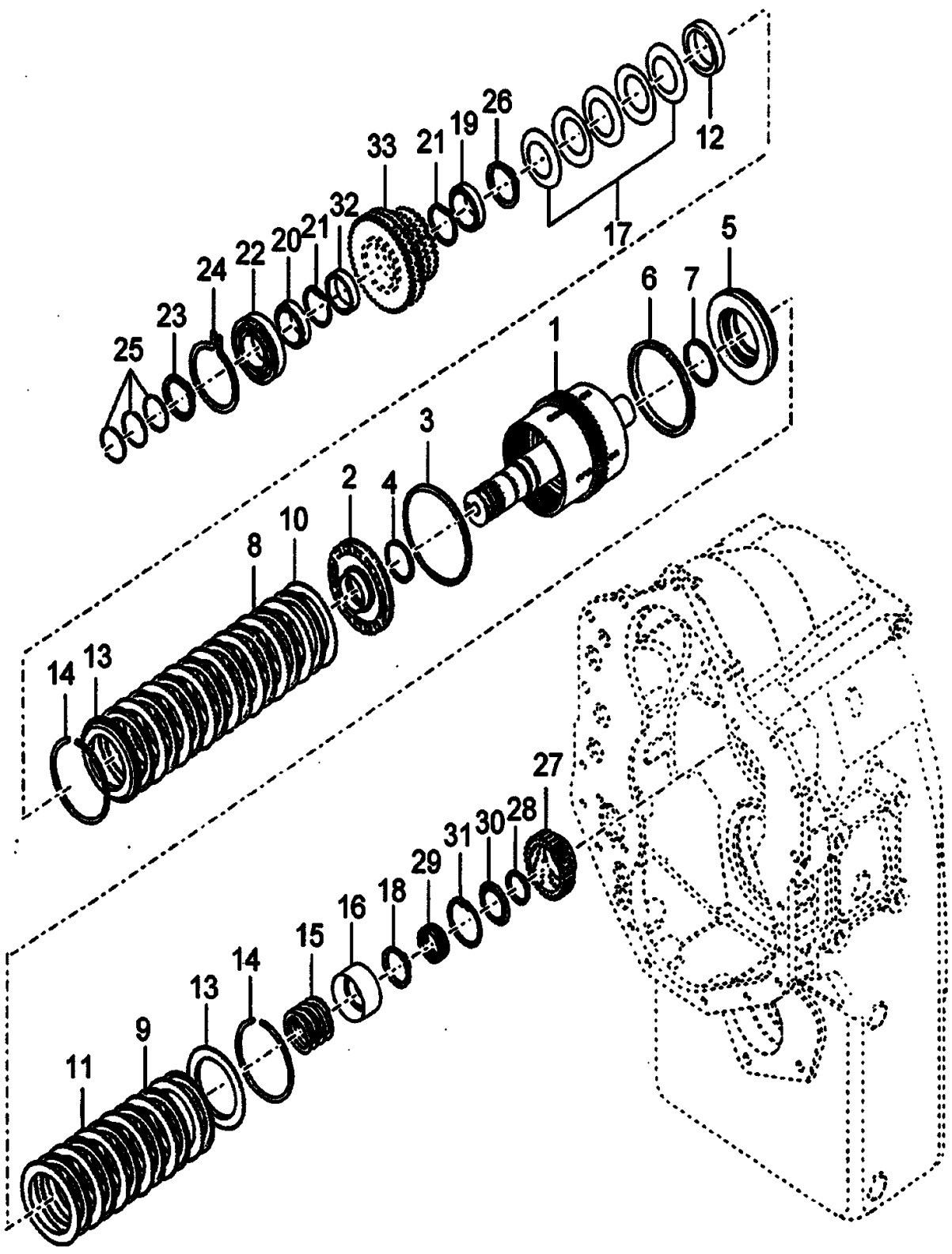


9904110618

(SHEET 1 OF 1)

Description
**REVERSE & 2ND. SHAFT GROUP**

Assembly No.
**9904110618**
Revision:

| Item | FN | Part | Qty | Description |
|---|---|---|---|---|
| 1 | | **9904110466** | 1 | REV. & 2ND, SHAFT & DRUM ASSY |
| 2 | | **9904108934** | 1 | PISTON ASSY, CLUTCH<br>INCLUDES ITEMS 3 AND 4 |
| 3 | | **9904103637** | 1 | SEAL, PISTON |
| 4 | | **9904103638** | 1 | SEAL, PISTON |
| 5 | | **9904110467** | 1 | PISTON ASSY. |
| 6 | | **9904103637** | 1 | SEAL, PISTON |
| 7 | | **9904103638** | 1 | SEAL, PISTON |
| 8 | | **9904103988** | 8 | DISC, CLUTCH |
| 9 | | **9904103988** | 6 | DISC, CLUTCH |
| 10 | | **9904103635** | 8 | DISC, CLUTCH |
| 11 | | **9904103635** | 6 | DISC, CLUTCH |
| 12 | | **9904103982** | 1 | SPACER |
| 13 | | **9904110464** | 2 | PLATE, END |
| 14 | | **9904103638** | 2 | SEAL, PISTON |
| 15 | | **9904103569** | 1 | SPRING |
| 16 | | **9904103568** | 1 | RETAINER, SPRING |
| 17 | | **9904107838** | 1 | SPRING ASSY |
| 18 | | **9904103567** | 1 | RING, SNAP |
| 19 | | **9904109595** | 1 | BEARING |
| 20 | | **9904109647** | 1 | BEARING |
| 21 | | **9904103563** | 2 | RING, RETAINING |
| 22 | | **9904105994** | 1 | BEARING, FRONT |
| 23 | | **9904108558** | 1 | KEY |
| 24 | | **9904101348** | 1 | RING, SNAP |
| 25 | | **9904110465** | 3 | RING, PISTON |
| 26 | | **9904103980** | 1 | RING, SNAP |
| 27 | | **9904109597** | 1 | HUB, DISC<br>SECOND CLUTCH |
| 28 | | **9904103567** | 1 | RING, SNAP |
| 29 | | **9904109648** | 1 | BEARING, REAR |
| 30 | | **9904105981** | 1 | RETAINER, SPRING |
| 31 | | **9904105997** | 1 | RING, RETAINING |
| 32 | | **9904109594** | 1 | SPACER |
| 33 | | **9904109649** | 1 | GEAR, REVERSE CLUTCH 43T |

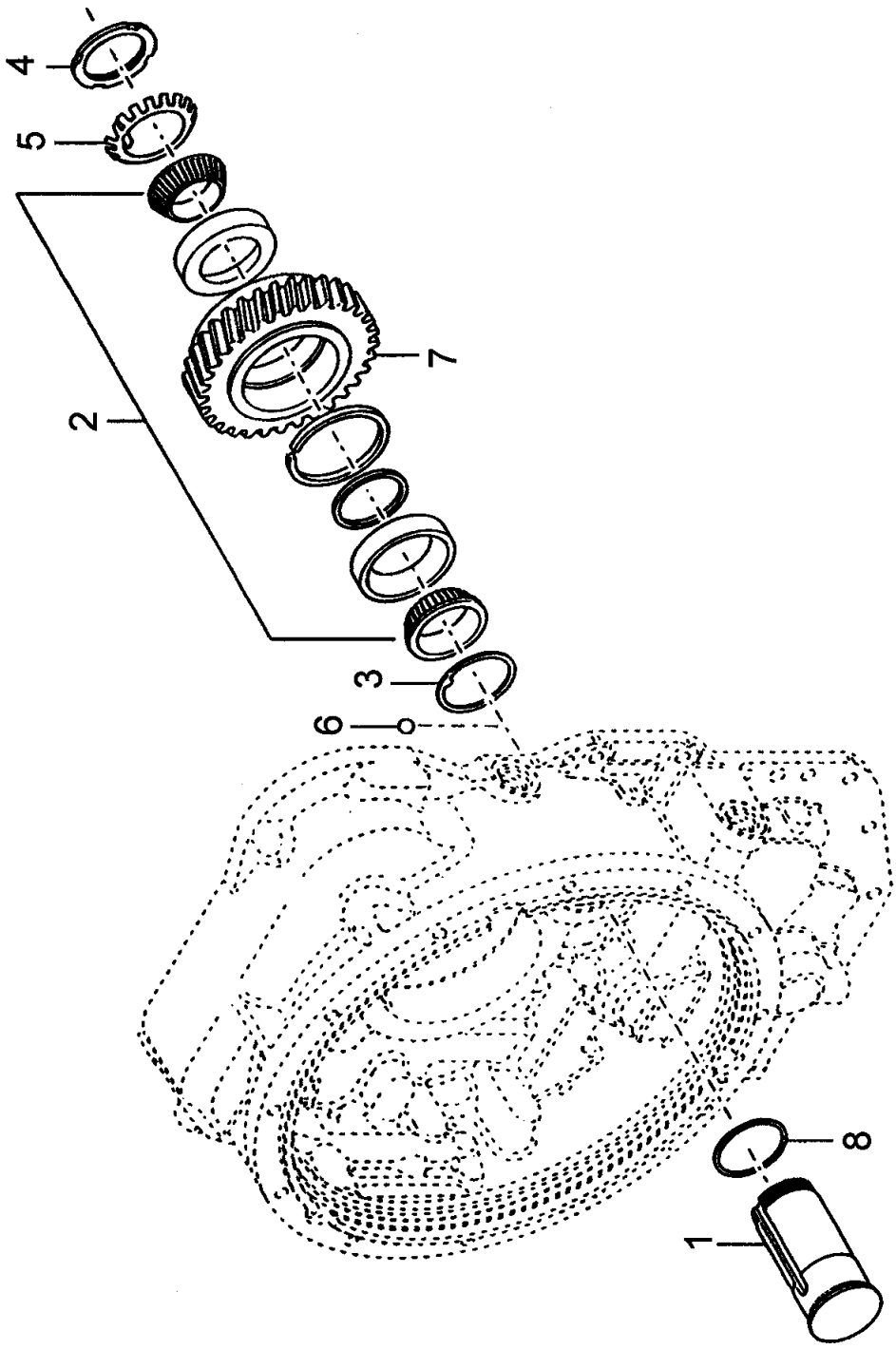


9904110619

(SHEET 1 OF 1)

Description
**REVERSE IDLER GROUP**

Assembly No.
**9904110619**
Revision:

| Item | FN | Part | Qty | Description |
|---|---|---|---|---|
| 1 | | **9904109598** | 1 | SHAFT, REVERSE IDLER |
| 2 | | **9904104053** | 1 | BEARING ASSEMBLY |
| 3 | | **9904109599** | 1 | WASHER, THRUST |
| 4 | | **9904109601** | 1 | NUT |
| 5 | | **9904109600** | 1 | WASHER, THRUST |
| 6 | | **9904105989** | 1 | BALL, LOCK |
| 7 | | **9904109602** | 1 | GEAR, REVERSE IDLER |
| 8 | | **9904106805** | 1 | O-RING |

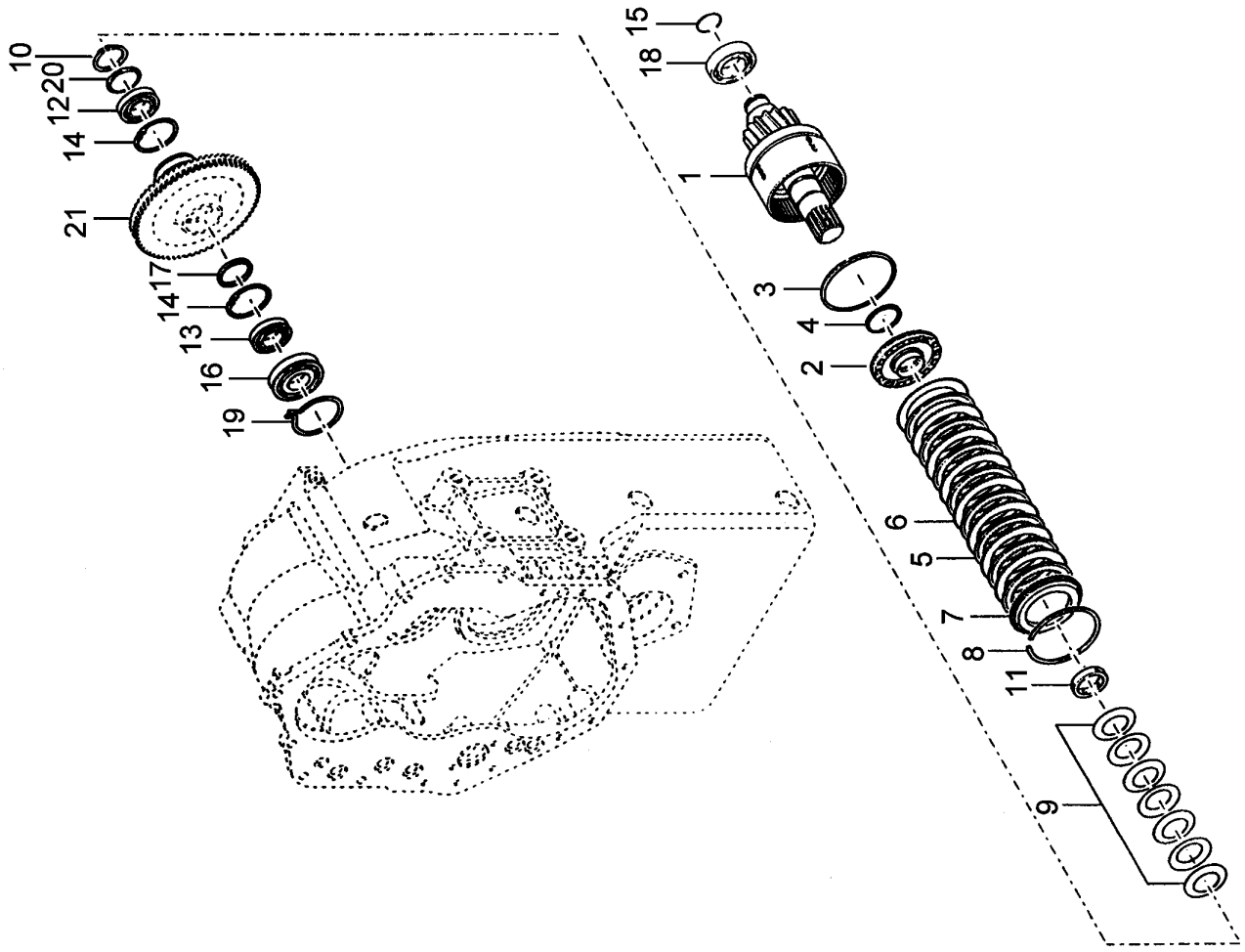


**9904110620**

**(SHEET 1 OF 1)**

Description
**LOW SPEED SHAFT GROUP**

Assembly No.
**9904110620**
Revision:

| Item | FN | Part | Qty | Description |
|---|---|---|---|---|
| 1 | | **9904109603** | 1 | LOW SHAFT,HUB & DRUM W/ VALVE |
| 2 | | **9904108934** | 1 | PISTON ASSY, CLUTCH |
| 3 | | **9904103637** | 1 | SEAL, PISTON |
| 4 | | **9904103638** | 1 | SEAL, PISTON |
| 5 | | **9904103987** | 8 | DISC, CLUTCH |
| 6 | | **9904103635** | 8 | DISC, CLUTCH |
| 7 | | **9904110464** | 1 | PLATE, END |
| 8 | | **9904103632** | 1 | RING, SNAP |
| 9 | | **9904107783** | 1 | SPRING, DISC |
| 10 | | **9904103567** | 1 | RING, SNAP |
| 11 | | **9904109650** | 1 | SPACER, DISC SPRING |
| 12 | | **9904101353** | 1 | BEARING, GEAR |
| 13 | | **9904106000** | 1 | BEARING, REAR |
| 14 | | **9904106001** | 2 | RING, SNAP |
| 15 | | **9904108795** | 1 | RING, PISTON |
| 16 | | **9904109574** | 1 | BEARING, SHAFT |
| 17 | | **9904106002** | 1 | SPACER |
| 18 | | **9904109604** | 1 | BEARING |
| 19 | | **9904103906** | 1 | RING, SNAP |
| 20 | | **9904107784** | 1 | RETAINER, SPRING |
| 21 | | **9904109651** | 1 | GEAR, LOW CLUTCH 63T |

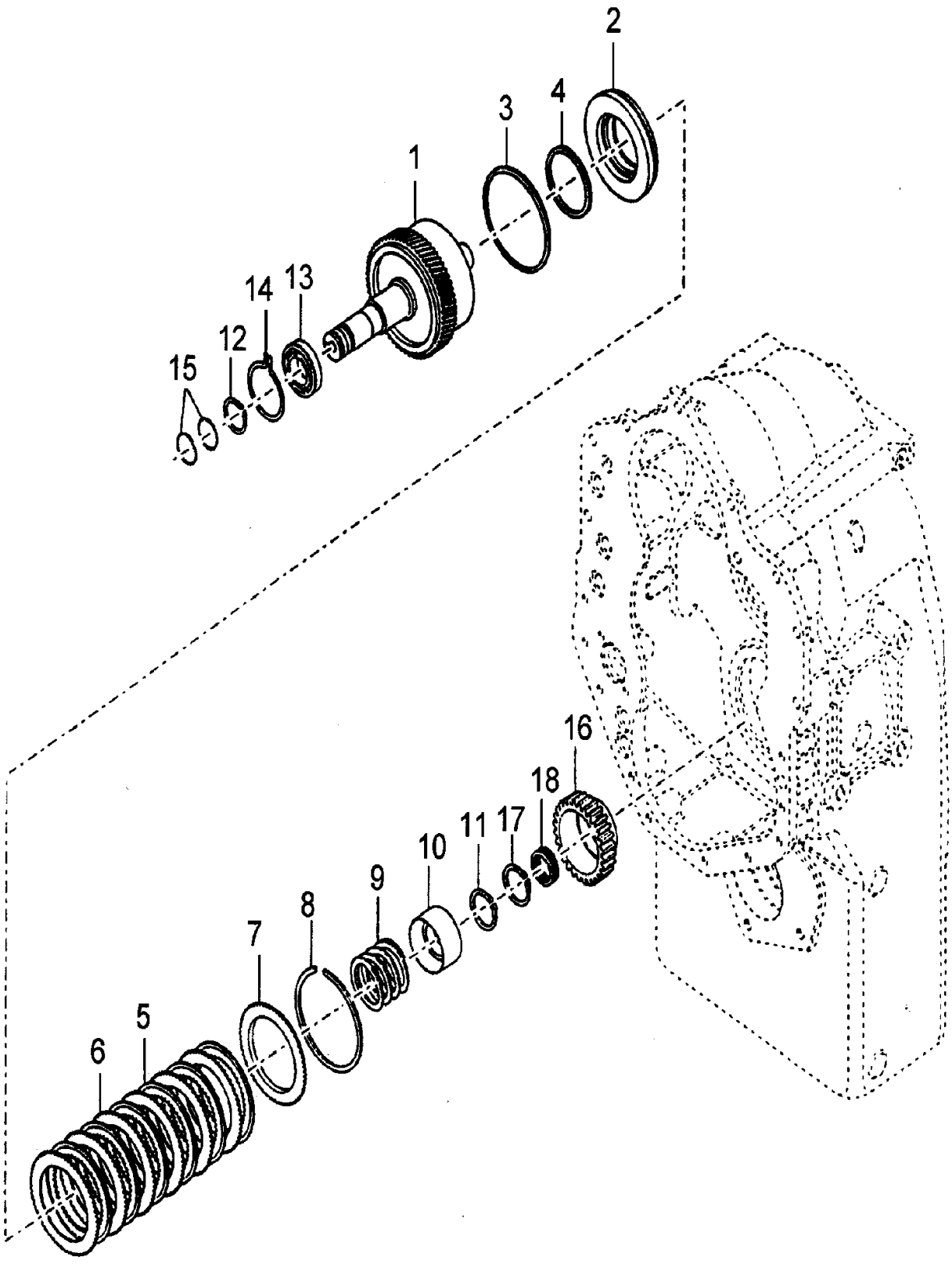


9904110621

(SHEET 1 OF 1)

Description
**3RD. SHAFT GROUP**

Assembly No.
**9904110621**
Revision:

| Item | FN | Part | Qty | Description |
|---|---|---|---|---|
| 1 | | **9904110468** | 1 | 3rd. SHAFT & DRUM ASSY. |
| 2 | | **9904110467** | 1 | PISTON ASSY. |
| 3 | | **9904103637** | 1 | SEAL, PISTON |
| 4 | | **9904103638** | 1 | SEAL, PISTON |
| 5 | | **9904103988** | 6 | DISC, CLUTCH |
| 6 | | **9904103635** | 6 | DISC, CLUTCH |
| 7 | | **9904110464** | 1 | PLATE, END |
| 8 | | **9904103632** | 1 | RING, SNAP |
| 9 | | **9904103569** | 1 | SPRING |
| 10 | | **9904103568** | 1 | RETAINER, SPRING |
| 11 | | **9904103567** | 1 | RING, SNAP |
| 12 | | **9904107558** | 1 | RING, RETAINING<br>FRONT BEARING |
| 13 | | **9904105994** | 1 | BEARING, FRONT |
| 14 | | **9904101348** | 1 | RING, SNAP |
| 15 | | **9904110465** | 2 | RING, PISTON |
| 16 | | **9904108979** | 1 | HUB, CLUTCH DISC |
| 17 | | **9904103570** | 1 | RING |
| 18 | | **9904109648** | 1 | BEARING, REAR |

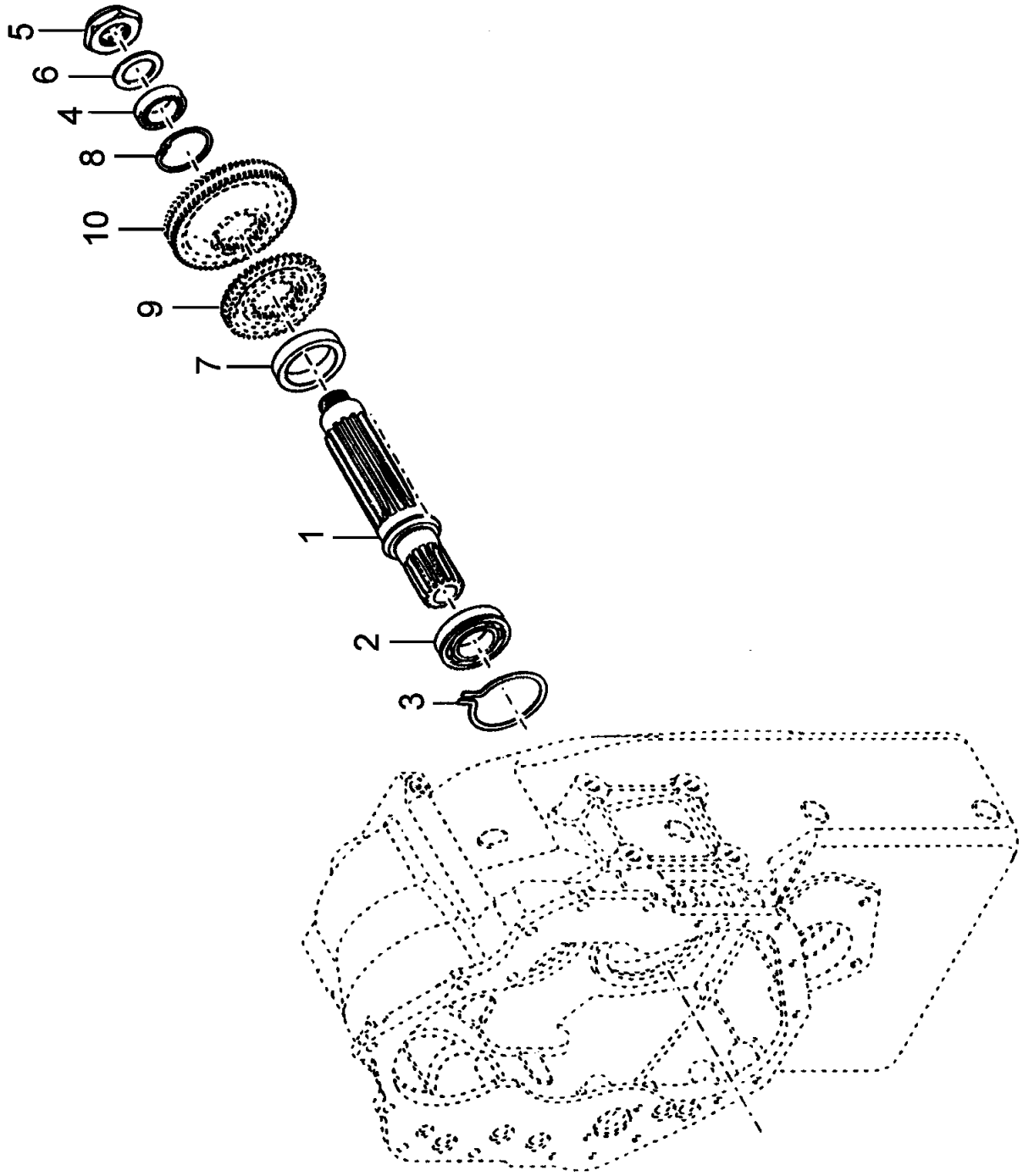


**9904110622**

**(SHEET 1 OF 1)**

Description
**IDLER SHAFT GROUP**

Assembly No.
**9904110622**
Revision:

| Item | FN | Part | Qty | Description |
|---|---|---|---|---|
| 1 | | **9904109607** | 1 | SHAFT, IDLER |
| 2 | | **9904109574** | 1 | BEARING, SHAFT |
| 3 | | **9904103906** | 1 | RING, SNAP |
| 4 | | **9904109606** | 1 | BEARING |
| 5 | | **9904102383** | 1 | NUT |
| 6 | | **9904100983** | 1 | WASHER |
| 7 | | **9904103922** | 1 | SPACER |
| 8 | | **9904101209** | 1 | RING, RETAINING |
| 9 | | **9904109815** | 1 | GEAR, IDLER FRONT 21T |
| 10 | | **9904109652** | 1 | GEAR, REAR IDLER 51T |
| 11 | | **9904105442** | 1 | COVER<br>ITEM NOT SHOWN |
| 12 | | **9904106364** | 1 | GASKET<br>ITEM NOT SHOWN |
| 13 | | **9049100263** | 2 | CAPSCREW<br>ITEM NOT SHOWN |
| 14 | | **7950160050** | 2 | WASHER, LOCK 3/8" I.D.<br>ITEM NOT SHOWN |

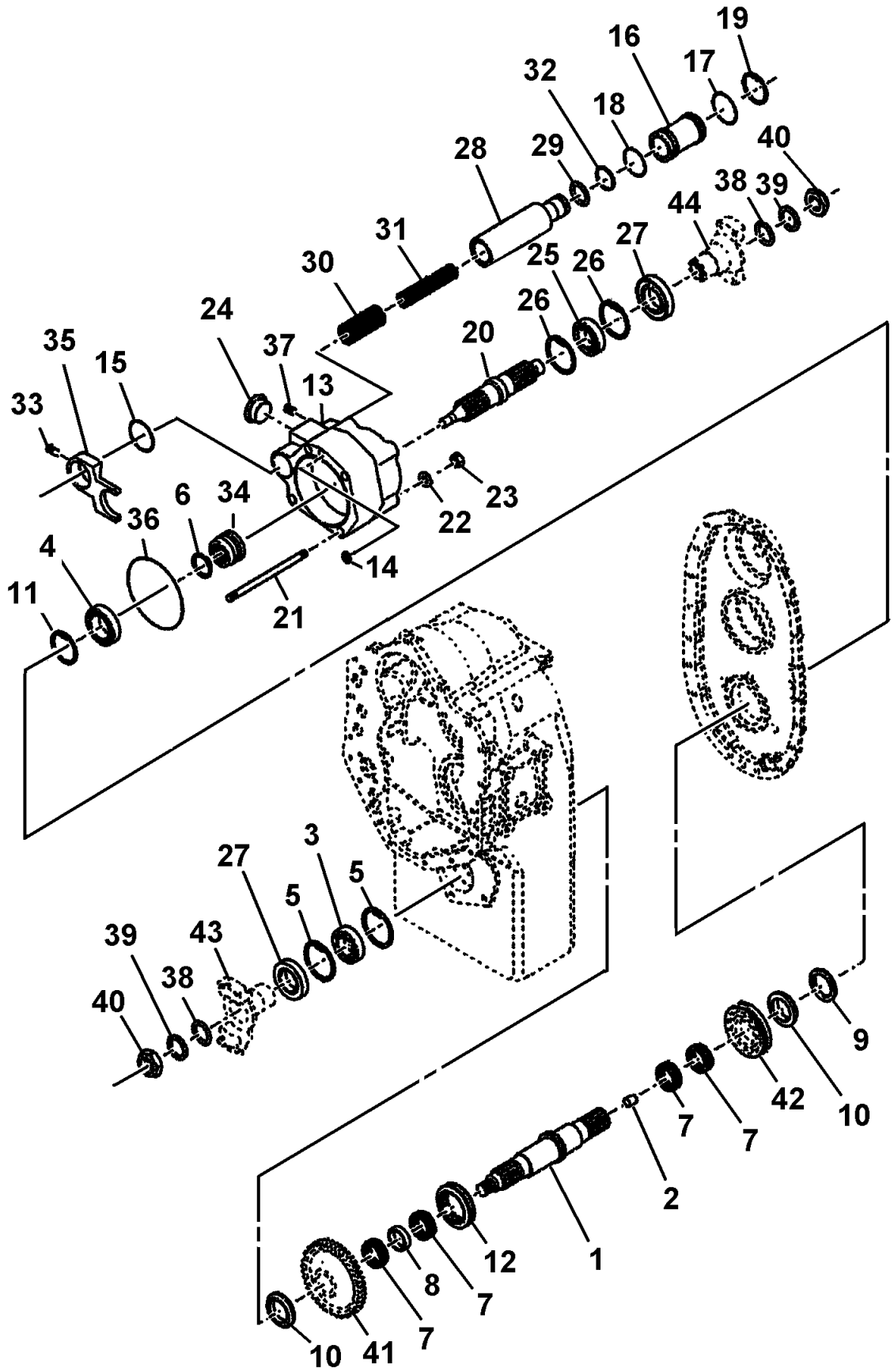


90015440

(SHEET 1 OF 1)

Description
**OUTPUT SHAFT GROUP**

Assembly No.
**90015440**
Revision:

| Item | FN | Part | Qty | Description |
|---|---|---|---|---|
| 1 | | **9904109612** | 1 | OUTPUT SHAFT AND BEARING (INCLUDES ITEM 2) |
| 2 | | **9904100967** | 1 | BUSHING |
| 3 | | **9904106320** | 1 | BEARING |
| 4 | | **9904109608** | 1 | BEARING, REAR |
| 5 | | **9904101022** | 1 | RING, RETAINING |
| 6 | | **9904103621** | 1 | RING, RETAINING |
| 7 | | **9904103612** | 4 | BEARING |
| 8 | | **9904109611** | 1 | SPACER |
| 9 | | **9904103595** | 1 | WASHER |
| 10 | | **9904103610** | 2 | WASHER, THRUST |
| 11 | | **9904109459** | 1 | RING, SNAP |
| 12 | | **9904103615** | 1 | HUB |
| 13 | | **9904105289** | 1 | HOUSING |
| 14 | | **9904103993** | 1 | O-RING |
| 15 | | **9904103994** | 1 | O-RING |
| 16 | | **9904108408** | 1 | PLUG |
| 17 | | **9904109561** | 1 | O-RING |
| 18 | | **9904108409** | 1 | O-RING |
| 19 | | **9904106408** | 1 | RING, RETAINING |
| 20 | | **9904105288** | 1 | SHAFT |
| 21 | | **9904103623** | 4 | STUD |
| 22 | | **7950190050** | 4 | WASHER, LOCK 9/16" I.D. |
| 23 | | **9904103605** | 4 | NUT |
| 24 | | **9904101047** | 1 | PLUG |
| 25 | | **9049101566** | 1 | BEARING |
| 26 | | **9904101022** | 2 | RING, RETAINING |
| 27 | | **90012853** | 2 | SEAL |
| 28 | | **9904108406** | 1 | PISTON |
| 29 | | **9904109481** | 1 | O-RING |
| 30 | | **9904105292** | 1 | SPRING |
| 31 | | **9904105293** | 1 | SPRING |
| 32 | | **9904108407** | 1 | RING |
| 33 | | **9904101044** | 1 | SCREW, LOCK |

Description
**OUTPUT SHAFT GROUP**

Assembly No.
**90015440**
Revision:

| Item | FN | Part | Qty | Description |
|---|---|---|---|---|
| 34 | | **9904103626** | 1 | HUB, SHIFT |
| 35 | | **9904105290** | 1 | FORK, SHIFT |
| 36 | | **9904109641** | 1 | O-RING |
| 37 | | **7444020031** | 1 | PLUG, PIPE<br>1/4" NPT |
| 38 | | **9904103997** | 2 | O-RING |
| 39 | | **9904100983** | 2 | WASHER |
| 40 | | **9904102383** | 2 | NUT |
| 41 | | **9904109816** | 1 | GEAR, LOW RANGE 42T<br>(SEE GEAR GROUP) |
| 42 | | **9904109613** | 1 | GEAR, HIGH RANGE 41T<br>(SEE GEAR GROUP) |
| 43 | | **9904103677** | 1 | FLANGE |
| 44 | | **9904105662** | 1 | FLANGE |

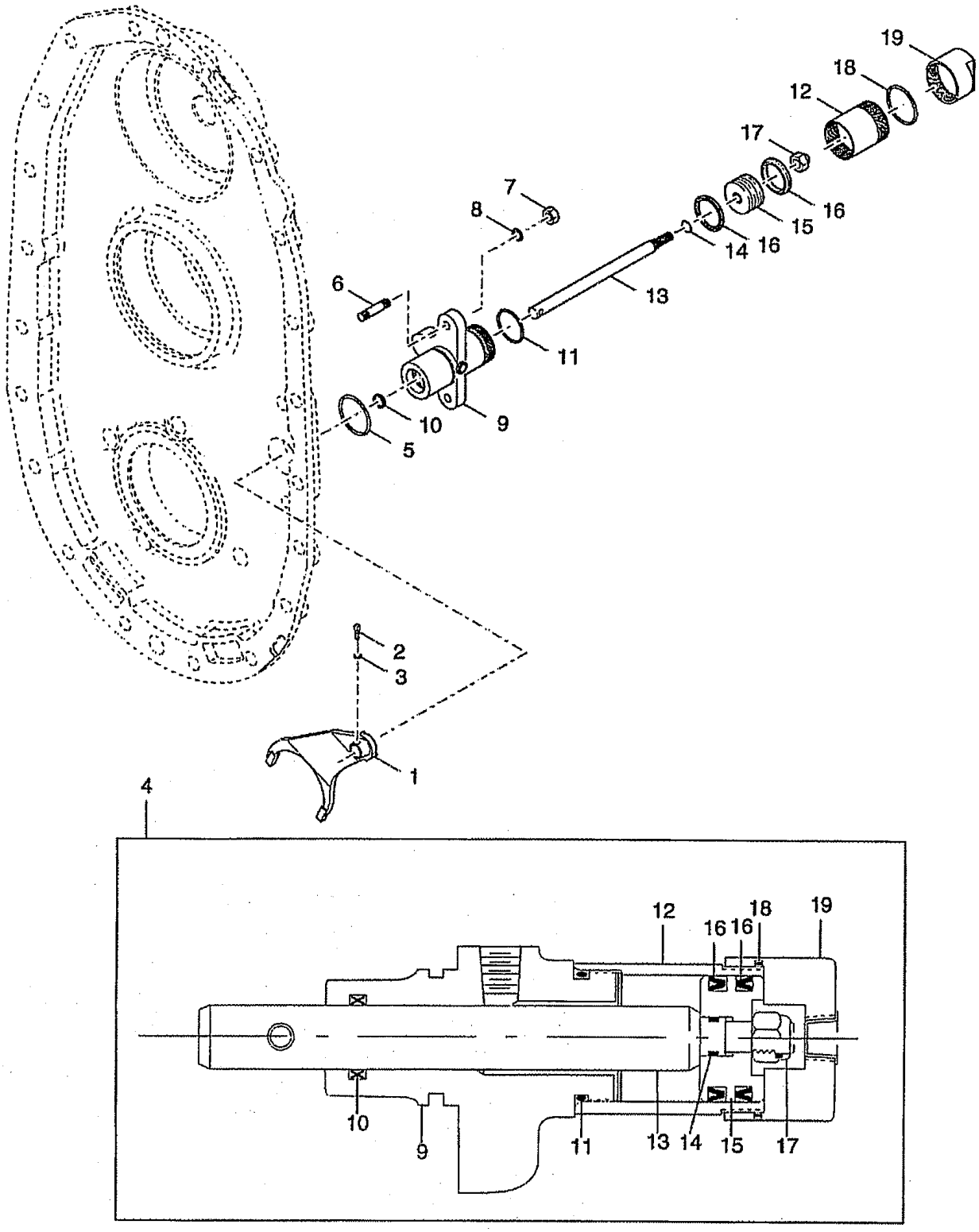


9904110624

(SHEET 1 OF 1)

Description
**HI/LOW RANGE SHIFT CONT. GROUP**

Assembly No.
**9904110624**
Revision:

| Item | FN | Part | Qty | Description |
|---|---|---|---|---|
| 1 | | **9904109622** | 1 | FORK, SHAFT |
| 2 | | **9904109620** | 1 | WASHER, LOCK |
| 3 | | **9904109621** | 1 | SCREW, LOCK |
| 4 | | **9904109623** | 1 | CYLINDER, AIRSHIFT<br>INCLUDES ITEMS 9 THRU 19 |
| 5 | | **9904103660** | 1 | O-RING |
| 6 | | **9904103986** | 2 | STUD |
| 7 | | **9904109618** | 2 | NUT |
| 8 | | **9904109617** | 2 | WASHER, LOCK |
| 9 | | **9904105306** | 1 | BODY |
| 10 | | **9904105307** | 1 | SEAL |
| 11 | | **9904105299** | 1 | O-RING |
| 12 | | **9904106482** | 1 | TUBE, CYLINDER |
| 13 | | **9904109619** | 1 | ROD, PISTON |
| 14 | | **7755110000** | 1 | O-RING |
| 15 | | **9904109616** | 1 | PISTON |
| 16 | | **9904105302** | 2 | SEAL |
| 17 | | **9904105301** | 1 | NUT |
| 18 | | **9904107179** | 1 | O-RING |
| 19 | | **9904106483** | 1 | CAP, END |

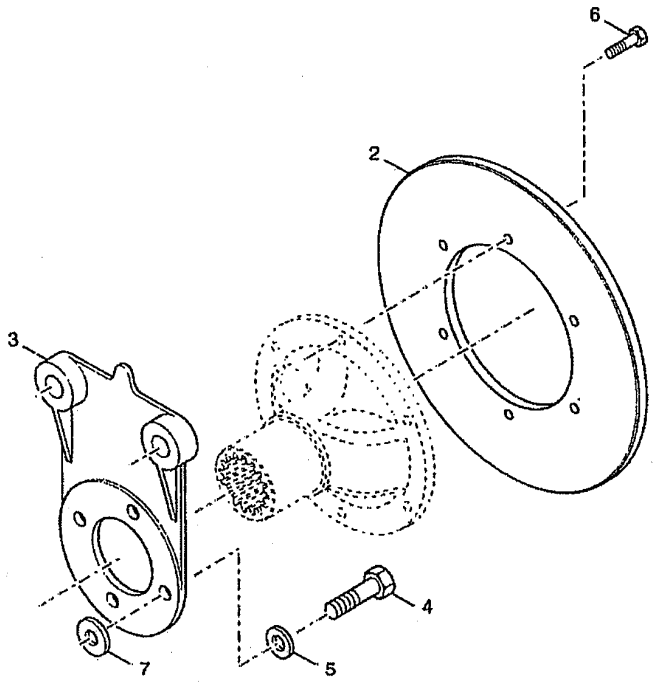


9904110625

(SHEET 1 OF 1)

Description
**DISC BRAKE GROUP**

Assembly No.
**9904110625**
Revision:

| Item | FN | Part | Qty | Description |
|---|---|---|---|---|
| 2 | | **7188000165** | 1 | BRAKE, DISC |
| 3 | | **9904110157** | 1 | BRACKET,PARK BRAKE |
| 4 | | **9049106636** | 4 | CAP SCREW, |
| 5 | | **9904106235** | 4 | WASHER |
| 6 | | **9904109531** | 6 | CAPSCREW, DISC BRAKE |

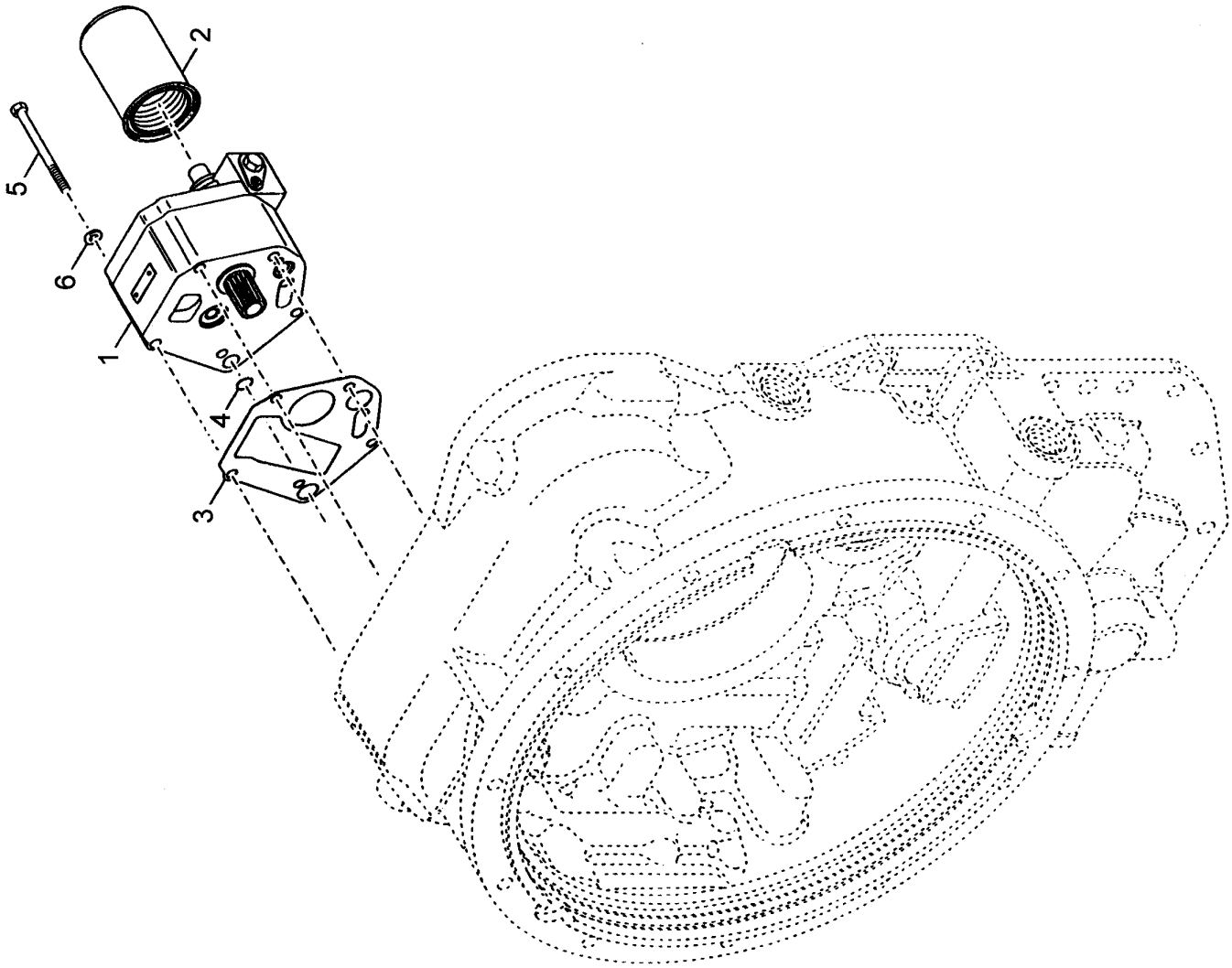


**9904110626**

**(SHEET 1 OF 1)**

Description
**CHARGE PUMP & FILTER GROUP**

Assembly No.
**9904110626**
Revision:

| Item | FN | Part | Qty | Description |
|---|---|---|---|---|
| 1 | | **9904110603** | 1 | PUMP ASSY, CHARGE |
| 2 | | **7437000873** | 1 | FILTER, TRANSMISSION FLUID |
| 3 | | **9904103887** | 1 | GASKET |
| 4 | | **9904103500** | 1 | O-RING |
| 5 | | **9904110469** | 1 | CAPSCREW |
| 5 | | **9904104420** | 4 | CAP SCREW, |
| 6 | | **7950170050** | 5 | WASHER, LOCK 7/16" I.D. |

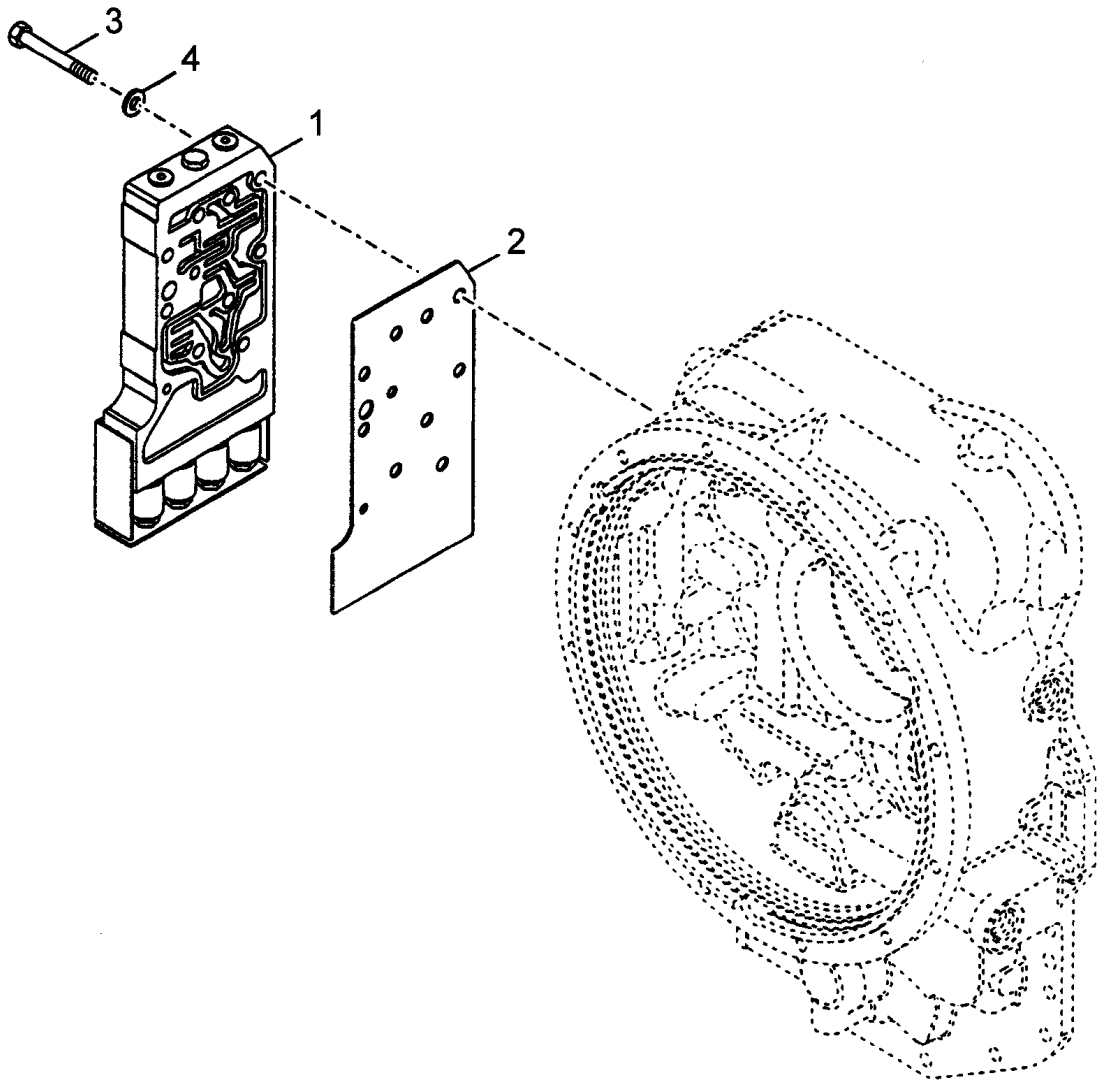


9904110627

(SHEET 1 OF 1)

Description
**CONTROL VALVE MOUNTING GROUP**

Assembly No.
**9904110627**
Revision:

| Item | FN | Part | Qty | Description |
|---|---|---|---|---|
| 1 | | **9904110604** | 1 | BODY ASSY. VALVE<br>BODY, LESS CART. & COIL ASSY. |
| 2 | | **9904110605** | 1 | GASKET |
| 3 | | **7115161250** | 4 | CAP SCREW,<br>3/8" - 16 N.C. X 1 1/2"<br>GRADE 5 |
| 4 | | **9904100974** | 3 | CAP SCREW |
| 5 | | **9904105328** | 2 | SCREW, VALVE MOUNTING |
| 6 | | **9904109625** | 9 | LOCKWASHER, SCREW |

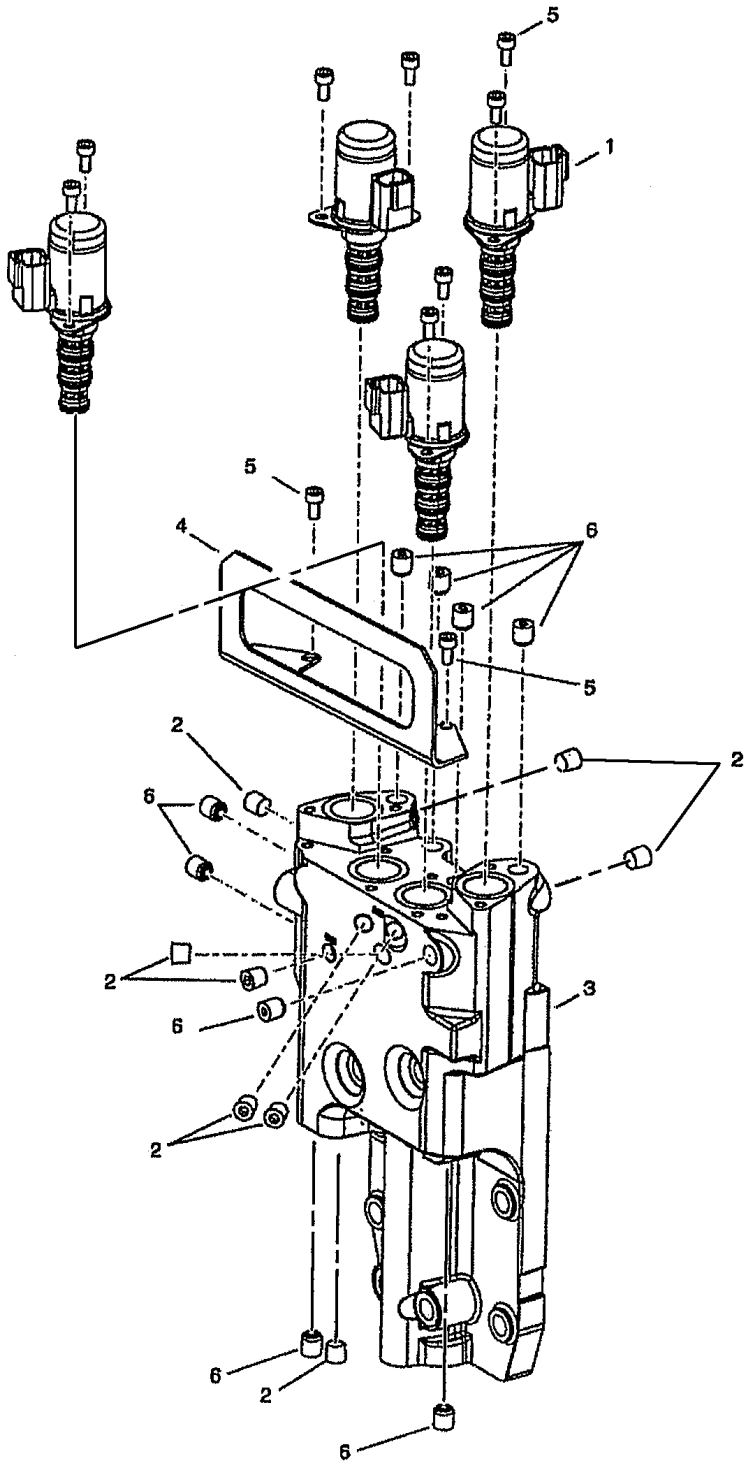


9904110628

(SHEET 1 OF 1)

Description
**CONTROL VALVE ASSY. GROUP**

Assembly No.
**9904110628**
Revision:

| Item | FN | Part | Qty | Description |
|---|---|---|---|---|
| 1 | | **9904110606** | 4 | CART.& COIL ASSY. 12V.<br>INCLUDES THE FOLLOWING PARTS |
| | | **9904110793** | 1 | O-RING |
| | | **9904110794** | 1 | O-RING |
| | | **9904110795** | 1 | O-RING |
| | | **9904110796** | 1 | O-RING |
| 2 | | **9904104055** | 8 | PLUG |
| 3 | | **9904110604** | 1 | BODY ASSY. VALVE<br>INCLUDES ITEM 6 |
| 4 | | **9904110607** | 1 | COVER |
| 5 | | **9904110608** | 10 | CAPSCREW |
| 6 | | **NSS** | 9 | PLUGS, EXPANSION |

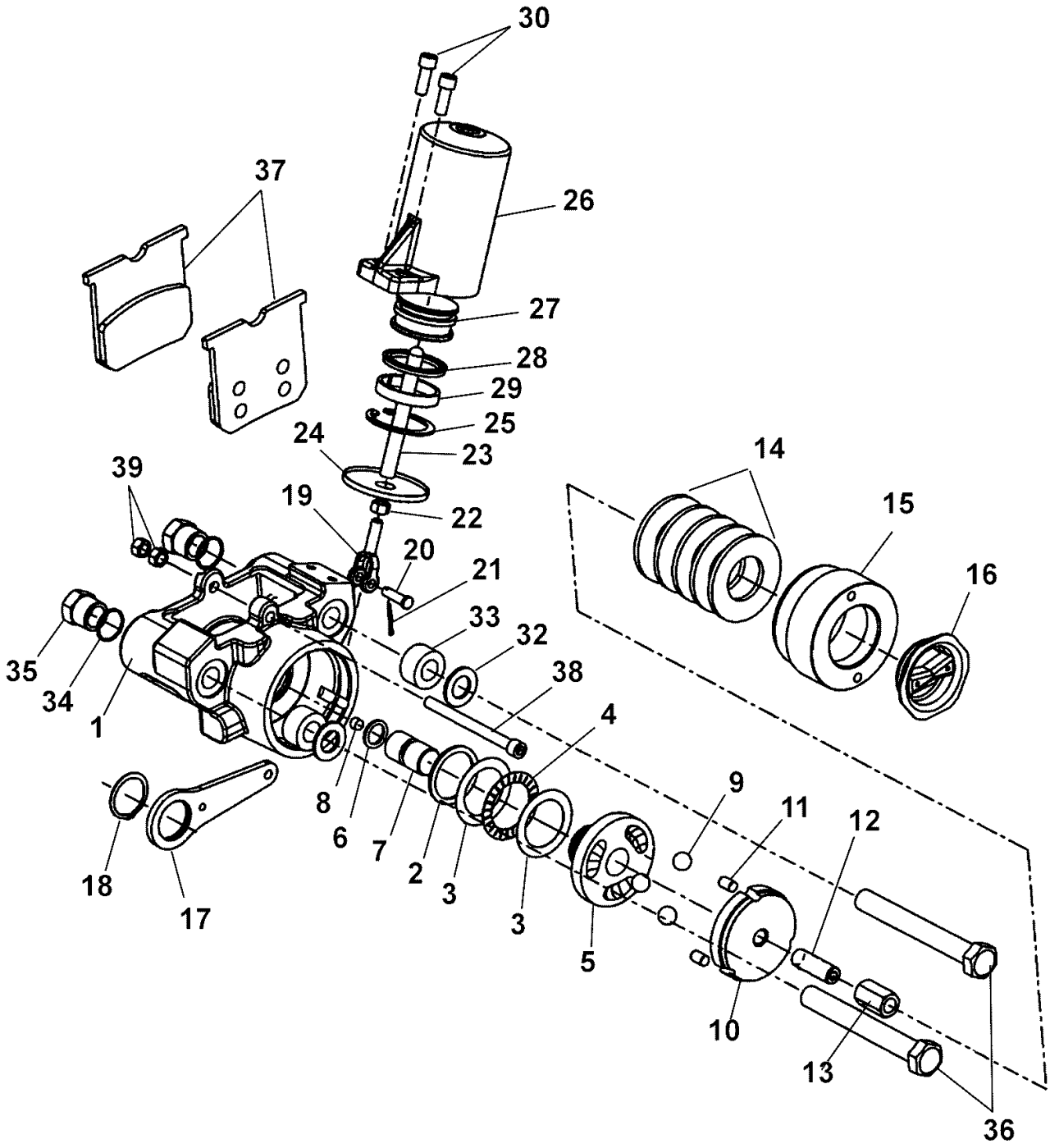


80006812

(SHEET 1 OF 1)

Description
**BRAKE ASSEMBLY - PARKING (COMPLETE ASSEMBLY)**

Assembly No.
**80006812**
Revision:

| Item | FN | Part | Qty | Description |
|---|---|---|---|---|
| 1 | | **NSS** | 1 | PLATE, TORQUE |
| 2 | @$ | **NSS** | 1 | SEAL, O-RING |
| 3 | @ | **NSS** | 2 | WASHER |
| 4 | @ | **NSS** | 1 | BEARING |
| 5 | | **NSS** | 1 | CAM, THRUST<br>SEE ITEM 46 FOR SERVICE |
| 6 | @$ | **NSS** | 1 | SEAL, O-RING |
| 7 | @ | **NSS** | 1 | PISTON ASSY. |
| 8 | | **NSS** | 1 | MAGNET |
| 9 | | **NSS** | 3 | BEARING, BALL<br>SEE ITEM 46 FOR SERVICE |
| 10 | | **NSS** | 1 | CAM<br>SEE ITEM 46 FOR SERVICE |
| 11 | | **NSS** | 3 | PIN, DOWEL<br>SEE ITEM 46 FOR SERVICE |
| 12 | @ | **NSS** | 1 | SETSCREW |
| 13 | @ | **NSS** | 1 | NUT |
| 14 | @- | **NSS** | 5 | DISC SPRING |
| 15 | | **NSS** | 1 | HOUSING |
| 16 | | **9188101096** | 1 | PLUG,SCREW TYPE |
| 17 | * | **NSS** | 1 | LEVER |
| 18 | *@ | **NSS** | 1 | RING, RETAINER |
| 19 | * | **NSS** | 1 | CLEVIS |

**@ SECOND REPAIR KIT AND/OR PART OF 2ND KIT**
**- THIRD REPAIR KIT AND/OR PART OF 3RD KIT**
**$ FIFTH REPAIR KIT**
*** REPAIR KIT AND/OR PART OF KIT**

Description
**BRAKE ASSEMBLY - PARKING (COMPLETE ASSEMBLY)**

Assembly No.
**80006812**
Revision:

| Item | FN | Part | Qty | Description |
|---|---|---|---|---|
| 20 | * | **NSS** | 1 | PIN, CLEVIS |
| 21 | * | **NSS** | 1 | PIN, COTTER |
| 22 | * | **NSS** | 1 | NUT, JAM |
| 23 | * | **NSS** | 1 | ROD |
| 24 | *$ | **NSS** | 1 | EXCLUDER, ROD |
| 25 | * | **NSS** | 1 | RING, RETAINER |
| 26 | * | **NSS** | 1 | HOUSING, CYLINDER |
| 27 | * | **NSS** | 1 | PISTON |
| 28 | *$ | **NSS** | 1 | SEAL |
| 29 | *$ | **NSS** | 1 | RING, |
| 30 | * | **NSS** | 2 | CAPSCREW |
| 32 | @ | **NSS** | 2 | WASHER, FLAT |
| 33 | @< | **NSS** | 2 | SPRING, URETHANE |
| 34 | @$ | **NSS** | 2 | SEAL, O-RING |
| 35 | | **9188101097** | 2 | NUT,JAM |
| 36 | | **9188101020** | 2 | CAP SCREW, |
| 37 | & | **NSS** | 2 | LINING & CARRIER ASSY. |
| 38 | & | **NSS** | 1 | CAPSCREW |
| 39 | & | **NSS** | 2 | NUT |
| 40 | * | **9188101094** | 1 | KIT, HYD.CYLINDER SERVICE |
| 41 | @ | **90011883** | 1 | KIT, OVERHAUL |
| 42 | - | **90011882** | 1 | KIT, DICS SPRING |

*** REPAIR KIT AND/OR PART OF KIT**
**@ SECOND REPAIR KIT AND/OR PART OF 2ND KIT**
**& SIXTH REPAIR KIT**
**$ FIFTH REPAIR KIT**
**< FOURTH REPAIR KIT AND/OR PART OF 4TH KIT**
**- THIRD REPAIR KIT AND/OR PART OF 3RD KIT**

Description
**BRAKE ASSEMBLY - PARKING (COMPLETE ASSEMBLY)**

Assembly No.
**80006812**
Revision:

| Item | FN | Part | Qty | Description |
|---|---|---|---|---|
| 43 | < | **9188101043** | 1 | KIT, SPRING |
| 44 | $ | **9188101078** | 1 | KIT,SEAL |
| 45 | & | **9188101041** | 1 | KIT, LINING |
| 46 | | **9188101092** | 1 | KIT,CAM OVERHAUL<br>INCLUDES ITEMS 5, 9 THRU 11 |

**< FOURTH REPAIR KIT AND/OR PART OF 4TH KIT**
**$ FIFTH REPAIR KIT**
**& SIXTH REPAIR KIT**

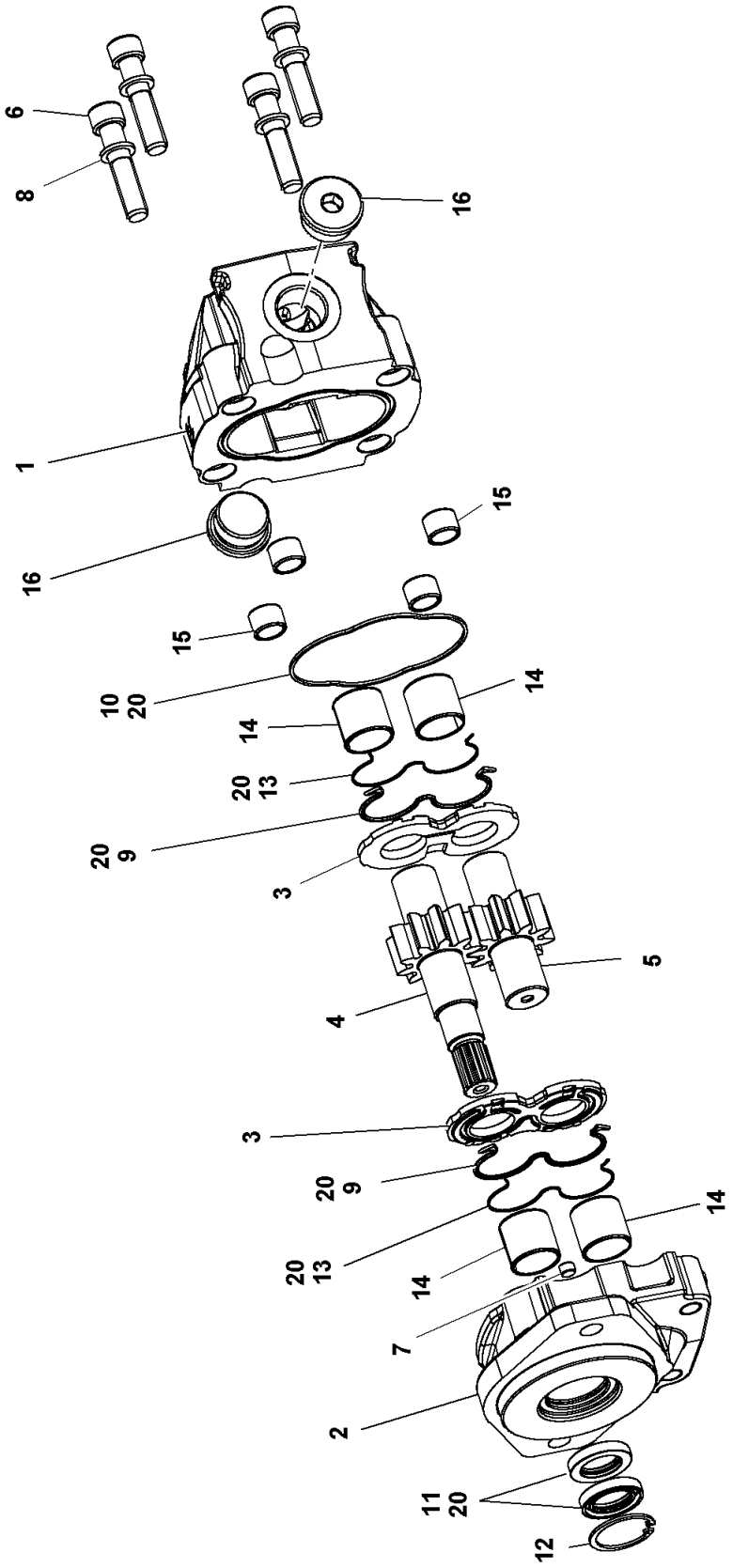


7722100101

(SHEET 1 OF 1)

Description
**PUMP ASSEMBLY - GEAR (COMPLETE ASSEMBLY)**

Assembly No.
**7722100101**
Revision:

| Item | FN | Part | Qty | Description |
|---|---|---|---|---|
| 1 | | **NSS** | 1 | HOUSING, GEAR |
| 2 | | **9722105433** | 1 | COVER, FRONT |
| 3 | | **9722105434** | 2 | PLATE, THRUST |
| 4 | | **9722105468** | 1 | GEAR, DRIVE SHAFT |
| 5 | | **9722105469** | 1 | GEAR, DRIVEN |
| 6 | | **9722105435** | 4 | CAPSCREW |
| 7 | | **9722105436** | 1 | SCREW, GRUB |
| 8 | | **9722105437** | 4 | WASHER |
| 9 | * | **NSS** | 2 | SEAL |
| 10 | * | **NSS** | 1 | SEAL, SECTION |
| 11 | * | **NSS** | 2 | SEAL, SHAFT |
| 12 | | **9722105441** | 1 | RING, RETAINER |
| 13 | * | **NSS** | 2 | SEAL |
| 14 | | **9722105443** | 4 | BEARING |
| 15 | | **9722105444** | 4 | BUSHING |
| 16 | | **9722105514** | 2 | PLUG |
| 20 | * | **9722105445** | 1 | KIT, SEAL |

*** REPAIR KIT AND/OR PART OF KIT**

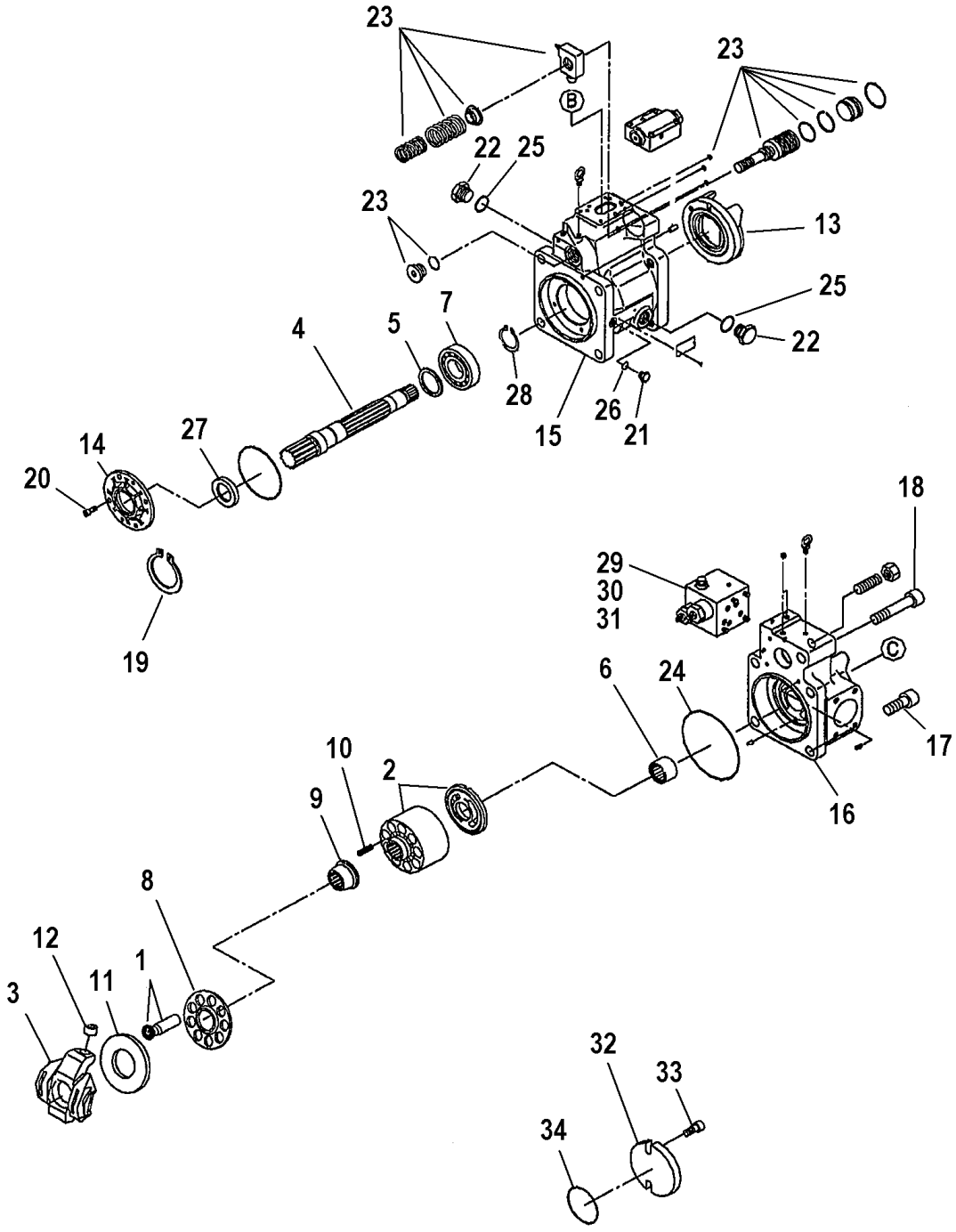


NBR 40 KIT ROTARY

NBR 41 KIT SWASH PLATE

NBR 50 KIT SEAL

7722100100

(SHEET 1 OF 1)

Description
**PUMP ASSEMBLY - PISTON (COMPLETE ASSEMBLY)**

Assembly No.
**7722100100**
Revision:

| Item | FN | Part | Qty | Description |
|---|---|---|---|---|
| 1 | | **NSS** | 1 | PISTON ASSY. GROUP |
| 2 | | **NSS** | 1 | CYLINDER ASSY. |
| 3 | | **NSS** | 1 | SWASHPLATE ASSY. |
| 4 | | **9722105546** | 1 | SHAFT ASSY. |
| 5 | | **9722105547** | 1 | BEARING |
| 6 | | **9722105548** | 1 | BEARING |
| 7 | | **9722105549** | 2 | SPACER |
| 8 | | **NSS** | 1 | SET PLATE |
| 9 | | **NSS** | 1 | BUSHING |
| 10 | | **NSS** | 9 | SPRING |
| 11 | | **NSS** | 1 | SHOE PLATE |
| 12 | | **NSS** | 1 | BUSHING |
| 13 | | **NSS** | 1 | SWASHPLATE SUPPORT |
| 14 | | **9722105550** | 1 | COVER |
| 15 | | **NSS** | 1 | HOUSING, PUMP CASE |
| 16 | | **NSS** | 1 | HOUSING, END COVER |
| 17 | | **9722105551** | 4 | CAPSCREW |
| 18 | | **9722105552** | 1 | CAPSCREW |
| 19 | | **9722105553** | 1 | RING, RETAINER |
| 20 | | **9722105554** | 4 | CAPSCREW |
| 21 | | **9722105555** | 1 | PLUG, BLEEDER |
| 22 | | **9722105556** | 2 | PLUG |
| 23 | | **NSS** | 1 | SERVO PISTON ASSY. |
| 24 | | **9722105567** | 1 | O-RING |
| 25 | | **9722105568** | 2 | O-RING |

Description
**PUMP ASSEMBLY - PISTON (COMPLETE ASSEMBLY)**

Assembly No.
**7722100100**
Revision:

| Item | FN | Part | Qty | Description |
|---|---|---|---|---|
| 26 | | **9722105569** | 1 | O-RING |
| 27 | | **9722105557** | 1 | SEAL, SHAFT |
| 28 | | **9722105570** | 1 | RING, RETAINER |
| 29 | | **9722105558** | 1 | REGULATOR ASSY. |
| 30 | | **9722105559** | 4 | CAPSCREW |
| 31 | | **9722105560** | 7 | O-RING |
| 32 | | **9722105561** | 1 | PLATE, COVER |
| 33 | | **9722105562** | 2 | CAPSCREW |
| 34 | | **9722105563** | 1 | O-RING |
| 40 | | **9722105564** | 1 | KIT, ROTARY GROUP<br>INCLUDES ITEMS 1, 2, 8 THRU 11 |
| 41 | | **9722105565** | 1 | KIT, SWASH PLATE GROUP<br>INCLUDES ITEMS 3 AND 13 |
| 50 | | **9722105566** | 1 | KIT, SEAL |

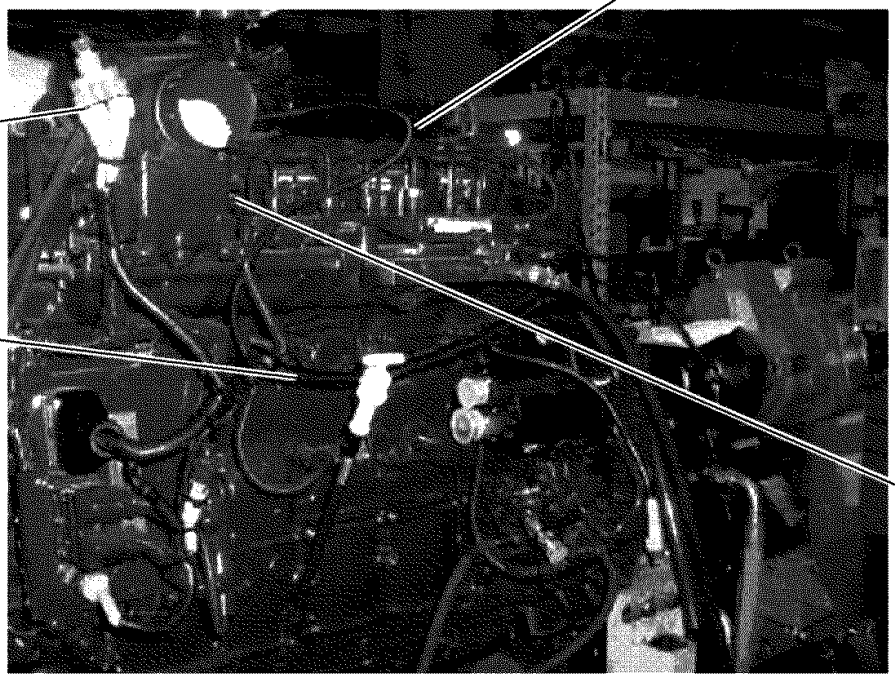
100
100
TIE STRAP
100
TIE STRAP
101
102
107
108
RED CABLES
GRID HEATER
RELAYS TO POS.
GRID
HEATER

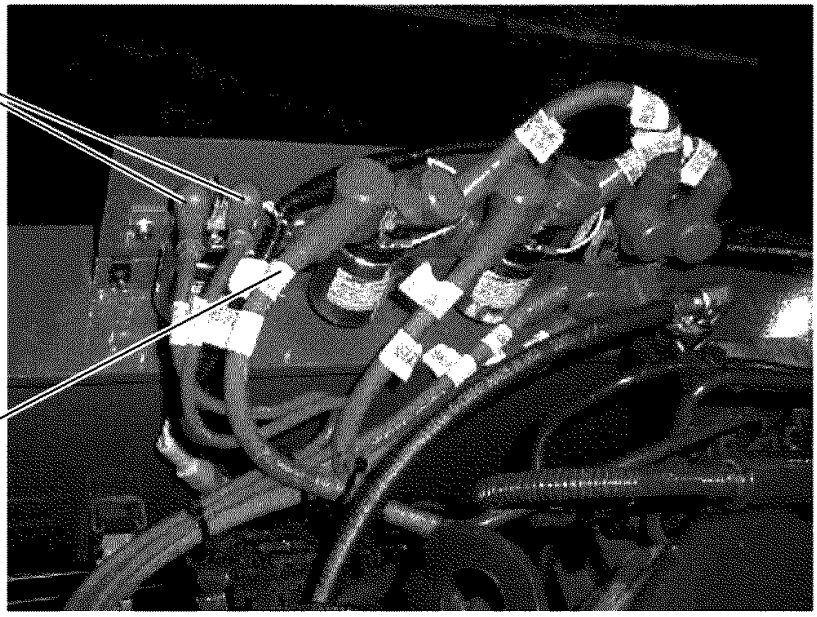
101
CABLES TO "S"
POST AND STARTER
POS POST
101
1/O CABLES FROM
RELAYS TO
GRID HEATER
POS POSTS

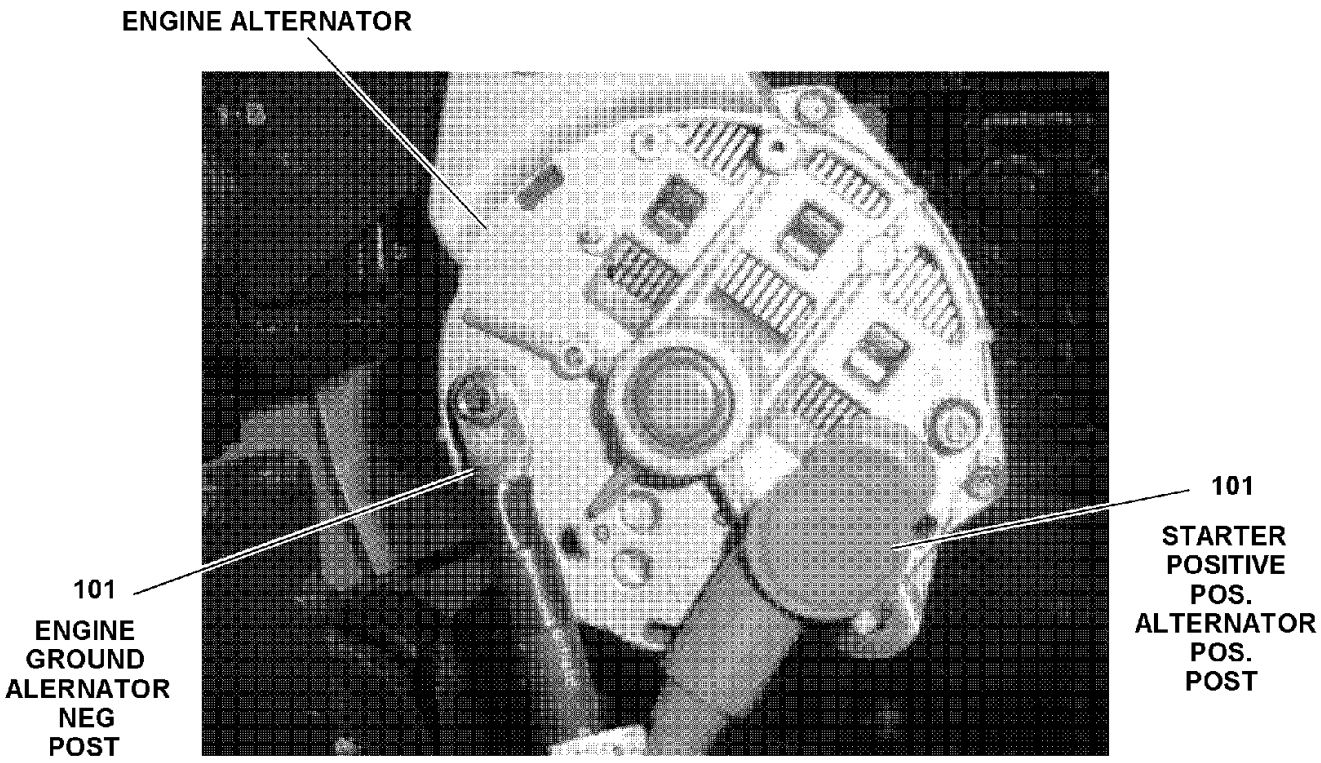
ENGINE ALTERNATOR
101
ENGINE GROUND ALERNATOR NEG POST
101
STARTER POSITIVE POS. ALTERNATOR POS. POST

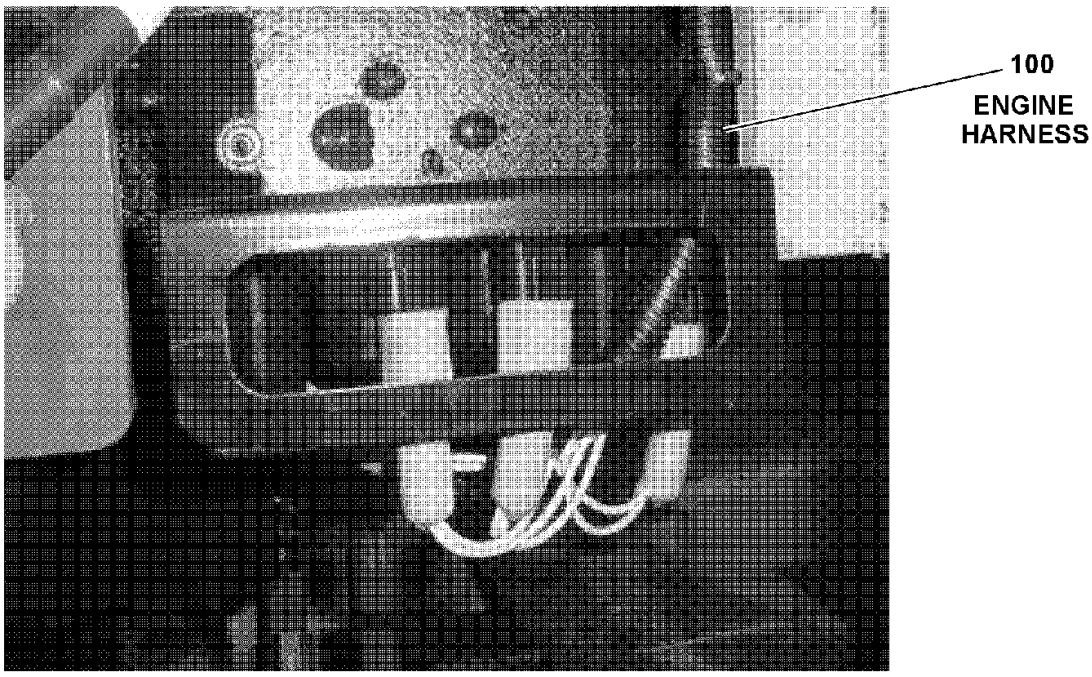
100
ENGINE HARNESS

6978100956

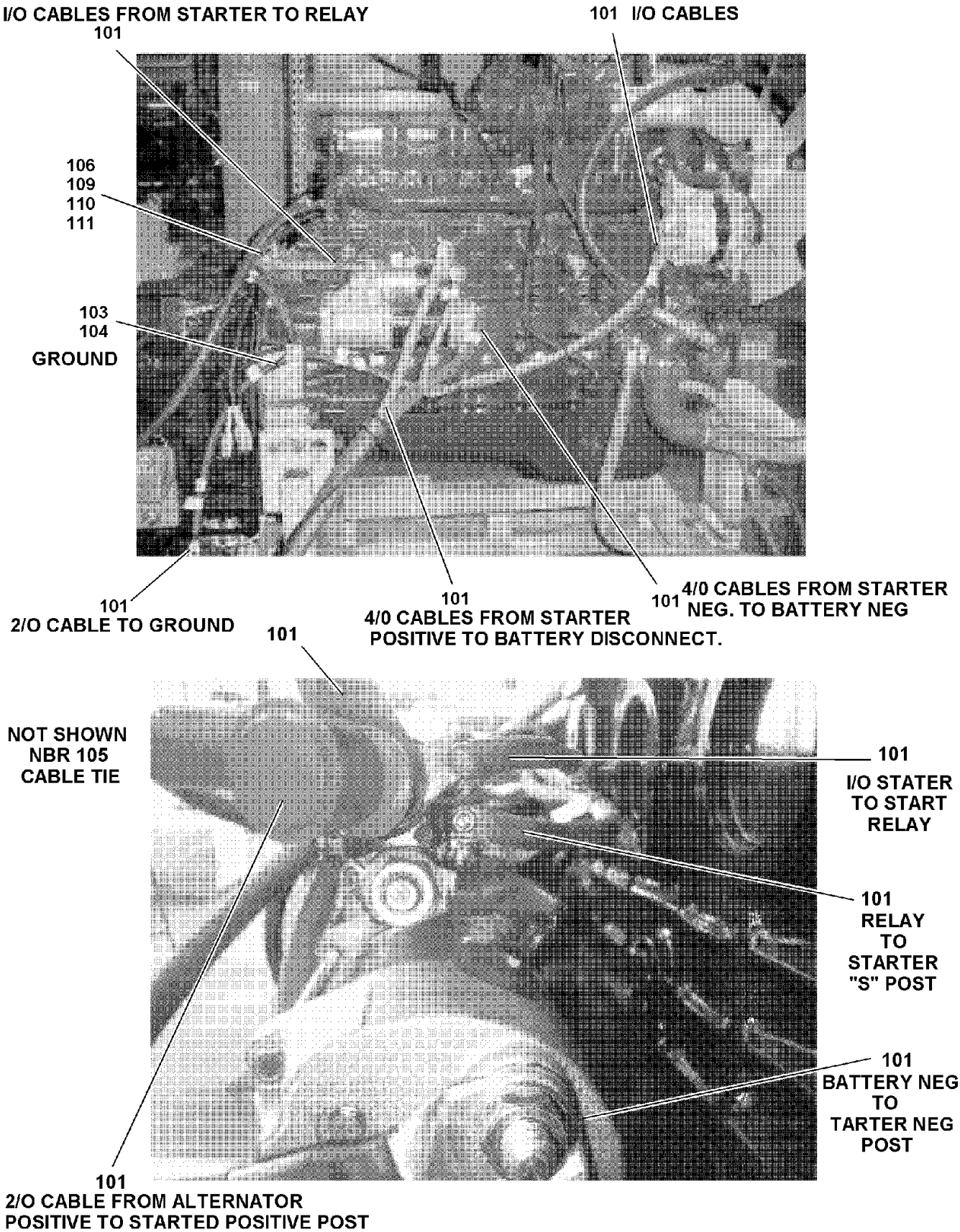


6978100956

(SHEET 1 OF 3)

Description
**ELECTRICAL SYSTEM INSTALLATION - ENGINE**
**(NOT AVAILABLE AS ASSEMBLY)**

Assembly No.
**6978100956**
Revision: #

| Item | FN | Part | Qty | Description |
|---|---|---|---|---|
| 100 | + | **6512100819** | 1 | HARNESS ASSEMBLY - ENGINE (COMPLETE ASSEMBLY) |
| 101 | + | **7246100345** | 1 | KIT - CABLE (ENGINE) (COMPLETE ASSEMBLY) |
| 102 | | **7951150210** | 3 | LOCKWASHER, 6MM I.D. |
| 103 | # | **7950180350** | 2 | LOCK WASHER, 1/2" I.D. |
| 104 | | **7126211353** | 1 | CAP SCREW, M12X30 HEX HEAD |
| 105 | | **7850000208** | 10 | CABLE TIE, BLACK |
| 106 | | **7300000247** | 2 | CLAMP, 1 1/4" TUBING |
| 107 | # | **7661150003** | 3 | NUT, HEX |
| 108 | | **7951150014** | 3 | WASHER, 6MM I.D. |
| 109 | | **7126191250** | 2 | CAP SCREW, M10 X 25MM HEX HEAD |
| 110 | | **7951190014** | 2 | FLAT WASHER, 10MM I.D. |
| 111 | | **7951190210** | 2 | LOCK WASHER, 10MM |

**+ SEE FURTHER BREAKDOWN THIS GROUP**

**# SERVICED AS AN ASSEMBLY ONLY**

| WIRE NO | COLOR | SAE SIZE | LENGTH TOT IN | TP | B/M ITEM NO | REMARKS | TP | B/M ITEM NO | REMARKS |
|---|---|---|---|---|---|---|---|---|---|
| 2A | WHITE | 16 | 53 | F | 17 | ——— | K | 17 | ——— |
| 25 | | 16 | 65 | K | 17 | ——— | J | 17 | ——— |
| 51A | | 16 | 44 | G | STRIP | SEE DETAIL | H | 17 | ——— |
| 51B | | 16 | 44 | G | STRIP | SEE DETAIL | H | 17 | ——— |
| 51C | | 16 | 44 | G | STRIP | SEE DETAIL | H | 17 | ——— |
| 51D | | 16 | 44 | G | STRIP | SEE DETAIL | H | 17 | ——— |
| 51F | | 16 | 53 | F | 17 | ——— | G | STRIP | SEE DETAIL |
| 89A | | 18 | 73 | B | 17 | ——— | K | 17 | ——— |
| 343A | | 16 | 60 | K | 16 | ——— | SB | STRIP | SEE DETAIL |
| 343B | | 18 | 8 | A | 15 | ——— | SB | STRIP | SEE DETAIL |
| 343C | | 18 | 81 | J | 17 | ——— | SB | STRIP | SEE DETAIL |
| 344 | | 12 | 73 | K | 14 | ——— | C | 14 | ——— |
| 345 | | 12 | 73 | G | 20 | ——— | C | 14 | ——— |
| 367 | | 16 | 44 | K | 17 | ——— | H | 17 | ——— |
| 368 | | 16 | 44 | K | 17 | ——— | H | 17 | ——— |
| 371 | | 16 | 44 | K | 17 | ——— | H | 17 | ——— |
| 609 | | 16 | 44 | K | 17 | ——— | H | 17 | ——— |
| 645 | | 18 | 45 | F | 17 | ——— | A | 15 | ——— |
| 646 | | 18 | 45 | F | 17 | ——— | A | 15 | ——— |
| 695 | | 18 | 45 | A | 15 | ——— | B | 25,30 | ——— |
| 697 | | 18 | 45 | A | 15 | ——— | B | 25,30 | ——— |
| 1280 | | 16 | 67 | K | 16 | ——— | E | 16 | ——— |
| 1299 | | 16 | 67 | K | 16 | ——— | E | 16 | ——— |
| SHLD1 | | 16 | 3 | K | STRIP | SEE CABLE 1939A | K | STRIP | SEE CABLE 1939A |
| SHLD2 | | 16 | 3 | D | STRIP | SEE CABLE 1939A | D | STRIP | SEE CABLE 1939A |
| SHLD3 | | 16 | 3 | D | STRIP | SEE CABLE 1939B | D | STRIP | SEE CABLE 1939B |
| SHLD4 | WHITE | 18 | 3 | A | STRIP | SEE CABLE 1939B | A | STRIP | SEE CABLE 1939B |

| | | | | | | | | | |
|---|---|---|---|---|---|---|---|---|---|
| A1 | WHITE | 18 | 6 | A | 15 | ——— | ——— | SEE NOTE 5 | ——— |
| A2 | | 18 | 6 | A | 15 | ——— | ——— | SEE NOTE 5 | ——— |
| A3 | | 18 | 6 | A | 15 | ——— | ——— | SEE NOTE 5 | ——— |
| A4 | | 18 | 6 | A | 15 | ——— | ——— | SEE NOTE 5 | ——— |
| A5 | | 18 | 6 | A | 15 | ——— | ——— | SEE NOTE 5 | ——— |
| A6 | | 18 | 6 | A | 15 | ——— | ——— | SEE NOTE 5 | ——— |
| A7 | | 18 | 6 | A | 15 | ——— | ——— | SEE NOTE 5 | ——— |
| A8 | | 18 | 6 | A | 15 | ——— | ——— | SEE NOTE 5 | ——— |
| A9 | | 18 | 6 | A | 15 | ——— | ——— | SEE NOTE 5 | ——— |
| A10 | | 18 | 6 | A | 15 | ——— | ——— | SEE NOTE 5 | ——— |
| A41 | | 18 | 6 | A | 15 | ——— | ——— | SEE NOTE 5 | ——— |
| A43 | | 18 | 6 | A | 15 | ——— | ——— | SEE NOTE 5 | ——— |
| A44 | | 18 | 6 | A | 15 | ——— | ——— | SEE NOTE 5 | ——— |
| A45 | | 18 | 6 | A | 15 | ——— | ——— | SEE NOTE 5 | ——— |
| A48 | | 18 | 6 | A | 15 | ——— | ——— | SEE NOTE 5 | ——— |
| A49 | | 18 | 6 | A | 15 | ——— | ——— | SEE NOTE 5 | ——— |
| A50 | | 18 | 6 | A | 15 | ——— | ——— | SEE NOTE 5 | ——— |
| B2 | | 16 | 6 | B | 17 | ——— | ——— | SEE NOTE 5 | ——— |
| C2 | | 14 | 10 | C | 14 | ——— | ——— | SEE NOTE 5 | ——— |
| C4 | | 14 | 10 | C | 14 | ——— | ——— | SEE NOTE 5 | ——— |
| JA | | 18 | 6 | J | 17 | ——— | ——— | SEE NOTE 5 | ——— |
| K2 | | 14 | 10 | K | 14 | ——— | ——— | SEE NOTE 5 | ——— |
| K3 | | 16 | 6 | K | 17 | ——— | ——— | SEE NOTE 5 | ——— |
| K4 | | 16 | 6 | K | 17 | ——— | ——— | SEE NOTE 5 | ——— |
| K5 | WHITE | 16 | 6 | K | 17 | ——— | ——— | SEE NOTE 5 | ——— |

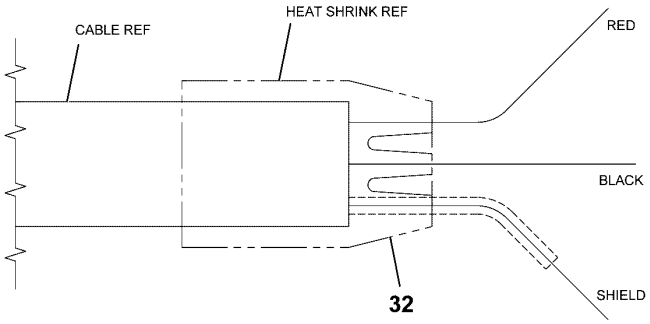


DETAIL AA

CABLE ENDS
TYP-BOTH ENDS

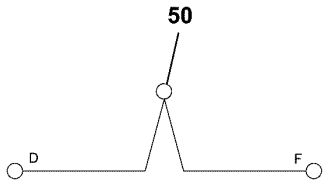


DETAIL 51D-F

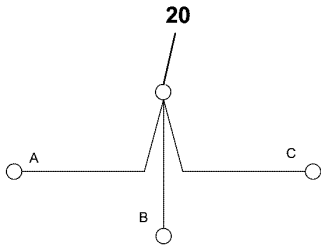


DETAIL 51A-C

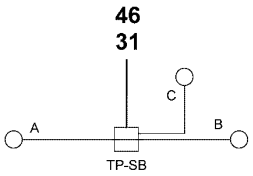


DETAIL 343

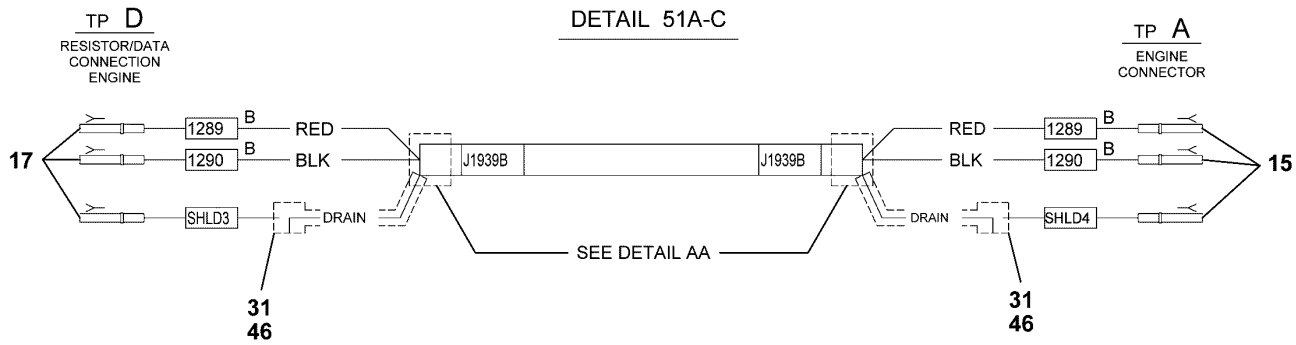


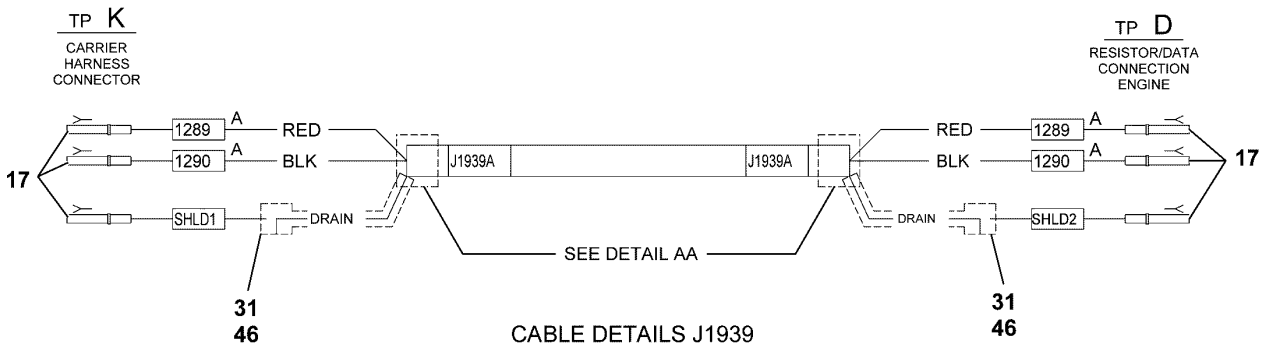


CABLE DETAILS J1939

| WIRE NUMBER LABELS FOR USE ON CABLE ASSYS | | | | | | | | | |
|---|---|---|---|---|---|---|---|---|---|
| WIRE NO | CONDUCTOR COLOR | SAE SIZE | LENGTH TOT IN | CABLE ASSY | TP | REMARKS | TP | REMARKS | LABLES REQ'D |
| 1289A | RED | 10 | 5 | J1939A | K | USE INSUL | D | USE INSUL | 2 |
| 1289B | RED | 10 | 5 | J1939B | A | USE INSUL | D | USE INSUL | 2 |
| 1290A | BLK | 10 | 5 | J1939A | K | USE INSUL | D | USE INSUL | 2 |
| 1290B | BLK | 10 | 5 | J1939B | A | USE INSUL | D | USE INSUL | 2 |

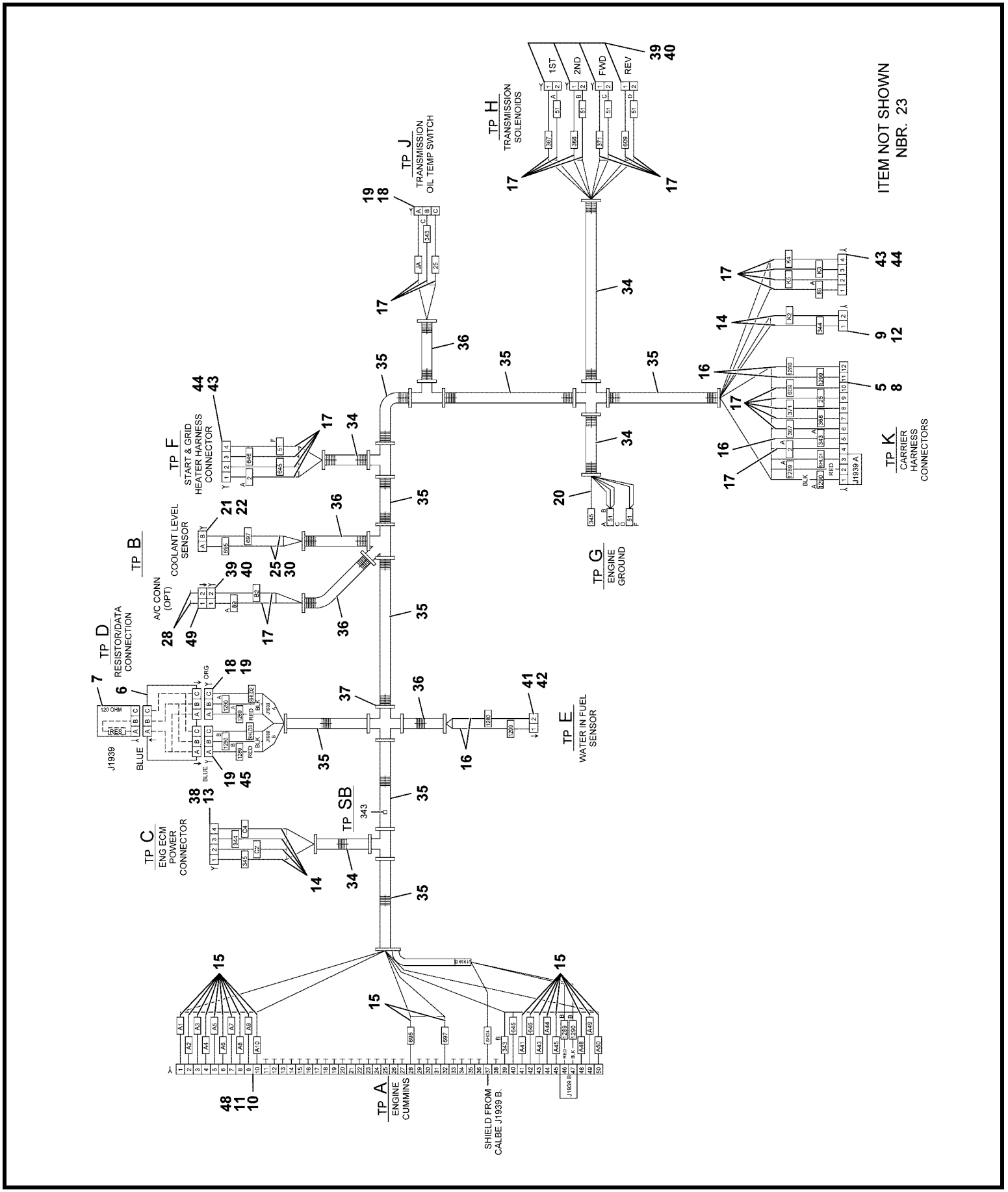


6512100819

(SHEET 1 OF 3)

Description
**HARNESS ASSEMBLY - ENGINE (COMPLETE ASSEMBLY)**

Assembly No.
**6512100819**
Revision: **F**

| Item | FN | Part | Qty | Description |
|---|---|---|---|---|
| 5 | | **7709000846** | 1 | PLUG, 12 SOCKET |
| 6 | | **7892100036** | 1 | RECEPTACLE, 3 WAY |
| 7 | | **7709100902** | 1 | PLUG, 3 PIN |
| 8 | | **7172000552** | 1 | BOOT |
| 9 | | **7172100004** | 1 | BOOT, DTP2S-BT |
| 10 | | **7709100890** | 1 | PLUG, DEUTSCH DRC26-50S-04 |
| 11 | | **7172000554** | 1 | BOOT |
| 12 | | **7709100891** | 1 | PLUG, 2-PASS DEUTSCH DTP |
| 13 | | **7172100006** | 1 | BOOT, DTP4S - BT |
| 14 | | **7826000092** | 6 | SOCKET, (12) 12-14GA |
| 15 | | **7826000651** | 25 | SOCKET, 20 GA AU-PLATE |
| 16 | | **7689000704** | 7 | PIN, 16 - 14 GA |
| 17 | | **7826100004** | 35 | SOCKET, (16 - 18) 30 SERIES |
| 18 | | **7709000874** | 3 | PLUG<br>3 SOCKET |
| 19 | | **7172000547** | 4 | BOOT |
| 20 | | **7345261901** | 2 | TERMINAL<br>12 - 10 AWG |
| 21 | | **7364002517** | 1 | CONNECTOR |
| 22 | | **7364002518** | 1 | CONNECTOR |
| 23 | | **7345001744** | 2 | TERMINAL, FEMALE<br>16 - 14 AWG |
| 25 | | **7892100003** | 2 | TERMINAL, DARK RED CABLE SEAL |
| 28 | | **7689000503** | 2 | PLUG, SEALING<br>16 - 12 AWG |
| 30 | | **7892000843** | 2 | TERMINAL, FEMALE<br>16 - 20 AWG |
| 31 | | **8594100256** | 1 | TUBING, HEAT SHRINK 1/4" I.D.<br>LINER, MELTABLE<br>(QUANTITY IN FEET) |
| 32 | | **8594100257** | 1 | TUBING, HEAT SHRINK 1/2" I.D.<br>LINER, MELTABLE<br>(QUANTITY IN FEET) |
| 34 | | **8594000006** | 5 | FLEXGUARD - .350" I.D.<br>(QUANTITY IN FEET) |
| 35 | | **8594000003** | 6 | FLEXGUARD - .625" I.D.<br>(QUANTITY IN FEET) |

Description
**HARNESS ASSEMBLY - ENGINE (COMPLETE ASSEMBLY)**

Assembly No.
**6512100819**
Revision: **F**

| Item | FN | Part | Qty | Description |
|---|---|---|---|---|
| 36 | | **8594000019** | 7 | FLEXGUARD, 1/4" I.D.<br>(QUANTITY IN FEET) |
| 37 | | **7850000208** | 40 | CABLE TIE, BLACK |
| 38 | | **7709100870** | 1 | PLUG, 4 PASS |
| 39 | | **7709000844** | 2 | PLUG, 2 SOCKET |
| 40 | | **7172000545** | 2 | BOOT, DT2S CONNECTOR |
| 41 | | **7892000949** | 3 | RECEPTACLE,<br>2 PIN |
| 42 | | **7172000546** | 1 | BOOT |
| 43 | | **7709000936** | 2 | PLUG, 4 SOCKET |
| 44 | | **7172000567** | 2 | BOOT, CONNECTOR |
| 45 | | **7709100911** | 1 | PLUG,DT06-3S-CEO6 W/BLUE WEDGE |
| 46 | | **7892000194** | 5 | PARALLEL, NON - INSULATED<br>16 - 14 AWG |
| 48 | | **7826000650** | 25 | PLUG, SEALING |
| 49 | | **7892000949** | 1 | RECEPTACLE,<br>2 PIN |
| 50 | | **7345261701** | 1 | 16 - 14 AWG<br>TERMINAL, ELECTRICAL |

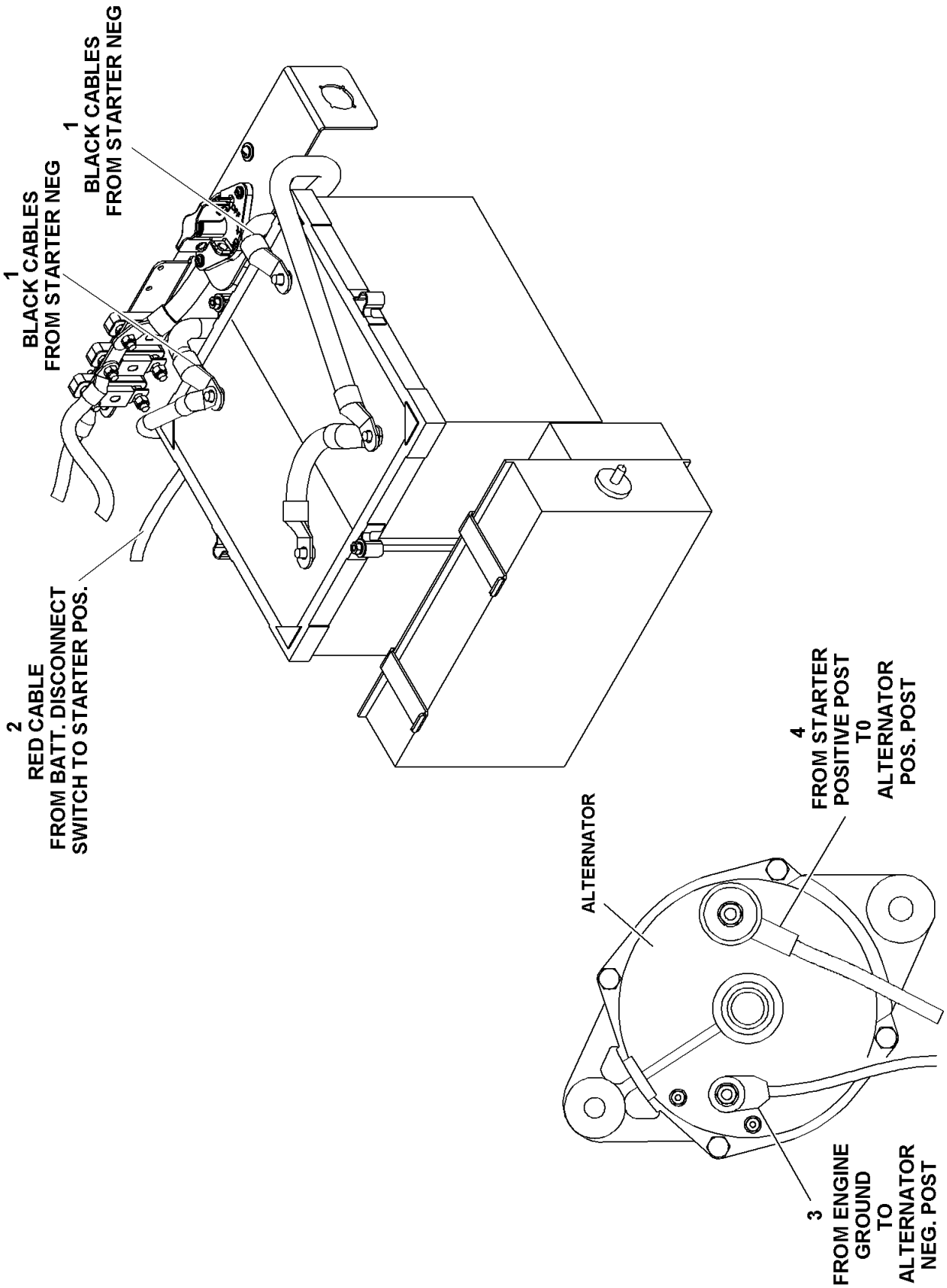


7246100345

(SHEET 2 OF 2)

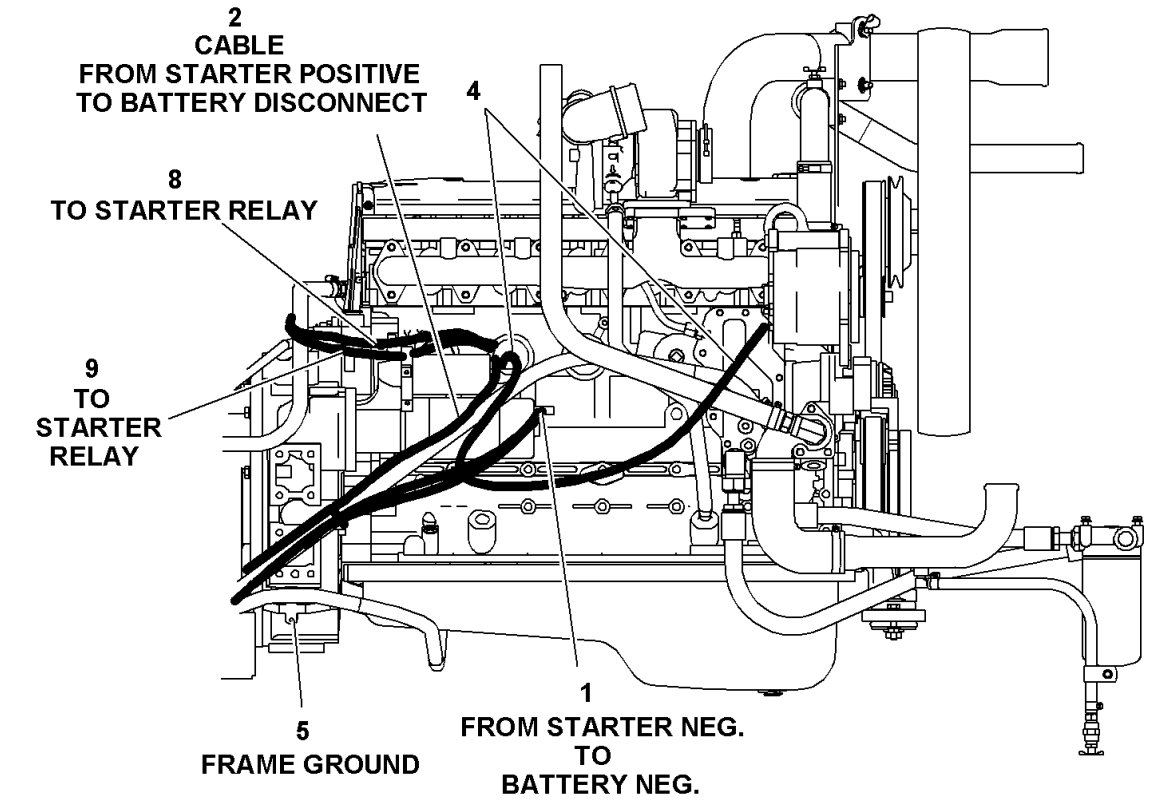


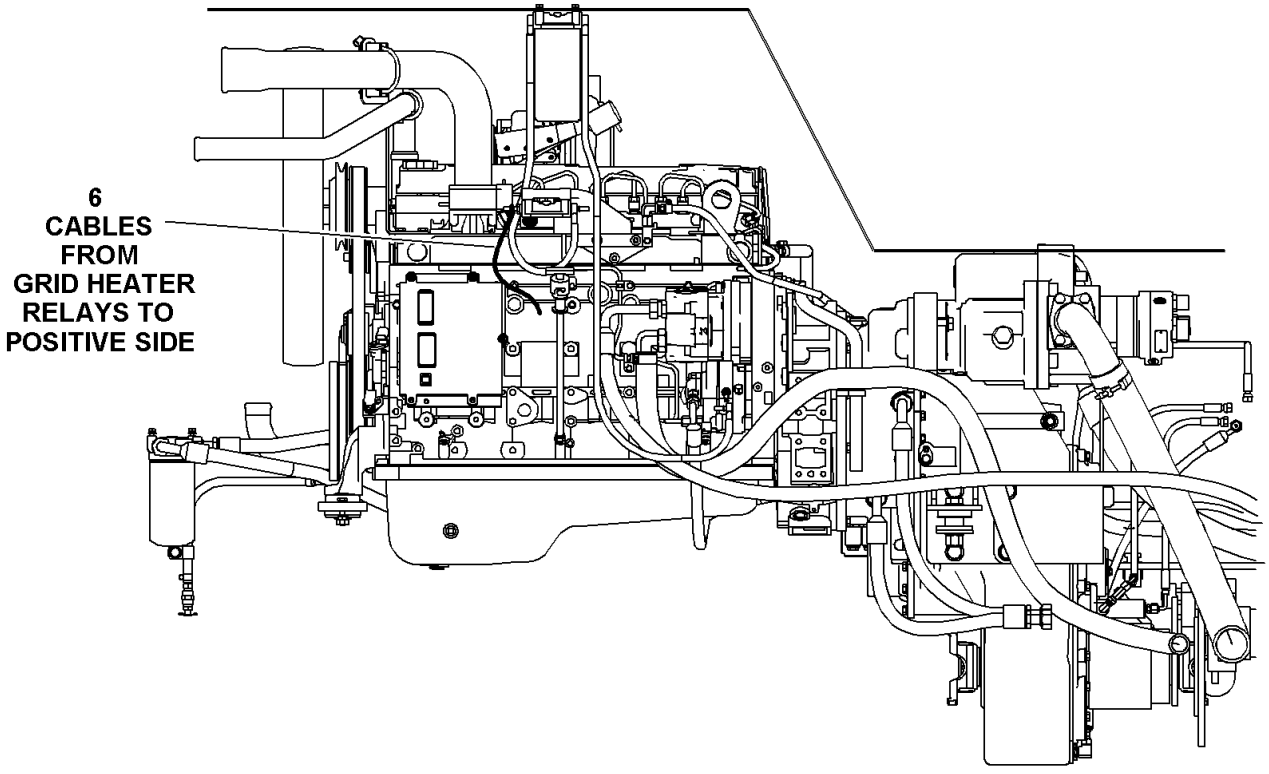


7246100345

(SHEET 1 OF 2)

Description
**KIT - CABLE (ENGINE) (COMPLETE ASSEMBLY)**

Assembly No.
**7246100345**
Revision:

| Item | FN | Part | Qty | Description |
|---|---|---|---|---|
| 1 | | **7246100342** | 2 | CBL-BLK 4/0 90" BAT-/START- |
| | | | | INCLUDES THE FOLLOWING PARTS |
| | | **9246100185** | 1 | BOOT, BLACK |
| 2 | | **7246100343** | 1 | CBL-RED 4/0 84"BAT DISC/START+ |
| | | | | INCLUDES THE FOLLOWING PARTS |
| | | **9246100177** | 2 | BOOT, RED |
| 3 | | **7246100186** | 1 | CABLE-BLK 60"ENG GND TO ALT - |
| 4 | | **7246100145** | 1 | CABLE-RED 1/0 42" (STR TO ALT) |
| | | | | INCLUDES THE FOLLOWING PARTS |
| | | **9246100159** | 2 | BOOT, SWIVEL (RED) |
| 5 | | **7246100028** | 1 | CABLE, BLACK |
| 6 | | **7246100198** | 2 | CABLE-RED 1/0 36" (RLY/GRDHTR) |
| | | | | INCLUDES THE FOLLOWING PARTS |
| | | **9246100159** | 2 | BOOT, SWIVEL (RED) |
| 8 | | **7246100276** | 1 | CABLE-RED 6GA 48" STRTR/RELAY |
| 9 | | **7246100220** | 1 | CABLE-RED 6GA 48" STRTR/RELAY |
| | | | | INCLUDES THE FOLLOWING PARTS |
| | | **9246100168** | 1 | BOOT, RED |

The drawing or bill of material for this installation was not available when this catalog was created. Please contact Rich Rebok at richard.rebok@manitowoc.com for Grove products or Galen Burkholder at galen.burkholder@manitowoc.com for National products to supply us with your mailing information. Once the drawing or bill of material has been completed, we will send you the appropriate pages to be inserted into your manual.

Regards,
Technical Publications Department
Shady Grove, Pennsylvania
www.cranecare.com

Description
**RADIATOR INSTALLATION**

Assembly No.
**80014219**
Revision: #

| Item | FN | Part | Qty | Description |
|---|---|---|---|---|
| 100 | + | **2159810147** | 1 | RADIATOR ASSEMBLY (NOT AVAILABLE AS ASSEMBLY) |
| 101 | | **4159810075** | 1 | SHROUD BACK PLATE |
| 102 | | **4159810074** | 1 | SHROUD BOTTOM PLATE |
| 103 | | **80012114** | 1 | FAN GUARD |
| 104 | | **7910101599** | 1 | TUBE, CHARGE AIR COOL |
| 105 | | **7406000537** | 1 | BELLOWS |
| 106 | | **7406001053** | 2 | BELLOWS |
| 107 | | **8596902521** | 1 | 1.75"ID X 2.13"OD WRAPPED HOSE |
| 108 | | **8596902522** | 1 | 2.00"ID X 2.39"OD WRAPPED HOSE |
| 110 | | **7300000461** | 2 | CLAMP, T-BOLT |
| 111 | | **7300001000** | 4 | CLAMP |
| 112 | | **8596902527** | 5 | HOSE, HEATER 3/8 ID X 11/16 OD |
| 113 | | **7300000195** | 2 | CLAMP, TUBING 3/4" I.D. |
| 114 | | **7300000121** | 3 | HOSE CLAMP -0.69"MAX |
| 115 | | **7949000235** | 2 | WASHER, 1/2" I.D. FLAT |
| 116 | | **7126212150** | 2 | CAP SCREW, M12 X 70MM HEX HEAD |
| 117 | | **6949000036** | 4 | WASHER, HARDENED ROUND 1/2" I.D. |
| 118 | # | **7638000044** | 2 | SHOCK, MOUNTING |
| 119 | | **7661210003** | 4 | NUT, HEX 12MM N.C. |
| 120 | | **4159810077** | 2 | STRAP, MOUNTING |
| 121 | | **7951210014** | 6 | WASHER, FLAT #12 |
| 122 | | **7126211250** | 2 | CAP SCREW, M12 X 25MM HEX HEAD |
| 123 | | **7126211450** | 2 | CAP SCREW, M12 X 35MM HEX HEAD |
| 124 | | **7300000035** | 2 | CLAMP, HOSE 1 13/16" TO 2 3/4" |
| 125 | | **8246964300** | 7 | MOULDING (QUANTITY IN FEET) |
| 126 | | **7951150014** | 18 | WASHER, 6MM I.D. |
| 127 | | **7951150210** | 18 | LOCKWASHER, 6MM I.D. |
| 128 | | **7126151153** | 18 | CAP SCREW, M6X20 HEX HEAD |
| 129 | | **7659190019** | 7 | RETAINING NUT M6 |
| 130 | | **7951170014** | 12 | FLAT WASHER |
| 131 | | **7951170210** | 4 | WASHER, LOCK 8MM |

**+ SEE FURTHER BREAKDOWN THIS GROUP**

**# SERVICED AS AN ASSEMBLY ONLY**

Description
**RADIATOR INSTALLATION**

Assembly No.
**80014219**
Revision: #

| Item | FN | Part | Qty | Description |
|---|---|---|---|---|
| 132 | | **7661170003** | 4 | NUT - 8MM X 1.25 |
| 133 | | **7126171253** | 4 | CAP SCREW, M8X25 HEX HEAD |
| 134 | + | **2159810114** | 1 | TANK ASSEMBLY - SURGE<br>(NOT AVAILABLE AS ASSEMBLY) |
| 135 | | **7300000167** | 1 | CLAMP, HOSE |
| 136 | | **7300000101** | 2 | CLAMP, TUBING<br>1/2" I.D. |
| 137 | | **8596902531** | 6 | TUBE, RUBBER 5/16 ID X 50'LONG |
| 138 | | **7950140161** | 3 | WASHER, 1/4" I.D. FLAT WIDE |
| 139 | | **7951210210** | 6 | LOCK WASHER, 12MM I.D. |
| 140 | | **7300000006** | 2 | CLAMP, HOSE |

**+ SEE FURTHER BREAKDOWN THIS GROUP**

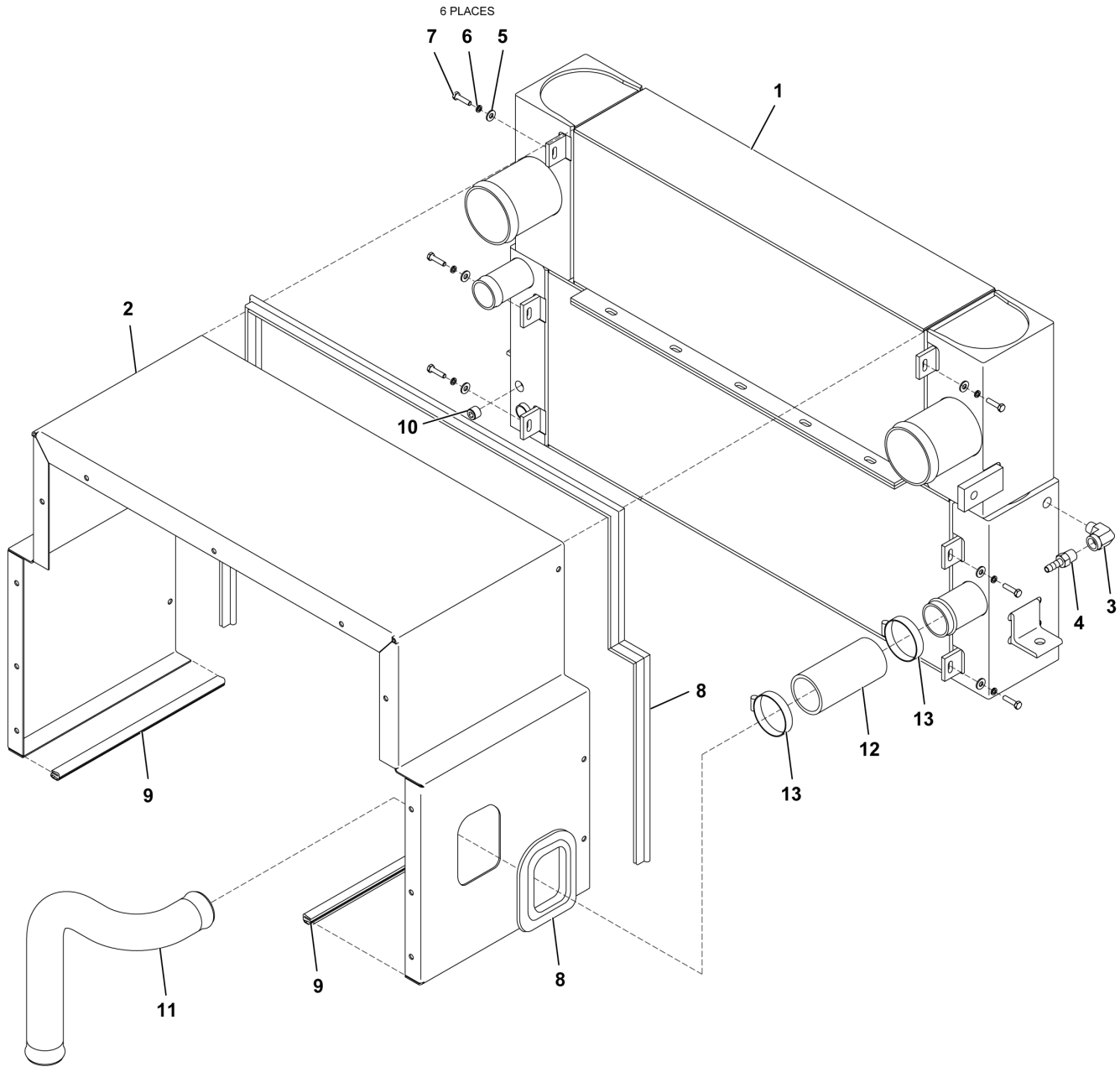


2159810147

(SHEET 1 OF 1)

Description
**RADIATOR ASSEMBLY (NOT AVAILABLE AS ASSEMBLY)**

Assembly No.
**2159810147**
Revision: #

| Item | FN | Part | Qty | Description |
|---|---|---|---|---|
| 1 | + | **7726191194** | 1 | COOLER ASSEMBLY - RADIATOR/CHARGE AIR (COMPLETE ASSEMBLY) |
| 2 | | **2159810148** | 1 | SHROUD<br>INCLUDES THE FOLLOWING PARTS |
| | | **7662150100** | 22 | WELD NUT, M6X1.0 |
| 3 | | **7445060653** | 1 | ELBOW, 90 DEGREE |
| 4 | | **7649000062** | 1 | NIPPLE |
| 5 | | **7950140141** | 11 | WASHER, FLAT 1/4" PLAIN NARROW |
| 6 | | **7951150210** | 11 | LOCKWASHER, 6MM I.D. |
| 7 | | **7126151253** | 11 | CAP SCREW, M6 X 25MM |
| 8 | | **8246964300** | 6 | MOULDING<br>(QUANTITY IN FEET) |
| 9 | | **8637062018** | 2 | MOULDING<br>(QUANTITY IN FEET) |
| 10 | | **7444030031** | 1 | PLUG, PIPE |
| 11 | | **7910101600** | 1 | TUBE, RADIATOR |
| 12 | | **8596902522** | 1 | 2.00"ID X 2.39"OD WRAPPED HOSE |
| 13 | | **7300000035** | 2 | CLAMP, HOSE<br>1 13/16" TO 2 3/4" |

**+ SEE FURTHER BREAKDOWN THIS GROUP**

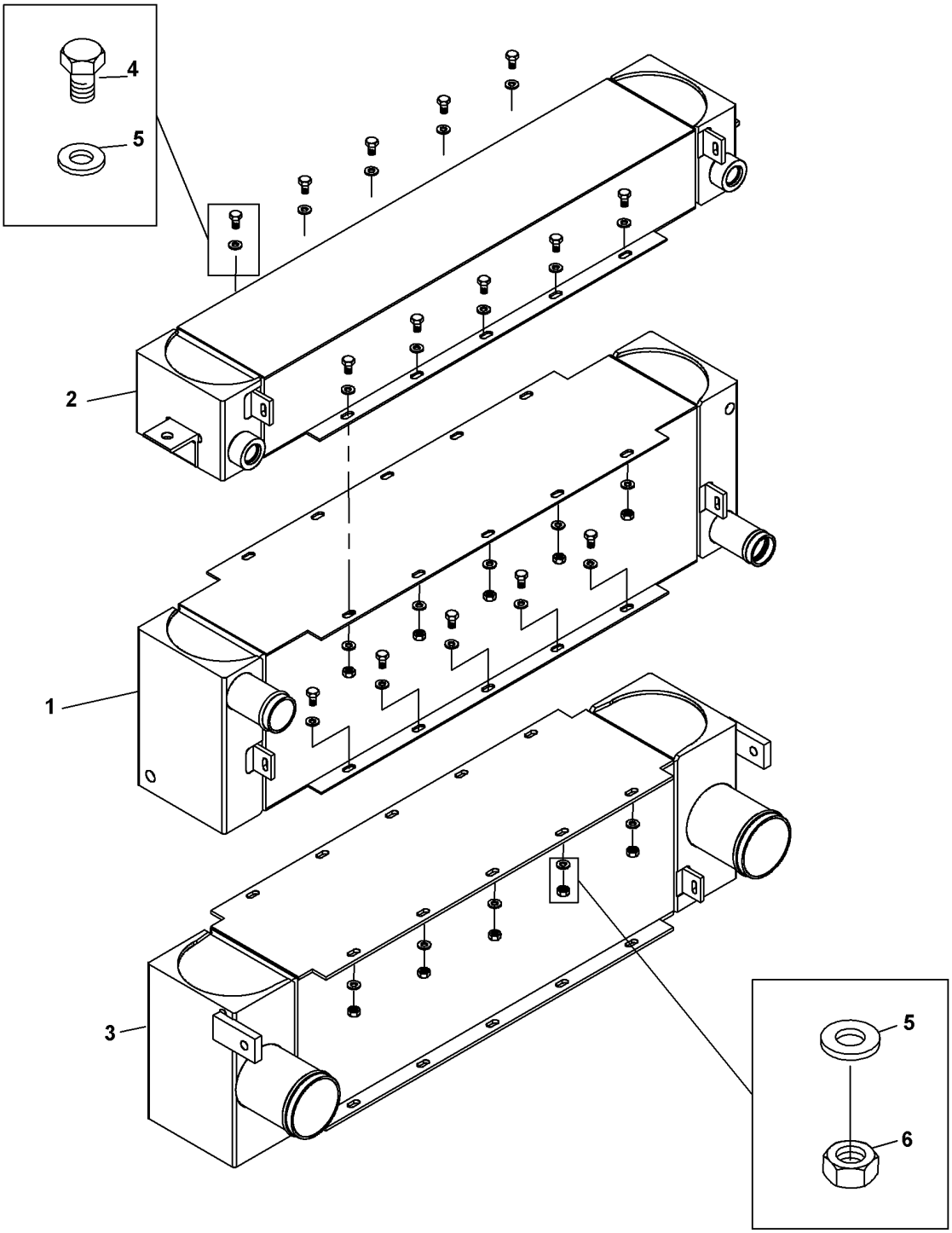


**7726191194**

**(SHEET 1 OF 1)**

Description
**COOLER ASSEMBLY - RADIATOR/CHARGE AIR (COMPLETE ASSEMBLY)**

Assembly No.
**7726191194**
Revision:

| Item | FN | Part | Qty | Description |
|---|---|---|---|---|
| 1 | | **9726100338** | 1 | RADIATOR ASSY. |
| 2 | | **9726100337** | 1 | COOLER ASSY. TRANS. OIL |
| 3 | | **9726100339** | 1 | COOLER ASSY. AIR CHARGE |
| 4 | | **9726100326** | 20 | CAPSCREW |
| 5 | | **9726100169** | 40 | FLATWASHER 8MM I.D. |
| 6 | | **9726100327** | 20 | NUT |

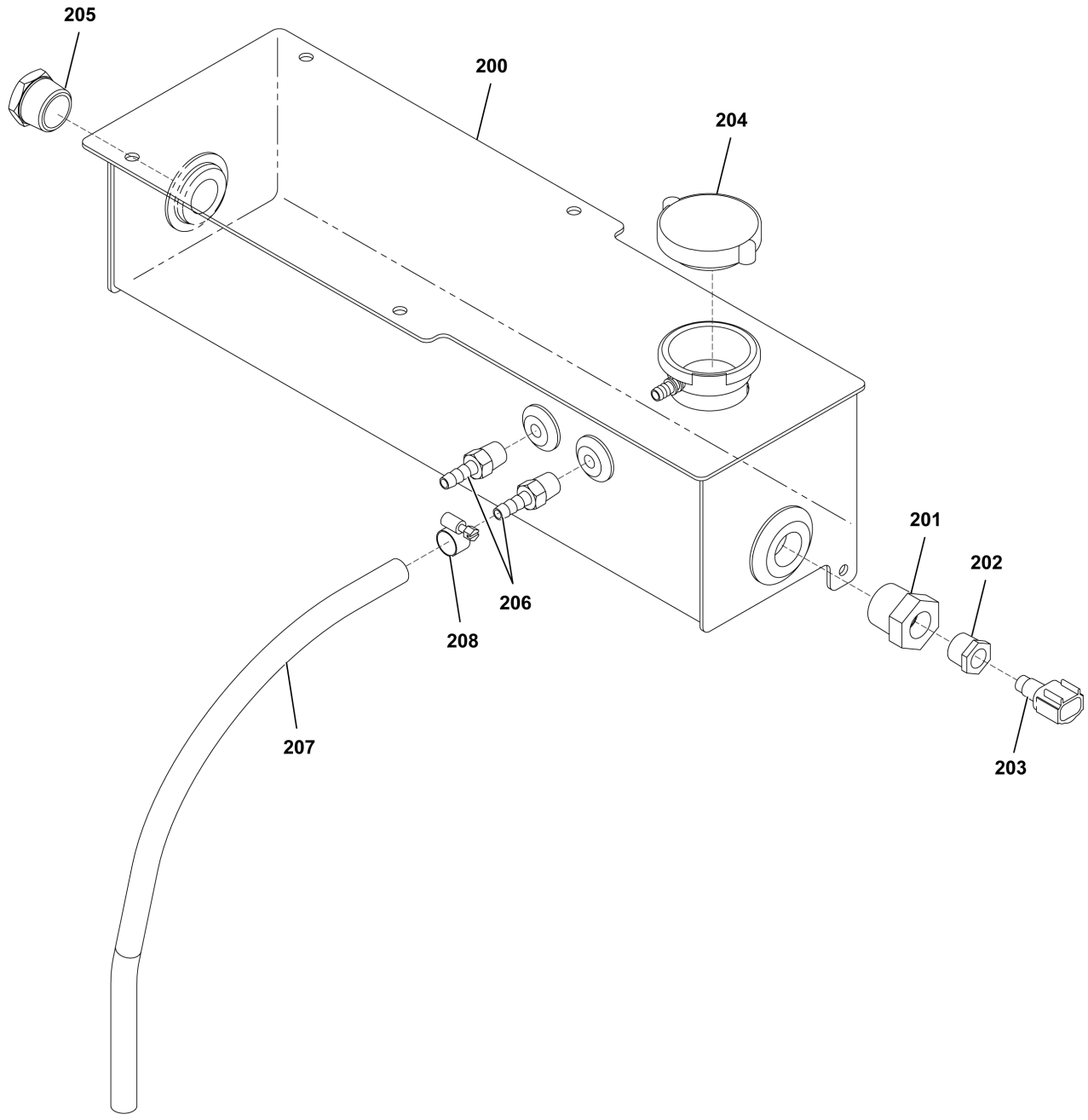


**2159810114**

**(SHEET 1 OF 1)**

Description
**TANK ASSEMBLY - SURGE (NOT AVAILABLE AS ASSEMBLY)**

Assembly No.
**2159810114**
Revision: **B**

| Item | FN | Part | Qty | Description |
|---|---|---|---|---|
| 200 | | **2159810180** | 1 | SURGE TANK |
| 201 | | **7445160850** | 1 | BUSHING, REDUCER |
| 202 | | **7445080450** | 1 | BUSHING, REDUCER |
| 203 | | **7352100036** | 1 | SENSOR-COOLANT LEVEL |
| 204 | | **7258001468** | 1 | RADIATOR CAP |
| 205 | | **7486002666** | 1 | GAUGE, WINDOW |
| 206 | | **7649000062** | 2 | NIPPLE |
| 207 | | **8596902527** | 2 | HOSE, HEATER 3/8 ID X 11/16 OD |
| 208 | | **7300000121** | 1 | HOSE CLAMP -0.69"MAX |
| 209 | | **7649000005** | 1 | NIPPLE |

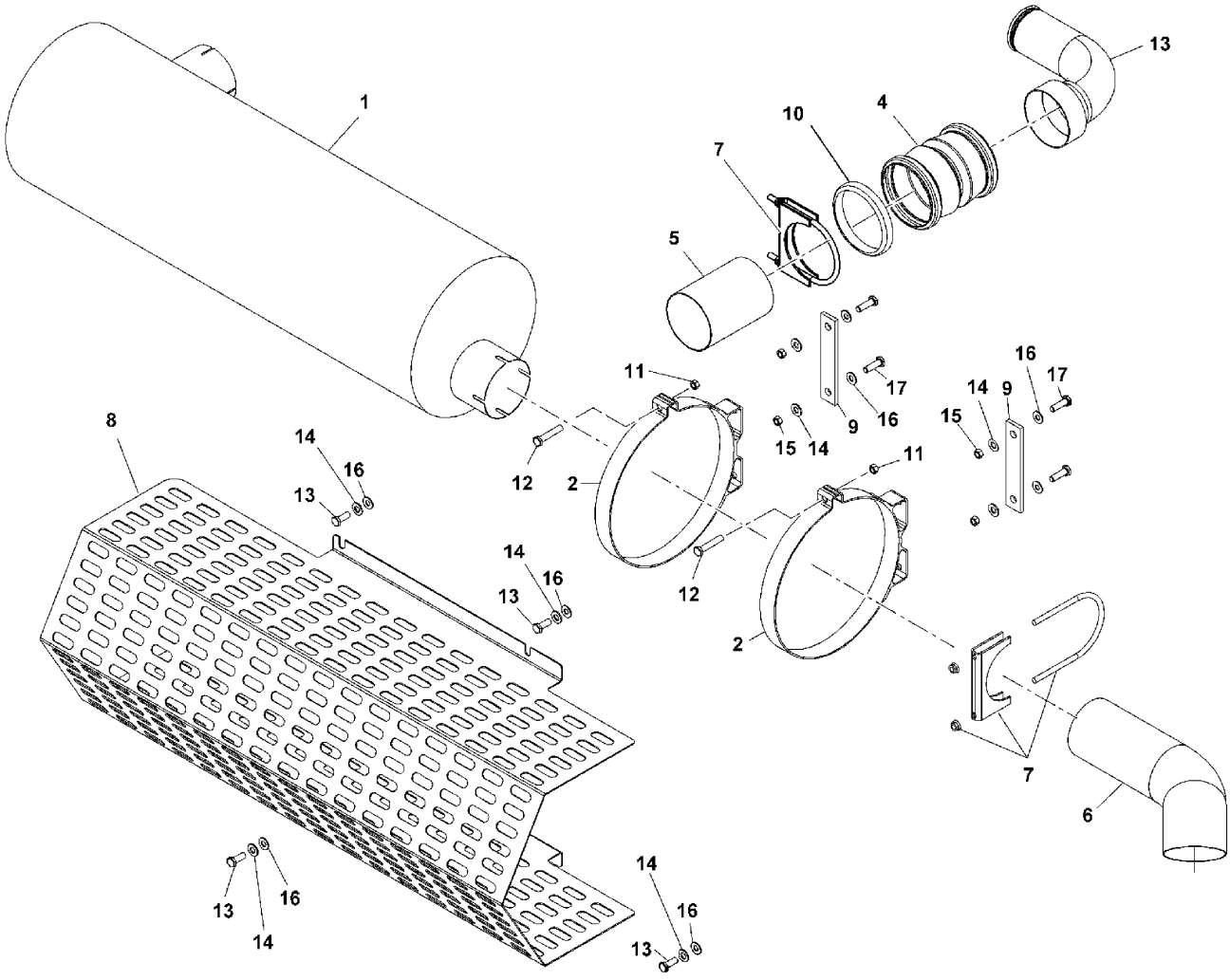


2159810115

(SHEET 1 OF 1)

Description
**SYSTEM INSTALLATION - EXHAUST**

Assembly No.
**2159810115**
Revision: **B**

| Item | FN | Part | Qty | Description |
|---|---|---|---|---|
| 1 | | **7642100004** | 1 | MUFFLER |
| 2 | | **7056000620** | 2 | BAND, MOUNTING |
| 3 | | **7910101450** | 1 | TUBE, EXHAUST |
| 4 | | **7364002995** | 1 | COUPLER, FLEX<br>INCLUDES THE FOLLOWING PARTS |
| | | **9364101388** | 1 | GASKET |
| | | **9364101404** | 1 | CLAMP |
| | | **9364101403** | 1 | RETAINER |
| 5 | | **6910100085** | 1 | TUBE, STRAIGHT |
| 6 | | **6910100017** | 1 | TAILPIPE |
| 7 | | **7300000231** | 2 | MUFFLER CLAMP |
| 8 | | **6814100042** | 1 | GUARD, MUFFLER |
| 9 | | **6705100115** | 2 | PLATE |
| 10 | | **7300000018** | 1 | CLAMP<br>4 1/2" |
| 11 | | **7661171103** | 2 | NUT, HEX<br>8MM N.C. |
| 12 | | **7126171553** | 2 | CAP SCREW, M8 X 40MM HEX HEAD |
| 13 | | **7126191253** | 4 | CAP SCREW |
| 14 | | **7951190220** | 8 | WASHER, LOCK |
| 15 | | **7661190003** | 4 | HEX NUT 10MM I.D. X 1.5 |
| 16 | | **7951190014** | 8 | FLAT WASHER, 10MM I.D. |
| 17 | | **7126191353** | 4 | CAP SCREW, M10 X 30MM HEX HEAD |

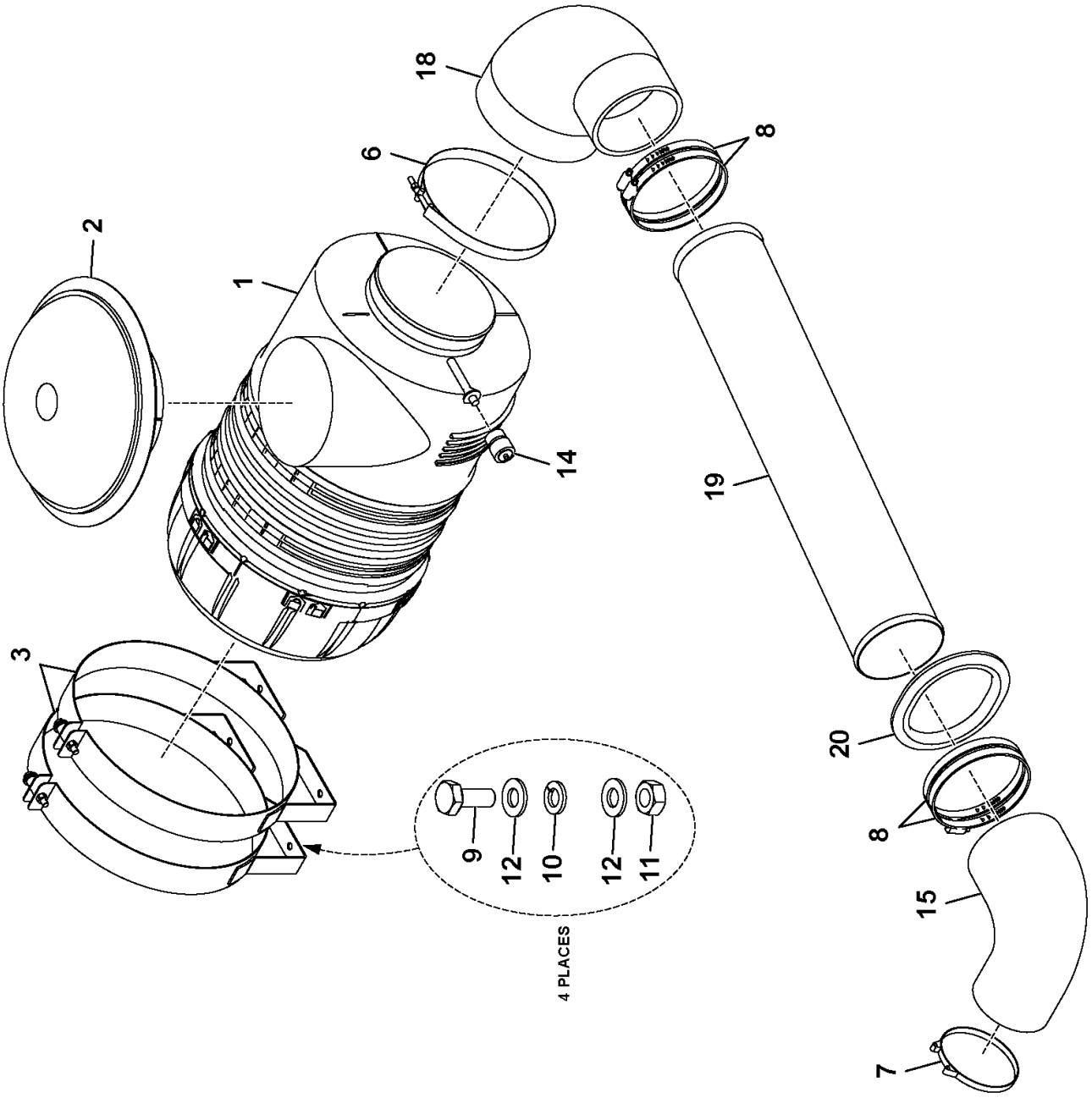


**80009949**

**(SHEET 1 OF 1)**

Description
**AIR CLEANER INSTALLATION**

Assembly No.
**80009949**
Revision: #

| Item | FN | Part | Qty | Description |
|---|---|---|---|---|
| 1 | + | **7304100012** | 1 | CLEANER ASSEMBLY - AIR (COMPLETE ASSEMBLY) |
| 2 | | **7535100006** | 1 | HOOD, INLET |
| 3 | | **7056100011** | 2 | BAND, MOUNTING |
| 6 | | **7300100026** | 1 | CLAMP, T-BOLT 7.75 NOM |
| 7 | | **7300000223** | 1 | CLAMP, T-BOLT |
| 8 | | **7300000206** | 4 | CLAMP, HOSE |
| 9 | | **7126191253** | 4 | CAP SCREW |
| 10 | | **7951190220** | 4 | WASHER, LOCK |
| 11 | | **7661190003** | 4 | HEX NUT 10MM I.D. X 1.5 |
| 12 | | **7951190014** | 8 | FLAT WASHER, 10MM I.D. |
| 14 | | **7486000629** | 1 | INDICATOR, SERVICE |
| 15 | | **7013000156** | 1 | ELBOW |
| 18 | | **80010098** | 1 | 90 DEG REDUCING ELBOW |
| 19 | | **7910101222** | 1 | TUBE, INTAKE 28" |
| 20 | | **8246964300** | 2 | MOULDING (QUANTITY IN FEET) |

**+ SEE FURTHER BREAKDOWN THIS GROUP**

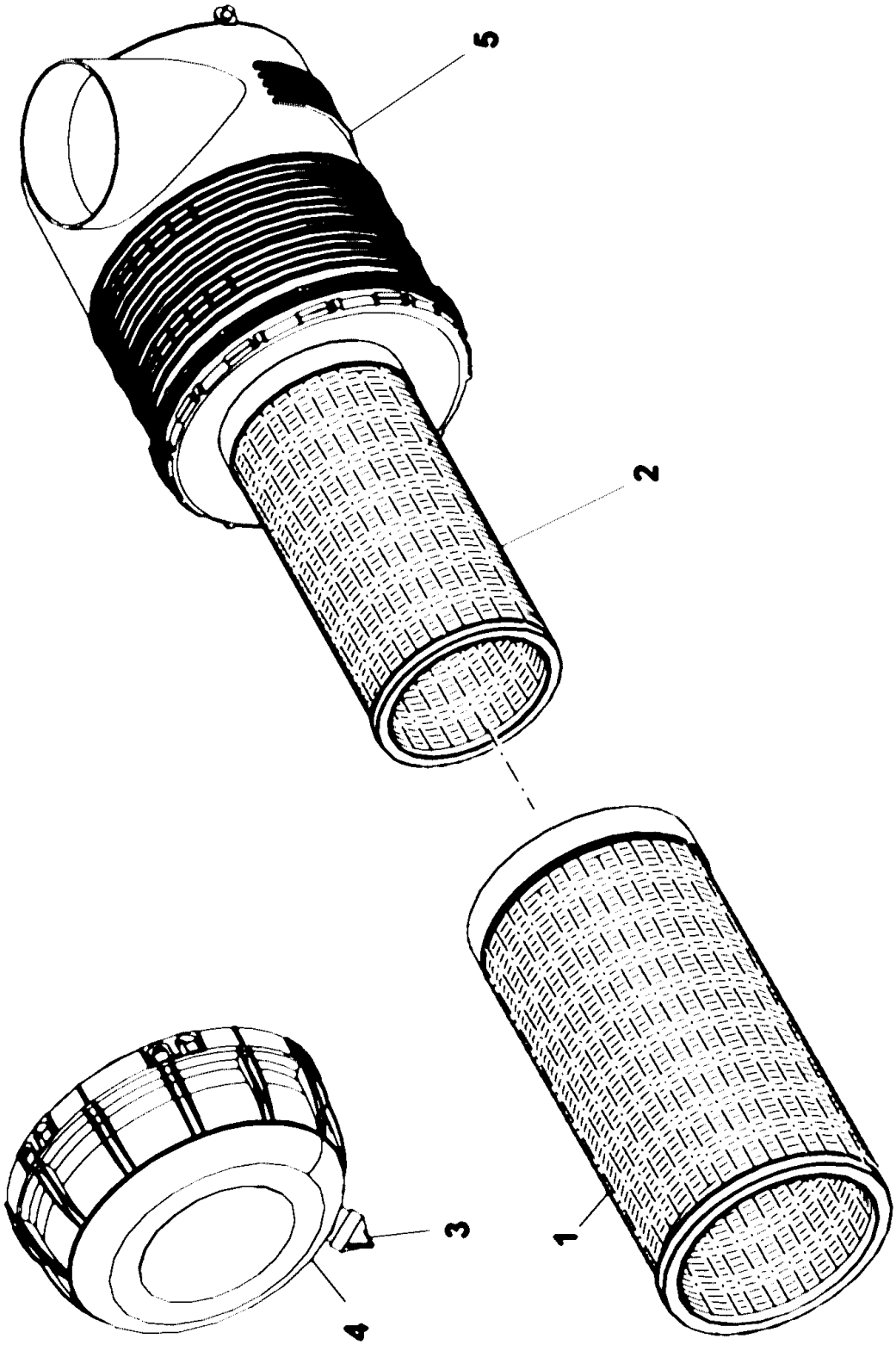


**7304100012**

**(SHEET 1 OF 1)**

Description
**CLEANER ASSEMBLY - AIR (COMPLETE ASSEMBLY)**

Assembly No.
**7304100012**
Revision:

| Item | FN | Part | Qty | Description |
|---|---|---|---|---|
| 1 | | **90001159** | 1 | ELEMENT, PRIMARY |
| 2 | | **90001160** | 1 | ELEMENT, SECONDARY |
| 3 | | **90001162** | 1 | VALVE, DUST EJECTION |
| 4 | | **90001163** | 1 | COVER ASSY. |
| 5 | | **NSS** | 1 | HOUSING |

The drawing or bill of material for this installation was not available when this catalog was created. Please contact Rich Rebok at richard.rebok@manitowoc.com for Grove products or Galen Burkholder at galen.burkholder@manitowoc.com for National products to supply us with your mailing information. Once the drawing or bill of material has been completed, we will send you the appropriate pages to be inserted into your manual.

Regards,
Technical Publications Department
Shady Grove, Pennsylvania
www.cranecare.com

Description
**OIL COOLER INSTALLATION - HYDRAULIC**

Assembly No.
**80013440**
Revision: #

| Item | FN | Part | Qty | Description |
|---|---|---|---|---|
| 1 | | **80010553** | 1 | HYDRAULIC COOLER |
| 2 | | **4159210194** | 1 | MOUNTING BRACKET |
| 3 | | **4159210195** | 1 | MOUNTING BRACKET |
| 4 | | **4159210193** | 1 | PLATE - SHIELD |
| 5 | | **7951170014** | 8 | FLAT WASHER |
| 6 | | **7951170210** | 4 | WASHER, LOCK 8MM |
| 7 | | **7126171253** | 4 | CAP SCREW, M8X25 HEX HEAD |
| 8 | | **7661170003** | 4 | NUT - 8MM X 1.25 |
| 9 | | **7951210014** | 16 | WASHER, FLAT #12 |
| 10 | | **7951210210** | 8 | LOCK WASHER, 12MM I.D. |
| 11 | | **7126211550** | 8 | CAP SCREW M12 X 40 |
| 12 | | **7661210003** | 8 | NUT, HEX 12MM N.C. |
| 13 | | **7659190033** | 4 | NUT, RETAINING M10 X 1.50 |
| 14 | | **7951190014** | 4 | FLAT WASHER, 10MM I.D. |
| 15 | | **7951190210** | 4 | LOCK WASHER, 10MM |
| 16 | | **7126191353** | 4 | CAP SCREW, M10 X 30MM HEX HEAD |

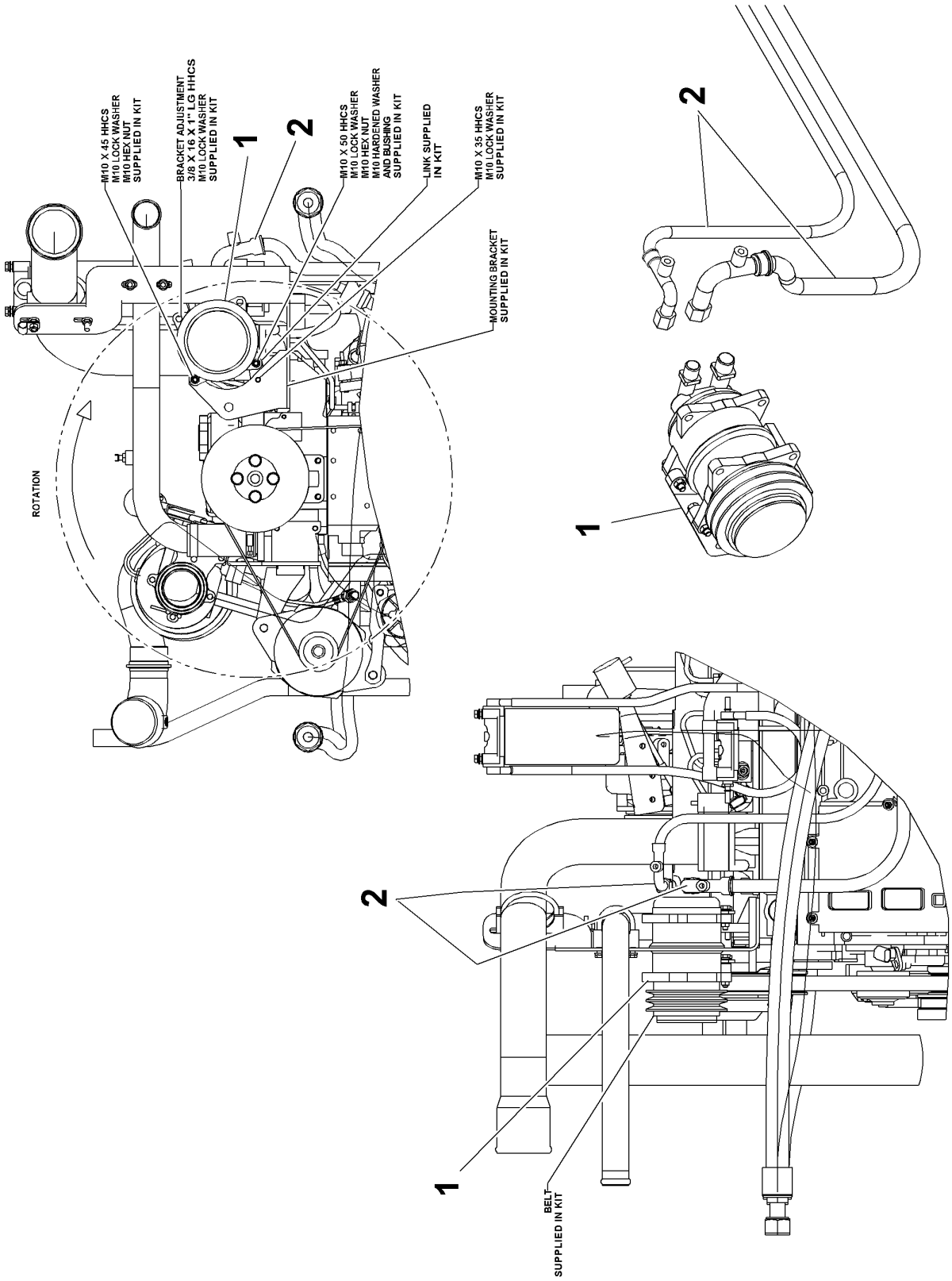


2159810172

(SHEET 1 OF 1)

Description
**COMPRESSOR INSTALLATION- AIR CONDITIONER**

Assembly No.
**2159810172**
Revision: **A**

| Item | FN | Part | Qty | Description |
|---|---|---|---|---|
| 1 | + | **7576134474** | 1 | KIT - CUMMINS AIR CONDITIONER COMPRESSOR 12 VOLT (COMPLETE ASSEMBLY) |
| 2 | + | **7576134451** | 1 | KIT - CARRIER A/C HOSE |

**+ SEE FURTHER BREAKDOWN THIS GROUP**

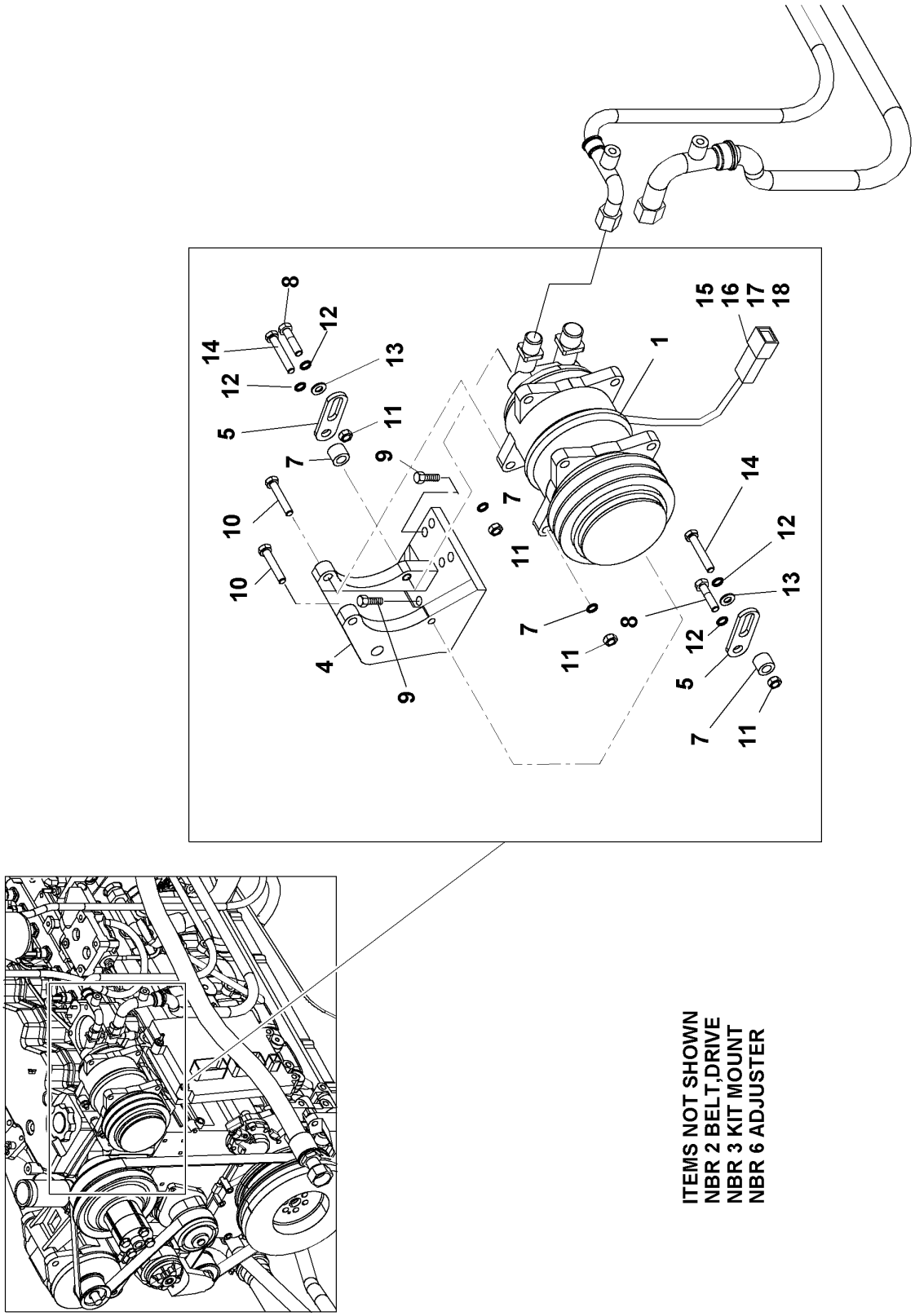


7576134474

(SHEET 1 OF 1)

Description
**KIT - CUMMINS AIR CONDITIONER COMPRESSOR 12 VOLT (COMPLETE ASSEMBLY)**

Assembly No.
**7576134474**
Revision:

| Item | FN | Part | Qty | Description |
|---|---|---|---|---|
| 1 | | **9576101205** | 1 | COMPRESSOR ASSY. 12V. INCLUDES THE FOLLOWING PARTS |
| | | **9515102889** | 1 | CLUTCH ASSY. 12V./PULLEY& COIL |
| | | **9515102890** | 1 | COIL 12V. |
| 2 | | **9576101424** | 1 | BELT, DRIVE |
| 3 | | **9576101420** | 1 | KIT, COMPRESSOR MOUNT INCLUDES ITEM 2, AND 4 THRU 13 |
| 4 | | **9576101407** | 1 | MOUNT, COMPRESSOR |
| 5 | | **9576101421** | 2 | ARM, ADJUSTING |
| 6 | | **9576101422** | 1 | ADJUSTER |
| 7 | | **9576101423** | 2 | SPACER |
| 8 | | **7118160850** | 1 | CAP SCREW, 3/8" - 16 N.C. X 1" GRADE 8 |
| 9 | | **7126191450** | 5 | CAP SCREW, M10 X 35MM HEX HEAD |
| 10 | | **7126191650** | 4 | HHCS M10x45 -8.8 ISO 4014 |
| 11 | | **7661190003** | 4 | HEX NUT 10MM I.D. X 1.5 |
| 12 | | **9515102320** | 10 | LOCK WASHER, 10MM I.D. |
| 13 | | **7951190014** | 2 | FLAT WASHER, 10MM I.D. |
| 14 | | **7126191750** | 2 | CAP SCREW, M10 X 50MM HEX HEAD |
| 15 | | **7892000836** | 1 | RECEPTACLE, 2 PIN |
| 16 | | **7689000704** | 2 | PIN, 16 - 14 GA |
| 17 | | **7172000546** | 1 | BOOT |
| 18 | | **7689000503** | 1 | PLUG, SEALING 16 - 12 AWG |

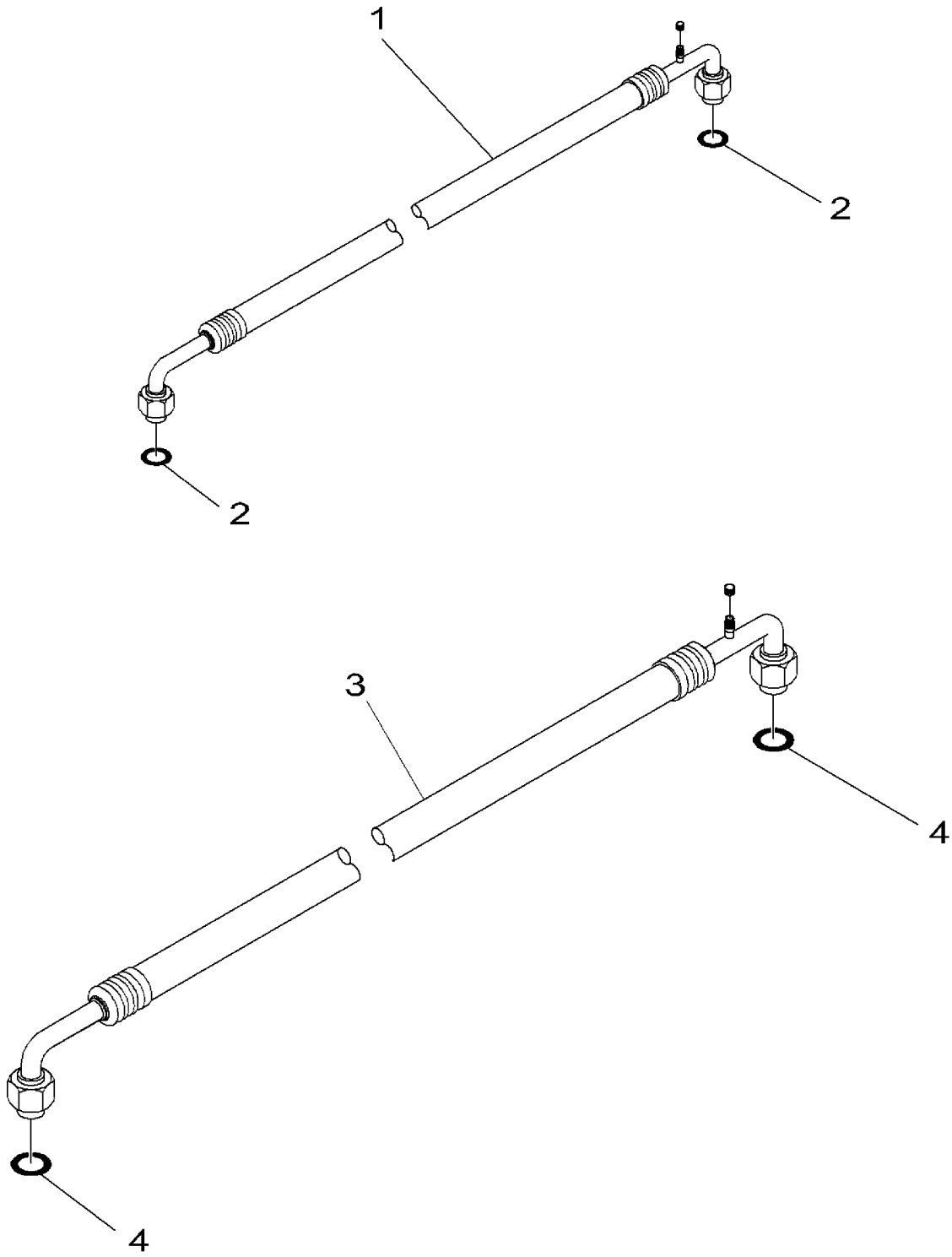


**7576134451**

**(SHEET 1 OF 1)**

Description
**KIT - CARRIER A/C HOSE**

Assembly No.
**7576134451**
Revision:

| Item | FN | Part | Qty | Description |
|---|---|---|---|---|
| 1 | | **9576101202** | 1 | HOSE ASSY. #8 |
| 2 | | **9515102844** | 2 | O-RING #8 |
| 3 | | **9576101203** | 1 | HOSE ASSY. #10 |
| 4 | | **9576101194** | 2 | O-RING #10 |

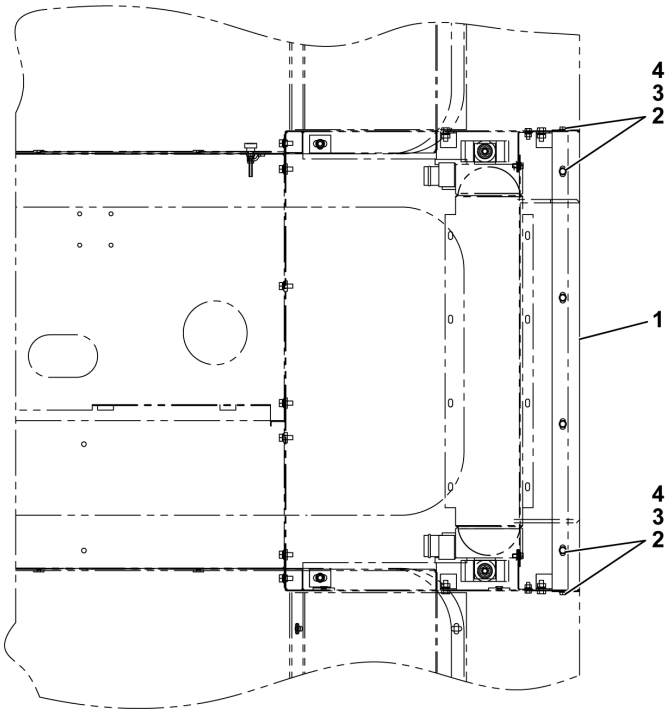


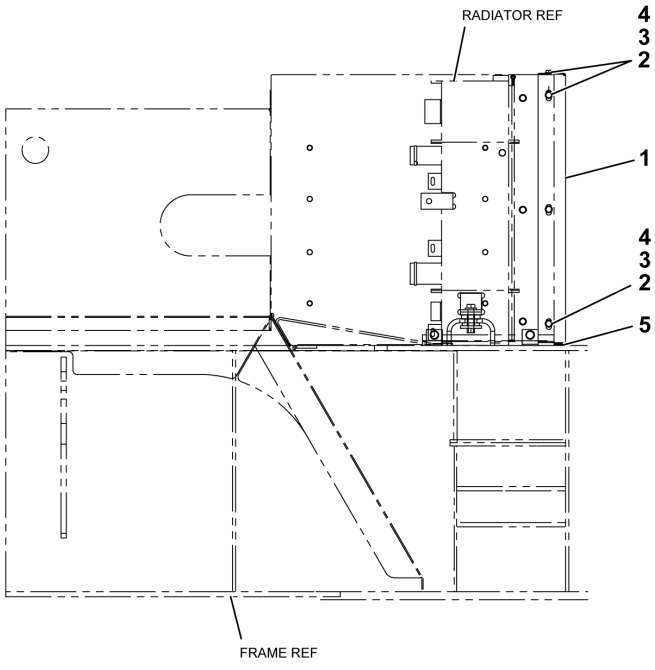


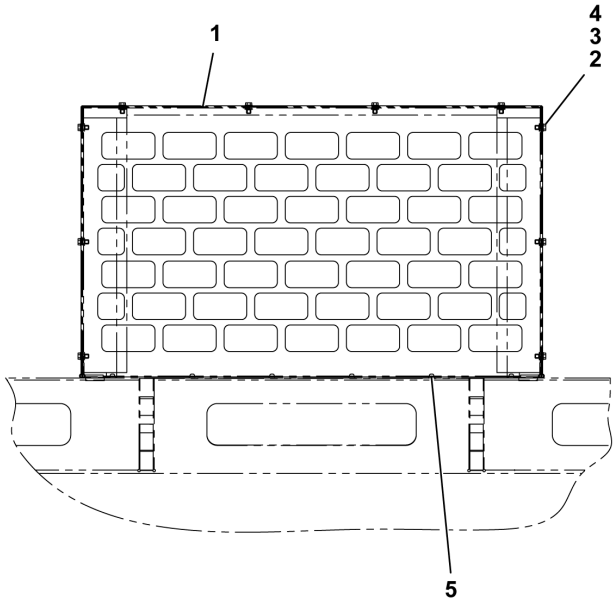


**2159810143**

**(SHEET 1 OF 1)**

Description
**GRILL INSTALLATION - ENGINE HOOD**

Assembly No.
**2159810143**
Revision: #

| Item | FN | Part | Qty | Description |
|---|---|---|---|---|
| 1 | | **4159810068** | 1 | GRILL, ENGINE HOOD |
| 2 | | **7126171150** | 10 | CAP SCREW, M8 X 20MM HEX HEAD |
| 3 | | **7951170014** | 10 | FLAT WASHER |
| 4 | | **7659190020** | 10 | NUT, RETAINING 8 X 1.25 |
| 5 | | **7195000032** | 6 | BUMPER, RUBBER |

The drawing or bill of material for this installation was not available when this catalog was created. Please contact Rich Rebok at richard.rebok@manitowoc.com for Grove products or Galen Burkholder at galen.burkholder@manitowoc.com for National products to supply us with your mailing information. Once the drawing or bill of material has been completed, we will send you the appropriate pages to be inserted into your manual.

Regards,
Technical Publications Department
Shady Grove, Pennsylvania
www.cranecare.com

Description
**BLOCK HEATER ASSEMBLY - 120V**

Assembly No.
**80001526**
Revision: #

| Item | FN | Part | Qty | Description |
|---|---|---|---|---|
| 200 | # | **7515000877** | 1 | HEATER, 750W 120V ENGINE BLOCK |

**# SERVICED AS AN ASSEMBLY ONLY**

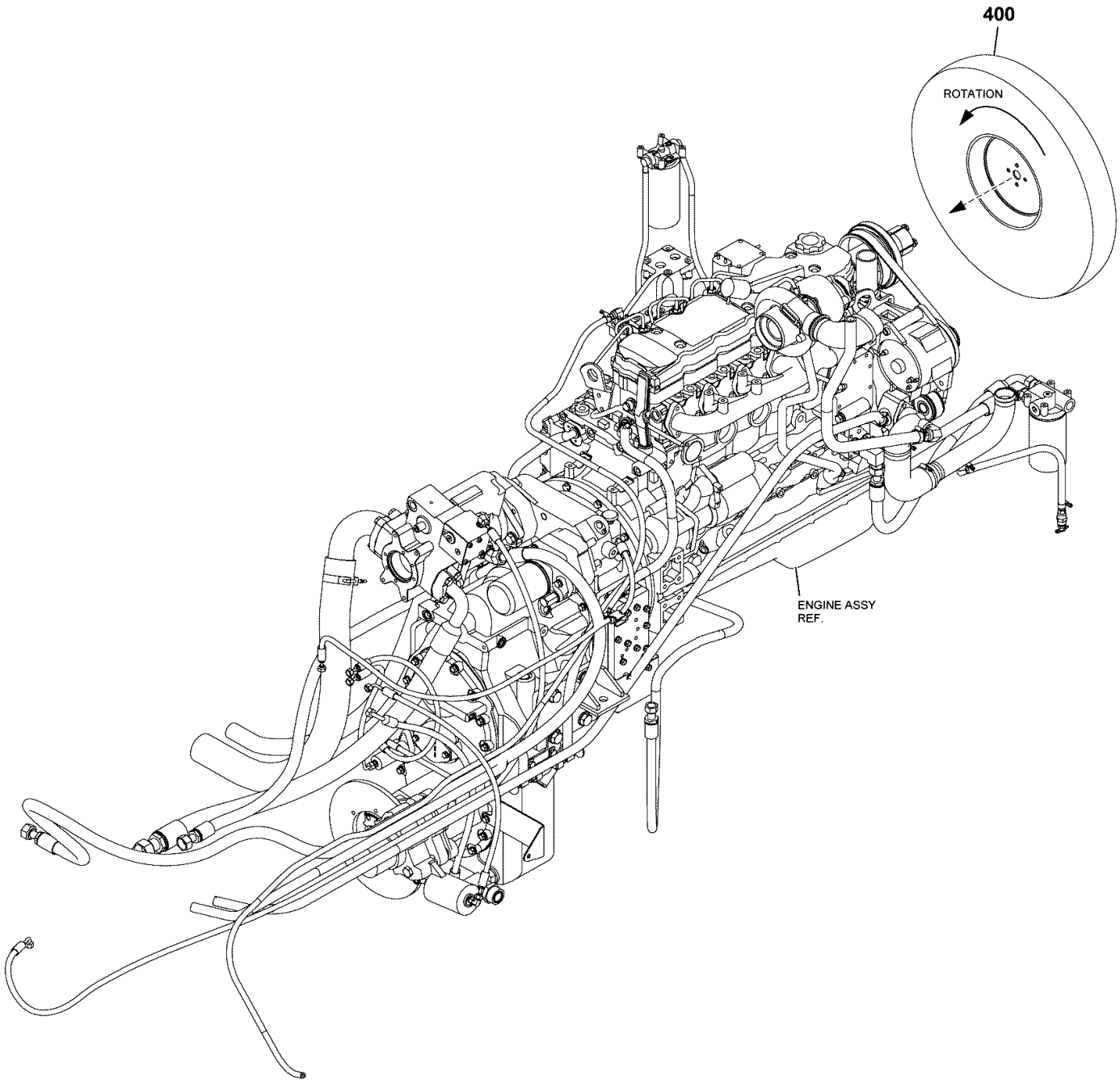


80004881

(SHEET 1 OF 1)

Description
**FAN INSTALLATION - NON CE**

Assembly No.
**80004881**
Revision: #

| Item | FN | Part | Qty | Description |
|---|---|---|---|---|
| 400 | | **7425100007** | 1 | FAN, 9 BLADE CLOCK WISE SUCKER |

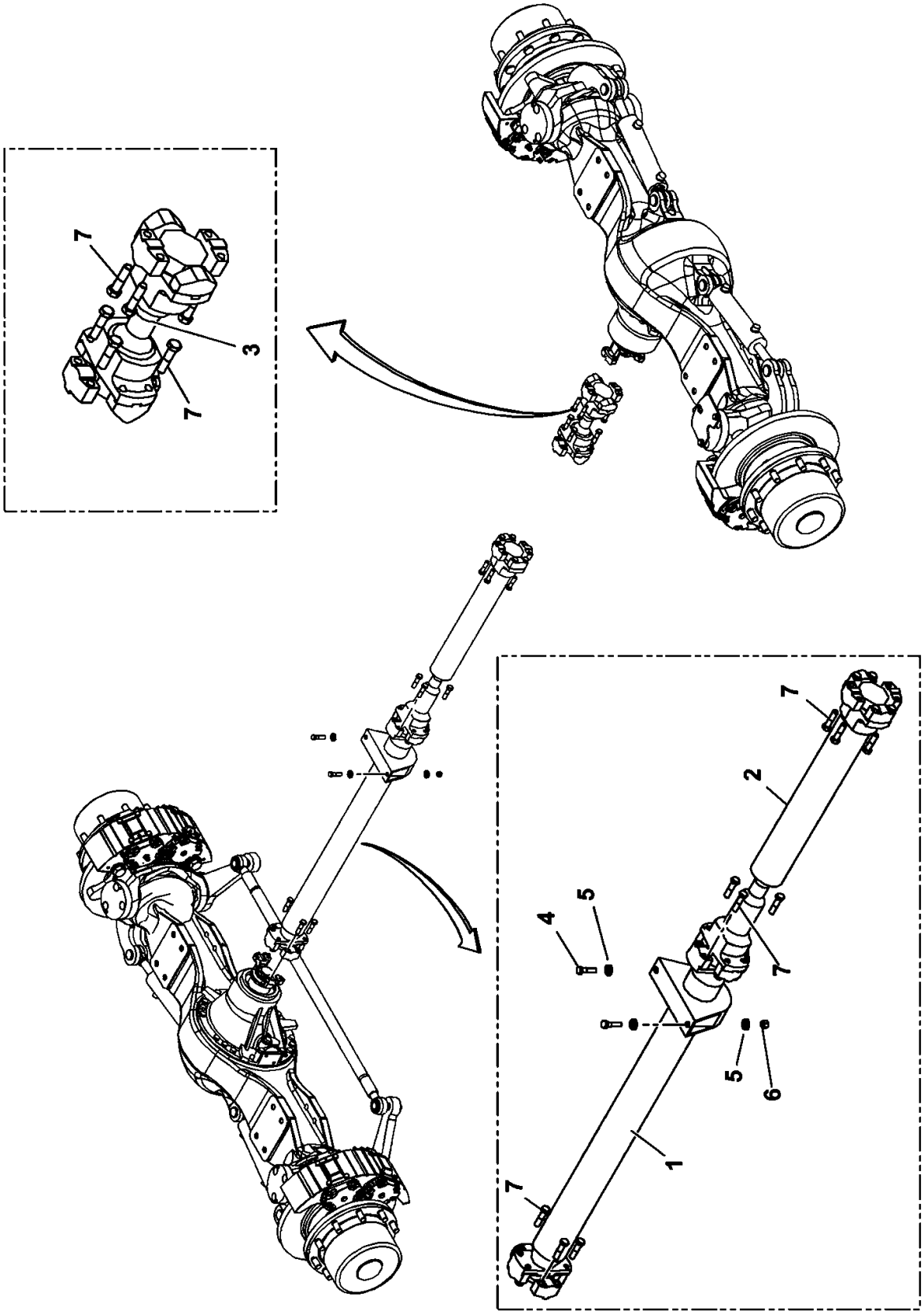


**80011142**

**(SHEET 1 OF 1)**

Description
**DRIVE LINE INSTALLATION**

Assembly No.
**80011142**
Revision: #

| Item | FN | Part | Qty | Description |
|---|---|---|---|---|
| 1 | + | **80000554** | 1 | DRIVE LINE ASSEMBLY WITH CENTER BEARING (COMPLETE ASSEMBLY) |
| 2 | + | **80000556** | 1 | DRIVE LINE ASSEMBLY (COMPLETE ASSEMBLY) |
| 3 | + | **7364100166** | 1 | DRIVE LINE ASSEMBLY (COMPLETE ASSEMBLY) |
| 4 | | **7126211650** | 2 | CAP SCREW, HEX HEAD M12X45 |
| 5 | | **7949000235** | 4 | WASHER, 1/2" I.D. FLAT |
| 6 | | **7661210003** | 2 | NUT, HEX 12MM N.C. |
| 7 | | **7108181650** | 20 | BOLT, HEX |

**+ SEE FURTHER BREAKDOWN THIS GROUP**

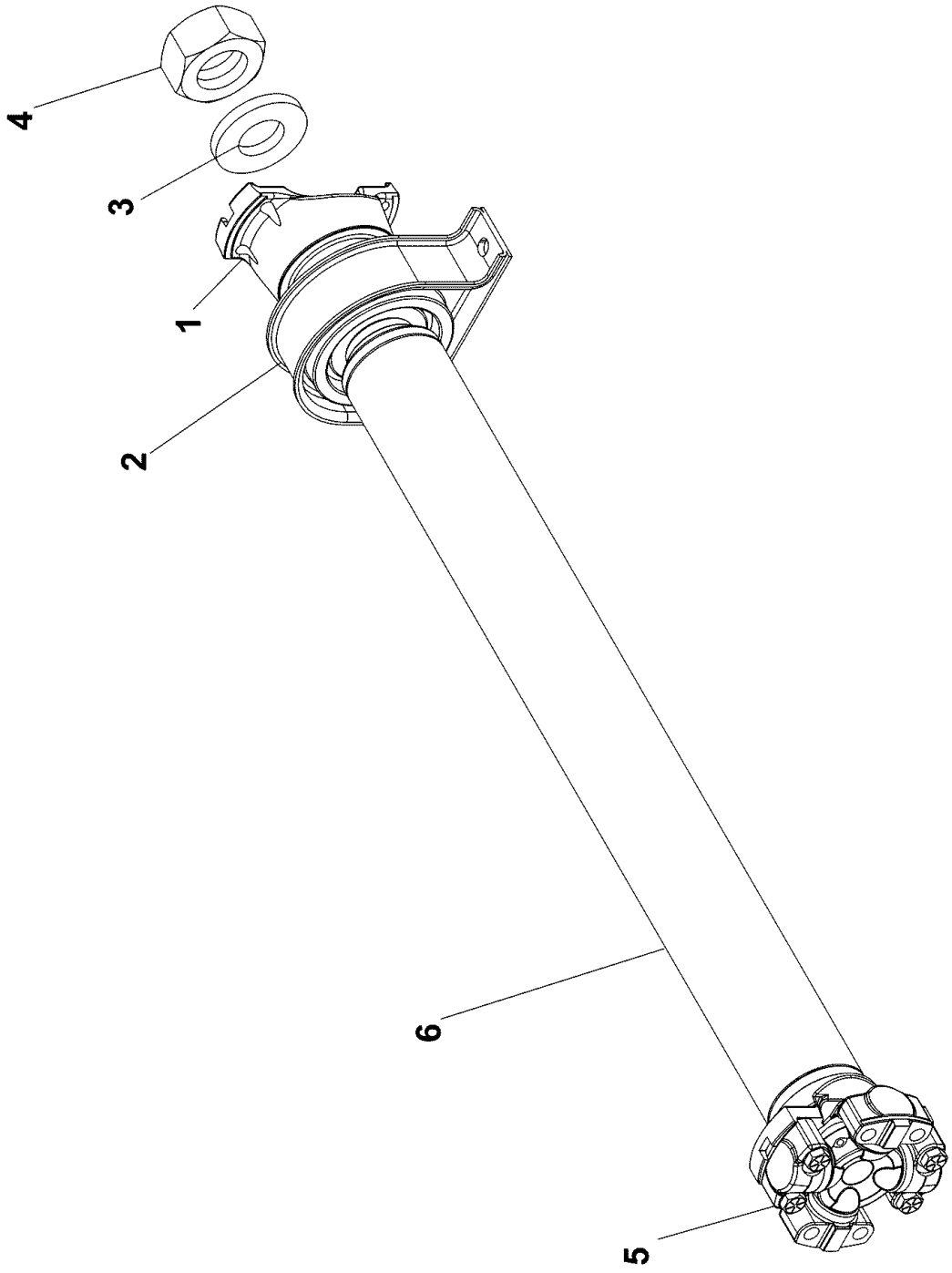


**80000554**

**(SHEET 1 OF 1)**

Description
**DRIVE LINE ASSEMBLY WITH CENTER BEARING (COMPLETE ASSEMBLY)**

Assembly No.
**80000554**
Revision:

| Item | FN | Part | Qty | Description |
|---|---|---|---|---|
| 1 | | **90012592** | 1 | YOKE ASSY. |
| 2 | | **9364101907** | 1 | BEARING, CENTER |
| 3 | | **9364101903** | 1 | WASHER |
| 4 | | **9364101902** | 1 | LOCKNUT |
| 5 | | **9364101535** | 1 | U-JOINT BEARING WITH HARDWARE |
| 6 | | **NSS** | 1 | TUBE WELDMENT |

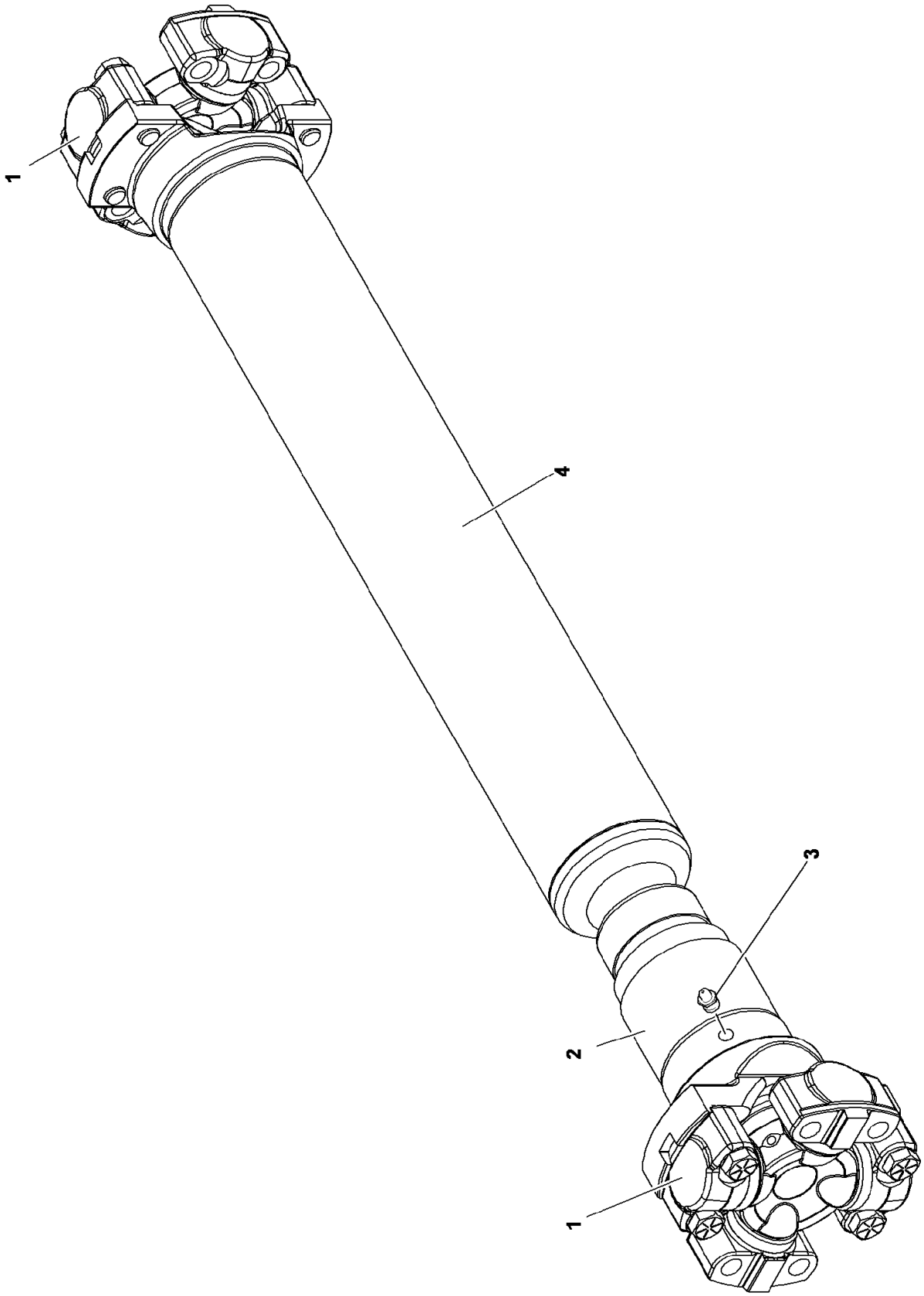


**80000556**

**(SHEET 1 OF 1)**

Description
**DRIVE LINE ASSEMBLY (COMPLETE ASSEMBLY)**

Assembly No.
**80000556**
Revision:

| Item | FN | Part | Qty | Description |
|---|---|---|---|---|
| 1 | | **9364101535** | 2 | U-JOINT BEARING WITH HARDWARE |
| 2 | | **90012594** | 1 | YOKE ASSY. W/ DUST CAP |
| 3 | | **9364101577** | 1 | FITTING, GREASE |
| 4 | | **NSS** | 1 | TUBE WELDMENT |

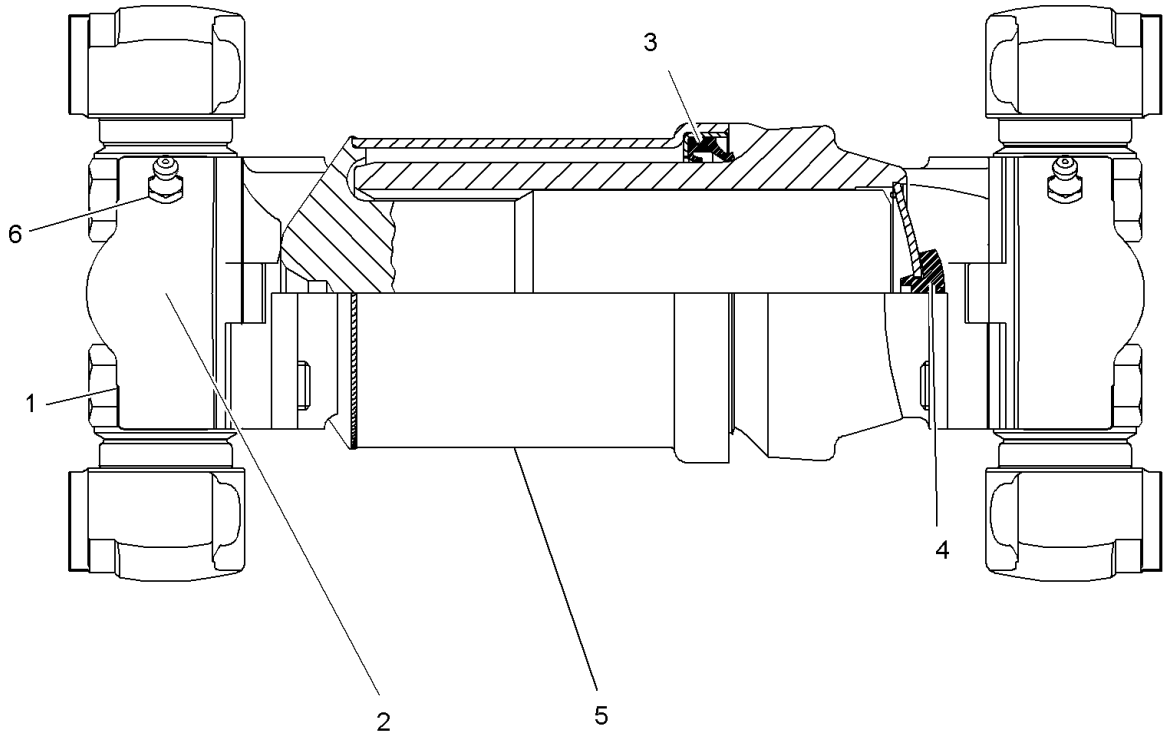


**7364100166**

**(SHEET 1 OF 1)**

Description
**DRIVE LINE ASSEMBLY (COMPLETE ASSEMBLY)**

Assembly No.
**7364100166**
Revision:

| Item | FN | Part | Qty | Description |
|---|---|---|---|---|
| 1 | | **9364101866** | 8 | CAPSCREW |
| 2 | | **9364101867** | 2 | U-JOINT ASSY. |
| 3 | | **9364101868** | 1 | SEAL, SHAFT |
| 4 | | **9364101869** | 1 | VALVE, AIR |
| 5 | | **NSS** | 1 | SHAFT ASSY. |
| 6 | | **9364101870** | 1 | FITTING, GREASE<br>QTY. 1 PER U-JOINT ASSY. |

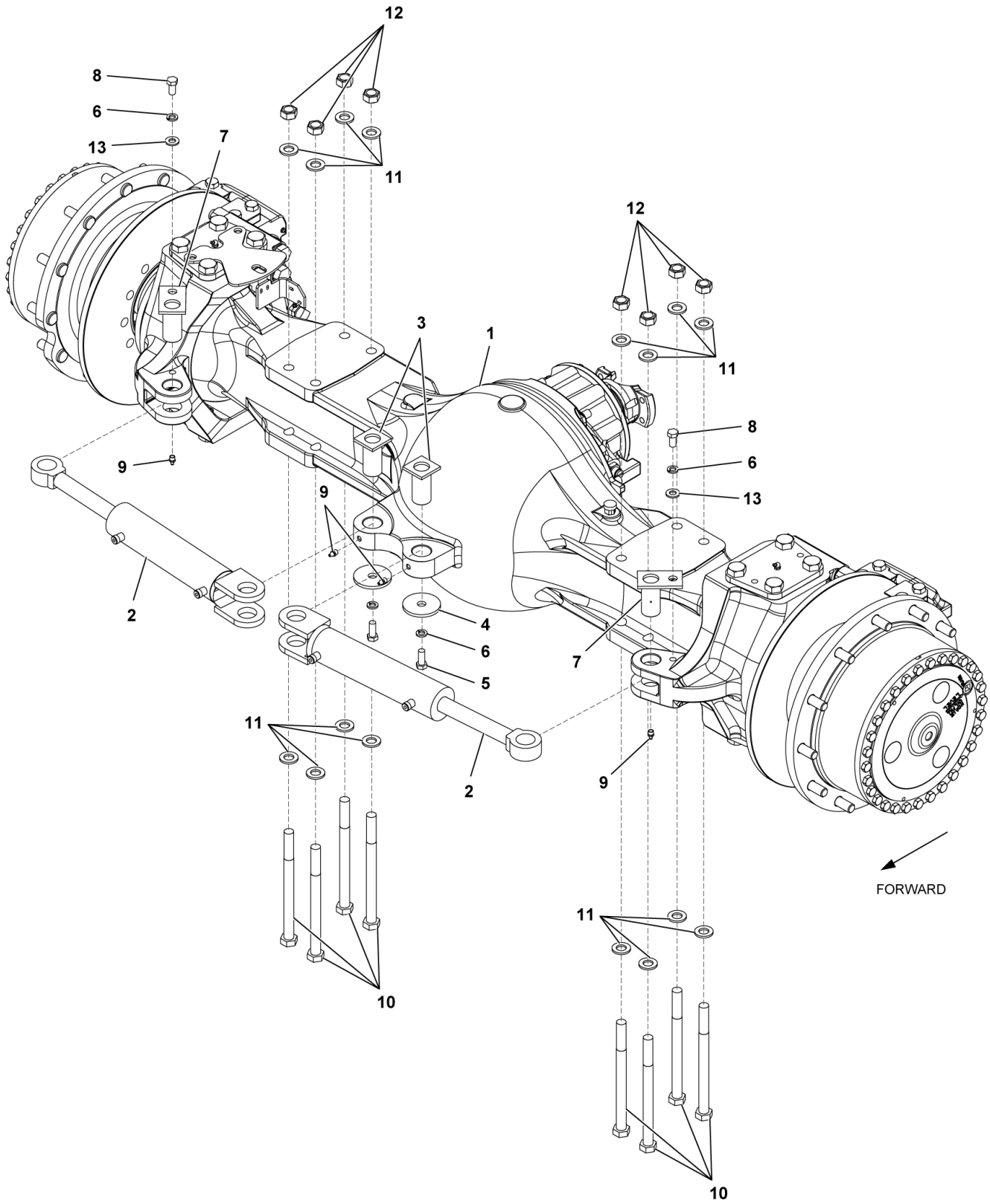


2159510006

(SHEET 1 OF 1)

Description
**AXLE INSTALLATION - FRONT**

Assembly No.
**2159510006**
Revision: **A**

| Item | FN | Part | Qty | Description |
|---|---|---|---|---|
| 1 | + | **7049101487** | 1 | AXLE ASSEMBLY - DRIVE/STEER (COMPLETE ASSEMBLY) |
| 2 | += | **7372100077** | 2 | CYLINDER ASSEMBLY - 2 1/2" STEER ( ALSO USED AS A CAB TILT CYLINDER ) (COMPLETE ASSEMBLY) |
| 2 | += | **7372100250** | 2 | CYLINDER ASSEMBLY - 2 1/2" STEER (COMPLETE ASSEMBLY) |
| 3 | | **6689100036** | 2 | PIN |
| 4 | | **7949000148** | 2 | WASHER, 5/8" I.D. FLAT |
| 5 | | **7115181050** | 2 | CAP SCREW, 1/2" - 13 N.C. X 1 1/4" GRADE 5 |
| 6 | | **7950180050** | 4 | WASHER, LOCK 1/2" I.D. |
| 7 | | **6689100025** | 2 | PIN |
| 8 | | **7105180850** | 2 | CAP SCREW, 1/2" - 20 N.F. X 1" GRADE 5 |
| 9 | | **7440000000** | 4 | FITTING, 1/8 STRAIGHT GREASE |
| 10 | | **7127273950** | 8 | SCREW, M20X260 HEX HEAD CAP |
| 11 | | **7949000236** | 16 | FLAT WASHER, 3/4" |
| 12 | | **7661270004** | 8 | NUT - M20 |
| 13 | | **7950180141** | 2 | WASHER, FLAT 1/2" |

**+ SEE FURTHER BREAKDOWN THIS GROUP** **= REFER TO MCI FOR APPLICABLE NUMBER**

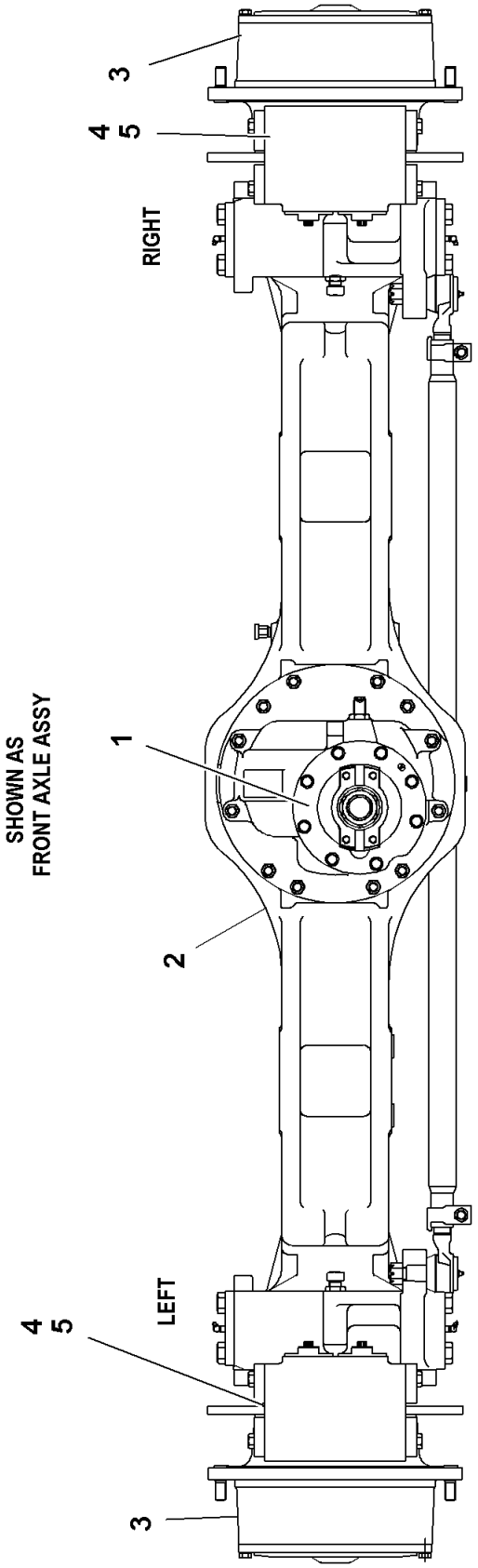


7049101487

(SHEET 1 OF 1)

Description
**AXLE ASSEMBLY - DRIVE/STEER (COMPLETE ASSEMBLY)**

Assembly No.
**7049101487**
Revision:

| Item | FN | Part | Qty | Description |
|---|---|---|---|---|
| 1 | + | **9049112776** | 1 | DIFF. CARRIER GROUP |
| 2 | + | **9049112778** | 1 | HOUSING GROUP |
| 3 | + | **9049112780** | 1 | HUB & SHAFT GROUP |
| 4 | + | **9049112516** | 1 | BRAKE GROUP |
| 5 | + | **9049112523** | 1 | BRAKE ASSEMBLY,GROUP |

**+ SEE FURTHER BREAKDOWN THIS GROUP**

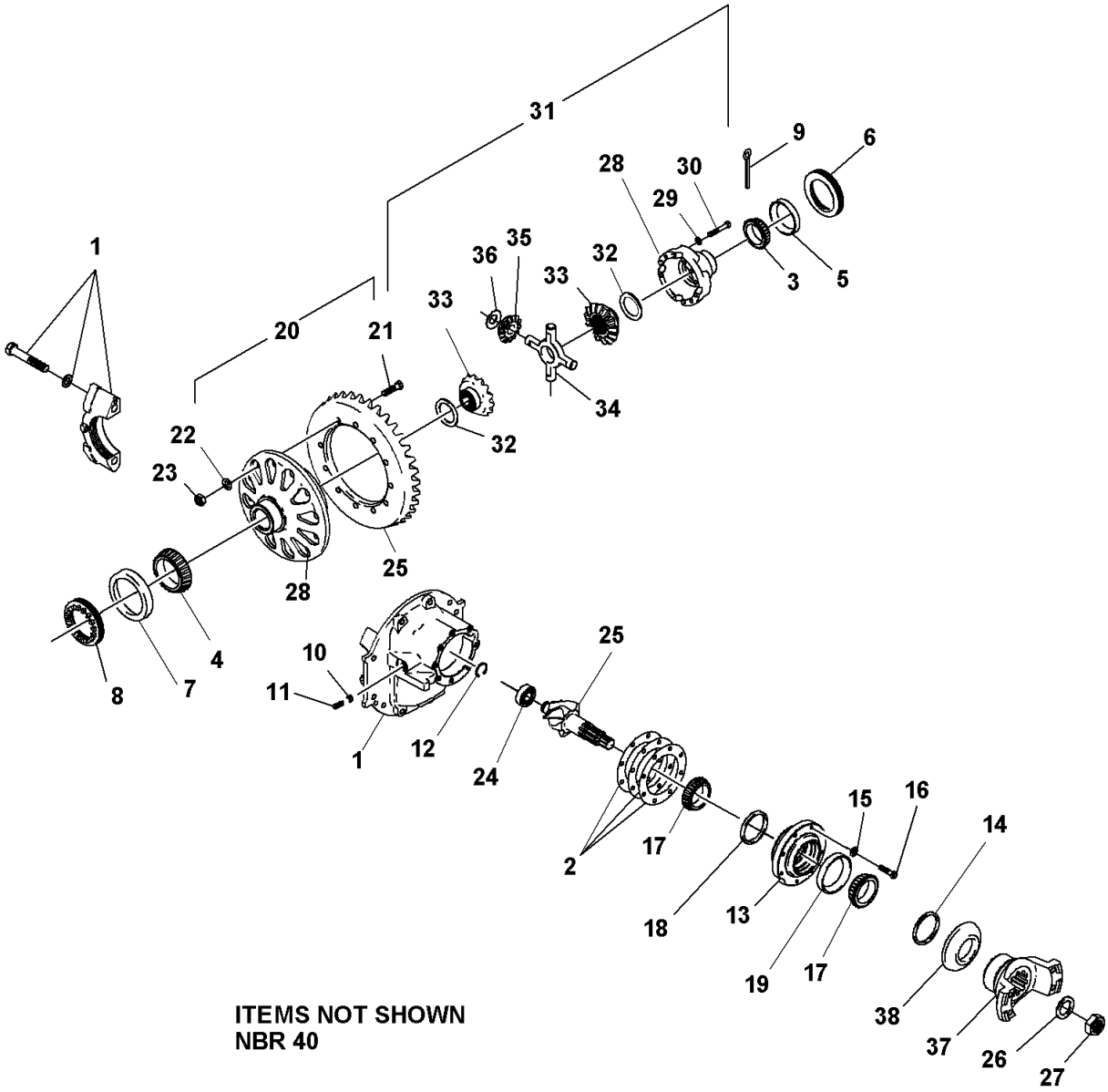


9049112776

(SHEET 1 OF 1)

Description
**DIFF. CARRIER GROUP**

Assembly No.
**9049112776**
Revision:

| Item | FN | Part | Qty | Description |
|---|---|---|---|---|
| 1 | | **9049112762** | 1 | HOUSING, DIFF. W/CAP ASSY. |
| 2 | | **9049112763** | 1 | KIT, SHIM |
| 3 | | **9049112264** | 1 | CONE, BEARING |
| 4 | | **9049112264** | 1 | CONE, BEARING |
| 5 | | **9049112263** | 1 | CUP, BEARING |
| 6 | | **9049108971** | 1 | RING, ADJUSTING |
| 7 | | **9049112263** | 1 | CUP, BEARING |
| 8 | | **9049108971** | 1 | RING, ADJUSTING |
| 9 | | **9049112764** | 2 | SCREW |
| 10 | | **9049109021** | 1 | SCREW, THRUST |
| 11 | | **9049109022** | 1 | NUT, JAM |
| 12 | | **9049101600** | 1 | RING, RETAINING |
| 13 | | **9049112639** | 1 | CAGE ASSY. PINION<br>INCLUDES THE FOLLOWING PARTS |
| | | **9049100895** | 1 | OUTER |
| | | **9049100535** | 1 | CUP, BEARING |
| | | **9049112786** | 1 | SEAL, OIL |
| 14 | | **9049112786** | 1 | SEAL, OIL |
| 15 | | **9049111037** | 8 | WASHER, |
| 16 | | **9049108332** | 8 | CAP SCREW, |
| 17 | | **9049109690** | 1 | CONE, BEARING |
| 18 | | **9049108952** | 1 | KIT, SPACER |
| 19 | | **9049108948** | 1 | CONE, BEARING |
| 20 | | **9049108966** | 1 | KIT, HARDWARE<br>INCLUDES 21 THRU 23 |
| 21 | | **9049108967** | 12 | CAP SCREW, |
| 22 | | **9049101705** | 12 | WASHER, LOCK |
| 23 | | **9049111517** | 12 | NUT |
| 24 | | **9049104578** | 1 | BEARING |
| 25 | | **9049111750** | 1 | GEAR ASSEMBLY, BEVEL<br>5.57:1 |
| 26 | | **9049104393** | 1 | FLATWASHER |
| 27 | | **9049111513** | 1 | LOCKNUT |
| 28 | | **9049112766** | 1 | CASE ASSY. DIFF.<br>INCLUDES BOTH CASE HALFS<br>AND ITEMS 29 AND 30 |

Description
**DIFF. CARRIER GROUP**

Assembly No.
**9049112776**
Revision:

| Item | FN | Part | Qty | Description |
|---|---|---|---|---|
| 29 | | **9049111037** | 16 | WASHER, |
| 30 | | **9049111509** | 16 | SCREW |
| 31 | | **9049112767** | 1 | KIT, DIFF<br>INCLUDES ITEMS 32 THRU 36 |
| 32 | | **9049112768** | 2 | WASHER, THRUST |
| 33 | | **9049109699** | 2 | GEAR, SIDE |
| 34 | | **9049109751** | 1 | SPIDER |
| 35 | | **9049108965** | 4 | PINION |
| 36 | | **9049112769** | 4 | WASHER, THRUST |
| 37 | | **9049112432** | 1 | YOKE ASSY.<br>INCLUDES ITEM 38 |
| 38 | | **9049112096** | 1 | DEFLECTOR |
| 40 | | **9049112777** | 1 | DIFF.CARRIER ASSY.@ 5.57 RATIO<br>INCLUDES ITEMS 1 THRU 36 |

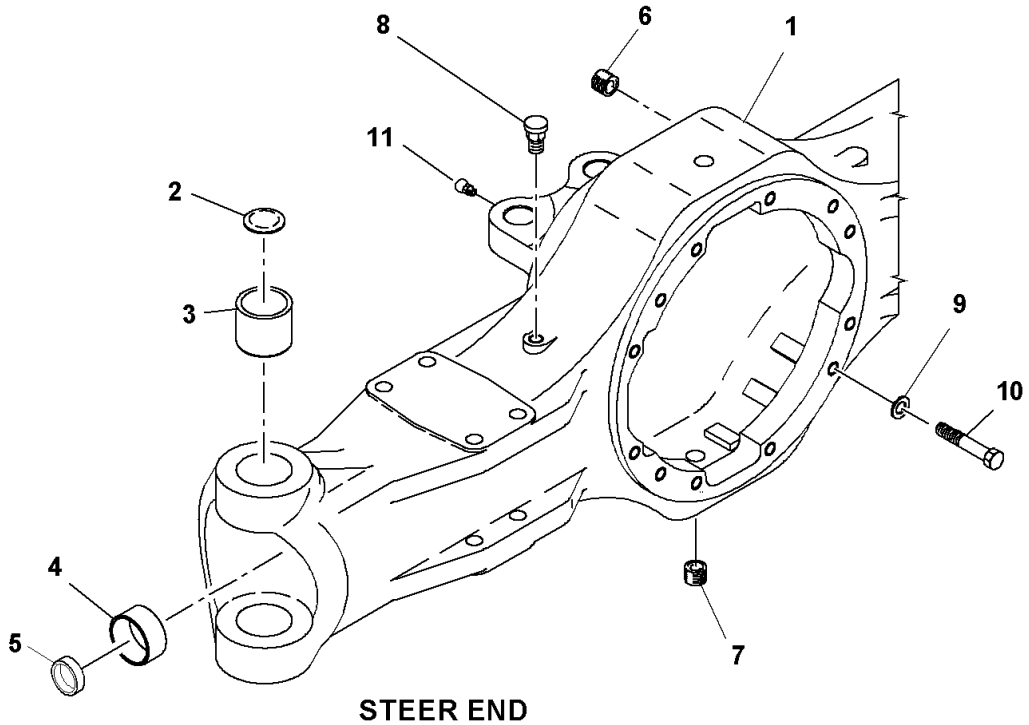


STEER END
STYLE BOTH ENDS

Description
**HOUSING GROUP**

Assembly No.
**9049112778**
Revision:

| Item | FN | Part | Qty | Description |
|---|---|---|---|---|
| 1 | | **9049112779** | 1 | HOUSING, ASSY. AXLE<br>INCLUDES ITEMS 2 THRU 7 |
| 2 | | **9049102254** | 4 | PLUG, EXPANSION |
| 3 | | **9049102253** | 4 | BUSHING |
| 4 | | **9049112682** | 2 | BUSHING |
| 5 | | **9049112781** | 2 | SEAL |
| 6 | | **9049112771** | 1 | PLUG ASSY.<br>INCLUDES THE FOLLOWING PARTS |
| | | **9049112889** | 1 | O-RING |
| 7 | | **9049112771** | 1 | PLUG ASSY.<br>INCLUDES THE FOLLOWING PARTS |
| | | **9049112889** | 1 | O-RING |
| 8 | | **9049112686** | 1 | BREATHER |
| 9 | | **9049101705** | 16 | WASHER, LOCK |
| 10 | | **9049110385** | 12 | SCREW |
| 10 | | **9049111473** | 4 | SCREW |
| 11 | | **7440000000** | 2 | FITTING, 1/8 STRAIGHT GREASE |

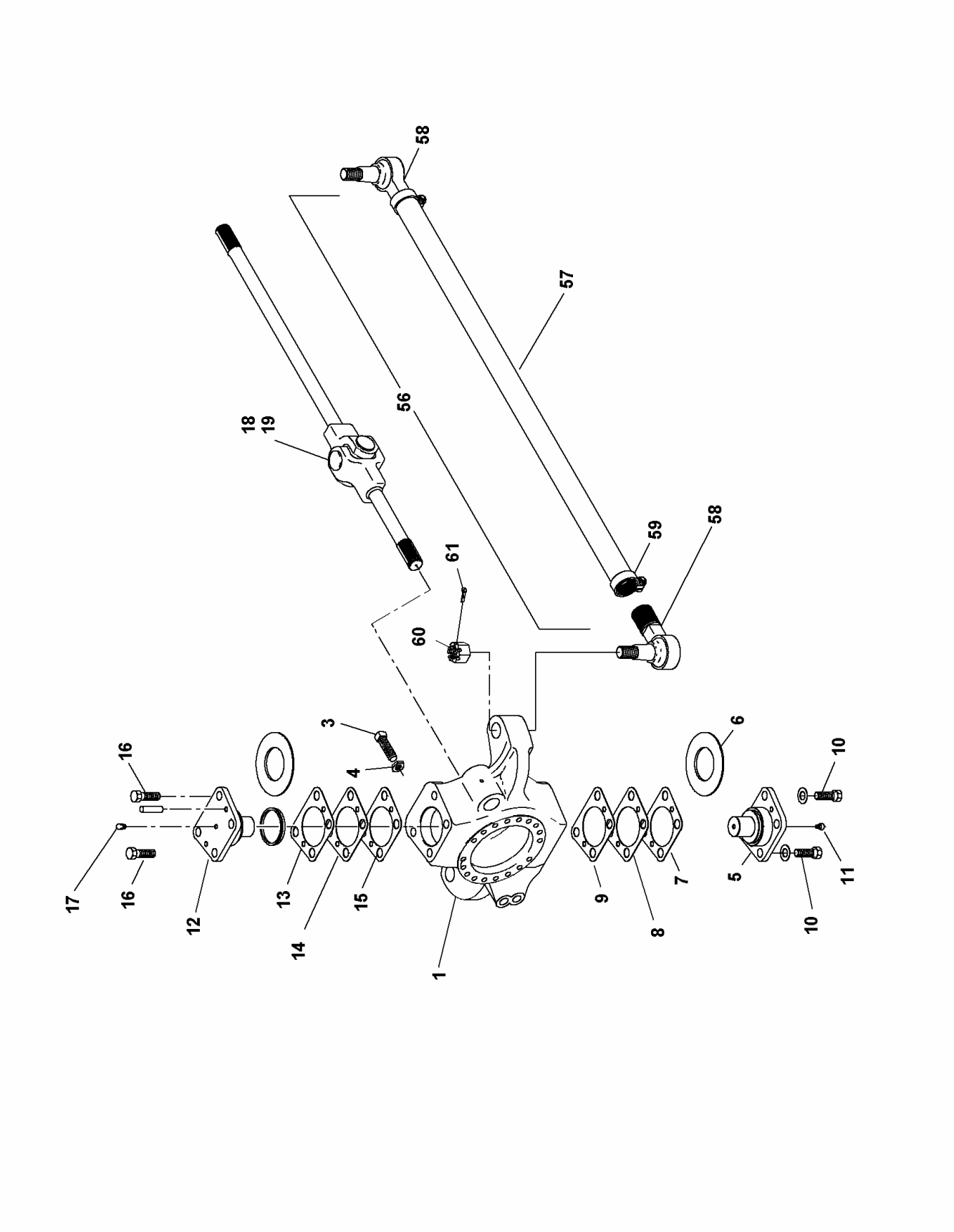


9049112780

(SHEET 2 OF 2)

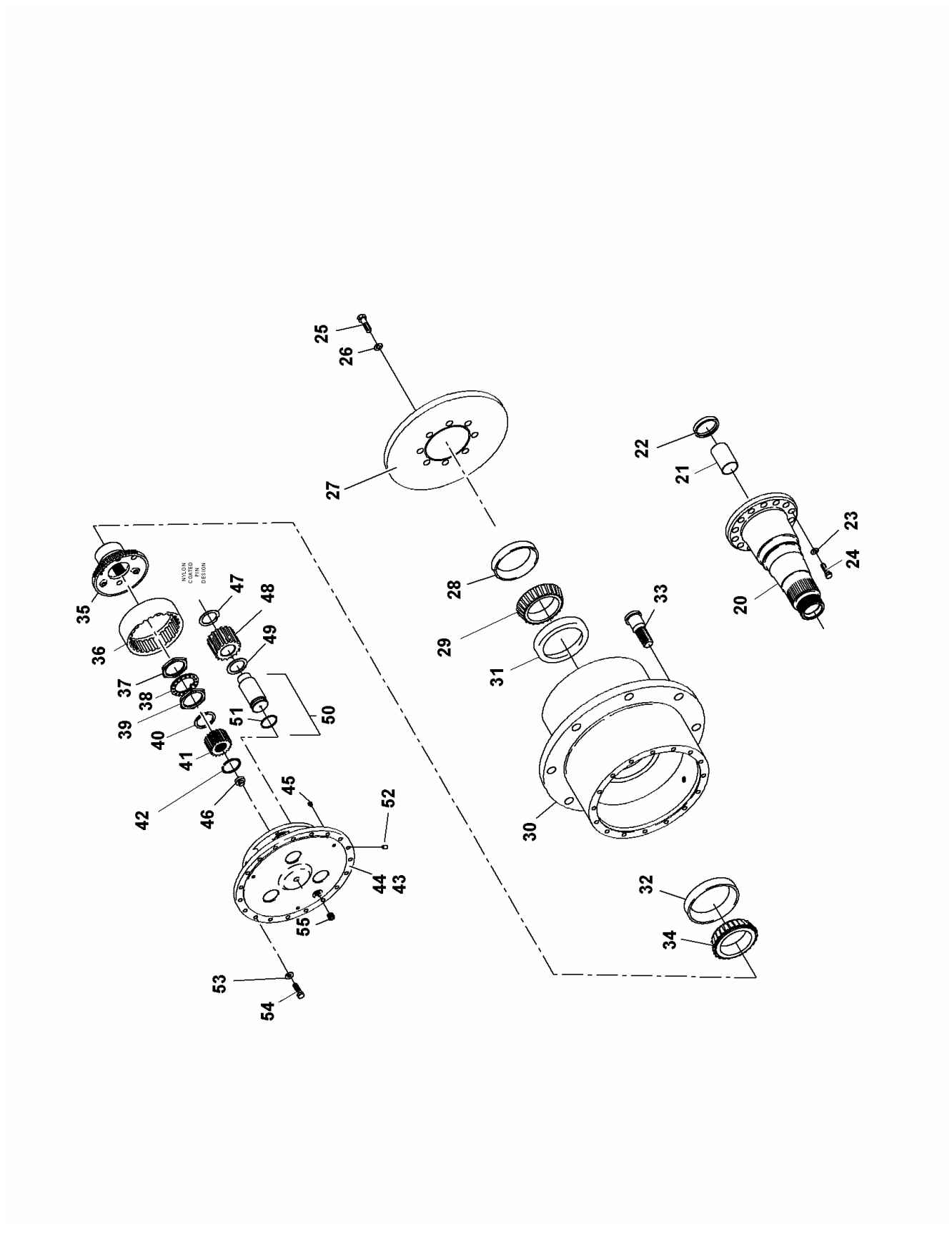


9049112780

(SHEET 1 OF 2)

Description
**HUB & SHAFT GROUP**

Assembly No.
**9049112780**
Revision:

| Item | FN | Part | Qty | Description |
|---|---|---|---|---|
| 1 | | **9049110932** | 1 | KNUCKLE, STEERING<br>-RIGHT HAND KNUCKLE ON THIS ASSY. PARTS LISTS WAS WORKED AS A FRONT AXLE |
| 1 | | **9049107133** | 1 | KNUCKLE, STEERING<br>-LEFT HAND KNUCKLE ON THIS ASSY. PARTS LIST WAS WORKED AS A FRONT AXLE |
| 3 | | **9049106456** | 2 | SCREW, STOP |
| 4 | | **9049101497** | 4 | NUT, JAM |
| 5 | | **9049107137** | 2 | CAP<br>LOWER |
| 6 | | **9049101673** | 2 | WASHER, THRUST |
| 7 | | **9049107134** | 6 | SHIM,<br>.003”<br>ITEMS 7 THRU 9 ARE TO BE USED AS REQUIRED |
| 8 | | **9049107135** | 4 | SHIM,<br>.005” |
| 9 | | **9049107136** | 2 | SHIM,<br>.020" |
| 10 | | **9049103595** | 8 | CAP SCREW, |
| 11 | | **9049103562** | 2 | FITTING, GREASE |
| 12 | | **9049107138** | 2 | CAP<br>UPPER |
| 13 | | **9049107134** | 6 | SHIM,<br>.003”<br>ITEMS 13 THRU 15 ARE TO BE USED AS REQUIRED |
| 14 | | **9049107135** | 4 | SHIM,<br>.005” |
| 15 | | **9049107136** | 2 | SHIM,<br>.020" |
| 16 | | **9049103595** | 8 | CAP SCREW, |
| 17 | | **9049103562** | 2 | FITTING, GREASE |
| 18 | | **9049111754** | 1 | JOINT ASSEMBLY<br>44.34 LENGTH<br>INCLUDES THE FOLLOWING PARTS |
| | | **9049109733** | 1 | BEARING ASSEMBLY, U JOINT |
| 19 | | **9049111756** | 1 | JOINT ASSEMBLY<br>48.69 LENGTH |

Description
**HUB & SHAFT GROUP**

Assembly No.
**9049112780**
Revision:

| Item | FN | Part | Qty | Description |
|---|---|---|---|---|
| | | | | INCLUDES THE FOLLOWING PARTS |
| | | **9049109733** | 1 | BEARING ASSEMBLY, U JOINT |
| 20 | | **9049112782** | 2 | SPINDLE ASSY. |
| 21 | | **9049112682** | 2 | BUSHING |
| 22 | | **9049112781** | 2 | SEAL |
| 23 | | **9049106450** | 36 | WASHER, HARDENED |
| 24 | | **9049111753** | 36 | CAP SCREW, |
| 25 | | **9049103927** | 24 | CAP SCREW, |
| 26 | | **9049103739** | 24 | WASHER, HARDENED |
| 27 | | **9049107129** | 2 | DISC, BRAKE |
| 28 | | **9049112685** | 2 | SEAL |
| 29 | | **9049101693** | 2 | CONE, BEARING |
| 30 | | **9049107128** | 2 | WHEEL HUB |
| 31 | | **9049101695** | 2 | CUP, BEARING |
| 32 | | **9049101696** | 2 | CUP, BEARING |
| 33 | | **9049101687** | 24 | STUD |
| 34 | | **9049101694** | 2 | CONE, BEARING |
| 35 | | **9049105562** | 2 | HUB |
| 36 | | **9049103392** | 2 | GEAR |
| 37 | | **9049112240** | 2 | NUT |
| 38 | | **9049101704** | 2 | WASHER, LOCK |
| 39 | | **9049101703** | 2 | NUT, WHEEL BEARING |
| 40 | | **9049105580** | 2 | THRUSTWASHER |
| 41 | | **9049101844** | 2 | GEAR-20T |
| 42 | | **9274100125** | 2 | RING, SNAP |
| 43 | | **9049107127** | 2 | SPIDER ASSEMBLY |
| 44 | | **9049106034** | 2 | SPIDER ASSEMBLY |
| 45 | | **9049103565** | 6 | BUTTON, THRUST |
| 46 | | **9049106791** | 2 | BUTTON, THRUST |
| 47 | | **9049101847** | 6 | WASHER, THRUST |
| 48 | | **9049101846** | 6 | GEAR, PINION |
| 49 | | **9049101848** | 6 | WASHER, THRUST |
| 50 | | **9049106490** | 6 | SHAFT ASSEMBLY, PINION |
| 51 | | **9049106322** | 6 | O-RING |
| 52 | | **9049105399** | 6 | SET SCREW |

Description
**HUB & SHAFT GROUP**

Assembly No.
**9049112780**
Revision:

| Item | FN | Part | Qty | Description |
|---|---|---|---|---|
| 53 | | **9049101980** | 60 | FLATWASHER |
| 54 | | **9049106579** | 60 | CAP SCREW, |
| 55 | | **9049101920** | 2 | PLUG, DRAIN<br>(MAGNETIC) |
| 56 | | **9049109724** | 1 | TIE ROD ASSEMBLY<br>INCLUDES ITEMS 57 THRU 59 |
| 57 | | **9049109725** | 1 | CLAMP AND TIE ROD ASSEMBLY |
| 58 | | **9049109727** | 1 | END, TIE ROD<br>LEFT HAND THREAD |
| 59 | | **9049109726** | 1 | END, TIE ROD<br>RIGHT HAND THREAD |
| 60 | | **9049103033** | 2 | NUT |
| 61 | | **9049109511** | 2 | PIN, COTTER-END YOKE NUT |

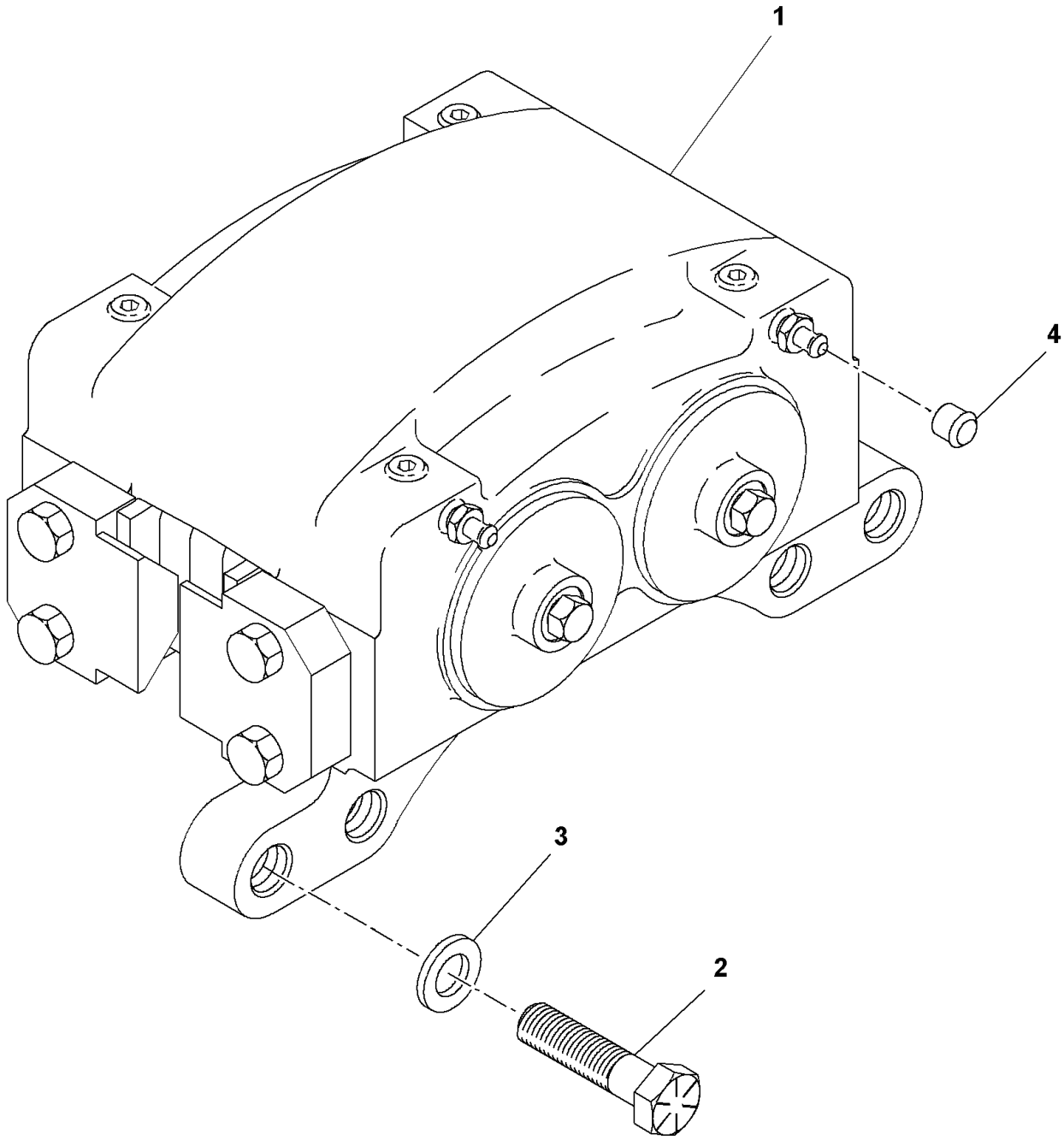


**9049112516**

**(SHEET 1 OF 1)**

Description
**BRAKE GROUP**

Assembly No.
**9049112516**
Revision:

| Item | FN | Part | Qty | Description |
|---|---|---|---|---|
| 1 | | **9049112522** | 2 | BRAKE ASSEMBLY, DISC |
| 2 | | **9049107142** | 8 | CAP SCREW, |
| 3 | | **9049102985** | 8 | WASHER, |
| 4 | | **9049112382** | 4 | CAP |

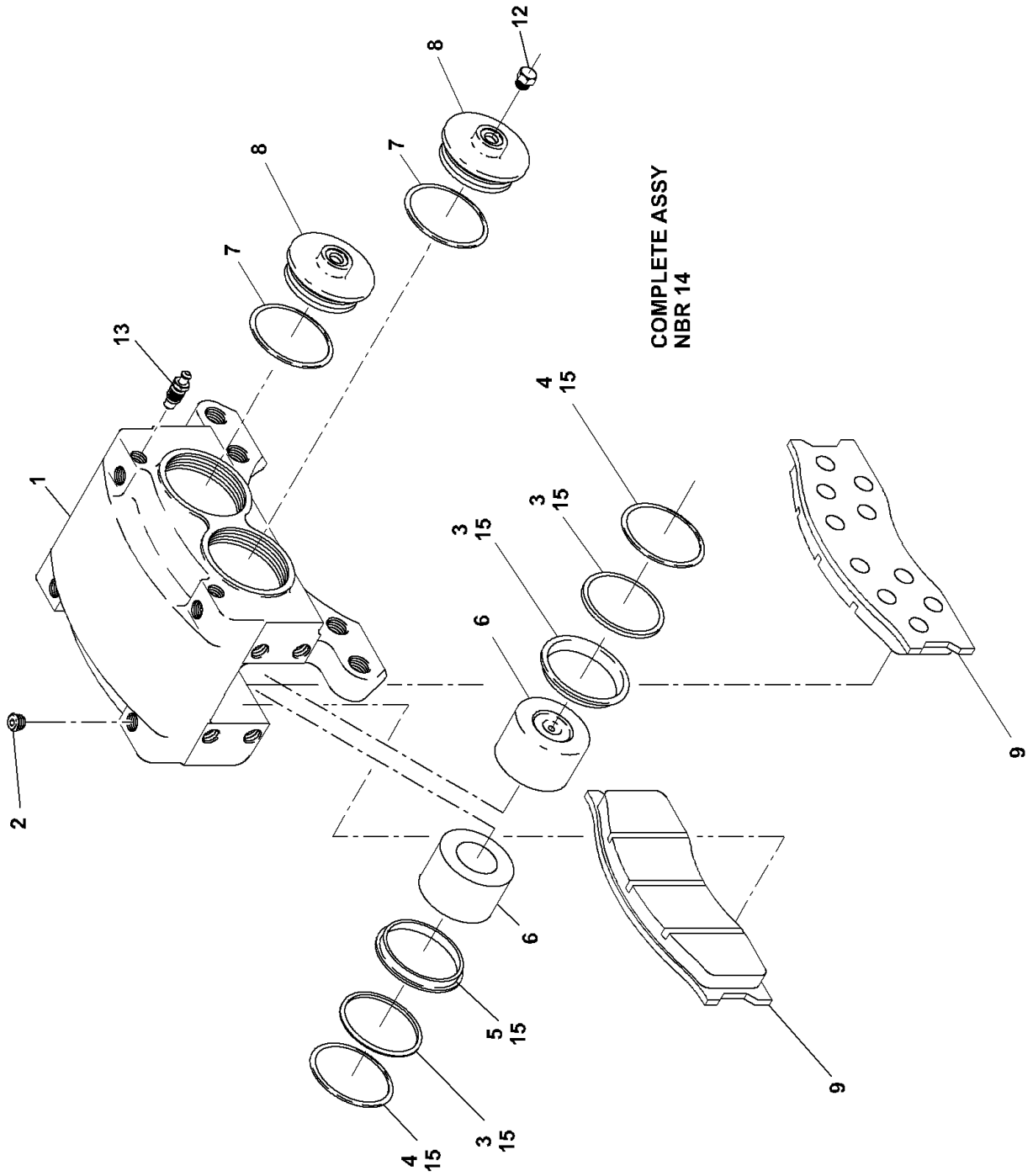


9049112523

(SHEET 1 OF 1)

Description
**BRAKE ASSEMBLY,GROUP**

Assembly No.
**9049112523**
Revision:

| Item | FN | Part | Qty | Description |
|---|---|---|---|---|
| 1 | | **NSS** | 1 | HOUSING |
| 2 | | **9049107402** | 4 | PLUG |
| 3 | * | **NSS** | 4 | BACK-UP RING |
| 4 | * | **NSS** | 4 | O-RING |
| 5 | * | **NSS** | 4 | DUST SEAL |
| 6 | | **9049107148** | 4 | PISTON |
| 7 | * | **NSS** | 2 | O-RING |
| 8 | | **9049107152** | 2 | CAP HEAD, CYLINDER |
| 9 | | **9049109243** | 1 | KIT, LINING<br>PER BRAKE |
| 10 | | **9049110945** | 4 | PLATE |
| 11 | | **9049109048** | 8 | CAP SCREW, |
| 12 | | **9049107157** | 1 | PLUG |
| 13 | | **9049100638** | 2 | SCREW, BLEEDER |
| 14 | | **9049112522** | 1 | BRAKE ASSEMBLY, DISC<br>INCLUDES ITEMS 1 THRU 13 |
| 15 | * | **9049111761** | 1 | KIT, SEAL |

*** REPAIR KIT AND/OR PART OF KIT**

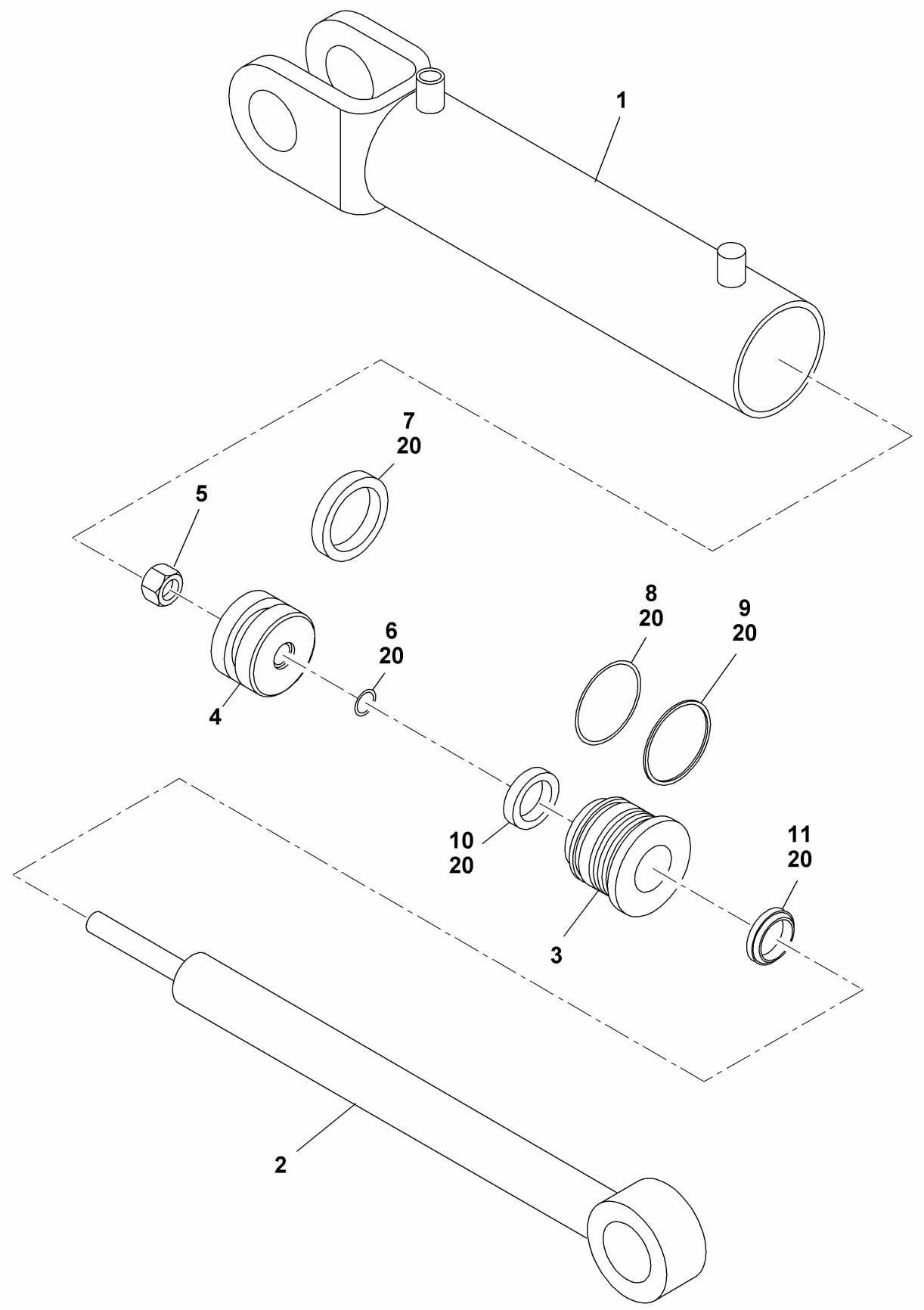


7372100250

(SHEET 1 OF 1)

Description
**CYLINDER ASSEMBLY - 2 1/2" STEER (COMPLETE ASSEMBLY)**

Assembly No.
**7372100250**
Revision:

| Item | FN | Part | Qty | Description |
|---|---|---|---|---|
| 1 | | **9372103533** | 1 | BARREL ASSY. |
| 2 | | **9372103534** | 1 | ROD ASSY. |
| 3 | | **9372103535** | 1 | GLAND, ROD |
| 4 | | **9372103536** | 1 | PISTON |
| 5 | | **9372103538** | 1 | NUT |
| 6 | * | **NSS** | 1 | O-RING |
| 7 | * | **NSS** | 1 | RING, SEAL PISTON |
| 8 | * | **NSS** | 1 | O-RING |
| 9 | * | **NSS** | 1 | RING, BACK-UP |
| 10 | * | **NSS** | 1 | RING, SEAL ROD |
| 11 | * | **NSS** | 1 | RING, WIPER |
| 20 | * | **9372103537** | 1 | KIT, SEAL |

*** REPAIR KIT AND/OR PART OF KIT**

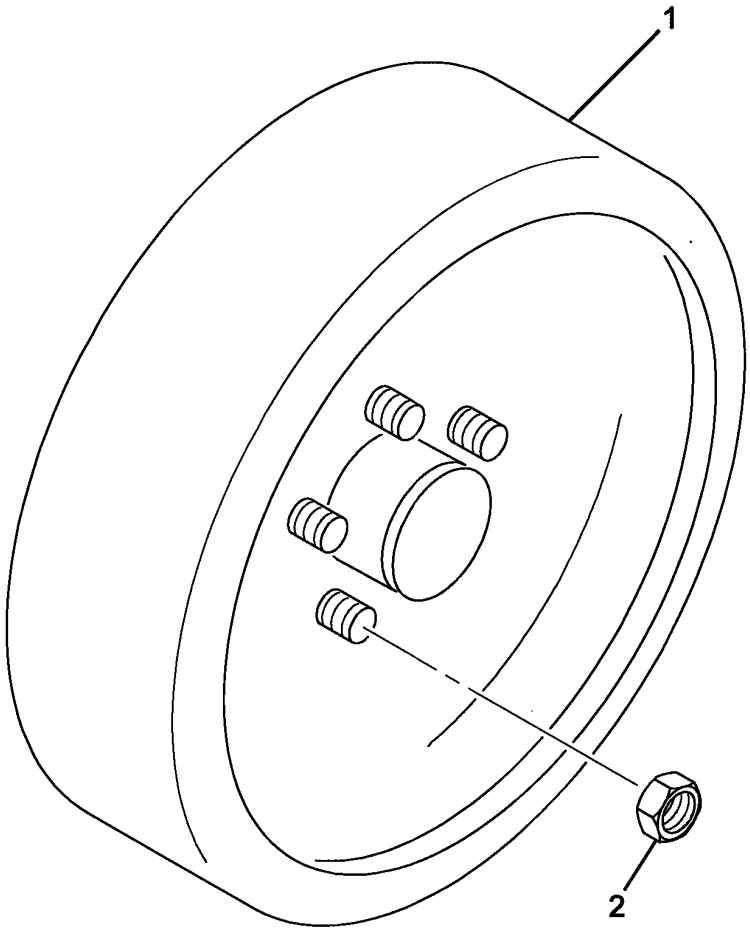


**6970003421**

**(SHEET 1 OF 1)**

Description
**TIRE AND WHEEL INSTALLATION 20.5 X 25**

Assembly No.
**6970003421**
Revision: **B**

| Item | FN | Part | Qty | Description |
|---|---|---|---|---|
| 1 | += | **6970003422** | 2 | TIRE AND WHEEL ASSEMBLY<br>20.5 X 25 |
| 1 | += | **6970003422** | 2 | TIRE AND WHEEL ASSEMBLY<br>20.5 X 25 |
| 1 | += | **6970100151** | 2 | T & W ASSY - 20.5 X 25 - GENER |
| 2 | | **7659000813** | 48 | NUT, WHEEL<br>3/4" - 16 N.F. |
| 3 | += | **6970003422** | 2 | TIRE AND WHEEL ASSEMBLY<br>20.5 X 25 |
| 3 | += | **6970100151** | 2 | T & W ASSY - 20.5 X 25 - GENER |

**+ SEE FURTHER BREAKDOWN THIS GROUP** **= REFER TO MCI FOR APPLICABLE NUMBER**

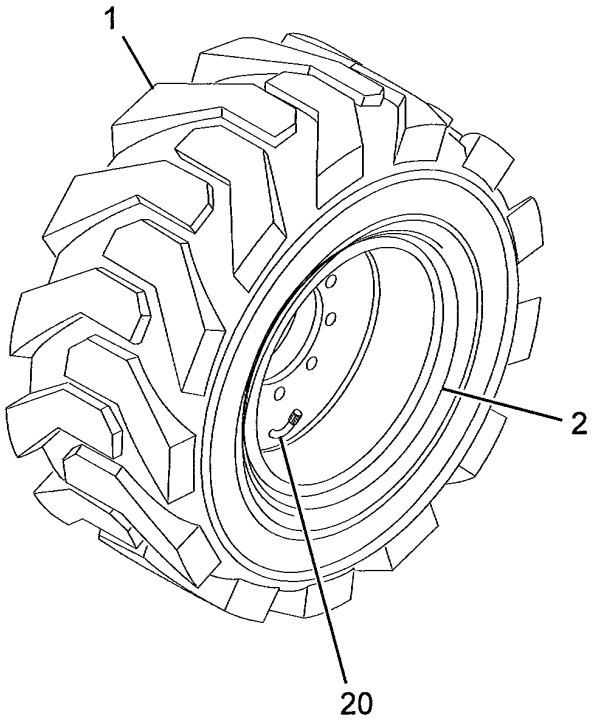
1
2
20

Description
**T & W ASSY - 20.5 X 25 - GENER**

Assembly No.
**6970100151**
Revision: **A**

| Item | FN | Part | Qty | Description |
|---|---|---|---|---|
| 1 | | **7900000380** | 1 | TIRE, 20.5 X 25-24 PLY GENERAL |
| 2 | + | **6970100153** | 1 | WHEEL & DISC ASSY |

**+ SEE FURTHER BREAKDOWN THIS GROUP**

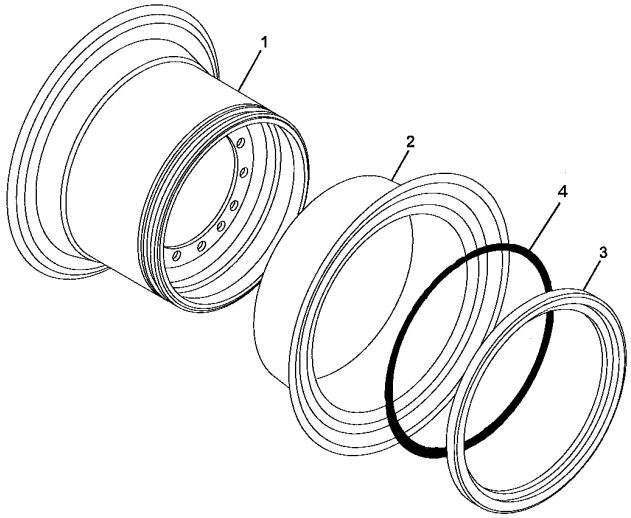


**6970100153**

**(SHEET 1 OF 1)**

Description
**WHEEL & DISC ASSY**

Assembly No.
**6970100153**
Revision: **B**

| Item | FN | Part | Qty | Description |
|---|---|---|---|---|
| 1 | | **7970140708** | 1 | WHEEL 17.00 X 25.0 |
| 2 | | **7450160006** | 1 | FLANGE 25" X 2.0" |
| 3 | | **7753000368** | 1 | RING, LOCK |
| 4 | | **7754000085** | 1 | O-RING |

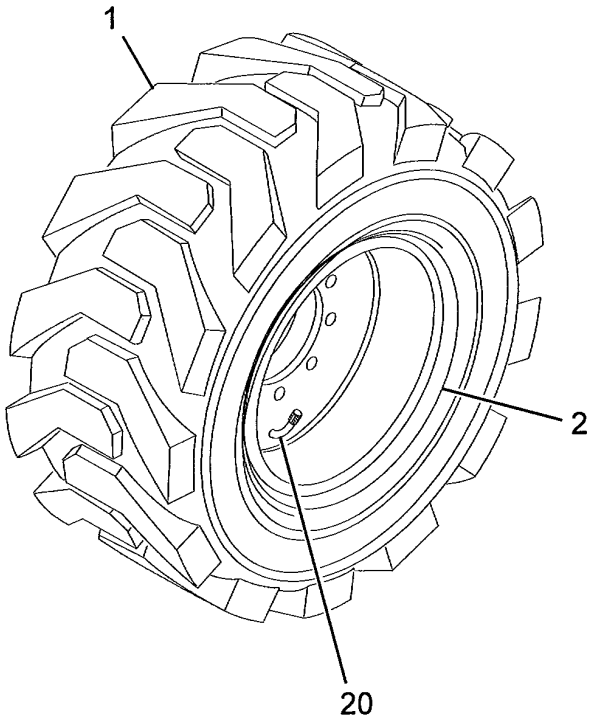


**6970100151**

**(SHEET 1 OF 1)**

Description
**T & W ASSY - 20.5 X 25 - GENER**

Assembly No.
**6970100151**
Revision: **A**

| Item | FN | Part | Qty | Description |
|---|---|---|---|---|
| 1 | | **7900000380** | 1 | TIRE, 20.5 X 25-24 PLY GENERAL |
| 2 | + | **6970100153** | 1 | WHEEL & DISC ASSY |

**+ SEE FURTHER BREAKDOWN THIS GROUP**

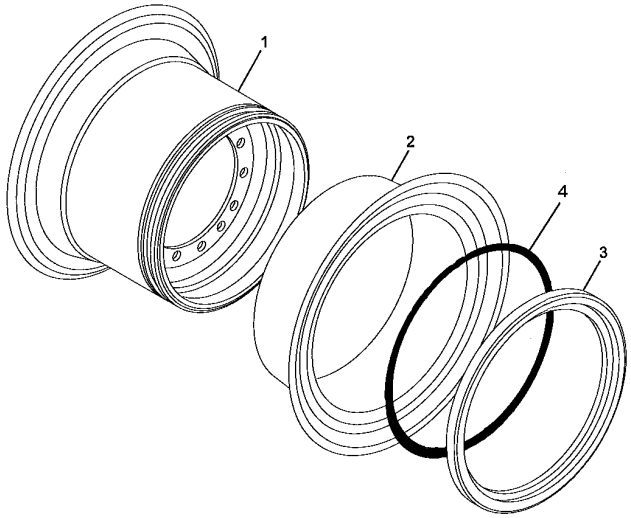


**6970100153**

**(SHEET 1 OF 1)**

Description
**WHEEL & DISC ASSY**

Assembly No.
**6970100153**
Revision: **B**

| Item | FN | Part | Qty | Description |
|---|---|---|---|---|
| 1 | | **7970140708** | 1 | WHEEL 17.00 X 25.0 |
| 2 | | **7450160006** | 1 | FLANGE 25" X 2.0" |
| 3 | | **7753000368** | 1 | RING, LOCK |
| 4 | | **7754000085** | 1 | O-RING |

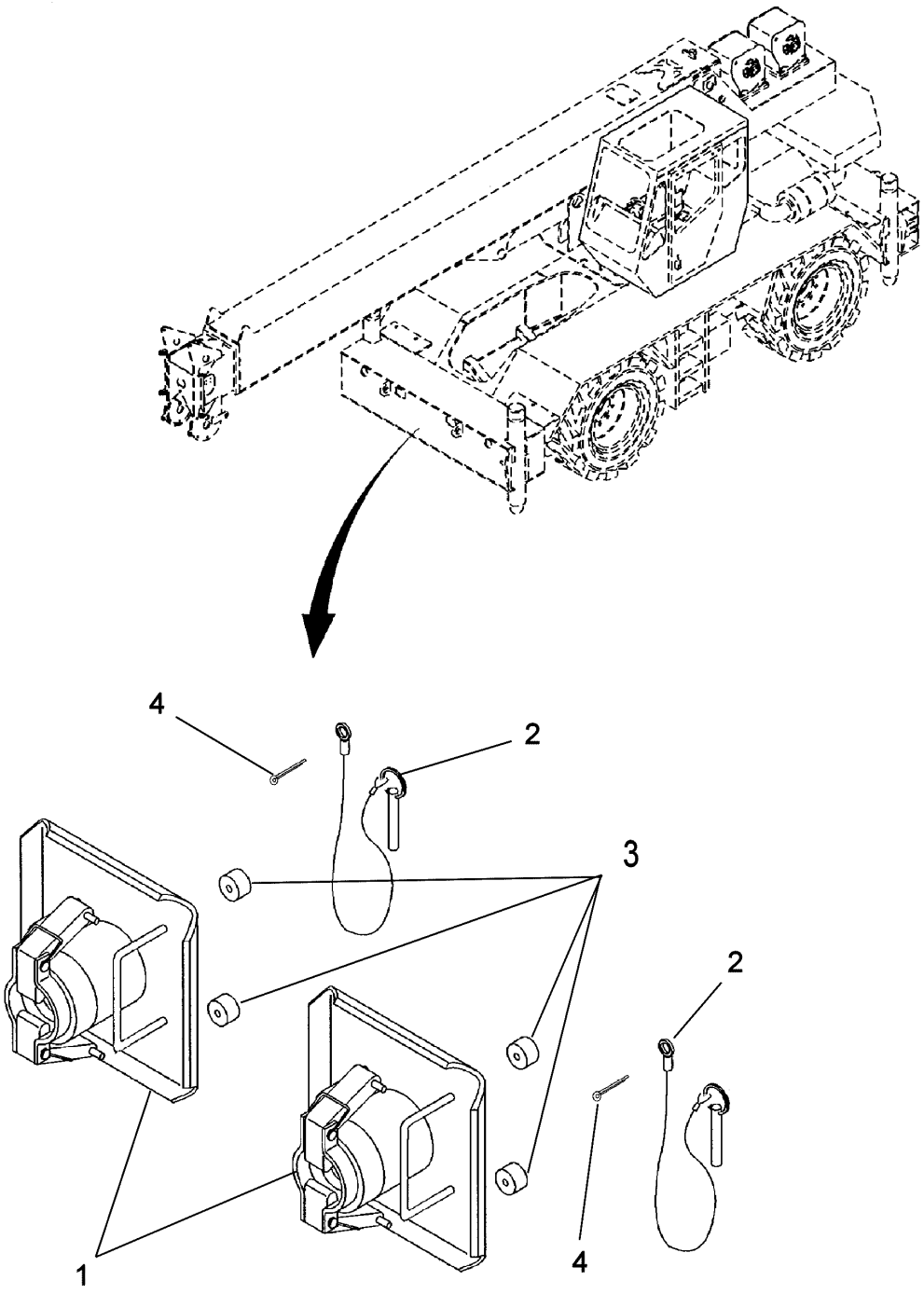


2159110157

(SHEET 1 OF 1)

Description
**FLOAT INSTALLATION - OUTRIGGER**

Assembly No.
**2159110157**
Revision: #

| Item | FN | Part | Qty | Description |
|---|---|---|---|---|
| 1 | + | **6458100000** | 4 | FLOAT ASSEMBLY - OUTRIGGER (COMPLETE ASSEMBLY) |
| 2 | | **7689100034** | 8 | PIN, QUICK WITH (LANYARD) |
| 3 | | **7195000037** | 8 | BUMPER, RUBBER |
| 4 | | **7690082010** | 8 | PIN, COTTER |

**+ SEE FURTHER BREAKDOWN THIS GROUP**

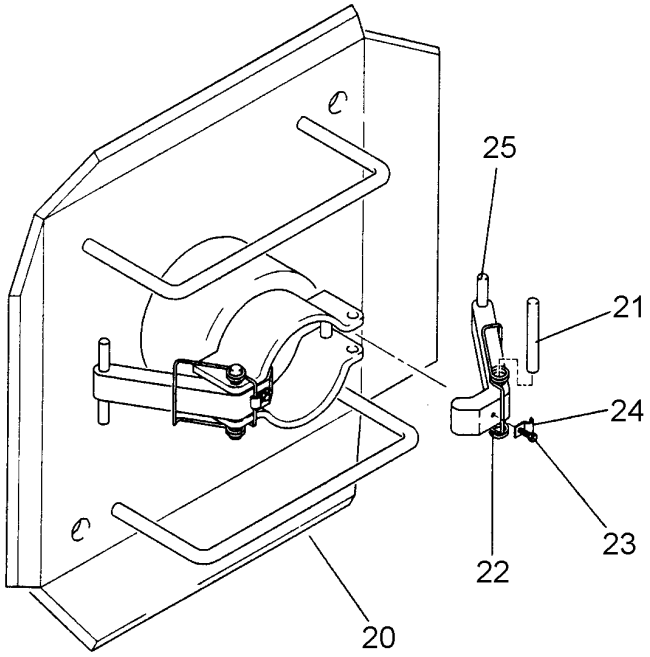


**6458100000**

**(SHEET 1 OF 1)**

Description
**FLOAT ASSEMBLY - OUTRIGGER (COMPLETE ASSEMBLY)**

Assembly No.
**6458100000**
Revision: **A**

| Item | FN | Part | Qty | Description |
|---|---|---|---|---|
| 20 | | **6458100001** | 1 | FLOAT, OUTRIGGER |
| 21 | | **7690164845** | 2 | PIN, ROLL<br>3/8" X 3" |
| 22 | | **7834000120** | 2 | SPRING |
| 23 | | **7790100653** | 2 | SCREW, SELF-TAPPING |
| 24 | | **7300000056** | 2 | CLAMP |
| 25 | | **6593000137** | 2 | LEVER |

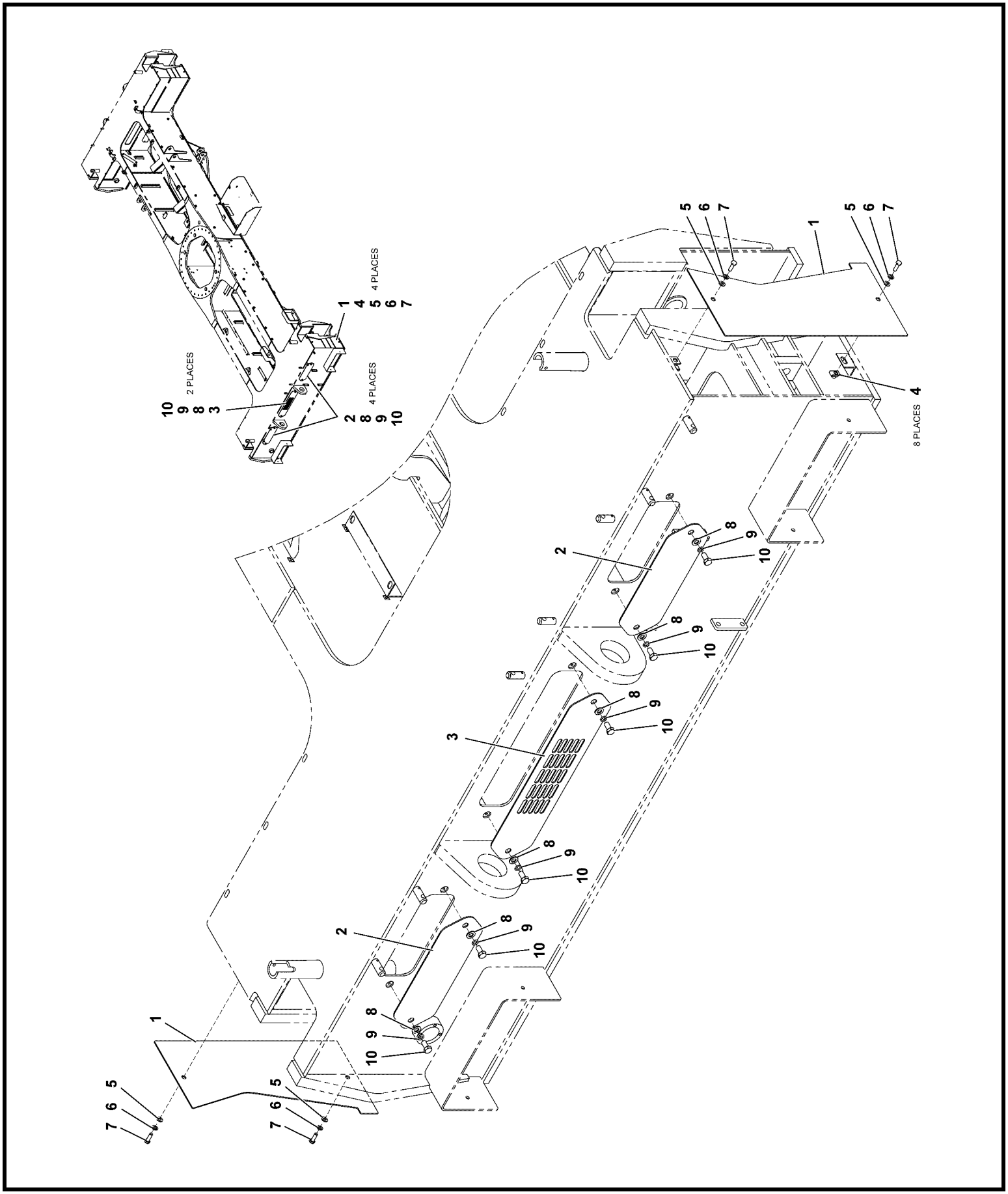


2159110160

(SHEET 1 OF 1)

Description
**COVER INSTALLATION - OUTRIGGER BOX**

Assembly No.
**2159110160**
Revision: #

| Item | FN | Part | Qty | Description |
|---|---|---|---|---|
| 1 | | **4159110300** | 4 | PLATE, COVER |
| 2 | | **4159110298** | 4 | PLATE, COVER |
| 3 | | **4159110299** | 2 | PLATE, COVER |
| 4 | | **7659190020** | 8 | NUT, RETAINING 8 X 1.25 |
| 5 | | **7951170014** | 8 | FLAT WASHER |
| 6 | | **7951170210** | 8 | WASHER, LOCK 8MM |
| 7 | | **7126171253** | 8 | CAP SCREW, M8X25 HEX HEAD |
| 8 | | **7951210014** | 12 | WASHER, FLAT #12 |
| 9 | | **7951210210** | 12 | LOCK WASHER, 12MM I.D. |
| 10 | | **7126211253** | 12 | CAP SCREW, M12 X 25MM HEX HEAD |

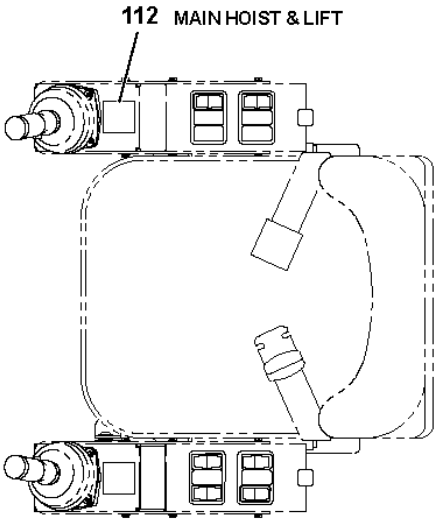


OPERATOR'S SEAT TOP VIEW

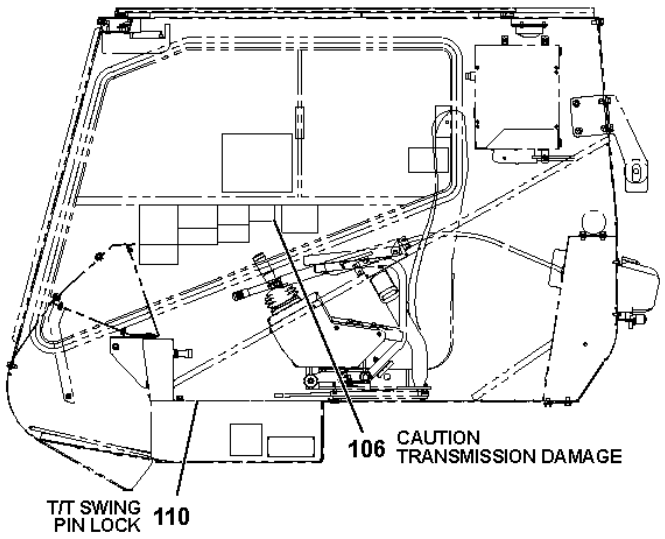


CAB LEFT INSIDE VIEW

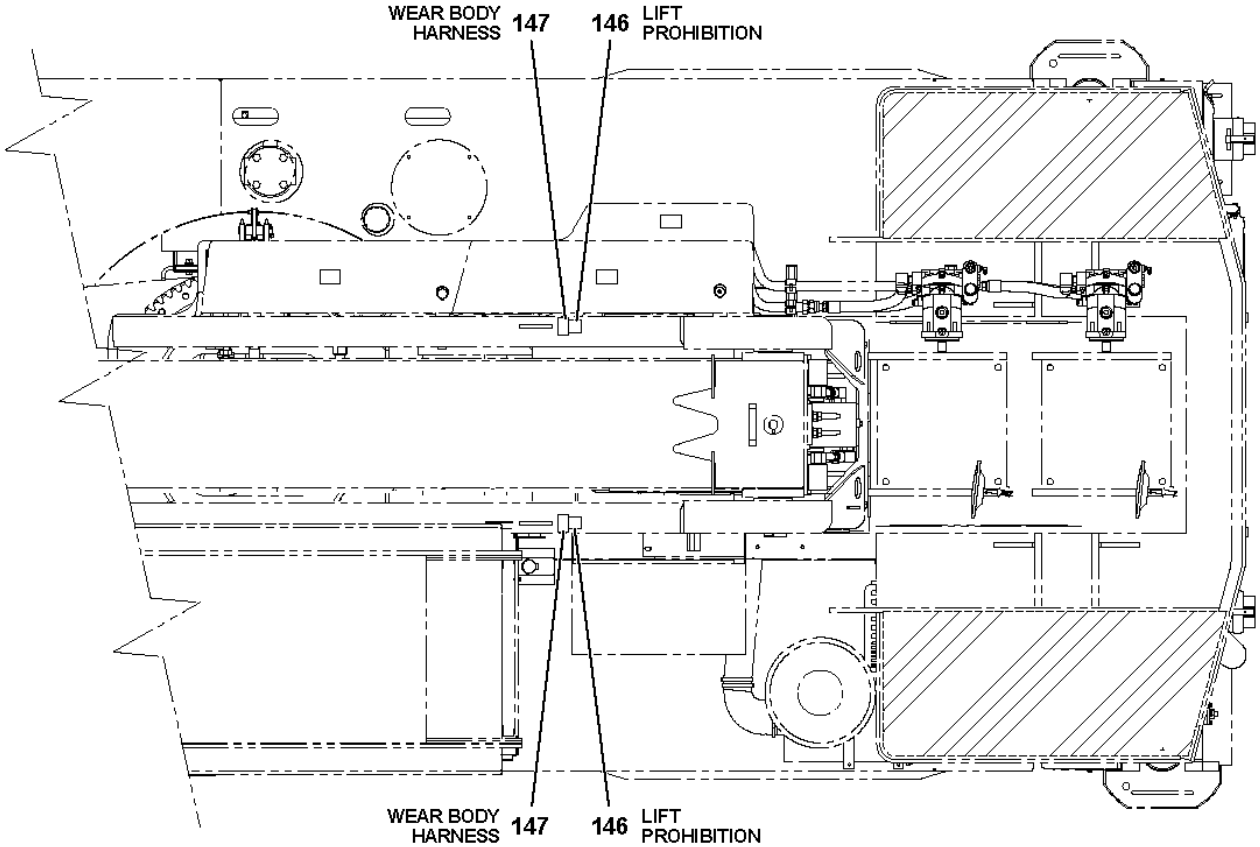


SUPERSTRUCTURE TOP VIEW

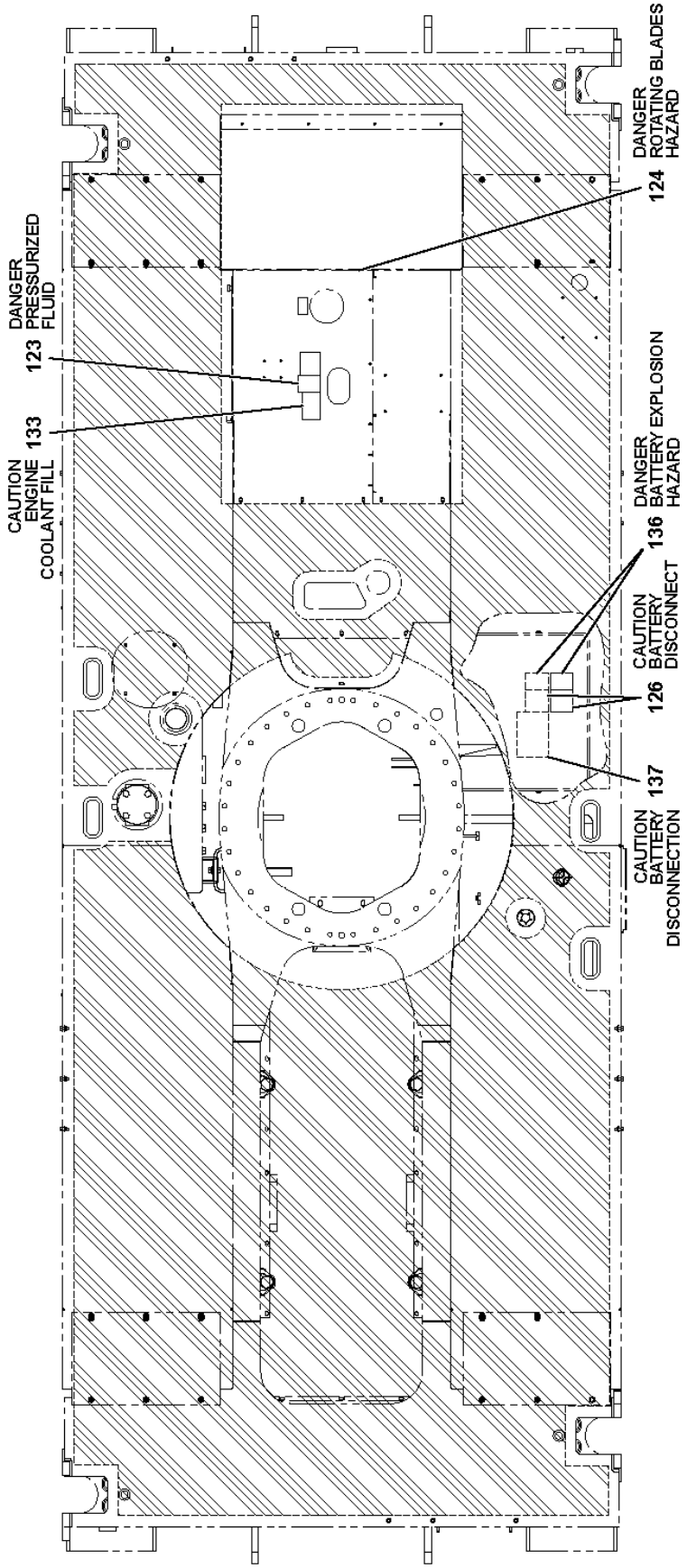


TOP VIEW W/O SUPERSTRUCTURE SHOWING NON-SKID PAINT

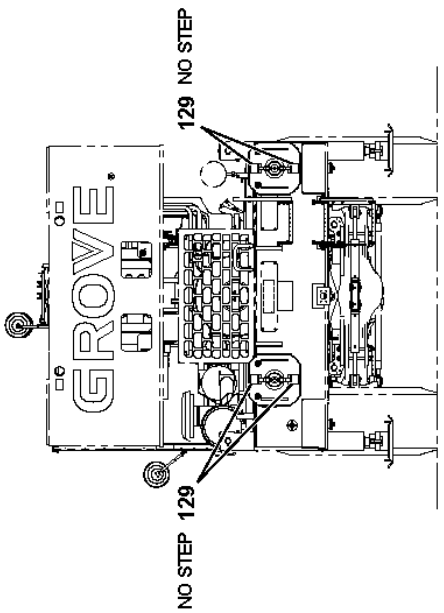


REAR VIEW

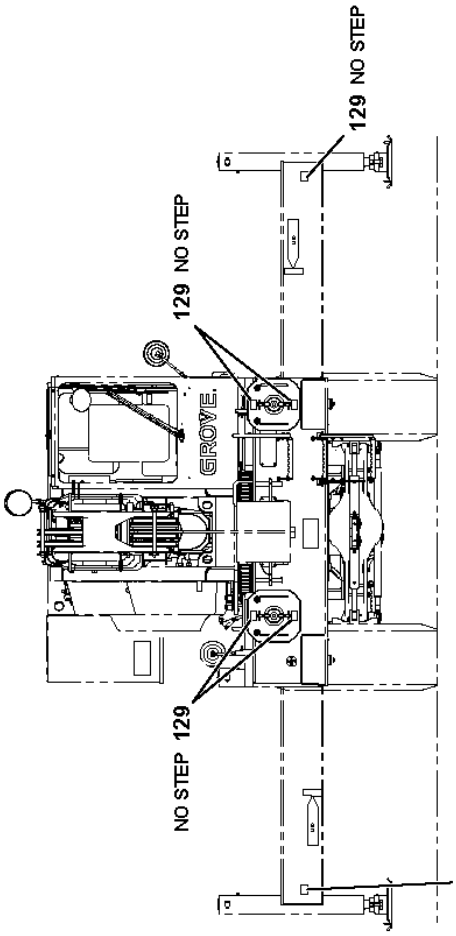


FRONT VIEW

80004508

(SHEET 2 OF 3)

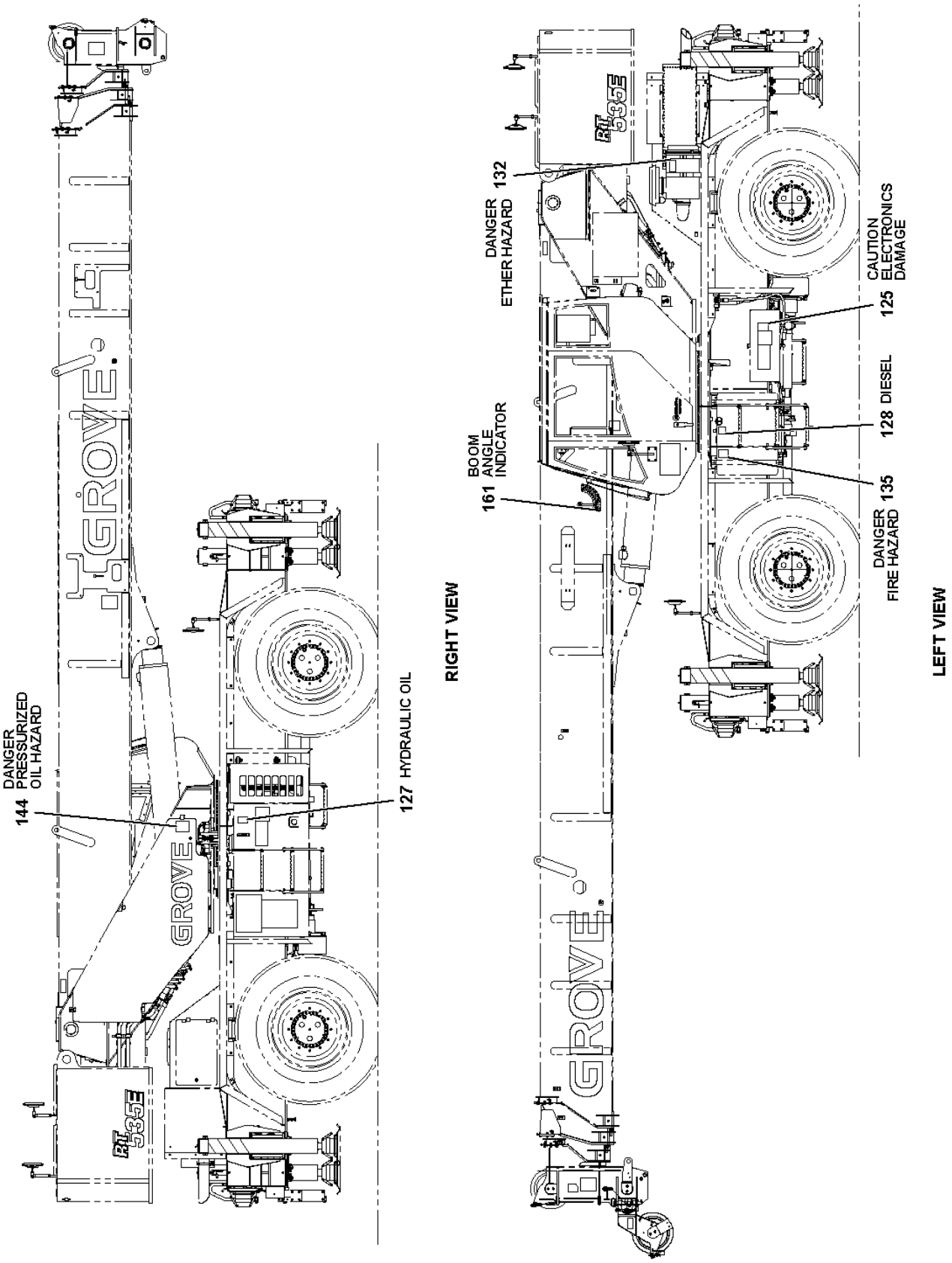


80004508

(SHEET 1 OF 3)

Description
**DECAL INSTALLATION - RT535/540E (FOREIGN STANDARD)**

Assembly No.
**80004508**
Revision: **A**

| Item | FN | Part | Qty | Description |
|---|---|---|---|---|
| 106 | | **7376102093** | 1 | DECAL - CAUTION TRANSMISSION DAMAGE (SYMBOLIC) |
| 110 | | **80002325** | 1 | DECAL - PIN SWING LOCK (SYMBOLIC) |
| 112 | | **7376102599** | 1 | DECAL-MAIN HOIST & LIFT -DUAL (ENGLISH) |
| 123 | | **7376102529** | 1 | DECAL - DANGER PRESSURIZED FLUID (SYMBOLIC) |
| 124 | | **7376011416** | 1 | DECAL - ROTATING BLADES |
| 125 | | **7376102350** | 1 | DECAL - CAUTION ELECTRONICS DAMAGE (SYMBOLIC) |
| 126 | | **7376102053** | 2 | DECAL - CAUTION BATTERY DISCONNECT (SYMBOLIC) |
| 127 | | **7376991546** | 1 | DECAL - HYDRAULIC OIL |
| 128 | | **7376991544** | 1 | DECAL - DIESEL |
| 129 | | **7376991542** | 20 | DECAL - NO STEP |
| 132 | | **7376102544** | 1 | DECAL - DANGER ETHER HAZARD (SYMBOLIC) |
| 133 | | **7376102530** | 1 | DECAL - CAUTION ENGINE COOLANT FILL (SYMBOLIC) |
| 135 | | **7376102533** | 1 | DECAL - DANGER FIRE HAZARD (SYMBOLIC) |
| 136 | | **7376102555** | 2 | DECAL - DANGER BATTERY EXPLOSION HAZARD (SYMBOLIC) |
| 137 | | **7376102806** | 1 | DECAL - CAUTION BATTERY CONNECTION (SYMBOLIC) |
| 144 | | **7376102553** | 1 | DECAL - DANGER PRESSURIZED OIL LEAK (SYMBOLIC) |
| 146 | | **7376102910** | 2 | DECAL - LIFT POINT PROHIBITION |
| 147 | | **7376991722** | 2 | DECAL - WEAR BODY HARNESS |
| 161 | | **7376001935** | 1 | DECAL - BOOM ANGLE |

The drawing or bill of material for this installation was not available when this catalog was created. Please contact Rich Rebok at richard.rebok@manitowoc.com for Grove products or Galen Burkholder at galen.burkholder@manitowoc.com for National products to supply us with your mailing information. Once the drawing or bill of material has been completed, we will send you the appropriate pages to be inserted into your manual.

Regards,
Technical Publications Department
Shady Grove, Pennsylvania
www.cranecare.com

Description
**FENDER AND DECK INSTALLATION HOIST ACCESS**

Assembly No.
**80010008**
Revision: #

| Item | FN | Part | Qty | Description |
|---|---|---|---|---|
| 1 | | **2159110174** | 1 | FENDER, RIGHT HAND REAR<br>INCLUDES THE FOLLOWING PARTS |
| | | **7662170100** | 3 | WELD NUT, M8X1.25 |
| 2 | | **2159110176** | 1 | FENDER, RIGHT HAND FRONT<br>INCLUDES THE FOLLOWING PARTS |
| | | **7662170100** | 3 | WELD NUT, M8X1.25 |
| 3 | | **80010000** | 1 | REAR FENDER - LEFT HAND |
| 4 | | **2159110175** | 1 | FRONT FENDER - LEFT HAND |
| 5 | | **4159110256** | 1 | COVER, ACCESS |
| 6 | | **4159110267** | 4 | STEP, TAPERED |
| 7 | | **4159110268** | 2 | GUARD, MUD |
| 8 | | **4159110269** | 2 | GUARD, MUD |
| 9 | | **4159110271** | 1 | SUPPORT, FENDER |
| 10 | | **7126211353** | 34 | CAP SCREW, M12X30 HEX HEAD |
| 11 | | **7950180161** | 34 | FLAT WASHER, 1/2" I.D. |
| 12 | | **7950160161** | 114 | WASHER, FLAT WIDE 3/8 I.D. |
| 13 | | **7951190210** | 72 | LOCK WASHER, 10MM |
| 14 | | **7126191350** | 60 | CAP SCREW, M10X30 HEX HEAD |
| 15 | | **7661190003** | 66 | HEX NUT 10MM I.D. X 1.5 |
| 16 | | **7951210210** | 34 | LOCK WASHER, 12MM I.D. |
| 17 | | **7659190020** | 4 | NUT, RETAINING 8 X 1.25 |
| 18 | | **7126171253** | 4 | CAP SCREW, M8X25 HEX HEAD |
| 19 | | **7951170014** | 4 | FLAT WASHER |
| 20 | | **8496980002** | 7 | MOULDING<br>(QUANTITY IN FEET) |
| 21 | | **7126191450** | 12 | CAP SCREW, M10 X 35MM HEX HEAD |
| 22 | | **7242000021** | 4 | PLUG, 1" BUTTON |

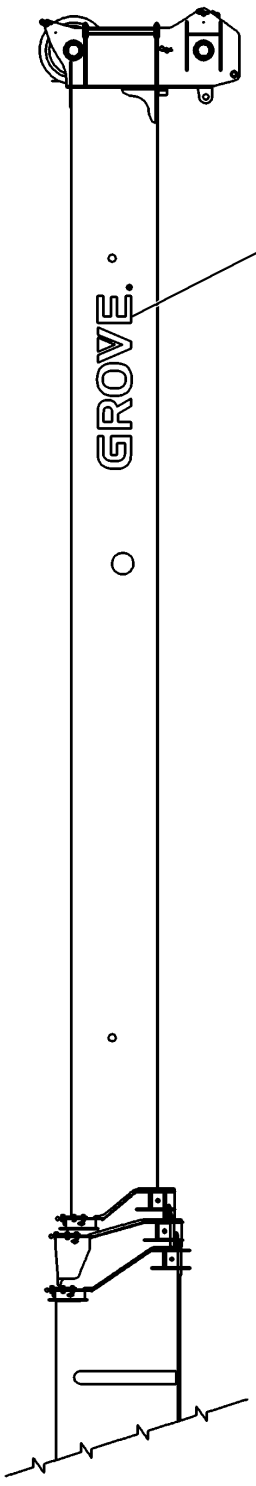


**BOOM FLY SECTION RIGHT VIEW**

**6376206950**

**(SHEET 3 OF 3)**

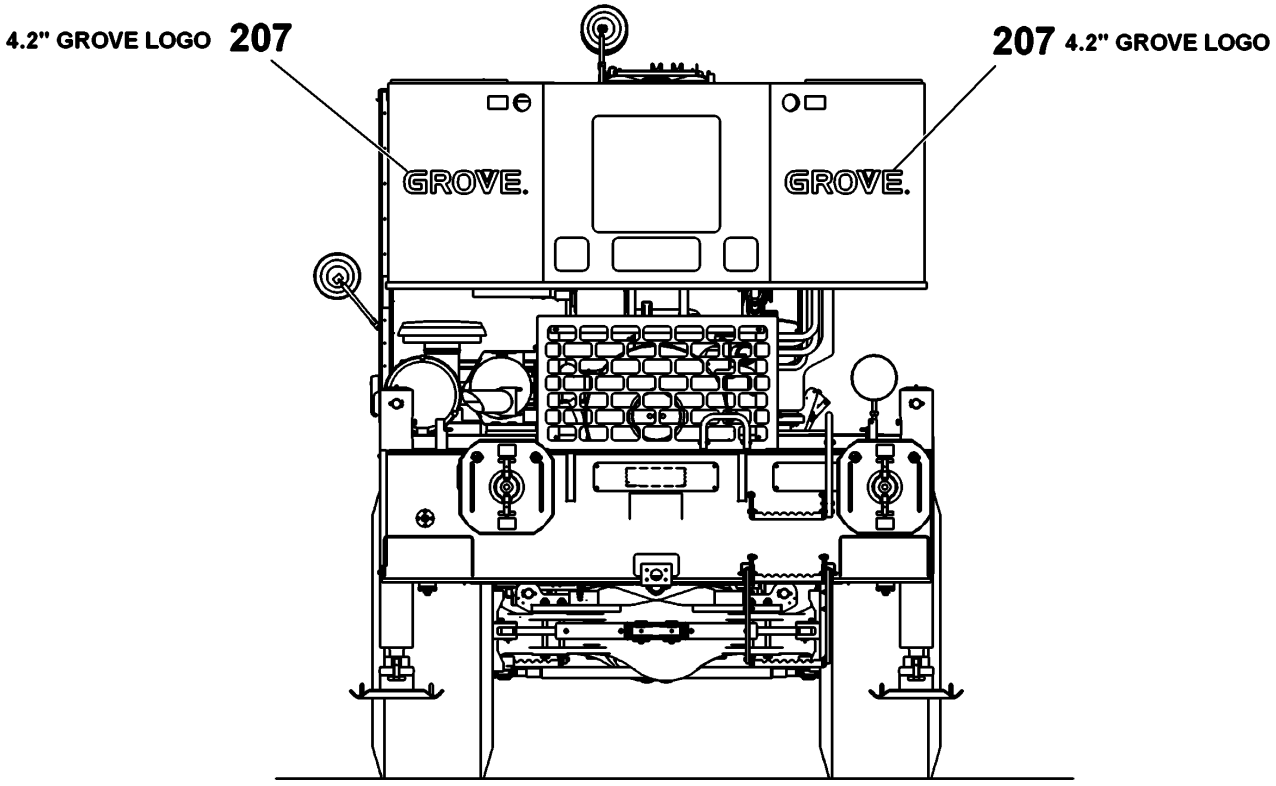


**REAR VIEW**

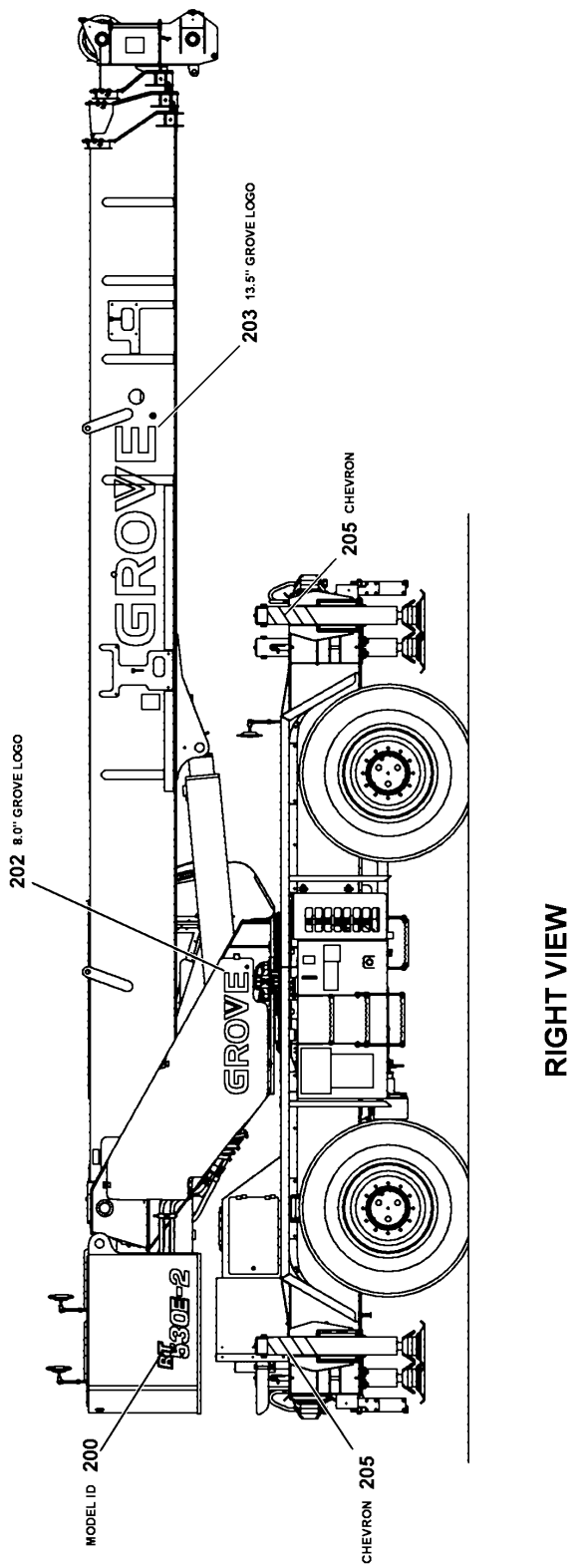


RIGHT VIEW

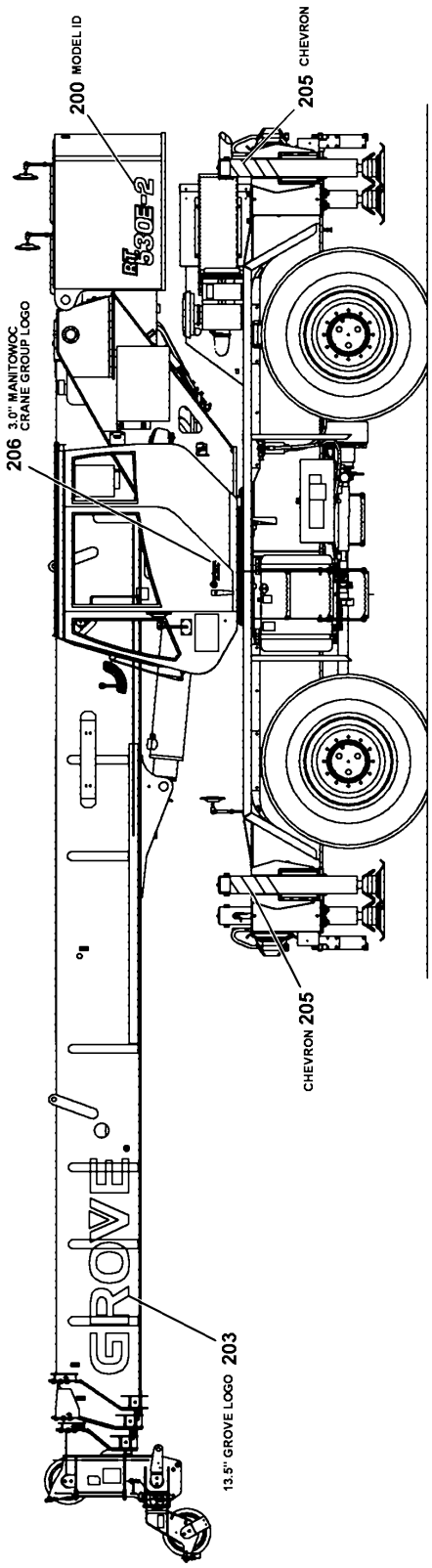


LEFT VIEW

NOTES:
1. LOCATE DECALS AND PLATES APPROXIMATELY AS SHOWN UNLESS OTHERWISE SPECIFIED.

6376206950

(SHEET 1 OF 3)

Description
**DECAL INSTALLATION - RT530E2 (NOMENCLATURE)**

Assembly No.
**6376206950**
Revision: #

| Item | FN | Part | Qty | Description |
|---|---|---|---|---|
| 200 | | **7376102951** | 2 | DECAL - RT530E-2 |
| 201 | | **7376241052** | 1 | DECAL - GROVE LOGO (GRAY WITH RED TRIANGLE) |
| 202 | | **7376241080** | 1 | DECAL - GROVE LOGO (GRAY WITH RED TRIANGLE) |
| 203 | | **7376241135** | 2 | DECAL - GROVE LOGO (GRAY WITH RED TRIANGLE) |
| 204 | | **7376221080** | 2 | DECAL - GROVE LOGO (WHITE WITH RED TRIANGLE) |
| 205 | | **7376101141** | 4 | DECAL - CHEVRON OUTRIGGER JACK |
| 206 | | **7376202030** | 1 | DECAL - MANITOWOC CRANE GROUP LOGO 3" GRAY/RED |
| 207 | | **7376241042** | 2 | DECAL - GROVE LOGO (GRAY WITH RED TRIANGLE) |

The drawing or bill of material for this installation was not available when this catalog was created. Please contact Rich Rebok at richard.rebok@manitowoc.com for Grove products or Galen Burkholder at galen.burkholder@manitowoc.com for National products to supply us with your mailing information. Once the drawing or bill of material has been completed, we will send you the appropriate pages to be inserted into your manual.

Regards,
Technical Publications Department
Shady Grove, Pennsylvania
www.cranecare.com

Description
**COUNTERWEIGHT INSTALLATION**

Assembly No.
**2159210227**
Revision: **A**

| Item | FN | Part | Qty | Description |
|---|---|---|---|---|
| 1 | | **2159210233** | 1 | COUNTERWEIGHT |
| 2 | | **2150200656** | 2 | PIN ASSEMBLY<br>INCLUDES THE FOLLOWING PARTS |
| | | **7690143644** | 1 | PIN, ROLL |
| | | **7949000360** | 1 | WASHER, 1" I.D. |
| | | **7834000786** | 1 | SPRING |
| 3 | | **7126272353** | 4 | CAP SCREW, M20 X 80MM HEX HEAD |
| 4 | | **7661270003** | 4 | NUT, HEX<br>M20 |
| 5 | | **7661270103** | 4 | NUT |
| 6 | | **4159210191** | 1 | GRILL |
| 7 | | **7659190020** | 6 | NUT, RETAINING 8 X 1.25 |
| 8 | | **7951170014** | 6 | FLAT WASHER |
| 9 | | **7951170210** | 6 | WASHER, LOCK 8MM |
| 10 | | **7126171253** | 6 | CAP SCREW, M8X25 HEX HEAD |

The drawing or bill of material for this installation was not available when this catalog was created. Please contact Rich Rebok at richard.rebok@manitowoc.com for Grove products or Galen Burkholder at galen.burkholder@manitowoc.com for National products to supply us with your mailing information. Once the drawing or bill of material has been completed, we will send you the appropriate pages to be inserted into your manual.

Regards,
Technical Publications Department
Shady Grove, Pennsylvania
www.cranecare.com

Description
**DECAL INSTALLATION - RT530E2 (SPANISH)**

Assembly No.
**80006894**
Revision: #

| Item | FN | Part | Qty | Description |
|---|---|---|---|---|
| 10 | | **7376100554** | 1 | DECAL - DANGER CABLE WEDGE (SPANISH) |
| 13 | | **7376100386** | 2 | DECAL - DANGER AUXILIARY BOOM NOSE (SPANISH) |
| 14 | | **7376101875** | 3 | DECAL - DANGER BOOM EXTENSION HAZARD (SPANISH) |
| 18 | | **7376103014** | 1 | DECAL - TRANSPORTATION AND LIFTING DATA RT530E-2 (SPANISH) |
| 100 | | **7376100610** | 1 | DECAL - DANGER TIPPING/2 BLOCKING HAZARD (SPANISH) |
| 101 | | **7376100442** | 1 | DECAL - DANGER QUALIFIED OPERATOR (SPANISH) |
| 102 | | **7376100394** | 1 | DECAL - DANGER OUTRIGGER MID EXTENSION (SPANISH) |
| 103 | | **7376100562** | 1 | DECAL - DANGER SUPERSTRUCTURE SWING (SPANISH) |
| 104 | | **7376101867** | 1 | DECAL - DANGER ELECTROCUTION HAZARD (SPANISH) |
| 105 | | **80005875** | 1 | DECAL-DANGER REMOVE LMI OVERRIDE KEY (SPANISH) |
| 107 | | **7376102810** | 1 | DECAL - FUSES (SPANISH) |
| 108 | | **7376102558** | 1 | DECAL - CAUTION TRANSMISSION DAMAGE (SPANISH) |
| 109 | | **7376100482** | 1 | DECAL - CAUTION PIN SWING LOCK (SPANISH) |
| 111 | | **7376100434** | 1 | DECAL - EMERGENCY EXIT (SPANISH) |
| 113 | | **7376102928** | 1 | DECAL - SYMBOL ID (SPANISH) |
| 120 | | **7376100634** | 4 | DECAL - DANGER ELECTROCUTION HAZARD (SPANISH) |
| 121 | | **7376100402** | 2 | DECAL - DANGER REVOLVING TIRES (SPANISH) |
| 122 | | **7376100450** | 4 | DECAL - DANGER OUTRIGGER CRUSHING HAZARD (SPANISH) |
| 130 | | **7376100418** | 4 | DECAL - MID-EXTEND OUTRIGGERS > (SPANISH) |
| 131 | | **7376100426** | 4 | DECAL - MID-EXTEND OUTRIGGERS < (SPANISH) |

Description
**DECAL INSTALLATION - RT530E2 (SPANISH)**

Assembly No.
**80006894**
Revision: #

| Item | FN | Part | Qty | Description |
|---|---|---|---|---|
| 134 | | **7376102534** | 1 | DECAL - CAUTION SPECIAL FILL REQUIREMENT (SPANISH) |
| 138 | | **7376102959** | 1 | DECAL - CAUTION MAXIMUM FILL RATE (SPANISH) |
| 140 | | **7376100349** | 2 | DECAL - DANGER COUNTERWEIGHT CRUSHING HAZARD (SPANISH) |
| 141 | | **7376100586** | 4 | DECAL - DANGER COUNTERWEIGHT LIFT (SPANISH) |
| 142 | | **7376100554** | 1 | DECAL - DANGER CABLE WEDGE (SPANISH) |
| 143 | | **7376101562** | 1 | DECAL - HAND SIGNALS ( SPANISH ) |
| 160 | | **7376100360** | 2 | DECAL - DANGER BOOM NOT WALKWAY (SPANISH) |
| 163 | | **80005886** | 1 | DECAL-DANGER REMOVE LMI OVERRIDE KEY (SPANISH) |

Description
**LIGHTS INSTALLATION - EXTERIOR (DOMESTIC)**
**(FOR REFERENCE ONLY)**

Assembly No.
**2159110262**
Revision: #

| Item | FN | Part | Qty | Description |
|---|---|---|---|---|
| 300 | | **7581001361** | 4 | LIGHT ASSY, WORK<br>INCLUDES THE FOLLOWING PARTS |
| | | **9581100396** | 1 | BULB, HALOGEN |
| 301 | | **7581100048** | 2 | LIGHT, STOP/TURN/TAIL LED RED<br>INCLUDES THE FOLLOWING PARTS |
| | | **9581100461** | 1 | GROMMET, RUBBER |
| | | **7364100051** | 1 | PLUG |
| 302 | | **7581100050** | 2 | LIGHT, YELLOW REAR TURN (WITH GROMMET)<br>INCLUDES THE FOLLOWING PARTS |
| | | **9581100461** | 1 | GROMMET, RUBBER |
| | | **7364100051** | 1 | PLUG |
| 303 | | **4159110314** | 4 | BRACKET, HEAD/TAIL LIGHT |
| 304 | | **7126171253** | 8 | CAP SCREW, M8X25 HEX HEAD |
| 305 | | **7951170014** | 8 | FLAT WASHER |
| 306 | | **7951170210** | 8 | WASHER, LOCK 8MM |
| 307 | | **7661170003** | 8 | NUT - 8MM X 1.25 |

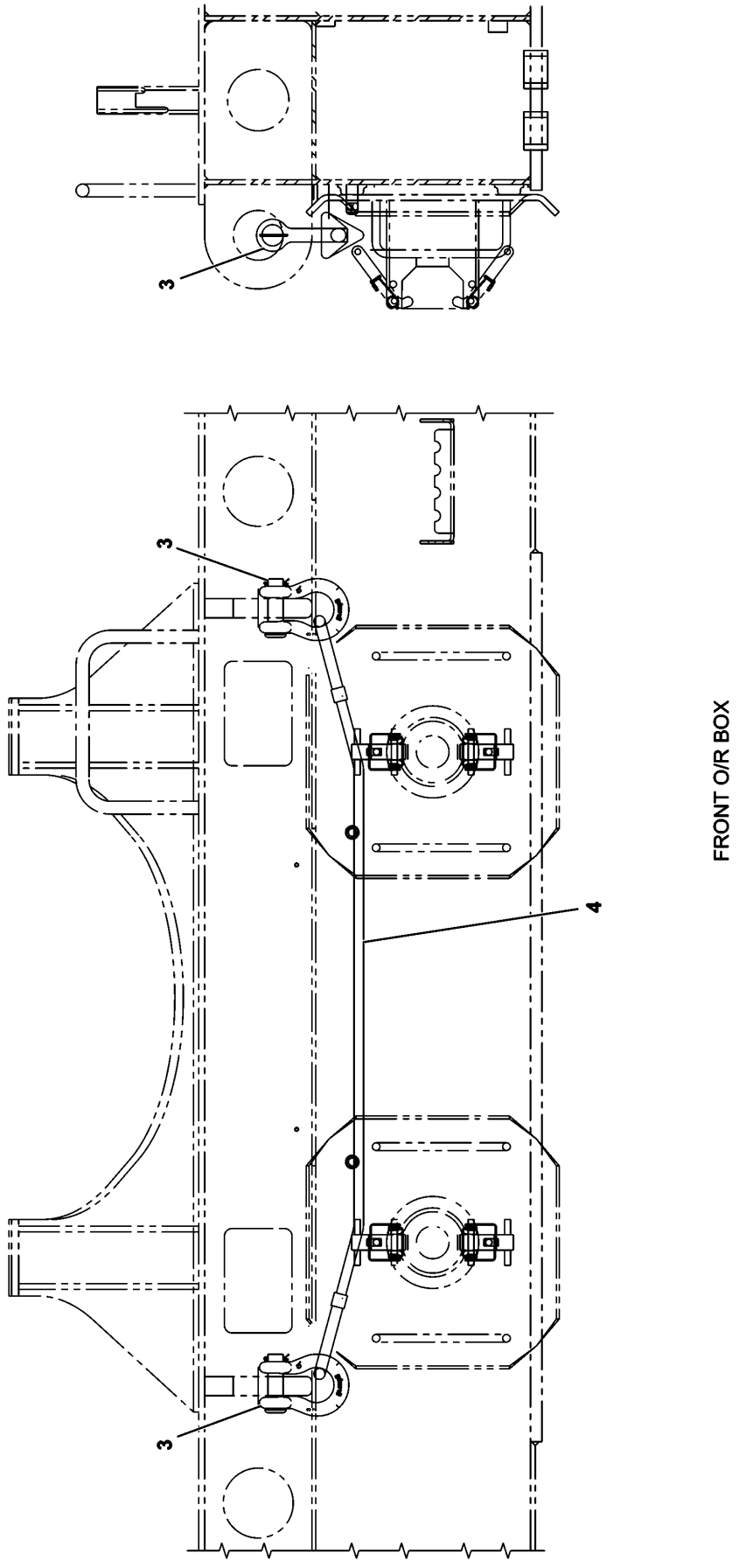


2159110098

(SHEET 1 OF 1)

Description
**TIE DOWN INSTALLATION - HOOK BLOCK**

Assembly No.
**2159110098**
Revision: **B**

| Item | FN | Part | Qty | Description |
|---|---|---|---|---|
| 3 | | **7806100006** | 2 | SHACKLE, 7/8" GALVANIZED<br>INCLUDES THE FOLLOWING PARTS |
| | | **9086101063** | 1 | PIN & COTTER |
| 4 | | **7780100877** | 1 | SLING, 5FT X 5/8 WIRE ROPE |

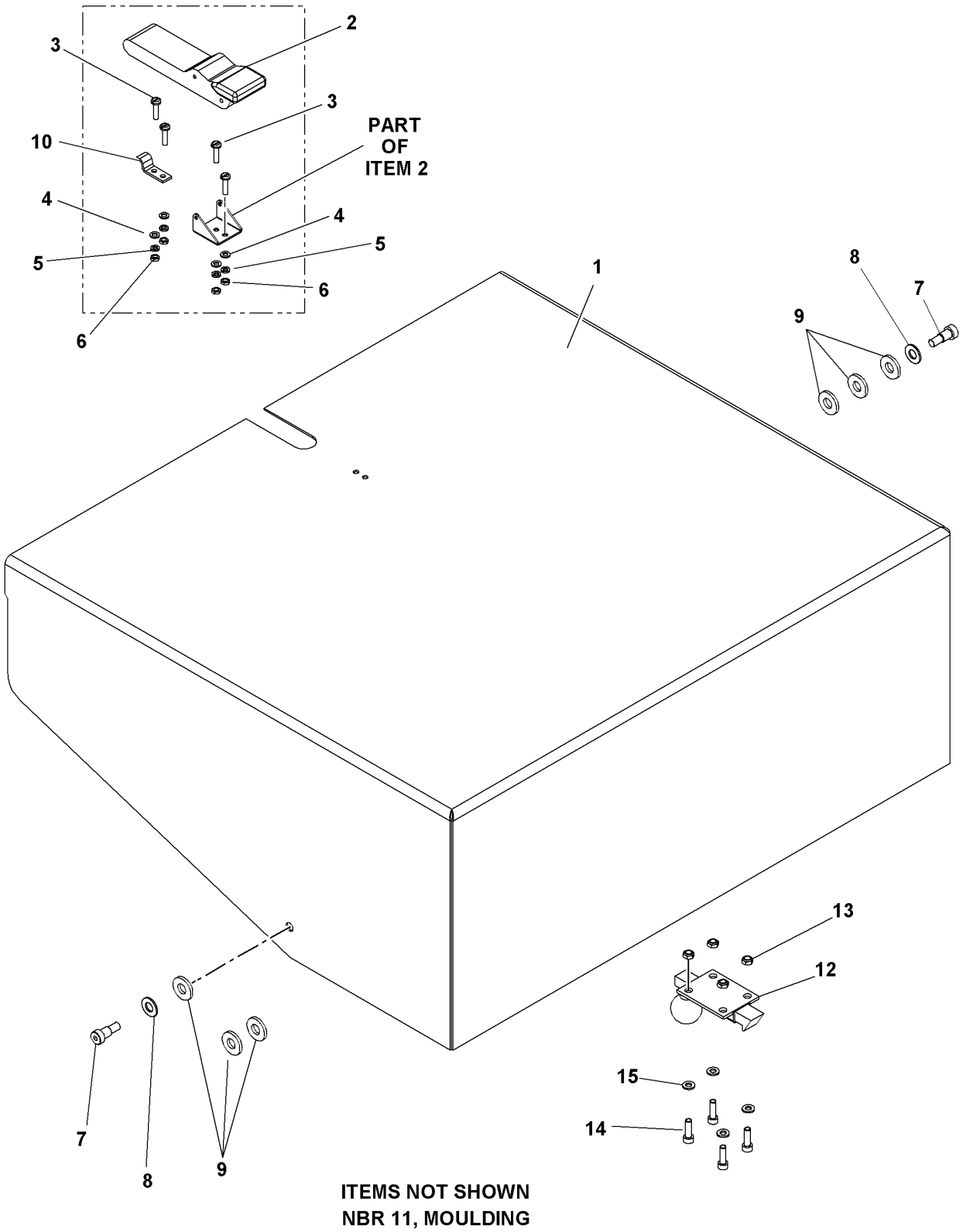


2159810191

(SHEET 1 OF 1)

Description
**COVER INSTALLATION-BATTERY BOX**

Assembly No.
**2159810191**
Revision: **B**

| Item | FN | Part | Qty | Description |
|---|---|---|---|---|
| 1 | | **4159810085** | 1 | COVER, BATTERY BOX |
| 2 | | **7585000812** | 1 | DRAW LATCH<br>INCLUDES THE FOLLOWING PARTS |
| | | **9585100055** | 1 | KEEPER |
| 3 | | **7121131101** | 4 | MACHINE SCREW, M5X20 SLOTTED |
| 4 | | **7951130014** | 4 | WASHER, 5MM I.D. |
| 5 | | **7951130210** | 4 | LOCKWASHER, 5MM I.D. |
| 6 | | **7661130103** | 4 | NUT |
| 7 | | **7099100020** | 2 | SCREW,SOCKET HD 5/16 X 1/2" LG |
| 8 | | **7950160141** | 2 | WASHER, 3/8" PLAIN NARROW |
| 9 | | **7949000561** | 4 | WASHER, .450 I.D. NYLON FLAT |
| 10 | | **6184100054** | 1 | BRACKET, LATCH |
| 11 | | **8496980002** | 7 | MOULDING<br>(QUANTITY IN FEET) |
| 12 | # | **6585100018** | 1 | LATCH ASSY |
| 13 | | **7661151103** | 4 | NUT<br>6MM |
| 14 | | **7128151154** | 4 | SHCS M6x20 -12.9 ISO 4762 |
| 15 | | **7951150014** | 4 | WASHER, 6MM I.D. |

**# SERVICED AS AN ASSEMBLY ONLY**

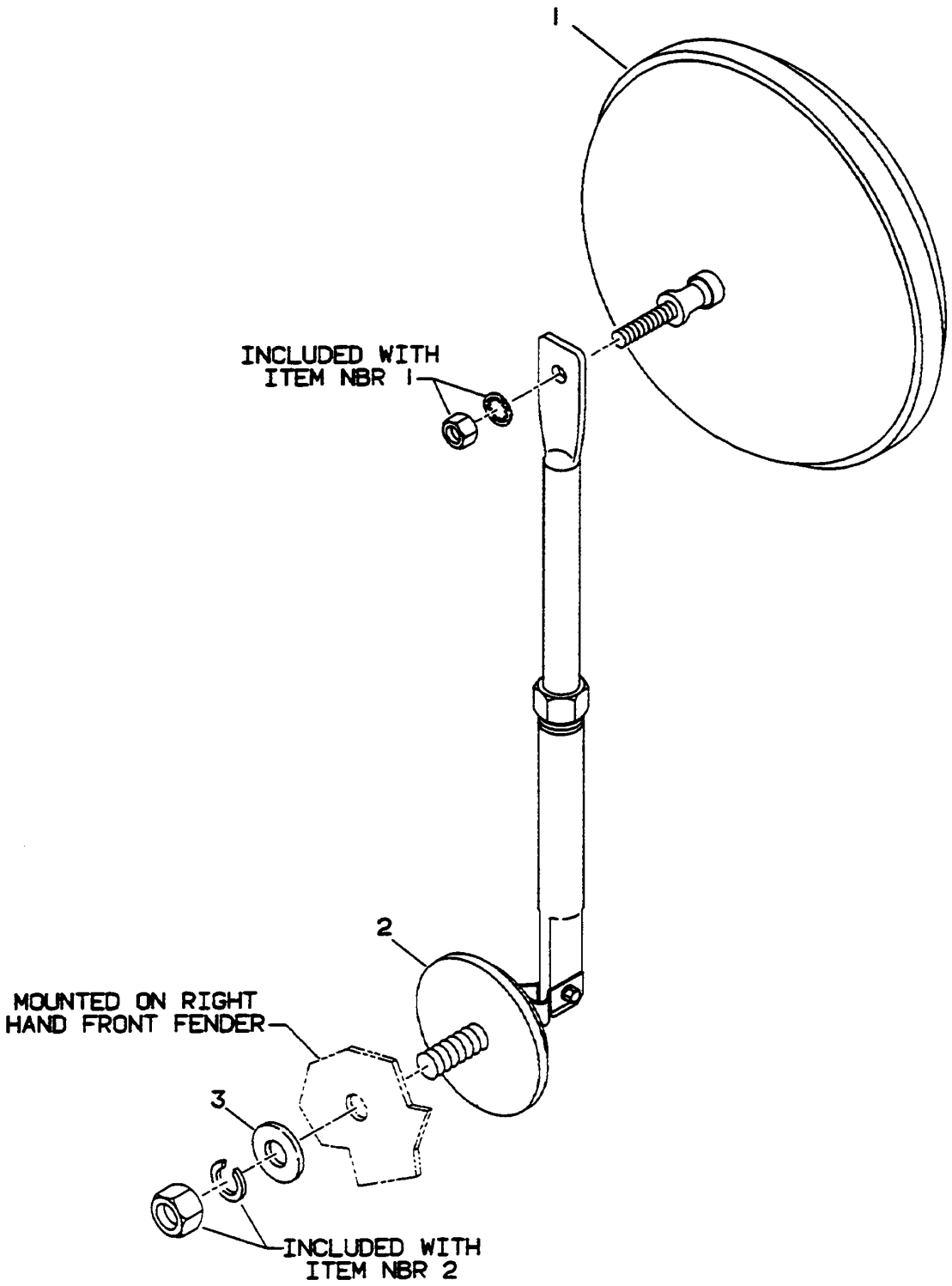


**2159100686**

**(SHEET 1 OF 1)**

Description
**MIRROR INSTALLATION - REAR VIEW**

Assembly No.
**2159100686**
Revision: #

| Item | FN | Part | Qty | Description |
|---|---|---|---|---|
| 1 | # | **7628000025** | 1 | MIRROR, 8" CONVEX<br>INCLUDES MOUNTING HARDWARE |
| 2 | # | **7184001014** | 1 | BRACKET, MIRROR ARM<br>INCLUDES MOUNTING HARDWARE |
| 3 | | **7950180141** | 1 | WASHER, FLAT 1/2" |

**# SERVICED AS AN ASSEMBLY ONLY**

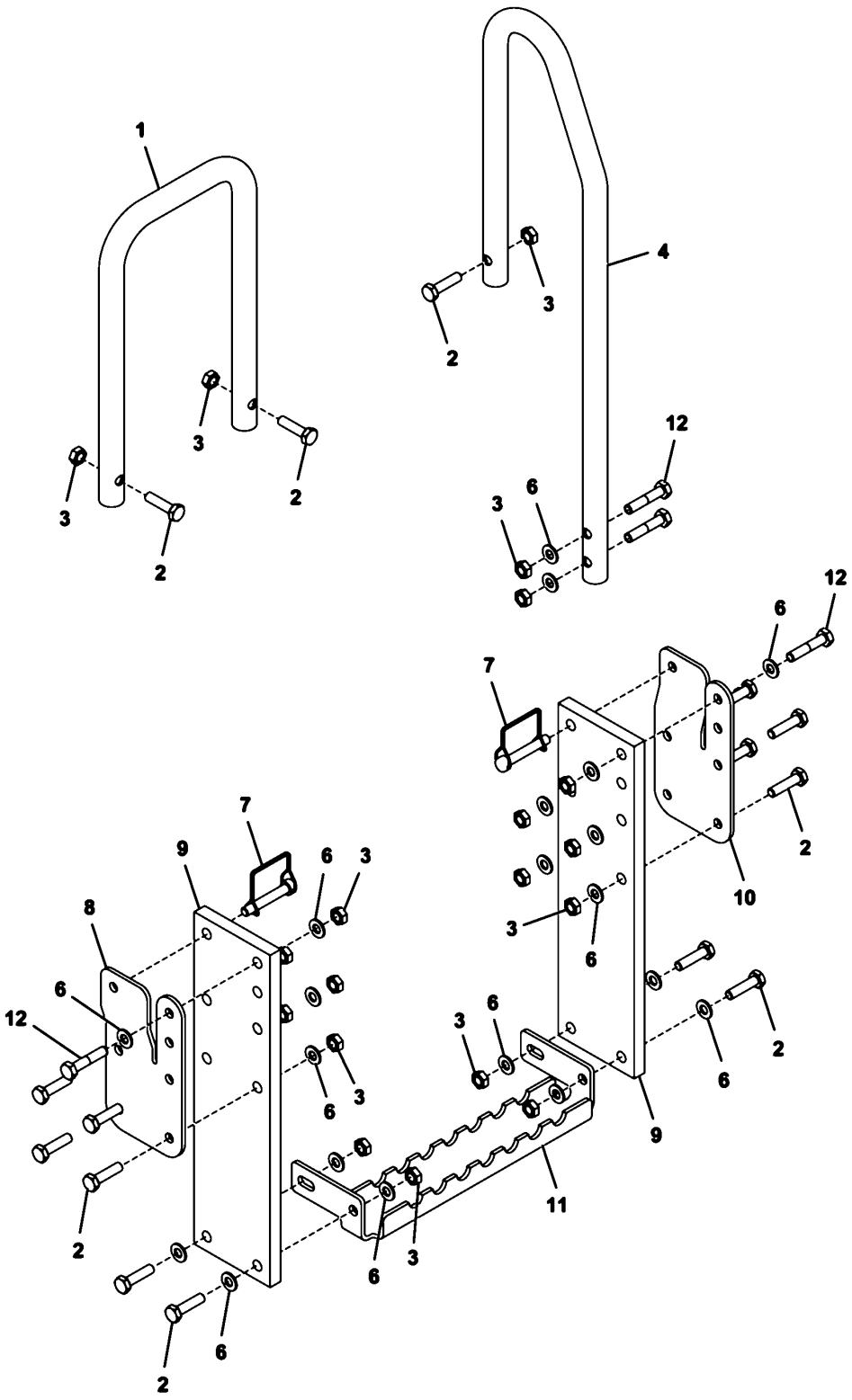


TYPICAL FOR FRONT AND REAR OUTRIGGER BOXES

ITEM NOT SHOWN
NBR. 5

2159110216

(SHEET 1 OF 1)

Description
**STEP INSTALLATION**

Assembly No.
**2159110216**
Revision: **A**

| Item | FN | Part | Qty | Description |
|---|---|---|---|---|
| 1 | | **4159110364** | 2 | HANDLE, GRAB |
| 2 | | **7126191550** | 30 | CAP SCREW, M10 X 40MM HEX HEAD |
| 3 | | **7661191103** | 38 | LOCKNUT |
| 4 | | **4159110343** | 2 | HANDLE, GRAB |
| 5 | | **7126191353** | 16 | CAP SCREW, M10 X 30MM HEX HEAD |
| 6 | | **7951190014** | 44 | FLAT WASHER, 10MM I.D. |
| 7 | | **7689001756** | 4 | PIN |
| 8 | | **4197110295** | 2 | PLATE, STEP INNER |
| 9 | | **7418100011** | 4 | EXTENSION, STEP |
| 10 | | **4197110296** | 2 | PLATE, STEP OUTER |
| 11 | | **4159110250** | 2 | STEP |
| 12 | | **7126191750** | 8 | CAP SCREW, M10 X 50MM HEX HEAD |

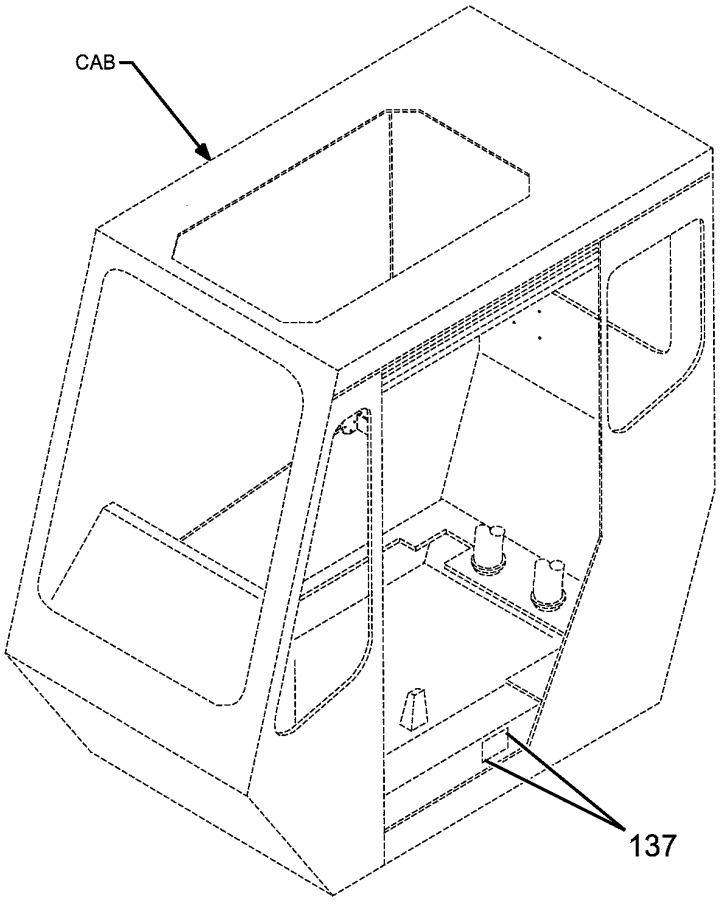
CAB
137

Description
**HARDWARE KIT - DECAL**

Assembly No.
**6376100272**
Revision: **A**

| Item | FN | Part | Qty | Description |
|---|---|---|---|---|
| 137 | | **7760000011** | 4 | RIVET, POP |

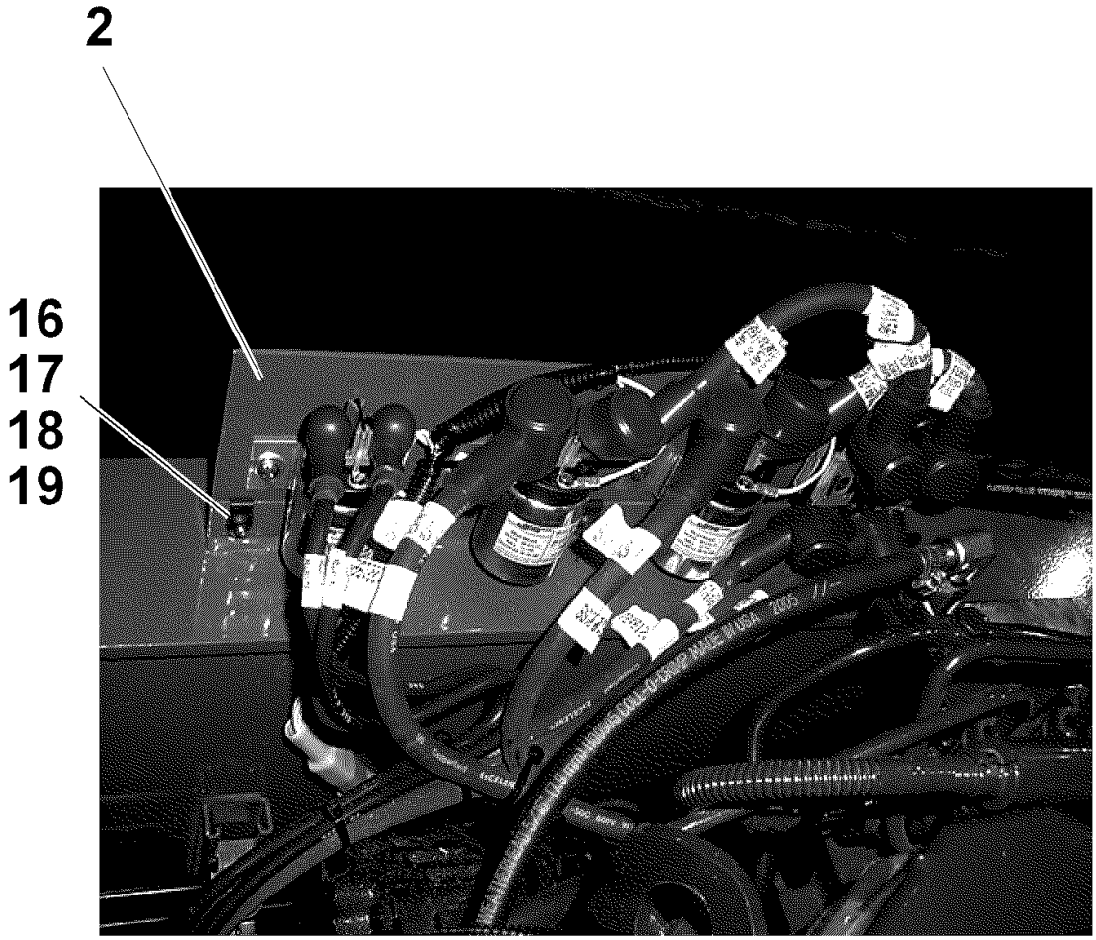


RIGHT SIDE ENGINE




REAR CENTER

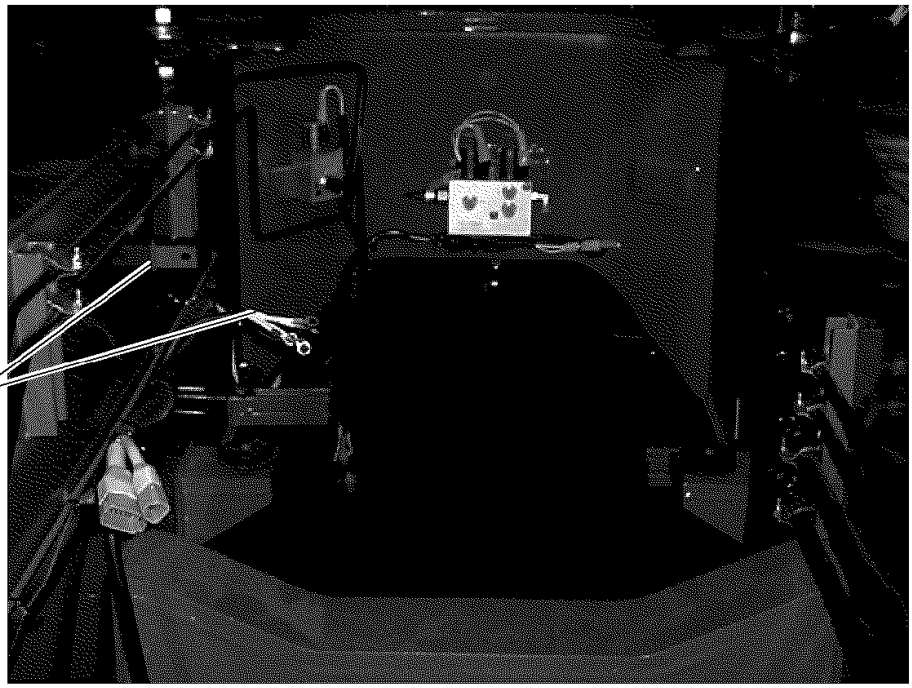


REAR CROSS MEMBER

ITEMS NOT SHOWN
NBR 4 CABLE TIE
NBR 13 CABLE

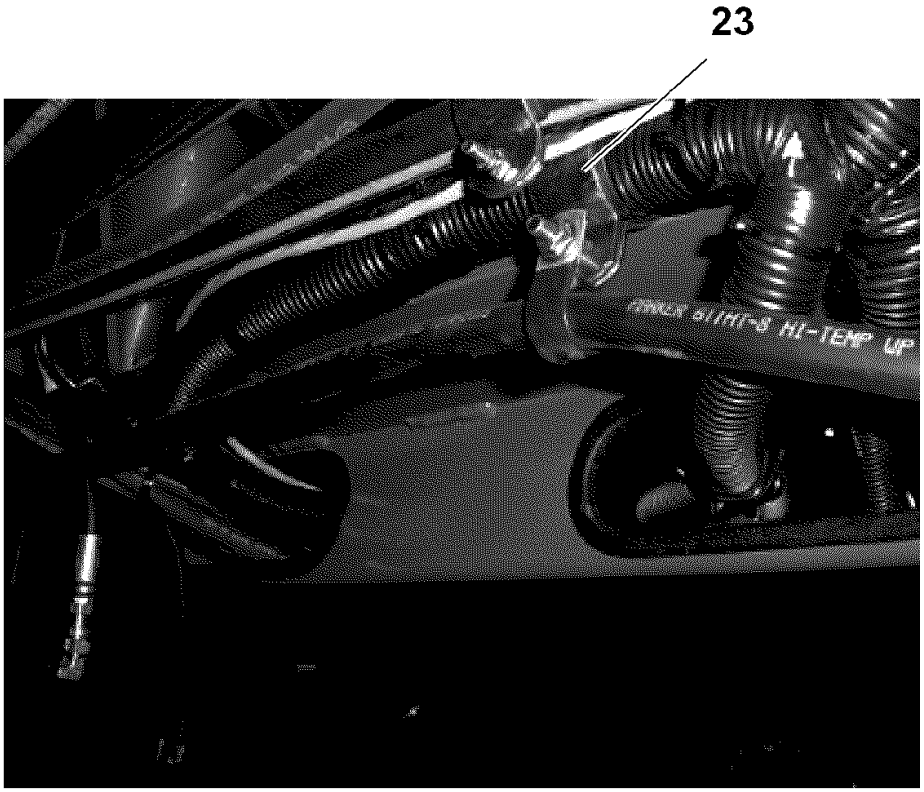


**SWIVEL AREA**

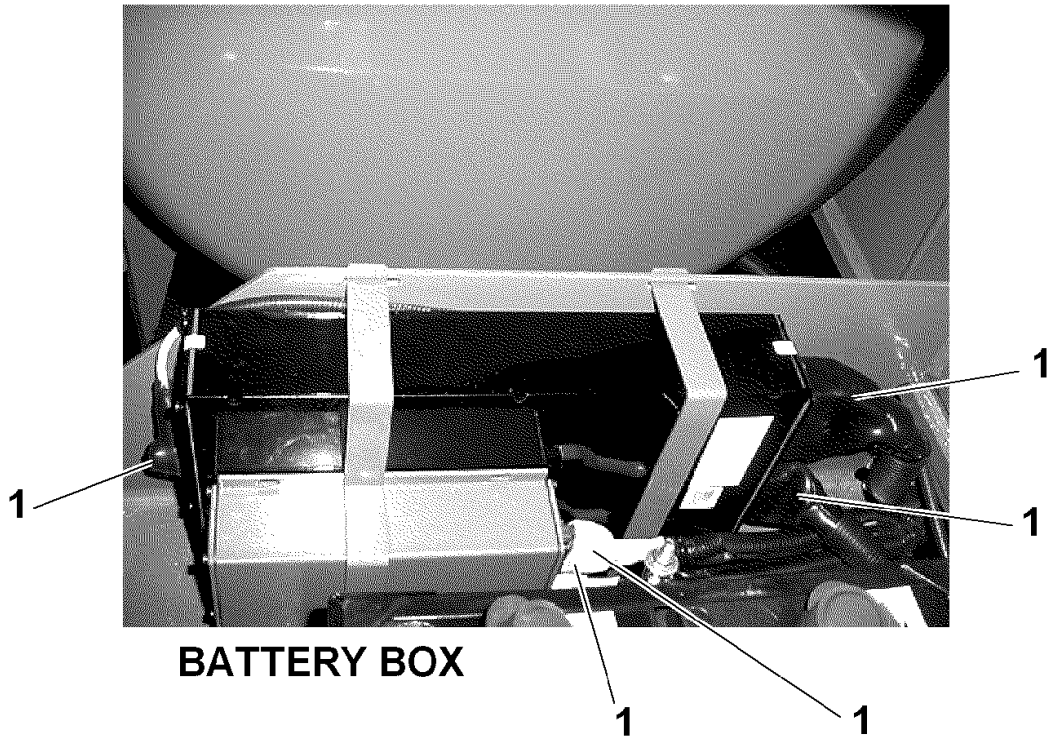


**BATTERY BOX**

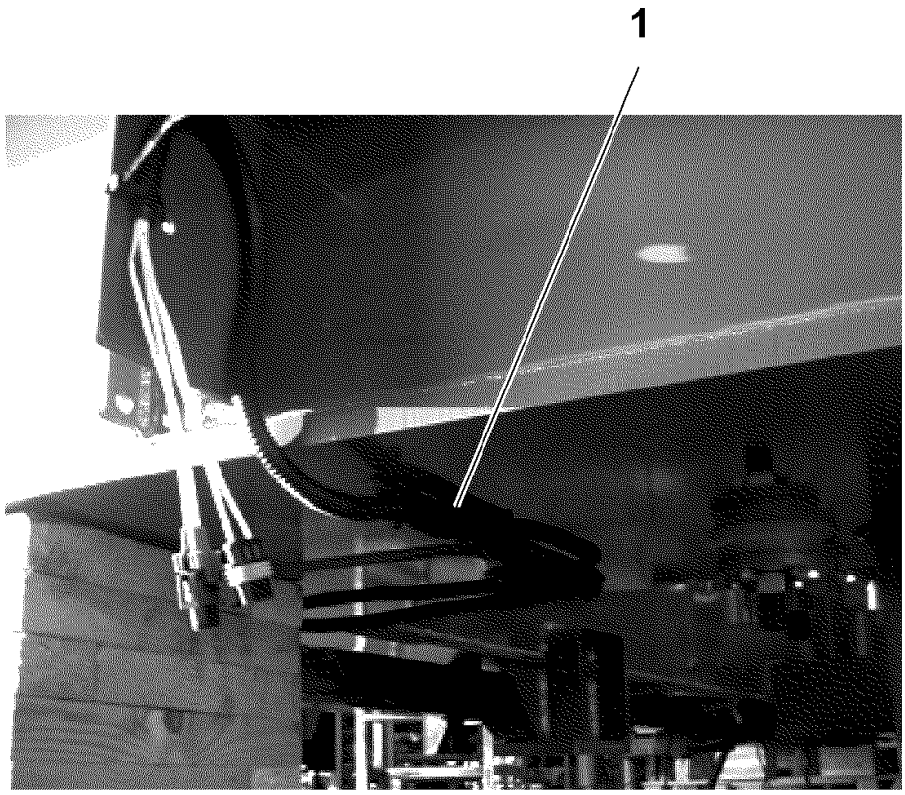


LEFT FRONT

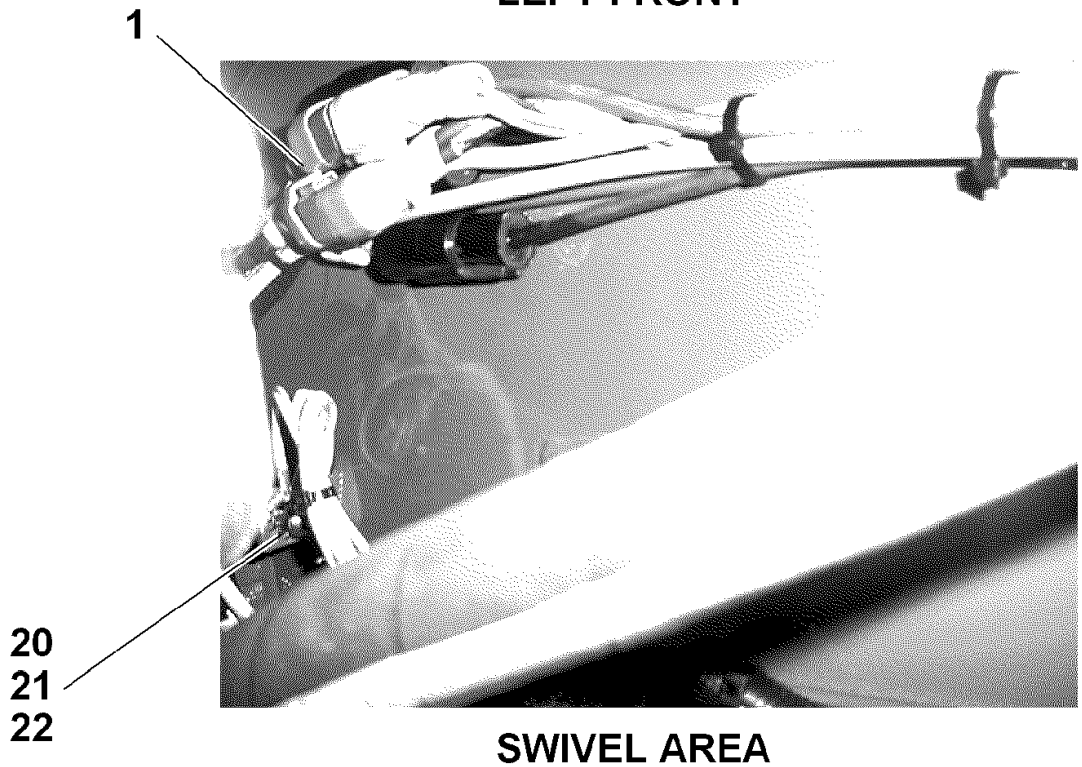


SWIVEL AREA

Description
**ELECTRICAL SYSTEM INSTALLATION - CARRIER (RT540E/RT530E2)**

Assembly No.
**6978100997**
Revision: #

| Item | FN | Part | Qty | Description |
|---|---|---|---|---|
| 1 | + | **6512101096** | 1 | HARNESS ASSEMBLY - CARRIER (COMPLETE ASSEMBLY) |
| 2 | + | **6679100157** | 1 | PANEL ASSEMBLY - ENGINE RELAYS (COMPLETE ASSEMBLY) |
| 3 | | **7025000836** | 1 | ALARM, BACK-UP INCLUDES THE FOLLOWING PARTS |
| | | **7172000546** | 1 | BOOT |
| | | **7689000704** | 2 | PIN, 16 - 14 GA |
| 4 | | **7850000237** | 100 | TIE, CABLE (BLACK) 7 5/16" LONG |
| 5 | | **7126151153** | 2 | CAP SCREW, M6X20 HEX HEAD |
| 6 | | **7951150210** | 2 | LOCKWASHER, 6MM I.D. |
| 7 | # | **7661150003** | 2 | NUT, HEX |
| 8 | | **7950140161** | 2 | WASHER, 1/4" I.D. FLAT WIDE |
| 9 | | **7111040410** | 4 | SCREW, MACHINE 7/64" - 40 N.C. X 1/2" GRADE 1 |
| 10 | | **7950040141** | 4 | WASHER, 7/64" I.D. |
| 11 | | **7950040050** | 4 | LOCKWASHER, 7/64" I.D. |
| 12 | | **7660041100** | 4 | NUT, HEX 7/64" - 40 N.C. GRADE 1 |
| 13 | | **7246002555** | 1 | CABLE ASSY |
| 14 | | **7300000408** | 1 | CLAMP, TUBING |
| 15 | | **7300000404** | 1 | CLAMP, 1" TUBING |
| 16 | | **7126151153** | 3 | CAP SCREW, M6X20 HEX HEAD |
| 17 | | **7950140161** | 3 | WASHER, 1/4" I.D. FLAT WIDE |
| 18 | | **7951150210** | 3 | LOCKWASHER, 6MM I.D. |
| 19 | | **7659190019** | 3 | RETAINING NUT M6 |
| 20 | | **7115161050** | 2 | CAP SCREW, 3/8" - 16 N.C. X 1 1/4" GRADE 5 |
| 21 | | **7660160000** | 2 | NUT, HEX 3/8" - 16 N.C. |
| 22 | | **7950160350** | 4 | WASHER, LOCK 3/8" I.D. |
| 23 | | **7300000406** | 1 | CLAMP, TUBING |

**+ SEE FURTHER BREAKDOWN THIS GROUP** **# SERVICED AS AN ASSEMBLY ONLY**

| WIRE NO | COLOR | SAE SIZE | LENGTH TOT IN | TP | B/M ITEM NO | REMARKS | TP | B/M ITEM NO | REMARKS |
|---|---|---|---|---|---|---|---|---|---|
| SHLD8 | WHT GXL | 16 | 4 | BG | STRIP | SEE CABLE PC1C | BG | STRIP | SEE CABLE PC1C |
| SHLD9 | | 16 | 4 | AM | STRIP | SEE CABLE PC2B | AM | STRIP | SEE CABLE PC2B |
| SHLD10 | | 16 | 4 | BG | STRIP | SEE CABLE PC2C | BG | STRIP | SEE CABLE PC2C |
| SHLD11 | | 16 | 4 | BE | STRIP | SEE CABLE RB | BE | STRIP | SEE CABLE RB |
| AE7 | | 16 | 6 | AE | 49 | ——— | ——— | SEE NOTE 8 | ——— |
| AM1 | | 16 | 8 | AM | 48 | ——— | ——— | SEE NOTE 8 | ——— |
| AM4 | | 16 | 8 | AM | 48 | ——— | ——— | SEE NOTE 8 | ——— |
| AM5 | | 16 | 8 | AM | 48 | ——— | ——— | SEE NOTE 8 | ——— |
| BPA | | 16 | 8 | BP | 49 | ——— | ——— | SEE NOTE 8 | ——— |
| CD10 | | 16 | 6 | CD | 49 | ——— | ——— | SEE NOTE 8 | ——— |
| CD11 | | 16 | 6 | CD | 49 | ——— | ——— | SEE NOTE 8 | ——— |
| CD12 | | 16 | 6 | CD | 49 | ——— | ——— | SEE NOTE 8 | ——— |
| CE1 | | 12 | 8 | CE | 75 | ——— | ——— | SEE NOTE 8 | ——— |
| CE2 | | 16 | 9 | CE | 48 | ——— | ——— | SEE NOTE 8 | ——— |
| CE3 | | 16 | 9 | CE | 48 | ——— | ——— | SEE NOTE 8 | ——— |
| CE4 | | 16 | 9 | CE | 48 | ——— | ——— | SEE NOTE 8 | ——— |
| CM1 | | 16 | 7 | CM | 48 | ——— | ——— | SEE NOTE 8 | ——— |
| CN1 | | 16 | 7 | CN | 48 | ——— | ——— | SEE NOTE 8 | ——— |
| CP6 | | 16 | 8 | CP | 49 | ——— | ——— | SEE NOTE 8 | ——— |
| CP12 | WHT GXL | 16 | 8 | CP | 49 | ——— | ——— | SEE NOTE 8 | ——— |

| WIRE NUMBER LABELS FOR USE ON CABLE ASSYS | | | | | | | | | |
|---|---|---|---|---|---|---|---|---|---|
| WIRE NO | CONDUCTOR COLOR | SAE SIZE | LENGTH TOT IN | CABLE ASSY | TP | REMARKS | TP | REMARKS | LABLES REQ'D |
| 1484A | RED | 10 | 5 | PC1A | BH | USE INSUL | SB6 | USE INSUL | 2 |
| 1484B | RED | 10 | 5 | PC1B | AM | USE INSUL | SB6 | USE INSUL | 2 |
| 1484C | RED | 10 | 5 | PC1C | BG | USE INSUL | SB6 | USE INSUL | 2 |
| 1485A | BLK | 10 | 5 | PC1A | BH | USE INSUL | SB6 | USE INSUL | 2 |
| 1485B | BLK | 10 | 5 | PC1B | AM | USE INSUL | SB6 | USE INSUL | 2 |
| 1485C | BLK | 10 | 5 | PC1C | BG | USE INSUL | SB6 | USE INSUL | 2 |
| 1486A | RED | 10 | 5 | PC2A | BH | USE INSUL | SB7 | USE INSUL | 2 |
| 1486B | RED | 10 | 5 | PC2B | AM | USE INSUL | SB7 | USE INSUL | 2 |
| 1486C | RED | 10 | 5 | PC2C | BG | USE INSUL | SB7 | USE INSUL | 2 |
| 1487A | BLK | 10 | 5 | PC2A | BH | USE INSUL | SB7 | USE INSUL | 2 |
| 1487B | BLK | 10 | 5 | PC2B | AM | USE INSUL | SB7 | USE INSUL | 2 |
| 1487C | BLK | 10 | 5 | PC2C | BG | USE INSUL | SB7 | USE INSUL | 2 |
| 1289A | RED | 10 | 5 | RA | BE | USE INSUL | CE | USE INSUL | 2 |
| 1289B | RED | 10 | 5 | RB | BF | USE INSUL | SB2 | USE INSUL | 2 |
| 1289C | RED | 10 | 5 | RC | BE | USE INSUL | BD | USE INSUL | 2 |
| 1289D | RED | 10 | 5 | RB | AM | USE INSUL | SB2 | USE INSUL | 2 |
| 1289E | RED | 10 | 5 | RB | BE | USE INSUL | SB2 | USE INSUL | 2 |
| 1290A | BLK | 10 | 5 | RA | BE | USE INSUL | CE | USE INSUL | 2 |
| 1290B | BLK | 10 | 5 | RB | BF | USE INSUL | SB2 | USE INSUL | 2 |
| 1290C | BLK | 10 | 5 | RC | BE | USE INSUL | BD | USE INSUL | 2 |
| 1290D | BLK | 10 | 5 | RB | AM | USE INSUL | SB2 | USE INSUL | 2 |
| 1290E | BLK | 10 | 5 | RB | BE | USE INSUL | SB2 | USE INSUL | 2 |
| 1323A | RED | 10 | 5 | RS | BF | USE INSUL | BD | USE INSUL | 2 |
| 1324A | BLK | 10 | 5 | RS | BF | USE INSUL | BD | USE INSUL | 2 |

| WIRE NO | COLOR | SAE SIZE | LENGTH TOT IN | TP | B/M ITEM NO | REMARKS | TP | B/M ITEM NO | REMARKS |
|---|---|---|---|---|---|---|---|---|---|
| 134A | WHT GXL | 16 | 152 | BH | 49 | —— | SA1 | STRIP | SEE DETAIL |
| 134B | | 16 | 21 | AS | 48 | —— | SA1 | STRIP | SEE DETAIL |
| 134C | | 16 | 74 | AC | 13,14 | —— | SA1 | STRIP | SEE DETAIL |
| 343 | | 18 | 97 | BH | 45 | —— | CE | 48 | —— |
| 344A | | 12 | 5 | SB1 | STRIP | SEE DETAIL | BA | STRIP | NOTE 5 |
| 344B | | 12 | 63 | SB1 | STRIP | SEE DETAIL | SC7 | STRIP | SEE DETAIL |
| 344C | | 12 | 63 | SB1 | STRIP | SEE DETAIL | SC7 | STRIP | SEE DETAIL |
| 344D | | 12 | 8 | CE | 75 | —— | SC7 | STRIP | SEE DETAIL |
| 367 | | 18 | 97 | BH | 49 | —— | CE | 48 | —— |
| 368 | | 18 | 97 | BH | 49 | —— | CE | 48 | —— |
| 371 | | 18 | 97 | BH | 49 | —— | CE | 48 | —— |
| 440A | | 18 | 25 | BH | 45 | —— | SB3 | STRIP | SEE DETAIL |
| 440B | | 18 | 95 | AF | 36,37 | —— | SB3 | STRIP | SEE DETAIL |
| 440C | | 18 | 102 | CA | 36,37 | —— | SB3 | STRIP | SEE DETAIL |
| 504 | | 18 | 78 | BH | 49 | —— | BK | 49 | —— |
| 530 | | 18 | 90 | BP | 49 | —— | BH | 49 | —— |
| 609A | | 18 | 87 | BH | 49 | —— | SC1 | STRIP | SEE DETAIL |
| 609B | | 18 | 10 | CE | 48 | —— | SC1 | STRIP | SEE DETAIL |
| 609C | | 18 | 96 | CC | 49 | —— | SC1 | STRIP | SEE DETAIL |
| 631 | | 18 | 98 | BH | 49 | —— | BJ | 49 | —— |
| 713A | | 18 | 44 | BH | 45 | —— | SB5 | STRIP | SEE DETAIL |
| 713B | | 18 | 29 | BL | 49 | —— | SB5 | STRIP | SEE DETAIL |
| 713C | | 18 | 29 | BL | 49 | —— | SB5 | STRIP | SEE DETAIL |
| 787 | | 18 | 78 | BH | 49 | —— | BK | 49 | —— |
| 792 | | 18 | 105 | BH | 49 | —— | AL | 49 | —— |
| 793 | | 18 | 105 | BH | 49 | —— | AL | 49 | —— |
| 842 | | 18 | 130 | BH | 45 | —— | CB | 51 | |
| 1253 | WHT GXL | 16 | 33 | BA | STRIP | NOTE 9 | BD | 48 | —— |
| 1274 | YEL SXL | 6 | 56 | AM | 20 | —— | BC | 25 | —— |
| 1280 | WHT GXL | 16 | 81 | CE | 48 | —— | BM | 45 | —— |
| 1299 | | 16 | 81 | CE | 48 | —— | BM | 45 | —— |
| 1358A | | 12 | 8 | BA | STRIP | NOTE 5 | BA | 41 | —— |
| 1358B | | 14 | 8 | BA | STRIP | NOTE 5 | BA | 92 | —— |
| 1358C | | 16 | 8 | BA | STRIP | NOTE 9 | BA | 92 | —— |
| 1410A | | 16 | 45 | BH | 49 | —— | SB5 | STRIP | SEE DETAIL |
| 1410B | | 18 | 117 | AF | 36,37 | —— | SB5 | STRIP | SEE DETAIL |
| 1410C | | 18 | 31 | BK | 49 | —— | SB5 | STRIP | SEE DETAIL |
| 1410D | | 18 | 85 | CB | 51 | —— | SB5 | STRIP | SEE DETAIL |
| 1410E | | 18 | 80 | CA | 36,37 | —— | SB5 | STRIP | SEE DETAIL |
| 1410F | | 18 | 75 | BP | 49 | —— | SB5 | STRIP | SEE DETAIL |
| 1414 | | 8 | 59 | BN | 26 | —— | SB1 | STRIP | SEE DETAIL |
| 1463 | | 14 | 62 | BA | STRIP | NOTE 5 | BG | 15 | —— |
| 1478 | | 18 | 76 | BH | 45 | —— | BK | 49 | —— |
| SHLD1 | | 16 | 4 | BE | STRIP | SEE CABLE RA | BE | STRIP | SEE CABLE RA |
| SHLD2 | | 16 | 4 | CE | STRIP | SEE CABLE RA | CE | STRIP | SEE CABLE RA |
| SHLD3 | | 16 | 4 | BE | STRIP | SEE CABLE RB | BE | STRIP | SEE CABLE RB |
| SHLD4 | | 16 | 4 | BF | STRIP | SEE CABLE RB | BF | STRIP | SEE CABLE RB |
| SHLD5 | | 16 | 4 | BE | STRIP | SEE CABLE RC | BE | STRIP | SEE CABLE RC |
| SHLD6 | | 16 | 4 | BD | STRIP | SEE CABLE RC | BD | STRIP | SEE CABLE RC |
| SHLD7 | WHT GXL | 16 | 4 | AM | STRIP | SEE CABLE PC1B | AM | STRIP | SEE CABLE PC1B |

| WIRE NO | COLOR | SAE SIZE | LENGTH TOT IN | TP | B/M ITEM NO | REMARKS | TP | B/M ITEM NO | REMARKS |
|---|---|---|---|---|---|---|---|---|---|
| 51S | WHT GXL | 16 | 81 | AK | 49 | ——— | AV | 49 | ——— |
| 51T | | 16 | 85 | AL | 49 | ——— | AV | 49 | ——— |
| 51V | | 16 | 85 | AL | 49 | ——— | AV | 49 | ——— |
| 51W | | 18 | 78 | AN | 49 | ——— | AV | 49 | ——— |
| 51Y | | 14 | 70 | AV | 15 | ——— | CP | 15 | ——— |
| 51AA | | 16 | 89 | BF | 49 | ——— | CG | 28 | CRIMP W/51AB |
| 51AB | | 16 | 89 | BF | 49 | ——— | CG | STRIP | CRIMP W/51AA |
| 51AC | | 16 | 89 | BG | 49 | ——— | CG | 28 | ——— |
| 51AD | | 14 | 90 | BH | 15 | ——— | CG | 27 | CRIMP W/51AE |
| 51AE | | 14 | 90 | BH | 15 | ——— | CG | STRIP | CRIMP W/51AD |
| 51AG | | 18 | 67 | BL | 49 | ——— | CP | 49 | ——— |
| 51AH | | 18 | 74 | BK | 49 | ——— | CP | 49 | ——— |
| 51AK | | 18 | 72 | BK | 49 | ——— | CP | 49 | ——— |
| 51AL | | 18 | 92 | BJ | 49 | ——— | CP | 49 | ——— |
| 51AM | | 18 | 56 | CB | 51 | ——— | CP | 49 | ——— |
| 51AN | | 16 | 54 | CC | 49 | ——— | CD | 49 | ——— |
| 51AP | | 18 | 28 | CF | 49 | ——— | CD | 49 | ——— |
| 51AR | | 18 | 26 | CF | 49 | ——— | CD | 49 | ——— |
| 51AS | | 18 | 26 | CF | 49 | ——— | CD | 49 | ——— |
| 51AT | | 18 | 28 | CF | 49 | ——— | CD | 49 | ——— |
| 51AU | | 14 | 85 | CD | 15 | ——— | CP | 15 | ——— |
| 51AV | | 16 | 94 | CH | 46,47 | ——— | SC8 | STRIP | SEE DETAIL |
| 51AW | | 16 | 94 | CJ | 13,14 | ——— | SC8 | STRIP | SEE DETAIL |
| 51AX | | 16 | 97 | CK | 13,14 | ——— | SC8 | STRIP | SEE DETAIL |
| 51AY | | 16 | 71 | BR | 49 | ——— | AV | 49 | ——— |
| 51BF | | 16 | 4 | CD | 49 | ——— | SC8 | STRIP | SEE DETAIL |
| 51BG | | 16 | 5 | CD | 49 | ——— | SC8 | STRIP | SEE DETAIL |
| 51BH | | 16 | 29 | CM | 48 | ——— | SC8 | STRIP | SEE DETAIL |
| 51BJ | | 16 | 28 | CN | 48 | ——— | SC8 | STRIP | SEE DETAIL |
| 51BK | | 16 | 97 | CL | 46,47 | ——— | SC8 | STRIP | SEE DETAIL |
| 51BN | | 16 | 77 | CP | 49 | ——— | BD | 48 | ——— |
| 51BP | | 16 | 140 | CD | 49 | ——— | BL | 49 | ——— |
| 51BR | | 14 | 14 | AV | 15 | ——— | AH | STRIP | CRIMP W/51BS |
| 51BS | | 14 | 14 | AV | 15 | ——— | AH | 27 | CRIMP W/51BR |
| 51BT | | 14 | 13 | CP | 15 | ——— | CG | STRIP | CRIMP W/51BV |
| 51BV | | 14 | 13 | CP | 15 | ——— | CG | 27 | CRIMP W/51BT |
| 75 | | 18 | 161 | AP | 49 | ——— | BH | 49 | ——— |
| 76 | | 18 | 161 | AP | 49 | ——— | BH | 49 | ——— |
| 77 | | 18 | 181 | BH | 49 | ——— | CF | 49 | ——— |
| 78 | | 18 | 181 | BH | 49 | ——— | CF | 49 | ——— |
| 79A | | 16 | 101 | AK | 49 | ——— | BH | 49 | ——— |
| 80A | | 16 | 101 | AK | 49 | ——— | BH | 49 | ——— |
| 81A | | 18 | 159 | AP | 49 | ——— | BH | 49 | ——— |
| 82 | | 18 | 159 | AP | 49 | ——— | BH | 49 | ——— |
| 83 | | 18 | 179 | BH | 49 | ——— | CF | 49 | ——— |
| 84 | | 18 | 179 | BH | 49 | ——— | CF | 49 | ——— |
| 89A | | 16 | 97 | BH | 49 | ——— | CE | 48 | ——— |
| 133A | | 16 | 153 | BH | 49 | ——— | SA1 | STRIP | SEE DETAIL |
| 133B | | 16 | 22 | AR | 49 | ——— | SA1 | STRIP | SEE DETAIL |
| 133C | WHT GXL | 16 | 77 | AB | 13,14 | ——— | SA1 | STRIP | SEE DETAIL |

| WIRE NO | COLOR | SAE SIZE | LENGTH TOT IN | TP | B/M ITEM NO | REMARKS | TP | B/M ITEM NO | REMARKS |
|---|---|---|---|---|---|---|---|---|---|
| 2A | WHT GXL | 18 | 25 | BH | 45 | —— | SB2 | STRIP | SEE DETAIL |
| 2B | WHT GXL | 18 | 82 | SB2 | STRIP | SEE DETAIL | AJ | 49 | —— |
| 2C | WHT GXL | 18 | 72 | SB2 | STRIP | SEE DETAIL | CE | 48 | —— |
| 5 | YEL SXL | 6 | 56 | AM | 20 | —— | BC | 25 | —— |
| 6A | YEL SXL | 6 | 56 | AM | 20 | —— | BC | 25 | —— |
| 8A | WHT GXL | 14 | 164 | BH | 15 | —— | SC5 | STRIP | SEE DETAIL |
| 8B | | 16 | 87 | CJ | 13,14 | —— | SC5 | STRIP | SEE DETAIL |
| 8C | | 16 | 22 | CM | 48 | —— | SC5 | STRIP | SEE DETAIL |
| 8D | | 16 | 22 | CN | 48 | —— | SC5 | STRIP | SEE DETAIL |
| 8E | | 16 | 91 | CK | 13,14 | —— | SC5 | STRIP | SEE DETAIL |
| 8F | | 14 | 164 | BH | 15 | —— | SC5 | STRIP | SEE DETAIL |
| 13A | | 14 | 26 | BH | 15 | —— | SB2 | STRIP | SEE DETAIL |
| 13B | | 16 | 123 | AS | 48 | —— | SB2 | STRIP | SEE DETAIL |
| 13C | | 16 | 123 | AR | 49 | —— | SB2 | STRIP | SEE DETAIL |
| 13D | | 14 | 139 | SC6 | STRIP | SEE DETAIL | SB2 | STRIP | SEE DETAIL |
| 13E | | 16 | 86 | SC6 | STRIP | SEE DETAIL | CH | 46,47 | —— |
| 13F | | 16 | 21 | SC6 | STRIP | SEE DETAIL | CM | 48 | —— |
| 13G | | 16 | 21 | SC6 | STRIP | SEE DETAIL | CN | 48 | —— |
| 13H | | 16 | 90 | SC6 | STRIP | SEE DETAIL | CL | 46,47 | —— |
| 13J | | 16 | 10 | AT | 15 | —— | SB2 | STRIP | SEE DETAIL |
| 13K | | 16 | 61 | BR | 15 | —— | SB2 | STRIP | SEE DETAIL |
| 14A | | 14 | 137 | BH | 15 | —— | SA2 | STRIP | SEE DETAIL |
| 14B | | 16 | 93 | AA | 46,47 | —— | SA2 | STRIP | SEE DETAIL |
| 14C | | 16 | 8 | AR | 49 | —— | SA2 | STRIP | SEE DETAIL |
| 14E | | 16 | 275 | CM | 48 | —— | SA2 | STRIP | SEE DETAIL |
| 15A | | 14 | 136 | BH | 15 | —— | SA2 | STRIP | SEE DETAIL |
| 15B | | 16 | 90 | AD | 46,47 | —— | SA2 | STRIP | SEE DETAIL |
| 15C | | 16 | 9 | AS | 48 | —— | SA2 | STRIP | SEE DETAIL |
| 15E | | 16 | 274 | CN | 48 | —— | SA2 | STRIP | SEE DETAIL |
| 16A | | 16 | 251 | BH | 15 | —— | CH | 46,47 | —— |
| 17 | | 16 | 255 | BH | 15 | —— | CL | 46,47 | —— |
| 25 | | 18 | 97 | BH | 45 | —— | CE | 48 | —— |
| 32 | | 18 | 98 | AN | 50 | —— | BH | 45 | —— |
| 41A | | 16 | 167 | BH | 15 | —— | SC9 | STRIP | SEE DETAIL |
| 41B | | 16 | 19 | CM | 48 | —— | SC9 | STRIP | SEE DETAIL |
| 41C | | 16 | 19 | CN | 48 | —— | SC9 | STRIP | SEE DETAIL |
| 51A | | 16 | 91 | AA | 46,47 | —— | AE | 49 | —— |
| 51B | | 16 | 91 | AB | 13,14 | —— | AE | 49 | —— |
| 51C | | 16 | 87 | AC | 13,14 | —— | AE | 49 | —— |
| 51D | | 16 | 87 | AD | 46,47 | —— | AE | 49 | —— |
| 51E | | 16 | 14 | AE | 49 | —— | AS | 48 | —— |
| 51F | | 16 | 14 | AE | 49 | —— | AS | 49 | —— |
| 51G | | 16 | 12 | AT | 49 | —— | AV | 49 | —— |
| 51H | | 18 | 22 | AE | 49 | —— | AP | 49 | —— |
| 51J | | 18 | 20 | AE | 49 | —— | AP | 49 | —— |
| 51K | | 18 | 20 | AE | 49 | —— | AP | 49 | —— |
| 51L | | 18 | 22 | AE | 49 | —— | AP | 49 | —— |
| 51M | | 14 | 125 | AV | 15 | —— | AE | 15 | —— |
| 51N | | 18 | 85 | AJ | 49 | —— | AV | 49 | —— |
| 51P | WHT GXL | 16 | 81 | AK | 49 | —— | AV | 49 | —— |

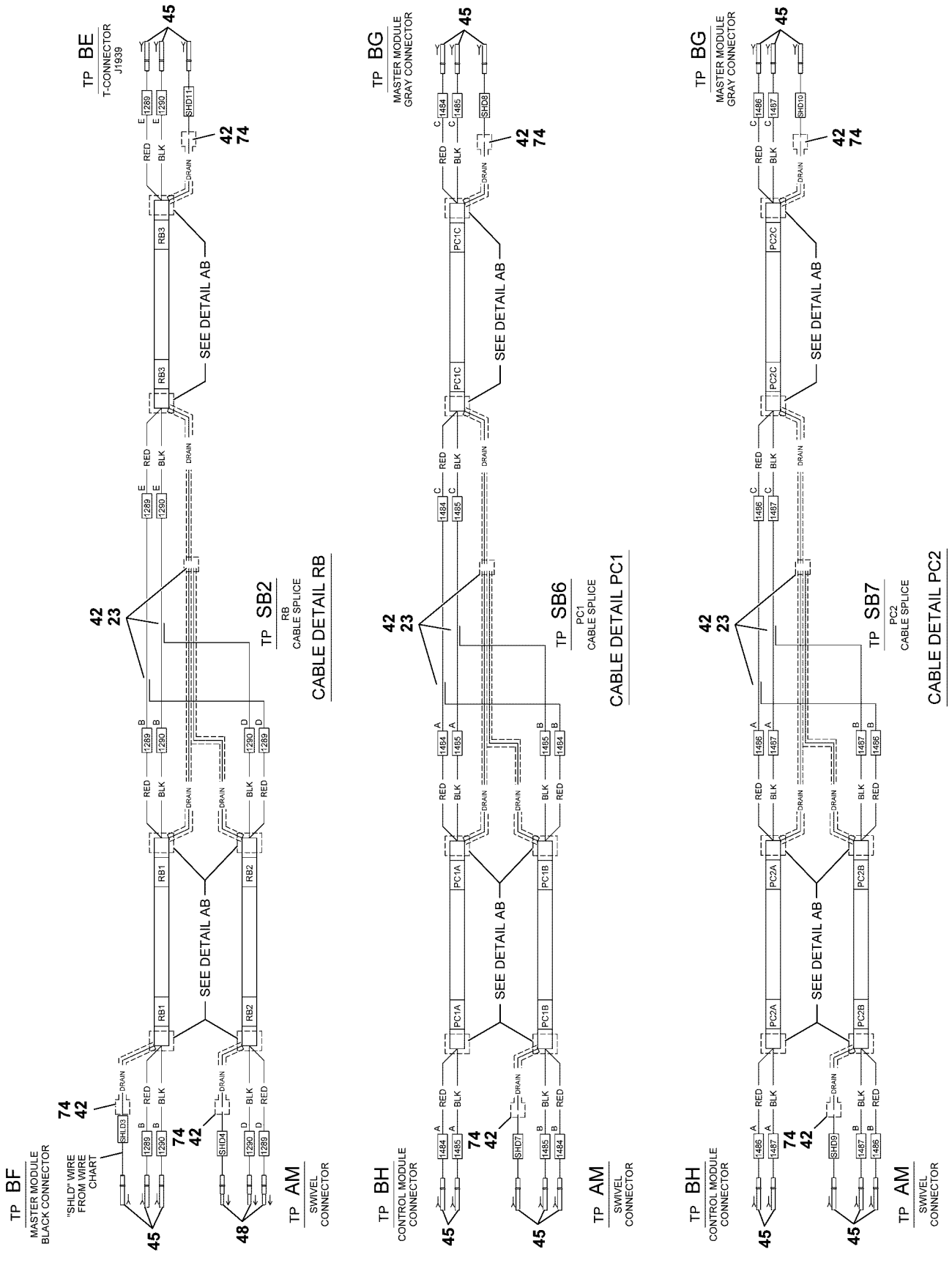
TP BF
MASTER MODULE
BLACK CONNECTOR
"SHLD" WIRE
FROM WIRE
CHART
TP BE
T-CONNECTOR
J1939
TP SB2
RB
CABLE SPLICE
CABLE DETAIL RB
TP AM
SWIVEL
CONNECTOR
SEE DETAIL AB
TP BG
MASTER MODULE
GRAY CONNECTOR
TP BH
CONTROL MODULE
CONNECTOR
TP SB6
PC1
CABLE SPLICE
CABLE DETAIL PC1
TP SB7
PC2
CABLE SPLICE
CABLE DETAIL PC2
RED
BLK
DRAIN

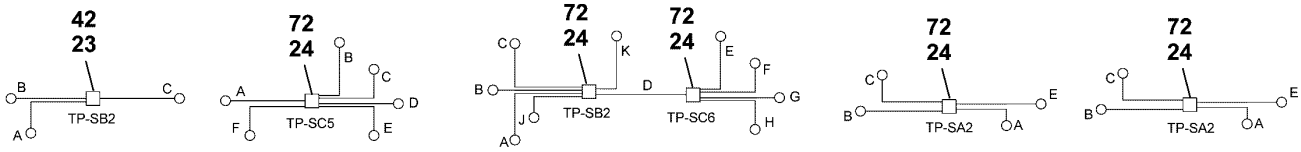


DETAIL 2 DETAIL 8 DETAIL 13 DETAIL 14 DETAIL 15

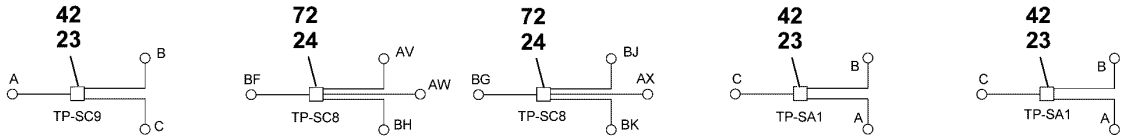


DETAIL 41 DETAIL 51 DETAIL 133 DETAIL 134

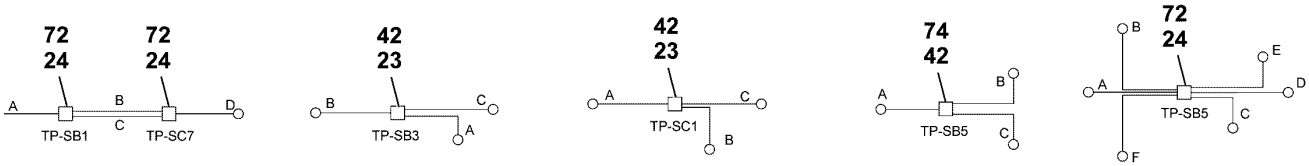


DETAIL 344 DETAIL 440 DETAIL 609 DETAIL 713 DETAIL 1410

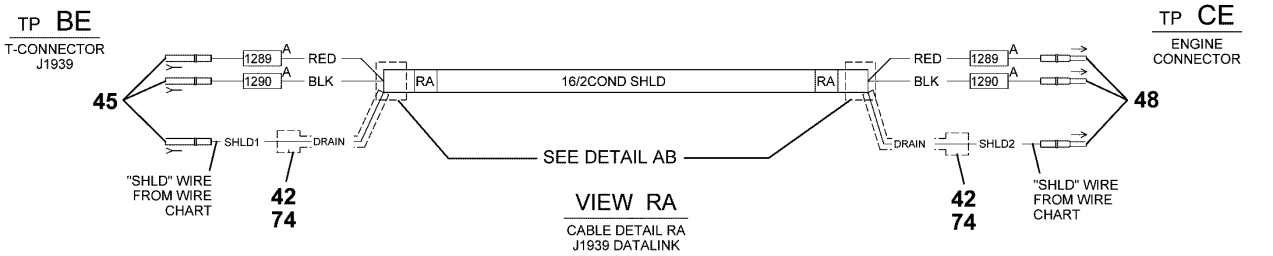


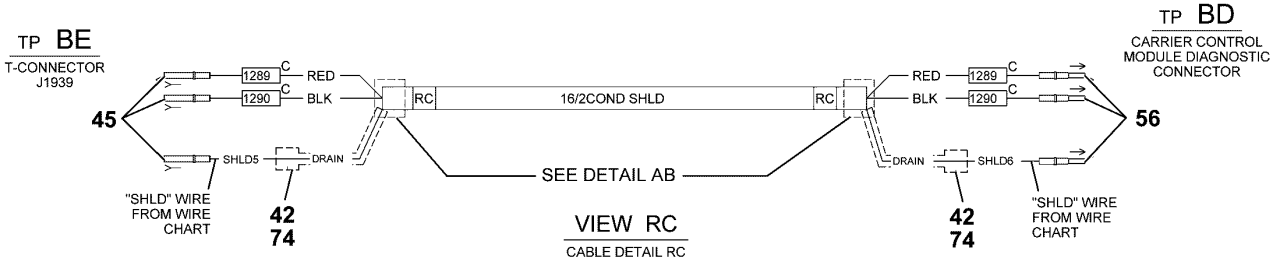


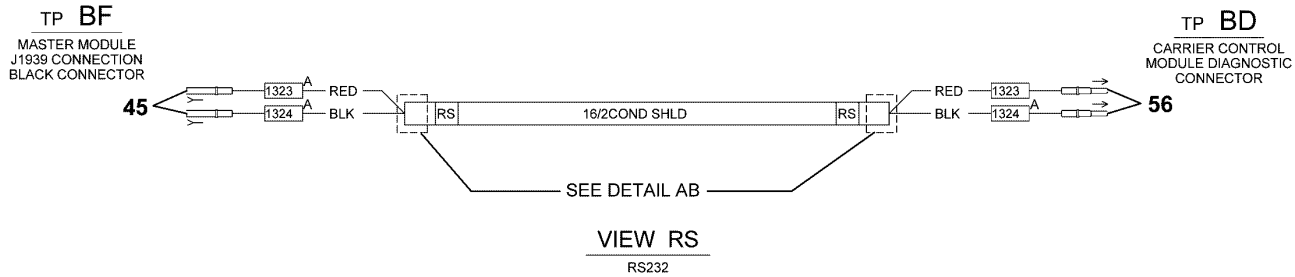

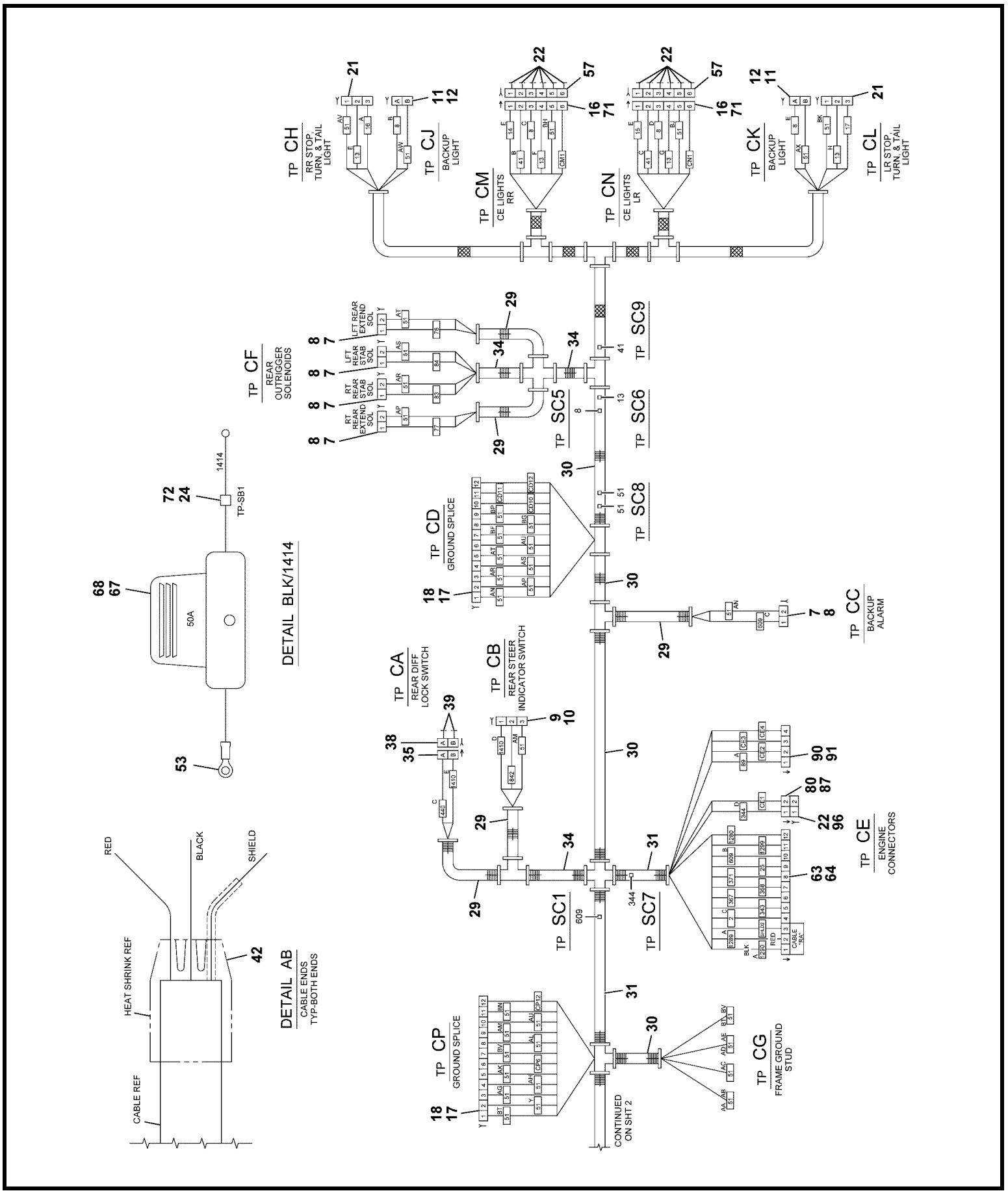
TP CH
RR STOP, TURN, & TAIL LIGHT
TP CJ
BACKUP LIGHT
TP CM
CE LIGHTS RR
TP CN
CE LIGHTS LR
TP CK
BACKUP LIGHT
TP CL
LR STOP, TURN, & TAIL LIGHT
TP CF
REAR OUTRIGGER SOLENOIDS
LFT REAR EXTEND SOL
LFT REAR STAB SOL
RT REAR STAB SOL
RT REAR EXTEND SOL
TP SC5
TP SC6
TP SC9
TP SC8
TP CD
GROUND SPLICE
TP CC
BACKUP ALARM
TP CA
REAR DIFF LOCK SWITCH
TP CB
REAR STEER INDICATOR SWITCH
TP CE
ENGINE CONNECTORS
TP SC1
TP SC7
TP CP
GROUND SPLICE
TP CG
FRAME GROUND STUD
CONTINUED ON SHT 2
DETAIL BLK/1414
TP-SB1
50A
DETAIL AB
CABLE ENDS TYP-BOTH ENDS
RED
BLACK
SHIELD
HEAT SHRINK REF
CABLE REF

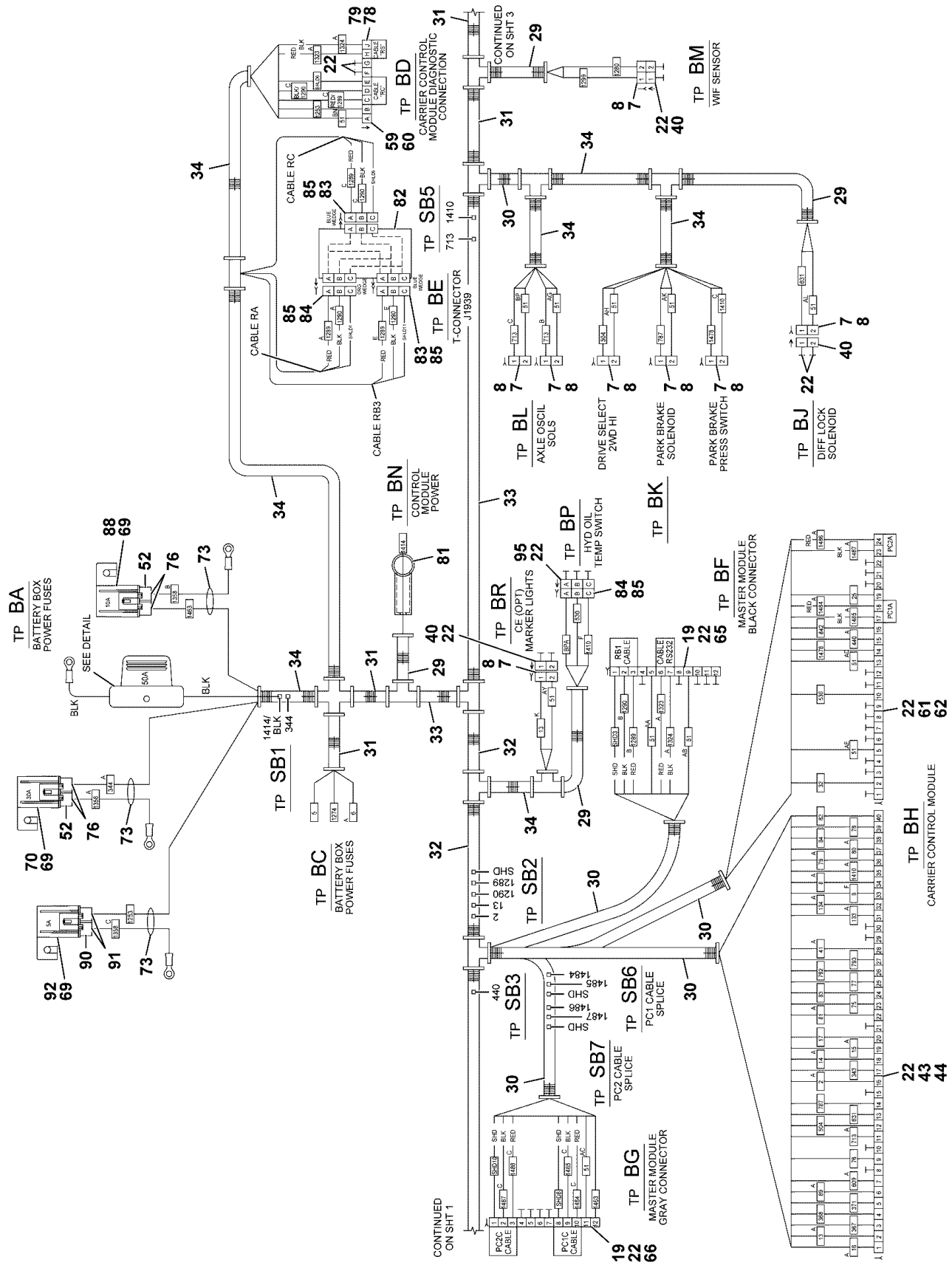


6512101096

(SHEET 2 OF 9)

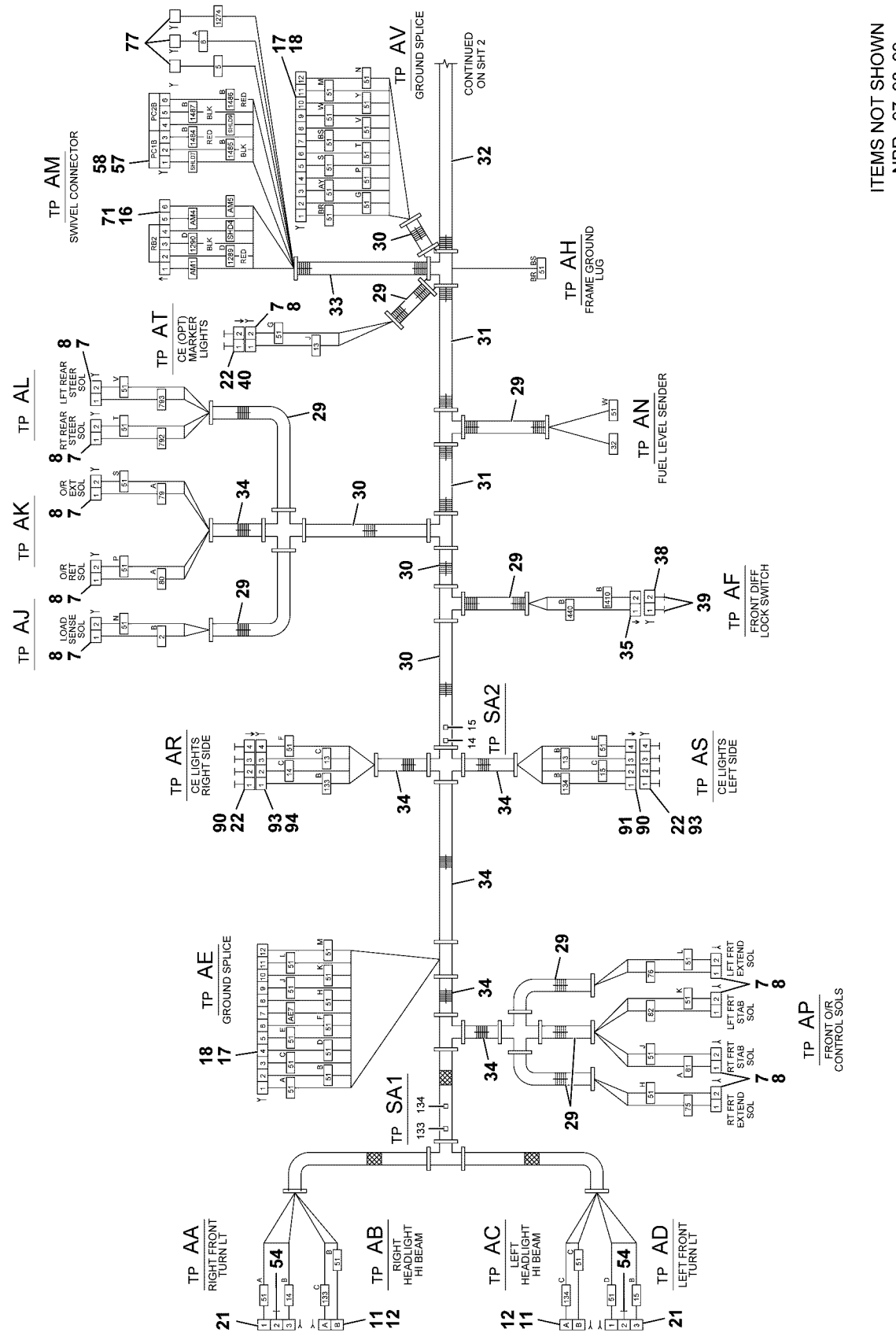


6512101096

(SHEET 1 OF 9)

Description
**HARNESS ASSEMBLY - CARRIER (COMPLETE ASSEMBLY)**

Assembly No.
**6512101096**
Revision: **B**

| Item | FN | Part | Qty | Description |
|---|---|---|---|---|
| 7 | | **7709000844** | 25 | PLUG, 2 SOCKET |
| 8 | | **7172000545** | 25 | BOOT, DT2S CONNECTOR |
| 9 | | **7709100877** | 1 | PLUG |
| 10 | | **7172100002** | 1 | BOOT, PLUG |
| 11 | | **7364100008** | 4 | PLUG, 2 PASS |
| 12 | | **7364100009** | 4 | CONNECTOR, LOCKING<br>2 PASS |
| 13 | | **7892000843** | 8 | TERMINAL, FEMALE<br>16 - 20 AWG |
| 14 | | **7892000254** | 8 | TERMINAL, GREEN CABLE SEAL |
| 15 | | **7826000087** | 23 | SOCKET, 16-14 GA |
| 16 | | **7892000986** | 3 | RECEPTACLE,<br>6 PIN |
| 17 | | **7892001036** | 3 | RECEPTACLE, SPLICE BLOCK |
| 18 | | **7709000846** | 3 | PLUG, 12 SOCKET |
| 19 | | **7172000552** | 2 | BOOT |
| 20 | | **7826000095** | 3 | SOCKET,<br>4 AWG |
| 21 | | **7364100051** | 4 | PLUG |
| 22 | | **7689000503** | 67 | PLUG, SEALING<br>16 - 12 AWG |
| 23 | | **7892000195** | 11 | PARALLEL, NON - INSULATED<br>12 - 10 AWG |
| 24 | | **8594100257** | 1 | TUBING, HEAT SHRINK 1/2" I.D.<br>LINER, MELTABLE<br>(QUANTITY IN FEET) |
| 25 | | **7345232101** | 3 | TERMINAL<br>6 AWG |
| 26 | | **7345242001** | 1 | TERMINAL<br>8 AWG |
| 27 | | **7345241901** | 3 | TONGUE, INSULATED RING |
| 28 | | **7345241701** | 2 | TONGUE, INSULATED RING |
| 29 | | **8594000019** | 40 | FLEXGUARD, 1/4" I.D.<br>(QUANTITY IN FEET) |
| 30 | | **8594000003** | 21 | FLEXGUARD - .625" I.D.<br>(QUANTITY IN FEET) |
| 31 | | **8594000002** | 9 | FLEXGUARD - .750" I.D.<br>(QUANTITY IN FEET) |

Description
**HARNESS ASSEMBLY - CARRIER (COMPLETE ASSEMBLY)**

Assembly No.
**6512101096**
Revision: **B**

| Item | FN | Part | Qty | Description |
|---|---|---|---|---|
| 32 | | **8594000022** | 2 | FLEXGUARD - 1.250" I.D.<br>(QUANTITY IN FEET) |
| 33 | | **8594000001** | 2 | FLEXGUARD - 1.00" I.D.<br>(QUANTITY IN FEET) |
| 34 | | **8594000006** | 21 | FLEXGUARD - .350" I.D.<br>(QUANTITY IN FEET) |
| 35 | | **7364001683** | 2 | CONNECTOR, 2 CONDUCTOR<br>SHROUD |
| 36 | | **7892000252** | 4 | TERMINAL, MALE PIN |
| 37 | | **7892100003** | 4 | TERMINAL, DARK RED CABLE SEAL |
| 38 | | **7364001682** | 2 | CONNECTOR, 2 CONDUCTOR<br>TOWER WITH SEAL |
| 39 | | **7892000257** | 4 | TERMINAL, GREEN CAVITY<br>SEAL |
| 40 | | **7892000949** | 4 | RECEPTACLE,<br>2 PIN |
| 41 | | **7345231901** | 1 | TERMINAL<br>12 - 10 AWG |
| 42 | | **8594100256** | 1 | TUBING, HEAT SHRINK 1/4" I.D.<br>LINER, MELTABLE<br>(QUANTITY IN FEET) |
| 43 | | **7709000849** | 1 | PLUG<br>40 SOCKET |
| 44 | | **7172000554** | 1 | BOOT |
| 45 | | **7826100004** | 40 | SOCKET, (16 - 18) 30 SERIES |
| 46 | | **7826100013** | 10 | SOCKET, |
| 47 | | **7364100052** | 10 | SEAL |
| 48 | | **7689001782** | 41 | PIN, 18 - 16 GAGE |
| 49 | | **7826000626** | 115 | SOCKET,<br>16 - 18 AWG |
| 50 | | **7345211401** | 3 | TERMINAL<br>22 - 18 AWG |
| 51 | | **7826100016** | 3 | SOCKET-DEUTSCH 22/20 GA NI |
| 52 | | **7892100029** | 2 | 2-PASS CONNECTOR/ORANGE SEAL |
| 53 | | **7345232001** | 1 | TERMINAL<br>8 AWG |
| 54 | | **7364100058** | 2 | SEAL, RED PLUG |
| 56 | | **7689002053** | 5 | PIN<br>16 - 18 AWG |

Description
**HARNESS ASSEMBLY - CARRIER (COMPLETE ASSEMBLY)**

Assembly No.
**6512101096**
Revision: **B**

| Item | FN | Part | Qty | Description |
|---|---|---|---|---|
| 57 | | **7709000883** | 3 | PLUG<br>6 SOCKET |
| 58 | | **7172000565** | 1 | BOOT, CONNECTOR |
| 59 | | **7892001053** | 1 | RECEPTACLE, 9 PIN |
| 60 | | **7258100154** | 1 | CAP, DEUTSCH HDC16 - 9 DUST |
| 61 | | **7709000850** | 1 | PLUG<br>24 SOCKET |
| 62 | | **7172000553** | 1 | BOOT |
| 63 | | **7892000951** | 1 | RECEPTACLE,<br>12 PIN |
| 64 | | **7172000551** | 1 | BOOT |
| 65 | | **7709100929** | 1 | PLUG, DTO6-12SB-C015 W/WEDGE |
| 66 | | **7709000846** | 1 | PLUG, 12 SOCKET |
| 67 | | **7482100000** | 1 | FUSE, MAXI HOLDER |
| 68 | | **7482100005** | 1 | FUSE, MAXI 50AMP |
| 69 | | **7892100030** | 3 | CONNECTOR, COVER/SINGLE |
| 70 | | **7482000029** | 1 | FUSE, 30 AMP |
| 71 | | **7172000564** | 3 | BOOT |
| 72 | | **7892000196** | 13 | PARALLEL, NON - INSULATED<br>8 AWG |
| 73 | | **7850000208** | 100 | CABLE TIE, BLACK |
| 74 | | **7892000194** | 12 | PARALLEL, NON - INSULATED<br>16 - 14 AWG |
| 75 | | **7689000797** | 2 | PIN<br>12 AWG |
| 76 | | **7892100033** | 4 | TERMINAL, FEMALE 2.94-3.68 |
| 77 | | **7709000838** | 3 | PLUG<br>1 SOCKET |
| 78 | | **7258100165** | 1 | BACKSHELL, DEUTSCH HD10 SERIES |
| 79 | | **7659190018** | 1 | NUT, DEUTSCH HD10-SER/COMPRESS |
| 80 | | **7172100005** | 1 | BOOT, DTP2P-BT |
| 81 | | **7172000558** | 1 | BOOT, TERMINAL |
| 82 | | **7892100036** | 1 | RECEPTACLE, 3 WAY |
| 83 | | **7709100911** | 2 | PLUG,DT06-3S-CEO6 W/BLUE WEDGE |
| 84 | | **7709000874** | 4 | PLUG<br>3 SOCKET |

Description
**HARNESS ASSEMBLY - CARRIER (COMPLETE ASSEMBLY)**

Assembly No.
**6512101096**
Revision: **B**

| Item | FN | Part | Qty | Description |
|---|---|---|---|---|
| 85 | | **7172000547** | 3 | BOOT |
| 87 | | **7892100025** | 1 | DEUTSCH DTP 2-PASS RECEPTACLE |
| 88 | | **7482000033** | 1 | FUSE, 10 AMP |
| 90 | | **7892001051** | 3 | RECEPTACLE, 4 PIN |
| 91 | | **7172000568** | 2 | BOOT, CONNECTOR |
| 92 | | **7345231701** | 2 | TERMINAL 16 - 14 AWG |
| 93 | | **7709000936** | 2 | PLUG, 4 SOCKET |
| 94 | | **7172000567** | 1 | BOOT, CONNECTOR |
| 95 | | **7892000947** | 1 | RECEPTACLE, 3 PIN |
| 96 | | **7709100891** | 1 | PLUG, 2-PASS DEUTSCH DTP |
| 97 | | **7482000035** | 1 | FUSE, 5 AMP |
| 98 | | **7892100028** | 1 | CONNECTOR, 2 - PASS GREEN SEAL |
| 99 | | **7892100034** | 2 | TERMINAL, FEMALE |

**Notes**

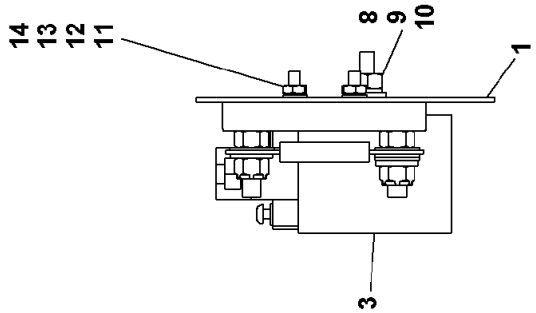
14
13
12
11
8
9
10
1
3

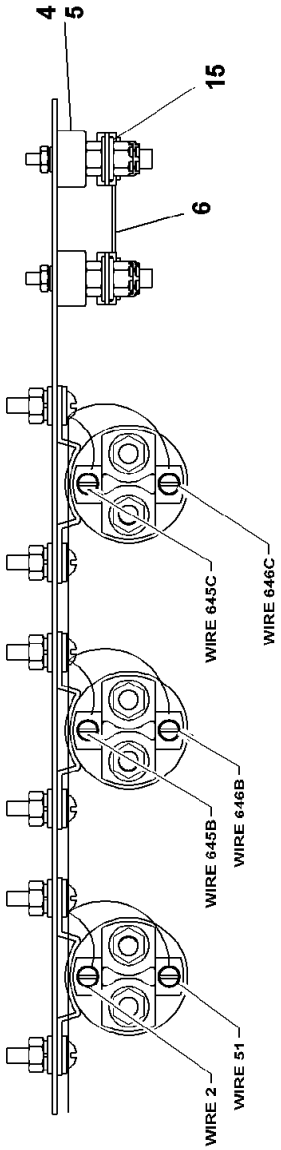
4
5
15
6
WIRE 645C
WIRE 646C
WIRE 645B
WIRE 646B
WIRE 2
WIRE 51

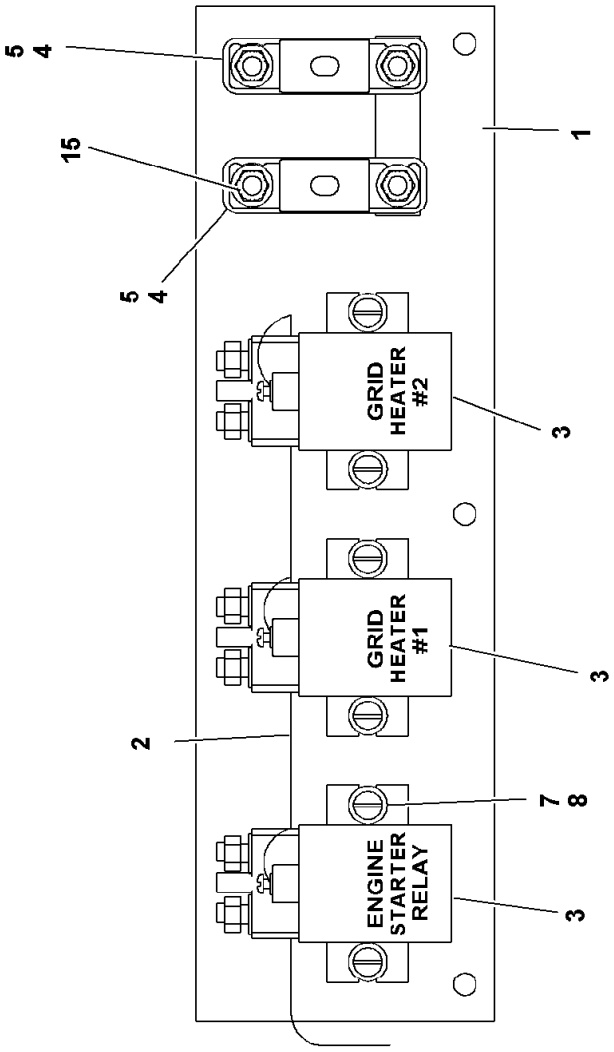
5
4
15
5
4
1
GRID HEATER #2
3
GRID HEATER #1
3
2
7
8
ENGINE STARTER RELAY
3

Description
**PANEL ASSEMBLY - ENGINE RELAYS (COMPLETE ASSEMBLY)**

Assembly No.
**6679100157**
Revision: **B**

| Item | FN | Part | Qty | Description |
|---|---|---|---|---|
| 1 | | **4174810060** | 1 | PANEL, RELAY |
| 2 | + | **6512100807** | 1 | HARNESS ASSEMBLY - ENGINE RELAY PANEL (COMPLETE ASSEMBLY) |
| 3 | | **7750000793** | 3 | RELAY, 200 AMP |
| 4 | | **7086001082** | 2 | HOLDER, FUSE |
| 5 | | **7482000572** | 2 | FUSE 125A/125V |
| 6 | | **6059000910** | 1 | BAR |
| 7 | | **7111140810** | 6 | SCREW, MACHINE 1/4" - 20 N.C. X 1" GRADE 1 |
| 8 | | **7950140141** | 12 | WASHER, FLAT 1/4" PLAIN NARROW |
| 9 | | **7950140050** | 6 | WASHER, LOCK 1/4" I.D. |
| 10 | | **7660140000** | 6 | NUT, HEX 1/4" - 20 N.C. |
| 11 | | **7111100807** | 4 | SCREW, MACHINE 3/16" - 24 N.C. X 1" GRADE 1 |
| 12 | | **7950100141** | 4 | WASHER, FLAT, #10 |
| 13 | | **7950100050** | 4 | WASHER, LOCK #10 |
| 14 | | **7660101100** | 4 | NUT, HEX 3/16" - 32 N.F. GRADE 1 |
| 15 | | **7950150141** | 4 | WASHER, FLAT 5/16" |

**+ SEE FURTHER BREAKDOWN THIS GROUP**

| WIRE CHART | | | | | | | | | |
|---|---|---|---|---|---|---|---|---|---|
| WIRE NO | COLOR | SAE SIZE | LENGTH TOT IN | TP | B/M ITEM NO | REMARKS | TP | B/M ITEM NO | REMARKS |
| 2 | WHITE | 16 | 11 | C | 5 | ——— | D | 4 | ——— |
| 51 | WHITE | 16 | 13 | D | 4 | ——— | C | 5 | ——— |
| 645A | WHITE | 16 | 10 | D | 4 | ——— | SA | STRIP | SEE DETAIL |
| 645B | WHITE | 16 | 5 | B | 5 | ——— | SA | STRIP | SEE DETAIL |
| 645C | WHITE | 16 | 10 | A | 5 | ——— | SA | STRIP | SEE DETAIL |
| 646A | WHITE | 16 | 12 | D | 4 | ——— | SB | STRIP | SEE DETAIL |
| 646B | WHITE | 16 | 5 | B | 5 | ——— | SB | STRIP | SEE DETAIL |
| 646C | WHITE | 16 | 10 | A | 5 | ——— | SB | STRIP | SEE DETAIL |

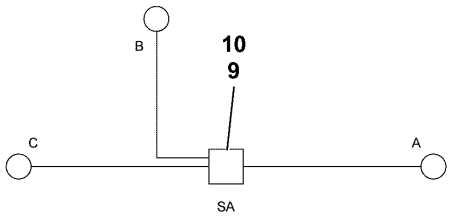


DETAIL 645

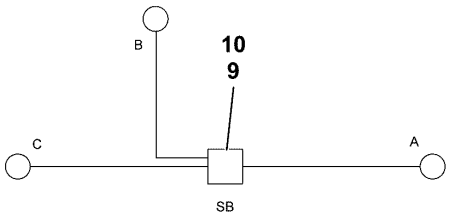


DETAIL 646

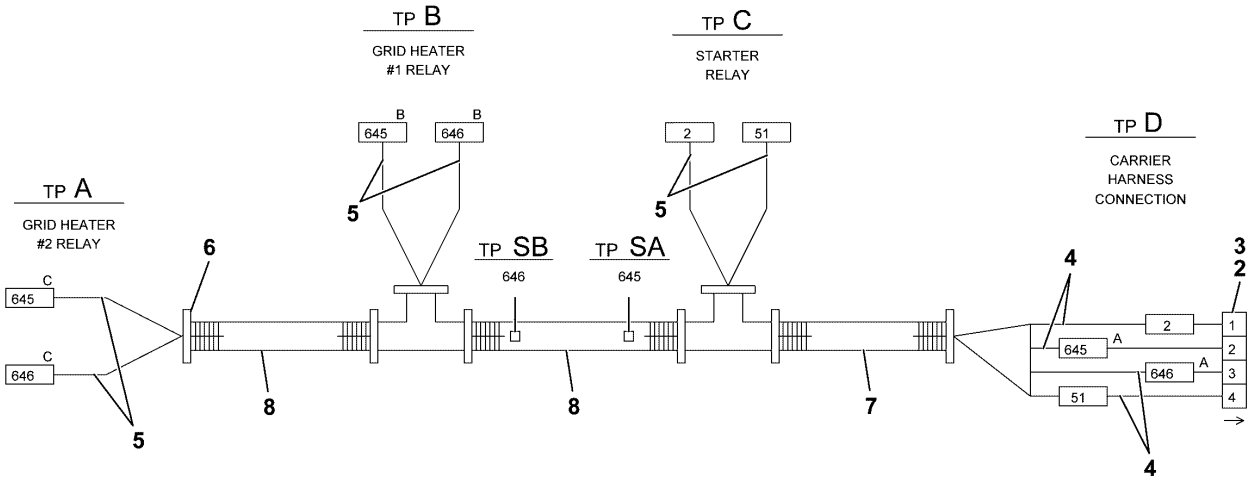

Description
**HARNESS ASSEMBLY - ENGINE RELAY PANEL (COMPLETE ASSEMBLY)**

Assembly No.
**6512100807**
Revision: #

| Item | FN | Part | Qty | Description |
|---|---|---|---|---|
| 2 | | **7892001051** | 1 | RECEPTACLE,<br>4 PIN |
| 3 | | **7172000568** | 1 | BOOT, CONNECTOR |
| 4 | | **7689000704** | 4 | PIN, 16 - 14 GA |
| 5 | | **7345211701** | 6 | TONGUE, INSULATED RING |
| 6 | | **7850000208** | 8 | CABLE TIE, BLACK |
| 7 | | **8594000006** | 1 | FLEXGUARD - .350" I.D.<br>(QUANTITY IN FEET) |
| 8 | | **8594000019** | 1 | FLEXGUARD, 1/4" I.D.<br>(QUANTITY IN FEET) |
| 9 | | **7892000195** | 2 | PARALLEL, NON - INSULATED<br>12 - 10 AWG |
| 10 | | **8594100257** | 1 | TUBING, HEAT SHRINK 1/2" I.D.<br>LINER, MELTABLE<br>(QUANTITY IN FEET) |

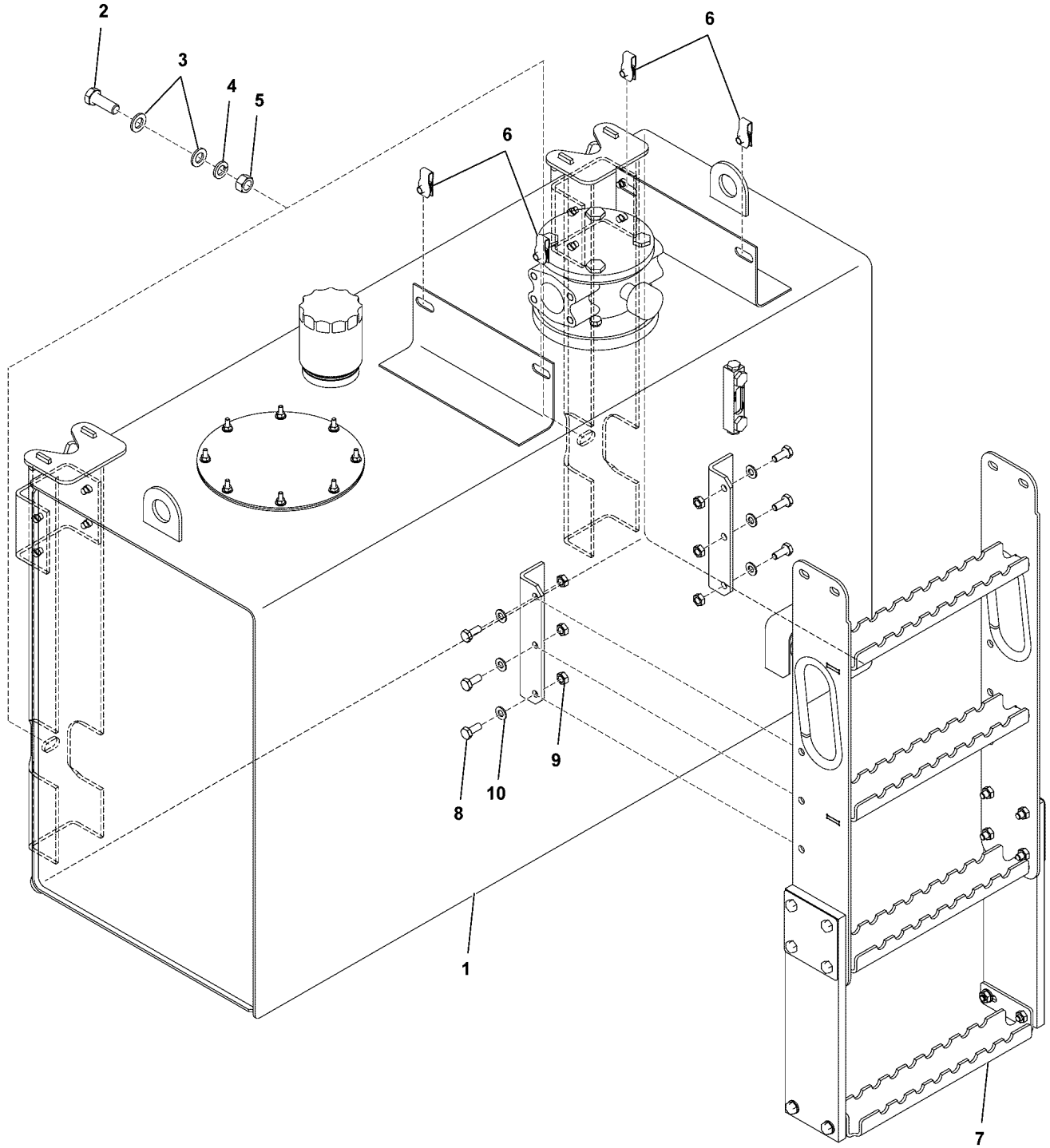


**2159110182**

**(SHEET 1 OF 1)**

Description
**TANK INSTALLATION - HYDRAULIC**

Assembly No.
**2159110182**
Revision: #

| Item | FN | Part | Qty | Description |
|---|---|---|---|---|
| 1 | + | **7880100112** | 1 | RESERVOIR ASSEMBLY - HYDRAULIC (COMPLETE ASSEMBLY) |
| 2 | | **7126241653** | 2 | CAP SCREW, M16 X 45MM HEX HEAD |
| 3 | | **7951240014** | 4 | FLATWASHER 16MM I.D. |
| 4 | | **7951240210** | 2 | SPRING WASHER, 16MM I.D. |
| 5 | | **7661240003** | 2 | NUT, HEX 16MM N.C. |
| 6 | | **7659190024** | 4 | M10 X 1.50 RETAINING NUT |
| 7 | + | **2159110178** | 1 | LADDER ASSEMBLY (COMPLETE ASSEMBLY) |
| 8 | | **7126191253** | 6 | CAP SCREW |
| 9 | | **7661191103** | 6 | LOCKNUT |
| 10 | | **7951190014** | 6 | FLAT WASHER, 10MM I.D. |

**+ SEE FURTHER BREAKDOWN THIS GROUP**

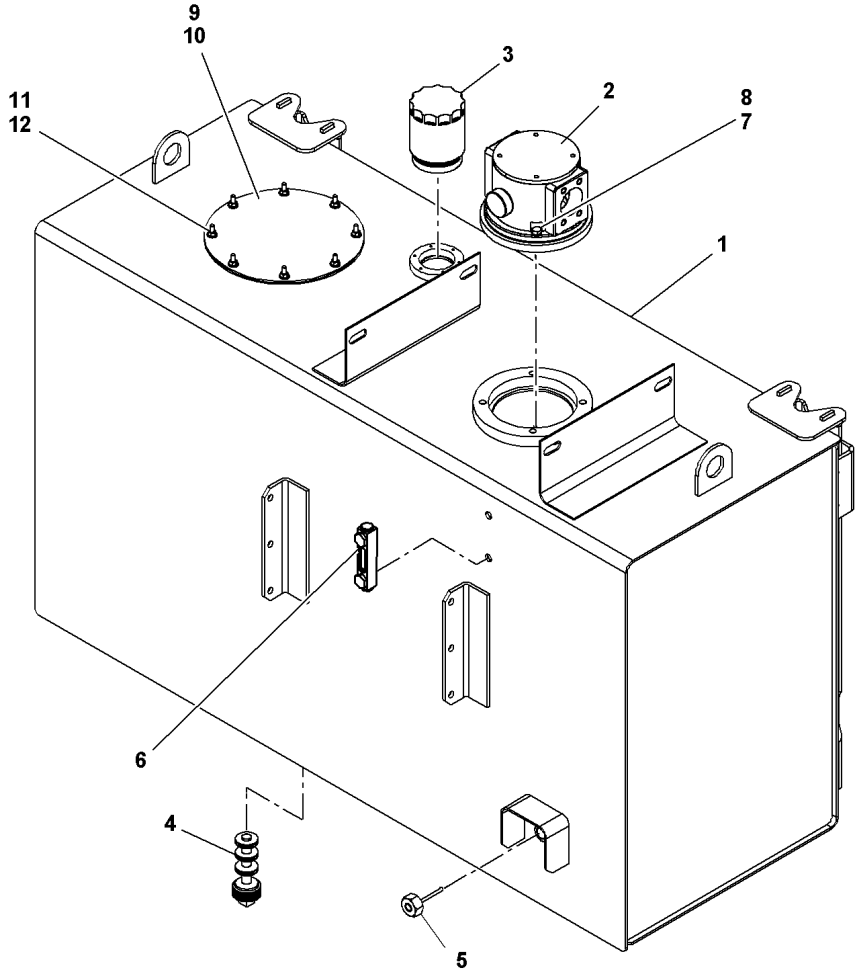


**7880100112**

**(SHEET 1 OF 1)**

Description
**RESERVOIR ASSEMBLY - HYDRAULIC (COMPLETE ASSEMBLY)**

Assembly No.
**7880100112**
Revision:

| Item | FN | Part | Qty | Description |
|---|---|---|---|---|
| 1 | | **NSS** | 1 | WELDMENT, TANK |
| 2 | + | **9437100891** | 1 | FILTER ASSY. HYD. RETURN |
| 3 | | **7258100146** | 1 | CAP, FILL (WITH BREATHER)<br>INCLUDES THE FOLLOWING PARTS |
| | | **9258100173** | 1 | BREATHER |
| | | **9258100174** | 1 | KIT, STRAINER |
| 4 | | **7709000157** | 1 | PLUG, MAGNETIC |
| 5 | | **7486000836** | 1 | THERMOMETER |
| 6 | | **7486002936** | 1 | GUAGE, OIL LEVEL<br>INCLUDES THE FOLLOWING PARTS |
| | | **9752101414** | 1 | KIT, SEAL MOUNTING |
| 7 | | **7126191450** | 4 | CAP SCREW, M10 X 35MM HEX HEAD |
| 8 | | **7951190210** | 4 | LOCK WASHER, 10MM |
| 9 | | **9880100223** | 1 | COVER |
| 10 | | **9880100222** | 1 | GASKET |
| 11 | | **7950140141** | 8 | WASHER, FLAT 1/4" PLAIN NARROW |
| 12 | | **7660140000** | 8 | NUT, HEX<br>1/4" - 20 N.C. |

**+ SEE FURTHER BREAKDOWN THIS GROUP**

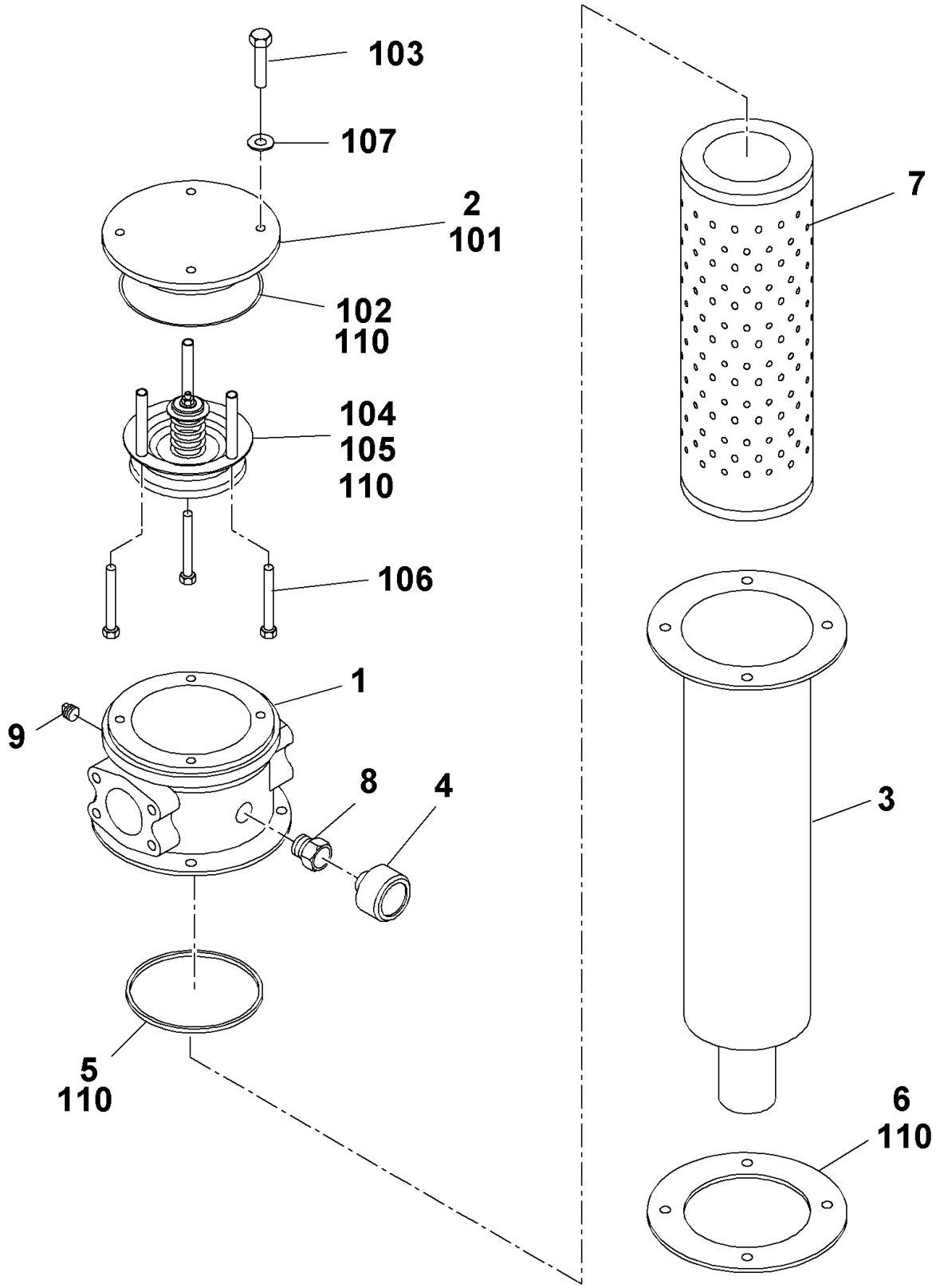


**9437100891**

**(SHEET 1 OF 1)**

Description
**FILTER ASSY. HYD. RETURN**

Assembly No.
**9437100891**
Revision:

| Item | FN | Part | Qty | Description |
|---|---|---|---|---|
| 1 | | **9437100842** | 1 | HEAD, FILTER |
| 2 | | **9437100763** | 1 | CAP ASSEMBLY<br>INCLUDES ITEMS 101 THRU 107 |
| 3 | | **NSS** | 1 | TUBE, BOWL ASSY. |
| 4 | | **9437100456** | 1 | GAUGE |
| 5 | * | **9437100479** | 1 | O-RING, SQUARE |
| 6 | * | **9437100480** | 1 | GASKET |
| 7 | | **9437100825** | 1 | ELEMENT |
| 8 | | **9437100894** | 1 | PLUG |
| 9 | | **9437100895** | 1 | PLUG |
| 101 | | **9437100828** | 1 | CAP |
| 102 | * | **9437100575** | 1 | O-RING |
| 103 | | **9437100856** | 4 | CAPSCREW |
| 104 | | **9437100476** | 1 | VALVE, BY-PASS |
| 105 | | **9437100765** | 3 | SPACER |
| 106 | | **9437100766** | 3 | CAP SCREW, |
| 107 | | **9437100857** | 3 | WASHER |
| 110 | * | **9437100452** | 1 | KIT, SEAL |

*** REPAIR KIT AND/OR PART OF KIT**

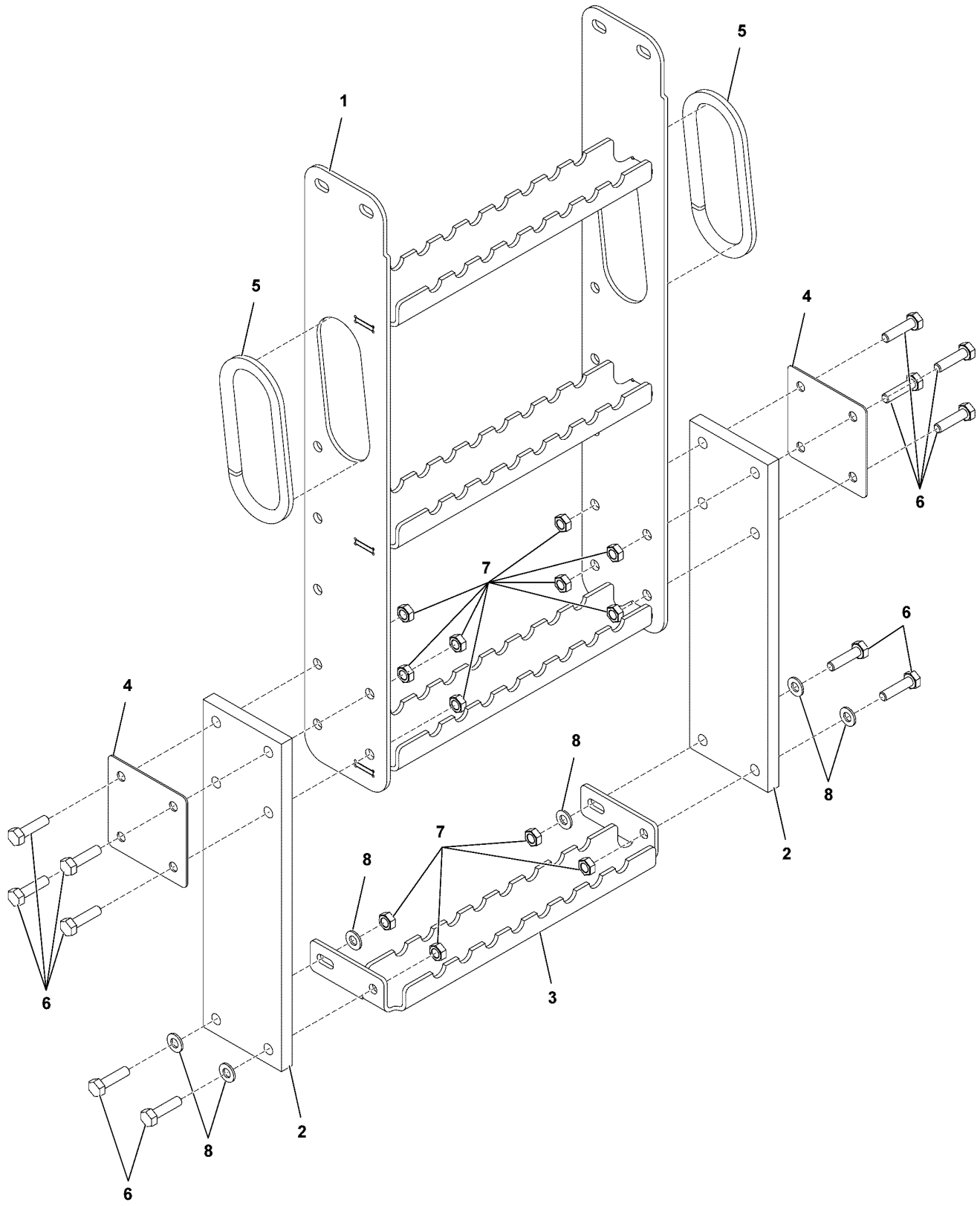


2159110178

(SHEET 1 OF 1)

Description
**LADDER ASSEMBLY (COMPLETE ASSEMBLY)**

Assembly No.
**2159110178**
Revision: **B**

| Item | FN | Part | Qty | Description |
|---|---|---|---|---|
| 1 | | **2159110177** | 1 | LADDER |
| 2 | | **7418100008** | 2 | EXTENSION, STEP |
| 3 | | **4174110070** | 1 | STEP |
| 4 | | **4159110071** | 2 | PLATE |
| 5 | | **8496980002** | 4 | MOULDING<br>(QUANTITY IN FEET) |
| 6 | | **7126191550** | 12 | CAP SCREW, M10 X 40MM HEX HEAD |
| 7 | | **7661191103** | 12 | LOCKNUT |
| 8 | | **7951190014** | 6 | FLAT WASHER, 10MM I.D. |

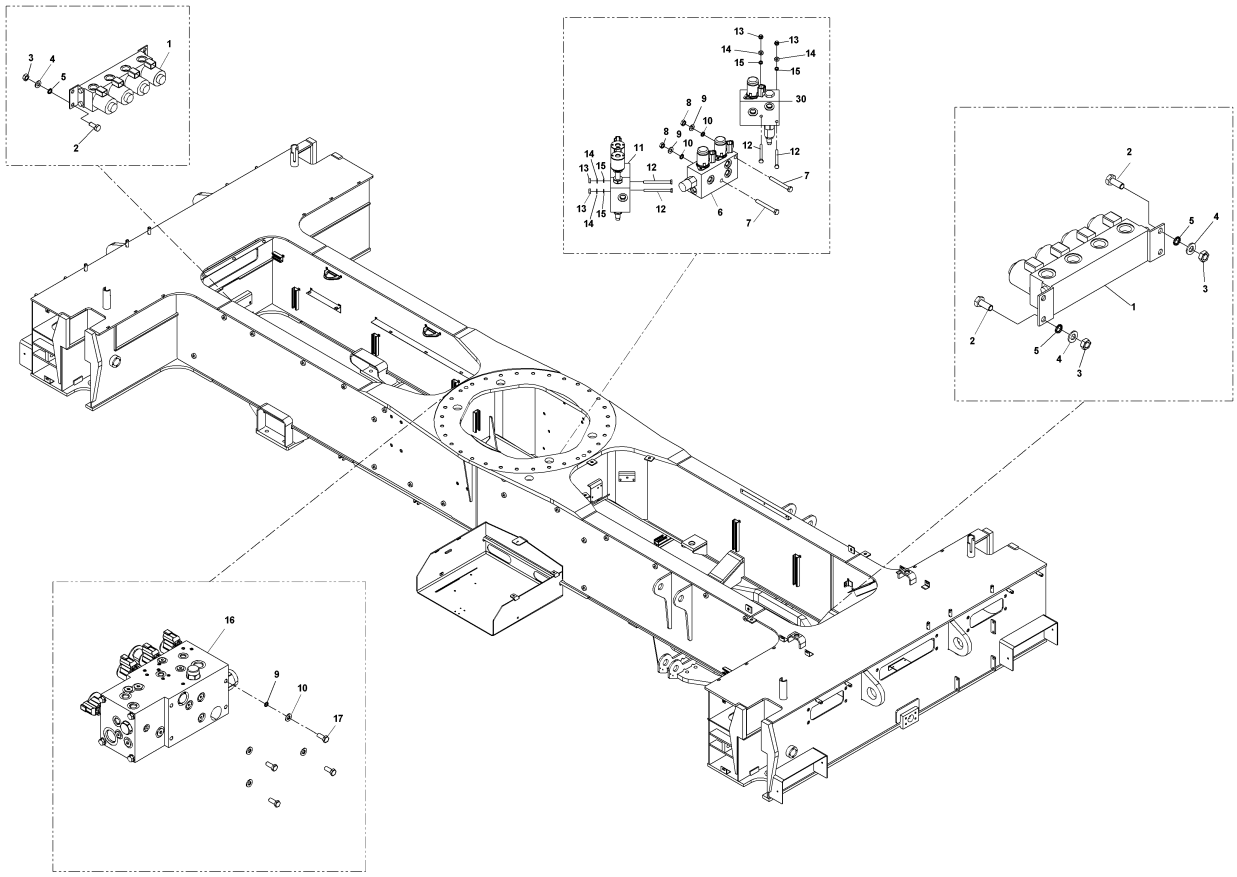


2159610147

(SHEET 1 OF 1)

Description
**VALVE INSTALLATION - HYDRAULIC (CARRIER)**

Assembly No.
**2159610147**
Revision: **E**

| Item | FN | Part | Qty | Description |
|---|---|---|---|---|
| 1 | + | **7926100859** | 2 | VALVE ASSEMBLY - OUTRIGGER CONTROL 4 SECTION (COMPLETE ASSEMBLY) |
| 2 | | **7126191250** | 4 | CAP SCREW, M10 X 25MM HEX HEAD |
| 3 | | **7661190003** | 4 | HEX NUT 10MM I.D. X 1.5 |
| 4 | | **7951190014** | 4 | FLAT WASHER, 10MM I.D. |
| 5 | | **7951190210** | 4 | LOCK WASHER, 10MM |
| 6 | + | **7926100911** | 1 | VALVE ASSEMBLY - PARK BRAKE RANGE SHIFT (COMPLETE ASSEMBLY) |
| 7 | | **7126172150** | 2 | CAP SCREW, HEX HEAD M8X70MM |
| 8 | | **7661170003** | 2 | NUT - 8MM X 1.25 |
| 9 | | **7951170014** | 6 | FLAT WASHER |
| 10 | | **7951170210** | 6 | WASHER, LOCK 8MM |
| 11 | + | **7926100924** | 1 | VALVE ASSEMBLY - AXLE LOCKOUT (COMPLETE ASSEMBLY) |
| 12 | | **7126152150** | 2 | CAP SCREW, M6 X 70MM HEX HEAD |
| 13 | # | **7661150003** | 2 | NUT, HEX |
| 14 | | **7951170014** | 2 | FLAT WASHER |
| 15 | | **7951170210** | 2 | WASHER, LOCK 8MM |
| 16 | += | **7926100908** | 1 | VALVE ASSEMBLY - OUTRIGGER SELECTOR REAR STEER (COMPLETE ASSEMBLY) |
| 16 | += | **7926100936** | 1 | VALVE ASSEMBLY - OUTRIGGER SELECTOR REAR STEER (COMPLETE ASSEMBLY) |
| 17 | | **7126171150** | 4 | CAP SCREW, M8 X 20MM HEX HEAD |

**+ SEE FURTHER BREAKDOWN THIS GROUP**
**= REFER TO MCI FOR APPLICABLE NUMBER**
**# SERVICED AS AN ASSEMBLY ONLY**

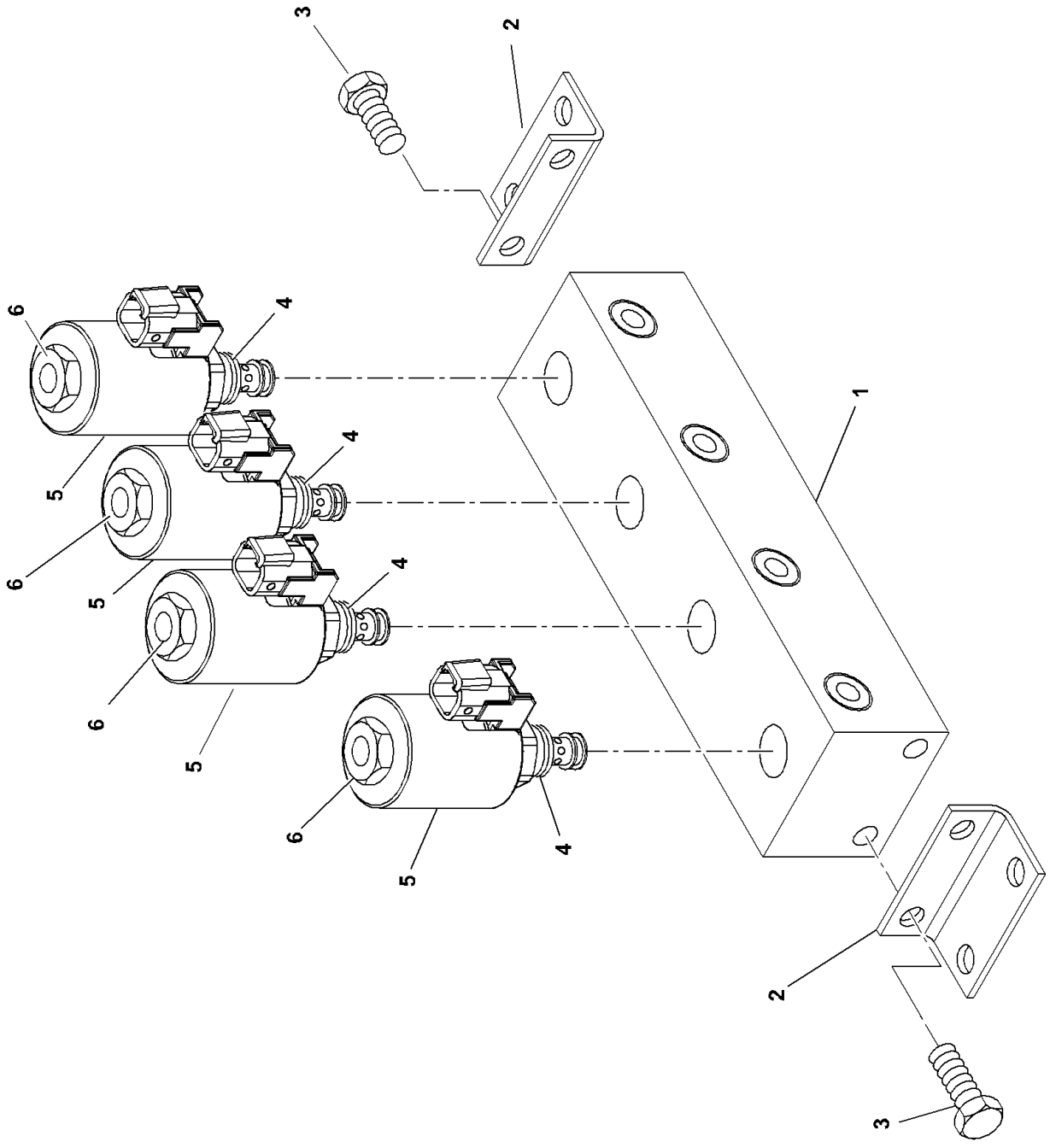


**7926100859**

**(SHEET 1 OF 1)**

Description
**VALVE ASSEMBLY - OUTRIGGER CONTROL 4 SECTION (COMPLETE ASSEMBLY)**

Assembly No.
**7926100859**
Revision:

| Item | FN | Part | Qty | Description |
|---|---|---|---|---|
| 1 | | **NSS** | 1 | MANIFOLD, ALUMINUM |
| 2 | | **9926112988** | 2 | BRACKET, MOUNTING |
| 3 | | **7115160650** | 4 | CAP SCREW,<br>3/8" - 16 N.C. X 3/4"<br>GRADE 5 |
| 4 | | **9926112986** | 4 | VALVE, CARTRIDGE<br>INCLUDES THE FOLLOWING PARTS |
| | | **9752100996** | 1 | KIT, REPAIR |
| 5 | | **9926112987** | 4 | COIL, 12V. |
| 6 | | **9926107745** | 4 | NUT |

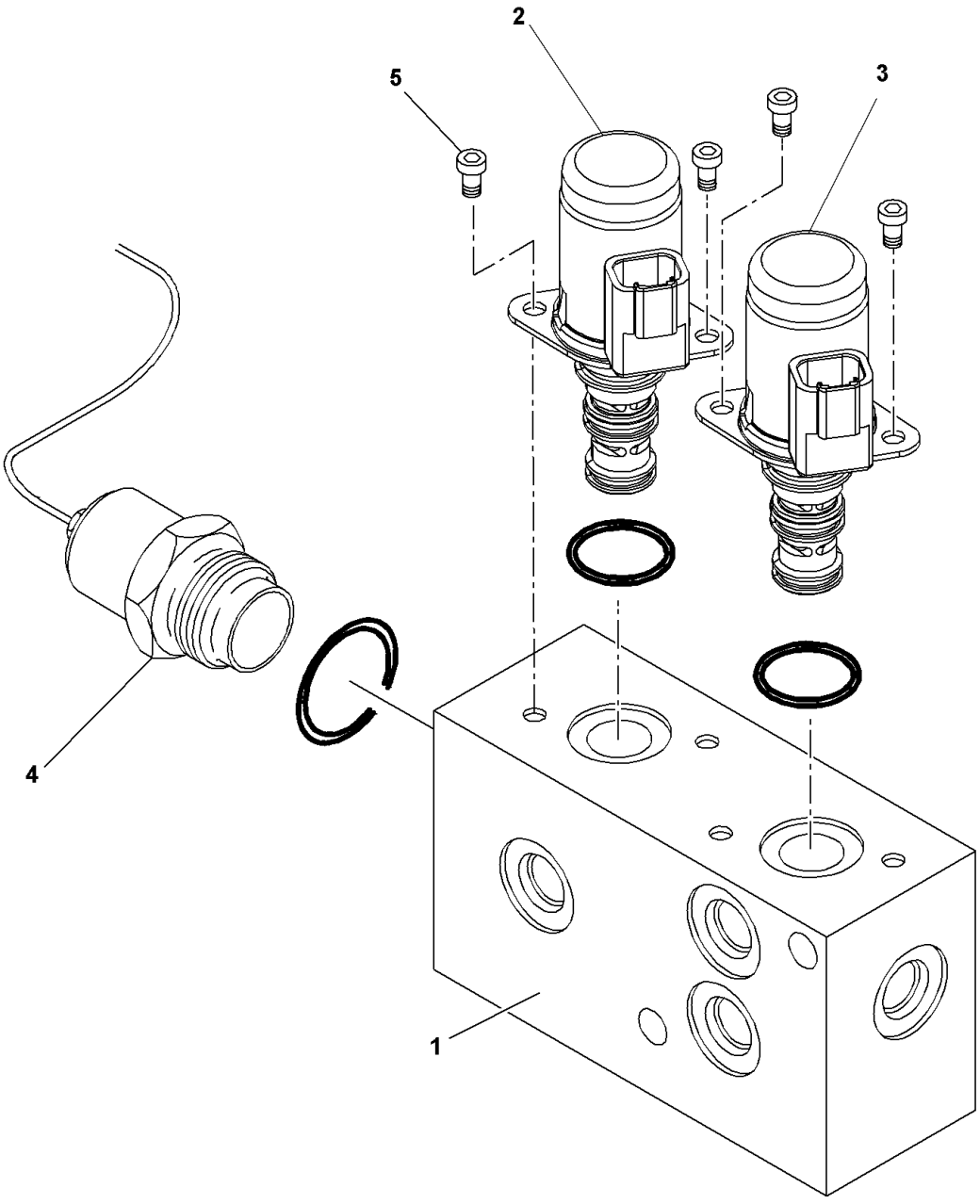


**7926100911**

**(SHEET 1 OF 1)**

Description
**VALVE ASSEMBLY - PARK BRAKE RANGE SHIFT (COMPLETE ASSEMBLY)**

Assembly No.
**7926100911**
Revision:

| Item | FN | Part | Qty | Description |
|---|---|---|---|---|
| 1 | | **NSS** | 1 | MANIFOLD, VALVE |
| 2 | | **9926113140** | 1 | VALVE, CART. & COIL ASSY. 12V. INCLUDES THE FOLLOWING PARTS |
| | | **9926113057** | 1 | KIT, SEAL |
| 3 | | **9926113174** | 1 | VALVE, CART. & COIL ASSY. 12V. INCLUDES THE FOLLOWING PARTS |
| | | **9926113176** | 1 | KIT, SEAL |
| 4 | | **9926113175** | 1 | SWITCH ASSY. PRESSURE |
| 5 | | **9926113142** | 4 | SCREW, HEX SOCKET |

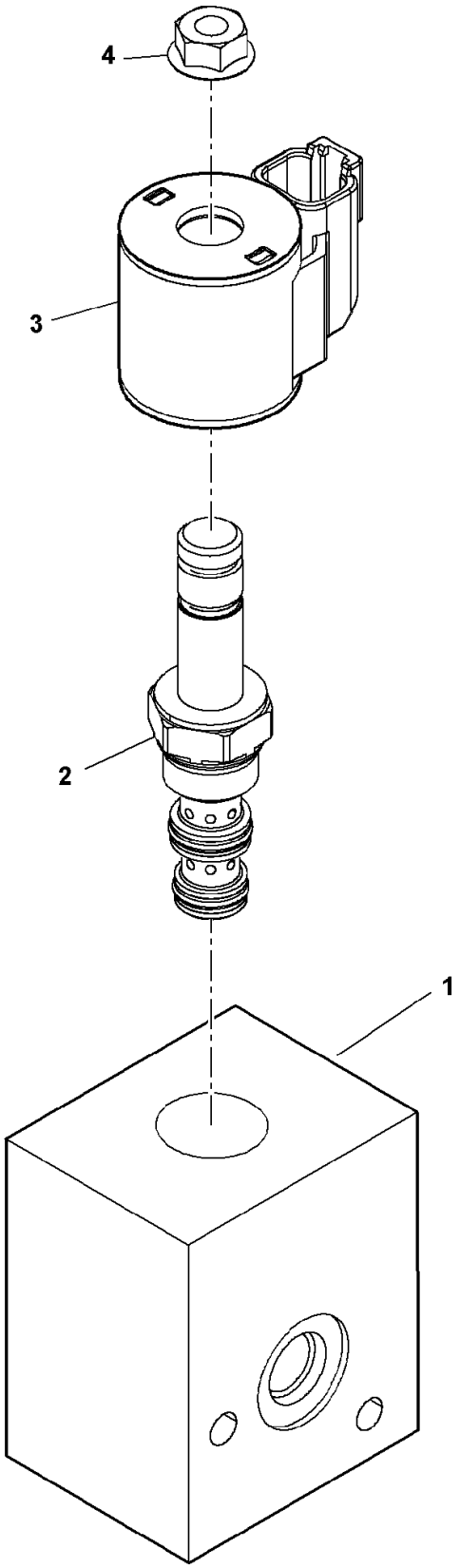


**7926100924**

**(SHEET 1 OF 1)**

Description
**VALVE ASSEMBLY - AXLE LOCKOUT (COMPLETE ASSEMBLY)**

Assembly No.
**7926100924**
Revision:

| Item | FN | Part | Qty | Description |
|---|---|---|---|---|
| 1 | | **NSS** | 1 | BODY, MANIFOLD |
| 2 | | **9926110708** | 1 | CARTRIDGE<br>INCLUDES THE FOLLOWING PARTS |
| | | **9752100994** | 1 | KIT, REPAIR |
| 3 | | **9926112931** | 1 | COIL, 12V. |
| 4 | | **9926107745** | 1 | NUT |

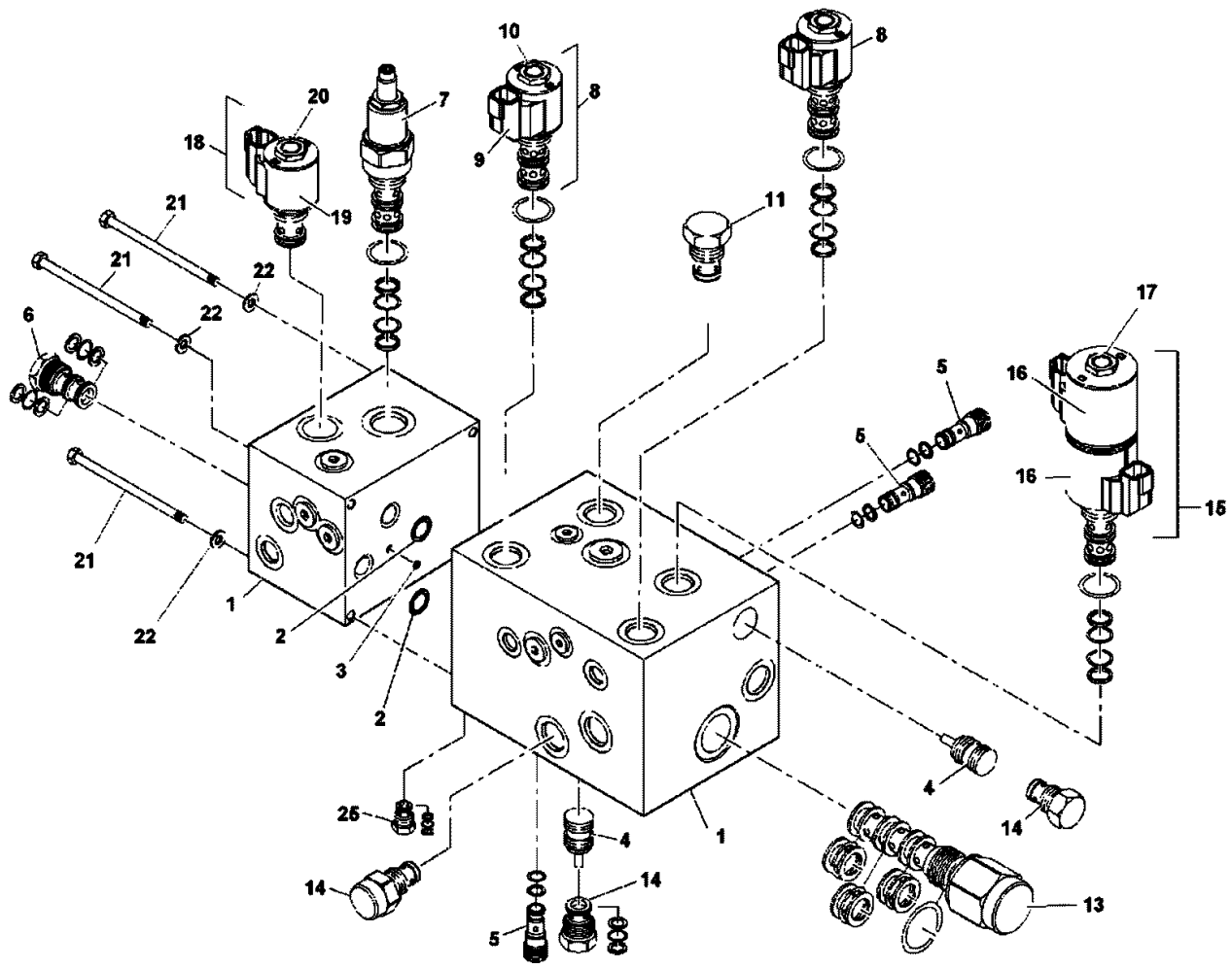


7926100936

(SHEET 1 OF 1)

Description
**VALVE ASSEMBLY - OUTRIGGER SELECTOR REAR STEER (COMPLETE ASSEMBLY)**

Assembly No.
**7926100936**
Revision:

| Item | FN | Part | Qty | Description |
|---|---|---|---|---|
| 1 | | **NSS** | 2 | MANIFOLD ASSY. VALVE |
| 2 | | **9926113181** | 2 | O-RING |
| 3 | | **9926113182** | 1 | O-RING |
| 4 | | **9926113183** | 2 | PISTON, PILOT |
| 5 | | **9926113184** | 3 | VALVE, CARTRIDGE SHUTTLE<br>INCLUDES THE FOLLOWING PARTS |
| | | **9926113185** | 1 | KIT, SEAL |
| 6 | | **9926113169** | 1 | VALVE, SHUTTLE<br>INCLUDES THE FOLLOWING PARTS |
| | | **9926113170** | 1 | KIT, SEAL |
| 7 | | **9926113186** | 1 | VALVE,PRESS.REDUCING @2500PSI<br>INCLUDES THE FOLLOWING PARTS |
| | | **9926113187** | 1 | KIT, SEAL |
| 8 | | **9926106474** | 2 | VALVE, CARTRIDGE<br>INCLUDES THE FOLLOWING PARTS |
| | | **9926108423** | 1 | KIT, SEAL |
| | | **9926107745** | 1 | NUT |
| 9 | | **9926112931** | 2 | COIL, 12V. |
| 10 | | **9926107745** | 2 | NUT |
| 11 | | **9926113089** | 1 | VALVE, CHECK CARTRIDGE<br>INCLUDES THE FOLLOWING PARTS |
| | | **9752100994** | 1 | KIT, REPAIR |
| 12 | | **9926111878** | 1 | VALVE, CHECK<br>INCLUDES THE FOLLOWING PARTS |
| | | **9926105593** | 1 | KIT, REPAIR |
| 13 | | **9926113192** | 1 | VALVE ASSY. CARTRIDGE<br>INCLUDES THE FOLLOWING PARTS |
| | | **9926112997** | 1 | KIT, SEAL |
| 14 | | **9926113193** | 2 | VALVE ASSY. CHECK<br>INCLUDES THE FOLLOWING PARTS |
| | | **9752100944** | 1 | KIT, REPAIR |
| 15 | | **9926111720** | 1 | VALVE ASSEMBLY - SOLENOID 12 VOLT<br>INCLUDES THE FOLLOWING PARTS |
| | | **9926111719** | 1 | KIT, SEAL |
| 16 | | **9926112936** | 2 | COIL, 12V. |
| 17 | | **9926107745** | 1 | NUT |
| 18 | | **9926113194** | 1 | VALVE ASSY. CARTRIDGE<br>INCLUDES THE FOLLOWING PARTS |
| | | **9926113195** | 1 | KIT, SEAL |

Description
**VALVE ASSEMBLY - OUTRIGGER SELECTOR REAR STEER (COMPLETE ASSEMBLY)**

Assembly No.
**7926100936**
Revision:

| Item | FN | Part | Qty | Description |
|---|---|---|---|---|
| 19 | | **9926112931** | 1 | COIL, 12V. |
| 20 | | **9926107745** | 1 | NUT |
| 21 | | **9926113196** | 4 | CAPSCREW |
| 22 | | **9926113197** | 4 | WASHER |
| 23 | | **9926113297** | 1 | PLUG, ORIFICE .076 |
| 24 | | **9926113296** | 1 | PLUG, ORIFICE .261 |
| 25 | | **9926113295** | 1 | PLUG #10 |
| | | | | INCLUDES THE FOLLOWING PARTS |
| | | **7755910002** | 1 | O-RING |
| 26 | | **9926111396** | 7 | PLUG |
| 27 | | **9926111747** | 7 | PLUG, PORT |
| | | | | INCLUDES THE FOLLOWING PARTS |
| | | **9926111748** | 1 | O-RING |
| 28 | | **9926113294** | 2 | PLUG |

**Notes**

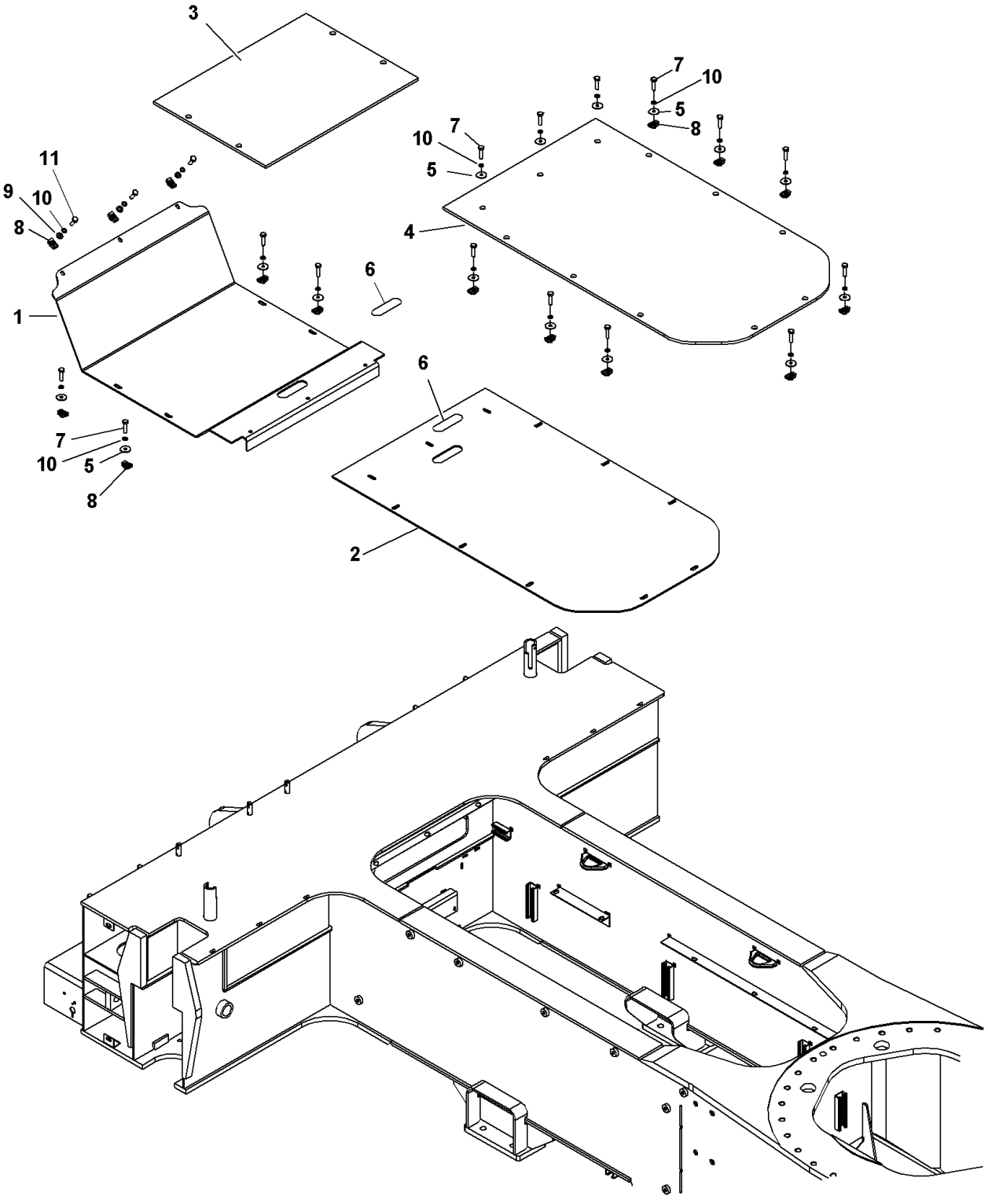


2159110149

(SHEET 1 OF 1)

Description
**TRAY INSTALLATION - STORAGE (WITH MAT)**

Assembly No.
**2159110149**
Revision: **E**

| Item | FN | Part | Qty | Description |
|---|---|---|---|---|
| 1 | | **2159110150** | 1 | TRAY, FRONT<br>INCLUDES THE FOLLOWING PARTS |
| | | **7662190100** | 3 | WELD NUT, M10X1.5 |
| 2 | | **2159110151** | 1 | TRAY, REAR |
| 3 | | **7814100084** | 1 | MAT, FRONT STORAGE TRAY |
| 4 | | **7814100085** | 1 | MAT, REAR STORAGE TRAY |
| 5 | | **7949000615** | 15 | WASHER, |
| 6 | | **8496980002** | 2 | MOULDING<br>(QUANTITY IN FEET) |
| 7 | | **7126191550** | 15 | CAP SCREW, M10 X 40MM HEX HEAD |
| 8 | | **7659190033** | 15 | NUT, RETAINING M10 X 1.50 |
| 9 | | **7951190014** | 3 | FLAT WASHER, 10MM I.D. |
| 10 | | **7951190210** | 18 | LOCK WASHER, 10MM |
| 11 | | **7126191350** | 3 | CAP SCREW, M10X30 HEX HEAD |
| 12 | | **7199100027** | 15 | BUSHING |

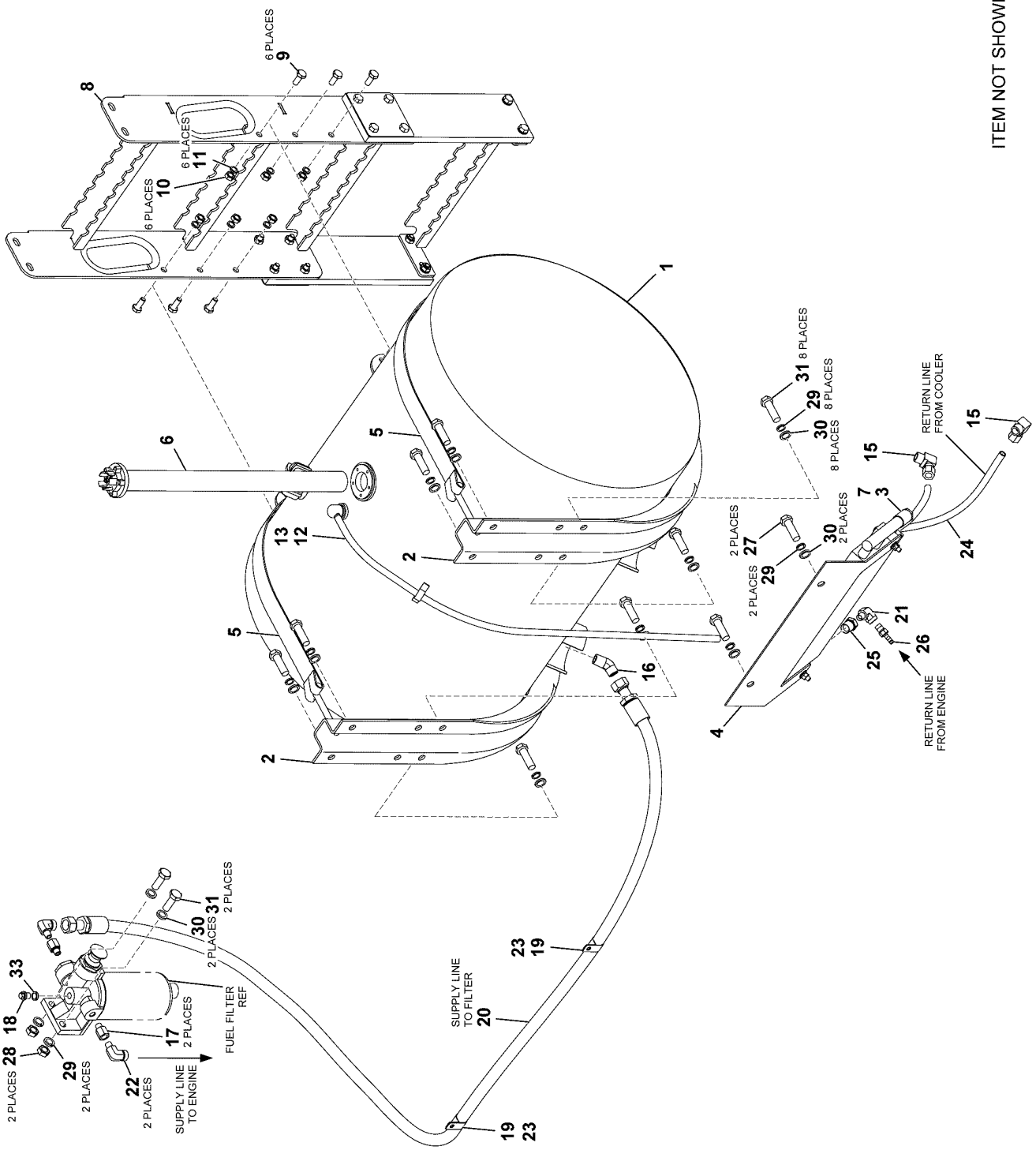


2159110179

(SHEET 1 OF 1)

Description
**TANK INSTALLATION - FUEL**

Assembly No.
**2159110179**
Revision: **B**

| Item | FN | Part | Qty | Description |
|---|---|---|---|---|
| 1 | + | **7880100116** | 1 | TANK ASSEMBLY - 58 GALLON FUEL (COMPLETE ASSEMBLY) |
| 2 | # | **7880000092** | 2 | KIT, JAY BRACKET |
| 3 | # | **7726000128** | 1 | COOLER, OIL |
| 4 | | **4159110251** | 1 | PLATE, MOUNTING |
| 5 | | **8637059004** | 6 | MOULDING (QUANTITY IN FEET) |
| 6 | | **7352000878** | 1 | SENDER, FUEL LEVEL |
| | | | | INCLUDES THE FOLLOWING PARTS |
| | | **9352100751** | 1 | KIT, GASKET AND HARDWARE |
| 7 | + | **7576001743** | 1 | MOUNTING KIT - OIL COOLER |
| 8 | + | **2159110178** | 2 | LADDER ASSEMBLY (COMPLETE ASSEMBLY) |
| 9 | | **7126191253** | 6 | CAP SCREW |
| 10 | | **7661191103** | 6 | LOCKNUT |
| 11 | | **7951190014** | 6 | FLAT WASHER, 10MM I.D. |
| 12 | | **7300000121** | 2 | HOSE CLAMP -0.69"MAX |
| 13 | | **8596902512** | 4 | 1/4" ID X 25' GATES HOSE #4791 |
| 14 | | **7444040021** | 1 | PLUG, PIPE 1/2" N.P.T. |
| 15 | | **7446080836** | 2 | ELBOW, 90 DEGREE MALE |
| 16 | | **7447080829** | 1 | ELBOW, 45 DEGREE |
| | | | | INCLUDES THE FOLLOWING PARTS |
| | | **7755014002** | 1 | O-RING |
| | | **7755908002** | 1 | O-RING |
| 17 | | **7013000405** | 2 | ADAPTER |
| 18 | | **7709100932** | 1 | PLUG, M12 X 1.5 |
| 19 | | **7660152701** | 2 | LOCKNUT 5/16" - 18 N.C. |
| 20 | | **7561308430** | 1 | HOSE ASSY, 1/2" ID STR-STR HYD |
| 21 | | **7445040453** | 1 | ELBOW, 90 DEGREE |
| 22 | | **7447080430** | 2 | ELBOW, MALE ORS THD TO MALE N |
| 23 | | **7300100015** | 2 | CLAMP, 7/8" TUBING |
| 24 | | **8594100012** | 2 | TUBE, 1/2" NYLON FUEL (QUANTITY IN FEET) |
| 25 | | **7445080450** | 1 | BUSHING, REDUCER |
| 26 | | **7649000042** | 1 | NIPPLE, HOSE |

**+ SEE FURTHER BREAKDOWN THIS GROUP** **# SERVICED AS AN ASSEMBLY ONLY**

Description
**TANK INSTALLATION - FUEL**

Assembly No.
**2159110179**
Revision: **B**

| Item | FN | Part | Qty | Description |
|---|---|---|---|---|
| 27 | | **7126211253** | 2 | CAP SCREW, M12 X 25MM HEX HEAD |
| 28 | | **7661210003** | 2 | NUT, HEX 12MM N.C. |
| 29 | | **7951210210** | 12 | LOCK WASHER, 12MM I.D. |
| 30 | | **7951210014** | 14 | WASHER, FLAT #12 |
| 31 | | **7126211550** | 10 | CAP SCREW M12 X 40 |
| 33 | | **7949180045** | 1 | WASHER, COPPER |

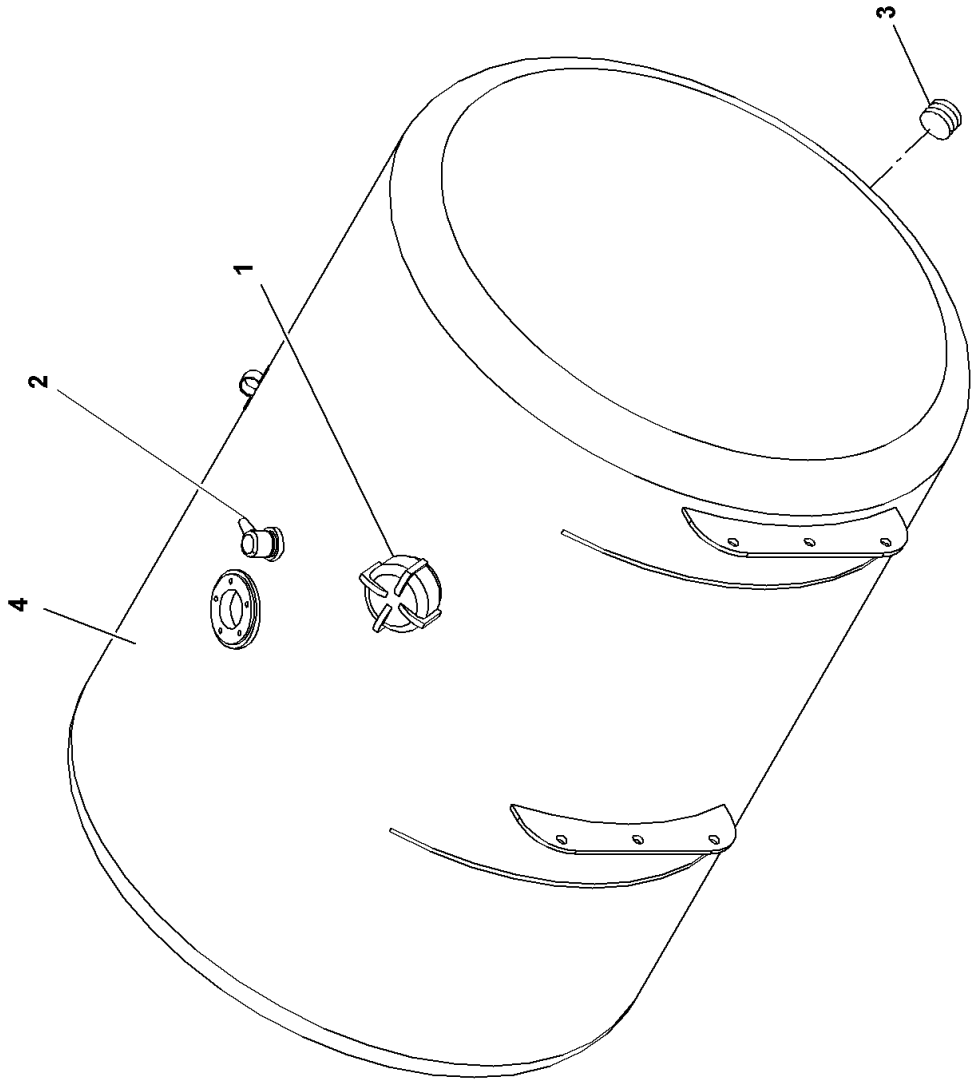


**7880100116**

**(SHEET 1 OF 1)**

Description
**TANK ASSEMBLY - 58 GALLON FUEL (COMPLETE ASSEMBLY)**

Assembly No.
**7880100116**
Revision:

| Item | FN | Part | Qty | Description |
|---|---|---|---|---|
| 1 | | **9880100202** | 1 | CAP ASSY. |
| 2 | | **9880100073** | 1 | VENT |
| 3 | | **9880100081** | 2 | PLUG, MAGNETIC |
| 4 | | **NSS** | 1 | WELDMENT, TANK |

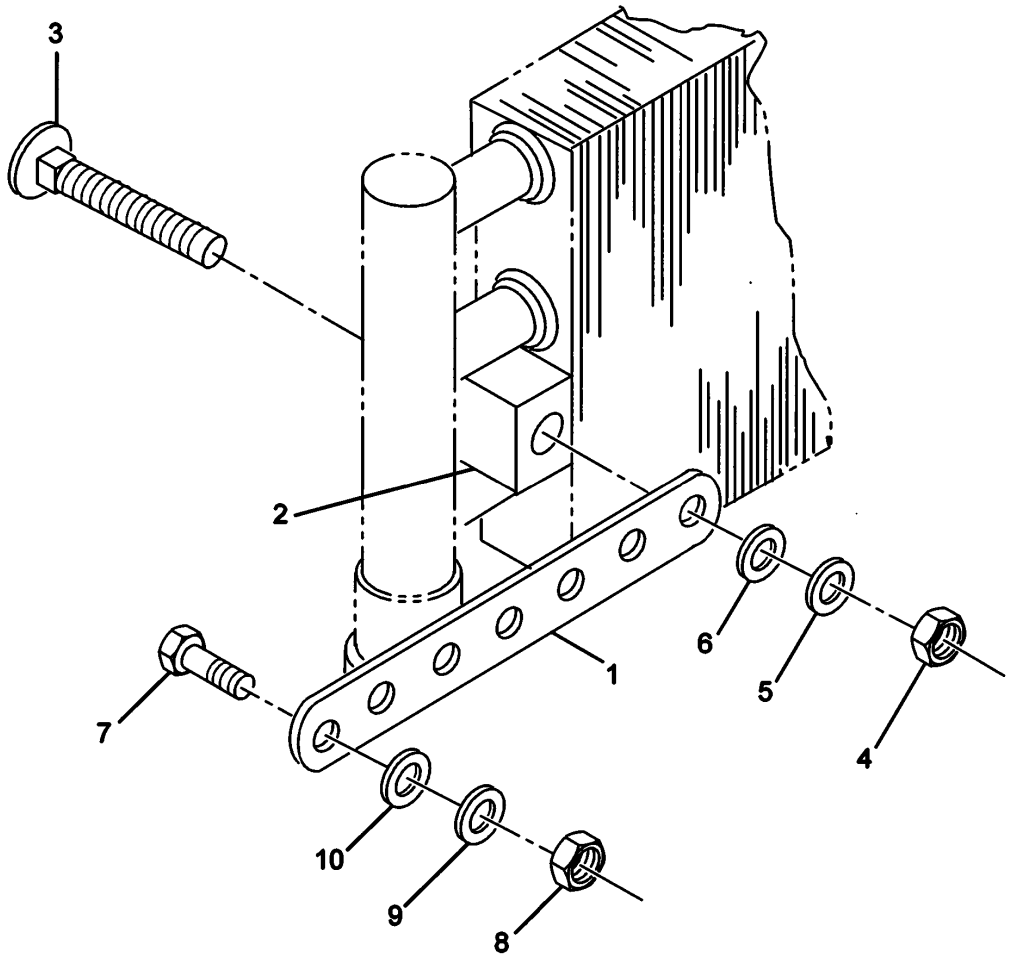


7576001743

(SHEET 1 OF 1)

Description
**MOUNTING KIT - OIL COOLER**

Assembly No.
**7576001743**
Revision:

| Item | FN | Part | Qty | Description |
|---|---|---|---|---|
| 1 | | **9576101028** | 2 | STRAP |
| 2 | | **9576101029** | 2 | BUSHING |
| 3 | | **7115152050** | 2 | CAP SCREW,<br>5/16" - 18 N.C. X 2 1/2"<br>GRADE 5 |
| 4 | | **7660150008** | 2 | NUT, HEX<br>5/16" - 18 N.C.<br>GRADE 8 |
| 5 | | **7950150050** | 2 | WASHER, LOCK 5/16" I.D. |
| 6 | | **7950150141** | 2 | WASHER, FLAT 5/16" |
| 7 | | **7115140650** | 2 | CAP SCREW,<br>1/4" - 20 N.C. X 3/4"<br>GRADE 5 |
| 8 | | **7660140008** | 2 | NUT, HEX<br>1/4" - 20 N.C. |
| 9 | | **7950140050** | 2 | WASHER, LOCK 1/4" I.D. |
| 10 | | **7950140141** | 2 | WASHER, FLAT 1/4" PLAIN NARROW |

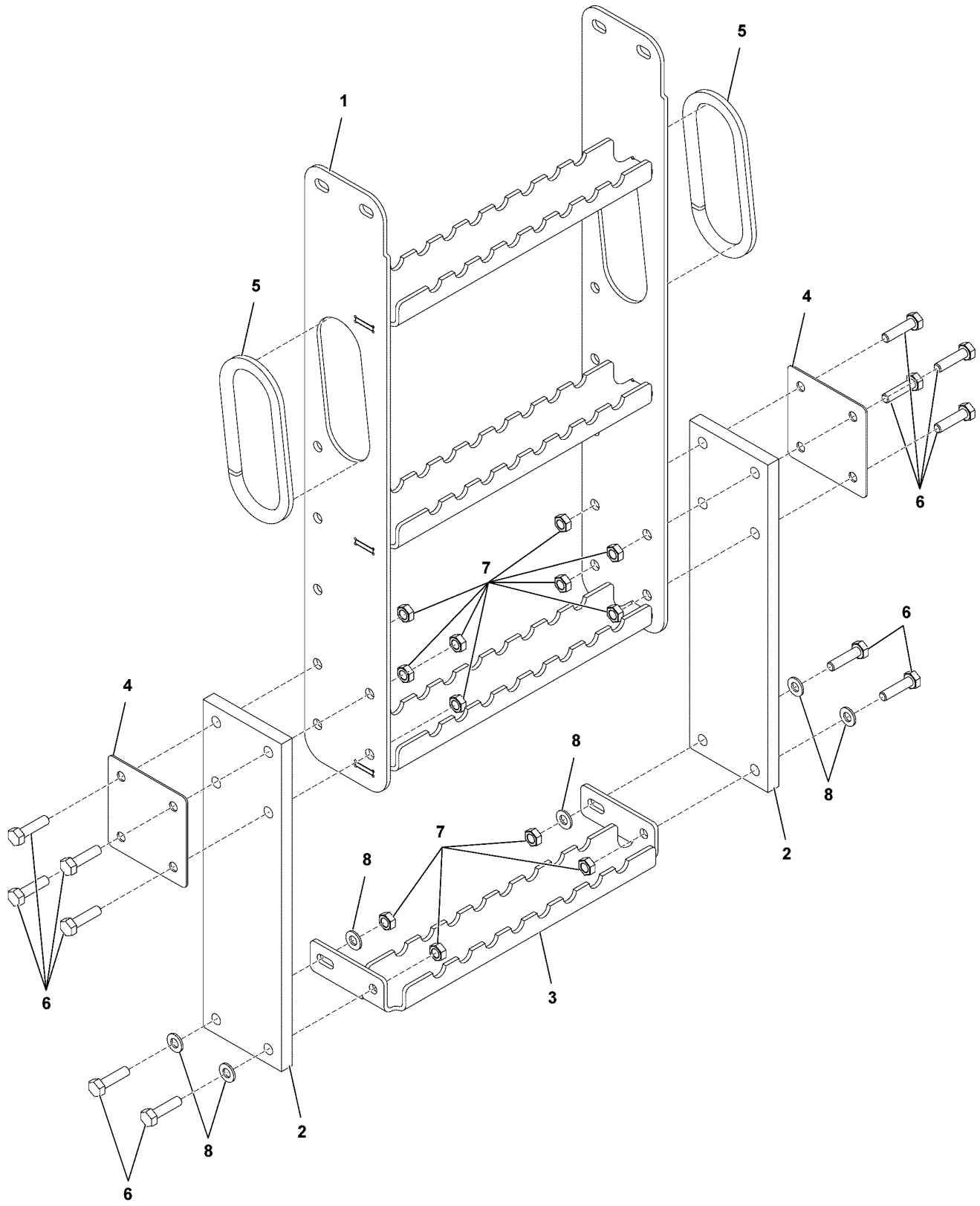


2159110178

(SHEET 1 OF 1)

Description
**LADDER ASSEMBLY (COMPLETE ASSEMBLY)**

Assembly No.
**2159110178**
Revision: **B**

| Item | FN | Part | Qty | Description |
|---|---|---|---|---|
| 1 | | **2159110177** | 1 | LADDER |
| 2 | | **7418100008** | 2 | EXTENSION, STEP |
| 3 | | **4174110070** | 1 | STEP |
| 4 | | **4159110071** | 2 | PLATE |
| 5 | | **8496980002** | 4 | MOULDING<br>(QUANTITY IN FEET) |
| 6 | | **7126191550** | 12 | CAP SCREW, M10 X 40MM HEX HEAD |
| 7 | | **7661191103** | 12 | LOCKNUT |
| 8 | | **7951190014** | 6 | FLAT WASHER, 10MM I.D. |

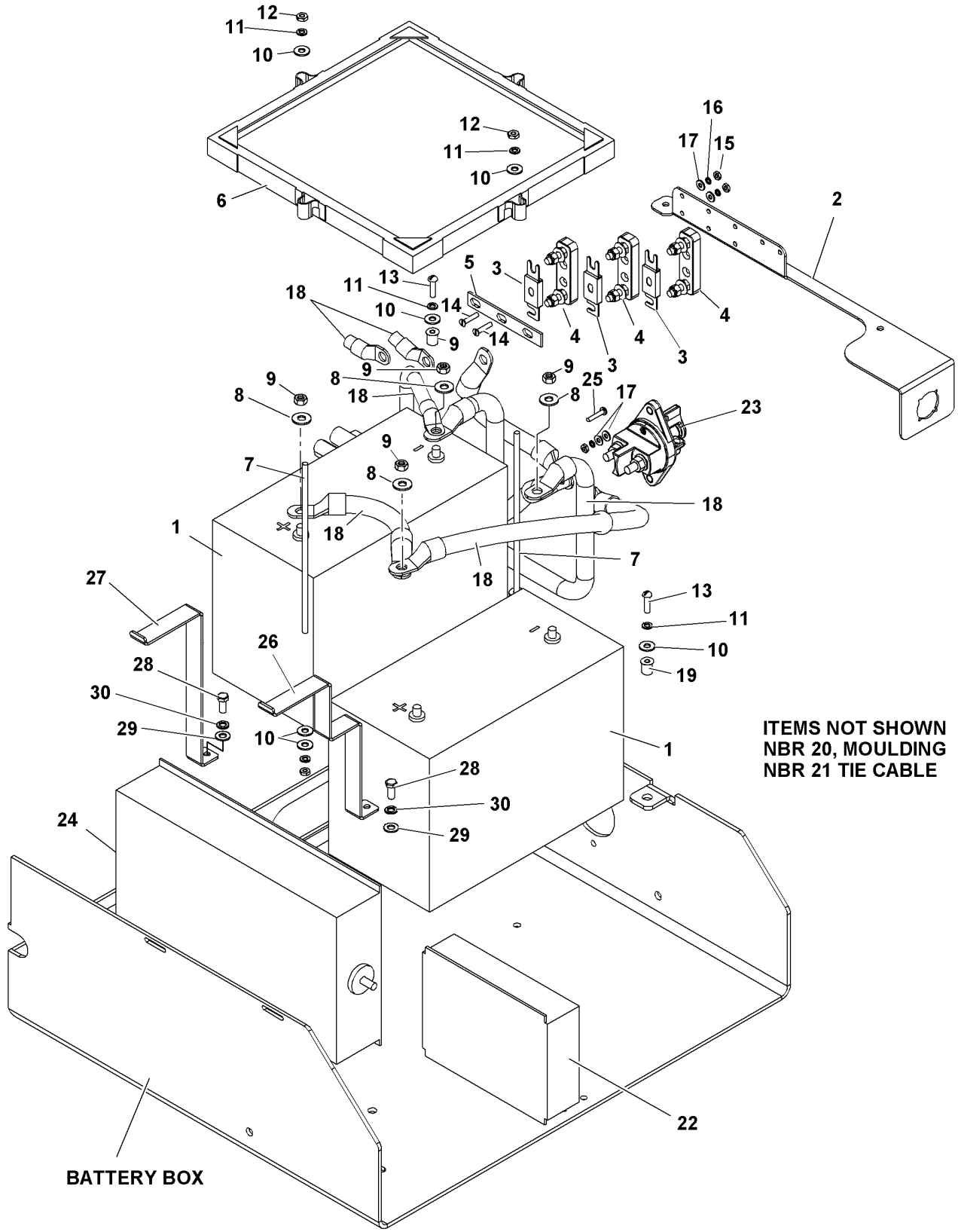


2159810190

(SHEET 1 OF 1)

Description
**BATTERY INSTALLATION**

Assembly No.
**2159810190**
Revision: **A**

| Item | FN | Part | Qty | Description |
|---|---|---|---|---|
| 1 | | **7064000070** | 2 | BATTERY, 12 VOLT |
| 2 | | **4159810086** | 1 | BRACKET, POWER FUSES |
| 3 | | **7482000555** | 3 | FUSE, 100 AMP |
| 4 | | **7086001082** | 3 | HOLDER, FUSE |
| 5 | | **6059100001** | 1 | BAR, BUSS |
| 6 | | **7300000393** | 1 | BATTERY, HOLD-DOWN |
| 7 | | **6865147860** | 2 | STUD |
| 8 | | **7950160050** | 4 | WASHER, LOCK 3/8" I.D. |
| 9 | | **7660160200** | 4 | NUT, HEX JAM<br>3/8" - 16 N.C. |
| 10 | | **7950140161** | 8 | WASHER, 1/4" I.D. FLAT WIDE |
| 11 | | **7950140050** | 6 | WASHER, LOCK 1/4" I.D. |
| 12 | | **7660140000** | 6 | NUT, HEX<br>1/4" - 20 N.C. |
| 13 | | **7111140810** | 2 | SCREW, MACHINE<br>1/4" - 20 N.C. X 1"<br>GRADE 1 |
| 14 | | **7111100807** | 6 | SCREW, MACHINE<br>3/16" - 24 N.C. X 1"<br>GRADE 1 |
| 15 | | **7660101100** | 8 | NUT, HEX<br>3/16" - 32 N.F.<br>GRADE 1 |
| 16 | | **7950100050** | 8 | WASHER, LOCK #10 |
| 17 | | **7950100141** | 10 | WASHER, FLAT, #10 |
| 18 | + | **7246100441** | 1 | KIT - CABLE (BATTERIES)<br>RT535 |
| 19 | | **7429000542** | 2 | FASTENER, NUT 1/4" - 20 N.C. |
| 20 | | **8496980002** | 5 | MOULDING<br>(QUANTITY IN FEET) |
| 21 | | **7850000237** | 2 | TIE, CABLE (BLACK)<br>7 5/16" LONG |
| 22 | # | **7352100069** | 1 | MODULE, MASTER CONTROL |
| 23 | | **7872100142** | 1 | DISCONNECT SWITCH |
| 24 | # | **7352100067** | 1 | MODULE, CARRIER CONTROL |
| 25 | | **7111100811** | 2 | SCREW, MACHINE<br>3/16" - 24 N.C. X 1"<br>GRADE 1 |

**+ SEE FURTHER BREAKDOWN THIS GROUP** **# SERVICED AS AN ASSEMBLY ONLY**

Description
**BATTERY INSTALLATION**

Assembly No.
**2159810190**
Revision: **A**

| Item | FN | Part | Qty | Description |
|---|---|---|---|---|
| 26 | | **4159110253** | 1 | STRAP, MOUNTING |
| 27 | | **4159110254** | 1 | STRAP, MOUNTING |
| 28 | | **7115150650** | 2 | CAP SCREW,<br>5/16" - 18 N.C. X 3/4"<br>GRADE 5 |
| 29 | | **7950150141** | 2 | WASHER, FLAT 5/16" |
| 30 | | **7950150050** | 2 | WASHER, LOCK 5/16" I.D. |

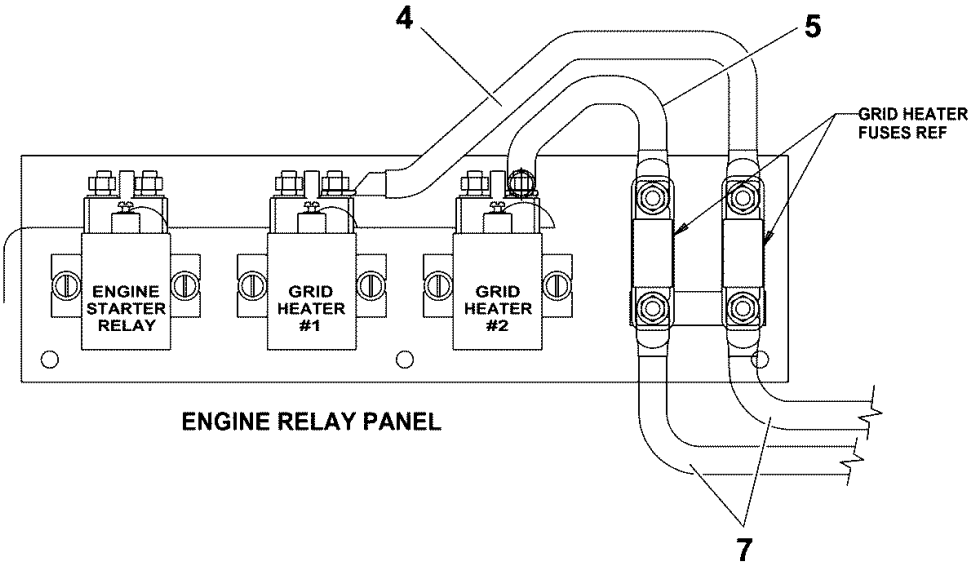


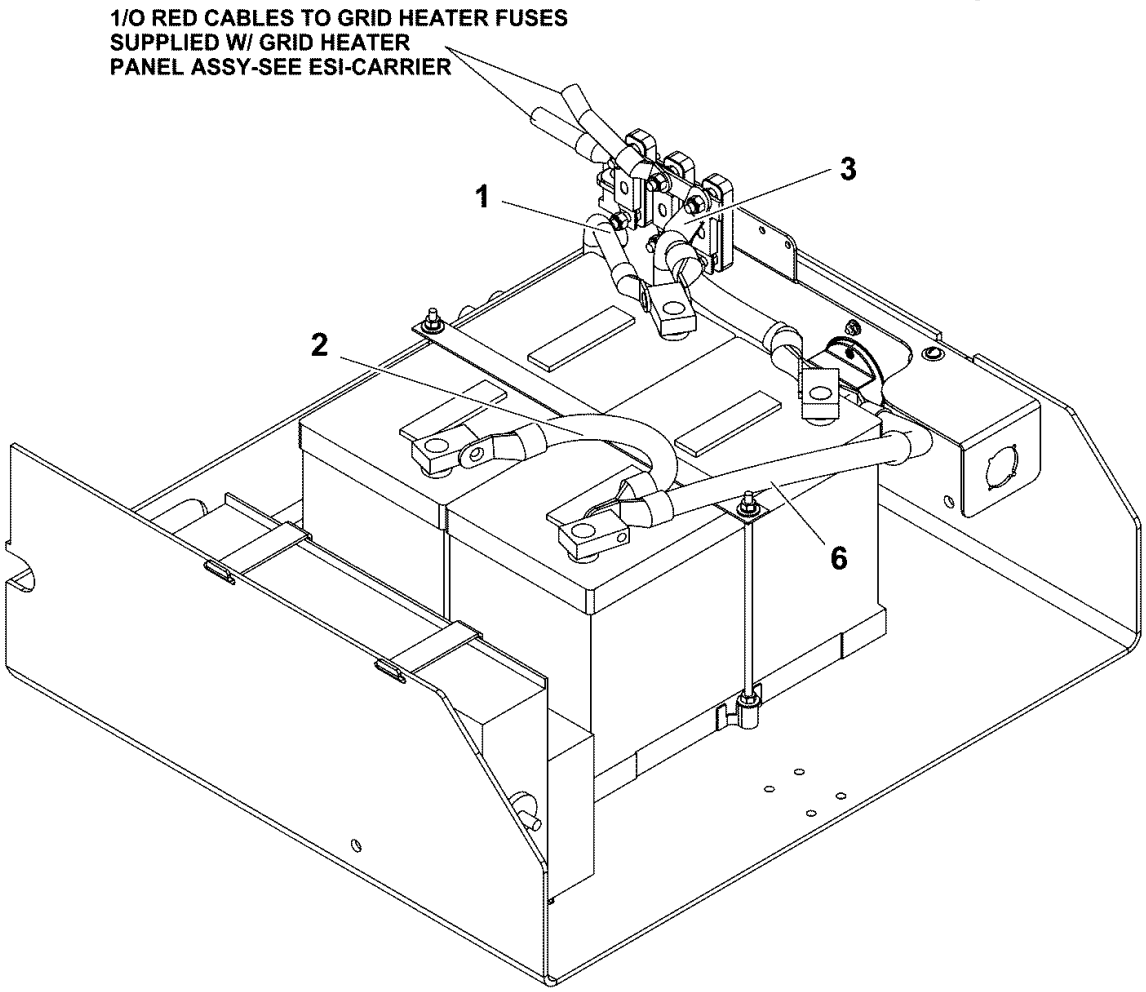


7246100441

(SHEET 1 OF 1)

Description
**KIT - CABLE (BATTERIES) RT535**

Assembly No.
**7246100441**
Revision:

| Item | FN | Part | Qty | Description |
|---|---|---|---|---|
| 1 | | **7246100031** | 1 | CABLE ASSY 2/0 BLK (66" LG) |
| 2 | | **7246100114** | 1 | CABLE ASSY-4/0 RED (9.0")LG<br>INCLUDES THE FOLLOWING PARTS |
| | | **9246100177** | 2 | BOOT, RED |
| 3 | | **7246100227** | 1 | CABLE-RED 4/0 10" DISCSW/FUSE<br>INCLUDES THE FOLLOWING PARTS |
| | | **9246100177** | 1 | BOOT, RED |
| 4 | | **7246100156** | 1 | CABLE-RED 1/0 12" FUSE/RELAY<br>INCLUDES THE FOLLOWING PARTS |
| | | **9246100159** | 2 | BOOT, SWIVEL (RED) |
| 5 | | **7246100157** | 1 | CABLE-RED 1/0 8" FUSE TO RELAY<br>INCLUDES THE FOLLOWING PARTS |
| | | **9246100159** | 2 | BOOT, SWIVEL (RED) |
| 6 | | **7246100453** | 1 | CABLE, RED 4/0 32" BAT+/ BAT<br>INCLUDES THE FOLLOWING PARTS |
| | | **9246100177** | 1 | BOOT, RED |
| 7 | | **7246100347** | 2 | CABLE-RED 1/0 96" FUSE/FUSE |

## Alphabetical Index — Appendix A


| Description | Part | Page |
|---|---|---|
| .75"ID X 1.12"OD HEATER HOSE ( | 8596902529 | 319 |
| 1" I.D. HYDR HOSE ASSY STR-45 | 7555603062 | 229 |
| 1.75"ID X 2.13"OD WRAPPED HOSE | 8596902521 | 317, 391 |
| 1/4" I.D. X 20" | 7561102003 | 319 |
| 1/4" I.D. X 60" | 7561106003 | 319 |
| 1/4" I.D. X 76" | 7555107601 | 229 |
| 1/4" ID X 25' GATES HOSE #4791 | 8596902512 | 539 |
| 16 - 14 AWG | 7345261701 | 386 |
| 2.00"ID X 2.39"OD WRAPPED HOSE | 8596902522 | 391, 395 |
| 2-PASS CONNECTOR/ORANGE SEAL | 7892100029 | 142, 508 |
| 3/8 HOSE STR ORFS X LG 90 ORFS | 7555208203 | 233 |
| 3/8" I.D. X 44" | 7555204400 | 233 |
| 3/8" I.D. X 30" | 7561203017 | 319 |
| 3/8" I.D. X 53" | 7555205301 | 233 |
| 3/8" I.D. X 60" | 7555206001 | 231 |
| 3/8" I.D. X 62" | 7555206201 | 233 |
| 3/8" I.D. X 68" | 7555206800 | 231 |
| 3/8" I.D. X 74" | 7555207401 | 233 |
| 3/8" X 72" | 7555207203 | 231, 233 |
| 3rd. SHAFT & DRUM ASSY. | 9904110468 | 351 |
| 3RD. SHAFT GROUP | 9904110621 | 323 |
| 5/16"WEATHERHEAD HOSE-650'REEL | 8596931250 | 319 |
| 5/8" X 24" | 7555402403 | 230 |
| 90 DEG REDUCING ELBOW | 80010098 | 403 |
| A2B SWITCH - WITH | 9333102230 | 15 |
| ACCUMULATOR ASSY,HYDRAULIC OIL | 7005100017 | 275 |
| ADAPTER | 7013000405<br>7013001112<br>90000104<br>9576101348<br>9974102210 | 319, 539<br>225<br>243<br>73, 75<br>243 |
| ADAPTER, 0.062 DIA ORIFICE | 7013100059 | 231 |
| ADAPTER, 08 ORB TO 08 BEADLOCK | 7013100029 | 297 |
| ADAPTER, 08 ORB TO 10 BEADLOCK | 7013100030 | 297 |
| ADAPTER, 3 HOLE FRONT ASSY. | 90012227 | 147 |
| ADAPTER, PUMP MOUNT | 9904110598 | 339 |


From - .75"ID X 1.12"OD HEATER HOSE ( To - ADAPTER, PUMP MOUNT

## Alphabetical Index — Appendix A


| Description | Part | Page |
|---|---|---|
| **ADAPTER,ORB TO HOSE BARB 20-16** | 7013100047 | 319 |
| **ADJUSTER** | 9576101422 | 411 |
| **ALARM, BACK-UP** | 7025000836 | 497 |
| **ALARM, FAST PULSE BUZZER** | 7025000821 | 135 |
| **ALTERNATOR** | 7029100003 | 317 |
| **ANGLE** | 6245101034 | 62 |
| **ARM SUPPORT** | 6245100081 | 91 |
| **ARM, ADJUSTING** | 9576101421 | 411 |
| **ARM, DRIVE 60 DEG** | 9576101405 | 73, 75 |
| **ARM, LEVER** | 7768003904 | 145 |
| **ARM, WIPER 24"** | 9576101406 | 73, 75 |
| **ARMREST** | 6033100018 | 91 |
| **AUXILIARY PUMP DRIVE GROUP** | 9904110615 | 323 |
| **AXLE ASSEMBLY - DRIVE/STEER** | 7049101487 | 429 |
| **BACKSHELL, DEUTSCH HD10 SERIES** | 7258100165 | 509 |
| **BACK-UP RING;7.00 ROD** | 7753100021 | 291 |
| **BAFFLE** | 4159810070 | 311 |
| **BAFFLE AND SEAL** | 9904105958 | 331 |
| **BAFFLE, OIL** | 9904109572 | 327 |
| **BALL, LOCK** | 9904101025<br>9904105989 | 341<br>347 |
| **BAND, MOUNTING** | 7056000620<br>7056100011 | 401<br>403 |
| **BAR** | 6059000910 | 513 |
| **BAR, 2-POLE JUMPER** | 9333102717 | 21 |
| **BAR, BUSS** | 6059100001 | 549 |
| **BAR, LATCH** | 6245100273 | 63 |
| **BAR, LINK 14.64"** | 9576101404 | 73 |
| **BAR, RETAINER** | 9498100387 | 81 |
| **BAR, SPACER** | 9974102822 | 242 |
| **BARREL ASSY.** | 9372103533 | 449 |
| **BARREL, LIFT CYLINDER** | 6372100486 | 291 |
| **BASE** | 9974102942 | 241 |
| **BATTERY, 12 VOLT** | 7064000070 | 549 |
| **BATTERY, HOLD-DOWN** | 7300000393 | 549 |
| **BEAM, SEALED 12 VOLT** | 9581100391 | 7, 62 |


**From - ADAPTER,ORB TO HOSE BARB 20-16** **To - BEAM, SEALED 12 VOLT**

## Alphabetical Index — Appendix A


| Description | Part | Page |
|---|---|---|
| **BEARING** | 7069000516 | 63, 71 |
| | 7069000518 | 49 |
| | 7069001045 | 63 |
| | 9049101566 | 355 |
| | 9049104578 | 433 |
| | 9086100088 | 37 |
| | 9576101135 | 258 |
| | 9576101332 | 257 |
| | 9576101335 | 257 |
| | 9722105443 | 373 |
| | 9722105547 | 375 |
| | 9722105548 | 375 |
| | 9904103612 | 355 |
| | 9904104423 | 341 |
| | 9904104428 | 335 |
| | 9904104432 | 339, 341 |
| | 9904106320 | 355 |
| | 9904109592 | 343 |
| | 9904109595 | 345 |
| | 9904109604 | 349 |
| | 9904109606 | 353 |
| | 9904109647 | 345 |
| | 9926113112 | 207 |
| | 9974102183 | 241 |
| | 9974103086 | 244 |
| **BEARING ASSEMBLY** | 9904104053 | 347 |
| **BEARING ASSEMBLY, U JOINT** | 9049109733 | 441, 442 |
| **BEARING, BALL** | 9974101211 | 241 |
| **BEARING, CENTER** | 9364101907 | 423 |
| **BEARING, FRONT** | 9904105994 | 345, 351 |
| **BEARING, GEAR** | 9904101353 | 349 |
| **BEARING, NEEDLE** | 9576101336 | 257 |
| **BEARING, NYLON** | 9364100180 | 271 |
| | 9364100964 | 271 |
| **BEARING, PILOT** | 9904103575 | 343 |
| **BEARING, REAR** | 9904106000 | 349 |
| | 9904109608 | 355 |
| | 9904109648 | 345, 351 |
| **BEARING, ROLLER** | 9086100014 | 37 |
| | 9974101182 | 241 |
| **BEARING, SHAFT** | 9904109574 | 331, 349, 353 |
| **BEARING, SPRAG** | 9974102665 | 242 |
| **BEARING, THRUST** | 9974102218 | 242 |

## Alphabetical Index — Appendix A


| Description | Part | Page |
|---|---|---|
| **BEARING, TURNTABLE** | 7069100081 | 251 |
| **BEARING,NEEDLE** | 9576101127 | 257 |
| **BELLOWS** | 7406000537 | 313, 391 |
| | 7406001053 | 391 |
| **BELT, DRIVE** | 9414101764 | 321 |
| | 9576101424 | 411 |
| **BELT, SEAT** | 7576000311 | 92 |
| **BEZEL, L-SERIES 3 GANG LM3** | 7364100179 | 91, 113 |
| **BEZEL, L-SERIES 4 GANG LM4** | 7364100180 | 113 |
| **BEZEL, L-SERIES 6 GANG LM6** | 7364100182 | 113 |
| **BEZEL, L-SERIES SINGLE LMS** | 7364100177 | 113 |
| **BINDER** | 7258100138 | 153 |
| **BLADE, WIPER 34"** | 9576101347 | 73, 75 |
| **BLOCK** | 7086100002 | 61, 71 |
| **BLOCK, FUSE** | 7086000947 | 141 |
| **BLOCK, SLIDE** | 7086100000 | 61, 71 |
| **BLOCK, SPACER** | 7086100144 | 66 |
| **BLOCK, TERMINAL STRIP** | 9333102663 | 21 |
| **BLOWER ASSY, 12 VOLT** | 90012228 | 147 |
| **BODY** | 9904105306 | 359 |
| **BODY ASSY. VALVE** | 9904110604 | 365, 367 |
| **BOLT, CAP SCREW** | 9049101125 | 325 |
| **BOLT, STACKING** | 7099000399 | 185 |
| **BOLT, TIE** | 9086100809 | 37 |
| | 9086100810 | 37 |
| **BOOT** | 7172000546 | 193, 309, 386, 411, 497 |
| | 7172000547 | 179, 385, 510 |
| | 7172000549 | 142 |
| | 7172000550 | 179, 209 |
| | 7172000551 | 142, 181, 185, 272, 509 |
| | 7172000552 | 179, 209, 385, 507 |
| | 7172000553 | 179, 509 |
| | 7172000554 | 180, 385, 508 |
| | 7172000564 | 272, 509 |
| | 9352100771 | 97, 99 |
| | 9511100017 | 97, 99 |
| **BOOT, BLACK** | 9246100185 | 389 |
| **BOOT, CONNECTOR** | 7172000565 | 180, 272, 509 |
| | 7172000567 | 181, 273, 386, 510 |

## Alphabetical Index — Appendix A


| Description | Part | Page |
|---|---|---|
| **BOOT, CONNECTOR** | 7172000568 | 185, 510, 515 |
| **BOOT, DT2S CONNECTOR** | 7172000545 | 179, 386, 507 |
| **BOOT, DTP2P-BT** | 7172100005 | 509 |
| **BOOT, DTP2S-BT** | 7172100004 | 385 |
| **BOOT, DTP4S - BT** | 7172100006 | 385 |
| **BOOT, LOWER END** | 9326100495 | 211 |
| **BOOT, PLUG** | 7172100002 | 103, 180, 507 |
| **BOOT, RED** | 9246100168 | 389 |
| | 9246100177 | 389, 553 |
| **BOOT, RUBBER** | 9926113275 | 201 |
| **BOOT, SWIVEL (RED)** | 9246100159 | 389, 553 |
| **BOOT, TERMINAL** | 7172000558 | 142, 509 |
| **BOOT, UPPER END** | 9326100496 | 211 |
| **BOOT-DTM3P-RECP** | 7172100003 | 95 |
| **BOX ASSEMBLY - JUNCTION** | 9333103565 | 15 |
| **BOX, JUNCTION** | 9333103735 | 21 |
| **BRACE** | 6184100007 | 109 |
| **BRACKET** | 4159810078 | 321 |
| | 4159810079 | 314 |
| | 6245100077 | 91 |
| | 7348000669 | 85 |
| | 9364101827 | 265 |
| | 9576101397 | 299 |
| | 9926113289 | 281 |
| | 9974102831 | 243 |
| **BRACKET SET, FOOTLESS BLIND** | 7942000512 | 151 |
| **BRACKET WELD** | 80001639 | 185 |
| **BRACKET, ANGLE** | 4159210122 | 303 |
| **BRACKET, CLAMP** | 4159810076 | 313 |
| **BRACKET, COVER** | 4159210167 | 303 |
| **BRACKET, FRONT** | 4159210164 | 303 |
| **BRACKET, FUSE** | 6184001406 | 141 |
| **BRACKET, HEAD/TAIL LIGHT** | 4159110314 | 481 |
| **BRACKET, LATCH** | 6184100054 | 485 |
| **BRACKET, LEFT HAND SUN SCREEN** | 6245101062 | 151 |
| **BRACKET, MID** | 4159210165 | 303 |
| **BRACKET, MIRROR ARM** | 7184001014 | 62, 247, 249, 487 |

## Alphabetical Index — Appendix A


| Description | Part | Page |
|---|---|---|
| **BRACKET, MODULE SUPPORT** | 6245101066 | 133 |
| **BRACKET, MOUNTING** | 6245101026 | 195 |
| | 6245101030 | 61 |
| | 6245101133 | 61 |
| | 9926112988 | 527 |
| **BRACKET, PEDAL MOUNTING** | 6245100878 | 199 |
| **BRACKET, POWER FUSES** | 4159810086 | 549 |
| **BRACKET, RAIL** | 9498100145 | 79 |
| **BRACKET, REAR** | 4159210166 | 303 |
| **BRACKET, RIGHT HAND SUN SCREEN** | 6245101063 | 151 |
| **BRACKET, ROLLER** | 9974103084 | 243 |
| **BRACKET, SEAT** | 6184100027 | 145 |
| **BRACKET, SEAT BAR** | 6184003088 | 87 |
| **BRACKET, STROBE LIGHT** | 4159210126 | 307 |
| **BRACKET, SWITCH** | 6184100242 | 185 |
| **BRACKET, TERMINAL STRIP END** | 9333102665 | 21 |
| **BRACKET,BASE** | 9364101731 | 271 |
| **BRACKET,PARK BRAKE** | 9904110157 | 361 |
| **BRAKE ASSEMBLY - PARKING** | 80006812 | 317 |
| **BRAKE ASSEMBLY, DISC** | 9049112522 | 445, 447 |
| **BRAKE ASSEMBLY,GROUP** | 9049112523 | 431 |
| **BRAKE GROUP** | 9049112516 | 431 |
| **BRAKE, DISC** | 7188000165 | 361 |
| **BREATHER** | 9049112686 | 437 |
| | 9258100173 | 519 |
| | 9576101189 | 259 |
| | 9904104050 | 325 |
| **BREATHER ASSY.** | 9364101836 | 272 |
| **BRUSH & ARM ASSY. (SILVER)** | 9364101733 | 271 |
| **BRUSH AND HOLDER ASSEMBLY** | 9364100340 | 271 |
| | 9364100437 | 271 |
| **BULB** | 9581100048 | 62 |
| **BULB, 12 VOLT** | 9581100405 | 113 |
| | 9581100406 | 129 |
| **BULB, HALOGEN** | 9581100396 | 481 |
| **BUMPER, MOLDED** | 7195000010 | 303 |
| **BUMPER, RUBBER** | 7195000032 | 311, 415 |


**From - BRACKET, MODULE SUPPORT** **To - BUMPER, RUBBER**

## Alphabetical Index — Appendix A


| Description | Part | Page |
|---|---|---|
| **BUMPER, RUBBER** | 7195000037 | 461 |
| **BUSHING** | 6199100090 | 251 |
| | 6199100100 | 261 |
| | 6199100104 | 313 |
| | 7199001289 | 91 |
| | 7199100027 | 537 |
| | 90001016 | 148 |
| | 9049102253 | 437 |
| | 9049112682 | 437, 442 |
| | 9576101029 | 545 |
| | 9722105444 | 373 |
| | 9904100967 | 355 |
| | 9974102808 | 244 |
| **BUSHING, LINER** | 7199100029 | 291 |
| **BUTTON, HORN** | 7970140707 | 205 |
| **BUTTON, SQUARE** | 7242100002 | 92 |
| **BUTTON, THRUST** | 9049103565 | 442 |
| | 9049106791 | 442 |
| **CAB ASSEMBLY** | 6245101147 | 55 |
| **CAB WELD** | 6245101145 | 61 |
| **CABLE ASSEMBLY - BOOM** | 6246100015 | 5 |
| **CABLE ASSEMBLY - BOOM LIGHTS** | 6246100259 | 5 |
| **CABLE ASSY** | 7246002555 | 133, 497 |
| **CABLE ASSY 2/0 BLK (66" LG)** | 7246100031 | 553 |
| **CABLE ASSY-4/0 RED (9.0")LG** | 7246100114 | 553 |
| **CABLE REEL LWG508 - IFLEX 5** | 9333103873 | 15 |
| **CABLE TIE, BLACK** | 7850000208 | 5, 104, 126, 133, 135, 142, 159, 180, 199, 297, 381, 386, 509, 515 |
| **CABLE, BLACK** | 7246100028 | 389 |
| **CABLE, CANBUS 11M W/MOLDED M12** | 9333103872 | 15 |
| **CABLE, LENGTH SENSOR - 1** | 9333102986 | 17 |
| **CABLE, RED 4/0 32" BAT+/ BAT** | 7246100453 | 553 |
| **CABLE-BLK 60"ENG GND TO ALT -** | 7246100186 | 389 |
| **CABLE-RED 1/0 12" FUSE/RELAY** | 7246100156 | 553 |
| **CABLE-RED 1/0 36" (RLY/GRDHTR)** | 7246100198 | 389 |
| **CABLE-RED 1/0 42" (STR TO ALT)** | 7246100145 | 389 |
| **CABLE-RED 1/0 8" FUSE TO RELAY** | 7246100157 | 553 |
| **CABLE-RED 1/0 96" FUSE/FUSE** | 7246100347 | 553 |

## Alphabetical Index — Appendix A


| Description | Part | Page |
|---|---|---|
| **CABLE-RED 4/0 10" DISCSW/FUSE** | 7246100227 | 553 |
| **CABLE-RED 6GA 48" STRTR/RELAY** | 7246100220 | 389 |
| | 7246100276 | 389 |
| **CAC TUBE** | 7910101859 | 313 |
| **CAGE ASSY. PINION** | 9049112639 | 433 |
| **CANNON CONNECTOR, 2-PIN** | 9333103040 | 25 |
| **CAP** | 9049107137 | 441 |
| | 9049107138 | 441 |
| | 9049112382 | 445 |
| | 9326100497 | 211 |
| | 9437100828 | 521 |
| | 9926111453 | 281 |
| | 9926113301 | 284 |
| **CAP #8** | 7258001452 | 65, 109, 114 |
| **CAP ASSEMBLY** | 9437100763 | 521 |
| **CAP ASSY.** | 9880100202 | 543 |
| **CAP HEAD, CYLINDER** | 9049107152 | 447 |
| **CAP SCREW** | 7126191253 | 65, 109, 314, 321, 401, 403, 517, 539 |
| | 9904100974 | 365 |
| | 9904109358 | 325, 327 |
| | 9974102684 | 243 |
| **CAP SCREW - HEX SOCKET HEAD** | 7099100023 | 33 |
| **CAP SCREW M12 X 40** | 7126211550 | 407, 540 |
| **CAP SCREW,** | 7115140450 | 135 |
| | 7115140478 | 151 |
| | 7115140550 | 133, 185 |
| | 7115140650 | 29, 35, 63, 299, 545 |
| | 7115141450 | 71, 91 |
| | 7115143250 | 19 |
| | 7115150650 | 550 |
| | 7115150750 | 186 |
| | 7115150850 | 49, 64, 71, 247, 249 |
| | 7115152050 | 545 |
| | 7115160650 | 247, 249, 527 |
| | 7115160750 | 63 |
| | 7115160850 | 205 |
| | 7115161050 | 55, 228, 229, 497 |
| | 7115161250 | 33, 69, 365 |
| | 7115161450 | 71 |
| | 7115171250 | 227 |
| | 7115174450 | 231 |
| | 7115181050 | 429 |

## Alphabetical Index — Appendix A


| Description | Part | Page |
|---|---|---|
| **CAP SCREW,** | 7115181250 | 227 |
| | 7115181450 | 319 |
| | 7115182250 | 63 |
| | 7115184050 | 291 |
| | 7115203050 | 55 |
| | 7115221650 | 317 |
| | 7115222450 | 237 |
| | 7118160850 | 411 |
| | 7118171050 | 325 |
| | 7118201450 | 318 |
| | 7118244250 | 287 |
| | 7118264250 | 251 |
| | 9049101150 | 327 |
| | 9049103595 | 441 |
| | 9049103927 | 442 |
| | 9049106579 | 443 |
| | 9049106636 | 361 |
| | 9049107142 | 445 |
| | 9049108332 | 433 |
| | 9049108967 | 433 |
| | 9049109048 | 447 |
| | 9049111753 | 442 |
| | 9086100801 | 38 |
| | 9086100806 | 37 |
| | 9188101020 | 370 |
| | 9437100766 | 521 |
| | 9904104420 | 363 |
| | 9904109554 | 339 |
| | 9974102198 | 242 |
| | 9974102820 | 242 |
| | 9974102835 | 244 |
| **CAP SCREW, 1/2"-13UNCX2"LONG** | 7115181650 | 263 |
| **CAP SCREW, 1/4-20UNC X 5 1/2** | 7115144450 | 19 |
| **CAP SCREW, HEX HEAD M12X45** | 7126211650 | 421 |
| **CAP SCREW, HEX HEAD M8X30MM** | 7126171353 | 303 |
| **CAP SCREW, HEX HEAD M8X70MM** | 7126172150 | 525 |
| **CAP SCREW, M10 X 100MM HEX HEAD** | 7126192650 | 317 |
| **CAP SCREW, M10 X 25MM HEX HEAD** | 7126191250 | 311, 320, 381, 525 |
| **CAP SCREW, M10 X 30MM HEX HEAD** | 7126191353 | 65, 401, 407, 489 |
| **CAP SCREW, M10 X 35MM HEX HEAD** | 7126191450 | 64, 411, 471, 519 |
| **CAP SCREW, M10 X 40MM HEX HEAD** | 7126191550 | 317, 489, 523, 537, 547 |
| **CAP SCREW, M10 X 50MM HEX HEAD** | 7126191750 | 64, 313, 411, 489 |
| **CAP SCREW, M10X30 HEX HEAD** | 7126191350 | 217, 219, 471, 537 |

## Alphabetical Index — Appendix A


| Description | Part | Page |
|---|---|---|
| **CAP SCREW, M12 X 20MM HEX HEAD** | 7126211150 | 62, 313 |
| **CAP SCREW, M12 X 25MM HEX HEAD** | 7126211250<br>7126211253 | 391<br>318, 465, 540 |
| **CAP SCREW, M12 X 35MM HEX HEAD** | 7126211450 | 391 |
| **CAP SCREW, M12 X 70MM HEX HEAD** | 7126212150 | 275, 391 |
| **CAP SCREW, M12 X 75MM HEX HEAD** | 7126212250 | 251 |
| **CAP SCREW, M12X30 HEX HEAD** | 7126211353 | 64, 381, 471 |
| **CAP SCREW, M12X35 SOCKET HEAD** | 7126211454 | 318 |
| **CAP SCREW, M12X55 HEX HEAD** | 7126211853 | 314 |
| **CAP SCREW, M16 X 40MM HEX HEAD** | 7127241550 | 263 |
| **CAP SCREW, M16 X 45MM HEX HEAD** | 7126241653 | 517 |
| **CAP SCREW, M16X100 HEX HEAD** | 7127242653 | 313 |
| **CAP SCREW, M16X150 HEX HEAD** | 7126243150 | 3 |
| **CAP SCREW, M20 X 80MM HEX HEAD** | 7126272353 | 477 |
| **CAP SCREW, M20X120 HEX HEAD** | 7127272850 | 313 |
| **CAP SCREW, M24X340 HEX HEAD** | 7126294350 | 261 |
| **CAP SCREW, M5 X 14MM HEX HEAD** | 7126130953 | 303 |
| **CAP SCREW, M5 X 25MM HEX HEAD** | 7126131250 | 307 |
| **CAP SCREW, M6 X 25MM** | 7126151253 | 395 |
| **CAP SCREW, M6 X 45MM HEX HEAD** | 7126151650 | 64, 303 |
| **CAP SCREW, M6 X 70MM HEX HEAD** | 7126152150 | 525 |
| **CAP SCREW, M6X20 HEX HEAD** | 7126151153 | 65, 133, 199, 275, 391, 497 |
| **CAP SCREW, M6X30 HEX HEAD** | 7126151353 | 133 |
| **CAP SCREW, M8 X 20MM HEX HEAD** | 7126171150 | 251, 263, 275, 311, 415, 525 |
| **CAP SCREW, M8 X 30MM HEX HEAD** | 7126171350 | 87, 145, 297 |
| **CAP SCREW, M8 X 40MM HEX HEAD** | 7126171550<br>7126171553 | 263<br>401 |
| **CAP SCREW, M8X25 HEX HEAD** | 7126171250<br>7126171253 | 64<br>87, 109, 169, 303, 314, 392, 407, 465, 471, 477, 481 |
| **CAP SCREW, M8X25 SOCKET HEAD** | 7128171254 | 145 |
| **CAP SCREW, MM 8 X 35MM SOCKET** | 7128171454 | 87 |
| **CAP SCREW, SOCKET HEAD M6X35** | 01147202 | 291 |
| **CAP, 1/4"** | 7258001451 | 92, 109, 159 |
| **CAP, DEUTSCH HDC16 - 9 DUST** | 7258100154 | 126, 509 |
| **CAP, END** | 4159910026 | 41, 51 |


**From - CAP SCREW, M12 X 20MM HEX HEAD** **To - CAP, END**

## Alphabetical Index — Appendix A


| Description | Part | Page |
|---|---|---|
| **CAP, END** | 9904106483 | 359 |
| **CAP, FILL (WITH BREATHER)** | 7258100146 | 519 |
| **CAP, VALVE** | 9005100231 | 275 |
| **CAPSCREW** | 90000125 | 243 |
| | 90012929 | 284 |
| | 90012930 | 284 |
| | 9049100263 | 328, 353 |
| | 9364101822 | 265 |
| | 9364101866 | 427 |
| | 9437100856 | 521 |
| | 9576101100 | 258 |
| | 9576101148 | 259 |
| | 9576101175 | 258 |
| | 9576101308 | 257 |
| | 9722105435 | 373 |
| | 9722105551 | 375 |
| | 9722105552 | 375 |
| | 9722105554 | 375 |
| | 9722105559 | 376 |
| | 9722105562 | 376 |
| | 9726100326 | 397 |
| | 981134 | 243 |
| | 9904110469 | 363 |
| | 9904110596 | 333 |
| | 9904110600 | 339 |
| | 9904110608 | 367 |
| | 9926113029 | 281 |
| | 9926113115 | 207 |
| | 9926113196 | 534 |
| | 9926113302 | 284 |
| | 9974102854 | 242 |
| | 9974102859 | 242 |
| | 9974103015 | 244 |
| | 9974103043 | 244 |
| **CAPSCREW, 8MM LG** | 90012927 | 283 |
| **CAPSCREW, DISC BRAKE** | 9904109531 | 361 |
| **CAPSCREW, M8** | 9364101823 | 265 |
| **CAPSCREW, SOCKET HEAD 10MM** | 9926113051 | 283 |
| **CAPSCREW, SPECIAL** | 9926113114 | 207 |
| **CAPSCREW,SOCKET HEAD 2-1/4" LG** | 90012926 | 283 |
| **CARRIER, PLANET** | 9974102668 | 241 |
| **CART. VALVE ASSY. CONTROL 12V.** | 90001131 | 243 |
| **CART.& COIL ASSY. 12V.** | 9904110606 | 367 |

## Alphabetical Index — Appendix A


| Description | Part | Page |
|---|---|---|
| **CARTRIDGE** | 9926110370<br>9926110708 | 284<br>531 |
| **CARTRIDGE & COIL ASSY. 12V.** | 9926113030 | 281 |
| **CARTRIDGE ASSY. FILTER** | 9926110629 | 283 |
| **CASE & REAR COVER GROUP** | 9904109807 | 323 |
| **CASE ASSEMBLY** | 9904109567 | 327 |
| **CASE ASSY. DIFF.** | 9049112766 | 433 |
| **CASE, GASKET** | 9904109563<br>9904109566 | 325<br>327 |
| **CATCH** | 7585000790 | 77 |
| **CATCH, FRONT LATCH** | 6585100004 | 61 |
| **CATCH, REAR LATCH** | 6245101033 | 61 |
| **CBL-BLK 4/0 90" BAT-/START-** | 7246100342 | 389 |
| **CBL-RED 4/0 84"BAT DISC/START+** | 7246100343 | 389 |
| **CENTERAL UNIT ASSEMBLY - iFLEX2** | 9333107524 | 163 |
| **CHAIN** | 9086100919<br>9286100001 | 37<br>41, 51 |
| **CHAIN ASSEMBLY** | 9333101921 | 27, 31 |
| **CHANNEL** | 6245101061<br>9498100203<br>9498100204 | 61<br>79<br>79 |
| **CHANNEL, DOOR** | 6245101038 | 61, 71 |
| **CHANNEL, RUBBER** | 9498100398<br>9498100399 | 81<br>81 |
| **CHARGE PUMP & FILTER GROUP** | 9904110626 | 323 |
| **CLAMP** | 7300000018<br>7300000056<br>7300001000<br>9364101404<br>9515102830<br>9515102839<br>9515103061 | 401<br>463<br>391<br>401<br>147<br>147<br>147 |
| **CLAMP AND TIE ROD ASSEMBLY** | 9049109725 | 443 |
| **CLAMP ASSY, 2.38" HYDRA-ZORB** | 7300100025 | 275 |
| **CLAMP, 1 1/4" TUBING** | 7300000247 | 381 |
| **CLAMP, 1" TUBING** | 7300000404 | 227, 313, 497 |
| **CLAMP, 5/8" TUBING** | 7300100014 | 313 |
| **CLAMP, 7/8" TUBING** | 7300100015 | 539 |

## Alphabetical Index — Appendix A


| Description | Part | Page |
|---|---|---|
| **CLAMP, CABLE** | 9333103094 | 15 |
| **CLAMP, CHAIN** | 9333101922 | 27, 31 |
| **CLAMP, HOSE** | 7300000006 | 313, 317, 392 |
| | 7300000013 | 318 |
| | 7300000035 | 145, 317, 391, 395 |
| | 7300000040 | 313 |
| | 7300000167 | 318, 392 |
| | 7300000206 | 403 |
| **CLAMP, LINER** | 7300001061 | 145 |
| **CLAMP, MUFFLER** | 7300001083 | 313 |
| **CLAMP, PIPE** | 7300000269 | 291 |
| **CLAMP, SERVO W/SCREW** | 9364101889 | 272 |
| **CLAMP, T-BOLT** | 7300000223 | 403 |
| | 7300000461 | 313, 391 |
| **CLAMP, T-BOLT 1.75" NOM** | 7300100024 | 320 |
| **CLAMP, T-BOLT 3"** | 7300100022 | 320 |
| **CLAMP, T-BOLT 7.75 NOM** | 7300100026 | 403 |
| **CLAMP, TUBING** | 7300000101 | 313, 392 |
| | 7300000102 | 228 |
| | 7300000195 | 391 |
| | 7300000243 | 5, 313 |
| | 7300000244 | 263 |
| | 7300000251 | 233 |
| | 7300000399 | 227 |
| | 7300000401 | 227 |
| | 7300000405 | 227, 228 |
| | 7300000406 | 497 |
| | 7300000408 | 497 |
| **CLAMP, TUBING 1-1/4" I.D.** | 7300000246 | 314, 320 |
| **CLEANER ASSEMBLY - AIR** | 7304100012 | 403 |
| **CLEVIS** | 9333101840 | 27, 31 |
| **CLIP** | 9914100042 | 11, 45 |
| **CLIP, GRIPPER** | 9333103730 | 29 |
| **CLIP, HITCH PIN** | 7689000701 | 41, 51 |
| **CLIP, TUBE** | 9904109571 | 327 |
| **CLOSURE, BEARING** | 7069000175 | 43, 53 |
| **CLOSURE, CABLE DRUM** | 9974102676 | 241 |
| **CLUTCH ASSY. 12V./PULLEY& COIL** | 9515102889 | 411 |
| **CLUTCH SPRAG ASSY. BRAKE** | 9974102214 | 242 |

## Alphabetical Index — Appendix A


| Description | Part | Page |
|---|---|---|
| **COIL 12V.** | 9515102890 | 411 |
| **COIL ASSY. CONDENSER** | 9576101396 | 299 |
| **COIL, 12V.** | 9926112931<br>9926112936<br>9926112987 | 283, 531, 533, 534<br>533<br>527 |
| **COLLAR, SET 5/16"** | 9364101601 | 271 |
| **COLUMN ASSEMBLY - MODIFIED TILT S** | 6326100001 | 205 |
| **COLUMN ASSEMBLY - TILT STEERING** | 7326100007 | 205, 209 |
| **COMPRESSOR ASSY. 12V.** | 9576101205 | 411 |
| **CONDUIT** | 9333102235 | 15 |
| **CONE, BEARING** | 6069001186<br>9049101693<br>9049101694<br>9049108948<br>9049109690<br>9049112264 | 43, 53<br>442<br>442<br>433<br>433<br>433 |
| **CONNECTOR** | 7364002517<br>7364002518<br>7892000821<br>9364101208<br>9515102921 | 385<br>385<br>185<br>271<br>147 |
| **CONNECTOR ASSEMBLY** | 9333102765 | 15 |
| **CONNECTOR, 2 - PASS GREEN SEAL** | 7892100028 | 510 |
| **CONNECTOR, 2 CONDUCTOR** | 7364001682<br>7364001683 | 9, 179, 508<br>7, 179, 181, 508 |
| **CONNECTOR, 3 CONDUCTOR** | 7364001684<br>7364001685 | 125<br>126 |
| **CONNECTOR, BUTT** | 7345001713 | 185 |
| **CONNECTOR, CANNON 2-SOCKET** | 9333102792 | 21 |
| **CONNECTOR, CHAIN** | 9333102620 | 15 |
| **CONNECTOR, COVER/SINGLE** | 7892100030 | 142, 509 |
| **CONNECTOR, CRIMPED** | 9364100178 | 271 |
| **CONNECTOR, LIQUID TIGHT** | 9364100968 | 271 |
| **CONNECTOR, LOCKING** | 7364100009 | 507 |
| **CONNECTOR, L-SERIES SWITCHES** | 7364100184 | 103, 125 |
| **CONNECTOR, SETSCREW** | 9364101224 | 271 |
| **CONNECTOR, Y** | 9515103062 | 148 |
| **CONSOLE ASSEMBLY - FRONT** | 6245101332 | 109 |
| **CONSOLE ASSEMBLY - GRAPHIC (COLOR** | 9333107526 | 163 |


**From - COIL 12V.** **To - CONSOLE ASSEMBLY - GRAPHIC (**

## Alphabetical Index — Appendix A


| Description | Part | Page |
|---|---|---|
| **CONSOLE, FRONT FRAME** | 6245100947 | 114 |
| **CONTROL ASSEMBLY - THROTTLE** | 80004942 | 199 |
| **CONTROL CABLE W/LOCK HANDLE** | 7246100476 | 301 |
| **CONTROL VALVE ASSY. GROUP** | 9904110628 | 323 |
| **CONTROL VALVE MOUNTING GROUP** | 9904110627 | 323 |
| **CONTROL, ADJUST - BACK** | 9798100585 | 87 |
| **CONTROLLER CAN 12V LH W/AR** | 7352100096 | 92 |
| **CONTROLLER CAN 12V RH ARMREST** | 7352100095 | 92 |
| **CONVERTER ASSEMBLY - TORQUE** | 9904109582 | 335 |
| **CONVERTER HOUSING GROUP** | 9904110609 | 323 |
| **COOLER ASSEMBLY - RADIATOR/CHARGE** | 7726191194 | 395 |
| **COOLER ASSY. AIR CHARGE** | 9726100339 | 397 |
| **COOLER ASSY. TRANS. OIL** | 9726100337 | 397 |
| **COOLER, OIL** | 7726000128 | 539 |
| **CORE ASSY, HEATER** | 9515102828 | 147 |
| **CORE ASSY. SLIP RING** | 9364101838 | 271 |
| **COUNTERWEIGHT** | 2159210233 | 477 |
| **COUPLER, FLEX** | 7364002995 | 401 |
| **COUPLING** | 9352100787<br>9576101136 | 97, 99<br>258 |
| **COUPLING, 1/8" TEST PORT** | 7443100139 | 229 |
| **COUPLING, 3/8" TEST PORT** | 7443100140 | 230 |
| **COVER** | 6258100042<br>90012229<br>9333103907<br>9722105550<br>9880100223<br>9904105442<br>9904110601<br>9904110607 | 169<br>147<br>17<br>375<br>519<br>327, 353<br>339<br>367 |
| **COVER ASSY.** | 90001163 | 405 |
| **COVER ASSY. W/LATCHES** | 9364101840 | 271 |
| **COVER, ACCESS** | 4159110256 | 471 |
| **COVER, ARMREST** | 7245100056 | 91 |
| **COVER, BASE** | 9515103058 | 147 |
| **COVER, BATTERY BOX** | 4159810085 | 485 |
| **COVER, CONSOLE** | 7245100069 | 109 |

## Alphabetical Index — Appendix A


| Description | Part | Page |
|---|---|---|
| **COVER, DUST** | 9333102612<br>9333102615 | 21<br>25 |
| **COVER, FRONT** | 9722105433 | 373 |
| **COVER, FUSE** | 7245100058 | 133 |
| **COVER, HOUSING** | 90000943<br>9515102920 | 97, 99<br>147 |
| **COVER, LEFT SIDE HOOD** | 4159110295 | 311 |
| **COVER, REAR AND PLUG ASSEMBLY** | 9904109565 | 327 |
| **COVER, RIGHT SIDE HOOD** | 4159110294 | 311 |
| **COVER, RUBBER** | 9926113273 | 201 |
| **COVER, TRANSMISSION ACCESS** | 4159110292 | 311 |
| **COVER, TRANSMISSION ACCESS FRONT** | 4159110282 | 311 |
| **COVER, VALVE** | 7258100188 | 303 |
| **COVER, WIPER MOTOR** | 7245100073 | 65 |
| **COVER,TUBE** | 9515102835 | 147 |
| **CRIMP FERRULE, 20 AWG** | 9333103042 | 21 |
| **CUP, BEARING** | 7794000272<br>9049100535<br>9049101695<br>9049101696<br>9049112263 | 43, 53<br>433<br>442<br>442<br>433 |
| **CYLINDER ASSEMBLY - 2 1/2" STEER** | 7372100077<br>7372100250 | 429<br>429 |
| **CYLINDER ASSEMBLY - 9" LIFT** | 6372100488 | 289 |
| **CYLINDER, AIRSHIFT** | 9904109623 | 359 |
| **CYLINDER, BRAKE** | 9974102861 | 241 |
| **DECAL - BOOM ANGLE** | 7376001935 | 469 |
| **DECAL - CAUTION BATTERY CONNECTIO** | 7376102806 | 469 |
| **DECAL - CAUTION BATTERY DISCONNEC** | 7376102053 | 469 |
| **DECAL - CAUTION ELECTRONICS DAMAG** | 7376102350 | 469 |
| **DECAL - CAUTION ENGINE COOLANT FI** | 7376102530 | 469 |
| **DECAL - CAUTION MAXIMUM FILL RATE** | 7376102959 | 480 |
| **DECAL - CAUTION PIN SWING LOCK** | 7376100482 | 479 |
| **DECAL - CAUTION SPECIAL FILL REQU** | 7376102534 | 480 |
| **DECAL - CAUTION TRANSMISSION DAMA** | 7376102093<br>7376102558 | 469<br>479 |
| **DECAL - CHEVRON OUTRIGGER JACK** | 7376101141 | 475 |

## Alphabetical Index — Appendix A


| Description | Part | Page |
|---|---|---|
| DECAL - DANGER AUXILIARY BOOM NOS | 7376100386 | 479 |
| DECAL - DANGER BATTERY EXPLOSION | 7376102555 | 469 |
| DECAL - DANGER BOOM EXTENSION HAZ | 7376101875 | 479 |
| DECAL - DANGER BOOM NOT WALKWAY | 7376100360 | 480 |
| DECAL - DANGER CABLE WEDGE | 7376100554 | 479, 480 |
| DECAL - DANGER COUNTERWEIGHT | 7376100349 | 480 |
| DECAL - DANGER COUNTERWEIGHT LIFT | 7376100586 | 480 |
| DECAL - DANGER ELECTROCUTION HAZA | 7376100634<br>7376101867 | 479<br>479 |
| DECAL - DANGER ETHER HAZARD | 7376102544 | 469 |
| DECAL - DANGER FIRE HAZARD | 7376102533 | 469 |
| DECAL - DANGER OUTRIGGER CRUSHING | 7376100450 | 479 |
| DECAL - DANGER OUTRIGGER MID EXTE | 7376100394 | 479 |
| DECAL - DANGER PRESSURIZED FLUID | 7376102529 | 469 |
| DECAL - DANGER PRESSURIZED OIL LE | 7376102553 | 469 |
| DECAL - DANGER QUALIFIED OPERATOR | 7376100442 | 479 |
| DECAL - DANGER REVOLVING TIRES | 7376100402 | 479 |
| DECAL - DANGER SUPERSTRUCTURE SWI | 7376100562 | 479 |
| DECAL - DANGER TIPPING/2 BLOCKING | 7376100610 | 479 |
| DECAL - DIESEL | 7376991544 | 469 |
| DECAL - EMERGENCY EXIT | 7376100434 | 479 |
| DECAL - FUSES (SPANISH) | 7376102810 | 479 |
| DECAL - GROVE LOGO | 7376221080<br>7376241042<br>7376241052<br>7376241080<br>7376241135 | 475<br>475<br>475<br>475<br>475 |
| DECAL - HAND SIGNALS ( SPANISH ) | 7376101562 | 480 |
| DECAL - HYDRAULIC OIL | 7376991546 | 469 |
| DECAL - LIFT POINT PROHIBITION | 7376102910 | 469 |
| DECAL - MANITOWOC CRANE GROUP LOG | 7376202030 | 475 |
| DECAL - MID-EXTEND OUTRIGGERS < | 7376100426 | 479 |
| DECAL - MID-EXTEND OUTRIGGERS > | 7376100418 | 479 |
| DECAL - NO STEP | 7376991542 | 469 |
| DECAL - PIN SWING LOCK | 80002325 | 469 |
| DECAL - ROTATING BLADES | 7376011416 | 469 |

## Alphabetical Index — Appendix A


| Description | Part | Page |
|---|---|---|
| **DECAL - RT530E-2** | 7376102951 | 475 |
| **DECAL - SYMBOL ID (SPANISH)** | 7376102928 | 479 |
| **DECAL - TRANSPORTATION AND LIFTIN** | 7376103014 | 479 |
| **DECAL - WEAR BODY HARNESS** | 7376991722 | 469 |
| **DECAL, A2B** | 9333102618 | 23 |
| **DECAL-DANGER REMOVE LMI OVERRIDE** | 80005875<br>80005886 | 479<br>480 |
| **DECAL-MAIN HOIST & LIFT -DUAL** | 7376102599 | 469 |
| **DEFLECTOR** | 9049112096 | 434 |
| **DEUTSCH DTP 2-PASS RECEPTACLE** | 7892100025 | 181, 510 |
| **DIFF. CARRIER GROUP** | 9049112776 | 431 |
| **DIFF.CARRIER ASSY.@ 5.57 RATIO** | 9049112777 | 434 |
| **DIPSTICK** | 7486100132<br>9576101151 | 314<br>259 |
| **DISC BRAKE GROUP** | 9904110625 | 323 |
| **DISC, BRAKE** | 9049107129 | 442 |
| **DISC, CLUTCH** | 9904103635<br>9904103987<br>9904103988 | 343, 345, 349, 351<br>349<br>343, 345, 351 |
| **DISC, FRICTION** | 9974100594 | 241 |
| **DISC, ORIFICE .015** | 90000899 | 283 |
| **DISCONNECT SWITCH** | 7872100142 | 549 |
| **DISK, BRAKE** | 9974102704 | 241 |
| **DISK, RUB** | 9364101590 | 272 |
| **DISK, SHUTTLE** | 9926111438 | 278 |
| **DOOR INSTALLATION - CAB** | 6245101159 | 69 |
| **DOOR WELDMENT, CAB** | 6245101144 | 63, 71 |
| **DRAW LATCH** | 7585000812 | 303, 485 |
| **DRIER ASSY.** | 9576101398 | 299 |
| **DRIVE LINE ASSEMBLY** | 7364100166<br>80000554<br>80000556 | 421<br>421<br>421 |
| **DRIVE PLATE GROUP** | 9904110612 | 323 |
| **DRIVE, SHAFT** | 9364101850 | 272 |
| **DRUM** | 9974102941 | 241 |
| **ELBOW** | 7013000156<br>9576101152 | 403<br>259 |


**From - DECAL - RT530E-2** **To - ELBOW**

## Alphabetical Index — Appendix A


| Description | Part | Page |
|---|---|---|
| **ELBOW** | 9974102212 | 243 |
| **ELECTRICAL SYSTEM INSTALLATION** | 6978100956 | 320 |
| **ELEMENT** | 9437100825 | 521 |
| **ELEMENT, PRIMARY** | 90001159 | 405 |
| **ELEMENT, SECONDARY** | 90001160 | 405 |
| **END, TIE ROD** | 9049109726 | 443 |
| | 9049109727 | 443 |
| **ENGINE ASSEMBLY - CUMMINS QSB6.7** | 2159810225 | 313 |
| **EXTENSION, CENTER POST** | 7714000585 | 77 |
| **EXTENSION, STEP** | 7418100008 | 523, 547 |
| | 7418100011 | 489 |
| **EXTINGUISHER, FIRE** | 7348000667 | 62 |
| **EYEBOLT** | 9333101923 | 27, 31 |
| **FAN ASSEMBLY - 12 VOLT CAB** | 7425100015 | 62 |
| **FAN ASSY, DEFROSTER** | 7425000007 | 109 |
| **FAN ASSY. 12V.** | 9576101400 | 299 |
| **FAN GUARD** | 80012114 | 391 |
| **FAN, 9 BLADE CLOCK WISE SUCKER** | 7425100007 | 419 |
| **FASTENER, NUT 1/4" - 20 N.C.** | 7429000542 | 159, 549 |
| **FASTENER, WELL-NUT** | 7429000011 | 65, 92 |
| **FENDER, RIGHT HAND FRONT** | 2159110176 | 471 |
| **FENDER, RIGHT HAND REAR** | 2159110174 | 471 |
| **FERRULE, DUAL WIRE** | 7892001006 | 186 |
| **FERRULE, SINGLE WIRE** | 7892001001 | 125 |
| | 7892001002 | 126, 141, 185 |
| **FILTER** | 9515102854 | 147 |
| | 9926112004 | 278 |
| **FILTER ASSY. HYD. RETURN** | 9437100891 | 519 |
| **FILTER, FUEL** | 9414101756 | 321 |
| **FILTER, PRIMARY FUEL** | 9414101755 | 321 |
| **FILTER, TRANSMISSION FLUID** | 7437000873 | 363 |
| **FILTER,OIL** | 9414101679 | 321 |
| **FITTING** | 9086100151 | 37 |
| | 9974103093 | 243 |
| **FITTING, ADAPTOR** | 9926113277 | 201 |
| **FITTING, BULKHEAD ADAPTER** | 9333101471 | 155 |

## Alphabetical Index — Appendix A


| Description | Part | Page |
|---|---|---|
| **FITTING, ELBOW** | 90012231 | 148 |
| **FITTING, GREASE** | 9049103562<br>9364101577<br>9364101870 | 441<br>425<br>427 |
| **FITTING, TEE** | 90012233 | 148 |
| **FITTING, WASHER NOZZLE** | 7949001149 | 62 |
| **FLAG ASSEMBLY - A2B** | 9333102633 | 15 |
| **FLAG, RETAINER** | 9333102373 | 23 |
| **FLANGE** | 9904103677<br>9904105662 | 356<br>356 |
| **FLANGE 25" X 2.0"** | 7450160006 | 455, 459 |
| **FLANGE, SPLIT** | 7450000102<br>7450000201<br>7450000254<br>7450000375 | 227<br>228, 229<br>319<br>319 |
| **FLAT WASHER - 6** | 01925033 | 142 |
| **FLAT WASHER, 3/4"** | 7949000236 | 91, 237, 313, 317, 429 |
| **FLATWASHER** | 9049101980<br>9049104393 | 443<br>433 |
| **FLATWASHER 8MM I.D.** | 9726100169 | 397 |
| **FLEXGUARD - .350" I.D.** | 8594000006 | 103, 385, 508, 515 |
| **FLEXGUARD - .500" I.D.** | 8594000004 | 103 |
| **FLEXGUARD - .625" I.D.** | 8594000003 | 103, 181, 385, 507 |
| **FLEXGUARD - .750" I.D.** | 8594000002 | 507 |
| **FLEXGUARD - 1.00" I.D.** | 8594000001 | 508 |
| **FLEXGUARD - 1.250" I.D.** | 8594000022 | 508 |
| **FLEXGUARD, 1/4" I.D.** | 8594000019 | 104, 127, 186, 199, 309, 386, 507, 515 |
| **FLEXHOSE** | 9515102852 | 147 |
| **FLOAT ASSEMBLY - OUTRIGGER** | 6458100000 | 461 |
| **FLOAT, OUTRIGGER** | 6458100001 | 463 |
| **FOAM** | 90012230<br>9515102829 | 147<br>147 |
| **FOAM, .75 ACOUSTIC** | 7001100580<br>7001100581<br>7001100582 | 107<br>107<br>107 |
| **FOAM, 1.00 ACOUSTIC** | 7001100583<br>7001100584 | 107<br>107 |


**From - FITTING, ELBOW** **To - FOAM, 1.00 ACOUSTIC**

## Alphabetical Index — Appendix A


| Description | Part | Page |
|---|---|---|
| **FOAM, 1.00 ACOUSTIC** | 7001100585 | 107 |
| | 7001100586 | 107 |
| | 7001100587 | 107 |
| | 7001100588 | 107 |
| | 7001100589 | 107 |
| **FORK, SHAFT** | 9904109622 | 359 |
| **FORK, SHIFT** | 9904105290 | 356 |
| **FORWARD SHAFT GROUP** | 9904110617 | 323 |
| **FRAME** | 9498100197 | 79 |
| **FRONT FENDER - LEFT HAND** | 2159110175 | 471 |
| **FUSE** | 7482000572 | 513 |
| **FUSE, 10 AMP** | 7482000033 | 135, 510 |
| **FUSE, 100 AMP** | 7482000555 | 549 |
| **FUSE, 15 AMP** | 7482000032 | 135 |
| **FUSE, 30 AMP** | 7482000029 | 135, 142, 509 |
| **FUSE, 5 AMP** | 7482000035 | 135, 510 |
| **FUSE, BUSS BAR** | 7892000220 | 141 |
| **FUSE, MAXI 50AMP** | 7482100005 | 509 |
| **FUSE, MAXI HOLDER** | 7482100000 | 509 |
| **FUSE, TERMINAL** | 7892000218 | 141 |
| | 7892000219 | 142 |
| **FUSE, VELOCITY** | 7926003526 | 229 |
| **FUSE,15A** | 90011562 | 163 |
| **FUSE,2A** | 90011561 | 163 |
| **FUSE,7.5A** | 90011563 | 163 |
| **FWD SHAFT & DRUM ASSY.** | 9904110463 | 343 |
| **GASKET** | 6794000650 | 320 |
| | 6794001567 | 320 |
| | 9333102482 | 21 |
| | 9352100657 | 97, 99 |
| | 9352100772 | 97, 99 |
| | 9364101388 | 401 |
| | 9437100480 | 521 |
| | 9880100222 | 519 |
| | 9904103887 | 363 |
| | 9904105441 | 327 |
| | 9904106364 | 353 |
| | 9904106593 | 339 |
| | 9904110599 | 339 |
| | 9904110605 | 365 |

## Alphabetical Index — Appendix A


| Description | Part | Page |
|---|---|---|
| **GASKET, 2 BOLT HOLE** | 6794100011 | 320 |
| | 6794100012 | 320 |
| **GAUGE** | 9437100456 | 521 |
| **GAUGE, 12 VOLT TACHOMETER** | 7486100100 | 113 |
| **GAUGE, CLUSTER** | 7486100024 | 113 |
| **GAUGE, SIGHT** | 9974102855 | 242 |
| **GAUGE, WINDOW** | 7486002666 | 399 |
| **GEAR** | 9049103392 | 442 |
| **GEAR - PLANET** | 9974102667 | 241 |
| **GEAR ASSEMBLY, BEVEL** | 9049111750 | 433 |
| **GEAR GROUP** | 9904110614 | 323 |
| **GEAR, 1ST DRIVE 29T** | 9904109653 | 337, 343 |
| **GEAR, 25T** | 9333103905 | 17 |
| **GEAR, 37T** | 9904110597 | 339 |
| **GEAR, 75T** | 9333101625 | 17 |
| **GEAR, DRIVE SHAFT** | 9722105468 | 373 |
| **GEAR, DRIVEN** | 9722105469 | 373 |
| **GEAR, HIGH RANGE 41T** | 9904109613 | 337, 356 |
| **GEAR, IDLER** | 9904109590 | 341 |
| **GEAR, IDLER FRONT 21T** | 9904109815 | 337, 353 |
| **GEAR, LOW CLUTCH 63T** | 9904109651 | 337, 349 |
| **GEAR, LOW RANGE 42T** | 9904109816 | 337, 356 |
| **GEAR, PINION** | 9049101846 | 442 |
| **GEAR, PLANET** | 9974102671 | 241 |
| **GEAR, PUMP DRIVE** | 9904109705 | 341 |
| **GEAR, REAR IDLER 51T** | 9904109652 | 337, 353 |
| **GEAR, REVERSE CLUTCH 43T** | 9904109649 | 337, 345 |
| **GEAR, REVERSE IDLER** | 9904109602 | 347 |
| **GEAR, SET** | 9926110266 | 207 |
| **GEAR, SIDE** | 9049109699 | 434 |
| **GEAR, SUN** | 9974102194 | 241 |
| **GEAR,RING** | 9576101126 | 259 |
| **GEAR,SUN** | 9576101176 | 258 |
| | 9576101180 | 257 |
| **GEAR-20T** | 9049101844 | 442 |
| **GLAND, ROD** | 9372103535 | 449 |


**From - GASKET, 2 BOLT HOLE** **To - GLAND, ROD**

## Alphabetical Index — Appendix A


| Description | Part | Page |
|---|---|---|
| **GLASS** | 9498100192<br>9498100195 | 79<br>79 |
| **GLASS ASSEMBLY** | 9498100191<br>9498100194 | 79<br>79 |
| **GLASS ASSY.** | 9498100390<br>9498100391<br>9498100392 | 81<br>81<br>81 |
| **GLASS, LEFT FRONT** | 7498100027 | 61 |
| **GLASS, LEFT REAR** | 7498100026 | 61 |
| **GLASS, SLIDING DOOR** | 7498100025 | 61 |
| **GLASS, WINDSHIELD** | 7498100024 | 61 |
| **GLAZING, PVC** | 9498100193 | 79 |
| **GRILL** | 4159210191<br>9576101441 | 477<br>299 |
| **GRILL, ENGINE HOOD** | 4159810068 | 415 |
| **GROMMET** | 7506000001<br>7506000021<br>9515102848 | 63<br>301<br>147 |
| **GROMMET, RUBBER** | 9581100461 | 481 |
| **GUAGE, OIL LEVEL** | 7486002936 | 519 |
| **GUARD, FAN** | 9425100078 | 83 |
| **GUARD, HOSE** | 7814100077 | 230 |
| **GUARD, MUD** | 4159110268<br>4159110269 | 471<br>471 |
| **GUARD, MUFFLER** | 6814100042 | 401 |
| **GUARD, PINION** | 4159200657 | 251 |
| **GUARD,LOUVER** | 9515102846 | 147 |
| **GUIDE ASSY.** | 9086101337 | 37 |
| **GUIDE, CABLE** | 9333101435 | 15 |
| **HANDLE ASSY.** | 9352100770<br>9352100784 | 99<br>97 |
| **HANDLE, DOOR (MODIFIED)** | 6511100009 | 62 |
| **HANDLE, GRAB** | 4159110343<br>4159110364<br>7511001255 | 489<br>489<br>62 |
| **HANDLE, LATCH** | 7585000720 | 62 |
| **HANDLE, SHELL (BOTH HALVES)** | 9352100786<br>9352100792 | 97<br>99 |

## Alphabetical Index — Appendix A


| Description | Part | Page |
|---|---|---|
| **HANDLE, TAPERED** | 7511000161 | 62 |
| **HANDRAIL, GRAB** | 7511001139 | 61 |
| | 7511001140 | 61 |
| | 7511100015 | 217 |
| | 7511100046 | 61 |
| | 7511100047 | 62 |
| | 7511100048 | 62 |
| **HARNESS ASSEMBLY - CARRIER** | 6512101096 | 497 |
| **HARNESS ASSEMBLY - ENGINE** | 6512100819 | 381 |
| **HARNESS ASSEMBLY - ENGINE RELAY P** | 6512100807 | 513 |
| **HARNESS ASSEMBLY - FRONT CONSOLE** | 6512101099 | 113 |
| **HARNESS ASSEMBLY - FUSE AND RELAY** | 6512100914 | 135 |
| **HARNESS ASSEMBLY - SEAT** | 6512100837 | 92 |
| **HARNESS ASSEMBLY - SHIFTER** | 6512100854 | 209 |
| **HARNESS ASSEMBLY - SUPERSTRUCTURE** | 6512101098 | 169 |
| **HARNESS ASSEMBLY - TURN SIGNAL/WA** | 6512100853 | 209 |
| **HARNESS ASSY, S/S (IFLEX2)** | 9333107525 | 163 |
| **HARNESS ASSY.** | 9515103069 | 147 |
| | 9576101401 | 299 |
| **HARNESS ASSY. W/ CONNECTOR** | 9576101201 | 193 |
| **HARNESS ASSY. CENTER** | 9364101841 | 271 |
| **HARNESS ASSY. FRONT** | 9364101842 | 271 |
| **HARNESS ASSY. POTENTIOMETER** | 9364101844 | 271 |
| **HARNESS ASSY. REAR** | 9364101843 | 271 |
| **HARNESS ASSY. WATER VALVE** | 9576101439 | 148 |
| **HEAD, CYLINDER** | 7372100268 | 291 |
| **HEAD, FILTER** | 9437100842 | 521 |
| **HEATER, 750W 120V ENGINE BLOCK** | 7515000877 | 417 |
| **HEX HEAD NUT M6** | 01923998 | 142 |
| **HEX L NUT M6 8-A2C ISO 7040** | 00437742 | 303 |
| **HHCS M10x45 -8.8 ISO 4014** | 7126191650 | 411 |
| **HHCS M16x170 -8.8 ISO 4017** | 7126243350 | 289 |
| **HI/LOW RANGE SHIFT CONT. GROUP** | 9904110624 | 323 |
| **HOIST ASSEMBLY - HP15C/17G** | 7974100043 | 237 |
| **HOLDER, FUSE** | 7086001082 | 135, 513, 549 |
| **HOOD SECTION, REAR** | 2159810140 | 311 |
| **HOOD, INLET** | 7535100006 | 403 |

## Alphabetical Index — Appendix A


| Description | Part | Page |
|---|---|---|
| **HOOK & NUT** | 9086100495 | 37 |
| **HORN** | 7025100013 | 62 |
| **HOSE** | 90012234 | 148 |
| **HOSE ASSEMBLY** | 981786 | 243 |
| **HOSE ASSY** | 7566503700 | 320 |
| **HOSE ASSY, 1 1/4" HYDRAULIC** | 7543109361 | 320 |
| **HOSE ASSY, 1 1/4" ID** | 7566208000 | 320 |
| **HOSE ASSY, 1" STR ORFS X 23"** | 7555602360 | 229 |
| **HOSE ASSY, 1" STR ORFS X 48"** | 7555604860 | 230 |
| **HOSE ASSY, 1/2" ID STR-STR HYD** | 7561308430 | 539 |
| **HOSE ASSY, 1/2"I.D. X 84" LONG** | 7561308432 | 319 |
| **HOSE ASSY, 1/4" I.D. STR X 32"** | 7555103203 | 229 |
| **HOSE ASSY, 1/4" ID** | 7555111021 | 320 |
| **HOSE ASSY, 1/4" ID STR X 39"** | 7550103921 | 230 |
| **HOSE ASSY, 1/4" ID STR X 42"** | 7550104221 | 230 |
| **HOSE ASSY, 1/4"I.D. 45 X 90"** | 7555109005 | 229 |
| **HOSE ASSY, 1/4"I.D. X 15" LONG** | 7561101503 | 318 |
| **HOSE ASSY, 1/4"I.D. X 30" LONG** | 7561103003 | 319 |
| **HOSE ASSY, 1/4"I.DX30"LONG** | 7555103000 | 229 |
| **HOSE ASSY, 3/4" I.D. X 93"** | 7543109321 | 229 |
| **HOSE ASSY, 3/4" ID** | 7555514390 | 320 |
| **HOSE ASSY, 3/4" ID X 85"** | 7555508503 | 320 |
| **HOSE ASSY, 3/4"I.D. X 24" LONG** | 7561502452 | 319 |
| **HOSE ASSY, 3/4"I.D.X 38" LONG** | 7561503852 | 319 |
| **HOSE ASSY, 3/8 X 26"** | 7542506663<br>7550103631<br>7555101801<br>7555103600<br>9543100045<br>9974102208 | 318<br>305<br>231<br>229<br>62<br>243 |
| **HOSE ASSY, 3/8" I.D. X 72"** | 7555207201 | 231, 233 |
| **HOSE ASSY, 3/8" I.D. X 89"** | 7555208900 | 229, 230 |
| **HOSE ASSY, 3/8"I.D.X19"LONG** | 7555201921 | 229 |
| **HOSE ASSY, 5/8" STR ORFS X 21"** | 7555402101 | 229 |
| **HOSE ASSY, 7/8" ID HOT ENG OIL** | 7542508463 | 321 |
| **HOSE ASSY,1 1/4" STR ORF X 25"** | 7555702591 | 229 |

## Alphabetical Index — Appendix A


| Description | Part | Page |
|---|---|---|
| HOSE ASSY,1" I.D. HYDR STR-STR | 7555604400 | 229, 231 |
| HOSE ASSY,3/4" I.D. X 34" LONG | 7555503400 | 229 |
| HOSE ASSY,3/4" I.D. X 42" LONG | 7555504201 | 229 |
| HOSE ASSY. #10 | 9576101200<br>9576101203 | 193<br>413 |
| HOSE ASSY. #6 | 9576101402 | 193 |
| HOSE ASSY. #8 | 9576101202 | 413 |
| HOSE CLAMP -0.69"MAX | 7300000121 | 319, 391, 399, 539 |
| HOSE, 1 1/2" STR S/F X 64" 90 | 7546806493 | 229 |
| HOSE, 1 1/4" STR S/F X 64" STR | 7546706470 | 229 |
| HOSE, 3/8" I.D X 72" LONG | 7555207202 | 229 |
| HOSE, 5/8" I.D. | 8596902528 | 145, 319, 320 |
| HOSE, DRAIN | 9515102855 | 147 |
| HOSE, HEATER 3/8 ID X 11/16 OD | 8596902527 | 318, 391, 399 |
| HOSE, HEATER 5/8" I.D. - 60.00" | 8596910250 | 317 |
| HOUSING | 9086100929<br>9904105289 | 37<br>355 |
| HOUSING GROUP | 9049112778 | 431 |
| HOUSING, ASSY. AXLE | 9049112779 | 437 |
| HOUSING, CANNON CONNECTOR | 9333102770 | 25 |
| HOUSING, CASE | 9364101828 | 265 |
| HOUSING, CONVERTER | 9904109562 | 325 |
| HOUSING, DIFF. W/CAP ASSY. | 9049112762 | 433 |
| HOUSING, WATER | 9364101826 | 265 |
| HOUSING,FLANGE MTG. | 9576101184 | 258 |
| HUB | 9049105562<br>9904103615 | 442<br>355 |
| HUB & SHAFT GROUP | 9049112780 | 431 |
| HUB, CLUTCH DISC | 9904108979 | 351 |
| HUB, DISC | 9904109597 | 345 |
| HUB, SHIFT | 9904103626 | 356 |
| HYDRAULIC COOLER | 80010553 | 407 |
| I/O CONTROL MODULE | 7352100064 | 133 |
| IDLER SHAFT GROUP | 9904110622 | 323 |
| IND LED 4WHL ENGED/WHL NOT CNT | 7486100134 | 114 |
| IND LED ENG STOP/MODULE ERROR | 7486100083 | 114 |


From - HOSE ASSY,1" I.D. HYDR STR-STR To - IND LED ENG STOP/MODULE ERRO

## Alphabetical Index — Appendix A


| Description | Part | Page |
|---|---|---|
| IND LED ENG WARN/ELECT SYS DIA | 7486100084 | 114 |
| IND LED HI BEAMS/LAMP OUT WARN | 7486100114 | 114 |
| IND LED HYD OIL COOLER TEMP | 7486100128 | 114 |
| IND LED LEFT TURN/RIGHT TURN | 7486100115 | 114 |
| IND LED LOW BRK PRESS/LOW FUEL | 7486100104 | 114 |
| IND LED PARK BRK ENGD/SWG BRK | 7486100110 | 114 |
| IND LED WAIT TO STR/XMSN WARN | 7486100103 | 114 |
| INDICATOR, SERVICE | 7486000629 | 403 |
| INHIBITOR, CORROSION | 7296000004 | 15 |
| INNER LINER | 9498100198 | 79 |
| INSULATION | 9515102847 | 147 |
| JAMB, REAR DOOR | 6245101036 | 61 |
| JOINT ASSEMBLY | 9049111754<br>9049111756 | 441<br>441 |
| KEEPER | 9585100055 | 303, 485 |
| KEY | 9872100243<br>9904108558 | 185<br>345 |
| KEY, SET | 9576101074 | 62 |
| KIT - AIR CONDITIONER CONDENSER | 7576134531 | 297 |
| KIT - AIR CONDITIONER CONDENSER H | 7576134447 | 297 |
| KIT - AIR CONDITIONER HOSE | 7576134413 | 191 |
| KIT - CAB HEATER AND AIR CONDITIO | 80006745 | 145 |
| KIT - CABLE (BATTERIES) | 7246100441 | 549 |
| KIT - CABLE (ENGINE) | 7246100345 | 381 |
| KIT - CARRIER A/C HOSE | 7576134451 | 409 |
| KIT - CUMMINS AIR CONDITIONER COM | 7576134474 | 409 |
| KIT - FRONT WIPER | 7576134397 | 61 |
| KIT - SKYLIGHT WIPER | 7576134398 | 61 |
| KIT, ACOUSTICS | 80004087 | 107 |
| KIT, BUSHING W/BALL | 9926113111 | 207 |
| KIT, COMPRESSOR MOUNT | 9576101420 | 411 |
| KIT, COVER ASSY. | 9683100090 | 203 |
| KIT, DICS SPRING | 90011882 | 370 |
| KIT, DIFF | 9049112767 | 434 |
| KIT, DRIVE ASSY. | 9683100088 | 203 |
| KIT, DRIVE PLATE | 9904109669 | 333 |


From - IND LED ENG WARN/ELECT SYS DIA To - KIT, DRIVE PLATE

## Alphabetical Index — Appendix A


| Description | Part | Page |
|---|---|---|
| **KIT, ELECTRICAL ASSY.** | 9683100089 | 203 |
| **KIT, GASKET AND HARDWARE** | 9352100751 | 539 |
| **KIT, HANDLE** | 90011630 | 301 |
| **KIT, HARDWARE** | 9049108966 | 433 |
| **KIT, HORN BRUSH W/GREASE** | 9326100494 | 211 |
| **KIT, HYD.CYLINDER SERVICE** | 9188101094 | 370 |
| **KIT, JAY BRACKET** | 7880000092 | 539 |
| **KIT, LINING** | 9049109243 | 447 |
| | 9188101041 | 371 |
| **KIT, MOTOR WITH HARDWARE AND BRAC** | 9576101343 | 73, 75 |
| **KIT, OVERHAUL** | 90011883 | 370 |
| **KIT, REPAIR** | 9752100944 | 533 |
| | 9752100994 | 283, 531, 533 |
| | 9752100996 | 527 |
| | 9926105593 | 533 |
| **KIT, RING W/CROSS PIN** | 9926113113 | 207 |
| **KIT, ROTARY GROUP** | 9722105564 | 376 |
| **KIT, SEAL** | 7373000012 | 292 |
| | 90001067 | 243 |
| | 9049111761 | 447 |
| | 9364101829 | 265 |
| | 9364101830 | 265 |
| | 9372103537 | 449 |
| | 9437100452 | 521 |
| | 9576101337 | 259 |
| | 9722105445 | 373 |
| | 9722105566 | 376 |
| | 9904109671 | 323 |
| | 9926107747 | 284 |
| | 9926108423 | 283, 533 |
| | 9926108644 | 283 |
| | 9926110372 | 283 |
| | 9926111719 | 533 |
| | 9926111722 | 283 |
| | 9926112358 | 283 |
| | 9926112997 | 533 |
| | 9926113031 | 281 |
| | 9926113032 | 281 |
| | 9926113057 | 283, 529 |
| | 9926113058 | 283 |
| | 9926113116 | 207 |
| | 9926113146 | 295 |
| | 9926113147 | 295 |

## Alphabetical Index — Appendix A

| Description | Part | Page |
|---|---|---|
| **KIT, SEAL** | 9926113170<br>9926113176<br>9926113185<br>9926113187<br>9926113195<br>9974101280<br>9974102222 | 533<br>529<br>533<br>533<br>533<br>243<br>244 |
| **KIT, SEAL MOUNTING** | 9752101414 | 519 |
| **KIT, SERVICE** | 7576001696 | 77 |
| **KIT, SHIM** | 9049112763<br>9576101339 | 433<br>259 |
| **KIT, SPACER** | 9049108952 | 433 |
| **KIT, SPRING** | 9188101043 | 371 |
| **KIT, STRAINER** | 9258100174 | 519 |
| **KIT, SWASH PLATE GROUP** | 9722105565 | 376 |
| **KIT, TREADLE ASSY.** | 9683100087 | 203 |
| **KIT, VALVE ASSY. WATER** | 9515102922 | 148 |
| **KIT, VALVE ASSY. WORK SECTION** | 90012928 | 284 |
| **KIT, WET** | 9576101349 | 75 |
| **KIT,BRAKE ASSY.** | 9576101165 | 259 |
| **KIT,CAM OVERHAUL** | 9188101092 | 371 |
| **KIT,DISC BRAKE** | 9576101102 | 259 |
| **KIT,HARDWARE** | 9486100290 | 129 |
| **KIT,LATCH** | 9086100491 | 37 |
| **KIT,SEAL** | 9188101078 | 371 |
| **KIT,SEAL BRAKE** | 9576101101 | 259 |
| **KIT,SEAL MOTOR** | 9576101186 | 258 |
| **KIT,SHIM** | 9576101171 | 257 |
| **KNOB** | 90016149<br>9798100584 | 163<br>87 |
| **KNOB, FLUTED** | 7511000093 | 91 |
| **KNUCKLE, STEERING** | 9049107133<br>9049110932 | 441<br>441 |
| **LADDER** | 2159110177 | 523, 547 |
| **LADDER ASSEMBLY** | 2159110178 | 517, 539 |
| **LANYARD** | 6246001174<br>9333102232 | 153<br>23 |
| **LATCH** | 9364101847 | 272 |

## Alphabetical Index — Appendix A


| Description | Part | Page |
|---|---|---|
| LATCH ASSY | 6585100018 | 485 |
| LATCH, ARROWHEAD | 7585000184 | 311 |
| LENS, AMBER | 9581100390 | 309 |
| LENS, MOONSTONE | 9581100058 | 62 |
| LEVEL, CIRCULAR | 7486000225 | 62 |
| LEVER | 6593000137<br>9974102828 | 463<br>243 |
| LEVER, ROLLER R.H. | 9974102829 | 243 |
| LEVER,ROLLER L.H. | 9974102830 | 243 |
| LIGHT ASSEMBLY - MODIFIED BOOM | 6581100024 | 5 |
| LIGHT ASSEMBLY - MODIFIED STROBE | 6581100074 | 307 |
| LIGHT ASSY, WORK | 7581001361 | 481 |
| LIGHT, DOME | 7581000186 | 62 |
| LIGHT, STOP/TURN/TAIL LED RED | 7581100048 | 481 |
| LIGHT, STROBE | 7581100000 | 309 |
| LIGHT, WORK | 7581100001 | 7, 62 |
| LIGHT, YELLOW REAR TURN (WITH GRO | 7581100050 | 481 |
| LMI INTERNAL LIGHT BAR | 80008129 | 159 |
| LOCK | 7585000789<br>9498100155 | 77<br>79, 81 |
| LOCK WASHER, 10MM I.D. | 9515102320 | 411 |
| LOCK, PLATE | 9904101298 | 325 |
| LOCKNUT | 7659000081<br>9049111513<br>9333101984<br>9364101902 | 41, 51<br>433<br>21<br>423 |
| LOCKWASHER, SCREW | 9904109625 | 365 |
| LOUVER, 2" BALL | 9515103059 | 147 |
| LOUVER, 4" W/ADAPTER | 9515102926 | 147 |
| LOW SHAFT,HUB & DRUM W/ VALVE | 9904109603 | 349 |
| LOW SPEED SHAFT GROUP | 9904110620 | 323 |
| LUG | 6608001308 | 62 |
| M10 X 1.50 RETAINING NUT | 7659190024 | 311, 517 |
| MACHINE SCREW, M4X12 SLOTTED | 7121110801 | 65, 151 |
| MACHINE SCREW, M4X20 SLOTTED | 7121111101 | 65 |
| MACHINE SCREW, M5X12 SLOTTED | 7121130801 | 145 |

## Alphabetical Index — Appendix A


| Description | Part | Page |
|---|---|---|
| **MACHINE SCREW, M5X20 SLOTTED** | 7121131101 | 65, 485 |
| **MAGNET** | 7616000519 | 91 |
| **MAGNET, CUP** | 7616000517 | 92 |
| **MANIFOLD** | 9974103090 | 243 |
| **MARKING TAGS, 1-5** | 9333103044 | 21 |
| **MAT, FLOOR** | 7001100579 | 107 |
| **MAT, FRONT STORAGE TRAY** | 7814100084 | 537 |
| **MAT, REAR STORAGE TRAY** | 7814100085 | 537 |
| **MESH, SUNSCREEN** | 7942000522 | 151 |
| **MIRROR, 8" CONVEX** | 7628000025 | 62, 247, 249, 487 |
| **MODULE, CARRIER CONTROL** | 7352100067 | 549 |
| **MODULE, CONTROL** | 7352100053<br>7352100070 | 133<br>169 |
| **MODULE, MASTER CONTROL** | 7352100069 | 549 |
| **MOTOR** | 90001017 | 148 |
| **MOTOR ASSEMBLY - SWING DRIVE** | 7576134386 | 251 |
| **MOTOR ASSY. 12V.** | 9425100077 | 83 |
| **MOTOR ASSY. HYD.** | 90000100<br>9576101395 | 242<br>258 |
| **MOULDING** | 8246964300<br>8496900043<br>8496900046<br>8496980002<br>8637054001<br>8637059004<br>8637062018 | 65, 311, 391, 395, 403<br>61<br>64, 311<br>62, 311, 471, 485, 523, 537, 547, 549<br>311<br>539<br>395 |
| **MOULDING, TRIM LOCK** | 8637052011 | 66 |
| **MOUNT, 2 PIECE ISOLATOR** | 7638100029 | 314 |
| **MOUNT, 2-PC ISOLATOR** | 7638100033 | 313 |
| **MOUNT, BRACKET LEVEL** | 6245101002 | 61 |
| **MOUNT, BRACKET MODULE** | 6245101003 | 109 |
| **MOUNT, COMPRESSOR** | 9576101407 | 411 |
| **MOUNT, LEFT HAND** | 9515102840 | 147 |
| **MOUNT, MOTOR BASE** | 9974102731 | 241 |
| **MOUNT, RIGHT HAND** | 9515102842 | 147 |
| **MOUNT, SHOCK** | 7638000203 | 55 |
| **MOUNT, STEERING COLUMN** | 6245101005 | 61 |

## Alphabetical Index — Appendix A


| Description | Part | Page |
|---|---|---|
| **MOUNT, TRANSMISSION** | 2159810022 | 317 |
| | 2159810023 | 317 |
| **MOUNT, WIRE TIE** | 7638000750 | 159 |
| **MOUNTING BRACKET** | 4159210194 | 407 |
| | 4159210195 | 407 |
| **MOUNTING KIT - OIL COOLER** | 7576001743 | 539 |
| **MUFFLER** | 7642100004 | 401 |
| **MUFFLER CLAMP** | 7300000231 | 401 |
| **MULL, BAR** | 9498100393 | 81 |
| **NIPPLE** | 7649000005 | 317, 399 |
| | 7649000062 | 317, 395, 399 |
| **NIPPLE, HOSE** | 7649000042 | 319, 539 |
| | 7649000061 | 319 |
| | 7649000092 | 317 |
| **NIPPLE, HOSE 5/8 ID TO 1/2 NPT** | 7649000059 | 263, 317 |
| **NOSE, AUXILIARY** | 2159910022 | 41 |
| **NUT** | 7659000252 | 205 |
| | 7659000796 | 63, 71 |
| | 9049103033 | 443 |
| | 9049111517 | 433 |
| | 9049112240 | 442 |
| | 9086100061 | 37 |
| | 9352100528 | 97, 99 |
| | 9352100676 | 97 |
| | 9352100692 | 97, 99 |
| | 9352100791 | 97, 99 |
| | 9364100658 | 272 |
| | 9372103538 | 449 |
| | 9498100122 | 79 |
| | 9498100389 | 81 |
| | 9726100327 | 397 |
| | 9904102383 | 353, 356 |
| | 9904103605 | 355 |
| | 9904105301 | 359 |
| | 9904109601 | 347 |
| | 9904109618 | 359 |
| | 9926107745 | 283, 527, 531, 533, 534 |
| | 9926111436 | 277 |
| | 9974102995 | 244 |
| **NUT #4** | 9333102480 | 21 |
| **NUT LTM-M6 W1 DIN 3015** | 01571750 | 291 |
| **NUT, DEUTSCH HD10-SER/COMPRESS** | 7659190018 | 509 |

## Alphabetical Index — Appendix A


| Description | Part | Page |
|---|---|---|
| **NUT, EYE** | 9333103768 | 15 |
| **NUT, HEX JAM** | 9364101429 | 271 |
| **NUT, JAM** | 9049101497<br>9049109022<br>9974103094 | 441<br>433<br>243 |
| **NUT, KEPS** | 9352100410 | 272 |
| **NUT, LOCK 1/2"** | 9364101845 | 272 |
| **NUT, LOCK 3/4"** | 9364101397 | 272 |
| **NUT, RETAINING** | 7659000256<br>7659000862 | 133<br>195 |
| **NUT, RETAINING 8 X 1.25** | 7659190020 | 66, 87, 109, 145, 311, 415, 465, 471, 477 |
| **NUT, RETAINING M10 X 1.50** | 7659190033 | 64, 109, 407, 537 |
| **NUT, SELF-LOCKING** | 846531 | 19 |
| **NUT, WHEEL** | 7659000813 | 451 |
| **NUT, WHEEL BEARING** | 9049101703 | 442 |
| **NUT,JAM** | 9188101097 | 370 |
| **NUT,RING** | 9576101173 | 257 |
| **NYLON LIFT OFF HINGE - LH** | 7519000198 | 133, 311 |
| **O-RING** | 7754000085<br>7754100010<br>7755011002<br>7755012002<br>7755014000<br>7755014002<br>7755016002<br>7755018002<br>7755021002<br>7755025002<br>7755107002<br>7755110000<br>7755152000<br>7755170000<br>7755219002<br>7755220000<br>7755222002<br>7755225002<br>7755232002<br>7755245000<br>7755251000<br>7755260000 | 455, 459<br>297<br>226, 228, 230, 317, 318<br>225, 226, 227, 228, 230, 231, 233<br>283<br>225, 226, 321, 539<br>228, 231<br>225, 228, 318, 319, 320<br>225, 227, 229, 291, 321<br>230, 321<br>281<br>359<br>258<br>258<br>228, 229<br>281<br>227, 319<br>227<br>320<br>258<br>258<br>258 |

## Alphabetical Index — Appendix A


| Description | Part | Page |
|---|---|---|
| **O-RING** | 7755265000 | 258 |
| | 7755904002 | 226, 228, 230, 231, 233, 243, 258, 263, 318 |
| | 7755906002 | 225, 226, 228, 230, 231, 233, 318, 321 |
| | 7755908002 | 225, 226, 227, 230, 233, 242, 263, 539 |
| | 7755910002 | 228, 319, 534 |
| | 7755912002 | 225, 229, 277, 278, 318, 320, 321 |
| | 7755916002 | 225, 230, 291, 292, 321 |
| | 7755920002 | 230 |
| | 90000105 | 243 |
| | 9049106322 | 442 |
| | 9049112889 | 437 |
| | 9176100603 | 97 |
| | 9437100575 | 521 |
| | 9515102845 | 147 |
| | 9576101334 | 257 |
| | 9576101338 | 259 |
| | 9722105560 | 376 |
| | 9722105563 | 376 |
| | 9722105567 | 375 |
| | 9722105568 | 375 |
| | 9722105569 | 376 |
| | 9904103500 | 327, 363 |
| | 9904103660 | 359 |
| | 9904103779 | 327 |
| | 9904103993 | 355 |
| | 9904103994 | 355 |
| | 9904103997 | 356 |
| | 9904105299 | 359 |
| | 9904105336 | 327 |
| | 9904106445 | 325, 327 |
| | 9904106805 | 347 |
| | 9904107179 | 359 |
| | 9904108409 | 355 |
| | 9904109357 | 325, 327 |
| | 9904109481 | 355 |
| | 9904109561 | 335, 355 |
| | 9904109570 | 327 |
| | 9904109641 | 356 |
| | 9904110793 | 367 |
| | 9904110794 | 367 |
| | 9904110795 | 367 |
| | 9904110796 | 367 |
| | 9926103232 | 233 |
| | 9926106646 | 233 |

## Alphabetical Index — Appendix A


| Description | Part | Page |
|---|---|---|
| **O-RING** | 9926111469<br>9926111748<br>9926112013<br>9926113181<br>9926113182<br>9974101198<br>9974102227<br>9974102868<br>9974102898<br>9974102922 | 277, 281<br>534<br>277, 279, 280<br>533<br>533<br>241<br>243<br>241<br>243<br>242 |
| **O-RING #10** | 9576101194 | 193, 413 |
| **O-RING #6** | 9576101193 | 193 |
| **O-RING #8** | 9515102844 | 147, 297, 413 |
| **O-RING SEAL** | 9926113253 | 284 |
| **O-RING, LOW TEMPERATURE** | 7754000163<br>7754000166 | 291<br>291 |
| **O-RING, SQUARE** | 9437100479 | 521 |
| **O-RING, VITON** | 9926111931<br>9926111932 | 284<br>284 |
| **O-RING,VITON** | 9926112501 | 284 |
| **OUTER** | 9049100895 | 433 |
| **OUTPUT SHAFT AND BEARING** | 9904109612 | 355 |
| **OUTPUT SHAFT GROUP** | 90015440 | 323 |
| **P.C. BOARD** | 9333103896 | 17 |
| **PAD** | 7671100005 | 311 |
| **PAD, ARMREST** | 7033001063 | 91 |
| **PANEL** | 2188410002 | 135 |
| **PANEL ASSEMBLY - ENGINE RELAYS** | 6679100157 | 497 |
| **PANEL ASSEMBLY - FUSE AND RELAY** | 6679100195 | 133 |
| **PANEL, DOOR** | 4159110291 | 311 |
| **PANEL, FRONT CONSOLE** | 7679100268 | 113 |
| **PANEL, INNER DOOR** | 7392100011 | 63 |
| **PANEL, RELAY** | 4174810060 | 513 |
| **PARALLEL - NON-INSULATED 4 AWG** | 7892000198 | 180 |
| **PARALLEL, NON - INSULATED** | 7892000194<br>7892000195<br>7892000196<br>7892000197 | 103, 126, 180, 386, 509<br>103, 127, 180, 507, 515<br>153, 509<br>180 |
| **PEDAL ASSEMBLY - ELECTRONIC TELES** | 7683100010 | 199 |

## Alphabetical Index — Appendix A


| Description | Part | Page |
|---|---|---|
| **PEDAL ASSY.** | 9926113272 | 201 |
| **PIN** | 6689100012 | 41 |
| | 6689100025 | 429 |
| | 6689100036 | 429 |
| | 7689000797 | 181, 509 |
| | 7689000813 | 141, 272 |
| | 7689001756 | 489 |
| | 7689001883 | 180 |
| | 7689002053 | 125, 180, 273, 508 |
| | 7689100033 | 95 |
| | 7689100046 | 3 |
| | 9086100214 | 37 |
| | 9086100811 | 37 |
| | 9576100517 | 241 |
| | 9576101181 | 257 |
| | 9576101183 | 257 |
| | 9826100008 | 11, 45 |
| | 9904109588 | 339, 341 |
| | 9974102966 | 244 |
| **PIN & COTTER** | 9086101063 | 483 |
| **PIN ASSEMBLY** | 2150200656 | 477 |
| **PIN, 16 - 14 GA** | 7689000704 | 73, 75, 125, 141, 180, 185, 193, 309, 385, 411, 497, 515 |
| **PIN, 18 - 16 GAGE** | 7689001782 | 97, 99, 103, 141, 203, 213, 215, 508 |
| **PIN, 20GA GOLD** | 7689100044 | 180 |
| **PIN, CLIP** | 7689000036 | 3 |
| | 7689000053 | 41 |
| **PIN, COTTER** | 9333101916 | 27, 31 |
| | 9826100009 | 11, 45 |
| **PIN, COTTER-END YOKE NUT** | 9049109511 | 443 |
| **PIN, DOWEL** | 9904109564 | 325, 327 |
| **PIN, HITCH** | 7689000059 | 41 |
| | 7689000721 | 41 |
| **PIN, LOCK HAIR** | 7689000023 | 51 |
| **PIN, QUICK RELEASE** | 9086100584 | 37 |
| **PIN, QUICK WITH (LANYARD)** | 7689100034 | 461 |
| **PIN, ROLL** | 9086100011 | 37 |
| | 9086100204 | 37 |
| **PIN, SPIRAL** | 9974101183 | 241 |
| **PIN, SWING LOCK** | 2159210126 | 301 |


**From - PEDAL ASSY.** **To - PIN, SWING LOCK**

## Alphabetical Index — Appendix A


| Description | Part | Page |
|---|---|---|
| **PINION** | 9049108965<br>9576101167 | 434<br>257 |
| **PIPE** | 9576101149 | 259 |
| **PISTON** | 9049107148<br>9372103536<br>9904108406<br>9904109616 | 447<br>449<br>355<br>359 |
| **PISTON ASSY, CLUTCH** | 9904108934 | 343, 345, 349 |
| **PISTON ASSY.** | 9904110467 | 345, 351 |
| **PISTON, 9" CYLINDER** | 6701000970 | 291 |
| **PISTON, PILOT** | 9926113183 | 533 |
| **PLANET CARRIER - PRIMARY** | 9974102666 | 241 |
| **PLANETARY CARRIER ASSY.** | 9576101340<br>9576101341 | 259<br>259 |
| **PLATE** | 4159110071<br>6705016148<br>6705018338<br>6705100115<br>6705170914<br>9049110945<br>9364101595<br>9904110602<br>9974102825 | 523, 547<br>263<br>91<br>401<br>92<br>447<br>272<br>339<br>243 |
| **PLATE - SHIELD** | 4159210193 | 407 |
| **PLATE, COVER** | 4159110298<br>4159110299<br>4159110300<br>6245101025<br>6245101104<br>6705016902<br>9722105561 | 465<br>465<br>465<br>195<br>62<br>62<br>376 |
| **PLATE, COVER FLANGE** | 9364101818 | 265 |
| **PLATE, END** | 9904110464 | 343, 345, 349, 351 |
| **PLATE, KICK** | 6245101201 | 66 |
| **PLATE, MOUNT** | 6705171095 | 313 |
| **PLATE, MOUNTING** | 4159110251<br>4159810060<br>6705012439<br>6705100026<br>6705170886<br>9352100789 | 539<br>320<br>61<br>62, 71<br>61<br>97, 99 |
| **PLATE, MTG.** | 9364101849 | 272 |


**From - PINION** **To - PLATE, MTG.**

## Alphabetical Index — Appendix A


| Description | Part | Page |
|---|---|---|
| **PLATE, PEDAL MOUNTING** | 6245101007 | 199 |
| **PLATE, PRESSURE** | 9974102177 | 241 |
| **PLATE, RETAINER** | 6705100260 | 263 |
| | 6705171011 | 263 |
| | 9576101307 | 257 |
| **PLATE, RIGHT HAND CONSOLE** | 6245101009 | 63 |
| **PLATE, SIDE** | 9086101008 | 37 |
| **PLATE, SIDE SET** | 9086101336 | 37 |
| **PLATE, STEP INNER** | 4197110295 | 489 |
| **PLATE, STEP OUTER** | 4197110296 | 489 |
| **PLATE, TAP** | 6705100083 | 63, 71 |
| **PLATE, TERMINAL STRIP END** | 9333102664 | 21 |
| **PLATE, THRUST** | 9722105434 | 373 |
| | 9974102196 | 242 |
| | 9974102197 | 242 |
| **PLATE,DISTRIBUTOR** | 9926110265 | 207 |
| **PLATE,END** | 9576101142 | 257 |
| **PLUG** | 7364100051 | 481, 507 |
| | 7709000811 | 103, 215 |
| | 7709000812 | 97, 99, 103 |
| | 7709000838 | 509 |
| | 7709000845 | 125, 179 |
| | 7709000849 | 179, 508 |
| | 7709000850 | 179, 509 |
| | 7709000874 | 126, 179, 385, 509 |
| | 7709000883 | 125, 180, 272, 509 |
| | 7709100877 | 103, 180, 507 |
| | 9049107157 | 447 |
| | 9049107402 | 447 |
| | 9437100894 | 521 |
| | 9437100895 | 521 |
| | 9576101141 | 259 |
| | 9576101154 | 259 |
| | 9576101185 | 258 |
| | 9576101220 | 259 |
| | 9722105514 | 373 |
| | 9722105556 | 375 |
| | 9904101047 | 355 |
| | 9904103528 | 335 |
| | 9904103913 | 325 |
| | 9904104055 | 325, 367 |
| | 9904108396 | 325, 327 |
| | 9904108408 | 355 |

## Alphabetical Index — Appendix A


| Description | Part | Page |
|---|---|---|
| **PLUG** | 9904109356 | 325, 327 |
| | 9926111396 | 534 |
| | 9926112141 | 277, 278, 279, 280 |
| | 9926113294 | 534 |
| | 9974102931 | 243 |
| **PLUG #10** | 9926113295 | 534 |
| **PLUG ASSEMBLY, SHUT-OFF** | 9926111439 | 277, 278, 279, 281 |
| **PLUG ASSY** | 9926111999 | 277, 281 |
| **PLUG ASSY.** | 9049112771 | 437 |
| | 9926113025 | 279, 280 |
| | 9926113026 | 278, 279, 280 |
| | 9926113285 | 277, 278 |
| **PLUG DTM06-12SA W/WM-12S WEDGE** | 7709100907 | 125 |
| **PLUG DTM06-12SB W/WM-12S WEDGE** | 7709100908 | 125 |
| **PLUG WITH O-RING** | 9904106063 | 327 |
| **PLUG, 1 SOCKET** | 7709000876 | 141, 272 |
| **PLUG, 1" BUTTON** | 7242000021 | 47, 471 |
| **PLUG, 12 SOCKET** | 7709000846 | 125, 179, 213, 385, 507, 509 |
| **PLUG, 2 PASS** | 7364100008 | 507 |
| **PLUG, 2 SOCKET** | 7709000844 | 179, 386, 507 |
| **PLUG, 2-PASS DEUTSCH DTP** | 7709100891 | 142, 385, 510 |
| **PLUG, 3 PIN** | 7709100902 | 126, 180, 385 |
| **PLUG, 4 PASS** | 7709100870 | 386 |
| **PLUG, 4 SOCKET** | 7709000936 | 181, 273, 386, 510 |
| | 7709100895 | 181 |
| **PLUG, 40 SOCKET** | 7709100883 | 125 |
| | 7709100884 | 125 |
| **PLUG, BLEEDER** | 9722105555 | 375 |
| **PLUG, DEUTSCH DRC26-50S-04** | 7709100890 | 385 |
| **PLUG, DRAIN** | 9049101920 | 443 |
| | 9904108964 | 327 |
| **PLUG, DTO6-12SB-C015 W/WEDGE** | 7709100929 | 180, 509 |
| **PLUG, DTO6-12SC-C015 W/WEDGE** | 7709100930 | 180 |
| **PLUG, EXPANSION** | 9049102254 | 437 |
| **PLUG, FILLER** | 9049100054 | 327 |
| **PLUG, FLUSH** | 9974102201 | 242 |
| **PLUG, HOLE** | 9333102047 | 25 |
| | 9333102808 | 21 |

## Alphabetical Index — Appendix A


| Description | Part | Page |
|---|---|---|
| **PLUG, L SERIES LH1 PANEL** | 7242100005 | 92, 113 |
| **PLUG, M12 X 1.5** | 7709100932 | 539 |
| **PLUG, MAGNETIC** | 7709000157<br>9880100081<br>9904101317 | 519<br>543<br>327 |
| **PLUG, ORIFICE .040"** | 9926113171 | 283 |
| **PLUG, ORIFICE .076** | 9926113297 | 534 |
| **PLUG, ORIFICE .261** | 9926113296 | 534 |
| **PLUG, O-RING** | 7709000038 | 226, 230 |
| **PLUG, PORT** | 9926111747 | 534 |
| **PLUG, SAE #4** | 7709800001 | 258, 263 |
| **PLUG, SAE #6** | 7709000031 | 230 |
| **PLUG, SAE #8** | 7709800000 | 263 |
| **PLUG, SEAL** | 9364101712 | 271 |
| **PLUG, SEALING** | 7689000503<br>7826000650 | 73, 75, 103, 126, 142, 179, 185, 273, 385, 411, 507<br>180, 386 |
| **PLUG, VENT** | 9974102858 | 242 |
| **PLUG,CONNECTOR ASSY.5 PIN PASS** | 9333103906 | 17 |
| **PLUG,DT06-3S-CEO6 W/BLUE WEDGE** | 7709100911 | 126, 180, 386, 509 |
| **PLUG,SCREW TYPE** | 9188101096 | 369 |
| **POINTER** | 4195900219 | 49 |
| **POINTER ASSEMBLY** | 2114900861 | 47 |
| **POST, CENTER** | 6714100004 | 263 |
| **POTENTIOMETER,LENGTH** | 9333103897 | 17 |
| **PRESSURE TRANSDUCER, iFLEX 5 (2 P** | 9333103870 | 155 |
| **PRIMARY SUN GEAR** | 9974102677 | 242 |
| **PROXY SENSOR-PNP 10mm RANGE** | 7872100062 | 95 |
| **PUMP AND CANISTER** | 7576000320 | 62 |
| **PUMP ASSEMBLY - GEAR** | 7722100101 | 317 |
| **PUMP ASSEMBLY - PISTON** | 7722100100 | 317 |
| **PUMP ASSY, CHARGE** | 9904110603 | 363 |
| **PUMP DRIVE GROUP** | 9904110616 | 323 |
| **R134A REFRIGERANT** | 8898920005 | 297 |
| **RADIATOR ASSEMBLY** | 2159810147 | 391 |
| **RADIATOR ASSY.** | 9726100338 | 397 |


**From - PLUG, L SERIES LH1 PANEL** **To - RADIATOR ASSY.**

## Alphabetical Index — Appendix A


| Description | Part | Page |
|---|---|---|
| **RADIATOR CAP** | 7258001468 | 399 |
| **RAIL** | 9498100196 | 79 |
| | 9498100199 | 79 |
| **RAIL ASSY.** | 9498100394 | 81 |
| **RAIL, TERMINAL STRIP MOUNTING** | 9333102759 | 21 |
| **REAR FENDER - LEFT HAND** | 80010000 | 471 |
| **RECEPT, (8P) SPLICE BLOCK** | 7892100026 | 103, 125, 179 |
| **RECEPT, DTO4-12PB-C015 W/WEDGE** | 7892100086 | 125, 185 |
| **RECEPT, DTO4-12PC-C015 W/WEDGE** | 7892100087 | 125 |
| **RECEPTABLE, 12 P FLANGE** | 7892001012 | 273 |
| **RECEPTACLE** | 7892100039 | 181 |
| **RECEPTACLE,** | 7364002417 | 142 |
| | 7892000824 | 73, 75, 272 |
| | 7892000831 | 215 |
| | 7892000832 | 97, 99, 103 |
| | 7892000939 | 141, 272 |
| | 7892000947 | 203, 510 |
| | 7892000949 | 126, 179, 386, 508 |
| | 7892000950 | 126, 142 |
| | 7892000951 | 125, 142, 180, 213, 509 |
| | 7892000978 | 179 |
| | 7892000979 | 180 |
| | 7892000986 | 507 |
| | 7892001051 | 181, 185, 510, 515 |
| **RECEPTACLE, 12 VOLT DASH MOUNT** | 7892000999 | 133 |
| **RECEPTACLE, 2 PIN** | 7892000836 | 193, 309, 411 |
| **RECEPTACLE, 3 WAY** | 7892100036 | 126, 180, 385, 509 |
| **RECEPTACLE, 9 PIN** | 7892001053 | 125, 509 |
| **RECEPTACLE, SPLICE BLOCK** | 7892001036 | 125, 179, 507 |
| **RECP-DTM-3P** | 7892100010 | 95, 180 |
| **REFRIGERANT OIL** | 8898920006 | 297 |
| **REGULATOR ASSY.** | 9722105558 | 376 |
| **RELAY, 12 VOLT 100AMP** | 7750160021 | 142 |
| **RELAY, 12 VOLT DC** | 7750000055 | 135 |
| **RELAY, 200 AMP** | 7750000793 | 513 |
| **RELAY, 75 AMP** | 7750000056 | 141 |
| **RELIEF, VALVE** | 9333103041 | 21 |
| **RESERVOIR ASSEMBLY - HYDRAULIC** | 7880100112 | 517 |
| **RESISTOR ASSY.** | 9515102837 | 147 |


**From - RADIATOR CAP** **To - RESISTOR ASSY.**

## Alphabetical Index — Appendix A


| Description | Part | Page |
|---|---|---|
| **RESISTOR, 4700 OHMS** | 9333101465 | 25 |
| **RETAINER** | 9364101403 | 401 |
| **RETAINER, FILTER** | 9515102927 | 148 |
| **RETAINER, KEEPER** | 9498100121<br>9498100388 | 79<br>81 |
| **RETAINER, SPRING** | 9904103568<br>9904105981<br>9904107784 | 345, 351<br>345<br>349 |
| **RETAINING NUT M6** | 7659190019 | 109, 133, 391, 497 |
| **REV. & 2ND, SHAFT & DRUM ASSY** | 9904110466 | 345 |
| **REVERSE & 2ND. SHAFT GROUP** | 9904110618 | 323 |
| **REVERSE IDLER GROUP** | 9904110619 | 323 |
| **RING** | 9904103570<br>9904108407 | 351<br>355 |
| **RING ASSEMBLY - SLIP** | 7753100037 | 263 |
| **RING GEAR** | 9576101174 | 259 |
| **RING, ADJUSTING** | 9049108971 | 433 |
| **RING, BACKING** | 9904109579 | 333 |
| **RING, BACK-UP** | 7755365609<br>7755445609<br>9974102178<br>9974102226 | 291<br>291<br>241<br>242 |
| **RING, LOCATING** | 9904103893 | 341 |
| **RING, LOCK** | 7753000368 | 455, 459 |
| **RING, PISTON** | 9904108795<br>9904109575<br>9904109646<br>9904110465 | 349<br>331<br>331<br>343, 345, 351 |
| **RING, RETAINER** | 9722105441<br>9722105553<br>9722105570<br>9974103087 | 373<br>375<br>376<br>244 |
| **RING, RETAINING** | 9049101600<br>9576101333<br>9904101022<br>9904101209<br>9904103563<br>9904103621<br>9904103899<br>9904105997<br>9904106400 | 433<br>257<br>355<br>353<br>345<br>331, 355<br>339, 341<br>345<br>331 |

## Alphabetical Index — Appendix A


| Description | Part | Page |
|---|---|---|
| **RING, RETAINING** | 9904106408 | 335, 355 |
| | 9904107558 | 351 |
| | 9904109593 | 343 |
| | 9974102191 | 241 |
| | 9974102219 | 242 |
| | 9974102221 | 242 |
| **RING, SEAL** | 9904105957 | 331 |
| **RING, SNAP** | 9274100125 | 442 |
| | 9904101348 | 345, 351 |
| | 9904101354 | 341 |
| | 9904103567 | 345, 349, 351 |
| | 9904103632 | 343, 349, 351 |
| | 9904103906 | 331, 349, 353 |
| | 9904103980 | 343, 345 |
| | 9904103983 | 343 |
| | 9904105286 | 331 |
| | 9904106001 | 349 |
| | 9904109459 | 355 |
| | 9904109581 | 335 |
| | 9904109583 | 335 |
| **RING, SPLIT** | 9086100815 | 37 |
| **RING, WEAR** | 7753000307 | 291 |
| | 7753000477 | 291 |
| **RING, WIPER** | 7753000299 | 291 |
| **RING,RETAINER** | 9576101130 | 257 |
| | 9576101133 | 259 |
| | 9576101137 | 258 |
| | 9576101138 | 258 |
| | 9576101140 | 259 |
| **RIVET, POP** | 7760000008 | 153 |
| | 7760000011 | 491 |
| **ROD** | 9974102810 | 243 |
| **ROD ASSY.** | 9372103534 | 449 |
| **ROD, 7" CYLINDER** | 6768100342 | 291 |
| **ROD, PISTON** | 9904109619 | 359 |
| **ROD, TIE** | 9926111533 | 277 |
| **ROLLER** | 203583 | 19 |
| | 203584 | 19 |
| | 9974102840 | 244 |
| | 9974103083 | 243 |
| **ROLLER GUIDE ASSEMBLY** | 9333101437 | 15 |
| **ROLLPIN** | 9974102814 | 244 |

## Alphabetical Index — Appendix A


| Description | Part | Page |
|---|---|---|
| **RUBBER, FLOCKED 154” LONG** | 7794001721 | 77 |
| **SCREW** | 90000942 | 97, 99 |
| | 9049110385 | 437 |
| | 9049111473 | 437 |
| | 9049111509 | 434 |
| | 9049112764 | 433 |
| | 9086100805 | 37 |
| | 9352100777 | 97, 99 |
| | 9364101727 | 272 |
| | 9364101846 | 272 |
| | 9364101853 | 272 |
| | 9498100135 | 79 |
| | 9498100402 | 81 |
| | 9511100007 | 97, 99 |
| | 9904103916 | 327 |
| | 9904109584 | 339, 341 |
| | 9904109704 | 331 |
| | 9926111974 | 281 |
| | 9926113274 | 201 |
| **SCREW #4** | 9333102669 | 21 |
| **SCREW, #10-32 X 5/8" FLATHEAD** | 9364101596 | 272 |
| **SCREW, #8 X 1"** | 9498100400 | 81 |
| **SCREW, #8 X 3/8"** | 9498100401 | 81 |
| **SCREW, 3/8" - 16NC X 3/8" SET** | 7099000378 | 291 |
| **SCREW, BLEEDER** | 9049100638 | 447 |
| **SCREW, CABINET** | 7099000154 | 64 |
| **SCREW, CATCH** | 7786000539 | 77 |
| **SCREW, CENTER POST** | 7786000537 | 77 |
| **SCREW, COVER** | 9333101566 | 17 |
| **SCREW, FLANGE** | 7115160878 | 41, 51 |
| **SCREW, GRUB** | 9364101821 | 265 |
| | 9722105436 | 373 |
| **SCREW, HEX HEAD** | 7126191153 | 64, 199 |
| **SCREW, HEX SOCKET** | 9926113142 | 529 |
| **SCREW, LOCK** | 9904101044 | 355 |
| | 9904109621 | 359 |
| **SCREW, M10X20 DIN 316 WING** | 7099100054 | 307 |
| **SCREW, M20X260 HEX HEAD CAP** | 7127273950 | 429 |
| **SCREW, M4X30 LONG SLOTTED PAN** | 7121111301 | 91 |
| **SCREW, M6X35 LONG SLOTTED PAN** | 7121151401 | 91, 109 |

## Alphabetical Index — Appendix A


| Description | Part | Page |
|---|---|---|
| **SCREW, PLASTIC** | 9498100167 | 79, 81 |
| **SCREW, SLOTTED MACHINE** | 9333102790 | 25 |
| **SCREW, STOP** | 9049106456 | 441 |
| **SCREW, THRUST** | 9049109021 | 433 |
| **SCREW, THUMB** | 7099001159 | 133 |
| **SCREW, VALVE MOUNTING** | 9904105328 | 365 |
| **SCREW,SOCKET HD 5/16 X 1/2" LG** | 7099100020 | 485 |
| **SCREW-HEX HEAD** | 9926111452 | 281 |
| **SEAL** | 7364100052 | 508 |
| | 90012853 | 355 |
| | 9049112685 | 442 |
| | 9049112781 | 437, 442 |
| | 9498100200 | 79 |
| | 9515102849 | 147 |
| | 9515102853 | 147 |
| | 9904105302 | 359 |
| | 9904105307 | 359 |
| **SEAL, BEARING 21'** | 9069100118 | 251 |
| **SEAL, BUFFER** | 7794000544 | 291 |
| **SEAL, CAP** | 90000633 | 284 |
| **SEAL, COVER** | 9333101565 | 17 |
| **SEAL, CUTTING** | 9333101472 | 155 |
| **SEAL, DEEP Z ROD** | 7794000642 | 291 |
| **SEAL, DUST RING** | 9926113110 | 207 |
| **SEAL, MODIFIED** | 6860100000 | 61 |
| **SEAL, OIL** | 9049112786 | 433 |
| | 9576101331 | 257 |
| | 9904109139 | 331 |
| | 9974101216 | 241 |
| | 9974102190 | 241 |
| **SEAL, PISTON** | 7794000577 | 291 |
| | 9904103637 | 343, 345, 349, 351 |
| | 9904103638 | 343, 345, 349, 351 |
| | 9974102176 | 241 |
| **SEAL, RED PLUG** | 7364100058 | 508 |
| **SEAL, SHAFT** | 9364101868 | 427 |
| | 9722105557 | 376 |
| **SEALANT, ADHESIVE** | 6829015131 | 61 |
| **SEALER, FOAM** | 9515102833 | 147 |

## Alphabetical Index — Appendix A


| Description | Part | Page |
|---|---|---|
| **SEAL-SPECIAL** | 9926111468<br>9926111470 | 277, 278, 279, 281<br>277, 281 |
| **SEAT** | 7798000843 | 87 |
| **SEAT ASSEMBLY - DUAL AXIS CONTROL** | 80003783 | 87 |
| **SEAT, SPRING** | 9926113298 | 284 |
| **SENDER, FUEL LEVEL** | 7352000878 | 539 |
| **SENSOR** | 9974103091 | 243 |
| **SENSOR,ANGLE** | 9333103898 | 17 |
| **SENSOR-COOLANT LEVEL** | 7352100036 | 399 |
| **SERVO POT. & BOARD ASSY.** | 9364101848 | 272 |
| **SET SCREW** | 9049105399<br>9352100669<br>9364101615<br>9926112199 | 442<br>97, 99<br>272<br>278, 279, 280 |
| **SET, KEY** | 9872100256 | 113 |
| **SHACKLE, 7/8" GALVANIZED** | 7806100006 | 483 |
| **SHAFT** | 6810001156<br>6810001159<br>6810002810<br>9904104424<br>9904105288<br>9974102180<br>9974102182<br>9974102841 | 51<br>41<br>63<br>341<br>355<br>241<br>241<br>244 |
| **SHAFT & HUB W/ RETAINING RING** | 9904109573 | 331 |
| **SHAFT ASSEMBLY, PINION** | 9049106490 | 442 |
| **SHAFT ASSY.** | 9722105546 | 375 |
| **SHAFT, IDLER** | 9904109607 | 353 |
| **SHAFT, LOWER PIVOT** | 7810100133 | 289 |
| **SHAFT, OUTPUT** | 9576101330 | 257 |
| **SHAFT, PIVOT** | 6810100067<br>7810100139<br>9576101345 | 3<br>3<br>73, 75 |
| **SHAFT, REVERSE IDLER** | 9904109598 | 347 |
| **SHAFT, ROLLER** | 9974103085 | 243 |
| **SHCS M10x65 -8.8 ISO 4762 PLTD** | 80010420 | 227 |
| **SHCS M12x70 -8.8 ISO 4762 PLTD** | 80010421 | 227 |
| **SHCS M6x20 -12.9 ISO 4762** | 7128151154 | 485 |
| **SHEAVE ASSEMBLY - 5/8" ROPE** | 6718100031 | 41, 51 |

## Alphabetical Index — Appendix A


| Description | Part | Page |
|---|---|---|
| **SHIM (.0359")** | 6705004268 | 237 |
| **SHIM (.0544")** | 4159900304 | 41, 51 |
| **SHIM (.0598")** | 6705004267 | 237 |
| **SHIM (.1250")** | 6705004266 | 237 |
| **SHIM,** | 6705017532<br>9049107134<br>9049107135<br>9049107136 | 33<br>441<br>441<br>441 |
| **SHOCK, MOUNTING** | 7638000044 | 391 |
| **S-HOOK** | 9086100813 | 37 |
| **S-HOOK, STANDARD** | 7601000955 | 41, 51 |
| **SHROUD** | 2159810148 | 395 |
| **SHROUD BACK PLATE** | 4159810075 | 391 |
| **SHROUD BOTTOM PLATE** | 4159810074 | 391 |
| **SIDEPLATE, MOTOR** | 9974102943 | 242 |
| **SIDEPLATE,SUPPORT** | 9974102944 | 242 |
| **SILL, DOOR** | 6245101035 | 107 |
| **SKYLIGHT ASSEMBLY - SLIDING** | 7498100022 | 61 |
| **SLEEVE** | 9904105940 | 325 |
| **SLEEVE, 3/16" I.D. X 3"** | 9364100092 | 271 |
| **SLEEVE, 5/16" I.D. X 3"** | 9364100334 | 271 |
| **SLEEVE, RED VINYL** | 7822100002 | 66 |
| **SLEEVE, TUBE** | 9904100993 | 327 |
| **SLEEVE, VINYL** | 7822000598 | 145 |
| **SLING, 5FT X 5/8 WIRE ROPE** | 7780100877 | 483 |
| **SLIP RING ASSY. 2 CONN.** | 9333103904 | 17 |
| **Slot PMS M5x60 -4.8 ISO 1580** | 7121131901 | 205 |
| **SLOTTED CHEESE HEAD SCREW** | 01374648 | 109, 114 |
| **SOCKET - 20 GAUGE GOLD** | 7826100018 | 103, 125, 181 |
| **SOCKET,** | 7826000095<br>7826000626<br>7826000635<br>7826100013<br>9581100394<br>9581100407 | 273, 507<br>103, 179, 213, 215, 508<br>141<br>508<br>113<br>129 |
| **SOCKET, (12) 12-14GA** | 7826000092 | 142, 385 |
| **SOCKET, (16 - 18) 30 SERIES** | 7826100004 | 103, 125, 179, 273, 385, 508 |

## Alphabetical Index — Appendix A

| Description | Part | Page |
|---|---|---|
| **SOCKET, 16-14 GA** | 7826000087 | 97, 99, 103, 125, 179, 507 |
| **SOCKET, 20 GA AU-PLATE** | 7826000651 | 385 |
| **SOCKET, RELAY** | 7826000079 | 141 |
| **SOCKET-DEUTSCH 22/20 GA NI** | 7826100016 | 508 |
| **SOLENIOD, THUMPER** | 9352100788 | 97, 99 |
| **SOLENOID & CAP ASSY. 12V.** | 9926113288 | 278, 279, 280 |
| **SPACER** | 6910001855 | 41 |
| | 6910010579 | 51 |
| | 6910100009 | 51 |
| | 90001015 | 148 |
| | 9086100567 | 37 |
| | 9086100812 | 37 |
| | 9437100765 | 521 |
| | 9576101329 | 257 |
| | 9576101423 | 411 |
| | 9722105549 | 375 |
| | 9904103922 | 353 |
| | 9904103982 | 343, 345 |
| | 9904106002 | 349 |
| | 9904109594 | 345 |
| | 9904109611 | 355 |
| | 9974102195 | 242 |
| | 9974102672 | 241 |
| | 9974102705 | 242 |
| **SPACER, DISC SPRING** | 9904109650 | 349 |
| **SPACER, NYLON** | 9364101594 | 272 |
| **SPACER, STAND-OFF** | 9364101588 | 272 |
| **SPIDER** | 9049109751 | 434 |
| **SPIDER ASSEMBLY** | 9049106034 | 442 |
| | 9049107127 | 442 |
| **SPINDLE ASSY.** | 9049112782 | 442 |
| **SPLIT FLANGE HALF, 1 1/4"** | 7450000188 | 227 |
| **SPOOL ASSY. HYD./ WATER** | 9364101820 | 265 |
| **SPRING** | 7834000120 | 463 |
| | 7834000786 | 477 |
| | 7834100003 | 62 |
| | 9326100498 | 211 |
| | 9326100499 | 211 |
| | 9498100156 | 79 |
| | 9904103569 | 345, 351 |
| | 9904105292 | 355 |
| | 9904105293 | 355 |

## Alphabetical Index — Appendix A


| Description | Part | Page |
|---|---|---|
| **SPRING** | 9926111456 | 281 |
| | 9926112003 | 278 |
| | 9926112200 | 278, 279, 280 |
| | 9926113299 | 284 |
| | 9974102179 | 241 |
| | 9974102832 | 244 |
| **SPRING ASSY** | 9904107838 | 343, 345 |
| **SPRING, BRUSH** | 9364100333 | 271 |
| | 9364101154 | 271 |
| **SPRING, DISC** | 9904107783 | 349 |
| **STARTER, 12 VOLT** | 9414101731 | 321 |
| **STATOR, SUPPORT** | 9904109576 | 331 |
| **STEP** | 4159110250 | 489 |
| | 4174110070 | 523, 547 |
| **STEP, CARRIER DECK** | 2159110274 | 219 |
| **STEP, TAPERED** | 4159110267 | 471 |
| **STOP, SLIDE** | 7846000680 | 77 |
| **STOPPER, RUBBER** | 7195100001 | 303 |
| **STRAIN RELIEF** | 9333102056 | 21 |
| **STRAINER, MESH** | 7437100220 | 320 |
| **STRAP** | 9576101028 | 545 |
| **STRAP, GROUND** | 7850000046 | 62 |
| **STRAP, MOUNTING** | 4159110253 | 550 |
| | 4159110254 | 550 |
| | 4159810077 | 391 |
| **STRAP, RUBBER** | 7418100004 | 314 |
| **STRIP, TERMINAL** | 7086000875 | 141 |
| **STUD** | 6865147860 | 549 |
| | 9049101687 | 442 |
| | 9904103623 | 355 |
| | 9904103986 | 359 |
| **STUD, 7.75" LEVELING** | 9364101839 | 271 |
| **SUPPORT, BEARING** | 9904109585 | 339 |
| | 9974102846 | 241 |
| **SUPPORT, CONSOLE** | 6245101004 | 61 |
| **SUPPORT, FENDER** | 4159110271 | 471 |
| **SUPPORT, PUMP** | 4159810082 | 319 |
| | 4159810083 | 321 |
| **SURGE TANK** | 2159810180 | 399 |

## Alphabetical Index — Appendix A


| Description | Part | Page |
|---|---|---|
| **SWITCH ASSEMBLY** | 9333103729 | 29 |
| **SWITCH ASSEMBLY - PROXIMITY** | 6872100045 | 91 |
| **SWITCH ASSY.** | 9425100079 | 83 |
| **SWITCH ASSY. PRESSURE** | 9926113175<br>9926113270<br>9926113276 | 529<br>275<br>201 |
| **SWITCH L-SERIES HEADLIGHTS** | 7872100210 | 113 |
| **SWITCH L-SERIES PARK BRAKE** | 7872100211 | 113 |
| **SWITCH, 12 VOLT** | 9425100009 | 109 |
| **SWITCH, 120 TEMPERATURE (N.C.)** | 7872100170 | 230 |
| **SWITCH, EMERGENCY STOP** | 7872100071 | 113 |
| **SWITCH, HEATER CNTRL EATON 12V** | 7872100091 | 113 |
| **SWITCH, IGNITION** | 7872100051 | 113 |
| **SWITCH, KEY** | 80008491 | 186 |
| **SWITCH, KEY OPERATED 2 POSITION S** | 7872100132 | 185 |
| **SWITCH, L-SERIES AIR CONDITION** | 7872100104 | 189 |
| **SWITCH, L-SERIES AUX HOIST** | 7872100119 | 92 |
| **SWITCH, L-SERIES BOOM LIGHTS** | 7872100111 | 197 |
| **SWITCH, L-SERIES CAB TILT** | 7872100125 | 92 |
| **SWITCH, L-SERIES DEFROST FAN** | 7872100145 | 113 |
| **SWITCH, L-SERIES DRIVE SELECT** | 7872100138 | 113 |
| **SWITCH, L-SERIES ENGNE INC/DEC** | 7872100095 | 113 |
| **SWITCH, L-SERIES FAN HI/MED/LO** | 7872100105 | 113 |
| **SWITCH, L-SERIES HAZARDS** | 7872100100 | 113 |
| **SWITCH, L-SERIES HEATER ON/OFF** | 7872100106 | 113 |
| **SWITCH, L-SERIES MAIN HOIST** | 7872100118 | 92 |
| **SWITCH, L-SERIES O/R EXT/RET** | 7872100117 | 113 |
| **SWITCH, L-SERIES REAR STEER** | 7872100139 | 92 |
| **SWITCH, L-SERIES SWING BRAKE** | 7872100123 | 92 |
| **SWITCH, L-SERIES SWING SPEED** | 7872100124 | 92 |
| **SWITCH, L-SERIES WORK LIGHTS** | 7872100110 | 113 |
| **SWITCH, PUSH BUTTON** | 9352100790 | 97 |
| **SWITCH, SEAT** | 7872001408 | 87 |
| **SWITCH, SHIFTER** | 7872001734 | 205 |
| **SWITCH, TEMPERATURE 250 (N.C.)** | 7872100179 | 320 |
| **SWITCH, TURNSIGNAL/WIPER** | 7872001747 | 205 |

## Alphabetical Index — Appendix A


| Description | Part | Page |
|---|---|---|
| **SWITCH,L-SERIES CRANE FUNC PWR** | 7872100107 | 113 |
| **SWITCH,L-SERIES LF O/R BM/STAB** | 7872100112 | 113 |
| **SWITCH,L-SERIES LR O/R BM/STAB** | 7872100114 | 113 |
| **SWITCH,L-SERIES RF O/R BM/STAB** | 7872100113 | 113 |
| **SWITCH,L-SERIES RR O/R BM/STAB** | 7872100115 | 113 |
| **SWITCH,L-SERIES SKYLIGHT WIPER** | 7872100108 | 113 |
| **SWITCH,PRESSURE** | 9515102865 | 193 |
| **SWIVEL** | 7364001547 | 153 |
| **SWIVEL ASSEMBLY -** | 6364101749 | 261 |
| **SWIVEL ASSEMBLY - 14 PORT** | 7364100165 | 263 |
| **T & W ASSY - 20.5 X 25 - GENER** | 6970100151 | 451 |
| **TAB, MALE** | 7364001457 | 114 |
| **TABS,MOUNTING** | 9515102872 | 299 |
| **TAILPIPE** | 6910100017 | 401 |
| **TANK ASSEMBLY - 58 GALLON FUEL** | 7880100116 | 539 |
| **TANK ASSEMBLY - SURGE** | 2159810114 | 392 |
| **TAPE** | 9498100206 | 79 |
| **TEE** | 7888000045 | 317 |
| **TEE, SWIVEL** | 9974102211 | 243 |
| **TERMINAL** | 7345001752 | 141 |
| | 7345211401 | 125, 508 |
| | 7345211901 | 142, 153 |
| | 7345212101 | 141 |
| | 7345221901 | 142, 153 |
| | 7345231701 | 510 |
| | 7345231901 | 141, 508 |
| | 7345232001 | 508 |
| | 7345232101 | 141, 507 |
| | 7345241401 | 142 |
| | 7345242001 | 507 |
| | 7345242101 | 272 |
| | 7345261901 | 385 |
| | 7364001846 | 9, 181 |
| **TERMINAL, BLUE CABLE SEAL** | 7892000256 | 9, 181 |
| **TERMINAL, DARK RED CABLE SEAL** | 7892100003 | 385, 508 |
| **TERMINAL, FEMALE** | 7345001443 | 142 |
| | 7345001444 | 103, 125, 133, 141, 179 |
| | 7345001744 | 92, 114, 125, 141, 186, 385 |
| | 7345001944 | 125 |

## Alphabetical Index — Appendix A


| Description | Part | Page |
|---|---|---|
| **TERMINAL, FEMALE** | 7892000843<br>7892100034 | 385, 507<br>142, 510 |
| **TERMINAL, FEMALE 2.94-3.68** | 7892100033 | 509 |
| **TERMINAL, FEMALE SLEEVE** | 7364001847<br>7892000253 | 9<br>126, 179 |
| **TERMINAL, FM MP 630 SERIES** | 7892100058<br>7892100059 | 103, 125<br>103, 125 |
| **TERMINAL, GRAY CABLE SEAL** | 7892000255 | 7 |
| **TERMINAL, GREEN CABLE SEAL** | 7892000254 | 126, 179, 507 |
| **TERMINAL, GREEN CAVITY** | 7892000257 | 126, 179, 508 |
| **TERMINAL, JUMBO KNIFE** | 9364100332 | 271 |
| **TERMINAL, MALE** | 7345001446<br>7345001746 | 103, 114, 126, 133<br>92, 125, 186 |
| **TERMINAL, MALE PIN** | 7892000252 | 7, 126, 508 |
| **TERMINAL, SMALL KNIFE** | 9364100088 | 271 |
| **THERMOMETER** | 7486000836 | 519 |
| **THERMOSTAT** | 9515102838 | 147 |
| **THIMBLE, 1/8" CABLE** | 9333103697 | 15 |
| **THRUSTWASHER** | 9049105580 | 442 |
| **TIE ROD ASSEMBLY** | 9049109724 | 443 |
| **TIE, 8.14" LONG CABLE (BLACK)** | 7850000831 | 136 |
| **TIE, CABLE (BLACK)** | 7850000237<br>7850000805 | 169, 185, 320, 497, 549<br>33, 169 |
| **TIRE AND WHEEL ASSEMBLY** | 6970003422 | 451 |
| **TIRE, 20.5 X 25-24 PLY GENERAL** | 7900000380 | 453, 457 |
| **TONGUE, INSULATED RING** | 7345211701<br>7345241701<br>7345241901 | 126, 515<br>142, 507<br>179, 507 |
| **TORQUE CONVERTER GROUP** | 9904110613 | 323 |
| **TRACK, CONTROL** | 7798100005 | 145 |
| **TRACK, FREE** | 7798100006 | 145 |
| **TRANSMISSION ASSEMBLY - 6 SPEED** | 80011908 | 317 |
| **TRAY, FRONT** | 2159110150 | 537 |
| **TRAY, REAR** | 2159110151 | 537 |
| **TREADLE** | 9352100665 | 203 |
| **TRIM** | 9498100201<br>9498100202 | 79<br>79 |


**From - TERMINAL, FEMALE** **To - TRIM**

## Alphabetical Index — Appendix A


| Description | Part | Page |
|---|---|---|
| **TRIM, COVER** | 9498100396<br>9498100397 | 81<br>81 |
| **TRIM, STOP** | 9498100395 | 81 |
| **TUBE** | 203582<br>9904103551 | 19<br>327 |
| **TUBE ASSEMBLY, SUCTION** | 9904109569 | 327 |
| **TUBE ASSY, 1A MAN TO LS STEER** | 7910101516<br>7910101642 | 227<br>231 |
| **TUBE ASSY, 1B MAN TO P STEER** | 7910101517<br>7910101641 | 226<br>231 |
| **TUBE ASSY, AUXILARY HOIST DOWN** | 7910101609 | 228 |
| **TUBE ASSY, AUXILARY HOIST UP** | 7910101610 | 228 |
| **TUBE ASSY, BR MAN TO P CHARGE** | 7910101515 | 227 |
| **TUBE ASSY, COOLER IN TO CHECK** | 7910101629 | 230 |
| **TUBE ASSY, COOLER OUTLET TO 4** | 7910101616 | 230 |
| **TUBE ASSY, D1 MAN TO TANK CHAR** | 7910101513 | 226 |
| **TUBE ASSY, D4 MAN TO PD MAIN** | 7910101436 | 226 |
| **TUBE ASSY, D6 MAN TO PD MAIN** | 7910101437 | 228 |
| **TUBE ASSY, INLET MAIN VALVE** | 7910101454 | 226 |
| **TUBE ASSY, LIFT A EXT TO HOSE** | 7910101597 | 227 |
| **TUBE ASSY, LIFT B RET TO HOSE** | 7910101432 | 227 |
| **TUBE ASSY, LIFT CYLINDER** | 7910101710 | 291 |
| **TUBE ASSY, LS MAIN TO PORT 2** | 7910101638 | 231 |
| **TUBE ASSY, MAIN HOIST DOWN M&A** | 7910101607 | 228 |
| **TUBE ASSY, MAIN HOIST UP M&A** | 7910101608 | 228 |
| **TUBE ASSY, MAIN TANK TO CHECK** | 7910101628 | 226 |
| **TUBE ASSY, MAN IN TO PORT 5 SW** | 7910101433 | 226 |
| **TUBE ASSY, MANIFOLD D5 TO 10** | 7910101618 | 226 |
| **TUBE ASSY, OIL COOLER INLET** | 7910101613 | 230 |
| **TUBE ASSY, OIL COOLER OUTLET** | 7910101614 | 230 |
| **TUBE ASSY, P BR CHARGE TO TUBE** | 7910101518 | 227 |
| **TUBE ASSY, P1 MAN TO P3 MAIN** | 80000423 | 226 |
| **TUBE ASSY, PORT 6 SWIVEL TO IN** | 7910101566 | 226 |
| **TUBE ASSY, PS MAN TO PS MAIN** | 7910101435 | 226 |
| **TUBE ASSY, PUMP INLET** | 7910101464 | 320 |
| **TUBE ASSY, T BR CHARGE TO TUBE** | 7910101520 | 227 |

## Alphabetical Index — Appendix A


| Description | Part | Page |
|---|---|---|
| TUBE ASSY, TELE A EXT TO HOSE | 7910101706 | 227 |
| TUBE ASSY, TELE B RET TO HOSE | 7910101707 | 227 |
| TUBE ASSY,HOIST DR TO HOIST DR | 7910101644 | 229 |
| TUBE ASSY,LS BR CHARGE TO TUBE | 7910101519 | 226 |
| TUBE ASSY,LS MAIN TO LS CHARGE | 7910101636 | 231 |
| TUBE ASSY,PORT 4 SWIVEL TO OUT | 7910101567 | 226 |
| TUBE ASSY,PORT 4SWIVEL TO TANK | 7910101568 | 226 |
| TUBE ASSY. | 9576101399 | 299 |
| TUBE, 1/2" NYLON FUEL | 8594100012 | 539 |
| TUBE, CHARGE AIR COOL | 7910101599 | 391 |
| TUBE, CYLINDER | 9904106482 | 359 |
| TUBE, DIPSTICK | 7910101627 | 314 |
| TUBE, EXHAUST | 7910101450 | 401 |
| TUBE, INTAKE 28" | 7910101222 | 403 |
| TUBE, LOWER RADIATOR | 7910101584 | 319 |
| TUBE, RADIATOR | 7910101600<br>7910101601 | 395<br>313 |
| TUBE, RUBBER 5/16 ID X 50’LONG | 8596902531 | 392 |
| TUBE, STRAIGHT | 6910100085 | 401 |
| TUBE, THIRD SPEED | 9904109568 | 327 |
| TUBE,STROBE | 9581100389 | 309 |
| TUBING, HEAT SHRINK 1/2" I.D. | 8594100257 | 9, 103, 126, 180, 185, 385, 507, 515 |
| TUBING, HEAT SHRINK 1/4" I.D. | 8594100256 | 95, 103, 126, 180, 185, 385, 508 |
| TUBING, HEAT SHRINK 3/4 I.D. | 8594100265 | 185 |
| TURBINE SHAFT GROUP | 9904110611 | 323 |
| TURNTABLE WELD | 80014148 | 251 |
| U-JOINT ASSY. | 9364101867 | 427 |
| U-JOINT BEARING WITH HARDWARE | 9364101535 | 423, 425 |
| VALVE ASSEMBLY - ACCESSORY | 80002486 | 275 |
| VALVE ASSEMBLY - AXLE LOCKOUT | 7926100924 | 525 |
| VALVE ASSEMBLY - BRAKE TREADLE | 7926100912 | 199 |
| VALVE ASSEMBLY - DIRECTIONAL CONT | 7926100986 | 275 |
| VALVE ASSEMBLY - HOLDING | 7926100925 | 291 |
| VALVE ASSEMBLY - OUTRIGGER CONTRO | 7926100859 | 525 |

## Alphabetical Index — Appendix A


| Description | Part | Page |
|---|---|---|
| **VALVE ASSEMBLY - OUTRIGGER SELECT** | 7926100908<br>7926100936 | 525<br>525 |
| **VALVE ASSEMBLY - PARK BRAKE RANGE** | 7926100911 | 525 |
| **VALVE ASSEMBLY - SOLENOID 12 VOLT** | 9926111720 | 533 |
| **VALVE ASSEMBLY - STEERING CONTROL** | 7926100899 | 205 |
| **VALVE ASSY, CHECK** | 7926100948 | 230 |
| **VALVE ASSY, DUAL ACCUMULATOR CHAR** | 7926100910 | 275 |
| **VALVE ASSY. BRAKE** | 9926113271 | 201 |
| **VALVE ASSY. CARTRIDGE** | 9926113192<br>9926113194 | 533<br>533 |
| **VALVE ASSY. CHECK** | 9926113193 | 533 |
| **VALVE ASSY. GAS** | 9005100230 | 275 |
| **VALVE ASSY. INLET SECTION** | 9926113280 | 277 |
| **VALVE ASSY. OUTLET SECTION** | 9926113284 | 277 |
| **VALVE ASSY. WORK SECTION** | 9926113281<br>9926113283<br>9926113459 | 277<br>277<br>277 |
| **VALVE, #12 INLET CHECK** | 7926100959 | 225 |
| **VALVE, AIR** | 9364101869 | 427 |
| **VALVE, BRAKE** | 9974102885 | 243 |
| **VALVE, BY-PASS** | 9437100476 | 521 |
| **VALVE, CART. & COIL ASSY. 12V.** | 9926113045<br>9926113140<br>9926113174 | 283<br>529<br>529 |
| **VALVE, CART. COUNTER BALANCE** | 9926113144 | 295 |
| **VALVE, CART. RELIEF @ 1800 PSI** | 9926113254 | 284 |
| **VALVE, CART.SEQUENCE @4400 PSI** | 9926113145 | 295 |
| **VALVE, CARTRIDGE** | 9926106474<br>9926112986 | 283, 533<br>527 |
| **VALVE, CARTRIDGE SHUTTLE** | 9926113184 | 533 |
| **VALVE, CHECK** | 9926111878<br>9926113049 | 533<br>283 |
| **VALVE, CHECK CART.** | 9926113293 | 230 |
| **VALVE, CHECK CARTRIDGE** | 9926113089 | 533 |
| **VALVE, DRAIN** | 7926000557 | 318 |
| **VALVE, DUST EJECTION** | 90001162 | 405 |
| **VALVE, EXPANSION** | 9515102831 | 147 |


**From - VALVE ASSEMBLY - OUTRIGGER SELECTOR** **To - VALVE, EXPANSION**

## Alphabetical Index — Appendix A


| Description | Part | Page |
|---|---|---|
| **VALVE, INLET CHECK** | 7926002156 | 233 |
| **VALVE, PRESS. COMPENSATOR** | 9926113443 | 283 |
| **VALVE, RELIEF @ 2500 PSI** | 9926113167 | 283 |
| **VALVE, SHUT-OFF** | 7926002329 | 320 |
| **VALVE, SHUTTLE** | 9926113169 | 533 |
| **VALVE, WATER** | 90001014 | 148 |
| **VALVE,CART. RELIEF @ 3250 PSI** | 9926113287 | 277, 279 |
| **VALVE,CART. RELIEF @ 3500 PSI** | 9926113286 | 277, 280 |
| **VALVE,CART. RELIEF @ 4000 PSI** | 9926113018 | 277, 281 |
| **VALVE,CART. RELIEF @ 4300 PSI** | 9926113017 | 277, 280 |
| **VALVE,CART/COIL PRESS.REDUCING** | 9926113165 | 283 |
| **VALVE,PRESS.REDUCING @2500PSI** | 9926113186 | 533 |
| **VALVE,PRESS.REDUCING 250 PSI** | 90012924 | 283 |
| **VALVE,PRESS.REDUCING 2500 PSI** | 90012925 | 283 |
| **VALVE-DRAIN COCK** | 7926000014 | 313 |
| **VENT** | 9880100073 | 543 |
| **WASHER** | 9364101903 | 423 |
| | 9437100857 | 521 |
| | 9576101124 | 257 |
| | 9576101129 | 257 |
| | 9722105437 | 373 |
| | 9904100983 | 353, 356 |
| | 9904103595 | 331, 355 |
| | 9904106235 | 361 |
| | 9926113197 | 534 |
| | 9926113300 | 284 |
| | 9974102839 | 244 |
| | 9974102843 | 244 |
| **WASHER,** | 6949001154 | 49 |
| | 7949000190 | 41, 51 |
| | 7949000615 | 64, 537 |
| | 9049102985 | 445 |
| | 9049111037 | 433, 434 |
| | 9086100804 | 37 |
| | 9632102851 | 207 |
| | 9926111457 | 281 |
| | 9974102821 | 242 |
| **WASHER, #10 FLAT** | 9364101851 | 272 |
| **WASHER, .450 I.D. NYLON FLAT** | 7949000561 | 485 |
| **WASHER, 1" I.D.** | 7949000360 | 477 |

## Alphabetical Index — Appendix A


| Description | Part | Page |
|---|---|---|
| **WASHER, 1" I.D. HARDENED ROUND** | 7949000359 | 251, 261 |
| **WASHER, 1/2" I.D. FLAT** | 7949000235 | 291, 313, 318, 391, 421 |
| **WASHER, 12 FLAT** | 00437529 | 251 |
| **WASHER, 5/8" I.D.** | 7949000259 | 313, 318 |
| **WASHER, 5/8" I.D. FLAT** | 7949000148 | 55, 429 |
| **WASHER, 7/8" I.D.** | 7949000237 | 287 |
| **WASHER, BEVELED** | 7949001227 | 91 |
| **WASHER, BLACK NYLON** | 7949001186 | 91, 109, 159 |
| **WASHER, BLACK PLASTIC** | 7949000623 | 63 |
| **WASHER, COMPRESSION** | 9926111435 | 277 |
| **WASHER, COPPER** | 7949180045 | 540 |
| **WASHER, DOCK** | 6949100020<br>7949180046 | 313<br>313 |
| **WASHER, FINISHED** | 7949001165 | 64 |
| **WASHER, HARDENED** | 7949000263<br>9049103739<br>9049106450 | 314, 317<br>442<br>442 |
| **WASHER, HARDENED ROUND** | 6949000036<br>7949000534 | 391<br>263 |
| **WASHER, KEYED** | 7949000269 | 41, 51 |
| **WASHER, LOCK** | 9049101704<br>9049101705<br>9049109896<br>9086100705<br>9333102266<br>9904109352<br>9904109617<br>9904109620<br>9904109676 | 442<br>433, 437<br>339<br>37<br>21<br>333<br>359<br>359<br>339 |
| **WASHER, LOCK 1/2" I.D.** | 9974100476 | 242, 243 |
| **WASHER, PLATE** | 7705100003 | 237 |
| **WASHER, SEAL** | 9974103092 | 243 |
| **WASHER, THRUST** | 7949000383<br>7949000385<br>9049101673<br>9049101847<br>9049101848<br>9049112768<br>9049112769<br>9086100802 | 289<br>3<br>441<br>442<br>442<br>434<br>434<br>37 |


**From - WASHER, 1" I.D. HARDENED ROUND** **To - WASHER, THRUST**

## Alphabetical Index — Appendix A


| Description | Part | Page |
|---|---|---|
| **WASHER, THRUST** | 9086100803 | 37 |
| | 9904103610 | 355 |
| | 9904109599 | 347 |
| | 9904109600 | 347 |
| | 9974102181 | 241, 244 |
| | 9974102185 | 241 |
| | 9974102747 | 242 |
| | 9974102849 | 241 |
| **WEATHERSEAL** | 9498100337 | 77 |
| | 9498100339 | 77 |
| **WEDGE** | 9826100007 | 11, 45 |
| **WEDGE, CABLE 5/8"** | 9974103088 | 242 |
| **WEIGHT, FEMALE** | 9333101924 | 27, 31 |
| **WEIGHT, MALE** | 9333101925 | 27, 31 |
| **WHEEL & DISC ASSY** | 6970100153 | 453, 457 |
| **WHEEL 17.00 X 25.0** | 7970140708 | 455, 459 |
| **WHEEL HUB** | 9049107128 | 442 |
| **WHEEL, 5/8" ROPE SHEAVE** | 6718100030 | 43, 53 |
| **WHEEL, SHEAVE** | 9086100800 | 37 |
| **WHEEL, STEERING** | 7970140706 | 205 |
| **WINDOW ASSEMBLY - REAR** | 7498000897 | 61 |
| **WINDOW ASSEMBLY - RIGHT HAND** | 7498100028 | 61 |
| **WIRE** | 9333102479 | 21 |
| **WIRE, 16 GAUGE WHITE** | 8977010300 | 185 |
| **WIRE, GROUND** | 9364101852 | 272 |
| **WIRE, SAFETY** | 9086100933 | 37 |
| **YOKE** | 7308000042 | 301 |
| **YOKE ASSY.** | 90012592 | 423 |
| | 9049112432 | 434 |
| **YOKE ASSY. W/ DUST CAP** | 90012594 | 425 |
| **ZINC MUFFLER CLAMP** | 7300001018 | 313 |

## Numerical Index — Appendix B

| Part | Description | Page |
|---|---|---|
| **00437529** | WASHER, 12 FLAT | 251 |
| **00437742** | HEX L NUT M6 8-A2C ISO 7040 | 303 |
| **01147202** | CAP SCREW, SOCKET HEAD M6X35 | 291 |
| **01374648** | SLOTTED CHEESE HEAD SCREW | 109, 114 |
| **01571750** | NUT LTM-M6 W1 DIN 3015 | 291 |
| **01923998** | HEX HEAD NUT M6 | 142 |
| **01925033** | FLAT WASHER - 6 | 142 |
| **203582** | TUBE | 19 |
| **203583** | ROLLER | 19 |
| **203584** | ROLLER | 19 |
| **2114900861** | POINTER ASSEMBLY | 47 |
| **2150200656** | PIN ASSEMBLY | 477 |
| **2159110150** | TRAY, FRONT | 537 |
| **2159110151** | TRAY, REAR | 537 |
| **2159110174** | FENDER, RIGHT HAND REAR | 471 |
| **2159110175** | FRONT FENDER - LEFT HAND | 471 |
| **2159110176** | FENDER, RIGHT HAND FRONT | 471 |
| **2159110177** | LADDER | 523, 547 |
| **2159110178** | LADDER ASSEMBLY | 517, 539 |
| **2159110274** | STEP, CARRIER DECK | 219 |
| **2159210126** | PIN, SWING LOCK | 301 |
| **2159210233** | COUNTERWEIGHT | 477 |
| **2159810022** | MOUNT, TRANSMISSION | 317 |
| **2159810023** | MOUNT, TRANSMISSION | 317 |
| **2159810114** | TANK ASSEMBLY - SURGE | 392 |
| **2159810140** | HOOD SECTION, REAR | 311 |
| **2159810147** | RADIATOR ASSEMBLY | 391 |
| **2159810148** | SHROUD | 395 |
| **2159810180** | SURGE TANK | 399 |
| **2159810225** | ENGINE ASSEMBLY - CUMMINS QSB6.7 | 313 |
| **2159910022** | NOSE, AUXILIARY | 41 |
| **2188410002** | PANEL | 135 |
| **4159110071** | PLATE | 523, 547 |
| **4159110250** | STEP | 489 |
| **4159110251** | PLATE, MOUNTING | 539 |
| **4159110253** | STRAP, MOUNTING | 550 |

**From - 00437529** **To - 4159110253**

## Numerical Index — Appendix B

| Part | Description | Page |
|---|---|---|
| **4159110254** | STRAP, MOUNTING | 550 |
| **4159110256** | COVER, ACCESS | 471 |
| **4159110267** | STEP, TAPERED | 471 |
| **4159110268** | GUARD, MUD | 471 |
| **4159110269** | GUARD, MUD | 471 |
| **4159110271** | SUPPORT, FENDER | 471 |
| **4159110282** | COVER, TRANSMISSION ACCESS FRONT | 311 |
| **4159110291** | PANEL, DOOR | 311 |
| **4159110292** | COVER, TRANSMISSION ACCESS | 311 |
| **4159110294** | COVER, RIGHT SIDE HOOD | 311 |
| **4159110295** | COVER, LEFT SIDE HOOD | 311 |
| **4159110298** | PLATE, COVER | 465 |
| **4159110299** | PLATE, COVER | 465 |
| **4159110300** | PLATE, COVER | 465 |
| **4159110314** | BRACKET, HEAD/TAIL LIGHT | 481 |
| **4159110343** | HANDLE, GRAB | 489 |
| **4159110364** | HANDLE, GRAB | 489 |
| **4159200657** | GUARD, PINION | 251 |
| **4159210122** | BRACKET, ANGLE | 303 |
| **4159210126** | BRACKET, STROBE LIGHT | 307 |
| **4159210164** | BRACKET, FRONT | 303 |
| **4159210165** | BRACKET, MID | 303 |
| **4159210166** | BRACKET, REAR | 303 |
| **4159210167** | BRACKET, COVER | 303 |
| **4159210191** | GRILL | 477 |
| **4159210193** | PLATE - SHIELD | 407 |
| **4159210194** | MOUNTING BRACKET | 407 |
| **4159210195** | MOUNTING BRACKET | 407 |
| **4159810060** | PLATE, MOUNTING | 320 |
| **4159810068** | GRILL, ENGINE HOOD | 415 |
| **4159810070** | BAFFLE | 311 |
| **4159810074** | SHROUD BOTTOM PLATE | 391 |
| **4159810075** | SHROUD BACK PLATE | 391 |
| **4159810076** | BRACKET, CLAMP | 313 |
| **4159810077** | STRAP, MOUNTING | 391 |
| **4159810078** | BRACKET | 321 |

**From - 4159110254** **To - 4159810078**

## Numerical Index — Appendix B


| Part | Description | Page |
|---|---|---|
| **4159810079** | BRACKET | 314 |
| **4159810082** | SUPPORT, PUMP | 319 |
| **4159810083** | SUPPORT, PUMP | 321 |
| **4159810085** | COVER, BATTERY BOX | 485 |
| **4159810086** | BRACKET, POWER FUSES | 549 |
| **4159900304** | SHIM (.0544") | 41, 51 |
| **4159910026** | CAP, END | 41, 51 |
| **4174110070** | STEP | 523, 547 |
| **4174810060** | PANEL, RELAY | 513 |
| **4195900219** | POINTER | 49 |
| **4197110295** | PLATE, STEP INNER | 489 |
| **4197110296** | PLATE, STEP OUTER | 489 |
| **6033100018** | ARMREST | 91 |
| **6059000910** | BAR | 513 |
| **6059100001** | BAR, BUSS | 549 |
| **6069001186** | CONE, BEARING | 43, 53 |
| **6184001406** | BRACKET, FUSE | 141 |
| **6184003088** | BRACKET, SEAT BAR | 87 |
| **6184100007** | BRACE | 109 |
| **6184100027** | BRACKET, SEAT | 145 |
| **6184100054** | BRACKET, LATCH | 485 |
| **6184100242** | BRACKET, SWITCH | 185 |
| **6199100090** | BUSHING | 251 |
| **6199100100** | BUSHING | 261 |
| **6199100104** | BUSHING | 313 |
| **6245100077** | BRACKET | 91 |
| **6245100081** | ARM SUPPORT | 91 |
| **6245100273** | BAR, LATCH | 63 |
| **6245100878** | BRACKET, PEDAL MOUNTING | 199 |
| **6245100947** | CONSOLE, FRONT FRAME | 114 |
| **6245101002** | MOUNT, BRACKET LEVEL | 61 |
| **6245101003** | MOUNT, BRACKET MODULE | 109 |
| **6245101004** | SUPPORT, CONSOLE | 61 |
| **6245101005** | MOUNT, STEERING COLUMN | 61 |
| **6245101007** | PLATE, PEDAL MOUNTING | 199 |
| **6245101009** | PLATE, RIGHT HAND CONSOLE | 63 |


**From - 4159810079** **To - 6245101009**

## Numerical Index — Appendix B

| Part | Description | Page |
|---|---|---|
| **6245101025** | PLATE, COVER | 195 |
| **6245101026** | BRACKET, MOUNTING | 195 |
| **6245101030** | BRACKET, MOUNTING | 61 |
| **6245101033** | CATCH, REAR LATCH | 61 |
| **6245101034** | ANGLE | 62 |
| **6245101035** | SILL, DOOR | 107 |
| **6245101036** | JAMB, REAR DOOR | 61 |
| **6245101038** | CHANNEL, DOOR | 61, 71 |
| **6245101061** | CHANNEL | 61 |
| **6245101062** | BRACKET, LEFT HAND SUN SCREEN | 151 |
| **6245101063** | BRACKET, RIGHT HAND SUN SCREEN | 151 |
| **6245101066** | BRACKET, MODULE SUPPORT | 133 |
| **6245101104** | PLATE, COVER | 62 |
| **6245101133** | BRACKET, MOUNTING | 61 |
| **6245101144** | DOOR WELDMENT, CAB | 63, 71 |
| **6245101145** | CAB WELD | 61 |
| **6245101147** | CAB ASSEMBLY | 55 |
| **6245101159** | DOOR INSTALLATION - CAB | 69 |
| **6245101201** | PLATE, KICK | 66 |
| **6245101332** | CONSOLE ASSEMBLY - FRONT | 109 |
| **6246001174** | LANYARD | 153 |
| **6246100015** | CABLE ASSEMBLY - BOOM | 5 |
| **6246100259** | CABLE ASSEMBLY - BOOM LIGHTS | 5 |
| **6258100042** | COVER | 169 |
| **6326100001** | COLUMN ASSEMBLY - MODIFIED TILT | 205 |
| **6364101749** | SWIVEL ASSEMBLY - | 261 |
| **6372100486** | BARREL, LIFT CYLINDER | 291 |
| **6372100488** | CYLINDER ASSEMBLY - 9" LIFT | 289 |
| **6458100000** | FLOAT ASSEMBLY - OUTRIGGER | 461 |
| **6458100001** | FLOAT, OUTRIGGER | 463 |
| **6511100009** | HANDLE, DOOR (MODIFIED) | 62 |
| **6512100807** | HARNESS ASSEMBLY - ENGINE RELAY | 513 |
| **6512100819** | HARNESS ASSEMBLY - ENGINE | 381 |
| **6512100837** | HARNESS ASSEMBLY - SEAT | 92 |
| **6512100853** | HARNESS ASSEMBLY - TURN SIGNAL/W | 209 |
| **6512100854** | HARNESS ASSEMBLY - SHIFTER | 209 |

**From - 6245101025** **To - 6512100854**

## Numerical Index — Appendix B

| Part | Description | Page |
|---|---|---|
| **6512100914** | HARNESS ASSEMBLY - FUSE AND RELA | 135 |
| **6512101096** | HARNESS ASSEMBLY - CARRIER | 497 |
| **6512101098** | HARNESS ASSEMBLY - SUPERSTRUCTUR | 169 |
| **6512101099** | HARNESS ASSEMBLY - FRONT CONSOLE | 113 |
| **6581100024** | LIGHT ASSEMBLY - MODIFIED BOOM | 5 |
| **6581100074** | LIGHT ASSEMBLY - MODIFIED STROBE | 307 |
| **6585100004** | CATCH, FRONT LATCH | 61 |
| **6585100018** | LATCH ASSY | 485 |
| **6593000137** | LEVER | 463 |
| **6608001308** | LUG | 62 |
| **6679100157** | PANEL ASSEMBLY - ENGINE RELAYS | 497 |
| **6679100195** | PANEL ASSEMBLY - FUSE AND RELAY | 133 |
| **6689100012** | PIN | 41 |
| **6689100025** | PIN | 429 |
| **6689100036** | PIN | 429 |
| **6701000970** | PISTON, 9" CYLINDER | 291 |
| **6705004266** | SHIM (.1250") | 237 |
| **6705004267** | SHIM (.0598") | 237 |
| **6705004268** | SHIM (.0359") | 237 |
| **6705012439** | PLATE, MOUNTING | 61 |
| **6705016148** | PLATE | 263 |
| **6705016902** | PLATE, COVER | 62 |
| **6705017532** | SHIM, | 33 |
| **6705018338** | PLATE | 91 |
| **6705100026** | PLATE, MOUNTING | 62, 71 |
| **6705100083** | PLATE, TAP | 63, 71 |
| **6705100115** | PLATE | 401 |
| **6705100260** | PLATE, RETAINER | 263 |
| **6705170886** | PLATE, MOUNTING | 61 |
| **6705170914** | PLATE | 92 |
| **6705171011** | PLATE, RETAINER | 263 |
| **6705171095** | PLATE, MOUNT | 313 |
| **6714100004** | POST, CENTER | 263 |
| **6718100030** | WHEEL, 5/8" ROPE SHEAVE | 43, 53 |
| **6718100031** | SHEAVE ASSEMBLY - 5/8" ROPE | 41, 51 |
| **6768100342** | ROD, 7" CYLINDER | 291 |

**From - 6512100914** **To - 6768100342**

## Numerical Index — Appendix B


| Part | Description | Page |
|---|---|---|
| **6794000650** | GASKET | 320 |
| **6794001567** | GASKET | 320 |
| **6794100011** | GASKET, 2 BOLT HOLE | 320 |
| **6794100012** | GASKET, 2 BOLT HOLE | 320 |
| **6810001156** | SHAFT | 51 |
| **6810001159** | SHAFT | 41 |
| **6810002810** | SHAFT | 63 |
| **6810100067** | SHAFT, PIVOT | 3 |
| **6814100042** | GUARD, MUFFLER | 401 |
| **6829015131** | SEALANT, ADHESIVE | 61 |
| **6860100000** | SEAL, MODIFIED | 61 |
| **6865147860** | STUD | 549 |
| **6872100045** | SWITCH ASSEMBLY - PROXIMITY | 91 |
| **6910001855** | SPACER | 41 |
| **6910010579** | SPACER | 51 |
| **6910100009** | SPACER | 51 |
| **6910100017** | TAILPIPE | 401 |
| **6910100085** | TUBE, STRAIGHT | 401 |
| **6949000036** | WASHER, HARDENED ROUND | 391 |
| **6949001154** | WASHER, | 49 |
| **6949100020** | WASHER, DOCK | 313 |
| **6970003422** | TIRE AND WHEEL ASSEMBLY | 451 |
| **6970100151** | T & W ASSY - 20.5 X 25 - GENER | 451 |
| **6970100153** | WHEEL & DISC ASSY | 453, 457 |
| **6978100956** | ELECTRICAL SYSTEM INSTALLATION | 320 |
| **7001100579** | MAT, FLOOR | 107 |
| **7001100580** | FOAM, .75 ACOUSTIC | 107 |
| **7001100581** | FOAM, .75 ACOUSTIC | 107 |
| **7001100582** | FOAM, .75 ACOUSTIC | 107 |
| **7001100583** | FOAM, 1.00 ACOUSTIC | 107 |
| **7001100584** | FOAM, 1.00 ACOUSTIC | 107 |
| **7001100585** | FOAM, 1.00 ACOUSTIC | 107 |
| **7001100586** | FOAM, 1.00 ACOUSTIC | 107 |
| **7001100587** | FOAM, 1.00 ACOUSTIC | 107 |
| **7001100588** | FOAM, 1.00 ACOUSTIC | 107 |
| **7001100589** | FOAM, 1.00 ACOUSTIC | 107 |


**From - 6794000650** **To - 7001100589**

## Numerical Index — Appendix B

| Part | Description | Page |
|---|---|---|
| **7005100017** | ACCUMULATOR ASSY,HYDRAULIC OIL | 275 |
| **7013000156** | ELBOW | 403 |
| **7013000405** | ADAPTER | 319, 539 |
| **7013001112** | ADAPTER | 225 |
| **7013100029** | ADAPTER, 08 ORB TO 08 BEADLOCK | 297 |
| **7013100030** | ADAPTER, 08 ORB TO 10 BEADLOCK | 297 |
| **7013100047** | ADAPTER,ORB TO HOSE BARB 20-16 | 319 |
| **7013100059** | ADAPTER, 0.062 DIA ORIFICE | 231 |
| **7025000821** | ALARM, FAST PULSE BUZZER | 135 |
| **7025000836** | ALARM, BACK-UP | 497 |
| **7025100013** | HORN | 62 |
| **7029100003** | ALTERNATOR | 317 |
| **7033001063** | PAD, ARMREST | 91 |
| **7049101487** | AXLE ASSEMBLY - DRIVE/STEER | 429 |
| **7056000620** | BAND, MOUNTING | 401 |
| **7056100011** | BAND, MOUNTING | 403 |
| **7064000070** | BATTERY, 12 VOLT | 549 |
| **7069000175** | CLOSURE, BEARING | 43, 53 |
| **7069000516** | BEARING | 63, 71 |
| **7069000518** | BEARING | 49 |
| **7069001045** | BEARING | 63 |
| **7069100081** | BEARING, TURNTABLE | 251 |
| **7086000875** | STRIP, TERMINAL | 141 |
| **7086000947** | BLOCK, FUSE | 141 |
| **7086001082** | HOLDER, FUSE | 135, 513, 549 |
| **7086100000** | BLOCK, SLIDE | 61, 71 |
| **7086100002** | BLOCK | 61, 71 |
| **7086100144** | BLOCK, SPACER | 66 |
| **7099000154** | SCREW, CABINET | 64 |
| **7099000378** | SCREW, 3/8" - 16NC X 3/8" SET | 291 |
| **7099000399** | BOLT, STACKING | 185 |
| **7099001159** | SCREW, THUMB | 133 |
| **7099100020** | SCREW,SOCKET HD 5/16 X 1/2" LG | 485 |
| **7099100023** | CAP SCREW - HEX SOCKET HEAD | 33 |
| **7099100054** | SCREW, M10X20 DIN 316 WING | 307 |
| **7101100611** | SCREW, MACHINE | 65 |

**From - 7005100017** **To - 7101100611**

## Numerical Index — Appendix B

| Part | Description | Page |
|---|---|---|
| **7101101210** | SCREW, MACHINE | 92 |
| **7105140650** | CAP SCREW, | 63 |
| **7105141250** | 1/4" - 28 NF X 1 1/2" GRADE 5 | 66 |
| **7105180850** | CAP SCREW, | 429 |
| **7108161450** | CAP SCREW, | 318 |
| **7108181650** | BOLT, HEX | 421 |
| **7110080605** | CAP SCREW, | 33 |
| **7110150818** | CAP SCREW, | 71 |
| **7110151205** | CAP SCREW, | 29, 35 |
| **7110151618** | CAP SCREW, | 92 |
| **7111040410** | SCREW, MACHINE | 497 |
| **7111040610** | SCREW, MACHINE | 65, 135 |
| **7111080410** | SCREW, MACHINE | 136 |
| **7111080810** | SCREW, MACHINE | 186 |
| **7111100611** | SCREW, MACHINE | 135, 141 |
| **7111100807** | SCREW, MACHINE | 135, 513, 549 |
| **7111100811** | SCREW, MACHINE | 136, 549 |
| **7111140410** | SCREW, MACHINE | 311 |
| **7111140610** | SCREW, MACHINE | 311 |
| **7111140810** | SCREW, MACHINE | 513, 549 |
| **7111140811** | SCREW, MACHINE | 159 |
| **7111150864** | BOLT, CARRIAGE | 64 |
| **7111151664** | BOLT, CARRIAGE | 91 |
| **7111161064** | BOLT, CARRIAGE | 64 |
| **7111161264** | BOLT, CARRIAGE | 63, 71 |
| **7115140450** | CAP SCREW, | 135 |
| **7115140478** | CAP SCREW, | 151 |
| **7115140550** | CAP SCREW, | 133, 185 |
| **7115140650** | CAP SCREW, | 29, 35, 63, 299, 545 |
| **7115141450** | CAP SCREW, | 71, 91 |
| **7115143250** | CAP SCREW, | 19 |
| **7115144450** | CAP SCREW, 1/4-20UNC X 5 1/2 | 19 |
| **7115150650** | CAP SCREW, | 550 |
| **7115150750** | CAP SCREW, | 186 |
| **7115150850** | CAP SCREW, | 49, 64, 71, 247, 249 |
| **7115152050** | CAP SCREW, | 545 |

**From - 7101101210** **To - 7115152050**

## Numerical Index — Appendix B

| Part | Description | Page |
|---|---|---|
| **7115160650** | CAP SCREW, | 247, 249, 527 |
| **7115160750** | CAP SCREW, | 63 |
| **7115160850** | CAP SCREW, | 205 |
| **7115160878** | SCREW, FLANGE | 41, 51 |
| **7115161050** | CAP SCREW, | 55, 228, 229, 497 |
| **7115161250** | CAP SCREW, | 33, 69, 365 |
| **7115161450** | CAP SCREW, | 71 |
| **7115171250** | CAP SCREW, | 227 |
| **7115174450** | CAP SCREW, | 231 |
| **7115181050** | CAP SCREW, | 429 |
| **7115181250** | CAP SCREW, | 227 |
| **7115181450** | CAP SCREW, | 319 |
| **7115181650** | CAP SCREW, 1/2"-13UNCX2"LONG | 263 |
| **7115182250** | CAP SCREW, | 63 |
| **7115184050** | CAP SCREW, | 291 |
| **7115203050** | CAP SCREW, | 55 |
| **7115221650** | CAP SCREW, | 317 |
| **7115222450** | CAP SCREW, | 237 |
| **7118160850** | CAP SCREW, | 411 |
| **7118171050** | CAP SCREW, | 325 |
| **7118201450** | CAP SCREW, | 318 |
| **7118244250** | CAP SCREW, | 287 |
| **7118264250** | CAP SCREW, | 251 |
| **7121110801** | MACHINE SCREW, M4X12 SLOTTED | 65, 151 |
| **7121111101** | MACHINE SCREW, M4X20 SLOTTED | 65 |
| **7121111301** | SCREW, M4X30 LONG SLOTTED PAN | 91 |
| **7121130801** | MACHINE SCREW, M5X12 SLOTTED | 145 |
| **7121131101** | MACHINE SCREW, M5X20 SLOTTED | 65, 485 |
| **7121131901** | Slot PMS M5x60 -4.8 ISO 1580 | 205 |
| **7121151401** | SCREW, M6X35 LONG SLOTTED PAN | 91, 109 |
| **7126130953** | CAP SCREW, M5 X 14MM HEX HEAD | 303 |
| **7126131250** | CAP SCREW, M5 X 25MM HEX HEAD | 307 |
| **7126151153** | CAP SCREW, M6X20 HEX HEAD | 65, 133, 199, 275, 391, 497 |
| **7126151253** | CAP SCREW, M6 X 25MM | 395 |
| **7126151353** | CAP SCREW, M6X30 HEX HEAD | 133 |
| **7126151650** | CAP SCREW, M6 X 45MM HEX HEAD | 64, 303 |

**From - 7115160650** **To - 7126151650**

## Numerical Index — Appendix B

| Part | Description | Page |
|---|---|---|
| **7126152150** | CAP SCREW, M6 X 70MM HEX HEAD | 525 |
| **7126171150** | CAP SCREW, M8 X 20MM HEX HEAD | 251, 263, 275, 311, 415, 525 |
| **7126171250** | CAP SCREW, M8X25 HEX HEAD | 64 |
| **7126171253** | CAP SCREW, M8X25 HEX HEAD | 87, 109, 169, 303, 314, 392, 407, 465, 471, 477, 481 |
| **7126171350** | CAP SCREW, M8 X 30MM HEX HEAD | 87, 145, 297 |
| **7126171353** | CAP SCREW, HEX HEAD M8X30MM | 303 |
| **7126171550** | CAP SCREW, M8 X 40MM HEX HEAD | 263 |
| **7126171553** | CAP SCREW, M8 X 40MM HEX HEAD | 401 |
| **7126172150** | CAP SCREW, HEX HEAD M8X70MM | 525 |
| **7126191153** | SCREW, HEX HEAD | 64, 199 |
| **7126191250** | CAP SCREW, M10 X 25MM HEX HEAD | 311, 320, 381, 525 |
| **7126191253** | CAP SCREW | 65, 109, 314, 321, 401, 403, 517, 539 |
| **7126191350** | CAP SCREW, M10X30 HEX HEAD | 217, 219, 471, 537 |
| **7126191353** | CAP SCREW, M10 X 30MM HEX HEAD | 65, 401, 407, 489 |
| **7126191450** | CAP SCREW, M10 X 35MM HEX HEAD | 64, 411, 471, 519 |
| **7126191550** | CAP SCREW, M10 X 40MM HEX HEAD | 317, 489, 523, 537, 547 |
| **7126191650** | HHCS M10x45 -8.8 ISO 4014 | 411 |
| **7126191750** | CAP SCREW, M10 X 50MM HEX HEAD | 64, 313, 411, 489 |
| **7126192650** | CAP SCREW, M10 X 100MM HEX HEAD | 317 |
| **7126211150** | CAP SCREW, M12 X 20MM HEX HEAD | 62, 313 |
| **7126211250** | CAP SCREW, M12 X 25MM HEX HEAD | 391 |
| **7126211253** | CAP SCREW, M12 X 25MM HEX HEAD | 318, 465, 540 |
| **7126211353** | CAP SCREW, M12X30 HEX HEAD | 64, 381, 471 |
| **7126211450** | CAP SCREW, M12 X 35MM HEX HEAD | 391 |
| **7126211454** | CAP SCREW, M12X35 SOCKET HEAD | 318 |
| **7126211550** | CAP SCREW M12 X 40 | 407, 540 |
| **7126211650** | CAP SCREW, HEX HEAD M12X45 | 421 |
| **7126211853** | CAP SCREW, M12X55 HEX HEAD | 314 |
| **7126212150** | CAP SCREW, M12 X 70MM HEX HEAD | 275, 391 |
| **7126212250** | CAP SCREW, M12 X 75MM HEX HEAD | 251 |
| **7126241653** | CAP SCREW, M16 X 45MM HEX HEAD | 517 |
| **7126243150** | CAP SCREW, M16X150 HEX HEAD | 3 |
| **7126243350** | HHCS M16x170 -8.8 ISO 4017 | 289 |
| **7126272353** | CAP SCREW, M20 X 80MM HEX HEAD | 477 |

**From - 7126152150** **To - 7126272353**

## Numerical Index — Appendix B

| Part | Description | Page |
|---|---|---|
| **7126294350** | CAP SCREW, M24X340 HEX HEAD | 261 |
| **7127241550** | CAP SCREW, M16 X 40MM HEX HEAD | 263 |
| **7127242653** | CAP SCREW, M16X100 HEX HEAD | 313 |
| **7127272850** | CAP SCREW, M20X120 HEX HEAD | 313 |
| **7127273950** | SCREW, M20X260 HEX HEAD CAP | 429 |
| **7128151154** | SHCS M6x20 -12.9 ISO 4762 | 485 |
| **7128171254** | CAP SCREW, M8X25 SOCKET HEAD | 145 |
| **7128171454** | CAP SCREW, MM 8 X 35MM SOCKET | 87 |
| **7172000545** | BOOT, DT2S CONNECTOR | 179, 386, 507 |
| **7172000546** | BOOT | 193, 309, 386, 411, 497 |
| **7172000547** | BOOT | 179, 385, 510 |
| **7172000549** | BOOT | 142 |
| **7172000550** | BOOT | 179, 209 |
| **7172000551** | BOOT | 142, 181, 185, 272, 509 |
| **7172000552** | BOOT | 179, 209, 385, 507 |
| **7172000553** | BOOT | 179, 509 |
| **7172000554** | BOOT | 180, 385, 508 |
| **7172000558** | BOOT, TERMINAL | 142, 509 |
| **7172000564** | BOOT | 272, 509 |
| **7172000565** | BOOT, CONNECTOR | 180, 272, 509 |
| **7172000567** | BOOT, CONNECTOR | 181, 273, 386, 510 |
| **7172000568** | BOOT, CONNECTOR | 185, 510, 515 |
| **7172100002** | BOOT, PLUG | 103, 180, 507 |
| **7172100003** | BOOT-DTM3P-RECP | 95 |
| **7172100004** | BOOT, DTP2S-BT | 385 |
| **7172100005** | BOOT, DTP2P-BT | 509 |
| **7172100006** | BOOT, DTP4S - BT | 385 |
| **7184001014** | BRACKET, MIRROR ARM | 62, 247, 249, 487 |
| **7188000165** | BRAKE, DISC | 361 |
| **7195000010** | BUMPER, MOLDED | 303 |
| **7195000032** | BUMPER, RUBBER | 311, 415 |
| **7195000037** | BUMPER, RUBBER | 461 |
| **7195100001** | STOPPER, RUBBER | 303 |
| **7199001289** | BUSHING | 91 |
| **7199100027** | BUSHING | 537 |
| **7199100029** | BUSHING, LINER | 291 |

**From - 7126294350** **To - 7199100029**

## Numerical Index — Appendix B

| Part | Description | Page |
|---|---|---|
| **7242000021** | PLUG, 1" BUTTON | 47, 471 |
| **7242100002** | BUTTON, SQUARE | 92 |
| **7242100005** | PLUG, L SERIES LH1 PANEL | 92, 113 |
| **7245100056** | COVER, ARMREST | 91 |
| **7245100058** | COVER, FUSE | 133 |
| **7245100069** | COVER, CONSOLE | 109 |
| **7245100073** | COVER, WIPER MOTOR | 65 |
| **7246002555** | CABLE ASSY | 133, 497 |
| **7246100028** | CABLE, BLACK | 389 |
| **7246100031** | CABLE ASSY 2/0 BLK (66" LG) | 553 |
| **7246100114** | CABLE ASSY-4/0 RED (9.0")LG | 553 |
| **7246100145** | CABLE-RED 1/0 42" (STR TO ALT) | 389 |
| **7246100156** | CABLE-RED 1/0 12" FUSE/RELAY | 553 |
| **7246100157** | CABLE-RED 1/0 8" FUSE TO RELAY | 553 |
| **7246100186** | CABLE-BLK 60"ENG GND TO ALT - | 389 |
| **7246100198** | CABLE-RED 1/0 36" (RLY/GRDHTR) | 389 |
| **7246100220** | CABLE-RED 6GA 48" STRTR/RELAY | 389 |
| **7246100227** | CABLE-RED 4/0 10" DISCSW/FUSE | 553 |
| **7246100276** | CABLE-RED 6GA 48" STRTR/RELAY | 389 |
| **7246100342** | CBL-BLK 4/0 90" BAT-/START- | 389 |
| **7246100343** | CBL-RED 4/0 84"BAT DISC/START+ | 389 |
| **7246100345** | KIT - CABLE (ENGINE) | 381 |
| **7246100347** | CABLE-RED 1/0 96" FUSE/FUSE | 553 |
| **7246100441** | KIT - CABLE (BATTERIES) | 549 |
| **7246100453** | CABLE, RED 4/0 32" BAT+/ BAT | 553 |
| **7246100476** | CONTROL CABLE W/LOCK HANDLE | 301 |
| **7258001451** | CAP, 1/4" | 92, 109, 159 |
| **7258001452** | CAP #8 | 65, 109, 114 |
| **7258001468** | RADIATOR CAP | 399 |
| **7258100138** | BINDER | 153 |
| **7258100146** | CAP, FILL (WITH BREATHER) | 519 |
| **7258100154** | CAP, DEUTSCH HDC16 - 9 DUST | 126, 509 |
| **7258100165** | BACKSHELL, DEUTSCH HD10 SERIES | 509 |
| **7258100188** | COVER, VALVE | 303 |
| **7296000004** | INHIBITOR, CORROSION | 15 |
| **7300000006** | CLAMP, HOSE | 313, 317, 392 |

**From - 7242000021** **To - 7300000006**

## Numerical Index — Appendix B

| Part | Description | Page |
|---|---|---|
| **7300000013** | CLAMP, HOSE | 318 |
| **7300000018** | CLAMP | 401 |
| **7300000035** | CLAMP, HOSE | 145, 317, 391, 395 |
| **7300000040** | CLAMP, HOSE | 313 |
| **7300000056** | CLAMP | 463 |
| **7300000101** | CLAMP, TUBING | 313, 392 |
| **7300000102** | CLAMP, TUBING | 228 |
| **7300000121** | HOSE CLAMP -0.69"MAX | 319, 391, 399, 539 |
| **7300000167** | CLAMP, HOSE | 318, 392 |
| **7300000195** | CLAMP, TUBING | 391 |
| **7300000206** | CLAMP, HOSE | 403 |
| **7300000223** | CLAMP, T-BOLT | 403 |
| **7300000231** | MUFFLER CLAMP | 401 |
| **7300000243** | CLAMP, TUBING | 5, 313 |
| **7300000244** | CLAMP, TUBING | 263 |
| **7300000246** | CLAMP, TUBING 1-1/4" I.D. | 314, 320 |
| **7300000247** | CLAMP, 1 1/4" TUBING | 381 |
| **7300000251** | CLAMP, TUBING | 233 |
| **7300000269** | CLAMP, PIPE | 291 |
| **7300000393** | BATTERY, HOLD-DOWN | 549 |
| **7300000399** | CLAMP, TUBING | 227 |
| **7300000401** | CLAMP, TUBING | 227 |
| **7300000404** | CLAMP, 1" TUBING | 227, 313, 497 |
| **7300000405** | CLAMP, TUBING | 227, 228 |
| **7300000406** | CLAMP, TUBING | 497 |
| **7300000408** | CLAMP, TUBING | 497 |
| **7300000461** | CLAMP, T-BOLT | 313, 391 |
| **7300001000** | CLAMP | 391 |
| **7300001018** | ZINC MUFFLER CLAMP | 313 |
| **7300001061** | CLAMP, LINER | 145 |
| **7300001083** | CLAMP, MUFFLER | 313 |
| **7300100014** | CLAMP, 5/8" TUBING | 313 |
| **7300100015** | CLAMP, 7/8" TUBING | 539 |
| **7300100022** | CLAMP, T-BOLT 3" | 320 |
| **7300100024** | CLAMP, T-BOLT 1.75" NOM | 320 |
| **7300100025** | CLAMP ASSY, 2.38" HYDRA-ZORB | 275 |

**From - 7300000013** **To - 7300100025**

## Numerical Index — Appendix B

| Part | Description | Page |
|---|---|---|
| **7300100026** | CLAMP, T-BOLT 7.75 NOM | 403 |
| **7304100012** | CLEANER ASSEMBLY - AIR | 403 |
| **7308000042** | YOKE | 301 |
| **7326100007** | COLUMN ASSEMBLY - TILT STEERING | 205, 209 |
| **7345001443** | TERMINAL, FEMALE | 142 |
| **7345001444** | TERMINAL, FEMALE | 103, 125, 133, 141, 179 |
| **7345001446** | TERMINAL, MALE | 103, 114, 126, 133 |
| **7345001713** | CONNECTOR, BUTT | 185 |
| **7345001744** | TERMINAL, FEMALE | 92, 114, 125, 141, 186, 385 |
| **7345001746** | TERMINAL, MALE | 92, 125, 186 |
| **7345001752** | TERMINAL | 141 |
| **7345001944** | TERMINAL, FEMALE | 125 |
| **7345211401** | TERMINAL | 125, 508 |
| **7345211701** | TONGUE, INSULATED RING | 126, 515 |
| **7345211901** | TERMINAL | 142, 153 |
| **7345212101** | TERMINAL | 141 |
| **7345221901** | TERMINAL | 142, 153 |
| **7345231701** | TERMINAL | 510 |
| **7345231901** | TERMINAL | 141, 508 |
| **7345232001** | TERMINAL | 508 |
| **7345232101** | TERMINAL | 141, 507 |
| **7345241401** | TERMINAL | 142 |
| **7345241701** | TONGUE, INSULATED RING | 142, 507 |
| **7345241901** | TONGUE, INSULATED RING | 179, 507 |
| **7345242001** | TERMINAL | 507 |
| **7345242101** | TERMINAL | 272 |
| **7345261701** | 16 - 14 AWG | 386 |
| **7345261901** | TERMINAL | 385 |
| **7348000667** | EXTINGUISHER, FIRE | 62 |
| **7348000669** | BRACKET | 85 |
| **7352000878** | SENDER, FUEL LEVEL | 539 |
| **7352100036** | SENSOR-COOLANT LEVEL | 399 |
| **7352100053** | MODULE, CONTROL | 133 |
| **7352100064** | I/O CONTROL MODULE | 133 |
| **7352100067** | MODULE, CARRIER CONTROL | 549 |
| **7352100069** | MODULE, MASTER CONTROL | 549 |

**From - 7300100026** **To - 7352100069**

## Numerical Index — Appendix B

| Part | Description | Page |
|---|---|---|
| **7352100070** | MODULE, CONTROL | 169 |
| **7352100095** | CONTROLLER CAN 12V RH ARMREST | 92 |
| **7352100096** | CONTROLLER CAN 12V LH W/AR | 92 |
| **7364001457** | TAB, MALE | 114 |
| **7364001547** | SWIVEL | 153 |
| **7364001682** | CONNECTOR, 2 CONDUCTOR | 9, 179, 508 |
| **7364001683** | CONNECTOR, 2 CONDUCTOR | 7, 179, 181, 508 |
| **7364001684** | CONNECTOR, 3 CONDUCTOR | 125 |
| **7364001685** | CONNECTOR, 3 CONDUCTOR | 126 |
| **7364001846** | TERMINAL | 9, 181 |
| **7364001847** | TERMINAL, FEMALE SLEEVE | 9 |
| **7364002417** | RECEPTACLE, | 142 |
| **7364002517** | CONNECTOR | 385 |
| **7364002518** | CONNECTOR | 385 |
| **7364002995** | COUPLER, FLEX | 401 |
| **7364100008** | PLUG, 2 PASS | 507 |
| **7364100009** | CONNECTOR, LOCKING | 507 |
| **7364100051** | PLUG | 481, 507 |
| **7364100052** | SEAL | 508 |
| **7364100058** | SEAL, RED PLUG | 508 |
| **7364100165** | SWIVEL ASSEMBLY - 14 PORT | 263 |
| **7364100166** | DRIVE LINE ASSEMBLY | 421 |
| **7364100177** | BEZEL, L-SERIES SINGLE LMS | 113 |
| **7364100179** | BEZEL, L-SERIES 3 GANG LM3 | 91, 113 |
| **7364100180** | BEZEL, L-SERIES 4 GANG LM4 | 113 |
| **7364100182** | BEZEL, L-SERIES 6 GANG LM6 | 113 |
| **7364100184** | CONNECTOR, L-SERIES SWITCHES | 103, 125 |
| **7372100077** | CYLINDER ASSEMBLY - 2 1/2" STEER | 429 |
| **7372100250** | CYLINDER ASSEMBLY - 2 1/2" STEER | 429 |
| **7372100268** | HEAD, CYLINDER | 291 |
| **7373000012** | KIT, SEAL | 292 |
| **7376001935** | DECAL - BOOM ANGLE | 469 |
| **7376011416** | DECAL - ROTATING BLADES | 469 |
| **7376100349** | DECAL - DANGER COUNTERWEIGHT | 480 |
| **7376100360** | DECAL - DANGER BOOM NOT WALKWAY | 480 |
| **7376100386** | DECAL - DANGER AUXILIARY BOOM NO | 479 |

**From - 7352100070** **To - 7376100386**

## Numerical Index — Appendix B

| Part | Description | Page |
|---|---|---|
| **7376100394** | DECAL - DANGER OUTRIGGER MID EXT | 479 |
| **7376100402** | DECAL - DANGER REVOLVING TIRES | 479 |
| **7376100418** | DECAL - MID-EXTEND OUTRIGGERS > | 479 |
| **7376100426** | DECAL - MID-EXTEND OUTRIGGERS < | 479 |
| **7376100434** | DECAL - EMERGENCY EXIT | 479 |
| **7376100442** | DECAL - DANGER QUALIFIED OPERATO | 479 |
| **7376100450** | DECAL - DANGER OUTRIGGER CRUSHIN | 479 |
| **7376100482** | DECAL - CAUTION PIN SWING LOCK | 479 |
| **7376100554** | DECAL - DANGER CABLE WEDGE | 479, 480 |
| **7376100562** | DECAL - DANGER SUPERSTRUCTURE SW | 479 |
| **7376100586** | DECAL - DANGER COUNTERWEIGHT LIF | 480 |
| **7376100610** | DECAL - DANGER TIPPING/2 BLOCKIN | 479 |
| **7376100634** | DECAL - DANGER ELECTROCUTION HAZ | 479 |
| **7376101141** | DECAL - CHEVRON OUTRIGGER JACK | 475 |
| **7376101562** | DECAL - HAND SIGNALS ( SPANISH ) | 480 |
| **7376101867** | DECAL - DANGER ELECTROCUTION HAZ | 479 |
| **7376101875** | DECAL - DANGER BOOM EXTENSION HA | 479 |
| **7376102053** | DECAL - CAUTION BATTERY DISCONNE | 469 |
| **7376102093** | DECAL - CAUTION TRANSMISSION DAM | 469 |
| **7376102350** | DECAL - CAUTION ELECTRONICS DAMA | 469 |
| **7376102529** | DECAL - DANGER PRESSURIZED FLUID | 469 |
| **7376102530** | DECAL - CAUTION ENGINE COOLANT F | 469 |
| **7376102533** | DECAL - DANGER FIRE HAZARD | 469 |
| **7376102534** | DECAL - CAUTION SPECIAL FILL REQ | 480 |
| **7376102544** | DECAL - DANGER ETHER HAZARD | 469 |
| **7376102553** | DECAL - DANGER PRESSURIZED OIL L | 469 |
| **7376102555** | DECAL - DANGER BATTERY EXPLOSION | 469 |
| **7376102558** | DECAL - CAUTION TRANSMISSION DAM | 479 |
| **7376102599** | DECAL-MAIN HOIST & LIFT -DUAL | 469 |
| **7376102806** | DECAL - CAUTION BATTERY CONNECTI | 469 |
| **7376102810** | DECAL - FUSES (SPANISH) | 479 |
| **7376102910** | DECAL - LIFT POINT PROHIBITION | 469 |
| **7376102928** | DECAL - SYMBOL ID (SPANISH) | 479 |
| **7376102951** | DECAL - RT530E-2 | 475 |
| **7376102959** | DECAL - CAUTION MAXIMUM FILL RAT | 480 |
| **7376103014** | DECAL - TRANSPORTATION AND LIFTI | 479 |

**From - 7376100394** **To - 7376103014**

## Numerical Index — Appendix B

| Part | Description | Page |
|---|---|---|
| **7376202030** | DECAL - MANITOWOC CRANE GROUP LO | 475 |
| **7376221080** | DECAL - GROVE LOGO | 475 |
| **7376241042** | DECAL - GROVE LOGO | 475 |
| **7376241052** | DECAL - GROVE LOGO | 475 |
| **7376241080** | DECAL - GROVE LOGO | 475 |
| **7376241135** | DECAL - GROVE LOGO | 475 |
| **7376991542** | DECAL - NO STEP | 469 |
| **7376991544** | DECAL - DIESEL | 469 |
| **7376991546** | DECAL - HYDRAULIC OIL | 469 |
| **7376991722** | DECAL - WEAR BODY HARNESS | 469 |
| **7392100011** | PANEL, INNER DOOR | 63 |
| **7406000537** | BELLOWS | 313, 391 |
| **7406001053** | BELLOWS | 391 |
| **7418100004** | STRAP, RUBBER | 314 |
| **7418100008** | EXTENSION, STEP | 523, 547 |
| **7418100011** | EXTENSION, STEP | 489 |
| **7425000007** | FAN ASSY, DEFROSTER | 109 |
| **7425100007** | FAN, 9 BLADE CLOCK WISE SUCKER | 419 |
| **7425100015** | FAN ASSEMBLY - 12 VOLT CAB | 62 |
| **7429000011** | FASTENER, WELL-NUT | 65, 92 |
| **7429000542** | FASTENER, NUT 1/4" - 20 N.C. | 159, 549 |
| **7437000873** | FILTER, TRANSMISSION FLUID | 363 |
| **7437100220** | STRAINER, MESH | 320 |
| **7440000000** | FITTING, 1/8 STRAIGHT GREASE | 3, 43, 53, 292, 429, 437 |
| **7440030000** | FITTING, STRAIGHT GREASE | 37 |
| **7443100139** | COUPLING, 1/8" TEST PORT | 229 |
| **7443100140** | COUPLING, 3/8" TEST PORT | 230 |
| **7444020031** | PLUG, PIPE | 356 |
| **7444030031** | PLUG, PIPE | 395 |
| **7444040021** | PLUG, PIPE | 539 |
| **7445040219** | ADAPTER, STRAIGHT | 305 |
| **7445040220** | ELBOW, 90 DEGREE | 305 |
| **7445040453** | ELBOW, 90 DEGREE | 319, 539 |
| **7445040472** | ELBOW, 90 DEGREE | 228 |
| **7445040645** | ELBOW, 90 DEGREE MALE | 228 |
| **7445060439** | ADAPTER, REDUCING FEMALE | 228 |

**From - 7376202030** **To - 7445060439**

## Numerical Index — Appendix B


| Part | Description | Page |
|---|---|---|
| **7445060642** | NUT | 228 |
| **7445060651** | UNION, STRAIGHT | 318 |
| **7445060653** | ELBOW, 90 DEGREE | 395 |
| **7445080450** | BUSHING, REDUCER | 399, 539 |
| **7445080650** | BUSHING, REDUCER | 320 |
| **7445080803** | ADAPTER, STRAIGHT | 263 |
| **7445080804** | ELBOW, 90 DEGREE | 263 |
| **7445080808** | ADAPTER, SWIVEL | 263 |
| **7445120809** | ADAPTER, 45 DEGREE SWIVEL | 318 |
| **7445121253** | ELBOW, 90 DEGREE | 317 |
| **7445160850** | BUSHING, REDUCER | 320, 399 |
| **7445161217** | REDUCING CONNECTOR | 317 |
| **7446080836** | ELBOW, 90 DEGREE MALE | 539 |
| **7447040401** | ADAPTER, STRAIGHT | 226 |
| **7447040403** | ELBOW, 90 DEGREE | 228, 317 |
| **7447040408** | ELBOW, 45 DEGREE MALE | 230 |
| **7447040428** | ADAPTER, STRAIGHT | 318 |
| **7447040430** | ELBOW, 90 DEGREE | 317 |
| **7447040434** | TEE, MALE RUN | 318 |
| **7447040601** | ADAPTER, STRAIGHT | 226, 318 |
| **7447060401** | ADAPTER, STRAIGHT MALE | 231, 233 |
| **7447060403** | ELBOW, 90 DEGREE MALE | 226, 230 |
| **7447060413** | REDUCER | 230 |
| **7447060601** | ADAPTER, STRAIGHT MALE | 225, 233 |
| **7447060603** | ELBOW, 90 DEGREE | 231 |
| **7447060605** | TEE, RUN | 231 |
| **7447060616** | CAP | 229 |
| **7447060617** | UNION, BULKHEAD | 226 |
| **7447060633** | ELBOW, 90 DEGREE MALE | 227 |
| **7447060634** | TEE, FEMALE RUN | 225 |
| **7447060635** | TEE, BRANCH | 227, 228 |
| **7447060801** | ADAPTER, STRAIGHT MALE | 227, 233 |
| **7447060803** | ELBOW, 90 DEGREE MALE | 226 |
| **7447060830** | ELBOW, 90 DEGREE MALE | 320 |
| **7447061001** | ADAPTER, STRAIGHT | 228 |
| **7447061003** | FITTING, 90 DEGREE | 228 |


**From - 7445060642** **To - 7447061003**

## Numerical Index — Appendix B

| Part | Description | Page |
|---|---|---|
| **7447080428** | ADAPTER, STRAIGHT MALE | 317 |
| **7447080430** | ELBOW, MALE ORS THD TO MALE N | 539 |
| **7447080601** | ADAPTER, STRAIGHT | 225 |
| **7447080613** | REDUCER | 233 |
| **7447080801** | ADAPTER, STRAIGHT | 225 |
| **7447080829** | ELBOW, 45 DEGREE | 539 |
| **7447080833** | ELBOW, 90 DEGREE MALE | 226 |
| **7447100413** | REDUCER | 231 |
| **7447101001** | ADAPTER, STRAIGHT | 228 |
| **7447101034** | TEE | 231 |
| **7447121001** | ADAPTER, STRAIGHT | 319 |
| **7447121003** | ELBOW, 90 DEGREE | 319 |
| **7447121201** | ADAPTER, STRAIGHT MALE | 318 |
| **7447121203** | ELBOW, 90 DEGREE | 225 |
| **7447121208** | ELBOW, 45 DEGREE MALE | 320 |
| **7447121217** | UNION, BULKHEAD | 225 |
| **7447121232** | ELBOW, #12 BULKHEAD UNION 90 | 225 |
| **7447121233** | ELBOW, 90 DEGREE | 225, 319 |
| **7447121601** | ADAPTER, STRAIGHT | 225 |
| **7447161201** | ADAPTER, STRAIGHT | 229, 321 |
| **7447161203** | ELBOW, 90 DEGREE | 229, 321 |
| **7447161601** | ADAPTER, STRAIGHT | 225, 291 |
| **7447161603** | ELBOW, 90 DEGREE MALE | 291 |
| **7447161638** | ELBOW, 90 DEGREE LONG | 225 |
| **7447201603** | ELBOW, 90 DEGREE MALE | 230 |
| **7447201628** | ADAPTER, STRAIGHT | 321 |
| **7447202001** | ADAPTER, STRAIGHT MALE | 230 |
| **7447202032** | ELBOW, #20 BULKHEAD UNION 90 | 225 |
| **7450000102** | FLANGE, SPLIT | 227 |
| **7450000188** | SPLIT FLANGE HALF, 1 1/4" | 227 |
| **7450000201** | FLANGE, SPLIT | 228, 229 |
| **7450000254** | FLANGE, SPLIT | 319 |
| **7450000375** | FLANGE, SPLIT | 319 |
| **7450160006** | FLANGE 25" X 2.0" | 455, 459 |
| **7482000029** | FUSE, 30 AMP | 135, 142, 509 |
| **7482000032** | FUSE, 15 AMP | 135 |

**From - 7447080428** **To - 7482000032**

## Numerical Index — Appendix B

| Part | Description | Page |
|---|---|---|
| **7482000033** | FUSE, 10 AMP | 135, 510 |
| **7482000035** | FUSE, 5 AMP | 135, 510 |
| **7482000555** | FUSE, 100 AMP | 549 |
| **7482000572** | FUSE | 513 |
| **7482100000** | FUSE, MAXI HOLDER | 509 |
| **7482100005** | FUSE, MAXI 50AMP | 509 |
| **7486000225** | LEVEL, CIRCULAR | 62 |
| **7486000629** | INDICATOR, SERVICE | 403 |
| **7486000836** | THERMOMETER | 519 |
| **7486002666** | GAUGE, WINDOW | 399 |
| **7486002936** | GUAGE, OIL LEVEL | 519 |
| **7486100024** | GAUGE, CLUSTER | 113 |
| **7486100083** | IND LED ENG STOP/MODULE ERROR | 114 |
| **7486100084** | IND LED ENG WARN/ELECT SYS DIA | 114 |
| **7486100100** | GAUGE, 12 VOLT TACHOMETER | 113 |
| **7486100103** | IND LED WAIT TO STR/XMSN WARN | 114 |
| **7486100104** | IND LED LOW BRK PRESS/LOW FUEL | 114 |
| **7486100110** | IND LED PARK BRK ENGD/SWG BRK | 114 |
| **7486100114** | IND LED HI BEAMS/LAMP OUT WARN | 114 |
| **7486100115** | IND LED LEFT TURN/RIGHT TURN | 114 |
| **7486100128** | IND LED HYD OIL COOLER TEMP | 114 |
| **7486100132** | DIPSTICK | 314 |
| **7486100134** | IND LED 4WHL ENGED/WHL NOT CNT | 114 |
| **7498000897** | WINDOW ASSEMBLY - REAR | 61 |
| **7498100022** | SKYLIGHT ASSEMBLY - SLIDING | 61 |
| **7498100024** | GLASS, WINDSHIELD | 61 |
| **7498100025** | GLASS, SLIDING DOOR | 61 |
| **7498100026** | GLASS, LEFT REAR | 61 |
| **7498100027** | GLASS, LEFT FRONT | 61 |
| **7498100028** | WINDOW ASSEMBLY - RIGHT HAND | 61 |
| **7506000001** | GROMMET | 63 |
| **7506000021** | GROMMET | 301 |
| **7511000093** | KNOB, FLUTED | 91 |
| **7511000161** | HANDLE, TAPERED | 62 |
| **7511001139** | HANDRAIL, GRAB | 61 |
| **7511001140** | HANDRAIL, GRAB | 61 |

**From - 7482000033** **To - 7511001140**

## Numerical Index — Appendix B

| Part | Description | Page |
|---|---|---|
| **7511001255** | HANDLE, GRAB | 62 |
| **7511100015** | HANDRAIL, GRAB | 217 |
| **7511100046** | HANDRAIL, GRAB | 61 |
| **7511100047** | HANDRAIL, GRAB | 62 |
| **7511100048** | HANDRAIL, GRAB | 62 |
| **7515000877** | HEATER, 750W 120V ENGINE BLOCK | 417 |
| **7519000198** | NYLON LIFT OFF HINGE - LH | 133, 311 |
| **7535100006** | HOOD, INLET | 403 |
| **7542506663** | HOSE ASSY, 3/8 X 26" | 318 |
| **7542508463** | HOSE ASSY, 7/8" ID HOT ENG OIL | 321 |
| **7543109321** | HOSE ASSY, 3/4" I.D. X 93" | 229 |
| **7543109361** | HOSE ASSY, 1 1/4" HYDRAULIC | 320 |
| **7546706470** | HOSE, 1 1/4" STR S/F X 64" STR | 229 |
| **7546806493** | HOSE, 1 1/2" STR S/F X 64" 90 | 229 |
| **7550103631** | HOSE ASSY, 3/8 X 26" | 305 |
| **7550103921** | HOSE ASSY, 1/4" ID STR X 39" | 230 |
| **7550104221** | HOSE ASSY, 1/4" ID STR X 42" | 230 |
| **7555101801** | HOSE ASSY, 3/8 X 26" | 231 |
| **7555103000** | HOSE ASSY, 1/4"I.DX30"LONG | 229 |
| **7555103203** | HOSE ASSY, 1/4" I.D. STR X 32" | 229 |
| **7555103600** | HOSE ASSY, 3/8 X 26" | 229 |
| **7555107601** | 1/4" I.D. X 76" | 229 |
| **7555109005** | HOSE ASSY, 1/4"I.D. 45 X 90" | 229 |
| **7555111021** | HOSE ASSY, 1/4" ID | 320 |
| **7555201921** | HOSE ASSY, 3/8"I.D.X19"LONG | 229 |
| **7555204400** | 3/8” I.D. X 44” | 233 |
| **7555205301** | 3/8" I.D. X 53" | 233 |
| **7555206001** | 3/8" I.D. X 60" | 231 |
| **7555206201** | 3/8" I.D. X 62" | 233 |
| **7555206800** | 3/8" I.D. X 68" | 231 |
| **7555207201** | HOSE ASSY, 3/8" I.D. X 72" | 231, 233 |
| **7555207202** | HOSE, 3/8" I.D X 72" LONG | 229 |
| **7555207203** | 3/8" X 72" | 231, 233 |
| **7555207401** | 3/8" I.D. X 74" | 233 |
| **7555208203** | 3/8 HOSE STR ORFS X LG 90 ORFS | 233 |
| **7555208900** | HOSE ASSY, 3/8" I.D. X 89" | 229, 230 |

**From - 7511001255** **To - 7555208900**

## Numerical Index — Appendix B


| Part | Description | Page |
|---|---|---|
| **7555402101** | HOSE ASSY, 5/8" STR ORFS X 21" | 229 |
| **7555402403** | 5/8" X 24" | 230 |
| **7555503400** | HOSE ASSY,3/4" I.D. X 34" LONG | 229 |
| **7555504201** | HOSE ASSY,3/4" I.D. X 42" LONG | 229 |
| **7555508503** | HOSE ASSY, 3/4" ID X 85" | 320 |
| **7555514390** | HOSE ASSY, 3/4" ID | 320 |
| **7555602360** | HOSE ASSY, 1" STR ORFS X 23" | 229 |
| **7555603062** | 1" I.D. HYDR HOSE ASSY STR-45 | 229 |
| **7555604400** | HOSE ASSY,1" I.D. HYDR STR-STR | 229, 231 |
| **7555604860** | HOSE ASSY, 1" STR ORFS X 48" | 230 |
| **7555702591** | HOSE ASSY,1 1/4" STR ORF X 25" | 229 |
| **7561101503** | HOSE ASSY, 1/4"I.D. X 15" LONG | 318 |
| **7561102003** | 1/4" I.D. X 20" | 319 |
| **7561103003** | HOSE ASSY, 1/4"I.D. X 30" LONG | 319 |
| **7561106003** | 1/4" I.D. X 60" | 319 |
| **7561203017** | 3/8" I.D. X 30" | 319 |
| **7561308430** | HOSE ASSY, 1/2" ID STR-STR HYD | 539 |
| **7561308432** | HOSE ASSY, 1/2"I.D. X 84" LONG | 319 |
| **7561502452** | HOSE ASSY, 3/4"I.D. X 24" LONG | 319 |
| **7561503852** | HOSE ASSY, 3/4"I.D.X 38" LONG | 319 |
| **7566208000** | HOSE ASSY, 1 1/4" ID | 320 |
| **7566503700** | HOSE ASSY | 320 |
| **7576000311** | BELT, SEAT | 92 |
| **7576000320** | PUMP AND CANISTER | 62 |
| **7576001696** | KIT, SERVICE | 77 |
| **7576001743** | MOUNTING KIT - OIL COOLER | 539 |
| **7576134386** | MOTOR ASSEMBLY - SWING DRIVE | 251 |
| **7576134397** | KIT - FRONT WIPER | 61 |
| **7576134398** | KIT - SKYLIGHT WIPER | 61 |
| **7576134413** | KIT - AIR CONDITIONER HOSE | 191 |
| **7576134447** | KIT - AIR CONDITIONER CONDENSER | 297 |
| **7576134451** | KIT - CARRIER A/C HOSE | 409 |
| **7576134474** | KIT - CUMMINS AIR CONDITIONER CO | 409 |
| **7576134531** | KIT - AIR CONDITIONER CONDENSER | 297 |
| **7581000186** | LIGHT, DOME | 62 |
| **7581001361** | LIGHT ASSY, WORK | 481 |


**From - 7555402101** **To - 7581001361**

## Numerical Index — Appendix B

| Part | Description | Page |
|---|---|---|
| **7581100000** | LIGHT, STROBE | 309 |
| **7581100001** | LIGHT, WORK | 7, 62 |
| **7581100048** | LIGHT, STOP/TURN/TAIL LED RED | 481 |
| **7581100050** | LIGHT, YELLOW REAR TURN (WITH GR | 481 |
| **7585000184** | LATCH, ARROWHEAD | 311 |
| **7585000720** | HANDLE, LATCH | 62 |
| **7585000789** | LOCK | 77 |
| **7585000790** | CATCH | 77 |
| **7585000812** | DRAW LATCH | 303, 485 |
| **7601000955** | S-HOOK, STANDARD | 41, 51 |
| **7616000517** | MAGNET, CUP | 92 |
| **7616000519** | MAGNET | 91 |
| **7628000025** | MIRROR, 8" CONVEX | 62, 247, 249, 487 |
| **7638000044** | SHOCK, MOUNTING | 391 |
| **7638000203** | MOUNT, SHOCK | 55 |
| **7638000750** | MOUNT, WIRE TIE | 159 |
| **7638100029** | MOUNT, 2 PIECE ISOLATOR | 314 |
| **7638100033** | MOUNT, 2-PC ISOLATOR | 313 |
| **7642100004** | MUFFLER | 401 |
| **7649000005** | NIPPLE | 317, 399 |
| **7649000042** | NIPPLE, HOSE | 319, 539 |
| **7649000059** | NIPPLE, HOSE 5/8 ID TO 1/2 NPT | 263, 317 |
| **7649000061** | NIPPLE, HOSE | 319 |
| **7649000062** | NIPPLE | 317, 395, 399 |
| **7649000092** | NIPPLE, HOSE | 317 |
| **7659000081** | LOCKNUT | 41, 51 |
| **7659000252** | NUT | 205 |
| **7659000256** | NUT, RETAINING | 133 |
| **7659000796** | NUT | 63, 71 |
| **7659000813** | NUT, WHEEL | 451 |
| **7659000862** | NUT, RETAINING | 195 |
| **7659190018** | NUT, DEUTSCH HD10-SER/COMPRESS | 509 |
| **7659190019** | RETAINING NUT M6 | 109, 133, 391, 497 |
| **7659190020** | NUT, RETAINING 8 X 1.25 | 66, 87, 109, 145, 311, 415, 465, 471, 477 |
| **7659190024** | M10 X 1.50 RETAINING NUT | 311, 517 |

**From - 7581100000** **To - 7659190024**

## Numerical Index — Appendix B

| Part | Description | Page |
|---|---|---|
| **7659190033** | NUT, RETAINING M10 X 1.50 | 64, 109, 407, 537 |
| **7660041100** | NUT, HEX | 65, 135, 497 |
| **7660080000** | USE 7660081100 | 136 |
| **7660081100** | NUT, HEX | 114, 186 |
| **7660101100** | NUT, HEX | 135, 141, 513, 549 |
| **7660101130** | NUT, HEX | 64 |
| **7660101630** | LOCKNUT, HEX | 83 |
| **7660140000** | NUT, HEX | 29, 35, 71, 135, 185, 513, 519, 549 |
| **7660140008** | NUT, HEX | 545 |
| **7660140200** | NUT, HEX JAM | 185 |
| **7660141601** | NUT, 1/4-20UNC HEX LOCK | 63 |
| **7660142701** | LOCKNUT, HEX | 151 |
| **7660150001** | NUT, HEX | 186, 247, 249 |
| **7660150008** | NUT, HEX | 64, 71, 545 |
| **7660150200** | NUT, JAM | 49 |
| **7660152200** | NUT, ACORN | 91 |
| **7660152701** | LOCKNUT | 314, 539 |
| **7660160000** | NUT, HEX | 33, 64, 71, 133, 497 |
| **7660160001** | NUT, HEX | 55 |
| **7660160200** | NUT, HEX JAM | 549 |
| **7660180200** | NUT, HEX | 263 |
| **7660190008** | NUT, HEX | 157 |
| **7660201600** | LOCKNUT, HEX | 55 |
| **7660220001** | NUT, HEX | 237 |
| **7660220200** | NUT, HEX JAM | 91 |
| **7661110003** | NUT, HEX | 65, 91, 109, 114, 151 |
| **7661130003** | NUT, HEX | 65, 145, 205, 303, 307 |
| **7661130103** | NUT | 485 |
| **7661150003** | NUT, HEX | 64, 199, 381, 497, 525 |
| **7661151103** | NUT | 91, 485 |
| **7661170003** | NUT - 8MM X 1.25 | 64, 87, 109, 169, 263, 303, 311, 313, 392, 407, 481, 525 |
| **7661171103** | NUT, HEX | 87, 92, 303, 401 |
| **7661190003** | HEX NUT 10MM I.D. X 1.5 | 64, 219, 311, 320, 401, 403, 411, 471, 525 |

**From - 7659190033** **To - 7661190003**

## Numerical Index — Appendix B

| Part | Description | Page |
|---|---|---|
| **7661191103** | LOCKNUT | 489, 517, 523, 539, 547 |
| **7661210003** | NUT, HEX 12MM N.C. | 65, 275, 314, 391, 407, 421, 540 |
| **7661240003** | NUT, HEX | 3, 289, 517 |
| **7661270003** | NUT, HEX | 477 |
| **7661270004** | NUT - M20 | 429 |
| **7661270103** | NUT | 477 |
| **7661271104** | NUT, M20-10 HEX LOCK | 313 |
| **7662150100** | WELD NUT, M6X1.0 | 395 |
| **7662170100** | WELD NUT, M8X1.25 | 471 |
| **7662190100** | WELD NUT, M10X1.5 | 311, 537 |
| **7671100005** | PAD | 311 |
| **7679100268** | PANEL, FRONT CONSOLE | 113 |
| **7683100010** | PEDAL ASSEMBLY - ELECTRONIC TELE | 199 |
| **7689000023** | PIN, LOCK HAIR | 51 |
| **7689000036** | PIN, CLIP | 3 |
| **7689000053** | PIN, CLIP | 41 |
| **7689000059** | PIN, HITCH | 41 |
| **7689000503** | PLUG, SEALING | 73, 75, 103, 126, 142, 179, 185, 273, 385, 411, 507 |
| **7689000701** | CLIP, HITCH PIN | 41, 51 |
| **7689000704** | PIN, 16 - 14 GA | 73, 75, 125, 141, 180, 185, 193, 309, 385, 411, 497, 515 |
| **7689000721** | PIN, HITCH | 41 |
| **7689000797** | PIN | 181, 509 |
| **7689000813** | PIN | 141, 272 |
| **7689001756** | PIN | 489 |
| **7689001782** | PIN, 18 - 16 GAGE | 97, 99, 103, 141, 203, 213, 215, 508 |
| **7689001883** | PIN | 180 |
| **7689002053** | PIN | 125, 180, 273, 508 |
| **7689100033** | PIN | 95 |
| **7689100034** | PIN, QUICK WITH (LANYARD) | 461 |
| **7689100044** | PIN, 20GA GOLD | 180 |
| **7689100046** | PIN | 3 |
| **7690001210** | PIN, COTTER | 301 |

**From - 7661191103** **To - 7690001210**

## Numerical Index — Appendix B

| Part | Description | Page |
|---|---|---|
| **7690052410** | PIN, COTTER | 41 |
| **7690082010** | PIN, COTTER | 461 |
| **7690101610** | PIN, COTTER | 51 |
| **7690141600** | PIN, CLEVIS | 301 |
| **7690143644** | PIN, ROLL | 477 |
| **7690152410** | PIN, COTTER | 41 |
| **7690164845** | PIN, ROLL | 463 |
| **7705100003** | WASHER, PLATE | 237 |
| **7709000031** | PLUG, SAE #6 | 230 |
| **7709000038** | PLUG, O-RING | 226, 230 |
| **7709000157** | PLUG, MAGNETIC | 519 |
| **7709000811** | PLUG | 103, 215 |
| **7709000812** | PLUG | 97, 99, 103 |
| **7709000838** | PLUG | 509 |
| **7709000844** | PLUG, 2 SOCKET | 179, 386, 507 |
| **7709000845** | PLUG | 125, 179 |
| **7709000846** | PLUG, 12 SOCKET | 125, 179, 213, 385, 507, 509 |
| **7709000849** | PLUG | 179, 508 |
| **7709000850** | PLUG | 179, 509 |
| **7709000874** | PLUG | 126, 179, 385, 509 |
| **7709000876** | PLUG, 1 SOCKET | 141, 272 |
| **7709000883** | PLUG | 125, 180, 272, 509 |
| **7709000936** | PLUG, 4 SOCKET | 181, 273, 386, 510 |
| **7709100870** | PLUG, 4 PASS | 386 |
| **7709100877** | PLUG | 103, 180, 507 |
| **7709100883** | PLUG, 40 SOCKET | 125 |
| **7709100884** | PLUG, 40 SOCKET | 125 |
| **7709100890** | PLUG, DEUTSCH DRC26-50S-04 | 385 |
| **7709100891** | PLUG, 2-PASS DEUTSCH DTP | 142, 385, 510 |
| **7709100895** | PLUG, 4 SOCKET | 181 |
| **7709100902** | PLUG, 3 PIN | 126, 180, 385 |
| **7709100907** | PLUG DTM06-12SA W/WM-12S WEDGE | 125 |
| **7709100908** | PLUG DTM06-12SB W/WM-12S WEDGE | 125 |
| **7709100911** | PLUG,DT06-3S-CEO6 W/BLUE WEDGE | 126, 180, 386, 509 |
| **7709100929** | PLUG, DTO6-12SB-C015 W/WEDGE | 180, 509 |
| **7709100930** | PLUG, DTO6-12SC-C015 W/WEDGE | 180 |

**From - 7690052410** **To - 7709100930**

## Numerical Index — Appendix B

| Part | Description | Page |
|---|---|---|
| **7709100932** | PLUG, M12 X 1.5 | 539 |
| **7709800000** | PLUG, SAE #8 | 263 |
| **7709800001** | PLUG, SAE #4 | 258, 263 |
| **7714000585** | EXTENSION, CENTER POST | 77 |
| **7722100100** | PUMP ASSEMBLY - PISTON | 317 |
| **7722100101** | PUMP ASSEMBLY - GEAR | 317 |
| **7726000128** | COOLER, OIL | 539 |
| **7726191194** | COOLER ASSEMBLY - RADIATOR/CHARG | 395 |
| **7750000055** | RELAY, 12 VOLT DC | 135 |
| **7750000056** | RELAY, 75 AMP | 141 |
| **7750000793** | RELAY, 200 AMP | 513 |
| **7750160021** | RELAY, 12 VOLT 100AMP | 142 |
| **7753000299** | RING, WIPER | 291 |
| **7753000307** | RING, WEAR | 291 |
| **7753000368** | RING, LOCK | 455, 459 |
| **7753000477** | RING, WEAR | 291 |
| **7753100021** | BACK-UP RING;7.00 ROD | 291 |
| **7753100037** | RING ASSEMBLY - SLIP | 263 |
| **7754000085** | O-RING | 455, 459 |
| **7754000163** | O-RING, LOW TEMPERATURE | 291 |
| **7754000166** | O-RING, LOW TEMPERATURE | 291 |
| **7754100010** | O-RING | 297 |
| **7755011002** | O-RING | 226, 228, 230, 317, 318 |
| **7755012002** | O-RING | 225, 226, 227, 228, 230, 231, 233 |
| **7755014000** | O-RING | 283 |
| **7755014002** | O-RING | 225, 226, 321, 539 |
| **7755016002** | O-RING | 228, 231 |
| **7755018002** | O-RING | 225, 228, 318, 319, 320 |
| **7755021002** | O-RING | 225, 227, 229, 291, 321 |
| **7755025002** | O-RING | 230, 321 |
| **7755107002** | O-RING | 281 |
| **7755110000** | O-RING | 359 |
| **7755152000** | O-RING | 258 |
| **7755170000** | O-RING | 258 |
| **7755219002** | O-RING | 228, 229 |

**From - 7709100932** **To - 7755219002**

## Numerical Index — Appendix B

| Part | Description | Page |
|---|---|---|
| **7755220000** | O-RING | 281 |
| **7755222002** | O-RING | 227, 319 |
| **7755225002** | O-RING | 227 |
| **7755232002** | O-RING | 320 |
| **7755245000** | O-RING | 258 |
| **7755251000** | O-RING | 258 |
| **7755260000** | O-RING | 258 |
| **7755265000** | O-RING | 258 |
| **7755365609** | RING, BACK-UP | 291 |
| **7755445609** | RING, BACK-UP | 291 |
| **7755904002** | O-RING | 226, 228, 230, 231, 233, 243, 258, 263, 318 |
| **7755906002** | O-RING | 225, 226, 228, 230, 231, 233, 318, 321 |
| **7755908002** | O-RING | 225, 226, 227, 230, 233, 242, 263, 539 |
| **7755910002** | O-RING | 228, 319, 534 |
| **7755912002** | O-RING | 225, 229, 277, 278, 318, 320, 321 |
| **7755916002** | O-RING | 225, 230, 291, 292, 321 |
| **7755920002** | O-RING | 230 |
| **7760000008** | RIVET, POP | 153 |
| **7760000011** | RIVET, POP | 491 |
| **7768003904** | ARM, LEVER | 145 |
| **7780100877** | SLING, 5FT X 5/8 WIRE ROPE | 483 |
| **7786000537** | SCREW, CENTER POST | 77 |
| **7786000539** | SCREW, CATCH | 77 |
| **7790060673** | SCREW, SELF-TAPPING | 133 |
| **7790100653** | SCREW, SELF-TAPPING | 463 |
| **7790100853** | SCREW, SELF-TAPPING | 63 |
| **7790100871** | SCREW, SELF-TAPPING | 63, 71 |
| **7790140853** | SCREW, SELF-TAPPING | 63, 65 |
| **7790161253** | SCREW | 107, 195 |
| **7792151221** | SCREW | 92 |
| **7794000272** | CUP, BEARING | 43, 53 |
| **7794000544** | SEAL, BUFFER | 291 |

**From - 7755220000** **To - 7794000544**

## Numerical Index — Appendix B

| Part | Description | Page |
|---|---|---|
| **7794000577** | SEAL, PISTON | 291 |
| **7794000642** | SEAL, DEEP Z ROD | 291 |
| **7794001721** | RUBBER, FLOCKED 154” LONG | 77 |
| **7798000843** | SEAT | 87 |
| **7798100005** | TRACK, CONTROL | 145 |
| **7798100006** | TRACK, FREE | 145 |
| **7806100006** | SHACKLE, 7/8" GALVANIZED | 483 |
| **7810100133** | SHAFT, LOWER PIVOT | 289 |
| **7810100139** | SHAFT, PIVOT | 3 |
| **7814100077** | GUARD, HOSE | 230 |
| **7814100084** | MAT, FRONT STORAGE TRAY | 537 |
| **7814100085** | MAT, REAR STORAGE TRAY | 537 |
| **7822000598** | SLEEVE, VINYL | 145 |
| **7822100002** | SLEEVE, RED VINYL | 66 |
| **7826000079** | SOCKET, RELAY | 141 |
| **7826000087** | SOCKET, 16-14 GA | 97, 99, 103, 125, 179, 507 |
| **7826000092** | SOCKET, (12) 12-14GA | 142, 385 |
| **7826000095** | SOCKET, | 273, 507 |
| **7826000626** | SOCKET, | 103, 179, 213, 215, 508 |
| **7826000635** | SOCKET, | 141 |
| **7826000650** | PLUG, SEALING | 180, 386 |
| **7826000651** | SOCKET, 20 GA AU-PLATE | 385 |
| **7826100004** | SOCKET, (16 - 18) 30 SERIES | 103, 125, 179, 273, 385, 508 |
| **7826100013** | SOCKET, | 508 |
| **7826100016** | SOCKET-DEUTSCH 22/20 GA NI | 508 |
| **7826100018** | SOCKET - 20 GAUGE GOLD | 103, 125, 181 |
| **7834000120** | SPRING | 463 |
| **7834000786** | SPRING | 477 |
| **7834100003** | SPRING | 62 |
| **7846000680** | STOP, SLIDE | 77 |
| **7850000046** | STRAP, GROUND | 62 |
| **7850000208** | CABLE TIE, BLACK | 5, 104, 126, 133, 135, 142, 159, 180, 199, 297, 381, 386, 509, 515 |
| **7850000237** | TIE, CABLE (BLACK) | 169, 185, 320, 497, 549 |
| **7850000805** | TIE, CABLE (BLACK) | 33, 169 |

**From - 7794000577** **To - 7850000805**

## Numerical Index — Appendix B


| Part | Description | Page |
|---|---|---|
| **7850000831** | TIE, 8.14" LONG CABLE (BLACK) | 136 |
| **7872001408** | SWITCH, SEAT | 87 |
| **7872001734** | SWITCH, SHIFTER | 205 |
| **7872001747** | SWITCH, TURNSIGNAL/WIPER | 205 |
| **7872100051** | SWITCH, IGNITION | 113 |
| **7872100062** | PROXY SENSOR-PNP 10mm RANGE | 95 |
| **7872100071** | SWITCH, EMERGENCY STOP | 113 |
| **7872100091** | SWITCH, HEATER CNTRL EATON 12V | 113 |
| **7872100095** | SWITCH, L-SERIES ENGNE INC/DEC | 113 |
| **7872100100** | SWITCH, L-SERIES HAZARDS | 113 |
| **7872100104** | SWITCH, L-SERIES AIR CONDITION | 189 |
| **7872100105** | SWITCH, L-SERIES FAN HI/MED/LO | 113 |
| **7872100106** | SWITCH, L-SERIES HEATER ON/OFF | 113 |
| **7872100107** | SWITCH,L-SERIES CRANE FUNC PWR | 113 |
| **7872100108** | SWITCH,L-SERIES SKYLIGHT WIPER | 113 |
| **7872100110** | SWITCH, L-SERIES WORK LIGHTS | 113 |
| **7872100111** | SWITCH, L-SERIES BOOM LIGHTS | 197 |
| **7872100112** | SWITCH,L-SERIES LF O/R BM/STAB | 113 |
| **7872100113** | SWITCH,L-SERIES RF O/R BM/STAB | 113 |
| **7872100114** | SWITCH,L-SERIES LR O/R BM/STAB | 113 |
| **7872100115** | SWITCH,L-SERIES RR O/R BM/STAB | 113 |
| **7872100117** | SWITCH, L-SERIES O/R EXT/RET | 113 |
| **7872100118** | SWITCH, L-SERIES MAIN HOIST | 92 |
| **7872100119** | SWITCH, L-SERIES AUX HOIST | 92 |
| **7872100123** | SWITCH, L-SERIES SWING BRAKE | 92 |
| **7872100124** | SWITCH, L-SERIES SWING SPEED | 92 |
| **7872100125** | SWITCH, L-SERIES CAB TILT | 92 |
| **7872100132** | SWITCH, KEY OPERATED 2 POSITION | 185 |
| **7872100138** | SWITCH, L-SERIES DRIVE SELECT | 113 |
| **7872100139** | SWITCH, L-SERIES REAR STEER | 92 |
| **7872100142** | DISCONNECT SWITCH | 549 |
| **7872100145** | SWITCH, L-SERIES DEFROST FAN | 113 |
| **7872100170** | SWITCH, 120 TEMPERATURE (N.C.) | 230 |
| **7872100179** | SWITCH, TEMPERATURE 250 (N.C.) | 320 |
| **7872100210** | SWITCH L-SERIES HEADLIGHTS | 113 |
| **7872100211** | SWITCH L-SERIES PARK BRAKE | 113 |


**From - 7850000831** **To - 7872100211**

## Numerical Index — Appendix B

| Part | Description | Page |
|---|---|---|
| **7880000092** | KIT, JAY BRACKET | 539 |
| **7880100112** | RESERVOIR ASSEMBLY - HYDRAULIC | 517 |
| **7880100116** | TANK ASSEMBLY - 58 GALLON FUEL | 539 |
| **7888000045** | TEE | 317 |
| **7892000194** | PARALLEL, NON - INSULATED | 103, 126, 180, 386, 509 |
| **7892000195** | PARALLEL, NON - INSULATED | 103, 127, 180, 507, 515 |
| **7892000196** | PARALLEL, NON - INSULATED | 153, 509 |
| **7892000197** | PARALLEL, NON - INSULATED | 180 |
| **7892000198** | PARALLEL - NON-INSULATED 4 AWG | 180 |
| **7892000218** | FUSE, TERMINAL | 141 |
| **7892000219** | FUSE, TERMINAL | 142 |
| **7892000220** | FUSE, BUSS BAR | 141 |
| **7892000252** | TERMINAL, MALE PIN | 7, 126, 508 |
| **7892000253** | TERMINAL, FEMALE SLEEVE | 126, 179 |
| **7892000254** | TERMINAL, GREEN CABLE SEAL | 126, 179, 507 |
| **7892000255** | TERMINAL, GRAY CABLE SEAL | 7 |
| **7892000256** | TERMINAL, BLUE CABLE SEAL | 9, 181 |
| **7892000257** | TERMINAL, GREEN CAVITY | 126, 179, 508 |
| **7892000821** | CONNECTOR | 185 |
| **7892000824** | RECEPTACLE, | 73, 75, 272 |
| **7892000831** | RECEPTACLE, | 215 |
| **7892000832** | RECEPTACLE, | 97, 99, 103 |
| **7892000836** | RECEPTACLE, 2 PIN | 193, 309, 411 |
| **7892000843** | TERMINAL, FEMALE | 385, 507 |
| **7892000939** | RECEPTACLE, | 141, 272 |
| **7892000947** | RECEPTACLE, | 203, 510 |
| **7892000949** | RECEPTACLE, | 126, 179, 386, 508 |
| **7892000950** | RECEPTACLE, | 126, 142 |
| **7892000951** | RECEPTACLE, | 125, 142, 180, 213, 509 |
| **7892000978** | RECEPTACLE, | 179 |
| **7892000979** | RECEPTACLE, | 180 |
| **7892000986** | RECEPTACLE, | 507 |
| **7892000999** | RECEPTACLE, 12 VOLT DASH MOUNT | 133 |
| **7892001001** | FERRULE, SINGLE WIRE | 125 |
| **7892001002** | FERRULE, SINGLE WIRE | 126, 141, 185 |
| **7892001006** | FERRULE, DUAL WIRE | 186 |

**From - 7880000092** **To - 7892001006**

## Numerical Index — Appendix B

| Part | Description | Page |
|---|---|---|
| **7892001012** | RECEPTABLE, 12 P FLANGE | 273 |
| **7892001036** | RECEPTACLE, SPLICE BLOCK | 125, 179, 507 |
| **7892001051** | RECEPTACLE, | 181, 185, 510, 515 |
| **7892001053** | RECEPTACLE, 9 PIN | 125, 509 |
| **7892100003** | TERMINAL, DARK RED CABLE SEAL | 385, 508 |
| **7892100010** | RECP-DTM-3P | 95, 180 |
| **7892100025** | DEUTSCH DTP 2-PASS RECEPTACLE | 181, 510 |
| **7892100026** | RECEPT, (8P) SPLICE BLOCK | 103, 125, 179 |
| **7892100028** | CONNECTOR, 2 - PASS GREEN SEAL | 510 |
| **7892100029** | 2-PASS CONNECTOR/ORANGE SEAL | 142, 508 |
| **7892100030** | CONNECTOR, COVER/SINGLE | 142, 509 |
| **7892100033** | TERMINAL, FEMALE 2.94-3.68 | 509 |
| **7892100034** | TERMINAL, FEMALE | 142, 510 |
| **7892100036** | RECEPTACLE, 3 WAY | 126, 180, 385, 509 |
| **7892100039** | RECEPTACLE | 181 |
| **7892100058** | TERMINAL, FM MP 630 SERIES | 103, 125 |
| **7892100059** | TERMINAL, FM MP 630 SERIES | 103, 125 |
| **7892100086** | RECEPT, DTO4-12PB-C015 W/WEDGE | 125, 185 |
| **7892100087** | RECEPT, DTO4-12PC-C015 W/WEDGE | 125 |
| **7900000380** | TIRE, 20.5 X 25-24 PLY GENERAL | 453, 457 |
| **7910101222** | TUBE, INTAKE 28" | 403 |
| **7910101432** | TUBE ASSY, LIFT B RET TO HOSE | 227 |
| **7910101433** | TUBE ASSY, MAN IN TO PORT 5 SW | 226 |
| **7910101435** | TUBE ASSY, PS MAN TO PS MAIN | 226 |
| **7910101436** | TUBE ASSY, D4 MAN TO PD MAIN | 226 |
| **7910101437** | TUBE ASSY, D6 MAN TO PD MAIN | 228 |
| **7910101450** | TUBE, EXHAUST | 401 |
| **7910101454** | TUBE ASSY, INLET MAIN VALVE | 226 |
| **7910101464** | TUBE ASSY, PUMP INLET | 320 |
| **7910101513** | TUBE ASSY, D1 MAN TO TANK CHAR | 226 |
| **7910101515** | TUBE ASSY, BR MAN TO P CHARGE | 227 |
| **7910101516** | TUBE ASSY, 1A MAN TO LS STEER | 227 |
| **7910101517** | TUBE ASSY, 1B MAN TO P STEER | 226 |
| **7910101518** | TUBE ASSY, P BR CHARGE TO TUBE | 227 |
| **7910101519** | TUBE ASSY,LS BR CHARGE TO TUBE | 226 |
| **7910101520** | TUBE ASSY, T BR CHARGE TO TUBE | 227 |

**From - 7892001012** **To - 7910101520**

## Numerical Index — Appendix B

| Part | Description | Page |
|---|---|---|
| **7910101566** | TUBE ASSY, PORT 6 SWIVEL TO IN | 226 |
| **7910101567** | TUBE ASSY,PORT 4 SWIVEL TO OUT | 226 |
| **7910101568** | TUBE ASSY,PORT 4SWIVEL TO TANK | 226 |
| **7910101584** | TUBE, LOWER RADIATOR | 319 |
| **7910101597** | TUBE ASSY, LIFT A EXT TO HOSE | 227 |
| **7910101599** | TUBE, CHARGE AIR COOL | 391 |
| **7910101600** | TUBE, RADIATOR | 395 |
| **7910101601** | TUBE, RADIATOR | 313 |
| **7910101607** | TUBE ASSY, MAIN HOIST DOWN M&A | 228 |
| **7910101608** | TUBE ASSY, MAIN HOIST UP M&A | 228 |
| **7910101609** | TUBE ASSY, AUXILARY HOIST DOWN | 228 |
| **7910101610** | TUBE ASSY, AUXILARY HOIST UP | 228 |
| **7910101613** | TUBE ASSY, OIL COOLER INLET | 230 |
| **7910101614** | TUBE ASSY, OIL COOLER OUTLET | 230 |
| **7910101616** | TUBE ASSY, COOLER OUTLET TO 4 | 230 |
| **7910101618** | TUBE ASSY, MANIFOLD D5 TO 10 | 226 |
| **7910101627** | TUBE, DIPSTICK | 314 |
| **7910101628** | TUBE ASSY, MAIN TANK TO CHECK | 226 |
| **7910101629** | TUBE ASSY, COOLER IN TO CHECK | 230 |
| **7910101636** | TUBE ASSY,LS MAIN TO LS CHARGE | 231 |
| **7910101638** | TUBE ASSY, LS MAIN TO PORT 2 | 231 |
| **7910101641** | TUBE ASSY, 1B MAN TO P STEER | 231 |
| **7910101642** | TUBE ASSY, 1A MAN TO LS STEER | 231 |
| **7910101644** | TUBE ASSY,HOIST DR TO HOIST DR | 229 |
| **7910101706** | TUBE ASSY, TELE A EXT TO HOSE | 227 |
| **7910101707** | TUBE ASSY, TELE B RET TO HOSE | 227 |
| **7910101710** | TUBE ASSY, LIFT CYLINDER | 291 |
| **7910101859** | CAC TUBE | 313 |
| **7926000014** | VALVE-DRAIN COCK | 313 |
| **7926000557** | VALVE, DRAIN | 318 |
| **7926002156** | VALVE, INLET CHECK | 233 |
| **7926002329** | VALVE, SHUT-OFF | 320 |
| **7926003526** | FUSE, VELOCITY | 229 |
| **7926100859** | VALVE ASSEMBLY - OUTRIGGER CONTR | 525 |
| **7926100899** | VALVE ASSEMBLY - STEERING CONTRO | 205 |
| **7926100908** | VALVE ASSEMBLY - OUTRIGGER SELEC | 525 |

**From - 7910101566** **To - 7926100908**

## Numerical Index — Appendix B

| Part | Description | Page |
|---|---|---|
| **7926100910** | VALVE ASSY, DUAL ACCUMULATOR CHA | 275 |
| **7926100911** | VALVE ASSEMBLY - PARK BRAKE RANG | 525 |
| **7926100912** | VALVE ASSEMBLY - BRAKE TREADLE | 199 |
| **7926100924** | VALVE ASSEMBLY - AXLE LOCKOUT | 525 |
| **7926100925** | VALVE ASSEMBLY - HOLDING | 291 |
| **7926100936** | VALVE ASSEMBLY - OUTRIGGER SELEC | 525 |
| **7926100948** | VALVE ASSY, CHECK | 230 |
| **7926100959** | VALVE, #12 INLET CHECK | 225 |
| **7926100986** | VALVE ASSEMBLY - DIRECTIONAL CON | 275 |
| **7942000512** | BRACKET SET, FOOTLESS BLIND | 151 |
| **7942000522** | MESH, SUNSCREEN | 151 |
| **7949000148** | WASHER, 5/8" I.D. FLAT | 55, 429 |
| **7949000190** | WASHER, | 41, 51 |
| **7949000235** | WASHER, 1/2" I.D. FLAT | 291, 313, 318, 391, 421 |
| **7949000236** | FLAT WASHER, 3/4" | 91, 237, 313, 317, 429 |
| **7949000237** | WASHER, 7/8" I.D. | 287 |
| **7949000259** | WASHER, 5/8" I.D. | 313, 318 |
| **7949000263** | WASHER, HARDENED | 314, 317 |
| **7949000269** | WASHER, KEYED | 41, 51 |
| **7949000359** | WASHER, 1" I.D. HARDENED ROUND | 251, 261 |
| **7949000360** | WASHER, 1" I.D. | 477 |
| **7949000383** | WASHER, THRUST | 289 |
| **7949000385** | WASHER, THRUST | 3 |
| **7949000534** | WASHER, HARDENED ROUND | 263 |
| **7949000561** | WASHER, .450 I.D. NYLON FLAT | 485 |
| **7949000615** | WASHER, | 64, 537 |
| **7949000623** | WASHER, BLACK PLASTIC | 63 |
| **7949001149** | FITTING, WASHER NOZZLE | 62 |
| **7949001165** | WASHER, FINISHED | 64 |
| **7949001186** | WASHER, BLACK NYLON | 91, 109, 159 |
| **7949001227** | WASHER, BEVELED | 91 |
| **7949180045** | WASHER, COPPER | 540 |
| **7949180046** | WASHER, DOCK | 313 |
| **7950040050** | LOCKWASHER, 7/64" I.D. | 135, 497 |
| **7950040141** | WASHER, 7/64" I.D. | 135, 497 |
| **7950080050** | LOCKWASHER, 5/32" I.D. | 136, 186 |

**From - 7926100910** **To - 7950080050**

## Numerical Index — Appendix B

| Part | Description | Page |
|---|---|---|
| **7950080141** | FLATWASHER, 5/32" I.D. | 136, 153, 186 |
| **7950100050** | WASHER, LOCK #10 | 64, 135, 141, 513, 549 |
| **7950100141** | WASHER, FLAT, #10 | 64, 83, 135, 141, 307, 513, 549 |
| **7950140050** | WASHER, LOCK 1/4" I.D. | 29, 71, 91, 133, 135, 185, 311, 513, 545, 549 |
| **7950140141** | WASHER, FLAT 1/4" PLAIN NARROW | 29, 35, 71, 91, 135, 185, 275, 303, 395, 513, 519, 545 |
| **7950140161** | WASHER, 1/4" I.D. FLAT WIDE | 145, 392, 497, 549 |
| **7950150050** | WASHER, LOCK 5/16" I.D. | 71, 186, 263, 325, 545, 550 |
| **7950150051** | WASHER, LOCK 5/16" I.D. | 247, 249 |
| **7950150141** | WASHER, FLAT 5/16" | 71, 91, 186, 247, 249, 263, 271, 513, 545, 550 |
| **7950150161** | WASHER, 5/16" FLAT PLAIN WIDE | 275, 297, 311 |
| **7950160020** | WASHER, LOCK 3/8" I.D. | 244 |
| **7950160050** | WASHER, LOCK 3/8" I.D. | 33, 55, 71, 205, 318, 328, 353, 549 |
| **7950160141** | WASHER, 3/8" PLAIN NARROW | 33, 55, 205, 247, 249, 485 |
| **7950160161** | WASHER, FLAT WIDE 3/8 I.D. | 71, 311, 471 |
| **7950160350** | WASHER, LOCK 3/8" I.D. | 55, 65, 133, 205, 497 |
| **7950170050** | WASHER, LOCK 7/16" I.D. | 325, 327, 363 |
| **7950170141** | WASHER, 7/16" I.D. | 231 |
| **7950180050** | WASHER, LOCK 1/2" I.D. | 429 |
| **7950180141** | WASHER, FLAT 1/2" | 5, 63, 275, 429, 487 |
| **7950180161** | FLAT WASHER, 1/2" I.D. | 471 |
| **7950180350** | LOCK WASHER, 1/2" I.D. | 381 |
| **7950190050** | WASHER, LOCK | 157, 355 |
| **7950220161** | WASHER, FLAT 3/4" | 157 |
| **7950260141** | WASHER, 1" I.D. | 41 |
| **7951110014** | WASHER, 4MM I.D. | 65, 66, 91, 109, 114 |
| **7951110210** | LOCKWASHER, 4MM I.D. | 65, 91, 109, 114, 151 |
| **7951130014** | WASHER, 5MM I.D. | 65, 145, 205, 303, 485 |
| **7951130210** | LOCKWASHER, 5MM I.D. | 65, 145, 205, 303, 307, 485 |
| **7951150014** | WASHER, 6MM I.D. | 64, 91, 133, 199, 381, 391, 485 |
| **7951150210** | LOCKWASHER, 6MM I.D. | 63, 199, 275, 381, 391, 395, 497 |

**From - 7950080141** **To - 7951150210**

## Numerical Index — Appendix B


| Part | Description | Page |
|---|---|---|
| **7951170014** | FLAT WASHER | 64, 87, 92, 109, 169, 303, 311, 314, 391, 407, 415, 465, 471, 477, 481, 525 |
| **7951170210** | WASHER, LOCK 8MM | 64, 87, 109, 145, 169, 251, 275, 297, 303, 313, 391, 407, 465, 477, 481, 525 |
| **7951170580** | WASHER, SHAKE | 87 |
| **7951190014** | FLAT WASHER, 10MM I.D. | 63, 64, 109, 199, 217, 219, 307, 381, 401, 403, 407, 411, 489, 517, 523, 525, 537, 539, 547 |
| **7951190210** | LOCK WASHER, 10MM | 64, 109, 199, 217, 219, 311, 320, 381, 407, 471, 519, 525, 537 |
| **7951190220** | WASHER, LOCK | 401, 403 |
| **7951210014** | WASHER, FLAT #12 | 65, 313, 391, 407, 465, 540 |
| **7951210210** | LOCK WASHER, 12MM I.D. | 64, 275, 392, 407, 465, 471, 540 |
| **7951240014** | FLATWASHER 16MM I.D. | 517 |
| **7951240210** | SPRING WASHER, 16MM I.D. | 3, 517 |
| **7970140706** | WHEEL, STEERING | 205 |
| **7970140707** | BUTTON, HORN | 205 |
| **7970140708** | WHEEL 17.00 X 25.0 | 455, 459 |
| **7974100043** | HOIST ASSEMBLY - HP15C/17G | 237 |
| **80000423** | TUBE ASSY, P1 MAN TO P3 MAIN | 226 |
| **80000554** | DRIVE LINE ASSEMBLY | 421 |
| **80000556** | DRIVE LINE ASSEMBLY | 421 |
| **80001639** | BRACKET WELD | 185 |
| **80002325** | DECAL - PIN SWING LOCK | 469 |
| **80002486** | VALVE ASSEMBLY - ACCESSORY | 275 |
| **80003783** | SEAT ASSEMBLY - DUAL AXIS CONTRO | 87 |
| **80004087** | KIT, ACOUSTICS | 107 |
| **80004942** | CONTROL ASSEMBLY - THROTTLE | 199 |
| **80005875** | DECAL-DANGER REMOVE LMI OVERRIDE | 479 |
| **80005886** | DECAL-DANGER REMOVE LMI OVERRIDE | 480 |
| **80006745** | KIT - CAB HEATER AND AIR CONDITI | 145 |


**From - 7951170014** **To - 80006745**

## Numerical Index — Appendix B

| Part | Description | Page |
|---|---|---|
| **80006812** | BRAKE ASSEMBLY - PARKING | 317 |
| **80008129** | LMI INTERNAL LIGHT BAR | 159 |
| **80008491** | SWITCH, KEY | 186 |
| **80010000** | REAR FENDER - LEFT HAND | 471 |
| **80010098** | 90 DEG REDUCING ELBOW | 403 |
| **80010420** | SHCS M10x65 -8.8 ISO 4762 PLTD | 227 |
| **80010421** | SHCS M12x70 -8.8 ISO 4762 PLTD | 227 |
| **80010553** | HYDRAULIC COOLER | 407 |
| **80011908** | TRANSMISSION ASSEMBLY - 6 SPEED | 317 |
| **80012114** | FAN GUARD | 391 |
| **80014148** | TURNTABLE WELD | 251 |
| **8246964300** | MOULDING | 65, 311, 391, 395, 403 |
| **846531** | NUT, SELF-LOCKING | 19 |
| **8496900043** | MOULDING | 61 |
| **8496900046** | MOULDING | 64, 311 |
| **8496980002** | MOULDING | 62, 311, 471, 485, 523, 537, 547, 549 |
| **8594000001** | FLEXGUARD - 1.00" I.D. | 508 |
| **8594000002** | FLEXGUARD - .750" I.D. | 507 |
| **8594000003** | FLEXGUARD - .625" I.D. | 103, 181, 385, 507 |
| **8594000004** | FLEXGUARD - .500" I.D. | 103 |
| **8594000006** | FLEXGUARD - .350" I.D. | 103, 385, 508, 515 |
| **8594000019** | FLEXGUARD, 1/4" I.D. | 104, 127, 186, 199, 309, 386, 507, 515 |
| **8594000022** | FLEXGUARD - 1.250" I.D. | 508 |
| **8594100012** | TUBE, 1/2" NYLON FUEL | 539 |
| **8594100256** | TUBING, HEAT SHRINK 1/4" I.D. | 95, 103, 126, 180, 185, 385, 508 |
| **8594100257** | TUBING, HEAT SHRINK 1/2" I.D. | 9, 103, 126, 180, 185, 385, 507, 515 |
| **8594100265** | TUBING, HEAT SHRINK 3/4 I.D. | 185 |
| **8596902512** | 1/4" ID X 25’ GATES HOSE #4791 | 539 |
| **8596902521** | 1.75"ID X 2.13"OD WRAPPED HOSE | 317, 391 |
| **8596902522** | 2.00"ID X 2.39"OD WRAPPED HOSE | 391, 395 |
| **8596902527** | HOSE, HEATER 3/8 ID X 11/16 OD | 318, 391, 399 |
| **8596902528** | HOSE, 5/8" I.D. | 145, 319, 320 |

**From - 80006812** **To - 8596902528**

## Numerical Index — Appendix B

| Part | Description | Page |
|---|---|---|
| **8596902529** | .75"ID X 1.12"OD HEATER HOSE ( | 319 |
| **8596902531** | TUBE, RUBBER 5/16 ID X 50'LONG | 392 |
| **8596910250** | HOSE, HEATER 5/8" I.D. - 60.00" | 317 |
| **8596931250** | 5/16"WEATHERHEAD HOSE-650'REEL | 319 |
| **8637052011** | MOULDING, TRIM LOCK | 66 |
| **8637054001** | MOULDING | 311 |
| **8637059004** | MOULDING | 539 |
| **8637062018** | MOULDING | 395 |
| **8898920005** | R134A REFRIGERANT | 297 |
| **8898920006** | REFRIGERANT OIL | 297 |
| **8977010300** | WIRE, 16 GAUGE WHITE | 185 |
| **90000100** | MOTOR ASSY. HYD. | 242 |
| **90000104** | ADAPTER | 243 |
| **90000105** | O-RING | 243 |
| **90000125** | CAPSCREW | 243 |
| **90000633** | SEAL, CAP | 284 |
| **90000899** | DISC, ORIFICE .015 | 283 |
| **90000942** | SCREW | 97, 99 |
| **90000943** | COVER, HOUSING | 97, 99 |
| **90001014** | VALVE, WATER | 148 |
| **90001015** | SPACER | 148 |
| **90001016** | BUSHING | 148 |
| **90001017** | MOTOR | 148 |
| **90001067** | KIT, SEAL | 243 |
| **90001131** | CART. VALVE ASSY. CONTROL 12V. | 243 |
| **90001159** | ELEMENT, PRIMARY | 405 |
| **90001160** | ELEMENT, SECONDARY | 405 |
| **90001162** | VALVE, DUST EJECTION | 405 |
| **90001163** | COVER ASSY. | 405 |
| **90011561** | FUSE,2A | 163 |
| **90011562** | FUSE,15A | 163 |
| **90011563** | FUSE,7.5A | 163 |
| **90011630** | KIT, HANDLE | 301 |
| **90011882** | KIT, DICS SPRING | 370 |
| **90011883** | KIT, OVERHAUL | 370 |
| **90012227** | ADAPTER, 3 HOLE FRONT ASSY. | 147 |

**From - 8596902529** **To - 90012227**

## Numerical Index — Appendix B


| Part | Description | Page |
|---|---|---|
| **90012228** | BLOWER ASSY, 12 VOLT | 147 |
| **90012229** | COVER | 147 |
| **90012230** | FOAM | 147 |
| **90012231** | FITTING, ELBOW | 148 |
| **90012233** | FITTING, TEE | 148 |
| **90012234** | HOSE | 148 |
| **90012592** | YOKE ASSY. | 423 |
| **90012594** | YOKE ASSY. W/ DUST CAP | 425 |
| **90012853** | SEAL | 355 |
| **90012924** | VALVE,PRESS.REDUCING 250 PSI | 283 |
| **90012925** | VALVE,PRESS.REDUCING 2500 PSI | 283 |
| **90012926** | CAPSCREW,SOCKET HEAD 2-1/4" LG | 283 |
| **90012927** | CAPSCREW, 8MM LG | 283 |
| **90012928** | KIT, VALVE ASSY. WORK SECTION | 284 |
| **90012929** | CAPSCREW | 284 |
| **90012930** | CAPSCREW | 284 |
| **90015440** | OUTPUT SHAFT GROUP | 323 |
| **90016149** | KNOB | 163 |
| **9005100230** | VALVE ASSY. GAS | 275 |
| **9005100231** | CAP, VALVE | 275 |
| **9049100054** | PLUG, FILLER | 327 |
| **9049100263** | CAPSCREW | 328, 353 |
| **9049100535** | CUP, BEARING | 433 |
| **9049100638** | SCREW, BLEEDER | 447 |
| **9049100895** | OUTER | 433 |
| **9049101125** | BOLT, CAP SCREW | 325 |
| **9049101150** | CAP SCREW, | 327 |
| **9049101497** | NUT, JAM | 441 |
| **9049101566** | BEARING | 355 |
| **9049101600** | RING, RETAINING | 433 |
| **9049101673** | WASHER, THRUST | 441 |
| **9049101687** | STUD | 442 |
| **9049101693** | CONE, BEARING | 442 |
| **9049101694** | CONE, BEARING | 442 |
| **9049101695** | CUP, BEARING | 442 |
| **9049101696** | CUP, BEARING | 442 |


**From - 90012228** **To - 9049101696**

## Numerical Index — Appendix B

| Part | Description | Page |
|---|---|---|
| **9049101703** | NUT, WHEEL BEARING | 442 |
| **9049101704** | WASHER, LOCK | 442 |
| **9049101705** | WASHER, LOCK | 433, 437 |
| **9049101844** | GEAR-20T | 442 |
| **9049101846** | GEAR, PINION | 442 |
| **9049101847** | WASHER, THRUST | 442 |
| **9049101848** | WASHER, THRUST | 442 |
| **9049101920** | PLUG, DRAIN | 443 |
| **9049101980** | FLATWASHER | 443 |
| **9049102253** | BUSHING | 437 |
| **9049102254** | PLUG, EXPANSION | 437 |
| **9049102985** | WASHER, | 445 |
| **9049103033** | NUT | 443 |
| **9049103392** | GEAR | 442 |
| **9049103562** | FITTING, GREASE | 441 |
| **9049103565** | BUTTON, THRUST | 442 |
| **9049103595** | CAP SCREW, | 441 |
| **9049103739** | WASHER, HARDENED | 442 |
| **9049103927** | CAP SCREW, | 442 |
| **9049104393** | FLATWASHER | 433 |
| **9049104578** | BEARING | 433 |
| **9049105399** | SET SCREW | 442 |
| **9049105562** | HUB | 442 |
| **9049105580** | THRUSTWASHER | 442 |
| **9049106034** | SPIDER ASSEMBLY | 442 |
| **9049106322** | O-RING | 442 |
| **9049106450** | WASHER, HARDENED | 442 |
| **9049106456** | SCREW, STOP | 441 |
| **9049106490** | SHAFT ASSEMBLY, PINION | 442 |
| **9049106579** | CAP SCREW, | 443 |
| **9049106636** | CAP SCREW, | 361 |
| **9049106791** | BUTTON, THRUST | 442 |
| **9049107127** | SPIDER ASSEMBLY | 442 |
| **9049107128** | WHEEL HUB | 442 |
| **9049107129** | DISC, BRAKE | 442 |
| **9049107133** | KNUCKLE, STEERING | 441 |

**From - 9049101703** **To - 9049107133**

## Numerical Index — Appendix B

| Part | Description | Page |
|---|---|---|
| **9049107134** | SHIM, | 441 |
| **9049107135** | SHIM, | 441 |
| **9049107136** | SHIM, | 441 |
| **9049107137** | CAP | 441 |
| **9049107138** | CAP | 441 |
| **9049107142** | CAP SCREW, | 445 |
| **9049107148** | PISTON | 447 |
| **9049107152** | CAP HEAD, CYLINDER | 447 |
| **9049107157** | PLUG | 447 |
| **9049107402** | PLUG | 447 |
| **9049108332** | CAP SCREW, | 433 |
| **9049108948** | CONE, BEARING | 433 |
| **9049108952** | KIT, SPACER | 433 |
| **9049108965** | PINION | 434 |
| **9049108966** | KIT, HARDWARE | 433 |
| **9049108967** | CAP SCREW, | 433 |
| **9049108971** | RING, ADJUSTING | 433 |
| **9049109021** | SCREW, THRUST | 433 |
| **9049109022** | NUT, JAM | 433 |
| **9049109048** | CAP SCREW, | 447 |
| **9049109243** | KIT, LINING | 447 |
| **9049109511** | PIN, COTTER-END YOKE NUT | 443 |
| **9049109690** | CONE, BEARING | 433 |
| **9049109699** | GEAR, SIDE | 434 |
| **9049109724** | TIE ROD ASSEMBLY | 443 |
| **9049109725** | CLAMP AND TIE ROD ASSEMBLY | 443 |
| **9049109726** | END, TIE ROD | 443 |
| **9049109727** | END, TIE ROD | 443 |
| **9049109733** | BEARING ASSEMBLY, U JOINT | 441, 442 |
| **9049109751** | SPIDER | 434 |
| **9049109896** | WASHER, LOCK | 339 |
| **9049110385** | SCREW | 437 |
| **9049110932** | KNUCKLE, STEERING | 441 |
| **9049110945** | PLATE | 447 |
| **9049111037** | WASHER, | 433, 434 |
| **9049111473** | SCREW | 437 |

**From - 9049107134** **To - 9049111473**

## Numerical Index — Appendix B

| Part | Description | Page |
|---|---|---|
| **9049111509** | SCREW | 434 |
| **9049111513** | LOCKNUT | 433 |
| **9049111517** | NUT | 433 |
| **9049111750** | GEAR ASSEMBLY, BEVEL | 433 |
| **9049111753** | CAP SCREW, | 442 |
| **9049111754** | JOINT ASSEMBLY | 441 |
| **9049111756** | JOINT ASSEMBLY | 441 |
| **9049111761** | KIT, SEAL | 447 |
| **9049112096** | DEFLECTOR | 434 |
| **9049112240** | NUT | 442 |
| **9049112263** | CUP, BEARING | 433 |
| **9049112264** | CONE, BEARING | 433 |
| **9049112382** | CAP | 445 |
| **9049112432** | YOKE ASSY. | 434 |
| **9049112516** | BRAKE GROUP | 431 |
| **9049112522** | BRAKE ASSEMBLY, DISC | 445, 447 |
| **9049112523** | BRAKE ASSEMBLY,GROUP | 431 |
| **9049112639** | CAGE ASSY. PINION | 433 |
| **9049112682** | BUSHING | 437, 442 |
| **9049112685** | SEAL | 442 |
| **9049112686** | BREATHER | 437 |
| **9049112762** | HOUSING, DIFF. W/CAP ASSY. | 433 |
| **9049112763** | KIT, SHIM | 433 |
| **9049112764** | SCREW | 433 |
| **9049112766** | CASE ASSY. DIFF. | 433 |
| **9049112767** | KIT, DIFF | 434 |
| **9049112768** | WASHER, THRUST | 434 |
| **9049112769** | WASHER, THRUST | 434 |
| **9049112771** | PLUG ASSY. | 437 |
| **9049112776** | DIFF. CARRIER GROUP | 431 |
| **9049112777** | DIFF.CARRIER ASSY.@ 5.57 RATIO | 434 |
| **9049112778** | HOUSING GROUP | 431 |
| **9049112779** | HOUSING, ASSY. AXLE | 437 |
| **9049112780** | HUB & SHAFT GROUP | 431 |
| **9049112781** | SEAL | 437, 442 |
| **9049112782** | SPINDLE ASSY. | 442 |

**From - 9049111509** **To - 9049112782**

## Numerical Index — Appendix B

| Part | Description | Page |
|---|---|---|
| **9049112786** | SEAL, OIL | 433 |
| **9049112889** | O-RING | 437 |
| **9069100118** | SEAL, BEARING 21’ | 251 |
| **9086100011** | PIN, ROLL | 37 |
| **9086100014** | BEARING, ROLLER | 37 |
| **9086100061** | NUT | 37 |
| **9086100088** | BEARING | 37 |
| **9086100151** | FITTING | 37 |
| **9086100204** | PIN, ROLL | 37 |
| **9086100214** | PIN | 37 |
| **9086100491** | KIT,LATCH | 37 |
| **9086100495** | HOOK & NUT | 37 |
| **9086100567** | SPACER | 37 |
| **9086100584** | PIN, QUICK RELEASE | 37 |
| **9086100705** | WASHER, LOCK | 37 |
| **9086100800** | WHEEL, SHEAVE | 37 |
| **9086100801** | CAP SCREW, | 38 |
| **9086100802** | WASHER, THRUST | 37 |
| **9086100803** | WASHER, THRUST | 37 |
| **9086100804** | WASHER, | 37 |
| **9086100805** | SCREW | 37 |
| **9086100806** | CAP SCREW, | 37 |
| **9086100809** | BOLT, TIE | 37 |
| **9086100810** | BOLT, TIE | 37 |
| **9086100811** | PIN | 37 |
| **9086100812** | SPACER | 37 |
| **9086100813** | S-HOOK | 37 |
| **9086100815** | RING, SPLIT | 37 |
| **9086100919** | CHAIN | 37 |
| **9086100929** | HOUSING | 37 |
| **9086100933** | WIRE, SAFETY | 37 |
| **9086101008** | PLATE, SIDE | 37 |
| **9086101063** | PIN & COTTER | 483 |
| **9086101336** | PLATE, SIDE SET | 37 |
| **9086101337** | GUIDE ASSY. | 37 |
| **9176100603** | O-RING | 97 |

**From - 9049112786** **To - 9176100603**

## Numerical Index — Appendix B

| Part | Description | Page |
|---|---|---|
| **9188101020** | CAP SCREW, | 370 |
| **9188101041** | KIT, LINING | 371 |
| **9188101043** | KIT, SPRING | 371 |
| **9188101078** | KIT,SEAL | 371 |
| **9188101092** | KIT,CAM OVERHAUL | 371 |
| **9188101094** | KIT, HYD.CYLINDER SERVICE | 370 |
| **9188101096** | PLUG,SCREW TYPE | 369 |
| **9188101097** | NUT,JAM | 370 |
| **9246100159** | BOOT, SWIVEL (RED) | 389, 553 |
| **9246100168** | BOOT, RED | 389 |
| **9246100177** | BOOT, RED | 389, 553 |
| **9246100185** | BOOT, BLACK | 389 |
| **9258100173** | BREATHER | 519 |
| **9258100174** | KIT, STRAINER | 519 |
| **9274100125** | RING, SNAP | 442 |
| **9286100001** | CHAIN | 41, 51 |
| **9326100494** | KIT, HORN BRUSH W/GREASE | 211 |
| **9326100495** | BOOT, LOWER END | 211 |
| **9326100496** | BOOT, UPPER END | 211 |
| **9326100497** | CAP | 211 |
| **9326100498** | SPRING | 211 |
| **9326100499** | SPRING | 211 |
| **9333101435** | GUIDE, CABLE | 15 |
| **9333101437** | ROLLER GUIDE ASSEMBLY | 15 |
| **9333101465** | RESISTOR, 4700 OHMS | 25 |
| **9333101471** | FITTING, BULKHEAD ADAPTER | 155 |
| **9333101472** | SEAL, CUTTING | 155 |
| **9333101565** | SEAL, COVER | 17 |
| **9333101566** | SCREW, COVER | 17 |
| **9333101625** | GEAR, 75T | 17 |
| **9333101840** | CLEVIS | 27, 31 |
| **9333101916** | PIN, COTTER | 27, 31 |
| **9333101921** | CHAIN ASSEMBLY | 27, 31 |
| **9333101922** | CLAMP, CHAIN | 27, 31 |
| **9333101923** | EYEBOLT | 27, 31 |
| **9333101924** | WEIGHT, FEMALE | 27, 31 |

**From - 9188101020** **To - 9333101924**

## Numerical Index — Appendix B

| Part | Description | Page |
|---|---|---|
| **9333101925** | WEIGHT, MALE | 27, 31 |
| **9333101984** | LOCKNUT | 21 |
| **9333102047** | PLUG, HOLE | 25 |
| **9333102056** | STRAIN RELIEF | 21 |
| **9333102230** | A2B SWITCH - WITH | 15 |
| **9333102232** | LANYARD | 23 |
| **9333102235** | CONDUIT | 15 |
| **9333102266** | WASHER, LOCK | 21 |
| **9333102373** | FLAG, RETAINER | 23 |
| **9333102479** | WIRE | 21 |
| **9333102480** | NUT #4 | 21 |
| **9333102482** | GASKET | 21 |
| **9333102612** | COVER, DUST | 21 |
| **9333102615** | COVER, DUST | 25 |
| **9333102618** | DECAL, A2B | 23 |
| **9333102620** | CONNECTOR, CHAIN | 15 |
| **9333102633** | FLAG ASSEMBLY - A2B | 15 |
| **9333102663** | BLOCK, TERMINAL STRIP | 21 |
| **9333102664** | PLATE, TERMINAL STRIP END | 21 |
| **9333102665** | BRACKET, TERMINAL STRIP END | 21 |
| **9333102669** | SCREW #4 | 21 |
| **9333102717** | BAR, 2-POLE JUMPER | 21 |
| **9333102759** | RAIL, TERMINAL STRIP MOUNTING | 21 |
| **9333102765** | CONNECTOR ASSEMBLY | 15 |
| **9333102770** | HOUSING, CANNON CONNECTOR | 25 |
| **9333102790** | SCREW, SLOTTED MACHINE | 25 |
| **9333102792** | CONNECTOR, CANNON 2-SOCKET | 21 |
| **9333102808** | PLUG, HOLE | 21 |
| **9333102986** | CABLE, LENGTH SENSOR - 1 | 17 |
| **9333103040** | CANNON CONNECTOR, 2-PIN | 25 |
| **9333103041** | RELIEF, VALVE | 21 |
| **9333103042** | CRIMP FERRULE, 20 AWG | 21 |
| **9333103044** | MARKING TAGS, 1-5 | 21 |
| **9333103094** | CLAMP, CABLE | 15 |
| **9333103565** | BOX ASSEMBLY - JUNCTION | 15 |
| **9333103697** | THIMBLE, 1/8" CABLE | 15 |

**From - 9333101925** **To - 9333103697**

## Numerical Index — Appendix B

| Part | Description | Page |
|---|---|---|
| **9333103729** | SWITCH ASSEMBLY | 29 |
| **9333103730** | CLIP, GRIPPER | 29 |
| **9333103735** | BOX, JUNCTION | 21 |
| **9333103768** | NUT, EYE | 15 |
| **9333103870** | PRESSURE TRANSDUCER, iFLEX 5 (2 | 155 |
| **9333103872** | CABLE, CANBUS 11M W/MOLDED M12 | 15 |
| **9333103873** | CABLE REEL LWG508 - IFLEX 5 | 15 |
| **9333103896** | P.C. BOARD | 17 |
| **9333103897** | POTENTIOMETER,LENGTH | 17 |
| **9333103898** | SENSOR,ANGLE | 17 |
| **9333103904** | SLIP RING ASSY. 2 CONN. | 17 |
| **9333103905** | GEAR, 25T | 17 |
| **9333103906** | PLUG,CONNECTOR ASSY.5 PIN PASS | 17 |
| **9333103907** | COVER | 17 |
| **9333107524** | CENTERAL UNIT ASSEMBLY - iFLEX2 | 163 |
| **9333107525** | HARNESS ASSY, S/S (IFLEX2) | 163 |
| **9333107526** | CONSOLE ASSEMBLY - GRAPHIC (COLO | 163 |
| **9352100410** | NUT, KEPS | 272 |
| **9352100528** | NUT | 97, 99 |
| **9352100657** | GASKET | 97, 99 |
| **9352100665** | TREADLE | 203 |
| **9352100669** | SET SCREW | 97, 99 |
| **9352100676** | NUT | 97 |
| **9352100692** | NUT | 97, 99 |
| **9352100751** | KIT, GASKET AND HARDWARE | 539 |
| **9352100770** | HANDLE ASSY. | 99 |
| **9352100771** | BOOT | 97, 99 |
| **9352100772** | GASKET | 97, 99 |
| **9352100777** | SCREW | 97, 99 |
| **9352100784** | HANDLE ASSY. | 97 |
| **9352100786** | HANDLE, SHELL (BOTH HALVES) | 97 |
| **9352100787** | COUPLING | 97, 99 |
| **9352100788** | SOLENIOD, THUMPER | 97, 99 |
| **9352100789** | PLATE, MOUNTING | 97, 99 |
| **9352100790** | SWITCH, PUSH BUTTON | 97 |
| **9352100791** | NUT | 97, 99 |

**From - 9333103729** **To - 9352100791**

## Numerical Index — Appendix B

| Part | Description | Page |
|---|---|---|
| **9352100792** | HANDLE, SHELL (BOTH HALVES) | 99 |
| **9364100088** | TERMINAL, SMALL KNIFE | 271 |
| **9364100092** | SLEEVE, 3/16" I.D. X 3" | 271 |
| **9364100178** | CONNECTOR, CRIMPED | 271 |
| **9364100180** | BEARING, NYLON | 271 |
| **9364100332** | TERMINAL, JUMBO KNIFE | 271 |
| **9364100333** | SPRING, BRUSH | 271 |
| **9364100334** | SLEEVE, 5/16" I.D. X 3" | 271 |
| **9364100340** | BRUSH AND HOLDER ASSEMBLY | 271 |
| **9364100437** | BRUSH AND HOLDER ASSEMBLY | 271 |
| **9364100658** | NUT | 272 |
| **9364100964** | BEARING, NYLON | 271 |
| **9364100968** | CONNECTOR, LIQUID TIGHT | 271 |
| **9364101154** | SPRING, BRUSH | 271 |
| **9364101208** | CONNECTOR | 271 |
| **9364101224** | CONNECTOR, SETSCREW | 271 |
| **9364101388** | GASKET | 401 |
| **9364101397** | NUT, LOCK 3/4" | 272 |
| **9364101403** | RETAINER | 401 |
| **9364101404** | CLAMP | 401 |
| **9364101429** | NUT, HEX JAM | 271 |
| **9364101535** | U-JOINT BEARING WITH HARDWARE | 423, 425 |
| **9364101577** | FITTING, GREASE | 425 |
| **9364101588** | SPACER, STAND-OFF | 272 |
| **9364101590** | DISK, RUB | 272 |
| **9364101594** | SPACER, NYLON | 272 |
| **9364101595** | PLATE | 272 |
| **9364101596** | SCREW, #10-32 X 5/8" FLATHEAD | 272 |
| **9364101601** | COLLAR, SET 5/16" | 271 |
| **9364101615** | SET SCREW | 272 |
| **9364101712** | PLUG, SEAL | 271 |
| **9364101727** | SCREW | 272 |
| **9364101731** | BRACKET,BASE | 271 |
| **9364101733** | BRUSH & ARM ASSY. (SILVER) | 271 |
| **9364101818** | PLATE, COVER FLANGE | 265 |
| **9364101820** | SPOOL ASSY.  HYD./ WATER | 265 |

**From - 9352100792** **To - 9364101820**

## Numerical Index — Appendix B

| Part | Description | Page |
|---|---|---|
| **9364101821** | SCREW, GRUB | 265 |
| **9364101822** | CAPSCREW | 265 |
| **9364101823** | CAPSCREW, M8 | 265 |
| **9364101826** | HOUSING, WATER | 265 |
| **9364101827** | BRACKET | 265 |
| **9364101828** | HOUSING, CASE | 265 |
| **9364101829** | KIT, SEAL | 265 |
| **9364101830** | KIT, SEAL | 265 |
| **9364101836** | BREATHER ASSY. | 272 |
| **9364101838** | CORE ASSY. SLIP RING | 271 |
| **9364101839** | STUD, 7.75" LEVELING | 271 |
| **9364101840** | COVER ASSY. W/LATCHES | 271 |
| **9364101841** | HARNESS ASSY. CENTER | 271 |
| **9364101842** | HARNESS ASSY. FRONT | 271 |
| **9364101843** | HARNESS ASSY. REAR | 271 |
| **9364101844** | HARNESS ASSY. POTENTIOMETER | 271 |
| **9364101845** | NUT, LOCK 1/2" | 272 |
| **9364101846** | SCREW | 272 |
| **9364101847** | LATCH | 272 |
| **9364101848** | SERVO POT. & BOARD ASSY. | 272 |
| **9364101849** | PLATE, MTG. | 272 |
| **9364101850** | DRIVE, SHAFT | 272 |
| **9364101851** | WASHER, #10 FLAT | 272 |
| **9364101852** | WIRE, GROUND | 272 |
| **9364101853** | SCREW | 272 |
| **9364101866** | CAPSCREW | 427 |
| **9364101867** | U-JOINT ASSY. | 427 |
| **9364101868** | SEAL, SHAFT | 427 |
| **9364101869** | VALVE, AIR | 427 |
| **9364101870** | FITTING, GREASE | 427 |
| **9364101889** | CLAMP, SERVO W/SCREW | 272 |
| **9364101902** | LOCKNUT | 423 |
| **9364101903** | WASHER | 423 |
| **9364101907** | BEARING, CENTER | 423 |
| **9372103533** | BARREL ASSY. | 449 |
| **9372103534** | ROD ASSY. | 449 |

**From - 9364101821** **To - 9372103534**

## Numerical Index — Appendix B

| Part | Description | Page |
|---|---|---|
| **9372103535** | GLAND, ROD | 449 |
| **9372103536** | PISTON | 449 |
| **9372103537** | KIT, SEAL | 449 |
| **9372103538** | NUT | 449 |
| **9414101679** | FILTER,OIL | 321 |
| **9414101731** | STARTER, 12 VOLT | 321 |
| **9414101755** | FILTER, PRIMARY FUEL | 321 |
| **9414101756** | FILTER, FUEL | 321 |
| **9414101764** | BELT, DRIVE | 321 |
| **9425100009** | SWITCH, 12 VOLT | 109 |
| **9425100077** | MOTOR ASSY. 12V. | 83 |
| **9425100078** | GUARD, FAN | 83 |
| **9425100079** | SWITCH ASSY. | 83 |
| **9437100452** | KIT, SEAL | 521 |
| **9437100456** | GAUGE | 521 |
| **9437100476** | VALVE, BY-PASS | 521 |
| **9437100479** | O-RING, SQUARE | 521 |
| **9437100480** | GASKET | 521 |
| **9437100575** | O-RING | 521 |
| **9437100763** | CAP ASSEMBLY | 521 |
| **9437100765** | SPACER | 521 |
| **9437100766** | CAP SCREW, | 521 |
| **9437100825** | ELEMENT | 521 |
| **9437100828** | CAP | 521 |
| **9437100842** | HEAD, FILTER | 521 |
| **9437100856** | CAPSCREW | 521 |
| **9437100857** | WASHER | 521 |
| **9437100891** | FILTER ASSY. HYD. RETURN | 519 |
| **9437100894** | PLUG | 521 |
| **9437100895** | PLUG | 521 |
| **9486100290** | KIT,HARDWARE | 129 |
| **9498100121** | RETAINER, KEEPER | 79 |
| **9498100122** | NUT | 79 |
| **9498100135** | SCREW | 79 |
| **9498100145** | BRACKET, RAIL | 79 |
| **9498100155** | LOCK | 79, 81 |

**From - 9372103535** **To - 9498100155**

## Numerical Index — Appendix B

| Part | Description | Page |
|---|---|---|
| **9498100156** | SPRING | 79 |
| **9498100167** | SCREW, PLASTIC | 79, 81 |
| **9498100191** | GLASS ASSEMBLY | 79 |
| **9498100192** | GLASS | 79 |
| **9498100193** | GLAZING, PVC | 79 |
| **9498100194** | GLASS ASSEMBLY | 79 |
| **9498100195** | GLASS | 79 |
| **9498100196** | RAIL | 79 |
| **9498100197** | FRAME | 79 |
| **9498100198** | INNER LINER | 79 |
| **9498100199** | RAIL | 79 |
| **9498100200** | SEAL | 79 |
| **9498100201** | TRIM | 79 |
| **9498100202** | TRIM | 79 |
| **9498100203** | CHANNEL | 79 |
| **9498100204** | CHANNEL | 79 |
| **9498100206** | TAPE | 79 |
| **9498100337** | WEATHERSEAL | 77 |
| **9498100339** | WEATHERSEAL | 77 |
| **9498100387** | BAR, RETAINER | 81 |
| **9498100388** | RETAINER, KEEPER | 81 |
| **9498100389** | NUT | 81 |
| **9498100390** | GLASS ASSY. | 81 |
| **9498100391** | GLASS ASSY. | 81 |
| **9498100392** | GLASS ASSY. | 81 |
| **9498100393** | MULL, BAR | 81 |
| **9498100394** | RAIL ASSY. | 81 |
| **9498100395** | TRIM, STOP | 81 |
| **9498100396** | TRIM, COVER | 81 |
| **9498100397** | TRIM, COVER | 81 |
| **9498100398** | CHANNEL, RUBBER | 81 |
| **9498100399** | CHANNEL, RUBBER | 81 |
| **9498100400** | SCREW, #8 X 1" | 81 |
| **9498100401** | SCREW, #8 X 3/8" | 81 |
| **9498100402** | SCREW | 81 |
| **9511100007** | SCREW | 97, 99 |

**From - 9498100156** **To - 9511100007**

## Numerical Index — Appendix B

| Part | Description | Page |
|---|---|---|
| **9511100017** | BOOT | 97, 99 |
| **9515102320** | LOCK WASHER, 10MM I.D. | 411 |
| **9515102828** | CORE ASSY, HEATER | 147 |
| **9515102829** | FOAM | 147 |
| **9515102830** | CLAMP | 147 |
| **9515102831** | VALVE, EXPANSION | 147 |
| **9515102833** | SEALER, FOAM | 147 |
| **9515102835** | COVER,TUBE | 147 |
| **9515102837** | RESISTOR ASSY. | 147 |
| **9515102838** | THERMOSTAT | 147 |
| **9515102839** | CLAMP | 147 |
| **9515102840** | MOUNT, LEFT HAND | 147 |
| **9515102842** | MOUNT, RIGHT HAND | 147 |
| **9515102844** | O-RING #8 | 147, 297, 413 |
| **9515102845** | O-RING | 147 |
| **9515102846** | GUARD,LOUVER | 147 |
| **9515102847** | INSULATION | 147 |
| **9515102848** | GROMMET | 147 |
| **9515102849** | SEAL | 147 |
| **9515102852** | FLEXHOSE | 147 |
| **9515102853** | SEAL | 147 |
| **9515102854** | FILTER | 147 |
| **9515102855** | HOSE, DRAIN | 147 |
| **9515102865** | SWITCH,PRESSURE | 193 |
| **9515102872** | TABS,MOUNTING | 299 |
| **9515102889** | CLUTCH ASSY. 12V./PULLEY& COIL | 411 |
| **9515102890** | COIL 12V. | 411 |
| **9515102920** | COVER, HOUSING | 147 |
| **9515102921** | CONNECTOR | 147 |
| **9515102922** | KIT, VALVE ASSY. WATER | 148 |
| **9515102926** | LOUVER, 4" W/ADAPTER | 147 |
| **9515102927** | RETAINER, FILTER | 148 |
| **9515103058** | COVER, BASE | 147 |
| **9515103059** | LOUVER, 2" BALL | 147 |
| **9515103061** | CLAMP | 147 |
| **9515103062** | CONNECTOR, Y | 148 |

**From - 9511100017** **To - 9515103062**

## Numerical Index — Appendix B

| Part | Description | Page |
|---|---|---|
| **9515103069** | HARNESS ASSY. | 147 |
| **9543100045** | HOSE ASSY, 3/8 X 26" | 62 |
| **9576100517** | PIN | 241 |
| **9576101028** | STRAP | 545 |
| **9576101029** | BUSHING | 545 |
| **9576101074** | KEY, SET | 62 |
| **9576101100** | CAPSCREW | 258 |
| **9576101101** | KIT,SEAL BRAKE | 259 |
| **9576101102** | KIT,DISC BRAKE | 259 |
| **9576101124** | WASHER | 257 |
| **9576101126** | GEAR,RING | 259 |
| **9576101127** | BEARING,NEEDLE | 257 |
| **9576101129** | WASHER | 257 |
| **9576101130** | RING,RETAINER | 257 |
| **9576101133** | RING,RETAINER | 259 |
| **9576101135** | BEARING | 258 |
| **9576101136** | COUPLING | 258 |
| **9576101137** | RING,RETAINER | 258 |
| **9576101138** | RING,RETAINER | 258 |
| **9576101140** | RING,RETAINER | 259 |
| **9576101141** | PLUG | 259 |
| **9576101142** | PLATE,END | 257 |
| **9576101148** | CAPSCREW | 259 |
| **9576101149** | PIPE | 259 |
| **9576101151** | DIPSTICK | 259 |
| **9576101152** | ELBOW | 259 |
| **9576101154** | PLUG | 259 |
| **9576101165** | KIT,BRAKE ASSY. | 259 |
| **9576101167** | PINION | 257 |
| **9576101171** | KIT,SHIM | 257 |
| **9576101173** | NUT,RING | 257 |
| **9576101174** | RING GEAR | 259 |
| **9576101175** | CAPSCREW | 258 |
| **9576101176** | GEAR,SUN | 258 |
| **9576101180** | GEAR,SUN | 257 |
| **9576101181** | PIN | 257 |

**From - 9515103069** **To - 9576101181**

## Numerical Index — Appendix B

| Part | Description | Page |
|---|---|---|
| **9576101183** | PIN | 257 |
| **9576101184** | HOUSING,FLANGE MTG. | 258 |
| **9576101185** | PLUG | 258 |
| **9576101186** | KIT,SEAL MOTOR | 258 |
| **9576101189** | BREATHER | 259 |
| **9576101193** | O-RING #6 | 193 |
| **9576101194** | O-RING #10 | 193, 413 |
| **9576101200** | HOSE ASSY. #10 | 193 |
| **9576101201** | HARNESS ASSY. W/ CONNECTOR | 193 |
| **9576101202** | HOSE ASSY. #8 | 413 |
| **9576101203** | HOSE ASSY. #10 | 413 |
| **9576101205** | COMPRESSOR ASSY. 12V. | 411 |
| **9576101220** | PLUG | 259 |
| **9576101307** | PLATE, RETAINER | 257 |
| **9576101308** | CAPSCREW | 257 |
| **9576101329** | SPACER | 257 |
| **9576101330** | SHAFT, OUTPUT | 257 |
| **9576101331** | SEAL, OIL | 257 |
| **9576101332** | BEARING | 257 |
| **9576101333** | RING, RETAINING | 257 |
| **9576101334** | O-RING | 257 |
| **9576101335** | BEARING | 257 |
| **9576101336** | BEARING, NEEDLE | 257 |
| **9576101337** | KIT, SEAL | 259 |
| **9576101338** | O-RING | 259 |
| **9576101339** | KIT, SHIM | 259 |
| **9576101340** | PLANETARY CARRIER ASSY. | 259 |
| **9576101341** | PLANETARY CARRIER ASSY. | 259 |
| **9576101343** | KIT, MOTOR WITH HARDWARE AND BRA | 73, 75 |
| **9576101345** | SHAFT, PIVOT | 73, 75 |
| **9576101347** | BLADE, WIPER 34" | 73, 75 |
| **9576101348** | ADAPTER | 73, 75 |
| **9576101349** | KIT, WET | 75 |
| **9576101395** | MOTOR ASSY. HYD. | 258 |
| **9576101396** | COIL ASSY. CONDENSER | 299 |
| **9576101397** | BRACKET | 299 |

**From - 9576101183** **To - 9576101397**

## Numerical Index — Appendix B

| Part | Description | Page |
|---|---|---|
| **9576101398** | DRIER ASSY. | 299 |
| **9576101399** | TUBE ASSY. | 299 |
| **9576101400** | FAN ASSY. 12V. | 299 |
| **9576101401** | HARNESS ASSY. | 299 |
| **9576101402** | HOSE ASSY. #6 | 193 |
| **9576101404** | BAR, LINK 14.64" | 73 |
| **9576101405** | ARM, DRIVE 60 DEG | 73, 75 |
| **9576101406** | ARM, WIPER 24" | 73, 75 |
| **9576101407** | MOUNT, COMPRESSOR | 411 |
| **9576101420** | KIT, COMPRESSOR MOUNT | 411 |
| **9576101421** | ARM, ADJUSTING | 411 |
| **9576101422** | ADJUSTER | 411 |
| **9576101423** | SPACER | 411 |
| **9576101424** | BELT, DRIVE | 411 |
| **9576101439** | HARNESS ASSY. WATER VALVE | 148 |
| **9576101441** | GRILL | 299 |
| **9581100048** | BULB | 62 |
| **9581100058** | LENS, MOONSTONE | 62 |
| **9581100389** | TUBE,STROBE | 309 |
| **9581100390** | LENS, AMBER | 309 |
| **9581100391** | BEAM, SEALED 12 VOLT | 7, 62 |
| **9581100394** | SOCKET, | 113 |
| **9581100396** | BULB, HALOGEN | 481 |
| **9581100405** | BULB, 12 VOLT | 113 |
| **9581100406** | BULB, 12 VOLT | 129 |
| **9581100407** | SOCKET, | 129 |
| **9581100461** | GROMMET, RUBBER | 481 |
| **9585100055** | KEEPER | 303, 485 |
| **9632102851** | WASHER, | 207 |
| **9683100087** | KIT, TREADLE ASSY. | 203 |
| **9683100088** | KIT, DRIVE ASSY. | 203 |
| **9683100089** | KIT, ELECTRICAL ASSY. | 203 |
| **9683100090** | KIT, COVER ASSY. | 203 |
| **9722105433** | COVER, FRONT | 373 |
| **9722105434** | PLATE, THRUST | 373 |
| **9722105435** | CAPSCREW | 373 |

**From - 9576101398** **To - 9722105435**

## Numerical Index — Appendix B


| Part | Description | Page |
|---|---|---|
| **9722105436** | SCREW, GRUB | 373 |
| **9722105437** | WASHER | 373 |
| **9722105441** | RING, RETAINER | 373 |
| **9722105443** | BEARING | 373 |
| **9722105444** | BUSHING | 373 |
| **9722105445** | KIT, SEAL | 373 |
| **9722105468** | GEAR, DRIVE SHAFT | 373 |
| **9722105469** | GEAR, DRIVEN | 373 |
| **9722105514** | PLUG | 373 |
| **9722105546** | SHAFT ASSY. | 375 |
| **9722105547** | BEARING | 375 |
| **9722105548** | BEARING | 375 |
| **9722105549** | SPACER | 375 |
| **9722105550** | COVER | 375 |
| **9722105551** | CAPSCREW | 375 |
| **9722105552** | CAPSCREW | 375 |
| **9722105553** | RING, RETAINER | 375 |
| **9722105554** | CAPSCREW | 375 |
| **9722105555** | PLUG, BLEEDER | 375 |
| **9722105556** | PLUG | 375 |
| **9722105557** | SEAL, SHAFT | 376 |
| **9722105558** | REGULATOR ASSY. | 376 |
| **9722105559** | CAPSCREW | 376 |
| **9722105560** | O-RING | 376 |
| **9722105561** | PLATE, COVER | 376 |
| **9722105562** | CAPSCREW | 376 |
| **9722105563** | O-RING | 376 |
| **9722105564** | KIT, ROTARY GROUP | 376 |
| **9722105565** | KIT, SWASH PLATE GROUP | 376 |
| **9722105566** | KIT, SEAL | 376 |
| **9722105567** | O-RING | 375 |
| **9722105568** | O-RING | 375 |
| **9722105569** | O-RING | 376 |
| **9722105570** | RING, RETAINER | 376 |
| **9726100169** | FLATWASHER 8MM I.D. | 397 |
| **9726100326** | CAPSCREW | 397 |


**From - 9722105436** **To - 9726100326**

## Numerical Index — Appendix B

| Part | Description | Page |
|---|---|---|
| **9726100327** | NUT | 397 |
| **9726100337** | COOLER ASSY. TRANS. OIL | 397 |
| **9726100338** | RADIATOR ASSY. | 397 |
| **9726100339** | COOLER ASSY. AIR CHARGE | 397 |
| **9752100944** | KIT, REPAIR | 533 |
| **9752100994** | KIT, REPAIR | 283, 531, 533 |
| **9752100996** | KIT, REPAIR | 527 |
| **9752101414** | KIT, SEAL MOUNTING | 519 |
| **9798100584** | KNOB | 87 |
| **9798100585** | CONTROL, ADJUST - BACK | 87 |
| **981134** | CAPSCREW | 243 |
| **981786** | HOSE ASSEMBLY | 243 |
| **9826100007** | WEDGE | 11, 45 |
| **9826100008** | PIN | 11, 45 |
| **9826100009** | PIN, COTTER | 11, 45 |
| **9872100243** | KEY | 185 |
| **9872100256** | SET, KEY | 113 |
| **9880100073** | VENT | 543 |
| **9880100081** | PLUG, MAGNETIC | 543 |
| **9880100202** | CAP ASSY. | 543 |
| **9880100222** | GASKET | 519 |
| **9880100223** | COVER | 519 |
| **9904100967** | BUSHING | 355 |
| **9904100974** | CAP SCREW | 365 |
| **9904100983** | WASHER | 353, 356 |
| **9904100993** | SLEEVE, TUBE | 327 |
| **9904101022** | RING, RETAINING | 355 |
| **9904101025** | BALL, LOCK | 341 |
| **9904101044** | SCREW, LOCK | 355 |
| **9904101047** | PLUG | 355 |
| **9904101209** | RING, RETAINING | 353 |
| **9904101298** | LOCK, PLATE | 325 |
| **9904101317** | PLUG, MAGNETIC | 327 |
| **9904101348** | RING, SNAP | 345, 351 |
| **9904101353** | BEARING, GEAR | 349 |
| **9904101354** | RING, SNAP | 341 |

**From - 9726100327** **To - 9904101354**

## Numerical Index — Appendix B

| Part | Description | Page |
|---|---|---|
| **9904102383** | NUT | 353, 356 |
| **9904103500** | O-RING | 327, 363 |
| **9904103528** | PLUG | 335 |
| **9904103551** | TUBE | 327 |
| **9904103563** | RING, RETAINING | 345 |
| **9904103567** | RING, SNAP | 345, 349, 351 |
| **9904103568** | RETAINER, SPRING | 345, 351 |
| **9904103569** | SPRING | 345, 351 |
| **9904103570** | RING | 351 |
| **9904103575** | BEARING, PILOT | 343 |
| **9904103595** | WASHER | 331, 355 |
| **9904103605** | NUT | 355 |
| **9904103610** | WASHER, THRUST | 355 |
| **9904103612** | BEARING | 355 |
| **9904103615** | HUB | 355 |
| **9904103621** | RING, RETAINING | 331, 355 |
| **9904103623** | STUD | 355 |
| **9904103626** | HUB, SHIFT | 356 |
| **9904103632** | RING, SNAP | 343, 349, 351 |
| **9904103635** | DISC, CLUTCH | 343, 345, 349, 351 |
| **9904103637** | SEAL, PISTON | 343, 345, 349, 351 |
| **9904103638** | SEAL, PISTON | 343, 345, 349, 351 |
| **9904103660** | O-RING | 359 |
| **9904103677** | FLANGE | 356 |
| **9904103779** | O-RING | 327 |
| **9904103887** | GASKET | 363 |
| **9904103893** | RING, LOCATING | 341 |
| **9904103899** | RING, RETAINING | 339, 341 |
| **9904103906** | RING, SNAP | 331, 349, 353 |
| **9904103913** | PLUG | 325 |
| **9904103916** | SCREW | 327 |
| **9904103922** | SPACER | 353 |
| **9904103980** | RING, SNAP | 343, 345 |
| **9904103982** | SPACER | 343, 345 |
| **9904103983** | RING, SNAP | 343 |
| **9904103986** | STUD | 359 |

**From - 9904102383** **To - 9904103986**

## Numerical Index — Appendix B

| Part | Description | Page |
|---|---|---|
| **9904103987** | DISC, CLUTCH | 349 |
| **9904103988** | DISC, CLUTCH | 343, 345, 351 |
| **9904103993** | O-RING | 355 |
| **9904103994** | O-RING | 355 |
| **9904103997** | O-RING | 356 |
| **9904104050** | BREATHER | 325 |
| **9904104053** | BEARING ASSEMBLY | 347 |
| **9904104055** | PLUG | 325, 367 |
| **9904104420** | CAP SCREW, | 363 |
| **9904104423** | BEARING | 341 |
| **9904104424** | SHAFT | 341 |
| **9904104428** | BEARING | 335 |
| **9904104432** | BEARING | 339, 341 |
| **9904105286** | RING, SNAP | 331 |
| **9904105288** | SHAFT | 355 |
| **9904105289** | HOUSING | 355 |
| **9904105290** | FORK, SHIFT | 356 |
| **9904105292** | SPRING | 355 |
| **9904105293** | SPRING | 355 |
| **9904105299** | O-RING | 359 |
| **9904105301** | NUT | 359 |
| **9904105302** | SEAL | 359 |
| **9904105306** | BODY | 359 |
| **9904105307** | SEAL | 359 |
| **9904105328** | SCREW, VALVE MOUNTING | 365 |
| **9904105336** | O-RING | 327 |
| **9904105441** | GASKET | 327 |
| **9904105442** | COVER | 327, 353 |
| **9904105662** | FLANGE | 356 |
| **9904105940** | SLEEVE | 325 |
| **9904105957** | RING, SEAL | 331 |
| **9904105958** | BAFFLE AND SEAL | 331 |
| **9904105981** | RETAINER, SPRING | 345 |
| **9904105989** | BALL, LOCK | 347 |
| **9904105994** | BEARING, FRONT | 345, 351 |
| **9904105997** | RING, RETAINING | 345 |

**From - 9904103987** **To - 9904105997**

## Numerical Index — Appendix B

| Part | Description | Page |
|---|---|---|
| **9904106000** | BEARING, REAR | 349 |
| **9904106001** | RING, SNAP | 349 |
| **9904106002** | SPACER | 349 |
| **9904106063** | PLUG WITH O-RING | 327 |
| **9904106235** | WASHER | 361 |
| **9904106320** | BEARING | 355 |
| **9904106364** | GASKET | 353 |
| **9904106400** | RING, RETAINING | 331 |
| **9904106408** | RING, RETAINING | 335, 355 |
| **9904106445** | O-RING | 325, 327 |
| **9904106482** | TUBE, CYLINDER | 359 |
| **9904106483** | CAP, END | 359 |
| **9904106593** | GASKET | 339 |
| **9904106805** | O-RING | 347 |
| **9904107179** | O-RING | 359 |
| **9904107558** | RING, RETAINING | 351 |
| **9904107783** | SPRING, DISC | 349 |
| **9904107784** | RETAINER, SPRING | 349 |
| **9904107838** | SPRING ASSY | 343, 345 |
| **9904108396** | PLUG | 325, 327 |
| **9904108406** | PISTON | 355 |
| **9904108407** | RING | 355 |
| **9904108408** | PLUG | 355 |
| **9904108409** | O-RING | 355 |
| **9904108558** | KEY | 345 |
| **9904108795** | RING, PISTON | 349 |
| **9904108934** | PISTON ASSY, CLUTCH | 343, 345, 349 |
| **9904108964** | PLUG, DRAIN | 327 |
| **9904108979** | HUB, CLUTCH DISC | 351 |
| **9904109139** | SEAL, OIL | 331 |
| **9904109352** | WASHER, LOCK | 333 |
| **9904109356** | PLUG | 325, 327 |
| **9904109357** | O-RING | 325, 327 |
| **9904109358** | CAP SCREW | 325, 327 |
| **9904109459** | RING, SNAP | 355 |
| **9904109481** | O-RING | 355 |

**From - 9904106000** **To - 9904109481**

## Numerical Index — Appendix B

| Part | Description | Page |
|---|---|---|
| **9904109531** | CAPSCREW, DISC BRAKE | 361 |
| **9904109554** | CAP SCREW, | 339 |
| **9904109561** | O-RING | 335, 355 |
| **9904109562** | HOUSING, CONVERTER | 325 |
| **9904109563** | CASE, GASKET | 325 |
| **9904109564** | PIN, DOWEL | 325, 327 |
| **9904109565** | COVER, REAR AND PLUG ASSEMBLY | 327 |
| **9904109566** | CASE, GASKET | 327 |
| **9904109567** | CASE ASSEMBLY | 327 |
| **9904109568** | TUBE, THIRD SPEED | 327 |
| **9904109569** | TUBE ASSEMBLY, SUCTION | 327 |
| **9904109570** | O-RING | 327 |
| **9904109571** | CLIP, TUBE | 327 |
| **9904109572** | BAFFLE, OIL | 327 |
| **9904109573** | SHAFT & HUB W/ RETAINING RING | 331 |
| **9904109574** | BEARING, SHAFT | 331, 349, 353 |
| **9904109575** | RING, PISTON | 331 |
| **9904109576** | STATOR, SUPPORT | 331 |
| **9904109579** | RING, BACKING | 333 |
| **9904109581** | RING, SNAP | 335 |
| **9904109582** | CONVERTER ASSEMBLY - TORQUE | 335 |
| **9904109583** | RING, SNAP | 335 |
| **9904109584** | SCREW | 339, 341 |
| **9904109585** | SUPPORT, BEARING | 339 |
| **9904109588** | PIN | 339, 341 |
| **9904109590** | GEAR, IDLER | 341 |
| **9904109592** | BEARING | 343 |
| **9904109593** | RING, RETAINING | 343 |
| **9904109594** | SPACER | 345 |
| **9904109595** | BEARING | 345 |
| **9904109597** | HUB, DISC | 345 |
| **9904109598** | SHAFT, REVERSE IDLER | 347 |
| **9904109599** | WASHER, THRUST | 347 |
| **9904109600** | WASHER, THRUST | 347 |
| **9904109601** | NUT | 347 |
| **9904109602** | GEAR, REVERSE IDLER | 347 |

**From - 9904109531** **To - 9904109602**

## Numerical Index — Appendix B

| Part | Description | Page |
|---|---|---|
| **9904109603** | LOW SHAFT,HUB & DRUM W/ VALVE | 349 |
| **9904109604** | BEARING | 349 |
| **9904109606** | BEARING | 353 |
| **9904109607** | SHAFT, IDLER | 353 |
| **9904109608** | BEARING, REAR | 355 |
| **9904109611** | SPACER | 355 |
| **9904109612** | OUTPUT SHAFT AND BEARING | 355 |
| **9904109613** | GEAR, HIGH RANGE 41T | 337, 356 |
| **9904109616** | PISTON | 359 |
| **9904109617** | WASHER, LOCK | 359 |
| **9904109618** | NUT | 359 |
| **9904109619** | ROD, PISTON | 359 |
| **9904109620** | WASHER, LOCK | 359 |
| **9904109621** | SCREW, LOCK | 359 |
| **9904109622** | FORK, SHAFT | 359 |
| **9904109623** | CYLINDER, AIRSHIFT | 359 |
| **9904109625** | LOCKWASHER, SCREW | 365 |
| **9904109641** | O-RING | 356 |
| **9904109646** | RING, PISTON | 331 |
| **9904109647** | BEARING | 345 |
| **9904109648** | BEARING, REAR | 345, 351 |
| **9904109649** | GEAR, REVERSE CLUTCH 43T | 337, 345 |
| **9904109650** | SPACER, DISC SPRING | 349 |
| **9904109651** | GEAR, LOW CLUTCH 63T | 337, 349 |
| **9904109652** | GEAR, REAR IDLER 51T | 337, 353 |
| **9904109653** | GEAR, 1ST DRIVE 29T | 337, 343 |
| **9904109669** | KIT, DRIVE PLATE | 333 |
| **9904109671** | KIT, SEAL | 323 |
| **9904109676** | WASHER, LOCK | 339 |
| **9904109704** | SCREW | 331 |
| **9904109705** | GEAR, PUMP DRIVE | 341 |
| **9904109807** | CASE &  REAR COVER GROUP | 323 |
| **9904109815** | GEAR, IDLER FRONT 21T | 337, 353 |
| **9904109816** | GEAR, LOW RANGE 42T | 337, 356 |
| **9904110157** | BRACKET,PARK BRAKE | 361 |
| **9904110463** | FWD SHAFT & DRUM ASSY. | 343 |

**From - 9904109603** **To - 9904110463**

## Numerical Index — Appendix B

| Part | Description | Page |
|---|---|---|
| **9904110464** | PLATE, END | 343, 345, 349, 351 |
| **9904110465** | RING, PISTON | 343, 345, 351 |
| **9904110466** | REV. & 2ND, SHAFT & DRUM ASSY | 345 |
| **9904110467** | PISTON ASSY. | 345, 351 |
| **9904110468** | 3rd. SHAFT & DRUM ASSY. | 351 |
| **9904110469** | CAPSCREW | 363 |
| **9904110596** | CAPSCREW | 333 |
| **9904110597** | GEAR, 37T | 339 |
| **9904110598** | ADAPTER, PUMP MOUNT | 339 |
| **9904110599** | GASKET | 339 |
| **9904110600** | CAPSCREW | 339 |
| **9904110601** | COVER | 339 |
| **9904110602** | PLATE | 339 |
| **9904110603** | PUMP ASSY, CHARGE | 363 |
| **9904110604** | BODY ASSY. VALVE | 365, 367 |
| **9904110605** | GASKET | 365 |
| **9904110606** | CART.& COIL ASSY. 12V. | 367 |
| **9904110607** | COVER | 367 |
| **9904110608** | CAPSCREW | 367 |
| **9904110609** | CONVERTER HOUSING GROUP | 323 |
| **9904110611** | TURBINE SHAFT GROUP | 323 |
| **9904110612** | DRIVE PLATE GROUP | 323 |
| **9904110613** | TORQUE CONVERTER GROUP | 323 |
| **9904110614** | GEAR GROUP | 323 |
| **9904110615** | AUXILIARY PUMP DRIVE GROUP | 323 |
| **9904110616** | PUMP DRIVE GROUP | 323 |
| **9904110617** | FORWARD SHAFT GROUP | 323 |
| **9904110618** | REVERSE & 2ND. SHAFT GROUP | 323 |
| **9904110619** | REVERSE IDLER GROUP | 323 |
| **9904110620** | LOW SPEED SHAFT GROUP | 323 |
| **9904110621** | 3RD. SHAFT GROUP | 323 |
| **9904110622** | IDLER SHAFT GROUP | 323 |
| **9904110624** | HI/LOW RANGE SHIFT CONT. GROUP | 323 |
| **9904110625** | DISC BRAKE GROUP | 323 |
| **9904110626** | CHARGE PUMP & FILTER GROUP | 323 |
| **9904110627** | CONTROL VALVE MOUNTING GROUP | 323 |

**From - 9904110464** **To - 9904110627**

## Numerical Index — Appendix B

| Part | Description | Page |
|---|---|---|
| **9904110628** | CONTROL VALVE ASSY. GROUP | 323 |
| **9904110793** | O-RING | 367 |
| **9904110794** | O-RING | 367 |
| **9904110795** | O-RING | 367 |
| **9904110796** | O-RING | 367 |
| **9914100042** | CLIP | 11, 45 |
| **9926103232** | O-RING | 233 |
| **9926105593** | KIT, REPAIR | 533 |
| **9926106474** | VALVE, CARTRIDGE | 283, 533 |
| **9926106646** | O-RING | 233 |
| **9926107745** | NUT | 283, 527, 531, 533, 534 |
| **9926107747** | KIT, SEAL | 284 |
| **9926108423** | KIT, SEAL | 283, 533 |
| **9926108644** | KIT, SEAL | 283 |
| **9926110265** | PLATE,DISTRIBUTOR | 207 |
| **9926110266** | GEAR, SET | 207 |
| **9926110370** | CARTRIDGE | 284 |
| **9926110372** | KIT, SEAL | 283 |
| **9926110629** | CARTRIDGE ASSY. FILTER | 283 |
| **9926110708** | CARTRIDGE | 531 |
| **9926111396** | PLUG | 534 |
| **9926111435** | WASHER, COMPRESSION | 277 |
| **9926111436** | NUT | 277 |
| **9926111438** | DISK, SHUTTLE | 278 |
| **9926111439** | PLUG ASSEMBLY, SHUT-OFF | 277, 278, 279, 281 |
| **9926111452** | SCREW-HEX HEAD | 281 |
| **9926111453** | CAP | 281 |
| **9926111456** | SPRING | 281 |
| **9926111457** | WASHER, | 281 |
| **9926111468** | SEAL-SPECIAL | 277, 278, 279, 281 |
| **9926111469** | O-RING | 277, 281 |
| **9926111470** | SEAL-SPECIAL | 277, 281 |
| **9926111533** | ROD, TIE | 277 |
| **9926111719** | KIT, SEAL | 533 |
| **9926111720** | VALVE ASSEMBLY - SOLENOID 12 VOL | 533 |
| **9926111722** | KIT, SEAL | 283 |

**From - 9904110628** **To - 9926111722**

## Numerical Index — Appendix B

| Part | Description | Page |
|---|---|---|
| **9926111747** | PLUG, PORT | 534 |
| **9926111748** | O-RING | 534 |
| **9926111878** | VALVE, CHECK | 533 |
| **9926111931** | O-RING, VITON | 284 |
| **9926111932** | O-RING, VITON | 284 |
| **9926111974** | SCREW | 281 |
| **9926111999** | PLUG ASSY | 277, 281 |
| **9926112003** | SPRING | 278 |
| **9926112004** | FILTER | 278 |
| **9926112013** | O-RING | 277, 279, 280 |
| **9926112141** | PLUG | 277, 278, 279, 280 |
| **9926112199** | SET SCREW | 278, 279, 280 |
| **9926112200** | SPRING | 278, 279, 280 |
| **9926112358** | KIT, SEAL | 283 |
| **9926112501** | O-RING,VITON | 284 |
| **9926112931** | COIL, 12V. | 283, 531, 533, 534 |
| **9926112936** | COIL, 12V. | 533 |
| **9926112986** | VALVE, CARTRIDGE | 527 |
| **9926112987** | COIL, 12V. | 527 |
| **9926112988** | BRACKET, MOUNTING | 527 |
| **9926112997** | KIT, SEAL | 533 |
| **9926113017** | VALVE,CART. RELIEF @ 4300 PSI | 277, 280 |
| **9926113018** | VALVE,CART. RELIEF @ 4000 PSI | 277, 281 |
| **9926113025** | PLUG ASSY. | 279, 280 |
| **9926113026** | PLUG ASSY. | 278, 279, 280 |
| **9926113029** | CAPSCREW | 281 |
| **9926113030** | CARTRIDGE & COIL ASSY. 12V. | 281 |
| **9926113031** | KIT, SEAL | 281 |
| **9926113032** | KIT, SEAL | 281 |
| **9926113045** | VALVE, CART. & COIL ASSY. 12V. | 283 |
| **9926113049** | VALVE, CHECK | 283 |
| **9926113051** | CAPSCREW, SOCKET HEAD 10MM | 283 |
| **9926113057** | KIT, SEAL | 283, 529 |
| **9926113058** | KIT, SEAL | 283 |
| **9926113089** | VALVE, CHECK CARTRIDGE | 533 |
| **9926113110** | SEAL, DUST RING | 207 |

**From - 9926111747** **To - 9926113110**

## Numerical Index — Appendix B

| Part | Description | Page |
|---|---|---|
| **9926113111** | KIT, BUSHING W/BALL | 207 |
| **9926113112** | BEARING | 207 |
| **9926113113** | KIT, RING W/CROSS PIN | 207 |
| **9926113114** | CAPSCREW, SPECIAL | 207 |
| **9926113115** | CAPSCREW | 207 |
| **9926113116** | KIT, SEAL | 207 |
| **9926113140** | VALVE, CART. & COIL ASSY. 12V. | 529 |
| **9926113142** | SCREW, HEX SOCKET | 529 |
| **9926113144** | VALVE, CART. COUNTER BALANCE | 295 |
| **9926113145** | VALVE, CART.SEQUENCE @4400 PSI | 295 |
| **9926113146** | KIT, SEAL | 295 |
| **9926113147** | KIT, SEAL | 295 |
| **9926113165** | VALVE,CART/COIL PRESS.REDUCING | 283 |
| **9926113167** | VALVE, RELIEF @ 2500 PSI | 283 |
| **9926113169** | VALVE, SHUTTLE | 533 |
| **9926113170** | KIT, SEAL | 533 |
| **9926113171** | PLUG, ORIFICE .040" | 283 |
| **9926113174** | VALVE, CART. & COIL ASSY. 12V. | 529 |
| **9926113175** | SWITCH ASSY. PRESSURE | 529 |
| **9926113176** | KIT, SEAL | 529 |
| **9926113181** | O-RING | 533 |
| **9926113182** | O-RING | 533 |
| **9926113183** | PISTON, PILOT | 533 |
| **9926113184** | VALVE, CARTRIDGE  SHUTTLE | 533 |
| **9926113185** | KIT, SEAL | 533 |
| **9926113186** | VALVE,PRESS.REDUCING @2500PSI | 533 |
| **9926113187** | KIT, SEAL | 533 |
| **9926113192** | VALVE ASSY. CARTRIDGE | 533 |
| **9926113193** | VALVE ASSY. CHECK | 533 |
| **9926113194** | VALVE ASSY. CARTRIDGE | 533 |
| **9926113195** | KIT, SEAL | 533 |
| **9926113196** | CAPSCREW | 534 |
| **9926113197** | WASHER | 534 |
| **9926113253** | O-RING SEAL | 284 |
| **9926113254** | VALVE, CART. RELIEF @ 1800 PSI | 284 |
| **9926113270** | SWITCH ASSY. PRESSURE | 275 |

**From - 9926113111** **To - 9926113270**

## Numerical Index — Appendix B

| Part | Description | Page |
|---|---|---|
| **9926113271** | VALVE ASSY. BRAKE | 201 |
| **9926113272** | PEDAL ASSY. | 201 |
| **9926113273** | COVER, RUBBER | 201 |
| **9926113274** | SCREW | 201 |
| **9926113275** | BOOT, RUBBER | 201 |
| **9926113276** | SWITCH ASSY. PRESSURE | 201 |
| **9926113277** | FITTING, ADAPTOR | 201 |
| **9926113280** | VALVE ASSY. INLET SECTION | 277 |
| **9926113281** | VALVE ASSY. WORK SECTION | 277 |
| **9926113283** | VALVE ASSY. WORK SECTION | 277 |
| **9926113284** | VALVE ASSY. OUTLET SECTION | 277 |
| **9926113285** | PLUG ASSY. | 277, 278 |
| **9926113286** | VALVE,CART. RELIEF @ 3500 PSI | 277, 280 |
| **9926113287** | VALVE,CART. RELIEF @ 3250 PSI | 277, 279 |
| **9926113288** | SOLENOID & CAP ASSY. 12V. | 278, 279, 280 |
| **9926113289** | BRACKET | 281 |
| **9926113293** | VALVE, CHECK CART. | 230 |
| **9926113294** | PLUG | 534 |
| **9926113295** | PLUG #10 | 534 |
| **9926113296** | PLUG, ORIFICE .261 | 534 |
| **9926113297** | PLUG, ORIFICE .076 | 534 |
| **9926113298** | SEAT, SPRING | 284 |
| **9926113299** | SPRING | 284 |
| **9926113300** | WASHER | 284 |
| **9926113301** | CAP | 284 |
| **9926113302** | CAPSCREW | 284 |
| **9926113443** | VALVE, PRESS. COMPENSATOR | 283 |
| **9926113459** | VALVE ASSY. WORK SECTION | 277 |
| **9974100476** | WASHER, LOCK 1/2" I.D. | 242, 243 |
| **9974100594** | DISC, FRICTION | 241 |
| **9974101182** | BEARING, ROLLER | 241 |
| **9974101183** | PIN, SPIRAL | 241 |
| **9974101198** | O-RING | 241 |
| **9974101211** | BEARING, BALL | 241 |
| **9974101216** | SEAL, OIL | 241 |
| **9974101280** | KIT, SEAL | 243 |

**From - 9926113271** **To - 9974101280**

## Numerical Index — Appendix B

| Part | Description | Page |
|---|---|---|
| **9974102176** | SEAL, PISTON | 241 |
| **9974102177** | PLATE, PRESSURE | 241 |
| **9974102178** | RING, BACK-UP | 241 |
| **9974102179** | SPRING | 241 |
| **9974102180** | SHAFT | 241 |
| **9974102181** | WASHER, THRUST | 241, 244 |
| **9974102182** | SHAFT | 241 |
| **9974102183** | BEARING | 241 |
| **9974102185** | WASHER, THRUST | 241 |
| **9974102190** | SEAL, OIL | 241 |
| **9974102191** | RING, RETAINING | 241 |
| **9974102194** | GEAR, SUN | 241 |
| **9974102195** | SPACER | 242 |
| **9974102196** | PLATE, THRUST | 242 |
| **9974102197** | PLATE, THRUST | 242 |
| **9974102198** | CAP SCREW, | 242 |
| **9974102201** | PLUG, FLUSH | 242 |
| **9974102208** | HOSE ASSY, 3/8 X 26" | 243 |
| **9974102210** | ADAPTER | 243 |
| **9974102211** | TEE, SWIVEL | 243 |
| **9974102212** | ELBOW | 243 |
| **9974102214** | CLUTCH SPRAG ASSY. BRAKE | 242 |
| **9974102218** | BEARING, THRUST | 242 |
| **9974102219** | RING, RETAINING | 242 |
| **9974102221** | RING, RETAINING | 242 |
| **9974102222** | KIT, SEAL | 244 |
| **9974102226** | RING, BACK-UP | 242 |
| **9974102227** | O-RING | 243 |
| **9974102665** | BEARING, SPRAG | 242 |
| **9974102666** | PLANET CARRIER - PRIMARY | 241 |
| **9974102667** | GEAR - PLANET | 241 |
| **9974102668** | CARRIER, PLANET | 241 |
| **9974102671** | GEAR, PLANET | 241 |
| **9974102672** | SPACER | 241 |
| **9974102676** | CLOSURE, CABLE DRUM | 241 |
| **9974102677** | PRIMARY SUN GEAR | 242 |

**From - 9974102176** **To - 9974102677**

## Numerical Index — Appendix B

| Part | Description | Page |
|---|---|---|
| **9974102684** | CAP SCREW | 243 |
| **9974102704** | DISK, BRAKE | 241 |
| **9974102705** | SPACER | 242 |
| **9974102731** | MOUNT, MOTOR BASE | 241 |
| **9974102747** | WASHER, THRUST | 242 |
| **9974102808** | BUSHING | 244 |
| **9974102810** | ROD | 243 |
| **9974102814** | ROLLPIN | 244 |
| **9974102820** | CAP SCREW, | 242 |
| **9974102821** | WASHER, | 242 |
| **9974102822** | BAR, SPACER | 242 |
| **9974102825** | PLATE | 243 |
| **9974102828** | LEVER | 243 |
| **9974102829** | LEVER, ROLLER R.H. | 243 |
| **9974102830** | LEVER,ROLLER L.H. | 243 |
| **9974102831** | BRACKET | 243 |
| **9974102832** | SPRING | 244 |
| **9974102835** | CAP SCREW, | 244 |
| **9974102839** | WASHER | 244 |
| **9974102840** | ROLLER | 244 |
| **9974102841** | SHAFT | 244 |
| **9974102843** | WASHER | 244 |
| **9974102846** | SUPPORT, BEARING | 241 |
| **9974102849** | WASHER, THRUST | 241 |
| **9974102854** | CAPSCREW | 242 |
| **9974102855** | GAUGE, SIGHT | 242 |
| **9974102858** | PLUG, VENT | 242 |
| **9974102859** | CAPSCREW | 242 |
| **9974102861** | CYLINDER, BRAKE | 241 |
| **9974102868** | O-RING | 241 |
| **9974102885** | VALVE, BRAKE | 243 |
| **9974102898** | O-RING | 243 |
| **9974102922** | O-RING | 242 |
| **9974102931** | PLUG | 243 |
| **9974102941** | DRUM | 241 |
| **9974102942** | BASE | 241 |

**From - 9974102684** **To - 9974102942**

## Numerical Index — Appendix B

| Part | Description | Page |
|---|---|---|
| **9974102943** | SIDEPLATE, MOTOR | 242 |
| **9974102944** | SIDEPLATE,SUPPORT | 242 |
| **9974102966** | PIN | 244 |
| **9974102995** | NUT | 244 |
| **9974103015** | CAPSCREW | 244 |
| **9974103043** | CAPSCREW | 244 |
| **9974103083** | ROLLER | 243 |
| **9974103084** | BRACKET, ROLLER | 243 |
| **9974103085** | SHAFT, ROLLER | 243 |
| **9974103086** | BEARING | 244 |
| **9974103087** | RING, RETAINER | 244 |
| **9974103088** | WEDGE, CABLE 5/8" | 242 |
| **9974103090** | MANIFOLD | 243 |
| **9974103091** | SENSOR | 243 |
| **9974103092** | WASHER, SEAL | 243 |
| **9974103093** | FITTING | 243 |
| **9974103094** | NUT, JAM | 243 |

**From - 9974102943** **To - 9974103094**

**Notes**

## Recommended Spare Parts List — Appendix C

| Part No. | 1 Yr | 2 Yr | 3 Yr | Qty | Description | Page |
|---|---|---|---|---|---|---|
| 6069001186 | 0 | 0 | 1 | 4 | CONE, BEARING | 43, 53 |
| 6511100009 | 0 | 0 | 0 | 1 | HANDLE, DOOR (MODIFIED) | 62 |
| 6689100012 | 0 | 0 | 0 | 1 | PIN | 41 |
| 6689100025 | 0 | 0 | 0 | 2 | PIN | 429 |
| 6689100036 | 0 | 0 | 0 | 2 | PIN | 429 |
| 6701000970 | 0 | 0 | 0 | 1 | PISTON, 9" CYLINDER | 291 |
| 6718100030 | 0 | 0 | 1 | 4 | WHEEL, 5/8" ROPE SHEAVE | 43, 53 |
| 6794000650 | 0 | 0 | 2 | 1 | GASKET | 320 |
| 6794001567 | 0 | 0 | 2 | 1 | GASKET | 320 |
| 6794100011 | 0 | 0 | 2 | 2 | GASKET, 2 BOLT HOLE | 320 |
| 6794100012 | 0 | 0 | 2 | 2 | GASKET, 2 BOLT HOLE | 320 |
| 6949001154 | 0 | 0 | 0 | 2 | WASHER, | 49 |
| 6970100153 | 0 | 0 | 0 | 8 | WHEEL & DISC ASSY | 453, 457 |
| 7013000405 | 0 | 0 | 1 | 4 | ADAPTER | 319, 539 |
| 7013001112 | 0 | 0 | 1 | 1 | ADAPTER | 225 |
| 7013100029 | 0 | 0 | 1 | 4 | ADAPTER, 08 ORB TO 08 BEADLOCK | 297 |
| 7013100030 | 0 | 0 | 1 | 4 | ADAPTER, 08 ORB TO 10 BEADLOCK | 297 |
| 7013100047 | 0 | 0 | 1 | 2 | ADAPTER,ORB TO HOSE BARB 20-16 | 319 |
| 7013100059 | 0 | 0 | 1 | 2 | ADAPTER, 0.062 DIA ORIFICE | 231 |
| 7069000175 | 0 | 0 | 1 | 4 | CLOSURE, BEARING | 43, 53 |
| 7069000516 | 0 | 0 | 1 | 8 | BEARING | 63, 71 |
| 7069000518 | 0 | 0 | 1 | 1 | BEARING | 49 |
| 7069001045 | 0 | 0 | 1 | 2 | BEARING | 63 |
| 7118244250 | 0 | 0 | 0 | 36 | CAP SCREW, | 287 |
| 7118264250 | 0 | 0 | 0 | 36 | CAP SCREW, | 251 |
| 7172000545 | 1 | 1 | 3 | 96 | BOOT, DT2S CONNECTOR | 179, 386, 507 |
| 7172000546 | 1 | 1 | 3 | 5 | BOOT | 193, 309, 386, 411, 497 |
| 7172000547 | 1 | 1 | 3 | 13 | BOOT | 179, 385, 510 |
| 7172000549 | 1 | 1 | 3 | 1 | BOOT | 142 |
| 7172000550 | 1 | 1 | 3 | 4 | BOOT | 179, 209 |
| 7172000551 | 1 | 1 | 3 | 5 | BOOT | 142, 181, 185, 272, 509 |
| 7172000552 | 1 | 1 | 3 | 8 | BOOT | 179, 209, 385, 507 |
| 7172000553 | 0 | 0 | 2 | 3 | BOOT | 179, 509 |
| 7172000554 | 0 | 0 | 2 | 4 | BOOT | 180, 385, 508 |
| 7172000564 | 0 | 0 | 2 | 4 | BOOT | 272, 509 |
| 7172000565 | 1 | 1 | 3 | 3 | BOOT, CONNECTOR | 180, 272, 509 |
| 7172000567 | 1 | 1 | 3 | 7 | BOOT, CONNECTOR | 181, 273, 386, 510 |
| 7172000568 | 1 | 1 | 3 | 4 | BOOT, CONNECTOR | 185, 510, 515 |
| 7172100002 | 1 | 1 | 3 | 4 | BOOT, PLUG | 103, 180, 507 |
| 7172100003 | 0 | 0 | 2 | 6 | BOOT-DTM3P-RECP | 95 |
| 7172100004 | 1 | 1 | 3 | 2 | BOOT, DTP2S-BT | 385 |
| 7172100006 | 1 | 1 | 3 | 2 | BOOT, DTP4S - BT | 385 |
| 7195000032 | 0 | 0 | 2 | 8 | BUMPER, RUBBER | 311, 415 |
| 7195000037 | 0 | 0 | 2 | 8 | BUMPER, RUBBER | 461 |

**From - 6069001186** **To - 7195000037**

## Recommended Spare Parts List — Appendix C

| Part No. | 1 Yr | 2 Yr | 3 Yr | Qty | Description | Page |
|---|---|---|---|---|---|---|
| 7242000021 | 1 | 1 | 3 | 10 | PLUG, 1" BUTTON | 47, 471 |
| 7242100005 | 1 | 1 | 2 | 38 | PLUG, L SERIES LH1 PANEL | 92, 113 |
| 7246100476 | 0 | 0 | 1 | 2 | CONTROL CABLE W/LOCK HANDLE | 301 |
| 7258001468 | 0 | 0 | 0 | 2 | RADIATOR CAP | 399 |
| 7345001444 | 1 | 1 | 3 | 19 | TERMINAL, FEMALE | 103, 125, 133, 141, 179 |
| 7345001446 | 1 | 1 | 3 | 10 | TERMINAL, MALE | 103, 114, 126, 133 |
| 7345001713 | 1 | 1 | 3 | 3 | CONNECTOR, BUTT | 185 |
| 7345001744 | 1 | 1 | 3 | 16 | TERMINAL, FEMALE | 92, 114, 125, 141, 186, 385 |
| 7345001746 | 1 | 1 | 3 | 8 | TERMINAL, MALE | 92, 125, 186 |
| 7345001752 | 1 | 1 | 3 | 5 | TERMINAL | 141 |
| 7345001944 | 1 | 1 | 3 | 1 | TERMINAL, FEMALE | 125 |
| 7345211701 | 1 | 1 | 3 | 11 | TONGUE, INSULATED RING | 126, 515 |
| 7345211901 | 1 | 1 | 3 | 7 | TERMINAL | 142, 153 |
| 7345212101 | 1 | 1 | 3 | 2 | TERMINAL | 141 |
| 7345221901 | 1 | 1 | 3 | 3 | TERMINAL | 142, 153 |
| 7345231701 | 1 | 1 | 3 | 2 | TERMINAL | 510 |
| 7345231901 | 1 | 1 | 3 | 3 | TERMINAL | 141, 508 |
| 7345232001 | 1 | 1 | 3 | 1 | TERMINAL | 508 |
| 7345232101 | 1 | 1 | 3 | 4 | TERMINAL | 141, 507 |
| 7345241701 | 1 | 1 | 3 | 3 | TONGUE, INSULATED RING | 142, 507 |
| 7345241901 | 1 | 1 | 3 | 8 | TONGUE, INSULATED RING | 179, 507 |
| 7345242001 | 1 | 1 | 3 | 1 | TERMINAL | 507 |
| 7345242101 | 1 | 1 | 3 | 2 | TERMINAL | 272 |
| 7345261701 | 1 | 1 | 3 | 1 | 16 - 14 AWG | 386 |
| 7345261901 | 1 | 1 | 3 | 2 | TERMINAL | 385 |
| 7352000878 | 0 | 0 | 1 | 1 | SENDER, FUEL LEVEL | 539 |
| 7352100036 | 0 | 0 | 1 | 1 | SENSOR-COOLANT LEVEL | 399 |
| 7364001457 | 1 | 1 | 3 | 1 | TAB, MALE | 114 |
| 7364001682 | 1 | 1 | 3 | 6 | CONNECTOR, 2 CONDUCTOR | 9, 179, 508 |
| 7364001683 | 1 | 1 | 3 | 6 | CONNECTOR, 2 CONDUCTOR | 7, 179, 181, 508 |
| 7364001684 | 1 | 1 | 3 | 2 | CONNECTOR, 3 CONDUCTOR | 125 |
| 7364001685 | 1 | 1 | 3 | 1 | CONNECTOR, 3 CONDUCTOR | 126 |
| 7364001846 | 1 | 1 | 3 | 6 | TERMINAL | 9, 181 |
| 7364001847 | 1 | 1 | 3 | 4 | TERMINAL, FEMALE SLEEVE | 9 |
| 7364002995 | 0 | 0 | 0 | 1 | COUPLER, FLEX | 401 |
| 7364100051 | 1 | 1 | 3 | 6 | PLUG | 481, 507 |
| 7364100052 | 1 | 1 | 3 | 10 | SEAL | 508 |
| 7364100058 | 1 | 1 | 3 | 4 | SEAL, RED PLUG | 508 |
| 7364100165 | 0 | 0 | 0 | 2 | SWIVEL ASSEMBLY - 14 PORT | 263 |
| 7364100166 | 0 | 0 | 0 | 9 | DRIVE LINE ASSEMBLY | 421 |
| 7372100268 | 0 | 0 | 0 | 2 | HEAD, CYLINDER | 291 |
| 7373000012 | 1 | 1 | 2 | 1 | KIT, SEAL | 292 |
| 7406000537 | 0 | 0 | 2 | 2 | BELLOWS | 313, 391 |

**From - 7242000021** **To - 7406000537**

## Recommended Spare Parts List — Appendix C

| Part No. | 1 Yr | 2 Yr | 3 Yr | Qty | Description | Page |
|---|---|---|---|---|---|---|
| 7406001053 | 0 | 0 | 2 | 2 | BELLOWS | 391 |
| 7437000873 | 4 | 4 | 6 | 1 | FILTER, TRANSMISSION FLUID | 363 |
| 7440000000 | 0 | 0 | 1 | 24 | FITTING, 1/8 STRAIGHT GREASE | 3, 43, 53, 292, 429, 437 |
| 7440030000 | 0 | 0 | 1 | 1 | FITTING, STRAIGHT GREASE | 37 |
| 7443100139 | 0 | 0 | 0 | 8 | COUPLING, 1/8" TEST PORT | 229 |
| 7443100140 | 0 | 0 | 1 | 18 | COUPLING, 3/8" TEST PORT | 230 |
| 7444020031 | 1 | 1 | 3 | 1 | PLUG, PIPE | 356 |
| 7445040219 | 0 | 0 | 1 | 2 | ADAPTER, STRAIGHT | 305 |
| 7445040220 | 0 | 0 | 1 | 2 | ELBOW, 90 DEGREE | 305 |
| 7445040453 | 0 | 0 | 1 | 2 | ELBOW, 90 DEGREE | 319, 539 |
| 7445040472 | 0 | 0 | 1 | 1 | ELBOW, 90 DEGREE | 228 |
| 7445040645 | 0 | 0 | 1 | 1 | ELBOW, 90 DEGREE MALE | 228 |
| 7445060439 | 0 | 0 | 1 | 3 | ADAPTER, REDUCING FEMALE | 228 |
| 7445060642 | 0 | 0 | 1 | 3 | NUT | 228 |
| 7445060651 | 0 | 0 | 1 | 1 | UNION, STRAIGHT | 318 |
| 7445060653 | 0 | 0 | 1 | 1 | ELBOW, 90 DEGREE | 395 |
| 7445080450 | 0 | 0 | 1 | 2 | BUSHING, REDUCER | 399, 539 |
| 7445080650 | 0 | 0 | 1 | 2 | BUSHING, REDUCER | 320 |
| 7445080803 | 0 | 0 | 1 | 2 | ADAPTER, STRAIGHT | 263 |
| 7445080804 | 0 | 0 | 1 | 2 | ELBOW, 90 DEGREE | 263 |
| 7445080808 | 0 | 0 | 1 | 2 | ADAPTER, SWIVEL | 263 |
| 7445120809 | 0 | 0 | 1 | 2 | ADAPTER, 45 DEGREE SWIVEL | 318 |
| 7445121253 | 0 | 0 | 1 | 1 | ELBOW, 90 DEGREE | 317 |
| 7445160850 | 0 | 0 | 1 | 2 | BUSHING, REDUCER | 320, 399 |
| 7445161217 | 0 | 0 | 1 | 2 | REDUCING CONNECTOR | 317 |
| 7446080836 | 0 | 0 | 1 | 2 | ELBOW, 90 DEGREE MALE | 539 |
| 7447040401 | 0 | 0 | 1 | 1 | ADAPTER, STRAIGHT | 226 |
| 7447040403 | 0 | 0 | 1 | 4 | ELBOW, 90 DEGREE | 228, 317 |
| 7447040408 | 0 | 0 | 1 | 1 | ELBOW, 45 DEGREE MALE | 230 |
| 7447040428 | 0 | 0 | 1 | 2 | ADAPTER, STRAIGHT | 318 |
| 7447040430 | 0 | 0 | 1 | 1 | ELBOW, 90 DEGREE | 317 |
| 7447040434 | 0 | 0 | 1 | 1 | TEE, MALE RUN | 318 |
| 7447040601 | 0 | 0 | 1 | 5 | ADAPTER, STRAIGHT | 226, 318 |
| 7447060401 | 0 | 0 | 1 | 4 | ADAPTER, STRAIGHT MALE | 231, 233 |
| 7447060403 | 0 | 0 | 1 | 4 | ELBOW, 90 DEGREE MALE | 226, 230 |
| 7447060413 | 0 | 0 | 1 | 2 | REDUCER | 230 |
| 7447060601 | 0 | 0 | 1 | 25 | ADAPTER, STRAIGHT MALE | 225, 233 |
| 7447060603 | 0 | 0 | 1 | 1 | ELBOW, 90 DEGREE | 231 |
| 7447060605 | 0 | 0 | 1 | 1 | TEE, RUN | 231 |
| 7447060617 | 0 | 0 | 1 | 3 | UNION, BULKHEAD | 226 |
| 7447060633 | 0 | 0 | 1 | 7 | ELBOW, 90 DEGREE MALE | 227 |
| 7447060634 | 0 | 0 | 1 | 4 | TEE, FEMALE RUN | 225 |
| 7447060635 | 0 | 0 | 1 | 3 | TEE, BRANCH | 227, 228 |

**From - 7406001053** **To - 7447060635**

## Recommended Spare Parts List — Appendix C

| Part No. | 1 Yr | 2 Yr | 3 Yr | Qty | Description | Page |
|---|---|---|---|---|---|---|
| 7447060801 | 0 | 0 | 1 | 4 | ADAPTER, STRAIGHT MALE | 227, 233 |
| 7447060803 | 0 | 0 | 1 | 2 | ELBOW, 90 DEGREE MALE | 226 |
| 7447060830 | 0 | 0 | 1 | 1 | ELBOW, 90 DEGREE MALE | 320 |
| 7447061001 | 0 | 0 | 1 | 1 | ADAPTER, STRAIGHT | 228 |
| 7447061003 | 0 | 0 | 1 | 1 | FITTING, 90 DEGREE | 228 |
| 7447080428 | 0 | 0 | 1 | 2 | ADAPTER, STRAIGHT MALE | 317 |
| 7447080430 | 0 | 0 | 1 | 4 | ELBOW, MALE ORS THD TO MALE N | 539 |
| 7447080601 | 0 | 0 | 1 | 1 | ADAPTER, STRAIGHT | 225 |
| 7447080613 | 0 | 0 | 1 | 1 | REDUCER | 233 |
| 7447080801 | 0 | 0 | 1 | 1 | ADAPTER, STRAIGHT | 225 |
| 7447080829 | 0 | 0 | 1 | 1 | ELBOW, 45 DEGREE | 539 |
| 7447080833 | 0 | 0 | 1 | 1 | ELBOW, 90 DEGREE MALE | 226 |
| 7447100413 | 0 | 0 | 1 | 2 | REDUCER | 231 |
| 7447101001 | 0 | 0 | 1 | 4 | ADAPTER, STRAIGHT | 228 |
| 7447101034 | 0 | 0 | 1 | 2 | TEE | 231 |
| 7447121001 | 0 | 0 | 1 | 2 | ADAPTER, STRAIGHT | 319 |
| 7447121003 | 0 | 0 | 1 | 2 | ELBOW, 90 DEGREE | 319 |
| 7447121201 | 0 | 0 | 1 | 1 | ADAPTER, STRAIGHT MALE | 318 |
| 7447121203 | 0 | 0 | 1 | 1 | ELBOW, 90 DEGREE | 225 |
| 7447121208 | 0 | 0 | 1 | 1 | ELBOW, 45 DEGREE MALE | 320 |
| 7447121217 | 0 | 0 | 1 | 1 | UNION, BULKHEAD | 225 |
| 7447121232 | 0 | 0 | 1 | 2 | ELBOW, #12 BULKHEAD UNION 90 | 225 |
| 7447121233 | 0 | 0 | 1 | 2 | ELBOW, 90 DEGREE | 225, 319 |
| 7447121601 | 0 | 0 | 1 | 2 | ADAPTER, STRAIGHT | 225 |
| 7447161201 | 0 | 0 | 1 | 4 | ADAPTER, STRAIGHT | 229, 321 |
| 7447161203 | 0 | 0 | 1 | 4 | ELBOW, 90 DEGREE | 229, 321 |
| 7447161601 | 0 | 0 | 1 | 3 | ADAPTER, STRAIGHT | 225, 291 |
| 7447161603 | 0 | 0 | 1 | 1 | ELBOW, 90 DEGREE MALE | 291 |
| 7447161638 | 0 | 0 | 1 | 2 | ELBOW, 90 DEGREE LONG | 225 |
| 7447201603 | 0 | 0 | 1 | 1 | ELBOW, 90 DEGREE MALE | 230 |
| 7447201628 | 0 | 0 | 1 | 1 | ADAPTER, STRAIGHT | 321 |
| 7447202001 | 0 | 0 | 1 | 2 | ADAPTER, STRAIGHT MALE | 230 |
| 7447202032 | 0 | 0 | 1 | 2 | ELBOW, #20 BULKHEAD UNION 90 | 225 |
| 7482000029 | 1 | 1 | 1 | 4 | FUSE, 30 AMP | 135, 142, 509 |
| 7482000032 | 1 | 1 | 1 | 4 | FUSE, 15 AMP | 135 |
| 7482000033 | 1 | 1 | 1 | 8 | FUSE, 10 AMP | 135, 510 |
| 7482000035 | 1 | 1 | 1 | 4 | FUSE, 5 AMP | 135, 510 |
| 7482000555 | 1 | 1 | 1 | 3 | FUSE, 100 AMP | 549 |
| 7482000572 | 1 | 1 | 1 | 2 | FUSE | 513 |
| 7482100000 | 1 | 1 | 1 | 2 | FUSE, MAXI HOLDER | 509 |
| 7482100005 | 1 | 1 | 1 | 2 | FUSE, MAXI 50AMP | 509 |
| 7486000225 | 0 | 0 | 1 | 1 | LEVEL, CIRCULAR | 62 |
| 7486000629 | 0 | 0 | 1 | 1 | INDICATOR, SERVICE | 403 |
| 7486000836 | 0 | 0 | 1 | 1 | THERMOMETER | 519 |

**From - 7447060801** **To - 7486000836**

## Recommended Spare Parts List — Appendix C

| Part No. | 1 Yr | 2 Yr | 3 Yr | Qty | Description | Page |
|---|---|---|---|---|---|---|
| 7486002666 | 0 | 0 | 1 | 1 | GAUGE, WINDOW | 399 |
| 7486002936 | 0 | 0 | 1 | 1 | GUAGE, OIL LEVEL | 519 |
| 7486100024 | 0 | 0 | 1 | 1 | GAUGE, CLUSTER | 113 |
| 7486100100 | 0 | 0 | 1 | 2 | GAUGE, 12 VOLT TACHOMETER | 113 |
| 7506000021 | 0 | 0 | 2 | 1 | GROMMET | 301 |
| 7511000161 | 0 | 0 | 0 | 1 | HANDLE, TAPERED | 62 |
| 7511001255 | 0 | 0 | 0 | 1 | HANDLE, GRAB | 62 |
| 7542506663 | 0 | 0 | 0 | 1 | HOSE ASSY, 3/8 X 26" | 318 |
| 7542508463 | 0 | 0 | 0 | 2 | HOSE ASSY, 7/8" ID HOT ENG OIL | 321 |
| 7543109321 | 0 | 0 | 0 | 2 | HOSE ASSY, 3/4" I.D. X 93" | 229 |
| 7543109361 | 0 | 0 | 0 | 2 | HOSE ASSY, 1 1/4" HYDRAULIC | 320 |
| 7546706470 | 0 | 0 | 0 | 2 | HOSE, 1 1/4" STR S/F X 64" STR | 229 |
| 7546806493 | 0 | 0 | 0 | 2 | HOSE, 1 1/2" STR S/F X 64" 90 | 229 |
| 7550103631 | 0 | 0 | 0 | 2 | HOSE ASSY, 3/8 X 26" | 305 |
| 7550103921 | 0 | 0 | 0 | 2 | HOSE ASSY, 1/4" ID STR X 39" | 230 |
| 7550104221 | 0 | 0 | 0 | 2 | HOSE ASSY, 1/4" ID STR X 42" | 230 |
| 7555101801 | 0 | 0 | 0 | 1 | HOSE ASSY, 3/8 X 26" | 231 |
| 7555103000 | 0 | 0 | 0 | 2 | HOSE ASSY, 1/4"I.DX30"LONG | 229 |
| 7555103203 | 0 | 0 | 0 | 2 | HOSE ASSY, 1/4" I.D. STR X 32" | 229 |
| 7555103600 | 0 | 0 | 0 | 1 | HOSE ASSY, 3/8 X 26" | 229 |
| 7555107601 | 0 | 0 | 0 | 1 | 1/4" I.D. X 76" | 229 |
| 7555109005 | 0 | 0 | 0 | 2 | HOSE ASSY, 1/4"I.D. 45 X 90" | 229 |
| 7555111021 | 0 | 0 | 0 | 2 | HOSE ASSY, 1/4" ID | 320 |
| 7555201921 | 0 | 0 | 0 | 2 | HOSE ASSY, 3/8"I.D.X19"LONG | 229 |
| 7555204400 | 0 | 0 | 0 | 1 | 3/8'' I.D. X 44'' | 233 |
| 7555206001 | 0 | 0 | 0 | 1 | 3/8" I.D. X 60" | 231 |
| 7555206201 | 0 | 0 | 0 | 1 | 3/8" I.D. X 62" | 233 |
| 7555206800 | 0 | 0 | 0 | 1 | 3/8" I.D. X 68" | 231 |
| 7555207201 | 0 | 0 | 0 | 4 | HOSE ASSY, 3/8" I.D. X 72" | 231, 233 |
| 7555207202 | 0 | 0 | 0 | 2 | HOSE, 3/8" I.D X 72" LONG | 229 |
| 7555207203 | 0 | 0 | 0 | 2 | 3/8" X 72" | 231, 233 |
| 7555207401 | 0 | 0 | 0 | 1 | 3/8" I.D. X 74" | 233 |
| 7555208203 | 0 | 0 | 0 | 2 | 3/8 HOSE STR ORFS X LG 90 ORFS | 233 |
| 7555208900 | 0 | 0 | 0 | 4 | HOSE ASSY, 3/8" I.D. X 89" | 229, 230 |
| 7555402101 | 0 | 0 | 0 | 2 | HOSE ASSY, 5/8" STR ORFS X 21" | 229 |
| 7555402403 | 0 | 0 | 0 | 1 | 5/8" X 24" | 230 |
| 7555503400 | 0 | 0 | 0 | 2 | HOSE ASSY,3/4" I.D. X 34" LONG | 229 |
| 7555504201 | 0 | 0 | 0 | 2 | HOSE ASSY,3/4" I.D. X 42" LONG | 229 |
| 7555508503 | 0 | 0 | 0 | 2 | HOSE ASSY, 3/4" ID X 85" | 320 |
| 7555514390 | 0 | 0 | 0 | 2 | HOSE ASSY, 3/4" ID | 320 |
| 7555602360 | 0 | 0 | 0 | 4 | HOSE ASSY, 1" STR ORFS X 23" | 229 |
| 7555604400 | 0 | 0 | 0 | 4 | HOSE ASSY,1" I.D. HYDR STR-STR | 229, 231 |
| 7555604860 | 0 | 0 | 0 | 2 | HOSE ASSY, 1" STR ORFS X 48" | 230 |
| 7555702591 | 0 | 0 | 0 | 2 | HOSE ASSY,1 1/4" STR ORF X 25" | 229 |

**From - 7486002666** **To - 7555702591**

## Recommended Spare Parts List — Appendix C

| Part No. | 1 Yr | 2 Yr | 3 Yr | Qty | Description | Page |
|---|---|---|---|---|---|---|
| 7561101503 | 0 | 0 | 0 | 2 | HOSE ASSY, 1/4"I.D. X 15" LONG | 318 |
| 7561102003 | 0 | 0 | 0 | 1 | 1/4" I.D. X 20" | 319 |
| 7561103003 | 0 | 0 | 0 | 4 | HOSE ASSY, 1/4"I.D. X 30" LONG | 319 |
| 7561106003 | 0 | 0 | 0 | 1 | 1/4" I.D. X 60" | 319 |
| 7561203017 | 0 | 0 | 0 | 1 | 3/8" I.D. X 30" | 319 |
| 7561308430 | 0 | 0 | 0 | 2 | HOSE ASSY, 1/2" ID STR-STR HYD | 539 |
| 7561308432 | 0 | 0 | 0 | 2 | HOSE ASSY, 1/2"I.D. X 84" LONG | 319 |
| 7561502452 | 0 | 0 | 0 | 2 | HOSE ASSY, 3/4"I.D. X 24" LONG | 319 |
| 7561503852 | 0 | 0 | 0 | 2 | HOSE ASSY, 3/4"I.D.X 38" LONG | 319 |
| 7566208000 | 0 | 0 | 0 | 2 | HOSE ASSY, 1 1/4" ID | 320 |
| 7566503700 | 0 | 0 | 0 | 2 | HOSE ASSY | 320 |
| 7576134386 | 0 | 0 | 0 | 2 | MOTOR ASSEMBLY - SWING DRIVE | 251 |
| 7581100000 | 1 | 1 | 1 | 1 | LIGHT, STROBE | 309 |
| 7585000720 | 0 | 0 | 0 | 1 | HANDLE, LATCH | 62 |
| 7642100004 | 0 | 0 | 0 | 1 | MUFFLER | 401 |
| 7659000813 | 0 | 0 | 0 | 48 | NUT, WHEEL | 451 |
| 7671100005 | 0 | 0 | 2 | 2 | PAD | 311 |
| 7689000023 | 0 | 0 | 0 | 3 | PIN, LOCK HAIR | 51 |
| 7689000036 | 0 | 0 | 0 | 1 | PIN, CLIP | 3 |
| 7689000053 | 0 | 0 | 0 | 2 | PIN, CLIP | 41 |
| 7689000059 | 0 | 0 | 0 | 1 | PIN, HITCH | 41 |
| 7689000503 | 1 | 1 | 3 | 239 | PLUG, SEALING | 73, 75, 103, 126, 142, 179, 185, 273, 385, 411, 507 |
| 7689000701 | 0 | 0 | 0 | 4 | CLIP, HITCH PIN | 41, 51 |
| 7689000704 | 0 | 0 | 0 | 90 | PIN, 16 - 14 GA | 73, 75, 125, 141, 180, 185, 193, 309, 385, 411, 497, 515 |
| 7689000721 | 0 | 0 | 0 | 2 | PIN, HITCH | 41 |
| 7689000797 | 0 | 0 | 0 | 3 | PIN | 181, 509 |
| 7689000813 | 1 | 1 | 3 | 6 | PIN | 141, 272 |
| 7689001756 | 0 | 0 | 0 | 4 | PIN | 489 |
| 7689001782 | 0 | 0 | 0 | 246 | PIN, 18 - 16 GAGE | 97, 99, 103, 141, 203, 213, 215, 508 |
| 7689001883 | 0 | 0 | 0 | 2 | PIN | 180 |
| 7689002053 | 0 | 0 | 0 | 79 | PIN | 125, 180, 273, 508 |
| 7689100033 | 0 | 0 | 0 | 6 | PIN | 95 |
| 7689100034 | 0 | 0 | 0 | 16 | PIN, QUICK WITH (LANYARD) | 461 |
| 7689100046 | 0 | 0 | 0 | 2 | PIN | 3 |
| 7690001210 | 0 | 0 | 0 | 1 | PIN, COTTER | 301 |
| 7690052410 | 0 | 0 | 0 | 2 | PIN, COTTER | 41 |
| 7690082010 | 0 | 0 | 0 | 8 | PIN, COTTER | 461 |
| 7690101610 | 0 | 0 | 0 | 2 | PIN, COTTER | 51 |
| 7690152410 | 0 | 0 | 0 | 2 | PIN, COTTER | 41 |

**From - 7561101503** **To - 7690152410**

## Recommended Spare Parts List — Appendix C

| Part No. | 1 Yr | 2 Yr | 3 Yr | Qty | Description | Page |
|---|---|---|---|---|---|---|
| 7709000031 | 0 | 0 | 1 | 1 | PLUG, SAE #6 | 230 |
| 7709000038 | 0 | 0 | 1 | 2 | PLUG, O-RING | 226, 230 |
| 7709000157 | 0 | 0 | 1 | 1 | PLUG, MAGNETIC | 519 |
| 7709000811 | 1 | 1 | 3 | 2 | PLUG | 103, 215 |
| 7709000812 | 1 | 1 | 3 | 5 | PLUG | 97, 99, 103 |
| 7709000838 | 1 | 1 | 3 | 3 | PLUG | 509 |
| 7709000844 | 1 | 1 | 3 | 98 | PLUG, 2 SOCKET | 179, 386, 507 |
| 7709000845 | 1 | 1 | 3 | 6 | PLUG | 125, 179 |
| 7709000846 | 1 | 1 | 3 | 26 | PLUG, 12 SOCKET | 125, 179, 213, 385, 507, 509 |
| 7709000849 | 1 | 1 | 3 | 3 | PLUG | 179, 508 |
| 7709000850 | 1 | 1 | 3 | 3 | PLUG | 179, 509 |
| 7709000874 | 1 | 1 | 3 | 14 | PLUG | 126, 179, 385, 509 |
| 7709000876 | 1 | 1 | 3 | 10 | PLUG, 1 SOCKET | 141, 272 |
| 7709000883 | 1 | 1 | 3 | 8 | PLUG | 125, 180, 272, 509 |
| 7709000936 | 1 | 1 | 3 | 6 | PLUG, 4 SOCKET | 181, 273, 386, 510 |
| 7709100870 | 1 | 1 | 3 | 1 | PLUG, 4 PASS | 386 |
| 7709100877 | 1 | 1 | 2 | 4 | PLUG | 103, 180, 507 |
| 7709100883 | 1 | 1 | 3 | 2 | PLUG, 40 SOCKET | 125 |
| 7709100884 | 1 | 1 | 3 | 2 | PLUG, 40 SOCKET | 125 |
| 7709100890 | 1 | 1 | 3 | 2 | PLUG, DEUTSCH DRC26-50S-04 | 385 |
| 7709100891 | 1 | 1 | 3 | 6 | PLUG, 2-PASS DEUTSCH DTP | 142, 385, 510 |
| 7709100895 | 1 | 1 | 3 | 8 | PLUG, 4 SOCKET | 181 |
| 7709100902 | 1 | 1 | 3 | 8 | PLUG, 3 PIN | 126, 180, 385 |
| 7709100907 | 1 | 1 | 3 | 2 | PLUG DTM06-12SA W/WM-12S WEDGE | 125 |
| 7709100908 | 1 | 1 | 3 | 2 | PLUG DTM06-12SB W/WM-12S WEDGE | 125 |
| 7709100929 | 1 | 1 | 3 | 6 | PLUG, DTO6-12SB-C015 W/WEDGE | 180, 509 |
| 7709100930 | 1 | 1 | 3 | 2 | PLUG, DTO6-12SC-C015 W/WEDGE | 180 |
| 7709800000 | 1 | 1 | 3 | 4 | PLUG, SAE #8 | 263 |
| 7722100100 | 0 | 0 | 0 | 2 | PUMP ASSEMBLY - PISTON | 317 |
| 7722100101 | 0 | 0 | 0 | 2 | PUMP ASSEMBLY - GEAR | 317 |
| 7726000128 | 0 | 0 | 0 | 1 | COOLER, OIL | 539 |
| 7726191194 | 0 | 0 | 0 | 2 | COOLER ASSEMBLY - RADIATOR/CHA | 395 |
| 7750000055 | 0 | 0 | 1 | 1 | RELAY, 12 VOLT DC | 135 |
| 7750000056 | 0 | 0 | 1 | 2 | RELAY, 75 AMP | 141 |
| 7750000793 | 0 | 0 | 1 | 3 | RELAY, 200 AMP | 513 |
| 7750160021 | 0 | 0 | 1 | 2 | RELAY, 12 VOLT 100AMP | 142 |
| 7753100021 | 0 | 0 | 2 | 2 | BACK-UP RING;7.00 ROD | 291 |
| 7753100037 | 0 | 0 | 0 | 2 | RING ASSEMBLY - SLIP | 263 |
| 7754000163 | 0 | 0 | 2 | 1 | O-RING, LOW TEMPERATURE | 291 |
| 7754000166 | 0 | 0 | 2 | 1 | O-RING, LOW TEMPERATURE | 291 |
| 7754100010 | 0 | 0 | 2 | 8 | O-RING | 297 |
| 7755011002 | 0 | 0 | 2 | 10 | O-RING | 226, 228, 230, 317, 318 |
| 7755012002 | 0 | 0 | 2 | 25 | O-RING | 225, 226, 227, 228, 230, 231, 233 |

**From - 7709000031** **To - 7755012002**

## Recommended Spare Parts List — Appendix C

| Part No. | 1 Yr | 2 Yr | 3 Yr | Qty | Description | Page |
|---|---|---|---|---|---|---|
| 7755014000 | 0 | 0 | 2 | 2 | O-RING | 283 |
| 7755014002 | 0 | 0 | 2 | 5 | O-RING | 225, 226, 321, 539 |
| 7755016002 | 0 | 0 | 2 | 2 | O-RING | 228, 231 |
| 7755018002 | 0 | 0 | 2 | 10 | O-RING | 225, 228, 318, 319, 320 |
| 7755021002 | 0 | 0 | 2 | 15 | O-RING | 225, 227, 229, 291, 321 |
| 7755025002 | 0 | 0 | 2 | 6 | O-RING | 230, 321 |
| 7755107002 | 0 | 0 | 2 | 4 | O-RING | 281 |
| 7755110000 | 0 | 0 | 2 | 1 | O-RING | 359 |
| 7755152000 | 0 | 0 | 2 | 1 | O-RING | 258 |
| 7755219002 | 0 | 0 | 2 | 8 | O-RING | 228, 229 |
| 7755220000 | 0 | 0 | 2 | 2 | O-RING | 281 |
| 7755222002 | 0 | 0 | 2 | 7 | O-RING | 227, 319 |
| 7755225002 | 0 | 0 | 2 | 4 | O-RING | 227 |
| 7755232002 | 0 | 0 | 2 | 1 | O-RING | 320 |
| 7755245000 | 0 | 0 | 2 | 2 | O-RING | 258 |
| 7755260000 | 0 | 0 | 2 | 1 | O-RING | 258 |
| 7755265000 | 0 | 0 | 2 | 1 | O-RING | 258 |
| 7755904002 | 0 | 0 | 2 | 28 | O-RING | 226, 228, 230, 231, 233, 243, 258, 263, 318 |
| 7755906002 | 0 | 0 | 2 | 11 | O-RING | 225, 226, 228, 230, 231, 233, 318, 321 |
| 7755908002 | 0 | 0 | 2 | 10 | O-RING | 225, 226, 227, 230, 233, 242, 263, 539 |
| 7755910002 | 0 | 0 | 2 | 6 | O-RING | 228, 319, 534 |
| 7755912002 | 0 | 0 | 2 | 9 | O-RING | 225, 229, 277, 278, 318, 320, 321 |
| 7755916002 | 0 | 0 | 2 | 8 | O-RING | 225, 230, 291, 292, 321 |
| 7755920002 | 0 | 0 | 2 | 1 | O-RING | 230 |
| 7794000272 | 0 | 0 | 1 | 4 | CUP, BEARING | 43, 53 |
| 7794001721 | 0 | 0 | 2 | 1 | RUBBER, FLOCKED 154” LONG | 77 |
| 7826000087 | 1 | 1 | 3 | 208 | SOCKET, 16-14 GA | 97, 99, 103, 125, 179, 507 |
| 7826000092 | 1 | 1 | 3 | 14 | SOCKET, (12) 12-14GA | 142, 385 |
| 7826000095 | 1 | 1 | 3 | 6 | SOCKET, | 273, 507 |
| 7826000626 | 1 | 1 | 3 | 262 | SOCKET, | 103, 179, 213, 215, 508 |
| 7826000635 | 1 | 1 | 3 | 2 | SOCKET, | 141 |
| 7826000650 | 1 | 1 | 3 | 34 | PLUG, SEALING | 180, 386 |
| 7826000651 | 1 | 1 | 3 | 50 | SOCKET, 20 GA AU-PLATE | 385 |
| 7826100004 | 1 | 1 | 3 | 472 | SOCKET, (16 - 18) 30 SERIES | 103, 125, 179, 273, 385, 508 |
| 7826100013 | 1 | 1 | 3 | 10 | SOCKET, | 508 |
| 7826100016 | 1 | 1 | 3 | 6 | SOCKET-DEUTSCH 22/20 GA NI | 508 |
| 7826100018 | 1 | 1 | 3 | 228 | SOCKET - 20 GAUGE GOLD | 103, 125, 181 |
| 7834100003 | 0 | 0 | 1 | 4 | SPRING | 62 |

**From - 7755014000** **To - 7834100003**

## Recommended Spare Parts List — Appendix C

| Part No. | 1 Yr | 2 Yr | 3 Yr | Qty | Description | Page |
|---|---|---|---|---|---|---|
| 7872001408 | 0 | 0 | 1 | 1 | SWITCH, SEAT | 87 |
| 7872001734 | 0 | 0 | 1 | 1 | SWITCH, SHIFTER | 205 |
| 7872001747 | 0 | 0 | 1 | 1 | SWITCH, TURNSIGNAL/WIPER | 205 |
| 7872100051 | 0 | 0 | 1 | 1 | SWITCH, IGNITION | 113 |
| 7872100071 | 0 | 0 | 1 | 2 | SWITCH, EMERGENCY STOP | 113 |
| 7872100091 | 0 | 0 | 1 | 2 | SWITCH, HEATER CNTRL EATON 12V | 113 |
| 7872100095 | 0 | 0 | 1 | 2 | SWITCH, L-SERIES ENGNE INC/DEC | 113 |
| 7872100100 | 0 | 0 | 1 | 2 | SWITCH, L-SERIES HAZARDS | 113 |
| 7872100104 | 0 | 0 | 1 | 2 | SWITCH, L-SERIES AIR CONDITION | 189 |
| 7872100105 | 0 | 0 | 1 | 2 | SWITCH, L-SERIES FAN HI/MED/LO | 113 |
| 7872100106 | 0 | 0 | 1 | 2 | SWITCH, L-SERIES HEATER ON/OFF | 113 |
| 7872100107 | 0 | 0 | 1 | 2 | SWITCH,L-SERIES CRANE FUNC PWR | 113 |
| 7872100108 | 0 | 0 | 1 | 2 | SWITCH,L-SERIES SKYLIGHT WIPER | 113 |
| 7872100110 | 0 | 0 | 1 | 2 | SWITCH, L-SERIES WORK LIGHTS | 113 |
| 7872100111 | 0 | 0 | 1 | 2 | SWITCH, L-SERIES BOOM LIGHTS | 197 |
| 7872100112 | 0 | 0 | 1 | 2 | SWITCH,L-SERIES LF O/R BM/STAB | 113 |
| 7872100113 | 0 | 0 | 1 | 2 | SWITCH,L-SERIES RF O/R BM/STAB | 113 |
| 7872100114 | 0 | 0 | 1 | 2 | SWITCH,L-SERIES LR O/R BM/STAB | 113 |
| 7872100115 | 0 | 0 | 1 | 2 | SWITCH,L-SERIES RR O/R BM/STAB | 113 |
| 7872100117 | 0 | 0 | 1 | 2 | SWITCH, L-SERIES O/R EXT/RET | 113 |
| 7872100118 | 0 | 0 | 1 | 2 | SWITCH, L-SERIES MAIN HOIST | 92 |
| 7872100119 | 0 | 0 | 1 | 2 | SWITCH, L-SERIES AUX HOIST | 92 |
| 7872100123 | 0 | 0 | 1 | 2 | SWITCH, L-SERIES SWING BRAKE | 92 |
| 7872100124 | 0 | 0 | 1 | 2 | SWITCH, L-SERIES SWING SPEED | 92 |
| 7872100125 | 0 | 0 | 1 | 2 | SWITCH, L-SERIES CAB TILT | 92 |
| 7872100132 | 0 | 0 | 1 | 1 | SWITCH, KEY OPERATED 2 POSITIO | 185 |
| 7872100138 | 0 | 0 | 1 | 2 | SWITCH, L-SERIES DRIVE SELECT | 113 |
| 7872100139 | 0 | 0 | 1 | 2 | SWITCH, L-SERIES REAR STEER | 92 |
| 7872100142 | 0 | 0 | 1 | 2 | DISCONNECT SWITCH | 549 |
| 7872100145 | 0 | 0 | 1 | 2 | SWITCH, L-SERIES DEFROST FAN | 113 |
| 7872100170 | 0 | 0 | 1 | 2 | SWITCH, 120 TEMPERATURE (N.C.) | 230 |
| 7872100179 | 0 | 0 | 1 | 2 | SWITCH, TEMPERATURE 250 (N.C.) | 320 |
| 7872100210 | 0 | 0 | 1 | 2 | SWITCH L-SERIES HEADLIGHTS | 113 |
| 7872100211 | 0 | 0 | 1 | 2 | SWITCH L-SERIES PARK BRAKE | 113 |
| 7888000045 | 0 | 0 | 1 | 1 | TEE | 317 |
| 7892000195 | 1 | 1 | 3 | 22 | PARALLEL, NON - INSULATED | 103, 127, 180, 507, 515 |
| 7892000196 | 1 | 1 | 3 | 15 | PARALLEL, NON - INSULATED | 153, 509 |
| 7892000198 | 1 | 1 | 3 | 2 | PARALLEL - NON-INSULATED 4 AWG | 180 |
| 7892000218 | 1 | 1 | 1 | 14 | FUSE, TERMINAL | 141 |
| 7892000219 | 1 | 1 | 1 | 2 | FUSE, TERMINAL | 142 |
| 7892000220 | 1 | 1 | 1 | 16 | FUSE, BUSS BAR | 141 |
| 7892000252 | 1 | 1 | 3 | 8 | TERMINAL, MALE PIN | 7, 126, 508 |
| 7892000253 | 1 | 1 | 3 | 10 | TERMINAL, FEMALE SLEEVE | 126, 179 |
| 7892000254 | 1 | 1 | 3 | 20 | TERMINAL, GREEN CABLE SEAL | 126, 179, 507 |

**From - 7872001408** **To - 7892000254**

## Recommended Spare Parts List — Appendix C

| Part No. | 1 Yr | 2 Yr | 3 Yr | Qty | Description | Page |
|---|---|---|---|---|---|---|
| 7892000255 | 1 | 1 | 3 | 2 | TERMINAL, GRAY CABLE SEAL | 7 |
| 7892000256 | 1 | 1 | 3 | 10 | TERMINAL, BLUE CABLE SEAL | 9, 181 |
| 7892000257 | 1 | 1 | 3 | 9 | TERMINAL, GREEN CAVITY | 126, 179, 508 |
| 7892000824 | 1 | 1 | 3 | 4 | RECEPTACLE, | 73, 75, 272 |
| 7892000831 | 1 | 1 | 3 | 1 | RECEPTACLE, | 215 |
| 7892000832 | 1 | 1 | 3 | 4 | RECEPTACLE, | 97, 99, 103 |
| 7892000836 | 1 | 1 | 3 | 6 | RECEPTACLE, 2 PIN | 193, 309, 411 |
| 7892000843 | 1 | 1 | 3 | 10 | TERMINAL, FEMALE | 385, 507 |
| 7892000939 | 1 | 1 | 3 | 6 | RECEPTACLE, | 141, 272 |
| 7892000949 | 1 | 1 | 3 | 15 | RECEPTACLE, | 126, 179, 386, 508 |
| 7892000951 | 1 | 1 | 3 | 5 | RECEPTACLE, | 125, 142, 180, 213, 509 |
| 7892000978 | 1 | 1 | 3 | 1 | RECEPTACLE, | 179 |
| 7892000979 | 1 | 1 | 3 | 2 | RECEPTACLE, | 180 |
| 7892000986 | 1 | 1 | 3 | 3 | RECEPTACLE, | 507 |
| 7892000999 | 0 | 0 | 0 | 2 | RECEPTACLE, 12 VOLT DASH MOUNT | 133 |
| 7892001012 | 1 | 1 | 3 | 2 | RECEPTABLE, 12 P FLANGE | 273 |
| 7892001036 | 1 | 1 | 3 | 7 | RECEPTACLE, SPLICE BLOCK | 125, 179, 507 |
| 7892001051 | 1 | 1 | 3 | 6 | RECEPTACLE, | 181, 185, 510, 515 |
| 7892001053 | 1 | 1 | 3 | 2 | RECEPTACLE, 9 PIN | 125, 509 |
| 7892100003 | 1 | 1 | 3 | 6 | TERMINAL, DARK RED CABLE SEAL | 385, 508 |
| 7892100025 | 1 | 1 | 3 | 4 | DEUTSCH DTP 2-PASS RECEPTACLE | 181, 510 |
| 7892100026 | 1 | 1 | 3 | 8 | RECEPT, (8P) SPLICE BLOCK | 103, 125, 179 |
| 7892100036 | 1 | 1 | 3 | 10 | RECEPTACLE, 3 WAY | 126, 180, 385, 509 |
| 7892100039 | 1 | 1 | 3 | 4 | RECEPTACLE | 181 |
| 7892100086 | 1 | 1 | 3 | 6 | RECEPT, DTO4-12PB-C015 W/WEDGE | 125, 185 |
| 7892100087 | 1 | 1 | 3 | 2 | RECEPT, DTO4-12PC-C015 W/WEDGE | 125 |
| 7900000380 | 0 | 0 | 0 | 4 | TIRE, 20.5 X 25-24 PLY GENERAL | 453, 457 |
| 7926000014 | 0 | 0 | 0 | 1 | VALVE-DRAIN COCK | 313 |
| 7926000557 | 0 | 0 | 0 | 1 | VALVE, DRAIN | 318 |
| 7926002156 | 0 | 0 | 0 | 1 | VALVE, INLET CHECK | 233 |
| 7926002329 | 0 | 0 | 0 | 2 | VALVE, SHUT-OFF | 320 |
| 7926003526 | 1 | 1 | 1 | 1 | FUSE, VELOCITY | 229 |
| 7926100859 | 0 | 0 | 0 | 3 | VALVE ASSEMBLY - OUTRIGGER CON | 525 |
| 7926100899 | 0 | 0 | 0 | 2 | VALVE ASSEMBLY - STEERING CONT | 205 |
| 7926100908 | 0 | 0 | 0 | 1 | VALVE ASSEMBLY - OUTRIGGER SEL | 525 |
| 7926100910 | 0 | 0 | 0 | 1 | VALVE ASSY, DUAL ACCUMULATOR C | 275 |
| 7926100911 | 0 | 0 | 0 | 2 | VALVE ASSEMBLY - PARK BRAKE RA | 525 |
| 7926100912 | 0 | 0 | 0 | 2 | VALVE ASSEMBLY - BRAKE TREADLE | 199 |
| 7926100924 | 0 | 0 | 0 | 2 | VALVE ASSEMBLY - AXLE LOCKOUT | 525 |
| 7926100925 | 0 | 0 | 0 | 2 | VALVE ASSEMBLY - HOLDING | 291 |
| 7926100936 | 0 | 0 | 0 | 3 | VALVE ASSEMBLY - OUTRIGGER SEL | 525 |
| 7926100948 | 0 | 0 | 0 | 2 | VALVE ASSY, CHECK | 230 |
| 7926100959 | 0 | 0 | 0 | 2 | VALVE, #12 INLET CHECK | 225 |
| 7949000383 | 0 | 0 | 1 | 4 | WASHER, THRUST | 289 |

**From - 7892000255** **To - 7949000383**

## Recommended Spare Parts List — Appendix C

| Part No. | 1 Yr | 2 Yr | 3 Yr | Qty | Description | Page |
|---|---|---|---|---|---|---|
| 7949000385 | 0 | 0 | 1 | 2 | WASHER, THRUST | 3 |
| 80002486 | 0 | 0 | 0 | 2 | VALVE ASSEMBLY - ACCESSORY | 275 |
| 80008491 | 0 | 2 | 3 | 2 | SWITCH, KEY | 186 |
| 90000100 | 0 | 0 | 0 | 2 | MOTOR ASSY. HYD. | 242 |
| 90000105 | 0 | 0 | 2 | 2 | O-RING | 243 |
| 90001014 | 0 | 0 | 0 | 2 | VALVE, WATER | 148 |
| 90001067 | 1 | 1 | 2 | 2 | KIT, SEAL | 243 |
| 90001131 | 0 | 0 | 0 | 2 | CART. VALVE ASSY. CONTROL 12V. | 243 |
| 90001159 | 4 | 4 | 6 | 2 | ELEMENT, PRIMARY | 405 |
| 90001160 | 4 | 4 | 6 | 2 | ELEMENT, SECONDARY | 405 |
| 90011561 | 1 | 1 | 1 | 2 | FUSE,2A | 163 |
| 90011562 | 1 | 1 | 1 | 2 | FUSE,15A | 163 |
| 90011563 | 1 | 1 | 1 | 2 | FUSE,7.5A | 163 |
| 90012231 | 0 | 0 | 1 | 2 | FITTING, ELBOW | 148 |
| 90012233 | 0 | 0 | 1 | 4 | FITTING, TEE | 148 |
| 90012853 | 0 | 0 | 2 | 4 | SEAL | 355 |
| 90012924 | 0 | 0 | 0 | 2 | VALVE,PRESS.REDUCING 250 PSI | 283 |
| 90012925 | 0 | 0 | 0 | 2 | VALVE,PRESS.REDUCING 2500 PSI | 283 |
| 90012928 | 0 | 0 | 0 | 2 | KIT, VALVE ASSY. WORK SECTION | 284 |
| 9005100230 | 0 | 0 | 0 | 2 | VALVE ASSY. GAS | 275 |
| 9049100895 | 0 | 0 | 1 | 1 | OUTER | 433 |
| 9049101566 | 0 | 0 | 1 | 1 | BEARING | 355 |
| 9049101687 | 0 | 0 | 1 | 24 | STUD | 442 |
| 9049101693 | 0 | 0 | 1 | 2 | CONE, BEARING | 442 |
| 9049104578 | 0 | 0 | 1 | 1 | BEARING | 433 |
| 9049106322 | 0 | 0 | 2 | 6 | O-RING | 442 |
| 9049107129 | 0 | 0 | 0 | 2 | DISC, BRAKE | 442 |
| 9049108948 | 0 | 0 | 1 | 1 | CONE, BEARING | 433 |
| 9049109690 | 0 | 0 | 1 | 1 | CONE, BEARING | 433 |
| 9049111761 | 1 | 1 | 2 | 1 | KIT, SEAL | 447 |
| 9049112263 | 0 | 0 | 1 | 2 | CUP, BEARING | 433 |
| 9049112264 | 0 | 0 | 1 | 2 | CONE, BEARING | 433 |
| 9049112685 | 1 | 1 | 2 | 4 | SEAL | 442 |
| 9049112768 | 0 | 0 | 1 | 4 | WASHER, THRUST | 434 |
| 9049112769 | 0 | 0 | 1 | 8 | WASHER, THRUST | 434 |
| 9049112781 | 0 | 0 | 2 | 8 | SEAL | 437, 442 |
| 9049112786 | 0 | 0 | 2 | 4 | SEAL, OIL | 433 |
| 9176100603 | 0 | 0 | 2 | 1 | O-RING | 97 |
| 9188101041 | 0 | 0 | 1 | 1 | KIT, LINING | 371 |
| 9188101043 | 0 | 0 | 1 | 1 | KIT, SPRING | 371 |
| 9188101078 | 1 | 1 | 2 | 2 | KIT,SEAL | 371 |
| 9246100168 | 0 | 0 | 2 | 1 | BOOT, RED | 389 |
| 9246100177 | 0 | 0 | 2 | 12 | BOOT, RED | 389, 553 |
| 9246100185 | 0 | 0 | 2 | 2 | BOOT, BLACK | 389 |

**From - 7949000385** **To - 9246100185**

## Recommended Spare Parts List — Appendix C

| Part No. | 1 Yr | 2 Yr | 3 Yr | Qty | Description | Page |
|---|---|---|---|---|---|---|
| 9326100495 | 0 | 0 | 2 | 2 | BOOT, LOWER END | 211 |
| 9326100496 | 0 | 0 | 2 | 2 | BOOT, UPPER END | 211 |
| 9326100498 | 0 | 0 | 1 | 4 | SPRING | 211 |
| 9326100499 | 0 | 0 | 1 | 4 | SPRING | 211 |
| 9333101471 | 0 | 0 | 1 | 2 | FITTING, BULKHEAD ADAPTER | 155 |
| 9333102230 | 0 | 0 | 1 | 1 | A2B SWITCH - WITH | 15 |
| 9333102232 | 0 | 0 | 1 | 1 | LANYARD | 23 |
| 9333102373 | 0 | 0 | 1 | 1 | FLAG, RETAINER | 23 |
| 9333102765 | 1 | 1 | 3 | 2 | CONNECTOR ASSEMBLY | 15 |
| 9333103897 | 0 | 0 | 1 | 2 | POTENTIOMETER,LENGTH | 17 |
| 9333103898 | 0 | 0 | 1 | 2 | SENSOR,ANGLE | 17 |
| 9333103904 | 0 | 0 | 0 | 2 | SLIP RING ASSY. 2 CONN. | 17 |
| 9333103905 | 0 | 0 | 0 | 2 | GEAR, 25T | 17 |
| 9333103906 | 1 | 1 | 3 | 2 | PLUG,CONNECTOR ASSY.5 PIN PASS | 17 |
| 9352100657 | 0 | 0 | 2 | 4 | GASKET | 97, 99 |
| 9352100751 | 1 | 1 | 2 | 1 | KIT, GASKET AND HARDWARE | 539 |
| 9352100771 | 0 | 0 | 2 | 4 | BOOT | 97, 99 |
| 9352100772 | 0 | 0 | 2 | 4 | GASKET | 97, 99 |
| 9352100790 | 0 | 0 | 1 | 2 | SWITCH, PUSH BUTTON | 97 |
| 9364100340 | 0 | 0 | 0 | 5 | BRUSH AND HOLDER ASSEMBLY | 271 |
| 9364100437 | 0 | 0 | 0 | 8 | BRUSH AND HOLDER ASSEMBLY | 271 |
| 9364101577 | 0 | 0 | 1 | 1 | FITTING, GREASE | 425 |
| 9364101733 | 0 | 0 | 0 | 12 | BRUSH & ARM ASSY. (SILVER) | 271 |
| 9364101829 | 1 | 1 | 2 | 2 | KIT, SEAL | 265 |
| 9364101830 | 1 | 1 | 2 | 2 | KIT, SEAL | 265 |
| 9364101867 | 0 | 0 | 0 | 4 | U-JOINT ASSY. | 427 |
| 9364101868 | 0 | 0 | 2 | 2 | SEAL, SHAFT | 427 |
| 9364101869 | 0 | 0 | 0 | 2 | VALVE, AIR | 427 |
| 9364101870 | 0 | 0 | 1 | 2 | FITTING, GREASE | 427 |
| 9364101907 | 0 | 0 | 0 | 2 | BEARING, CENTER | 423 |
| 9372103536 | 0 | 0 | 0 | 2 | PISTON | 449 |
| 9372103537 | 1 | 1 | 2 | 2 | KIT, SEAL | 449 |
| 9414101679 | 4 | 4 | 6 | 2 | FILTER,OIL | 321 |
| 9414101755 | 4 | 4 | 6 | 2 | FILTER, PRIMARY FUEL | 321 |
| 9414101756 | 4 | 4 | 6 | 2 | FILTER, FUEL | 321 |
| 9414101764 | 1 | 1 | 1 | 2 | BELT, DRIVE | 321 |
| 9425100079 | 0 | 0 | 1 | 2 | SWITCH ASSY. | 83 |
| 9437100452 | 1 | 1 | 2 | 1 | KIT, SEAL | 521 |
| 9437100456 | 0 | 0 | 1 | 1 | GAUGE | 521 |
| 9437100479 | 0 | 0 | 2 | 1 | O-RING, SQUARE | 521 |
| 9437100480 | 0 | 0 | 2 | 1 | GASKET | 521 |
| 9437100825 | 1 | 2 | 3 | 1 | ELEMENT | 521 |
| 9511100017 | 0 | 0 | 2 | 2 | BOOT | 97, 99 |
| 9515102838 | 0 | 0 | 1 | 2 | THERMOSTAT | 147 |

**From - 9326100495** **To - 9515102838**

## Recommended Spare Parts List — Appendix C

| Part No. | 1 Yr | 2 Yr | 3 Yr | Qty | Description | Page |
|---|---|---|---|---|---|---|
| 9515102848 | 0 | 0 | 2 | 2 | GROMMET | 147 |
| 9515102865 | 0 | 0 | 1 | 2 | SWITCH,PRESSURE | 193 |
| 9515102889 | 0 | 0 | 0 | 2 | CLUTCH ASSY. 12V./PULLEY& COIL | 411 |
| 9515102890 | 0 | 0 | 0 | 2 | COIL 12V. | 411 |
| 9515102922 | 0 | 0 | 0 | 2 | KIT, VALVE ASSY. WATER | 148 |
| 9576101074 | 1 | 1 | 1 | 1 | KEY, SET | 62 |
| 9576101101 | 1 | 1 | 2 | 2 | KIT,SEAL BRAKE | 259 |
| 9576101102 | 1 | 1 | 2 | 2 | KIT,DISC BRAKE | 259 |
| 9576101126 | 0 | 0 | 0 | 2 | GEAR,RING | 259 |
| 9576101127 | 0 | 0 | 1 | 324 | BEARING,NEEDLE | 257 |
| 9576101135 | 0 | 0 | 1 | 2 | BEARING | 258 |
| 9576101167 | 0 | 0 | 0 | 2 | PINION | 257 |
| 9576101174 | 0 | 0 | 0 | 2 | RING GEAR | 259 |
| 9576101176 | 0 | 0 | 0 | 2 | GEAR,SUN | 258 |
| 9576101180 | 0 | 0 | 0 | 2 | GEAR,SUN | 257 |
| 9576101186 | 1 | 1 | 2 | 2 | KIT,SEAL MOTOR | 258 |
| 9576101193 | 0 | 0 | 2 | 4 | O-RING #6 | 193 |
| 9576101194 | 0 | 0 | 2 | 8 | O-RING #10 | 193, 413 |
| 9576101200 | 0 | 0 | 0 | 2 | HOSE ASSY. #10 | 193 |
| 9576101202 | 0 | 0 | 0 | 2 | HOSE ASSY. #8 | 413 |
| 9576101203 | 0 | 0 | 0 | 2 | HOSE ASSY. #10 | 413 |
| 9576101331 | 0 | 0 | 2 | 2 | SEAL, OIL | 257 |
| 9576101332 | 0 | 0 | 1 | 2 | BEARING | 257 |
| 9576101334 | 0 | 0 | 2 | 2 | O-RING | 257 |
| 9576101335 | 0 | 0 | 1 | 2 | BEARING | 257 |
| 9576101336 | 0 | 0 | 1 | 108 | BEARING, NEEDLE | 257 |
| 9576101337 | 1 | 1 | 2 | 2 | KIT, SEAL | 259 |
| 9576101338 | 0 | 0 | 2 | 8 | O-RING | 259 |
| 9576101343 | 0 | 0 | 1 | 2 | KIT, MOTOR WITH HARDWARE AND B | 73, 75 |
| 9576101347 | 1 | 1 | 2 | 4 | BLADE, WIPER 34" | 73, 75 |
| 9576101395 | 0 | 0 | 0 | 2 | MOTOR ASSY. HYD. | 258 |
| 9576101396 | 0 | 0 | 0 | 2 | COIL ASSY. CONDENSER | 299 |
| 9576101402 | 0 | 0 | 0 | 2 | HOSE ASSY. #6 | 193 |
| 9576101406 | 0 | 0 | 0 | 4 | ARM, WIPER 24" | 73, 75 |
| 9576101424 | 1 | 1 | 1 | 2 | BELT, DRIVE | 411 |
| 9581100048 | 1 | 1 | 1 | 2 | BULB | 62 |
| 9581100396 | 1 | 1 | 1 | 1 | BULB, HALOGEN | 481 |
| 9581100405 | 1 | 1 | 1 | 1 | BULB, 12 VOLT | 113 |
| 9581100406 | 1 | 1 | 1 | 1 | BULB, 12 VOLT | 129 |
| 9581100461 | 0 | 0 | 2 | 4 | GROMMET, RUBBER | 481 |
| 9722105443 | 0 | 0 | 1 | 8 | BEARING | 373 |
| 9722105445 | 1 | 1 | 2 | 2 | KIT, SEAL | 373 |
| 9722105468 | 0 | 0 | 0 | 2 | GEAR, DRIVE SHAFT | 373 |
| 9722105469 | 0 | 0 | 0 | 2 | GEAR, DRIVEN | 373 |

**From - 9515102848** **To - 9722105469**

## Recommended Spare Parts List — Appendix C

| Part No. | 1 Yr | 2 Yr | 3 Yr | Qty | Description | Page |
|---|---|---|---|---|---|---|
| 9722105547 | 0 | 0 | 1 | 2 | BEARING | 375 |
| 9722105548 | 0 | 0 | 1 | 2 | BEARING | 375 |
| 9722105557 | 0 | 0 | 2 | 2 | SEAL, SHAFT | 376 |
| 9722105560 | 0 | 0 | 2 | 14 | O-RING | 376 |
| 9722105563 | 0 | 0 | 2 | 2 | O-RING | 376 |
| 9722105566 | 1 | 1 | 2 | 2 | KIT, SEAL | 376 |
| 9722105567 | 0 | 0 | 2 | 2 | O-RING | 375 |
| 9722105568 | 0 | 0 | 2 | 4 | O-RING | 375 |
| 9722105569 | 0 | 0 | 2 | 2 | O-RING | 376 |
| 9726100337 | 0 | 0 | 0 | 2 | COOLER ASSY. TRANS. OIL | 397 |
| 9726100338 | 0 | 0 | 0 | 2 | RADIATOR ASSY. | 397 |
| 9726100339 | 0 | 0 | 0 | 2 | COOLER ASSY. AIR CHARGE | 397 |
| 9752100994 | 1 | 1 | 2 | 3 | KIT, REPAIR | 283, 531, 533 |
| 9752100996 | 1 | 1 | 2 | 1 | KIT, REPAIR | 527 |
| 9752101414 | 1 | 1 | 2 | 2 | KIT, SEAL MOUNTING | 519 |
| 9826100008 | 0 | 0 | 0 | 4 | PIN | 11, 45 |
| 9826100009 | 0 | 0 | 0 | 4 | PIN, COTTER | 11, 45 |
| 9872100243 | 1 | 1 | 1 | 2 | KEY | 185 |
| 9872100256 | 1 | 1 | 1 | 1 | SET, KEY | 113 |
| 9880100222 | 0 | 0 | 2 | 2 | GASKET | 519 |
| 9904101047 | 1 | 1 | 3 | 1 | PLUG | 355 |
| 9904101348 | 0 | 0 | 2 | 2 | RING, SNAP | 345, 351 |
| 9904101353 | 0 | 0 | 1 | 1 | BEARING, GEAR | 349 |
| 9904101354 | 0 | 0 | 2 | 4 | RING, SNAP | 341 |
| 9904103500 | 0 | 0 | 2 | 2 | O-RING | 327, 363 |
| 9904103570 | 0 | 0 | 2 | 1 | RING | 351 |
| 9904103575 | 0 | 0 | 1 | 1 | BEARING, PILOT | 343 |
| 9904103612 | 0 | 0 | 1 | 4 | BEARING | 355 |
| 9904103621 | 0 | 0 | 2 | 2 | RING, RETAINING | 331, 355 |
| 9904103635 | 0 | 0 | 0 | 36 | DISC, CLUTCH | 343, 345, 349, 351 |
| 9904103637 | 0 | 0 | 0 | 5 | SEAL, PISTON | 343, 345, 349, 351 |
| 9904103638 | 0 | 0 | 0 | 7 | SEAL, PISTON | 343, 345, 349, 351 |
| 9904103660 | 0 | 0 | 2 | 1 | O-RING | 359 |
| 9904103779 | 0 | 0 | 2 | 4 | O-RING | 327 |
| 9904103887 | 0 | 0 | 2 | 1 | GASKET | 363 |
| 9904103893 | 0 | 0 | 2 | 2 | RING, LOCATING | 341 |
| 9904103899 | 0 | 0 | 1 | 2 | RING, RETAINING | 339, 341 |
| 9904103993 | 0 | 0 | 2 | 1 | O-RING | 355 |
| 9904103994 | 0 | 0 | 2 | 1 | O-RING | 355 |
| 9904103997 | 0 | 0 | 2 | 2 | O-RING | 356 |
| 9904104053 | 0 | 0 | 1 | 1 | BEARING ASSEMBLY | 347 |
| 9904104423 | 0 | 0 | 1 | 1 | BEARING | 341 |
| 9904104428 | 0 | 0 | 1 | 1 | BEARING | 335 |
| 9904104432 | 0 | 0 | 1 | 2 | BEARING | 339, 341 |

**From - 9722105547** **To - 9904104432**

## Recommended Spare Parts List — Appendix C

| Part No. | 1 Yr | 2 Yr | 3 Yr | Qty | Description | Page |
|---|---|---|---|---|---|---|
| 9904105299 | 0 | 0 | 2 | 1 | O-RING | 359 |
| 9904105302 | 0 | 0 | 2 | 2 | SEAL | 359 |
| 9904105307 | 0 | 0 | 2 | 1 | SEAL | 359 |
| 9904105336 | 0 | 0 | 2 | 3 | O-RING | 327 |
| 9904105441 | 0 | 0 | 2 | 1 | GASKET | 327 |
| 9904105957 | 0 | 0 | 2 | 1 | RING, SEAL | 331 |
| 9904106063 | 1 | 1 | 3 | 2 | PLUG WITH O-RING | 327 |
| 9904106364 | 0 | 0 | 2 | 1 | GASKET | 353 |
| 9904106445 | 0 | 0 | 2 | 7 | O-RING | 325, 327 |
| 9904106593 | 0 | 0 | 2 | 1 | GASKET | 339 |
| 9904107179 | 0 | 0 | 2 | 1 | O-RING | 359 |
| 9904108409 | 0 | 0 | 2 | 1 | O-RING | 355 |
| 9904109651 | 0 | 0 | 0 | 4 | GEAR, LOW CLUTCH 63T | 337, 349 |
| 9904110599 | 0 | 0 | 2 | 4 | GASKET | 339 |
| 9904110605 | 0 | 0 | 2 | 2 | GASKET | 365 |
| 9904110606 | 0 | 0 | 0 | 8 | CART.& COIL ASSY. 12V. | 367 |
| 9904110793 | 0 | 0 | 2 | 2 | O-RING | 367 |
| 9904110794 | 0 | 0 | 2 | 2 | O-RING | 367 |
| 9904110795 | 0 | 0 | 2 | 2 | O-RING | 367 |
| 9904110796 | 0 | 0 | 2 | 2 | O-RING | 367 |
| 9926105593 | 1 | 1 | 2 | 1 | KIT, REPAIR | 533 |
| 9926106474 | 0 | 0 | 0 | 6 | VALVE, CARTRIDGE | 283, 533 |
| 9926108423 | 1 | 1 | 2 | 2 | KIT, SEAL | 283, 533 |
| 9926108644 | 1 | 1 | 2 | 1 | KIT, SEAL | 283 |
| 9926111468 | 0 | 0 | 2 | 5 | SEAL-SPECIAL | 277, 278, 279, 281 |
| 9926111469 | 0 | 0 | 2 | 4 | O-RING | 277, 281 |
| 9926111470 | 0 | 0 | 2 | 2 | SEAL-SPECIAL | 277, 281 |
| 9926111719 | 1 | 1 | 2 | 1 | KIT, SEAL | 533 |
| 9926112358 | 1 | 1 | 2 | 1 | KIT, SEAL | 283 |
| 9926112501 | 0 | 0 | 2 | 4 | O-RING,VITON | 284 |
| 9926112931 | 0 | 0 | 0 | 10 | COIL, 12V. | 283, 531, 533, 534 |
| 9926112936 | 0 | 0 | 0 | 4 | COIL, 12V. | 533 |
| 9926112986 | 0 | 0 | 0 | 8 | VALVE, CARTRIDGE | 527 |
| 9926112987 | 0 | 0 | 0 | 8 | COIL, 12V. | 527 |
| 9926112997 | 1 | 1 | 2 | 2 | KIT, SEAL | 533 |
| 9926113017 | 0 | 0 | 0 | 4 | VALVE,CART. RELIEF @ 4300 PSI | 277, 280 |
| 9926113018 | 0 | 0 | 0 | 4 | VALVE,CART. RELIEF @ 4000 PSI | 277, 281 |
| 9926113030 | 0 | 0 | 0 | 2 | CARTRIDGE & COIL ASSY. 12V. | 281 |
| 9926113031 | 1 | 1 | 2 | 2 | KIT, SEAL | 281 |
| 9926113032 | 1 | 1 | 2 | 2 | KIT, SEAL | 281 |
| 9926113045 | 0 | 0 | 0 | 2 | VALVE, CART. & COIL ASSY. 12V. | 283 |
| 9926113049 | 0 | 0 | 0 | 2 | VALVE, CHECK | 283 |
| 9926113057 | 1 | 1 | 2 | 6 | KIT, SEAL | 283, 529 |
| 9926113058 | 0 | 0 | 0 | 2 | KIT, SEAL | 283 |

**From - 9904105299** **To - 9926113058**

## Recommended Spare Parts List — Appendix C

| Part No. | 1 Yr | 2 Yr | 3 Yr | Qty | Description | Page |
|---|---|---|---|---|---|---|
| 9926113089 | 0 | 0 | 0 | 2 | VALVE, CHECK CARTRIDGE | 533 |
| 9926113110 | 0 | 0 | 2 | 2 | SEAL, DUST RING | 207 |
| 9926113112 | 0 | 0 | 1 | 2 | BEARING | 207 |
| 9926113116 | 1 | 1 | 2 | 2 | KIT, SEAL | 207 |
| 9926113140 | 0 | 0 | 0 | 2 | VALVE, CART. & COIL ASSY. 12V. | 529 |
| 9926113144 | 0 | 0 | 0 | 2 | VALVE, CART. COUNTER BALANCE | 295 |
| 9926113145 | 0 | 0 | 0 | 2 | VALVE, CART.SEQUENCE @4400 PSI | 295 |
| 9926113146 | 1 | 1 | 2 | 2 | KIT, SEAL | 295 |
| 9926113147 | 1 | 1 | 2 | 2 | KIT, SEAL | 295 |
| 9926113165 | 0 | 0 | 0 | 6 | VALVE,CART/COIL PRESS.REDUCING | 283 |
| 9926113167 | 0 | 0 | 0 | 2 | VALVE, RELIEF @ 2500 PSI | 283 |
| 9926113169 | 0 | 0 | 0 | 2 | VALVE, SHUTTLE | 533 |
| 9926113170 | 1 | 1 | 2 | 2 | KIT, SEAL | 533 |
| 9926113174 | 0 | 0 | 0 | 2 | VALVE, CART. & COIL ASSY. 12V. | 529 |
| 9926113175 | 0 | 0 | 1 | 2 | SWITCH ASSY. PRESSURE | 529 |
| 9926113176 | 1 | 1 | 2 | 2 | KIT, SEAL | 529 |
| 9926113181 | 0 | 0 | 2 | 4 | O-RING | 533 |
| 9926113182 | 0 | 0 | 2 | 2 | O-RING | 533 |
| 9926113184 | 0 | 0 | 0 | 6 | VALVE, CARTRIDGE SHUTTLE | 533 |
| 9926113185 | 1 | 1 | 2 | 2 | KIT, SEAL | 533 |
| 9926113186 | 0 | 0 | 0 | 2 | VALVE,PRESS.REDUCING @2500PSI | 533 |
| 9926113187 | 1 | 1 | 2 | 2 | KIT, SEAL | 533 |
| 9926113192 | 0 | 0 | 0 | 2 | VALVE ASSY. CARTRIDGE | 533 |
| 9926113193 | 0 | 0 | 0 | 4 | VALVE ASSY. CHECK | 533 |
| 9926113194 | 0 | 0 | 0 | 2 | VALVE ASSY. CARTRIDGE | 533 |
| 9926113195 | 1 | 1 | 2 | 2 | KIT, SEAL | 533 |
| 9926113253 | 0 | 0 | 2 | 2 | O-RING SEAL | 284 |
| 9926113254 | 0 | 0 | 0 | 4 | VALVE, CART. RELIEF @ 1800 PSI | 284 |
| 9926113270 | 0 | 0 | 1 | 2 | SWITCH ASSY. PRESSURE | 275 |
| 9926113271 | 0 | 0 | 0 | 2 | VALVE ASSY. BRAKE | 201 |
| 9926113275 | 0 | 0 | 2 | 2 | BOOT, RUBBER | 201 |
| 9926113276 | 0 | 0 | 1 | 2 | SWITCH ASSY. PRESSURE | 201 |
| 9926113277 | 0 | 0 | 1 | 2 | FITTING, ADAPTOR | 201 |
| 9926113280 | 0 | 0 | 0 | 2 | VALVE ASSY. INLET SECTION | 277 |
| 9926113281 | 0 | 0 | 0 | 4 | VALVE ASSY. WORK SECTION | 277 |
| 9926113283 | 0 | 0 | 0 | 2 | VALVE ASSY. WORK SECTION | 277 |
| 9926113284 | 0 | 0 | 0 | 2 | VALVE ASSY. OUTLET SECTION | 277 |
| 9926113286 | 0 | 0 | 0 | 4 | VALVE,CART. RELIEF @ 3500 PSI | 277, 280 |
| 9926113287 | 0 | 0 | 0 | 4 | VALVE,CART. RELIEF @ 3250 PSI | 277, 279 |
| 9926113293 | 0 | 0 | 0 | 2 | VALVE, CHECK CART. | 230 |
| 9926113299 | 0 | 0 | 1 | 4 | SPRING | 284 |
| 9926113443 | 0 | 0 | 0 | 2 | VALVE, PRESS. COMPENSATOR | 283 |
| 9926113459 | 0 | 0 | 0 | 2 | VALVE ASSY. WORK SECTION | 277 |
| 9974102176 | 0 | 0 | 2 | 1 | SEAL, PISTON | 241 |

**From - 9926113089** **To - 9974102176**

## Recommended Spare Parts List — Appendix C

| Part No. | 1 Yr | 2 Yr | 3 Yr | Qty | Description | Page |
|---|---|---|---|---|---|---|
| 9974102222 | 1 | 1 | 2 | 1 | KIT, SEAL | 244 |
| 9974102898 | 0 | 0 | 2 | 4 | O-RING | 243 |
| 9974102922 | 0 | 0 | 2 | 1 | O-RING | 242 |
| 9974103086 | 0 | 0 | 1 | 4 | BEARING | 244 |
| 9974103091 | 0 | 0 | 1 | 2 | SENSOR | 243 |
| 9974103092 | 0 | 0 | 2 | 2 | WASHER, SEAL | 243 |
| 9974103093 | 0 | 0 | 1 | 2 | FITTING | 243 |

**From - 9974102222** **To - 9974103093**

**Notes**

## Belt and Filter Maintenance List — Appendix D

| Part No. | 1000 Hrs | 2000 Hrs | Qty | Description | Page |
|---|---|---|---|---|---|
| 7437000873 | 2 | 4 | 1 | FILTER, TRANSMISSION FLUID | 363 |
| 90001159 | 2 | 4 | 2 | ELEMENT, PRIMARY | 405 |
| 90001160 | 2 | 4 | 2 | ELEMENT, SECONDARY | 405 |
| 9414101679 | 2 | 4 | 2 | FILTER,OIL | 321 |
| 9414101755 | 2 | 4 | 2 | FILTER, PRIMARY FUEL | 321 |
| 9414101756 | 2 | 4 | 2 | FILTER, FUEL | 321 |
| 9414101764 | | 1 | 2 | BELT, DRIVE | 321 |
| 9437100825 | 1 | 1 | 1 | ELEMENT | 521 |
| 9576101424 | | 1 | 2 | BELT, DRIVE | 411 |

**From - 7437000873** **To - 9576101424**

**Notes**

## Foot Note Index — Appendix E

| Foot Note | Description |
|---|---|
| - | THIRD REPAIR KIT AND/OR PART OF 3RD KIT |
| ! | SUB ASSY AND/OR PART OF SUB ASSY |
| # | SERVICED AS AN ASSEMBLY ONLY |
| $ | FIFTH REPAIR KIT |
| % | SEE NOTE AT END OF LIST |
| & | SIXTH REPAIR KIT |
| ( | 4TH SUB ASSY AND/OR PART OF 4TH SUB ASSY |
| ) | 5TH SUB ASSY AND/OR PART OF 5TH SUB ASSY |
| * | REPAIR KIT AND/OR PART OF KIT |
| / | 2ND SUB ASSY AND/OR PART OF 2ND SUB ASSY |
| @ | SECOND REPAIR KIT AND/OR PART OF 2ND KIT |
| ^ | 3RD SUB ASSY AND/OR PART OF 3RD SUB ASSY |
| { | 6TH SUB ASSY AND/OR PART OF 6TH SUB ASSY |
| } | 7TH SUB ASSY AND/OR PART OF 7TH SUB ASSY |
| ~ | SEE ALLISON DEALER FOR REPAIR PARTS |
| + | SEE FURTHER BREAKDOWN THIS GROUP |
| < | FOURTH REPAIR KIT AND/OR PART OF 4TH KIT |
| = | REFER TO MCI FOR APPLICABLE NUMBER |
| > | REFER TO MCI FOR BREAKDOWN LOCATION |