RUTHZIL TRATOR COMERCIAL DE PEÇAS LTDA 11 97083-6812 ROLANDO CITRANGULO

2016

Grove Manitowoc National Crane Potain

Manitowoc Crane Care

# GROVE CRANE CARE

## RT540E - 280119
## Parts Manual



# *Manitowoc Cranes*
# MACHINE COMPONENT INDEX

**Date: Oct 31, 2016** **Rev:**

| Model Number | Serial Number |
|---|---|
| **RT540E (40 T** | **280119** |


| Item | Part | Description | Page |
|---|---|---|---|
| | | **BOOM** | |
| 1 | **80049529** | BOOM ASSY COMPLETE (102') | 1 |
| | **80074611** | BOOM ASSEMBLY | 7 |
| | **80046908** | TELE HYDRAULIC CYLINDER ASSY | 13 |
| | **6718100031** | SHEAVE ASSEMBLY - 5/8" ROPE | 17 |
| | **80049532** | BOOM PIVOT INSTALLATION | 19 |
| | **2159910036** | INDICATOR INSTALLATION - BOOM ANGLE | 21 |
| | **2114900861** | POINTER ASSEMBLY | 23 |
| 3 | **80002952** | LIGHT INSTALLATION - BOOM | 25 |
| | **80002953** | BOOM LIGHT-REWORK | 27 |
| | **6246100270** | CABLE ASSEMBLY - BOOM LIGHTS (COMPLETE ASSEMBLY) | 29 |
| 3 | **7826100017** | SOCKET ASSY 5/8" | 31 |
| 5 | **7598100094** | KIT INSTALLATION - iFLEX 5 LMI BOOM | 35 |
| | **9333103873** | CABLE REEL LWG508 - IFLEX 5 | 37 |
| | **9333101437** | ROLLER GUIDE ASSEMBLY | 39 |
| | **9333103565** | BOX ASSEMBLY - JUNCTION | 41 |
| | **9333102633** | FLAG ASSEMBLY - A2B RETAINER (COMPLETE ASSEMBLY) | 43 |
| | **9333102765** | CONNECTOR ASSEMBLY DUMMY PLUG, 2-PIN | 45 |
| 5 | **3486000212** | WEIGHT AND CHAIN ASSEMBLY (COMPLETE ASSEMBLY) | 47 |
| 6 | **7598100004** | KIT-LMI AUXILARY BOOM NOSE | 49 |
| 6 | **3486000212** | WEIGHT AND CHAIN ASSEMBLY (COMPLETE ASSEMBLY) | 51 |
| 7 | **7598100003** | EXTENSION KIT INSTALLATION - BOOM | 55 |
| | **9333102768** | JUNCTION BOX ASSEMBLY - 80MM X 75MM, PG9 + 2-PIN | 57 |
| 8 | **80041279** | LMI BOOM KIT | 59 |
| 8 | **7053100009** | BALL ASSEMBLY - OVERHAUL (7.5 TON) | 61 |
| 9 | **80051901** | LMI TELE-OFF BOOM EXTENSION KIT INSTALLATION | 65 |

# *Manitowoc Cranes*
# MACHINE COMPONENT INDEX

**Date: Oct 31, 2016** **Rev:**

| Model Number | Serial Number |
|---|---|
| **RT540E (40 T** | **280119** |


| Item | Part | Description | Page |
|---|---|---|---|
| 9 | **7826100017** | SOCKET ASSY 5/8" | 67 |
| 10 | **6978100041** | LMI AUX BOOM NOSE KIT INSTL | 69 |
| 11 | **2159910170** | NOSE INSTALLATION - AUXILIARY | 71 |
| | **6718100031** | SHEAVE ASSEMBLY - 5/8" ROPE | 73 |
| 13 | **80024930** | BOOM EXTENSION INSTALLATION 7.9-13.7M | 75 |
| | **80024931** | BOOM EXTENSION ASSEMBLY 7.9-13.7M | 77 |
| | **6718100031** | SHEAVE ASSEMBLY - 5/8" ROPE | 81 |
| | **2159910191** | MAST ASSEMBLY (COMPLETE ASSEMBLY) | 83 |
| | **6718100031** | SHEAVE ASSEMBLY - 5/8" ROPE | 85 |
| 14 | **80023915** | LMI CAB KIT INSTALLATION-IFLEX2 | 89 |
| | **80023913** | LMI CAB KIT, IFLEX2, EXPERT | 93 |
| 14 | **2159910193** | CARRIER INSTALLATION - JIB EXTENSION | 97 |
| 16 | **80049534** | BOOM MOUNT INSTALLATION | 99 |
| | | **SUPERSTRUCTURE** | |
| 1 | **80030455** | TURNTABLE & DRIVE INSTALLATION (ROTEK) | 101 |
| | **7576134386** | MOTOR ASSEMBLY - SWING DRIVE (COMPLETE ASSEMBLY) | 107 |
| 2 | **2159210121** | LOCK INSTALLATION - 360 SWING | 111 |
| | **2165210021** | LOCK ASSEMBLY - SWING (COMPLETE ASSEMBLY) | 113 |
| 3 | **80034580** | COUNTERWEIGHT INSTALLATION | 115 |
| 4 | **80041780** | ELECTRIC, WATER & HYDRAULIC SWIVEL INSTALLATION | 117 |
| | **80041779** | ELECTRIC, WATER & HYDRAULIC SWIVEL ASSEMBLY | 119 |
| | **80025416** | SWIVEL ASSY-14 PORT HYD ASSY. | 121 |
| 5 | **80033344** | CONTROL VALVE INSTALLATION | 123 |
| | **80039533** | DIRECTIONAL CONTROL VALVE | 125 |
| | **9926113280** | VALVE ASSY. INLET SECTION | 131 |
| | **80029768** | ACCESSORY MANIFOLD | 133 |
| 5 | **80029622** | T/T PIN LOCK CONTROL INSTALLATION | 137 |
| 6 | **80033427** | HYDRAULIC LINES INSTALLATION MAIN & AUXILIARY HOIST (SUPERSTRUCTURE) | 143 |

# *Manitowoc Cranes*
# MACHINE COMPONENT INDEX

**Date: Oct 31, 2016** **Rev:**

| Model Number | Serial Number |
|---|---|
| **RT540E (40 T** | **280119** |


| Item | Part | Description | Page |
|---|---|---|---|
| 7 | **6974100178** | HOIST INSTALLATION - MAIN AND AUXILIARY (C.E. CONFORMITY) | 151 |
| | **7974100039** | HOIST ASSEMBLY - HP15C/17G WITH 3RD WRAP (COMPLETE ASSEMBLY) | 155 |
| | **90013061** | ROLLER ASSY. IDLER GROUP | 161 |
| 8 | **2159210143** | BOLT INSTALLATION - BEARING | 163 |
| 8 | **2159210000** | MIRROR INSTALLATION - HOIST | 165 |
| 9 | **2159210000** | MIRROR INSTALLATION - HOIST | 167 |
| 10 | **2159210116** | CYLINDER INSTALLATION-LOWER PIVOT & LIFT | 169 |
| | **80092942** | LIFT CYLINDER ASSEMBLY | |
| 11 | **7598100092** | KIT - LMI S/S IFLEX 5 | 171 |
| 11 | **80029598** | HYDRAULIC LINES INSTALLATION-CAB | 173 |
| 11 | **6258100005** | BINDER INSTALLATION | 175 |
| 12 | **6978100727** | KIT INSTALLATION - iFLEX 5 LMI SUPERSTRUCTURE | 177 |
| 13 | **80047682** | HEATER & AIR CONDITION INSTALLATION (SUPERSTRUCTURE) | 179 |
| | **80026821** | AIR COND LINES KIT - S/S | 181 |
| | **80027884** | A/C CONDENSER-VERT. MTG. 24V. | 183 |
| 14 | **80041087** | VALVE COVER COMPS INSTALLATION | 185 |
| 14 | **80041086** | VALVE COVER INSTALLATION | 187 |
| 15 | **80035982** | ESI-SUPERSTRUCTURE | 193 |
| | **80030317** | HARNESS ASSEMBLY-SS | 199 |
| | **80001293** | DIODE (MODIFIED) | 203 |
| 17 | **80054738** | 360 SWING LOCK PEDAL INSTALL | 205 |
| | **7683000610** | PEDAL ASSEMBLY - FOOT (COMPLETE ASSEMBLY) | 207 |
| 20 | **80032919** | TURNTABLE BEARING LUBE INSTALLATION | 209 |
| 25 | **2159210134** | LIGHT INSTALLATION - STROBE | 211 |
| | **6581100074** | LIGHT ASSEMBLY - MODIFIED STROBE (COMPLETE ASSEMBLY) | 213 |
| 36 | **80031321** | WASHER BOTTLE INSTALLATION | 215 |
| | | **SUPERSTRUCTURE CAB** | |
| 1 | **80058644** | CAB ASSEMBLY-24V BRAZIL | 217 |

# *Manitowoc Cranes*
# MACHINE COMPONENT INDEX

**Date: Oct 31, 2016** **Rev:**

| Model Number | Serial Number |
|---|---|
| **RT540E (40 T** | **280119** |


| Item | Part | Description | Page |
|---|---|---|---|
| | **80058646** | CAB SUB-ASSEMBLY - (SG-24V) | 225 |
| | **80024013** | GLASS DOOR ASSEMBLY | 229 |
| | **80003325** | SKYLIGHT ASSEMBLY - SLIDING (COMPLETE ASSEMBLY) | 233 |
| | **80023695** | WINDOW ASSEMBLY - SIDE RH | 235 |
| | **80004174** | WINDOW ASSEMBLY - REAR (COMPLETE ASSEMBLY) | 237 |
| | **80004448** | KIT - SKYLIGHT WIPER (24 VOLT) (COMPLETE ASSEMBLY) | 239 |
| | **80004449** | KIT - FRONT WIPER (24 VOLT) (COMPLETE ASSEMBLY) | 241 |
| | **80037618** | HEATER & A/C INSTALLATION - SUPERSTRUCTURE CAB (24 VOLT) | 245 |
| | **80042060** | 24V HEATER/COOL KIT | 251 |
| | **80023693** | ACOUSTICS INSTALLATION (SG) | 255 |
| | **80046522** | CAB MISC COMPONENTS | 257 |
| | **80058561** | CAB BRACKETS INSTALLATION | 259 |
| | **80042879** | PEDAL GROUP INSTALLATION | 263 |
| | **80040090** | SWING BRAKE PEDAL-5V | 265 |
| | **80040089** | PEDAL, THROTTLE 5V | 267 |
| | **7926100912** | VALVE ASSEMBLY - BRAKE TREADLE (COMPLETE ASSEMBLY) | 269 |
| | **80023681** | CAB CRANESTAR INSTALLATION | 271 |
| | **80054540** | PROTECTIVE TAPE STRIP INSTALL | 273 |
| 2 | **80029611** | CONTROL SEAT INSTALLATION-DUAL AXIS WITH AUXILIARY HOIST | 275 |
| | **80029612** | CONTROL SEAT ASSEMBLY-DUAL AXIS WITH AUXILIARY HOIST | 279 |
| | **6872100045** | SWITCH ASSEMBLY - PROXIMITY (NORMALLY OPEN) (COMPLETE ASSEMBLY) | 283 |
| | **80004322** | CONTROLLER ASSEMBLY - 8-32 VOLT RIGHT HAND ARMREST (COMPLETE ASSEMBLY) | 285 |
| | **80004326** | CONTROLLER ASSEMBLY - 8-32 VOLT LEFT HAND ARMREST WITH AUXILIARY HOIST (COMPLETE ASSEMBLY) | 287 |

# *Manitowoc Cranes*
# MACHINE COMPONENT INDEX

**Date: Oct 31, 2016** **Rev:**

| Model Number | Serial Number |
|---|---|
| **RT540E (40 T** | **280119** |


| Item | Part | Description | Page |
|---|---|---|---|
| | **80030292** | HARNESS ASSEMBLY-SEAT | 291 |
| | **80046456** | SEAT | 293 |
| | **80027886** | HEATER & CONTROL PANEL (24V) | 297 |
| 4 | **80024119** | PLASTIC COVERS INSTALLATION | 299 |
| 6 | **6683100033** | PEDAL INSTALLATION - BOOM TELESCOPE | 301 |
| | **7683100010** | PEDAL ASSEMBLY - ELECTRONIC TELESCOPE (COMPLETE ASSEMBLY) | 303 |
| 7 | **80029575** | DRIVE CONTROLS INSTALLATION | 305 |
| | **80027907** | STEERING COLUMN W/ CLUSTER | 309 |
| | **7926100899** | VALVE ASSEMBLY - STEERING CONTROL (COMPLETE ASSEMBLY) | 313 |
| 8 | **80011030** | BOOM LIGHT SWITCH | 315 |
| 13 | **80008131** | LMI INTERNAL LIGHT BAR INSTALLATION | 317 |
| 18 | **2159210210** | HANDLE INSTALLATION HOIST ACCESS | 319 |
| 18 | **80052128** | ESI - CAB | 325 |
| | **80043366** | PANEL ASSEMBLY FUSE & RELAY | 331 |
| | **80043367** | HARNESS ASSEMBLY-FUSE & RELAY | 341 |
| | **80052124** | PANEL ASM OVERHEAD | 345 |
| | **80023422** | HARNESS ASSEMBLY-OVERHEAD CAB PANEL | 349 |
| | **80030293** | PANEL ASSY-FRONT CONSOLE | 351 |
| | **80023710** | HARNESS ASSEMBLY-FRONT PANEL CAB | 355 |
| | **80042878** | HARNESS ASSEMBLY-SUPERSTRUCTURE CAB | 359 |
| 19 | **80019937** | REAR CAB COVER INSTALLATION | 363 |
| 19 | **80035879** | 3RD WRAP INDICATOR INSTALLATION | 365 |
| 20 | **80042777** | FIRE EXTINGUISHER INSTALLATION | 367 |
| | **80043532** | FIRE EXTINGUISHER ASSEMBLY | 369 |
| 21 | **80049878** | HARNESS-SWING BRAKE JUMPER | 371 |
| 22 | **80049393** | REWORK-BRAKE PEDAL | 373 |
| | **80048017** | ROLLER ASSEMBLY | 375 |
| 34 | **80017157** | CAB INSTALLATION-COMPONENTS | 377 |
| 35 | **80056055** | HEATER LINES INSTALLATION-CAB | 379 |
| 37 | **80016297** | CAB CRANESTAR INSTALLATION | 383 |
| | **80018267** | TCU AND SAT ANTENNA KIT | 385 |

# *Manitowoc Cranes*
# MACHINE COMPONENT INDEX

**Date: Oct 31, 2016** **Rev:**

| Model Number | Serial Number |
|---|---|
| **RT540E (40 T** | **280119** |


| Item | Part | Description | Page |
|---|---|---|---|
| | | **LOWERWORKS/CARRIER** | |
| 1 | **80055514** | CARRIER FRAME COMPLETE | 387 |
| | **80055512** | FRAME ASSEMBLY | 389 |
| | **80053696** | OUTRIGGER BEAM INSTALL | 391 |
| | **80053694** | OUTRIGGER BEAM ASSEMBLY-BR | 393 |
| | **80044364** | CYLINDER ASSEMBLY-4.00 JACK | 395 |
| | **80056042** | O/R EXT CYL-COMPLETE ASSY | 397 |
| 2 | **80049681** | DECKING INSTALLATION-FENDER | 401 |
| | **80025188** | LADDER ASSEMBLY | 405 |
| 3 | **80050848** | ENGINE HOOD INSTALLATION | 407 |
| 4 | **80062019** | O/R FLOAT INSTALLATION | 411 |
| | **80062020** | OUTRIGGER FLOAT ASSEMBLY | 413 |
| 5 | **80032638** | EXTERIOR LIGHTS INSTALLATION-DOM 24V | 415 |
| 6 | **2159110098** | TIE DOWN INSTALLATION - HOOK BLOCK | 417 |
| 7 | **80033034** | BATTERY BOX COVER INSTALLATION | 419 |
| 9 | **2159100686** | MIRROR INSTALLATION - REAR VIEW | 421 |
| 12 | **80049322** | OUTRIGGER CONTROLLER INSTALLATION | 423 |
| | **80049319** | OUTRIGGER CONTROLLER ASSEMBLY | 425 |
| | **6246003053** | CABLE ASSEMBLY | 427 |
| 12 | **6376100272** | HARDWARE KIT - DECAL | 429 |
| 13 | **80058230** | ESI-CARRIER | 437 |
| | **80054011** | WIRING HARNESS-CARRIER | 455 |
| 14 | **80040443** | HYDRAULIC TANK INSTALLATION | 461 |
| | **80039526** | HYDRAULIC RESERVIOR ASSEMBLY | 463 |
| | **9437100891** | FILTER ASSY. HYD. RETURN | 465 |
| 15 | **80033499** | HYDRAULIC VALVE INSTALLATION | 467 |
| | **7926100906** | VALVE ASSEMBLY - OUTRIGGER CONTROL 4 SECTION (COMPLETE ASSEMBLY) | 469 |
| | **80029763** | PARK BRAKE RANGE SHIFT VALVE | 471 |
| | **80008126** | VALVE-AXLE LOCKOUT | 473 |
| | **80029764** | O/R REAR STEER VALVE | 477 |
| 16 | **80034278** | HYDRAULIC LINES INSTALLATION | 485 |

# *Manitowoc Cranes*
# MACHINE COMPONENT INDEX

**Date: Oct 31, 2016** **Rev:**

| Model Number | Serial Number |
|---|---|
| **RT540E (40 T** | **280119** |


| Item | Part | Description | Page |
|---|---|---|---|
| | **80010095** | SOLENOID VALVE ASSEMBLY | 493 |
| 17 | **80031650** | STORAGE TRAY WITH MAT INSTALLATION | 495 |
| 18 | **80056752** | REAR AXLE INSTALLATION W/O DIFFERENTIAL LOCK | 497 |
| | **80054429** | DRIVE STEER AXLE | 501 |
| | **9049112776** | DIFF. CARRIER GROUP | 503 |
| | **90026471** | AXLE HOUSING GROUP | 507 |
| | **90026729** | HUB & SHAFT GROUP | 511 |
| | **9049112516** | BRAKE GROUP | 515 |
| | **9049112523** | BRAKE ASSEMBLY,GROUP | 517 |
| | **80047322** | CYL ASSEMBLY-2.50 STEER BR | 519 |
| | **80047331** | CYLINDER - LOCKOUT BR | 523 |
| 19 | **80057652** | FRONT AXLE INSTALLATION WITHOUT DIFFERENTIAL LOCK | 525 |
| | **80054429** | DRIVE STEER AXLE | 527 |
| | **9049112776** | DIFF. CARRIER GROUP | 529 |
| | **90026471** | AXLE HOUSING GROUP | 533 |
| | **90026729** | HUB & SHAFT GROUP | 537 |
| | **9049112516** | BRAKE GROUP | 541 |
| | **9049112523** | BRAKE ASSEMBLY,GROUP | 543 |
| | **80047322** | CYL ASSEMBLY-2.50 STEER BR | 545 |
| 21 | **80011142** | DRIVE LINE INSTALLATION | 547 |
| | **80000554** | DRIVE LINE ASSEMBLY WITH CENTER BEARING (COMPLETE ASSEMBLY) | 549 |
| | **80000556** | DRIVE LINE ASSEMBLY (COMPLETE ASSEMBLY) | 551 |
| | **7364100166** | DRIVE LINE ASSEMBLY (COMPLETE ASSEMBLY) | 553 |
| 22 | **80056046** | ENGINE INSTALLATION-BRAZIL | 555 |
| | **80056047** | ENGINE ASSEMBLY-BRAZIL | 559 |
| | **80029525** | TRANSMISSION | 565 |
| | **9904110609** | CONVERTER HOUSING GROUP | 567 |
| | **9904109807** | CASE & REAR COVER GROUP | 569 |
| | **9904110611** | TURBINE SHAFT GROUP | 573 |

# *Manitowoc Cranes*
# MACHINE COMPONENT INDEX

**Date: Oct 31, 2016** **Rev:**

| Model Number | Serial Number |
|---|---|
| **RT540E (40 T** | **280119** |


| Item | Part | Description | Page |
|---|---|---|---|
| | **9904110612** | DRIVE PLATE GROUP | 575 |
| | **9904110613** | TORQUE CONVERTER GROUP | 577 |
| | **9904110614** | GEAR GROUP | 579 |
| | **9904110615** | AUXILIARY PUMP DRIVE GROUP | 581 |
| | **9904110616** | PUMP DRIVE GROUP | 583 |
| | **9904110617** | FORWARD SHAFT GROUP | 585 |
| | **9904110618** | REVERSE & 2ND. SHAFT GROUP | 587 |
| | **9904110619** | REVERSE IDLER GROUP | 589 |
| | **9904110620** | LOW SPEED SHAFT GROUP | 591 |
| | **9904110621** | 3RD. SHAFT GROUP | 593 |
| | **9904110622** | IDLER SHAFT GROUP | 595 |
| | **90015440** | OUTPUT SHAFT GROUP | 597 |
| | **9904110624** | HI/LOW RANGE SHIFT CONT. GROUP | 601 |
| | **9904110625** | DISC BRAKE GROUP | 603 |
| | **90023152** | CHARGING PUMP GROUP | 605 |
| | **90013617** | CONTROL VALVE MOUNTING GROUP 24 VOLT | 607 |
| | **90023154** | CONTROL VALVE ASSY.GROUP 24V. | 609 |
| | **7722100101** | PUMP ASSEMBLY - GEAR (COMPLETE ASSEMBLY) | 611 |
| | **7722100100** | PUMP ASSEMBLY - PISTON (COMPLETE ASSEMBLY) | 613 |
| | **80033489** | PUMP ASS'Y WITH FLOW DIVIDER | 617 |
| | **80038095** | ESI-ENGINE | 621 |
| | **80047418** | WIRING HARNESS-ENGINE T3 | 625 |
| | **80051988** | BRAKE-PARK ASSY W/O SPACER | 629 |
| | **7437100235** | FILTER ASSEMBLY (COMPLETE ASSEMBLY) | 631 |
| 23 | **80056048** | RADIATOR INSTALLATION-BRAZIL | 633 |
| | **80056049** | RADIATOR ASSEMBLY-BRAZIL | 637 |
| 24 | **80056051** | FUEL TANK INSTALLATION-T3 | 639 |
| | **80050972** | FUEL TANK | 641 |
| | **7576001743** | MOUNTING KIT - OIL COOLER | 643 |
| 25 | **80047471** | BATTERY BOX INSTALLATION | 645 |

# *Manitowoc Cranes*
# MACHINE COMPONENT INDEX

**Date: Oct 31, 2016** **Rev:**

| Model Number | Serial Number |
|---|---|
| **RT540E (40 T** | **280119** |


| Item | Part | Description | Page |
|---|---|---|---|
| | **80047472** | BATTERY BOX ASSEMBLY | 647 |
| | **80034165** | FUSE PANEL ASSEMBLY | 651 |
| | **80023449** | HARNESS ASSEMBLY-ENGINE RELAY PANEL | 653 |
| | **80033011** | BATTERY CABLE KIT | 655 |
| 26 | **80061488** | EXHAUST SYSTEM INSTALLATION | 657 |
| 27 | **80056054** | AIR CLEANER INSTALLATION-BRZ | 659 |
| | **80018496** | AIR CLEANER ASSEMBLY | 663 |
| 28 | **80030841** | AIR CONDITION INSTALLATION-CARRIER | 665 |
| | **80029872** | COMPRESSOR(FREON)-24V PAD, KIT | 667 |
| | **80029848** | A/C HOSE KIT-CARRIER | 669 |
| 28 | **80034020** | HYDRAULIC OIL COOLER INSTALL | 671 |
| | **80033850** | HYDRAULIC OIL COOLER | 673 |
| 29 | **80031249** | ENGINE HOOD GRILL INSTALLATION | 675 |
| 32 | **80028277** | BLOCK HEATER INSTALLATION-QSB 120V | 677 |
| 33 | **80030378** | STEP INSTALLATION-HOIST ACCESS | 679 |
| 37 | **80030594** | OIL COOLER INSTALLATION | 681 |
| | **80030569** | OIL COOLER-TRANSMISSION | 683 |
| 39 | **80058514** | OMS INSTALLATION | 685 |
| | **80038231** | STRING POT INSTALLATION | 687 |
| | | **LOOSE SHIP ITEMS** | |
| 1 | **7782161382** | 16MM DIA HOISTING WIRE ROPE - | 689 |
| 2 | **7782161382** | 16MM DIA HOISTING WIRE ROPE - | 691 |
| 7 | **7086100148** | HOOK BLOCK ASSEMBLY - 40 TON 3 SHEAVE (COMPLETE ASSEMBLY) | 693 |
| | | **SPECS/SCHEMATICS** | |
| 1 | **80029889** | ELECTRICAL SCHEMATIC RT540E | |
| 16 | **80031939** | CRANESTAR SOFTWARE UPDATE GUID | NO DWG |
| | | **DECALS** | |
| 1 | **80039075** | DECAL INSTALLATION-FRENCH | 699 |
| 2 | **80028004** | DECAL INSTALLATION-RT540E NOMENCLATURE | 703 |
| 4 | **80039114** | DECAL INSTALLATION-PORTUGUESE | 709 |

**Notes**

# *Manitowoc Cranes*

Description
**BOOM ASSY COMPLETE (102')**

Assembly No.
**80049529**
Revision: **B**

| Item | FN | Part | Qty | Description |
|---|---|---|---|---|
| 1 | + | **80074611** | 1 | BOOM ASSEMBLY |
| 2 | + | **80049532** | 1 | BOOM PIVOT INSTALLATION |
| 3 | + | **2159910036** | 1 | INDICATOR INSTALLATION - BOOM ANGLE |

**+ SEE FURTHER BREAKDOWN THIS GROUP**

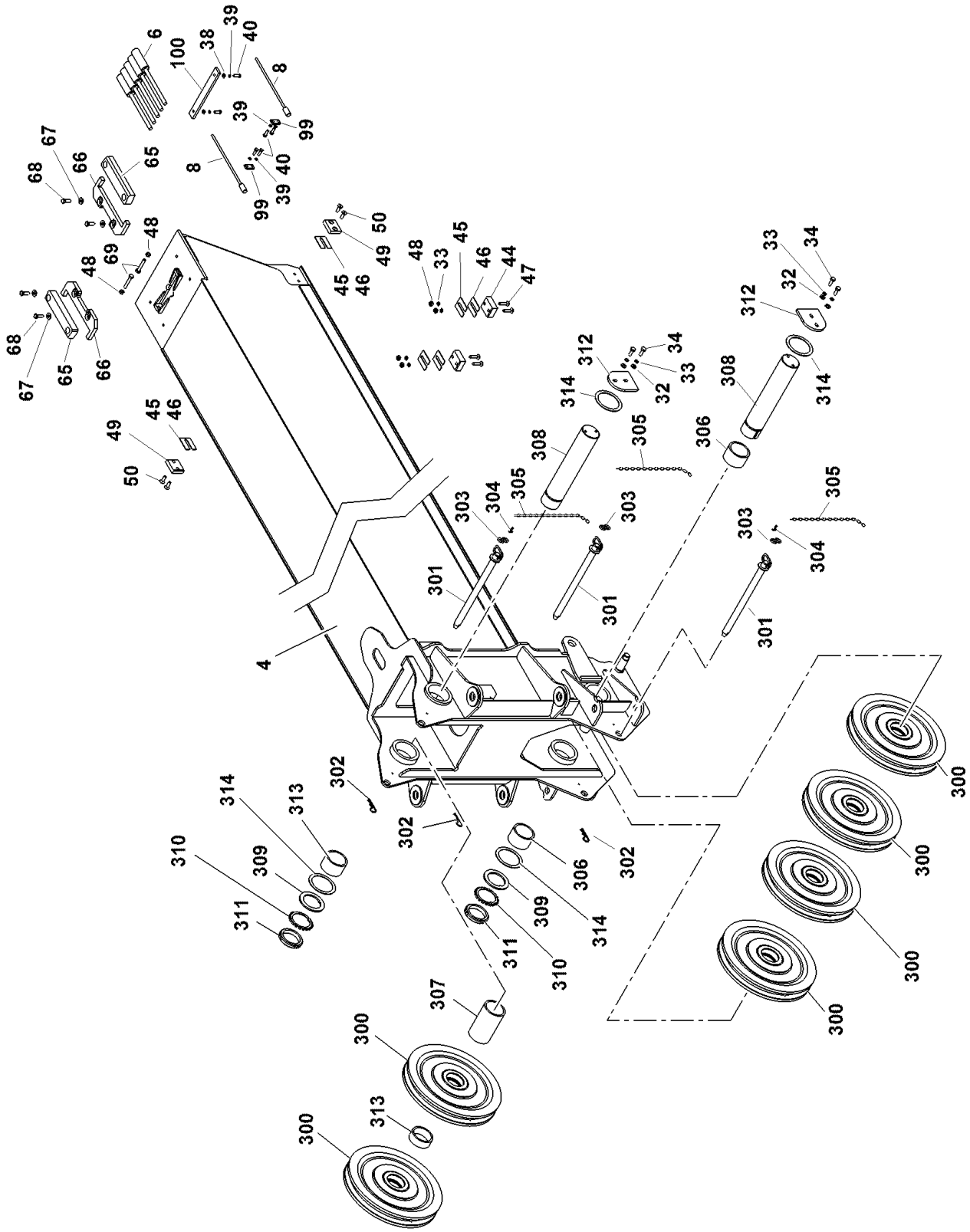


80074611

(SHEET 5 OF 5)

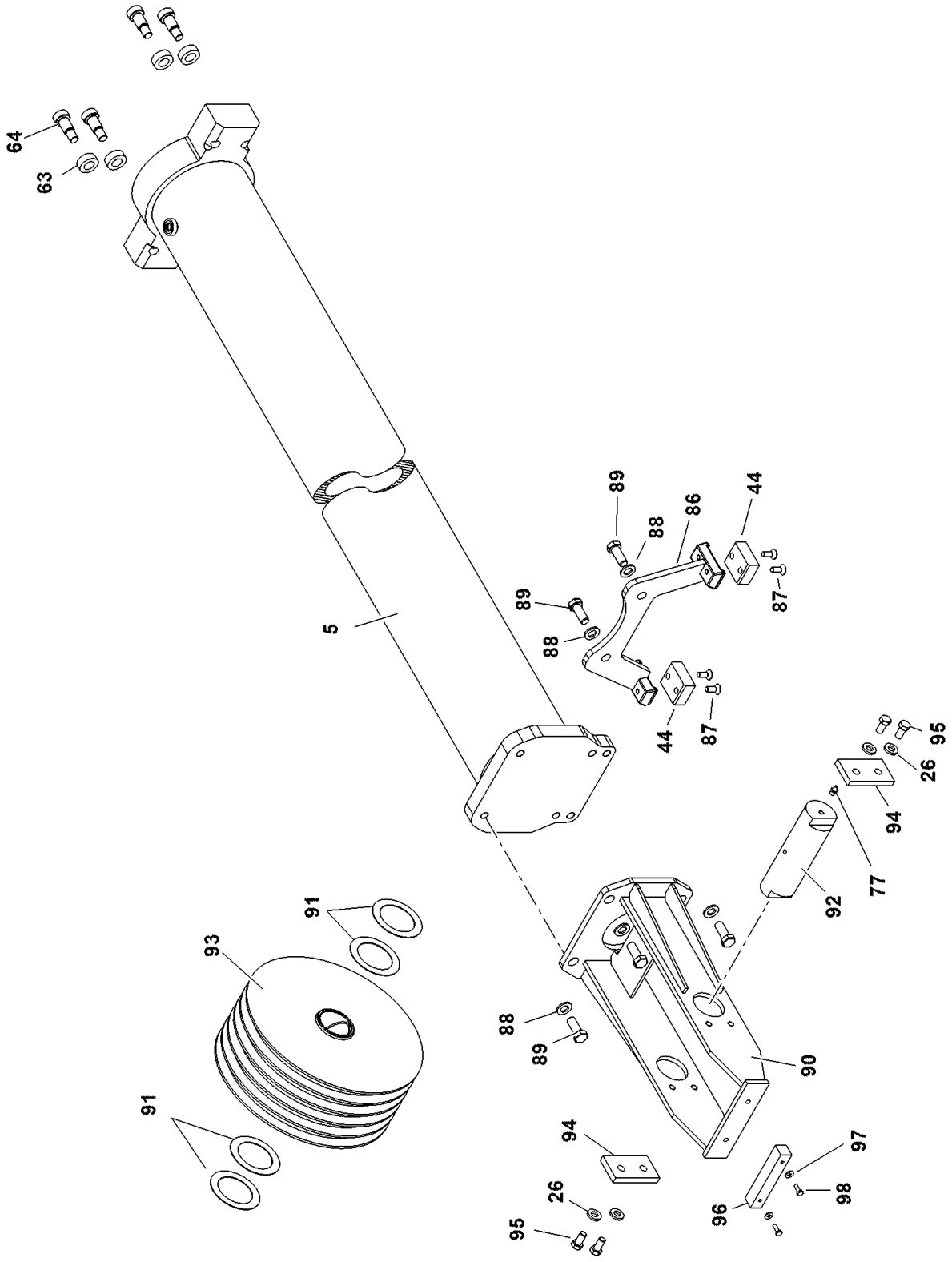


80074611

(SHEET 4 OF 5)

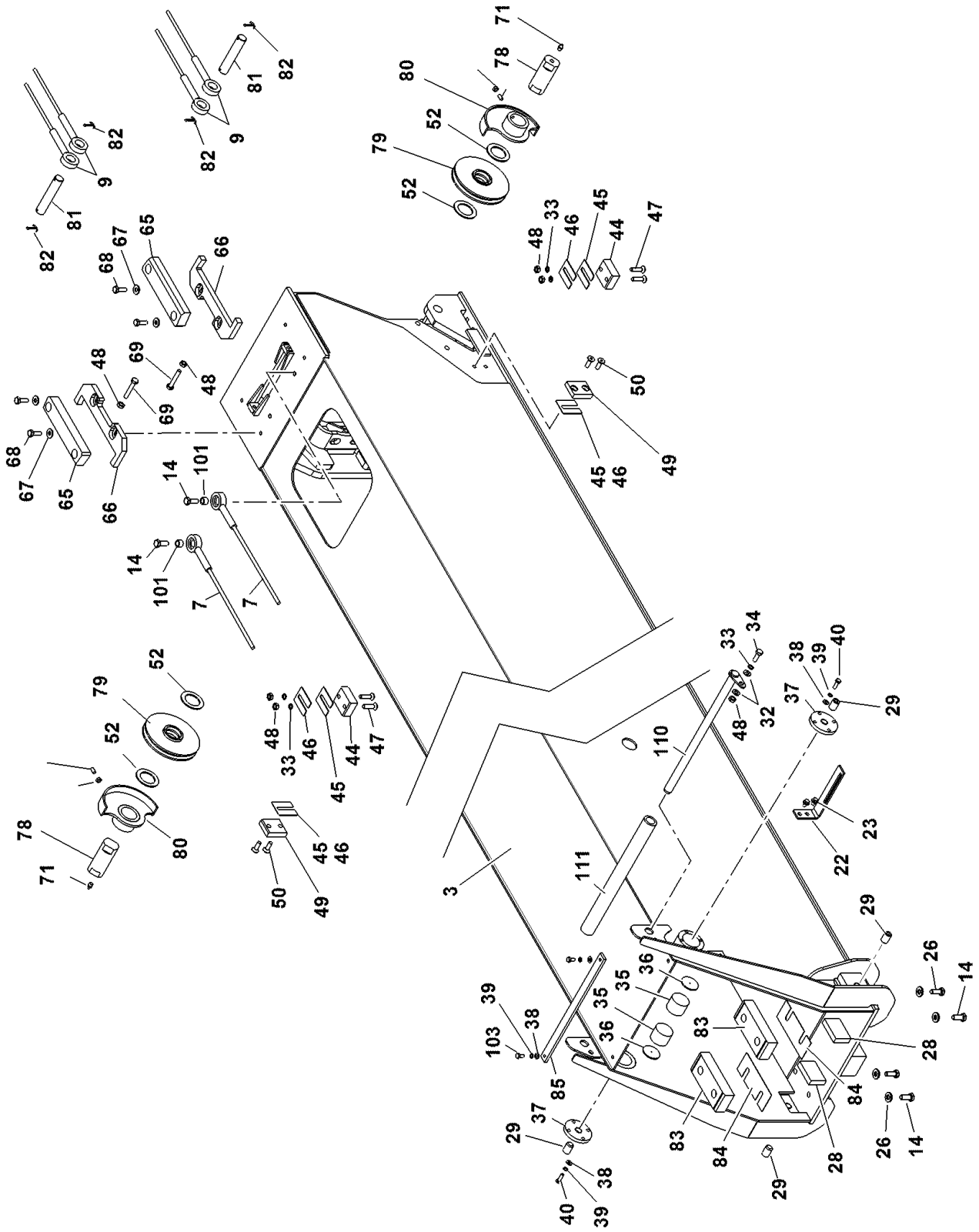


80074611

(SHEET 3 OF 5)

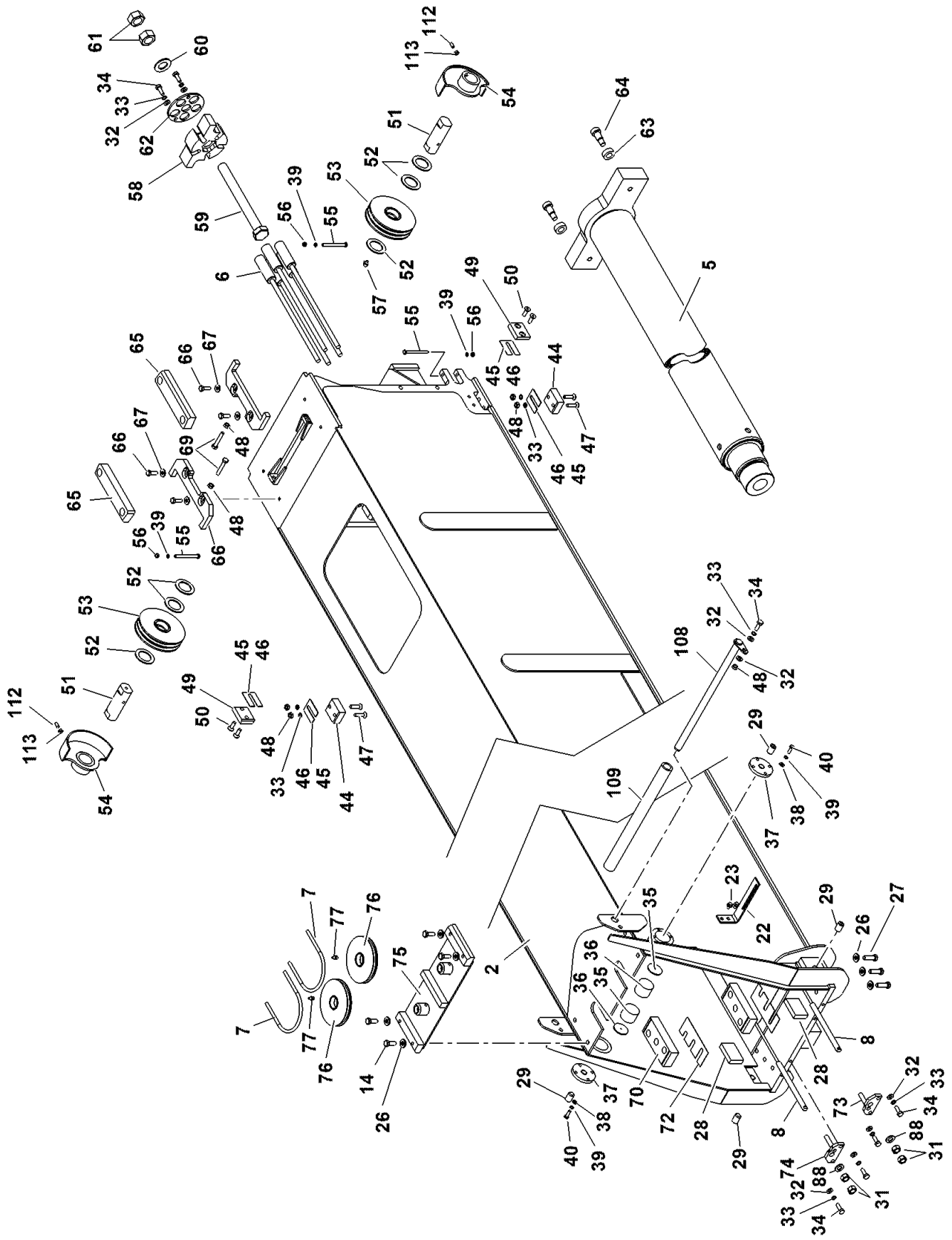

80074611

(SHEET 2 OF 5)

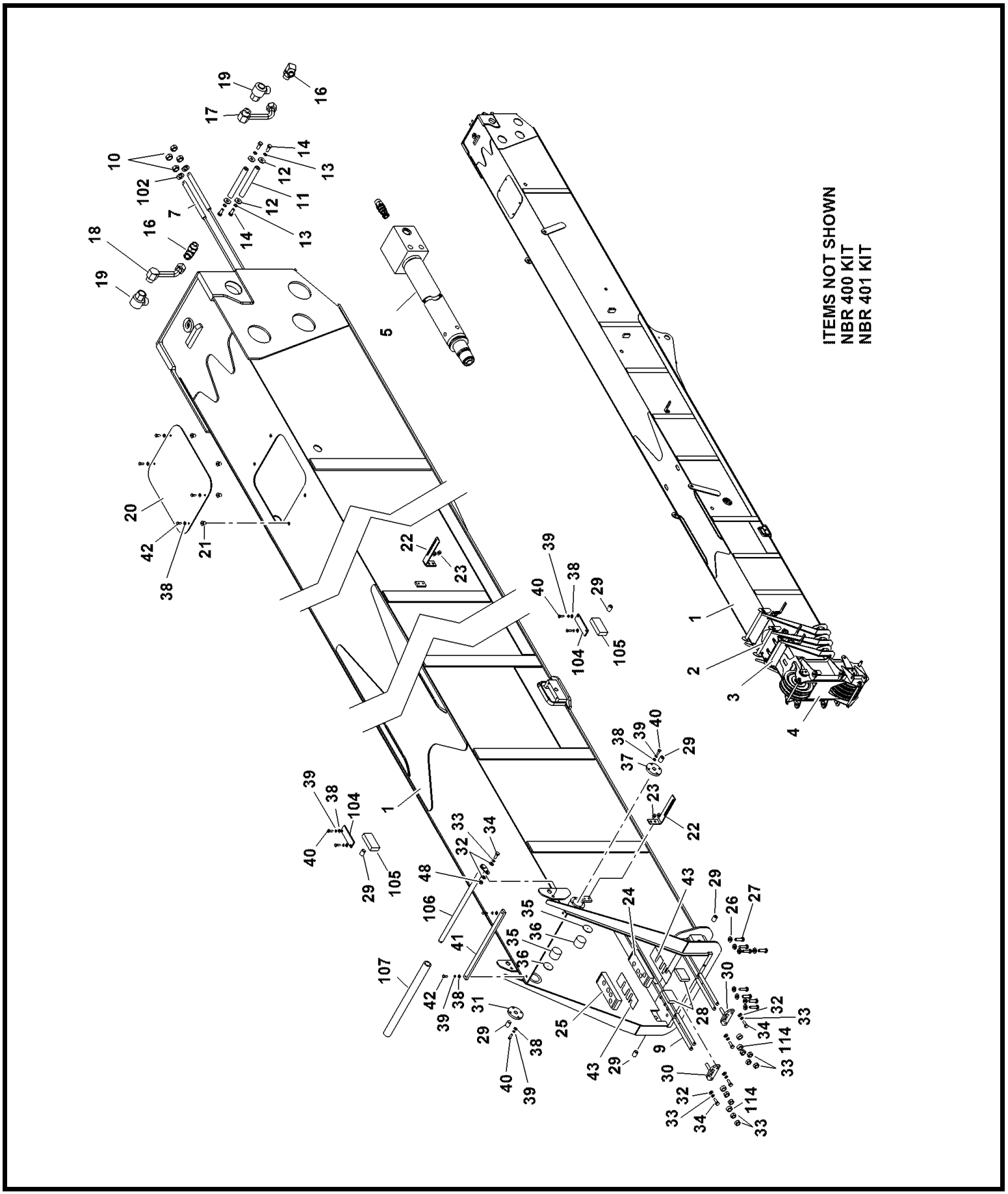


80074611

(SHEET 1 OF 5)

Description
**BOOM ASSEMBLY**

Assembly No.
**80074611**
Revision: **D**

| Item | FN | Part | Qty | Description |
|---|---|---|---|---|
| 1 | | **80040123** | 1 | BASE BOOM |
| 2 | | **80058308** | 1 | INNER MID WELD |
| 3 | | **80058309** | 1 | OUTER MID WELD |
| 4 | | **80040127** | 1 | BOOM NOSE TO FLY |
| 5 | + | **80046908** | 1 | TELE HYDRAULIC CYLINDER ASSY |
| 6 | | **7246100338** | 5 | CABLE ASSY, EXTEND |
| 7 | | **7246100417** | 2 | CABLE, 9.5MM DIA SYNCHRO |
| 8 | | **7246100415** | 2 | CABLE, 8MM DIA RETARCT |
| 9 | | **7246100416** | 4 | CABLE, 8MM DIA RETRACT |
| 10 | | **7661270004** | 4 | NUT |
| 11 | | **80017569** | 2 | PIN TELE ROD END |
| 12 | | **7950180161** | 4 | FLAT WASHER, 1/2" I.D. |
| 13 | | **7951210210** | 4 | LOCK WASHER, 12MM I.D. |
| 14 | | **7127211353** | 14 | CAP SCREW,M12X30-10.9 |
| 16 | | **7447161603** | 2 | ELBOW, 90 DEGREE MALE<br>INCLUDES THE FOLLOWING PARTS |
| | | **7755021002** | 1 | O-RING |
| | | **7755916002** | 1 | O-RING |
| 17 | | **7910101455** | 1 | TUBE ASSY, TELE CYL PISTON |
| 18 | | **7910101456** | 1 | TUBE ASSY, TELE CYL ROD PORT |
| 19 | | **7364002614** | 2 | JOINT, 90 DEGREE LIVE SWIVEL |
| 20 | | **4159910619** | 1 | COVER |
| 21 | | **7429100012** | 4 | NUT, 8MM WELL |
| 24 | ** | **80074465** | 1 | WEAR PAD |
| 25 | ** | **80074468** | 1 | WEAR PAD |
| 26 | | **7949000235** | 26 | WASHER, 1/2" I.D. FLAT |
| 27 | | **7127211553** | 18 | HHCS M12x40 -10.9 ISO 4017 |
| 28 | | **7671100021** | 6 | PAD, SIDE WEAR |
| 29 | | **7786160804** | 14 | SET SCREW |
| 30 | | **2159910131** | 2 | ANCHOR |
| 31 | | **7661240004** | 12 | NUT, M16 CLASS 10 |
| 32 | | **7951190014** | 20 | FLAT WASHER, 10MM I.D. |
| 33 | | **7951190210** | 33 | LOCK WASHER, 10MM |
| 34 | | **7126191353** | 17 | CAP SCREW, M10 X 30MM HEX HEAD |

**+ SEE FURTHER BREAKDOWN THIS GROUP** *** REPAIR KIT AND/OR PART OF KIT**

Description
**BOOM ASSEMBLY**

Assembly No.
**80074611**
Revision: **D**

| Item | FN | Part | Qty | Description |
|---|---|---|---|---|
| 35 | * | **6671000236** | 6 | PAD, WEAR |
| 36 | | **4159110165** | 6 | PLATE |
| 37 | | **4159110164** | 6 | PLATE, ADJUSTING |
| 38 | | **7951170014** | 38 | WASHER, FLAT #8 |
| 39 | | **7951170210** | 42 | WASHER, LOCK 8MM |
| 40 | | **7126171253** | 30 | CAP SCREW, M8X25 HEX HEAD |
| 41 | | **4159910612** | 1 | PLATE, KICKBACK |
| 42 | | **7126171153** | 4 | CAP SCREW, M8 X 20MM HEX HEAD |
| 43 | | **4159910549** | 0 | SHIM, 4 HOLE 1MM |
| 44 | * | **6671000177** | 8 | WEAR PAD |
| 45 | | **4159910262** | 10 | SHIM, 2MM SIDE PAD |
| 46 | | **4159910261** | 12 | SHIM, 1MM SIDE PAD |
| 47 | | **7127191555** | 12 | CAP SCREW, M10X40 -10.9 |
| 48 | | **7661190003** | 21 | NUT, HEX 10MM |
| 49 | * | **6671000166** | 6 | PAD, WEAR |
| 50 | | **7127191355** | 12 | CAP SCREW,M10X30 |
| 51 | | **80017570** | 2 | PIN |
| 52 | | **7949000333** | 10 | WASHER, THRUST |
| 53 | | **6718100017** | 2 | SHEAVE<br>INCLUDES THE FOLLOWING PARTS |
| | | **6069100001** | 1 | BEARING |
| 54 | | **80046500** | 2 | GUARD |
| 55 | | **7126172550** | 4 | CAP SCREW, M8X90 |
| 56 | | **7661170003** | 2 | NUT |
| 57 | | **7440000400** | 2 | FITTING, 90 DEGREE GREASE |
| 58 | | **4159910571** | 1 | PLATE, CABLE ANCHOR |
| 59 | | **7099100052** | 1 | BOLT, 30MM |
| 60 | | **7949000230** | 1 | WASHER, 1 1/8" I.D. |
| 61 | | **7661340004** | 2 | NUT, M30X3.5 CLASS 10 HEX |
| 62 | | **4159910260** | 1 | PLATE, ROUND KEEPER |
| 63 | | **6199100098** | 6 | BUSHING |
| 64 | | **7128271358** | 6 | SET SCREW, M20X30-12.9 |
| 65 | ** | **80074464** | 6 | WEAR PAD ASSY |
| 66 | | **4165910219** | 6 | HOLDER, PAD |
| 67 | | **7949000377** | 12 | WASHER, 3/8" I.D. |

*** REPAIR KIT AND/OR PART OF KIT**

Description
**BOOM ASSEMBLY**

Assembly No.
**80074611**
Revision: **D**

| Item | FN | Part | Qty | Description |
|---|---|---|---|---|
| 68 | | **7127191353** | 12 | CAP SCREW, M10 X 30 |
| 69 | | **7126191953** | 6 | CAP SCREW, M10X60 -8.8 |
| 70 | ** | **80074467** | 1 | WEAR PAD |
| 71 | ** | **80074469** | 1 | WEAR PAD |
| 72 | | **4159910616** | 0 | SHIM, 3 HOLE 1MM |
| 73 | | **2159910166** | 1 | ANCHOR, LEFT HAND |
| 74 | | **2159910167** | 1 | ANCHOR, RIGHT HAND |
| 75 | | **80012761** | 1 | SHEAVE MOUNTING |
| 76 | | **6718100000** | 2 | SHEAVE<br>INCLUDES THE FOLLOWING PARTS |
| | | **6069100000** | 1 | BEARING |
| 77 | | **7440000000** | 5 | FITTING, 1/8 STRAIGHT GREASE |
| 78 | | **80017571** | 2 | PIN |
| 79 | | **6718100015** | 2 | SHEAVE<br>INCLUDES THE FOLLOWING PARTS |
| | | **7069100041** | 1 | BEARING |
| 80 | | **80046498** | 2 | CABLE RETAINER |
| 81 | | **80017568** | 2 | PIN |
| 82 | | **7690082410** | 4 | PIN, COTTER<br>5/32" X 1 1/2" |
| 83 | ** | **80074466** | 2 | WEAR PAD |
| 84 | | **4159910551** | 0 | SHIM, 2 HOLE 1MM |
| 85 | | **4159910613** | 1 | PLATE, KICKBACK |
| 86 | | **2159910181** | 1 | FOOT, TELESCOPE CYLINDER |
| 87 | | **7111160807** | 4 | SCREW, MACHINE<br>3/8" - 16 N.C. X 1"<br>GRADE 1 |
| 88 | | **7949000617** | 8 | WASHER, 5/8" I.D. |
| 89 | | **7127241550** | 6 | CAP SCREW, M16 X 40MM HEX HEAD |
| 90 | | **2155910039** | 1 | MOUNT, SHEAVE |
| 91 | | **6949001174** | 6 | PLATE, SPACER |
| 92 | | **4155910024** | 1 | SHAFT, SHEAVE |
| 93 | * | **6718100006** | 1 | SHEAVE ASSY, 5 GROOVE<br>INCLUDES THE FOLLOWING PARTS |
| | * | **7069100031** | 1 | BEARING |
| 94 | | **6705006974** | 2 | PLATE |
| 95 | | **7118180850** | 4 | CAP SCREW,<br>1/2" - 13 N.C. X 1" |

*** REPAIR KIT AND/OR PART OF KIT**

Description
**BOOM ASSEMBLY**

Assembly No.
**80074611**
Revision: **D**

| Item | FN | Part | Qty | Description |
|---|---|---|---|---|
| | | | | GRADE 8 |
| 96 | | **4140900205** | 1 | RETAINER |
| 97 | | **7950140141** | 2 | WASHER, FLAT 1/4" PLAIN NARROW |
| 98 | | **7115140650** | 2 | CAP SCREW,<br>1/4" - 20 N.C. X 3/4"<br>GRADE 5 |
| 99 | | **4165910073** | 2 | PLATE, KEEPER |
| 100 | | **4159901579** | 1 | PLATE, KEEPER |
| 101 | | **6199100030** | 2 | BUSHING |
| 102 | | **7949000236** | 2 | FLAT WASHER, 3/4" |
| 103 | | **7126171053** | 2 | CAP SCREW, M8 X 16MM HEX HEAD |
| 104 | | **4159900070** | 2 | PLATE, LOCK |
| 105 | | **6671000266** | 2 | PAD, WEAR |
| 106 | | **80026287** | 1 | SHAFT |
| 107 | | **80013553** | 1 | ROLLER, HOIST CABLES |
| 108 | | **80026288** | 1 | SHAFT |
| 109 | | **80020264** | 1 | ROLLER, NYLATRON IM |
| 110 | | **80026289** | 1 | SHAFT OM |
| 111 | | **80020265** | 1 | ROLLER, NYLATRON OM |
| 112 | | **7787172011** | 4 | SCREW,<br>M8 X 20<br>LONG |
| 113 | | **7661170003** | 4 | NUT |
| 114 | | **80049013** | 4 | BUSHING |
| 300 | * | **6718100031** | 6 | SHEAVE ASSEMBLY - 5/8" ROPE |
| 301 | | **7689000023** | 3 | PIN, LOCK HAIR |
| 302 | | **7689000701** | 3 | CLIP, HITCH PIN |
| 303 | | **7601000955** | 3 | S-HOOK, STANDARD |
| 304 | | **7690101610** | 2 | PIN, COTTER<br>3/16" X 1" |
| 305 | | **6286000736** | 3 | CHAIN |
| 306 | | **80018338** | 3 | SPACER |
| 307 | | **80023247** | 1 | SPACER TUBE |
| 308 | | **6810100132** | 2 | SHAFT |
| 309 | | **80022876** | 2 | KEYED WASHER |
| 310 | | **80022875** | 2 | LOCKWASHER |

*** REPAIR KIT AND/OR PART OF KIT**

Description
**BOOM ASSEMBLY**

Assembly No.
**80074611**
Revision: **D**

| Item | FN | Part | Qty | Description |
|---|---|---|---|---|
| 311 | | **80022874** | 2 | LOCKNUT |
| 312 | | **4159910026** | 2 | CAP, END |
| 313 | | **80018339** | 1 | SPACER |
| 314 | | **4159900304** | 4 | SHIM (.0544") |
| 400 | * | **80074677** | 1 | KIT - BOOM WEAR PAD 2 OVER 4 |
| 401 | ** | **80074694** | 1 | KIT - BOOM WEAR PAD (NSM) |

*** REPAIR KIT AND/OR PART OF KIT**

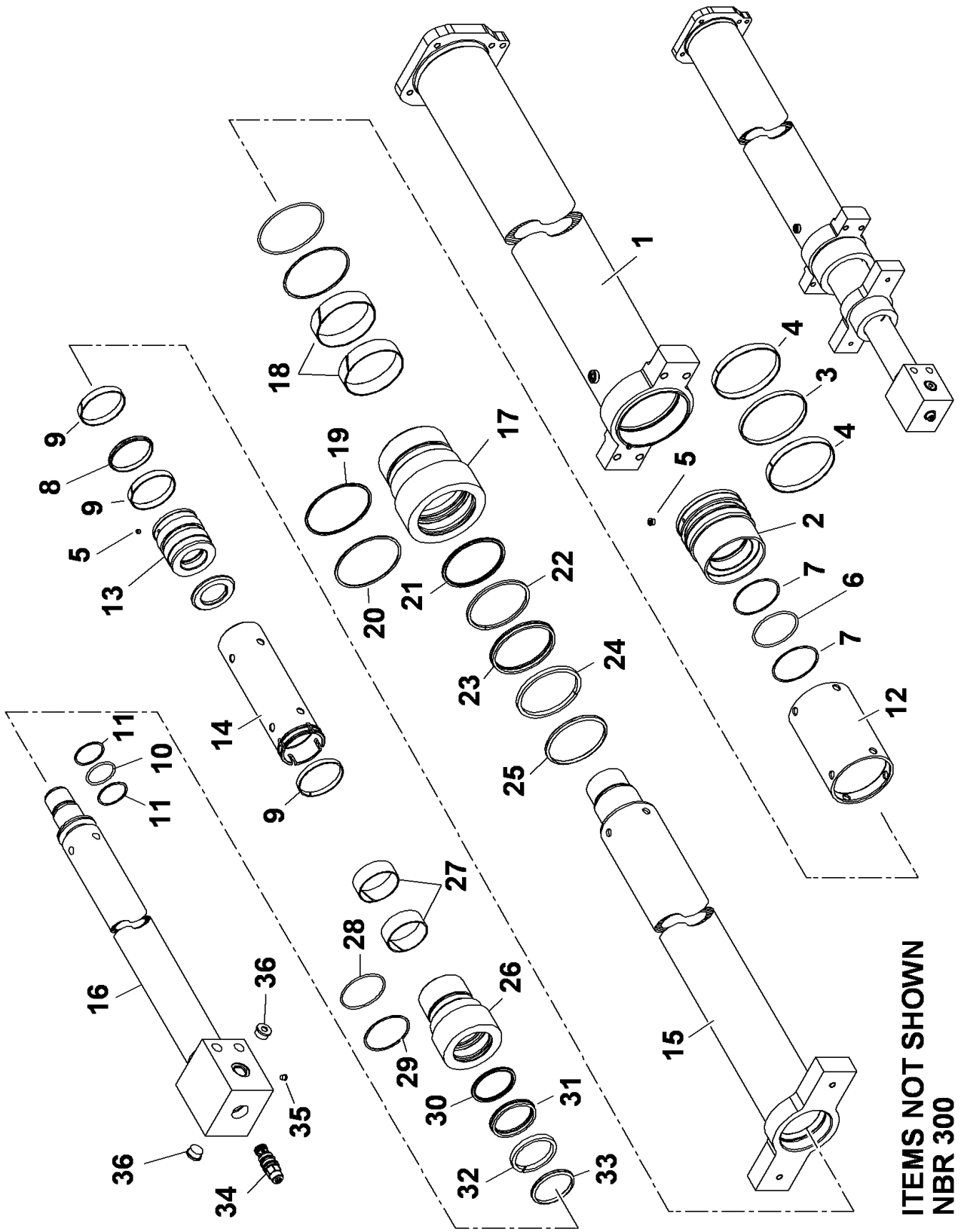


80046908

(SHEET 1 OF 1)

Description
**TELE HYDRAULIC CYLINDER ASSY**

Assembly No.
**80046908**
Revision: **C**

| Item | FN | Part | Qty | Description |
|---|---|---|---|---|
| 1 | | **80048344** | 1 | CYLINDER BARREL, 7.00" BORE |
| 2 | | **80048945** | 1 | CYLINDER PISTON 7.00" BORE |
| 3 | * | **80030043** | 1 | CAP-T SEAL |
| 4 | * | **80030029** | 2 | WEAR RING |
| 5 | | **7099000378** | 2 | SCREW, 3/8" - 16NC X 3/8" SET |
| 6 | * | **7754000154** | 1 | O-RING, LOW TEMPERATURE |
| 7 | * | **7753100057** | 2 | RING, BACK-UP |
| 8 | * | **80030084** | 1 | CAP-T SEAL |
| 9 | * | **80030085** | 2 | WEAR RING |
| 10 | * | **7754000157** | 1 | O-RING, LOW TEMPERATURE |
| 11 | * | **7753100056** | 2 | RING, HYTREL BACK-UP |
| 12 | | **7910101727** | 1 | SPACER |
| 13 | | **80048946** | 1 | CYLINDER PISTON, 4.75" BORE |
| 14 | | **80048535** | 1 | CYLINDER SPACER |
| 15 | | **6768100356** | 1 | CYLINDER ROD |
| 16 | | **6768100241** | 1 | TELESCOPE CYLINDER ROD |
| 17 | | **7372100213** | 1 | CYLINDER HEAD |
| 18 | * | **7753000274** | 2 | RING, WEAR |
| 19 | * | **7754000143** | 1 | O-RING, LOW TEMPERATURE |
| 20 | * | **7755439609** | 1 | RING, BACK-UP |
| 21 | * | **80044969** | 1 | SEAL, 6.00" BUFFER |
| 22 | * | **7753000835** | 1 | RING, BACK-UP |
| 23 | * | **7794000626** | 1 | SEAL, DEEP Z ROD |
| 24 | * | **6753000303** | 1 | RING, BACK-UP |
| 25 | * | **7753000161** | 1 | RING, WIPER |
| 26 | | **7372100274** | 1 | HEAD, CYLINDER |
| 27 | * | **7753000444** | 2 | RING, WEAR<br>1 1/2" LONG |
| 28 | * | **7754000169** | 1 | O-RING, LOW TEMPERATURE |
| 29 | * | **7755348609** | 1 | RING, BACK-UP |
| 30 | * | **80047848** | 1 | SEAL, 4.00" BUFFER |
| 31 | * | **7794000602** | 1 | SEAL<br>4" |
| 32 | | **7753100066** | 0 | RING, 4" BACKUP |
| 33 | * | **7753000376** | 1 | RING, WIPER<br>4" |

*** REPAIR KIT AND/OR PART OF KIT**

Description
**TELE HYDRAULIC CYLINDER ASSY**

Assembly No.
**80046908**
Revision: **C**

| Item | FN | Part | Qty | Description |
|---|---|---|---|---|
| 34 | | **7926100886** | 1 | VALVE ASSY, CARTRIDGE HOLDING<br>INCLUDES THE FOLLOWING PARTS |
| | | **9926107803** | 1 | KIT, SEAL |
| 35 | | **7709800001** | 1 | PLUG, SAE #4<br>INCLUDES THE FOLLOWING PARTS |
| | | **7755904002** | 1 | O-RING |
| 36 | | **7709800004** | 2 | PLUG<br>INCLUDES THE FOLLOWING PARTS |
| | | **7755916002** | 1 | O-RING |
| 37 | * | **7753100054** | 1 | WEAR RING |
| 300 | * | **80048726** | 1 | SEAL KIT |

*** REPAIR KIT AND/OR PART OF KIT**

**Notes**

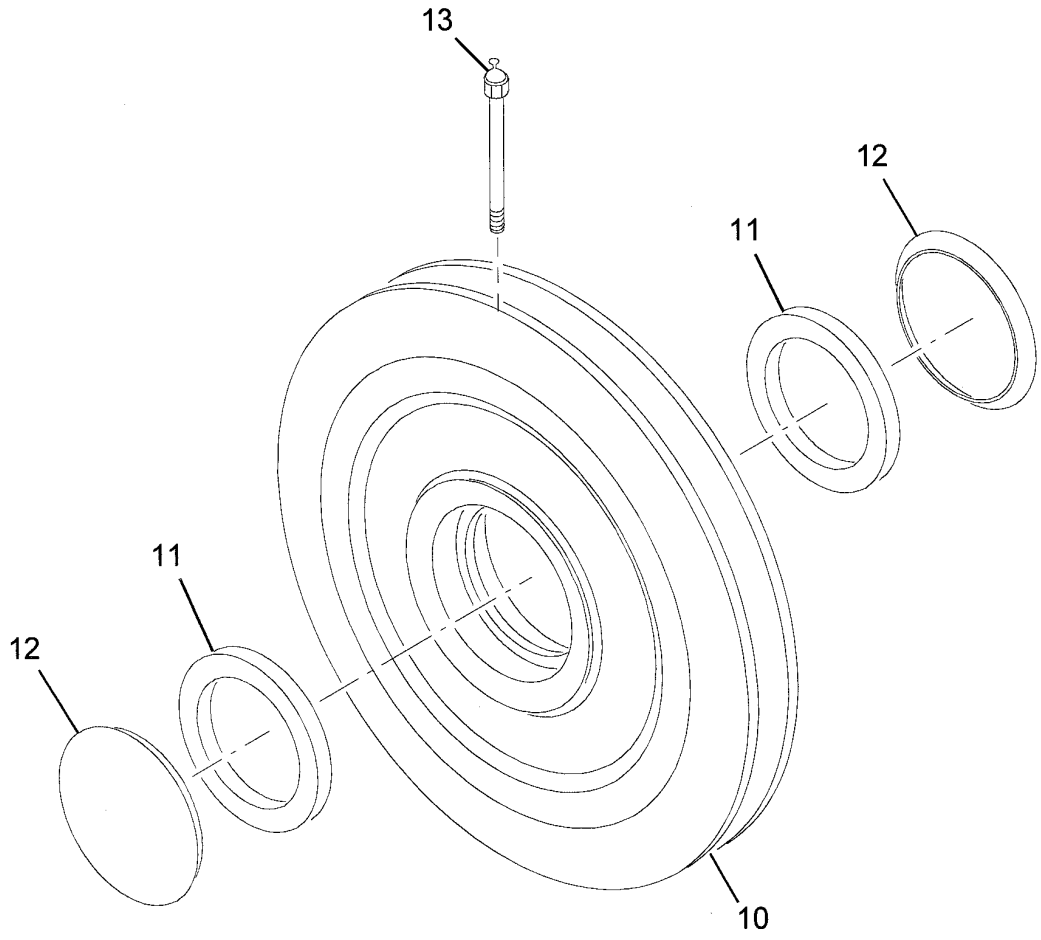


**6718100031**

**(SHEET 1 OF 1)**

Description
**SHEAVE ASSEMBLY - 5/8" ROPE**

Assembly No.
**6718100031**
Revision: **A**

| Item | FN | Part | Qty | Description |
|---|---|---|---|---|
| 10 | | **6718100030** | 1 | WHEEL, 5/8" ROPE SHEAVE<br>INCLUDES THE FOLLOWING PARTS |
| | | **7794000272** | 2 | CUP, BEARING |
| 11 | | **7069000183** | 2 | CONE, BEARING |
| 12 | | **7069000175** | 2 | CLOSURE, BEARING |
| 13 | | **7440000000** | 1 | FITTING, 1/8 STRAIGHT GREASE |

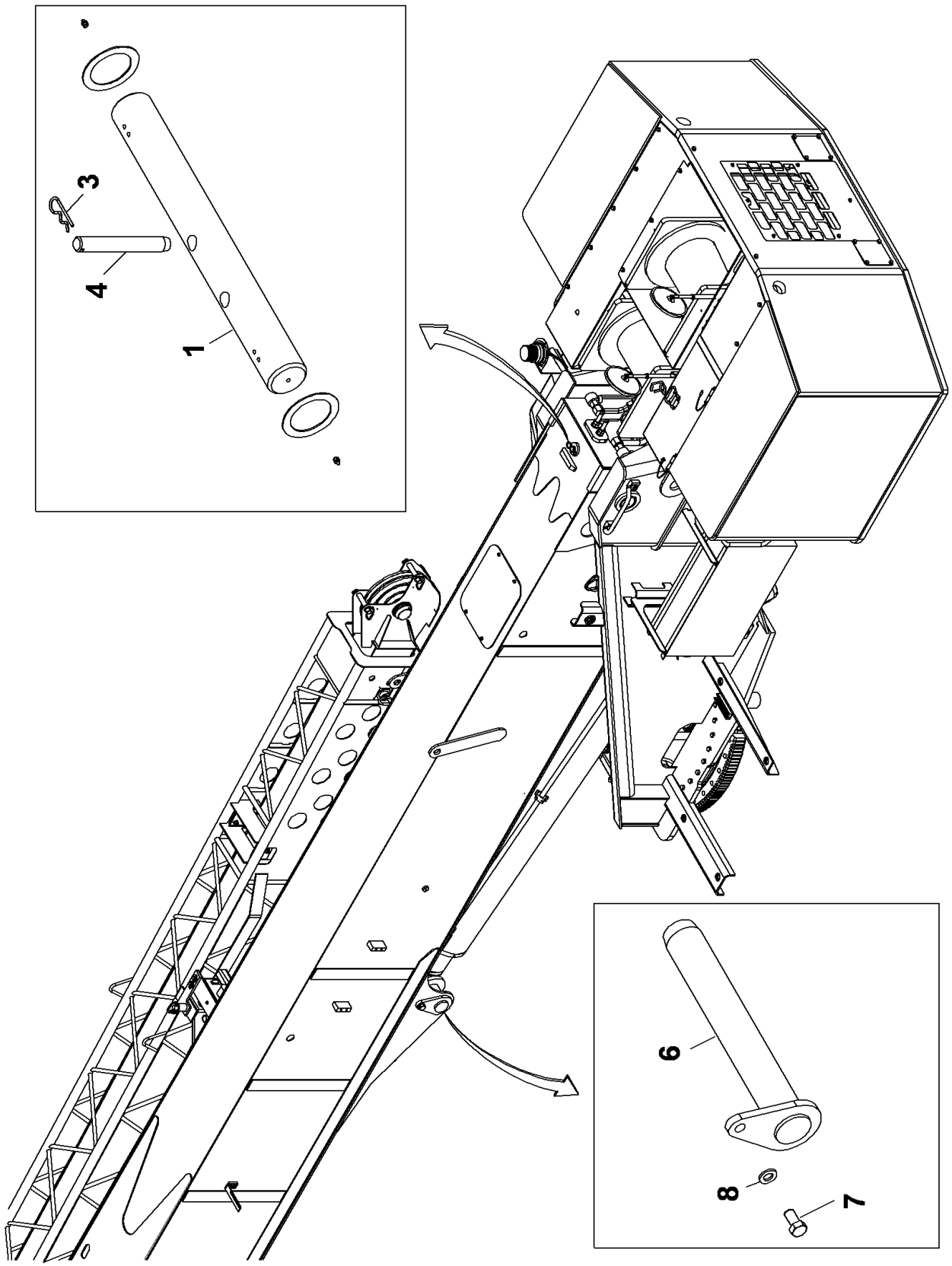


**80049532**

**(SHEET 1 OF 1)**

Description
**BOOM PIVOT INSTALLATION**

Assembly No.
**80049532**
Revision: **A**

| Item | FN | Part | Qty | Description |
|---|---|---|---|---|
| 1 | | **6810100067** | 1 | SHAFT, PIVOT |
| 3 | | **7689000036** | 1 | PIN, CLIP |
| 4 | | **7689100046** | 1 | PIN |
| 6 | | **7810100136** | 1 | SHAFT, UPPER |
| 7 | | **7127271550** | 1 | HHCS M20x40 -10.9 ISO 4014 |
| 8 | | **7949000236** | 1 | FLAT WASHER, 3/4" |

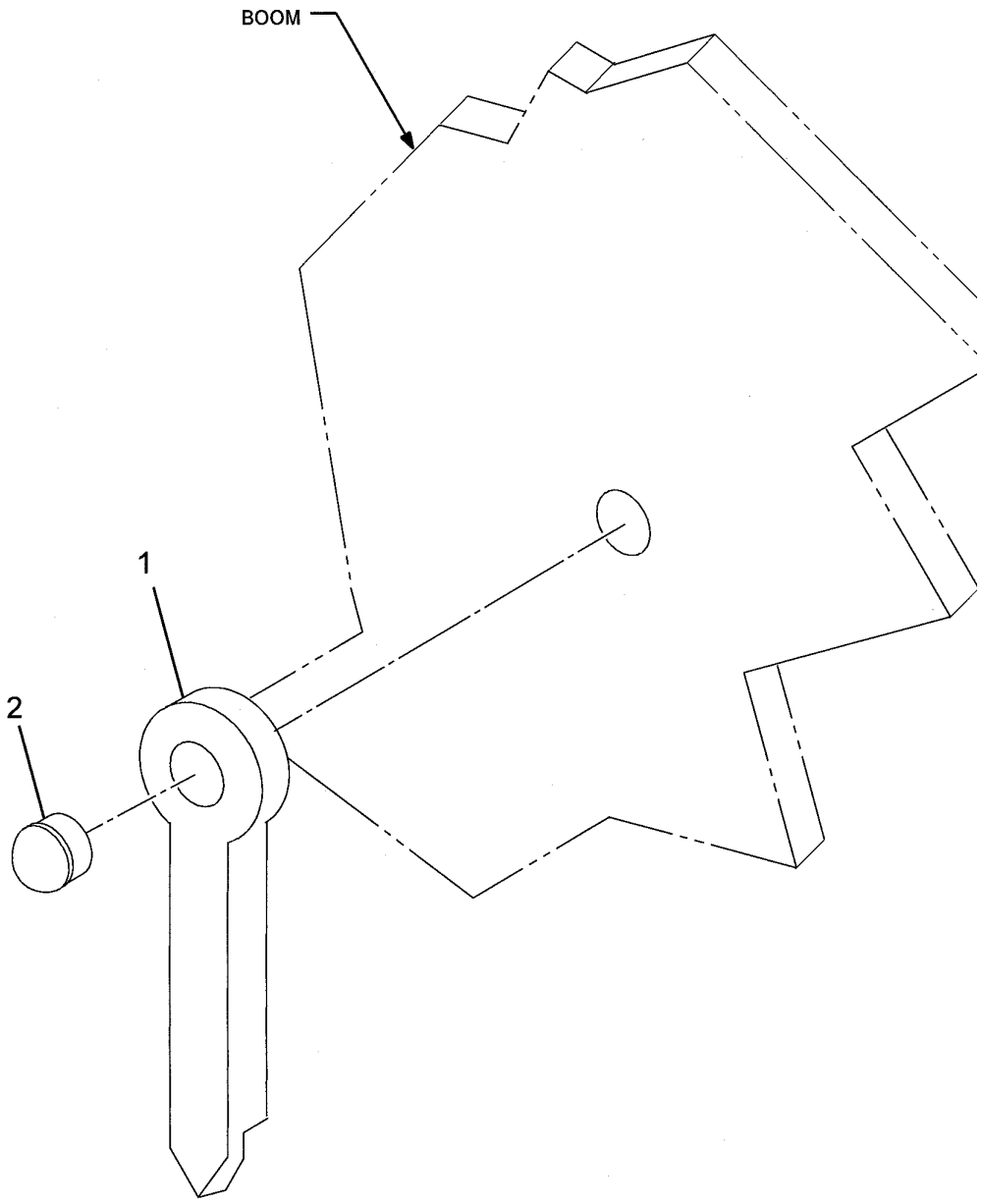


**2159910036**

**(SHEET 1 OF 1)**

Description
**INDICATOR INSTALLATION - BOOM ANGLE**

Assembly No.
**2159910036**
Revision: **A**

| Item | FN | Part | Qty | Description |
|---|---|---|---|---|
| 1 | + | **2114900861** | 1 | POINTER ASSEMBLY |
| 2 | | **7242000021** | 1 | PLUG, 1" BUTTON |

**+ SEE FURTHER BREAKDOWN THIS GROUP**

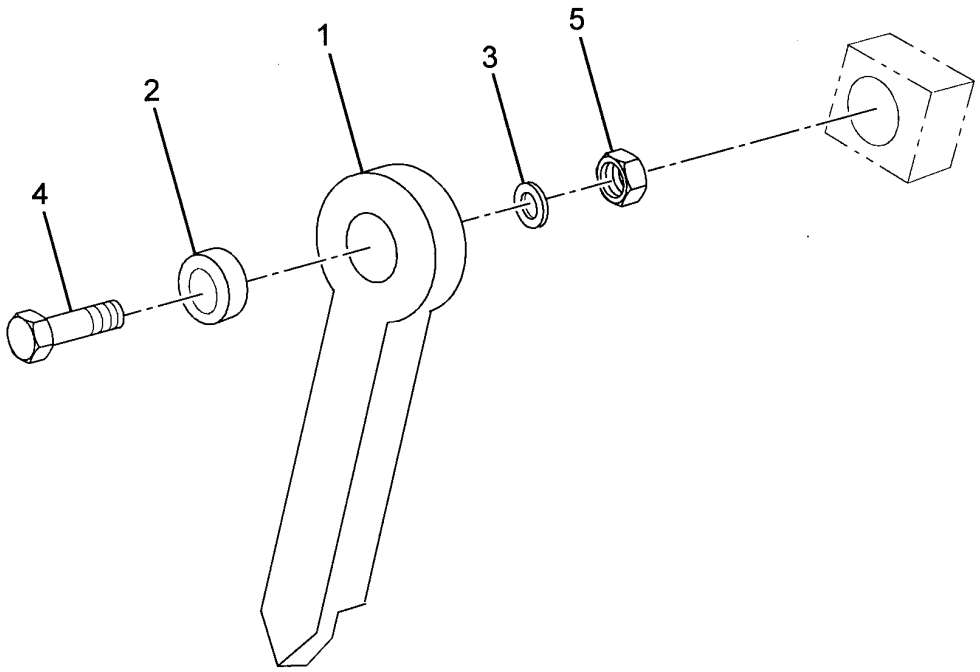


**2114900861**

**(SHEET 1 OF 1)**

Description
**POINTER ASSEMBLY**

Assembly No.
**2114900861**
Revision: **A**

| Item | FN | Part | Qty | Description |
|---|---|---|---|---|
| 1 | | **4195900219** | 1 | POINTER |
| 2 | | **7069000518** | 1 | BEARING |
| 3 | | **6949001154** | 2 | WASHER, |
| 4 | | **7115150850** | 1 | CAP SCREW,<br>5/16" - 18 N.C. X 1"<br>GRADE 5 |
| 5 | | **7660150200** | 1 | NUT, JAM<br>5/16" - 18 N.C.<br>GRADE A |

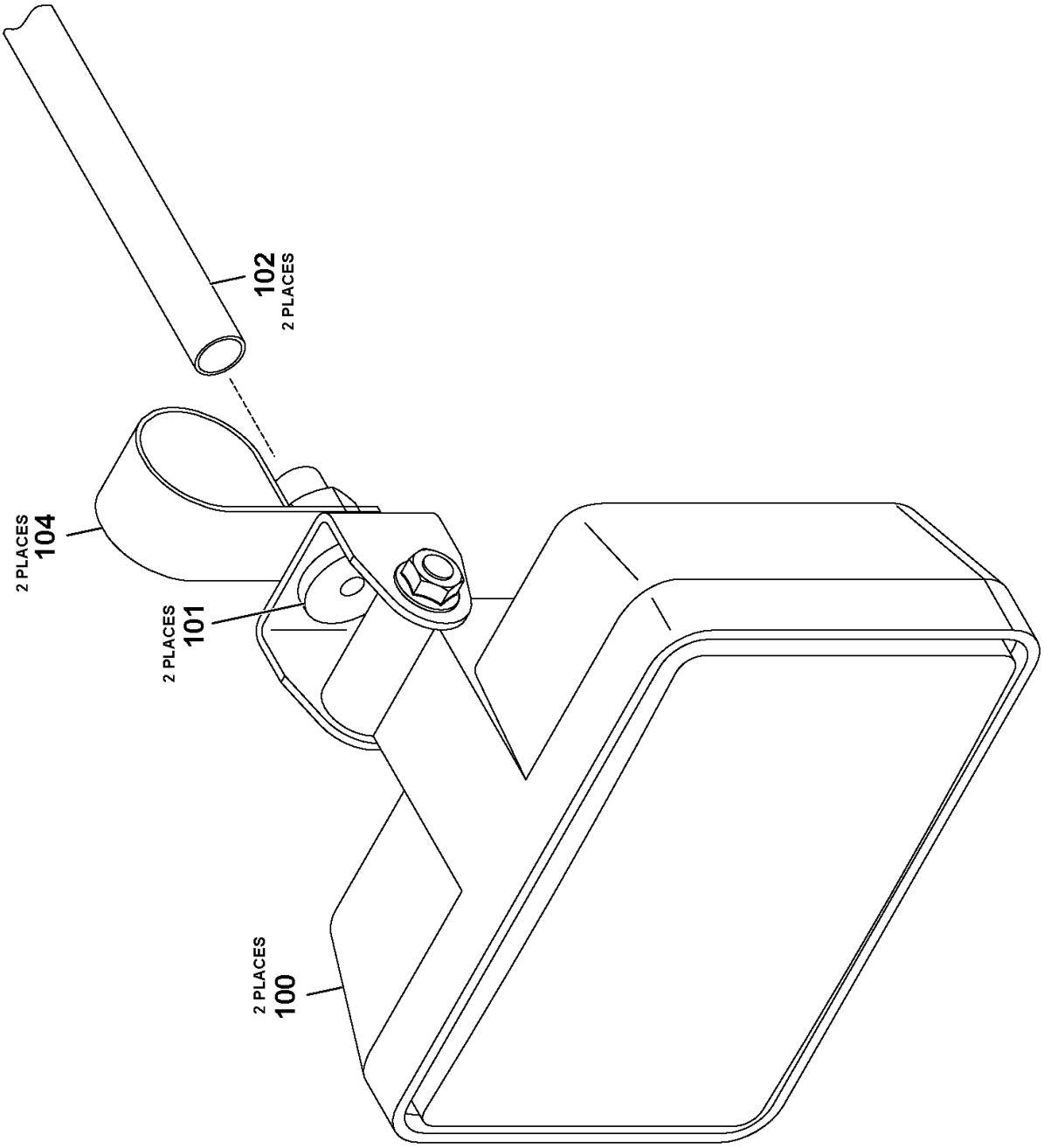
ITEM NOT SHOWN NBR. 103
102
2 PLACES
2 PLACES
104
2 PLACES
101
2 PLACES
100

Description
**LIGHT INSTALLATION - BOOM**

Assembly No.
**80002952**
Revision: **#**

| Item | FN | Part | Qty | Description |
|---|---|---|---|---|
| 100 | + | **80002953** | 2 | BOOM LIGHT-REWORK |
| 101 | | **7950180141** | 2 | WASHER, FLAT 1/2" |
| 102 | + | **6246100270** | 1 | CABLE ASSEMBLY - BOOM LIGHTS (COMPLETE ASSEMBLY) |
| 103 | | **7850000208** | 42 | CABLE TIE 5.63", BLACK |
| 104 | | **7300000243** | 1 | CLAMP, TUBING 3/4" I.D. |

**+ SEE FURTHER BREAKDOWN THIS GROUP**

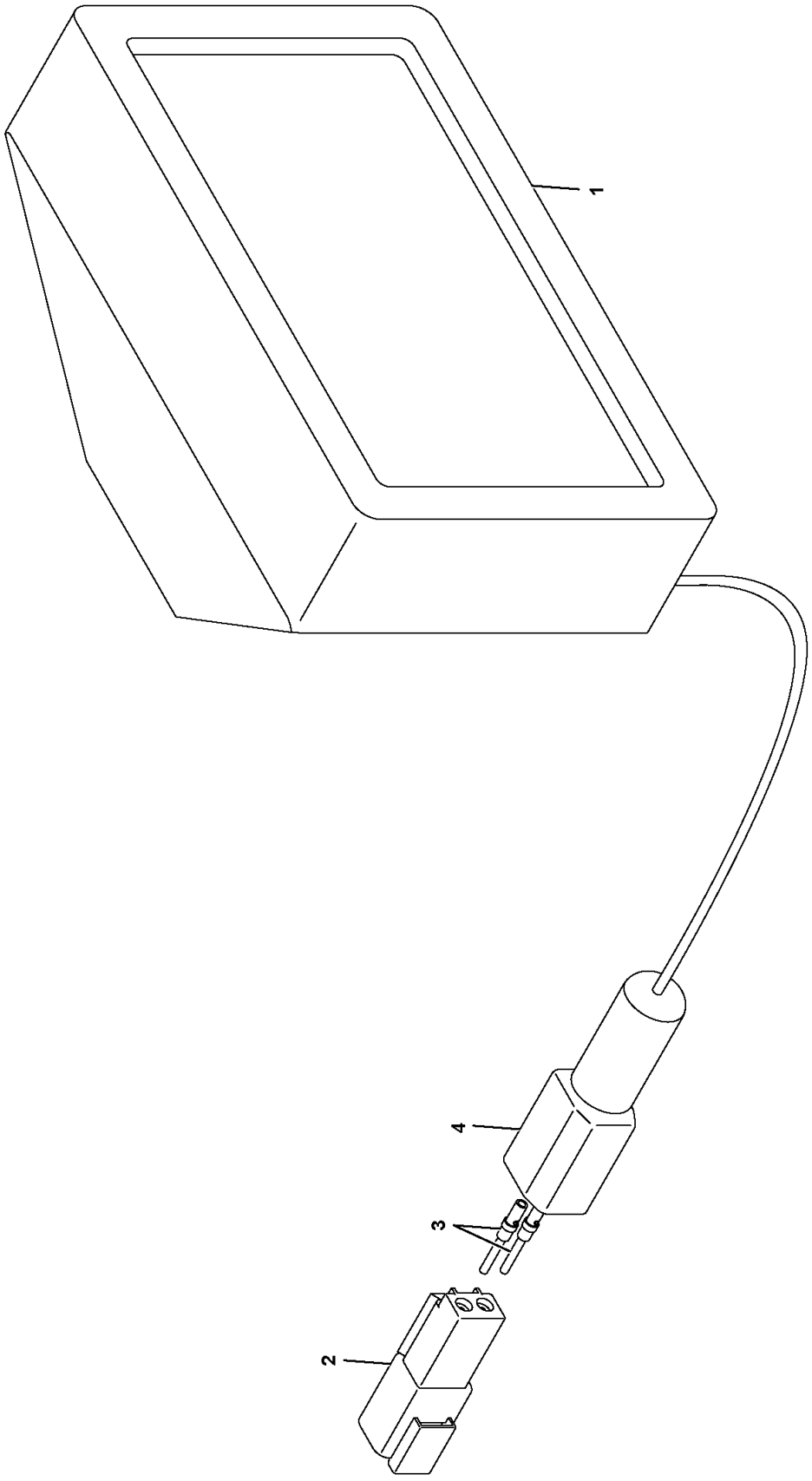


**80002953**

**(SHEET 1 OF 1)**

Description
**BOOM LIGHT-REWORK**

Assembly No.
**80002953**
Revision: **B**

| Item | FN | Part | Qty | Description |
|---|---|---|---|---|
| 1 | | **7581100061** | 1 | LIGHT ASSY, 24 VOLT WORK<br>INCLUDES THE FOLLOWING PARTS |
| | | **9581100101** | 1 | BEAM, SEALED |
| 2 | | **7892000949** | 1 | RECEPTACLE,<br>2 PIN |
| 3 | | **7689000704** | 2 | PIN, 16 - 14 GA |
| 4 | | **7172000546** | 1 | BOOT |

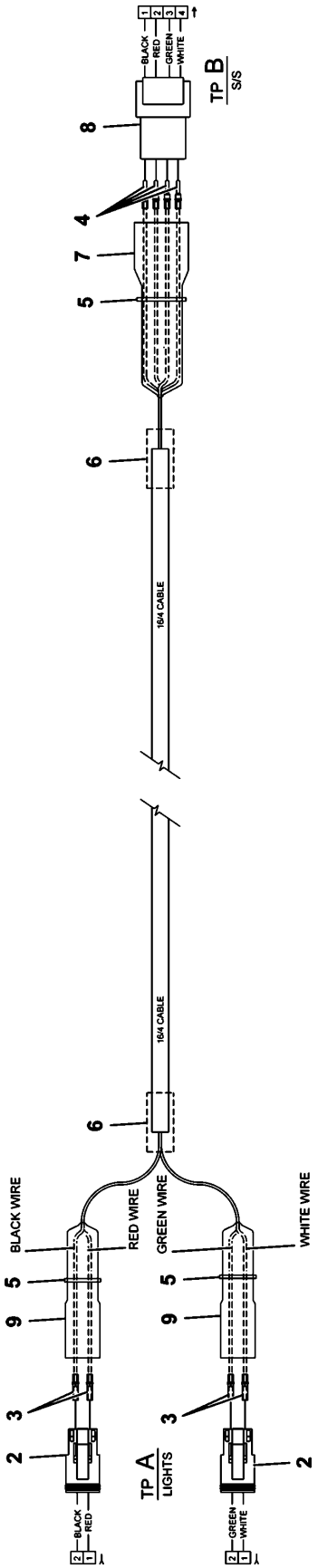


6246100270

(SHEET 1 OF 1)

Description
**CABLE ASSEMBLY - BOOM LIGHTS (COMPLETE ASSEMBLY)**

Assembly No.
**6246100270**
Revision: **#**

| Item | FN | Part | Qty | Description |
|---|---|---|---|---|
| 2 | | **7709000844** | 2 | PLUG, 2 SOCKET |
| 3 | | **7826000087** | 4 | SOCKET, 16-14 GA |
| 4 | | **7689000704** | 4 | PIN, 16 - 14 GA |
| 5 | | **7850000208** | 3 | CABLE TIE 5.63", BLACK |
| 6 | | **8594100257** | 1 | TUBING, HEAT SHRINK 1/2" I.D.<br>LINER, MELTABLE<br>(QUANTITY IN FEET) |
| 7 | | **7172000568** | 1 | BOOT, CONNECTOR |
| 8 | | **7892000835** | 1 | RECEPTACLE,<br>4 PIN |
| 9 | | **7172000545** | 2 | BOOT, DT2S CONNECTOR |

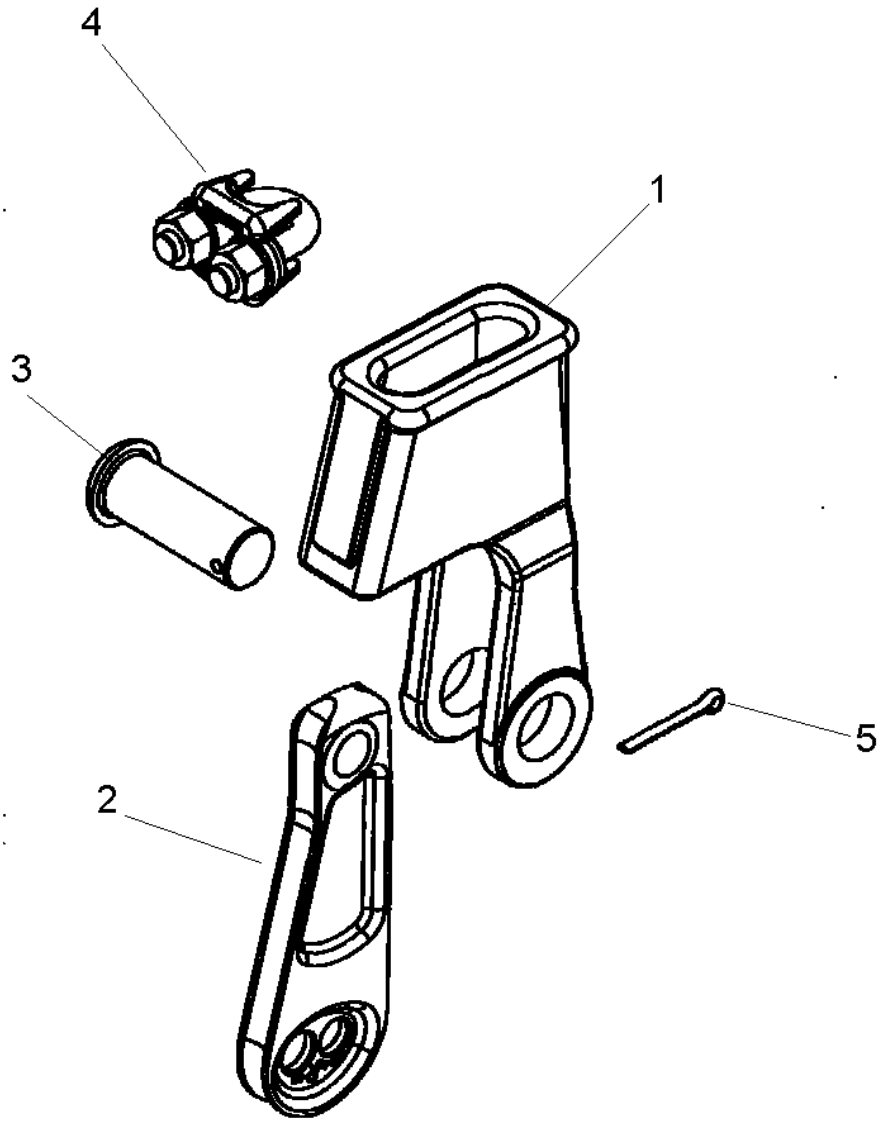


**7826100017**

**(SHEET 1 OF 1)**

Description
**SOCKET ASSY 5/8"**

Assembly No.
**7826100017**
Revision:

| Item | FN | Part | Qty | Description |
|---|---|---|---|---|
| 1 | | **NSS** | 1 | NOT SERVICED SEPARATELY<br>SOCKET |
| 2 | | **9826100007** | 1 | WEDGE |
| 3 | | **9826100008** | 1 | PIN |
| 4 | | **9914100042** | 1 | CLIP |
| 5 | | **9826100009** | 1 | PIN, COTTER |

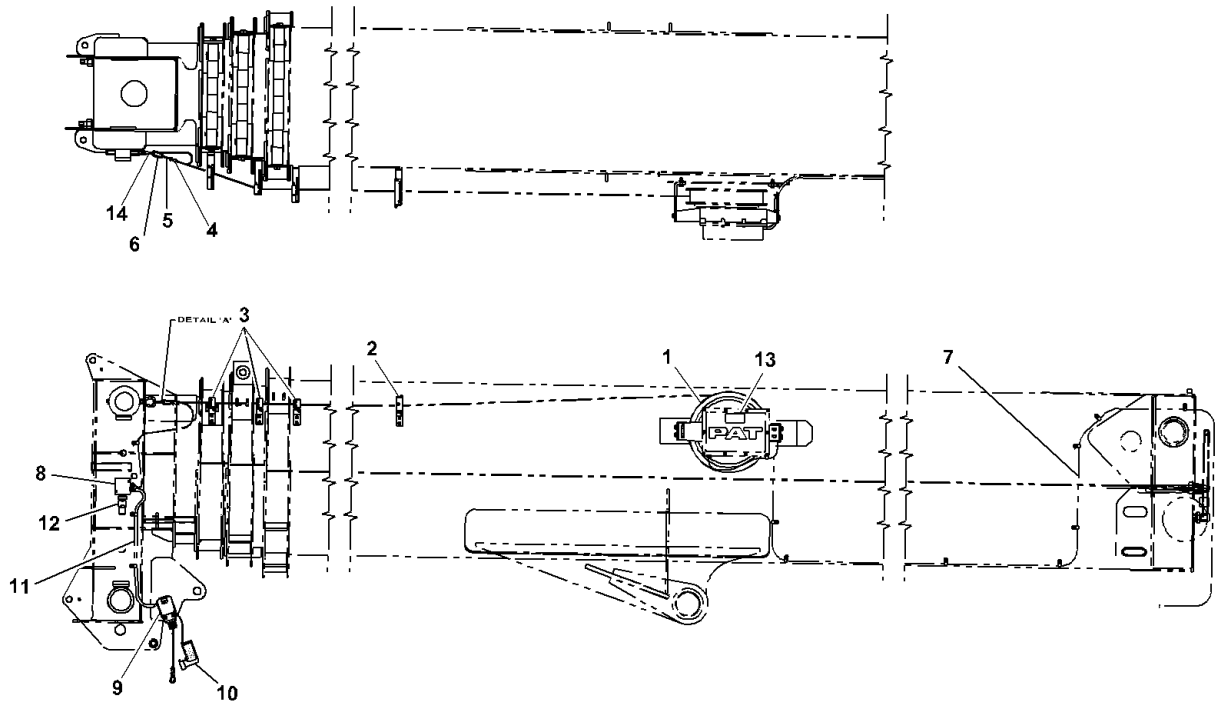


**RT700E AND TMS700E**

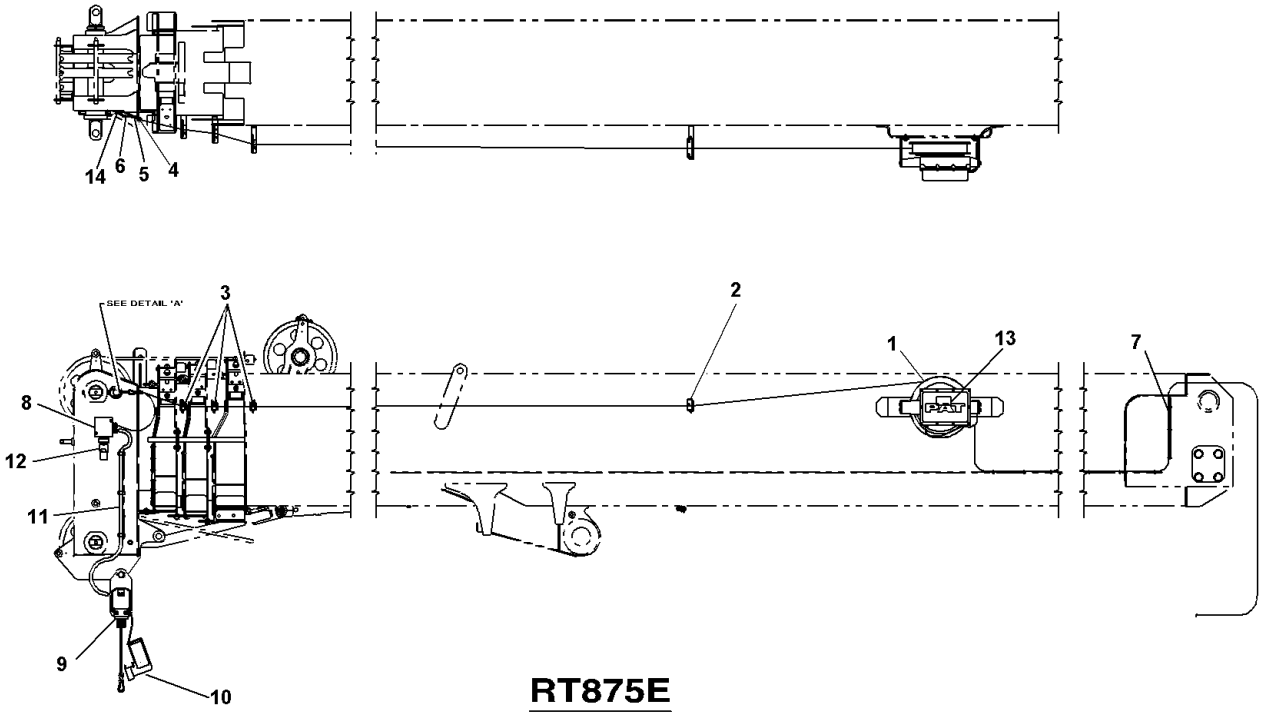


**RT875E**

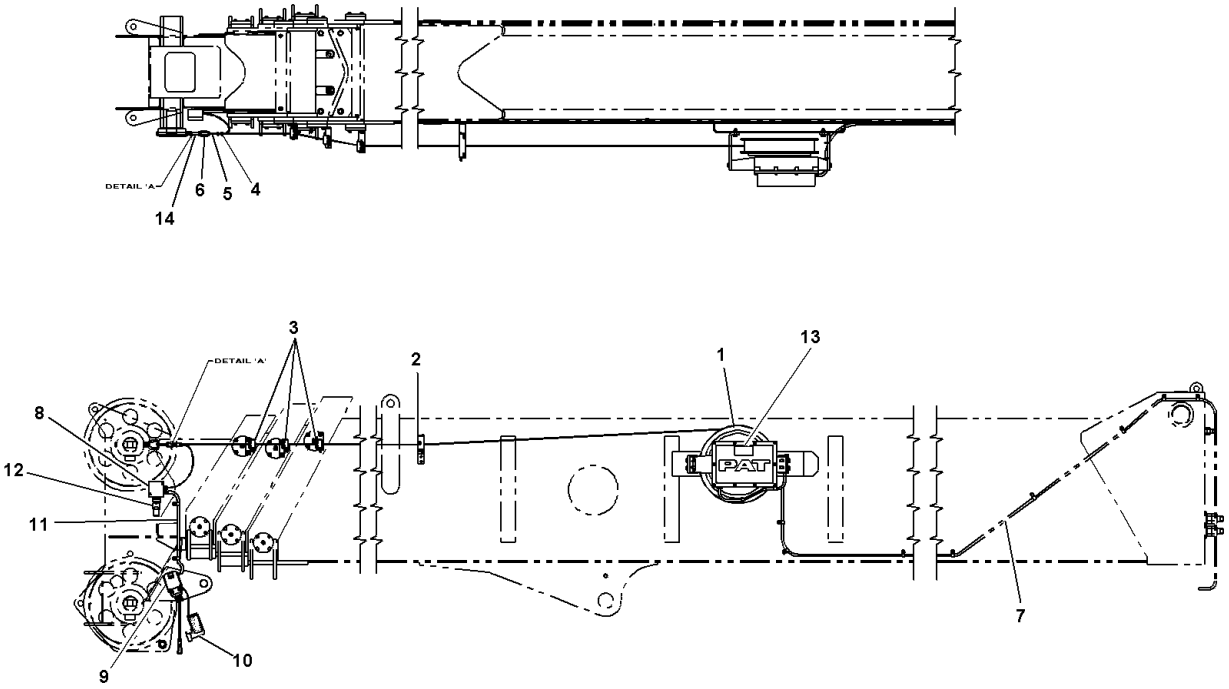


RT600E

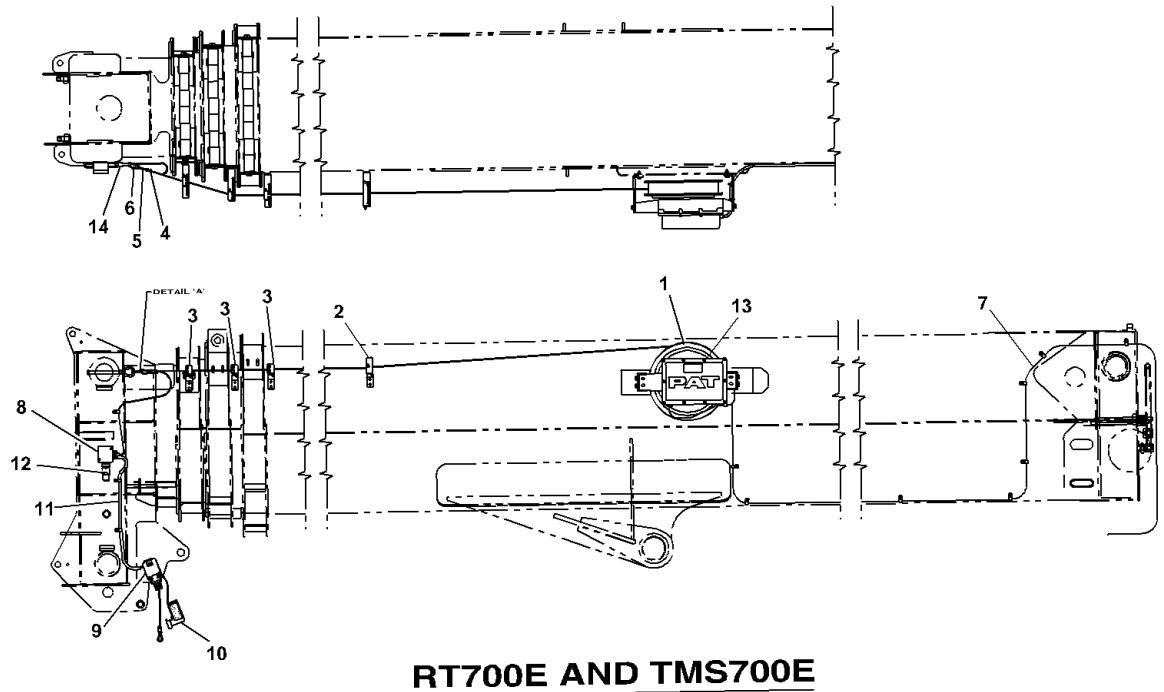


RT700E AND TMS700E

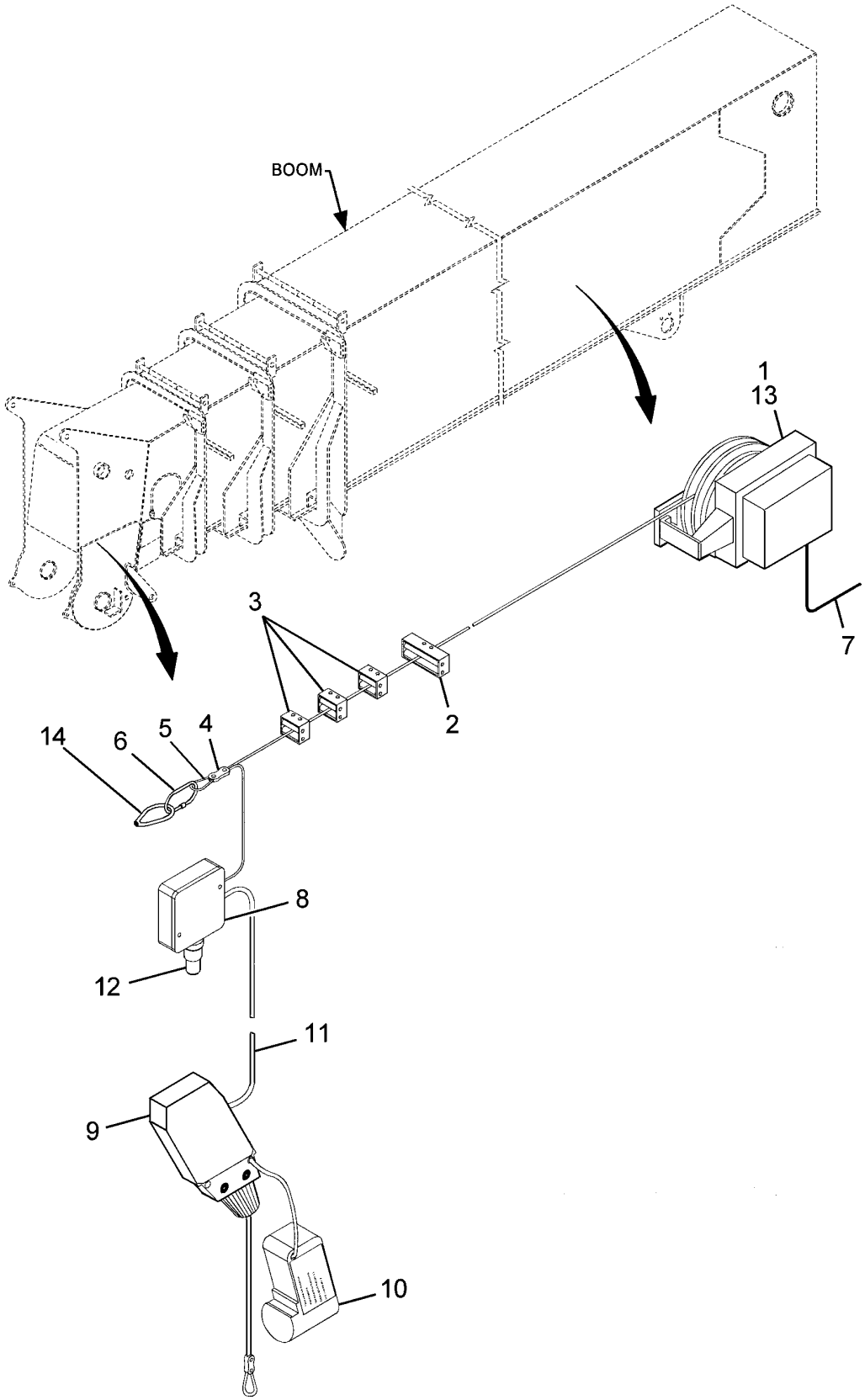


7598100094

(SHEET 1 OF 3)

Description
**KIT INSTALLATION - iFLEX 5 LMI BOOM**

Assembly No.
**7598100094**
Revision: **N**

| Item | FN | Part | Qty | Description |
|---|---|---|---|---|
| 1 | + | **9333103873** | 1 | CABLE REEL LWG508 - IFLEX 5 |
| 2 | + | **9333101437** | 1 | ROLLER GUIDE ASSEMBLY |
| 3 | | **9333101435** | 3 | GUIDE, CABLE |
| 4 | | **9333103094** | 1 | CLAMP, CABLE |
| 5 | | **9333103697** | 1 | THIMBLE ASSY. 1/8" CABLE |
| 6 | | **9333102620** | 1 | CONNECTOR, CHAIN<br>2 7/16" |
| 7 | | **9333103872** | 1 | CABLE, CANBUS 11M W/MOLDED M12 |
| 8 | + | **9333103565** | 1 | BOX ASSEMBLY - JUNCTION |
| 9 | | **9333102230** | 1 | A2B SWITCH - WITH<br>RETAINER CRIMP |
| 10 | + | **9333102633** | 1 | FLAG ASSEMBLY - A2B<br>RETAINER<br>(COMPLETE ASSEMBLY) |
| 11 | | **9333102235** | 2 | CONDUIT<br>(CUT TO LENGTH REQUIRED) |
| 12 | + | **9333102765** | 1 | CONNECTOR ASSEMBLY<br>DUMMY PLUG, 2-PIN |
| 13 | # | **7296000004** | 1 | INHIBITOR, CORROSION<br>VAPOR CONTROL |
| 14 | | **9333103768** | 1 | NUT, EYE |

**+ SEE FURTHER BREAKDOWN THIS GROUP**

**# SERVICED AS AN ASSEMBLY ONLY**

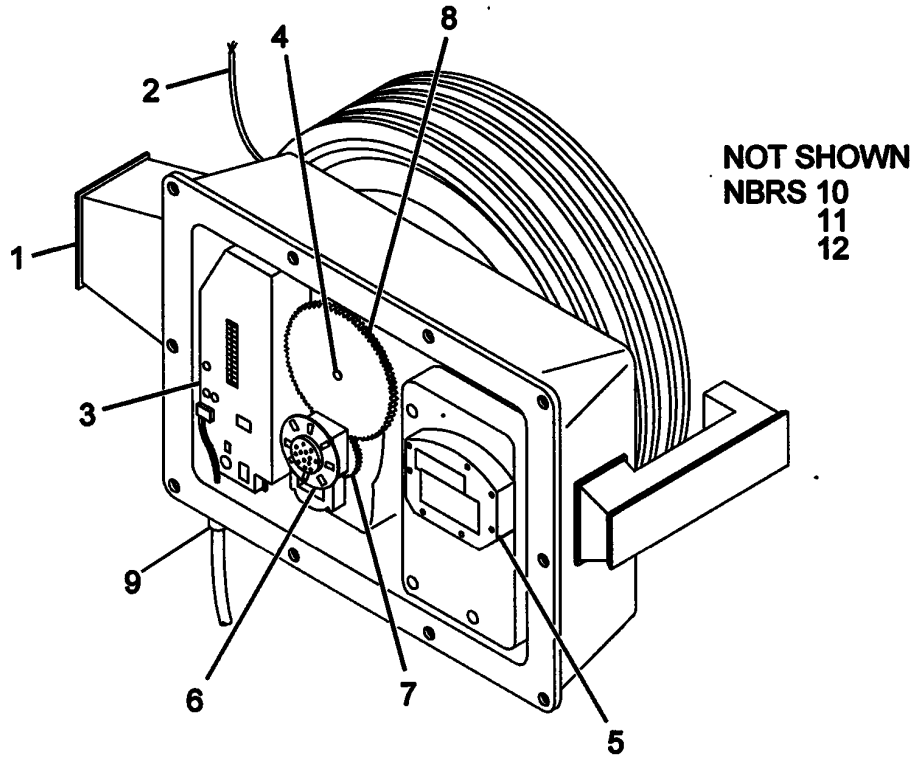
1
2
3
4
5
6
7
8
9
NOT SHOWN
NBRS 10
11
12

Description
**CABLE REEL LWG508 - IFLEX 5**

Assembly No.
**9333103873**
Revision:

| Item | FN | Part | Qty | Description |
|---|---|---|---|---|
| 1 | | **NSS** | 1 | NOT SERVICED SEPARATELY<br>DRUM BODY, W/CABLE REEL<br>HOUSING, INCLUDES ITEM 14<br>FOR SERVICE |
| 2 | | **9333102986** | 139 | CORE W/ SCREEN (BULK) |
| 3 | | **9333103896** | 1 | P.C. BOARD |
| 4 | | **9333103897** | 1 | POTENTIOMETER,LENGTH |
| 5 | | **9333103898** | 1 | SENSOR,ANGLE |
| 6 | | **9333103904** | 1 | SLIP RING ASSY. 2 CONN. |
| 7 | | **9333103905** | 1 | GEAR WHEEL 25T |
| 8 | | **9333101625** | 1 | GEAR, 75T |
| 9 | | **9333103906** | 1 | CONNECTOR ASSY.W/WIRES, 5PASS |
| 10 | | **9333103907** | 1 | COVER ASSY. W/SCREWS |
| 11 | | **9333101565** | 1 | SEAL, COVER |
| 12 | | **9333101566** | 10 | SCREW, COVER |
| 14 | | **90019021** | 1 | HOUSING, DRUM ASSY. W/SPRINGS<br>, ITEM NOT SHOWN |

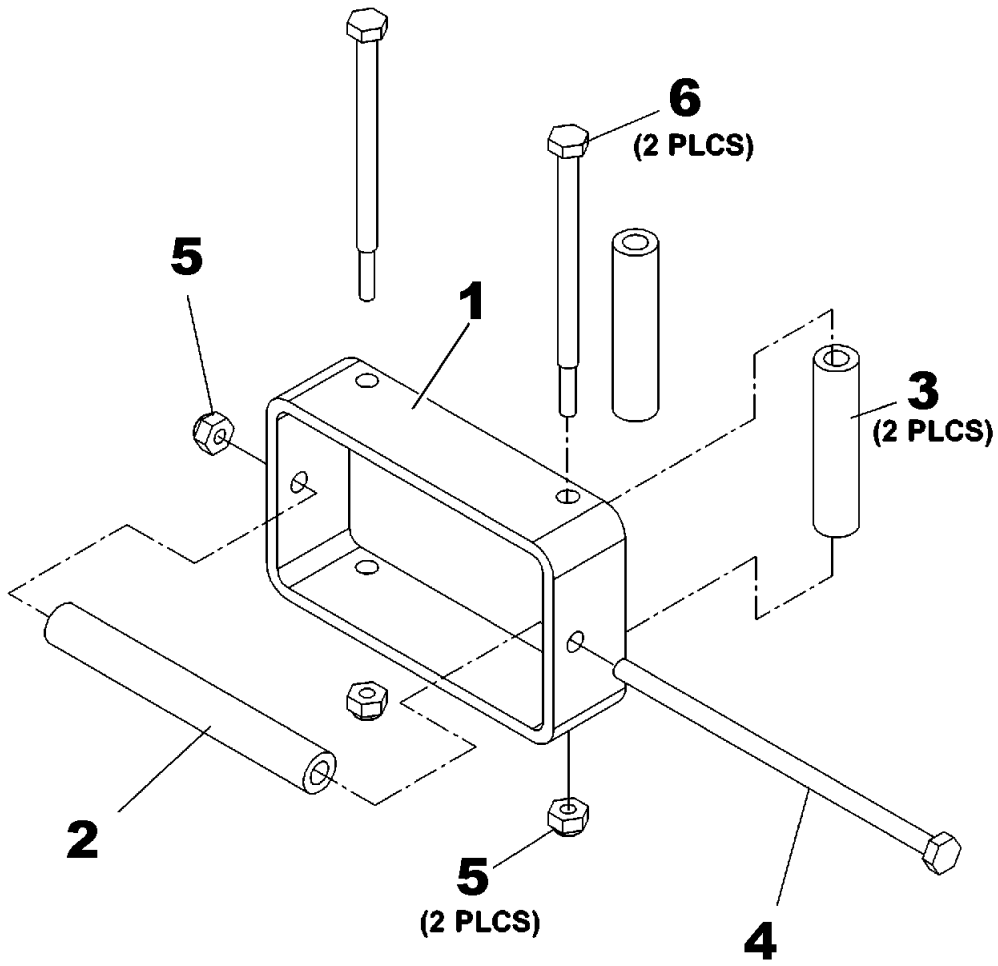


**9333101437**

**(SHEET 1 OF 1)**

Description
**ROLLER GUIDE ASSEMBLY**

Assembly No.
**9333101437**
Revision:

| Item | FN | Part | Qty | Description |
|---|---|---|---|---|
| 1 | | **203582** | 1 | TUBE |
| 2 | | **203583** | 1 | ROLLER |
| 3 | | **203584** | 2 | ROLLER |
| 4 | | **7115144450** | 1 | CAP SCREW, 1/4-20UNC X 5 1/2 |
| 5 | | **846531** | 3 | NUT, SELF-LOCKING |
| 6 | | **7115143250** | 2 | CAP SCREW,<br>1/4" - 20 N.C. X 4"<br>GRADE 5 |

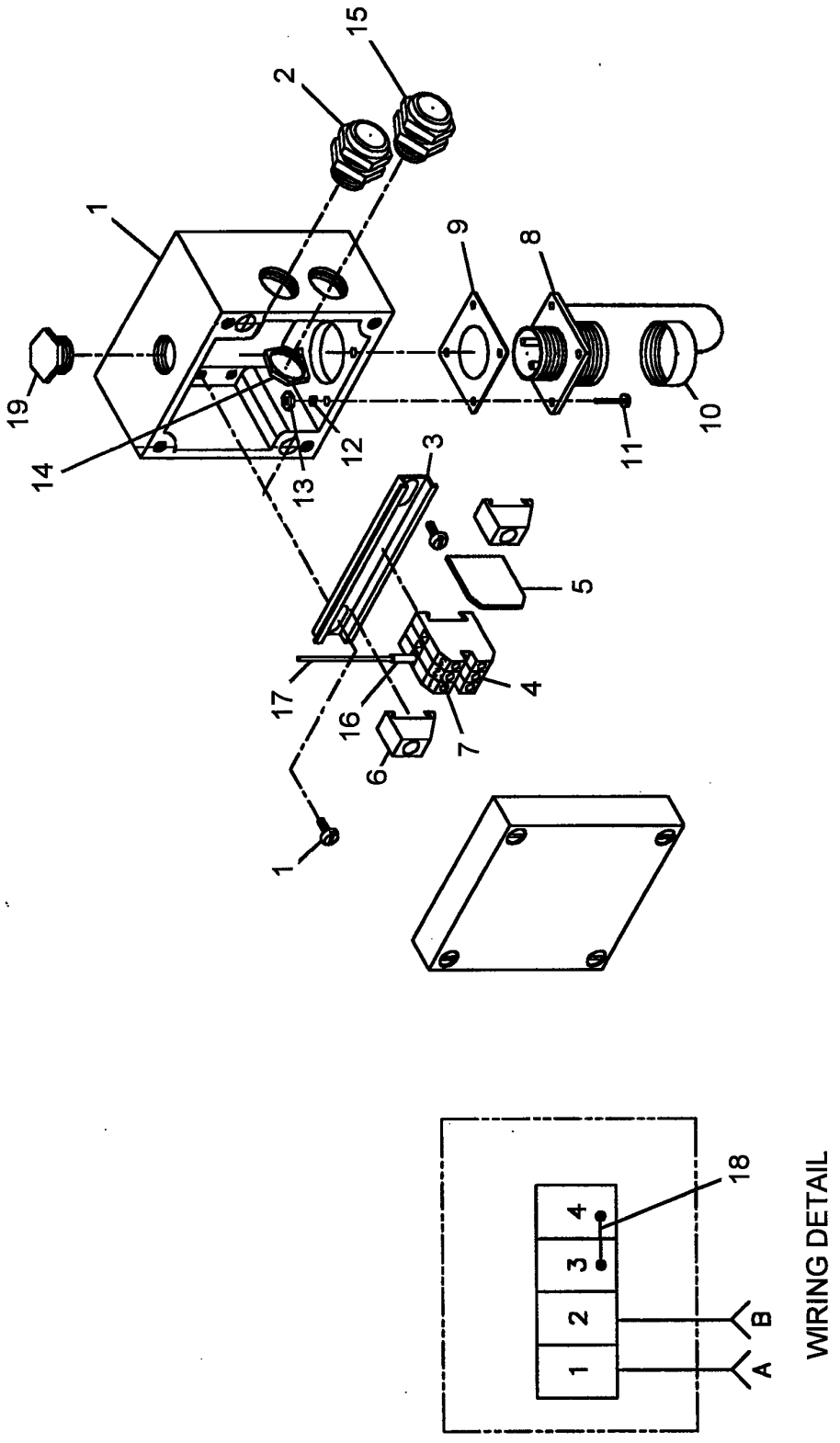


**9333103565**

**(SHEET 1 OF 1)**

Description
**BOX ASSEMBLY - JUNCTION**

Assembly No.
**9333103565**
Revision:

| Item | FN | Part | Qty | Description |
|---|---|---|---|---|
| 1 | | **9333103735** | 1 | BOX, JUNCTION |
| 2 | | **9333102056** | 1 | STRAIN RELIEF<br>WHITE INSERT - PG9 |
| 3 | | **9333102759** | 1 | RAIL, TERMINAL STRIP MOUNTING |
| 4 | | **9333102663** | 4 | BLOCK, TERMINAL STRIP |
| 5 | | **9333102664** | 1 | PLATE, TERMINAL STRIP END |
| 6 | | **9333102665** | 2 | BRACKET, TERMINAL STRIP END |
| 7 | | **9333103044** | 1 | MARKING TAGS, 1-5 |
| 8 | | **9333102792** | 1 | CONNECTOR, CANNON 2-SOCKET<br>RECEPTACLE, |
| 9 | | **9333102482** | 1 | GASKET |
| 10 | | **9333102612** | 1 | COVER, DUST |
| 11 | | **9333102669** | 4 | SCREW #4 |
| 12 | | **9333102266** | 4 | WASHER, LOCK<br>#4 |
| 13 | | **9333102480** | 4 | NUT #4 |
| 14 | | **9333101984** | 1 | LOCKNUT<br>PG9 |
| 15 | | **9333103041** | 1 | RELIEF, VALVE<br>PG9 W/<br>YELLOW INSERT |
| 16 | | **9333103042** | 2 | CRIMP FERRULE, 20 AWG |
| 17 | | **9333102479** | 1 | WIRE |
| 18 | | **9333102717** | 1 | BAR, 2-POLE JUMPER |
| 19 | | **9333102808** | 1 | PLUG, HOLE |

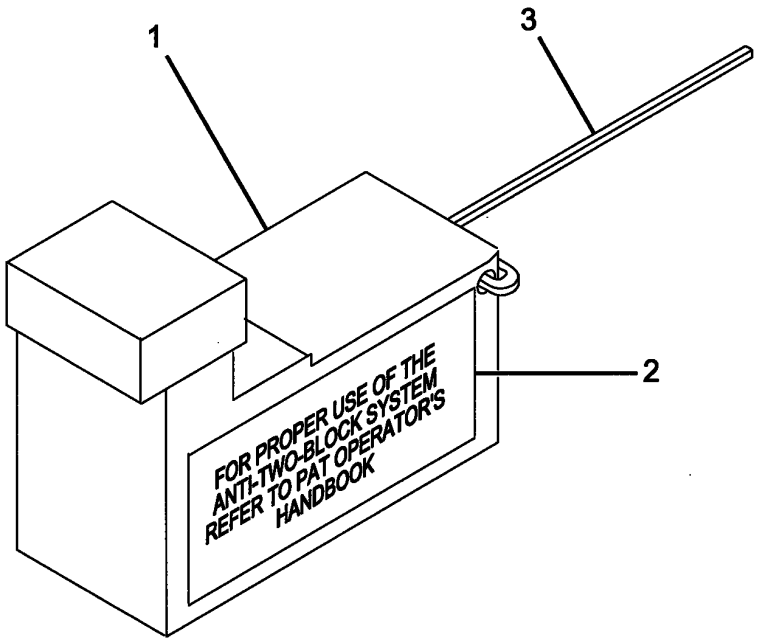


9333102633

(SHEET 1 OF 1)

Description
**FLAG ASSEMBLY - A2B RETAINER**
**(COMPLETE ASSEMBLY)**

Assembly No.
**9333102633**
Revision:

| Item | FN | Part | Qty | Description |
|---|---|---|---|---|
| 1 | | **9333102373** | 1 | FLAG, RETAINER |
| 2 | | **9333102618** | 1 | DECAL, A2B |
| 3 | | **9333102232** | 1 | LANYARD |

NOTE: SCREW TO HOUSING CONNECTION MUST BE WATER TIGHT.

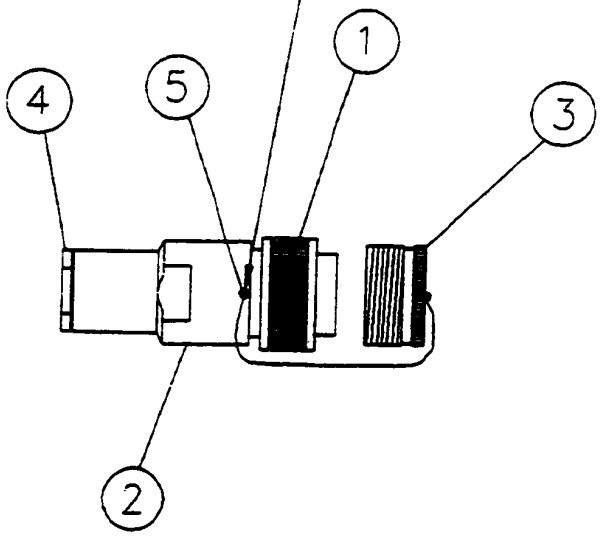


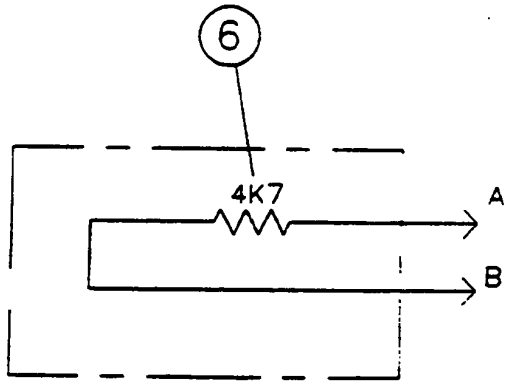


WIRING DETAIL

NOTES:

4K7 = 4.7 kΩ RESISTOR (1/4 W)

NC = NOT CONNECTED

CONNECTOR ASSEMBLY

Description
**CONNECTOR ASSEMBLY DUMMY PLUG, 2-PIN**

Assembly No.
**9333102765**
Revision:

| Item | FN | Part | Qty | Description |
|---|---|---|---|---|
| 1 | | **9333103040** | 1 | CANNON CONNECTOR, 2-PIN<br>PLUG |
| 2 | | **9333102770** | 1 | HOUSING, CANNON CONNECTOR<br>END<br>#16 |
| 3 | | **9333102615** | 1 | COVER, DUST<br>PLUG END |
| 4 | | **9333102047** | 1 | PLUG, HOLE |
| 5 | | **9333102790** | 1 | SCREW, SLOTTED MACHINE |
| 6 | | **9333101465** | 1 | RESISTOR, 4700 OHMS |

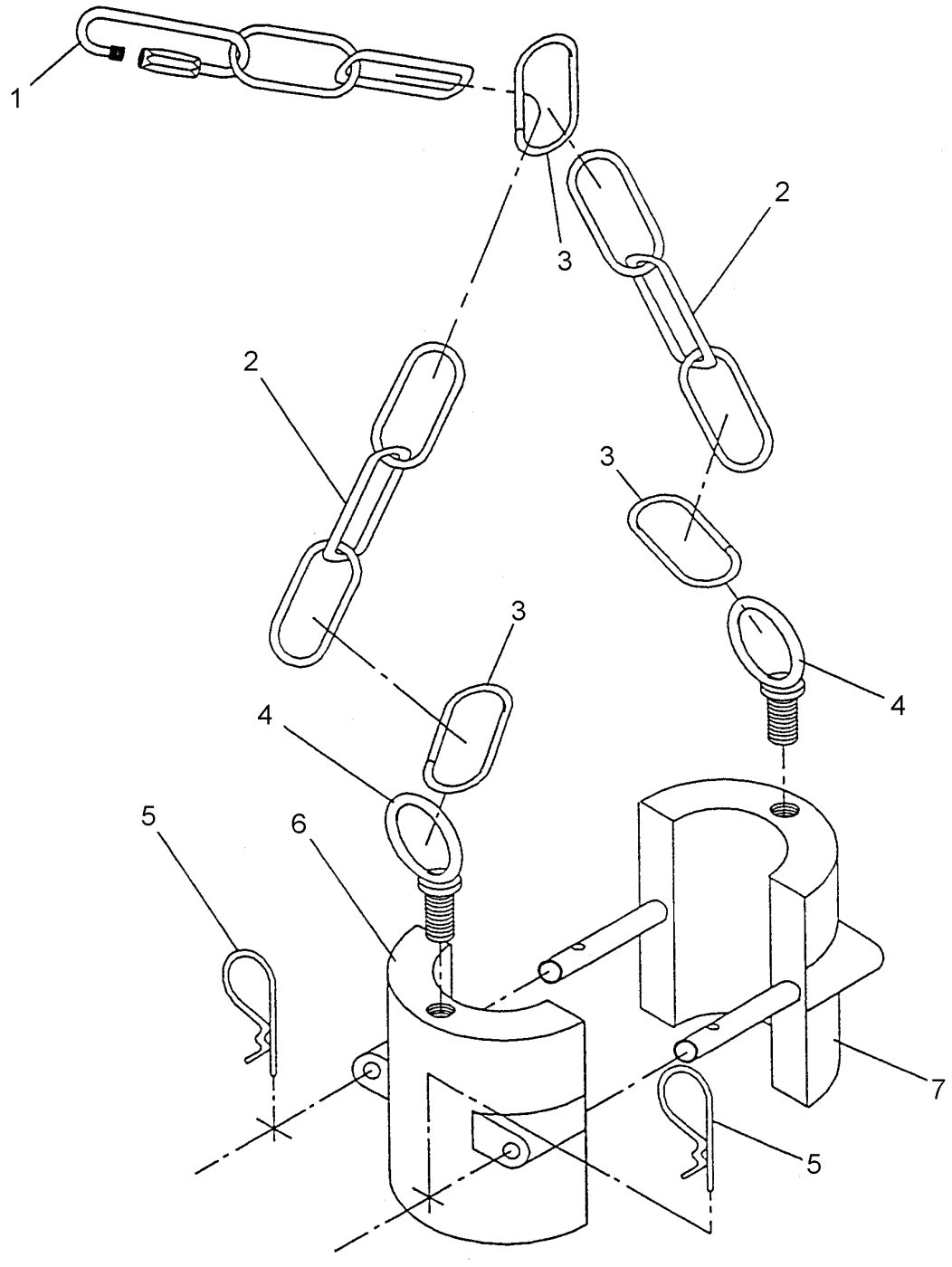


**3486000212**

**(SHEET 1 OF 1)**

Description
**WEIGHT AND CHAIN ASSEMBLY (COMPLETE ASSEMBLY)**

Assembly No.
**3486000212**
Revision:

| Item | FN | Part | Qty | Description |
|---|---|---|---|---|
| 1 | | **9333101840** | 1 | CLEVIS |
| 2 | | **9333101921** | 1 | CHAIN ASSEMBLY |
| 3 | | **9333101922** | 3 | CLAMP, CHAIN |
| 4 | | **9333101923** | 2 | EYEBOLT |
| 5 | | **9333101916** | 2 | PIN, COTTER |
| 6 | | **9333101924** | 1 | WEIGHT, FEMALE |
| 7 | | **9333101925** | 1 | WEIGHT, MALE |

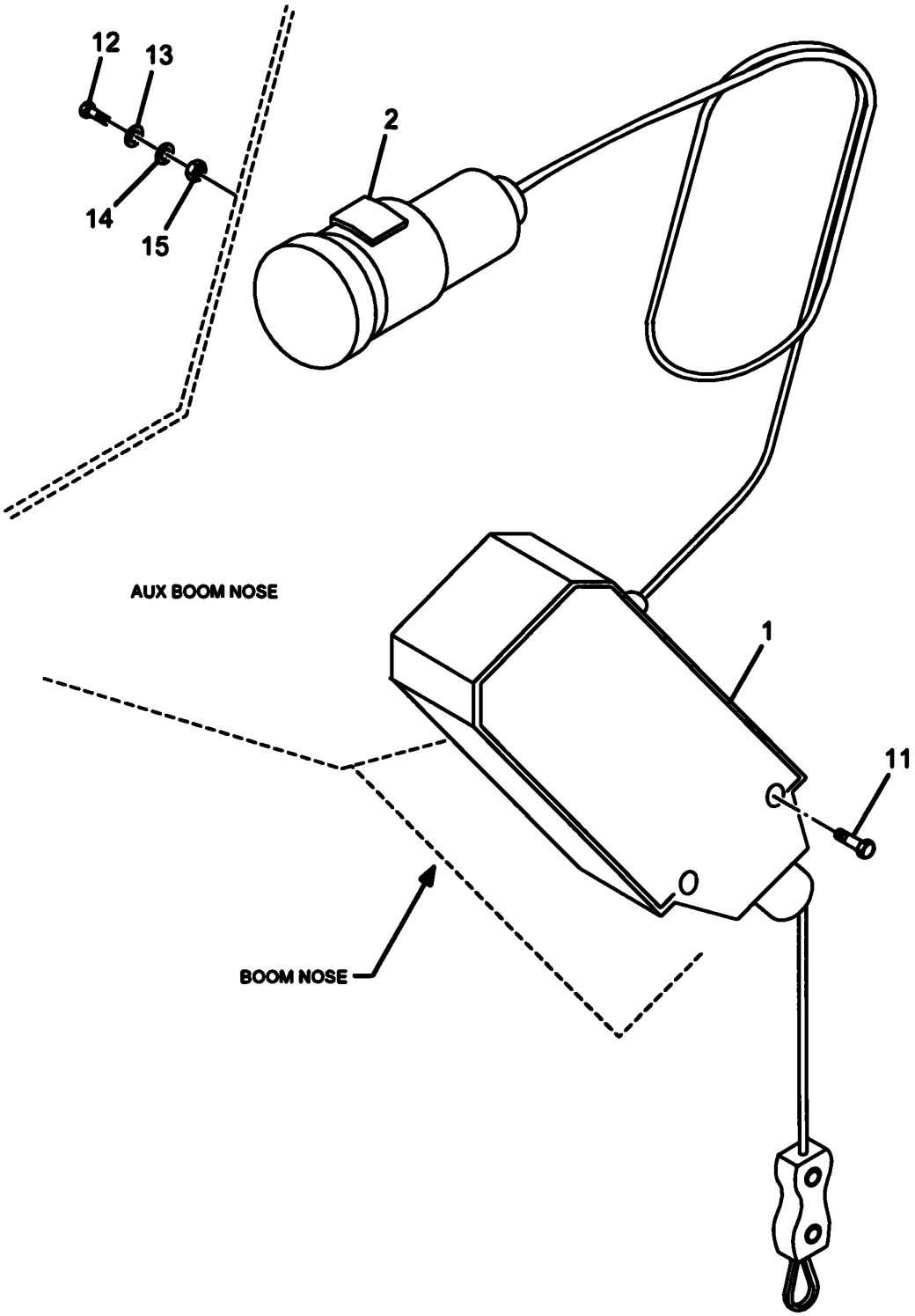


7598100004

(SHEET 1 OF 1)

Description
**KIT-LMI AUXILARY BOOM NOSE**

Assembly No.
**7598100004**
Revision: **#**

| Item | FN | Part | Qty | Description |
|---|---|---|---|---|
| 1 | | **9333103729** | 1 | SWITCH ASSEMBLY |
| 2 | | **9333103703** | 1 | CLIP, GRIPPER |
| 11 | | **7110151205** | 1 | CAP SCREW,<br>5/16" - 18 N.C. X 1 1/2"<br>GRADE 1 |
| 12 | | **7115140650** | 1 | CAP SCREW,<br>1/4" - 20 N.C. X 3/4"<br>GRADE 5 |
| 13 | | **7950140141** | 1 | WASHER, FLAT 1/4" PLAIN NARROW |
| 14 | | **7950140050** | 1 | WASHER, LOCK 1/4" |
| 15 | | **7660140000** | 1 | NUT, HEX<br>1/4" - 20 N.C. |

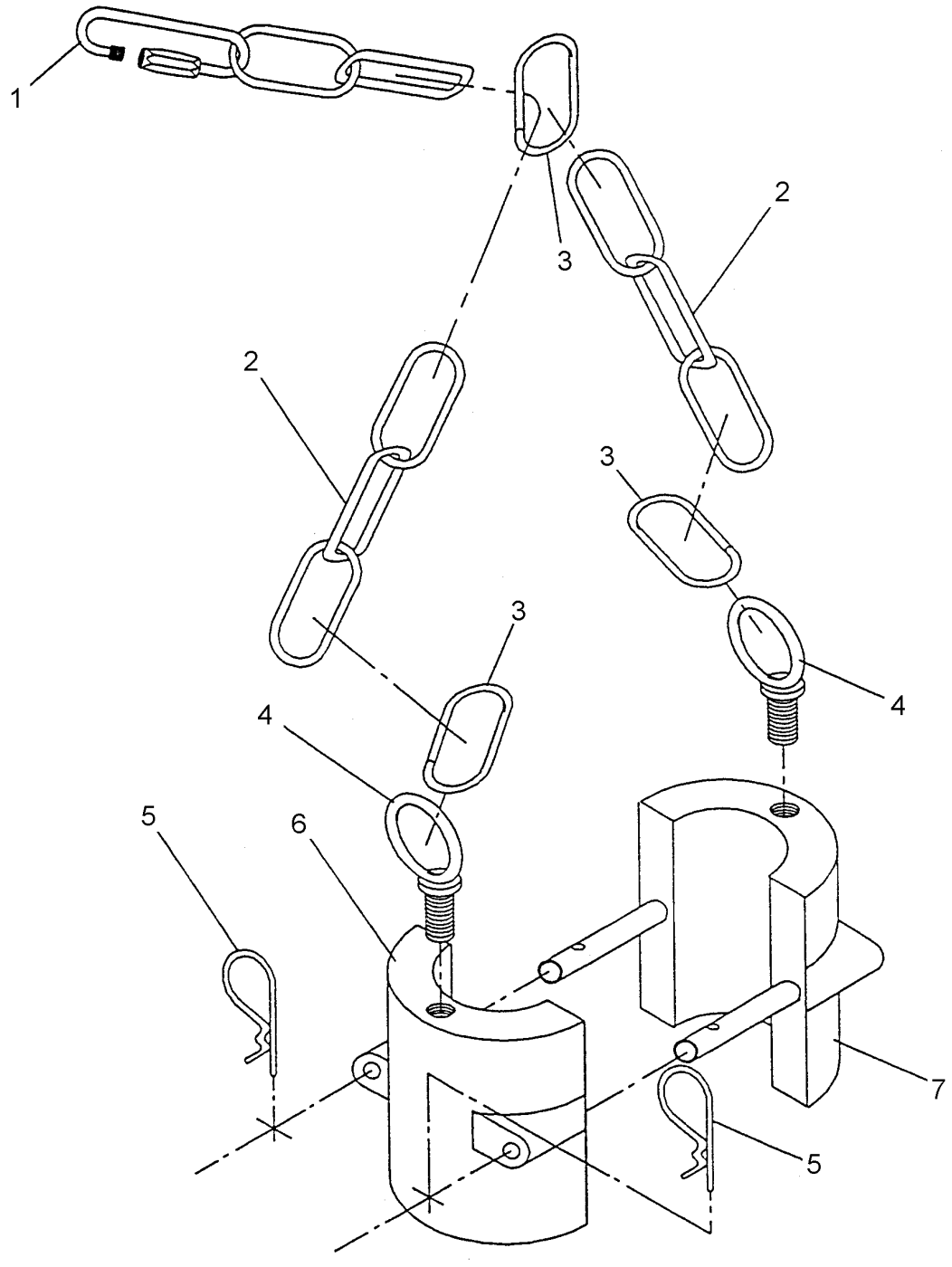


**3486000212**

**(SHEET 1 OF 1)**

Description
**WEIGHT AND CHAIN ASSEMBLY (COMPLETE ASSEMBLY)**

Assembly No.
**3486000212**
Revision:

| Item | FN | Part | Qty | Description |
|---|---|---|---|---|
| 1 | | **9333101840** | 1 | CLEVIS |
| 2 | | **9333101921** | 1 | CHAIN ASSEMBLY |
| 3 | | **9333101922** | 3 | CLAMP, CHAIN |
| 4 | | **9333101923** | 2 | EYEBOLT |
| 5 | | **9333101916** | 2 | PIN, COTTER |
| 6 | | **9333101924** | 1 | WEIGHT, FEMALE |
| 7 | | **9333101925** | 1 | WEIGHT, MALE |

**Notes**

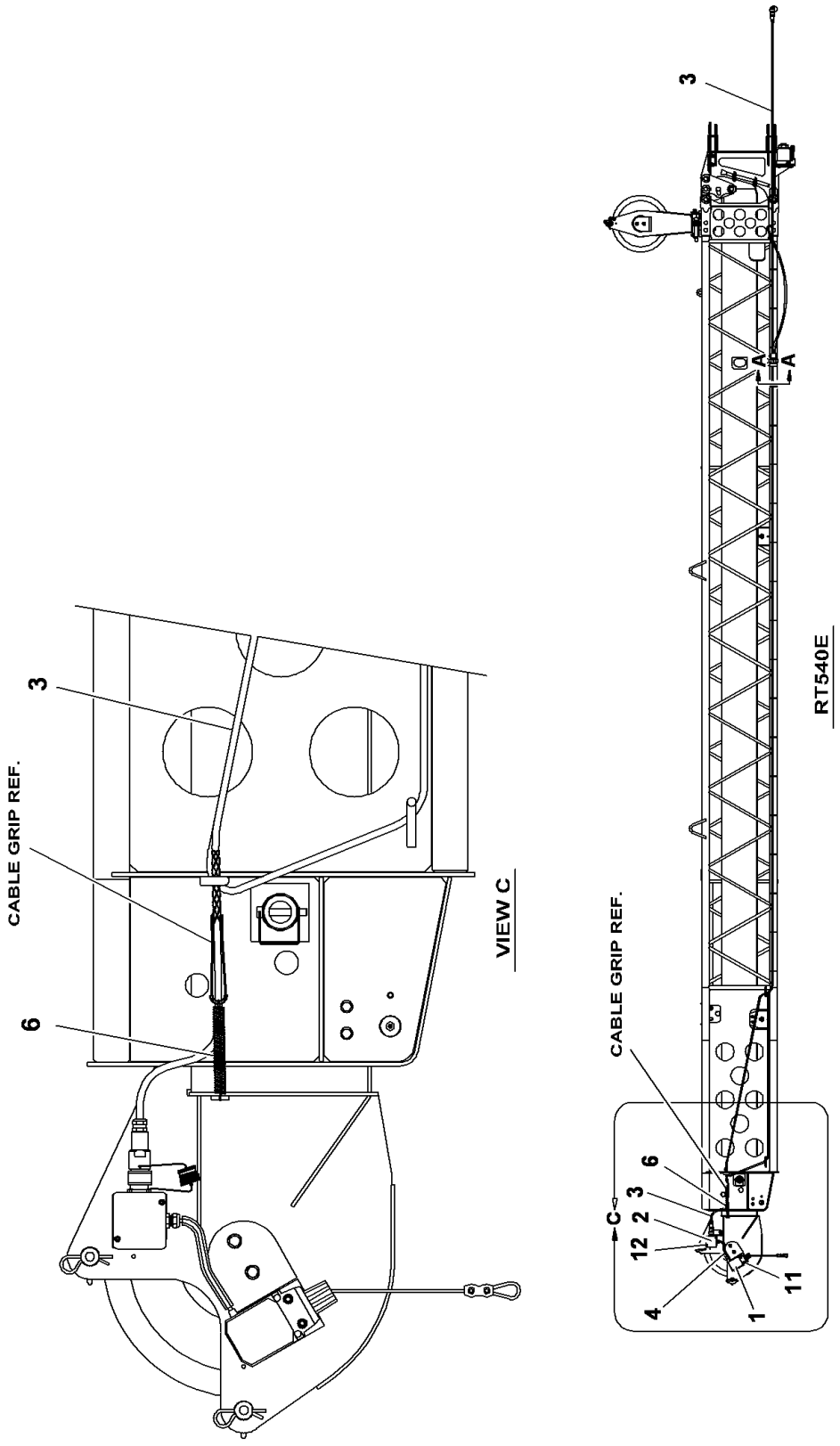


7598100003

(SHEET 2 OF 2)

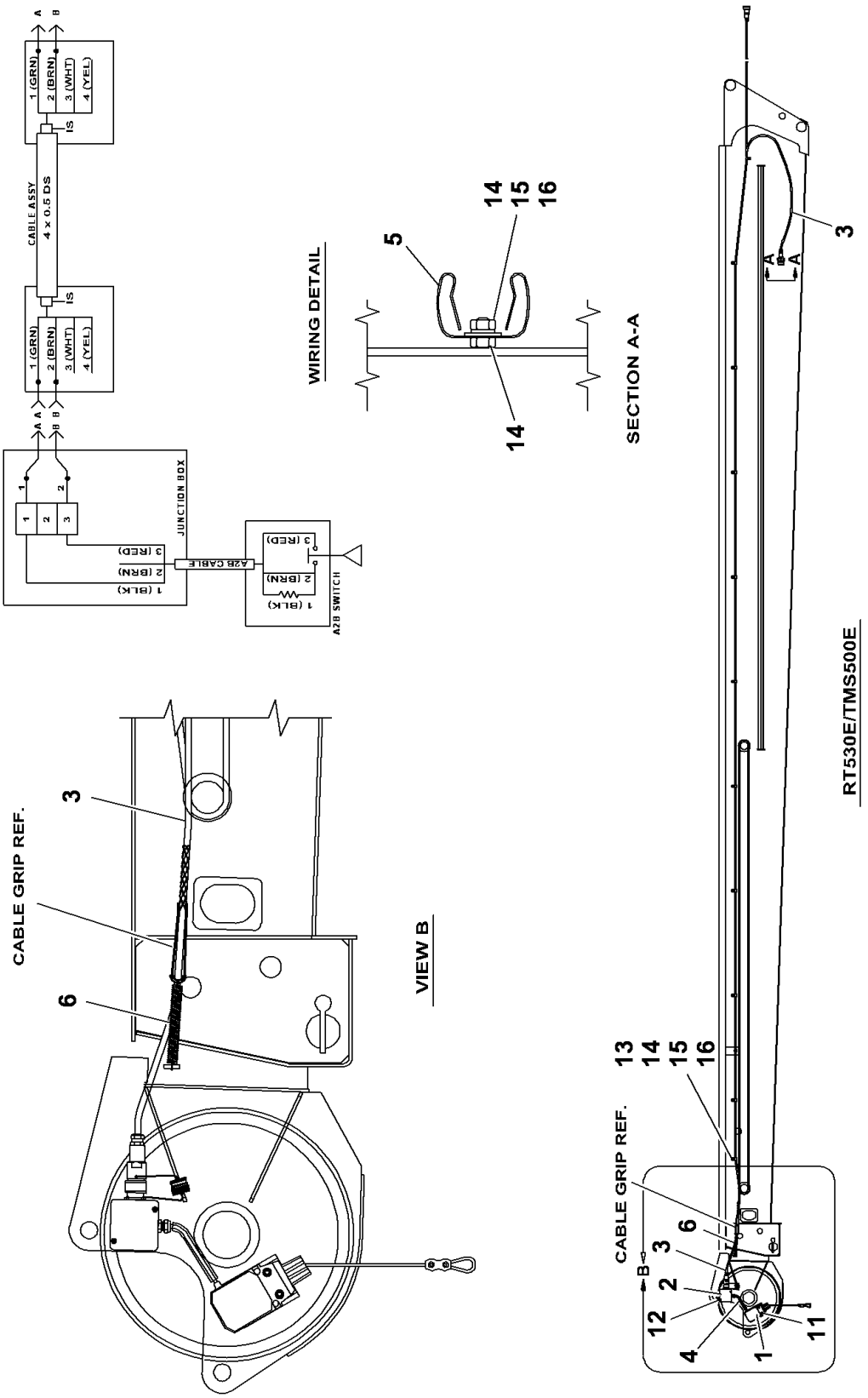
WIRING DETAIL
SECTION A-A
RT530E/TMS500E
VIEW B
CABLE GRIP REF.
CABLE ASSY
4 x 0.5 DS
JUNCTION BOX
A2B CABLE
A2B SWITCH
1 (GRN)
2 (BRN)
3 (WHT)
4 (YEL)
1 (BLK)
2 (BRN)
3 (RED)

Description
**EXTENSION KIT INSTALLATION - BOOM**

Assembly No.
**7598100003**
Revision: **J**

| Item | FN | Part | Qty | Description |
|---|---|---|---|---|
| 1 | | **9333102238** | 1 | A2B SWITCH, WITHOUT CRIMP |
| 2 | + | **9333102768** | 1 | JUNCTION BOX ASSEMBLY - 80MM X 75MM, PG9 + 2-PIN |
| 3 | | **9333103701** | 1 | CABLE ASSEMBLY INCLUDES THE FOLLOWING PARTS |
| | | **9333103739** | 1 | GRIP, CABLE |
| 4 | | **9333102235** | 1 | CONDUIT (CUT TO LENGTH REQUIRED) |
| 5 | | **9333103703** | 1 | CLIP, GRIPPER |
| 6 | | **9333103738** | 1 | SPRING |
| 11 | | **7110151205** | 2 | CAP SCREW, 5/16" - 18 N.C. X 1 1/2" GRADE 1 |
| 12 | | **7110080605** | 2 | CAP SCREW, 5/32" - 32 N.C. X 3/4" GRADE 1 |
| 13 | | **7300000100** | 11 | CLAMP, TUBING 3/8" I.D. |
| 14 | | **7660140000** | 12 | NUT, HEX 1/4" - 20 N.C. |
| 15 | | **7950140141** | 12 | WASHER, FLAT 1/4" PLAIN NARROW |
| 16 | | **7950140050** | 12 | WASHER, LOCK 1/4" |

**+ SEE FURTHER BREAKDOWN THIS GROUP**

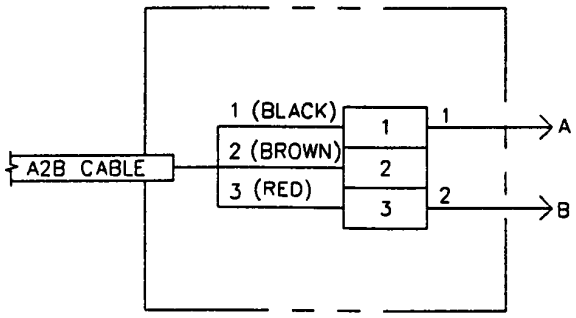


WIRING DETAIL

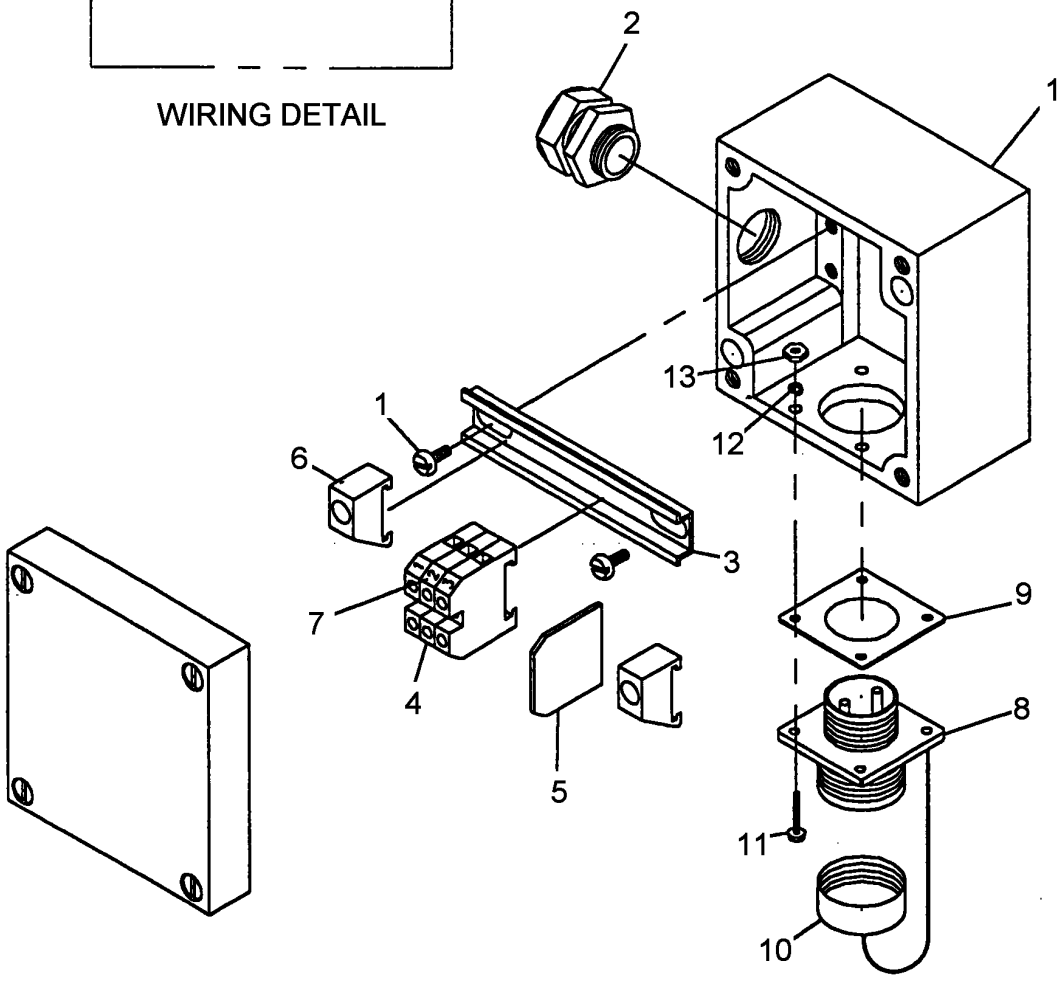


EXPLODED VIEW

Description
**JUNCTION BOX ASSEMBLY - 80MM X 75MM, PG9 + 2-PIN**

Assembly No.
**9333102768**
Revision:

| Item | FN | Part | Qty | Description |
|---|---|---|---|---|
| 1 | | **9333104159** | 1 | JUNCTION BOX,- MACHINED |
| 2 | | **9333102674** | 1 | STRAIN RELIEF<br>PG9 |
| 3 | | **9333102759** | 1 | RAIL, TERMINAL STRIP MOUNTING |
| 4 | | **9333102663** | 3 | BLOCK, TERMINAL STRIP |
| 5 | | **9333102664** | 1 | PLATE, TERMINAL STRIP END |
| 6 | | **9333102665** | 2 | BRACKET, TERMINAL STRIP END |
| 7 | | **9333102666** | 1 | TAGS, TERMINAL STRIP |
| 8 | | **9333102760** | 1 | CONNECTOR, CANNON<br>2-PIN MALE RECEPTACLE |
| 9 | | **9333102482** | 1 | GASKET |
| 10 | | **9333102612** | 1 | COVER, DUST |
| 11 | | **9333102669** | 4 | SCREW #4 |
| 12 | | **9333102266** | 4 | WASHER, LOCK<br>#4 |
| 13 | | **9333102480** | 4 | NUT #4 |

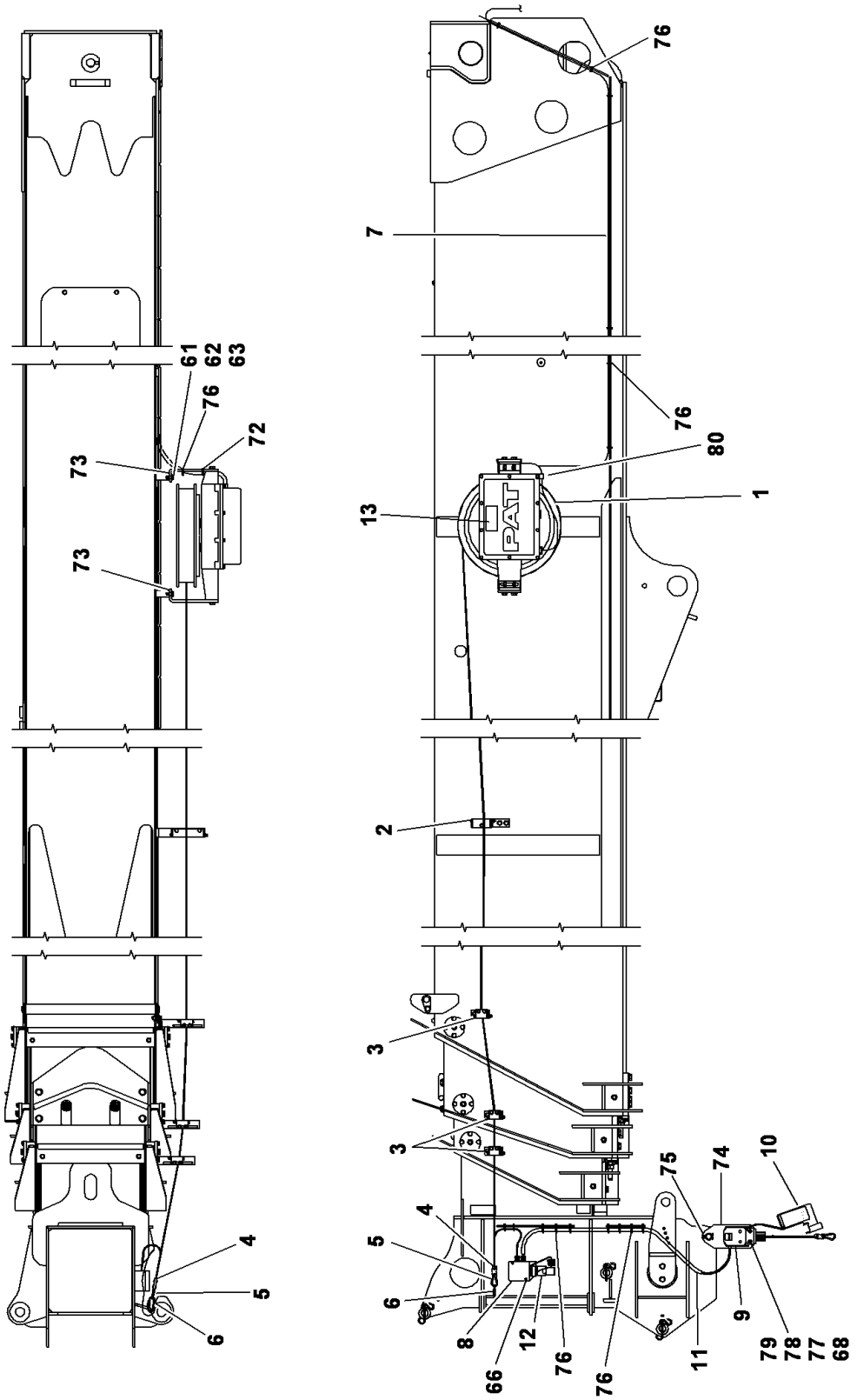


80041279

(SHEET 1 OF 1)

Description
**LMI BOOM KIT**

Assembly No.
**80041279**
Revision: **D**

| Item | FN | Part | Qty | Description |
|---|---|---|---|---|
| 61 | | **7126191253** | 4 | CAP SCREW, M10 X 25 HEX HEAD |
| 62 | | **7951190014** | 4 | FLAT WASHER, 10MM I.D. |
| 63 | | **7951190210** | 4 | LOCK WASHER, 10MM |
| 65 | | **7110151605** | 2 | CAP SCREW,<br>5/16" -18 N.C. X 2"<br>GRADE 1 |
| 66 | | **7128111154** | 2 | SHCS M4x20 -12.9 ISO 4762 |
| 72 | | **7850000805** | 1 | TIE, CABLE (BLACK)<br>13 3/8" LONG |
| 73 | | **6705017532** | 0 | SHIM,<br>-USE AS REQUIRED |
| 74 | | **4197910236** | 1 | PLATE, ANTI 2 BLOCK |
| 75 | | **7690102410** | 1 | PIN, COTTER<br>3/16" X 1 1/2" |
| 76 | | **7850000237** | 43 | TIE, CABLE (BLACK)<br>7 5/16" LONG |
| 77 | | **7950150141** | 2 | WASHER, FLAT 5/16" |
| 78 | | **7950150050** | 2 | WASHER, LOCK 5/16" I.D. |
| 79 | | **7660150000** | 2 | NUT, HEX<br>5/16" - 18 N.C. |
| 80 | | **7300100021** | 1 | TUBING CLAMP - 3/16 |

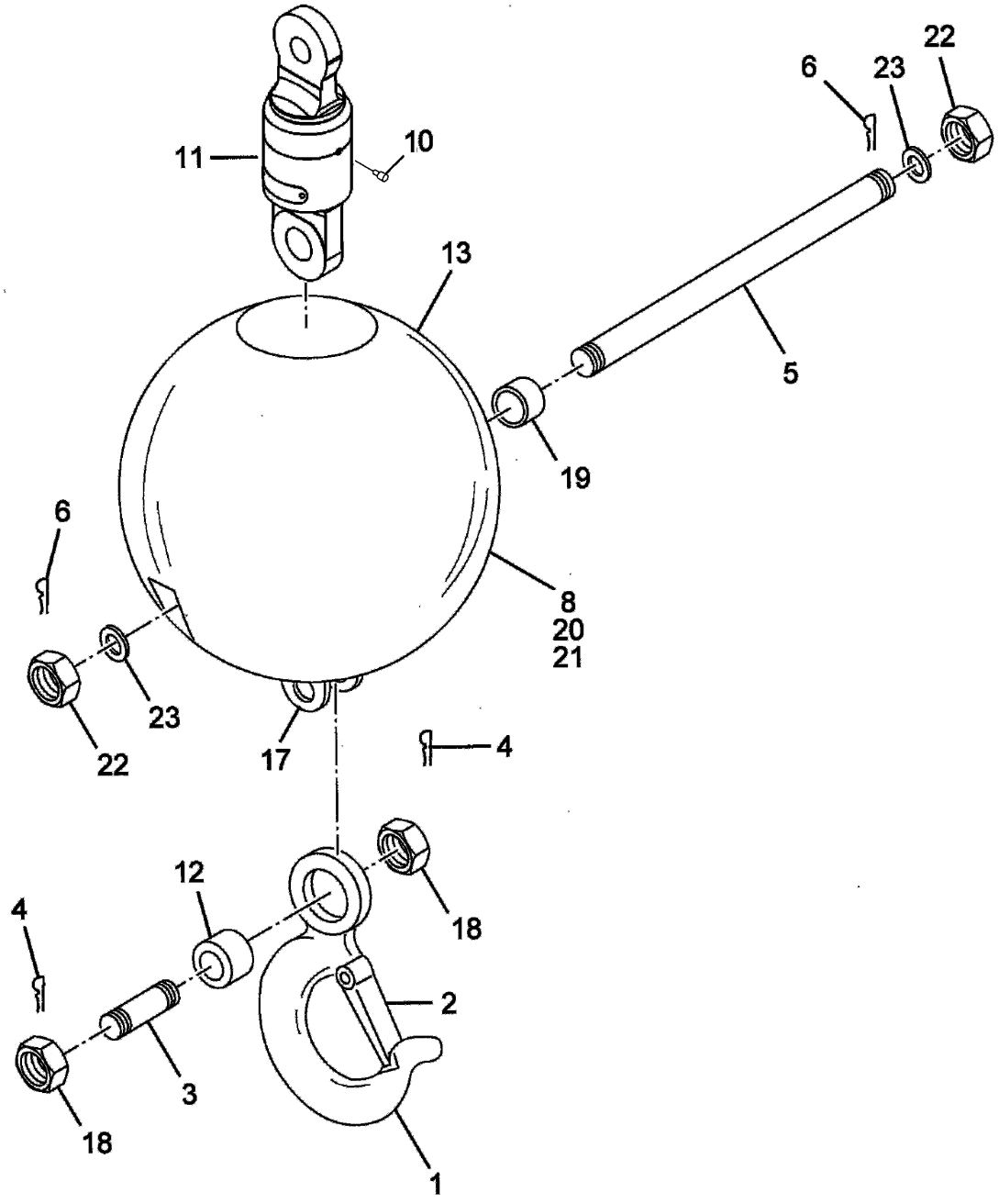


7053100009

(SHEET 1 OF 1)

Description
**BALL ASSEMBLY - OVERHAUL (7.5 TON)**

Assembly No.
**7053100009**
Revision:

| Item | FN | Part | Qty | Description |
|---|---|---|---|---|
| 1 | | **9053100042** | 1 | HOOK |
| 2 | | **9086100639** | 1 | KIT, LATCH<br>INCLUDES THE FOLLOWING PARTS |
| | | **9086100578** | 1 | PIN, W/GROOVE |
| | | **9086100577** | 2 | RING,RETAINER E-CLIP |
| | | **9086100579** | 1 | SPRING |
| | | **9086100571** | 1 | PIN, QUICK RELEASE |
| 3 | | **9053100043** | 1 | PIN |
| 4 | | **9086100294** | 2 | PIN, COTTER |
| 5 | | **9053100044** | 1 | PIN |
| 6 | | **9053100003** | 2 | PIN, COTTER |
| 8 | | **NSS** | 1 | NOT SERVICED SEPARATELY<br>BALL |
| 10 | | **7440030000** | 1 | FITTING, STRAIGHT GREASE<br>1/4" N.P.T. |
| 11 | | **9053100071** | 1 | SWIVEL ASSY. |
| 12 | | **9053100047** | 1 | SPACER |
| 13 | | **9086100305** | 1 | PLATE, CAUTION |
| 17 | | **9053100086** | 2 | PLATE, ADAPTER |
| 18 | | **9086100300** | 2 | NUT |
| 19 | | **9053100050** | 1 | SPACER |
| 20 | | **9053100051** | 1 | PLATE,NAME I.D. |
| 21 | | **9086100327** | 8 | DRIVE SCREW |
| 22 | | **9086100144** | 2 | NUT |
| 23 | | **9053100038** | 2 | WASHER, |

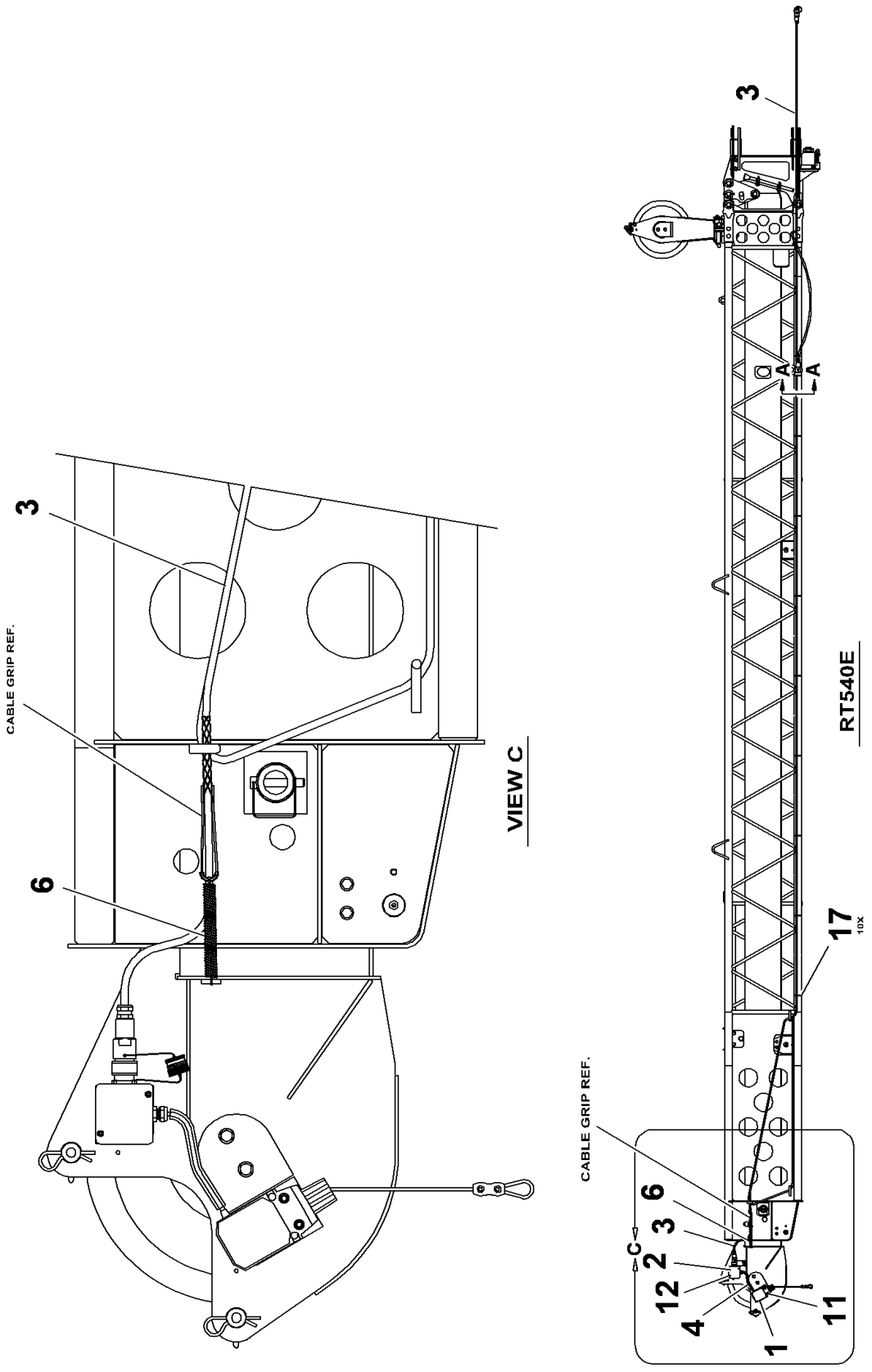
3
A
A
RT540E
17
10X
CABLE GRIP REF.
C
6
3
2
12
4
1
11
VIEW C
3
CABLE GRIP REF.
6

80051901

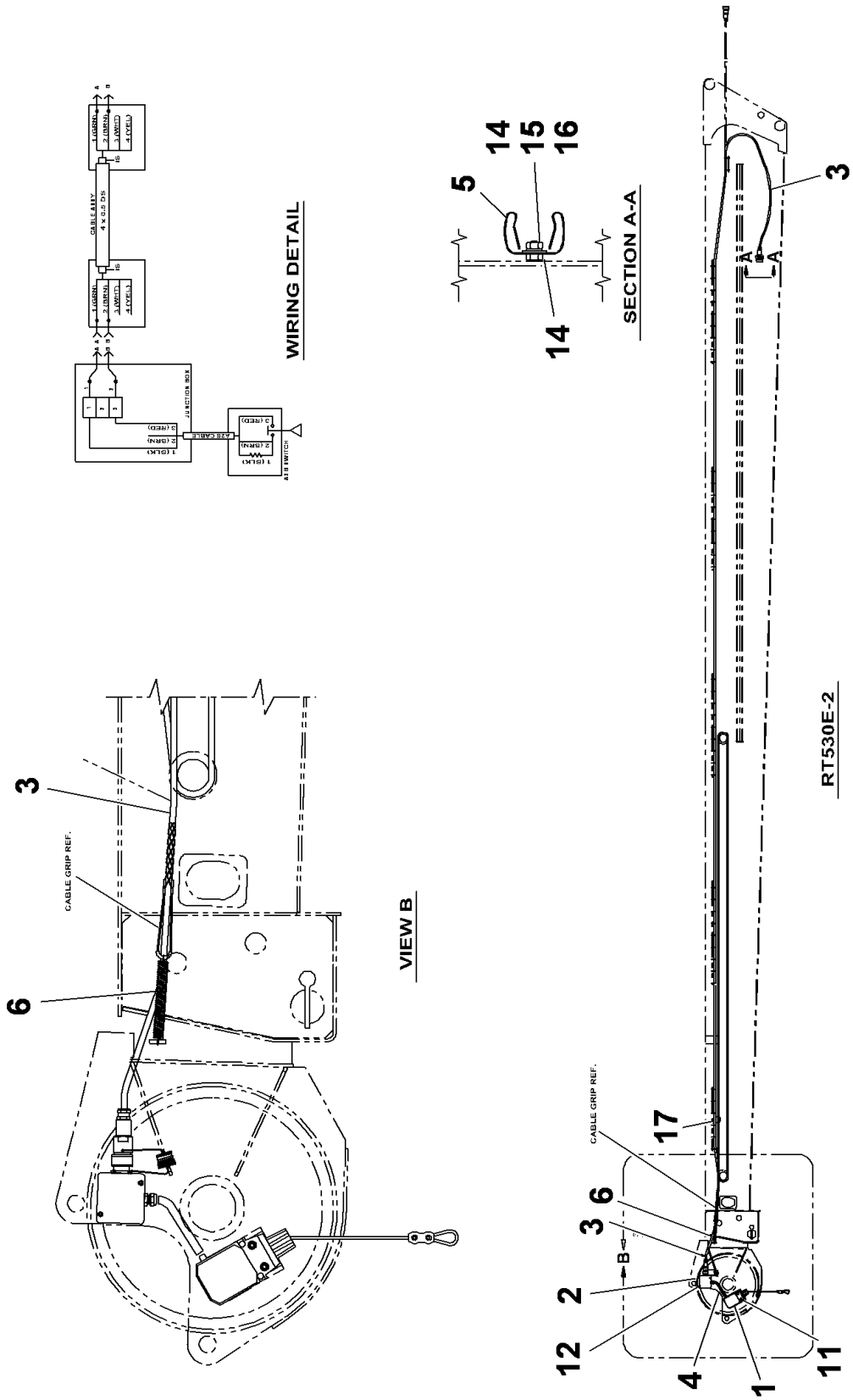


80051901

(SHEET 1 OF 2)

Description
**LMI TELE-OFF BOOM EXTENSION KIT INSTALLATION**

Assembly No.
**80051901**
Revision: **B**

| Item | FN | Part | Qty | Description |
|---|---|---|---|---|
| 11 | | **7110151205** | 2 | CAP SCREW,<br>5/16" - 18 N.C. X 1 1/2"<br>GRADE 1 |
| 12 | | **7110080605** | 2 | CAP SCREW,<br>5/32" - 32 N.C. X 3/4"<br>GRADE 1 |
| 14 | | **7660100000** | 2 | NUT, HEX<br>3/16" - 32 N.F.<br>GRADE 1 |
| 15 | | **7950100141** | 1 | WASHER, FLAT, #10 |
| 16 | | **7950100050** | 1 | WASHER, LOCK #10 |
| 17 | | **7850000805** | 10 | TIE, CABLE (BLACK)<br>13 3/8" LONG |

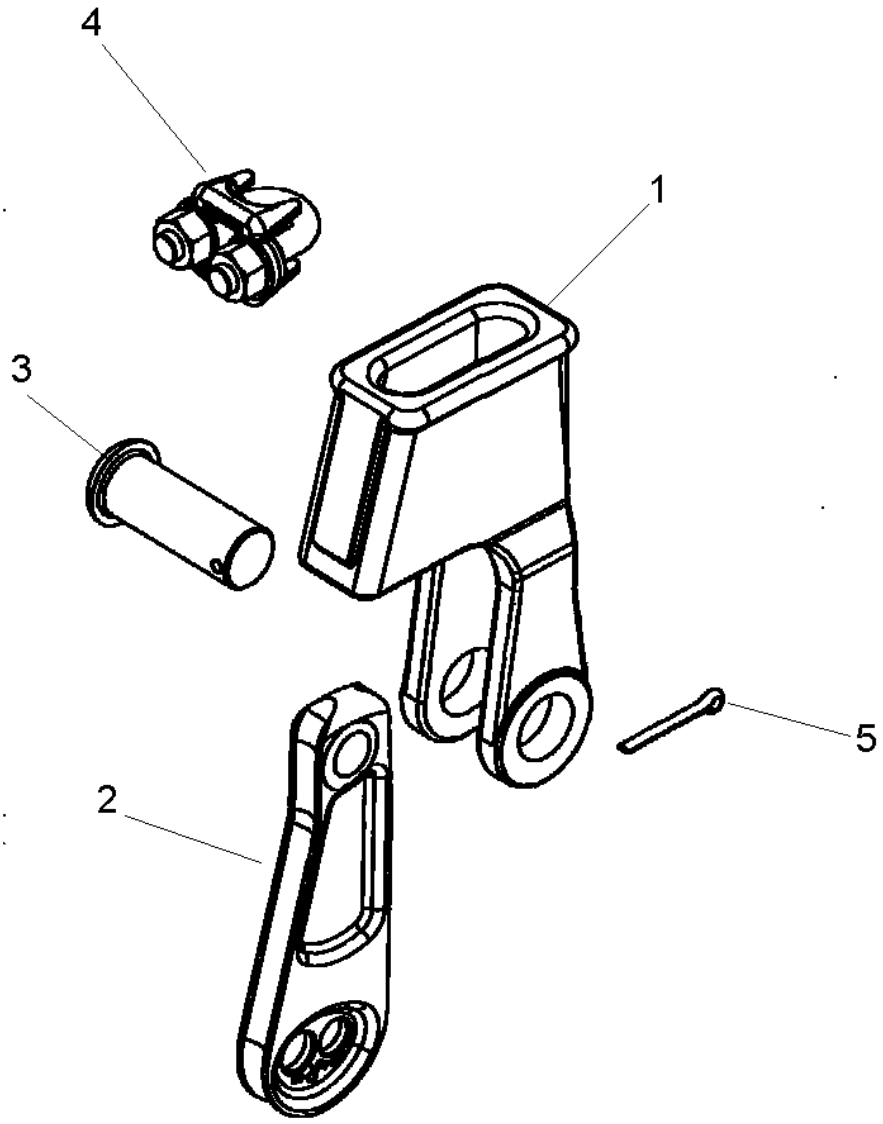


**7826100017**

**(SHEET 1 OF 1)**

Description
**SOCKET ASSY 5/8"**

Assembly No.
**7826100017**
Revision:

| Item | FN | Part | Qty | Description |
|---|---|---|---|---|
| 1 | | **NSS** | 1 | NOT SERVICED SEPARATELY<br>SOCKET |
| 2 | | **9826100007** | 1 | WEDGE |
| 3 | | **9826100008** | 1 | PIN |
| 4 | | **9914100042** | 1 | CLIP |
| 5 | | **9826100009** | 1 | PIN, COTTER |

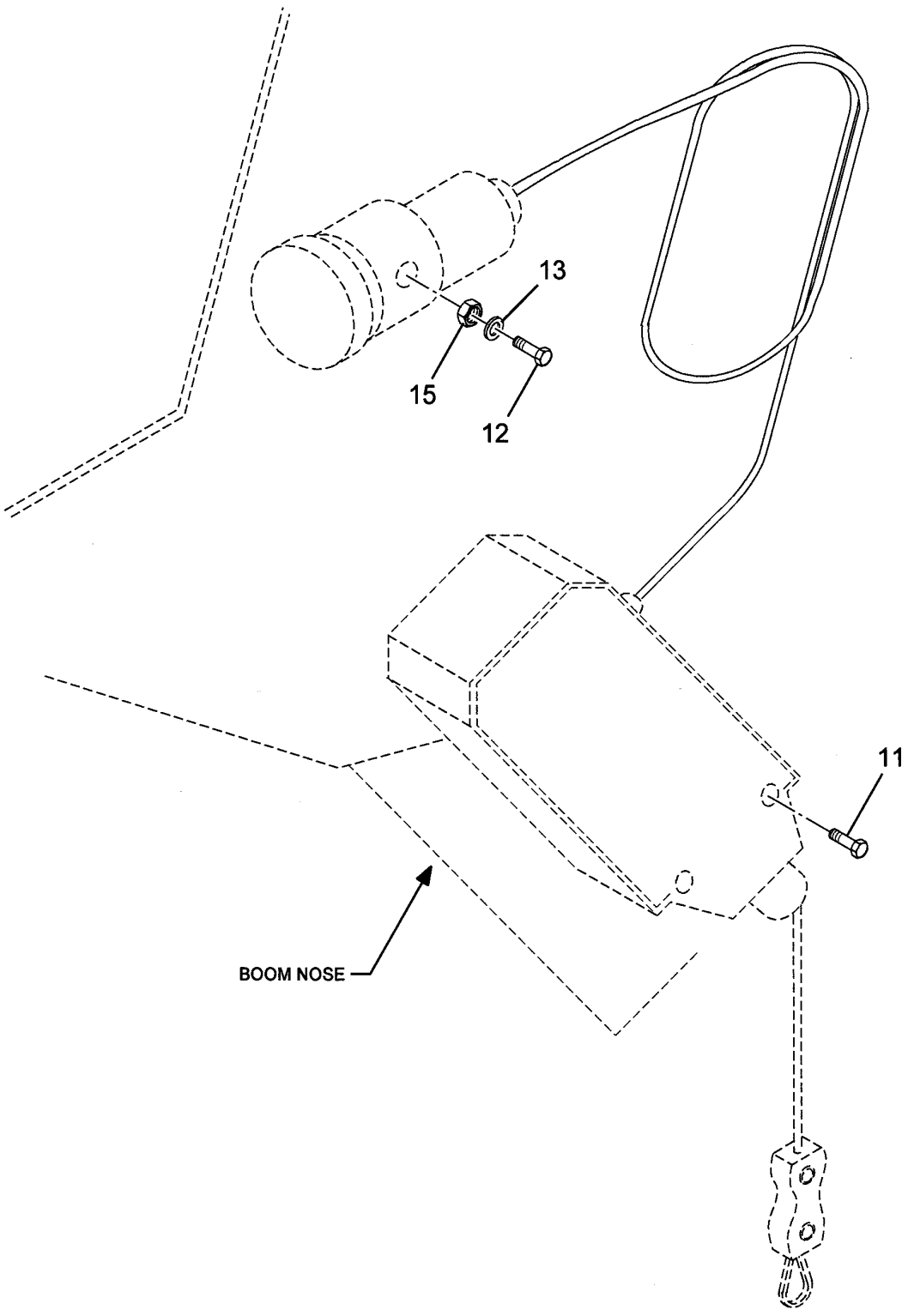


6978100041

(SHEET 1 OF 1)

Description
**LMI AUX BOOM NOSE KIT INSTL**

Assembly No.
**6978100041**
Revision: **D**

| Item | FN | Part | Qty | Description |
|---|---|---|---|---|
| 11 | | **7110151205** | 2 | CAP SCREW,<br>5/16" - 18 N.C. X 1 1/2"<br>GRADE 1 |
| 12 | | **7111100611** | 1 | SCREW, MACHINE<br>3/16" - 24 N.C. X 3/4"<br>GRADE 1 |
| 13 | | **7950100161** | 1 | FLATWASHER, 3/16" I.D. |
| 14 | | **7950100050** | 1 | WASHER, LOCK #10 |
| 15 | | **7660101100** | 1 | NUT, HEX<br>3/16" - 32 N.F.<br>GRADE 1 |

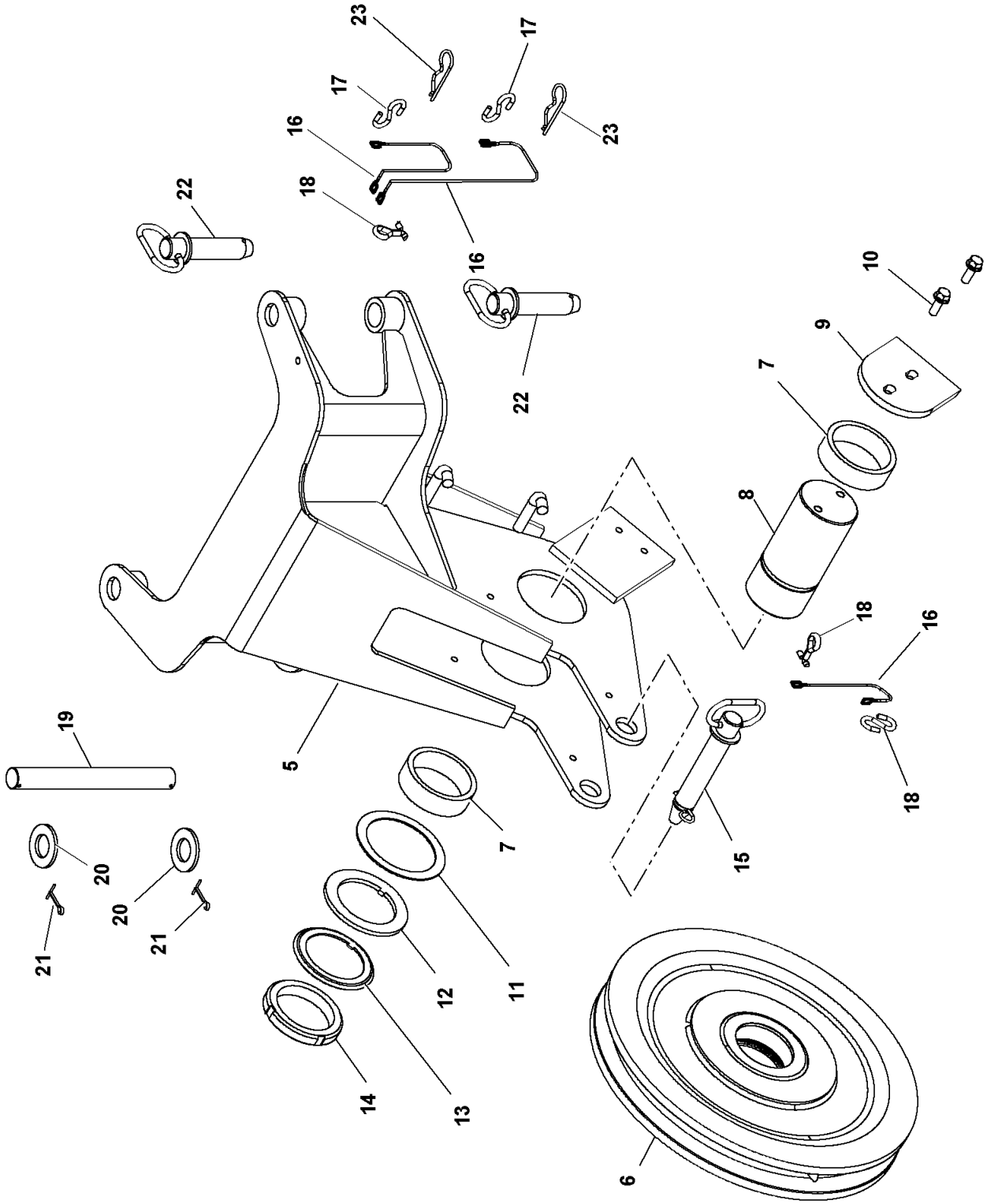


2159910170

(SHEET 1 OF 1)

Description
**NOSE INSTALLATION - AUXILIARY**

Assembly No.
**2159910170**
Revision: **C**

| Item | FN | Part | Qty | Description |
|---|---|---|---|---|
| 5 | | **2159910022** | 1 | NOSE, AUXILIARY |
| 6 | + | **6718100031** | 1 | SHEAVE ASSEMBLY - 5/8" ROPE |
| 7 | | **80018337** | 2 | SPACER |
| 8 | | **6810001159** | 1 | SHAFT |
| 9 | | **4159910026** | 1 | CAP, END |
| 10 | | **7115160878** | 2 | SCREW, FLANGE<br>3/8" - 16 N.C. X 1"<br>GRADE 5 |
| 11 | | **4159900304** | 3 | SHIM (.0544") |
| 12 | | **80022876** | 1 | KEYED WASHER |
| 13 | | **80022875** | 1 | LOCKWASHER |
| 14 | | **80022874** | 1 | LOCKNUT |
| 15 | | **7689000059** | 1 | PIN, HITCH<br>INCLUDES THE FOLLOWING PARTS |
| | | **7689000701** | 1 | CLIP, HITCH PIN |
| 16 | | **9286100001** | 1 | CHAIN<br>3' PC. ( MUST CUT TO LENGTH NEEDED ) |
| 17 | | **7601000955** | 3 | S-HOOK, STANDARD |
| 18 | | **7690152410** | 2 | PIN, COTTER<br>5/16" X 1 1/2" |
| 19 | | **6689100012** | 1 | PIN |
| 20 | | **7950260141** | 2 | WASHER, 1" I.D. |
| 21 | | **7690052410** | 2 | PIN, COTTER<br>1/8" X 1 1/2" |
| 22 | | **7689000721** | 2 | PIN, HITCH |
| 23 | | **7689000053** | 2 | PIN, CLIP |

**+ SEE FURTHER BREAKDOWN THIS GROUP**

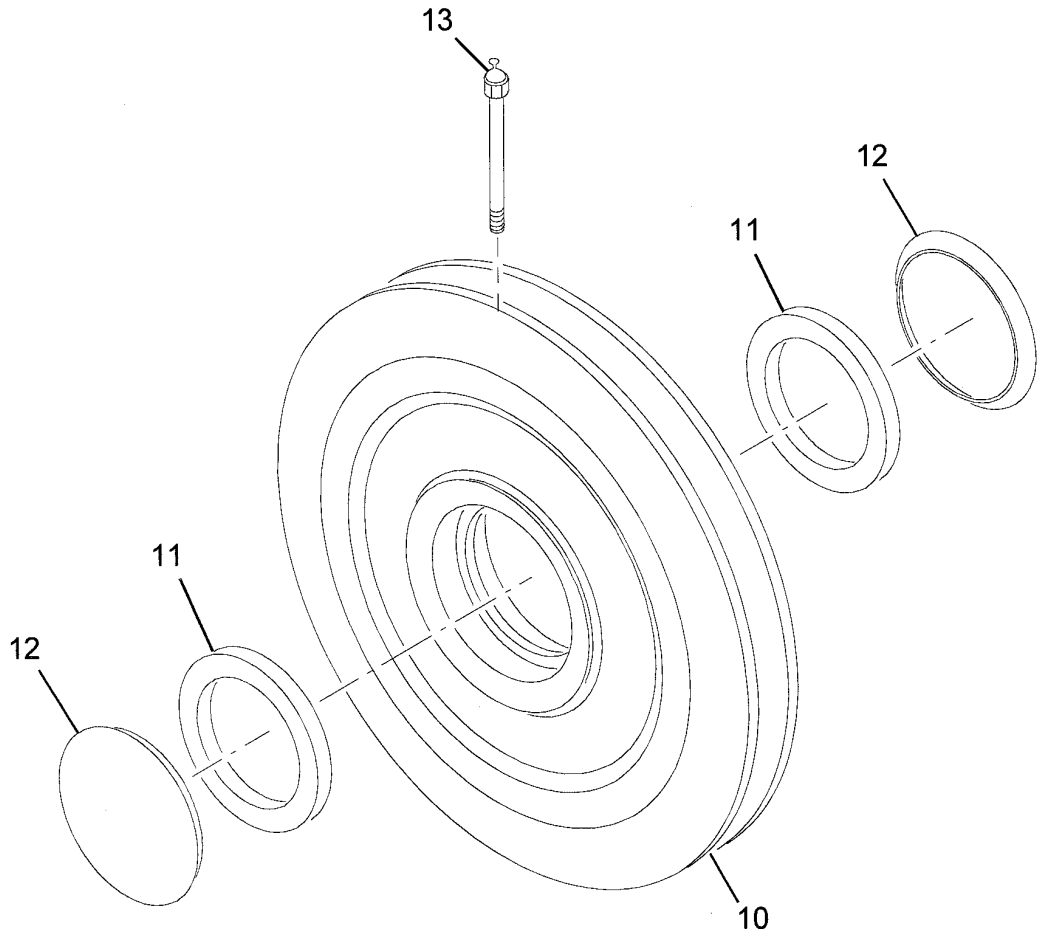


**6718100031**

**(SHEET 1 OF 1)**

Description
**SHEAVE ASSEMBLY - 5/8" ROPE**

Assembly No.
**6718100031**
Revision: **A**

| Item | FN | Part | Qty | Description |
|---|---|---|---|---|
| 10 | | **6718100030** | 1 | WHEEL, 5/8" ROPE SHEAVE<br>INCLUDES THE FOLLOWING PARTS |
| | | **7794000272** | 2 | CUP, BEARING |
| 11 | | **7069000183** | 2 | CONE, BEARING |
| 12 | | **7069000175** | 2 | CLOSURE, BEARING |
| 13 | | **7440000000** | 1 | FITTING, 1/8 STRAIGHT GREASE |

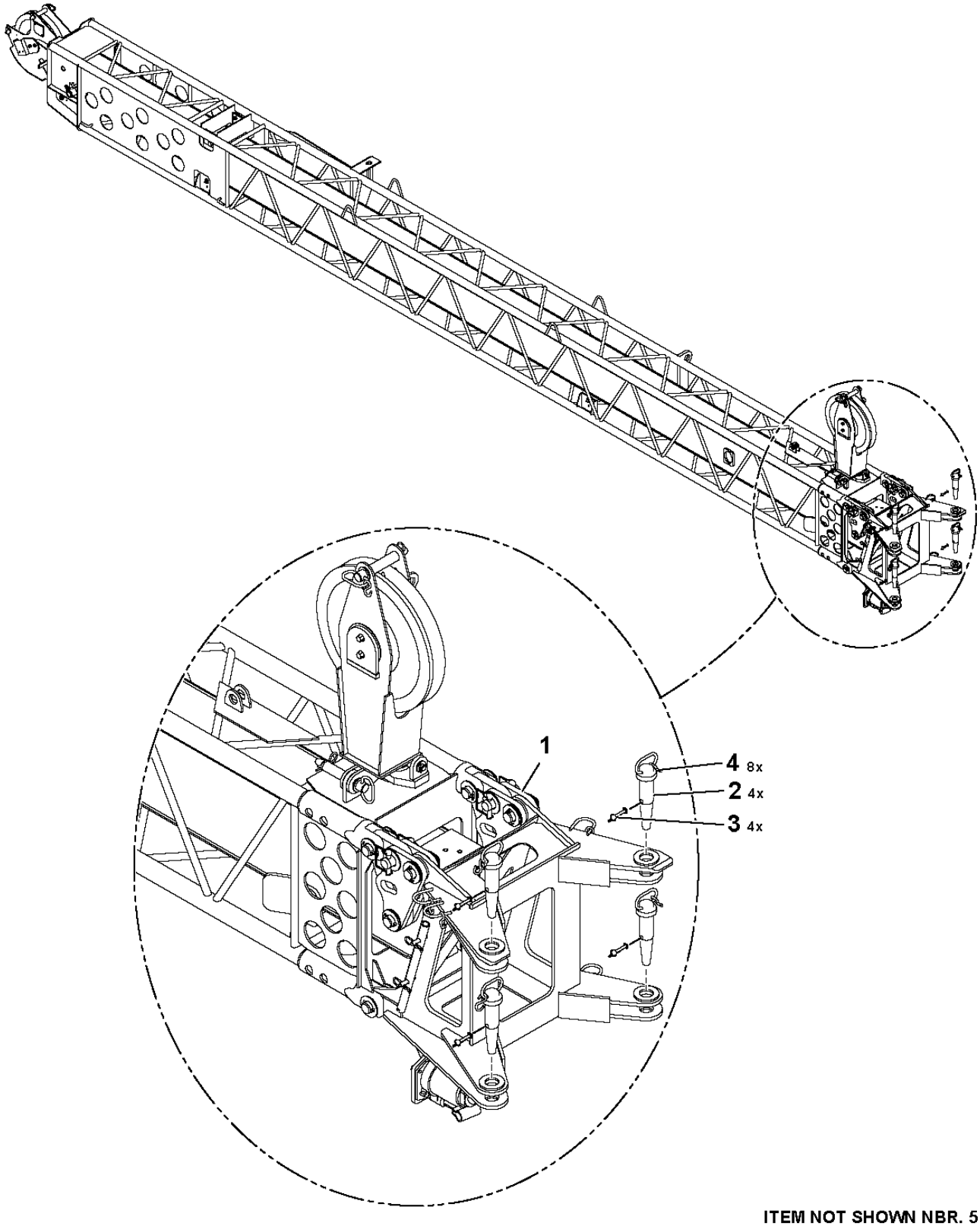


ITEM NOT SHOWN NBR. 5

80024930

(SHEET 1 OF 1)

Description
**BOOM EXTENSION INSTALLATION 7.9-13.7M**

Assembly No.
**80024930**
Revision: **#**

| Item | FN | Part | Qty | Description |
|---|---|---|---|---|
| 1 | + | **80024931** | 1 | BOOM EXTENSION ASSEMBLY 7.9-13.7M |
| 2 | | **6689100027** | 4 | PIN |
| 3 | | **7689001653** | 4 | PIN, SAFETY SNAP |
| 4 | | **7601000955** | 8 | S-HOOK, STANDARD |
| 5 | | **6286000736** | 4 | CHAIN |

**+ SEE FURTHER BREAKDOWN THIS GROUP**

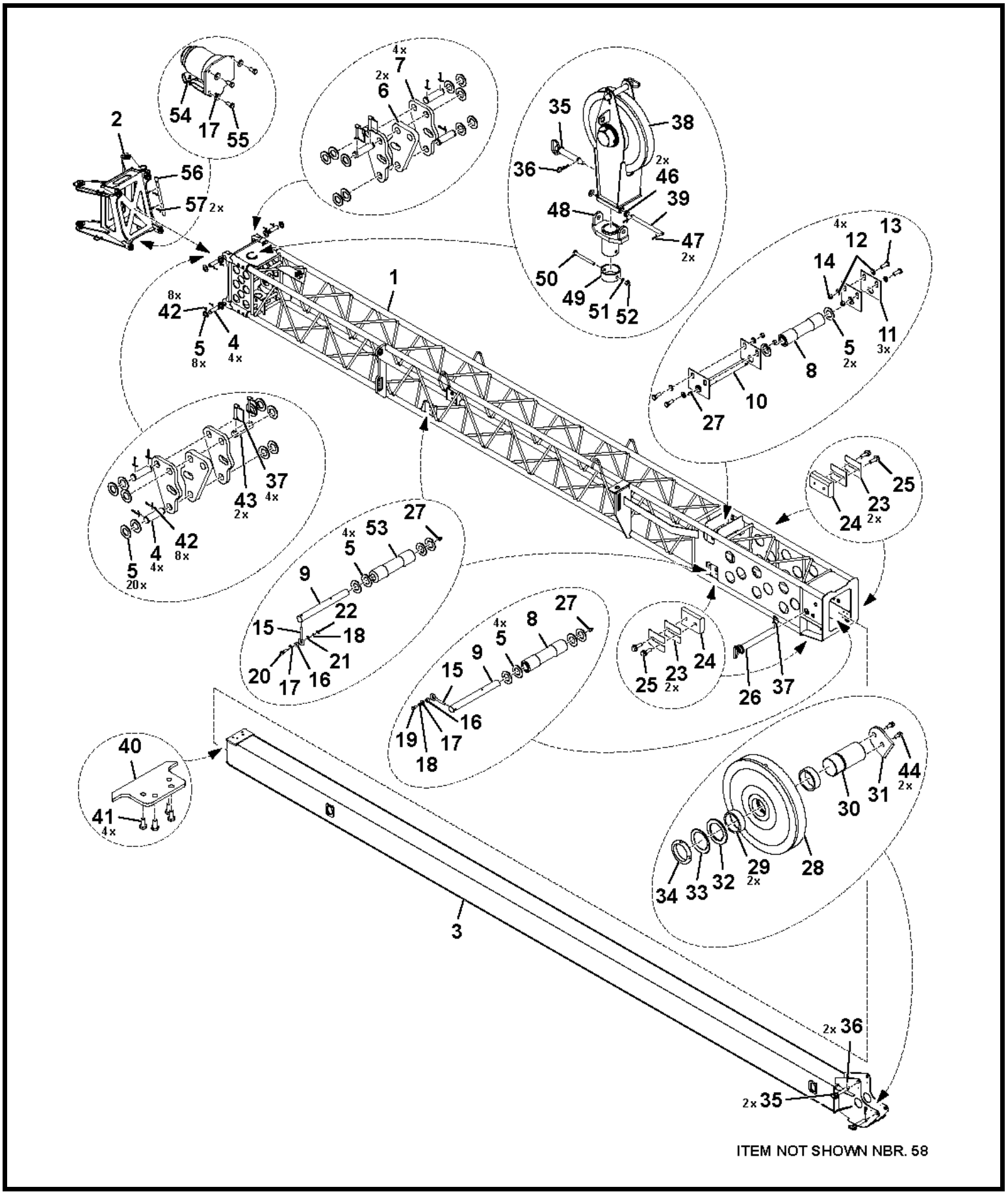


80024931

(SHEET 1 OF 1)

Description
**BOOM EXTENSION ASSEMBLY 7.9-13.7M**

Assembly No.
**80024931**
Revision: **C**

| Item | FN | Part | Qty | Description |
|---|---|---|---|---|
| 1 | | **80024932** | 1 | BASE EXTENSION |
| 2 | | **2159910202** | 1 | ADAPTER, JIB BOOM EXTENSION |
| 3 | | **80013783** | 1 | STINGER |
| 4 | | **6689100155** | 8 | PIN |
| 5 | | **7950280140** | 42 | WASHER, |
| 6 | | **4159910646** | 2 | LINK, OFFSET |
| 7 | | **4159910647** | 4 | LINK, OFFSET |
| 8 | | **6772000112** | 2 | ROLLER<br>INCLUDES THE FOLLOWING PARTS |
| | | **6069000293** | 2 | BEARING |
| 9 | | **6810003491** | 3 | SHAFT, 1.12 |
| 10 | | **80026847** | 1 | SHAFT |
| 11 | | **4174900282** | 3 | PLATE |
| 12 | | **7951210014** | 16 | WASHER, FLAT #12 |
| 13 | | **7126211453** | 4 | CAP SCREW, HEX HEAD M12X35 |
| 14 | | **7661210003** | 4 | NUT, HEX 12MM N.C. |
| 15 | | **7099000573** | 3 | BOLT, RIVET EYE |
| 16 | | **6200050303** | 3 | BUSHING |
| 17 | | **7951190014** | 6 | FLAT WASHER, 10MM I.D. |
| 18 | | **7951170210** | 3 | WASHER, LOCK 8MM |
| 19 | | **7126171153** | 1 | CAP SCREW, M8 X 20MM HEX HEAD |
| 20 | | **7126171353** | 2 | CAP SCREW, HEX HEAD |
| 21 | | **7951170014** | 2 | WASHER, FLAT #8 |
| 22 | | **7661170003** | 2 | NUT |
| 23 | | **4159910001** | 8 | SHIM, |
| 24 | | **7671100010** | 4 | WEAR PAD, SIDE |
| 25 | | **7115150878** | 8 | SCREW, FLANGE<br>5/16" - 18 N.C. X 1"<br>GRADE 5 |
| 26 | | **2159910153** | 1 | PIN |
| 27 | | **7440000000** | 4 | FITTING, 1/8 STRAIGHT GREASE |
| 28 | + | **6718100031** | 1 | SHEAVE ASSEMBLY - 5/8" ROPE |
| 29 | | **80018337** | 2 | SPACER |
| 30 | | **6810001159** | 1 | SHAFT |
| 31 | | **4159910026** | 1 | CAP, END |

**+ SEE FURTHER BREAKDOWN THIS GROUP**

Description
**BOOM EXTENSION ASSEMBLY 7.9-13.7M**

Assembly No.
**80024931**
Revision: **C**

| Item | FN | Part | Qty | Description |
|---|---|---|---|---|
| 32 | | **80022876** | 1 | KEYED WASHER |
| 33 | | **80022875** | 1 | LOCKWASHER |
| 34 | | **80022874** | 1 | LOCKNUT |
| 35 | | **7689000059** | 3 | PIN, HITCH<br>INCLUDES THE FOLLOWING PARTS |
| | | **7689000701** | 1 | CLIP, HITCH PIN |
| 36 | | **7689000701** | 3 | CLIP, HITCH PIN |
| 37 | | **7689001756** | 5 | PIN |
| 38 | + | **2159910191** | 1 | MAST ASSEMBLY<br>(COMPLETE ASSEMBLY) |
| 39 | | **6689100143** | 1 | PIN |
| 40 | | **80013784** | 1 | STOP PLATE |
| 41 | | **7126211253** | 4 | CAP SCREW, M12 X 25MM HEX HEAD |
| 42 | | **7690103610** | 16 | PIN, COTTER<br>3/16" X 2 1/4" |
| 43 | | **6689100127** | 2 | PIN |
| 44 | | **7115160878** | 2 | SCREW, FLANGE<br>3/8" - 16 N.C. X 1"<br>GRADE 5 |
| 46 | | **7951240014** | 2 | FLATWASHER 16MM I.D. |
| 47 | | **7690082010** | 2 | PIN, COTTER |
| 48 | | **2159910190** | 1 | SUPPORT, MAST |
| 49 | | **4159910665** | 1 | COLLAR |
| 50 | | **7126212850** | 1 | CAP SCREW, M12 X 120MM HEX HEAD |
| 51 | | **7951210210** | 1 | LOCK WASHER, 12MM I.D. |
| 52 | | **7661210003** | 1 | NUT, HEX 12MM N.C. |
| 53 | | **7772100019** | 2 | ROLLER, NYLATRON |
| 54 | # | **80016520** | 1 | JACK, MODIFIED |
| 55 | | **7115160650** | 3 | CAP SCREW,<br>3/8" - 16 N.C. X 3/4"<br>GRADE 5 |
| 56 | | **80016533** | 1 | HANDLE |
| 57 | | **7689000053** | 2 | PIN, CLIP |
| 58 | | **4159900304** | 4 | SHIM (.0544") |

**+ SEE FURTHER BREAKDOWN THIS GROUP**

**# SERVICED AS AN ASSEMBLY ONLY**

**Notes**

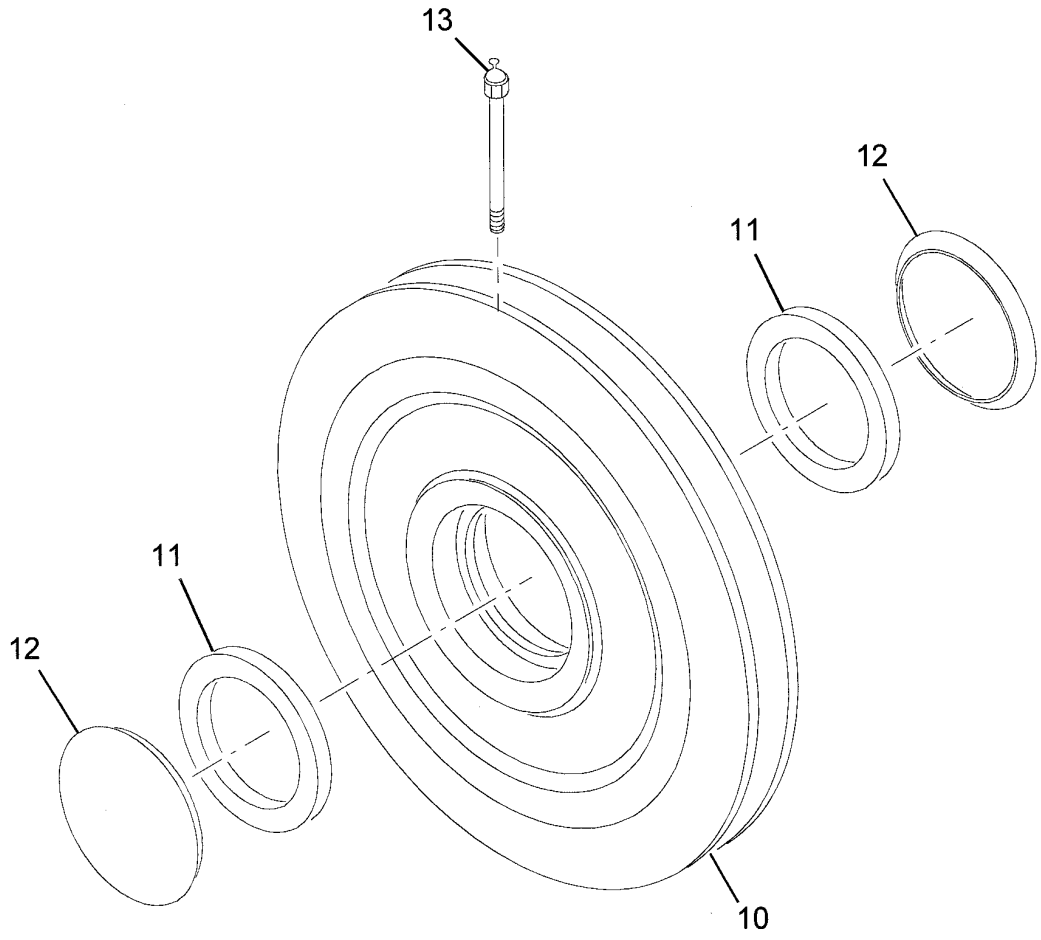


**6718100031**

**(SHEET 1 OF 1)**

Description
**SHEAVE ASSEMBLY - 5/8" ROPE**

Assembly No.
**6718100031**
Revision: **A**

| Item | FN | Part | Qty | Description |
|---|---|---|---|---|
| 10 | | **6718100030** | 1 | WHEEL, 5/8" ROPE SHEAVE<br>INCLUDES THE FOLLOWING PARTS |
| | | **7794000272** | 2 | CUP, BEARING |
| 11 | | **7069000183** | 2 | CONE, BEARING |
| 12 | | **7069000175** | 2 | CLOSURE, BEARING |
| 13 | | **7440000000** | 1 | FITTING, 1/8 STRAIGHT GREASE |

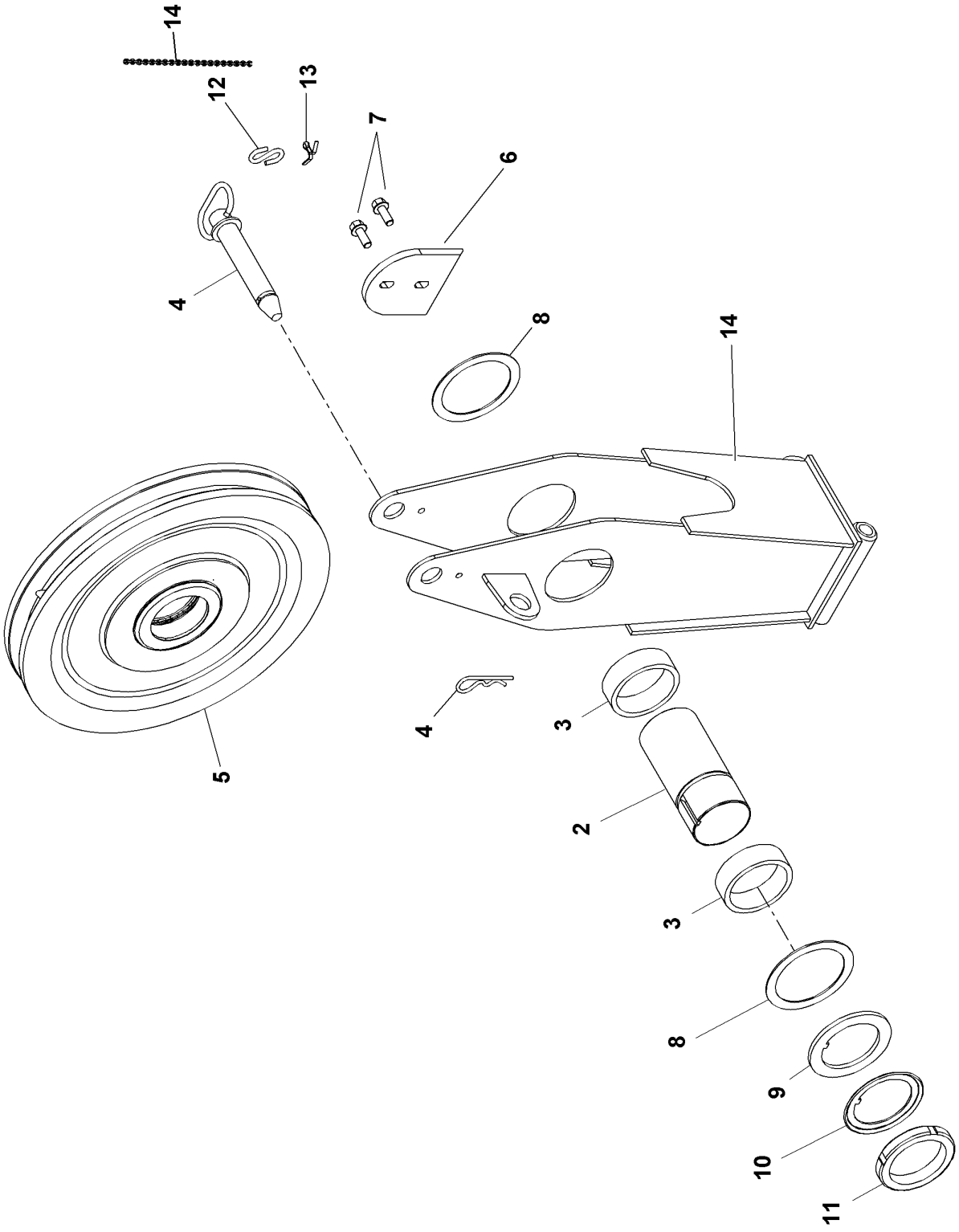


2159910191

(SHEET 1 OF 1)

Description
**MAST ASSEMBLY (COMPLETE ASSEMBLY)**

Assembly No.
**2159910191**
Revision: **C**

| Item | FN | Part | Qty | Description |
|---|---|---|---|---|
| 1 | | **2159910192** | 1 | MAST |
| 2 | | **6810001159** | 1 | SHAFT |
| 3 | | **6910001855** | 2 | SPACER |
| 4 | | **7689000059** | 1 | PIN, HITCH<br>INCLUDES THE FOLLOWING PARTS |
| | | **7689000701** | 1 | CLIP, HITCH PIN |
| 5 | + | **6718100031** | 1 | SHEAVE ASSEMBLY - 5/8" ROPE |
| 6 | | **4159910026** | 1 | CAP, END |
| 7 | | **7115160878** | 2 | SCREW, FLANGE<br>3/8" - 16 N.C. X 1"<br>GRADE 5 |
| 8 | | **4159900304** | 2 | SHIM (.0544") |
| 9 | | **7949000269** | 1 | WASHER, KEYED |
| 10 | | **7949000190** | 1 | WASHER, |
| 11 | | **7659000081** | 1 | LOCKNUT |
| 12 | | **7601000955** | 1 | S-HOOK, STANDARD |
| 13 | | **7690102410** | 1 | PIN, COTTER<br>3/16" X 1 1/2" |
| 14 | | **9286100001** | 1 | CHAIN<br>3' PC. ( MUST CUT TO LENGTH NEEDED ) |

**+ SEE FURTHER BREAKDOWN THIS GROUP**

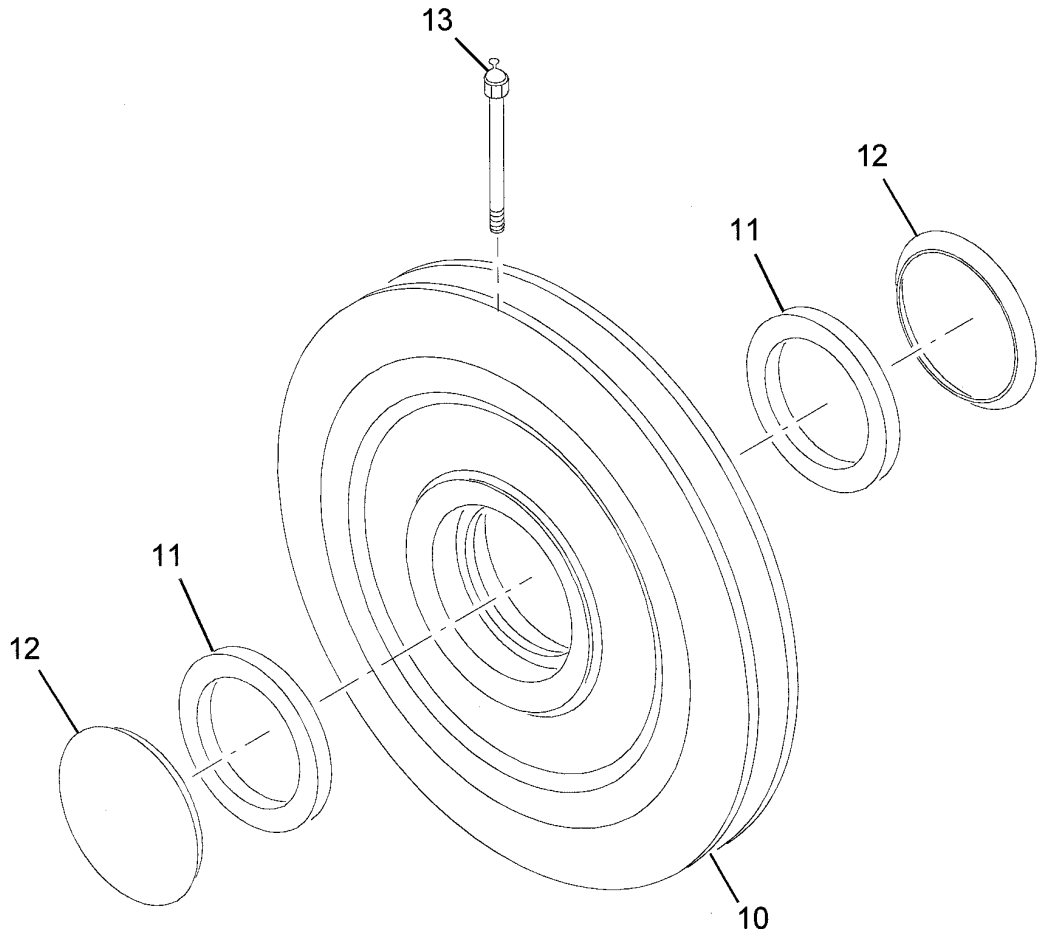


**6718100031**

**(SHEET 1 OF 1)**

Description
**SHEAVE ASSEMBLY - 5/8" ROPE**

Assembly No.
**6718100031**
Revision: **A**

| Item | FN | Part | Qty | Description |
|---|---|---|---|---|
| 10 | | **6718100030** | 1 | WHEEL, 5/8" ROPE SHEAVE<br>INCLUDES THE FOLLOWING PARTS |
| | | **7794000272** | 2 | CUP, BEARING |
| 11 | | **7069000183** | 2 | CONE, BEARING |
| 12 | | **7069000175** | 2 | CLOSURE, BEARING |
| 13 | | **7440000000** | 1 | FITTING, 1/8 STRAIGHT GREASE |

**Notes**

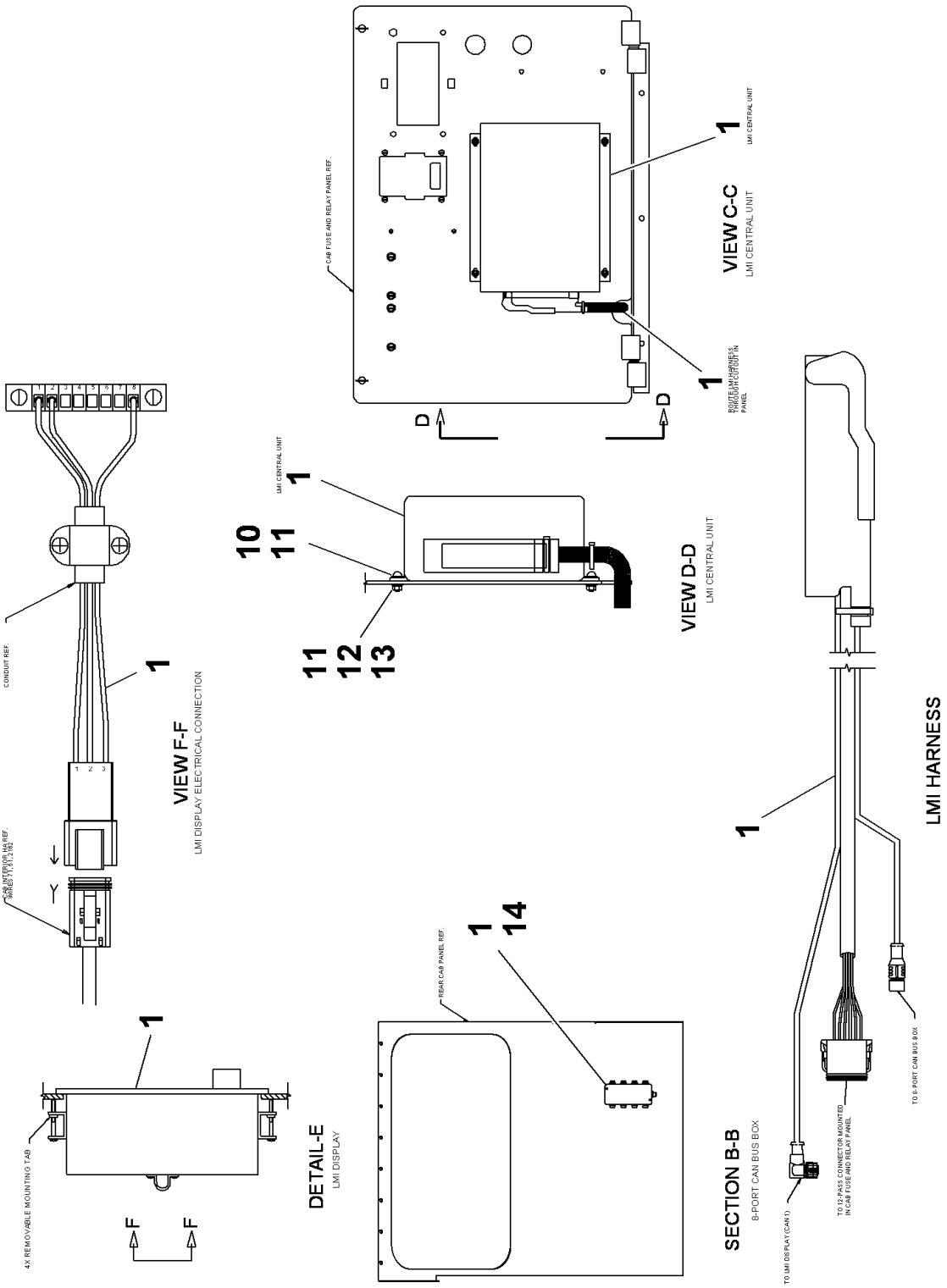


80023915

(SHEET 2 OF 2)

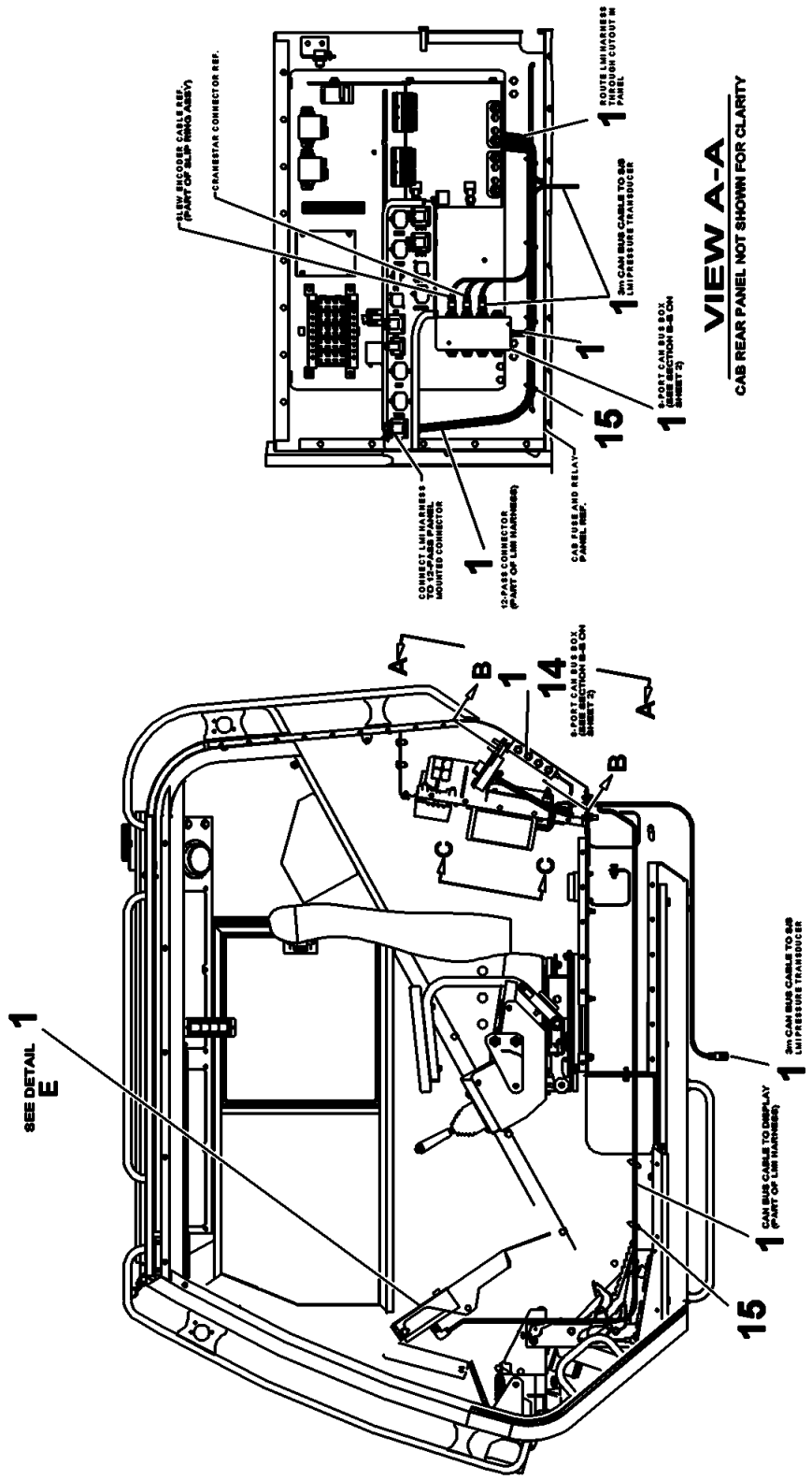


80023915

(SHEET 1 OF 2)

Description
**LMI CAB KIT INSTALLATION-IFLEX2**

Assembly No.
**80023915**
Revision: **C**

| Item | FN | Part | Qty | Description |
|---|---|---|---|---|
| 1 | + | **80023913** | 1 | LMI CAB KIT, IFLEX2, EXPERT |
| 10 | | **7111080810** | 4 | SCREW, MACHINE<br>5/32" - 32 N.C. X 1"<br>GRADE 1 |
| 11 | | **7950080141** | 8 | FLATWASHER, 5/32" I.D. |
| 12 | | **7950080050** | 4 | LOCKWASHER, 5/32" I.D. |
| 13 | | **7660081100** | 4 | NUT, HEX<br>5/32" - 24 N.F.<br>GRADE 1 |
| 14 | | **80022642** | 1 | TAPE CUTOUT, 3M VHB |
| 15 | | **7850000237** | 10 | TIE, CABLE (BLACK)<br>7 5/16" LONG |

**+ SEE FURTHER BREAKDOWN THIS GROUP**

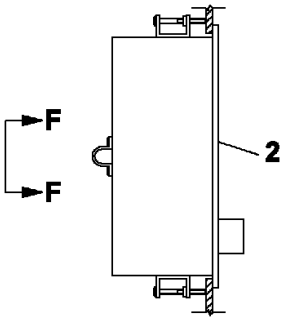


DETAIL-E
LMI DISPLAY

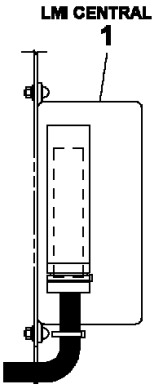


VIEW D-D
LMI CENTRAL UNIT

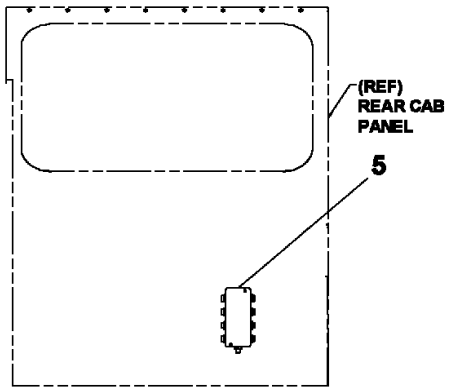


SECTION B-B
8-PORT CAN BUS BOX

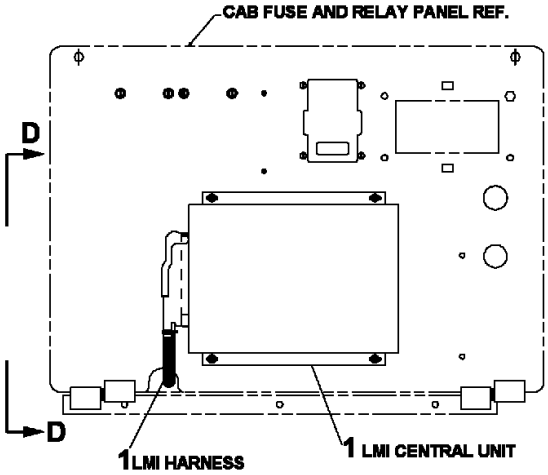


VIEW C-C
LMI CENTRAL UNIT

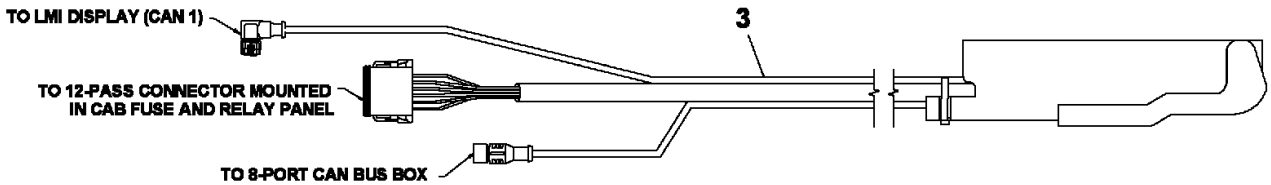


LMI HARNESS

80023913

(SHEET 2 OF 2)

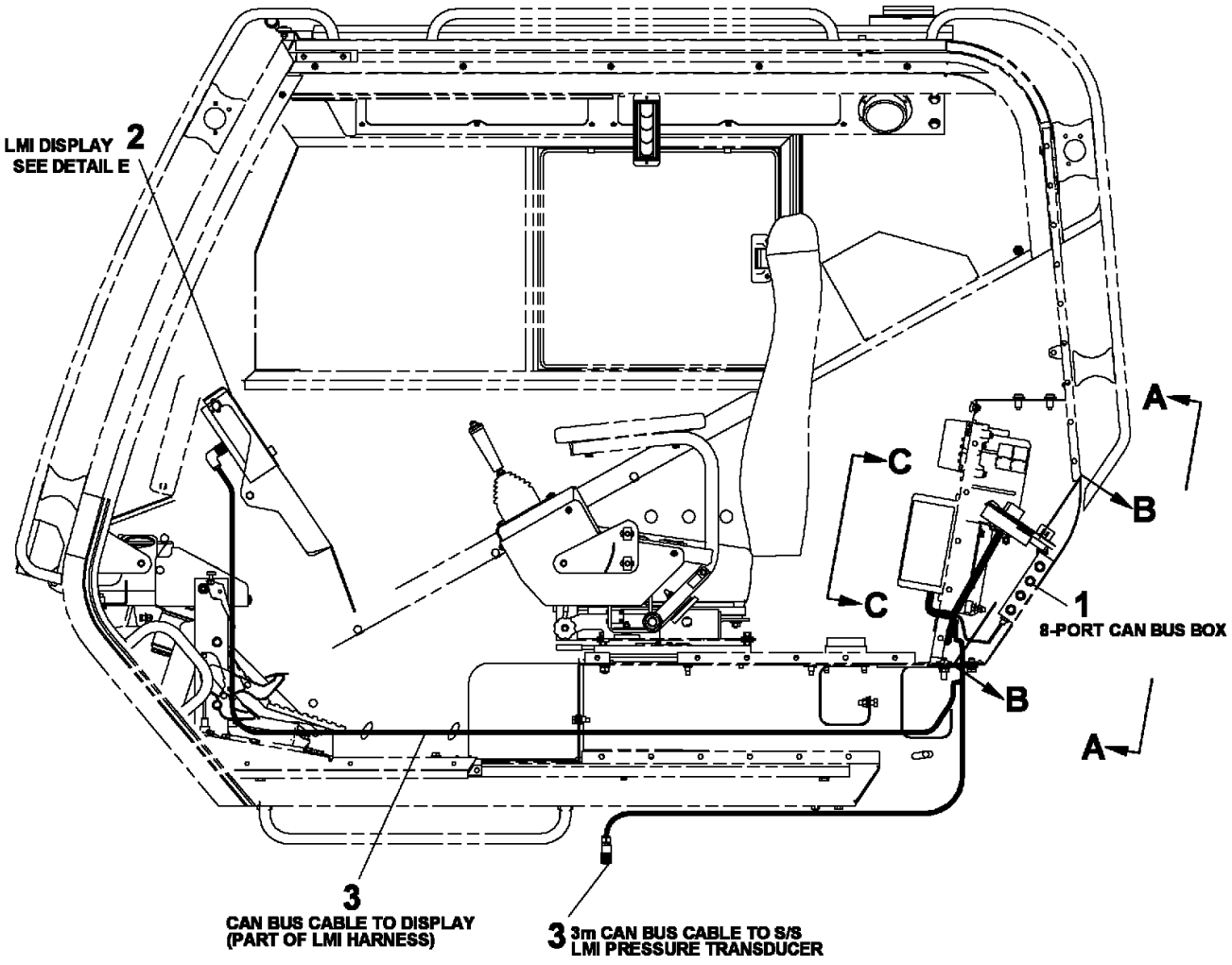


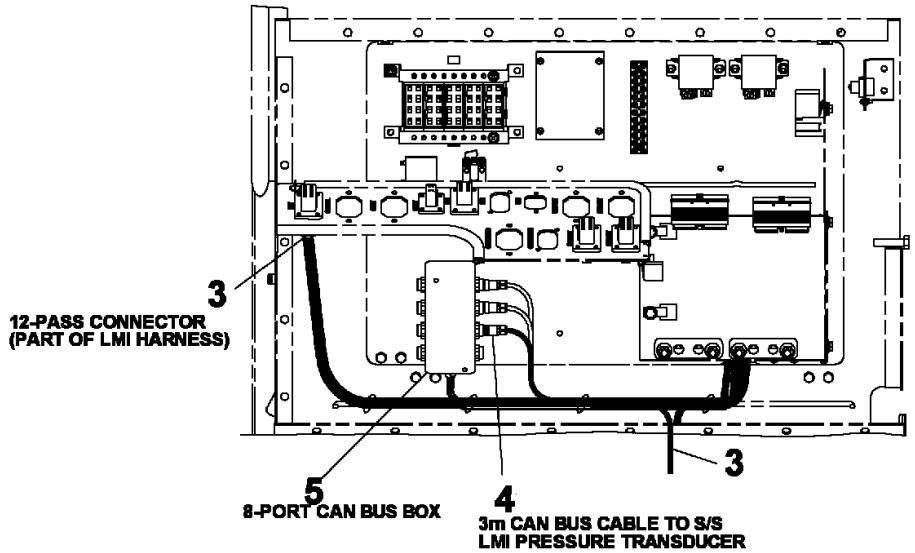


## VIEW A-A

CAB REAR PANEL NOT SHOWN FOR CLARITY

80023913

(SHEET 1 OF 2)

Description
**LMI CAB KIT, IFLEX2, EXPERT**

Assembly No.
**80023913**
Revision: **D**

| Item | FN | Part | Qty | Description |
|---|---|---|---|---|
| 1 | | **9333107524** | 1 | CENTERAL UNIT ASSEMBLY - iFLEX2 (COMPLETE ASSEMBLY) INCLUDES THE FOLLOWING PARTS |
| | | **90011561** | 1 | FUSE,2A |
| | | **90011563** | 1 | FUSE,7.5A |
| | | **90011562** | 1 | FUSE,15A |
| 2 | | **9333107526** | 1 | CONSOLE ASSEMBLY - GRAPHIC (COLOR) (COMPLETE ASSEMBLY) INCLUDES THE FOLLOWING PARTS |
| | | **90016149** | 1 | KNOB |
| | | **90020942** | 1 | FUSE, MINI 2AMP |
| | | **90024260** | 1 | FUSE, 4 AMP |
| 3 | | **80023914** | 1 | HA, LMI iFLEX2 |
| 4 | | **80008201** | 1 | CABLE, CAN BUS M12 SHLD 3m |
| 5 | | **80023931** | 1 | LMI 8-PORT CANBUS BOX |

**Notes**

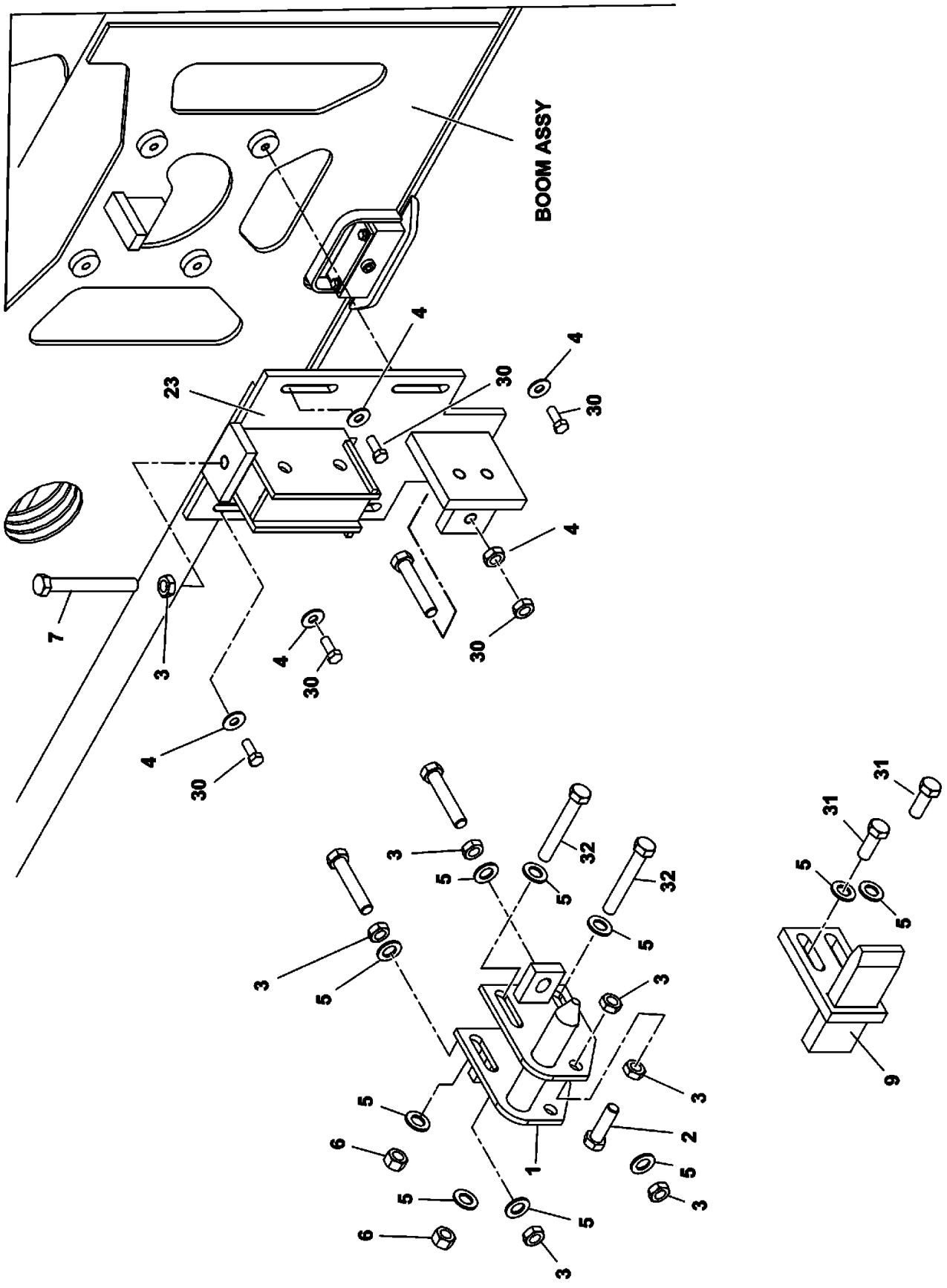


2159910193

(SHEET 2 OF 2)

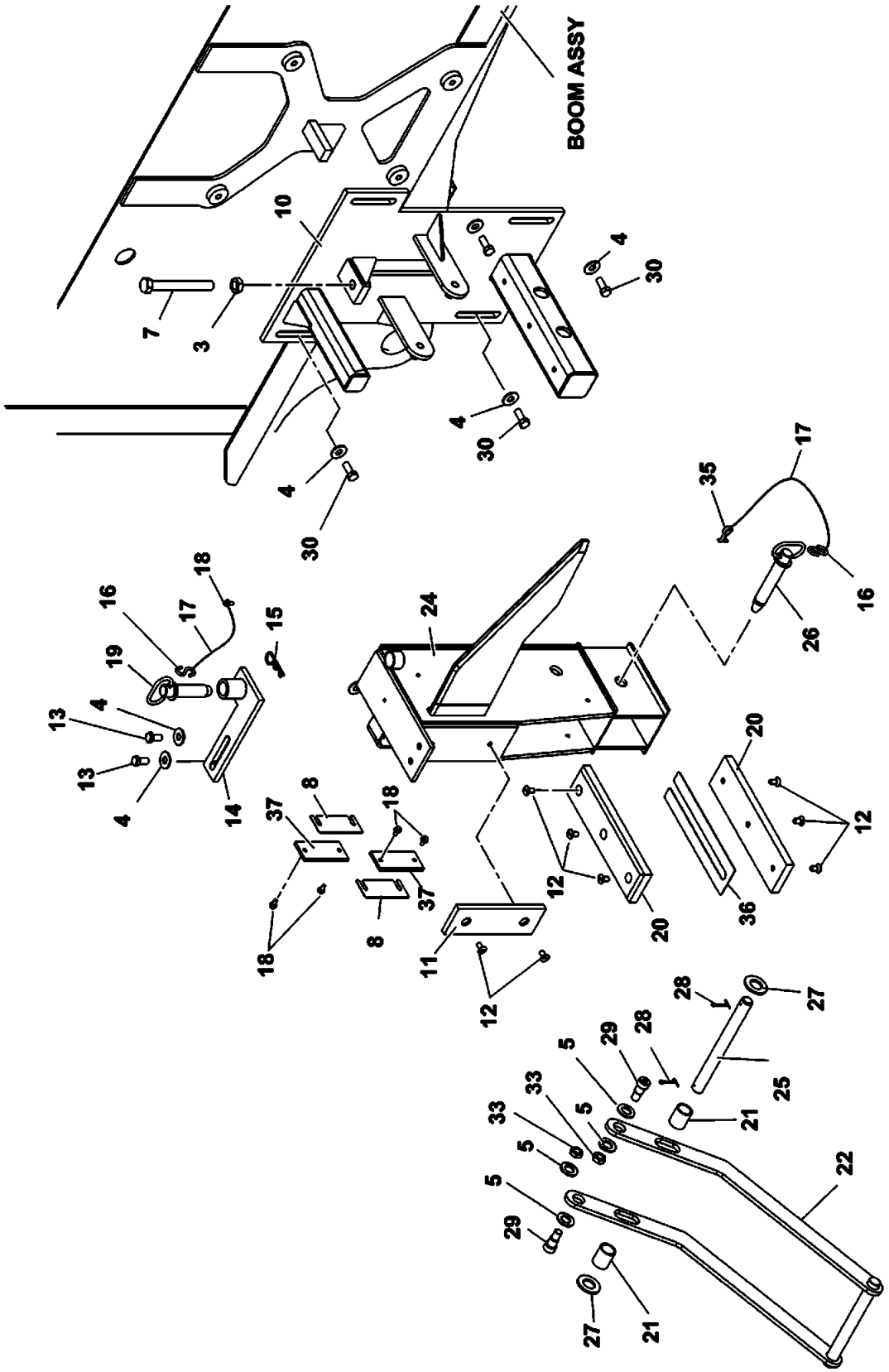


2159910193

(SHEET 1 OF 2)

Description
**CARRIER INSTALLATION - JIB EXTENSION**

Assembly No.
**2159910193**
Revision: **E**

| Item | FN | Part | Qty | Description |
|---|---|---|---|---|
| 1 | | **2159910070** | 1 | HANGER |
| 2 | | **7115222050** | 1 | CAP SCREW,<br>3/4" - 10 N.C. X 2 1/2"<br>GRADE 5 |
| 3 | | **7660220200** | 9 | NUT, HEX JAM<br>3/4" - 10 N.C. |
| 4 | | **7950180160** | 10 | WASHER, 9/16" |
| 5 | | **7950220140** | 14 | WASHER,<br>3/4" I.D. |
| 6 | | **7660220001** | 2 | NUT, HEX<br>3/4" - 10 N.C. |
| 7 | | **7099001194** | 2 | CAP SCREW,<br>3/4" - 10 N.C. X 6 1/2" |
| 8 | | **4155910018** | 1 | SHIM |
| 9 | | **2159910071** | 1 | SUPPORT, LOWER |
| 10 | | **2155910018** | 1 | HANGER, REAR |
| 11 | | **7671100007** | 1 | PAD, WEAR |
| 12 | | **7111160607** | 8 | SCREW, MACHINE<br>3/8" - 16 N.C. X 3/4"<br>GRADE 1 |
| 13 | | **7115180850** | 2 | CAP SCREW, 1/2"-13 UNC X 1" |
| 14 | | **2159910073** | 1 | RETAINER |
| 15 | | **7689000721** | 1 | PIN, HITCH |
| 16 | | **7601000955** | 2 | S-HOOK, STANDARD |
| 17 | | **6286000012** | 2 | CHAIN - USE 9286100001<br>QTY 1 CHAIN<br>10" |
| 18 | | **7115140478** | 5 | CAP SCREW,<br>1/4" - 20 N.C. X 1/2"<br>GRADE 5 |
| 19 | | **7689000701** | 1 | CLIP, HITCH PIN |
| 20 | | **7671100016** | 2 | PAD, WEAR |
| 21 | | **6199100023** | 2 | BUSHING |
| 22 | | **2159910074** | 1 | HANDLE |
| 23 | | **2159910194** | 1 | FRONT HANGER |
| 24 | | **2155910034** | 1 | HANGER, REAR |
| 25 | | **4159910169** | 1 | SHAFT |

Description
**CARRIER INSTALLATION - JIB EXTENSION**

Assembly No.
**2159910193**
Revision: **E**

| Item | FN | Part | Qty | Description |
|---|---|---|---|---|
| 26 | | **7689000059** | 1 | PIN, HITCH<br>INCLUDES THE FOLLOWING PARTS |
| | | **7689000701** | 1 | CLIP, HITCH PIN |
| 27 | | **7950260141** | 2 | WASHER, 1" I.D. |
| 28 | | **7690053210** | 2 | PIN, COTTER<br>1/8" X 2" |
| 29 | | **7110220606** | 2 | SHSS 3/4x0.75 A574 |
| 30 | | **7115181050** | 8 | CAP SCREW,<br>1/2" - 13 N.C. X 1 1/4"<br>GRADE 5 |
| 31 | | **7115221450** | 2 | CAP SCREW,<br>3/4" - 10 N.C. X 1 3/4"<br>GRADE 5 |
| 32 | | **7115224050** | 2 | CAP SCREW,<br>3/4" - 10 N.C. X 5"<br>GRADE 5 |
| 33 | | **7660200200** | 2 | NUT, HEX<br>5/8" - 11 N.C. |
| 34 | | **6099001230** | 1 | CAP SCREW, MODIFIED |
| 35 | | **7690152410** | 1 | PIN, COTTER<br>5/16" X 1 1/2" |
| 36 | | **4184900657** | 1 | SHIM, |
| 37 | | **7671100095** | 2 | PAD, WEAR |

Description
**BOOM MOUNT INSTALLATION**

Assembly No.
**80049534**
Revision: **A**

| Item | FN | Part | Qty | Description |
|---|---|---|---|---|
| 100 | | **7440000000** | 2 | FITTING, 1/8 STRAIGHT GREASE |
| 101 | | **7949000385** | 2 | WASHER, THRUST |

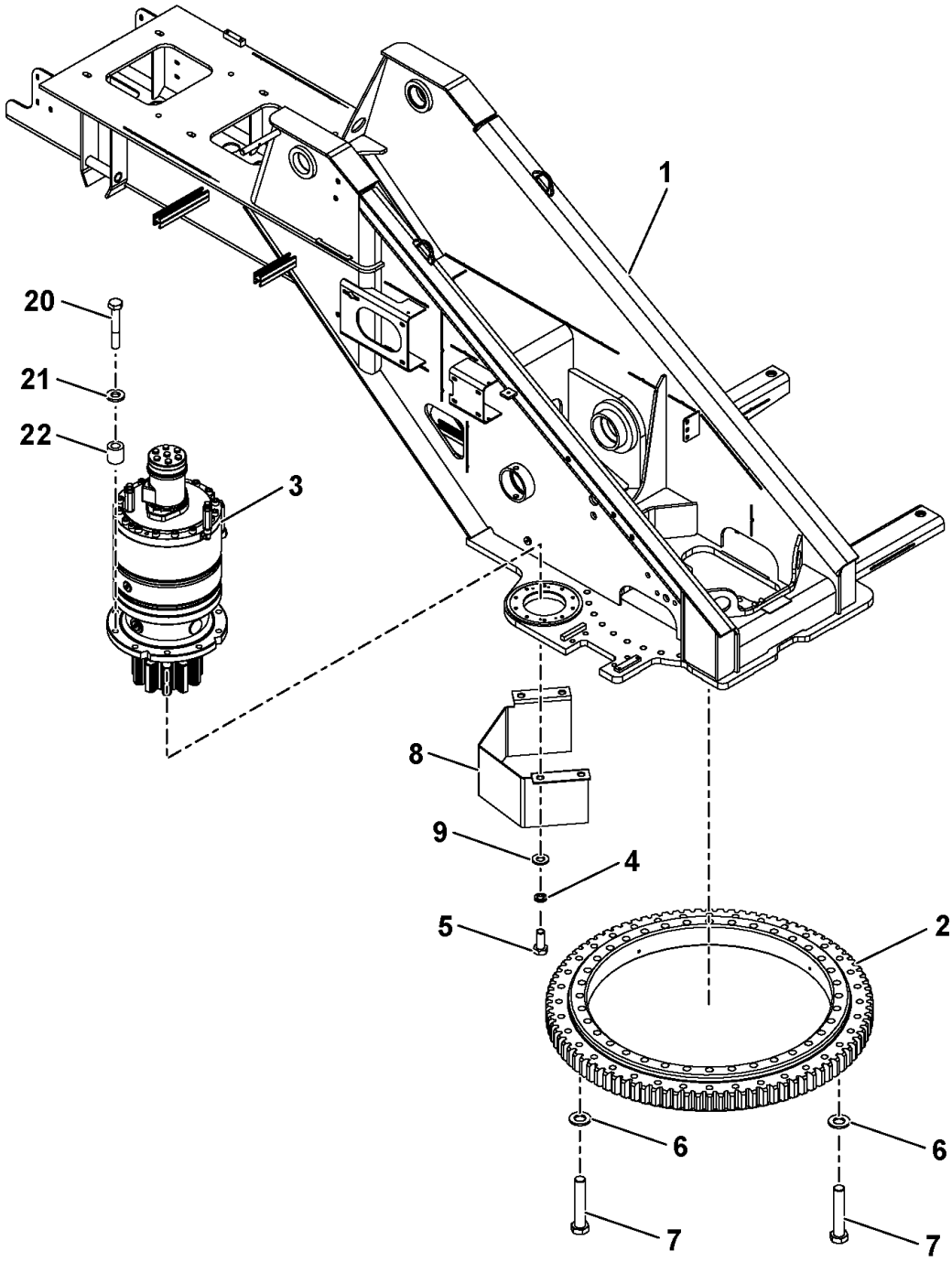


80030455

(SHEET 1 OF 1)

Description
**TURNTABLE & DRIVE INSTALLATION (ROTEK)**

Assembly No.
**80030455**
Revision: **B**

| Item | FN | Part | Qty | Description |
|---|---|---|---|---|
| 1 | | **80030457** | 1 | TURNTABLE |
| 2 | | **7069100081** | 1 | BEARING, TURNTABLE<br>INCLUDES THE FOLLOWING PARTS |
| | | **9069100118** | 1 | SEAL, BEARING 21' |
| 3 | + | **7576134386** | 1 | MOTOR ASSEMBLY - SWING DRIVE (COMPLETE ASSEMBLY) |
| 4 | | **7951170210** | 4 | WASHER, LOCK 8MM |
| 5 | | **7126171150** | 4 | CAP SCREW, M8 X 20MM HEX HEAD |
| 6 | | **7949000359** | 36 | WASHER, 1" I.D. HARDENED ROUND |
| 7 | | **80021340** | 36 | HHCS 1-8UNCx5.25 G8 |
| 8 | | **4159200657** | 1 | GUARD, PINION |
| 9 | | **7951170014** | 4 | WASHER, FLAT #8 |
| 20 | | **7126212250** | 10 | CAP SCREW, M12 X 75MM HEX HEAD |
| 21 | | **7949000235** | 10 | WASHER, 1/2" I.D. FLAT |
| 22 | | **6199100090** | 10 | BUSHING |

**+ SEE FURTHER BREAKDOWN THIS GROUP**

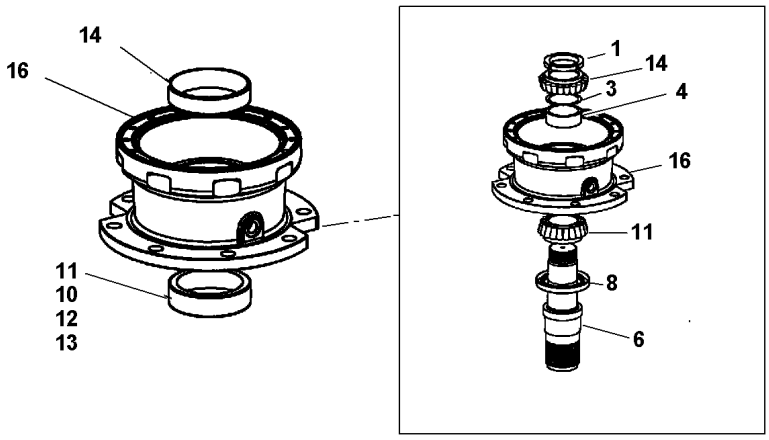


ITEMS NOT SHOWN
NBR 75 PLANET GEAR COMPLETE ASSY SEE PARTS LIST
NBR 76 PLANET GEAR COMPELTE ASSY SEE PARTS LIST
NBR 77 KIT, BRAKE
NBR 80 KIT,SEAL BRAKE
NBR 81 KIT,DISC BRAKE
NBR 82 KIT,SEAL.
NBR 62 PLATE,NAME
NBR 70 KIT, SHIM

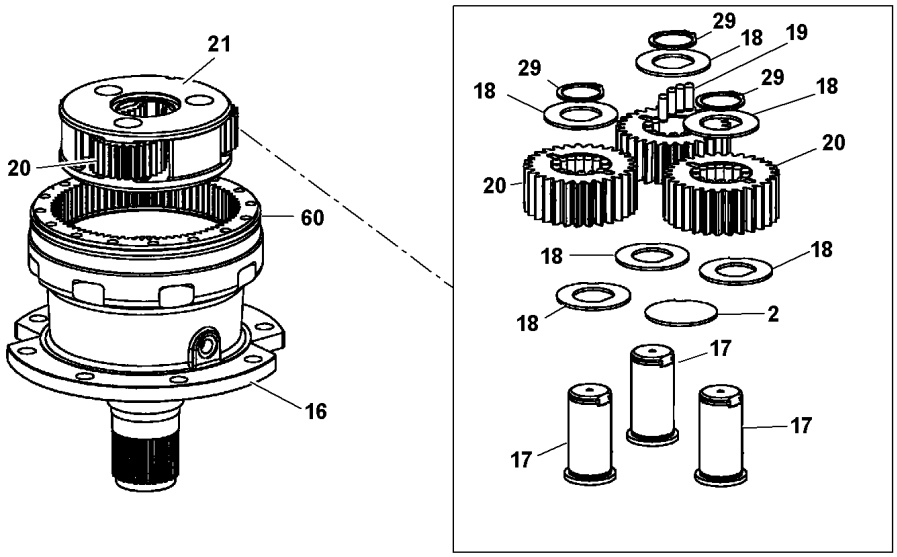


7576134386

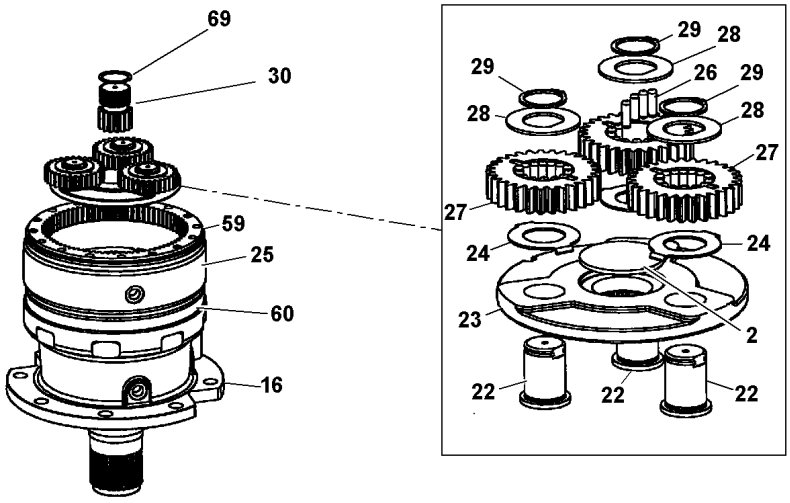


7576134386

(SHEET 3 OF 5)

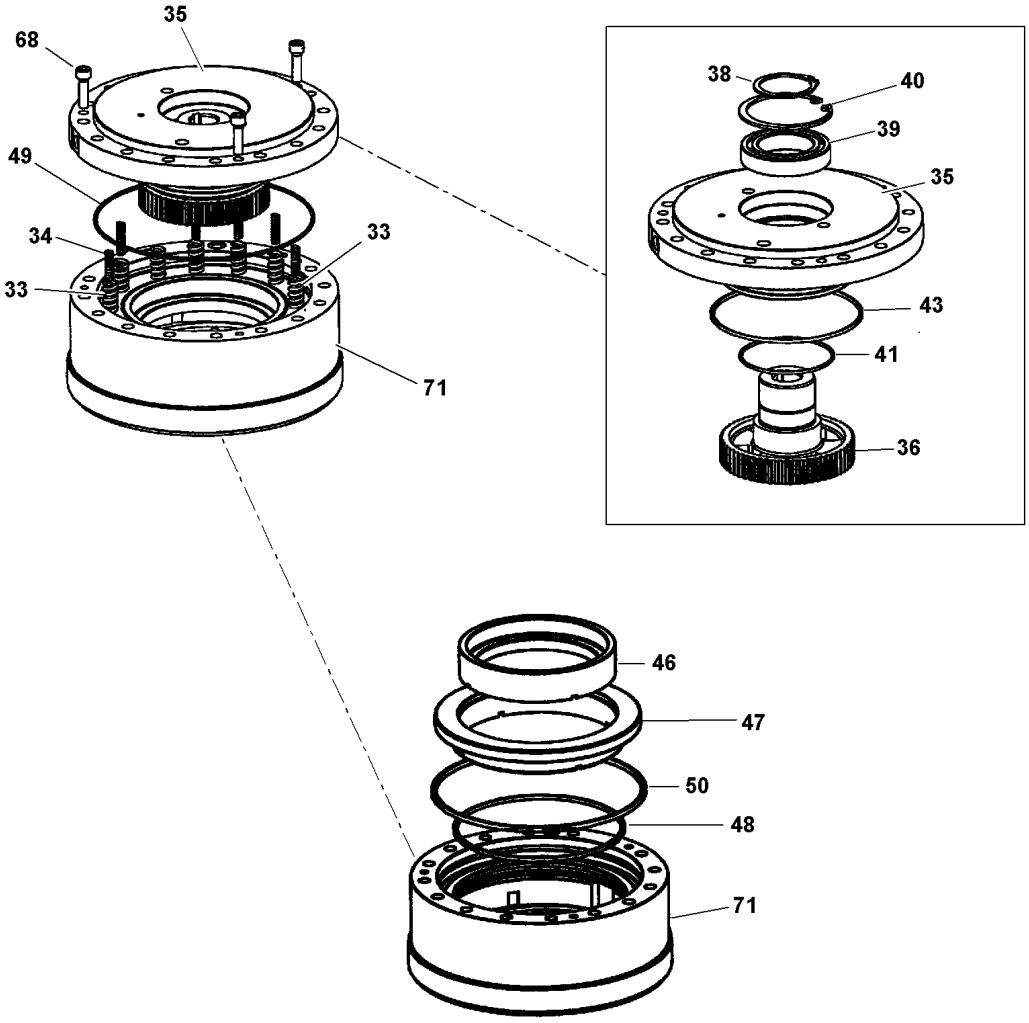


7576134386

(SHEET 2 OF 5)

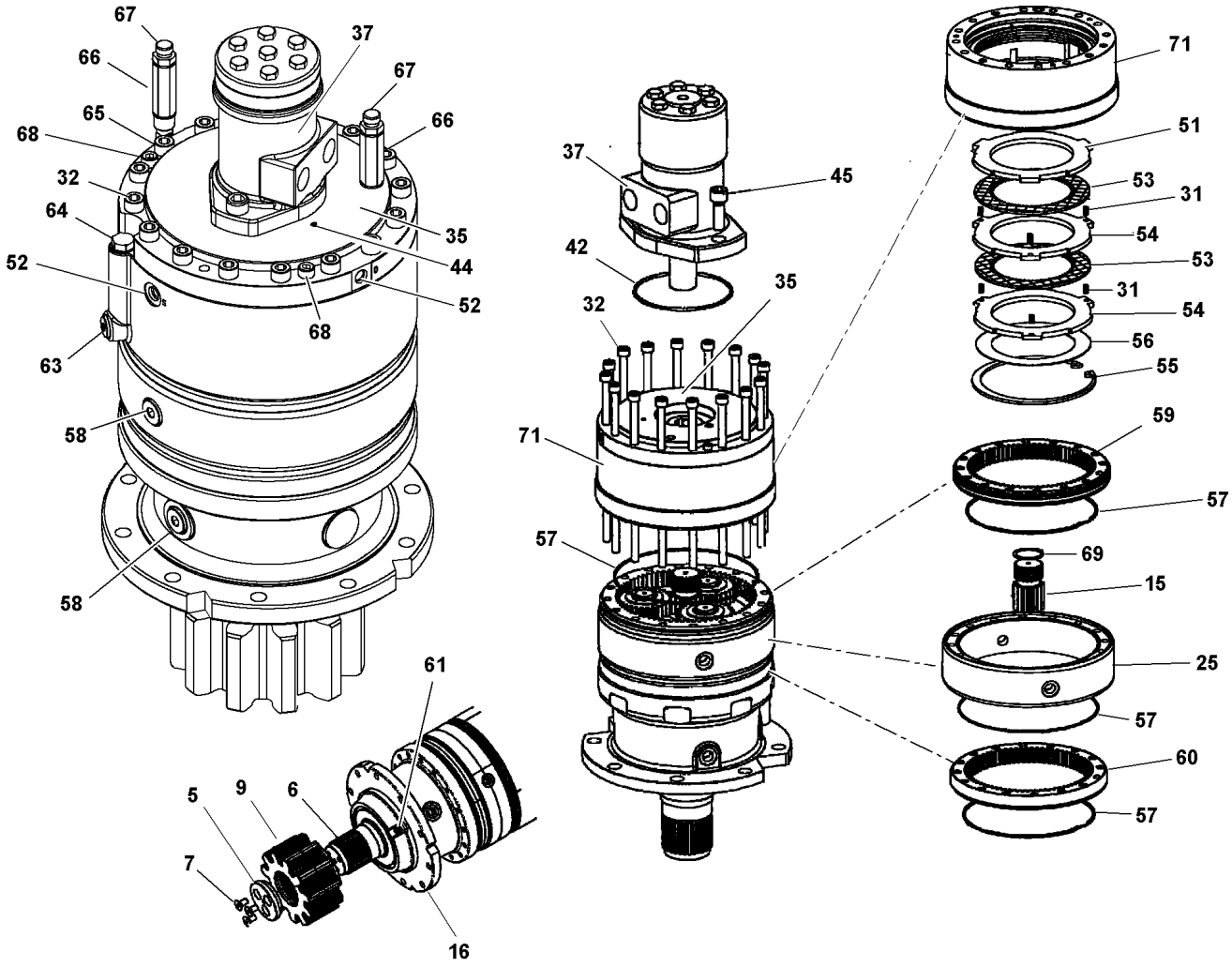


7576134386

(SHEET 1 OF 5)

Description
**MOTOR ASSEMBLY - SWING DRIVE (COMPLETE ASSEMBLY)**

Assembly No.
**7576134386**
Revision:

| Item | FN | Part | Qty | Description |
|---|---|---|---|---|
| 1 | | **9576101173** | 1 | NUT,RING |
| 2 | | **9576101142** | 2 | PLATE,END |
| 3 | | **9576101171** | 1 | KIT,SHIM |
| 4 | | **9576101329** | 1 | SPACER |
| 5 | | **9576101307** | 1 | PLATE, RETAINER |
| 6 | | **9576101330** | 1 | SHAFT, OUTPUT |
| 7 | | **9576101308** | 3 | CAPSCREW |
| 8 | * | **9576101331** | 1 | SEAL, OIL |
| 9 | | **9576101167** | 1 | PINION |
| 10 | | **NSS** | 1 | NOT SERVICED SEPARATELY HOUSING |
| 11 | | **9576101332** | 1 | BEARING |
| 12 | | **9576101333** | 1 | RING, RETAINING |
| 13 | * | **9576101334** | 1 | O-RING |
| 14 | | **9576101335** | 1 | BEARING |
| 15 | | **9576101180** | 1 | GEAR,SUN |
| 16 | | **NSS** | 1 | NOT SERVICED SEPARATELY HOUSING |
| 17 | | **9576101183** | 3 | PIN |
| 18 | | **9576101124** | 6 | WASHER |
| 19 | | **9576101127** | 162 | BEARING,NEEDLE |
| 20 | | **NSS** | 3 | NOT SERVICED SEPARATELY GEAR, PLANET |
| 21 | | **NSS** | 1 | NOT SERVICED SEPARATELY HOUSING, PLANET |
| 22 | | **9576101181** | 3 | PIN |
| 23 | | **NSS** | 1 | NOT SERVICED SEPARATELY HOUSING, CARRIER PLANET |
| 24 | | **9576101124** | 3 | WASHER |
| 25 | | **NSS** | 1 | NOT SERVICED SEPARATELY HOUSING |
| 26 | | **9576101336** | 54 | BEARING, NEEDLE |
| 27 | | **NSS** | 3 | NOT SERVICED SEPARATELY GEAR, PLANET |
| 28 | | **9576101129** | 3 | WASHER |
| 29 | | **9576101130** | 3 | RING,RETAINER |

*** REPAIR KIT AND/OR PART OF KIT**

Description
**MOTOR ASSEMBLY - SWING DRIVE (COMPLETE ASSEMBLY)**

Assembly No.
**7576134386**
Revision:

| Item | FN | Part | Qty | Description |
|---|---|---|---|---|
| 30 | | **9576101176** | 1 | GEAR,SUN |
| 31 | - | **NSS** | 6 | NOT SERVICED SEPARATELY<br>SPRING |
| 32 | | **9576101175** | 16 | CAPSCREW |
| 33 | - | **NSS** | 12 | NOT SERVICED SEPARATELY<br>SPRING |
| 34 | - | **NSS** | 8 | NOT SERVICED SEPARATELY<br>SPRING |
| 35 | | **9576101184** | 1 | HOUSING,FLANGE MTG. |
| 36 | | **9576101136** | 1 | COUPLING |
| 37 | | **9576101395** | 1 | MOTOR ASSY. HYD.<br>INCLUDES THE FOLLOWING PARTS |
| | | **9576101186** | 1 | KIT,SEAL MOTOR |
| 38 | | **9576101137** | 1 | RING,RETAINER |
| 39 | | **9576101135** | 1 | BEARING |
| 40 | | **9576101138** | 1 | RING,RETAINER |
| 41 | @ | **7755245000** | 1 | O-RING |
| 42 | *@ | **7755152000** | 1 | O-RING |
| 43 | @ | **7755251000** | 1 | O-RING |
| 44 | | **9576101185** | 1 | PLUG |
| 45 | | **9576101100** | 2 | CAPSCREW |
| 46 | | **NSS** | 1 | NOT SERVICED SEPARATELY<br>PISTON |
| 47 | | **NSS** | 1 | NOT SERVICED SEPARATELY<br>PISTON |
| 48 | @ | **7755260000** | 1 | O-RING |
| 49 | @ | **7755170000** | 1 | O-RING |
| 50 | @ | **7755265000** | 1 | O-RING |
| 51 | - | **NSS** | 1 | NOT SERVICED SEPARATELY<br>SPACER |
| 52 | | **7709800001** | 2 | PLUG, SAE #4<br>INCLUDES THE FOLLOWING PARTS |
| | | **7755904002** | 1 | O-RING |
| 53 | - | **NSS** | 2 | NOT SERVICED SEPARATELY<br>DISK, BRAKE |
| 54 | - | **NSS** | 2 | NOT SERVICED SEPARATELY<br>DISK, BRAKE |

**- THIRD REPAIR KIT AND/OR PART OF 3RD KIT**
**@ SECOND REPAIR KIT AND/OR PART OF 2ND KIT**
*** REPAIR KIT AND/OR PART OF KIT**

Description
**MOTOR ASSEMBLY - SWING DRIVE (COMPLETE ASSEMBLY)**

Assembly No.
**7576134386**
Revision:

| Item | FN | Part | Qty | Description |
|---|---|---|---|---|
| 55 | - | **NSS** | 1 | NOT SERVICED SEPARATELY<br>KIT, SHIM |
| 56 | | **9576101140** | 1 | RING,RETAINER |
| 57 | * | **9576101338** | 4 | O-RING |
| 58 | | **9576101141** | 6 | PLUG |
| 59 | | **9576101126** | 1 | GEAR,RING |
| 60 | | **9576101174** | 1 | RING GEAR |
| 61 | | **9576101220** | 1 | PLUG |
| 62 | | **NSS** | 1 | NOT SERVICED SEPARATELY<br>PLATE, NAME |
| 63 | | **9576101154** | 1 | PLUG |
| 64 | | **9576101151** | 1 | DIPSTICK |
| 65 | | **9576101152** | 1 | ELBOW |
| 66 | | **9576101149** | 2 | PIPE |
| 67 | | **9576101189** | 2 | BREATHER |
| 68 | | **9576101148** | 1 | CAPSCREW |
| 69 | | **9576101133** | 2 | RING,RETAINER |
| 70 | | **9576101339** | 1 | KIT, SHIM |
| 71 | | **NSS** | 1 | NOT SERVICED SEPARATELY<br>HOUSING, BRAKE |
| 75 | | **9576101340** | 1 | PLANETARY CARRIER ASSY.<br>INCLUDES ITEMS 2,15,17,19,20,<br>21,24,60,69 |
| 76 | | **9576101341** | 1 | PLANETARY CARRIER ASSY.<br>INCLUDES ITEMS 2,18,22,23,26,<br>27,28,29,30,59,69 |
| 77 | | **9576101165** | 1 | KIT,BRAKE ASSY.<br>INCLUDES ITEMS 31,33,34,35,36,<br>39,41,42,43,44,46 THRU 55 AND<br>64 THRU 68 ,71 |
| 80 | @ | **9576101101** | 1 | KIT,SEAL BRAKE |
| 81 | - | **9576101102** | 1 | KIT,DISC BRAKE |
| 82 | * | **9576101337** | 1 | KIT, SEAL |

**- THIRD REPAIR KIT AND/OR PART OF 3RD KIT**
**@ SECOND REPAIR KIT AND/OR PART OF 2ND KIT**
*** REPAIR KIT AND/OR PART OF KIT**

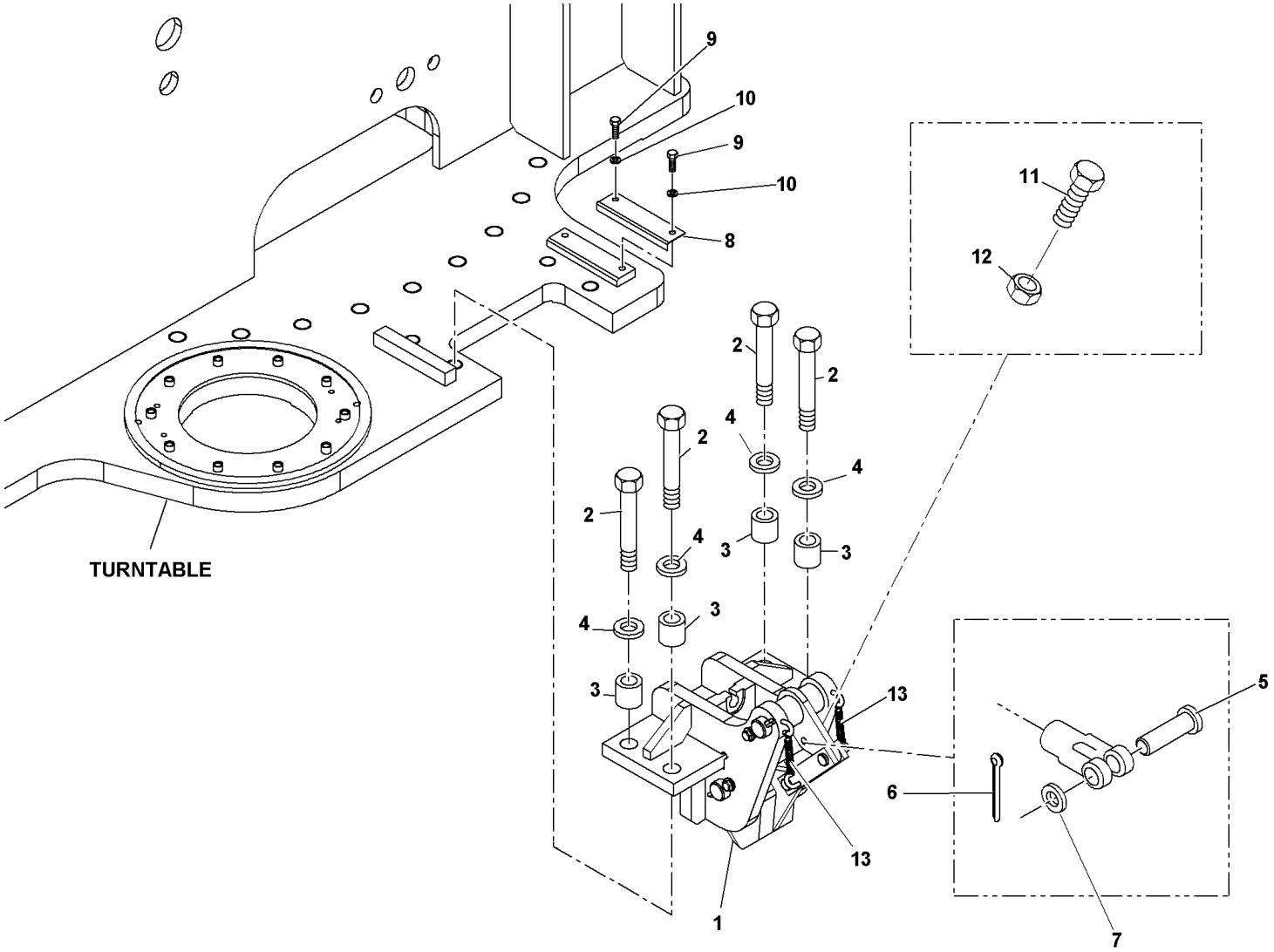


2159210121

(SHEET 1 OF 1)

Description
**LOCK INSTALLATION - 360 SWING**

Assembly No.
**2159210121**
Revision: **A**

| Item | FN | Part | Qty | Description |
|---|---|---|---|---|
| 1 | + | **2165210021** | 1 | LOCK ASSEMBLY - SWING<br>(COMPLETE ASSEMBLY) |
| 2 | | **7126272550** | 4 | CAP SCREW, M20X90MM HEX HEAD |
| 3 | | **6199100070** | 4 | BUSHING |
| 4 | | **7949000236** | 4 | FLAT WASHER, 3/4" |
| 5 | | **7690161600** | 1 | PIN, CLEVIS 3/8" X 1" |
| 6 | | **7690021610** | 1 | PIN, #2 X 1" LONG COTTER |
| 7 | | **7950160141** | 1 | WASHER, 3/8" PLAIN NARROW |
| 8 | | **4159210027** | 1 | SHIM |
| 9 | | **00437175** | 2 | CAP SCREW, M8 X 12MM HEX HEAD |
| 10 | | **7951170210** | 2 | WASHER, LOCK 8MM |
| 11 | | **7115151050** | 1 | CAP SCREW,<br>5/16" - 18 N.C. X 1 1/4"<br>GRADE 5 |
| 12 | | **7660150000** | 1 | NUT, HEX<br>5/16" - 18 N.C. |
| 13 | | **7834100009** | 2 | SPRING, LOCKING |

**+ SEE FURTHER BREAKDOWN THIS GROUP**

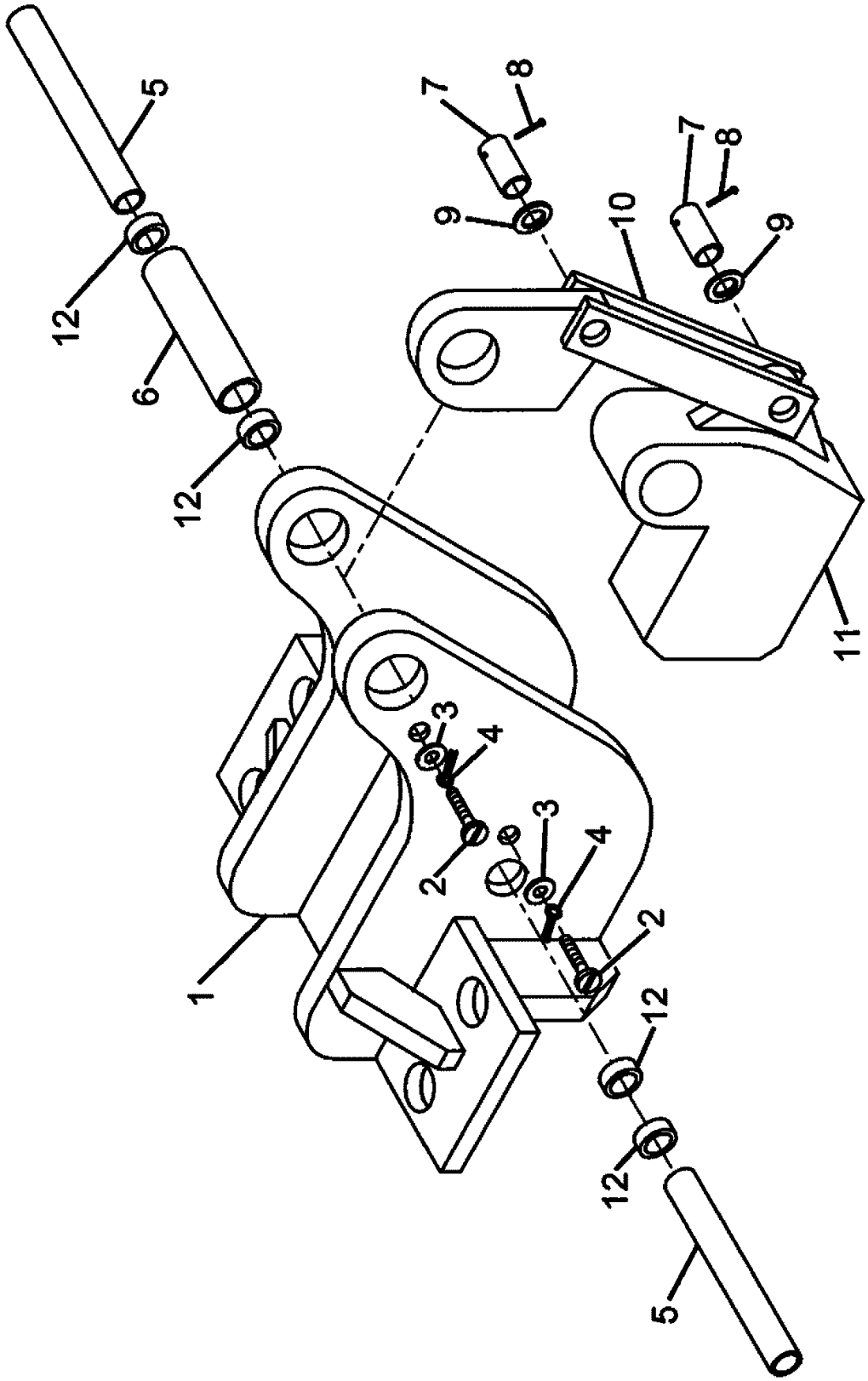


2165210021

(SHEET 1 OF 1)

Description
**LOCK ASSEMBLY - SWING (COMPLETE ASSEMBLY)**

Assembly No.
**2165210021**
Revision: **C**

| Item | FN | Part | Qty | Description |
|---|---|---|---|---|
| 1 | | **2165210120** | 1 | MTG BRACKET WELD |
| 2 | | **7115150850** | 2 | CAP SCREW,<br>5/16" - 18 N.C. X 1"<br>GRADE 5 |
| 3 | | **7950150141** | 2 | WASHER, FLAT 5/16" |
| 4 | | **7690152410** | 2 | PIN, COTTER<br>5/16" X 1 1/2" |
| 5 | | **80023887** | 2 | SHAFT |
| 6 | | **2159200729** | 1 | BUSHING |
| 7 | | **7690182404** | 2 | PIN, CLEVIS<br>1/2"X 1 1/2" |
| 8 | | **7690051210** | 2 | PIN, COTTER<br>1/8" X 3/4" |
| 9 | | **7950180141** | 2 | WASHER, FLAT 1/2" |
| 10 | | **6601000965** | 2 | LINK |
| 11 | | **2159200728** | 1 | BLOCK, SWING LOCK |
| 12 | | **7069000238** | 4 | BEARING |

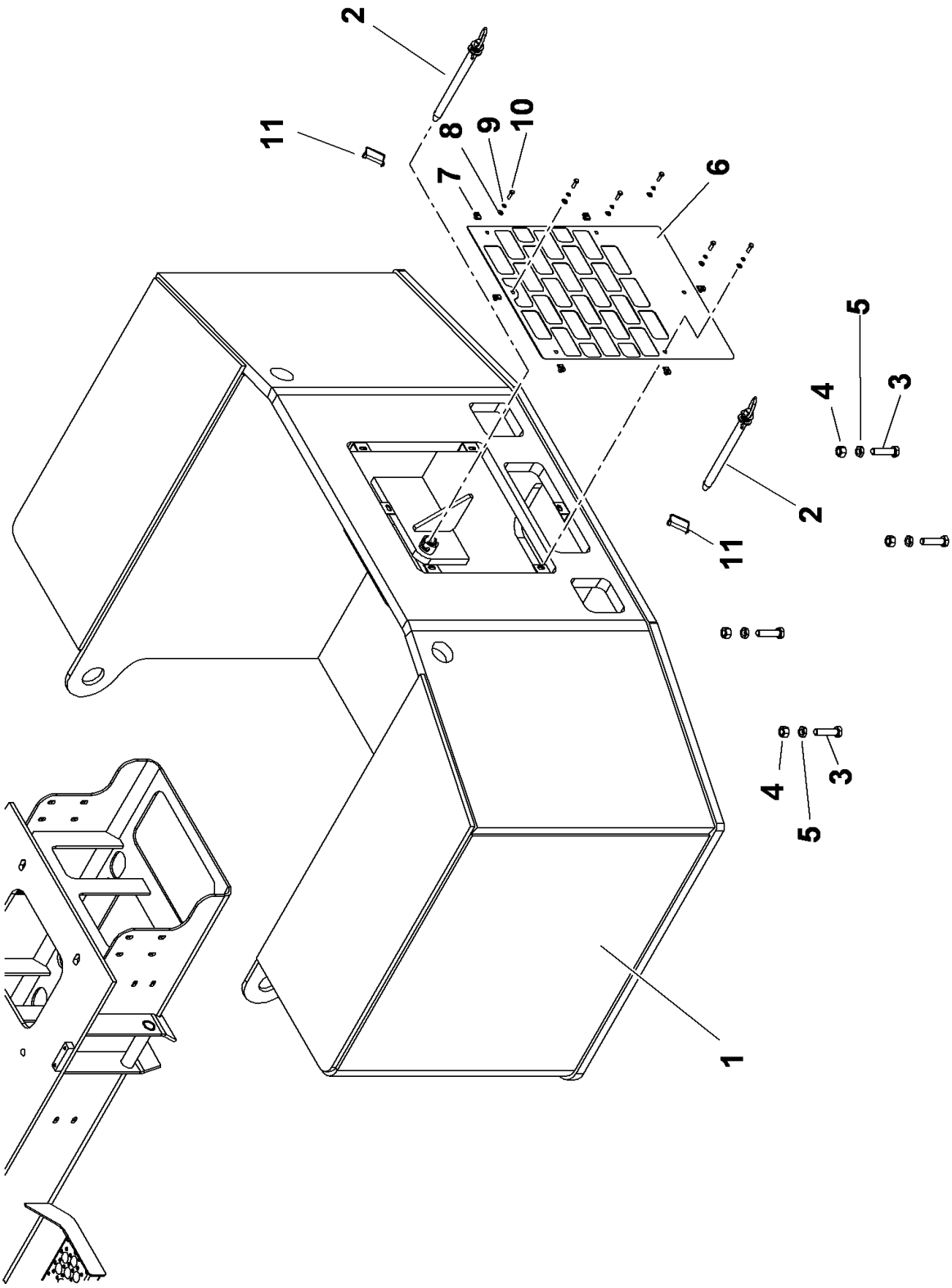


**80034580**

**(SHEET 1 OF 1)**

Description
**COUNTERWEIGHT INSTALLATION**

Assembly No.
**80034580**
Revision: **C**

| Item | FN | Part | Qty | Description |
|---|---|---|---|---|
| 1 | | **2159210212** | 1 | COUNTERWEIGHT |
| 2 | | **80017252** | 2 | PIN ASSY<br>INCLUDES THE FOLLOWING PARTS |
| | | **80017250** | 1 | PIN |
| | | **7690143644** | 1 | PIN, ROLL |
| | | **7949000360** | 1 | WASHER, 1" I.D. |
| | | **7834000786** | 1 | SPRING |
| 3 | | **7126272353** | 4 | CAP SCREW, M20 X 80MM HEX HEAD |
| 4 | | **7661270003** | 4 | NUT, HEX<br>M20 |
| 5 | | **7661270103** | 4 | NUT |
| 6 | | **4159210191** | 1 | GRILL |
| 7 | | **7659190020** | 6 | NUT, RETAINING 8 X 1.25 |
| 8 | | **7951170014** | 6 | WASHER, FLAT #8 |
| 9 | | **7951170210** | 6 | WASHER, LOCK 8MM |
| 10 | | **7126171253** | 6 | CAP SCREW, M8X25 HEX HEAD |
| 11 | | **7689001756** | 2 | PIN |
| 12 | | **7126171053** | 0 | CAP SCREW, M8 X 16MM HEX HEAD<br>-USE FOR COUNTERWEIGHTS WITH TAP BLOCKS |
| 13 | | **7951170210** | 4 | WASHER, LOCK 8MM<br>-USED FOR COUNTERWEIGHTS WITH TAP BLOCKS |

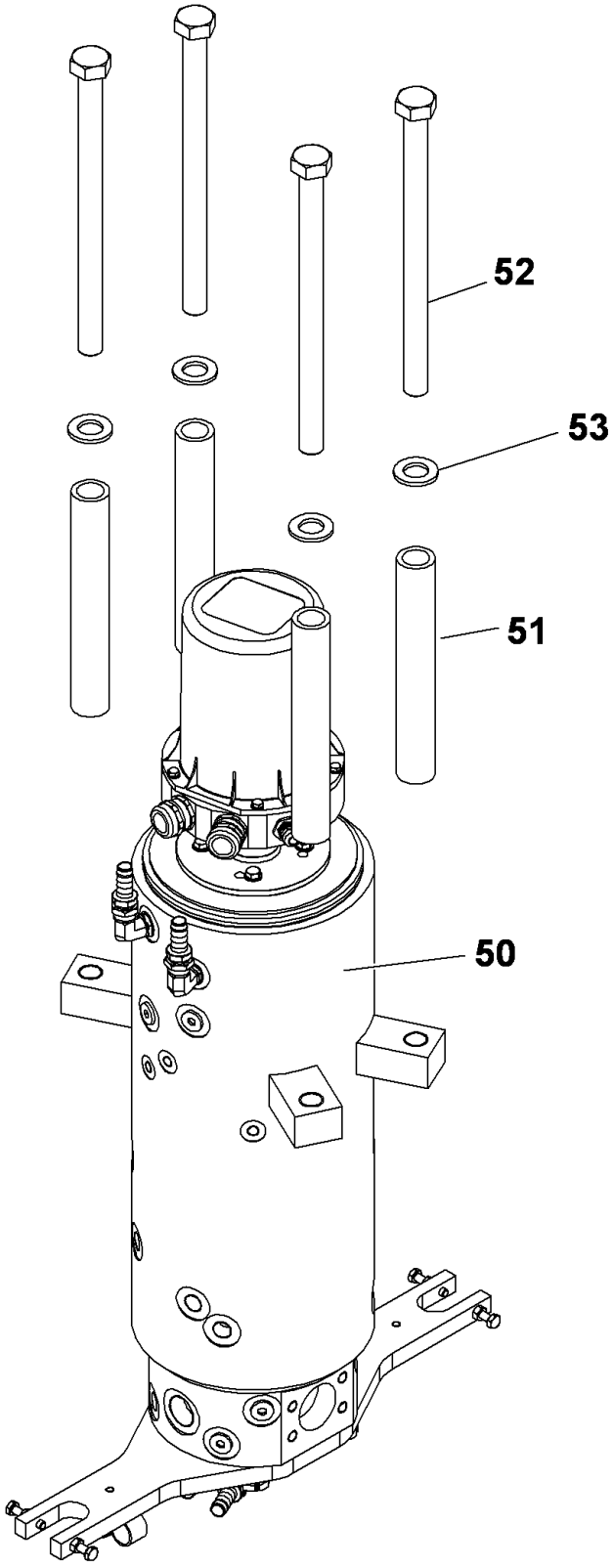
52
53
51
50

Description
**ELECTRIC, WATER & HYDRAULIC SWIVEL INSTALLATION**

Assembly No.
**80041780**
Revision: **A**

| Item | FN | Part | Qty | Description |
|---|---|---|---|---|
| 50 | + | **80041779** | 1 | ELECTRIC, WATER & HYDRAULIC SWIVEL ASSEMBLY |
| 51 | | **6199100100** | 4 | BUSHING |
| 52 | | **7126294350** | 4 | CAP SCREW, M24X340 HEX HEAD |
| 53 | | **7951290095** | 4 | F WASHER 24-HRC38 ANSI B18.22M |

**+ SEE FURTHER BREAKDOWN THIS GROUP**

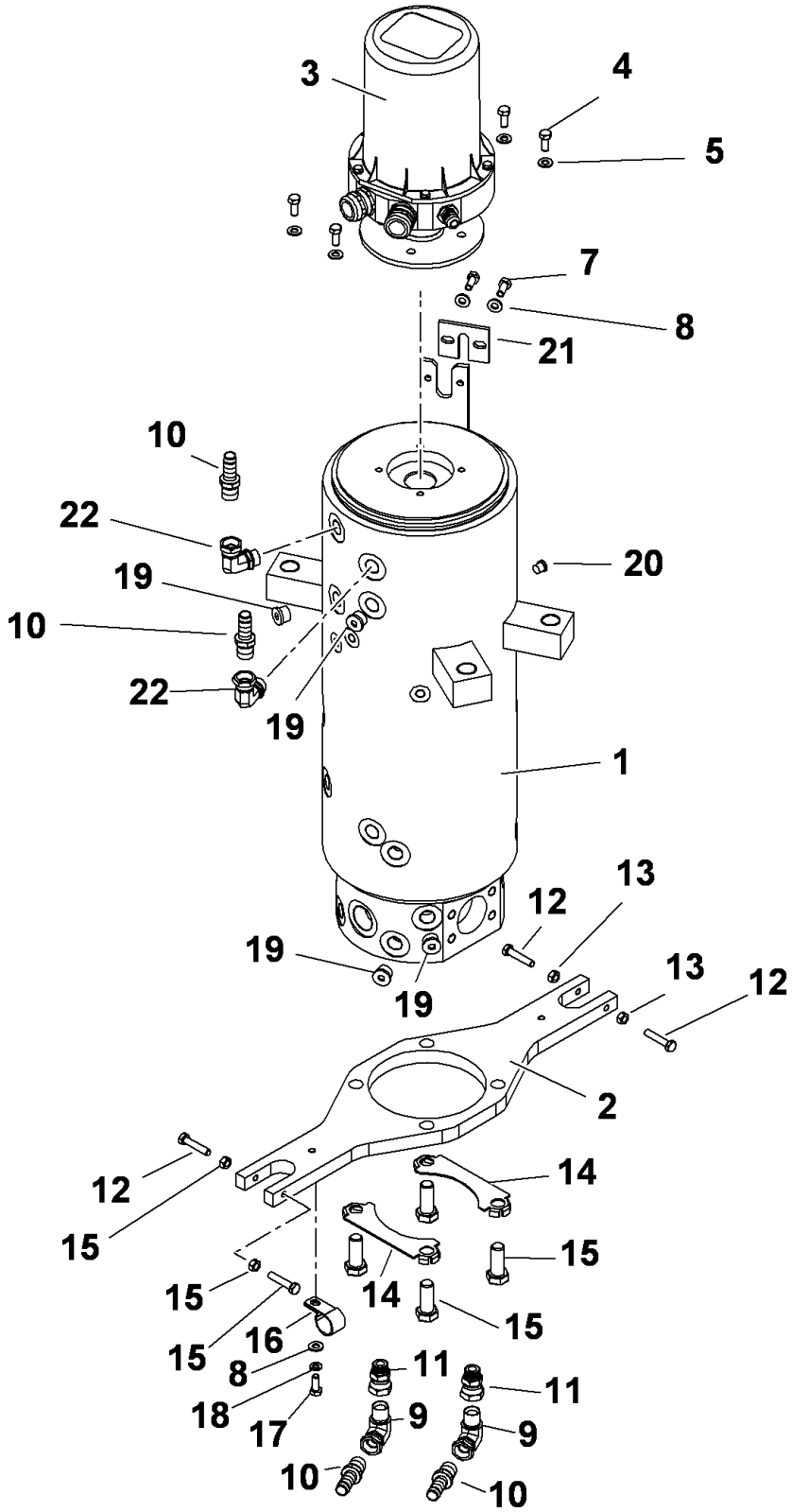


80041779

(SHEET 1 OF 1)

Description
**ELECTRIC, WATER & HYDRAULIC SWIVEL ASSEMBLY**

Assembly No.
**80041779**
Revision: **E**

| Item | FN | Part | Qty | Description |
|---|---|---|---|---|
| 1 | + | **80025416** | 1 | SWIVEL ASSY-14 PORT HYD ASSY. |
| 2 | | **6705171011** | 1 | PLATE, RETAINER |
| 3 | + | **80060934** | 1 | SLIP RING ASSY 20 COND W/SLEW |
| 4 | | **7126171053** | 4 | CAP SCREW, M8 X 16MM HEX HEAD |
| 5 | | **7949000534** | 4 | WASHER, HARDENED ROUND |
| 7 | | **7126171150** | 2 | CAP SCREW, M8 X 20MM HEX HEAD |
| 8 | | **7950150141** | 3 | WASHER, FLAT 5/16" |
| 9 | | **7445080804** | 2 | ELBOW, 90 DEGREE |
| 10 | | **7649000059** | 4 | NIPPLE, HOSE 5/8 ID TO 1/2 NPT |
| 11 | | **7445080803** | 2 | ADAPTER, STRAIGHT |
| 12 | | **7126171553** | 4 | CAP SCREW, M8 X 40MM HEX HEAD |
| 13 | | **7661170003** | 4 | NUT |
| 14 | | **80055309** | 2 | PLATE-RETAINER |
| 15 | | **7127241550** | 4 | CAP SCREW, M16 X 40MM HEX HEAD |
| 16 | | **7300000244** | 1 | CLAMP, TUBING<br>1" I.D. |
| 17 | | **7126171150** | 1 | CAP SCREW, M8 X 20MM HEX HEAD |
| 18 | | **7950150050** | 1 | WASHER, LOCK 5/16" I.D. |
| 19 | # | **7709800000** | 4 | PLUG, #8 SAE, 75-16<br>INCLUDES THE FOLLOWING PARTS |
| | | **7755908002** | 1 | O-RING |
| 20 | | **7709800001** | 1 | PLUG, SAE #4<br>INCLUDES THE FOLLOWING PARTS |
| | | **7755904002** | 1 | O-RING |
| 21 | | **6705016148** | 1 | PLATE |
| 22 | | **7445080808** | 2 | ADAPTER, SWIVEL |

**+ SEE FURTHER BREAKDOWN THIS GROUP**

**# SERVICED AS AN ASSEMBLY ONLY**

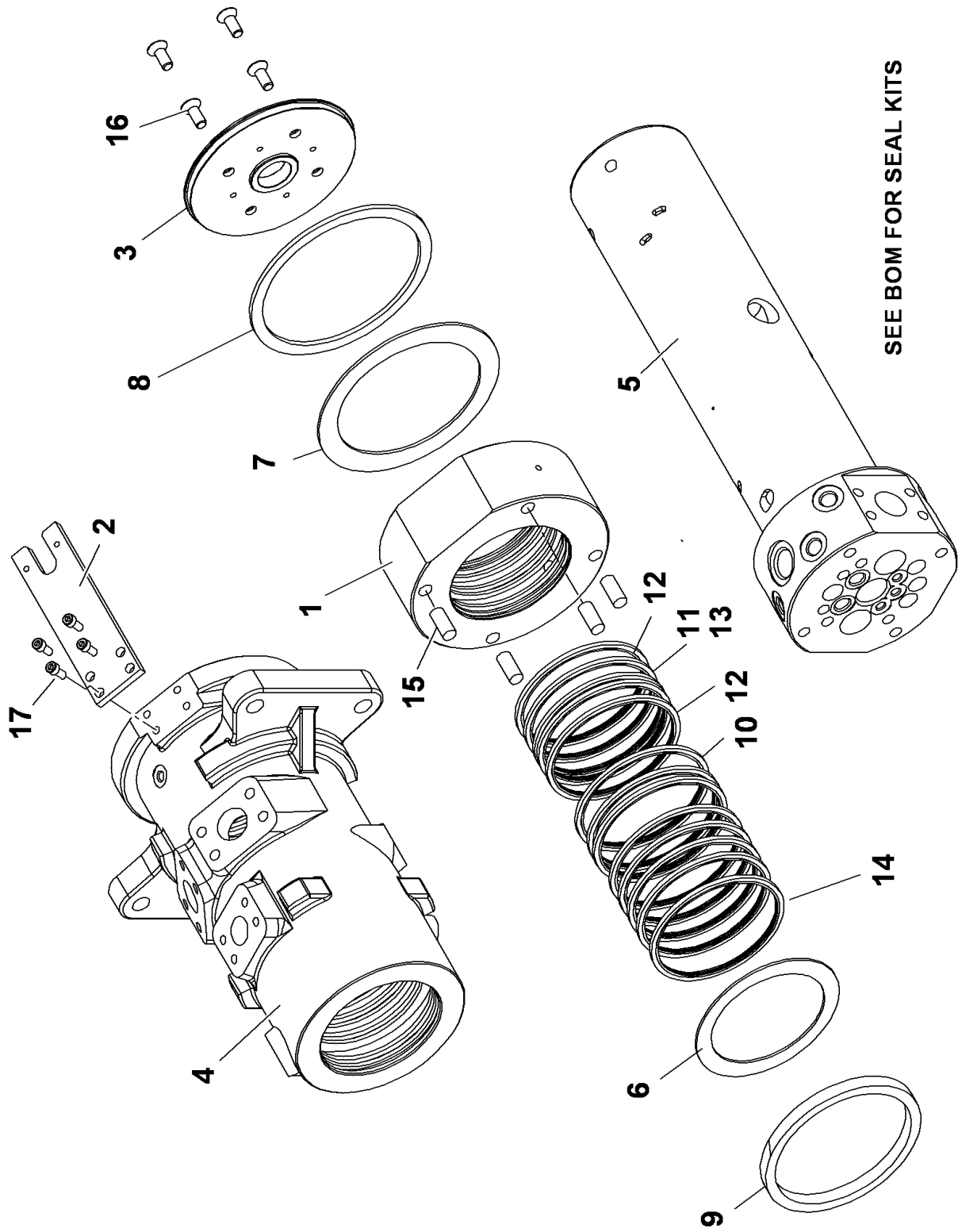


80025416

(SHEET 1 OF 1)

Description
**SWIVEL ASSY-14 PORT HYD ASSY.**

Assembly No.
**80025416**
Revision:

| Item | FN | Part | Qty | Description |
|---|---|---|---|---|
| 1 | | **9364101826** | 1 | HOUSING, WATER |
| 2 | | **9364101827** | 1 | BRACKET |
| 3 | | **9364101818** | 1 | PLATE, COVER FLANGE |
| 4 | | **90021925** | 1 | HOUSING ASSY. HYD. |
| 5 | | **90021926** | 1 | SPOOL ASSY. |
| 6 | | **90021924** | 1 | RING, ANTI-SEIZURE |
| 7 | | **9364101981** | 1 | RING, ANTISEIZURE |
| 8 | | **9364101982** | 1 | RING, SEAL-V |
| 9 | | **90021927** | 1 | V-SEAL |
| 10 | | **9364101983** | 13 | RING, SEAL |
| 11 | | **9364101984** | 3 | RING, GLYDE |
| 12 | | **9364101986** | 6 | O-RING |
| 13 | | **9364101985** | 3 | O-RING |
| 14 | | **9364101987** | 1 | O-RING |
| 15 | | **9364101821** | 4 | SCREW, GRUB |
| 16 | | **9364101822** | 4 | CAPSCREW |
| 17 | | **9364101988** | 4 | CAPSCREW, 10M |
| 20 | * | **90021928** | 1 | KIT, SEAL |
| 21 | @ | **9364101830** | 1 | KIT, SEAL<br>SEAL KIT FOR WATER SWIVEL ASSY<br>. INCLUDES ITEM 11 QTY.3,<br>ITEM 12, QTY.2 AND ITEM 13,<br>QTY.3 |

*** REPAIR KIT AND/OR PART OF KIT**

**@ SECOND REPAIR KIT AND/OR PART OF 2ND KIT**

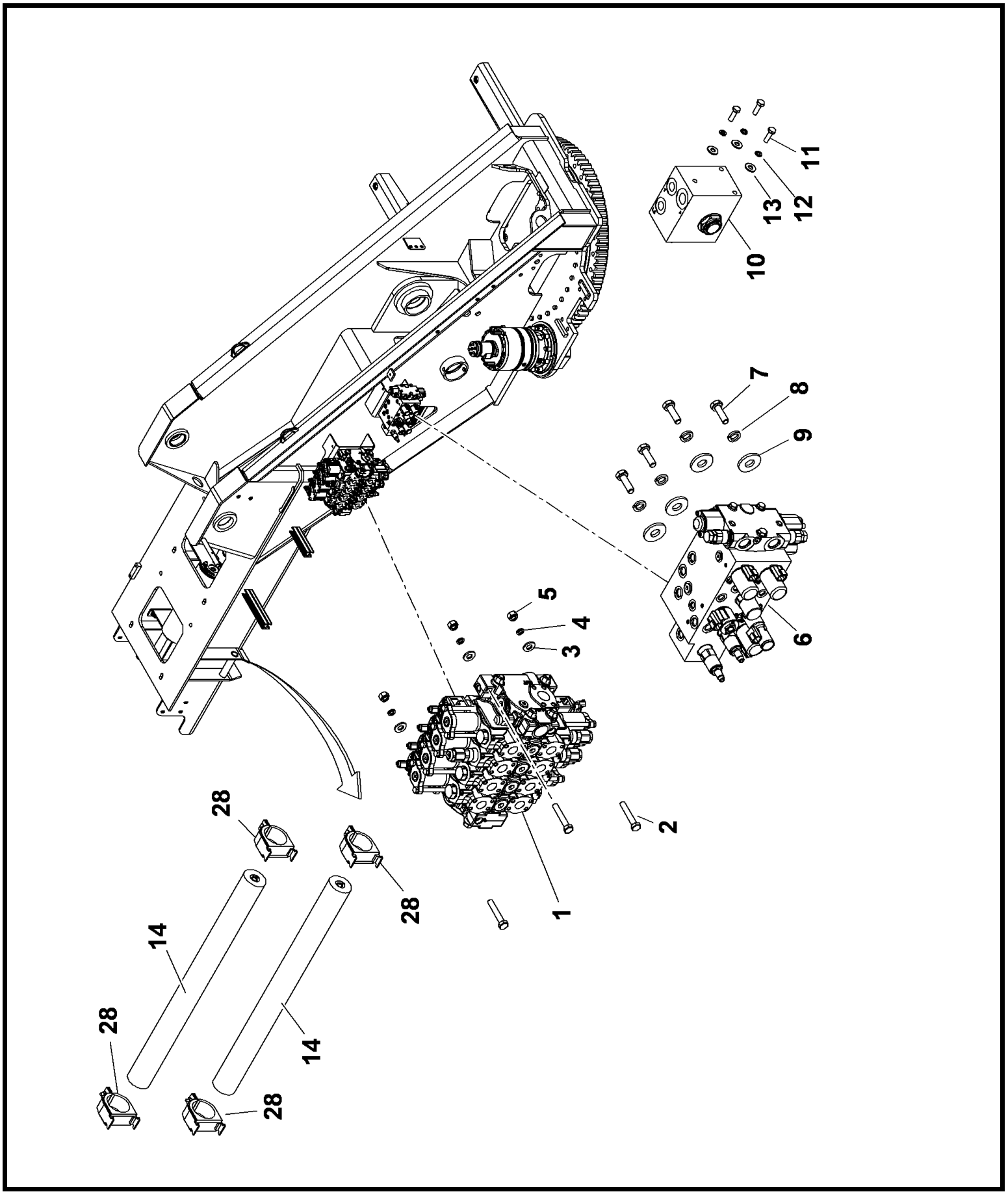


80033344

(SHEET 1 OF 1)

Description
**CONTROL VALVE INSTALLATION**

Assembly No.
**80033344**
Revision: **D**

| Item | FN | Part | Qty | Description |
|---|---|---|---|---|
| 1 | + | **80039533** | 1 | DIRECTIONAL CONTROL VALVE |
| 2 | | **7126212150** | 3 | CAP SCREW, M12 X 70MM HEX HEAD |
| 3 | | **7950180141** | 6 | WASHER, FLAT 1/2" |
| 4 | | **7951210210** | 3 | LOCK WASHER, 12MM I.D. |
| 5 | | **7661210003** | 3 | NUT, HEX 12MM N.C. |
| 6 | + | **80029768** | 1 | ACCESSORY MANIFOLD |
| 7 | | **7126171150** | 4 | CAP SCREW, M8 X 20MM HEX HEAD |
| 8 | | **7951170210** | 4 | WASHER, LOCK 8MM |
| 9 | | **7950150161** | 4 | WASHER, 5/16" FLAT PLAIN WIDE |
| 10 | | **7926100910** | 1 | VALVE ASSY, DUAL ACCUMULATOR CHARGE<br>INCLUDES THE FOLLOWING PARTS |
| | | **9926113270** | 1 | SWITCH ASSY. PRESSURE |
| | | **90020175** | 1 | WASHER SEAL |
| 11 | | **7126151153** | 3 | CAP SCREW, M6X20 HEX HEAD |
| 12 | | **7951150210** | 3 | LOCKWASHER, 6MM I.D. |
| 13 | | **7950140141** | 3 | WASHER, FLAT 1/4" PLAIN NARROW |
| 14 | | **80060944** | 2 | ACCUMULATOR 76 CI |
| 15 | | **929048** | 5 | 5/8" TRIM-LOK PLASTIC CHANNEL |
| 28 | | **7300100025** | 4 | CLAMP ASSY, 2.38" |

**+ SEE FURTHER BREAKDOWN THIS GROUP**

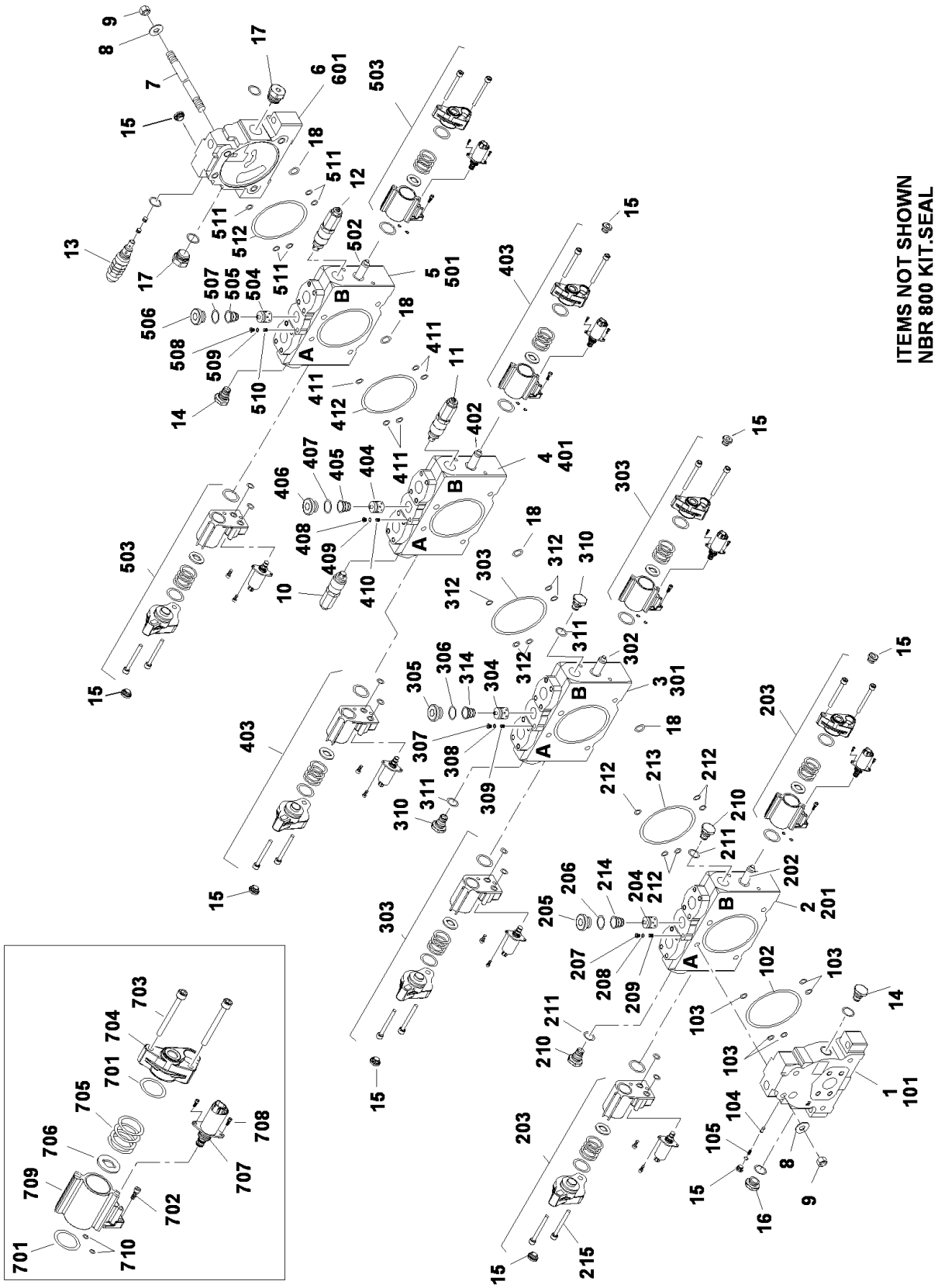


80039533

(SHEET 1 OF 1)

Description
**DIRECTIONAL CONTROL VALVE**

Assembly No.
**80039533**
Revision:

| Item | FN | Part | Qty | Description |
|---|---|---|---|---|
| 1 | + | **9926113280** | 1 | VALVE ASSY. INLET SECTION INCLUDES ITEMS 101 THRU 105 |
| 2 | | **90023271** | 1 | VALVE ASSY. WORK SECTION FOR MAIN HOIST,INCLUDES ITEMS 201 THRU 214 |
| 3 | | **90023271** | 1 | VALVE ASSY. WORK SECTION FOR AUX HOIST, INCLUDES ITEMS 301 THRU 314 |
| 4 | | **90023285** | 1 | VALVE ASSY. WORK SECTION FOR TELE, INCLUDES ITEMS 401 THRU 412 |
| 5 | | **90023273** | 1 | VALVE ASSY. WORK SECTION FOR LIFT, INCLUDES ITEMS 501 THRU 512 |
| 6 | | **9926113284** | 1 | VALVE ASSY. OUTLET SECTION INCLUDES ITEM 601 |
| 7 | | **9926111533** | 4 | ROD, TIE |
| 8 | | **9926111435** | 8 | WASHER, COMPRESSION |
| 9 | | **9926111436** | 8 | NUT |
| 10 | | **90023274** | 1 | VALVE, CART RELIEF 3500 PSI INCLUDES THE FOLLOWING PARTS |
| | | **9926112013** | 1 | O-RING |
| 11 | | **90023275** | 1 | VALVE, CART RELIEF 3250 PSI INCLUDES THE FOLLOWING PARTS |
| | | **9926112013** | 1 | O-RING |
| 12 | | **90023276** | 1 | VALVE, CART RELIEF 4300 PSI INCLUDES THE FOLLOWING PARTS |
| | | **9926112013** | 1 | O-RING |
| 13 | | **9926113018** | 1 | VALVE,CART. RELIEF @ 4000 PSI INCLUDES THE FOLLOWING PARTS |
| | | **9926111470** | 1 | SEAL-SPECIAL |
| | | **9926111469** | 2 | O-RING |
| 14 | | **9926111439** | 2 | PLUG ASSEMBLY, SHUT-OFF INCLUDES THE FOLLOWING PARTS |
| | | **9926111468** | 1 | SEAL-SPECIAL |
| 15 | | **9926112141** | 8 | PLUG |
| 16 | | **9926113285** | 1 | PLUG ASSY. INCLUDES THE FOLLOWING PARTS |
| | | **7755912002** | 1 | O-RING |
| 17 | | **9926111999** | 2 | PLUG ASSY |

**+ SEE FURTHER BREAKDOWN THIS GROUP**

Description
**DIRECTIONAL CONTROL VALVE**

Assembly No.
**80039533**
Revision:

| Item | FN | Part | Qty | Description |
|---|---|---|---|---|
| | | | | INCLUDES THE FOLLOWING PARTS |
| | | **7755912002** | 1 | O-RING |
| 18 | | **9926111438** | 4 | DISK, SHUTTLE |
| 101 | | **NSS** | 1 | NOT SERVICED SEPARATELY<br>HOUSING |
| 102 | * | **NSS** | 1 | NOT SERVICED SEPARATELY<br>O-RING |
| 103 | * | **NSS** | 5 | NOT SERVICED SEPARATELY<br>O-RING |
| 104 | | **9926112004** | 1 | FILTER |
| 105 | | **9926112003** | 1 | SPRING |
| 201 | | **NSS** | 1 | NOT SERVICED SEPARATELY<br>HOUSING |
| 202 | | **NSS** | 1 | NOT SERVICED SEPARATELY<br>SPOOL |
| 203 | | **90023280** | 2 | SOLENOID & CAP ASSY. 24V<br>INCLUDES ITEMS 701 THRU 710 |
| 204 | | **NSS** | 1 | NOT SERVICED SEPARATELY<br>SPOOL |
| 205 | | **9926113025** | 1 | PLUG ASSY. |
| 206 | * | **NSS** | 1 | NOT SERVICED SEPARATELY<br>O-RING |
| 207 | | **90022957** | 1 | PLUG, ORIFICE ASSY. |
| 208 | * | **NSS** | 1 | NOT SERVICED SEPARATELY<br>O-RING |
| 209 | * | **NSS** | 1 | NOT SERVICED SEPARATELY<br>O-RING |
| 210 | | **9926112006** | 2 | PLUG |
| 211 | * | **NSS** | 2 | NOT SERVICED SEPARATELY<br>O-RING |
| 212 | * | **NSS** | 5 | NOT SERVICED SEPARATELY<br>O-RING |
| 213 | | **NSS** | 1 | NOT SERVICED SEPARATELY<br>O-RING |
| 214 | | **9926112200** | 1 | SPRING |
| 301 | | **NSS** | 1 | NOT SERVICED SEPARATELY<br>HOUSING |
| 302 | | **NSS** | 1 | NOT SERVICED SEPARATELY<br>SPOOL |

*** REPAIR KIT AND/OR PART OF KIT**

Description
**DIRECTIONAL CONTROL VALVE**

Assembly No.
**80039533**
Revision:

| Item | FN | Part | Qty | Description |
|---|---|---|---|---|
| 303 | | **90023280** | 2 | SOLENOID & CAP ASSY. 24V<br>INCLUDES ITEMS 701 THRU 710 |
| 304 | | **NSS** | 1 | NOT SERVICED SEPARATELY<br>SPOOL |
| 305 | | **9926113025** | 1 | PLUG ASSY. |
| 306 | * | **NSS** | 1 | NOT SERVICED SEPARATELY<br>O-RING |
| 307 | | **90022957** | 1 | PLUG, ORIFICE ASSY. |
| 308 | * | **NSS** | 1 | NOT SERVICED SEPARATELY<br>O-RING |
| 309 | * | **NSS** | 1 | NOT SERVICED SEPARATELY<br>O-RING |
| 310 | | **9926112006** | 2 | PLUG |
| 311 | * | **NSS** | 2 | NOT SERVICED SEPARATELY<br>O-RING |
| 312 | * | **NSS** | 5 | NOT SERVICED SEPARATELY<br>O-RING |
| 313 | * | **NSS** | 1 | NOT SERVICED SEPARATELY<br>O-RING |
| 314 | | **9926112200** | 1 | SPRING |
| 401 | | **NSS** | 1 | NOT SERVICED SEPARATELY<br>HOUSING |
| 402 | | **NSS** | 1 | NOT SERVICED SEPARATELY<br>SPOOL |
| 403 | | **90023280** | 2 | SOLENOID & CAP ASSY. 24V<br>INCLUDES ITEMS 701 THRU 710 |
| 404 | | **NSS** | 1 | NOT SERVICED SEPARATELY<br>SPOOL |
| 405 | | **9926112200** | 1 | SPRING |
| 406 | | **9926113025** | 1 | PLUG ASSY. |
| 407 | * | **NSS** | 1 | NOT SERVICED SEPARATELY<br>O-RING |
| 408 | | **90022957** | 1 | PLUG, ORIFICE ASSY. |
| 409 | * | **NSS** | 1 | NOT SERVICED SEPARATELY<br>O-RING |
| 410 | * | **NSS** | 1 | NOT SERVICED SEPARATELY<br>O-RING |
| 411 | * | **NSS** | 5 | NOT SERVICED SEPARATELY<br>O-RING |

*** REPAIR KIT AND/OR PART OF KIT**

Description
**DIRECTIONAL CONTROL VALVE**

Assembly No.
**80039533**
Revision:

| Item | FN | Part | Qty | Description |
|---|---|---|---|---|
| 412 | * | **NSS** | 1 | NOT SERVICED SEPARATELY<br>O-RING |
| 501 | | **NSS** | 1 | NOT SERVICED SEPARATELY<br>HOUSING |
| 502 | | **NSS** | 1 | NOT SERVICED SEPARATELY<br>SPOOL |
| 503 | | **90023280** | 2 | SOLENOID & CAP ASSY. 24V<br>INCLUDES ITEMS 701 THRU 710 |
| 504 | | **NSS** | 1 | NOT SERVICED SEPARATELY<br>SPOOL |
| 505 | | **9926112200** | 1 | SPRING |
| 506 | | **9926113025** | 1 | PLUG ASSY. |
| 507 | * | **NSS** | 1 | NOT SERVICED SEPARATELY<br>O-RING |
| 508 | | **90022957** | 1 | PLUG, ORIFICE ASSY. |
| 509 | * | **NSS** | 1 | NOT SERVICED SEPARATELY<br>O-RING |
| 510 | * | **NSS** | 1 | NOT SERVICED SEPARATELY<br>O-RING |
| 511 | * | **NSS** | 5 | NOT SERVICED SEPARATELY<br>O-RING |
| 512 | * | **NSS** | 1 | NOT SERVICED SEPARATELY<br>O-RING |
| 601 | | **NSS** | 1 | NOT SERVICED SEPARATELY<br>HOUSING |
| 701 | | **7755220002** | 2 | O-RING |
| 702 | | **9926111974** | 1 | SCREW, |
| 703 | | **90023163** | 2 | CAPSCREW |
| 704 | | **NSS** | 1 | NOT SERVICED SEPARATELY<br>END CAP |
| 705 | | **9926111456** | 1 | SPRING |
| 706 | | **9926111457** | 1 | WASHER, |
| 707 | | **90023281** | 1 | CART & COIL ASSY. 24V<br>INCLUDES THE FOLLOWING PARTS |
| | | **90023277** | 1 | KIT, SEAL |
| 708 | | **9926113029** | 2 | CAPSCREW |
| 709 | | **NSS** | 1 | NOT SERVICED SEPARATELY<br>CAP ASSY. |

*** REPAIR KIT AND/OR PART OF KIT**

Description
**DIRECTIONAL CONTROL VALVE**

Assembly No.
**80039533**
Revision:

| Item | FN | Part | Qty | Description |
|---|---|---|---|---|
| 710 | | **7755107002** | 2 | O-RING |
| 800 | * | **9926113031** | 1 | KIT, SEAL VALVE ASSY. |

*** REPAIR KIT AND/OR PART OF KIT**

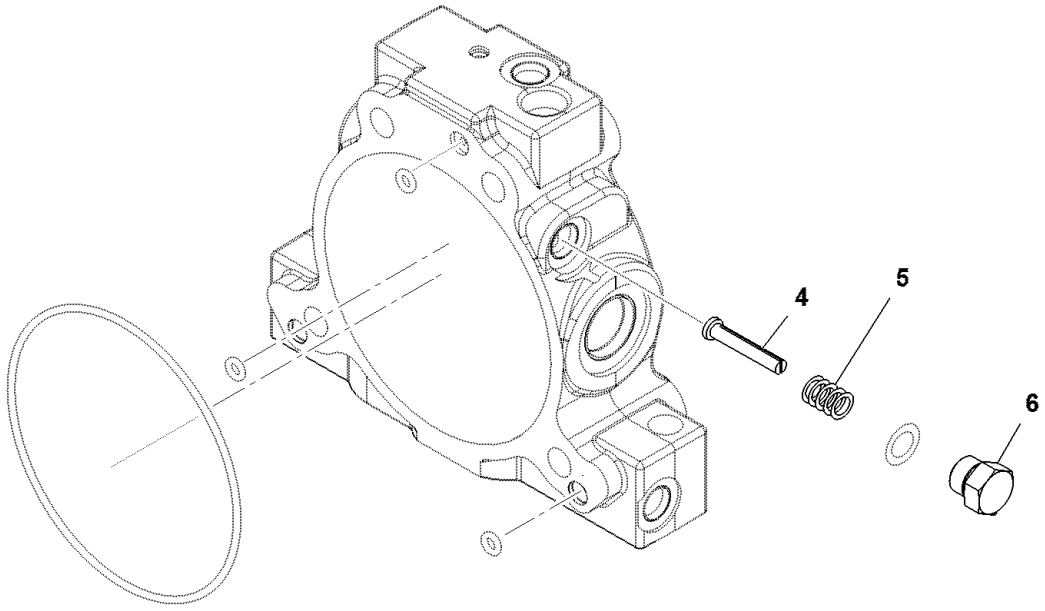


9926113280

Description
**VALVE ASSY. INLET SECTION**

Assembly No.
**9926113280**
Revision:

| Item | FN | Part | Qty | Description |
|---|---|---|---|---|
| 4 | | **90027014** | 1 | FILTER |
| 5 | | **9926112003** | 1 | SPRING |
| 6 | + | **90027015** | 1 | PLUG ASSY. - SAE |

**+ SEE FURTHER BREAKDOWN THIS GROUP**

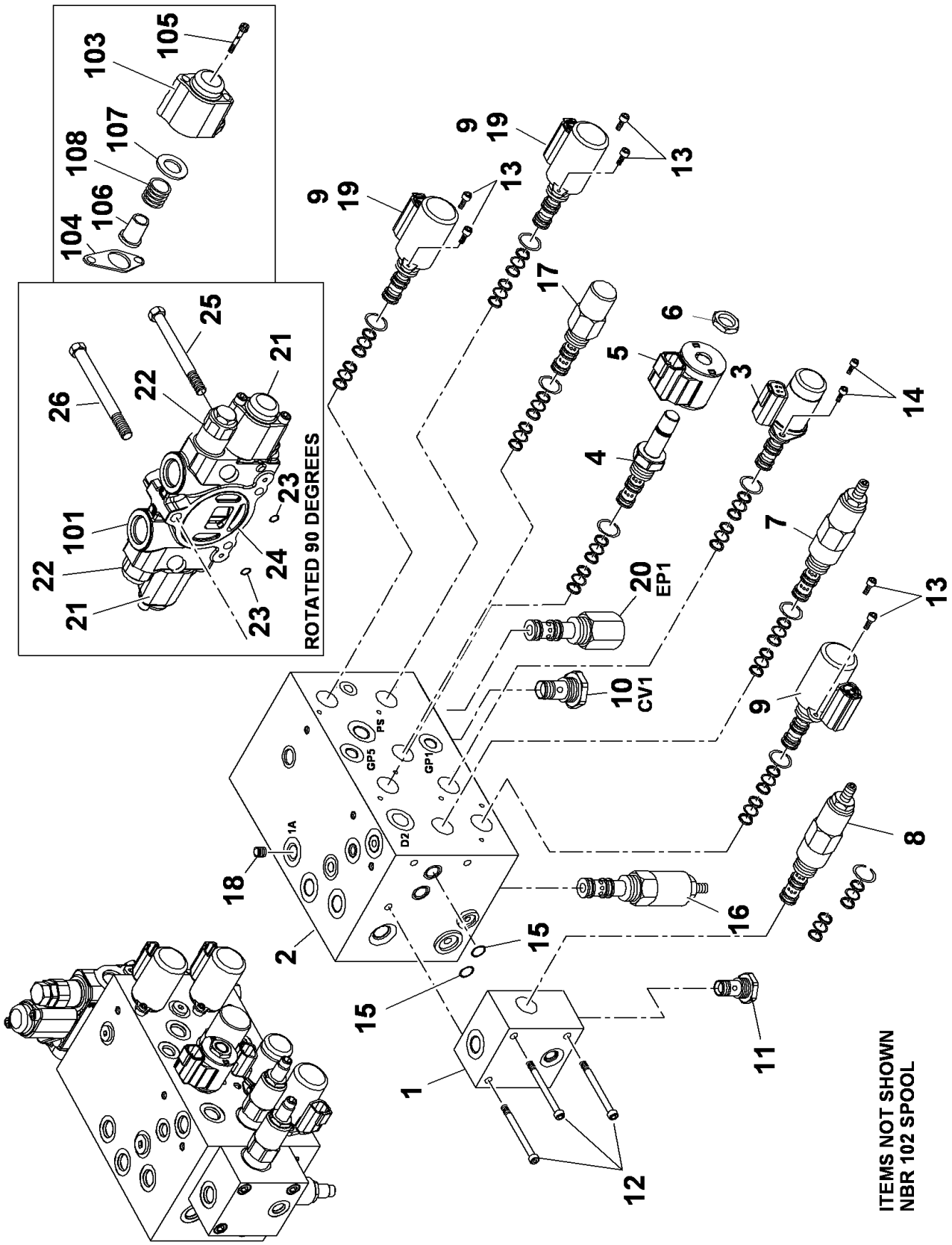


80029768

(SHEET 1 OF 1)

Description
**ACCESSORY MANIFOLD**

Assembly No.
**80029768**
Revision:

| Item | FN | Part | Qty | Description |
|---|---|---|---|---|
| 1 | | **NSS** | 1 | NOT SERVICED SEPARATELY<br>BODY, VALVE |
| 2 | | **NSS** | 1 | NOT SERVICED SEPARATELY<br>BODY, VALVE |
| 3 | | **90000894** | 1 | VALVE, CART. & COIL ASSY. 24V.<br>INCLUDES THE FOLLOWING PARTS |
| | | **9926113057** | 1 | KIT, SEAL |
| 4 | | **9926106474** | 1 | VALVE, CARTRIDGE<br>INCLUDES THE FOLLOWING PARTS |
| | | **9926108423** | 1 | KIT, SEAL |
| | | **9926107745** | 1 | NUT |
| 5 | | **90015312** | 1 | COIL ASSY. 24V. |
| 6 | | **9926107745** | 1 | NUT |
| 7 | | **90012924** | 1 | VALVE,PRESS.REDUCING 250 PSI<br>INCLUDES THE FOLLOWING PARTS |
| | | **9926111722** | 1 | KIT, SEAL |
| 8 | | **90012925** | 1 | VALVE,PRESS.REDUCING 2500 PSI<br>INCLUDES THE FOLLOWING PARTS |
| | | **9926113058** | 1 | KIT, SEAL |
| 9 | | **90000895** | 3 | VALVE, PRESS. REDUCING<br>INCLUDES THE FOLLOWING PARTS |
| | | **9926113057** | 1 | KIT, SEAL |
| 10 | | **9926113049** | 1 | VALVE, CHECK<br>INCLUDES THE FOLLOWING PARTS |
| | | **9926112358** | 1 | KIT, SEAL |
| 11 | | **9926110629** | 1 | CARTRIDGE ASSY. FILTER<br>INCLUDES THE FOLLOWING PARTS |
| | | **9752100994** | 1 | KIT, REPAIR |
| | | **9926108644** | 1 | KIT, SEAL |
| 12 | | **90012926** | 3 | CAPSCREW,SOCKET HEAD 2-1/4" LG |
| 13 | | **9926113051** | 6 | CAPSCREW, SOCKET HEAD 10MM |
| 14 | | **90012927** | 2 | CAPSCREW, 8MM LG |
| 15 | | **7755014000** | 2 | O-RING |
| 16 | | **9926113167** | 1 | VALVE, RELIEF @ 2500 PSI<br>INCLUDES THE FOLLOWING PARTS |
| | | **9926108644** | 1 | KIT, SEAL |
| 17 | | **9926113443** | 1 | VALVE, PRESS. COMPENSATOR<br>INCLUDES THE FOLLOWING PARTS |
| | | **9926110372** | 1 | KIT, SEAL |
| 18 | | **9926113171** | 1 | PLUG, ORIFICE .040" |

Description
**ACCESSORY MANIFOLD**

Assembly No.
**80029768**
Revision:

| Item | FN | Part | Qty | Description |
|---|---|---|---|---|
| 19 | | **90000899** | 2 | DISC, ORIFICE .015 |
| 20 | | **9926110370** | 1 | CARTRIDGE<br>INCLUDES THE FOLLOWING PARTS |
| | | **9926107747** | 1 | KIT, SEAL |
| 21 | | **90012928** | 1 | KIT, VALVE ASSY. WORK SECTION<br>INCLUDES ITEMS 22 THRU 24<br>AND ITEMS 101 THRU 108 |
| 22 | | **9926113254** | 2 | VALVE, CART. RELIEF @ 1800 PSI<br>INCLUDES THE FOLLOWING PARTS |
| | | **9926111932** | 1 | O-RING, VITON |
| | | **9926111931** | 1 | O-RING, VITON |
| 23 | | **9926112501** | 2 | O-RING,VITON |
| 24 | | **9926113253** | 1 | O-RING SEAL |
| 25 | | **90012929** | 2 | CAPSCREW |
| 26 | | **90012930** | 1 | CAPSCREW |
| 101 | | **NSS** | 1 | NOT SERVICED SEPARATELY<br>HOUSING |
| 102 | | **NSS** | 1 | NOT SERVICED SEPARATELY<br>SPOOL |
| 103 | | **9926113301** | 2 | CAP |
| 104 | | **90000633** | 2 | SEAL, CAP |
| 105 | | **9926113302** | 4 | CAPSCREW |
| 106 | | **9926113298** | 2 | SEAT, SPRING |
| 107 | | **9926113300** | 2 | WASHER |
| 108 | | **9926113299** | 2 | SPRING |

**Notes**

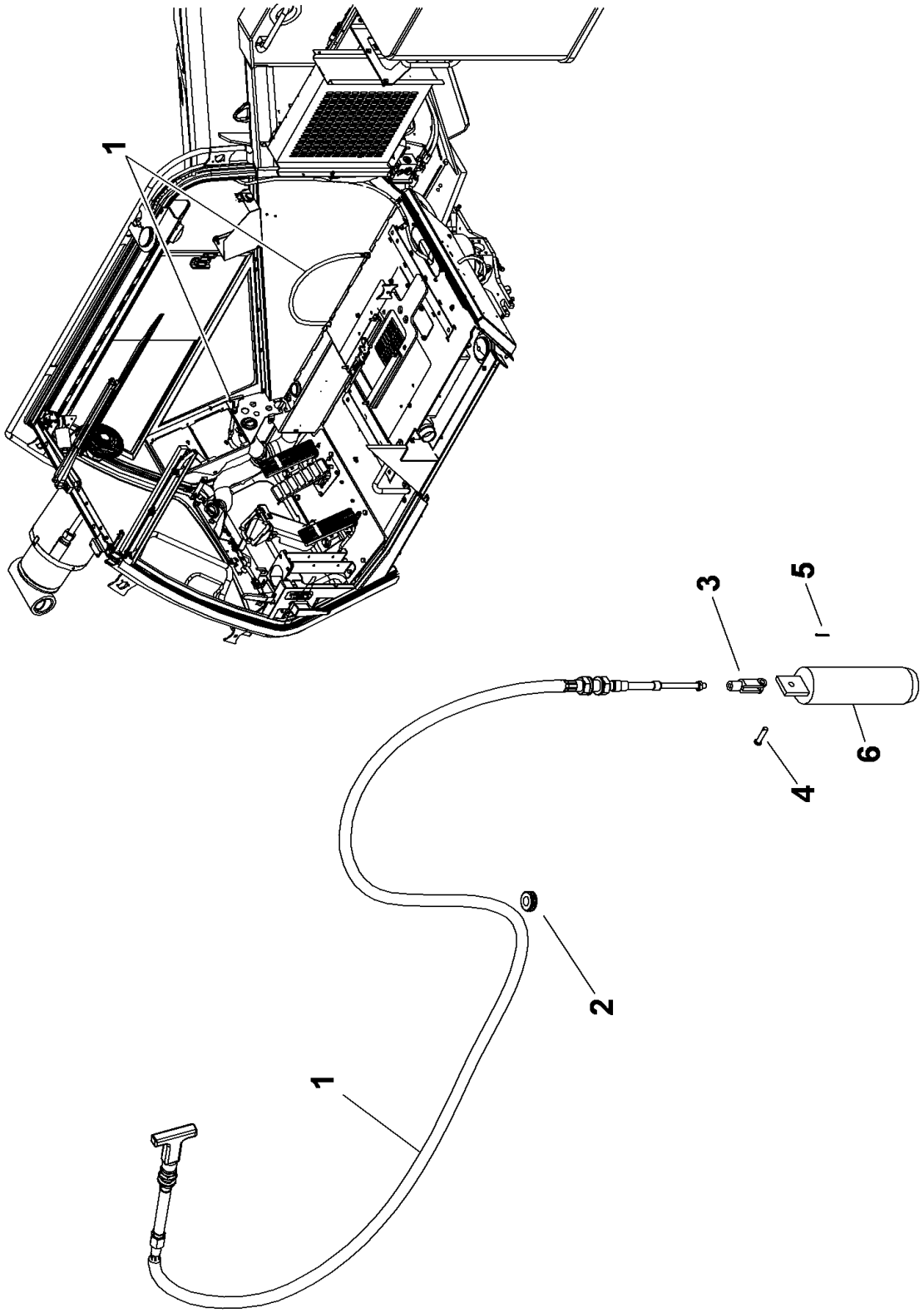


80029622

(SHEET 1 OF 1)

Description
**T/T PIN LOCK CONTROL INSTALLATION**

Assembly No.
**80029622**
Revision: **C**

| Item | FN | Part | Qty | Description |
|---|---|---|---|---|
| 1 | | **7246100350** | 1 | CONTROL CABLE W/LOCK HANDLE<br>INCLUDES THE FOLLOWING PARTS |
| | | **9246100182** | 1 | T-HANDLE |
| | | **9246100183** | 1 | SCREW, T-HANDLE |
| 2 | | **7506000021** | 1 | GROMMET<br>1/2" I.D. |
| 3 | | **80044648** | 1 | YOKE, 1/4-28UNF |
| 4 | | **7690141600** | 1 | PIN, CLEVIS<br>1/4" X 1" |
| 5 | | **7690001210** | 1 | PIN, COTTER<br>1/16" X 3/4" |
| 6 | | **2159210126** | 1 | PIN, SWING LOCK |

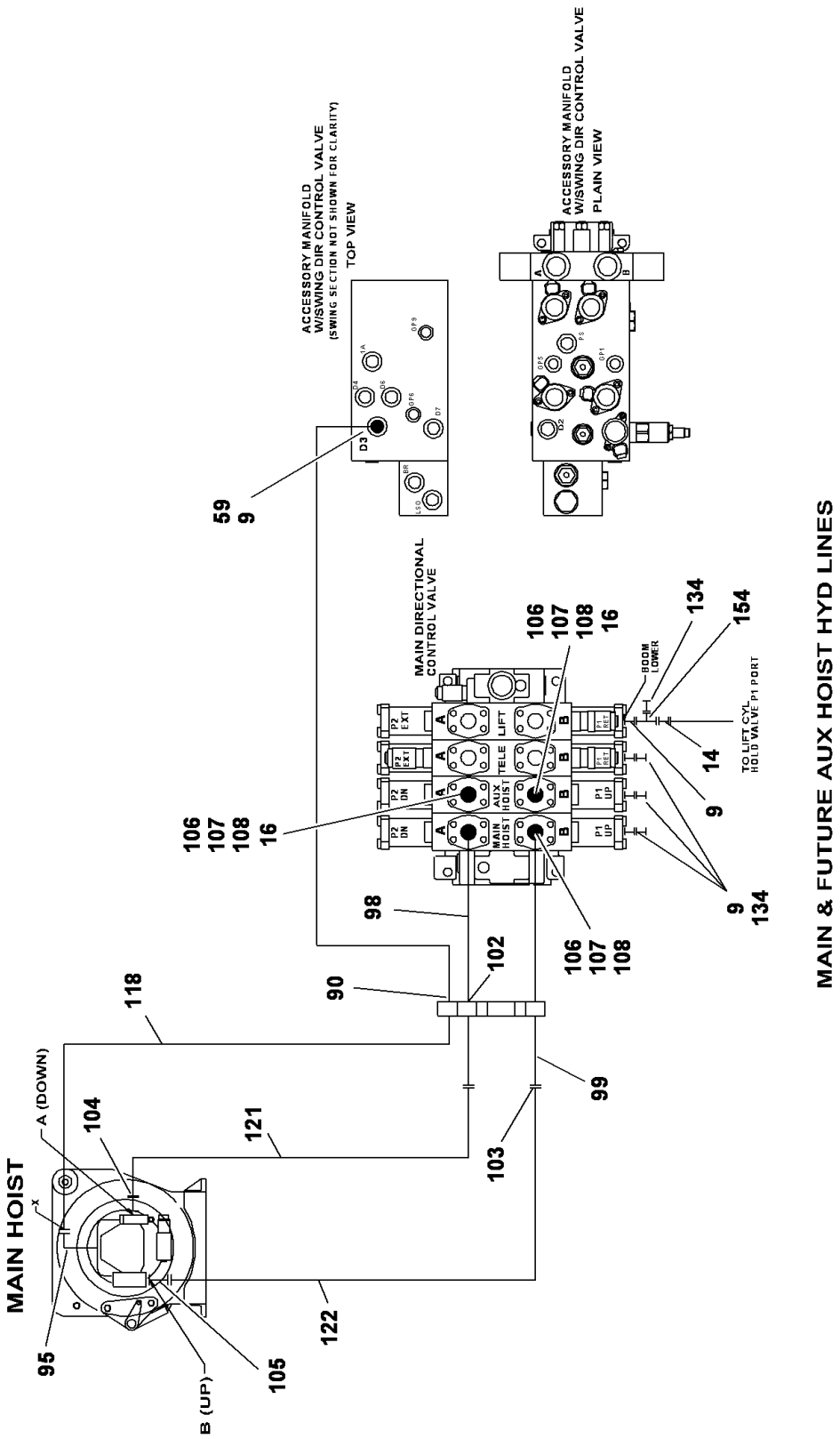


80033427

(SHEET 5 OF 5)

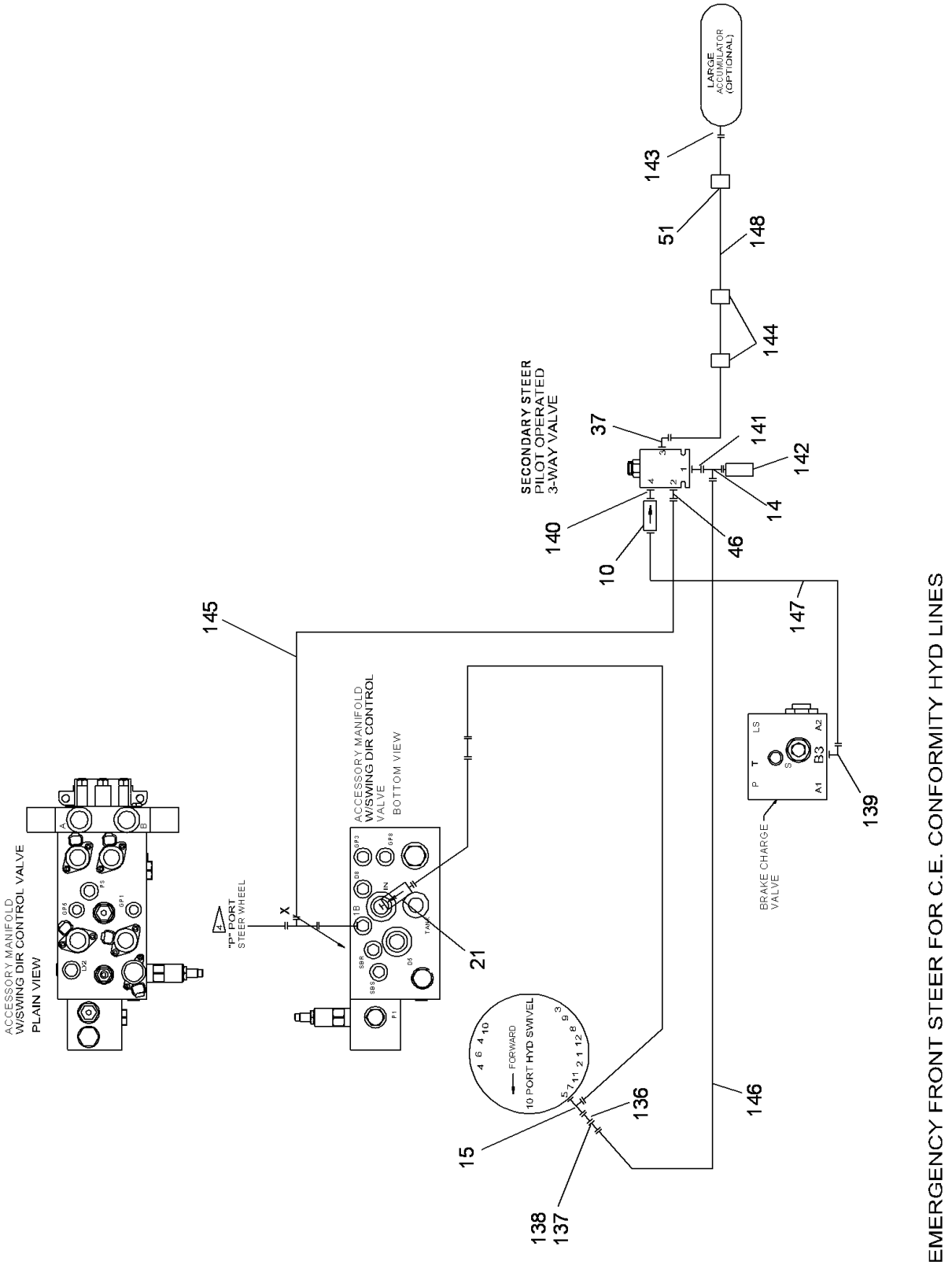
LARGE ACCUMULATOR (OPTIONAL)
143
51
148
144
SECONDARY STEER PILOT OPERATED 3-WAY VALVE
37
141
142
14
140
10
46
147
145
ACCESSORY MANIFOLD W/SWING DIR CONTROL VALVE BOTTOM VIEW
"P" PORT STEER WHEEL
X
21
ACCESSORY MANIFOLD W/SWING DIR CONTROL VALVE PLAIN VIEW
BRAKE CHARGE VALVE
139
FORWARD
10 PORT HYD SWIVEL
15
136
146
138
137
EMERGENCY FRONT STEER FOR C.E. CONFORMITY HYD LINES

80033427

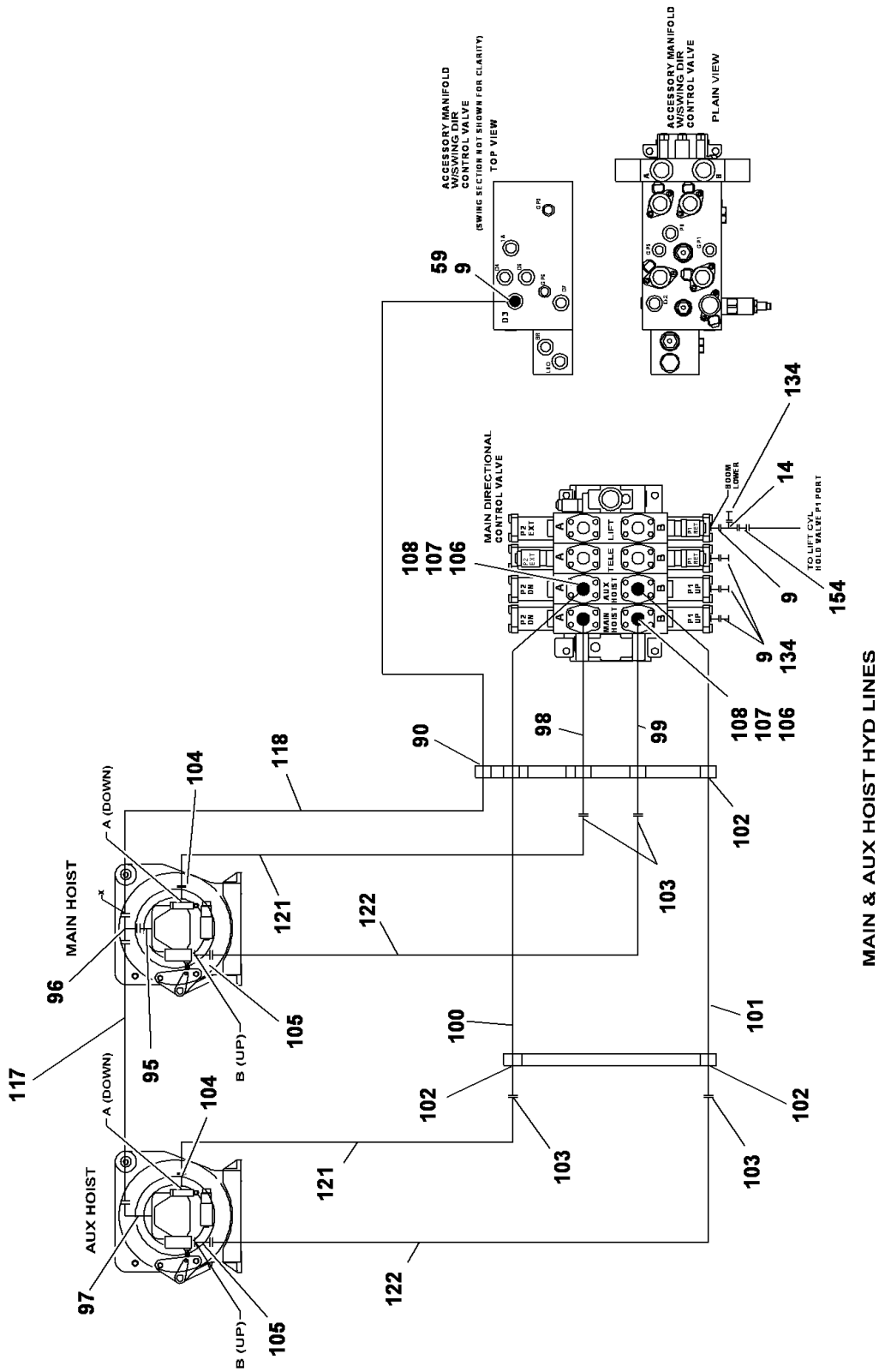


80033427

(SHEET 3 OF 5)

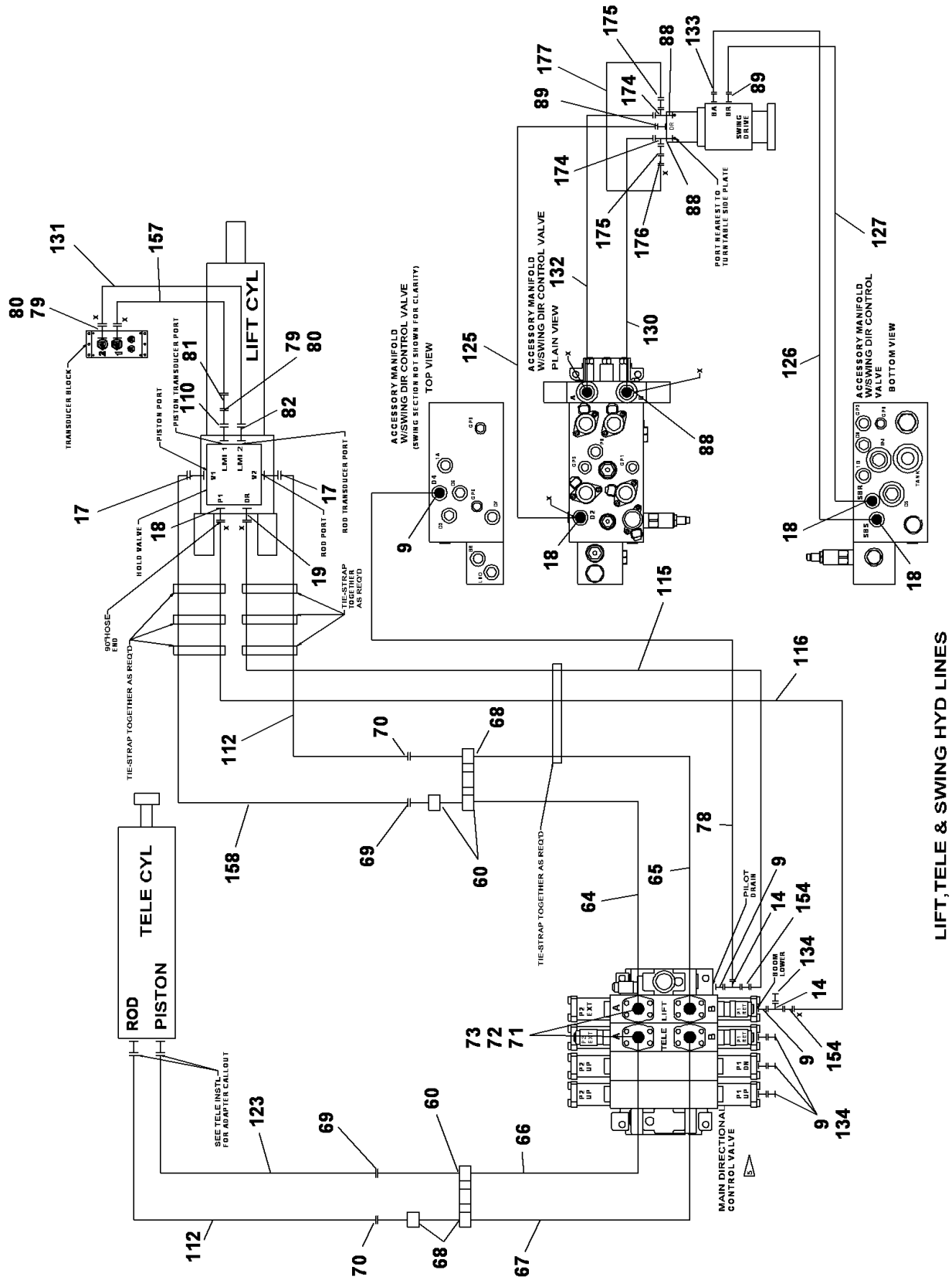


80033427

(SHEET 2 OF 5)

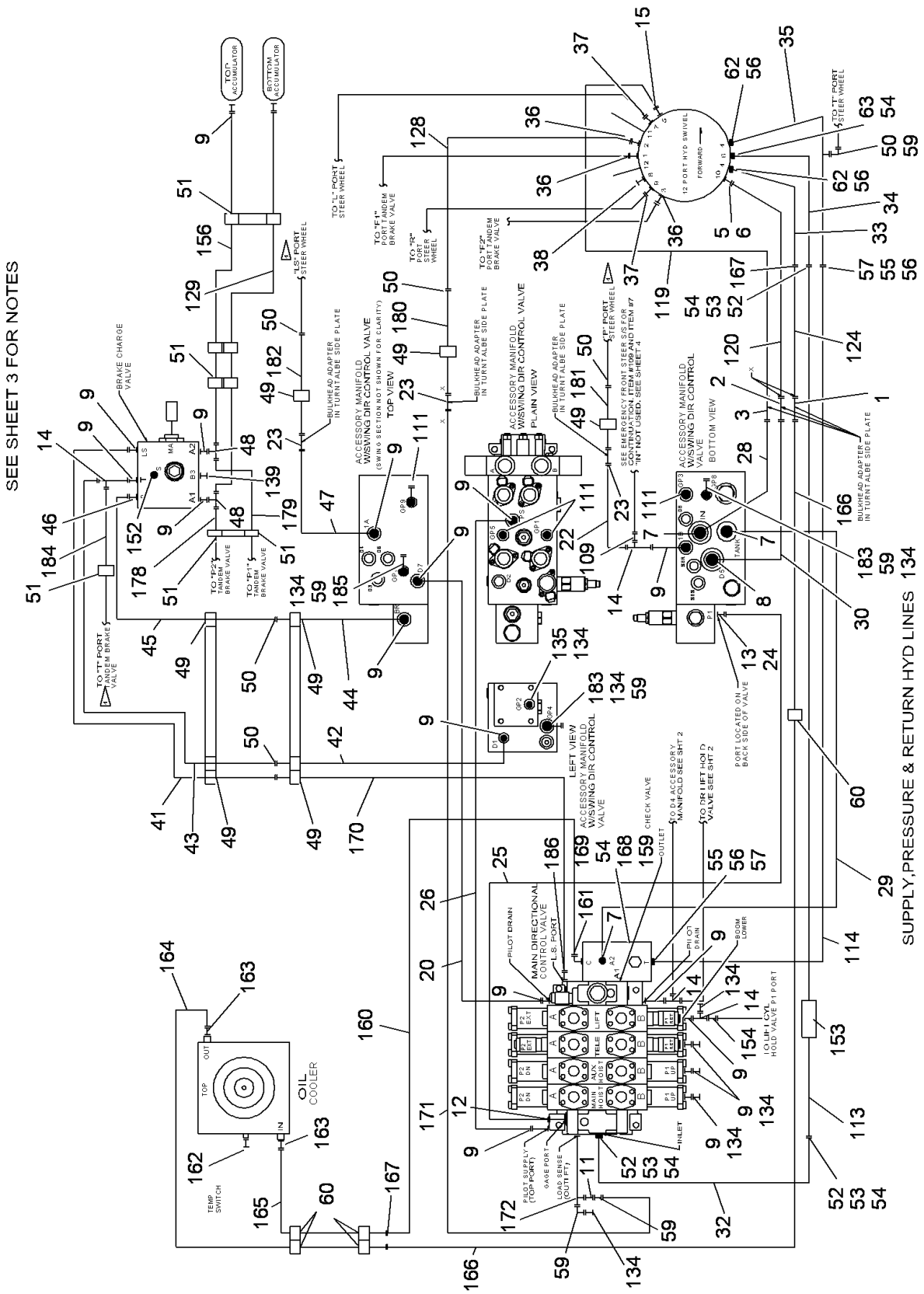


80033427

(SHEET 1 OF 5)

Description
**HYDRAULIC LINES INSTALLATION MAIN & AUXILIARY HOIST (SUPERSTRUCTURE)**

Assembly No.
**80033427**
Revision: **H**

| Item | FN | Part | Qty | Description |
|---|---|---|---|---|
| 1 | | **7447202032** | 1 | ELBOW, #20 BULKHEAD UNION 90 |
| 2 | | **7447121232** | 1 | ELBOW, #12 BULKHEAD UNION 90 |
| 3 | | **7447121217** | 1 | UNION, BULKHEAD<br>INCLUDES THE FOLLOWING PARTS |
| | | **7755018002** | 1 | O-RING |
| 5 | | **7447121233** | 1 | ELBOW, 90 DEGREE<br>INCLUDES THE FOLLOWING PARTS |
| | | **7755018002** | 1 | O-RING |
| 6 | | **7447121601** | 1 | ADAPTER, STRAIGHT<br>INCLUDES THE FOLLOWING PARTS |
| | | **7755018002** | 1 | O-RING |
| | | **7755916002** | 1 | O-RING |
| 7 | | **7447161601** | 3 | ADAPTER, STRAIGHT<br>INCLUDES THE FOLLOWING PARTS |
| | | **7755021002** | 1 | O-RING |
| | | **7755916002** | 1 | O-RING |
| 8 | | **7926100959** | 1 | VALVE, #12 INLET CHECK |
| 9 | | **7447060601** | 21 | ADAPTER, STRAIGHT MALE<br>INCLUDES THE FOLLOWING PARTS |
| | | **7755012002** | 1 | O-RING |
| | | **7755906002** | 1 | O-RING |
| 11 | | **7013001112** | 1 | FITTING, ORIFICE .031 |
| 12 | | **7447080601** | 1 | ADAPTER, STRAIGHT<br>INCLUDES THE FOLLOWING PARTS |
| | | **7755014002** | 1 | O-RING |
| | | **7755906002** | 1 | O-RING |
| 13 | | **7447080801** | 1 | ADAPTER, STRAIGHT<br>INCLUDES THE FOLLOWING PARTS |
| | | **7755014002** | 1 | O-RING |
| | | **7755908002** | 1 | O-RING |
| 14 | | **7447060634** | 4 | TEE, FEMALE RUN<br>INCLUDES THE FOLLOWING PARTS |
| | | **7755012002** | 1 | O-RING |
| | | **7755906002** | 1 | O-RING |
| 15 | | **7447121203** | 1 | ELBOW, 90 DEGREE<br>INCLUDES THE FOLLOWING PARTS |
| | | **7755018002** | 1 | O-RING |
| | | **7755912002** | 1 | O-RING |
| 17 | | **7447161638** | 2 | ELBOW, 90 DEGREE LONG<br>INCLUDES THE FOLLOWING PARTS |
| | | **7755021002** | 1 | O-RING |
| | | **7755916002** | 2 | O-RING |

Description
**HYDRAULIC LINES INSTALLATION MAIN & AUXILIARY HOIST (SUPERSTRUCTURE)**

Assembly No.
**80033427**
Revision: **H**

| Item | FN | Part | Qty | Description |
|---|---|---|---|---|
| 18 | | **7447040601** | 4 | ADAPTER, STRAIGHT |
| | | | | INCLUDES THE FOLLOWING PARTS |
| | | **7755011002** | 1 | O-RING |
| | | **7755906002** | 1 | O-RING |
| 19 | | **7447040401** | 1 | ADAPTER, STRAIGHT |
| | | | | INCLUDES THE FOLLOWING PARTS |
| | | **7755011002** | 1 | O-RING |
| | | **7755904002** | 1 | O-RING |
| 20 | | **7910101436** | 1 | TUBE ASSY, D4 MAN TO PD MAIN |
| 22 | | **7910101517** | 1 | TUBE ASSY, 1B MAN TO P STEER |
| 23 | | **7447060617** | 3 | UNION, BULKHEAD |
| | | | | INCLUDES THE FOLLOWING PARTS |
| | | **7755011002** | 1 | O-RING |
| 24 | | **7447080833** | 1 | ELBOW, 90 DEGREE MALE |
| | | | | INCLUDES THE FOLLOWING PARTS |
| | | **7755014002** | 1 | O-RING |
| | | **7755908002** | 1 | O-RING |
| 25 | | **80045167** | 1 | TUBE ASSY P1 MAN TO P3 MAIN |
| 26 | | **7910101435** | 1 | TUBE ASSY, PS MAN TO PS MAIN |
| 28 | | **80015247** | 1 | TUBE ASSY |
| 29 | | **7910101628** | 1 | TUBE ASSY, MAIN TANK TO CHECK |
| 30 | | **7910101618** | 1 | TUBE ASSY, MANIFOLD D5 TO 10 |
| 32 | | **7910101454** | 1 | TUBE ASSY, INLET MAIN VALVE |
| 33 | | **7910101568** | 1 | TUBE ASSY,PORT 4SWIVEL TO TANK |
| 34 | | **7910101566** | 1 | TUBE ASSY, PORT 6 SWIVEL TO IN |
| 35 | | **7910101567** | 1 | TUBE ASSY,PORT 4 SWIVEL TO OUT |
| 36 | | **7447060403** | 3 | ELBOW, 90 DEGREE MALE |
| | | | | INCLUDES THE FOLLOWING PARTS |
| | | **7755012002** | 1 | O-RING |
| | | **7755904002** | 1 | O-RING |
| 37 | | **7447060803** | 2 | ELBOW, 90 DEGREE MALE |
| | | | | INCLUDES THE FOLLOWING PARTS |
| | | **7755012002** | 1 | O-RING |
| | | **7755908002** | 1 | O-RING |
| 38 | | **7709000038** | 1 | O-RING PLUG #8 |
| | | | | INCLUDES THE FOLLOWING PARTS |
| | | **7755908002** | 1 | O-RING |
| 41 | | **7910101519** | 1 | TUBE ASSY,LS BR CHARGE TO TUBE |
| 42 | | **7910101513** | 1 | TUBE ASSY, D1 MAN TO TANK CHAR |

Description
**HYDRAULIC LINES INSTALLATION MAIN & AUXILIARY HOIST (SUPERSTRUCTURE)**

Assembly No.
**80033427**
Revision: **H**

| Item | FN | Part | Qty | Description |
|---|---|---|---|---|
| 43 | | **7910101520** | 1 | TUBE ASSY, T BR CHARGE TO TUBE |
| 44 | | **7910101515** | 1 | TUBE ASSY, BR MAN TO P CHARGE |
| 45 | | **7910101518** | 1 | TUBE ASSY, P BR CHARGE TO TUBE |
| 46 | | **7447060801** | 1 | ADAPTER, STRAIGHT MALE<br>INCLUDES THE FOLLOWING PARTS |
| | | **7755012002** | 1 | O-RING |
| | | **7755908002** | 1 | O-RING |
| 47 | | **7910101516** | 1 | TUBE ASSY, 1A MAN TO LS STEER |
| 48 | | **7447060635** | 2 | TEE, BRANCH<br>INCLUDES THE FOLLOWING PARTS |
| | | **7755012002** | 1 | O-RING |
| 49 | | **7300000399** | 9 | CLAMP, TUBING<br>3/8" I.D. |
| 50 | | **7755012002** | 7 | O-RING |
| 51 | | **7300000401** | 9 | CLAMP, TUBING<br>5/8" I.D. |
| 52 | # | **7450000188** | 6 | SPLIT FLANGE HALF, 1 1/4" |
| 53 | | **7115171250** | 12 | CAP SCREW,<br>7/16" - 14 N.C. X 1 1/2"<br>GRADE 5 |
| 54 | | **7755222002** | 6 | O-RING |
| 55 | | **7115181250** | 8 | CAP SCREW,<br>1/2" - 13 N.C. X 1 1/2"<br>GRADE 5 |
| 56 | | **7755225002** | 4 | O-RING |
| 57 | # | **7450000102** | 4 | FLANGE, SPLIT |
| 59 | | **7447060633** | 7 | ELBOW, 90 DEGREE MALE<br>INCLUDES THE FOLLOWING PARTS |
| | | **7755012002** | 1 | O-RING |
| 60 | | **7300000405** | 8 | CLAMP, TUBING |
| 62 | | **80010421** | 8 | SHCS M12X70 -8.8 |
| 63 | | **80010420** | 4 | SHCS M10x65 -8.8 ISO 4762 PLTD |
| 64 | | **7910101597** | 1 | TUBE ASSY, LIFT A EXT TO HOSE |
| 65 | | **7910101432** | 1 | TUBE ASSY, LIFT B RET TO HOSE |
| 66 | | **7910101429** | 1 | TUBE ASSY, TELE A EXT TO HOSE |
| 67 | | **7910101430** | 1 | TUBE ASSY, TELE B RET TO HOSE |
| 68 | | **7300000404** | 3 | CLAMP, 1" TUBING |
| 69 | | **7755021002** | 2 | O-RING |

**# SERVICED AS AN ASSEMBLY ONLY**

Description
**HYDRAULIC LINES INSTALLATION MAIN & AUXILIARY HOIST (SUPERSTRUCTURE)**

Assembly No.
**80033427**
Revision: **H**

| Item | FN | Part | Qty | Description |
|---|---|---|---|---|
| 70 | | **7755018002** | 2 | O-RING |
| 71 | # | **7450000201** | 8 | FLANGE, SPLIT |
| 72 | | **7115161050** | 16 | CAP SCREW,<br>3/8" - 16 N.C. X 1 1/4"<br>GRADE 5 |
| 73 | | **7755219002** | 4 | O-RING |
| 78 | | **7910101437** | 1 | TUBE ASSY, D6 MAN TO PD MAIN |
| 79 | | **7445060439** | 3 | ADAPTER, REDUCING FEMALE |
| 81 | | **7445040472** | 1 | ELBOW, 90 DEGREE |
| 82 | | **7445040645** | 1 | ELBOW, 90 DEGREE MALE<br>INCLUDES THE FOLLOWING PARTS |
| | | **7755906002** | 1 | O-RING |
| 88 | | **7447101001** | 4 | ADAPTER, STRAIGHT<br>INCLUDES THE FOLLOWING PARTS |
| | | **7755016002** | 1 | O-RING |
| | | **7755910002** | 1 | O-RING |
| 89 | | **7447040403** | 2 | ELBOW, 90 DEGREE<br>INCLUDES THE FOLLOWING PARTS |
| | | **7755011002** | 1 | O-RING |
| | | **7755904002** | 1 | O-RING |
| 90 | | **7300000102** | 1 | CLAMP, TUBING<br>5/8" I.D. |
| 95 | | **7447061001** | 1 | ADAPTER, STRAIGHT<br>INCLUDES THE FOLLOWING PARTS |
| | | **7755012002** | 1 | O-RING |
| | | **7755910002** | 1 | O-RING |
| 96 | | **7447060635** | 1 | TEE, BRANCH<br>INCLUDES THE FOLLOWING PARTS |
| | | **7755012002** | 1 | O-RING |
| 97 | | **7447061003** | 1 | FITTING, 90 DEGREE<br>INCLUDES THE FOLLOWING PARTS |
| | | **7755012002** | 1 | O-RING |
| | | **7755910002** | 1 | O-RING |
| 98 | | **7910101607** | 1 | TUBE ASSY, MAIN HOIST DOWN M&A |
| 99 | | **7910101608** | 1 | TUBE ASSY, MAIN HOIST UP M&A |
| 100 | | **7910101609** | 1 | TUBE ASSY, AUXILARY HOIST DOWN |
| 101 | | **7910101610** | 1 | TUBE ASSY, AUXILARY HOIST UP |
| 102 | | **7300000405** | 6 | CLAMP, TUBING |
| 103 | | **7755021002** | 4 | O-RING |

**# SERVICED AS AN ASSEMBLY ONLY**

Description
**HYDRAULIC LINES INSTALLATION MAIN & AUXILIARY HOIST (SUPERSTRUCTURE)**

Assembly No.
**80033427**
Revision: **H**

| Item | FN | Part | Qty | Description |
|---|---|---|---|---|
| 104 | | **7447161203** | 2 | ELBOW, 90 DEGREE<br>INCLUDES THE FOLLOWING PARTS |
| | | **7755021002** | 1 | O-RING |
| | | **7755912002** | 1 | O-RING |
| 105 | | **7447161201** | 2 | ADAPTER, STRAIGHT<br>INCLUDES THE FOLLOWING PARTS |
| | | **7755021002** | 1 | O-RING |
| | | **7755912002** | 1 | O-RING |
| 106 | # | **7450000201** | 8 | FLANGE, SPLIT |
| 107 | | **7115161050** | 16 | CAP SCREW,<br>3/8" - 16 N.C. X 1 1/4"<br>GRADE 5 |
| 108 | | **7755219002** | 4 | O-RING |
| 109 | | **7447060616** | 1 | CAP ASSY. FEMALE 11/16-16<br>INCLUDES THE FOLLOWING PARTS |
| | | **7755012002** | 1 | O-RING |
| 110 | | **7926003526** | 1 | FUSE, VELOCITY |
| 111 | | **7443100139** | 4 | COUPLING, 1/8" TEST PORT |
| 112 | | **7543109321** | 2 | HOSE ASSY, 3/4" I.D. X 93" |
| 113 | | **7546706470** | 1 | HOSE, 1 1/4" STR S/F X 64" STR |
| 114 | | **7546806493** | 1 | HOSE, 1 1/2" STR S/F X 64" 90 |
| 115 | | **7555107601** | 1 | HOSE ASSY, 1/4"I.D. X 76" LONG |
| 116 | | **7555109005** | 1 | HOSE ASSY, 1/4"I.D. 45 X 90" |
| 117 | | **7910101644** | 1 | TUBE ASSY,HOIST DR TO HOIST DR |
| 118 | | **7555207202** | 1 | HOSE, 3/8" I.D X 72" LONG |
| 119 | | **7555503400** | 1 | HOSE ASSY, 3/4"I.D. X 34" LONG |
| 120 | | **7555504201** | 1 | HOSE ASSY,3/4" I.D. X 42" LONG |
| 121 | | **7555602360** | 2 | HOSE ASSY, 1" STR ORFS X 23" |
| 122 | | **7555603062** | 2 | 1" I.D. HYDR HOSE ASSY STR-45 |
| 123 | | **7555604560** | 1 | HOSE ASSY, 1" STR ORFS X 45" |
| 124 | | **7555702591** | 1 | HOSE ASSY,1 1/4" STR ORF X 25" |
| 125 | | **7555102803** | 1 | 1/4 HOSE ASS'Y-STR-LG 90 ORS |
| 126 | | **7555103000** | 1 | HOSE ASSY, 1/4"I.D. X 30" LONG |
| 127 | | **7555103600** | 1 | HOSE ASSY, 1/4"I.D. X 36" LONG |
| 128 | | **7555201921** | 1 | HOSE ASSY, 3/8"I.D. X 19" LONG |
| 129 | | **7555208900** | 1 | HOSE ASSY, 3/8"I.D. X 89" LONG |
| 130 | | **7555402101** | 1 | HOSE ASSY, 5/8" STR ORFS X 21" |

**# SERVICED AS AN ASSEMBLY ONLY**

Description
**HYDRAULIC LINES INSTALLATION MAIN & AUXILIARY HOIST (SUPERSTRUCTURE)**

Assembly No.
**80033427**
Revision: **H**

| Item | FN | Part | Qty | Description |
|---|---|---|---|---|
| 131 | | **7550104221** | 1 | HOSE ASSY, 1/4" ID STR X 42" |
| 132 | | **7555402403** | 1 | HOSE ASSY, 5/8" I.D. STR-9 HYD |
| 133 | | **7447040408** | 1 | ELBOW, 45 DEGREE MALE<br>INCLUDES THE FOLLOWING PARTS |
| | | **7755011002** | 1 | O-RING |
| | | **7755904002** | 1 | O-RING |
| 134 | | **7443100140** | 9 | COUPLING, 3/8" TEST PORT<br>INCLUDES THE FOLLOWING PARTS |
| | | **9447100041** | 1 | CAP, DUST - DIAGNOSTIC |
| 135 | | **7447060403** | 1 | ELBOW, 90 DEGREE MALE<br>INCLUDES THE FOLLOWING PARTS |
| | | **7755012002** | 1 | O-RING |
| | | **7755904002** | 1 | O-RING |
| 139 | | **7709000031** | 1 | O-RING PLUG #6<br>INCLUDES THE FOLLOWING PARTS |
| | | **7755906002** | 1 | O-RING |
| 152 | | **7709000038** | 1 | O-RING PLUG #8<br>INCLUDES THE FOLLOWING PARTS |
| | | **7755908002** | 1 | O-RING |
| 153 | | **7814100077** | 1 | GUARD, HOSE |
| 154 | | **7447060413** | 2 | REDUCER |
| 156 | | **7555208900** | 1 | HOSE ASSY, 3/8"I.D. X 89" LONG |
| 157 | | **7550103921** | 1 | HOSE ASSY, 1/4" ID STR X 39" |
| 158 | | **7555604860** | 1 | HOSE ASSY, 1" STR ORFS X 48" |
| 159 | | **7926100948** | 1 | VALVE ASSY, CHECK<br>INCLUDES THE FOLLOWING PARTS |
| | | **9926113293** | 1 | VALVE, CHECK CART. |
| 160 | | **7910101629** | 1 | TUBE ASSY, COOLER IN TO CHECK |
| 161 | | **7447201603** | 1 | ELBOW, 90 DEGREE MALE<br>INCLUDES THE FOLLOWING PARTS |
| | | **7755025002** | 1 | O-RING |
| | | **7755916002** | 1 | O-RING |
| 162 | | **7872100170** | 1 | SWITCH, 120 TEMPERATURE (N.C.)<br>INCLUDES THE FOLLOWING PARTS |
| | | **7755906002** | 1 | O-RING |
| 163 | | **7447202001** | 2 | ADAPTER, STRAIGHT MALE<br>INCLUDES THE FOLLOWING PARTS |
| | | **7755025002** | 1 | O-RING |
| | | **7755920002** | 1 | O-RING |
| 164 | | **7910101614** | 1 | TUBE ASSY, OIL COOLER OUTLET |

Description
**HYDRAULIC LINES INSTALLATION MAIN & AUXILIARY HOIST (SUPERSTRUCTURE)**

Assembly No.
**80033427**
Revision: **H**

| Item | FN | Part | Qty | Description |
|---|---|---|---|---|
| 165 | | **7910101613** | 1 | TUBE ASSY, OIL COOLER INLET |
| 166 | | **7910101616** | 1 | TUBE ASSY, COOLER OUTLET TO 4 |
| 167 | | **7755025002** | 3 | O-RING |
| 168 | | **7115174450** | 4 | CAP SCREW, |
| 169 | | **7950170141** | 4 | WASHER, 7/16" I.D. |
| 170 | | **7910101636** | 1 | TUBE ASSY,LS MAIN TO LS CHARGE |
| 171 | | **7555206001** | 1 | HOSE ASSY, 3/8"I.D. X 60" LONG |
| 172 | | **7447060605** | 1 | TEE, RUN<br>INCLUDES THE FOLLOWING PARTS |
| | | **7755012002** | 1 | O-RING |
| | | **7755906002** | 1 | O-RING |
| 174 | | **7447101034** | 2 | TEE<br>INCLUDES THE FOLLOWING PARTS |
| | | **7755016002** | 1 | O-RING |
| 175 | | **7447100413** | 2 | REDUCER |
| 176 | | **7013100059** | 1 | ADAPTER, 0.062 DIA ORIFICE |
| 177 | | **7555101801** | 1 | HOSE ASSY, 1/4"I.D. X 18" LONG |
| 178 | | **7555207203** | 1 | HOSE ASSY, 3/8 I.D. X 72"LONG |
| 179 | | **7555207201** | 1 | HOSE ASSY, 3/8"I.D. X 72" LONG |
| 180 | | **7910101638** | 1 | TUBE ASSY, LS MAIN TO PORT 2 |
| 181 | | **7910101641** | 1 | TUBE ASSY, 1B MAN TO P STEER |
| 182 | | **7910101642** | 1 | TUBE ASSY, 1A MAN TO LS STEER |
| 183 | | **7447060401** | 2 | ADAPTER, STRAIGHT MALE<br>INCLUDES THE FOLLOWING PARTS |
| | | **7755012002** | 1 | O-RING |
| | | **7755904002** | 1 | O-RING |
| 184 | | **7555206800** | 1 | HOSE ASSY, 3/8"I.D. X 68"LONG |
| 185 | | **7447060401** | 1 | ADAPTER, STRAIGHT MALE<br>INCLUDES THE FOLLOWING PARTS |
| | | **7755012002** | 1 | O-RING |
| | | **7755904002** | 1 | O-RING |
| 186 | | **7447060603** | 1 | ELBOW, 90 DEGREE<br>INCLUDES THE FOLLOWING PARTS |
| | | **7755012002** | 1 | O-RING |
| | | **7755906002** | 1 | O-RING |
| 187 | | **80060094** | 10 | SADDLE SPACER |
| 188 | | **80061556** | 10 | SADDLE SPACER .63-6.0" BUNDLES |
| 189 | | **7850000805** | 40 | TIE, CABLE (BLACK)<br>13 3/8" LONG |

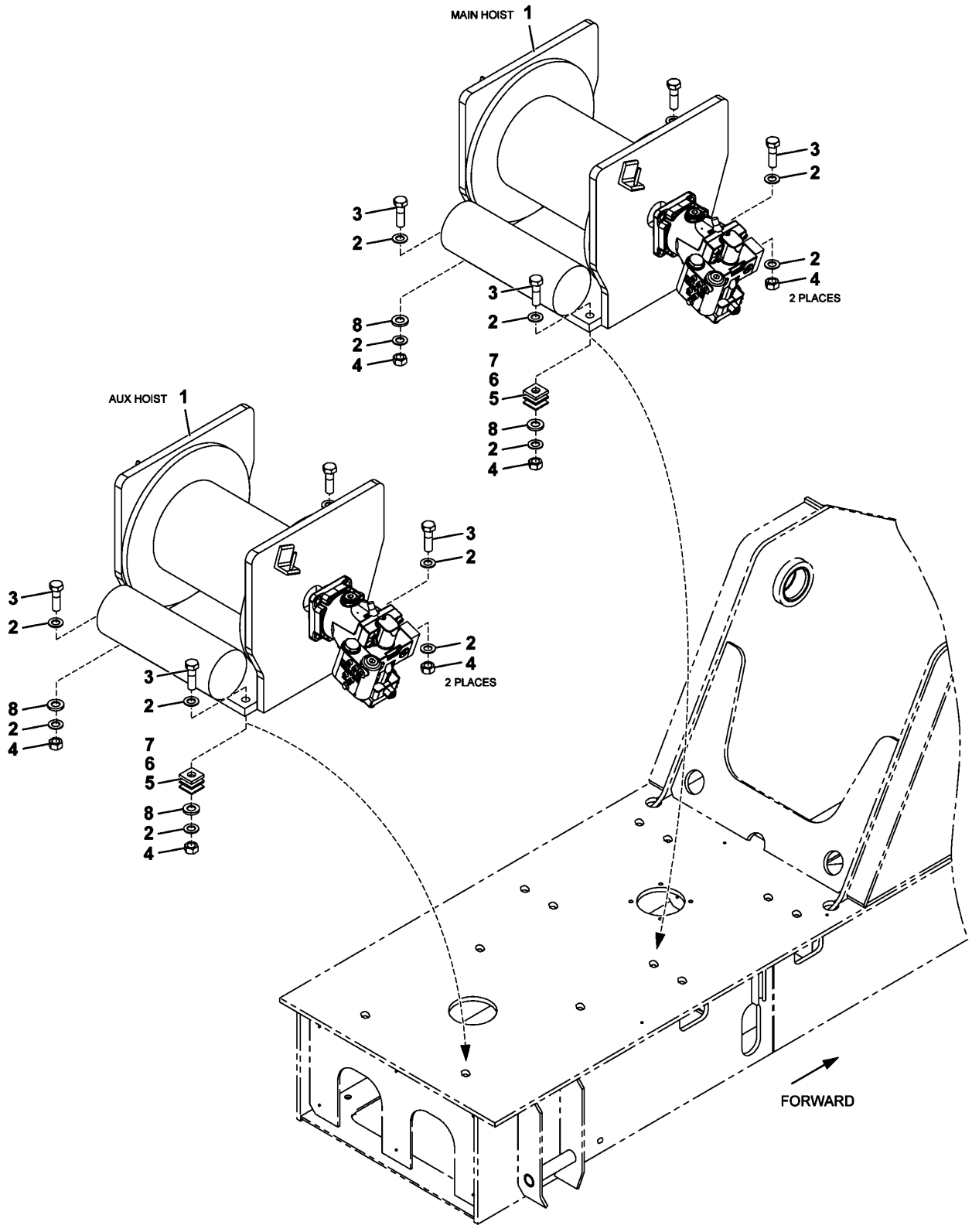


6974100178

(SHEET 1 OF 1)

Description
**HOIST INSTALLATION - MAIN AND AUXILIARY**
**(C.E. CONFORMITY)**

Assembly No.
**6974100178**
Revision: **A**

| Item | FN | Part | Qty | Description |
|---|---|---|---|---|
| 1 | + | **7974100039** | 2 | HOIST ASSEMBLY - HP15C/17G<br>WITH 3RD WRAP<br>(COMPLETE ASSEMBLY) |
| 2 | | **7949000236** | 16 | FLAT WASHER, 3/4" |
| 3 | | **7126272353** | 8 | CAP SCREW, M20 X 80MM HEX HEAD |
| 4 | | **7661270003** | 8 | NUT, HEX<br>M20 |
| 5 | | **6705004266** | 1 | SHIM (.1250") |
| 6 | | **6705004267** | 1 | SHIM (.0598") |
| 7 | | **6705004268** | 1 | SHIM (.0359") |
| 8 | | **7705100003** | 4 | WASHER, PLATE |

**+ SEE FURTHER BREAKDOWN THIS GROUP**

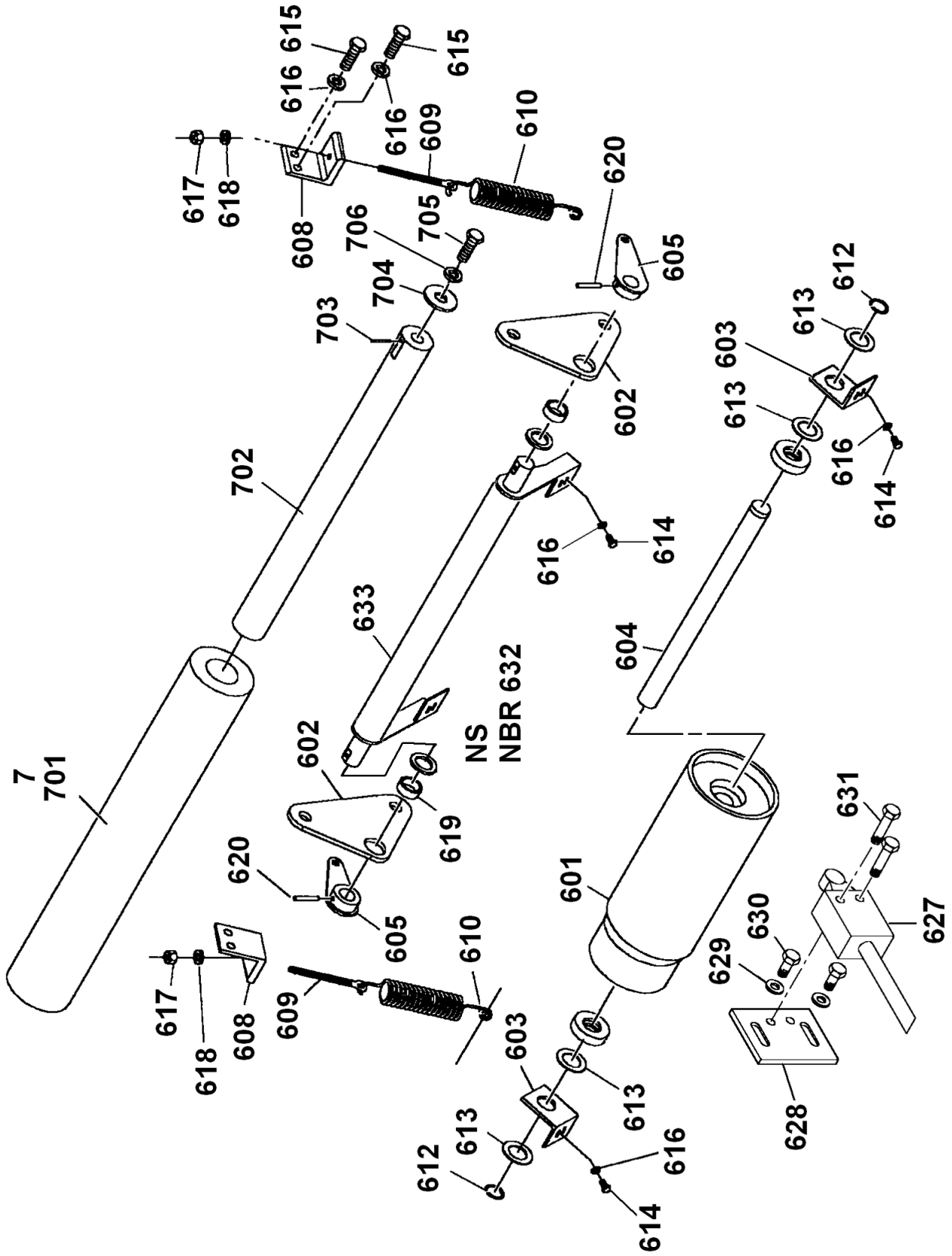


7974100039

(SHEET 3 OF 3)

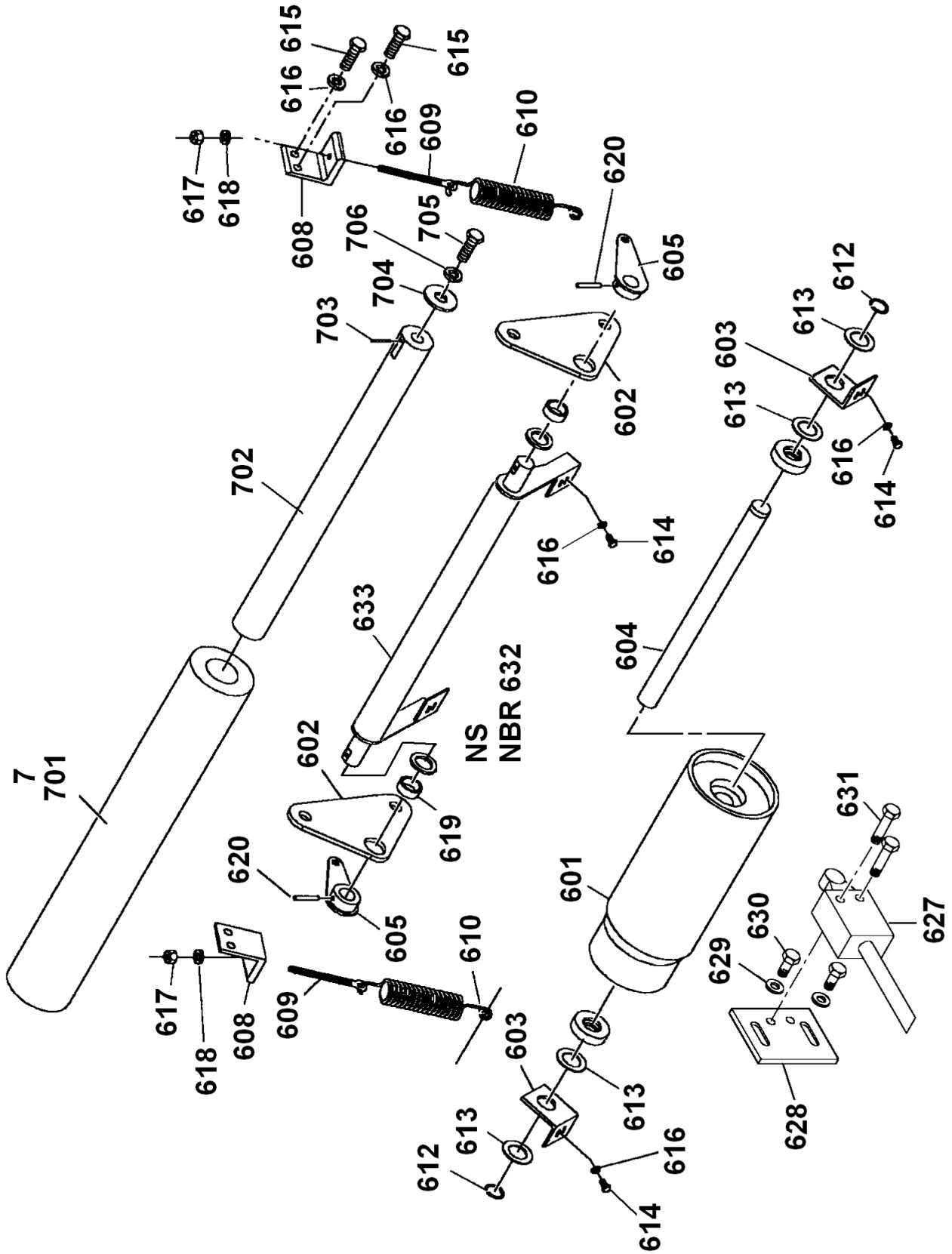


7974100039

(SHEET 2 OF 3)

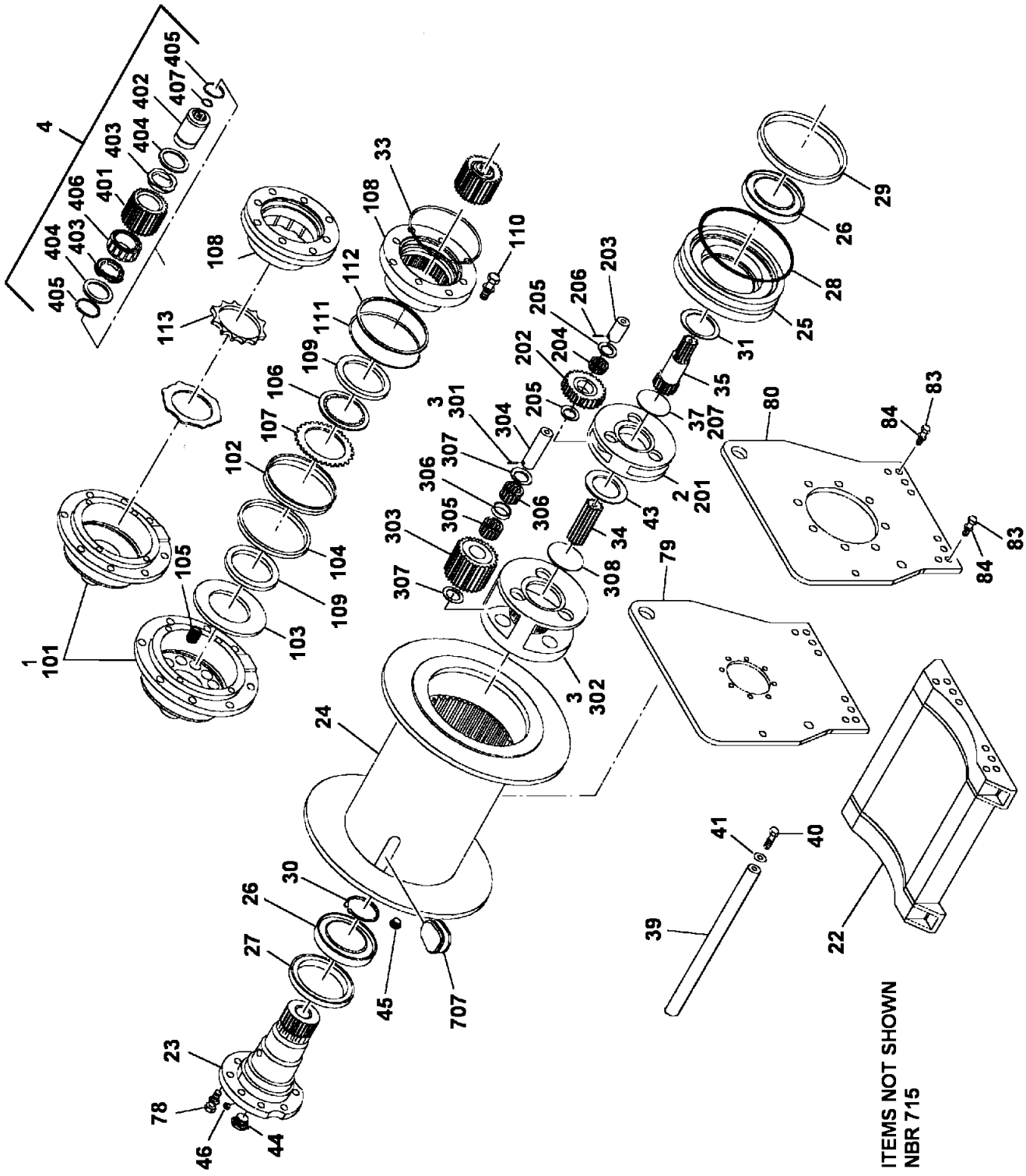


7974100039

(SHEET 1 OF 3)

Description
**HOIST ASSEMBLY - HP15C/17G WITH 3RD WRAP**
**(COMPLETE ASSEMBLY)**

Assembly No.
**7974100039**
Revision:

| Item | FN | Part | Qty | Description |
|---|---|---|---|---|
| 1 | | **90011568** | 1 | BRAKE CYLINDER ASSY.<br>INCLUDES ITEMS 101 THRU 113 |
| 2 | | **9974102669** | 1 | CARRIER ASSY. PRIMARY PLANET<br>INCLUDES ITEMS 201 THRU 207 |
| 3 | | **9974102670** | 1 | CARRIER ASSY. PLANET OUTPUT<br>INCLUDES ITEMS 301 THRU 308 |
| 4 | | **9974102214** | 1 | CLUTCH SPRAG ASSY. BRAKE<br>INCLUDES ITEMS 401 THRU 407 |
| 5 | | **90013464** | 1 | MOTOR SUB ASSEMBLY. HYDRAULIC<br>INCLUDES ITEMS 501 THRU 523 |
| 6 | | **90013465** | 1 | ROLLER ASSEMBLY. CABLE<br>INCLUDES ITEMS 601 THRU 605,<br>608 THRU 620, 627 THRU 633 |
| 7 | + | **90013061** | 1 | ROLLER ASSY. IDLER GROUP<br>INCLUDES ITEMS 701 THRU 707 |
| 22 | | **9974102942** | 1 | BASE |
| 23 | | **9974102846** | 1 | SUPPORT, BEARING |
| 24 | | **9974102941** | 1 | DRUM |
| 25 | | **9974102676** | 1 | CLOSURE, CABLE DRUM |
| 26 | | **9974101211** | 2 | BEARING, BALL |
| 27 | * | **9974101216** | 1 | SEAL,OIL |
| 28 | * | **9974102868** | 1 | O-RING |
| 29 | * | **9974102190** | 1 | SEAL,OIL |
| 30 | | **9974102191** | 1 | RING, RETAINING |
| 31 | | **9974102849** | 1 | WASHER, THRUST |
| 33 | * | **9974101198** | 1 | ORING |
| 34 | | **9974102194** | 1 | GEAR, SUN |
| 35 | | **9974102677** | 1 | PRIMARY SUN GEAR |
| 39 | | **9974102822** | 1 | BAR, SPACER |
| 40 | | **9974102854** | 14 | CAPSCREW |
| 41 | | **9974100476** | 18 | WASHER, LOCK 1/2" I.D. |
| 43 | | **9974102199** | 1 | WASHER, THRUST |
| 44 | | **9974102855** | 1 | GAUGE, SIGHT |
| 45 | | **9974102201** | 1 | PLUG, FLUSH<br>INCLUDES THE FOLLOWING PARTS |
| | | **90023963** | 1 | O-RING |
| 46 | | **9974102858** | 1 | PLUG, VENT |

**+ SEE FURTHER BREAKDOWN THIS GROUP** *** REPAIR KIT AND/OR PART OF KIT**

Description
**HOIST ASSEMBLY - HP15C/17G WITH 3RD WRAP**
**(COMPLETE ASSEMBLY)**

Assembly No.
**7974100039**
Revision:

| Item | FN | Part | Qty | Description |
|---|---|---|---|---|
| 78 | | **9974102859** | 8 | CAPSCREW |
| 79 | | **9974102943** | 1 | SIDEPLATE, MOTOR |
| 80 | | **90013483** | 1 | SIDE PLATE, SUPPORT |
| 83 | | **9974103082** | 16 | CAPSCREW |
| 84 | | **9974102821** | 16 | WASHER, |
| 101 | | **9974102861** | 1 | HOUSING, CYLINDER BRAKE |
| 102 | * | **9974102176** | 1 | SEAL, PISTON |
| 103 | | **9974102177** | 1 | PLATE, PRESSURE |
| 104 | | **9974102178** | 1 | RING, BACK-UP |
| 105 | | **9974102179** | 12 | SPRING |
| 106 | | **9974100594** | 7 | DISC, FRICTION |
| 107 | | **9974102704** | 8 | DISK, BRAKE |
| 108 | | **9974102731** | 1 | MOUNT, MOTOR BASE |
| 109 | | **9974102195** | 1 | SPACER |
| 110 | | **9974103081** | 4 | CAPSCREW |
| 111 | * | **9974102203** | 1 | O-RING |
| 112 | * | **9974102226** | 1 | RING, BACK-UP |
| 113 | | **9974102705** | 1 | SPACER |
| 201 | | **NSS** | 1 | NOT SERVICED SEPARATELY<br>CARRIER, PLANET PRIMARY |
| 202 | | **9974102667** | 3 | GEAR - PLANET |
| 203 | | **981127** | 3 | PRIMARY PLANET GEAR SHAFT |
| 204 | | **9974101182** | 3 | ROLLER BEARING |
| 205 | | **9974102181** | 6 | WASHER, THRUST |
| 206 | | **9974101183** | 3 | PIN |
| 207 | | **9974102196** | 1 | PLATE, THRUST |
| 301 | | **9576100517** | 3 | PIN |
| 302 | | **NSS** | 1 | NOT SERVICED SEPARATELY<br>CARRIER, PLANET OUTPUT |
| 303 | | **9974102671** | 3 | GEAR, PLANET |
| 304 | | **9974102182** | 3 | SHAFT |
| 305 | | **9974102183** | 6 | BEARING |
| 306 | | **9974102672** | 3 | SPACER |
| 307 | | **9974102185** | 6 | WASHER, THRUST |
| 308 | | **9974102197** | 1 | PLATE, THRUST |

*** REPAIR KIT AND/OR PART OF KIT**

Description
**HOIST ASSEMBLY - HP15C/17G WITH 3RD WRAP**
**(COMPLETE ASSEMBLY)**

Assembly No.
**7974100039**
Revision:

| Item | FN | Part | Qty | Description |
|---|---|---|---|---|
| 401 | | **NSS** | 1 | NOT SERVICED SEPARATELY<br>RACE, OUTER BRAKE |
| 402 | | **NSS** | 1 | NOT SERVICED SEPARATELY<br>RACE, INNER BRAKE |
| 403 | | **NSS** | 2 | NOT SERVICED SEPARATELY<br>BEARING, SPRAG |
| 404 | | **9974102218** | 2 | BEARING, THRUST |
| 405 | | **9974102219** | 2 | RING, RETAINING |
| 406 | | **NSS** | 1 | NOT SERVICED SEPARATELY<br>CLUTCH, SPRAG |
| 407 | | **9974102221** | 1 | RING, RETAINING |
| 501 | | **90000830** | 1 | MOTOR ASSY. HYD.<br>INCLUDES THE FOLLOWING PARTS |
| | | **90001128** | 1 | CART. VALVE ASSY. CONTROL 24V. |
| | | **90019872** | 1 | COIL ASSY. 24V |
| | | **90001067** | 1 | KIT, SEAL |
| 502 | | **9974102885** | 1 | VALVE, BRAKE<br>INCLUDES THE FOLLOWING PARTS |
| | | **9974101280** | 1 | KIT, SEAL |
| 503 | | **9974103090** | 1 | MANIFOLD |
| 504 | * | **9974102898** | 2 | O-RING |
| 505 | | **9974102684** | 4 | CAP SCREW |
| 506 | * | **981134** | 4 | CAPSCREW |
| 507 | * | **9974102211** | 1 | TEE, SWIVEL |
| 508 | * | **9974102210** | 2 | ADAPTER |
| 509 | * | **981786** | 1 | HOSE ASSEMBLY |
| 510 | | **9974102212** | 1 | ELBOW |
| 511 | | **NSS** | 1 | NOT SERVICED SEPARATELY<br>PLUG, SHIPPING |
| 512 | | **9974103091** | 1 | SENSOR |
| 513 | | **9974103094** | 1 | NUT, JAM |
| 514 | | **9974103092** | 1 | WASHER, SEAL |
| 515 | | **9974103093** | 1 | FITTING |
| 516 | | **9974102208** | 1 | HOSE ASSY, USE AS REQUIRED |
| 517 | | **9974102931** | 1 | PLUG<br>INCLUDES THE FOLLOWING PARTS |
| | | **7755904002** | 1 | O-RING |
| 518 | | **9974102203** | 1 | O-RING |

*** REPAIR KIT AND/OR PART OF KIT**

Description
**HOIST ASSEMBLY - HP15C/17G WITH 3RD WRAP**
**(COMPLETE ASSEMBLY)**

Assembly No.
**7974100039**
Revision:

| Item | FN | Part | Qty | Description |
|---|---|---|---|---|
| 519 | | **90000104** | 1 | ADAPTER |
| 520 | | **NSS** | 1 | NOT SERVICED SEPARATELY<br>PLUG, SHIPPING |
| 521 | | **90000105** | 1 | O-RING |
| 522 | | **90000125** | 4 | CAPSCREW |
| 523 | | **9974100476** | 4 | WASHER, LOCK 1/2" I.D. |
| 601 | | **9974103095** | 1 | ROLLER, W/3RD. WRAP OFFSET |
| 602 | | **9974102825** | 2 | PLATE |
| 603 | | **9974103084** | 2 | BRACKET, ROLLER |
| 604 | | **9974103085** | 1 | SHAFT, ROLLER |
| 605 | | **9974102828** | 2 | LEVER |
| 608 | | **9974102831** | 2 | BRACKET |
| 609 | | **9974102810** | 2 | ROD |
| 610 | | **9974102832** | 2 | SPRING |
| 612 | | **9974103087** | 2 | RING, RETAINER |
| 613 | | **9974102181** | 8 | WASHER, THRUST |
| 614 | | **9974102835** | 4 | CAP SCREW, |
| 615 | | **9974103043** | 4 | CAPSCREW |
| 616 | | **9974102837** | 8 | WASHER, LOCK |
| 617 | | **9974102995** | 2 | NUT |
| 618 | | **9974102839** | 2 | WASHER |
| 619 | | **9974102808** | 2 | BUSHING |
| 620 | | **9974102814** | 2 | ROLLPIN |
| 627 | | **9974103097** | 1 | SWITCH ASSY. |
| 628 | | **9974103098** | 1 | PLATE |
| 629 | | **9974103099** | 4 | WASHER |
| 630 | | **9974103100** | 4 | CAPSCREW |
| 631 | | **9974103101** | 2 | CAPSCREW |
| 632 | | **9974103102** | 1 | BRACKET |
| 633 | | **80013051** | 1 | LEVER, ROLLER |
| 701 | | **9974102840** | 1 | ROLLER |
| 702 | | **9974102841** | 1 | SHAFT |
| 703 | | **9974102842** | 1 | PIN, DOWEL |
| 704 | | **9974102843** | 1 | WASHER |

Description
**HOIST ASSEMBLY - HP15C/17G WITH 3RD WRAP**
**(COMPLETE ASSEMBLY)**

Assembly No.
**7974100039**
Revision:

| Item | FN | Part | Qty | Description |
|---|---|---|---|---|
| 705 | | **9974103015** | 2 | CAPSCREW |
| 706 | | **9974100476** | 2 | WASHER, LOCK 1/2" I.D. |
| 707 | | **NSS** | 1 | NOT SERVICED SEPARATELY<br>WEDGE, CABLE 5/8" |
| 715 | * | **9974102222** | 1 | KIT, SEAL |

*** REPAIR KIT AND/OR PART OF KIT**

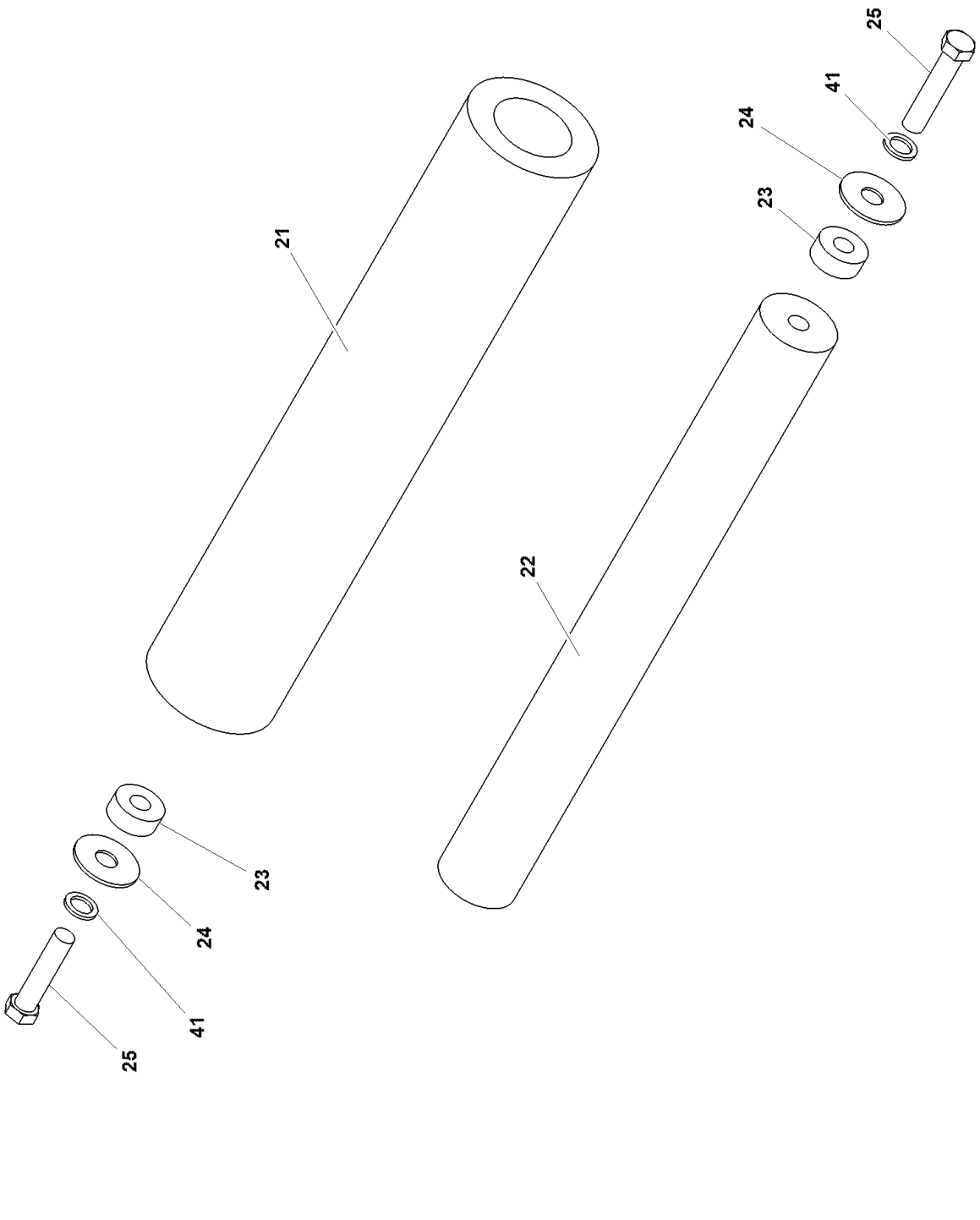


90013061

(SHEET 1 OF 1)

Description
**ROLLER ASSY. IDLER GROUP**

Assembly No.
**90013061**
Revision:

| Item | FN | Part | Qty | Description |
|---|---|---|---|---|
| 21 | | **9974102840** | 1 | ROLLER |
| 22 | | **9974102841** | 1 | SHAFT |
| 23 | | **9974102966** | 1 | PIN |
| 24 | | **9974102843** | 1 | WASHER |
| 25 | | **9974103015** | 2 | CAPSCREW |
| 41 | | **9974100476** | 2 | WASHER, LOCK 1/2" I.D. |

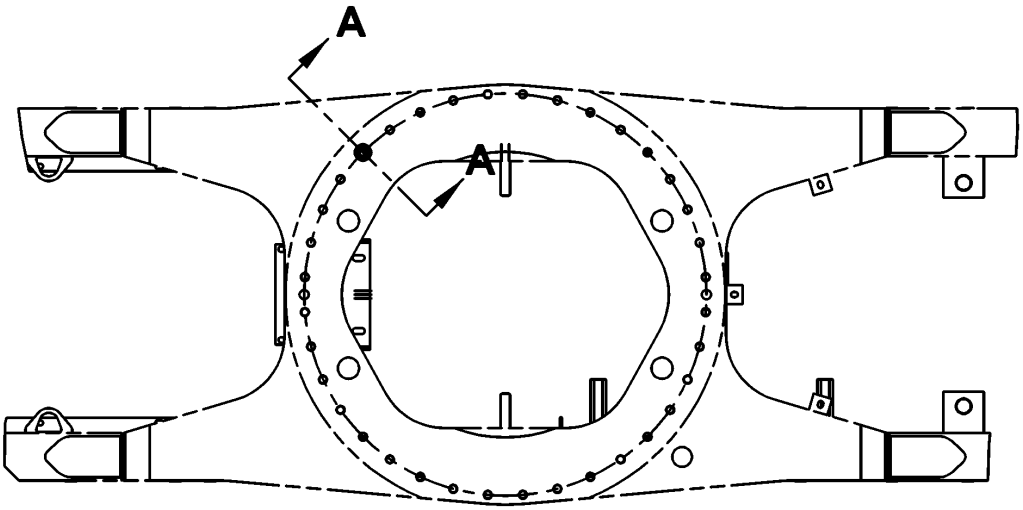
A
A

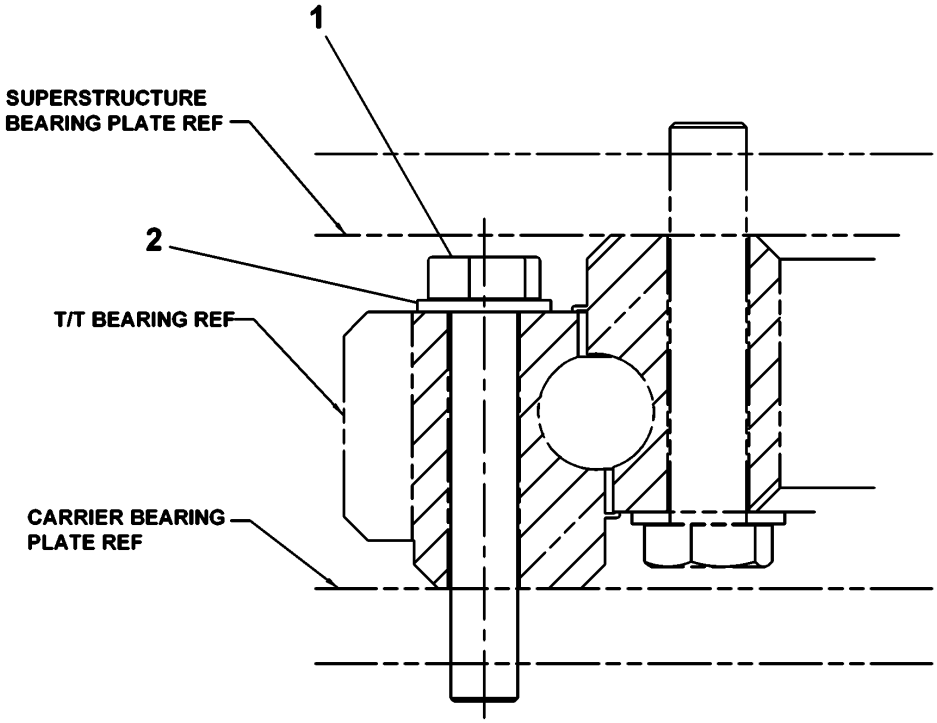
1
SUPERSTRUCTURE
BEARING PLATE REF
2
T/T BEARING REF
CARRIER BEARING
PLATE REF

**SECTION A-A**

Description
**BOLT INSTALLATION - BEARING**

Assembly No.
**2159210143**
Revision: **A**

| Item | FN | Part | Qty | Description |
|---|---|---|---|---|
| 1 | | **80021335** | 36 | CAP SCREW, 7/8-9UNCX5.25 HH |
| 2 | | **7949000237** | 36 | WASHER, 7/8" I.D. |

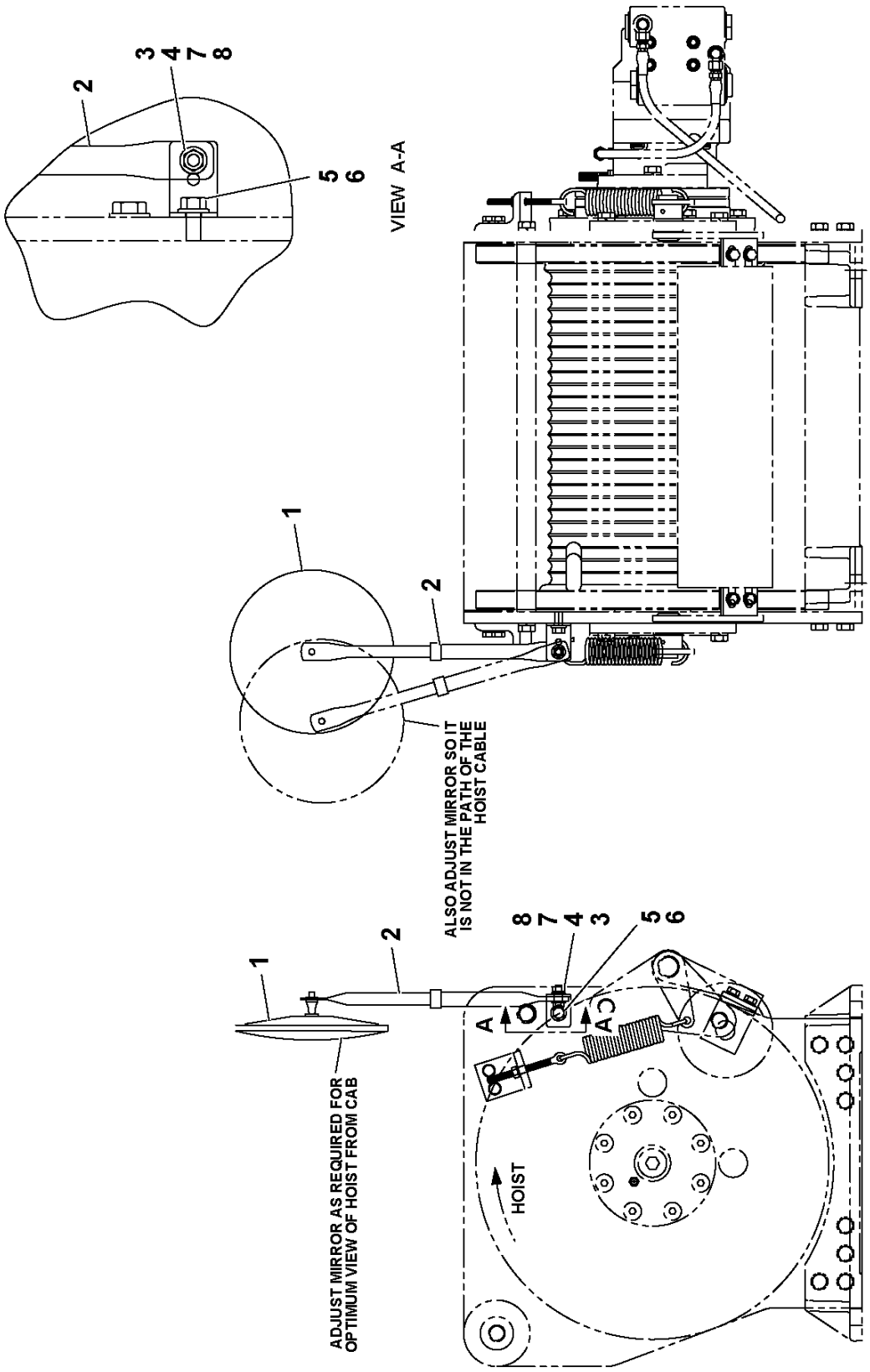


2159210000

(SHEET 1 OF 1)

Description
**MIRROR INSTALLATION - HOIST**

Assembly No.
**2159210000**
Revision: **F**

| Item | FN | Part | Qty | Description |
|---|---|---|---|---|
| 1 | | **7628000025** | 1 | MIRROR, 8" CONVEX<br>INCLUDES MOUNTING HARDWARE |
| 2 | # | **7184001014** | 1 | BRACKET, MIRROR ARM<br>INCLUDES MOUNTING HARDWARE |
| 3 | | **7115150850** | 1 | CAP SCREW,<br>5/16" - 18 N.C. X 1"<br>GRADE 5 |
| 4 | | **7950150050** | 1 | WASHER, LOCK 5/16" I.D. |
| 5 | | **7115160650** | 1 | CAP SCREW,<br>3/8" - 16 N.C. X 3/4"<br>GRADE 5 |
| 6 | | **7950160141** | 1 | WASHER, 3/8" PLAIN NARROW |
| 7 | | **7950150141** | 2 | WASHER, FLAT 5/16" |
| 8 | | **7660150000** | 1 | NUT, HEX<br>5/16" - 18 N.C. |

**# SERVICED AS AN ASSEMBLY ONLY**

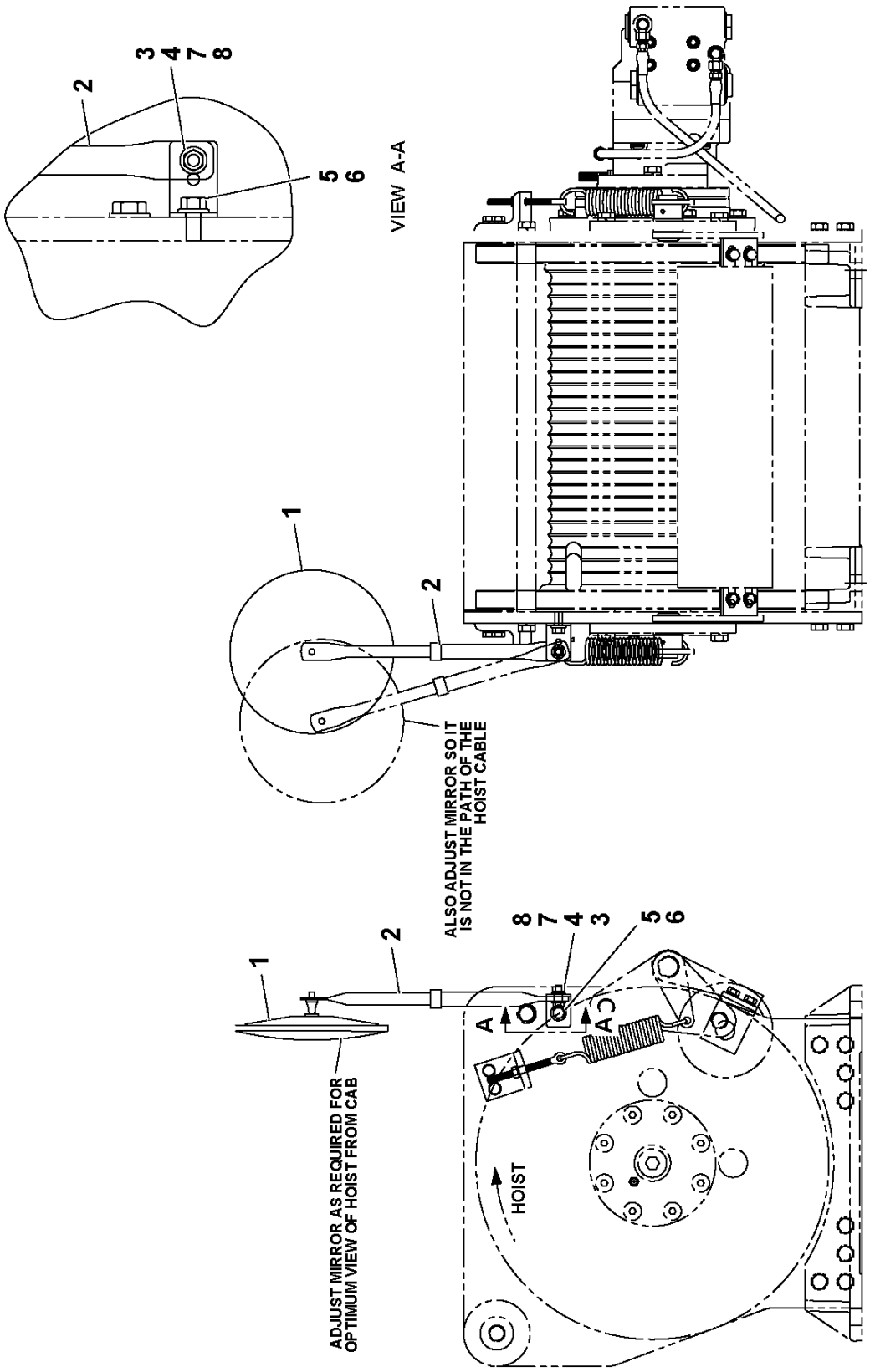


2159210000

(SHEET 1 OF 1)

Description
**MIRROR INSTALLATION - HOIST**

Assembly No.
**2159210000**
Revision: **F**

| Item | FN | Part | Qty | Description |
|---|---|---|---|---|
| 1 | | **7628000025** | 1 | MIRROR, 8" CONVEX<br>INCLUDES MOUNTING HARDWARE |
| 2 | # | **7184001014** | 1 | BRACKET, MIRROR ARM<br>INCLUDES MOUNTING HARDWARE |
| 3 | | **7115150850** | 1 | CAP SCREW,<br>5/16" - 18 N.C. X 1"<br>GRADE 5 |
| 4 | | **7950150050** | 1 | WASHER, LOCK 5/16" I.D. |
| 5 | | **7115160650** | 1 | CAP SCREW,<br>3/8" - 16 N.C. X 3/4"<br>GRADE 5 |
| 6 | | **7950160141** | 1 | WASHER, 3/8" PLAIN NARROW |
| 7 | | **7950150141** | 2 | WASHER, FLAT 5/16" |
| 8 | | **7660150000** | 1 | NUT, HEX<br>5/16" - 18 N.C. |

**# SERVICED AS AN ASSEMBLY ONLY**

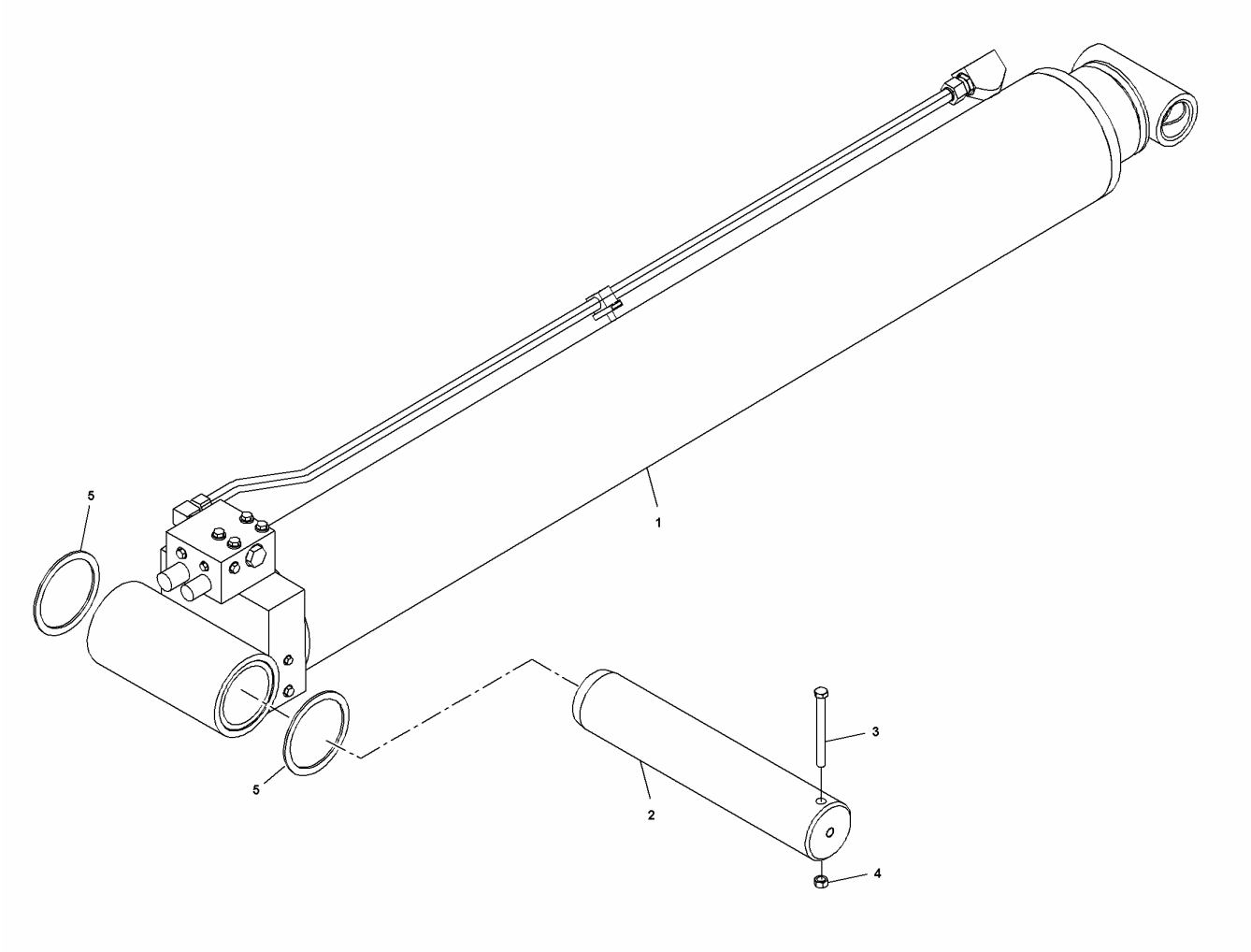


2159210116

(SHEET 1 OF 1)

Description
**CYLINDER INSTALLATION-LOWER PIVOT & LIFT**

Assembly No.
**2159210116**
Revision: **G**

| Item | FN | Part | Qty | Description |
|---|---|---|---|---|
| 1 | + | **80092942** | 1 | LIFT CYLINDER ASSEMBLY |
| 2 | | **7810100133** | 1 | SHAFT, LOWER PIVOT |
| 3 | | **7126263350** | 1 | HHCS M18x170 8.8 ISO 4014 |
| 4 | | **7661260003** | 1 | NUT |
| 5 | | **7949000383** | 4 | WASHER, THRUST |

**+ SEE FURTHER BREAKDOWN THIS GROUP**

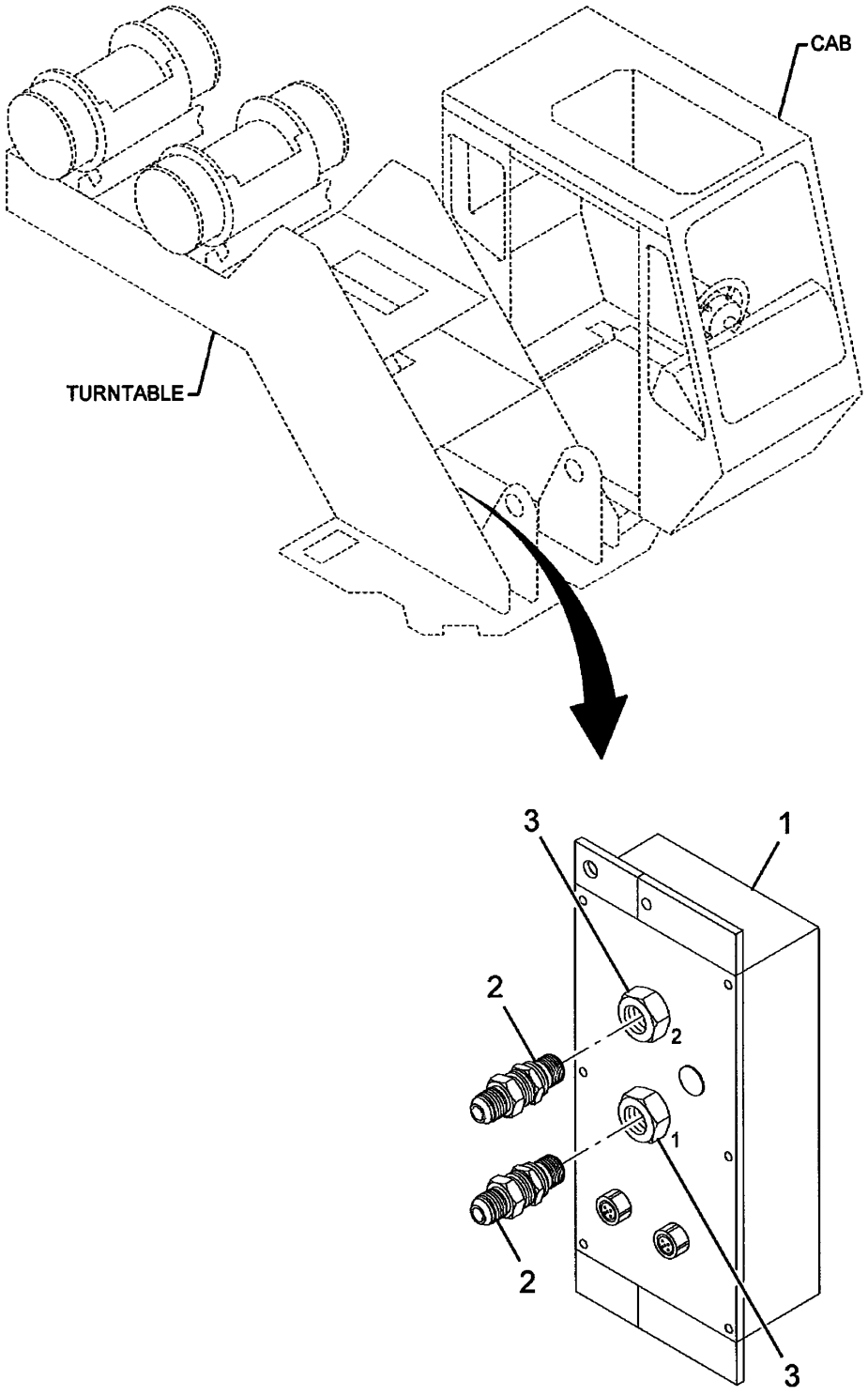


7598100092

(SHEET 1 OF 1)

Description
**KIT - LMI S/S IFLEX 5**

Assembly No.
**7598100092**
Revision: **AB**

| Item | FN | Part | Qty | Description |
|---|---|---|---|---|
| 1 | | **9333103870** | 1 | PRESSURE TRANSDUCER, iFLEX 5 (2 PACK) |
| 2 | | **9333101471** | 2 | FITTING, BULKHEAD ADAPTER<br>9/16-18 JIC |
| 3 | | **9333101472** | 2 | SEAL, CUTTING |

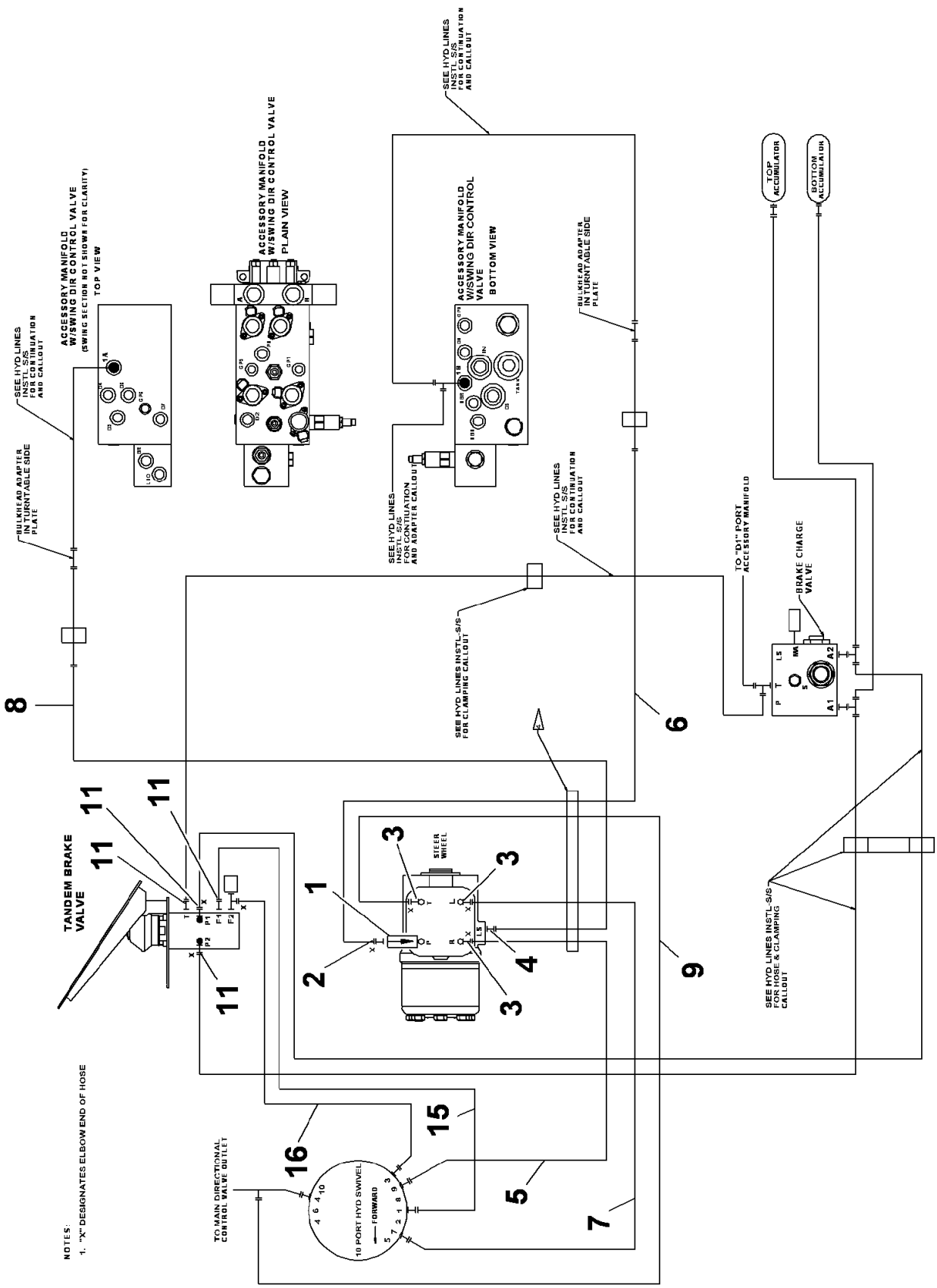


80029598

(SHEET 1 OF 1)

Description
**HYDRAULIC LINES INSTALLATION-CAB**

Assembly No.
**80029598**
Revision: **D**

| Item | FN | Part | Qty | Description |
|---|---|---|---|---|
| 1 | | **7926002156** | 1 | VALVE, INLET CHECK<br>INCLUDES THE FOLLOWING PARTS |
| | | **9926103232** | 1 | O-RING |
| | | **9926106646** | 1 | O-RING |
| 2 | | **7447080613** | 1 | REDUCER |
| 3 | | **7447060801** | 3 | ADAPTER, STRAIGHT MALE<br>INCLUDES THE FOLLOWING PARTS |
| | | **7755012002** | 1 | O-RING |
| | | **7755908002** | 1 | O-RING |
| 4 | | **7447060403** | 1 | ELBOW, 90 DEGREE MALE<br>INCLUDES THE FOLLOWING PARTS |
| | | **7755012002** | 1 | O-RING |
| | | **7755904002** | 1 | O-RING |
| 5 | | **7555208502** | 2 | HYDR HOSE ASSY |
| 6 | | **7555207202** | 1 | HOSE, 3/8" I.D X 72" LONG |
| 7 | | **7555207902** | 1 | HO ASY, 11/16-16X3/8 I.D. X 07 |
| 8 | | **7555207800** | 1 | HOSE ASSY, 3/8"I.D. X 78" LONG |
| 11 | | **7447060601** | 4 | ADAPTER, STRAIGHT MALE<br>INCLUDES THE FOLLOWING PARTS |
| | | **7755012002** | 1 | O-RING |
| | | **7755906002** | 1 | O-RING |
| 15 | | **7555204400** | 1 | HOSE ASSY, 3/8"I.D. X 44" LONG |
| 16 | | **7555204801** | 1 | HOSE ASSY, 3/8"I.D. X 48" LONG |

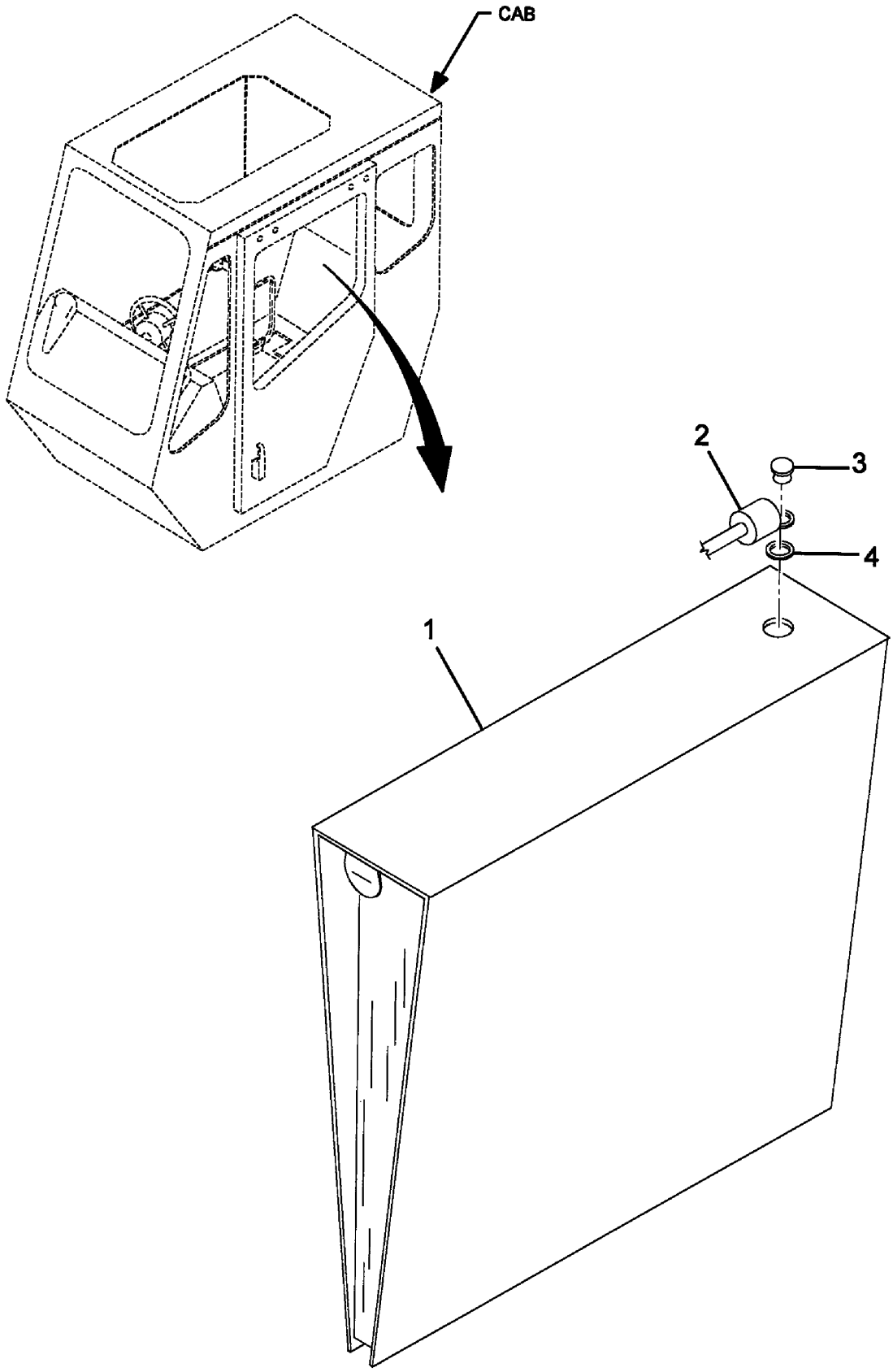


6258100005

(SHEET 1 OF 1)

Description
**BINDER INSTALLATION**

Assembly No.
**6258100005**
Revision: **A**

| Item | FN | Part | Qty | Description |
|---|---|---|---|---|
| 1 | | **7258100138** | 1 | BINDER |
| 2 | | **6246001174** | 1 | LANYARD<br>INCLUDES THE FOLLOWING PARTS |
| | | **7345211901** | 1 | TERMINAL<br>12 - 10 AWG |
| | | **7345221901** | 1 | TERMINAL<br>12 - 10 AWG |
| | | **7892000196** | 2 | PARALLEL, NON - INSULATED<br>8 AWG |
| | | **7364001547** | 1 | SWIVEL |
| 3 | | **7760000008** | 1 | RIVET, POP |
| 4 | | **7950080141** | 1 | FLATWASHER, 5/32" I.D. |

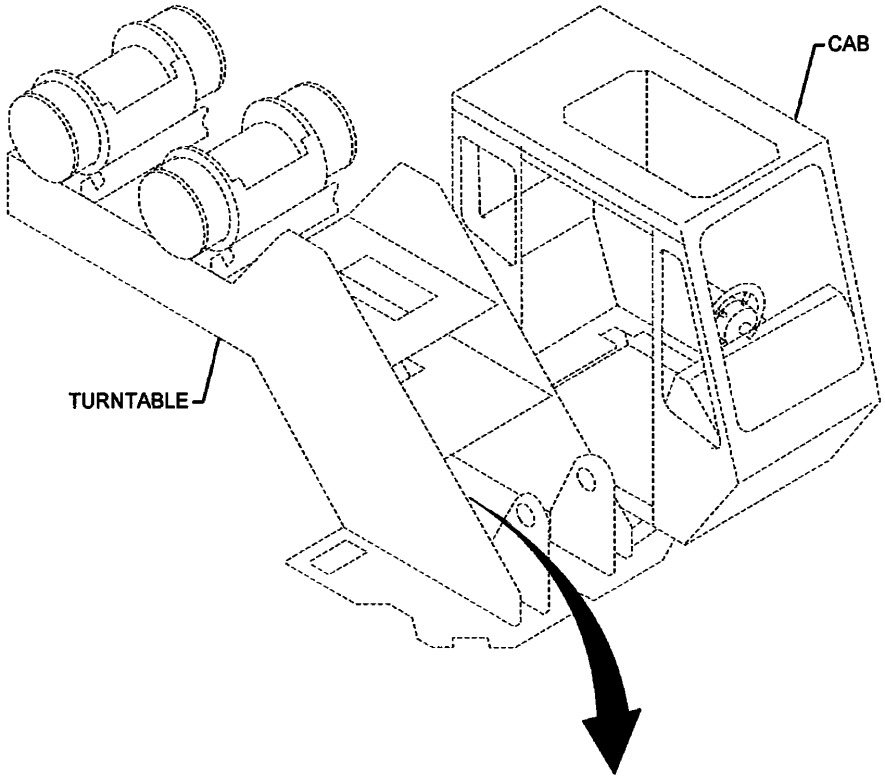


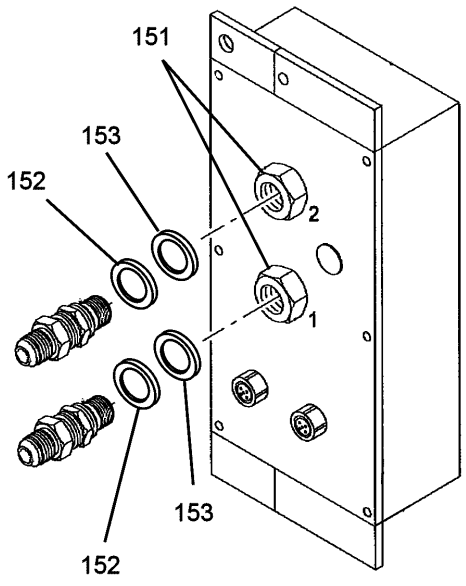


6978100727

(SHEET 1 OF 1)

Description
**KIT INSTALLATION - iFLEX 5 LMI SUPERSTRUCTURE**

Assembly No.
**6978100727**
Revision: **D**

| Item | FN | Part | Qty | Description |
|---|---|---|---|---|
| 153 | | **7950180161** | 2 | FLAT WASHER, 1/2" I.D. |

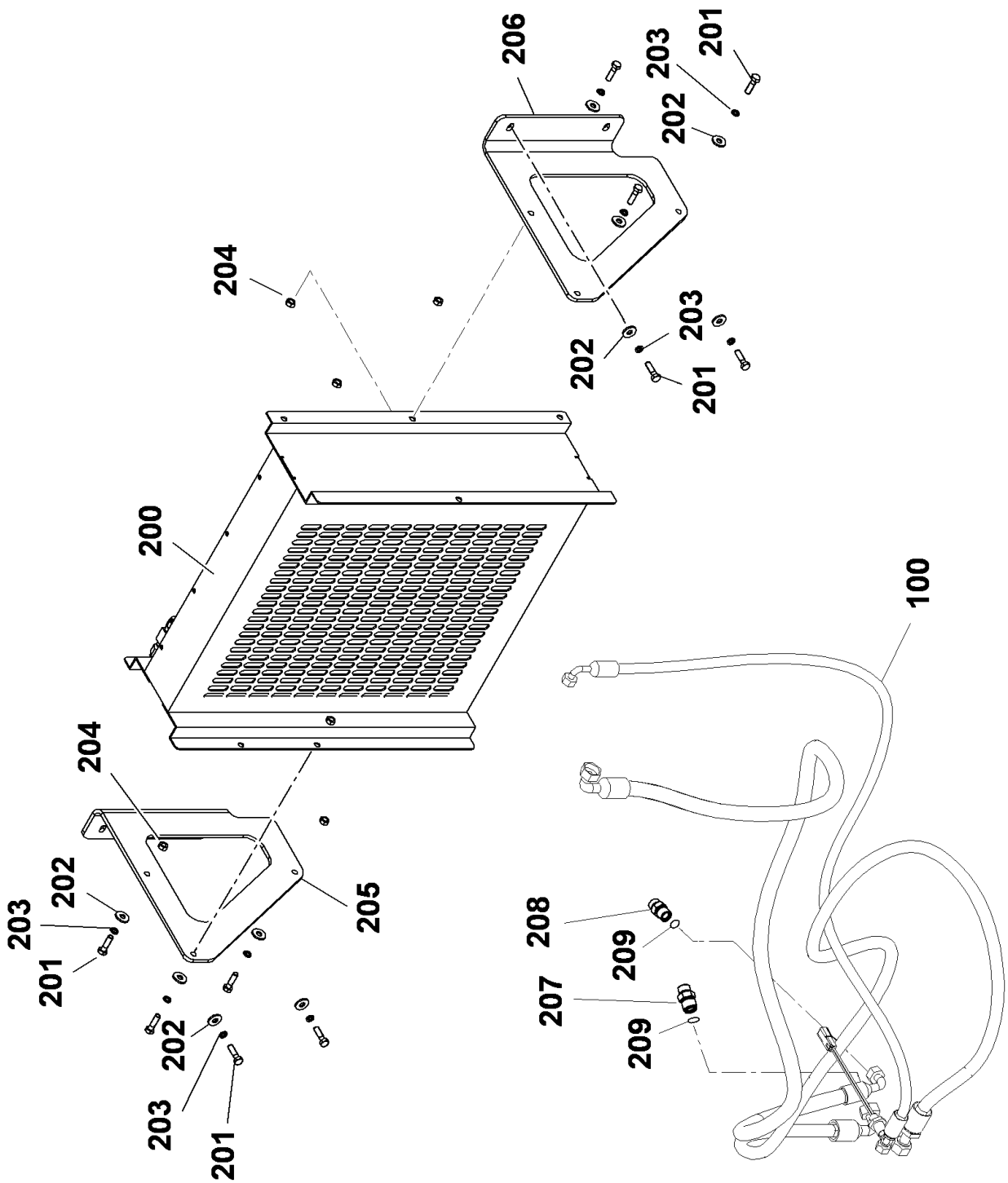


80047682

(SHEET 1 OF 1)

Description
**HEATER & AIR CONDITION INSTALLATION (SUPERSTRUCTURE)**

Assembly No.
**80047682**
Revision: **B**

| Item | FN | Part | Qty | Description |
|---|---|---|---|---|
| 100 | + | **80026821** | 1 | AIR COND LINES KIT - S/S |
| 200 | + | **80027884** | 1 | A/C CONDENSER-VERT. MTG. 24V. |
| 201 | | **7126171350** | 10 | CAP SCREW, M8 X 30MM HEX HEAD |
| 202 | | **7950150161** | 10 | WASHER, 5/16" FLAT PLAIN WIDE |
| 203 | | **7951170210** | 10 | WASHER, LOCK 8MM |
| 204 | | **7661170003** | 6 | NUT |
| 205 | | **80029687** | 1 | CONDENSER MOUNT-LH |
| 206 | | **80029686** | 1 | CONDENSER MOUNT-RH |
| 207 | | **7013100030** | 1 | ADAPTER |
| 208 | | **7013100029** | 1 | ADAPTER |
| 209 | | **7754100010** | 2 | O-RING |

**+ SEE FURTHER BREAKDOWN THIS GROUP**

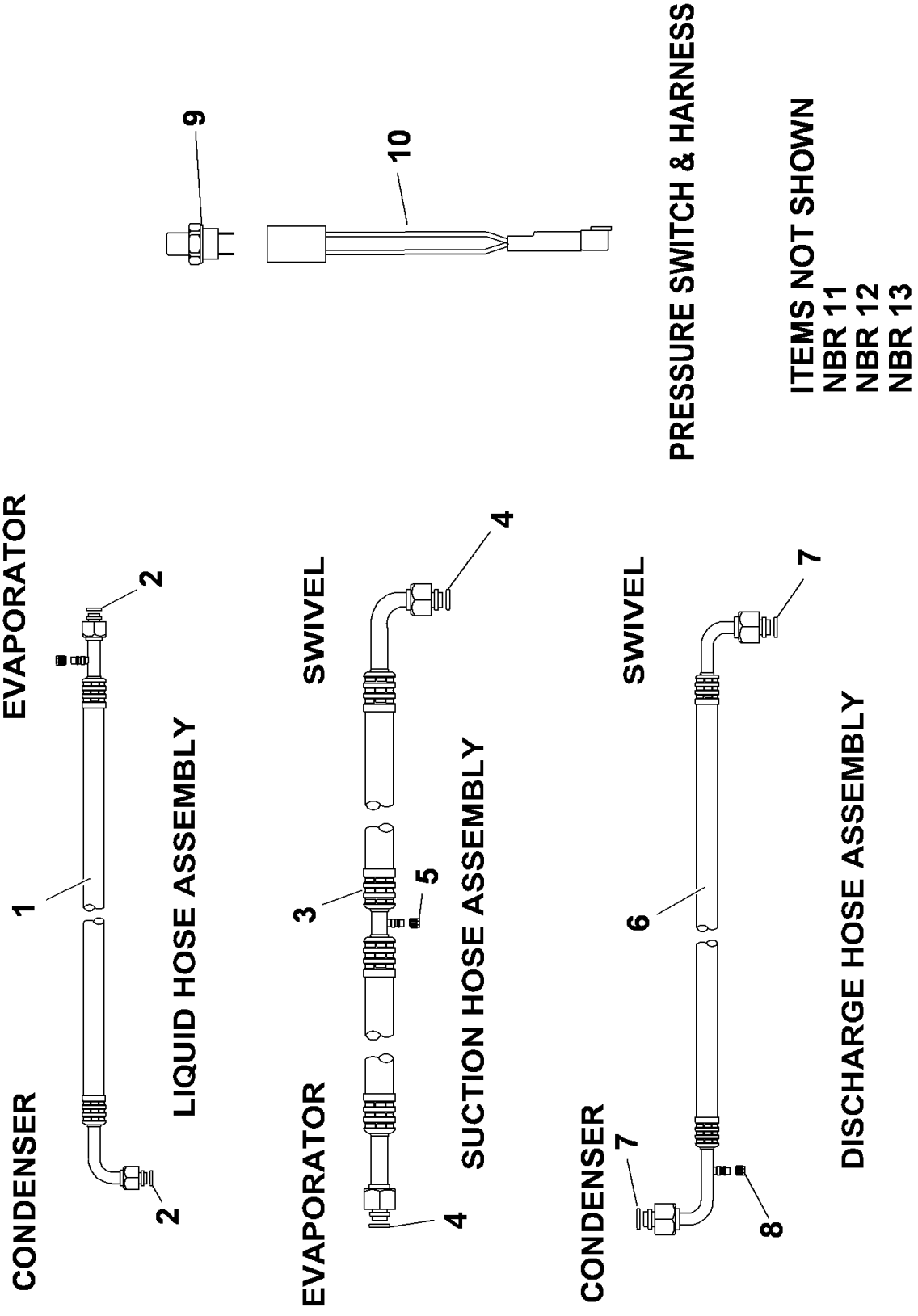


80026821

(SHEET 1 OF 1)

Description
**AIR COND LINES KIT - S/S**

Assembly No.
**80026821**
Revision:

| Item | FN | Part | Qty | Description |
|---|---|---|---|---|
| 1 | | **90018819** | 1 | HOSE ASSY. #6 |
| 2 | | **90018813** | 2 | O-RING #6 |
| 3 | | **90018820** | 1 | HOSE ASSY. #10 |
| 4 | | **90018814** | 2 | O-RING #10 |
| 5 | | **90018815** | 1 | CAP ASSY, SERVICE ( BLUE ) |
| 6 | | **90018821** | 1 | HOSE ASSY. #8 |
| 7 | | **90018818** | 2 | O-RING #8 |
| 8 | | **90018822** | 1 | CAP, DUST |
| 9 | | **90018823** | 1 | SWITCH, PRESSURE HI/LO |
| 10 | | **90018824** | 1 | HARNESS ASSY.<br>INCLUDES ITEMS 11 THRU 13 |
| 11 | | **7892000836** | 1 | RECEPTACLE, 2 PIN |
| 12 | | **7689000704** | 2 | PIN, 16 - 14 GA |
| 13 | | **7172000546** | 1 | BOOT |

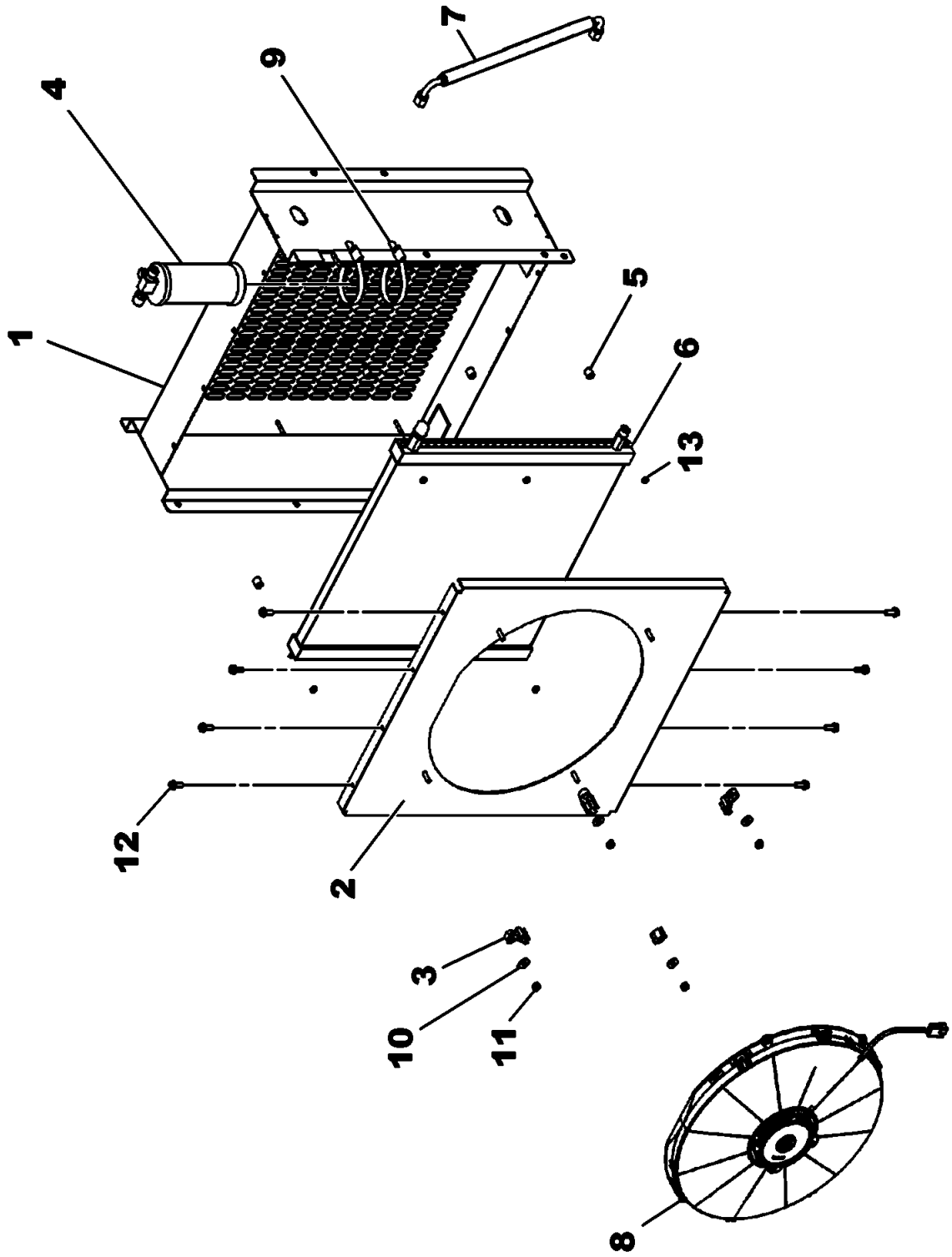


80027884

(SHEET 1 OF 1)

Description
**A/C CONDENSER-VERT. MTG. 24V.**

Assembly No.
**80027884**
Revision:

| Item | FN | Part | Qty | Description |
|---|---|---|---|---|
| 1 | | **NSS** | 1 | NOT SERVICED SEPARATELY<br>HOUSING, WELDMENT |
| 2 | | **90018837** | 1 | SHROUD ASSY. FAN MTG. |
| 3 | | **90018838** | 4 | BRACKET, FAN |
| 4 | | **90018839** | 1 | DRIER ASSY. RECEIVER |
| 5 | | **90018840** | 6 | SPACER, NYLON |
| 6 | | **90018841** | 1 | COIL, CONDENSER |
| 7 | | **90018842** | 1 | HOSE ASSY. #6<br>INCLUDES O-RING'S ITEM 15 |
| 8 | | **90018843** | 1 | FAN & MOTOR ASSY. 24V. 16" |
| 9 | | **90018844** | 2 | CLAMP ASSY. |
| 10 | | **7950140161** | 4 | WASHER, 1/4" I.D. FLAT WIDE |
| 11 | | **7660141600** | 4 | LOCKNUT, HEX<br>1/4" - 20 N.C. |
| 12 | | **7115140650** | 8 | CAP SCREW,<br>1/4" - 20 N.C. X 3/4"<br>GRADE 5 |
| 13 | | **7660101600** | 6 | LOCKNUT 10-24 |
| 15 | | **90018813** | 2 | O-RING #6 |

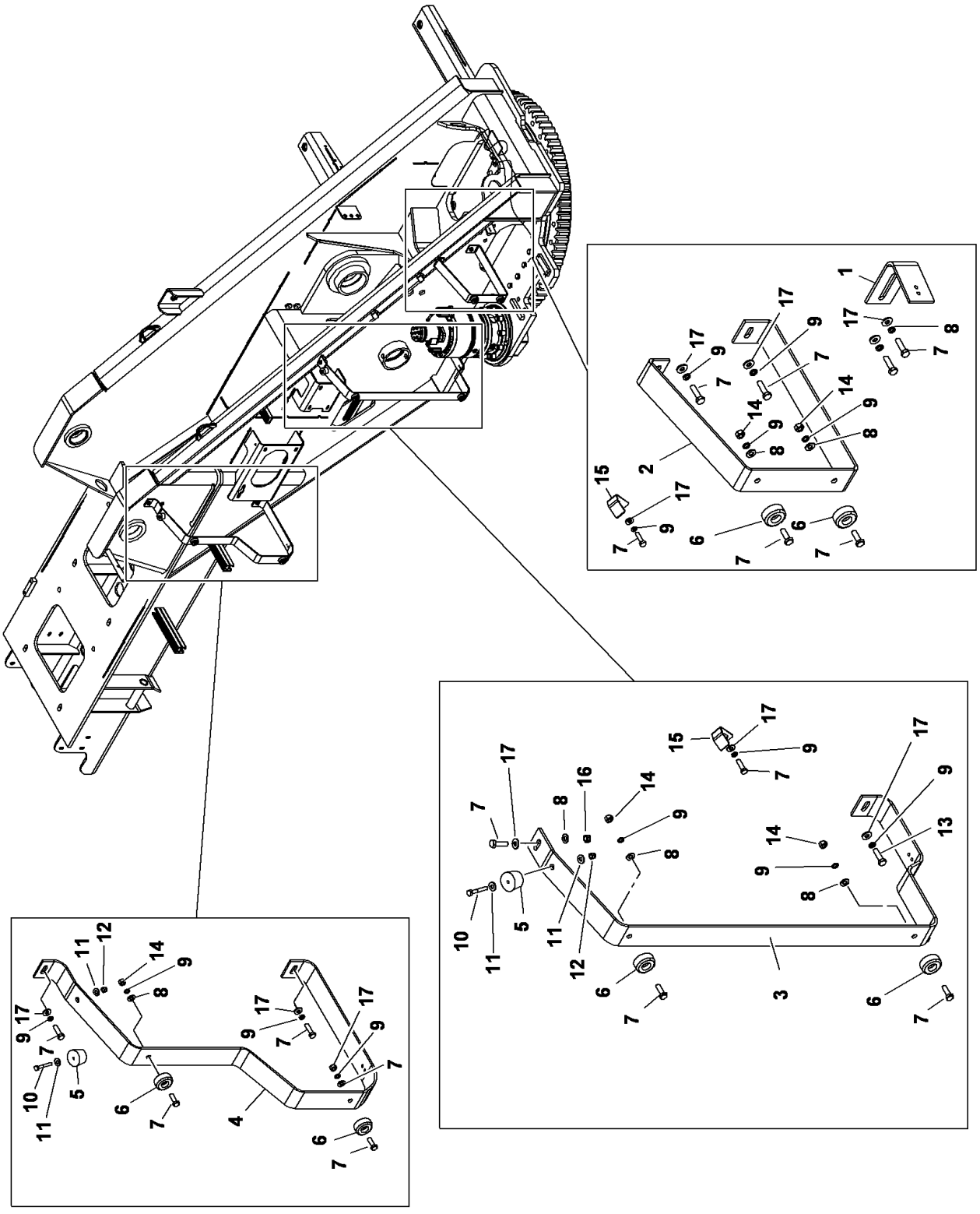

80041087

(SHEET 1 OF 1)

Description
**VALVE COVER COMPS INSTALLATION**

Assembly No.
**80041087**
Revision: **A**

| Item | FN | Part | Qty | Description |
|---|---|---|---|---|
| 1 | | **4159210122** | 1 | BRACKET, ANGLE |
| 2 | | **4159210164** | 1 | BRACKET, FRONT |
| 3 | | **4159210165** | 1 | BRACKET, MID |
| 4 | | **4159210166** | 1 | BRACKET, REAR |
| 5 | | **7910101702** | 2 | SPACER |
| 6 | | **7910101703** | 6 | SPACER |
| 7 | | **7126171353** | 15 | CAP SCREW, HEX HEAD |
| 8 | | **7951170014** | 7 | WASHER, FLAT #8 |
| 9 | | **7951170210** | 15 | WASHER, LOCK 8MM |
| 10 | | **7126151650** | 2 | CAP SCREW, M6 X 45MM HEX HEAD |
| 11 | | **7950140141** | 4 | WASHER, FLAT 1/4" PLAIN NARROW |
| 12 | | **00437742** | 2 | HEX HEAD NUT |
| 13 | | **7126171253** | 1 | CAP SCREW, M8X25 HEX HEAD |
| 14 | | **7661170003** | 6 | NUT |
| 15 | | **4159210167** | 2 | BRACKET, COVER |
| 16 | | **7661171103** | 1 | NUT, HEX<br>8MM N.C. |
| 17 | | **7950150161** | 10 | WASHER, 5/16" FLAT PLAIN WIDE |

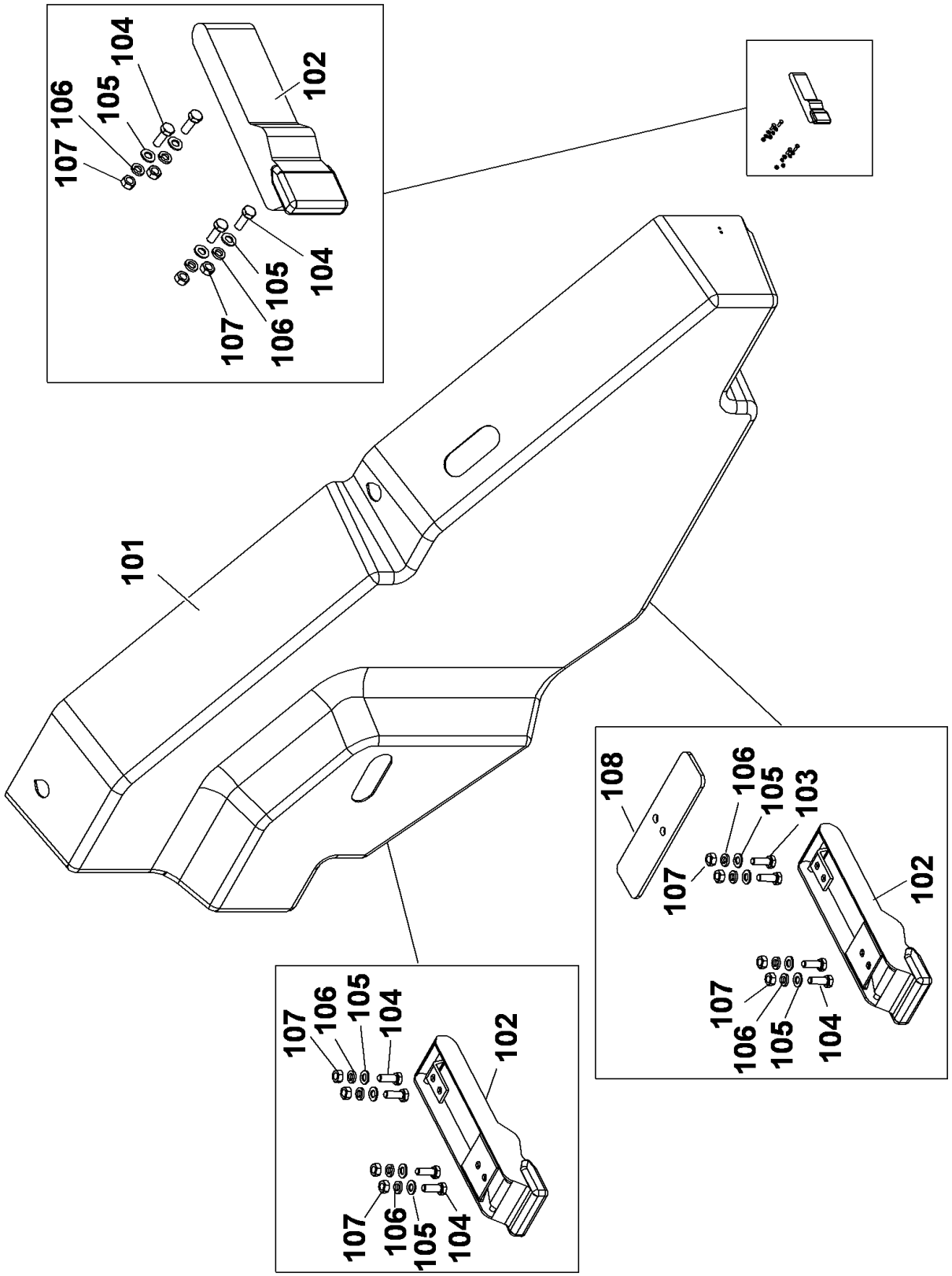


80041086

(SHEET 1 OF 1)

Description
**VALVE COVER INSTALLATION**

Assembly No.
**80041086**
Revision: **B**

| Item | FN | Part | Qty | Description |
|---|---|---|---|---|
| 101 | | **7258100188** | 1 | COVER, VALVE |
| 102 | | **7585000812** | 3 | DRAW LATCH<br>INCLUDES THE FOLLOWING PARTS |
| | | **9585100055** | 1 | KEEPER |
| 104 | | **7126130953** | 12 | CAP SCREW, M5 X 14MM HEX HEAD |
| 105 | | **7951130014** | 12 | WASHER, FLAT M5 I.D. |
| 106 | | **7951130210** | 12 | LOCKWASHER, 5MM I.D. |
| 107 | | **7661130003** | 12 | NUT, HEX<br>5MM |

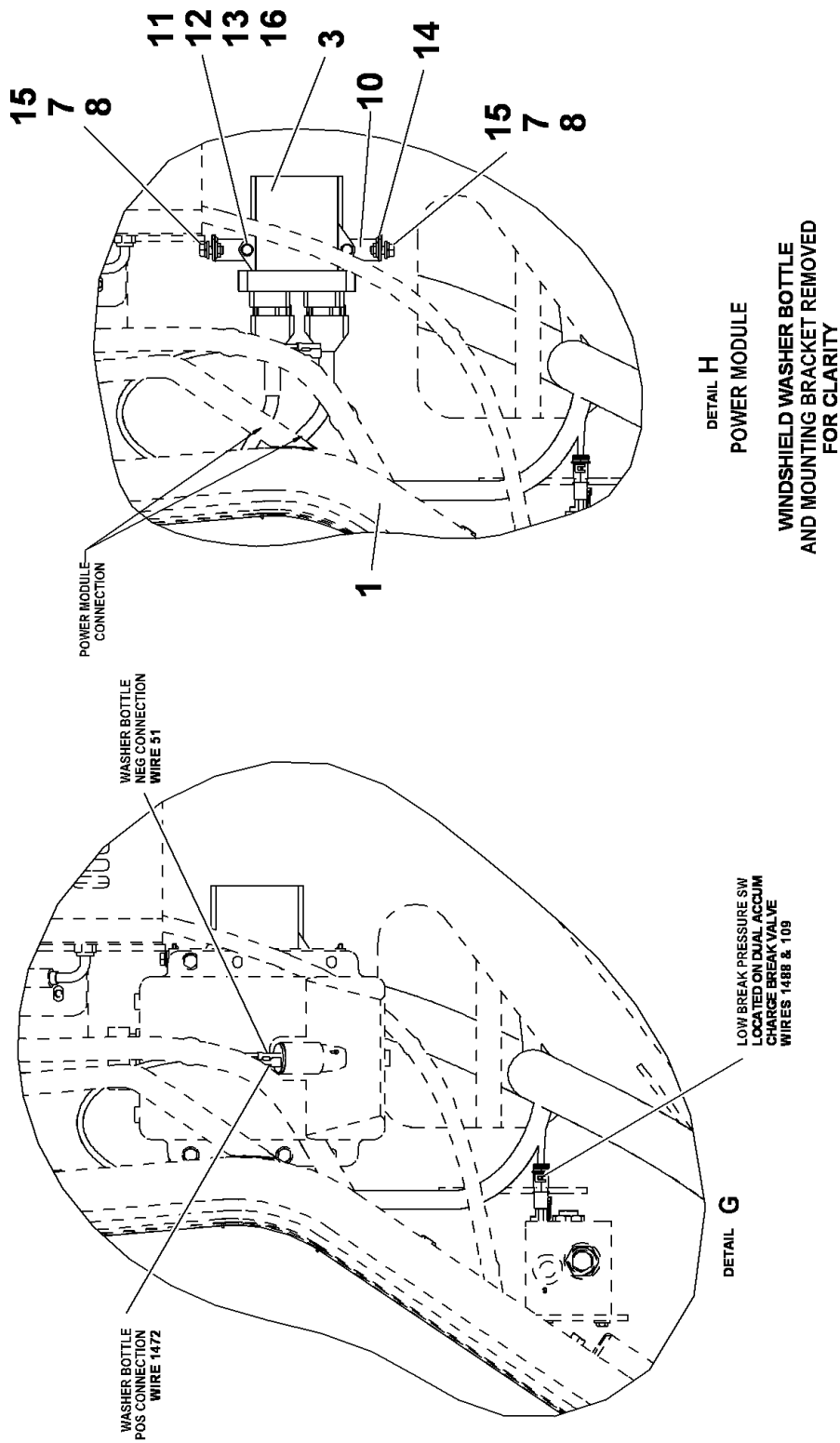
15
7
8
11
12
13
16
3
10
14
15
7
8
1
POWER MODULE CONNECTION
DETAIL H
POWER MODULE
WINDSHIELD WASHER BOTTLE AND MOUNTING BRACKET REMOVED FOR CLARITY
WASHER BOTTLE NEG CONNECTION WIRE 51
WASHER BOTTLE POS CONNECTION WIRE 1472
LOW BREAK PRESSURE SW LOCATED ON DUAL ACCUM CHARGE BREAK VALVE WIRES 1488 & 109
DETAIL G

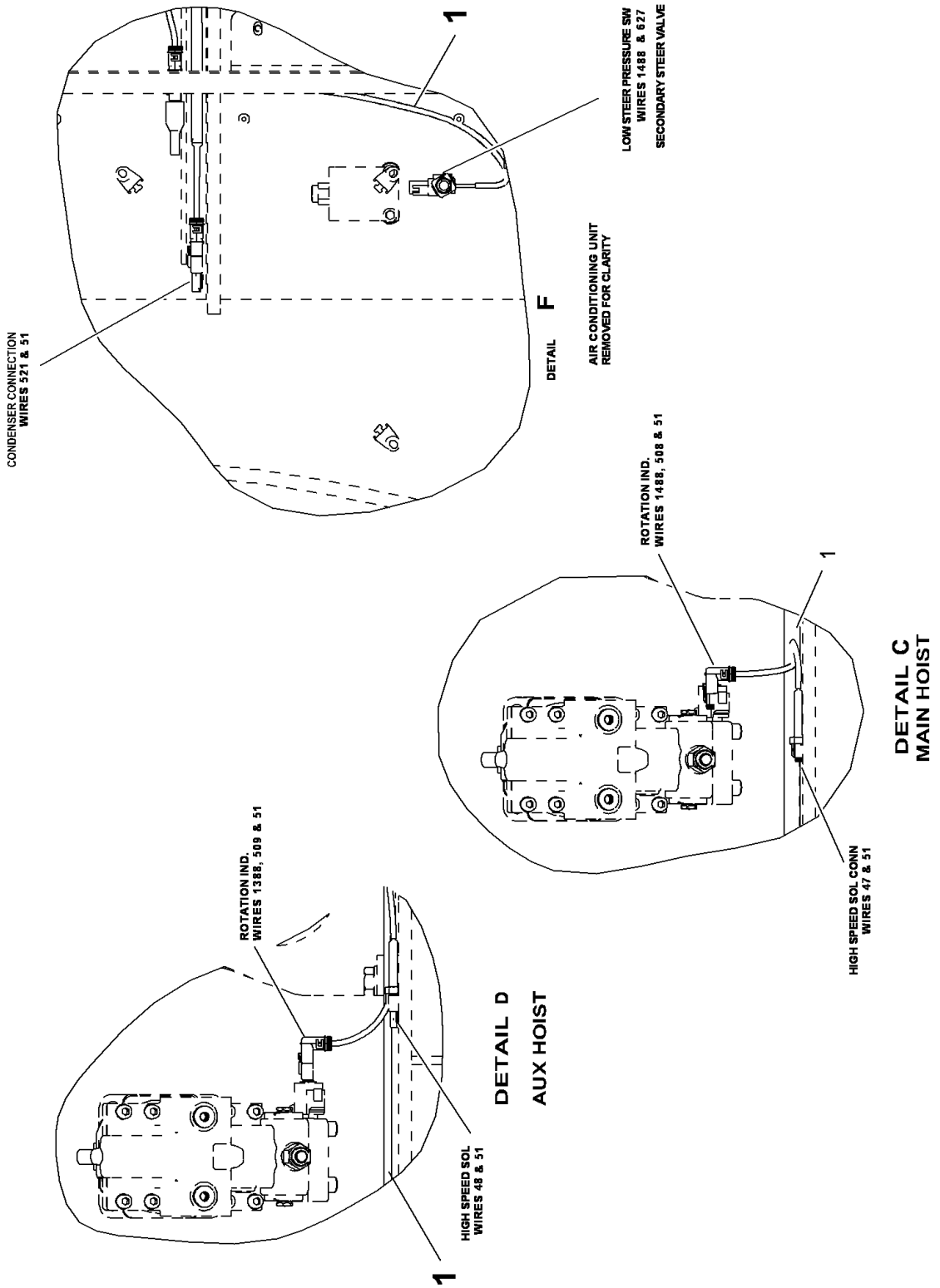


80035982

(SHEET 4 OF 5)

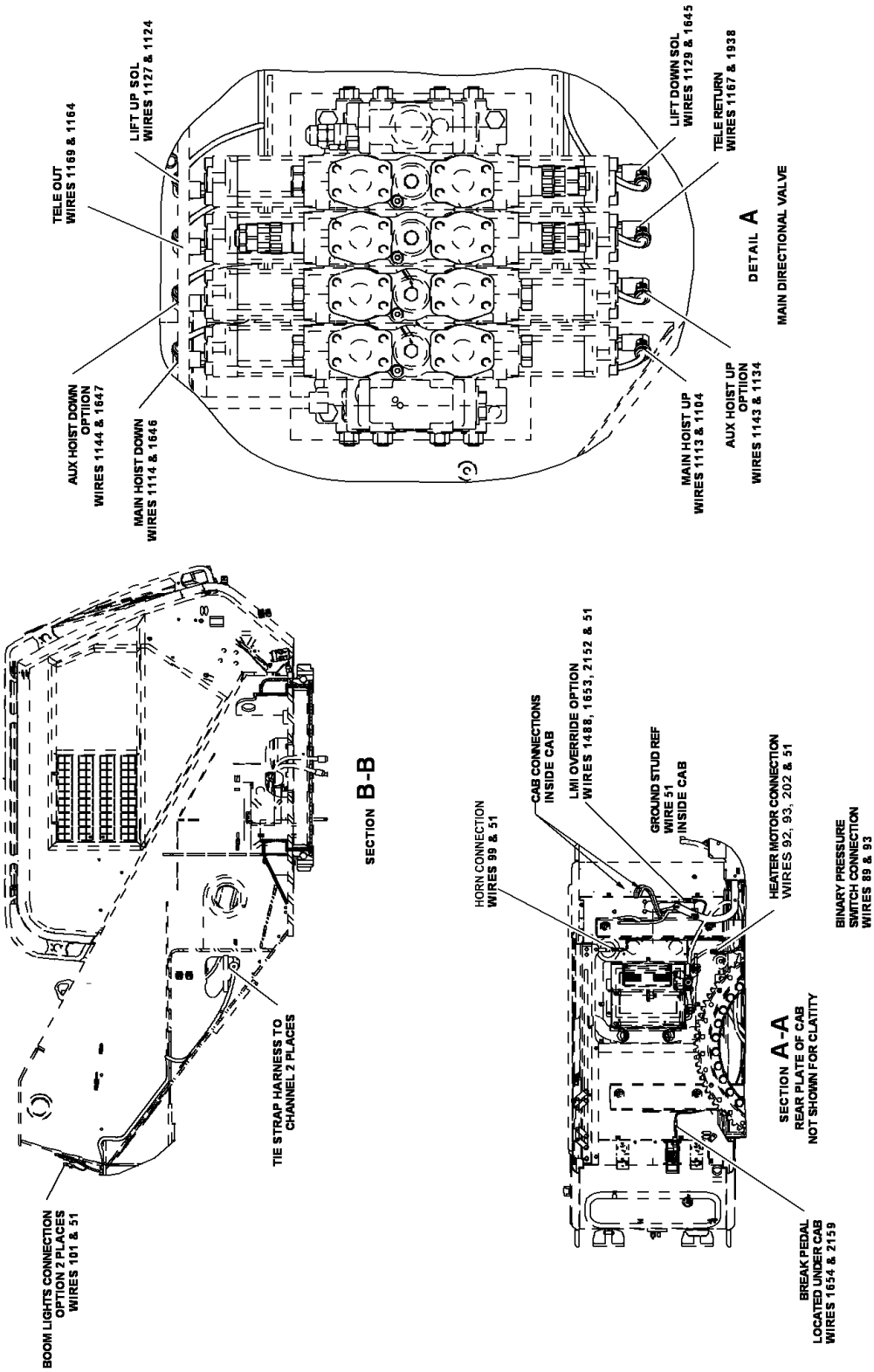
TELE OUT
WIRES 1169 & 1164
LIFT UP SOL
WIRES 1127 & 1124
LIFT DOWN SOL
WIRES 1129 & 1645
TELE RETURN
WIRES 1167 & 1938
AUX HOIST DOWN
OPTIION
WIRES 1144 & 1647
MAIN HOIST DOWN
WIRES 1114 & 1646
MAIN HOIST UP
WIRES 1113 & 1104
AUX HOIST UP
OPTIION
WIRES 1143 & 1134
DETAIL A
MAIN DIRECTIONAL VALVE
SECTION B-B
TIE STRAP HARNESS TO
CHANNEL 2 PLACES
BOOM LIGHTS CONNECTION
OPTION 2 PLACES
WIRES 101 & 51
HORN CONNECTION
WIRES 99 & 51
CAB CONNECTIONS
INSIDE CAB
LMI OVERRIDE OPTION
WIRES 1488, 1653, 2152 & 51
GROUND STUD REF
WIRE 51
INSIDE CAB
HEATER MOTOR CONNECTION
WIRES 92, 93, 202 & 51
BINARY PRESSURE
SWITCH CONNECTION
WIRES 89 & 93
SECTION A-A
REAR PLATE OF CAB
NOT SHOWN FOR CLATITY
BREAK PEDAL
LOCATED UNDER CAB
WIRES 1654 & 2159

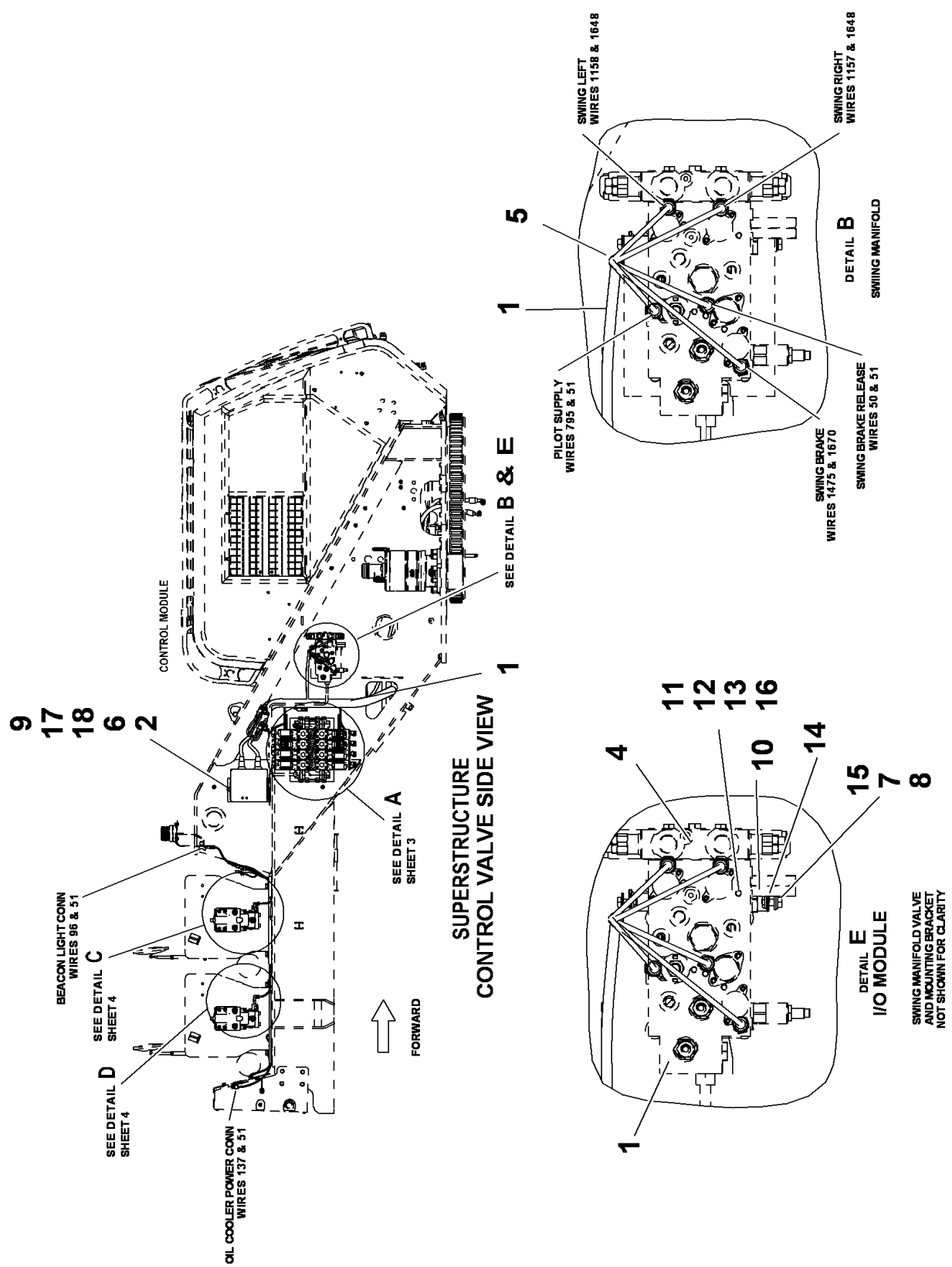


80035982

(SHEET 2 OF 5)

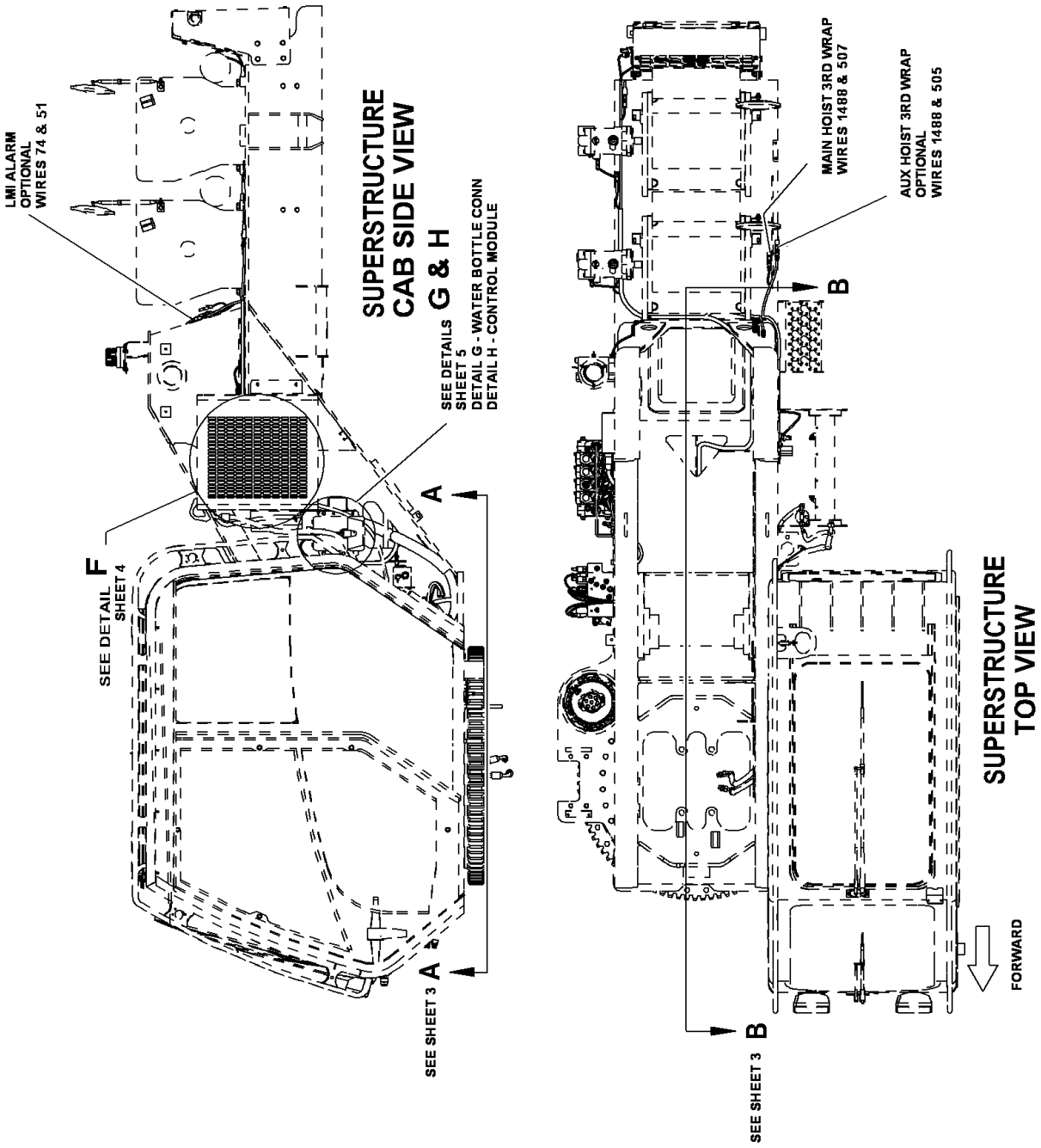


80035982

(SHEET 1 OF 5)

Description
**ESI-SUPERSTRUCTURE**

Assembly No.
**80035982**
Revision: **D**

| Item | FN | Part | Qty | Description |
|---|---|---|---|---|
| 1 | + | **80030317** | 1 | HARNESS ASSEMBLY-SS |
| 2 | # | **80025017** | 1 | CONTROL MODULE I/O |
| 3 | # | **7352100109** | 1 | MODULE ASSY, CONTROL |
| 4 | # | **7352100110** | 1 | MODULE ASSEMBLY CONTROL |
| 5 | | **7300100014** | 1 | CLAMP, 5/8" TUBING |
| 6 | | **80025245** | 1 | COVER |
| 7 | | **7950150141** | 3 | WASHER, FLAT 5/16" |
| 8 | | **7950150050** | 3 | WASHER, LOCK 5/16" I.D. |
| 9 | | **7951170210** | 1 | WASHER, LOCK 8MM |
| 10 | | **80009225** | 2 | BRACKET-ELEC MOUNTING |
| 11 | | **7951150014** | 4 | WASHER, 6MM I.D. |
| 12 | | **7951150210** | 4 | LOCKWASHER, 6MM I.D. |
| 13 | # | **7661150003** | 4 | NUT, HEX |
| 14 | | **7659000287** | 4 | NUT, RETAINING<br>5/16" - 18 N.C. |
| 15 | | **7115150650** | 4 | CAP SCREW,<br>5/16" - 18 N.C. X 3/4"<br>GRADE 5 |
| 16 | | **7126151353** | 4 | CAP SCREW, M6X30 HEX HEAD |
| 17 | | **7126171253** | 1 | CAP SCREW, M8X25 HEX HEAD |
| 18 | | **7950150161** | 1 | WASHER, 5/16" FLAT PLAIN WIDE |

**+ SEE FURTHER BREAKDOWN THIS GROUP**

**# SERVICED AS AN ASSEMBLY ONLY**

**Notes**

| WIRE NO | COLOR | SAE SIZE | LENGTH TOT IN | TP | DIM ITEM NO | REMARKS |
|---|---|---|---|---|---|---|
| 47 | WHT GXL | 16 | 1976 | AS | 11 | ——— |
| 48 | ——— | 18 | 197 | AV | 11 | ——— |
| 50 | ——— | 18 | 31 | AZ | 11 | ——— |
| 51A | ——— | 10 | 15 | AB | 21 | CRMP W/51B |
| 51B | ——— | 10 | 16 | AB | STRIP | CRMP W/51A |
| 51C | ——— | 14 | 98 | AX | 9 | ——— |
| 51D | ——— | 14 | 98 | AX | 9 | ——— |
| 51E | ——— | 18 | 32 | AX | 11 | ——— |
| 51F | ——— | 18 | 32 | AX | 11 | ——— |
| 51G | ——— | 16 | 152 | AX | 9 | ——— |
| 51T | ——— | 16 | 38 | AX | 11 | ——— |
| 51U | ——— | 14 | 132 | AX | 9 | ——— |
| 51X | ——— | 14 | 9 | AQ | 11 | ——— |
| 51Y | ——— | 18 | 10 | AQ | 11 | ——— |
| 51Z | ——— | 14 | 9 | AQ | 11 | ——— |
| 51AA | ——— | 18 | 139 | AX | 11 | ——— |
| 51AB | ——— | 18 | 17 | S10 | STRIP | SEE DETAIL |
| 51AC | ——— | 18 | 13 | AS | 11 | ——— |
| 51AD | ——— | 20 | 9 | AT | 12 | ——— |
| 51AE | ——— | 20 | 17 | AW | 11 | ——— |
| 51AF | ——— | 20 | 8 | AW | 12 | ——— |
| 51AG | ——— | 18 | 32 | AX | 11 | ——— |
| 51AH | ——— | 16 | 98 | AN | 11 | ——— |
| 51AJ | ——— | 18 | 40 | S1 | STRIP | SEE DETAIL |
| 51AK | ——— | 20 | 29 | AU | 12 | ——— |
| 51AL | ——— | 14 | 156 | S1 | STRIP | SEE DETAIL |
| 51AM | ——— | 18 | 37 | AJ | 20 | ——— |
| 51AR | ——— | 16 | 17 | AK | 11 | ——— |
| 51AQ | ——— | 16 | 11 | AK1 | 11 | ——— |
| 51AS | ——— | 14 | 36 | S1 | STRIP | SEE DETAIL |
| 51AU | ——— | 14 | 14 | AD1 | 9 | ——— |
| 51AV | ——— | 14 | 11 | AD | 9 | ——— |
| 51AW | ——— | 18 | 40 | AC | 20 | ——— |
| 51AY | ——— | 18 | 64 | BS | 12 | ——— |
| 51AZ | ——— | 18 | 64 | BT | 12 | ——— |
| 51BA | ——— | 14 | 22 | BV2 | 17,18 | ——— |
| 51BB | ——— | 18 | 74 | BV3 | 11 | ——— |
| 51BC | ——— | 14 | 164 | S1 | STRIP | SEE DETAIL |
| 51C | ——— | 18 | 166 | AH | 11 | ——— |
| 92 | ——— | 18 | 141 | AE | 11 | ——— |
| 93 | ——— | 18 | 127 | AD1 | 11 | ——— |
| 95 | ——— | 18 | 40 | AD1 | 11 | ——— |
| 96 | ——— | 18 | 176 | BF | 11 | ——— |
| 99 | ——— | 18 | 99 | AC | 20 | ——— |
| 191A | ——— | 18 | 15 | AG | 12 | ——— |
| 191B | ——— | 12 | 115 | S5 | STRIP | SEE DETAIL |
| 191C | ——— | 14 | 10 | AQ | 11 | ——— |
| 191D | ——— | 14 | 10 | AQ | 11 | ——— |
| 193 | ——— | 18 | 90 | AL | 11 | ——— |
| 137A | ——— | 18 | 16 | AG | 12 | ——— |
| 137B | ——— | 18 | 16 | AH | 12 | ——— |
| 137C | ——— | 14 | 154 | S5 | STRIP | SEE DETAIL |
| 137D | ——— | 18 | 8 | BV3 | 11 | ——— |
| 137E | ——— | 14 | 23 | BV2 | 17,18 | ——— |
| 202A | ——— | 18 | 61 | AH | 12 | ——— |
| 202B | ——— | 14 | 11 | AD | 9 | ——— |
| 202C | ——— | 14 | 12 | AD1 | 9 | ——— |
| 205 | ——— | 16 | 220 | BE | 11 | ——— |
| 305 | ——— | 18 | 171 | AY | 12 | ——— |
| 307 | ——— | 18 | 168 | AU | 12 | ——— |
| 308 | ——— | 18 | 171 | AT | 12 | ——— |
| 309 | ——— | 18 | 168 | AW | 12 | ——— |
| 321A | ——— | 18 | 142 | AG | 12 | ——— |
| 321B | ——— | 14 | 18 | AK | 9 | ——— |
| 321C | ——— | 14 | 10 | AK1 | 9 | ——— |
| 927 | ——— | 18 | 200 | AM | 11 | ——— |
| 1004 | ——— | 18 | 62 | BA | 11 | ——— |
| 1113 | ——— | 18 | 63 | BE | 11 | ——— |
| 1114 | ——— | 18 | 50 | BF | 11 | ——— |
| 1124 | ——— | 18 | 44 | BE | 11 | ——— |
| 1127 | ——— | 18 | 44 | BE | 11 | ——— |
| 1129 | ——— | 18 | 57 | BE | 11 | ——— |
| 1134 | ——— | 18 | 63 | BF | 11 | ——— |
| 1143 | ——— | 18 | 63 | BF | 11 | ——— |
| 1144 | ——— | 18 | 30 | BF | 11 | ——— |
| 1158 | ——— | 18 | 53 | BJ | 11 | ——— |
| 1164 | ——— | 18 | 51 | BB | 11 | ——— |
| 1167 | ——— | 18 | 47 | BE | 11 | ——— |
| 1169 | ——— | 18 | 47 | BE | 11 | ——— |
| 1388 | ——— | 18 | 188 | AW | 12 | ——— |
| 1436A | ——— | 12 | 71 | AA | 10 | ——— |
| 1436B | ——— | 18 | 17 | AG | 12 | ——— |
| 1436C | ——— | 18 | 17 | AG | 12 | ——— |
| 1436D | ——— | 18 | 17 | AG | 12 | ——— |
| 1475 | ——— | 18 | 55 | BQ | 11 | ——— |
| 1475 | ——— | 12 | 127 | AA | 10 | ——— |
| 1481A | ——— | 18 | 15 | BE | 11 | ——— |
| 1481B | WHT GXL | 16 | 15 | BE | 9 | ——— |

| WIRE NO | COLOR | SAE SIZE | LENGTH TOT IN | TP | DIM ITEM NO | REMARKS |
|---|---|---|---|---|---|---|
| 1481D | WHT GXL | 16 | 15 | BE | 9 | ——— |
| 1481E | ——— | 16 | 15 | BE | 9 | ——— |
| 1481F | ——— | 16 | 15 | BF | 9 | ——— |
| 1481G | ——— | 18 | 15 | BF | 11 | ——— |
| 1488A | ——— | 18 | 67 | BE | 9 | ——— |
| 1488B | ——— | 18 | 74 | S8 | STRIP | SEE DETAIL |
| 1488C | ——— | 18 | 55 | AM | 11 | ——— |
| 1488D | ——— | 18 | 23 | AL | 11 | ——— |
| 1488E | ——— | 18 | 59 | AM | 11 | ——— |
| 1488G | ——— | 20 | 30 | AU | 12 | ——— |
| 1488H | ——— | 16 | 27 | AV | 12 | ——— |
| 1488J | ——— | 18 | 29 | AY | 12 | ——— |
| 1488K | ——— | 18 | 79 | BW1 | 12 | ——— |
| 1645 | ——— | 18 | 57 | BE | 11 | ——— |
| 1646 | ——— | 18 | 30 | BF | 11 | ——— |
| 1647 | ——— | 18 | 50 | BF | 11 | ——— |
| 1653 | ——— | 18 | 122 | AM | 11 | ——— |
| 1654 | ——— | 18 | 114 | AA1 | 11 | ——— |
| 1670 | ——— | 18 | 55 | BQ | 11 | ——— |
| 1935 | ——— | 18 | 90 | BE | 11 | ——— |
| 1944A | ——— | 18 | 55 | BB | 12 | ——— |
| 1944B | ——— | 18 | 15 | BB | 11 | ——— |
| 1944C | ——— | 18 | 17 | BJ | 11 | ——— |
| 2152 | ——— | 18 | 122 | AN | 11 | ——— |
| 2159 | ——— | 18 | 114 | AA1 | 14 | ——— |
| 2161A | ——— | 12 | 70 | AA | 10 | ——— |
| 2161B | ——— | 18 | 18 | AH | 12 | ——— |
| 2161C | ——— | 18 | 18 | AH | 12 | ——— |
| 2161D | ——— | 18 | 90 | BE | 11 | ——— |
| 2161E | ——— | 18 | 23 | AS | 12 | ——— |
| 2220 | ——— | 16 | 51 | AU | 12 | ——— |
| J1 | ——— | 18 | 3 | AU | 73 | ——— |
| J2 | ——— | 18 | 3 | AY | 73 | ——— |
| SHD1 | ——— | 16 | 3 | AA1 | SEE CABLE | DETAIL PC1A |
| SHD2 | ——— | 16 | 3 | BD | SEE CABLE | DETAIL PC1D |
| SHD3 | ——— | 16 | 3 | BD | SEE CABLE | DETAIL PC1E |
| SHD4 | ——— | 16 | 3 | AA1 | SEE CABLE | DETAIL PC2A |
| SHD5 | ——— | 16 | 3 | BC | SEE CABLE | DETAIL PC2C |
| SHD6 | WHT GXL | 16 | 3 | BC | SEE CABLE | DETAIL PC2D |

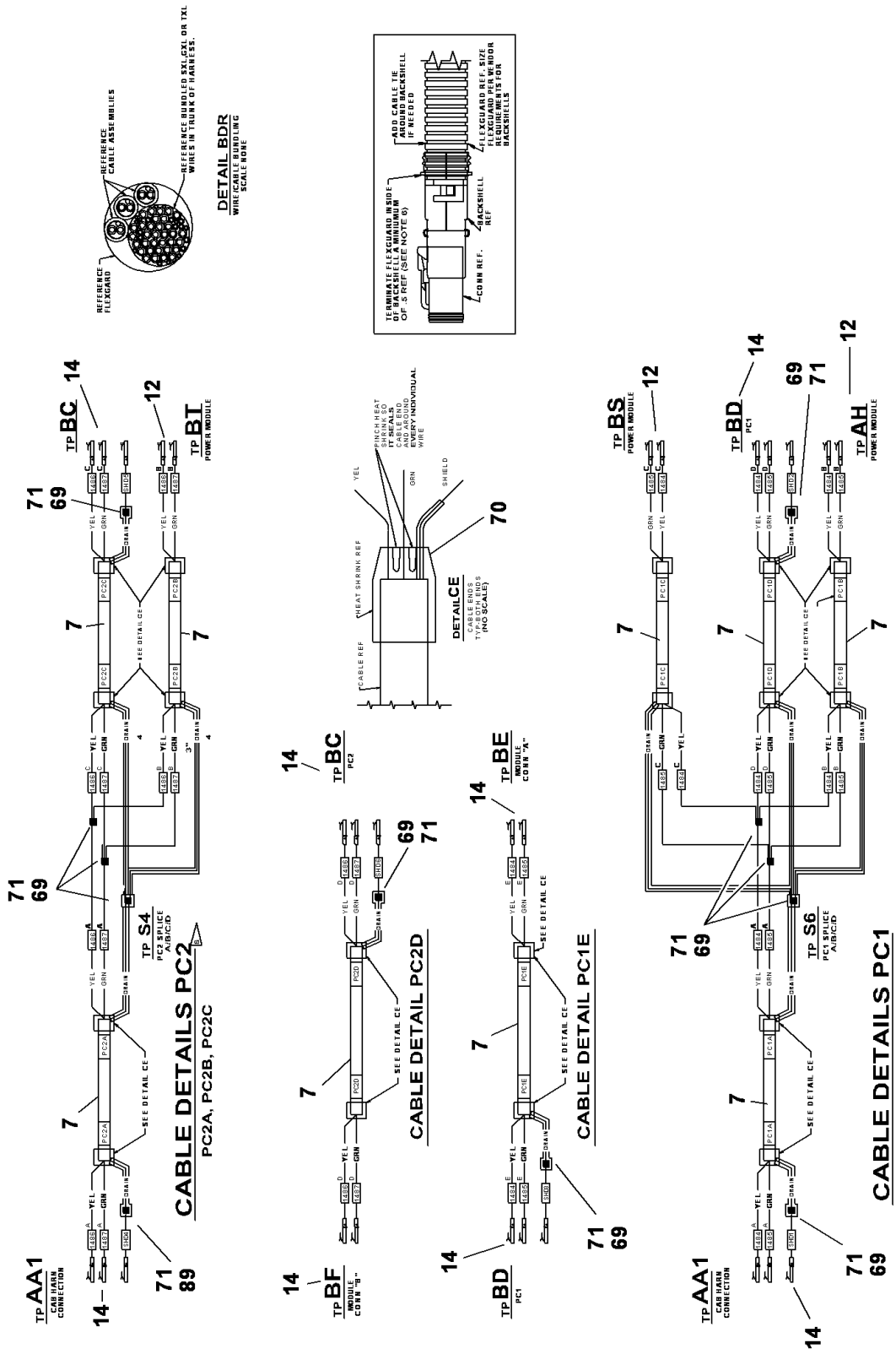
DETAIL BDR
WIRE/CABLE BUNDLING
SCALE NONE
REFERENCE FLEXGUARD
REFERENCE CABLE ASSEMBLIES
REFERENCE BUNDLED SXL(CXL OR TXL WIRES IN TRUNK OF HARNESS.
TERMINATE FLEXGUARD INSIDE OF BACKSHELL A MINIMUM OF .5 REF (SEE NOTE 6)
ADD CABLE TIE AROUND BACKSHELL IF NEEDED
FLEXGUARD REF. SIZE FLEXGUARD PER VENDOR REQUIREMENTS FOR BACKSHELLS
CONN REF.
BACKSHELL REF
DETAIL CE
CABLE END TYPICAL FOR ALL (NO SCALE)
CABLE REF
HEAT SHRINK REF
PINCH HEAT SHRINK TO IT SEALS AND BIND EVERY INDIVIDUAL WIRE
YEL
GRN
SHIELD
70
CABLE DETAILS PC2
PC2A, PC2B, PC2C
CABLE DETAIL PC2D
CABLE DETAIL PC1E
CABLE DETAILS PC1
PC1A, PC1B, PC1C, PC1D
TP AA1
CAB HARN CONNECTION
TP BC
TP BT
POWER MODULE
TP S4
PC2 SPLICE A/B/C/D
TP BF
MODULE CONN "B"
TP BD
PC1
TP BE
MODULE CONN "A"
TP BS
TP AH
TP S6
PC1 SPLICE A/B/C/D
SEE DETAIL CE

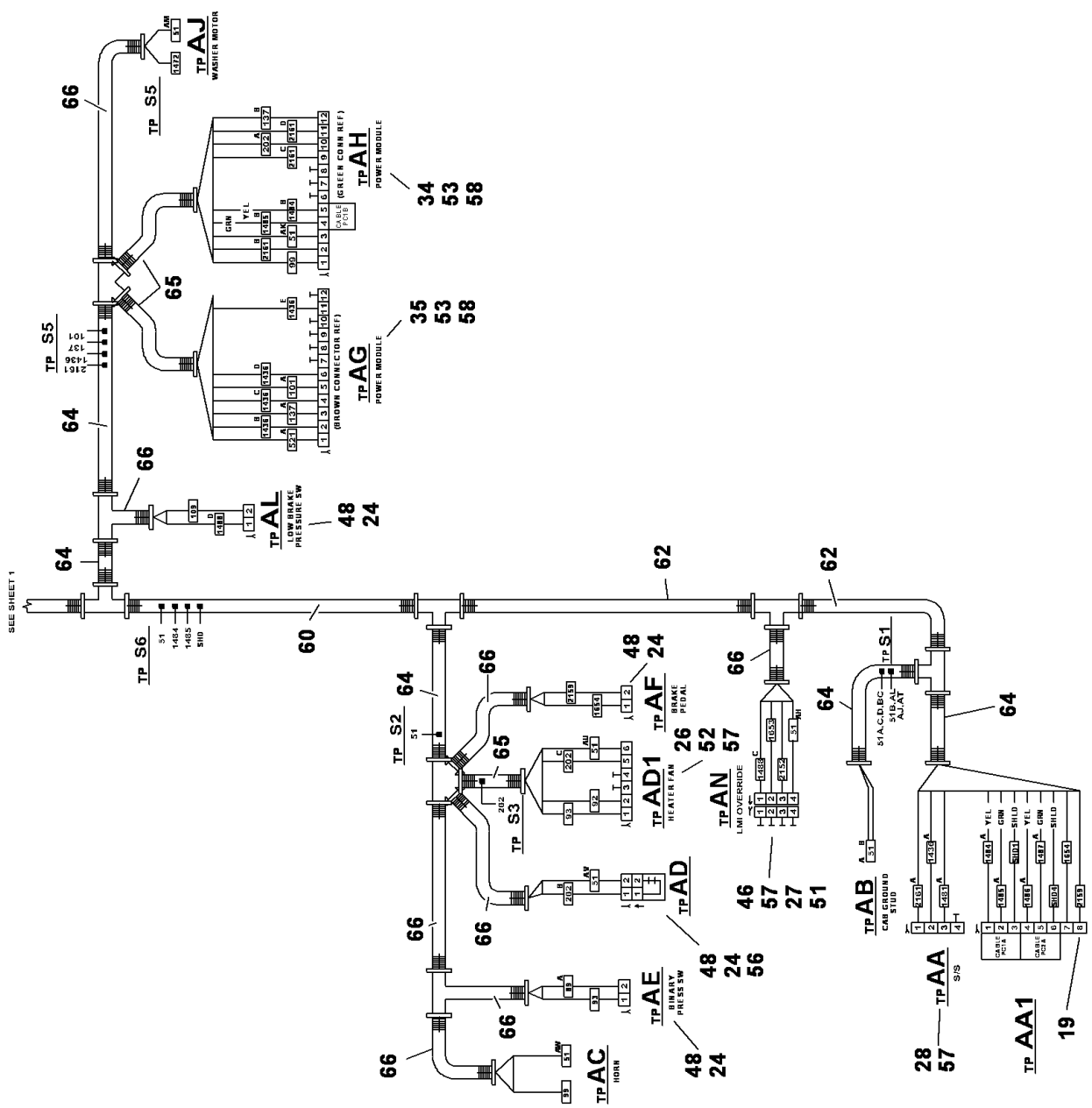
TP AJ
WASHER MOTOR
TP S5
TP AH
POWER MODULE
TP AG
POWER MODULE
TP AL
LOW BRAKE PRESSURE SW
TP S6
TP S2
TP S3
TP AF
BRAKE PEDAL
TP AD1
HEATER FAN
TP AN
LMI OVERRIDE
TP AD
TP AE
BINARY PRESS SW
TP AC
HORN
TP S1
TP AB
CAB GROUND STUD
TP AA
TP AA1
SEE SHEET 1

80030317

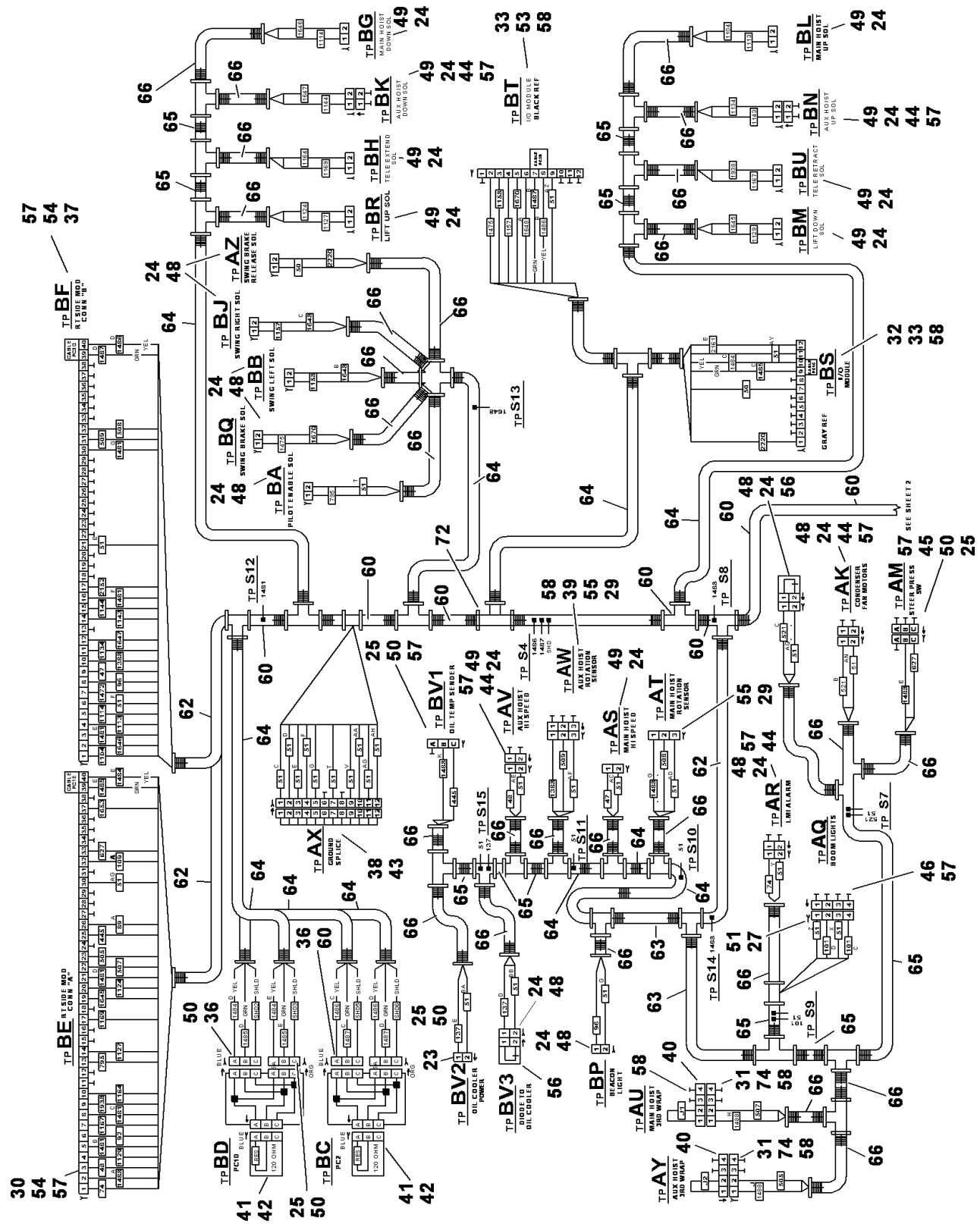


80030317

(SHEET 1 OF 4)

Description
**HARNESS ASSEMBLY-SS**

Assembly No.
**80030317**
Revision: **F**

| Item | FN | Part | Qty | Description |
|---|---|---|---|---|
| 7 | | **80021593** | 38 | CABLE, 20 AWG CAN-BUS SHEILDED |
| 9 | | **7826000087** | 21 | SOCKET, 16-14 GA |
| 10 | | **7826000092** | 3 | SOCKET, (12) 12-14GA |
| 11 | | **7826000626** | 103 | SOCKET,<br>16 - 18 AWG |
| 12 | | **7826100016** | 39 | SOCKET, DEUTSCH 22/20 GA NI |
| 13 | | **7826100018** | 0 | SOCKET, 20 GAUGE GOLD |
| 14 | | **7826100004** | 24 | SOCKET, (16 - 18) 30 SERIES |
| 17 | | **7892000252** | 2 | TERMINAL, MALE PIN |
| 18 | | **7892000255** | 2 | TERMINAL, GRAY CABLE SEAL |
| 19 | | **80023485** | 1 | DT PLUG 8SB BLK |
| 20 | | **7345001444** | 4 | TERMINAL, FEMALE |
| 21 | | **7345242001** | 1 | TERMINAL<br>8 AWG |
| 23 | | **7364001683** | 1 | CONNECTOR, 2 CONDUCTOR<br>SHROUD |
| 24 | | **7709000844** | 24 | PLUG, 2 SOCKET |
| 25 | | **7709000874** | 4 | PLUG<br>3 SOCKET |
| 26 | | **7709000883** | 1 | PLUG<br>6 SOCKET |
| 27 | | **7709000936** | 2 | PLUG, 4 SOCKET |
| 28 | | **7709100870** | 1 | PLUG, 4 PASS |
| 29 | | **7709100877** | 2 | PLUG |
| 30 | | **7709100882** | 1 | PLUG |
| 31 | | **7709100895** | 2 | PLUG, 4 SOCKET |
| 32 | | **7709100907** | 1 | PLUG |
| 33 | | **7709100908** | 1 | PLUG |
| 34 | | **7709100909** | 1 | PLUG DTM06-12SC W/WM-12S WEDGE |
| 35 | | **7709100910** | 1 | PLUG DTM06-12SD W/WM-12S WEDGE |
| 36 | | **7709100911** | 2 | PLUG W/BLUE WEDGE |
| 37 | | **7709100946** | 1 | PLUG |
| 38 | | **7892001036** | 1 | RECEPTACLE, SPLICE BLOCK |
| 39 | | **7892100010** | 1 | RECEPTACLE, DTM-3P |
| 40 | | **7892100039** | 2 | RECEPTACLE, DTM04-4P |
| 41 | | **7709100902** | 2 | PLUG, 3 PIN |

Description
**HARNESS ASSEMBLY-SS**

Assembly No.
**80030317**
Revision: **F**

| Item | FN | Part | Qty | Description |
|---|---|---|---|---|
| 42 | | **7892100036** | 2 | RECEPTACLE, 3 WAY |
| 43 | | **7709000846** | 1 | PLUG, 12 SOCKET |
| 44 | | **7892000949** | 5 | RECEPTACLE, 2 PIN |
| 45 | | **7892000978** | 1 | RECEPTACLE, 3 PIN |
| 46 | | **7892001051** | 2 | RECEPTACLE, 4 PIN |
| 48 | | **80008755** | 14 | 180DEG BSHELL |
| 49 | | **80008759** | 10 | 90DEG BSHELL |
| 50 | | **80008765** | 6 | 180DEG BSHELL |
| 51 | | **80008773** | 2 | 180 DEG BSHELL |
| 52 | | **80008783** | 1 | 180DEG BSHELL |
| 53 | | **7172000552** | 4 | BOOT |
| 54 | | **7172000554** | 2 | BOOT |
| 55 | | **7172100002** | 2 | BOOT, PLUG |
| 56 | + | **80001293** | 3 | DIODE (MODIFIED) |
| 57 | | **7689000503** | 55 | PLUG, SEALING 16 - 12 AWG |
| 58 | | **7826000650** | 29 | PLUG, SEALING |
| 60 | | **8594000023** | 8 | FLEXGUARD - 1.625" I.D. (QUANTITY IN FEET) |
| 61 | | **8594000022** | 0 | FLEXGUARD - 1.250" I.D. (QUANTITY IN FEET) |
| 62 | | **8594000001** | 10 | FLEXGUARD - 1.00" I.D. (QUANTITY IN FEET) |
| 63 | | **8594000002** | 2 | FLEXGUARD - .750" I.D. (QUANTITY IN FEET) |
| 64 | | **8594000004** | 13 | FLEXGUARD - .500" I.D. (QUANTITY IN FEET) |
| 65 | | **8594000006** | 8 | FLEXGUARD - .350" I.D. (QUANTITY IN FEET) |
| 66 | | **8594000019** | 36 | FLEXGUARD, 1/4" I.D. (QUANTITY IN FEET) |
| 67 | | **7892000196** | 10 | PARALLEL, NON - INSULATED 8 AWG |
| 68 | | **7892000195** | 11 | PARALLEL, NON - INSULATED 12 - 10 AWG |

**+ SEE FURTHER BREAKDOWN THIS GROUP**

Description
**HARNESS ASSEMBLY-SS**

Assembly No.
**80030317**
Revision: **F**

| Item | FN | Part | Qty | Description |
|---|---|---|---|---|
| 69 | | **7892000194** | 12 | PARALLEL, NON - INSULATED<br>16 - 14 AWG |
| 70 | | **8594100257** | 10 | TUBING, HEAT SHRINK 1/2" I.D.<br>LINER, MELTABLE<br>(QUANTITY IN FEET) |
| 71 | | **8594100256** | 22 | 1/4" SHRINK TUBING (CLEAR) W/M |
| 72 | | **7850000208** | 50 | CABLE TIE 5.63", BLACK |
| 73 | | **7689100033** | 4 | PIN |
| 74 | | **7172000567** | 2 | BOOT, CONNECTOR |

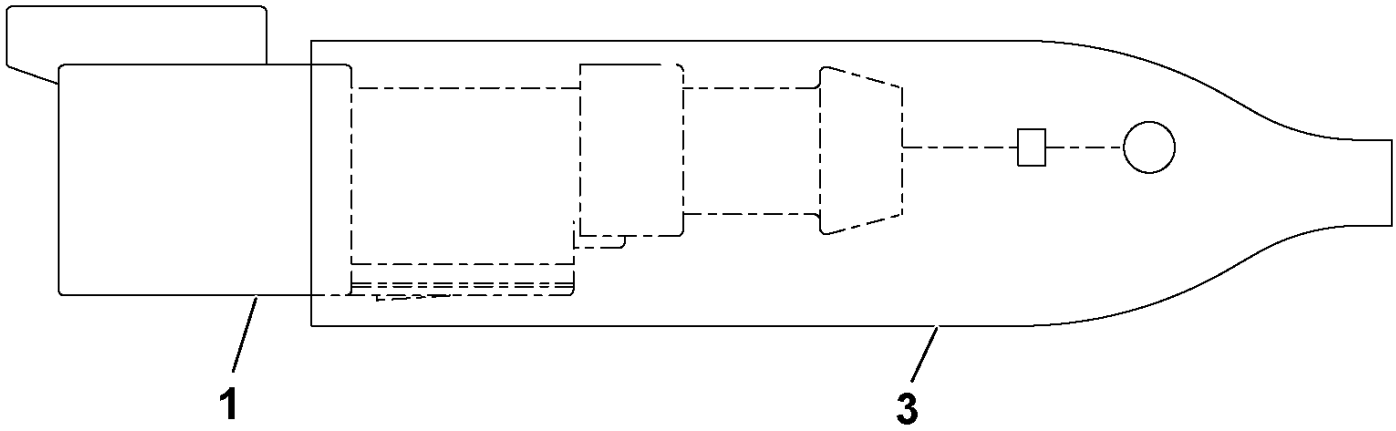


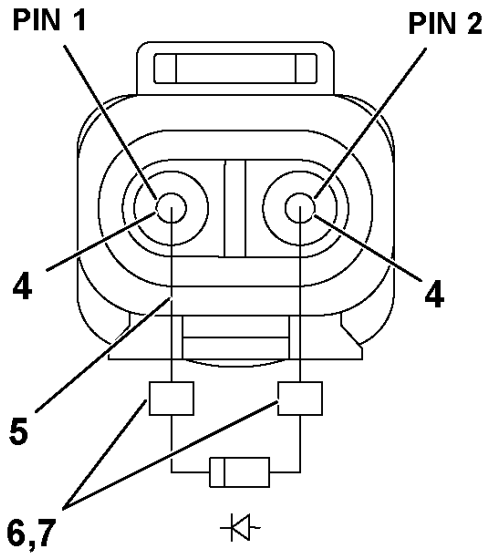


CATHODE - + ANNODE

DIODE SHOWED LOWER THAN CONNECTOR FOR PIN LOADING CLARITY.

ITEMS NOT SHOWN NBR 2

Description
**DIODE (MODIFIED)**

Assembly No.
**80001293**
Revision: **A**

| Item | FN | Part | Qty | Description |
|---|---|---|---|---|
| 1 | | **80001292** | 1 | RECEPT DT-2P (DT04-2P-E008) |
| 2 | | **7356000099** | 1 | DIODE, SILICON RECTIFIER |
| 3 | | **8594100271** | 1 | FLEXGUARD |
| 4 | | **7689000704** | 2 | PIN, 16 - 14 GA |
| 5 | | **8977010300** | 1 | WIRE, 16 GAUGE WHITE |
| 6 | | **7892000194** | 2 | PARALLEL, NON - INSULATED<br>16 - 14 AWG |
| 7 | | **8594100256** | 1 | 1/4" SHRINK TUBING (CLEAR) W/M |

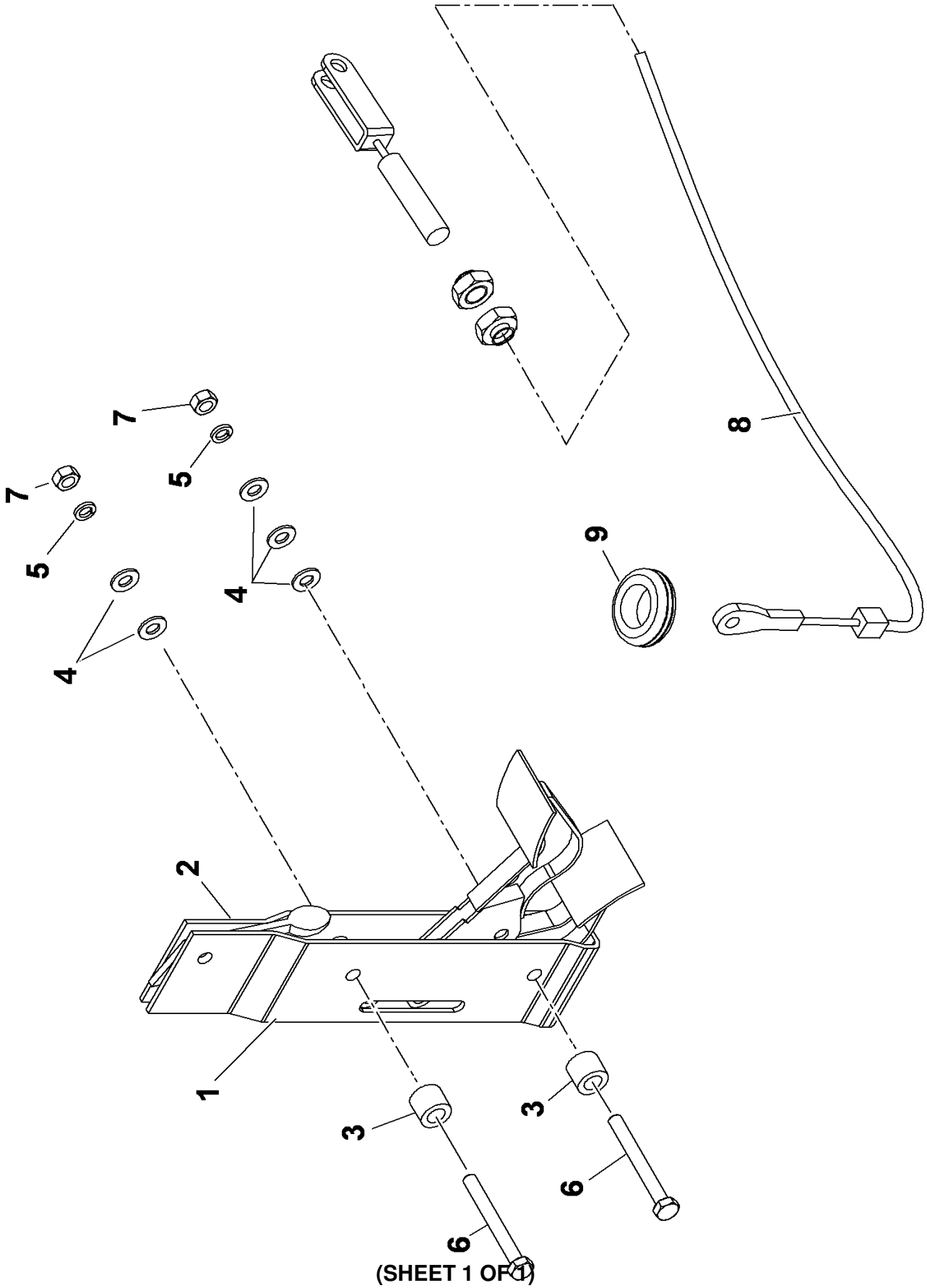


80054738

(SHEET 1 OF 1)

Description
**360 SWING LOCK PEDAL INSTALL**

Assembly No.
**80054738**
Revision: **A**

| Item | FN | Part | Qty | Description |
|---|---|---|---|---|
| 1 | + | **7683000610** | 1 | PEDAL ASSEMBLY - FOOT (COMPLETE ASSEMBLY) |
| 2 | | **6200060505** | 1 | BUSHING |
| 3 | | **6200060506** | 1 | BUSHING |
| 4 | | **7951170014** | 5 | WASHER, FLAT #8 |
| 5 | | **7951170210** | 2 | WASHER, LOCK 8MM |
| 6 | | **7126172150** | 2 | CAP SCREW, HEX HEAD M8X70MM |
| 7 | | **7661170003** | 2 | NUT |
| 8 | | **80048042** | 1 | BRAKE CABLE |
| 9 | | **7506000019** | 1 | GROMMET |

**+ SEE FURTHER BREAKDOWN THIS GROUP**

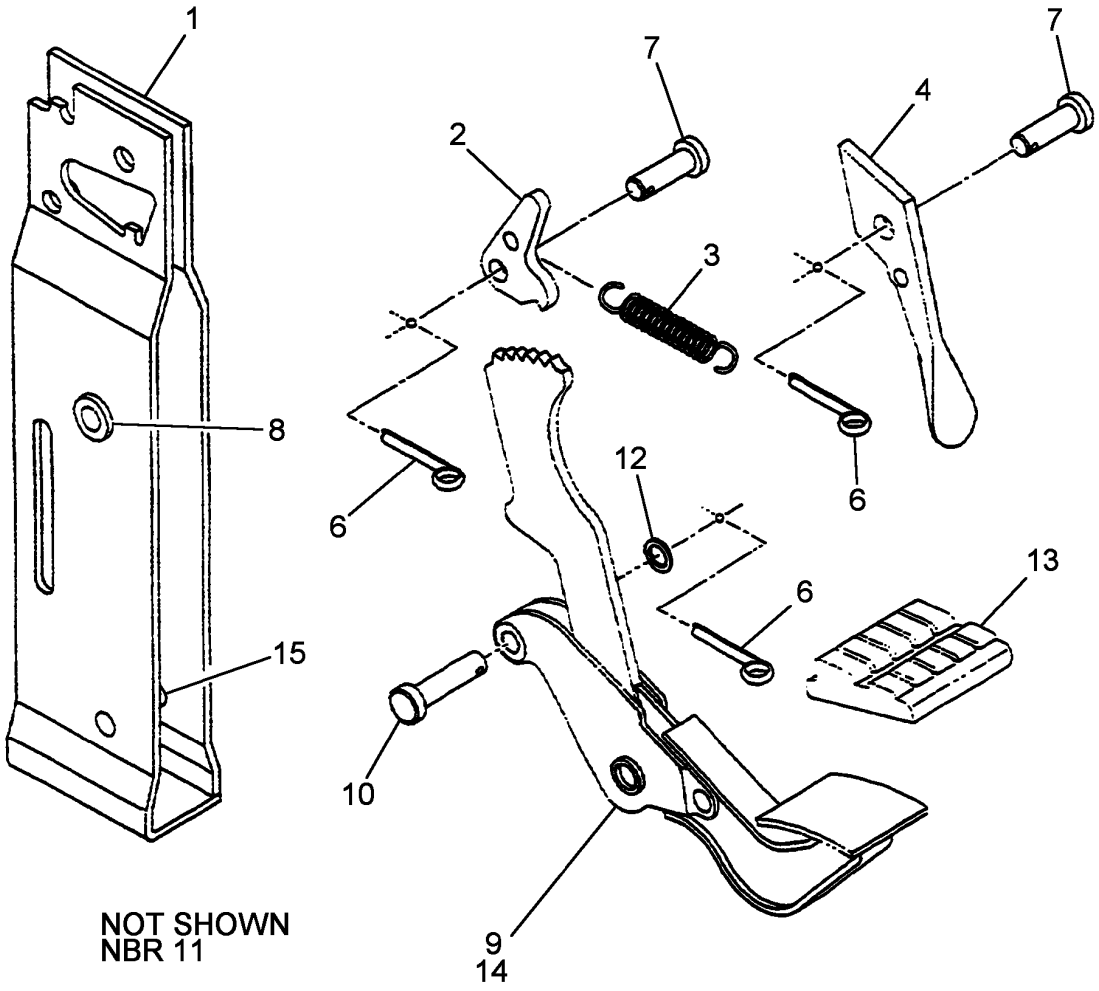


**7683000610**

**(SHEET 1 OF 1)**

Description
**PEDAL ASSEMBLY - FOOT (COMPLETE ASSEMBLY)**

Assembly No.
**7683000610**
Revision:

| Item | FN | Part | Qty | Description |
|---|---|---|---|---|
| 1 | # | **NS** | 1 | NOT SERVICED<br>BRACKET |
| 2 | | **9188100365** | 1 | PAD, PEDAL |
| 3 | | **9188100364** | 1 | SPRING |
| 4 | # | **NS** | 1 | NOT SERVICED<br>ARM |
| 6 | | **9188100367** | 3 | PIN, COTTER |
| 7 | # | **NS** | 2 | NOT SERVICED<br>PIN |
| 8 | # | **NS** | 2 | NOT SERVICED<br>SPACER |
| 9 | # | **NS** | 1 | NOT SERVICED<br>PEDAL AND RATCHET |
| 10 | | **9188100153** | 1 | PIN |
| 11 | | **9188100367** | 1 | PIN, COTTER |
| 12 | | **9188100366** | 1 | WASHER, |
| 13 | | **9188100365** | 1 | PAD, PEDAL |
| 14 | | **9188100754** | 1 | BUMPER |
| 15 | # | **NS** | 1 | NOT SERVICED<br>SPACER |

**# SERVICED AS AN ASSEMBLY ONLY**

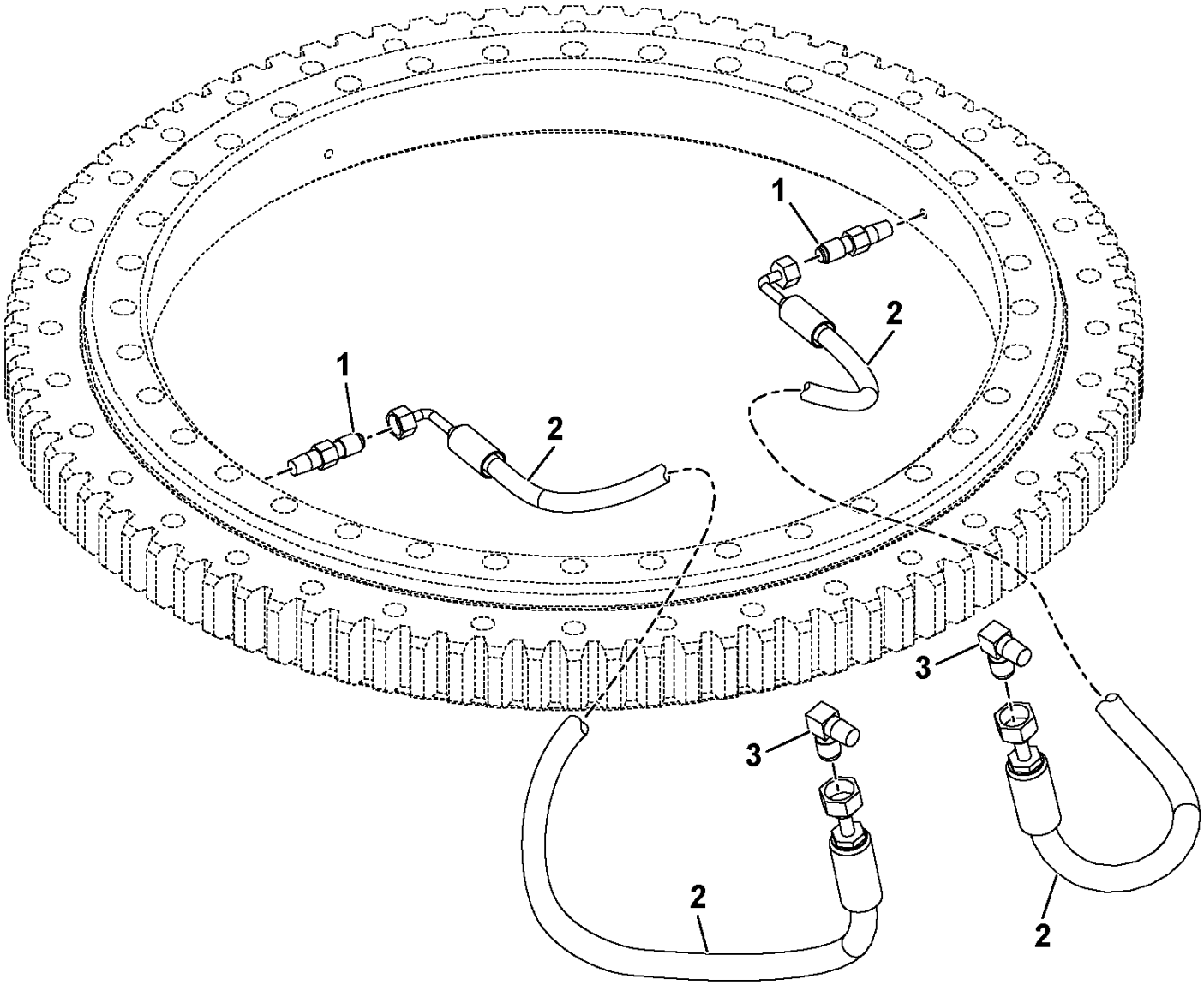


**80032919**

**(SHEET 1 OF 1)**

Description
**TURNTABLE BEARING LUBE INSTALLATION**

Assembly No.
**80032919**
Revision: **A**

| Item | FN | Part | Qty | Description |
|---|---|---|---|---|
| 1 | | **7445040219** | 2 | ADAPTER, STRAIGHT |
| 2 | | **7550103631** | 2 | HOSE ASSY, USE AS REQUIRED 1/4" X 36" |
| 3 | | **7445040220** | 2 | ELBOW, 90 DEGREE |

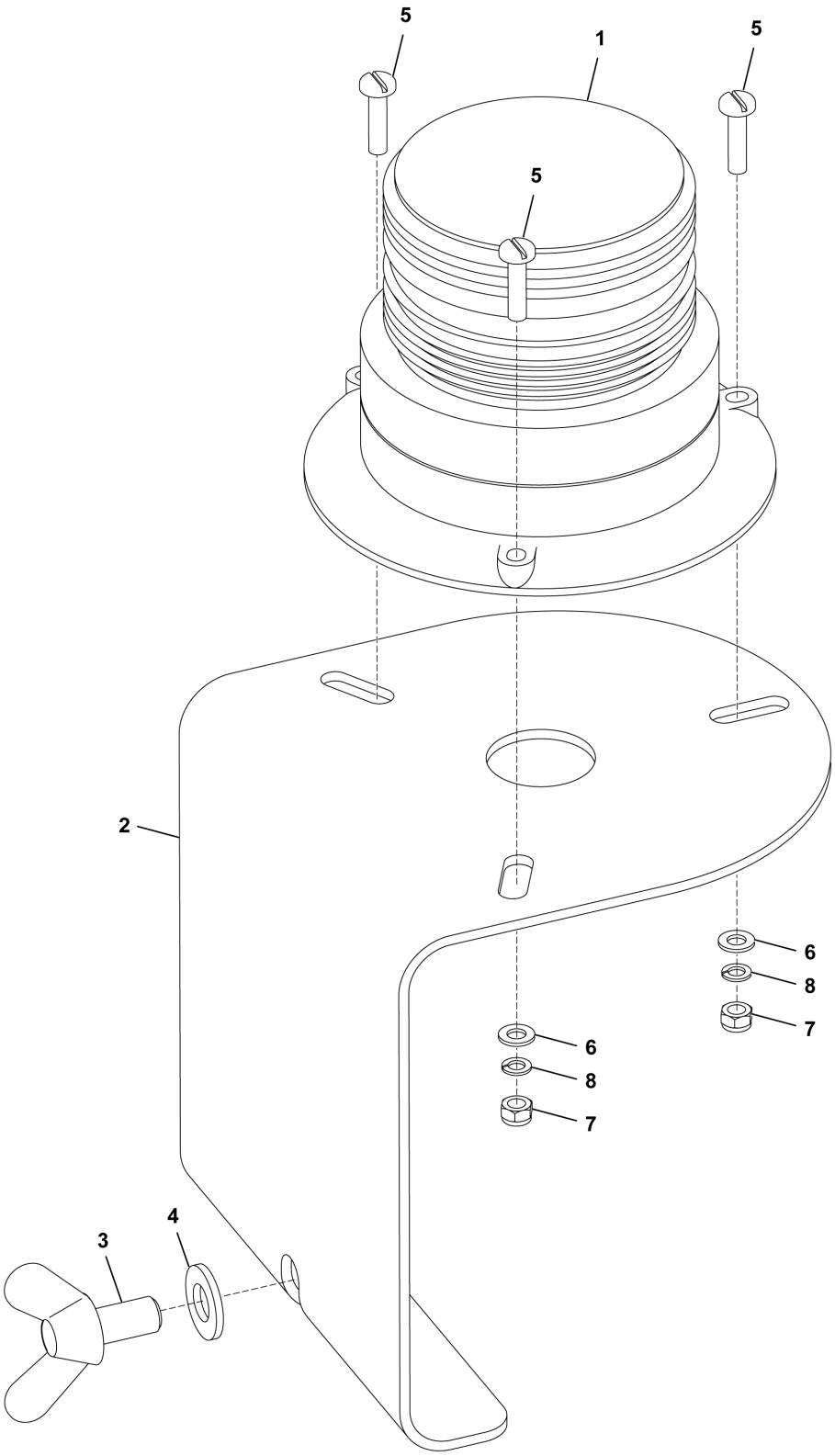


**2159210134**

**(SHEET 1 OF 1)**

Description
**LIGHT INSTALLATION - STROBE**

Assembly No.
**2159210134**
Revision: **D**

| Item | FN | Part | Qty | Description |
|---|---|---|---|---|
| 1 | + | **6581100074** | 1 | LIGHT ASSEMBLY - MODIFIED STROBE (COMPLETE ASSEMBLY) |
| 2 | | **4159210126** | 1 | BRACKET, STROBE LIGHT |
| 3 | | **80069853** | 1 | Wingscrew M10x35 |
| 4 | | **7951190014** | 1 | FLAT WASHER, 10MM I.D. |
| 5 | | **7126131250** | 3 | CAP SCREW, M5 X 25MM HEX HEAD |
| 6 | | **7950100141** | 3 | WASHER, FLAT, #10 |
| 7 | | **7661130003** | 3 | NUT, HEX 5MM |
| 8 | | **7951130210** | 3 | LOCKWASHER, 5MM I.D. |

**+ SEE FURTHER BREAKDOWN THIS GROUP**

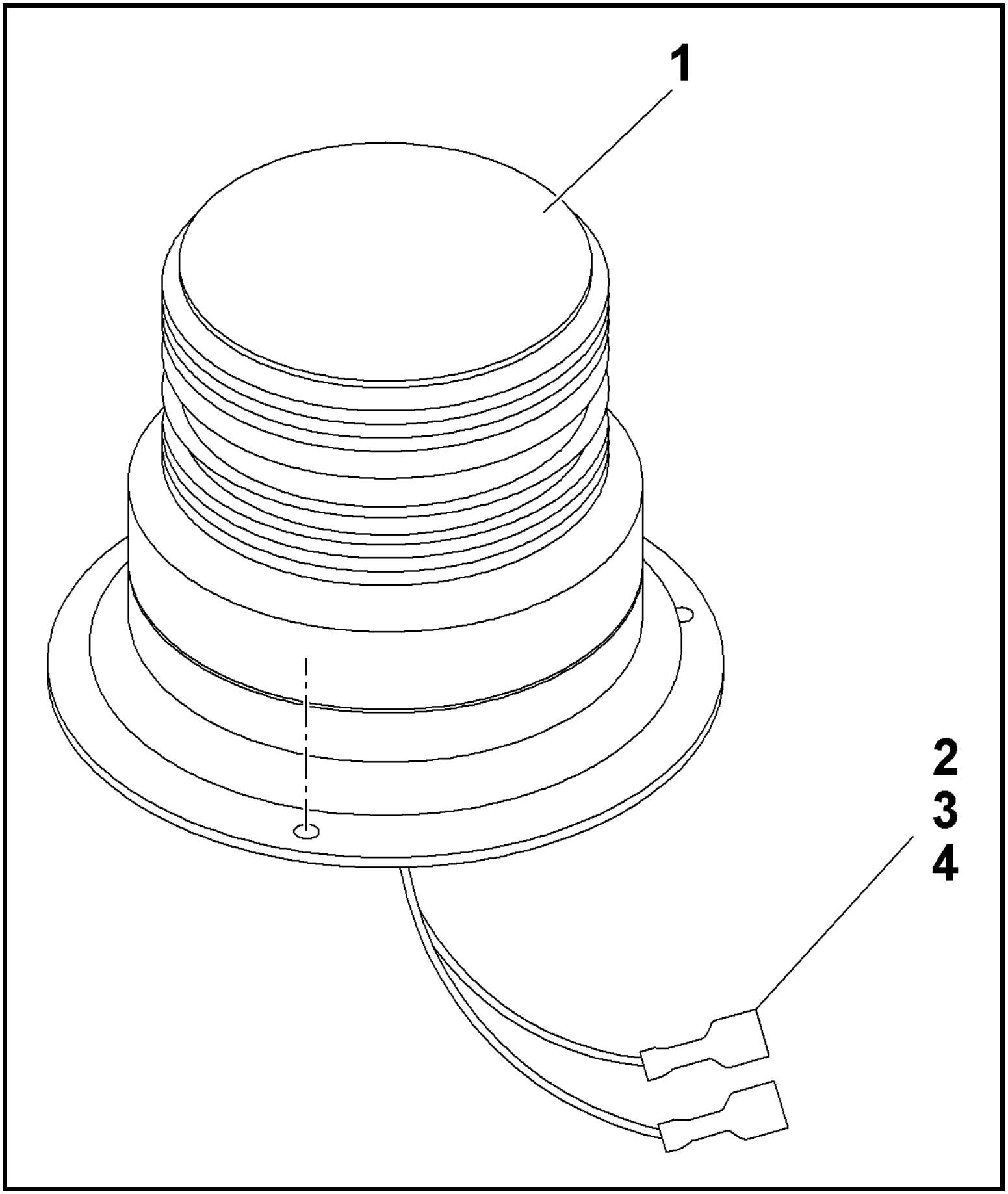


**6581100074**

**(SHEET 1 OF 1)**

Description
**LIGHT ASSEMBLY - MODIFIED STROBE (COMPLETE ASSEMBLY)**

Assembly No.
**6581100074**
Revision: **A**

| Item | FN | Part | Qty | Description |
|---|---|---|---|---|
| 1 | | **7581100000** | 1 | LIGHT, STROBE<br>INCLUDES THE FOLLOWING PARTS |
| | | **9581100389** | 1 | TUBE,STROBE |
| | | **9581100390** | 1 | LENS, AMBER |
| 2 | | **7892000836** | 1 | RECEPTACLE, 2 PIN |
| 3 | | **7172000546** | 1 | BOOT |
| 4 | | **7689000704** | 2 | PIN, 16 - 14 GA |
| 5 | | **8594000019** | 1 | FLEXGUARD, 1/4" I.D.<br>(QUANTITY IN FEET) |

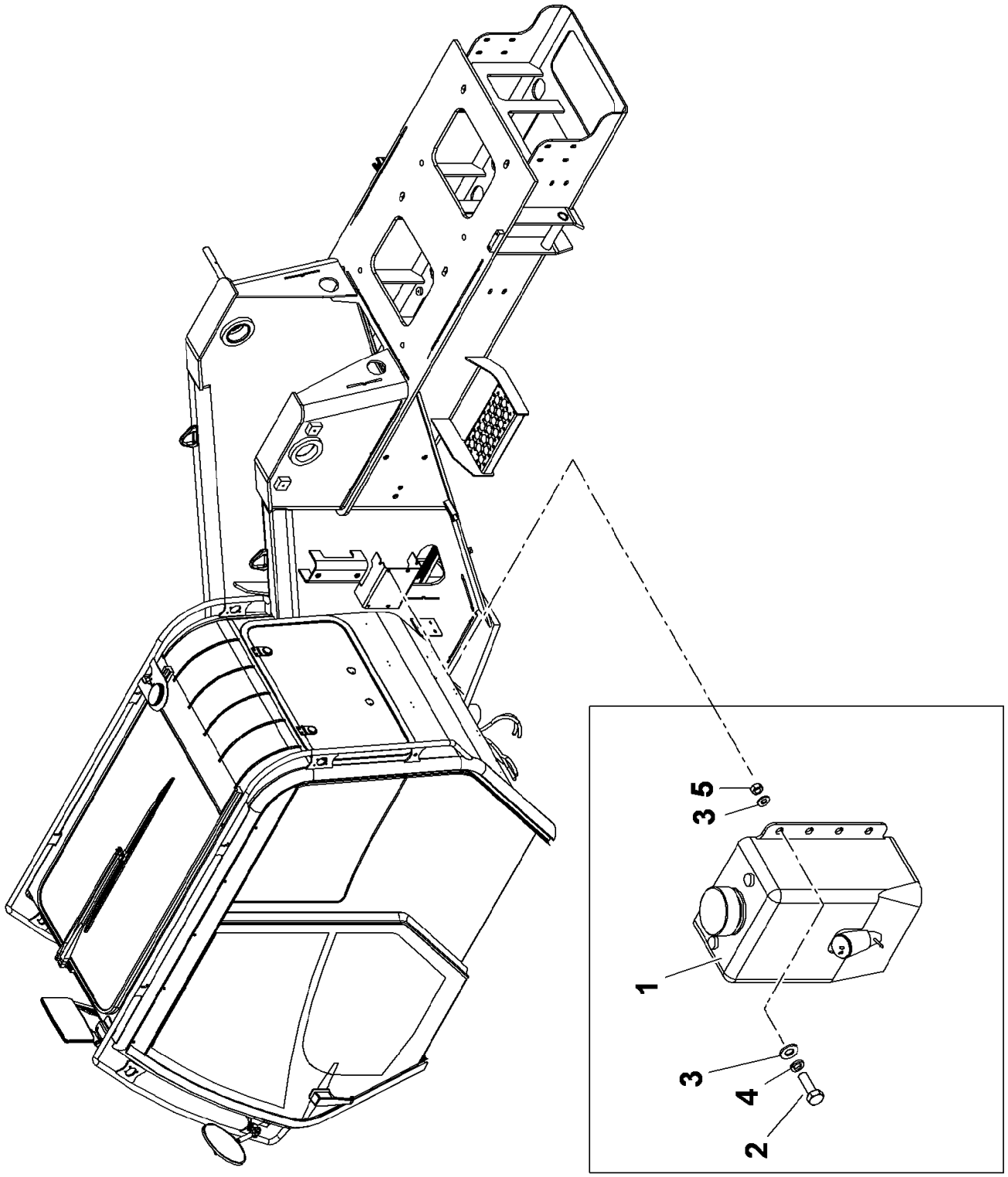


80031321

(SHEET 1 OF 1)

Description
**WASHER BOTTLE INSTALLATION**

Assembly No.
**80031321**
Revision: **#**

| Item | FN | Part | Qty | Description |
|---|---|---|---|---|
| 1 | | **7880000879** | 1 | TANK - 4 QUART FLUID<br>INCLUDES THE FOLLOWING PARTS |
| | | **9880100091** | 1 | CAP |
| | | **9880100092** | 1 | MOTOR<br>24 VOLT |
| | | **9880100093** | 1 | GROMMET |
| 2 | | **7126171253** | 4 | CAP SCREW, M8X25 HEX HEAD |
| 3 | | **7951170014** | 8 | WASHER, FLAT #8 |
| 4 | | **7951170210** | 4 | WASHER, LOCK 8MM |
| 5 | | **7661170003** | 4 | NUT |

Description
**CAB ASSEMBLY-24V BRAZIL**

Assembly No.
**80058644**
Revision: **C**

| Item | FN | Part | Qty | Description |
|---|---|---|---|---|
| 1 | + | **80058646** | 1 | CAB SUB-ASSEMBLY - (SG-24V) |
| 2 | + | **80037618** | 1 | HEATER & A/C INSTALLATION - SUPERSTRUCTURE CAB (24 VOLT) |
| 3 | + | **80023693** | 1 | ACOUSTICS INSTALLATION (SG) |
| 4 | + | **80046522** | 1 | CAB MISC COMPONENTS |
| 5 | + | **80058561** | 1 | CAB BRACKETS INSTALLATION |
| 6 | + | **80042879** | 1 | PEDAL GROUP INSTALLATION |
| 7 | + | **80023681** | 1 | CAB CRANESTAR INSTALLATION |
| 8 | + | **80054540** | 1 | PROTECTIVE TAPE STRIP INSTALL |

**+ SEE FURTHER BREAKDOWN THIS GROUP**

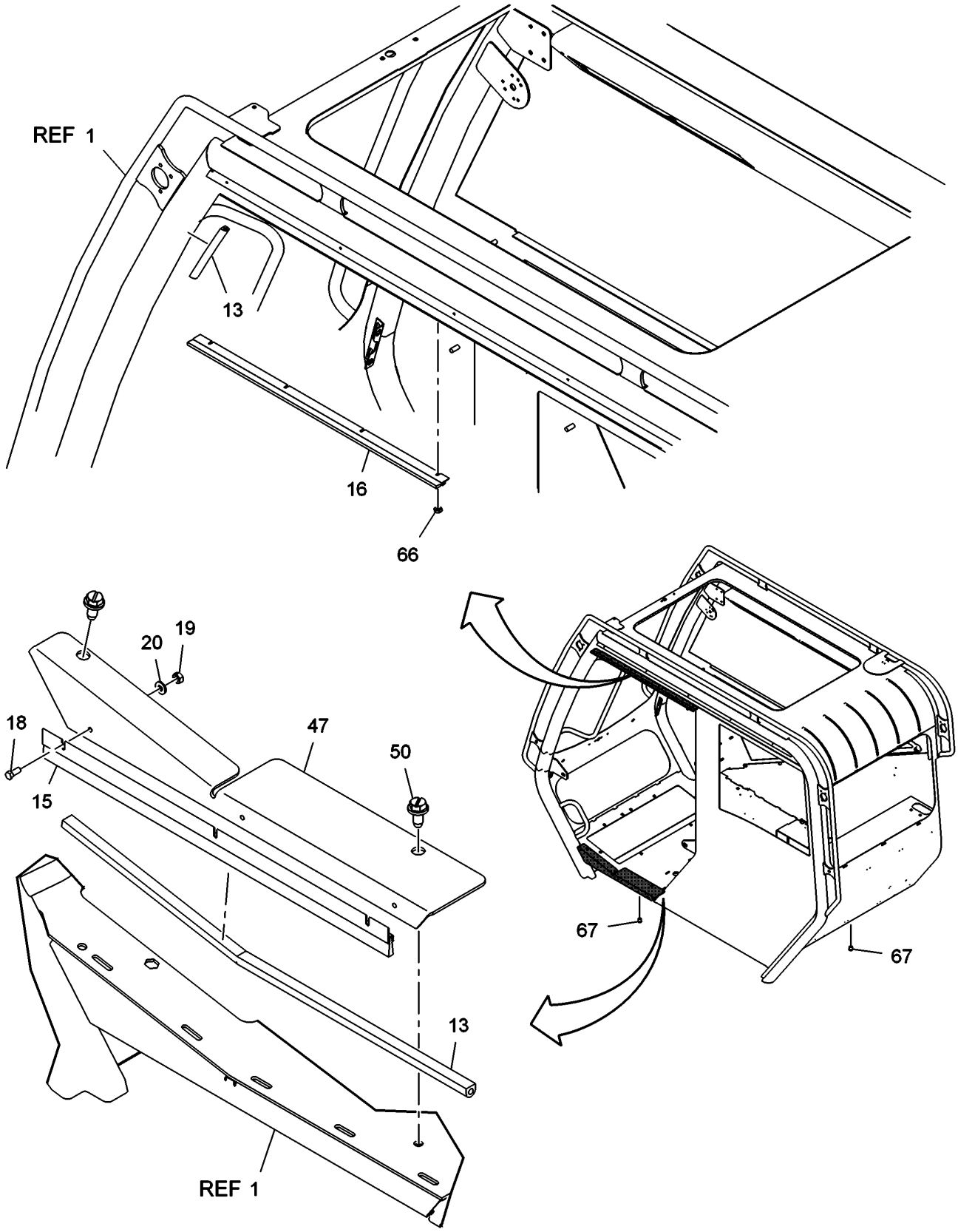
REF 1
13
16
66
20
19
18
47
50
15
67
67
13
REF 1
80058646-7

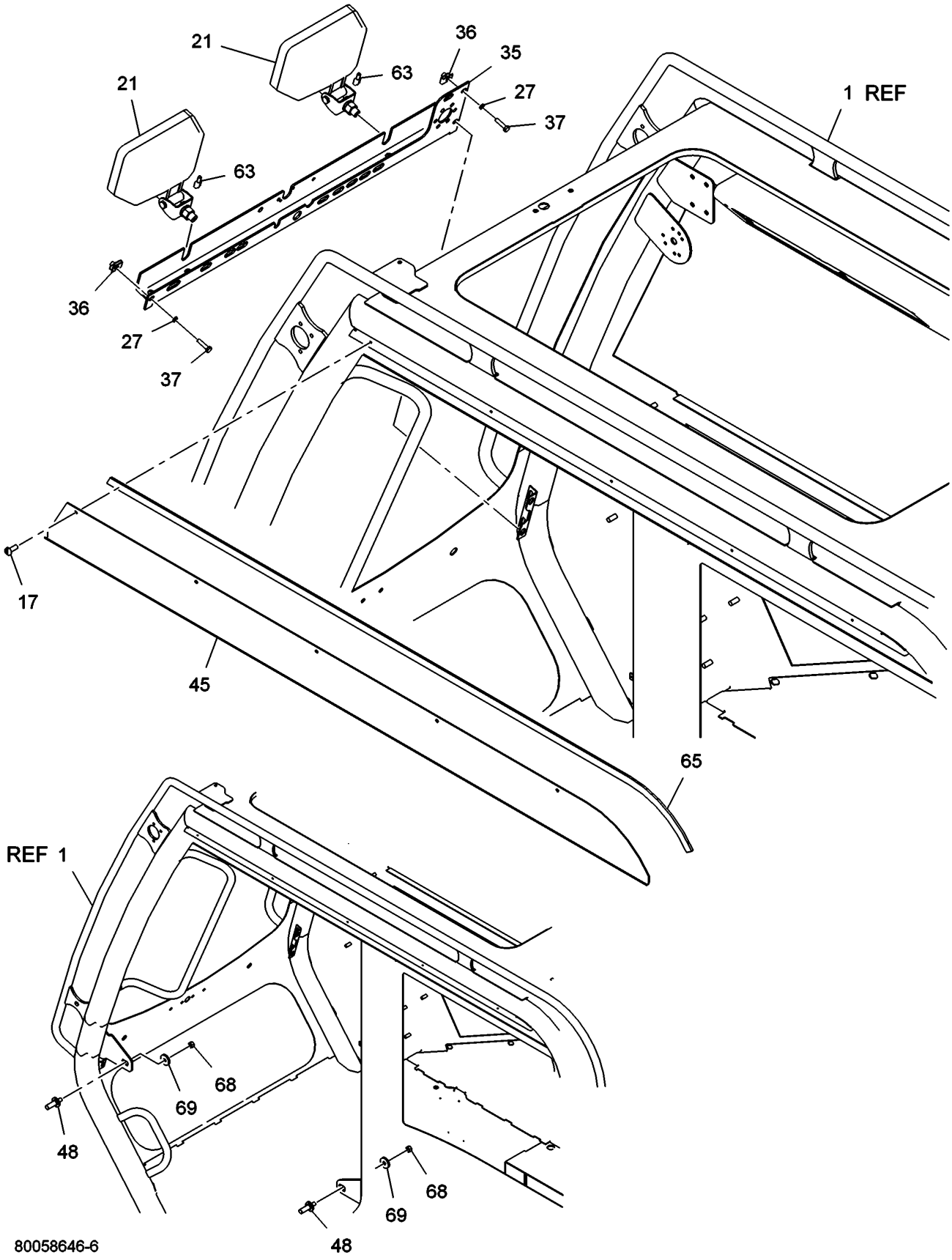


80058646

(SHEET 6 OF 7)

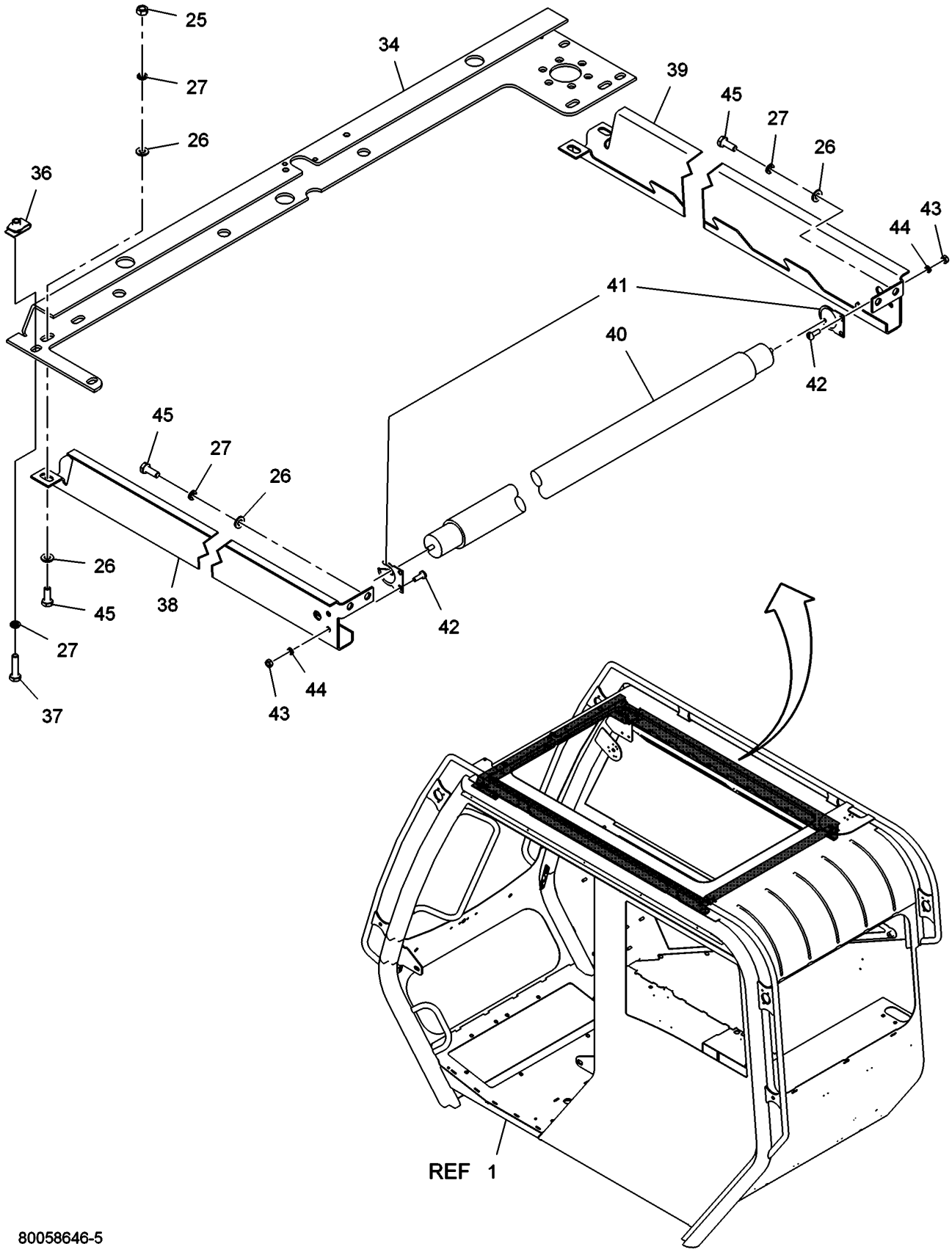
25
27
26
34
39
45
27
26
36
43
44
41
40
42
45
27
26
26
45
38
42
27
37
44
43
REF 1
80058646-5

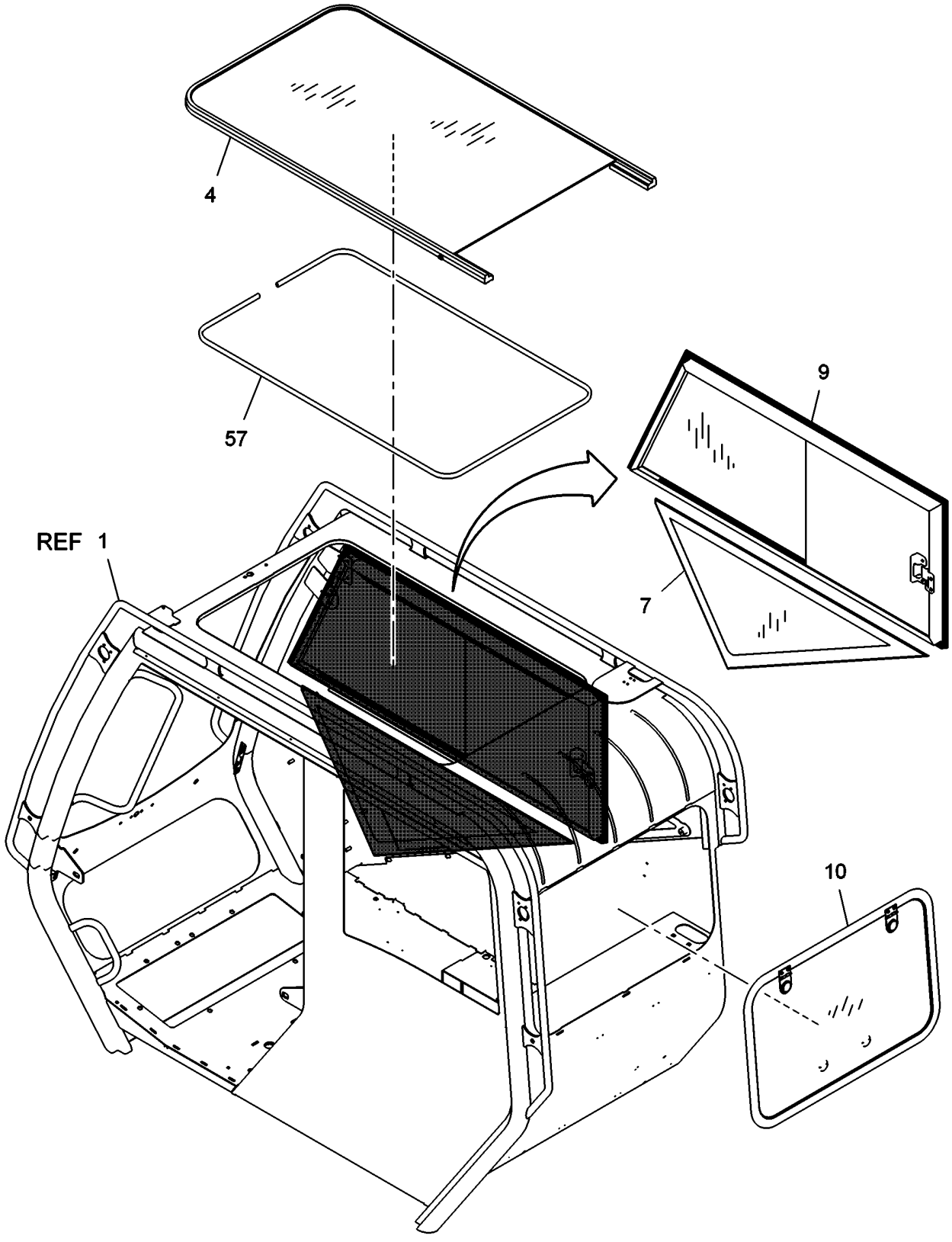


80058646

(SHEET 4 OF 7)

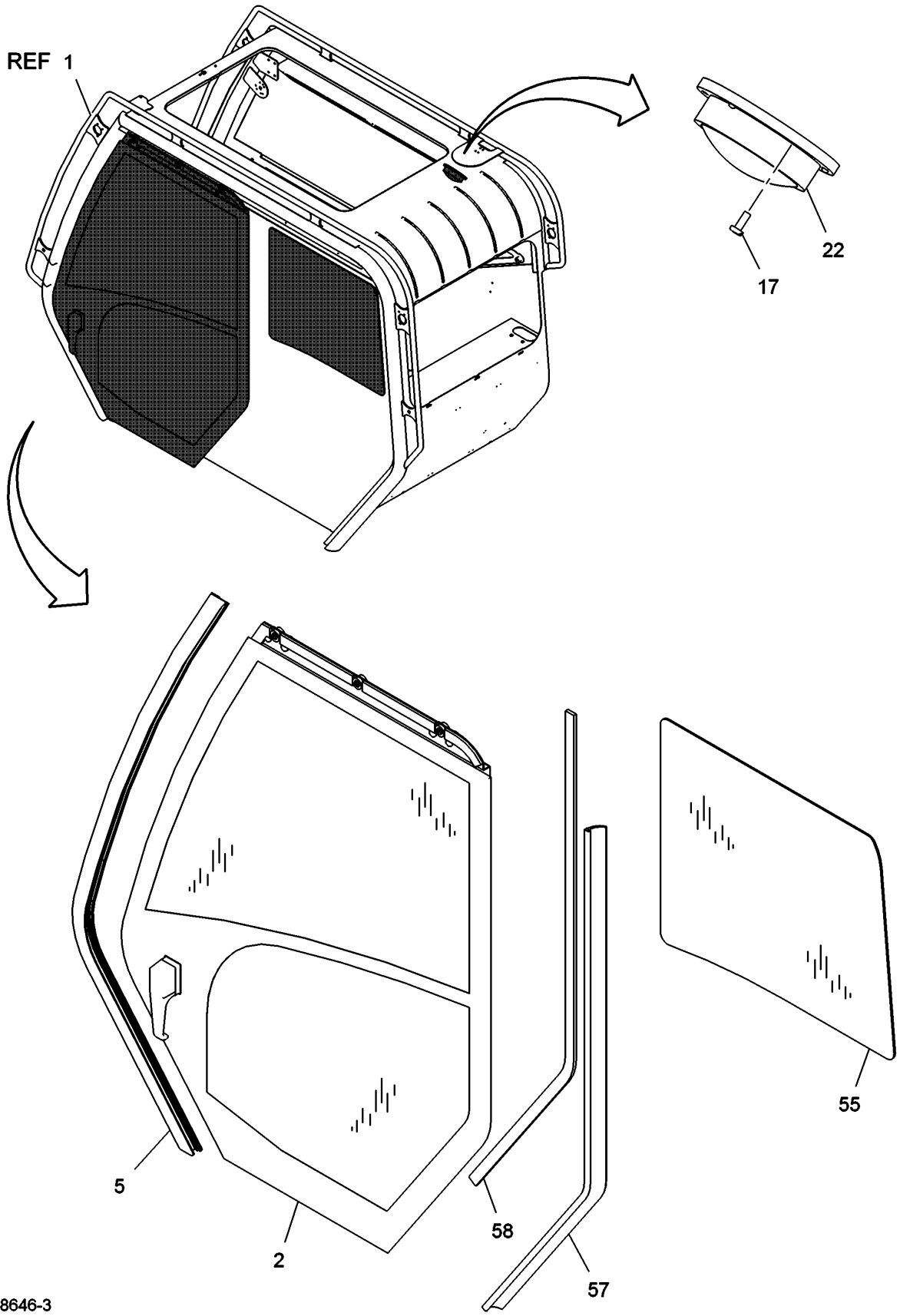


80058646

(SHEET 3 OF 7)

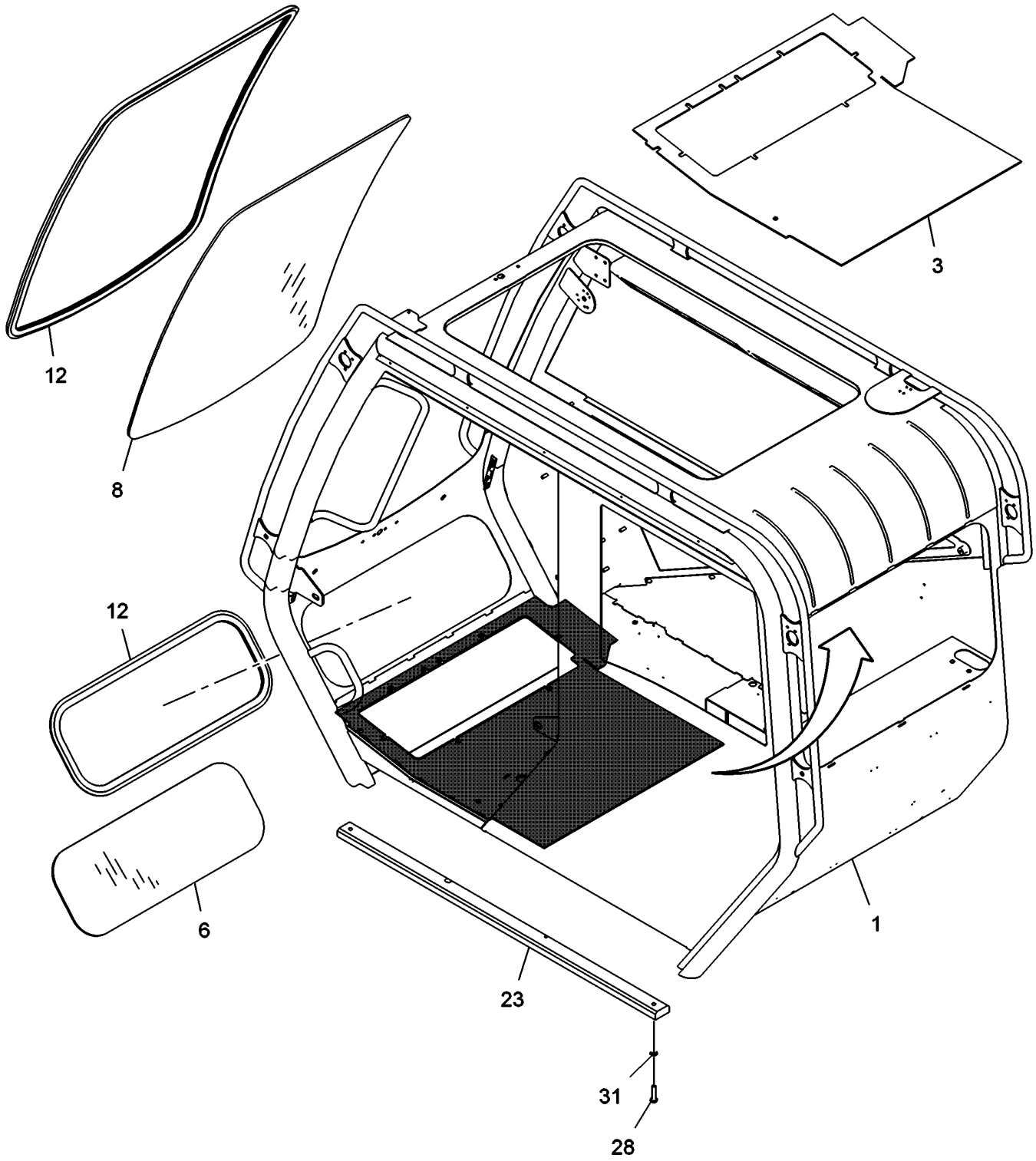


80058646

(SHEET 2 OF 7)

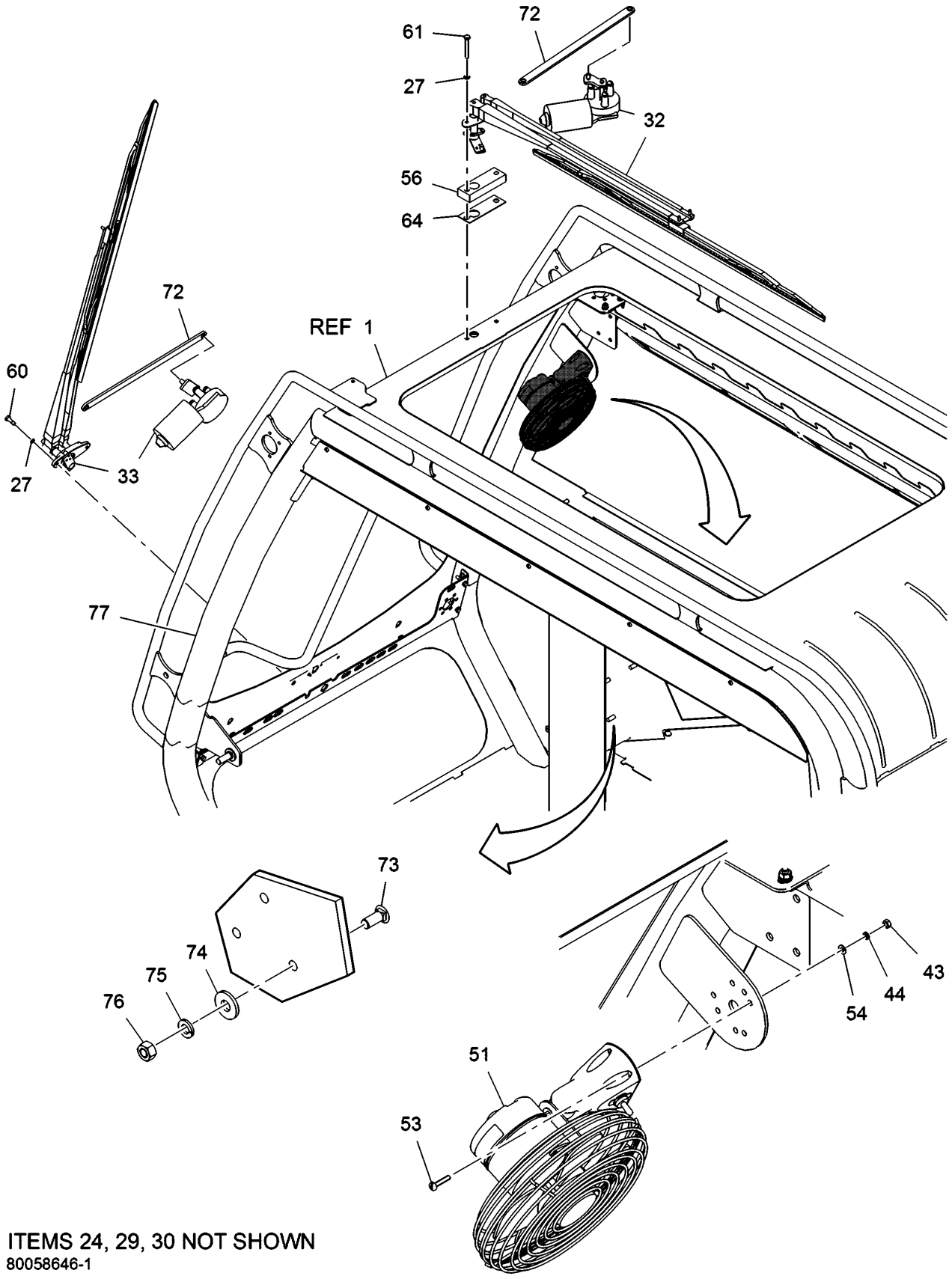
61
72
27
32
56
64
72
REF 1
60
27
33
77
73
74
75
76
43
44
54
51
53
ITEMS 24, 29, 30 NOT SHOWN
80058646-1

Description
**CAB SUB-ASSEMBLY - (SG-24V)**

Assembly No.
**80058646**
Revision: **D**

| Item | FN | Part | Qty | Description |
|---|---|---|---|---|
| 1 | | **80058290** | 1 | CAB |
| 2 | + | **80024013** | 1 | GLASS DOOR ASSEMBLY |
| 3 | | **80004968** | 1 | FLOOR MAT |
| 4 | + | **80003325** | 1 | SKYLIGHT ASSEMBLY - SLIDING (COMPLETE ASSEMBLY) |
| 5 | | **80016417** | 1 | EXTRUSION, FRONT DOOR SEAL |
| 6 | | **80016553** | 1 | WINDOW ASSY, FRONT BOTTOM |
| 7 | | **80016415** | 1 | WINDOW ASSY, FIXED RIGHT HAND |
| 8 | | **7498100012** | 1 | GLASS, WINDSHIELD |
| 9 | + | **80023695** | 1 | WINDOW ASSEMBLY - SIDE RH |
| 10 | + | **80004174** | 1 | WINDOW ASSEMBLY - REAR (COMPLETE ASSEMBLY) |
| 11 | | **6829015131** | 2 | SEALANT, ADHESIVE |
| 12 | | **8496900043** | 19 | MOULDING (QUANTITY IN FEET) |
| 13 | | **8496907196** | 3 | WEATHERSTRIP |
| 14 | | **8496980002** | 12 | MOULDING (QUANTITY IN FEET) |
| 15 | | **80004992** | 1 | SEAL, MODIFIED |
| 16 | | **80038105** | 1 | SEAL-BRUSH TOP |
| 17 | | **7101100411** | 8 | SCREW, MACHINE GRADE 1 |
| 18 | | **7101100415** | 3 | SCREW, MACHINE GRADE 1 |
| 19 | | **7660101630** | 3 | LOCKNUT, HEX GRADE 1 |
| 20 | | **7950100141** | 3 | WASHER, FLAT, #10 |
| 21 | | **7581100061** | 2 | LIGHT ASSY, 24 VOLT WORK INCLUDES THE FOLLOWING PARTS |
| | | **9581100101** | 1 | BEAM, SEALED |
| 22 | | **7581000279** | 1 | LIGHT, 24 VOLT DOME INCLUDES THE FOLLOWING PARTS |
| | | **9581100058** | 1 | LENS, MOONSTONE |
| | | **9581100330** | 1 | SWITCH,PUSH-BUTTON |
| | | **9581100088** | 1 | BULB |
| 23 | | **80016416** | 1 | TRACK, DOOR BOTTOM PLASTIC |
| 24 | | **7126151650** | 1 | CAP SCREW, M6 X 45MM HEX HEAD |
| 25 | # | **7661150003** | 5 | NUT, HEX |

**+ SEE FURTHER BREAKDOWN THIS GROUP** **# SERVICED AS AN ASSEMBLY ONLY**

Description
**CAB SUB-ASSEMBLY - (SG-24V)**

Assembly No.
**80058646**
Revision: **D**

| Item | FN | Part | Qty | Description |
|---|---|---|---|---|
| 26 | | **7951150014** | 9 | WASHER, 6MM I.D. |
| 27 | | **7951150210** | 20 | LOCKWASHER, 6MM I.D. |
| 28 | | **7126191653** | 2 | CAP SCREW, M10 X 45MM HEX HEAD |
| 29 | | **7951190210** | 2 | LOCK WASHER, 10MM |
| 30 | | **7661190003** | 2 | NUT, HEX 10MM |
| 31 | | **7951190014** | 2 | FLAT WASHER, 10MM I.D. |
| 32 | + | **80004448** | 1 | KIT - SKYLIGHT WIPER (24 VOLT) (COMPLETE ASSEMBLY) |
| 33 | + | **80004449** | 1 | KIT - FRONT WIPER (24 VOLT) (COMPLETE ASSEMBLY) |
| 34 | | **80016408** | 1 | CHANNEL, TOP WIPER MOUNT |
| 35 | | **80041876** | 1 | CHANNEL FRONT WIPER MOUNT |
| 36 | | **7659190019** | 7 | NUT, RETAINING M6 |
| 37 | | **7126151253** | 7 | CAP SCREW, M6 X 25MM |
| 38 | | **80016409** | 1 | SCREEN, TRACK LEFT HAND |
| 39 | | **80016410** | 1 | SCREEN, TRACK RIGHT HAND |
| 40 | | **7942000522** | 1 | MESH, SUNSCREEN |
| 41 | | **7942000512** | 1 | BRACKET SET, FOOTLESS BLIND |
| 42 | | **7121110801** | 4 | MACHINE SCREW, M4X12 SLOTTED |
| 43 | | **7661110003** | 8 | NUT, HEX 4 MM N.C. |
| 44 | | **7951110210** | 8 | LOCKWASHER, 4MM I.D. |
| 45 | | **7126151053** | 8 | CAP SCREW, M6 X 16MM HEX HEAD |
| 46 | | **80016418** | 1 | GUARD, RAIN |
| 47 | | **80016419** | 1 | SILL, DOOR |
| 48 | | **80038104** | 2 | STRIKER BOLT ASSY |
| 50 | | **7790161253** | 2 | SCREW, 3/8" - 16 N.C. X 3/4" |
| 51 | | **80052794** | 1 | 24V CAB FAN |
| 53 | | **7121111101** | 4 | MACHINE SCREW, M4X20 SLOTTED |
| 54 | | **7951110014** | 4 | WASHER, 4MM I.D. |
| 55 | | **80016411** | 1 | WINDOW ASSY-LH |
| 56 | | **7086100144** | 1 | BLOCK, SPACER |
| 57 | | **8637052012** | 5 | MOULDING, 6B100B3X3/16A |

**+ SEE FURTHER BREAKDOWN THIS GROUP**

Description
**CAB SUB-ASSEMBLY - (SG-24V)**

Assembly No.
**80058646**
Revision: **D**

| Item | FN | Part | Qty | Description |
|---|---|---|---|---|
| 58 | | **8506904000** | 5 | MOULDING<br>(QUANTITY IN FEET) |
| 60 | | **7105140650** | 2 | CAP SCREW,<br>1/4" -28 N.F. X 3/4"<br>GRADE 5 |
| 61 | | **7105141250** | 2 | 1/4" - 28 NF X 1 1/2" GRADE 5 |
| 63 | | **7345001746** | 4 | TERMINAL, MALE<br>16 - 14 AWG |
| 64 | | **80016424** | 1 | GASKET, WIPER BLOCK |
| 65 | | **8506903750** | 1 | MOULDING<br>(QUANTITY IN FEET) |
| 66 | | **7660081100** | 4 | NUT, HEX<br>5/32" - 24 N.F.<br>GRADE 1 |
| 67 | | **80016421** | 10 | INSERT, HEX M10 |
| 68 | | **7660160008** | 2 | NUT, HEX<br>3/8" - 16 N.C.<br>GRADE 8 |
| 69 | | **80038198** | 2 | 3/8 x 3/16 THK WASHER |
| 70 | | **7111080311** | 4 | SCREW, MACHINE<br>5/32" - 32 N.C. X 3/8"<br>GRADE 1 |
| 71 | | **7950080050** | 4 | LOCKWASHER, 5/32" I.D. |
| 72 | | **80042108** | 2 | CAB WIPER LINK BAR ASSY |
| 73 | | **7111150664** | 3 | BOLT, CARRIAGE<br>5/16" - 18 N.C. X 3/4" |
| 74 | | **7950150161** | 3 | WASHER, 5/16" FLAT PLAIN WIDE |
| 75 | | **7950150050** | 3 | WASHER, LOCK 5/16" I.D. |
| 76 | | **7660150001** | 3 | NUT, HEX<br>5/16" - 18 N.C.<br>GRADE 5 |
| 77 | | **6637073000** | 1 | EDGE TRIM |

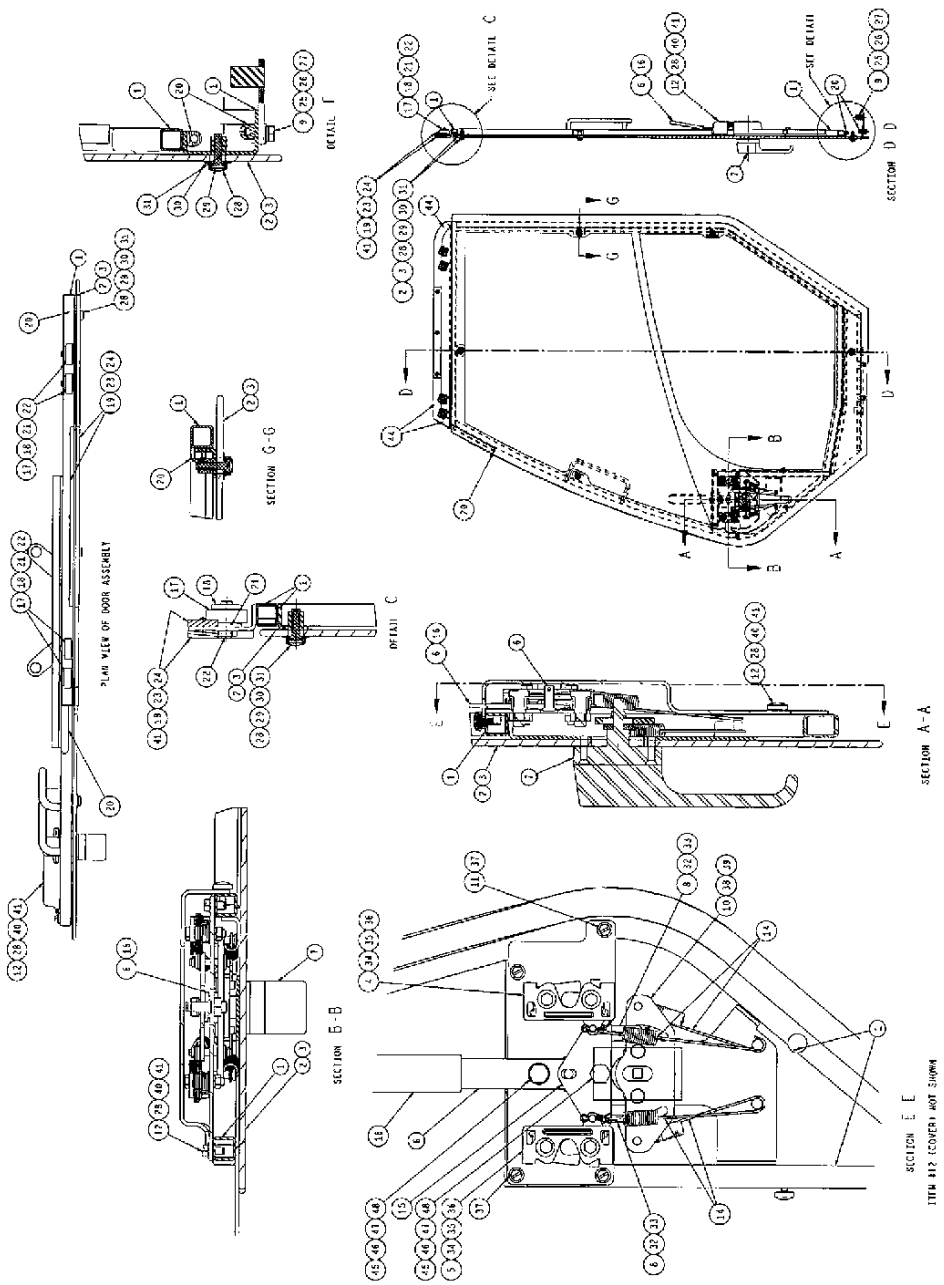


80024013

(SHEET 1 OF 1)

Description
**GLASS DOOR ASSEMBLY**

Assembly No.
**80024013**
Revision: **B**

| Item | FN | Part | Qty | Description |
|---|---|---|---|---|
| 1 | | **80024018** | 1 | DOOR |
| 2 | | **80016383** | 1 | GLASS DOOR |
| 3 | | **6829015131** | 1 | SEALANT, ADHESIVE |
| 4 | # | **80004407** | 1 | ROTARY LATCH - LEFT HAND |
| 5 | # | **80004406** | 1 | LATCH, RIGHT HAND ROTARY |
| 6 | | **80022442** | 1 | HANDLE |
| 7 | | **80004480** | 1 | HANDLE, MODIFIED DOOR<br>INCLUDES THE FOLLOWING PARTS |
| | | **80004479** | 1 | KIT, DOOR HANDLE |
| | | **80004481** | 1 | LUG |
| | | **9576101074** | 1 | KEY |
| | | **7101101207** | 2 | SCREW, MACHINE<br>3/16" - 32 NF X 1 1/2" |
| | | **80016406** | 1 | GASKET DOOR HANDLE |
| 8 | | **80004994** | 2 | ROD, LATCH |
| 9 | | **80004486** | 1 | MOUNTING PLATE |
| 10 | | **80004996** | 1 | PLATE, CAB LATCH |
| 11 | | **80022413** | 1 | LATCH MTG PLATE |
| 12 | | **80024021** | 1 | DOOR LATCH COVER |
| 14 | | **7834000193** | 4 | SPRING |
| 15 | | **80022424** | 1 | PLATE |
| 16 | | **7822000080** | 1 | SLEEVE |
| 17 | | **7069000516** | 4 | BEARING |
| 18 | | **7659000796** | 4 | NUT |
| 19 | | **7086100002** | 2 | BLOCK |
| 20 | | **8496907196** | 6 | WEATHERSTRIP |
| 21 | | **7950160161** | 8 | WASHER, FLAT WIDE 3/8 |
| 22 | | **7115160650** | 4 | CAP SCREW,<br>3/8" - 16 N.C. X 3/4"<br>GRADE 5 |
| 23 | | **7660081600** | 3 | LOCKNUT, HEX<br>5/32" - 32 N.C.<br>GRADE 1 |
| 24 | | **7111080415** | 3 | SCREW, MACHINE<br>5/32" - 32 N.C. X 1/2"<br>GRADE 1 |
| 25 | | **7126171150** | 2 | CAP SCREW, M8 X 20MM HEX HEAD |
| 26 | | **7951170210** | 2 | WASHER, LOCK 8MM |

**# SERVICED AS AN ASSEMBLY ONLY**

Description
**GLASS DOOR ASSEMBLY**

Assembly No.
**80024013**
Revision: **B**

| Item | FN | Part | Qty | Description |
|---|---|---|---|---|
| 27 | | **7951170014** | 2 | WASHER, FLAT #8 |
| 28 | | **7258001451** | 8 | CAP, 1/4" |
| 29 | | **7111140610** | 5 | SCREW, MACHINE<br>1/4" - 20 N.C. X 3/4"<br>GRADE 1 |
| 30 | | **7949001186** | 5 | WASHER, BLACK NYLON |
| 31 | | **7429000542** | 5 | FASTENER, NUT 1/4" - 20 N.C. |
| 32 | | **7690021610** | 4 | PIN, #2 X 1" LONG COTTER |
| 33 | | **7950100161** | 4 | FLATWASHER, 3/16" I.D. |
| 34 | | **7126151353** | 4 | CAP SCREW, M6X30 HEX HEAD |
| 35 | | **7951150210** | 4 | LOCKWASHER, 6MM I.D. |
| 36 | # | **7661150003** | 4 | NUT, HEX |
| 37 | | **7790140853** | 4 | SCREW, SELF-TAPPING<br>1/4" - 20 N.C. X 1/2" |
| 38 | | **7115140550** | 2 | CAP SCREW,<br>1/4" - 20 N.C. X 5/8"<br>GRADE 5 |
| 39 | | **7950140050** | 2 | WASHER, LOCK 1/4" |
| 40 | | **7790100871** | 3 | SCREW, SELF-TAPPING<br>3/16" - 24 N.C. X 1/2"<br>GRADE 1 |
| 41 | | **7950080141** | 6 | FLATWASHER, 5/32" I.D. |
| 44 | | **1006766** | 24 | SEALER, ADHESIVE BACKED |
| 45 | | **7115160850** | 2 | CAP SCREW,<br>3/8" - 16 N.C. X 1"<br>GRADE 5 |
| 46 | | **7949000623** | 6 | WASHER, BLACK PLASTIC |
| 47 | | **7069001045** | 2 | BEARING |
| 48 | | **7660161601** | 2 | LOCKNUT, HEX<br>3/8" - 16 N.C.<br>GRADE 5 |

**# SERVICED AS AN ASSEMBLY ONLY**

**Notes**

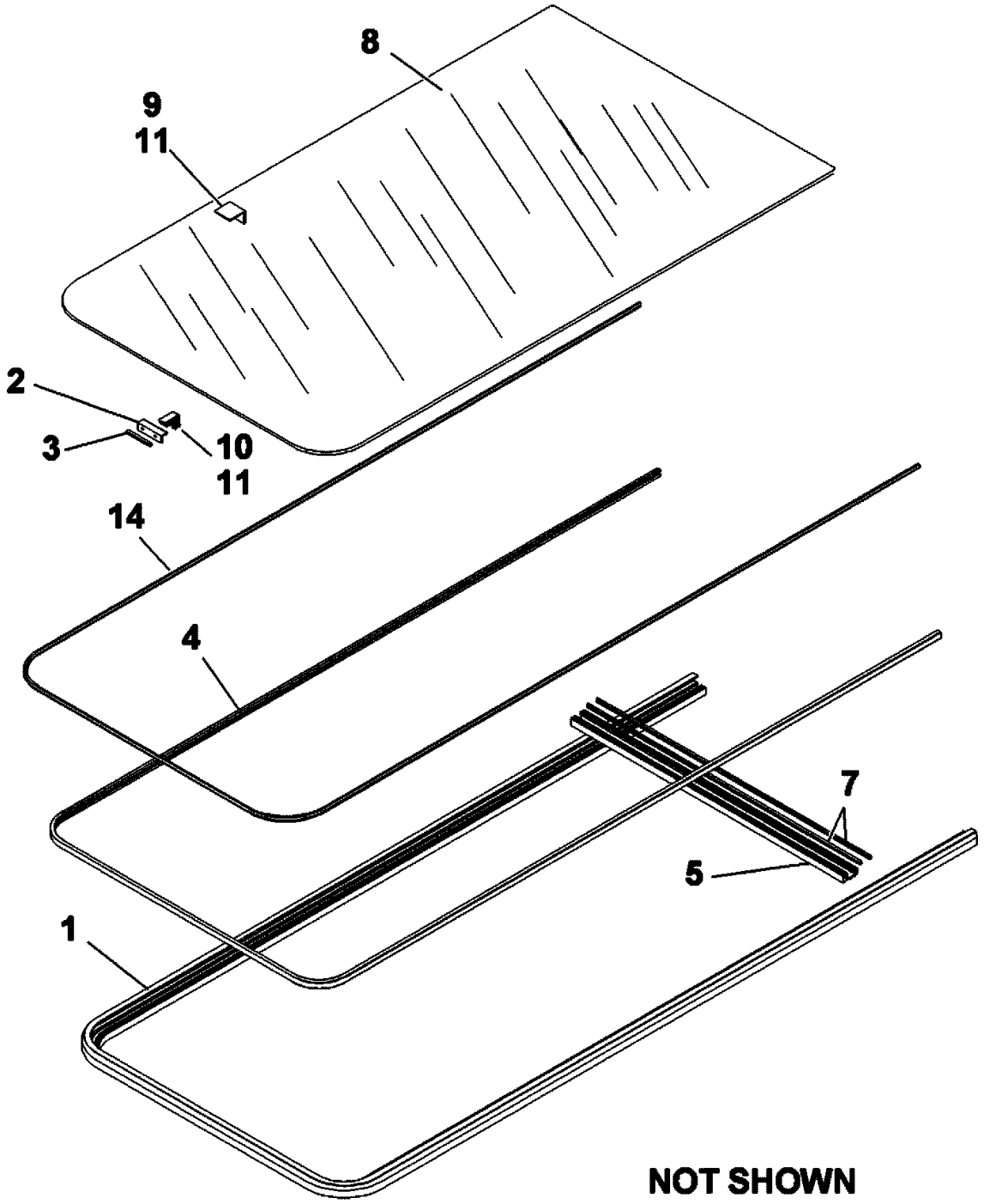


**NOT SHOWN**
**12**
**13**
**20**

**80003325**

**(SHEET 1 OF 1)**

Description
**SKYLIGHT ASSEMBLY - SLIDING (COMPLETE ASSEMBLY)**

Assembly No.
**80003325**
Revision:

| Item | FN | Part | Qty | Description |
|---|---|---|---|---|
| 1 | | **NSS** | 1 | NOT SERVICED SEPARATELY<br>FRAME |
| 2 | | **7585000790** | 1 | CATCH |
| 3 | | **7786000539** | 2 | SCREW, CATCH |
| 4 | | **7794001721** | 1 | RUBBER, FLOCKED 154" LONG |
| 5 | | **7714000585** | 1 | EXTENSION, CENTER POST |
| 6 | | **7786000537** | 2 | SCREW, CENTER POST |
| 7 | | **9498100339** | 1 | WEATHERSEAL |
| 8 | * | **80003366** | 1 | GLASS |
| 9 | * | **7846000680** | 1 | STOP, SLIDE |
| 10 | * | **7585000789** | 1 | LOCK |
| 11 | * | **NSS** | 1 | NOT SERVICED SEPARATELY<br>ADHESIVE |
| 12 | | **NSS** | 0 | NOT SERVICED SEPARATELY<br>LOCITE |
| 13 | * | **NSS** | 1 | NOT SERVICED SEPARATELY<br>BUTYL |
| 14 | | **9498100337** | 1 | WEATHERSEAL |
| 20 | * | **80003365** | 1 | SERVICE KIT<br>KIT INCLUDES ITEMS 8 THRU 13 |

*** REPAIR KIT AND/OR PART OF KIT**

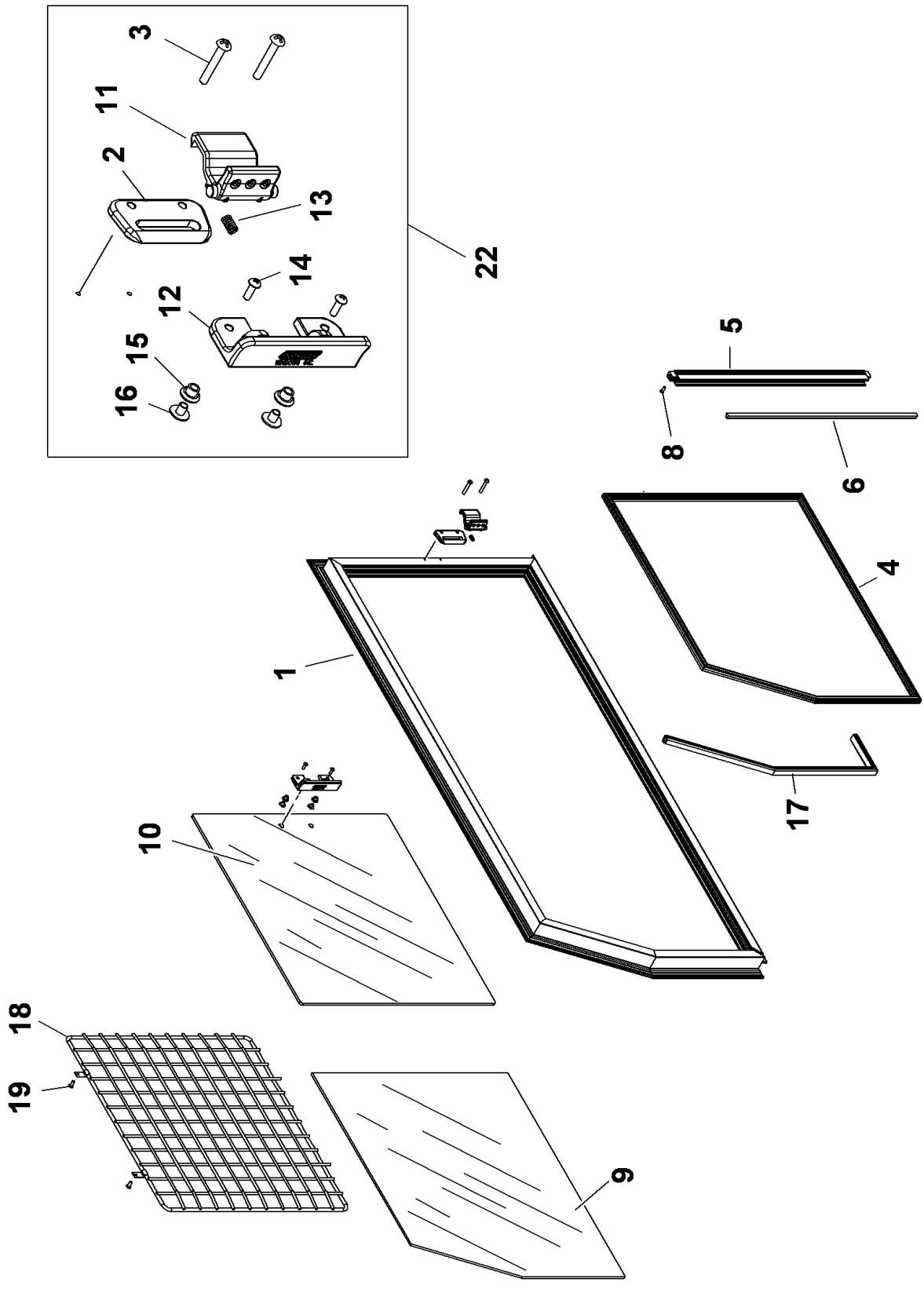


80023695

(SHEET 1 OF 1)

Description
**WINDOW ASSEMBLY - SIDE RH**

Assembly No.
**80023695**
Revision:

| Item | FN | Part | Qty | Description |
|---|---|---|---|---|
| 1 | | **NSS** | 1 | NOT SERVICED SEPARATELY<br>FRAME, MAIN |
| 2 | * | **NSS** | 1 | NOT SERVICED SEPARATELY<br>CATCH |
| 3 | * | **90014324** | 2 | SCREW |
| 4 | | **90020194** | 1 | CHANNEL, RUBBER 189" LG |
| 5 | | **90020195** | 1 | POST, CENTER |
| 6 | | **90014321** | 1 | SEAL, BLACK FINISH 19" |
| 8 | | **9498100349** | 2 | SCREW, |
| 9 | | **90020088** | 1 | GLASS ASSY. STATIONARY |
| 10 | | **90014319** | 1 | GLASS, SLIDING |
| 11 | * | **NSS** | 1 | NOT SERVICED SEPARATELY<br>LOCK, TOP |
| 12 | * | **NSS** | 1 | NOT SERVICED SEPARATELY<br>LOCK, BOTTOM |
| 13 | * | **NSS** | 1 | NOT SERVICED SEPARATELY<br>SPRING |
| 14 | * | **90014315** | 2 | SCREW |
| 15 | * | **9498100354** | 1 | SPACER |
| 16 | * | **9498100355** | 1 | NUT, LOCK |
| 17 | | **90020196** | 1 | CHANNEL, VINYL 67 1/2" LG |
| 18 | | **90014313** | 1 | GUARD, WINDOW |
| 19 | | **9498100371** | 2 | SCREW |
| 22 | * | **90014326** | 1 | KIT, SERVICE, LOCK ASSY. |

*** REPAIR KIT AND/OR PART OF KIT**

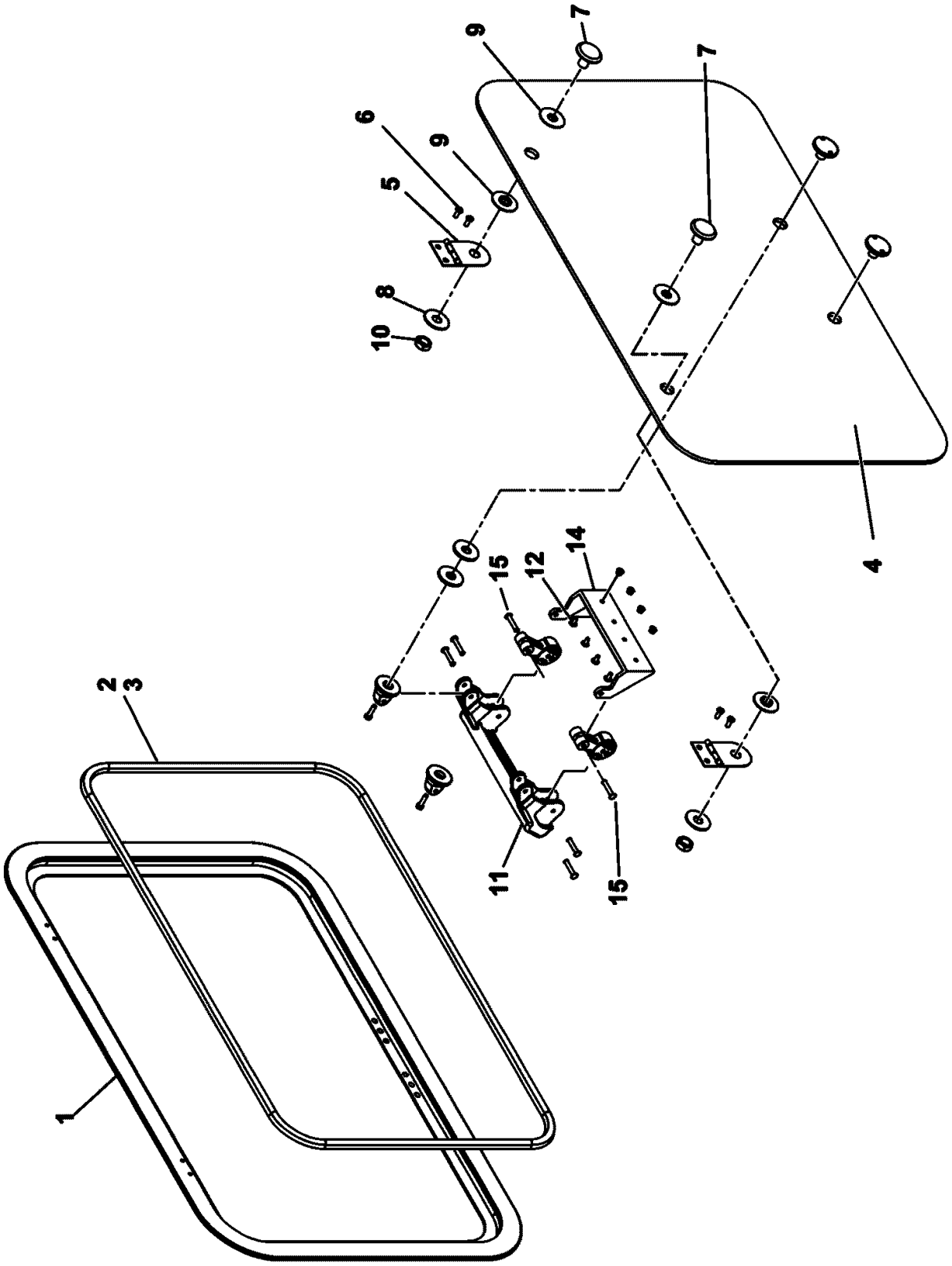


80004174

(SHEET 1 OF 1)

Description
**WINDOW ASSEMBLY - REAR (COMPLETE ASSEMBLY)**

Assembly No.
**80004174**
Revision:

| Item | FN | Part | Qty | Description |
|---|---|---|---|---|
| 1 | | **NSS** | 1 | NOT SERVICED SEPARATELY<br>FRAME ASSY, MAIN 323 EXT |
| 2 | | **90014311** | 1 | SEAL, 90" BULB<br>(WHEN ORDERING THIS ITEM, THE LENGHT MUST BE SPECIFIED) |
| 3 | | **NSS** | 1 | NOT SERVICED SEPARATELY |
| 4 | | **90014310** | 1 | GLASS, VENT |
| 5 | | **90014309** | 2 | HINGE |
| 6 | | **9498100371** | 4 | SCREW |
| 7 | | **90014308** | 2 | BOLT, MOUNTING |
| 8 | | **90014307** | 2 | WASHER |
| 9 | | **90014306** | 4 | WASHER, NEOPRENE |
| 10 | | **90014305** | 2 | NUT, S.S. |
| 11 | * | **90014304** | 1 | DEVICE, HOLD OPEN |
| 12 | | **90014303** | 4 | SCREW |
| 13 | | **NSS** | 1 | NOT SERVICED SEPARATELY<br>LOCKER, LOCTITE THREAD<br>(QUANTITY AS REQUIRED)<br>(USE THIS ITEM ON ALL SCREWS UNLESS OTHERWISE NOTED) |
| 14 | * | **90014302** | 1 | BRACKET, MOUNTING H.O.D. |
| 15 | * | **90014301** | 2 | RIVET |
| 20 | * | **90014312** | 1 | KIT, SEAL<br>(ITEMS 11, 14, AND 15 CAN BE PURCHASED ASSEMBLED AS KIT NUMBER 90014312) |

*** REPAIR KIT AND/OR PART OF KIT**

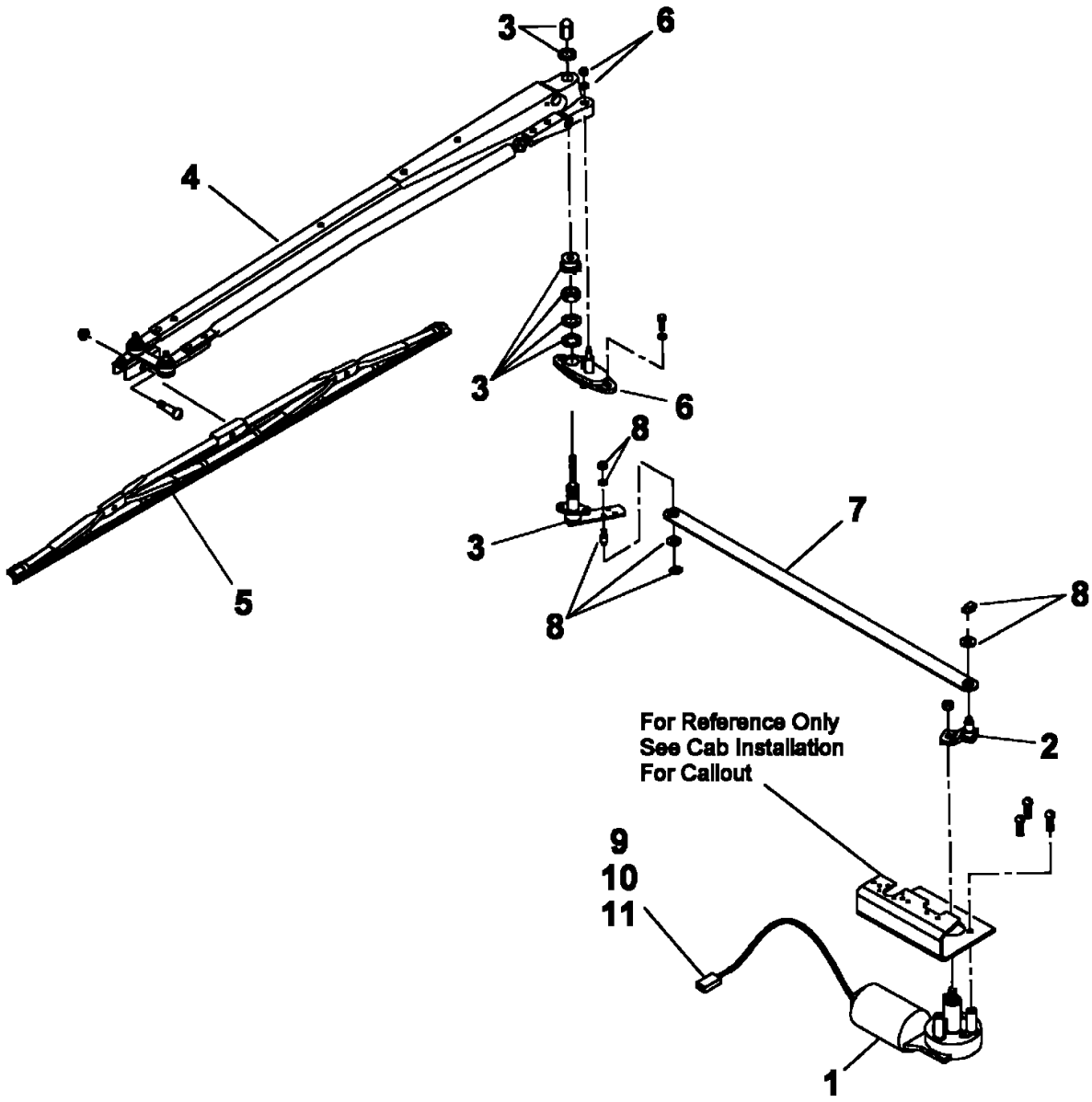


80004448

(SHEET 1 OF 1)

Description
**KIT - SKYLIGHT WIPER (24 VOLT)**
**(COMPLETE ASSEMBLY)**

Assembly No.
**80004448**
Revision:

| Item | FN | Part | Qty | Description |
|---|---|---|---|---|
| 1 | | **90000907** | 1 | MOTOR ASSY. 24V. |
| 2 | | **90011813** | 1 | LINK, DRIVE ARM |
| 3 | | **90000996** | 1 | SHAFT, PIVOT |
| 4 | | **90000994** | 1 | ARM, WIPER/DRY 24" |
| 5 | | **9576101347** | 1 | BLADE, WIPER 34" |
| 6 | | **90000908** | 1 | ADAPTER |
| 7 | | **90011814** | 1 | LINK, 13.5" LG |
| 8 | | **90000992** | 1 | KIT, HARDWARE |
| 9 | | **7892000824** | 1 | RECEPTACLE, 6 PIN |
| 10 | | **7689000704** | 5 | PIN, 16 - 14 GA |
| 11 | | **7689000503** | 1 | PLUG, SEALING 16 - 12 AWG |

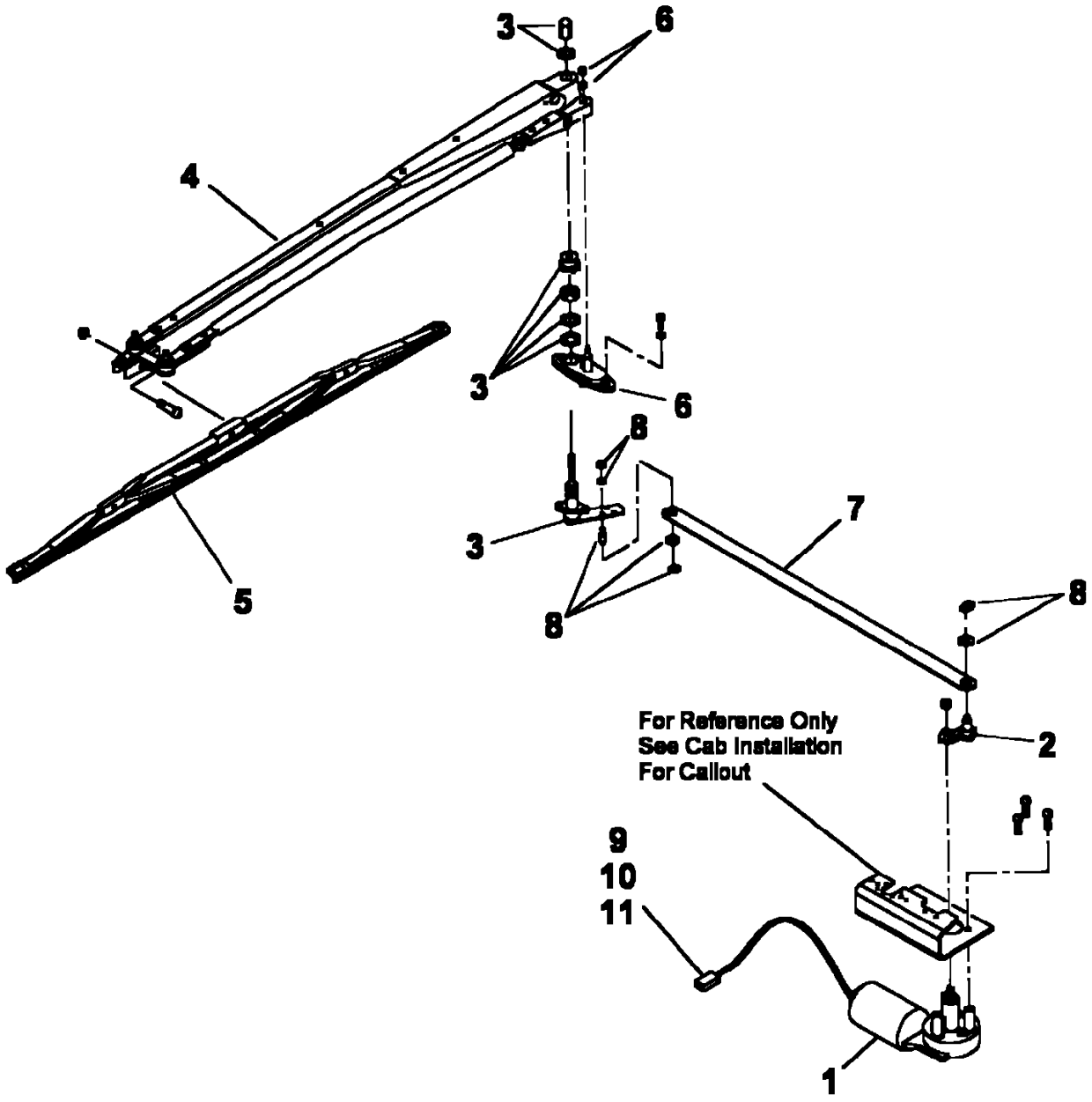


80004449

(SHEET 1 OF 1)

Description
**KIT - FRONT WIPER (24 VOLT)**
**(COMPLETE ASSEMBLY)**

Assembly No.
**80004449**
Revision:

| Item | FN | Part | Qty | Description |
|---|---|---|---|---|
| 1 | | **90000907** | 1 | MOTOR ASSY. 24V. |
| 2 | | **90011813** | 1 | LINK, DRIVE ARM |
| 3 | | **90000912** | 1 | SHAFT, PIVOT |
| 4 | | **90011815** | 1 | ARM, WIPER/WET 26" |
| 5 | | **9576101347** | 1 | BLADE, WIPER 34" |
| 6 | | **90000908** | 1 | ADAPTER |
| 7 | | **90011814** | 1 | LINK, 13.5" LG |
| 8 | | **90000992** | 1 | KIT, HARDWARE |
| 9 | | **7892000824** | 1 | RECEPTACLE, 6 PIN |
| 10 | | **7689000704** | 5 | PIN, 16 - 14 GA |
| 11 | | **7689000503** | 1 | PLUG, SEALING 16 - 12 AWG |

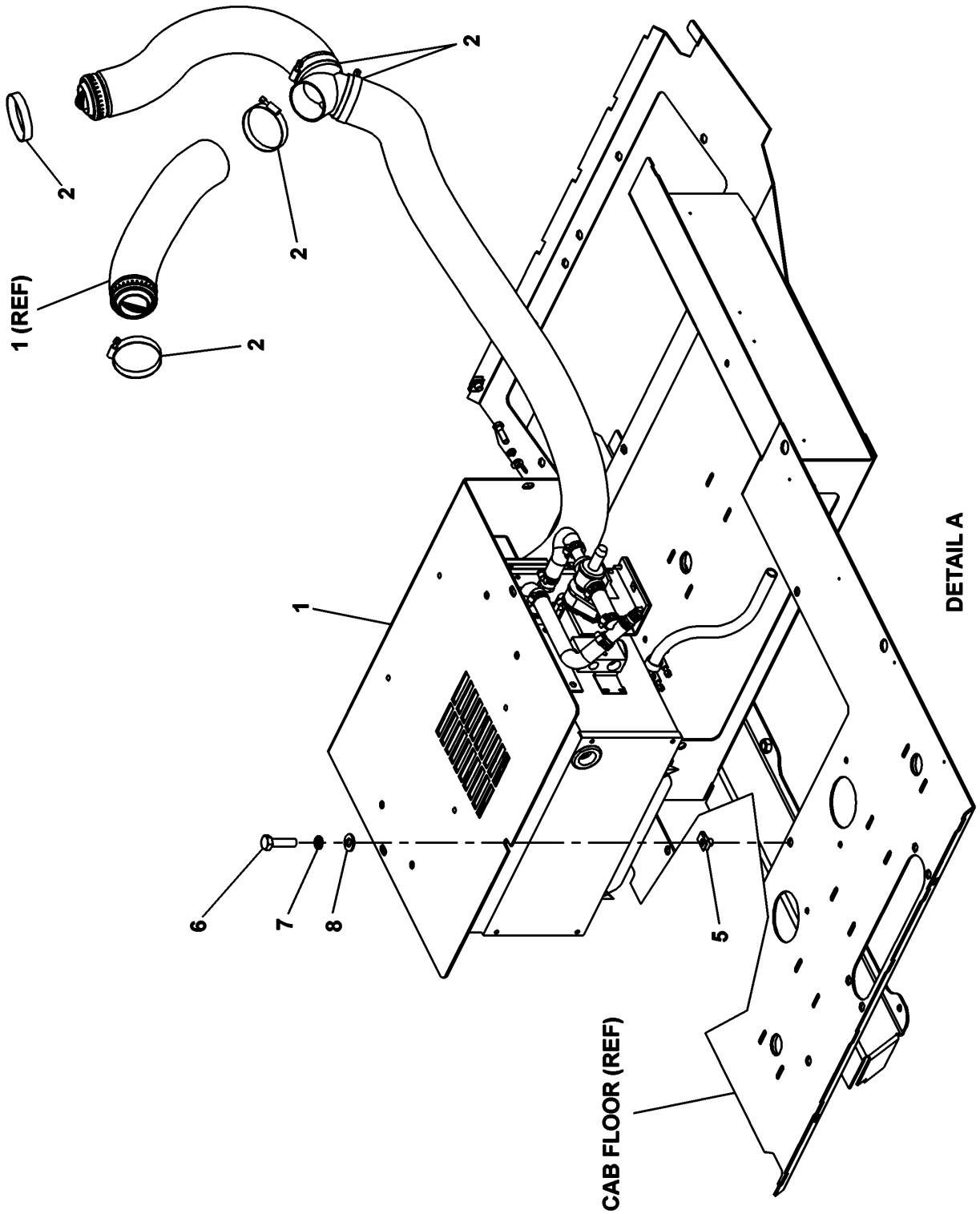


80037618

(SHEET 2 OF 2)

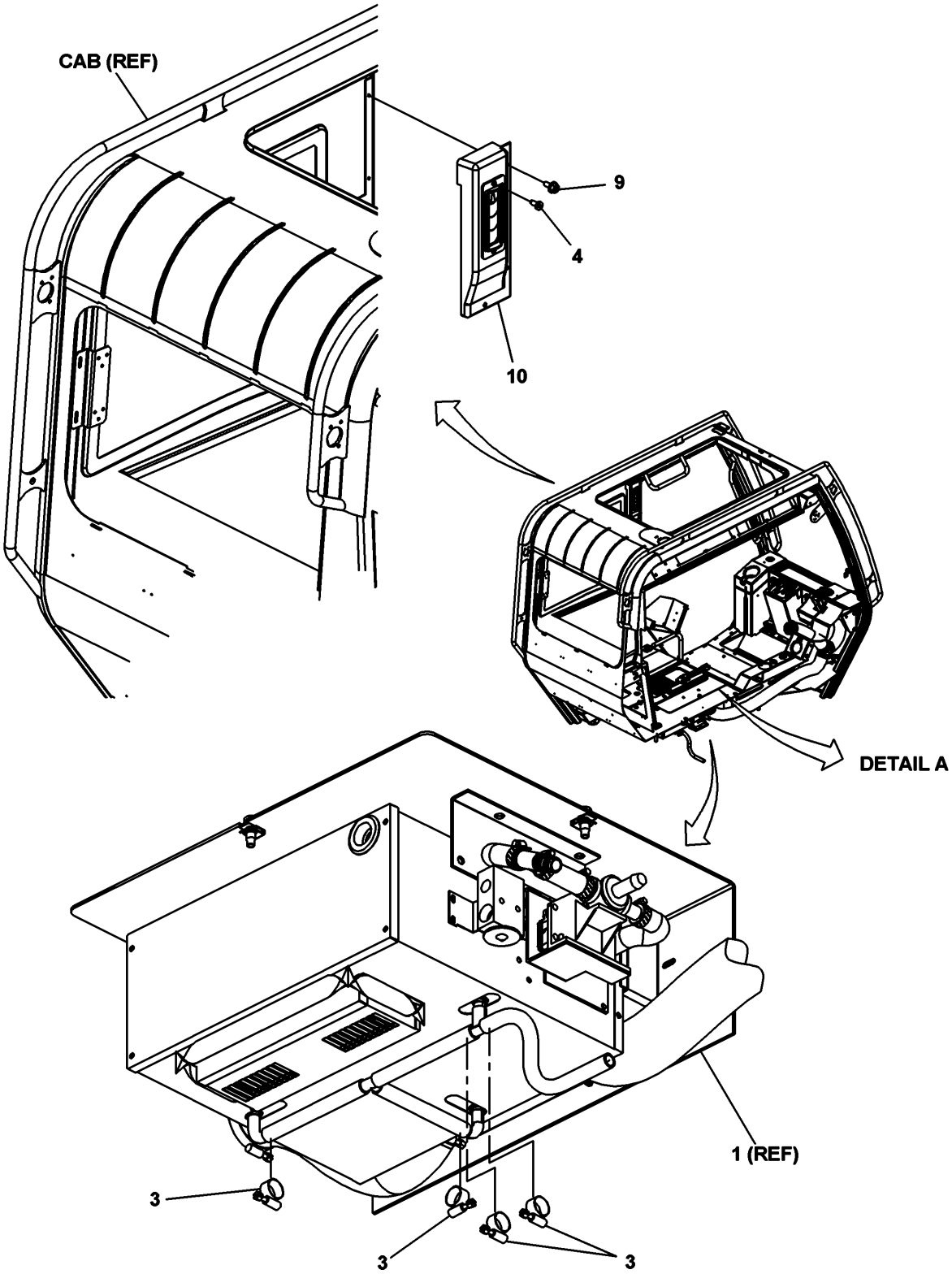


80037618

(SHEET 1 OF 2)

Description
**HEATER & A/C INSTALLATION - SUPERSTRUCTURE CAB (24 VOLT)**

Assembly No.
**80037618**
Revision: **D**

| Item | FN | Part | Qty | Description |
|---|---|---|---|---|
| 1 | + | **80042060** | 1 | 24V HEATER/COOL KIT |
| 2 | | **7300000035** | 8 | CLAMP, HOSE<br>1 13/16" TO 2 3/4" |
| 3 | | **7300000040** | 4 | CLAMP, HOSE<br>29/32" I.D. |
| 4 | | **7790060673** | 2 | SCREW, SELF-TAPPING |
| 5 | | **7659190020** | 6 | NUT, RETAINING 8 X 1.25 |
| 6 | | **7126171350** | 6 | CAP SCREW, M8 X 30MM HEX HEAD |
| 7 | | **7951170210** | 6 | WASHER, LOCK 8MM |
| 8 | | **7951170014** | 6 | WASHER, FLAT #8 |
| 9 | | **7790100853** | 3 | SCREW, SELF-TAPPING<br>3/16" - 24 N.C. X 1/2" |
| 10 | | **80016475** | 1 | COVER, AIR CONDITIONER SIDE |

**+ SEE FURTHER BREAKDOWN THIS GROUP**

**Notes**

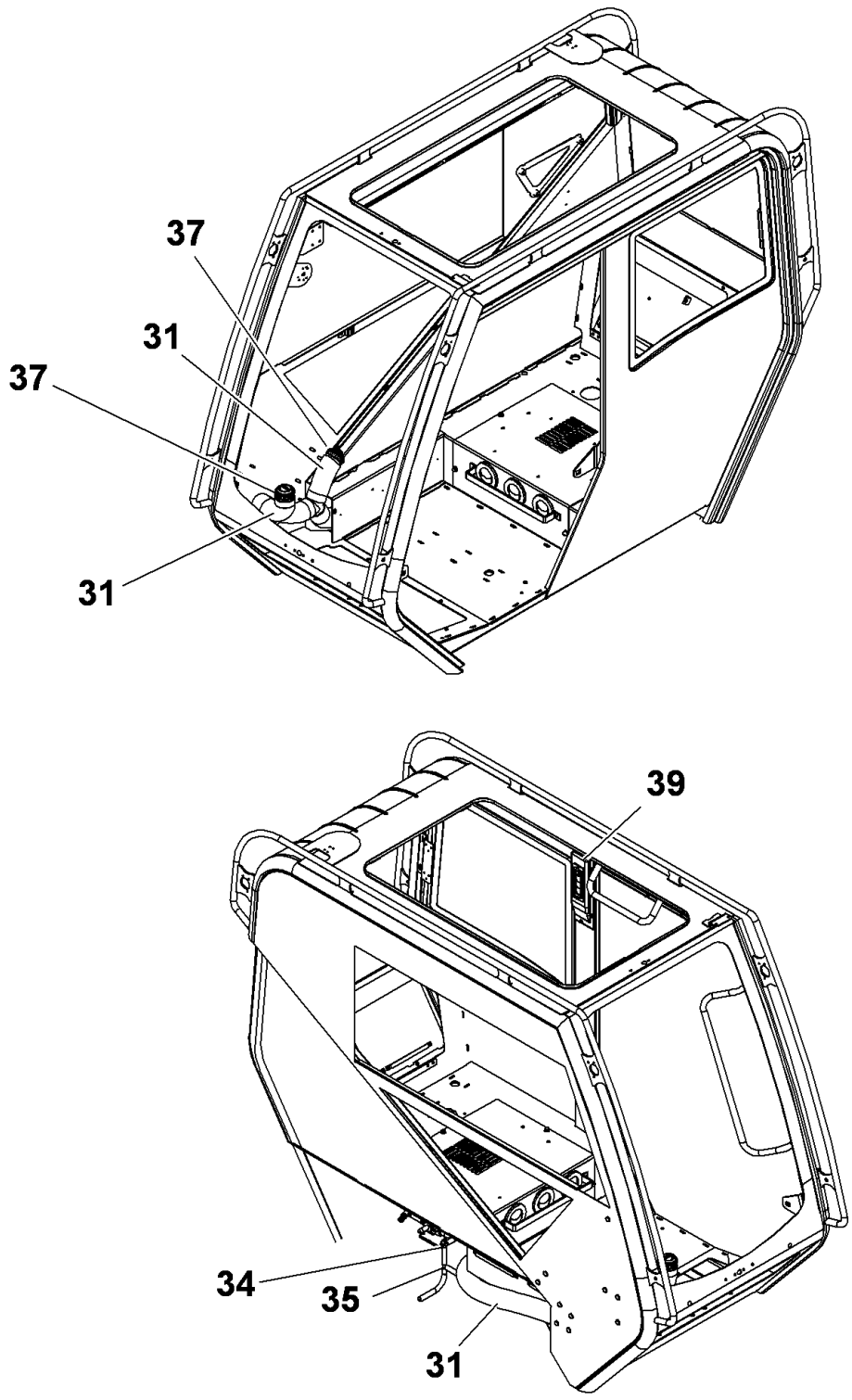


80042060

(SHEET 4 OF 4)

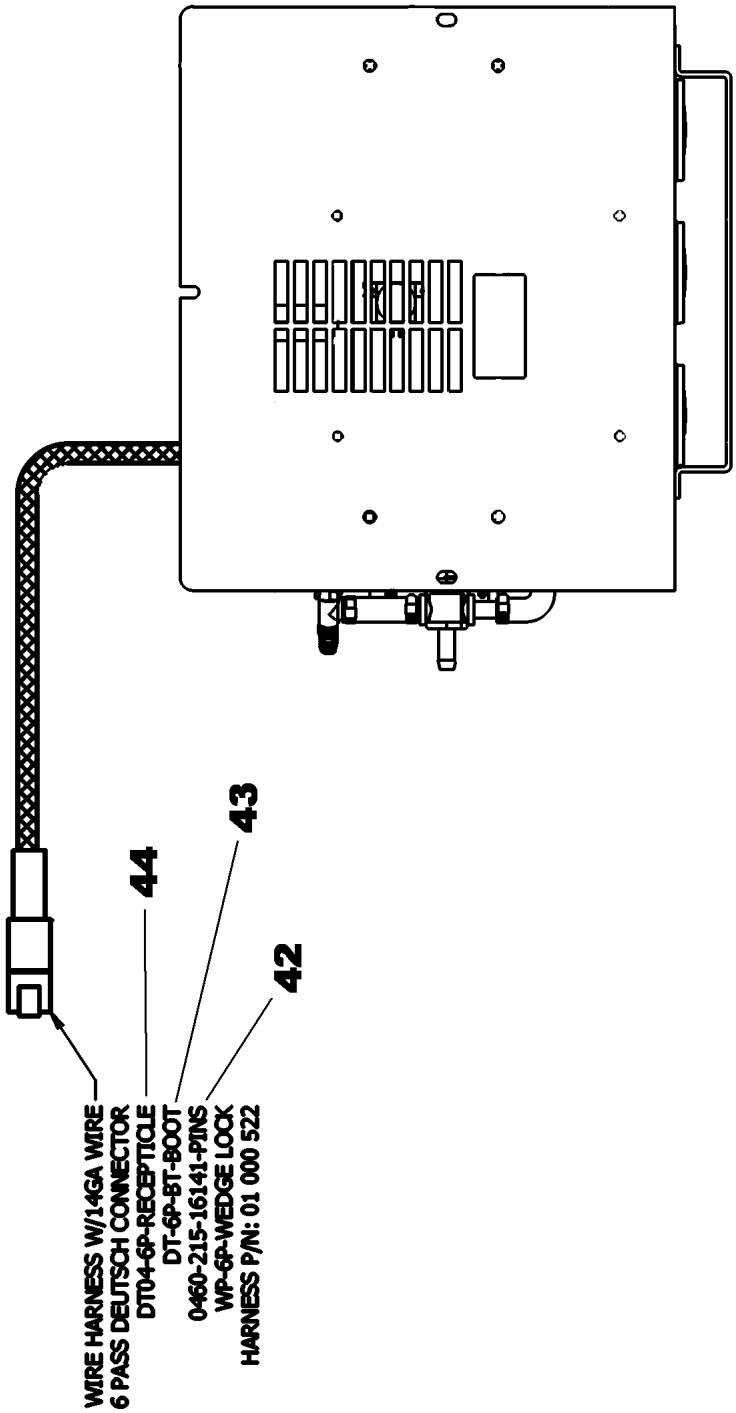


80042060

(SHEET 3 OF 4)

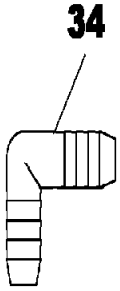


ELBOW -DRAIN LINE

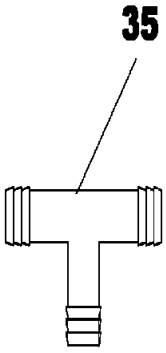


TEE - DRAIN LINE

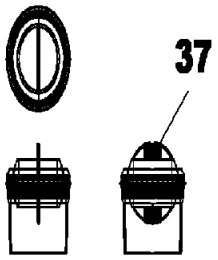


LOUVER , BALL TYPE

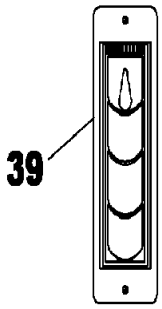


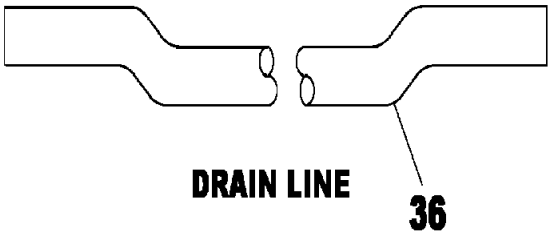


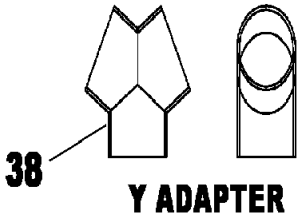


Y ADAPTER



LOUVER

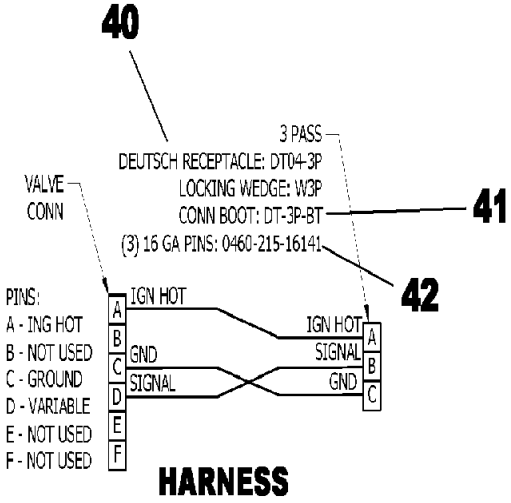


HARNESS

80042060

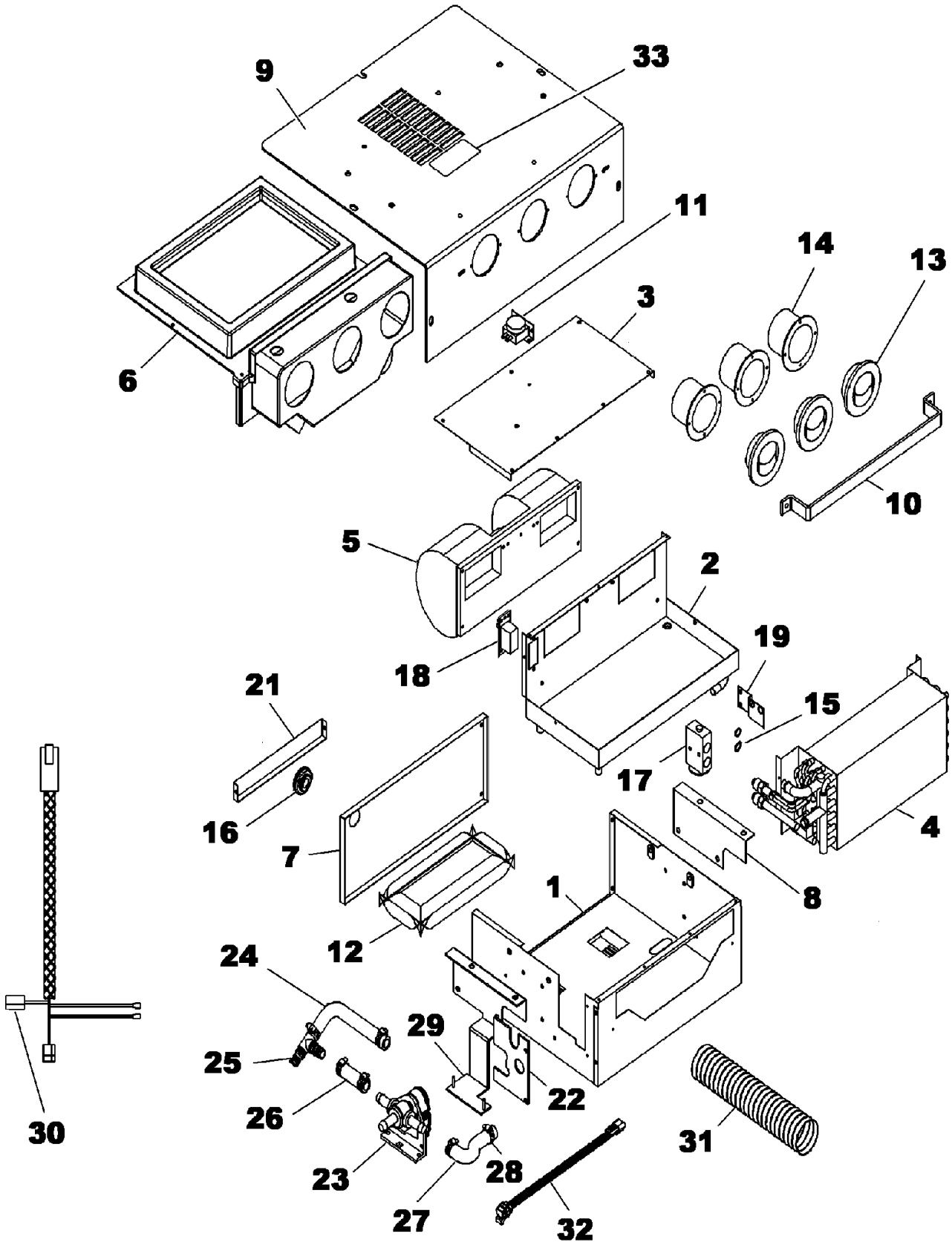


80042060

(SHEET 1 OF 4)

Description
**24V HEATER/COOL KIT**

Assembly No.
**80042060**
Revision:

| Item | FN | Part | Qty | Description |
|---|---|---|---|---|
| 1 | | **90018852** | 1 | HOUSING, BASE ASSY. |
| 2 | | **90018853** | 1 | HOUSING ASSY. BLOWER / DRAIN |
| 3 | | **90018854** | 1 | PLATE, COVER |
| 4 | | **90022799** | 1 | COIL ASSY. HEAT & A/C |
| 5 | | **90018856** | 1 | BLOWER ASSY. 24V. |
| 6 | | **90018857** | 1 | PLENUM ASSY. |
| 7 | | **90018858** | 1 | PLATE ASSY. REAR |
| 8 | | **90018860** | 1 | BRACKET, R.H. |
| 9 | | **90018861** | 1 | PLATE ASSY. SEAT BASE |
| 10 | | **90018862** | 1 | BRACE, LOUVER |
| 11 | | **90018863** | 1 | THERMOSTAT, NON-ADJ. |
| 12 | | **90018864** | 1 | FILTER, AIR |
| 13 | | **90018865** | 3 | LOUVER ASSY. 3" |
| 14 | | **90018866** | 3 | RETAINER, 3" |
| 15 | | **90018818** | 2 | O-RING #8 |
| 16 | | **90018867** | 1 | GROMMET, 3/4" |
| 17 | | **90018868** | 1 | VALVE ASSY, EXPANSION |
| 18 | | **90018869** | 1 | RESISTOR ASSY. |
| 19 | | **90018870** | 1 | BRACKET, MOUNTING |
| 20 | | **90018872** | 1 | HARNESS ASSY. |
| 21 | | **90018873** | 1 | PLATE, FILTER |
| 22 | | **90022800** | 1 | PLATE, MOUNT |
| 23 | | **90018874** | 1 | VALVE ASSY. WATER SHUT OFF |
| 24 | | **90022801** | 1 | HOSE, 90 DEG |
| 25 | | **90022802** | 1 | FITTING, TEE |
| 26 | | **90022803** | 1 | HOSE ASSY. 3" LG |
| 27 | | **90022804** | 1 | HOSE ASSY. 90DEG |
| 28 | | **90022805** | 6 | CLAMP, #10 |
| 29 | | **90022806** | 1 | BRACKET |
| 30 | | **90018872** | 1 | HARNESS ASSY. |
| 31 | | **90018881** | 1 | HOSE |
| 32 | | **90018875** | 1 | HARNESS ASSY. WATER VALVE |
| 33 | | **90022817** | 1 | LABEL, 24V |
| 34 | | **90022808** | 1 | FITTING, ELBOW |

Description
**24V HEATER/COOL KIT**

Assembly No.
**80042060**
Revision:

| Item | FN | Part | Qty | Description |
|---|---|---|---|---|
| 35 | | **90018884** | 3 | ADAPTER, TEE |
| 36 | | **90018883** | 1 | HOSE, DRAIN LINE 1/2" X 15FT |
| 37 | | **90018877** | 2 | LOUVER ASSY. BALL |
| 38 | | **90018878** | 1 | ADAPTER, Y-2.5" |
| 39 | | **90018876** | 1 | LOUVER ASSY. RECT. |
| 40 | | **7892000947** | 1 | RECEPTACLE, 3 PIN |
| 41 | | **7172000548** | 1 | BOOT |
| 42 | | **7689000704** | 9 | PIN, 16 - 14 GA |
| 43 | | **7172000564** | 1 | BOOT |
| 44 | | **7892000824** | 1 | RECEPTACLE, 6 PIN |

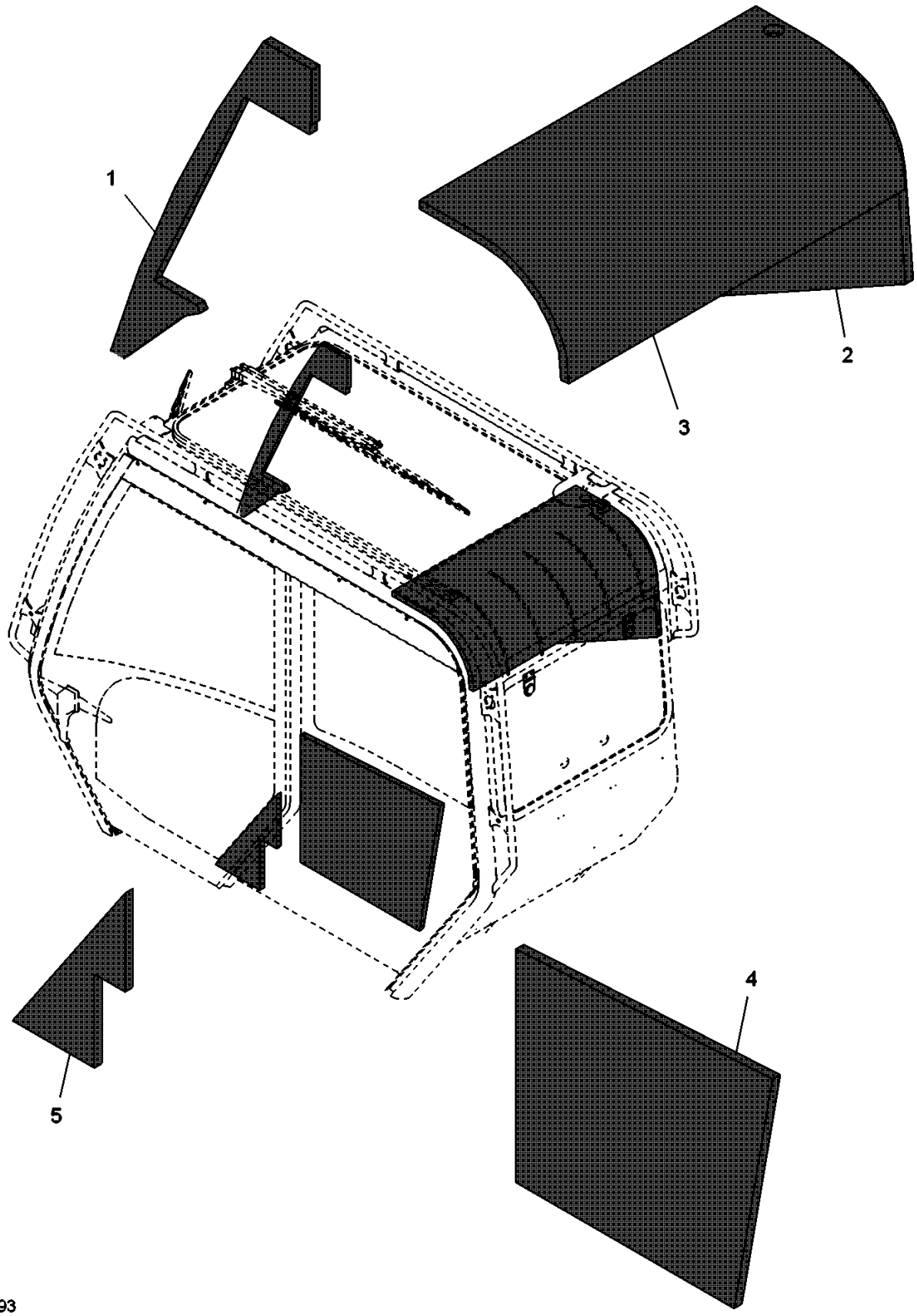


80023693

(SHEET 1 OF 1)

Description
**ACOUSTICS INSTALLATION (SG)**

Assembly No.
**80023693**
Revision: **B**

| Item | FN | Part | Qty | Description |
|---|---|---|---|---|
| 1 | | **80024116** | 1 | FOAM, ACOUSTIC RH FRONT |
| 2 | | **80004577** | 1 | FOAM, RIGHT HAND REAR ACOUSTIC |
| 3 | | **80038107** | 1 | ACOUSTIC FOAM TOP |
| 4 | | **80004580** | 1 | FOAM, LEFT HAND REAR ACOUSTIC |
| 5 | | **80004581** | 1 | FOAM, LEFT HAND FRONT ACOUSTIC |

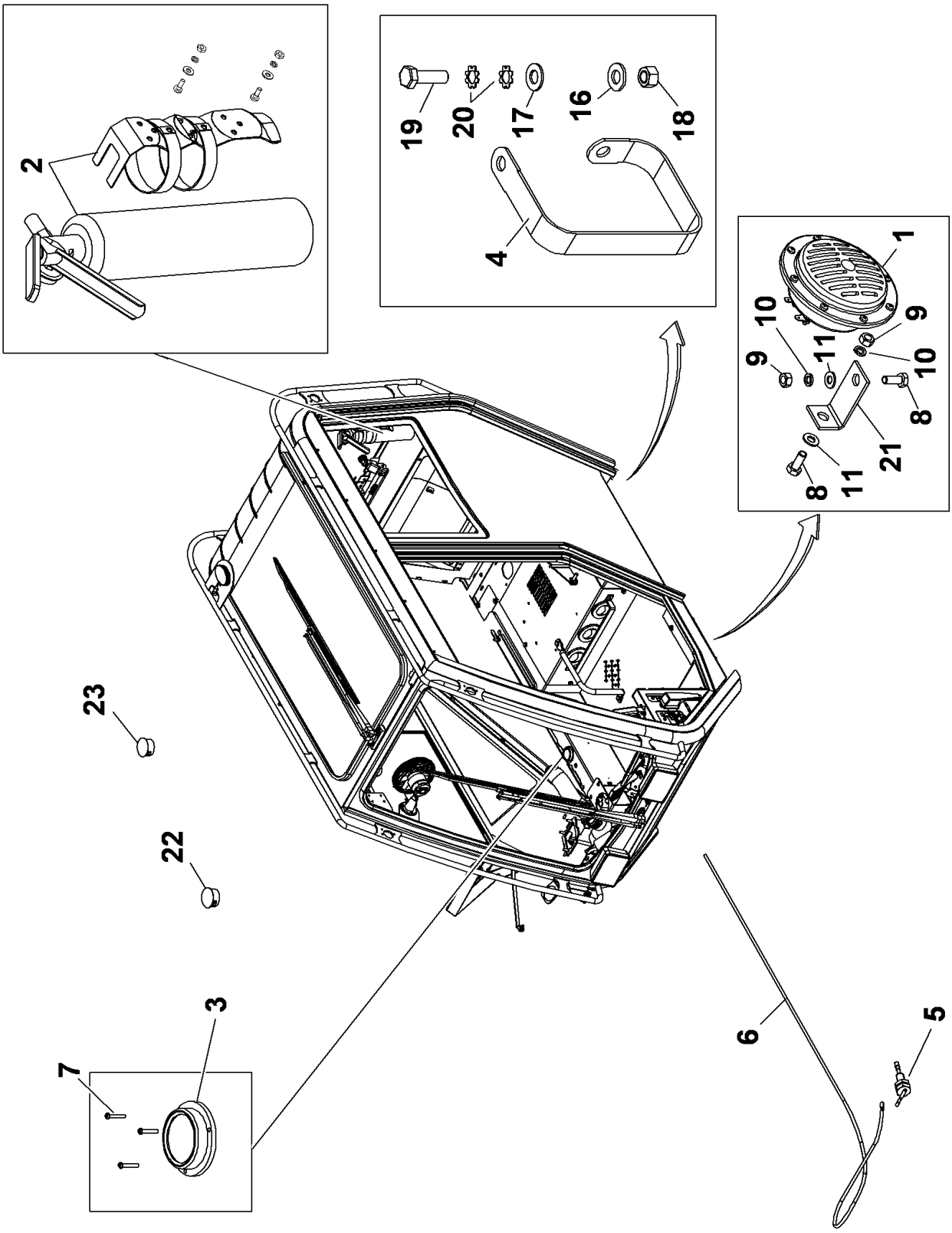


80046522

(SHEET 1 OF 1)

Description
**CAB MISC COMPONENTS**

Assembly No.
**80046522**
Revision: **B**

| Item | FN | Part | Qty | Description |
|---|---|---|---|---|
| 1 | | **7025800003** | 1 | HORN<br>(24 VOLT) |
| 3 | | **7486000225** | 1 | LEVEL, CIRCULAR |
| 4 | | **7850000046** | 1 | STRAP, GROUND |
| 5 | | **7949001149** | 1 | FITTING, WASHER NOZZLE |
| 6 | | **9543100045** | 1 | HOSE ASSY, USE AS REQUIRED<br>25' PC. ( MUST CUT TO LENGTH NEEDED ) |
| 7 | | **7111040610** | 3 | SCREW, MACHINE<br>7/64" - 40 N.C. X 3/4"<br>GRADE 1 |
| 8 | | **7126171150** | 2 | CAP SCREW, M8 X 20MM HEX HEAD |
| 9 | | **7661170003** | 2 | NUT |
| 10 | | **7951170210** | 2 | WASHER, LOCK 8MM |
| 11 | | **7951170014** | 2 | WASHER, FLAT #8 |
| 16 | | **7950160050** | 1 | WASHER, LOCK 3/8" I.D. |
| 17 | | **7950160141** | 1 | WASHER, 3/8" PLAIN NARROW |
| 18 | | **7660160000** | 1 | NUT, HEX<br>3/8" - 16 N.C. |
| 19 | | **7115161050** | 1 | CAP SCREW,<br>3/8" - 16 N.C. X 1 1/4"<br>GRADE 5 |
| 20 | | **7950160350** | 2 | WASHER, LOCK 3/8" I.D. |
| 21 | | **80035379** | 1 | MOUNT |
| 22 | | **7242000027** | 1 | PLUG |
| 23 | | **7242000007** | 1 | BUTTON, PLUG<br>3/4" |

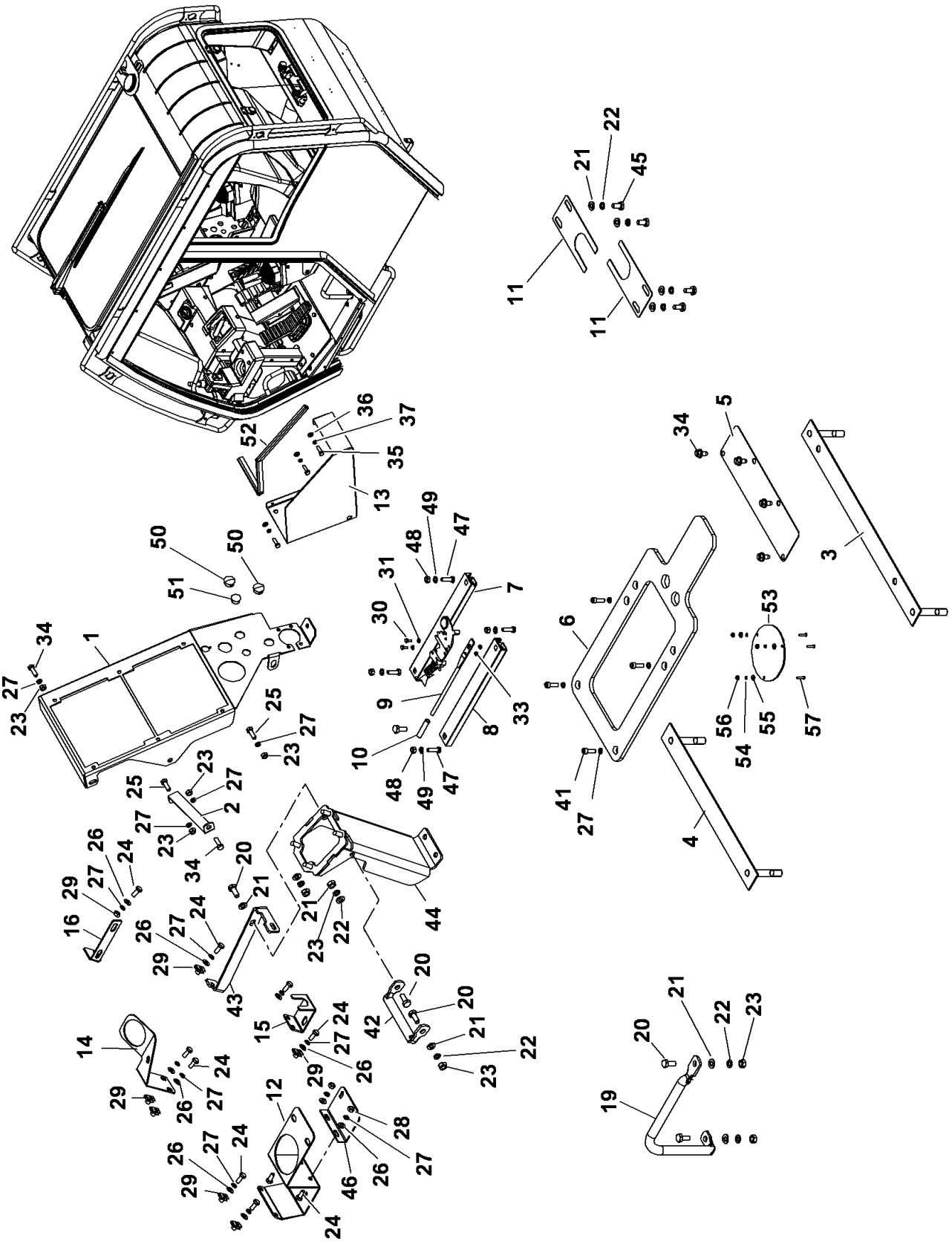

80058561

(SHEET 1 OF 1)

Description
**CAB BRACKETS INSTALLATION**

Assembly No.
**80058561**
Revision: **E**

| Item | FN | Part | Qty | Description |
|---|---|---|---|---|
| 1 | | **80024114** | 1 | CONSOLE MOUNTING PLATE |
| 2 | | **80024117** | 1 | MOUNTING STRAP |
| 3 | | **80016487** | 1 | PLATE, MOUNTING 24 |
| 4 | | **80016489** | 1 | PLATE, MOUNTING 17 |
| 5 | | **80005246** | 1 | PLATE, COVER |
| 6 | | **80016495** | 1 | BRACKET, SEAT |
| 7 | # | **7798100005** | 1 | TRACK, CONTROL |
| 8 | # | **7798100006** | 1 | TRACK, FREE |
| 9 | | **80016496** | 1 | ARM, LEVER |
| 10 | | **7822000598** | 1 | SLEEVE, VINYL |
| 11 | | **80016497** | 2 | PLATE, ACCESS |
| 12 | | **80016498** | 1 | BRACKET, CUP HOLDER |
| 13 | | **80016499** | 1 | BRACKET, OPERATORS MANUAL |
| 14 | | **80029745** | 1 | A/C COVER BRACKET |
| 15 | | **80016501** | 1 | BRACKET, MOUNTING CAB COVER |
| 16 | | **80016502** | 1 | BRACKET, CAB OUTRIGGER |
| 19 | | **80005520** | 1 | HANDRAIL, GRAB |
| 20 | | **7126191253** | 6 | CAP SCREW, M10 X 25 HEX HEAD |
| 21 | | **7951190014** | 9 | FLAT WASHER, 10MM I.D. |
| 22 | | **7951190220** | 9 | WASHER, LOCK |
| 23 | | **7661190003** | 5 | NUT, HEX 10MM |
| 24 | | **7126171153** | 9 | CAP SCREW, M8 X 20MM HEX HEAD |
| 25 | | **7126171253** | 5 | CAP SCREW, M8X25 HEX HEAD |
| 26 | | **7951170014** | 7 | WASHER, FLAT #8 |
| 27 | | **7951170210** | 21 | WASHER, LOCK 8MM |
| 28 | | **7661170003** | 7 | NUT |
| 29 | | **7659190020** | 7 | NUT, RETAINING 8 X 1.25 |
| 30 | | **7126130853** | 2 | HHCS M5x12 -8.8 ISO 4017 |
| 31 | | **7951130014** | 2 | WASHER, FLAT M5 I.D. |
| 33 | | **7661131103** | 2 | NUT, M5 -8 ISO 7042 HEX LOCK |
| 34 | | **7790161253** | 8 | SCREW,<br>3/8" - 16 N.C. X 3/4" |
| 35 | | **7126151153** | 3 | CAP SCREW, M6X20 HEX HEAD |
| 36 | | **7951150014** | 3 | WASHER, 6MM I.D. |

**# SERVICED AS AN ASSEMBLY ONLY**

Description
**CAB BRACKETS INSTALLATION**

Assembly No.
**80058561**
Revision: **E**

| Item | FN | Part | Qty | Description |
|---|---|---|---|---|
| 37 | | **7951150210** | 3 | LOCKWASHER, 6MM I.D. |
| 41 | | **7128171254** | 4 | CAP SCREW, M8X25 SOCKET HEAD |
| 42 | | **80006549** | 1 | GRAB HANDRAIL |
| 43 | | **80029942** | 1 | STEER COLUMN SUPPORT BRACKET |
| 44 | | **80054200** | 1 | STEER MOUNTING BRACKET |
| 45 | | **7126191153** | 4 | CAP SCREW, M10 X 20 HEX HEAD |
| 46 | | **80018931** | 1 | BRACKET, ELECTRIC MODULE |
| 47 | | **7115150950** | 4 | CAP SCREW,<br>5/16" - 18 N.C. X 1 1/8"<br>GRADE 5 |
| 48 | | **7660150008** | 4 | NUT, HEX<br>5/16" - 18 N.C.<br>GRADE 8 |
| 49 | | **7950150350** | 4 | WASHER, LOCK 5/16" |
| 50 | | **7709000021** | 2 | PLUG, DOT<br>7/8" |
| 51 | | **7242000007** | 1 | BUTTON, PLUG<br>3/4" |
| 52 | | **8496900045** | 2 | MOULDING<br>(QUANTITY IN FEET) |
| 53 | | **80058287** | 1 | PLATE, COVER |
| 54 | | **7950080050** | 3 | LOCKWASHER, 5/32" I.D. |
| 55 | | **7950080161** | 3 | FLATWASHER, 5/32" I.D. |
| 56 | | **7660081100** | 3 | NUT, HEX<br>5/32" - 24 N.F.<br>GRADE 1 |
| 57 | | **7111080610** | 3 | SCREW, MACHINE<br>5/32" - 32 N.C. X 3/4"<br>GRADE 1 |

**Notes**

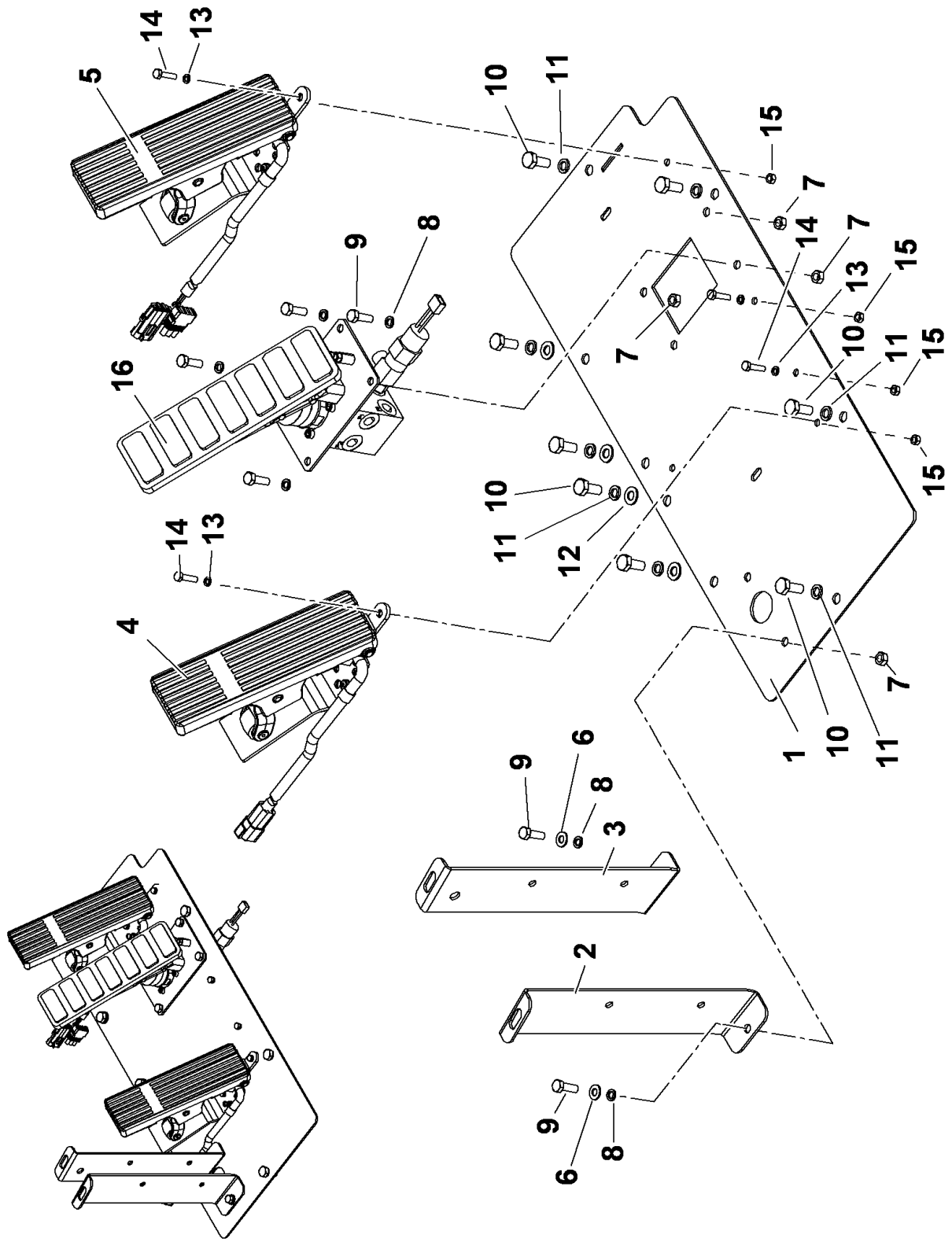


80042879

(SHEET 1 OF 1)

Description
**PEDAL GROUP INSTALLATION**

Assembly No.
**80042879**
Revision: **C**

| Item | FN | Part | Qty | Description |
|---|---|---|---|---|
| 1 | | **80025279** | 1 | FOOT PEDAL PLATE |
| 2 | | **80016505** | 1 | PEDAL BRACKET |
| 3 | | **80024252** | 1 | PEDAL BRACKET, OPPOSITE |
| 4 | + | **80040090** | 1 | SWING BRAKE PEDAL-5V |
| 5 | + | **80040089** | 1 | PEDAL, THROTTLE 5V |
| 6 | | **7951170014** | 1 | WASHER, FLAT #8 |
| 7 | | **7661170003** | 6 | NUT |
| 8 | | **7951170210** | 6 | WASHER, LOCK 8MM |
| 9 | | **7126171253** | 6 | CAP SCREW, M8X25 HEX HEAD |
| 10 | | **7126191253** | 8 | CAP SCREW, M10 X 25 HEX HEAD |
| 11 | | **7951190210** | 8 | LOCK WASHER, 10MM |
| 12 | | **7951190014** | 4 | FLAT WASHER, 10MM I.D. |
| 13 | | **7951150210** | 7 | LOCKWASHER, 6MM I.D. |
| 14 | | **7126151253** | 7 | CAP SCREW, M6 X 25MM |
| 15 | # | **7661150003** | 7 | NUT, HEX |
| 16 | + | **7926100912** | 1 | VALVE ASSEMBLY - BRAKE TREADLE (COMPLETE ASSEMBLY) |

**+ SEE FURTHER BREAKDOWN THIS GROUP**

**# SERVICED AS AN ASSEMBLY ONLY**

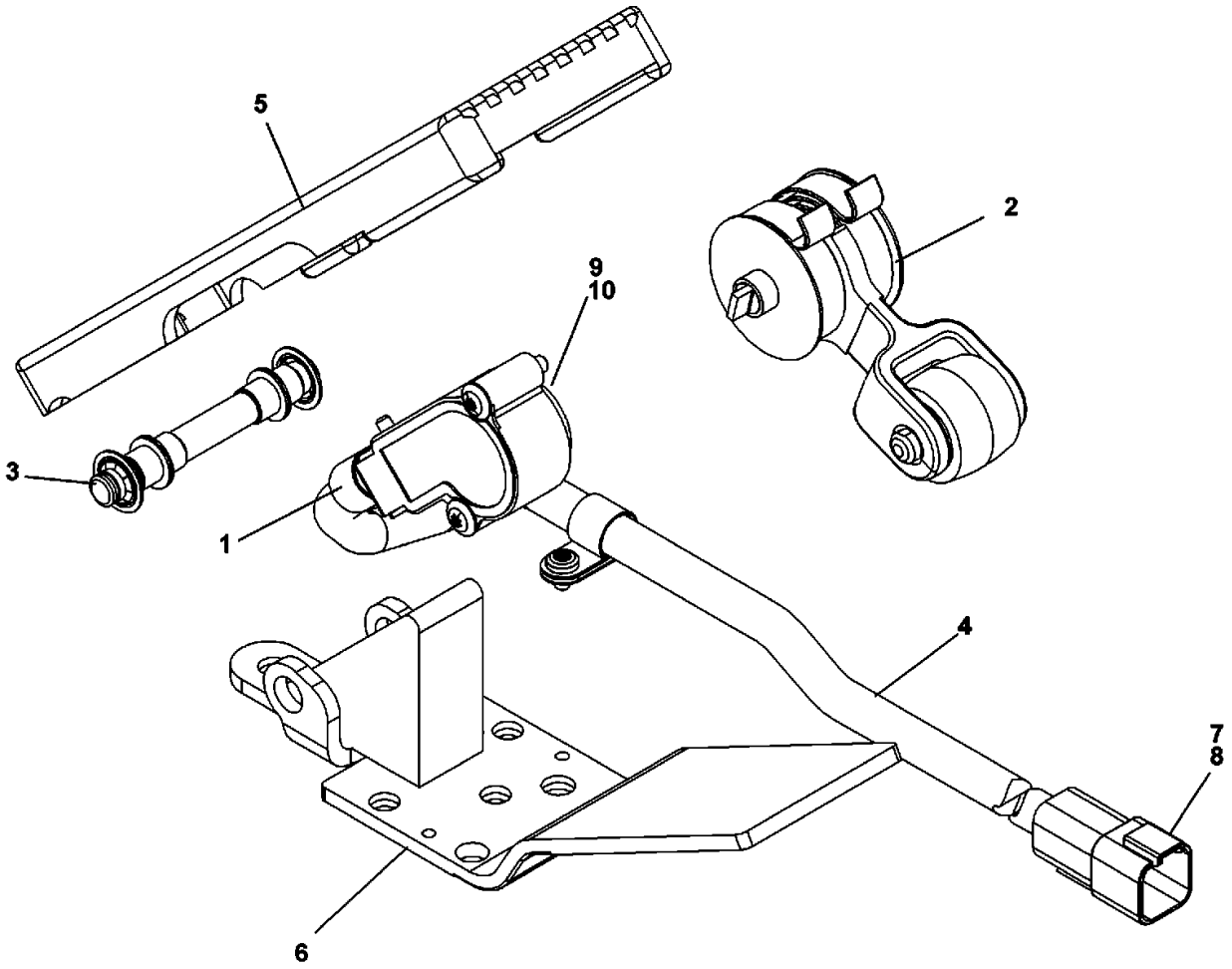


**80040090**

**(SHEET 1 OF 1)**

Description
**SWING BRAKE PEDAL-5V**

Assembly No.
**80040090**
Revision:

| Item | FN | Part | Qty | Description |
|---|---|---|---|---|
| 1 | # | **4301410000** | 1 | KIT, SENSOR & MTG SCREW |
| 2 | | **9683100015** | 1 | ROLLER KIT |
| 3 | | **90022846** | 1 | KIT, PIN BUSHING & RETAINER |
| 4 | | **90022856** | 1 | HARNESS ASSY. |
| 5 | | **9683100010** | 1 | COVER TREADLE |
| 6 | | **NSS** | 1 | NOT SERVICED SEPARATELY<br>PLATE, BASE |
| 7 | | **7892000824** | 1 | RECEPTACLE,<br>6 PIN |
| 8 | | **7689000704** | 6 | PIN, 16 - 14 GA |
| 9 | | **7364002749** | 1 | RECEPTACLE,<br>6 SOCKET |
| 10 | | **7826000633** | 6 | TERMINAL, FEMALE |

**# SERVICED AS AN ASSEMBLY ONLY**

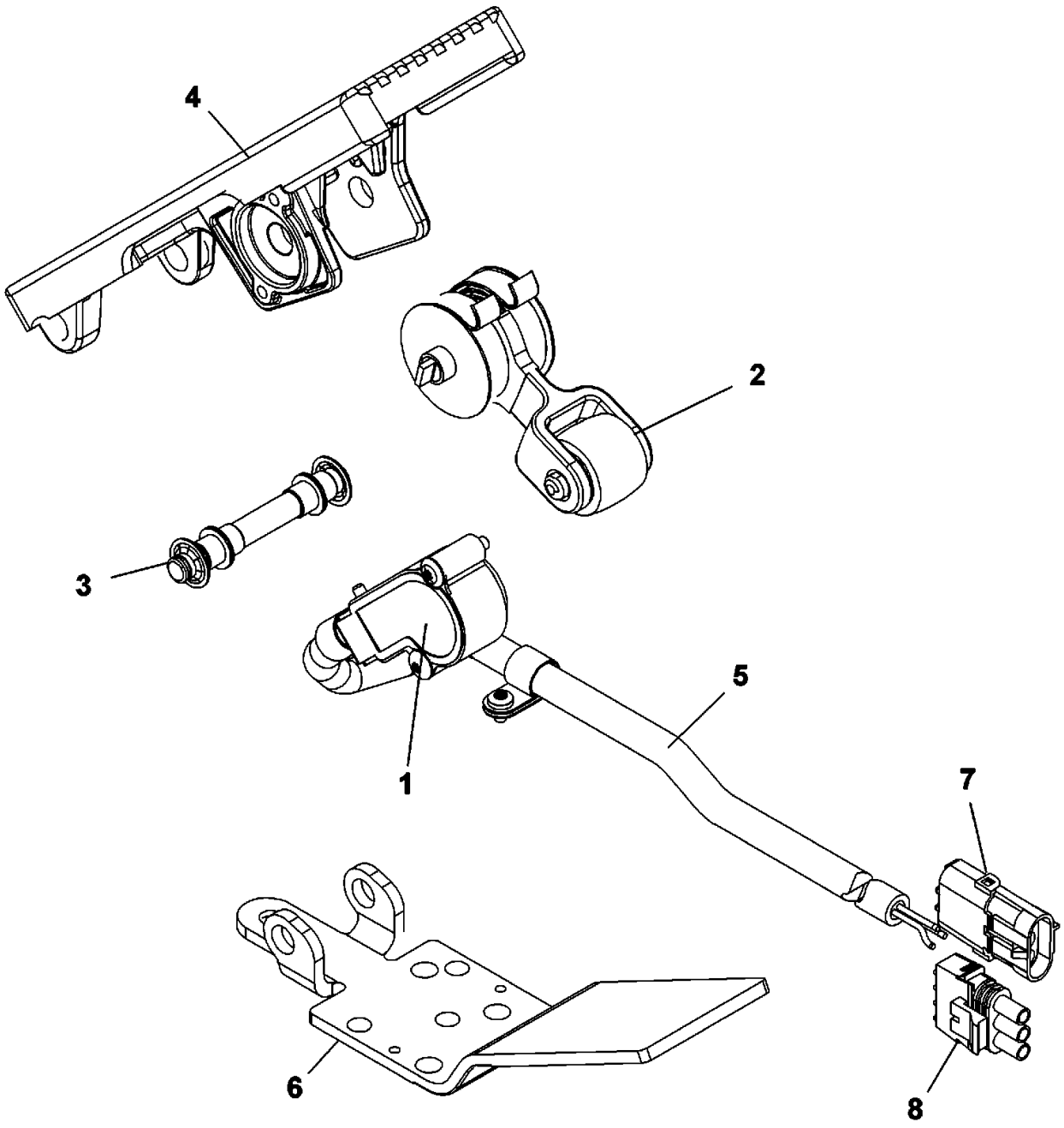


**80040089**

**(SHEET 1 OF 1)**

Description
**PEDAL, THROTTLE 5V**

Assembly No.
**80040089**
Revision:

| Item | FN | Part | Qty | Description |
|---|---|---|---|---|
| 1 | # | **4301410000** | 1 | KIT, SENSOR & MTG SCREW |
| 2 | | **9683100015** | 1 | ROLLER KIT |
| 3 | | **90022846** | 1 | KIT, PIN BUSHING & RETAINER |
| 4 | | **9683100010** | 1 | COVER TREADLE |
| 5 | | **9683100008** | 1 | HARNESS, SENSOR |
| 6 | | **NSS** | 1 | NOT SERVICED SEPARATELY<br>PLATE, BASE |
| 7 | | **7364001684** | 1 | CONNECTOR, 3 CONDUCTOR<br>TOWER WITH SEAL |
| 8 | | **7364001685** | 1 | CONNECTOR, 3 CONDUCTOR<br>SHROUD |

**# SERVICED AS AN ASSEMBLY ONLY**

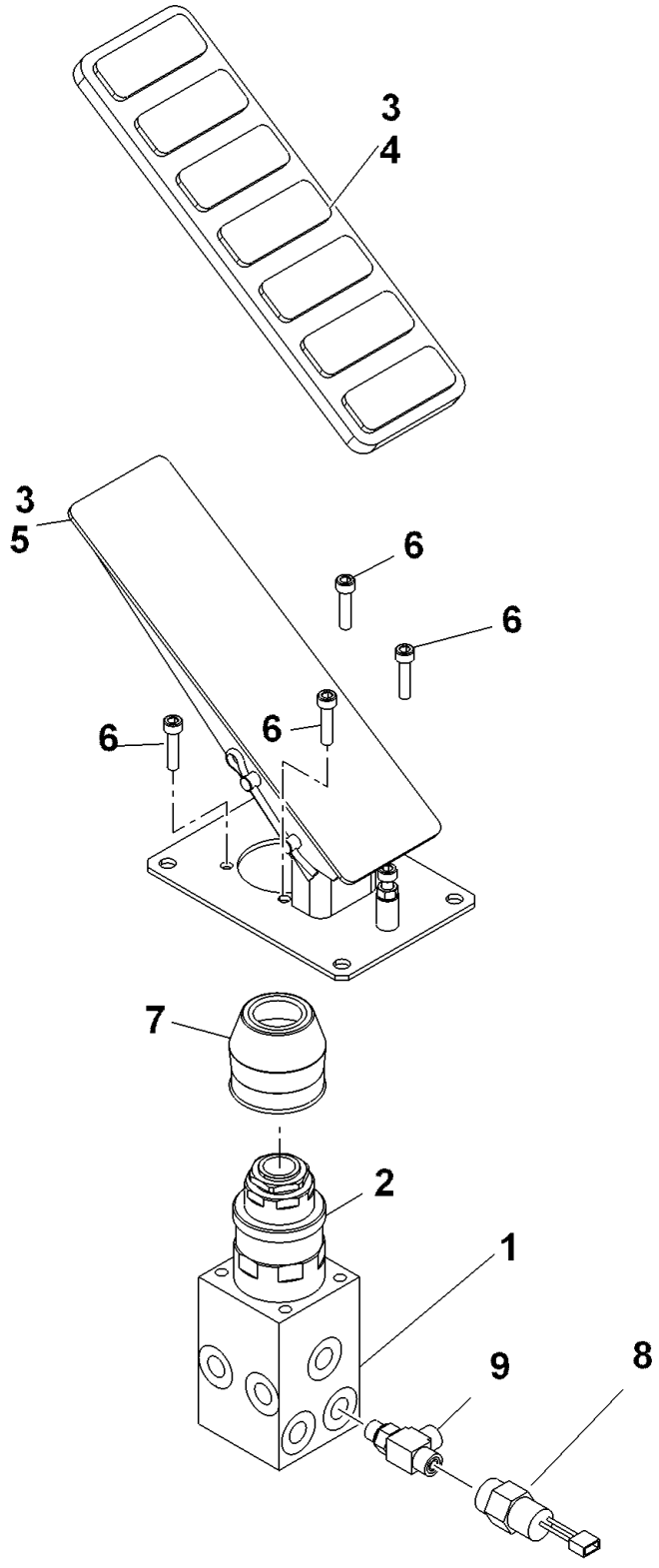


**7926100912**

**(SHEET 1 OF 1)**

Description
**VALVE ASSEMBLY - BRAKE TREADLE (COMPLETE ASSEMBLY)**

Assembly No.
**7926100912**
Revision:

| Item | FN | Part | Qty | Description |
|---|---|---|---|---|
| 1 | | **9926113271** | 1 | VALVE ASSY. BRAKE<br>INCLUDES ITEM 2 |
| 2 | | **NSS** | 1 | NOT SERVICED SEPARATELY<br>VALVE, CARTRIDGE |
| 3 | | **9926113272** | 1 | PEDAL ASSY.<br>INCLUDES ITEMS 4 AND 5 |
| 4 | | **9926113273** | 1 | COVER, RUBBER |
| 5 | | **NSS** | 1 | NOT SERVICED SEPARATELY<br>BASE, PEDAL |
| 6 | | **9926113274** | 4 | SCREW |
| 7 | | **9926113275** | 1 | BOOT, RUBBER |
| 8 | | **9926113276** | 1 | SWITCH ASSY. PRESSURE |
| 9 | | **9926113277** | 1 | FITTING, ADAPTOR |

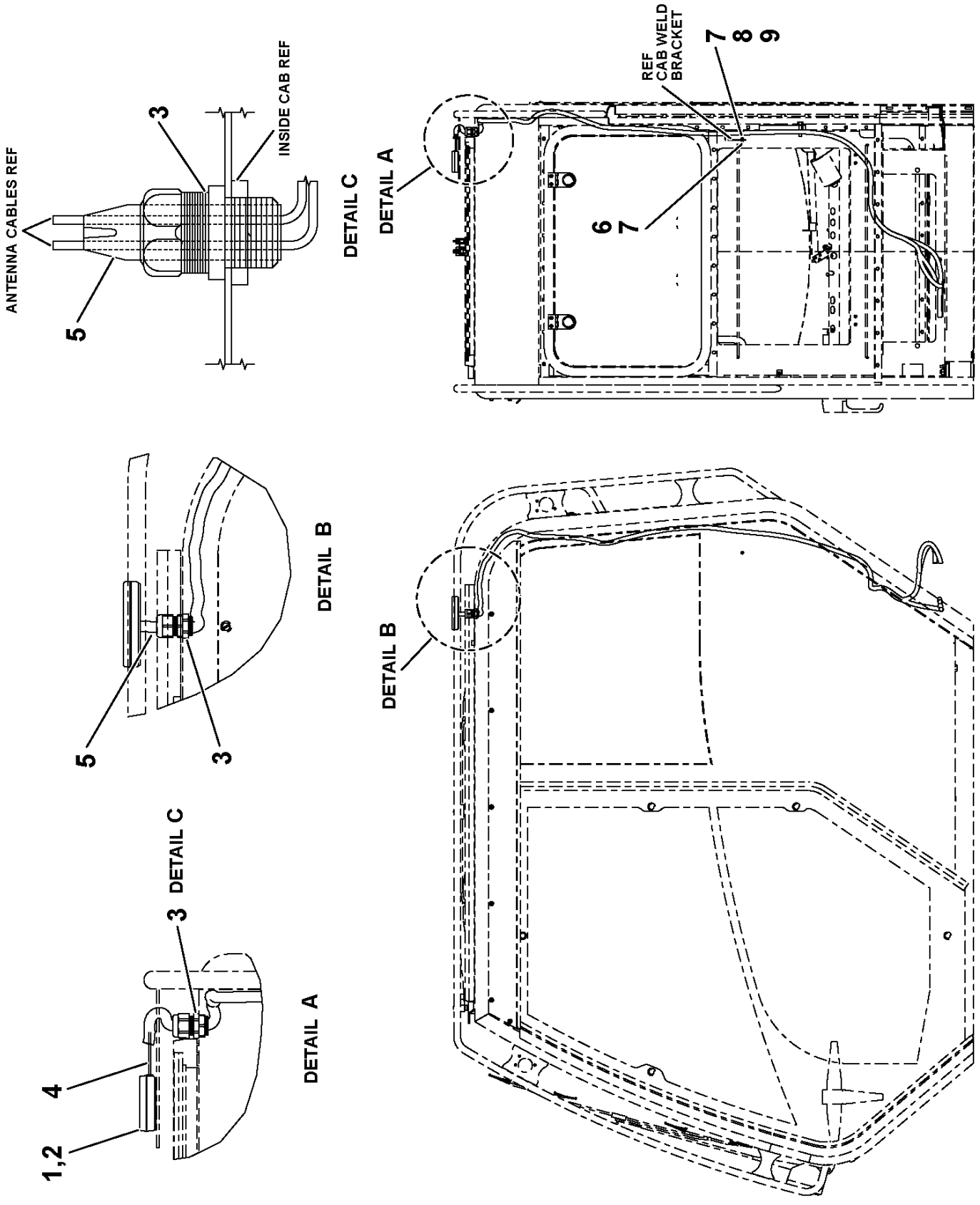


80023681

(SHEET 1 OF 1)

Description
**CAB CRANESTAR INSTALLATION**

Assembly No.
**80023681**
Revision: **#**

| Item | FN | Part | Qty | Description |
|---|---|---|---|---|
| 1 | | **80021858** | 1 | ANTENNA , GPS/GSM |
| 2 | | **80022642** | 1 | TAPE CUTOUT, 3M VHB |
| 3 | | **80015532** | 1 | 180 DEG CABLE CORDGRIP |
| 4 | | **7850000208** | 2 | CABLE TIE 5.63", BLACK |
| 5 | | **8594100257** | 1 | TUBING, HEAT SHRINK 1/2" I.D.<br>LINER, MELTABLE<br>(QUANTITY IN FEET) |
| 6 | | **7111040410** | 1 | SCREW, MACHINE<br>7/64" - 40 N.C. X 1/2"<br>GRADE 1 |
| 7 | | **7950040141** | 2 | WASHER, 7/64" I.D. |
| 8 | | **7950040050** | 1 | LOCKWASHER, 7/64" I.D. |
| 9 | | **7660041100** | 1 | NUT, HEX<br>7/64" - 40 N.C.<br>GRADE 1 |

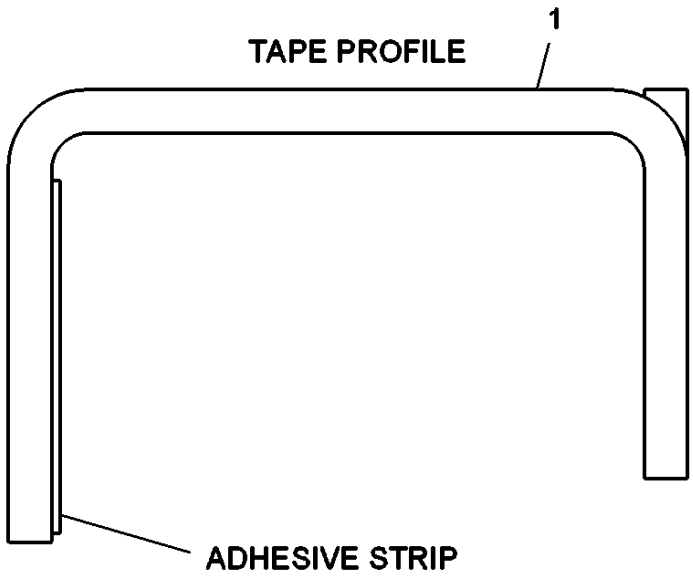


80054540

Description
**PROTECTIVE TAPE STRIP INSTALL**

Assembly No.
**80054540**
Revision: **A**

| Item | FN | Part | Qty | Description |
|---|---|---|---|---|
| 1 | | **80053612** | 1 | TAPE STRIP |

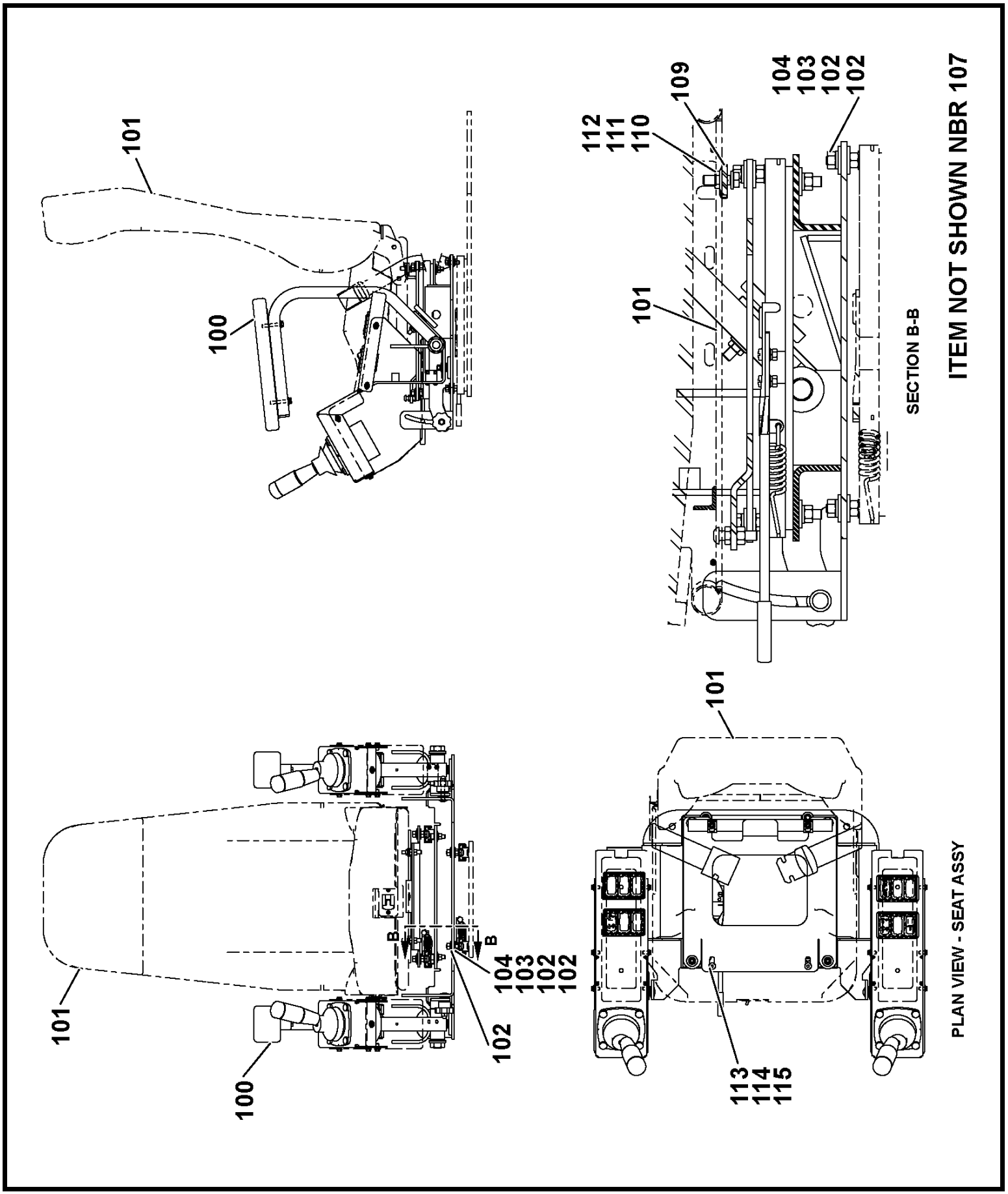


80029611

(SHEET 1 OF 1)

Description
**CONTROL SEAT INSTALLATION-DUAL AXIS WITH AUXILIARY HOIST**

Assembly No.
**80029611**
Revision: **D**

| Item | FN | Part | Qty | Description |
|---|---|---|---|---|
| 100 | + | **80029612** | 1 | CONTROL SEAT ASSEMBLY-DUAL AXIS WITH AUXILIARY HOIST |
| 101 | + | **80046456** | 1 | SEAT |
| 102 | | **7950150161** | 8 | WASHER, 5/16" FLAT PLAIN WIDE |
| 103 | | **7950150050** | 4 | WASHER, LOCK 5/16" I.D. |
| 104 | | **7660150008** | 4 | NUT, HEX<br>5/16" - 18 N.C.<br>GRADE 8 |
| 109 | | **80023851** | 1 | BRACKET, SEAT BAR |
| 110 | | **80076029** | 2 | NUT |
| 111 | | **7950150050** | 2 | WASHER, LOCK 5/16" I.D. |
| 112 | | **7115150850** | 2 | CAP SCREW,<br>5/16" - 18 N.C. X 1"<br>GRADE 5 |
| 113 | | **7110151018** | 2 | CAP SCREW,<br>5/16" - 18 N.C. X 1 1/4"<br>GRADE 1 |
| 114 | | **7660150200** | 2 | NUT, JAM<br>5/16" - 18 N.C.<br>GRADE A |
| 115 | | **7660152701** | 2 | LOCKNUT<br>5/16" - 18 N.C. |

**+ SEE FURTHER BREAKDOWN THIS GROUP**

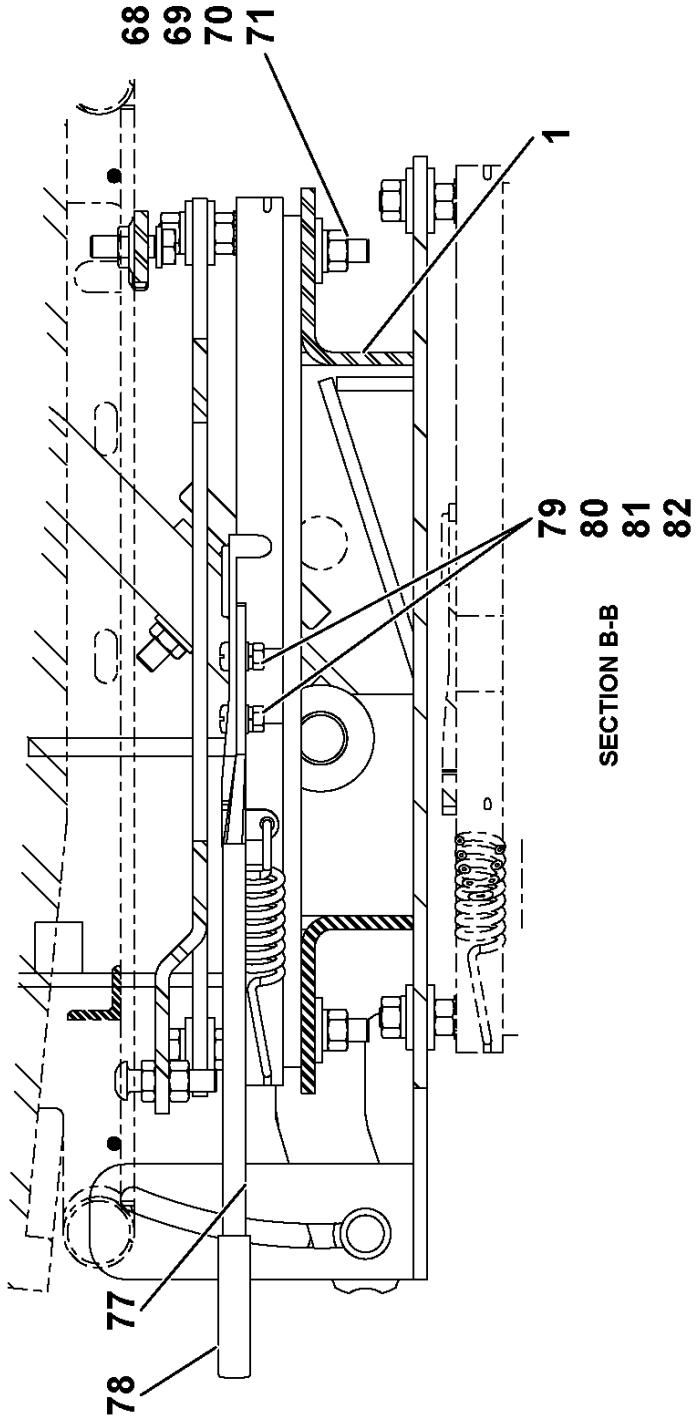


SECTION B-B

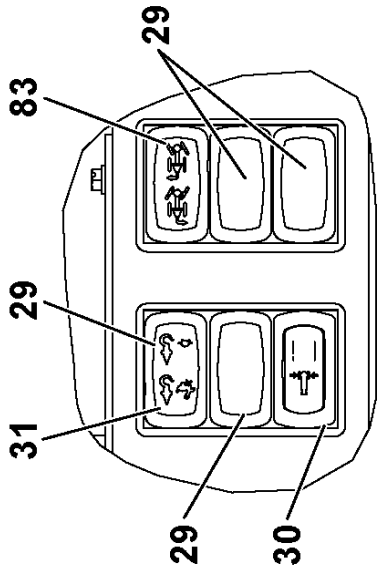


SWITCHES BELOW LEFT ARM REST
INSTALL AS SHOWN

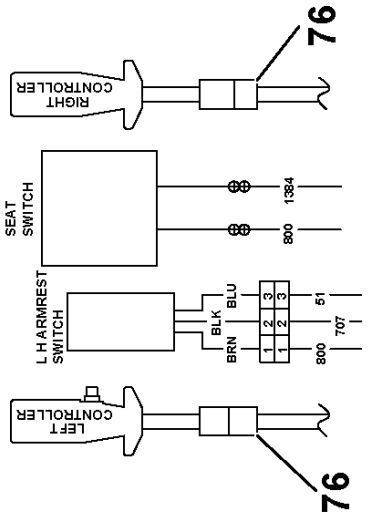


REAR VIEW OF SEAT SWITCHES

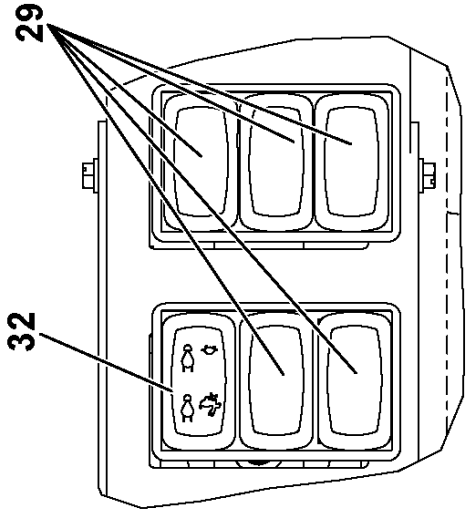


SWITCHES BELOW RIGHT ARM REST
INSTALL AS SHOWN

80029612

(SHEET 3 OF 3)

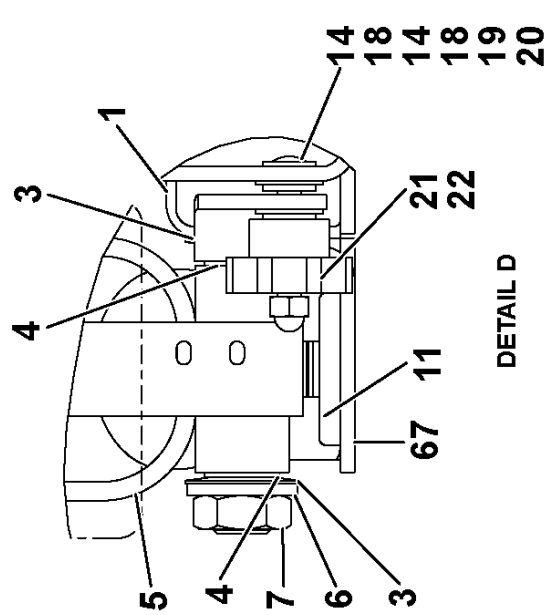


DETAIL D

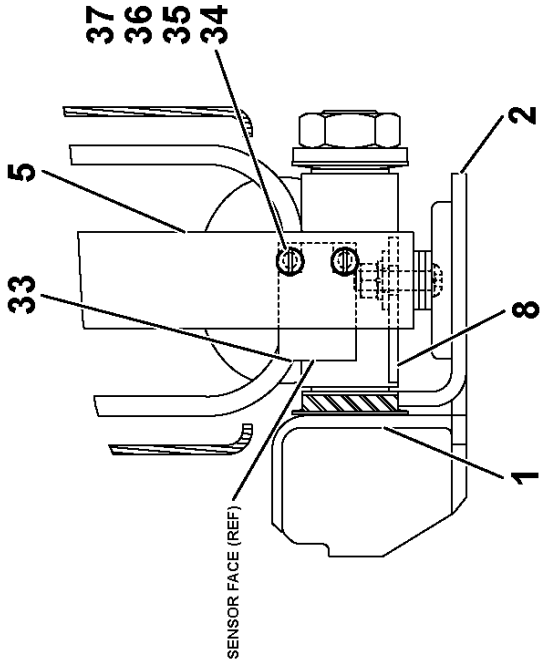


SECTION E-E

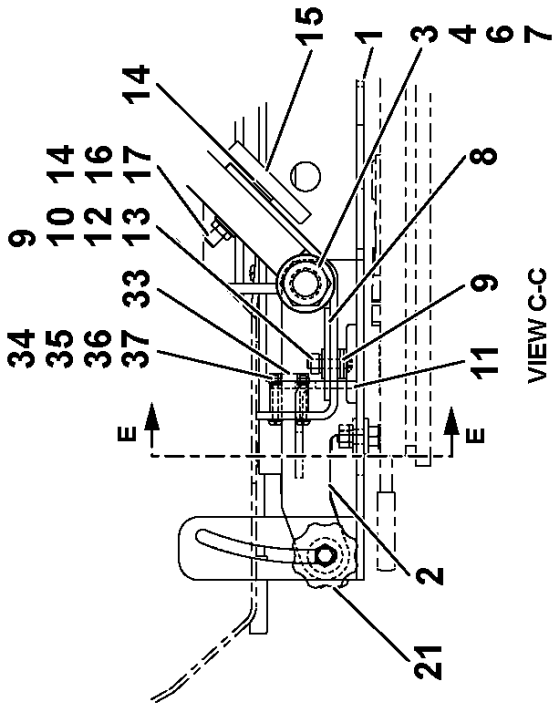


VIEW C-C

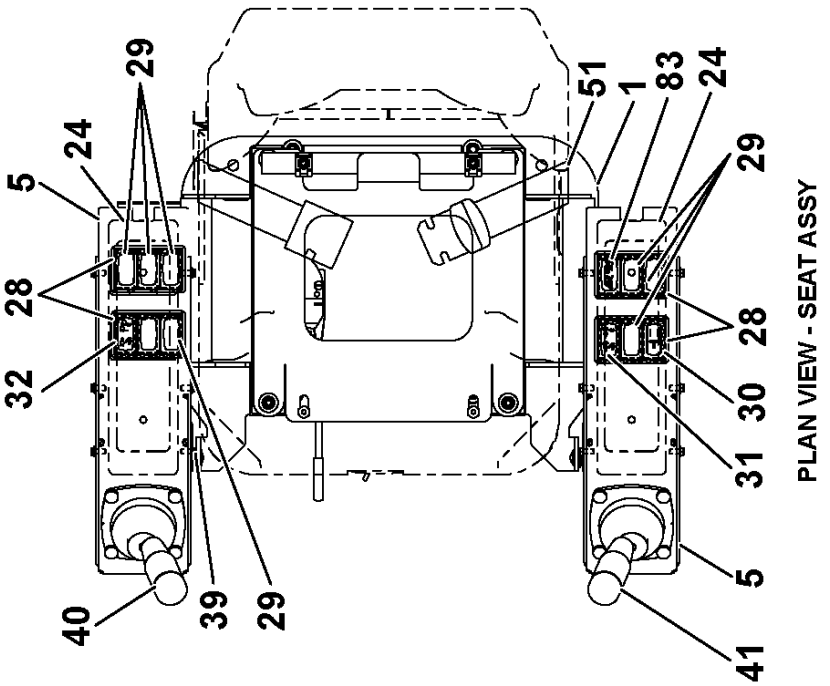


PLAN VIEW - SEAT ASSY

80029612

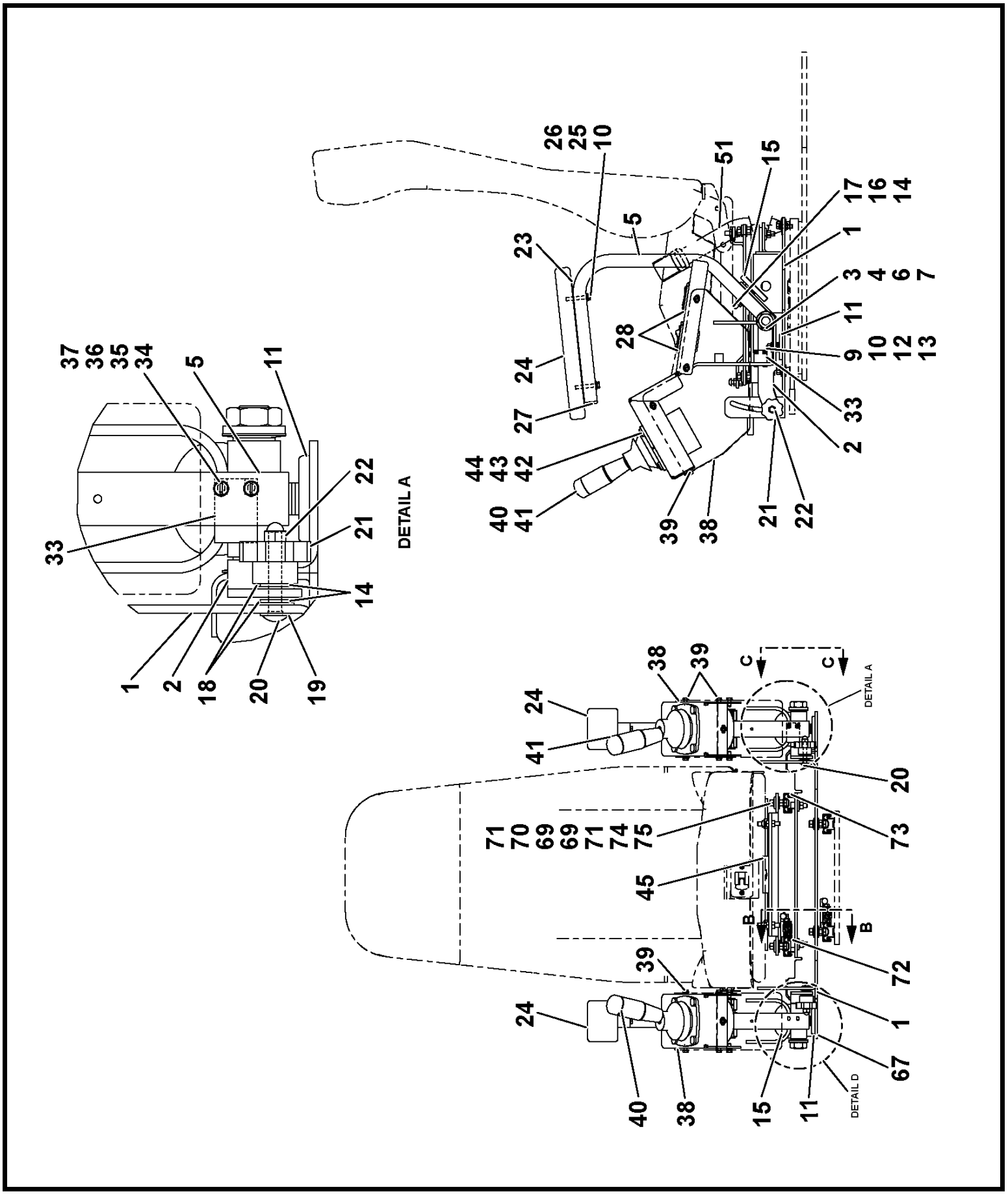


80029612

(SHEET 1 OF 3)

Description
**CONTROL SEAT ASSEMBLY-DUAL AXIS WITH AUXILIARY HOIST**

Assembly No.
**80029612**
Revision: **F**

| Item | FN | Part | Qty | Description |
|---|---|---|---|---|
| 1 | | **80023849** | 1 | ARM SUPPORT |
| 2 | | **6245100077** | 1 | BRACKET |
| 3 | | **7949001227** | 4 | WASHER, BEVELED |
| 4 | | **7199001289** | 4 | BUSHING |
| 5 | | **80017432** | 2 | ARMREST |
| 6 | | **7949000236** | 2 | FLAT WASHER, 3/4" |
| 7 | | **7660220200** | 2 | NUT, HEX JAM<br>3/4" - 10 N.C. |
| 8 | | **6705170914** | 1 | PLATE |
| 9 | | **7950140161** | 8 | WASHER, 1/4" I.D. FLAT WIDE |
| 10 | | **7950140050** | 6 | WASHER, LOCK 1/4" |
| 11 | | **7616000519** | 2 | MAGNET |
| 12 | | **7660141601** | 2 | NUT, 1/4-20UNC HEX LOCK |
| 13 | | **7110140818** | 2 | CAP SCREW,<br>1/4" - 20 N.C. X 1"<br>GRADE 1 |
| 14 | | **7950150141** | 8 | WASHER, FLAT 5/16" |
| 15 | | **7616000517** | 2 | MAGNET, CUP |
| 16 | | **7660151601** | 2 | LOCKNUT<br>5/16" - 18 N.C.<br>GRADE 5 |
| 17 | | **7110151618** | 2 | CAP SCREW,<br>5/16" -18 N.C. X 2"<br>GRADE 1 |
| 18 | | **7949001186** | 2 | WASHER, BLACK NYLON |
| 19 | | **7949000623** | 2 | WASHER, BLACK PLASTIC |
| 20 | | **7111151664** | 2 | BOLT, CARRIAGE<br>5/16" -18 N.C. X 2" |
| 21 | | **7511000093** | 2 | KNOB, FLUTED |
| 22 | | **7660152200** | 2 | NUT, ACORN<br>5/16" - 18 N.C. |
| 23 | | **6705018338** | 2 | PLATE |
| 24 | | **7033001063** | 2 | PAD, ARMREST |
| 25 | | **7950140141** | 6 | WASHER, FLAT 1/4" PLAIN NARROW |
| 26 | | **7115141450** | 4 | CAP SCREW, 1/4-20UNC X 1 3/4 |
| 27 | | **7242100002** | 2 | BUTTON, SQUARE |
| 28 | | **7364100179** | 4 | BEZEL, L-SERIES 3 GANG LM3 |

Description
**CONTROL SEAT ASSEMBLY-DUAL AXIS WITH AUXILIARY HOIST**

Assembly No.
**80029612**
Revision: **F**

| Item | FN | Part | Qty | Description |
|---|---|---|---|---|
| 29 | | **7242100005** | 8 | PLUG, L SERIES LH1 PANEL |
| 30 | | **7872100208** | 1 | SWITCH, L-SERIES SWING BRAKE |
| 31 | | **7872100205** | 1 | SWITCH, L-SERIES AUX HOIST |
| 32 | | **7872100204** | 1 | SWITCH, L-SERIES MAIN HOIST |
| 33 | + | **6872100045** | 1 | SWITCH ASSEMBLY - PROXIMITY<br>(NORMALLY OPEN)<br>(COMPLETE ASSEMBLY) |
| 34 | | **7951110014** | 2 | WASHER, 4MM I.D. |
| 35 | | **7951110210** | 2 | LOCKWASHER, 4MM I.D. |
| 36 | | **7661110003** | 2 | NUT, HEX<br>4 MM N.C. |
| 37 | | **7121111301** | 2 | SCREW, M4X30 LONG SLOTTED PAN |
| 38 | | **7245100056** | 2 | COVER, ARMREST |
| 39 | | **7792151221** | 2 | HEX TAP SCREW, M6X12 DIN 7500 |
| 40 | + | **80004322** | 1 | CONTROLLER ASSEMBLY - 8-32 VOLT<br>RIGHT HAND ARMREST<br>(COMPLETE ASSEMBLY) |
| 41 | + | **80004326** | 1 | CONTROLLER ASSEMBLY - 8-32 VOLT<br>LEFT HAND ARMREST<br>WITH AUXILIARY HOIST<br>(COMPLETE ASSEMBLY) |
| 42 | | **7101101210** | 8 | SCREW, MACHINE<br>3/16" - 32 NF X 1 1/2" |
| 43 | | **7258001451** | 8 | CAP, 1/4" |
| 44 | | **7429000011** | 8 | FASTENER, WELL-NUT |
| 45 | | **80023842** | 1 | PLATE, SEAT MOUNT |
| 51 | # | **7576000311** | 1 | KIT, SEAT BELT |
| 67 | | **80023723** | 1 | BRACKET |
| 68 | | **7110150805** | 4 | CAP SCREW,<br>5/16" - 18 N.C. X 1"<br>GRADE 1 |
| 69 | | **7950150161** | 12 | WASHER, 5/16" FLAT PLAIN WIDE |
| 70 | | **7950150050** | 8 | WASHER, LOCK 5/16" I.D. |
| 71 | | **7660150008** | 12 | NUT, HEX<br>5/16" - 18 N.C.<br>GRADE 8 |
| 72 | # | **7798100005** | 1 | TRACK, CONTROL |
| 73 | # | **7798100006** | 1 | TRACK, FREE |

**+ SEE FURTHER BREAKDOWN THIS GROUP** **# SERVICED AS AN ASSEMBLY ONLY**

Description
**CONTROL SEAT ASSEMBLY-DUAL AXIS WITH AUXILIARY HOIST**

Assembly No.
**80029612**
Revision: **F**

| Item | FN | Part | Qty | Description |
|---|---|---|---|---|
| 74 | | **7950150350** | 4 | WASHER, LOCK 5/16" |
| 75 | | **7115150950** | 4 | CAP SCREW,<br>5/16" - 18 N.C. X 1 1/8"<br>GRADE 5 |
| 76 | + | **80030292** | 1 | HARNESS ASSEMBLY-SEAT |
| 77 | | **7768003904** | 1 | ARM, LEVER |
| 78 | | **7822000598** | 1 | SLEEVE, VINYL |
| 79 | | **7121130801** | 2 | MACHINE SCREW, M5X12 SLOTTED |
| 80 | | **7951130014** | 2 | WASHER, FLAT M5 I.D. |
| 81 | | **7951130210** | 2 | LOCKWASHER, 5MM I.D. |
| 82 | | **7661130003** | 2 | NUT, HEX<br>5MM |
| 83 | | **80006228** | 1 | SWITCH L-SERIES REAR STEER |
| 84 | | **7949180028** | 4 | WASHER |
| 86 | | **7345001446** | 2 | TERMINAL, MALE<br>22 - 18 AWG |
| 90 | | **7429000549** | 12 | CLIP |

**+ SEE FURTHER BREAKDOWN THIS GROUP**

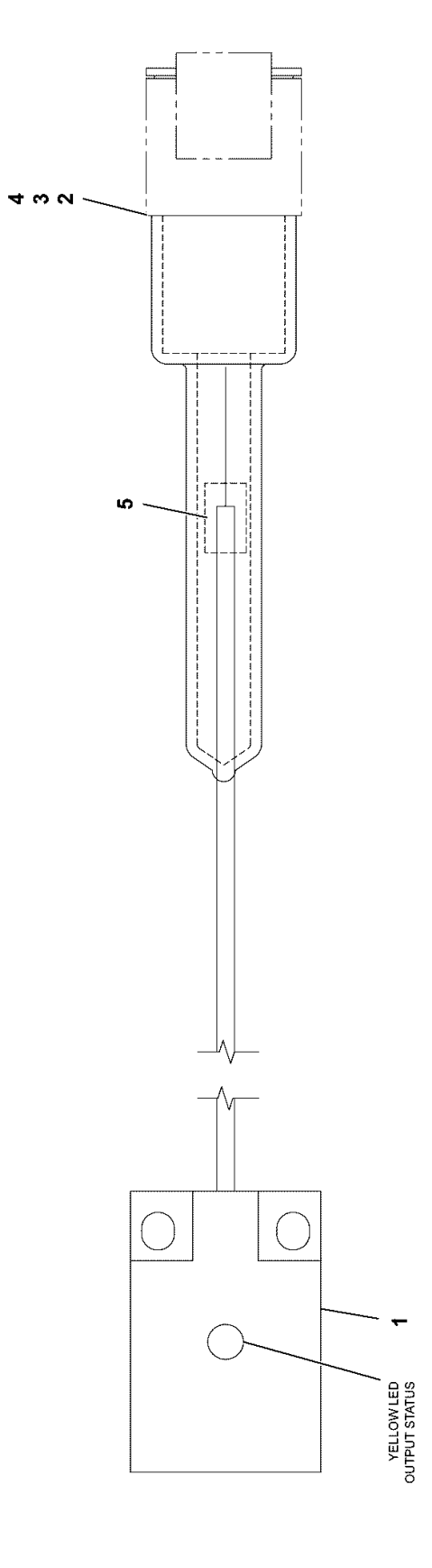


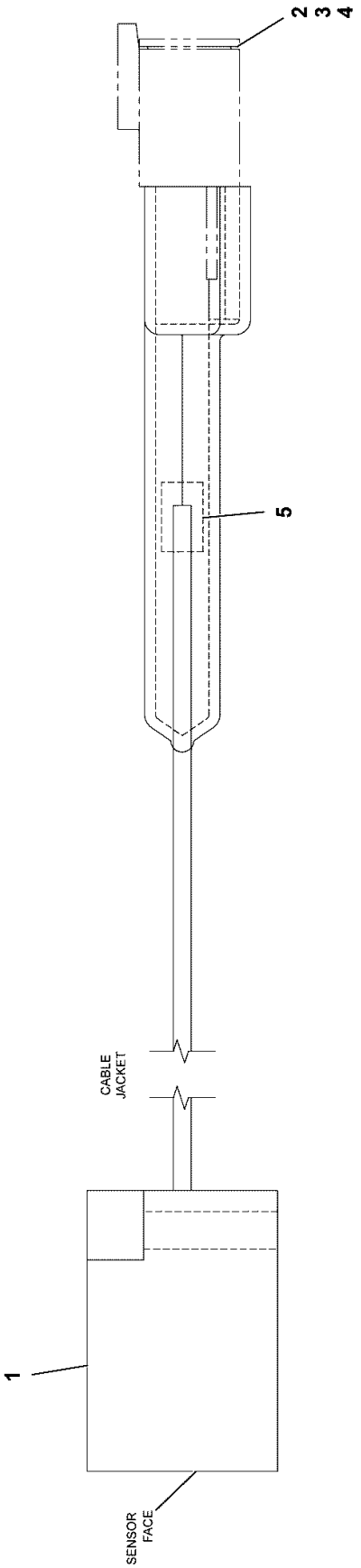


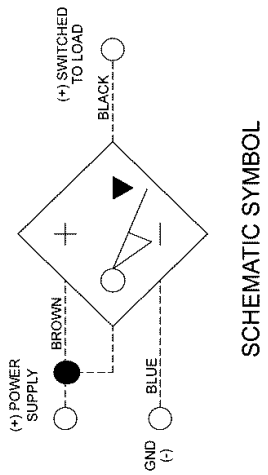


SCHEMATIC SYMBOL

| CONNECTOR LOADING | |
|---|---|
| CAVITY | WIRE |
| 1 | BROWN |
| 2 | BLACK |
| 3 | BLUE |

6872100045

(SHEET 1 OF 1)

Description
**SWITCH ASSEMBLY - PROXIMITY (NORMALLY OPEN)**
**(COMPLETE ASSEMBLY)**

Assembly No.
**6872100045**
Revision: **A**

| Item | FN | Part | Qty | Description |
|---|---|---|---|---|
| 1 | | **7872100062** | 1 | PROXY SENSOR-PNP 10mm RANGE |
| 2 | | **7892100010** | 1 | RECEPTACLE, DTM-3P |
| 3 | | **7172100003** | 3 | BOOT-DTM3P-RECP |
| 4 | | **7689100033** | 3 | PIN |
| 5 | | **8594100256** | 1 | 1/4" SHRINK TUBING (CLEAR) W/M |

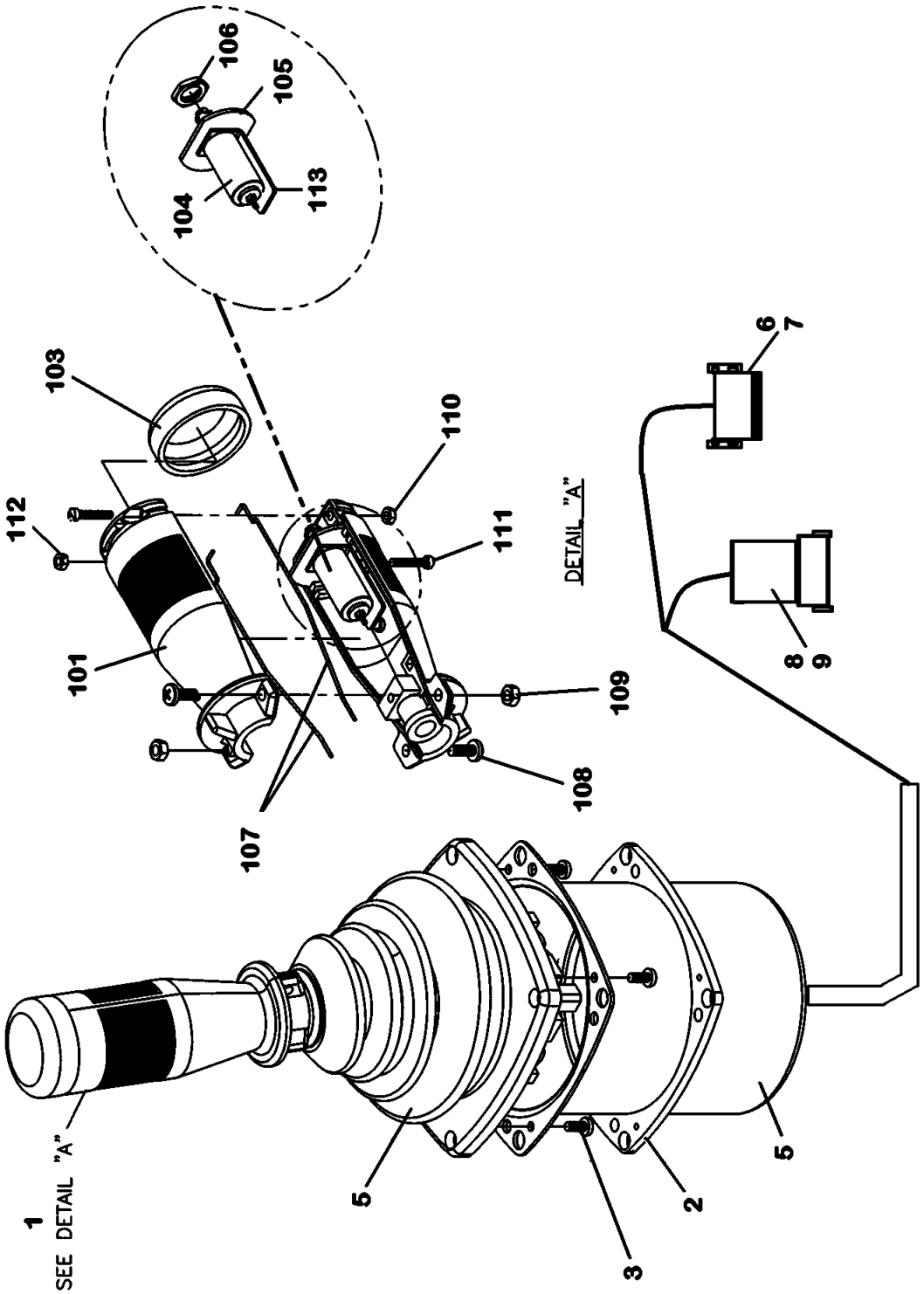


80004322

(SHEET 1 OF 1)

Description
**CONTROLLER ASSEMBLY - 8-32 VOLT RIGHT HAND ARMREST (COMPLETE ASSEMBLY)**

Assembly No.
**80004322**
Revision:

| Item | FN | Part | Qty | Description |
|---|---|---|---|---|
| 1 | | **90012640** | 1 | HANDLE ASSY.<br>INCLUDES ITEMS 101 THRU 113 |
| 2 | | **9352100772** | 1 | GASKET |
| 3 | | **90000942** | 4 | SCREW |
| 4 | | **90000943** | 1 | COVER, HOUSING |
| 5 | | **9352100771** | 1 | BOOT |
| 6 | | **7709000812** | 1 | PLUG<br>12 SOCKET |
| 7 | | **7826000087** | 12 | SOCKET, 16-14 GA |
| 8 | | **7892000832** | 1 | RECEPTACLE,<br>12 PIN |
| 9 | | **7689001782** | 12 | PIN, 18 - 16 GAGE |
| 101 | | **9352100792** | 1 | HANDLE, SHELL (BOTH HALVES) |
| 102 | | **9352100787** | 1 | COUPLING |
| 103 | | **9511100017** | 1 | BOOT, CAP |
| 104 | | **90012641** | 1 | SOLENIOD ASSY. 24V THUMPER |
| 105 | | **9352100789** | 1 | PLATE, MOUNTING |
| 106 | | **9352100692** | 1 | NUT |
| 107 | | **9352100657** | 2 | GASKET |
| 108 | | **9352100777** | 2 | SCREW |
| 109 | | **9352100791** | 2 | NUT |
| 110 | | **9352100528** | 2 | NUT |
| 111 | | **9511100007** | 2 | SCREW |
| 112 | | **9352100669** | 2 | SET SCREW |
| 113 | | **90012642** | 1 | BRACKET |

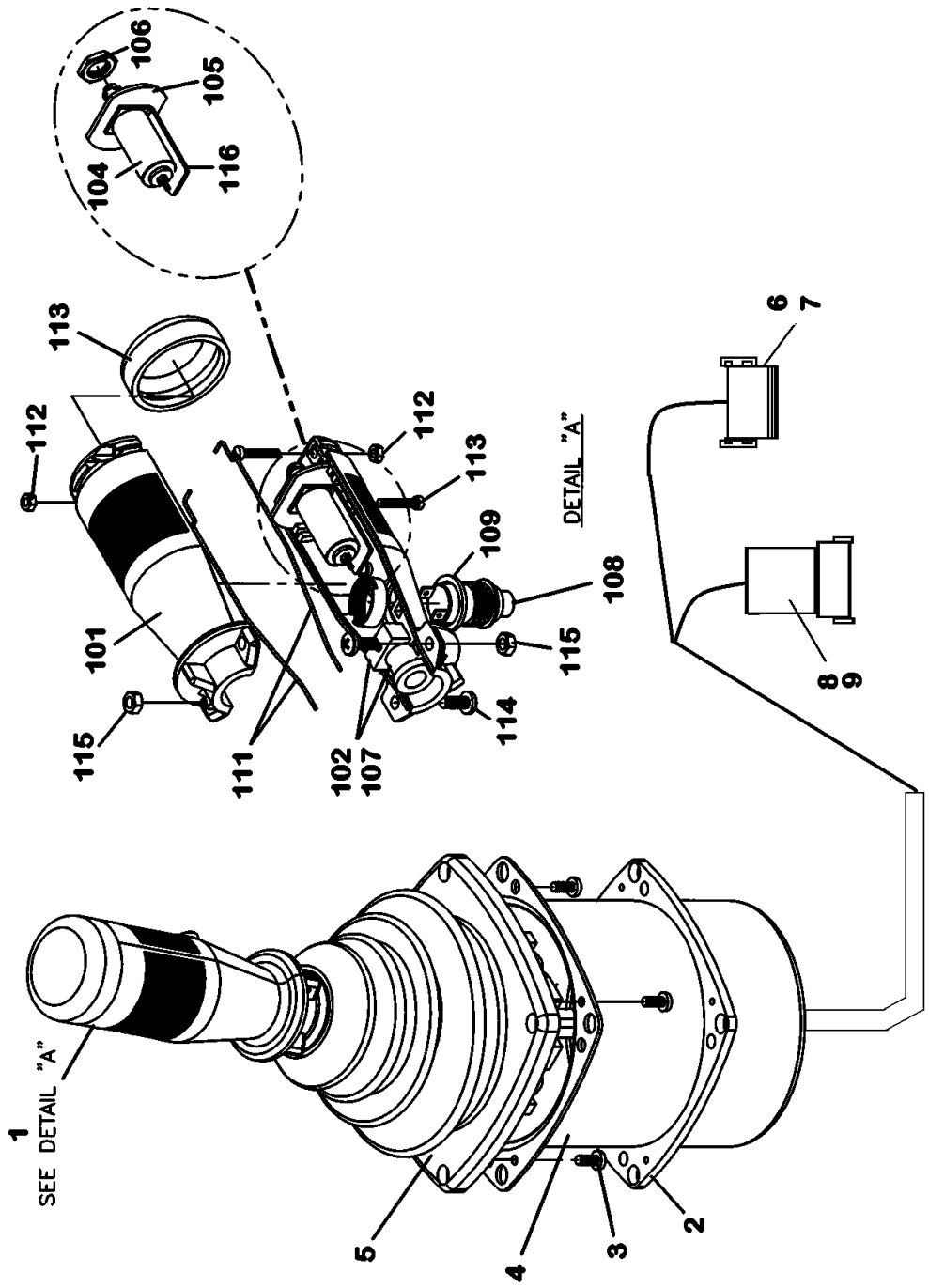


80004326

(SHEET 1 OF 1)

Description
**CONTROLLER ASSEMBLY - 8-32 VOLT LEFT HAND ARMREST WITH AUXILIARY HOIST**

Assembly No.
**80004326**
Revision:

| Item | FN | Part | Qty | Description |
|---|---|---|---|---|
| 1 | | **90012643** | 1 | HANDLE ASSY.<br>INCLUDES ITEMS 101 THRU 115 |
| 2 | | **9352100772** | 1 | GASKET |
| 3 | | **90000942** | 4 | SCREW |
| 4 | | **90000943** | 1 | COVER, HOUSING |
| 5 | | **9352100771** | 1 | BOOT |
| 6 | | **7709000812** | 1 | PLUG<br>12 SOCKET |
| 7 | | **7826000087** | 12 | SOCKET, 16-14 GA |
| 8 | | **7892000832** | 1 | RECEPTACLE,<br>12 PIN |
| 9 | | **7689001782** | 12 | PIN, 18 - 16 GAGE |
| 101 | | **9352100786** | 1 | HANDLE, SHELL (BOTH HALVES) |
| 102 | | **9352100787** | 1 | COUPLING |
| 103 | | **9511100017** | 1 | BOOT, CAP |
| 104 | | **90012641** | 1 | SOLENIOD ASSY. 24V THUMPER |
| 105 | | **9352100789** | 1 | PLATE, MOUNTING |
| 106 | | **9352100692** | 1 | NUT |
| 107 | | **9352100669** | 2 | SET SCREW |
| 108 | | **9352100790** | 1 | SWITCH, PUSH BUTTON |
| 109 | | **9176100603** | 1 | O-RING |
| 110 | | **9352100676** | 1 | NUT |
| 111 | | **9352100657** | 2 | GASKET |
| 112 | | **9352100528** | 2 | NUT |
| 113 | | **9511100007** | 2 | SCREW |
| 114 | | **9352100777** | 2 | SCREW |
| 115 | | **9352100791** | 2 | NUT |
| 116 | | **90012642** | 1 | BRACKET |

| WIRE NO | COLOR | TYPE | SAE SIZE | LENGTH INCHES | TP | B/M ITEM # | REMARKS | TP | B/M ITEM NO | REMARKS |
|---|---|---|---|---|---|---|---|---|---|---|
| 43D | WHT | GXL | 20 | 10 | D | 11 | ——— | S3 | STRIP | SEE DETAIL |
| 43E | | | 20 | 10 | E | STRIP | CRIMP W/43EE | S3 | STRIP | SEE DETAIL |
| 43EE | | | 20 | 4 | E | 12 | CRIMP W/43E | E | 11 | ——— |
| 43F | | | 20 | 7 | F | STRIP | CRIMP W/43FF | S3 | STRIP | SEE DETAIL |
| 43FF | | | 20 | 4 | F | 12 | CRIMP W/43F | F | 11 | ——— |
| 43H | | | 20 | 7 | H | STRIP | CRIMP W/43HH | S3 | STRIP | SEE DETAIL |
| 43HH | | | 20 | 4 | H | 12 | CRIMP W/43H | H | 11 | ——— |
| 43K | | | 18 | 57 | K | 8 | ——— | S1 | STRIP | SEE DETAIL |
| 43L | | | 20 | 20 | L | STRIP | CRIMP W/43LL | S1 | STRIP | SEE DETAIL |
| 43LL | | | 20 | 4 | L | 12 | CRIMP W/43L | L | 11 | ——— |
| 43X | | | 20 | 34 | S1 | STRIP | SEE DETAIL | S3 | STRIP | SEE DETAIL |
| 48 | | | 18 | 101 | A | 8 | ——— | E | 11 | ——— |
| 50 | | | 18 | 101 | A | 8 | ——— | D | 11 | ——— |
| 51B | | | 20 | 11 | B | 9 | ——— | S2 | STRIP | SEE DETAIL |
| 51C | | | 20 | 17 | C | 8 | ——— | S2 | STRIP | SEE DETAIL |
| 51D | | | 20 | 8 | D | 11 | ——— | S2 | STRIP | SEE DETAIL |
| 51E | | | 20 | 8 | E | 11 | ——— | S2 | STRIP | SEE DETAIL |
| 51F | | | 20 | 7 | F | 11 | ——— | S2 | STRIP | SEE DETAIL |
| 51G | | | 20 | 28 | G | 8 | ——— | S1 | STRIP | SEE DETAIL |
| 51H | | | 20 | 7 | H | 11 | ——— | S2 | STRIP | SEE DETAIL |
| 51K | | | 18 | 58 | K | 8 | ——— | S1 | STRIP | SEE DETAIL |
| 51L | | | 20 | 19 | L | 11 | ——— | S1 | STRIP | SEE DETAIL |
| 51X | | | 18 | 35 | S1 | STRIP | SEE DETAIL | S2 | STRIP | SEE DETAIL |
| 415 | | | 18 | 77 | A | 8 | ——— | L | 11 | ——— |
| 479 | | | 18 | 77 | A | 8 | ——— | L | 11 | ——— |
| 506 | | | 18 | 101 | A | 8 | ——— | E | 11 | ——— |
| 631 | | | 18 | 98 | A | 8 | ——— | F | 11 | ——— |
| 707 | | | 20 | 104 | A | 8 | ——— | B | 9 | ——— |
| 792 | | | 18 | 98 | A | 8 | ——— | H | 11 | ——— |
| 793 | | | 18 | 98 | A | 8 | ——— | H | 11 | ——— |
| 800 | | | 20 | 30 | B | 9 | ——— | J | 13 | ——— |
| 1384C | | | 20 | 16 | C | 8 | ——— | S2 | STRIP | SEE DETAIL |
| 1384D | | | 20 | 7 | D | 11 | ——— | S2 | STRIP | SEE DETAIL |
| 1384E | | | 20 | 7 | E | 11 | ——— | S2 | STRIP | SEE DETAIL |
| 1384F | | | 20 | 8 | F | 11 | ——— | S2 | STRIP | SEE DETAIL |
| 1384G | | | 20 | 27 | G | 8 | ——— | S1 | STRIP | SEE DETAIL |
| 1384H | | | 20 | 8 | H | 11 | ——— | S2 | STRIP | SEE DETAIL |
| 1384J | | | 20 | 20 | J | 13 | ——— | S2 | STRIP | SEE DETAIL |
| 1384K | | | 18 | 59 | K | 8 | ——— | S1 | STRIP | SEE DETAIL |
| 1384L | | | 20 | 18 | L | 11 | ——— | S1 | STRIP | SEE DETAIL |
| 1384X | | | 20 | 35 | S1 | STRIP | SEE DETAIL | S2 | STRIP | SEE DETAIL |
| SHD1 | WHT | GXL | 20 | 2 | A | STRIP | CABLE PC1 | | | |

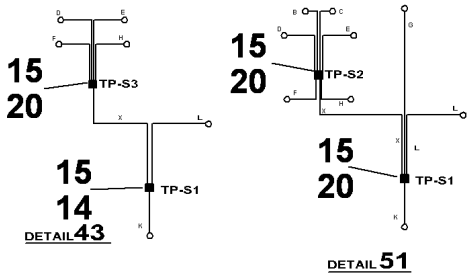


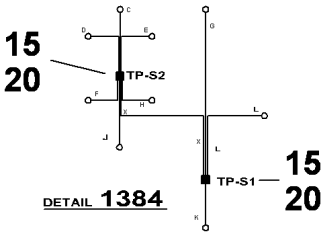


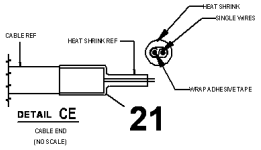


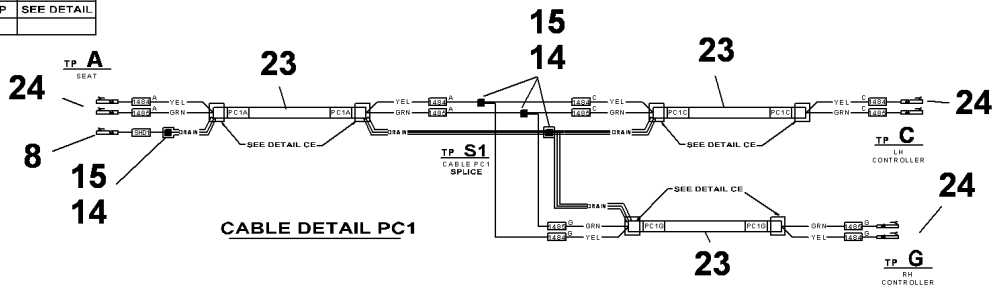

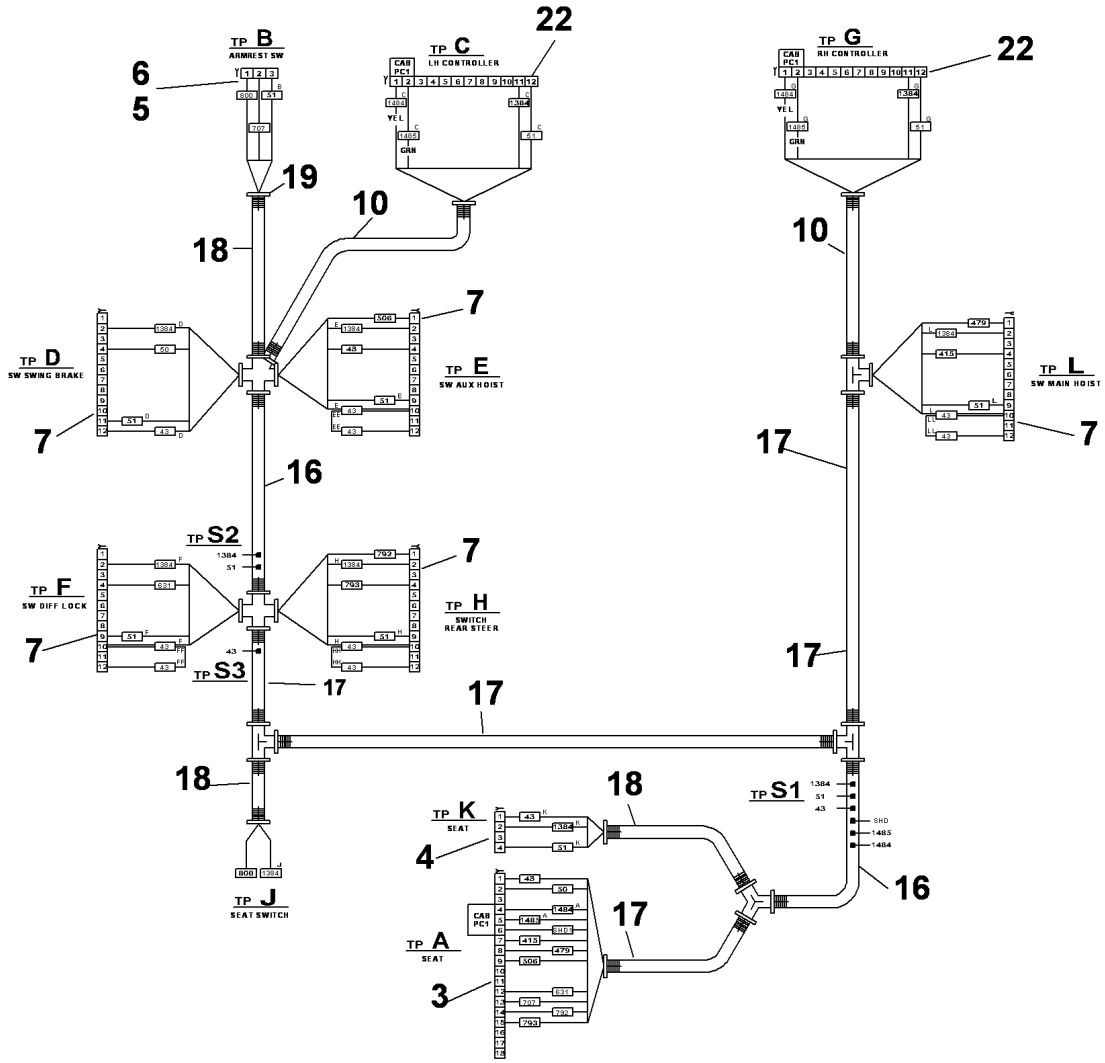


80030292

(SHEET 1 OF 2)

Description
**HARNESS ASSEMBLY-SEAT**

Assembly No.
**80030292**
Revision: **A**

| Item | FN | Part | Qty | Description |
|---|---|---|---|---|
| 3 | | **80023115** | 1 | PLUG/DTV06-18SB W/WEDGE WV-18P |
| 4 | | **7709000936** | 1 | PLUG, 4 SOCKET |
| 5 | | **7709100877** | 1 | PLUG |
| 6 | | **7172100002** | 1 | BOOT, PLUG |
| 7 | | **7364100184** | 5 | CONNECTOR, L-SERIES SWITCHES |
| 8 | | **7826000626** | 17 | SOCKET,<br>16 - 18 AWG |
| 9 | | **7826100016** | 3 | SOCKET, DEUTSCH 22/20 GA NI |
| 10 | | **8594000005** | 2 | FLEXGUARD - .413" I.D.<br>(QUANTITY IN FEET) |
| 11 | | **7892100059** | 23 | TERMINAL |
| 12 | | **7892100058** | 4 | TERMINAL, FM MP 630 SERIES |
| 13 | | **7345001444** | 2 | TERMINAL, FEMALE |
| 14 | | **7892000194** | 5 | PARALLEL, NON - INSULATED<br>16 - 14 AWG |
| 15 | | **8594100256** | 1 | 1/4" SHRINK TUBING (CLEAR) W/M |
| 16 | | **8594000003** | 5 | FLEXGUARD - .625" I.D.<br>(QUANTITY IN FEET) |
| 17 | | **8594000004** | 4 | FLEXGUARD - .500" I.D.<br>(QUANTITY IN FEET) |
| 18 | | **8594000019** | 2 | FLEXGUARD, 1/4" I.D.<br>(QUANTITY IN FEET) |
| 19 | | **7850000208** | 27 | CABLE TIE 5.63", BLACK |
| 20 | | **7892000195** | 5 | PARALLEL, NON - INSULATED<br>12 - 10 AWG |
| 21 | | **8594100257** | 1 | TUBING, HEAT SHRINK 1/2" I.D.<br>LINER, MELTABLE<br>(QUANTITY IN FEET) |
| 22 | | **7709000812** | 2 | PLUG<br>12 SOCKET |
| 23 | | **80021593** | 12 | CABLE, 20 AWG CAN-BUS SHEILDED |
| 24 | | **7826100004** | 6 | SOCKET, (16 - 18) 30 SERIES |

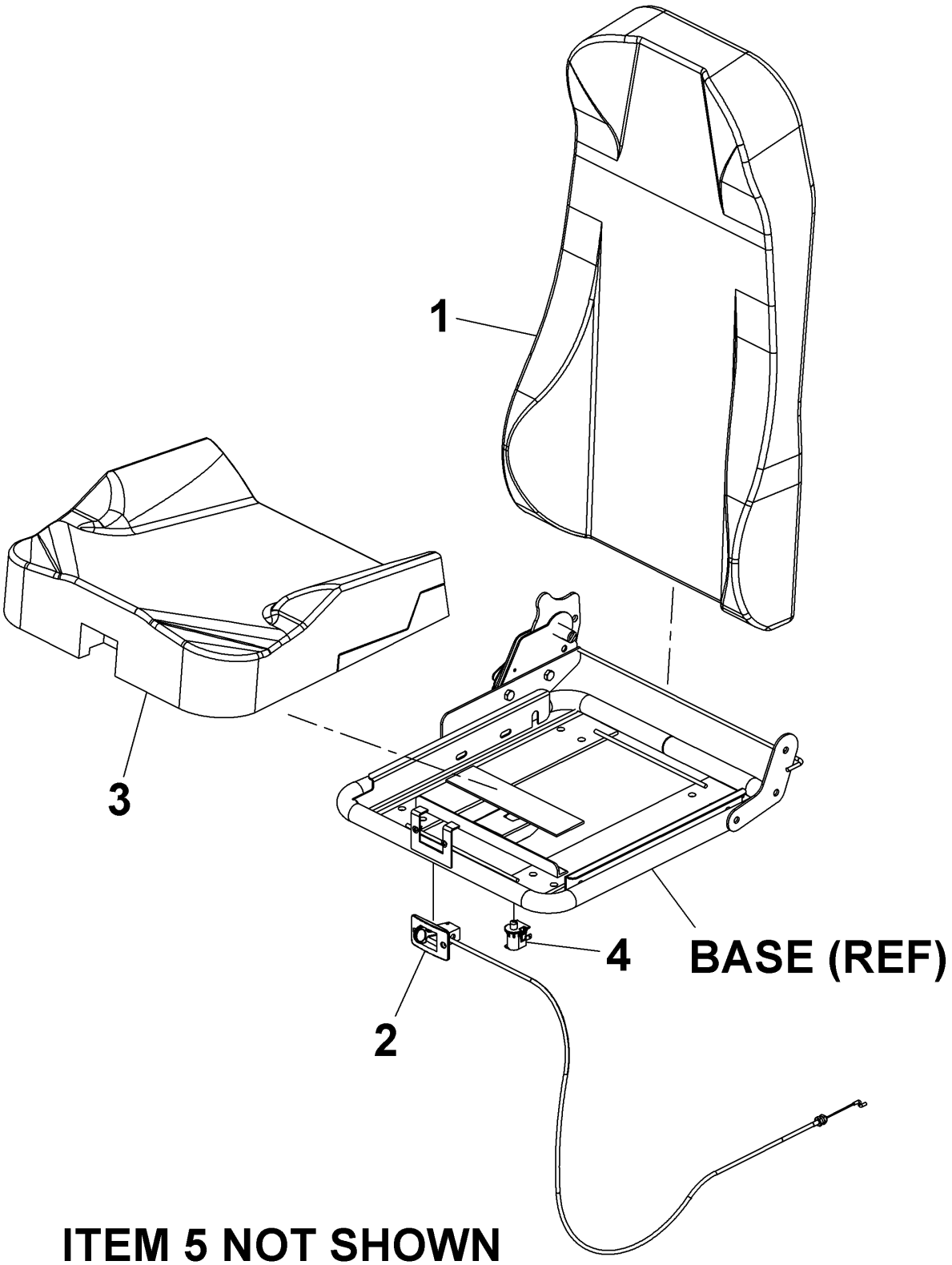


80046456

(SHEET 1 OF 1)

Description
**SEAT**

Assembly No.
**80046456**
Revision:

| Item | FN | Part | Qty | Description |
|---|---|---|---|---|
| 1 | | **90023916** | 1 | COVER ASSY. BACK |
| 2 | | **9798100792** | 1 | LEVER & CABLE ASSY. RECLINER |
| 3 | | **90023917** | 1 | COVER ASSY. CUSHION |
| 4 | | **90023918** | 1 | SWITCH ASSY. |
| 5 | | **90023919** | 1 | HARNESS ASSY. |

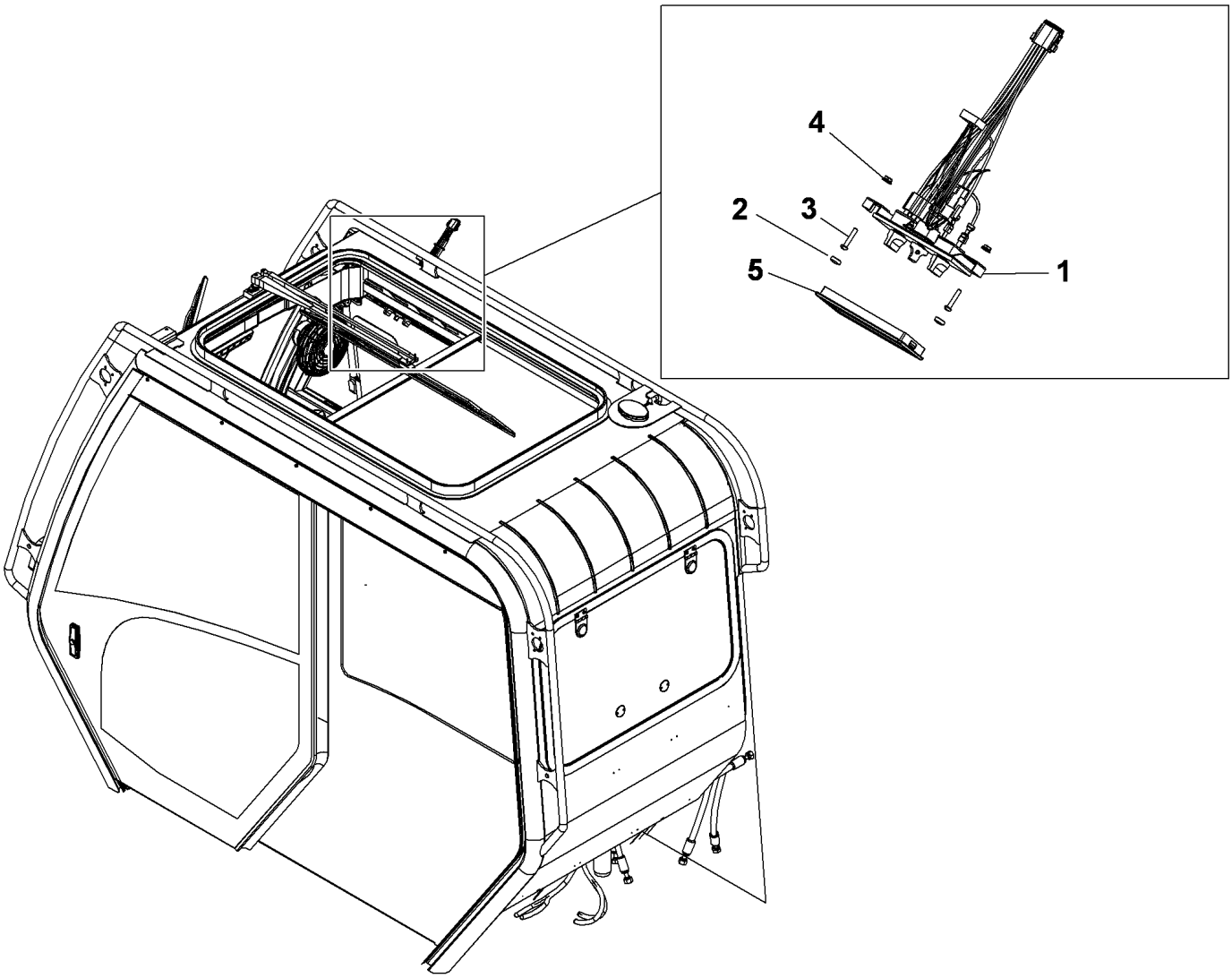


80042753

(SHEET 1 OF 1)

Description

Assembly No.
**80042753**
Revision: **A**

| Item | FN | Part | Qty | Description |
|---|---|---|---|---|
| 1 | + | **80027886** | 1 | HEATER & CONTROL PANEL (24V) |
| 2 | | **7258001452** | 2 | CAP #8 |
| 3 | | **7111100810** | 2 | SCREW, MACHINE<br>3/16" - 32 N.F. X 1"<br>GRADE 1 |
| 4 | | **7660102701** | 2 | LOCKNUT, FLANGE |
| 5 | | **80040417** | 1 | BEZEL |

**+ SEE FURTHER BREAKDOWN THIS GROUP**

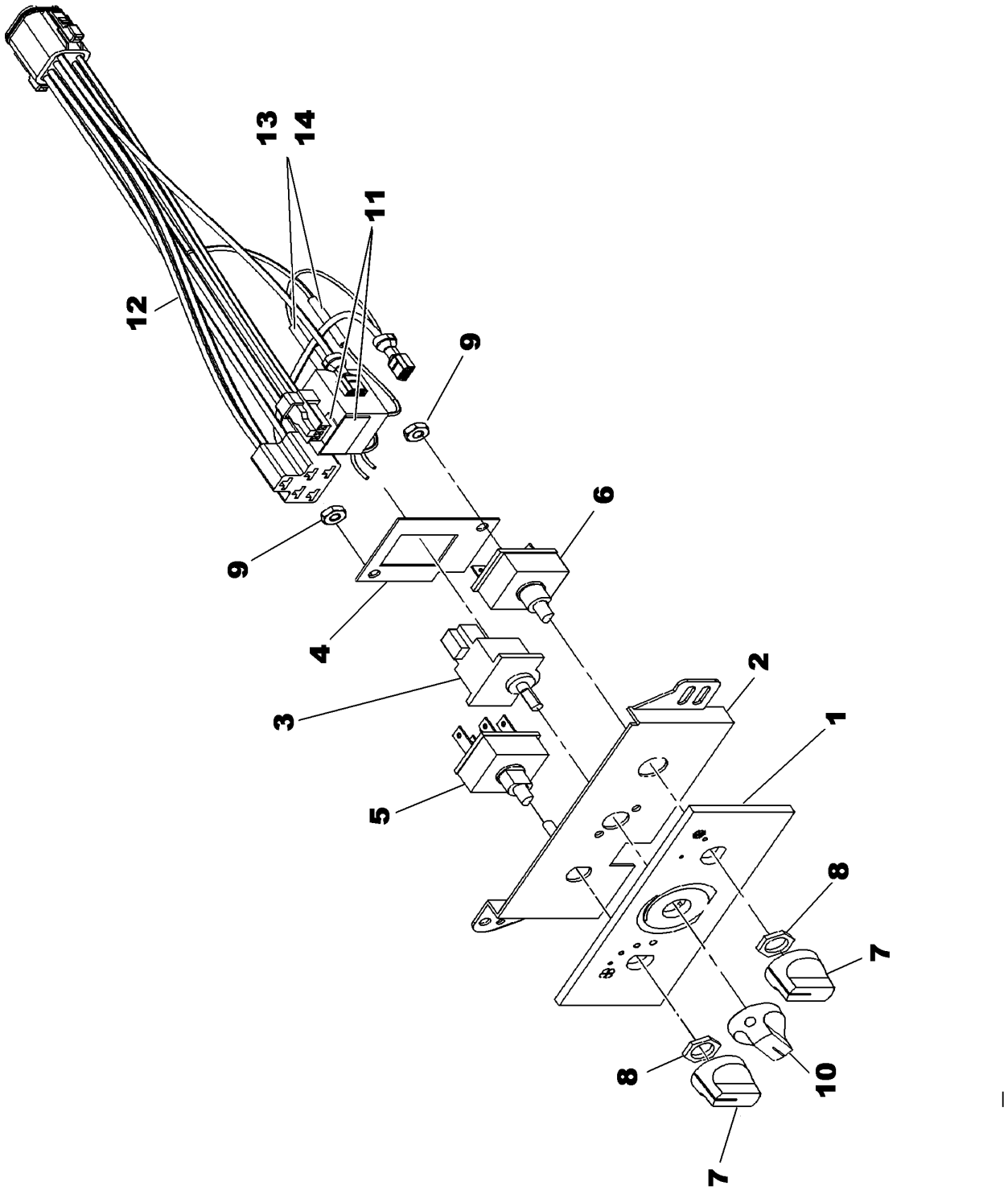


80027886

(SHEET 1 OF 1)

Description
**HEATER & CONTROL PANEL (24V)**

Assembly No.
**80027886**
Revision:

| Item | FN | Part | Qty | Description |
|---|---|---|---|---|
| 1 | | **90020653** | 1 | FACEPLATE, LIGHTED 24V. |
| 2 | | **90020643** | 1 | PLATE, BACKING |
| 3 | | **90020644** | 1 | POTENTIOMETER, CONTROL, TEMP. |
| 4 | | **90020645** | 1 | PLATE, MOUNTING |
| 5 | | **90020646** | 1 | SWITCH ASSY. BLOWER |
| 6 | | **90020647** | 1 | SWITCH ASSY. ON/OFF |
| 7 | | **90020648** | 2 | KNOB ASSY. |
| 8 | | **90020650** | 2 | NUT |
| 9 | | **90020651** | 2 | LOCKNUT |
| 10 | | **90020652** | 1 | KNOB W/SET SCREW |
| 12 | | **90020649** | 1 | HARNESS ASSY. |
| 13 | | **7709000811** | 1 | PLUG<br>8 SOCKET |
| 14 | | **7364100014** | 1 | WEDGE, 8 SOCKET |
| 15 | | **7826000087** | 8 | SOCKET, 16-14 GA |

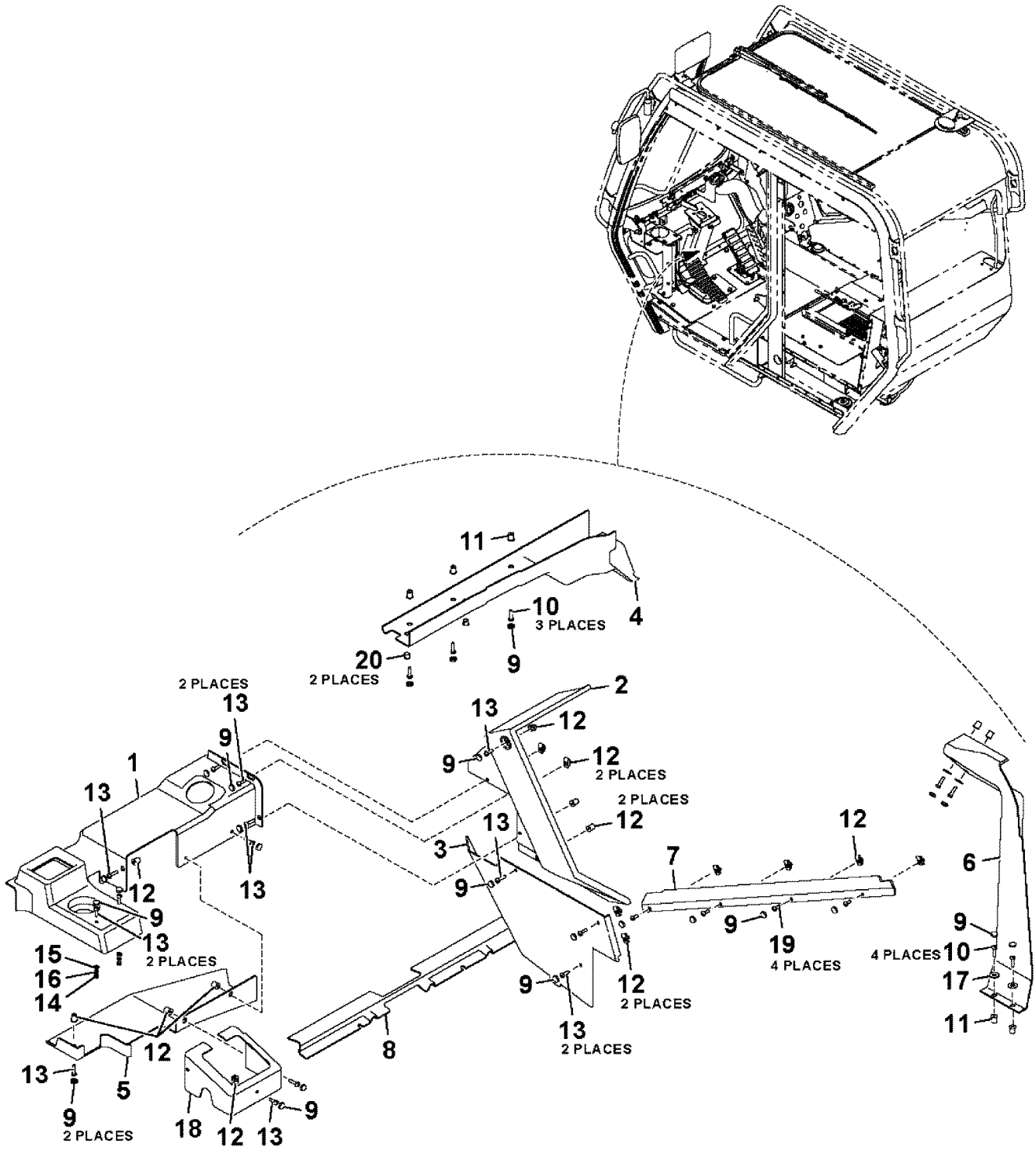


80024119

(SHEET 1 OF 1)

Description
**PLASTIC COVERS INSTALLATION**

Assembly No.
**80024119**
Revision: **H**

| Item | FN | Part | Qty | Description |
|---|---|---|---|---|
| 1 | | **80024177** | 1 | FRONT DASH COVER |
| 2 | | **80053545** | 1 | CONSOLE COVER ASSY |
| 3 | | **80024121** | 1 | COVER, BOTTOM |
| 4 | | **80005378** | 1 | COVER, TOP FRONT |
| 5 | | **80006552** | 1 | FRONT DASH BOTTOM COVER |
| 6 | | **80005189** | 1 | COVER, REAR CORNER (CAB) |
| 7 | | **80024123** | 1 | PLASTIC, CAB WINDOW RH |
| 8 | | **80006553** | 1 | COVER, ELECTRIC WIRE |
| 9 | | **7258001451** | 28 | CAP, 1/4" |
| 10 | | **7111140810** | 7 | SCREW, MACHINE<br>1/4" - 20 N.C. X 1"<br>GRADE 1 |
| 11 | | **7659000865** | 7 | NUT<br>1/4" - 20 N.C. |
| 12 | | **7659190019** | 19 | NUT, RETAINING M6 |
| 13 | | **7121151201** | 11 | SLOT, PMS M6X25 |
| 17 | | **7949001186** | 14 | WASHER, BLACK NYLON |
| 18 | | **80024122** | 1 | STEERING CONSOLE COVER |
| 19 | | **7121151001** | 8 | SLOT, PMS M6X16 |
| 21 | | **7111140610** | 2 | SCREW, MACHINE<br>1/4" - 20 N.C. X 3/4"<br>GRADE 1 |
| 22 | | **7429000542** | 2 | FASTENER, NUT 1/4" - 20 N.C. |

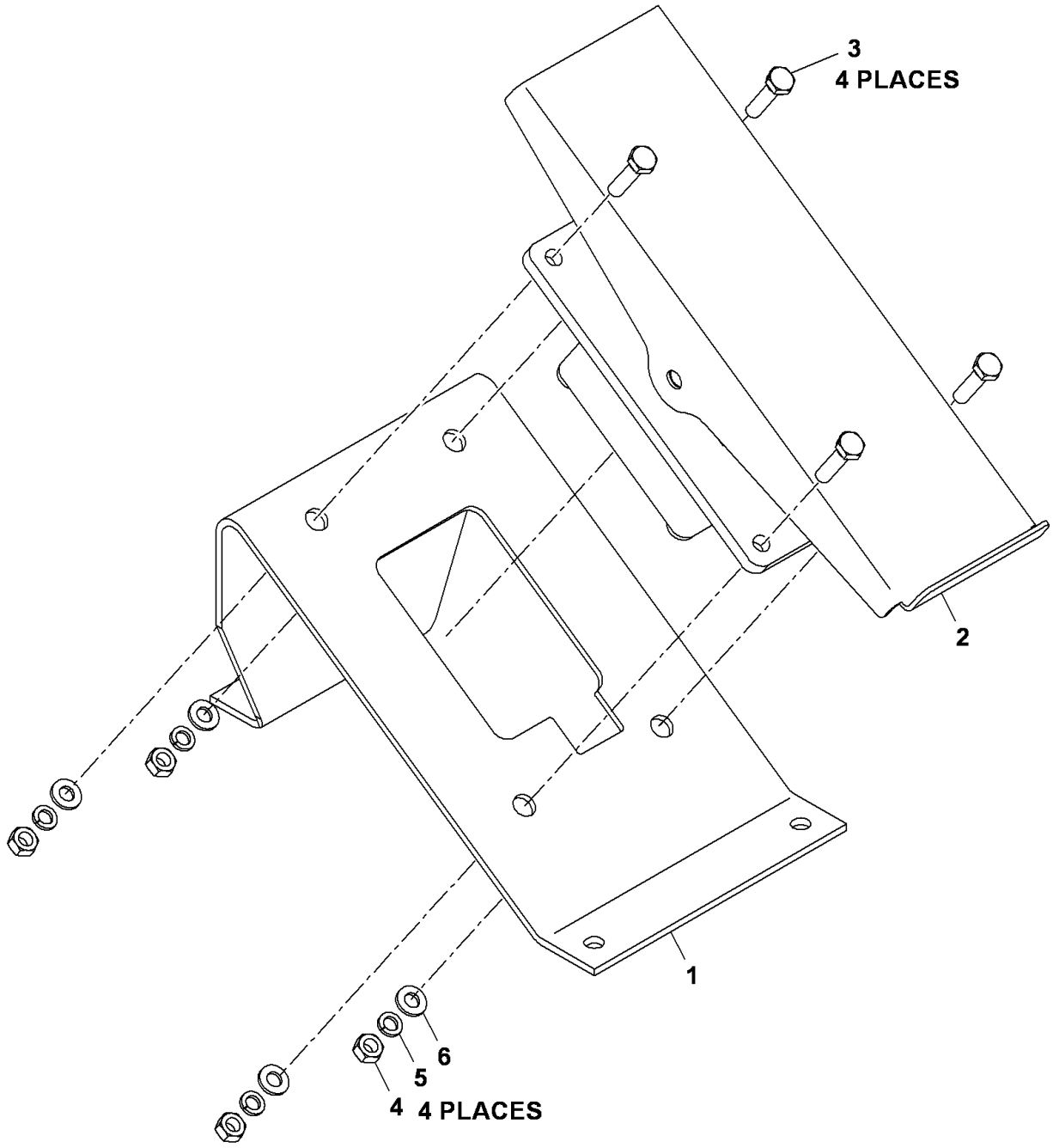


ITEMS NOT SHOWN NBR. 7, 8

6683100033

(SHEET 1 OF 1)

Description
**PEDAL INSTALLATION - BOOM TELESCOPE**

Assembly No.
**6683100033**
Revision: **A**

| Item | FN | Part | Qty | Description |
|---|---|---|---|---|
| 1 | | **6245100878** | 1 | BRACKET, PEDAL MOUNTING |
| 2 | + | **7683100010** | 1 | PEDAL ASSEMBLY - ELECTRONIC TELESCOPE (COMPLETE ASSEMBLY) |
| 3 | | **7126151253** | 4 | CAP SCREW, M6 X 25MM |
| 4 | # | **7661150003** | 4 | NUT, HEX |
| 5 | | **7951150210** | 4 | LOCKWASHER, 6MM I.D. |
| 6 | | **7951150014** | 4 | WASHER, 6MM I.D. |
| 7 | | **8594000006** | 1 | FLEXGUARD - .350" I.D. (QUANTITY IN FEET) |
| 8 | | **7850000208** | 3 | CABLE TIE 5.63", BLACK |

**+ SEE FURTHER BREAKDOWN THIS GROUP**

**# SERVICED AS AN ASSEMBLY ONLY**

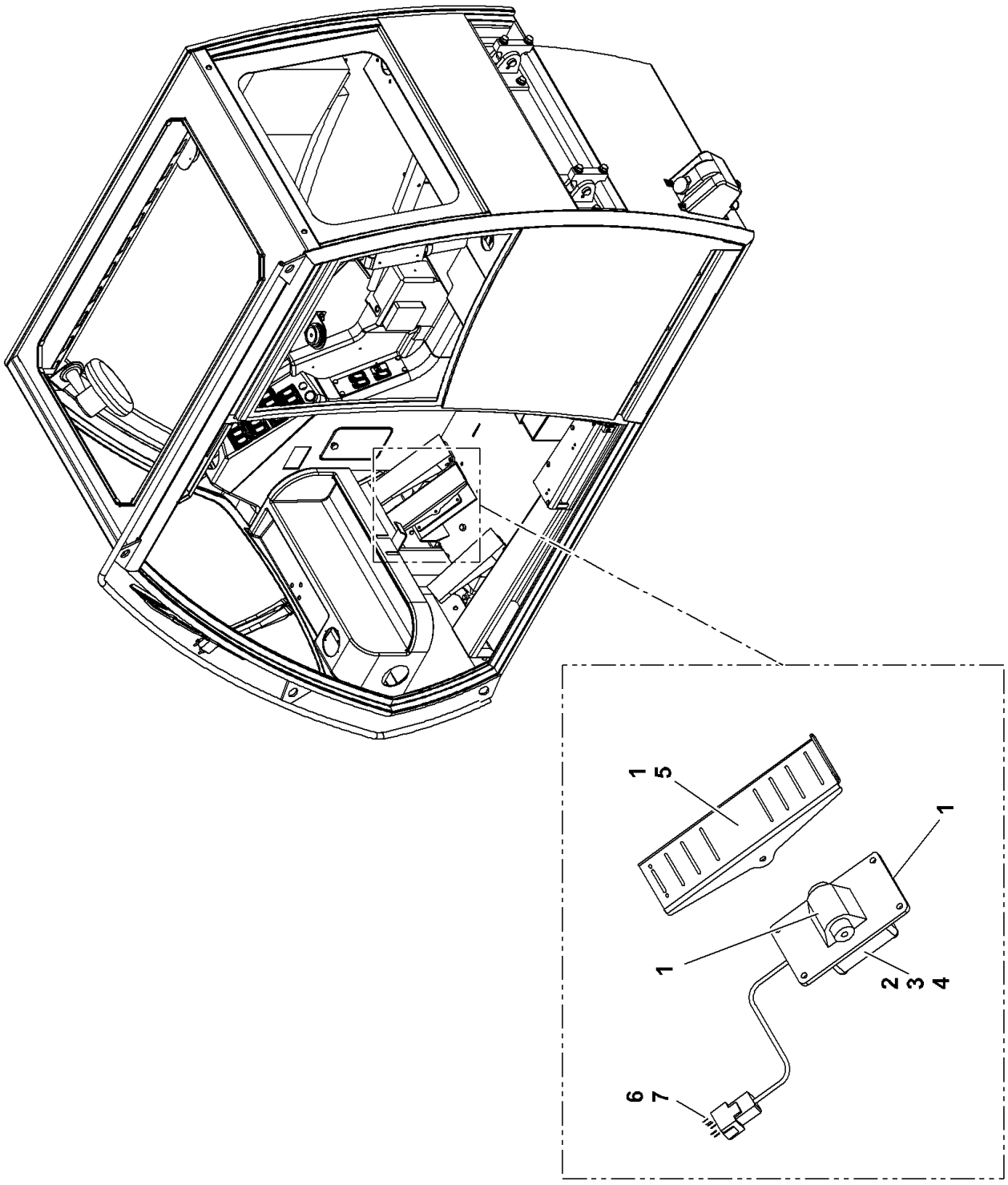


**7683100010**

**(SHEET 1 OF 1)**

Description
**PEDAL ASSEMBLY - ELECTRONIC TELESCOPE (COMPLETE ASSEMBLY)**

Assembly No.
**7683100010**
Revision:

| Item | FN | Part | Qty | Description |
|---|---|---|---|---|
| 1 | | **9683100087** | 1 | KIT, TREADLE ASSY.<br>INCLUDES TREADLE ASSY. AND<br>MOUNTING PLATE ASSY. |
| 2 | | **9683100088** | 1 | KIT, DRIVE ASSY.<br>INCLUDES MOUNTING PLATE FOR<br>P.C.BOARD,W/ MAGNET AND HOLDER |
| 3 | | **9683100089** | 1 | KIT, ELECTRICAL ASSY.<br>INCLUDES P.C. BOARD AND SENSOR |
| 4 | | **9683100090** | 1 | KIT, COVER ASSY.<br>INCLUDES COVER, GASKETS AND<br>STRAIN RELIEF AND HARDWARE |
| 5 | | **9352100665** | 1 | TREADLE |
| 6 | | **7892000947** | 1 | RECEPTACLE,<br>3 PIN |
| 7 | | **7689001782** | 3 | PIN, 18 - 16 GAGE |

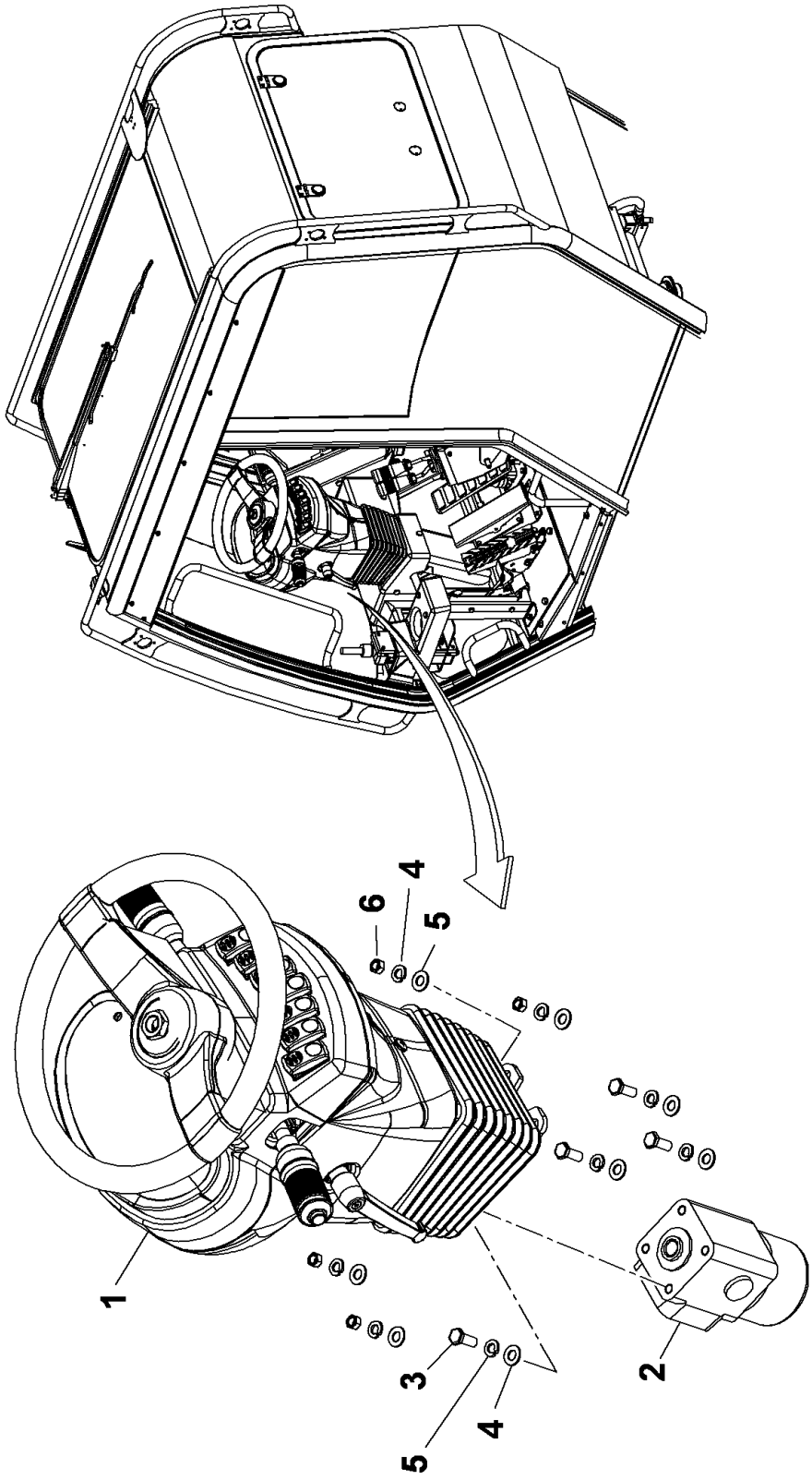


80029575

(SHEET 1 OF 1)

Description
**DRIVE CONTROLS INSTALLATION**

Assembly No.
**80029575**
Revision: **B**

| Item | FN | Part | Qty | Description |
|---|---|---|---|---|
| 1 | + | **80027907** | 1 | STEERING COLUMN W/ CLUSTER |
| 2 | + | **7926100899** | 1 | VALVE ASSEMBLY - STEERING CONTROL (COMPLETE ASSEMBLY) |
| 3 | | **7115160850** | 4 | CAP SCREW, 3/8" - 16 N.C. X 1" GRADE 5 |
| 4 | | **7950160050** | 8 | WASHER, LOCK 3/8" I.D. |
| 5 | | **7950160141** | 8 | WASHER, 3/8" PLAIN NARROW |
| 6 | | **7660160000** | 4 | NUT, HEX 3/8" - 16 N.C. |

**+ SEE FURTHER BREAKDOWN THIS GROUP**

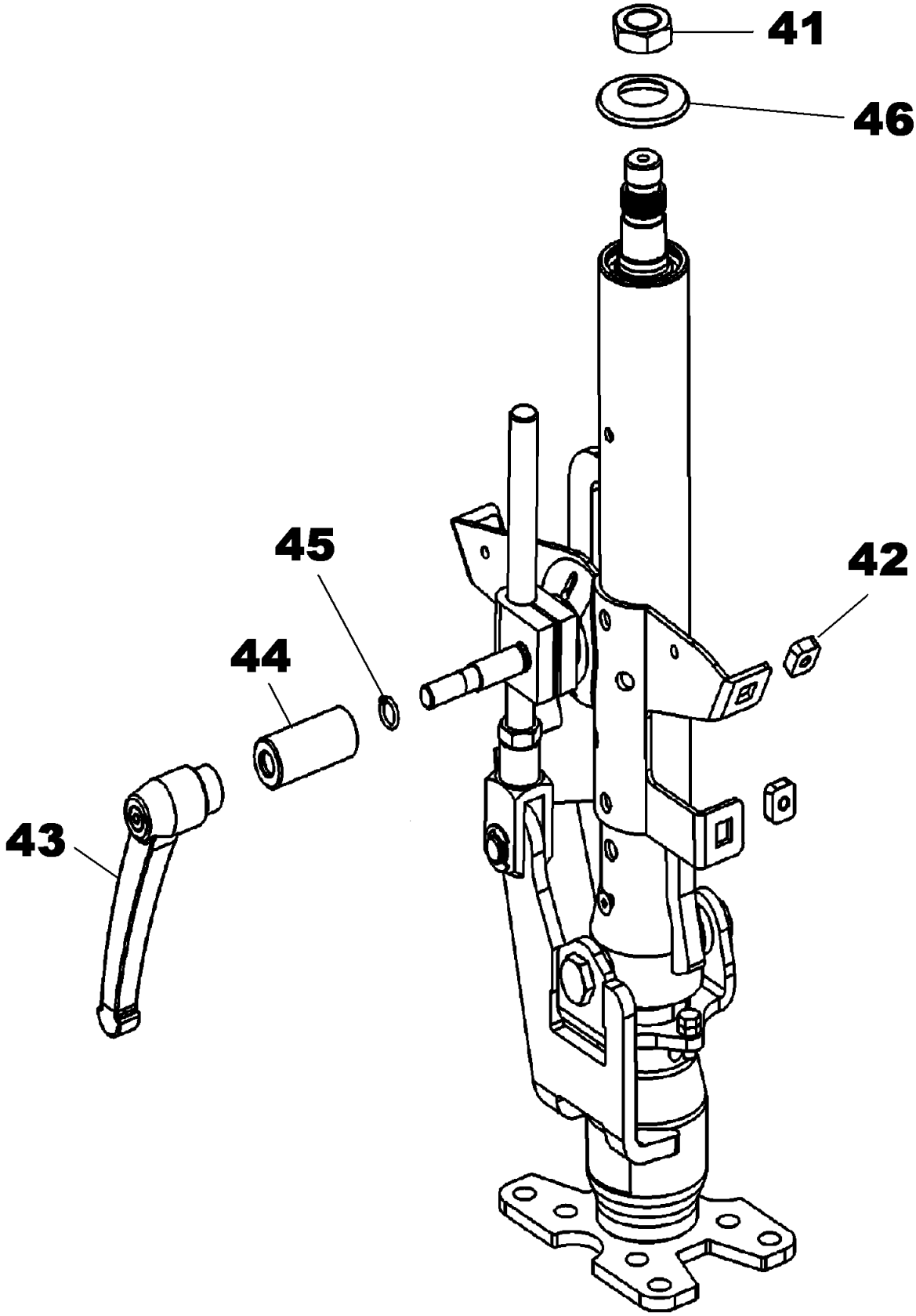


80027907

(SHEET 2 OF 2)

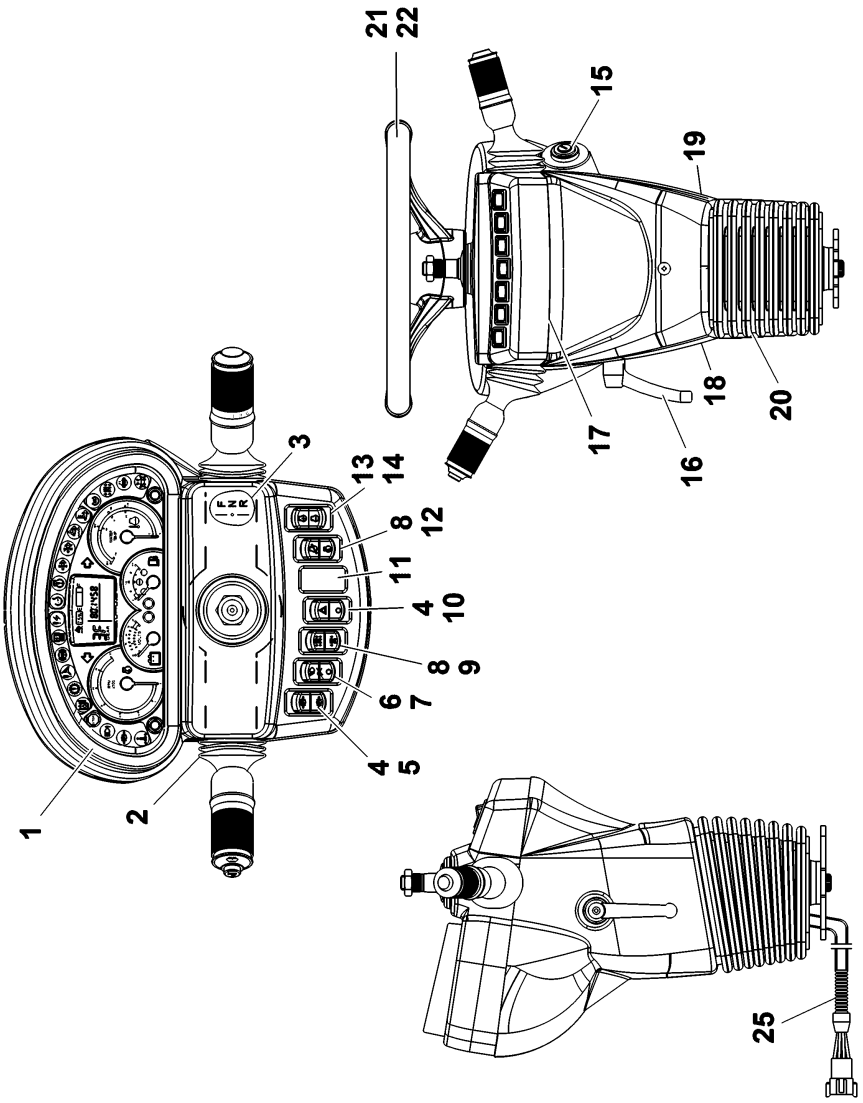


80027907

(SHEET 1 OF 2)

Description
**STEERING COLUMN W/ CLUSTER**

Assembly No.
**80027907**
Revision:

| Item | FN | Part | Qty | Description |
|---|---|---|---|---|
| 1 | | **90022352** | 1 | PANEL DISPLAY, CLUSTER 12V. |
| 2 | | **90019800** | 1 | COLUMN |
| 3 | | **90016073** | 1 | DECAL, LABEL F-N-R |
| 4 | | **90018774** | 2 | SWITCH ASSY. ROCKER |
| 5 | | **90018785** | 1 | BUTTON, ENGINE INC/DEC |
| 6 | | **90018776** | 1 | SWITCH ASSY. ROCKER |
| 7 | | **90016090** | 1 | BUTTON, HEADLIGHTS, AMBER |
| 8 | | **90018778** | 2 | SWITCH ASSY. ROCKER |
| 9 | | **90016092** | 1 | BUTTON, 2WD/4WD, AMBER |
| 10 | | **90016093** | 1 | BUTTON, HAZARD ON/OFF, RED |
| 11 | | **90016094** | 1 | COVER, CAP |
| 12 | | **90019801** | 1 | BUTTON, ENGINE INC/DEC AMBER |
| 13 | | **90018782** | 1 | SWITCH ASSY. ROCKER |
| 14 | | **90016096** | 1 | BUTTON, ENGINE IDLE/DEC |
| 15 | | **90016097** | 1 | SWITCH ASSY. INGITION<br>INCLUDES THE FOLLOWING PARTS |
| | | **90018981** | 1 | KEY, IGNITION |
| 16 | | **90018946** | 1 | COLUMN ASSY. STEERING<br>INCLUDES ITEMS 41 THRU 46 |
| 17 | | **90019803** | 1 | COVER, DASHBOARD |
| 18 | | **90018789** | 1 | COVER, LEFT SIDE |
| 19 | | **90022353** | 1 | COVER, RIGHT SIDE |
| 20 | | **90016102** | 1 | BELLOW, RUBBER |
| 21 | | **90016103** | 1 | WHEEL, STEERING |
| 22 | | **90016104** | 1 | CAP, WHEEL STEERING |
| 23 | | **90019804** | 1 | HARNESS ASSY. |
| 24 | | **90019805** | 1 | ECU, I/O-MODE |
| 25 | | **90019806** | 1 | BRACKET, SUPPORT I/O MODE |
| 26 | | **90019808** | 7 | CLIP, SCREW M4 |
| 27 | | **90019809** | 9 | SCREW, M4 X 12 |
| 28 | | **90019810** | 3 | SCREW, M4 X 16 |
| 29 | | **90018947** | 6 | SCREW, COVER |
| 30 | | **90019831** | 2 | NUT, SELF-LOCK |
| 31 | | **90019811** | 2 | CLIP, BLACK |
| 32 | | **90019812** | 2 | WASHER |

Description
**STEERING COLUMN W/ CLUSTER**

Assembly No.
**80027907**
Revision:

| Item | FN | Part | Qty | Description |
|---|---|---|---|---|
| 33 | | **90022388** | 2 | NUT, SELF-LOCK |
| 34 | | **90022389** | 2 | WASHER |
| 35 | | **90022390** | 1 | CONVERTER, VOLTAGE 24V TO 12V |
| 36 | | **90016107** | 2 | RELAY |
| 41 | | **90016403** | 1 | NUT, STEERING WHEEL |
| 42 | | **90016404** | 4 | NUT |
| 43 | | **90016119** | 1 | HANDLE, LOCKING |
| 44 | | **90018775** | 1 | SPACER |
| 45 | | **90018777** | 1 | O-RING |
| 46 | | **90016382** | 1 | CAP, RUBBER |

**Notes**

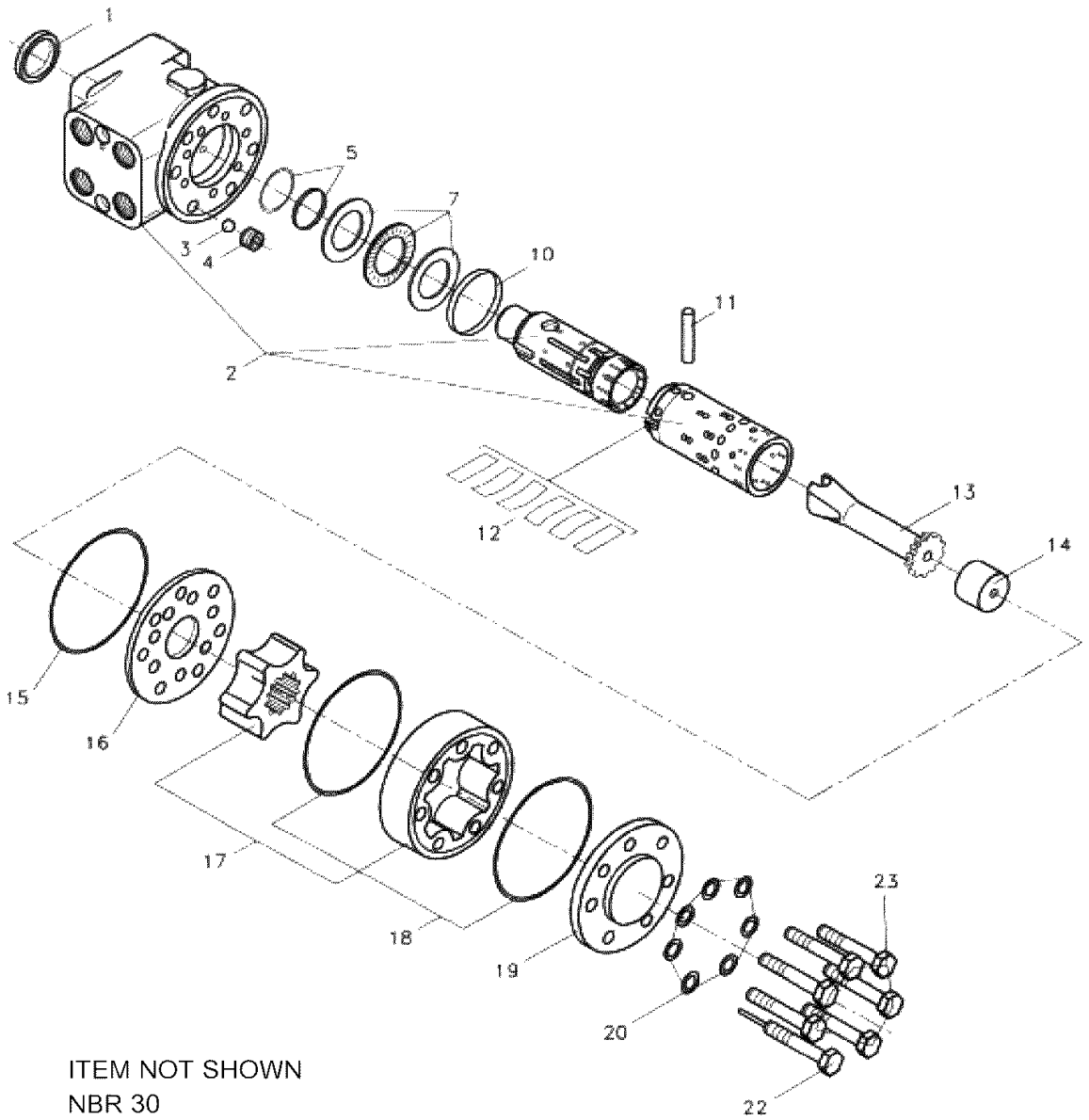


ITEM NOT SHOWN
NBR 30

Description
**VALVE ASSEMBLY - STEERING CONTROL (COMPLETE ASSEMBLY)**

Assembly No.
**7926100899**
Revision:

| Item | FN | Part | Qty | Description |
|---|---|---|---|---|
| 1 | * | **9926113110** | 1 | SEAL, DUST RING |
| 2 | | **NSS** | 1 | NOT SERVICED SEPARATELY<br>HOUSING, AND SPOOL W/ SLEEVE |
| 3 | | **9926113111** | 1 | KIT, BUSHING W/BALL<br>INCLUDES ITEMS 4 |
| 4 | | **NSS** | 1 | NOT SERVICED SEPARATELY<br>BUSHING |
| 5 | * | **NSS** | 1 | NOT SERVICED SEPARATELY<br>SEAL, SHAFT |
| 7 | | **9926113112** | 1 | BEARING |
| 10 | | **9926113113** | 1 | KIT, RING W/CROSS PIN<br>INCLUDES ITEM 11 |
| 11 | | **NSS** | 1 | NOT SERVICED SEPARATELY<br>CROSS PIN |
| 12 | | **NSS** | 6 | NOT SERVICED SEPARATELY<br>SPRINGS |
| 13 | | **NSS** | 1 | NOT SERVICED SEPARATELY<br>SHAFT |
| 14 | | **NSS** | 1 | NOT SERVICED SEPARATELY<br>SPACER |
| 15 | * | **NSS** | 1 | NOT SERVICED SEPARATELY<br>O-RING |
| 16 | | **9926110265** | 1 | PLATE,DISTRIBUTOR |
| 17 | | **9926110266** | 1 | GEAR, SET |
| 18 | | **NSS** | 1 | NOT SERVICED SEPARATELY<br>O-RING |
| 19 | | **NSS** | 1 | NOT SERVICED SEPARATELY<br>COVER, END |
| 20 | * | **9632102851** | 7 | WASHER, |
| 22 | | **9926113114** | 1 | CAPSCREW, SPECIAL |
| 23 | | **9926113115** | 6 | CAPSCREW |
| 30 | * | **9926113116** | 1 | KIT, SEAL |

*** REPAIR KIT AND/OR PART OF KIT**

**Notes**

Description
**BOOM LIGHT SWITCH**

Assembly No.
**80011030**
Revision: **#**

| Item | FN | Part | Qty | Description |
|---|---|---|---|---|
| 100 | | **7872100198** | 1 | SWITCH, L-SERIES BOOM LIGHTS |

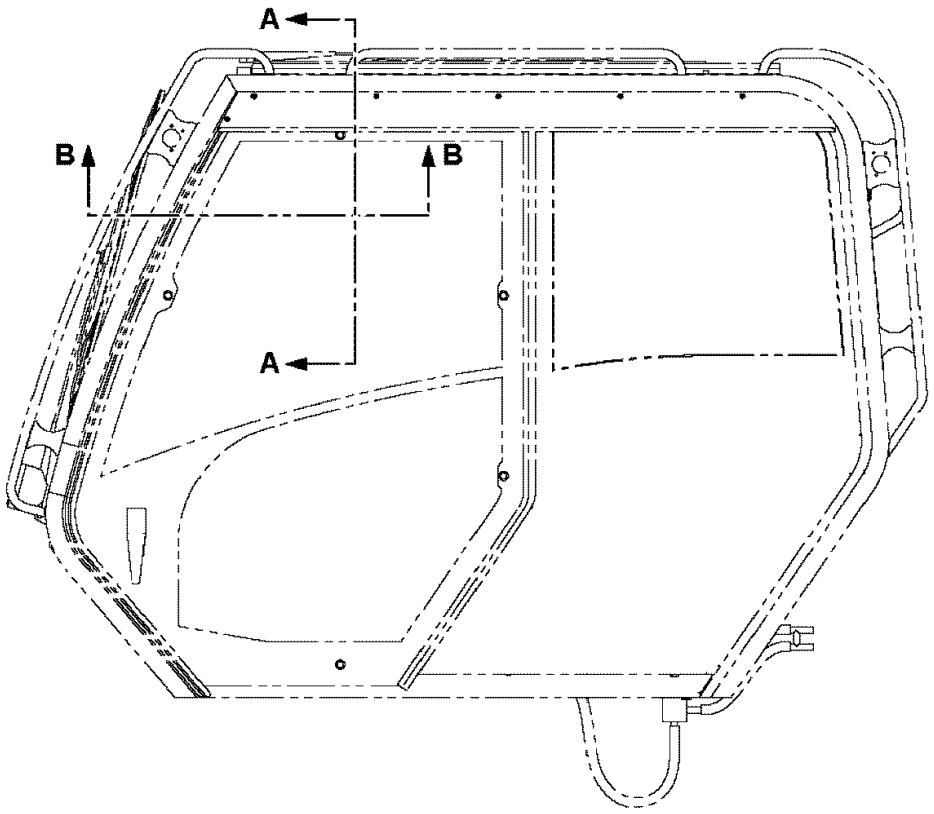


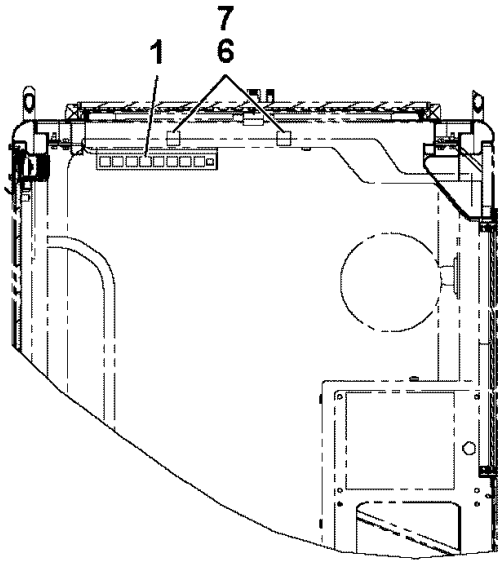


SECTION A-A

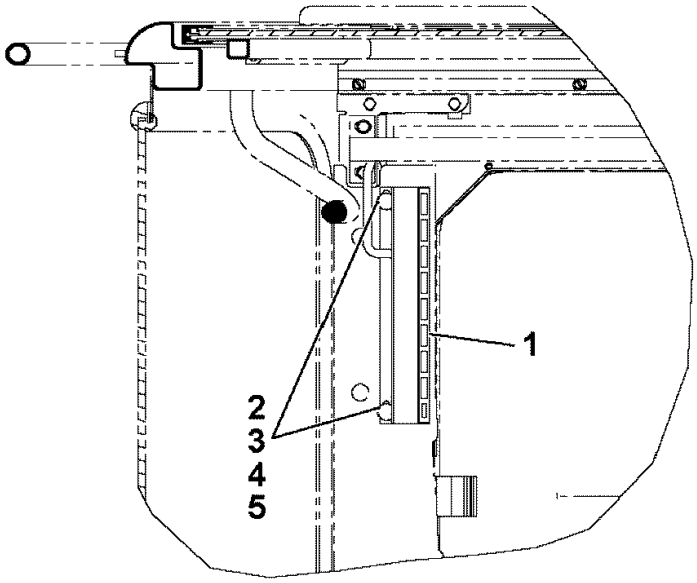


SECTION B-B

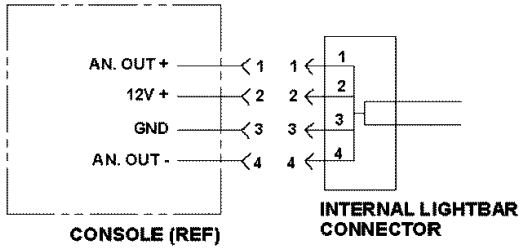


WIRING DETAIL

80008131

(SHEET 1 OF 1)

Description
**LMI INTERNAL LIGHT BAR INSTALLATION**

Assembly No.
**80008131**
Revision: **C**

| Item | FN | Part | Qty | Description |
|---|---|---|---|---|
| 1 | | **80008129** | 1 | LMI INTERNAL LIGHT BAR |
| 6 | | **7638000750** | 4 | MOUNT, WIRE TIE |
| 7 | | **7850000208** | 4 | CABLE TIE 5.63", BLACK |

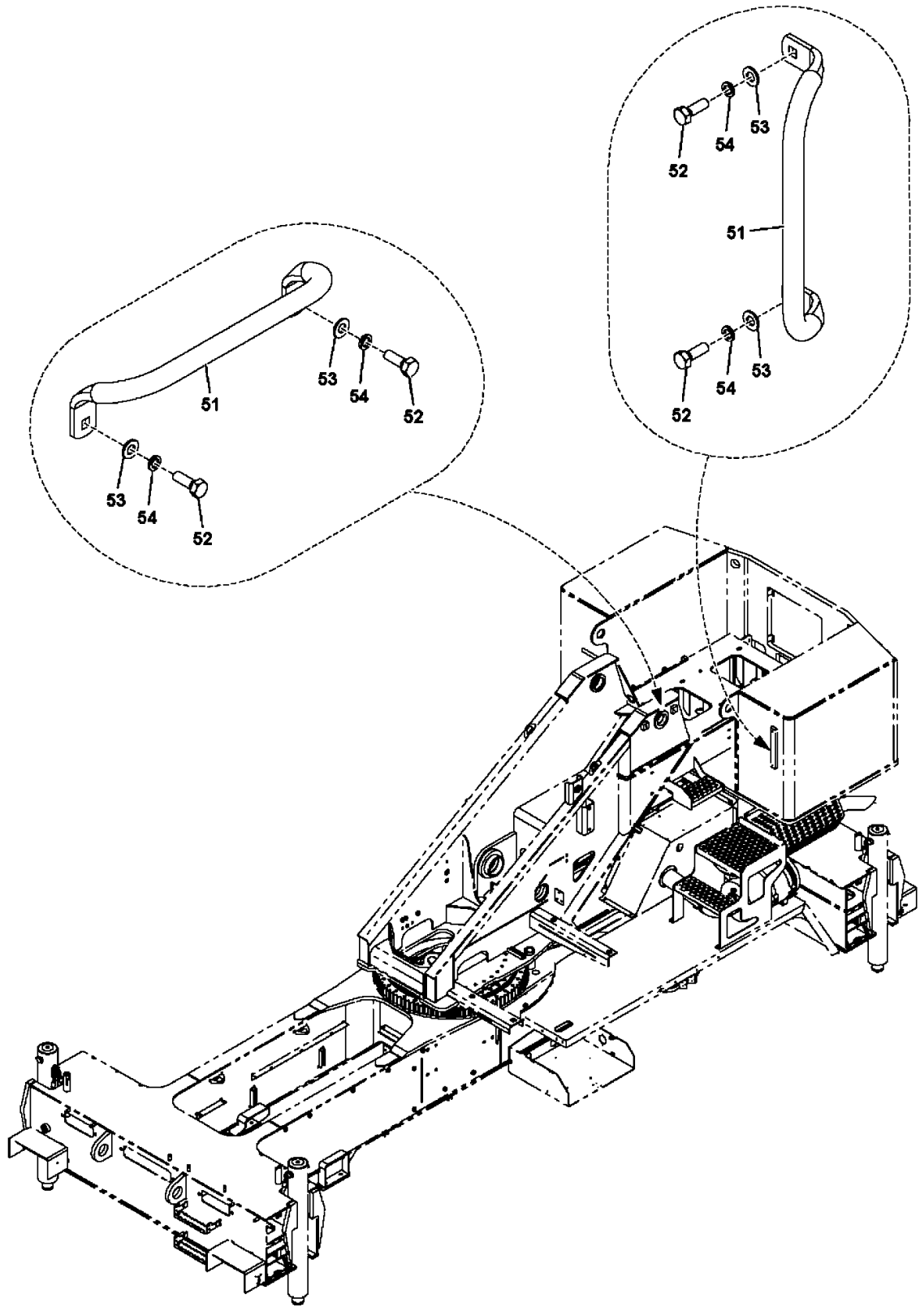


2159210210

(SHEET 1 OF 1)

Description
**HANDLE INSTALLATION HOIST ACCESS**

Assembly No.
**2159210210**
Revision: **#**

| Item | FN | Part | Qty | Description |
|---|---|---|---|---|
| 51 | | **7511100015** | 2 | HANDRAIL, GRAB |
| 52 | | **7126191350** | 4 | CAP SCREW, M10X30 HEX HEAD |
| 53 | | **7951190014** | 4 | FLAT WASHER, 10MM I.D. |
| 54 | | **7951190210** | 4 | LOCK WASHER, 10MM |

**Notes**

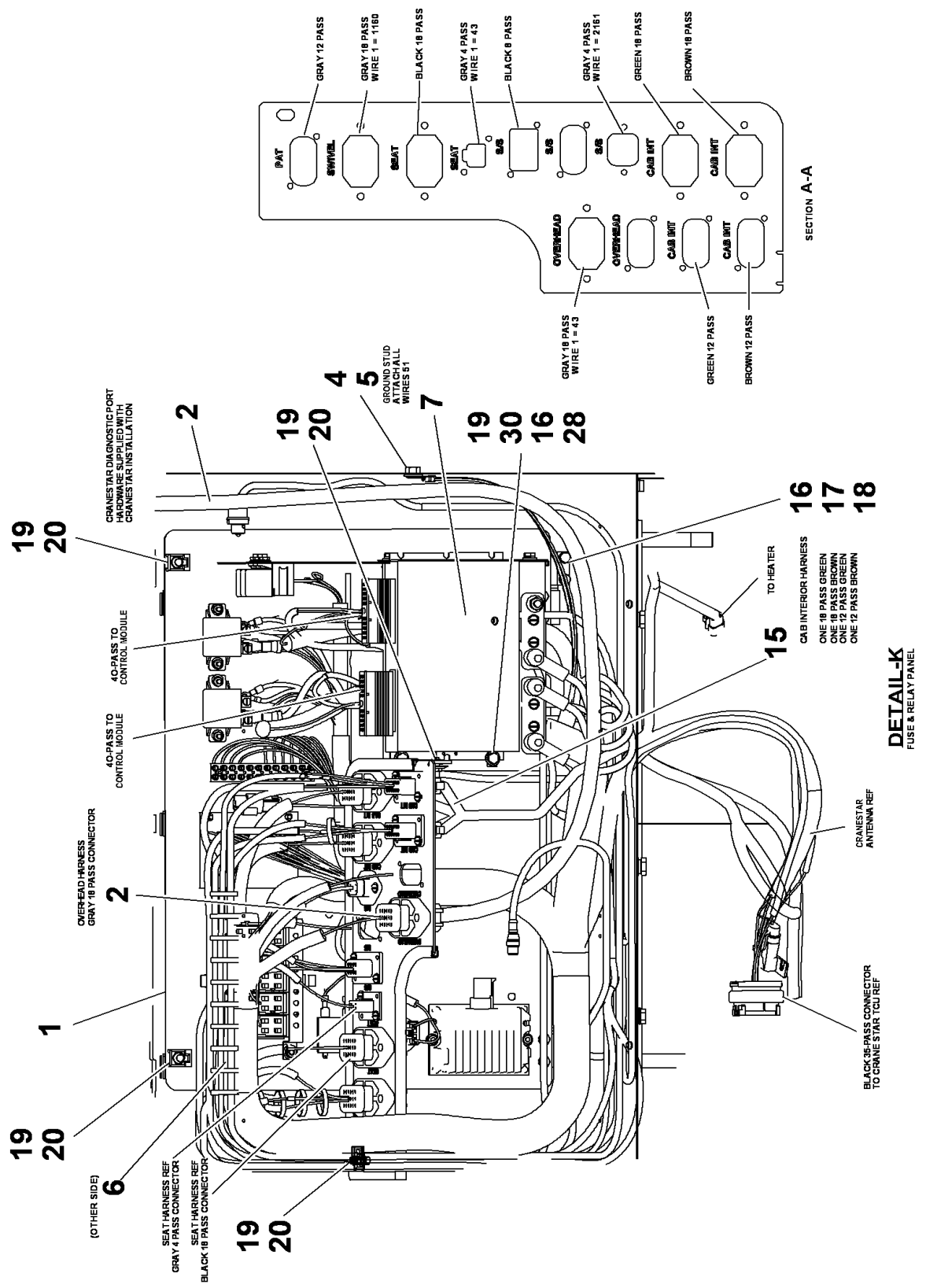


80052128

(SHEET 4 OF 4)

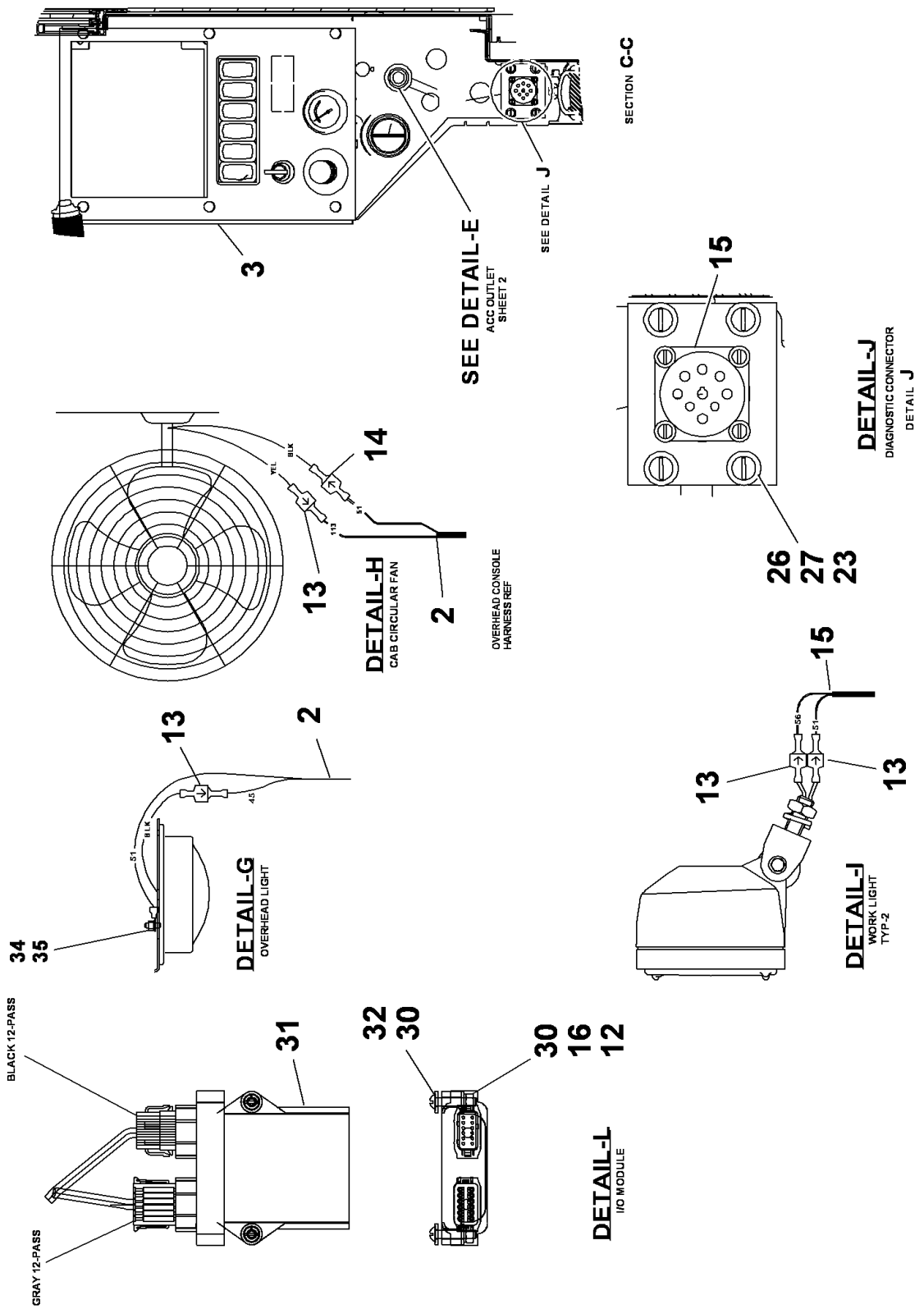


80052128

(SHEET 3 OF 4)

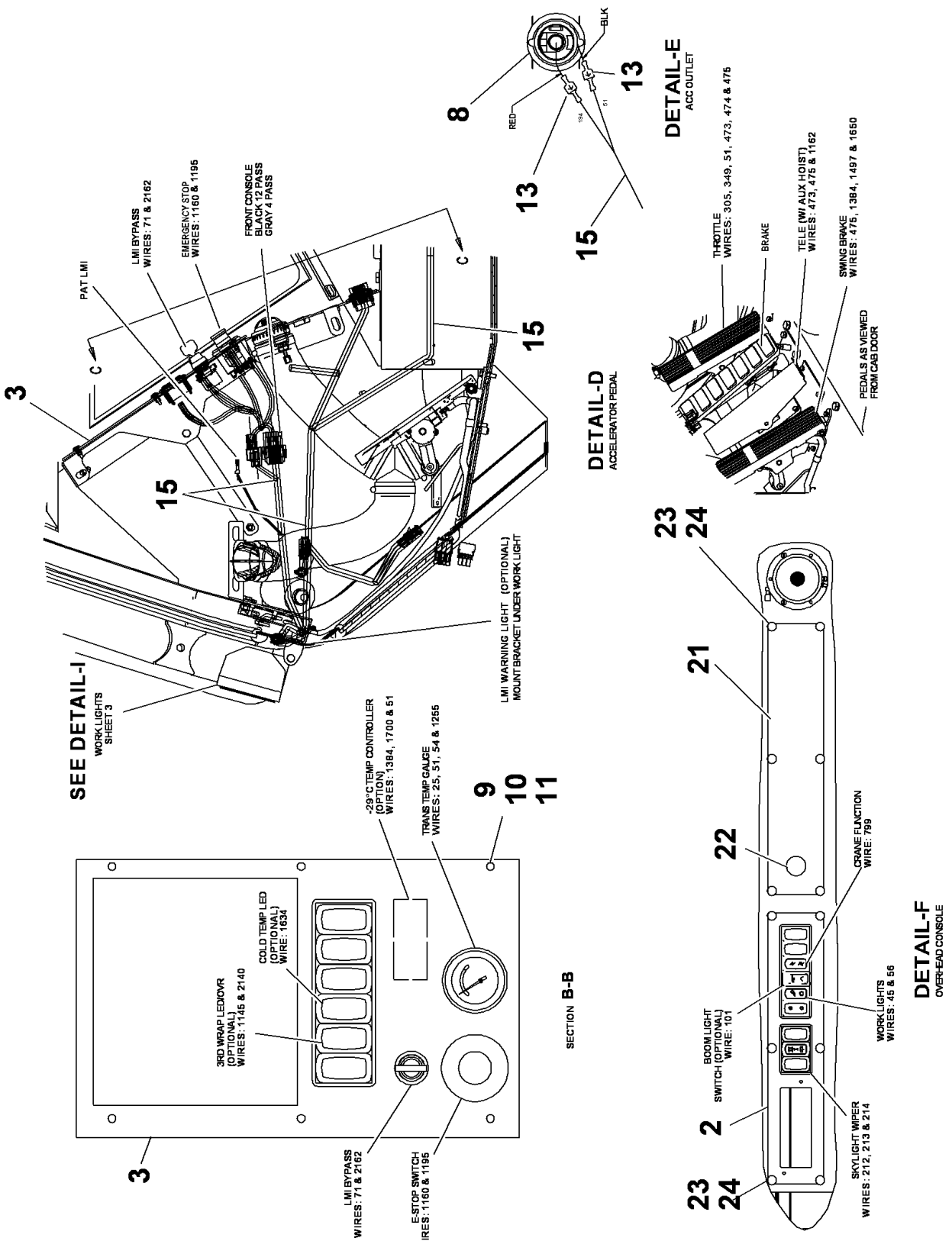


80052128

(SHEET 2 OF 4)

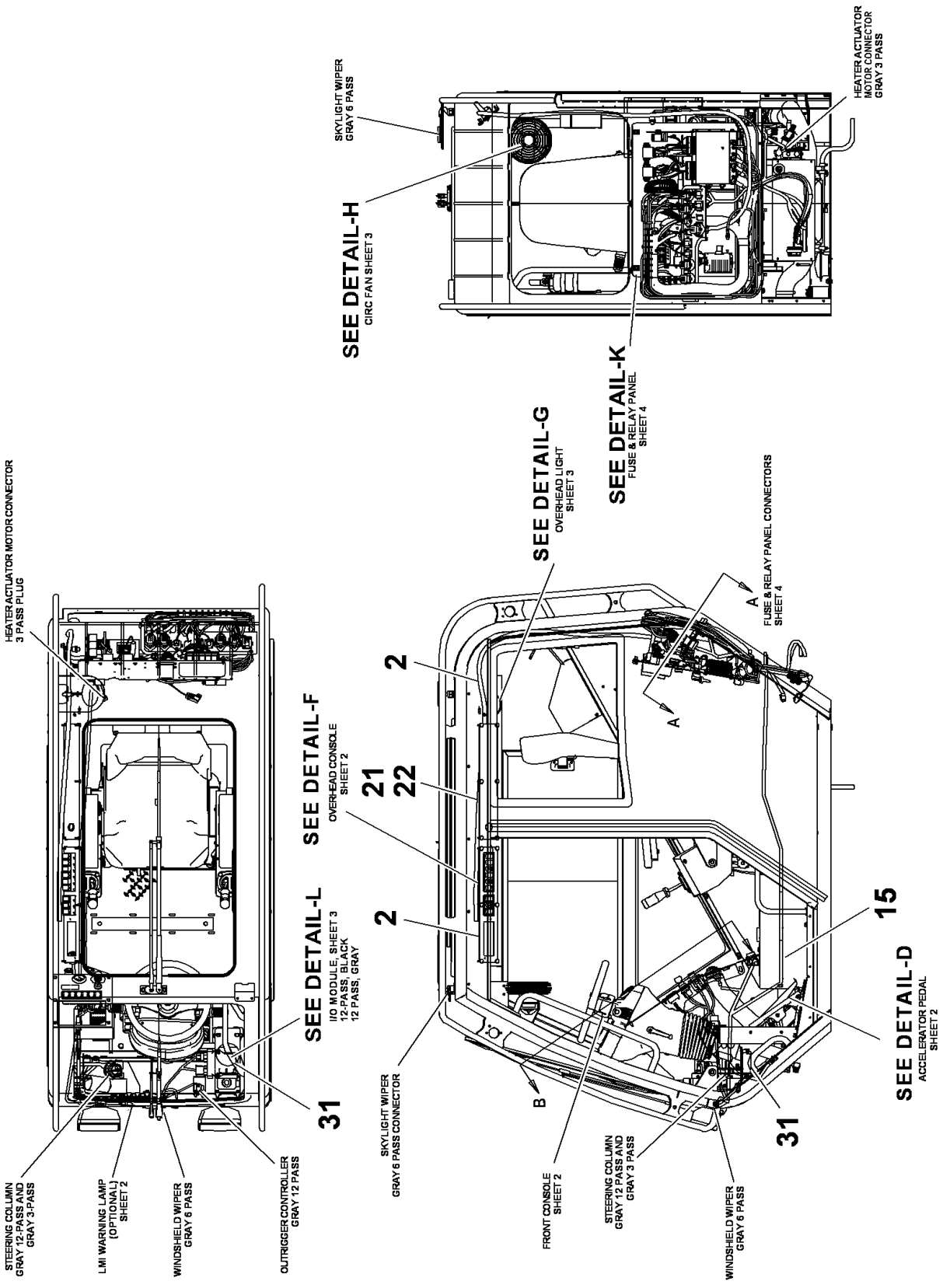


80052128

(SHEET 1 OF 4)

Description
**ESI - CAB**

Assembly No.
**80052128**
Revision: **B**

| Item | FN | Part | Qty | Description |
|---|---|---|---|---|
| 1 | + | **80043366** | 1 | PANEL ASSEMBLY FUSE & RELAY |
| 2 | + | **80052124** | 1 | PANEL ASM OVERHEAD |
| 3 | + | **80030293** | 1 | PANEL ASSY-FRONT CONSOLE |
| 4 | | **7950160141** | 1 | WASHER, 3/8" PLAIN NARROW |
| 5 | | **7660160001** | 1 | NUT, HEX<br>3/8" - 16 N.C.<br>GRADE 5 |
| 6 | | **7245100058** | 1 | COVER, FUSE |
| 7 | # | **80022523** | 1 | CONTROL MOD I/O |
| 8 | | **7892000999** | 1 | RECEPTACLE, 12 VOLT DASH MOUNT |
| 9 | | **7429100008** | 6 | NUT, #8-32NF WELL |
| 10 | | **7111080610** | 6 | SCREW, MACHINE<br>5/32" - 32 N.C. X 3/4"<br>GRADE 1 |
| 11 | | **7258001452** | 6 | CAP #8 |
| 12 | | **7660140000** | 2 | NUT, HEX<br>1/4" - 20 N.C. |
| 13 | | **7345001746** | 8 | TERMINAL, MALE<br>16 - 14 AWG |
| 14 | | **7345001744** | 1 | TERMINAL, FEMALE<br>16 - 14 AWG |
| 15 | + | **80042878** | 1 | HARNESS ASSEMBLY-SUPERSTRUCTURE CAB |
| 16 | | **7950140050** | 12 | WASHER, LOCK 1/4" |
| 17 | | **7519000198** | 2 | HINGE, LEFT HAND NYLON<br>LIFT OFF |
| 18 | | **7115140550** | 8 | CAP SCREW,<br>1/4" - 20 N.C. X 5/8"<br>GRADE 5 |
| 19 | | **7099001159** | 4 | SCREW, THUMB |
| 20 | | **7659000287** | 4 | NUT, RETAINING<br>5/16" - 18 N.C. |
| 21 | | **80016541** | 1 | CONSOLE, OVERHEAD PANEL W/HOLE |
| 22 | | **7242000015** | 1 | PLUG |
| 23 | | **7101100610** | 16 | SCREW, MACHINE<br>3/16" - 32 N.F. X 3/4"<br>GRADE 1 |
| 24 | | **7258001451** | 12 | CAP, 1/4" |
| 25 | | **7850000208** | 20 | CABLE TIE 5.63", BLACK |

**+ SEE FURTHER BREAKDOWN THIS GROUP**

**# SERVICED AS AN ASSEMBLY ONLY**

Description
**ESI - CAB**

Assembly No.
**80052128**
Revision: **B**

| Item | FN | Part | Qty | Description |
|---|---|---|---|---|
| 26 | | **7950100141** | 4 | WASHER, FLAT, #10 |
| 27 | | **7950100050** | 4 | WASHER, LOCK #10 |
| 28 | | **7115140650** | 2 | CAP SCREW,<br>1/4" - 20 N.C. X 3/4"<br>GRADE 5 |
| 29 | | **7659000865** | 2 | NUT<br>1/4" - 20 N.C. |
| 30 | | **7950140141** | 6 | WASHER, FLAT 1/4" PLAIN NARROW |
| 31 | | **80035961** | 1 | CONTROL MODULE |
| 32 | | **7111141010** | 2 | SCREW, MACHINE<br>1/4" - 20 N.C. X 1 1/4"<br>GRADE 1 |
| 34 | | **7950100350** | 1 | LOCK WASHER, 3/16" I.D. |
| 35 | | **7660100030** | 1 | NUT |

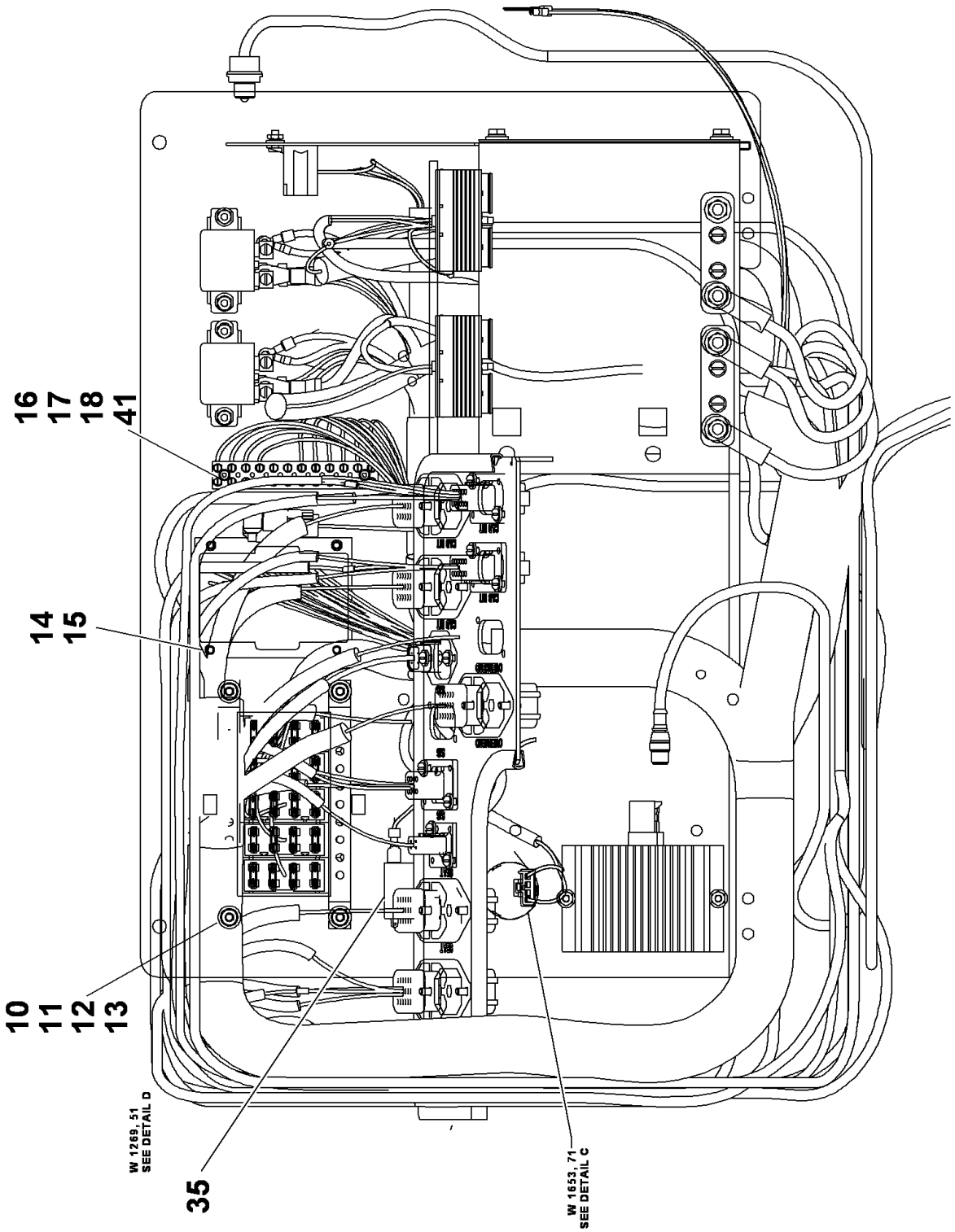


80043366

(SHEET 3 OF 3)

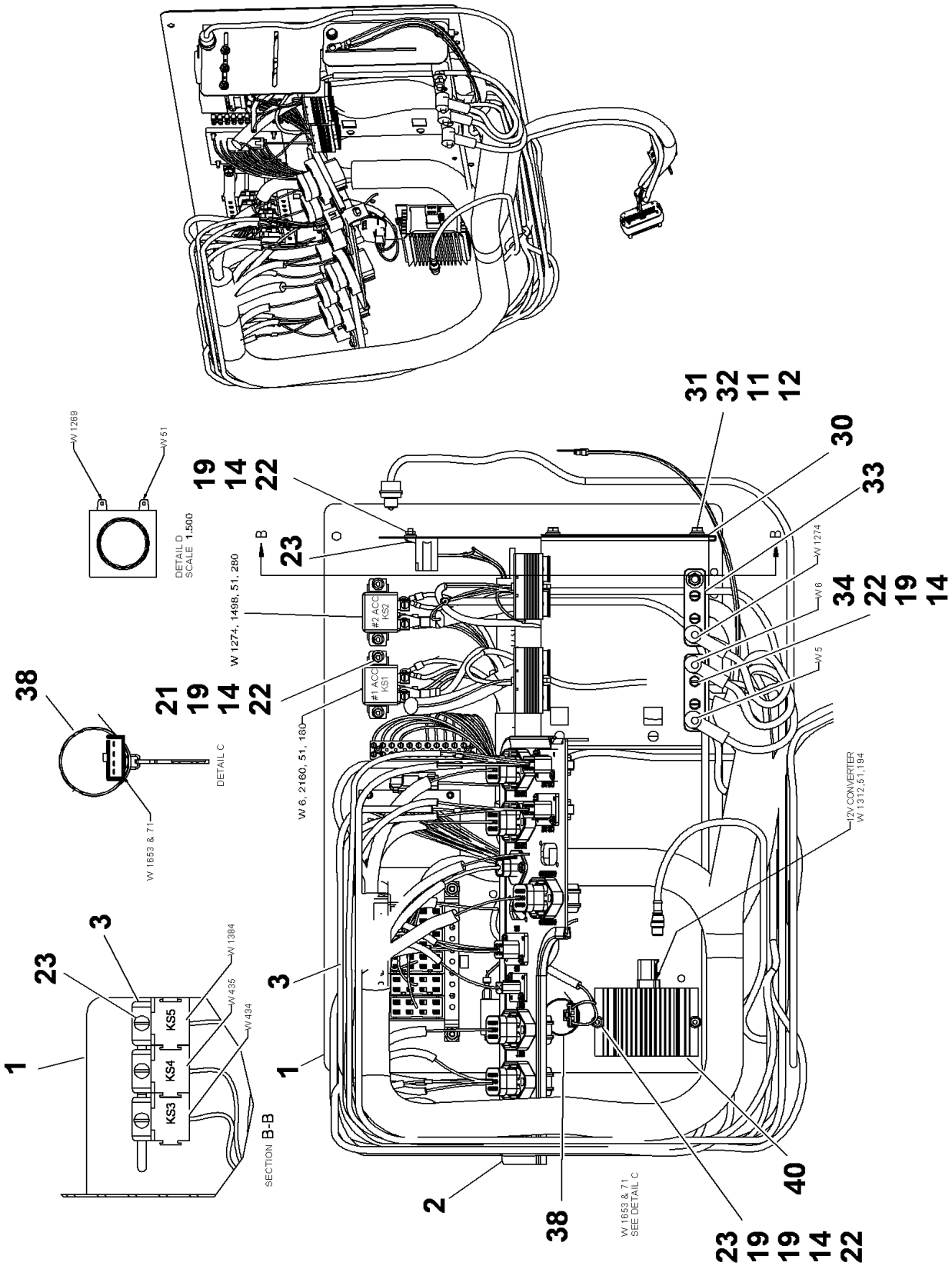


80043366

(SHEET 2 OF 3)

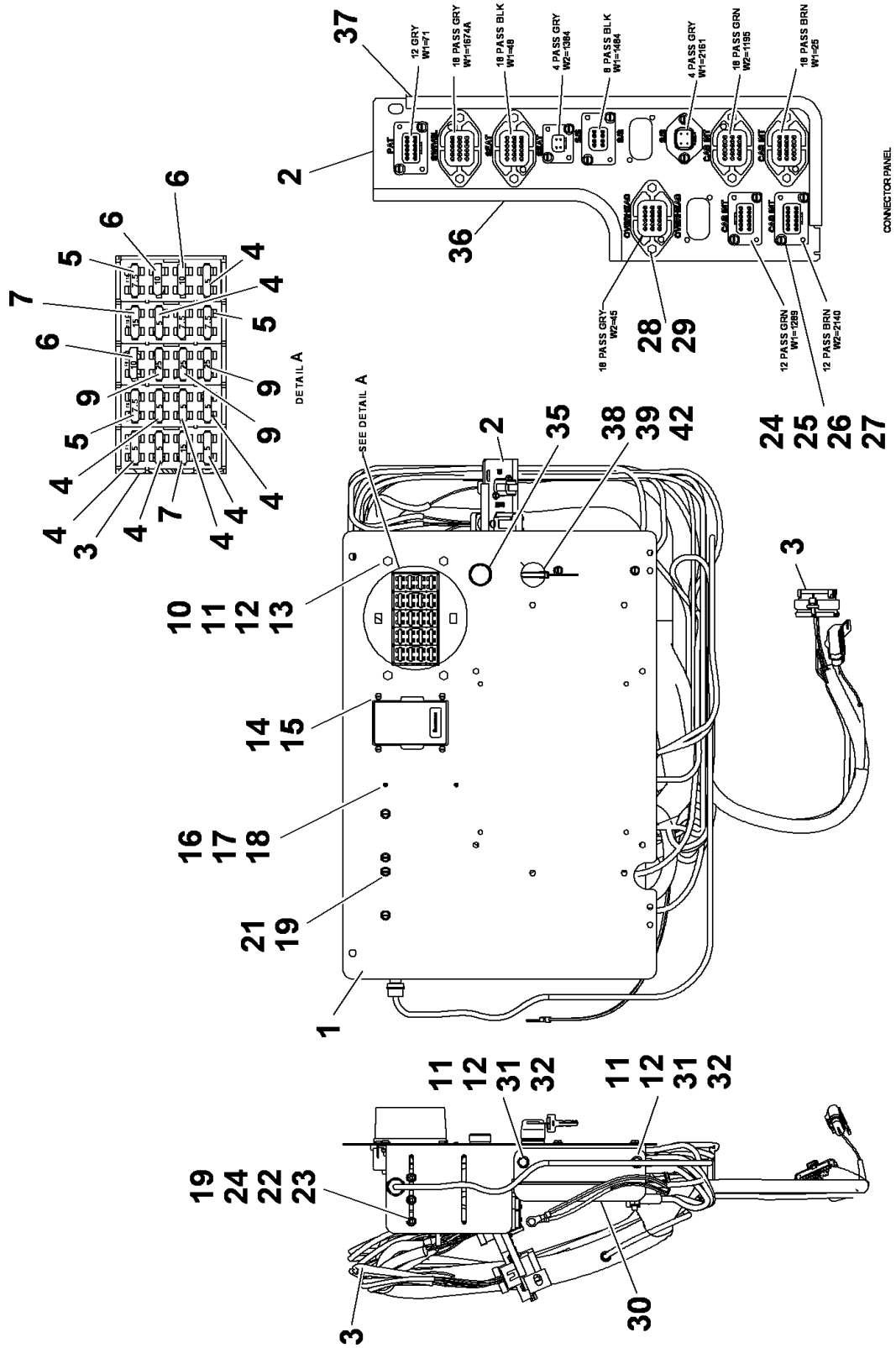


80043366

(SHEET 1 OF 3)

Description
**PANEL ASSEMBLY FUSE & RELAY**

Assembly No.
**80043366**
Revision: **E**

| Item | FN | Part | Qty | Description |
|---|---|---|---|---|
| 1 | | **80023037** | 1 | PANEL FUSE & RELAY<br>INCLUDES THE FOLLOWING PARTS |
| | | **80023039** | 1 | PANEL FUSE & RELAY |
| | | **80023076** | 1 | PLATE MODULE |
| | | **01575650** | 1 | CABLE HOLDER ST37 K |
| 2 | | **80023469** | 1 | PLATE CONNECTOR BULKHEAD |
| 3 | + | **80043367** | 1 | HARNESS ASSEMBLY-FUSE & RELAY |
| 4 | | **7482000035** | 8 | FUSE, 5 AMP |
| 5 | | **7482000034** | 4 | FUSE, 7.5 AMP |
| 6 | | **7482000033** | 3 | FUSE, 10 AMP |
| 7 | | **7482000032** | 2 | FUSE, 15 AMP |
| 9 | | **7482000030** | 3 | FUSE, 25 AMP |
| 10 | | **7115140450** | 4 | CAP SCREW,<br>1/4" - 20 N.C. X 1/2"<br>GRADE 5 |
| 11 | | **7950140141** | 6 | WASHER, FLAT 1/4" PLAIN NARROW |
| 12 | | **7950140050** | 6 | WASHER, LOCK 1/4" |
| 13 | | **7660140000** | 4 | NUT, HEX<br>1/4" - 20 N.C. |
| 14 | | **7950100050** | 14 | WASHER, LOCK #10 |
| 15 | | **7101100611** | 4 | SCREW, MACHINE<br>3/16" - 32 N.F. X 3/4"<br>GRADE 1 |
| 16 | | **7111040610** | 2 | SCREW, MACHINE<br>7/64" - 40 N.C. X 3/4"<br>GRADE 1 |
| 17 | | **7950040141** | 2 | WASHER, 7/64" I.D. |
| 18 | | **7660041100** | 2 | NUT, HEX<br>7/64" - 40 N.C.<br>GRADE 1 |
| 19 | | **7950100141** | 19 | WASHER, FLAT, #10 |
| 20 | | **7850000208** | 6 | CABLE TIE 5.63", BLACK |
| 21 | | **7111100611** | 4 | SCREW, MACHINE<br>3/16" - 24 N.C. X 3/4"<br>GRADE 1 |
| 22 | | **7660101100** | 13 | NUT, HEX<br>3/16" - 32 N.F.<br>GRADE 1 |
| 23 | | **7111100411** | 3 | SCREW, MACHINE<br>3/16" - 24 N.C. X 1/2" |

**+ SEE FURTHER BREAKDOWN THIS GROUP**

Description
**PANEL ASSEMBLY FUSE & RELAY**

Assembly No.
**80043366**
Revision: **E**

| Item | FN | Part | Qty | Description |
|---|---|---|---|---|
| | | | | GRADE 1 |
| 24 | | **7111080511** | 12 | Slot PMS #8-32UNCx0.63 G1 |
| 25 | | **7950080141** | 12 | FLATWASHER, 5/32" I.D. |
| 26 | | **7950080050** | 12 | LOCKWASHER, 5/32" I.D. |
| 27 | | **7660081100** | 12 | NUT, HEX<br>5/32" - 24 N.F.<br>GRADE 1 |
| 28 | | **7121130801** | 10 | MACHINE SCREW, M5X12 SLOTTED |
| 29 | | **7951130210** | 10 | LOCKWASHER, 5MM I.D. |
| 30 | | **80023834** | 1 | PLATE - MODULE |
| 31 | | **7115140650** | 2 | CAP SCREW,<br>1/4" - 20 N.C. X 3/4"<br>GRADE 5 |
| 32 | | **7659000865** | 2 | NUT<br>1/4" - 20 N.C. |
| 33 | | **7086001082** | 2 | HOLDER, FUSE |
| 34 | | **7111100807** | 4 | SCREW, MACHINE<br>3/16" - 24 N.C. X 1"<br>GRADE 1 |
| 35 | # | **7025000821** | 1 | ALARM, FAST PULSE BUZZER |
| 36 | | **8496980002** | 12 | MOULDING<br>(QUANTITY IN FEET) |
| 37 | | **8496980002** | 22 | MOULDING<br>(QUANTITY IN FEET) |
| 38 | | **80042917** | 1 | SWITCH, LMI OVERRIDE (KEYED)<br>INCLUDES THE FOLLOWING PARTS |
| | | **80045633** | 1 | SERVICE KEY (1 PER) |
| 39 | | **80042480** | 2 | SHIM RING, KEYSWITCH .015" |
| 40 | # | **80046759** | 1 | 12AMP CONVERTER |
| 41 | | **7950040050** | 2 | LOCKWASHER, 7/64" I.D. |
| 42 | | **80043253** | 1 | SHIM RING, KEYSWITCH .125" |
| 43 | | **7111100611** | 2 | SCREW, MACHINE<br>3/16" - 24 N.C. X 3/4"<br>GRADE 1 |

**# SERVICED AS AN ASSEMBLY ONLY**

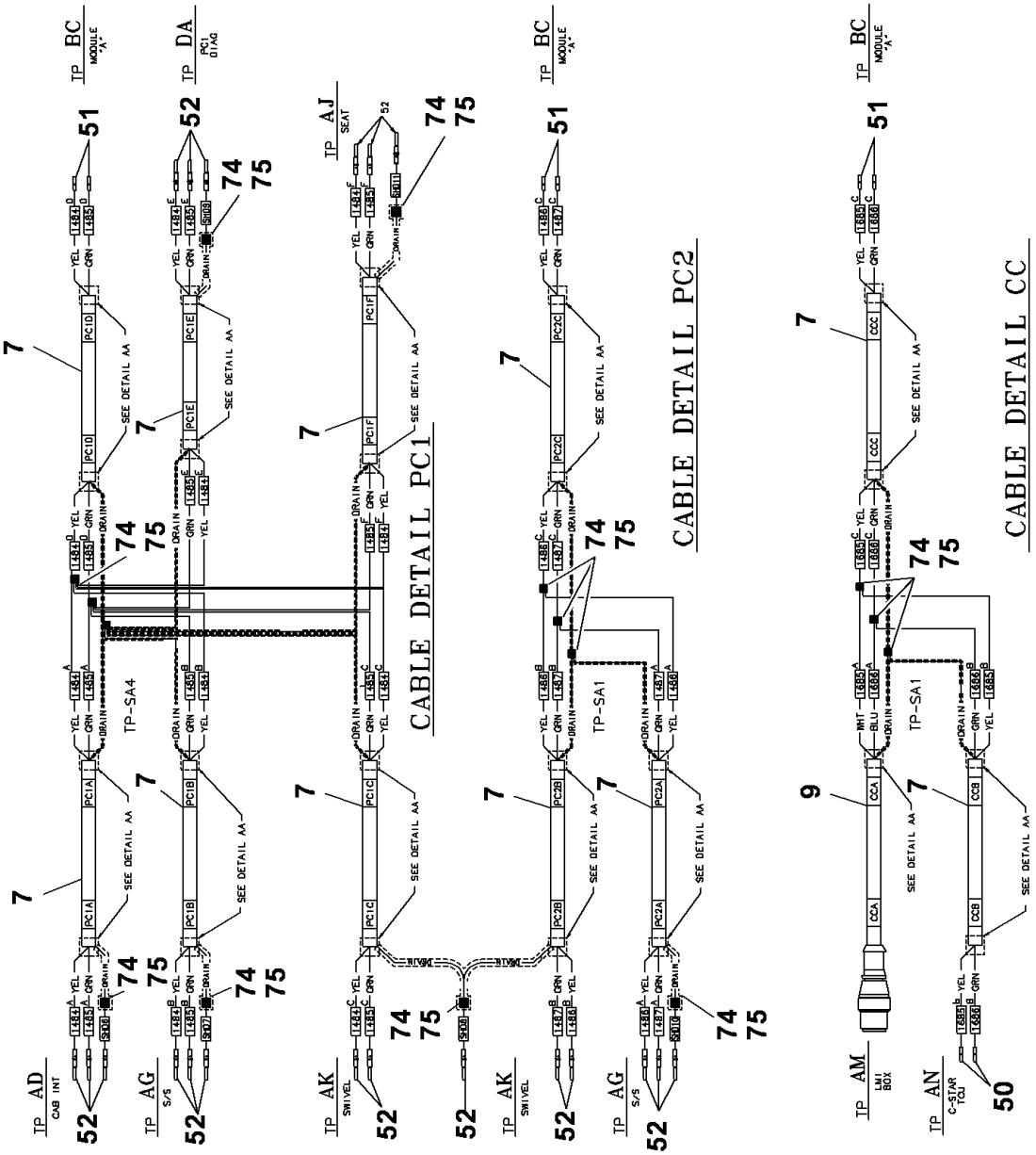
CABLE DETAIL PC1
CABLE DETAIL PC2
CABLE DETAIL CC
TP AD
TP AG
TP AK
TP AJ
TP BC
TP DA
TP AM
TP AN
TP-SA4
TP-SA1
SEE DETAIL AA

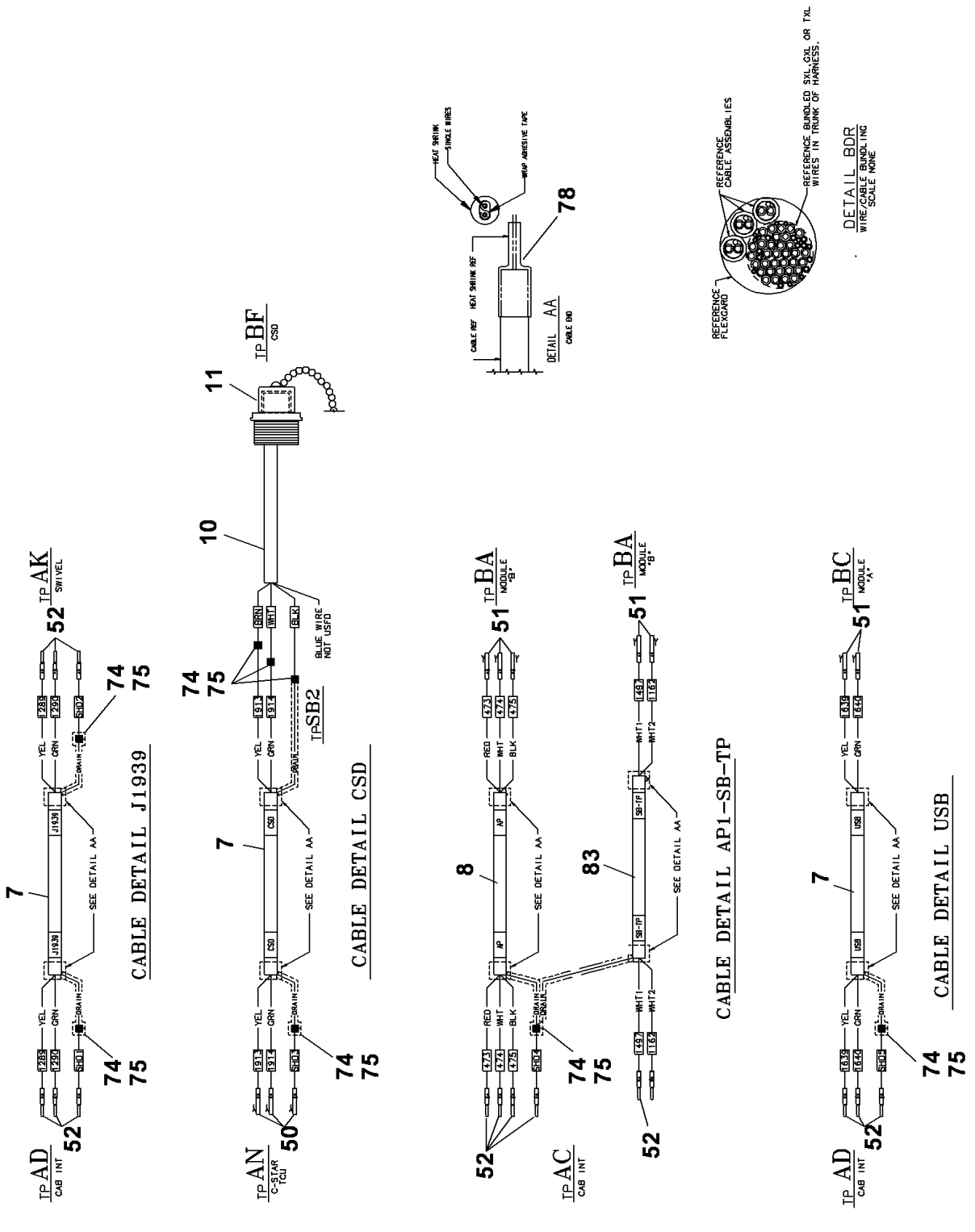
CABLE DETAIL J1939
CABLE DETAIL CSD
CABLE DETAIL AP1-SB-TP
CABLE DETAIL USB
DETAIL AA
DETAIL BDR
WIRE/CABLE BUNDLING
SCALE NONE
SEE DETAIL AA
REFERENCE FLEXGARD
REFERENCE CABLE ASSEMBLIES
REFERENCE BUNDLED SXL,GXL OR TXL WIRES IN TRUNK OF HARNESS.
BLUE WIRE NOT USED
HEAT SHRINK
SINGLE WIRES
WRAP ADHESIVE TAPE
CABLE REF
HEAT SHRINK REF
CABLE END
TP AD CAB INT
TP AK SWIVEL
TP AN C-STAR TCU
TP BF CSD
TP SB2
TP BA MODULE "B"
TP AC CAB INT
TP BA MODULE "B"
TP BC MODULE "A"
TP AD CAB INT

80043367

| WIRE NO | COLOR | SAE SIZE | LENGTH TOT | LENGTH IN | TP | B/N ITEM NO | REMARKS |
|---|---|---|---|---|---|---|---|
| 5A | WHITE | 12 | 44 | | BE | 73 | |
| 5B | | 12 | 4 | | CA | STRIP | SEE DET |
| 25 | | 18 | 75 | | AA | 54 | |
| 35 | | 18 | 84 | | AA | 54 | |
| 43A | | 18 | 20 | | AA | 54 | |
| 43B | | 18 | 15 | | AE | 54 | |
| 43D | | 18 | 36 | | CD | 60 | |
| 43E | | 18 | 37 | | CD | 60 | |
| 43F | | 18 | 37 | | CD | 60 | |
| 45 | | 16 | 59 | | AE | 54 | |
| 48 | | 18 | 65 | | AJ | 54 | |
| 50 | | 14 | 65 | | AE | 54 | |
| 51A | | 14 | 27 | | AE | STRIP | CRIMP W/B |
| 51C | | 18 | 40 | | BE | STRIP | CRIMP W/A |
| 51D | | 18 | 25 | | CB | 65 | CRIMP W/C |
| 51E | | 18 | 11 | | DB | 65 | CRIMP W/D |
| 51F | | 18 | 15 | | DC | 65 | CRIMP W/E |
| 51G | | 18 | 7 | | DD | 65 | CRIMP W/F |
| 51H | | 18 | 12 | | BA | 56 | |
| 51K | | 18 | 12 | | BA | 56 | |
| 51L | | 18 | 12 | | BC | 56 | |
| 51M | | 18 | 12 | | BC | 56 | |
| 51N | | 18 | 12 | | BC | 56 | |
| 51P | | 18 | 11 | | AL | 54 | |
| 51R | | 14 | 22 | | AC | 53 | |
| 51S | | 18 | 14 | | AH | 54 | |
| 51T | | 18 | 51 | | AP | 57 | |
| 51W | | 18 | 54 | | AN | 50 | |
| 51X | | 16 | 47 | | CE | 56 | |
| 51Y | | 16 | 47 | | CE | 56 | |
| 51AA | | 18 | 3 | | DC | 66 | |
| 56A | | 18 | 21 | | AA | 54 | |
| 64 | | 14 | 22 | | AC | 53 | |
| 65 | | 16 | 70 | | AA | 54 | |
| 66A | | 16 | 70 | | AA | 54 | |
| 68A | | 16 | 30 | | CA | 58 | |
| 68B | | 16 | 3 | | DE | 66 | |
| 71A | | 18 | 44 | | AA | 54 | |
| 71B | | 18 | 36 | | CA | 58 | |
| 71C | | 18 | 19 | | CC | 61 | |
| 73A | | 18 | 41 | | AJ | 54 | |
| 73B | | 18 | 24 | | BC | 56 | |
| 73C | | 18 | 32 | | CD | 60 | |
| 80A | | 20 | 70 | | AA | 54 | |
| 101A | | 18 | 21 | | AA | 54 | |
| 112 | | 18 | 64 | | AA | 54 | |
| 113 | | 16 | 59 | | AE | 54 | |
| 149 | | 18 | 28 | | AA | 54 | |
| 180A | | 10 | 40 | | CA | STRIP | SEE DET |
| 180B | | 10 | 40 | | CA | STRIP | SEE DET |
| 194A | | 18 | 49 | | AA | 54 | |
| 194C | | 18 | 21 | | DC | 66 | |
| 268 | | 14 | 59 | | AE | 54 | |
| 280A | | 14 | 39 | | CA | STRIP | SEE DET |
| 280B | | 10 | 39 | | CA | STRIP | SEE DET |
| 349 | | 18 | 75 | | AA | 54 | |
| 350 | | 18 | 75 | | AA | 54 | |
| 413 | | 18 | 85 | | AJ | 54 | |
| 414 | | 18 | 85 | | AJ | 54 | |
| 479 | | 18 | 65 | | AJ | 54 | |
| 506 | | 18 | 65 | | AJ | 54 | |
| 601A | | 14 | 64 | | AA | 53 | |
| 631A | | 18 | 65 | | AJ | 54 | |
| 707 | | 18 | 65 | | AJ | 54 | |
| 793 | | 18 | 65 | | AJ | 54 | |
| 799 | | 18 | 70 | | AE | 54 | |
| 1145 | | 18 | 75 | | AA | 54 | |
| 1160A | | 14 | 41 | | AB | 53 | |
| 1160B | | 14 | 12 | | AK | 53 | |
| 1160C | | 18 | 33 | | BA | 56 | |
| 1195 | | 14 | 63 | | AB | 53 | |
| 1257A | | 18 | 48 | | CA | 58 | |
| 1257B | | 18 | 12 | | CA | 58 | |
| 1257C | | 16 | 25 | | BA | 56 | |
| 1257D | | 16 | 25 | | BA | 56 | |
| 1257E | | 16 | 25 | | BC | 56 | |
| 1257F | | 16 | 25 | | BC | 56 | |
| 1319 | | 18 | 25 | | CC | 58 | |
| 1362 | | 18 | 25 | | CA | 58 | |
| 1363 | | 16 | 30 | | CA | 58 | |
| 1364 | | 16 | 30 | | CA | 58 | |
| 1365 | WHITE | 16 | 30 | | CA | 58 | |
| 1384A | WHITE | 20 | 20 | | AB | 54 | |
| 1384B | | 20 | 16 | | AE | 54 | |
| 1384C | | 20 | 16 | | AH | 54 | |
| 1384D | | 20 | 54 | | BC | 56 | |
| 1384E | | 18 | 49 | | DG | 66 | |
| 1412 | | 18 | 56 | | AB | 54 | |
| 1436 | | 12 | 60 | | AF | 55 | |
| 1450A | | 18 | 9 | | AB | 54 | |
| 1450B | | 18 | 11 | | AE | 54 | |
| 1450C | | 16 | 65 | | DG | 66 | |
| 1451 | | 16 | 20 | | AB | 54 | |
| 1498 | | 20 | 20 | | AB | 54 | |
| 1470 | | 20 | 20 | | AB | 54 | |
| 1471 | | 20 | 20 | | AE | 54 | |
| 1481 | | 12 | 60 | | AF | 55 | |
| 1498A | | 18 | 22 | | AB | 54 | |
| 1498B | | 18 | 33 | | CD | 60 | |
| 1498C | | 18 | 34 | | CD | 60 | |
| 1498D | | 18 | 42 | | CA | 58 | |
| 1498E | | 18 | 52 | | CA | 58 | |
| 1634 | | 18 | 75 | | AB | 54 | |
| 1650 | | 18 | 74 | | AB | 52 | |
| 1653A | | 18 | 61 | | CC | 5 | |
| 1653B | | 18 | 10 | | CD | 60 | |
| 1653C | | 18 | 50 | | AL | 54 | |
| 1654A | | 16 | 63 | | AB | 54 | |
| 1654B | | 16 | 58 | | CA | 58 | |
| 1674A | | 16 | 33 | | AK | 54 | |
| 1674C | | 18 | 16 | | CD | 60 | |
| 1674D | | 18 | 14 | | CD | 60 | |
| 1674E | | 18 | 25 | | CD | 60 | |
| 1700 | | 16 | 25 | | AB | 54 | |
| 1791A | | 18 | 21 | | AB | 54 | |
| 1791B | | 18 | 49 | | AN | 50 | |
| 1791C | | 18 | 36 | | CD | 60 | |
| 1791D | | 18 | 53 | | BA | 56 | |
| 1791E | | 18 | 42 | | CA | 58 | |
| 1799 | | 18 | 58 | | AH | 54 | |
| 1912 | | 18 | 15 | | AN | 50 | |
| 2135 | | 18 | 70 | | AE | 54 | |
| 2136 | | 18 | 70 | | AE | 54 | |
| 2156D | | 18 | 78 | | AC | 54 | |
| 2157 | | 18 | 63 | | AC | 54 | |
| 2159A | | 18 | 37 | | AG | 54 | |
| 2159B | | 18 | 35 | | BC | 56 | |
| 2159C | | 18 | 17 | | CD | 60 | |
| 2160A | | 18 | 48 | | AC | 54 | |
| 2160B | | 16 | 21 | | DB | 65 | |
| 2160C | | 18 | 14 | | CD | 60 | |
| 2160D | | 18 | 13 | | CD | 60 | |
| 2160E | | 18 | 12 | | CD | 60 | |
| 2160F | | 18 | 14 | | CD | 60 | |
| 2160G | | 18 | 11 | | DB | 65 | |
| 2161 | | 12 | 60 | | AF | 55 | |
| 2273 | | 18 | 48 | | AL | 54 | |
| SH01 | | 18 | 4 | | AD | SEE CABLE | |
| SH03 | | 18 | 4 | | AK | SEE CABLE | |
| SH04 | | 18 | 4 | | AC | SEE CABLE | |
| SH05 | | 18 | 4 | | AD | SEE CABLE | |
| SH06 | | 18 | 4 | | AD | SEE CABLE | |
| SH07 | | 18 | 4 | | AG | SEE CABLE | |
| SH08 | | 16 | 4 | | AK | SEE CABLE | |
| SH09 | | 18 | 4 | | DA | SEE CABLE | |
| SH10 | | 18 | 4 | | AG | SEE CABLE | |
| SH11 | WHITE | 18 | 4 | | AJ | SEE CABLE | |

| WIRE NO | REMARKS | TP | B/N ITEM NO | REMARKS |
|---|---|---|---|---|
| 1384A | | SA1 | STRIP | SEE DET |
| 1384B | | SA1 | STRIP | SEE DET |
| 1384C | | SA1 | STRIP | SEE DET |
| 1384D | | SA1 | STRIP | SEE DET |
| 1384E | | SA1 | STRIP | SEE DET |
| 1412 | | CD | 60 | |
| 1436 | | CA | 59 | |
| 1450A | | SA2 | STRIP | SEE DET |
| 1450B | | SA2 | STRIP | SEE DET |
| 1450C | | SA2 | STRIP | SEE DET |
| 1451 | | AE | 54 | |
| 1498 | | AE | 54 | |
| 1470 | | AE | 54 | |
| 1471 | | AE | 54 | |
| 1481 | | CA | 59 | |
| 1498A | | SA1 | STRIP | SEE DET |
| 1498B | | SA1 | STRIP | SEE DET |
| 1498C | | SA1 | STRIP | SEE DET |
| 1498D | | SA1 | STRIP | SEE DET |
| 1498E | | SA1 | STRIP | SEE DET |
| 1634 | | BA | 54 | |
| 1650 | | BC | 51 | |
| 1653A | | SC1 | STRIP | SEE DET |
| 1653B | | SC1 | STRIP | SEE DET |
| 1653C | | SC1 | STRIP | SEE DET |
| 1654A | CRIMP W/A | CA | STRIP | CRIMP W/B |
| 1654B | | AG | 54 | |
| 1674A | | SA3 | STRIP | SEE DET |
| 1674C | | SA3 | STRIP | SEE DET |
| 1674D | | SA3 | STRIP | SEE DET |
| 1674E | | SA3 | STRIP | SEE DET |
| 1700 | | AL | 54 | |
| 1791A | | SA1 | STRIP | SEE DET |
| 1791B | | SA1 | STRIP | SEE DET |
| 1791C | | SA1 | STRIP | SEE DET |
| 1791D | | SA1 | STRIP | SEE DET |
| 1791E | | SA1 | STRIP | SEE DET |
| 1799 | | CA | 58 | |
| 1912 | | AP | 57 | |
| 2135 | | BC | 56 | |
| 2136 | | BC | 56 | |
| 2156D | | BA | 54 | |
| 2157 | | CD | 60 | |
| 2159A | | SA3 | STRIP | SEE DET |
| 2159B | | SA3 | STRIP | SEE DET |
| 2159C | | SA3 | STRIP | SEE DET |
| 2160A | | SA3 | STRIP | SEE DET |
| 2160B | CRIMP W/G | SA3 | STRIP | SEE DET |
| 2160C | | SA3 | STRIP | SEE DET |
| 2160D | | SA3 | STRIP | SEE DET |
| 2160E | | SA3 | STRIP | SEE DET |
| 2160F | | SA3 | STRIP | SEE DET |
| 2160G | CRIMP W/B | DC | 64 | |
| 2161 | | CA | 59 | |
| 2273 | | CD | 60 | |
| SH01 | DETAIL J1939 | | | |
| SH03 | DETAIL J1939 | | | |
| SH04 | DETAIL CSD | | | |
| SH05 | DETAIL AP | | | |
| SH06 | DETAIL USB | | | |
| SH07 | DETAIL PC1B | | | |
| SH08 | DETAIL PC1A | | | |
| SH09 | DETAIL PC1E | | | |
| SH10 | DETAIL PC1A | | | |
| SH11 | DETAIL PC1F | | | |

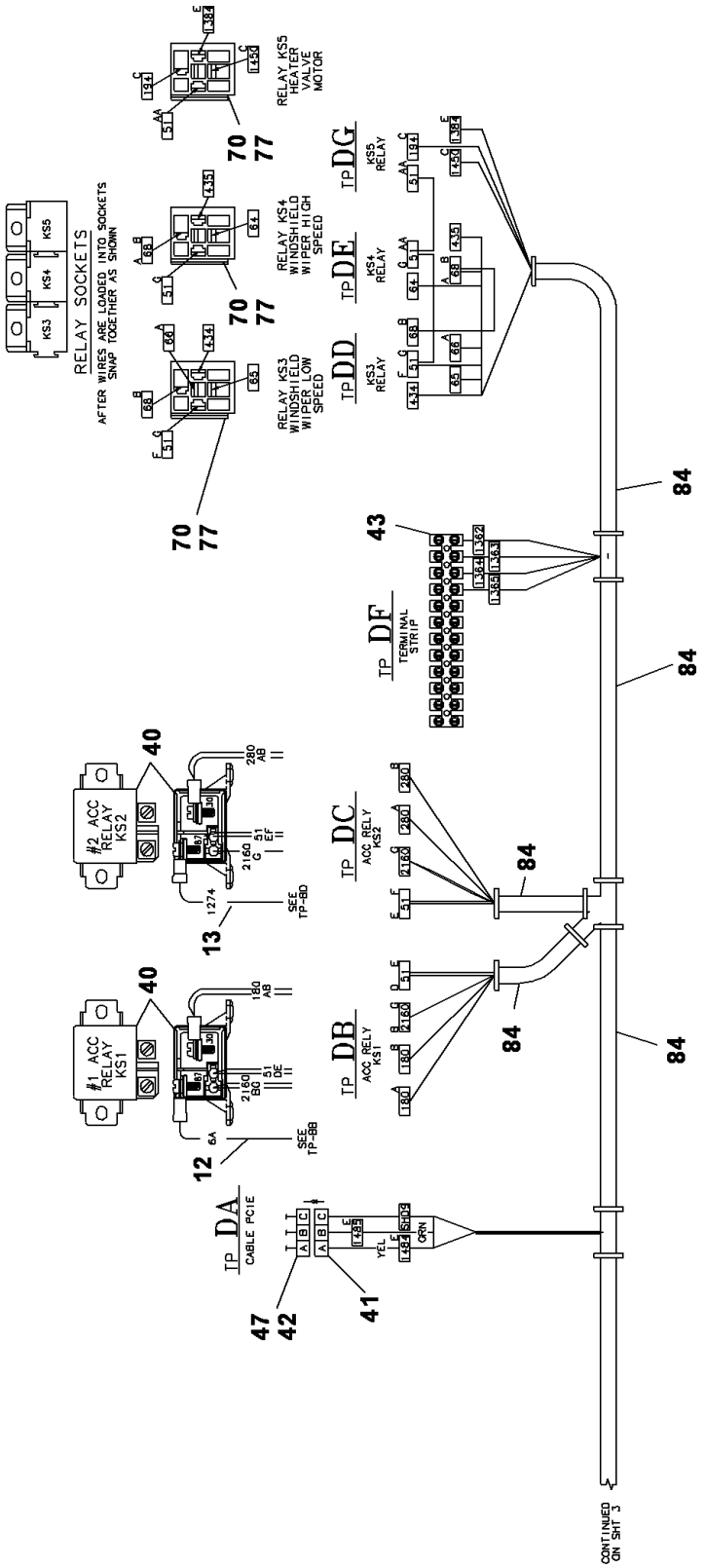
RELAY SOCKETS
AFTER WIRES ARE LOADED INTO SOCKETS SNAP TOGETHER AS SHOWN
KS3
KS4
KS5
RELAY KS3 WINDSHIELD WIPER LOW SPEED
RELAY KS4 WINDSHIELD WIPER HIGH SPEED
RELAY KS5 HEATER VALVE MOTOR
TP DD KS3 RELAY
TP DE KS4 RELAY
TP DG KS5 RELAY
TP DF TERMINAL STRIP
TP DC ACC RELY KS2
TP DB ACC RELY KS1
TP DA CABLE PC1E
#2 ACC RELAY KS2
#1 ACC RELAY KS1
SEE TP-8D
SEE TP-8B
CONTINUED ON SHT 3

80043367

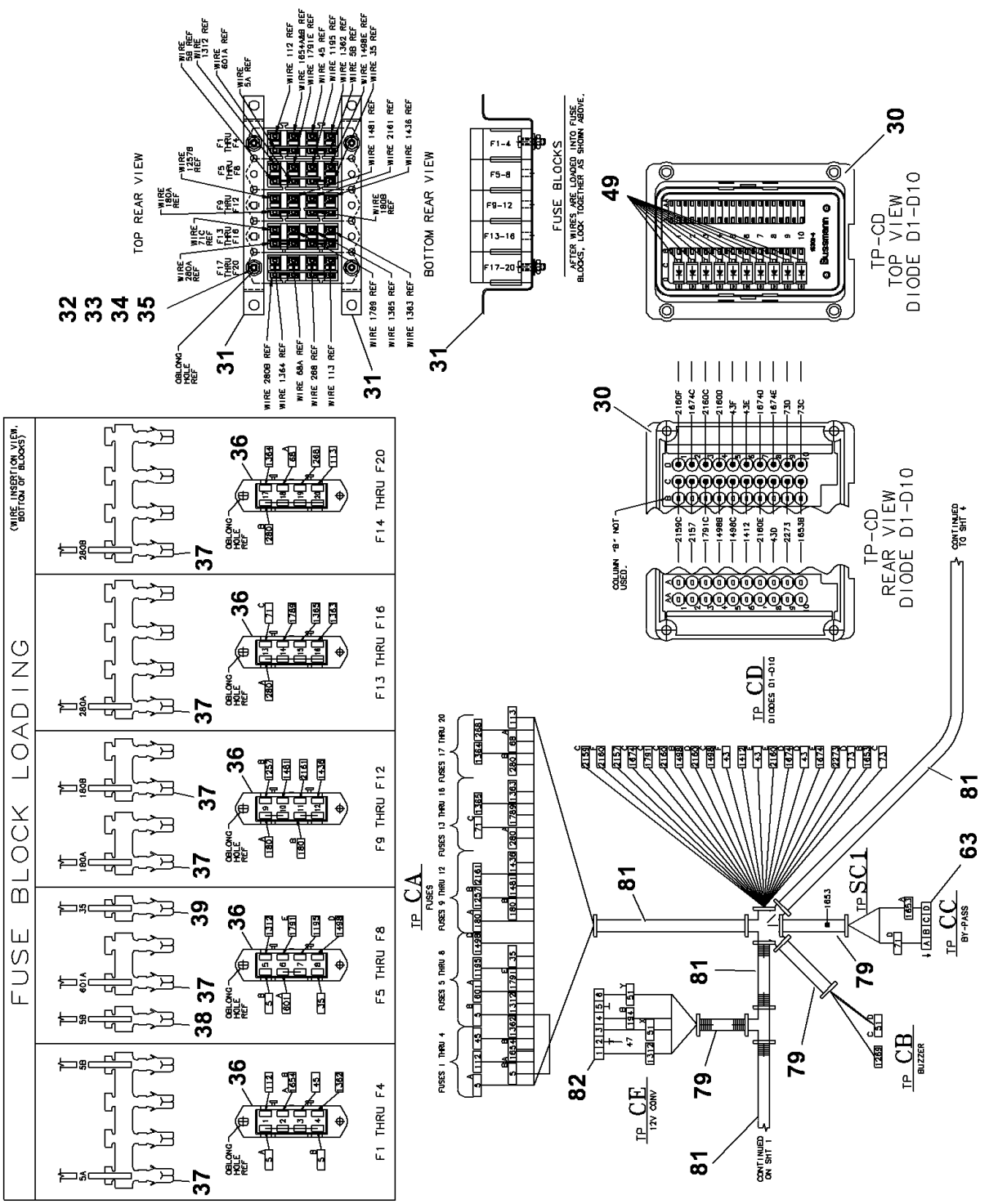
FUSE BLOCK LOADING
(WIRE INSERTION VIEW, BOTTOM OF BLOCKS)
F1 THRU F4
F5 THRU F8
F9 THRU F12
F13 THRU F16
F14 THRU F20
TOP REAR VIEW
BOTTOM REAR VIEW
FUSE BLOCKS
AFTER WIRES ARE LOADED INTO FUSE BLOCKS, LOCK TOGETHER AS SHOWN ABOVE.
TP-CD
TOP VIEW
DIODE D1-D10
TP-CD
REAR VIEW
DIODE D1-D10
COLUMN "B" NOT USED.
TP CA
FUSES
TP CD
DIODES D1-D10
TP SC1
TP CC
BY-PASS
TP CB
BUZZER
TP CE
12V CONV
CONTINUED ON SHT 1
CONTINUED TO SHT 4

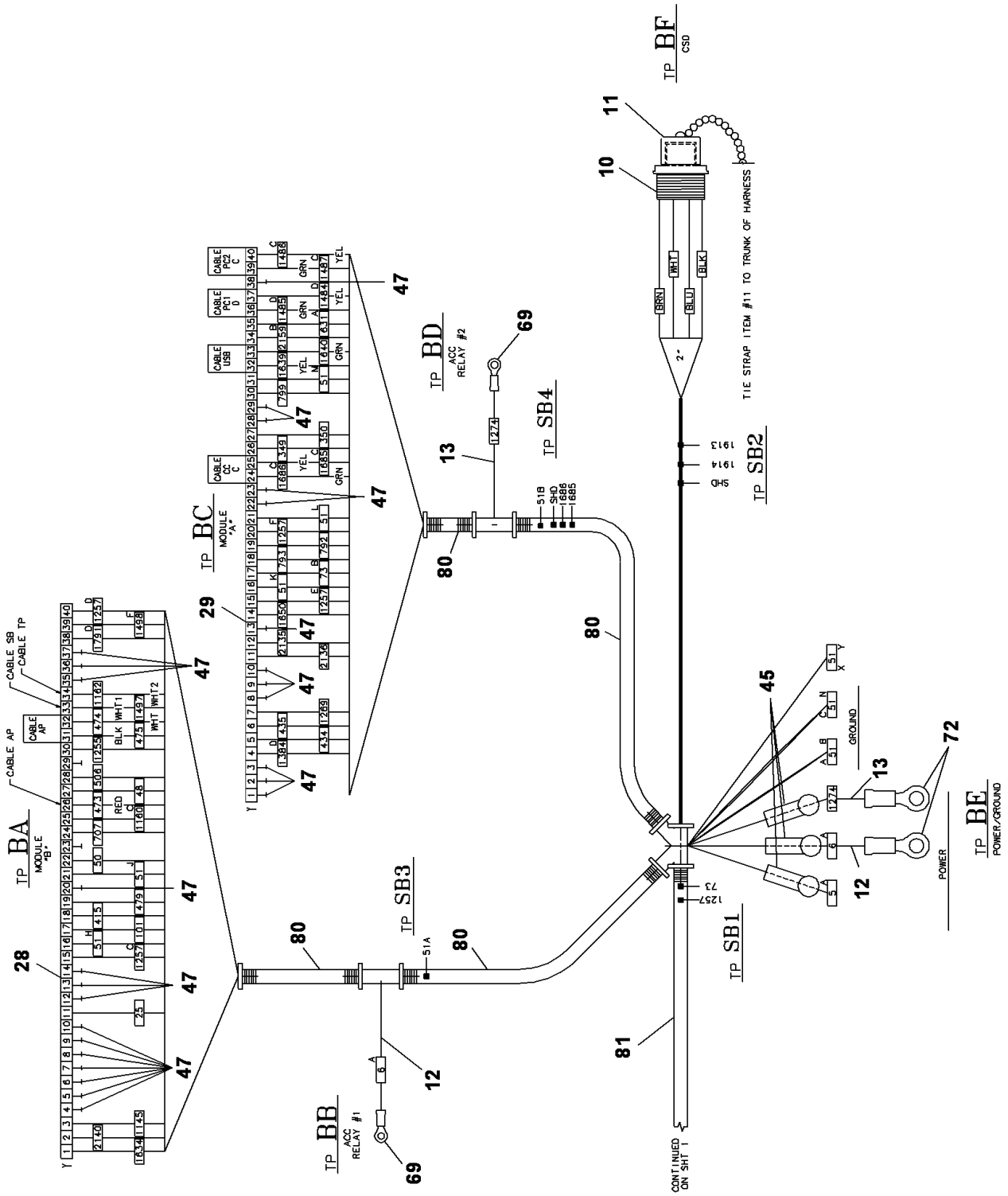
TP BA
MODULE "B"
TP BB
ACC RELAY #1
TP BC
MODULE "A"
TP BD
ACC RELAY #2
TP BE
POWER/GROUND
TP BF
CSD
TP SB1
TP SB2
TP SB3
TP SB4
CABLE SB
CABLE TP
CABLE AP
CABLE USB
CABLE CC
CABLE PC1
CABLE PC2
TIE STRAP ITEM #11 TO TRUNK OF HARNESS
GROUND
POWER
CONTINUED ON SHT 1

80043367

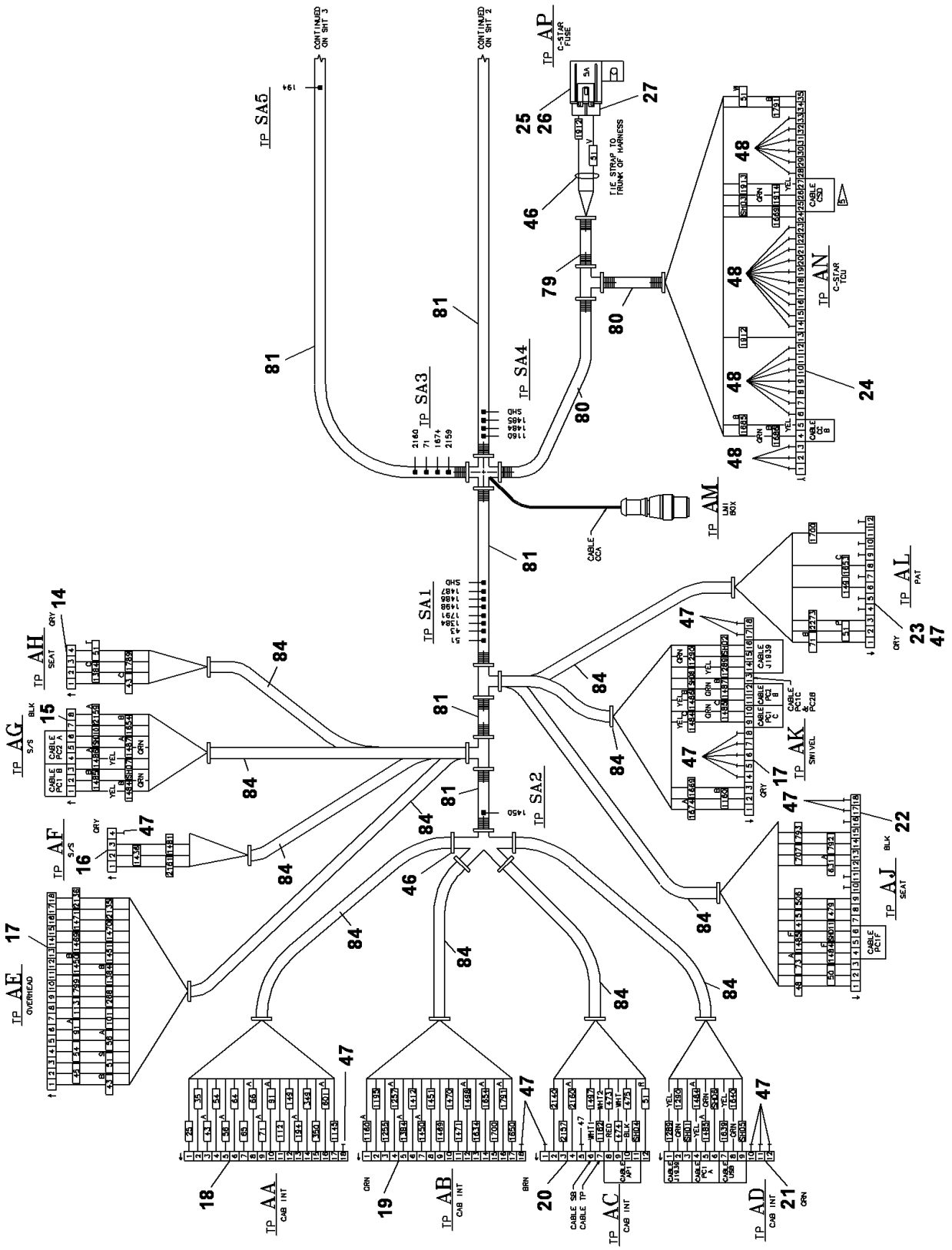


80043367

(SHEET 1 OF 7)

Description
**HARNESS ASSEMBLY-FUSE & RELAY**

Assembly No.
**80043367**
Revision: **D**

| Item | FN | Part | Qty | Description |
|---|---|---|---|---|
| 7 | | **80021593** | 44 | CABLE, 20 AWG CAN-BUS SHEILDED |
| 8 | | **7246100387** | 7 | CABLE, 3 COND 18GA SHLDD W/DRN |
| 9 | | **80017392** | 1 | M12 CABLE STRAIGHT, MALE, 1M |
| 10 | | **5898700** | 1 | RECEPTACLE |
| 11 | | **3046370** | 1 | CAP |
| 12 | | **80023980** | 1 | BATTERY CABLE RED 6GA 26" |
| 13 | | **80023981** | 1 | BATT CABLE RED 6GA 26" |
| 14 | | **80023432** | 1 | RECEPT FLG GRY |
| 15 | | **80023106** | 1 | DT RECP 8PB FLG BLK |
| 16 | | **80023122** | 1 | DTP RECP 4P FLG GRY |
| 17 | | **80023118** | 2 | RECEPT FLG W/WEDGE |
| 18 | | **80023121** | 1 | RECEPT FLG W/WEDGE |
| 19 | | **80023120** | 1 | RECEPT FLG W/WEDGE |
| 20 | | **80023110** | 1 | DT RECP 12PD FLG BRN |
| 21 | | **80023111** | 1 | DT RECP 12PC FLG GRN |
| 22 | | **80023119** | 1 | RECEPT FLG W/WEDGE |
| 23 | | **7892001012** | 1 | RECEPTABLE, 12 P FLANGE |
| 24 | | **80003395** | 1 | AMP-PLUG |
| 25 | | **7482000035** | 1 | FUSE, 5 AMP |
| 26 | | **7892100030** | 1 | CONNECTOR, COVER/SINGLE |
| 27 | | **7892100027** | 1 | 2-PASS CONNECTOR/GRAY SEAL |
| 28 | | **7709100946** | 1 | PLUG |
| 29 | | **7709100882** | 1 | PLUG |
| 30 | | **7086100159** | 1 | BLOCK, FUSE |
| 31 | | **6184001406** | 2 | BRACKET, FUSE |
| 32 | | **7111100611** | 4 | SCREW, MACHINE<br>3/16" - 24 N.C. X 3/4"<br>GRADE 1 |
| 33 | | **7950100050** | 4 | WASHER, LOCK #10 |
| 34 | | **7950100141** | 4 | WASHER, FLAT, #10 |
| 35 | | **7660101100** | 4 | NUT, HEX<br>3/16" - 32 N.F.<br>GRADE 1 |
| 36 | | **7086000947** | 5 | BLOCK, FUSE |
| 37 | | **7892000220** | 18 | FUSE, BUSS BAR<br>12 - 10 AWG |

Description
**HARNESS ASSEMBLY-FUSE & RELAY**

Assembly No.
**80043367**
Revision: **D**

| Item | FN | Part | Qty | Description |
|---|---|---|---|---|
| 38 | | **7892000219** | 1 | FUSE, TERMINAL<br>12 - 10 AWG |
| 39 | | **7892000218** | 1 | FUSE, TERMINAL<br>16 - 14 AWG |
| 40 | # | **7750000058** | 2 | RELAY, 24 VOLT |
| 41 | | **7892000978** | 1 | RECEPTACLE,<br>3 PIN |
| 42 | | **7709000874** | 1 | PLUG<br>3 SOCKET |
| 43 | | **7086000875** | 1 | STRIP, TERMINAL |
| 44 | # | **7826000079** | 3 | SOCKET, RELAY |
| 45 | | **7172000558** | 3 | BOOT, TERMINAL |
| 46 | | **7850000208** | 61 | CABLE TIE 5.63", BLACK |
| 47 | | **7689000503** | 57 | PLUG, SEALING<br>16 - 12 AWG |
| 48 | | **80004700** | 26 | SEALING PLUG - NYLON |
| 49 | | **80023439** | 10 | DIODE 6AMP KEY |
| 50 | | **80003367** | 9 | SOCKET 20-16GA |
| 51 | | **7826100004** | 14 | SOCKET, (16 - 18) 30 SERIES |
| 52 | | **7689002053** | 36 | PIN<br>16 - 18 AWG |
| 53 | | **7689000704** | 6 | PIN, 16 - 14 GA |
| 54 | | **7689001782** | 74 | PIN, 18 - 16 GAGE |
| 55 | | **7689000797** | 3 | PIN<br>12 AWG |
| 56 | | **7826000626** | 42 | SOCKET,<br>16 - 18 AWG |
| 57 | | **7892100032** | 2 | TERMINAL, FEMALE |
| 58 | | **7892000218** | 17 | FUSE, TERMINAL<br>16 - 14 AWG |
| 59 | | **7892000219** | 3 | FUSE, TERMINAL<br>12 - 10 AWG |
| 60 | | **7892100065** | 20 | TERMINAL, TANGLESS FEMALE |
| 61 | | **7892000843** | 2 | TERMINAL, FEMALE<br>16 - 20 AWG |
| 62 | | **7892001002** | 4 | FERRULE, SINGLE WIRE<br>(BLACK) |

**# SERVICED AS AN ASSEMBLY ONLY**

Description
**HARNESS ASSEMBLY-FUSE & RELAY**

Assembly No.
**80043367**
Revision: **D**

| Item | FN | Part | Qty | Description |
|---|---|---|---|---|
| 63 | | **7364100044** | 1 | CONNECTOR, 4PASS 280 SERIES |
| 64 | | **7345001444** | 3 | TERMINAL, FEMALE |
| 65 | | **7345001744** | 4 | TERMINAL, FEMALE<br>16 - 14 AWG |
| 66 | | **7345001752** | 13 | TERMINAL<br>16 - 14 AWG |
| 67 | | **7345211701** | 1 | TONGUE, INSULATED RING |
| 68 | | **7345211901** | 3 | TERMINAL<br>12 - 10 AWG |
| 69 | | **7345212101** | 2 | TERMINAL<br>6 AWG |
| 70 | | **7750000741** | 3 | RELAY, 24 VOLT |
| 71 | | **7345241901** | 3 | TONGUE, INSULATED RING |
| 72 | | **7345232101** | 2 | TERMINAL<br>6 AWG |
| 73 | | **7345231901** | 1 | TERMINAL<br>12 - 10 AWG |
| 74 | | **7892000194** | 26 | PARALLEL, NON - INSULATED<br>16 - 14 AWG |
| 75 | | **8594100256** | 4 | 1/4" SHRINK TUBING (CLEAR) W/M |
| 76 | | **7892000195** | 11 | PARALLEL, NON - INSULATED<br>12 - 10 AWG |
| 77 | | **7892000196** | 3 | PARALLEL, NON - INSULATED<br>8 AWG |
| 78 | | **8594100257** | 3 | TUBING, HEAT SHRINK 1/2" I.D.<br>LINER, MELTABLE<br>(QUANTITY IN FEET) |
| 79 | | **8594000019** | 3 | FLEXGUARD, 1/4" I.D.<br>(QUANTITY IN FEET) |
| 80 | | **8594000002** | 6 | FLEXGUARD - .750" I.D.<br>(QUANTITY IN FEET) |
| 81 | | **8594000023** | 7 | FLEXGUARD - 1.625" I.D.<br>(QUANTITY IN FEET) |
| 82 | | **7709000883** | 1 | PLUG<br>6 SOCKET |
| 83 | | **80018276** | 7 | CABLE, 18/4 TWIST SHEILDED |
| 84 | | **8594000004** | 7 | FLEXGUARD - .500" I.D.<br>(QUANTITY IN FEET) |

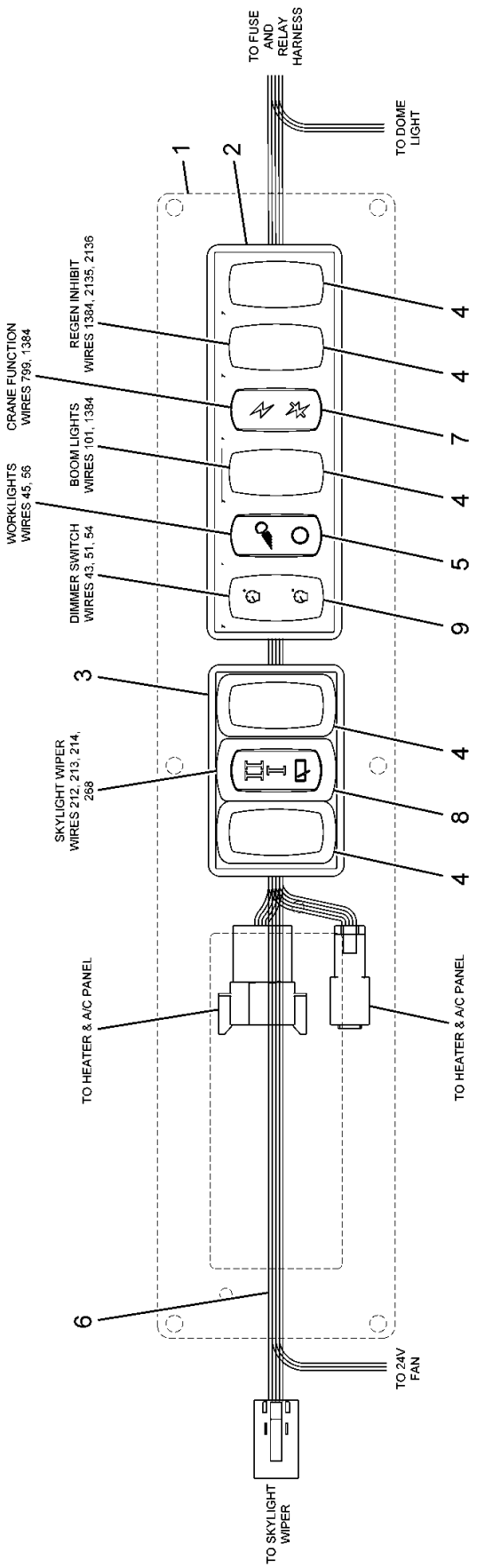


80052124

(SHEET 1 OF 1)

Description
**PANEL ASM OVERHEAD**

Assembly No.
**80052124**
Revision: **B**

| Item | FN | Part | Qty | Description |
|---|---|---|---|---|
| 1 | | **80041859** | 1 | PANEL, OVERHEAD CONSOLE |
| 2 | | **7364100182** | 1 | BEZEL, L-SERIES 6 GANG LM6 |
| 3 | | **7364100179** | 1 | BEZEL, L-SERIES 3 GANG LM3 |
| 4 | | **7242100005** | 5 | PLUG, L SERIES LH1 PANEL |
| 5 | | **7872100192** | 1 | SWITCH, WORK LIGHTS |
| 6 | + | **80023422** | 1 | HARNESS ASSEMBLY-OVERHEAD CAB PANEL |
| 7 | | **7872100215** | 1 | SWITCH,L-SERIES CRANE FUNC PWR |
| 8 | | **80019097** | 1 | SWITCH L-SERIES SKYLIGHT WIPER |
| 9 | | **7872100164** | 1 | SWITCH, L-SERIES DIMMER |

**+ SEE FURTHER BREAKDOWN THIS GROUP**

**Notes**

| WIRE NO | COLOR | TYPE | SAE SIZE | LENGTH TOTAL IN | TP | B/M ITEM NO | REMARKS | TP | B/M ITEM NO | REMARKS |
|---|---|---|---|---|---|---|---|---|---|---|
| 43A | WHITE | GXL | 18 | 111 | A | 16 | ——— | S1 | STRIP | SEE DETAIL |
| 43B | ↑ | ↑ | 18 | 8 | D | STRIP | CRIMP W/43C | S1 | STRIP | SEE DETAIL |
| 43C | | | 18 | 4 | D | 17 | CRIMP W/43B | D | 18 | ——— |
| 43D | | | 18 | 9 | E | STRIP | CRIMP W/43E | S1 | STRIP | SEE DETAIL |
| 43E | | | 18 | 4 | E | 17 | CRIMP W/43D | E | 18 | ——— |
| 43F | | | 18 | 10 | F | STRIP | CRIMP W/43G | S1 | STRIP | SEE DETAIL |
| 43G | | | 18 | 4 | F | 17 | CRIMP W/43F | F | 18 | ——— |
| 43H | | | 18 | 11 | H | STRIP | CRIMP W/43J | S1 | STRIP | SEE DETAIL |
| 43J | | | 18 | 4 | H | 17 | CRIMP W/43H | H | 18 | ——— |
| 43K | | | 18 | 15 | L | STRIP | CRIMP W/43L | S1 | STRIP | SEE DETAIL |
| 43L | | | 18 | 4 | L | 17 | CRIMP W/43K | L | 18 | ——— |
| 43M | | | 18 | 12 | J | 18 | ——— | S1 | STRIP | SEE DETAIL |
| 45A | | | 16 | 89 | A | 16 | ——— | S2 | STRIP | SEE DETAIL |
| 45B | | | 16 | 11 | S2 | STRIP | SEE DETAIL | C | 19 | ——— |
| 45C | | | 16 | 33 | S2 | STRIP | SEE DETAIL | H | 17 | ——— |
| 51A | | | 14 | 122 | A | 14 | ——— | G | 14 | ——— |
| 51B | | | 18 | 34 | G | 16 | ——— | N | 22 | ——— |
| 51D | | | 18 | 10 | G | 16 | ——— | L | 18 | ——— |
| 51E | | | 18 | 10 | G | 16 | ——— | E | 18 | ——— |
| 51F | | | 18 | 7 | G | 16 | ——— | J | 18 | ——— |
| 51G | | | 18 | 8 | G | 16 | ——— | H | 18 | ——— |
| 51H | | | 18 | 9 | G | 16 | ——— | F | 18 | ——— |
| 51J | | | 18 | 16 | K | 15 | ——— | G | 16 | ——— |
| 51K | | | 18 | 16 | K | 15 | ——— | G | 16 | ——— |
| 51L | | | 16 | 42 | C | 21 | ——— | G | 16 | ——— |
| 51M | | | 16 | 20 | P | 16 | ——— | G | 16 | ——— |
| 51N | | | 18 | 11 | D | 18 | ——— | G | 16 | ——— |
| 54A | | | 16 | 113 | A | 16 | ——— | S1 | STRIP | SEE DETAIL |
| 54B | | | 18 | 10 | J | 18 | ——— | S1 | STRIP | SEE DETAIL |
| 54C | | | 18 | 19 | K | 15 | ——— | S1 | STRIP | SEE DETAIL |
| 56 | | | 16 | 122 | A | 16 | ——— | H | 17 | ——— |
| 91A | | | 18 | 132 | A | 16 | ——— | K | 15 | ——— |
| 101 | | | 18 | 121 | A | 16 | ——— | F | 18 | ——— |
| 113 | | | 18 | 152 | A | 16 | ——— | N | 19 | ——— |
| 212 | | | 16 | 18 | L | 17 | ——— | P | 16 | ——— |
| 213 | | | 16 | 18 | L | 17 | ——— | P | 16 | ——— |
| 214 | | | 16 | 18 | L | 17 | ——— | P | 16 | ——— |
| 268 | | | 16 | 126 | A | 16 | ——— | L | 17 | ——— |
| 799 | | | 18 | 120 | A | 16 | ——— | E | 18 | ——— |
| 1384A | | | 18 | 112 | A | 16 | ——— | S1 | STRIP | SEE DETAIL |
| 1384B | | | 18 | 7 | D | 18 | ——— | S1 | STRIP | SEE DETAIL |
| 1384C | | | 18 | 8 | E | 18 | ——— | S1 | STRIP | SEE DETAIL |
| 1384D | | | 18 | 9 | F | 18 | ——— | S1 | STRIP | SEE DETAIL |
| 1384E | | | 18 | 20 | K | 18 | ——— | S1 | STRIP | SEE DETAIL |
| 1450 | | | 18 | 132 | A | 16 | ——— | K | 15 | ——— |
| 1451 | | | 18 | 132 | A | 16 | ——— | K | 15 | ——— |
| 1469 | | | 18 | 132 | A | 16 | ——— | K | 15 | ——— |
| 1470 | | | 18 | 132 | A | 16 | ——— | K | 15 | ——— |
| 1471 | | | 18 | 132 | A | 16 | ——— | K | 15 | ——— |
| 2135 | ↓ | ↓ | 18 | 119 | A | 16 | ——— | D | 18 | ——— |
| 2136 | WHITE | GXL | 18 | 119 | A | 16 | ——— | D | 18 | ——— |

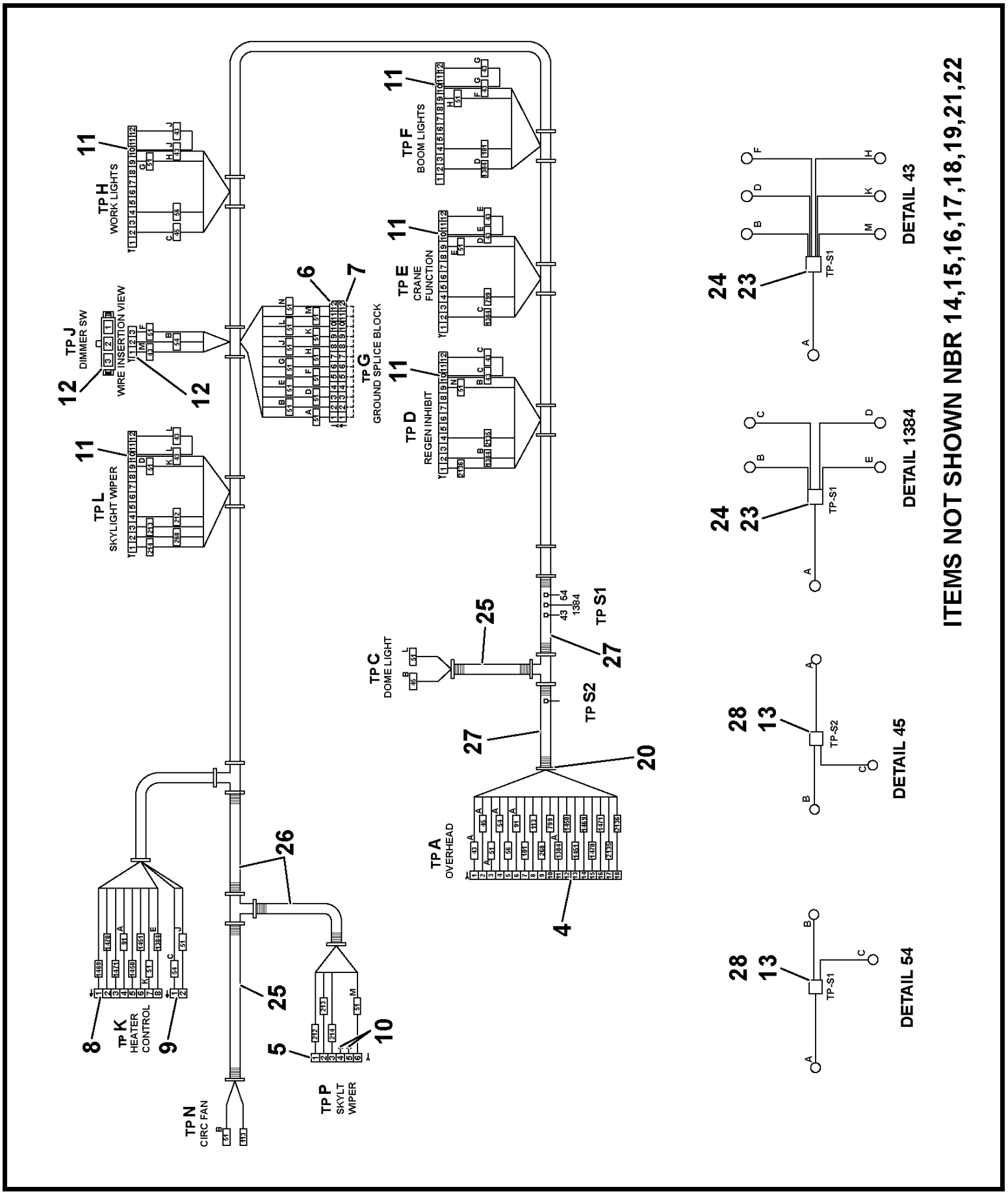


80023422

(SHEET 1 OF 2)

Description
**HARNESS ASSEMBLY-OVERHEAD CAB PANEL**

Assembly No.
**80023422**
Revision: **B**

| Item | FN | Part | Qty | Description |
|---|---|---|---|---|
| 4 | | **80023114** | 1 | PLUG/DTV06-18SA W/WEDGE WV-18P |
| 5 | | **7709000883** | 1 | PLUG<br>6 SOCKET |
| 6 | | **7709000846** | 1 | PLUG, 12 SOCKET |
| 7 | | **7892001036** | 1 | RECEPTACLE, SPLICE BLOCK |
| 8 | | **7892000950** | 1 | RECEPTACLE,<br>8 PIN |
| 9 | | **7892000949** | 1 | RECEPTACLE,<br>2 PIN |
| 10 | | **7689000503** | 2 | PLUG, SEALING<br>16 - 12 AWG |
| 11 | | **7364100184** | 5 | CONNECTOR, L-SERIES SWITCHES |
| 12 | | **7364100183** | 1 | CONNECTOR, L-SERIES DIMMER SWITCH |
| 13 | | **7892000195** | 2 | PARALLEL, NON - INSULATED<br>12 - 10 AWG |
| 14 | | **7826000087** | 2 | SOCKET, 16-14 GA |
| 15 | | **7689001782** | 9 | PIN, 18 - 16 GAGE |
| 16 | | **7826000626** | 32 | SOCKET,<br>16 - 18 AWG |
| 17 | | **7892100058** | 11 | TERMINAL, FM MP 630 SERIES |
| 18 | | **7892100059** | 21 | TERMINAL |
| 19 | | **7345001444** | 2 | TERMINAL, FEMALE |
| 20 | | **7850000208** | 30 | CABLE TIE 5.63", BLACK |
| 21 | | **7345211701** | 1 | TONGUE, INSULATED RING |
| 22 | | **7345001446** | 1 | TERMINAL, MALE<br>22 - 18 AWG |
| 23 | | **7892000196** | 2 | PARALLEL, NON - INSULATED<br>8 AWG |
| 24 | | **8594100259** | 1 | TUBING, HEAT SHRINK 3/8" I.D.<br>LINER, MELTABLE<br>(QUANTITY IN FEET) |
| 25 | | **8594000019** | 3 | FLEXGUARD, 1/4" I.D.<br>(QUANTITY IN FEET) |
| 26 | | **8594000006** | 1 | FLEXGUARD - .350" I.D.<br>(QUANTITY IN FEET) |
| 27 | | **8594000003** | 6 | FLEXGUARD - .625" I.D.<br>(QUANTITY IN FEET) |
| 28 | | **8594100256** | 1 | 1/4" SHRINK TUBING (CLEAR) W/M |

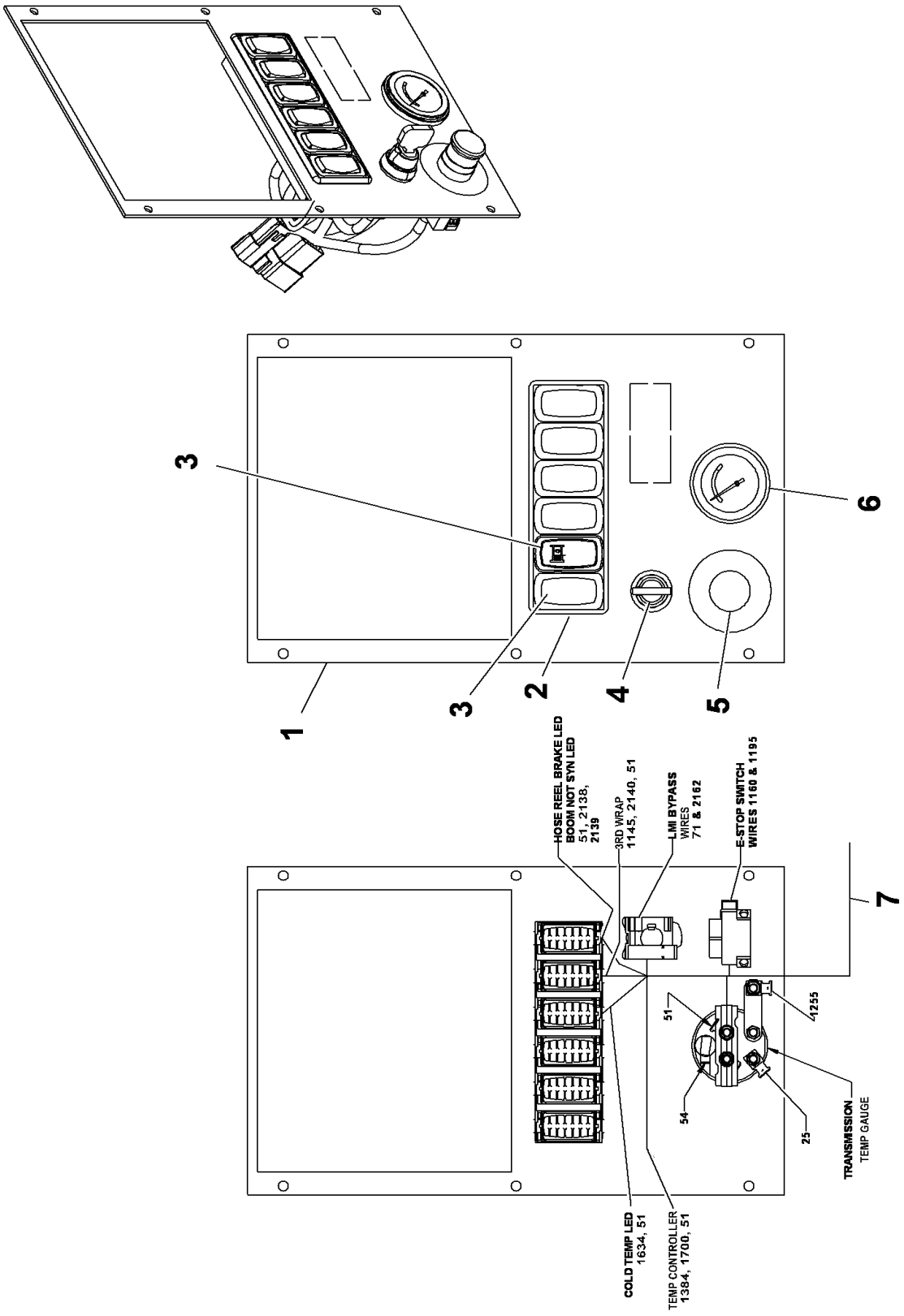


80030293

(SHEET 1 OF 1)

Description
**PANEL ASSY-FRONT CONSOLE**

Assembly No.
**80030293**
Revision: **C**

| Item | FN | Part | Qty | Description |
|---|---|---|---|---|
| 1 | | **80023540** | 1 | PANEL, FRONT CONSOLE |
| 2 | | **7364100182** | 1 | BEZEL, L-SERIES 6 GANG LM6 |
| 3 | | **7242100005** | 6 | PLUG, L SERIES LH1 PANEL |
| 4 | | **80008491** | 1 | SWITCH, KEY<br>INCLUDES THE FOLLOWING PARTS |
| | | **90020929** | 1 | KEY SET, (2) |
| 5 | | **7872100071** | 1 | SWITCH, EMERGENCY STOP |
| 6 | | **80030279** | 1 | GAUGE 2"-TRANSMISSION OIL TEMP |
| 7 | + | **80023710** | 1 | HARNESS ASSEMBLY-FRONT PANEL CAB |

**+ SEE FURTHER BREAKDOWN THIS GROUP**

**Notes**

| WIRE NO | COLOR | TYPE | SAE SIZE | LENGTH INCHES | TP | B/M ITEM # | REMARKS | TP | B/M ITEM NO | REMARKS |
|---|---|---|---|---|---|---|---|---|---|---|
| 25 | WHT | GXL | 18 | 19 | A | 13 | ——— | C | 20 | ——— |
| 51A | | | 18 | 14 | A | 13 | ——— | S1 | STRIP | SEE DETAIL |
| 51B | | | 18 | 5 | C | 20 | ——— | S1 | STRIP | SEE DETAIL |
| 51C | | | 18 | 7 | E | 14 | ——— | S1 | STRIP | SEE DETAIL |
| 51D | | | 18 | 10 | F | 16 | ——— | S1 | STRIP | SEE DETAIL |
| 51E | | | 18 | 10 | H | 16 | ——— | S1 | STRIP | SEE DETAIL |
| 51F | | | 18 | 10 | J | 16 | ——— | S1 | STRIP | SEE DETAIL |
| 54 | | | 18 | 19 | A | 13 | ——— | C | 20 | ——— |
| 71 | | | 18 | 21 | A | 13 | ——— | D | 19 | ——— |
| 1145 | | | 18 | 24 | A | 13 | ——— | H | 16 | ——— |
| 1160A | | | 14 | 19 | A | 12 | ——— | B | 18 | ——— |
| 1195 | | | 14 | 19 | A | 12 | ——— | B | 18 | ——— |
| 1255 | | | 18 | 19 | A | 13 | ——— | C | 20 | ——— |
| 1384 | | | 18 | 21 | A | 13 | ——— | E | 14 | ——— |
| 1634 | | | 18 | 24 | A | 13 | ——— | J | 16 | ——— |
| 1700 | | | 18 | 21 | A | 13 | ——— | E | 14 | ——— |
| 2138 | | | 18 | 24 | A | 13 | ——— | F | 16 | ——— |
| 2139 | | | 18 | 24 | A | 13 | ——— | F | 16 | ——— |
| 2140 | | | 18 | 24 | A | 13 | ——— | H | 16 | ——— |
| 2162 | WHT | GXL | 18 | 21 | A | 13 | ——— | D | 19 | ——— |

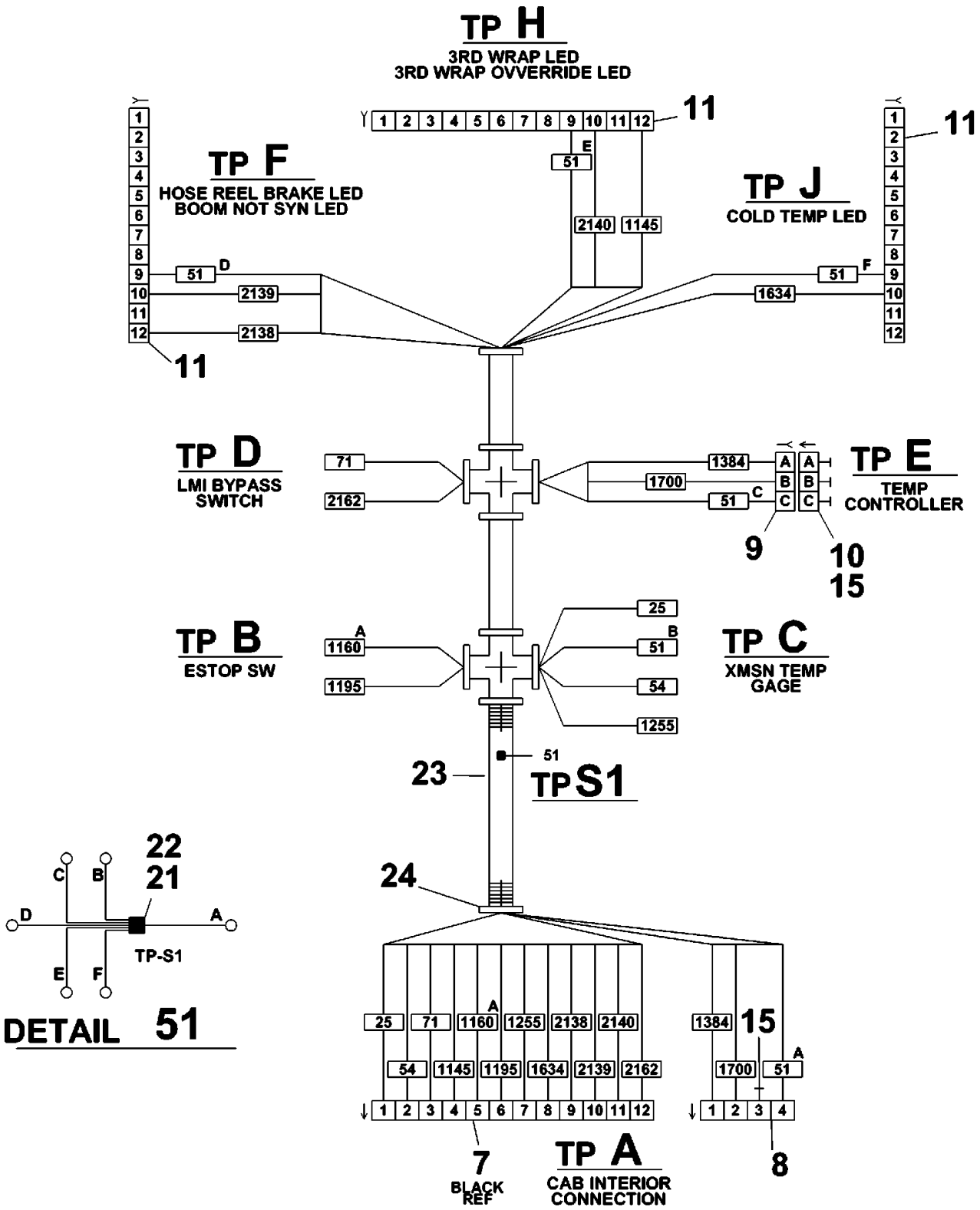


80023710

(SHEET 1 OF 2)

Description
**HARNESS ASSEMBLY-FRONT PANEL CAB**

Assembly No.
**80023710**
Revision: **A**

| Item | FN | Part | Qty | Description |
|---|---|---|---|---|
| 7 | | **7892100086** | 1 | RECEPT,W/WEDGE |
| 8 | | **7892001051** | 1 | RECEPTACLE,<br>4 PIN |
| 9 | | **7709000874** | 1 | PLUG<br>3 SOCKET |
| 10 | | **7892000978** | 1 | RECEPTACLE,<br>3 PIN |
| 11 | | **7364100184** | 3 | CONNECTOR, L-SERIES SWITCHES |
| 12 | | **7689000704** | 2 | PIN, 16 - 14 GA |
| 13 | | **7689001782** | 13 | PIN, 18 - 16 GAGE |
| 14 | | **7826000626** | 3 | SOCKET,<br>16 - 18 AWG |
| 15 | | **7689000503** | 4 | PLUG, SEALING<br>16 - 12 AWG |
| 16 | | **7892100059** | 8 | TERMINAL |
| 18 | | **7892001003** | 2 | FERRULE, SINGLE WIRE<br>(BLUE) |
| 19 | | **7892001001** | 2 | FERRULE, SINGLE WIRE<br>(RED) |
| 20 | | **7345001444** | 4 | TERMINAL, FEMALE |
| 21 | | **7892000196** | 1 | PARALLEL, NON - INSULATED<br>8 AWG |
| 22 | | **8594100257** | 1 | TUBING, HEAT SHRINK 1/2" I.D.<br>LINER, MELTABLE<br>(QUANTITY IN FEET) |
| 23 | | **8594000003** | 1 | FLEXGUARD - .625" I.D.<br>(QUANTITY IN FEET) |
| 24 | | **7850000208** | 12 | CABLE TIE 5.63", BLACK |

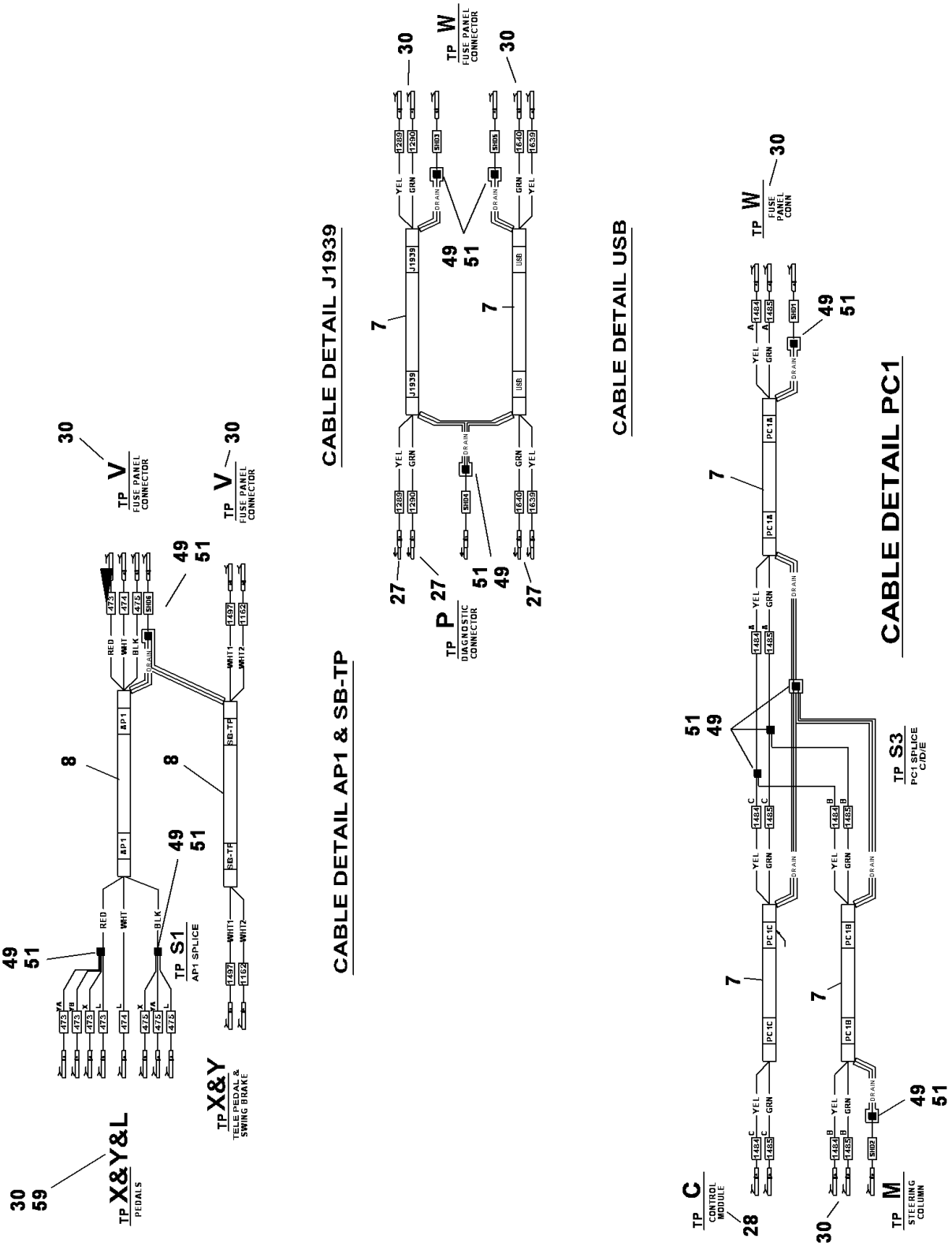
CABLE DETAIL AP1 & SB-TP
CABLE DETAIL J1939
CABLE DETAIL USB
CABLE DETAIL PC1
TP X&Y&L
PEDALS
TP X&Y
TELE PEDAL & SWING BRAKE
TP S1
AP1 SPLICE
TP V
FUSE PANEL CONNECTOR
TP P
DIAGNOSTIC CONNECTOR
TP W
FUSE PANEL CONN
TP S3
PC1 SPLICE C/D/E
TP C
CONTROL MODULE
TP M
STEERING COLUMN
RED
WHT
BLK
YEL
GRN
DRAIN
AP1
SB-TP
J1939
USB
PC1A
PC1C
PC1B

80042878

| WIRE NO | COLOR | TYPE | SAE SIZE | LENGTH INCHES | TP | B/M ITEM # | REMARKS | TP | B/M ITEM NO | REMARKS |
|---|---|---|---|---|---|---|---|---|---|---|
| 25 | WHT | GXL | 18 | 132 | J | 31 | ——— | T | 31 | ——— |
| 35 | | | 18 | 108 | M | 31 | ——— | T | 31 | ——— |
| 43 | | | 18 | 108 | M | 31 | ——— | T | 31 | ——— |
| 51A | | | 14 | 100 | G | 32 | ——— | W | 32 | ——— |
| 51B | | | 20 | 52 | C | 29 | ——— | G | 31 | ——— |
| 51C | | | 18 | 40 | G | 31 | ——— | J | 31 | ——— |
| 51F | | | 16 | 46 | D | 35 | ——— | G | 31 | ——— |
| 51G | | | 16 | 26 | E | 35 | ——— | G | 31 | ——— |
| 51H | | | 18 | 30 | F | 31 | ——— | G | 31 | ——— |
| 51J | | | 18 | 26 | K | 31 | ——— | G | 31 | ——— |
| 51K | | | 18 | 16 | L | 62 | ——— | G | 31 | ——— |
| 51L | | | 16 | 16 | M | 31 | ——— | G | 31 | ——— |
| 51M | | | 18 | 28 | G | 31 | ——— | N | 36 | ——— |
| 51N | | | 18 | 28 | G | 31 | ——— | P | 27 | ——— |
| 51P | | | 18 | 79 | G | 31 | ——— | R | 31 | ——— |
| 54 | | | 18 | 132 | J | 31 | ——— | T | 31 | ——— |
| 56A | | | 16 | 107 | T | 31 | ——— | S2 | STRIP | SEE DETAIL |
| 56B | | | 16 | 11 | E | 35 | ——— | S2 | STRIP | SEE DETAIL |
| 56C | | | 16 | 31 | D | 35 | ——— | S2 | STRIP | SEE DETAIL |
| 64 | | | 16 | 118 | K | 31 | ——— | T | 31 | ——— |
| 65 | | | 16 | 118 | K | 31 | ——— | T | 31 | ——— |
| 66A | | | 16 | 118 | K | 31 | ——— | T | 31 | ——— |
| 71 | | | 16 | 132 | T | 31 | ——— | J | 31 | ——— |
| 75 | | | 20 | 30 | A | 31 | ——— | C | 29 | ——— |
| 76 | | | 20 | 30 | A | 31 | ——— | C | 29 | ——— |
| 77 | | | 20 | 30 | A | 31 | ——— | C | 29 | ——— |
| 78 | | | 20 | 30 | A | 31 | ——— | C | 29 | ——— |
| 79 | | | 20 | 30 | A | 31 | ——— | H | 29 | ——— |
| 80A | | | 20 | 30 | A | 31 | ——— | H | 29 | ——— |
| 81A | | | 20 | 30 | A | 31 | ——— | H | 29 | ——— |
| 82 | | | 20 | 30 | A | 31 | ——— | C | 29 | ——— |
| 83 | | | 20 | 30 | A | 31 | ——— | C | 29 | ——— |
| 84 | | | 20 | 30 | A | 31 | ——— | C | 29 | ——— |
| 91A | | | 20 | 144 | H | 29 | ——— | T | 31 | ——— |
| 112 | | | 14 | 108 | M | 32 | ——— | T | 32 | ——— |
| 149 | | | 18 | 122 | F | 31 | ——— | T | 31 | ——— |
| 194A | | | 16 | 108 | N | STRIP | CRIMP W/194B | T | 31 | ——— |
| 194B | | | 16 | 24 | N | 35 | CRIMP W/194A | P | 27 | ——— |
| 349 | | | 18 | 108 | L | 62 | ——— | T | 31 | ——— |
| 350 | | | 18 | 108 | L | 62 | ——— | T | 31 | ——— |
| 473L | | | 18 | 5 | L | SEE CABLE | DETAIL AP1 | — | — | ——— |
| 473X | | | 18 | 5 | X | SEE CABLE | DETAIL AP1 | — | — | ——— |
| 473YA | | | 18 | 5 | X | SEE CABLE | DETAIL AP1 | — | — | ——— |
| 473YB | | | 18 | 5 | X | SEE CABLE | DETAIL AP1 | — | — | ——— |
| 474L | | | 18 | 108 | X | SEE CABLE | DETAIL AP1 | — | — | ——— |
| 475L | | | 18 | 4 | L | SEE CABLE | DETAIL AP1 | — | — | ——— |
| 475X | | | 18 | 4 | X | SEE CABLE | DETAIL AP1 | — | — | ——— |
| 475YA | | | 18 | 4 | Y | SEE CABLE | DETAIL AP1 | — | — | ——— |
| 601A | | | 14 | 108 | M | 32 | ——— | T | 32 | ——— |
| 1145 | | | 18 | 132 | J | 31 | ——— | T | 31 | ——— |
| 1160A | | | 14 | 132 | J | 32 | ——— | U | 32 | ——— |
| 1195 | | | 14 | 132 | J | 32 | ——— | U | 32 | ——— |
| 1255 | | | 18 | 132 | J | 31 | ——— | U | 31 | ——— |
| 1257 | | | 18 | 144 | C | 29 | ——— | U | 31 | ——— |
| 1384A | | | 18 | 108 | U | 31 | ——— | S2 | STRIP | SEE DETAIL |
| 1384B | | | 18 | 26 | J | 31 | ——— | S2 | STRIP | SEE DETAIL |
| 1384C | | | 18 | 32 | A | 31 | ——— | S2 | STRIP | SEE DETAIL |
| 1412 | | | 18 | 108 | M | 31 | ——— | U | 31 | ——— |
| 1450 | | | 18 | 51 | R | 31 | ——— | U | 31 | ——— |
| 1451 | | | 18 | 51 | R | 31 | ——— | U | 31 | ——— |
| 1469 | | | 20 | 144 | H | 29 | ——— | U | 31 | ——— |
| 1470 | | | 20 | 144 | H | 29 | ——— | U | 31 | ——— |
| 1471 | | | 20 | 144 | H | 29 | ——— | U | 31 | ——— |
| 1498 | | | 18 | 108 | M | 31 | ——— | U | 31 | ——— |
| 1634 | | | 18 | 132 | J | 31 | ——— | U | 31 | ——— |
| 1650 | | | 18 | 108 | U | 31 | ——— | Y | 31 | ——— |
| 1654 | | | 18 | 108 | M | 31 | ——— | U | 31 | ——— |
| 1700 | | | 18 | 132 | J | 31 | ——— | U | 31 | ——— |
| 1791 | | | 18 | 108 | M | 31 | ——— | U | 31 | ——— |
| 2139 | | | 18 | 132 | J | 31 | ——— | W | 31 | ——— |
| 2140 | | | 18 | 132 | J | 31 | ——— | W | 31 | ——— |
| 2157 | | | 18 | 108 | M | 31 | ——— | W | 31 | ——— |
| 2160 | | | 18 | 108 | M | 31 | ——— | W | 31 | ——— |
| 2162 | | | 18 | 26 | H | 36 | ——— | J | 31 | ——— |

| WIRE NO | COLOR | TYPE | SAE SIZE | LENGTH INCHES | TP | B/M ITEM # | REMARKS | TP | B/M ITEM NO | REMARKS |
|---|---|---|---|---|---|---|---|---|---|---|
| SHD1 | | | 18 | 3 | N | SEE CABLE | DETAIL PC1A | — | — | ——— |
| SHD2 | | | 18 | 3 | M | SEE CABLE | DETAIL PC1B | — | — | ——— |
| SHD3 | | | 18 | 3 | N | SEE CABLE | DETAIL J1939 | — | — | ——— |
| SHD4 | | | 18 | 3 | P | SEE CABLE | DETAIL J1939 | — | — | ——— |
| SHD5 | | | 18 | 3 | N | SEE CABLE | DETAIL USB | — | — | ——— |
| SHD6 | WHT | GXL | 18 | 3 | W | SEE CABLE | DETAIL AP1 | — | — | ——— |

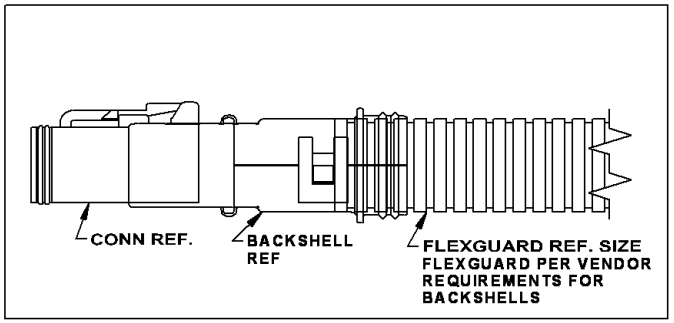


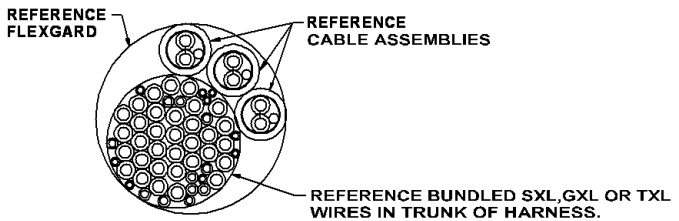


## DETAIL BDR

WIRE/CABLE BUNDLING
SCALE NONE

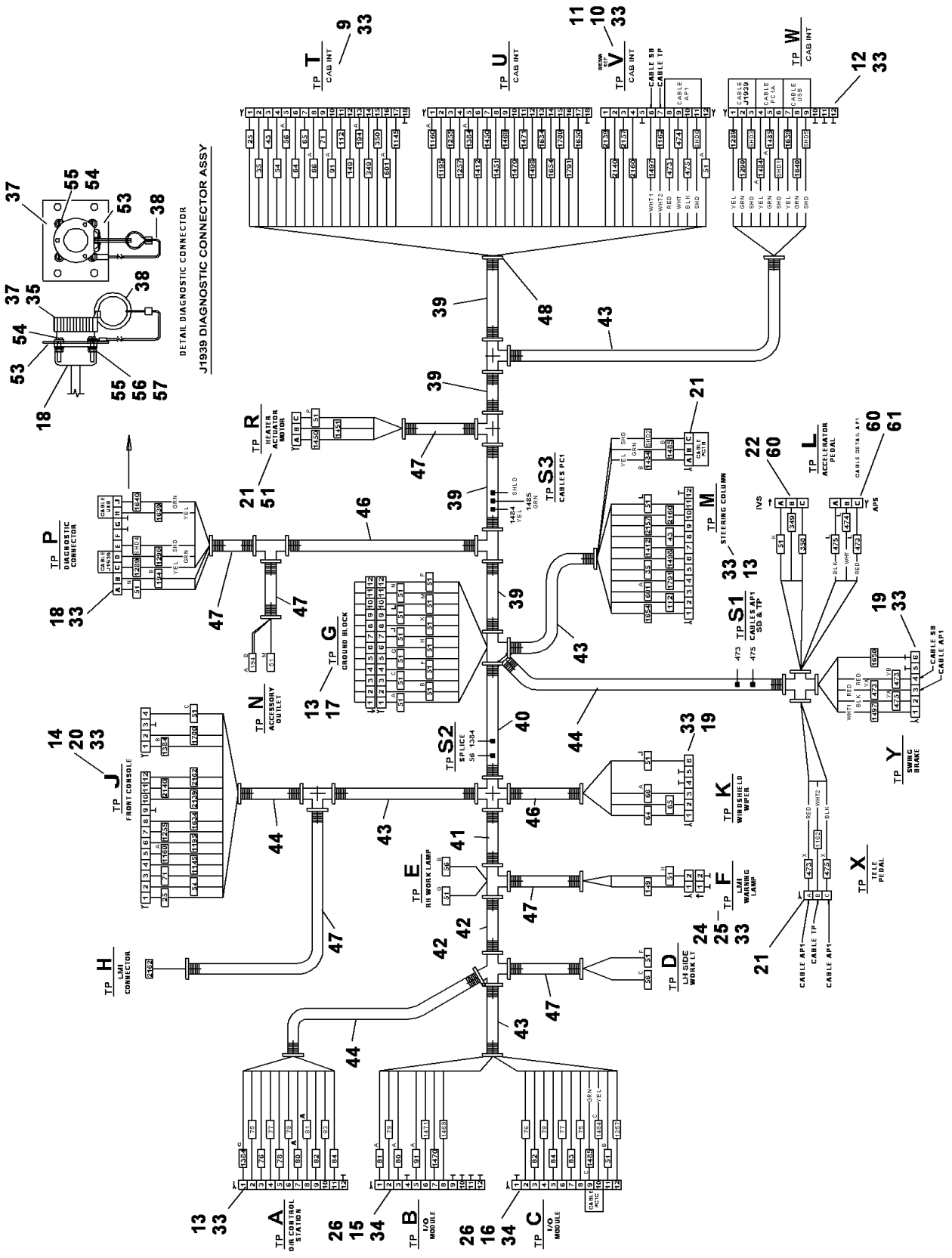


80042878

(SHEET 1 OF 3)

Description
**HARNESS ASSEMBLY-SUPERSTRUCTURE CAB**

Assembly No.
**80042878**
Revision: **A**

| Item | FN | Part | Qty | Description |
|---|---|---|---|---|
| 7 | | **80021593** | 32 | CABLE, 20 AWG CAN-BUS SHEILDED |
| 8 | | **7246100387** | 9 | CABLE, 3 COND 18GA SHLDD W/DRN |
| 9 | | **80023117** | 1 | PLUG |
| 10 | | **80023116** | 1 | PLUG |
| 11 | | **7709100931** | 1 | PLUG, DTO6-12SD-C015 W/WEDGE |
| 12 | | **7709100930** | 1 | PLUG, DTO6-12SC-C015 W/WEDGE |
| 13 | | **7709000846** | 3 | PLUG, 12 SOCKET |
| 14 | | **7709100929** | 1 | PLUG, W/WEDGE |
| 15 | | **7709100908** | 1 | PLUG |
| 16 | | **7709100907** | 1 | PLUG |
| 17 | | **7892001036** | 1 | RECEPTACLE, SPLICE BLOCK |
| 18 | | **7892001053** | 1 | RECEPTACLE, 9 PIN |
| 19 | | **7709000883** | 2 | PLUG<br>6 SOCKET |
| 20 | | **7709000936** | 1 | PLUG, 4 SOCKET |
| 21 | | **7709000874** | 3 | PLUG<br>3 SOCKET |
| 22 | | **7364001685** | 1 | CONNECTOR, 3 CONDUCTOR<br>SHROUD |
| 23 | | **7709100877** | 0 | PLUG |
| 24 | | **7709000844** | 1 | PLUG, 2 SOCKET |
| 25 | | **7892000949** | 1 | RECEPTACLE,<br>2 PIN |
| 26 | | **7172000552** | 2 | BOOT |
| 27 | | **7689002053** | 7 | PIN<br>16 - 18 AWG |
| 28 | | **7826100018** | 2 | SOCKET, 20 GAUGE GOLD |
| 29 | | **7826100016** | 16 | SOCKET, DEUTSCH 22/20 GA NI |
| 30 | | **7826100004** | 25 | SOCKET, (16 - 18) 30 SERIES |
| 31 | | **7826000626** | 85 | SOCKET,<br>16 - 18 AWG |
| 32 | | **7826000087** | 10 | SOCKET, 16-14 GA |
| 33 | | **7689000503** | 15 | PLUG, SEALING<br>16 - 12 AWG |
| 34 | | **7826000650** | 6 | PLUG, SEALING |
| 35 | | **7345001744** | 5 | TERMINAL, FEMALE<br>16 - 14 AWG |

Description
**HARNESS ASSEMBLY-SUPERSTRUCTURE CAB**

Assembly No.
**80042878**
Revision: **A**

| Item | FN | Part | Qty | Description |
|---|---|---|---|---|
| 36 | | **7345001444** | 2 | TERMINAL, FEMALE |
| 37 | | **7258100154** | 1 | CAP, DEUTSCH HDC16 - 9 DUST |
| 38 | | **7246002555** | 1 | CABLE ASSY |
| 39 | | **8594000023** | 8 | FLEXGUARD - 1.625" I.D.<br>(QUANTITY IN FEET) |
| 40 | | **8594000022** | 1 | FLEXGUARD - 1.250" I.D.<br>(QUANTITY IN FEET) |
| 41 | | **8594000001** | 1 | FLEXGUARD - 1.00" I.D.<br>(QUANTITY IN FEET) |
| 42 | | **8594000002** | 1 | FLEXGUARD - .750" I.D.<br>(QUANTITY IN FEET) |
| 43 | | **8594000003** | 3 | FLEXGUARD - .625" I.D.<br>(QUANTITY IN FEET) |
| 44 | | **8594000004** | 3 | FLEXGUARD - .500" I.D.<br>(QUANTITY IN FEET) |
| 45 | | **8594000005** | 0 | FLEXGUARD - .413" I.D.<br>(QUANTITY IN FEET) |
| 46 | | **8594000006** | 2 | FLEXGUARD - .350" I.D.<br>(QUANTITY IN FEET) |
| 47 | | **8594000019** | 5 | FLEXGUARD, 1/4" I.D.<br>(QUANTITY IN FEET) |
| 48 | | **7850000208** | 52 | CABLE TIE 5.63", BLACK |
| 49 | | **7892000194** | 11 | PARALLEL, NON - INSULATED<br>16 - 14 AWG |
| 50 | | **7892000195** | 4 | PARALLEL, NON - INSULATED<br>12 - 10 AWG |
| 51 | | **8594100256** | 3 | 1/4" SHRINK TUBING (CLEAR) W/M |
| 52 | | **80008765** | 1 | 180DEG BSHELL |
| 53 | | **80012470** | 1 | PLATE-DIAG CONN |
| 54 | | **7111040611** | 4 | SCREW, MACHINE<br>7/64" - 40 N.C. X 3/4"<br>GRADE 1 |
| 55 | | **7950040151** | 8 | WASHER, |
| 56 | | **7950040050** | 4 | LOCKWASHER, 7/64" I.D. |
| 57 | | **7660041100** | 4 | NUT, HEX<br>7/64" - 40 N.C.<br>GRADE 1 |
| 58 | | **80018276** | 9 | CABLE, 18/4 TWIST SHEILDED |

Description
**HARNESS ASSEMBLY-SUPERSTRUCTURE CAB**

Assembly No.
**80042878**
Revision: **A**

| Item | FN | Part | Qty | Description |
|---|---|---|---|---|
| 59 | | **7892100115** | 3 | TERMINAL, FEMALE SLEEVE (18GA) |
| 60 | | **7364100264** | 6 | SEAL, CABLE (TAN) |
| 61 | | **7364001684** | 1 | CONNECTOR, 3 CONDUCTOR TOWER WITH SEAL |
| 62 | | **7892100133** | 3 | TERMINAL, MALE |

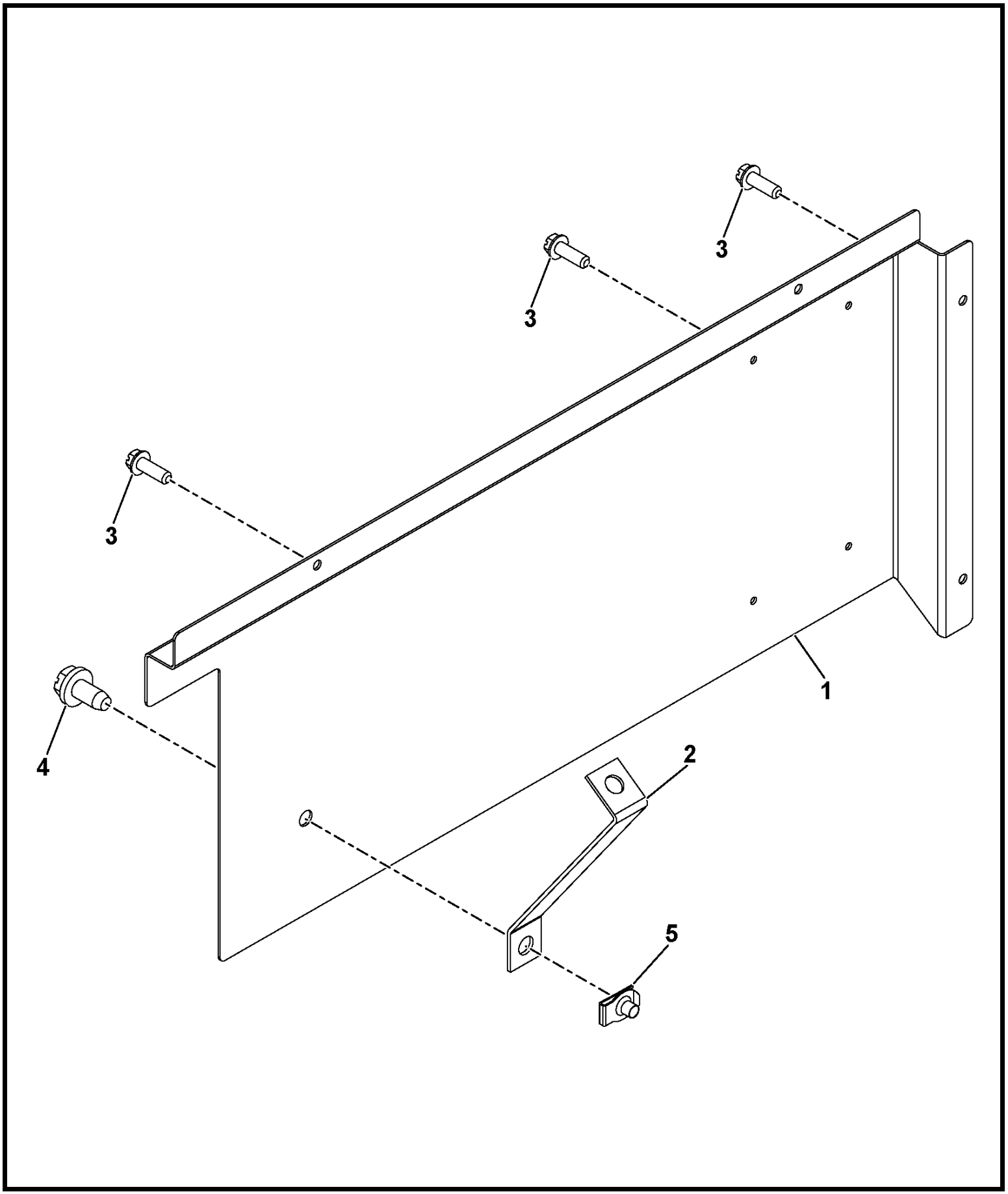


80019937

(SHEET 1 OF 1)

Description
**REAR CAB COVER INSTALLATION**

Assembly No.
**80019937**
Revision: **C**

| Item | FN | Part | Qty | Description |
|---|---|---|---|---|
| 1 | | **80019938** | 1 | COVER PLATE |
| 2 | | **80006460** | 1 | MOUNTING BRACKET |
| 4 | | **7790161253** | 6 | SCREW,<br>3/8" - 16 N.C. X 3/4" |
| 5 | | **7659000862** | 1 | NUT, RETAINING |

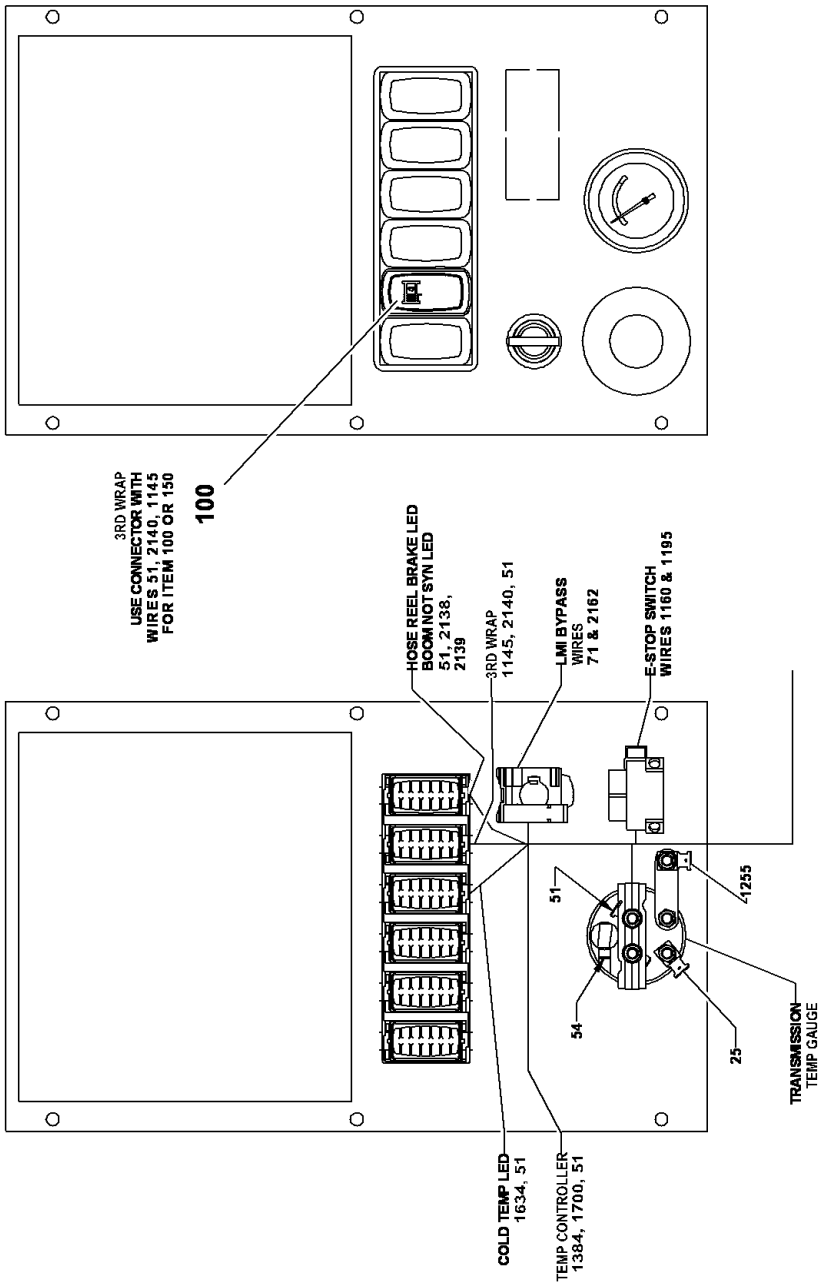


80035879

(SHEET 1 OF 1)

Description
**3RD WRAP INDICATOR INSTALLATION**

Assembly No.
**80035879**
Revision: **A**

| Item | FN | Part | Qty | Description |
|---|---|---|---|---|
| 100 | # | **7486100142** | 1 | INDICATOR, LED 3RD WRAP |

**# SERVICED AS AN ASSEMBLY ONLY**

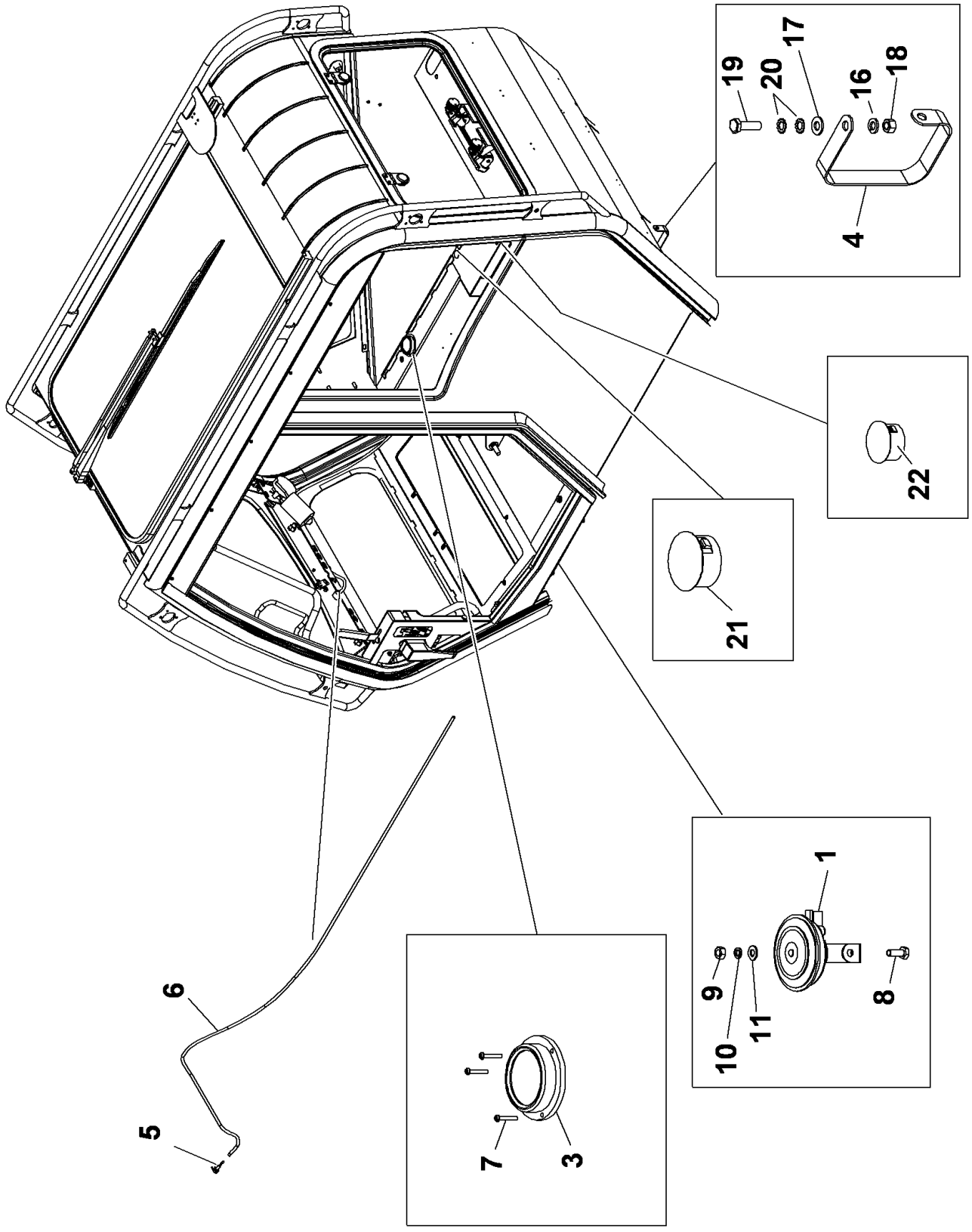


80042777

(SHEET 1 OF 1)

Description
**FIRE EXTINGUISHER INSTALLATION**

Assembly No.
**80042777**
Revision: **A**

| Item | FN | Part | Qty | Description |
|---|---|---|---|---|
| 2 | + | **80043532** | 1 | FIRE EXTINGUISHER ASSEMBLY |
| 12 | | **7660100000** | 2 | NUT, HEX<br>3/16" - 32 N.F.<br>GRADE 1 |
| 13 | | **7111100411** | 2 | SCREW, MACHINE<br>3/16" - 24 N.C. X 1/2"<br>GRADE 1 |
| 14 | | **7950100350** | 2 | LOCK WASHER, 3/16" I.D. |
| 15 | | **7950100141** | 2 | WASHER, FLAT, #10 |

**+ SEE FURTHER BREAKDOWN THIS GROUP**

**Notes**

Description
**FIRE EXTINGUISHER ASSEMBLY**

Assembly No.
**80043532**
Revision: **B**

| Item | FN | Part | Qty | Description |
|---|---|---|---|---|
| 1 | # | **80044080** | 1 | FIRE EXTINGUISHER |
| 2 | | **80054412** | 1 | FIRE EXTINGUISHER BRACKET |

**# SERVICED AS AN ASSEMBLY ONLY**

| WIRE NO | COLOR | SAE SIZE | LENGTH TOT IN | TP | B/M ITEM NO | REMARKS | TP | B/M ITEM NO | REMARKS |
|---|---|---|---|---|---|---|---|---|---|
| BLK | WHT GXL | 18 | 24 | A | 7 | —— | B | 6 | —— |
| WHT | | 18 | 24 | A | 7 | —— | B | 6 | —— |
| RED | | 18 | 24 | A | 7 | —— | B | 6 | —— |
| ORN | | 18 | 24 | A | 7 | —— | B | 6 | —— |
| BLU | | 18 | 24 | A | 7 | —— | B | 6 | —— |
| GRN | WHT GXL | 18 | 24 | A | 7 | —— | B | 6 | —— |

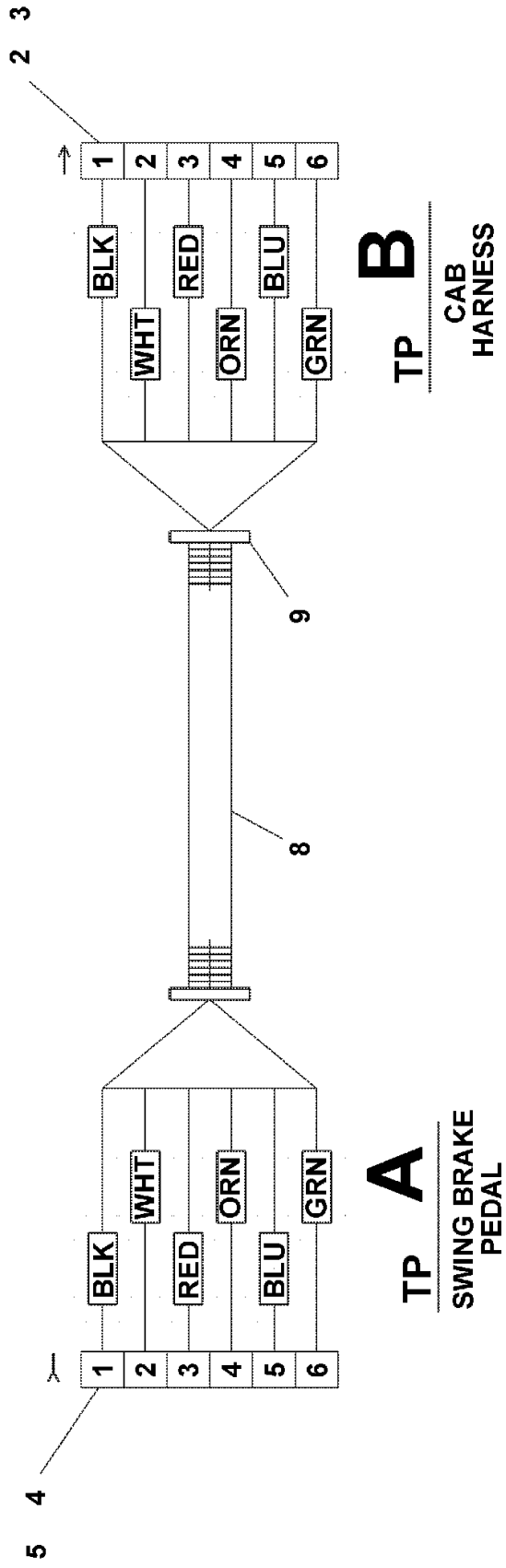

Description
**HARNESS-SWING BRAKE JUMPER**

Assembly No.
**80049878**
Revision: **A**

| Item | FN | Part | Qty | Description |
|---|---|---|---|---|
| 2 | | **7892000824** | 1 | RECEPTACLE,<br>6 PIN |
| 3 | | **7172000564** | 1 | BOOT |
| 4 | | **7709000809** | 1 | PLUG<br>6 SOCKET |
| 5 | | **7172000565** | 1 | BOOT, CONNECTOR |
| 6 | | **7689001782** | 6 | PIN, 18 - 16 GAGE |
| 7 | | **7826000626** | 6 | SOCKET,<br>16 - 18 AWG |
| 8 | | **8594000019** | 2 | FLEXGUARD, 1/4" I.D.<br>(QUANTITY IN FEET) |
| 9 | | **7850000208** | 2 | CABLE TIE 5.63", BLACK |

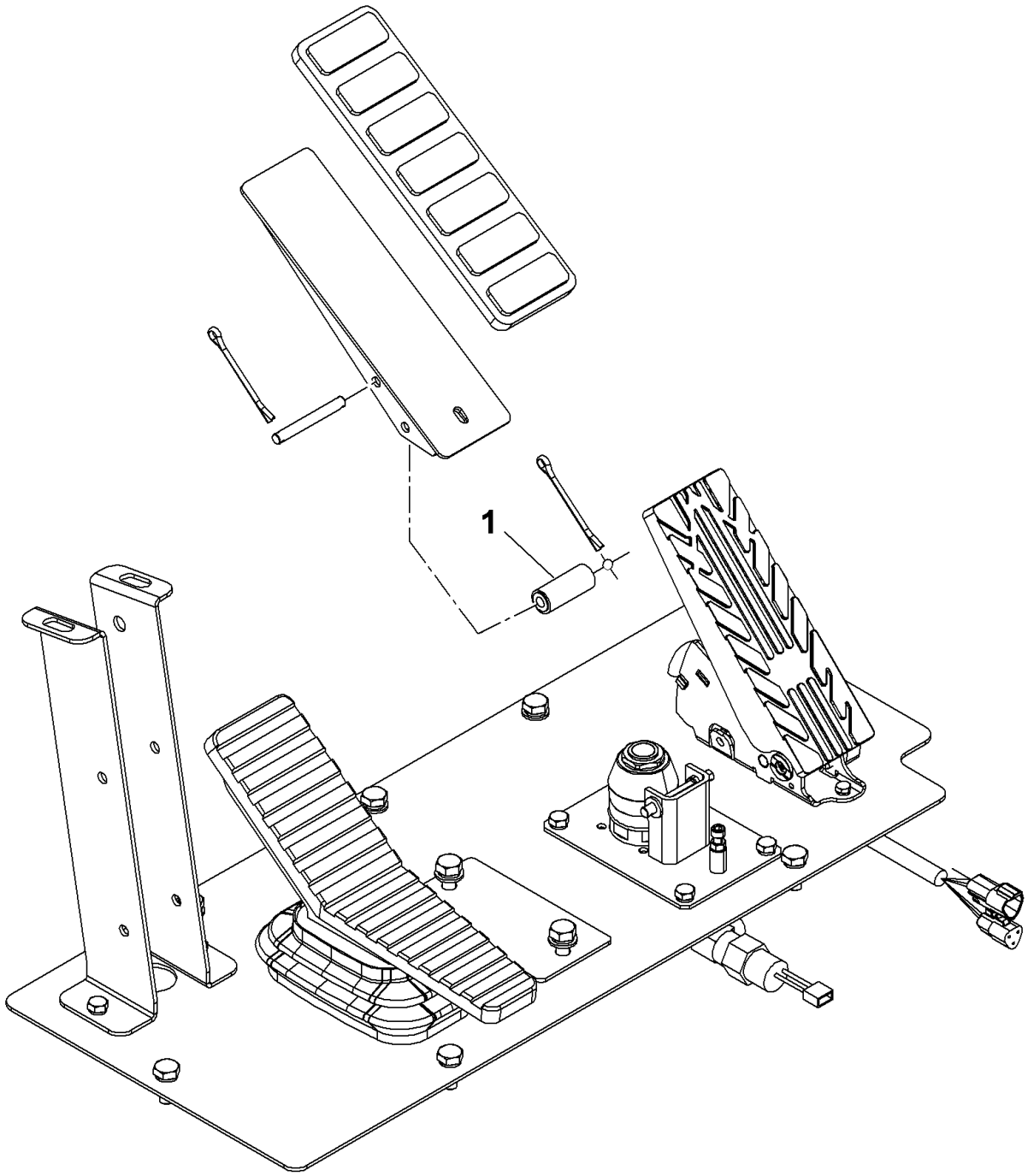


80049393

(SHEET 1 OF 1)

Description
**REWORK-BRAKE PEDAL**

Assembly No.
**80049393**
Revision: **A**

| Item | FN | Part | Qty | Description |
|---|---|---|---|---|
| 1 | + | **80048017** | 1 | ROLLER ASSEMBLY |

**+ SEE FURTHER BREAKDOWN THIS GROUP**

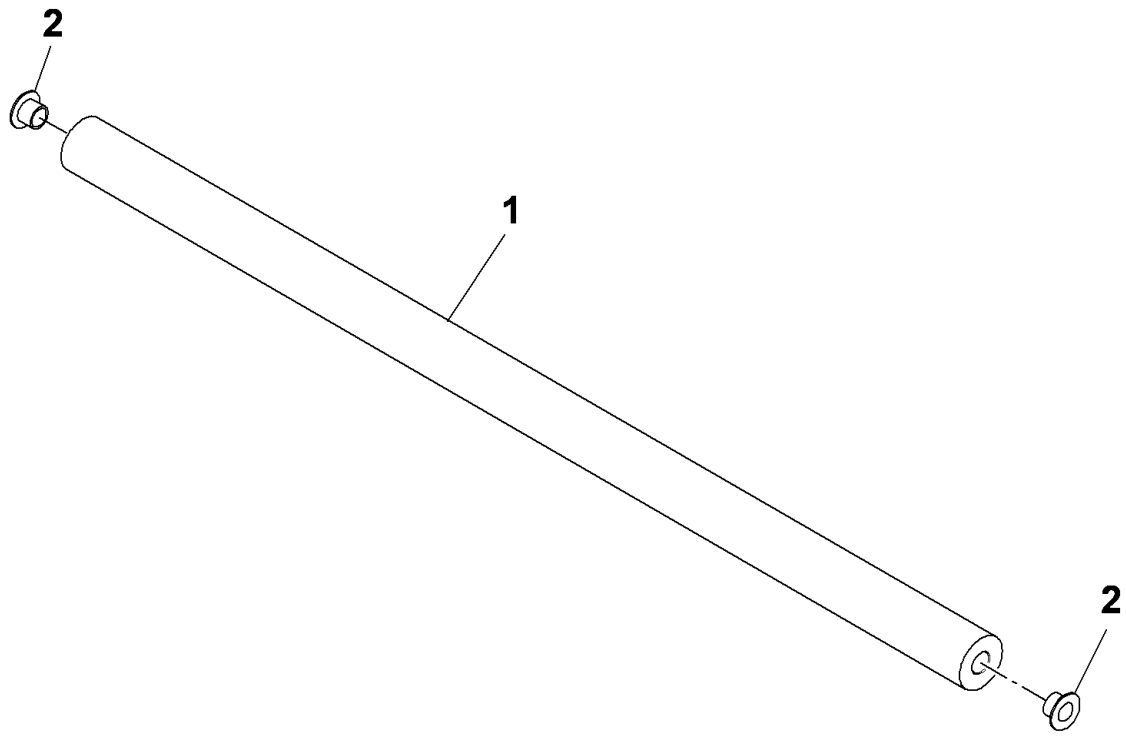


80048017

(SHEET 1 OF 1)

Description
**ROLLER ASSEMBLY**

Assembly No.
**80048017**
Revision: **A**

| Item | FN | Part | Qty | Description |
|---|---|---|---|---|
| 1 | | **80048013** | 1 | ROLLER |
| 2 | | **80048014** | 2 | BEARING |

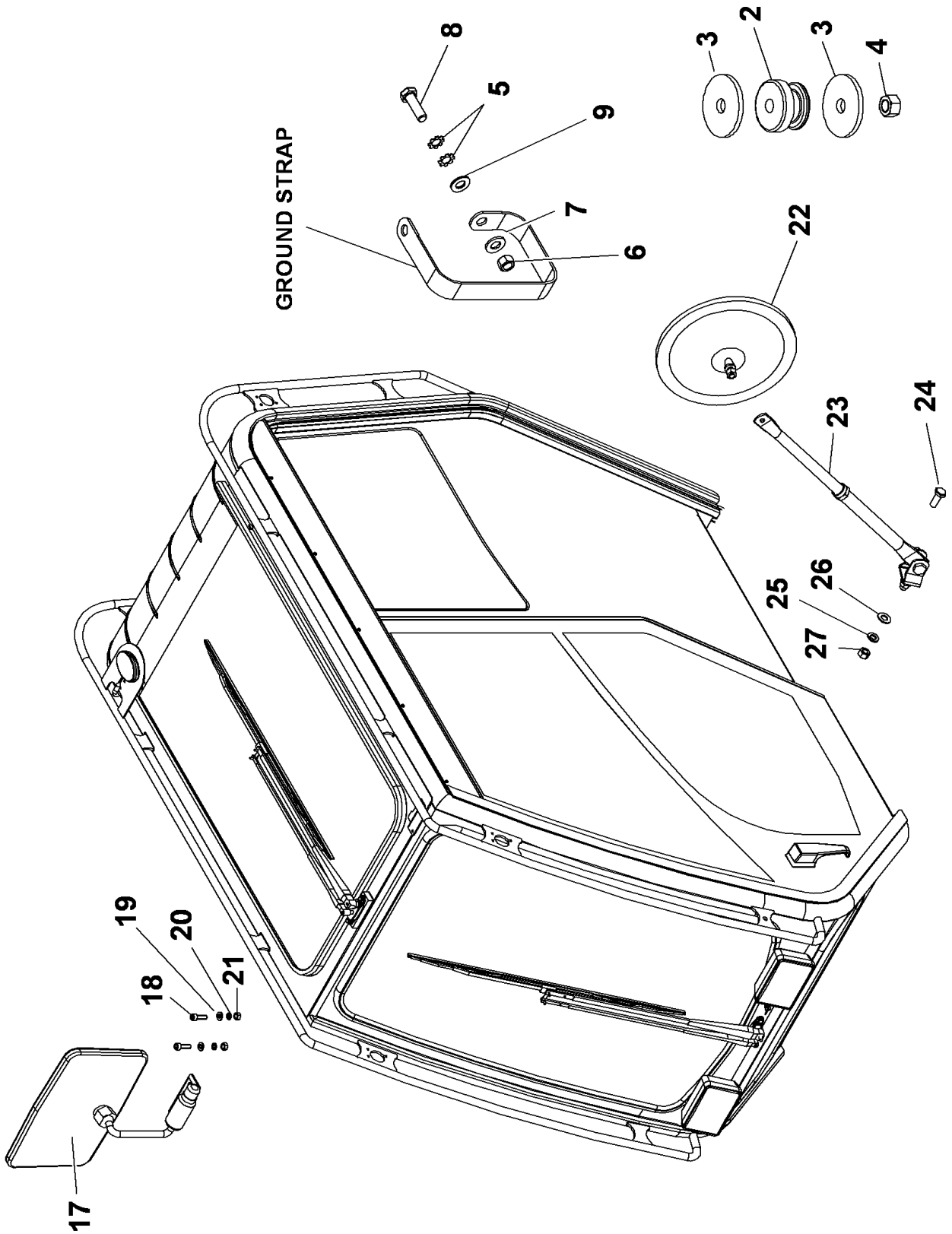


80017157

(SHEET 1 OF 1)

Description
**CAB INSTALLATION-COMPONENTS**

Assembly No.
**80017157**
Revision: **F**

| Item | FN | Part | Qty | Description |
|---|---|---|---|---|
| 2 | # | **7638000203** | 4 | MOUNT, SHOCK |
| 3 | | **80023974** | 8 | DOCK WASHER |
| 4 | | **7660200000** | 4 | NUT, HEX<br>5/8" - 11 N.C.<br>GRADE 1 |
| 5 | | **7950160350** | 1 | WASHER, LOCK 3/8" I.D. |
| 6 | | **7660160000** | 1 | NUT, HEX<br>3/8" - 16 N.C. |
| 7 | | **7950160050** | 1 | WASHER, LOCK 3/8" I.D. |
| 8 | | **7115161050** | 1 | CAP SCREW,<br>3/8" - 16 N.C. X 1 1/4"<br>GRADE 5 |
| 9 | | **7950160141** | 1 | WASHER, 3/8" PLAIN NARROW |
| 17 | | **02254477** | 1 | OUTSIDE MIRROR WITH HOLDER |
| 18 | | **7115140850** | 2 | CAP SCREW,<br>1/4" - 20 N.C. X 1"<br>GRADE 5 |
| 19 | | **7950140141** | 2 | WASHER, FLAT 1/4" PLAIN NARROW |
| 20 | | **7950140050** | 2 | WASHER, LOCK 1/4" |
| 21 | | **7660140000** | 2 | NUT, HEX<br>1/4" - 20 N.C. |
| 22 | | **7628000025** | 1 | MIRROR, 8" CONVEX<br>INCLUDES MOUNTING HARDWARE |
| 23 | # | **7184001014** | 1 | BRACKET, MIRROR ARM<br>INCLUDES MOUNTING HARDWARE |
| 24 | | **7115160850** | 1 | CAP SCREW,<br>3/8" - 16 N.C. X 1"<br>GRADE 5 |
| 25 | | **7950160050** | 1 | WASHER, LOCK 3/8" I.D. |
| 26 | | **7950160141** | 1 | WASHER, 3/8" PLAIN NARROW |
| 27 | | **7660160000** | 1 | NUT, HEX<br>3/8" - 16 N.C. |
| 28 | | **7660200201** | 4 | LOCKNUT<br>5/8" UNC GRADE 5 |

**# SERVICED AS AN ASSEMBLY ONLY**

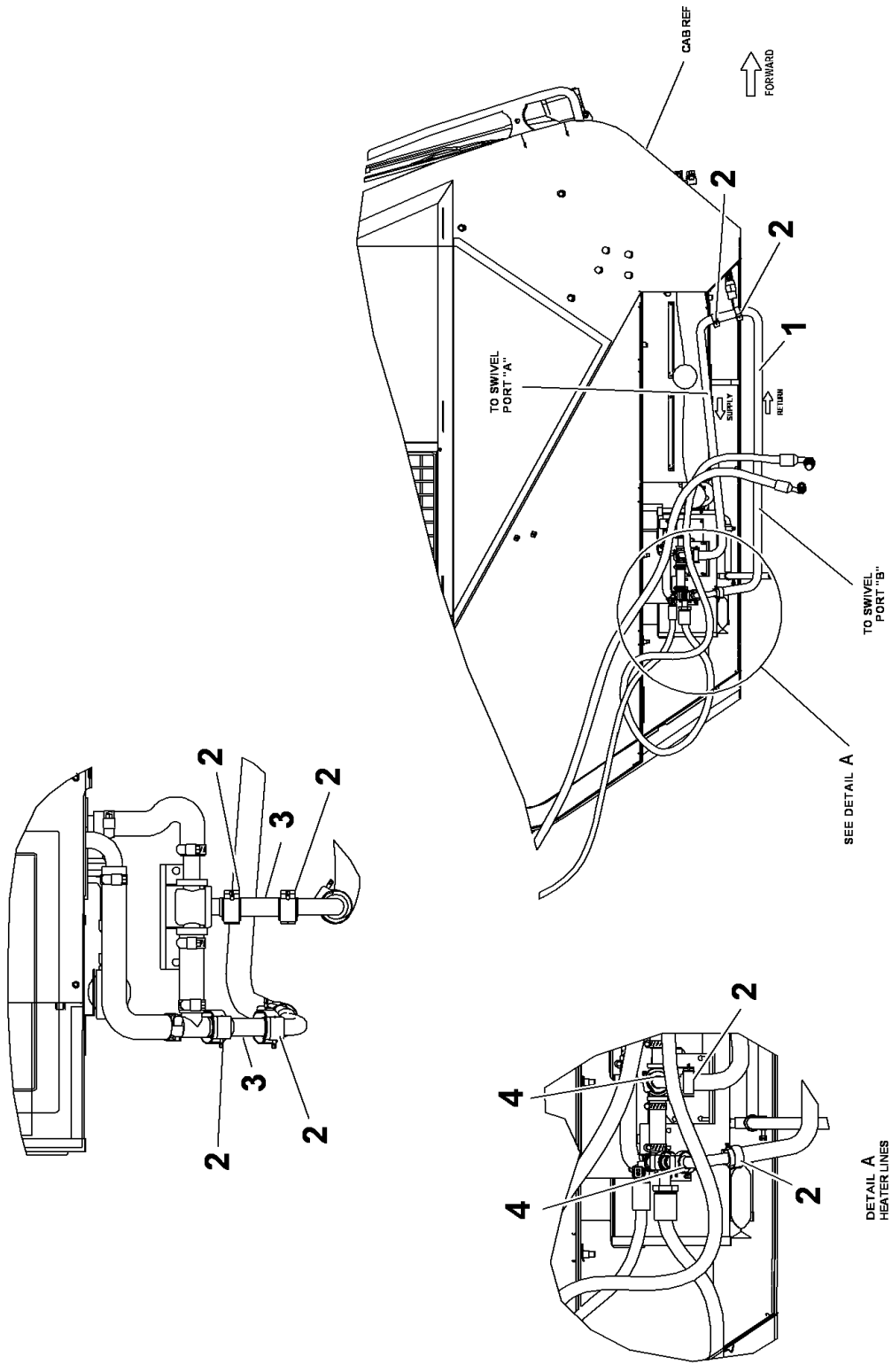


80056055

(SHEET 1 OF 1)

Description
**HEATER LINES INSTALLATION-CAB**

Assembly No.
**80056055**
Revision: **A**

| Item | FN | Part | Qty | Description |
|---|---|---|---|---|
| 1 | | **8596902528** | 8 | HOSE, 5/8" I.D.<br>(QUANTITY IN FEET) |
| 2 | | **80054545** | 8 | HOSE CLAMP 19-27mm |
| 3 | | **80026570** | 2 | HEATER HOSE |
| 4 | | **80036469** | 2 | 5/8" x 5/8" ALUMINUM ELBOW |

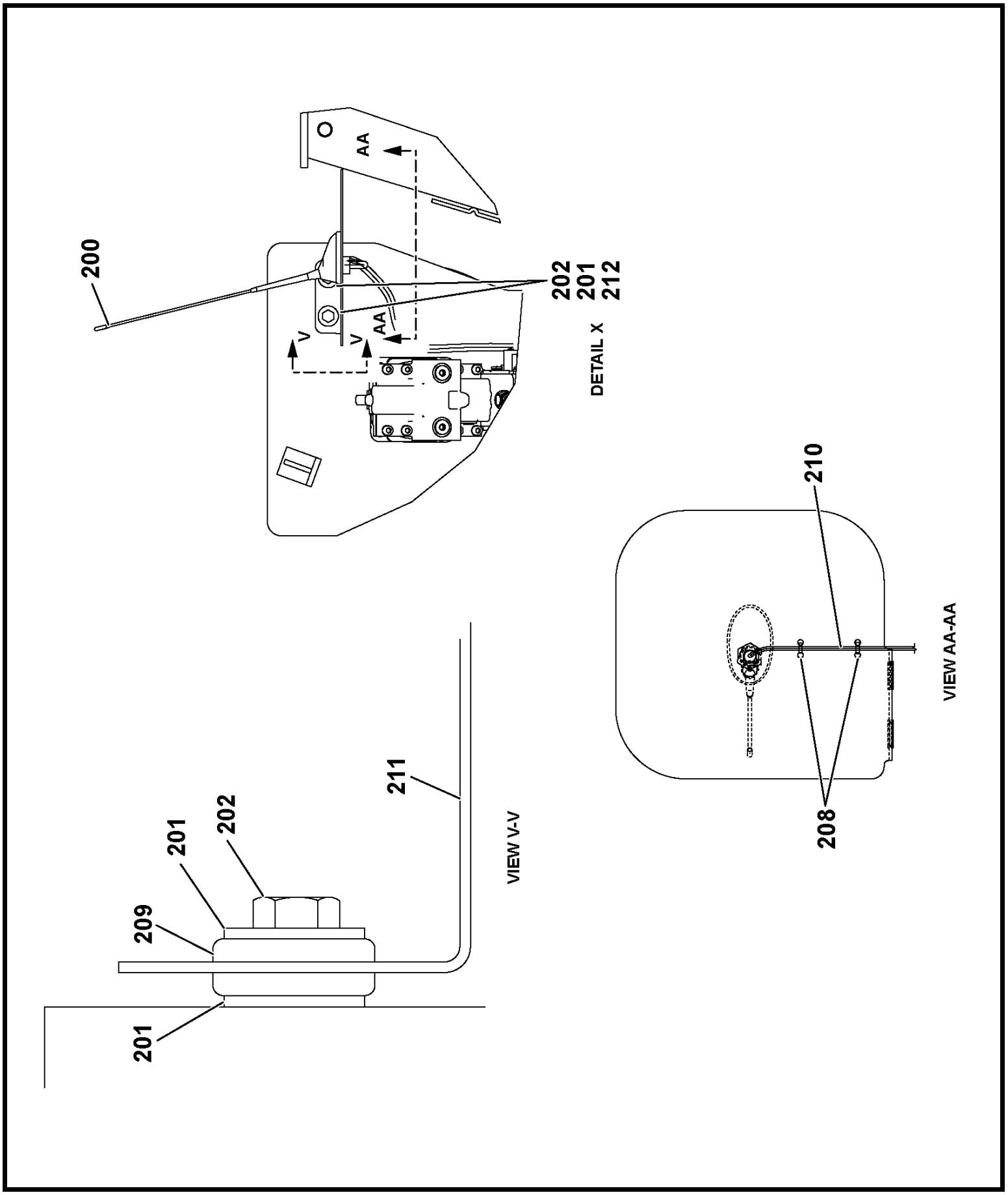


80016297

(SHEET 2 OF 2)

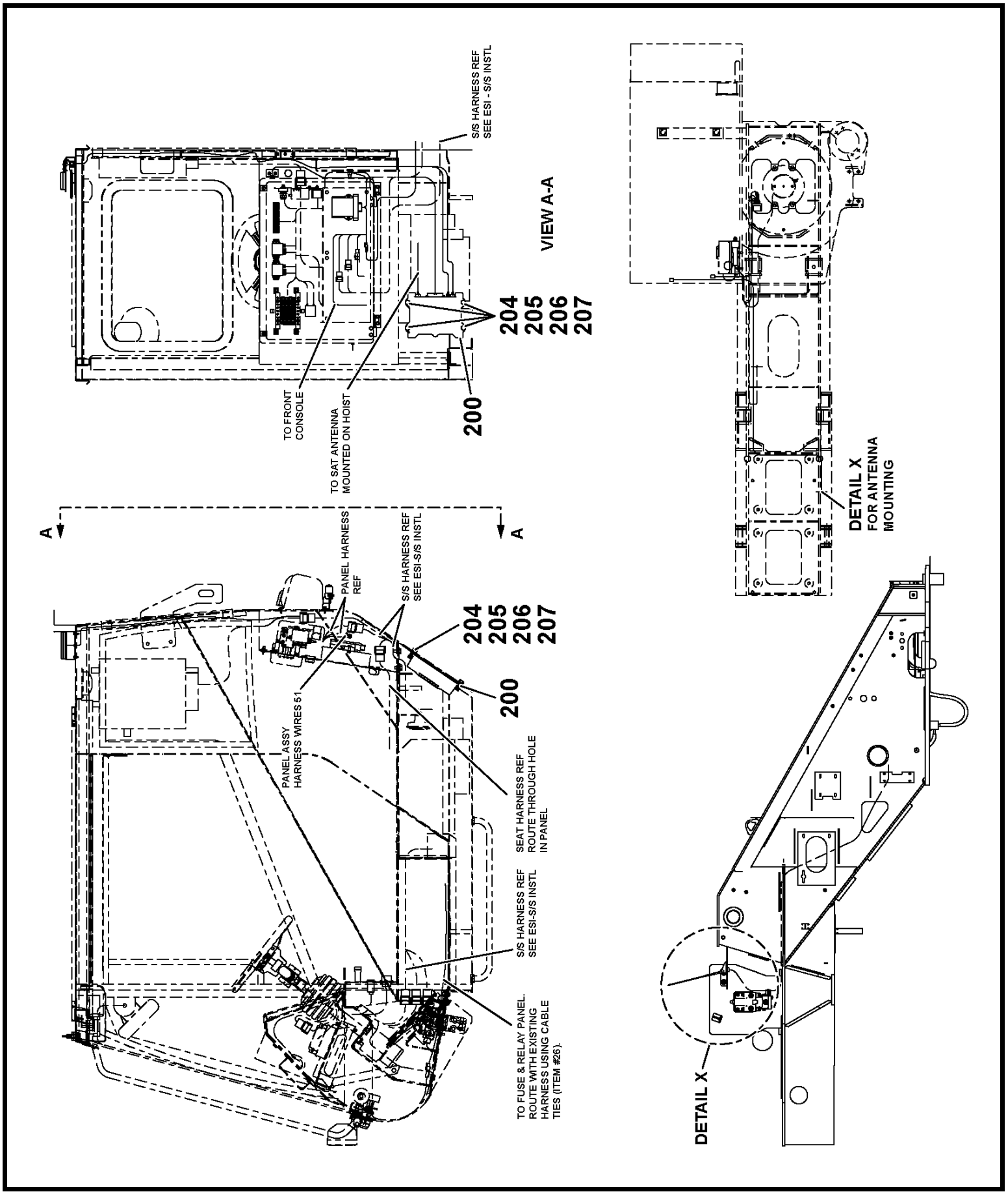


80016297

(SHEET 1 OF 2)

Description
**CAB CRANESTAR INSTALLATION**

Assembly No.
**80016297**
Revision: **D**

| Item | FN | Part | Qty | Description |
|---|---|---|---|---|
| 200 | + | **80018267** | 1 | TCU AND SAT ANTENNA KIT |
| 201 | | **7950180161** | 4 | FLAT WASHER, 1/2" I.D. |
| 202 | | **7115180850** | 2 | CAP SCREW, 1/2"-13 UNC X 1" |
| 204 | | **7111101015** | 4 | SCREW, MACHINE<br>3/16" - 24 N.C. X 1 1/4"<br>GRADE 1 |
| 205 | | **7950100141** | 4 | WASHER, FLAT, #10 |
| 206 | | **7950100050** | 4 | WASHER, LOCK #10 |
| 207 | | **7660102701** | 4 | LOCKNUT, FLANGE |
| 208 | | **7850000208** | 50 | CABLE TIE 5.63", BLACK |
| 209 | | **7506000018** | 2 | GROMMET<br>1/2" I.D. |
| 210 | | **8594000019** | 25 | FLEXGUARD, 1/4" I.D.<br>(QUANTITY IN FEET) |
| 211 | | **80014331** | 1 | MOUNTING BRACKET |
| 212 | | **7115180850** | 1 | CAP SCREW, 1/2"-13 UNC X 1" |

**+ SEE FURTHER BREAKDOWN THIS GROUP**

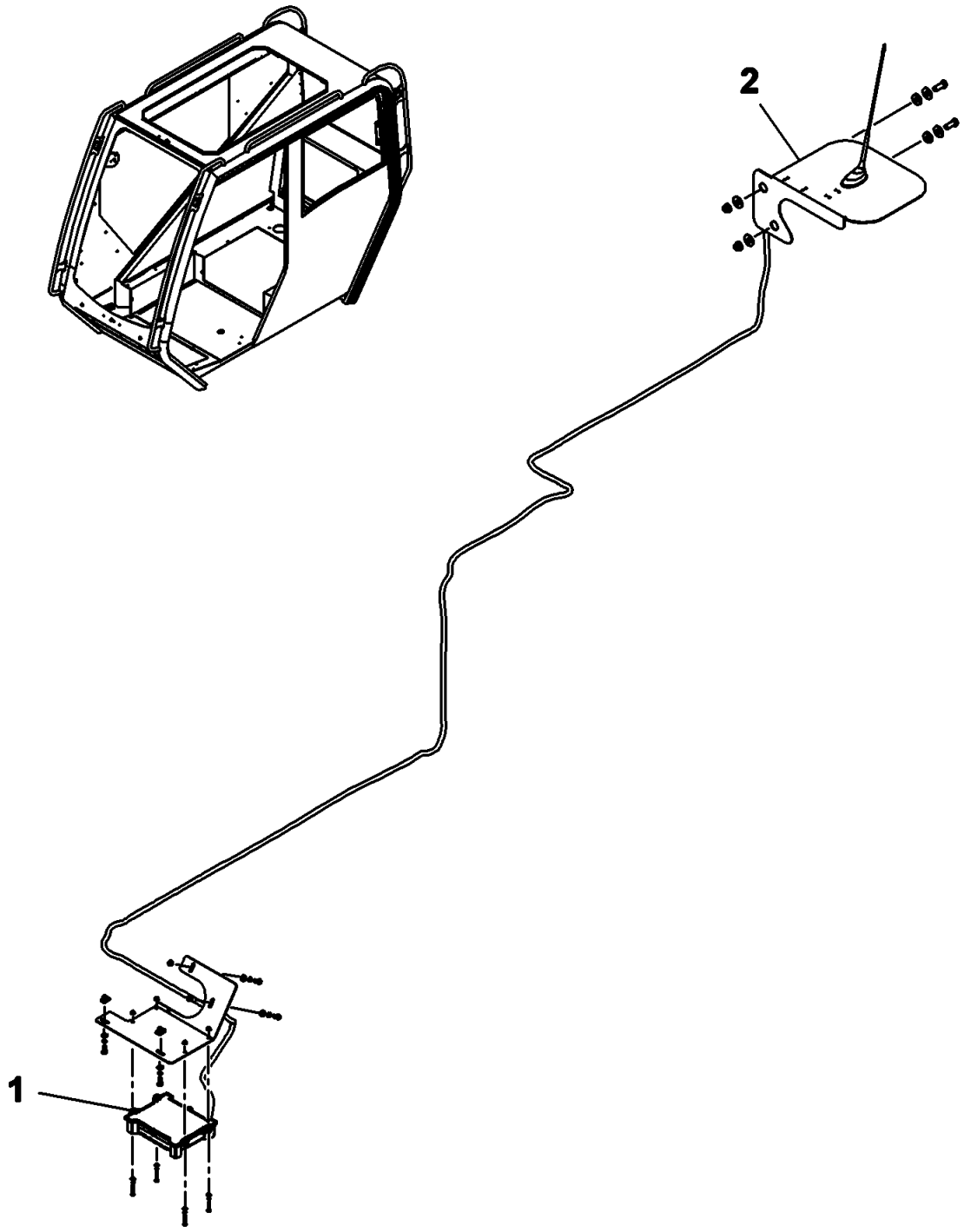


**80018267**

**(SHEET 1 OF 1)**

Description
**TCU AND SAT ANTENNA KIT**

Assembly No.
**80018267**
Revision: **#**

| Item | FN | Part | Qty | Description |
|---|---|---|---|---|
| 1 | | **80009833** | 1 | TELEMATIC CONTROL UNIT (TCU) |
| 2 | | **80014746** | 1 | SATALITE ANTENNA |

Description
**CARRIER FRAME COMPLETE**

Assembly No.
**80055514**
Revision: **B**

| Item | FN | Part | Qty | Description |
|---|---|---|---|---|
| 1 | + | **80055512** | 1 | FRAME ASSEMBLY |
| 2 | + | **80053696** | 1 | OUTRIGGER BEAM INSTALL |

**+ SEE FURTHER BREAKDOWN THIS GROUP**

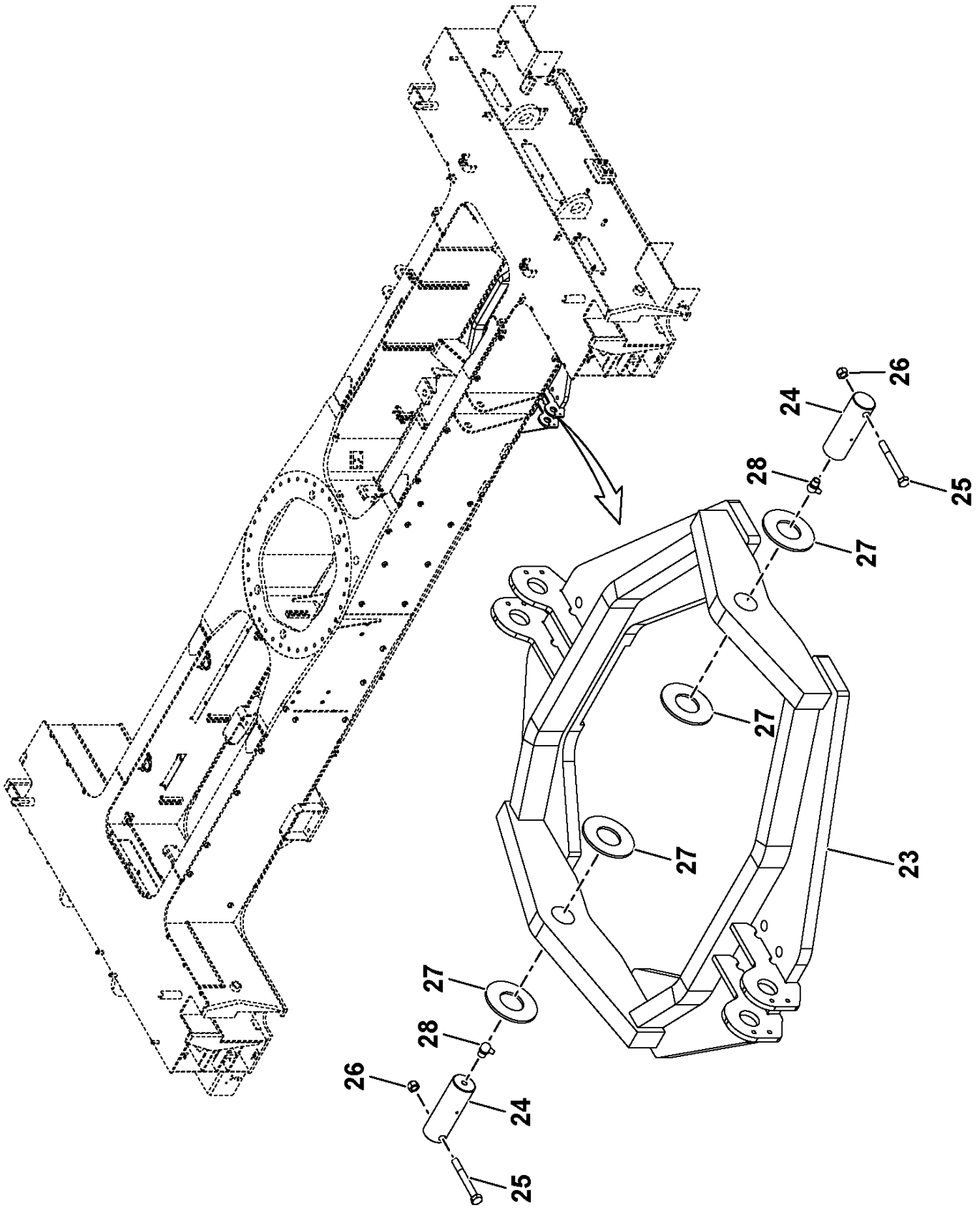


80055512

(SHEET 1 OF 1)

Description
**FRAME ASSEMBLY**

Assembly No.
**80055512**
Revision: **E**

| Item | FN | Part | Qty | Description |
|---|---|---|---|---|
| 23 | | **80055496** | 1 | 5TH WHEEL |
| 24 | | **6810003003** | 2 | SHAFT |
| 25 | | **7126212650** | 2 | CAP SCREW, M12X100 HEX HEAD |
| 26 | | **7661211103** | 2 | NUT, HEX<br>12MM N.C. |
| 27 | | **7950420161** | 4 | FLATWASHER<br>2" I.D. |
| 28 | | **7440000400** | 2 | FITTING, 90 DEGREE GREASE |

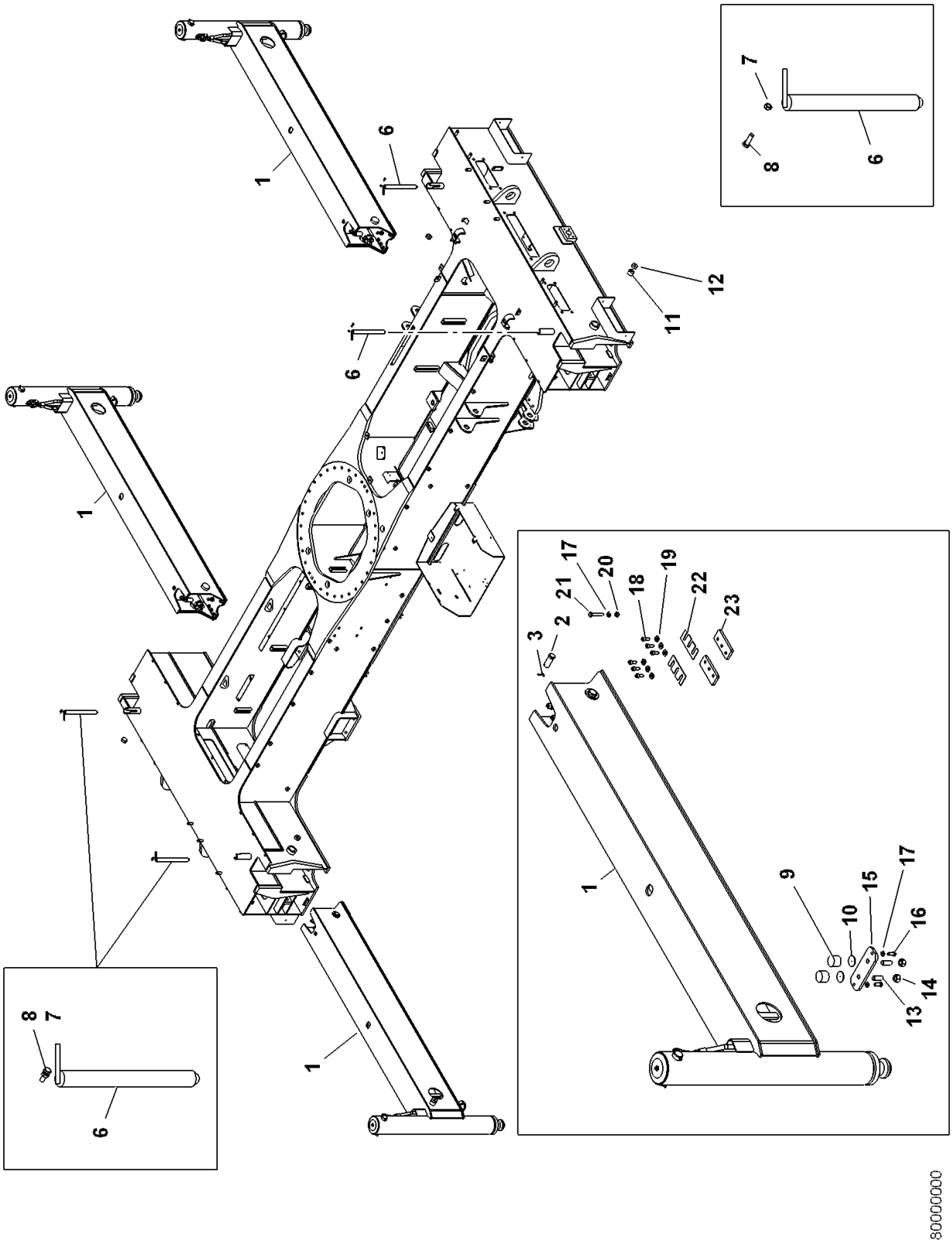


80053696

(SHEET 1 OF 1)

Description
**OUTRIGGER BEAM INSTALL**

Assembly No.
**80053696**
Revision: **D**

| Item | FN | Part | Qty | Description |
|---|---|---|---|---|
| 1 | + | **80053694** | 4 | OUTRIGGER BEAM ASSEMBLY-BR |
| 2 | | **7689100036** | 4 | PIN, CLEVIS |
| 3 | | **7690082410** | 4 | PIN, COTTER<br>5/32" X 1 1/2" |
| 6 | | **80026806** | 4 | PIN |
| 7 | # | **7661150003** | 4 | NUT, HEX |
| 8 | | **7126151253** | 4 | CAP SCREW, M6 X 25MM |
| 9 | | **6671000236** | 8 | PAD, WEAR |
| 10 | | **4159110165** | 8 | PLATE |
| 11 | | **80034260** | 4 | WEAR PAD ASSY<br>INCLUDES THE FOLLOWING PARTS |
| | | **80034261** | 1 | WEAR PAD |
| | | **7786160809** | 1 | SET SCREW, 1 3/4" N.C. X 1" LG |
| 12 | | **7786000544** | 8 | SCREW, SET (SLOTTED) |
| 13 | | **7787275013** | 8 | HEX SOCKET SET SCREW M20X50 LG |
| 14 | | **7661270003** | 8 | NUT, HEX<br>M20 |
| 15 | | **4159110308** | 4 | PLATE, ADJUSTING |
| 16 | | **7126211353** | 8 | CAP SCREW, M12 X 30 HEX HEAD |
| 17 | | **7951210014** | 12 | WASHER, FLAT #12 |
| 18 | | **7128211254** | 24 | CAP SCREW, SOCKET HEAD M12X25 |
| 19 | | **7949000235** | 24 | WASHER, 1/2" I.D. FLAT |
| 20 | | **7661210003** | 4 | NUT, HEX 12MM N.C. |
| 21 | | **7126211853** | 4 | CAP SCREW, M12X55 HEX HEAD |
| 22 | | **4155110444** | 0 | SPACER |
| 23 | | **4155110443** | 8 | BLOCK, TAPPED |

**+ SEE FURTHER BREAKDOWN THIS GROUP**

**# SERVICED AS AN ASSEMBLY ONLY**

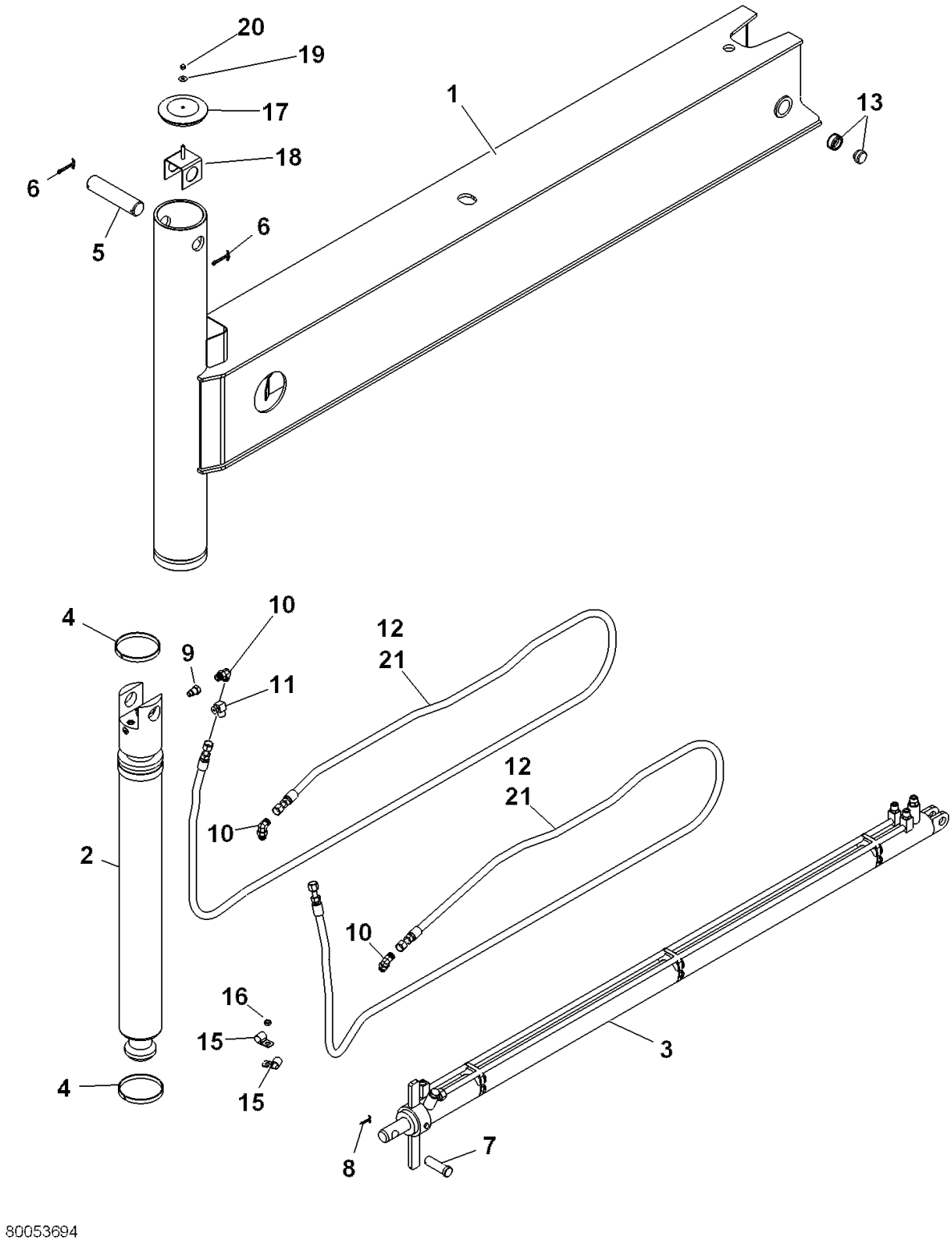
20
19
17
18
6
5
6
1
13
4
10
9
11
12
21
10
12
21
2
10
16
15
15
4
3
8
7
80053694

Description
**OUTRIGGER BEAM ASSEMBLY-BR**

Assembly No.
**80053694**
Revision: **G**

| Item | FN | Part | Qty | Description |
|---|---|---|---|---|
| 1 | | **80053124** | 1 | OUTRIGGER BEAM |
| 2 | + | **80044364** | 1 | CYLINDER ASSEMBLY-4.00 JACK |
| 2 | + | **80057022** | 1 | JACK CYLINDER 4.00 BR |
| 3 | + | **80056042** | 1 | O/R EXT CYL-COMPLETE ASSY |
| 4 | | **7753001553** | 2 | RING, WEAR |
| 5 | | **80032622** | 1 | PIN |
| 6 | | **7690144010** | 2 | PIN, COTTER |
| 7 | | **7690264804** | 1 | PIN, CLEVIS<br>1" X 3" |
| 8 | | **7690082410** | 1 | PIN, COTTER<br>5/32" X 1 1/2" |
| 9 | | **7013000384** | 1 | ADAPTER, REDUCING |
| 10 | | **7447080803** | 3 | ELBOW, 90 DEGREE MALE<br>INCLUDES THE FOLLOWING PARTS |
| | | **7755014002** | 1 | O-RING |
| | | **7755908002** | 1 | O-RING |
| 11 | | **7447080603** | 1 | ELBOW, 90 DEGREE<br>INCLUDES THE FOLLOWING PARTS |
| | | **7755014002** | 1 | O-RING |
| | | **7755906002** | 1 | O-RING |
| 12 | | **7554315600** | 2 | HOSE ASSY, 1/2" I.D. X 156" |
| 13 | | **80034260** | 1 | WEAR PAD ASSY<br>INCLUDES THE FOLLOWING PARTS |
| | | **80034261** | 1 | WEAR PAD |
| | | **7786160809** | 1 | SET SCREW, 1 3/4" N.C. X 1" LG |
| 15 | | **7300000243** | 2 | CLAMP, TUBING<br>3/4" I.D. |
| 16 | | **7661190003** | 1 | NUT, HEX 10MM |
| 17 | | **7258001691** | 1 | CAP, JACK CYLINDER |
| 18 | | **6184003000** | 1 | BRACKET, CAP |
| 19 | | **7949001186** | 1 | WASHER, BLACK NYLON |
| 20 | | **7660152200** | 1 | NUT, ACORN<br>5/16" - 18 N.C. |
| 22 | | **80060094** | 5 | SADDLE SPACER |
| 23 | | **80061556** | 5 | SADDLE SPACER .63-6.0" BUNDLES |
| 24 | | **7850000805** | 20 | TIE, CABLE (BLACK)<br>13 3/8" LONG |

**+ SEE FURTHER BREAKDOWN THIS GROUP**

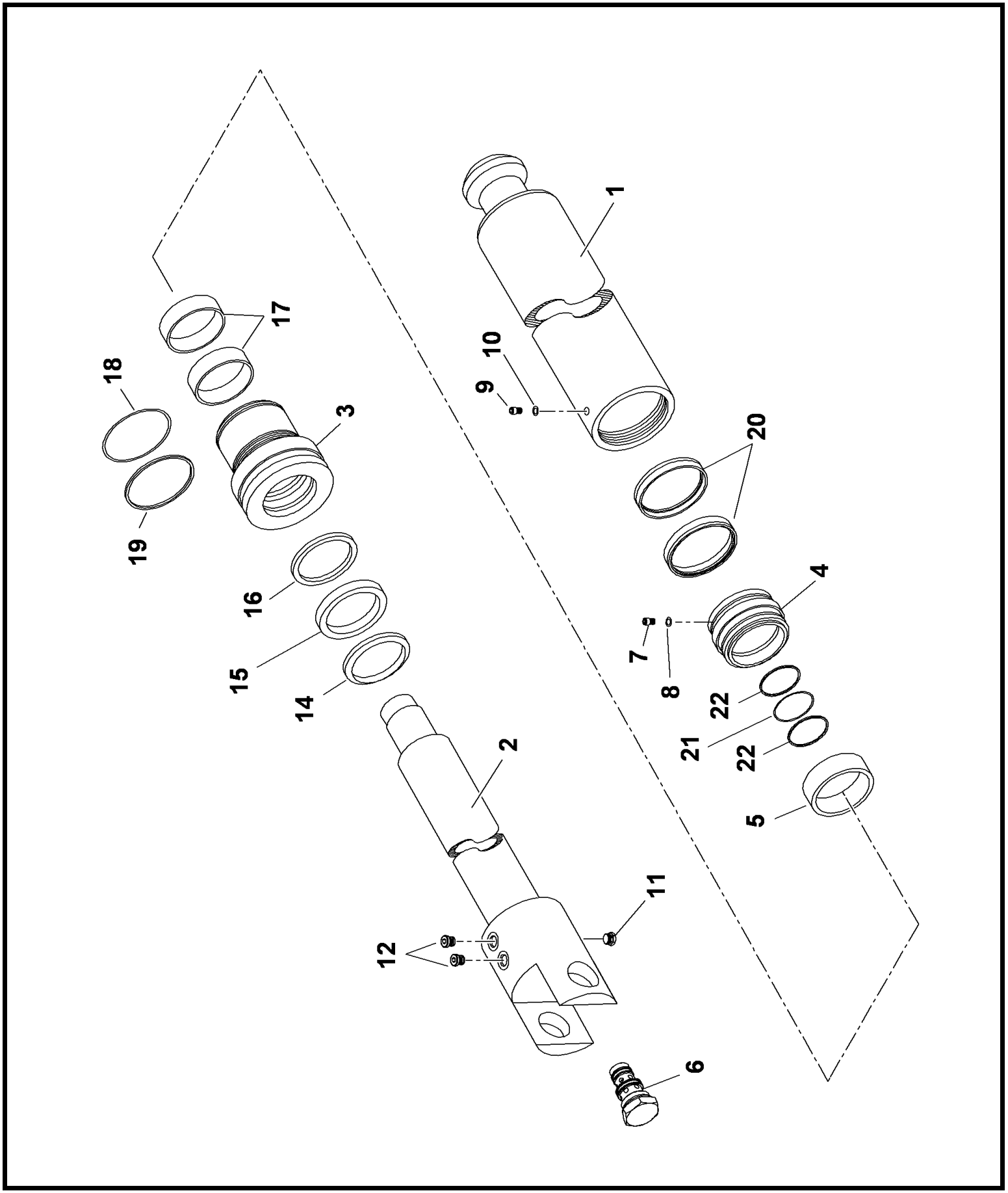


80044364

(SHEET 1 OF 1)

Description
**CYLINDER ASSEMBLY-4.00 JACK**

Assembly No.
**80044364**
Revision:

| Item | FN | Part | Qty | Description |
|---|---|---|---|---|
| 1 | | **9372103623** | 1 | BARREL ASSY. |
| 2 | | **9372103624** | 1 | ROD ASSY. |
| 3 | | **6372005910** | 1 | HEAD, CYLINDER |
| 4 | | **6701001035** | 1 | PISTON, CYLINDER |
| 5 | | **6910016597** | 1 | SPACER |
| 6 | | **80012095** | 1 | VALVE, CHECK PO<br>INCLUDES THE FOLLOWING PARTS |
| | | **90014436** | 1 | KIT, SEAL |
| 7 | | **9372103595** | 1 | SCREW, SET |
| 8 | | **9372103596** | 1 | INSERT, NYLON |
| 9 | | **9372103611** | 1 | SCREW, SET |
| 10 | | **9372103612** | 1 | INSERT, NYLON |
| 11 | | **7709800001** | 2 | PLUG, SAE #4<br>, USE AS REQUIRED<br>INCLUDES THE FOLLOWING PARTS |
| | | **7755904002** | 1 | O-RING |
| 12 | | **7709800005** | 2 | PLUG, SAE #6<br>, USE AS REQUIRED<br>INCLUDES THE FOLLOWING PARTS |
| | | **7755906002** | 1 | O-RING |
| 14 | * | **7794000277** | 1 | RING, WIPER |
| 15 | * | **7794000638** | 1 | SEAL, DEEP Z ROD |
| 16 | * | **7794000543** | 1 | SEAL, BUFFER |
| 17 | * | **7753000540** | 2 | RING, WEAR |
| 18 | * | **7754000140** | 1 | O-RING, LOW TEMPERATURE |
| 19 | * | **7755342609** | 1 | RING, BACK-UP |
| 20 | * | **7794000608** | 2 | SEAL |
| 21 | * | **7754000160** | 1 | O-RING, LOW TEMPERATURE |
| 22 | * | **7755332609** | 2 | RING, BACK-UP |
| 25 | * | **7373000159** | 1 | KIT, SEAL |

*** REPAIR KIT AND/OR PART OF KIT**

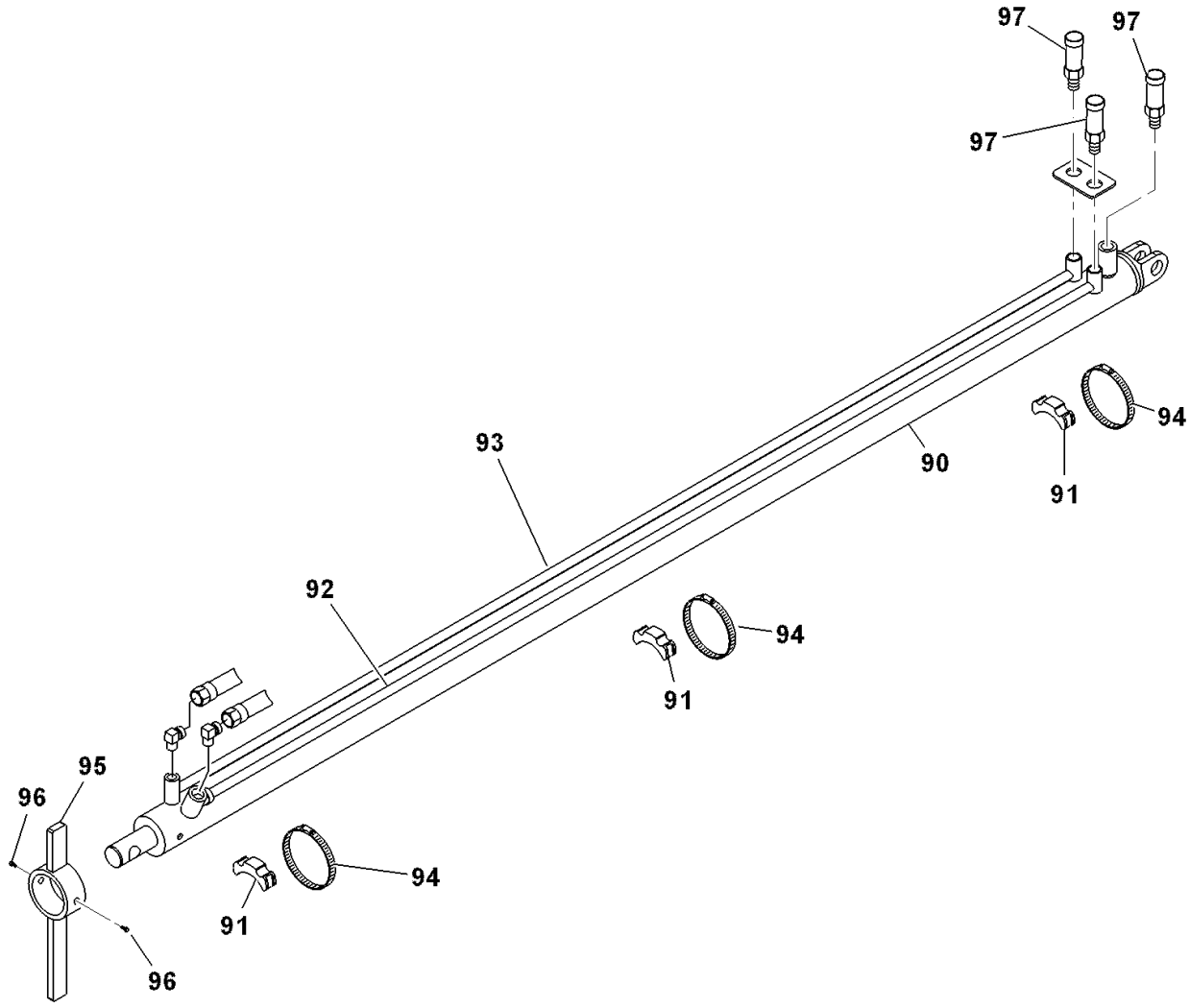


80056042

Description
**O/R EXT CYL-COMPLETE ASSY**

Assembly No.
**80056042**
Revision: **B**

| Item | FN | Part | Qty | Description |
|---|---|---|---|---|
| 90 | + | **80057206** | 1 | O/R EXT CYL 2.50 BR |
| 91 | | **7300001082** | 3 | CLAMP, DOUBLE SADDLE |
| 92 | | **7910100671** | 1 | TUBE |
| 93 | | **7910100672** | 1 | TUBE |
| 94 | | **80054543** | 3 | HOSE CLAMP 95-114mm |
| 95 | | **6608100004** | 1 | LUG |
| 96 | | **7115160550** | 2 | CAP SCREW,<br>3/8" - 16 N.C. X 5/8"<br>GRADE 5 |
| 97 | | **7447080801** | 3 | ADAPTER, STRAIGHT<br>INCLUDES THE FOLLOWING PARTS |
| | | **7755014002** | 1 | O-RING |
| | | **7755908002** | 1 | O-RING |

**+ SEE FURTHER BREAKDOWN THIS GROUP**

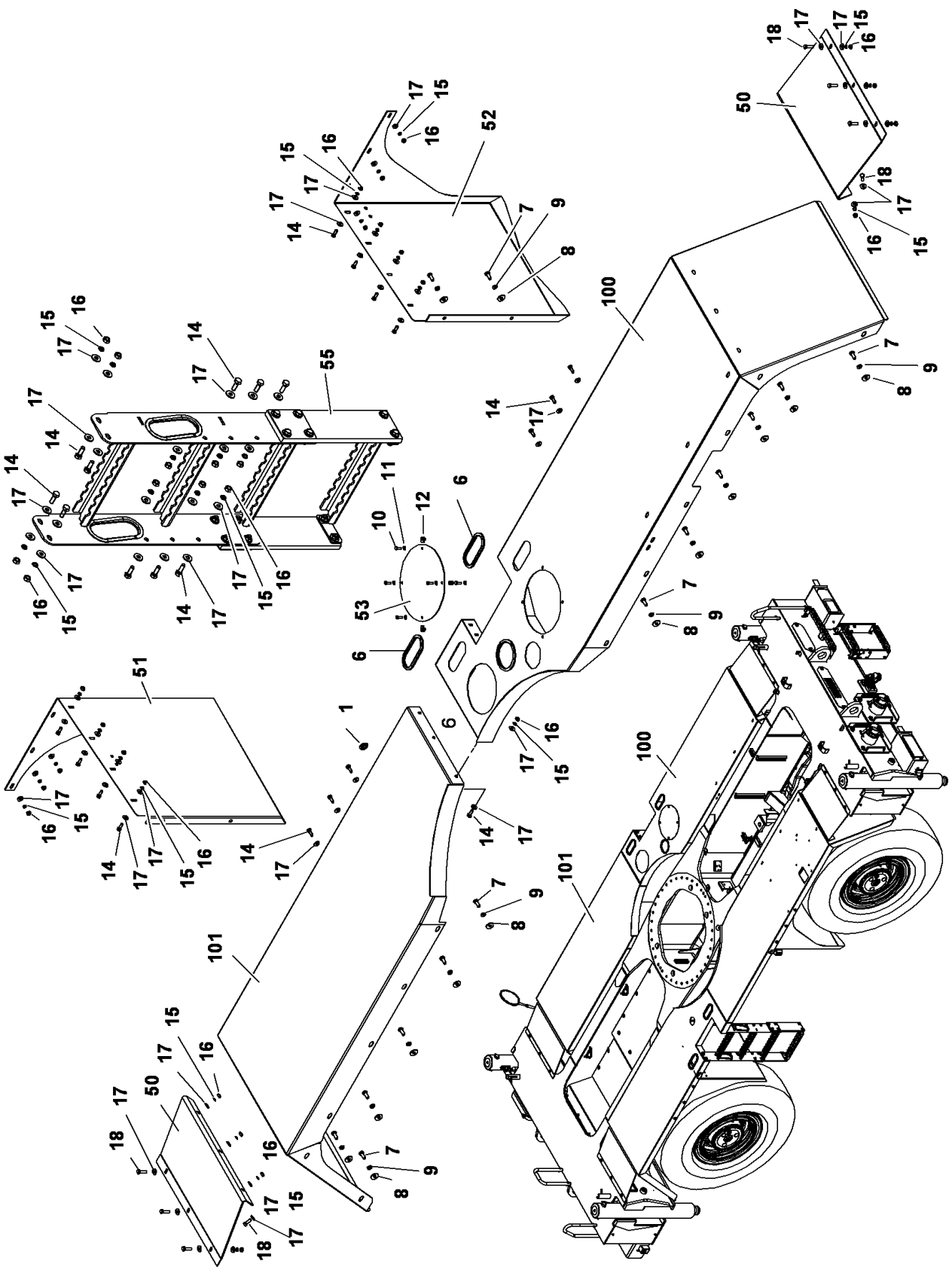

80049681

(SHEET 3 OF 3)

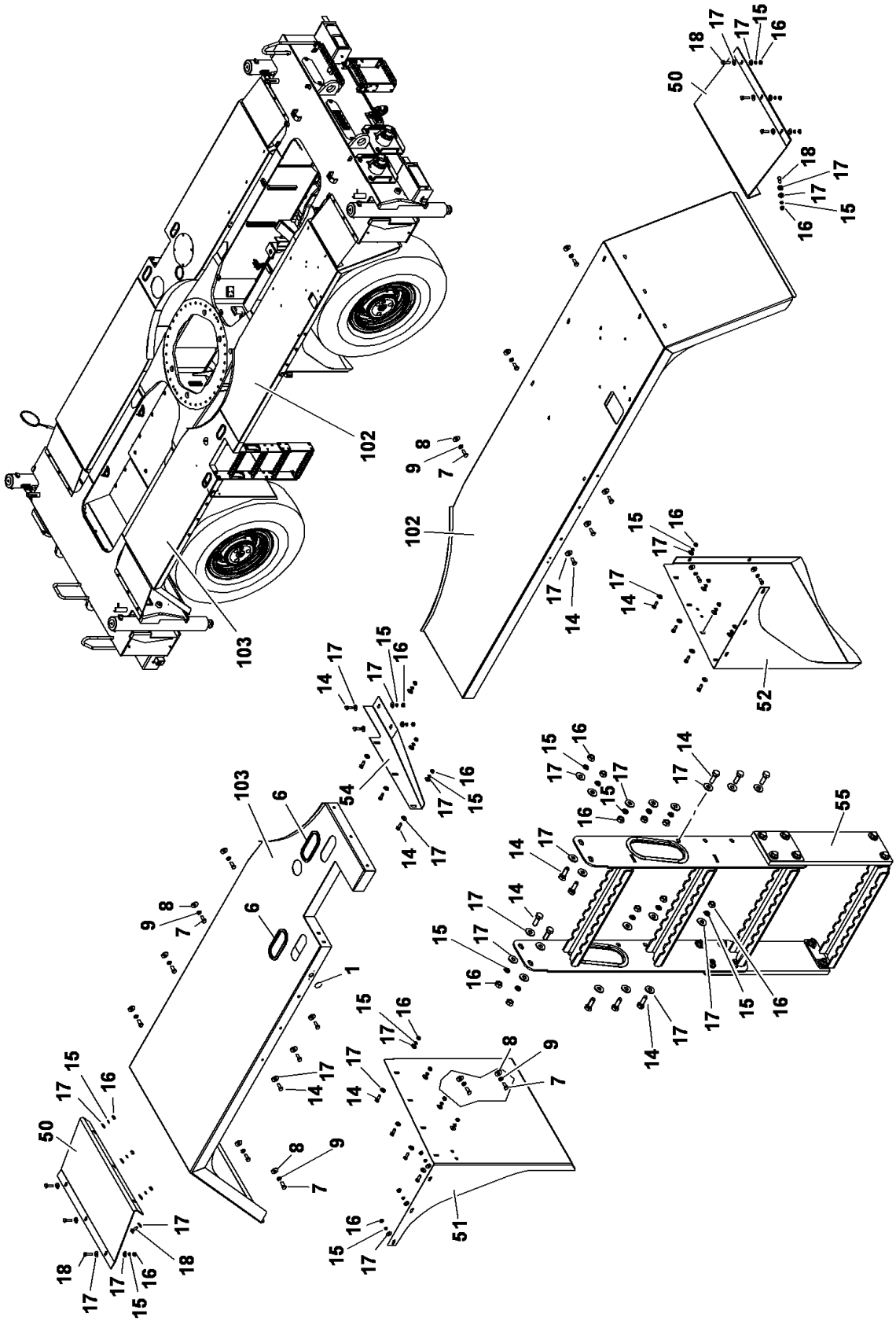


80049681

(SHEET 2 OF 3)

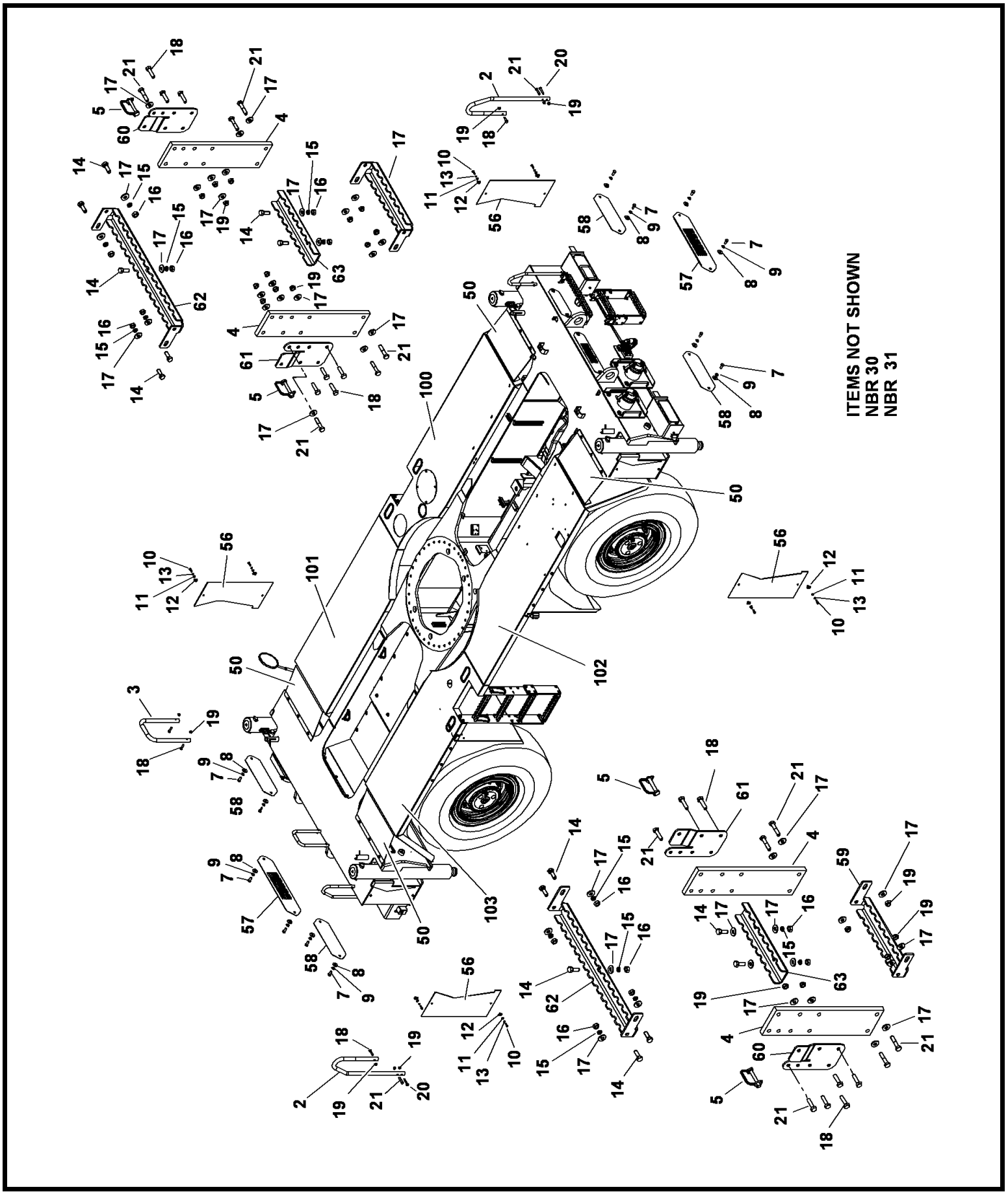


80049681

(SHEET 1 OF 3)

Description
**DECKING INSTALLATION-FENDER**

Assembly No.
**80049681**
Revision: **D**

| Item | FN | Part | Qty | Description |
|---|---|---|---|---|
| 1 | | **7242000021** | 2 | PLUG, 1" BUTTON |
| 2 | | **4159110343** | 2 | HANDLE, GRAB |
| 3 | | **4159110364** | 1 | HANDLE, GRAB |
| 4 | | **7418100011** | 4 | EXTENSION, STEP |
| 5 | | **7689001756** | 4 | PIN |
| 6 | | **8496980002** | 9 | MOULDING (QUANTITY IN FEET) |
| 7 | | **7126211353** | 44 | CAP SCREW, M12 X 30 HEX HEAD |
| 8 | | **7950180161** | 52 | FLAT WASHER, 1/2" I.D. |
| 9 | | **7950180050** | 44 | WASHER, LOCK 1/2" I.D. |
| 10 | | **7126171253** | 12 | CAP SCREW, M8X25 HEX HEAD |
| 11 | | **7951170014** | 12 | WASHER, FLAT #8 |
| 12 | | **7659190020** | 12 | NUT, RETAINING 8 X 1.25 |
| 13 | | **7951170210** | 8 | WASHER, LOCK 8MM |
| 14 | | **7126191350** | 85 | CAP SCREW, M10X30 HEX HEAD |
| 15 | | **7951190210** | 97 | LOCK WASHER, 10MM |
| 16 | | **7661190003** | 93 | NUT, HEX 10MM |
| 17 | | **7950160161** | 220 | WASHER, FLAT WIDE 3/8 |
| 18 | | **7126191550** | 40 | CAP SCREW, M10 X 40MM HEX HEAD |
| 19 | | **7661191103** | 36 | LOCKNUT |
| 20 | | **7126191850** | 2 | CAP SCREW, M10 X 55MM HEX HEAD |
| 21 | | **7126191750** | 6 | CAP SCREW, M10 X 50MM HEX HEAD |
| 30 | * | **80049682** | 1 | KIT - DECKING INSTL |
| 31 | ** | **80044870** | 1 | FENDER INSTALLATION-KIT |
| 50 | * | **4159110267** | 4 | STEP, TAPERED |
| 51 | * | **4159110268** | 2 | GUARD, MUD |
| 52 | * | **4159110269** | 2 | GUARD, MUD |
| 53 | * | **4159110256** | 1 | COVER, ACCESS |
| 54 | * | **80030810** | 1 | FENDER SUPPORT |
| 55 | * | **80025188** | 2 | LADDER ASSEMBLY |
| 56 | * | **4159110300** | 4 | PLATE, COVER |
| 57 | * | **4159110299** | 2 | PLATE, COVER |
| 58 | * | **4159110298** | 4 | PLATE, COVER |
| 59 | * | **80024956** | 2 | STEP |

*** REPAIR KIT AND/OR PART OF KIT**

Description
**DECKING INSTALLATION-FENDER**

Assembly No.
**80049681**
Revision: **D**

| Item | FN | Part | Qty | Description |
|---|---|---|---|---|
| 60 | * | **80049497** | 2 | PLATE-STEP OUTER |
| 61 | * | **80049496** | 2 | PLATE-STEP INNER |
| 62 | * | **80031609** | 2 | STEP |
| 63 | * | **80024992** | 2 | STEP |
| 100 | ** | **80040216** | 1 | REAR FENDER-RH |
| 101 | ** | **80040217** | 1 | FRONT FENDER-RH |
| 102 | ** | **80044884** | 1 | REAR COVER-LH |
| 103 | ** | **80044871** | 1 | FRONT COVER-LH |

*** REPAIR KIT AND/OR PART OF KIT**

**Notes**

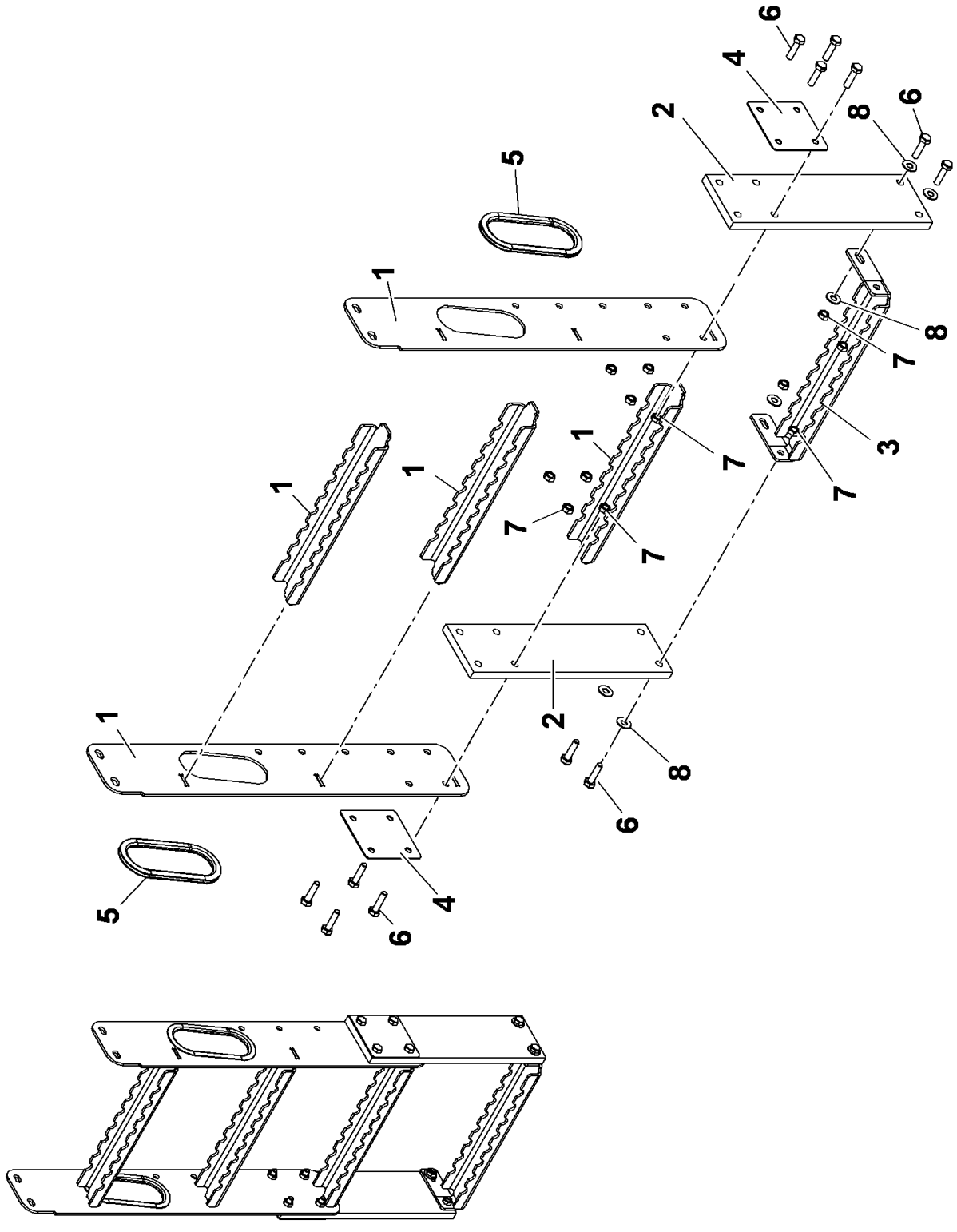


80025188

(SHEET 1 OF 1)

Description
**LADDER ASSEMBLY**

Assembly No.
**80025188**
Revision: **B**

| Item | FN | Part | Qty | Description |
|---|---|---|---|---|
| 1 | | **80025187** | 1 | LADDER |
| 2 | | **7418100008** | 2 | EXTENSION, STEP |
| 3 | | **80022993** | 1 | STEP |
| 4 | | **4159110071** | 2 | PLATE |
| 5 | | **9637100001** | 1 | MOULDING<br>10 FEET<br>( MUST CUT TO LENGTH NEEDED ) |
| 6 | | **7126191550** | 12 | CAP SCREW, M10 X 40MM HEX HEAD |
| 7 | | **7661191103** | 12 | LOCKNUT |
| 8 | | **7950160161** | 6 | WASHER, FLAT WIDE 3/8 |

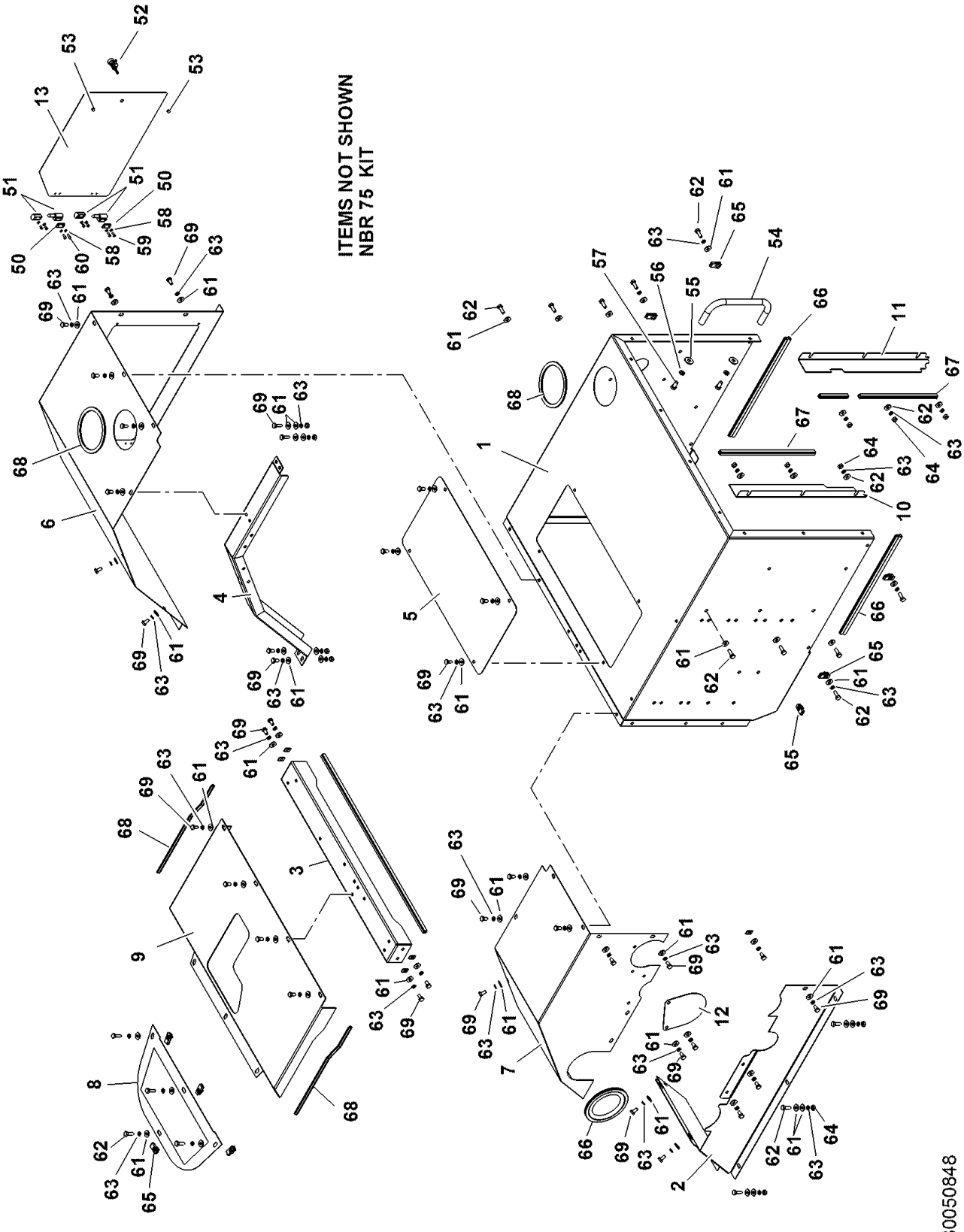


80050848

(SHEET 1 OF 1)

Description
**ENGINE HOOD INSTALLATION**

Assembly No.
**80050848**
Revision: **B**

| Item | FN | Part | Qty | Description |
|---|---|---|---|---|
| 1 | * | **80031017** | 1 | REAR HOOD COVER |
| 2 | * | **80031450** | 1 | BOTTOM HOOD |
| 3 | * | **80031447** | 1 | SUPPORT |
| 4 | * | **80031454** | 1 | SUPPROT |
| 5 | * | **80030937** | 1 | ACCESS PANEL |
| 6 | * | **80030935** | 1 | RIGHT SIDE HOOD COVER |
| 7 | * | **80031452** | 1 | TOP HOOD |
| 8 | * | **80031021** | 1 | COVER TRANSMISSION ACCESS |
| 9 | * | **80031022** | 1 | TRANSMISSION ACCESS COVER |
| 10 | * | **80031470** | 1 | BAFFLE |
| 11 | * | **80031047** | 1 | BAFFLE |
| 12 | * | **80031457** | 1 | COVER |
| 13 | * | **80031456** | 1 | DOOR |
| 50 | | **7671100005** | 2 | PAD |
| 51 | | **7519000198** | 2 | HINGE, LEFT HAND NYLON<br>LIFT OFF |
| 52 | | **7585000184** | 1 | LATCH, ARROWHEAD |
| 53 | | **7195000032** | 2 | BUMPER, RUBBER |
| 54 | | **80049924** | 1 | GRAB HANDRAIL |
| 55 | | **7950180161** | 2 | FLAT WASHER, 1/2" I.D. |
| 56 | | **7950180050** | 2 | WASHER, LOCK 1/2" I.D. |
| 57 | | **7115180850** | 2 | CAP SCREW, 1/2"-13 UNC X 1" |
| 58 | | **7950140050** | 8 | WASHER, LOCK 1/4" |
| 59 | | **7111140410** | 4 | SCREW, MACHINE<br>1/4" - 20 N.C. X 1/2"<br>GRADE 1 |
| 60 | | **7111140610** | 4 | SCREW, MACHINE<br>1/4" - 20 N.C. X 3/4"<br>GRADE 1 |
| 61 | | **7950160161** | 76 | WASHER, FLAT WIDE 3/8 |
| 62 | | **7126191353** | 22 | CAP SCREW, M10 X 30MM HEX HEAD |
| 63 | | **7951190210** | 64 | LOCK WASHER, 10MM |
| 64 | | **7661190003** | 12 | NUT, HEX 10MM |
| 65 | | **7659190024** | 10 | RETAINING NUT, M10 X 1.50 |
| 66 | | **8246964300** | 5 | MOULDING<br>(QUANTITY IN FEET) |

*** REPAIR KIT AND/OR PART OF KIT**

Description
**ENGINE HOOD INSTALLATION**

Assembly No.
**80050848**
Revision: **B**

| Item | FN | Part | Qty | Description |
|---|---|---|---|---|
| 67 | | **8496900046** | 5 | MOULDING |
| 68 | | **8496980002** | 6 | MOULDING<br>(QUANTITY IN FEET) |
| 69 | | **7126191153** | 42 | CAP SCREW, M10 X 20 HEX HEAD |
| 75 | * | **80031865** | 1 | ENGINE HOOD-KIT |

*** REPAIR KIT AND/OR PART OF KIT**

**Notes**

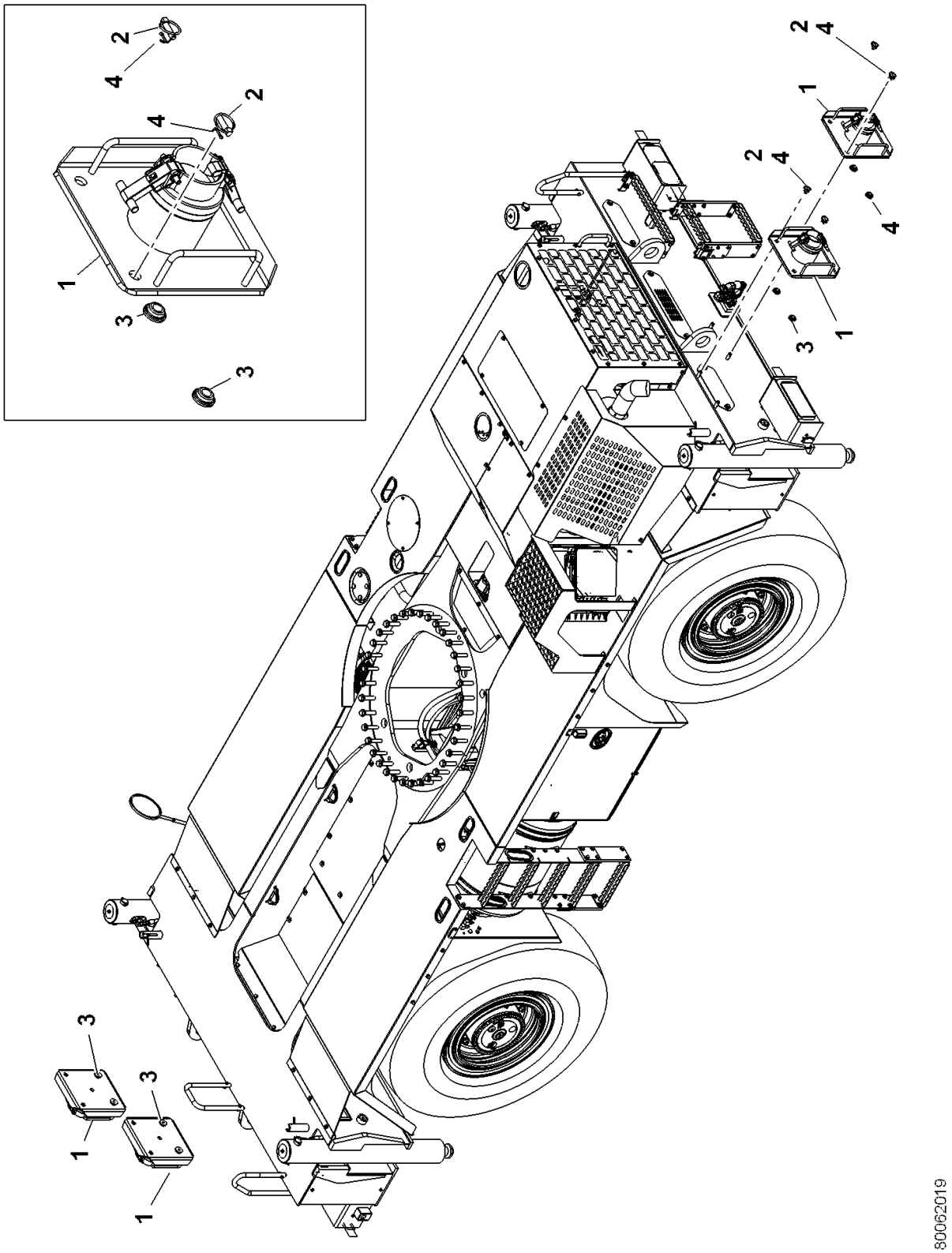


80062019

(SHEET 1 OF 1)

Description
**O/R FLOAT INSTALLATION**

Assembly No.
**80062019**
Revision: **D**

| Item | FN | Part | Qty | Description |
|---|---|---|---|---|
| 1 | + | **80062020** | 4 | OUTRIGGER FLOAT ASSEMBLY |
| 2 | | **80003153** | 8 | QUICK-PIN W/ LANYARD (.44 DIA) |
| 3 | | **80046829** | 8 | O/R PAD BUMPER .81" |
| 4 | | **7690082010** | 8 | PIN, COTTER |

**+ SEE FURTHER BREAKDOWN THIS GROUP**

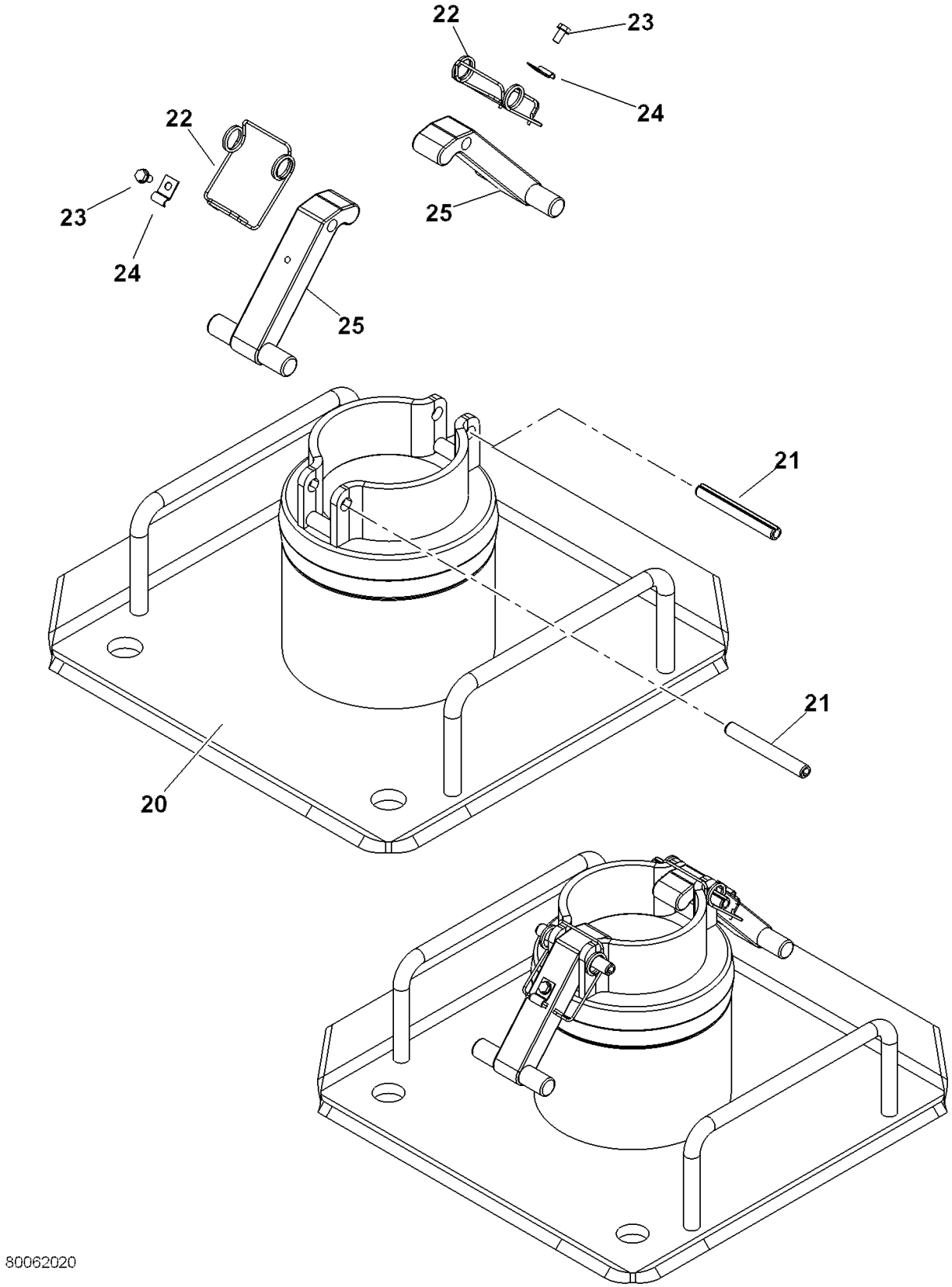


80062020

(SHEET 1 OF 1)

Description
**OUTRIGGER FLOAT ASSEMBLY**

Assembly No.
**80062020**
Revision: **A**

| Item | FN | Part | Qty | Description |
|---|---|---|---|---|
| 20 | | **80062021** | 1 | OUTRIGGER FLOAT |
| 21 | | **7690164841** | 2 | SPRING PIN 0.38X3" SS |
| 22 | | **80029339** | 2 | SPRING |
| 23 | | **7790100653** | 2 | SCREW, SELF-TAPPING |
| 24 | | **80028838** | 2 | HALF CLIP PLAIN, SS |
| 25 | | **6593000137** | 2 | LEVER |

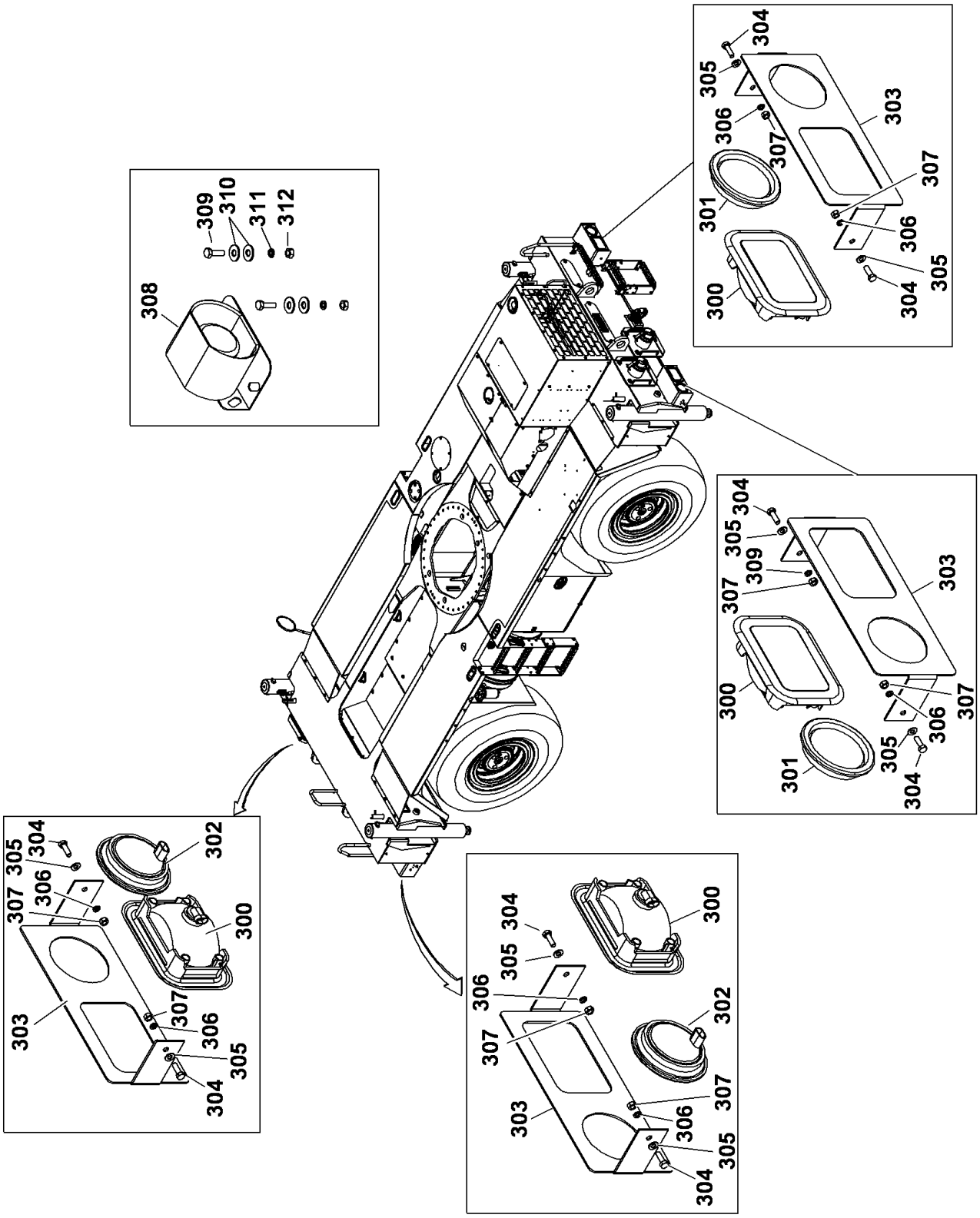


80032638

(SHEET 1 OF 1)

Description
**EXTERIOR LIGHTS INSTALLATION-DOM 24V**

Assembly No.
**80032638**
Revision: **B**

| Item | FN | Part | Qty | Description |
|---|---|---|---|---|
| 300 | | **80066885** | 4 | WORK LIGHT-LED |
| 301 | | **7581100049** | 2 | STOP, TURN, TAIL LED RED LT<br>INCLUDES THE FOLLOWING PARTS |
| | | **9581100461** | 1 | GROMMET, RUBBER |
| | | **7364100051** | 1 | PLUG |
| 302 | | **7581100051** | 2 | YELLOW REAR TURN LT W/GROMMET<br>INCLUDES THE FOLLOWING PARTS |
| | | **9581100461** | 1 | GROMMET, RUBBER |
| | | **7364100051** | 1 | PLUG |
| 303 | | **4159110314** | 4 | BRACKET, HEAD/TAIL LIGHT |
| 304 | | **7126171253** | 8 | CAP SCREW, M8X25 HEX HEAD |
| 305 | | **7951170014** | 8 | WASHER, FLAT #8 |
| 306 | | **7951170210** | 8 | WASHER, LOCK 8MM |
| 307 | | **7661170003** | 8 | NUT |
| 308 | | **7025000836** | 1 | ALARM, BACK-UP<br>INCLUDES THE FOLLOWING PARTS |
| | | **7172000546** | 1 | BOOT |
| | | **7689000704** | 2 | PIN, 16 - 14 GA |
| 309 | | **7126151153** | 2 | CAP SCREW, M6X20 HEX HEAD |
| 310 | | **7950140161** | 4 | WASHER, 1/4" I.D. FLAT WIDE |
| 311 | | **7951150210** | 2 | LOCKWASHER, 6MM I.D. |
| 312 | # | **7661150003** | 2 | NUT, HEX |

**# SERVICED AS AN ASSEMBLY ONLY**

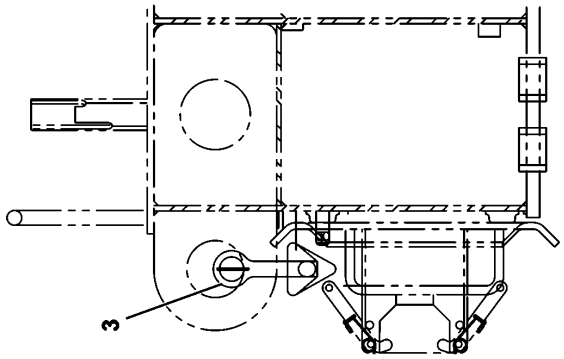


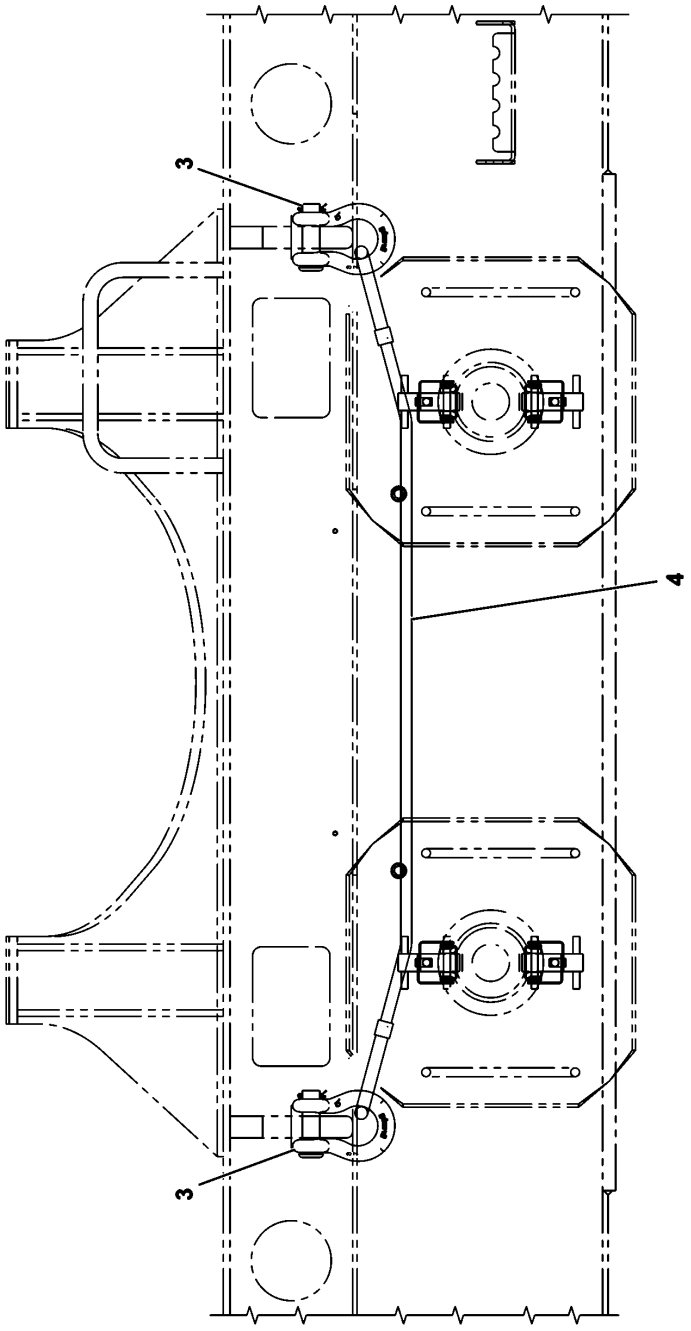


2159110098

(SHEET 1 OF 1)

Description
**TIE DOWN INSTALLATION - HOOK BLOCK**

Assembly No.
**2159110098**
Revision: **B**

| Item | FN | Part | Qty | Description |
|---|---|---|---|---|
| 3 | | **7806100006** | 2 | SHACKLE, 7/8" GALVANIZED<br>INCLUDES THE FOLLOWING PARTS |
| | | **9086101063** | 1 | PIN & COTTER |
| 4 | | **7780100877** | 1 | SLING, 5FT X 5/8 WIRE ROPE |

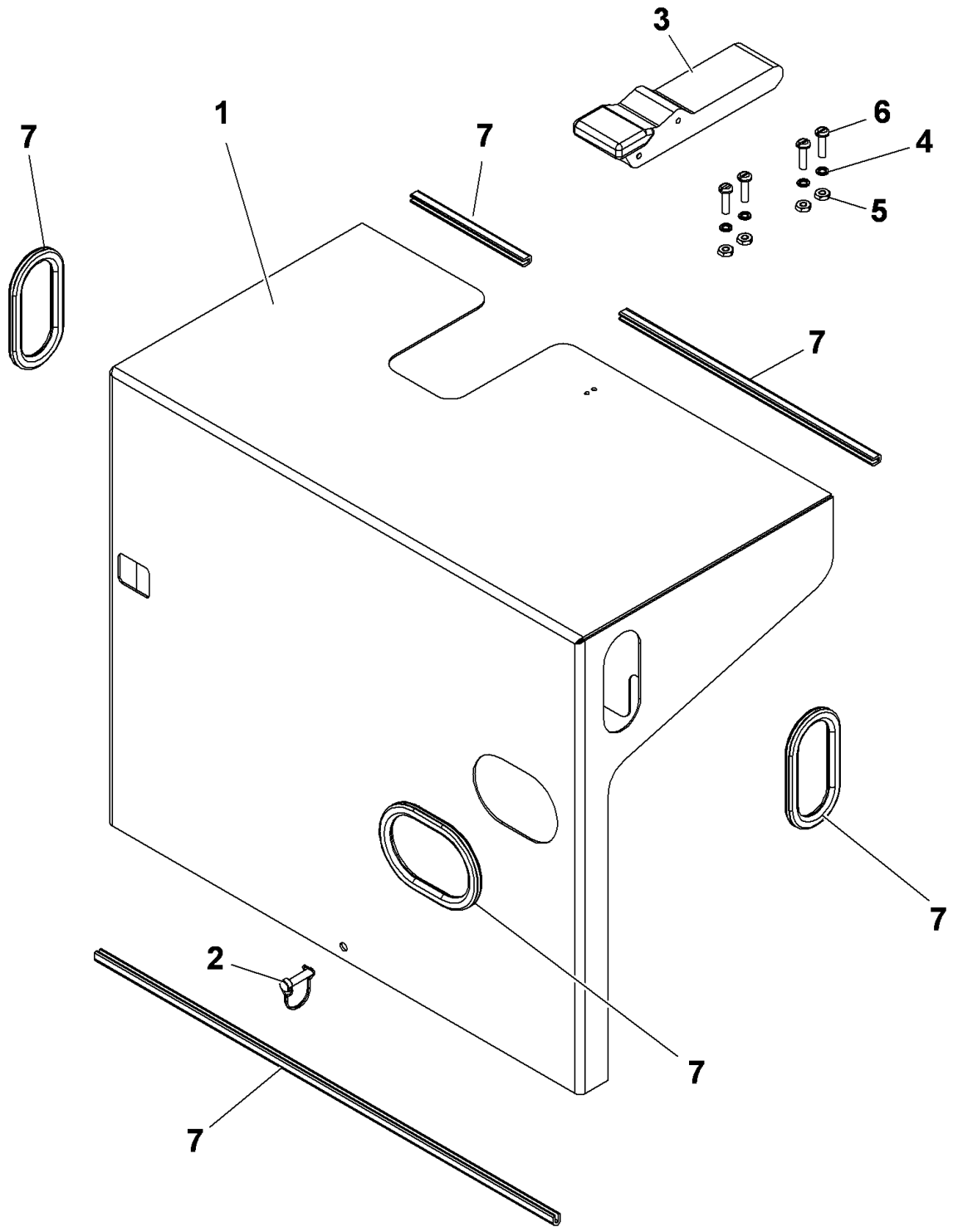


80033034

(SHEET 1 OF 1)

Description
**BATTERY BOX COVER INSTALLATION**

Assembly No.
**80033034**
Revision: **A**

| Item | FN | Part | Qty | Description |
|---|---|---|---|---|
| 1 | | **80033035** | 1 | BATTERY COVER |
| 2 | | **7689000014** | 1 | PIN |
| 3 | | **7585000812** | 1 | DRAW LATCH<br>INCLUDES THE FOLLOWING PARTS |
| | | **9585100055** | 1 | KEEPER |
| 4 | | **7950100050** | 4 | WASHER, LOCK #10 |
| 5 | | **7660101100** | 4 | NUT, HEX<br>3/16" - 32 N.F.<br>GRADE 1 |
| 6 | | **7111100611** | 4 | SCREW, MACHINE<br>3/16" - 24 N.C. X 3/4"<br>GRADE 1 |
| 7 | | **6637007010** | 1 | MOULDING - USE 9637100001<br>MOULDING<br>10 FEET |

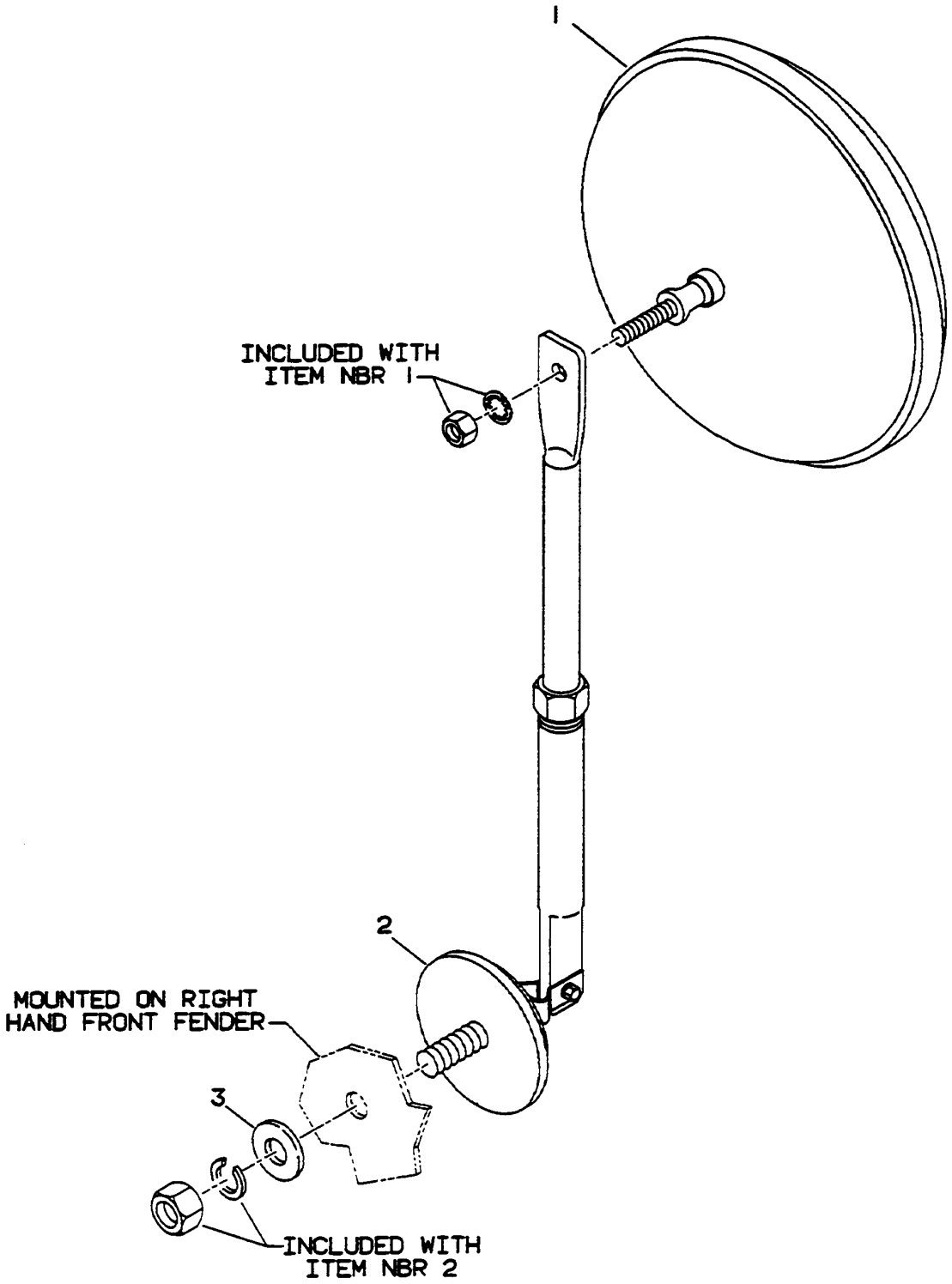


2159100686

(SHEET 1 OF 1)

Description
**MIRROR INSTALLATION - REAR VIEW**

Assembly No.
**2159100686**
Revision: **#**

| Item | FN | Part | Qty | Description |
|---|---|---|---|---|
| 1 | # | **7628000025** | 1 | MIRROR, 8" CONVEX<br>INCLUDES MOUNTING HARDWARE |
| 2 | # | **7184001014** | 1 | BRACKET, MIRROR ARM<br>INCLUDES MOUNTING HARDWARE |
| 3 | | **7950180141** | 1 | WASHER, FLAT 1/2" |

**# SERVICED AS AN ASSEMBLY ONLY**

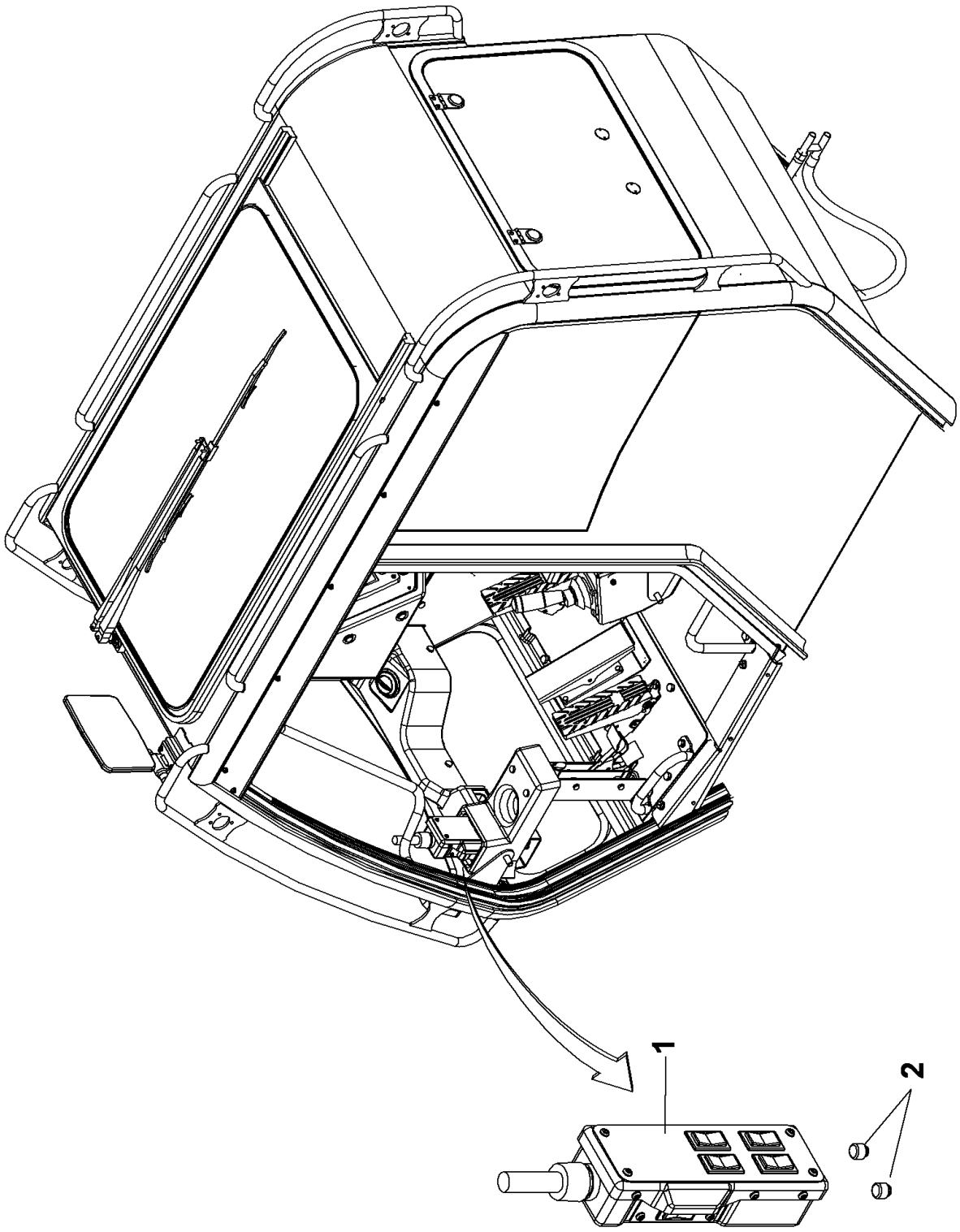


80049322

(SHEET 1 OF 1)

Description
**OUTRIGGER CONTROLLER INSTALLATION**

Assembly No.
**80049322**
Revision: **B**

| Item | FN | Part | Qty | Description |
|---|---|---|---|---|
| 1 | + | **80049319** | 1 | OUTRIGGER CONTROLLER ASSEMBLY |
| 2 | | **7195000031** | 2 | BUMPER, RUBBER |

**+ SEE FURTHER BREAKDOWN THIS GROUP**

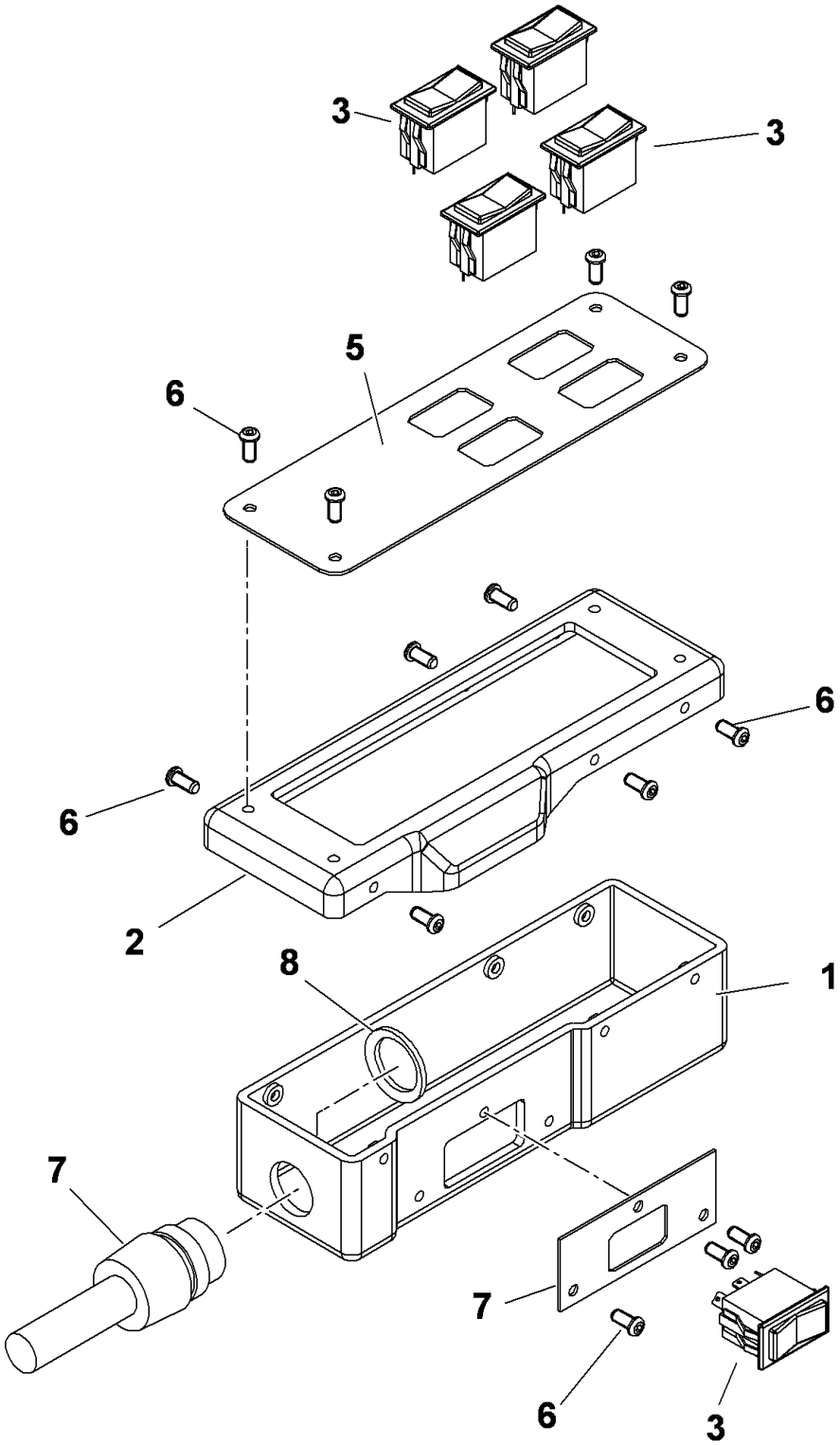


80049319

(SHEET 1 OF 1)

Description
**OUTRIGGER CONTROLLER ASSEMBLY**

Assembly No.
**80049319**
Revision: **A**

| Item | FN | Part | Qty | Description |
|---|---|---|---|---|
| 1 | | **7176002679** | 1 | BOTTOM, BOX |
| 2 | | **7176002678** | 1 | TOP, BOX |
| 3 | | **80049315** | 5 | ROCKER SW-SPDT ON-OFF-ON |
| 4 | | **80023927** | 1 | SIDE PANEL |
| 5 | | **80023877** | 1 | TOP PANEL |
| 6 | | **7099001153** | 13 | SCREW,<br>3/16" - 32 N.F. |
| 7 | + | **6246003053** | 1 | CABLE ASSEMBLY |
| 8 | | **7659000042** | 1 | LOCKNUT<br>3/4" - 10 N.C. |

**+ SEE FURTHER BREAKDOWN THIS GROUP**

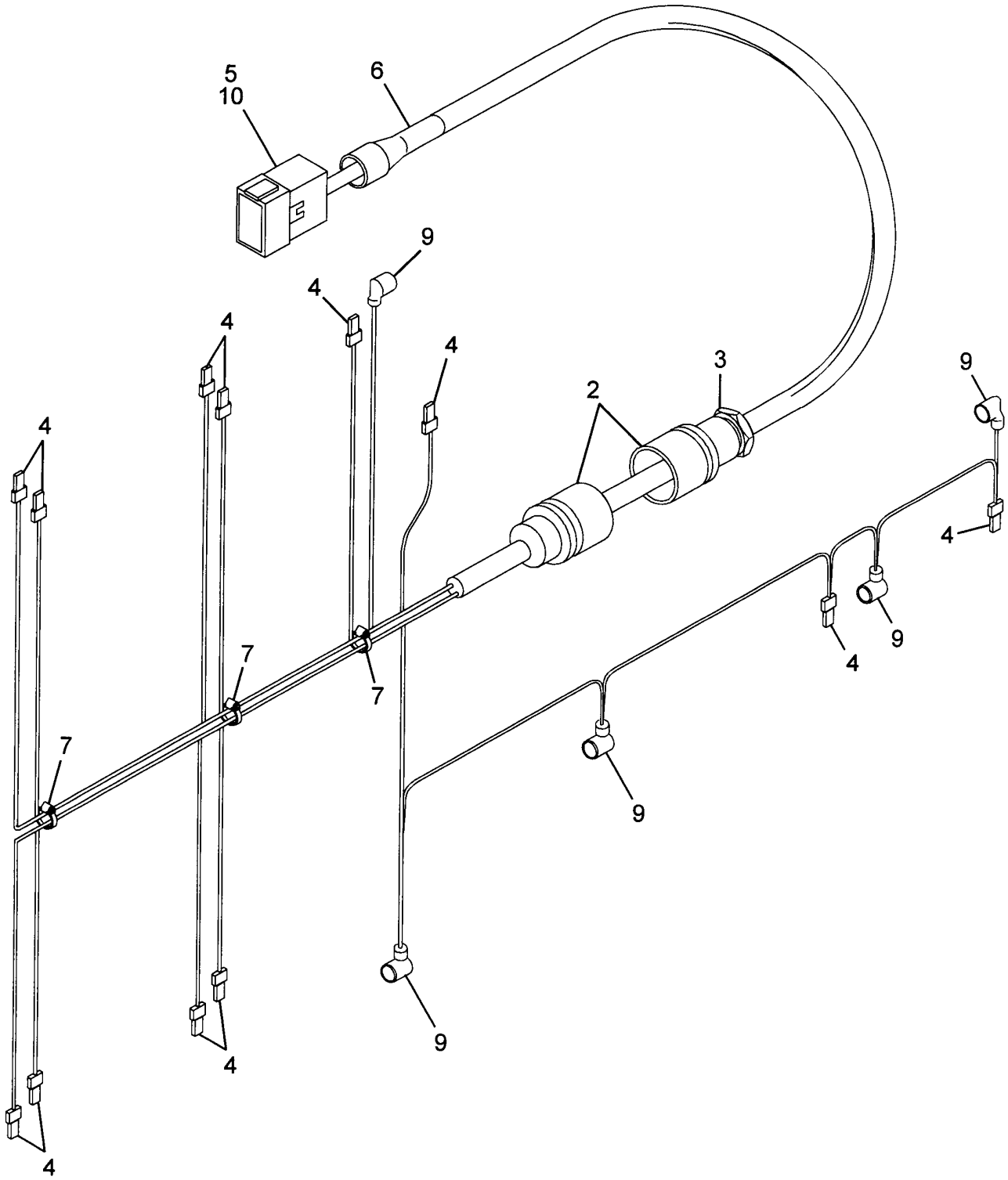


6246003053

(SHEET 1 OF 1)

Description
**CABLE ASSEMBLY**

Assembly No.
**6246003053**
Revision: **B**

| Item | FN | Part | Qty | Description |
|---|---|---|---|---|
| 2 | | **7364001840** | 2 | CONNECTOR, STRAIN RELIEF |
| 3 | | **7659000042** | 1 | LOCKNUT<br>3/4" - 10 N.C. |
| 4 | | **7345001443** | 12 | TERMINAL, FEMALE<br>22 - 18 AWG |
| 5 | | **7892000951** | 1 | RECEPTACLE,<br>12 PIN |
| 6 | | **7172000551** | 1 | BOOT |
| 7 | | **7850000208** | 3 | CABLE TIE 5.63", BLACK |
| 9 | | **7345001743** | 5 | TERMINAL, FEMALE<br>16 - 14 AWG |
| 10 | | **7689000704** | 12 | PIN, 16 - 14 GA |

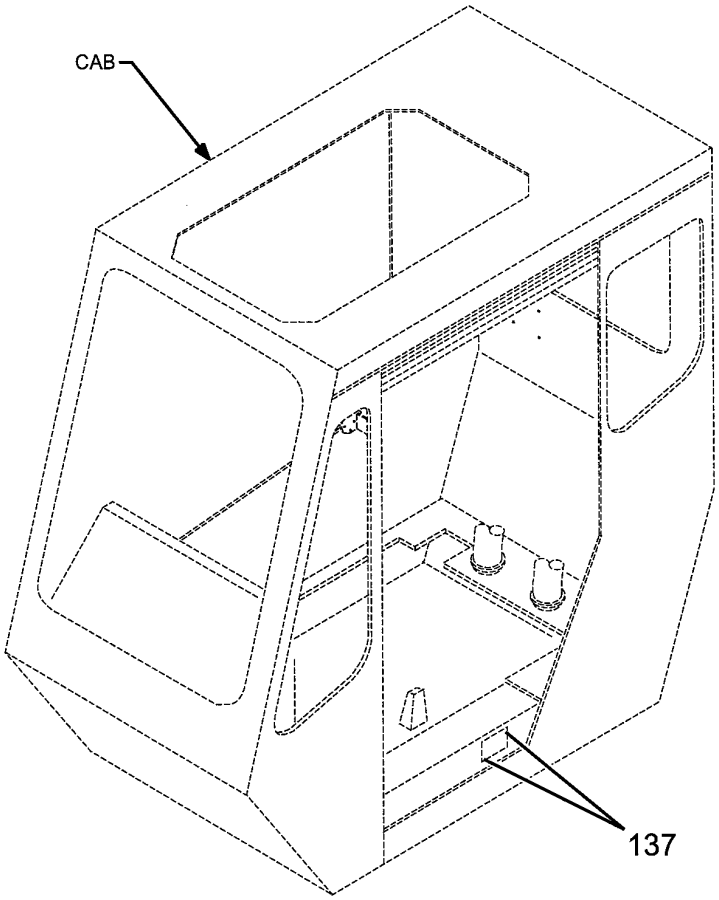


6376100272

(SHEET 1 OF 1)

Description
**HARDWARE KIT - DECAL**

Assembly No.
**6376100272**
Revision: **A**

| Item | FN | Part | Qty | Description |
|---|---|---|---|---|
| 137 | | **7760000011** | 4 | RIVET, POP |

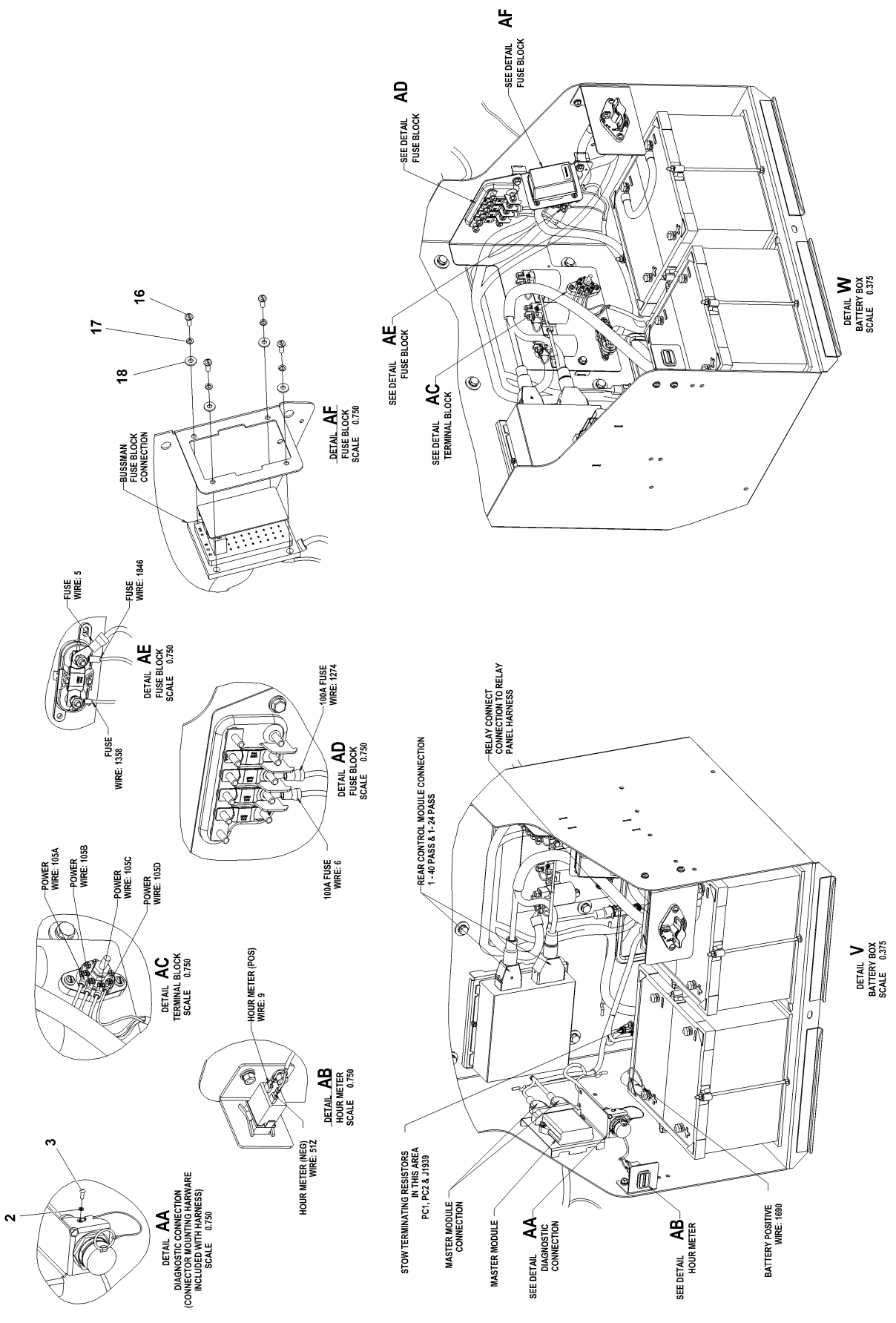
DETAIL AA
DIAGNOSTIC CONNECTION
(CONNECTOR MOUNTING HARWARE
INCLUDED WITH HARNESS)
SCALE 0.750
2
3
DETAIL AB
HOUR METER
SCALE 0.750
HOUR METER (NEG)
WIRE: 512
HOUR METER (POS)
WIRE: 9
DETAIL AC
TERMINAL BLOCK
SCALE 0.750
POWER
WIRE: 105A
POWER
WIRE: 105B
POWER
WIRE: 105C
POWER
WIRE: 105D
DETAIL AD
FUSE BLOCK
SCALE 0.750
100A FUSE
WIRE: 6
100A FUSE
WIRE: 1274
DETAIL AE
FUSE BLOCK
SCALE 0.750
FUSE
WIRE: 1358
FUSE
WIRE: 5
FUSE
WIRE: 1846
DETAIL AF
FUSE BLOCK
SCALE 0.750
BUSSMAN
FUSE BLOCK
CONNECTION
16
17
18
DETAIL W
BATTERY BOX
SCALE 0.375
SEE DETAIL
FUSE BLOCK
AD
SEE DETAIL
FUSE BLOCK
AF
SEE DETAIL
FUSE BLOCK
AE
SEE DETAIL
TERMINAL BLOCK
AC
DETAIL V
BATTERY BOX
SCALE 0.375
REAR CONTROL MODULE CONNECTION
1 - 40 PASS & 1 - 24 PASS
RELAY CONNECT
CONNECTION TO RELAY
PANEL HARNESS
STOW TERMINATING RESISTORS
IN THIS AREA
PC1, PC2 & J1939
MASTER MODULE
CONNECTION
MASTER MODULE
SEE DETAIL
DIAGNOSTIC
CONNECTION
AA
SEE DETAIL
HOUR METER
AB
BATTERY POSITIVE
WIRE: 1690

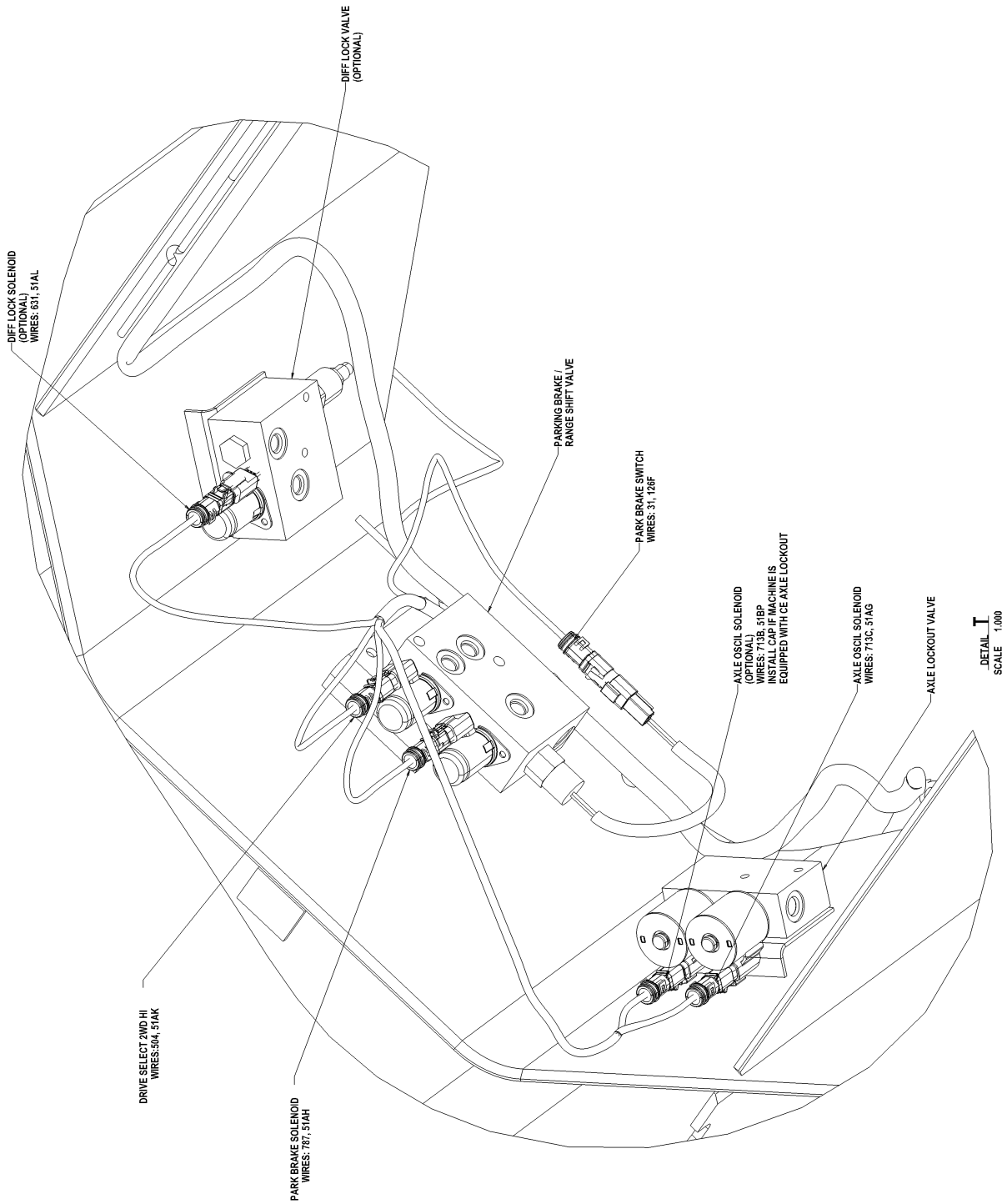


80058230

(SHEET 6 OF 7)

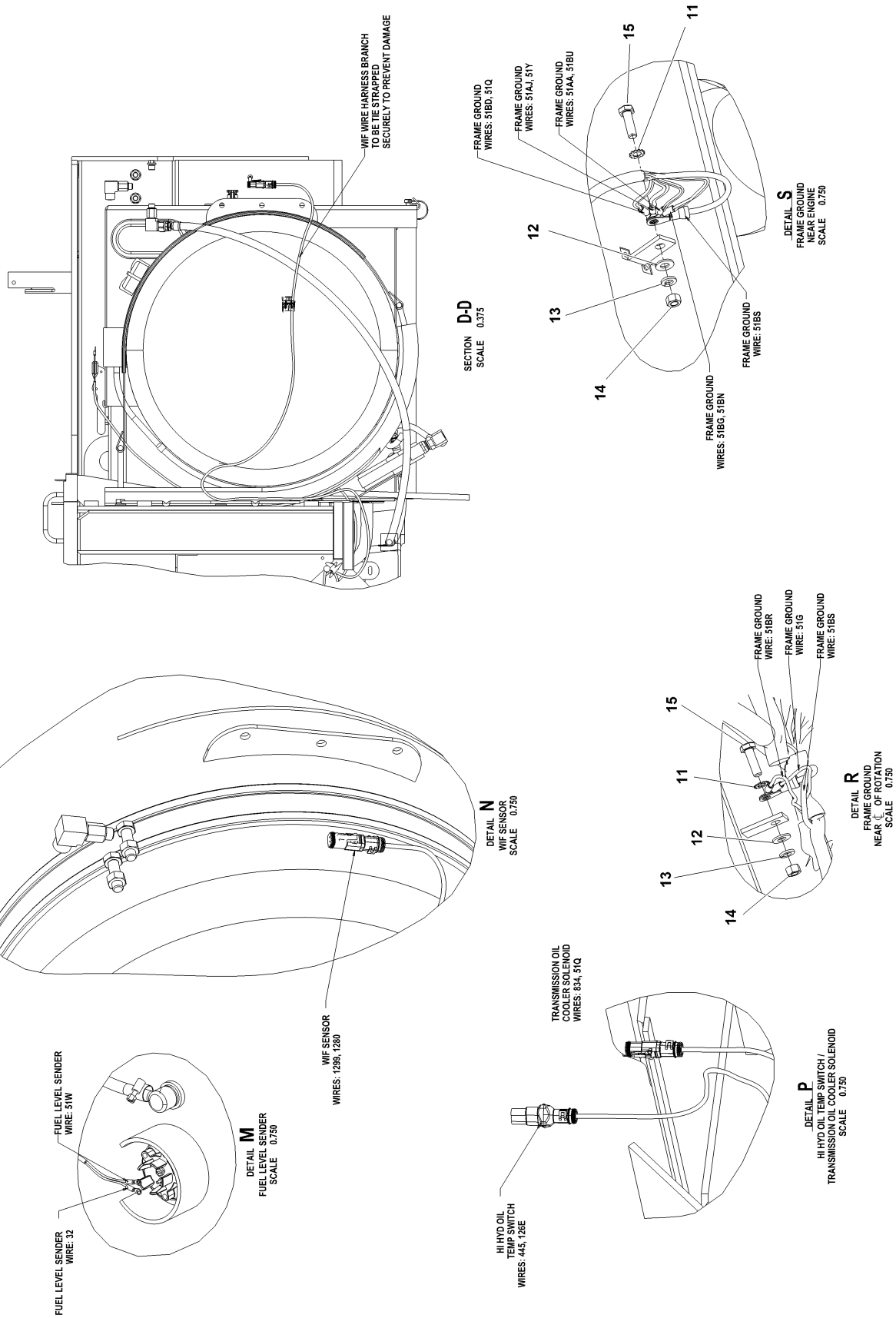
WIF WIRE HARNESS BRANCH TO BE TIE STRAPPED SECURELY TO PREVENT DAMAGE
D-D
SECTION
SCALE 0.375
FRAME GROUND WIRES: 51BD, 51Q
FRAME GROUND WIRES: 51AJ, 51Y
FRAME GROUND WIRES: 51AA, 51BU
FRAME GROUND WIRE: 51BS
FRAME GROUND WIRES: 51BG, 51BN
DETAIL S
FRAME GROUND NEAR ENGINE
SCALE 0.750
WIF SENSOR WIRES: 1299, 1280
DETAIL N
WIF SENSOR
SCALE 0.750
FUEL LEVEL SENDER WIRE: 51W
FUEL LEVEL SENDER WIRE: 32
DETAIL M
FUEL LEVEL SENDER
SCALE 0.750
TRANSMISSION OIL COOLER SOLENOID WIRES: 834, 51Q
HI HYD OIL TEMP SWITCH WIRES: 445, 126E
DETAIL P
HI HYD OIL TEMP SWITCH / TRANSMISSION OIL COOLER SOLENOID
SCALE 0.750
FRAME GROUND WIRE: 51BR
FRAME GROUND WIRE: 51G
FRAME GROUND WIRE: 51BS
DETAIL R
FRAME GROUND NEAR ℄ OF ROTATION
SCALE 0.750

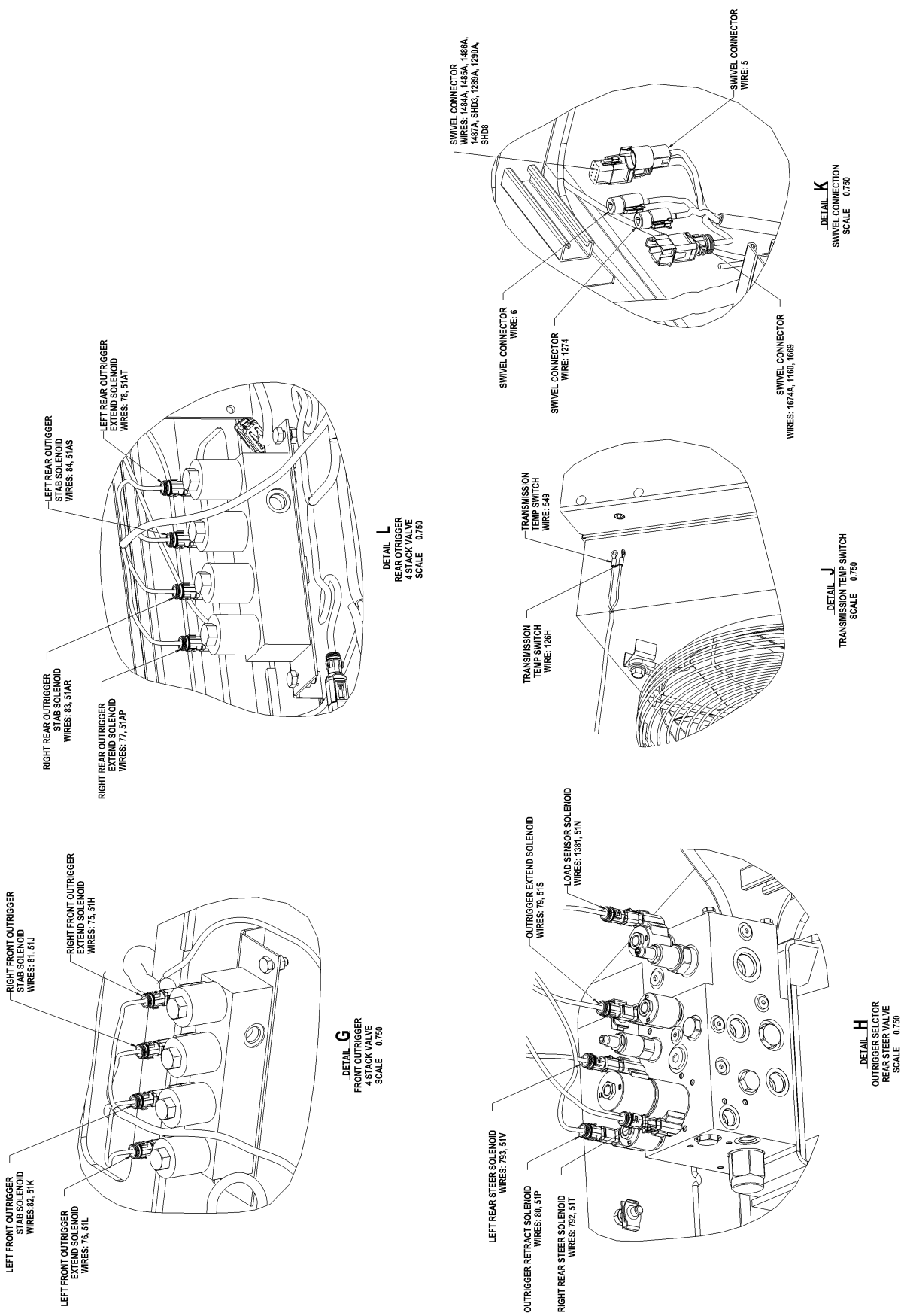


80058230

(SHEET 4 OF 7)

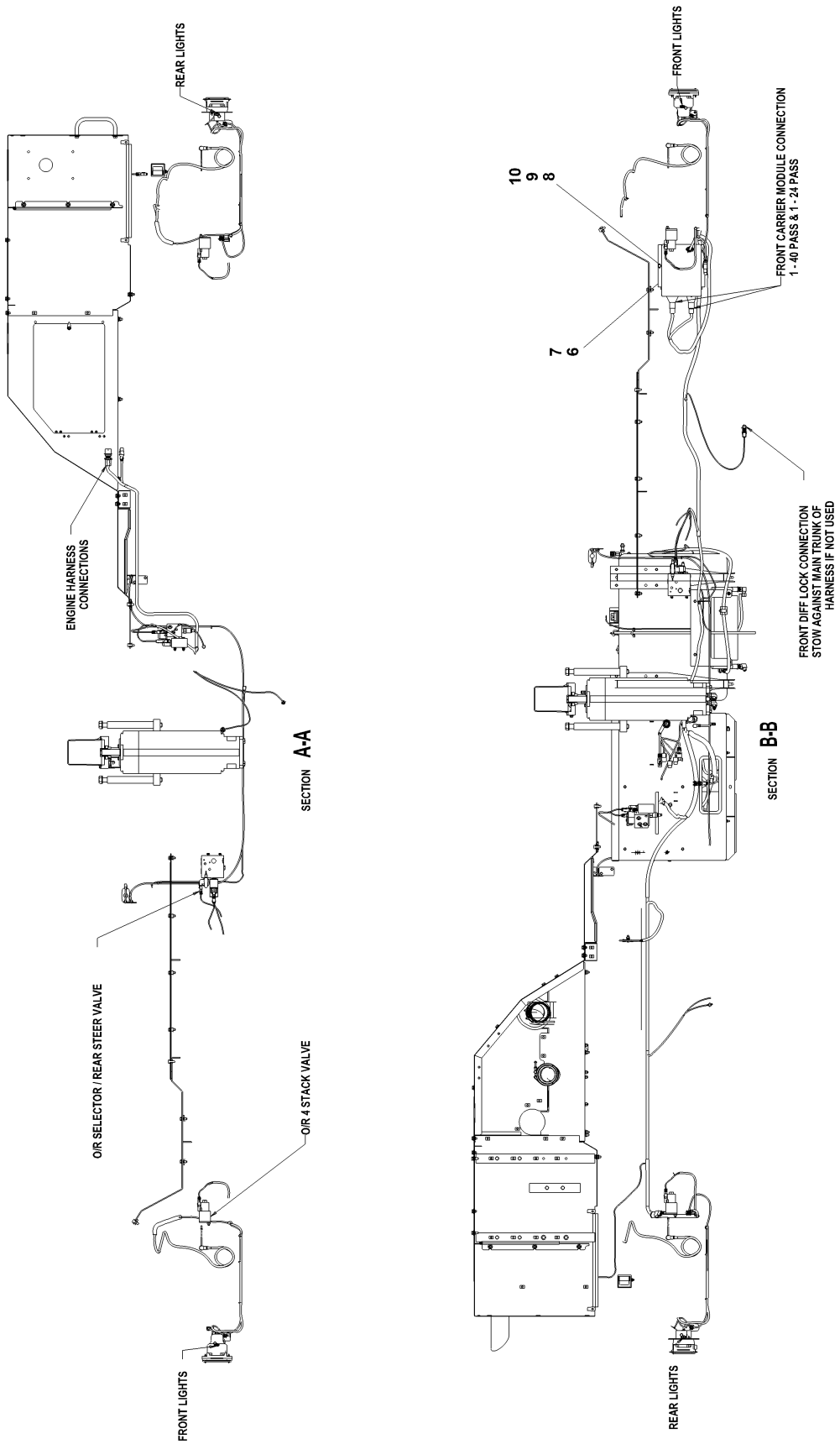
REAR LIGHTS
ENGINE HARNESS CONNECTIONS
SECTION A-A
O/R SELECTOR / REAR STEER VALVE
O/R 4 STACK VALVE
FRONT LIGHTS
FRONT LIGHTS
10
9
8
7
6
FRONT CARRIER MODULE CONNECTION
1 - 40 PASS & 1 - 24 PASS
FRONT DIFF LOCK CONNECTION
STOW AGAINST MAIN TRUNK OF
HARNESS IF NOT USED
SECTION B-B
REAR LIGHTS

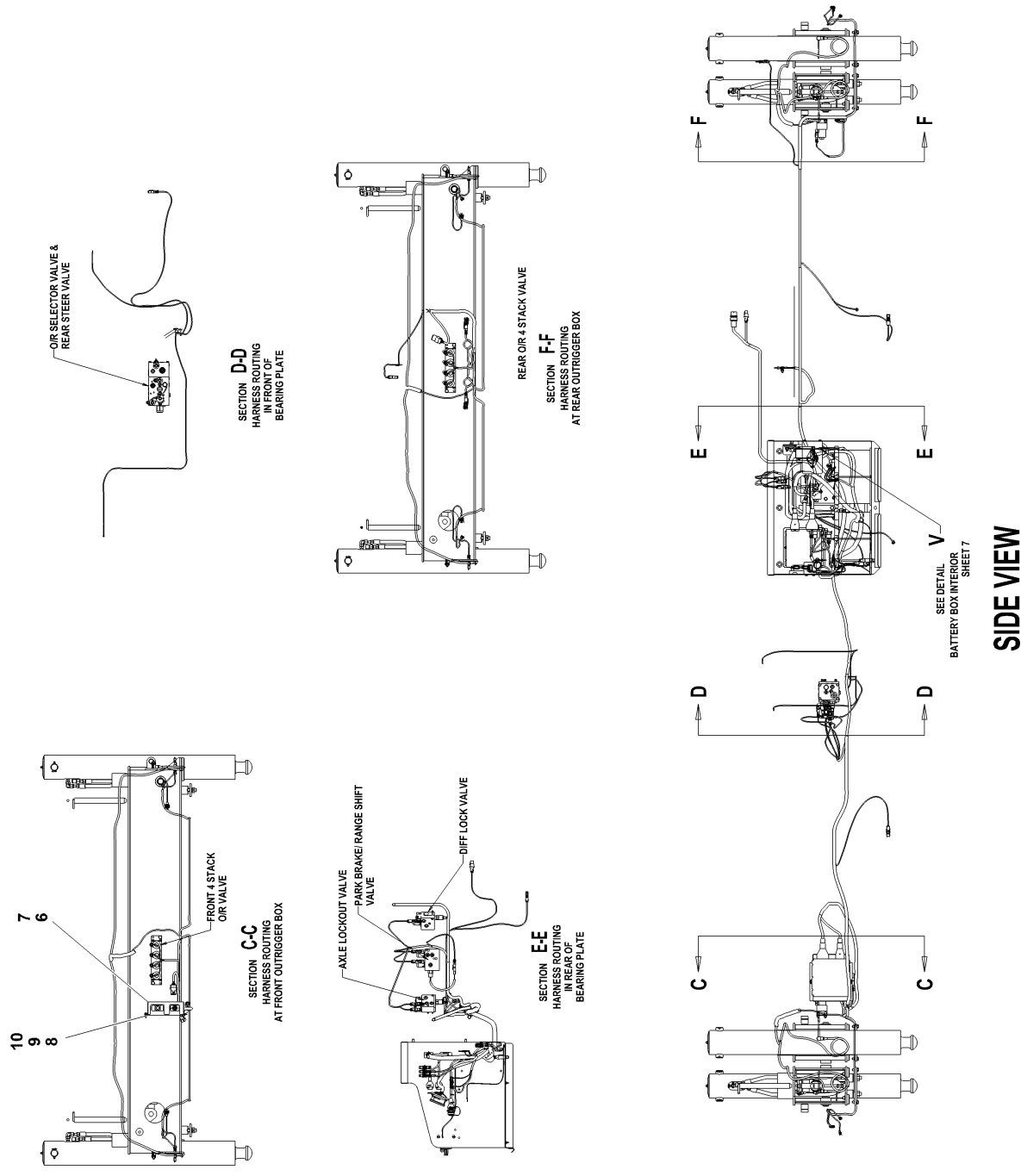


80058230

(SHEET 2 OF 7)

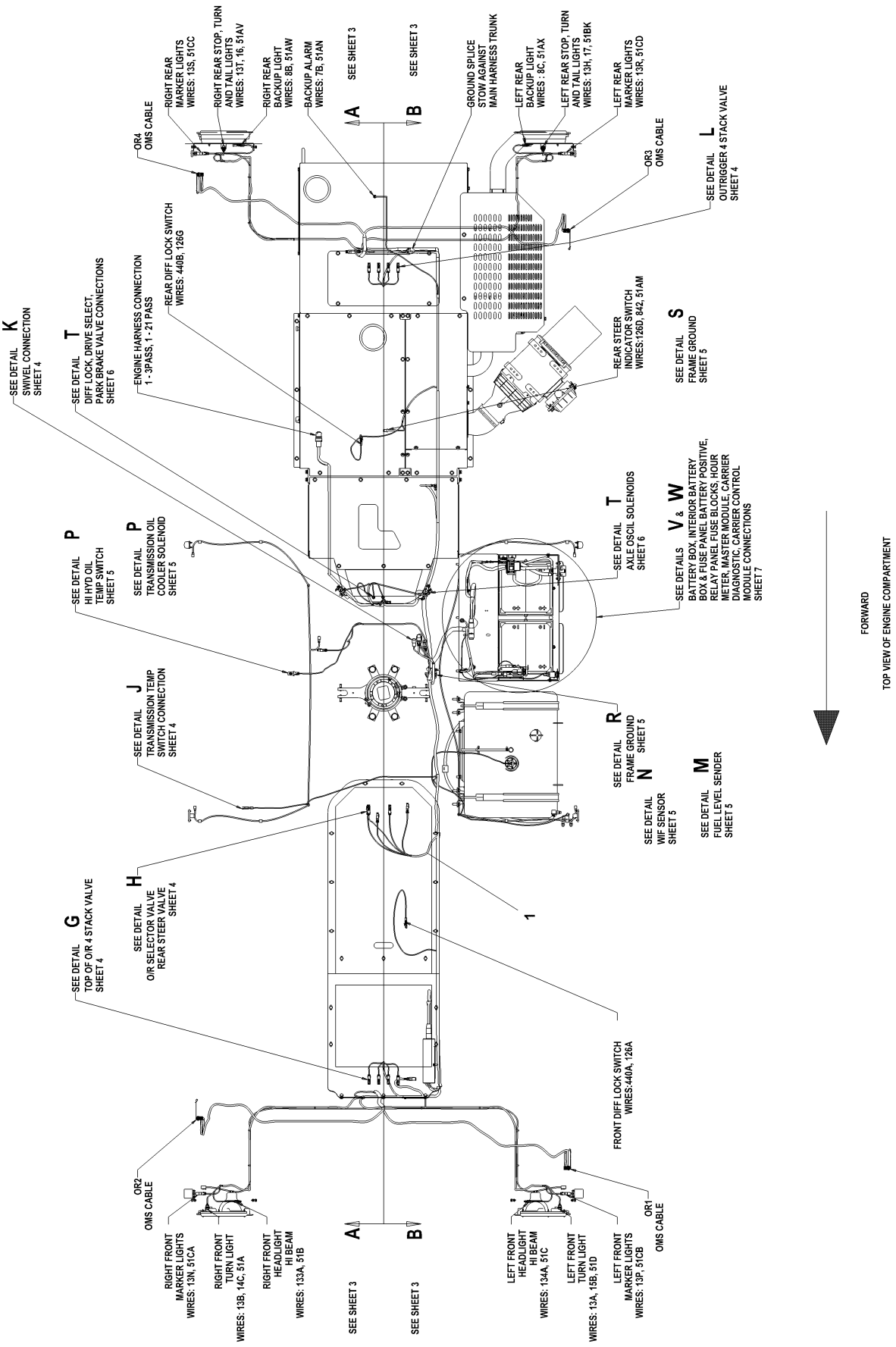


80058230

(SHEET 1 OF 7)

Description
**ESI-CARRIER**

Assembly No.
**80058230**
Revision: **C**

| Item | FN | Part | Qty | Description |
|---|---|---|---|---|
| 1 | + | **80054011** | 1 | WIRING HARNESS-CARRIER |
| 2 | | **7950060050** | 1 | WASHER, # 6 LOCK |
| 3 | | **7111060310** | 1 | SCREW, MACHINE<br>#6 - 32 N.C. X 3/8"<br>GRADE 1 |
| 6 | # | **80053357** | 1 | CONTROL MODULE FRAME AND TT |
| 7 | | **80000934** | 1 | COVER |
| 8 | | **7951170014** | 1 | WASHER, FLAT #8 |
| 9 | | **7951170220** | 1 | WASHER, 8MM SPRING LOCK |
| 10 | | **7126171253** | 1 | CAP SCREW, M8X25 HEX HEAD |
| 11 | | **7950160350** | 4 | WASHER, LOCK 3/8" I.D. |
| 12 | | **7950160141** | 2 | WASHER, 3/8" PLAIN NARROW |
| 13 | | **7950160050** | 2 | WASHER, LOCK 3/8" I.D. |
| 14 | | **7660160000** | 2 | NUT, HEX<br>3/8" - 16 N.C. |
| 15 | | **7115161050** | 2 | CAP SCREW,<br>3/8" - 16 N.C. X 1 1/4"<br>GRADE 5 |
| 16 | | **7101100411** | 4 | SCREW, MACHINE<br>GRADE 1 |
| 17 | | **7950100050** | 4 | WASHER, LOCK #10 |
| 18 | | **7950100141** | 4 | WASHER, FLAT, #10 |
| 23 | | **7850000237** | 200 | TIE, CABLE (BLACK)<br>7 5/16" LONG |

**+ SEE FURTHER BREAKDOWN THIS GROUP** **# SERVICED AS AN ASSEMBLY ONLY**

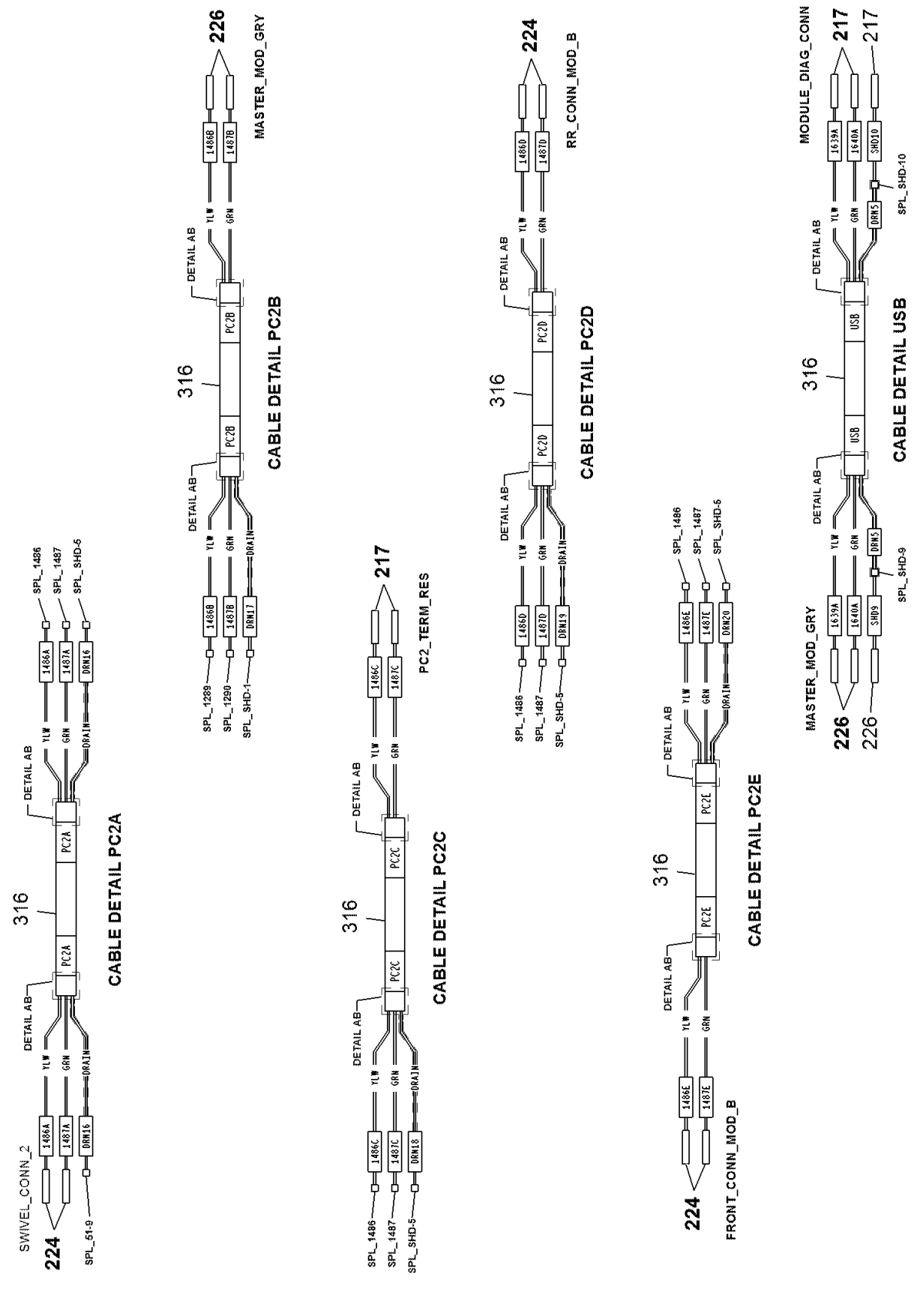
CABLE DETAIL PC2A
CABLE DETAIL PC2B
CABLE DETAIL PC2C
CABLE DETAIL PC2D
CABLE DETAIL PC2E
CABLE DETAIL USB
316
224
226
217
DETAIL AB
YLW
GRN
DRAIN
SWIVEL_CONN_2
SPL_51-9
MASTER_MOD_GRY
SPL_1289
SPL_1290
SPL_SHD-1
PC2_TERM_RES
RR_CONN_MOD_B
SPL_1486
SPL_1487
SPL_SHD-5
FRONT_CONN_MOD_B
MODULE_DIAG_CONN
SPL_SHD-9
SPL_SHD-10
80054011-17

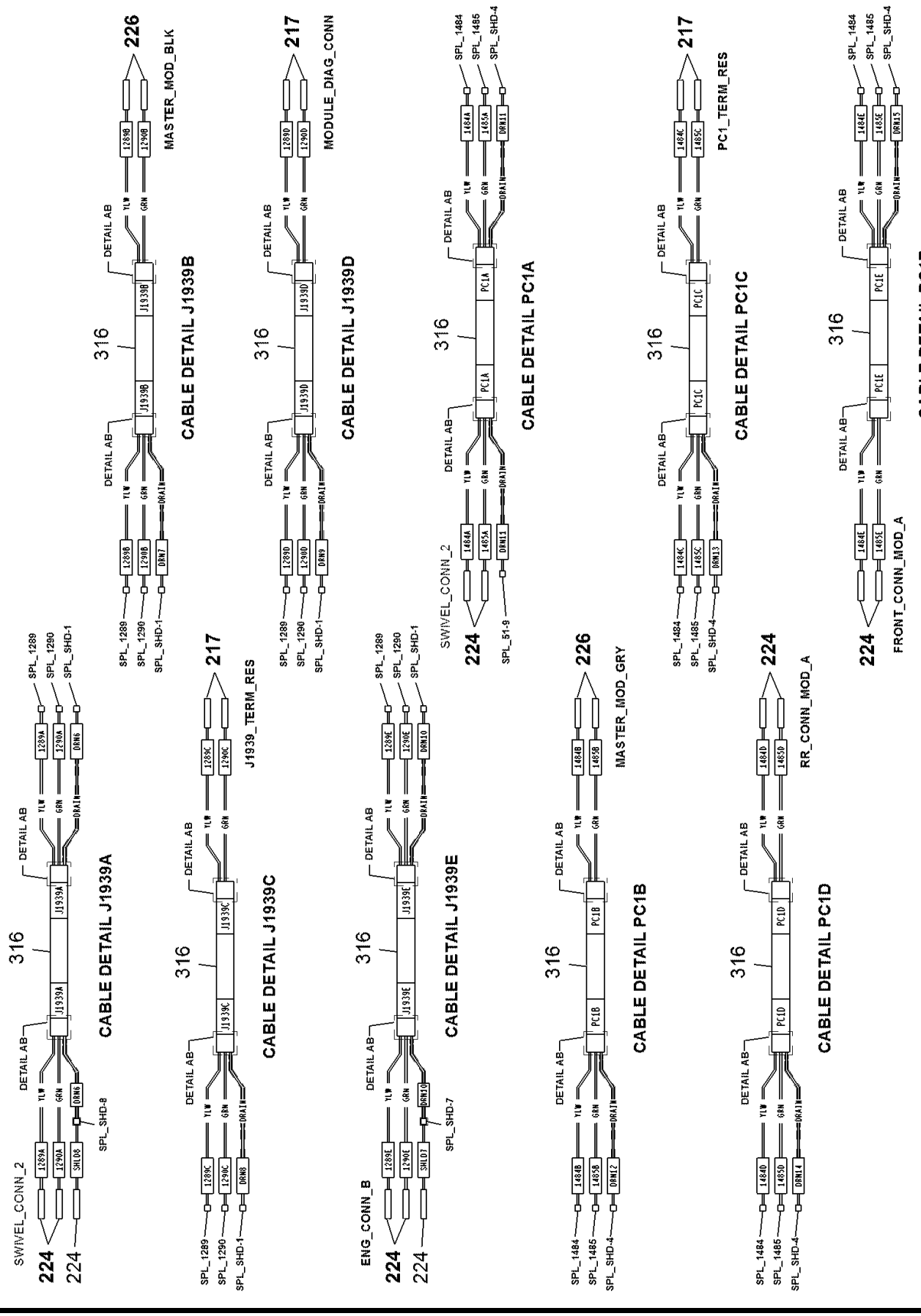


80054011

(SHEET 16 OF 17)

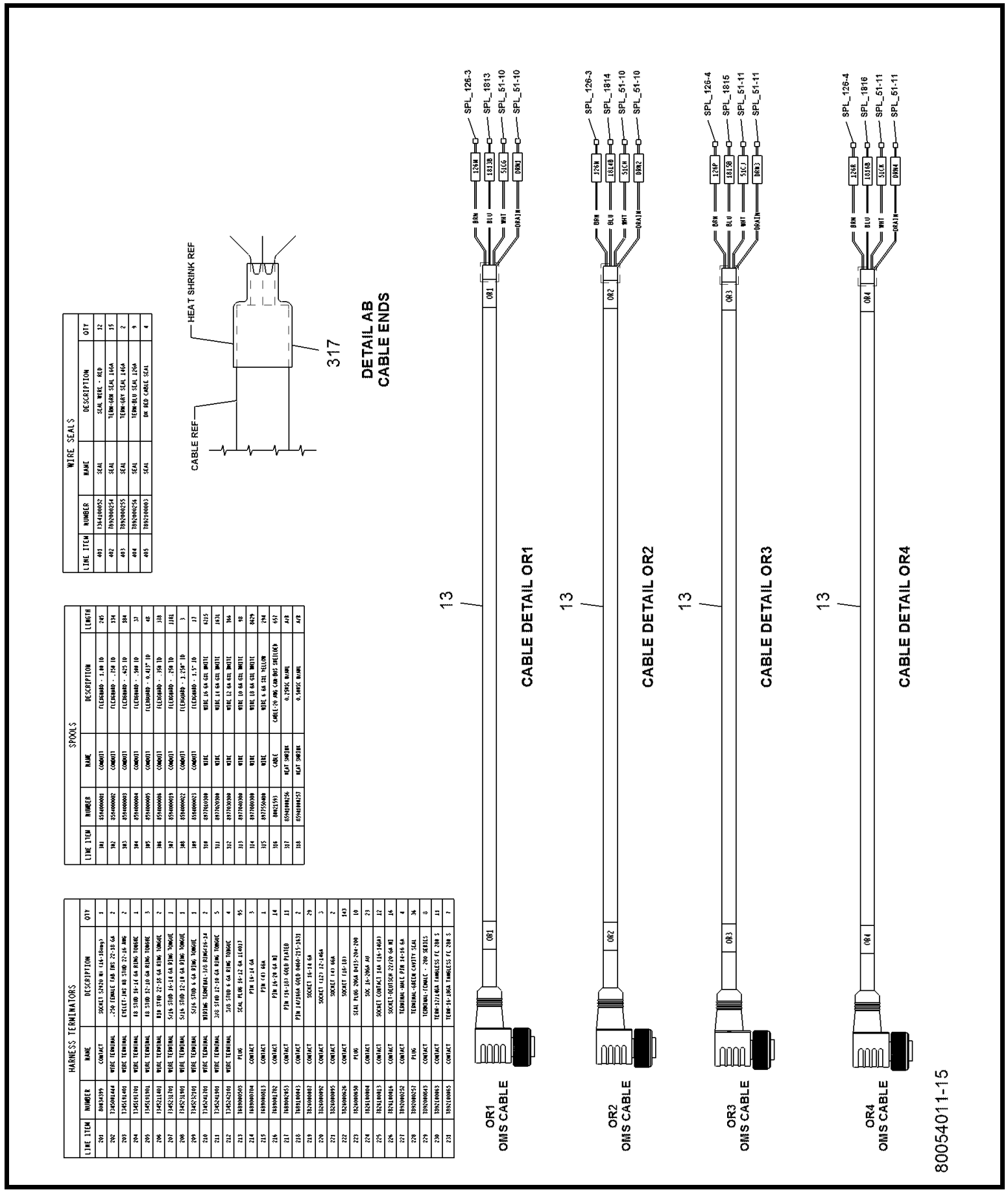
HARNESS TERMINATORS
LINE ITEM | NUMBER | NAME | DESCRIPTION | QTY
201 | 80054399 | CONTACT | SOCKET 12420 #1 (16-18awg) | 1
202 | 1345041444 | WIRE TERMINAL | .250 FEMALE TAB INS 22-16 GA | 2
203 | 1345141401 | WIRE TERMINAL | EYELET-INS #8 STUD 22-16 AWG | 2
204 | 1345191701 | WIRE TERMINAL | #8 STUD 16-14 GA RING TONGUE | 1
205 | 1345191901 | WIRE TERMINAL | #8 STUD 12-10 GA RING TONGUE | 3
206 | 1345211401 | WIRE TERMINAL | #10 STUD 22-16 GA RING TONGUE | 2
207 | 1345212101 | WIRE TERMINAL | 5/16 STUD 16-14 GA RING TONGUE | 2
208 | 1345212901 | WIRE TERMINAL | 5/16 STUD 12-10 GA RING TONGUE | 1
209 | 1345232101 | WIRE TERMINAL | 5/16 STUD 6 GA RING TONGUE | 1
210 | 1345241701 | WIRE TERMINAL | WIRING TERMINAL-3/8 RING#16-14 | 2
211 | 1345241901 | WIRE TERMINAL | 3/8 STUD 12-10 GA RING TONGUE | 5
212 | 1345242101 | WIRE TERMINAL | 3/8 STUD 6 GA RING TONGUE | 4
213 | 1680000503 | PLUG | SEAL PLUG 16-12 GA (14913) | 95
214 | 1680000704 | CONTACT | PIN 16-14 GA | 3
215 | 1680000813 | CONTACT | PIN #16 GA | 1
216 | 1680001702 | CONTACT | PIN 16-20 GA MJ | 14
217 | 1680002653 | CONTACT | PIN 16-18J GOLD PLATED | 11
218 | 1680100443 | CONTACT | PIN 16#14GA GOLD 0460-215-16J1 | 2
219 | 1826000087 | CONTACT | SOCKET 16-14 GA | 29
220 | 1826000092 | CONTACT | SOCKET 1421 12-14GA | 3
221 | 1826000095 | CONTACT | SOCKET 143 16GA | 2
222 | 1826000626 | CONTACT | SOCKET 16-18J | 143
223 | 1826000650 | PLUG | SEAL PLUG 20GA 0413-204-20U | 10
224 | 1826100004 | CONTACT | SOC 16-20GA AU | 23
225 | 1826100013 | CONTACT | SOCKET CONTACT 16# (16-18GA) | 12
226 | 1826100016 | CONTACT | SOCKET-DEUTSCH 22/20 GA MJ | 16
227 | 1826000252 | CONTACT | TERMINAL-HALL PIN 14-16 GA | 4
228 | 1826000252 | PLUG | TERMINAL-GREEN CAVITY SEAL | 36
229 | 1826100043 | CONTACT | TERMINAL-FEMALE - 20# SERIES | 8
230 | 1826100063 | CONTACT | TERM-12/14GA TAMPLESS FC 20# S | 13
231 | 1826100065 | CONTACT | TERM-16-18GA TAMPLESS FC 20# S | 7
SPOOLS
LINE ITEM | NUMBER | NAME | DESCRIPTION | LENGTH
301 | 8554000001 | COMBO11 | FLEX6#AWG - 1.00 ID | 245
302 | 8554000002 | COMBO11 | FLEX6#AWG - .750 ID | 334
303 | 8554000003 | COMBO11 | FLEX6#AWG - .625 ID | 184
304 | 8554000004 | COMBO11 | FLEX6#AWG - .500 ID | 37
305 | 8554000005 | COMBO11 | FLEX6#AWG - 0.417" ID | 48
306 | 8554000006 | COMBO11 | FLEX6#AWG - .375 ID | 338
307 | 8554000019 | COMBO11 | FLEX6#AWG - .250 ID | 1181
308 | 8554000022 | COMBO11 | FLEX6#AWG - 3.250" ID | 5
309 | 8554000023 | COMBO11 | FLEX6#AWG - 1.5" ID | 17
310 | 8937010300 | WIRE | WIRE 16 GA COIL WHITE | 4315
311 | 8937020300 | WIRE | WIRE 14 GA COIL WHITE | 1431
312 | 8937030300 | WIRE | WIRE 12 GA COIL WHITE | 766
313 | 8937040300 | WIRE | WIRE 10 GA COIL WHITE | 98
314 | 8937050300 | WIRE | WIRE 8 GA COIL WHITE | 9629
315 | 8937250400 | WIRE | WIRE 6 GA 2XL YELLOW | 294
316 | 8842191 | CABLE | CABLE-20 AWG CONDUCTORS SHIELDED | 6617
317 | 8554010025 | HEAT SHRINK | 0.25#SC BLACK | AR
318 | 8554010037 | HEAT SHRINK | 0.50#SC BLACK | AR
WIRE SEALS
LINE ITEM | NUMBER | NAME | DESCRIPTION | QTY
401 | 1344100052 | SEAL | SEAL WIRE - RED | 12
402 | 1892000254 | SEAL | TERM-ORN SEAL 1464 | 15
403 | 1892000255 | SEAL | TERM-GRY SEAL 1464 | 2
404 | 1892000256 | SEAL | TERM-BLU SEAL 1264 | 9
405 | 1892100003 | SEAL | DK RED CABLE SEAL | 4
HEAT SHRINK REF
CABLE REF
317
DETAIL AB
CABLE ENDS
13
OR1
CABLE DETAIL OR1
SPL_126-3
SPL_1813
SPL_51-10
SPL_51-10
12BN
18138
51CG
DRN1
BRN
BLU
WHT
DRAIN
OR1
OMS CABLE
13
OR2
CABLE DETAIL OR2
SPL_126-3
SPL_1814
SPL_51-10
SPL_51-10
12BN
18140
51CH
DRN2
BRN
BLU
WHT
DRAIN
OR2
OMS CABLE
13
OR3
CABLE DETAIL OR3
SPL_126-4
SPL_1815
SPL_51-11
SPL_51-11
12BP
18139
51CJ
DRN3
BRN
BLU
WHT
DRAIN
OR3
OMS CABLE
13
OR4
CABLE DETAIL OR4
SPL_126-4
SPL_1816
SPL_51-11
SPL_51-11
12BR
18141
51CK
DRN4
BRN
BLU
WHT
DRAIN
OR4
OMS CABLE
80054011-15

| CABLE | WIRE | COLOR | SIZE | TYPE | NUMBER | LENGTH (FEET) | FROM | | | | | TO | | | | | | REMARKS |
|---|---|---|---|---|---|---|---|---|---|---|---|---|---|---|---|---|---|---|
| | | | | | | | TP | PIN | TERMINATOR | SEAL | REMARKS | TP | PIN | TERMINATOR | SEAL | REMARKS | | |
| 504 | WHT | 18 | GEL | 8173084300 | 114 | RH_COMM_MOD_B | 9 | 78264084C6 | | | | DRM_SOL_2WC_A1 | 1 | 78264084C6 | | | | |
| 505 | WHT | 18 | GEL | 8173084300 | 154 | DRM_TURN_SW_1 | 1 | 13451914U1 | | | | RH_COMM_MOD_A | 25 | 78264084C6 | | | | |
| 506 | WHT | 18 | GEL | 8173084300 | 158 | LH6_COMM_A | M | 78264084C6 | | | | RH_COMM_MOD_B | 13 | 78264084C6 | | | | |
| 633 | WHT | 18 | GEL | 8173084300 | 117 | RH_COMM_MOD_B | 10 | 78264084C6 | | | | BOOM_LOCK_SOL | 13 | 78264084C6 | | | | |
| 845 | WHT | 18 | GEL | 8173091300 | 139 | RLY_COMM_1 | 1 | 78264084C6 | | | | LH6_COMM_A | B | 78264084C6 | | | | |
| 1134 | WHT | 18 | GEL | 8173084300 | 12 | SPL_123 | 1 | SPL_LCC | | | | RH_COMM_MOD_A | 1 | 78264084C6 | | | | |
| 1148 | WHT | 18 | GEL | 8173084300 | 53 | AUX_DRC_SOL_2 | 1 | 78264084C6 | | | | SPL_123 | 2 | SPL_LCC | | | | |
| 1134 | WHT | 18 | GEL | 8173084300 | 36 | AUX_DRC_SOL_1 | 1 | 78264084C6 | | | | SPL_123 | 2 | SPL_LCC | | | | |
| 787 | WHT | 18 | GEL | 8173084300 | 115 | RH_COMM_MOD_B | 7 | 78264084C6 | | | | PARK_BRAKE_SOL | 1 | 78264084C6 | | | | |
| 792 | WHT | 18 | GEL | 8173084300 | 141 | RH_STICK_SOL | 1 | 78264084C6 | | | | FRONT_COMM_MOD_B | 5 | 78264084C6 | | | | |
| 793 | WHT | 18 | GEL | 8173084300 | 139 | LH_STICK_SOL | 1 | 78264084C6 | | | | FRONT_COMM_MOD_B | 6 | 78264084C6 | | | | |
| 834 | WHT | 18 | GEL | 8173091300 | 215 | BOOM_OIL_COOL_SOL | 1 | 78264084C6 | | | | FRONT_COMM_MOD_B | 13 | 78264084C6 | | | | |
| 842 | WHT | 18 | GEL | 8173084300 | 156 | RH_COMM_MOD_A | 39 | 78264084C6 | | | | RH_STICK_IND_SW | 2 | 78264084C6 | | | | |
| 1483 | WHT | 14 | GEL | 8173084300 | 264 | FRONT_COMM_MOD_B | 11 | 78264084C6 | | | | LH6_COMM_A | 5 | 78264084C6 | | | | |
| 1160 | WHT | 14 | GEL | 8173084300 | 128 | LH6_COMM_A | C | 78264084C6 | | | | SWING_COMM_1 | 2 | 78264084C6 | | | | |
| 1253 | WHT | 16 | GEL | 8173084300 | 46 | TURN_SW_1 | 1 | 78264084C6 | | | | BOOM_LOCK_COMM | B | 78264084C6 | | | | |
| 1274 | TAN | 6 | SJO | 8173084300 | 73 | SWING_COMM_5 | 1 | 13452421U1 | | | | TURN_SENSOR | 2 | 78264084C6 | | | | |
| 1280 | WHT | 16 | GEL | 8173084300 | 200 | LH6_COMM_A | B | 78264084C6 | | | | SPL_123 | 1 | SPL_LCC | | | | |
| 12830 | WHT | 18 | GEL | 8173084300 | 92 | LH6_COMM_A | T | 78264084C6 | | | | SPL_123 | 2 | SPL_LCC | | | | |
| 1283B | WHT | 18 | GEL | 8173084300 | 40 | RLY_COMM_1 | 4 | 78264084C6 | | | | SPL_123 | 2 | SPL_LCC | | | | |
| 1283K | WHT | 18 | GEL | 8173084300 | 70 | TURN_BRK | A410 | 78271084C6 | 78264084C6 | | | SPL_123 | 2 | SPL_LCC | | | | |
| 1299 | WHT | 18 | GEL | 8173084300 | 49 | LH6_COMM_A | B | 78264084C6 | | | | WIT_SENSOR | 1 | 78264084C6 | | | | |
| 1359 | WHT | 12 | GEL | 8173084300 | 204 | TURN_1 | 1 | 13452519U1 | | | | TURN_BRK | A401 | 78271084C6 | 78264084C6 | | | |
| 1384 | WHT | 14 | GEL | 8173084300 | 142 | FRONT_COMM_MOD_B | 8 | 78264084C6 | | | | LOAD_RACK_SOL | 1 | 78264084C6 | | | | |
| 1414D | WHT | 14 | GEL | 8173029300 | 5 | FRONT_COMM_MOD_A | 10 | 78264084B7 | | | | SPL_1414-1 | 1 | SPL_LCC | | | | |
| 1414E | WHT | 14 | GEL | 8173029300 | 5 | FRONT_COMM_MOD_A | 11 | 78264084B7 | | | | SPL_1414-1 | 1 | SPL_LCC | | | | |
| 1414C | WHT | 14 | GEL | 8173029300 | 5 | FRONT_COMM_MOD_A | 15 | 78264084B7 | | | | SPL_1414-1 | 1 | SPL_LCC | | | | |
| 1414F | WHT | 14 | GEL | 8173029300 | 5 | FRONT_COMM_MOD_A | 16 | 78264084B7 | | | | SPL_1414-1 | 1 | SPL_LCC | | | | |
| 1414H | WHT | 14 | GEL | 8173029300 | 5 | FRONT_COMM_MOD_A | 20 | 78264084B7 | | | | SPL_1414-1 | 1 | SPL_LCC | | | | |
| 1414K | WHT | 14 | GEL | 8173029300 | 15 | FRONT_COMM_MOD_B | 3 | 78264084B7 | | | | SPL_1414-2 | 1 | SPL_LCC | | | | |
| 1414G | WHT | 14 | GEL | 8173029300 | 16 | FRONT_COMM_MOD_B | 18 | 78264084B7 | | | | SPL_1414-2 | 1 | SPL_LCC | | | | |
| 1414M | WHT | 14 | GEL | 8173029300 | 10 | FRONT_COMM_MOD_B | 19 | 78264084B7 | | | | SPL_1414-2 | 1 | SPL_LCC | | | | |
| 1414J | WHT | 12 | GEL | 8173029300 | 10 | FRONT_COMM_MOD_B | 10 | 78264084B7 | 78264084C6 | | | FREE_BRK | A05 | 78262084B3 | 78264084C6 | | | |
| 1414K | WHT | 14 | GEL | 8173029300 | 191 | FRONT_COMM_MOD_B | 1 | SPL_LCC | | | | SPL_1414-3 | 1 | SPL_LCC | | | | |
| 1414L | WHT | 14 | GEL | 8173029300 | 10 | FRONT_COMM_MOD_B | 2 | SPL_LCC | | | | SPL_1414-3 | 2 | SPL_LCC | | | | |
| 1432A | WHT | 14 | GEL | 8173029300 | 16 | RH_COMM_MOD_A | 10 | 78264084B7 | | | | SPL_1432-1 | 1 | SPL_LCC | | | | |
| 1432B | WHT | 14 | GEL | 8173029300 | 15 | RH_COMM_MOD_A | 11 | 78264084B7 | | | | SPL_1432-1 | 1 | SPL_LCC | | | | |
| 1432C | WHT | 14 | GEL | 8173029300 | 15 | RH_COMM_MOD_A | 15 | 78264084B7 | | | | SPL_1432-1 | 1 | SPL_LCC | | | | |
| 1432D | WHT | 14 | GEL | 8173029300 | 9 | RH_COMM_MOD_B | 10 | 78264084B7 | | | | SPL_1432-1 | 1 | SPL_LCC | | | | |
| 1432E | WHT | 14 | GEL | 8173029300 | 49 | SPL_1432-2 | 1 | SPL_LCC | | | | FREE_BRK | A03 | 78262084B3 | 78264084C6 | | | |
| 1432F | WHT | 14 | GEL | 8173029300 | 17 | SPL_1432-2 | 1 | SPL_LCC | | | | SPL_1432-1 | 2 | SPL_LCC | | | | |
| 1432G | WHT | 14 | GEL | 8173029300 | 17 | RH_COMM_MOD_A | 16 | 78264084B7 | | | | SPL_1433-1 | 1 | SPL_LCC | | | | |
| 1432H | WHT | 14 | GEL | 8173029300 | 17 | RH_COMM_MOD_A | 20 | 78264084B7 | | | | SPL_1433-1 | 1 | SPL_LCC | | | | |
| 1433K | WHT | 14 | GEL | 8173029300 | 14 | RH_COMM_MOD_B | 3 | 78264084B7 | | | | SPL_1433-1 | 1 | SPL_LCC | | | | |
| 1433G | WHT | 14 | GEL | 8173029300 | 14 | RH_COMM_MOD_B | 19 | 78264084B7 | | | | SPL_1433-1 | 1 | SPL_LCC | | | | |
| 1433L | WHT | 12 | GEL | 8173084300 | 7 | SPL_1433-2 | 1 | SPL_LCC | | | | FREE_BRK | A04 | 78262084B3 | 78264084C6 | | | |
| 1433F | WHT | 18 | GEL | 8173084300 | 49 | SPL_1433-2 | 1 | SPL_LCC | | | | SPL_1433-1 | 2 | SPL_LCC | | | | |
| 1359 | WHT | 18 | GEL | 8173084300 | 297 | FRONT_COMM_MOD_B | 9 | 78264084C6 | | | | LH6_COMM_A | B | 78264084C6 | | | | |
| 1949 | WHT | 16 | GEL | 8173091300 | 77 | RLY_COMM_1 | A42 | 78264084C6 | | | | FRONT_COMM_MOD_A | 3 | 78264084C6 | | | | |
| 1674G | WHT | 14 | GEL | 8173029300 | 25 | SPL_1674 | 1 | SPL_LCC | | | | SWING_COMM_1 | 1 | 78264084C6 | | | | |
| 1674H | WHT | 14 | GEL | 8173029300 | 55 | FREE_BRK | NA2 | 78271084C6 | 78264084C6 | | | SPL_1674 | 2 | SPL_LCC | | | | |
| 1674K | WHT | 16 | GEL | 8173029300 | 25 | RLY_COMM_1 | 5 | 78264084C6 | | | | SPL_1674 | 2 | SPL_LCC | | | | |
| 1674L | WHT | 18 | GEL | 8173084300 | 46 | MASTER_MOD_BLK | 1 | 78261084B6 | | | | SPL_1674 | 2 | SPL_LCC | | | | |
| 1674M | WHT | 18 | GEL | 8173084300 | 43 | MASTER_MOD_GRY | A12 | 78261084B5 | | | | SPL_1674 | 2 | SPL_LCC | | | | |
| 1590 | WHT | 16 | GEL | 8173091300 | 73 | FREE_BRK | A007 | 78271084C6 | 78264084C6 | | | BATT_DISC | 1 | 13452641U1 | | | | |
| 1681A | WHT | 18 | GEL | 8173084300 | 86 | SPL_1681A | 1 | SPL_LCC | | | | FRONT_COMM_MOD_A | 23 | 78264084B7 | | | | |
| 1681G | WHT | 18 | GEL | 8173084300 | 85 | SPL_1681A | 1 | SPL_LCC | | | | FRONT_COMM_MOD_A | 22 | 78264084B7 | | | | |
| 1681A | WHT | 18 | GEL | 8173084300 | 213 | SPL_1681A | 1 | SPL_LCC | | | | RH_COMM_MOD_A | 22 | 78264084B7 | | | | |
| 1845 | WHT | 18 | GEL | 8173084300 | 65 | FREE_BRK | NA1 | 78271084C6 | 78264084C6 | | | MASTER_MOD_BLK | 2 | 78261084B6 | | | | |
| 1846 | WHT | 14 | GEL | 8173029300 | 48 | FREE_BRK | NA1 | 78271084C6 | 78264084C6 | | | FREE_2 | 1 | 13452731U1 | | | | |
| 2164A | WHT | 18 | GEL | 8173084300 | 128 | SPL_2164 | 1 | SPL_LCC | | | | LH6_COMM_A | M | 78264084C6 | | | | |
| 2164B | WHT | 18 | GEL | 8173084300 | 34 | SPL_2164 | 2 | SPL_LCC | | | | FREE_BRK | A04 | 78262084C6 | 78264084C6 | | | |
| 2164K | WHT | 18 | GEL | 8173084300 | 36 | RH_COMM_MOD_B | 16 | 78264084C6 | | | | FRONT_COMM_MOD_A | 27 | 78261084B4 | | | | |
| 2185A | WHT | 18 | GEL | 8173084300 | 217 | SPL_1815 | 1 | SPL_LCC | | | | RH_COMM_MOD_A | 22 | 78261084B4 | | | | |
| 2845 | WHT | 18 | GEL | 8173084300 | 65 | FREE_BRK | NA1 | 78271084C6 | 78264084C6 | | | MASTER_MOD_BLK | 2 | 78261084B6 | | | | |
| 2846 | WHT | 14 | GEL | 8173029300 | 48 | FREE_BRK | NA1 | 78271084C6 | 78264084C6 | | | FREE_2 | 1 | 13452731U1 | | | | |
| 2164A | WHT | 18 | GEL | 8173084300 | 128 | SPL_2164 | 1 | SPL_LCC | | | | LH6_COMM_A | M | 78264084C6 | | | | |
| 2164B | WHT | 18 | GEL | 8173084300 | 34 | SPL_2164 | 2 | SPL_LCC | | | | FREE_BRK | A04 | 78262084C6 | 78264084C6 | | | |
| 2164K | WHT | 18 | GEL | 8173084300 | 36 | RH_COMM_MOD_B | 16 | 78264084C6 | | | | FRONT_COMM_MOD_A | 27 | 78261084B4 | | | | |
| 2801A | WHT | 16 | GEL | 8173091300 | 4 | SPL_501-10 | 1 | SPL_LCC | | | | MODULE_DIAG_COMM | 1 | 13499002U1 | | | | |
| 5803 | WHT | 16 | GEL | 8173091300 | 3 | SPL_51-9 | 1 | SPL_LCC | | | | SWING_COMM_2 | 5 | 78263084B4 | | | | |
| 5807 | WHT | 18 | GEL | 8173084300 | 3 | SPL_501-1 | C | 78263084B4 | | | | LH6_COMM_B | C | 78263084B4 | | | | |
| 5806 | WHT | 18 | GEL | 8173084300 | 4 | SWING_COMM_2 | 8 | 78263084B4 | | | | SPL_501-8 | 1 | SPL_LCC | | | | |
| J1939A | TAN | 20 | | 8002U1593 | 31 | SPL_1703 | 1 | SPL_LCC | | | | SWING_COMM_2 | 6 | 78263084B4 | | | | |
| J1939B | GRN | 20 | | 8002U1593 | 31 | SPL_1704 | 1 | SPL_LCC | | | | SWING_COMM_2 | 7 | 78263084B4 | | | | |
| J1939C | WHT | 20 | | 8002U1593 | 31 | SPL_1704 | 1 | SPL_LCC | | | | SPL_501-8 | 2 | SPL_LCC | | | | |
| J1939D | TAN | 20 | | 8002U1593 | 40 | MASTER_MOD_BLK | 10 | 78261084B6 | | | | SPL_1703 | 2 | SPL_LCC | | | | |
| J1939E | GRN | 20 | | 8002U1593 | 40 | MASTER_MOD_GRY | 9 | 78261084B5 | | | | SPL_1704 | 2 | SPL_LCC | | | | |
| J1939F | TAN | 20 | | 8002U1593 | 40 | C5_2 | 1 | | | | | SPL_501-1 | 2 | SPL_LCC | | | | |
| J1939G | WHT | 20 | | 8002U1593 | 29 | J939_TERM_RES | A | 78269021U1 | | | | SPL_1703 | 2 | SPL_LCC | | | | |
| J1939H | GRN | 20 | | 8002U1593 | 29 | J939_TERM_RES | B | 78269021U1 | | | | SPL_1704 | 2 | SPL_LCC | | | | |
| J1939I | WHT | 20 | | 8002U1593 | 29 | C5_3 | C | 78269021U1 | | | | SPL_501-1 | 2 | SPL_LCC | | | | |
| J1939J | TAN | 20 | | 8002U1593 | 42 | MODULE_DIAG_COMM | C | 78269021U1 | | | | SPL_1703 | 2 | SPL_LCC | | | | |
| J1939K | GRN | 20 | | 8002U1593 | 42 | MODULE_DIAG_COMM | D | 78269021U1 | | | | SPL_1704 | 2 | SPL_LCC | | | | |

80054011-14

## WIRE CUT LIST

| CABLE | WIRE | COLOR | SIZE | TYPE | NUMBER | LENGTH (REF) | FROM | | | | | TO | | | | |
|---|---|---|---|---|---|---|---|---|---|---|---|---|---|---|---|---|
| | | | | | | | TP | PIN | TERMINATOR | SEAL | REMARKS | TP | PIN | TERMINATOR | SEAL | REMARKS |
| | 7 | WHT | 18 | GXL | 8977000380 | 43 | RLY_COM_1 | 1 | 7826000626 | | | RR_CONN_MOD_B | 13 | 7826000626 | | |
| | 5 | YLW | 6 | SXL | 8977550480 | 33 | FUSE_3 | 1 | 7345232101 | | | SOLVE1_COIL_3 | 1 | 7689000813 | | |
| | 6 | YLW | 6 | SXL | 8977550480 | 73 | FUSE_4 | 1 | 7345242101 | | | SOLVE1_COIL_4 | 1 | 7826000895 | | |
| | 8A | WHT | 18 | GXL | 8977000380 | 38 | RR_CONN_MOD_B | 2 | 7826000626 | | | SPL_1 | 1 | SPLICE | | |
| | 8B | WHT | 18 | GXL | 8977000380 | 158 | BACKUP_ALARM | 1 | 7826000626 | | | SPL_1 | 2 | SPLICE | | |
| | 8C | WHT | 18 | GXL | 8977000380 | 121 | ENG_CONN_A | A | 7826000626 | | | SPL_7 | 2 | SPLICE | | |
| | 8A | WHT | 14 | GXL | 8977020380 | 164 | SPL_8 | 1 | SPLICE | | | RR_CONN_MOD_A | 40 | 7826000887 | | |
| | 8B | WHT | 16 | GXL | 8977010380 | 115 | SPL_8 | 2 | SPLICE | | | RB_BACKUP_L1 | A | 7892000843 | 7892000254 | |
| | 8C | WHT | 16 | GXL | 8977010380 | 126 | SPL_8 | 2 | SPLICE | | | LB_BACKUP_L1 | A | 7892000843 | 7892000254 | |
| | 8B | WHT | 16 | GXL | 8977010380 | 49 | SPL_8 | 2 | SPLICE | | | RR_CE_LTS | 3 | 7689001782 | | |
| | 8E | WHT | 16 | GXL | 8977010380 | 49 | SPL_8 | 2 | SPLICE | | | LR_CE_LTS | 3 | 7689001782 | | |
| | 9 | WHT | 18 | GXL | 8977000380 | 72 | RR_CONN_MOD_B | 12 | 7826000626 | | | RB_METER_1 | 1 | 7345001444 | | |
| | 13A | WHT | 16 | GXL | 8977010380 | 12 | LT_TURB_LT | 2 | 7826100813 | 7364100052 | | SPL_13-1 | 1 | SPLICE | | |
| | 13B | WHT | 16 | GXL | 8977010380 | 12 | RT_TURB_LT | 2 | 7826100813 | 7364100052 | | SPL_13-2 | 1 | SPLICE | | |
| | 13C | WHT | 16 | GXL | 8977010380 | 102 | SPL_13-3 | 1 | SPLICE | | | SPL_13-1 | 2 | SPLICE | | |
| | 13D | WHT | 16 | GXL | 8977010380 | 19 | SPL_13-3 | 1 | SPLICE | | | CE_LTS_LFT | 2 | 7689001782 | | |
| | 13L | WHT | 16 | GXL | 8977010380 | 19 | SPL_13-3 | 1 | SPLICE | | | CE_LTS_RGT | 2 | 7826000626 | | |
| | 13F | WHT | 16 | GXL | 8977010380 | 59 | RR_CONN_MOD_B | 6 | 7826000626 | | | SPL_13-4 | 1 | SPLICE | | |
| | 136 | WHT | 16 | GXL | 8977010380 | 111 | SPL_13-4 | 1 | SPLICE | | | SPL_13-3 | 2 | SPLICE | | |
| | 13H | WHT | 16 | GXL | 8977010380 | 119 | SPL_13-5 | 2 | SPLICE | | | LR_STP/TRN/TAIL | 2 | 7826100813 | 7364100052 | |
| | 13J | WHT | 16 | GXL | 8977010380 | 51 | SPL_13-5 | 2 | SPLICE | | | RR_CE_LTS | 4 | 7689001782 | | |
| | 13R | WHT | 16 | GXL | 8977010380 | 98 | SPL_13-4 | 2 | SPLICE | | | SPL_13-5 | 1 | SPLICE | | |
| | 13L | WHT | 16 | GXL | 8977010380 | 51 | SPL_13-5 | 2 | SPLICE | | | LR_CE_LTS | 4 | 7689001782 | | |
| | 13N | WHT | 16 | GXL | 8977010380 | 90 | SPL_13-2 | 2 | SPLICE | | | SPL_13-3 | 1 | SPLICE | | |
| | 13M | WHT | 16 | GXL | 8977010380 | 12 | RF_HBRR_LTS | 1 | 7826000626 | | | SPL_13-2 | 1 | SPLICE | | |
| | 13P | WHT | 16 | GXL | 8977010380 | 12 | LF_HBRR_LTS | 1 | 7826000626 | | | SPL_13-1 | 1 | SPLICE | | |
| | 13R | WHT | 16 | GXL | 8977010380 | 124 | SPL_13-5 | 2 | SPLICE | | | LR_HBRR_LTS | 1 | 7826000626 | | |
| | 13S | WHT | 16 | GXL | 8977010380 | 109 | SPL_13-5 | 2 | SPLICE | | | RR_HBRR_LTS | 1 | 7826000626 | | |
| | 13T | WHT | 16 | GXL | 8977010380 | 108 | SPL_13-5 | 2 | SPLICE | | | RB_STP/TRN/TAIL | 2 | 7826100813 | 7364100052 | |
| | 14A | WHT | 14 | GXL | 8977020380 | 51 | SPL_14 | 1 | SPLICE | | | FRONT_CONN_MOD_B | 10 | 7826000883 | | |
| | 14B | WHT | 16 | GXL | 8977010380 | 20 | SPL_14 | 1 | SPLICE | | | CE_LTS_RGT | 3 | 7826000626 | | |
| | 14C | WHT | 16 | GXL | 8977010380 | 102 | RT_TURB_LT | 3 | 7826100813 | 7364100052 | | SPL_14 | 1 | SPLICE | | |
| | 14D | WHT | 16 | GXL | 8977010380 | 256 | RR_CE_LTS | 1 | 7689001782 | | | SPL_14 | 2 | SPLICE | | |
| | 15A | WHT | 14 | GXL | 8977020380 | 59 | SPL_15 | 1 | SPLICE | | | FRONT_CONN_MOD_B | 9 | 7826000883 | | |
| | 15B | WHT | 16 | GXL | 8977010380 | 116 | LT_TURB_LT | 3 | 7826100813 | 7364100052 | | SPL_15 | 1 | SPLICE | | |
| | 15C | WHT | 16 | GXL | 8977010380 | 27 | SPL_15 | 1 | SPLICE | | | CE_LTS_LFT | 3 | 7689001782 | | |
| | 15D | WHT | 16 | GXL | 8977010380 | 254 | SPL_15 | 2 | SPLICE | | | LR_CE_LTS | 1 | 7689001782 | | |
| | 16 | WHT | 16 | GXL | 8977010380 | 262 | RR_CONN_MOD_B | 5 | 7826000626 | | | RB_STP/TRN/TAIL | 3 | 7826100813 | 7364100052 | |
| | 17 | WHT | 16 | GXL | 8977010380 | 274 | RR_CONN_MOD_B | 4 | 7826000626 | | | LR_STP/TRN/TAIL | 3 | 7826100813 | 7364100052 | |
| | 25 | WHT | 18 | GXL | 8977000380 | 161 | ENG_CONN_A | C | 7826000626 | | | RR_CONN_MOD_A | 34 | 7826000626 | | |
| | 33 | WHT | 18 | GXL | 8977000380 | 116 | PARK_BRAKE_SW | 1 | 7826000626 | | | RR_CONN_MOD_A | 23 | 7826000626 | | |
| | 32 | WHT | 18 | GXL | 8977000380 | 173 | FUEL_LVL_SNDR_1 | 1 | 7345211401 | | | FRONT_CONN_MOD_A | 34 | 7826000626 | | |
| | 41A | WHT | 16 | GXL | 8977010380 | 161 | SPL_41 | 1 | SPLICE | | | RR_CONN_MOD_A | 6 | 7826000626 | | |
| | 41B | WHT | 16 | GXL | 8977010380 | 48 | SPL_41 | 2 | SPLICE | | | RR_CE_LTS | 2 | 7689001782 | | |
| | 41C | WHT | 16 | GXL | 8977010380 | 48 | SPL_41 | 2 | SPLICE | | | LR_CE_LTS | 2 | 7689001782 | | |
| | 51A | WHT | 16 | GXL | 8977010380 | 104 | GROUND_SPLICE_1 | 1 | 7826000626 | | | RT_TURB_LT | 1 | 7826100813 | 7364100052 | |
| | 51B | WHT | 16 | GXL | 8977010380 | 103 | GROUND_SPLICE_1 | 2 | 7826000626 | | | RGT_HL_HI_BM | B | 7892000843 | 7892000254 | |
| | 51C | WHT | 16 | GXL | 8977010380 | 115 | GROUND_SPLICE_1 | 3 | 7826000626 | | | LFT_HL_HI_BM | B | 7892000843 | 7892000254 | |
| | 51D | WHT | 16 | GXL | 8977010380 | 112 | GROUND_SPLICE_1 | 4 | 7826000626 | | | LT_TURB_LT | 1 | 7826100813 | 7364100052 | |
| | 51E | WHT | 16 | GXL | 8977010380 | 30 | GROUND_SPLICE_1 | 5 | 7826000626 | | | CE_LTS_LFT | 4 | 7689001782 | | |
| | 51F | WHT | 16 | GXL | 8977010380 | 30 | GROUND_SPLICE_1 | 6 | 7826000626 | | | CE_LTS_RGT | 4 | 7826000626 | | |
| | 51G | WHT | 12 | GXL | 8977030380 | 119 | FRM_GND_2 | 1 | 7345241901 | | | SPL_51-1 | 2 | SPLICE | | |
| | 51H | WHT | 18 | GXL | 8977000380 | 43 | GROUND_SPLICE_1 | 7 | 7826000626 | | | RF_O/R_EXT_SOL | 2 | 7826000626 | | |
| | 51J | WHT | 18 | GXL | 8977000380 | 40 | GROUND_SPLICE_1 | 11 | 7826000626 | | | RT_O/R_STAB_SOL | 2 | 7826000626 | | |
| | 51R | WHT | 18 | GXL | 8977000380 | 43 | GROUND_SPLICE_1 | 10 | 7826000626 | | | LT_O/R_STAB_SOL | 2 | 7826000626 | | |
| | 51L | WHT | 18 | GXL | 8977000380 | 43 | GROUND_SPLICE_1 | 12 | 7826000626 | | | LF_O/R_EXT_SOL | 2 | 7826000626 | | |
| | 51M | WHT | 14 | GXL | 8977020380 | 16 | SPL_51-1 | 1 | SPLICE | | | GROUND_SPLICE_1 | 9 | 7826000883 | | |
| | 51N | WHT | 18 | GXL | 8977000380 | 49 | LOAD_SNSR_SOL | 2 | 7826000626 | | | SPL_51-2 | 1 | SPLICE | | |
| | 51P | WHT | 16 | GXL | 8977010380 | 49 | SPL_51-2 | 1 | SPLICE | | | O/R_RET_SOL | 2 | 7826000626 | | |
| | 51Q | WHT | 16 | GXL | 8977010380 | 124 | FRM_GND_8 | 1 | 7345241901 | | CRIMP W/51BD | XMSN_OIL_COOL_SOL | 2 | 7826000626 | | |
| | 51R | WHT | 14 | GXL | 8977020380 | 16 | GROUND_SPLICE_1 | 8 | 7826000626 | | | SPL_51-1 | 1 | SPLICE | | |
| | 51S | WHT | 16 | GXL | 8977010380 | 45 | SPL_51-2 | 1 | SPLICE | | | O/R_EXT_SOL | 2 | 7826000626 | | |
| | 51T | WHT | 16 | GXL | 8977010380 | 46 | SPL_51-2 | 1 | SPLICE | | | RB_STEER_SOL | 2 | 7826000626 | | |
| | 51V | WHT | 16 | GXL | 8977010380 | 44 | SPL_51-2 | 1 | SPLICE | | | LB_STEER_SOL | 2 | 7826000626 | | |
| | 51D | WHT | 18 | GXL | 8977000380 | 55 | SPL_51-2 | 1 | SPLICE | | | FUEL_LVL_SNDR_2 | 1 | 7345211401 | | |
| | 51Y | WHT | 12 | GXL | 8977030380 | 165 | SPL_51-3 | 2 | SPLICE | | | FRM_GND_7 | 1 | 7345241901 | | CRIMP W/51AJ |
| | 51Z | WHT | 18 | GXL | 8977000380 | 63 | SPL_51-4 | 1 | SPLICE | | | RB_METER_2 | 1 | 7345001444 | | |
| | 51AA | WHT | 18 | GXL | 8977000380 | 56 | SPL_51-6 | 1 | SPLICE | | | FRM_GND_5 | 1 | 7345241701 | | CRIMP W/51BH |
| | 51AB | WHT | 18 | GXL | 8977000380 | 51 | MASTER_MOD_BLK | 11 | 7826100816 | | | SPL_51-6 | 2 | SPLICE | | |
| | 51AC | WHT | 18 | GXL | 8977000380 | 52 | MASTER_MOD_GRY | 11 | 7826100816 | | | SPL_51-6 | 2 | SPLICE | | |
| | 51AD | WHT | 18 | GXL | 8977000380 | 60 | RR_CONN_MOD_A | 13 | 7826000883 | | | SPL_51-6 | 2 | SPLICE | | |
| | 51AE | WHT | 14 | GXL | 8977020380 | 60 | RR_CONN_MOD_A | 31 | 7826000883 | | | SPL_51-6 | 2 | SPLICE | | |
| | 51AF | WHT | 14 | GXL | 8977020380 | 53 | FRONT_CONN_MOD_A | 12 | 7826000883 | | | SPL_51-3 | 1 | SPLICE | | |
| | 51AG | WHT | 18 | GXL | 8977000380 | 38 | AXLE_OSC_SOL_1 | 2 | 7826000626 | | | SPL_51-5 | 2 | SPLICE | | |
| | 51AH | WHT | 18 | GXL | 8977000380 | 20 | PARK_BRAKE_SOL | 2 | 7826000626 | | | SPL_51-5 | 2 | SPLICE | | |
| | 51AJ | WHT | 12 | GXL | 8977030380 | 53 | SPL_51-4 | 2 | SPLICE | | | FRM_GND_7 | 1 | 7345241901 | | CRIMP W/51Y |
| | 51AK | WHT | 18 | GXL | 8977000380 | 28 | DRV_SCL_2ND_HI | 2 | 7826000626 | | | SPL_51-5 | 2 | SPLICE | | |
| | 51AL | WHT | 16 | GXL | 8977010380 | 30 | DIFF_LOCK_SOL | 2 | 7826000626 | | | SPL_51-5 | 2 | SPLICE | | |
| | 51AM | WHT | 18 | GXL | 8977000380 | 73 | GROUND_SPLICE_2 | 12 | 7826000626 | | | RR_STEER_IND_SW | 3 | 7826100816 | | |
| | 51AN | WHT | 16 | GXL | 8977010380 | 65 | GROUND_SPLICE_2 | 1 | 7826000626 | | | BACKUP_ALARM | 2 | 7826000626 | | |
| | 51AP | WHT | 18 | GXL | 8977000380 | 55 | GROUND_SPLICE_2 | 2 | 7826000626 | | | RR_O/R_EXT_SOL | 2 | 7826000626 | | |

| CABLE | WIRE | COLOR | SIZE | TYPE | NUMBER | LENGTH (REF) | FROM | | | | | TO | | | | |
|---|---|---|---|---|---|---|---|---|---|---|---|---|---|---|---|---|
| | | | | | | | TP | PIN | TERMINATOR | SEAL | REMARKS | TP | PIN | TERMINATOR | SEAL | REMARKS |
| | 51AQ | WHT | 14 | GXL | 8977020380 | 53 | FRONT_CONN_MOD_A | 31 | 7826000087 | | | SPL_51-3 | 1 | SPLICE | | |
| | 51AR | WHT | 18 | GXL | 8977000380 | 53 | GROUND_SPLICE_2 | 3 | 7826000626 | | | RR_O/R_STAB_SOL | 2 | 7826000626 | | |
| | 51AS | WHT | 18 | GXL | 8977000380 | 53 | GROUND_SPLICE_2 | 4 | 7826000626 | | | LR_O/R_STAB_SOL | 2 | 7826000626 | | |
| | 51AT | WHT | 18 | GXL | 8977000380 | 55 | GROUND_SPLICE_2 | 5 | 7826000626 | | | LR_O/R_EXT_SOL | 2 | 7826000626 | | |
| | 51AU | WHT | 14 | GXL | 8977020380 | 82 | SPL_51-7 | 1 | SPLICE | | | GROUND_SPLICE_2 | 6 | 7826000087 | | |
| | 51AV | WHT | 16 | GXL | 8977010380 | 31 | SPL_51-7 | 2 | SPLICE | | | RR_STP/TRN/TAIL | 1 | 7826100813 | 7364100052 | |
| | 51AB | WHT | 16 | GXL | 8977010380 | 39 | SPL_51-7 | 2 | SPLICE | | | RB_BACKUP_L1 | B | 7892000843 | 7892000254 | |
| | 51AB | WHT | 16 | GXL | 8977010380 | 41 | SPL_51-8 | 2 | SPLICE | | | LR_BACKUP_L1 | B | 7892000843 | 7892000254 | |
| | 51AY | WHT | 14 | GXL | 8977020380 | 55 | FRONT_CONN_MOD_B | 24 | 7826000087 | | | SPL_51-3 | 1 | SPLICE | | |
| | 51AZ | WHT | 18 | GXL | 8977000380 | 49 | SPL_51-3 | 1 | SPLICE | | | SPL_51-10 | 1 | SPLICE | | |
| | 51BD | WHT | 14 | GXL | 8977020380 | 19 | SPL_51-9 | 2 | SPLICE | | | FRM_GND_8 | 1 | 7345241901 | | CRIMP W/51Q |
| | 51BE | WHT | 16 | GXL | 8977010380 | 63 | SPL_51-4 | 1 | SPLICE | | | FUSE_BOX | B02 | 7892100065 | 7892000254 | |
| | 51BF | WHT | 14 | GXL | 8977020380 | 92 | SPL_51-8 | 1 | SPLICE | | | GROUND_SPLICE_2 | F | 7826000087 | | |
| | 51BG | WHT | 14 | GXL | 8977020380 | 100 | FRM_GND_6 | 1 | 7345241901 | | CRIMP W/51BR | GROUND_SPLICE_2 | H | 7826000087 | | |
| | 51BH | WHT | 16 | GXL | 8977010380 | 54 | GROUND_SPLICE_2 | 10 | 7826000626 | | | RB_CE_LTS | 5 | 7689001782 | | |
| | 51BJ | WHT | 16 | GXL | 8977010380 | 54 | GROUND_SPLICE_2 | 9 | 7826000626 | | | LB_CE_LTS | 5 | 7689001782 | | |
| | 51BK | WHT | 16 | GXL | 8977010380 | 32 | SPL_51-8 | 2 | SPLICE | | | LR_STP/TRN/TAIL | 1 | 7826100813 | 7364100052 | |
| | 51BM | WHT | 18 | GXL | 8977000380 | 156 | SPL_51-6 | 1 | SPLICE | | | SPL_51-11 | 1 | SPLICE | | |
| | 51BM | WHT | 14 | GXL | 8977020380 | 100 | GROUND_SPLICE_2 | 11 | 7826000087 | | | FRM_GND_6 | 1 | 7345241901 | | CRIMP W/BG |
| | 51BP | WHT | 16 | GXL | 8977010380 | 38 | AXLE_OSC_SOL_2 | 2 | 7826000626 | | | SPL_51-5 | 2 | SPLICE | | |
| | 51BR | WHT | 12 | GXL | 8977030380 | 38 | FRM_GND_3 | 1 | 7345241901 | | | SPL_51-2 | 2 | SPLICE | | |
| | 51BS | YLW | 6 | SXL | 8977550480 | 15 | FRM_GND_1 | 1 | 7345242101 | | | FRM_GND_4 | 1 | 7345242101 | | |
| | 51BT | WHT | 18 | GXL | 8977000380 | 55 | SPL_51-4 | 1 | SPLICE | | | MODULE_DIAG_CONN | A | 7689100043 | | |
| | 51BU | WHT | 18 | GXL | 8977000380 | 113 | RR_CONN_MOD_B | 24 | 7826000626 | | | FRM_GND_5 | 1 | 7345241701 | | CRIMP W/51AA |
| | 51BV | WHT | 12 | GXL | 8977030380 | 29 | SPL_51-4 | 2 | SPLICE | | | SPL_51-5 | 1 | SPLICE | | |
| | 51CA | WHT | 16 | GXL | 8977010380 | 89 | SPL_51-1 | 1 | SPLICE | | | RT_WHD_LTS | 2 | 7826000626 | | |
| | 51CB | WHT | 16 | GXL | 8977010380 | 102 | SPL_51-1 | 1 | SPLICE | | | LT_WHD_LTS | 2 | 7826000626 | | |
| | 51CC | WHT | 16 | GXL | 8977010380 | 32 | SPL_51-7 | 2 | SPLICE | | | RB_WHD_LTS | 2 | 7826000626 | | |
| | 51CD | WHT | 16 | GXL | 8977010380 | 33 | SPL_51-8 | 2 | SPLICE | | | LB_WHD_LTS | 2 | 7826000626 | | |
| | 51CE | WHT | 18 | GXL | 8977000380 | 30 | RLY_COM_1 | 2 | 7826000626 | | | SPL_51-4 | 2 | SPLICE | | |
| | 51CF | WHT | 16 | GXL | 8977010380 | 99 | ENG_CONN_A | X | 7826000626 | | | SPL_51-4 | 2 | SPLICE | | |
| | 75 | WHT | 18 | GXL | 8977000380 | 81 | FRONT_CONN_MOD_A | 4 | 7826000626 | | | RF_O/R_EXT_SOL | 1 | 7826000626 | | |
| | 76 | WHT | 18 | GXL | 8977000380 | 81 | FRONT_CONN_MOD_A | 2 | 7826000626 | | | LF_O/R_EXT_SOL | 1 | 7826000626 | | |
| | 77 | WHT | 18 | GXL | 8977000380 | 209 | RR_CONN_MOD_A | 2 | 7826000626 | | | RB_O/R_EXT_SOL | 1 | 7826000626 | | |
| | 78 | WHT | 18 | GXL | 8977000380 | 209 | RR_CONN_MOD_A | 4 | 7826000626 | | | LB_O/R_EXT_SOL | 1 | 7826000626 | | |
| | 79 | WHT | 16 | GXL | 8977010380 | 140 | FRONT_CONN_MOD_B | 1 | 7826000626 | | | O/R_EXT_SOL | 1 | 7826000626 | | |
| | 80 | WHT | 16 | GXL | 8977010380 | 144 | O/R_RET_SOL | 1 | 7826000626 | | | FRONT_CONN_MOD_B | 2 | 7826000626 | | |
| | 81 | WHT | 18 | GXL | 8977000380 | 79 | FRONT_CONN_MOD_A | 5 | 7826000626 | | | RF_O/R_STAB_SOL | 1 | 7826000626 | | |
| | 82 | WHT | 18 | GXL | 8977000380 | 79 | FRONT_CONN_MOD_A | 3 | 7826000626 | | | LF_O/R_STAB_SOL | 1 | 7826000626 | | |
| | 83 | WHT | 18 | GXL | 8977000380 | 201 | RR_CONN_MOD_A | 3 | 7826000626 | | | RR_O/R_STAB_SOL | 1 | 7826000626 | | |
| | 84 | WHT | 18 | GXL | 8977000380 | 201 | RR_CONN_MOD_A | 5 | 7826000626 | | | LR_O/R_STAB_SOL | 1 | 7826000626 | | |
| | 89 | WHT | 16 | GXL | 8977010380 | 158 | ENG_CONN_A | F | 7826000626 | | | RB_CONN_MOD_B | 1 | 7826000626 | | |
| | 105A | WHT | 12 | GXL | 8977030380 | 38 | PWR_DIS_1 | 1 | 7345191901 | | | FUSE_BOX | AA03 | 7892100063 | 7892000256 | |
| | 105B | WHT | 12 | GXL | 8977030380 | 37 | PWR_DIS_2 | 1 | 7345191901 | | | FUSE_BOX | AA04 | 7892100063 | 7892000256 | |
| | 105C | WHT | 12 | GXL | 8977030380 | 36 | PWR_DIS_3 | 1 | 7345191901 | | | FUSE_BOX | AA05 | 7892100063 | 7892000256 | |
| | 105D | WHT | 16 | GXL | 8977010380 | 36 | PWR_DIS_4 | 1 | 7345191701 | | | FUSE_BOX | AA06 | 7892100065 | 7892000254 | |
| | 126A | WHT | 18 | GXL | 8977000380 | 56 | FT_DIFF_LOCK_SW | B | 7892000252 | 7892100003 | | SPL_126-1 | 2 | SPLICE | | |
| | 126B | WHT | 18 | GXL | 8977000380 | 67 | SPL_126-1 | 1 | SPLICE | | | FRONT_CONN_MOD_A | I | 7826000626 | | |
| | 126C | WHT | 18 | GXL | 8977000380 | 109 | SPL_126-1 | 2 | SPLICE | | | SPL_126-2 | 2 | SPLICE | | |
| | 126D | WHT | 18 | GXL | 8977000380 | 86 | SPL_126-2 | 1 | SPLICE | | | RR_STEER_IND_SW | 1 | 7826100816 | | |
| | 126E | WHT | 18 | GXL | 8977000380 | 153 | SPL_126-1 | 2 | SPLICE | | | RT_HTD_OIL_TMP_SW | B | 7826000626 | | |
| | 126F | WHT | 18 | GXL | 8977000380 | 46 | PARK_BRAKE_SW | 2 | 7826000626 | | | SPL_126-2 | 1 | SPLICE | | |
| | 126G | WHT | 18 | GXL | 8977000380 | 107 | SPL_126-2 | 1 | SPLICE | | | RR_DIFF_LOCK_SW | B | 7892000252 | 7892100003 | |
| | 126H | WHT | 18 | GXL | 8977000380 | 111 | XMSN_TEMP_SW_2 | 1 | 7345191401 | | | SPL_126-2 | 2 | SPLICE | | |
| | 126J | WHT | 16 | GXL | 8977010380 | 89 | ENG_CONN_A | P | 7826000626 | | | SPL_126-2 | 1 | SPLICE | | |
| | 126K | WHT | 16 | GXL | 8977010380 | 62 | SPL_126-1 | 1 | SPLICE | | | SPL_126-3 | 1 | SPLICE | | |
| | 126L | WHT | 18 | GXL | 8977000380 | 142 | SPL_126-2 | 1 | SPLICE | | | SPL_126-4 | 1 | SPLICE | | |
| | 133A | WHT | 16 | GXL | 8977010380 | 88 | RGT_HL_HI_BM | A | 7892000843 | 7892000254 | | SPL_133 | 1 | SPLICE | | |
| | 133B | WHT | 16 | GXL | 8977010380 | 55 | FRONT_CONN_MOD_A | 48 | 7826000626 | | | SPL_133 | 2 | SPLICE | | |
| | 133C | WHT | 16 | GXL | 8977010380 | 19 | CE_LTS_RGT | 1 | 7826000626 | | | SPL_133 | 2 | SPLICE | | |
| | 134A | WHT | 16 | GXL | 8977010380 | 89 | LFT_HL_HI_BM | A | 7892000843 | 7892000254 | | SPL_134 | 1 | SPLICE | | |
| | 134B | WHT | 16 | GXL | 8977010380 | 56 | FRONT_CONN_MOD_A | 1 | 7826000626 | | | SPL_134 | 2 | SPLICE | | |
| | 134C | WHT | 16 | GXL | 8977010380 | 21 | CE_LTS_LFT | 1 | 7689001782 | | | SPL_134 | 2 | SPLICE | | |
| | 344A | WHT | 12 | GXL | 8977030380 | 143 | SPL_344 | 1 | SPLICE | | | FUSE_BOX | A01 | 7892100063 | 7892000256 | |
| | 344B | WHT | 12 | GXL | 8977030380 | 21 | ENG_CONN_A | B | 7826000092 | | | SPL_344 | 2 | SPLICE | | |
| | 344C | WHT | 12 | GXL | 8977030380 | 21 | ENG_CONN_A | D | 7826000092 | | | SPL_344 | 2 | SPLICE | | |
| | 367 | WHT | 18 | GXL | 8977000380 | 161 | ENG_CONN_A | J | 7826000626 | | | RR_CONN_MOD_A | 8 | 7826000626 | | |
| | 368 | WHT | 18 | GXL | 8977000380 | 161 | ENG_CONN_A | R | 7826000626 | | | RR_CONN_MOD_A | 9 | 7826000626 | | |
| | 371 | WHT | 18 | GXL | 8977000380 | 161 | ENG_CONN_A | L | 7826000626 | | | RR_CONN_MOD_A | I | 7826000626 | | |
| | 440A | WHT | 18 | GXL | 8977000380 | 122 | FT_DIFF_LOCK_SW | A | 7892000252 | 7892100003 | | FRONT_CONN_MOD_A | 24 | 7826000626 | | |
| | 440B | WHT | 18 | GXL | 8977000380 | 178 | RR_CONN_MOD_A | 24 | 7826000626 | | | RR_DIFF_LOCK_SW | A | 7892000252 | 7892100003 | |
| | 445 | WHT | 18 | GXL | 8977000380 | 122 | RR_CONN_MOD_A | 28 | 7826000626 | | | RT_HTD_OIL_TMP_SW | C | 7826000626 | | |

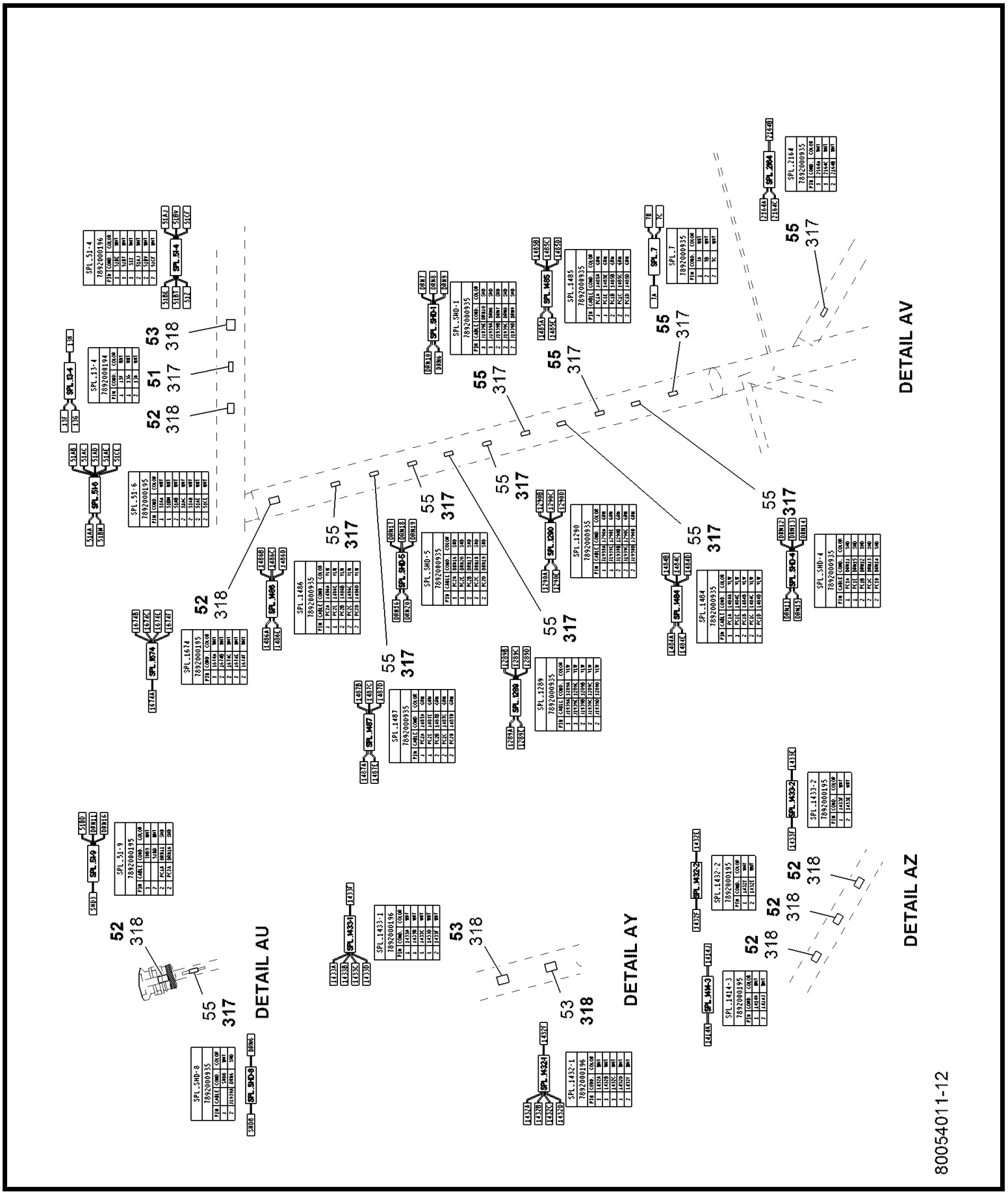


80054011

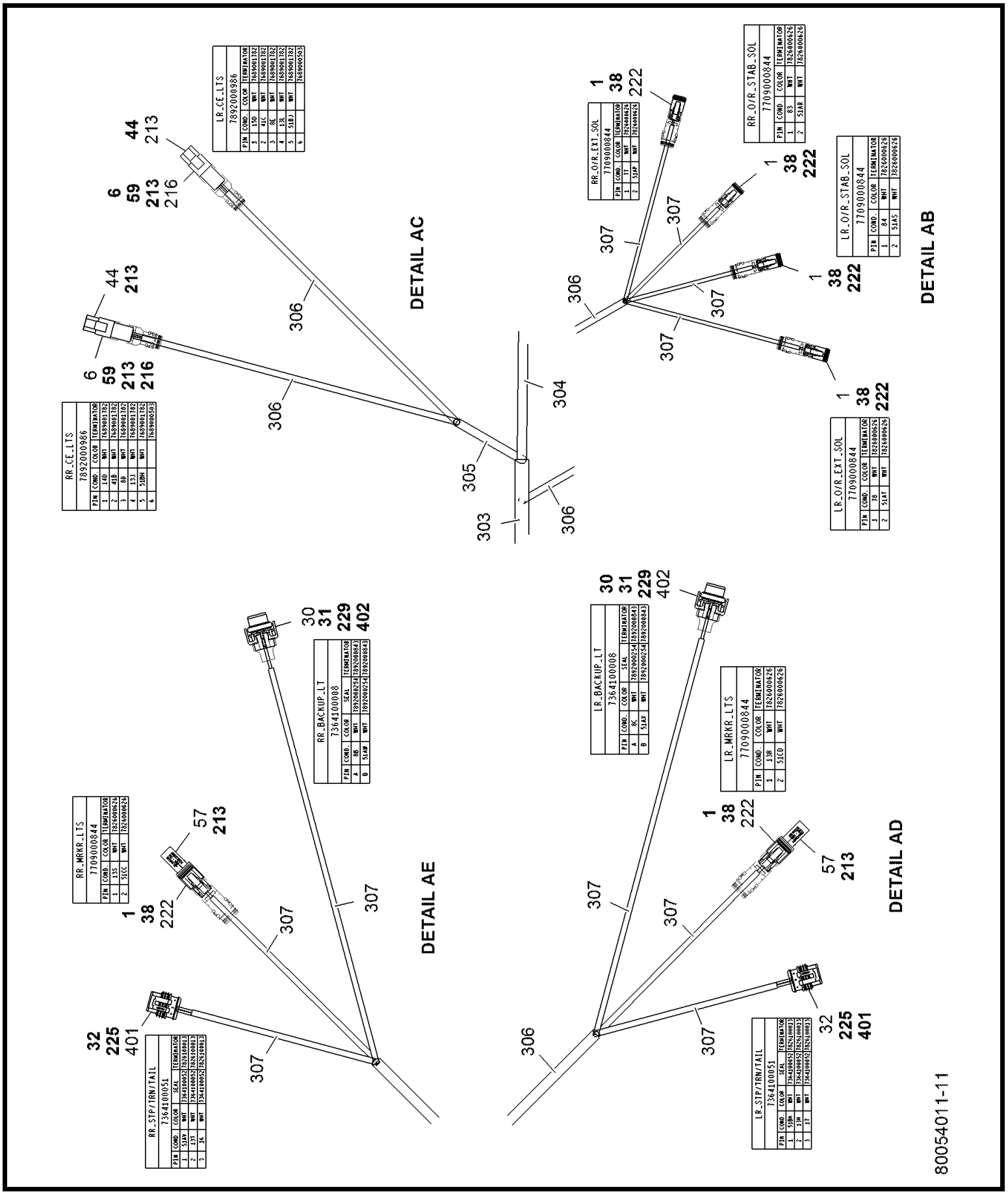
DETAIL AC
DETAIL AB
DETAIL AE
DETAIL AD
RR_CE_LTS
7892000986
LR_CE_LTS
7892000986
RR_O/R_EXT_SOL
7709000844
LR_O/R_EXT_SOL
7709000844
RR_O/R_STAB_SOL
7709000844
LR_O/R_STAB_SOL
7709000844
RR_MRKR_LTS
7709000844
RR_BACKUP_LT
7364100008
LR_BACKUP_LT
7364100008
LR_MRKR_LTS
7709000844
RR_STP/TRN/TAIL
7364100051
LR_STP/TRN/TAIL
7364100051
80054011-11

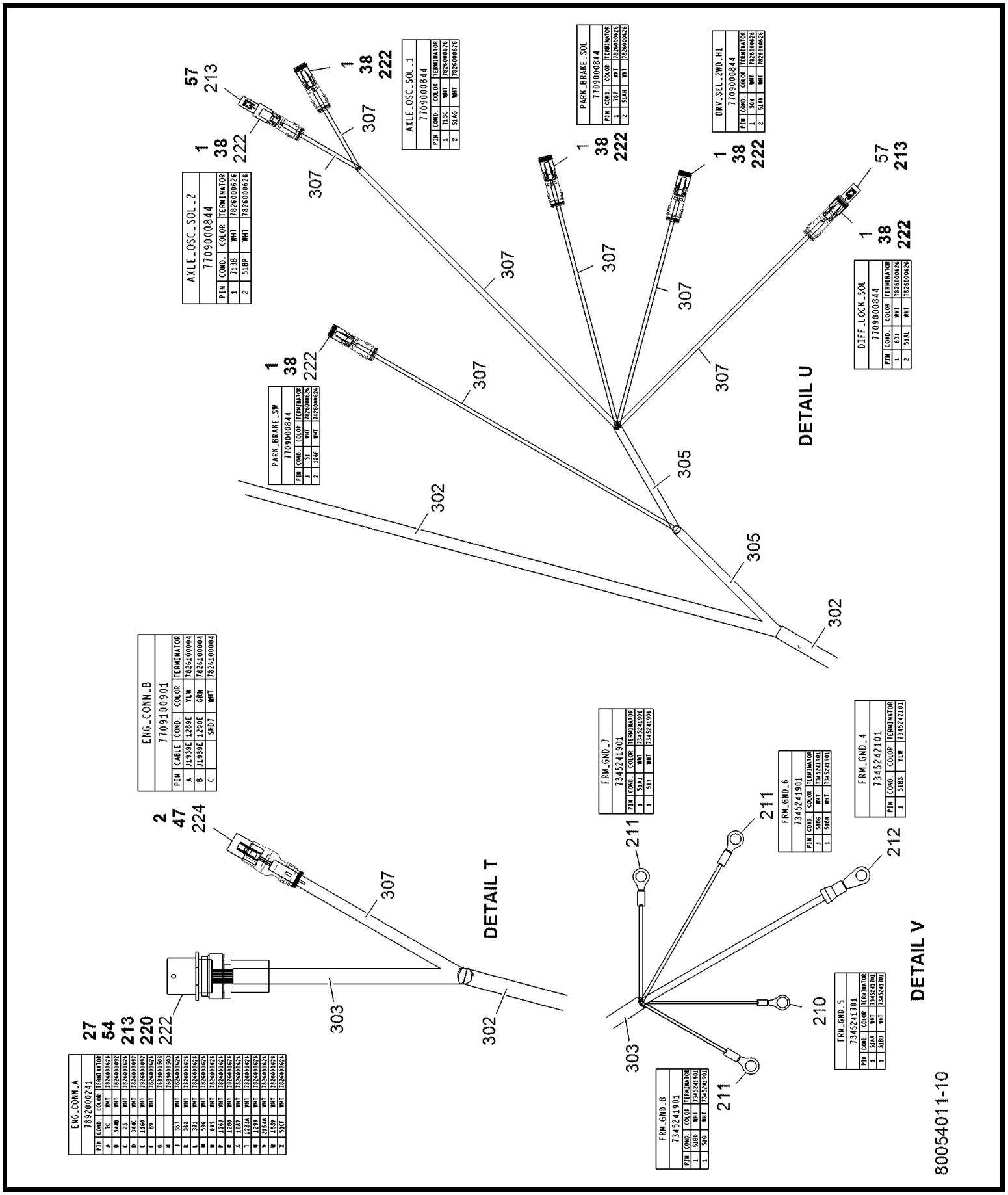
ENG_CONN_A
7692000241
PIN COND. COLOR TERMINATOR
A 1C WHT 7826000626
B 3448 WHT 7826000924
C 25 WHT 7826000624
D 3446 WHT 7826000924
E 1160 WHT 7826000624
F 69 WHT 7826000624
G
H
J 367 WHT 7826000626
K 868 WHT 7826000626
L 331 WHT 7826000626
M 506 WHT 7826000626
N 645 WHT 7826000626
P 1241 WHT 7826000626
R 1286 WHT 7826000626
S 1087 WHT 7826000626
T 12834 WHT 7826000626
U 1295 WHT 7826000626
V 21446 WHT 7826000626
W 1559 WHT 7826000626
X 525E WHT 7826000626
27
54
213
220
222
ENG_CONN_B
7709100901
PIN CABLE COND. COLOR TERMINATOR
A J1939E 1289E YLW 7826100004
B J1939E 1290E GRN 7826100004
C SHD7 WHT 7826100004
2
47
224
DETAIL T
303
302
307
FRM_GND_8
7345241901
PIN COND. COLOR TERMINATOR
1 518D WHT 7345241901
1 51D WHT 7345241901
FRM_GND_7
7345241901
PIN COND. COLOR TERMINATOR
1 51AJ WHT 7345241901
1 51T WHT 7345241901
211
FRM_GND_6
7345241901
PIN COND. COLOR TERMINATOR
1 518G WHT 7345241901
1 518H WHT 7345241901
FRM_GND_5
7345241701
PIN COND. COLOR TERMINATOR
1 51A WHT 7345241701
1 51BD WHT 7345241701
210
FRM_GND_4
7345242101
PIN COND. COLOR TERMINATOR
1 518S YLW 7345242101
212
DETAIL V
AXLE_OSC_SOL_2
7709000844
PIN COND. COLOR TERMINATOR
1 713B WHT 7826000626
2 51BP WHT 7826000626
AXLE_OSC_SOL_1
7709000844
PIN COND. COLOR TERMINATOR
1 713C WHT 7826000626
2 514G WHT 7826000626
PARK_BRAKE_SW
7709000844
PIN COND. COLOR TERMINATOR
1 51 WHT 7826000626
2 1764 WHT 7826000626
PARK_BRAKE_SOL
7709000844
PIN COND. COLOR TERMINATOR
1 787 WHT 7826000626
2 514M WHT 7826000626
DRV_SEL_2WD_HI
7709000844
PIN COND. COLOR TERMINATOR
1 904 WHT 7826000626
2 514M WHT 7826000626
DIFF_LOCK_SOL
7709000844
PIN COND. COLOR TERMINATOR
1 631 WHT 7826000626
2 514L WHT 7826000626
1
38
222
57
213
305
DETAIL U
80054011-10

80054011

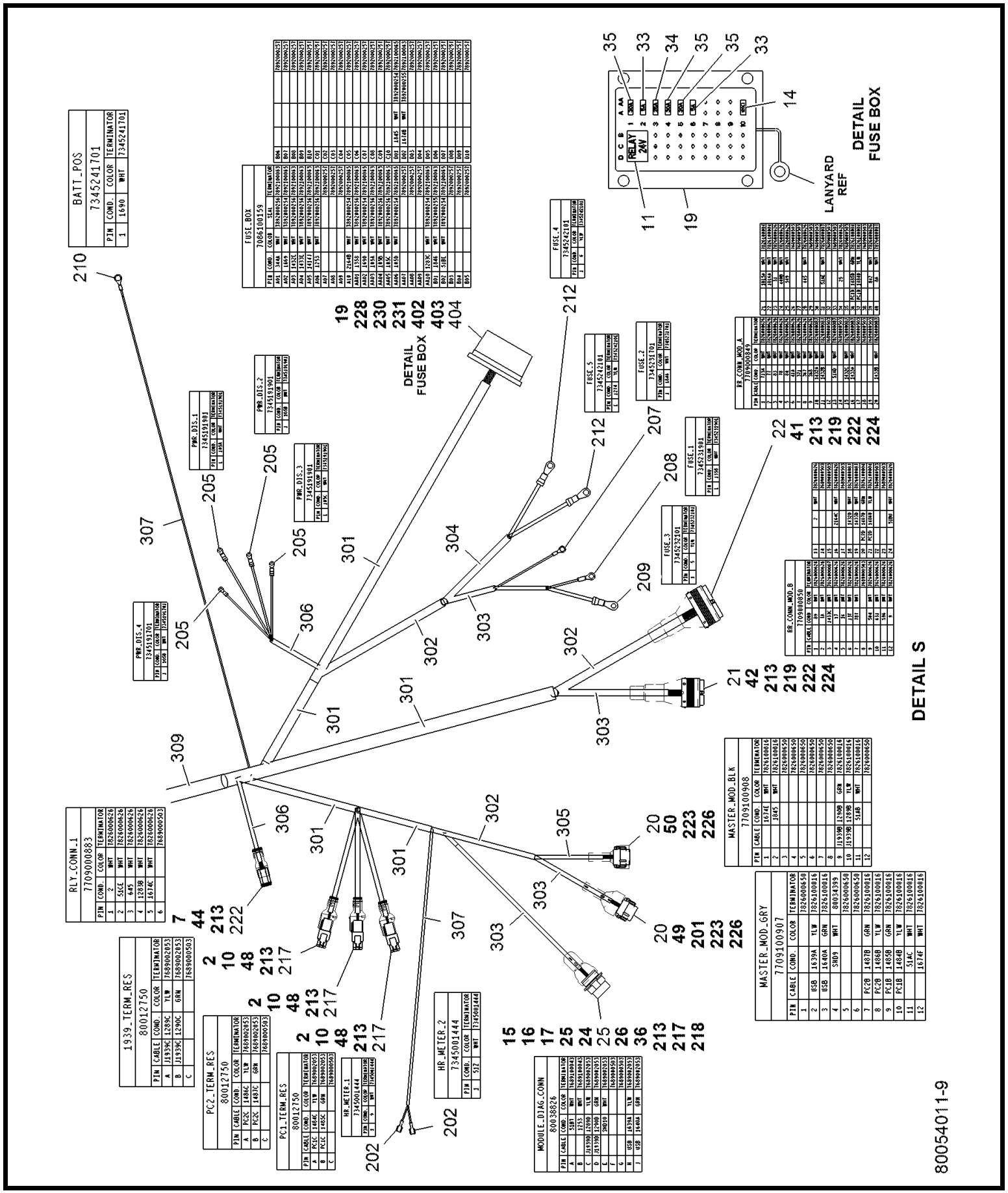
DETAIL S
DETAIL FUSE BOX
LANYARD REF
80054011-9

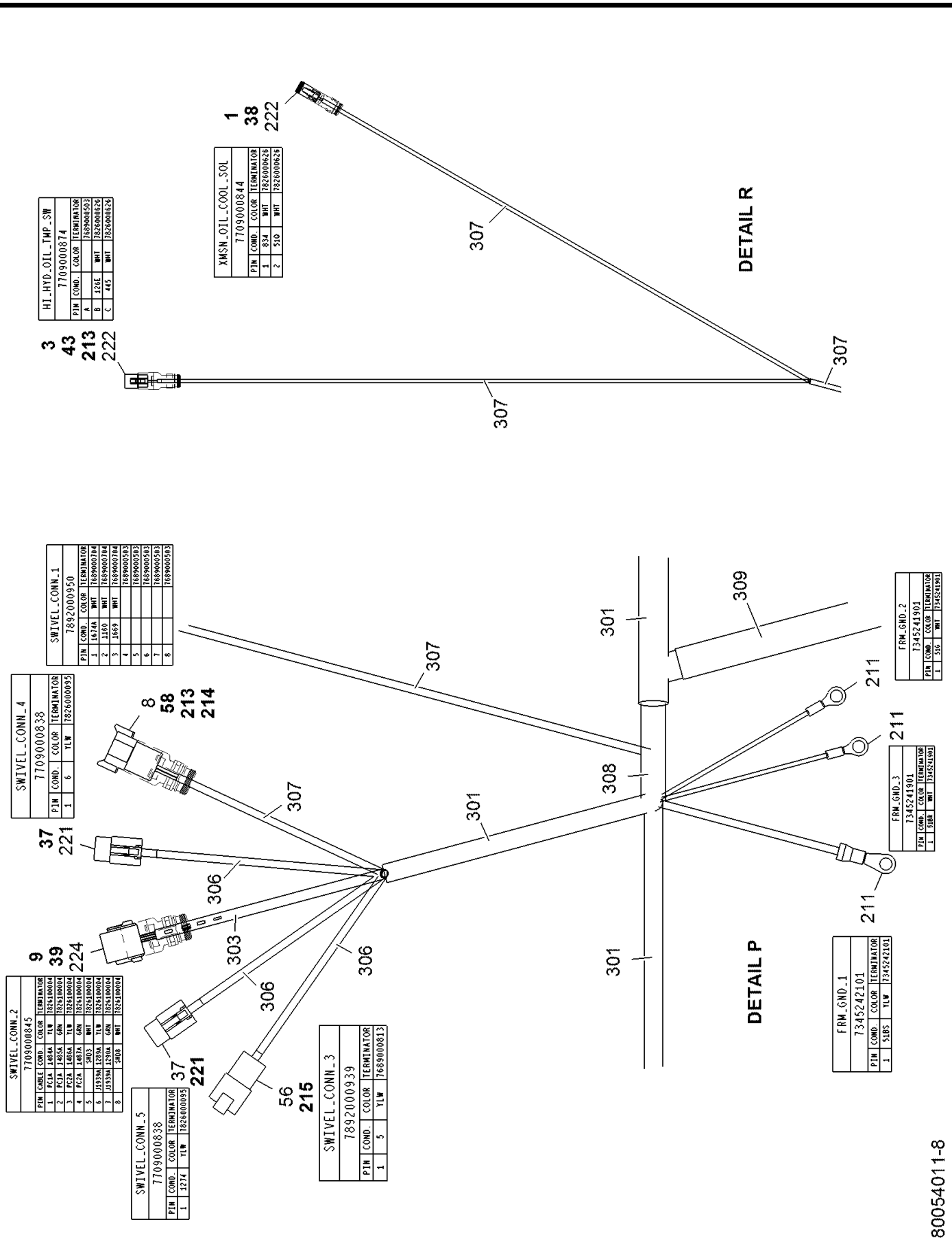
HI_HYD_OIL_TMP_SW
7709000874
PIN | COND. | COLOR | TERMINATOR
A | | | 7689000593
B | 126E | WHT | 7826000626
C | 445 | WHT | 7826000626
XMSN_OIL_COOL_SOL
7709000844
PIN | COND. | COLOR | TERMINATOR
1 | 834 | WHT | 7826000626
2 | 510 | WHT | 7826000626
1
38
222
307
DETAIL R
3
43
213
222
307
307
SWIVEL_CONN_1
7892000950
PIN | COND. | COLOR | TERMINATOR
1 | 1674A | WHT | 7689000784
2 | 1116D | WHT | 7689000784
3 | 1669 | WHT | 7689000784
4 | | | 7689000593
5 | | | 7689000593
6 | | | 7689000593
7 | | | 7689000593
8 | | | 7689000593
SWIVEL_CONN_4
7709000838
PIN | COND. | COLOR | TERMINATOR
1 | 6 | YLW | 7826000095
8
58
213
214
307
37
221
306
SWIVEL_CONN_2
7709000845
PIN | CABLE | COND. | COLOR | TERMINATOR
1 | PC1A | 1405A | YLW | 7826100004
2 | PC2A | 1405A | GRN | 7826100004
3 | PC2A | 1406A | YLW | 7826100004
4 | PC2A | 1407A | GRN | 7826100004
5 | | 3H03 | WHT | 7826100004
6 | J1939A | 1289A | YLW | 7826100004
7 | J1939A | 1290A | GRN | 7826100004
8 | | 3H08 | WHT | 7826100004
9
39
224
303
306
306
306
SWIVEL_CONN_5
7709000838
PIN | COND. | COLOR | TERMINATOR
1 | 1274 | YLW | 7826000095
37
221
56
215
SWIVEL_CONN_3
7892000939
PIN | COND. | COLOR | TERMINATOR
1 | 5 | YLW | 7689000813
301
301
308
309
211
211
211
DETAIL P
FRM_GND_1
7345242101
PIN | COND. | COLOR | TERMINATOR
1 | 518S | YLW | 7345242101
FRM_GND_3
7345241901
PIN | COND. | COLOR | TERMINATOR
1 | 358R | WHT | 7345241901
FRM_GND_2
7345241901
PIN | COND. | COLOR | TERMINATOR
1 | 536 | WHT | 7345241901
80054011-8

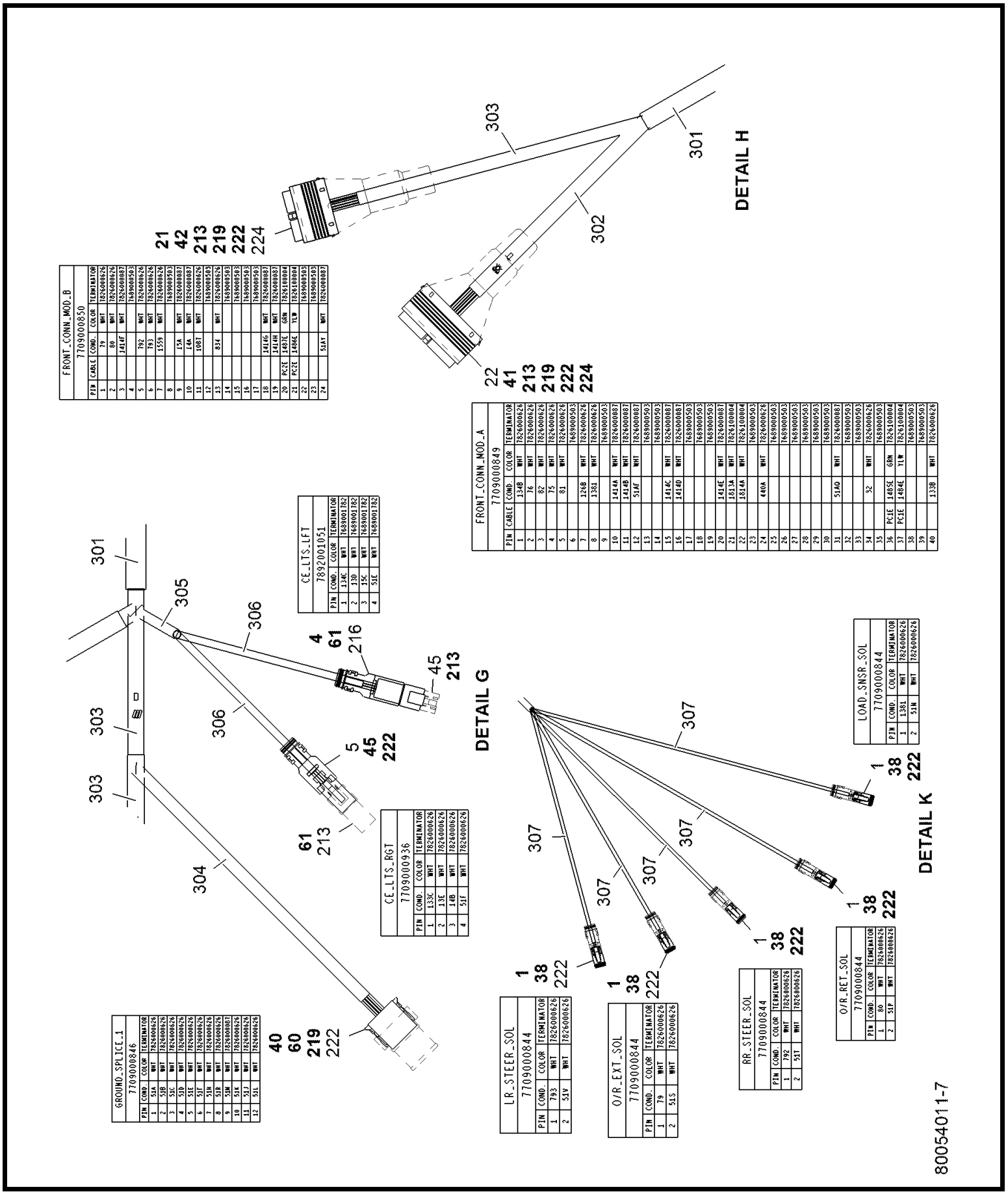


| FRONT_CONN_MOD_B | | | |
|---|---|---|---|
| 7709000850 | | | |
| PIN | CABLE | COND. | COLOR | TERMINATOR |
| 1 | | 79 | WHT | 7826000626 |
| 2 | | 80 | WHT | 7826000626 |
| 3 | | 141F | WHT | 7826000087 |
| 4 | | | | 7689000593 |
| 5 | | 792 | WHT | 7826000626 |
| 6 | | 793 | WHT | 7826000626 |
| 7 | | 155S | WHT | 7826000626 |
| 8 | | | | 7689000593 |
| 9 | | 15A | WHT | 7826000087 |
| 10 | | 14A | WHT | 7826000087 |
| 11 | | 108T | WHT | 7826000626 |
| 12 | | | | 7689000593 |
| 13 | | 834 | WHT | 7826000626 |
| 14 | | | | 7689000593 |
| 15 | | | | 7689000593 |
| 16 | | | | 7689000593 |
| 17 | | | | 7689000593 |
| 18 | | 1414G | WHT | 7826000087 |
| 19 | | 1414H | WHT | 7826000087 |
| 20 | PC2E | 1487E | GRN | 7826100004 |
| 21 | PC2E | 1486E | YLW | 7826100004 |
| 22 | | | | 7689000593 |
| 23 | | | | 7689000593 |
| 24 | | 51AT | WHT | 7826000087 |

| FRONT_CONN_MOD_A | | | |
|---|---|---|---|
| 7709000849 | | | |
| PIN | CABLE | COND. | COLOR | TERMINATOR |
| 1 | | 134B | WHT | 7826000626 |
| 2 | | 76 | WHT | 7826000626 |
| 3 | | 82 | WHT | 7826000626 |
| 4 | | 75 | WHT | 7826000626 |
| 5 | | 81 | WHT | 7826000626 |
| 6 | | | | 7689000503 |
| 7 | | 126B | WHT | 7826000626 |
| 8 | | 138J | WHT | 7826000626 |
| 9 | | | | 7689000503 |
| 10 | | 1414A | WHT | 7826000087 |
| 11 | | 1414B | WHT | 7826000087 |
| 12 | | 51AF | WHT | 7826000087 |
| 13 | | | | 7689000503 |
| 14 | | | | 7689000503 |
| 15 | | 1414C | WHT | 7826000087 |
| 16 | | 1414D | WHT | 7826000087 |
| 17 | | | | 7689000503 |
| 18 | | | | 7689000503 |
| 19 | | | | 7689000503 |
| 20 | | 1414E | WHT | 7826000087 |
| 21 | | 1613A | WHT | 7826100004 |
| 22 | | 1614A | WHT | 7826100004 |
| 23 | | | | 7689000503 |
| 24 | | 440A | WHT | 7826000626 |
| 25 | | | | 7689000503 |
| 26 | | | | 7689000503 |
| 27 | | | | 7689000503 |
| 28 | | | | 7689000503 |
| 29 | | | | 7689000503 |
| 30 | | | | 7689000503 |
| 31 | | 51AO | WHT | 7826000087 |
| 32 | | | | 7689000503 |
| 33 | | | | 7689000503 |
| 34 | | 32 | WHT | 7826000626 |
| 35 | | | | 7689000503 |
| 36 | PC1E | 1485E | GRN | 7826100004 |
| 37 | PC1E | 1484E | YLW | 7826100004 |
| 38 | | | | 7689000503 |
| 39 | | | | 7689000503 |
| 40 | | 133B | WHT | 7826000626 |

| GROUND_SPLICE_1 | | | |
|---|---|---|---|
| 7709000846 | | | |
| PIN | COND. | COLOR | TERMINATOR |
| 1 | 51A | WHT | 7826000626 |
| 2 | 51B | WHT | 7826000626 |
| 3 | 51C | WHT | 7826000626 |
| 4 | 51D | WHT | 7826000626 |
| 5 | 51E | WHT | 7826000626 |
| 6 | 51F | WHT | 7826000626 |
| 7 | 51N | WHT | 7826000626 |
| 8 | 51R | WHT | 7826000626 |
| 9 | 51M | WHT | 7826000087 |
| 10 | 51K | WHT | 7826000626 |
| 11 | 51J | WHT | 7826000626 |
| 12 | 51L | WHT | 7826000626 |

| CE_LTS_LFT | | | |
|---|---|---|---|
| 7892001051 | | | |
| PIN | COND. | COLOR | TERMINATOR |
| 1 | 134C | WHT | 7689001782 |
| 2 | 13D | WHT | 7689001782 |
| 3 | 13C | WHT | 7689001782 |
| 4 | 51E | WHT | 7689001782 |

| CE_LTS_RGT | | | |
|---|---|---|---|
| 7709000936 | | | |
| PIN | COND. | COLOR | TERMINATOR |
| 1 | 133C | WHT | 7826000626 |
| 2 | 13E | WHT | 7826000626 |
| 3 | 14B | WHT | 7826000626 |
| 4 | 51F | WHT | 7826000626 |

| LR_STEER_SOL | | | |
|---|---|---|---|
| 7709000844 | | | |
| PIN | COND. | COLOR | TERMINATOR |
| 1 | 793 | WHT | 7826000626 |
| 2 | 51V | WHT | 7826000626 |

| O/R_EXT_SOL | | | |
|---|---|---|---|
| 7709000844 | | | |
| PIN | COND. | COLOR | TERMINATOR |
| 1 | 79 | WHT | 7826000626 |
| 2 | 51S | WHT | 7826000626 |

| RR_STEER_SOL | | | |
|---|---|---|---|
| 7709000844 | | | |
| PIN | COND. | COLOR | TERMINATOR |
| 1 | 792 | WHT | 7826000626 |
| 2 | 51T | WHT | 7826000626 |

| O/R_RET_SOL | | | |
|---|---|---|---|
| 7709000844 | | | |
| PIN | COND. | COLOR | TERMINATOR |
| 1 | 80 | WHT | 7826000626 |
| 2 | 51P | WHT | 7826000626 |

| LOAD_SNSR_SOL | | | |
|---|---|---|---|
| 7709000844 | | | |
| PIN | COND. | COLOR | TERMINATOR |
| 1 | 138L | WHT | 7826000626 |
| 2 | 51N | WHT | 7826000626 |

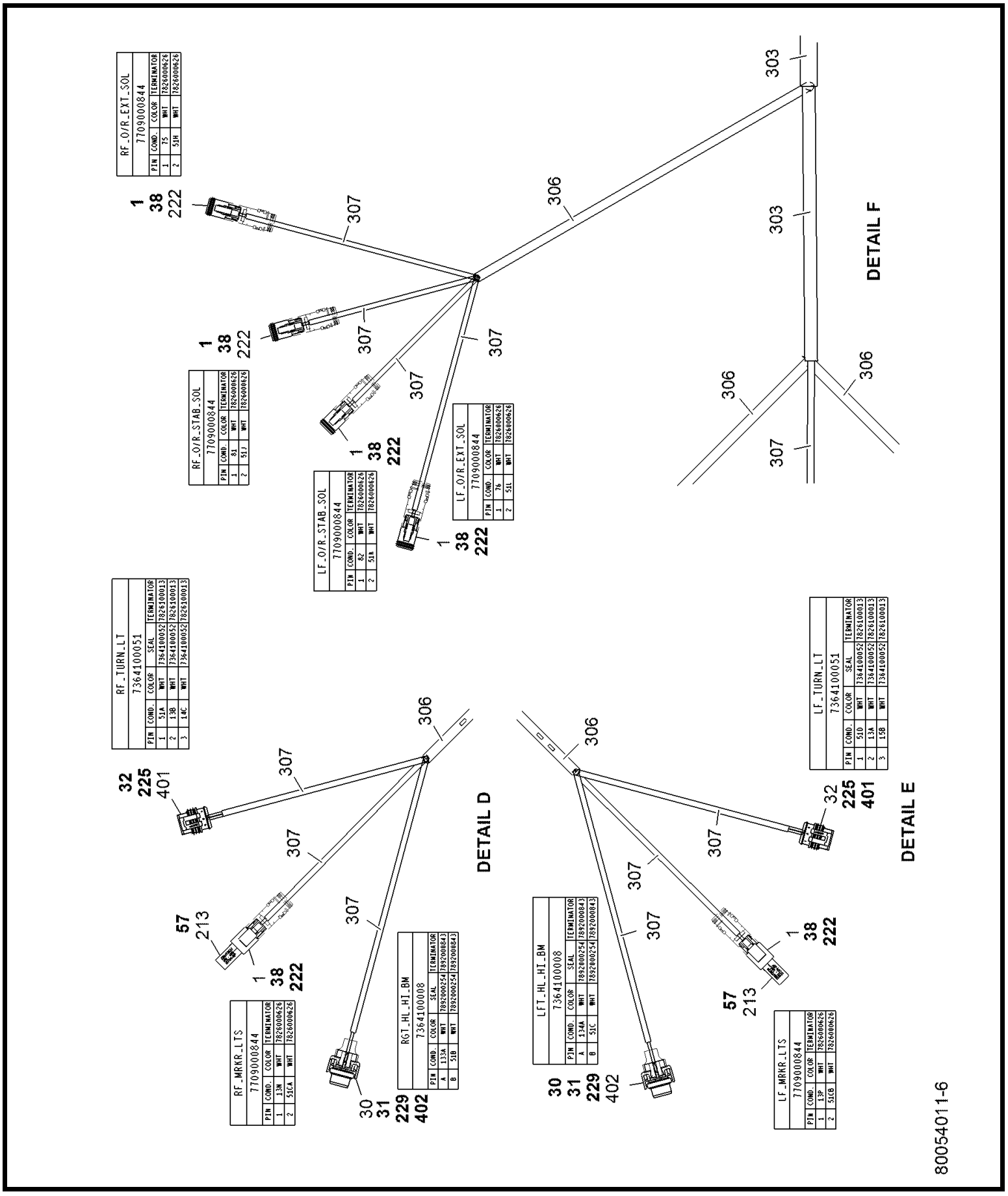
RF_O/R_EXT_SOL
7709000844
PIN COND. COLOR TERMINATOR
1 7S WHT 7826000626
2 51H WHT 7826000626
RF_O/R_STAB_SOL
7709000844
PIN COND. COLOR TERMINATOR
1 8J WHT 7826000626
2 51J WHT 7826000626
LF_O/R_STAB_SOL
7709000844
PIN COND. COLOR TERMINATOR
1 8Z WHT 7826000626
2 51A WHT 7826000626
LF_O/R_EXT_SOL
7709000844
PIN COND. COLOR TERMINATOR
1 7R WHT 7826000626
2 51L WHT 7826000626
RF_TURN_LT
7364100051
PIN COND. COLOR SEAL TERMINATOR
1 51A WHT 7364100052 7826100013
2 13B WHT 7364100052 7826100013
3 14C WHT 7364100052 7826100013
LF_TURN_LT
7364100051
PIN COND. COLOR SEAL TERMINATOR
1 51D WHT 7364100052 7826100013
2 13A WHT 7364100052 7826100013
3 15B WHT 7364100052 7826100013
RF_MRKR_LTS
7709000844
PIN COND. COLOR TERMINATOR
1 13M WHT 7826000626
2 51CA WHT 7826000626
LF_MRKR_LTS
7709000844
PIN COND. COLOR TERMINATOR
1 13P WHT 7826000626
2 51CB WHT 7826000626
RGT_HL_HI_BM
7364100008
PIN COND. COLOR SEAL TERMINATOR
A 113A WHT 7892000254 7892000843
B 51B WHT 7892000254 7892000843
LFT_HL_HI_BM
7364100008
PIN COND. COLOR SEAL TERMINATOR
A 134A WHT 7892000254 7892000843
B 51C WHT 7892000254 7892000843
DETAIL D
DETAIL E
DETAIL F
80054011-6

80054011

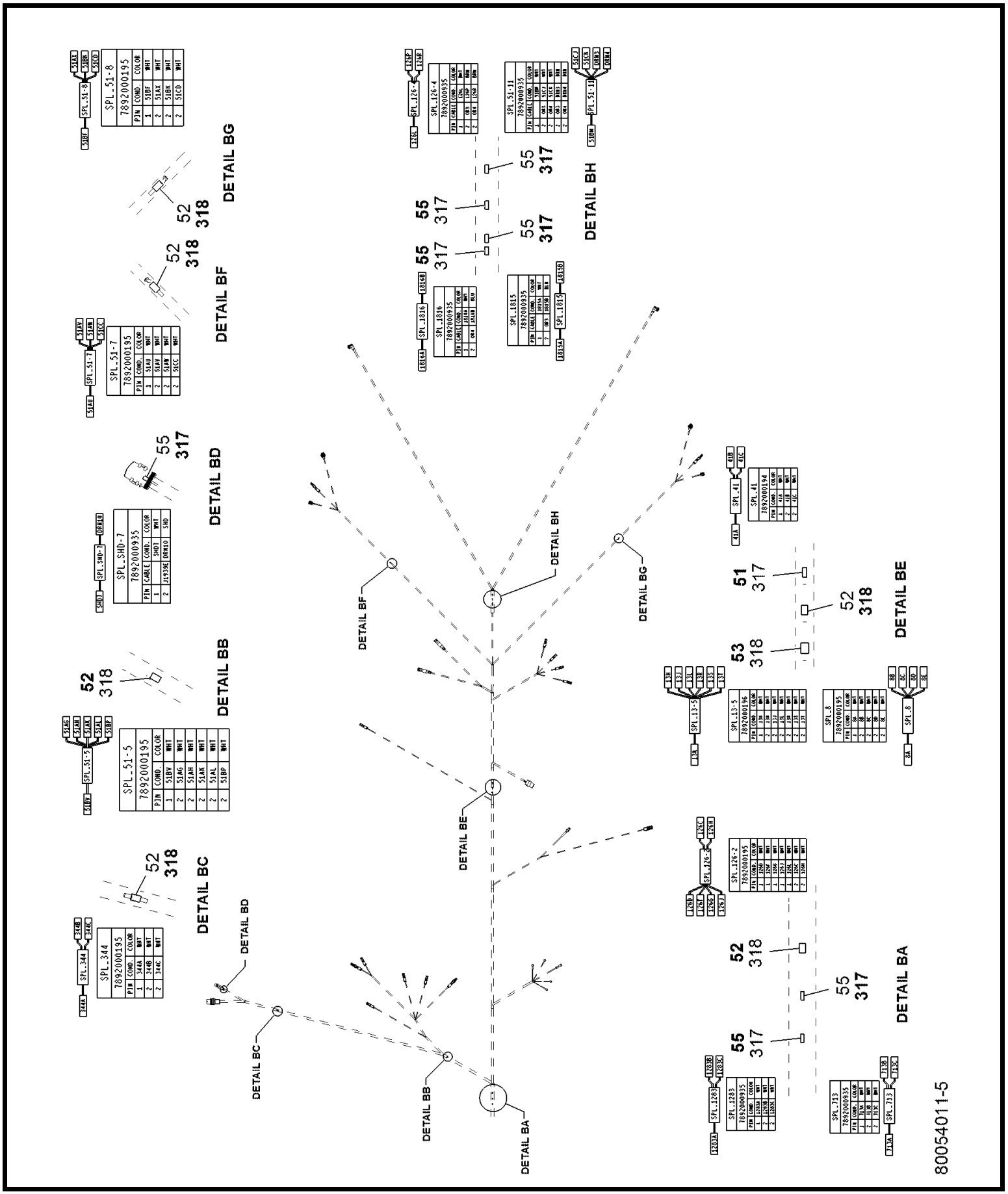
DETAIL BA
DETAIL BB
DETAIL BC
DETAIL BD
DETAIL BE
DETAIL BF
DETAIL BG
DETAIL BH
80054011-5

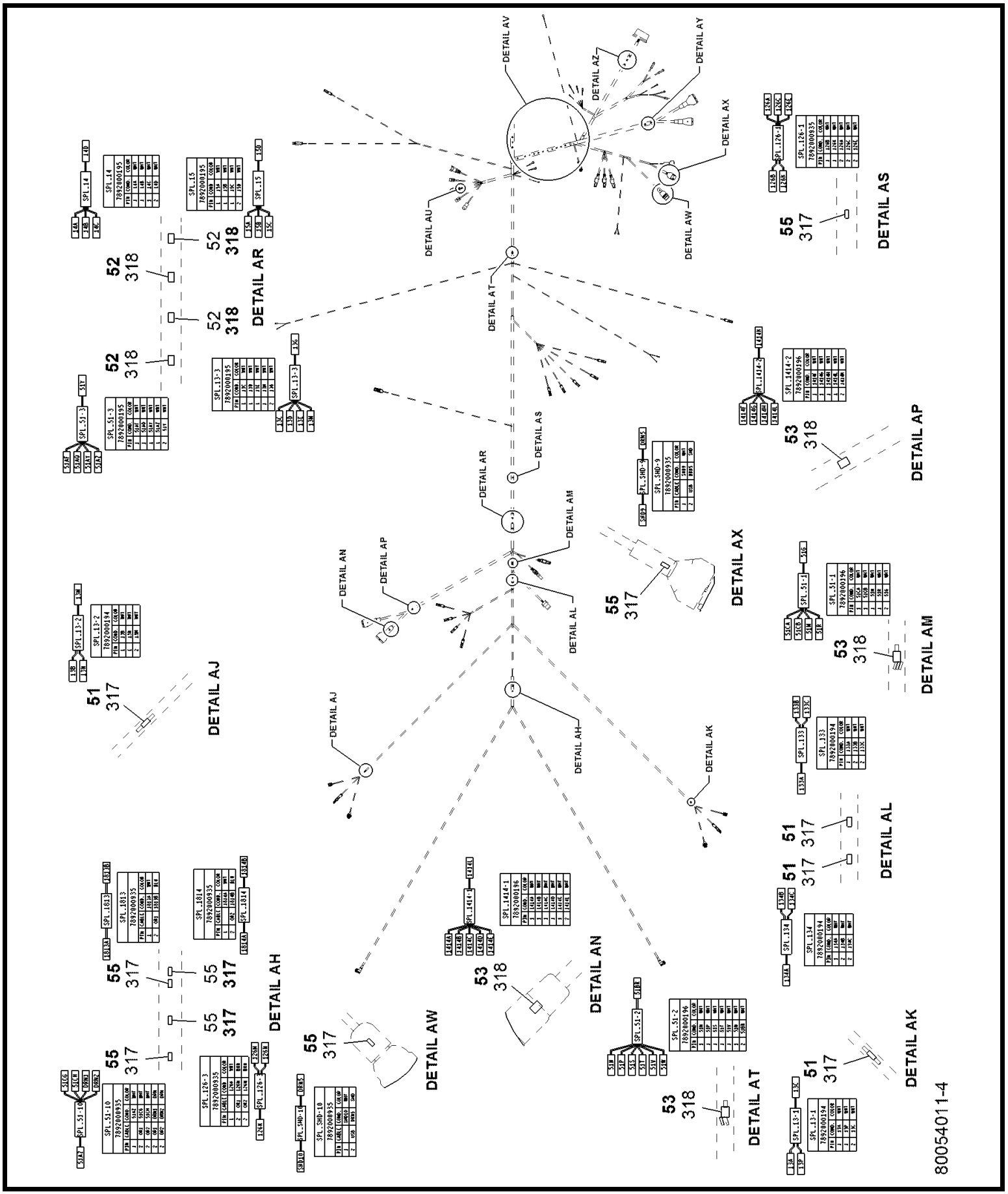


80054011

(SHEET 4 OF 17)

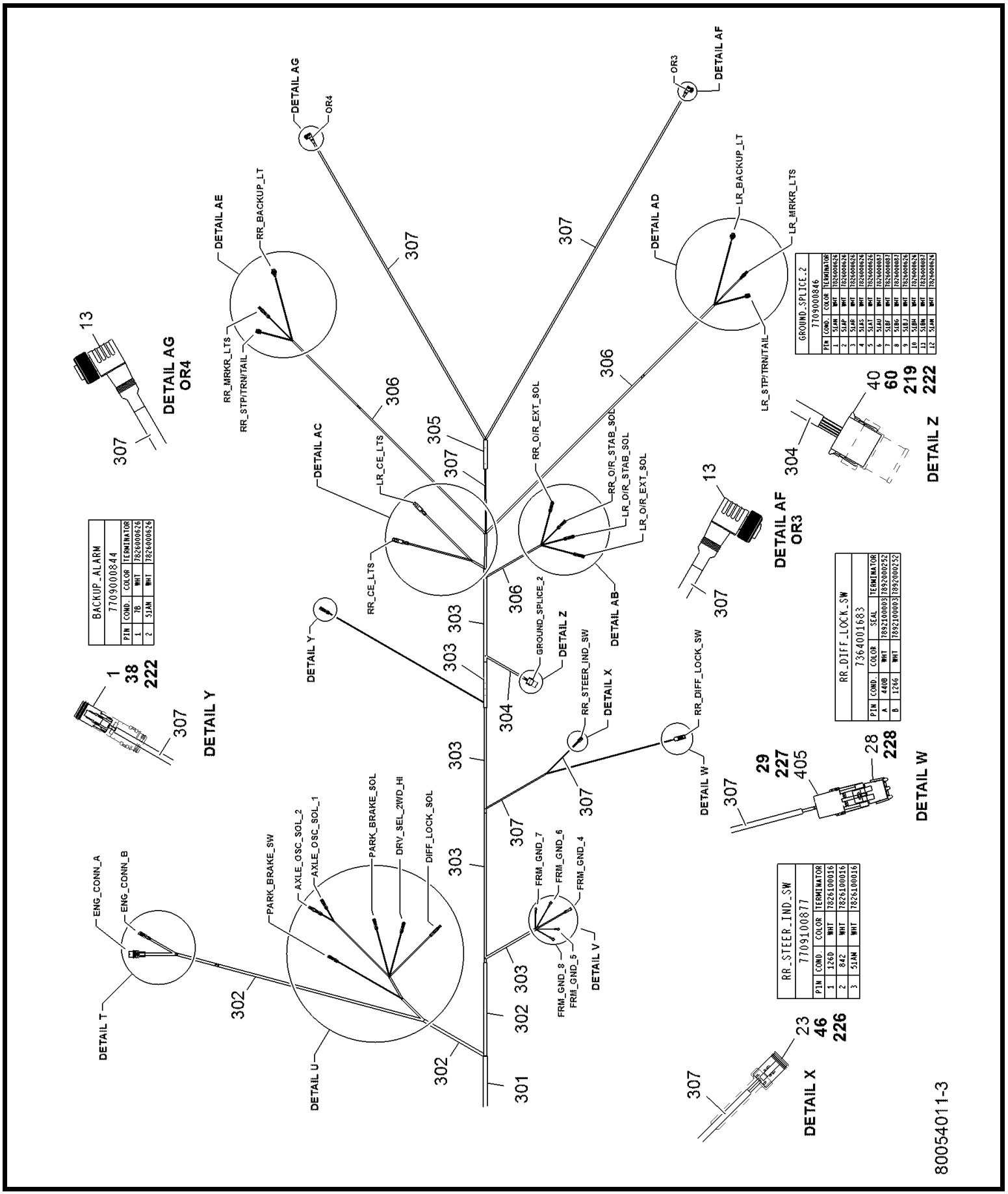
BACKUP_ALARM
7709000844
PIN | COND. | COLOR | TERMINATOR
1 | 7B | WHT | 7826000626
2 | 51AM | WHT | 7826000626
RR_STEER_IND_SW
7709100877
PIN | COND. | COLOR | TERMINATOR
1 | 126D | WHT | 7826100016
2 | 84Z | WHT | 7826100016
3 | 51AM | WHT | 7826100016
RR_DIFF_LOCK_SW
736400168 3
PIN | COND. | COLOR | SEAL | TERMINATOR
A | 440B | WHT | 7892000003 | 7892000252
B | 126G | WHT | 7892000003 | 7892000252
GROUND_SPLICE_2
7709000846
PIN | COND. | COLOR | TERMINATOR
1 | 51AM | WHT | 7826000626
2 | 51AP | WHT | 7826000626
3 | 51AP | WHT | 7826000626
4 | 51AS | WHT | 7826000626
5 | 51AT | WHT | 7826000626
6 | 51AU | WHT | 7826000083
7 | 51BC | WHT | 7826000083
8 | 51BJ | WHT | 7826000626
9 | 51BS | WHT | 7826000083
10 | 51BU | WHT | 7826000626
11 | 51BW | WHT | 7826000083
12 | 51AM | WHT | 7826000626
DETAIL AG
OR4
DETAIL AE
RR_BACKUP_LT
RR_MRKR_LTS
RR_STP/TRN/TAIL
DETAIL AC
LR_CE_LTS
RR_CE_LTS
DETAIL AD
LR_BACKUP_LT
LR_MRKR_LTS
LR_STP/TRN/TAIL
DETAIL AF
OR3
RR_O/R_EXT_SOL
RR_O/R_STAB_SOL
LR_O/R_STAB_SOL
LR_O/R_EXT_SOL
DETAIL AB
DETAIL Y
DETAIL Z
GROUND_SPLICE_2
DETAIL X
RR_STEER_IND_SW
DETAIL W
RR_DIFF_LOCK_SW
DETAIL V
FRM_GND_7
FRM_GND_6
FRM_GND_4
FRM_GND_8
FRM_GND_5
DETAIL U
PARK_BRAKE_SW
AXLE_OSC_SOL_2
AXLE_OSC_SOL_1
PARK_BRAKE_SOL
DRV_SEL_2WD_HI
DIFF_LOCK_SOL
DETAIL T
ENG_CONN_A
ENG_CONN_B
DETAIL AG
OR4
DETAIL Y
DETAIL AF
OR3
DETAIL Z
DETAIL X
DETAIL W
80054011-3

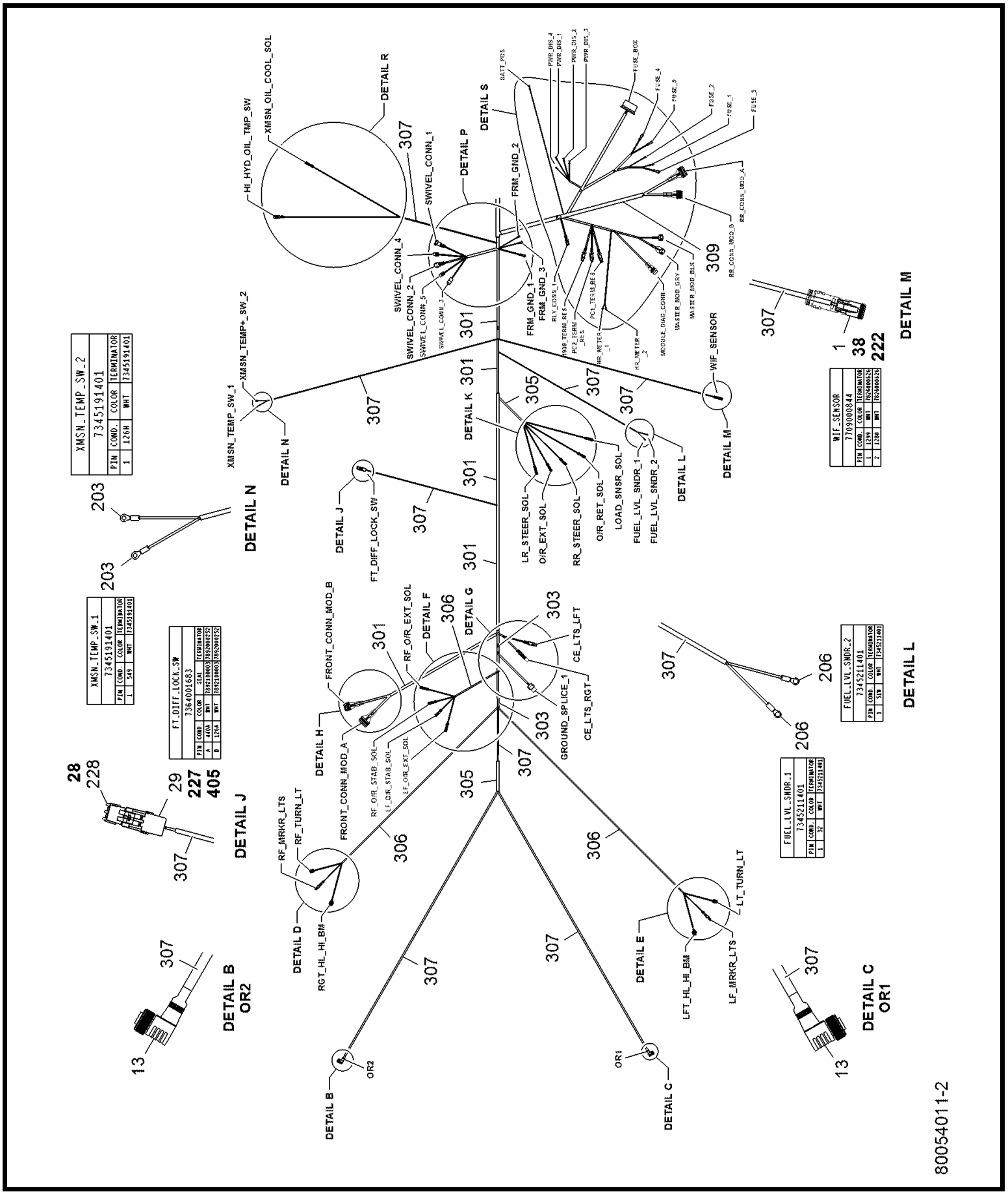


80054011

(SHEET 2 OF 17)

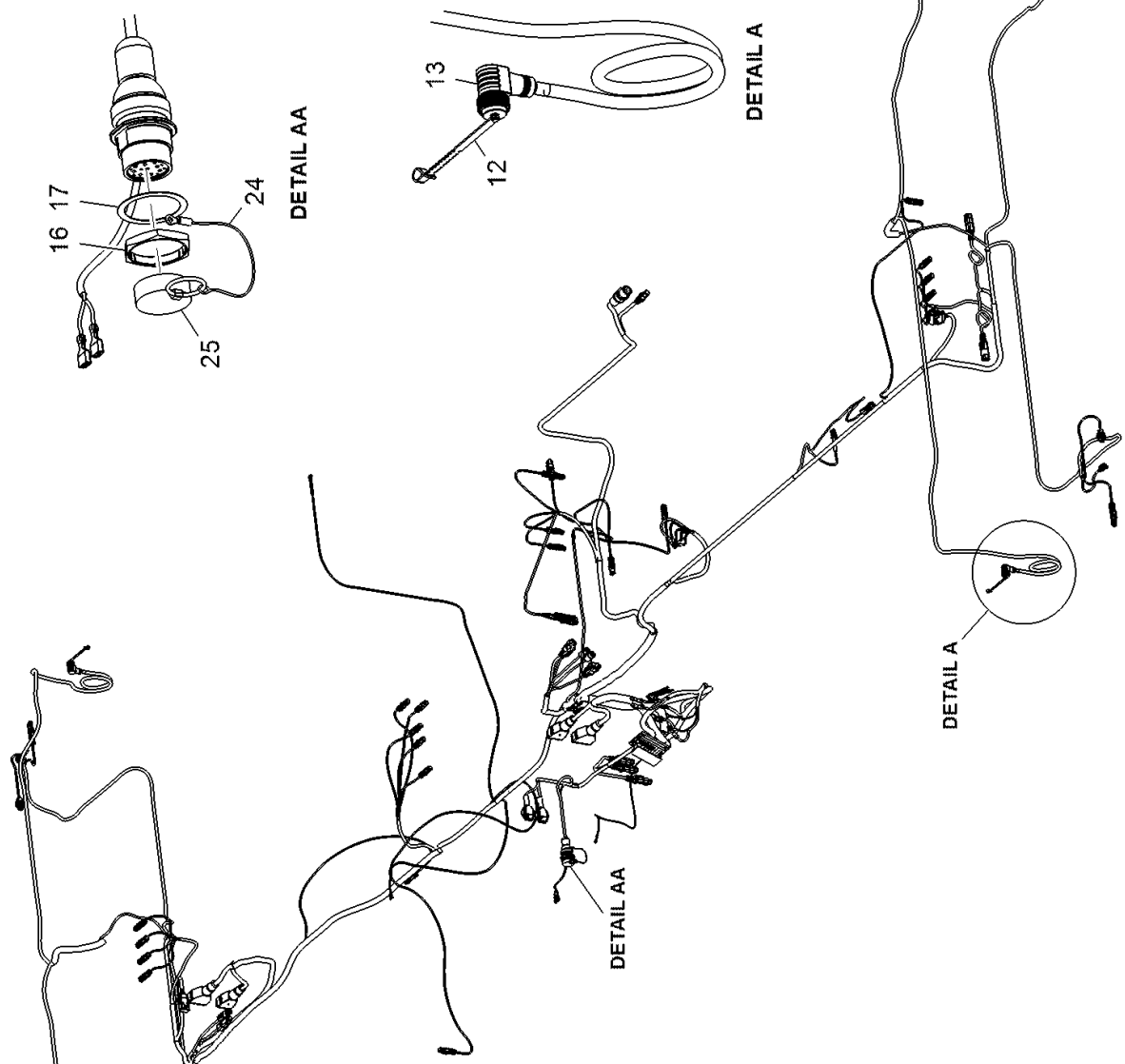


MECHANICAL COMPONENTS

| LINE ITEM | NUMBER | NAME | DESCRIPTION | QTY |
|---|---|---|---|---|
| 1 | 80008755 | BOOT | 1800EG BSHELL 227-0205 | 26 |
| 2 | 80008760 | BOOT | 1800EG BSHEL W/STRAIN 262-0305 | 3 |
| 3 | 80008764 | BOOT | 1800EG BSHEL W/STRAIN 259-0305 | 2 |
| 4 | 80008769 | BOOT | 1800EG BSHELL 237-0405 | 1 |
| 5 | 80008773 | BOOT | 1800EG BSHELL 255-0405 | 1 |
| 6 | 80008779 | BOOT | 1800EG BSHELL 241-0605 | 2 |
| 7 | 80008783 | BOOT | 1800EG BSHELL 239-0605 | 1 |
| 8 | 80008786 | BOOT | 1800EG BSHELL 245-0805 | 1 |
| 9 | 80008788 | BOOT | 1800EG BSHELL 243-0805 | 1 |
| 10 | 80012750 | RECEPTACLE | RECEPT 1SP BLU WEDGE) | 3 |
| 11 | 80017119 | RELAY | 24V RELAY | 1 |
| 12 | 80030502 | CAP | M12 CAP-MALE PLASTIC,LOOP | 4 |
| 13 | 80031257 | CABLE | M12 4-SOC SHLD 900EG | 4 |
| 14 | 80035796 | RESISTOR | 120OHM 5 WATT | 1 |
| 15 | 80038626 | ELEC CONNECTOR | RECEPT (9P) | 1 |
| 16 | 80038844 | HEXAGON NUT | PANEL NUT (3B) | 1 |
| 17 | 80038845 | L WASHER | DEUTSCH LOCKWASHER (3B) (WAVE) | 1 |
| 19 | 7058100159 | FUSE BOX | FUSE BLOCK | 1 |
| 20 | 712000552 | BOOT | CONN BOOT-DT12S | 2 |
| 21 | 712000553 | BOOT | DRC BOOT C42) | 2 |
| 22 | 712000554 | BOOT | 40P DEUTSCH DRC PLUG | 2 |
| 23 | 7112100002 | BOOT | 3P DEUTSCH DTM PLUG | 1 |
| 24 | 7246002555 | ASSY | CABLE ASS'Y | 1 |
| 25 | 7258100154 | CAP | DUST CAP-DEUTSCH HDC | 1 |
| 26 | 7258100165 | BOOT | DEUTSCH HDD SERIES | 1 |
| 27 | 7300000429 | COVER | HD36-24 RECEPTACLE | 1 |
| 28 | 7364001682 | PLUG | COMM-2 COND TOWER W/SEAL | 2 |
| 29 | 7364001683 | RECEPTACLE | COMM-2 COND SHROUD | 2 |
| 30 | 7364100008 | PLUG | 2 PASS PLUG - 200 SERIES | 4 |
| 31 | 7364100009 | ELEC CONNECTOR | COMM LOCK - 2 PASS 200 SERIES | 4 |
| 32 | 7364100051 | PLUG | 3 PASS W/WEDGE | 4 |
| 33 | 7402100013 | FUSE | FUSE, MINI 5AMP | 2 |
| 34 | 7402100018 | FUSE | FUSE, MINI 25AMP | 1 |
| 35 | 7402100019 | FUSE | FUSE, MINI 30AMP | 3 |
| 36 | 7659190018 | HARDWARE | DEUTSCH HDD-SER/COM | 1 |
| 37 | 7709000838 | PLUG | PLUG (15#) | 2 |
| 38 | 7709000844 | PLUG | PLUG (2P) THIN | 26 |
| 39 | 7709000845 | PLUG | PLUG (8P) - THIN WALL - F16. 4 | 1 |
| 40 | 7709000846 | PLUG | PLUG (12P) | 2 |
| 41 | 7709000849 | PLUG | PLUG (40PAE) - THIN WALL | 2 |
| 42 | 7709000850 | PLUG | PLUG (24PAE) - THIN WALL | 2 |
| 43 | 7709000874 | PLUG | PLUG (3P) | 1 |
| 44 | 7709000883 | PLUG | PLUG (6P) - THIN WALL | 3 |
| 45 | 7709000936 | PLUG | PLUG (4P) | 2 |
| 46 | 7709100877 | PLUG | PLUG-DTM-3S | 1 |
| 47 | 7709100901 | PLUG | PLUG DT06-3S W/BLU W | 1 |
| 48 | 7709100902 | PLUG | 3P DT W/2P CONN RES | 3 |
| 49 | 7709100907 | PLUG | PLUG DT06S-12SA W/DW-12S WEDGE | 1 |
| 50 | 7709100908 | PLUG | PLUG DT06S-12SB W/DW-12S WEDGE | 1 |
| 51 | 7892000194 | WIRE TERMINAL | 16-14 GA PARA COMM N | 6 |
| 52 | 7892000195 | WIRE TERMINAL | 12-10 GA PARA COMM N | 34 |
| 53 | 7892000196 | WIRE TERMINAL | 8 GA PARA COMM NON I | 8 |
| 54 | 7892000241 | RECEPTACLE | RECEPT (21S-12) | 1 |
| 55 | 7892000935 | WIRE TERMINAL | 22-16 GA PARA COMM NON INS | 26 |
| 56 | 7892000939 | RECEPTACLE | RECEPT (1P) DTM04-1-4P | 1 |
| 57 | 7892000949 | RECEPTACLE | RECEPT (2P) THIN | 6 |
| 58 | 7892000958 | RECEPTACLE | RECEPT (8P) - THIN WALL - F16. | 1 |
| 59 | 7892000986 | RECEPTACLE | RECEPT (6P) - THIN WALL - F16. | 2 |
| 60 | 7892001038 | RECEPTACLE | RECEPT (12P) SPLICE | 2 |
| 61 | 7892001051 | RECEPTACLE | RECEPT (4P) | 2 |
| 62 | 7850000208 | CABLE TIE | nCable Tie 5.63" | 100 |

80054011-1

Description
**WIRING HARNESS-CARRIER**

Assembly No.
**80054011**
Revision: **B**

| Item | FN | Part | Qty | Description |
|---|---|---|---|---|
| 1 | | **80008755** | 26 | 180DEG BSHELL |
| 2 | | **80008760** | 3 | 180DEG BSHEL W/STRAIN |
| 3 | | **80008764** | 2 | 180DEG BSHEL W/STRAIN |
| 4 | | **80008769** | 1 | 180DEG BSHELL |
| 5 | | **80008773** | 1 | 180 DEG BSHELL |
| 6 | | **80008779** | 2 | 180DEG BSHELL |
| 7 | | **80008783** | 1 | 180DEG BSHELL |
| 8 | | **80008786** | 1 | 180DEG BACKSHELL |
| 9 | | **80008788** | 1 | 180DEG BACKSHELL |
| 10 | | **80012750** | 3 | RECEPT (3P BLU WEDGE) |
| 11 | | **80017719** | 1 | RELAY, 24 VOLT |
| 12 | | **80030502** | 4 | M12 CAP,MALE,PLASTIC,LOOP |
| 13 | | **80031257** | 4 | Cable M12 4-SOC Shielded 90DEG |
| 14 | | **80035796** | 1 | RESISTOR 120 ohm 5watt |
| 15 | | **80038826** | 1 | RECEPT (9P) |
| 16 | | **80038844** | 1 | PANEL NUT (18) |
| 17 | | **80038845** | 1 | LOCKWASHER, (18) |
| 19 | | **7086100159** | 1 | BLOCK, FUSE |
| 20 | | **7172000552** | 2 | BOOT |
| 21 | | **7172000553** | 2 | BOOT |
| 22 | | **7172000554** | 2 | BOOT |
| 23 | | **7172100002** | 1 | BOOT, PLUG |
| 24 | | **7246002555** | 1 | CABLE ASSY |
| 25 | | **7258100154** | 1 | CAP, DEUTSCH HDC16 - 9 DUST |
| 26 | | **7258100165** | 1 | BACKSHELL, DEUTSCH HD10 SERIES |
| 27 | | **7300000429** | 1 | CLAMP, STRAIN RELIEF |
| 28 | | **7364001682** | 2 | CONNECTOR, 2 CONDUCTOR TOWER WITH SEAL |
| 29 | | **7364001683** | 2 | CONNECTOR, 2 CONDUCTOR SHROUD |
| 30 | | **7364100008** | 4 | PLUG, 2 PASS |
| 31 | | **7364100009** | 4 | CONNECTOR, LOCKING 2 PASS |
| 32 | | **7364100051** | 4 | PLUG |
| 33 | | **7482100013** | 2 | FUSE, MINI 5 AMP |

Description
**WIRING HARNESS-CARRIER**

Assembly No.
**80054011**
Revision: **B**

| Item | FN | Part | Qty | Description |
|---|---|---|---|---|
| 34 | | **7482100018** | 1 | FUSE, MINI 25AMP |
| 35 | | **7482100019** | 3 | FUSE, MINI 30AMP |
| 36 | | **7659190018** | 1 | NUT, DEUTSCH |
| 37 | | **7709000838** | 2 | PLUG<br>1 SOCKET |
| 38 | | **7709000844** | 26 | PLUG, 2 SOCKET |
| 39 | | **7709000845** | 1 | PLUG<br>8 SOCKET |
| 40 | | **7709000846** | 2 | PLUG, 12 SOCKET |
| 41 | | **7709000849** | 2 | PLUG<br>40 SOCKET |
| 42 | | **7709000850** | 2 | PLUG<br>24 SOCKET |
| 43 | | **7709000874** | 1 | PLUG<br>3 SOCKET |
| 44 | | **7709000883** | 3 | PLUG<br>6 SOCKET |
| 45 | | **7709000936** | 2 | PLUG, 4 SOCKET |
| 46 | | **7709100877** | 1 | PLUG |
| 47 | | **7709100901** | 1 | PLUG, 3 SOCKET |
| 48 | | **7709100902** | 3 | PLUG, 3 PIN |
| 49 | | **7709100907** | 1 | PLUG |
| 50 | | **7709100908** | 1 | PLUG |
| 51 | | **7892000194** | 6 | PARALLEL, NON - INSULATED<br>16 - 14 AWG |
| 52 | | **7892000195** | 16 | PARALLEL, NON - INSULATED<br>12 - 10 AWG |
| 53 | | **7892000196** | 8 | PARALLEL, NON - INSULATED<br>8 AWG |
| 54 | | **7892000241** | 1 | RECEPTACLE,<br>21 SOCKET |
| 55 | | **7892000935** | 26 | PARALLEL |
| 56 | | **7892000939** | 1 | RECEPTACLE,<br>1 PIN |
| 57 | | **7892000949** | 6 | RECEPTACLE,<br>2 PIN |
| 58 | | **7892000950** | 1 | RECEPTACLE,<br>8 PIN |

Description
**WIRING HARNESS-CARRIER**

Assembly No.
**80054011**
Revision: **B**

| Item | FN | Part | Qty | Description |
|---|---|---|---|---|
| 59 | | **7892000986** | 2 | RECEPTACLE, 6 PIN |
| 60 | | **7892001036** | 2 | RECEPTACLE, SPLICE BLOCK |
| 61 | | **7892001051** | 2 | RECEPTACLE, 4 PIN |
| 62 | | **7850000208** | 100 | CABLE TIE 5.63", BLACK |
| 201 | | **80034399** | 1 | SOCKET,(16-18AWG) |
| 202 | | **7345001444** | 2 | TERMINAL, FEMALE |
| 203 | | **7345191401** | 2 | TERMINAL 22 - 18 AWG |
| 204 | | **7345191701** | 1 | TERMINAL 16 - 14 AWG |
| 205 | | **7345191901** | 3 | TERMINAL 12 - 10 AWG |
| 206 | | **7345211401** | 2 | TERMINAL 22 - 18 AWG |
| 207 | | **7345231701** | 1 | TERMINAL 16 - 14 AWG |
| 208 | | **7345231901** | 1 | TERMINAL 12 - 10 AWG |
| 209 | | **7345232101** | 1 | TERMINAL 6 AWG |
| 210 | | **7345241701** | 2 | TONGUE, INSULATED RING |
| 211 | | **7345241901** | 5 | TONGUE, INSULATED RING |
| 212 | | **7345242101** | 4 | TERMINAL 6 AWG |
| 213 | | **7689000503** | 95 | PLUG, SEALING 16 - 12 AWG |
| 214 | | **7689000704** | 3 | PIN, 16 - 14 GA |
| 215 | | **7689000813** | 1 | PIN 4 AWG |
| 216 | | **7689001782** | 14 | PIN, 18 - 16 GAGE |
| 217 | | **7689002053** | 11 | PIN 16 - 18 AWG |
| 218 | | **7689100043** | 2 | PIN,14/16GA GOLD |
| 219 | | **7826000087** | 29 | SOCKET, 16-14 GA |
| 220 | | **7826000092** | 3 | SOCKET, (12) 12-14GA |
| 221 | | **7826000095** | 2 | SOCKET, 4 AWG |

Description
**WIRING HARNESS-CARRIER**

Assembly No.
**80054011**
Revision: **B**

| Item | FN | Part | Qty | Description |
|---|---|---|---|---|
| 222 | | **7826000626** | 143 | SOCKET,<br>16 - 18 AWG |
| 223 | | **7826000650** | 10 | PLUG, SEALING |
| 224 | | **7826100004** | 23 | SOCKET, (16 - 18) 30 SERIES |
| 225 | | **7826100013** | 12 | AMP 1.5 16-14 SOCKET |
| 226 | | **7826100016** | 16 | SOCKET, DEUTSCH 22/20 GA NI |
| 227 | | **7892000252** | 4 | TERMINAL, MALE PIN |
| 228 | | **7892000257** | 38 | TERMINAL, GREEN CAVITY<br>SEAL |
| 229 | | **7892000843** | 8 | TERMINAL, FEMALE<br>16 - 20 AWG |
| 230 | | **7892100063** | 11 | TERMINAL,TANGLESS FEMALE 280 S |
| 231 | | **7892100065** | 7 | TERMINAL, TANGLESS FEMALE |
| 301 | | **8594000001** | 20 | FLEXGUARD - 1.00" I.D.<br>(QUANTITY IN FEET) |
| 302 | | **8594000002** | 11 | FLEXGUARD - .750" I.D.<br>(QUANTITY IN FEET) |
| 303 | | **8594000003** | 15 | FLEXGUARD - .625" I.D.<br>(QUANTITY IN FEET) |
| 304 | | **8594000004** | 3 | FLEXGUARD - .500" I.D.<br>(QUANTITY IN FEET) |
| 305 | | **8594000005** | 4 | FLEXGUARD - .413" I.D.<br>(QUANTITY IN FEET) |
| 306 | | **8594000006** | 31 | FLEXGUARD - .350" I.D.<br>(QUANTITY IN FEET) |
| 307 | | **8594000019** | 98 | FLEXGUARD, 1/4" I.D.<br>(QUANTITY IN FEET) |
| 308 | | **8594000022** | 0 | FLEXGUARD - 1.250" I.D.<br>(QUANTITY IN FEET) |
| 309 | | **8594000023** | 1 | FLEXGUARD - 1.625" I.D.<br>(QUANTITY IN FEET) |
| 316 | | **80021593** | 76 | CABLE, 20 AWG CAN-BUS SHEILDED |
| 317 | | **8594100256** | 4 | 1/4" SHRINK TUBING (CLEAR) W/M |
| 318 | | **8594100257** | 2 | TUBING, HEAT SHRINK 1/2" I.D.<br>LINER, MELTABLE<br>(QUANTITY IN FEET) |
| 401 | | **7364100052** | 12 | SEAL |
| 402 | | **7892000254** | 15 | TERMINAL, GREEN CABLE SEAL |

Description
**WIRING HARNESS-CARRIER**

Assembly No.
**80054011**
Revision: **B**

| Item | FN | Part | Qty | Description |
|---|---|---|---|---|
| 403 | | **7892000255** | 2 | TERMINAL, GRAY CABLE SEAL |
| 404 | | **7892000256** | 9 | TERMINAL, BLUE CABLE SEAL |
| 405 | | **7892100003** | 4 | TERMINAL, DARK RED CABLE SEAL |

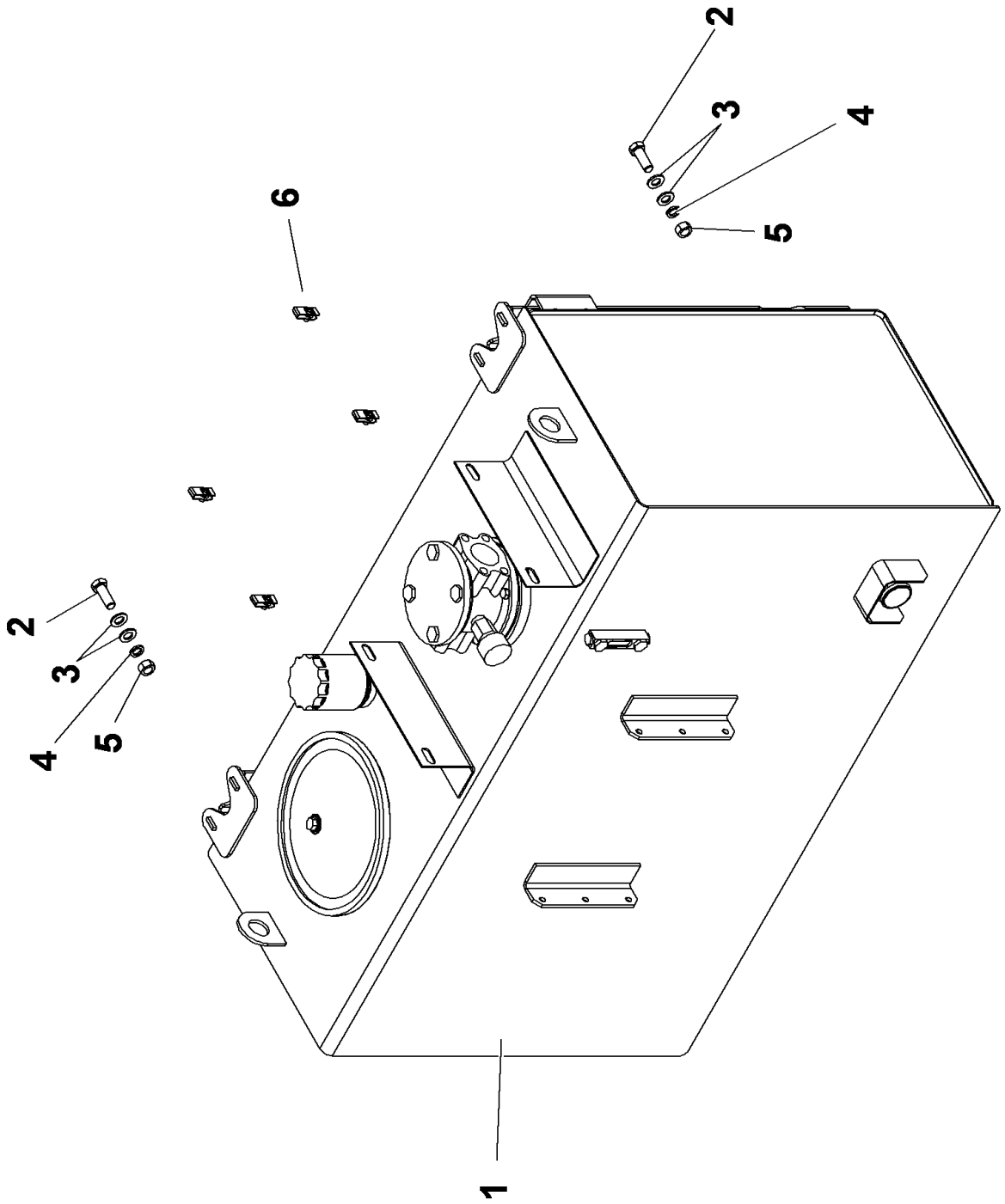


**80040443**

**(SHEET 1 OF 1)**

Description
**HYDRAULIC TANK INSTALLATION**

Assembly No.
**80040443**
Revision: **B**

| Item | FN | Part | Qty | Description |
|---|---|---|---|---|
| 1 | + | **80039526** | 1 | HYDRAULIC RESERVIOR ASSEMBLY |
| 2 | | **7126241653** | 2 | CAP SCREW, M16 X 45MM HEX HEAD |
| 3 | | **7951240014** | 4 | FLATWASHER 16MM I.D. |
| 4 | | **7951240210** | 2 | SPRING WASHER, 16MM I.D. |
| 5 | | **7661240003** | 2 | NUT, HEX<br>16MM N.C. |
| 6 | | **7659190024** | 4 | RETAINING NUT, M10 X 1.50 |

**+ SEE FURTHER BREAKDOWN THIS GROUP**

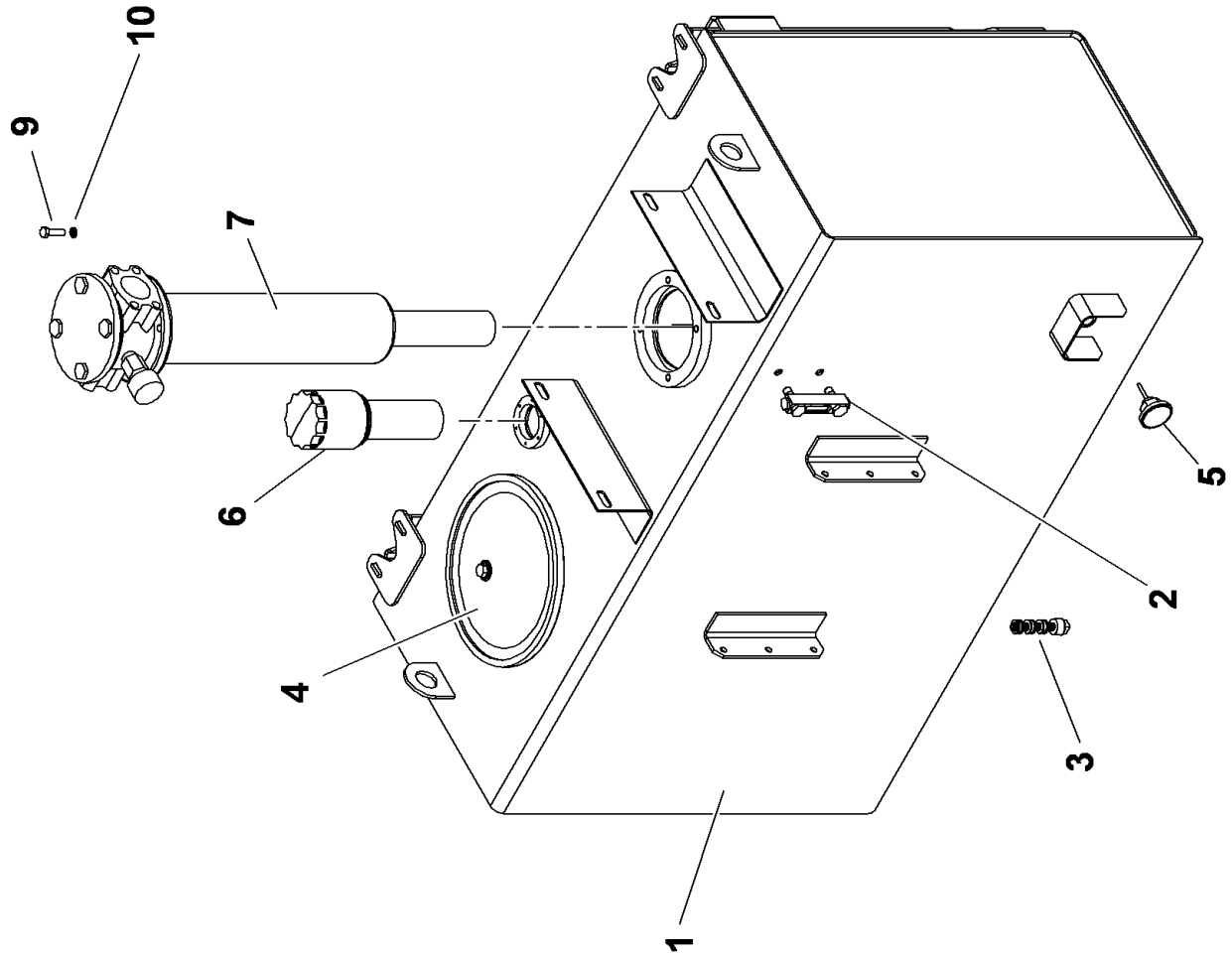


80039526

(SHEET 1 OF 1)

Description
**HYDRAULIC RESERVIOR ASSEMBLY**

Assembly No.
**80039526**
Revision:

| Item | FN | Part | Qty | Description |
|---|---|---|---|---|
| 1 | | **NSS** | 1 | NOT SERVICED SEPARATELY<br>TANK WELDMENT |
| 2 | | **7486002936** | 1 | GUAGE, OIL LEVEL<br>INCLUDES THE FOLLOWING PARTS |
| | | **9752101414** | 1 | KIT, SEAL MOUNTING |
| 3 | | **7709000157** | 1 | PLUG, MAGNETIC |
| 4 | | **90023146** | 1 | COVER, CLEANOUT 12"<br>INCLUDES THE FOLLOWING PARTS |
| | | **90023148** | 1 | GASKET, 12" |
| 5 | | **7486000836** | 1 | THERMOMETER |
| 6 | | **7258100146** | 1 | CAP, FILL (WITH BREATHER)<br>INCLUDES THE FOLLOWING PARTS |
| | | **9258100173** | 1 | BREATHER |
| | | **9258100174** | 1 | KIT, STRAINER |
| 7 | + | **9437100891** | 1 | FILTER ASSY. HYD. RETURN |
| 9 | | **7126191450** | 4 | CAP SCREW, M10 X 35MM HEX HEAD |
| 10 | | **7951190210** | 4 | LOCK WASHER, 10MM |

**+ SEE FURTHER BREAKDOWN THIS GROUP**

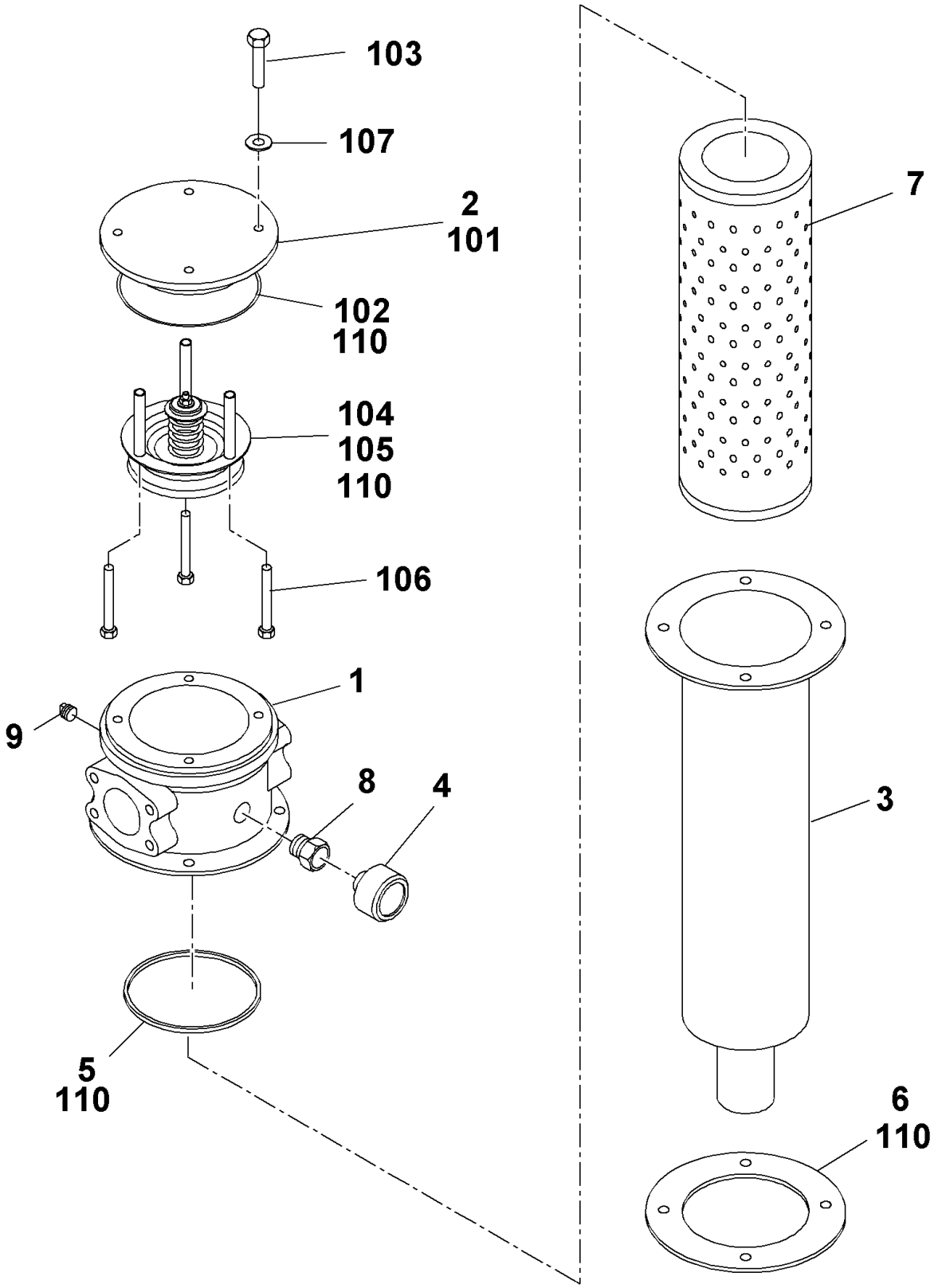


9437100891

(SHEET 1 OF 1)

Description
**FILTER ASSY. HYD. RETURN**

Assembly No.
**9437100891**
Revision:

| Item | FN | Part | Qty | Description |
|---|---|---|---|---|
| 1 | | **9437100842** | 1 | HEAD, FILTER |
| 2 | | **9437100763** | 1 | CAP ASSEMBLY<br>INCLUDES ITEMS 101 THRU 107 |
| 3 | | **NSS** | 1 | NOT SERVICED SEPARATELY<br>TUBE, BOWL ASSY. |
| 4 | | **9437100456** | 1 | GAUGE |
| 5 | * | **9437100479** | 1 | O-RING, SQUARE |
| 6 | * | **9437100480** | 1 | GASKET |
| 7 | | **9437100825** | 1 | ELEMENT |
| 8 | | **9437100894** | 1 | FITTING, ADAPTER |
| 9 | | **9437100895** | 1 | PLUG |
| 101 | | **9437100828** | 1 | CAP |
| 102 | * | **9437100575** | 1 | O-RING |
| 103 | | **9437100856** | 4 | CAPSCREW |
| 104 | | **9437100476** | 1 | VALVE, BY-PASS |
| 105 | | **9437100765** | 3 | SPACER |
| 106 | | **9437100766** | 3 | CAP SCREW, |
| 107 | | **9437100857** | 3 | WASHER |
| 110 | * | **9437100452** | 1 | KIT, SEAL |

*** REPAIR KIT AND/OR PART OF KIT**

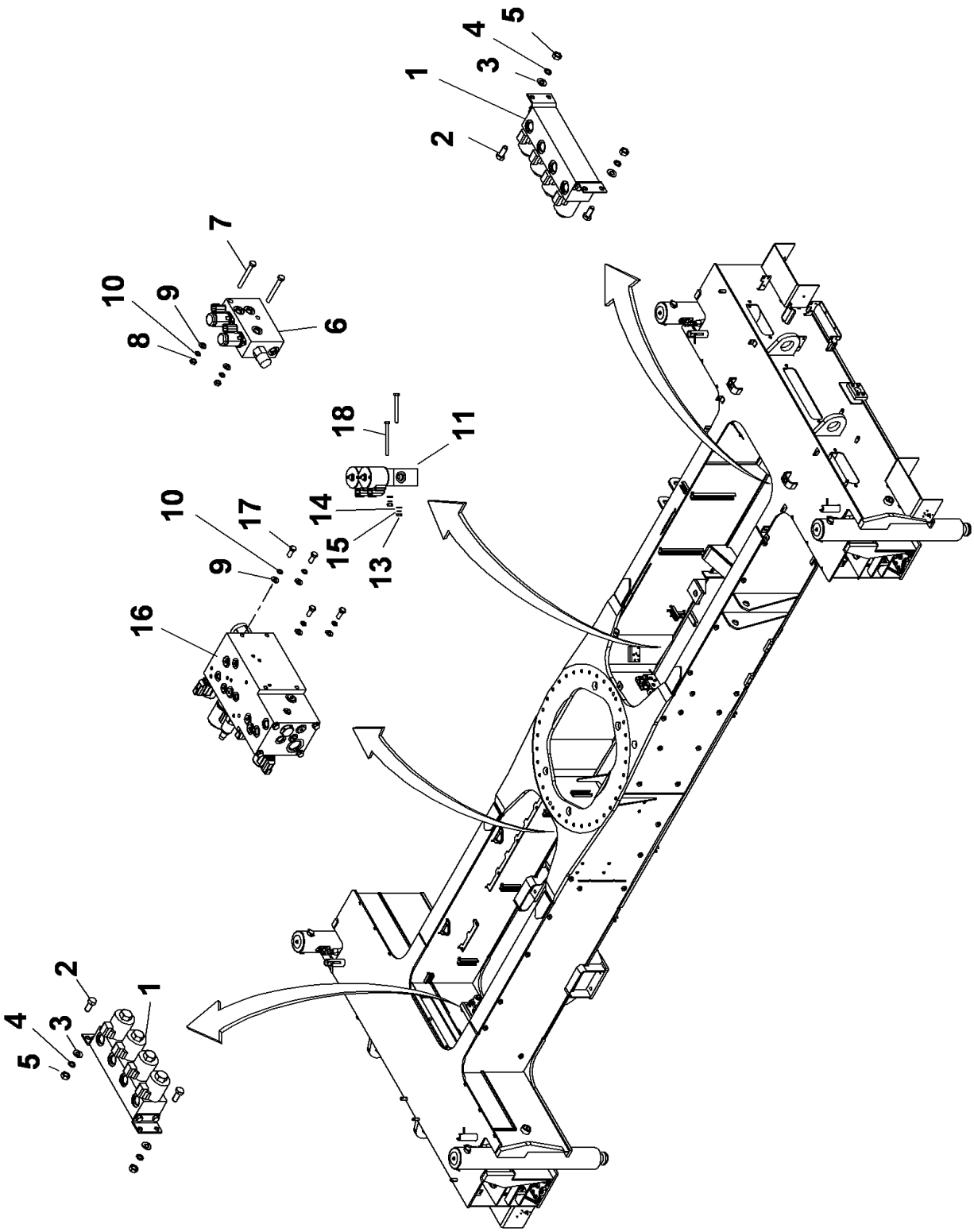


80033499

(SHEET 1 OF 1)

Description
**HYDRAULIC VALVE INSTALLATION**

Assembly No.
**80033499**
Revision: **A**

| Item | FN | Part | Qty | Description |
|---|---|---|---|---|
| 1 | + | **7926100906** | 2 | VALVE ASSEMBLY - OUTRIGGER CONTROL 4 SECTION (COMPLETE ASSEMBLY) |
| 2 | | **7126191253** | 4 | CAP SCREW, M10 X 25 HEX HEAD |
| 3 | | **7661190003** | 4 | NUT, HEX 10MM |
| 4 | | **7951190014** | 4 | FLAT WASHER, 10MM I.D. |
| 5 | | **7951190210** | 4 | LOCK WASHER, 10MM |
| 6 | + | **80029763** | 1 | PARK BRAKE RANGE SHIFT VALVE |
| 7 | | **7126172150** | 2 | CAP SCREW, HEX HEAD M8X70MM |
| 8 | | **7661170003** | 2 | NUT |
| 9 | | **7951170014** | 6 | WASHER, FLAT #8 |
| 10 | | **7951170210** | 6 | WASHER, LOCK 8MM |
| 11 | + | **80008126** | 1 | VALVE-AXLE LOCKOUT |
| 13 | # | **7661150003** | 2 | NUT, HEX |
| 14 | | **7951150014** | 2 | WASHER, 6MM I.D. |
| 15 | | **7951150210** | 2 | LOCKWASHER, 6MM I.D. |
| 16 | + | **80029764** | 1 | O/R REAR STEER VALVE |
| 17 | | **7126171153** | 4 | CAP SCREW, M8 X 20MM HEX HEAD |
| 18 | | **7126151753** | 2 | CAP SCREW,M6X50 -8.8 ISO 4017 |

**+ SEE FURTHER BREAKDOWN THIS GROUP**

**# SERVICED AS AN ASSEMBLY ONLY**

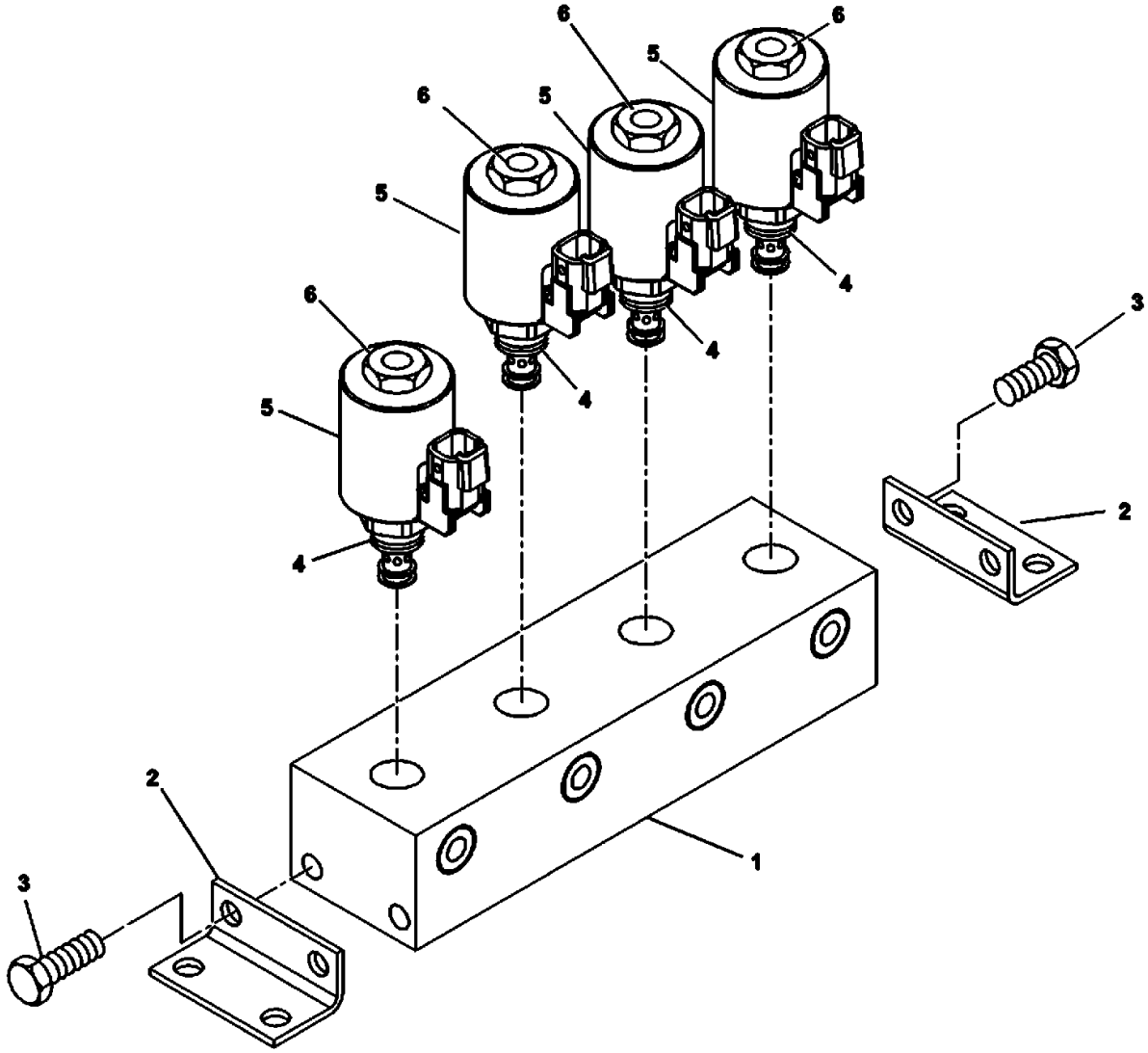


7926100906

(SHEET 1 OF 1)

Description
**VALVE ASSEMBLY - OUTRIGGER CONTROL 4 SECTION (COMPLETE ASSEMBLY)**

Assembly No.
**7926100906**
Revision:

| Item | FN | Part | Qty | Description |
|---|---|---|---|---|
| 1 | | **NSS** | 1 | NOT SERVICED SEPARATELY<br>MANIFOLD, ALUMINUM |
| 2 | | **9926112988** | 2 | BRACKET, MOUNTING |
| 3 | | **7115160650** | 4 | CAP SCREW,<br>3/8" - 16 N.C. X 3/4"<br>GRADE 5 |
| 4 | | **9926112986** | 4 | VALVE, CARTRIDGE<br>INCLUDES THE FOLLOWING PARTS |
| | | **9752100996** | 1 | KIT, REPAIR |
| 5 | | **9926113117** | 4 | COIL, 24V. |
| 6 | | **9926107745** | 4 | NUT |

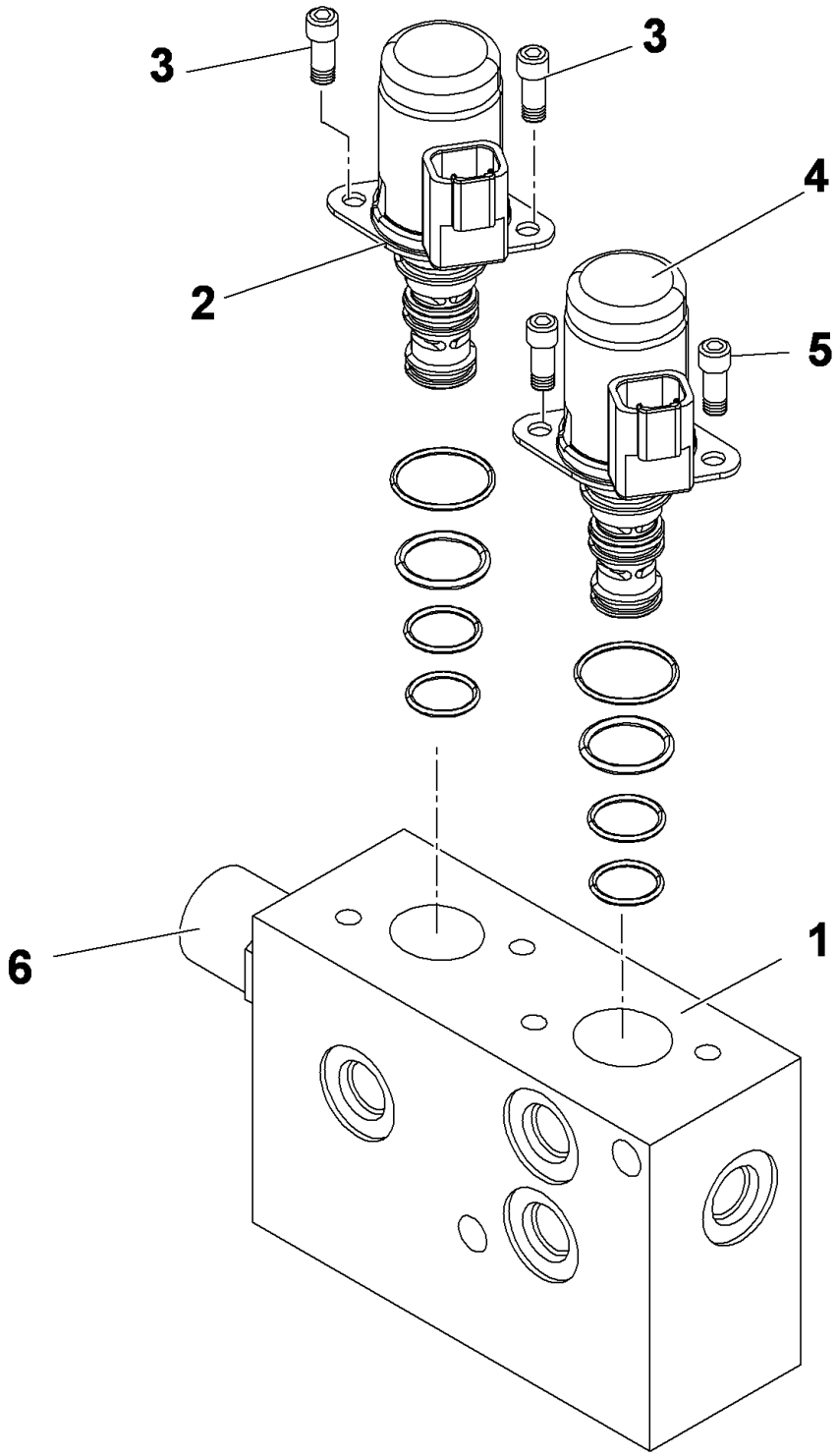


80029763

(SHEET 1 OF 1)

Description
**PARK BRAKE RANGE SHIFT VALVE**

Assembly No.
**80029763**
Revision:

| Item | FN | Part | Qty | Description |
|---|---|---|---|---|
| 1 | | **NSS** | 1 | NOT SERVICED SEPARATELY<br>BODY, MANIFOLD |
| 2 | | **90000894** | 1 | VALVE, CART. & COIL ASSY. 24V.<br>INCLUDES THE FOLLOWING PARTS |
| | | **9926113057** | 1 | KIT, SEAL |
| 3 | | **9926113142** | 2 | SCREW, HEX SOCKET |
| 4 | | **90023241** | 1 | VALVE, CART. & COIL ASSY. 24V.<br>INCLUDES THE FOLLOWING PARTS |
| | | **9926113176** | 1 | KIT, SEAL |
| 5 | | **9926113142** | 2 | SCREW, HEX SOCKET |
| 6 | | **90015412** | 1 | SWITCH ASSY, PRESSURE |

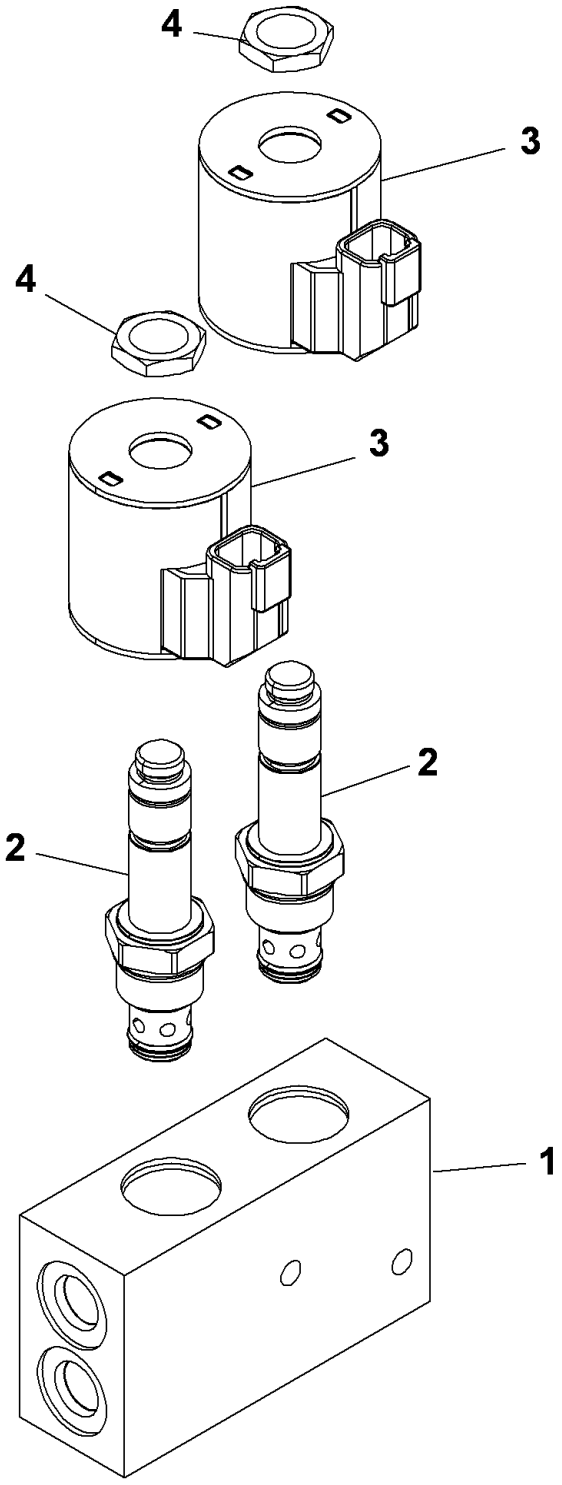


80008126

(SHEET 1 OF 1)

Description
**VALVE-AXLE LOCKOUT**

Assembly No.
**80008126**
Revision:

| Item | FN | Part | Qty | Description |
|---|---|---|---|---|
| 1 | | **NSS** | 1 | NOT SERVICED SEPARATELY<br>BODY, VALVE |
| 2 | | **9926110316** | 2 | CARTRIDGE VALVE<br>INCLUDES THE FOLLOWING PARTS |
| | | **9926106323** | 1 | KIT, SEAL |
| 3 | | **9926113339** | 2 | COIL, 24V. |
| 4 | | **9926107745** | 2 | NUT |

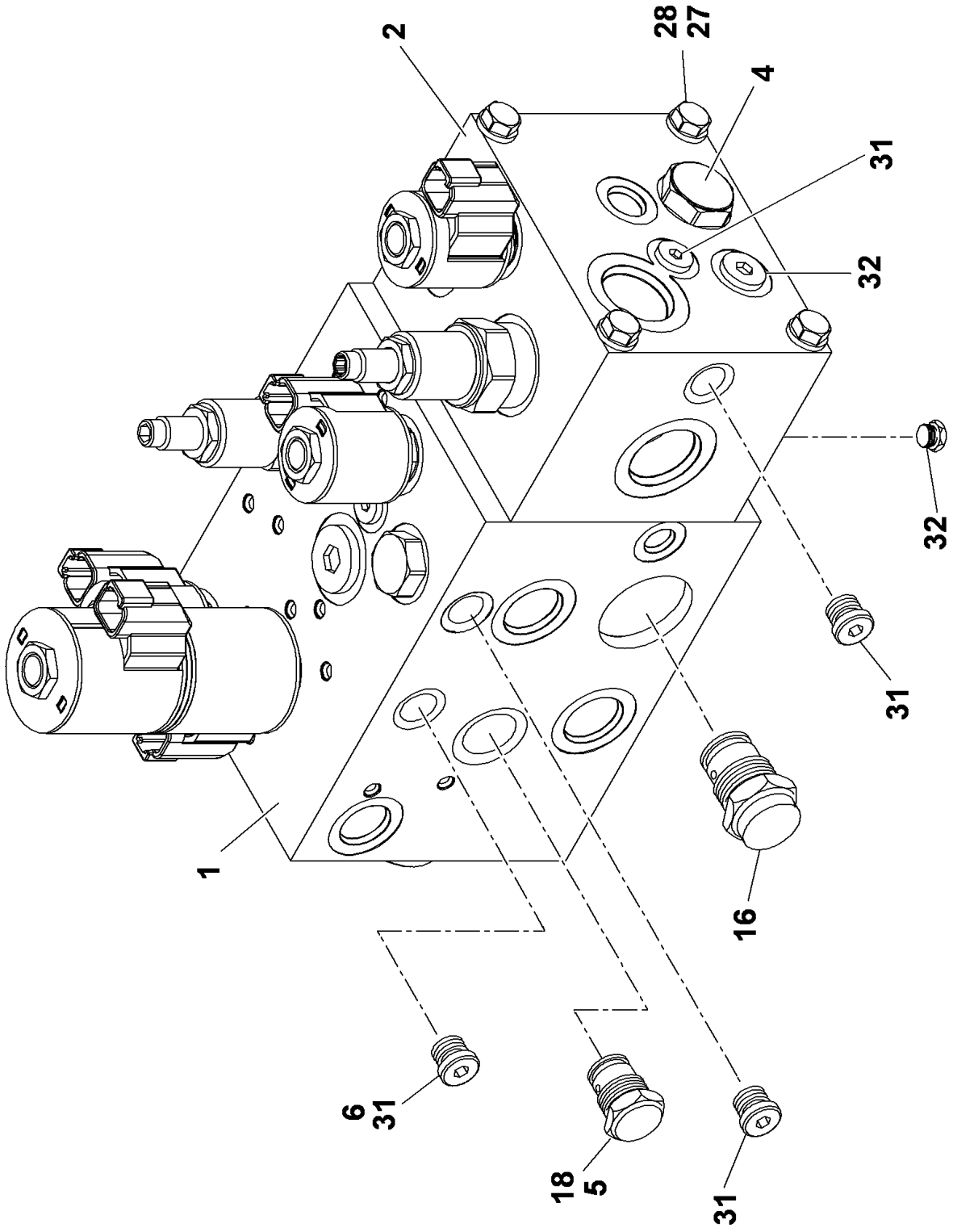


80029764

(SHEET 2 OF 2)

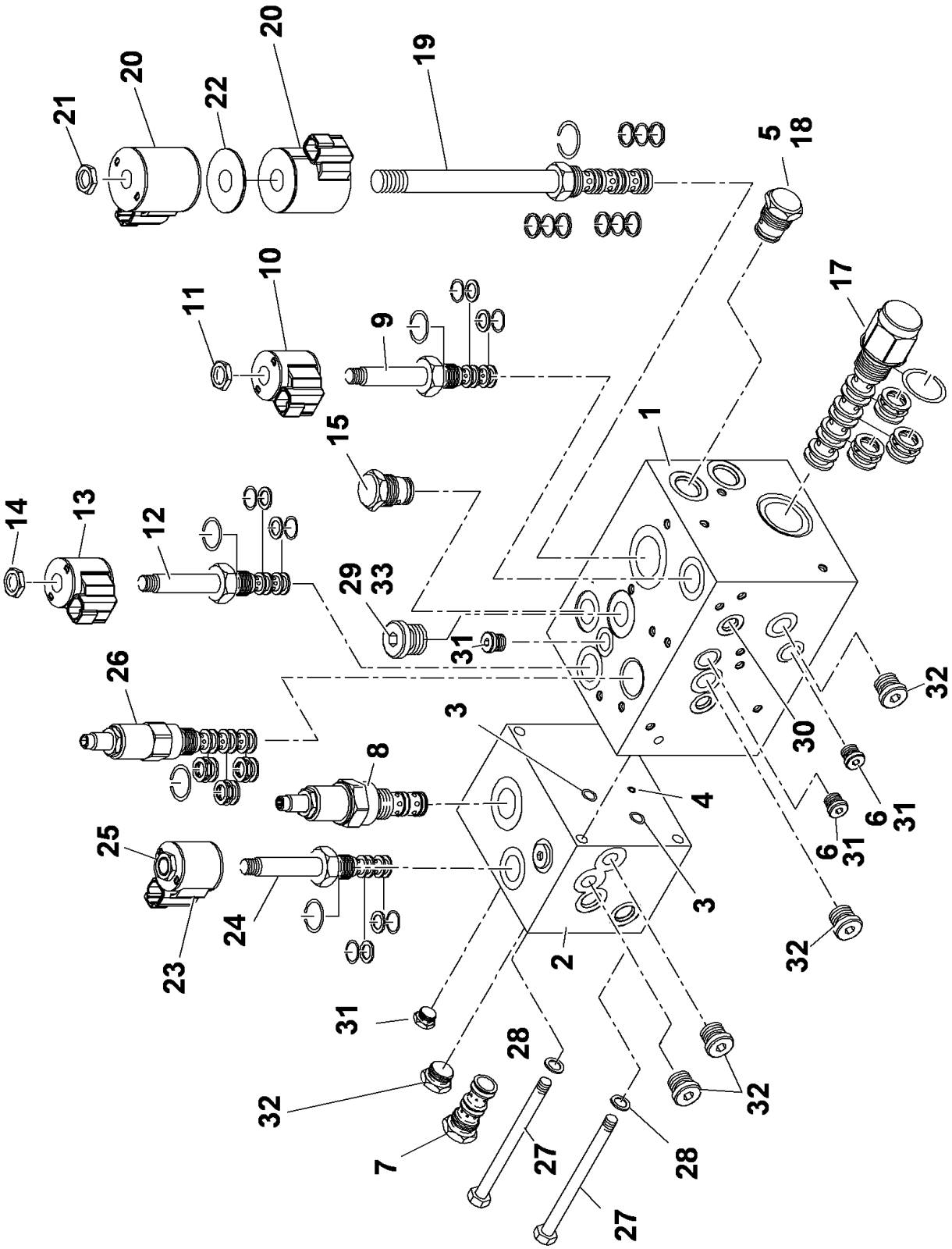


80029764

(SHEET 1 OF 2)

Description
**O/R REAR STEER VALVE**

Assembly No.
**80029764**
Revision:

| Item | FN | Part | Qty | Description |
|---|---|---|---|---|
| 1 | | **NSS** | 1 | NOT SERVICED SEPARATELY<br>MANIFOLD BLOCK |
| 2 | | **NSS** | 1 | NOT SERVICED SEPARATELY<br>MANIFOLD BLOCK |
| 3 | | **9926113181** | 2 | O-RING |
| 4 | | **9926113182** | 1 | O-RING |
| 5 | | **9926113183** | 2 | PISTON, PILOT |
| 6 | | **9926113184** | 3 | VALVE, CARTRIDGE SHUTTLE<br>INCLUDES THE FOLLOWING PARTS |
| | | **9926113185** | 1 | KIT, SEAL |
| 7 | | **9926113169** | 1 | VALVE, SHUTTLE<br>INCLUDES THE FOLLOWING PARTS |
| | | **9926113170** | 1 | KIT, SEAL |
| 8 | | **9926113186** | 1 | VALVE,PRESS.REDUCING @2500PSI<br>INCLUDES THE FOLLOWING PARTS |
| | | **9926113187** | 1 | KIT, SEAL |
| 9 | | **9926106474** | 1 | VALVE, CARTRIDGE<br>INCLUDES THE FOLLOWING PARTS |
| | | **9926108423** | 1 | KIT, SEAL |
| | | **9926107745** | 1 | NUT |
| 10 | | **90015312** | 1 | COIL ASSY. 24V. |
| 11 | | **9926107745** | 1 | NUT |
| 12 | | **9926110630** | 1 | VALVE<br>INCLUDES THE FOLLOWING PARTS |
| | | **9752101039** | 1 | KIT, REPAIR |
| 13 | | **90015312** | 1 | COIL ASSY. 24V. |
| 14 | | **9926107745** | 1 | NUT |
| 15 | | **9926113089** | 1 | VALVE, CHECK CARTRIDGE<br>INCLUDES THE FOLLOWING PARTS |
| | | **9926108644** | 1 | KIT, SEAL |
| 16 | | **9926111878** | 1 | VALVE, CHECK<br>INCLUDES THE FOLLOWING PARTS |
| | | **9926105593** | 1 | KIT, REPAIR |
| 17 | | **9926112992** | 1 | VALVE, CARTRIDGE DIRECTIONAL<br>INCLUDES THE FOLLOWING PARTS |
| | | **9926112997** | 1 | KIT, SEAL |
| 18 | | **9926113193** | 2 | VALVE ASSY. CHECK<br>INCLUDES THE FOLLOWING PARTS |
| | | **9752100944** | 1 | KIT, REPAIR |
| 19 | | **9926111720** | 1 | VALVE ASSEMBLY - SOLENOID 12 VOLT |

Description
**O/R REAR STEER VALVE**

Assembly No.
**80029764**
Revision:

| Item | FN | Part | Qty | Description |
|---|---|---|---|---|
| | | | | INCLUDES THE FOLLOWING PARTS |
| | | **9926111719** | 1 | KIT, SEAL |
| 20 | | **9926113339** | 2 | COIL, 24V. |
| 21 | | **9926107745** | 1 | NUT |
| 22 | | **90018312** | 1 | SPACER |
| 23 | | **9926113194** | 1 | VALVE ASSY. CARTRIDGE |
| | | | | INCLUDES THE FOLLOWING PARTS |
| | | **9926113195** | 1 | KIT, SEAL |
| 24 | | **9926113339** | 1 | COIL, 24V. |
| 25 | | **9926107745** | 1 | NUT |
| 26 | | **90018313** | 1 | VALVE, CART RELIEF @ 500 PSI |
| | | | | INCLUDES THE FOLLOWING PARTS |
| | | **9926108124** | 1 | KIT, REPAIR |
| 27 | | **9926113196** | 4 | CAPSCREW |
| 28 | | **9926113197** | 4 | WASHER |
| 29 | | **9926113297** | 1 | PLUG, ORIFICE .076 |
| 30 | | **9926113296** | 1 | PLUG, ORIFICE .261 |
| 31 | | **9926111747** | 7 | PLUG, PORT |
| | | | | INCLUDES THE FOLLOWING PARTS |
| | | **9926111748** | 1 | O-RING |
| 32 | | **9926111396** | 7 | PLUG |
| 33 | | **9926113295** | 1 | PLUG #10 |
| | | | | INCLUDES THE FOLLOWING PARTS |
| | | **7755910002** | 1 | O-RING |
| 34 | | **9926113294** | 2 | PLUG |

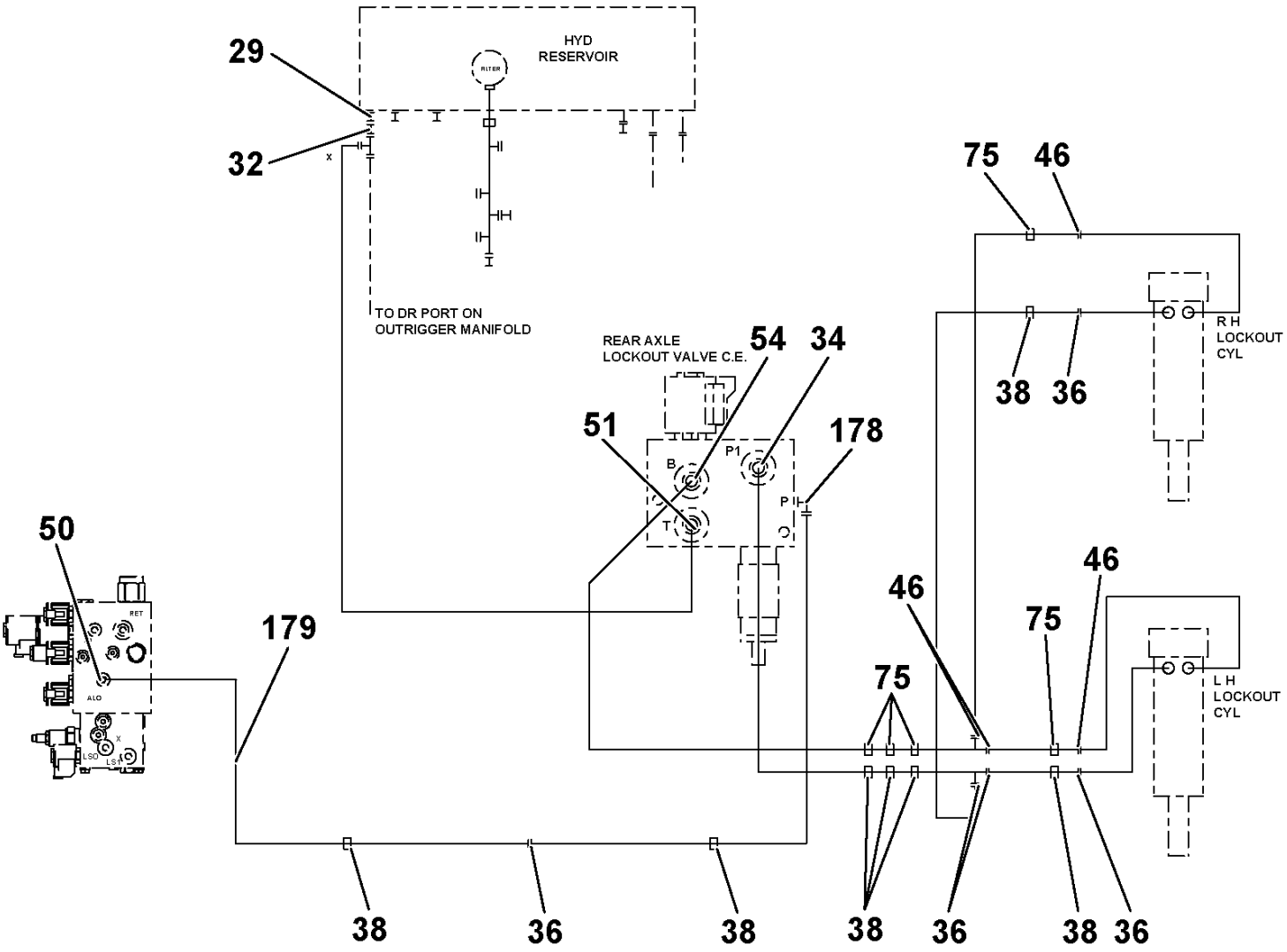


AXLE LOCKOUT CE

80034278

(SHEET 5 OF 5)

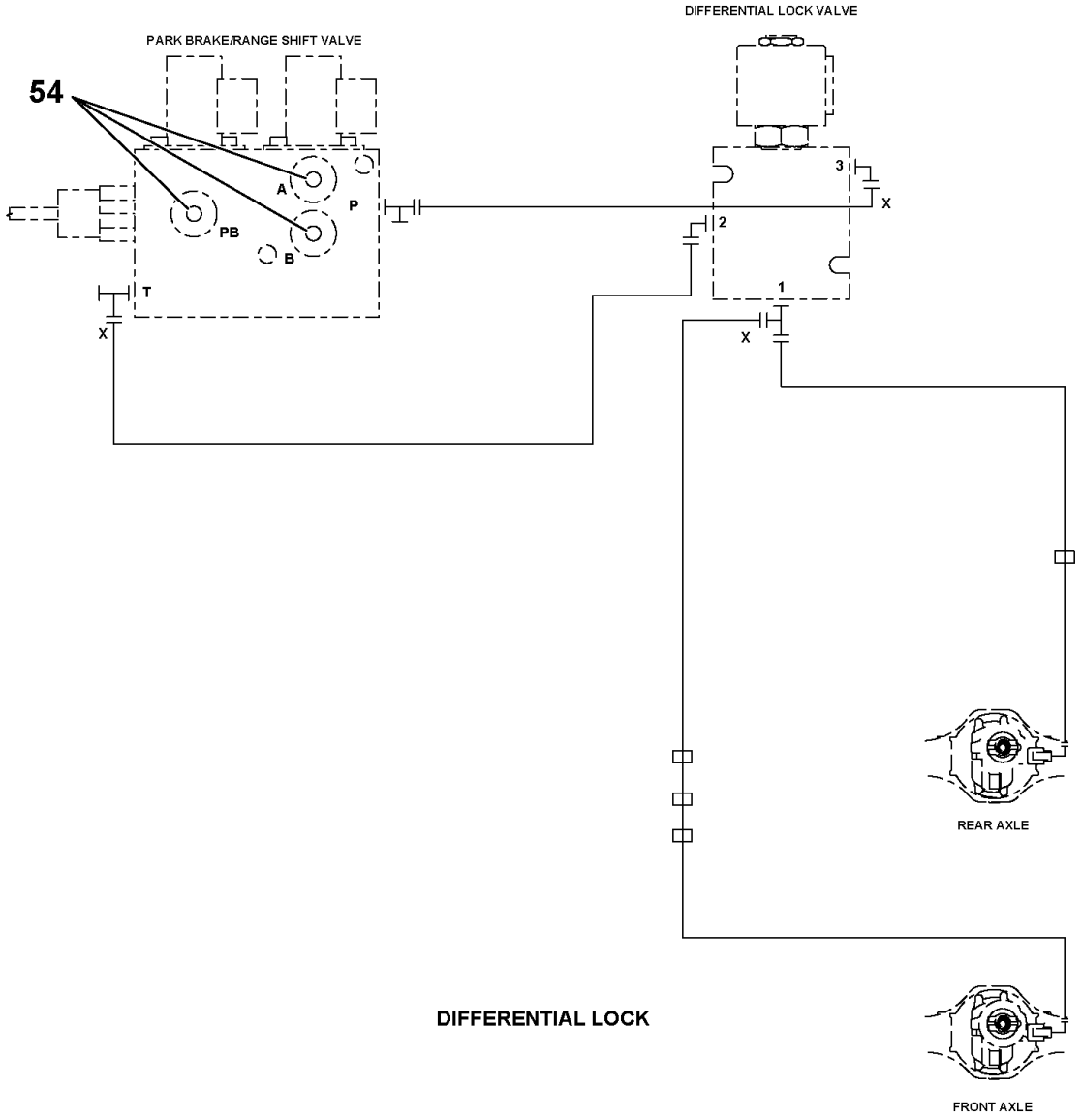


DIFFERENTIAL LOCK

80034278

(SHEET 4 OF 5)

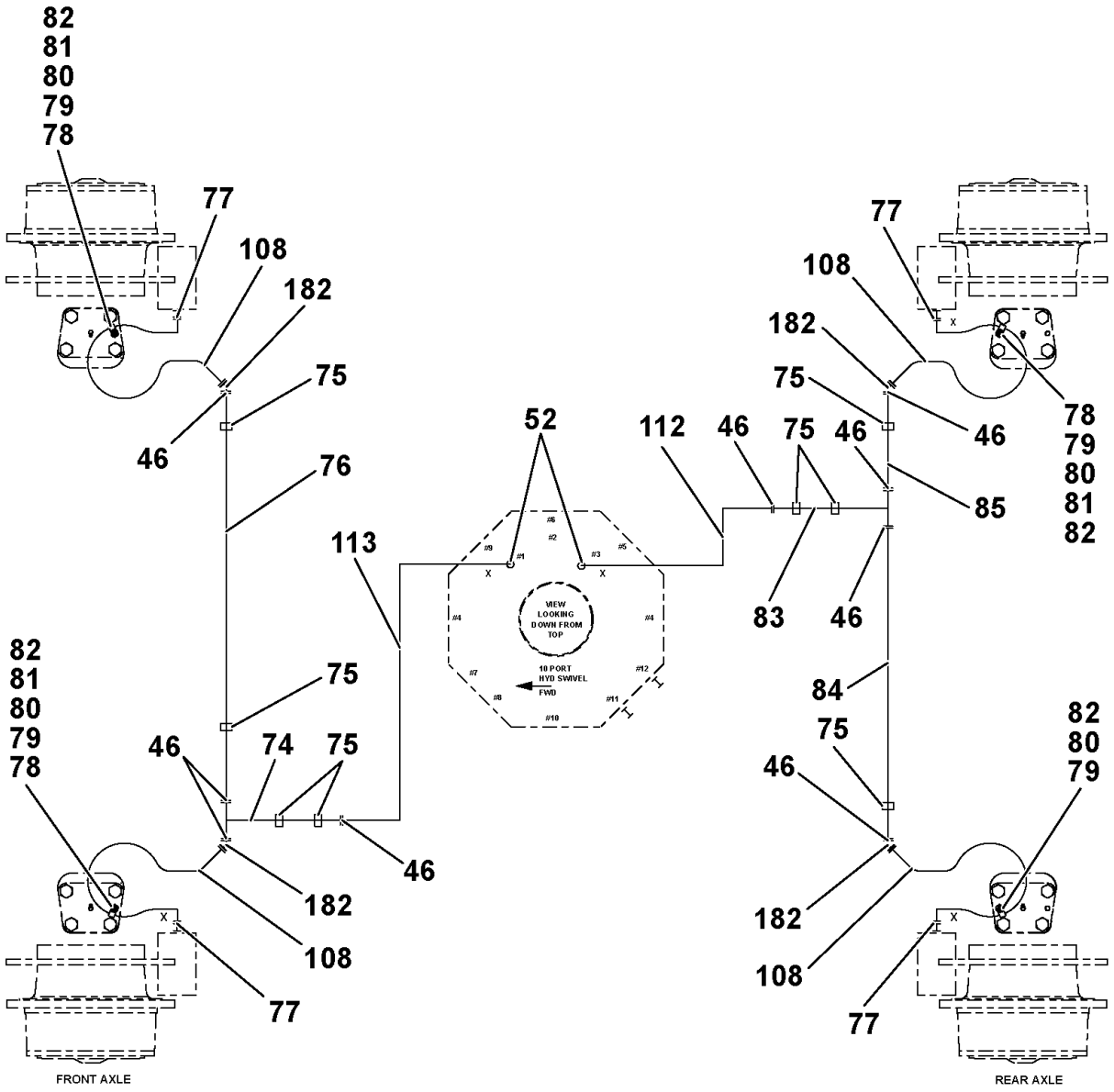


SERVICE BRAKE

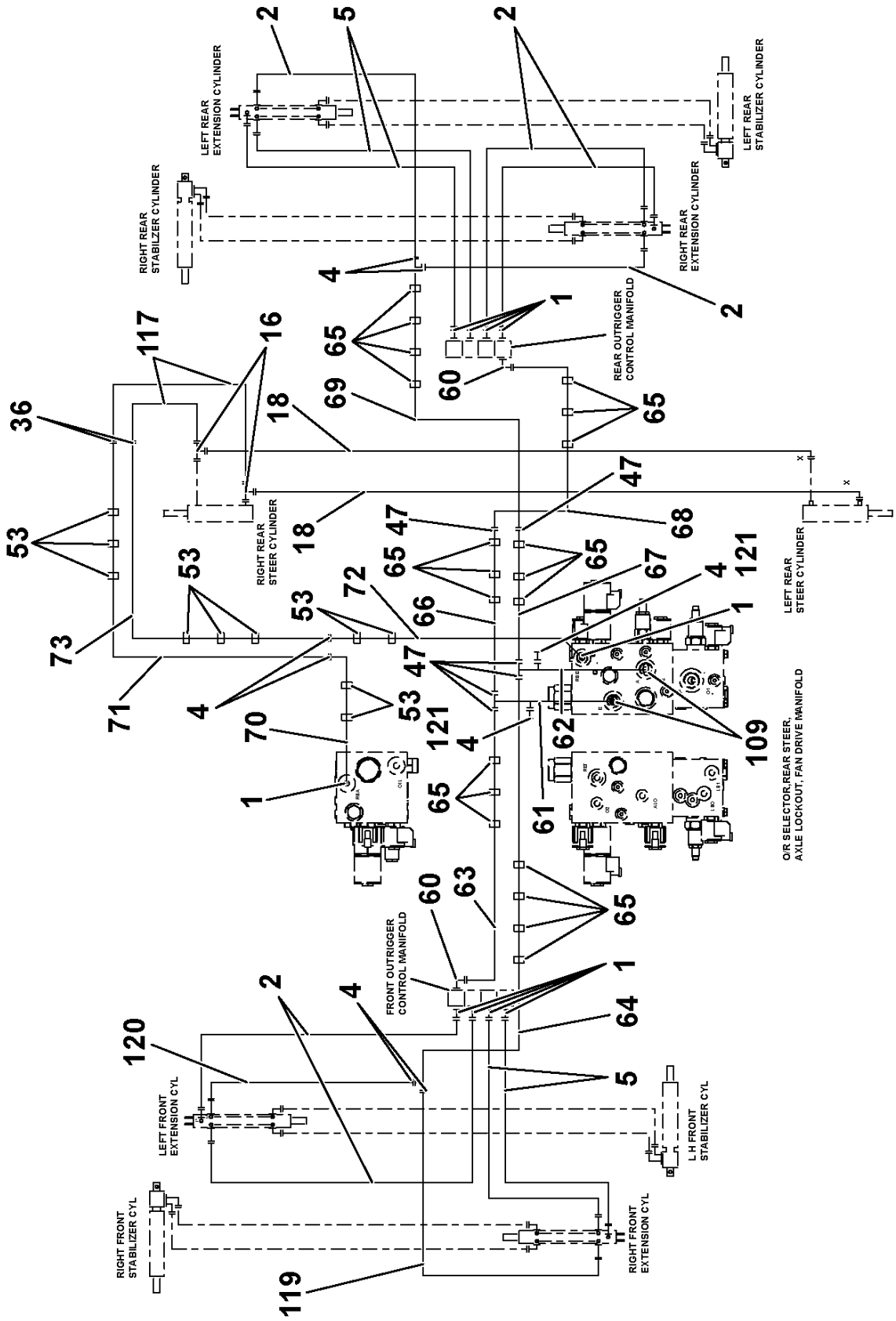


80034278

(SHEET 2 OF 5)

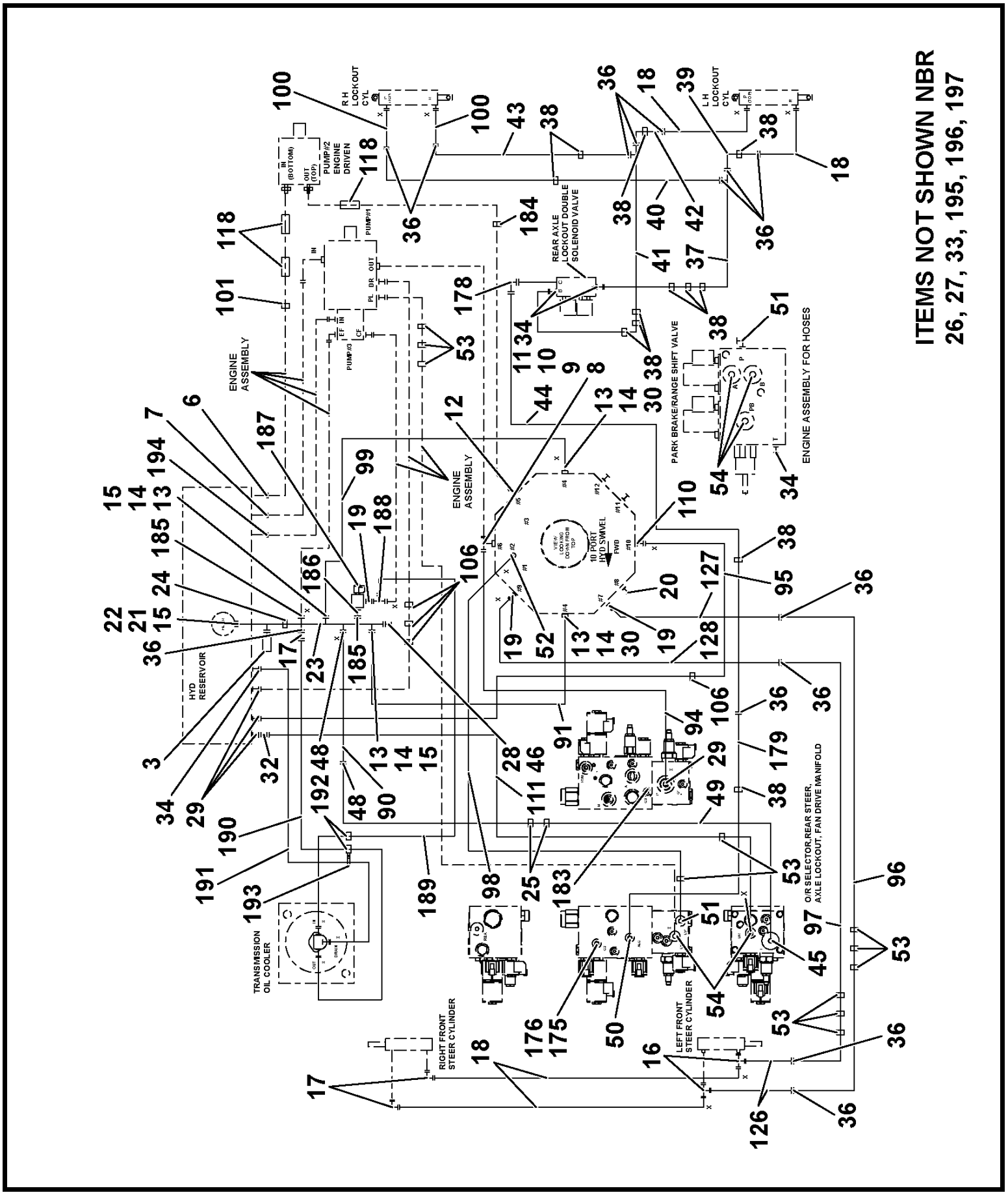


80034278

(SHEET 1 OF 5)

Description
**HYDRAULIC LINES INSTALLATION**

Assembly No.
**80034278**
Revision: **K**

| Item | FN | Part | Qty | Description |
|---|---|---|---|---|
| 1 | | **7447080801** | 10 | ADAPTER, STRAIGHT<br>INCLUDES THE FOLLOWING PARTS |
| | | **7755014002** | 1 | O-RING |
| | | **7755908002** | 1 | O-RING |
| 2 | | **7555306000** | 6 | HOSE ASSY, 1/2"I.D. X 60"LONG |
| 3 | | **7872100171** | 1 | SWITCH, 190 TEMPERATURE (N.C.) |
| 4 | | **7755014002** | 8 | O-RING |
| 5 | | **7555307200** | 4 | 1/2" I.D. X 72" LONG |
| 6 | | **7300100024** | 2 | CLAMP, T-BOLT 1.75" NOM |
| 7 | | **7300001103** | 2 | CLAMP, T-BOLT |
| 8 | | **7888100000** | 1 | TEE, SPLIT FLANGE BRANCH |
| 9 | # | **7450000188** | 4 | SPLIT FLANGE HALF, 1 1/4" |
| 10 | | **7755222002** | 2 | O-RING |
| 11 | | **7126191450** | 4 | CAP SCREW, M10 X 35MM HEX HEAD |
| 12 | | **7447121208** | 1 | ELBOW, 45 DEGREE MALE<br>INCLUDES THE FOLLOWING PARTS |
| | | **7755018002** | 1 | O-RING |
| | | **7755912002** | 1 | O-RING |
| 13 | # | **7450000102** | 8 | FLANGE, SPLIT |
| 14 | | **7755225002** | 3 | O-RING |
| 15 | | **7115181250** | 8 | CAP SCREW,<br>1/2" - 13 N.C. X 1 1/2"<br>GRADE 5 |
| 16 | | **7447060634** | 4 | TEE, FEMALE RUN<br>INCLUDES THE FOLLOWING PARTS |
| | | **7755012002** | 1 | O-RING |
| | | **7755906002** | 1 | O-RING |
| 17 | | **7447060633** | 2 | ELBOW, 90 DEGREE MALE<br>INCLUDES THE FOLLOWING PARTS |
| | | **7755012002** | 1 | O-RING |
| 18 | | **7555202401** | 6 | HOSE ASSY, 3/8"I.D. X 24" LONG |
| 19 | | **7447060801** | 3 | ADAPTER, STRAIGHT MALE<br>INCLUDES THE FOLLOWING PARTS |
| | | **7755012002** | 1 | O-RING |
| | | **7755908002** | 1 | O-RING |
| 20 | | **7711080001** | 1 | O RING PLUG |
| 21 | # | **7450000103** | 2 | FLANGE, SPLIT |
| 22 | | **7755228002** | 1 | O-RING, 2" |
| 23 | | **80090141** | 1 | TUBE ASSY, RETURN MANIFOLD |

**# SERVICED AS AN ASSEMBLY ONLY**

Description
**HYDRAULIC LINES INSTALLATION**

Assembly No.
**80034278**
Revision: **K**

| Item | FN | Part | Qty | Description |
|---|---|---|---|---|
| 24 | | **7300000408** | 1 | CLAMP, TUBING |
| 25 | | **7300000404** | 2 | CLAMP, 1" TUBING |
| 26 | | **7450000401** | 1 | PLUG |
| 27 | | **7115171250** | 4 | CAP SCREW,<br>7/16" - 14 N.C. X 1 1/2"<br>GRADE 5 |
| 28 | | **7447040416** | 1 | CAP ASSY, FEMALE ORS THREAD |
| 29 | | **7447121201** | 4 | ADAPTER, STRAIGHT MALE<br>INCLUDES THE FOLLOWING PARTS |
| | | **7755018002** | 1 | O-RING |
| | | **7755912002** | 1 | O-RING |
| 30 | | **7126211450** | 8 | CAP SCREW, M12 X 35MM HEX HEAD |
| 32 | | **7447120413** | 2 | REDUCER |
| 33 | | **7447121216** | 1 | CAP, 3/4 ORS |
| 34 | | **7447060601** | 4 | ADAPTER, STRAIGHT MALE<br>INCLUDES THE FOLLOWING PARTS |
| | | **7755012002** | 1 | O-RING |
| | | **7755906002** | 1 | O-RING |
| 36 | | **7755012002** | 16 | O-RING |
| 37 | | **7910101588** | 1 | TUBE ASSY, ALO P2 TO TEE |
| 38 | | **7300000399** | 12 | CLAMP, TUBING<br>3/8" I.D. |
| 39 | | **7910101509** | 1 | TUBE ASSY, ALO P2 SHORT |
| 40 | | **7910101510** | 1 | TUBE ASSY, ALO P2 LONG |
| 41 | | **7910101587** | 1 | TUBE ASSY, ALO P1 TO TEE |
| 42 | | **7910101507** | 1 | TUBE ASSY, ALO P1 SHORT |
| 43 | | **7910101508** | 1 | TUBE ASSY, ALO P1 LONG |
| 44 | | **80009830** | 1 | TUBE ASSY |
| 45 | | **7447161203** | 1 | ELBOW, 90 DEGREE<br>INCLUDES THE FOLLOWING PARTS |
| | | **7755021002** | 1 | O-RING |
| | | **7755912002** | 1 | O-RING |
| 46 | | **7755011002** | 9 | O-RING |
| 47 | | **7755018002** | 7 | O-RING |
| 48 | | **7755021002** | 2 | O-RING |
| 49 | | **7910101490** | 1 | TUBE ASSY,SEL VALV TO RET MANI |
| 50 | | **7447060401** | 1 | ADAPTER, STRAIGHT MALE |

Description
**HYDRAULIC LINES INSTALLATION**

Assembly No.
**80034278**
Revision: **K**

| Item | FN | Part | Qty | Description |
|---|---|---|---|---|
| | | | | INCLUDES THE FOLLOWING PARTS |
| | | **7755012002** | 1 | O-RING |
| | | **7755904002** | 1 | O-RING |
| 51 | | **7447040603** | 2 | FITTING, 90 DEGREE |
| | | | | INCLUDES THE FOLLOWING PARTS |
| | | **7755011002** | 1 | O-RING |
| | | **7755906002** | 1 | O-RING |
| 52 | | **7447040401** | 3 | ADAPTER, STRAIGHT |
| | | | | INCLUDES THE FOLLOWING PARTS |
| | | **7755011002** | 1 | O-RING |
| | | **7755904002** | 1 | O-RING |
| 53 | | **7300000400** | 17 | CLAMP, TUBING |
| 54 | | **7447040601** | 5 | ADAPTER, STRAIGHT |
| | | | | INCLUDES THE FOLLOWING PARTS |
| | | **7755011002** | 1 | O-RING |
| | | **7755906002** | 1 | O-RING |
| 60 | | **7447120803** | 2 | ELBOW, 90 DEGREE |
| | | | | INCLUDES THE FOLLOWING PARTS |
| | | **7755018002** | 1 | O-RING |
| | | **7755908002** | 1 | O-RING |
| 61 | | **7910101472** | 1 | TUBE ASSY, SEL TO TEE EXT |
| 62 | | **7910101473** | 1 | TUBE ASSY, SEL TO TEE RET |
| 63 | | **7910101474** | 1 | TUBE ASSY, TEE TO STACK FRT |
| 64 | | **7910101475** | 1 | TUBE ASSY, TEE TO HOSE RET FRT |
| 65 | | **7300000402** | 20 | CLAMP, TUBING |
| 66 | | **7910101476** | 1 | TUBE ASSY,TEE TO TUBE EXT REAR |
| 67 | | **7910101478** | 1 | TUBE ASSY,TEE TO TUBE RET REAR |
| 68 | | **7910101477** | 1 | TUBE ASSY, TUBE TO STACK REAR |
| 69 | | **7910101479** | 1 | TUBE ASSY, TUBE TO HOSE RET RE |
| 70 | | **7910101470** | 1 | TUBE ASSY, VALVE TO TUBE RSA |
| 71 | | **7910101471** | 1 | TUBE ASSY, HOSE TO TUBE RSA |
| 72 | | **7910101468** | 1 | TUBE ASSY, VALVE TO TUBE RSB |
| 73 | | **7910101469** | 1 | TUBE ASSY, HOSE TO TUBE RSB |
| 74 | | **7910101571** | 1 | TUBE ASSY,BRAKE HOSE TO TUBE F |
| 75 | | **7300000397** | 8 | CLAMP, TUBING<br>1/4" I.D. |
| 76 | | **7910101572** | 1 | TUBE ASSY,BRAKE TUBE SHORT FRT |
| 77 | | **7447040501** | 4 | ADAPTER, STRAIGHT |

Description
**HYDRAULIC LINES INSTALLATION**

Assembly No.
**80034278**
Revision: **K**

| Item | FN | Part | Qty | Description |
|---|---|---|---|---|
| 78 | | **6099001190** | 3 | BOLT, MODIFIED |
| 79 | | **7300000101** | 4 | CLAMP, TUBING<br>1/2" I.D. |
| 80 | | **7950140050** | 4 | WASHER, LOCK 1/4" |
| 81 | | **7950180050** | 3 | WASHER, LOCK 1/2" I.D. |
| 82 | | **7660140000** | 4 | NUT, HEX<br>1/4" - 20 N.C. |
| 83 | | **7910101496** | 1 | TUBE ASSY,BRK TUBE TO TEE REAR |
| 84 | | **7910101570** | 1 | TUBE ASSY,BRAKE TUBE REAR LONG |
| 85 | | **7910101569** | 1 | TUBE ASSY,BRAKE TUBE REAR SHRT |
| 90 | | **7555603591** | 1 | HOSE ASSY, 1.00 DIA |
| 91 | | **7546803793** | 1 | HOSE ASSY |
| 94 | | **7555502761** | 1 | 3/4" I.D. HYDR HOSE ASSY STR-9 |
| 95 | | **7555507491** | 1 | HOSE ASSY, .75 DIA |
| 96 | | **7910101640** | 1 | TUBE ASSY, FRONT STEER |
| 97 | | **7910101639** | 1 | TUBE ASSY, FRONT STEER |
| 98 | | **7555104623** | 1 | HOSE ASSY, .25 DIA |
| 99 | | **7546802393** | 1 | HOSE ASSY, 1 1/2" I.D.X 23" |
| 100 | | **7555202801** | 2 | HOSE ASSY, 3/8"I.D. X 28" LONG |
| 101 | | **7300000407** | 1 | CLAMP, TUBING<br>1 3/4" I.D. |
| 106 | | **7300000405** | 5 | CLAMP, TUBING |
| 108 | | **7555104201** | 4 | HOSE ASSY, 1/4"I.D. X 42" LONG |
| 109 | | **7447121001** | 2 | ADAPTER, STRAIGHT<br>INCLUDES THE FOLLOWING PARTS |
| | | **7755018002** | 1 | O-RING |
| | | **7755910002** | 1 | O-RING |
| 110 | | **7447121601** | 1 | ADAPTER, STRAIGHT<br>INCLUDES THE FOLLOWING PARTS |
| | | **7755018002** | 1 | O-RING |
| | | **7755916002** | 1 | O-RING |
| 111 | | **7555105401** | 1 | HOSE ASSY, USE AS REQUIRED<br>1/4" I.D. X 54" |
| 112 | | **7555101801** | 1 | HOSE ASSY, 1/4"I.D. X 18" LONG |
| 113 | | **7555102801** | 1 | HOSE ASSY, 1/4"I.D. X 28"LONG |
| 117 | | **7555201802** | 2 | HOSE ASSY, 3/8"I.D. X 18"LONG |
| 118 | | **7814100077** | 6 | GUARD, HOSE |

Description
**HYDRAULIC LINES INSTALLATION**

Assembly No.
**80034278**
Revision: **K**

| Item | FN | Part | Qty | Description |
|---|---|---|---|---|
| 119 | | **7555306500** | 1 | HOSE ASSY, 1/2"I.D. X 65"LONG |
| 120 | | **7555304500** | 1 | HOSE ASSY, 1/2"I.D. X 45" LONG |
| 121 | | **7447080816** | 2 | CAP |
| 126 | | **7555202400** | 2 | HOSE ASSY, 3/8"I.D. X 24" LONG |
| 127 | | **7555202000** | 1 | 3/8" I.D. HYDR HOSE ASSY STR B |
| 128 | | **7555202101** | 1 | HOSE ASSY, 3/8"I.D. X 21"LONG |
| 175 | | **7447060403** | 1 | ELBOW, 90 DEGREE MALE<br>INCLUDES THE FOLLOWING PARTS |
| | | **7755012002** | 1 | O-RING |
| | | **7755904002** | 1 | O-RING |
| 176 | | **7443100140** | 1 | COUPLING, 3/8" TEST PORT<br>INCLUDES THE FOLLOWING PARTS |
| | | **9447100041** | 1 | CAP, DUST - DIAGNOSTIC |
| 178 | | **7447060603** | 1 | ELBOW, 90 DEGREE<br>INCLUDES THE FOLLOWING PARTS |
| | | **7755012002** | 1 | O-RING |
| | | **7755906002** | 1 | O-RING |
| 179 | | **7910101672** | 1 | TUBE ASSY SEL AXLE LO P3 |
| 182 | | **7447040446** | 4 | ADAPTER - 45 DEGREE |
| 183 | | **7711040001** | 1 | PLUG |
| 185 | | **7755014002** | 2 | O-RING |
| 186 | | **7447080840** | 1 | ADAPTER, STRAIGHT FEMALE<br>INCLUDES THE FOLLOWING PARTS |
| | | **7755014002** | 1 | O-RING |
| | | **7755908002** | 1 | O-RING |
| 187 | + | **80010095** | 1 | SOLENOID VALVE ASSEMBLY |
| 188 | | **7447060634** | 1 | TEE, FEMALE RUN<br>INCLUDES THE FOLLOWING PARTS |
| | | **7755012002** | 1 | O-RING |
| | | **7755906002** | 1 | O-RING |
| 189 | | **7555206801** | 1 | HOSE ASSY, 3/8"I.D. X 68" LONG |
| 190 | | **7555206801** | 1 | HOSE ASSY, 3/8"I.D. X 68" LONG |
| 191 | | **7555206402** | 1 | 3/8" I.D. X 64" |
| 192 | | **7300000401** | 5 | CLAMP, TUBING<br>5/8" I.D. |
| 193 | | **7300000102** | 2 | CLAMP, TUBING<br>5/8" I.D. |
| 194 | | **80034442** | 2 | T-BOLT Clamp 1.50" |
| 195 | | **80060094** | 10 | SADDLE SPACER |

**+ SEE FURTHER BREAKDOWN THIS GROUP**

Description
**HYDRAULIC LINES INSTALLATION**

Assembly No.
**80034278**
Revision: **K**

| Item | FN | Part | Qty | Description |
|---|---|---|---|---|
| 196 | | **80061556** | 10 | SADDLE SPACER .63-6.0" BUNDLES |
| 197 | | **7850000805** | 40 | TIE, CABLE (BLACK)<br>13 3/8" LONG |
| 198 | | **8594000027** | 6 | WRAP, HOSE<br>(QUANTITY IN FEET) |

**Notes**

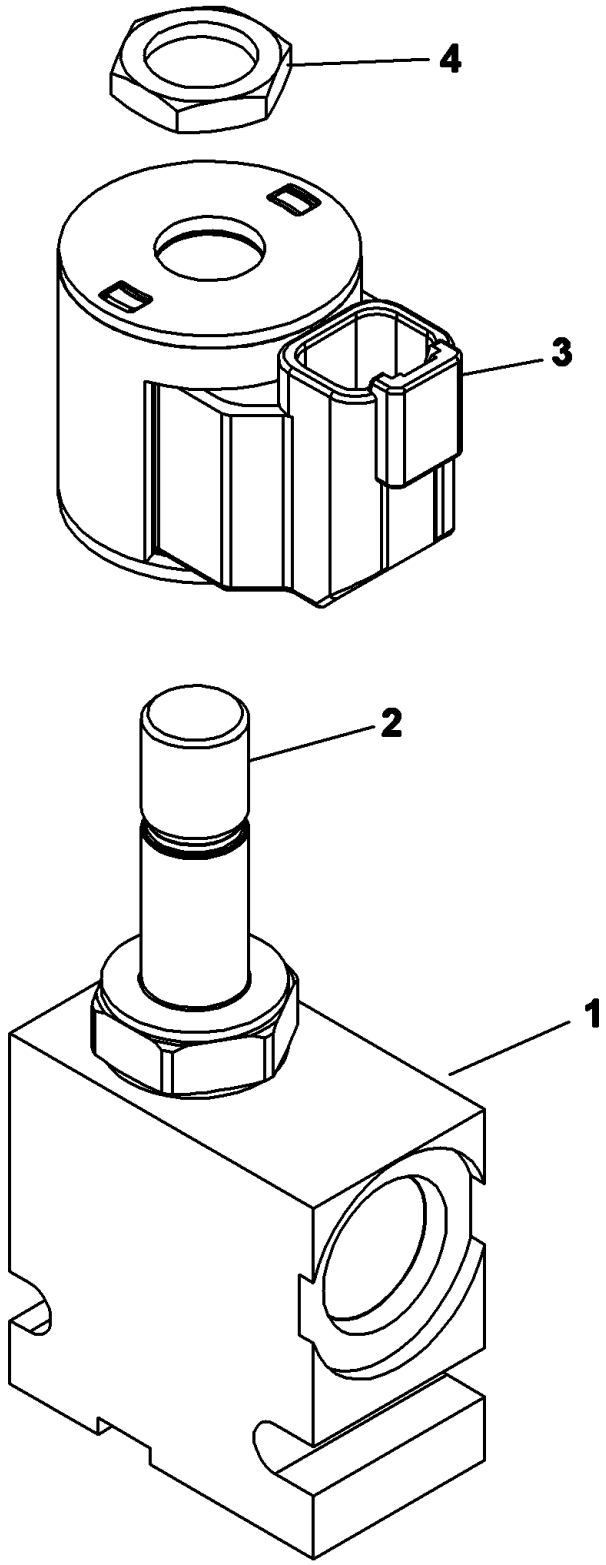


80010095

(SHEET 1 OF 1)

Description
**SOLENOID VALVE ASSEMBLY**

Assembly No.
**80010095**
Revision:

| Item | FN | Part | Qty | Description |
|---|---|---|---|---|
| 1 | | **NSS** | 1 | NOT SERVICED SEPARATELY<br>BODY, VALVE |
| 2 | | **9926110722** | 1 | CARTRIDGE<br>INCLUDES THE FOLLOWING PARTS |
| | | **9926108644** | 1 | KIT, SEAL |
| 3 | | **90015312** | 1 | COIL ASSY. 24V. |
| 4 | | **9926107745** | 1 | NUT |

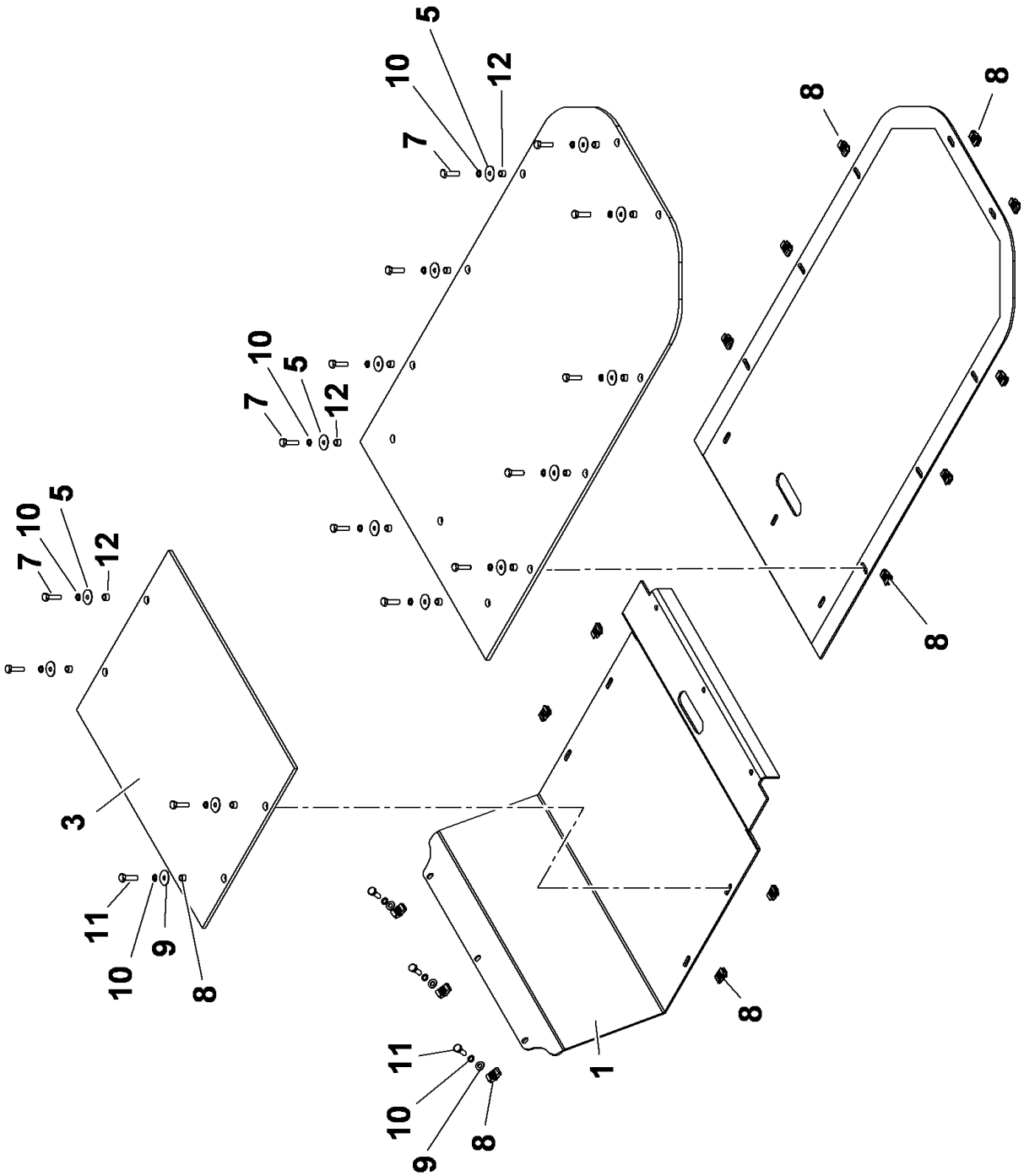


80031650

(SHEET 1 OF 1)

Description
**STORAGE TRAY WITH MAT INSTALLATION**

Assembly No.
**80031650**
Revision: **#**

| Item | FN | Part | Qty | Description |
|---|---|---|---|---|
| 1 | | **2159110150** | 1 | TRAY-FRONT<br>INCLUDES THE FOLLOWING PARTS |
| | | **7662190100** | 3 | NUT, M10X1.5 |
| 2 | | **2159110151** | 1 | TRAY-REAR |
| 3 | | **7814100084** | 1 | FRONT STORAGE TRAY MAT |
| 4 | | **7814100085** | 1 | STORAGE TRAY MAT-REAR |
| 5 | | **7950160161** | 15 | WASHER, FLAT WIDE 3/8 |
| 7 | | **7126191550** | 15 | CAP SCREW, M10 X 40MM HEX HEAD |
| 8 | | **7659190033** | 15 | NUT, RETAINING |
| 9 | | **7951190014** | 3 | FLAT WASHER, 10MM I.D. |
| 10 | | **7951190210** | 18 | LOCK WASHER, 10MM |
| 11 | | **7126191353** | 3 | CAP SCREW, M10 X 30MM HEX HEAD |
| 12 | | **80016241** | 15 | NYLON SPACER |

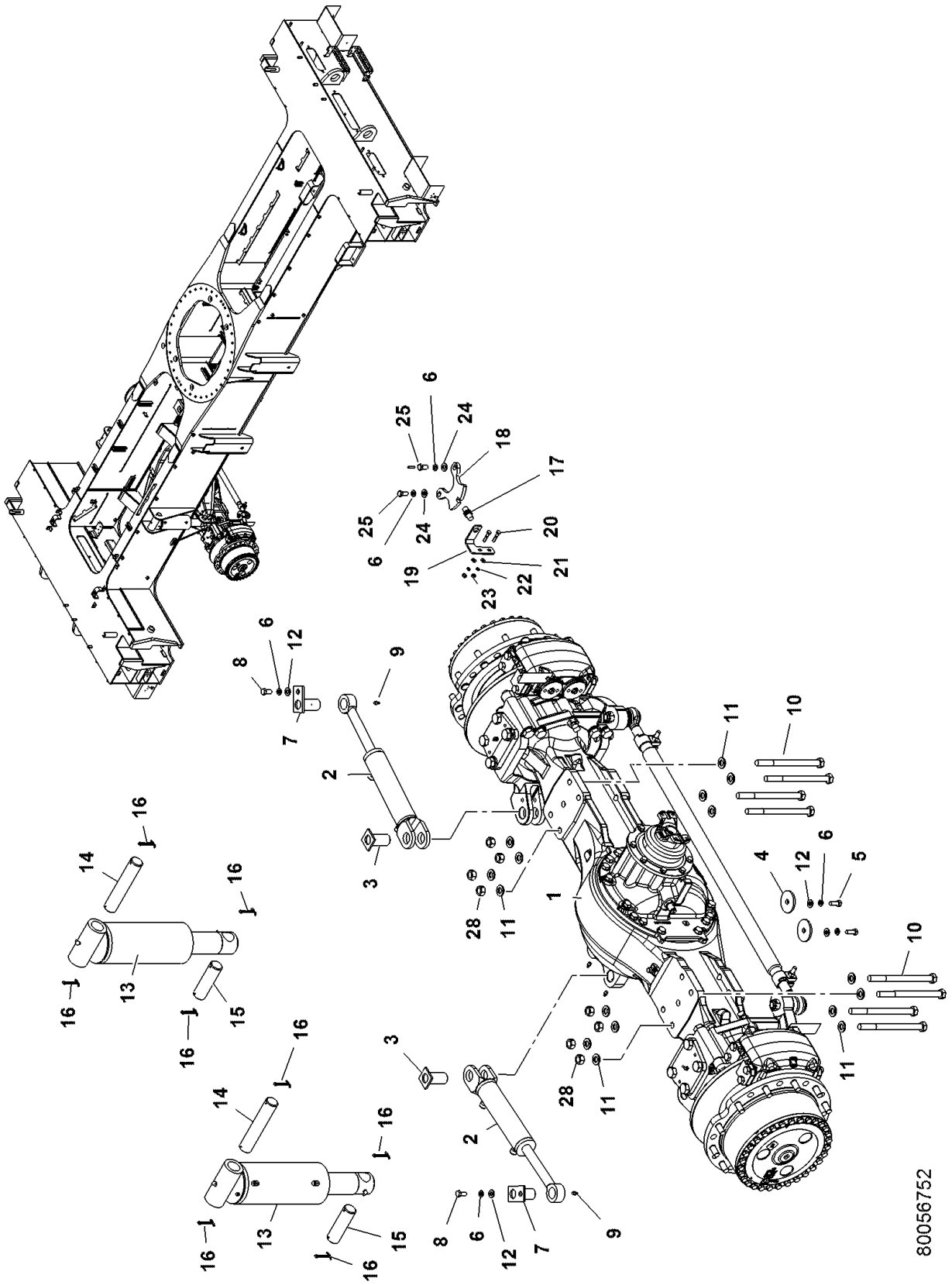


80056752

(SHEET 1 OF 1)

Description
**REAR AXLE INSTALLATION W/O DIFFERENTIAL LOCK**

Assembly No.
**80056752**
Revision: **B**

| Item | FN | Part | Qty | Description |
|---|---|---|---|---|
| 1 | + | **80054429** | 1 | DRIVE STEER AXLE |
| 2 | + | **80047322** | 2 | CYL ASSEMBLY-2.50 STEER BR |
| 3 | | **80018328** | 2 | PIN - 1.50" DIA |
| 4 | | **80023974** | 2 | DOCK WASHER |
| 5 | | **7115181050** | 2 | CAP SCREW,<br>1/2" - 13 N.C. X 1 1/4"<br>GRADE 5 |
| 6 | | **7950180050** | 6 | WASHER, LOCK 1/2" I.D. |
| 7 | | **80018332** | 2 | PIN - 1.50" DIA |
| 8 | | **7105180850** | 2 | CAP SCREW,<br>1/2" - 20 N.F. X 1"<br>GRADE 5 |
| 9 | | **7440000000** | 4 | FITTING, 1/8 STRAIGHT GREASE |
| 10 | | **7127273950** | 8 | SCREW, M20X260 HEX HEAD CAP |
| 11 | | **7949000236** | 16 | FLAT WASHER, 3/4" |
| 12 | | **7950180141** | 4 | WASHER, FLAT 1/2" |
| 13 | + | **80047331** | 2 | CYLINDER - LOCKOUT BR |
| 14 | | **80018329** | 2 | PIN-L/O CYLINDER |
| 15 | | **80018330** | 2 | PIN-L/O CYL |
| 16 | | **7690144010** | 8 | PIN, COTTER |
| 17 | | **80017319** | 1 | SWITCH ASSY, PROXIMITY NORMALLY OPEN (MODIFIED)<br>INCLUDES THE FOLLOWING PARTS |
| | | **80017317** | 1 | SWITCH,PROXIMITY NORMALLY OPEN |
| | | **7892100010** | 1 | RECEPTACLE, DTM-3P |
| | | **7689100033** | 3 | PIN |
| | | **7172100003** | 1 | BOOT-DTM3P-RECP |
| | | **8594000019** | 1 | FLEXGUARD, 1/4" I.D.<br>(QUANTITY IN FEET) |
| 18 | | **80017852** | 1 | PLATE SENSOR |
| 19 | | **80017851** | 1 | BRACKET |
| 20 | | **7126171450** | 2 | CAP SCREW, M8X35-8.8 HEX HEAD |
| 21 | | **7951170014** | 2 | WASHER, FLAT #8 |
| 22 | | **7951170210** | 2 | WASHER, LOCK 8MM |
| 23 | | **7661170003** | 2 | NUT |
| 24 | | **7950180141** | 2 | WASHER, FLAT 1/2" |
| 25 | | **7115180850** | 1 | CAP SCREW, 1/2"-13 UNC X 1" |

**+ SEE FURTHER BREAKDOWN THIS GROUP**

Description
**REAR AXLE INSTALLATION W/O DIFFERENTIAL LOCK**

Assembly No.
**80056752**
Revision: **B**

| Item | FN | Part | Qty | Description |
|---|---|---|---|---|
| 26 | | **80019087** | 1 | BOLT |
| 27 | | **80055534** | 0 | SHIM-REAR STEER BRKT |
| 28 | | **7661270004** | 8 | NUT |

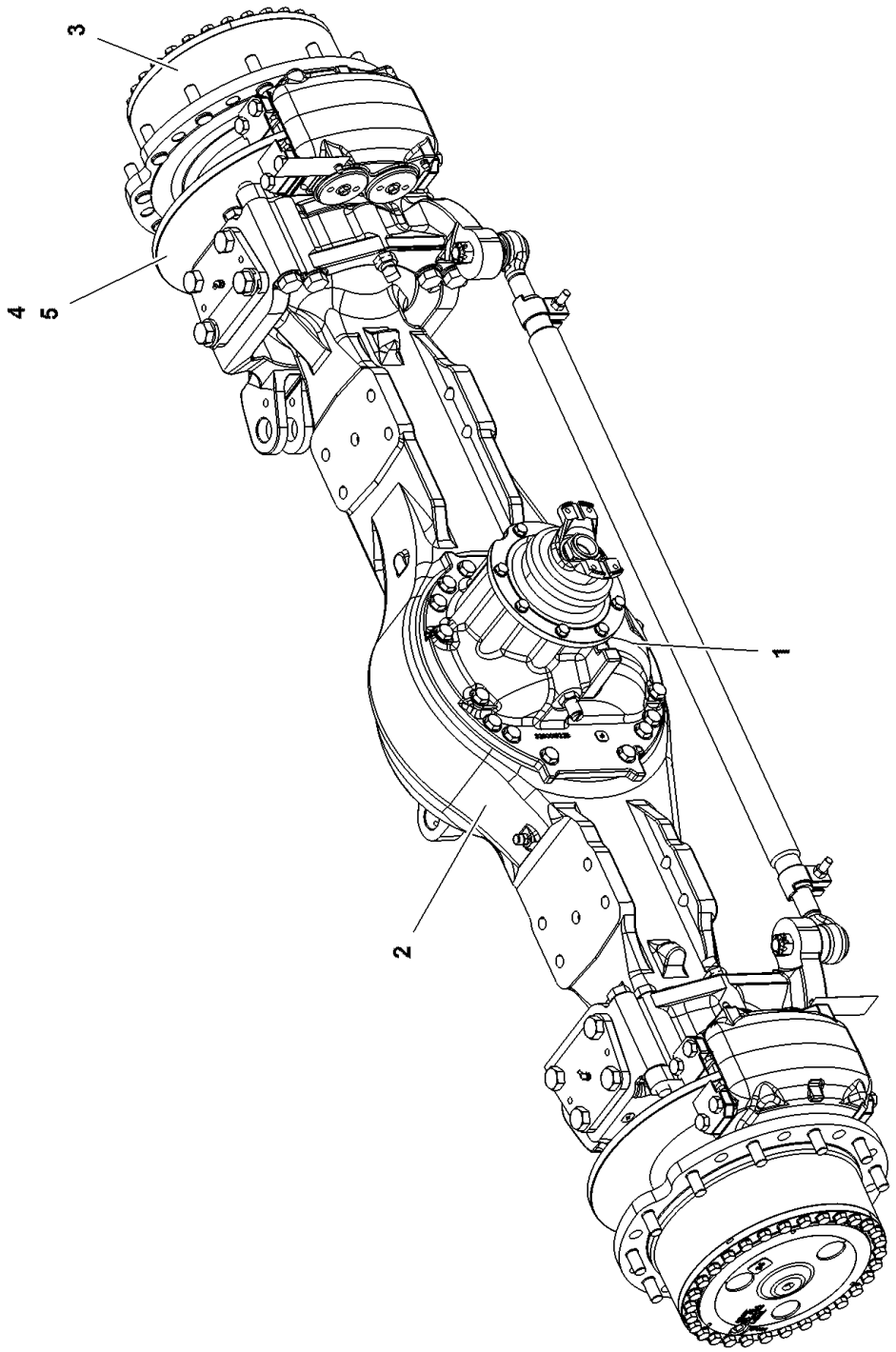


80054429

(SHEET 1 OF 1)

Description
**DRIVE STEER AXLE**

Assembly No.
**80054429**
Revision:

| Item | FN | Part | Qty | Description |
|---|---|---|---|---|
| 1 | + | **9049112776** | 1 | DIFF. CARRIER GROUP |
| 2 | + | **90026471** | 1 | AXLE HOUSING GROUP |
| 3 | + | **90026729** | 1 | HUB & SHAFT GROUP |
| 4 | + | **9049112516** | 1 | BRAKE GROUP |
| 5 | + | **9049112523** | 1 | BRAKE ASSEMBLY,GROUP |

**+ SEE FURTHER BREAKDOWN THIS GROUP**

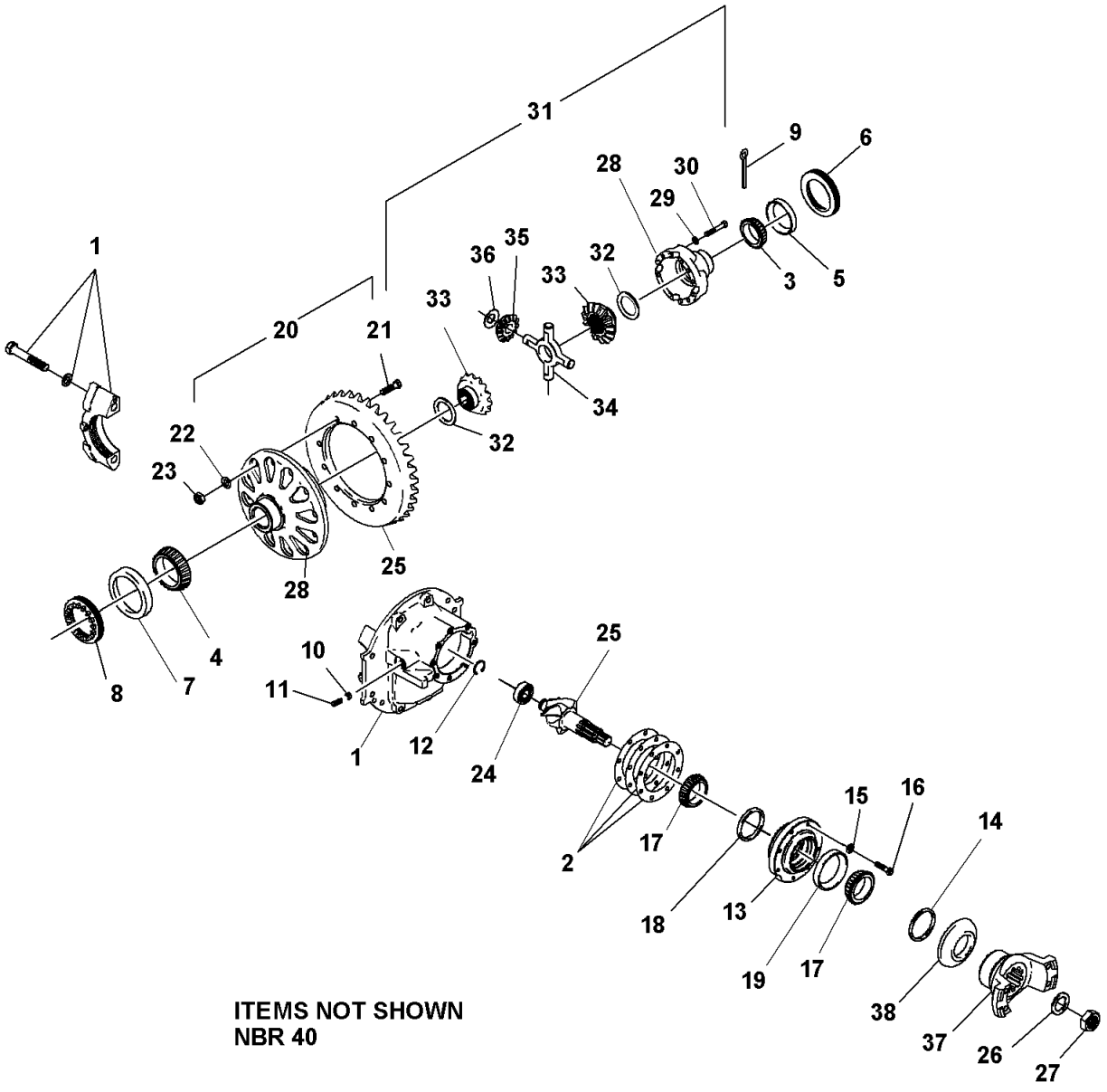
31
9
6
28
30
29
1
36
35
32
33
3
5
20
21
33
34
32
22
23
25
28
4
8
7
10
11
1
12
24
25
2
17
15
16
14
18
13
19
17
38
37
26
27
ITEMS NOT SHOWN
NBR 40

Description
**DIFF. CARRIER GROUP**

Assembly No.
**9049112776**
Revision:

| Item | FN | Part | Qty | Description |
|---|---|---|---|---|
| 1 | | **9049112762** | 1 | HOUSING, DIFF. W/CAP ASSY. |
| 2 | | **9049112763** | 1 | KIT, SHIM |
| 3 | | **9049112264** | 1 | CONE, BEARING |
| 4 | | **9049112264** | 1 | CONE, BEARING |
| 5 | | **9049112263** | 1 | CUP, BEARING |
| 6 | | **9049108971** | 1 | RING, ADJUSTING |
| 7 | | **9049112263** | 1 | CUP, BEARING |
| 8 | | **9049108971** | 1 | RING, ADJUSTING |
| 9 | | **9049112764** | 2 | SCREW |
| 10 | | **9049109021** | 1 | SCREW, THRUST |
| 11 | | **9049109022** | 1 | NUT, JAM |
| 12 | | **9049101600** | 1 | RING, RETAINING |
| 13 | | **9049112639** | 1 | CAGE ASSY. PINION<br>INCLUDES THE FOLLOWING PARTS |
| | | **9049100895** | 1 | OUTER |
| | | **9049100535** | 1 | CUP, BEARING |
| | | **9049112786** | 1 | SEAL, OIL |
| 14 | | **9049112786** | 1 | SEAL, OIL |
| 15 | | **9049111037** | 8 | WASHER, |
| 16 | | **9049108332** | 8 | CAP SCREW, |
| 17 | | **9049109690** | 1 | CONE, BEARING |
| 18 | | **9049108952** | 1 | KIT, SPACER |
| 19 | | **9049108948** | 1 | CONE, BEARING |
| 20 | | **9049108966** | 1 | KIT, HARDWARE<br>INCLUDES 21 THRU 23 |
| 21 | | **9049108967** | 12 | CAP SCREW, |
| 22 | | **9049101705** | 12 | WASHER, LOCK |
| 23 | | **9049111517** | 12 | NUT |
| 24 | | **9049104578** | 1 | BEARING |
| 25 | | **9049111750** | 1 | GEAR ASSEMBLY, BEVEL<br>5.57:1 |
| 26 | | **9049104393** | 1 | FLATWASHER |
| 27 | | **9049111513** | 1 | LOCKNUT |
| 28 | | **9049112766** | 1 | CASE ASSY. DIFF.<br>INCLUDES BOTH CASE HALFS<br>AND ITEMS 29 AND 30 |

Description
**DIFF. CARRIER GROUP**

Assembly No.
**9049112776**
Revision:

| Item | FN | Part | Qty | Description |
|---|---|---|---|---|
| 29 | | **9049111037** | 16 | WASHER, |
| 30 | | **9049111509** | 16 | SCREW, |
| 31 | | **9049112767** | 1 | KIT, DIFF<br>INCLUDES ITEMS 32 THRU 36 |
| 32 | | **9049112768** | 2 | WASHER, THRUST |
| 33 | | **9049109699** | 2 | GEAR, SIDE |
| 34 | | **9049109751** | 1 | SPIDER |
| 35 | | **9049108965** | 4 | PINION |
| 36 | | **9049112769** | 4 | WASHER, THRUST |
| 37 | | **9049112432** | 1 | YOKE ASSY.<br>INCLUDES ITEM 38 |
| 38 | | **9049112096** | 1 | DEFLECTOR |
| 40 | | **9049112777** | 1 | DIFF.CARRIER ASSY.@ 5.57 RATIO<br>INCLUDES ITEMS 1 THRU 36 |

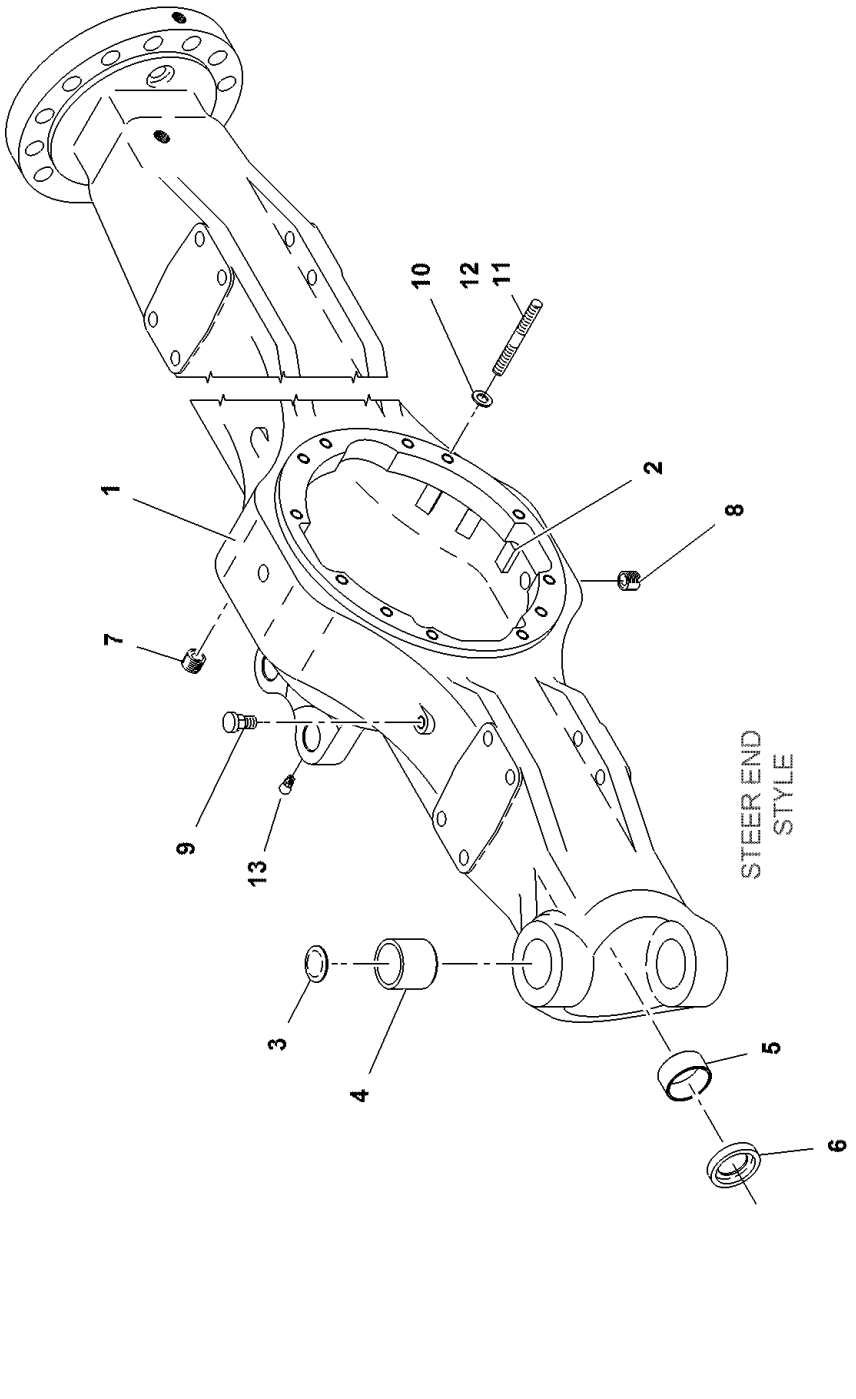


90026471

(SHEET 1 OF 1)

Description
**AXLE HOUSING GROUP**

Assembly No.
**90026471**
Revision:

| Item | FN | Part | Qty | Description |
|---|---|---|---|---|
| 1 | | **90026472** | 1 | AXLE HOUSING ASSY. |
| 2 | | **9049109717** | 6 | MAGNET |
| 3 | | **9049102254** | 4 | PLUG, EXPANSION |
| 4 | | **9049102253** | 4 | BUSHING |
| 5 | | **9049112682** | 2 | BUSHING |
| 6 | | **9049112781** | 2 | SEAL |
| 7 | | **90026473** | 1 | PLUG |
| 8 | | **90026473** | 1 | PLUG |
| 9 | | **9049112686** | 1 | BREATHER |
| 10 | | **9049101705** | 16 | WASHER, LOCK |
| 11 | | **9049110385** | 12 | SCREW, |
| 12 | | **9049111473** | 4 | CAPSCREW, 2.50" LG |
| 13 | | **7440000000** | 2 | FITTING, 1/8 STRAIGHT GREASE |

**Notes**

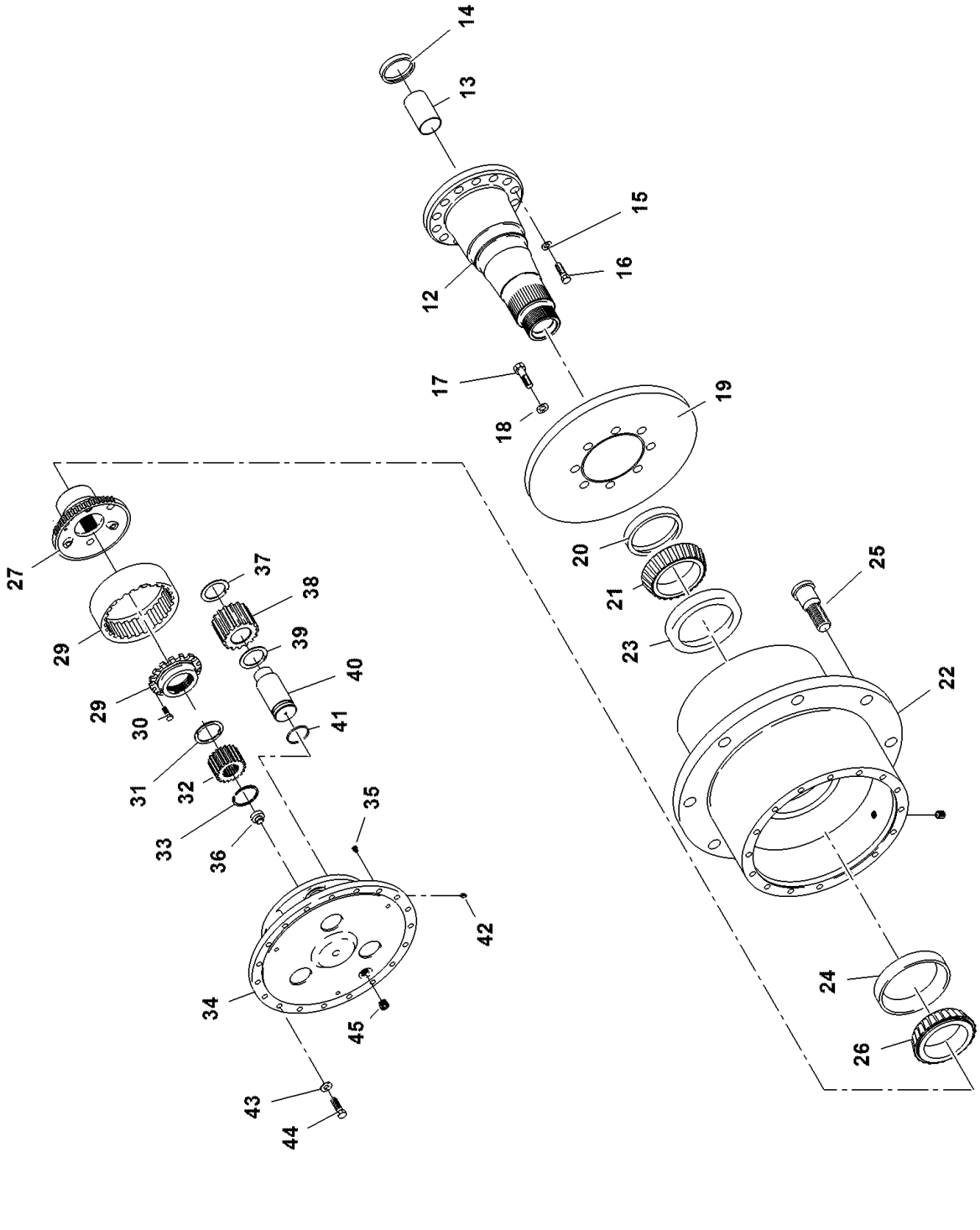


90026729

(SHEET 2 OF 2)

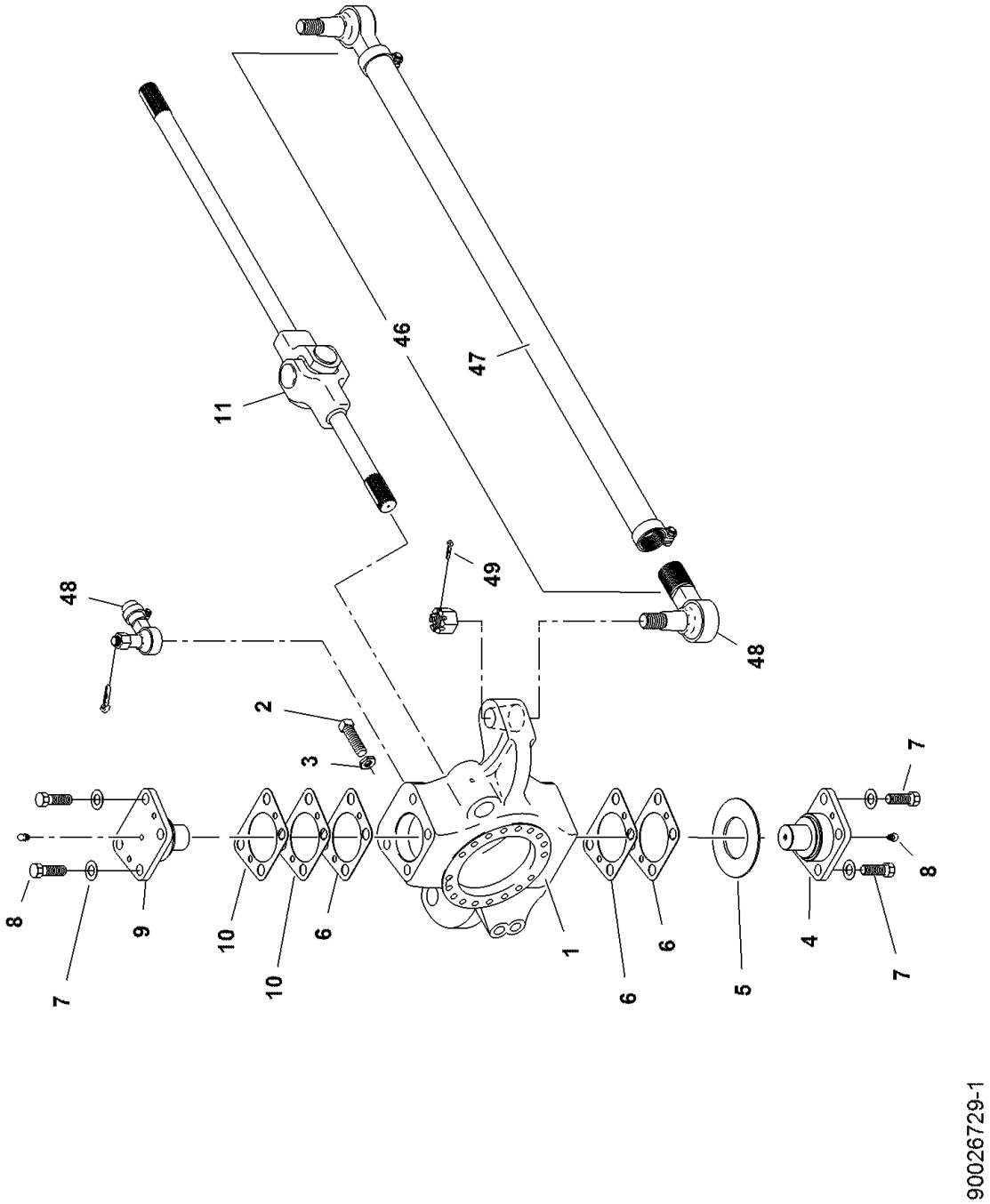


90026729

(SHEET 1 OF 2)

Description
**HUB & SHAFT GROUP**

Assembly No.
**90026729**
Revision:

| Item | FN | Part | Qty | Description |
|---|---|---|---|---|
| 1 | | **9049112654** | 1 | KNUCKLE, STEER<br>THIS AXLE WAS WORKED AS A FRONT AXLE ASSY.THIS ITEM WILL BE RIGHT HAND FOR THIS AXLE.IF BEING USED REAR AXLE IT WILL BE LEFT HAND |
| 1 | | **9049112655** | 1 | KNUCKLE, STEER<br>THIS AXLE WAS WORKED AS A FRONT AXLE. THIS ITEM WIIL BE LEFT HAND FOR THIS AXLE. IF BEING USED AS A REAR IT WILL BE RIGHT HAND |
| 2 | | **9049106456** | 2 | SCREW, STOP |
| 3 | | **9049101497** | 4 | NUT, JAM |
| 4 | | **9049107137** | 2 | CAP<br>LOWER |
| 5 | | **9049101673** | 2 | WASHER, THRUST |
| 6 | | **9049110934** | 6 | SHIM,<br>.003" |
| 6 | | **9049110935** | 4 | SHIM,<br>.005" |
| 6 | | **9049110936** | 2 | SHIM,<br>.020" |
| 7 | | **9049103595** | 8 | CAP SCREW, |
| 8 | | **9049103562** | 2 | FITTING, GREASE |
| 9 | | **9049107138** | 2 | CAP<br>UPPER |
| 10 | | **9049107134** | 6 | SHIM,<br>.003" |
| 10 | | **9049107135** | 4 | SHIM,<br>.005" |
| 10 | | **9049110936** | 2 | SHIM,<br>.020" |
| 11 | | **90026474** | 1 | SHAFT ASSY. L.H. AXLE<br>INCLUDES THE FOLLOWING PARTS |
| | | **9049109733** | 1 | BEARING ASSEMBLY, U JOINT |
| 11 | | **90026475** | 1 | SHAFT ASSY. R.H. AXLE |
| 12 | | **90026476** | 2 | SPINDLE ASSY. |
| 13 | | **9049112682** | 2 | BUSHING |
| 14 | | **9049112781** | 2 | SEAL |

Description
**HUB & SHAFT GROUP**

Assembly No.
**90026729**
Revision:

| Item | FN | Part | Qty | Description |
|---|---|---|---|---|
| 15 | | **9049106450** | 36 | WASHER, HARDENED |
| 16 | | **9049111753** | 36 | CAP SCREW, |
| 17 | | **90026477** | 24 | CAPSCREW |
| 18 | | **90000391** | 24 | WASHER, FLAT |
| 19 | | **9049107129** | 2 | DISC, BRAKE |
| 20 | | **9049112927** | 2 | SEAL, OIL |
| 21 | | **9049101693** | 2 | CONE, BEARING |
| 22 | | **90026478** | 2 | HUB ASSY. |
| 23 | | **9049101695** | 2 | CUP, BEARING |
| 24 | | **9049101696** | 2 | CUP, BEARING |
| 25 | | **9049101687** | 24 | STUD |
| 26 | | **9049101694** | 2 | CONE, BEARING |
| 27 | | **9049105562** | 2 | GEAR, HUB |
| 28 | | **9049103392** | 2 | GEAR |
| 29 | | **9049112463** | 2 | NUT |
| 30 | | **9049112464** | 2 | CAPSCREW |
| 31 | | **9049112520** | 2 | WASHER,THRUST |
| 32 | | **9049112030** | 2 | GEAR |
| 33 | | **9274100125** | 2 | RING, SNAP |
| 34 | | **9049106034** | 2 | SPIDER, W/ THRUST WASHERS |
| 35 | | **9049103565** | 6 | BUTTON, THRUST |
| 36 | | **9049106791** | 2 | BUTTON, THRUST |
| 37 | | **9049101847** | 6 | WASHER, THRUST |
| 38 | | **9049101846** | 6 | GEAR, PINION |
| 39 | | **9049101848** | 6 | WASHER, THRUST |
| 40 | | **9049106490** | 6 | SHAFT ASSEMBLY, PINION |
| 41 | | **9049106322** | 6 | O-RING |
| 42 | | **9049105399** | 6 | SET SCREW |
| 43 | | **9049101980** | 60 | FLATWASHER |
| 44 | | **9049106579** | 60 | CAP SCREW, |
| 45 | | **90000383** | 2 | PLUG, FILL/DRAIN (MAGNETIC) |
| 46 | | **9049109724** | 1 | TIE ROD ASSEMBLY |
| 47 | | **9049109725** | 1 | CLAMP AND TIE ROD ASSEMBLY |
| 48 | | **9049109727** | 1 | END, TIE ROD (R.H. THD.) |

Description
**HUB & SHAFT GROUP**

Assembly No.
**90026729**
Revision:

| Item | FN | Part | Qty | Description |
|---|---|---|---|---|
| 48 | | **9049109726** | 1 | END, TIE ROD.(L.H. THD.) |
| 49 | | **9049109511** | 2 | PIN, COTTER-END YOKE NUT |

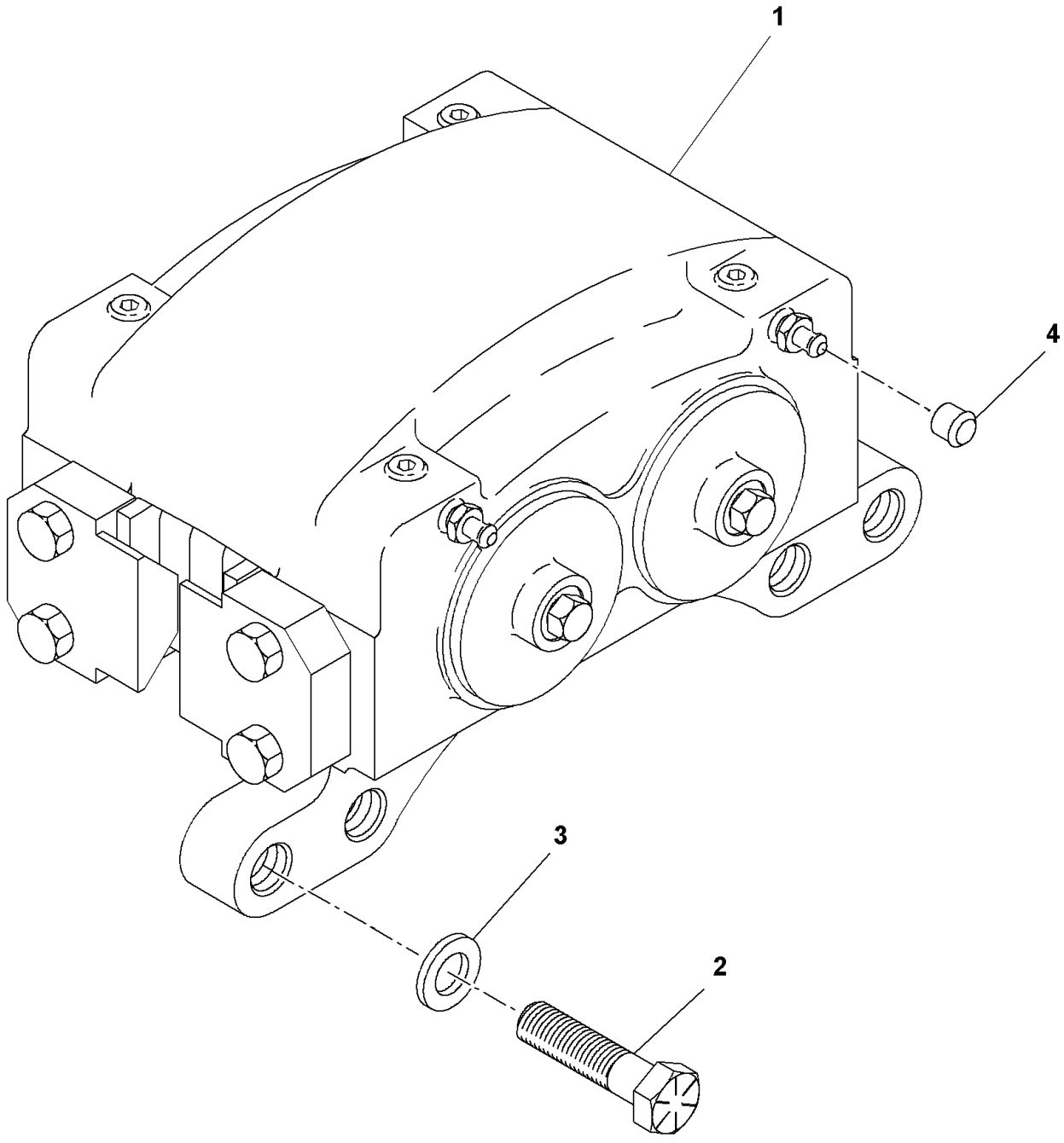


**9049112516**

**(SHEET 1 OF 1)**

Description
**BRAKE GROUP**

Assembly No.
**9049112516**
Revision:

| Item | FN | Part | Qty | Description |
|---|---|---|---|---|
| 1 | | **9049112522** | 2 | BRAKE ASSEMBLY, DISC |
| 2 | | **9049107142** | 8 | CAP SCREW, |
| 3 | | **9049102985** | 8 | WASHER, |
| 4 | | **9049112382** | 4 | CAP |

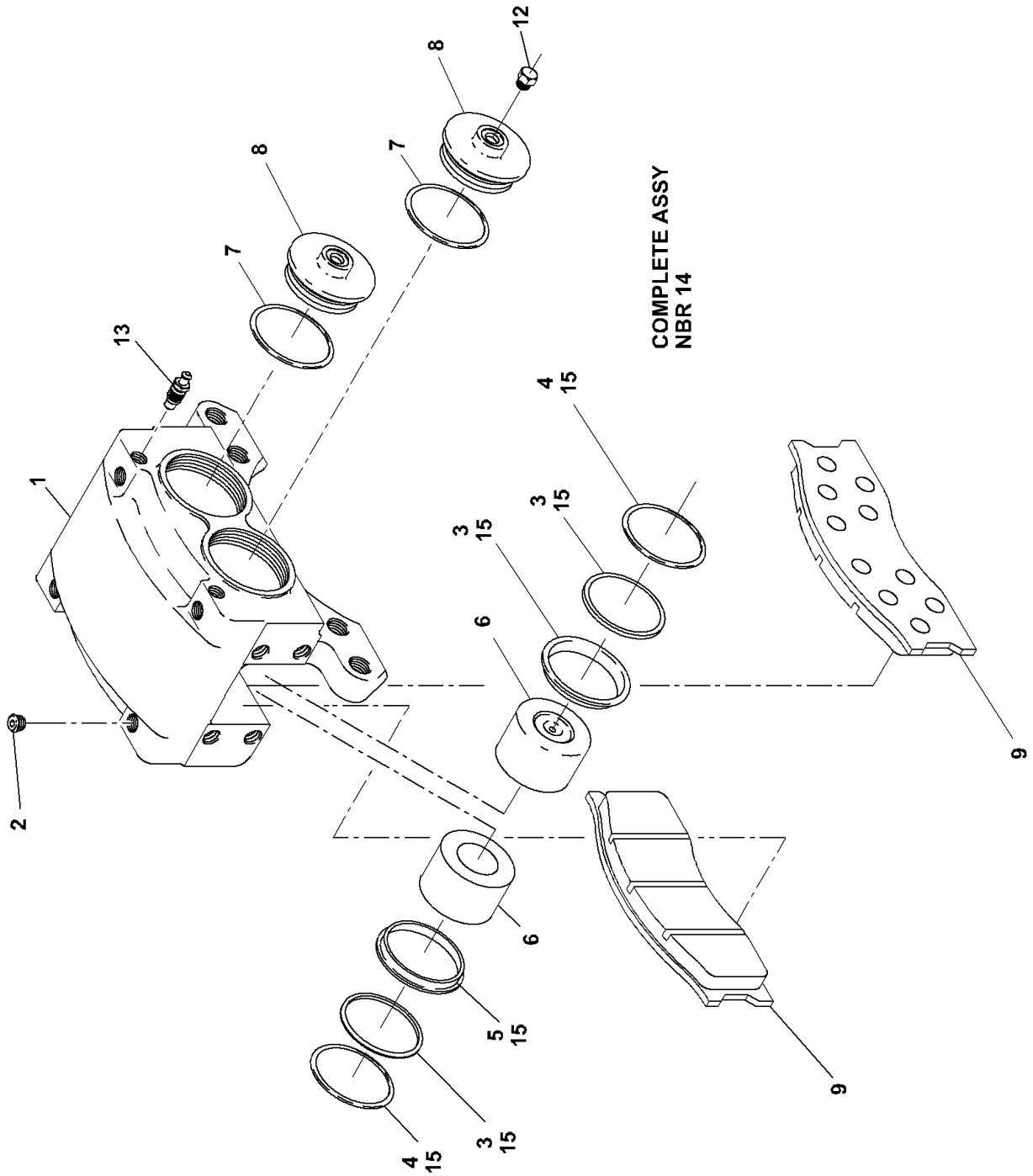


9049112523

(SHEET 1 OF 1)

Description
**BRAKE ASSEMBLY,GROUP**

Assembly No.
**9049112523**
Revision:

| Item | FN | Part | Qty | Description |
|---|---|---|---|---|
| 1 | | **NSS** | 1 | NOT SERVICED SEPARATELY<br>HOUSING |
| 2 | | **9049107402** | 4 | PLUG |
| 3 | * | **NSS** | 4 | NOT SERVICED SEPARATELY<br>BACK-UP RING |
| 4 | * | **NSS** | 4 | NOT SERVICED SEPARATELY<br>O-RING |
| 5 | * | **NSS** | 4 | NOT SERVICED SEPARATELY<br>DUST SEAL |
| 6 | | **9049107148** | 4 | PISTON |
| 7 | * | **NSS** | 2 | NOT SERVICED SEPARATELY<br>O-RING |
| 8 | | **9049107152** | 2 | HEAD CYL |
| 9 | | **9049109243** | 1 | KIT, LINING<br>PER BRAKE |
| 10 | | **9049110945** | 4 | PLATE |
| 11 | | **9049109048** | 8 | CAP SCREW, |
| 12 | | **9049107157** | 1 | PLUG |
| 13 | | **9049100638** | 2 | SCREW, BLEEDER |
| 14 | | **9049112522** | 1 | BRAKE ASSEMBLY, DISC<br>INCLUDES ITEMS 1 THRU 13 |
| 15 | * | **9049111761** | 1 | KIT, SEAL |

*** REPAIR KIT AND/OR PART OF KIT**

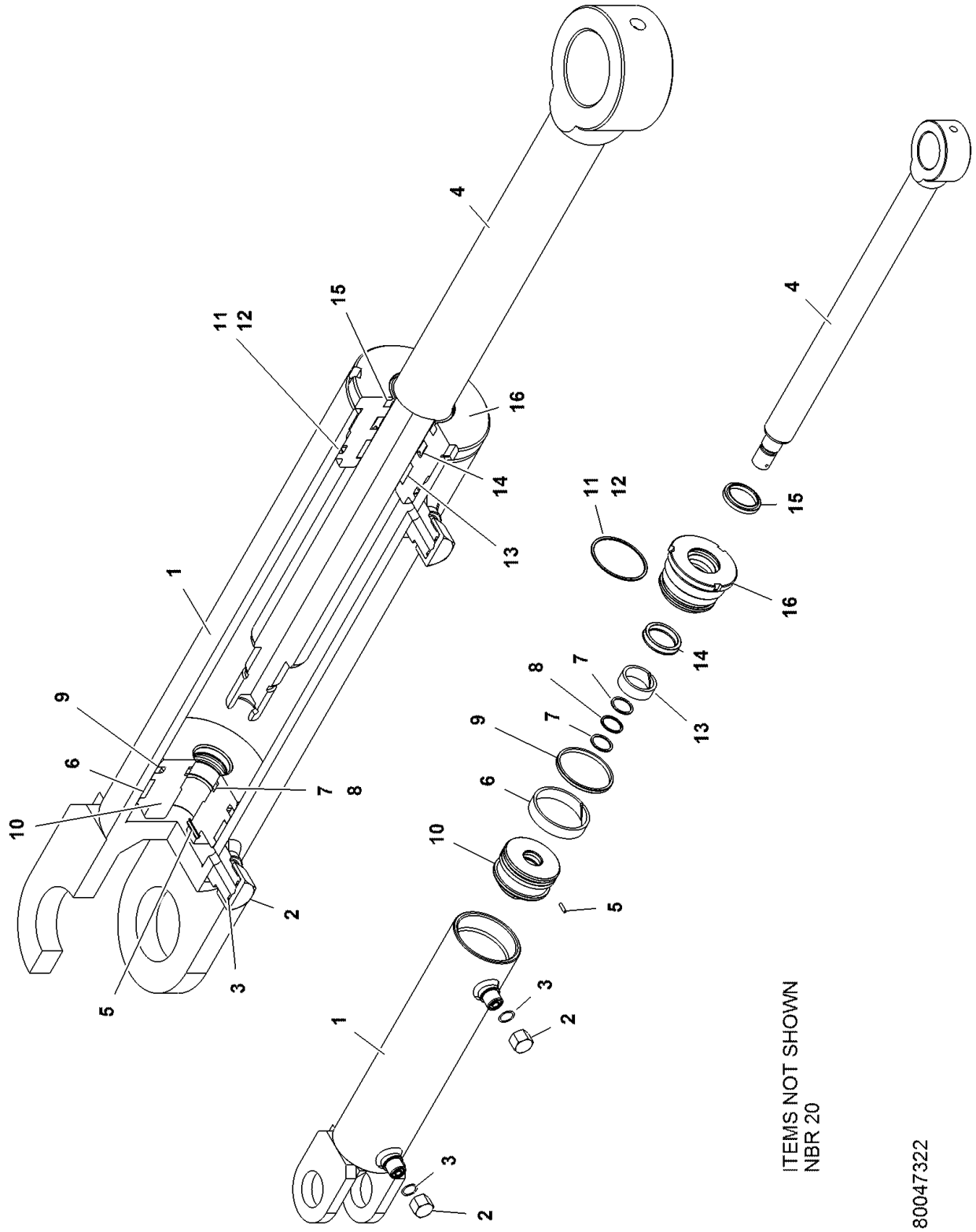


80047322

(SHEET 1 OF 1)

Description
**CYL ASSEMBLY-2.50 STEER BR**

Assembly No.
**80047322**
Revision:

| Item | FN | Part | Qty | Description |
|---|---|---|---|---|
| 1 | | **90026933** | 1 | BARREL ASSEMBLY |
| 2 | | **90026934** | 2 | STEEL CAP, 11/16"UN, FEMALE |
| 3 | * | **NSS** | 2 | NOT SERVICED SEPARATELY<br>O-RING |
| 4 | | **90026935** | 1 | ROD ASSEMBLY |
| 5 | | **90026936** | 1 | SPRING PIN (D.3.0 X 12MM) |
| 6 | | **90026909** | 1 | RING, WEAR |
| 7 | * | **NSS** | 2 | NOT SERVICED SEPARATELY<br>BACKUP RING |
| 8 | * | **NSS** | 1 | NOT SERVICED SEPARATELY<br>O-RING |
| 9 | * | **NSS** | 1 | NOT SERVICED SEPARATELY<br>PISTON SEAL |
| 10 | | **90026938** | 1 | PISTON |
| 11 | * | **NSS** | 1 | NOT SERVICED SEPARATELY<br>BACKUP RING |
| 12 | * | **NSS** | 1 | NOT SERVICED SEPARATELY<br>O-RING |
| 13 | | **90026939** | 1 | WEAR RING |
| 14 | * | **NSS** | 1 | NOT SERVICED SEPARATELY<br>ROD SEAL |
| 15 | * | **NSS** | 1 | NOT SERVICED SEPARATELY<br>WIPER |
| 16 | | **90026940** | 1 | HEAD |
| 20 | * | **80049022** | 1 | CYL SEAL KIT -2.50 STEER BR<br>INCL. ITEMS 3,7-9,11-12,14-15 |

*** REPAIR KIT AND/OR PART OF KIT**

**Notes**

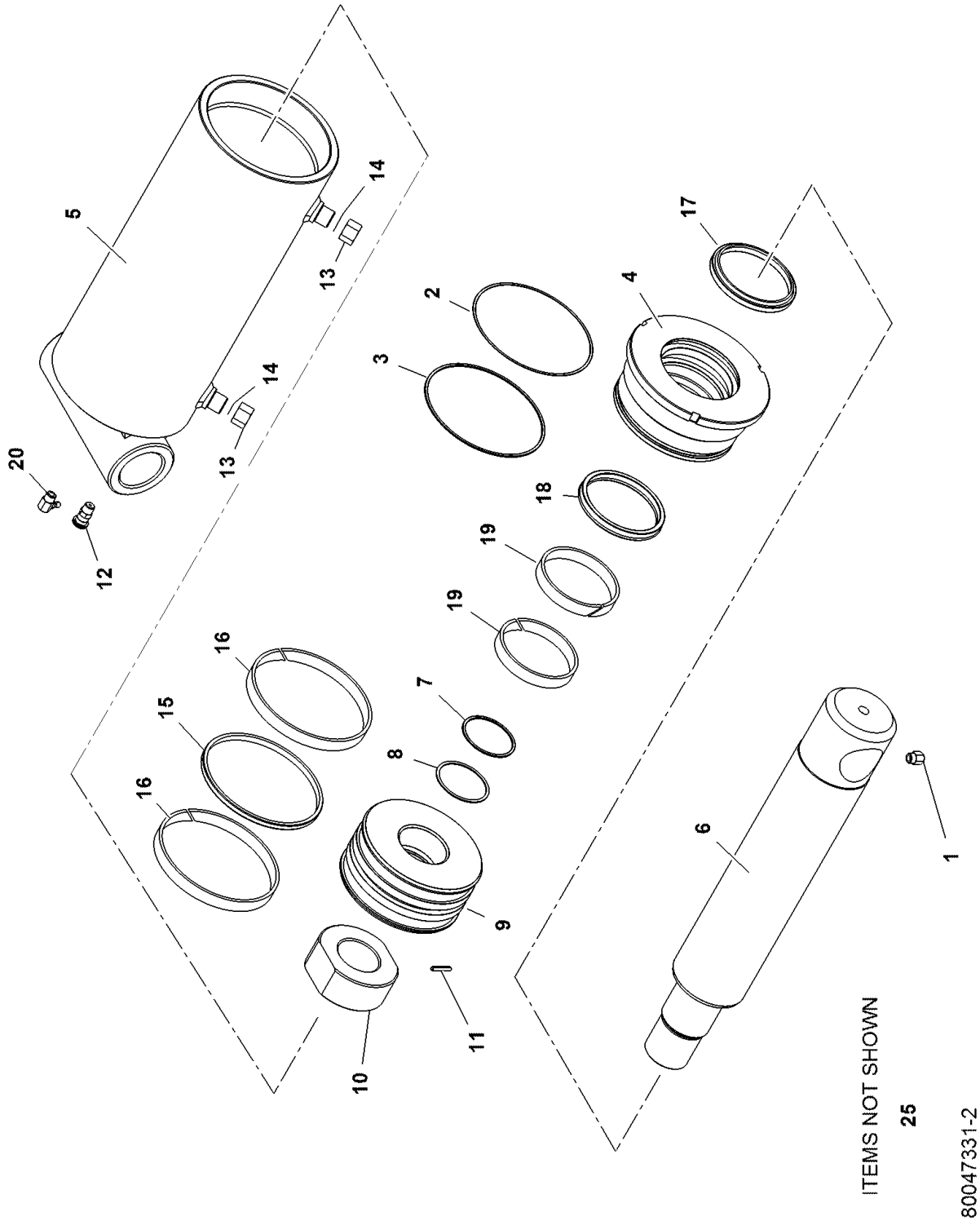


80047331

(SHEET 2 OF 2)

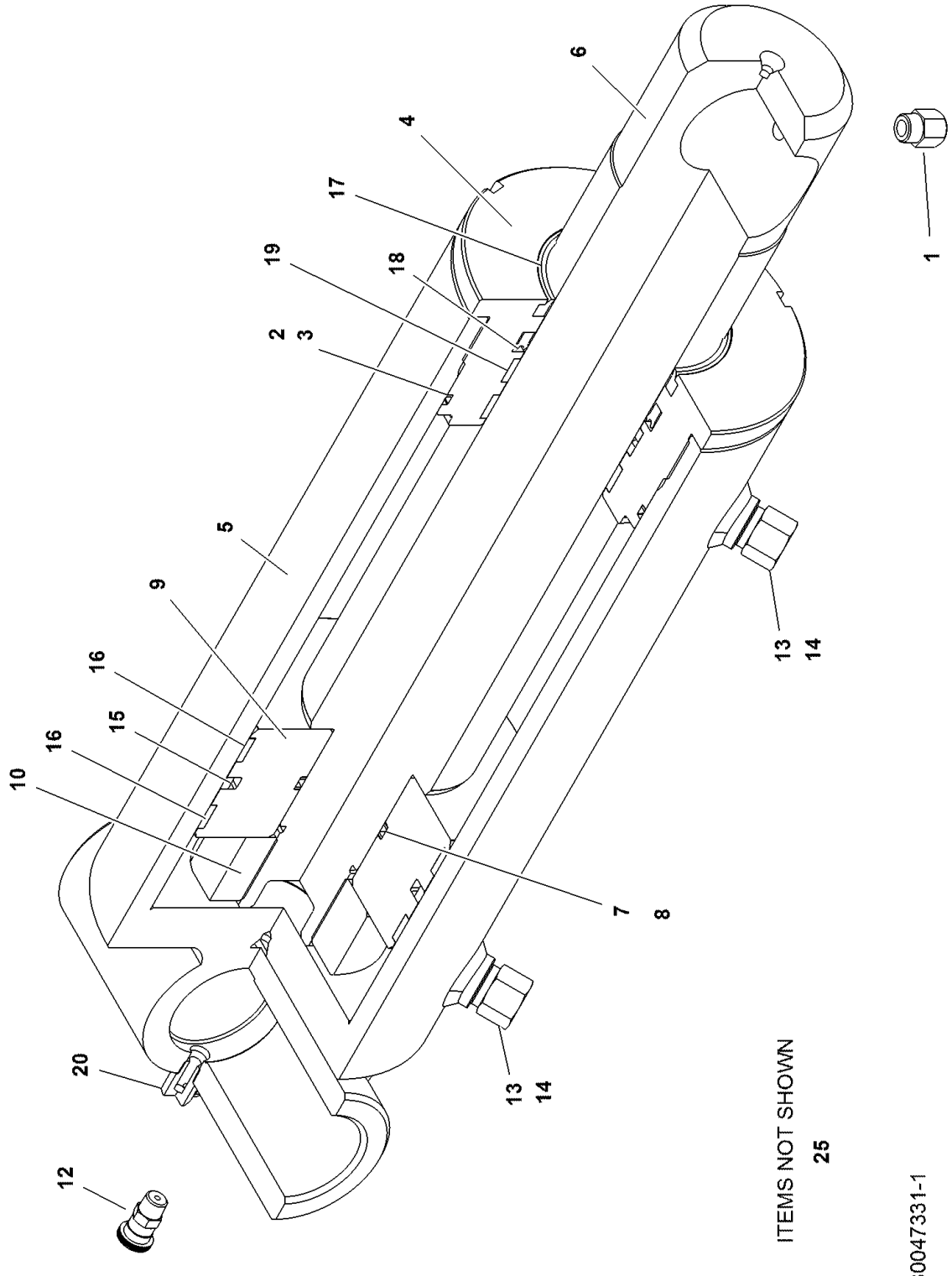


80047331

(SHEET 1 OF 2)

Description
**CYLINDER - LOCKOUT BR**

Assembly No.
**80047331**
Revision:

| Item | FN | Part | Qty | Description |
|---|---|---|---|---|
| 1 | | **90026989** | 1 | GREASE FITTING 1/8"-NPT(45DEG) |
| 2 | * | **NSS** | 1 | NOT SERVICED SEPARATELY ,BACKUP RING |
| 3 | * | **NSS** | 1 | NOT SERVICED SEPARATELY ,O-RING |
| 4 | | **90026990** | 1 | HEAD |
| 5 | | **90026991** | 1 | BARREL ASSEMBLY |
| 6 | | **90026992** | 1 | ROD |
| 7 | * | **NSS** | 1 | NOT SERVICED SEPARATELY ,O-RING |
| 8 | * | **NSS** | 2 | NOT SERVICED SEPARATELY ,BACKUP RING |
| 9 | | **90026993** | 1 | PISTON |
| 10 | | **90026994** | 1 | PISTON NUT M45 X 1.5 |
| 11 | | **90026973** | 1 | SPRING PIN (D4.0MM X 22MM) |
| 12 | | **90026995** | 1 | BLEEDER |
| 13 | | **90026934** | 2 | STEEL CAP, 11/16"UN, FEMALE |
| 14 | * | **NSS** | 2 | NOT SERVICED SEPARATELY ,O-RING |
| 15 | * | **NSS** | 1 | NOT SERVICED SEPARATELY ,PISTON SEAL |
| 16 | | **90026996** | 1 | WEAR RING |
| 17 | * | **NSS** | 1 | NOT SERVICED SEPARATELY ,WIPER |
| 18 | * | **NSS** | 1 | NOT SERVICED SEPARATELY ,ROD SEAL |
| 19 | | **90026997** | 2 | WEAR RING |
| 20 | | **90026998** | 1 | GREASE FITTING 1/8"-NPT 90 DEG |
| 25 | * | **80049029** | 1 | CYL SEAL KIT-LOCKOUT BR INCL ITEMS 2-3,7-8,14-15,17-18 |

*** REPAIR KIT AND/OR PART OF KIT**

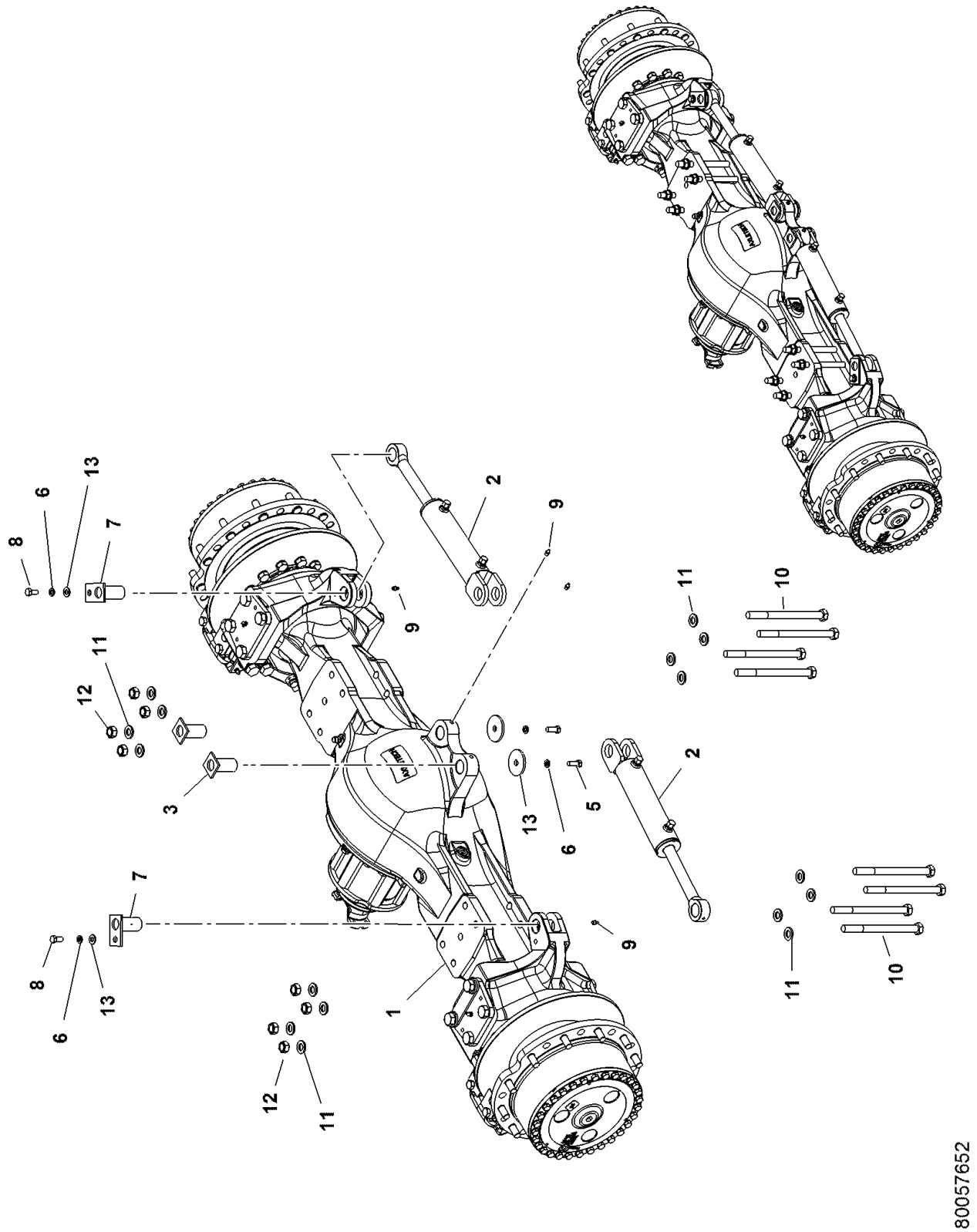


80057652

(SHEET 1 OF 1)

Description
**FRONT AXLE INSTALLATION WITHOUT DIFFERENTIAL LOCK**

Assembly No.
**80057652**
Revision: **B**

| Item | FN | Part | Qty | Description |
|---|---|---|---|---|
| 1 | + | **80054429** | 1 | DRIVE STEER AXLE |
| 2 | + | **80047322** | 2 | CYL ASSEMBLY-2.50 STEER BR |
| 3 | | **80018328** | 2 | PIN - 1.50" DIA |
| 4 | | **80023974** | 2 | DOCK WASHER |
| 5 | | **7115181050** | 2 | CAP SCREW,<br>1/2" - 13 N.C. X 1 1/4"<br>GRADE 5 |
| 6 | | **7950180050** | 4 | WASHER, LOCK 1/2" I.D. |
| 7 | | **80018332** | 2 | PIN - 1.50" DIA |
| 8 | | **7105180850** | 2 | CAP SCREW,<br>1/2" - 20 N.F. X 1"<br>GRADE 5 |
| 9 | | **7440000000** | 4 | FITTING, 1/8 STRAIGHT GREASE |
| 10 | | **7127273950** | 8 | SCREW, M20X260 HEX HEAD CAP |
| 11 | | **7949000236** | 16 | FLAT WASHER, 3/4" |
| 12 | | **7661270004** | 8 | NUT |
| 13 | | **7950180141** | 4 | WASHER, FLAT 1/2" |

**+ SEE FURTHER BREAKDOWN THIS GROUP**

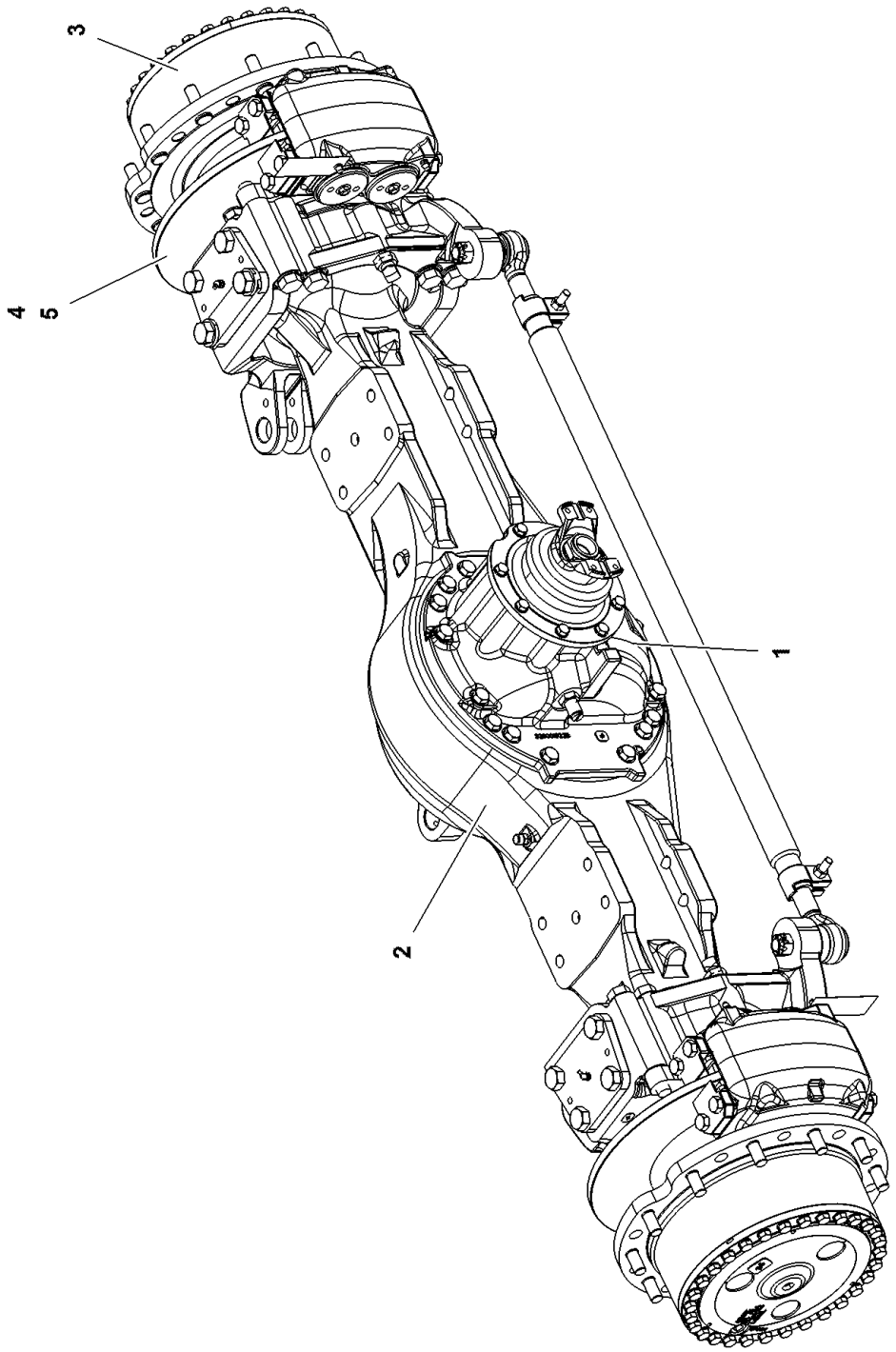


80054429

(SHEET 1 OF 1)

Description
**DRIVE STEER AXLE**

Assembly No.
**80054429**
Revision:

| Item | FN | Part | Qty | Description |
|---|---|---|---|---|
| 1 | + | **9049112776** | 1 | DIFF. CARRIER GROUP |
| 2 | + | **90026471** | 1 | AXLE HOUSING GROUP |
| 3 | + | **90026729** | 1 | HUB & SHAFT GROUP |
| 4 | + | **9049112516** | 1 | BRAKE GROUP |
| 5 | + | **9049112523** | 1 | BRAKE ASSEMBLY,GROUP |

**+ SEE FURTHER BREAKDOWN THIS GROUP**

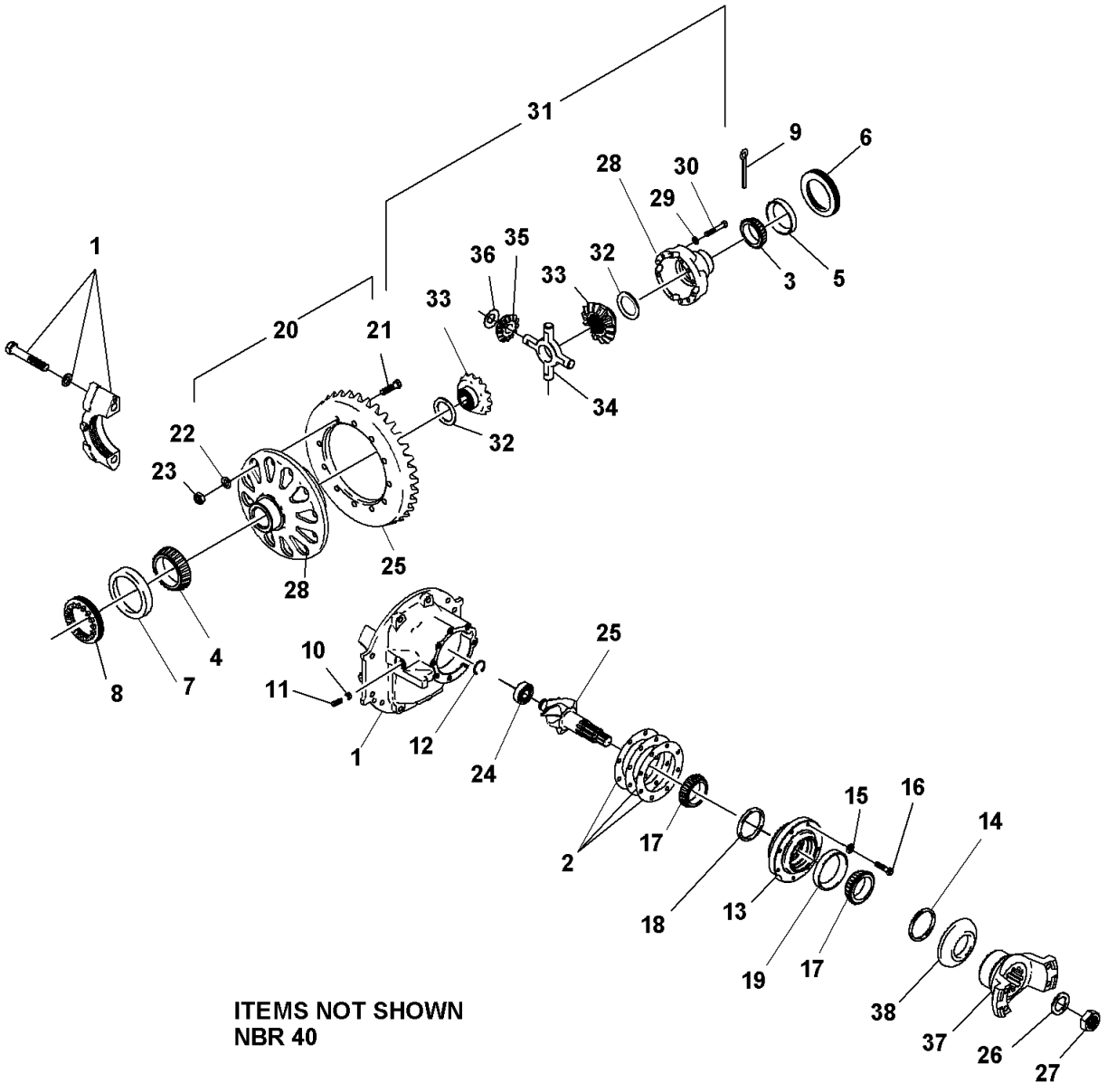
31
9
6
28
30
29
1
36
35
32
33
3
5
20
21
33
34
32
22
23
28
25
4
8
7
10
11
1
12
24
25
2
17
15
16
14
18
13
19
17
38
37
26
27
ITEMS NOT SHOWN
NBR 40

Description
**DIFF. CARRIER GROUP**

Assembly No.
**9049112776**
Revision:

| Item | FN | Part | Qty | Description |
|---|---|---|---|---|
| 1 | | **9049112762** | 1 | HOUSING, DIFF. W/CAP ASSY. |
| 2 | | **9049112763** | 1 | KIT, SHIM |
| 3 | | **9049112264** | 1 | CONE, BEARING |
| 4 | | **9049112264** | 1 | CONE, BEARING |
| 5 | | **9049112263** | 1 | CUP, BEARING |
| 6 | | **9049108971** | 1 | RING, ADJUSTING |
| 7 | | **9049112263** | 1 | CUP, BEARING |
| 8 | | **9049108971** | 1 | RING, ADJUSTING |
| 9 | | **9049112764** | 2 | SCREW |
| 10 | | **9049109021** | 1 | SCREW, THRUST |
| 11 | | **9049109022** | 1 | NUT, JAM |
| 12 | | **9049101600** | 1 | RING, RETAINING |
| 13 | | **9049112639** | 1 | CAGE ASSY. PINION<br>INCLUDES THE FOLLOWING PARTS |
| | | **9049100895** | 1 | OUTER |
| | | **9049100535** | 1 | CUP, BEARING |
| | | **9049112786** | 1 | SEAL, OIL |
| 14 | | **9049112786** | 1 | SEAL, OIL |
| 15 | | **9049111037** | 8 | WASHER, |
| 16 | | **9049108332** | 8 | CAP SCREW, |
| 17 | | **9049109690** | 1 | CONE, BEARING |
| 18 | | **9049108952** | 1 | KIT, SPACER |
| 19 | | **9049108948** | 1 | CONE, BEARING |
| 20 | | **9049108966** | 1 | KIT, HARDWARE<br>INCLUDES 21 THRU 23 |
| 21 | | **9049108967** | 12 | CAP SCREW, |
| 22 | | **9049101705** | 12 | WASHER, LOCK |
| 23 | | **9049111517** | 12 | NUT |
| 24 | | **9049104578** | 1 | BEARING |
| 25 | | **9049111750** | 1 | GEAR ASSEMBLY, BEVEL<br>5.57:1 |
| 26 | | **9049104393** | 1 | FLATWASHER |
| 27 | | **9049111513** | 1 | LOCKNUT |
| 28 | | **9049112766** | 1 | CASE ASSY. DIFF.<br>INCLUDES BOTH CASE HALFS<br>AND ITEMS 29 AND 30 |

Description
**DIFF. CARRIER GROUP**

Assembly No.
**9049112776**
Revision:

| Item | FN | Part | Qty | Description |
|---|---|---|---|---|
| 29 | | **9049111037** | 16 | WASHER, |
| 30 | | **9049111509** | 16 | SCREW, |
| 31 | | **9049112767** | 1 | KIT, DIFF<br>INCLUDES ITEMS 32 THRU 36 |
| 32 | | **9049112768** | 2 | WASHER, THRUST |
| 33 | | **9049109699** | 2 | GEAR, SIDE |
| 34 | | **9049109751** | 1 | SPIDER |
| 35 | | **9049108965** | 4 | PINION |
| 36 | | **9049112769** | 4 | WASHER, THRUST |
| 37 | | **9049112432** | 1 | YOKE ASSY.<br>INCLUDES ITEM 38 |
| 38 | | **9049112096** | 1 | DEFLECTOR |
| 40 | | **9049112777** | 1 | DIFF.CARRIER ASSY.@ 5.57 RATIO<br>INCLUDES ITEMS 1 THRU 36 |

**Notes**

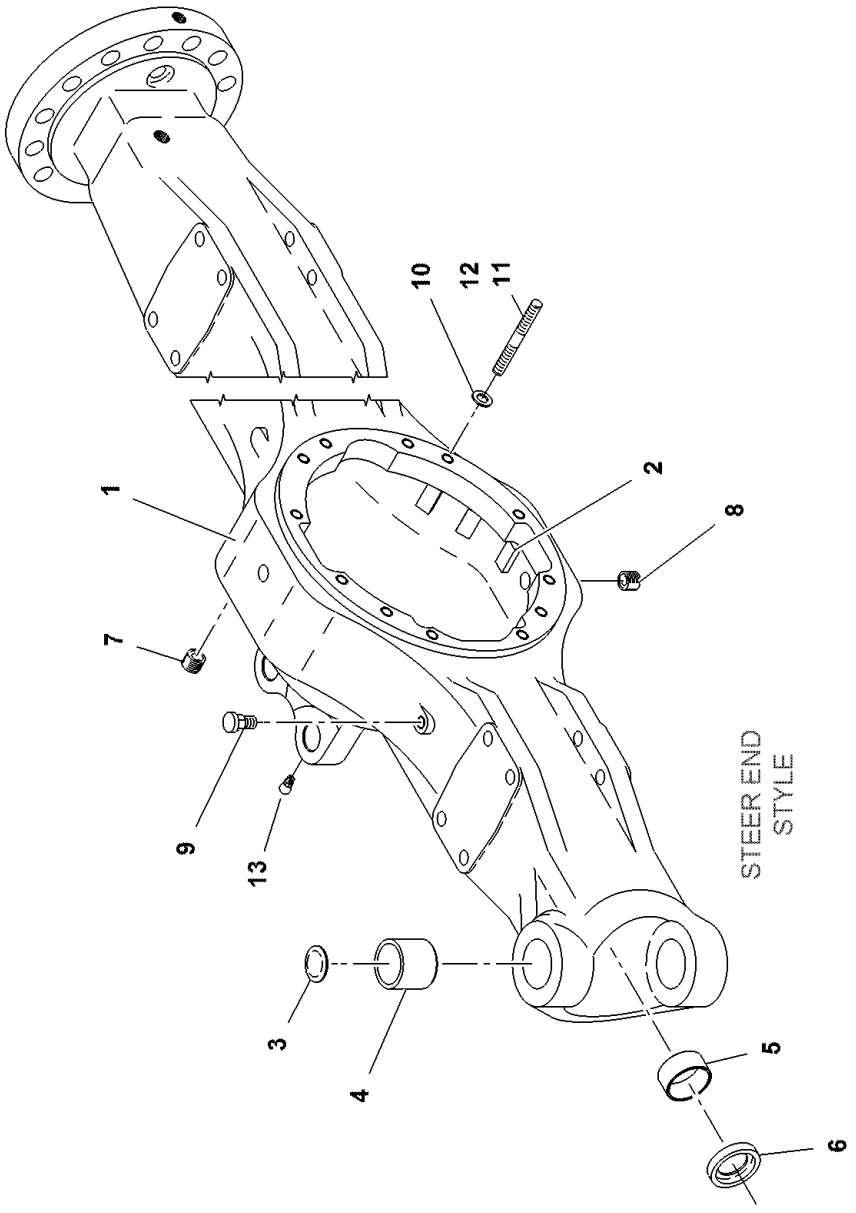


90026471

(SHEET 1 OF 1)

Description
**AXLE HOUSING GROUP**

Assembly No.
**90026471**
Revision:

| Item | FN | Part | Qty | Description |
|---|---|---|---|---|
| 1 | | **90026472** | 1 | AXLE HOUSING ASSY. |
| 2 | | **9049109717** | 6 | MAGNET |
| 3 | | **9049102254** | 4 | PLUG, EXPANSION |
| 4 | | **9049102253** | 4 | BUSHING |
| 5 | | **9049112682** | 2 | BUSHING |
| 6 | | **9049112781** | 2 | SEAL |
| 7 | | **90026473** | 1 | PLUG |
| 8 | | **90026473** | 1 | PLUG |
| 9 | | **9049112686** | 1 | BREATHER |
| 10 | | **9049101705** | 16 | WASHER, LOCK |
| 11 | | **9049110385** | 12 | SCREW, |
| 12 | | **9049111473** | 4 | CAPSCREW, 2.50" LG |
| 13 | | **7440000000** | 2 | FITTING, 1/8 STRAIGHT GREASE |

**Notes**

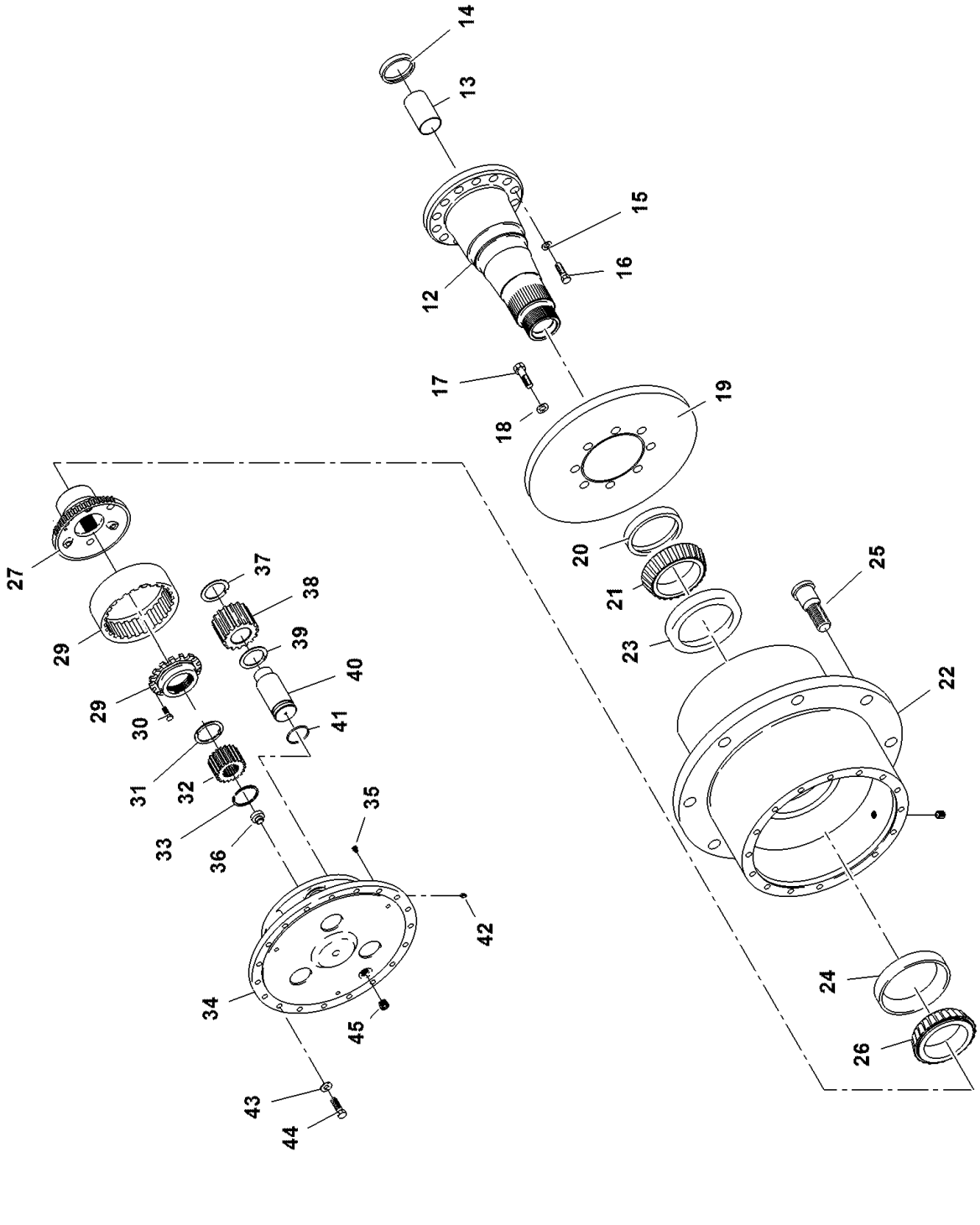


90026729

(SHEET 2 OF 2)

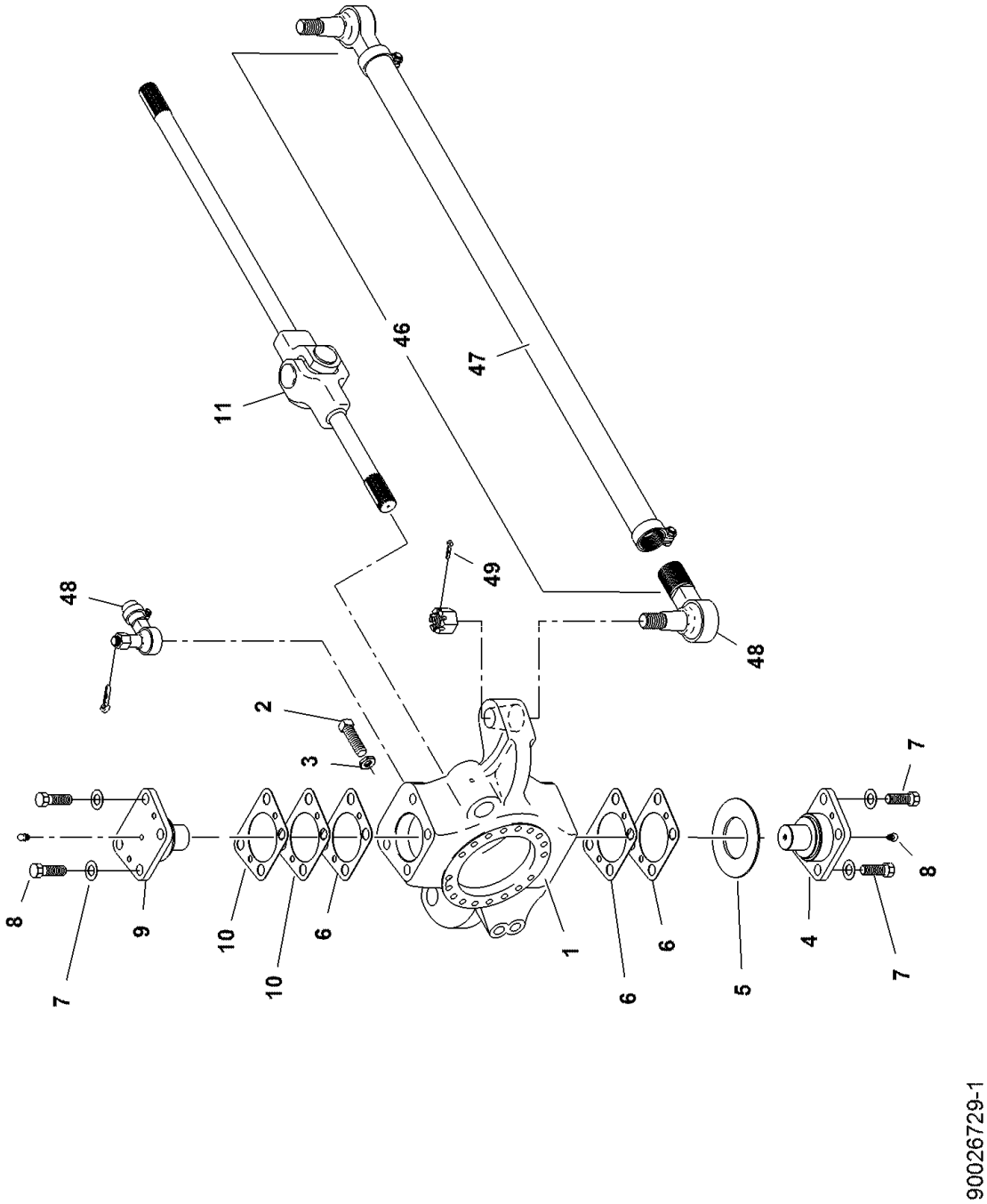


90026729

(SHEET 1 OF 2)

Description
**HUB & SHAFT GROUP**

Assembly No.
**90026729**
Revision:

| Item | FN | Part | Qty | Description |
|---|---|---|---|---|
| 1 | | **9049112654** | 1 | KNUCKLE, STEER<br>THIS AXLE WAS WORKED AS A FRONT AXLE ASSY.THIS ITEM WILL BE RIGHT HAND FOR THIS AXLE.IF BEING USED REAR AXLE IT WILL BE LEFT HAND |
| 1 | | **9049112655** | 1 | KNUCKLE, STEER<br>THIS AXLE WAS WORKED AS A FRONT AXLE. THIS ITEM WIIL BE LEFT HAND FOR THIS AXLE. IF BEING USED AS A REAR IT WILL BE RIGHT HAND |
| 2 | | **9049106456** | 2 | SCREW, STOP |
| 3 | | **9049101497** | 4 | NUT, JAM |
| 4 | | **9049107137** | 2 | CAP<br>LOWER |
| 5 | | **9049101673** | 2 | WASHER, THRUST |
| 6 | | **9049110934** | 6 | SHIM,<br>.003" |
| 6 | | **9049110935** | 4 | SHIM,<br>.005" |
| 6 | | **9049110936** | 2 | SHIM,<br>.020" |
| 7 | | **9049103595** | 8 | CAP SCREW, |
| 8 | | **9049103562** | 2 | FITTING, GREASE |
| 9 | | **9049107138** | 2 | CAP<br>UPPER |
| 10 | | **9049107134** | 6 | SHIM,<br>.003" |
| 10 | | **9049107135** | 4 | SHIM,<br>.005" |
| 10 | | **9049110936** | 2 | SHIM,<br>.020" |
| 11 | | **90026474** | 1 | SHAFT ASSY. L.H. AXLE<br>INCLUDES THE FOLLOWING PARTS |
| | | **9049109733** | 1 | BEARING ASSEMBLY, U JOINT |
| 11 | | **90026475** | 1 | SHAFT ASSY. R.H. AXLE |
| 12 | | **90026476** | 2 | SPINDLE ASSY. |
| 13 | | **9049112682** | 2 | BUSHING |
| 14 | | **9049112781** | 2 | SEAL |

Description
**HUB & SHAFT GROUP**

Assembly No.
**90026729**
Revision:

| Item | FN | Part | Qty | Description |
|---|---|---|---|---|
| 15 | | **9049106450** | 36 | WASHER, HARDENED |
| 16 | | **9049111753** | 36 | CAP SCREW, |
| 17 | | **90026477** | 24 | CAPSCREW |
| 18 | | **90000391** | 24 | WASHER, FLAT |
| 19 | | **9049107129** | 2 | DISC, BRAKE |
| 20 | | **9049112927** | 2 | SEAL, OIL |
| 21 | | **9049101693** | 2 | CONE, BEARING |
| 22 | | **90026478** | 2 | HUB ASSY. |
| 23 | | **9049101695** | 2 | CUP, BEARING |
| 24 | | **9049101696** | 2 | CUP, BEARING |
| 25 | | **9049101687** | 24 | STUD |
| 26 | | **9049101694** | 2 | CONE, BEARING |
| 27 | | **9049105562** | 2 | GEAR, HUB |
| 28 | | **9049103392** | 2 | GEAR |
| 29 | | **9049112463** | 2 | NUT |
| 30 | | **9049112464** | 2 | CAPSCREW |
| 31 | | **9049112520** | 2 | WASHER,THRUST |
| 32 | | **9049112030** | 2 | GEAR |
| 33 | | **9274100125** | 2 | RING, SNAP |
| 34 | | **9049106034** | 2 | SPIDER, W/ THRUST WASHERS |
| 35 | | **9049103565** | 6 | BUTTON, THRUST |
| 36 | | **9049106791** | 2 | BUTTON, THRUST |
| 37 | | **9049101847** | 6 | WASHER, THRUST |
| 38 | | **9049101846** | 6 | GEAR, PINION |
| 39 | | **9049101848** | 6 | WASHER, THRUST |
| 40 | | **9049106490** | 6 | SHAFT ASSEMBLY, PINION |
| 41 | | **9049106322** | 6 | O-RING |
| 42 | | **9049105399** | 6 | SET SCREW |
| 43 | | **9049101980** | 60 | FLATWASHER |
| 44 | | **9049106579** | 60 | CAP SCREW, |
| 45 | | **90000383** | 2 | PLUG, FILL/DRAIN (MAGNETIC) |
| 46 | | **9049109724** | 1 | TIE ROD ASSEMBLY |
| 47 | | **9049109725** | 1 | CLAMP AND TIE ROD ASSEMBLY |
| 48 | | **9049109727** | 1 | END, TIE ROD (R.H. THD.) |

Description
**HUB & SHAFT GROUP**

Assembly No.
**90026729**
Revision:

| Item | FN | Part | Qty | Description |
|---|---|---|---|---|
| 48 | | **9049109726** | 1 | END, TIE ROD.(L.H. THD.) |
| 49 | | **9049109511** | 2 | PIN, COTTER-END YOKE NUT |

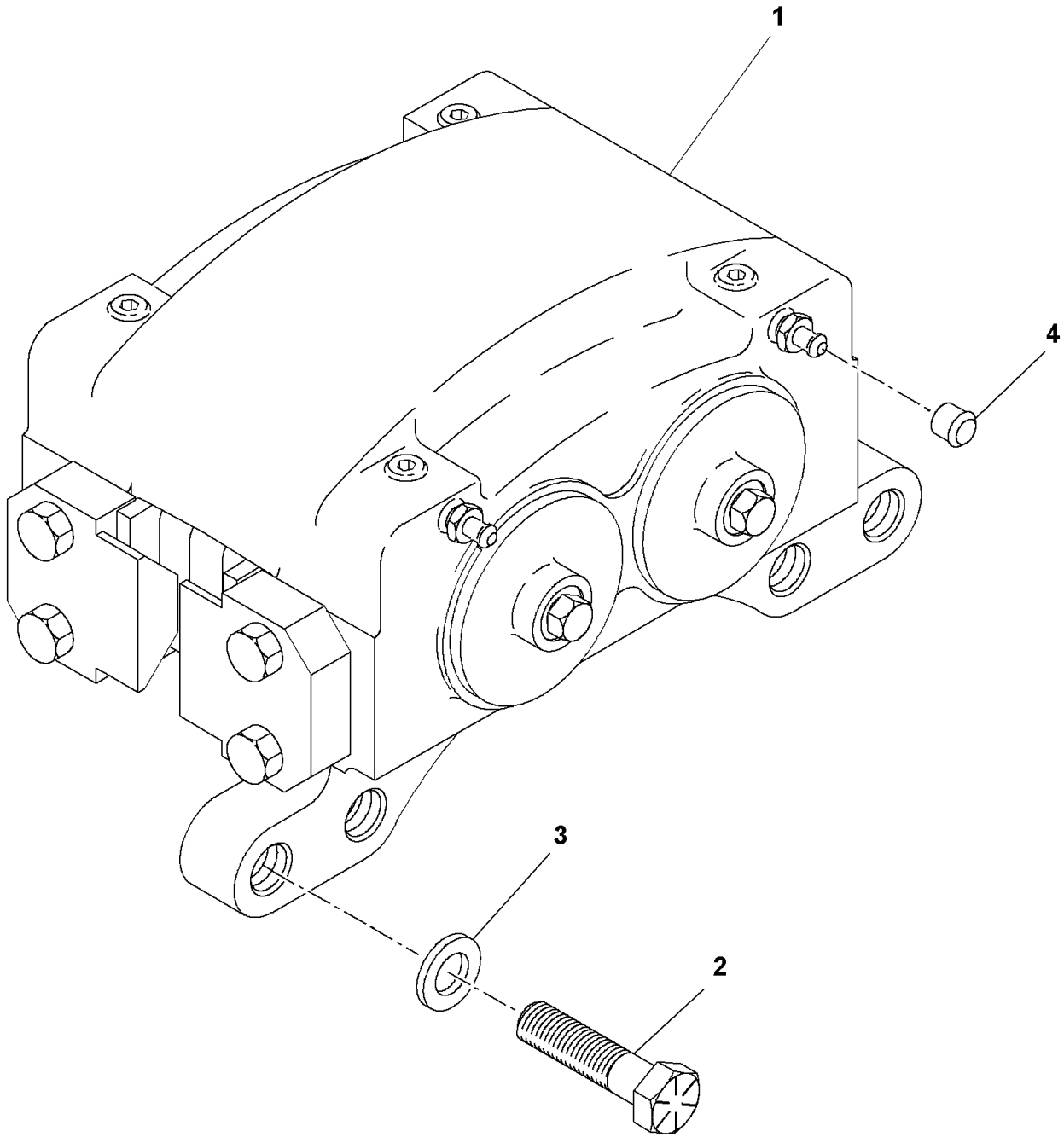


**9049112516**

**(SHEET 1 OF 1)**

Description
**BRAKE GROUP**

Assembly No.
**9049112516**
Revision:

| Item | FN | Part | Qty | Description |
|---|---|---|---|---|
| 1 | | **9049112522** | 2 | BRAKE ASSEMBLY, DISC |
| 2 | | **9049107142** | 8 | CAP SCREW, |
| 3 | | **9049102985** | 8 | WASHER, |
| 4 | | **9049112382** | 4 | CAP |

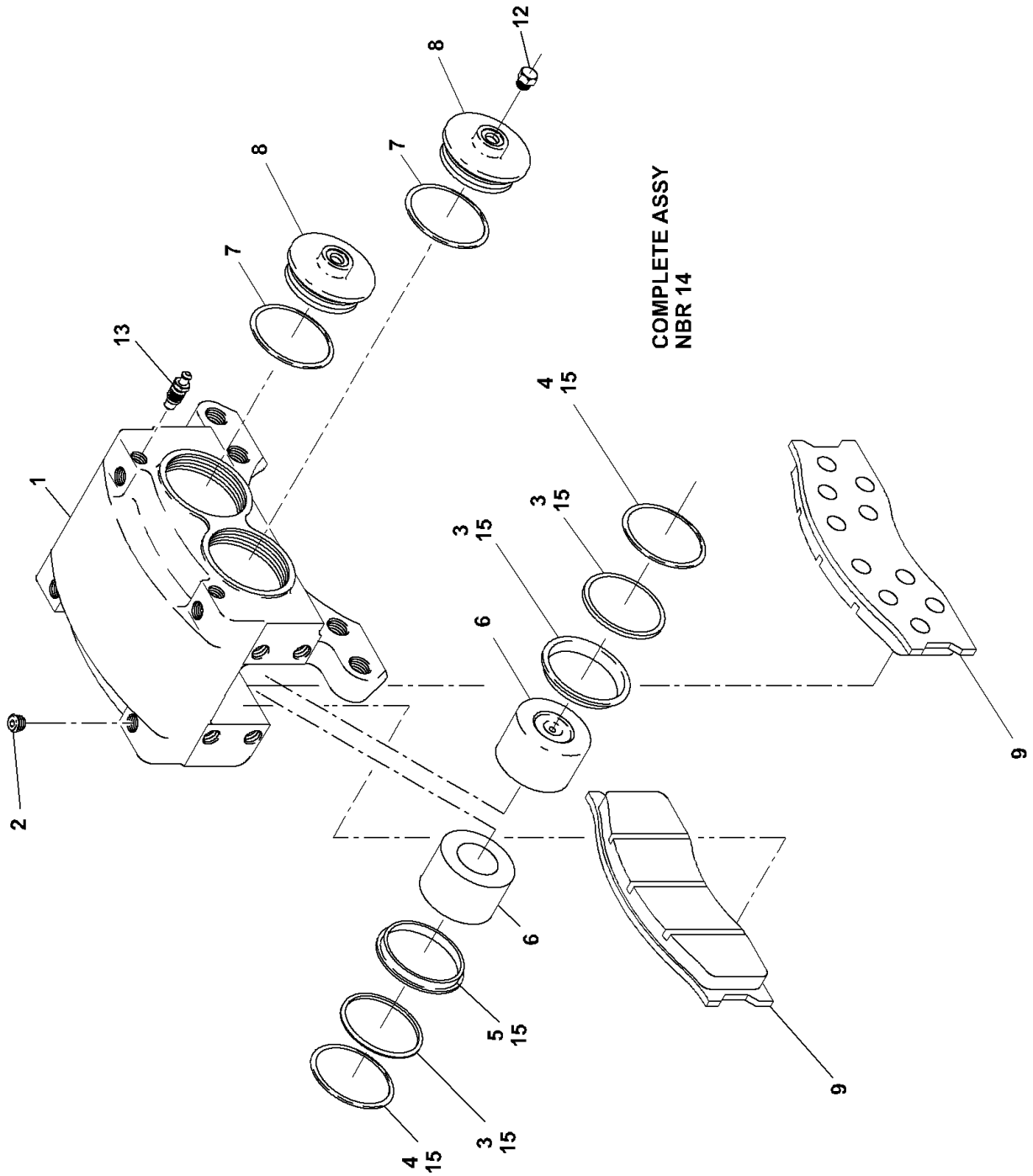


9049112523

(SHEET 1 OF 1)

Description
**BRAKE ASSEMBLY,GROUP**

Assembly No.
**9049112523**
Revision:

| Item | FN | Part | Qty | Description |
|---|---|---|---|---|
| 1 | | **NSS** | 1 | NOT SERVICED SEPARATELY<br>HOUSING |
| 2 | | **9049107402** | 4 | PLUG |
| 3 | * | **NSS** | 4 | NOT SERVICED SEPARATELY<br>BACK-UP RING |
| 4 | * | **NSS** | 4 | NOT SERVICED SEPARATELY<br>O-RING |
| 5 | * | **NSS** | 4 | NOT SERVICED SEPARATELY<br>DUST SEAL |
| 6 | | **9049107148** | 4 | PISTON |
| 7 | * | **NSS** | 2 | NOT SERVICED SEPARATELY<br>O-RING |
| 8 | | **9049107152** | 2 | HEAD CYL |
| 9 | | **9049109243** | 1 | KIT, LINING<br>PER BRAKE |
| 10 | | **9049110945** | 4 | PLATE |
| 11 | | **9049109048** | 8 | CAP SCREW, |
| 12 | | **9049107157** | 1 | PLUG |
| 13 | | **9049100638** | 2 | SCREW, BLEEDER |
| 14 | | **9049112522** | 1 | BRAKE ASSEMBLY, DISC<br>INCLUDES ITEMS 1 THRU 13 |
| 15 | * | **9049111761** | 1 | KIT, SEAL |

*** REPAIR KIT AND/OR PART OF KIT**

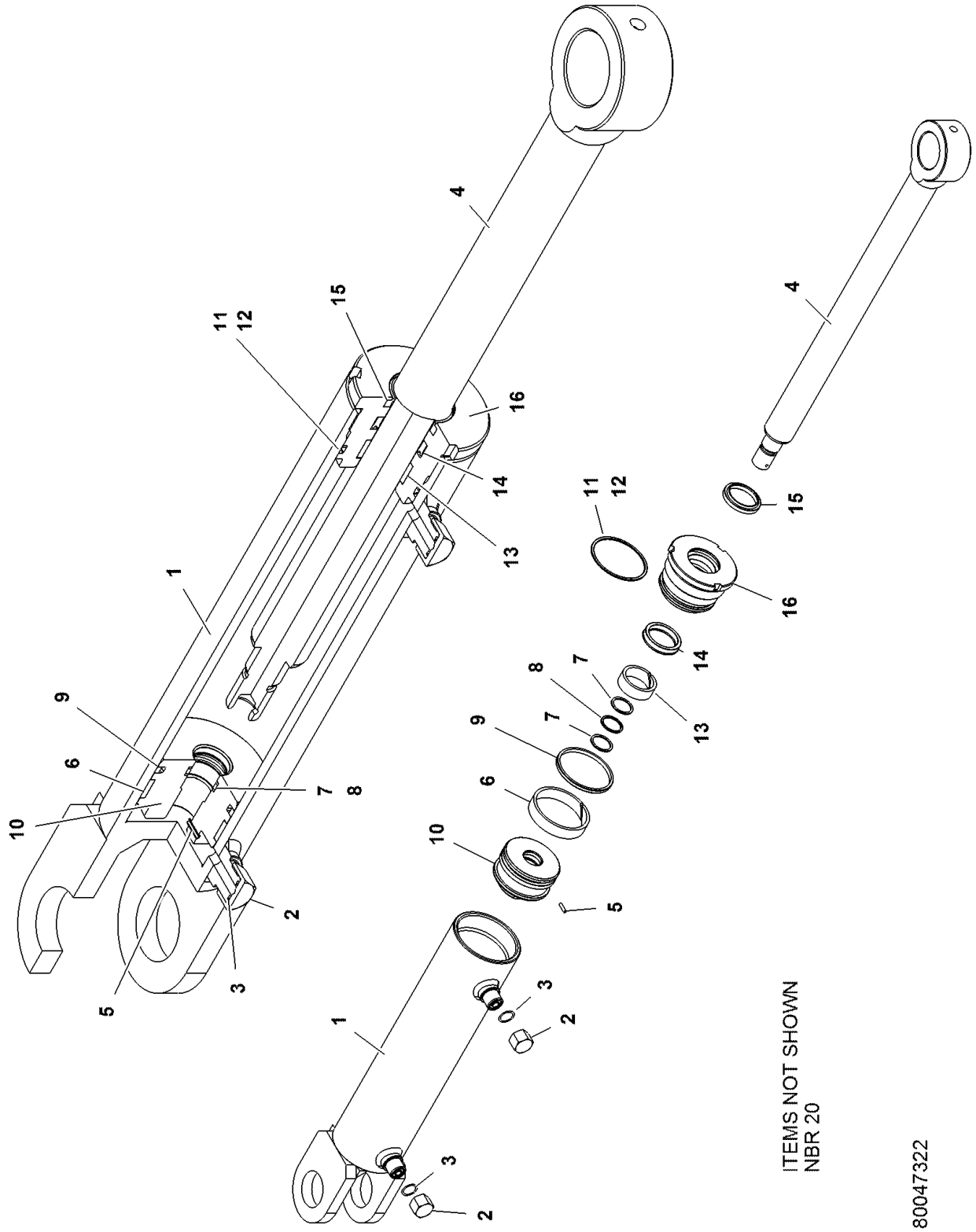


80047322

(SHEET 1 OF 1)

Description
**CYL ASSEMBLY-2.50 STEER BR**

Assembly No.
**80047322**
Revision:

| Item | FN | Part | Qty | Description |
|---|---|---|---|---|
| 1 | | **90026933** | 1 | BARREL ASSEMBLY |
| 2 | | **90026934** | 2 | STEEL CAP, 11/16"UN, FEMALE |
| 3 | * | **NSS** | 2 | NOT SERVICED SEPARATELY<br>O-RING |
| 4 | | **90026935** | 1 | ROD ASSEMBLY |
| 5 | | **90026936** | 1 | SPRING PIN (D.3.0 X 12MM) |
| 6 | | **90026909** | 1 | RING, WEAR |
| 7 | * | **NSS** | 2 | NOT SERVICED SEPARATELY<br>BACKUP RING |
| 8 | * | **NSS** | 1 | NOT SERVICED SEPARATELY<br>O-RING |
| 9 | * | **NSS** | 1 | NOT SERVICED SEPARATELY<br>PISTON SEAL |
| 10 | | **90026938** | 1 | PISTON |
| 11 | * | **NSS** | 1 | NOT SERVICED SEPARATELY<br>BACKUP RING |
| 12 | * | **NSS** | 1 | NOT SERVICED SEPARATELY<br>O-RING |
| 13 | | **90026939** | 1 | WEAR RING |
| 14 | * | **NSS** | 1 | NOT SERVICED SEPARATELY<br>ROD SEAL |
| 15 | * | **NSS** | 1 | NOT SERVICED SEPARATELY<br>WIPER |
| 16 | | **90026940** | 1 | HEAD |
| 20 | * | **80049022** | 1 | CYL SEAL KIT -2.50 STEER BR<br>INCL. ITEMS 3,7-9,11-12,14-15 |

*** REPAIR KIT AND/OR PART OF KIT**

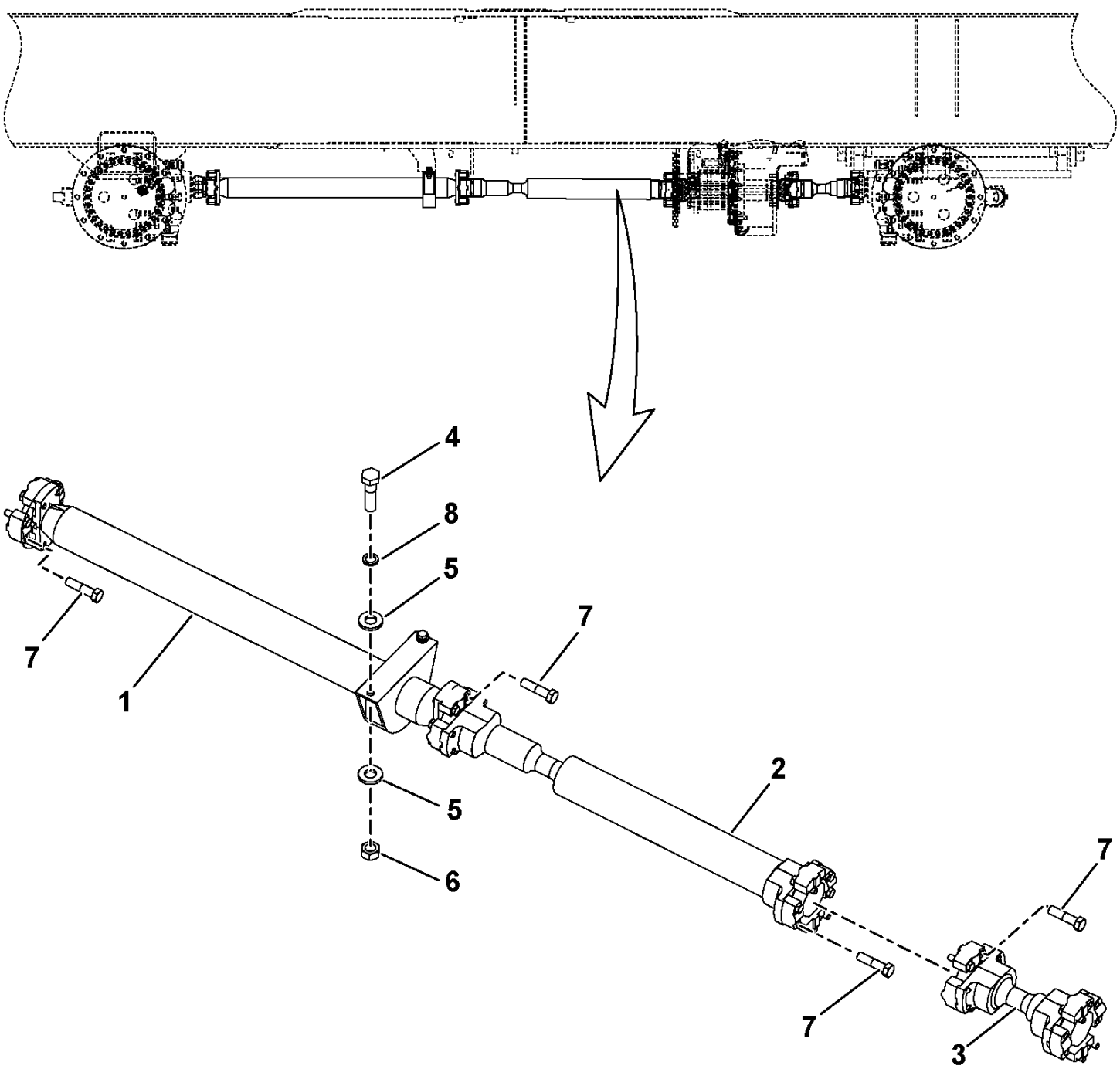


80011142

(SHEET 1 OF 1)

Description
**DRIVE LINE INSTALLATION**

Assembly No.
**80011142**
Revision: **B**

| Item | FN | Part | Qty | Description |
|---|---|---|---|---|
| 1 | + | **80000554** | 1 | DRIVE LINE ASSEMBLY WITH CENTER BEARING (COMPLETE ASSEMBLY) |
| 2 | + | **80000556** | 1 | DRIVE LINE ASSEMBLY (COMPLETE ASSEMBLY) |
| 3 | + | **7364100166** | 1 | DRIVE LINE ASSEMBLY (COMPLETE ASSEMBLY) |
| 4 | | **7126211650** | 2 | CAP SCREW, HEX HEAD |
| 5 | | **7949000235** | 4 | WASHER, 1/2" I.D. FLAT |
| 6 | | **7661210003** | 2 | NUT, HEX 12MM N.C. |
| 7 | | **7108181650** | 20 | BOLT, HEX |
| 8 | | **7951210210** | 2 | LOCK WASHER, 12MM I.D. |

**+ SEE FURTHER BREAKDOWN THIS GROUP**

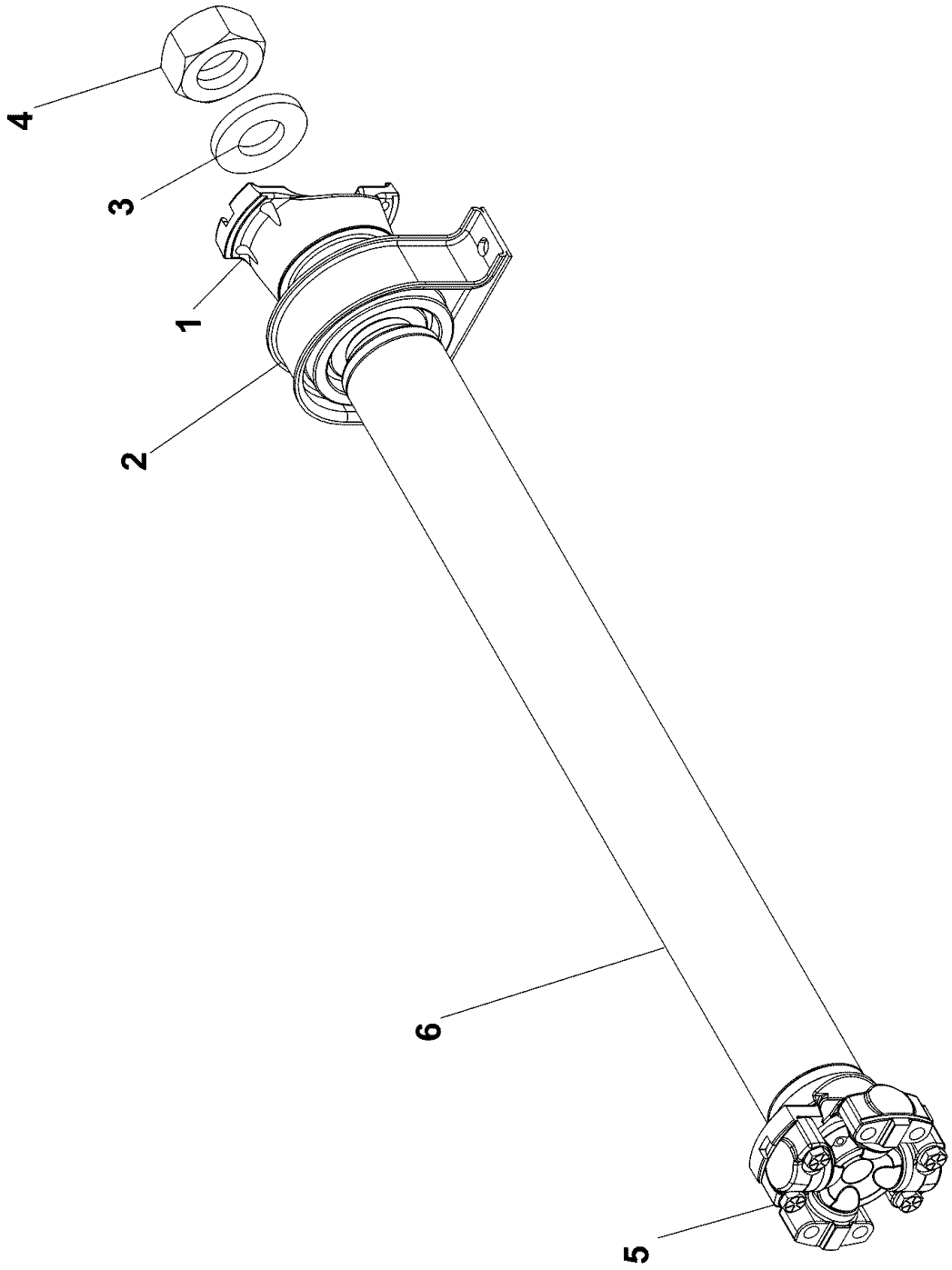


**80000554**

**(SHEET 1 OF 1)**

Description
**DRIVE LINE ASSEMBLY WITH CENTER BEARING (COMPLETE ASSEMBLY)**

Assembly No.
**80000554**
Revision:

| Item | FN | Part | Qty | Description |
|---|---|---|---|---|
| 1 | | **90012592** | 1 | YOKE ASSY. |
| 2 | | **9364101907** | 1 | BEARING, CENTER |
| 3 | | **9364101903** | 1 | WASHER |
| 4 | | **9364101902** | 1 | LOCKNUT |
| 5 | | **9364101535** | 1 | U-JOINT BEARING WITH HARDWARE |
| 6 | | **NSS** | 1 | NOT SERVICED SEPARATELY<br>TUBE WELDMENT |

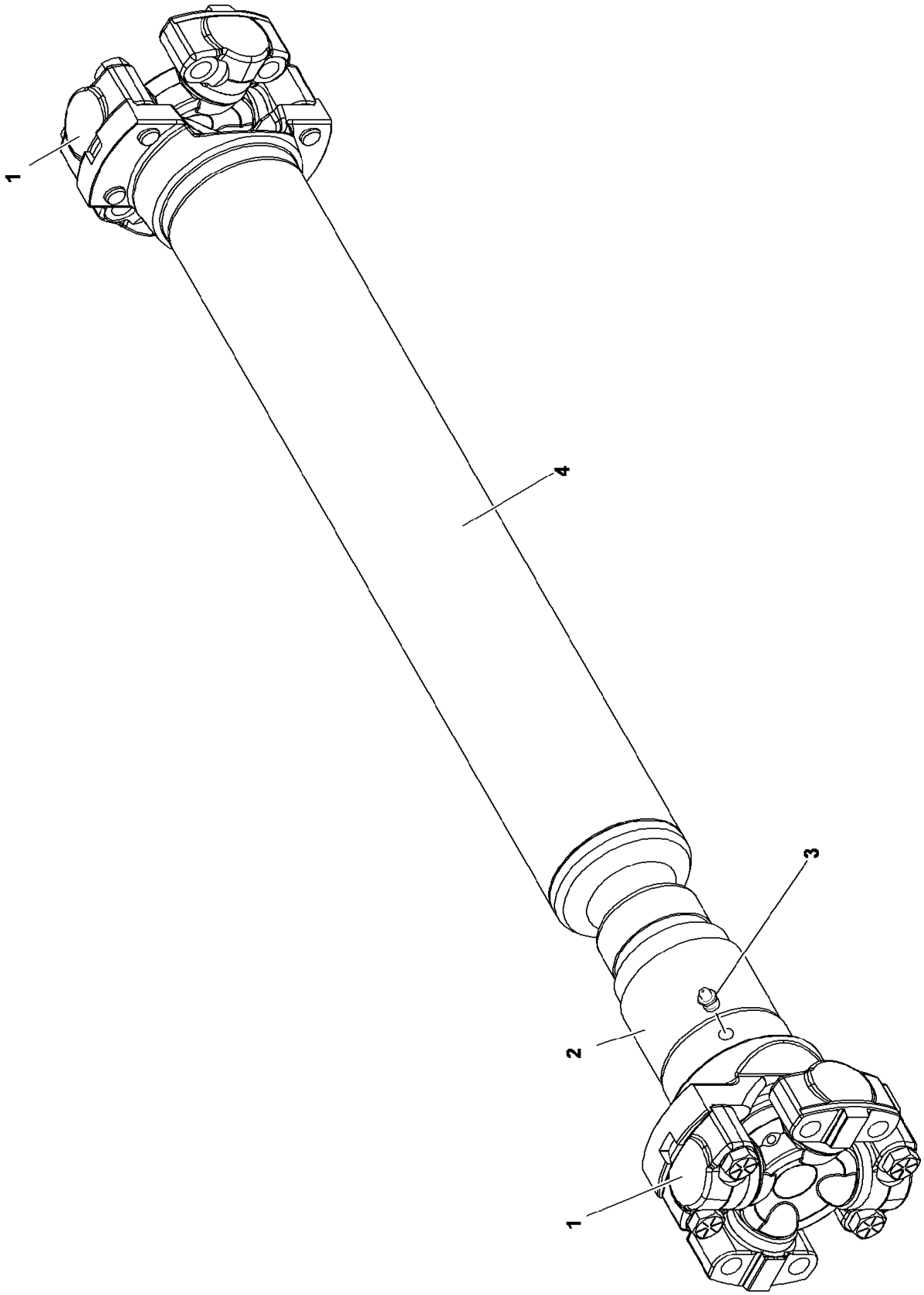


**80000556**

**(SHEET 1 OF 1)**

Description
**DRIVE LINE ASSEMBLY (COMPLETE ASSEMBLY)**

Assembly No.
**80000556**
Revision:

| Item | FN | Part | Qty | Description |
|---|---|---|---|---|
| 1 | | **9364101535** | 2 | U-JOINT BEARING WITH HARDWARE |
| 2 | | **90012594** | 1 | YOKE ASSY. W/ DUST CAP |
| 3 | | **9364101577** | 1 | FITTING, GREASE |
| 4 | | **NSS** | 1 | NOT SERVICED SEPARATELY<br>TUBE WELDMENT |

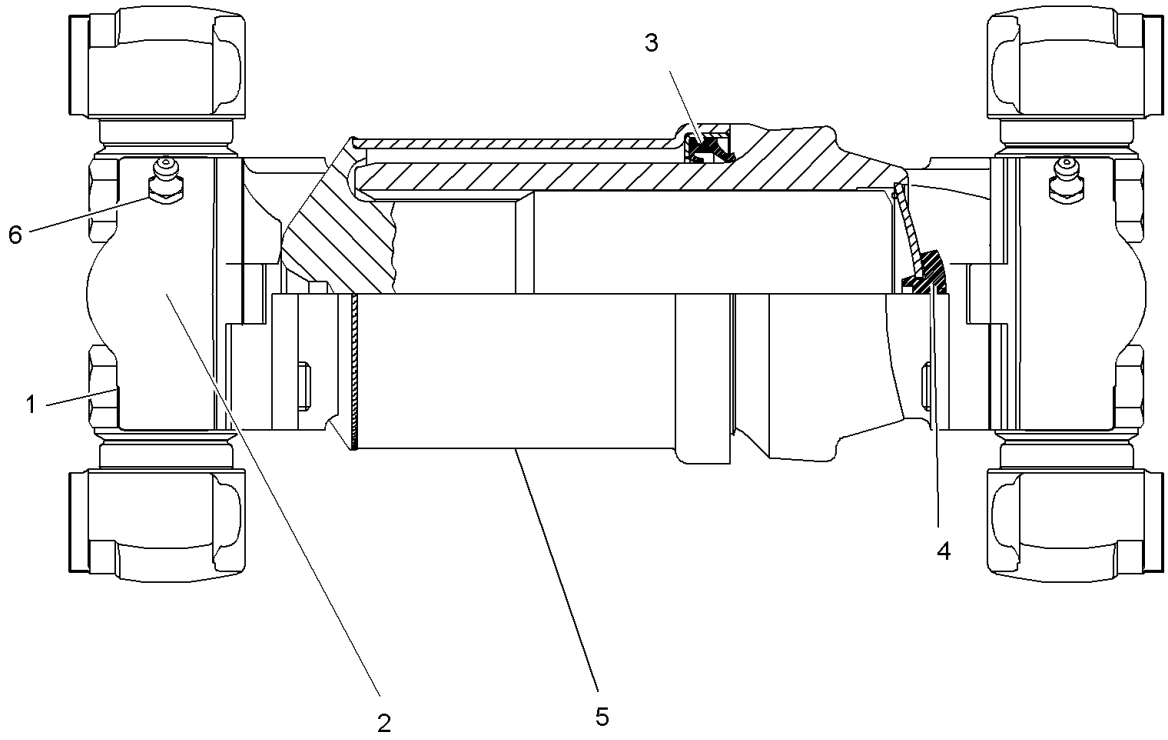


7364100166

(SHEET 1 OF 1)

Description
**DRIVE LINE ASSEMBLY (COMPLETE ASSEMBLY)**

Assembly No.
**7364100166**
Revision:

| Item | FN | Part | Qty | Description |
|---|---|---|---|---|
| 1 | | **9364101866** | 8 | CAPSCREW |
| 2 | | **9364101867** | 2 | U-JOINT ASSY. |
| 3 | | **9364101868** | 1 | SEAL, SHAFT |
| 4 | | **9364101869** | 1 | VALVE, AIR |
| 5 | | **NSS** | 1 | NOT SERVICED SEPARATELY<br>SHAFT ASSY. |
| 6 | | **9364101870** | 1 | FITTING, GREASE<br>QTY. 1 PER U-JOINT ASSY. |

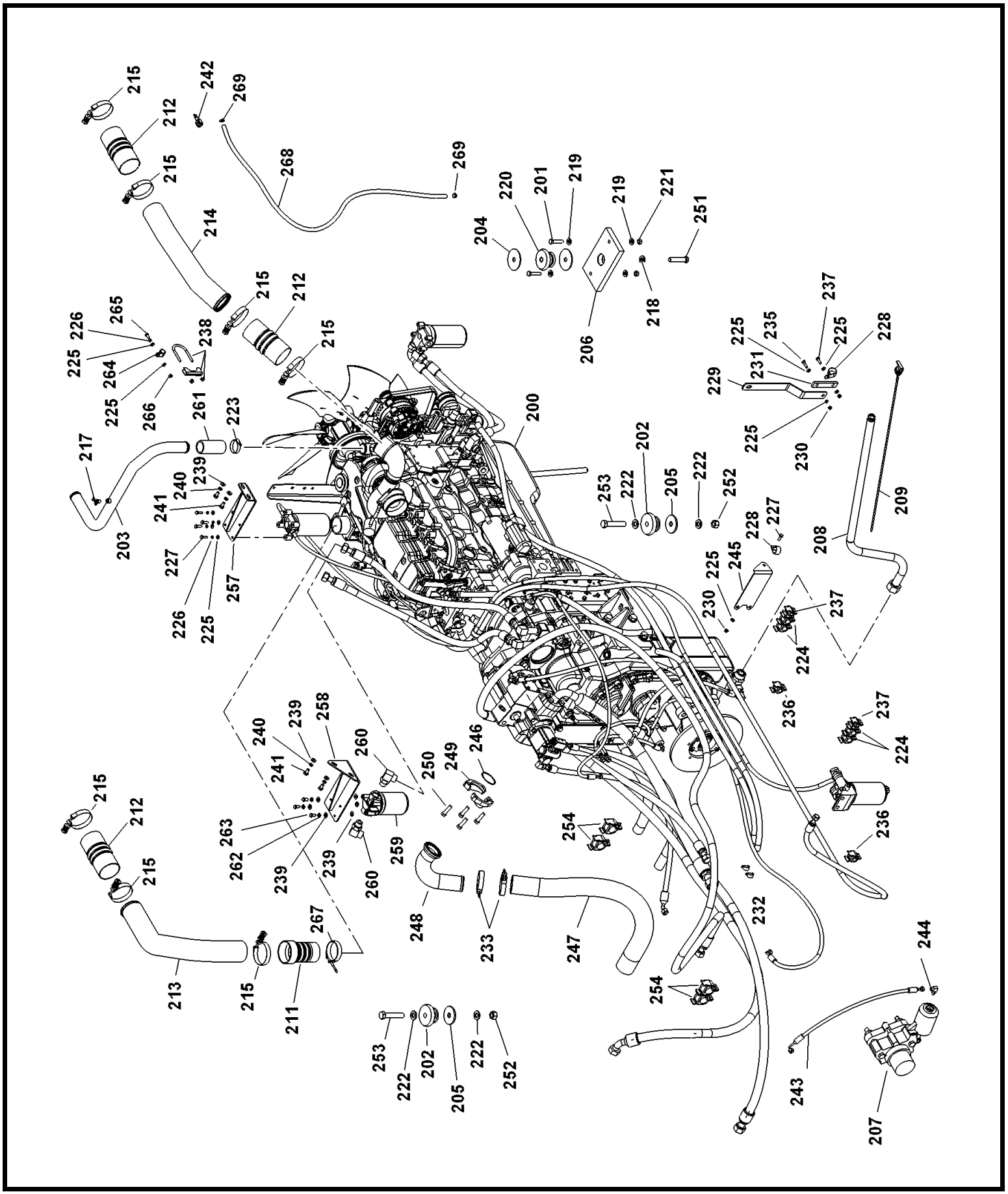


80056046

(SHEET 1 OF 1)

Description
**ENGINE INSTALLATION-BRAZIL**

Assembly No.
**80056046**
Revision: **F**

| Item | FN | Part | Qty | Description |
|---|---|---|---|---|
| 200 | + | **80056047** | 1 | ENGINE ASSEMBLY-BRAZIL |
| 201 | | **7638000183** | 1 | MOUNT |
| 202 | | **7638000137** | 2 | MOUNT, SHOCK |
| 203 | | **80059107** | 1 | TUBE-TOP RAD |
| 204 | | **80023972** | 2 | F WASHER 18X90X3.0 |
| 205 | | **80017459** | 2 | DOCK WASHER |
| 206 | | **80033702** | 1 | PLATE |
| 207 | + | **80051988** | 1 | BRAKE-PARK ASSY W/O SPACER |
| 208 | | **80030414** | 1 | TUBE ASSEMBLY |
| 209 | | **7486100132** | 1 | DIPSTICK |
| 211 | | **80033704** | 1 | BELLOWS-Ø3.5" TO Ø3.0" X 6"LG |
| 212 | | **7406001053** | 3 | BELLOWS |
| 213 | | **80059109** | 1 | TUBE - CAC |
| 214 | | **80059108** | 1 | TUBE - CAC |
| 215 | | **7300001000** | 7 | CLAMP |
| 217 | | **7926000014** | 1 | VALVE-DRAIN COCK |
| 218 | | **7949000259** | 1 | WASHER, 5/8" I.D. |
| 219 | | **7949000235** | 4 | WASHER, 1/2" I.D. FLAT |
| 220 | | **7126211853** | 2 | CAP SCREW, M12X55 HEX HEAD |
| 221 | | **7661210003** | 2 | NUT, HEX 12MM N.C. |
| 222 | | **7949000236** | 4 | FLAT WASHER, 3/4" |
| 223 | | **80056176** | 2 | HOSE CLAMP 44-57mm |
| 224 | | **7300000404** | 4 | CLAMP, 1" TUBING |
| 225 | | **7951170014** | 19 | WASHER, FLAT #8 |
| 226 | | **7951170210** | 9 | WASHER, LOCK 8MM |
| 227 | | **7126171253** | 10 | CAP SCREW, M8X25 HEX HEAD |
| 228 | | **7300000246** | 2 | CLAMP, TUBING 1-1/4" I.D. |
| 229 | | **4159810079** | 1 | BRACKET |
| 230 | | **7661171103** | 3 | NUT, HEX<br>8MM N.C. |
| 231 | | **7418100004** | 1 | STRAP, RUBBER |
| 232 | | **80054545** | 2 | HOSE CLAMP 19-27mm |
| 233 | | **7300001103** | 2 | CLAMP, T-BOLT |
| 235 | | **7126171350** | 1 | CAP SCREW, M8 X 30MM HEX HEAD |

**+ SEE FURTHER BREAKDOWN THIS GROUP**

Description
**ENGINE INSTALLATION-BRAZIL**

Assembly No.
**80056046**
Revision: **F**

| Item | FN | Part | Qty | Description |
|---|---|---|---|---|
| 236 | | **7300000402** | 2 | CLAMP, TUBING |
| 237 | | **7300000401** | 2 | CLAMP, TUBING<br>5/8" I.D. |
| 238 | | **7300000070** | 1 | CLAMP, MUFFLER |
| 239 | | **7949000263** | 10 | WASHER, HARDENED |
| 240 | | **7951190210** | 4 | LOCK WASHER, 10MM |
| 241 | | **7126191153** | 4 | CAP SCREW, M10 X 20 HEX HEAD |
| 242 | | **7352100036** | 1 | SENSOR-COOLANT LEVEL |
| 243 | | **7561103003** | 1 | HOSE ASSY, 1/4"I.D. X 30" LONG |
| 244 | | **7447040403** | 1 | ELBOW, 90 DEGREE<br>INCLUDES THE FOLLOWING PARTS |
| | | **7755011002** | 1 | O-RING |
| | | **7755904002** | 1 | O-RING |
| 245 | | **80033706** | 1 | PLATE - TRANS DIPSTICK SUP |
| 246 | | **7755232002** | 1 | O-RING |
| 247 | | **7566503700** | 1 | HOSE ASSY |
| 248 | | **7910101464** | 1 | TUBE ASSY, PUMP INLET |
| 249 | # | **7450000375** | 2 | FLANGE, SPLIT |
| 250 | | **7115181450** | 4 | CAP SCREW,<br>1/2" - 13 N.C. X 1 3/4" |
| 251 | | **7127242350** | 1 | CAP SCREW, M16 X 80MM LONG |
| 252 | | **7660220008** | 2 | NUT, HEX<br>3/4" - 10 N.C.<br>GRADE 8 |
| 253 | | **7118223250** | 2 | CAP SCREW,<br>3/4" - 10 N.C. X 4"<br>GRADE 8 |
| 254 | | **7300000406** | 4 | CLAMP, TUBING |
| 257 | | **80033571** | 1 | FUEL FILTER BRACKET |
| 258 | | **80033568** | 1 | TRANS FILTER BRACKET |
| 259 | + | **7437100235** | 1 | FILTER ASSEMBLY<br>(COMPLETE ASSEMBLY) |
| 260 | | **7447121203** | 2 | ELBOW, 90 DEGREE<br>INCLUDES THE FOLLOWING PARTS |
| | | **7755018002** | 1 | O-RING |
| | | **7755912002** | 1 | O-RING |
| 261 | | **8596902521** | 1 | 1.75"ID X 2.13"OD WRAPPED HOSE |
| 262 | | **7950160050** | 3 | WASHER, LOCK 3/8" I.D. |

**# SERVICED AS AN ASSEMBLY ONLY** **+ SEE FURTHER BREAKDOWN THIS GROUP**

Description
**ENGINE INSTALLATION-BRAZIL**

Assembly No.
**80056046**
Revision: **F**

| Item | FN | Part | Qty | Description |
|---|---|---|---|---|
| 263 | | **7115160650** | 3 | CAP SCREW,<br>3/8" - 16 N.C. X 3/4"<br>GRADE 5 |
| 264 | | **7300000243** | 1 | CLAMP, TUBING<br>3/4" I.D. |
| 265 | | **7126171153** | 1 | CAP SCREW, M8 X 20MM HEX HEAD |
| 266 | | **7661170003** | 1 | NUT |
| 267 | | **7300001102** | 1 | CLAMP, T-BOLT |
| 268 | | **80022516** | 1 | RADIATOR VENT LINE |
| 269 | | **80054549** | 2 | HOSE CLAMP 13-19mm |

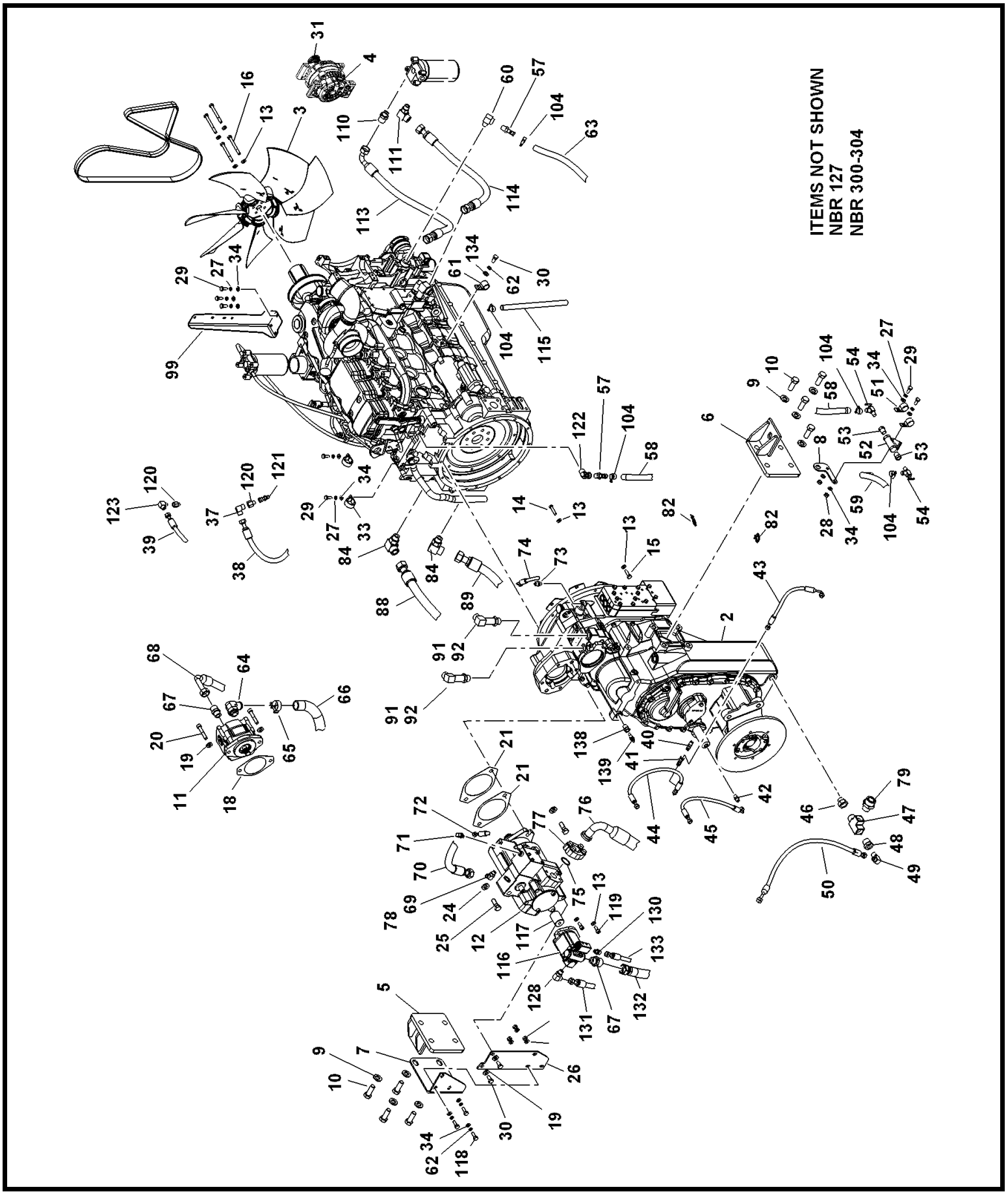


80056047

(SHEET 1 OF 1)

Description
**ENGINE ASSEMBLY-BRAZIL**

Assembly No.
**80056047**
Revision: **F**

| Item | FN | Part | Qty | Description |
|---|---|---|---|---|
| 2 | + | **80029525** | 1 | TRANSMISSION |
| 3 | | **80030260** | 1 | FAN - 26IN DIA SUCKER |
| 4 | # | **80033575** | 1 | ALTERNATOR-24SI |
| 5 | | **80033564** | 1 | BED TO PLATFORM MOUNTING GROUP (HEAVY DUTY) |
| 6 | | **80033565** | 1 | ENGINE MOUNT-RS |
| 7 | | **4159810082** | 1 | SUPPORT, PUMP |
| 8 | | **4159810060** | 1 | PLATE, MOUNTING |
| 9 | | **7949000236** | 8 | FLAT WASHER, 3/4" |
| 10 | | **7115221650** | 8 | CAP SCREW, 3/4" - 10 N.C. X 2" GRADE 5 |
| 11 | + | **7722100101** | 1 | PUMP ASSEMBLY - GEAR (COMPLETE ASSEMBLY) |
| 12 | + | **7722100100** | 1 | PUMP ASSEMBLY - PISTON (COMPLETE ASSEMBLY) |
| 13 | | **7949000263** | 25 | WASHER, HARDENED |
| 14 | | **7108161450** | 8 | CAP SCREW, 3/8" - 24 N.F. X 1 3/4" GRADE 8 |
| 15 | | **7126191450** | 11 | CAP SCREW, M10 X 35MM HEX HEAD |
| 16 | | **7126192650** | 4 | CAP SCREW, M10 X 100MM HEX HEAD |
| 18 | | **7794001655** | 1 | GASKET |
| 19 | | **7949000235** | 4 | WASHER, 1/2" I.D. FLAT |
| 20 | | **80010421** | 2 | SHCS M12X70 -8.8 |
| 21 | | **6794100011** | 2 | GASKET, 2 BOLT HOLE |
| 24 | | **7949000259** | 2 | WASHER, 5/8" I.D. |
| 25 | | **7115201450** | 2 | CAP SCREW, 5/8" - 11 N.C. X 1 3/4" GRADE 5 |
| 26 | | **4159810083** | 1 | SUPPORT, PUMP |
| 27 | | **7951190210** | 10 | LOCK WASHER, 10MM |
| 28 | | **7661190003** | 5 | NUT, HEX 10MM |
| 29 | | **7126191253** | 7 | CAP SCREW, M10 X 25 HEX HEAD |
| 30 | | **7126211253** | 3 | CAP SCREW, M12 X 25MM HEX HEAD |
| 31 | | **80029158** | 1 | PULLEY-8'K' DIA. 47.85 |
| 33 | | **7300000249** | 2 | CLAMP, TUBING 1 1/2" I.D. |

**+ SEE FURTHER BREAKDOWN THIS GROUP** **# SERVICED AS AN ASSEMBLY ONLY**

Description
**ENGINE ASSEMBLY-BRAZIL**

Assembly No.
**80056047**
Revision: **F**

| Item | FN | Part | Qty | Description |
|---|---|---|---|---|
| 34 | | **7951190014** | 15 | FLAT WASHER, 10MM I.D. |
| 37 | | **7447080810** | 1 | 90 UNION MALE ORFS-MALE ORFS |
| 38 | | **7572319231** | 1 | HOSE ASSY - FUEL #8 STR-STR |
| 39 | | **7572212013** | 1 | 3/8" HYD HOSE-HOT, STR-STR |
| 40 | | **7447040430** | 1 | ELBOW, 90 DEGREE<br>INCLUDES THE FOLLOWING PARTS |
| | | **7755011002** | 1 | O-RING |
| 41 | | **7447040434** | 1 | TEE, MALE RUN<br>INCLUDES THE FOLLOWING PARTS |
| | | **7755011002** | 1 | O-RING |
| | | **7755904002** | 1 | O-RING |
| 42 | | **7447040428** | 2 | ADAPTER, STRAIGHT<br>INCLUDES THE FOLLOWING PARTS |
| | | **7755011002** | 1 | O-RING |
| | | **7755904002** | 1 | O-RING |
| 43 | | **7561101503** | 1 | HOSE ASSY, 1/4"I.D. X 15" LONG |
| 44 | | **7561103003** | 1 | HOSE ASSY, 1/4"I.D. X 30" LONG |
| 45 | | **7561102003** | 1 | 1/4" I.D. X 20" |
| 46 | | **7445161217** | 1 | REDUCING CONNECTOR |
| 47 | | **7888000045** | 1 | TEE |
| 48 | | **7445160850** | 1 | BUSHING, REDUCER |
| 49 | | **7447060830** | 1 | ELBOW, 90 DEGREE MALE<br>INCLUDES THE FOLLOWING PARTS |
| | | **7755014002** | 1 | O-RING |
| | | **7755906002** | 1 | O-RING |
| 50 | | **7561203017** | 1 | 3/8" I.D. X 30" |
| 51 | | **7300000246** | 2 | CLAMP, TUBING 1-1/4" I.D. |
| 52 | | **7437100220** | 1 | STRAINER, MESH |
| 53 | | **7445080650** | 2 | BUSHING, REDUCER |
| 54 | # | **7926002329** | 2 | VALVE, SHUT-OFF |
| 57 | | **7649000059** | 2 | NIPPLE, HOSE 5/8 ID TO 1/2 NPT |
| 58 | | **8596902528** | 4 | HOSE, 5/8" I.D.<br>(QUANTITY IN FEET) |
| 59 | | **8596902528** | 4 | HOSE, 5/8" I.D.<br>(QUANTITY IN FEET) |
| 60 | | **7445080853** | 1 | ELBOW, 90 DEGREE |
| 61 | | **7300000245** | 1 | CLAMP, TUBING<br>1" I.D. |

**# SERVICED AS AN ASSEMBLY ONLY**

Description
**ENGINE ASSEMBLY-BRAZIL**

Assembly No.
**80056047**
Revision: **F**

| Item | FN | Part | Qty | Description |
|---|---|---|---|---|
| 62 | | **7951210210** | 1 | LOCK WASHER, 12MM I.D. |
| 63 | | **8596902528** | 17 | HOSE, 5/8" I.D.<br>(QUANTITY IN FEET) |
| 64 | | **7013100047** | 1 | ADAPTER,ORB TO HOSE BARB 20-16 |
| 65 | | **7300100024** | 1 | CLAMP, T-BOLT 1.75" NOM |
| 66 | | **80072247** | 1 | HOSE ASSY 1-1/4"IDX72" SUCTION |
| 67 | | **7447121201** | 1 | ADAPTER, STRAIGHT MALE<br>INCLUDES THE FOLLOWING PARTS |
| | | **7755018002** | 1 | O-RING |
| | | **7755912002** | 1 | O-RING |
| 68 | | **7555508503** | 1 | HOSE ASSY, 3/4" ID X 85" |
| 69 | | **7447121203** | 1 | ELBOW, 90 DEGREE<br>INCLUDES THE FOLLOWING PARTS |
| | | **7755018002** | 1 | O-RING |
| | | **7755912002** | 1 | O-RING |
| 70 | | **7555514390** | 1 | HOSE ASSY, 3/4" ID |
| 71 | | **7447040403** | 1 | ELBOW, 90 DEGREE<br>INCLUDES THE FOLLOWING PARTS |
| | | **7755011002** | 1 | O-RING |
| | | **7755904002** | 1 | O-RING |
| 72 | | **7555111021** | 1 | HOSE ASSY, 1/4" ID |
| 73 | | **7447040601** | 1 | ADAPTER, STRAIGHT<br>INCLUDES THE FOLLOWING PARTS |
| | | **7755011002** | 1 | O-RING |
| | | **7755906002** | 1 | O-RING |
| 74 | | **7561106003** | 1 | HOSE ASSY,1/4" I.D. HYD STR-90 |
| 75 | | **7755222002** | 1 | O-RING |
| 76 | | **7543109361** | 1 | HOSE ASSY, 1 1/4" HYDRAULIC |
| 77 | # | **7450000254** | 2 | FLANGE, SPLIT |
| 78 | | **7115181450** | 4 | CAP SCREW,<br>1/2" - 13 N.C. X 1 3/4" |
| 79 | | **7447201628** | 1 | ADAPTER, STRAIGHT<br>INCLUDES THE FOLLOWING PARTS |
| | | **7755025002** | 1 | O-RING |
| | | **7755916002** | 1 | O-RING |
| 82 | | **7850000237** | 3 | TIE, CABLE (BLACK)<br>7 5/16" LONG |
| 84 | | **7447161203** | 2 | ELBOW, 90 DEGREE<br>INCLUDES THE FOLLOWING PARTS |
| | | **7755021002** | 1 | O-RING |

**# SERVICED AS AN ASSEMBLY ONLY**

Description
**ENGINE ASSEMBLY-BRAZIL**

Assembly No.
**80056047**
Revision: **F**

| Item | FN | Part | Qty | Description |
|---|---|---|---|---|
| | | **7755912002** | 1 | O-RING |
| 88 | | **7561610261** | 1 | 1" HOSE ASSY-HOT, STRT-45 |
| 89 | | **7561610260** | 1 | HOSE ASSY, HOT 1" STRT-STRT |
| 91 | | **7447121238** | 2 | ELBOW, 90 DEGREE LONG MALE<br>INCLUDES THE FOLLOWING PARTS |
| | | **7755018002** | 1 | O-RING |
| | | **7755912002** | 1 | O-RING |
| 92 | | **7561504850** | 2 | 3/4 HOSE ASSY ORFS STR X STR |
| 99 | | **80041035** | 1 | RAD TUBE SUPPORT BRACKET |
| 104 | | **80054545** | 5 | HOSE CLAMP 19-27mm |
| 110 | | **7447121001** | 2 | ADAPTER, STRAIGHT<br>INCLUDES THE FOLLOWING PARTS |
| | | **7755018002** | 1 | O-RING |
| | | **7755910002** | 1 | O-RING |
| 111 | | **7447121003** | 2 | ELBOW, 90 DEGREE<br>INCLUDES THE FOLLOWING PARTS |
| | | **7755018002** | 1 | O-RING |
| | | **7755910002** | 1 | O-RING |
| 112 | | **7447121233** | 1 | ELBOW, 90 DEGREE<br>INCLUDES THE FOLLOWING PARTS |
| | | **7755018002** | 1 | O-RING |
| 113 | | **7561503252** | 1 | 3/4" HYD HOSE ASSY STR-90 |
| 114 | | **7561502650** | 1 | 3/4 HOSE ASSY ORFS STR X STR |
| 115 | | **6543003602** | 1 | HOSE - USE 8596902528<br>QTY 2 HOSE<br>20" |
| 116 | + | **80033489** | 1 | PUMP ASS'Y WITH FLOW DIVIDER |
| 117 | | **7364100217** | 1 | COUPLER SAE A TO A |
| 118 | | **7126191350** | 3 | CAP SCREW, M10X30 HEX HEAD |
| 119 | | **7126191254** | 2 | SHCS M10x25 -8.8 ISO 4762 |
| 120 | | **7447040467** | 1 | FEM ORFS TO MALE ISO |
| 121 | | **7447080413** | 1 | REDUCER |
| 122 | | **7445120809** | 1 | ADAPTER, 45 DEGREE SWIVEL |
| 123 | | **7447060430** | 1 | ELBOW, 90 DEGREE<br>INCLUDES THE FOLLOWING PARTS |
| | | **7755012002** | 1 | O-RING |
| | | **7755904002** | 1 | O-RING |
| 127 | + | **80038095** | 1 | ESI-ENGINE |
| 128 | | **7447080803** | 1 | ELBOW, 90 DEGREE MALE |

**+ SEE FURTHER BREAKDOWN THIS GROUP**

Description
**ENGINE ASSEMBLY-BRAZIL**

Assembly No.
**80056047**
Revision: **F**

| Item | FN | Part | Qty | Description |
|---|---|---|---|---|
| | | | | INCLUDES THE FOLLOWING PARTS |
| | | **7755014002** | 1 | O-RING |
| | | **7755908002** | 1 | O-RING |
| 129 | | **7447161201** | 1 | ADAPTER, STRAIGHT |
| | | | | INCLUDES THE FOLLOWING PARTS |
| | | **7755021002** | 1 | O-RING |
| | | **7755912002** | 1 | O-RING |
| 130 | | **7447060601** | 1 | ADAPTER, STRAIGHT MALE |
| | | | | INCLUDES THE FOLLOWING PARTS |
| | | **7755012002** | 1 | O-RING |
| | | **7755906002** | 1 | O-RING |
| 131 | | **7555304402** | 1 | HOSE ASSY, 1/2"I.D. X 44" LONG |
| 132 | | **80034290** | 1 | HOSE ASSY 1.00 SUCTION |
| 133 | | **7555204402** | 1 | 3/8"I.D. HYDR HOSE ASSY STR-45 |
| 134 | | **7951210014** | 1 | WASHER, FLAT #12 |
| 137 | | **7013000405** | 1 | ADAPTER |
| 138 | | **7445080450** | 1 | BUSHING, REDUCER |
| 139 | | **7872000723** | 1 | SENDER,TRANMISSION TEMPERATURE |
| 300 | | **9414101679** | 1 | FILTER,OIL |
| 301 | | **9414101756** | 1 | FILTER, FUEL/WATER SEPARATOR |
| 302 | | **9414101755** | 1 | FILTER, FUEL |
| 303 | | **90023884** | 1 | BELT, SERPENTINE V-RIBBED |
| 304 | | **90023883** | 1 | STARTER MOTOR, 24V. |

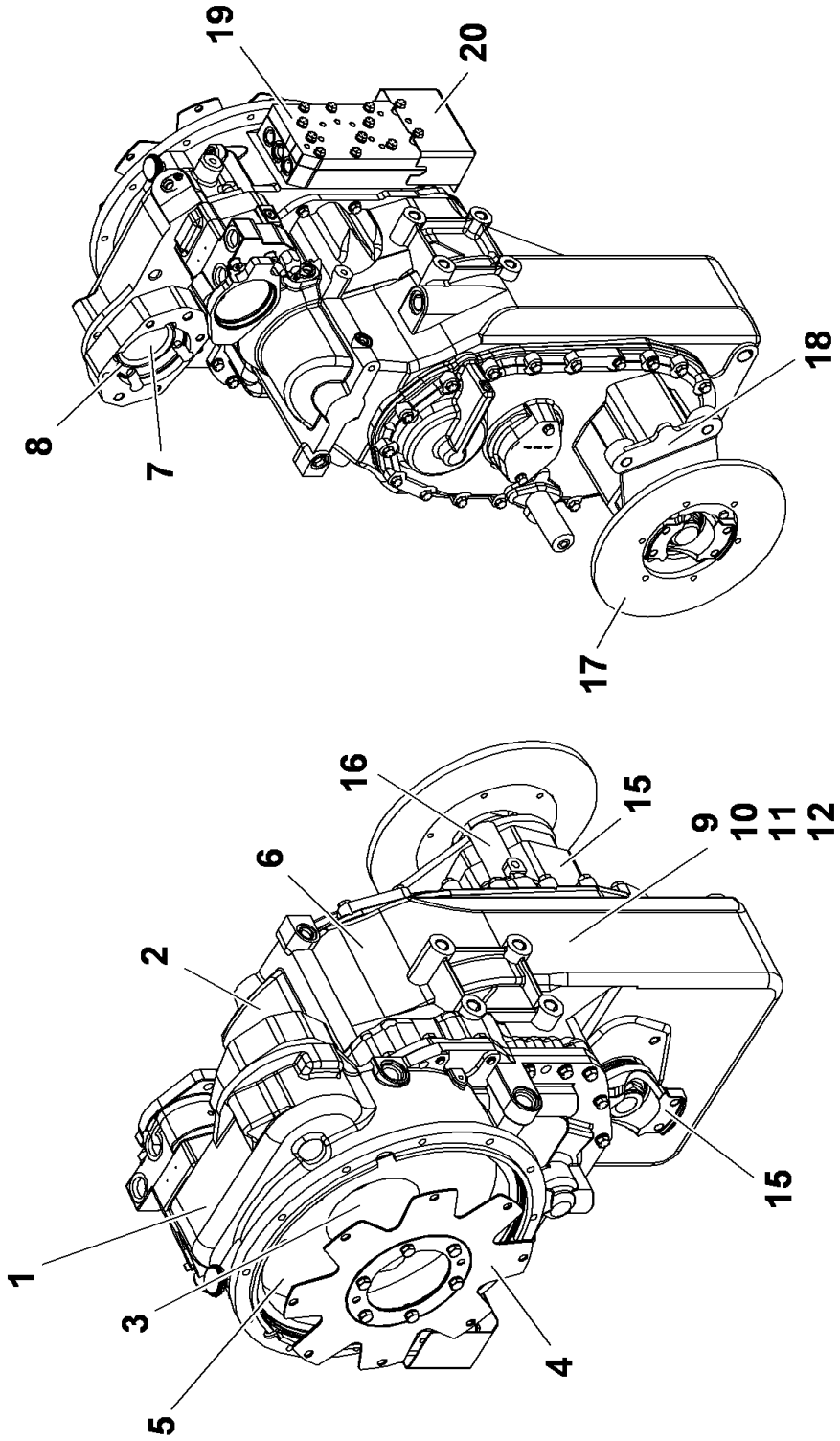


80029525

(SHEET 1 OF 1)

Description
**TRANSMISSION**

Assembly No.
**80029525**
Revision:

| Item | FN | Part | Qty | Description |
|---|---|---|---|---|
| 1 | + | **9904110609** | 1 | CONVERTER HOUSING GROUP |
| 2 | + | **9904109807** | 1 | CASE & REAR COVER GROUP |
| 3 | + | **9904110611** | 1 | TURBINE SHAFT GROUP |
| 4 | + | **9904110612** | 1 | DRIVE PLATE GROUP |
| 5 | + | **9904110613** | 1 | TORQUE CONVERTER GROUP |
| 6 | + | **9904110614** | 1 | GEAR GROUP |
| 7 | + | **9904110615** | 1 | AUXILIARY PUMP DRIVE GROUP |
| 8 | + | **9904110616** | 1 | PUMP DRIVE GROUP |
| 9 | + | **9904110617** | 1 | FORWARD SHAFT GROUP |
| 10 | + | **9904110618** | 1 | REVERSE & 2ND. SHAFT GROUP |
| 11 | + | **9904110619** | 1 | REVERSE IDLER GROUP |
| 12 | + | **9904110620** | 1 | LOW SPEED SHAFT GROUP |
| 13 | + | **9904110621** | 1 | 3RD. SHAFT GROUP |
| 14 | + | **9904110622** | 1 | IDLER SHAFT GROUP |
| 15 | + | **90015440** | 1 | OUTPUT SHAFT GROUP |
| 16 | + | **9904110624** | 1 | HI/LOW RANGE SHIFT CONT. GROUP |
| 17 | + | **9904110625** | 1 | DISC BRAKE GROUP |
| 18 | + | **90023152** | 1 | CHARGING PUMP GROUP |
| 19 | + | **90013617** | 1 | CONTROL VALVE MOUNTING GROUP 24 VOLT |
| 20 | + | **90023154** | 1 | CONTROL VALVE ASSY.GROUP 24V. |

**+ SEE FURTHER BREAKDOWN THIS GROUP**

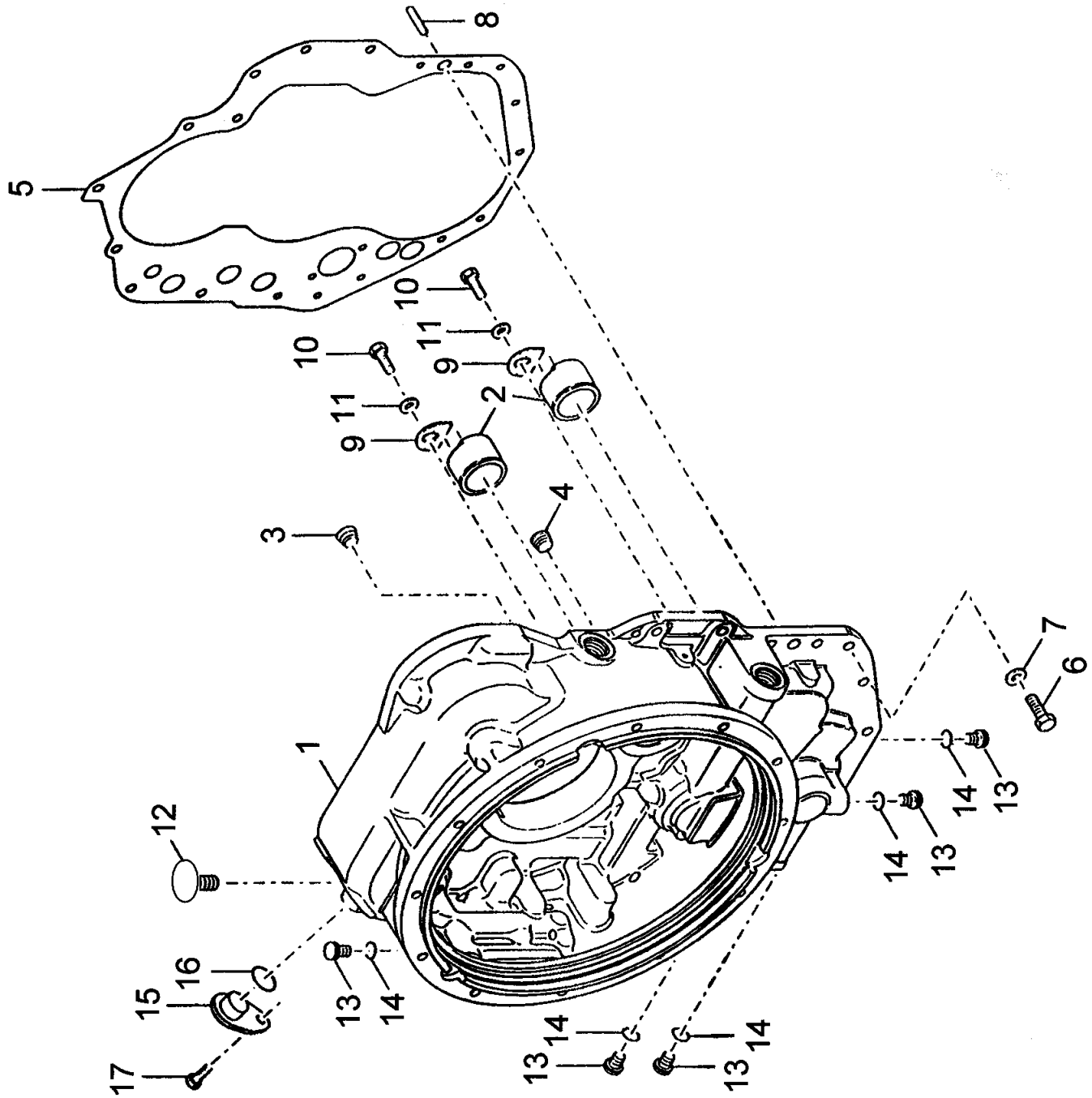


9904110609

(SHEET 1 OF 1)

Description
**CONVERTER HOUSING GROUP**

Assembly No.
**9904110609**
Revision:

| Item | FN | Part | Qty | Description |
|---|---|---|---|---|
| 1 | | **9904109562** | 1 | HOUSING, CONVERTER |
| 2 | | **9904105940** | 2 | SLEEVE |
| 3 | | **9904103913** | 1 | PLUG |
| 4 | | **9904104055** | 1 | PLUG |
| 5 | | **9904109563** | 1 | CASE, GASKET |
| 6 | | **7118171050** | 18 | CAP SCREW, |
| 7 | | **7950170050** | 18 | WASHER, LOCK 7/16" I.D. |
| 8 | | **9904109564** | 1 | PIN, DOWEL |
| 9 | | **9904101298** | 2 | LOCK, PLATE |
| 10 | | **9049101125** | 2 | BOLT, CAP SCREW |
| 11 | | **7950150050** | 2 | WASHER, LOCK 5/16" I.D. |
| 12 | | **9904104050** | 1 | BREATHER |
| 13 | | **9904108396** | 5 | PLUG |
| 14 | | **9904106445** | 5 | O-RING |
| 15 | | **9904109356** | 1 | PLUG |
| 16 | | **9904109357** | 1 | O-RING |
| 17 | | **9904109358** | 1 | CAP SCREW |

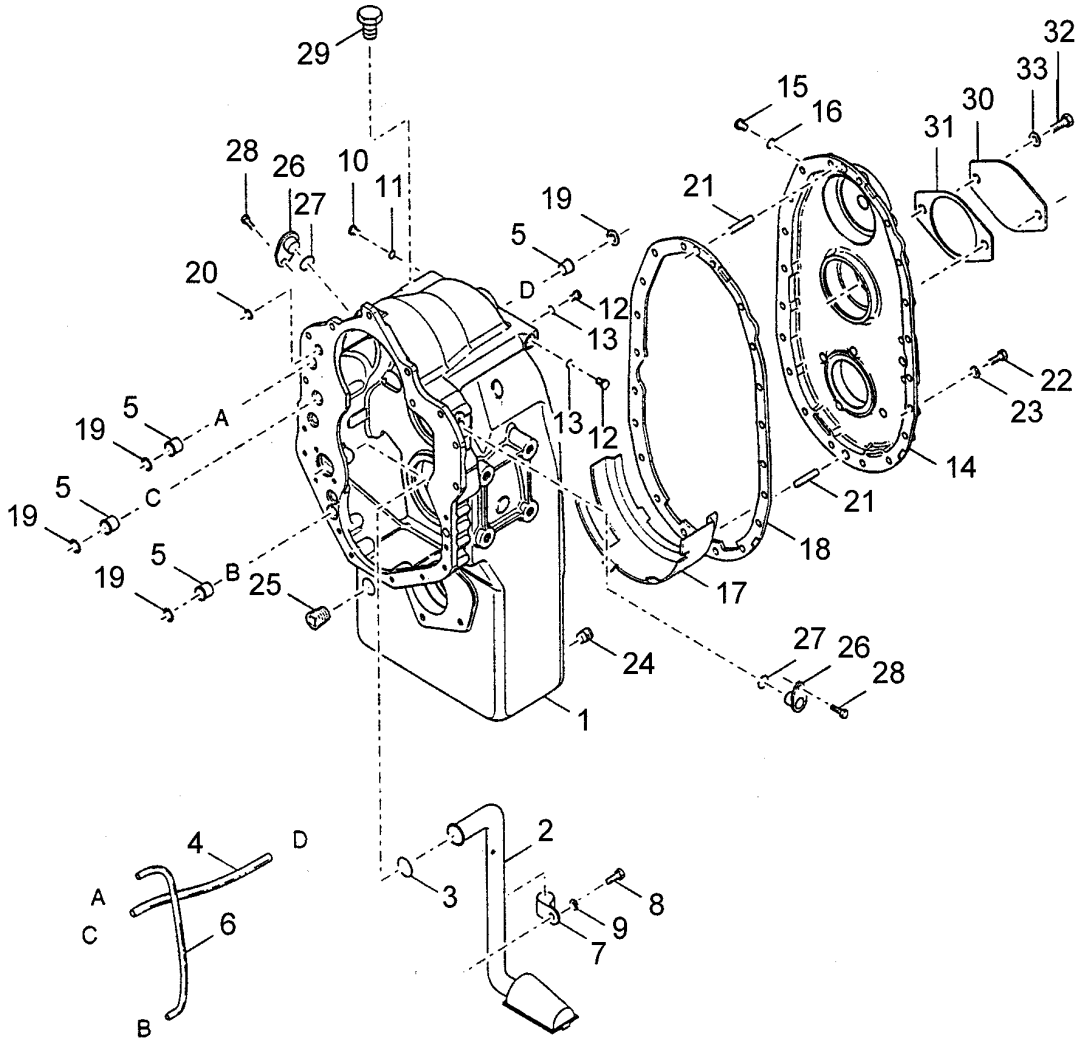


9904109807

(SHEET 1 OF 1)

Description
**CASE & REAR COVER GROUP**

Assembly No.
**9904109807**
Revision:

| Item | FN | Part | Qty | Description |
|---|---|---|---|---|
| 1 | | **9904109567** | 1 | CASE ASSEMBLY<br>INCLUDES NBRS 2 - 9 |
| 2 | | **9904109569** | 1 | TUBE ASSEMBLY, SUCTION |
| 3 | | **9904109570** | 1 | O-RING |
| 4 | | **9904103551** | 1 | TUBE |
| 5 | | **9904100993** | 4 | SLEEVE, TUBE |
| 6 | | **9904109568** | 1 | TUBE, THIRD SPEED |
| 7 | | **9904109571** | 1 | CLIP, TUBE |
| 8 | | **9904103916** | 1 | SCREW, |
| 9 | | **7950170050** | 1 | WASHER, LOCK 7/16" I.D. |
| 10 | | **9904108396** | 1 | PLUG |
| 11 | | **9904106445** | 1 | O-RING |
| 12 | | **9904106063** | 2 | PLUG WITH O-RING<br>INCLUDES THE FOLLOWING PARTS |
| | | **9904105336** | 1 | O-RING |
| 13 | | **9904105336** | 2 | O-RING |
| 14 | | **9904109565** | 1 | COVER, REAR AND PLUG ASSEMBLY<br>INCLUDES NBR 15 |
| 15 | | **9904108396** | 1 | PLUG<br>INCLUDES NBR 16 |
| 16 | | **9904106445** | 1 | O-RING |
| 17 | | **9904109572** | 1 | BAFFLE, OIL |
| 18 | | **9904109566** | 1 | CASE, GASKET |
| 19 | | **9904103779** | 4 | O'RING POLYACUL |
| 20 | | **9904103500** | 1 | O-RING |
| 21 | | **9904109564** | 2 | PIN, DOWEL |
| 22 | | **9049101150** | 20 | CAP SCREW, |
| 23 | | **7950170050** | 20 | WASHER, LOCK 7/16" I.D. |
| 24 | | **9904101317** | 2 | PLUG, MAGNETIC |
| 25 | | **9904108964** | 1 | PLUG, DRAIN |
| 26 | | **9904109356** | 2 | PLUG |
| 27 | | **9904109357** | 2 | O-RING |
| 28 | | **9904109358** | 2 | CAP SCREW |
| 29 | | **9049100054** | 1 | PLUG, FILLER |
| 30 | | **9904105442** | 1 | COVER |
| 31 | | **9904105441** | 1 | STEER PUMP GASKET |

Description
**CASE & REAR COVER GROUP**

Assembly No.
**9904109807**
Revision:

| Item | FN | Part | Qty | Description |
|---|---|---|---|---|
| 32 | | **9049100263** | 2 | CAPSCREW |
| 33 | | **7950160050** | 2 | WASHER, LOCK 3/8" I.D. |

**Notes**

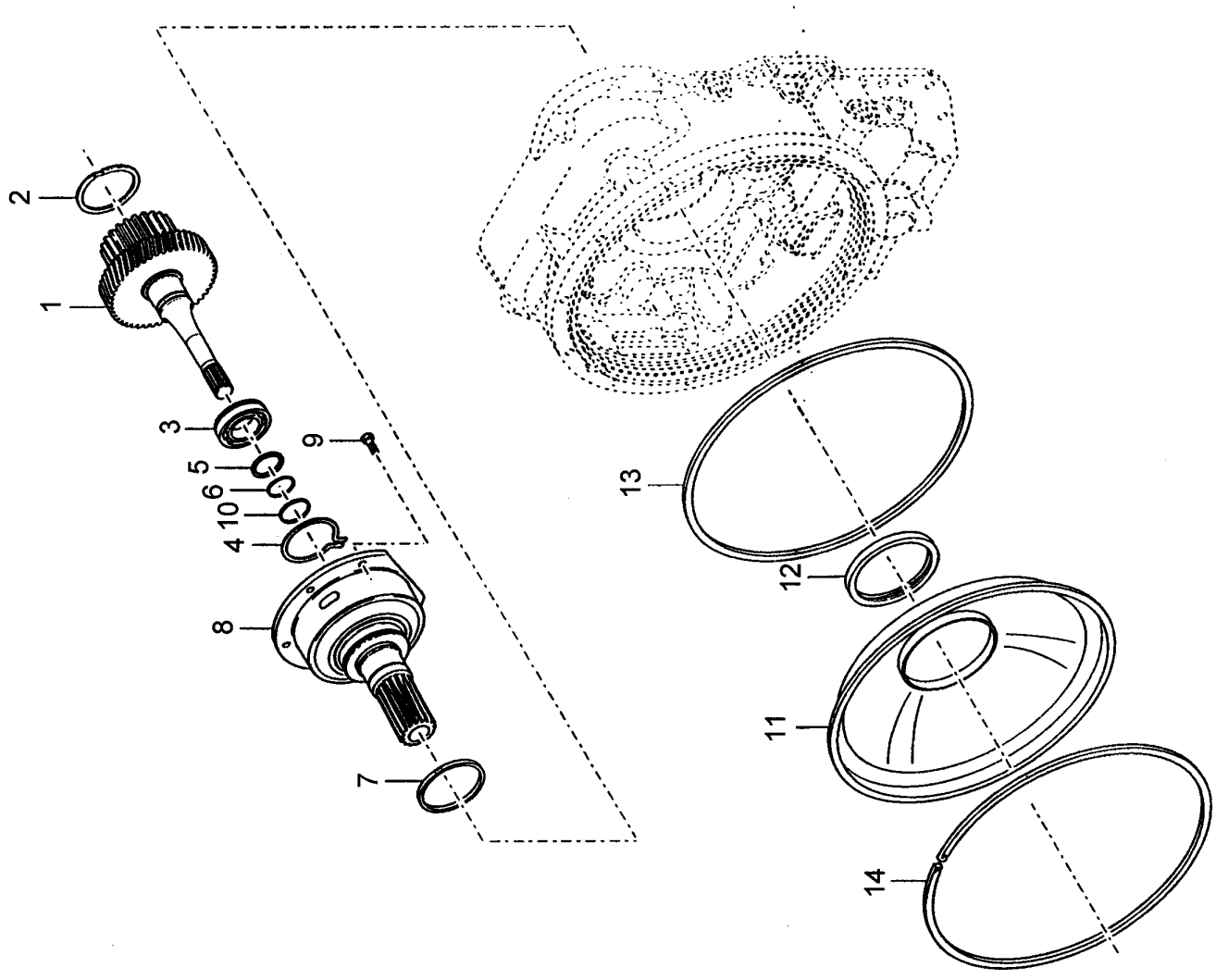


**9904110611**

**(SHEET 1 OF 1)**

Description
**TURBINE SHAFT GROUP**

Assembly No.
**9904110611**
Revision:

| Item | FN | Part | Qty | Description |
|---|---|---|---|---|
| 1 | | **9904109573** | 1 | SHAFT & HUB W/ RETAINING RING<br>INCLUDES ITEM 2 |
| 2 | | **9904105286** | 1 | RING, SNAP |
| 3 | | **9904109574** | 1 | BEARING ASSY |
| 4 | | **9904103906** | 1 | RING, SNAP |
| 5 | | **9904103595** | 1 | WASHER |
| 6 | | **9904103621** | 1 | RING, RETAINING |
| 7 | | **9904109575** | 1 | RING, PISTON |
| 8 | | **9904109576** | 1 | STATOR, SUPPORT |
| 9 | | **9904109704** | 6 | SCREW, |
| 10 | | **9904109646** | 1 | PISTON RING |
| 11 | | **9904105958** | 1 | BAFFLE AND SEAL<br>INCLUDES ITEM 12 |
| 12 | | **9904109139** | 1 | SEAL,OIL |
| 13 | | **9904105957** | 1 | RING, SEAL |
| 14 | | **9904106400** | 1 | RING, RETAINING |

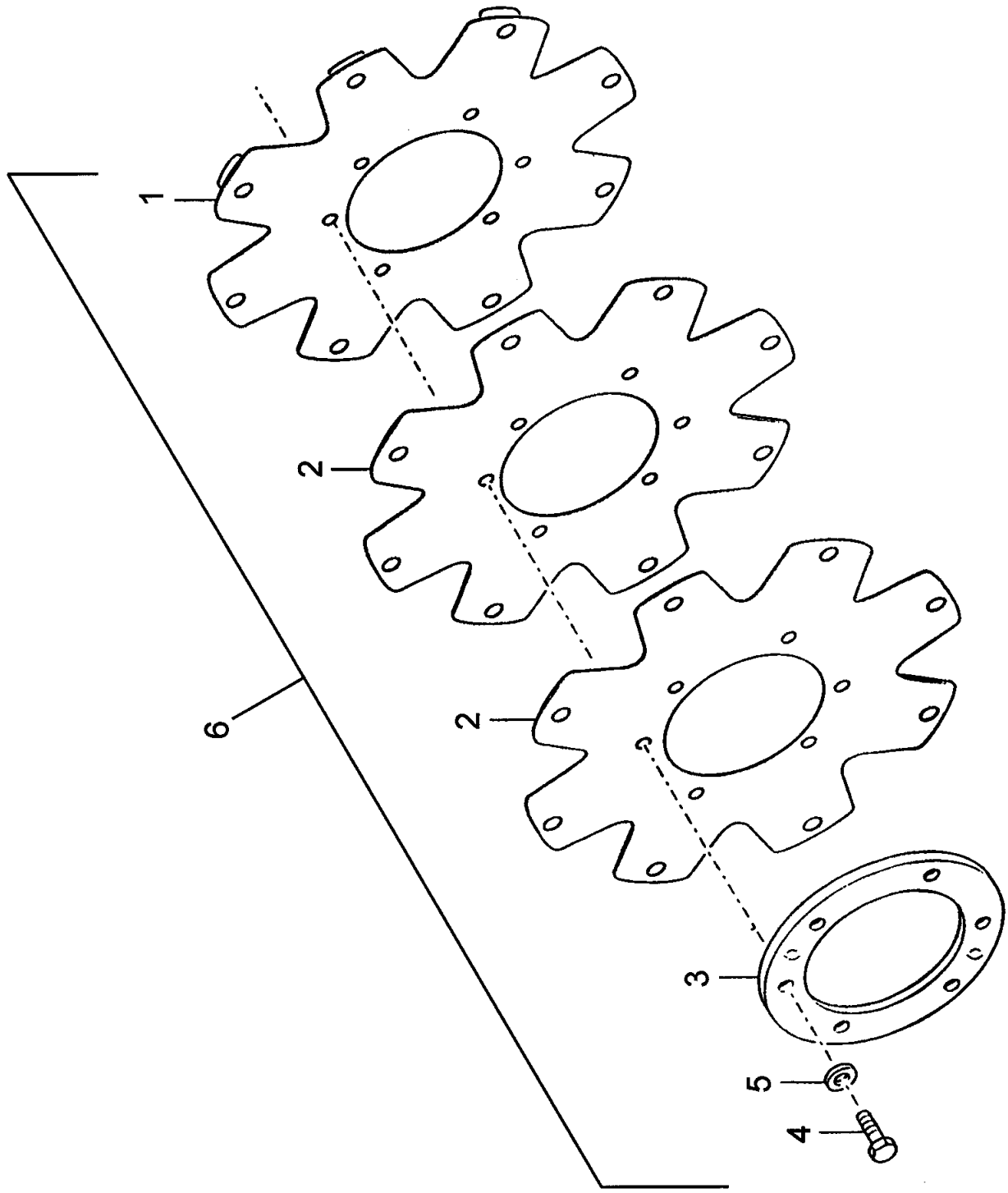


9904110612

(SHEET 1 OF 1)

Description
**DRIVE PLATE GROUP**

Assembly No.
**9904110612**
Revision:

| Item | FN | Part | Qty | Description |
|---|---|---|---|---|
| 1 | | **NSS** | 1 | NOT SERVICED SEPARATELY<br>DRIVE PLATE |
| 2 | | **NSS** | 1 | NOT SERVICED SEPARATELY<br>FLEX PLATE |
| 3 | | **9904109579** | 1 | RING, BACKING |
| 4 | | **9904110596** | 6 | CAPSCREW |
| 5 | | **9904109352** | 6 | WASHER, LOCK |
| 6 | | **9904109669** | 1 | KIT,DRIVE PLATE<br>INCLUDES ITEMS 1 THRU 5 |

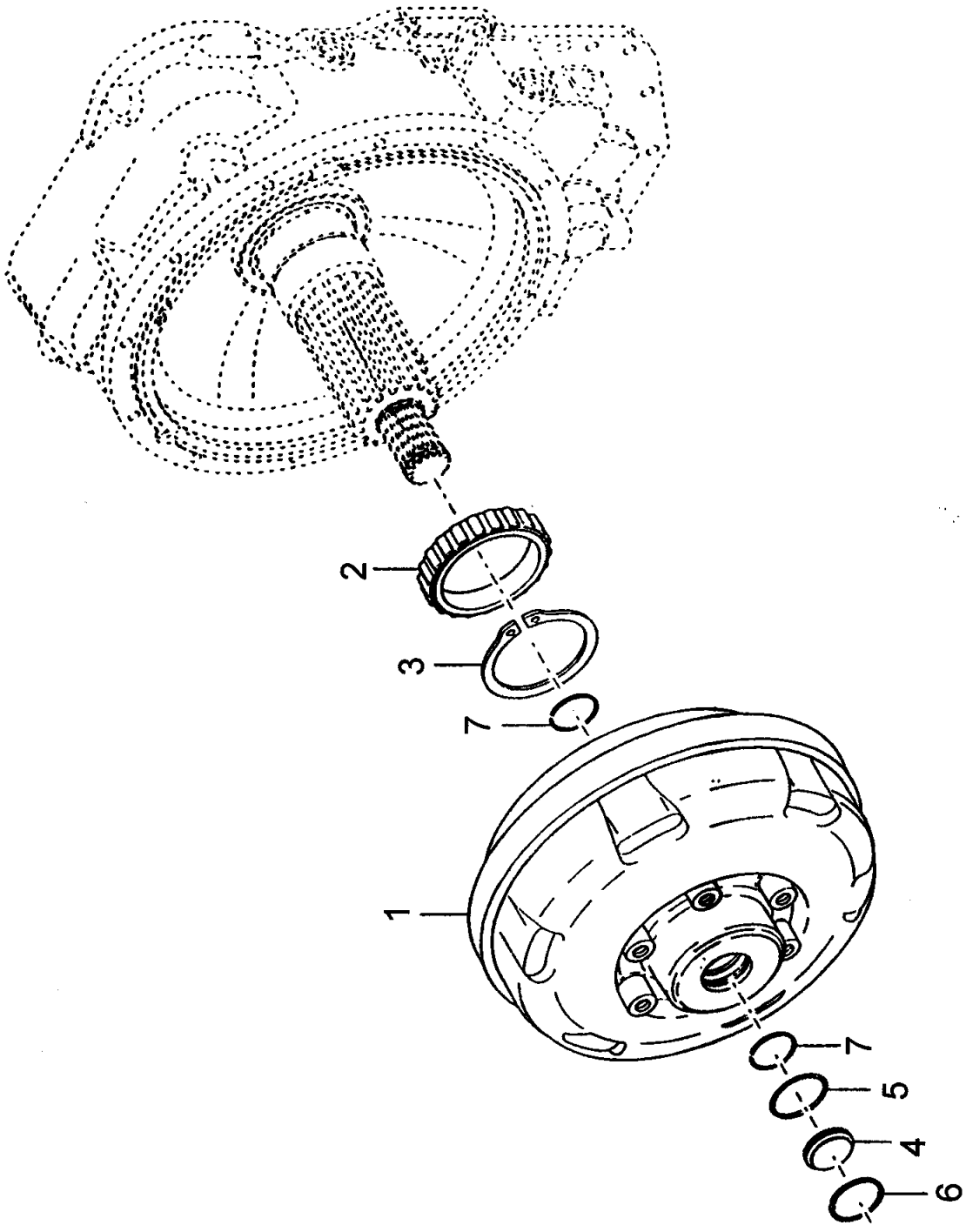


9904110613

(SHEET 1 OF 1)

Description
**TORQUE CONVERTER GROUP**

Assembly No.
**9904110613**
Revision:

| Item | FN | Part | Qty | Description |
|---|---|---|---|---|
| 1 | | **9904109582** | 1 | CONVERTER ASSEMBLY - TORQUE |
| 2 | | **9904104428** | 1 | BEARING |
| 3 | | **9904109583** | 1 | RING, SNAP |
| 4 | | **9904103528** | 1 | PLUG |
| 5 | | **9904109561** | 1 | O-RING |
| 6 | | **9904106408** | 1 | RING, RETAINING |
| 7 | | **9904109581** | 2 | RING, SNAP |

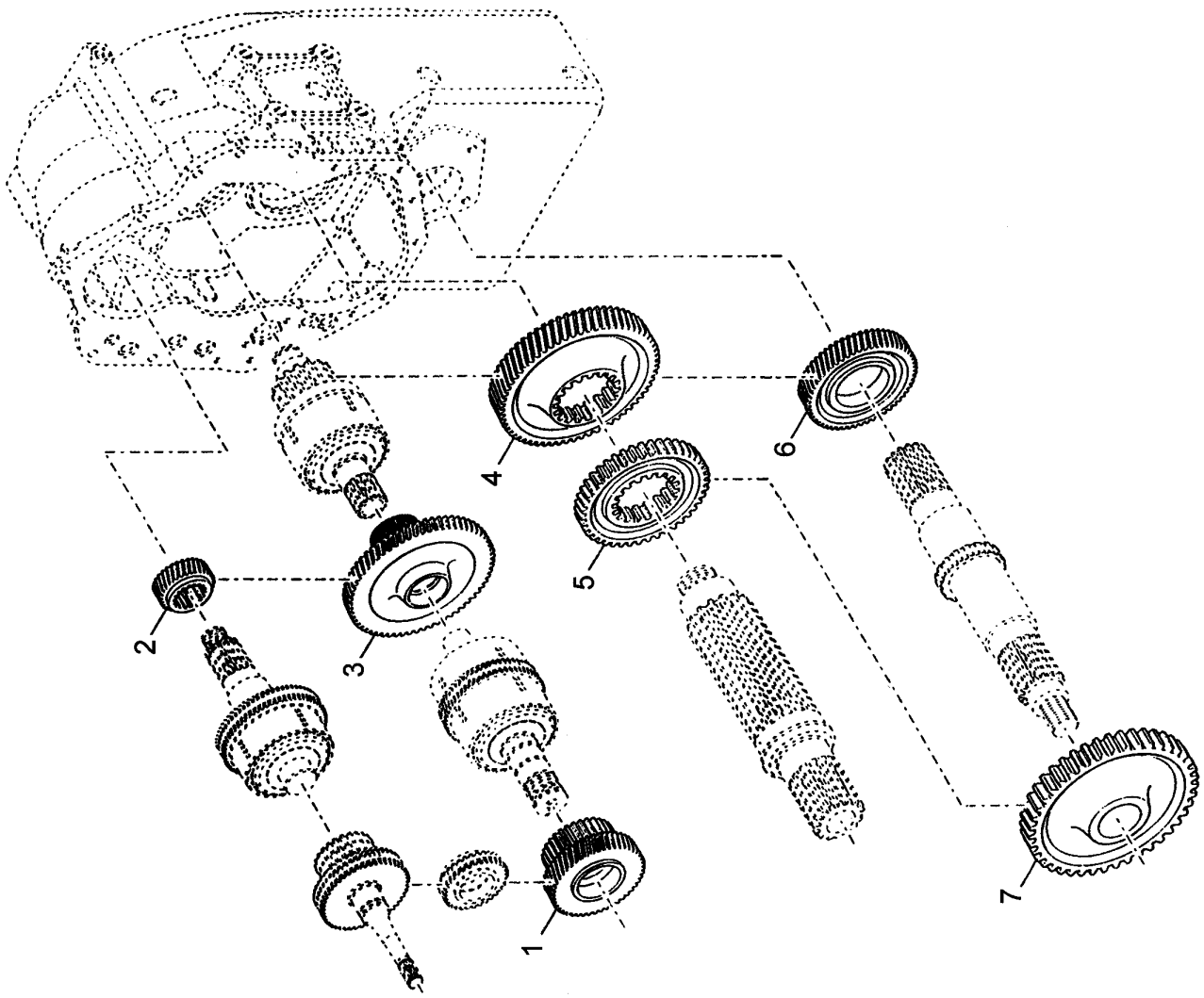


9904110614

(SHEET 1 OF 1)

Description
**GEAR GROUP**

Assembly No.
**9904110614**
Revision:

| Item | FN | Part | Qty | Description |
|---|---|---|---|---|
| 1 | | **9904109649** | 1 | GEAR, REVERSE CLUTCH 43T |
| 2 | | **9904109653** | 1 | DRIVE GEAR |
| 3 | | **9904109651** | 1 | GEAR, LOW CLUTCH 63T |
| 4 | | **9904109652** | 1 | REAR IDLER GEAR |
| 5 | | **9904109815** | 1 | GEAR, IDLER FRONT 21T |
| 6 | | **9904109613** | 1 | GEAR, HIGH RANGE 41T |
| 7 | | **9904109816** | 1 | GEAR, LOW RANGE 42T |

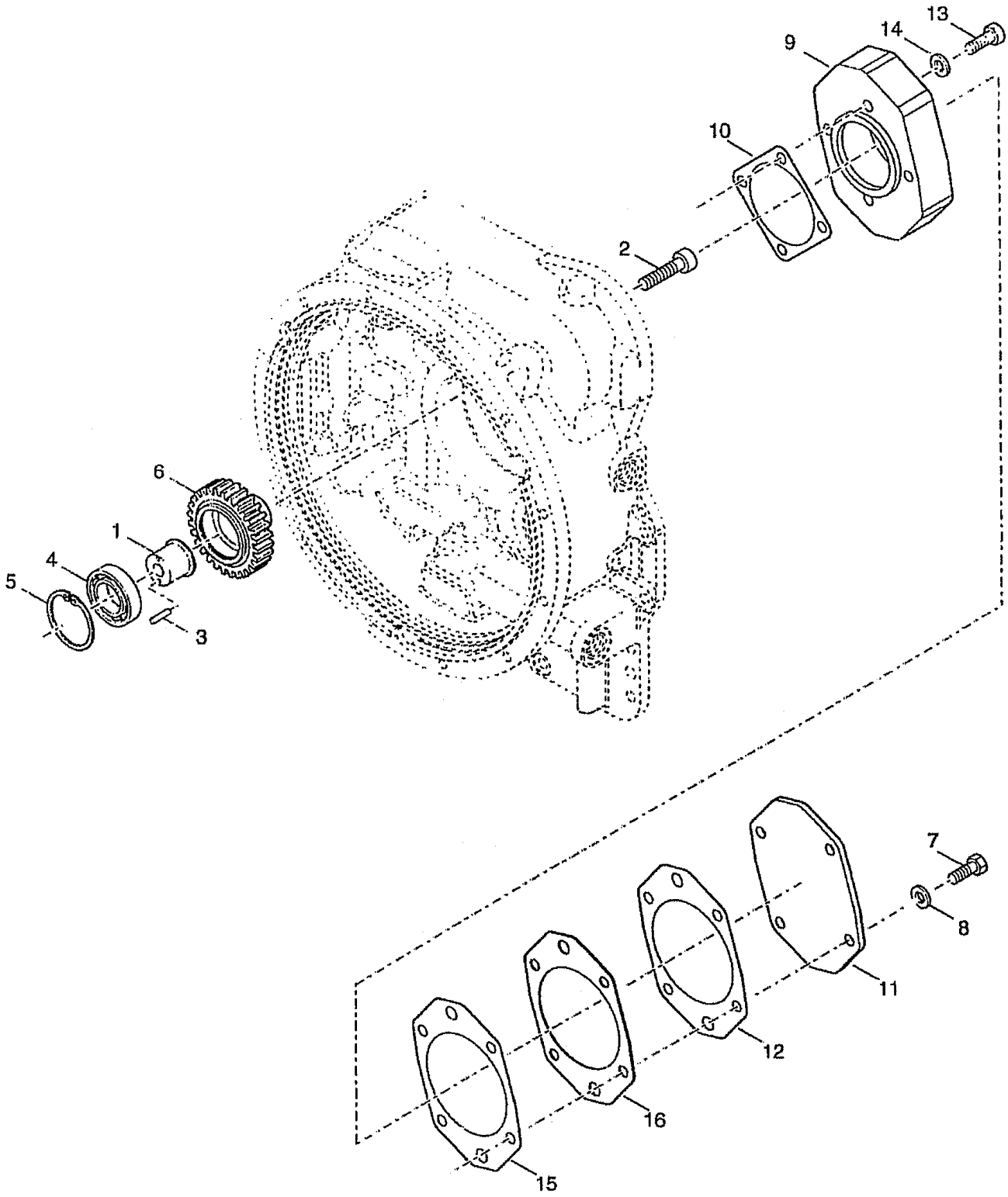


9904110615

(SHEET 1 OF 1)

Description
**AUXILIARY PUMP DRIVE GROUP**

Assembly No.
**9904110615**
Revision:

| Item | FN | Part | Qty | Description |
|---|---|---|---|---|
| 1 | | **9904109585** | 1 | SUPPORT, BEARING |
| 2 | | **9904109584** | 1 | SCREW |
| 3 | | **9904109588** | 1 | PIN |
| 4 | | **9904104432** | 1 | BEARING |
| 5 | | **9904103899** | 1 | RING, RETAINING |
| 6 | | **9904110597** | 1 | GEAR, 37T |
| 7 | | **9904109554** | 4 | CAP SCREW, |
| 8 | | **9049109896** | 4 | WASHER, LOCK |
| 9 | | **9904110598** | 1 | ADAPTER, PUMP MOUNT |
| 10 | | **9904106593** | 1 | GASKET |
| 11 | | **9904110601** | 1 | COVER |
| 12 | | **9904110599** | 1 | GASKET |
| 13 | | **9904110600** | 4 | CAPSCREW |
| 14 | | **9904109676** | 4 | WASHER, LOCK |
| 15 | | **9904110599** | 1 | GASKET |
| 16 | | **9904110602** | 1 | PLATE |

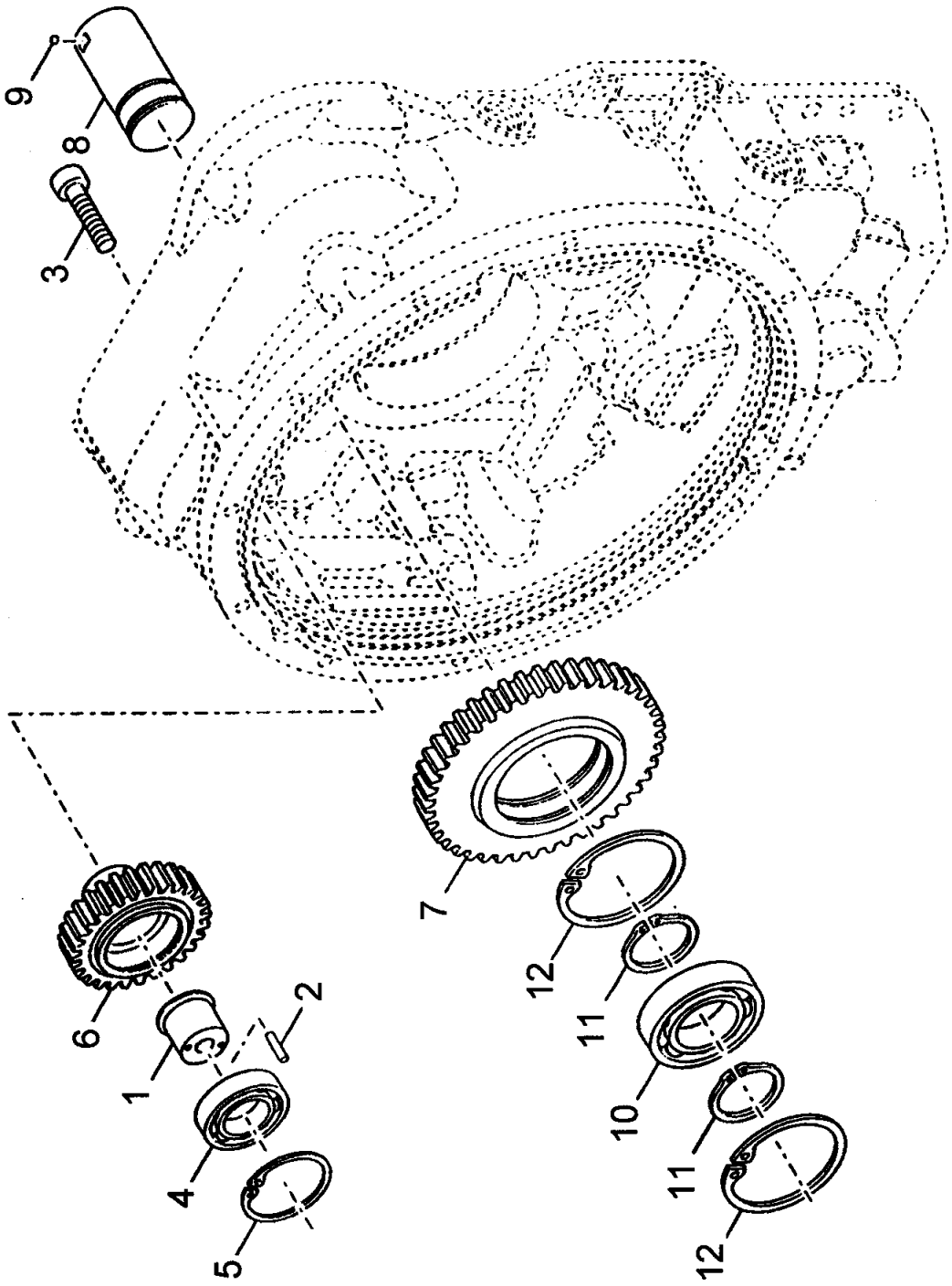


9904110616

(SHEET 1 OF 1)

Description
**PUMP DRIVE GROUP**

Assembly No.
**9904110616**
Revision:

| Item | FN | Part | Qty | Description |
|---|---|---|---|---|
| 1 | | **9904109585** | 1 | SUPPORT, BEARING |
| 2 | | **9904109588** | 1 | PIN |
| 3 | | **9904109584** | 1 | SCREW |
| 4 | | **9904104432** | 1 | BEARING |
| 5 | | **9904103899** | 1 | RING, RETAINING |
| 6 | | **9904109705** | 1 | GEAR, PUMP DRIVE |
| 7 | | **9904109590** | 1 | GEAR, IDLER |
| 8 | | **9904104424** | 1 | SHAFT |
| 9 | | **9904101025** | 1 | BALL, LOCK |
| 10 | | **9904104423** | 1 | BEARING |
| 11 | | **9904103893** | 2 | RING, LOCATING |
| 12 | | **9904101354** | 2 | RING, SNAP |

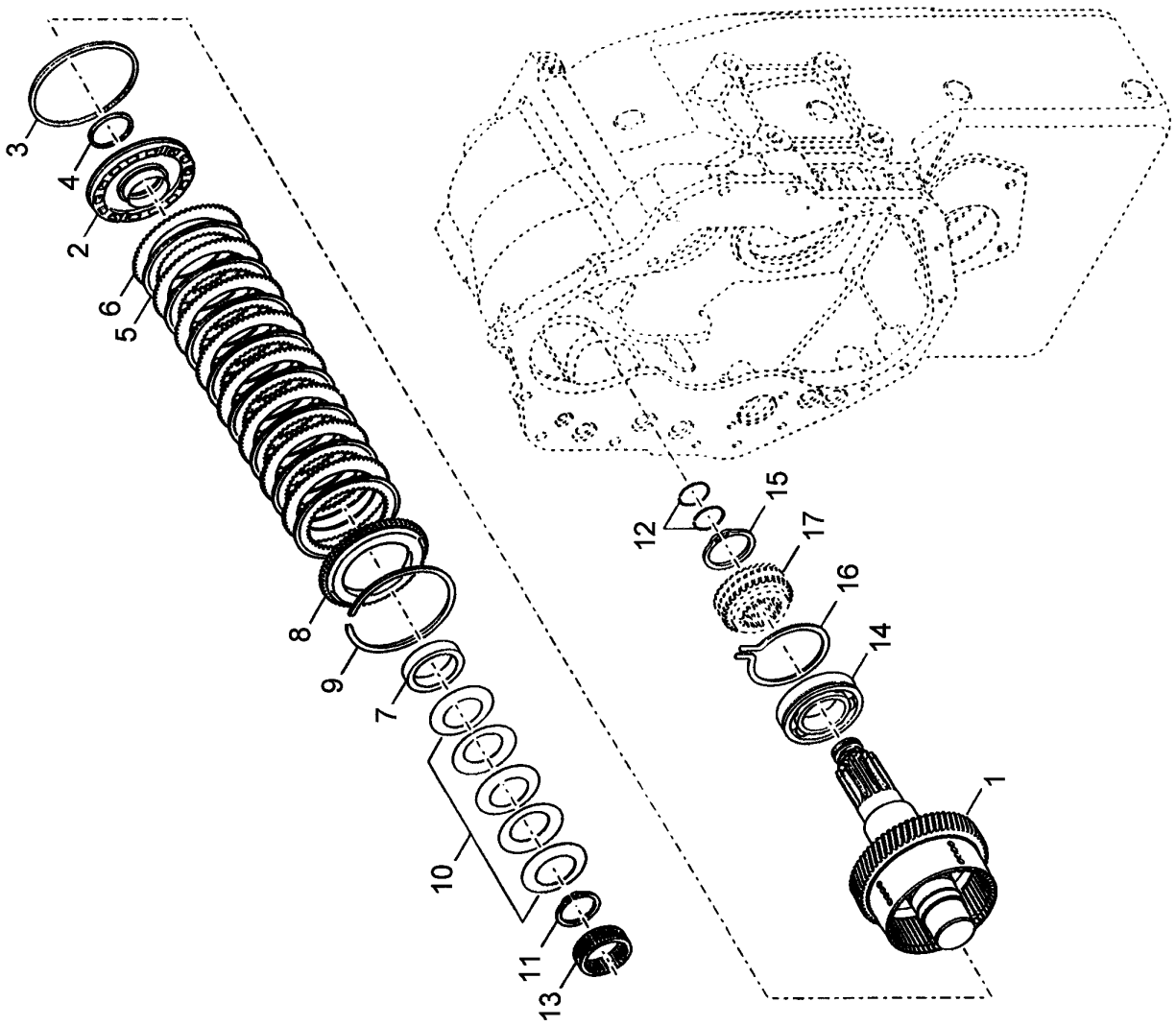


9904110617

(SHEET 1 OF 1)

Description
**FORWARD SHAFT GROUP**

Assembly No.
**9904110617**
Revision:

| Item | FN | Part | Qty | Description |
|---|---|---|---|---|
| 1 | | **9904110463** | 1 | FWD SHAFT & DRUM ASSY. |
| 2 | | **9904108934** | 1 | PISTON ASSY, CLUTCH |
| 3 | | **9904103637** | 1 | SEAL, PISTON |
| 4 | | **9904103638** | 1 | SEAL, PISTON |
| 5 | | **9904103988** | 1 | DISC, CLUTCH |
| 6 | | **9904103635** | 8 | DISC, CLUTCH |
| 7 | | **9904103982** | 1 | SPACER |
| 8 | | **9904110464** | 1 | PLATE, END |
| 9 | | **9904103632** | 1 | RING, SNAP |
| 10 | | **9904107838** | 1 | SPRING ASSY |
| 11 | | **9904103980** | 1 | RING, SNAP |
| 12 | | **9904110465** | 2 | RING, PISTON |
| 13 | | **9904103575** | 1 | BEARING, PILOT |
| 14 | | **9904109592** | 1 | BEARING |
| 15 | | **9904103983** | 1 | RING, SNAP |
| 16 | | **9904109593** | 1 | RING, RETAINING |
| 17 | | **9904109653** | 1 | DRIVE GEAR |

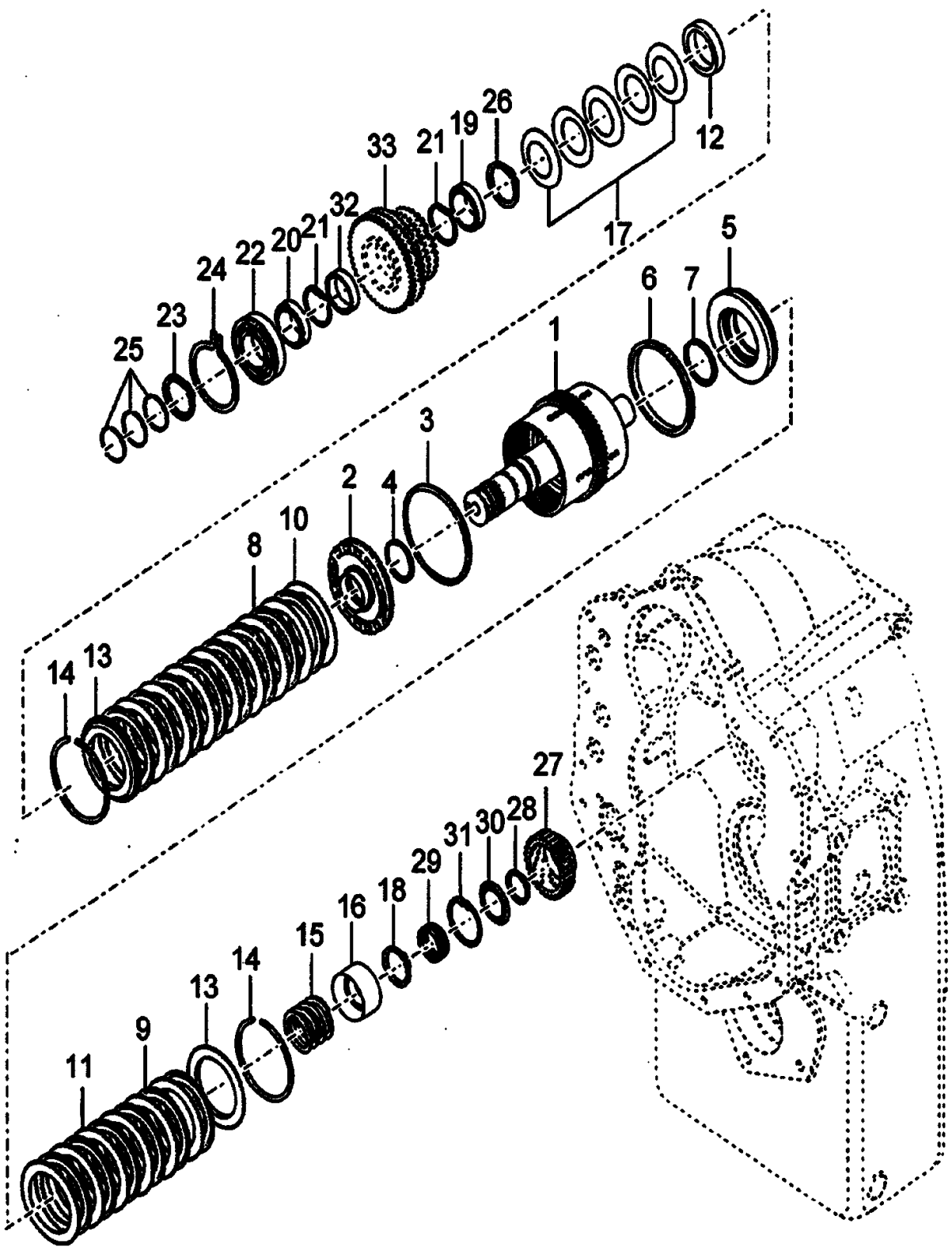


9904110618

(SHEET 1 OF 1)

Description
**REVERSE & 2ND. SHAFT GROUP**

Assembly No.
**9904110618**
Revision:

| Item | FN | Part | Qty | Description |
|---|---|---|---|---|
| 1 | | **9904110466** | 1 | REV. & 2ND, SHAFT & DRUM ASSY |
| 2 | | **9904108934** | 1 | PISTON ASSY, CLUTCH<br>INCLUDES ITEMS 3 AND 4 |
| 3 | | **9904103637** | 1 | SEAL, PISTON |
| 4 | | **9904103638** | 1 | SEAL, PISTON |
| 5 | | **9904110467** | 1 | PISTON ASSY. |
| 6 | | **9904103637** | 1 | SEAL, PISTON |
| 7 | | **9904103638** | 1 | SEAL, PISTON |
| 8 | | **9904103988** | 8 | DISC, CLUTCH |
| 9 | | **9904103988** | 6 | DISC, CLUTCH |
| 10 | | **9904103635** | 8 | DISC, CLUTCH |
| 11 | | **9904103635** | 6 | DISC, CLUTCH |
| 12 | | **9904103982** | 1 | SPACER |
| 13 | | **9904110464** | 2 | PLATE, END |
| 14 | | **9904103632** | 2 | RING, SNAP |
| 15 | | **9904103569** | 1 | SPRING |
| 16 | | **9904103568** | 1 | RETAINER, SPRING |
| 17 | | **9904107838** | 1 | SPRING ASSY |
| 18 | | **9904103567** | 1 | RING, SNAP |
| 19 | | **9904109595** | 1 | BEARING |
| 20 | | **9904109647** | 1 | BEARING |
| 21 | | **9904103563** | 2 | RING, RETAINING |
| 22 | | **9904105994** | 1 | BEARING, FRONT |
| 23 | | **9904108558** | 1 | KEY |
| 24 | | **9904101348** | 1 | RING, SNAP |
| 25 | | **9904110465** | 3 | RING, PISTON |
| 26 | | **9904103980** | 1 | RING, SNAP |
| 27 | | **9904109597** | 1 | HUB, DISC<br>SECOND CLUTCH |
| 28 | | **9904103567** | 1 | RING, SNAP |
| 29 | | **9904109648** | 1 | REAR BEARING |
| 30 | | **9904105981** | 1 | RETAINER, SPRING |
| 31 | | **9904105997** | 1 | RING, RETAINING |
| 32 | | **9904109594** | 1 | SPACER |
| 33 | | **9904109649** | 1 | GEAR, REVERSE CLUTCH 43T |

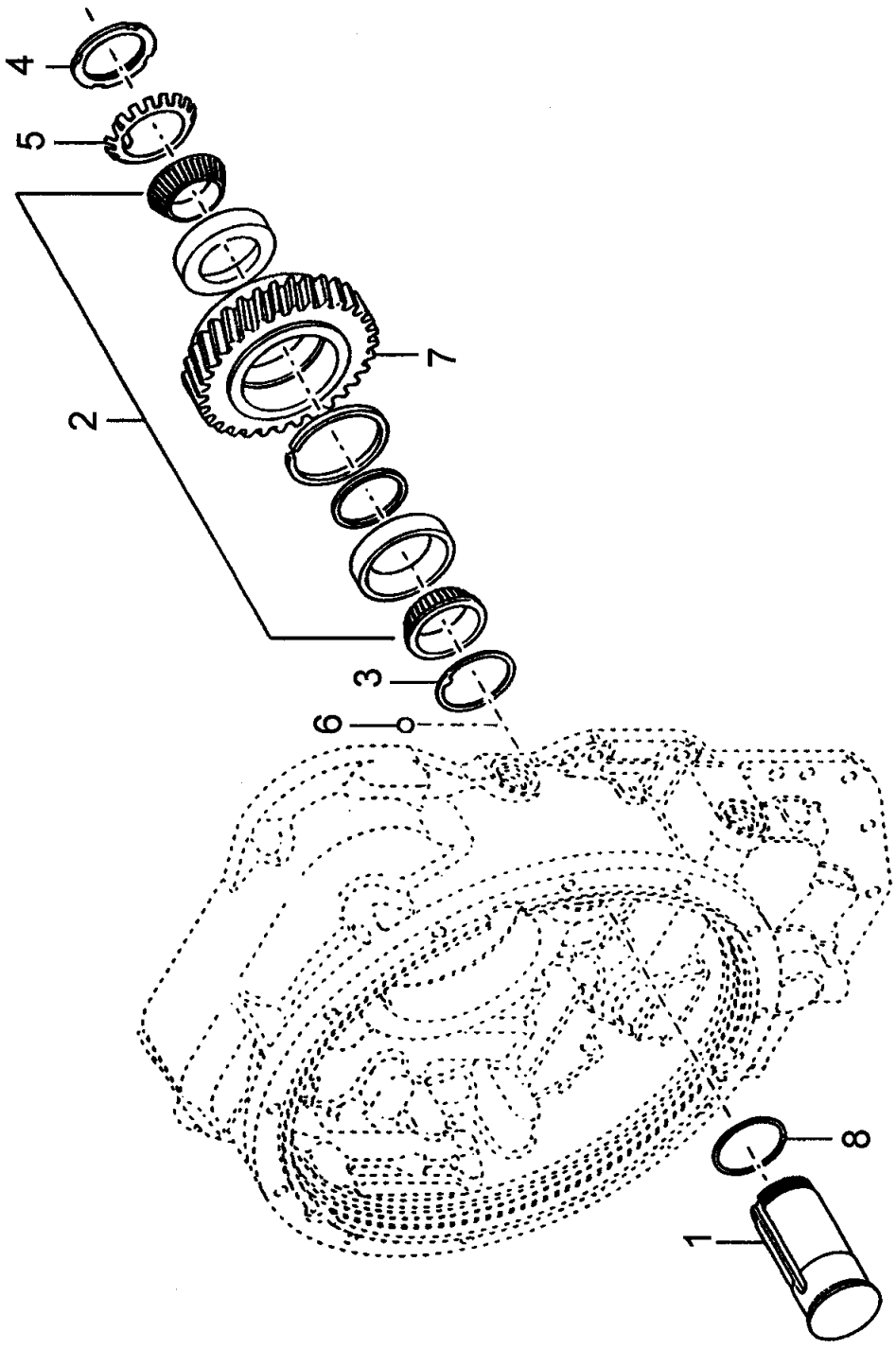


9904110619

(SHEET 1 OF 1)

Description
**REVERSE IDLER GROUP**

Assembly No.
**9904110619**
Revision:

| Item | FN | Part | Qty | Description |
|---|---|---|---|---|
| 1 | | **9904109598** | 1 | SHAFT, REVERSE IDLER |
| 2 | | **9904104053** | 1 | BEARING ASSEMBLY |
| 3 | | **9904109599** | 1 | WASHER, THRUST |
| 4 | | **9904109601** | 1 | NUT |
| 5 | | **9904109600** | 1 | WASHER, THRUST |
| 6 | | **9904105989** | 1 | BALL, LOCK |
| 7 | | **9904109602** | 1 | GEAR, REVERSE IDLER |
| 8 | | **9904106805** | 1 | O-RING |

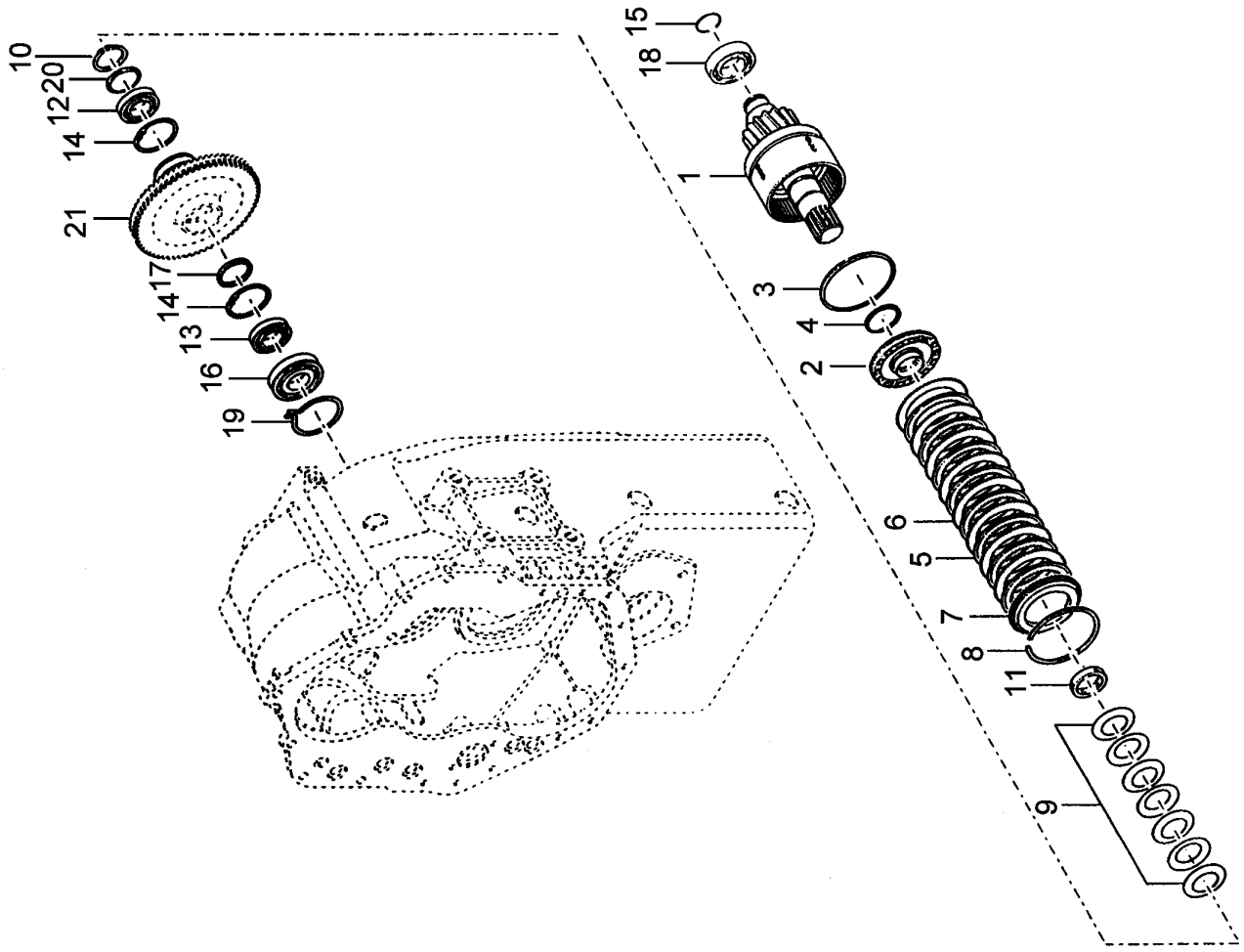


9904110620

(SHEET 1 OF 1)

Description
**LOW SPEED SHAFT GROUP**

Assembly No.
**9904110620**
Revision:

| Item | FN | Part | Qty | Description |
|---|---|---|---|---|
| 1 | | **9904109603** | 1 | LOW SHAFT,HUB & DRUM W/ VALVE |
| 2 | | **9904108934** | 1 | PISTON ASSY, CLUTCH |
| 3 | | **9904103637** | 1 | SEAL, PISTON |
| 4 | | **9904103638** | 1 | SEAL, PISTON |
| 5 | | **9904103987** | 8 | DISC, CLUTCH |
| 6 | | **9904103635** | 8 | DISC, CLUTCH |
| 7 | | **9904110464** | 1 | PLATE, END |
| 8 | | **9904103632** | 1 | RING, SNAP |
| 9 | | **9904107783** | 1 | SPRING, DISC |
| 10 | | **9904103567** | 1 | RING, SNAP |
| 11 | | **9904109650** | 1 | DISC SPRING SPACER |
| 12 | | **9904101353** | 1 | BEARING, GEAR |
| 13 | | **9904106000** | 1 | BEARING, REAR |
| 14 | | **9904106001** | 2 | RING, SNAP |
| 15 | | **9904108795** | 1 | RING, PISTON |
| 16 | | **9904109574** | 1 | BEARING ASSY |
| 17 | | **9904106002** | 1 | SPACER |
| 18 | | **9904109604** | 1 | BEARING |
| 19 | | **9904103906** | 1 | RING, SNAP |
| 20 | | **9904107784** | 1 | RETAINER, SPRING |
| 21 | | **9904109651** | 1 | GEAR, LOW CLUTCH 63T |

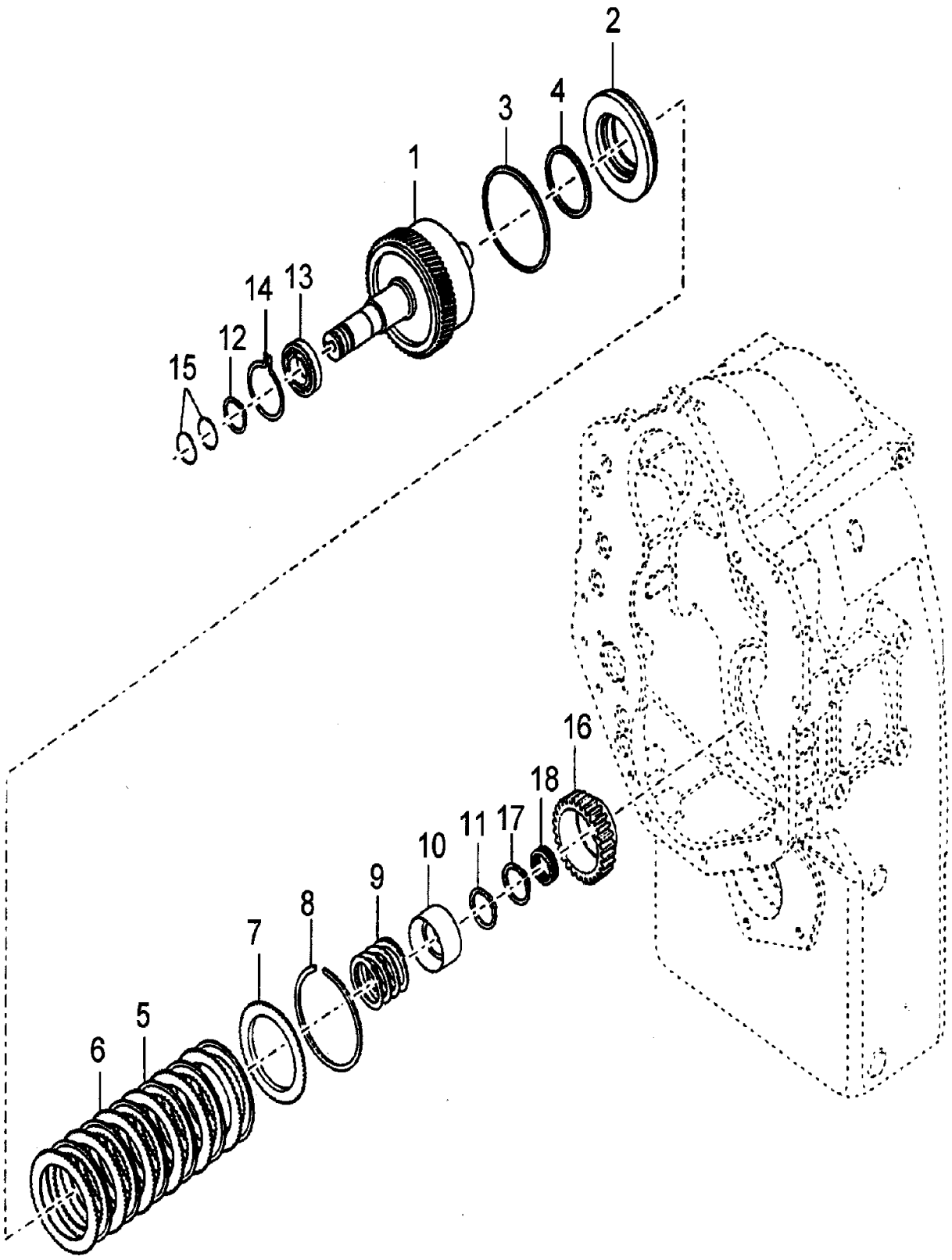


9904110621

(SHEET 1 OF 1)

Description
**3RD. SHAFT GROUP**

Assembly No.
**9904110621**
Revision:

| Item | FN | Part | Qty | Description |
|---|---|---|---|---|
| 1 | | **9904110468** | 1 | 3rd. SHAFT & DRUM ASSY. |
| 2 | | **9904110467** | 1 | PISTON ASSY. |
| 3 | | **9904103637** | 1 | SEAL, PISTON |
| 4 | | **9904103638** | 1 | SEAL, PISTON |
| 5 | | **9904103988** | 6 | DISC, CLUTCH |
| 6 | | **9904103635** | 6 | DISC, CLUTCH |
| 7 | | **9904110464** | 1 | PLATE, END |
| 8 | | **9904103632** | 1 | RING, SNAP |
| 9 | | **9904103569** | 1 | SPRING |
| 10 | | **9904103568** | 1 | RETAINER, SPRING |
| 11 | | **9904103567** | 1 | RING, SNAP |
| 12 | | **9904107558** | 1 | RING, RETAINING<br>FRONT BEARING |
| 13 | | **9904105994** | 1 | BEARING, FRONT |
| 14 | | **9904101348** | 1 | RING, SNAP |
| 15 | | **9904110465** | 2 | RING, PISTON |
| 16 | | **9904108979** | 1 | HUB, CLUTCH DISC |
| 17 | | **9904103570** | 1 | RING |
| 18 | | **9904109648** | 1 | REAR BEARING |

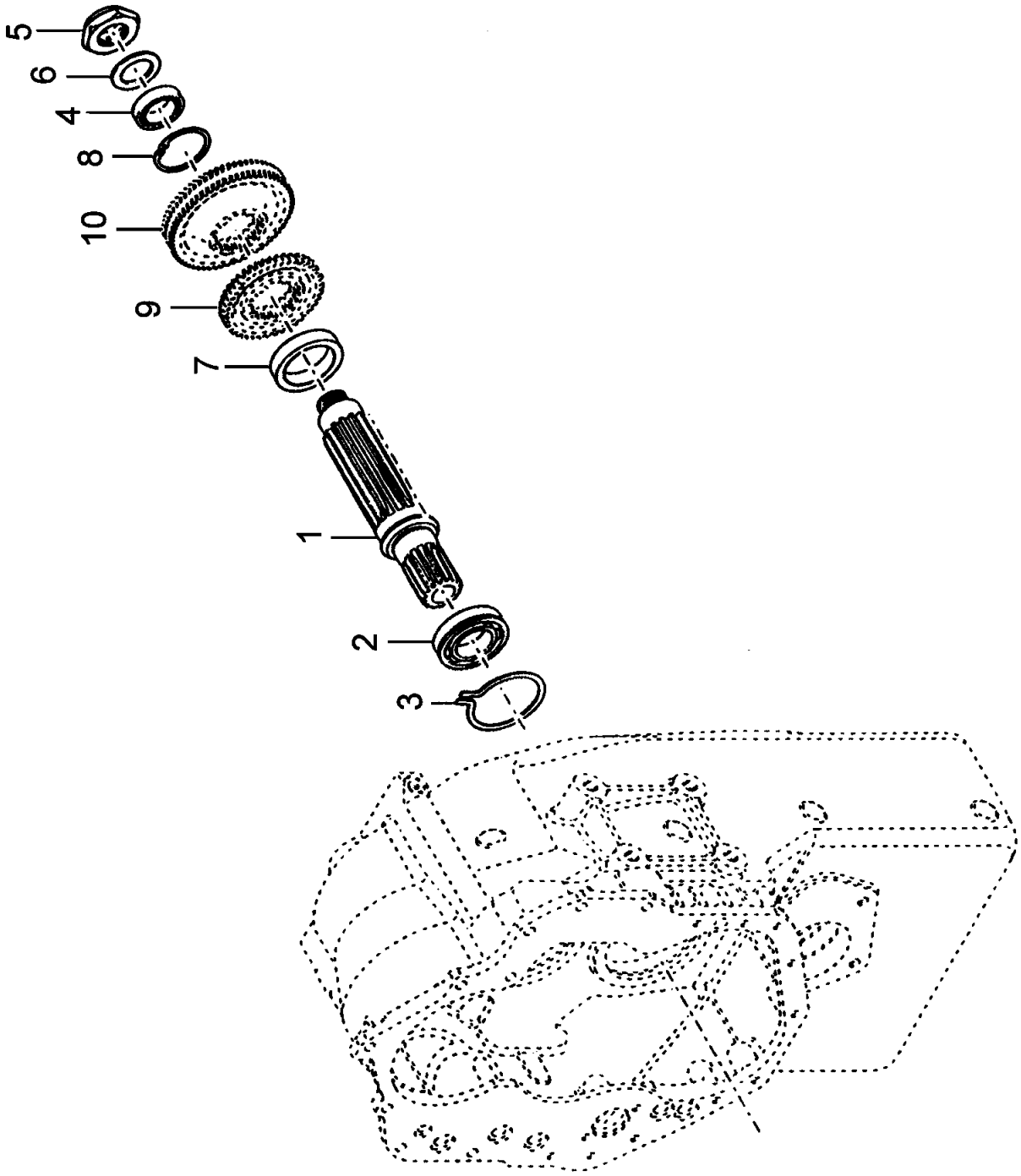


9904110622

(SHEET 1 OF 1)

Description
**IDLER SHAFT GROUP**

Assembly No.
**9904110622**
Revision:

| Item | FN | Part | Qty | Description |
|---|---|---|---|---|
| 1 | | **9904109607** | 1 | SHAFT, IDLER |
| 2 | | **9904109574** | 1 | BEARING ASSY |
| 3 | | **9904103906** | 1 | RING, SNAP |
| 4 | | **9904109606** | 1 | BEARING |
| 5 | | **9904102383** | 1 | NUT |
| 6 | | **9904100983** | 1 | WASHER |
| 7 | | **9904103922** | 1 | SPACER |
| 8 | | **9904101209** | 1 | RING, RETAINING |
| 9 | | **9904109815** | 1 | GEAR, IDLER FRONT 21T |
| 10 | | **9904109652** | 1 | REAR IDLER GEAR |
| 11 | | **9904105442** | 1 | COVER<br>ITEM NOT SHOWN |
| 12 | | **9904106364** | 1 | AUX PUMP GASKET<br>ITEM NOT SHOWN |
| 13 | | **9049100263** | 2 | CAPSCREW<br>ITEM NOT SHOWN |
| 14 | | **7950160050** | 2 | WASHER, LOCK 3/8" I.D.<br>ITEM NOT SHOWN |

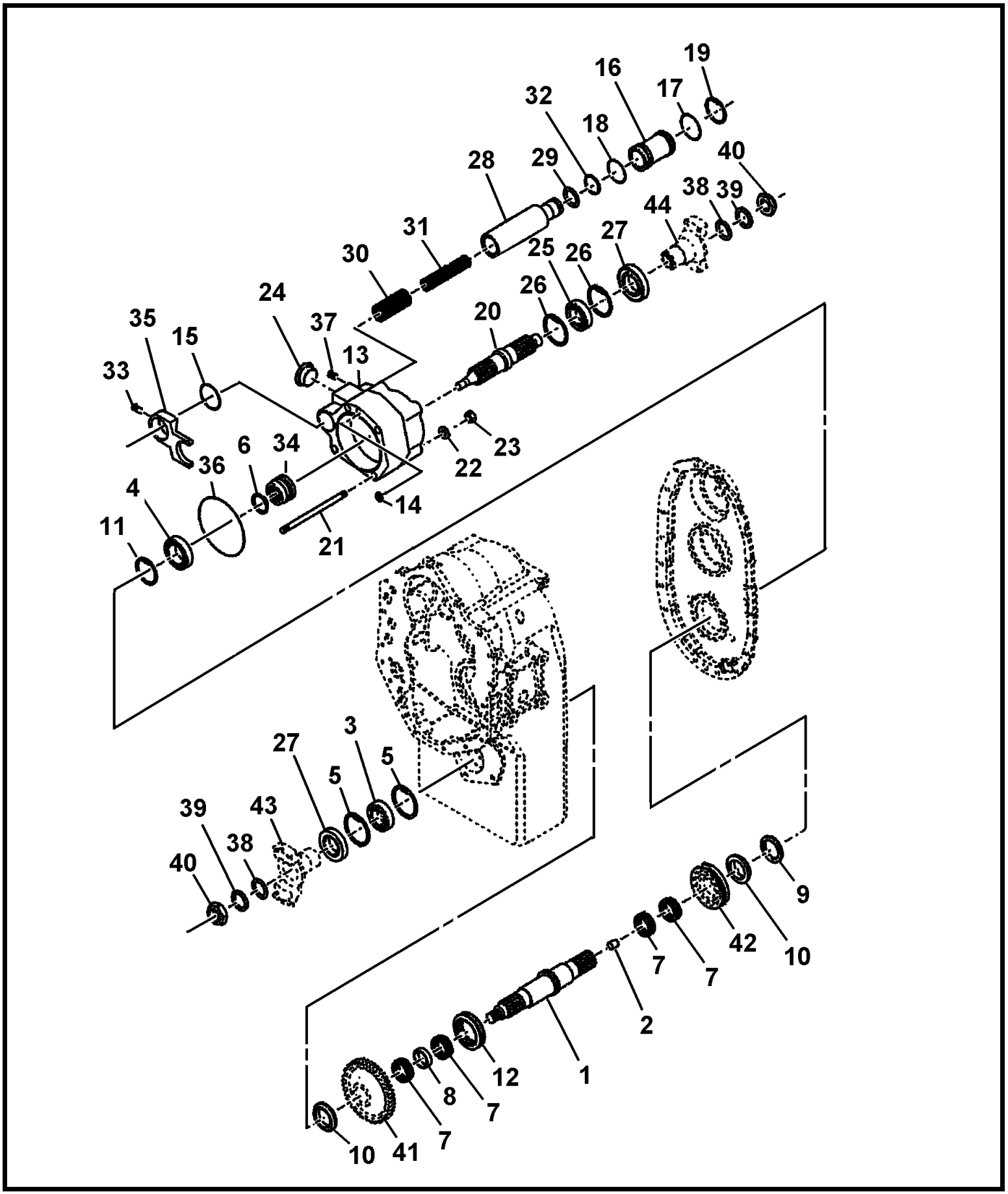


90015440

(SHEET 1 OF 1)

Description
**OUTPUT SHAFT GROUP**

Assembly No.
**90015440**
Revision:

| Item | FN | Part | Qty | Description |
|---|---|---|---|---|
| 1 | | **9904109612** | 1 | OUTPUT SHAFT AND BEARING (INCLUDES ITEM 2) |
| 2 | | **9904100967** | 1 | BUSHING |
| 3 | | **9904106320** | 1 | BEARING |
| 4 | | **9904109608** | 1 | BEARING, REAR |
| 5 | | **9904101022** | 1 | RING, RETAINING |
| 6 | | **9904103621** | 1 | RING, RETAINING |
| 7 | | **9904103612** | 4 | BEARING |
| 8 | | **9904109611** | 1 | SPACER |
| 9 | | **9904103595** | 1 | WASHER |
| 10 | | **9904103610** | 2 | WASHER, THRUST |
| 11 | | **9904109459** | 1 | RING, SNAP |
| 12 | | **9904103615** | 1 | HUB |
| 13 | | **9904105289** | 1 | HOUSING |
| 14 | | **9904103993** | 1 | O-RING |
| 15 | | **9904103994** | 1 | O-RING |
| 16 | | **9904108408** | 1 | PLUG |
| 17 | | **9904109561** | 1 | O-RING |
| 18 | | **9904108409** | 1 | O-RING |
| 19 | | **9904106408** | 1 | RING, RETAINING |
| 20 | | **9904105288** | 1 | SHAFT |
| 21 | | **9904103623** | 4 | STUD |
| 22 | | **7950190050** | 4 | WASHER, LOCK 9/16" I.D. |
| 23 | | **9904103605** | 4 | NUT |
| 24 | | **9904101047** | 1 | PLUG |
| 25 | | **9049101566** | 1 | BEARING |
| 26 | | **9904101022** | 2 | RING, RETAINING |
| 27 | | **90012853** | 2 | SEAL |
| 28 | | **9904108406** | 1 | PISTON |
| 29 | | **9904109481** | 1 | O-RING |
| 30 | | **9904105292** | 1 | SPRING |
| 31 | | **9904105293** | 1 | SPRING |
| 32 | | **9904108407** | 1 | RING |
| 33 | | **9904101044** | 1 | SCREW, LOCK |

Description
**OUTPUT SHAFT GROUP**

Assembly No.
**90015440**
Revision:

| Item | FN | Part | Qty | Description |
|---|---|---|---|---|
| 34 | | **9904103626** | 1 | HUB, SHIFT |
| 35 | | **9904105290** | 1 | FORK, SHIFT |
| 36 | | **9904109641** | 1 | O-RING |
| 37 | | **7444020031** | 1 | PLUG, PIPE<br>1/4" NPT |
| 38 | | **9904103997** | 2 | O-RING |
| 39 | | **9904100983** | 2 | WASHER |
| 40 | | **9904102383** | 2 | NUT |
| 41 | | **9904109816** | 1 | GEAR, LOW RANGE 42T<br>(SEE GEAR GROUP) |
| 42 | | **9904109613** | 1 | GEAR, HIGH RANGE 41T<br>(SEE GEAR GROUP) |
| 43 | | **9904103677** | 1 | FLANGE |
| 44 | | **9904105662** | 1 | FLANGE, COMPANION OUTPUT REAR |

**Notes**

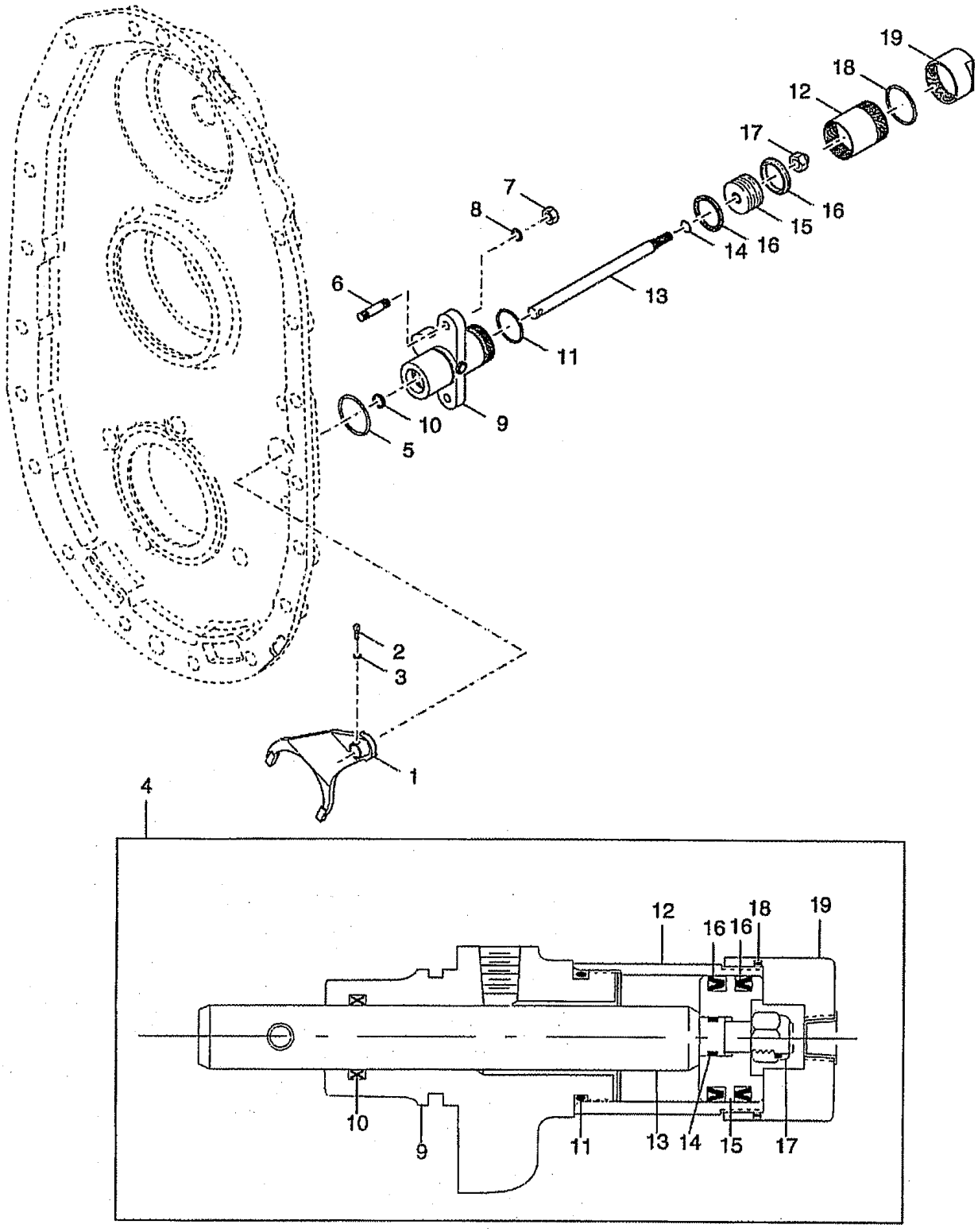


9904110624

(SHEET 1 OF 1)

Description
**HI/LOW RANGE SHIFT CONT. GROUP**

Assembly No.
**9904110624**
Revision:

| Item | FN | Part | Qty | Description |
|---|---|---|---|---|
| 1 | | **9904109622** | 1 | FORK, SHIFT |
| 2 | | **9904109620** | 1 | WASHER, LOCK |
| 3 | | **9904109621** | 1 | SCREW, LOCK |
| 4 | | **9904109623** | 1 | AIRSHIFT CYLINDER<br>INCLUDES ITEMS 9 THRU 19 |
| 5 | | **9904103660** | 1 | O-RING |
| 6 | | **9904103986** | 2 | STUD |
| 7 | | **9904109618** | 2 | NUT |
| 8 | | **9904109617** | 2 | WASHER, LOCK |
| 9 | | **9904105306** | 1 | BODY |
| 10 | | **9904105307** | 1 | SEAL |
| 11 | | **9904105299** | 1 | O-RING |
| 12 | | **9904106482** | 1 | TUBE, CYLINDER |
| 13 | | **9904109619** | 1 | ROD, PISTON |
| 14 | | **7755110000** | 1 | O-RING |
| 15 | | **9904109616** | 1 | PISTON |
| 16 | | **9904105302** | 2 | SEAL |
| 17 | | **9904105301** | 1 | NUT |
| 18 | | **9904107179** | 1 | O-RING |
| 19 | | **9904106483** | 1 | CAP, END |

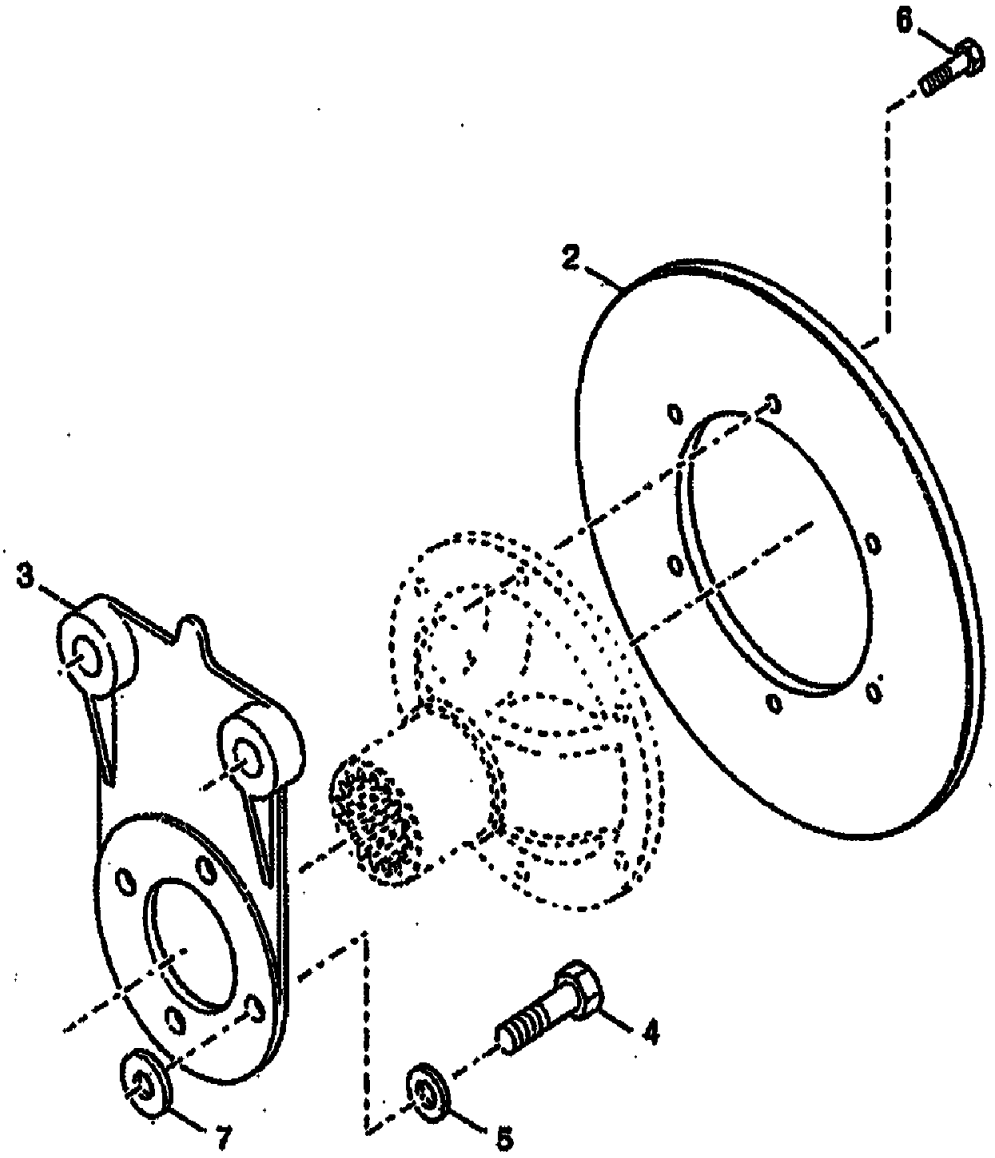


9904110625

(SHEET 1 OF 1)

Description
**DISC BRAKE GROUP**

Assembly No.
**9904110625**
Revision:

| Item | FN | Part | Qty | Description |
|---|---|---|---|---|
| 2 | | **7188000165** | 1 | BRAKE, DISC |
| 3 | | **9904110157** | 1 | BRACKET,PARK BRAKE |
| 4 | | **9049106636** | 4 | CAP SCREW, |
| 5 | | **9904106235** | 4 | WASHER |
| 6 | | **9904109531** | 6 | CAPSCREW, DISC BRAKE |

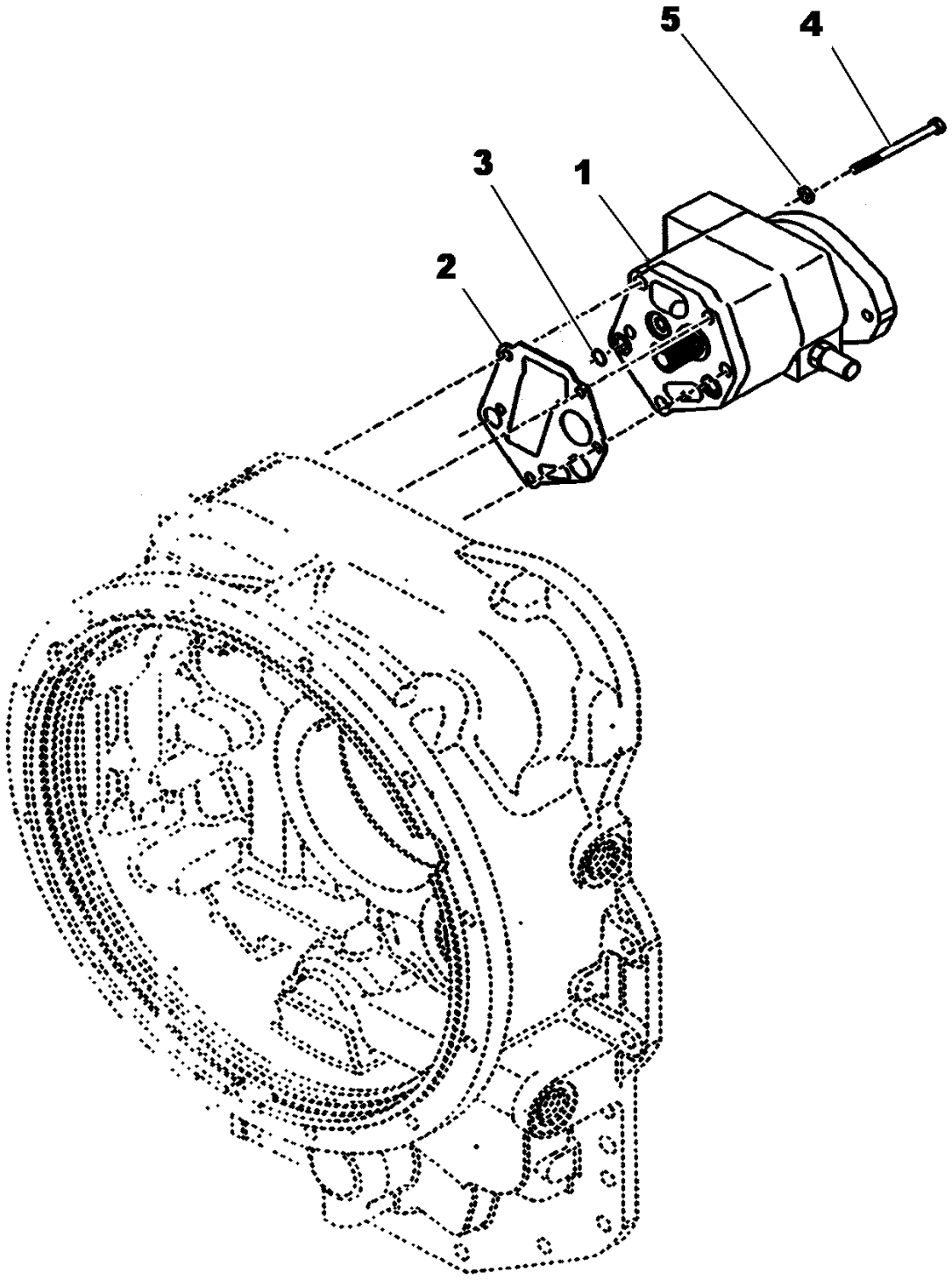


**90023152**

**(SHEET 1 OF 1)**

Description
**CHARGING PUMP GROUP**

Assembly No.
**90023152**
Revision:

| Item | FN | Part | Qty | Description |
|---|---|---|---|---|
| 1 | | **90023153** | 1 | PUMP ASSY. CHARGING |
| 2 | | **9904103887** | 1 | GASKET |
| 3 | | **9904103500** | 1 | O-RING |
| 4 | | **90013245** | 5 | SCREW, PUMP MOUNTING |
| 5 | | **7950170050** | 5 | WASHER, LOCK 7/16" I.D. |

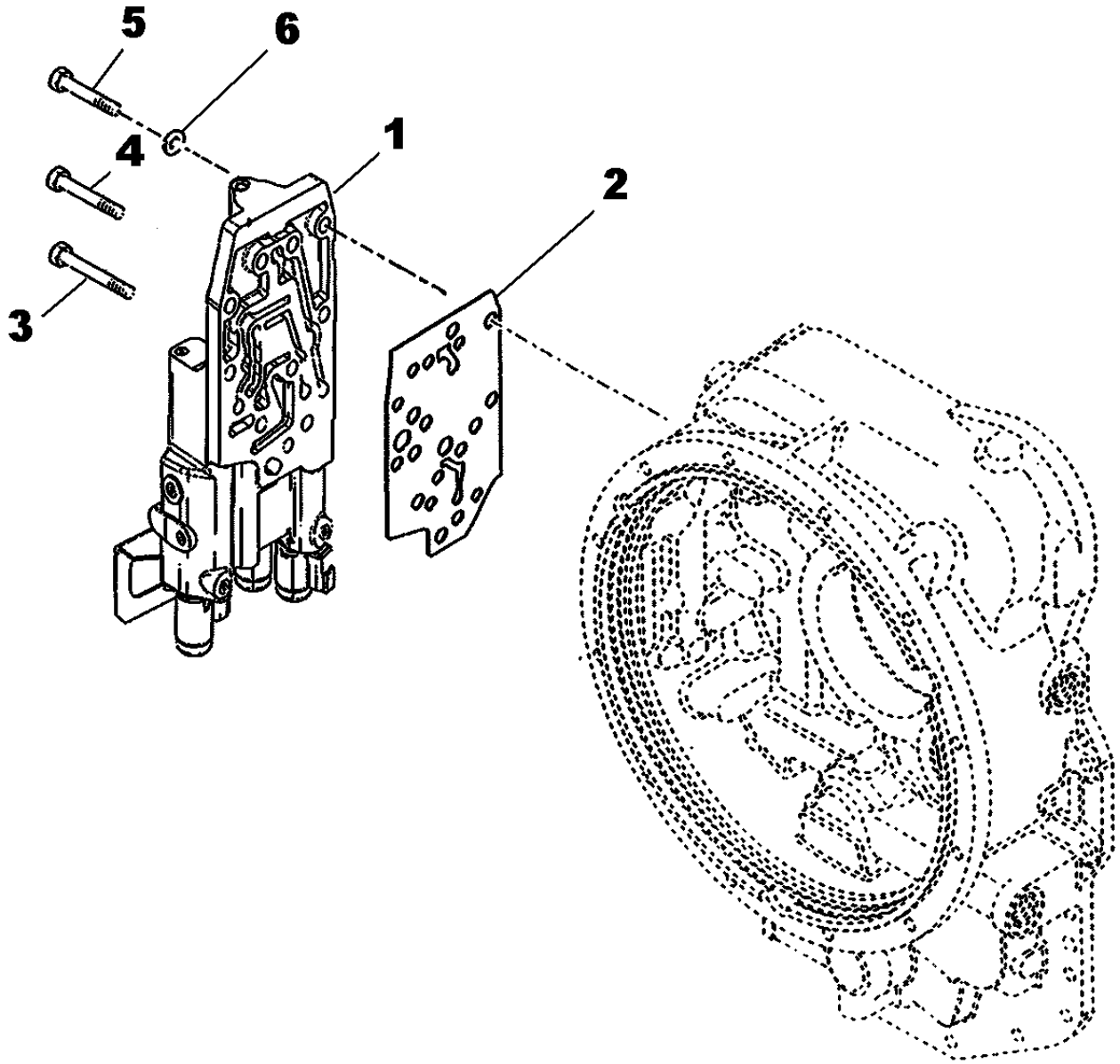


90013617

(SHEET 1 OF 1)

Description
**CONTROL VALVE MOUNTING GROUP 24 VOLT**

Assembly No.
**90013617**
Revision:

| Item | FN | Part | Qty | Description |
|---|---|---|---|---|
| 1 | | **90013618** | 1 | VALVE ASSY. 24 VOLT |
| 2 | | **9904110605** | 1 | GASKET |
| 3 | | **7115161250** | 4 | CAP SCREW,<br>3/8" - 16 N.C. X 1 1/2"<br>GRADE 5 |
| 4 | | **9904100974** | 3 | CAP SCREW |
| 5 | | **9904105328** | 2 | SCREW, VALVE MOUNTING |
| 6 | | **7950160050** | 9 | WASHER, LOCK 3/8" I.D. |

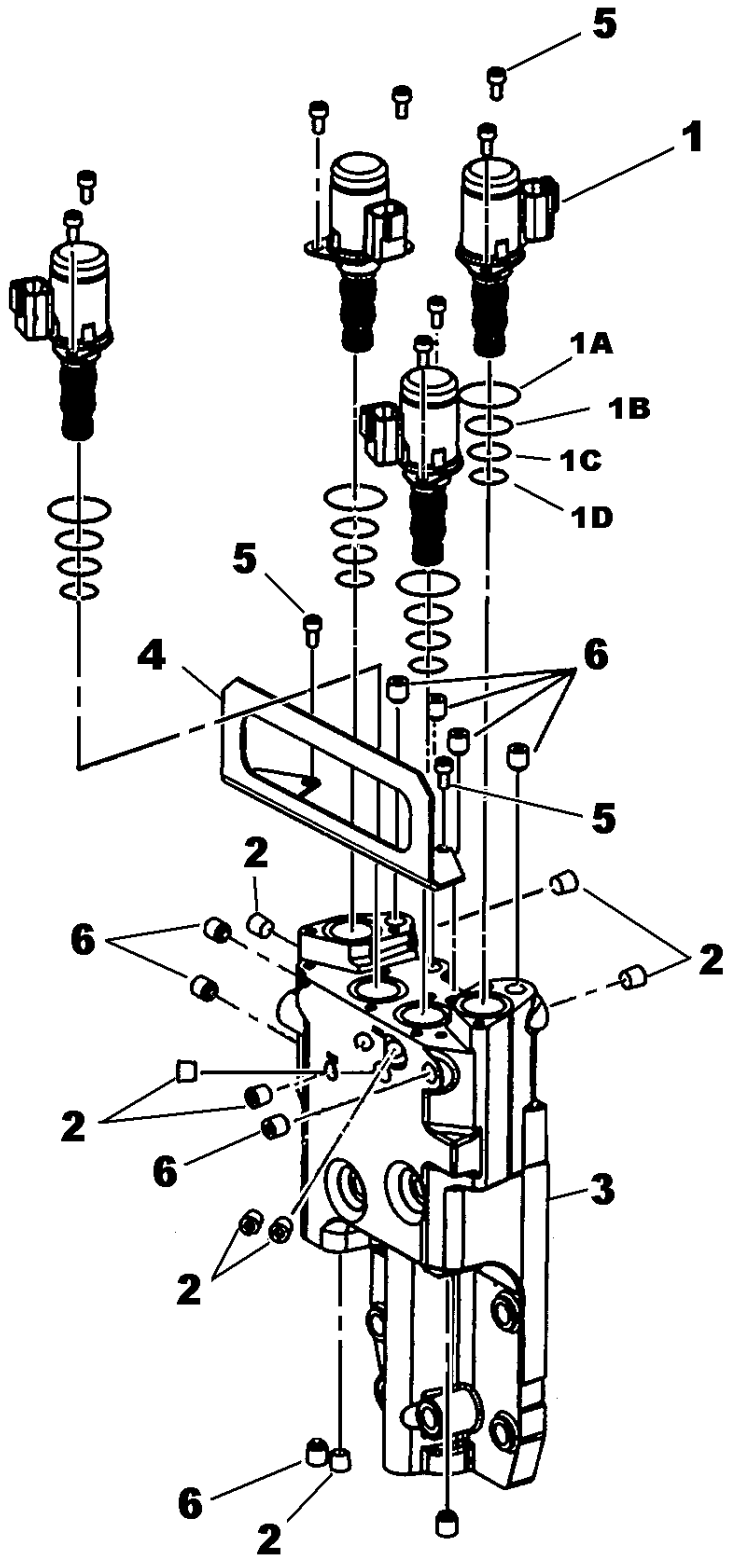


90023154

(SHEET 1 OF 1)

Description
**CONTROL VALVE ASSY.GROUP 24V.**

Assembly No.
**90023154**
Revision:

| Item | FN | Part | Qty | Description |
|---|---|---|---|---|
| 1 | | **9904110660** | 4 | CART.& COIL ASSY. 24V. |
| 1A | | **9904110793** | 4 | O-RING |
| 1B | | **9904110794** | 4 | O-RING |
| 1C | | **9904110795** | 4 | O-RING |
| 1D | | **9904110796** | 4 | O-RING |
| 2 | | **9904104055** | 8 | PLUG |
| 3 | | **NSS** | 1 | NOT SERVICED SEPARATELY<br>BODY |
| 4 | | **9904110607** | 1 | COVER |
| 5 | | **9904110608** | 10 | CAPSCREW |
| 6 | | **NSS** | 9 | NOT SERVICED SEPARATELY<br>PLUG, EXPANSION |

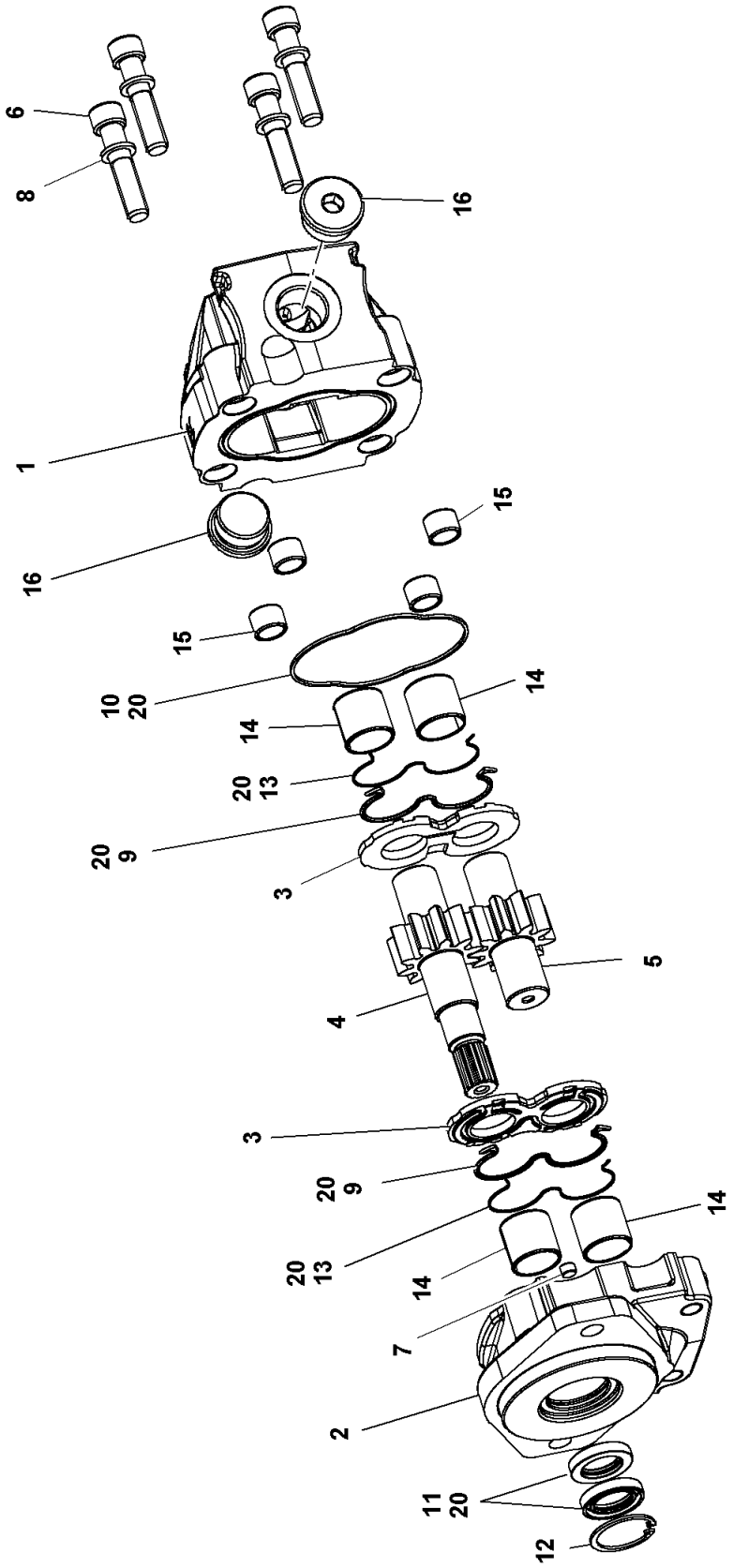


7722100101

(SHEET 1 OF 1)

Description
**PUMP ASSEMBLY - GEAR (COMPLETE ASSEMBLY)**

Assembly No.
**7722100101**
Revision:

| Item | FN | Part | Qty | Description |
|---|---|---|---|---|
| 1 | | **NSS** | 1 | NOT SERVICED SEPARATELY<br>HOUSING, GEAR |
| 2 | | **9722105433** | 1 | COVER, FRONT |
| 3 | | **9722105434** | 2 | PLATE, THRUST |
| 4 | | **9722105468** | 1 | GEAR, DRIVE SHAFT |
| 5 | | **9722105469** | 1 | GEAR, DRIVEN |
| 6 | | **9722105435** | 4 | CAPSCREW |
| 7 | | **9722105436** | 1 | SCREW, GRUB |
| 8 | | **9722105437** | 4 | WASHER |
| 9 | * | **NSS** | 2 | NOT SERVICED SEPARATELY<br>SEAL |
| 10 | * | **NSS** | 1 | NOT SERVICED SEPARATELY<br>SEAL, SECTION |
| 11 | * | **NSS** | 2 | NOT SERVICED SEPARATELY<br>SEAL, SHAFT |
| 12 | | **9722105441** | 1 | RING, RETAINER |
| 13 | * | **NSS** | 2 | NOT SERVICED SEPARATELY<br>SEAL |
| 14 | | **9722105443** | 4 | BEARING |
| 15 | | **9722105444** | 4 | BUSHING |
| 16 | | **9722105514** | 2 | PLUG |
| 20 | * | **9722105445** | 1 | KIT, SEAL |

*** REPAIR KIT AND/OR PART OF KIT**

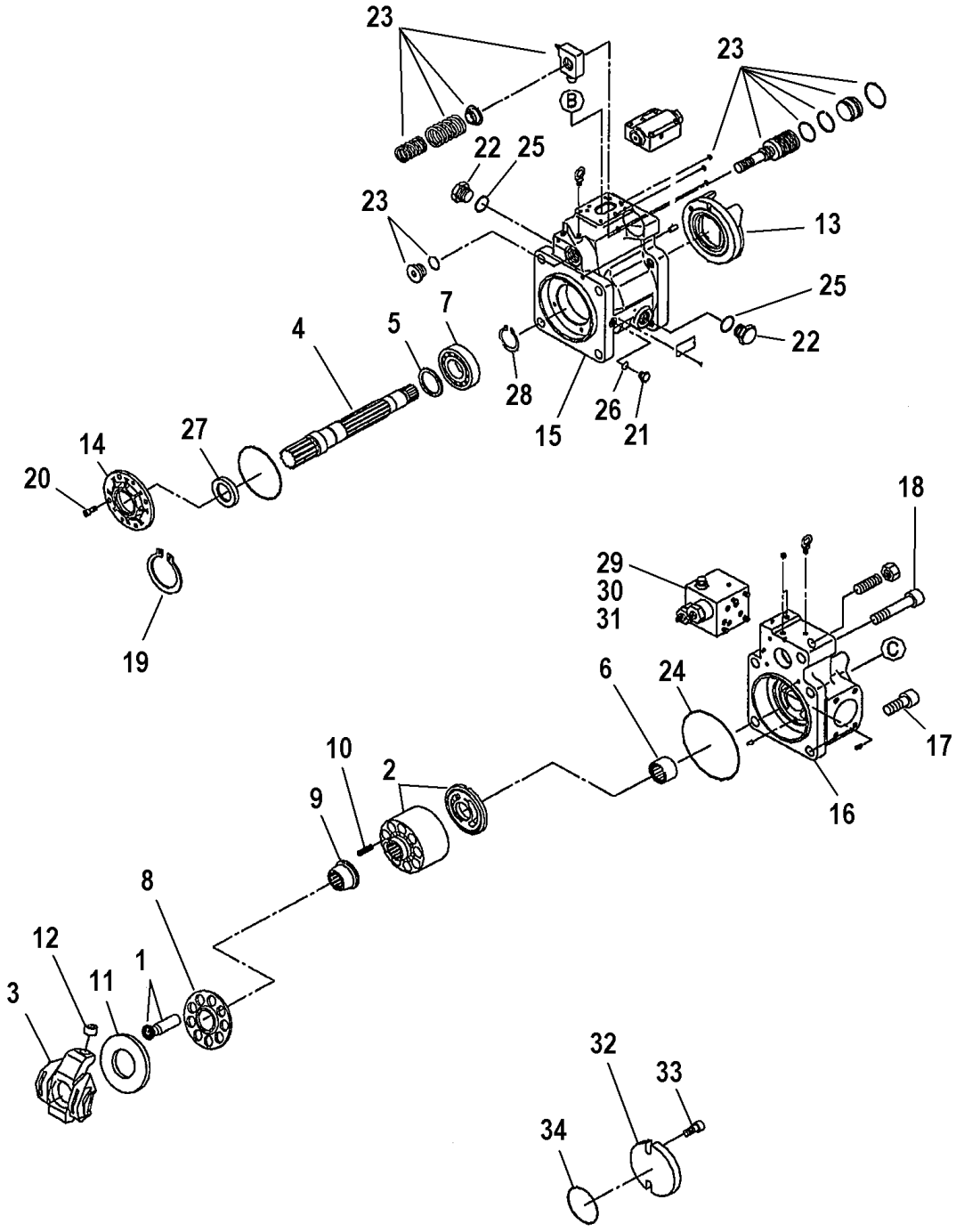


NBR 40 KIT ROTARY

NBR 41 KIT SWASH PLATE

NBR 50 KIT SEAL

7722100100

(SHEET 1 OF 1)

Description
**PUMP ASSEMBLY - PISTON (COMPLETE ASSEMBLY)**

Assembly No.
**7722100100**
Revision:

| Item | FN | Part | Qty | Description |
|---|---|---|---|---|
| 1 | | **NSS** | 1 | NOT SERVICED SEPARATELY<br>PISTON ASSY. GROUP |
| 2 | | **NSS** | 1 | NOT SERVICED SEPARATELY<br>CYLINDER ASSY. |
| 3 | | **NSS** | 1 | NOT SERVICED SEPARATELY<br>SWASHPLATE ASSY. |
| 4 | | **9722105546** | 1 | SHAFT ASSY. |
| 5 | | **9722105547** | 1 | BEARING |
| 6 | | **9722105548** | 1 | BEARING |
| 7 | | **9722105549** | 2 | SPACER |
| 8 | | **NSS** | 1 | NOT SERVICED SEPARATELY<br>SET PLATE |
| 9 | | **NSS** | 1 | NOT SERVICED SEPARATELY<br>BUSHING |
| 10 | | **NSS** | 9 | NOT SERVICED SEPARATELY<br>SPRING |
| 11 | | **NSS** | 1 | NOT SERVICED SEPARATELY<br>SHOE PLATE |
| 12 | | **NSS** | 1 | NOT SERVICED SEPARATELY<br>BUSHING |
| 13 | | **NSS** | 1 | NOT SERVICED SEPARATELY<br>SWASHPLATE SUPPORT |
| 14 | | **9722105550** | 1 | COVER |
| 15 | | **NSS** | 1 | NOT SERVICED SEPARATELY<br>HOUSING, PUMP CASE |
| 16 | | **NSS** | 1 | NOT SERVICED SEPARATELY<br>HOUSING, END COVER |
| 17 | | **9722105551** | 4 | CAPSCREW |
| 18 | | **9722105552** | 1 | CAPSCREW |
| 19 | | **9722105553** | 1 | RING, RETAINER |
| 20 | | **9722105554** | 4 | CAPSCREW |
| 21 | | **9722105555** | 1 | PLUG, BLEEDER |
| 22 | | **9722105556** | 2 | PLUG |
| 23 | | **NSS** | 1 | NOT SERVICED SEPARATELY<br>SERVO PISTON ASSY. |
| 24 | | **9722105567** | 1 | O-RING |
| 25 | | **9722105568** | 2 | O-RING |

Description
**PUMP ASSEMBLY - PISTON (COMPLETE ASSEMBLY)**

Assembly No.
**7722100100**
Revision:

| Item | FN | Part | Qty | Description |
|---|---|---|---|---|
| 26 | | **9722105569** | 1 | O-RING |
| 27 | | **9722105557** | 1 | SEAL, SHAFT |
| 28 | | **9722105570** | 1 | RING, RETAINER |
| 29 | | **9722105558** | 1 | REGULATOR ASSY. |
| 30 | | **9722105559** | 4 | CAPSCREW |
| 31 | | **9722105560** | 7 | O-RING |
| 32 | | **9722105561** | 1 | PLATE, COVER |
| 33 | | **9722105562** | 2 | CAPSCREW |
| 34 | | **9722105563** | 1 | O-RING |
| 40 | | **9722105564** | 1 | KIT, ROTARY GROUP<br>INCLUDES ITEMS 1, 2, 8 THRU 11 |
| 41 | | **9722105565** | 1 | KIT, SWASH PLATE GROUP<br>INCLUDES ITEMS 3 AND 13 |
| 50 | | **9722105566** | 1 | KIT, SEAL |

**Notes**

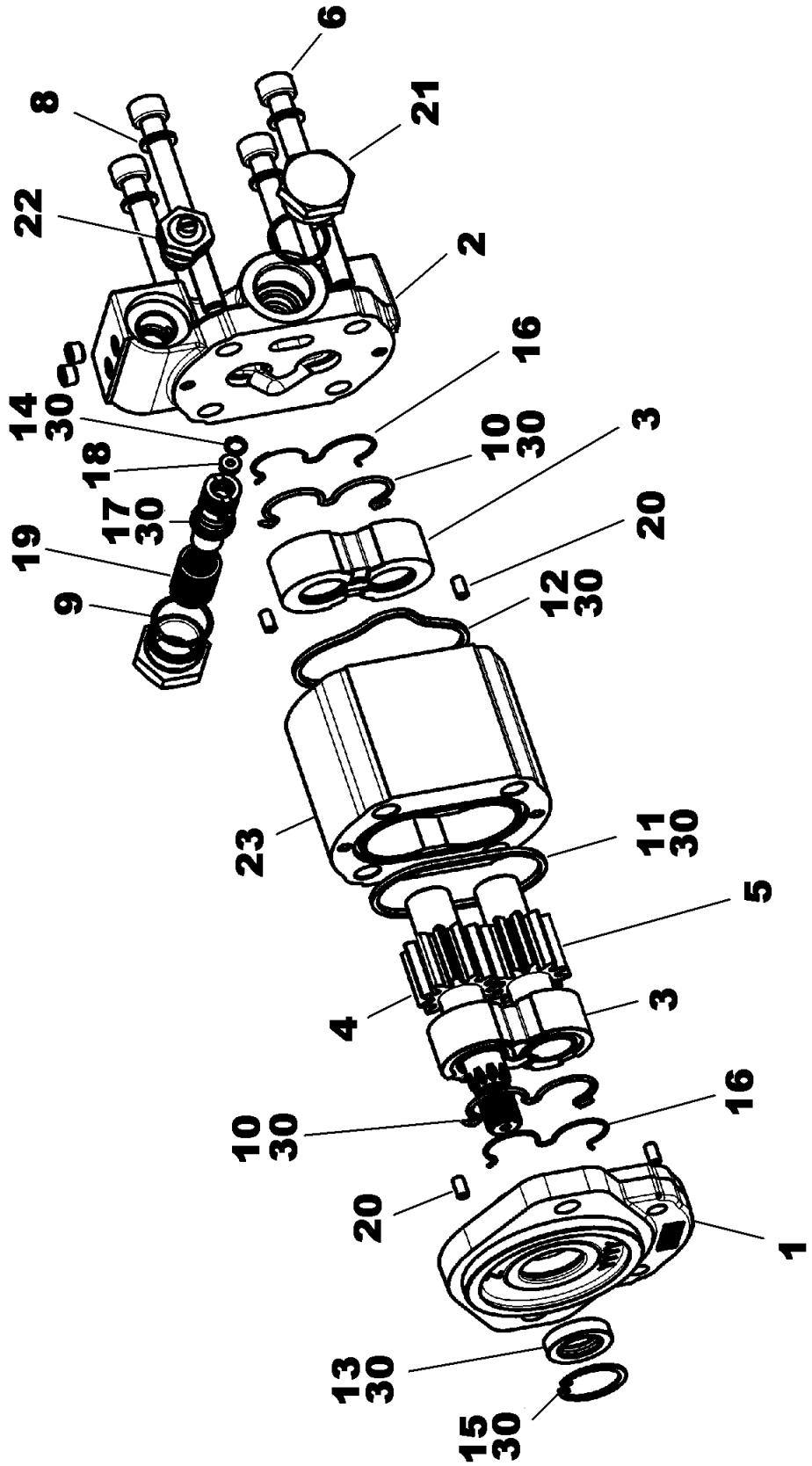


80033489

(SHEET 1 OF 1)

Description
**PUMP ASS'Y WITH FLOW DIVIDER**

Assembly No.
**80033489**
Revision:

| Item | FN | Part | Qty | Description |
|---|---|---|---|---|
| 1 | | **90022247** | 1 | HOUSING, BODY |
| 2 | | **90022248** | 1 | COVER, FRONT |
| 3 | | **90022249** | 1 | COVER, REAR |
| 4 | | **90022250** | 2 | PLATE, THRUST |
| 5 | | **90022251** | 1 | SHAFT ASSY, DRIVE |
| 6 | | **90022245** | 1 | SHAFT ASSY. DRIVEN |
| 7 | | **90022246** | 4 | CAPSCREW |
| 8 | | **9722105453** | 2 | SCREW, GRUB |
| 9 | | **9722105454** | 4 | WASHER |
| 10 | * | **9722105456** | 2 | O-RING |
| 11 | * | **9722105596** | 2 | SEAL |
| 12 | * | **9722105597** | 1 | SEAL, SQUARE |
| 13 | * | **90022252** | 1 | SEAL |
| 14 | * | **9722105598** | 4 | SEAL, SHAFT |
| 15 | | **9722105458** | 1 | RING |
| 16 | | **90022253** | 1 | RING, RETAINER |
| 17 | * | **9722105600** | 2 | RING, BACK-UP |
| 18 | | **9722105460** | 1 | SPOOL |
| 19 | | **90022254** | 1 | ORIFICE |
| 20 | | **9722105462** | 1 | SPRING |
| 21 | | **9722105601** | 4 | PIN, DOWEL |
| 22 | | **9722105465** | 2 | PLUG |
| 23 | | **90022255** | 1 | VALVE ASSY. RELIEF |
| 30 | * | **90022256** | 1 | KIT, SEAL |

*** REPAIR KIT AND/OR PART OF KIT**

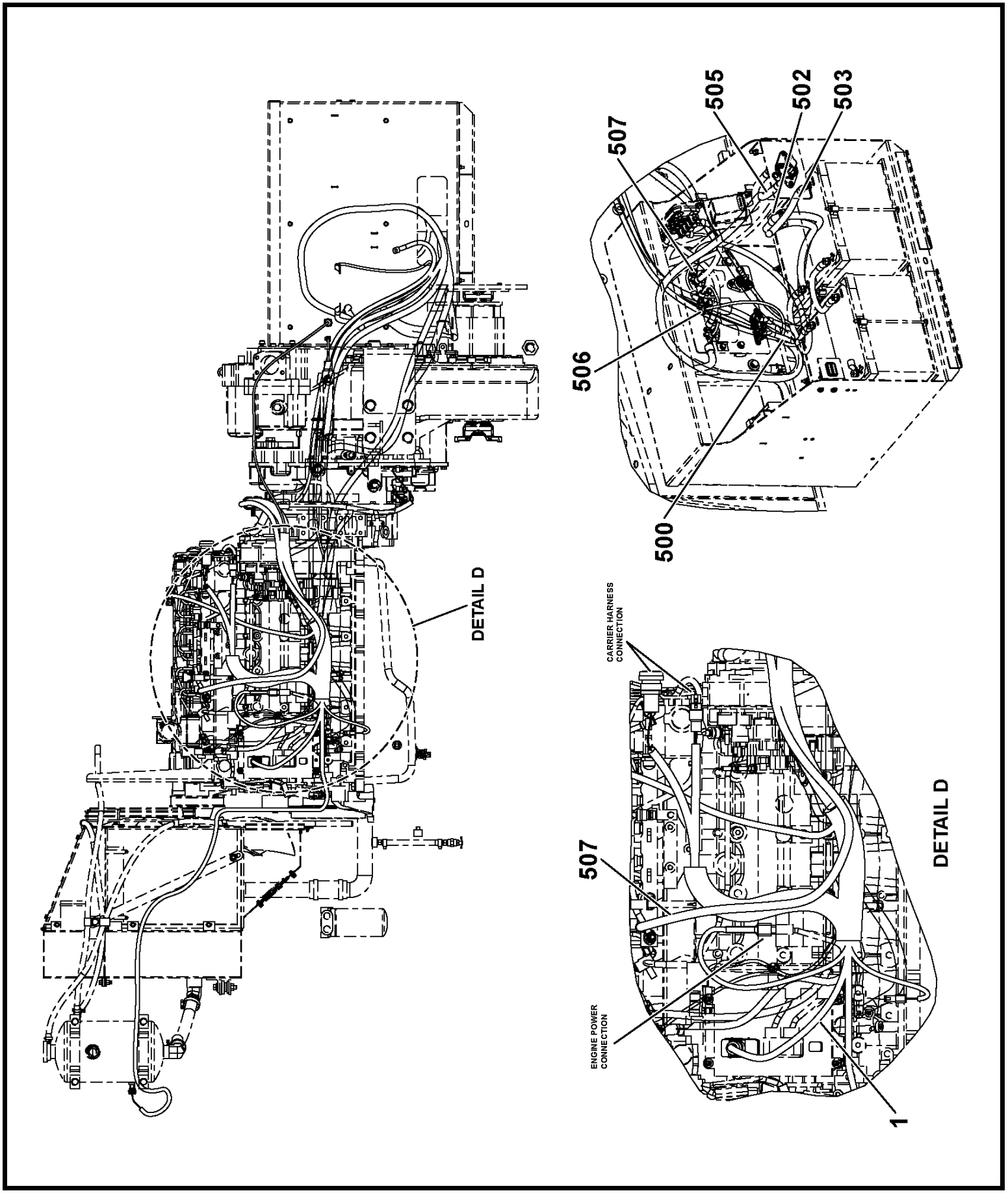


80038095

(SHEET 3 OF 3)

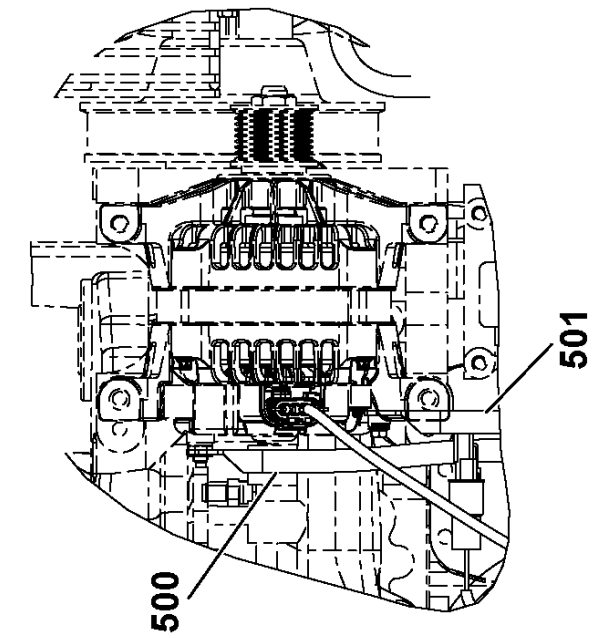


DETAIL E

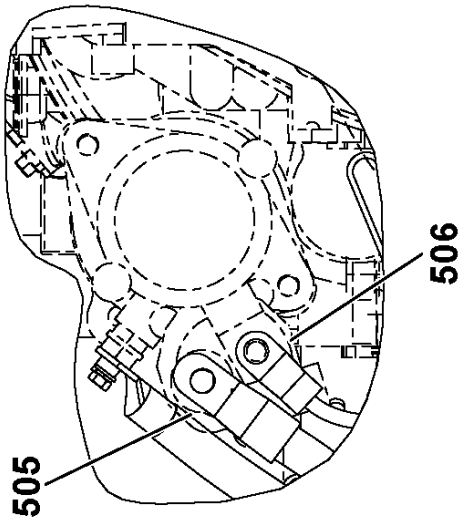


SECTION B1-B1

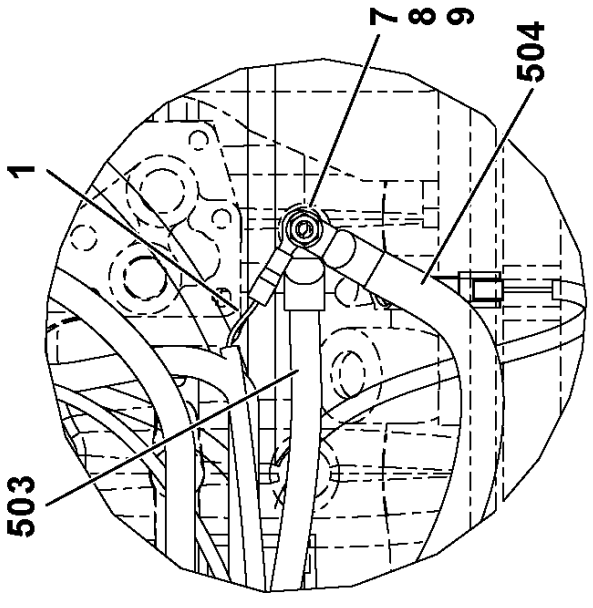


DETAIL A

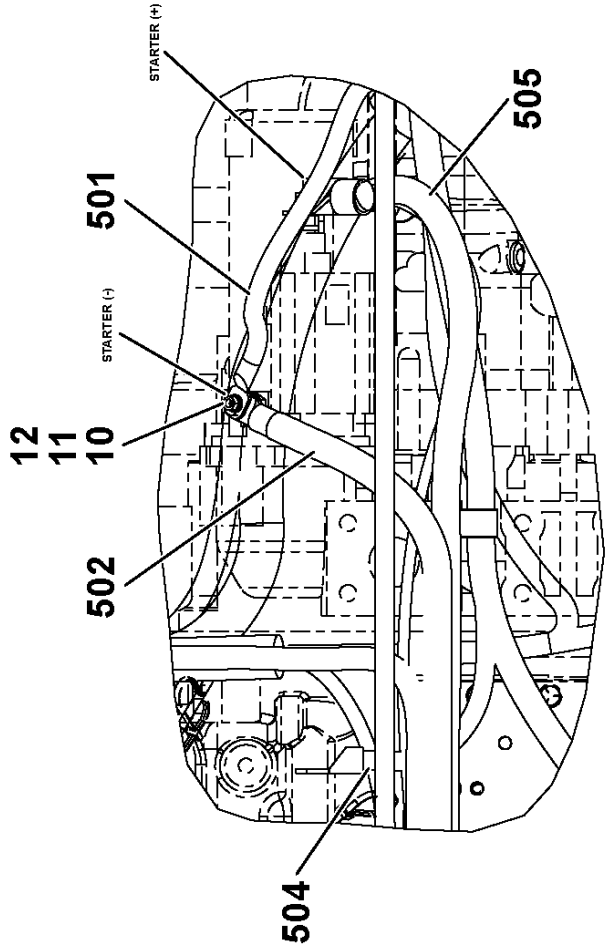


DETAIL B

80038095

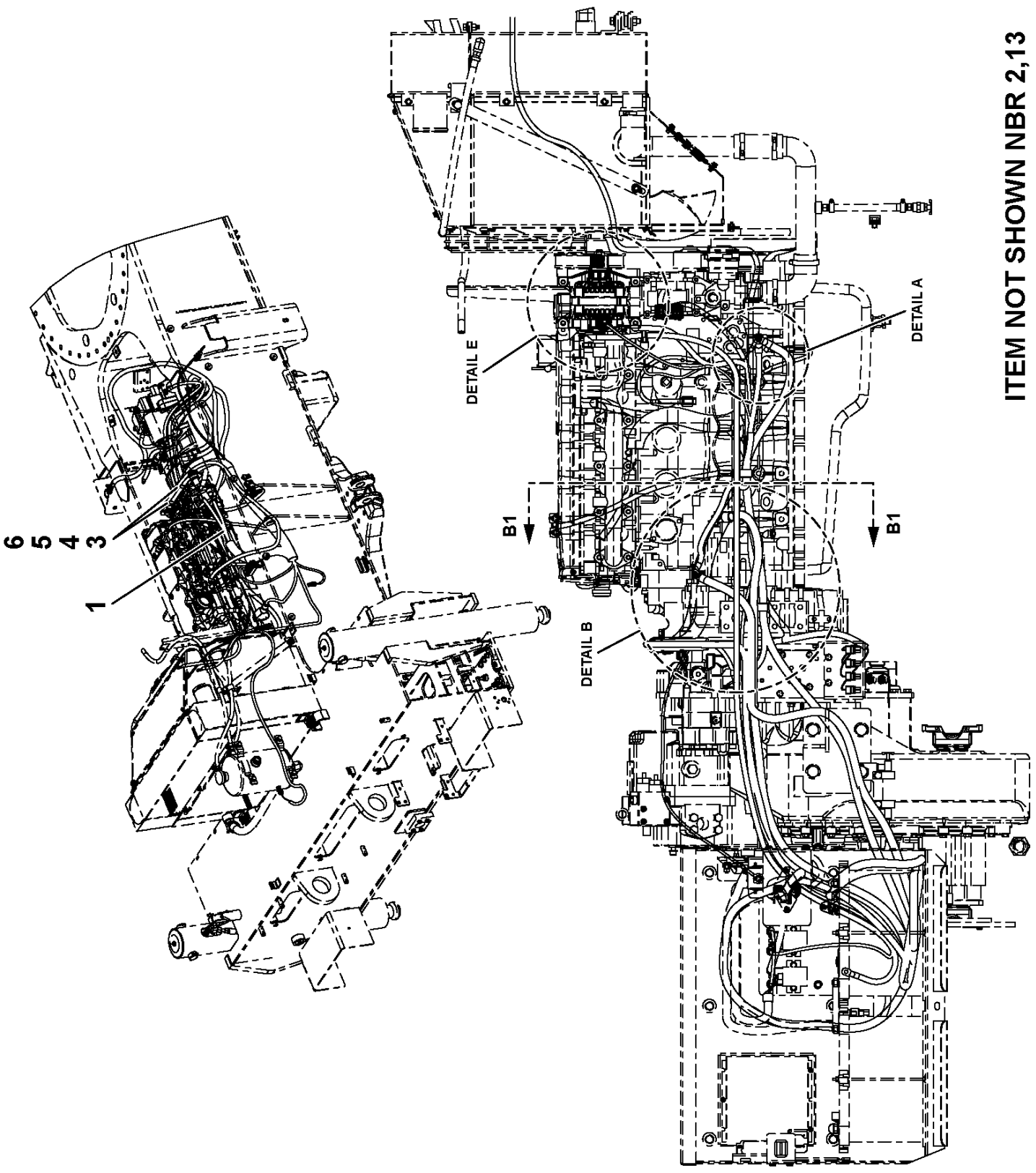


80038095

(SHEET 1 OF 3)

Description
**ESI-ENGINE**

Assembly No.
**80038095**
Revision: **E**

| Item | FN | Part | Qty | Description |
|---|---|---|---|---|
| 1 | + | **80047418** | 1 | WIRING HARNESS-ENGINE T3 |
| 2 | * | **80051312** | 1 | ENGINE CABLE KIT |
| 3 | | **7300000244** | 2 | CLAMP, TUBING<br>1" I.D. |
| 7 | | **7951170014** | 1 | WASHER, FLAT #8 |
| 8 | | **7951170210** | 1 | WASHER, LOCK 8MM |
| 9 | | **7661170003** | 1 | NUT |
| 10 | | **7951150014** | 1 | WASHER, 6MM I.D. |
| 11 | | **7951150210** | 1 | LOCKWASHER, 6MM I.D. |
| 12 | # | **7661150003** | 1 | NUT, HEX |
| 13 | | **7850000208** | 10 | CABLE TIE 5.63", BLACK |
| 500 | * | **80046248** | 1 | CABLE RELAY TO ALTERNATOR |
| 501 | * | **80046249** | 1 | CABLE STARTER TO ALTERNATOR |
| 502 | * | **80046250** | 1 | CABLE BATT NEG TO STARTER |
| 503 | * | **80030318** | 1 | CABLE 3/0 BLK 108" B- TO ENG- |
| 504 | * | **80046251** | 1 | CABLE GND TO GND |
| 505 | * | **80046252** | 1 | CABLE DISC TO STARTER |
| 506 | * | **80051491** | 1 | CABLE STARTER TO START RELAY |
| 507 | * | **80046254** | 1 | CABLE GH TO GH RELAY |

**+ SEE FURTHER BREAKDOWN THIS GROUP**
*** REPAIR KIT AND/OR PART OF KIT**
**# SERVICED AS AN ASSEMBLY ONLY**

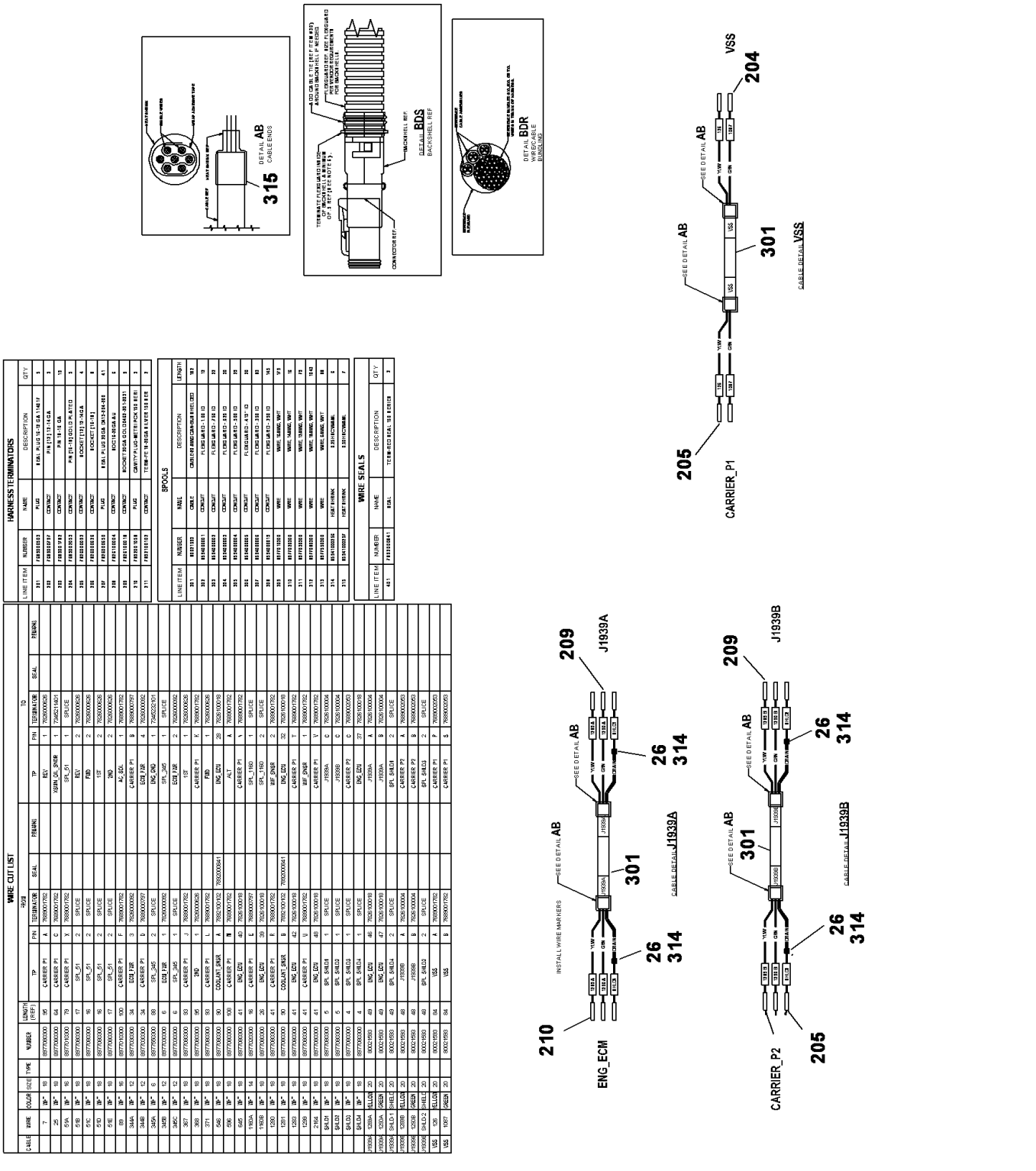
WIRE CUT LIST
HARNESS TERMINATORS
SPOOLS
WIRE SEALS
DETAIL AB CABLE ENDS
315
DETAIL BDS BACKSHELL REF
DETAIL BDR WIRE/CABLE BUNDLING
SEE DETAIL AB
CABLE DETAIL VSS
CARRIER_P1
205
301
204
VSS
INSTALL WIRE MARKERS
ENG_ECM
210
CABLE DETAIL J1939A
CABLE DETAIL J1939B
CARRIER_P2
209
J1939A
J1939B
26
314

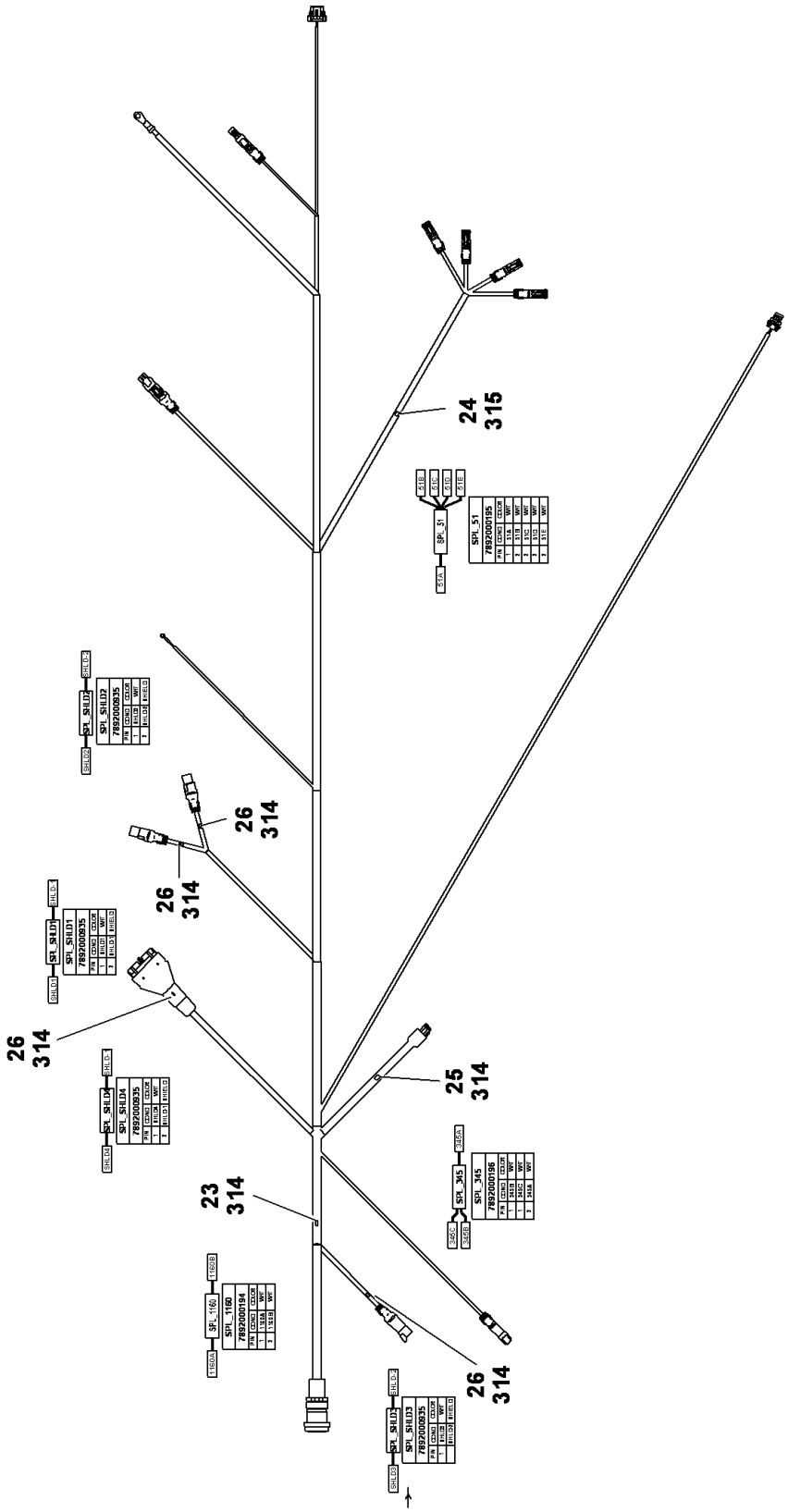


80047418

(SHEET 2 OF 3)

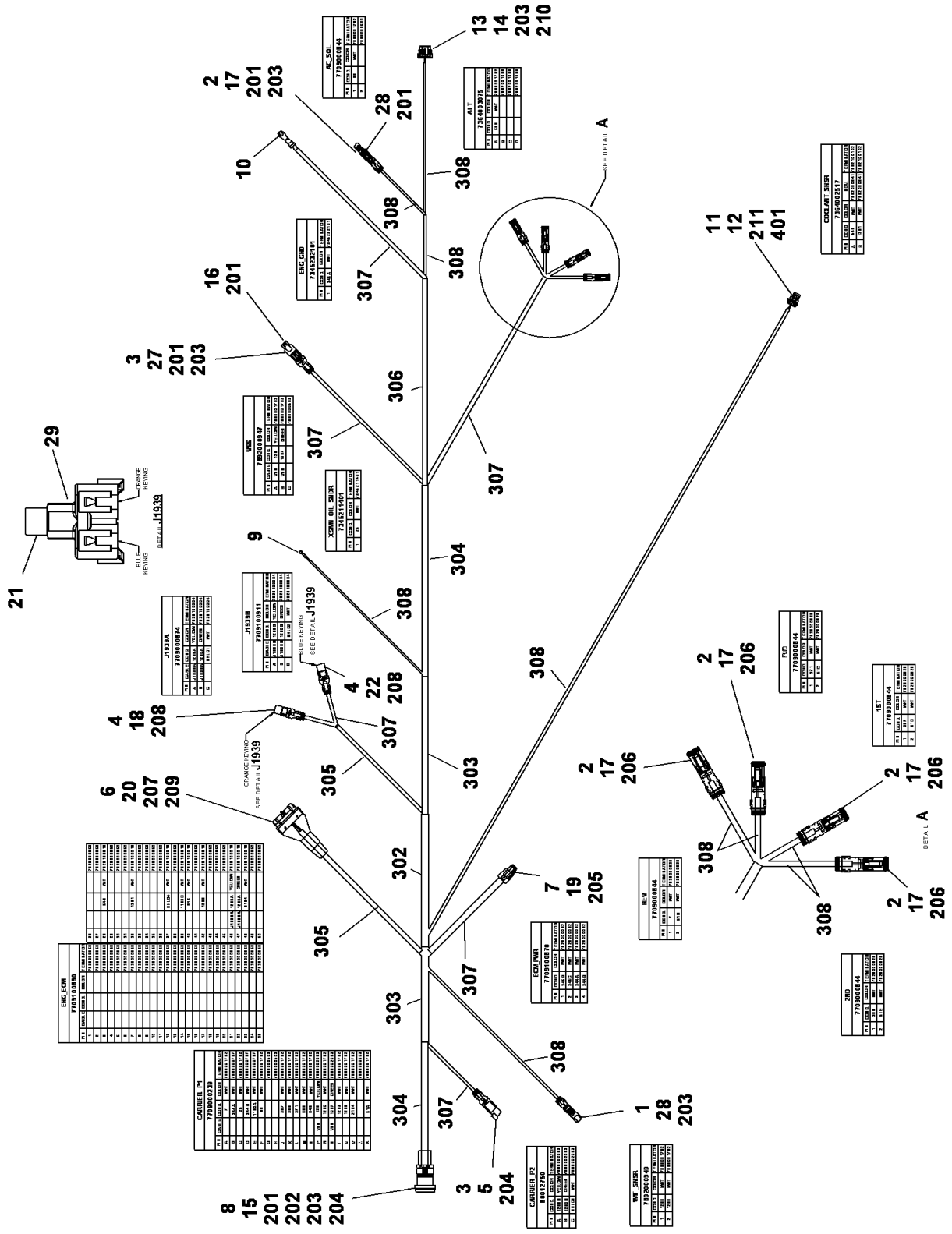


80047418

(SHEET 1 OF 3)

Description
**WIRING HARNESS-ENGINE T3**

Assembly No.
**80047418**
Revision: **C**

| Item | FN | Part | Qty | Description |
|---|---|---|---|---|
| 1 | | **80008750** | 1 | 180DEG BSHELL |
| 2 | | **80008755** | 5 | 180DEG BSHELL |
| 3 | | **80008761** | 2 | 180DEG BSHELL |
| 4 | | **80008765** | 2 | 180DEG BSHELL |
| 5 | | **80012750** | 1 | RECEPT (3P BLU WEDGE) |
| 6 | | **7172000554** | 1 | BOOT |
| 7 | | **7172100006** | 1 | BOOT |
| 8 | | **7300000429** | 1 | CLAMP, STRAIN RELIEF |
| 9 | | **7345211401** | 1 | TERMINAL<br>22 - 18 AWG |
| 10 | | **7345232101** | 1 | TERMINAL<br>6 AWG |
| 11 | | **7364002517** | 1 | CONNECTOR |
| 12 | | **7364002518** | 1 | CONNECTOR |
| 13 | | **7364003075** | 1 | PLUG, 4 PASS |
| 14 | | **7364003076** | 1 | CONNECTOR, 4 PASS |
| 15 | | **7709000239** | 1 | PLUG<br>21 PIN |
| 16 | | **7709000839** | 1 | PLUG, 3 SOCKET |
| 17 | | **7709000844** | 5 | PLUG, 2 SOCKET |
| 18 | | **7709000874** | 1 | PLUG<br>3 SOCKET |
| 19 | | **7709100870** | 1 | PLUG, 4 PASS |
| 20 | | **7709100890** | 1 | PLUG, DEUTSCH |
| 21 | | **7709100902** | 1 | PLUG, 3 PIN |
| 22 | | **7709100911** | 1 | PLUG W/BLUE WEDGE |
| 23 | | **7892000194** | 1 | PARALLEL, NON - INSULATED<br>16 - 14 AWG |
| 24 | | **7892000195** | 1 | PARALLEL, NON - INSULATED<br>12 - 10 AWG |
| 25 | | **7892000196** | 1 | PARALLEL, NON - INSULATED<br>8 AWG |
| 26 | | **7892000935** | 4 | PARALLEL |
| 27 | | **7892000947** | 1 | RECEPTACLE,<br>3 PIN |
| 28 | | **7892000949** | 2 | RECEPTACLE,<br>2 PIN |

Description
**WIRING HARNESS-ENGINE T3**

Assembly No.
**80047418**
Revision: **C**

| Item | FN | Part | Qty | Description |
|---|---|---|---|---|
| 29 | | **7892100036** | 1 | RECEPTACLE, 3 WAY |
| 30 | | **7850000208** | 50 | CABLE TIE 5.63", BLACK |
| 201 | | **7689000503** | 5 | PLUG, SEALING<br>16 - 12 AWG |
| 202 | | **7689000797** | 3 | PIN<br>12 AWG |
| 203 | | **7689001782** | 17 | PIN, 18 - 16 GAGE |
| 204 | | **7689002053** | 5 | PIN<br>16 - 18 AWG |
| 205 | | **7826000092** | 4 | SOCKET, (12) 12-14GA |
| 206 | | **7826000626** | 8 | SOCKET,<br>16 - 18 AWG |
| 207 | | **7826000650** | 41 | PLUG, SEALING |
| 208 | | **7826100004** | 7 | SOCKET, (16 - 18) 30 SERIES |
| 209 | | **7826100018** | 9 | SOCKET, 20 GAUGE GOLD |
| 210 | | **7892000840** | 1 | TERMINAL, FEMALE |
| 211 | | **7892000843** | 2 | TERMINAL, FEMALE<br>16 - 20 AWG |
| 212 | | **7892001058** | 3 | PLUG, CAVITY |
| 301 | | **80021593** | 15 | CABLE, 20 AWG CAN-BUS SHEILDED |
| 302 | | **8594000001** | 1 | FLEXGUARD - 1.00" I.D.<br>(QUANTITY IN FEET) |
| 303 | | **8594000002** | 2 | FLEXGUARD - .750" I.D.<br>(QUANTITY IN FEET) |
| 304 | | **8594000003** | 2 | FLEXGUARD - .625" I.D.<br>(QUANTITY IN FEET) |
| 305 | | **8594000004** | 2 | FLEXGUARD - .500" I.D.<br>(QUANTITY IN FEET) |
| 306 | | **8594000005** | 2 | FLEXGUARD - .413" I.D.<br>(QUANTITY IN FEET) |
| 307 | | **8594000006** | 7 | FLEXGUARD - .350" I.D.<br>(QUANTITY IN FEET) |
| 308 | | **8594000019** | 12 | FLEXGUARD, 1/4" I.D.<br>(QUANTITY IN FEET) |
| 314 | | **8594100256** | 6 | 1/4" SHRINK TUBING (CLEAR) W/M |
| 315 | | **8594100257** | 7 | TUBING, HEAT SHRINK 1/2" I.D.<br>LINER, MELTABLE<br>(QUANTITY IN FEET) |

**Notes**

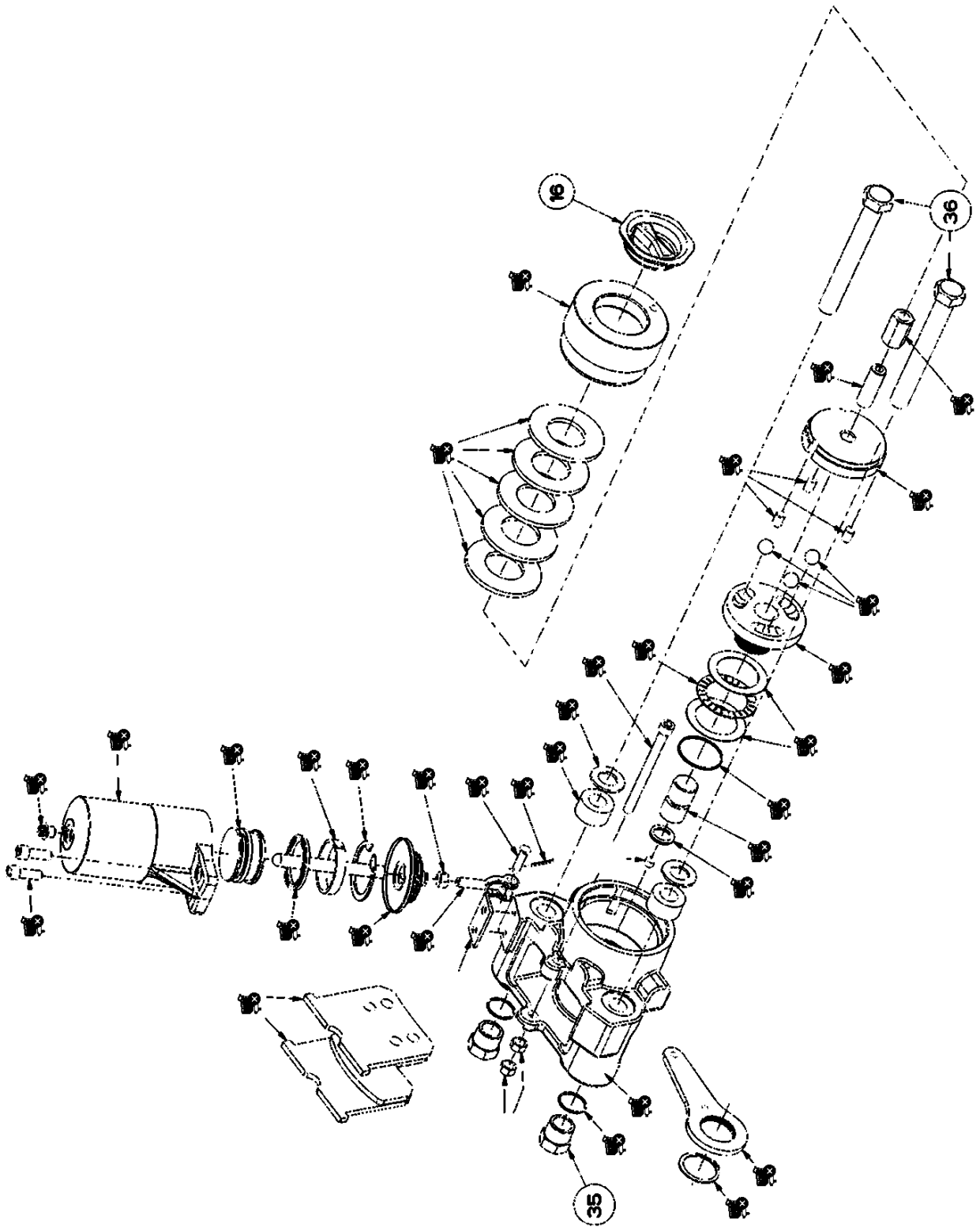


80051988

(SHEET 1 OF 1)

Description
**BRAKE-PARK ASSY W/O SPACER**

Assembly No.
**80051988**
Revision:

| Item | FN | Part | Qty | Description |
|---|---|---|---|---|
| 16 | | **9188101096** | 1 | PLUG,SCREW TYPE |
| 35 | | **9188101097** | 2 | NUT,JAM |
| 36 | | **9188101020** | 2 | CAP SCREW, |
| 41 | | **90011883** | 1 | KIT, OVERHAUL |
| 42 | | **90011882** | 1 | KIT, DICS SPRING |
| 43 | | **9188101043** | 1 | KIT, SPRING |
| 44 | | **90022859** | 1 | KIT, SEAL |
| 45 | | **9188101041** | 1 | KIT, LINING |
| 46 | | **90017521** | 1 | KIT, CAM OVERHAUL |

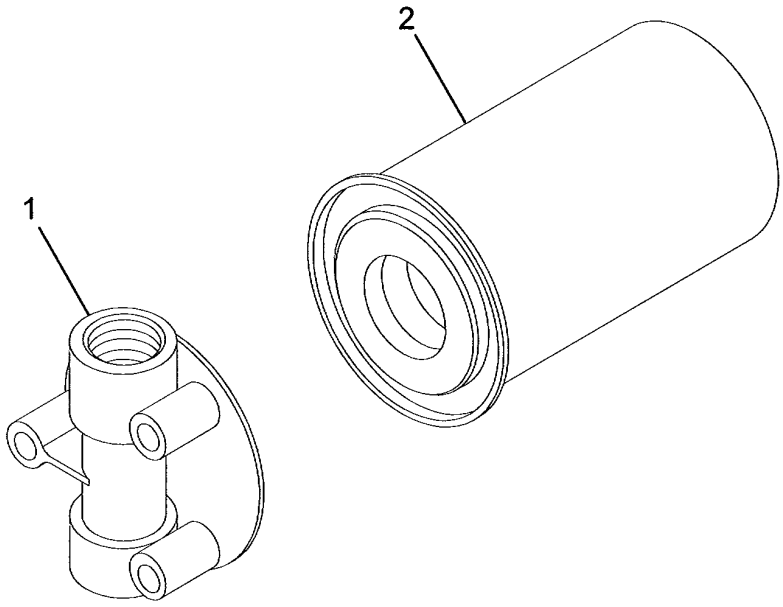


7437100235

(SHEET 1 OF 1)

Description
**FILTER ASSEMBLY (COMPLETE ASSEMBLY)**

Assembly No.
**7437100235**
Revision:

| Item | FN | Part | Qty | Description |
|---|---|---|---|---|
| 1 | | **7437000874** | 1 | HEAD, TRANSMISSION FILTER |
| 2 | | **7437000873** | 1 | FILTER, ELEMENT TRANS, 6.0"LG |

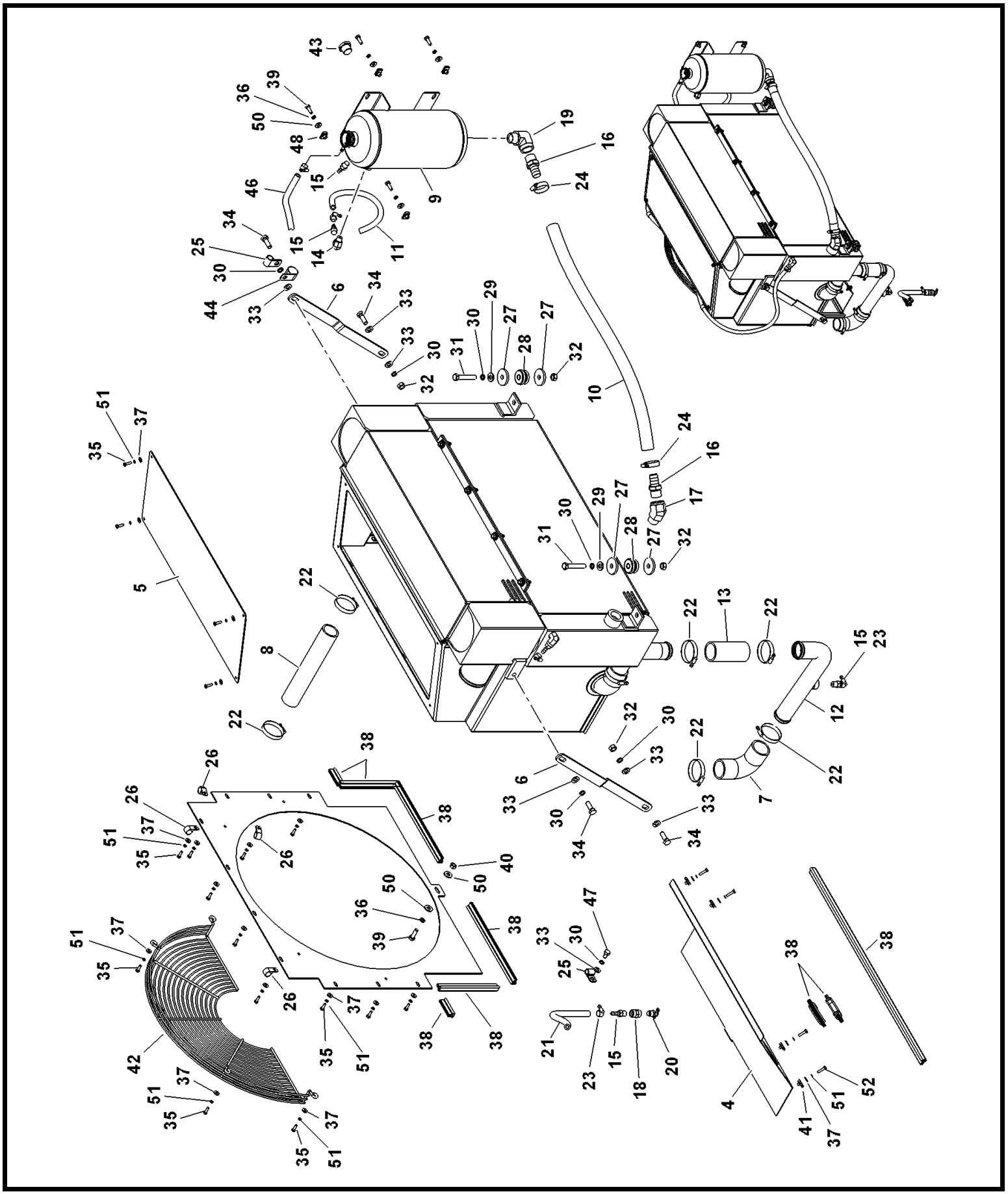

80056048

(SHEET 1 OF 1)

Description
**RADIATOR INSTALLATION-BRAZIL**

Assembly No.
**80056048**
Revision: **D**

| Item | FN | Part | Qty | Description |
|---|---|---|---|---|
| 1 | + | **80056049** | 1 | RADIATOR ASSEMBLY-BRAZIL |
| 3 | | **80041015** | 1 | SHROUD |
| 4 | | **80031697** | 1 | SHROUD BOTTOM PLATE |
| 5 | | **80031699** | 1 | SHROUD COVER |
| 6 | | **80045250** | 2 | MOUNTING STRAP |
| 7 | | **80031696** | 1 | CURVED RADIATOR HOSE |
| 8 | | **80039837** | 1 | RAD HOSE 1.75 ID 12"LG |
| 9 | | **80038983** | 1 | SURGE TANK |
| 10 | | **80031701** | 1 | 1.0 ID RAD HOSE 34" LG |
| 11 | | **80019779** | 1 | SCR COOL HOSE 3/8" ID x 103" L |
| 12 | | **80059105** | 1 | RADIATOR TUBE WELD |
| 13 | | **8596902522** | 1 | 2.00"ID X 2.39"OD WRAPPED HOSE |
| 14 | | **7445060653** | 1 | ELBOW, 90 DEGREE |
| 15 | | **7649000062** | 4 | NIPPLE |
| 16 | | **7649000049** | 2 | NIPPLE, HOSE |
| 17 | | **7445161652** | 1 | 1" NPT - 45 STREET ELBOW |
| 18 | | **7445060651** | 1 | UNION, STRAIGHT |
| 19 | | **7445161653** | 1 | ELBOW, 90 DEGREE |
| 20 | | **7926000557** | 1 | VALVE, DRAIN |
| 21 | | **80026985** | 1 | SCR COOL HOSE 3/8" ID x 8" LG |
| 22 | | **80061577** | 6 | CONSTANT TORQUE CLAMP |
| 23 | | **80054549** | 5 | HOSE CLAMP 13-19mm |
| 24 | | **80054547** | 2 | HOSE CLAMP 32-44mm |
| 25 | | **7300000243** | 2 | CLAMP, TUBING<br>3/4" I.D. |
| 26 | | **7300000195** | 4 | CLAMP, TUBING<br>3/4" I.D. |
| 27 | | **6949000036** | 4 | WASHER, HARDENED ROUND<br>1/2" I.D. |
| 28 | # | **7638000044** | 2 | SHOCK, MOUNTING |
| 29 | | **7949000235** | 2 | WASHER, 1/2" I.D. FLAT |
| 30 | | **7951210210** | 7 | LOCK WASHER, 12MM I.D. |
| 31 | | **7126212150** | 2 | CAP SCREW, M12 X 70MM HEX HEAD |
| 32 | | **7661210003** | 4 | NUT, HEX 12MM N.C. |
| 33 | | **7951210014** | 7 | WASHER, FLAT #12 |

**+ SEE FURTHER BREAKDOWN THIS GROUP**

**# SERVICED AS AN ASSEMBLY ONLY**

Description
**RADIATOR INSTALLATION-BRAZIL**

Assembly No.
**80056048**
Revision: **D**

| Item | FN | Part | Qty | Description |
|---|---|---|---|---|
| 34 | | **7126211450** | 4 | CAP SCREW, M12 X 35MM HEX HEAD |
| 35 | | **7126151153** | 18 | CAP SCREW, M6X20 HEX HEAD |
| 36 | | **7951170210** | 5 | WASHER, LOCK 8MM |
| 37 | | **7950140150** | 22 | WASHER, FLAT 1/4" I.D. |
| 38 | | **8637052013** | 10 | MOULD TRIM-LOK 6100B3X1/8C |
| 39 | | **7126171253** | 5 | CAP SCREW, M8X25 HEX HEAD |
| 40 | | **7661170003** | 1 | NUT |
| 41 | | **7659190019** | 4 | NUT, RETAINING M6 |
| 42 | | **80033041** | 1 | WIRE FAN GUARD |
| 43 | | **7486002666** | 1 | GAUGE, WINDOW |
| 44 | | **7300000247** | 1 | CLAMP, 1 1/4" TUBING |
| 46 | | **80022516** | 1 | RADIATOR VENT LINE |
| 47 | | **7126211150** | 1 | CAP SCREW, M12 X 20MM HEX HEAD |
| 48 | | **7659190020** | 4 | NUT, RETAINING 8 X 1.25 |
| 50 | | **7950150150** | 6 | FLAT WASHER, 5/16"I.D. |
| 51 | | **7951150210** | 22 | LOCKWASHER, 6MM I.D. |
| 52 | | **7126151253** | 4 | CAP SCREW, M6 X 25MM |

**Notes**

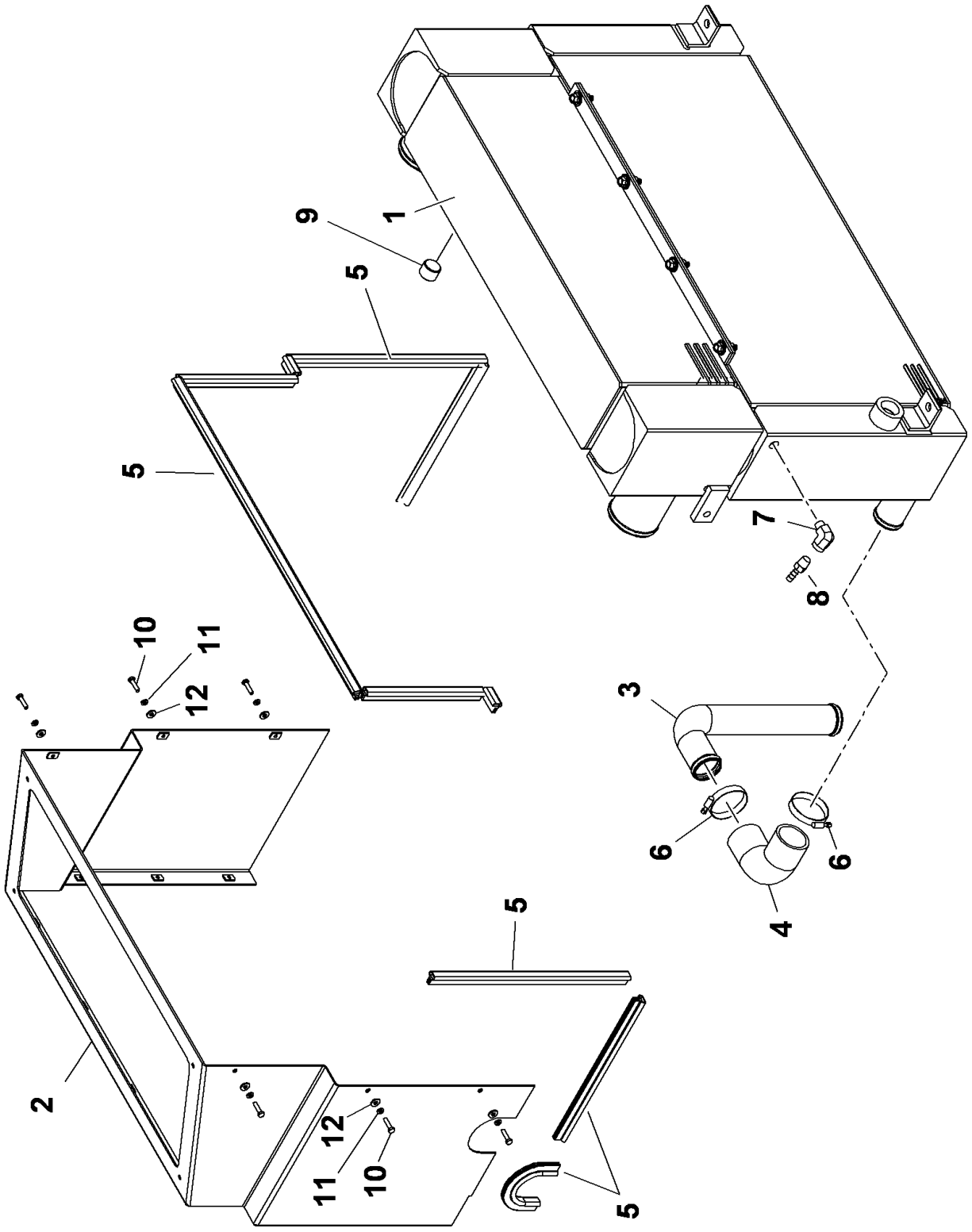


80056049

(SHEET 1 OF 1)

Description
**RADIATOR ASSEMBLY-BRAZIL**

Assembly No.
**80056049**
Revision: **D**

| Item | FN | Part | Qty | Description |
|---|---|---|---|---|
| 1 | | **80031703** | 1 | RADIATOR CAC TOC |
| 2 | | **80041013** | 1 | SHROUD |
| 3 | | **80059106** | 1 | RADIATOR TUBE |
| 4 | | **80031696** | 1 | CURVED RADIATOR HOSE |
| 5 | | **8637052013** | 10 | MOULD TRIM-LOK 6100B3X1/8C |
| 6 | | **80065679** | 2 | CONSTANT TORQUE CLAMP |
| 7 | | **7445060653** | 1 | ELBOW, 90 DEGREE |
| 8 | | **7649000062** | 1 | NIPPLE |
| 9 | | **7444030031** | 1 | PLUG, PIPE |
| 10 | | **7126151253** | 6 | CAP SCREW, M6 X 25MM |
| 11 | | **7951150220** | 6 | WASHER, LOCK M6 |
| 12 | | **7950140150** | 6 | WASHER, FLAT 1/4" I.D. |

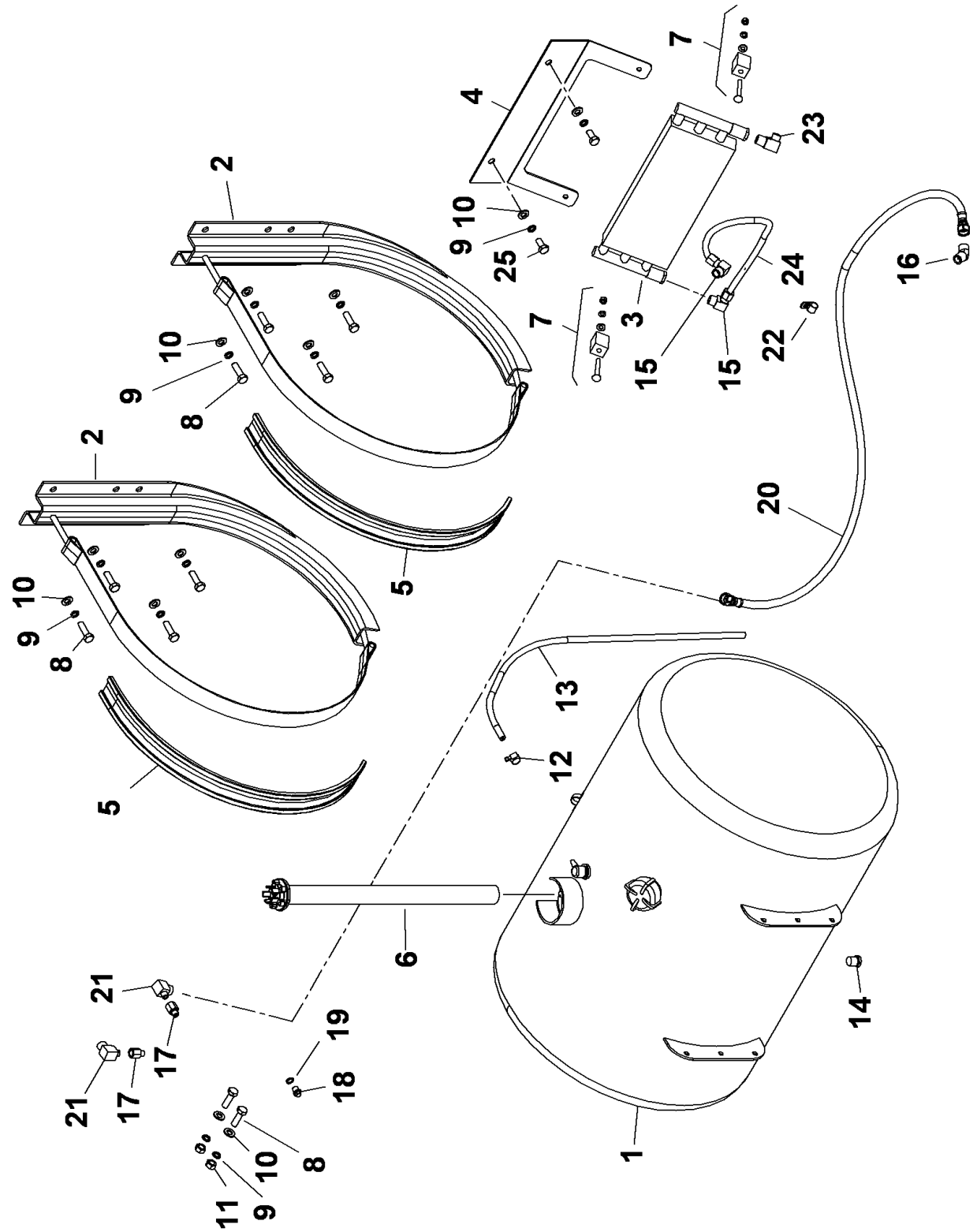


80056051

(SHEET 1 OF 1)

Description
**FUEL TANK INSTALLATION-T3**

Assembly No.
**80056051**
Revision: **F**

| Item | FN | Part | Qty | Description |
|---|---|---|---|---|
| 1 | + | **80050972** | 1 | FUEL TANK |
| 2 | # | **7880000092** | 2 | KIT, JAY BRACKET |
| 3 | # | **7726000128** | 1 | COOLER, OIL |
| 4 | | **80066936** | 1 | MOUNTING PLATE |
| 5 | | **8637059004** | 3 | MOULDING<br>(QUANTITY IN FEET) |
| 6 | | **7352000878** | 1 | SENDER, FUEL LEVEL<br>INCLUDES THE FOLLOWING PARTS |
| | | **9352100751** | 1 | KIT, GASKET AND HARDWARE |
| 7 | + | **7576001743** | 1 | MOUNTING KIT - OIL COOLER |
| 8 | | **7126211550** | 10 | CAP SCREW, M12 X 40 |
| 9 | | **7951210210** | 12 | LOCK WASHER, 12MM I.D. |
| 10 | | **7951210014** | 12 | WASHER, FLAT #12 |
| 11 | | **7661210003** | 2 | NUT, HEX 12MM N.C. |
| 12 | | **80054548** | 1 | HOSE CLAMP 9-13mm |
| 13 | | **8596902512** | 4 | HOSE ASSY, 1/4"I.D. X 25' |
| 14 | | **80026318** | 1 | PIPE PLUG, S/S 1/2" NPT HEX |
| 15 | | **7446080836** | 2 | ELBOW, 90 DEGREE MALE |
| 16 | | **7447080829** | 1 | ELBOW, 45 DEGREE<br>INCLUDES THE FOLLOWING PARTS |
| | | **7755014002** | 1 | O-RING |
| | | **7755908002** | 1 | O-RING |
| 17 | | **7013000405** | 2 | ADAPTER |
| 18 | | **80018055** | 1 | PLUG - M12 X 1.5 |
| 19 | | **7949180045** | 1 | WASHER, COPPER |
| 20 | | **7561307230** | 1 | 1/2" HOSE ASSY, ORFS STR-STR |
| 21 | | **7447080430** | 2 | ELBOW, MALE ORS THD TO MALE N |
| 22 | | **7300000102** | 1 | CLAMP, TUBING<br>5/8" I.D. |
| 23 | | **7447060830** | 1 | ELBOW, 90 DEGREE MALE<br>INCLUDES THE FOLLOWING PARTS |
| | | **7755014002** | 1 | O-RING |
| | | **7755906002** | 1 | O-RING |
| 24 | | **7916080182** | 1 | 1/2 X 18" NYLON FUEL TUBE |
| 25 | | **7126211253** | 2 | CAP SCREW, M12 X 25MM HEX HEAD |
| 26 | | **7445080801** | 2 | ADAPTER, STRAIGHT |

**+ SEE FURTHER BREAKDOWN THIS GROUP** **# SERVICED AS AN ASSEMBLY ONLY**

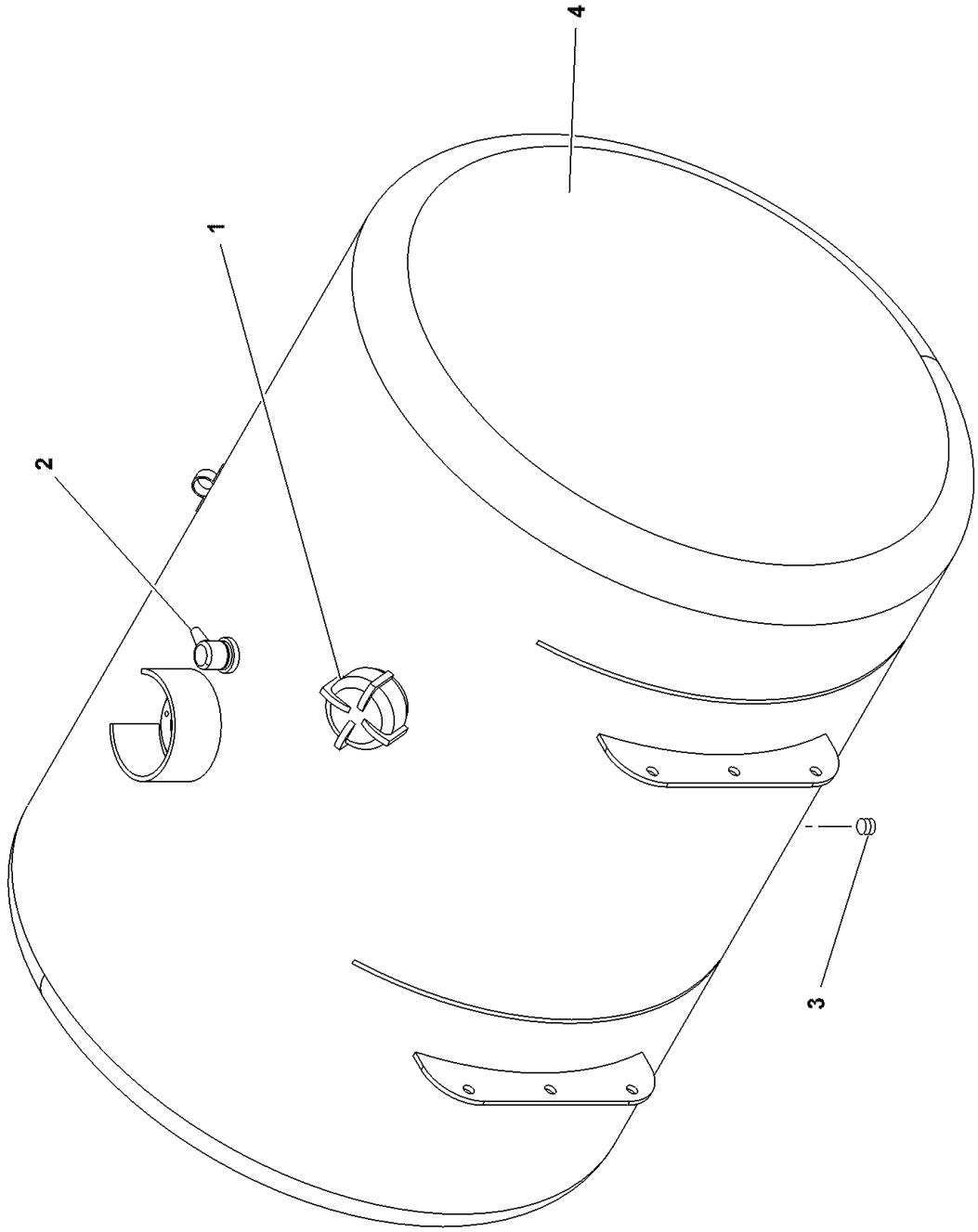


**80050972**

**(SHEET 1 OF 1)**

Description
**FUEL TANK**

Assembly No.
**80050972**
Revision:

| Item | FN | Part | Qty | Description |
|---|---|---|---|---|
| 1 | | **90019775** | 1 | CAP ASSY. FILL, W/CHAIN |
| 2 | | **9880100204** | 1 | VALVE,VENT |
| 3 | | **90022830** | 1 | PLUG, STAINLESS STEEL |
| 4 | | **NSS** | 1 | NOT SERVICED SEPARATELY<br>WELDMENT, TANK |

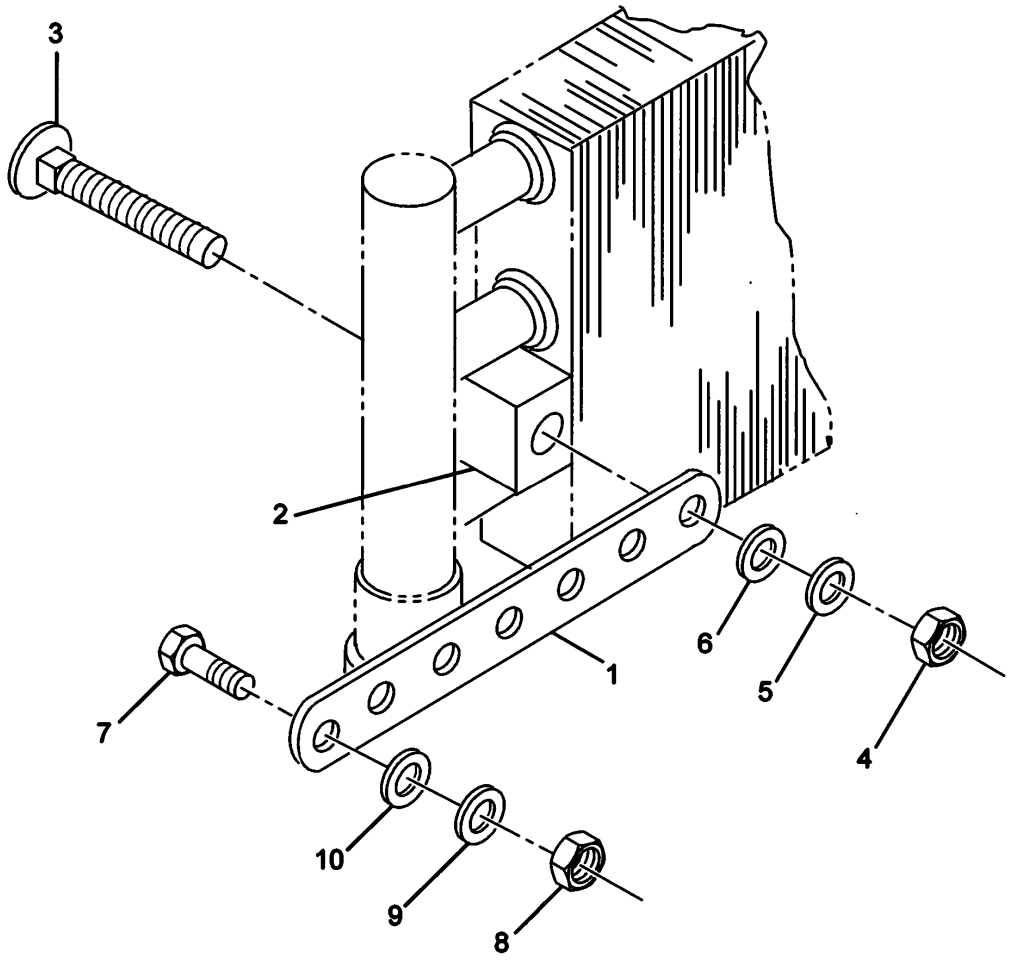


7576001743

(SHEET 1 OF 1)

Description
**MOUNTING KIT - OIL COOLER**

Assembly No.
**7576001743**
Revision:

| Item | FN | Part | Qty | Description |
|---|---|---|---|---|
| 1 | | **9576101028** | 2 | STRAP |
| 2 | | **9576101029** | 2 | BUSHING |
| 3 | | **7115152050** | 2 | CAP SCREW,<br>5/16" - 18 N.C. X 2 1/2"<br>GRADE 5 |
| 4 | | **7660150008** | 2 | NUT, HEX<br>5/16" - 18 N.C.<br>GRADE 8 |
| 5 | | **7950150050** | 2 | WASHER, LOCK 5/16" I.D. |
| 6 | | **7950150141** | 2 | WASHER, FLAT 5/16" |
| 7 | | **7115140650** | 2 | CAP SCREW,<br>1/4" - 20 N.C. X 3/4"<br>GRADE 5 |
| 8 | | **7660140008** | 2 | NUT, HEX<br>1/4" - 20 N.C. |
| 9 | | **7950140050** | 2 | WASHER, LOCK 1/4" |
| 10 | | **7950140141** | 2 | WASHER, FLAT 1/4" PLAIN NARROW |

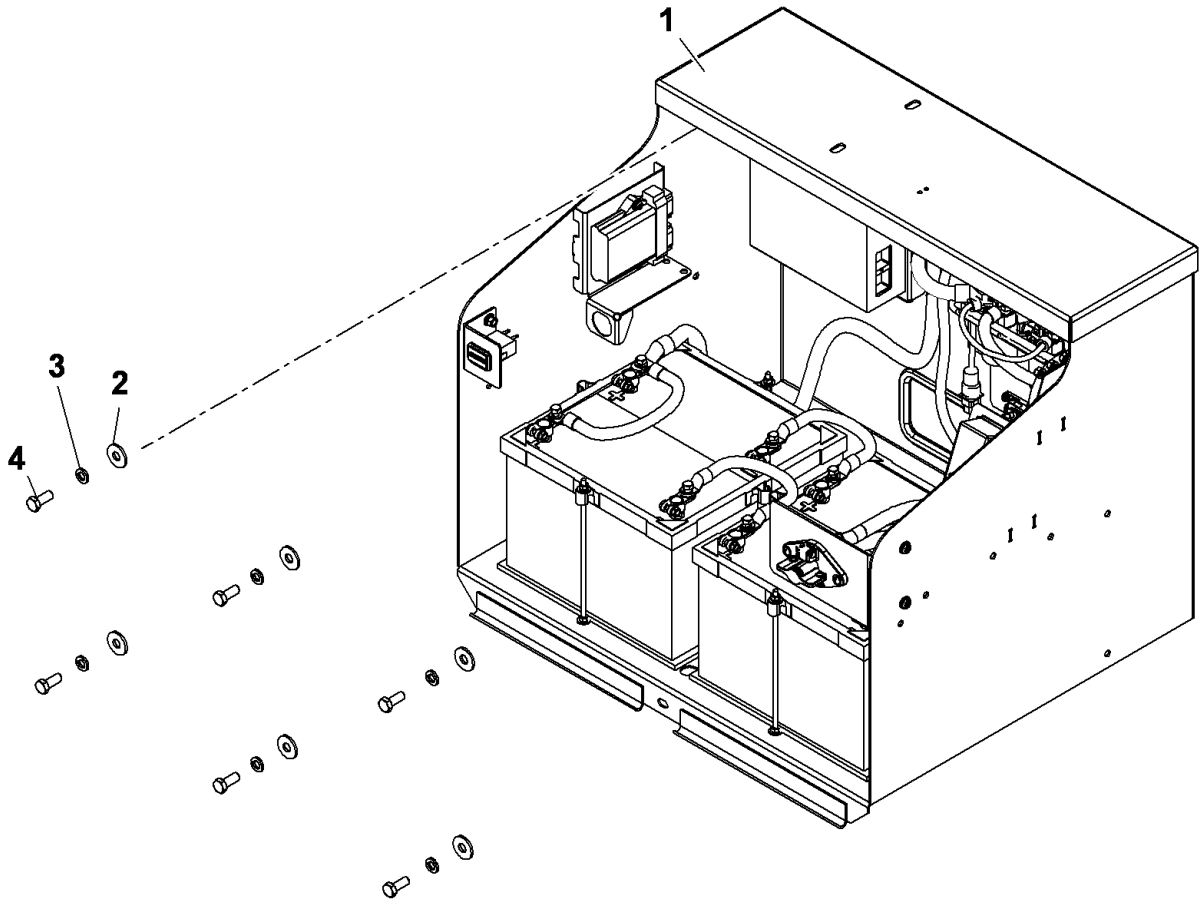


80047471

(SHEET 1 OF 1)

Description
**BATTERY BOX INSTALLATION**

Assembly No.
**80047471**
Revision: **A**

| Item | FN | Part | Qty | Description |
|---|---|---|---|---|
| 1 | + | **80047472** | 1 | BATTERY BOX ASSEMBLY |
| 2 | | **7950180161** | 6 | FLAT WASHER, 1/2" I.D. |
| 3 | | **7950180050** | 6 | WASHER, LOCK 1/2" I.D. |
| 4 | | **7126211353** | 6 | CAP SCREW, M12 X 30 HEX HEAD |

**+ SEE FURTHER BREAKDOWN THIS GROUP**

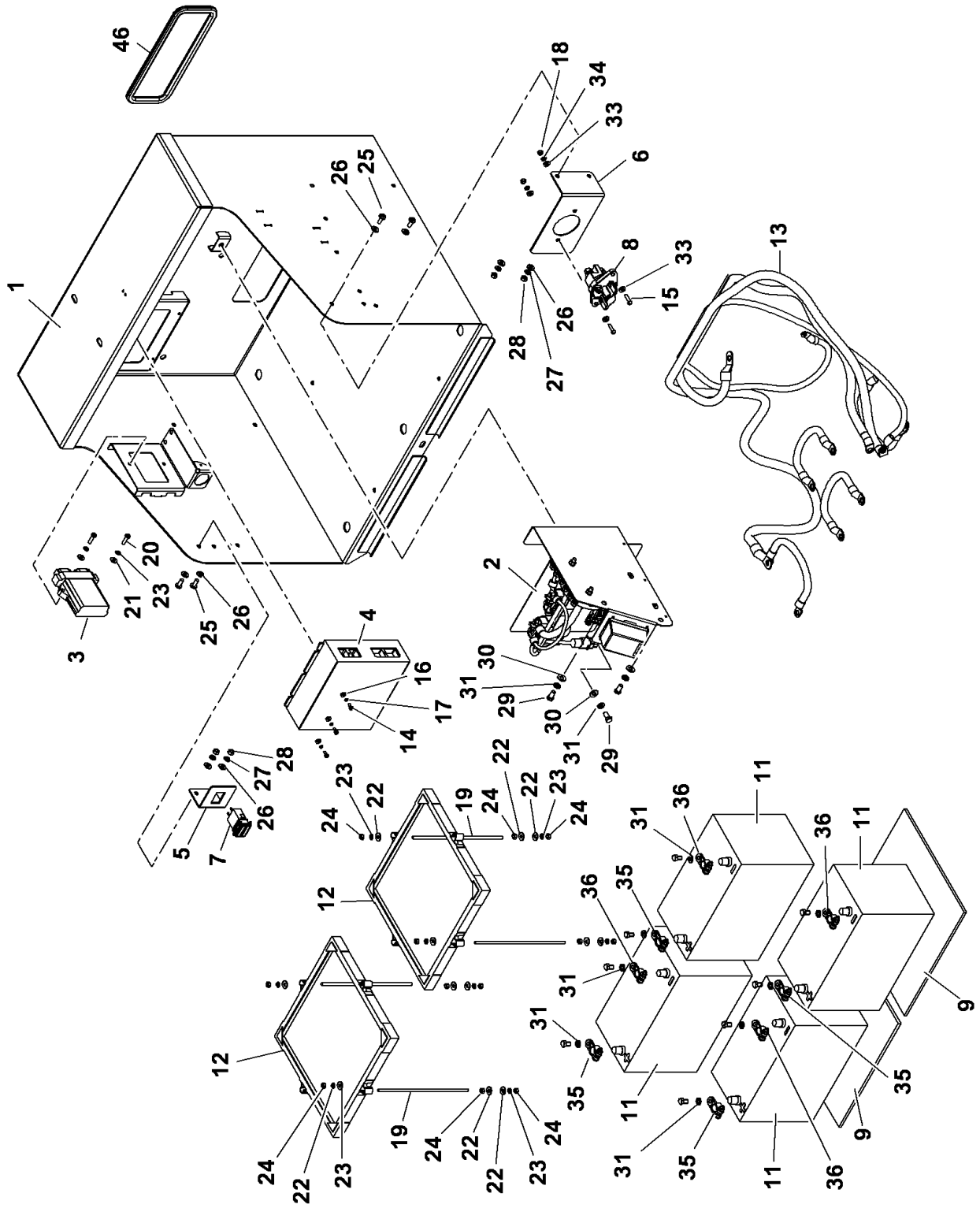


80047472

(SHEET 1 OF 1)

Description
**BATTERY BOX ASSEMBLY**

Assembly No.
**80047472**
Revision: **C**

| Item | FN | Part | Qty | Description |
|---|---|---|---|---|
| 1 | | **80030806** | 1 | BATTERY BOX |
| 2 | + | **80034165** | 1 | FUSE PANEL ASSEMBLY |
| 3 | # | **80023755** | 1 | MASTER CONTROL MODULE |
| 4 | # | **7352100070** | 1 | MODULE, CONTROL<br>(FRAME AND TURNTABLE) |
| 5 | | **80032835** | 1 | MOUNTING ANGLE HOURMETER |
| 6 | | **80032836** | 1 | MOUNTING ANGLE DISCONNECT |
| 7 | | **7486002973** | 1 | HOURMETER |
| 8 | | **7872100142** | 1 | DISCONNECT SWITCH |
| 9 | | **80018360** | 2 | PAD, TRAY |
| 11 | | **80042621** | 4 | 12V BATTERY |
| 12 | | **7300000393** | 2 | BATTERY, HOLD-DOWN |
| 13 | + | **80033011** | 1 | BATTERY CABLE KIT |
| 14 | | **7111100411** | 3 | SCREW, MACHINE<br>3/16" - 24 N.C. X 1/2"<br>GRADE 1 |
| 15 | | **7111140810** | 2 | SCREW, MACHINE<br>1/4" - 20 N.C. X 1"<br>GRADE 1 |
| 16 | | **7950100141** | 3 | WASHER, FLAT, #10 |
| 17 | | **7950100050** | 3 | WASHER, LOCK #10 |
| 18 | | **7660140001** | 2 | NUT, HEX<br>1/4" - 20 N.C.<br>GRADE 5 |
| 19 | | **6865148467** | 4 | Stud 1/4x10.5 NC - Full Length |
| 20 | | **7111140811** | 2 | SCREW, MACHINE<br>1/4" - 20 N.C. X 1"<br>GRADE 1 |
| 21 | | **7950140141** | 2 | WASHER, FLAT 1/4" PLAIN NARROW |
| 22 | | **7950140161** | 12 | WASHER, 1/4" I.D. FLAT WIDE |
| 23 | | **7950140050** | 10 | WASHER, LOCK 1/4" |
| 24 | | **7660140000** | 12 | NUT, HEX<br>1/4" - 20 N.C. |
| 25 | | **7111150611** | 4 | SCREW, MACHINE<br>5/16" - 18 N.C. X 3/4"<br>GRADE 1 |
| 26 | | **7950150141** | 8 | WASHER, FLAT 5/16" |

**+ SEE FURTHER BREAKDOWN THIS GROUP** **# SERVICED AS AN ASSEMBLY ONLY**

Description
**BATTERY BOX ASSEMBLY**

Assembly No.
**80047472**
Revision: **C**

| Item | FN | Part | Qty | Description |
|---|---|---|---|---|
| 27 | | **7950150050** | 4 | WASHER, LOCK 5/16" I.D. |
| 28 | | **7660150000** | 4 | NUT, HEX<br>5/16" - 18 N.C. |
| 29 | | **7115160650** | 3 | CAP SCREW,<br>3/8" - 16 N.C. X 3/4"<br>GRADE 5 |
| 30 | | **7950160141** | 3 | WASHER, 3/8" PLAIN NARROW |
| 31 | | **7950160050** | 11 | WASHER, LOCK 3/8" I.D. |
| 33 | | **7950140141** | 4 | WASHER, FLAT 1/4" PLAIN NARROW |
| 34 | | **7950140050** | 2 | WASHER, LOCK 1/4" |
| 35 | | **80042623** | 4 | BATTERY CONNECTOR - POS. POLE |
| 36 | | **80042664** | 4 | BATTERY CONNECTOR - NEG. POLE |
| 46 | | **8496980002** | 3 | MOULDING<br>(QUANTITY IN FEET) |

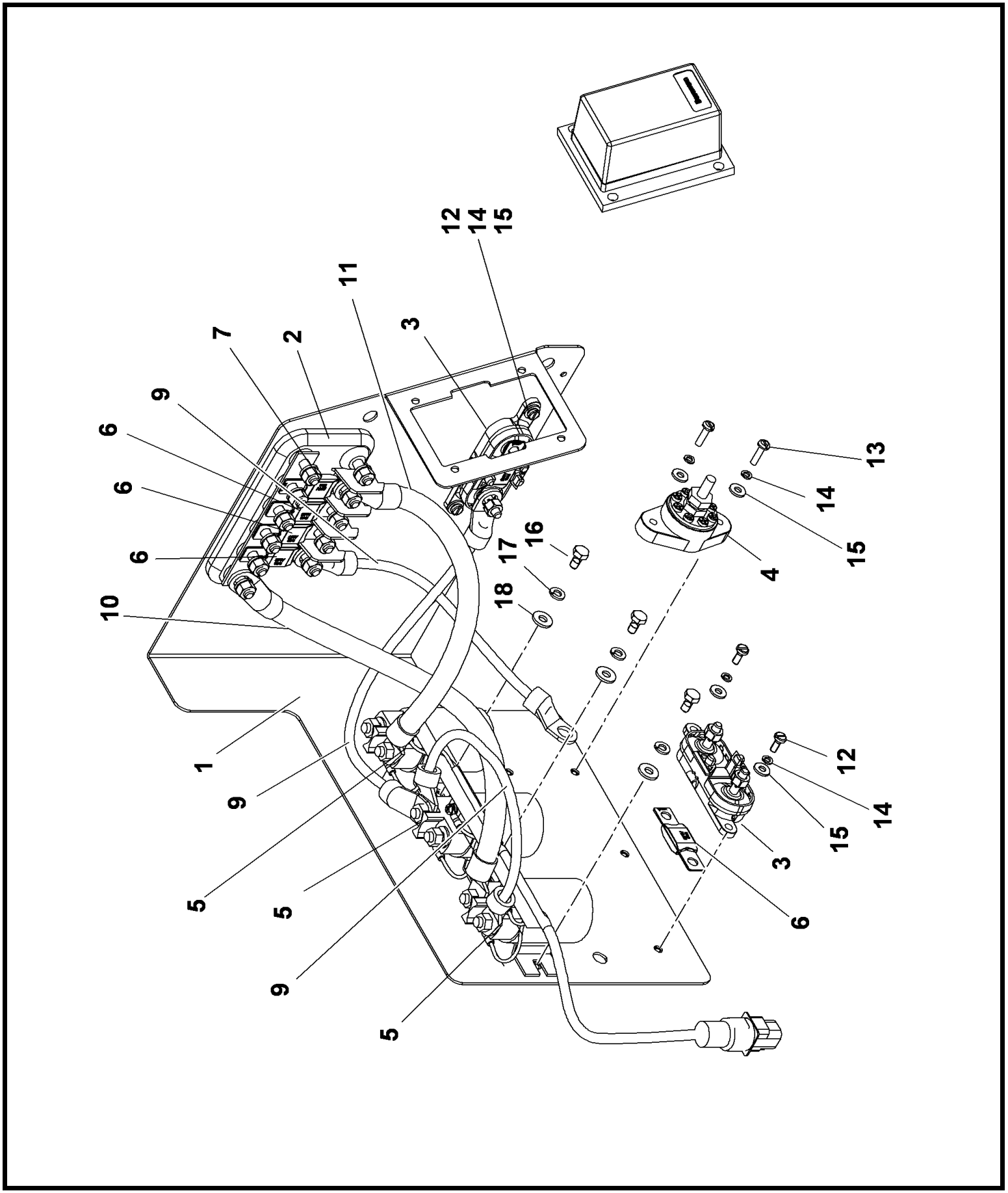


80034165

(SHEET 1 OF 1)

Description
**FUSE PANEL ASSEMBLY**

Assembly No.
**80034165**
Revision: **A**

| Item | FN | Part | Qty | Description |
|---|---|---|---|---|
| 1 | | **80034166** | 1 | FUSE PANEL |
| 2 | | **80022971** | 1 | FUSEHOLDER |
| 3 | | **80022969** | 2 | FUSEHOLDER |
| 4 | | **7346100003** | 1 | CONNECTOR, POWER DISTRIBUTION POST |
| 5 | # | **7750000757** | 3 | RELAY, 300 AMP<br>(24 VOLT DC) |
| 6 | | **80023219** | 4 | FUSE-AMG-100A |
| 7 | | **80023220** | 2 | FUSE-AMG-250A |
| 8 | + | **80023449** | 1 | HARNESS ASSEMBLY-ENGINE RELAY PANEL |
| 9 | | **80032000** | 3 | BATTERY CABLE RED 6GA 12" |
| 10 | | **80032002** | 1 | BATTERY CABLE RED 2OT 16" |
| 11 | | **80032019** | 1 | BATTERY CABLE RED 2OT 12" |
| 12 | | **7111100411** | 4 | SCREW, MACHINE<br>3/16" - 24 N.C. X 1/2"<br>GRADE 1 |
| 13 | | **7111100611** | 2 | SCREW, MACHINE<br>3/16" - 24 N.C. X 3/4"<br>GRADE 1 |
| 14 | | **7950100050** | 6 | WASHER, LOCK #10 |
| 15 | | **7950100141** | 6 | WASHER, FLAT, #10 |
| 16 | | **7115140450** | 6 | CAP SCREW,<br>1/4" - 20 N.C. X 1/2"<br>GRADE 5 |
| 17 | | **7950140050** | 6 | WASHER, LOCK 1/4" |
| 18 | | **7950140141** | 6 | WASHER, FLAT 1/4" PLAIN NARROW |

**# SERVICED AS AN ASSEMBLY ONLY**

**+ SEE FURTHER BREAKDOWN THIS GROUP**

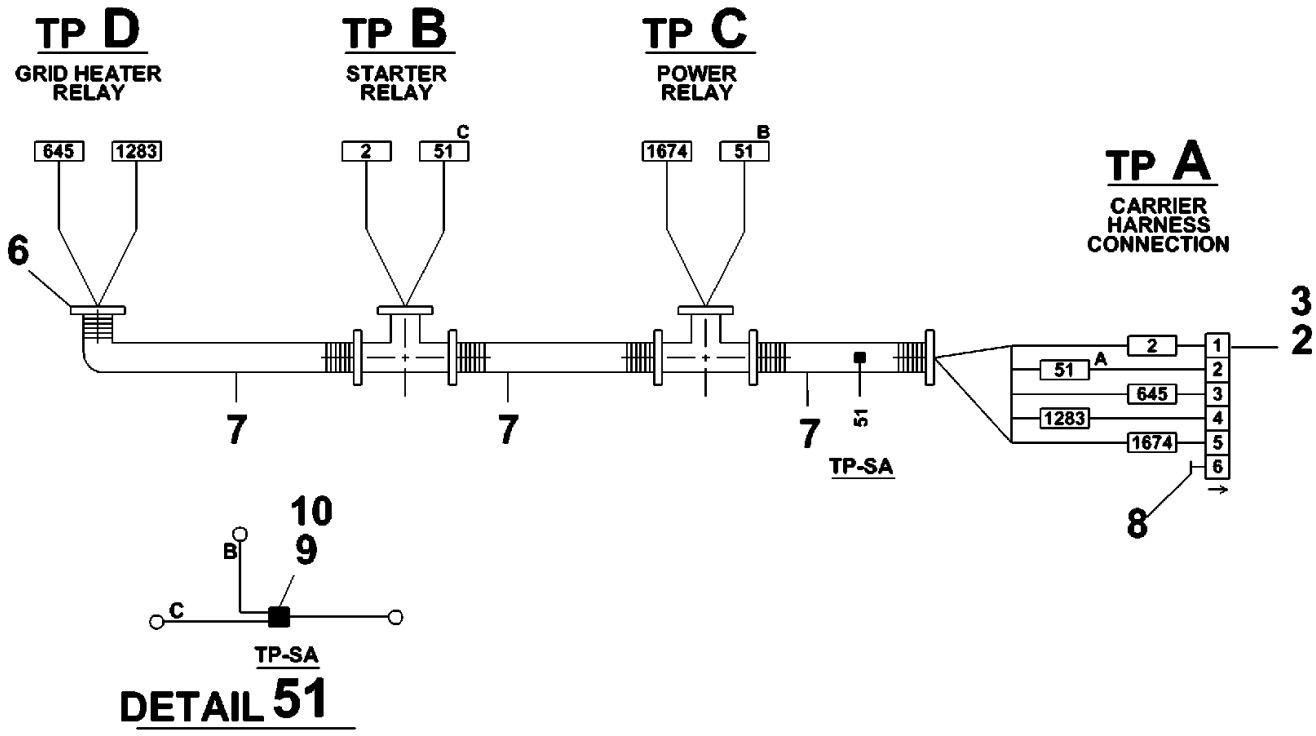


| WIRE CHART | | | | | | | | | |
|---|---|---|---|---|---|---|---|---|---|
| WIRE NO | COLOR | SAE SIZE | LENGTH TOT IN | TP | B/M ITEM NO | REMARKS | TP | B/M ITEM NO | REMARKS |
| 2 | WHITE | 16 | 15 | B | 5 | —— | A | 4 | —— |
| 51A | WHITE | 16 | 4 | SA | STRIP | SEE DETAIL | A | 4 | —— |
| 51B | WHITE | 16 | 9 | C | 5 | —— | SA | STRIP | SEE DETAIL |
| 51C | WHITE | 16 | 13 | B | 5 | —— | SA | STRIP | SEE DETAIL |
| 645 | WHITE | 16 | 19 | D | 5 | —— | A | 4 | —— |
| 1283 | WHITE | 16 | 21 | D | 5 | —— | A | 4 | —— |
| 1674 | WHITE | 16 | 11 | C | 5 | —— | A | 4 | —— |

Description
**HARNESS ASSEMBLY-ENGINE RELAY PANEL**

Assembly No.
**80023449**
Revision: **#**

| Item | FN | Part | Qty | Description |
|---|---|---|---|---|
| 2 | | **80008779** | 1 | 180DEG BSHELL |
| 3 | | **7892000986** | 1 | RECEPTACLE,<br>6 PIN |
| 4 | | **7689000704** | 5 | PIN, 16 - 14 GA |
| 5 | | **7345211701** | 6 | TONGUE, INSULATED RING |
| 6 | | **7850000208** | 8 | CABLE TIE 5.63", BLACK |
| 7 | | **8594000006** | 2 | FLEXGUARD - .350" I.D.<br>(QUANTITY IN FEET) |
| 8 | | **7689000503** | 1 | PLUG, SEALING<br>16 - 12 AWG |
| 9 | | **8594100257** | 1 | TUBING, HEAT SHRINK 1/2" I.D.<br>LINER, MELTABLE<br>(QUANTITY IN FEET) |
| 10 | | **7892000195** | 1 | PARALLEL, NON - INSULATED<br>12 - 10 AWG |

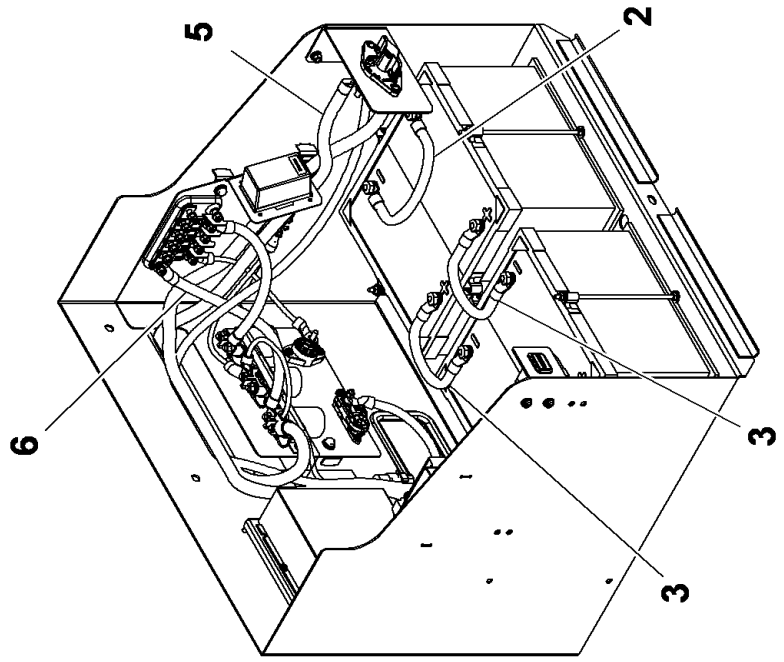


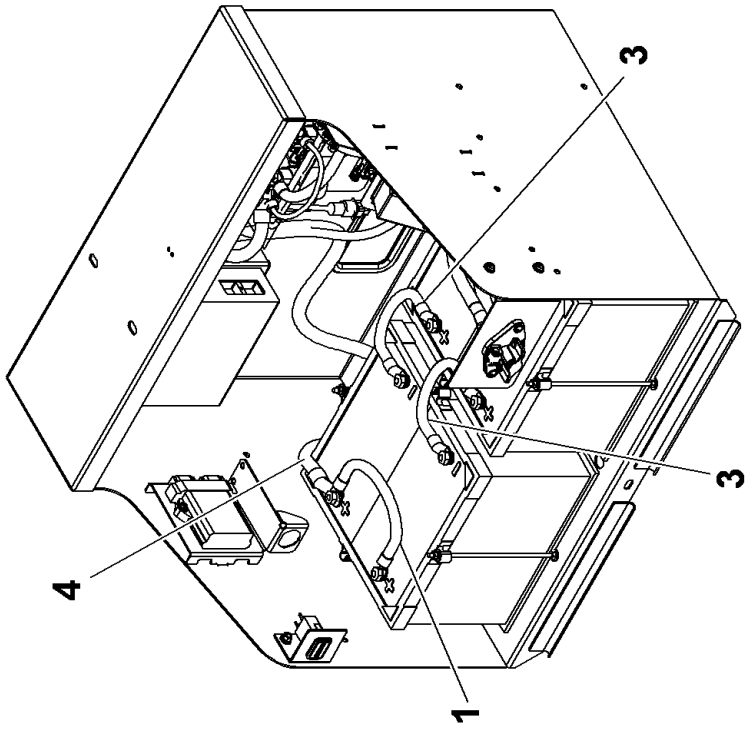


80033011

(SHEET 1 OF 1)

Description
**BATTERY CABLE KIT**

Assembly No.
**80033011**
Revision:

| Item | FN | Part | Qty | Description |
|---|---|---|---|---|
| 1 | | **80025552** | 1 | BATTERY CABLE RED 2/0 14" |
| | | | | INCLUDES THE FOLLOWING PARTS |
| | | **9246100159** | 2 | BOOT, SWIVEL (RED) |
| 2 | | **80025554** | 1 | BATTERY CABLE BLK 2/0 14" |
| 3 | | **7246100212** | 2 | CABLE ASSY-2/0 RED (8") LG |
| | | | | INCLUDES THE FOLLOWING PARTS |
| | | **9246100159** | 2 | BOOT, SWIVEL (RED) |
| 4 | | **80032053** | 2 | BATTERY CABLE RED 4OT 62" |
| 5 | | **80032065** | 1 | BATTERY CABLE RED 3OT 56" |
| 6 | | **80032083** | 1 | FUSE TO BATT. DISC |

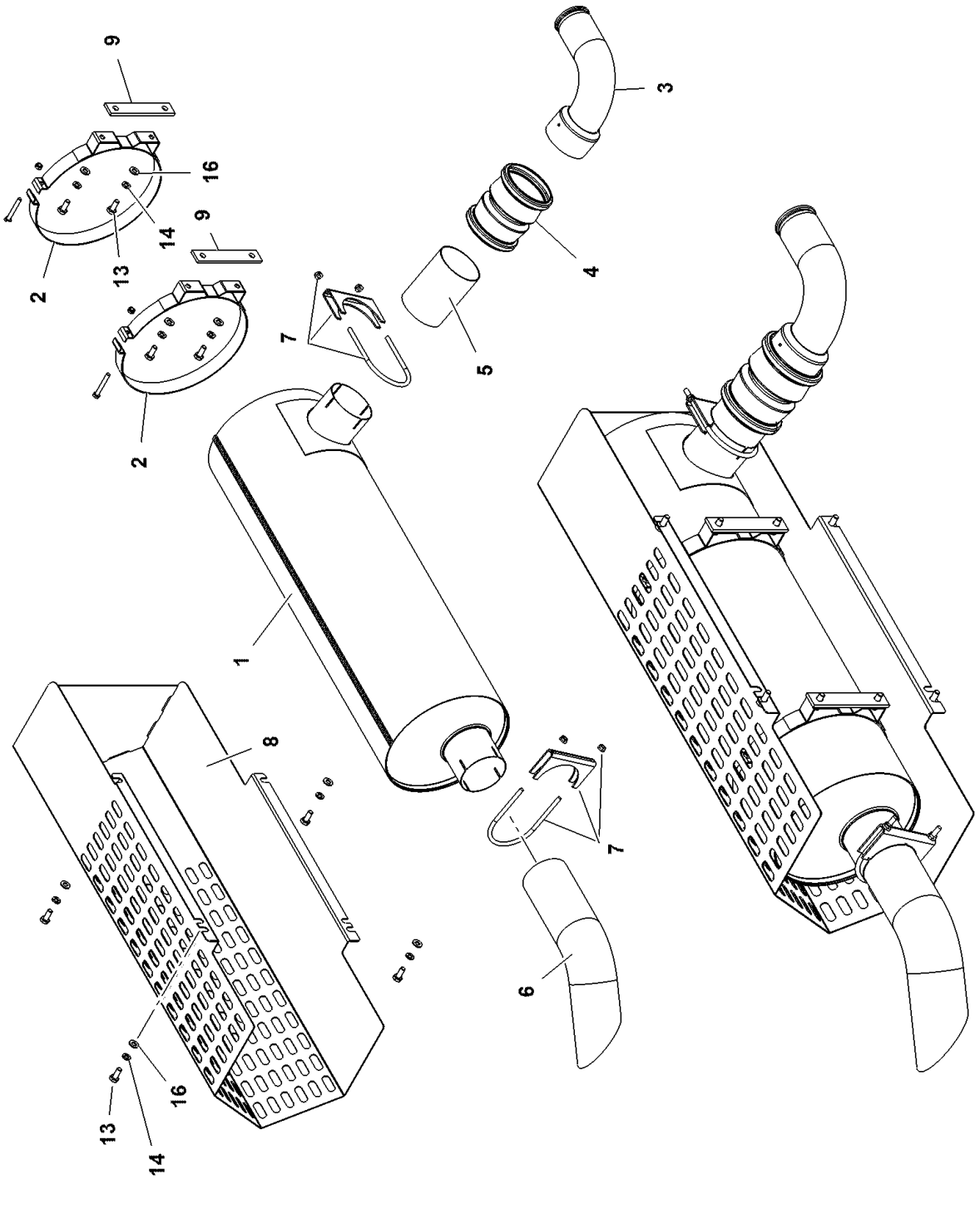


80061488

(SHEET 1 OF 1)

Description
**EXHAUST SYSTEM INSTALLATION**

Assembly No.
**80061488**
Revision: **C**

| Item | FN | Part | Qty | Description |
|---|---|---|---|---|
| 1 | | **80057422** | 1 | MUFFLER |
| 2 | | **80062363** | 2 | MOUNTING BAND |
| 3 | | **80057421** | 1 | TUBE EXHAUST |
| 4 | | **7364002995** | 1 | COUPLER, FLEX<br>INCLUDES THE FOLLOWING PARTS |
| | | **9364101388** | 1 | GASKET |
| | | **9364101404** | 1 | CLAMP |
| | | **9364101403** | 1 | RETAINER |
| 5 | | **80057426** | 1 | TUBE, STR |
| 6 | | **80057425** | 1 | TAILPIPE |
| 7 | | **7300000231** | 2 | MUFFLER CLAMP |
| 8 | | **6814100042** | 1 | GUARD, MUFFLER |
| 9 | | **6705100115** | 2 | PLATE |
| 13 | | **7126191253** | 8 | CAP SCREW, M10 X 25 HEX HEAD |
| 14 | | **7951190220** | 8 | WASHER, LOCK |
| 16 | | **7951190014** | 8 | FLAT WASHER, 10MM I.D. |

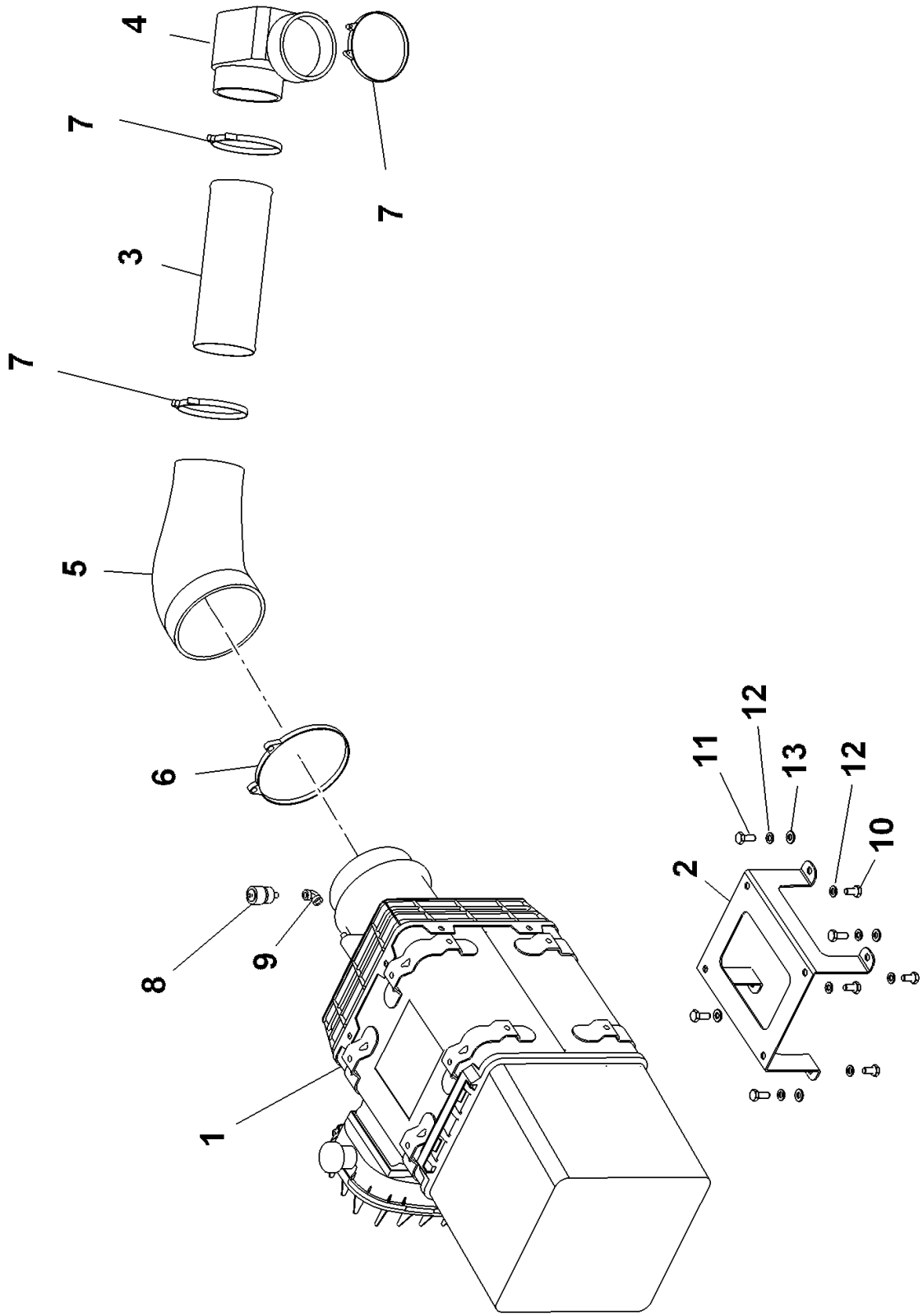


80056054

(SHEET 1 OF 1)

Description
**AIR CLEANER INSTALLATION-BRZ**

Assembly No.
**80056054**
Revision: **B**

| Item | FN | Part | Qty | Description |
|---|---|---|---|---|
| 1 | + | **80018496** | 1 | AIR CLEANER ASSEMBLY |
| 2 | | **80030446** | 1 | BRACKET - AIR CLEANER |
| 3 | | **80059104** | 1 | TUBE - AIR INTAKE 4" |
| 4 | | **7406000354** | 1 | ELBOW |
| 5 | | **7406000306** | 1 | ELBOW |
| 6 | | **7300000222** | 1 | CLAMP |
| 7 | | **80056177** | 3 | T-Bolt Clamp 112-124mm SS |
| 8 | # | **7576000310** | 1 | INDICATOR, RESTRICTION |
| 9 | | **7445020254** | 1 | ELBOW |
| 10 | | **7126191153** | 4 | CAP SCREW, M10 X 20 HEX HEAD |
| 11 | | **7126191250** | 4 | CAP SCREW, M10 X 25MM HEX HEAD |
| 12 | | **7951190220** | 8 | WASHER, LOCK |
| 13 | | **7661190003** | 4 | NUT, HEX 10MM |

**+ SEE FURTHER BREAKDOWN THIS GROUP**

**# SERVICED AS AN ASSEMBLY ONLY**

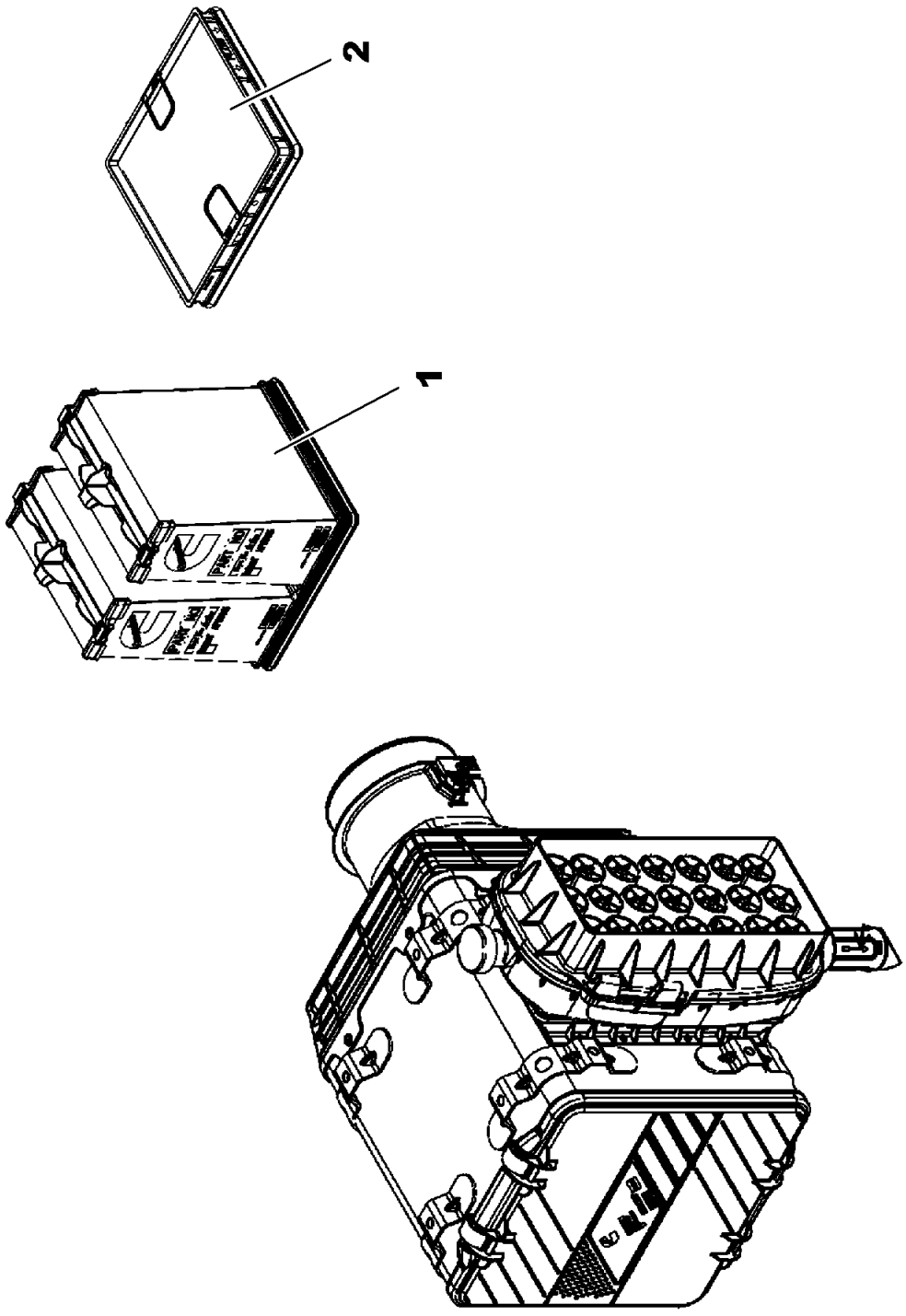


80018496

(SHEET 2 OF 2)

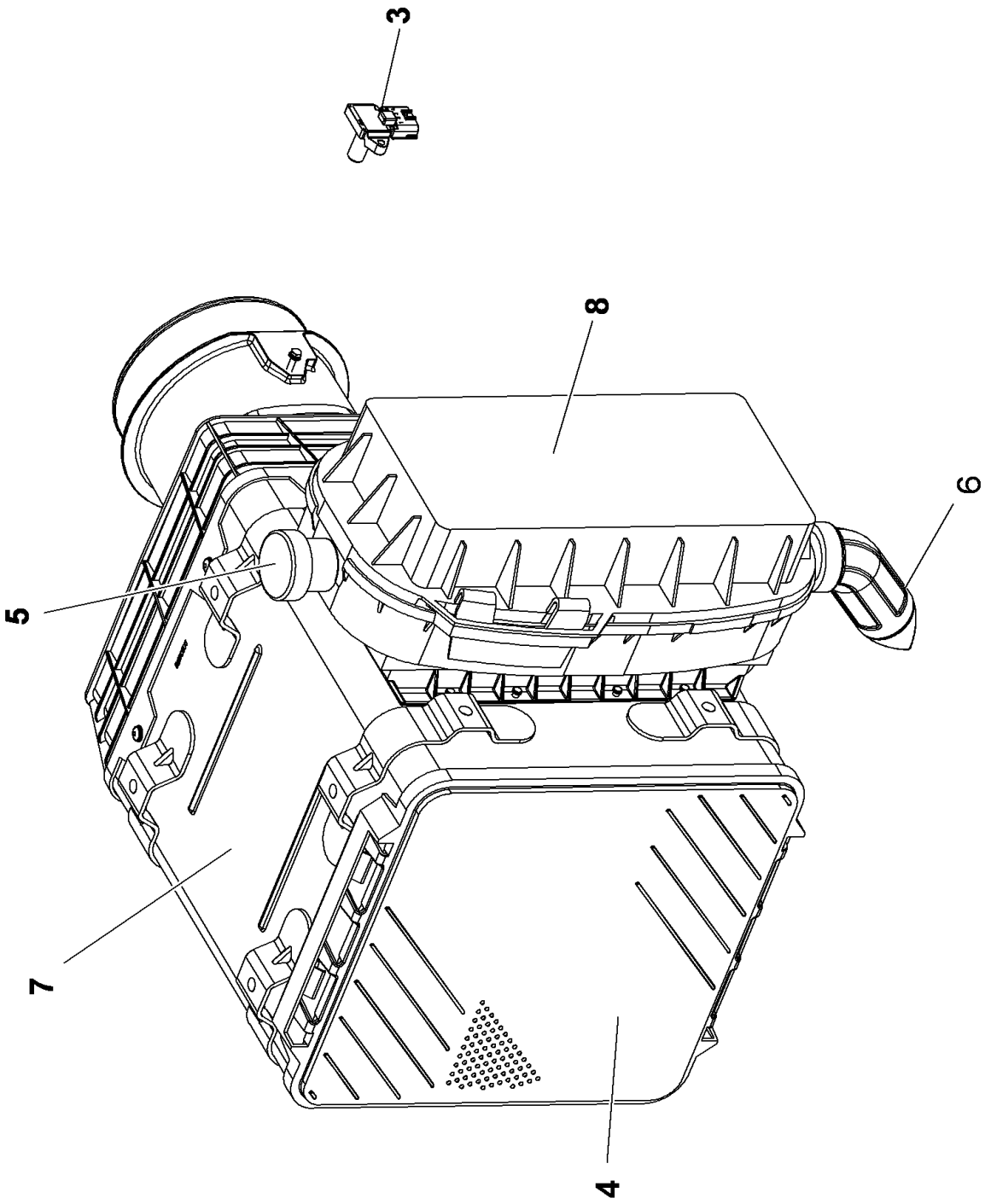


**80018496**

**(SHEET 1 OF 2)**

Description
**AIR CLEANER ASSEMBLY**

Assembly No.
**80018496**
Revision:

| Item | FN | Part | Qty | Description |
|---|---|---|---|---|
| 1 | | **90019453** | 1 | FILTER ASSY. AIR PRIMARY |
| 2 | | **90019454** | 1 | FILTER ASSY. AIR SECONDARY |
| 3 | | **90019455** | 1 | SENSOR ASSY. TBAP |
| 4 | | **90019456** | 1 | DOOR ASSY. SERVICE |
| 5 | | **90019457** | 1 | CAP ASSY. RUBBER |
| 6 | | **90019458** | 1 | VALVE ASSY. DUST EJECTION |
| 7 | | **NSS** | 1 | NOT SERVICED SEPARATELY HOUSING ASSY. |
| 8 | | **NSS** | 1 | NOT SERVICED SEPARATELY HOUSING, PRECLEANER |

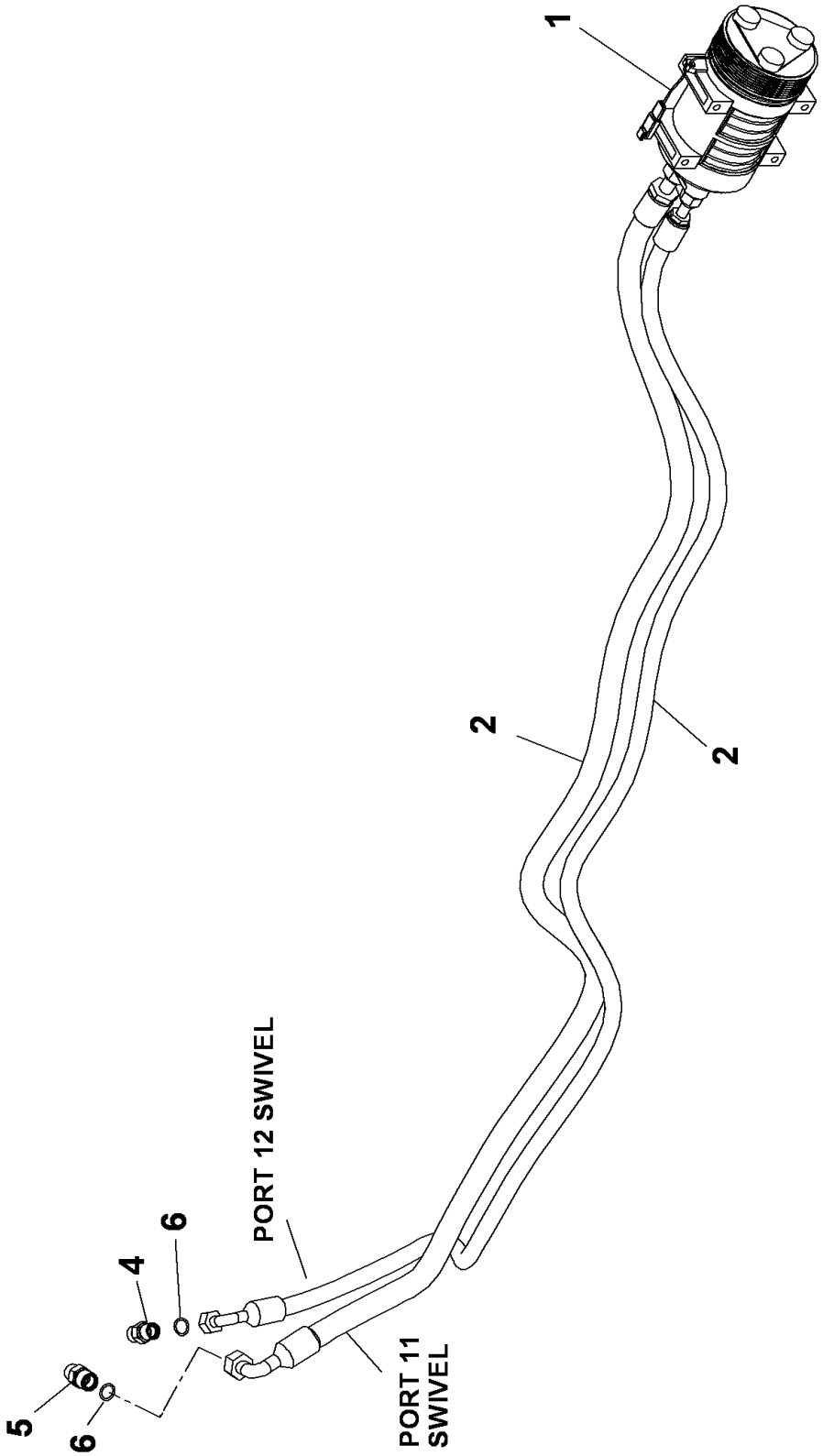


80030841

(SHEET 1 OF 1)

Description
**AIR CONDITION INSTALLATION-CARRIER**

Assembly No.
**80030841**
Revision: **A**

| Item | FN | Part | Qty | Description |
|---|---|---|---|---|
| 1 | + | **80029872** | 1 | COMPRESSOR(FREON)-24V PAD, KIT |
| 2 | + | **80029848** | 1 | A/C HOSE KIT-CARRIER |
| 4 | | **7013100029** | 1 | ADAPTER |
| 5 | | **7013100030** | 1 | ADAPTER |
| 6 | | **7754100010** | 2 | O-RING |

**+ SEE FURTHER BREAKDOWN THIS GROUP**

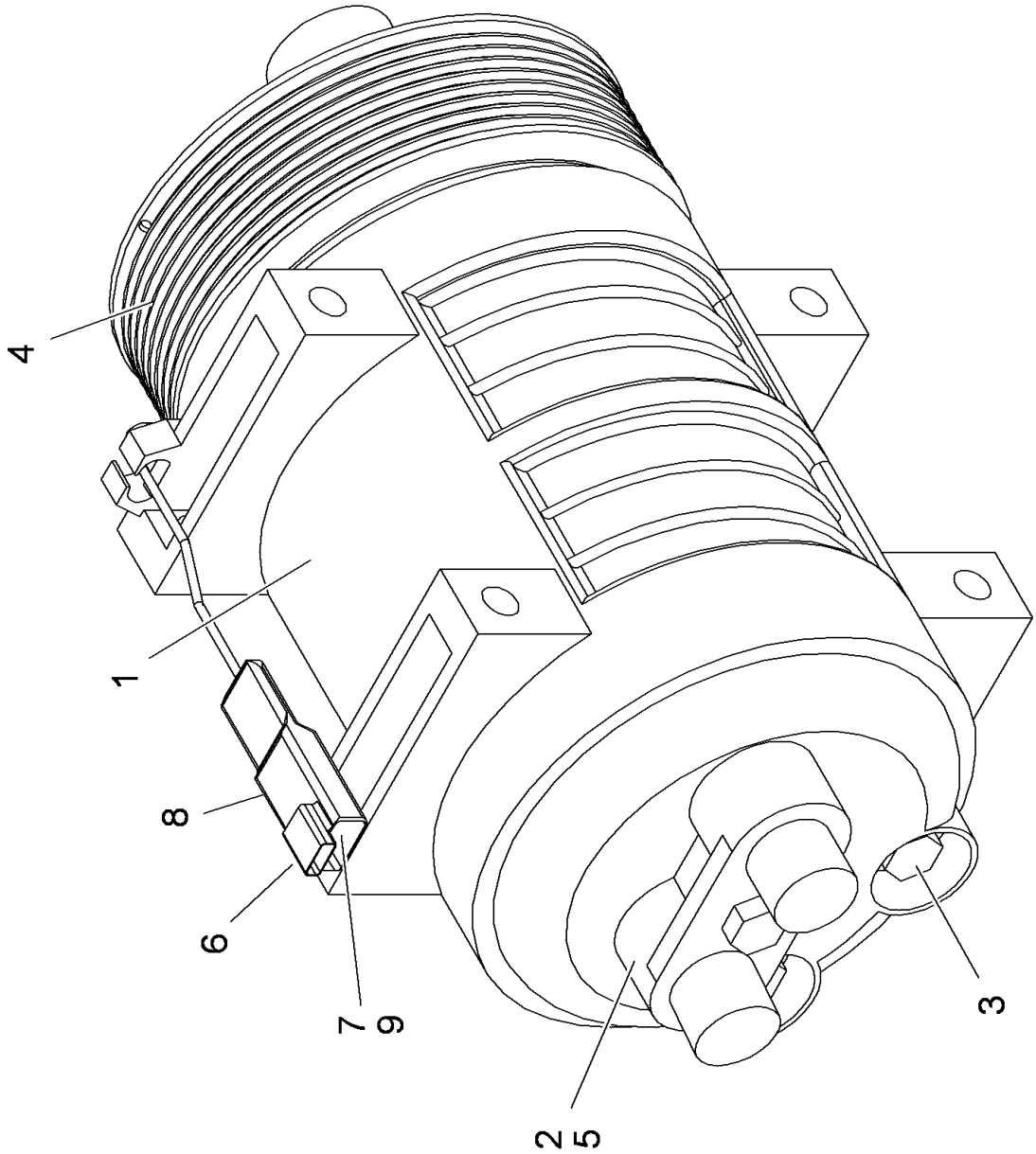


**80029872**

**(SHEET 1 OF 1)**

Description
**COMPRESSOR(FREON)-24V PAD, KIT**

Assembly No.
**80029872**
Revision:

| Item | FN | Part | Qty | Description |
|---|---|---|---|---|
| 1 | | **90019696** | 1 | COMPRESSOR ASSY. 24V |
| 2 | | **90019687** | 1 | PLATE, MANIFOLD |
| 3 | | **90019689** | 1 | KIT, BOLT |
| 4 | | **90020872** | 1 | CLUTCH & COIL ASSY. 24V. |
| 5 | | **90019917** | 1 | O-RING, 2-PKT |
| 6 | | **7892000836** | 1 | RECEPTACLE, 2 PIN |
| 7 | | **7689000704** | 1 | PIN, 16 - 14 GA |
| 8 | | **7172000546** | 1 | BOOT |
| 9 | | **7689000503** | 1 | PLUG, SEALING<br>16 - 12 AWG |

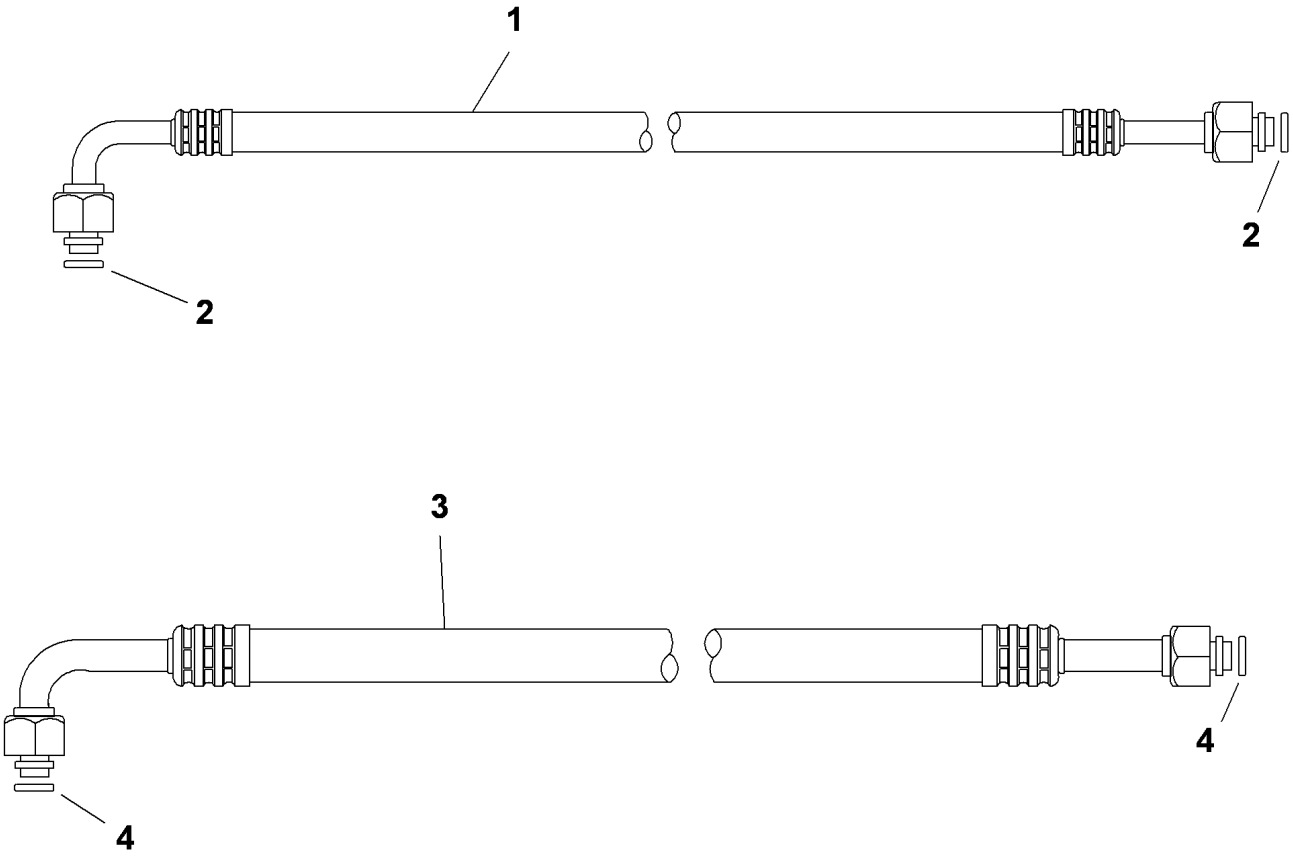


**80029848**

**(SHEET 1 OF 1)**

Description
**A/C HOSE KIT-CARRIER**

Assembly No.
**80029848**
Revision:

| Item | FN | Part | Qty | Description |
|---|---|---|---|---|
| 1 | | **90023258** | 1 | HOSE ASSY #8 |
| 2 | | **90018818** | 2 | O-RING #8 |
| 3 | | **90023259** | 1 | HOSE ASSY #10 |
| 4 | | **90018814** | 2 | O-RING #10 |

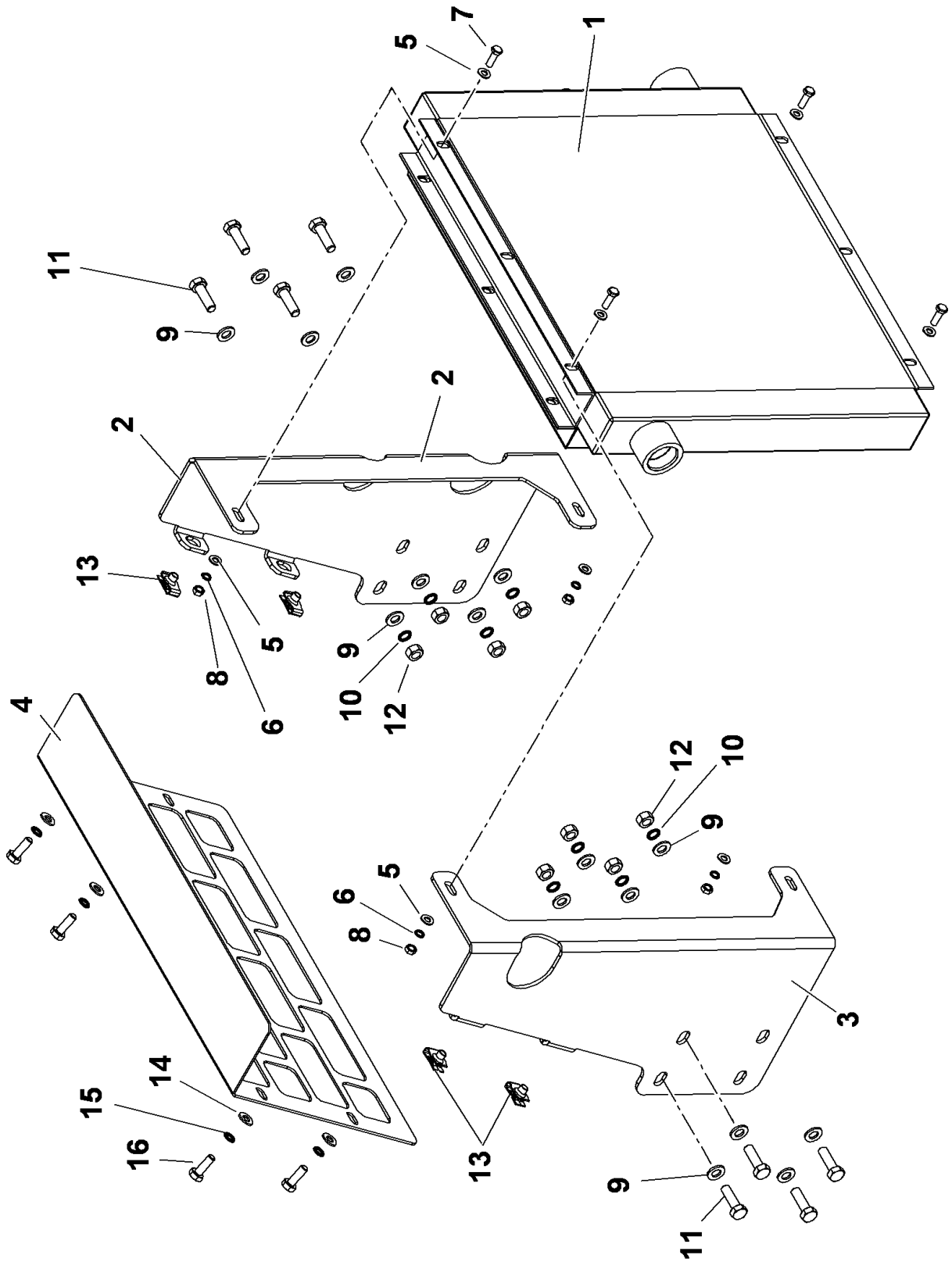


80034020

(SHEET 1 OF 1)

Description
**HYDRAULIC OIL COOLER INSTALL**

Assembly No.
**80034020**
Revision: **B**

| Item | FN | Part | Qty | Description |
|---|---|---|---|---|
| 1 | + | **80033850** | 1 | HYDRAULIC OIL COOLER |
| 2 | | **4159210194** | 1 | MOUNTING BRACKET |
| 3 | | **4159210195** | 1 | MOUNTING BRACKET |
| 4 | | **4159210193** | 1 | PLATE - SHIELD |
| 5 | | **7950150161** | 8 | WASHER, 5/16" FLAT PLAIN WIDE |
| 6 | | **7951170210** | 4 | WASHER, LOCK 8MM |
| 7 | | **7126171253** | 4 | CAP SCREW, M8X25 HEX HEAD |
| 8 | | **7661170003** | 4 | NUT |
| 9 | | **7951210014** | 16 | WASHER, FLAT #12 |
| 10 | | **7951210210** | 8 | LOCK WASHER, 12MM I.D. |
| 11 | | **7126211550** | 8 | CAP SCREW, M12 X 40 |
| 12 | | **7661210003** | 8 | NUT, HEX 12MM N.C. |
| 13 | | **7659190033** | 4 | NUT, RETAINING |
| 14 | | **7951190014** | 4 | FLAT WASHER, 10MM I.D. |
| 15 | | **7951190210** | 4 | LOCK WASHER, 10MM |
| 16 | | **7126191353** | 4 | CAP SCREW, M10 X 30MM HEX HEAD |

**+ SEE FURTHER BREAKDOWN THIS GROUP**

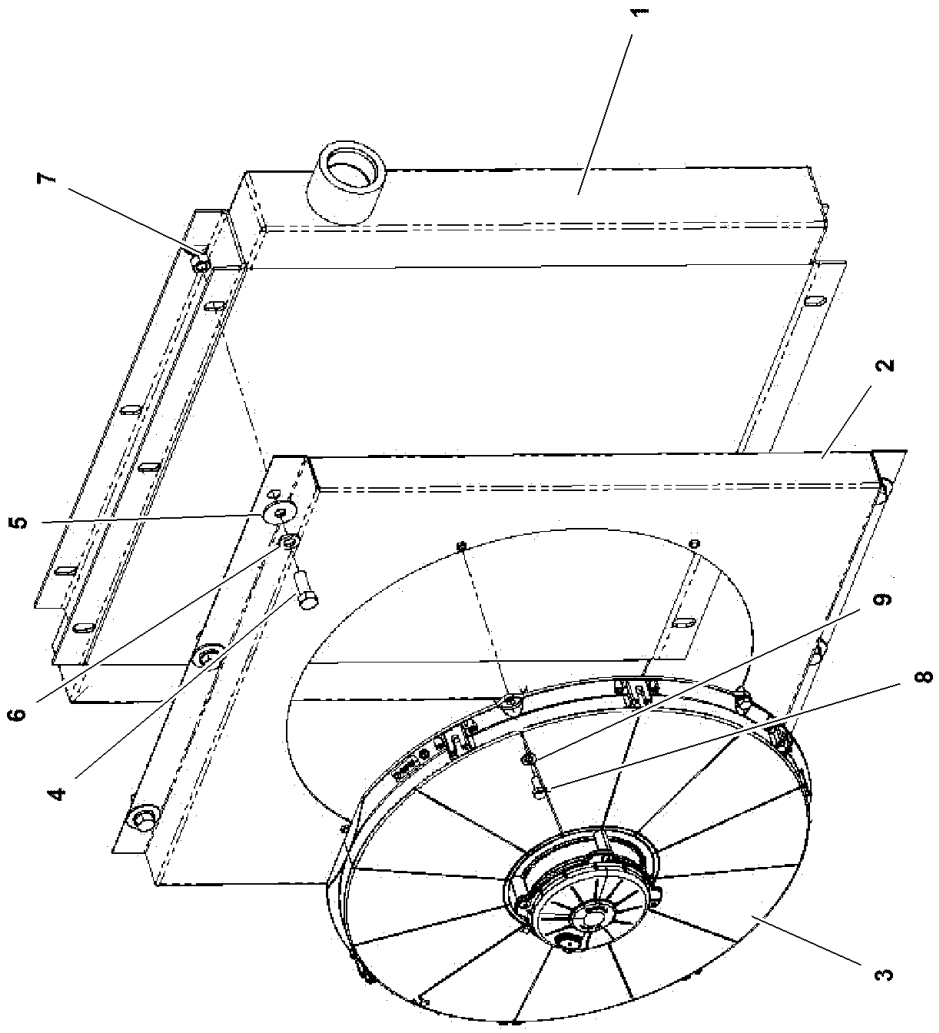


80033850

80033850

(SHEET 1 OF 1)

Description
**HYDRAULIC OIL COOLER**

Assembly No.
**80033850**
Revision:

| Item | FN | Part | Qty | Description |
|---|---|---|---|---|
| 1 | | **90038155** | 1 | CORE ASSY. |
| 2 | | **90024256** | 1 | SHROUD, FAN |
| 3 | | **90038156** | 1 | FAN & MOTOR ASSY.24V. |
| 4 | | **7115160850** | 6 | CAP SCREW,<br>3/8" - 16 N.C. X 1"<br>GRADE 5 |
| 5 | | **7950160161** | 6 | WASHER, FLAT WIDE 3/8 |
| 6 | | **7950160050** | 6 | WASHER, LOCK 3/8" I.D. |
| 7 | | **7660160000** | 6 | NUT, HEX<br>3/8" - 16 N.C. |
| 8 | | **90024257** | 4 | CAPSCREW |
| 9 | | **90024258** | 4 | LOCKWASHER |

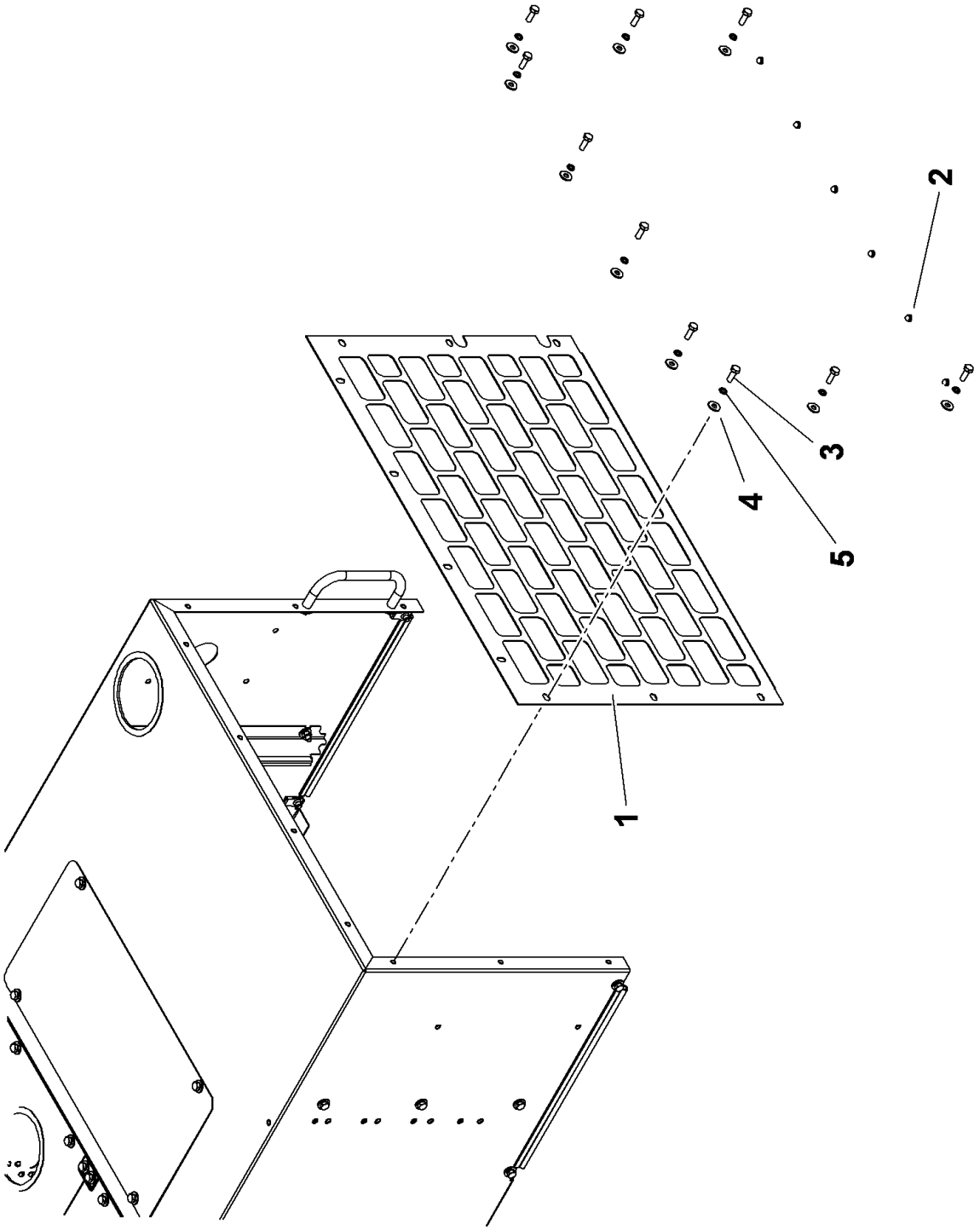


80031249

(SHEET 1 OF 1)

Description
**ENGINE HOOD GRILL INSTALLATION**

Assembly No.
**80031249**
Revision: **A**

| Item | FN | Part | Qty | Description |
|---|---|---|---|---|
| 1 | | **80031251** | 1 | ENGINE HOOD GRILL |
| 2 | | **7195000032** | 6 | BUMPER, RUBBER |
| 3 | | **7126191153** | 10 | CAP SCREW, M10 X 20 HEX HEAD |
| 4 | | **7950160161** | 10 | WASHER, FLAT WIDE 3/8 |
| 5 | | **7951190210** | 10 | LOCK WASHER, 10MM |

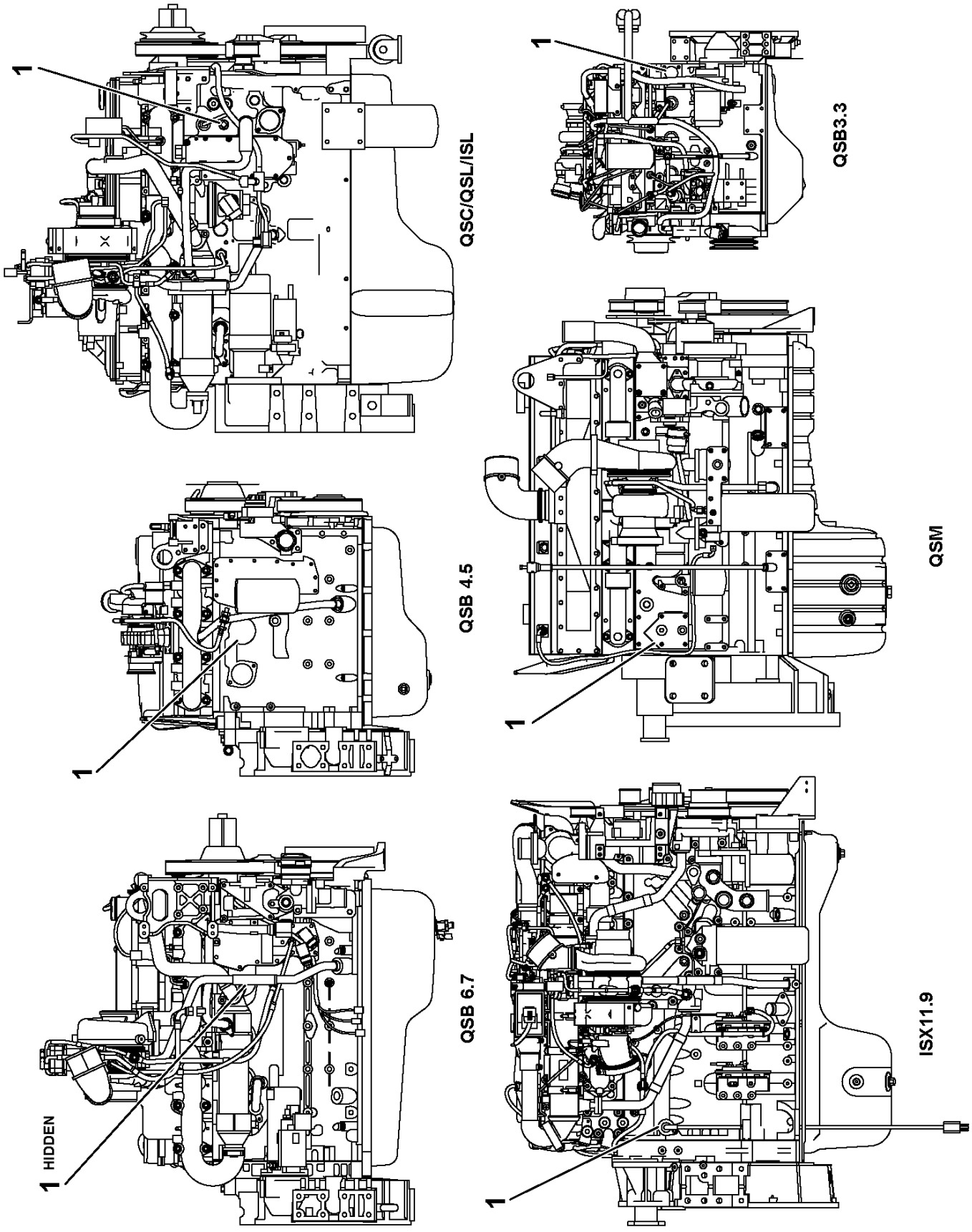


80028277

(SHEET 1 OF 1)

Description
**BLOCK HEATER INSTALLATION-QSB 120V**

Assembly No.
**80028277**
Revision: **#**

| Item | FN | Part | Qty | Description |
|---|---|---|---|---|
| 1 | # | **7515000877** | 1 | HEATER, 750W 120V ENGINE BLOCK |

**# SERVICED AS AN ASSEMBLY ONLY**

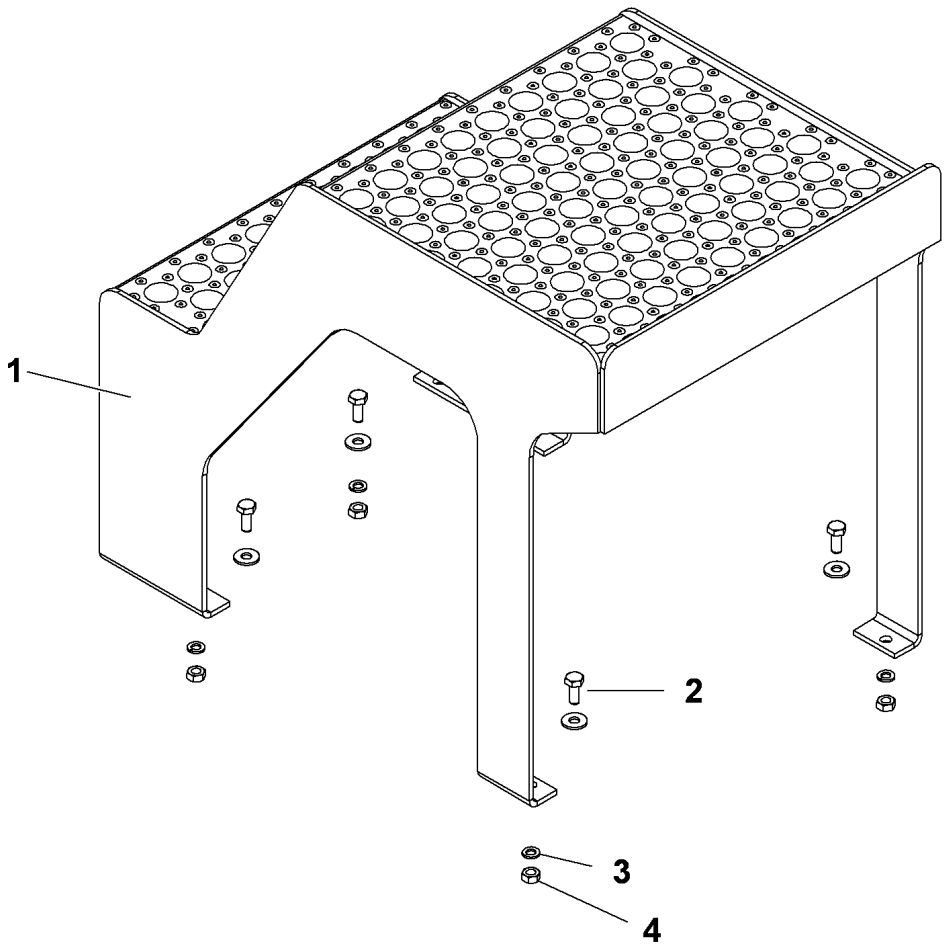


80030378

(SHEET 1 OF 1)

Description
**STEP INSTALLATION-HOIST ACCESS**

Assembly No.
**80030378**
Revision: **A**

| Item | FN | Part | Qty | Description |
|---|---|---|---|---|
| 1 | | **80030460** | 1 | STEP |
| 2 | | **7126191250** | 4 | CAP SCREW, M10 X 25MM HEX HEAD |
| 3 | | **7951190220** | 4 | WASHER, LOCK |
| 4 | | **7661190003** | 4 | NUT, HEX 10MM |
| 5 | | **7950160161** | 4 | WASHER, FLAT WIDE 3/8 |

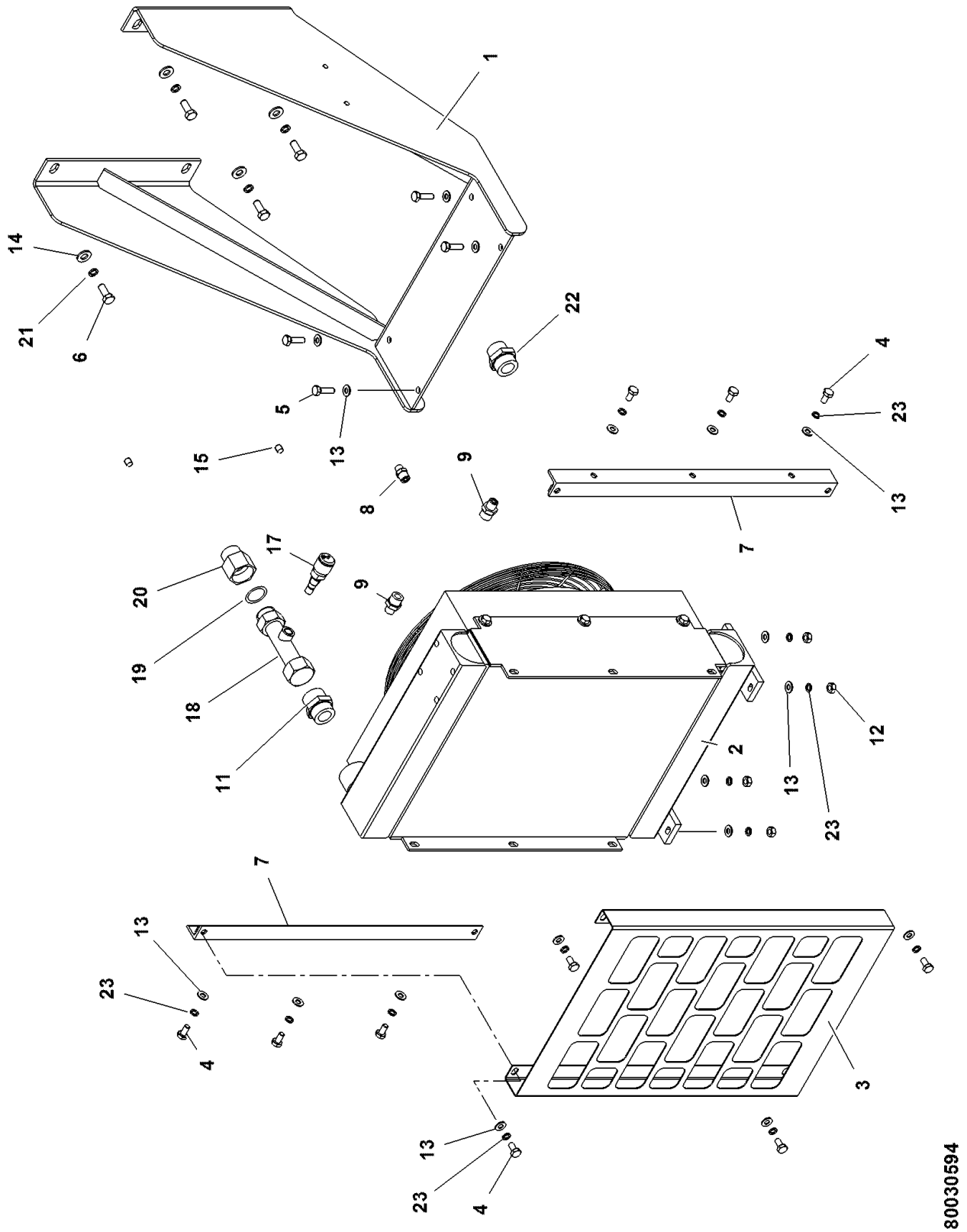


80030594

(SHEET 1 OF 1)

Description
**OIL COOLER INSTALLATION**

Assembly No.
**80030594**
Revision: **F**

| Item | FN | Part | Qty | Description |
|---|---|---|---|---|
| 1 | | **80030592** | 1 | ASSEMBLY-OIL COOLER BRACKET |
| 2 | + | **80030569** | 1 | OIL COOLER-TRANSMISSION |
| 3 | | **80030598** | 1 | OIL COOLER COVER |
| 4 | | **7126191153** | 10 | CAP SCREW, M10 X 20 HEX HEAD |
| 5 | | **7126191450** | 4 | CAP SCREW, M10 X 35MM HEX HEAD |
| 6 | | **7126211353** | 4 | CAP SCREW, M12 X 30 HEX HEAD |
| 7 | | **80030682** | 2 | ANGLE |
| 8 | | **7447060601** | 1 | ADAPTER, STRAIGHT MALE<br>INCLUDES THE FOLLOWING PARTS |
| | | **7755012002** | 1 | O-RING |
| | | **7755906002** | 1 | O-RING |
| 9 | | **7447061001** | 2 | ADAPTER, STRAIGHT<br>INCLUDES THE FOLLOWING PARTS |
| | | **7755012002** | 1 | O-RING |
| | | **7755910002** | 1 | O-RING |
| 11 | | **7447202001** | 1 | ADAPTER, STRAIGHT MALE<br>INCLUDES THE FOLLOWING PARTS |
| | | **7755025002** | 1 | O-RING |
| | | **7755920002** | 1 | O-RING |
| 12 | | **7661190003** | 4 | NUT, HEX 10MM |
| 13 | | **7950160141** | 18 | WASHER, 3/8" PLAIN NARROW |
| 14 | | **7950180141** | 4 | WASHER, FLAT 1/2" |
| 15 | | **7444020031** | 2 | PLUG, PIPE<br>1/4" NPT |
| 17 | | **7872000720** | 1 | SWITCH, TEMPERATURE |
| 18 | | **7910101133** | 1 | TUBE ASSY |
| 19 | | **7755025002** | 1 | O-RING |
| 20 | | **7447201613** | 1 | REDUCER |
| 21 | | **7951210210** | 4 | LOCK WASHER, 12MM I.D. |
| 22 | | **7447162001** | 1 | ADAPTER, STRAIGHT<br>INCLUDES THE FOLLOWING PARTS |
| | | **7755021002** | 1 | O-RING |
| | | **7755920002** | 1 | O-RING |
| 23 | | **7951190210** | 14 | LOCK WASHER, 10MM |

**+ SEE FURTHER BREAKDOWN THIS GROUP**

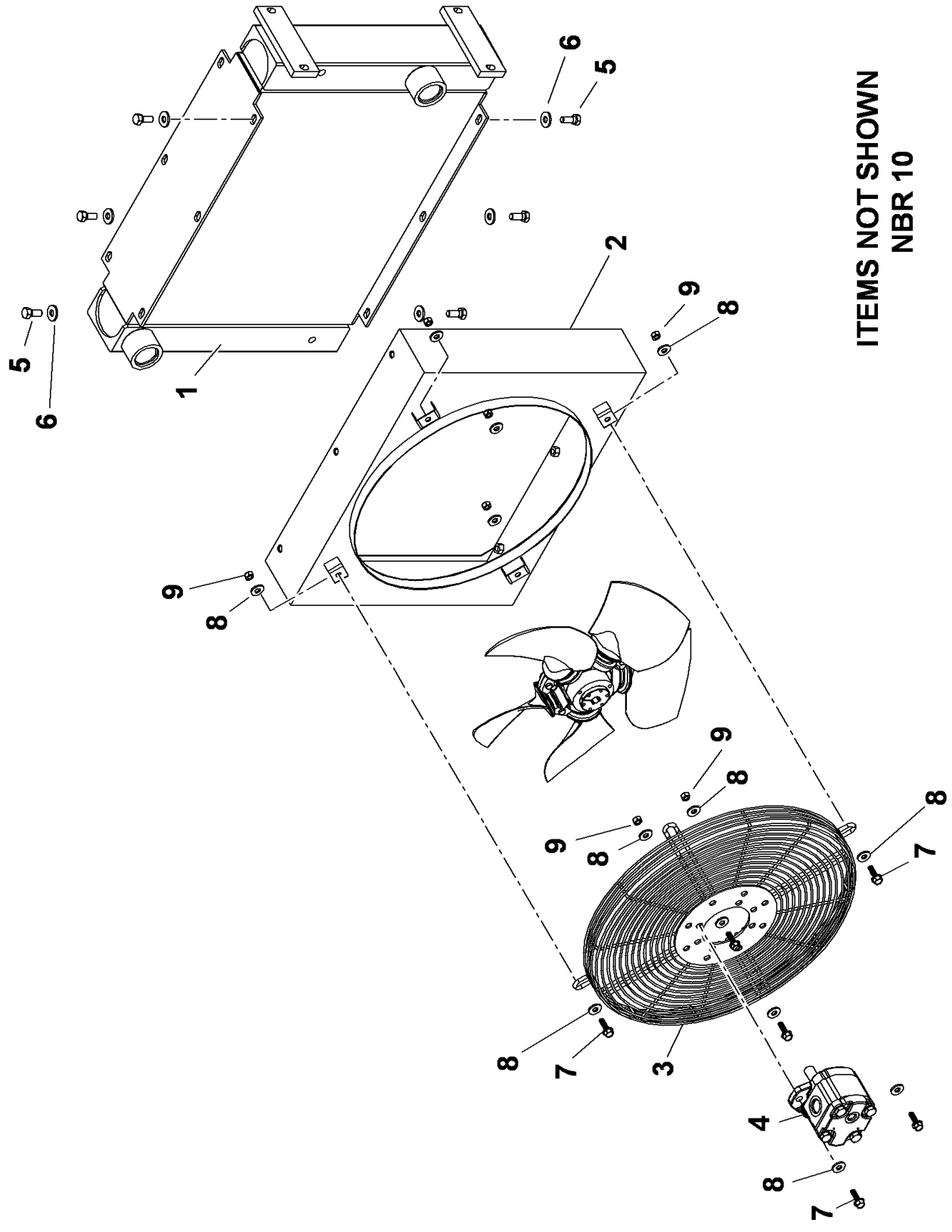


80030569

(SHEET 1 OF 1)

Description
**OIL COOLER-TRANSMISSION**

Assembly No.
**80030569**
Revision:

| Item | FN | Part | Qty | Description |
|---|---|---|---|---|
| 1 | | **90023171** | 1 | COOLER, TRAMS. OIL |
| 2 | | **90023172** | 1 | SHROUD ASSY. |
| 3 | | **9726100351** | 1 | GUARD, FAN |
| 4 | | **90018043** | 1 | MOTOR ASSY. HYD. INCLUDES THE FOLLOWING PARTS |
| | | **90001135** | 1 | KIT, SEAL |
| 5 | | **90023173** | 6 | CAPSCREW M10 |
| 6 | | **90023174** | 6 | WASHER M10 |
| 7 | | **90015593** | 6 | BOLT,5/16"-18 X 1" FLANGE HEAD |
| 8 | | **90015595** | 12 | WASHER, 5/16 FLAT |
| 9 | | **90015596** | 6 | NUT, 5/16" FLANGE HEAD |
| 10 | | **90023175** | 3 | CAPSCREW, SOCKET HEAD , ITEM NOT SHOWN. REQUIRED FOR MOUNTING FAN TO MOTOR SHAFT |

The drawing or bill of material for this installation was not available when this catalog was created. Please contact Rich Rebok at Richard.rebok@manitowoc.com for Grove products or Galen Burkholder at Galen.burkholder@manitowoc.com for National products to supply us with your serial number and model number along with your mailing information. We will then send you the missing pages either via PDF or a hardcopy to be inserted into your manual.

Regards,
Technical Publications Department
Shady Grove, Pennsylvania
www.cranecare.com

Description
**OMS INSTALLATION**

Assembly No.
**80058514**
Revision: **B**

| Item | FN | Part | Qty | Description |
|---|---|---|---|---|
| 1 | + | **80038231** | 4 | STRING POT INSTALLATION |

**+ SEE FURTHER BREAKDOWN THIS GROUP**

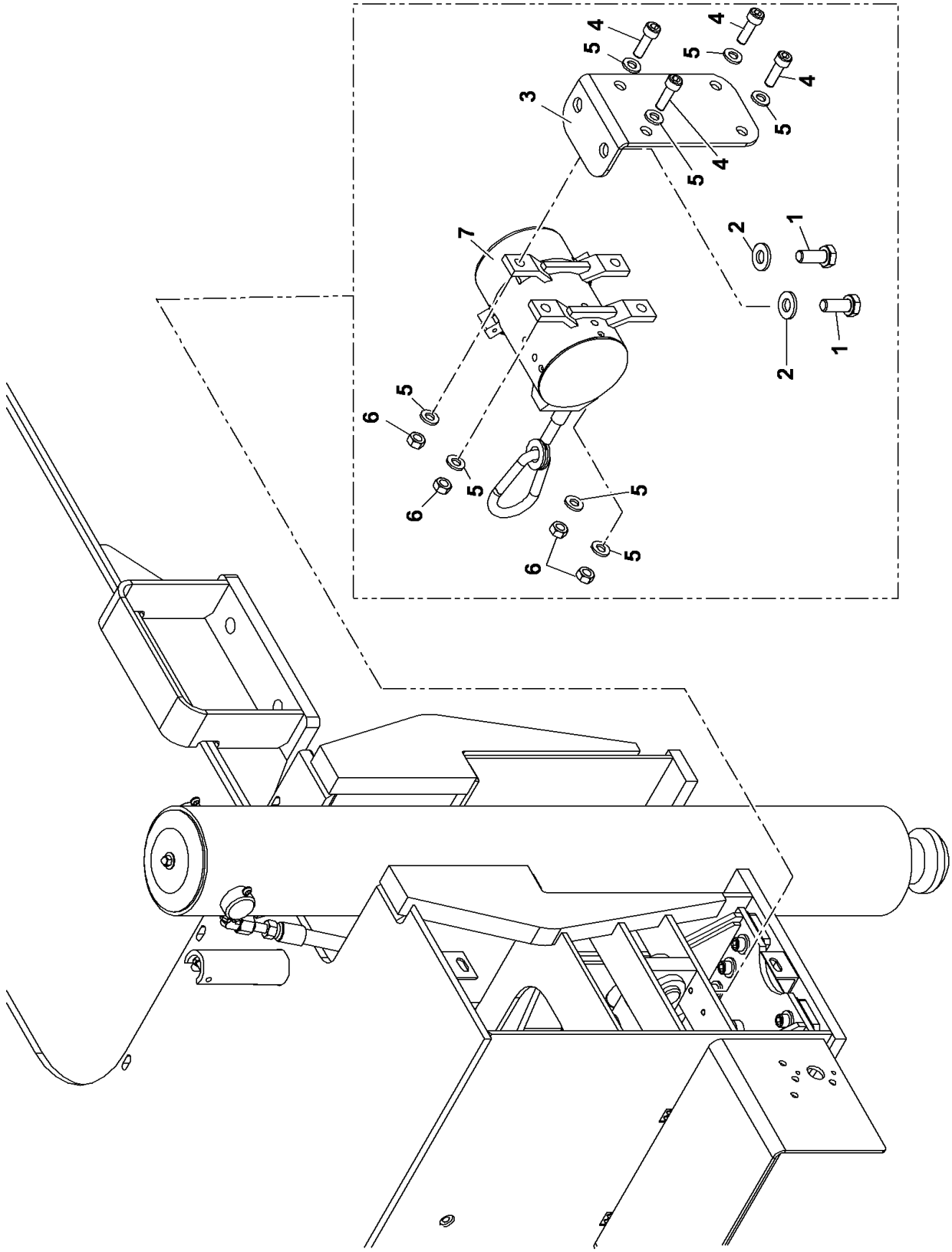


80038231

(SHEET 1 OF 1)

Description
**STRING POT INSTALLATION**

Assembly No.
**80038231**
Revision: **C**

| Item | FN | Part | Qty | Description |
|---|---|---|---|---|
| 1 | | **7126171153** | 2 | CAP SCREW, M8 X 20MM HEX HEAD |
| 2 | | **7950150141** | 2 | WASHER, FLAT 5/16" |
| 3 | | **80035056** | 1 | STRING POTENTIOMETER MOUNT |
| 4 | | **7126151154** | 4 | SHCS M6X20 - 8.8 |
| 5 | | **7951150014** | 8 | WASHER, 6MM I.D. |
| 6 | # | **7661150003** | 4 | NUT, HEX |
| 7 | | **80033282** | 1 | STRING POTENTIOMETER, 110" |

**# SERVICED AS AN ASSEMBLY ONLY**

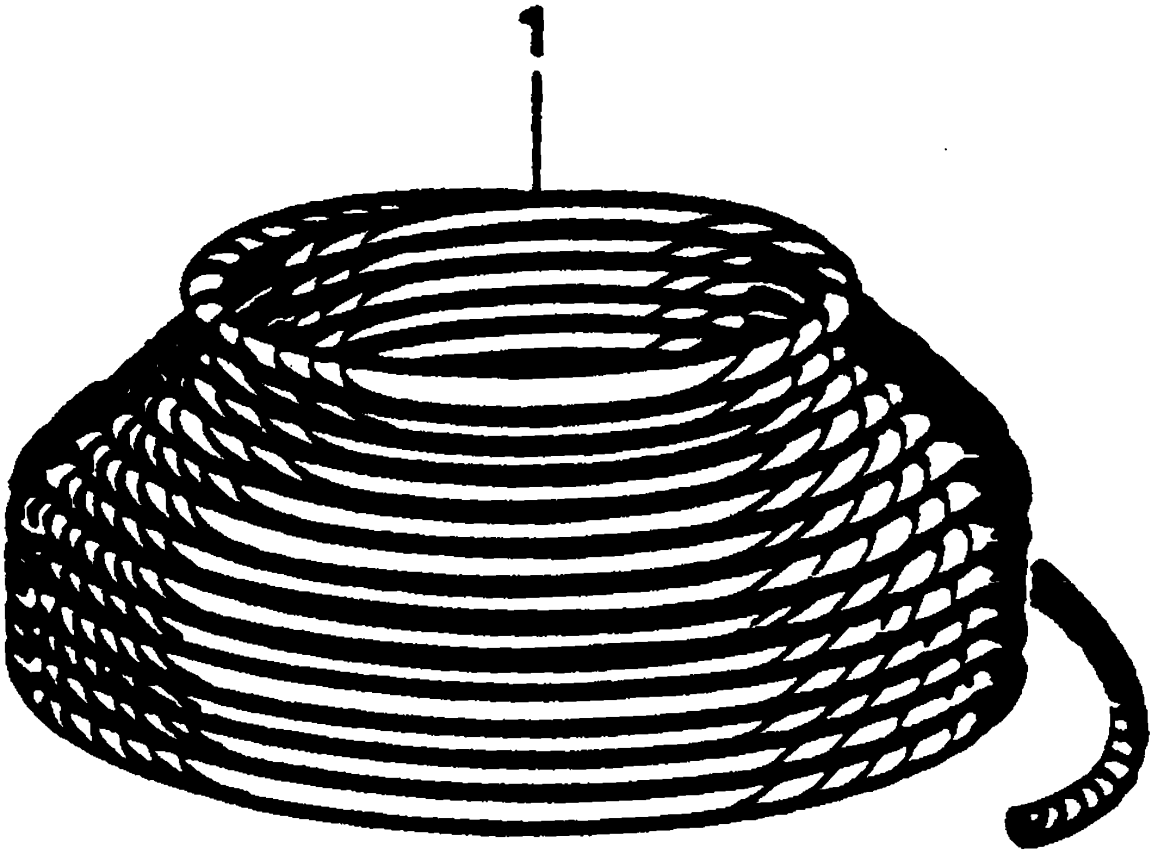


7782161382

(SHEET 1 OF 1)

Description
**16MM DIA HOISTING WIRE ROPE -**

Assembly No.
**7782161382**
Revision:

| Item | FN | Part | Qty | Description |
|---|---|---|---|---|
| 1 | | **NSS** | 1 | NOT SERVICED SEPARATELY<br>HOIST CABLE - PART NUMBER IS<br>7782161382 |

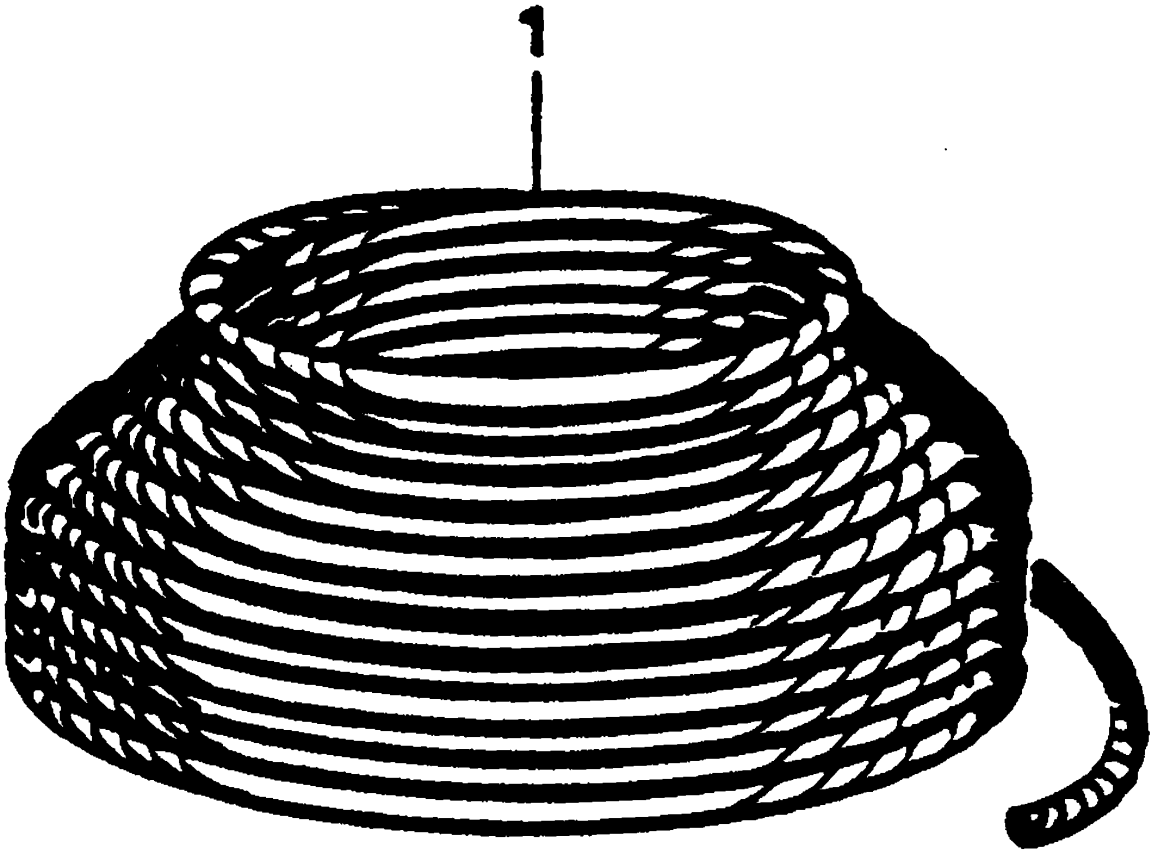


7782161382

(SHEET 1 OF 1)

Description
**16MM DIA HOISTING WIRE ROPE -**

Assembly No.
**7782161382**
Revision:

| Item | FN | Part | Qty | Description |
|---|---|---|---|---|
| 1 | | **NSS** | 1 | NOT SERVICED SEPARATELY<br>HOIST CABLE - PART NUMBER IS<br>7782161382 |

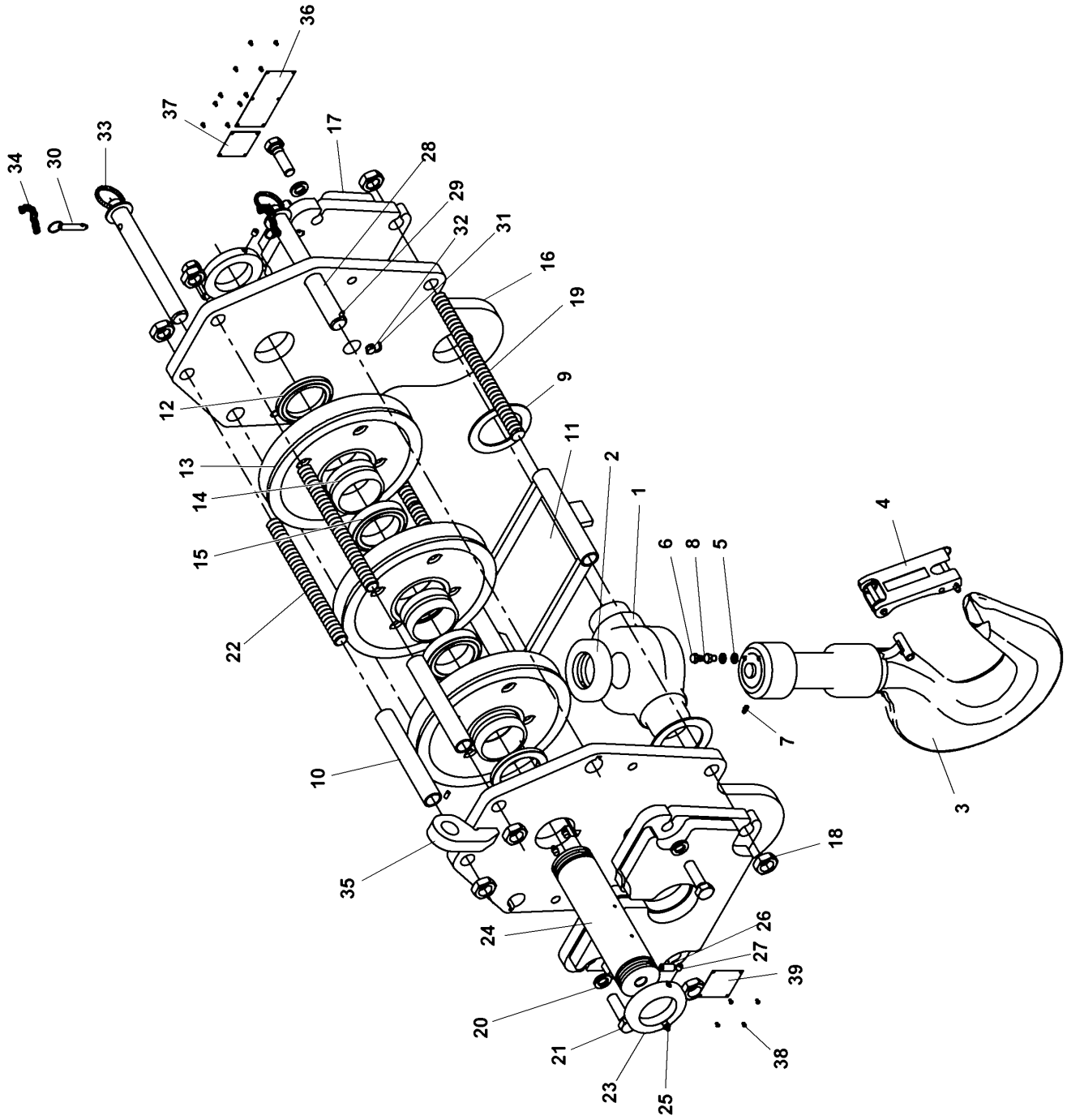


7086100148

(SHEET 1 OF 1)

Description
**HOOK BLOCK ASSEMBLY - 40 TON 3 SHEAVE**
**(COMPLETE ASSEMBLY)**

Assembly No.
**7086100148**
Revision:

| Item | FN | Part | Qty | Description |
|---|---|---|---|---|
| 1 | | **9086100539** | 1 | HOUSING, HOOK PIVOT |
| 2 | | **9086100088** | 1 | BEARING |
| 3 | | **9086100495** | 1 | HOOK & NUT |
| 4 | | **9086100788** | 1 | KIT,LATCH |
| 5 | | **9086100804** | 2 | WASHER, |
| 6 | | **9086100805** | 2 | SCREW, |
| 7 | | **7440030000** | 1 | FITTING, STRAIGHT GREASE 1/4" N.P.T. |
| 8 | | **9086100933** | 1 | WIRE, SAFETY |
| 9 | | **9086100538** | 2 | SPACER |
| 10 | | **9086101024** | 2 | SPACER |
| 11 | | **9086101338** | 1 | GUIDE ASSY. |
| 12 | | **9086101339** | 2 | WASHER, THRUST |
| 13 | | **9086101320** | 3 | WHEEL, SHEAVE |
| 14 | | **9086100062** | 3 | BEARING, ROLLER |
| 15 | | **9086101340** | 2 | WASHER, THRUST |
| 16 | | **9086101341** | 1 | PLATE, SIDE SET |
| 17 | | **9086101342** | 2 | PLATE, SIDE WT. |
| 18 | | **9086100061** | 8 | NUT |
| 19 | | **9086101343** | 2 | BOLT, TIE |
| 20 | | **9086100705** | 4 | WASHER, LOCK |
| 21 | | **9086100974** | 4 | CAP SCREW, |
| 22 | | **9086100534** | 2 | BOLT, TIE |
| 23 | | **9086100074** | 2 | NUT |
| 24 | | **9086100533** | 1 | PIN, CENTER |
| 25 | | **9086100151** | 3 | FITTING, GREASE |
| 26 | | **9086100269** | 1 | PIN, ROLL |
| 27 | | **7785160801** | 2 | SET SCREW 3/8" - 16 N.C. X 1/2" |
| 28 | | **9086101026** | 3 | PIN |
| 29 | | **9086100204** | 3 | PIN, ROLL |
| 30 | | **9086100584** | 3 | PIN, QUICK RELEASE |
| 31 | | **9086100813** | 1 | S-HOOK |
| 32 | | **9086100801** | 1 | CAP SCREW, |
| 33 | | **9086100815** | 3 | RING, SPLIT |

Description
**HOOK BLOCK ASSEMBLY - 40 TON 3 SHEAVE**
**(COMPLETE ASSEMBLY)**

Assembly No.
**7086100148**
Revision:

| Item | FN | Part | Qty | Description |
|---|---|---|---|---|
| 34 | | **9086100919** | 3 | CHAIN |
| 35 | | **942481** | 3 | PLATE, DEAD END |
| 36 | | **9086100920** | 1 | CAUTION PLATE |
| 37 | | **9086100137** | 1 | PLATE, CAUTION |
| 38 | | **9086100327** | 14 | DRIVE SCREW |
| 39 | | **9086101217** | 1 | I.D. PLATE, NAME / RATING |

**Notes**

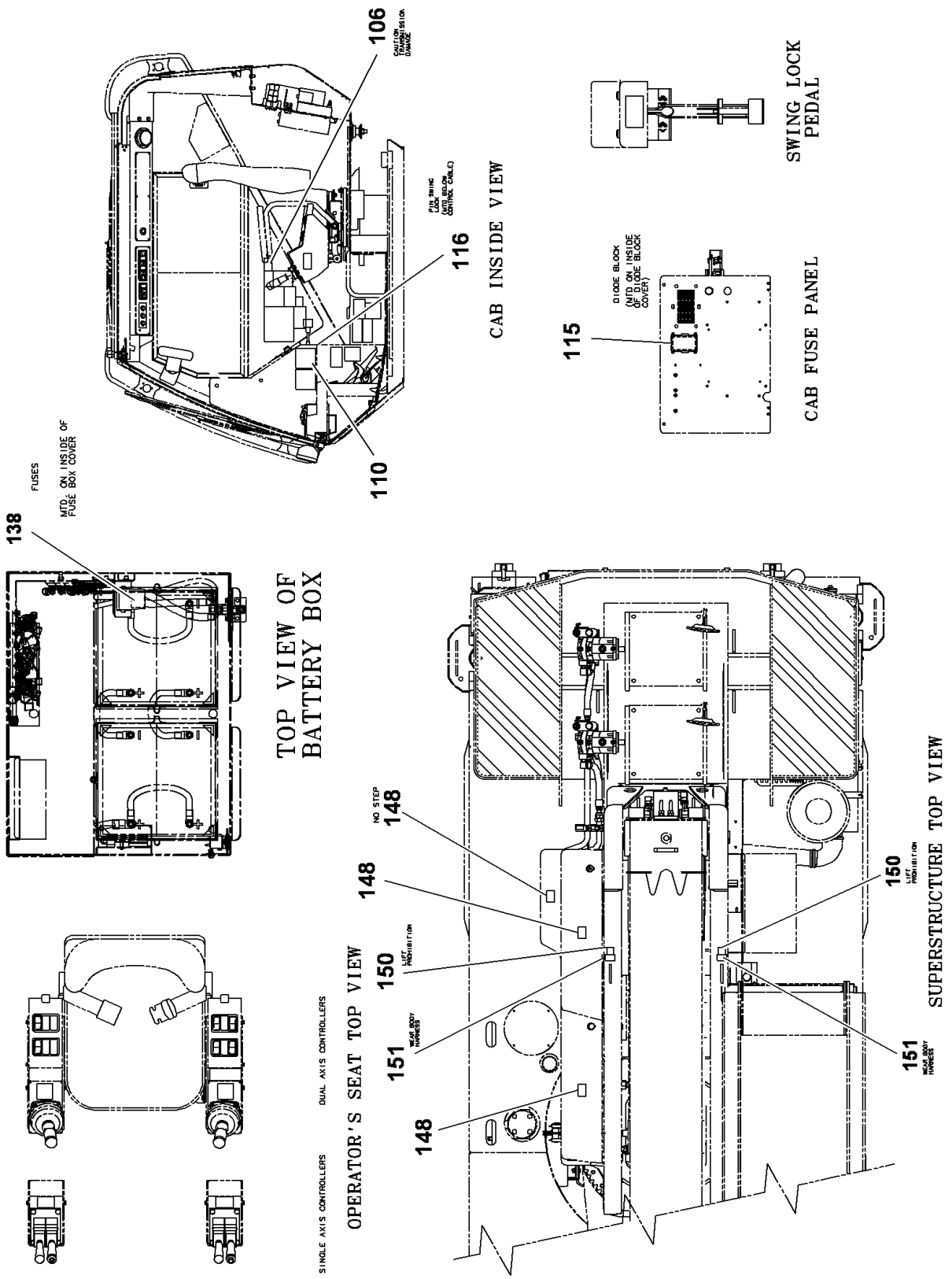


80039075

(SHEET 3 OF 3)

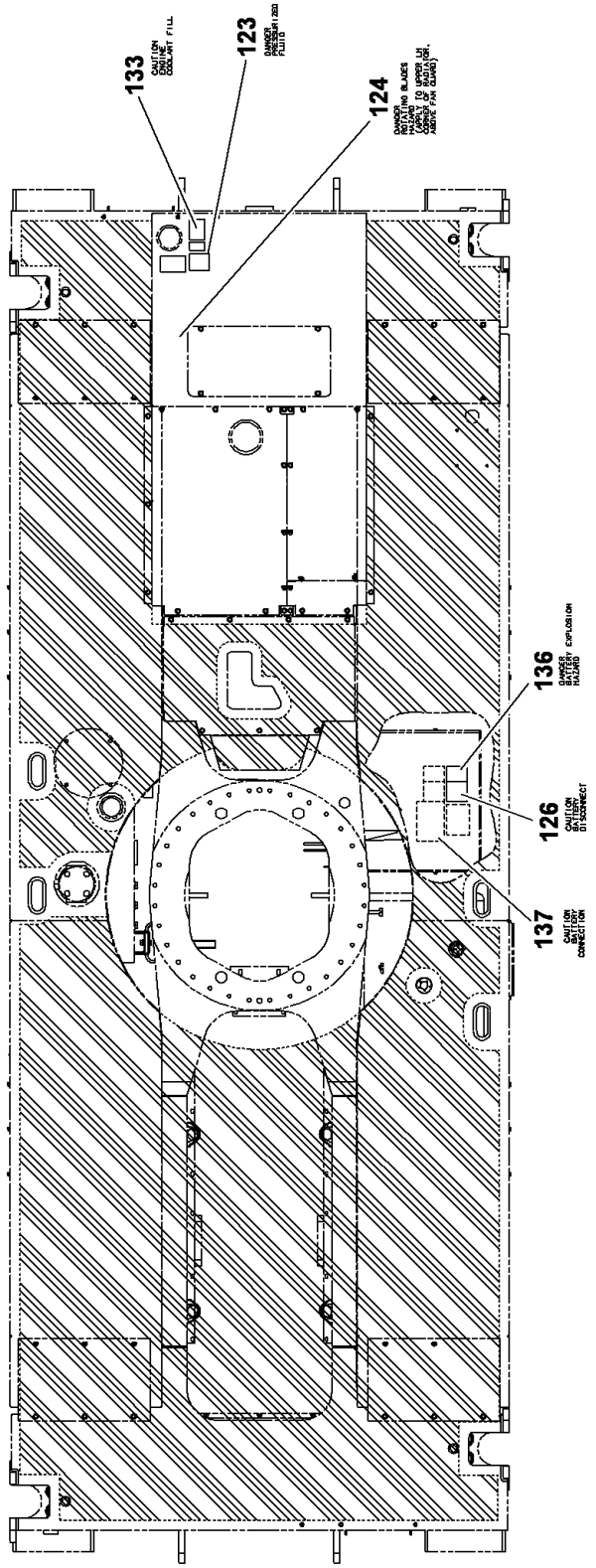


TOP VIEW W/O SUPERSTRUCTURE SHOWING NON-SKID PAINT

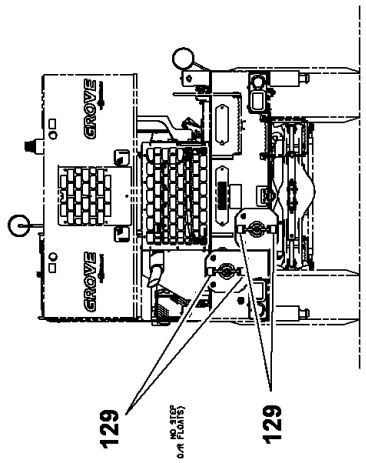


REAR VIEW

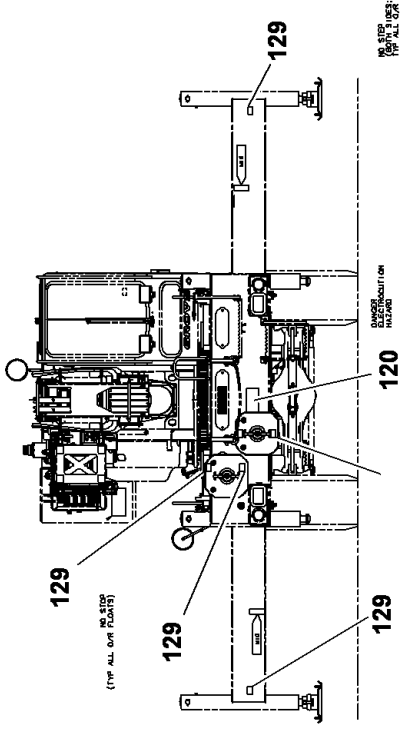


FRONT VIEW

80039075

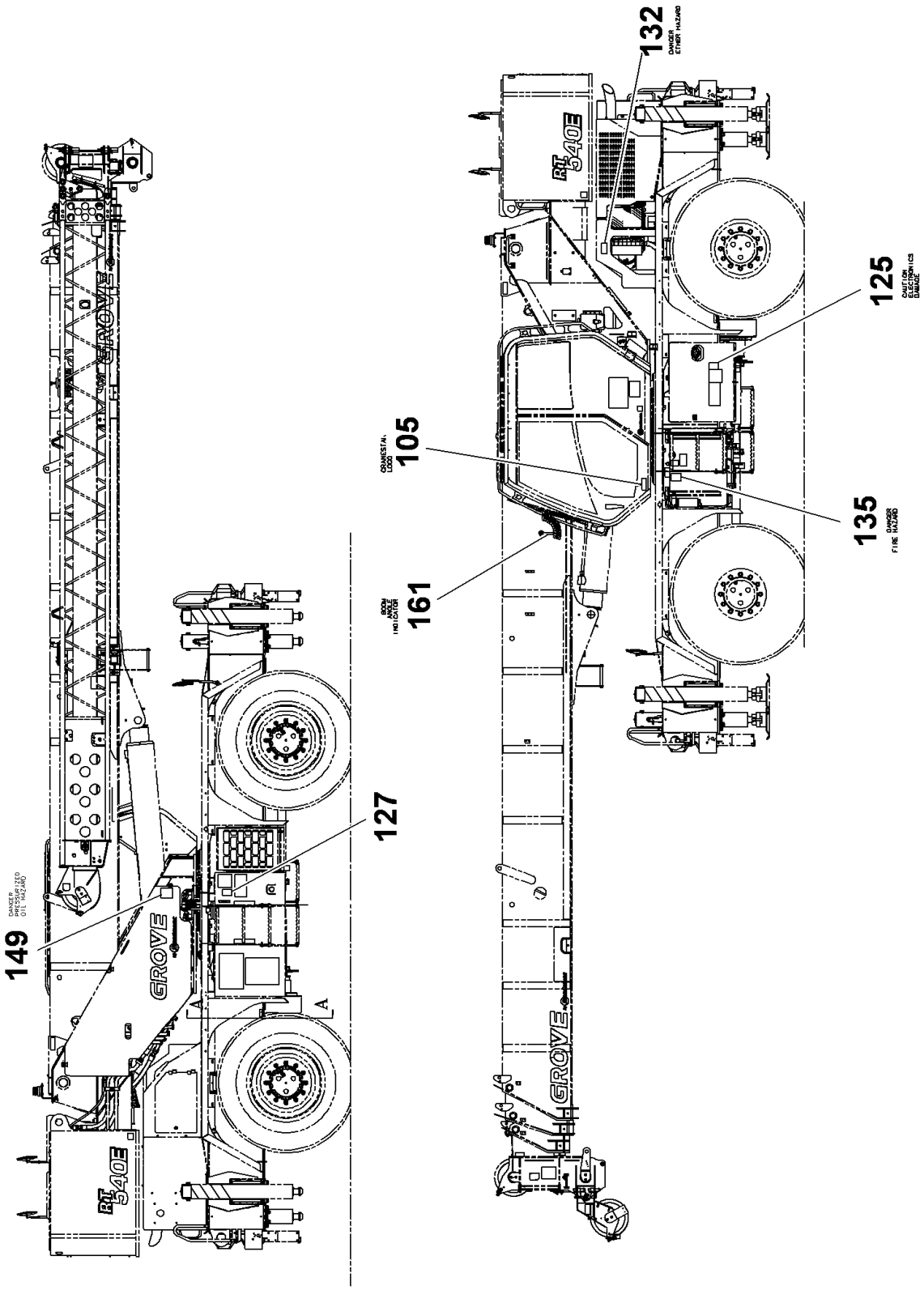


80039075

(SHEET 1 OF 3)

Description
**DECAL INSTALLATION-FRENCH**

Assembly No.
**80039075**
Revision: **E**

| Item | FN | Part | Qty | Description |
|---|---|---|---|---|
| 105 | | **80017200** | 1 | DECAL - CRANESTAR LOGO |
| 106 | | **80043888** | 1 | DECAL-CAUTION-TRANS DAMAGE-SYM |
| 110 | | **80000339** | 1 | DECAL - GROVE FINAL ASSEMBLY AUDIT (ENGLISH) |
| 115 | | **80080342** | 1 | DECAL-DIODE BLOCK |
| 116 | | **80026775** | 1 | DECAL-PIN SWING LOCK-SYM |
| 123 | | **7376102529** | 1 | DECAL - DANGER PRESSURIZED FLUID (SYMBOLIC) |
| 124 | | **7376011416** | 1 | DECAL - ROTATING BLADES |
| 125 | | **7376102350** | 1 | DECAL - CAUTION ELECTRONICS DAMAGE (SYMBOLIC) |
| 126 | | **7376102053** | 2 | DECAL - CAUTION BATTERY DISCONNECT (SYMBOLIC) |
| 127 | | **7376991546** | 1 | DECAL - HYDRAULIC OIL |
| 129 | | **7376991542** | 16 | DECAL - NO STEP |
| 132 | | **7376102544** | 1 | DECAL - DANGER ETHER HAZARD (SYMBOLIC) |
| 133 | | **7376102530** | 1 | DECAL - CAUTION ENGINE COOLANT FILL (SYMBOLIC) |
| 135 | | **7376102533** | 1 | DECAL - DANGER FIRE HAZARD (SYMBOLIC) |
| 136 | | **7376102555** | 2 | DECAL - DANGER BATTERY EXPLOSION HAZARD (SYMBOLIC) |
| 137 | | **80063555** | 1 | DECAL-CTN-BATTERY CONN-SYM |
| 138 | | **80080175** | 1 | DECAL-FUSE BLOCK COVER |
| 141 | | **80070745** | 1 | DECAL-BATTERY DISCONNECT |
| 148 | | **7376991542** | 3 | DECAL - NO STEP |
| 149 | | **7376102553** | 1 | DECAL - DANGER PRESSURIZED OIL LEAK (SYMBOLIC) |
| 150 | | **7376102910** | 2 | DECAL - LIFT POINT PROHIBITION |
| 151 | | **7376991722** | 2 | DECAL - WEAR BODY HARNESS |
| 161 | | **7376001935** | 1 | DECAL - BOOM ANGLE |

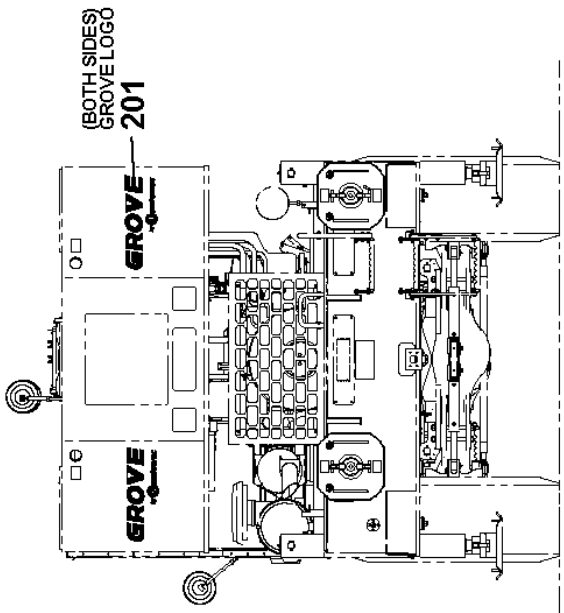


REAR VIEW

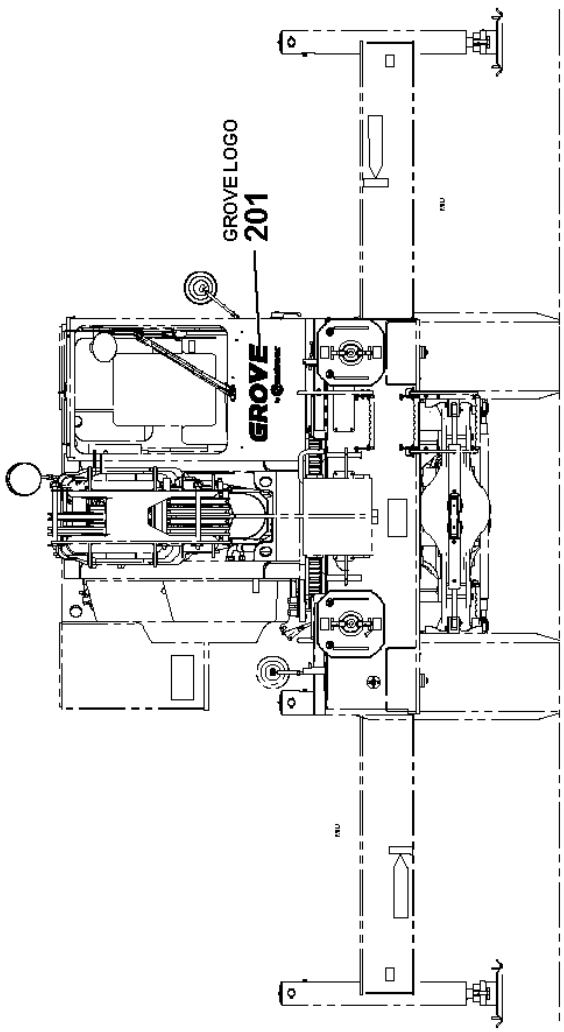


FRONT VIEW

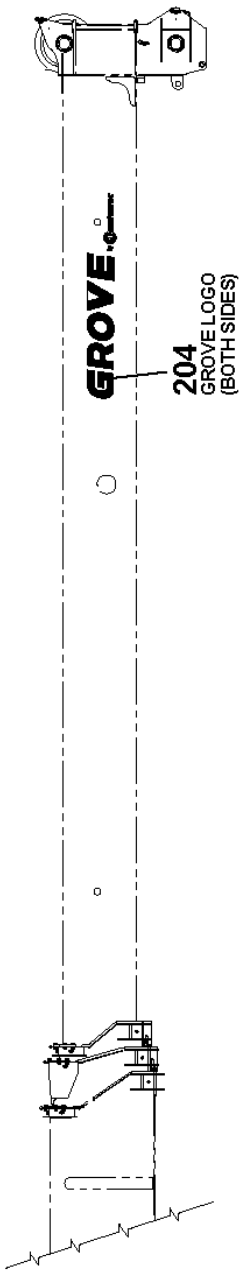


BOOM FLY SECTION RIGHT VIEW

80028004

(SHEET 2 OF 2)

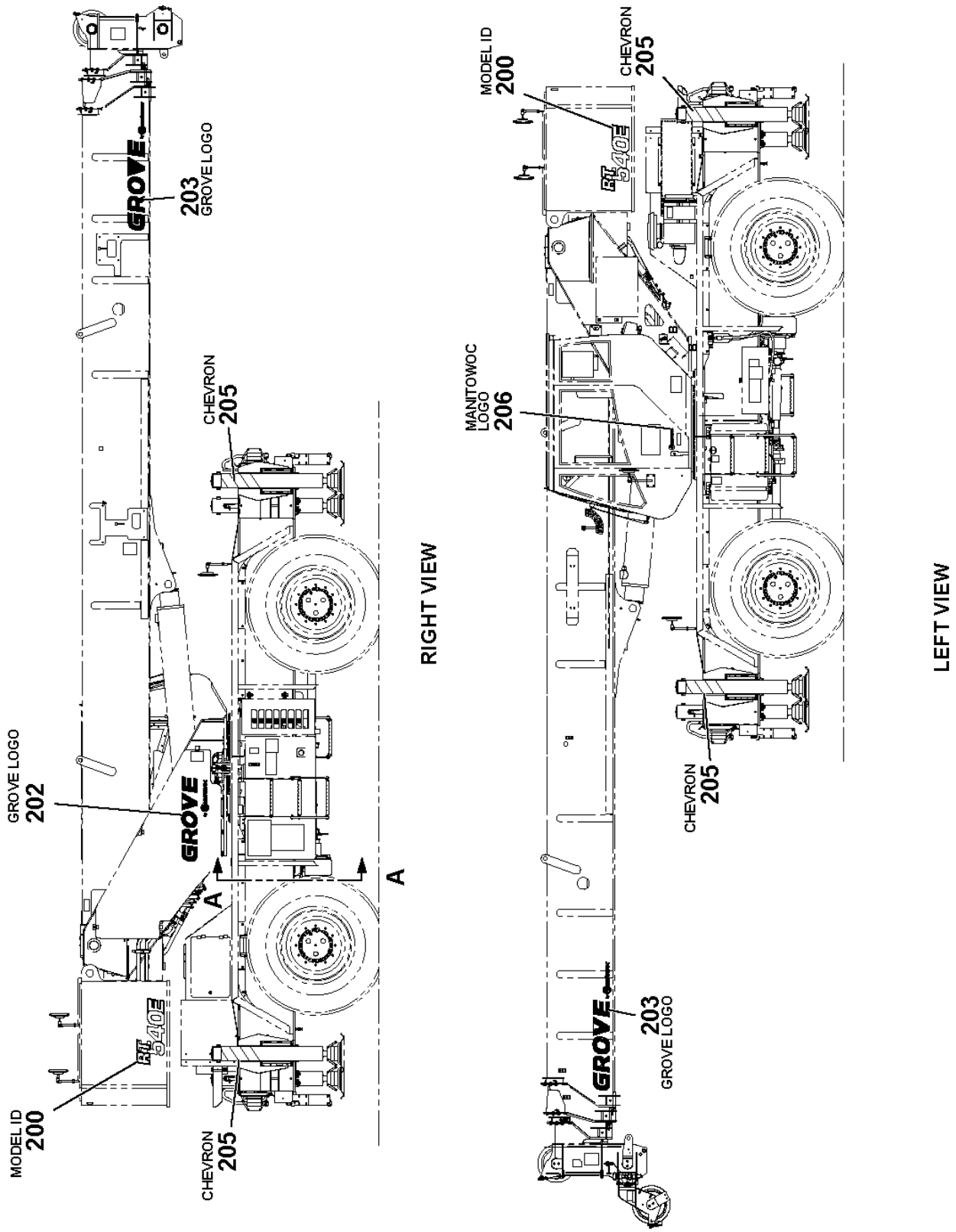


80028004

(SHEET 1 OF 2)

Description
**DECAL INSTALLATION-RT540E NOMENCLATURE**

Assembly No.
**80028004**
Revision: **A**

| Item | FN | Part | Qty | Description |
|---|---|---|---|---|
| 200 | | **7376102912** | 2 | DECAL - RT540E |
| 201 | | **7376247045** | 3 | DECAL-GROVE-4.5" GRAY |
| 202 | | **7376247065** | 1 | DECAL-GROVE-6.5" GRAY |
| 203 | | **7376246070** | 2 | DECAL-GROVE-7" GRAY |
| 204 | | **7376226070** | 2 | DECAL - GROVE - 7" WHITE |
| 205 | | **7376101141** | 4 | DECAL - CHEVRON OUTRIGGER JACK |
| 206 | | **7376202030** | 1 | DECAL - MANITOWOC CRANE GROUP LOGO 3" GRAY/RED |

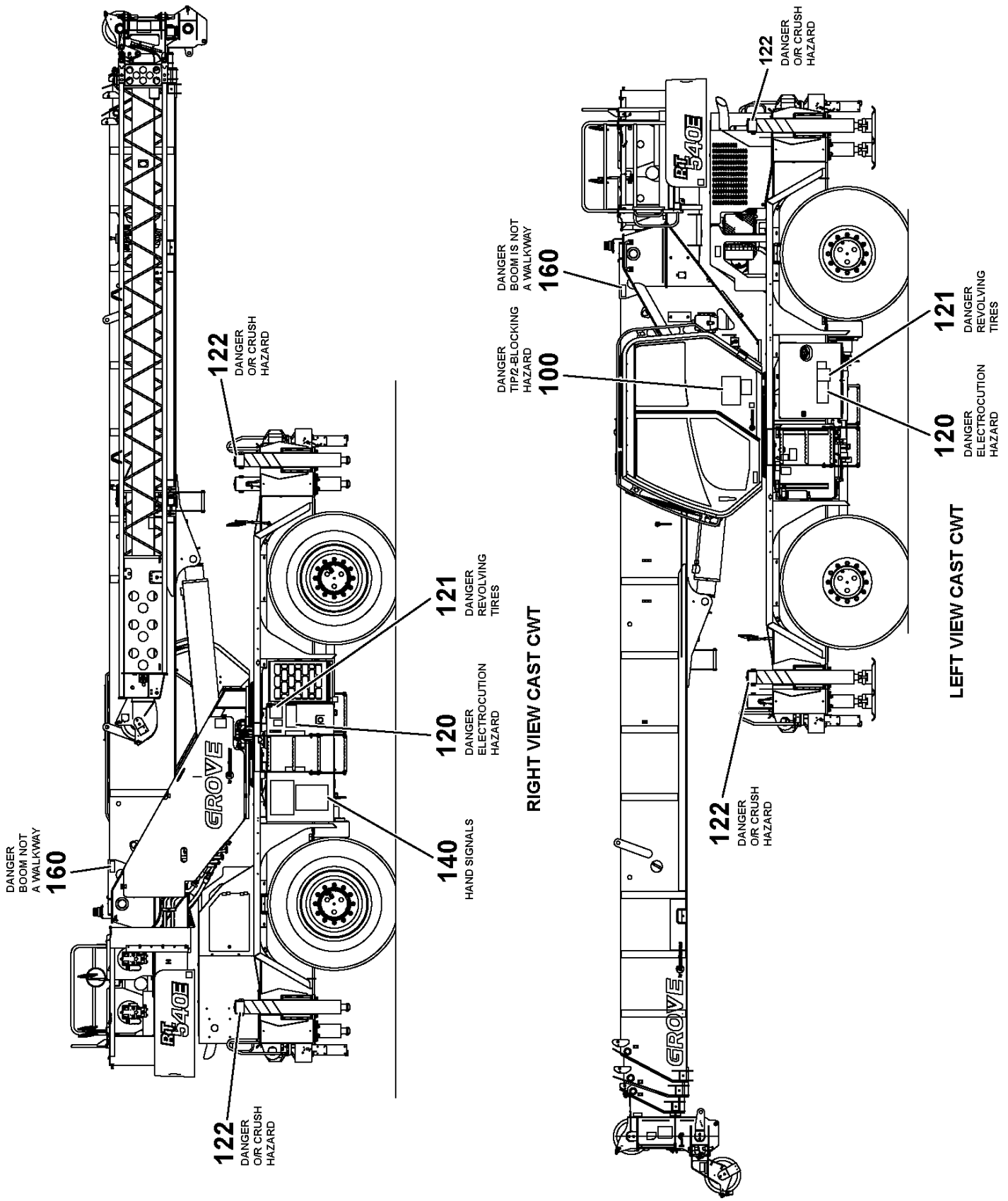


80039114

(SHEET 4 OF 4)

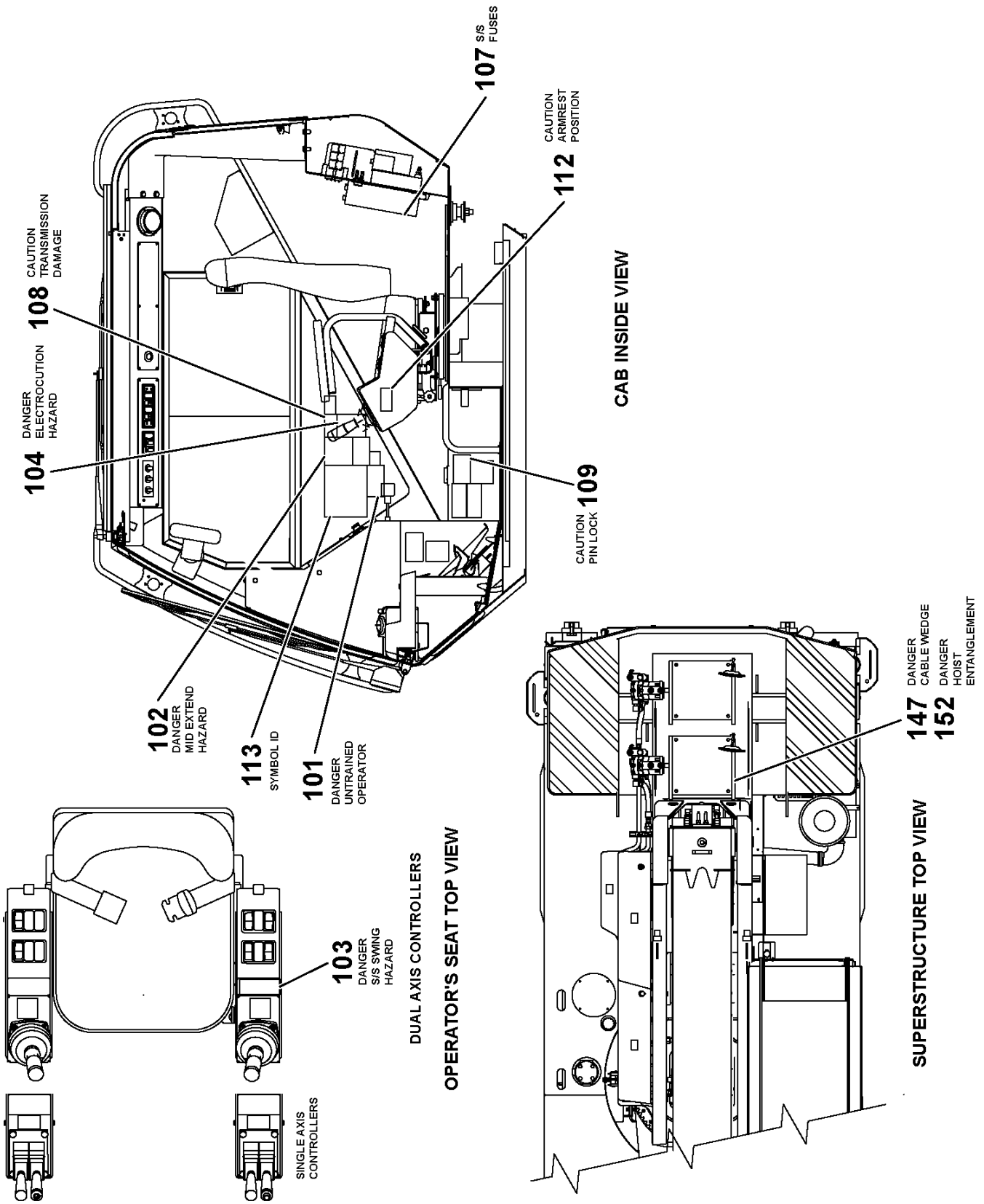


80039114

(SHEET 3 OF 4)

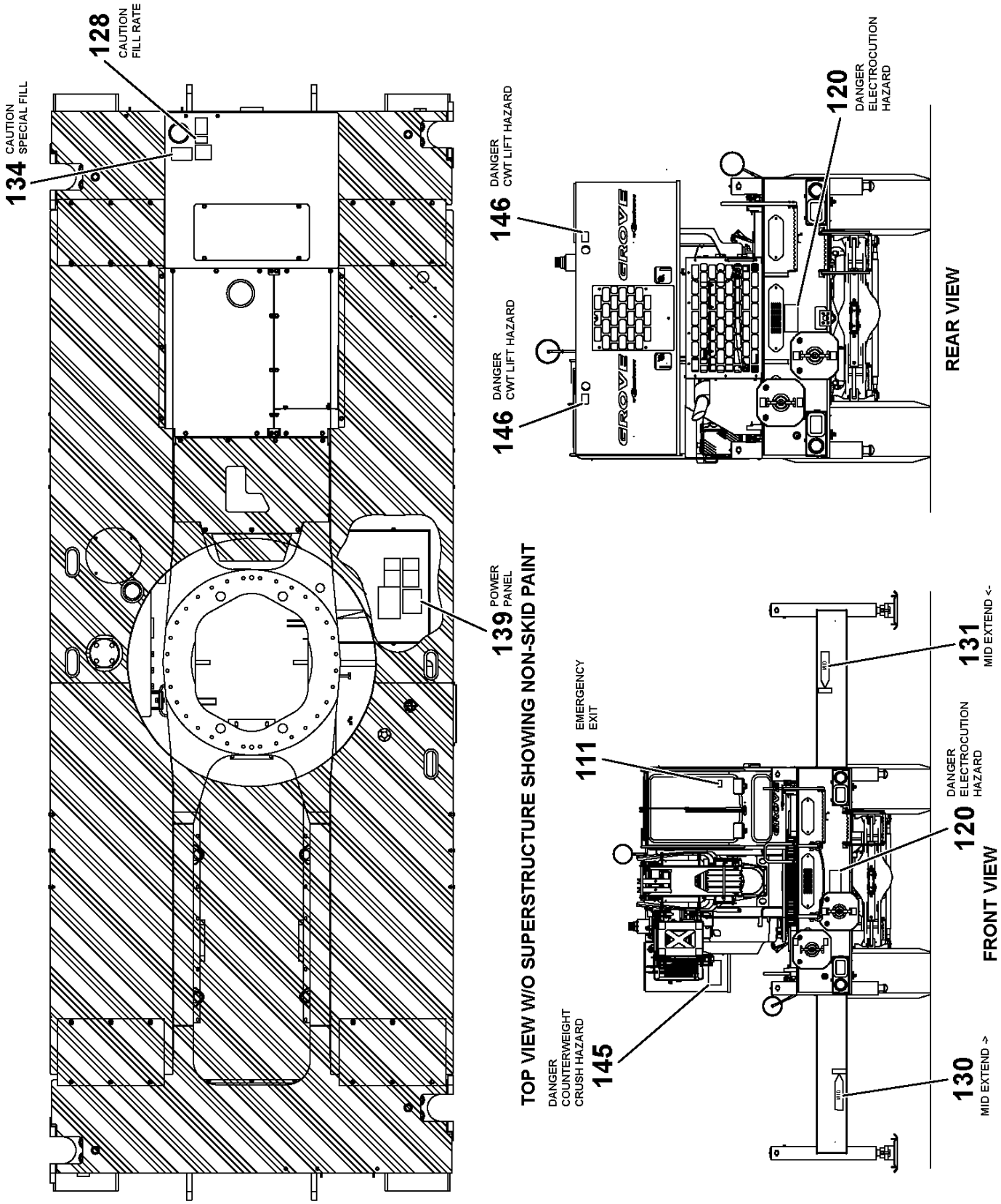


80039114

(SHEET 2 OF 4)

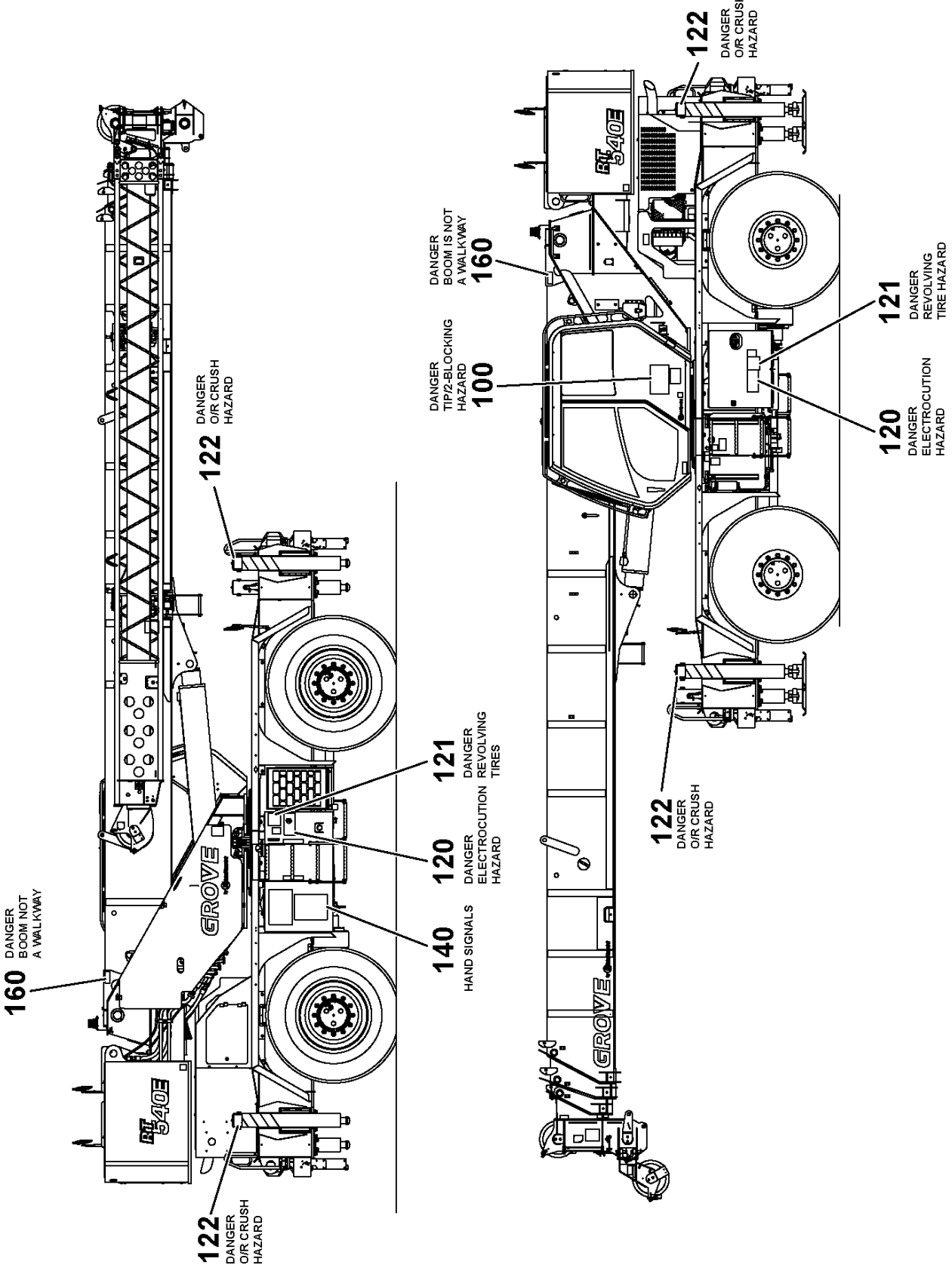


80039114

(SHEET 1 OF 4)

Description
**DECAL INSTALLATION-PORTUGUESE**

Assembly No.
**80039114**
Revision: **F**

| Item | FN | Part | Qty | Description |
|---|---|---|---|---|
| 100 | | **7376100614** | 1 | DECAL - DANGER TIPPING/2 BLOCKING HAZARD (PORTUGUESE - BRAZILIAN) |
| 101 | | **7376102773** | 1 | DECAL - DANGER UNTRAINED OPERATOR (PORTUGUESE - BRAZILIAN) |
| 102 | | **7376100398** | 1 | DECAL - DANGER OUTRIGGER MID EXTENSION (PORTUGUESE - BRAZILIAN) |
| 103 | | **7376100566** | 1 | DECAL - DANGER SUPERSTRUCTURE SWING (PORTUGUESE - BRAZILIAN) |
| 104 | | **80041223** | 1 | DECAL-DANGER-ELECTROC HAZ-PT |
| 107 | | **80039480** | 1 | DECAL-FUSE PANEL-CAB-PT |
| 108 | | **80035777** | 1 | DECAL-CAUTION-TRANS DAMAGE-PT |
| 109 | | **7376100486** | 1 | DECAL - CAUTION PIN SWING LOCK (PORTUGUESE - BRAZILIAN) |
| 111 | | **7376100438** | 1 | DECAL - EMERGENCY EXIT (PORTUGUESE - BRAZILIAN) |
| 112 | | **80011343** | 1 | DECAL - CAUTION ARMREST POSITION (PORTUGUESE - BRAZILIAN) |
| 113 | | **80036666** | 1 | DECAL-SYMBOL ID-PT |
| 120 | | **80040531** | 4 | DECAL - DANGER ELECTROCUTION HAZARD (PORTUGUESE BRAZILIAN) |
| 121 | | **7376100406** | 2 | DECAL - DANGER REVOLVING TIRES (PORTUGUESE - BRAZILIAN) |
| 122 | | **7376100454** | 4 | DECAL - DANGER OUTRIGGER CRUSHING HAZARD (PORTUGUESE - BRAZILIAN) |
| 128 | | **7376102966** | 1 | DECAL - CAUTION MAXIMUM FILL RATE (PORTUGUESE - BRAZILIAN) |
| 130 | | **7376100422** | 4 | DECAL - MID-EXTEND OUTRIGGERS > (PORTUGUESE - BRAZILIAN) |
| 131 | | **7376100430** | 4 | DECAL - MID-EXTEND OUTRIGGERS < (PORTUGUESE - BRAZILIAN) |
| 134 | | **7376102588** | 1 | DECAL - CAUTION SPECIAL FILL REQUIREMENT (PORTUGUESE - BRAZILIAN) |
| 139 | | **80039493** | 1 | DECAL-POWER PANEL-PT |
| 140 | | **7376101567** | 2 | DECAL - HAND SIGNALS (PORTUGUESE - BRAZILIAN) |
| 145 | | **7376100352** | 2 | DECAL - DANGER COUNTERWEIGHT CRUSHING HAZARD (PORTUGUESE - BRAZILIAN) |
| 146 | | **7376100590** | 4 | DECAL - DANGER COUNTERWEIGHT LIFT (PORTUGUESE - BRAZILIAN) |

Description
**DECAL INSTALLATION-PORTUGUESE**

Assembly No.
**80039114**
Revision: **F**

| Item | FN | Part | Qty | Description |
|---|---|---|---|---|
| 147 | | **7376100558** | 1 | DECAL - DANGER CABLE WEDGE (PORTUGUESE - BRAZILIAN) |
| 152 | | **80002870** | 1 | DECAL - DANGER HOIST ENTANGLEMENT (PORTUGUESE - BRAZILIAN) |
| 160 | | **7376100364** | 2 | DECAL - DANGER BOOM NOT WALKWAY (PORTUGUESE - BRAZILIAN) |

## Alphabetical Index — Appendix A


| Description | Part | Page |
|---|---|---|
| **1" HOSE ASSY-HOT, STRT-45** | 7561610261 | 562 |
| **1" I.D. HYDR HOSE ASSY STR-45** | 7555603062 | 147 |
| **1.0 ID RAD HOSE 34" LG** | 80031701 | 633 |
| **1.75"ID X 2.13"OD WRAPPED HOSE** | 8596902521 | 556 |
| **1/2 X 18" NYLON FUEL TUBE** | 7916080182 | 639 |
| **1/2" HOSE ASSY, ORFS STR-STR** | 7561307230 | 639 |
| **1/2" I.D. X 72" LONG** | 7555307200 | 485 |
| **1/4 HOSE ASS'Y-STR-LG 90 ORS** | 7555102803 | 147 |
| **1/4" I.D. X 20"** | 7561102003 | 560 |
| **1/4" SHRINK TUBING (CLEAR) W/M** | 8594100256 | 201, 203, 283, 291, 343, 349, 360, 458, 626 |
| **12AMP CONVERTER** | 80046759 | 332 |
| **12V BATTERY** | 80042621 | 647 |
| **180 DEG BSHELL** | 80008773 | 200, 455 |
| **180 DEG CABLE CORDGRIP** | 80015532 | 271 |
| **180DEG BACKSHELL** | 80008786<br>80008788 | 455<br>455 |
| **180DEG BSHEL W/STRAIN** | 80008760<br>80008764 | 455<br>455 |
| **180DEG BSHELL** | 80008750<br>80008755<br>80008761<br>80008765<br>80008769<br>80008779<br>80008783 | 625<br>200, 455, 625<br>625<br>200, 360, 625<br>455<br>455, 653<br>200, 455 |
| **2.00"ID X 2.39"OD WRAPPED HOSE** | 8596902522 | 633 |
| **24V CAB FAN** | 80052794 | 226 |
| **24V HEATER/COOL KIT** | 80042060 | 245 |
| **2-PASS CONNECTOR/GRAY SEAL** | 7892100027 | 341 |
| **3/4 HOSE ASSY ORFS STR X STR** | 7561502650<br>7561504850 | 562<br>562 |
| **3/4" HYD HOSE ASSY STR-90** | 7561503252 | 562 |
| **3/4" I.D. HYDR HOSE ASSY STR-9** | 7555502761 | 488 |
| **3/8" I.D. X 64"** | 7555206402 | 489 |
| **3/8 x 3/16 THK WASHER** | 80038198 | 227 |
| **3/8" HYD HOSE-HOT, STR-STR** | 7572212013 | 560 |
| **3/8" I.D. HYDR HOSE ASSY STR B** | 7555202000 | 489 |


**From - 1" HOSE ASSY-HOT, STRT-45** **To - 3/8" I.D. HYDR HOSE ASSY STR B**

## Alphabetical Index — Appendix A


| Description | Part | Page |
|---|---|---|
| 3/8" I.D. X 30" | 7561203017 | 560 |
| 3/8"I.D. HYDR HOSE ASSY STR-45 | 7555204402 | 563 |
| 3rd. SHAFT & DRUM ASSY. | 9904110468 | 593 |
| 3RD. SHAFT GROUP | 9904110621 | 565 |
| 5/8" TRIM-LOK PLASTIC CHANNEL | 929048 | 123 |
| 5/8" x 5/8" ALUMINUM ELBOW | 80036469 | 379 |
| 5TH WHEEL | 80055496 | 389 |
| 90DEG BSHELL | 80008759 | 200 |
| A/C CONDENSER-VERT. MTG. 24V. | 80027884 | 179 |
| A/C COVER BRACKET | 80029745 | 259 |
| A/C HOSE KIT-CARRIER | 80029848 | 665 |
| A2B SWITCH - WITH | 9333102230 | 35 |
| A2B SWITCH, WITHOUT CRIMP | 9333102238 | 55 |
| ACCESS PANEL | 80030937 | 407 |
| ACCESSORY MANIFOLD | 80029768 | 123 |
| ACCUMULATOR 76 CI | 80060944 | 123 |
| ACOUSTIC FOAM TOP | 80038107 | 255 |
| ACOUSTICS INSTALLATION (SG) | 80023693 | 217 |
| ADAPTER | 7013000405<br>7013100029<br>7013100030<br>90000104<br>90000908<br>9974102210 | 563, 639<br>179, 665<br>179, 665<br>158<br>239, 241<br>157 |
| ADAPTER, 0.062 DIA ORIFICE | 7013100059 | 149 |
| ADAPTER, JIB BOOM EXTENSION | 2159910202 | 77 |
| ADAPTER, PUMP MOUNT | 9904110598 | 581 |
| ADAPTER, REDUCING | 7013000384 | 393 |
| ADAPTER, TEE | 90018884 | 252 |
| ADAPTER, Y-2.5" | 90018878 | 252 |
| ADAPTER,ORB TO HOSE BARB 20-16 | 7013100047 | 561 |
| AIR CLEANER ASSEMBLY | 80018496 | 659 |
| AIR COND LINES KIT - S/S | 80026821 | 179 |
| AIRSHIFT CYLINDER | 9904109623 | 601 |
| ALARM, BACK-UP | 7025000836 | 415 |
| ALARM, FAST PULSE BUZZER | 7025000821 | 332 |

## Alphabetical Index — Appendix A


| Description | Part | Page |
|---|---|---|
| **ALTERNATOR-24SI** | 80033575 | 559 |
| **AMP 1.5 16-14 SOCKET** | 7826100013 | 458 |
| **AMP-PLUG** | 80003395 | 341 |
| **ANCHOR** | 2159910131 | 7 |
| **ANCHOR, LEFT HAND** | 2159910166 | 9 |
| **ANCHOR, RIGHT HAND** | 2159910167 | 9 |
| **ANGLE** | 80030682 | 681 |
| **ANTENNA , GPS/GSM** | 80021858 | 271 |
| **ARM SUPPORT** | 80023849 | 279 |
| **ARM, LEVER** | 7768003904<br>80016496 | 281<br>259 |
| **ARM, WIPER/DRY 24"** | 90000994 | 239 |
| **ARM, WIPER/WET 26"** | 90011815 | 241 |
| **ARMREST** | 80017432 | 279 |
| **ASSEMBLY-OIL COOLER BRACKET** | 80030592 | 681 |
| **AUX PUMP GASKET** | 9904106364 | 595 |
| **AUXILIARY PUMP DRIVE GROUP** | 9904110615 | 565 |
| **AXLE HOUSING ASSY.** | 90026472 | 507, 533 |
| **AXLE HOUSING GROUP** | 90026471 | 501, 527 |
| **BACKSHELL, DEUTSCH HD10 SERIES** | 7258100165 | 455 |
| **BAFFLE** | 80031047<br>80031470 | 407<br>407 |
| **BAFFLE AND SEAL** | 9904105958 | 573 |
| **BAFFLE, OIL** | 9904109572 | 569 |
| **BALL, LOCK** | 9904101025<br>9904105989 | 583<br>589 |
| **BAR, 2-POLE JUMPER** | 9333102717 | 41 |
| **BAR, SPACER** | 9974102822 | 155 |
| **BARREL ASSEMBLY** | 90026933<br>90026991 | 519, 545<br>523 |
| **BARREL ASSY.** | 9372103623 | 395 |
| **BASE** | 9974102942 | 155 |
| **BASE BOOM** | 80040123 | 7 |
| **BASE EXTENSION** | 80024932 | 77 |
| **BATT CABLE RED 6GA 26"** | 80023981 | 341 |
| **BATTERY BOX** | 80030806 | 647 |


**From - ALTERNATOR-24SI** **To - BATTERY BOX**

## Alphabetical Index — Appendix A


| Description | Part | Page |
|---|---|---|
| **BATTERY BOX ASSEMBLY** | 80047472 | 645 |
| **BATTERY CABLE BLK 2/0 14"** | 80025554 | 655 |
| **BATTERY CABLE KIT** | 80033011 | 647 |
| **BATTERY CABLE RED 2/0 14"** | 80025552 | 655 |
| **BATTERY CABLE RED 2OT 12"** | 80032019 | 651 |
| **BATTERY CABLE RED 2OT 16"** | 80032002 | 651 |
| **BATTERY CABLE RED 3OT 56"** | 80032065 | 655 |
| **BATTERY CABLE RED 4OT 62"** | 80032053 | 655 |
| **BATTERY CABLE RED 6GA 12"** | 80032000 | 651 |
| **BATTERY CABLE RED 6GA 26"** | 80023980 | 341 |
| **BATTERY CONNECTOR - NEG. POLE** | 80042664 | 648 |
| **BATTERY CONNECTOR - POS. POLE** | 80042623 | 648 |
| **BATTERY COVER** | 80033035 | 419 |
| **BATTERY, HOLD-DOWN** | 7300000393 | 647 |
| **BEAM, SEALED** | 9581100101 | 27, 225 |
| **BEARING** | 6069000293 | 77 |
| | 6069100000 | 9 |
| | 6069100001 | 8 |
| | 7069000238 | 113 |
| | 7069000516 | 229 |
| | 7069000518 | 23 |
| | 7069001045 | 230 |
| | 7069100031 | 9 |
| | 7069100041 | 9 |
| | 80048014 | 375 |
| | 9049101566 | 597 |
| | 9049104578 | 503, 529 |
| | 9086100088 | 693 |
| | 9576101135 | 108 |
| | 9576101332 | 107 |
| | 9576101335 | 107 |
| | 9722105443 | 611 |
| | 9722105547 | 613 |
| | 9722105548 | 613 |
| | 9904103612 | 597 |
| | 9904104423 | 583 |
| | 9904104428 | 577 |
| | 9904104432 | 581, 583 |
| | 9904106320 | 597 |
| | 9904109592 | 585 |
| | 9904109595 | 587 |
| | 9904109604 | 591 |

## Alphabetical Index — Appendix A


| Description | Part | Page |
|---|---|---|
| **BEARING** | 9904109606 | 595 |
| | 9904109647 | 587 |
| | 9926113112 | 313 |
| | 9974102183 | 156 |
| **BEARING ASSEMBLY** | 9904104053 | 589 |
| **BEARING ASSEMBLY, U JOINT** | 9049109733 | 511, 537 |
| **BEARING ASSY** | 9904109574 | 573, 591, 595 |
| **BEARING, BALL** | 9974101211 | 155 |
| **BEARING, CENTER** | 9364101907 | 549 |
| **BEARING, FRONT** | 9904105994 | 587, 593 |
| **BEARING, GEAR** | 9904101353 | 591 |
| **BEARING, NEEDLE** | 9576101336 | 107 |
| **BEARING, PILOT** | 9904103575 | 585 |
| **BEARING, REAR** | 9904106000 | 591 |
| | 9904109608 | 597 |
| **BEARING, ROLLER** | 9086100062 | 693 |
| **BEARING, THRUST** | 9974102218 | 157 |
| **BEARING, TURNTABLE** | 7069100081 | 101 |
| **BEARING,NEEDLE** | 9576101127 | 107 |
| **BED TO PLATFORM MOUNTING GROUP** | 80033564 | 559 |
| **BELLOW, RUBBER** | 90016102 | 309 |
| **BELLOWS** | 7406001053 | 555 |
| **BELLOWS-Ø3.5" TO Ø3.0" X 6"LG** | 80033704 | 555 |
| **BELT, SERPENTINE V-RIBBED** | 90023884 | 563 |
| **BEZEL** | 80040417 | 295 |
| **BEZEL, L-SERIES 3 GANG LM3** | 7364100179 | 279, 345 |
| **BEZEL, L-SERIES 6 GANG LM6** | 7364100182 | 345, 351 |
| **BINDER** | 7258100138 | 175 |
| **BLADE, WIPER 34"** | 9576101347 | 239, 241 |
| **BLEEDER** | 90026995 | 523 |
| **BLOCK** | 7086100002 | 229 |
| **BLOCK, FUSE** | 7086000947 | 341 |
| | 7086100159 | 341, 455 |
| **BLOCK, SPACER** | 7086100144 | 226 |
| **BLOCK, SWING LOCK** | 2159200728 | 113 |
| **BLOCK, TAPPED** | 4155110443 | 391 |


**From - BEARING** **To - BLOCK, TAPPED**

## Alphabetical Index — Appendix A


| Description | Part | Page |
|---|---|---|
| **BLOCK, TERMINAL STRIP** | 9333102663 | 41, 57 |
| **BLOWER ASSY. 24V.** | 90018856 | 251 |
| **BODY** | 9904105306 | 601 |
| **BOLT** | 80019087 | 498 |
| **BOLT, 30MM** | 7099100052 | 8 |
| **BOLT, CAP SCREW** | 9049101125 | 567 |
| **BOLT, MODIFIED** | 6099001190 | 488 |
| **BOLT, MOUNTING** | 90014308 | 237 |
| **BOLT, RIVET EYE** | 7099000573 | 77 |
| **BOLT, TIE** | 9086100534<br>9086101343 | 693<br>693 |
| **BOLT,5/16"-18 X 1" FLANGE HEAD** | 90015593 | 683 |
| **BOOM ASSEMBLY** | 80074611 | 1 |
| **BOOM EXTENSION ASSEMBLY 7.9-13.7M** | 80024931 | 75 |
| **BOOM LIGHT-REWORK** | 80002953 | 25 |
| **BOOM NOSE TO FLY** | 80040127 | 7 |
| **BOOM PIVOT INSTALLATION** | 80049532 | 1 |
| **BOOT** | 7172000546<br>7172000548<br>7172000551<br>7172000552<br>7172000553<br>7172000554<br>7172000564<br>7172100006<br>9352100771 | 27, 181, 213, 415, 667<br>252<br>427<br>200, 359, 455<br>455<br>200, 455, 625<br>252, 371<br>625<br>285, 287 |
| **BOOT, CAP** | 9511100017 | 285, 287 |
| **BOOT, CONNECTOR** | 7172000565<br>7172000567<br>7172000568 | 371<br>201<br>29 |
| **BOOT, DT2S CONNECTOR** | 7172000545 | 29 |
| **BOOT, PLUG** | 7172100002 | 200, 291, 455 |
| **BOOT, RUBBER** | 9926113275 | 269 |
| **BOOT, SWIVEL (RED)** | 9246100159 | 655 |
| **BOOT, TERMINAL** | 7172000558 | 342 |
| **BOOT-DTM3P-RECP** | 7172100003 | 283, 497 |
| **BOTTOM HOOD** | 80031450 | 407 |
| **BOTTOM, BOX** | 7176002679 | 425 |


**From - BLOCK, TERMINAL STRIP** **To - BOTTOM, BOX**

## Alphabetical Index — Appendix A


| Description | Part | Page |
|---|---|---|
| **BOX ASSEMBLY - JUNCTION** | 9333103565 | 35 |
| **BOX, JUNCTION** | 9333103735 | 41 |
| **BRACE, LOUVER** | 90018862 | 251 |
| **BRACKET** | 4159810079 | 555 |
| | 6245100077 | 279 |
| | 80017851 | 497 |
| | 80023723 | 280 |
| | 90012642 | 285, 287 |
| | 90022806 | 251 |
| | 9364101827 | 121 |
| | 9974102831 | 158 |
| | 9974103102 | 158 |
| **BRACKET - AIR CLEANER** | 80030446 | 659 |
| **BRACKET SET, FOOTLESS BLIND** | 7942000512 | 226 |
| **BRACKET, ANGLE** | 4159210122 | 185 |
| **BRACKET, CAB OUTRIGGER** | 80016502 | 259 |
| **BRACKET, CAP** | 6184003000 | 393 |
| **BRACKET, COVER** | 4159210167 | 185 |
| **BRACKET, CUP HOLDER** | 80016498 | 259 |
| **BRACKET, ELECTRIC MODULE** | 80018931 | 260 |
| **BRACKET, FAN** | 90018838 | 183 |
| **BRACKET, FRONT** | 4159210164 | 185 |
| **BRACKET, FUSE** | 6184001406 | 341 |
| **BRACKET, HEAD/TAIL LIGHT** | 4159110314 | 415 |
| **BRACKET, MID** | 4159210165 | 185 |
| **BRACKET, MIRROR ARM** | 7184001014 | 165, 167, 377, 421 |
| **BRACKET, MOUNTING** | 90018870 | 251 |
| | 9926112988 | 469 |
| **BRACKET, MOUNTING CAB COVER** | 80016501 | 259 |
| **BRACKET, MOUNTING H.O.D.** | 90014302 | 237 |
| **BRACKET, OPERATORS MANUAL** | 80016499 | 259 |
| **BRACKET, PEDAL MOUNTING** | 6245100878 | 301 |
| **BRACKET, R.H.** | 90018860 | 251 |
| **BRACKET, REAR** | 4159210166 | 185 |
| **BRACKET, ROLLER** | 9974103084 | 158 |
| **BRACKET, SEAT** | 80016495 | 259 |
| **BRACKET, SEAT BAR** | 80023851 | 275 |
| **BRACKET, STROBE LIGHT** | 4159210126 | 211 |

## Alphabetical Index — Appendix A


| Description | Part | Page |
|---|---|---|
| **BRACKET, SUPPORT I/O MODE** | 90019806 | 309 |
| **BRACKET, TERMINAL STRIP END** | 9333102665 | 41, 57 |
| **BRACKET,PARK BRAKE** | 9904110157 | 603 |
| **BRACKET-ELEC MOUNTING** | 80009225 | 193 |
| **BRAKE ASSEMBLY, DISC** | 9049112522 | 515, 517, 541, 543 |
| **BRAKE ASSEMBLY,GROUP** | 9049112523 | 501, 527 |
| **BRAKE CABLE** | 80048042 | 205 |
| **BRAKE CYLINDER ASSY.** | 90011568 | 155 |
| **BRAKE GROUP** | 9049112516 | 501, 527 |
| **BRAKE, DISC** | 7188000165 | 603 |
| **BRAKE-PARK ASSY W/O SPACER** | 80051988 | 555 |
| **BREATHER** | 9049112686 | 507, 533 |
| | 9258100173 | 463 |
| | 9576101189 | 109 |
| | 9904104050 | 567 |
| **BULB** | 9581100088 | 225 |
| **BUMPER** | 9188100754 | 207 |
| **BUMPER, RUBBER** | 7195000031 | 423 |
| | 7195000032 | 407, 675 |
| **BUSHING** | 2159200729 | 113 |
| | 6199100023 | 97 |
| | 6199100030 | 10 |
| | 6199100070 | 111 |
| | 6199100090 | 101 |
| | 6199100098 | 8 |
| | 6199100100 | 117 |
| | 6200050303 | 77 |
| | 6200060505 | 205 |
| | 6200060506 | 205 |
| | 7199001289 | 279 |
| | 80049013 | 10 |
| | 9049102253 | 507, 533 |
| | 9049112682 | 507, 511, 533, 537 |
| | 9576101029 | 643 |
| | 9722105444 | 611 |
| | 9904100967 | 597 |
| | 9974102808 | 158 |
| **BUTTON, 2WD/4WD, AMBER** | 90016092 | 309 |
| **BUTTON, ENGINE IDLE/DEC** | 90016096 | 309 |
| **BUTTON, ENGINE INC/DEC** | 90018785 | 309 |
| **BUTTON, ENGINE INC/DEC AMBER** | 90019801 | 309 |

## Alphabetical Index — Appendix A


| Description | Part | Page |
|---|---|---|
| **BUTTON, HAZARD ON/OFF, RED** | 90016093 | 309 |
| **BUTTON, HEADLIGHTS, AMBER** | 90016090 | 309 |
| **BUTTON, PLUG** | 7242000007 | 257, 260 |
| **BUTTON, SQUARE** | 7242100002 | 279 |
| **BUTTON, THRUST** | 9049103565<br>9049106791 | 512, 538<br>512, 538 |
| **CAB** | 80058290 | 225 |
| **CAB BRACKETS INSTALLATION** | 80058561 | 217 |
| **CAB CRANESTAR INSTALLATION** | 80023681 | 217 |
| **CAB MISC COMPONENTS** | 80046522 | 217 |
| **CAB SUB-ASSEMBLY - (SG-24V)** | 80058646 | 217 |
| **CAB WIPER LINK BAR ASSY** | 80042108 | 227 |
| **CABLE 3/0 BLK 108" B- TO ENG-** | 80030318 | 621 |
| **CABLE ASSEMBLY** | 6246003053<br>9333103701 | 425<br>55 |
| **CABLE ASSEMBLY - BOOM LIGHTS** | 6246100270 | 25 |
| **CABLE ASSY** | 7246002555 | 360, 455 |
| **CABLE ASSY, EXTEND** | 7246100338 | 7 |
| **CABLE ASSY-2/0 RED (8") LG** | 7246100212 | 655 |
| **CABLE BATT NEG TO STARTER** | 80046250 | 621 |
| **CABLE DISC TO STARTER** | 80046252 | 621 |
| **CABLE GH TO GH RELAY** | 80046254 | 621 |
| **CABLE GND TO GND** | 80046251 | 621 |
| **CABLE HOLDER ST37 K** | 01575650 | 331 |
| **Cable M12 4-SOC Shielded 90DEG** | 80031257 | 455 |
| **CABLE REEL LWG508 - IFLEX 5** | 9333103873 | 35 |
| **CABLE RELAY TO ALTERNATOR** | 80046248 | 621 |
| **CABLE RETAINER** | 80046498 | 9 |
| **CABLE STARTER TO ALTERNATOR** | 80046249 | 621 |
| **CABLE STARTER TO START RELAY** | 80051491 | 621 |
| **CABLE TIE 5.63", BLACK** | 7850000208 | 25, 29, 201, 271, 291, 301, 317, 325, 331, 342, 349, 355, 360, 371, 383, 427, 457, 621, 626, 653 |
| **CABLE, 18/4 TWIST SHEILDED** | 80018276 | 343, 360 |
| **CABLE, 20 AWG CAN-BUS SHEILDED** | 80021593 | 199, 291, 341, 359, 458, 626 |

## Alphabetical Index — Appendix A


| Description | Part | Page |
|---|---|---|
| **CABLE, 3 COND 18GA SHLDD W/DRN** | 7246100387 | 341, 359 |
| **CABLE, 8MM DIA RETARCT** | 7246100415 | 7 |
| **CABLE, 8MM DIA RETRACT** | 7246100416 | 7 |
| **CABLE, 9.5MM DIA SYNCHRO** | 7246100417 | 7 |
| **CABLE, CAN BUS M12 SHLD 3m** | 80008201 | 93 |
| **CABLE, CANBUS 11M W/MOLDED M12** | 9333103872 | 35 |
| **CAGE ASSY. PINION** | 9049112639 | 503, 529 |
| **CANNON CONNECTOR, 2-PIN** | 9333103040 | 45 |
| **CAP** | 3046370 | 341 |
| | 9049107137 | 511, 537 |
| | 9049107138 | 511, 537 |
| | 9049112382 | 515, 541 |
| | 9437100828 | 465 |
| | 9880100091 | 215 |
| | 9926113301 | 134 |
| **CAP #8** | 7258001452 | 295, 325 |
| **CAP ASSEMBLY** | 9437100763 | 465 |
| **CAP ASSY, SERVICE ( BLUE )** | 90018815 | 181 |
| **CAP ASSY. FILL, W/CHAIN** | 90019775 | 641 |
| **CAP ASSY. RUBBER** | 90019457 | 663 |
| **CAP SCREW** | 9904100974 | 607 |
| | 9904109358 | 567, 569 |
| | 9974102684 | 157 |
| **CAP SCREW,** | 7099001194 | 97 |
| | 7115140450 | 331, 651 |
| | 7115140478 | 97 |
| | 7115140550 | 230, 325 |
| | 7115140650 | 10, 49, 183, 326, 332, 643 |
| | 7115140850 | 377 |
| | 7115143250 | 39 |
| | 7115150650 | 193 |
| | 7115150850 | 23, 113, 165, 167, 275 |
| | 7115150950 | 260, 281 |
| | 7115151050 | 111 |
| | 7115152050 | 643 |
| | 7115160550 | 397 |
| | 7115160650 | 78, 165, 167, 229, 469, 557, 648 |
| | 7115160850 | 230, 305, 377, 673 |
| | 7115161050 | 146, 147, 257, 377, 437 |
| | 7115161250 | 607 |
| | 7115171250 | 145, 486 |

## Alphabetical Index — Appendix A

| Description | Part | Page |
|---|---|---|
| **CAP SCREW,** | 7115174450 | 149 |
| | 7115181050 | 98, 497, 525 |
| | 7115181250 | 145, 485 |
| | 7115181450 | 556, 561 |
| | 7115201450 | 559 |
| | 7115221450 | 98 |
| | 7115221650 | 559 |
| | 7115222050 | 97 |
| | 7115224050 | 98 |
| | 7118171050 | 567 |
| | 7118180850 | 9 |
| | 7118223250 | 556 |
| | 9049101150 | 569 |
| | 9049103595 | 511, 537 |
| | 9049106579 | 512, 538 |
| | 9049106636 | 603 |
| | 9049107142 | 515, 541 |
| | 9049108332 | 503, 529 |
| | 9049108967 | 503, 529 |
| | 9049109048 | 517, 543 |
| | 9049111753 | 512, 538 |
| | 9086100801 | 693 |
| | 9086100974 | 693 |
| | 9188101020 | 629 |
| | 9437100766 | 465 |
| | 9904109554 | 581 |
| | 9974102835 | 158 |
| **CAP SCREW, 1/2"-13 UNC X 1"** | 7115180850 | 97, 383, 407, 497 |
| **CAP SCREW, 1/4-20UNC X 1 3/4** | 7115141450 | 279 |
| **CAP SCREW, 1/4-20UNC X 5 1/2** | 7115144450 | 39 |
| **CAP SCREW, 7/8-9UNCX5.25 HH** | 80021335 | 163 |
| **CAP SCREW, HEX HEAD** | 7126171353 | 77, 185 |
| | 7126211650 | 547 |
| **CAP SCREW, HEX HEAD M12X35** | 7126211453 | 77 |
| **CAP SCREW, HEX HEAD M8X70MM** | 7126172150 | 205, 467 |
| **CAP SCREW, M10 X 100MM HEX HEAD** | 7126192650 | 559 |
| **CAP SCREW, M10 X 20 HEX HEAD** | 7126191153 | 260, 408, 556, 659, 675, 681 |
| **CAP SCREW, M10 X 25 HEX HEAD** | 7126191253 | 59, 259, 263, 467, 559, 657 |
| **CAP SCREW, M10 X 25MM HEX HEAD** | 7126191250 | 659, 679 |
| **CAP SCREW, M10 X 30** | 7127191353 | 9 |
| **CAP SCREW, M10 X 30MM HEX HEAD** | 7126191353 | 7, 407, 495, 671 |
| **CAP SCREW, M10 X 35MM HEX HEAD** | 7126191450 | 463, 485, 559, 681 |

## Alphabetical Index — Appendix A


| Description | Part | Page |
|---|---|---|
| **CAP SCREW, M10 X 40MM HEX HEAD** | 7126191550 | 401, 405, 495 |
| **CAP SCREW, M10 X 45MM HEX HEAD** | 7126191653 | 226 |
| **CAP SCREW, M10 X 50MM HEX HEAD** | 7126191750 | 401 |
| **CAP SCREW, M10 X 55MM HEX HEAD** | 7126191850 | 401 |
| **CAP SCREW, M10X30 HEX HEAD** | 7126191350 | 319, 401, 562 |
| **CAP SCREW, M10X40 -10.9** | 7127191555 | 8 |
| **CAP SCREW, M10X60 -8.8** | 7126191953 | 9 |
| **CAP SCREW, M12 X 120MM HEX HEAD** | 7126212850 | 78 |
| **CAP SCREW, M12 X 20MM HEX HEAD** | 7126211150 | 634 |
| **CAP SCREW, M12 X 25MM HEX HEAD** | 7126211253 | 78, 559, 639 |
| **CAP SCREW, M12 X 30 HEX HEAD** | 7126211353 | 391, 401, 645, 681 |
| **CAP SCREW, M12 X 35MM HEX HEAD** | 7126211450 | 486, 634 |
| **CAP SCREW, M12 X 40** | 7126211550 | 639, 671 |
| **CAP SCREW, M12 X 70MM HEX HEAD** | 7126212150 | 123, 633 |
| **CAP SCREW, M12 X 75MM HEX HEAD** | 7126212250 | 101 |
| **CAP SCREW, M12X100 HEX HEAD** | 7126212650 | 389 |
| **CAP SCREW, M12X55 HEX HEAD** | 7126211853 | 391, 555 |
| **CAP SCREW, M16 X 40MM HEX HEAD** | 7127241550 | 9, 119 |
| **CAP SCREW, M16 X 45MM HEX HEAD** | 7126241653 | 461 |
| **CAP SCREW, M16 X 80MM LONG** | 7127242350 | 556 |
| **CAP SCREW, M20 X 80MM HEX HEAD** | 7126272353 | 115, 151 |
| **CAP SCREW, M20X90MM HEX HEAD** | 7126272550 | 111 |
| **CAP SCREW, M24X340 HEX HEAD** | 7126294350 | 117 |
| **CAP SCREW, M5 X 14MM HEX HEAD** | 7126130953 | 187 |
| **CAP SCREW, M5 X 25MM HEX HEAD** | 7126131250 | 211 |
| **CAP SCREW, M6 X 16MM HEX HEAD** | 7126151053 | 226 |
| **CAP SCREW, M6 X 25MM** | 7126151253 | 226, 263, 301, 391, 634, 637 |
| **CAP SCREW, M6 X 45MM HEX HEAD** | 7126151650 | 185, 225 |
| **CAP SCREW, M6X20 HEX HEAD** | 7126151153 | 123, 259, 415, 634 |
| **CAP SCREW, M6X30 HEX HEAD** | 7126151353 | 193, 230 |
| **CAP SCREW, M8 X 12MM HEX HEAD** | 00437175 | 111 |
| **CAP SCREW, M8 X 16MM HEX HEAD** | 7126171053 | 10, 115, 119 |
| **CAP SCREW, M8 X 20MM HEX HEAD** | 7126171150<br>7126171153 | 101, 119, 123, 229, 257<br>8, 77, 259, 467, 557, 687 |
| **CAP SCREW, M8 X 30MM HEX HEAD** | 7126171350 | 179, 245, 555 |

## Alphabetical Index — Appendix A


| Description | Part | Page |
|---|---|---|
| **CAP SCREW, M8 X 40MM HEX HEAD** | 7126171553 | 119 |
| **CAP SCREW, M8X25 HEX HEAD** | 7126171253 | 8, 115, 185, 193, 215, 259, 263, 401, 415, 437, 555, 634, 671 |
| **CAP SCREW, M8X25 SOCKET HEAD** | 7128171254 | 260 |
| **CAP SCREW, M8X35-8.8 HEX HEAD** | 7126171450 | 497 |
| **CAP SCREW, M8X90** | 7126172550 | 8 |
| **CAP SCREW, MODIFIED** | 6099001230 | 98 |
| **CAP SCREW, SOCKET HEAD M12X25** | 7128211254 | 391 |
| **CAP SCREW,M10X30** | 7127191355 | 8 |
| **CAP SCREW,M12X30-10.9** | 7127211353 | 7 |
| **CAP SCREW,M6X50 -8.8 ISO 4017** | 7126151753 | 467 |
| **CAP, 1/4"** | 7258001451 | 230, 280, 299, 325 |
| **CAP, DEUTSCH HDC16 - 9 DUST** | 7258100154 | 360, 455 |
| **CAP, DUST** | 90018822 | 181 |
| **CAP, DUST - DIAGNOSTIC** | 9447100041 | 148, 489 |
| **CAP, END** | 4159910026<br>9904106483 | 11, 71, 77, 83<br>601 |
| **CAP, FILL (WITH BREATHER)** | 7258100146 | 463 |
| **CAP, JACK CYLINDER** | 7258001691 | 393 |
| **CAP, RUBBER** | 90016382 | 310 |
| **CAP, WHEEL STEERING** | 90016104 | 309 |
| **CAPSCREW** | 90000125<br>90012929<br>90012930<br>90022246<br>90023163<br>90024257<br>90026477<br>9049100263<br>9049112464<br>9364101822<br>9364101866<br>9437100856<br>9576101100<br>9576101148<br>9576101175<br>9576101308<br>9722105435<br>9722105551<br>9722105552 | 158<br>134<br>134<br>617<br>128<br>673<br>512, 538<br>570, 595<br>512, 538<br>121<br>553<br>465<br>108<br>109<br>108<br>107<br>611<br>613<br>613 |


**From - CAP SCREW, M8 X 40MM HEX HEAD** **To - CAPSCREW**

## Alphabetical Index — Appendix A


| Description | Part | Page |
|---|---|---|
| **CAPSCREW** | 9722105554 | 613 |
| | 9722105559 | 614 |
| | 9722105562 | 614 |
| | 981134 | 157 |
| | 9904110596 | 575 |
| | 9904110600 | 581 |
| | 9904110608 | 609 |
| | 9926113029 | 128 |
| | 9926113115 | 313 |
| | 9926113196 | 478 |
| | 9926113302 | 134 |
| | 9974102854 | 155 |
| | 9974102859 | 156 |
| | 9974103015 | 159, 161 |
| | 9974103043 | 158 |
| | 9974103081 | 156 |
| | 9974103082 | 156 |
| | 9974103100 | 158 |
| | 9974103101 | 158 |
| **CAPSCREW M10** | 90023173 | 683 |
| **CAPSCREW, 10M** | 9364101988 | 121 |
| **CAPSCREW, 2.50" LG** | 9049111473 | 507, 533 |
| **CAPSCREW, 8MM LG** | 90012927 | 133 |
| **CAPSCREW, DISC BRAKE** | 9904109531 | 603 |
| **CAPSCREW, SOCKET HEAD** | 90023175 | 683 |
| **CAPSCREW, SOCKET HEAD 10MM** | 9926113051 | 133 |
| **CAPSCREW, SPECIAL** | 9926113114 | 313 |
| **CAPSCREW,SOCKET HEAD 2-1/4" LG** | 90012926 | 133 |
| **CAP-T SEAL** | 80030043 | 13 |
| | 80030084 | 13 |
| **CARRIER ASSY. PLANET OUTPUT** | 9974102670 | 155 |
| **CARRIER ASSY. PRIMARY PLANET** | 9974102669 | 155 |
| **CART & COIL ASSY. 24V** | 90023281 | 128 |
| **CART. VALVE ASSY. CONTROL 24V.** | 90001128 | 157 |
| **CART.& COIL ASSY. 24V.** | 9904110660 | 609 |
| **CARTRIDGE** | 9926110370 | 134 |
| | 9926110722 | 493 |
| **CARTRIDGE ASSY. FILTER** | 9926110629 | 133 |
| **CARTRIDGE VALVE** | 9926110316 | 473 |
| **CASE & REAR COVER GROUP** | 9904109807 | 565 |
| **CASE ASSEMBLY** | 9904109567 | 569 |

## Alphabetical Index — Appendix A


| Description | Part | Page |
|---|---|---|
| CASE ASSY. DIFF. | 9049112766 | 503, 529 |
| CASE, GASKET | 9904109563 | 567 |
| | 9904109566 | 569 |
| CATCH | 7585000790 | 233 |
| CAUTION PLATE | 9086100920 | 694 |
| CENTERAL UNIT ASSEMBLY - iFLEX2 | 9333107524 | 93 |
| CHAIN | 6286000736 | 10, 75 |
| | 9086100919 | 694 |
| | 9286100001 | 71, 83 |
| CHAIN - USE 9286100001 | 6286000012 | 97 |
| CHAIN ASSEMBLY | 9333101921 | 47, 51 |
| CHANNEL FRONT WIPER MOUNT | 80041876 | 226 |
| CHANNEL, RUBBER 189" LG | 90020194 | 235 |
| CHANNEL, TOP WIPER MOUNT | 80016408 | 226 |
| CHANNEL, VINYL 67 1/2" LG | 90020196 | 235 |
| CHARGING PUMP GROUP | 90023152 | 565 |
| CLAMP | 7300000222 | 659 |
| | 7300001000 | 555 |
| | 9364101404 | 657 |
| CLAMP AND TIE ROD ASSEMBLY | 9049109725 | 512, 538 |
| CLAMP ASSY, 2.38" | 7300100025 | 123 |
| CLAMP ASSY. | 90018844 | 183 |
| CLAMP, #10 | 90022805 | 251 |
| CLAMP, 1 1/4" TUBING | 7300000247 | 634 |
| CLAMP, 1" TUBING | 7300000404 | 145, 486, 555 |
| CLAMP, 5/8" TUBING | 7300100014 | 193 |
| CLAMP, CABLE | 9333103094 | 35 |
| CLAMP, CHAIN | 9333101922 | 47, 51 |
| CLAMP, DOUBLE SADDLE | 7300001082 | 397 |
| CLAMP, HOSE | 7300000035 | 245 |
| | 7300000040 | 245 |
| CLAMP, MUFFLER | 7300000070 | 556 |
| CLAMP, STRAIN RELIEF | 7300000429 | 455, 625 |
| CLAMP, T-BOLT | 7300001102 | 557 |
| | 7300001103 | 485, 555 |
| CLAMP, T-BOLT 1.75" NOM | 7300100024 | 485, 561 |
| CLAMP, TUBING | 7300000100 | 55 |


From - CASE ASSY. DIFF. To - CLAMP, TUBING

## Alphabetical Index — Appendix A


| Description | Part | Page |
|---|---|---|
| **CLAMP, TUBING** | 7300000101 | 488 |
| | 7300000102 | 146, 489, 639 |
| | 7300000195 | 633 |
| | 7300000243 | 25, 393, 557, 633 |
| | 7300000244 | 119, 621 |
| | 7300000245 | 560 |
| | 7300000249 | 559 |
| | 7300000397 | 487 |
| | 7300000399 | 145, 486 |
| | 7300000400 | 487 |
| | 7300000401 | 145, 489, 556 |
| | 7300000402 | 487, 556 |
| | 7300000405 | 145, 146, 488 |
| | 7300000406 | 556 |
| | 7300000407 | 488 |
| | 7300000408 | 486 |
| **CLAMP, TUBING 1-1/4" I.D.** | 7300000246 | 555, 560 |
| **CLEVIS** | 9333101840 | 47, 51 |
| **CLIP** | 7429000549 | 281 |
| | 9914100042 | 31, 67 |
| **CLIP, BLACK** | 90019811 | 309 |
| **CLIP, GRIPPER** | 9333103703 | 49, 55 |
| **CLIP, HITCH PIN** | 7689000701 | 10, 71, 78, 83, 97, 98 |
| **CLIP, SCREW M4** | 90019808 | 309 |
| **CLIP, TUBE** | 9904109571 | 569 |
| **CLOSURE, BEARING** | 7069000175 | 17, 73, 81, 85 |
| **CLOSURE, CABLE DRUM** | 9974102676 | 155 |
| **CLUTCH & COIL ASSY. 24V.** | 90020872 | 667 |
| **CLUTCH SPRAG ASSY. BRAKE** | 9974102214 | 155 |
| **COIL ASSY. 24V** | 90019872 | 157 |
| **COIL ASSY. 24V.** | 90015312 | 133, 477, 493 |
| **COIL ASSY. HEAT & A/C** | 90022799 | 251 |
| **COIL, 24V.** | 9926113117 | 469 |
| | 9926113339 | 473, 478 |
| **COIL, CONDENSER** | 90018841 | 183 |
| **COLLAR** | 4159910665 | 78 |
| **COLUMN** | 90019800 | 309 |
| **COLUMN ASSY. STEERING** | 90018946 | 309 |
| **COMPRESSOR ASSY. 24V** | 90019696 | 667 |
| **COMPRESSOR(FREON)-24V PAD, KIT** | 80029872 | 665 |

## Alphabetical Index — Appendix A


| Description | Part | Page |
|---|---|---|
| CONDENSER MOUNT-LH | 80029687 | 179 |
| CONDENSER MOUNT-RH | 80029686 | 179 |
| CONDUIT | 9333102235 | 35, 55 |
| CONE, BEARING | 7069000183 | 17, 73, 81, 85 |
| | 9049101693 | 512, 538 |
| | 9049101694 | 512, 538 |
| | 9049108948 | 503, 529 |
| | 9049109690 | 503, 529 |
| | 9049112264 | 503, 529 |
| CONNECTOR | 7364002517 | 625 |
| | 7364002518 | 625 |
| CONNECTOR ASSEMBLY | 9333102765 | 35 |
| CONNECTOR ASSY.W/WIRES, 5PASS | 9333103906 | 37 |
| CONNECTOR, 2 CONDUCTOR | 7364001682 | 455 |
| | 7364001683 | 199, 455 |
| CONNECTOR, 3 CONDUCTOR | 7364001684 | 267, 361 |
| | 7364001685 | 267, 359 |
| CONNECTOR, 4 PASS | 7364003076 | 625 |
| CONNECTOR, 4PASS 280 SERIES | 7364100044 | 343 |
| CONNECTOR, CANNON | 9333102760 | 57 |
| CONNECTOR, CANNON 2-SOCKET | 9333102792 | 41 |
| CONNECTOR, CHAIN | 9333102620 | 35 |
| CONNECTOR, COVER/SINGLE | 7892100030 | 341 |
| CONNECTOR, LOCKING | 7364100009 | 455 |
| CONNECTOR, L-SERIES DIMMER SWITCH | 7364100183 | 349 |
| CONNECTOR, L-SERIES SWITCHES | 7364100184 | 291, 349, 355 |
| CONNECTOR, POWER DISTRIBUTION POS | 7346100003 | 651 |
| CONNECTOR, STRAIN RELIEF | 7364001840 | 427 |
| CONSOLE ASSEMBLY - GRAPHIC (COLOR | 9333107526 | 93 |
| CONSOLE COVER ASSY | 80053545 | 299 |
| CONSOLE MOUNTING PLATE | 80024114 | 259 |
| CONSOLE, OVERHEAD PANEL W/HOLE | 80016541 | 325 |
| CONSTANT TORQUE CLAMP | 80061577 | 633 |
| | 80065679 | 637 |
| CONTROL CABLE W/LOCK HANDLE | 7246100350 | 137 |
| CONTROL MOD I/O | 80022523 | 325 |
| CONTROL MODULE | 80035961 | 326 |
| CONTROL MODULE FRAME AND TT | 80053357 | 437 |

## Alphabetical Index — Appendix A

| Description | Part | Page |
|---|---|---|
| **CONTROL MODULE I/O** | 80025017 | 193 |
| **CONTROL SEAT ASSEMBLY-DUAL AXIS** | 80029612 | 275 |
| **CONTROL VALVE ASSY.GROUP 24V.** | 90023154 | 565 |
| **CONTROL VALVE MOUNTING GROUP** | 90013617 | 565 |
| **CONTROLLER ASSEMBLY - 8-32 VOLT** | 80004322<br>80004326 | 280<br>280 |
| **CONVERTER ASSEMBLY - TORQUE** | 9904109582 | 577 |
| **CONVERTER HOUSING GROUP** | 9904110609 | 565 |
| **CONVERTER, VOLTAGE 24V TO 12V** | 90022390 | 310 |
| **COOLER, OIL** | 7726000128 | 639 |
| **COOLER, TRAMS. OIL** | 90023171 | 683 |
| **CORE ASSY.** | 90038155 | 673 |
| **CORE W/ SCREEN (BULK)** | 9333102986 | 37 |
| **COUNTERWEIGHT** | 2159210212 | 115 |
| **COUPLER SAE A TO A** | 7364100217 | 562 |
| **COUPLER, FLEX** | 7364002995 | 657 |
| **COUPLING** | 9352100787<br>9576101136 | 285, 287<br>108 |
| **COUPLING, 1/8" TEST PORT** | 7443100139 | 147 |
| **COUPLING, 3/8" TEST PORT** | 7443100140 | 148, 489 |
| **COVER** | 4159910619<br>80000934<br>80025245<br>80031457<br>9722105550<br>9904105442<br>9904110601<br>9904110607 | 7<br>437<br>193<br>407<br>613<br>569, 595<br>581<br>609 |
| **COVER ASSY. BACK** | 90023916 | 293 |
| **COVER ASSY. CUSHION** | 90023917 | 293 |
| **COVER ASSY. W/SCREWS** | 9333103907 | 37 |
| **COVER PLATE** | 80019938 | 363 |
| **COVER TRANSMISSION ACCESS** | 80031021 | 407 |
| **COVER TREADLE** | 9683100010 | 265, 267 |
| **COVER, ACCESS** | 4159110256 | 401 |
| **COVER, AIR CONDITIONER SIDE** | 80016475 | 245 |
| **COVER, ARMREST** | 7245100056 | 280 |
| **COVER, BOTTOM** | 80024121 | 299 |

## Alphabetical Index — Appendix A


| Description | Part | Page |
|---|---|---|
| **COVER, CAP** | 90016094 | 309 |
| **COVER, CLEANOUT 12"** | 90023146 | 463 |
| **COVER, DASHBOARD** | 90019803 | 309 |
| **COVER, DUST** | 9333102612<br>9333102615 | 41, 57<br>45 |
| **COVER, ELECTRIC WIRE** | 80006553 | 299 |
| **COVER, FRONT** | 90022248<br>9722105433 | 617<br>611 |
| **COVER, FUSE** | 7245100058 | 325 |
| **COVER, HOUSING** | 90000943 | 285, 287 |
| **COVER, LEFT SIDE** | 90018789 | 309 |
| **COVER, REAR** | 90022249 | 617 |
| **COVER, REAR AND PLUG ASSEMBLY** | 9904109565 | 569 |
| **COVER, REAR CORNER (CAB)** | 80005189 | 299 |
| **COVER, RIGHT SIDE** | 90022353 | 309 |
| **COVER, RUBBER** | 9926113273 | 269 |
| **COVER, TOP FRONT** | 80005378 | 299 |
| **COVER, VALVE** | 7258100188 | 187 |
| **CRIMP FERRULE, 20 AWG** | 9333103042 | 41 |
| **CUP, BEARING** | 7794000272<br>9049100535<br>9049101695<br>9049101696<br>9049112263 | 17, 73, 81, 85<br>503, 529<br>512, 538<br>512, 538<br>503, 529 |
| **CURVED RADIATOR HOSE** | 80031696 | 633, 637 |
| **CYL ASSEMBLY-2.50 STEER BR** | 80047322 | 497, 525 |
| **CYL SEAL KIT -2.50 STEER BR** | 80049022 | 519, 545 |
| **CYL SEAL KIT-LOCKOUT BR** | 80049029 | 523 |
| **CYLINDER - LOCKOUT BR** | 80047331 | 497 |
| **CYLINDER ASSEMBLY-4.00 JACK** | 80044364 | 393 |
| **CYLINDER BARREL, 7.00" BORE** | 80048344 | 13 |
| **CYLINDER HEAD** | 7372100213 | 13 |
| **CYLINDER PISTON 7.00" BORE** | 80048945 | 13 |
| **CYLINDER PISTON, 4.75" BORE** | 80048946 | 13 |
| **CYLINDER ROD** | 6768100356 | 13 |
| **CYLINDER SPACER** | 80048535 | 13 |
| **DECAL - BOOM ANGLE** | 7376001935 | 699 |

## Alphabetical Index — Appendix A


| Description | Part | Page |
|---|---|---|
| DECAL - CAUTION ARMREST POSITION | 80011343 | 709 |
| DECAL - CAUTION BATTERY DISCONNEC | 7376102053 | 699 |
| DECAL - CAUTION ELECTRONICS DAMAG | 7376102350 | 699 |
| DECAL - CAUTION ENGINE COOLANT FI | 7376102530 | 699 |
| DECAL - CAUTION MAXIMUM FILL RATE | 7376102966 | 709 |
| DECAL - CAUTION PIN SWING LOCK | 7376100486 | 709 |
| DECAL - CAUTION SPECIAL FILL REQU | 7376102588 | 709 |
| DECAL - CHEVRON OUTRIGGER JACK | 7376101141 | 703 |
| DECAL - CRANESTAR LOGO | 80017200 | 699 |
| DECAL - DANGER BATTERY EXPLOSION | 7376102555 | 699 |
| DECAL - DANGER BOOM NOT WALKWAY | 7376100364 | 710 |
| DECAL - DANGER CABLE WEDGE | 7376100558 | 710 |
| DECAL - DANGER COUNTERWEIGHT | 7376100352 | 709 |
| DECAL - DANGER COUNTERWEIGHT LIFT | 7376100590 | 709 |
| DECAL - DANGER ELECTROCUTION HAZA | 80040531 | 709 |
| DECAL - DANGER ETHER HAZARD | 7376102544 | 699 |
| DECAL - DANGER FIRE HAZARD | 7376102533 | 699 |
| DECAL - DANGER HOIST ENTANGLEMENT | 80002870 | 710 |
| DECAL - DANGER OUTRIGGER CRUSHING | 7376100454 | 709 |
| DECAL - DANGER OUTRIGGER MID EXTE | 7376100398 | 709 |
| DECAL - DANGER PRESSURIZED FLUID | 7376102529 | 699 |
| DECAL - DANGER PRESSURIZED OIL LE | 7376102553 | 699 |
| DECAL - DANGER REVOLVING TIRES | 7376100406 | 709 |
| DECAL - DANGER SUPERSTRUCTURE SWI | 7376100566 | 709 |
| DECAL - DANGER TIPPING/2 BLOCKING | 7376100614 | 709 |
| DECAL - DANGER UNTRAINED OPERATOR | 7376102773 | 709 |
| DECAL - EMERGENCY EXIT | 7376100438 | 709 |
| DECAL - GROVE - 7" WHITE | 7376226070 | 703 |
| DECAL - GROVE FINAL ASSEMBLY AUDI | 80000339 | 699 |
| DECAL - HAND SIGNALS | 7376101567 | 709 |
| DECAL - HYDRAULIC OIL | 7376991546 | 699 |
| DECAL - LIFT POINT PROHIBITION | 7376102910 | 699 |
| DECAL - MANITOWOC CRANE GROUP LOG | 7376202030 | 703 |
| DECAL - MID-EXTEND OUTRIGGERS < | 7376100430 | 709 |
| DECAL - MID-EXTEND OUTRIGGERS > | 7376100422 | 709 |

## Alphabetical Index — Appendix A


| Description | Part | Page |
|---|---|---|
| **DECAL - NO STEP** | 7376991542 | 699 |
| **DECAL - ROTATING BLADES** | 7376011416 | 699 |
| **DECAL - RT540E** | 7376102912 | 703 |
| **DECAL - WEAR BODY HARNESS** | 7376991722 | 699 |
| **DECAL, A2B** | 9333102618 | 43 |
| **DECAL, LABEL F-N-R** | 90016073 | 309 |
| **DECAL-BATTERY DISCONNECT** | 80070745 | 699 |
| **DECAL-CAUTION-TRANS DAMAGE-PT** | 80035777 | 709 |
| **DECAL-CAUTION-TRANS DAMAGE-SYM** | 80043888 | 699 |
| **DECAL-CTN-BATTERY CONN-SYM** | 80063555 | 699 |
| **DECAL-DANGER-ELECTROC HAZ-PT** | 80041223 | 709 |
| **DECAL-DIODE BLOCK** | 80080342 | 699 |
| **DECAL-FUSE BLOCK COVER** | 80080175 | 699 |
| **DECAL-FUSE PANEL-CAB-PT** | 80039480 | 709 |
| **DECAL-GROVE-4.5" GRAY** | 7376247045 | 703 |
| **DECAL-GROVE-6.5" GRAY** | 7376247065 | 703 |
| **DECAL-GROVE-7" GRAY** | 7376246070 | 703 |
| **DECAL-PIN SWING LOCK-SYM** | 80026775 | 699 |
| **DECAL-POWER PANEL-PT** | 80039493 | 709 |
| **DECAL-SYMBOL ID-PT** | 80036666 | 709 |
| **DEFLECTOR** | 9049112096 | 504, 530 |
| **DEVICE, HOLD OPEN** | 90014304 | 237 |
| **DIFF. CARRIER GROUP** | 9049112776 | 501, 527 |
| **DIFF.CARRIER ASSY.@ 5.57 RATIO** | 9049112777 | 504, 530 |
| **DIODE (MODIFIED)** | 80001293 | 200 |
| **DIODE 6AMP KEY** | 80023439 | 342 |
| **DIODE, SILICON RECTIFIER** | 7356000099 | 203 |
| **DIPSTICK** | 7486100132<br>9576101151 | 555<br>109 |
| **DIRECTIONAL CONTROL VALVE** | 80039533 | 123 |
| **DISC BRAKE GROUP** | 9904110625 | 565 |
| **DISC SPRING SPACER** | 9904109650 | 591 |
| **DISC, BRAKE** | 9049107129 | 512, 538 |
| **DISC, CLUTCH** | 9904103635<br>9904103987<br>9904103988 | 585, 587, 591, 593<br>591<br>585, 587, 593 |


**From - DECAL - NO STEP** **To - DISC, CLUTCH**

## Alphabetical Index — Appendix A

| Description | Part | Page |
|---|---|---|
| **DISC, FRICTION** | 9974100594 | 156 |
| **DISC, ORIFICE .015** | 90000899 | 134 |
| **DISCONNECT SWITCH** | 7872100142 | 647 |
| **DISK, BRAKE** | 9974102704 | 156 |
| **DISK, SHUTTLE** | 9926111438 | 126 |
| **DOCK WASHER** | 80017459 | 555 |
| | 80023974 | 377, 497, 525 |
| **DOOR** | 80024018 | 229 |
| | 80031456 | 407 |
| **DOOR ASSY. SERVICE** | 90019456 | 663 |
| **DOOR LATCH COVER** | 80024021 | 229 |
| **DRAW LATCH** | 7585000812 | 187, 419 |
| **DRIER ASSY. RECEIVER** | 90018839 | 183 |
| **DRIVE GEAR** | 9904109653 | 579, 585 |
| **DRIVE LINE ASSEMBLY** | 7364100166 | 547 |
| | 80000554 | 547 |
| | 80000556 | 547 |
| **DRIVE PLATE GROUP** | 9904110612 | 565 |
| **DRIVE SCREW** | 9086100327 | 61, 694 |
| **DRIVE STEER AXLE** | 80054429 | 497, 525 |
| **DRUM** | 9974102941 | 155 |
| **DT PLUG 8SB BLK** | 80023485 | 199 |
| **DT RECP 12PC FLG GRN** | 80023111 | 341 |
| **DT RECP 12PD FLG BRN** | 80023110 | 341 |
| **DT RECP 8PB FLG BLK** | 80023106 | 341 |
| **DTP RECP 4P FLG GRY** | 80023122 | 341 |
| **ECU, I/O-MODE** | 90019805 | 309 |
| **EDGE TRIM** | 6637073000 | 227 |
| **ELBOW** | 7406000306 | 659 |
| | 7406000354 | 659 |
| | 9576101152 | 109 |
| | 9974102212 | 157 |
| **ELECTRIC, WATER & HYDRAULIC** | 80041779 | 117 |
| **ELEMENT** | 9437100825 | 465 |
| **END, TIE ROD (R.H. THD.)** | 9049109727 | 512, 538 |
| **END, TIE ROD.(L.H. THD.)** | 9049109726 | 513, 539 |
| **ENGINE ASSEMBLY-BRAZIL** | 80056047 | 555 |

## Alphabetical Index — Appendix A


| Description | Part | Page |
|---|---|---|
| ENGINE CABLE KIT | 80051312 | 621 |
| ENGINE HOOD GRILL | 80031251 | 675 |
| ENGINE HOOD-KIT | 80031865 | 408 |
| ENGINE MOUNT-RS | 80033565 | 559 |
| ESI-ENGINE | 80038095 | 562 |
| EXTENSION, CENTER POST | 7714000585 | 233 |
| EXTENSION, STEP | 7418100008<br>7418100011 | 405<br>401 |
| EXTRUSION, FRONT DOOR SEAL | 80016417 | 225 |
| EYEBOLT | 9333101923 | 47, 51 |
| F WASHER 18X90X3.0 | 80023972 | 555 |
| FACEPLATE, LIGHTED 24V. | 90020653 | 297 |
| FAN - 26IN DIA SUCKER | 80030260 | 559 |
| FAN & MOTOR ASSY. 24V. 16" | 90018843 | 183 |
| FAN & MOTOR ASSY.24V. | 90038156 | 673 |
| FASTENER, NUT 1/4" - 20 N.C. | 7429000542 | 230, 299 |
| FASTENER, WELL-NUT | 7429000011 | 280 |
| FENDER INSTALLATION-KIT | 80044870 | 401 |
| FENDER SUPPORT | 80030810 | 401 |
| FERRULE, SINGLE WIRE | 7892001001<br>7892001002<br>7892001003 | 355<br>342<br>355 |
| FILTER | 90027014<br>9926112004 | 131<br>126 |
| FILTER ASSEMBLY | 7437100235 | 556 |
| FILTER ASSY. AIR PRIMARY | 90019453 | 663 |
| FILTER ASSY. AIR SECONDARY | 90019454 | 663 |
| FILTER ASSY. HYD. RETURN | 9437100891 | 463 |
| FILTER, AIR | 90018864 | 251 |
| FILTER, ELEMENT TRANS, 6.0"LG | 7437000873 | 631 |
| FILTER, FUEL | 9414101755 | 563 |
| FILTER, FUEL/WATER SEPARATOR | 9414101756 | 563 |
| FILTER,OIL | 9414101679 | 563 |
| FIRE EXTINGUISHER | 80044080 | 369 |
| FIRE EXTINGUISHER ASSEMBLY | 80043532 | 367 |
| FIRE EXTINGUISHER BRACKET | 80054412 | 369 |


From - ENGINE CABLE KIT — To - FIRE EXTINGUISHER BRACKET

## Alphabetical Index — Appendix A


| Description | Part | Page |
|---|---|---|
| **FITTING** | 9974103093 | 157 |
| **FITTING, ADAPTER** | 9437100894 | 465 |
| **FITTING, ADAPTOR** | 9926113277 | 269 |
| **FITTING, BULKHEAD ADAPTER** | 9333101471 | 171 |
| **FITTING, ELBOW** | 90022808 | 251 |
| **FITTING, GREASE** | 9049103562<br>9086100151<br>9364101577<br>9364101870 | 511, 537<br>693<br>551<br>553 |
| **FITTING, ORIFICE .031** | 7013001112 | 143 |
| **FITTING, TEE** | 90022802 | 251 |
| **FITTING, WASHER NOZZLE** | 7949001149 | 257 |
| **FLAG ASSEMBLY - A2B** | 9333102633 | 35 |
| **FLAG, RETAINER** | 9333102373 | 43 |
| **FLANGE** | 9904103677 | 598 |
| **FLANGE, COMPANION OUTPUT REAR** | 9904105662 | 598 |
| **FLANGE, SPLIT** | 7450000102<br>7450000103<br>7450000201<br>7450000254<br>7450000375 | 145, 485<br>485<br>146, 147<br>561<br>556 |
| **FLAT WASHER, 3/4"** | 7949000236 | 10, 19, 111, 151, 279, 497, 525, 555, 559 |
| **FLATWASHER** | 9049101980<br>9049104393 | 512, 538<br>503, 529 |
| **FLEXGUARD** | 8594100271 | 203 |
| **FLEXGUARD - .350" I.D.** | 8594000006 | 200, 301, 349, 360, 458, 626, 653 |
| **FLEXGUARD - .413" I.D.** | 8594000005 | 291, 360, 458, 626 |
| **FLEXGUARD - .500" I.D.** | 8594000004 | 200, 291, 343, 360, 458, 626 |
| **FLEXGUARD - .625" I.D.** | 8594000003 | 291, 349, 355, 360, 458, 626 |
| **FLEXGUARD - .750" I.D.** | 8594000002 | 200, 343, 360, 458, 626 |
| **FLEXGUARD - 1.00" I.D.** | 8594000001 | 200, 360, 458, 626 |
| **FLEXGUARD - 1.250" I.D.** | 8594000022 | 200, 360, 458 |
| **FLEXGUARD - 1.625" I.D.** | 8594000023 | 200, 343, 360, 458 |
| **FLEXGUARD, 1/4" I.D.** | 8594000019 | 200, 213, 291, 343, 349, 360, 371, 383, 458, 497, 626 |
| **FLOOR MAT** | 80004968 | 225 |


**From - FITTING** **To - FLOOR MAT**

## Alphabetical Index — Appendix A


| Description | Part | Page |
|---|---|---|
| FOAM, ACOUSTIC RH FRONT | 80024116 | 255 |
| FOAM, LEFT HAND FRONT ACOUSTIC | 80004581 | 255 |
| FOAM, LEFT HAND REAR ACOUSTIC | 80004580 | 255 |
| FOAM, RIGHT HAND REAR ACOUSTIC | 80004577 | 255 |
| FOOT PEDAL PLATE | 80025279 | 263 |
| FOOT, TELESCOPE CYLINDER | 2159910181 | 9 |
| FORK, SHIFT | 9904105290<br>9904109622 | 598<br>601 |
| FORWARD SHAFT GROUP | 9904110617 | 565 |
| FRAME ASSEMBLY | 80055512 | 387 |
| FRONT COVER-LH | 80044871 | 402 |
| FRONT DASH BOTTOM COVER | 80006552 | 299 |
| FRONT DASH COVER | 80024177 | 299 |
| FRONT FENDER-RH | 80040217 | 402 |
| FRONT HANGER | 2159910194 | 97 |
| FRONT STORAGE TRAY MAT | 7814100084 | 495 |
| FUEL FILTER BRACKET | 80033571 | 556 |
| FUEL TANK | 80050972 | 639 |
| FUSE PANEL | 80034166 | 651 |
| FUSE PANEL ASSEMBLY | 80034165 | 647 |
| FUSE TO BATT. DISC | 80032083 | 655 |
| FUSE, 10 AMP | 7482000033 | 331 |
| FUSE, 15 AMP | 7482000032 | 331 |
| FUSE, 25 AMP | 7482000030 | 331 |
| FUSE, 4 AMP | 90024260 | 93 |
| FUSE, 5 AMP | 7482000035 | 331, 341 |
| FUSE, 7.5 AMP | 7482000034 | 331 |
| FUSE, BUSS BAR | 7892000220 | 341 |
| FUSE, MINI 25AMP | 7482100018 | 456 |
| FUSE, MINI 2AMP | 90020942 | 93 |
| FUSE, MINI 30AMP | 7482100019 | 456 |
| FUSE, MINI 5 AMP | 7482100013 | 455 |
| FUSE, TERMINAL | 7892000218<br>7892000219 | 342<br>342 |
| FUSE, VELOCITY | 7926003526 | 147 |
| FUSE,15A | 90011562 | 93 |


From - FOAM, ACOUSTIC RH FRONT To - FUSE,15A

## Alphabetical Index — Appendix A


| Description | Part | Page |
|---|---|---|
| **FUSE,2A** | 90011561 | 93 |
| **FUSE,7.5A** | 90011563 | 93 |
| **FUSE-AMG-100A** | 80023219 | 651 |
| **FUSE-AMG-250A** | 80023220 | 651 |
| **FUSEHOLDER** | 80022969 | 651 |
| | 80022971 | 651 |
| **FWD SHAFT & DRUM ASSY.** | 9904110463 | 585 |
| **GASKET** | 7794001655 | 559 |
| | 9333102482 | 41, 57 |
| | 9352100657 | 285, 287 |
| | 9352100772 | 285, 287 |
| | 9364101388 | 657 |
| | 9437100480 | 465 |
| | 9904103887 | 605 |
| | 9904106593 | 581 |
| | 9904110599 | 581 |
| | 9904110605 | 607 |
| **GASKET DOOR HANDLE** | 80016406 | 229 |
| **GASKET, 12"** | 90023148 | 463 |
| **GASKET, 2 BOLT HOLE** | 6794100011 | 559 |
| **GASKET, WIPER BLOCK** | 80016424 | 227 |
| **GAUGE** | 9437100456 | 465 |
| **GAUGE 2"-TRANSMISSION OIL TEMP** | 80030279 | 351 |
| **GAUGE, SIGHT** | 9974102855 | 155 |
| **GAUGE, WINDOW** | 7486002666 | 634 |
| **GEAR** | 9049103392 | 512, 538 |
| | 9049112030 | 512, 538 |
| **GEAR - PLANET** | 9974102667 | 156 |
| **GEAR ASSEMBLY, BEVEL** | 9049111750 | 503, 529 |
| **GEAR GROUP** | 9904110614 | 565 |
| **GEAR WHEEL 25T** | 9333103905 | 37 |
| **GEAR, 37T** | 9904110597 | 581 |
| **GEAR, 75T** | 9333101625 | 37 |
| **GEAR, DRIVE SHAFT** | 9722105468 | 611 |
| **GEAR, DRIVEN** | 9722105469 | 611 |
| **GEAR, HIGH RANGE 41T** | 9904109613 | 579, 598 |
| **GEAR, HUB** | 9049105562 | 512, 538 |
| **GEAR, IDLER** | 9904109590 | 583 |


**From - FUSE,2A** **To - GEAR, IDLER**

## Alphabetical Index — Appendix A


| Description | Part | Page |
|---|---|---|
| **GEAR, IDLER FRONT 21T** | 9904109815 | 579, 595 |
| **GEAR, LOW CLUTCH 63T** | 9904109651 | 579, 591 |
| **GEAR, LOW RANGE 42T** | 9904109816 | 579, 598 |
| **GEAR, PINION** | 9049101846 | 512, 538 |
| **GEAR, PLANET** | 9974102671 | 156 |
| **GEAR, PUMP DRIVE** | 9904109705 | 583 |
| **GEAR, REVERSE CLUTCH 43T** | 9904109649 | 579, 587 |
| **GEAR, REVERSE IDLER** | 9904109602 | 589 |
| **GEAR, SET** | 9926110266 | 313 |
| **GEAR, SIDE** | 9049109699 | 504, 530 |
| **GEAR, SUN** | 9974102194 | 155 |
| **GEAR,RING** | 9576101126 | 109 |
| **GEAR,SUN** | 9576101176<br>9576101180 | 108<br>107 |
| **GLASS** | 80003366 | 233 |
| **GLASS ASSY. STATIONARY** | 90020088 | 235 |
| **GLASS DOOR** | 80016383 | 229 |
| **GLASS DOOR ASSEMBLY** | 80024013 | 225 |
| **GLASS, SLIDING** | 90014319 | 235 |
| **GLASS, VENT** | 90014310 | 237 |
| **GLASS, WINDSHIELD** | 7498100012 | 225 |
| **GRAB HANDRAIL** | 80006549<br>80049924 | 260<br>407 |
| **GREASE FITTING 1/8"-NPT 90 DEG** | 90026998 | 523 |
| **GREASE FITTING 1/8"-NPT(45DEG)** | 90026989 | 523 |
| **GRILL** | 4159210191 | 115 |
| **GRIP, CABLE** | 9333103739 | 55 |
| **GROMMET** | 7506000018<br>7506000019<br>7506000021<br>9880100093 | 383<br>205<br>137<br>215 |
| **GROMMET, 3/4"** | 90018867 | 251 |
| **GROMMET, RUBBER** | 9581100461 | 415 |
| **GUAGE, OIL LEVEL** | 7486002936 | 463 |
| **GUARD** | 80046500 | 8 |
| **GUARD, FAN** | 9726100351 | 683 |


**From - GEAR, IDLER FRONT 21T** **To - GUARD, FAN**

## Alphabetical Index — Appendix A


| Description | Part | Page |
|---|---|---|
| **GUARD, HOSE** | 7814100077 | 148, 488 |
| **GUARD, MUD** | 4159110268 | 401 |
| | 4159110269 | 401 |
| **GUARD, MUFFLER** | 6814100042 | 657 |
| **GUARD, PINION** | 4159200657 | 101 |
| **GUARD, RAIN** | 80016418 | 226 |
| **GUARD, WINDOW** | 90014313 | 235 |
| **GUIDE ASSY.** | 9086101338 | 693 |
| **GUIDE, CABLE** | 9333101435 | 35 |
| **HA, LMI iFLEX2** | 80023914 | 93 |
| **HALF CLIP PLAIN, SS** | 80028838 | 413 |
| **HANDLE** | 2159910074 | 97 |
| | 80016533 | 78 |
| | 80022442 | 229 |
| **HANDLE ASSY.** | 90012640 | 285 |
| | 90012643 | 287 |
| **HANDLE, GRAB** | 4159110343 | 401 |
| | 4159110364 | 401 |
| **HANDLE, LOCKING** | 90016119 | 310 |
| **HANDLE, MODIFIED DOOR** | 80004480 | 229 |
| **HANDLE, SHELL (BOTH HALVES)** | 9352100786 | 287 |
| | 9352100792 | 285 |
| **HANDRAIL, GRAB** | 7511100015 | 319 |
| | 80005520 | 259 |
| **HANGER** | 2159910070 | 97 |
| **HANGER, REAR** | 2155910018 | 97 |
| | 2155910034 | 97 |
| **HARNESS ASSEMBLY-ENGINE RELAY PAN** | 80023449 | 651 |
| **HARNESS ASSEMBLY-FRONT PANEL CAB** | 80023710 | 351 |
| **HARNESS ASSEMBLY-FUSE & RELAY** | 80043367 | 331 |
| **HARNESS ASSEMBLY-OVERHEAD CAB PAN** | 80023422 | 345 |
| **HARNESS ASSEMBLY-SEAT** | 80030292 | 281 |
| **HARNESS ASSEMBLY-SS** | 80030317 | 193 |
| **HARNESS ASSEMBLY-SUPERSTRUCTURE C** | 80042878 | 325 |
| **HARNESS ASSY.** | 90018824 | 181 |
| | 90018872 | 251 |
| | 90019804 | 309 |
| | 90020649 | 297 |

## Alphabetical Index — Appendix A


| Description | Part | Page |
|---|---|---|
| **HARNESS ASSY.** | 90022856<br>90023919 | 265<br>293 |
| **HARNESS ASSY. WATER VALVE** | 90018875 | 251 |
| **HARNESS, SENSOR** | 9683100008 | 267 |
| **HEAD** | 90026940<br>90026990 | 519, 545<br>523 |
| **HEAD CYL** | 9049107152 | 517, 543 |
| **HEAD, CYLINDER** | 6372005910<br>7372100274 | 395<br>13 |
| **HEAD, FILTER** | 9437100842 | 465 |
| **HEAD, TRANSMISSION FILTER** | 7437000874 | 631 |
| **HEATER & A/C INSTALLATION -** | 80037618 | 217 |
| **HEATER & CONTROL PANEL (24V)** | 80027886 | 295 |
| **HEATER HOSE** | 80026570 | 379 |
| **HEATER, 750W 120V ENGINE BLOCK** | 7515000877 | 677 |
| **HEX HEAD NUT** | 00437742 | 185 |
| **HHCS 1-8UNCx5.25 G8** | 80021340 | 101 |
| **HHCS M12x40 -10.9 ISO 4017** | 7127211553 | 7 |
| **HHCS M18x170 8.8 ISO 4014** | 7126263350 | 169 |
| **HHCS M20x40 -10.9 ISO 4014** | 7127271550 | 19 |
| **HHCS M5x12 -8.8 ISO 4017** | 7126130853 | 259 |
| **HI/LOW RANGE SHIFT CONT. GROUP** | 9904110624 | 565 |
| **HINGE** | 90014309 | 237 |
| **HINGE, LEFT HAND NYLON** | 7519000198 | 325, 407 |
| **HO ASY, 11/16-16X3/8 I.D. X 07** | 7555207902 | 173 |
| **HOIST ASSEMBLY - HP15C/17G** | 7974100039 | 151 |
| **HOLDER, FUSE** | 7086001082 | 332 |
| **HOLDER, PAD** | 4165910219 | 8 |
| **HOOK** | 9053100042 | 61 |
| **HOOK & NUT** | 9086100495 | 693 |
| **HORN** | 7025800003 | 257 |
| **HOSE** | 90018881 | 251 |
| **HOSE - USE 8596902528** | 6543003602 | 562 |
| **HOSE ASSEMBLY** | 981786 | 157 |
| **HOSE ASSY** | 7546803793<br>7566503700 | 488<br>556 |


**From - HARNESS ASSY.** **To - HOSE ASSY**

## Alphabetical Index

## Appendix A


| Description | Part | Page |
|---|---|---|
| **HOSE ASSY - FUEL #8 STR-STR** | 7572319231 | 560 |
| **HOSE ASSY #10** | 90023259 | 669 |
| **HOSE ASSY #8** | 90023258 | 669 |
| **HOSE ASSY 1.00 SUCTION** | 80034290 | 563 |
| **HOSE ASSY 1-1/4"IDX72" SUCTION** | 80072247 | 561 |
| **HOSE ASSY, .25 DIA** | 7555104623 | 488 |
| **HOSE ASSY, .75 DIA** | 7555507491 | 488 |
| **HOSE ASSY, 1 1/2" I.D.X 23"** | 7546802393 | 488 |
| **HOSE ASSY, 1 1/4" HYDRAULIC** | 7543109361 | 561 |
| **HOSE ASSY, 1" STR ORFS X 23"** | 7555602360 | 147 |
| **HOSE ASSY, 1" STR ORFS X 45"** | 7555604560 | 147 |
| **HOSE ASSY, 1" STR ORFS X 48"** | 7555604860 | 148 |
| **HOSE ASSY, 1.00 DIA** | 7555603591 | 488 |
| **HOSE ASSY, 1/2" I.D. X 156"** | 7554315600 | 393 |
| **HOSE ASSY, 1/2"I.D. X 44" LONG** | 7555304402 | 563 |
| **HOSE ASSY, 1/2"I.D. X 45" LONG** | 7555304500 | 489 |
| **HOSE ASSY, 1/2"I.D. X 60"LONG** | 7555306000 | 485 |
| **HOSE ASSY, 1/2"I.D. X 65"LONG** | 7555306500 | 489 |
| **HOSE ASSY, 1/4" ID** | 7555111021 | 561 |
| **HOSE ASSY, 1/4" ID STR X 39"** | 7550103921 | 148 |
| **HOSE ASSY, 1/4" ID STR X 42"** | 7550104221 | 148 |
| **HOSE ASSY, 1/4"I.D. 45 X 90"** | 7555109005 | 147 |
| **HOSE ASSY, 1/4"I.D. X 15" LONG** | 7561101503 | 560 |
| **HOSE ASSY, 1/4"I.D. X 18" LONG** | 7555101801 | 149, 488 |
| **HOSE ASSY, 1/4"I.D. X 25'** | 8596902512 | 639 |
| **HOSE ASSY, 1/4"I.D. X 28"LONG** | 7555102801 | 488 |
| **HOSE ASSY, 1/4"I.D. X 30" LONG** | 7555103000<br>7561103003 | 147<br>556, 560 |
| **HOSE ASSY, 1/4"I.D. X 36" LONG** | 7555103600 | 147 |
| **HOSE ASSY, 1/4"I.D. X 42" LONG** | 7555104201 | 488 |
| **HOSE ASSY, 1/4"I.D. X 76" LONG** | 7555107601 | 147 |
| **HOSE ASSY, 3/4" I.D. X 93"** | 7543109321 | 147 |
| **HOSE ASSY, 3/4" ID** | 7555514390 | 561 |
| **HOSE ASSY, 3/4" ID X 85"** | 7555508503 | 561 |
| **HOSE ASSY, 3/4"I.D. X 34" LONG** | 7555503400 | 147 |

## Alphabetical Index — Appendix A


| Description | Part | Page |
|---|---|---|
| **HOSE ASSY, 3/8 I.D. X 72"LONG** | 7555207203 | 149 |
| **HOSE ASSY, 3/8"I.D. X 18"LONG** | 7555201802 | 488 |
| **HOSE ASSY, 3/8"I.D. X 19" LONG** | 7555201921 | 147 |
| **HOSE ASSY, 3/8"I.D. X 21"LONG** | 7555202101 | 489 |
| **HOSE ASSY, 3/8"I.D. X 24" LONG** | 7555202400<br>7555202401 | 489<br>485 |
| **HOSE ASSY, 3/8"I.D. X 28" LONG** | 7555202801 | 488 |
| **HOSE ASSY, 3/8"I.D. X 44" LONG** | 7555204400 | 173 |
| **HOSE ASSY, 3/8"I.D. X 48" LONG** | 7555204801 | 173 |
| **HOSE ASSY, 3/8"I.D. X 60" LONG** | 7555206001 | 149 |
| **HOSE ASSY, 3/8"I.D. X 68" LONG** | 7555206801 | 489 |
| **HOSE ASSY, 3/8"I.D. X 68"LONG** | 7555206800 | 149 |
| **HOSE ASSY, 3/8"I.D. X 72" LONG** | 7555207201 | 149 |
| **HOSE ASSY, 3/8"I.D. X 78" LONG** | 7555207800 | 173 |
| **HOSE ASSY, 3/8"I.D. X 89" LONG** | 7555208900 | 147, 148 |
| **HOSE ASSY, 5/8" I.D. STR-9 HYD** | 7555402403 | 148 |
| **HOSE ASSY, 5/8" STR ORFS X 21"** | 7555402101 | 147 |
| **HOSE ASSY, HOT 1" STRT-STRT** | 7561610260 | 562 |
| **HOSE ASSY, USE AS REQUIRED** | 7550103631<br>7555105401<br>9543100045<br>9974102208 | 209<br>488<br>257<br>157 |
| **HOSE ASSY,1 1/4" STR ORF X 25"** | 7555702591 | 147 |
| **HOSE ASSY,1/4" I.D. HYD STR-90** | 7561106003 | 561 |
| **HOSE ASSY,3/4" I.D. X 42" LONG** | 7555504201 | 147 |
| **HOSE ASSY. #10** | 90018820 | 181 |
| **HOSE ASSY. #6** | 90018819<br>90018842 | 181<br>183 |
| **HOSE ASSY. #8** | 90018821 | 181 |
| **HOSE ASSY. 3" LG** | 90022803 | 251 |
| **HOSE ASSY. 90DEG** | 90022804 | 251 |
| **HOSE CLAMP 13-19mm** | 80054549 | 557, 633 |
| **HOSE CLAMP 19-27mm** | 80054545 | 379, 555, 562 |
| **HOSE CLAMP 32-44mm** | 80054547 | 633 |
| **HOSE CLAMP 44-57mm** | 80056176 | 555 |
| **HOSE CLAMP 9-13mm** | 80054548 | 639 |

## Alphabetical Index — Appendix A


| Description | Part | Page |
|---|---|---|
| HOSE CLAMP 95-114mm | 80054543 | 397 |
| HOSE, 1 1/2" STR S/F X 64" 90 | 7546806493 | 147 |
| HOSE, 1 1/4" STR S/F X 64" STR | 7546706470 | 147 |
| HOSE, 3/8" I.D X 72" LONG | 7555207202 | 147, 173 |
| HOSE, 5/8" I.D. | 8596902528 | 379, 560, 561 |
| HOSE, 90 DEG | 90022801 | 251 |
| HOSE, DRAIN LINE 1/2" X 15FT | 90018883 | 252 |
| HOURMETER | 7486002973 | 647 |
| HOUSING | 9904105289 | 597 |
| HOUSING ASSY. BLOWER / DRAIN | 90018853 | 251 |
| HOUSING ASSY. HYD. | 90021925 | 121 |
| HOUSING, BASE ASSY. | 90018852 | 251 |
| HOUSING, BODY | 90022247 | 617 |
| HOUSING, CANNON CONNECTOR | 9333102770 | 45 |
| HOUSING, CONVERTER | 9904109562 | 567 |
| HOUSING, CYLINDER BRAKE | 9974102861 | 156 |
| HOUSING, DIFF. W/CAP ASSY. | 9049112762 | 503, 529 |
| HOUSING, DRUM ASSY. W/SPRINGS | 90019021 | 37 |
| HOUSING, HOOK PIVOT | 9086100539 | 693 |
| HOUSING, WATER | 9364101826 | 121 |
| HOUSING,FLANGE MTG. | 9576101184 | 108 |
| HUB | 9904103615 | 597 |
| HUB & SHAFT GROUP | 90026729 | 501, 527 |
| HUB ASSY. | 90026478 | 512, 538 |
| HUB, CLUTCH DISC | 9904108979 | 593 |
| HUB, DISC | 9904109597 | 587 |
| HUB, SHIFT | 9904103626 | 598 |
| HYDR HOSE ASSY | 7555208502 | 173 |
| HYDRAULIC OIL COOLER | 80033850 | 671 |
| HYDRAULIC RESERVIOR ASSEMBLY | 80039526 | 461 |
| I.D. PLATE, NAME / RATING | 9086101217 | 694 |
| IDLER SHAFT GROUP | 9904110622 | 565 |
| INDICATOR INSTALLATION - | 2159910036 | 1 |
| INDICATOR, LED 3RD WRAP | 7486100142 | 365 |
| INDICATOR, RESTRICTION | 7576000310 | 659 |


From - HOSE CLAMP 95-114mm To - INDICATOR, RESTRICTION

## Alphabetical Index — Appendix A


| Description | Part | Page |
|---|---|---|
| INHIBITOR, CORROSION | 7296000004 | 35 |
| INNER MID WELD | 80058308 | 7 |
| INSERT, HEX M10 | 80016421 | 227 |
| INSERT, NYLON | 9372103596<br>9372103612 | 395<br>395 |
| JACK CYLINDER 4.00 BR | 80057022 | 393 |
| JACK, MODIFIED | 80016520 | 78 |
| JOINT, 90 DEGREE LIVE | 7364002614 | 7 |
| JUNCTION BOX ASSEMBLY - | 9333102768 | 55 |
| JUNCTION BOX,- MACHINED | 9333104159 | 57 |
| KEEPER | 9585100055 | 187, 419 |
| KEY | 9576101074<br>9904108558 | 229<br>587 |
| KEY SET, (2) | 90020929 | 351 |
| KEY, IGNITION | 90018981 | 309 |
| KEYED WASHER | 80022876 | 10, 71, 78 |
| KIT - BOOM WEAR PAD (NSM) | 80074694 | 11 |
| KIT - BOOM WEAR PAD 2 OVER 4 | 80074677 | 11 |
| KIT - DECKING INSTL | 80049682 | 401 |
| KIT - FRONT WIPER | 80004449 | 226 |
| KIT - SKYLIGHT WIPER | 80004448 | 226 |
| KIT, BOLT | 90019689 | 667 |
| KIT, BUSHING W/BALL | 9926113111 | 313 |
| KIT, CAM OVERHAUL | 90017521 | 629 |
| KIT, COVER ASSY. | 9683100090 | 303 |
| KIT, DICS SPRING | 90011882 | 629 |
| KIT, DIFF | 9049112767 | 504, 530 |
| KIT, DOOR HANDLE | 80004479 | 229 |
| KIT, DRIVE ASSY. | 9683100088 | 303 |
| KIT, ELECTRICAL ASSY. | 9683100089 | 303 |
| KIT, GASKET AND HARDWARE | 9352100751 | 639 |
| KIT, HARDWARE | 90000992<br>9049108966 | 239, 241<br>503, 529 |
| KIT, JAY BRACKET | 7880000092 | 639 |
| KIT, LATCH | 9086100639 | 61 |
| KIT, LINING | 9049109243 | 517, 543 |


From - INHIBITOR, CORROSION To - KIT, LINING

## Alphabetical Index — Appendix A

| Description | Part | Page |
|---|---|---|
| **KIT, LINING** | 9188101041 | 629 |
| **KIT, OVERHAUL** | 90011883 | 629 |
| **KIT, PIN BUSHING & RETAINER** | 90022846 | 265, 267 |
| **KIT, REPAIR** | 9752100944 | 477 |
| | 9752100994 | 133 |
| | 9752100996 | 469 |
| | 9752101039 | 477 |
| | 9926105593 | 477 |
| | 9926108124 | 478 |
| **KIT, RING W/CROSS PIN** | 9926113113 | 313 |
| **KIT, ROTARY GROUP** | 9722105564 | 614 |
| **KIT, SEAL** | 7373000159 | 395 |
| | 90001067 | 157 |
| | 90001135 | 683 |
| | 90014312 | 237 |
| | 90014436 | 395 |
| | 90021928 | 121 |
| | 90022256 | 617 |
| | 90022859 | 629 |
| | 90023277 | 128 |
| | 9049111761 | 517, 543 |
| | 9364101830 | 121 |
| | 9437100452 | 465 |
| | 9576101337 | 109 |
| | 9722105445 | 611 |
| | 9722105566 | 614 |
| | 9926106323 | 473 |
| | 9926107747 | 134 |
| | 9926107803 | 14 |
| | 9926108423 | 133, 477 |
| | 9926108644 | 133, 477, 493 |
| | 9926110372 | 133 |
| | 9926111719 | 478 |
| | 9926111722 | 133 |
| | 9926112358 | 133 |
| | 9926112997 | 477 |
| | 9926113057 | 133, 471 |
| | 9926113058 | 133 |
| | 9926113116 | 313 |
| | 9926113170 | 477 |
| | 9926113176 | 471 |
| | 9926113185 | 477 |
| | 9926113187 | 477 |
| | 9926113195 | 478 |
| | 9974101280 | 157 |

## Alphabetical Index — Appendix A


| Description | Part | Page |
|---|---|---|
| KIT, SEAL | 9974102222 | 159 |
| KIT, SEAL VALVE ASSY. | 9926113031 | 129 |
| KIT, SEAL MOUNTING | 9752101414 | 463 |
| KIT, SEAT BELT | 7576000311 | 280 |
| KIT, SENSOR & MTG SCREW | 4301410000 | 265, 267 |
| KIT, SERVICE, LOCK ASSY. | 90014326 | 235 |
| KIT, SHIM | 9049112763<br>9576101339 | 503, 529<br>109 |
| KIT, SPACER | 9049108952 | 503, 529 |
| KIT, SPRING | 9188101043 | 629 |
| KIT, STRAINER | 9258100174 | 463 |
| KIT, SWASH PLATE GROUP | 9722105565 | 614 |
| KIT, TREADLE ASSY. | 9683100087 | 303 |
| KIT, VALVE ASSY. WORK SECTION | 90012928 | 134 |
| KIT,BRAKE ASSY. | 9576101165 | 109 |
| KIT,DISC BRAKE | 9576101102 | 109 |
| KIT,DRIVE PLATE | 9904109669 | 575 |
| KIT,LATCH | 9086100788 | 693 |
| KIT,SEAL BRAKE | 9576101101 | 109 |
| KIT,SEAL MOTOR | 9576101186 | 108 |
| KIT,SHIM | 9576101171 | 107 |
| KNOB | 90016149 | 93 |
| KNOB ASSY. | 90020648 | 297 |
| KNOB W/SET SCREW | 90020652 | 297 |
| KNOB, FLUTED | 7511000093 | 279 |
| KNUCKLE, STEER | 9049112654<br>9049112655 | 511, 537<br>511, 537 |
| LABEL, 24V | 90022817 | 251 |
| LADDER | 80025187 | 405 |
| LADDER ASSEMBLY | 80025188 | 401 |
| LANYARD | 6246001174<br>9333102232 | 175<br>43 |
| LATCH MTG PLATE | 80022413 | 229 |
| LATCH, ARROWHEAD | 7585000184 | 407 |
| LATCH, RIGHT HAND ROTARY | 80004406 | 229 |
| LENS, AMBER | 9581100390 | 213 |


From - KIT, SEAL — To - LENS, AMBER

## Alphabetical Index — Appendix A


| Description | Part | Page |
|---|---|---|
| **LENS, MOONSTONE** | 9581100058 | 225 |
| **LEVEL, CIRCULAR** | 7486000225 | 257 |
| **LEVER** | 6593000137 | 413 |
| | 9974102828 | 158 |
| **LEVER & CABLE ASSY. RECLINER** | 9798100792 | 293 |
| **LEVER, ROLLER** | 80013051 | 158 |
| **LIFT CYLINDER ASSEMBLY** | 80092942 | 169 |
| **LIGHT ASSEMBLY - MODIFIED STROBE** | 6581100074 | 211 |
| **LIGHT ASSY, 24 VOLT WORK** | 7581100061 | 27, 225 |
| **LIGHT, 24 VOLT DOME** | 7581000279 | 225 |
| **LIGHT, STROBE** | 7581100000 | 213 |
| **LINK** | 6601000965 | 113 |
| **LINK, 13.5" LG** | 90011814 | 239, 241 |
| **LINK, DRIVE ARM** | 90011813 | 239, 241 |
| **LINK, OFFSET** | 4159910646 | 77 |
| | 4159910647 | 77 |
| **LMI 8-PORT CANBUS BOX** | 80023931 | 93 |
| **LMI CAB KIT, IFLEX2, EXPERT** | 80023913 | 89 |
| **LMI INTERNAL LIGHT BAR** | 80008129 | 317 |
| **LOCK** | 7585000789 | 233 |
| **LOCK ASSEMBLY - SWING** | 2165210021 | 111 |
| **LOCK, PLATE** | 9904101298 | 567 |
| **LOCKNUT** | 7659000042 | 425, 427 |
| | 7659000081 | 83 |
| | 80022874 | 11, 71, 78 |
| | 90020651 | 297 |
| | 9049111513 | 503, 529 |
| | 9333101984 | 41 |
| | 9364101902 | 549 |
| **LOCKWASHER** | 80022875 | 10, 71, 78 |
| | 90024258 | 673 |
| **LOCKWASHER, (18)** | 80038845 | 455 |
| **LOUVER ASSY. 3"** | 90018865 | 251 |
| **LOUVER ASSY. BALL** | 90018877 | 252 |
| **LOUVER ASSY. RECT.** | 90018876 | 252 |
| **LOW SHAFT,HUB & DRUM W/ VALVE** | 9904109603 | 591 |
| **LOW SPEED SHAFT GROUP** | 9904110620 | 565 |
| **LUG** | 6608100004 | 397 |


**From - LENS, MOONSTONE** **To - LUG**

## Alphabetical Index — Appendix A


| Description | Part | Page |
|---|---|---|
| LUG | 80004481 | 229 |
| M12 CABLE STRAIGHT, MALE, 1M | 80017392 | 341 |
| M12 CAP,MALE,PLASTIC,LOOP | 80030502 | 455 |
| MACHINE SCREW, M4X12 SLOTTED | 7121110801 | 226 |
| MACHINE SCREW, M4X20 SLOTTED | 7121111101 | 226 |
| MACHINE SCREW, M5X12 SLOTTED | 7121130801 | 281, 332 |
| MAGNET | 7616000519 | 279 |
| | 9049109717 | 507, 533 |
| MAGNET, CUP | 7616000517 | 279 |
| MANIFOLD | 9974103090 | 157 |
| MARKING TAGS, 1-5 | 9333103044 | 41 |
| MAST | 2159910192 | 83 |
| MAST ASSEMBLY | 2159910191 | 78 |
| MASTER CONTROL MODULE | 80023755 | 647 |
| MESH, SUNSCREEN | 7942000522 | 226 |
| MIRROR, 8" CONVEX | 7628000025 | 165, 167, 377, 421 |
| MODULE ASSEMBLY CONTROL | 7352100110 | 193 |
| MODULE ASSY, CONTROL | 7352100109 | 193 |
| MODULE, CONTROL | 7352100070 | 647 |
| MOTOR | 9880100092 | 215 |
| MOTOR ASSEMBLY - SWING DRIVE | 7576134386 | 101 |
| MOTOR ASSY. 24V. | 90000907 | 239, 241 |
| MOTOR ASSY. HYD. | 90000830 | 157 |
| | 90018043 | 683 |
| | 9576101395 | 108 |
| MOTOR SUB ASSEMBLY. HYDRAULIC | 90013464 | 155 |
| MOULD TRIM-LOK 6100B3X1/8C | 8637052013 | 634, 637 |
| MOULDING | 8246964300 | 407 |
| | 8496900043 | 225 |
| | 8496900045 | 260 |
| | 8496900046 | 408 |
| | 8496980002 | 225, 332, 401, 408, 648 |
| | 8506903750 | 227 |
| | 8506904000 | 227 |
| | 8637059004 | 639 |
| | 9637100001 | 405 |
| MOULDING - USE 9637100001 | 6637007010 | 419 |
| MOULDING, 6B100B3X3/16A | 8637052012 | 226 |


From - LUG — To - MOULDING, 6B100B3X3/16A

## Alphabetical Index — Appendix A

| Description | Part | Page |
|---|---|---|
| **MOUNT** | 7638000183<br>80035379 | 555<br>257 |
| **MOUNT, MOTOR BASE** | 9974102731 | 156 |
| **MOUNT, SHEAVE** | 2155910039 | 9 |
| **MOUNT, SHOCK** | 7638000137<br>7638000203 | 555<br>377 |
| **MOUNT, WIRE TIE** | 7638000750 | 317 |
| **MOUNTING ANGLE DISCONNECT** | 80032836 | 647 |
| **MOUNTING ANGLE HOURMETER** | 80032835 | 647 |
| **MOUNTING BAND** | 80062363 | 657 |
| **MOUNTING BRACKET** | 4159210194<br>4159210195<br>80006460<br>80014331 | 671<br>671<br>363<br>383 |
| **MOUNTING KIT - OIL COOLER** | 7576001743 | 639 |
| **MOUNTING PLATE** | 80004486<br>80066936 | 229<br>639 |
| **MOUNTING STRAP** | 80024117<br>80045250 | 259<br>633 |
| **MTG BRACKET WELD** | 2165210120 | 113 |
| **MUFFLER** | 80057422 | 657 |
| **MUFFLER CLAMP** | 7300000231 | 657 |
| **NIPPLE** | 7649000062 | 633, 637 |
| **NIPPLE, HOSE** | 7649000049 | 633 |
| **NIPPLE, HOSE 5/8 ID TO 1/2 NPT** | 7649000059 | 119, 560 |
| **NOSE, AUXILIARY** | 2159910022 | 71 |
| **NOT SERVICED** | NS | 207 |
| **NUT** | 7659000796<br>7659000865<br>80076029<br>90016404<br>90020650<br>9049111517<br>9049112463<br>9086100061<br>9086100074<br>9086100144<br>9086100300<br>9352100528<br>9352100676 | 229<br>299, 326, 332<br>275<br>310<br>297<br>503, 529<br>512, 538<br>693<br>693<br>61<br>61<br>285, 287<br>287 |

## Alphabetical Index — Appendix A

| Description | Part | Page |
|---|---|---|
| **NUT** | 9352100692 | 285, 287 |
| | 9352100791 | 285, 287 |
| | 9904102383 | 595, 598 |
| | 9904103605 | 597 |
| | 9904105301 | 601 |
| | 9904109601 | 589 |
| | 9904109618 | 601 |
| | 9926107745 | 133, 469, 473, 477, 478, 493 |
| | 9926111436 | 125 |
| | 9974102995 | 158 |
| **NUT #4** | 9333102480 | 41, 57 |
| **NUT, #8-32NF WELL** | 7429100008 | 325 |
| **NUT, 5/16" FLANGE HEAD** | 90015596 | 683 |
| **NUT, 8MM WELL** | 7429100012 | 7 |
| **NUT, DEUTSCH** | 7659190018 | 456 |
| **NUT, EYE** | 9333103768 | 35 |
| **NUT, JAM** | 9049101497 | 511, 537 |
| | 9049109022 | 503, 529 |
| | 9974103094 | 157 |
| **NUT, LOCK** | 9498100355 | 235 |
| **NUT, RETAINING** | 7659000287 | 193, 325 |
| | 7659000862 | 363 |
| | 7659190033 | 495, 671 |
| **NUT, RETAINING 8 X 1.25** | 7659190020 | 115, 245, 259, 401, 634 |
| **NUT, RETAINING M6** | 7659190019 | 226, 299, 634 |
| **NUT, S.S.** | 90014305 | 237 |
| **NUT, SELF-LOCK** | 90019831 | 309 |
| | 90022388 | 310 |
| **NUT, SELF-LOCKING** | 846531 | 39 |
| **NUT, STEERING WHEEL** | 90016403 | 310 |
| **NUT,JAM** | 9188101097 | 629 |
| **NUT,RING** | 9576101173 | 107 |
| **NYLON SPACER** | 80016241 | 495 |
| **O RING PLUG** | 7711080001 | 485 |
| **O/R EXT CYL 2.50 BR** | 80057206 | 397 |
| **O/R EXT CYL-COMPLETE ASSY** | 80056042 | 393 |
| **O/R PAD BUMPER .81"** | 80046829 | 411 |
| **O/R REAR STEER VALVE** | 80029764 | 467 |
| **OIL COOLER COVER** | 80030598 | 681 |

## Alphabetical Index — Appendix A


| Description | Part | Page |
|---|---|---|
| **OIL COOLER-TRANSMISSION** | 80030569 | 681 |
| **ORIFICE** | 90022254 | 617 |
| **ORING** | 9974101198 | 155 |
| **O-RING** | 7754100010 | 179, 665 |
| | 7755011002 | 144, 146, 148, 486, 487, 556, 560, 561 |
| | 7755012002 | 143, 144, 145, 146, 147, 148, 149, 173, 485, 486, 487, 489, 562, 563, 681 |
| | 7755014000 | 133 |
| | 7755014002 | 143, 144, 393, 397, 485, 489, 560, 563, 639 |
| | 7755016002 | 146, 149 |
| | 7755018002 | 143, 146, 485, 486, 487, 488, 556, 561, 562 |
| | 7755021002 | 7, 143, 145, 146, 147, 486, 561, 563, 681 |
| | 7755025002 | 148, 149, 561, 681 |
| | 7755107002 | 129 |
| | 7755110000 | 601 |
| | 7755152000 | 108 |
| | 7755170000 | 108 |
| | 7755219002 | 146, 147 |
| | 7755220002 | 128 |
| | 7755222002 | 145, 485, 561 |
| | 7755225002 | 145, 485 |
| | 7755232002 | 556 |
| | 7755245000 | 108 |
| | 7755251000 | 108 |
| | 7755260000 | 108 |
| | 7755265000 | 108 |
| | 7755904002 | 14, 108, 119, 144, 146, 148, 149, 157, 173, 395, 487, 489, 556, 560, 561, 562 |
| | 7755906002 | 143, 144, 146, 148, 149, 173, 393, 395, 485, 486, 487, 489, 560, 561, 563, 639, 681 |
| | 7755908002 | 119, 143, 144, 145, 148, 173, 393, 397, 485, 487, 489, 563, 639 |
| | 7755910002 | 146, 478, 488, 562, 681 |
| | 7755912002 | 125, 126, 143, 147, 485, 486, 556, 561, 562, 563 |
| | 7755916002 | 7, 14, 143, 148, 488, 561 |
| | 7755920002 | 148, 681 |
| | 90000105 | 158 |
| | 90018777 | 310 |

## Alphabetical Index — Appendix A


| Description | Part | Page |
|---|---|---|
| **O-RING** | 90023963 | 155 |
| | 9049106322 | 512, 538 |
| | 9176100603 | 287 |
| | 9364101985 | 121 |
| | 9364101986 | 121 |
| | 9364101987 | 121 |
| | 9437100575 | 465 |
| | 9576101334 | 107 |
| | 9576101338 | 109 |
| | 9722105456 | 617 |
| | 9722105560 | 614 |
| | 9722105563 | 614 |
| | 9722105567 | 613 |
| | 9722105568 | 613 |
| | 9722105569 | 614 |
| | 9904103500 | 569, 605 |
| | 9904103660 | 601 |
| | 9904103993 | 597 |
| | 9904103994 | 597 |
| | 9904103997 | 598 |
| | 9904105299 | 601 |
| | 9904105336 | 569 |
| | 9904106445 | 567, 569 |
| | 9904106805 | 589 |
| | 9904107179 | 601 |
| | 9904108409 | 597 |
| | 9904109357 | 567, 569 |
| | 9904109481 | 597 |
| | 9904109561 | 577, 597 |
| | 9904109570 | 569 |
| | 9904109641 | 598 |
| | 9904110793 | 609 |
| | 9904110794 | 609 |
| | 9904110795 | 609 |
| | 9904110796 | 609 |
| | 9926103232 | 173 |
| | 9926106646 | 173 |
| | 9926111469 | 125 |
| | 9926111748 | 478 |
| | 9926112013 | 125 |
| | 9926113181 | 477 |
| | 9926113182 | 477 |
| | 9974102203 | 156, 157 |
| | 9974102868 | 155 |
| | 9974102898 | 157 |
| **O-RING #10** | 90018814 | 181, 669 |
| **O-RING #6** | 90018813 | 181, 183 |

## Alphabetical Index — Appendix A


| Description | Part | Page |
|---|---|---|
| **O-RING #8** | 90018818 | 181, 251, 669 |
| **O-RING PLUG #6** | 7709000031 | 148 |
| **O-RING PLUG #8** | 7709000038 | 144, 148 |
| **O'RING POLYACUL** | 9904103779 | 569 |
| **O-RING SEAL** | 9926113253 | 134 |
| **O-RING, 2"** | 7755228002 | 485 |
| **O-RING, 2-PKT** | 90019917 | 667 |
| **O-RING, LOW TEMPERATURE** | 7754000140<br>7754000143<br>7754000154<br>7754000157<br>7754000160<br>7754000169 | 395<br>13<br>13<br>13<br>395<br>13 |
| **O-RING, SQUARE** | 9437100479 | 465 |
| **O-RING, VITON** | 9926111931<br>9926111932 | 134<br>134 |
| **O-RING,VITON** | 9926112501 | 134 |
| **OUTER** | 9049100895 | 503, 529 |
| **OUTER MID WELD** | 80058309 | 7 |
| **OUTPUT SHAFT AND BEARING** | 9904109612 | 597 |
| **OUTPUT SHAFT GROUP** | 90015440 | 565 |
| **OUTRIGGER BEAM** | 80053124 | 393 |
| **OUTRIGGER BEAM ASSEMBLY-BR** | 80053694 | 391 |
| **OUTRIGGER BEAM INSTALL** | 80053696 | 387 |
| **OUTRIGGER CONTROLLER ASSEMBLY** | 80049319 | 423 |
| **OUTRIGGER FLOAT** | 80062021 | 413 |
| **OUTRIGGER FLOAT ASSEMBLY** | 80062020 | 411 |
| **OUTSIDE MIRROR WITH HOLDER** | 02254477 | 377 |
| **P.C. BOARD** | 9333103896 | 37 |
| **PAD** | 7671100005 | 407 |
| **PAD, ARMREST** | 7033001063 | 279 |
| **PAD, PEDAL** | 9188100365 | 207 |
| **PAD, SIDE WEAR** | 7671100021 | 7 |
| **PAD, TRAY** | 80018360 | 647 |
| **PAD, WEAR** | 6671000166<br>6671000236<br>6671000266 | 8<br>8, 391<br>10 |

## Alphabetical Index — Appendix A


| Description | Part | Page |
|---|---|---|
| **PAD, WEAR** | 7671100007 | 97 |
| | 7671100016 | 97 |
| | 7671100095 | 98 |
| **PANEL ASM OVERHEAD** | 80052124 | 325 |
| **PANEL ASSEMBLY FUSE & RELAY** | 80043366 | 325 |
| **PANEL ASSY-FRONT CONSOLE** | 80030293 | 325 |
| **PANEL DISPLAY, CLUSTER 12V.** | 90022352 | 309 |
| **PANEL FUSE & RELAY** | 80023037 | 331 |
| | 80023039 | 331 |
| **PANEL NUT (18)** | 80038844 | 455 |
| **PANEL, FRONT CONSOLE** | 80023540 | 351 |
| **PANEL, OVERHEAD CONSOLE** | 80041859 | 345 |
| **PARALLEL** | 7892000935 | 456, 625 |
| **PARALLEL, NON - INSULATED** | 7892000194 | 201, 203, 291, 343, 360, 456, 625 |
| | 7892000195 | 200, 291, 343, 349, 360, 456, 625, 653 |
| | 7892000196 | 175, 200, 343, 349, 355, 456, 625 |
| **PARK BRAKE RANGE SHIFT VALVE** | 80029763 | 467 |
| **PEDAL ASSEMBLY - ELECTRONIC TELES** | 7683100010 | 301 |
| **PEDAL ASSEMBLY - FOOT** | 7683000610 | 205 |
| **PEDAL ASSY.** | 9926113272 | 269 |
| **PEDAL BRACKET** | 80016505 | 263 |
| **PEDAL BRACKET, OPPOSITE** | 80024252 | 263 |
| **PEDAL GROUP INSTALLATION** | 80042879 | 217 |
| **PEDAL, THROTTLE 5V** | 80040089 | 263 |
| **PIN** | 2159910153 | 77 |
| | 6689100012 | 71 |
| | 6689100027 | 75 |
| | 6689100127 | 78 |
| | 6689100143 | 78 |
| | 6689100155 | 77 |
| | 7689000014 | 419 |
| | 7689000797 | 342, 626 |
| | 7689000813 | 457 |
| | 7689001756 | 78, 115, 401 |
| | 7689002053 | 342, 359, 457, 626 |
| | 7689100033 | 201, 283, 497 |
| | 7689100046 | 19 |
| | 80017250 | 115 |


**From - PAD, WEAR** **To - PIN**

## Alphabetical Index — Appendix A


| Description | Part | Page |
|---|---|---|
| **PIN** | 80017568 | 9 |
| | 80017570 | 8 |
| | 80017571 | 9 |
| | 80026806 | 391 |
| | 80032622 | 393 |
| | 9053100043 | 61 |
| | 9053100044 | 61 |
| | 9086101026 | 693 |
| | 9188100153 | 207 |
| | 9576100517 | 156 |
| | 9576101181 | 107 |
| | 9576101183 | 107 |
| | 9826100008 | 31, 67 |
| | 9904109588 | 581, 583 |
| | 9974101183 | 156 |
| | 9974102966 | 161 |
| **PIN - 1.50" DIA** | 80018328 | 497, 525 |
| | 80018332 | 497, 525 |
| **PIN & COTTER** | 9086101063 | 417 |
| **PIN ASSY** | 80017252 | 115 |
| **PIN TELE ROD END** | 80017569 | 7 |
| **PIN, 16 - 14 GA** | 7689000704 | 27, 29, 181, 203, 213, 239, 241, 252, 265, 342, 355, 415, 427, 457, 653, 667 |
| **PIN, 18 - 16 GAGE** | 7689001782 | 285, 287, 303, 342, 349, 355, 371, 457, 626 |
| **PIN, CENTER** | 9086100533 | 693 |
| **PIN, CLEVIS** | 7689100036 | 391 |
| **PIN, CLIP** | 7689000036 | 19 |
| | 7689000053 | 71, 78 |
| **PIN, COTTER** | 9053100003 | 61 |
| | 9086100294 | 61 |
| | 9188100367 | 207 |
| | 9333101916 | 47, 51 |
| | 9826100009 | 31, 67 |
| **PIN, COTTER-END YOKE NUT** | 9049109511 | 513, 539 |
| **PIN, DOWEL** | 9722105601 | 617 |
| | 9904109564 | 567, 569 |
| | 9974102842 | 158 |
| **PIN, HITCH** | 7689000059 | 71, 78, 83, 98 |
| | 7689000721 | 71, 97 |
| **PIN, LOCK HAIR** | 7689000023 | 10 |

## Alphabetical Index — Appendix A


| Description | Part | Page |
|---|---|---|
| **PIN, QUICK RELEASE** | 9086100571<br>9086100584 | 61<br>693 |
| **PIN, ROLL** | 9086100204<br>9086100269 | 693<br>693 |
| **PIN, SAFETY SNAP** | 7689001653 | 75 |
| **PIN, SWING LOCK** | 2159210126 | 137 |
| **PIN, W/GROOVE** | 9086100578 | 61 |
| **PIN,14/16GA GOLD** | 7689100043 | 457 |
| **PINION** | 9049108965<br>9576101167 | 504, 530<br>107 |
| **PIN-L/O CYL** | 80018330 | 497 |
| **PIN-L/O CYLINDER** | 80018329 | 497 |
| **PIPE** | 9576101149 | 109 |
| **PIPE PLUG, S/S 1/2" NPT HEX** | 80026318 | 639 |
| **PISTON** | 90026938<br>90026993<br>9049107148<br>9904108406<br>9904109616 | 519, 545<br>523<br>517, 543<br>597<br>601 |
| **PISTON ASSY, CLUTCH** | 9904108934 | 585, 587, 591 |
| **PISTON ASSY.** | 9904110467 | 587, 593 |
| **PISTON NUT M45 X 1.5** | 90026994 | 523 |
| **PISTON RING** | 9904109646 | 573 |
| **PISTON, CYLINDER** | 6701001035 | 395 |
| **PISTON, PILOT** | 9926113183 | 477 |
| **PLANETARY CARRIER ASSY.** | 9576101340<br>9576101341 | 109<br>109 |
| **PLASTIC, CAB WINDOW RH** | 80024123 | 299 |
| **PLATE** | 4159110071<br>4159110165<br>4174900282<br>6705006974<br>6705016148<br>6705018338<br>6705100115<br>6705170914<br>80022424<br>80033702<br>9049110945<br>9904110602 | 405<br>8, 391<br>77<br>9<br>119<br>279<br>657<br>279<br>229<br>555<br>517, 543<br>581 |

| Description | Part | Page |
|---|---|---|
| **PLATE** | 9974102825<br>9974103098 | 158<br>158 |
| **PLATE - MODULE** | 80023834 | 332 |
| **PLATE - SHIELD** | 4159210193 | 671 |
| **PLATE - TRANS DIPSTICK SUP** | 80033706 | 556 |
| **PLATE ASSY. REAR** | 90018858 | 251 |
| **PLATE ASSY. SEAT BASE** | 90018861 | 251 |
| **PLATE CONNECTOR BULKHEAD** | 80023469 | 331 |
| **PLATE MODULE** | 80023076 | 331 |
| **PLATE SENSOR** | 80017852 | 497 |
| **PLATE, ACCESS** | 80016497 | 259 |
| **PLATE, ADAPTER** | 9053100086 | 61 |
| **PLATE, ADJUSTING** | 4159110164<br>4159110308 | 8<br>391 |
| **PLATE, ANTI 2 BLOCK** | 4197910236 | 59 |
| **PLATE, BACKING** | 90020643 | 297 |
| **PLATE, CAB LATCH** | 80004996 | 229 |
| **PLATE, CABLE ANCHOR** | 4159910571 | 8 |
| **PLATE, CAUTION** | 9086100137<br>9086100305 | 694<br>61 |
| **PLATE, COVER** | 4159110298<br>4159110299<br>4159110300<br>80005246<br>80058287<br>90018854<br>9722105561 | 401<br>401<br>401<br>259<br>260<br>251<br>614 |
| **PLATE, COVER FLANGE** | 9364101818 | 121 |
| **PLATE, DEAD END** | 942481 | 694 |
| **PLATE, END** | 9904110464 | 585, 587, 591, 593 |
| **PLATE, FILTER** | 90018873 | 251 |
| **PLATE, KEEPER** | 4159901579<br>4165910073 | 10<br>10 |
| **PLATE, KICKBACK** | 4159910612<br>4159910613 | 8<br>9 |
| **PLATE, LOCK** | 4159900070 | 10 |
| **PLATE, MANIFOLD** | 90019687 | 667 |
| **PLATE, MOUNT** | 90022800 | 251 |

## Alphabetical Index — Appendix A


| Description | Part | Page |
|---|---|---|
| **PLATE, MOUNTING** | 4159810060 | 559 |
| | 90020645 | 297 |
| | 9352100789 | 285, 287 |
| **PLATE, MOUNTING 17** | 80016489 | 259 |
| **PLATE, MOUNTING 24** | 80016487 | 259 |
| **PLATE, PRESSURE** | 9974102177 | 156 |
| **PLATE, RETAINER** | 6705171011 | 119 |
| | 9576101307 | 107 |
| **PLATE, ROUND KEEPER** | 4159910260 | 8 |
| **PLATE, SEAT MOUNT** | 80023842 | 280 |
| **PLATE, SIDE SET** | 9086101341 | 693 |
| **PLATE, SIDE WT.** | 9086101342 | 693 |
| **PLATE, SPACER** | 6949001174 | 9 |
| **PLATE, TERMINAL STRIP END** | 9333102664 | 41, 57 |
| **PLATE, THRUST** | 90022250 | 617 |
| | 9722105434 | 611 |
| | 9974102196 | 156 |
| | 9974102197 | 156 |
| **PLATE,DISTRIBUTOR** | 9926110265 | 313 |
| **PLATE,END** | 9576101142 | 107 |
| **PLATE,NAME I.D.** | 9053100051 | 61 |
| **PLATE-DIAG CONN** | 80012470 | 360 |
| **PLATE-RETAINER** | 80055309 | 119 |
| **PLATE-STEP INNER** | 80049496 | 402 |
| **PLATE-STEP OUTER** | 80049497 | 402 |
| **PLENUM ASSY.** | 90018857 | 251 |
| **PLUG** | 7242000015 | 325 |
| | 7242000027 | 257 |
| | 7364100051 | 415, 455 |
| | 7450000401 | 486 |
| | 7709000239 | 625 |
| | 7709000809 | 371 |
| | 7709000811 | 297 |
| | 7709000812 | 285, 287, 291 |
| | 7709000838 | 456 |
| | 7709000845 | 456 |
| | 7709000849 | 456 |
| | 7709000850 | 456 |
| | 7709000874 | 199, 342, 355, 359, 456, 625 |
| | 7709000883 | 199, 343, 349, 359, 456 |

## Alphabetical Index — Appendix A

| Description | Part | Page |
|---|---|---|
| **PLUG** | 7709100877 | 199, 291, 359, 456 |
| | 7709100882 | 199, 341 |
| | 7709100907 | 199, 359, 456 |
| | 7709100908 | 199, 359, 456 |
| | 7709100946 | 199, 341 |
| | 7709800004 | 14 |
| | 7711040001 | 489 |
| | 80023116 | 359 |
| | 80023117 | 359 |
| | 90026473 | 507, 533 |
| | 9049107157 | 517, 543 |
| | 9049107402 | 517, 543 |
| | 9437100895 | 465 |
| | 9576101141 | 109 |
| | 9576101154 | 109 |
| | 9576101185 | 108 |
| | 9576101220 | 109 |
| | 9722105465 | 617 |
| | 9722105514 | 611 |
| | 9722105556 | 613 |
| | 9904101047 | 597 |
| | 9904103528 | 577 |
| | 9904103913 | 567 |
| | 9904104055 | 567, 609 |
| | 9904108396 | 567, 569 |
| | 9904108408 | 597 |
| | 9904109356 | 567, 569 |
| | 9926111396 | 478 |
| | 9926112006 | 126, 127 |
| | 9926112141 | 125 |
| | 9926113294 | 478 |
| | 9974102931 | 157 |
| **PLUG - M12 X 1.5** | 80018055 | 639 |
| **PLUG #10** | 9926113295 | 478 |
| **PLUG ASSEMBLY, SHUT-OFF** | 9926111439 | 125 |
| **PLUG ASSY** | 9926111999 | 125 |
| **PLUG ASSY.** | 9926113025 | 126, 127, 128 |
| | 9926113285 | 125 |
| **PLUG ASSY. - SAE** | 90027015 | 131 |
| **PLUG DTM06-12SC W/WM-12S WEDGE** | 7709100909 | 199 |
| **PLUG DTM06-12SD W/WM-12S WEDGE** | 7709100910 | 199 |
| **PLUG W/BLUE WEDGE** | 7709100911 | 199, 625 |
| **PLUG WITH O-RING** | 9904106063 | 569 |
| **PLUG, #8 SAE, 75-16** | 7709800000 | 119 |

## Alphabetical Index — Appendix A


| Description | Part | Page |
|---|---|---|
| **PLUG, 1" BUTTON** | 7242000021 | 21, 401 |
| **PLUG, 12 SOCKET** | 7709000846 | 200, 349, 359, 456 |
| **PLUG, 2 PASS** | 7364100008 | 455 |
| **PLUG, 2 SOCKET** | 7709000844 | 29, 199, 359, 456, 625 |
| **PLUG, 3 PIN** | 7709100902 | 199, 456, 625 |
| **PLUG, 3 SOCKET** | 7709000839<br>7709100901 | 625<br>456 |
| **PLUG, 4 PASS** | 7364003075<br>7709100870 | 625<br>199, 625 |
| **PLUG, 4 SOCKET** | 7709000936<br>7709100895 | 199, 291, 359, 456<br>199 |
| **PLUG, BLEEDER** | 9722105555 | 613 |
| **PLUG, CAVITY** | 7892001058 | 626 |
| **PLUG, DEUTSCH** | 7709100890 | 625 |
| **PLUG, DOT** | 7709000021 | 260 |
| **PLUG, DRAIN** | 9904108964 | 569 |
| **PLUG, DTO6-12SC-C015 W/WEDGE** | 7709100930 | 359 |
| **PLUG, DTO6-12SD-C015 W/WEDGE** | 7709100931 | 359 |
| **PLUG, EXPANSION** | 9049102254 | 507, 533 |
| **PLUG, FILL/DRAIN (MAGNETIC)** | 90000383 | 512, 538 |
| **PLUG, FILLER** | 9049100054 | 569 |
| **PLUG, FLUSH** | 9974102201 | 155 |
| **PLUG, HOLE** | 9333102047<br>9333102808 | 45<br>41 |
| **PLUG, L SERIES LH1 PANEL** | 7242100005 | 280, 345, 351 |
| **PLUG, MAGNETIC** | 7709000157<br>9904101317 | 463<br>569 |
| **PLUG, ORIFICE .040"** | 9926113171 | 133 |
| **PLUG, ORIFICE .076** | 9926113297 | 478 |
| **PLUG, ORIFICE .261** | 9926113296 | 478 |
| **PLUG, ORIFICE ASSY.** | 90022957 | 126, 127, 128 |
| **PLUG, PORT** | 9926111747 | 478 |
| **PLUG, SAE #4** | 7709800001 | 14, 108, 119, 395 |
| **PLUG, SAE #6** | 7709800005 | 395 |
| **PLUG, SEALING** | 7689000503<br>7826000650 | 200, 239, 241, 342, 349, 355, 359, 457, 626, 653, 667<br>200, 359, 458, 626 |

## Alphabetical Index — Appendix A


| Description | Part | Page |
|---|---|---|
| PLUG, STAINLESS STEEL | 90022830 | 641 |
| PLUG, VENT | 9974102858 | 155 |
| PLUG, W/WEDGE | 7709100929 | 359 |
| PLUG,SCREW TYPE | 9188101096 | 629 |
| PLUG/DTV06-18SA W/WEDGE WV-18P | 80023114 | 349 |
| PLUG/DTV06-18SB W/WEDGE WV-18P | 80023115 | 291 |
| POINTER | 4195900219 | 23 |
| POINTER ASSEMBLY | 2114900861 | 21 |
| POST, CENTER | 90020195 | 235 |
| POTENTIOMETER, CONTROL, TEMP. | 90020644 | 297 |
| POTENTIOMETER,LENGTH | 9333103897 | 37 |
| PRESSURE TRANSDUCER, iFLEX 5 (2 P | 9333103870 | 171 |
| PRIMARY PLANET GEAR SHAFT | 981127 | 156 |
| PRIMARY SUN GEAR | 9974102677 | 155 |
| PROTECTIVE TAPE STRIP INSTALL | 80054540 | 217 |
| PROXY SENSOR-PNP 10mm RANGE | 7872100062 | 283 |
| PULLEY-8'K' DIA. 47.85 | 80029158 | 559 |
| PUMP ASSEMBLY - GEAR | 7722100101 | 559 |
| PUMP ASSEMBLY - PISTON | 7722100100 | 559 |
| PUMP ASS'Y WITH FLOW DIVIDER | 80033489 | 562 |
| PUMP ASSY. CHARGING | 90023153 | 605 |
| PUMP DRIVE GROUP | 9904110616 | 565 |
| QUICK-PIN W/ LANYARD (.44 DIA) | 80003153 | 411 |
| RAD HOSE 1.75 ID 12"LG | 80039837 | 633 |
| RAD TUBE SUPPORT BRACKET | 80041035 | 562 |
| RADIATOR ASSEMBLY-BRAZIL | 80056049 | 633 |
| RADIATOR CAC TOC | 80031703 | 637 |
| RADIATOR TUBE | 80059106 | 637 |
| RADIATOR TUBE WELD | 80059105 | 633 |
| RADIATOR VENT LINE | 80022516 | 557, 634 |
| RAIL, TERMINAL STRIP MOUNTING | 9333102759 | 41, 57 |
| REAR BEARING | 9904109648 | 587, 593 |
| REAR COVER-LH | 80044884 | 402 |
| REAR FENDER-RH | 80040216 | 402 |
| REAR HOOD COVER | 80031017 | 407 |


From - PLUG, STAINLESS STEEL To - REAR HOOD COVER

## Alphabetical Index — Appendix A


| Description | Part | Page |
|---|---|---|
| **REAR IDLER GEAR** | 9904109652 | 579, 595 |
| **RECEPT (3P BLU WEDGE)** | 80012750 | 455, 625 |
| **RECEPT (9P)** | 80038826 | 455 |
| **RECEPT DT-2P (DT04-2P-E008)** | 80001292 | 203 |
| **RECEPT FLG GRY** | 80023432 | 341 |
| **RECEPT FLG W/WEDGE** | 80023118<br>80023119<br>80023120<br>80023121 | 341<br>341<br>341<br>341 |
| **RECEPT,W/WEDGE** | 7892100086 | 355 |
| **RECEPTABLE, 12 P FLANGE** | 7892001012 | 341 |
| **RECEPTACLE** | 5898700 | 341 |
| **RECEPTACLE,** | 7364002749<br>7892000241<br>7892000824<br>7892000832<br>7892000835<br>7892000939<br>7892000947<br>7892000949<br>7892000950<br>7892000951<br>7892000978<br>7892000986<br>7892001051 | 265<br>456<br>239, 241, 252, 265, 371<br>285, 287<br>29<br>456<br>252, 303, 625<br>27, 200, 349, 359, 456, 625<br>349, 456<br>427<br>200, 342, 355<br>457, 653<br>200, 355, 457 |
| **RECEPTACLE, 12 VOLT DASH MOUNT** | 7892000999 | 325 |
| **RECEPTACLE, 2 PIN** | 7892000836 | 181, 213, 667 |
| **RECEPTACLE, 3 WAY** | 7892100036 | 200, 626 |
| **RECEPTACLE, 9 PIN** | 7892001053 | 359 |
| **RECEPTACLE, DTM04-4P** | 7892100039 | 199 |
| **RECEPTACLE, DTM-3P** | 7892100010 | 199, 283, 497 |
| **RECEPTACLE, SPLICE BLOCK** | 7892001036 | 199, 349, 359, 457 |
| **REGULATOR ASSY.** | 9722105558 | 614 |
| **RELAY** | 90016107 | 310 |
| **RELAY, 24 VOLT** | 7750000058<br>7750000741<br>80017719 | 342<br>343<br>455 |
| **RELAY, 300 AMP** | 7750000757 | 651 |
| **RELIEF, VALVE** | 9333103041 | 41 |
| **RESISTOR 120 ohm 5watt** | 80035796 | 455 |

## Alphabetical Index — Appendix A


| Description | Part | Page |
|---|---|---|
| **RESISTOR ASSY.** | 90018869 | 251 |
| **RESISTOR, 4700 OHMS** | 9333101465 | 45 |
| **RETAINER** | 2159910073 | 97 |
| | 4140900205 | 10 |
| | 9364101403 | 657 |
| **RETAINER, 3"** | 90018866 | 251 |
| **RETAINER, SPRING** | 9904103568 | 587, 593 |
| | 9904105981 | 587 |
| | 9904107784 | 591 |
| **RETAINING NUT, M10 X 1.50** | 7659190024 | 407, 461 |
| **REV. & 2ND, SHAFT & DRUM ASSY** | 9904110466 | 587 |
| **REVERSE & 2ND. SHAFT GROUP** | 9904110618 | 565 |
| **REVERSE IDLER GROUP** | 9904110619 | 565 |
| **RIGHT SIDE HOOD COVER** | 80030935 | 407 |
| **RING** | 9722105458 | 617 |
| | 9904103570 | 593 |
| | 9904108407 | 597 |
| **RING GEAR** | 9576101174 | 109 |
| **RING, 4" BACKUP** | 7753100066 | 13 |
| **RING, ADJUSTING** | 9049108971 | 503, 529 |
| **RING, ANTISEIZURE** | 9364101981 | 121 |
| **RING, ANTI-SEIZURE** | 90021924 | 121 |
| **RING, BACKING** | 9904109579 | 575 |
| **RING, BACK-UP** | 6753000303 | 13 |
| | 7753000835 | 13 |
| | 7753100057 | 13 |
| | 7755332609 | 395 |
| | 7755342609 | 395 |
| | 7755348609 | 13 |
| | 7755439609 | 13 |
| | 9722105600 | 617 |
| | 9974102178 | 156 |
| | 9974102226 | 156 |
| **RING, GLYDE** | 9364101984 | 121 |
| **RING, HYTREL BACK-UP** | 7753100056 | 13 |
| **RING, LOCATING** | 9904103893 | 583 |
| **RING, PISTON** | 9904108795 | 591 |
| | 9904109575 | 573 |
| | 9904110465 | 585, 587, 593 |
| **RING, RETAINER** | 90022253 | 617 |


**From - RESISTOR ASSY.** **To - RING, RETAINER**

## Alphabetical Index — Appendix A


| Description | Part | Page |
|---|---|---|
| **RING, RETAINER** | 9722105441 | 611 |
| | 9722105553 | 613 |
| | 9722105570 | 614 |
| | 9974103087 | 158 |
| **RING, RETAINING** | 9049101600 | 503, 529 |
| | 9576101333 | 107 |
| | 9904101022 | 597 |
| | 9904101209 | 595 |
| | 9904103563 | 587 |
| | 9904103621 | 573, 597 |
| | 9904103899 | 581, 583 |
| | 9904105997 | 587 |
| | 9904106400 | 573 |
| | 9904106408 | 577, 597 |
| | 9904107558 | 593 |
| | 9904109593 | 585 |
| | 9974102191 | 155 |
| | 9974102219 | 157 |
| | 9974102221 | 157 |
| **RING, SEAL** | 9364101983 | 121 |
| | 9904105957 | 573 |
| **RING, SEAL-V** | 9364101982 | 121 |
| **RING, SNAP** | 9274100125 | 512, 538 |
| | 9904101348 | 587, 593 |
| | 9904101354 | 583 |
| | 9904103567 | 587, 591, 593 |
| | 9904103632 | 585, 587, 591, 593 |
| | 9904103906 | 573, 591, 595 |
| | 9904103980 | 585, 587 |
| | 9904103983 | 585 |
| | 9904105286 | 573 |
| | 9904106001 | 591 |
| | 9904109459 | 597 |
| | 9904109581 | 577 |
| | 9904109583 | 577 |
| **RING, SPLIT** | 9086100815 | 693 |
| **RING, WEAR** | 7753000274 | 13 |
| | 7753000444 | 13 |
| | 7753000540 | 395 |
| | 7753001553 | 393 |
| | 90026909 | 519, 545 |
| **RING, WIPER** | 7753000161 | 13 |
| | 7753000376 | 13 |
| | 7794000277 | 395 |
| **RING,RETAINER** | 9576101130 | 107 |

## Alphabetical Index — Appendix A


| Description | Part | Page |
|---|---|---|
| **RING,RETAINER** | 9576101133<br>9576101137<br>9576101138<br>9576101140 | 109<br>108<br>108<br>109 |
| **RING,RETAINER E-CLIP** | 9086100577 | 61 |
| **RIVET** | 90014301 | 237 |
| **RIVET, POP** | 7760000008<br>7760000011 | 175<br>429 |
| **ROCKER SW-SPDT ON-OFF-ON** | 80049315 | 425 |
| **ROD** | 90026992<br>9974102810 | 523<br>158 |
| **ROD ASSEMBLY** | 90026935 | 519, 545 |
| **ROD ASSY.** | 9372103624 | 395 |
| **ROD, LATCH** | 80004994 | 229 |
| **ROD, PISTON** | 9904109619 | 601 |
| **ROD, TIE** | 9926111533 | 125 |
| **ROLLER** | 203583<br>203584<br>6772000112<br>80048013<br>9974102840 | 39<br>39<br>77<br>375<br>158, 161 |
| **ROLLER ASSEMBLY** | 80048017 | 373 |
| **ROLLER ASSEMBLY. CABLE** | 90013465 | 155 |
| **ROLLER ASSY. IDLER GROUP** | 90013061 | 155 |
| **ROLLER BEARING** | 9974101182 | 156 |
| **ROLLER GUIDE ASSEMBLY** | 9333101437 | 35 |
| **ROLLER KIT** | 9683100015 | 265, 267 |
| **ROLLER, HOIST CABLES** | 80013553 | 10 |
| **ROLLER, NYLATRON** | 7772100019 | 78 |
| **ROLLER, NYLATRON IM** | 80020264 | 10 |
| **ROLLER, NYLATRON OM** | 80020265 | 10 |
| **ROLLER, W/3RD. WRAP OFFSET** | 9974103095 | 158 |
| **ROLLPIN** | 9974102814 | 158 |
| **ROTARY LATCH - LEFT HAND** | 80004407 | 229 |
| **RUBBER, FLOCKED 154" LONG** | 7794001721 | 233 |
| **SADDLE SPACER** | 80060094 | 149, 393, 489 |
| **SADDLE SPACER .63-6.0" BUNDLES** | 80061556 | 149, 393, 490 |
| **SATALITE ANTENNA** | 80014746 | 385 |


**From - RING,RETAINER** **To - SATALITE ANTENNA**

## Alphabetical Index — Appendix A


| Description | Part | Page |
|---|---|---|
| **SCR COOL HOSE 3/8" ID x 103" L** | 80019779 | 633 |
| **SCR COOL HOSE 3/8" ID x 8" LG** | 80026985 | 633 |
| **SCREEN, TRACK LEFT HAND** | 80016409 | 226 |
| **SCREEN, TRACK RIGHT HAND** | 80016410 | 226 |
| **SCREW** | 90000942<br>90014303<br>90014315<br>90014324<br>9049112764<br>9352100777<br>9498100371<br>9511100007<br>9904109584<br>9926113274 | 285, 287<br>237<br>235<br>235<br>503, 529<br>285, 287<br>235, 237<br>285, 287<br>581, 583<br>269 |
| **SCREW #4** | 9333102669 | 41, 57 |
| **SCREW,** | 7099001153<br>9049110385<br>9049111509<br>9086100805<br>9498100349<br>9904103916<br>9904109704<br>9926111974 | 425<br>507, 533<br>504, 530<br>693<br>235<br>569<br>573<br>128 |
| **SCREW, 3/8" - 16NC X 3/8" SET** | 7099000378 | 13 |
| **SCREW, BLEEDER** | 9049100638 | 517, 543 |
| **SCREW, CATCH** | 7786000539 | 233 |
| **SCREW, CENTER POST** | 7786000537 | 233 |
| **SCREW, COVER** | 90018947<br>9333101566 | 309<br>37 |
| **SCREW, FLANGE** | 7115150878<br>7115160878 | 77<br>71, 78, 83 |
| **SCREW, GRUB** | 9364101821<br>9722105436<br>9722105453 | 121<br>611<br>617 |
| **SCREW, HEX SOCKET** | 9926113142 | 471 |
| **SCREW, LOCK** | 9904101044<br>9904109621 | 597<br>601 |
| **SCREW, M20X260 HEX HEAD CAP** | 7127273950 | 497, 525 |
| **SCREW, M4 X 12** | 90019809 | 309 |
| **SCREW, M4 X 16** | 90019810 | 309 |
| **SCREW, M4X30 LONG SLOTTED PAN** | 7121111301 | 280 |

## Alphabetical Index — Appendix A


| Description | Part | Page |
|---|---|---|
| **SCREW, PUMP MOUNTING** | 90013245 | 605 |
| **SCREW, SET** | 9372103595 | 395 |
| | 9372103611 | 395 |
| **SCREW, SET (SLOTTED)** | 7786000544 | 391 |
| **SCREW, SLOTTED MACHINE** | 9333102790 | 45 |
| **SCREW, STOP** | 9049106456 | 511, 537 |
| **SCREW, T-HANDLE** | 9246100183 | 137 |
| **SCREW, THRUST** | 9049109021 | 503, 529 |
| **SCREW, THUMB** | 7099001159 | 325 |
| **SCREW, VALVE MOUNTING** | 9904105328 | 607 |
| **SEAL** | 7364100052 | 458 |
| | 7794000602 | 13 |
| | 7794000608 | 395 |
| | 90012853 | 597 |
| | 90022252 | 617 |
| | 9049112781 | 507, 511, 533, 537 |
| | 9722105596 | 617 |
| | 9904105302 | 601 |
| | 9904105307 | 601 |
| **SEAL KIT** | 80048726 | 14 |
| **SEAL, 4.00" BUFFER** | 80047848 | 13 |
| **SEAL, 6.00" BUFFER** | 80044969 | 13 |
| **SEAL, 90" BULB** | 90014311 | 237 |
| **SEAL, BEARING 21'** | 9069100118 | 101 |
| **SEAL, BLACK FINISH 19"** | 90014321 | 235 |
| **SEAL, BUFFER** | 7794000543 | 395 |
| **SEAL, CABLE (TAN)** | 7364100264 | 361 |
| **SEAL, CAP** | 90000633 | 134 |
| **SEAL, COVER** | 9333101565 | 37 |
| **SEAL, CUTTING** | 9333101472 | 171 |
| **SEAL, DEEP Z ROD** | 7794000626 | 13 |
| | 7794000638 | 395 |
| **SEAL, DUST RING** | 9926113110 | 313 |
| **SEAL, MODIFIED** | 80004992 | 225 |
| **SEAL, OIL** | 9049112786 | 503, 529 |
| | 9049112927 | 512, 538 |
| | 9576101331 | 107 |
| **SEAL, PISTON** | 9904103637 | 585, 587, 591, 593 |

## Alphabetical Index — Appendix A

| Description | Part | Page |
|---|---|---|
| **SEAL, PISTON** | 9904103638<br>9974102176 | 585, 587, 591, 593<br>156 |
| **SEAL, SHAFT** | 9364101868<br>9722105557<br>9722105598 | 553<br>614<br>617 |
| **SEAL, SQUARE** | 9722105597 | 617 |
| **SEAL,OIL** | 9904109139<br>9974101216<br>9974102190 | 573<br>155<br>155 |
| **SEALANT, ADHESIVE** | 6829015131 | 225, 229 |
| **SEAL-BRUSH TOP** | 80038105 | 225 |
| **SEALER, ADHESIVE BACKED** | 1006766 | 230 |
| **SEALING PLUG - NYLON** | 80004700 | 342 |
| **SEAL-SPECIAL** | 9926111468<br>9926111470 | 125<br>125 |
| **SEAT** | 80046456 | 275 |
| **SEAT, SPRING** | 9926113298 | 134 |
| **SENDER, FUEL LEVEL** | 7352000878 | 639 |
| **SENDER,TRANMISSION TEMPERATURE** | 7872000723 | 563 |
| **SENSOR** | 9974103091 | 157 |
| **SENSOR ASSY. TBAP** | 90019455 | 663 |
| **SENSOR,ANGLE** | 9333103898 | 37 |
| **SENSOR-COOLANT LEVEL** | 7352100036 | 556 |
| **SERVICE KEY (1 PER)** | 80045633 | 332 |
| **SERVICE KIT** | 80003365 | 233 |
| **SET SCREW** | 7786160804<br>9049105399<br>9352100669 | 7<br>512, 538<br>285, 287 |
| **SET SCREW, 1 3/4" N.C. X 1" LG** | 7786160809 | 391, 393 |
| **SET SCREW, M20X30-12.9** | 7128271358 | 8 |
| **SHACKLE, 7/8" GALVANIZED** | 7806100006 | 417 |
| **SHAFT** | 4159910169<br>6810001159<br>6810003003<br>6810100132<br>80023887<br>80026287<br>80026288<br>80026847 | 97<br>71, 77, 83<br>389<br>10<br>113<br>10<br>10<br>77 |

## Alphabetical Index — Appendix A


| Description | Part | Page |
|---|---|---|
| **SHAFT** | 9904104424<br>9904105288<br>9974102182<br>9974102841 | 583<br>597<br>156<br>158, 161 |
| **SHAFT & HUB W/ RETAINING RING** | 9904109573 | 573 |
| **SHAFT ASSEMBLY, PINION** | 9049106490 | 512, 538 |
| **SHAFT ASSY, DRIVE** | 90022251 | 617 |
| **SHAFT ASSY.** | 9722105546 | 613 |
| **SHAFT ASSY. DRIVEN** | 90022245 | 617 |
| **SHAFT ASSY. L.H. AXLE** | 90026474 | 511, 537 |
| **SHAFT ASSY. R.H. AXLE** | 90026475 | 511, 537 |
| **SHAFT OM** | 80026289 | 10 |
| **SHAFT, 1.12** | 6810003491 | 77 |
| **SHAFT, IDLER** | 9904109607 | 595 |
| **SHAFT, LOWER PIVOT** | 7810100133 | 169 |
| **SHAFT, OUTPUT** | 9576101330 | 107 |
| **SHAFT, PIVOT** | 6810100067<br>90000912<br>90000996 | 19<br>241<br>239 |
| **SHAFT, REVERSE IDLER** | 9904109598 | 589 |
| **SHAFT, ROLLER** | 9974103085 | 158 |
| **SHAFT, SHEAVE** | 4155910024 | 9 |
| **SHAFT, UPPER** | 7810100136 | 19 |
| **SHCS M10x25 -8.8 ISO 4762** | 7126191254 | 562 |
| **SHCS M10x65 -8.8 ISO 4762 PLTD** | 80010420 | 145 |
| **SHCS M12X70 -8.8** | 80010421 | 145, 559 |
| **SHCS M4x20 -12.9 ISO 4762** | 7128111154 | 59 |
| **SHCS M6X20 - 8.8** | 7126151154 | 687 |
| **SHEAVE** | 6718100000<br>6718100015<br>6718100017 | 9<br>9<br>8 |
| **SHEAVE ASSEMBLY - 5/8" ROPE** | 6718100031 | 10, 71, 77, 83 |
| **SHEAVE ASSY, 5 GROOVE** | 6718100006 | 9 |
| **SHEAVE MOUNTING** | 80012761 | 9 |
| **SHIM** | 4155910018<br>4159210027 | 97<br>111 |
| **SHIM (.0359")** | 6705004268 | 151 |

## Alphabetical Index — Appendix A


| Description | Part | Page |
|---|---|---|
| **SHIM (.0544")** | 4159900304 | 11, 71, 78, 83 |
| **SHIM (.0598")** | 6705004267 | 151 |
| **SHIM (.1250")** | 6705004266 | 151 |
| **SHIM RING, KEYSWITCH .015"** | 80042480 | 332 |
| **SHIM RING, KEYSWITCH .125"** | 80043253 | 332 |
| **SHIM,** | 4159910001 | 77 |
| | 4184900657 | 98 |
| | 6705017532 | 59 |
| | 9049107134 | 511, 537 |
| | 9049107135 | 511, 537 |
| | 9049110934 | 511, 537 |
| | 9049110935 | 511, 537 |
| | 9049110936 | 511, 537 |
| **SHIM, 1MM SIDE PAD** | 4159910261 | 8 |
| **SHIM, 2 HOLE 1MM** | 4159910551 | 9 |
| **SHIM, 2MM SIDE PAD** | 4159910262 | 8 |
| **SHIM, 3 HOLE 1MM** | 4159910616 | 9 |
| **SHIM, 4 HOLE 1MM** | 4159910549 | 8 |
| **SHIM-REAR STEER BRKT** | 80055534 | 498 |
| **SHOCK, MOUNTING** | 7638000044 | 633 |
| **S-HOOK** | 9086100813 | 693 |
| **S-HOOK, STANDARD** | 7601000955 | 10, 71, 75, 83, 97 |
| **SHROUD** | 80041013 | 637 |
| | 80041015 | 633 |
| **SHROUD ASSY.** | 90023172 | 683 |
| **SHROUD ASSY. FAN MTG.** | 90018837 | 183 |
| **SHROUD BOTTOM PLATE** | 80031697 | 633 |
| **SHROUD COVER** | 80031699 | 633 |
| **SHROUD, FAN** | 90024256 | 673 |
| **SIDE PANEL** | 80023927 | 425 |
| **SIDE PLATE, SUPPORT** | 90013483 | 156 |
| **SIDEPLATE, MOTOR** | 9974102943 | 156 |
| **SILL, DOOR** | 80016419 | 226 |
| **SKYLIGHT ASSEMBLY - SLIDING** | 80003325 | 225 |
| **SLEEVE** | 7822000080 | 229 |
| | 9904105940 | 567 |
| **SLEEVE, TUBE** | 9904100993 | 569 |
| **SLEEVE, VINYL** | 7822000598 | 259, 281 |

## Alphabetical Index — Appendix A


| Description | Part | Page |
|---|---|---|
| **SLING, 5FT X 5/8 WIRE ROPE** | 7780100877 | 417 |
| **SLIP RING ASSY 20 COND W/SLEW** | 80060934 | 119 |
| **SLIP RING ASSY. 2 CONN.** | 9333103904 | 37 |
| **SLOT, PMS M6X16** | 7121151001 | 299 |
| **SLOT, PMS M6X25** | 7121151201 | 299 |
| **SOCKET 20-16GA** | 80003367 | 342 |
| **SOCKET,** | 7826000095 | 457 |
| | 7826000626 | 199, 291, 342, 349, 355, 359, 371, 458, 626 |
| **SOCKET, (12) 12-14GA** | 7826000092 | 199, 457, 626 |
| **SOCKET, (16 - 18) 30 SERIES** | 7826100004 | 199, 291, 342, 359, 458, 626 |
| **SOCKET, 16-14 GA** | 7826000087 | 29, 199, 285, 287, 297, 349, 359, 457 |
| **SOCKET, 20 GAUGE GOLD** | 7826100018 | 199, 359, 626 |
| **SOCKET, DEUTSCH 22/20 GA NI** | 7826100016 | 199, 291, 359, 458 |
| **SOCKET, RELAY** | 7826000079 | 342 |
| **SOCKET,(16-18AWG)** | 80034399 | 457 |
| **SOLENIOD ASSY. 24V THUMPER** | 90012641 | 285, 287 |
| **SOLENOID & CAP ASSY. 24V** | 90023280 | 126, 127, 128 |
| **SOLENOID VALVE ASSEMBLY** | 80010095 | 489 |
| **SPACER** | 4155110444 | 391 |
| | 6910001855 | 83 |
| | 6910016597 | 395 |
| | 7910101702 | 185 |
| | 7910101703 | 185 |
| | 7910101727 | 13 |
| | 80018337 | 71, 77 |
| | 80018338 | 10 |
| | 80018339 | 11 |
| | 90018312 | 478 |
| | 90018775 | 310 |
| | 9053100047 | 61 |
| | 9053100050 | 61 |
| | 9086100538 | 693 |
| | 9086101024 | 693 |
| | 9437100765 | 465 |
| | 9498100354 | 235 |
| | 9576101329 | 107 |
| | 9722105549 | 613 |
| | 9904103922 | 595 |
| | 9904103982 | 585, 587 |


**From - SLING, 5FT X 5/8 WIRE ROPE** **To - SPACER**

## Alphabetical Index — Appendix A

| Description | Part | Page |
|---|---|---|
| **SPACER** | 9904106002 | 591 |
| | 9904109594 | 587 |
| | 9904109611 | 597 |
| | 9974102195 | 156 |
| | 9974102672 | 156 |
| | 9974102705 | 156 |
| **SPACER TUBE** | 80023247 | 10 |
| **SPACER, NYLON** | 90018840 | 183 |
| **SPIDER** | 9049109751 | 504, 530 |
| **SPIDER, W/ THRUST WASHERS** | 9049106034 | 512, 538 |
| **SPINDLE ASSY.** | 90026476 | 511, 537 |
| **SPLIT FLANGE HALF, 1 1/4"** | 7450000188 | 145, 485 |
| **SPOOL** | 9722105460 | 617 |
| **SPOOL ASSY.** | 90021926 | 121 |
| **SPRING** | 7834000193 | 229 |
| | 7834000786 | 115 |
| | 80029339 | 413 |
| | 9086100579 | 61 |
| | 9188100364 | 207 |
| | 9333103738 | 55 |
| | 9722105462 | 617 |
| | 9904103569 | 587, 593 |
| | 9904105292 | 597 |
| | 9904105293 | 597 |
| | 9926111456 | 128 |
| | 9926112003 | 126, 131 |
| | 9926112200 | 126, 127, 128 |
| | 9926113299 | 134 |
| | 9974102179 | 156 |
| | 9974102832 | 158 |
| **SPRING ASSY** | 9904107838 | 585, 587 |
| **SPRING PIN (D.3.0 X 12MM)** | 90026936 | 519, 545 |
| **SPRING PIN (D4.0MM X 22MM)** | 90026973 | 523 |
| **SPRING, DISC** | 9904107783 | 591 |
| **SPRING, LOCKING** | 7834100009 | 111 |
| **STARTER MOTOR, 24V.** | 90023883 | 563 |
| **STATOR, SUPPORT** | 9904109576 | 573 |
| **STEEL CAP, 11/16"UN, FEMALE** | 90026934 | 519, 523, 545 |
| **STEER COLUMN SUPPORT BRACKET** | 80029942 | 260 |
| **STEER MOUNTING BRACKET** | 80054200 | 260 |
| **STEER PUMP GASKET** | 9904105441 | 569 |

**From - SPACER** **To - STEER PUMP GASKET**

## Alphabetical Index — Appendix A


| Description | Part | Page |
|---|---|---|
| **STEERING COLUMN W/ CLUSTER** | 80027907 | 305 |
| **STEERING CONSOLE COVER** | 80024122 | 299 |
| **STEP** | 80022993<br>80024956<br>80024992<br>80030460<br>80031609 | 405<br>401<br>402<br>679<br>402 |
| **STEP, TAPERED** | 4159110267 | 401 |
| **STINGER** | 80013783 | 77 |
| **STOP PLATE** | 80013784 | 78 |
| **STOP, SLIDE** | 7846000680 | 233 |
| **STOP, TURN, TAIL LED RED LT** | 7581100049 | 415 |
| **STORAGE TRAY MAT-REAR** | 7814100085 | 495 |
| **STRAIN RELIEF** | 9333102056<br>9333102674 | 41<br>57 |
| **STRAINER, MESH** | 7437100220 | 560 |
| **STRAP** | 9576101028 | 643 |
| **STRAP, GROUND** | 7850000046 | 257 |
| **STRAP, RUBBER** | 7418100004 | 555 |
| **STRIKER BOLT ASSY** | 80038104 | 226 |
| **STRING POT INSTALLATION** | 80038231 | 685 |
| **STRING POTENTIOMETER MOUNT** | 80035056 | 687 |
| **STRING POTENTIOMETER, 110"** | 80033282 | 687 |
| **STRIP, TERMINAL** | 7086000875 | 342 |
| **STUD** | 9049101687<br>9904103623<br>9904103986 | 512, 538<br>597<br>601 |
| **Stud 1/4x10.5 NC - Full Length** | 6865148467 | 647 |
| **SUPPORT** | 80031447 | 407 |
| **SUPPORT, BEARING** | 9904109585<br>9974102846 | 581, 583<br>155 |
| **SUPPORT, LOWER** | 2159910071 | 97 |
| **SUPPORT, MAST** | 2159910190 | 78 |
| **SUPPORT, PUMP** | 4159810082<br>4159810083 | 559<br>559 |
| **SUPPROT** | 80031454 | 407 |
| **SURGE TANK** | 80038983 | 633 |
| **SWING BRAKE PEDAL-5V** | 80040090 | 263 |

## Alphabetical Index — Appendix A


| Description | Part | Page |
|---|---|---|
| **SWITCH ASSEMBLY** | 9333103729 | 49 |
| **SWITCH ASSEMBLY - PROXIMITY** | 6872100045 | 280 |
| **SWITCH ASSY, PRESSURE** | 90015412 | 471 |
| **SWITCH ASSY, PROXIMITY NORMALLY O** | 80017319 | 497 |
| **SWITCH ASSY.** | 90023918<br>9974103097 | 293<br>158 |
| **SWITCH ASSY. BLOWER** | 90020646 | 297 |
| **SWITCH ASSY. INGITION** | 90016097 | 309 |
| **SWITCH ASSY. ON/OFF** | 90020647 | 297 |
| **SWITCH ASSY. PRESSURE** | 9926113270<br>9926113276 | 123<br>269 |
| **SWITCH ASSY. ROCKER** | 90018774<br>90018776<br>90018778<br>90018782 | 309<br>309<br>309<br>309 |
| **SWITCH L-SERIES REAR STEER** | 80006228 | 281 |
| **SWITCH L-SERIES SKYLIGHT WIPER** | 80019097 | 345 |
| **SWITCH, 120 TEMPERATURE (N.C.)** | 7872100170 | 148 |
| **SWITCH, 190 TEMPERATURE (N.C.)** | 7872100171 | 485 |
| **SWITCH, EMERGENCY STOP** | 7872100071 | 351 |
| **SWITCH, KEY** | 80008491 | 351 |
| **SWITCH, LMI OVERRIDE (KEYED)** | 80042917 | 332 |
| **SWITCH, L-SERIES AUX HOIST** | 7872100205 | 280 |
| **SWITCH, L-SERIES BOOM LIGHTS** | 7872100198 | 315 |
| **SWITCH, L-SERIES DIMMER** | 7872100164 | 345 |
| **SWITCH, L-SERIES MAIN HOIST** | 7872100204 | 280 |
| **SWITCH, L-SERIES SWING BRAKE** | 7872100208 | 280 |
| **SWITCH, PRESSURE HI/LO** | 90018823 | 181 |
| **SWITCH, PUSH BUTTON** | 9352100790 | 287 |
| **SWITCH, TEMPERATURE** | 7872000720 | 681 |
| **SWITCH, WORK LIGHTS** | 7872100192 | 345 |
| **SWITCH,L-SERIES CRANE FUNC PWR** | 7872100215 | 345 |
| **SWITCH,PROXIMITY NORMALLY OPEN** | 80017317 | 497 |
| **SWITCH,PUSH-BUTTON** | 9581100330 | 225 |
| **SWIVEL** | 7364001547 | 175 |
| **SWIVEL ASSY.** | 9053100071 | 61 |

## Alphabetical Index — Appendix A


| Description | Part | Page |
|---|---|---|
| SWIVEL ASSY-14 PORT HYD ASSY. | 80025416 | 119 |
| TAGS, TERMINAL STRIP | 9333102666 | 57 |
| TAILPIPE | 80057425 | 657 |
| TANK - 4 QUART FLUID | 7880000879 | 215 |
| TAPE CUTOUT, 3M VHB | 80022642 | 89, 271 |
| TAPE STRIP | 80053612 | 273 |
| T-BOLT Clamp 1.50" | 80034442 | 489 |
| T-Bolt Clamp 112-124mm SS | 80056177 | 659 |
| TCU AND SAT ANTENNA KIT | 80018267 | 383 |
| TEE | 7888000045 | 560 |
| TEE, SPLIT FLANGE BRANCH | 7888100000 | 485 |
| TEE, SWIVEL | 9974102211 | 157 |
| TELE HYDRAULIC CYLINDER ASSY | 80046908 | 7 |
| TELEMATIC CONTROL UNIT (TCU) | 80009833 | 385 |
| TELESCOPE CYLINDER ROD | 6768100241 | 13 |
| TERMINAL | 7345001752 | 343 |
| | 7345191401 | 457 |
| | 7345191701 | 457 |
| | 7345191901 | 457 |
| | 7345211401 | 457, 625 |
| | 7345211901 | 175, 343 |
| | 7345212101 | 343 |
| | 7345221901 | 175 |
| | 7345231701 | 457 |
| | 7345231901 | 343, 457 |
| | 7345232101 | 343, 457, 625 |
| | 7345242001 | 199 |
| | 7345242101 | 457 |
| | 7892100059 | 291, 349, 355 |
| TERMINAL, BLUE CABLE SEAL | 7892000256 | 459 |
| TERMINAL, DARK RED CABLE SEAL | 7892100003 | 459 |
| TERMINAL, FEMALE | 7345001443 | 427 |
| | 7345001444 | 199, 291, 343, 349, 355, 360, 457 |
| | 7345001743 | 427 |
| | 7345001744 | 325, 343, 359 |
| | 7826000633 | 265 |
| | 7892000840 | 626 |
| | 7892000843 | 342, 458, 626 |
| | 7892100032 | 342 |
| TERMINAL, FEMALE SLEEVE (18GA) | 7892100115 | 361 |

## Alphabetical Index — Appendix A


| Description | Part | Page |
|---|---|---|
| **TERMINAL, FM MP 630 SERIES** | 7892100058 | 291, 349 |
| **TERMINAL, GRAY CABLE SEAL** | 7892000255 | 199, 459 |
| **TERMINAL, GREEN CABLE SEAL** | 7892000254 | 458 |
| **TERMINAL, GREEN CAVITY** | 7892000257 | 458 |
| **TERMINAL, MALE** | 7345001446<br>7345001746<br>7892100133 | 281, 349<br>227, 325<br>361 |
| **TERMINAL, MALE PIN** | 7892000252 | 199, 458 |
| **TERMINAL, TANGLESS FEMALE** | 7892100065 | 342, 458 |
| **TERMINAL,TANGLESS FEMALE 280 S** | 7892100063 | 458 |
| **T-HANDLE** | 9246100182 | 137 |
| **THERMOMETER** | 7486000836 | 463 |
| **THERMOSTAT, NON-ADJ.** | 90018863 | 251 |
| **THIMBLE ASSY. 1/8" CABLE** | 9333103697 | 35 |
| **TIE ROD ASSEMBLY** | 9049109724 | 512, 538 |
| **TIE, CABLE (BLACK)** | 7850000237<br>7850000805 | 59, 89, 437, 561<br>59, 65, 149, 393, 490 |
| **TONGUE, INSULATED RING** | 7345211701<br>7345241701<br>7345241901 | 343, 349, 653<br>457<br>343, 457 |
| **TOP HOOD** | 80031452 | 407 |
| **TOP PANEL** | 80023877 | 425 |
| **TOP, BOX** | 7176002678 | 425 |
| **TORQUE CONVERTER GROUP** | 9904110613 | 565 |
| **TRACK, CONTROL** | 7798100005 | 259, 280 |
| **TRACK, DOOR BOTTOM PLASTIC** | 80016416 | 225 |
| **TRACK, FREE** | 7798100006 | 259, 280 |
| **TRANS FILTER BRACKET** | 80033568 | 556 |
| **TRANSMISSION** | 80029525 | 559 |
| **TRANSMISSION ACCESS COVER** | 80031022 | 407 |
| **TRAY-FRONT** | 2159110150 | 495 |
| **TRAY-REAR** | 2159110151 | 495 |
| **TREADLE** | 9352100665 | 303 |
| **TUBE** | 203582<br>7910100671<br>7910100672<br>9904103551 | 39<br>397<br>397<br>569 |


**From - TERMINAL, FM MP 630 SERIES** **To - TUBE**

## Alphabetical Index — Appendix A


| Description | Part | Page |
|---|---|---|
| **TUBE - AIR INTAKE 4"** | 80059104 | 659 |
| **TUBE - CAC** | 80059108 | 555 |
| | 80059109 | 555 |
| **TUBE ASSEMBLY** | 80030414 | 555 |
| **TUBE ASSEMBLY, SUCTION** | 9904109569 | 569 |
| **TUBE ASSY** | 7910101133 | 681 |
| | 80009830 | 486 |
| | 80015247 | 144 |
| **TUBE ASSY P1 MAN TO P3 MAIN** | 80045167 | 144 |
| **TUBE ASSY SEL AXLE LO P3** | 7910101672 | 489 |
| **TUBE ASSY, ALO P1 SHORT** | 7910101507 | 486 |
| **TUBE ASSY, 1A MAN TO LS STEER** | 7910101516 | 145 |
| | 7910101642 | 149 |
| **TUBE ASSY, 1B MAN TO P STEER** | 7910101517 | 144 |
| | 7910101641 | 149 |
| **TUBE ASSY, ALO P1 LONG** | 7910101508 | 486 |
| **TUBE ASSY, ALO P1 TO TEE** | 7910101587 | 486 |
| **TUBE ASSY, ALO P2 LONG** | 7910101510 | 486 |
| **TUBE ASSY, ALO P2 SHORT** | 7910101509 | 486 |
| **TUBE ASSY, ALO P2 TO TEE** | 7910101588 | 486 |
| **TUBE ASSY, AUXILARY HOIST DOWN** | 7910101609 | 146 |
| **TUBE ASSY, AUXILARY HOIST UP** | 7910101610 | 146 |
| **TUBE ASSY, BR MAN TO P CHARGE** | 7910101515 | 145 |
| **TUBE ASSY, COOLER IN TO CHECK** | 7910101629 | 148 |
| **TUBE ASSY, COOLER OUTLET TO 4** | 7910101616 | 149 |
| **TUBE ASSY, D1 MAN TO TANK CHAR** | 7910101513 | 144 |
| **TUBE ASSY, D4 MAN TO PD MAIN** | 7910101436 | 144 |
| **TUBE ASSY, D6 MAN TO PD MAIN** | 7910101437 | 146 |
| **TUBE ASSY, FRONT STEER** | 7910101639 | 488 |
| | 7910101640 | 488 |
| **TUBE ASSY, HOSE TO TUBE RSA** | 7910101471 | 487 |
| **TUBE ASSY, HOSE TO TUBE RSB** | 7910101469 | 487 |
| **TUBE ASSY, INLET MAIN VALVE** | 7910101454 | 144 |
| **TUBE ASSY, LIFT A EXT TO HOSE** | 7910101597 | 145 |
| **TUBE ASSY, LIFT B RET TO HOSE** | 7910101432 | 145 |
| **TUBE ASSY, LS MAIN TO PORT 2** | 7910101638 | 149 |
| **TUBE ASSY, MAIN HOIST DOWN M&A** | 7910101607 | 146 |

## Alphabetical Index — Appendix A


| Description | Part | Page |
|---|---|---|
| TUBE ASSY, MAIN HOIST UP M&A | 7910101608 | 146 |
| TUBE ASSY, MAIN TANK TO CHECK | 7910101628 | 144 |
| TUBE ASSY, MANIFOLD D5 TO 10 | 7910101618 | 144 |
| TUBE ASSY, OIL COOLER INLET | 7910101613 | 149 |
| TUBE ASSY, OIL COOLER OUTLET | 7910101614 | 148 |
| TUBE ASSY, P BR CHARGE TO TUBE | 7910101518 | 145 |
| TUBE ASSY, PORT 6 SWIVEL TO IN | 7910101566 | 144 |
| TUBE ASSY, PS MAN TO PS MAIN | 7910101435 | 144 |
| TUBE ASSY, PUMP INLET | 7910101464 | 556 |
| TUBE ASSY, RETURN MANIFOLD | 80090141 | 485 |
| TUBE ASSY, SEL TO TEE EXT | 7910101472 | 487 |
| TUBE ASSY, SEL TO TEE RET | 7910101473 | 487 |
| TUBE ASSY, T BR CHARGE TO TUBE | 7910101520 | 145 |
| TUBE ASSY, TEE TO HOSE RET FRT | 7910101475 | 487 |
| TUBE ASSY, TEE TO STACK FRT | 7910101474 | 487 |
| TUBE ASSY, TELE A EXT TO HOSE | 7910101429 | 145 |
| TUBE ASSY, TELE B RET TO HOSE | 7910101430 | 145 |
| TUBE ASSY, TELE CYL PISTON | 7910101455 | 7 |
| TUBE ASSY, TELE CYL ROD PORT | 7910101456 | 7 |
| TUBE ASSY, TUBE TO HOSE RET RE | 7910101479 | 487 |
| TUBE ASSY, TUBE TO STACK REAR | 7910101477 | 487 |
| TUBE ASSY, VALVE TO TUBE RSA | 7910101470 | 487 |
| TUBE ASSY, VALVE TO TUBE RSB | 7910101468 | 487 |
| TUBE ASSY,BRAKE HOSE TO TUBE F | 7910101571 | 487 |
| TUBE ASSY,BRAKE TUBE REAR LONG | 7910101570 | 488 |
| TUBE ASSY,BRAKE TUBE REAR SHRT | 7910101569 | 488 |
| TUBE ASSY,BRAKE TUBE SHORT FRT | 7910101572 | 487 |
| TUBE ASSY,BRK TUBE TO TEE REAR | 7910101496 | 488 |
| TUBE ASSY,HOIST DR TO HOIST DR | 7910101644 | 147 |
| TUBE ASSY,LS BR CHARGE TO TUBE | 7910101519 | 144 |
| TUBE ASSY,LS MAIN TO LS CHARGE | 7910101636 | 149 |
| TUBE ASSY,PORT 4 SWIVEL TO OUT | 7910101567 | 144 |
| TUBE ASSY,PORT 4SWIVEL TO TANK | 7910101568 | 144 |
| TUBE ASSY,SEL VALV TO RET MANI | 7910101490 | 486 |
| TUBE ASSY,TEE TO TUBE EXT REAR | 7910101476 | 487 |


From - TUBE ASSY, MAIN HOIST UP M&A To - TUBE ASSY,TEE TO TUBE EXT REA

## Alphabetical Index

## Appendix A


| Description | Part | Page |
|---|---|---|
| TUBE ASSY,TEE TO TUBE RET REAR | 7910101478 | 487 |
| TUBE EXHAUST | 80057421 | 657 |
| TUBE, CYLINDER | 9904106482 | 601 |
| TUBE, STR | 80057426 | 657 |
| TUBE, THIRD SPEED | 9904109568 | 569 |
| TUBE,STROBE | 9581100389 | 213 |
| TUBE-TOP RAD | 80059107 | 555 |
| TUBING CLAMP - 3/16 | 7300100021 | 59 |
| TUBING, HEAT SHRINK 1/2" I.D. | 8594100257 | 29, 201, 271, 291, 343, 355, 458, 626, 653 |
| TUBING, HEAT SHRINK 3/8" I.D. | 8594100259 | 349 |
| TURBINE SHAFT GROUP | 9904110611 | 565 |
| TURNTABLE | 80030457 | 101 |
| U-JOINT ASSY. | 9364101867 | 553 |
| U-JOINT BEARING WITH HARDWARE | 9364101535 | 549, 551 |
| VALVE | 9926110630 | 477 |
| VALVE ASSEMBLY - BRAKE TREADLE | 7926100912 | 263 |
| VALVE ASSEMBLY - OUTRIGGER CONTRO | 7926100906 | 467 |
| VALVE ASSEMBLY - SOLENOID 12 VOLT | 9926111720 | 477 |
| VALVE ASSEMBLY - STEERING CONTROL | 7926100899 | 305 |
| VALVE ASSY, CARTRIDGE HOLDING | 7926100886 | 14 |
| VALVE ASSY, CHECK | 7926100948 | 148 |
| VALVE ASSY, DUAL ACCUMULATOR CHAR | 7926100910 | 123 |
| VALVE ASSY, EXPANSION | 90018868 | 251 |
| VALVE ASSY. 24 VOLT | 90013618 | 607 |
| VALVE ASSY. BRAKE | 9926113271 | 269 |
| VALVE ASSY. CARTRIDGE | 9926113194 | 478 |
| VALVE ASSY. CHECK | 9926113193 | 477 |
| VALVE ASSY. DUST EJECTION | 90019458 | 663 |
| VALVE ASSY. INLET SECTION | 9926113280 | 125 |
| VALVE ASSY. OUTLET SECTION | 9926113284 | 125 |
| VALVE ASSY. RELIEF | 90022255 | 617 |
| VALVE ASSY. WATER SHUT OFF | 90018874 | 251 |
| VALVE ASSY. WORK SECTION | 90023271<br>90023273<br>90023285 | 125<br>125<br>125 |

## Alphabetical Index — Appendix A


| Description | Part | Page |
|---|---|---|
| **VALVE, #12 INLET CHECK** | 7926100959 | 143 |
| **VALVE, AIR** | 9364101869 | 553 |
| **VALVE, BRAKE** | 9974102885 | 157 |
| **VALVE, BY-PASS** | 9437100476 | 465 |
| **VALVE, CART RELIEF @ 500 PSI** | 90018313 | 478 |
| **VALVE, CART RELIEF 3250 PSI** | 90023275 | 125 |
| **VALVE, CART RELIEF 3500 PSI** | 90023274 | 125 |
| **VALVE, CART RELIEF 4300 PSI** | 90023276 | 125 |
| **VALVE, CART. & COIL ASSY. 24V.** | 90000894<br>90023241 | 133, 471<br>471 |
| **VALVE, CART. RELIEF @ 1800 PSI** | 9926113254 | 134 |
| **VALVE, CARTRIDGE** | 9926106474<br>9926112986 | 133, 477<br>469 |
| **VALVE, CARTRIDGE DIRECTIONAL** | 9926112992 | 477 |
| **VALVE, CARTRIDGE SHUTTLE** | 9926113184 | 477 |
| **VALVE, CHECK** | 9926111878<br>9926113049 | 477<br>133 |
| **VALVE, CHECK CART.** | 9926113293 | 148 |
| **VALVE, CHECK CARTRIDGE** | 9926113089 | 477 |
| **VALVE, CHECK PO** | 80012095 | 395 |
| **VALVE, DRAIN** | 7926000557 | 633 |
| **VALVE, INLET CHECK** | 7926002156 | 173 |
| **VALVE, PRESS. COMPENSATOR** | 9926113443 | 133 |
| **VALVE, PRESS. REDUCING** | 90000895 | 133 |
| **VALVE, RELIEF @ 2500 PSI** | 9926113167 | 133 |
| **VALVE, SHUT-OFF** | 7926002329 | 560 |
| **VALVE, SHUTTLE** | 9926113169 | 477 |
| **VALVE,CART. RELIEF @ 4000 PSI** | 9926113018 | 125 |
| **VALVE,PRESS.REDUCING @2500PSI** | 9926113186 | 477 |
| **VALVE,PRESS.REDUCING 250 PSI** | 90012924 | 133 |
| **VALVE,PRESS.REDUCING 2500 PSI** | 90012925 | 133 |
| **VALVE,VENT** | 9880100204 | 641 |
| **VALVE-AXLE LOCKOUT** | 80008126 | 467 |
| **VALVE-DRAIN COCK** | 7926000014 | 555 |
| **V-SEAL** | 90021927 | 121 |
| **WASHER** | 7949180028 | 281 |


**From - VALVE, #12 INLET CHECK** **To - WASHER**

## Alphabetical Index — Appendix A

| Description | Part | Page |
|---|---|---|
| **WASHER** | 90014307 | 237 |
| | 90019812 | 309 |
| | 90022389 | 310 |
| | 9364101903 | 549 |
| | 9437100857 | 465 |
| | 9576101124 | 107 |
| | 9576101129 | 107 |
| | 9722105437 | 611 |
| | 9722105454 | 617 |
| | 9904100983 | 595, 598 |
| | 9904103595 | 573, 597 |
| | 9904106235 | 603 |
| | 9926113197 | 478 |
| | 9926113300 | 134 |
| | 9974102839 | 158 |
| | 9974102843 | 158, 161 |
| | 9974103099 | 158 |
| **WASHER M10** | 90023174 | 683 |
| **WASHER SEAL** | 90020175 | 123 |
| **WASHER,** | 6949001154 | 23 |
| | 7949000190 | 83 |
| | 9049102985 | 515, 541 |
| | 9049111037 | 503, 504, 529, 530 |
| | 9053100038 | 61 |
| | 9086100804 | 693 |
| | 9188100366 | 207 |
| | 9632102851 | 313 |
| | 9926111457 | 128 |
| | 9974102821 | 156 |
| **WASHER, 1 1/8" I.D.** | 7949000230 | 8 |
| **WASHER, 1" I.D.** | 7949000360 | 115 |
| **WASHER, 1" I.D. HARDENED ROUND** | 7949000359 | 101 |
| **WASHER, 1/2" I.D. FLAT** | 7949000235 | 7, 101, 391, 547, 555, 559, 633 |
| **WASHER, 3/8" I.D.** | 7949000377 | 8 |
| **WASHER, 5/16 FLAT** | 90015595 | 683 |
| **WASHER, 5/8" I.D.** | 7949000259 | 555, 559 |
| | 7949000617 | 9 |
| **WASHER, 7/8" I.D.** | 7949000237 | 163 |
| **WASHER, BEVELED** | 7949001227 | 279 |
| **WASHER, BLACK NYLON** | 7949001186 | 230, 279, 299, 393 |
| **WASHER, BLACK PLASTIC** | 7949000623 | 230, 279 |

## Alphabetical Index — Appendix A


| Description | Part | Page |
|---|---|---|
| **WASHER, COMPRESSION** | 9926111435 | 125 |
| **WASHER, COPPER** | 7949180045 | 639 |
| **WASHER, FLAT** | 90000391 | 512, 538 |
| **WASHER, HARDENED** | 7949000263 | 556, 559 |
| | 9049106450 | 512, 538 |
| **WASHER, HARDENED ROUND** | 6949000036 | 633 |
| | 7949000534 | 119 |
| **WASHER, KEYED** | 7949000269 | 83 |
| **WASHER, LOCK** | 9049101705 | 503, 507, 529, 533 |
| | 9049109896 | 581 |
| | 9086100705 | 693 |
| | 9333102266 | 41, 57 |
| | 9904109352 | 575 |
| | 9904109617 | 601 |
| | 9904109620 | 601 |
| | 9904109676 | 581 |
| | 9974102837 | 158 |
| **WASHER, LOCK 1/2" I.D.** | 9974100476 | 155, 158, 159, 161 |
| **WASHER, NEOPRENE** | 90014306 | 237 |
| **WASHER, PLATE** | 7705100003 | 151 |
| **WASHER, SEAL** | 9974103092 | 157 |
| **WASHER, THRUST** | 7949000333 | 8 |
| | 7949000383 | 169 |
| | 7949000385 | 99 |
| | 9049101673 | 511, 537 |
| | 9049101847 | 512, 538 |
| | 9049101848 | 512, 538 |
| | 9049112768 | 504, 530 |
| | 9049112769 | 504, 530 |
| | 9086101339 | 693 |
| | 9086101340 | 693 |
| | 9904103610 | 597 |
| | 9904109599 | 589 |
| | 9904109600 | 589 |
| | 9974102181 | 156, 158 |
| | 9974102185 | 156 |
| | 9974102199 | 155 |
| | 9974102849 | 155 |
| **WASHER,THRUST** | 9049112520 | 512, 538 |
| **WEAR PAD** | 6671000177 | 8 |
| | 80034261 | 391, 393 |
| | 80074465 | 7 |
| | 80074466 | 9 |

## Alphabetical Index — Appendix A


| Description | Part | Page |
|---|---|---|
| **WEAR PAD** | 80074467<br>80074468<br>80074469 | 9<br>7<br>9 |
| **WEAR PAD ASSY** | 80034260<br>80074464 | 391, 393<br>8 |
| **WEAR PAD, SIDE** | 7671100010 | 77 |
| **WEAR RING** | 7753100054<br>80030029<br>80030085<br>90026939<br>90026996<br>90026997 | 14<br>13<br>13<br>519, 545<br>523<br>523 |
| **WEATHERSEAL** | 9498100337<br>9498100339 | 233<br>233 |
| **WEATHERSTRIP** | 8496907196 | 225, 229 |
| **WEDGE** | 9826100007 | 31, 67 |
| **WEDGE, 8 SOCKET** | 7364100014 | 297 |
| **WEIGHT, FEMALE** | 9333101924 | 47, 51 |
| **WEIGHT, MALE** | 9333101925 | 47, 51 |
| **WHEEL, 5/8" ROPE SHEAVE** | 6718100030 | 17, 73, 81, 85 |
| **WHEEL, SHEAVE** | 9086101320 | 693 |
| **WHEEL, STEERING** | 90016103 | 309 |
| **WINDOW ASSEMBLY - REAR** | 80004174 | 225 |
| **WINDOW ASSEMBLY - SIDE RH** | 80023695 | 225 |
| **WINDOW ASSY, FIXED RIGHT HAND** | 80016415 | 225 |
| **WINDOW ASSY, FRONT BOTTOM** | 80016553 | 225 |
| **WINDOW ASSY-LH** | 80016411 | 226 |
| **Wingscrew M10x35** | 80069853 | 211 |
| **WIRE** | 9333102479 | 41 |
| **WIRE FAN GUARD** | 80033041 | 634 |
| **WIRE, 16 GAUGE WHITE** | 8977010300 | 203 |
| **WIRE, SAFETY** | 9086100933 | 693 |
| **WIRING HARNESS-CARRIER** | 80054011 | 437 |
| **WIRING HARNESS-ENGINE T3** | 80047418 | 621 |
| **WORK LIGHT-LED** | 80066885 | 415 |
| **WRAP, HOSE** | 8594000027 | 490 |
| **YELLOW REAR TURN LT W/GROMMET** | 7581100051 | 415 |
| **YOKE ASSY.** | 90012592 | 549 |

## Alphabetical Index — Appendix A


| Description | Part | Page |
|---|---|---|
| **YOKE ASSY.** | 9049112432 | 504, 530 |
| **YOKE ASSY. W/ DUST CAP** | 90012594 | 551 |
| **YOKE, 1/4-28UNF** | 80044648 | 137 |

## Numerical Index — Appendix B


| Part | Description | Page |
|---|---|---|
| **00437175** | CAP SCREW, M8 X 12MM HEX HEAD | 111 |
| **00437742** | HEX HEAD NUT | 185 |
| **01575650** | CABLE HOLDER ST37 K | 331 |
| **02254477** | OUTSIDE MIRROR WITH HOLDER | 377 |
| **1006766** | SEALER, ADHESIVE BACKED | 230 |
| **203582** | TUBE | 39 |
| **203583** | ROLLER | 39 |
| **203584** | ROLLER | 39 |
| **2114900861** | POINTER ASSEMBLY | 21 |
| **2155910018** | HANGER, REAR | 97 |
| **2155910034** | HANGER, REAR | 97 |
| **2155910039** | MOUNT, SHEAVE | 9 |
| **2159110150** | TRAY-FRONT | 495 |
| **2159110151** | TRAY-REAR | 495 |
| **2159200728** | BLOCK, SWING LOCK | 113 |
| **2159200729** | BUSHING | 113 |
| **2159210126** | PIN, SWING LOCK | 137 |
| **2159210212** | COUNTERWEIGHT | 115 |
| **2159910022** | NOSE, AUXILIARY | 71 |
| **2159910036** | INDICATOR INSTALLATION - | 1 |
| **2159910070** | HANGER | 97 |
| **2159910071** | SUPPORT, LOWER | 97 |
| **2159910073** | RETAINER | 97 |
| **2159910074** | HANDLE | 97 |
| **2159910131** | ANCHOR | 7 |
| **2159910153** | PIN | 77 |
| **2159910166** | ANCHOR, LEFT HAND | 9 |
| **2159910167** | ANCHOR, RIGHT HAND | 9 |
| **2159910181** | FOOT, TELESCOPE CYLINDER | 9 |
| **2159910190** | SUPPORT, MAST | 78 |
| **2159910191** | MAST ASSEMBLY | 78 |
| **2159910192** | MAST | 83 |
| **2159910194** | FRONT HANGER | 97 |
| **2159910202** | ADAPTER, JIB BOOM EXTENSION | 77 |
| **2165210021** | LOCK ASSEMBLY - SWING | 111 |
| **2165210120** | MTG BRACKET WELD | 113 |


**From - 00437175** **To - 2165210120**

## Numerical Index — Appendix B


| Part | Description | Page |
|---|---|---|
| **3046370** | CAP | 341 |
| **4140900205** | RETAINER | 10 |
| **4155110443** | BLOCK, TAPPED | 391 |
| **4155110444** | SPACER | 391 |
| **4155910018** | SHIM | 97 |
| **4155910024** | SHAFT, SHEAVE | 9 |
| **4159110071** | PLATE | 405 |
| **4159110164** | PLATE, ADJUSTING | 8 |
| **4159110165** | PLATE | 8, 391 |
| **4159110256** | COVER, ACCESS | 401 |
| **4159110267** | STEP, TAPERED | 401 |
| **4159110268** | GUARD, MUD | 401 |
| **4159110269** | GUARD, MUD | 401 |
| **4159110298** | PLATE, COVER | 401 |
| **4159110299** | PLATE, COVER | 401 |
| **4159110300** | PLATE, COVER | 401 |
| **4159110308** | PLATE, ADJUSTING | 391 |
| **4159110314** | BRACKET, HEAD/TAIL LIGHT | 415 |
| **4159110343** | HANDLE, GRAB | 401 |
| **4159110364** | HANDLE, GRAB | 401 |
| **4159200657** | GUARD, PINION | 101 |
| **4159210027** | SHIM | 111 |
| **4159210122** | BRACKET, ANGLE | 185 |
| **4159210126** | BRACKET, STROBE LIGHT | 211 |
| **4159210164** | BRACKET, FRONT | 185 |
| **4159210165** | BRACKET, MID | 185 |
| **4159210166** | BRACKET, REAR | 185 |
| **4159210167** | BRACKET, COVER | 185 |
| **4159210191** | GRILL | 115 |
| **4159210193** | PLATE - SHIELD | 671 |
| **4159210194** | MOUNTING BRACKET | 671 |
| **4159210195** | MOUNTING BRACKET | 671 |
| **4159810060** | PLATE, MOUNTING | 559 |
| **4159810079** | BRACKET | 555 |
| **4159810082** | SUPPORT, PUMP | 559 |
| **4159810083** | SUPPORT, PUMP | 559 |


**From - 3046370** **To - 4159810083**

## Numerical Index — Appendix B

| Part | Description | Page |
|---|---|---|
| **4159900070** | PLATE, LOCK | 10 |
| **4159900304** | SHIM (.0544") | 11, 71, 78, 83 |
| **4159901579** | PLATE, KEEPER | 10 |
| **4159910001** | SHIM, | 77 |
| **4159910026** | CAP, END | 11, 71, 77, 83 |
| **4159910169** | SHAFT | 97 |
| **4159910260** | PLATE, ROUND KEEPER | 8 |
| **4159910261** | SHIM, 1MM SIDE PAD | 8 |
| **4159910262** | SHIM, 2MM SIDE PAD | 8 |
| **4159910549** | SHIM, 4 HOLE 1MM | 8 |
| **4159910551** | SHIM, 2 HOLE 1MM | 9 |
| **4159910571** | PLATE, CABLE ANCHOR | 8 |
| **4159910612** | PLATE, KICKBACK | 8 |
| **4159910613** | PLATE, KICKBACK | 9 |
| **4159910616** | SHIM, 3 HOLE 1MM | 9 |
| **4159910619** | COVER | 7 |
| **4159910646** | LINK, OFFSET | 77 |
| **4159910647** | LINK, OFFSET | 77 |
| **4159910665** | COLLAR | 78 |
| **4165910073** | PLATE, KEEPER | 10 |
| **4165910219** | HOLDER, PAD | 8 |
| **4174900282** | PLATE | 77 |
| **4184900657** | SHIM, | 98 |
| **4195900219** | POINTER | 23 |
| **4197910236** | PLATE, ANTI 2 BLOCK | 59 |
| **4301410000** | KIT, SENSOR & MTG SCREW | 265, 267 |
| **5898700** | RECEPTACLE | 341 |
| **6069000293** | BEARING | 77 |
| **6069100000** | BEARING | 9 |
| **6069100001** | BEARING | 8 |
| **6099001190** | BOLT, MODIFIED | 488 |
| **6099001230** | CAP SCREW, MODIFIED | 98 |
| **6184001406** | BRACKET, FUSE | 341 |
| **6184003000** | BRACKET, CAP | 393 |
| **6199100023** | BUSHING | 97 |
| **6199100030** | BUSHING | 10 |

**From - 4159900070** **To - 6199100030**

## Numerical Index — Appendix B

| Part | Description | Page |
|---|---|---|
| **6199100070** | BUSHING | 111 |
| **6199100090** | BUSHING | 101 |
| **6199100098** | BUSHING | 8 |
| **6199100100** | BUSHING | 117 |
| **6200050303** | BUSHING | 77 |
| **6200060505** | BUSHING | 205 |
| **6200060506** | BUSHING | 205 |
| **6245100077** | BRACKET | 279 |
| **6245100878** | BRACKET, PEDAL MOUNTING | 301 |
| **6246001174** | LANYARD | 175 |
| **6246003053** | CABLE ASSEMBLY | 425 |
| **6246100270** | CABLE ASSEMBLY - BOOM LIGHTS | 25 |
| **6286000012** | CHAIN - USE 9286100001 | 97 |
| **6286000736** | CHAIN | 10, 75 |
| **6372005910** | HEAD, CYLINDER | 395 |
| **6543003602** | HOSE - USE 8596902528 | 562 |
| **6581100074** | LIGHT ASSEMBLY - MODIFIED STROBE | 211 |
| **6593000137** | LEVER | 413 |
| **6601000965** | LINK | 113 |
| **6608100004** | LUG | 397 |
| **6637007010** | MOULDING - USE 9637100001 | 419 |
| **6637073000** | EDGE TRIM | 227 |
| **6671000166** | PAD, WEAR | 8 |
| **6671000177** | WEAR PAD | 8 |
| **6671000236** | PAD, WEAR | 8, 391 |
| **6671000266** | PAD, WEAR | 10 |
| **6689100012** | PIN | 71 |
| **6689100027** | PIN | 75 |
| **6689100127** | PIN | 78 |
| **6689100143** | PIN | 78 |
| **6689100155** | PIN | 77 |
| **6701001035** | PISTON, CYLINDER | 395 |
| **6705004266** | SHIM (.1250") | 151 |
| **6705004267** | SHIM (.0598") | 151 |
| **6705004268** | SHIM (.0359") | 151 |
| **6705006974** | PLATE | 9 |

**From - 6199100070** **To - 6705006974**

## Numerical Index — Appendix B


| Part | Description | Page |
|---|---|---|
| **6705016148** | PLATE | 119 |
| **6705017532** | SHIM, | 59 |
| **6705018338** | PLATE | 279 |
| **6705100115** | PLATE | 657 |
| **6705170914** | PLATE | 279 |
| **6705171011** | PLATE, RETAINER | 119 |
| **6718100000** | SHEAVE | 9 |
| **6718100006** | SHEAVE ASSY, 5 GROOVE | 9 |
| **6718100015** | SHEAVE | 9 |
| **6718100017** | SHEAVE | 8 |
| **6718100030** | WHEEL, 5/8" ROPE SHEAVE | 17, 73, 81, 85 |
| **6718100031** | SHEAVE ASSEMBLY - 5/8" ROPE | 10, 71, 77, 83 |
| **6753000303** | RING, BACK-UP | 13 |
| **6768100241** | TELESCOPE CYLINDER ROD | 13 |
| **6768100356** | CYLINDER ROD | 13 |
| **6772000112** | ROLLER | 77 |
| **6794100011** | GASKET, 2 BOLT HOLE | 559 |
| **6810001159** | SHAFT | 71, 77, 83 |
| **6810003003** | SHAFT | 389 |
| **6810003491** | SHAFT, 1.12 | 77 |
| **6810100067** | SHAFT, PIVOT | 19 |
| **6810100132** | SHAFT | 10 |
| **6814100042** | GUARD, MUFFLER | 657 |
| **6829015131** | SEALANT, ADHESIVE | 225, 229 |
| **6865148467** | Stud 1/4x10.5 NC - Full Length | 647 |
| **6872100045** | SWITCH ASSEMBLY - PROXIMITY | 280 |
| **6910001855** | SPACER | 83 |
| **6910016597** | SPACER | 395 |
| **6949000036** | WASHER, HARDENED ROUND | 633 |
| **6949001154** | WASHER, | 23 |
| **6949001174** | PLATE, SPACER | 9 |
| **7013000384** | ADAPTER, REDUCING | 393 |
| **7013000405** | ADAPTER | 563, 639 |
| **7013001112** | FITTING, ORIFICE .031 | 143 |
| **7013100029** | ADAPTER | 179, 665 |
| **7013100030** | ADAPTER | 179, 665 |


**From - 6705016148** **To - 7013100030**

## Numerical Index — Appendix B

| Part | Description | Page |
|---|---|---|
| **7013100047** | ADAPTER,ORB TO HOSE BARB 20-16 | 561 |
| **7013100059** | ADAPTER, 0.062 DIA ORIFICE | 149 |
| **7025000821** | ALARM, FAST PULSE BUZZER | 332 |
| **7025000836** | ALARM, BACK-UP | 415 |
| **7025800003** | HORN | 257 |
| **7033001063** | PAD, ARMREST | 279 |
| **7069000175** | CLOSURE, BEARING | 17, 73, 81, 85 |
| **7069000183** | CONE, BEARING | 17, 73, 81, 85 |
| **7069000238** | BEARING | 113 |
| **7069000516** | BEARING | 229 |
| **7069000518** | BEARING | 23 |
| **7069001045** | BEARING | 230 |
| **7069100031** | BEARING | 9 |
| **7069100041** | BEARING | 9 |
| **7069100081** | BEARING, TURNTABLE | 101 |
| **7086000875** | STRIP, TERMINAL | 342 |
| **7086000947** | BLOCK, FUSE | 341 |
| **7086001082** | HOLDER, FUSE | 332 |
| **7086100002** | BLOCK | 229 |
| **7086100144** | BLOCK, SPACER | 226 |
| **7086100159** | BLOCK, FUSE | 341, 455 |
| **7099000378** | SCREW, 3/8" - 16NC X 3/8" SET | 13 |
| **7099000573** | BOLT, RIVET EYE | 77 |
| **7099001153** | SCREW, | 425 |
| **7099001159** | SCREW, THUMB | 325 |
| **7099001194** | CAP SCREW, | 97 |
| **7099100052** | BOLT, 30MM | 8 |
| **7101100411** | SCREW, MACHINE | 225, 437 |
| **7101100415** | SCREW, MACHINE | 225 |
| **7101100610** | SCREW, MACHINE | 325 |
| **7101100611** | SCREW, MACHINE | 331 |
| **7101101207** | SCREW, MACHINE | 229 |
| **7101101210** | SCREW, MACHINE | 280 |
| **7105140650** | CAP SCREW, | 227 |
| **7105141250** | 1/4" - 28 NF X 1 1/2" GRADE 5 | 227 |
| **7105180850** | CAP SCREW, | 497, 525 |

**From - 7013100047** **To - 7105180850**

## Numerical Index — Appendix B

| Part | Description | Page |
|---|---|---|
| **7108161450** | CAP SCREW, | 559 |
| **7108181650** | BOLT, HEX | 547 |
| **7110080605** | CAP SCREW, | 55, 65 |
| **7110140818** | CAP SCREW, | 279 |
| **7110150805** | CAP SCREW, | 280 |
| **7110151018** | CAP SCREW, | 275 |
| **7110151205** | CAP SCREW, | 49, 55, 65, 69 |
| **7110151605** | CAP SCREW, | 59 |
| **7110151618** | CAP SCREW, | 279 |
| **7110220606** | SHSS 3/4x0.75 A574 | 98 |
| **7111040410** | SCREW, MACHINE | 271 |
| **7111040610** | SCREW, MACHINE | 257, 331 |
| **7111040611** | SCREW, MACHINE | 360 |
| **7111060310** | SCREW, MACHINE | 437 |
| **7111080311** | SCREW, MACHINE | 227 |
| **7111080415** | SCREW, MACHINE | 229 |
| **7111080511** | Slot PMS #8-32UNCx0.63 G1 | 332 |
| **7111080610** | SCREW, MACHINE | 260, 325 |
| **7111080810** | SCREW, MACHINE | 89 |
| **7111100411** | SCREW, MACHINE | 331, 367, 647, 651 |
| **7111100611** | SCREW, MACHINE | 69, 331, 332, 341, 419, 651 |
| **7111100807** | SCREW, MACHINE | 332 |
| **7111100810** | SCREW, MACHINE | 295 |
| **7111101015** | SCREW, MACHINE | 383 |
| **7111140410** | SCREW, MACHINE | 407 |
| **7111140610** | SCREW, MACHINE | 230, 299, 407 |
| **7111140810** | SCREW, MACHINE | 299, 647 |
| **7111140811** | SCREW, MACHINE | 647 |
| **7111141010** | SCREW, MACHINE | 326 |
| **7111150611** | SCREW, MACHINE | 647 |
| **7111150664** | BOLT, CARRIAGE | 227 |
| **7111151664** | BOLT, CARRIAGE | 279 |
| **7111160607** | SCREW, MACHINE | 97 |
| **7111160807** | SCREW, MACHINE | 9 |
| **7115140450** | CAP SCREW, | 331, 651 |
| **7115140478** | CAP SCREW, | 97 |

**From - 7108161450** **To - 7115140478**

## Numerical Index — Appendix B

| Part | Description | Page |
|---|---|---|
| **7115140550** | CAP SCREW, | 230, 325 |
| **7115140650** | CAP SCREW, | 10, 49, 183, 326, 332, 643 |
| **7115140850** | CAP SCREW, | 377 |
| **7115141450** | CAP SCREW, 1/4-20UNC X 1 3/4 | 279 |
| **7115143250** | CAP SCREW, | 39 |
| **7115144450** | CAP SCREW, 1/4-20UNC X 5 1/2 | 39 |
| **7115150650** | CAP SCREW, | 193 |
| **7115150850** | CAP SCREW, | 23, 113, 165, 167, 275 |
| **7115150878** | SCREW, FLANGE | 77 |
| **7115150950** | CAP SCREW, | 260, 281 |
| **7115151050** | CAP SCREW, | 111 |
| **7115152050** | CAP SCREW, | 643 |
| **7115160550** | CAP SCREW, | 397 |
| **7115160650** | CAP SCREW, | 78, 165, 167, 229, 469, 557, 648 |
| **7115160850** | CAP SCREW, | 230, 305, 377, 673 |
| **7115160878** | SCREW, FLANGE | 71, 78, 83 |
| **7115161050** | CAP SCREW, | 146, 147, 257, 377, 437 |
| **7115161250** | CAP SCREW, | 607 |
| **7115171250** | CAP SCREW, | 145, 486 |
| **7115174450** | CAP SCREW, | 149 |
| **7115180850** | CAP SCREW, 1/2"-13 UNC X 1" | 97, 383, 407, 497 |
| **7115181050** | CAP SCREW, | 98, 497, 525 |
| **7115181250** | CAP SCREW, | 145, 485 |
| **7115181450** | CAP SCREW, | 556, 561 |
| **7115201450** | CAP SCREW, | 559 |
| **7115221450** | CAP SCREW, | 98 |
| **7115221650** | CAP SCREW, | 559 |
| **7115222050** | CAP SCREW, | 97 |
| **7115224050** | CAP SCREW, | 98 |
| **7118171050** | CAP SCREW, | 567 |
| **7118180850** | CAP SCREW, | 9 |
| **7118223250** | CAP SCREW, | 556 |
| **7121110801** | MACHINE SCREW, M4X12 SLOTTED | 226 |
| **7121111101** | MACHINE SCREW, M4X20 SLOTTED | 226 |
| **7121111301** | SCREW, M4X30 LONG SLOTTED PAN | 280 |

**From - 7115140550** **To - 7121111301**

## Numerical Index — Appendix B

| Part | Description | Page |
|---|---|---|
| **7121130801** | MACHINE SCREW, M5X12 SLOTTED | 281, 332 |
| **7121151001** | SLOT, PMS M6X16 | 299 |
| **7121151201** | SLOT, PMS M6X25 | 299 |
| **7126130853** | HHCS M5x12 -8.8 ISO 4017 | 259 |
| **7126130953** | CAP SCREW, M5 X 14MM HEX HEAD | 187 |
| **7126131250** | CAP SCREW, M5 X 25MM HEX HEAD | 211 |
| **7126151053** | CAP SCREW, M6 X 16MM HEX HEAD | 226 |
| **7126151153** | CAP SCREW, M6X20 HEX HEAD | 123, 259, 415, 634 |
| **7126151154** | SHCS M6X20 - 8.8 | 687 |
| **7126151253** | CAP SCREW, M6 X 25MM | 226, 263, 301, 391, 634, 637 |
| **7126151353** | CAP SCREW, M6X30 HEX HEAD | 193, 230 |
| **7126151650** | CAP SCREW, M6 X 45MM HEX HEAD | 185, 225 |
| **7126151753** | CAP SCREW,M6X50 -8.8 ISO 4017 | 467 |
| **7126171053** | CAP SCREW, M8 X 16MM HEX HEAD | 10, 115, 119 |
| **7126171150** | CAP SCREW, M8 X 20MM HEX HEAD | 101, 119, 123, 229, 257 |
| **7126171153** | CAP SCREW, M8 X 20MM HEX HEAD | 8, 77, 259, 467, 557, 687 |
| **7126171253** | CAP SCREW, M8X25 HEX HEAD | 8, 115, 185, 193, 215, 259, 263, 401, 415, 437, 555, 634, 671 |
| **7126171350** | CAP SCREW, M8 X 30MM HEX HEAD | 179, 245, 555 |
| **7126171353** | CAP SCREW, HEX HEAD | 77, 185 |
| **7126171450** | CAP SCREW, M8X35-8.8 HEX HEAD | 497 |
| **7126171553** | CAP SCREW, M8 X 40MM HEX HEAD | 119 |
| **7126172150** | CAP SCREW, HEX HEAD M8X70MM | 205, 467 |
| **7126172550** | CAP SCREW, M8X90 | 8 |
| **7126191153** | CAP SCREW, M10 X 20 HEX HEAD | 260, 408, 556, 659, 675, 681 |
| **7126191250** | CAP SCREW, M10 X 25MM HEX HEAD | 659, 679 |
| **7126191253** | CAP SCREW, M10 X 25 HEX HEAD | 59, 259, 263, 467, 559, 657 |
| **7126191254** | SHCS M10x25 -8.8 ISO 4762 | 562 |
| **7126191350** | CAP SCREW, M10X30 HEX HEAD | 319, 401, 562 |
| **7126191353** | CAP SCREW, M10 X 30MM HEX HEAD | 7, 407, 495, 671 |
| **7126191450** | CAP SCREW, M10 X 35MM HEX HEAD | 463, 485, 559, 681 |
| **7126191550** | CAP SCREW, M10 X 40MM HEX HEAD | 401, 405, 495 |
| **7126191653** | CAP SCREW, M10 X 45MM HEX HEAD | 226 |
| **7126191750** | CAP SCREW, M10 X 50MM HEX HEAD | 401 |
| **7126191850** | CAP SCREW, M10 X 55MM HEX HEAD | 401 |

**From - 7121130801** **To - 7126191850**

## Numerical Index — Appendix B

| Part | Description | Page |
|---|---|---|
| **7126191953** | CAP SCREW, M10X60 -8.8 | 9 |
| **7126192650** | CAP SCREW, M10 X 100MM HEX HEAD | 559 |
| **7126211150** | CAP SCREW, M12 X 20MM HEX HEAD | 634 |
| **7126211253** | CAP SCREW, M12 X 25MM HEX HEAD | 78, 559, 639 |
| **7126211353** | CAP SCREW, M12 X 30 HEX HEAD | 391, 401, 645, 681 |
| **7126211450** | CAP SCREW, M12 X 35MM HEX HEAD | 486, 634 |
| **7126211453** | CAP SCREW, HEX HEAD M12X35 | 77 |
| **7126211550** | CAP SCREW, M12 X 40 | 639, 671 |
| **7126211650** | CAP SCREW, HEX HEAD | 547 |
| **7126211853** | CAP SCREW, M12X55 HEX HEAD | 391, 555 |
| **7126212150** | CAP SCREW, M12 X 70MM HEX HEAD | 123, 633 |
| **7126212250** | CAP SCREW, M12 X 75MM HEX HEAD | 101 |
| **7126212650** | CAP SCREW, M12X100 HEX HEAD | 389 |
| **7126212850** | CAP SCREW, M12 X 120MM HEX HEAD | 78 |
| **7126241653** | CAP SCREW, M16 X 45MM HEX HEAD | 461 |
| **7126263350** | HHCS M18x170 8.8 ISO 4014 | 169 |
| **7126272353** | CAP SCREW, M20 X 80MM HEX HEAD | 115, 151 |
| **7126272550** | CAP SCREW, M20X90MM HEX HEAD | 111 |
| **7126294350** | CAP SCREW, M24X340 HEX HEAD | 117 |
| **7127191353** | CAP SCREW, M10 X 30 | 9 |
| **7127191355** | CAP SCREW,M10X30 | 8 |
| **7127191555** | CAP SCREW, M10X40 -10.9 | 8 |
| **7127211353** | CAP SCREW,M12X30-10.9 | 7 |
| **7127211553** | HHCS M12x40 -10.9 ISO 4017 | 7 |
| **7127241550** | CAP SCREW, M16 X 40MM HEX HEAD | 9, 119 |
| **7127242350** | CAP SCREW, M16 X 80MM LONG | 556 |
| **7127271550** | HHCS M20x40 -10.9 ISO 4014 | 19 |
| **7127273950** | SCREW, M20X260 HEX HEAD CAP | 497, 525 |
| **7128111154** | SHCS M4x20 -12.9 ISO 4762 | 59 |
| **7128171254** | CAP SCREW, M8X25 SOCKET HEAD | 260 |
| **7128211254** | CAP SCREW, SOCKET HEAD M12X25 | 391 |
| **7128271358** | SET SCREW, M20X30-12.9 | 8 |
| **7172000545** | BOOT, DT2S CONNECTOR | 29 |
| **7172000546** | BOOT | 27, 181, 213, 415, 667 |
| **7172000548** | BOOT | 252 |
| **7172000551** | BOOT | 427 |

**From - 7126191953** **To - 7172000551**

## Numerical Index — Appendix B


| Part | Description | Page |
|---|---|---|
| **7172000552** | BOOT | 200, 359, 455 |
| **7172000553** | BOOT | 455 |
| **7172000554** | BOOT | 200, 455, 625 |
| **7172000558** | BOOT, TERMINAL | 342 |
| **7172000564** | BOOT | 252, 371 |
| **7172000565** | BOOT, CONNECTOR | 371 |
| **7172000567** | BOOT, CONNECTOR | 201 |
| **7172000568** | BOOT, CONNECTOR | 29 |
| **7172100002** | BOOT, PLUG | 200, 291, 455 |
| **7172100003** | BOOT-DTM3P-RECP | 283, 497 |
| **7172100006** | BOOT | 625 |
| **7176002678** | TOP, BOX | 425 |
| **7176002679** | BOTTOM, BOX | 425 |
| **7184001014** | BRACKET, MIRROR ARM | 165, 167, 377, 421 |
| **7188000165** | BRAKE, DISC | 603 |
| **7195000031** | BUMPER, RUBBER | 423 |
| **7195000032** | BUMPER, RUBBER | 407, 675 |
| **7199001289** | BUSHING | 279 |
| **7242000007** | BUTTON, PLUG | 257, 260 |
| **7242000015** | PLUG | 325 |
| **7242000021** | PLUG, 1" BUTTON | 21, 401 |
| **7242000027** | PLUG | 257 |
| **7242100002** | BUTTON, SQUARE | 279 |
| **7242100005** | PLUG, L SERIES LH1 PANEL | 280, 345, 351 |
| **7245100056** | COVER, ARMREST | 280 |
| **7245100058** | COVER, FUSE | 325 |
| **7246002555** | CABLE ASSY | 360, 455 |
| **7246100212** | CABLE ASSY-2/0 RED (8") LG | 655 |
| **7246100338** | CABLE ASSY, EXTEND | 7 |
| **7246100350** | CONTROL CABLE W/LOCK HANDLE | 137 |
| **7246100387** | CABLE, 3 COND 18GA SHLDD W/DRN | 341, 359 |
| **7246100415** | CABLE, 8MM DIA RETARCT | 7 |
| **7246100416** | CABLE, 8MM DIA RETRACT | 7 |
| **7246100417** | CABLE, 9.5MM DIA SYNCHRO | 7 |
| **7258001451** | CAP, 1/4" | 230, 280, 299, 325 |
| **7258001452** | CAP #8 | 295, 325 |


**From - 7172000552** **To - 7258001452**

## Numerical Index — Appendix B

| Part | Description | Page |
|---|---|---|
| **7258001691** | CAP, JACK CYLINDER | 393 |
| **7258100138** | BINDER | 175 |
| **7258100146** | CAP, FILL (WITH BREATHER) | 463 |
| **7258100154** | CAP, DEUTSCH HDC16 - 9 DUST | 360, 455 |
| **7258100165** | BACKSHELL, DEUTSCH HD10 SERIES | 455 |
| **7258100188** | COVER, VALVE | 187 |
| **7296000004** | INHIBITOR, CORROSION | 35 |
| **7300000035** | CLAMP, HOSE | 245 |
| **7300000040** | CLAMP, HOSE | 245 |
| **7300000070** | CLAMP, MUFFLER | 556 |
| **7300000100** | CLAMP, TUBING | 55 |
| **7300000101** | CLAMP, TUBING | 488 |
| **7300000102** | CLAMP, TUBING | 146, 489, 639 |
| **7300000195** | CLAMP, TUBING | 633 |
| **7300000222** | CLAMP | 659 |
| **7300000231** | MUFFLER CLAMP | 657 |
| **7300000243** | CLAMP, TUBING | 25, 393, 557, 633 |
| **7300000244** | CLAMP, TUBING | 119, 621 |
| **7300000245** | CLAMP, TUBING | 560 |
| **7300000246** | CLAMP, TUBING 1-1/4" I.D. | 555, 560 |
| **7300000247** | CLAMP, 1 1/4" TUBING | 634 |
| **7300000249** | CLAMP, TUBING | 559 |
| **7300000393** | BATTERY, HOLD-DOWN | 647 |
| **7300000397** | CLAMP, TUBING | 487 |
| **7300000399** | CLAMP, TUBING | 145, 486 |
| **7300000400** | CLAMP, TUBING | 487 |
| **7300000401** | CLAMP, TUBING | 145, 489, 556 |
| **7300000402** | CLAMP, TUBING | 487, 556 |
| **7300000404** | CLAMP, 1" TUBING | 145, 486, 555 |
| **7300000405** | CLAMP, TUBING | 145, 146, 488 |
| **7300000406** | CLAMP, TUBING | 556 |
| **7300000407** | CLAMP, TUBING | 488 |
| **7300000408** | CLAMP, TUBING | 486 |
| **7300000429** | CLAMP, STRAIN RELIEF | 455, 625 |
| **7300001000** | CLAMP | 555 |
| **7300001082** | CLAMP, DOUBLE SADDLE | 397 |

**From - 7258001691** **To - 7300001082**

## Numerical Index — Appendix B

| Part | Description | Page |
|---|---|---|
| **7300001102** | CLAMP, T-BOLT | 557 |
| **7300001103** | CLAMP, T-BOLT | 485, 555 |
| **7300100014** | CLAMP, 5/8" TUBING | 193 |
| **7300100021** | TUBING CLAMP - 3/16 | 59 |
| **7300100024** | CLAMP, T-BOLT 1.75" NOM | 485, 561 |
| **7300100025** | CLAMP ASSY, 2.38" | 123 |
| **7345001443** | TERMINAL, FEMALE | 427 |
| **7345001444** | TERMINAL, FEMALE | 199, 291, 343, 349, 355, 360, 457 |
| **7345001446** | TERMINAL, MALE | 281, 349 |
| **7345001743** | TERMINAL, FEMALE | 427 |
| **7345001744** | TERMINAL, FEMALE | 325, 343, 359 |
| **7345001746** | TERMINAL, MALE | 227, 325 |
| **7345001752** | TERMINAL | 343 |
| **7345191401** | TERMINAL | 457 |
| **7345191701** | TERMINAL | 457 |
| **7345191901** | TERMINAL | 457 |
| **7345211401** | TERMINAL | 457, 625 |
| **7345211701** | TONGUE, INSULATED RING | 343, 349, 653 |
| **7345211901** | TERMINAL | 175, 343 |
| **7345212101** | TERMINAL | 343 |
| **7345221901** | TERMINAL | 175 |
| **7345231701** | TERMINAL | 457 |
| **7345231901** | TERMINAL | 343, 457 |
| **7345232101** | TERMINAL | 343, 457, 625 |
| **7345241701** | TONGUE, INSULATED RING | 457 |
| **7345241901** | TONGUE, INSULATED RING | 343, 457 |
| **7345242001** | TERMINAL | 199 |
| **7345242101** | TERMINAL | 457 |
| **7346100003** | CONNECTOR, POWER DISTRIBUTION PO | 651 |
| **7352000878** | SENDER, FUEL LEVEL | 639 |
| **7352100036** | SENSOR-COOLANT LEVEL | 556 |
| **7352100070** | MODULE, CONTROL | 647 |
| **7352100109** | MODULE ASSY, CONTROL | 193 |
| **7352100110** | MODULE ASSEMBLY CONTROL | 193 |
| **7356000099** | DIODE, SILICON RECTIFIER | 203 |

**From - 7300001102** **To - 7356000099**

## Numerical Index — Appendix B

| Part | Description | Page |
|---|---|---|
| **7364001547** | SWIVEL | 175 |
| **7364001682** | CONNECTOR, 2 CONDUCTOR | 455 |
| **7364001683** | CONNECTOR, 2 CONDUCTOR | 199, 455 |
| **7364001684** | CONNECTOR, 3 CONDUCTOR | 267, 361 |
| **7364001685** | CONNECTOR, 3 CONDUCTOR | 267, 359 |
| **7364001840** | CONNECTOR, STRAIN RELIEF | 427 |
| **7364002517** | CONNECTOR | 625 |
| **7364002518** | CONNECTOR | 625 |
| **7364002614** | JOINT, 90 DEGREE LIVE | 7 |
| **7364002749** | RECEPTACLE, | 265 |
| **7364002995** | COUPLER, FLEX | 657 |
| **7364003075** | PLUG, 4 PASS | 625 |
| **7364003076** | CONNECTOR, 4 PASS | 625 |
| **7364100008** | PLUG, 2 PASS | 455 |
| **7364100009** | CONNECTOR, LOCKING | 455 |
| **7364100014** | WEDGE, 8 SOCKET | 297 |
| **7364100044** | CONNECTOR, 4PASS 280 SERIES | 343 |
| **7364100051** | PLUG | 415, 455 |
| **7364100052** | SEAL | 458 |
| **7364100166** | DRIVE LINE ASSEMBLY | 547 |
| **7364100179** | BEZEL, L-SERIES 3 GANG LM3 | 279, 345 |
| **7364100182** | BEZEL, L-SERIES 6 GANG LM6 | 345, 351 |
| **7364100183** | CONNECTOR, L-SERIES DIMMER SWITC | 349 |
| **7364100184** | CONNECTOR, L-SERIES SWITCHES | 291, 349, 355 |
| **7364100217** | COUPLER SAE A TO A | 562 |
| **7364100264** | SEAL, CABLE (TAN) | 361 |
| **7372100213** | CYLINDER HEAD | 13 |
| **7372100274** | HEAD, CYLINDER | 13 |
| **7373000159** | KIT, SEAL | 395 |
| **7376001935** | DECAL - BOOM ANGLE | 699 |
| **7376011416** | DECAL - ROTATING BLADES | 699 |
| **7376100352** | DECAL - DANGER COUNTERWEIGHT | 709 |
| **7376100364** | DECAL - DANGER BOOM NOT WALKWAY | 710 |
| **7376100398** | DECAL - DANGER OUTRIGGER MID EXT | 709 |
| **7376100406** | DECAL - DANGER REVOLVING TIRES | 709 |
| **7376100422** | DECAL - MID-EXTEND OUTRIGGERS > | 709 |

**From - 7364001547** **To - 7376100422**

## Numerical Index — Appendix B

| Part | Description | Page |
|---|---|---|
| **7376100430** | DECAL - MID-EXTEND OUTRIGGERS < | 709 |
| **7376100438** | DECAL - EMERGENCY EXIT | 709 |
| **7376100454** | DECAL - DANGER OUTRIGGER CRUSHIN | 709 |
| **7376100486** | DECAL - CAUTION PIN SWING LOCK | 709 |
| **7376100558** | DECAL - DANGER CABLE WEDGE | 710 |
| **7376100566** | DECAL - DANGER SUPERSTRUCTURE SW | 709 |
| **7376100590** | DECAL - DANGER COUNTERWEIGHT LIF | 709 |
| **7376100614** | DECAL - DANGER TIPPING/2 BLOCKIN | 709 |
| **7376101141** | DECAL - CHEVRON OUTRIGGER JACK | 703 |
| **7376101567** | DECAL - HAND SIGNALS | 709 |
| **7376102053** | DECAL - CAUTION BATTERY DISCONNE | 699 |
| **7376102350** | DECAL - CAUTION ELECTRONICS DAMA | 699 |
| **7376102529** | DECAL - DANGER PRESSURIZED FLUID | 699 |
| **7376102530** | DECAL - CAUTION ENGINE COOLANT F | 699 |
| **7376102533** | DECAL - DANGER FIRE HAZARD | 699 |
| **7376102544** | DECAL - DANGER ETHER HAZARD | 699 |
| **7376102553** | DECAL - DANGER PRESSURIZED OIL L | 699 |
| **7376102555** | DECAL - DANGER BATTERY EXPLOSION | 699 |
| **7376102588** | DECAL - CAUTION SPECIAL FILL REQ | 709 |
| **7376102773** | DECAL - DANGER UNTRAINED OPERATO | 709 |
| **7376102910** | DECAL - LIFT POINT PROHIBITION | 699 |
| **7376102912** | DECAL - RT540E | 703 |
| **7376102966** | DECAL - CAUTION MAXIMUM FILL RAT | 709 |
| **7376202030** | DECAL - MANITOWOC CRANE GROUP LO | 703 |
| **7376226070** | DECAL - GROVE - 7" WHITE | 703 |
| **7376246070** | DECAL-GROVE-7" GRAY | 703 |
| **7376247045** | DECAL-GROVE-4.5" GRAY | 703 |
| **7376247065** | DECAL-GROVE-6.5" GRAY | 703 |
| **7376991542** | DECAL - NO STEP | 699 |
| **7376991546** | DECAL - HYDRAULIC OIL | 699 |
| **7376991722** | DECAL - WEAR BODY HARNESS | 699 |
| **7406000306** | ELBOW | 659 |
| **7406000354** | ELBOW | 659 |
| **7406001053** | BELLOWS | 555 |
| **7418100004** | STRAP, RUBBER | 555 |
| **7418100008** | EXTENSION, STEP | 405 |

**From - 7376100430** **To - 7418100008**

## Numerical Index — Appendix B


| Part | Description | Page |
|---|---|---|
| **7418100011** | EXTENSION, STEP | 401 |
| **7429000011** | FASTENER, WELL-NUT | 280 |
| **7429000542** | FASTENER, NUT 1/4" - 20 N.C. | 230, 299 |
| **7429000549** | CLIP | 281 |
| **7429100008** | NUT, #8-32NF WELL | 325 |
| **7429100012** | NUT, 8MM WELL | 7 |
| **7437000873** | FILTER, ELEMENT TRANS, 6.0"LG | 631 |
| **7437000874** | HEAD, TRANSMISSION FILTER | 631 |
| **7437100220** | STRAINER, MESH | 560 |
| **7437100235** | FILTER ASSEMBLY | 556 |
| **7440000000** | FITTING, 1/8 STRAIGHT GREASE | 9, 17, 73, 77, 81, 85, 99, 497, 507, 525, 533 |
| **7440000400** | FITTING, 90 DEGREE GREASE | 8, 389 |
| **7440030000** | FITTING, STRAIGHT GREASE | 61, 693 |
| **7443100139** | COUPLING, 1/8" TEST PORT | 147 |
| **7443100140** | COUPLING, 3/8" TEST PORT | 148, 489 |
| **7444020031** | PLUG, PIPE | 598, 681 |
| **7444030031** | PLUG, PIPE | 637 |
| **7445020254** | ELBOW | 659 |
| **7445040219** | ADAPTER, STRAIGHT | 209 |
| **7445040220** | ELBOW, 90 DEGREE | 209 |
| **7445040472** | ELBOW, 90 DEGREE | 146 |
| **7445040645** | ELBOW, 90 DEGREE MALE | 146 |
| **7445060439** | ADAPTER, REDUCING FEMALE | 146 |
| **7445060651** | UNION, STRAIGHT | 633 |
| **7445060653** | ELBOW, 90 DEGREE | 633, 637 |
| **7445080450** | BUSHING, REDUCER | 563 |
| **7445080650** | BUSHING, REDUCER | 560 |
| **7445080801** | ADAPTER, STRAIGHT | 639 |
| **7445080803** | ADAPTER, STRAIGHT | 119 |
| **7445080804** | ELBOW, 90 DEGREE | 119 |
| **7445080808** | ADAPTER, SWIVEL | 119 |
| **7445080853** | ELBOW, 90 DEGREE | 560 |
| **7445120809** | ADAPTER, 45 DEGREE SWIVEL | 562 |
| **7445160850** | BUSHING, REDUCER | 560 |
| **7445161217** | REDUCING CONNECTOR | 560 |


**From - 7418100011** **To - 7445161217**

## Numerical Index — Appendix B

| Part | Description | Page |
|---|---|---|
| **7445161652** | 1" NPT - 45 STREET ELBOW | 633 |
| **7445161653** | ELBOW, 90 DEGREE | 633 |
| **7446080836** | ELBOW, 90 DEGREE MALE | 639 |
| **7447040401** | ADAPTER, STRAIGHT | 144, 487 |
| **7447040403** | ELBOW, 90 DEGREE | 146, 556, 561 |
| **7447040408** | ELBOW, 45 DEGREE MALE | 148 |
| **7447040416** | CAP ASSY, FEMALE ORS THREAD | 486 |
| **7447040428** | ADAPTER, STRAIGHT | 560 |
| **7447040430** | ELBOW, 90 DEGREE | 560 |
| **7447040434** | TEE, MALE RUN | 560 |
| **7447040446** | ADAPTER - 45 DEGREE | 489 |
| **7447040467** | FEM ORFS TO MALE ISO | 562 |
| **7447040501** | ADAPTER, STRAIGHT | 487 |
| **7447040601** | ADAPTER, STRAIGHT | 144, 487, 561 |
| **7447040603** | FITTING, 90 DEGREE | 487 |
| **7447060401** | ADAPTER, STRAIGHT MALE | 149, 486 |
| **7447060403** | ELBOW, 90 DEGREE MALE | 144, 148, 173, 489 |
| **7447060413** | REDUCER | 148 |
| **7447060430** | ELBOW, 90 DEGREE | 562 |
| **7447060601** | ADAPTER, STRAIGHT MALE | 143, 173, 486, 563, 681 |
| **7447060603** | ELBOW, 90 DEGREE | 149, 489 |
| **7447060605** | TEE, RUN | 149 |
| **7447060616** | CAP ASSY. FEMALE 11/16-16 | 147 |
| **7447060617** | UNION, BULKHEAD | 144 |
| **7447060633** | ELBOW, 90 DEGREE MALE | 145, 485 |
| **7447060634** | TEE, FEMALE RUN | 143, 485, 489 |
| **7447060635** | TEE, BRANCH | 145, 146 |
| **7447060801** | ADAPTER, STRAIGHT MALE | 145, 173, 485 |
| **7447060803** | ELBOW, 90 DEGREE MALE | 144 |
| **7447060830** | ELBOW, 90 DEGREE MALE | 560, 639 |
| **7447061001** | ADAPTER, STRAIGHT | 146, 681 |
| **7447061003** | FITTING, 90 DEGREE | 146 |
| **7447080413** | REDUCER | 562 |
| **7447080430** | ELBOW, MALE ORS THD TO MALE N | 639 |
| **7447080601** | ADAPTER, STRAIGHT | 143 |
| **7447080603** | ELBOW, 90 DEGREE | 393 |

**From - 7445161652** **To - 7447080603**

## Numerical Index — Appendix B

| Part | Description | Page |
|---|---|---|
| **7447080613** | REDUCER | 173 |
| **7447080801** | ADAPTER, STRAIGHT | 143, 397, 485 |
| **7447080803** | ELBOW, 90 DEGREE MALE | 393, 562 |
| **7447080810** | 90 UNION MALE ORFS-MALE ORFS | 560 |
| **7447080816** | CAP | 489 |
| **7447080829** | ELBOW, 45 DEGREE | 639 |
| **7447080833** | ELBOW, 90 DEGREE MALE | 144 |
| **7447080840** | ADAPTER, STRAIGHT FEMALE | 489 |
| **7447100413** | REDUCER | 149 |
| **7447101001** | ADAPTER, STRAIGHT | 146 |
| **7447101034** | TEE | 149 |
| **7447120413** | REDUCER | 486 |
| **7447120803** | ELBOW, 90 DEGREE | 487 |
| **7447121001** | ADAPTER, STRAIGHT | 488, 562 |
| **7447121003** | ELBOW, 90 DEGREE | 562 |
| **7447121201** | ADAPTER, STRAIGHT MALE | 486, 561 |
| **7447121203** | ELBOW, 90 DEGREE | 143, 556, 561 |
| **7447121208** | ELBOW, 45 DEGREE MALE | 485 |
| **7447121216** | CAP, 3/4 ORS | 486 |
| **7447121217** | UNION, BULKHEAD | 143 |
| **7447121232** | ELBOW, #12 BULKHEAD UNION 90 | 143 |
| **7447121233** | ELBOW, 90 DEGREE | 143, 562 |
| **7447121238** | ELBOW, 90 DEGREE LONG MALE | 562 |
| **7447121601** | ADAPTER, STRAIGHT | 143, 488 |
| **7447161201** | ADAPTER, STRAIGHT | 147, 563 |
| **7447161203** | ELBOW, 90 DEGREE | 147, 486, 561 |
| **7447161601** | ADAPTER, STRAIGHT | 143 |
| **7447161603** | ELBOW, 90 DEGREE MALE | 7 |
| **7447161638** | ELBOW, 90 DEGREE LONG | 143 |
| **7447162001** | ADAPTER, STRAIGHT | 681 |
| **7447201603** | ELBOW, 90 DEGREE MALE | 148 |
| **7447201613** | REDUCER | 681 |
| **7447201628** | ADAPTER, STRAIGHT | 561 |
| **7447202001** | ADAPTER, STRAIGHT MALE | 148, 681 |
| **7447202032** | ELBOW, #20 BULKHEAD UNION 90 | 143 |
| **7450000102** | FLANGE, SPLIT | 145, 485 |

**From - 7447080613** **To - 7450000102**

## Numerical Index — Appendix B


| Part | Description | Page |
|---|---|---|
| **7450000103** | FLANGE, SPLIT | 485 |
| **7450000188** | SPLIT FLANGE HALF, 1 1/4" | 145, 485 |
| **7450000201** | FLANGE, SPLIT | 146, 147 |
| **7450000254** | FLANGE, SPLIT | 561 |
| **7450000375** | FLANGE, SPLIT | 556 |
| **7450000401** | PLUG | 486 |
| **7482000030** | FUSE, 25 AMP | 331 |
| **7482000032** | FUSE, 15 AMP | 331 |
| **7482000033** | FUSE, 10 AMP | 331 |
| **7482000034** | FUSE, 7.5 AMP | 331 |
| **7482000035** | FUSE, 5 AMP | 331, 341 |
| **7482100013** | FUSE, MINI 5 AMP | 455 |
| **7482100018** | FUSE, MINI 25AMP | 456 |
| **7482100019** | FUSE, MINI 30AMP | 456 |
| **7486000225** | LEVEL, CIRCULAR | 257 |
| **7486000836** | THERMOMETER | 463 |
| **7486002666** | GAUGE, WINDOW | 634 |
| **7486002936** | GUAGE, OIL LEVEL | 463 |
| **7486002973** | HOURMETER | 647 |
| **7486100132** | DIPSTICK | 555 |
| **7486100142** | INDICATOR, LED 3RD WRAP | 365 |
| **7498100012** | GLASS, WINDSHIELD | 225 |
| **7506000018** | GROMMET | 383 |
| **7506000019** | GROMMET | 205 |
| **7506000021** | GROMMET | 137 |
| **7511000093** | KNOB, FLUTED | 279 |
| **7511100015** | HANDRAIL, GRAB | 319 |
| **7515000877** | HEATER, 750W 120V ENGINE BLOCK | 677 |
| **7519000198** | HINGE, LEFT HAND NYLON | 325, 407 |
| **7543109321** | HOSE ASSY, 3/4" I.D. X 93" | 147 |
| **7543109361** | HOSE ASSY, 1 1/4" HYDRAULIC | 561 |
| **7546706470** | HOSE, 1 1/4" STR S/F X 64" STR | 147 |
| **7546802393** | HOSE ASSY, 1 1/2" I.D.X 23" | 488 |
| **7546803793** | HOSE ASSY | 488 |
| **7546806493** | HOSE, 1 1/2" STR S/F X 64" 90 | 147 |
| **7550103631** | HOSE ASSY, USE AS REQUIRED | 209 |


**From - 7450000103** **To - 7550103631**

## Numerical Index — Appendix B

| Part | Description | Page |
|---|---|---|
| **7550103921** | HOSE ASSY, 1/4" ID STR X 39" | 148 |
| **7550104221** | HOSE ASSY, 1/4" ID STR X 42" | 148 |
| **7554315600** | HOSE ASSY, 1/2" I.D. X 156" | 393 |
| **7555101801** | HOSE ASSY, 1/4"I.D. X 18" LONG | 149, 488 |
| **7555102801** | HOSE ASSY, 1/4"I.D. X 28"LONG | 488 |
| **7555102803** | 1/4 HOSE ASS'Y-STR-LG 90 ORS | 147 |
| **7555103000** | HOSE ASSY, 1/4"I.D. X 30" LONG | 147 |
| **7555103600** | HOSE ASSY, 1/4"I.D. X 36" LONG | 147 |
| **7555104201** | HOSE ASSY, 1/4"I.D. X 42" LONG | 488 |
| **7555104623** | HOSE ASSY, .25 DIA | 488 |
| **7555105401** | HOSE ASSY, USE AS REQUIRED | 488 |
| **7555107601** | HOSE ASSY, 1/4"I.D. X 76" LONG | 147 |
| **7555109005** | HOSE ASSY, 1/4"I.D. 45 X 90" | 147 |
| **7555111021** | HOSE ASSY, 1/4" ID | 561 |
| **7555201802** | HOSE ASSY, 3/8"I.D. X 18"LONG | 488 |
| **7555201921** | HOSE ASSY, 3/8"I.D. X 19" LONG | 147 |
| **7555202000** | 3/8" I.D. HYDR HOSE ASSY STR B | 489 |
| **7555202101** | HOSE ASSY, 3/8"I.D. X 21"LONG | 489 |
| **7555202400** | HOSE ASSY, 3/8"I.D. X 24" LONG | 489 |
| **7555202401** | HOSE ASSY, 3/8"I.D. X 24" LONG | 485 |
| **7555202801** | HOSE ASSY, 3/8"I.D. X 28" LONG | 488 |
| **7555204400** | HOSE ASSY, 3/8"I.D. X 44" LONG | 173 |
| **7555204402** | 3/8"I.D. HYDR HOSE ASSY STR-45 | 563 |
| **7555204801** | HOSE ASSY, 3/8"I.D. X 48" LONG | 173 |
| **7555206001** | HOSE ASSY, 3/8"I.D. X 60" LONG | 149 |
| **7555206402** | 3/8" I.D. X 64" | 489 |
| **7555206800** | HOSE ASSY, 3/8"I.D. X 68"LONG | 149 |
| **7555206801** | HOSE ASSY, 3/8"I.D. X 68" LONG | 489 |
| **7555207201** | HOSE ASSY, 3/8"I.D. X 72" LONG | 149 |
| **7555207202** | HOSE, 3/8" I.D X 72" LONG | 147, 173 |
| **7555207203** | HOSE ASSY, 3/8 I.D. X 72"LONG | 149 |
| **7555207800** | HOSE ASSY, 3/8"I.D. X 78" LONG | 173 |
| **7555207902** | HO ASY, 11/16-16X3/8 I.D. X 07 | 173 |
| **7555208502** | HYDR HOSE ASSY | 173 |
| **7555208900** | HOSE ASSY, 3/8"I.D. X 89" LONG | 147, 148 |
| **7555304402** | HOSE ASSY, 1/2"I.D. X 44" LONG | 563 |

**From - 7550103921** **To - 7555304402**

## Numerical Index — Appendix B

| Part | Description | Page |
|---|---|---|
| **7555304500** | HOSE ASSY, 1/2"I.D. X 45" LONG | 489 |
| **7555306000** | HOSE ASSY, 1/2"I.D. X 60"LONG | 485 |
| **7555306500** | HOSE ASSY, 1/2"I.D. X 65"LONG | 489 |
| **7555307200** | 1/2" I.D. X 72" LONG | 485 |
| **7555402101** | HOSE ASSY, 5/8" STR ORFS X 21" | 147 |
| **7555402403** | HOSE ASSY, 5/8" I.D. STR-9 HYD | 148 |
| **7555502761** | 3/4" I.D. HYDR HOSE ASSY STR-9 | 488 |
| **7555503400** | HOSE ASSY, 3/4"I.D. X 34" LONG | 147 |
| **7555504201** | HOSE ASSY,3/4" I.D. X 42" LONG | 147 |
| **7555507491** | HOSE ASSY, .75 DIA | 488 |
| **7555508503** | HOSE ASSY, 3/4" ID X 85" | 561 |
| **7555514390** | HOSE ASSY, 3/4" ID | 561 |
| **7555602360** | HOSE ASSY, 1" STR ORFS X 23" | 147 |
| **7555603062** | 1" I.D. HYDR HOSE ASSY STR-45 | 147 |
| **7555603591** | HOSE ASSY, 1.00 DIA | 488 |
| **7555604560** | HOSE ASSY, 1" STR ORFS X 45" | 147 |
| **7555604860** | HOSE ASSY, 1" STR ORFS X 48" | 148 |
| **7555702591** | HOSE ASSY,1 1/4" STR ORF X 25" | 147 |
| **7561101503** | HOSE ASSY, 1/4"I.D. X 15" LONG | 560 |
| **7561102003** | 1/4" I.D. X 20" | 560 |
| **7561103003** | HOSE ASSY, 1/4"I.D. X 30" LONG | 556, 560 |
| **7561106003** | HOSE ASSY,1/4" I.D. HYD STR-90 | 561 |
| **7561203017** | 3/8" I.D. X 30" | 560 |
| **7561307230** | 1/2" HOSE ASSY, ORFS STR-STR | 639 |
| **7561502650** | 3/4 HOSE ASSY ORFS STR X STR | 562 |
| **7561503252** | 3/4" HYD HOSE ASSY STR-90 | 562 |
| **7561504850** | 3/4 HOSE ASSY ORFS STR X STR | 562 |
| **7561610260** | HOSE ASSY, HOT 1" STRT-STRT | 562 |
| **7561610261** | 1" HOSE ASSY-HOT, STRT-45 | 562 |
| **7566503700** | HOSE ASSY | 556 |
| **7572212013** | 3/8" HYD HOSE-HOT, STR-STR | 560 |
| **7572319231** | HOSE ASSY - FUEL #8 STR-STR | 560 |
| **7576000310** | INDICATOR, RESTRICTION | 659 |
| **7576000311** | KIT, SEAT BELT | 280 |
| **7576001743** | MOUNTING KIT - OIL COOLER | 639 |
| **7576134386** | MOTOR ASSEMBLY - SWING DRIVE | 101 |

**From - 7555304500** **To - 7576134386**

## Numerical Index — Appendix B


| Part | Description | Page |
|---|---|---|
| **7581000279** | LIGHT, 24 VOLT DOME | 225 |
| **7581100000** | LIGHT, STROBE | 213 |
| **7581100049** | STOP, TURN, TAIL LED RED LT | 415 |
| **7581100051** | YELLOW REAR TURN LT W/GROMMET | 415 |
| **7581100061** | LIGHT ASSY, 24 VOLT WORK | 27, 225 |
| **7585000184** | LATCH, ARROWHEAD | 407 |
| **7585000789** | LOCK | 233 |
| **7585000790** | CATCH | 233 |
| **7585000812** | DRAW LATCH | 187, 419 |
| **7601000955** | S-HOOK, STANDARD | 10, 71, 75, 83, 97 |
| **7616000517** | MAGNET, CUP | 279 |
| **7616000519** | MAGNET | 279 |
| **7628000025** | MIRROR, 8" CONVEX | 165, 167, 377, 421 |
| **7638000044** | SHOCK, MOUNTING | 633 |
| **7638000137** | MOUNT, SHOCK | 555 |
| **7638000183** | MOUNT | 555 |
| **7638000203** | MOUNT, SHOCK | 377 |
| **7638000750** | MOUNT, WIRE TIE | 317 |
| **7649000049** | NIPPLE, HOSE | 633 |
| **7649000059** | NIPPLE, HOSE 5/8 ID TO 1/2 NPT | 119, 560 |
| **7649000062** | NIPPLE | 633, 637 |
| **7659000042** | LOCKNUT | 425, 427 |
| **7659000081** | LOCKNUT | 83 |
| **7659000287** | NUT, RETAINING | 193, 325 |
| **7659000796** | NUT | 229 |
| **7659000862** | NUT, RETAINING | 363 |
| **7659000865** | NUT | 299, 326, 332 |
| **7659190018** | NUT, DEUTSCH | 456 |
| **7659190019** | NUT, RETAINING M6 | 226, 299, 634 |
| **7659190020** | NUT, RETAINING 8 X 1.25 | 115, 245, 259, 401, 634 |
| **7659190024** | RETAINING NUT, M10 X 1.50 | 407, 461 |
| **7659190033** | NUT, RETAINING | 495, 671 |
| **7660041100** | NUT, HEX | 271, 331, 360 |
| **7660081100** | NUT, HEX | 89, 227, 260, 332 |
| **7660081600** | LOCKNUT, HEX | 229 |
| **7660100000** | NUT, HEX | 65, 367 |


**From - 7581000279** **To - 7660100000**

## Numerical Index — Appendix B

| Part | Description | Page |
|---|---|---|
| **7660100030** | NUT | 326 |
| **7660101100** | NUT, HEX | 69, 331, 341, 419 |
| **7660101600** | LOCKNUT 10-24 | 183 |
| **7660101630** | LOCKNUT, HEX | 225 |
| **7660102701** | LOCKNUT, FLANGE | 295, 383 |
| **7660140000** | NUT, HEX | 49, 55, 325, 331, 377, 488, 647 |
| **7660140001** | NUT, HEX | 647 |
| **7660140008** | NUT, HEX | 643 |
| **7660141600** | LOCKNUT, HEX | 183 |
| **7660141601** | NUT, 1/4-20UNC HEX LOCK | 279 |
| **7660150000** | NUT, HEX | 59, 111, 165, 167, 648 |
| **7660150001** | NUT, HEX | 227 |
| **7660150008** | NUT, HEX | 260, 275, 280, 643 |
| **7660150200** | NUT, JAM | 23, 275 |
| **7660151601** | LOCKNUT | 279 |
| **7660152200** | NUT, ACORN | 279, 393 |
| **7660152701** | LOCKNUT | 275 |
| **7660160000** | NUT, HEX | 257, 305, 377, 437, 673 |
| **7660160001** | NUT, HEX | 325 |
| **7660160008** | NUT, HEX | 227 |
| **7660161601** | LOCKNUT, HEX | 230 |
| **7660200000** | NUT, HEX | 377 |
| **7660200200** | NUT, HEX | 98 |
| **7660200201** | LOCKNUT | 377 |
| **7660220001** | NUT, HEX | 97 |
| **7660220008** | NUT, HEX | 556 |
| **7660220200** | NUT, HEX JAM | 97, 279 |
| **7661110003** | NUT, HEX | 226, 280 |
| **7661130003** | NUT, HEX | 187, 211, 281 |
| **7661131103** | NUT, M5 -8 ISO 7042 HEX LOCK | 259 |
| **7661150003** | NUT, HEX | 193, 225, 230, 263, 301, 391, 415, 467, 621, 687 |
| **7661170003** | NUT | 8, 10, 77, 119, 179, 185, 205, 215, 257, 259, 263, 415, 467, 497, 557, 621, 634, 671 |

**From - 7660100030** **To - 7661170003**

## Numerical Index — Appendix B

| Part | Description | Page |
|---|---|---|
| **7661171103** | NUT, HEX | 185, 555 |
| **7661190003** | NUT, HEX 10MM | 8, 226, 259, 393, 401, 407, 467, 559, 659, 679, 681 |
| **7661191103** | LOCKNUT | 401, 405 |
| **7661210003** | NUT, HEX 12MM N.C. | 77, 78, 123, 391, 547, 555, 633, 639, 671 |
| **7661211103** | NUT, HEX | 389 |
| **7661240003** | NUT, HEX | 461 |
| **7661240004** | NUT, M16 CLASS 10 | 7 |
| **7661260003** | NUT | 169 |
| **7661270003** | NUT, HEX | 115, 151, 391 |
| **7661270004** | NUT | 7, 498, 525 |
| **7661270103** | NUT | 115 |
| **7661340004** | NUT, M30X3.5 CLASS 10 HEX | 8 |
| **7662190100** | NUT, M10X1.5 | 495 |
| **7671100005** | PAD | 407 |
| **7671100007** | PAD, WEAR | 97 |
| **7671100010** | WEAR PAD, SIDE | 77 |
| **7671100016** | PAD, WEAR | 97 |
| **7671100021** | PAD, SIDE WEAR | 7 |
| **7671100095** | PAD, WEAR | 98 |
| **7683000610** | PEDAL ASSEMBLY - FOOT | 205 |
| **7683100010** | PEDAL ASSEMBLY - ELECTRONIC TELE | 301 |
| **7689000014** | PIN | 419 |
| **7689000023** | PIN, LOCK HAIR | 10 |
| **7689000036** | PIN, CLIP | 19 |
| **7689000053** | PIN, CLIP | 71, 78 |
| **7689000059** | PIN, HITCH | 71, 78, 83, 98 |
| **7689000503** | PLUG, SEALING | 200, 239, 241, 342, 349, 355, 359, 457, 626, 653, 667 |
| **7689000701** | CLIP, HITCH PIN | 10, 71, 78, 83, 97, 98 |
| **7689000704** | PIN, 16 - 14 GA | 27, 29, 181, 203, 213, 239, 241, 252, 265, 342, 355, 415, 427, 457, 653, 667 |
| **7689000721** | PIN, HITCH | 71, 97 |
| **7689000797** | PIN | 342, 626 |

**From - 7661171103** **To - 7689000797**

## Numerical Index — Appendix B

| Part | Description | Page |
|---|---|---|
| **7689000813** | PIN | 457 |
| **7689001653** | PIN, SAFETY SNAP | 75 |
| **7689001756** | PIN | 78, 115, 401 |
| **7689001782** | PIN, 18 - 16 GAGE | 285, 287, 303, 342, 349, 355, 371, 457, 626 |
| **7689002053** | PIN | 342, 359, 457, 626 |
| **7689100033** | PIN | 201, 283, 497 |
| **7689100036** | PIN, CLEVIS | 391 |
| **7689100043** | PIN,14/16GA GOLD | 457 |
| **7689100046** | PIN | 19 |
| **7690001210** | PIN, COTTER | 137 |
| **7690021610** | PIN, #2 X 1" LONG COTTER | 111, 230 |
| **7690051210** | PIN, COTTER | 113 |
| **7690052410** | PIN, COTTER | 71 |
| **7690053210** | PIN, COTTER | 98 |
| **7690082010** | PIN, COTTER | 78, 411 |
| **7690082410** | PIN, COTTER | 9, 391, 393 |
| **7690101610** | PIN, COTTER | 10 |
| **7690102410** | PIN, COTTER | 59, 83 |
| **7690103610** | PIN, COTTER | 78 |
| **7690141600** | PIN, CLEVIS | 137 |
| **7690143644** | PIN, ROLL | 115 |
| **7690144010** | PIN, COTTER | 393, 497 |
| **7690152410** | PIN, COTTER | 71, 98, 113 |
| **7690161600** | PIN, CLEVIS 3/8" X 1" | 111 |
| **7690164841** | SPRING PIN 0.38X3" SS | 413 |
| **7690182404** | PIN, CLEVIS | 113 |
| **7690264804** | PIN, CLEVIS | 393 |
| **7705100003** | WASHER, PLATE | 151 |
| **7709000021** | PLUG, DOT | 260 |
| **7709000031** | O-RING PLUG #6 | 148 |
| **7709000038** | O-RING PLUG #8 | 144, 148 |
| **7709000157** | PLUG, MAGNETIC | 463 |
| **7709000239** | PLUG | 625 |
| **7709000809** | PLUG | 371 |
| **7709000811** | PLUG | 297 |

**From - 7689000813** **To - 7709000811**

## Numerical Index — Appendix B

| Part | Description | Page |
|---|---|---|
| **7709000812** | PLUG | 285, 287, 291 |
| **7709000838** | PLUG | 456 |
| **7709000839** | PLUG, 3 SOCKET | 625 |
| **7709000844** | PLUG, 2 SOCKET | 29, 199, 359, 456, 625 |
| **7709000845** | PLUG | 456 |
| **7709000846** | PLUG, 12 SOCKET | 200, 349, 359, 456 |
| **7709000849** | PLUG | 456 |
| **7709000850** | PLUG | 456 |
| **7709000874** | PLUG | 199, 342, 355, 359, 456, 625 |
| **7709000883** | PLUG | 199, 343, 349, 359, 456 |
| **7709000936** | PLUG, 4 SOCKET | 199, 291, 359, 456 |
| **7709100870** | PLUG, 4 PASS | 199, 625 |
| **7709100877** | PLUG | 199, 291, 359, 456 |
| **7709100882** | PLUG | 199, 341 |
| **7709100890** | PLUG, DEUTSCH | 625 |
| **7709100895** | PLUG, 4 SOCKET | 199 |
| **7709100901** | PLUG, 3 SOCKET | 456 |
| **7709100902** | PLUG, 3 PIN | 199, 456, 625 |
| **7709100907** | PLUG | 199, 359, 456 |
| **7709100908** | PLUG | 199, 359, 456 |
| **7709100909** | PLUG DTM06-12SC W/WM-12S WEDGE | 199 |
| **7709100910** | PLUG DTM06-12SD W/WM-12S WEDGE | 199 |
| **7709100911** | PLUG W/BLUE WEDGE | 199, 625 |
| **7709100929** | PLUG, W/WEDGE | 359 |
| **7709100930** | PLUG, DTO6-12SC-C015 W/WEDGE | 359 |
| **7709100931** | PLUG, DTO6-12SD-C015 W/WEDGE | 359 |
| **7709100946** | PLUG | 199, 341 |
| **7709800000** | PLUG, #8 SAE, 75-16 | 119 |
| **7709800001** | PLUG, SAE #4 | 14, 108, 119, 395 |
| **7709800004** | PLUG | 14 |
| **7709800005** | PLUG, SAE #6 | 395 |
| **7711040001** | PLUG | 489 |
| **7711080001** | O RING PLUG | 485 |
| **7714000585** | EXTENSION, CENTER POST | 233 |
| **7722100100** | PUMP ASSEMBLY - PISTON | 559 |
| **7722100101** | PUMP ASSEMBLY - GEAR | 559 |

**From - 7709000812** **To - 7722100101**

## Numerical Index — Appendix B

| Part | Description | Page |
|---|---|---|
| **7726000128** | COOLER, OIL | 639 |
| **7750000058** | RELAY, 24 VOLT | 342 |
| **7750000741** | RELAY, 24 VOLT | 343 |
| **7750000757** | RELAY, 300 AMP | 651 |
| **7753000161** | RING, WIPER | 13 |
| **7753000274** | RING, WEAR | 13 |
| **7753000376** | RING, WIPER | 13 |
| **7753000444** | RING, WEAR | 13 |
| **7753000540** | RING, WEAR | 395 |
| **7753000835** | RING, BACK-UP | 13 |
| **7753001553** | RING, WEAR | 393 |
| **7753100054** | WEAR RING | 14 |
| **7753100056** | RING, HYTREL BACK-UP | 13 |
| **7753100057** | RING, BACK-UP | 13 |
| **7753100066** | RING, 4" BACKUP | 13 |
| **7754000140** | O-RING, LOW TEMPERATURE | 395 |
| **7754000143** | O-RING, LOW TEMPERATURE | 13 |
| **7754000154** | O-RING, LOW TEMPERATURE | 13 |
| **7754000157** | O-RING, LOW TEMPERATURE | 13 |
| **7754000160** | O-RING, LOW TEMPERATURE | 395 |
| **7754000169** | O-RING, LOW TEMPERATURE | 13 |
| **7754100010** | O-RING | 179, 665 |
| **7755011002** | O-RING | 144, 146, 148, 486, 487, 556, 560, 561 |
| **7755012002** | O-RING | 143, 144, 145, 146, 147, 148, 149, 173, 485, 486, 487, 489, 562, 563, 681 |
| **7755014000** | O-RING | 133 |
| **7755014002** | O-RING | 143, 144, 393, 397, 485, 489, 560, 563, 639 |
| **7755016002** | O-RING | 146, 149 |
| **7755018002** | O-RING | 143, 146, 485, 486, 487, 488, 556, 561, 562 |
| **7755021002** | O-RING | 7, 143, 145, 146, 147, 486, 561, 563, 681 |
| **7755025002** | O-RING | 148, 149, 561, 681 |

**From - 7726000128** **To - 7755025002**

## Numerical Index — Appendix B

| Part | Description | Page |
|---|---|---|
| **7755107002** | O-RING | 129 |
| **7755110000** | O-RING | 601 |
| **7755152000** | O-RING | 108 |
| **7755170000** | O-RING | 108 |
| **7755219002** | O-RING | 146, 147 |
| **7755220002** | O-RING | 128 |
| **7755222002** | O-RING | 145, 485, 561 |
| **7755225002** | O-RING | 145, 485 |
| **7755228002** | O-RING, 2" | 485 |
| **7755232002** | O-RING | 556 |
| **7755245000** | O-RING | 108 |
| **7755251000** | O-RING | 108 |
| **7755260000** | O-RING | 108 |
| **7755265000** | O-RING | 108 |
| **7755332609** | RING, BACK-UP | 395 |
| **7755342609** | RING, BACK-UP | 395 |
| **7755348609** | RING, BACK-UP | 13 |
| **7755439609** | RING, BACK-UP | 13 |
| **7755904002** | O-RING | 14, 108, 119, 144, 146, 148, 149, 157, 173, 395, 487, 489, 556, 560, 561, 562 |
| **7755906002** | O-RING | 143, 144, 146, 148, 149, 173, 393, 395, 485, 486, 487, 489, 560, 561, 563, 639, 681 |
| **7755908002** | O-RING | 119, 143, 144, 145, 148, 173, 393, 397, 485, 487, 489, 563, 639 |
| **7755910002** | O-RING | 146, 478, 488, 562, 681 |
| **7755912002** | O-RING | 125, 126, 143, 147, 485, 486, 556, 561, 562, 563 |
| **7755916002** | O-RING | 7, 14, 143, 148, 488, 561 |
| **7755920002** | O-RING | 148, 681 |
| **7760000008** | RIVET, POP | 175 |
| **7760000011** | RIVET, POP | 429 |
| **7768003904** | ARM, LEVER | 281 |
| **7772100019** | ROLLER, NYLATRON | 78 |

**From - 7755107002** **To - 7772100019**

## Numerical Index — Appendix B

| Part | Description | Page |
|---|---|---|
| **7780100877** | SLING, 5FT X 5/8 WIRE ROPE | 417 |
| **7785160801** | SET SCREW | 693 |
| **7786000537** | SCREW, CENTER POST | 233 |
| **7786000539** | SCREW, CATCH | 233 |
| **7786000544** | SCREW, SET (SLOTTED) | 391 |
| **7786160804** | SET SCREW | 7 |
| **7786160809** | SET SCREW, 1 3/4" N.C. X 1" LG | 391, 393 |
| **7787172011** | SCREW, | 10 |
| **7787275013** | HEX SOCKET SET SCREW M20X50 LG | 391 |
| **7790060673** | SCREW, SELF-TAPPING | 245 |
| **7790100653** | SCREW, SELF-TAPPING | 413 |
| **7790100853** | SCREW, SELF-TAPPING | 245 |
| **7790100871** | SCREW, SELF-TAPPING | 230 |
| **7790140853** | SCREW, SELF-TAPPING | 230 |
| **7790161253** | SCREW, | 226, 259, 363 |
| **7792151221** | HEX TAP SCREW, M6X12 DIN 7500 | 280 |
| **7794000272** | CUP, BEARING | 17, 73, 81, 85 |
| **7794000277** | RING, WIPER | 395 |
| **7794000543** | SEAL, BUFFER | 395 |
| **7794000602** | SEAL | 13 |
| **7794000608** | SEAL | 395 |
| **7794000626** | SEAL, DEEP Z ROD | 13 |
| **7794000638** | SEAL, DEEP Z ROD | 395 |
| **7794001655** | GASKET | 559 |
| **7794001721** | RUBBER, FLOCKED 154" LONG | 233 |
| **7798100005** | TRACK, CONTROL | 259, 280 |
| **7798100006** | TRACK, FREE | 259, 280 |
| **7806100006** | SHACKLE, 7/8" GALVANIZED | 417 |
| **7810100133** | SHAFT, LOWER PIVOT | 169 |
| **7810100136** | SHAFT, UPPER | 19 |
| **7814100077** | GUARD, HOSE | 148, 488 |
| **7814100084** | FRONT STORAGE TRAY MAT | 495 |
| **7814100085** | STORAGE TRAY MAT-REAR | 495 |
| **7822000080** | SLEEVE | 229 |
| **7822000598** | SLEEVE, VINYL | 259, 281 |
| **7826000079** | SOCKET, RELAY | 342 |

**From - 7780100877** **To - 7826000079**

## Numerical Index — Appendix B

| Part | Description | Page |
|---|---|---|
| **7826000087** | SOCKET, 16-14 GA | 29, 199, 285, 287, 297, 349, 359, 457 |
| **7826000092** | SOCKET, (12) 12-14GA | 199, 457, 626 |
| **7826000095** | SOCKET, | 457 |
| **7826000626** | SOCKET, | 199, 291, 342, 349, 355, 359, 371, 458, 626 |
| **7826000633** | TERMINAL, FEMALE | 265 |
| **7826000650** | PLUG, SEALING | 200, 359, 458, 626 |
| **7826100004** | SOCKET, (16 - 18) 30 SERIES | 199, 291, 342, 359, 458, 626 |
| **7826100013** | AMP 1.5 16-14 SOCKET | 458 |
| **7826100016** | SOCKET, DEUTSCH 22/20 GA NI | 199, 291, 359, 458 |
| **7826100018** | SOCKET, 20 GAUGE GOLD | 199, 359, 626 |
| **7834000193** | SPRING | 229 |
| **7834000786** | SPRING | 115 |
| **7834100009** | SPRING, LOCKING | 111 |
| **7846000680** | STOP, SLIDE | 233 |
| **7850000046** | STRAP, GROUND | 257 |
| **7850000208** | CABLE TIE 5.63", BLACK | 25, 29, 201, 271, 291, 301, 317, 325, 331, 342, 349, 355, 360, 371, 383, 427, 457, 621, 626, 653 |
| **7850000237** | TIE, CABLE (BLACK) | 59, 89, 437, 561 |
| **7850000805** | TIE, CABLE (BLACK) | 59, 65, 149, 393, 490 |
| **7872000720** | SWITCH, TEMPERATURE | 681 |
| **7872000723** | SENDER,TRANMISSION TEMPERATURE | 563 |
| **7872100062** | PROXY SENSOR-PNP 10mm RANGE | 283 |
| **7872100071** | SWITCH, EMERGENCY STOP | 351 |
| **7872100142** | DISCONNECT SWITCH | 647 |
| **7872100164** | SWITCH, L-SERIES DIMMER | 345 |
| **7872100170** | SWITCH, 120 TEMPERATURE (N.C.) | 148 |
| **7872100171** | SWITCH, 190 TEMPERATURE (N.C.) | 485 |
| **7872100192** | SWITCH, WORK LIGHTS | 345 |
| **7872100198** | SWITCH, L-SERIES BOOM LIGHTS | 315 |
| **7872100204** | SWITCH, L-SERIES MAIN HOIST | 280 |
| **7872100205** | SWITCH, L-SERIES AUX HOIST | 280 |
| **7872100208** | SWITCH, L-SERIES SWING BRAKE | 280 |

**From - 7826000087** **To - 7872100208**

## Numerical Index — Appendix B


| Part | Description | Page |
|---|---|---|
| **7872100215** | SWITCH,L-SERIES CRANE FUNC PWR | 345 |
| **7880000092** | KIT, JAY BRACKET | 639 |
| **7880000879** | TANK - 4 QUART FLUID | 215 |
| **7888000045** | TEE | 560 |
| **7888100000** | TEE, SPLIT FLANGE BRANCH | 485 |
| **7892000194** | PARALLEL, NON - INSULATED | 201, 203, 291, 343, 360, 456, 625 |
| **7892000195** | PARALLEL, NON - INSULATED | 200, 291, 343, 349, 360, 456, 625, 653 |
| **7892000196** | PARALLEL, NON - INSULATED | 175, 200, 343, 349, 355, 456, 625 |
| **7892000218** | FUSE, TERMINAL | 342 |
| **7892000219** | FUSE, TERMINAL | 342 |
| **7892000220** | FUSE, BUSS BAR | 341 |
| **7892000241** | RECEPTACLE, | 456 |
| **7892000252** | TERMINAL, MALE PIN | 199, 458 |
| **7892000254** | TERMINAL, GREEN CABLE SEAL | 458 |
| **7892000255** | TERMINAL, GRAY CABLE SEAL | 199, 459 |
| **7892000256** | TERMINAL, BLUE CABLE SEAL | 459 |
| **7892000257** | TERMINAL, GREEN CAVITY | 458 |
| **7892000824** | RECEPTACLE, | 239, 241, 252, 265, 371 |
| **7892000832** | RECEPTACLE, | 285, 287 |
| **7892000835** | RECEPTACLE, | 29 |
| **7892000836** | RECEPTACLE, 2 PIN | 181, 213, 667 |
| **7892000840** | TERMINAL, FEMALE | 626 |
| **7892000843** | TERMINAL, FEMALE | 342, 458, 626 |
| **7892000935** | PARALLEL | 456, 625 |
| **7892000939** | RECEPTACLE, | 456 |
| **7892000947** | RECEPTACLE, | 252, 303, 625 |
| **7892000949** | RECEPTACLE, | 27, 200, 349, 359, 456, 625 |
| **7892000950** | RECEPTACLE, | 349, 456 |
| **7892000951** | RECEPTACLE, | 427 |
| **7892000978** | RECEPTACLE, | 200, 342, 355 |
| **7892000986** | RECEPTACLE, | 457, 653 |
| **7892000999** | RECEPTACLE, 12 VOLT DASH MOUNT | 325 |
| **7892001001** | FERRULE, SINGLE WIRE | 355 |


**From - 7872100215** **To - 7892001001**

## Numerical Index — Appendix B


| Part | Description | Page |
|---|---|---|
| **7892001002** | FERRULE, SINGLE WIRE | 342 |
| **7892001003** | FERRULE, SINGLE WIRE | 355 |
| **7892001012** | RECEPTABLE, 12 P FLANGE | 341 |
| **7892001036** | RECEPTACLE, SPLICE BLOCK | 199, 349, 359, 457 |
| **7892001051** | RECEPTACLE, | 200, 355, 457 |
| **7892001053** | RECEPTACLE, 9 PIN | 359 |
| **7892001058** | PLUG, CAVITY | 626 |
| **7892100003** | TERMINAL, DARK RED CABLE SEAL | 459 |
| **7892100010** | RECEPTACLE, DTM-3P | 199, 283, 497 |
| **7892100027** | 2-PASS CONNECTOR/GRAY SEAL | 341 |
| **7892100030** | CONNECTOR, COVER/SINGLE | 341 |
| **7892100032** | TERMINAL, FEMALE | 342 |
| **7892100036** | RECEPTACLE, 3 WAY | 200, 626 |
| **7892100039** | RECEPTACLE, DTM04-4P | 199 |
| **7892100058** | TERMINAL, FM MP 630 SERIES | 291, 349 |
| **7892100059** | TERMINAL | 291, 349, 355 |
| **7892100063** | TERMINAL,TANGLESS FEMALE 280 S | 458 |
| **7892100065** | TERMINAL, TANGLESS FEMALE | 342, 458 |
| **7892100086** | RECEPT,W/WEDGE | 355 |
| **7892100115** | TERMINAL, FEMALE SLEEVE (18GA) | 361 |
| **7892100133** | TERMINAL, MALE | 361 |
| **7910100671** | TUBE | 397 |
| **7910100672** | TUBE | 397 |
| **7910101133** | TUBE ASSY | 681 |
| **7910101429** | TUBE ASSY, TELE A EXT TO HOSE | 145 |
| **7910101430** | TUBE ASSY, TELE B RET TO HOSE | 145 |
| **7910101432** | TUBE ASSY, LIFT B RET TO HOSE | 145 |
| **7910101435** | TUBE ASSY, PS MAN TO PS MAIN | 144 |
| **7910101436** | TUBE ASSY, D4 MAN TO PD MAIN | 144 |
| **7910101437** | TUBE ASSY, D6 MAN TO PD MAIN | 146 |
| **7910101454** | TUBE ASSY, INLET MAIN VALVE | 144 |
| **7910101455** | TUBE ASSY, TELE CYL PISTON | 7 |
| **7910101456** | TUBE ASSY, TELE CYL ROD PORT | 7 |
| **7910101464** | TUBE ASSY, PUMP INLET | 556 |
| **7910101468** | TUBE ASSY, VALVE TO TUBE RSB | 487 |
| **7910101469** | TUBE ASSY, HOSE TO TUBE RSB | 487 |


**From - 7892001002** **To - 7910101469**

## Numerical Index — Appendix B

| Part | Description | Page |
|---|---|---|
| **7910101470** | TUBE ASSY, VALVE TO TUBE RSA | 487 |
| **7910101471** | TUBE ASSY, HOSE TO TUBE RSA | 487 |
| **7910101472** | TUBE ASSY, SEL TO TEE EXT | 487 |
| **7910101473** | TUBE ASSY, SEL TO TEE RET | 487 |
| **7910101474** | TUBE ASSY, TEE TO STACK FRT | 487 |
| **7910101475** | TUBE ASSY, TEE TO HOSE RET FRT | 487 |
| **7910101476** | TUBE ASSY,TEE TO TUBE EXT REAR | 487 |
| **7910101477** | TUBE ASSY, TUBE TO STACK REAR | 487 |
| **7910101478** | TUBE ASSY,TEE TO TUBE RET REAR | 487 |
| **7910101479** | TUBE ASSY, TUBE TO HOSE RET RE | 487 |
| **7910101490** | TUBE ASSY,SEL VALV TO RET MANI | 486 |
| **7910101496** | TUBE ASSY,BRK TUBE TO TEE REAR | 488 |
| **7910101507** | TUBE ASSY,  ALO P1 SHORT | 486 |
| **7910101508** | TUBE ASSY, ALO P1 LONG | 486 |
| **7910101509** | TUBE ASSY, ALO P2 SHORT | 486 |
| **7910101510** | TUBE ASSY, ALO P2 LONG | 486 |
| **7910101513** | TUBE ASSY, D1 MAN TO TANK CHAR | 144 |
| **7910101515** | TUBE ASSY, BR MAN TO P CHARGE | 145 |
| **7910101516** | TUBE ASSY, 1A MAN TO LS STEER | 145 |
| **7910101517** | TUBE ASSY, 1B MAN TO P STEER | 144 |
| **7910101518** | TUBE ASSY, P BR CHARGE TO TUBE | 145 |
| **7910101519** | TUBE ASSY,LS BR CHARGE TO TUBE | 144 |
| **7910101520** | TUBE ASSY, T BR CHARGE TO TUBE | 145 |
| **7910101566** | TUBE ASSY, PORT 6 SWIVEL TO IN | 144 |
| **7910101567** | TUBE ASSY,PORT 4 SWIVEL TO OUT | 144 |
| **7910101568** | TUBE ASSY,PORT 4SWIVEL TO TANK | 144 |
| **7910101569** | TUBE ASSY,BRAKE TUBE REAR SHRT | 488 |
| **7910101570** | TUBE ASSY,BRAKE TUBE REAR LONG | 488 |
| **7910101571** | TUBE ASSY,BRAKE HOSE TO TUBE F | 487 |
| **7910101572** | TUBE ASSY,BRAKE TUBE SHORT FRT | 487 |
| **7910101587** | TUBE ASSY, ALO P1 TO TEE | 486 |
| **7910101588** | TUBE ASSY, ALO P2 TO TEE | 486 |
| **7910101597** | TUBE ASSY, LIFT A EXT TO HOSE | 145 |
| **7910101607** | TUBE ASSY, MAIN HOIST DOWN M&A | 146 |
| **7910101608** | TUBE ASSY, MAIN HOIST UP M&A | 146 |
| **7910101609** | TUBE ASSY, AUXILARY HOIST DOWN | 146 |

**From - 7910101470** **To - 7910101609**

## Numerical Index — Appendix B

| Part | Description | Page |
|---|---|---|
| **7910101610** | TUBE ASSY, AUXILARY HOIST UP | 146 |
| **7910101613** | TUBE ASSY, OIL COOLER INLET | 149 |
| **7910101614** | TUBE ASSY, OIL COOLER OUTLET | 148 |
| **7910101616** | TUBE ASSY, COOLER OUTLET TO 4 | 149 |
| **7910101618** | TUBE ASSY, MANIFOLD D5 TO 10 | 144 |
| **7910101628** | TUBE ASSY, MAIN TANK TO CHECK | 144 |
| **7910101629** | TUBE ASSY, COOLER IN TO CHECK | 148 |
| **7910101636** | TUBE ASSY,LS MAIN TO LS CHARGE | 149 |
| **7910101638** | TUBE ASSY, LS MAIN TO PORT 2 | 149 |
| **7910101639** | TUBE ASSY, FRONT STEER | 488 |
| **7910101640** | TUBE ASSY, FRONT STEER | 488 |
| **7910101641** | TUBE ASSY, 1B MAN TO P STEER | 149 |
| **7910101642** | TUBE ASSY, 1A MAN TO LS STEER | 149 |
| **7910101644** | TUBE ASSY,HOIST DR TO HOIST DR | 147 |
| **7910101672** | TUBE ASSY SEL AXLE LO P3 | 489 |
| **7910101702** | SPACER | 185 |
| **7910101703** | SPACER | 185 |
| **7910101727** | SPACER | 13 |
| **7916080182** | 1/2 X 18" NYLON FUEL TUBE | 639 |
| **7926000014** | VALVE-DRAIN COCK | 555 |
| **7926000557** | VALVE, DRAIN | 633 |
| **7926002156** | VALVE, INLET CHECK | 173 |
| **7926002329** | VALVE, SHUT-OFF | 560 |
| **7926003526** | FUSE, VELOCITY | 147 |
| **7926100886** | VALVE ASSY, CARTRIDGE HOLDING | 14 |
| **7926100899** | VALVE ASSEMBLY - STEERING CONTRO | 305 |
| **7926100906** | VALVE ASSEMBLY - OUTRIGGER CONTR | 467 |
| **7926100910** | VALVE ASSY, DUAL ACCUMULATOR CHA | 123 |
| **7926100912** | VALVE ASSEMBLY - BRAKE TREADLE | 263 |
| **7926100948** | VALVE ASSY, CHECK | 148 |
| **7926100959** | VALVE, #12 INLET CHECK | 143 |
| **7942000512** | BRACKET SET, FOOTLESS BLIND | 226 |
| **7942000522** | MESH, SUNSCREEN | 226 |
| **7949000190** | WASHER, | 83 |
| **7949000230** | WASHER, 1 1/8" I.D. | 8 |
| **7949000235** | WASHER, 1/2" I.D. FLAT | 7, 101, 391, 547, 555, 559, 633 |

**From - 7910101610** **To - 7949000235**

## Numerical Index — Appendix B

| Part | Description | Page |
|---|---|---|
| **7949000236** | FLAT WASHER, 3/4" | 10, 19, 111, 151, 279, 497, 525, 555, 559 |
| **7949000237** | WASHER, 7/8" I.D. | 163 |
| **7949000259** | WASHER, 5/8" I.D. | 555, 559 |
| **7949000263** | WASHER, HARDENED | 556, 559 |
| **7949000269** | WASHER, KEYED | 83 |
| **7949000333** | WASHER, THRUST | 8 |
| **7949000359** | WASHER, 1" I.D. HARDENED ROUND | 101 |
| **7949000360** | WASHER, 1" I.D. | 115 |
| **7949000377** | WASHER, 3/8" I.D. | 8 |
| **7949000383** | WASHER, THRUST | 169 |
| **7949000385** | WASHER, THRUST | 99 |
| **7949000534** | WASHER, HARDENED ROUND | 119 |
| **7949000617** | WASHER, 5/8" I.D. | 9 |
| **7949000623** | WASHER, BLACK PLASTIC | 230, 279 |
| **7949001149** | FITTING, WASHER NOZZLE | 257 |
| **7949001186** | WASHER, BLACK NYLON | 230, 279, 299, 393 |
| **7949001227** | WASHER, BEVELED | 279 |
| **7949180028** | WASHER | 281 |
| **7949180045** | WASHER, COPPER | 639 |
| **7950040050** | LOCKWASHER, 7/64" I.D. | 271, 332, 360 |
| **7950040141** | WASHER, 7/64" I.D. | 271, 331 |
| **7950040151** | WASHER, | 360 |
| **7950060050** | WASHER, # 6 LOCK | 437 |
| **7950080050** | LOCKWASHER, 5/32" I.D. | 89, 227, 260, 332 |
| **7950080141** | FLATWASHER, 5/32" I.D. | 89, 175, 230, 332 |
| **7950080161** | FLATWASHER, 5/32" I.D. | 260 |
| **7950100050** | WASHER, LOCK #10 | 65, 69, 326, 331, 341, 383, 419, 437, 647, 651 |
| **7950100141** | WASHER, FLAT, #10 | 65, 211, 225, 326, 331, 341, 367, 383, 437, 647, 651 |
| **7950100161** | FLATWASHER, 3/16" I.D. | 69, 230 |
| **7950100350** | LOCK WASHER, 3/16" I.D. | 326, 367 |
| **7950140050** | WASHER, LOCK 1/4" | 49, 55, 230, 279, 325, 331, 377, 407, 488, 643, 647, 648, 651 |

**From - 7949000236** **To - 7950140050**

## Numerical Index — Appendix B

| Part | Description | Page |
|---|---|---|
| **7950140141** | WASHER, FLAT 1/4" PLAIN NARROW | 10, 49, 55, 123, 185, 279, 326, 331, 377, 643, 647, 648, 651 |
| **7950140150** | WASHER, FLAT 1/4" I.D. | 634, 637 |
| **7950140161** | WASHER, 1/4" I.D. FLAT WIDE | 183, 279, 415, 647 |
| **7950150050** | WASHER, LOCK 5/16" I.D. | 59, 119, 165, 167, 193, 227, 275, 280, 567, 643, 648 |
| **7950150141** | WASHER, FLAT 5/16" | 59, 113, 119, 165, 167, 193, 279, 643, 647, 687 |
| **7950150150** | FLAT WASHER, 5/16"I.D. | 634 |
| **7950150161** | WASHER, 5/16" FLAT PLAIN WIDE | 123, 179, 185, 193, 227, 275, 280, 671 |
| **7950150350** | WASHER, LOCK 5/16" | 260, 281 |
| **7950160050** | WASHER, LOCK 3/8" I.D. | 257, 305, 377, 437, 556, 570, 595, 607, 648, 673 |
| **7950160141** | WASHER, 3/8" PLAIN NARROW | 111, 165, 167, 257, 305, 325, 377, 437, 648, 681 |
| **7950160161** | WASHER, FLAT WIDE 3/8 | 229, 401, 405, 407, 495, 673, 675, 679 |
| **7950160350** | WASHER, LOCK 3/8" I.D. | 257, 377, 437 |
| **7950170050** | WASHER, LOCK 7/16" I.D. | 567, 569, 605 |
| **7950170141** | WASHER, 7/16" I.D. | 149 |
| **7950180050** | WASHER, LOCK 1/2" I.D. | 401, 407, 488, 497, 525, 645 |
| **7950180141** | WASHER, FLAT 1/2" | 25, 113, 123, 421, 497, 525, 681 |
| **7950180160** | WASHER, 9/16" | 97 |
| **7950180161** | FLAT WASHER, 1/2" I.D. | 7, 177, 383, 401, 407, 645 |
| **7950190050** | WASHER, LOCK | 597 |
| **7950220140** | WASHER, | 97 |
| **7950260141** | WASHER, 1" I.D. | 71, 98 |
| **7950280140** | WASHER, | 77 |
| **7950420161** | FLATWASHER | 389 |
| **7951110014** | WASHER, 4MM I.D. | 226, 280 |
| **7951110210** | LOCKWASHER, 4MM I.D. | 226, 280 |
| **7951130014** | WASHER, FLAT M5 I.D. | 187, 259, 281 |
| **7951130210** | LOCKWASHER, 5MM I.D. | 187, 211, 281, 332 |

## Numerical Index — Appendix B

| Part | Description | Page |
|---|---|---|
| **7951150014** | WASHER, 6MM I.D. | 193, 226, 259, 301, 467, 621, 687 |
| **7951150210** | LOCKWASHER, 6MM I.D. | 123, 193, 226, 230, 260, 263, 301, 415, 467, 621, 634 |
| **7951150220** | WASHER, LOCK M6 | 637 |
| **7951170014** | WASHER, FLAT #8 | 8, 77, 101, 115, 185, 205, 215, 230, 245, 257, 259, 263, 401, 415, 437, 467, 497, 555, 621 |
| **7951170210** | WASHER, LOCK 8MM | 8, 77, 101, 111, 115, 123, 179, 185, 193, 205, 215, 229, 245, 257, 259, 263, 401, 415, 467, 497, 555, 621, 634, 671 |
| **7951170220** | WASHER, 8MM SPRING LOCK | 437 |
| **7951190014** | FLAT WASHER, 10MM I.D. | 7, 59, 77, 211, 226, 259, 263, 319, 467, 495, 560, 657, 671 |
| **7951190210** | LOCK WASHER, 10MM | 7, 59, 226, 263, 319, 401, 407, 463, 467, 495, 556, 559, 671, 675, 681 |
| **7951190220** | WASHER, LOCK | 259, 657, 659, 679 |
| **7951210014** | WASHER, FLAT #12 | 77, 391, 563, 633, 639, 671 |
| **7951210210** | LOCK WASHER, 12MM I.D. | 7, 78, 123, 547, 561, 633, 639, 671, 681 |
| **7951240014** | FLATWASHER 16MM I.D. | 78, 461 |
| **7951240210** | SPRING WASHER, 16MM I.D. | 461 |
| **7951290095** | F WASHER 24-HRC38 ANSI B18.22M | 117 |
| **7974100039** | HOIST ASSEMBLY - HP15C/17G | 151 |
| **80000339** | DECAL - GROVE FINAL ASSEMBLY AUD | 699 |
| **80000554** | DRIVE LINE ASSEMBLY | 547 |
| **80000556** | DRIVE LINE ASSEMBLY | 547 |
| **80000934** | COVER | 437 |
| **80001292** | RECEPT DT-2P (DT04-2P-E008) | 203 |
| **80001293** | DIODE (MODIFIED) | 200 |
| **80002870** | DECAL - DANGER HOIST ENTANGLEMEN | 710 |
| **80002953** | BOOM LIGHT-REWORK | 25 |

**From - 7951150014** **To - 80002953**

## Numerical Index — Appendix B

| Part | Description | Page |
|---|---|---|
| **80003153** | QUICK-PIN W/ LANYARD (.44 DIA) | 411 |
| **80003325** | SKYLIGHT ASSEMBLY - SLIDING | 225 |
| **80003365** | SERVICE KIT | 233 |
| **80003366** | GLASS | 233 |
| **80003367** | SOCKET 20-16GA | 342 |
| **80003395** | AMP-PLUG | 341 |
| **80004174** | WINDOW ASSEMBLY - REAR | 225 |
| **80004322** | CONTROLLER ASSEMBLY - 8-32 VOLT | 280 |
| **80004326** | CONTROLLER ASSEMBLY - 8-32 VOLT | 280 |
| **80004406** | LATCH, RIGHT HAND ROTARY | 229 |
| **80004407** | ROTARY LATCH - LEFT HAND | 229 |
| **80004448** | KIT - SKYLIGHT WIPER | 226 |
| **80004449** | KIT - FRONT WIPER | 226 |
| **80004479** | KIT, DOOR HANDLE | 229 |
| **80004480** | HANDLE, MODIFIED DOOR | 229 |
| **80004481** | LUG | 229 |
| **80004486** | MOUNTING PLATE | 229 |
| **80004577** | FOAM, RIGHT HAND REAR ACOUSTIC | 255 |
| **80004580** | FOAM, LEFT HAND REAR ACOUSTIC | 255 |
| **80004581** | FOAM, LEFT HAND FRONT ACOUSTIC | 255 |
| **80004700** | SEALING PLUG - NYLON | 342 |
| **80004968** | FLOOR MAT | 225 |
| **80004992** | SEAL, MODIFIED | 225 |
| **80004994** | ROD, LATCH | 229 |
| **80004996** | PLATE, CAB LATCH | 229 |
| **80005189** | COVER, REAR CORNER (CAB) | 299 |
| **80005246** | PLATE, COVER | 259 |
| **80005378** | COVER, TOP FRONT | 299 |
| **80005520** | HANDRAIL, GRAB | 259 |
| **80006228** | SWITCH L-SERIES REAR STEER | 281 |
| **80006460** | MOUNTING BRACKET | 363 |
| **80006549** | GRAB HANDRAIL | 260 |
| **80006552** | FRONT DASH BOTTOM COVER | 299 |
| **80006553** | COVER, ELECTRIC WIRE | 299 |
| **80008126** | VALVE-AXLE LOCKOUT | 467 |
| **80008129** | LMI INTERNAL LIGHT BAR | 317 |

**From - 80003153** **To - 80008129**

## Numerical Index — Appendix B

| Part | Description | Page |
|---|---|---|
| **80008201** | CABLE, CAN BUS M12 SHLD 3m | 93 |
| **80008491** | SWITCH, KEY | 351 |
| **80008750** | 180DEG BSHELL | 625 |
| **80008755** | 180DEG BSHELL | 200, 455, 625 |
| **80008759** | 90DEG BSHELL | 200 |
| **80008760** | 180DEG BSHEL W/STRAIN | 455 |
| **80008761** | 180DEG BSHELL | 625 |
| **80008764** | 180DEG BSHEL W/STRAIN | 455 |
| **80008765** | 180DEG BSHELL | 200, 360, 625 |
| **80008769** | 180DEG BSHELL | 455 |
| **80008773** | 180 DEG BSHELL | 200, 455 |
| **80008779** | 180DEG BSHELL | 455, 653 |
| **80008783** | 180DEG BSHELL | 200, 455 |
| **80008786** | 180DEG BACKSHELL | 455 |
| **80008788** | 180DEG BACKSHELL | 455 |
| **80009225** | BRACKET-ELEC MOUNTING | 193 |
| **80009830** | TUBE ASSY | 486 |
| **80009833** | TELEMATIC CONTROL UNIT (TCU) | 385 |
| **80010095** | SOLENOID VALVE ASSEMBLY | 489 |
| **80010420** | SHCS M10x65 -8.8 ISO 4762 PLTD | 145 |
| **80010421** | SHCS M12X70 -8.8 | 145, 559 |
| **80011343** | DECAL - CAUTION ARMREST POSITION | 709 |
| **80012095** | VALVE, CHECK PO | 395 |
| **80012470** | PLATE-DIAG CONN | 360 |
| **80012750** | RECEPT (3P BLU WEDGE) | 455, 625 |
| **80012761** | SHEAVE MOUNTING | 9 |
| **80013051** | LEVER, ROLLER | 158 |
| **80013553** | ROLLER, HOIST CABLES | 10 |
| **80013783** | STINGER | 77 |
| **80013784** | STOP PLATE | 78 |
| **80014331** | MOUNTING BRACKET | 383 |
| **80014746** | SATALITE ANTENNA | 385 |
| **80015247** | TUBE ASSY | 144 |
| **80015532** | 180 DEG CABLE CORDGRIP | 271 |
| **80016241** | NYLON SPACER | 495 |
| **80016383** | GLASS DOOR | 229 |

**From - 80008201** **To - 80016383**

## Numerical Index — Appendix B

| Part | Description | Page |
|---|---|---|
| **80016406** | GASKET DOOR HANDLE | 229 |
| **80016408** | CHANNEL, TOP WIPER MOUNT | 226 |
| **80016409** | SCREEN, TRACK LEFT HAND | 226 |
| **80016410** | SCREEN, TRACK RIGHT HAND | 226 |
| **80016411** | WINDOW ASSY-LH | 226 |
| **80016415** | WINDOW ASSY, FIXED RIGHT HAND | 225 |
| **80016416** | TRACK, DOOR BOTTOM PLASTIC | 225 |
| **80016417** | EXTRUSION, FRONT DOOR SEAL | 225 |
| **80016418** | GUARD, RAIN | 226 |
| **80016419** | SILL, DOOR | 226 |
| **80016421** | INSERT, HEX M10 | 227 |
| **80016424** | GASKET, WIPER BLOCK | 227 |
| **80016475** | COVER, AIR CONDITIONER SIDE | 245 |
| **80016487** | PLATE, MOUNTING 24 | 259 |
| **80016489** | PLATE, MOUNTING 17 | 259 |
| **80016495** | BRACKET, SEAT | 259 |
| **80016496** | ARM, LEVER | 259 |
| **80016497** | PLATE, ACCESS | 259 |
| **80016498** | BRACKET, CUP HOLDER | 259 |
| **80016499** | BRACKET, OPERATORS MANUAL | 259 |
| **80016501** | BRACKET, MOUNTING CAB COVER | 259 |
| **80016502** | BRACKET, CAB OUTRIGGER | 259 |
| **80016505** | PEDAL BRACKET | 263 |
| **80016520** | JACK, MODIFIED | 78 |
| **80016533** | HANDLE | 78 |
| **80016541** | CONSOLE, OVERHEAD PANEL W/HOLE | 325 |
| **80016553** | WINDOW ASSY, FRONT BOTTOM | 225 |
| **80017200** | DECAL - CRANESTAR LOGO | 699 |
| **80017250** | PIN | 115 |
| **80017252** | PIN ASSY | 115 |
| **80017317** | SWITCH,PROXIMITY NORMALLY OPEN | 497 |
| **80017319** | SWITCH ASSY, PROXIMITY NORMALLY | 497 |
| **80017392** | M12 CABLE STRAIGHT, MALE, 1M | 341 |
| **80017432** | ARMREST | 279 |
| **80017459** | DOCK WASHER | 555 |
| **80017568** | PIN | 9 |

**From - 80016406** **To - 80017568**

## Numerical Index — Appendix B

| Part | Description | Page |
|---|---|---|
| **80017569** | PIN TELE ROD END | 7 |
| **80017570** | PIN | 8 |
| **80017571** | PIN | 9 |
| **80017719** | RELAY, 24 VOLT | 455 |
| **80017851** | BRACKET | 497 |
| **80017852** | PLATE SENSOR | 497 |
| **80018055** | PLUG - M12 X 1.5 | 639 |
| **80018267** | TCU AND SAT ANTENNA KIT | 383 |
| **80018276** | CABLE, 18/4 TWIST SHEILDED | 343, 360 |
| **80018328** | PIN - 1.50" DIA | 497, 525 |
| **80018329** | PIN-L/O CYLINDER | 497 |
| **80018330** | PIN-L/O CYL | 497 |
| **80018332** | PIN - 1.50" DIA | 497, 525 |
| **80018337** | SPACER | 71, 77 |
| **80018338** | SPACER | 10 |
| **80018339** | SPACER | 11 |
| **80018360** | PAD, TRAY | 647 |
| **80018496** | AIR CLEANER ASSEMBLY | 659 |
| **80018931** | BRACKET, ELECTRIC MODULE | 260 |
| **80019087** | BOLT | 498 |
| **80019097** | SWITCH L-SERIES SKYLIGHT WIPER | 345 |
| **80019779** | SCR COOL HOSE 3/8" ID x 103" L | 633 |
| **80019938** | COVER PLATE | 363 |
| **80020264** | ROLLER, NYLATRON IM | 10 |
| **80020265** | ROLLER, NYLATRON OM | 10 |
| **80021335** | CAP SCREW, 7/8-9UNCX5.25 HH | 163 |
| **80021340** | HHCS 1-8UNCx5.25 G8 | 101 |
| **80021593** | CABLE, 20 AWG CAN-BUS SHEILDED | 199, 291, 341, 359, 458, 626 |
| **80021858** | ANTENNA , GPS/GSM | 271 |
| **80022413** | LATCH MTG PLATE | 229 |
| **80022424** | PLATE | 229 |
| **80022442** | HANDLE | 229 |
| **80022516** | RADIATOR VENT LINE | 557, 634 |
| **80022523** | CONTROL MOD I/O | 325 |
| **80022642** | TAPE CUTOUT, 3M VHB | 89, 271 |
| **80022874** | LOCKNUT | 11, 71, 78 |

**From - 80017569** **To - 80022874**

## Numerical Index — Appendix B

| Part | Description | Page |
|---|---|---|
| **80022875** | LOCKWASHER | 10, 71, 78 |
| **80022876** | KEYED WASHER | 10, 71, 78 |
| **80022969** | FUSEHOLDER | 651 |
| **80022971** | FUSEHOLDER | 651 |
| **80022993** | STEP | 405 |
| **80023037** | PANEL FUSE & RELAY | 331 |
| **80023039** | PANEL FUSE & RELAY | 331 |
| **80023076** | PLATE MODULE | 331 |
| **80023106** | DT RECP 8PB FLG BLK | 341 |
| **80023110** | DT RECP 12PD FLG BRN | 341 |
| **80023111** | DT RECP 12PC FLG GRN | 341 |
| **80023114** | PLUG/DTV06-18SA W/WEDGE WV-18P | 349 |
| **80023115** | PLUG/DTV06-18SB W/WEDGE WV-18P | 291 |
| **80023116** | PLUG | 359 |
| **80023117** | PLUG | 359 |
| **80023118** | RECEPT FLG W/WEDGE | 341 |
| **80023119** | RECEPT FLG W/WEDGE | 341 |
| **80023120** | RECEPT FLG W/WEDGE | 341 |
| **80023121** | RECEPT FLG W/WEDGE | 341 |
| **80023122** | DTP RECP 4P FLG GRY | 341 |
| **80023219** | FUSE-AMG-100A | 651 |
| **80023220** | FUSE-AMG-250A | 651 |
| **80023247** | SPACER TUBE | 10 |
| **80023422** | HARNESS ASSEMBLY-OVERHEAD CAB PA | 345 |
| **80023432** | RECEPT FLG GRY | 341 |
| **80023439** | DIODE 6AMP KEY | 342 |
| **80023449** | HARNESS ASSEMBLY-ENGINE RELAY PA | 651 |
| **80023469** | PLATE CONNECTOR BULKHEAD | 331 |
| **80023485** | DT PLUG 8SB BLK | 199 |
| **80023540** | PANEL, FRONT CONSOLE | 351 |
| **80023681** | CAB CRANESTAR INSTALLATION | 217 |
| **80023693** | ACOUSTICS INSTALLATION (SG) | 217 |
| **80023695** | WINDOW ASSEMBLY - SIDE RH | 225 |
| **80023710** | HARNESS ASSEMBLY-FRONT PANEL CAB | 351 |
| **80023723** | BRACKET | 280 |
| **80023755** | MASTER CONTROL MODULE | 647 |

**From - 80022875** **To - 80023755**

## Numerical Index — Appendix B


| Part | Description | Page |
|---|---|---|
| **80023834** | PLATE - MODULE | 332 |
| **80023842** | PLATE, SEAT MOUNT | 280 |
| **80023849** | ARM SUPPORT | 279 |
| **80023851** | BRACKET, SEAT BAR | 275 |
| **80023877** | TOP PANEL | 425 |
| **80023887** | SHAFT | 113 |
| **80023913** | LMI CAB KIT, IFLEX2, EXPERT | 89 |
| **80023914** | HA, LMI iFLEX2 | 93 |
| **80023927** | SIDE PANEL | 425 |
| **80023931** | LMI 8-PORT CANBUS BOX | 93 |
| **80023972** | F WASHER 18X90X3.0 | 555 |
| **80023974** | DOCK WASHER | 377, 497, 525 |
| **80023980** | BATTERY CABLE RED 6GA 26" | 341 |
| **80023981** | BATT CABLE RED 6GA 26" | 341 |
| **80024013** | GLASS DOOR ASSEMBLY | 225 |
| **80024018** | DOOR | 229 |
| **80024021** | DOOR LATCH COVER | 229 |
| **80024114** | CONSOLE MOUNTING PLATE | 259 |
| **80024116** | FOAM, ACOUSTIC RH FRONT | 255 |
| **80024117** | MOUNTING STRAP | 259 |
| **80024121** | COVER, BOTTOM | 299 |
| **80024122** | STEERING CONSOLE COVER | 299 |
| **80024123** | PLASTIC, CAB WINDOW RH | 299 |
| **80024177** | FRONT DASH COVER | 299 |
| **80024252** | PEDAL BRACKET, OPPOSITE | 263 |
| **80024931** | BOOM EXTENSION ASSEMBLY 7.9-13.7 | 75 |
| **80024932** | BASE EXTENSION | 77 |
| **80024956** | STEP | 401 |
| **80024992** | STEP | 402 |
| **80025017** | CONTROL MODULE I/O | 193 |
| **80025187** | LADDER | 405 |
| **80025188** | LADDER ASSEMBLY | 401 |
| **80025245** | COVER | 193 |
| **80025279** | FOOT PEDAL PLATE | 263 |
| **80025416** | SWIVEL ASSY-14 PORT HYD ASSY. | 119 |
| **80025552** | BATTERY CABLE RED 2/0 14" | 655 |


**From - 80023834** **To - 80025552**

## Numerical Index — Appendix B


| Part | Description | Page |
|---|---|---|
| **80025554** | BATTERY CABLE BLK 2/0 14" | 655 |
| **80026287** | SHAFT | 10 |
| **80026288** | SHAFT | 10 |
| **80026289** | SHAFT OM | 10 |
| **80026318** | PIPE PLUG, S/S 1/2" NPT HEX | 639 |
| **80026570** | HEATER HOSE | 379 |
| **80026775** | DECAL-PIN SWING LOCK-SYM | 699 |
| **80026806** | PIN | 391 |
| **80026821** | AIR COND LINES KIT - S/S | 179 |
| **80026847** | SHAFT | 77 |
| **80026985** | SCR COOL HOSE 3/8" ID x 8" LG | 633 |
| **80027884** | A/C CONDENSER-VERT. MTG. 24V. | 179 |
| **80027886** | HEATER & CONTROL PANEL (24V) | 295 |
| **80027907** | STEERING COLUMN W/ CLUSTER | 305 |
| **80028838** | HALF CLIP PLAIN, SS | 413 |
| **80029158** | PULLEY-8'K' DIA. 47.85 | 559 |
| **80029339** | SPRING | 413 |
| **80029525** | TRANSMISSION | 559 |
| **80029612** | CONTROL SEAT ASSEMBLY-DUAL AXIS | 275 |
| **80029686** | CONDENSER MOUNT-RH | 179 |
| **80029687** | CONDENSER MOUNT-LH | 179 |
| **80029745** | A/C COVER BRACKET | 259 |
| **80029763** | PARK BRAKE RANGE SHIFT VALVE | 467 |
| **80029764** | O/R REAR STEER VALVE | 467 |
| **80029768** | ACCESSORY MANIFOLD | 123 |
| **80029848** | A/C HOSE KIT-CARRIER | 665 |
| **80029872** | COMPRESSOR(FREON)-24V PAD, KIT | 665 |
| **80029942** | STEER COLUMN SUPPORT BRACKET | 260 |
| **80030029** | WEAR RING | 13 |
| **80030043** | CAP-T SEAL | 13 |
| **80030084** | CAP-T SEAL | 13 |
| **80030085** | WEAR RING | 13 |
| **80030260** | FAN - 26IN DIA SUCKER | 559 |
| **80030279** | GAUGE 2"-TRANSMISSION OIL TEMP | 351 |
| **80030292** | HARNESS ASSEMBLY-SEAT | 281 |
| **80030293** | PANEL ASSY-FRONT CONSOLE | 325 |


**From - 80025554** **To - 80030293**

## Numerical Index — Appendix B

| Part | Description | Page |
|---|---|---|
| **80030317** | HARNESS ASSEMBLY-SS | 193 |
| **80030318** | CABLE 3/0 BLK 108" B- TO ENG- | 621 |
| **80030414** | TUBE ASSEMBLY | 555 |
| **80030446** | BRACKET - AIR CLEANER | 659 |
| **80030457** | TURNTABLE | 101 |
| **80030460** | STEP | 679 |
| **80030502** | M12 CAP,MALE,PLASTIC,LOOP | 455 |
| **80030569** | OIL COOLER-TRANSMISSION | 681 |
| **80030592** | ASSEMBLY-OIL COOLER BRACKET | 681 |
| **80030598** | OIL COOLER COVER | 681 |
| **80030682** | ANGLE | 681 |
| **80030806** | BATTERY BOX | 647 |
| **80030810** | FENDER SUPPORT | 401 |
| **80030935** | RIGHT SIDE HOOD COVER | 407 |
| **80030937** | ACCESS PANEL | 407 |
| **80031017** | REAR HOOD COVER | 407 |
| **80031021** | COVER TRANSMISSION ACCESS | 407 |
| **80031022** | TRANSMISSION ACCESS COVER | 407 |
| **80031047** | BAFFLE | 407 |
| **80031251** | ENGINE HOOD GRILL | 675 |
| **80031257** | Cable M12 4-SOC Shielded 90DEG | 455 |
| **80031447** | SUPPORT | 407 |
| **80031450** | BOTTOM HOOD | 407 |
| **80031452** | TOP HOOD | 407 |
| **80031454** | SUPPROT | 407 |
| **80031456** | DOOR | 407 |
| **80031457** | COVER | 407 |
| **80031470** | BAFFLE | 407 |
| **80031609** | STEP | 402 |
| **80031696** | CURVED RADIATOR HOSE | 633, 637 |
| **80031697** | SHROUD BOTTOM PLATE | 633 |
| **80031699** | SHROUD COVER | 633 |
| **80031701** | 1.0 ID RAD HOSE 34" LG | 633 |
| **80031703** | RADIATOR CAC TOC | 637 |
| **80031865** | ENGINE HOOD-KIT | 408 |
| **80032000** | BATTERY CABLE RED 6GA 12" | 651 |

**From - 80030317** **To - 80032000**

## Numerical Index — Appendix B

| Part | Description | Page |
|---|---|---|
| **80032002** | BATTERY CABLE RED 2OT 16" | 651 |
| **80032019** | BATTERY CABLE RED 2OT 12" | 651 |
| **80032053** | BATTERY CABLE RED 4OT 62" | 655 |
| **80032065** | BATTERY CABLE RED 3OT 56" | 655 |
| **80032083** | FUSE TO BATT. DISC | 655 |
| **80032622** | PIN | 393 |
| **80032835** | MOUNTING ANGLE HOURMETER | 647 |
| **80032836** | MOUNTING ANGLE DISCONNECT | 647 |
| **80033011** | BATTERY CABLE KIT | 647 |
| **80033035** | BATTERY COVER | 419 |
| **80033041** | WIRE FAN GUARD | 634 |
| **80033282** | STRING POTENTIOMETER, 110" | 687 |
| **80033489** | PUMP ASS'Y WITH FLOW DIVIDER | 562 |
| **80033564** | BED TO PLATFORM MOUNTING GROUP | 559 |
| **80033565** | ENGINE MOUNT-RS | 559 |
| **80033568** | TRANS FILTER BRACKET | 556 |
| **80033571** | FUEL FILTER BRACKET | 556 |
| **80033575** | ALTERNATOR-24SI | 559 |
| **80033702** | PLATE | 555 |
| **80033704** | BELLOWS-Ø3.5" TO Ø3.0" X 6"LG | 555 |
| **80033706** | PLATE - TRANS DIPSTICK SUP | 556 |
| **80033850** | HYDRAULIC OIL COOLER | 671 |
| **80034165** | FUSE PANEL ASSEMBLY | 647 |
| **80034166** | FUSE PANEL | 651 |
| **80034260** | WEAR PAD ASSY | 391, 393 |
| **80034261** | WEAR PAD | 391, 393 |
| **80034290** | HOSE ASSY 1.00 SUCTION | 563 |
| **80034399** | SOCKET,(16-18AWG) | 457 |
| **80034442** | T-BOLT Clamp 1.50" | 489 |
| **80035056** | STRING POTENTIOMETER MOUNT | 687 |
| **80035379** | MOUNT | 257 |
| **80035777** | DECAL-CAUTION-TRANS DAMAGE-PT | 709 |
| **80035796** | RESISTOR 120 ohm 5watt | 455 |
| **80035961** | CONTROL MODULE | 326 |
| **80036469** | 5/8" x 5/8" ALUMINUM ELBOW | 379 |
| **80036666** | DECAL-SYMBOL ID-PT | 709 |

**From - 80032002** **To - 80036666**

## Numerical Index — Appendix B


| Part | Description | Page |
|---|---|---|
| **80037618** | HEATER & A/C INSTALLATION - | 217 |
| **80038095** | ESI-ENGINE | 562 |
| **80038104** | STRIKER BOLT ASSY | 226 |
| **80038105** | SEAL-BRUSH TOP | 225 |
| **80038107** | ACOUSTIC FOAM TOP | 255 |
| **80038198** | 3/8 x 3/16 THK WASHER | 227 |
| **80038231** | STRING POT INSTALLATION | 685 |
| **80038826** | RECEPT (9P) | 455 |
| **80038844** | PANEL NUT (18) | 455 |
| **80038845** | LOCKWASHER, (18) | 455 |
| **80038983** | SURGE TANK | 633 |
| **80039480** | DECAL-FUSE PANEL-CAB-PT | 709 |
| **80039493** | DECAL-POWER PANEL-PT | 709 |
| **80039526** | HYDRAULIC RESERVIOR ASSEMBLY | 461 |
| **80039533** | DIRECTIONAL CONTROL VALVE | 123 |
| **80039837** | RAD HOSE 1.75 ID 12"LG | 633 |
| **80040089** | PEDAL, THROTTLE 5V | 263 |
| **80040090** | SWING BRAKE PEDAL-5V | 263 |
| **80040123** | BASE BOOM | 7 |
| **80040127** | BOOM NOSE TO FLY | 7 |
| **80040216** | REAR FENDER-RH | 402 |
| **80040217** | FRONT FENDER-RH | 402 |
| **80040417** | BEZEL | 295 |
| **80040531** | DECAL - DANGER ELECTROCUTION HAZ | 709 |
| **80041013** | SHROUD | 637 |
| **80041015** | SHROUD | 633 |
| **80041035** | RAD TUBE SUPPORT BRACKET | 562 |
| **80041223** | DECAL-DANGER-ELECTROC HAZ-PT | 709 |
| **80041779** | ELECTRIC, WATER & HYDRAULIC | 117 |
| **80041859** | PANEL, OVERHEAD CONSOLE | 345 |
| **80041876** | CHANNEL FRONT WIPER MOUNT | 226 |
| **80042060** | 24V HEATER/COOL KIT | 245 |
| **80042108** | CAB WIPER LINK BAR ASSY | 227 |
| **80042480** | SHIM RING, KEYSWITCH .015" | 332 |
| **80042621** | 12V BATTERY | 647 |
| **80042623** | BATTERY CONNECTOR - POS. POLE | 648 |


**From - 80037618** **To - 80042623**

## Numerical Index — Appendix B

| Part | Description | Page |
|---|---|---|
| **80042664** | BATTERY CONNECTOR - NEG. POLE | 648 |
| **80042878** | HARNESS ASSEMBLY-SUPERSTRUCTURE | 325 |
| **80042879** | PEDAL GROUP INSTALLATION | 217 |
| **80042917** | SWITCH, LMI OVERRIDE (KEYED) | 332 |
| **80043253** | SHIM RING, KEYSWITCH .125" | 332 |
| **80043366** | PANEL ASSEMBLY FUSE & RELAY | 325 |
| **80043367** | HARNESS ASSEMBLY-FUSE & RELAY | 331 |
| **80043532** | FIRE EXTINGUISHER ASSEMBLY | 367 |
| **80043888** | DECAL-CAUTION-TRANS DAMAGE-SYM | 699 |
| **80044080** | FIRE EXTINGUISHER | 369 |
| **80044364** | CYLINDER ASSEMBLY-4.00 JACK | 393 |
| **80044648** | YOKE, 1/4-28UNF | 137 |
| **80044870** | FENDER INSTALLATION-KIT | 401 |
| **80044871** | FRONT COVER-LH | 402 |
| **80044884** | REAR COVER-LH | 402 |
| **80044969** | SEAL, 6.00" BUFFER | 13 |
| **80045167** | TUBE ASSY P1 MAN TO P3 MAIN | 144 |
| **80045250** | MOUNTING STRAP | 633 |
| **80045633** | SERVICE KEY (1 PER) | 332 |
| **80046248** | CABLE RELAY TO ALTERNATOR | 621 |
| **80046249** | CABLE STARTER TO ALTERNATOR | 621 |
| **80046250** | CABLE BATT NEG TO STARTER | 621 |
| **80046251** | CABLE GND TO GND | 621 |
| **80046252** | CABLE DISC TO STARTER | 621 |
| **80046254** | CABLE GH TO GH RELAY | 621 |
| **80046456** | SEAT | 275 |
| **80046498** | CABLE RETAINER | 9 |
| **80046500** | GUARD | 8 |
| **80046522** | CAB MISC COMPONENTS | 217 |
| **80046759** | 12AMP CONVERTER | 332 |
| **80046829** | O/R PAD BUMPER .81" | 411 |
| **80046908** | TELE HYDRAULIC CYLINDER ASSY | 7 |
| **80047322** | CYL ASSEMBLY-2.50 STEER BR | 497, 525 |
| **80047331** | CYLINDER - LOCKOUT BR | 497 |
| **80047418** | WIRING HARNESS-ENGINE T3 | 621 |
| **80047472** | BATTERY BOX ASSEMBLY | 645 |

**From - 80042664** **To - 80047472**

## Numerical Index — Appendix B


| Part | Description | Page |
|---|---|---|
| **80047848** | SEAL, 4.00" BUFFER | 13 |
| **80048013** | ROLLER | 375 |
| **80048014** | BEARING | 375 |
| **80048017** | ROLLER ASSEMBLY | 373 |
| **80048042** | BRAKE CABLE | 205 |
| **80048344** | CYLINDER BARREL, 7.00" BORE | 13 |
| **80048535** | CYLINDER SPACER | 13 |
| **80048726** | SEAL KIT | 14 |
| **80048945** | CYLINDER PISTON 7.00" BORE | 13 |
| **80048946** | CYLINDER PISTON, 4.75" BORE | 13 |
| **80049013** | BUSHING | 10 |
| **80049022** | CYL SEAL KIT -2.50 STEER BR | 519, 545 |
| **80049029** | CYL SEAL KIT-LOCKOUT BR | 523 |
| **80049315** | ROCKER SW-SPDT ON-OFF-ON | 425 |
| **80049319** | OUTRIGGER CONTROLLER ASSEMBLY | 423 |
| **80049496** | PLATE-STEP INNER | 402 |
| **80049497** | PLATE-STEP OUTER | 402 |
| **80049532** | BOOM PIVOT INSTALLATION | 1 |
| **80049682** | KIT - DECKING INSTL | 401 |
| **80049924** | GRAB HANDRAIL | 407 |
| **80050972** | FUEL TANK | 639 |
| **80051312** | ENGINE CABLE KIT | 621 |
| **80051491** | CABLE STARTER TO START RELAY | 621 |
| **80051988** | BRAKE-PARK ASSY W/O SPACER | 555 |
| **80052124** | PANEL ASM OVERHEAD | 325 |
| **80052794** | 24V CAB FAN | 226 |
| **80053124** | OUTRIGGER BEAM | 393 |
| **80053357** | CONTROL MODULE FRAME AND TT | 437 |
| **80053545** | CONSOLE COVER ASSY | 299 |
| **80053612** | TAPE STRIP | 273 |
| **80053694** | OUTRIGGER BEAM ASSEMBLY-BR | 391 |
| **80053696** | OUTRIGGER BEAM INSTALL | 387 |
| **80054011** | WIRING HARNESS-CARRIER | 437 |
| **80054200** | STEER MOUNTING BRACKET | 260 |
| **80054412** | FIRE EXTINGUISHER BRACKET | 369 |
| **80054429** | DRIVE STEER AXLE | 497, 525 |


**From - 80047848** **To - 80054429**

## Numerical Index — Appendix B

| Part | Description | Page |
|---|---|---|
| **80054540** | PROTECTIVE TAPE STRIP INSTALL | 217 |
| **80054543** | HOSE CLAMP 95-114mm | 397 |
| **80054545** | HOSE CLAMP 19-27mm | 379, 555, 562 |
| **80054547** | HOSE CLAMP 32-44mm | 633 |
| **80054548** | HOSE CLAMP 9-13mm | 639 |
| **80054549** | HOSE CLAMP 13-19mm | 557, 633 |
| **80055309** | PLATE-RETAINER | 119 |
| **80055496** | 5TH WHEEL | 389 |
| **80055512** | FRAME ASSEMBLY | 387 |
| **80055534** | SHIM-REAR STEER BRKT | 498 |
| **80056042** | O/R EXT CYL-COMPLETE ASSY | 393 |
| **80056047** | ENGINE ASSEMBLY-BRAZIL | 555 |
| **80056049** | RADIATOR ASSEMBLY-BRAZIL | 633 |
| **80056176** | HOSE CLAMP 44-57mm | 555 |
| **80056177** | T-Bolt Clamp 112-124mm SS | 659 |
| **80057022** | JACK CYLINDER 4.00 BR | 393 |
| **80057206** | O/R EXT CYL 2.50 BR | 397 |
| **80057421** | TUBE EXHAUST | 657 |
| **80057422** | MUFFLER | 657 |
| **80057425** | TAILPIPE | 657 |
| **80057426** | TUBE, STR | 657 |
| **80058287** | PLATE, COVER | 260 |
| **80058290** | CAB | 225 |
| **80058308** | INNER MID WELD | 7 |
| **80058309** | OUTER MID WELD | 7 |
| **80058561** | CAB BRACKETS INSTALLATION | 217 |
| **80058646** | CAB SUB-ASSEMBLY - (SG-24V) | 217 |
| **80059104** | TUBE - AIR INTAKE 4" | 659 |
| **80059105** | RADIATOR TUBE WELD | 633 |
| **80059106** | RADIATOR TUBE | 637 |
| **80059107** | TUBE-TOP RAD | 555 |
| **80059108** | TUBE - CAC | 555 |
| **80059109** | TUBE - CAC | 555 |
| **80060094** | SADDLE SPACER | 149, 393, 489 |
| **80060934** | SLIP RING ASSY 20 COND W/SLEW | 119 |
| **80060944** | ACCUMULATOR 76 CI | 123 |

**From - 80054540** **To - 80060944**

## Numerical Index — Appendix B

| Part | Description | Page |
|---|---|---|
| **80061556** | SADDLE SPACER .63-6.0" BUNDLES | 149, 393, 490 |
| **80061577** | CONSTANT TORQUE CLAMP | 633 |
| **80062020** | OUTRIGGER FLOAT ASSEMBLY | 411 |
| **80062021** | OUTRIGGER FLOAT | 413 |
| **80062363** | MOUNTING BAND | 657 |
| **80063555** | DECAL-CTN-BATTERY CONN-SYM | 699 |
| **80065679** | CONSTANT TORQUE CLAMP | 637 |
| **80066885** | WORK LIGHT-LED | 415 |
| **80066936** | MOUNTING PLATE | 639 |
| **80069853** | Wingscrew M10x35 | 211 |
| **80070745** | DECAL-BATTERY DISCONNECT | 699 |
| **80072247** | HOSE ASSY 1-1/4"IDX72" SUCTION | 561 |
| **80074464** | WEAR PAD ASSY | 8 |
| **80074465** | WEAR PAD | 7 |
| **80074466** | WEAR PAD | 9 |
| **80074467** | WEAR PAD | 9 |
| **80074468** | WEAR PAD | 7 |
| **80074469** | WEAR PAD | 9 |
| **80074611** | BOOM ASSEMBLY | 1 |
| **80074677** | KIT - BOOM WEAR PAD 2 OVER 4 | 11 |
| **80074694** | KIT - BOOM WEAR PAD (NSM) | 11 |
| **80076029** | NUT | 275 |
| **80080175** | DECAL-FUSE BLOCK COVER | 699 |
| **80080342** | DECAL-DIODE BLOCK | 699 |
| **80090141** | TUBE ASSY, RETURN MANIFOLD | 485 |
| **80092942** | LIFT CYLINDER ASSEMBLY | 169 |
| **8246964300** | MOULDING | 407 |
| **846531** | NUT, SELF-LOCKING | 39 |
| **8496900043** | MOULDING | 225 |
| **8496900045** | MOULDING | 260 |
| **8496900046** | MOULDING | 408 |
| **8496907196** | WEATHERSTRIP | 225, 229 |
| **8496980002** | MOULDING | 225, 332, 401, 408, 648 |
| **8506903750** | MOULDING | 227 |
| **8506904000** | MOULDING | 227 |
| **8594000001** | FLEXGUARD - 1.00" I.D. | 200, 360, 458, 626 |

**From - 80061556** **To - 8594000001**

## Numerical Index — Appendix B

| Part | Description | Page |
|---|---|---|
| **8594000002** | FLEXGUARD - .750" I.D. | 200, 343, 360, 458, 626 |
| **8594000003** | FLEXGUARD - .625" I.D. | 291, 349, 355, 360, 458, 626 |
| **8594000004** | FLEXGUARD - .500" I.D. | 200, 291, 343, 360, 458, 626 |
| **8594000005** | FLEXGUARD - .413" I.D. | 291, 360, 458, 626 |
| **8594000006** | FLEXGUARD - .350" I.D. | 200, 301, 349, 360, 458, 626, 653 |
| **8594000019** | FLEXGUARD, 1/4" I.D. | 200, 213, 291, 343, 349, 360, 371, 383, 458, 497, 626 |
| **8594000022** | FLEXGUARD - 1.250" I.D. | 200, 360, 458 |
| **8594000023** | FLEXGUARD - 1.625" I.D. | 200, 343, 360, 458 |
| **8594000027** | WRAP, HOSE | 490 |
| **8594100256** | 1/4" SHRINK TUBING (CLEAR) W/M | 201, 203, 283, 291, 343, 349, 360, 458, 626 |
| **8594100257** | TUBING, HEAT SHRINK 1/2" I.D. | 29, 201, 271, 291, 343, 355, 458, 626, 653 |
| **8594100259** | TUBING, HEAT SHRINK 3/8" I.D. | 349 |
| **8594100271** | FLEXGUARD | 203 |
| **8596902512** | HOSE ASSY, 1/4"I.D. X 25' | 639 |
| **8596902521** | 1.75"ID X 2.13"OD WRAPPED HOSE | 556 |
| **8596902522** | 2.00"ID X 2.39"OD WRAPPED HOSE | 633 |
| **8596902528** | HOSE, 5/8" I.D. | 379, 560, 561 |
| **8637052012** | MOULDING, 6B100B3X3/16A | 226 |
| **8637052013** | MOULD TRIM-LOK 6100B3X1/8C | 634, 637 |
| **8637059004** | MOULDING | 639 |
| **8977010300** | WIRE, 16 GAUGE WHITE | 203 |
| **90000104** | ADAPTER | 158 |
| **90000105** | O-RING | 158 |
| **90000125** | CAPSCREW | 158 |
| **90000383** | PLUG, FILL/DRAIN (MAGNETIC) | 512, 538 |
| **90000391** | WASHER, FLAT | 512, 538 |
| **90000633** | SEAL, CAP | 134 |
| **90000830** | MOTOR ASSY. HYD. | 157 |
| **90000894** | VALVE, CART. & COIL ASSY. 24V. | 133, 471 |
| **90000895** | VALVE, PRESS. REDUCING | 133 |
| **90000899** | DISC, ORIFICE .015 | 134 |
| **90000907** | MOTOR ASSY. 24V. | 239, 241 |

**From - 8594000002** **To - 90000907**

## Numerical Index — Appendix B

| Part | Description | Page |
|---|---|---|
| **90000908** | ADAPTER | 239, 241 |
| **90000912** | SHAFT, PIVOT | 241 |
| **90000942** | SCREW | 285, 287 |
| **90000943** | COVER, HOUSING | 285, 287 |
| **90000992** | KIT, HARDWARE | 239, 241 |
| **90000994** | ARM, WIPER/DRY 24" | 239 |
| **90000996** | SHAFT, PIVOT | 239 |
| **90001067** | KIT, SEAL | 157 |
| **90001128** | CART. VALVE ASSY. CONTROL 24V. | 157 |
| **90001135** | KIT, SEAL | 683 |
| **90011561** | FUSE,2A | 93 |
| **90011562** | FUSE,15A | 93 |
| **90011563** | FUSE,7.5A | 93 |
| **90011568** | BRAKE CYLINDER ASSY. | 155 |
| **90011813** | LINK, DRIVE ARM | 239, 241 |
| **90011814** | LINK, 13.5" LG | 239, 241 |
| **90011815** | ARM, WIPER/WET 26" | 241 |
| **90011882** | KIT, DICS SPRING | 629 |
| **90011883** | KIT, OVERHAUL | 629 |
| **90012592** | YOKE ASSY. | 549 |
| **90012594** | YOKE ASSY. W/ DUST CAP | 551 |
| **90012640** | HANDLE ASSY. | 285 |
| **90012641** | SOLENIOD ASSY. 24V THUMPER | 285, 287 |
| **90012642** | BRACKET | 285, 287 |
| **90012643** | HANDLE ASSY. | 287 |
| **90012853** | SEAL | 597 |
| **90012924** | VALVE,PRESS.REDUCING 250 PSI | 133 |
| **90012925** | VALVE,PRESS.REDUCING 2500 PSI | 133 |
| **90012926** | CAPSCREW,SOCKET HEAD 2-1/4" LG | 133 |
| **90012927** | CAPSCREW, 8MM LG | 133 |
| **90012928** | KIT, VALVE ASSY. WORK SECTION | 134 |
| **90012929** | CAPSCREW | 134 |
| **90012930** | CAPSCREW | 134 |
| **90013061** | ROLLER ASSY. IDLER GROUP | 155 |
| **90013245** | SCREW, PUMP MOUNTING | 605 |
| **90013464** | MOTOR SUB ASSEMBLY. HYDRAULIC | 155 |

**From - 90000908** **To - 90013464**

## Numerical Index — Appendix B

| Part | Description | Page |
|---|---|---|
| **90013465** | ROLLER ASSEMBLY. CABLE | 155 |
| **90013483** | SIDE PLATE, SUPPORT | 156 |
| **90013617** | CONTROL VALVE MOUNTING GROUP | 565 |
| **90013618** | VALVE ASSY. 24 VOLT | 607 |
| **90014301** | RIVET | 237 |
| **90014302** | BRACKET, MOUNTING H.O.D. | 237 |
| **90014303** | SCREW | 237 |
| **90014304** | DEVICE, HOLD OPEN | 237 |
| **90014305** | NUT, S.S. | 237 |
| **90014306** | WASHER, NEOPRENE | 237 |
| **90014307** | WASHER | 237 |
| **90014308** | BOLT, MOUNTING | 237 |
| **90014309** | HINGE | 237 |
| **90014310** | GLASS, VENT | 237 |
| **90014311** | SEAL, 90" BULB | 237 |
| **90014312** | KIT, SEAL | 237 |
| **90014313** | GUARD, WINDOW | 235 |
| **90014315** | SCREW | 235 |
| **90014319** | GLASS, SLIDING | 235 |
| **90014321** | SEAL, BLACK FINISH 19" | 235 |
| **90014324** | SCREW | 235 |
| **90014326** | KIT, SERVICE, LOCK ASSY. | 235 |
| **90014436** | KIT, SEAL | 395 |
| **90015312** | COIL ASSY. 24V. | 133, 477, 493 |
| **90015412** | SWITCH ASSY, PRESSURE | 471 |
| **90015440** | OUTPUT SHAFT GROUP | 565 |
| **90015593** | BOLT,5/16"-18 X 1" FLANGE HEAD | 683 |
| **90015595** | WASHER, 5/16 FLAT | 683 |
| **90015596** | NUT, 5/16" FLANGE HEAD | 683 |
| **90016073** | DECAL, LABEL F-N-R | 309 |
| **90016090** | BUTTON, HEADLIGHTS, AMBER | 309 |
| **90016092** | BUTTON, 2WD/4WD, AMBER | 309 |
| **90016093** | BUTTON, HAZARD ON/OFF, RED | 309 |
| **90016094** | COVER, CAP | 309 |
| **90016096** | BUTTON, ENGINE IDLE/DEC | 309 |
| **90016097** | SWITCH ASSY. INGITION | 309 |

**From - 90013465** **To - 90016097**

## Numerical Index — Appendix B

| Part | Description | Page |
|---|---|---|
| **90016102** | BELLOW, RUBBER | 309 |
| **90016103** | WHEEL, STEERING | 309 |
| **90016104** | CAP, WHEEL STEERING | 309 |
| **90016107** | RELAY | 310 |
| **90016119** | HANDLE, LOCKING | 310 |
| **90016149** | KNOB | 93 |
| **90016382** | CAP, RUBBER | 310 |
| **90016403** | NUT, STEERING WHEEL | 310 |
| **90016404** | NUT | 310 |
| **90017521** | KIT, CAM OVERHAUL | 629 |
| **90018043** | MOTOR ASSY. HYD. | 683 |
| **90018312** | SPACER | 478 |
| **90018313** | VALVE, CART RELIEF @ 500 PSI | 478 |
| **90018774** | SWITCH ASSY. ROCKER | 309 |
| **90018775** | SPACER | 310 |
| **90018776** | SWITCH ASSY. ROCKER | 309 |
| **90018777** | O-RING | 310 |
| **90018778** | SWITCH ASSY. ROCKER | 309 |
| **90018782** | SWITCH ASSY. ROCKER | 309 |
| **90018785** | BUTTON, ENGINE INC/DEC | 309 |
| **90018789** | COVER, LEFT SIDE | 309 |
| **90018813** | O-RING #6 | 181, 183 |
| **90018814** | O-RING #10 | 181, 669 |
| **90018815** | CAP ASSY, SERVICE ( BLUE ) | 181 |
| **90018818** | O-RING #8 | 181, 251, 669 |
| **90018819** | HOSE ASSY. #6 | 181 |
| **90018820** | HOSE ASSY. #10 | 181 |
| **90018821** | HOSE ASSY. #8 | 181 |
| **90018822** | CAP, DUST | 181 |
| **90018823** | SWITCH, PRESSURE HI/LO | 181 |
| **90018824** | HARNESS ASSY. | 181 |
| **90018837** | SHROUD ASSY. FAN MTG. | 183 |
| **90018838** | BRACKET, FAN | 183 |
| **90018839** | DRIER ASSY. RECEIVER | 183 |
| **90018840** | SPACER, NYLON | 183 |
| **90018841** | COIL, CONDENSER | 183 |

**From - 90016102** **To - 90018841**

## Numerical Index — Appendix B

| Part | Description | Page |
|---|---|---|
| **90018842** | HOSE ASSY. #6 | 183 |
| **90018843** | FAN & MOTOR ASSY. 24V. 16" | 183 |
| **90018844** | CLAMP ASSY. | 183 |
| **90018852** | HOUSING, BASE ASSY. | 251 |
| **90018853** | HOUSING ASSY. BLOWER / DRAIN | 251 |
| **90018854** | PLATE, COVER | 251 |
| **90018856** | BLOWER ASSY. 24V. | 251 |
| **90018857** | PLENUM ASSY. | 251 |
| **90018858** | PLATE ASSY. REAR | 251 |
| **90018860** | BRACKET, R.H. | 251 |
| **90018861** | PLATE ASSY. SEAT BASE | 251 |
| **90018862** | BRACE, LOUVER | 251 |
| **90018863** | THERMOSTAT, NON-ADJ. | 251 |
| **90018864** | FILTER, AIR | 251 |
| **90018865** | LOUVER ASSY. 3" | 251 |
| **90018866** | RETAINER, 3" | 251 |
| **90018867** | GROMMET, 3/4" | 251 |
| **90018868** | VALVE ASSY, EXPANSION | 251 |
| **90018869** | RESISTOR ASSY. | 251 |
| **90018870** | BRACKET, MOUNTING | 251 |
| **90018872** | HARNESS ASSY. | 251 |
| **90018873** | PLATE, FILTER | 251 |
| **90018874** | VALVE ASSY. WATER SHUT OFF | 251 |
| **90018875** | HARNESS ASSY. WATER VALVE | 251 |
| **90018876** | LOUVER ASSY. RECT. | 252 |
| **90018877** | LOUVER ASSY. BALL | 252 |
| **90018878** | ADAPTER, Y-2.5" | 252 |
| **90018881** | HOSE | 251 |
| **90018883** | HOSE, DRAIN LINE 1/2" X 15FT | 252 |
| **90018884** | ADAPTER, TEE | 252 |
| **90018946** | COLUMN ASSY. STEERING | 309 |
| **90018947** | SCREW, COVER | 309 |
| **90018981** | KEY, IGNITION | 309 |
| **90019021** | HOUSING, DRUM ASSY. W/SPRINGS | 37 |
| **90019453** | FILTER ASSY. AIR PRIMARY | 663 |
| **90019454** | FILTER ASSY. AIR SECONDARY | 663 |

**From - 90018842** **To - 90019454**

## Numerical Index — Appendix B

| Part | Description | Page |
|---|---|---|
| **90019455** | SENSOR ASSY. TBAP | 663 |
| **90019456** | DOOR ASSY. SERVICE | 663 |
| **90019457** | CAP ASSY. RUBBER | 663 |
| **90019458** | VALVE ASSY. DUST EJECTION | 663 |
| **90019687** | PLATE, MANIFOLD | 667 |
| **90019689** | KIT, BOLT | 667 |
| **90019696** | COMPRESSOR ASSY. 24V | 667 |
| **90019775** | CAP ASSY. FILL, W/CHAIN | 641 |
| **90019800** | COLUMN | 309 |
| **90019801** | BUTTON, ENGINE INC/DEC AMBER | 309 |
| **90019803** | COVER, DASHBOARD | 309 |
| **90019804** | HARNESS ASSY. | 309 |
| **90019805** | ECU, I/O-MODE | 309 |
| **90019806** | BRACKET, SUPPORT I/O MODE | 309 |
| **90019808** | CLIP, SCREW M4 | 309 |
| **90019809** | SCREW, M4 X 12 | 309 |
| **90019810** | SCREW, M4 X 16 | 309 |
| **90019811** | CLIP, BLACK | 309 |
| **90019812** | WASHER | 309 |
| **90019831** | NUT, SELF-LOCK | 309 |
| **90019872** | COIL ASSY. 24V | 157 |
| **90019917** | O-RING, 2-PKT | 667 |
| **90020088** | GLASS ASSY. STATIONARY | 235 |
| **90020175** | WASHER SEAL | 123 |
| **90020194** | CHANNEL, RUBBER 189" LG | 235 |
| **90020195** | POST, CENTER | 235 |
| **90020196** | CHANNEL, VINYL 67 1/2" LG | 235 |
| **90020643** | PLATE, BACKING | 297 |
| **90020644** | POTENTIOMETER, CONTROL, TEMP. | 297 |
| **90020645** | PLATE, MOUNTING | 297 |
| **90020646** | SWITCH ASSY. BLOWER | 297 |
| **90020647** | SWITCH ASSY. ON/OFF | 297 |
| **90020648** | KNOB ASSY. | 297 |
| **90020649** | HARNESS ASSY. | 297 |
| **90020650** | NUT | 297 |
| **90020651** | LOCKNUT | 297 |

**From - 90019455** **To - 90020651**

## Numerical Index — Appendix B

| Part | Description | Page |
|---|---|---|
| **90020652** | KNOB W/SET SCREW | 297 |
| **90020653** | FACEPLATE, LIGHTED 24V. | 297 |
| **90020872** | CLUTCH & COIL ASSY. 24V. | 667 |
| **90020929** | KEY SET, (2) | 351 |
| **90020942** | FUSE, MINI 2AMP | 93 |
| **90021924** | RING, ANTI-SEIZURE | 121 |
| **90021925** | HOUSING ASSY. HYD. | 121 |
| **90021926** | SPOOL ASSY. | 121 |
| **90021927** | V-SEAL | 121 |
| **90021928** | KIT, SEAL | 121 |
| **90022245** | SHAFT ASSY. DRIVEN | 617 |
| **90022246** | CAPSCREW | 617 |
| **90022247** | HOUSING, BODY | 617 |
| **90022248** | COVER, FRONT | 617 |
| **90022249** | COVER, REAR | 617 |
| **90022250** | PLATE, THRUST | 617 |
| **90022251** | SHAFT ASSY, DRIVE | 617 |
| **90022252** | SEAL | 617 |
| **90022253** | RING, RETAINER | 617 |
| **90022254** | ORIFICE | 617 |
| **90022255** | VALVE ASSY. RELIEF | 617 |
| **90022256** | KIT, SEAL | 617 |
| **90022352** | PANEL DISPLAY, CLUSTER 12V. | 309 |
| **90022353** | COVER, RIGHT SIDE | 309 |
| **90022388** | NUT, SELF-LOCK | 310 |
| **90022389** | WASHER | 310 |
| **90022390** | CONVERTER, VOLTAGE 24V TO 12V | 310 |
| **90022799** | COIL ASSY. HEAT & A/C | 251 |
| **90022800** | PLATE, MOUNT | 251 |
| **90022801** | HOSE, 90 DEG | 251 |
| **90022802** | FITTING, TEE | 251 |
| **90022803** | HOSE ASSY. 3" LG | 251 |
| **90022804** | HOSE ASSY. 90DEG | 251 |
| **90022805** | CLAMP, #10 | 251 |
| **90022806** | BRACKET | 251 |
| **90022808** | FITTING, ELBOW | 251 |

**From - 90020652** **To - 90022808**

## Numerical Index — Appendix B

| Part | Description | Page |
|---|---|---|
| **90022817** | LABEL, 24V | 251 |
| **90022830** | PLUG, STAINLESS STEEL | 641 |
| **90022846** | KIT, PIN BUSHING & RETAINER | 265, 267 |
| **90022856** | HARNESS ASSY. | 265 |
| **90022859** | KIT, SEAL | 629 |
| **90022957** | PLUG, ORIFICE ASSY. | 126, 127, 128 |
| **90023146** | COVER, CLEANOUT 12" | 463 |
| **90023148** | GASKET, 12" | 463 |
| **90023152** | CHARGING PUMP GROUP | 565 |
| **90023153** | PUMP ASSY. CHARGING | 605 |
| **90023154** | CONTROL VALVE ASSY.GROUP 24V. | 565 |
| **90023163** | CAPSCREW | 128 |
| **90023171** | COOLER, TRAMS. OIL | 683 |
| **90023172** | SHROUD ASSY. | 683 |
| **90023173** | CAPSCREW M10 | 683 |
| **90023174** | WASHER M10 | 683 |
| **90023175** | CAPSCREW, SOCKET HEAD | 683 |
| **90023241** | VALVE, CART. & COIL ASSY. 24V. | 471 |
| **90023258** | HOSE ASSY #8 | 669 |
| **90023259** | HOSE ASSY #10 | 669 |
| **90023271** | VALVE ASSY. WORK SECTION | 125 |
| **90023273** | VALVE ASSY. WORK SECTION | 125 |
| **90023274** | VALVE, CART RELIEF 3500 PSI | 125 |
| **90023275** | VALVE, CART RELIEF 3250 PSI | 125 |
| **90023276** | VALVE, CART RELIEF 4300 PSI | 125 |
| **90023277** | KIT, SEAL | 128 |
| **90023280** | SOLENOID & CAP ASSY. 24V | 126, 127, 128 |
| **90023281** | CART & COIL ASSY. 24V | 128 |
| **90023285** | VALVE ASSY. WORK SECTION | 125 |
| **90023883** | STARTER MOTOR, 24V. | 563 |
| **90023884** | BELT, SERPENTINE V-RIBBED | 563 |
| **90023916** | COVER ASSY. BACK | 293 |
| **90023917** | COVER ASSY. CUSHION | 293 |
| **90023918** | SWITCH ASSY. | 293 |
| **90023919** | HARNESS ASSY. | 293 |
| **90023963** | O-RING | 155 |

**From - 90022817** **To - 90023963**

## Numerical Index — Appendix B

| Part | Description | Page |
|---|---|---|
| **90024256** | SHROUD, FAN | 673 |
| **90024257** | CAPSCREW | 673 |
| **90024258** | LOCKWASHER | 673 |
| **90024260** | FUSE, 4 AMP | 93 |
| **90026471** | AXLE HOUSING GROUP | 501, 527 |
| **90026472** | AXLE HOUSING ASSY. | 507, 533 |
| **90026473** | PLUG | 507, 533 |
| **90026474** | SHAFT ASSY. L.H. AXLE | 511, 537 |
| **90026475** | SHAFT ASSY. R.H. AXLE | 511, 537 |
| **90026476** | SPINDLE ASSY. | 511, 537 |
| **90026477** | CAPSCREW | 512, 538 |
| **90026478** | HUB ASSY. | 512, 538 |
| **90026729** | HUB & SHAFT GROUP | 501, 527 |
| **90026909** | RING, WEAR | 519, 545 |
| **90026933** | BARREL ASSEMBLY | 519, 545 |
| **90026934** | STEEL CAP, 11/16"UN, FEMALE | 519, 523, 545 |
| **90026935** | ROD ASSEMBLY | 519, 545 |
| **90026936** | SPRING PIN (D.3.0 X 12MM) | 519, 545 |
| **90026938** | PISTON | 519, 545 |
| **90026939** | WEAR RING | 519, 545 |
| **90026940** | HEAD | 519, 545 |
| **90026973** | SPRING PIN (D4.0MM X 22MM) | 523 |
| **90026989** | GREASE FITTING 1/8"-NPT(45DEG) | 523 |
| **90026990** | HEAD | 523 |
| **90026991** | BARREL ASSEMBLY | 523 |
| **90026992** | ROD | 523 |
| **90026993** | PISTON | 523 |
| **90026994** | PISTON NUT M45 X 1.5 | 523 |
| **90026995** | BLEEDER | 523 |
| **90026996** | WEAR RING | 523 |
| **90026997** | WEAR RING | 523 |
| **90026998** | GREASE FITTING 1/8"-NPT 90 DEG | 523 |
| **90027014** | FILTER | 131 |
| **90027015** | PLUG ASSY. - SAE | 131 |
| **90038155** | CORE ASSY. | 673 |
| **90038156** | FAN & MOTOR ASSY.24V. | 673 |

**From - 90024256** **To - 90038156**

## Numerical Index — Appendix B

| Part | Description | Page |
|---|---|---|
| **9049100054** | PLUG, FILLER | 569 |
| **9049100263** | CAPSCREW | 570, 595 |
| **9049100535** | CUP, BEARING | 503, 529 |
| **9049100638** | SCREW, BLEEDER | 517, 543 |
| **9049100895** | OUTER | 503, 529 |
| **9049101125** | BOLT, CAP SCREW | 567 |
| **9049101150** | CAP SCREW, | 569 |
| **9049101497** | NUT, JAM | 511, 537 |
| **9049101566** | BEARING | 597 |
| **9049101600** | RING, RETAINING | 503, 529 |
| **9049101673** | WASHER, THRUST | 511, 537 |
| **9049101687** | STUD | 512, 538 |
| **9049101693** | CONE, BEARING | 512, 538 |
| **9049101694** | CONE, BEARING | 512, 538 |
| **9049101695** | CUP, BEARING | 512, 538 |
| **9049101696** | CUP, BEARING | 512, 538 |
| **9049101705** | WASHER, LOCK | 503, 507, 529, 533 |
| **9049101846** | GEAR, PINION | 512, 538 |
| **9049101847** | WASHER, THRUST | 512, 538 |
| **9049101848** | WASHER, THRUST | 512, 538 |
| **9049101980** | FLATWASHER | 512, 538 |
| **9049102253** | BUSHING | 507, 533 |
| **9049102254** | PLUG, EXPANSION | 507, 533 |
| **9049102985** | WASHER, | 515, 541 |
| **9049103392** | GEAR | 512, 538 |
| **9049103562** | FITTING, GREASE | 511, 537 |
| **9049103565** | BUTTON, THRUST | 512, 538 |
| **9049103595** | CAP SCREW, | 511, 537 |
| **9049104393** | FLATWASHER | 503, 529 |
| **9049104578** | BEARING | 503, 529 |
| **9049105399** | SET SCREW | 512, 538 |
| **9049105562** | GEAR, HUB | 512, 538 |
| **9049106034** | SPIDER, W/ THRUST WASHERS | 512, 538 |
| **9049106322** | O-RING | 512, 538 |
| **9049106450** | WASHER, HARDENED | 512, 538 |
| **9049106456** | SCREW, STOP | 511, 537 |

**From - 9049100054** **To - 9049106456**

## Numerical Index — Appendix B

| Part | Description | Page |
|---|---|---|
| **9049106490** | SHAFT ASSEMBLY, PINION | 512, 538 |
| **9049106579** | CAP SCREW, | 512, 538 |
| **9049106636** | CAP SCREW, | 603 |
| **9049106791** | BUTTON, THRUST | 512, 538 |
| **9049107129** | DISC, BRAKE | 512, 538 |
| **9049107134** | SHIM, | 511, 537 |
| **9049107135** | SHIM, | 511, 537 |
| **9049107137** | CAP | 511, 537 |
| **9049107138** | CAP | 511, 537 |
| **9049107142** | CAP SCREW, | 515, 541 |
| **9049107148** | PISTON | 517, 543 |
| **9049107152** | HEAD CYL | 517, 543 |
| **9049107157** | PLUG | 517, 543 |
| **9049107402** | PLUG | 517, 543 |
| **9049108332** | CAP SCREW, | 503, 529 |
| **9049108948** | CONE, BEARING | 503, 529 |
| **9049108952** | KIT, SPACER | 503, 529 |
| **9049108965** | PINION | 504, 530 |
| **9049108966** | KIT, HARDWARE | 503, 529 |
| **9049108967** | CAP SCREW, | 503, 529 |
| **9049108971** | RING, ADJUSTING | 503, 529 |
| **9049109021** | SCREW, THRUST | 503, 529 |
| **9049109022** | NUT, JAM | 503, 529 |
| **9049109048** | CAP SCREW, | 517, 543 |
| **9049109243** | KIT, LINING | 517, 543 |
| **9049109511** | PIN, COTTER-END YOKE NUT | 513, 539 |
| **9049109690** | CONE, BEARING | 503, 529 |
| **9049109699** | GEAR, SIDE | 504, 530 |
| **9049109717** | MAGNET | 507, 533 |
| **9049109724** | TIE ROD ASSEMBLY | 512, 538 |
| **9049109725** | CLAMP AND TIE ROD ASSEMBLY | 512, 538 |
| **9049109726** | END, TIE ROD.(L.H. THD.) | 513, 539 |
| **9049109727** | END, TIE ROD (R.H. THD.) | 512, 538 |
| **9049109733** | BEARING ASSEMBLY, U JOINT | 511, 537 |
| **9049109751** | SPIDER | 504, 530 |
| **9049109896** | WASHER, LOCK | 581 |

**From - 9049106490** **To - 9049109896**

## Numerical Index — Appendix B

| Part | Description | Page |
|---|---|---|
| **9049110385** | SCREW, | 507, 533 |
| **9049110934** | SHIM, | 511, 537 |
| **9049110935** | SHIM, | 511, 537 |
| **9049110936** | SHIM, | 511, 537 |
| **9049110945** | PLATE | 517, 543 |
| **9049111037** | WASHER, | 503, 504, 529, 530 |
| **9049111473** | CAPSCREW, 2.50" LG | 507, 533 |
| **9049111509** | SCREW, | 504, 530 |
| **9049111513** | LOCKNUT | 503, 529 |
| **9049111517** | NUT | 503, 529 |
| **9049111750** | GEAR ASSEMBLY, BEVEL | 503, 529 |
| **9049111753** | CAP SCREW, | 512, 538 |
| **9049111761** | KIT, SEAL | 517, 543 |
| **9049112030** | GEAR | 512, 538 |
| **9049112096** | DEFLECTOR | 504, 530 |
| **9049112263** | CUP, BEARING | 503, 529 |
| **9049112264** | CONE, BEARING | 503, 529 |
| **9049112382** | CAP | 515, 541 |
| **9049112432** | YOKE ASSY. | 504, 530 |
| **9049112463** | NUT | 512, 538 |
| **9049112464** | CAPSCREW | 512, 538 |
| **9049112516** | BRAKE GROUP | 501, 527 |
| **9049112520** | WASHER,THRUST | 512, 538 |
| **9049112522** | BRAKE ASSEMBLY, DISC | 515, 517, 541, 543 |
| **9049112523** | BRAKE ASSEMBLY,GROUP | 501, 527 |
| **9049112639** | CAGE ASSY.  PINION | 503, 529 |
| **9049112654** | KNUCKLE, STEER | 511, 537 |
| **9049112655** | KNUCKLE, STEER | 511, 537 |
| **9049112682** | BUSHING | 507, 511, 533, 537 |
| **9049112686** | BREATHER | 507, 533 |
| **9049112762** | HOUSING, DIFF. W/CAP ASSY. | 503, 529 |
| **9049112763** | KIT, SHIM | 503, 529 |
| **9049112764** | SCREW | 503, 529 |
| **9049112766** | CASE ASSY. DIFF. | 503, 529 |
| **9049112767** | KIT, DIFF | 504, 530 |
| **9049112768** | WASHER, THRUST | 504, 530 |

**From - 9049110385** **To - 9049112768**

## Numerical Index — Appendix B

| Part | Description | Page |
|---|---|---|
| **9049112769** | WASHER, THRUST | 504, 530 |
| **9049112776** | DIFF. CARRIER GROUP | 501, 527 |
| **9049112777** | DIFF.CARRIER ASSY.@ 5.57 RATIO | 504, 530 |
| **9049112781** | SEAL | 507, 511, 533, 537 |
| **9049112786** | SEAL, OIL | 503, 529 |
| **9049112927** | SEAL, OIL | 512, 538 |
| **9053100003** | PIN, COTTER | 61 |
| **9053100038** | WASHER, | 61 |
| **9053100042** | HOOK | 61 |
| **9053100043** | PIN | 61 |
| **9053100044** | PIN | 61 |
| **9053100047** | SPACER | 61 |
| **9053100050** | SPACER | 61 |
| **9053100051** | PLATE,NAME I.D. | 61 |
| **9053100071** | SWIVEL ASSY. | 61 |
| **9053100086** | PLATE, ADAPTER | 61 |
| **9069100118** | SEAL, BEARING 21' | 101 |
| **9086100061** | NUT | 693 |
| **9086100062** | BEARING, ROLLER | 693 |
| **9086100074** | NUT | 693 |
| **9086100088** | BEARING | 693 |
| **9086100137** | PLATE, CAUTION | 694 |
| **9086100144** | NUT | 61 |
| **9086100151** | FITTING, GREASE | 693 |
| **9086100204** | PIN, ROLL | 693 |
| **9086100269** | PIN, ROLL | 693 |
| **9086100294** | PIN, COTTER | 61 |
| **9086100300** | NUT | 61 |
| **9086100305** | PLATE, CAUTION | 61 |
| **9086100327** | DRIVE SCREW | 61, 694 |
| **9086100495** | HOOK & NUT | 693 |
| **9086100533** | PIN, CENTER | 693 |
| **9086100534** | BOLT, TIE | 693 |
| **9086100538** | SPACER | 693 |
| **9086100539** | HOUSING, HOOK PIVOT | 693 |
| **9086100571** | PIN, QUICK RELEASE | 61 |

**From - 9049112769** **To - 9086100571**

## Numerical Index — Appendix B


| Part | Description | Page |
|---|---|---|
| **9086100577** | RING,RETAINER E-CLIP | 61 |
| **9086100578** | PIN, W/GROOVE | 61 |
| **9086100579** | SPRING | 61 |
| **9086100584** | PIN, QUICK RELEASE | 693 |
| **9086100639** | KIT, LATCH | 61 |
| **9086100705** | WASHER, LOCK | 693 |
| **9086100788** | KIT,LATCH | 693 |
| **9086100801** | CAP SCREW, | 693 |
| **9086100804** | WASHER, | 693 |
| **9086100805** | SCREW, | 693 |
| **9086100813** | S-HOOK | 693 |
| **9086100815** | RING, SPLIT | 693 |
| **9086100919** | CHAIN | 694 |
| **9086100920** | CAUTION PLATE | 694 |
| **9086100933** | WIRE, SAFETY | 693 |
| **9086100974** | CAP SCREW, | 693 |
| **9086101024** | SPACER | 693 |
| **9086101026** | PIN | 693 |
| **9086101063** | PIN & COTTER | 417 |
| **9086101217** | I.D. PLATE, NAME / RATING | 694 |
| **9086101320** | WHEEL, SHEAVE | 693 |
| **9086101338** | GUIDE ASSY. | 693 |
| **9086101339** | WASHER, THRUST | 693 |
| **9086101340** | WASHER, THRUST | 693 |
| **9086101341** | PLATE, SIDE SET | 693 |
| **9086101342** | PLATE, SIDE WT. | 693 |
| **9086101343** | BOLT, TIE | 693 |
| **9176100603** | O-RING | 287 |
| **9188100153** | PIN | 207 |
| **9188100364** | SPRING | 207 |
| **9188100365** | PAD, PEDAL | 207 |
| **9188100366** | WASHER, | 207 |
| **9188100367** | PIN, COTTER | 207 |
| **9188100754** | BUMPER | 207 |
| **9188101020** | CAP SCREW, | 629 |
| **9188101041** | KIT, LINING | 629 |


**From - 9086100577** **To - 9188101041**

## Numerical Index — Appendix B

| Part | Description | Page |
|---|---|---|
| **9188101043** | KIT, SPRING | 629 |
| **9188101096** | PLUG,SCREW TYPE | 629 |
| **9188101097** | NUT,JAM | 629 |
| **9246100159** | BOOT, SWIVEL (RED) | 655 |
| **9246100182** | T-HANDLE | 137 |
| **9246100183** | SCREW, T-HANDLE | 137 |
| **9258100173** | BREATHER | 463 |
| **9258100174** | KIT, STRAINER | 463 |
| **9274100125** | RING, SNAP | 512, 538 |
| **9286100001** | CHAIN | 71, 83 |
| **929048** | 5/8" TRIM-LOK PLASTIC CHANNEL | 123 |
| **9333101435** | GUIDE, CABLE | 35 |
| **9333101437** | ROLLER GUIDE ASSEMBLY | 35 |
| **9333101465** | RESISTOR, 4700 OHMS | 45 |
| **9333101471** | FITTING, BULKHEAD ADAPTER | 171 |
| **9333101472** | SEAL, CUTTING | 171 |
| **9333101565** | SEAL, COVER | 37 |
| **9333101566** | SCREW, COVER | 37 |
| **9333101625** | GEAR, 75T | 37 |
| **9333101840** | CLEVIS | 47, 51 |
| **9333101916** | PIN, COTTER | 47, 51 |
| **9333101921** | CHAIN ASSEMBLY | 47, 51 |
| **9333101922** | CLAMP, CHAIN | 47, 51 |
| **9333101923** | EYEBOLT | 47, 51 |
| **9333101924** | WEIGHT, FEMALE | 47, 51 |
| **9333101925** | WEIGHT, MALE | 47, 51 |
| **9333101984** | LOCKNUT | 41 |
| **9333102047** | PLUG, HOLE | 45 |
| **9333102056** | STRAIN RELIEF | 41 |
| **9333102230** | A2B SWITCH - WITH | 35 |
| **9333102232** | LANYARD | 43 |
| **9333102235** | CONDUIT | 35, 55 |
| **9333102238** | A2B SWITCH, WITHOUT CRIMP | 55 |
| **9333102266** | WASHER, LOCK | 41, 57 |
| **9333102373** | FLAG, RETAINER | 43 |
| **9333102479** | WIRE | 41 |

**From - 9188101043** **To - 9333102479**

## Numerical Index — Appendix B

| Part | Description | Page |
|---|---|---|
| **9333102480** | NUT #4 | 41, 57 |
| **9333102482** | GASKET | 41, 57 |
| **9333102612** | COVER, DUST | 41, 57 |
| **9333102615** | COVER, DUST | 45 |
| **9333102618** | DECAL, A2B | 43 |
| **9333102620** | CONNECTOR, CHAIN | 35 |
| **9333102633** | FLAG ASSEMBLY - A2B | 35 |
| **9333102663** | BLOCK, TERMINAL STRIP | 41, 57 |
| **9333102664** | PLATE, TERMINAL STRIP END | 41, 57 |
| **9333102665** | BRACKET, TERMINAL STRIP END | 41, 57 |
| **9333102666** | TAGS, TERMINAL STRIP | 57 |
| **9333102669** | SCREW #4 | 41, 57 |
| **9333102674** | STRAIN RELIEF | 57 |
| **9333102717** | BAR, 2-POLE JUMPER | 41 |
| **9333102759** | RAIL, TERMINAL STRIP MOUNTING | 41, 57 |
| **9333102760** | CONNECTOR, CANNON | 57 |
| **9333102765** | CONNECTOR ASSEMBLY | 35 |
| **9333102768** | JUNCTION BOX ASSEMBLY - | 55 |
| **9333102770** | HOUSING, CANNON CONNECTOR | 45 |
| **9333102790** | SCREW, SLOTTED MACHINE | 45 |
| **9333102792** | CONNECTOR, CANNON 2-SOCKET | 41 |
| **9333102808** | PLUG, HOLE | 41 |
| **9333102986** | CORE W/ SCREEN (BULK) | 37 |
| **9333103040** | CANNON CONNECTOR, 2-PIN | 45 |
| **9333103041** | RELIEF, VALVE | 41 |
| **9333103042** | CRIMP FERRULE, 20 AWG | 41 |
| **9333103044** | MARKING TAGS, 1-5 | 41 |
| **9333103094** | CLAMP, CABLE | 35 |
| **9333103565** | BOX ASSEMBLY - JUNCTION | 35 |
| **9333103697** | THIMBLE ASSY. 1/8" CABLE | 35 |
| **9333103701** | CABLE ASSEMBLY | 55 |
| **9333103703** | CLIP, GRIPPER | 49, 55 |
| **9333103729** | SWITCH ASSEMBLY | 49 |
| **9333103735** | BOX, JUNCTION | 41 |
| **9333103738** | SPRING | 55 |
| **9333103739** | GRIP, CABLE | 55 |

**From - 9333102480** **To - 9333103739**

## Numerical Index — Appendix B

| Part | Description | Page |
|---|---|---|
| **9333103768** | NUT, EYE | 35 |
| **9333103870** | PRESSURE TRANSDUCER, iFLEX 5 (2 | 171 |
| **9333103872** | CABLE, CANBUS 11M W/MOLDED M12 | 35 |
| **9333103873** | CABLE REEL LWG508 - IFLEX 5 | 35 |
| **9333103896** | P.C. BOARD | 37 |
| **9333103897** | POTENTIOMETER,LENGTH | 37 |
| **9333103898** | SENSOR,ANGLE | 37 |
| **9333103904** | SLIP RING ASSY. 2 CONN. | 37 |
| **9333103905** | GEAR WHEEL 25T | 37 |
| **9333103906** | CONNECTOR ASSY.W/WIRES, 5PASS | 37 |
| **9333103907** | COVER ASSY. W/SCREWS | 37 |
| **9333104159** | JUNCTION BOX,- MACHINED | 57 |
| **9333107524** | CENTERAL UNIT ASSEMBLY - iFLEX2 | 93 |
| **9333107526** | CONSOLE ASSEMBLY - GRAPHIC (COLO | 93 |
| **9352100528** | NUT | 285, 287 |
| **9352100657** | GASKET | 285, 287 |
| **9352100665** | TREADLE | 303 |
| **9352100669** | SET SCREW | 285, 287 |
| **9352100676** | NUT | 287 |
| **9352100692** | NUT | 285, 287 |
| **9352100751** | KIT, GASKET AND HARDWARE | 639 |
| **9352100771** | BOOT | 285, 287 |
| **9352100772** | GASKET | 285, 287 |
| **9352100777** | SCREW | 285, 287 |
| **9352100786** | HANDLE, SHELL (BOTH HALVES) | 287 |
| **9352100787** | COUPLING | 285, 287 |
| **9352100789** | PLATE, MOUNTING | 285, 287 |
| **9352100790** | SWITCH, PUSH BUTTON | 287 |
| **9352100791** | NUT | 285, 287 |
| **9352100792** | HANDLE, SHELL (BOTH HALVES) | 285 |
| **9364101388** | GASKET | 657 |
| **9364101403** | RETAINER | 657 |
| **9364101404** | CLAMP | 657 |
| **9364101535** | U-JOINT BEARING WITH HARDWARE | 549, 551 |
| **9364101577** | FITTING, GREASE | 551 |
| **9364101818** | PLATE, COVER FLANGE | 121 |

**From - 9333103768** **To - 9364101818**

## Numerical Index — Appendix B

| Part | Description | Page |
|---|---|---|
| **9364101821** | SCREW, GRUB | 121 |
| **9364101822** | CAPSCREW | 121 |
| **9364101826** | HOUSING, WATER | 121 |
| **9364101827** | BRACKET | 121 |
| **9364101830** | KIT, SEAL | 121 |
| **9364101866** | CAPSCREW | 553 |
| **9364101867** | U-JOINT ASSY. | 553 |
| **9364101868** | SEAL, SHAFT | 553 |
| **9364101869** | VALVE, AIR | 553 |
| **9364101870** | FITTING, GREASE | 553 |
| **9364101902** | LOCKNUT | 549 |
| **9364101903** | WASHER | 549 |
| **9364101907** | BEARING, CENTER | 549 |
| **9364101981** | RING, ANTISEIZURE | 121 |
| **9364101982** | RING, SEAL-V | 121 |
| **9364101983** | RING, SEAL | 121 |
| **9364101984** | RING, GLYDE | 121 |
| **9364101985** | O-RING | 121 |
| **9364101986** | O-RING | 121 |
| **9364101987** | O-RING | 121 |
| **9364101988** | CAPSCREW, 10M | 121 |
| **9372103595** | SCREW, SET | 395 |
| **9372103596** | INSERT, NYLON | 395 |
| **9372103611** | SCREW, SET | 395 |
| **9372103612** | INSERT, NYLON | 395 |
| **9372103623** | BARREL ASSY. | 395 |
| **9372103624** | ROD ASSY. | 395 |
| **9414101679** | FILTER,OIL | 563 |
| **9414101755** | FILTER, FUEL | 563 |
| **9414101756** | FILTER, FUEL/WATER SEPARATOR | 563 |
| **942481** | PLATE, DEAD END | 694 |
| **9437100452** | KIT, SEAL | 465 |
| **9437100456** | GAUGE | 465 |
| **9437100476** | VALVE, BY-PASS | 465 |
| **9437100479** | O-RING, SQUARE | 465 |
| **9437100480** | GASKET | 465 |

**From - 9364101821** **To - 9437100480**

## Numerical Index — Appendix B

| Part | Description | Page |
|---|---|---|
| **9437100575** | O-RING | 465 |
| **9437100763** | CAP ASSEMBLY | 465 |
| **9437100765** | SPACER | 465 |
| **9437100766** | CAP SCREW, | 465 |
| **9437100825** | ELEMENT | 465 |
| **9437100828** | CAP | 465 |
| **9437100842** | HEAD, FILTER | 465 |
| **9437100856** | CAPSCREW | 465 |
| **9437100857** | WASHER | 465 |
| **9437100891** | FILTER ASSY. HYD. RETURN | 463 |
| **9437100894** | FITTING, ADAPTER | 465 |
| **9437100895** | PLUG | 465 |
| **9447100041** | CAP, DUST - DIAGNOSTIC | 148, 489 |
| **9498100337** | WEATHERSEAL | 233 |
| **9498100339** | WEATHERSEAL | 233 |
| **9498100349** | SCREW, | 235 |
| **9498100354** | SPACER | 235 |
| **9498100355** | NUT, LOCK | 235 |
| **9498100371** | SCREW | 235, 237 |
| **9511100007** | SCREW | 285, 287 |
| **9511100017** | BOOT, CAP | 285, 287 |
| **9543100045** | HOSE ASSY, USE AS REQUIRED | 257 |
| **9576100517** | PIN | 156 |
| **9576101028** | STRAP | 643 |
| **9576101029** | BUSHING | 643 |
| **9576101074** | KEY | 229 |
| **9576101100** | CAPSCREW | 108 |
| **9576101101** | KIT,SEAL BRAKE | 109 |
| **9576101102** | KIT,DISC BRAKE | 109 |
| **9576101124** | WASHER | 107 |
| **9576101126** | GEAR,RING | 109 |
| **9576101127** | BEARING,NEEDLE | 107 |
| **9576101129** | WASHER | 107 |
| **9576101130** | RING,RETAINER | 107 |
| **9576101133** | RING,RETAINER | 109 |
| **9576101135** | BEARING | 108 |

**From - 9437100575** **To - 9576101135**

## Numerical Index — Appendix B

| Part | Description | Page |
|---|---|---|
| **9576101136** | COUPLING | 108 |
| **9576101137** | RING,RETAINER | 108 |
| **9576101138** | RING,RETAINER | 108 |
| **9576101140** | RING,RETAINER | 109 |
| **9576101141** | PLUG | 109 |
| **9576101142** | PLATE,END | 107 |
| **9576101148** | CAPSCREW | 109 |
| **9576101149** | PIPE | 109 |
| **9576101151** | DIPSTICK | 109 |
| **9576101152** | ELBOW | 109 |
| **9576101154** | PLUG | 109 |
| **9576101165** | KIT,BRAKE ASSY. | 109 |
| **9576101167** | PINION | 107 |
| **9576101171** | KIT,SHIM | 107 |
| **9576101173** | NUT,RING | 107 |
| **9576101174** | RING GEAR | 109 |
| **9576101175** | CAPSCREW | 108 |
| **9576101176** | GEAR,SUN | 108 |
| **9576101180** | GEAR,SUN | 107 |
| **9576101181** | PIN | 107 |
| **9576101183** | PIN | 107 |
| **9576101184** | HOUSING,FLANGE MTG. | 108 |
| **9576101185** | PLUG | 108 |
| **9576101186** | KIT,SEAL MOTOR | 108 |
| **9576101189** | BREATHER | 109 |
| **9576101220** | PLUG | 109 |
| **9576101307** | PLATE, RETAINER | 107 |
| **9576101308** | CAPSCREW | 107 |
| **9576101329** | SPACER | 107 |
| **9576101330** | SHAFT, OUTPUT | 107 |
| **9576101331** | SEAL, OIL | 107 |
| **9576101332** | BEARING | 107 |
| **9576101333** | RING, RETAINING | 107 |
| **9576101334** | O-RING | 107 |
| **9576101335** | BEARING | 107 |
| **9576101336** | BEARING, NEEDLE | 107 |

**From - 9576101136** **To - 9576101336**

## Numerical Index — Appendix B

| Part | Description | Page |
|---|---|---|
| **9576101337** | KIT, SEAL | 109 |
| **9576101338** | O-RING | 109 |
| **9576101339** | KIT, SHIM | 109 |
| **9576101340** | PLANETARY CARRIER ASSY. | 109 |
| **9576101341** | PLANETARY CARRIER ASSY. | 109 |
| **9576101347** | BLADE, WIPER 34" | 239, 241 |
| **9576101395** | MOTOR ASSY. HYD. | 108 |
| **9581100058** | LENS, MOONSTONE | 225 |
| **9581100088** | BULB | 225 |
| **9581100101** | BEAM, SEALED | 27, 225 |
| **9581100330** | SWITCH,PUSH-BUTTON | 225 |
| **9581100389** | TUBE,STROBE | 213 |
| **9581100390** | LENS, AMBER | 213 |
| **9581100461** | GROMMET, RUBBER | 415 |
| **9585100055** | KEEPER | 187, 419 |
| **9632102851** | WASHER, | 313 |
| **9637100001** | MOULDING | 405 |
| **9683100008** | HARNESS, SENSOR | 267 |
| **9683100010** | COVER TREADLE | 265, 267 |
| **9683100015** | ROLLER KIT | 265, 267 |
| **9683100087** | KIT, TREADLE ASSY. | 303 |
| **9683100088** | KIT, DRIVE ASSY. | 303 |
| **9683100089** | KIT, ELECTRICAL ASSY. | 303 |
| **9683100090** | KIT, COVER ASSY. | 303 |
| **9722105433** | COVER, FRONT | 611 |
| **9722105434** | PLATE, THRUST | 611 |
| **9722105435** | CAPSCREW | 611 |
| **9722105436** | SCREW, GRUB | 611 |
| **9722105437** | WASHER | 611 |
| **9722105441** | RING, RETAINER | 611 |
| **9722105443** | BEARING | 611 |
| **9722105444** | BUSHING | 611 |
| **9722105445** | KIT, SEAL | 611 |
| **9722105453** | SCREW, GRUB | 617 |
| **9722105454** | WASHER | 617 |
| **9722105456** | O-RING | 617 |

**From - 9576101337** **To - 9722105456**

## Numerical Index — Appendix B

| Part | Description | Page |
|---|---|---|
| **9722105458** | RING | 617 |
| **9722105460** | SPOOL | 617 |
| **9722105462** | SPRING | 617 |
| **9722105465** | PLUG | 617 |
| **9722105468** | GEAR, DRIVE SHAFT | 611 |
| **9722105469** | GEAR, DRIVEN | 611 |
| **9722105514** | PLUG | 611 |
| **9722105546** | SHAFT ASSY. | 613 |
| **9722105547** | BEARING | 613 |
| **9722105548** | BEARING | 613 |
| **9722105549** | SPACER | 613 |
| **9722105550** | COVER | 613 |
| **9722105551** | CAPSCREW | 613 |
| **9722105552** | CAPSCREW | 613 |
| **9722105553** | RING, RETAINER | 613 |
| **9722105554** | CAPSCREW | 613 |
| **9722105555** | PLUG, BLEEDER | 613 |
| **9722105556** | PLUG | 613 |
| **9722105557** | SEAL, SHAFT | 614 |
| **9722105558** | REGULATOR ASSY. | 614 |
| **9722105559** | CAPSCREW | 614 |
| **9722105560** | O-RING | 614 |
| **9722105561** | PLATE, COVER | 614 |
| **9722105562** | CAPSCREW | 614 |
| **9722105563** | O-RING | 614 |
| **9722105564** | KIT, ROTARY GROUP | 614 |
| **9722105565** | KIT, SWASH PLATE GROUP | 614 |
| **9722105566** | KIT, SEAL | 614 |
| **9722105567** | O-RING | 613 |
| **9722105568** | O-RING | 613 |
| **9722105569** | O-RING | 614 |
| **9722105570** | RING, RETAINER | 614 |
| **9722105596** | SEAL | 617 |
| **9722105597** | SEAL, SQUARE | 617 |
| **9722105598** | SEAL, SHAFT | 617 |
| **9722105600** | RING, BACK-UP | 617 |

**From - 9722105458** **To - 9722105600**

## Numerical Index — Appendix B

| Part | Description | Page |
|---|---|---|
| **9722105601** | PIN, DOWEL | 617 |
| **9726100351** | GUARD, FAN | 683 |
| **9752100944** | KIT, REPAIR | 477 |
| **9752100994** | KIT, REPAIR | 133 |
| **9752100996** | KIT, REPAIR | 469 |
| **9752101039** | KIT, REPAIR | 477 |
| **9752101414** | KIT, SEAL MOUNTING | 463 |
| **9798100792** | LEVER & CABLE ASSY. RECLINER | 293 |
| **981127** | PRIMARY PLANET GEAR SHAFT | 156 |
| **981134** | CAPSCREW | 157 |
| **981786** | HOSE ASSEMBLY | 157 |
| **9826100007** | WEDGE | 31, 67 |
| **9826100008** | PIN | 31, 67 |
| **9826100009** | PIN, COTTER | 31, 67 |
| **9880100091** | CAP | 215 |
| **9880100092** | MOTOR | 215 |
| **9880100093** | GROMMET | 215 |
| **9880100204** | VALVE,VENT | 641 |
| **9904100967** | BUSHING | 597 |
| **9904100974** | CAP SCREW | 607 |
| **9904100983** | WASHER | 595, 598 |
| **9904100993** | SLEEVE, TUBE | 569 |
| **9904101022** | RING, RETAINING | 597 |
| **9904101025** | BALL, LOCK | 583 |
| **9904101044** | SCREW, LOCK | 597 |
| **9904101047** | PLUG | 597 |
| **9904101209** | RING, RETAINING | 595 |
| **9904101298** | LOCK, PLATE | 567 |
| **9904101317** | PLUG, MAGNETIC | 569 |
| **9904101348** | RING, SNAP | 587, 593 |
| **9904101353** | BEARING, GEAR | 591 |
| **9904101354** | RING, SNAP | 583 |
| **9904102383** | NUT | 595, 598 |
| **9904103500** | O-RING | 569, 605 |
| **9904103528** | PLUG | 577 |
| **9904103551** | TUBE | 569 |

**From - 9722105601** **To - 9904103551**

## Numerical Index — Appendix B

| Part | Description | Page |
|---|---|---|
| **9904103563** | RING, RETAINING | 587 |
| **9904103567** | RING, SNAP | 587, 591, 593 |
| **9904103568** | RETAINER, SPRING | 587, 593 |
| **9904103569** | SPRING | 587, 593 |
| **9904103570** | RING | 593 |
| **9904103575** | BEARING, PILOT | 585 |
| **9904103595** | WASHER | 573, 597 |
| **9904103605** | NUT | 597 |
| **9904103610** | WASHER, THRUST | 597 |
| **9904103612** | BEARING | 597 |
| **9904103615** | HUB | 597 |
| **9904103621** | RING, RETAINING | 573, 597 |
| **9904103623** | STUD | 597 |
| **9904103626** | HUB, SHIFT | 598 |
| **9904103632** | RING, SNAP | 585, 587, 591, 593 |
| **9904103635** | DISC, CLUTCH | 585, 587, 591, 593 |
| **9904103637** | SEAL, PISTON | 585, 587, 591, 593 |
| **9904103638** | SEAL, PISTON | 585, 587, 591, 593 |
| **9904103660** | O-RING | 601 |
| **9904103677** | FLANGE | 598 |
| **9904103779** | O'RING POLYACUL | 569 |
| **9904103887** | GASKET | 605 |
| **9904103893** | RING, LOCATING | 583 |
| **9904103899** | RING, RETAINING | 581, 583 |
| **9904103906** | RING, SNAP | 573, 591, 595 |
| **9904103913** | PLUG | 567 |
| **9904103916** | SCREW, | 569 |
| **9904103922** | SPACER | 595 |
| **9904103980** | RING, SNAP | 585, 587 |
| **9904103982** | SPACER | 585, 587 |
| **9904103983** | RING, SNAP | 585 |
| **9904103986** | STUD | 601 |
| **9904103987** | DISC, CLUTCH | 591 |
| **9904103988** | DISC, CLUTCH | 585, 587, 593 |
| **9904103993** | O-RING | 597 |
| **9904103994** | O-RING | 597 |

**From - 9904103563** **To - 9904103994**

## Numerical Index — Appendix B

| Part | Description | Page |
|---|---|---|
| **9904103997** | O-RING | 598 |
| **9904104050** | BREATHER | 567 |
| **9904104053** | BEARING ASSEMBLY | 589 |
| **9904104055** | PLUG | 567, 609 |
| **9904104423** | BEARING | 583 |
| **9904104424** | SHAFT | 583 |
| **9904104428** | BEARING | 577 |
| **9904104432** | BEARING | 581, 583 |
| **9904105286** | RING, SNAP | 573 |
| **9904105288** | SHAFT | 597 |
| **9904105289** | HOUSING | 597 |
| **9904105290** | FORK, SHIFT | 598 |
| **9904105292** | SPRING | 597 |
| **9904105293** | SPRING | 597 |
| **9904105299** | O-RING | 601 |
| **9904105301** | NUT | 601 |
| **9904105302** | SEAL | 601 |
| **9904105306** | BODY | 601 |
| **9904105307** | SEAL | 601 |
| **9904105328** | SCREW, VALVE MOUNTING | 607 |
| **9904105336** | O-RING | 569 |
| **9904105441** | STEER PUMP GASKET | 569 |
| **9904105442** | COVER | 569, 595 |
| **9904105662** | FLANGE, COMPANION OUTPUT REAR | 598 |
| **9904105940** | SLEEVE | 567 |
| **9904105957** | RING, SEAL | 573 |
| **9904105958** | BAFFLE AND SEAL | 573 |
| **9904105981** | RETAINER, SPRING | 587 |
| **9904105989** | BALL, LOCK | 589 |
| **9904105994** | BEARING, FRONT | 587, 593 |
| **9904105997** | RING, RETAINING | 587 |
| **9904106000** | BEARING, REAR | 591 |
| **9904106001** | RING, SNAP | 591 |
| **9904106002** | SPACER | 591 |
| **9904106063** | PLUG WITH O-RING | 569 |
| **9904106235** | WASHER | 603 |

**From - 9904103997** **To - 9904106235**

## Numerical Index — Appendix B

| Part | Description | Page |
|---|---|---|
| **9904106320** | BEARING | 597 |
| **9904106364** | AUX PUMP GASKET | 595 |
| **9904106400** | RING, RETAINING | 573 |
| **9904106408** | RING, RETAINING | 577, 597 |
| **9904106445** | O-RING | 567, 569 |
| **9904106482** | TUBE, CYLINDER | 601 |
| **9904106483** | CAP, END | 601 |
| **9904106593** | GASKET | 581 |
| **9904106805** | O-RING | 589 |
| **9904107179** | O-RING | 601 |
| **9904107558** | RING, RETAINING | 593 |
| **9904107783** | SPRING, DISC | 591 |
| **9904107784** | RETAINER, SPRING | 591 |
| **9904107838** | SPRING ASSY | 585, 587 |
| **9904108396** | PLUG | 567, 569 |
| **9904108406** | PISTON | 597 |
| **9904108407** | RING | 597 |
| **9904108408** | PLUG | 597 |
| **9904108409** | O-RING | 597 |
| **9904108558** | KEY | 587 |
| **9904108795** | RING, PISTON | 591 |
| **9904108934** | PISTON ASSY, CLUTCH | 585, 587, 591 |
| **9904108964** | PLUG, DRAIN | 569 |
| **9904108979** | HUB, CLUTCH DISC | 593 |
| **9904109139** | SEAL,OIL | 573 |
| **9904109352** | WASHER, LOCK | 575 |
| **9904109356** | PLUG | 567, 569 |
| **9904109357** | O-RING | 567, 569 |
| **9904109358** | CAP SCREW | 567, 569 |
| **9904109459** | RING, SNAP | 597 |
| **9904109481** | O-RING | 597 |
| **9904109531** | CAPSCREW, DISC BRAKE | 603 |
| **9904109554** | CAP SCREW, | 581 |
| **9904109561** | O-RING | 577, 597 |
| **9904109562** | HOUSING, CONVERTER | 567 |
| **9904109563** | CASE, GASKET | 567 |

**From - 9904106320** **To - 9904109563**

## Numerical Index — Appendix B

| Part | Description | Page |
|---|---|---|
| **9904109564** | PIN, DOWEL | 567, 569 |
| **9904109565** | COVER, REAR AND PLUG ASSEMBLY | 569 |
| **9904109566** | CASE, GASKET | 569 |
| **9904109567** | CASE ASSEMBLY | 569 |
| **9904109568** | TUBE, THIRD SPEED | 569 |
| **9904109569** | TUBE ASSEMBLY, SUCTION | 569 |
| **9904109570** | O-RING | 569 |
| **9904109571** | CLIP, TUBE | 569 |
| **9904109572** | BAFFLE, OIL | 569 |
| **9904109573** | SHAFT & HUB W/ RETAINING RING | 573 |
| **9904109574** | BEARING ASSY | 573, 591, 595 |
| **9904109575** | RING, PISTON | 573 |
| **9904109576** | STATOR, SUPPORT | 573 |
| **9904109579** | RING, BACKING | 575 |
| **9904109581** | RING, SNAP | 577 |
| **9904109582** | CONVERTER ASSEMBLY - TORQUE | 577 |
| **9904109583** | RING, SNAP | 577 |
| **9904109584** | SCREW | 581, 583 |
| **9904109585** | SUPPORT, BEARING | 581, 583 |
| **9904109588** | PIN | 581, 583 |
| **9904109590** | GEAR, IDLER | 583 |
| **9904109592** | BEARING | 585 |
| **9904109593** | RING, RETAINING | 585 |
| **9904109594** | SPACER | 587 |
| **9904109595** | BEARING | 587 |
| **9904109597** | HUB, DISC | 587 |
| **9904109598** | SHAFT, REVERSE IDLER | 589 |
| **9904109599** | WASHER, THRUST | 589 |
| **9904109600** | WASHER, THRUST | 589 |
| **9904109601** | NUT | 589 |
| **9904109602** | GEAR, REVERSE IDLER | 589 |
| **9904109603** | LOW SHAFT,HUB & DRUM W/ VALVE | 591 |
| **9904109604** | BEARING | 591 |
| **9904109606** | BEARING | 595 |
| **9904109607** | SHAFT, IDLER | 595 |
| **9904109608** | BEARING, REAR | 597 |

**From - 9904109564** **To - 9904109608**

## Numerical Index — Appendix B

| Part | Description | Page |
|---|---|---|
| **9904109611** | SPACER | 597 |
| **9904109612** | OUTPUT SHAFT AND BEARING | 597 |
| **9904109613** | GEAR, HIGH RANGE 41T | 579, 598 |
| **9904109616** | PISTON | 601 |
| **9904109617** | WASHER, LOCK | 601 |
| **9904109618** | NUT | 601 |
| **9904109619** | ROD, PISTON | 601 |
| **9904109620** | WASHER, LOCK | 601 |
| **9904109621** | SCREW, LOCK | 601 |
| **9904109622** | FORK, SHIFT | 601 |
| **9904109623** | AIRSHIFT CYLINDER | 601 |
| **9904109641** | O-RING | 598 |
| **9904109646** | PISTON RING | 573 |
| **9904109647** | BEARING | 587 |
| **9904109648** | REAR BEARING | 587, 593 |
| **9904109649** | GEAR, REVERSE CLUTCH 43T | 579, 587 |
| **9904109650** | DISC SPRING SPACER | 591 |
| **9904109651** | GEAR, LOW CLUTCH 63T | 579, 591 |
| **9904109652** | REAR IDLER GEAR | 579, 595 |
| **9904109653** | DRIVE GEAR | 579, 585 |
| **9904109669** | KIT,DRIVE PLATE | 575 |
| **9904109676** | WASHER, LOCK | 581 |
| **9904109704** | SCREW, | 573 |
| **9904109705** | GEAR, PUMP DRIVE | 583 |
| **9904109807** | CASE &  REAR COVER GROUP | 565 |
| **9904109815** | GEAR, IDLER FRONT 21T | 579, 595 |
| **9904109816** | GEAR, LOW RANGE 42T | 579, 598 |
| **9904110157** | BRACKET,PARK BRAKE | 603 |
| **9904110463** | FWD SHAFT & DRUM ASSY. | 585 |
| **9904110464** | PLATE, END | 585, 587, 591, 593 |
| **9904110465** | RING, PISTON | 585, 587, 593 |
| **9904110466** | REV. & 2ND, SHAFT & DRUM ASSY | 587 |
| **9904110467** | PISTON ASSY. | 587, 593 |
| **9904110468** | 3rd. SHAFT & DRUM ASSY. | 593 |
| **9904110596** | CAPSCREW | 575 |
| **9904110597** | GEAR, 37T | 581 |

**From - 9904109611** **To - 9904110597**

## Numerical Index — Appendix B

| Part | Description | Page |
|---|---|---|
| **9904110598** | ADAPTER, PUMP MOUNT | 581 |
| **9904110599** | GASKET | 581 |
| **9904110600** | CAPSCREW | 581 |
| **9904110601** | COVER | 581 |
| **9904110602** | PLATE | 581 |
| **9904110605** | GASKET | 607 |
| **9904110607** | COVER | 609 |
| **9904110608** | CAPSCREW | 609 |
| **9904110609** | CONVERTER HOUSING GROUP | 565 |
| **9904110611** | TURBINE SHAFT GROUP | 565 |
| **9904110612** | DRIVE PLATE GROUP | 565 |
| **9904110613** | TORQUE CONVERTER GROUP | 565 |
| **9904110614** | GEAR GROUP | 565 |
| **9904110615** | AUXILIARY PUMP DRIVE GROUP | 565 |
| **9904110616** | PUMP DRIVE GROUP | 565 |
| **9904110617** | FORWARD SHAFT GROUP | 565 |
| **9904110618** | REVERSE & 2ND. SHAFT GROUP | 565 |
| **9904110619** | REVERSE IDLER GROUP | 565 |
| **9904110620** | LOW SPEED SHAFT GROUP | 565 |
| **9904110621** | 3RD. SHAFT GROUP | 565 |
| **9904110622** | IDLER SHAFT GROUP | 565 |
| **9904110624** | HI/LOW RANGE SHIFT CONT. GROUP | 565 |
| **9904110625** | DISC BRAKE GROUP | 565 |
| **9904110660** | CART.& COIL ASSY. 24V. | 609 |
| **9904110793** | O-RING | 609 |
| **9904110794** | O-RING | 609 |
| **9904110795** | O-RING | 609 |
| **9904110796** | O-RING | 609 |
| **9914100042** | CLIP | 31, 67 |
| **9926103232** | O-RING | 173 |
| **9926105593** | KIT, REPAIR | 477 |
| **9926106323** | KIT, SEAL | 473 |
| **9926106474** | VALVE, CARTRIDGE | 133, 477 |
| **9926106646** | O-RING | 173 |
| **9926107745** | NUT | 133, 469, 473, 477, 478, 493 |
| **9926107747** | KIT, SEAL | 134 |

**From - 9904110598** **To - 9926107747**

## Numerical Index — Appendix B

| Part | Description | Page |
|---|---|---|
| **9926107803** | KIT, SEAL | 14 |
| **9926108124** | KIT, REPAIR | 478 |
| **9926108423** | KIT, SEAL | 133, 477 |
| **9926108644** | KIT, SEAL | 133, 477, 493 |
| **9926110265** | PLATE,DISTRIBUTOR | 313 |
| **9926110266** | GEAR, SET | 313 |
| **9926110316** | CARTRIDGE VALVE | 473 |
| **9926110370** | CARTRIDGE | 134 |
| **9926110372** | KIT, SEAL | 133 |
| **9926110629** | CARTRIDGE ASSY. FILTER | 133 |
| **9926110630** | VALVE | 477 |
| **9926110722** | CARTRIDGE | 493 |
| **9926111396** | PLUG | 478 |
| **9926111435** | WASHER, COMPRESSION | 125 |
| **9926111436** | NUT | 125 |
| **9926111438** | DISK, SHUTTLE | 126 |
| **9926111439** | PLUG ASSEMBLY, SHUT-OFF | 125 |
| **9926111456** | SPRING | 128 |
| **9926111457** | WASHER, | 128 |
| **9926111468** | SEAL-SPECIAL | 125 |
| **9926111469** | O-RING | 125 |
| **9926111470** | SEAL-SPECIAL | 125 |
| **9926111533** | ROD, TIE | 125 |
| **9926111719** | KIT, SEAL | 478 |
| **9926111720** | VALVE ASSEMBLY - SOLENOID 12 VOL | 477 |
| **9926111722** | KIT, SEAL | 133 |
| **9926111747** | PLUG, PORT | 478 |
| **9926111748** | O-RING | 478 |
| **9926111878** | VALVE, CHECK | 477 |
| **9926111931** | O-RING, VITON | 134 |
| **9926111932** | O-RING, VITON | 134 |
| **9926111974** | SCREW, | 128 |
| **9926111999** | PLUG ASSY | 125 |
| **9926112003** | SPRING | 126, 131 |
| **9926112004** | FILTER | 126 |
| **9926112006** | PLUG | 126, 127 |

**From - 9926107803** **To - 9926112006**

## Numerical Index — Appendix B

| Part | Description | Page |
|---|---|---|
| **9926112013** | O-RING | 125 |
| **9926112141** | PLUG | 125 |
| **9926112200** | SPRING | 126, 127, 128 |
| **9926112358** | KIT, SEAL | 133 |
| **9926112501** | O-RING,VITON | 134 |
| **9926112986** | VALVE, CARTRIDGE | 469 |
| **9926112988** | BRACKET, MOUNTING | 469 |
| **9926112992** | VALVE, CARTRIDGE DIRECTIONAL | 477 |
| **9926112997** | KIT, SEAL | 477 |
| **9926113018** | VALVE,CART. RELIEF @ 4000 PSI | 125 |
| **9926113025** | PLUG ASSY. | 126, 127, 128 |
| **9926113029** | CAPSCREW | 128 |
| **9926113031** | KIT, SEAL VALVE ASSY. | 129 |
| **9926113049** | VALVE, CHECK | 133 |
| **9926113051** | CAPSCREW, SOCKET HEAD 10MM | 133 |
| **9926113057** | KIT, SEAL | 133, 471 |
| **9926113058** | KIT, SEAL | 133 |
| **9926113089** | VALVE, CHECK CARTRIDGE | 477 |
| **9926113110** | SEAL, DUST RING | 313 |
| **9926113111** | KIT, BUSHING W/BALL | 313 |
| **9926113112** | BEARING | 313 |
| **9926113113** | KIT, RING W/CROSS PIN | 313 |
| **9926113114** | CAPSCREW, SPECIAL | 313 |
| **9926113115** | CAPSCREW | 313 |
| **9926113116** | KIT, SEAL | 313 |
| **9926113117** | COIL, 24V. | 469 |
| **9926113142** | SCREW, HEX SOCKET | 471 |
| **9926113167** | VALVE, RELIEF @ 2500 PSI | 133 |
| **9926113169** | VALVE, SHUTTLE | 477 |
| **9926113170** | KIT, SEAL | 477 |
| **9926113171** | PLUG, ORIFICE .040" | 133 |
| **9926113176** | KIT, SEAL | 471 |
| **9926113181** | O-RING | 477 |
| **9926113182** | O-RING | 477 |
| **9926113183** | PISTON, PILOT | 477 |
| **9926113184** | VALVE, CARTRIDGE SHUTTLE | 477 |

**From - 9926112013** **To - 9926113184**

## Numerical Index — Appendix B

| Part | Description | Page |
|---|---|---|
| **9926113185** | KIT, SEAL | 477 |
| **9926113186** | VALVE,PRESS.REDUCING @2500PSI | 477 |
| **9926113187** | KIT, SEAL | 477 |
| **9926113193** | VALVE ASSY. CHECK | 477 |
| **9926113194** | VALVE ASSY. CARTRIDGE | 478 |
| **9926113195** | KIT, SEAL | 478 |
| **9926113196** | CAPSCREW | 478 |
| **9926113197** | WASHER | 478 |
| **9926113253** | O-RING SEAL | 134 |
| **9926113254** | VALVE, CART. RELIEF @ 1800 PSI | 134 |
| **9926113270** | SWITCH ASSY. PRESSURE | 123 |
| **9926113271** | VALVE ASSY. BRAKE | 269 |
| **9926113272** | PEDAL ASSY. | 269 |
| **9926113273** | COVER, RUBBER | 269 |
| **9926113274** | SCREW | 269 |
| **9926113275** | BOOT, RUBBER | 269 |
| **9926113276** | SWITCH ASSY. PRESSURE | 269 |
| **9926113277** | FITTING, ADAPTOR | 269 |
| **9926113280** | VALVE ASSY. INLET SECTION | 125 |
| **9926113284** | VALVE ASSY. OUTLET SECTION | 125 |
| **9926113285** | PLUG ASSY. | 125 |
| **9926113293** | VALVE, CHECK CART. | 148 |
| **9926113294** | PLUG | 478 |
| **9926113295** | PLUG #10 | 478 |
| **9926113296** | PLUG, ORIFICE .261 | 478 |
| **9926113297** | PLUG, ORIFICE .076 | 478 |
| **9926113298** | SEAT, SPRING | 134 |
| **9926113299** | SPRING | 134 |
| **9926113300** | WASHER | 134 |
| **9926113301** | CAP | 134 |
| **9926113302** | CAPSCREW | 134 |
| **9926113339** | COIL, 24V. | 473, 478 |
| **9926113443** | VALVE, PRESS. COMPENSATOR | 133 |
| **9974100476** | WASHER, LOCK 1/2" I.D. | 155, 158, 159, 161 |
| **9974100594** | DISC, FRICTION | 156 |
| **9974101182** | ROLLER BEARING | 156 |

**From - 9926113185** **To - 9974101182**

## Numerical Index — Appendix B

| Part | Description | Page |
|---|---|---|
| **9974101183** | PIN | 156 |
| **9974101198** | ORING | 155 |
| **9974101211** | BEARING, BALL | 155 |
| **9974101216** | SEAL,OIL | 155 |
| **9974101280** | KIT, SEAL | 157 |
| **9974102176** | SEAL, PISTON | 156 |
| **9974102177** | PLATE, PRESSURE | 156 |
| **9974102178** | RING, BACK-UP | 156 |
| **9974102179** | SPRING | 156 |
| **9974102181** | WASHER, THRUST | 156, 158 |
| **9974102182** | SHAFT | 156 |
| **9974102183** | BEARING | 156 |
| **9974102185** | WASHER, THRUST | 156 |
| **9974102190** | SEAL,OIL | 155 |
| **9974102191** | RING, RETAINING | 155 |
| **9974102194** | GEAR, SUN | 155 |
| **9974102195** | SPACER | 156 |
| **9974102196** | PLATE, THRUST | 156 |
| **9974102197** | PLATE, THRUST | 156 |
| **9974102199** | WASHER, THRUST | 155 |
| **9974102201** | PLUG, FLUSH | 155 |
| **9974102203** | O-RING | 156, 157 |
| **9974102208** | HOSE ASSY, USE AS REQUIRED | 157 |
| **9974102210** | ADAPTER | 157 |
| **9974102211** | TEE, SWIVEL | 157 |
| **9974102212** | ELBOW | 157 |
| **9974102214** | CLUTCH SPRAG ASSY. BRAKE | 155 |
| **9974102218** | BEARING, THRUST | 157 |
| **9974102219** | RING, RETAINING | 157 |
| **9974102221** | RING, RETAINING | 157 |
| **9974102222** | KIT, SEAL | 159 |
| **9974102226** | RING, BACK-UP | 156 |
| **9974102667** | GEAR - PLANET | 156 |
| **9974102669** | CARRIER ASSY. PRIMARY PLANET | 155 |
| **9974102670** | CARRIER ASSY. PLANET OUTPUT | 155 |
| **9974102671** | GEAR, PLANET | 156 |

**From - 9974101183** **To - 9974102671**

## Numerical Index — Appendix B

| Part | Description | Page |
|---|---|---|
| **9974102672** | SPACER | 156 |
| **9974102676** | CLOSURE, CABLE DRUM | 155 |
| **9974102677** | PRIMARY SUN GEAR | 155 |
| **9974102684** | CAP SCREW | 157 |
| **9974102704** | DISK, BRAKE | 156 |
| **9974102705** | SPACER | 156 |
| **9974102731** | MOUNT, MOTOR BASE | 156 |
| **9974102808** | BUSHING | 158 |
| **9974102810** | ROD | 158 |
| **9974102814** | ROLLPIN | 158 |
| **9974102821** | WASHER, | 156 |
| **9974102822** | BAR, SPACER | 155 |
| **9974102825** | PLATE | 158 |
| **9974102828** | LEVER | 158 |
| **9974102831** | BRACKET | 158 |
| **9974102832** | SPRING | 158 |
| **9974102835** | CAP SCREW, | 158 |
| **9974102837** | WASHER, LOCK | 158 |
| **9974102839** | WASHER | 158 |
| **9974102840** | ROLLER | 158, 161 |
| **9974102841** | SHAFT | 158, 161 |
| **9974102842** | PIN, DOWEL | 158 |
| **9974102843** | WASHER | 158, 161 |
| **9974102846** | SUPPORT, BEARING | 155 |
| **9974102849** | WASHER, THRUST | 155 |
| **9974102854** | CAPSCREW | 155 |
| **9974102855** | GAUGE, SIGHT | 155 |
| **9974102858** | PLUG, VENT | 155 |
| **9974102859** | CAPSCREW | 156 |
| **9974102861** | HOUSING, CYLINDER BRAKE | 156 |
| **9974102868** | O-RING | 155 |
| **9974102885** | VALVE, BRAKE | 157 |
| **9974102898** | O-RING | 157 |
| **9974102931** | PLUG | 157 |
| **9974102941** | DRUM | 155 |
| **9974102942** | BASE | 155 |

**From - 9974102672** **To - 9974102942**

## Numerical Index — Appendix B

| Part | Description | Page |
|---|---|---|
| **9974102943** | SIDEPLATE, MOTOR | 156 |
| **9974102966** | PIN | 161 |
| **9974102995** | NUT | 158 |
| **9974103015** | CAPSCREW | 159, 161 |
| **9974103043** | CAPSCREW | 158 |
| **9974103081** | CAPSCREW | 156 |
| **9974103082** | CAPSCREW | 156 |
| **9974103084** | BRACKET, ROLLER | 158 |
| **9974103085** | SHAFT, ROLLER | 158 |
| **9974103087** | RING, RETAINER | 158 |
| **9974103090** | MANIFOLD | 157 |
| **9974103091** | SENSOR | 157 |
| **9974103092** | WASHER, SEAL | 157 |
| **9974103093** | FITTING | 157 |
| **9974103094** | NUT, JAM | 157 |
| **9974103095** | ROLLER, W/3RD. WRAP OFFSET | 158 |
| **9974103097** | SWITCH ASSY. | 158 |
| **9974103098** | PLATE | 158 |
| **9974103099** | WASHER | 158 |
| **9974103100** | CAPSCREW | 158 |
| **9974103101** | CAPSCREW | 158 |
| **9974103102** | BRACKET | 158 |
| **NS** | NOT SERVICED | 207 |

**From - 9974102943** **To - NS**

## Recommended Spare Parts List — Appendix C

| Part No. | 1 Yr | 2 Yr | 3 Yr | Qty | Description | Page |
|---|---|---|---|---|---|---|
| 6069000293 | 0 | 0 | 2 | | BEARING | 77 |
| 6671000166 | 1 | 1 | 2 | 6 | PAD, WEAR | 8 |
| 6671000177 | 1 | 1 | 2 | 8 | WEAR PAD | 8 |
| 6671000236 | 1 | 1 | 2 | 14 | PAD, WEAR | 8, 391 |
| 6671000266 | 1 | 1 | 2 | 2 | PAD, WEAR | 10 |
| 6718100000 | 0 | 0 | 1 | 2 | SHEAVE | 9 |
| 6718100006 | 0 | 0 | 1 | 1 | SHEAVE ASSY, 5 GROOVE | 9 |
| 6718100015 | 0 | 0 | 1 | 2 | SHEAVE | 9 |
| 6718100017 | 0 | 0 | 1 | 2 | SHEAVE | 8 |
| 6718100030 | 0 | 0 | 1 | 4 | WHEEL, 5/8" ROPE SHEAVE | 17, 73, 81, 85 |
| 6794100011 | 0 | 0 | 2 | 2 | GASKET, 2 BOLT HOLE | 559 |
| 7013000384 | 0 | 0 | 1 | 1 | ADAPTER, REDUCING | 393 |
| 7013000405 | 0 | 0 | 1 | 3 | ADAPTER | 563, 639 |
| 7013001112 | 0 | 0 | 1 | 1 | FITTING, ORIFICE .031 | 143 |
| 7013100029 | 0 | 0 | 1 | 2 | ADAPTER | 179, 665 |
| 7013100030 | 0 | 0 | 1 | 2 | ADAPTER | 179, 665 |
| 7013100047 | 0 | 0 | 1 | 1 | ADAPTER,ORB TO HOSE BARB 20-16 | 561 |
| 7013100059 | 0 | 0 | 1 | 1 | ADAPTER, 0.062 DIA ORIFICE | 149 |
| 7069000175 | 0 | 0 | 1 | 8 | CLOSURE, BEARING | 17, 73, 81, 85 |
| 7069000183 | 0 | 0 | 1 | 8 | CONE, BEARING | 17, 73, 81, 85 |
| 7069000238 | 0 | 0 | 1 | 4 | BEARING | 113 |
| 7069000516 | 0 | 0 | 1 | 4 | BEARING | 229 |
| 7069000518 | 0 | 0 | 1 | 1 | BEARING | 23 |
| 7069001045 | 0 | 0 | 1 | 2 | BEARING | 230 |
| 7069100031 | 0 | 0 | 1 | 2 | BEARING | 9 |
| 7172000545 | 1 | 1 | 3 | 2 | BOOT, DT2S CONNECTOR | 29 |
| 7172000546 | 1 | 1 | 3 | 4 | BOOT | 27, 181, 213, 415, 667 |
| 7172000551 | 1 | 1 | 3 | 1 | BOOT | 427 |
| 7172000552 | 1 | 1 | 3 | 8 | BOOT | 200, 359, 455 |
| 7172000553 | 0 | 0 | 2 | 2 | BOOT | 455 |
| 7172000554 | 0 | 0 | 2 | 5 | BOOT | 200, 455, 625 |
| 7172000564 | 0 | 0 | 2 | 2 | BOOT | 252, 371 |
| 7172000565 | 1 | 1 | 3 | 1 | BOOT, CONNECTOR | 371 |
| 7172000567 | 1 | 1 | 3 | 2 | BOOT, CONNECTOR | 201 |
| 7172000568 | 1 | 1 | 3 | 1 | BOOT, CONNECTOR | 29 |
| 7172100002 | 1 | 1 | 3 | 4 | BOOT, PLUG | 200, 291, 455 |
| 7172100003 | 0 | 0 | 2 | 3 | BOOT-DTM3P-RECP | 283, 497 |
| 7172100006 | 1 | 1 | 3 | 1 | BOOT | 625 |
| 7195000031 | 0 | 0 | 2 | 2 | BUMPER, RUBBER | 423 |
| 7195000032 | 0 | 0 | 2 | 8 | BUMPER, RUBBER | 407, 675 |
| 7242000021 | 1 | 1 | 3 | 3 | PLUG, 1" BUTTON | 21, 401 |
| 7242100005 | 1 | 1 | 2 | 19 | PLUG, L SERIES LH1 PANEL | 280, 345, 351 |
| 7246100338 | 0 | 0 | 1 | 5 | CABLE ASSY, EXTEND | 7 |
| 7246100415 | 0 | 0 | 1 | 2 | CABLE, 8MM DIA RETARCT | 7 |

**From - 6069000293** **To - 7246100415**

## Recommended Spare Parts List — Appendix C

| Part No. | 1 Yr | 2 Yr | 3 Yr | Qty | Description | Page |
|---|---|---|---|---|---|---|
| 7246100416 | 0 | 0 | 1 | 4 | CABLE, 8MM DIA RETRACT | 7 |
| 7246100417 | 0 | 0 | 1 | 2 | CABLE, 9.5MM DIA SYNCHRO | 7 |
| 7300000429 | 1 | 1 | 3 | 2 | CLAMP, STRAIN RELIEF | 455, 625 |
| 7345001444 | 1 | 1 | 3 | 19 | TERMINAL, FEMALE | 199, 291, 343, 349, 355, 360, 457 |
| 7345001446 | 1 | 1 | 3 | 3 | TERMINAL, MALE | 281, 349 |
| 7345001743 | 1 | 1 | 3 | 5 | TERMINAL, FEMALE | 427 |
| 7345001744 | 1 | 1 | 3 | 10 | TERMINAL, FEMALE | 325, 343, 359 |
| 7345001746 | 1 | 1 | 3 | 12 | TERMINAL, MALE | 227, 325 |
| 7345001752 | 1 | 1 | 3 | 13 | TERMINAL | 343 |
| 7345191701 | 1 | 1 | 3 | 1 | TERMINAL | 457 |
| 7345191901 | 1 | 1 | 3 | 3 | TERMINAL | 457 |
| 7345211701 | 1 | 1 | 3 | 8 | TONGUE, INSULATED RING | 343, 349, 653 |
| 7345211901 | 1 | 1 | 3 | 3 | TERMINAL | 175, 343 |
| 7345212101 | 1 | 1 | 3 | 2 | TERMINAL | 343 |
| 7345221901 | 1 | 1 | 3 | 2 | TERMINAL | 175 |
| 7345231701 | 1 | 1 | 3 | 1 | TERMINAL | 457 |
| 7345231901 | 1 | 1 | 3 | 2 | TERMINAL | 343, 457 |
| 7345232101 | 1 | 1 | 3 | 4 | TERMINAL | 343, 457, 625 |
| 7345241701 | 1 | 1 | 3 | 2 | TONGUE, INSULATED RING | 457 |
| 7345241901 | 1 | 1 | 3 | 8 | TONGUE, INSULATED RING | 343, 457 |
| 7345242001 | 1 | 1 | 3 | 1 | TERMINAL | 199 |
| 7345242101 | 1 | 1 | 3 | 4 | TERMINAL | 457 |
| 7352000878 | 0 | 0 | 1 | 1 | SENDER, FUEL LEVEL | 639 |
| 7352100036 | 0 | 0 | 1 | 1 | SENSOR-COOLANT LEVEL | 556 |
| 7364001682 | 1 | 1 | 3 | 2 | CONNECTOR, 2 CONDUCTOR | 455 |
| 7364001683 | 1 | 1 | 3 | 3 | CONNECTOR, 2 CONDUCTOR | 199, 455 |
| 7364001684 | 1 | 1 | 3 | 2 | CONNECTOR, 3 CONDUCTOR | 267, 361 |
| 7364001685 | 1 | 1 | 3 | 2 | CONNECTOR, 3 CONDUCTOR | 267, 359 |
| 7364001840 | 1 | 1 | 3 | 2 | CONNECTOR, STRAIN RELIEF | 427 |
| 7364002614 | 0 | 0 | 1 | 2 | JOINT, 90 DEGREE LIVE | 7 |
| 7364100044 | 1 | 1 | 3 | 1 | CONNECTOR, 4PASS 280 SERIES | 343 |
| 7364100051 | 1 | 1 | 3 | 4 | PLUG | 415, 455 |
| 7364100052 | 1 | 1 | 3 | 12 | SEAL | 458 |
| 7364100217 | 0 | 0 | 1 | 1 | COUPLER SAE A TO A | 562 |
| 7364100264 | 1 | 1 | 3 | 6 | SEAL, CABLE (TAN) | 361 |
| 7373000159 | 1 | 1 | 2 | 1 | KIT, SEAL | 395 |
| 7406001053 | 0 | 0 | 2 | 3 | BELLOWS | 555 |
| 7437000873 | 4 | 4 | 6 | 1 | FILTER, ELEMENT TRANS, 6.0"LG | 631 |
| 7440000000 | 0 | 0 | 1 | 27 | FITTING, 1/8 STRAIGHT GREASE | 9, 17, 73, 77, 81, 85, 99, 497, 507, 525, 533 |
| 7440000400 | 0 | 0 | 1 | 4 | FITTING, 90 DEGREE GREASE | 8, 389 |
| 7440030000 | 0 | 0 | 1 | 2 | FITTING, STRAIGHT GREASE | 61, 693 |

**From - 7246100416** **To - 7440030000**

## Recommended Spare Parts List — Appendix C

| Part No. | 1 Yr | 2 Yr | 3 Yr | Qty | Description | Page |
|---|---|---|---|---|---|---|
| 7443100140 | 0 | 0 | 1 | 10 | COUPLING, 3/8" TEST PORT | 148, 489 |
| 7444020031 | 1 | 1 | 3 | 3 | PLUG, PIPE | 598, 681 |
| 7445040219 | 0 | 0 | 1 | 2 | ADAPTER, STRAIGHT | 209 |
| 7445040220 | 0 | 0 | 1 | 2 | ELBOW, 90 DEGREE | 209 |
| 7445040472 | 0 | 0 | 1 | 1 | ELBOW, 90 DEGREE | 146 |
| 7445040645 | 0 | 0 | 1 | 1 | ELBOW, 90 DEGREE MALE | 146 |
| 7445060439 | 0 | 0 | 1 | 3 | ADAPTER, REDUCING FEMALE | 146 |
| 7445060651 | 0 | 0 | 1 | 1 | UNION, STRAIGHT | 633 |
| 7445060653 | 0 | 0 | 1 | 2 | ELBOW, 90 DEGREE | 633, 637 |
| 7445080450 | 0 | 0 | 1 | 1 | BUSHING, REDUCER | 563 |
| 7445080650 | 0 | 0 | 1 | 2 | BUSHING, REDUCER | 560 |
| 7445080801 | 0 | 0 | 1 | 2 | ADAPTER, STRAIGHT | 639 |
| 7445080803 | 0 | 0 | 1 | 2 | ADAPTER, STRAIGHT | 119 |
| 7445080804 | 0 | 0 | 1 | 2 | ELBOW, 90 DEGREE | 119 |
| 7445080808 | 0 | 0 | 1 | 2 | ADAPTER, SWIVEL | 119 |
| 7445080853 | 0 | 0 | 1 | 1 | ELBOW, 90 DEGREE | 560 |
| 7445120809 | 0 | 0 | 1 | 1 | ADAPTER, 45 DEGREE SWIVEL | 562 |
| 7445160850 | 0 | 0 | 1 | 1 | BUSHING, REDUCER | 560 |
| 7445161217 | 0 | 0 | 1 | 1 | REDUCING CONNECTOR | 560 |
| 7445161653 | 0 | 0 | 1 | 1 | ELBOW, 90 DEGREE | 633 |
| 7446080836 | 0 | 0 | 1 | 2 | ELBOW, 90 DEGREE MALE | 639 |
| 7447040401 | 0 | 0 | 1 | 4 | ADAPTER, STRAIGHT | 144, 487 |
| 7447040403 | 0 | 0 | 1 | 4 | ELBOW, 90 DEGREE | 146, 556, 561 |
| 7447040408 | 0 | 0 | 1 | 1 | ELBOW, 45 DEGREE MALE | 148 |
| 7447040416 | 0 | 0 | 1 | 1 | CAP ASSY, FEMALE ORS THREAD | 486 |
| 7447040428 | 0 | 0 | 1 | 2 | ADAPTER, STRAIGHT | 560 |
| 7447040430 | 0 | 0 | 1 | 1 | ELBOW, 90 DEGREE | 560 |
| 7447040434 | 0 | 0 | 1 | 1 | TEE, MALE RUN | 560 |
| 7447040446 | 0 | 0 | 1 | 4 | ADAPTER - 45 DEGREE | 489 |
| 7447040501 | 0 | 0 | 1 | 4 | ADAPTER, STRAIGHT | 487 |
| 7447040601 | 0 | 0 | 1 | 10 | ADAPTER, STRAIGHT | 144, 487, 561 |
| 7447040603 | 0 | 0 | 1 | 2 | FITTING, 90 DEGREE | 487 |
| 7447060401 | 0 | 0 | 1 | 4 | ADAPTER, STRAIGHT MALE | 149, 486 |
| 7447060403 | 0 | 0 | 1 | 6 | ELBOW, 90 DEGREE MALE | 144, 148, 173, 489 |
| 7447060413 | 0 | 0 | 1 | 2 | REDUCER | 148 |
| 7447060430 | 0 | 0 | 1 | 1 | ELBOW, 90 DEGREE | 562 |
| 7447060601 | 0 | 0 | 1 | 31 | ADAPTER, STRAIGHT MALE | 143, 173, 486, 563, 681 |
| 7447060603 | 0 | 0 | 1 | 2 | ELBOW, 90 DEGREE | 149, 489 |
| 7447060605 | 0 | 0 | 1 | 1 | TEE, RUN | 149 |
| 7447060617 | 0 | 0 | 1 | 3 | UNION, BULKHEAD | 144 |
| 7447060633 | 0 | 0 | 1 | 9 | ELBOW, 90 DEGREE MALE | 145, 485 |
| 7447060634 | 0 | 0 | 1 | 9 | TEE, FEMALE RUN | 143, 485, 489 |
| 7447060635 | 0 | 0 | 1 | 3 | TEE, BRANCH | 145, 146 |
| 7447060801 | 0 | 0 | 1 | 7 | ADAPTER, STRAIGHT MALE | 145, 173, 485 |

**From - 7443100140** **To - 7447060801**

## Recommended Spare Parts List — Appendix C

| Part No. | 1 Yr | 2 Yr | 3 Yr | Qty | Description | Page |
|---|---|---|---|---|---|---|
| 7447060803 | 0 | 0 | 1 | 2 | ELBOW, 90 DEGREE MALE | 144 |
| 7447060830 | 0 | 0 | 1 | 2 | ELBOW, 90 DEGREE MALE | 560, 639 |
| 7447061001 | 0 | 0 | 1 | 3 | ADAPTER, STRAIGHT | 146, 681 |
| 7447061003 | 0 | 0 | 1 | 1 | FITTING, 90 DEGREE | 146 |
| 7447080413 | 0 | 0 | 1 | 1 | REDUCER | 562 |
| 7447080430 | 0 | 0 | 1 | 2 | ELBOW, MALE ORS THD TO MALE N | 639 |
| 7447080601 | 0 | 0 | 1 | 1 | ADAPTER, STRAIGHT | 143 |
| 7447080603 | 0 | 0 | 1 | 1 | ELBOW, 90 DEGREE | 393 |
| 7447080613 | 0 | 0 | 1 | 1 | REDUCER | 173 |
| 7447080801 | 0 | 0 | 1 | 14 | ADAPTER, STRAIGHT | 143, 397, 485 |
| 7447080803 | 0 | 0 | 1 | 4 | ELBOW, 90 DEGREE MALE | 393, 562 |
| 7447080816 | 0 | 0 | 1 | 2 | CAP | 489 |
| 7447080829 | 0 | 0 | 1 | 1 | ELBOW, 45 DEGREE | 639 |
| 7447080833 | 0 | 0 | 1 | 1 | ELBOW, 90 DEGREE MALE | 144 |
| 7447080840 | 0 | 0 | 1 | 1 | ADAPTER, STRAIGHT FEMALE | 489 |
| 7447100413 | 0 | 0 | 1 | 2 | REDUCER | 149 |
| 7447101001 | 0 | 0 | 1 | 4 | ADAPTER, STRAIGHT | 146 |
| 7447101034 | 0 | 0 | 1 | 2 | TEE | 149 |
| 7447120413 | 0 | 0 | 1 | 2 | REDUCER | 486 |
| 7447120803 | 0 | 0 | 1 | 2 | ELBOW, 90 DEGREE | 487 |
| 7447121001 | 0 | 0 | 1 | 4 | ADAPTER, STRAIGHT | 488, 562 |
| 7447121003 | 0 | 0 | 1 | 2 | ELBOW, 90 DEGREE | 562 |
| 7447121201 | 0 | 0 | 1 | 5 | ADAPTER, STRAIGHT MALE | 486, 561 |
| 7447121203 | 0 | 0 | 1 | 4 | ELBOW, 90 DEGREE | 143, 556, 561 |
| 7447121208 | 0 | 0 | 1 | 1 | ELBOW, 45 DEGREE MALE | 485 |
| 7447121216 | 0 | 0 | 1 | 1 | CAP, 3/4 ORS | 486 |
| 7447121217 | 0 | 0 | 1 | 1 | UNION, BULKHEAD | 143 |
| 7447121232 | 0 | 0 | 1 | 1 | ELBOW, #12 BULKHEAD UNION 90 | 143 |
| 7447121233 | 0 | 0 | 1 | 2 | ELBOW, 90 DEGREE | 143, 562 |
| 7447121238 | 0 | 0 | 1 | 2 | ELBOW, 90 DEGREE LONG MALE | 562 |
| 7447121601 | 0 | 0 | 1 | 2 | ADAPTER, STRAIGHT | 143, 488 |
| 7447161201 | 0 | 0 | 1 | 3 | ADAPTER, STRAIGHT | 147, 563 |
| 7447161203 | 0 | 0 | 1 | 5 | ELBOW, 90 DEGREE | 147, 486, 561 |
| 7447161601 | 0 | 0 | 1 | 3 | ADAPTER, STRAIGHT | 143 |
| 7447161603 | 0 | 0 | 1 | 2 | ELBOW, 90 DEGREE MALE | 7 |
| 7447161638 | 0 | 0 | 1 | 2 | ELBOW, 90 DEGREE LONG | 143 |
| 7447162001 | 0 | 0 | 1 | 1 | ADAPTER, STRAIGHT | 681 |
| 7447201603 | 0 | 0 | 1 | 1 | ELBOW, 90 DEGREE MALE | 148 |
| 7447201613 | 0 | 0 | 1 | 1 | REDUCER | 681 |
| 7447201628 | 0 | 0 | 1 | 1 | ADAPTER, STRAIGHT | 561 |
| 7447202001 | 0 | 0 | 1 | 3 | ADAPTER, STRAIGHT MALE | 148, 681 |
| 7447202032 | 0 | 0 | 1 | 1 | ELBOW, #20 BULKHEAD UNION 90 | 143 |
| 7482000030 | 1 | 1 | 1 | 3 | FUSE, 25 AMP | 331 |
| 7482000032 | 1 | 1 | 1 | 2 | FUSE, 15 AMP | 331 |

**From - 7447060803** **To - 7482000032**

## Recommended Spare Parts List — Appendix C

| Part No. | 1 Yr | 2 Yr | 3 Yr | Qty | Description | Page |
|---|---|---|---|---|---|---|
| 7482000033 | 1 | 1 | 1 | 3 | FUSE, 10 AMP | 331 |
| 7482000034 | 1 | 1 | 1 | 4 | FUSE, 7.5 AMP | 331 |
| 7482000035 | 1 | 1 | 1 | 9 | FUSE, 5 AMP | 331, 341 |
| 7482100013 | 1 | 1 | 1 | 2 | FUSE, MINI 5 AMP | 455 |
| 7486000225 | 0 | 0 | 1 | 1 | LEVEL, CIRCULAR | 257 |
| 7486000836 | 0 | 0 | 1 | 1 | THERMOMETER | 463 |
| 7486002666 | 0 | 0 | 1 | 1 | GAUGE, WINDOW | 634 |
| 7486002936 | 0 | 0 | 1 | 1 | GUAGE, OIL LEVEL | 463 |
| 7486002973 | 0 | 0 | 1 | 1 | HOURMETER | 647 |
| 7506000021 | 0 | 0 | 2 | 1 | GROMMET | 137 |
| 7581100000 | 1 | 1 | 1 | 1 | LIGHT, STROBE | 213 |
| 7671100005 | 0 | 0 | 2 | 2 | PAD | 407 |
| 7671100007 | 1 | 1 | 2 | 1 | PAD, WEAR | 97 |
| 7671100010 | 1 | 1 | 2 | 4 | WEAR PAD, SIDE | 77 |
| 7671100016 | 1 | 1 | 2 | 2 | PAD, WEAR | 97 |
| 7671100021 | 1 | 1 | 2 | 6 | PAD, SIDE WEAR | 7 |
| 7671100095 | 1 | 1 | 2 | 2 | PAD, WEAR | 98 |
| 7689000503 | 1 | 1 | 3 | 237 | PLUG, SEALING | 200, 239, 241, 342, 349, 355, 359, 457, 626, 653, 667 |
| 7689000813 | 1 | 1 | 3 | 1 | PIN | 457 |
| 7689100043 | 1 | 1 | 3 | 2 | PIN,14/16GA GOLD | 457 |
| 7709000031 | 0 | 0 | 1 | 1 | O-RING PLUG #6 | 148 |
| 7709000038 | 0 | 0 | 1 | 2 | O-RING PLUG #8 | 144, 148 |
| 7709000157 | 0 | 0 | 1 | 1 | PLUG, MAGNETIC | 463 |
| 7709000809 | 1 | 1 | 3 | 1 | PLUG | 371 |
| 7709000811 | 1 | 1 | 3 | 1 | PLUG | 297 |
| 7709000812 | 1 | 1 | 3 | 4 | PLUG | 285, 287, 291 |
| 7709000838 | 1 | 1 | 3 | 2 | PLUG | 456 |
| 7709000839 | 1 | 1 | 3 | 1 | PLUG, 3 SOCKET | 625 |
| 7709000844 | 1 | 1 | 3 | 58 | PLUG, 2 SOCKET | 29, 199, 359, 456, 625 |
| 7709000845 | 1 | 1 | 3 | 1 | PLUG | 456 |
| 7709000846 | 1 | 1 | 3 | 7 | PLUG, 12 SOCKET | 200, 349, 359, 456 |
| 7709000849 | 1 | 1 | 3 | 2 | PLUG | 456 |
| 7709000850 | 1 | 1 | 3 | 2 | PLUG | 456 |
| 7709000874 | 1 | 1 | 3 | 11 | PLUG | 199, 342, 355, 359, 456, 625 |
| 7709000883 | 1 | 1 | 3 | 8 | PLUG | 199, 343, 349, 359, 456 |
| 7709000936 | 1 | 1 | 3 | 6 | PLUG, 4 SOCKET | 199, 291, 359, 456 |
| 7709100870 | 1 | 1 | 3 | 2 | PLUG, 4 PASS | 199, 625 |
| 7709100877 | 1 | 1 | 2 | 4 | PLUG | 199, 291, 359, 456 |
| 7709100882 | 1 | 1 | 3 | 2 | PLUG | 199, 341 |
| 7709100890 | 1 | 1 | 3 | 1 | PLUG, DEUTSCH | 625 |
| 7709100895 | 1 | 1 | 3 | 2 | PLUG, 4 SOCKET | 199 |

**From - 7482000033** **To - 7709100895**

## Recommended Spare Parts List — Appendix C

| Part No. | 1 Yr | 2 Yr | 3 Yr | Qty | Description | Page |
|---|---|---|---|---|---|---|
| 7709100901 | 1 | 1 | 3 | 1 | PLUG, 3 SOCKET | 456 |
| 7709100902 | 1 | 1 | 3 | 6 | PLUG, 3 PIN | 199, 456, 625 |
| 7709100907 | 1 | 1 | 3 | 3 | PLUG | 199, 359, 456 |
| 7709100908 | 1 | 1 | 3 | 3 | PLUG | 199, 359, 456 |
| 7709100909 | 1 | 1 | 3 | 1 | PLUG DTM06-12SC W/WM-12S WEDGE | 199 |
| 7709100910 | 1 | 1 | 3 | 1 | PLUG DTM06-12SD W/WM-12S WEDGE | 199 |
| 7709100929 | 1 | 1 | 3 | 1 | PLUG, W/WEDGE | 359 |
| 7709100930 | 1 | 1 | 3 | 1 | PLUG, DTO6-12SC-C015 W/WEDGE | 359 |
| 7709100931 | 1 | 1 | 3 | 1 | PLUG, DTO6-12SD-C015 W/WEDGE | 359 |
| 7709100946 | 1 | 1 | 3 | 2 | PLUG | 199, 341 |
| 7709800000 | 1 | 1 | 3 | 4 | PLUG, #8 SAE, 75-16 | 119 |
| 7750000058 | 0 | 0 | 1 | 2 | RELAY, 24 VOLT | 342 |
| 7750000741 | 0 | 0 | 1 | 3 | RELAY, 24 VOLT | 343 |
| 7750000757 | 0 | 0 | 1 | 3 | RELAY, 300 AMP | 651 |
| 7753000376 | 0 | 0 | 2 | 1 | RING, WIPER | 13 |
| 7753000444 | 0 | 0 | 2 | 2 | RING, WEAR | 13 |
| 7753001553 | 0 | 0 | 2 | 2 | RING, WEAR | 393 |
| 7753100066 | 0 | 0 | 2 | 0 | RING, 4" BACKUP | 13 |
| 7754000140 | 0 | 0 | 2 | 1 | O-RING, LOW TEMPERATURE | 395 |
| 7754000143 | 0 | 0 | 2 | 1 | O-RING, LOW TEMPERATURE | 13 |
| 7754000154 | 0 | 0 | 2 | 1 | O-RING, LOW TEMPERATURE | 13 |
| 7754000157 | 0 | 0 | 2 | 1 | O-RING, LOW TEMPERATURE | 13 |
| 7754000160 | 0 | 0 | 2 | 1 | O-RING, LOW TEMPERATURE | 395 |
| 7754000169 | 0 | 0 | 2 | 1 | O-RING, LOW TEMPERATURE | 13 |
| 7754100010 | 0 | 0 | 2 | 4 | O-RING | 179, 665 |
| 7755011002 | 0 | 0 | 2 | 9 | O-RING | 144, 146, 148, 486, 487, 556, 560, 561 |
| 7755012002 | 0 | 0 | 2 | 23 | O-RING | 143, 144, 145, 146, 147, 148, 149, 173, 485, 486, 487, 489, 562, 563, 681 |
| 7755014000 | 0 | 0 | 2 | 2 | O-RING | 133 |
| 7755014002 | 0 | 0 | 2 | 10 | O-RING | 143, 144, 393, 397, 485, 489, 560, 563, 639 |
| 7755016002 | 0 | 0 | 2 | 10 | O-RING | 146, 149 |
| 7755018002 | 0 | 0 | 2 | 9 | O-RING | 143, 146, 485, 486, 487, 488, 556, 561, 562 |
| 7755021002 | 0 | 0 | 2 | 8 | O-RING | 7, 143, 145, 146, 147, 486, 561, 563, 681 |
| 7755025002 | 0 | 0 | 2 | 4 | O-RING | 148, 149, 561, 681 |
| 7755107002 | 0 | 0 | 2 | 2 | O-RING | 129 |
| 7755110000 | 0 | 0 | 2 | 1 | O-RING | 601 |
| 7755152000 | 0 | 0 | 2 | 1 | O-RING | 108 |
| 7755219002 | 0 | 0 | 2 | 8 | O-RING | 146, 147 |
| 7755220002 | 0 | 0 | 2 | 2 | O-RING | 128 |

**From - 7709100901** **To - 7755220002**

## Recommended Spare Parts List — Appendix C

| Part No. | 1 Yr | 2 Yr | 3 Yr | Qty | Description | Page |
|---|---|---|---|---|---|---|
| 7755222002 | 0 | 0 | 2 | 9 | O-RING | 145, 485, 561 |
| 7755225002 | 0 | 0 | 2 | 7 | O-RING | 145, 485 |
| 7755228002 | 0 | 0 | 2 | 1 | O-RING, 2" | 485 |
| 7755232002 | 0 | 0 | 2 | 1 | O-RING | 556 |
| 7755245000 | 0 | 0 | 2 | 1 | O-RING | 108 |
| 7755260000 | 0 | 0 | 2 | 1 | O-RING | 108 |
| 7755265000 | 0 | 0 | 2 | 1 | O-RING | 108 |
| 7755332609 | 0 | 0 | 2 | 2 | RING, BACK-UP | 395 |
| 7755342609 | 0 | 0 | 2 | 1 | RING, BACK-UP | 395 |
| 7755904002 | 0 | 0 | 2 | 1 | O-RING | 14, 108, 119, 144, 146, 148, 149, 157, 173, 395, 487, 489, 556, 560, 561, 562 |
| 7755906002 | 0 | 0 | 2 | 1 | O-RING | 143, 144, 146, 148, 149, 173, 393, 395, 485, 486, 487, 489, 560, 561, 563, 639, 681 |
| 7755908002 | 0 | 0 | 2 | 1 | O-RING | 119, 143, 144, 145, 148, 173, 393, 397, 485, 487, 489, 563, 639 |
| 7755910002 | 0 | 0 | 2 | 1 | O-RING | 146, 478, 488, 562, 681 |
| 7755912002 | 0 | 0 | 2 | 1 | O-RING | 125, 126, 143, 147, 485, 486, 556, 561, 562, 563 |
| 7755916002 | 0 | 0 | 2 | 1 | O-RING | 7, 14, 143, 148, 488, 561 |
| 7755920002 | 0 | 0 | 2 | 1 | O-RING | 148, 681 |
| 7794000272 | 0 | 0 | 1 | 1 | CUP, BEARING | 17, 73, 81, 85 |
| 7794000602 | 0 | 0 | 2 | 1 | SEAL | 13 |
| 7794001655 | 0 | 0 | 2 | 1 | GASKET | 559 |
| 7794001721 | 0 | 0 | 2 | 1 | RUBBER, FLOCKED 154" LONG | 233 |
| 7826000087 | 1 | 1 | 3 | 98 | SOCKET, 16-14 GA | 29, 199, 285, 287, 297, 349, 359, 457 |
| 7826000092 | 1 | 1 | 3 | 10 | SOCKET, (12) 12-14GA | 199, 457, 626 |
| 7826000095 | 1 | 1 | 3 | 2 | SOCKET, | 457 |
| 7826000626 | 1 | 1 | 3 | 439 | SOCKET, | 199, 291, 342, 349, 355, 359, 371, 458, 626 |
| 7826000650 | 1 | 1 | 3 | 86 | PLUG, SEALING | 200, 359, 458, 626 |
| 7826100004 | 1 | 1 | 3 | 99 | SOCKET, (16 - 18) 30 SERIES | 199, 291, 342, 359, 458, 626 |
| 7826100013 | 1 | 1 | 3 | 12 | AMP 1.5 16-14 SOCKET | 458 |
| 7826100016 | 1 | 1 | 3 | 74 | SOCKET, DEUTSCH 22/20 GA NI | 199, 291, 359, 458 |
| 7826100018 | 1 | 1 | 3 | 11 | SOCKET, 20 GAUGE GOLD | 199, 359, 626 |
| 7834100009 | 0 | 0 | 1 | 2 | SPRING, LOCKING | 111 |
| 7872000720 | 0 | 0 | 1 | 1 | SWITCH, TEMPERATURE | 681 |

**From - 7755222002** **To - 7872000720**

## Recommended Spare Parts List — Appendix C

| Part No. | 1 Yr | 2 Yr | 3 Yr | Qty | Description | Page |
|---|---|---|---|---|---|---|
| 7872000723 | 0 | 0 | 1 | 1 | SENDER,TRANMISSION TEMPERATURE | 563 |
| 7872100071 | 0 | 0 | 1 | 1 | SWITCH, EMERGENCY STOP | 351 |
| 7872100142 | 0 | 0 | 1 | 1 | DISCONNECT SWITCH | 647 |
| 7872100164 | 0 | 0 | 1 | 1 | SWITCH, L-SERIES DIMMER | 345 |
| 7872100170 | 0 | 0 | 1 | 1 | SWITCH, 120 TEMPERATURE (N.C.) | 148 |
| 7872100171 | 0 | 0 | 1 | 1 | SWITCH, 190 TEMPERATURE (N.C.) | 485 |
| 7872100192 | 0 | 0 | 1 | 1 | SWITCH, WORK LIGHTS | 345 |
| 7872100198 | 0 | 0 | 1 | 1 | SWITCH, L-SERIES BOOM LIGHTS | 315 |
| 7872100204 | 0 | 0 | 1 | 1 | SWITCH, L-SERIES MAIN HOIST | 280 |
| 7872100205 | 0 | 0 | 1 | 1 | SWITCH, L-SERIES AUX HOIST | 280 |
| 7872100208 | 0 | 0 | 1 | 1 | SWITCH, L-SERIES SWING BRAKE | 280 |
| 7872100215 | 0 | 0 | 1 | 1 | SWITCH,L-SERIES CRANE FUNC PWR | 345 |
| 7888000045 | 0 | 0 | 1 | 1 | TEE | 560 |
| 7888100000 | 0 | 0 | 1 | 1 | TEE, SPLIT FLANGE BRANCH | 485 |
| 7892000195 | 1 | 1 | 3 | 51 | PARALLEL, NON - INSULATED | 200, 291, 343, 349, 360, 456, 625, 653 |
| 7892000196 | 1 | 1 | 3 | 25 | PARALLEL, NON - INSULATED | 175, 200, 343, 349, 355, 456, 625 |
| 7892000218 | 1 | 1 | 1 | 18 | FUSE, TERMINAL | 342 |
| 7892000219 | 1 | 1 | 1 | 4 | FUSE, TERMINAL | 342 |
| 7892000220 | 1 | 1 | 1 | 18 | FUSE, BUSS BAR | 341 |
| 7892000252 | 1 | 1 | 3 | 6 | TERMINAL, MALE PIN | 199, 458 |
| 7892000254 | 1 | 1 | 3 | 15 | TERMINAL, GREEN CABLE SEAL | 458 |
| 7892000255 | 1 | 1 | 3 | 4 | TERMINAL, GRAY CABLE SEAL | 199, 459 |
| 7892000256 | 1 | 1 | 3 | 9 | TERMINAL, BLUE CABLE SEAL | 459 |
| 7892000257 | 1 | 1 | 3 | 38 | TERMINAL, GREEN CAVITY | 458 |
| 7892000824 | 1 | 1 | 3 | 5 | RECEPTACLE, | 239, 241, 252, 265, 371 |
| 7892000832 | 1 | 1 | 3 | 2 | RECEPTACLE, | 285, 287 |
| 7892000835 | 1 | 1 | 3 | 1 | RECEPTACLE, | 29 |
| 7892000836 | 1 | 1 | 3 | 3 | RECEPTACLE, 2 PIN | 181, 213, 667 |
| 7892000840 | 1 | 1 | 3 | 1 | TERMINAL, FEMALE | 626 |
| 7892000843 | 1 | 1 | 3 | 12 | TERMINAL, FEMALE | 342, 458, 626 |
| 7892000939 | 1 | 1 | 3 | 1 | RECEPTACLE, | 456 |
| 7892000949 | 1 | 1 | 3 | 16 | RECEPTACLE, | 27, 200, 349, 359, 456, 625 |
| 7892000951 | 1 | 1 | 3 | 1 | RECEPTACLE, | 427 |
| 7892000978 | 1 | 1 | 3 | 3 | RECEPTACLE, | 200, 342, 355 |
| 7892000986 | 1 | 1 | 3 | 3 | RECEPTACLE, | 457, 653 |
| 7892001012 | 1 | 1 | 3 | 1 | RECEPTABLE, 12 P FLANGE | 341 |
| 7892001036 | 1 | 1 | 3 | 5 | RECEPTACLE, SPLICE BLOCK | 199, 349, 359, 457 |
| 7892001051 | 1 | 1 | 3 | 5 | RECEPTACLE, | 200, 355, 457 |
| 7892001053 | 1 | 1 | 3 | 1 | RECEPTACLE, 9 PIN | 359 |
| 7892001058 | 1 | 1 | 3 | 3 | PLUG, CAVITY | 626 |
| 7892100003 | 1 | 1 | 3 | 4 | TERMINAL, DARK RED CABLE SEAL | 459 |

**From - 7872000723** **To - 7892100003**

## Recommended Spare Parts List — Appendix C

| Part No. | 1 Yr | 2 Yr | 3 Yr | Qty | Description | Page |
|---|---|---|---|---|---|---|
| 7892100032 | 1 | 1 | 3 | 2 | TERMINAL, FEMALE | 342 |
| 7892100036 | 1 | 1 | 3 | 3 | RECEPTACLE, 3 WAY | 200, 626 |
| 7892100039 | 1 | 1 | 3 | 2 | RECEPTACLE, DTM04-4P | 199 |
| 7892100063 | 1 | 1 | 3 | 11 | TERMINAL,TANGLESS FEMALE 280 S | 458 |
| 7892100065 | 1 | 1 | 1 | 27 | TERMINAL, TANGLESS FEMALE | 342, 458 |
| 7892100086 | 1 | 1 | 3 | 1 | RECEPT,W/WEDGE | 355 |
| 7892100115 | 1 | 1 | 3 | 3 | TERMINAL, FEMALE SLEEVE (18GA) | 361 |
| 7892100133 | 1 | 1 | 3 | 3 | TERMINAL, MALE | 361 |
| 7926003526 | 1 | 1 | 1 | 1 | FUSE, VELOCITY | 147 |
| 7949000333 | 0 | 0 | 1 | 10 | WASHER, THRUST | 8 |
| 7949000383 | 0 | 0 | 1 | 4 | WASHER, THRUST | 169 |
| 7949000385 | 0 | 0 | 1 | 2 | WASHER, THRUST | 99 |
| 80004700 | 1 | 1 | 3 | 26 | SEALING PLUG - NYLON | 342 |
| 80006228 | 0 | 0 | 1 | 1 | SWITCH L-SERIES REAR STEER | 281 |
| 80008491 | 0 | 2 | 3 | 1 | SWITCH, KEY | 351 |
| 80010095 | 0 | 0 | 1 | 1 | SOLENOID VALVE ASSEMBLY | 489 |
| 80017252 | 1 | 1 | 2 | 2 | PIN ASSY | 115 |
| 80017317 | 0 | 0 | 1 | 2 | SWITCH,PROXIMITY NORMALLY OPEN | 497 |
| 80017719 | 0 | 0 | 1 | 1 | RELAY, 24 VOLT | 455 |
| 80023220 | 1 | 1 | 1 | 2 | FUSE-AMG-250A | 651 |
| 80034261 | 1 | 1 | 2 | 2 | WEAR PAD | 391, 393 |
| 80042917 | 0 | 0 | 1 | 1 | SWITCH, LMI OVERRIDE (KEYED) | 332 |
| 90000105 | 0 | 0 | 2 | 1 | O-RING | 158 |
| 90001067 | 1 | 1 | 2 | 1 | KIT, SEAL | 157 |
| 90001135 | 1 | 1 | 2 | 1 | KIT, SEAL | 683 |
| 90011561 | 1 | 1 | 1 | 1 | FUSE,2A | 93 |
| 90011562 | 1 | 1 | 1 | 1 | FUSE,15A | 93 |
| 90011563 | 1 | 1 | 1 | 1 | FUSE,7.5A | 93 |
| 90012641 | 0 | 0 | 1 | 2 | SOLENIOD ASSY. 24V THUMPER | 285, 287 |
| 90012853 | 0 | 0 | 2 | 2 | SEAL | 597 |
| 90014312 | 1 | 1 | 2 | 1 | KIT, SEAL | 237 |
| 90014436 | 1 | 1 | 2 | 1 | KIT, SEAL | 395 |
| 90015412 | 0 | 0 | 1 | 1 | SWITCH ASSY, PRESSURE | 471 |
| 90016097 | 0 | 0 | 1 | 1 | SWITCH ASSY. INGITION | 309 |
| 90016107 | 0 | 0 | 1 | 2 | RELAY | 310 |
| 90018813 | 0 | 0 | 2 | 4 | O-RING #6 | 181, 183 |
| 90018814 | 0 | 0 | 2 | 4 | O-RING #10 | 181, 669 |
| 90018818 | 0 | 0 | 2 | 6 | O-RING #8 | 181, 251, 669 |
| 90018823 | 0 | 0 | 1 | 1 | SWITCH, PRESSURE HI/LO | 181 |
| 90018824 | 0 | 0 | 1 | 1 | HARNESS ASSY. | 181 |
| 90019453 | 4 | 4 | 6 | 1 | FILTER ASSY. AIR PRIMARY | 663 |
| 90019454 | 4 | 4 | 6 | 1 | FILTER ASSY. AIR SECONDARY | 663 |
| 90019917 | 0 | 0 | 2 | 1 | O-RING, 2-PKT | 667 |
| 90020175 | 0 | 0 | 2 | 1 | WASHER SEAL | 123 |

**From - 7892100032** **To - 90020175**

## Recommended Spare Parts List — Appendix C

| Part No. | 1 Yr | 2 Yr | 3 Yr | Qty | Description | Page |
|---|---|---|---|---|---|---|
| 90021924 | 0 | 0 | 2 | 1 | RING, ANTI-SEIZURE | 121 |
| 90021927 | 0 | 0 | 2 | 1 | V-SEAL | 121 |
| 90021928 | 1 | 1 | 2 | 1 | KIT, SEAL | 121 |
| 90022256 | 1 | 1 | 2 | 1 | KIT, SEAL | 617 |
| 90022859 | 1 | 1 | 2 | 1 | KIT, SEAL | 629 |
| 90023277 | 1 | 1 | 2 | 1 | KIT, SEAL | 128 |
| 90023884 | 1 | 1 | 1 | 1 | BELT, SERPENTINE V-RIBBED | 563 |
| 9049100895 | 0 | 0 | 1 | 1 | OUTER | 503, 529 |
| 9049101566 | 0 | 0 | 1 | 1 | BEARING | 597 |
| 9049101687 | 0 | 0 | 1 | 48 | STUD | 512, 538 |
| 9049101693 | 0 | 0 | 1 | 4 | CONE, BEARING | 512, 538 |
| 9049104578 | 0 | 0 | 1 | 2 | BEARING | 503, 529 |
| 9049106322 | 0 | 0 | 2 | 12 | O-RING | 512, 538 |
| 9049108948 | 0 | 0 | 1 | 2 | CONE, BEARING | 503, 529 |
| 9049109690 | 0 | 0 | 1 | 2 | CONE, BEARING | 503, 529 |
| 9049111761 | 1 | 1 | 2 | 2 | KIT, SEAL | 517, 543 |
| 9049112263 | 0 | 0 | 1 | 4 | CUP, BEARING | 503, 529 |
| 9049112264 | 0 | 0 | 1 | 4 | CONE, BEARING | 503, 529 |
| 9049112520 | 0 | 0 | 1 | 4 | WASHER,THRUST | 512, 538 |
| 9049112768 | 0 | 0 | 1 | 4 | WASHER, THRUST | 504, 530 |
| 9049112769 | 0 | 0 | 1 | 8 | WASHER, THRUST | 504, 530 |
| 9049112781 | 0 | 0 | 2 | 8 | SEAL | 507, 511, 533, 537 |
| 9049112786 | 0 | 0 | 2 | 2 | SEAL, OIL | 503, 529 |
| 9049112927 | 0 | 0 | 2 | 4 | SEAL, OIL | 512, 538 |
| 9086100639 | 0 | 0 | 1 | 1 | KIT, LATCH | 61 |
| 9086101320 | 0 | 0 | 1 | 3 | WHEEL, SHEAVE | 693 |
| 9086101340 | 0 | 0 | 1 | 2 | WASHER, THRUST | 693 |
| 9176100603 | 0 | 0 | 2 | 1 | O-RING | 287 |
| 9188100364 | 0 | 0 | 1 | 1 | SPRING | 207 |
| 9188100365 | 0 | 0 | 2 | 2 | PAD, PEDAL | 207 |
| 9188101041 | 0 | 0 | 1 | 1 | KIT, LINING | 629 |
| 9188101043 | 0 | 0 | 1 | 1 | KIT, SPRING | 629 |
| 9333101471 | 0 | 0 | 1 | 2 | FITTING, BULKHEAD ADAPTER | 171 |
| 9333102230 | 0 | 0 | 1 | 1 | A2B SWITCH - WITH | 35 |
| 9333102232 | 0 | 0 | 1 | 1 | LANYARD | 43 |
| 9333102238 | 0 | 0 | 1 | 1 | A2B SWITCH, WITHOUT CRIMP | 55 |
| 9333102373 | 0 | 0 | 1 | 1 | FLAG, RETAINER | 43 |
| 9333102765 | 1 | 1 | 3 | 1 | CONNECTOR ASSEMBLY | 35 |
| 9333103897 | 0 | 0 | 1 | 1 | POTENTIOMETER,LENGTH | 37 |
| 9333103898 | 0 | 0 | 1 | 1 | SENSOR,ANGLE | 37 |
| 9333103906 | 1 | 1 | 3 | 1 | CONNECTOR ASSY.W/WIRES, 5PASS | 37 |
| 9352100657 | 0 | 0 | 2 | 4 | GASKET | 285, 287 |
| 9352100751 | 1 | 1 | 2 | 4 | KIT, GASKET AND HARDWARE | 639 |
| 9352100771 | 0 | 0 | 2 | 2 | BOOT | 285, 287 |

**From - 90021924** **To - 9352100771**

## Recommended Spare Parts List — Appendix C

| Part No. | 1 Yr | 2 Yr | 3 Yr | Qty | Description | Page |
|---|---|---|---|---|---|---|
| 9352100772 | 0 | 0 | 2 | 2 | GASKET | 285, 287 |
| 9352100790 | 0 | 0 | 1 | 1 | SWITCH, PUSH BUTTON | 287 |
| 9364101577 | 0 | 0 | 1 | 1 | FITTING, GREASE | 551 |
| 9364101830 | 1 | 1 | 2 | 1 | KIT, SEAL | 121 |
| 9364101868 | 0 | 0 | 2 | 1 | SEAL, SHAFT | 553 |
| 9364101870 | 0 | 0 | 1 | 1 | FITTING, GREASE | 553 |
| 9414101679 | 4 | 4 | 6 | 1 | FILTER,OIL | 563 |
| 9414101755 | 4 | 4 | 6 | 1 | FILTER, FUEL | 563 |
| 9414101756 | 4 | 4 | 6 | 1 | FILTER, FUEL/WATER SEPARATOR | 563 |
| 9437100452 | 1 | 1 | 2 | 1 | KIT, SEAL | 465 |
| 9437100456 | 0 | 0 | 1 | 1 | GAUGE | 465 |
| 9437100479 | 4 | 4 | 6 | 1 | O-RING, SQUARE | 465 |
| 9437100480 | 0 | 0 | 2 | 1 | GASKET | 465 |
| 9437100575 | 4 | 4 | 6 | 1 | O-RING | 465 |
| 9437100825 | 4 | 4 | 6 | 1 | ELEMENT | 465 |
| 9511100017 | 0 | 0 | 2 | 2 | BOOT, CAP | 285, 287 |
| 9576101074 | 1 | 1 | 1 | 2 | KEY | 229 |
| 9576101101 | 1 | 1 | 2 | 1 | KIT,SEAL BRAKE | 109 |
| 9576101102 | 1 | 1 | 2 | 1 | KIT,DISC BRAKE | 109 |
| 9576101127 | 0 | 0 | 1 | 162 | BEARING,NEEDLE | 107 |
| 9576101135 | 0 | 0 | 1 | 1 | BEARING | 108 |
| 9576101186 | 1 | 1 | 2 | 1 | KIT,SEAL MOTOR | 108 |
| 9576101331 | 0 | 0 | 2 | 1 | SEAL, OIL | 107 |
| 9576101332 | 0 | 0 | 1 | 1 | BEARING | 107 |
| 9576101334 | 0 | 0 | 2 | 1 | O-RING | 107 |
| 9576101335 | 0 | 0 | 1 | 1 | BEARING | 107 |
| 9576101336 | 0 | 0 | 1 | 54 | BEARING, NEEDLE | 107 |
| 9576101337 | 1 | 1 | 2 | 1 | KIT, SEAL | 109 |
| 9576101338 | 0 | 0 | 2 | 4 | O-RING | 109 |
| 9576101347 | 1 | 1 | 2 | 2 | BLADE, WIPER 34" | 239, 241 |
| 9581100088 | 1 | 1 | 1 | 2 | BULB | 225 |
| 9581100101 | 0 | 0 | 2 | 2 | BEAM, SEALED | 27, 225 |
| 9581100461 | 0 | 0 | 2 | 2 | GROMMET, RUBBER | 415 |
| 9722105443 | 0 | 0 | 1 | 4 | BEARING | 611 |
| 9722105445 | 1 | 1 | 2 | 1 | KIT, SEAL | 611 |
| 9722105456 | 0 | 0 | 2 | 2 | O-RING | 617 |
| 9722105462 | 0 | 0 | 1 | 1 | SPRING | 617 |
| 9722105547 | 0 | 0 | 1 | 1 | BEARING | 613 |
| 9722105548 | 0 | 0 | 1 | 1 | BEARING | 613 |
| 9722105557 | 0 | 0 | 2 | 1 | SEAL, SHAFT | 614 |
| 9722105560 | 0 | 0 | 2 | 7 | O-RING | 614 |
| 9722105563 | 0 | 0 | 2 | 1 | O-RING | 614 |
| 9722105566 | 1 | 1 | 2 | 1 | KIT, SEAL | 614 |
| 9722105567 | 0 | 0 | 2 | 1 | O-RING | 613 |

**From - 9352100772** **To - 9722105567**

## Recommended Spare Parts List — Appendix C

| Part No. | 1 Yr | 2 Yr | 3 Yr | Qty | Description | Page |
|---|---|---|---|---|---|---|
| 9722105568 | 0 | 0 | 2 | 2 | O-RING | 613 |
| 9722105569 | 0 | 0 | 2 | 1 | O-RING | 614 |
| 9722105596 | 0 | 0 | 2 | 2 | SEAL | 617 |
| 9722105597 | 1 | 1 | 2 | 1 | SEAL, SQUARE | 617 |
| 9722105598 | 0 | 0 | 2 | 4 | SEAL, SHAFT | 617 |
| 9722105600 | 0 | 0 | 2 | 2 | RING, BACK-UP | 617 |
| 9752100994 | 1 | 1 | 2 | 2 | KIT, REPAIR | 133 |
| 9752100996 | 1 | 1 | 2 | 2 | KIT, REPAIR | 469 |
| 9752101039 | 1 | 1 | 2 | 2 | KIT, REPAIR | 477 |
| 9752101414 | 1 | 1 | 2 | 2 | KIT, SEAL MOUNTING | 463 |
| 9904101047 | 1 | 1 | 3 | 1 | PLUG | 597 |
| 9904101348 | 0 | 0 | 2 | 2 | RING, SNAP | 587, 593 |
| 9904101353 | 0 | 0 | 1 | 1 | BEARING, GEAR | 591 |
| 9904101354 | 0 | 0 | 2 | 2 | RING, SNAP | 583 |
| 9904103500 | 0 | 0 | 2 | 2 | O-RING | 569, 605 |
| 9904103570 | 0 | 0 | 2 | 1 | RING | 593 |
| 9904103575 | 0 | 0 | 1 | 1 | BEARING, PILOT | 585 |
| 9904103612 | 0 | 0 | 1 | 4 | BEARING | 597 |
| 9904103621 | 0 | 0 | 2 | 2 | RING, RETAINING | 573, 597 |
| 9904103660 | 0 | 0 | 2 | 1 | O-RING | 601 |
| 9904103779 | 0 | 0 | 2 | 4 | O'RING POLYACUL | 569 |
| 9904103887 | 0 | 0 | 2 | 1 | GASKET | 605 |
| 9904103893 | 0 | 0 | 2 | 2 | RING, LOCATING | 583 |
| 9904103899 | 0 | 0 | 1 | 2 | RING, RETAINING | 581, 583 |
| 9904103993 | 0 | 0 | 2 | 1 | O-RING | 597 |
| 9904103994 | 0 | 0 | 2 | 1 | O-RING | 597 |
| 9904103997 | 0 | 0 | 2 | 2 | O-RING | 598 |
| 9904104053 | 0 | 0 | 1 | 1 | BEARING ASSEMBLY | 589 |
| 9904104423 | 0 | 0 | 1 | 1 | BEARING | 583 |
| 9904104428 | 0 | 0 | 1 | 1 | BEARING | 577 |
| 9904104432 | 0 | 0 | 1 | 2 | BEARING | 581, 583 |
| 9904105299 | 0 | 0 | 2 | 1 | O-RING | 601 |
| 9904105302 | 0 | 0 | 2 | 2 | SEAL | 601 |
| 9904105307 | 0 | 0 | 2 | 1 | SEAL | 601 |
| 9904105336 | 0 | 0 | 2 | 2 | O-RING | 569 |
| 9904105441 | 0 | 0 | 2 | 1 | STEER PUMP GASKET | 569 |
| 9904105957 | 0 | 0 | 2 | 1 | RING, SEAL | 573 |
| 9904106063 | 1 | 1 | 3 | 2 | PLUG WITH O-RING | 569 |
| 9904106364 | 0 | 0 | 2 | 1 | AUX PUMP GASKET | 595 |
| 9904106445 | 0 | 0 | 2 | 7 | O-RING | 567, 569 |
| 9904106593 | 0 | 0 | 2 | 1 | GASKET | 581 |
| 9904107179 | 0 | 0 | 2 | 1 | O-RING | 601 |
| 9904108409 | 0 | 0 | 2 | 1 | O-RING | 597 |
| 9904110599 | 0 | 0 | 2 | 2 | GASKET | 581 |

**From - 9722105568** **To - 9904110599**

## Recommended Spare Parts List — Appendix C

| Part No. | 1 Yr | 2 Yr | 3 Yr | Qty | Description | Page |
|---|---|---|---|---|---|---|
| 9904110605 | 0 | 0 | 2 | 1 | GASKET | 607 |
| 9904110793 | 0 | 0 | 2 | 4 | O-RING | 609 |
| 9904110794 | 0 | 0 | 2 | 4 | O-RING | 609 |
| 9904110795 | 0 | 0 | 2 | 4 | O-RING | 609 |
| 9904110796 | 0 | 0 | 2 | 4 | O-RING | 609 |
| 9926105593 | 1 | 1 | 2 | 4 | KIT, REPAIR | 477 |
| 9926107803 | 1 | 1 | 2 | 4 | KIT, SEAL | 14 |
| 9926108124 | 1 | 1 | 2 | 4 | KIT, REPAIR | 478 |
| 9926108423 | 1 | 1 | 2 | 4 | KIT, SEAL | 133, 477 |
| 9926108644 | 1 | 1 | 2 | 4 | KIT, SEAL | 133, 477, 493 |
| 9926111468 | 0 | 0 | 2 | 4 | SEAL-SPECIAL | 125 |
| 9926111469 | 0 | 0 | 2 | 4 | O-RING | 125 |
| 9926111470 | 0 | 0 | 2 | 4 | SEAL-SPECIAL | 125 |
| 9926111719 | 1 | 1 | 2 | 4 | KIT, SEAL | 478 |
| 9926112358 | 1 | 1 | 2 | 4 | KIT, SEAL | 133 |
| 9926112501 | 0 | 0 | 2 | 2 | O-RING,VITON | 134 |
| 9926112997 | 1 | 1 | 2 | 2 | KIT, SEAL | 477 |
| 9926113031 | 1 | 1 | 2 | 1 | KIT, SEAL VALVE ASSY. | 129 |
| 9926113057 | 1 | 1 | 2 | 1 | KIT, SEAL | 133, 471 |
| 9926113110 | 0 | 0 | 2 | 1 | SEAL, DUST RING | 313 |
| 9926113112 | 0 | 0 | 1 | 1 | BEARING | 313 |
| 9926113116 | 1 | 1 | 2 | 1 | KIT, SEAL | 313 |
| 9926113170 | 1 | 1 | 2 | 1 | KIT, SEAL | 477 |
| 9926113176 | 1 | 1 | 2 | 1 | KIT, SEAL | 471 |
| 9926113181 | 0 | 0 | 2 | 2 | O-RING | 477 |
| 9926113182 | 0 | 0 | 2 | 1 | O-RING | 477 |
| 9926113185 | 1 | 1 | 2 | 1 | KIT, SEAL | 477 |
| 9926113187 | 1 | 1 | 2 | 1 | KIT, SEAL | 477 |
| 9926113195 | 1 | 1 | 2 | 1 | KIT, SEAL | 478 |
| 9926113253 | 0 | 0 | 2 | 1 | O-RING SEAL | 134 |
| 9926113270 | 0 | 0 | 1 | 1 | SWITCH ASSY. PRESSURE | 123 |
| 9926113275 | 0 | 0 | 2 | 1 | BOOT, RUBBER | 269 |
| 9926113276 | 0 | 0 | 1 | 1 | SWITCH ASSY. PRESSURE | 269 |
| 9926113277 | 0 | 0 | 1 | 1 | FITTING, ADAPTOR | 269 |
| 9926113299 | 0 | 0 | 1 | 2 | SPRING | 134 |
| 9974102176 | 0 | 0 | 2 | 1 | SEAL, PISTON | 156 |
| 9974102203 | 0 | 0 | 2 | 2 | O-RING | 156, 157 |
| 9974102222 | 1 | 1 | 2 | 1 | KIT, SEAL | 159 |
| 9974102898 | 0 | 0 | 2 | 2 | O-RING | 157 |
| 9974103091 | 0 | 0 | 1 | 1 | SENSOR | 157 |
| 9974103092 | 0 | 0 | 2 | 1 | WASHER, SEAL | 157 |
| 9974103093 | 0 | 0 | 1 | 1 | FITTING | 157 |
| 9974103097 | 0 | 0 | 1 | 1 | SWITCH ASSY. | 158 |

**From - 9904110605** **To - 9974103097**

**Notes**

## Belt and Filter Maintenance List — Appendix D

| Part No. | 1000 Hrs | 2000 Hrs | Qty | Description | Page |
|---|---|---|---|---|---|
| 7437000873 | 2 | 4 | 2 | FILTER, ELEMENT TRANS, 6.0"LG | 631 |
| 90019453 | 2 | 4 | 2 | FILTER ASSY. AIR PRIMARY | 663 |
| 90019454 | 2 | 4 | 2 | FILTER ASSY. AIR SECONDARY | 663 |
| 90023884 | | 1 | 2 | BELT, SERPENTINE V-RIBBED | 563 |
| 9414101679 | 2 | 4 | 2 | FILTER,OIL | 563 |
| 9414101755 | 2 | 4 | 2 | FILTER, FUEL | 563 |
| 9414101756 | 2 | 4 | 2 | FILTER, FUEL/WATER SEPARATOR | 563 |
| 9437100479 | 2 | 4 | 1 | O-RING, SQUARE | 465 |
| 9437100575 | 2 | 4 | 1 | O-RING | 465 |
| 9437100825 | 2 | 4 | 1 | ELEMENT | 465 |

**From - 7437000873** **To - 9437100825**

## Foot Note Index — Appendix E

| Foot Note | Description |
|---|---|
| - | THIRD REPAIR KIT AND/OR PART OF 3RD KIT |
| ! | SUB ASSY AND/OR PART OF SUB ASSY |
| # | SERVICED AS AN ASSEMBLY ONLY |
| $ | FIFTH REPAIR KIT |
| % | SEE NOTE AT END OF LIST |
| & | SIXTH REPAIR KIT |
| ( | 4TH SUB ASSY AND/OR PART OF 4TH SUB ASSY |
| ) | 5TH SUB ASSY AND/OR PART OF 5TH SUB ASSY |
| * | REPAIR KIT AND/OR PART OF KIT |
| / | 2ND SUB ASSY AND/OR PART OF 2ND SUB ASSY |
| @ | SECOND REPAIR KIT AND/OR PART OF 2ND KIT |
| ^ | 3RD SUB ASSY AND/OR PART OF 3RD SUB ASSY |
| { | 6TH SUB ASSY AND/OR PART OF 6TH SUB ASSY |
| } | 7TH SUB ASSY AND/OR PART OF 7TH SUB ASSY |
| ~ | SEE ALLISON DEALER FOR REPAIR PARTS |
| + | SEE FURTHER BREAKDOWN THIS GROUP |
| < | FOURTH REPAIR KIT AND/OR PART OF 4TH KIT |
| = | REFER TO MCI FOR APPLICABLE NUMBER |
| > | REFER TO MCI FOR BREAKDOWN LOCATION |