RUTHZIL TRATOR COMERCIAL DE PEÇAS LTDA 11 97083-6812 ROLANDO CITRANGULO

S130

Bobcat®

Parts Manual

S/N 5246 11001 & Above
S/N 5247 11001 & Above

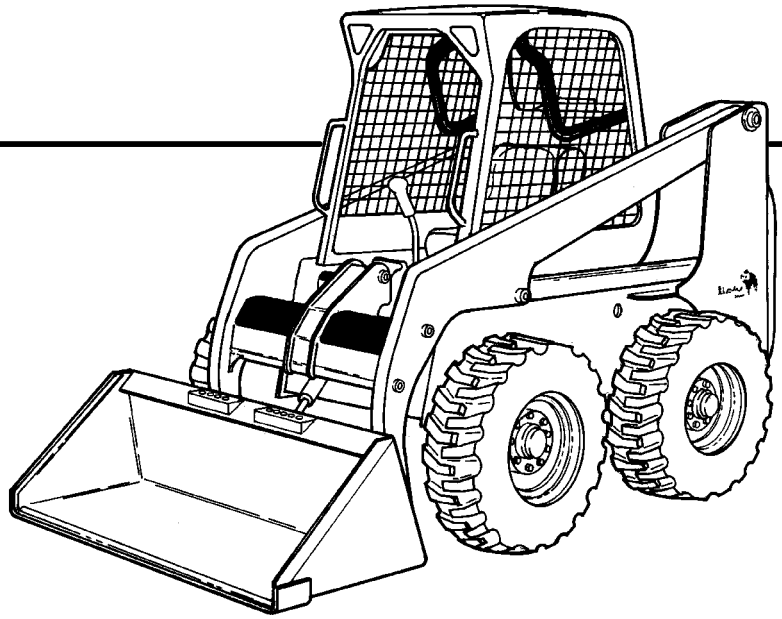

EQUIPPED WITH BOBCAT INTERLOCK CONTROL SYSTEM (BICS™)

IR Bobcat®

6902713 (11-03)

Printed in U.S.A.

© Bobcat Company 2003

MAINTENANCE ITEMS
S130

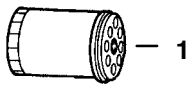

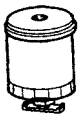

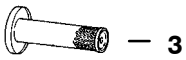

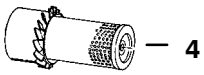

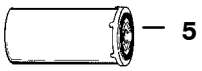

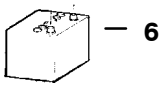



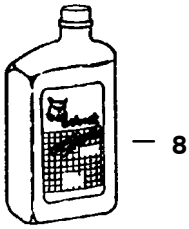

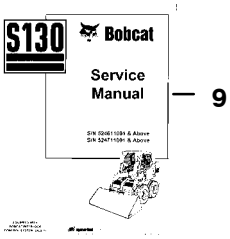

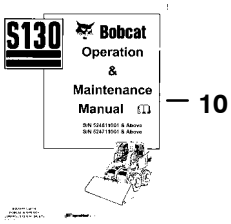



B-22667

MAINTENANCE ITEMS (Cont'd)
S130

Ref. No.	Part Number	Description	Remarks	Serial Number	Qty.
1	6684783	FILTER	Engine Oil - See Page 141		x
2	6667352	ELEMENT	Fuel - See Page 35		x
3	6598362	CARTRIDGE	Inner Air Cleaner -See Page 179		x
4	6598492	CARTRIDGE	Outer Air Cleaner -See Page 179		x
5	6661248	ELEMENT	Hydrostatic # 3 Media -		
			See Page 99		x
6	6674687	BATTERY	See Page 103		x
7	6563328	FLUID	Hyd./Hydro. - (2) 2.5 Gal. -		
			- See Page 319		x
	6722344	FLUID	Hyd./Hydro. - (5 Gal.) -		
			See Page 319		x
	6563330	FLUID	Hyd./Hydro. - 55 Gallon Drum -		
			See Page 319		x
8	6657301	MOTOR OIL	10W30 CE/SG - 1 Qt. -		
			See Page 319		x
	6724557	MOTOR OIL	10W30 CE/SG - 1 Gallon -		
			See Page 319		x
	6674205	MOTOR OIL	10W30 CE/SG - 2.5 Gal. -		
			See Page 319		x
	6657299	MOTOR OIL	15W40 CE/SG - 1 Qt. -		
			See Page 319		x
	6724558	MOTOR OIL	15W40 CE/SG - 1 Gallon -		
			See Page 319		x
	6674204	MOTOR OIL	15W40 CE/SG - 2.5 Gal. -		
			See Page 319		x
	6657303	MOTOR OIL	30 CE/SG - 1 Qt. -		
			See Page 319		x
	6724559	MOTOR OIL	30 CE/SG - 1 Gallon -		
			See Page 319		x
	6674206	MOTOR OIL	30 CE/SG - 2.5 Gal. -		
			See Page 319		x
9	6902680	MANUAL	service		1
10	6902679	MANUAL	operator		1
11	6718719	HANDBOOK	operator		1

MAINTENANCE SCHEDULE ITEMS
S130

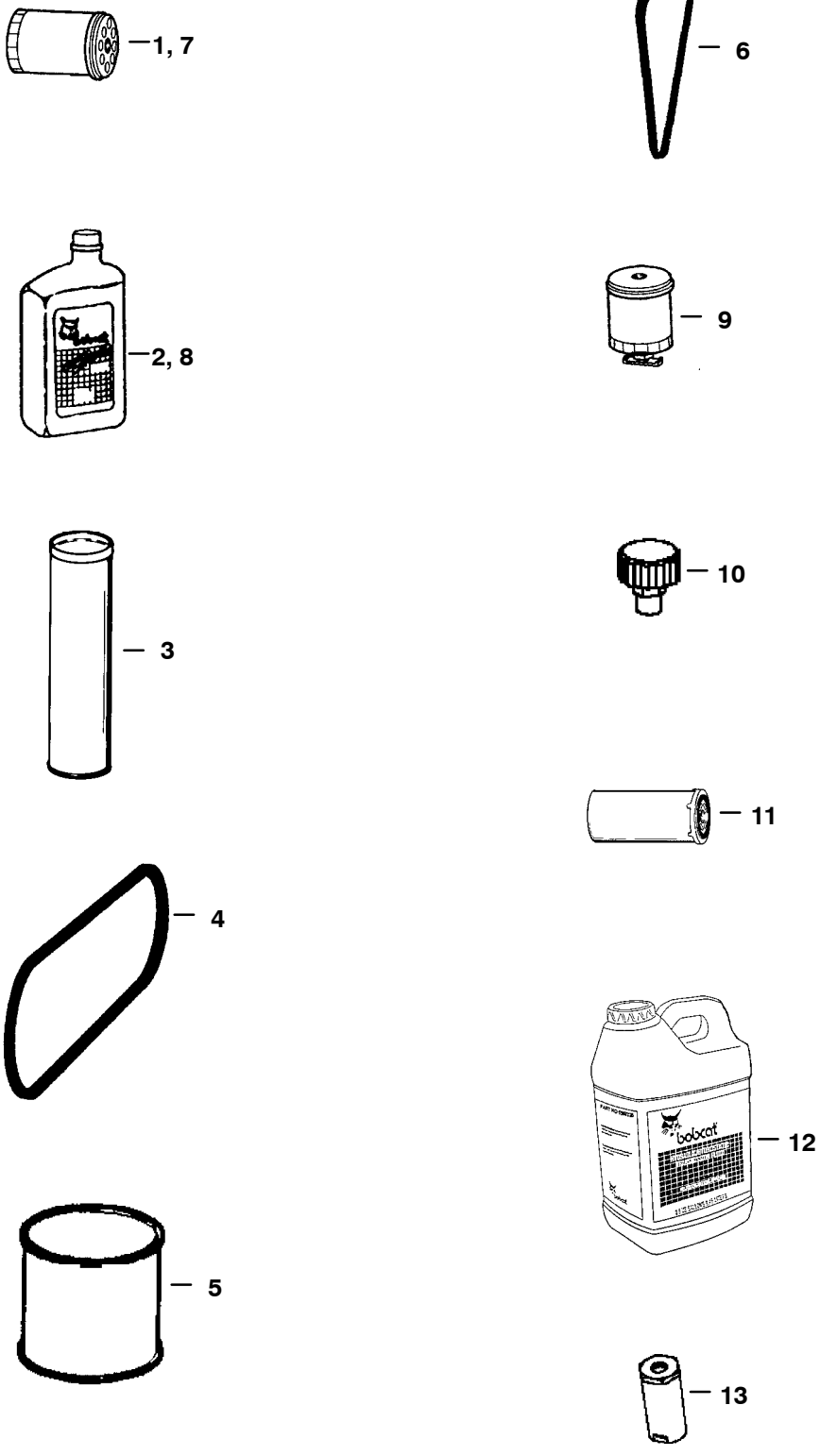

MAINTENANCE SCHEDULE ITEMS (Cont'd)
S130

Ref. No.	Part Number	Description	Remarks	Serial Number	Qty.
			50 HOUR SERVICE SCHEDULE		
1	6675517	FILTER	engine oil (6 Pack) -		
			See Page 141		x
2	6657301	MOTOR OIL	10W30 CE/SG - 1 Qt. -		
			See Page 319		x
	6724557	MOTOR OIL	10W30 CE/SG - 1 Gallon -		
			See Page 319		x
	6674205	MOTOR OIL	10W30 CE/SG - 2.5 Gal. -		
			See Page 319		x
	6657299	MOTOR OIL	15W40 CE/SG - 1 Qt. -		
			See Page 319		x
	6724558	MOTOR OIL	15W40 CE/SG - 1 Gallon -		
			See Page 319		x
	6674204	MOTOR OIL	15W40 CE/SG - 2.5 Gal. -		
			See Page 319		x
	6657303	MOTOR OIL	30 CE/SG - 1 Qt. - See Page 319		x
	6724559	MOTOR OIL	30 CE/SG - 1 Gal - See Page 319		x
	6674206	MOTOR OIL	30 CE/SG - 2.5 Gal. -		
			See Page 319		x
			250 HOUR SERVICE SCHEDULE		
3	6658266	GREASE	steering lever pivots -		
			See Page 319		x
4	6736775	BELT	eng./hydro. drive - See Page 129		x
5	6634393	LUBRICANT	cooling fan drive gearbox -		
			See Page 319		x
6	7100572	BELT	alternator - See Page 133		x
7	6675517	FILTER	engine oil (6 Pack) -		
			See Page 141		x
8	6657301	MOTOR OIL	10W30 CE/SG - 1 Qt. -		
			See Page 319		x
	6724557	MOTOR OIL	10W30 CE/SG - 1 Gallon -		
			See Page 319		x
	6674205	MOTOR OIL	10W30 CE/SG - 2.5 Gal. -		
			See Page 319		x
	6657299	MOTOR OIL	15W40 CE/SG - 1 Qt. -		
			See Page 319		x
	6724558	MOTOR OIL	15W40 CE/SG - 1 Gallon -		
			See Page 319		x
	6674204	MOTOR OIL	15W40 CE/SG - 2.5 Gal. -		
			See Page 319		x
	6657303	MOTOR OIL	30 CE/SG - 1 Qt. - See Page 319		x
	6724559	MOTOR OIL	30 CE/SG - 1 Gal -See Page 319		x
	6674206	MOTOR OIL	30 CE/SG - 2.5 Gal. -		
			See Page 319		x
9	6667352	ELEMENT	fuel - See Page 35		x

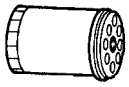





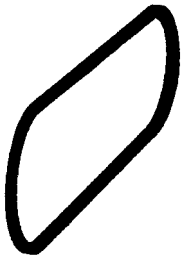

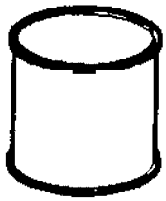



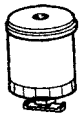









B-22382

MAINTENANCE SCHEDULE ITEMS (Cont'd)
S130

Ref. No.	Part Number	Description	Remarks	Serial Number	Qty.
			500 HOUR SERVICE SCHEDULE		
10	6732508	CAP	hyd. reservoir breather - See Page 77		x
11	6661248	ELEMENT	hyd./hydro. - See Page 99		x
			1000 HOUR SERVICE SCHEDULE		
12	6563328	FLUID	Hyd./Hydro. - (2) 2.5 Gal. - - See Page 319		x
	6722344	FLUID	Hyd./Hydro. - (5 Gal.) - See Page 319		x
	6563330	FLUID	Hyd./Hydro. - 55 Gallon Drum - See Page 319		x
13	6661022	FILTER	case drain - See Page 97		x

GENERAL INFORMATION

When using the machine serial number, use the complete number.

Some Serial Number breaks are not available at time of printing. These are listed as & Below or & Above.

The number shown in the quantity column in this manual is the number of parts needed for the illustration on the page. For some parts an "x" will be shown in the quantity column. This "x" indicates that the quantity to be used is "As Needed".

When references L.H. and R.H. are used in this manual, it is done from the operator's seat in the forward operating position.

Some of the illustrations and information found in this parts manual were supplied to Bobcat by machine component companies.

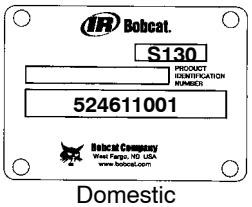

Domestic

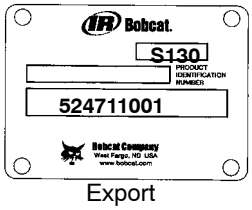

Export

ABBREVIATIONS & SYMBOLS

SALES = Order from Gwinner Sales Department

NSS = Not Serviced Seperately

NAP = Not Available as Parts

*** = Changed or Added Sections, Pages or Part Numbers**

Disposition Code Definition (Found in the Remarks Column

[A] = Use Up

[B] = Use Up on Other Appplication (See PNI)

[C] = File PDR Report With Bobcat Parts Sales

[D] = Part Number Error

Explications en francais	**Grid Nb**	**3**
Erklärungen auf deutsch	**Grid Nb**	**4**
Spiegazioni in italiano	**Grid Nb**	**5**
Explicaciones en espanol	**Grid Nb**	**6**
Verklaring in het Nederlands	**Grid Nb**	**7**

NOTE D'INFORMATION

Pour toute référence au numéro de série de l'engin, toujours donner le numéro complet.

Le chiffré apparaissant dans la colonne des quantités de ce manuel représentent le nombre de pièces nécessaires pour l'illustration reprise sur la page. Dans certains cas, on lira un "x" dans la colonne des quantités. Cet "x" indique que la quantité nécessaire est "selon besoin".

Pour toute référence vers la GAUCHE ou la DROITE dans ce manuel, considérer que la personne se trouve assise dans le siège de l'opérateur, en position de fonctionnement en marche avant.

Certaines illustrations et informations reprises dans ce manuel de pièces de rechange ont été fournies à Bobcat/Ingersoll–Rand par des fabricants de composants.

ABREVIATIONS & SYMBOLES

SALES	= Commander au Service Ventes à Bruxelles
NSS	= Pas vendu séparément
NAP	= Non disponible comme pièce de rechange
*****	= Chapitre, page ou numéro de pièce modifié ou supplémentaire
BTI	= Bobcat Technical Information Bulletin : voir à la fin de la microfiché du modèle concerné ou la microfiche générale reprenant l' ensemble des "BTI".
was 6535403	= était avant 6535403
adj. (adjustment)	= réglage
Assembly	= ensemble
available W/Ref.	= disponible avec réf.
bulk/sold per foot	= en vrac/vendu par pied
does not include	= ne comprend pas
included with	= compris dans
I.D.	= D.I. (diamètre intérieur)
O.D.	= D.E. (diamètre extérieur)
not in kit	= pas en kit
W/ – WO/	= inclus/ – non inclus/
Qty	= quantité requise
see page/ref.	= voir page/réf.
used with ref/	= utilisé avec réf.
0,05 inch thickness	= 0,05 pouce d'épaisseur (un pouce = 25.4 mm)
weld on	= à souder

ALLGEMEINE INFORMATIONEN

Bei Angabe der Maschinen–Seriennummer stets die komplette Nummer angeben.

Bei der in der Mengenspalte (Anzahl) in diesem Handbuch angegebenen Zahl handelt es sich um die Anzahl von Teilen, die für die Abbildung auf der betreffenden Seite benötigt werden. Bei manchen Teilen in der Mengenspalte ist ein “x” angegeben. Dieses “x” weist darauf hin, dass sich die Anzahl der verwendeten Teile auf den “Bedarf” bezieht.

Bei Verwendung der Seitenangaben links und rechts in diesem Handbuch gelten diese für die Blickrichtung vom Fahrersitz aus, und zwar in Vorwärts–Betriebsrichtung.

Einige der in diesem Ersatzteilhandbuch aufgeführten Abbildungen und Informationen wurden der Bobcat/Ingersoll–Rand von den Herstellern von Maschinenbauteilen zur Verfügung gestellt.

ABKÜRZUNGEN UND SYMBOLE

SALES	= Bestellung bei der Verkaufsabteilung in Brüssel
NSS	= Nicht einzeln erhältlich
NAP	= Nicht als Ersatzteil erhältlich
*****	= Geänderte oder hinzugefügte Abschnitte, Seiten oder Teilenummern
BTI	= Bobcat Technical Information Bulletin : Siehe am Ende der Mikrokarte des jeweiligen Modells oder der allgemeinen Mikrokarte der BTI.
was 6535403	= War 6535403
adj.	= Einstellung
Assembly	= Baugruppe
available W/Ref.	= erhältlich mit der Referenz
bulk/sold per foot	= Mengenabnahme / Verkauf pro Fuss
does not include	= beinhaltet nicht
included with	= enthalten in
I.D.	= Innendurchmesser
O.D.	= Aussendurchmesser
not in kit	= nicht in Bausatz
W/ – WO/	= mit/ – ohne/
Qty	= Anzahl
see page/ref.	= Siehe Seite / Referenz
used with ref.	= verwendet mit Referenz
0.05 inch thickness	= Dicke : 0.05 Zoll (ein Zoll = 25.4 mm)
weld on	= anschweissen

INFORMAZIONI GENERALI

Quando si usa il numero di serie della macchina usare il numero completo.

Il numero mostrato nella colonna della quantità di questo manuale corrisponde al numero di componenti necessari per l'illustrazione della pagina. Per alcuni componenti appare "X" nella colonna delle quantità. Questa "X" indica che la quantità da usare è "come necessario".

See in questo manuale si fa riferimento alla parte destra o sinistra, si intende dal sedile dell'operatore nella posizione in avanti di funzionamento.

Alcune delle illustrazioni e informazioni trovate in questo manuale di componenti sono state fornite alla Bobcat/Ingersoll–Rand da società di componenti di macchine.

SIMBOLI E ABBREVIAZIONI

SALES	= Ordinare al servizio vendite di Bruxelles
NSS	= Non vendute separatamente
NAP	= Non disponibile come componente
*****	= Sezioni, pagine o numeri di componente cambiati o aggiunti
BTI	= (Bobcat Technical information) Ved. al termine del microfiche del modello relativo oppure microfiche generale
was 6535403	= era 6535403
adj. (adjustment)	= regol. (regolazione)
Assembly	= Complessivo
available W/Ref.	= disponibile con rif.
bulk/sold per foot	= alla rinfusa/venduto al piede
does not include	= non comprende
Included with	= compreso con
I.D.	= d. i.
O.D.	= d. e.
not in kit	= non fa parte del kit
W/ – WO/	= con – senza
Qty	= Qtà
see page/ref	= ved. pagina/rif.
used with ref.	= usato con il rif.
0,05 inch thickness	= spessore 0,05 pollici (un pollice = 25,4 mm)
weld on	= a saldare

INFORMACION GENERAL

Al utilizar el número de serie de la máquina, debe emplearse el número completo.

El número que figura en la columna de “Unidades” en este manual es el número de piezas que se necesitan para la ilustración que consta en la página. En algunas piezas aparece una “x” en la columna de “Unidades”. Esta “x” indica que las unidades a utilizar son “según sea necesario”.

Cuando se empleen las referencias izq. y dcha., éstas se entienden mirando desde el asiento del conductor, en posición de marcha adelante.

Algunas de las ilustraciones y la información que figuran en este manual de piezas han sido facilitadas a Bobcat/Ingersoll–Rand por empresas de componentes de máquinas.

ABREVIATURAS Y SIMBOLOS

VENTAS	= Pedido al Departamento de Ventas de Bruselas
NSS	= No se vende por separado
NAP	= No disponible como pieza de repuesto
*****	= Secciones, páginas o referencias modificadas o añadidas
BTI	= (Bobcat Tecnical Information) Ver al final de la microficha del modelo afectado o en la microficha general “Boletín de Información Técnica Bobcat”.
was 6535403	= era anteriormente el 6535403
adj. (adjustment)	= ajuste
assembly	= conjunto
available W/Ref.	= disponible con la ref.
bulk/sold per foot	= a granel/vendido por pies
does not include	= no incluye
included with	= incluido en
I.D.	= diámetro interior
O.D.	= diámetro exterior
not in kit	= no en el kit
W/ – WO/	= con/ – sin
Qty	= Unidades
see page /ref.	= ver página/ref.
used with ref.	= empleado con la ref.
0,05 inch thickness	= 0,05 pulgadas de espesor (1 pulgada = 25,4 mm)
weld on	= debe ser soldado

ALGEMENE INFORMATIE

Als u het serienummer van de machine gebruikt, geef dan het gehele serienummer.

Het cijfer dat voorkomt in de kolom “Aantal”, in deze handleiding, is het aantal onderdelen dat nodig is van de illustratie op de pagina. Voor sommige onderdelen staat er een “x” in de kolom “Aantal”. Deze “x” betekent dat er een aantal “zoals nodig” vereist is.

Wanneer er in deze handleiding naar “links” en naar “rechts” gerefereerd wordt, moet dit verstaan worden voor een bestuurder die in de bestuurdersstoel zit in de voorwaartse bedrijfsstand.

Sommige van de illustraties en informatie in deze onderdelen-handleiding werden door firma’s van machine-componenten geleverd aan Bobcat/Ingersoll-Rand.

AFKORTINGEN EN SYMBOLEN

SALES	= Bestellen bij de Verkoopafdeling te Brussel
NSS	= Niet afzonderlijk te verkrijgen
NAP	= Niet beschikbaar als onderdeel
*	= Gewijzigde of toegevoegde paragrafen, pagina’s of onderdeelnummers
BTI	= Bobcat Technical Information Bulletin : Zie einde van de microfiche van het desbetreffende model of einde van de algemene microfiche die het geheel van alle “BTI” herneemt.
was 6535403	= was vroeger 6535403
adj. (adjustment)	= afstelling
Assembly	= geheel
available W/Ref.	= beschikbaar met ref.
bulk/sold per foot	= bulk/aan de meter verkocht
does not include	= bevat niet
includes with	= is bevat in
I.D.	= ϕ inw. (inwendige diameter)
O.D.	= ϕ uitw. (uitwendige diameter)
not in kit	= niet in de kit
W/ - WO/	= met/ - zonder/
Qty	= vereiste aantal
see page/ref.	= zie pagina/ref.
used with ref/	= gebruikt met ref.
0,05 inch thickness	= 0.05 inch dik (een inch = 25.4 mm)
weld on	= te lassen

Use only Bobcat belts and hoses to maintain maximum service life.

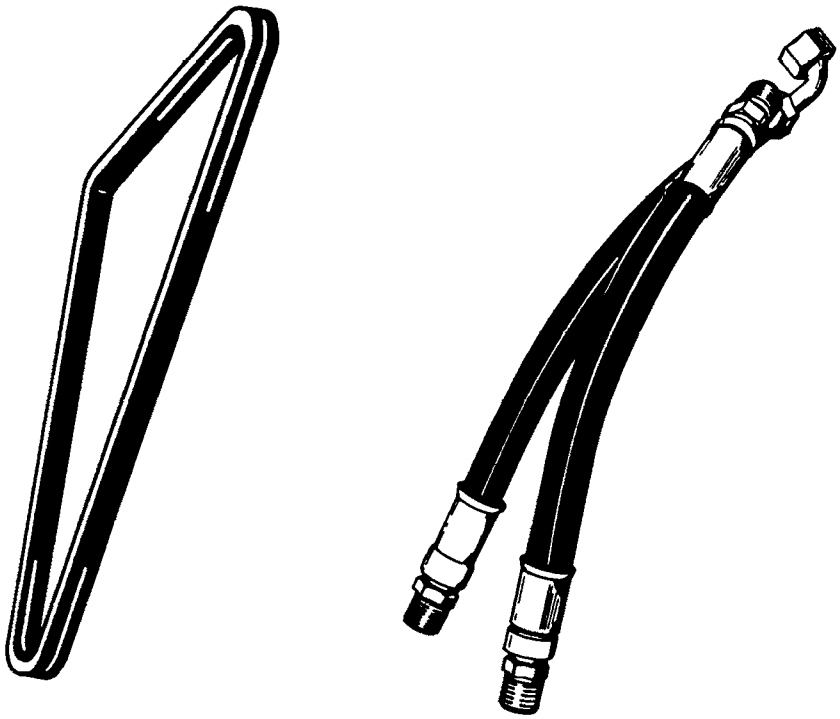

Available from Bobcat Parts.

Bobcat

ADHESIVE 320
AIR CLEANER 128
ALTERNATOR 118
ANTI-FREEZE 320

BATTERY 104
BLACK GOLD 320
BLOCK HEATER 198
BOB-TACH 32

CAB 20, 22
CAB DOOR 204, 210
CAB ENCLOSURE 220
CABLE, BATTERY 104
CAMSHAFT 156, 158
CAP, FUEL 36
CAP, HYD. OIL 78
CHAIN, DRIVE 40
CHAINCASE 18, 40
COOLING FAN DRIVE ASSY. 138
COUNTER WEIGHTS 226
CYLINDER BLOCK 144
CYLINDER, BOBTACH 282
CYLINDER, LIFT 60
CYLINDER, TILT 58

DIPSTICK, ENG. OIL 152
DOOR, CAB 204, 210

ENGINE 130
EXT RMVL R WIN KIT, 224
EXTINGUISHER 248

FAN 122
FILTER, AIR 180
FILTER, ENG. OIL 142
FILTER, FUEL 36
FIRE EXTINGUISHER 248
FLASHER LIGHTS 252
FUEL SYSTEM 36

GAS SPRING 20, 204, 210
GLOW PLUG 176
GUAGE, ENG. TEMP. 102
GUAGE, FUEL 102

HARNESS, CAB 102
HARNESS, ENGINE 104
HARNESS, LIGHTS 276
HEAD, CYLINDER 150
HEATER 260
HORN 270
HUB, AXLE 46

INJECTION NOZZLES 176, 178

LATCH, REAR DOOR 30
LIFT KITS 272, 274
LIGHT KIT 276
LIGHTS, FLASHER 252
LOCK, REAR DOOR 292
LUBRICANT 320

MANIFOLD 164
MOUNT, ENGINE 134
MOUNT, HYDRO. PUMP 134
MUFFLER 128

OIL 320
OIL COOLER 80

PAINT 320
PAN, OIL 152
PANEL, INSTRUMENT 102
PEDALS, CONTROL 62
PISTON, ENGINE 154
POLISH 320
PUMP, FUEL 172
PUMP, OIL 144
PUMP, WATER 160
RIM, WHEEL 316
RING GEAR 130

SEAT 26
SEALANT 320
SEAT BELT 298, 306
SENDER, ENG. TEMP. 104
SENDER, FUEL 36
SENSOR, RPM 104
SHOCK CONTROLS 82
SOLENOID 104
SPROCKET, AXLE 40, 46
STARTER 104, 130
STOP, LIFT ARM 32
SWITCH, HYD. PRESS. 104
SWITCH, HYD. TEMP. 104
SWITCH, IGNITION 102

THROTTLE 136

VALVE, ENGINE 148
VALVE, HYD. CONTROL 64
WINDOW, REAR 222, 232
WINDOW, SIDE 222
WIPER, WINDSHIELD 208

MAIN FRAME 17-38
MAIN FRAME 17
OPERATOR CAB 19
SEAT & SEAT BAR 23
SEAT 25
PANELS 27
REAR DOOR 29
LIFT ARM & BOB-TACH 31
BOB-TACH 33
FUEL SYSTEM 35-38
DRIVE TRAIN 39-46
DRIVE TRAIN 39
MOTOR CARRIER 41
DISC BRAKE 43
AXLE 45
HYDRAULIC CIRCIUTRY 47-76
HYDRAULIC CIRCUITRY 47-52
MANUAL LIFT RELEASE SYSTEM 53
AUXILIARY HYDRAULICS 55
TILT CYLINDER 57
LIFT CYLINDER 59
CONTROL PEDALS 61
HYDRAULIC CONTROL VALVE 63-70
BICS CONTROL VALVE 71
MANUAL LIFT RELEASE VALVE 73
BUCKET POSITIONING VALVE 75
HYDROSTATIC CIRCUITRY 77-100
HYDROSTATIC CIRCUITRY 77-80
HAND CONTROLS 81-84
HYDROSTATIC MOTOR 85
HYDROSTATIC PUMP 87-94
GEAR PUMP 95
HYDROSTATIC OIL FILTER 97-100
ELECTRICAL SYSTEM 101-120
CAB ELECTRICAL CIRCUITRY 101
ENGINE ELECTRICAL CIRCUITRY 103-106
CONTROLS ELECTRICAL 107-116
ALTERNATOR 117
STARTER 119
POWER UNIT 121-180
COOLING SYSTEM 121-124
ENGINE & ATTACHING PARTS 125-134
THROTTLE 135
COOLING FAN DRIVE ASSY. 137
ENGINE & GASKET KITS 139
ENGINE BREAKDOWN 141-178
AIR CLEANER 179
ACCECCORIES & OPTIONS
ACS CONVERSION KIT 183
ACCESS COVER 185
ACCESSORIES HARNESS 187
AIR DEFLECTOR KIT 189

ACCECCORIES & OPTIONS (Cont'd)

AXLE SEAL KIT 191
BACK-UP ALARM 193
BEACON 195
BLOCK HEATER 197
BOB-TACH LEVERS 199
BUCKET POSITIONING VALVE KIT 201
CAB DOOR 203-216
CAB ENCLOSURE 217-220
CAB WINDOWS 221-224
COUNTERWEIGHT KIT 225
DECALS 227-230
DELUXE CAB 231
ELECTRICAL CONNECTOR KIT 233
ELECTRICAL CONTROLS KIT 235-240
ENGINE MOUNT KIT 241
EUROPEAN ACCESSORIES 243-246
FIRE EXTINGUISHER 247
F.O.P.S. KIT 249
FLASHER LIGHTS 251
GAS SPRING KIT 253
HAND CONTROL KIT 255-258
HEATER KIT 259
HEATER 261-266
HEATER PLUMBING KIT 267
HORN KIT 269
LIFT KIT 271-274
LIGHT KIT 275
MUFFLER/PURIFIER KIT 277
POWER BOB-TACH KIT 279
POWER BOB-TACH 281-284
RADIATOR SCREEN KIT 285
REAR AUXILIARY KIT 287
REAR AUXILIARY VALVE 289
REAR DOOR LOCK 291
REAR WIPER 293
SEAL ENCLOSURE KIT 295
SEAT 297-300
SEAT BELT 301-306
SOUND KIT 307
SOUND OPTION 309
SOUND REDUCTION HARDHAT 311
STROBE LIGHT 313
TIRES & RIMS 315-318

BULK ITEMS 319

NUMERICAL INDEX 321-361

MAIN FRAME

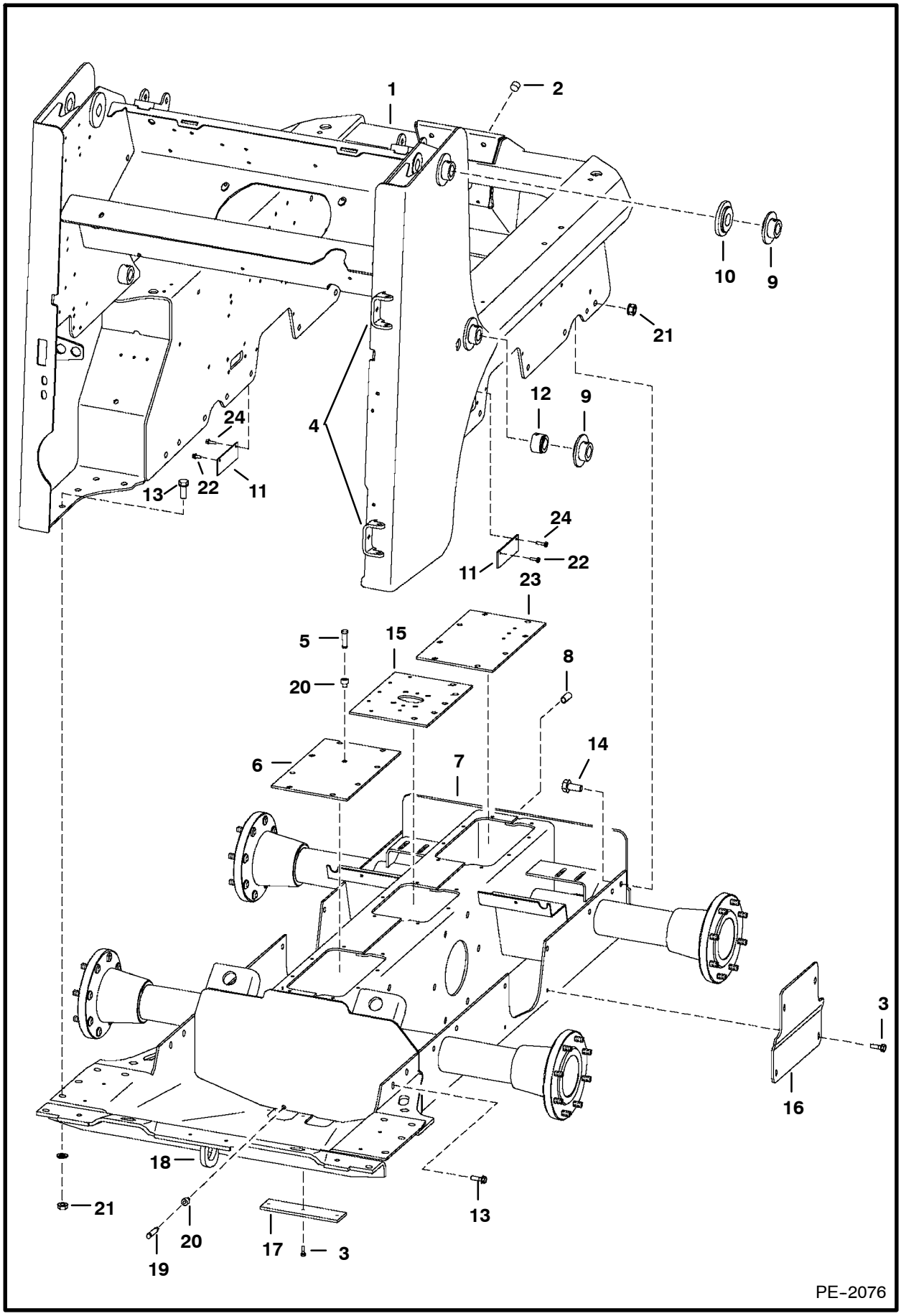
1
2
10
9
21
12
9
4
24
13
22
11
24
11
22
23
5
15
20
8
6
7
14
3
16
18
21
20
19
17
3
13
PE-2076

MAIN FRAME (Cont'd)

Ref. No.	Part Number	Description	Remarks	Serial Number	Qty.
1	6714590	MAIN FRAME			1
2	6718796	PLUG			1
3	84G-3712	BOLT			11
4	6708987	BRACKET	hinge - bottom & top - weld on		2
5	6680970	BREATHER	See Page 43		1
6	6700330	COVER			1
7	6712827	CHAINCASE	See Page 39		1
8	6731121	PLUG	chaincase fill		1
9	6702584	BUSHING	weld on		4
10	6702583	BUSHING	weld on		2
11	6734420	COVER			2
12	6555987	BUSHING	weld on		2
13	31C-824	BOLT			12
14	31C-820	BOLT			28
15	6706042	COVER	See Page 43		1
16	6733701	COVER			2
17	6700182	COVER			1
18	6706485	HOOK	tie down - weld on		2
19	6599645	PLUG	chaincase drain		1
20	6553411	BUSHING			2
21	83D-8	NUT			26
22	17C-620	BOLT			2
23	6578505	COVER	See Page 43		1
24	84G-3710	BOLT			2

OPERATOR CAB

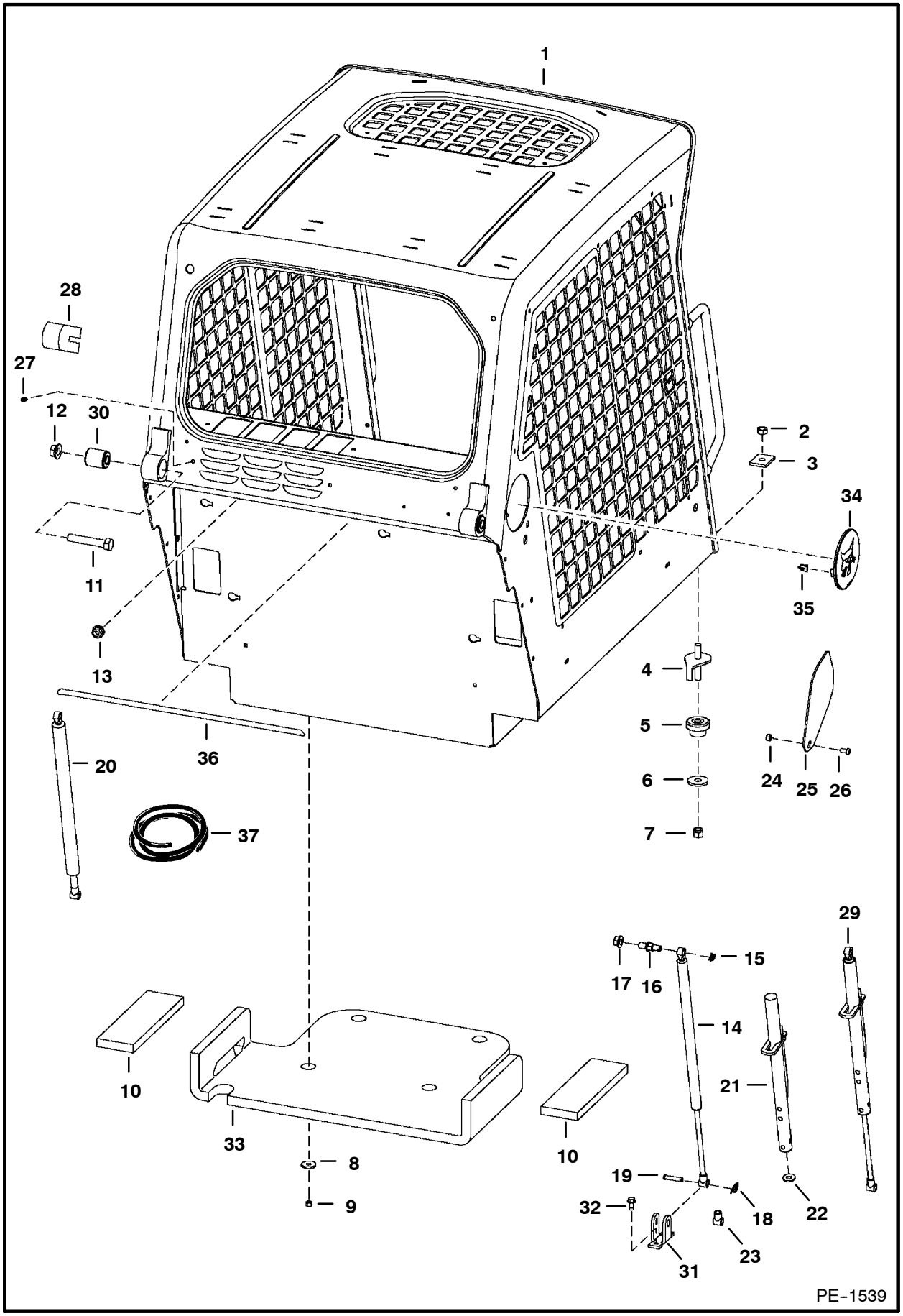

OPERATOR CAB (Cont'd)

Ref. No.	Part Number	Description	Remarks	Serial Number	Qty.
1	6719672	OPERATOR CAB	includes cab decals		1
2	59D-8	NUT			2
3	6553709	WASHER	rectangular		2
4	6702971	BOLT			2
5	6560633	MOUNT			2
6	6515817	WASHER			2
7	85D-8	NUT			2
8	619021	WASHER			4
9	59D-5	NUT			4
10	6729012	INSULATION	seat pan		2
11	17C-1056	BOLT			2
12	53D-10	NUT			2
13	53D-6	NUT			4
14	6675135	GAS SPRING	R.H.		1
15	6675140	SNAP RING			2
16	6719064	MOUNT			2
17	95D-8	NUT			2
18	6631418	PIN	ring		2
19	6567743	PIN			2
20	6675134	GAS SPRING	L.H.		1
	6675136	GAS SPRING	L.H. - heavy duty		1
21	6708189	TUBE	stop - R.H.		1
22	6701174	WASHER			1
23	6675257	ROD END			1
24	95D-5	NUT			2
25	6718784	COVER			2
26	25G-512	BOLT			2
27	6675033	INSERT	filter cover		2
28	6579613	STOP			2
29	NSS	GAS SPRING	R.H. - W/latch - Order Ref. 14 & 21-23		1
30	6562602	BUSHING			2
31	6706349	MOUNT	gas spring		2
32	84G-3112	BOLT			4
33	6729013	INSULATION	seat pan		1
34	6733107	PLUG ASSY.	W/Ref. 35		2
35	6679990	CLIP			6
36	NAP	SEAL	31"(787,4 mm) long - Order Ref. 37		1
37	6679994	SEAL	bulk - Sold Per Foot		x

OPERATOR CAB

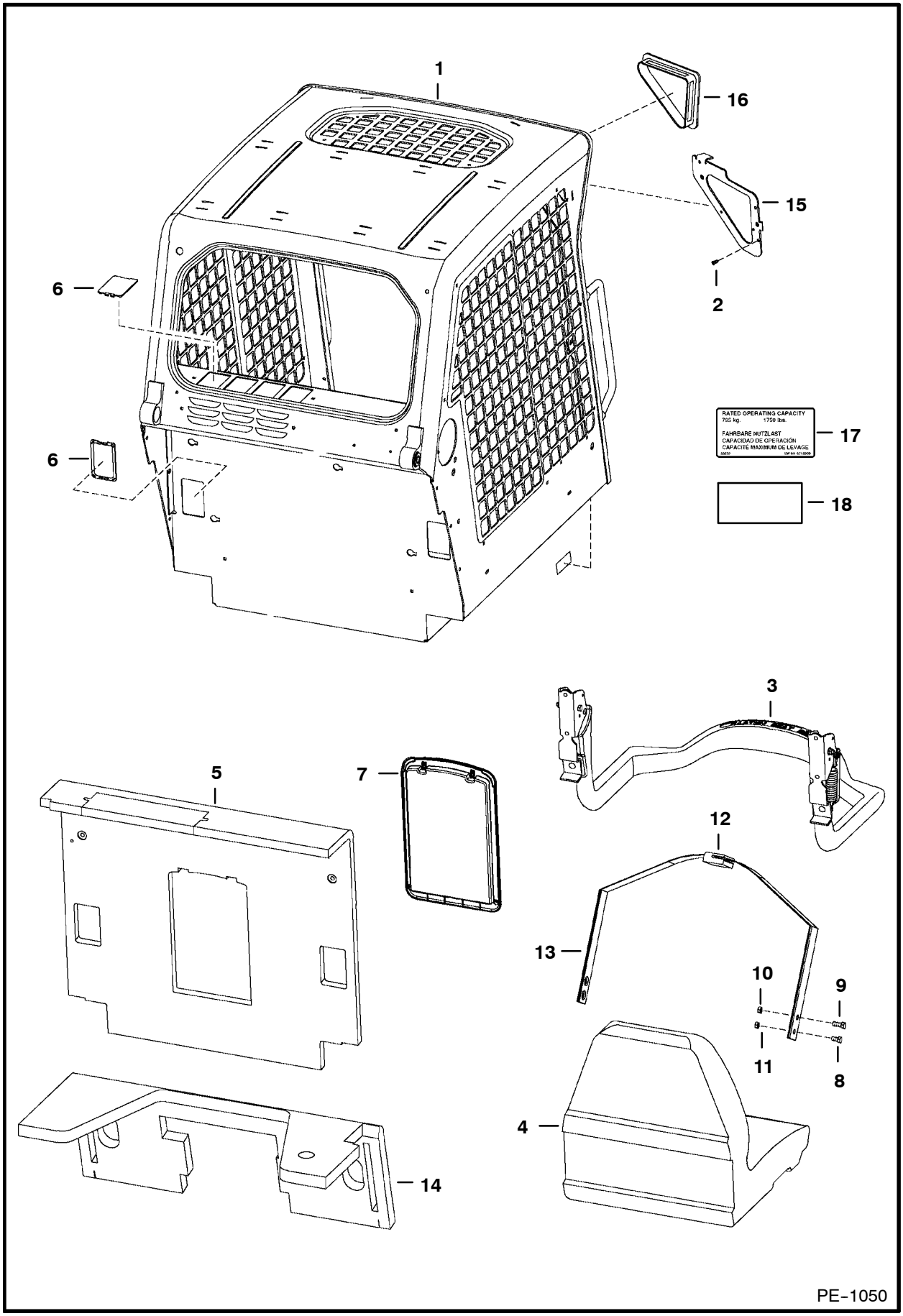

OPERATOR CAB (Cont'd)

Ref. No.	Part Number	Description	Remarks	Serial Number	Qty.
1	6719672	OPERATOR CAB	includes cab decals		1
2	6675033	INSERT			6
3		SEAT BAR	See Page 23		1
4	6669135	SEAT	See Page 25		1
5	6719504	INSULATION	W/Ref. 7		1
6	6718101	COVER			6
7	6719503	CONTAINER	manuals		1
	6675524	CLIP			2
	6725301	COVER			1
	6725303	FRAME			1
8	17C-612	BOLT			2
9	17C-716	BOLT			2
10	85D-7	NUT			2
11	85D-6	NUT			2
12	6675074	SEAT BELT			1
13	6565355	GUIDE			1
	6630207	RIVET			2
	6725373	SPRING PLATE			2
14	6718489	INSULATION	steering panel		1
15	NSS	PLATE	R.H. - weld on		1
	NSS	PLATE	L.H. - weld on		1
16	6674403	COVER	no lights		2
17	6804790	DECAL	capacity		1
18					

SEAT & SEAT BAR

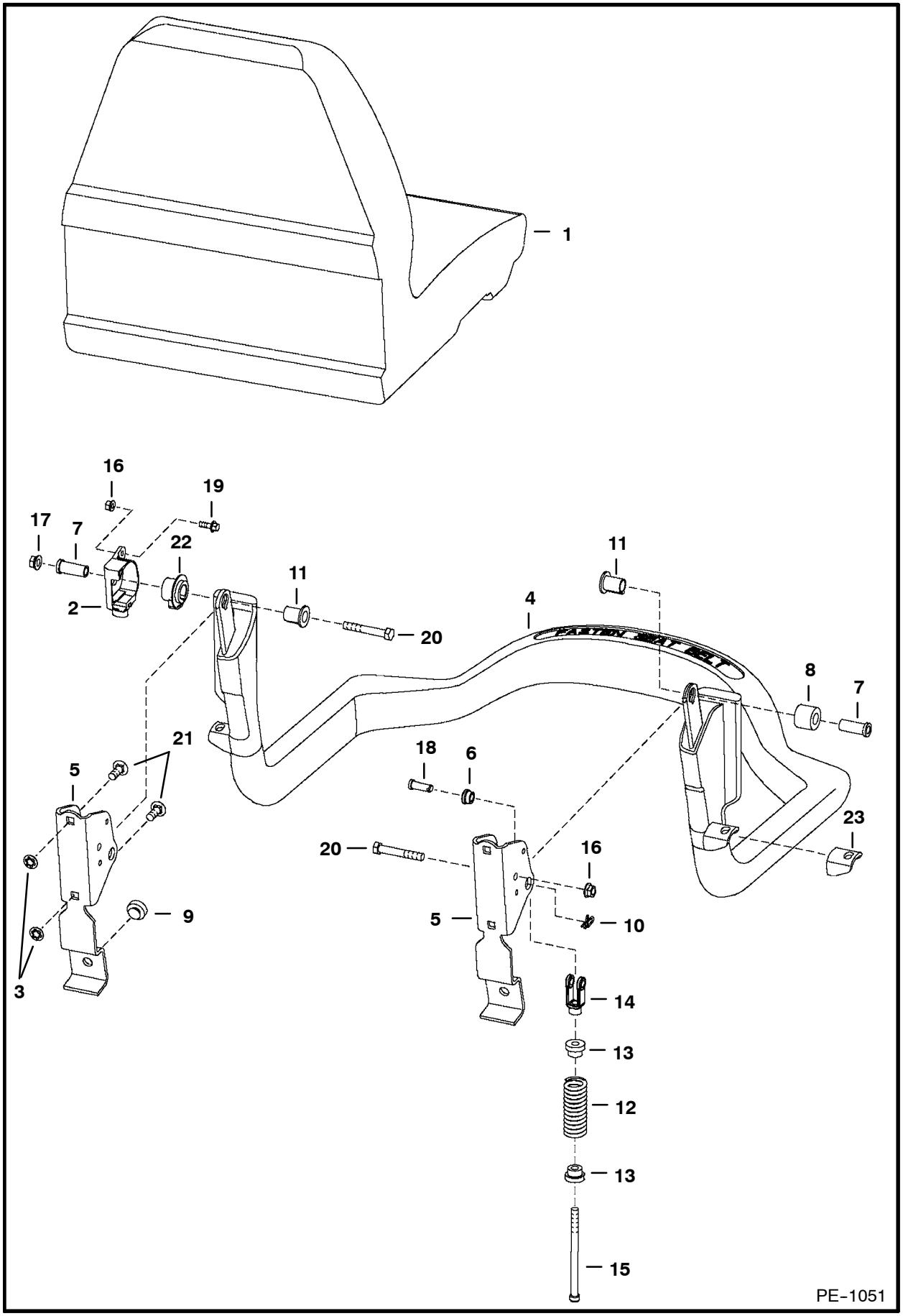

SEAT & SEAT BAR (Cont'd)

Ref. No.	Part Number	Description	Remarks	Serial Number	Qty.
1	6669135	SEAT	See Page 25		1
2	6680429	SENSOR			1
3	6684033	NUT			4
4	6715860	SEAT BAR			1
5	6715863	BRACKET			1
6	6715864	BUSHING			2
7	6715865	BUSHING			2
8	6715866	BUSHING			1
9	6519178	BUMPER			2
10	6631418	PIN	ring		2
11	6680441	BUSHING	keyed		2
12	6701535	SPRING			2
13	6710659	BUSHING			2
14	6713589	CLEVIS			2
15	6713887	BOLT			2
16	83D-4	NUT			1
17	53D-6	NUT			2
18	4F-6106	PIN			2
19	35C-412	BOLT			1
20	17C-640	BOLT			2
21	10C-616	BOLT			4
22	6680443	BUSHING			1
23	NAP	MOUNT	Order Ref. 4		1

SEAT
(Michigan)

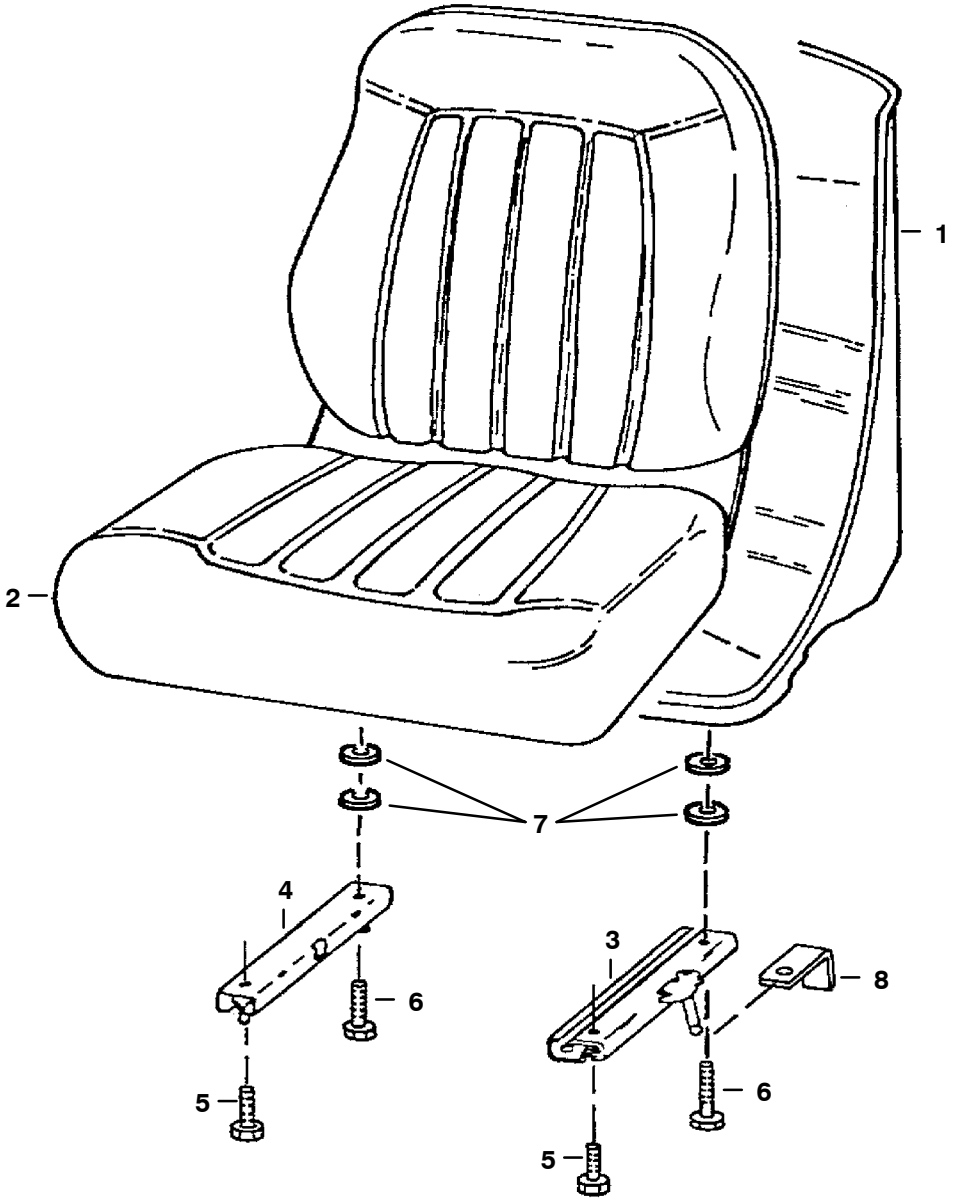

B-14720

SEAT (Cont'd)
(Michigan)

Ref. No.	Part Number	Description	Remarks	Serial Number	Qty.
1	6669135	SEAT	W/Ref. 2-7		1
2	6670160	CUSHION	W/edging, clip & (2) grommets		1
	NSS	EDGING			1
	NSS	CLIP			1
3	6674013	TRACK	L.H. - W/8"(203,2 mm) latch		1
4	6669089	TRACK	R.H. - W/O Latch		1
5	25G-512	BOLT			2
6	25G-520	BOLT			2
7	6672715	SPACER			4
8	6668953	BRACKET	See S/L Dated 16 April 1996		2

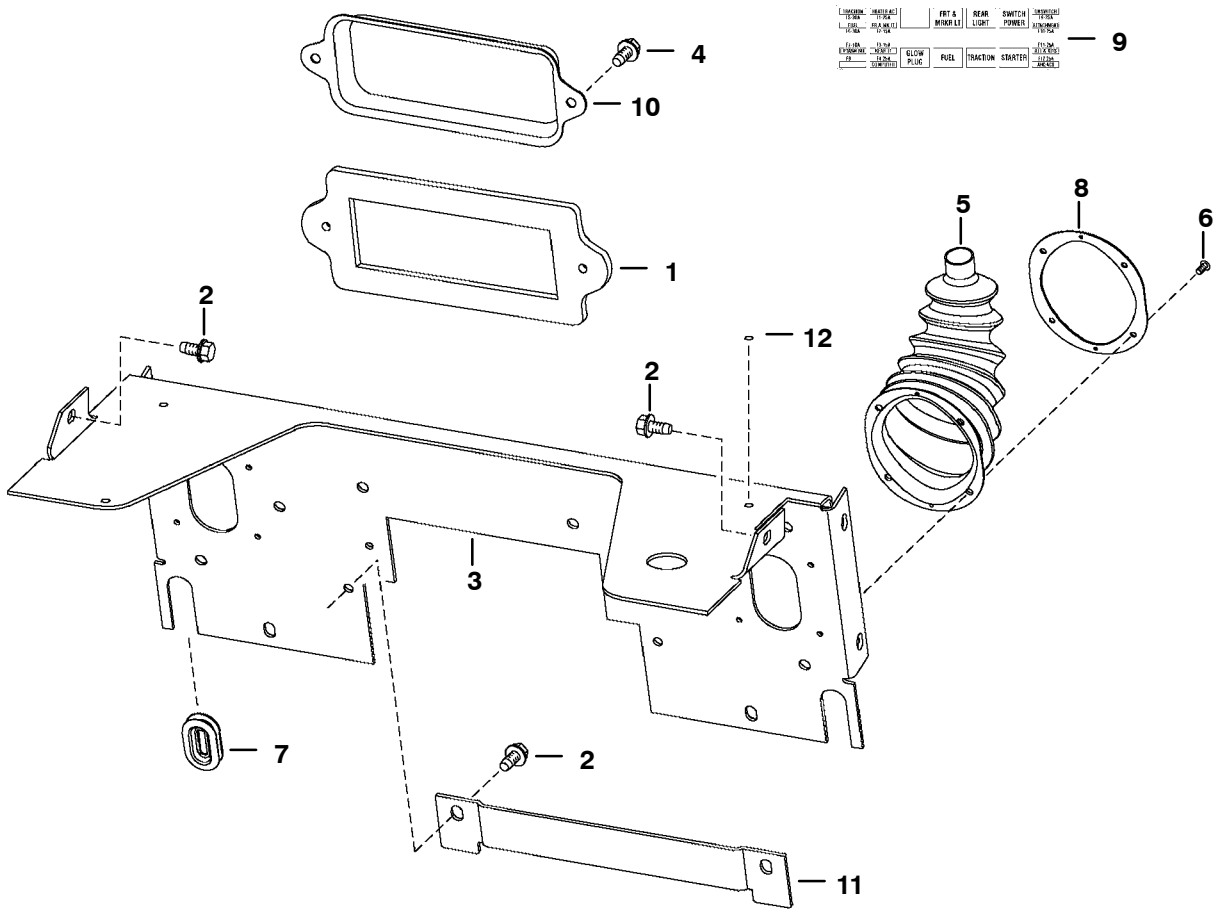
4
10
1
2
2
12
3
7
2
11
9
5
8
6
FRT & MRKR LT
REAR LIGHT
SWITCH POWER
GLOW PLUG
FUEL
TRACTION
STARTER

B-16483

PANELS (Cont'd)

Ref. No.	Part Number	Description	Remarks	Serial Number	Qty.
1	6725302	GASKET			1
2	84G-3712	BOLT			16
3	6717208	SHIELD			1
4	84G-3112	BOLT			2
5	6532127	BOOT	W/Ref. 8		2
6	6630207	RIVET			12
7	6577961	GROMMET			2
8	NAP	PLATE	Order Ref. 5		2
9	6718774	DECAL	fuse/relay - 2" x 7"		
			(50,8 mm x 177,8 mm)		1
10	6716621	COVER	fuse/relay		1
	6736071	KIT	extreme conditions		1
	6718774	DECAL	relay/fuse		1
	6731275	INSULATION			1
11	6718760	COVER			1
12	6657719	PLUG	for .75"(19,05 mm) dia. hole		2
	6648348	PLUG	for .812"(20,62 mm) dia. hole		2

REAR DOOR

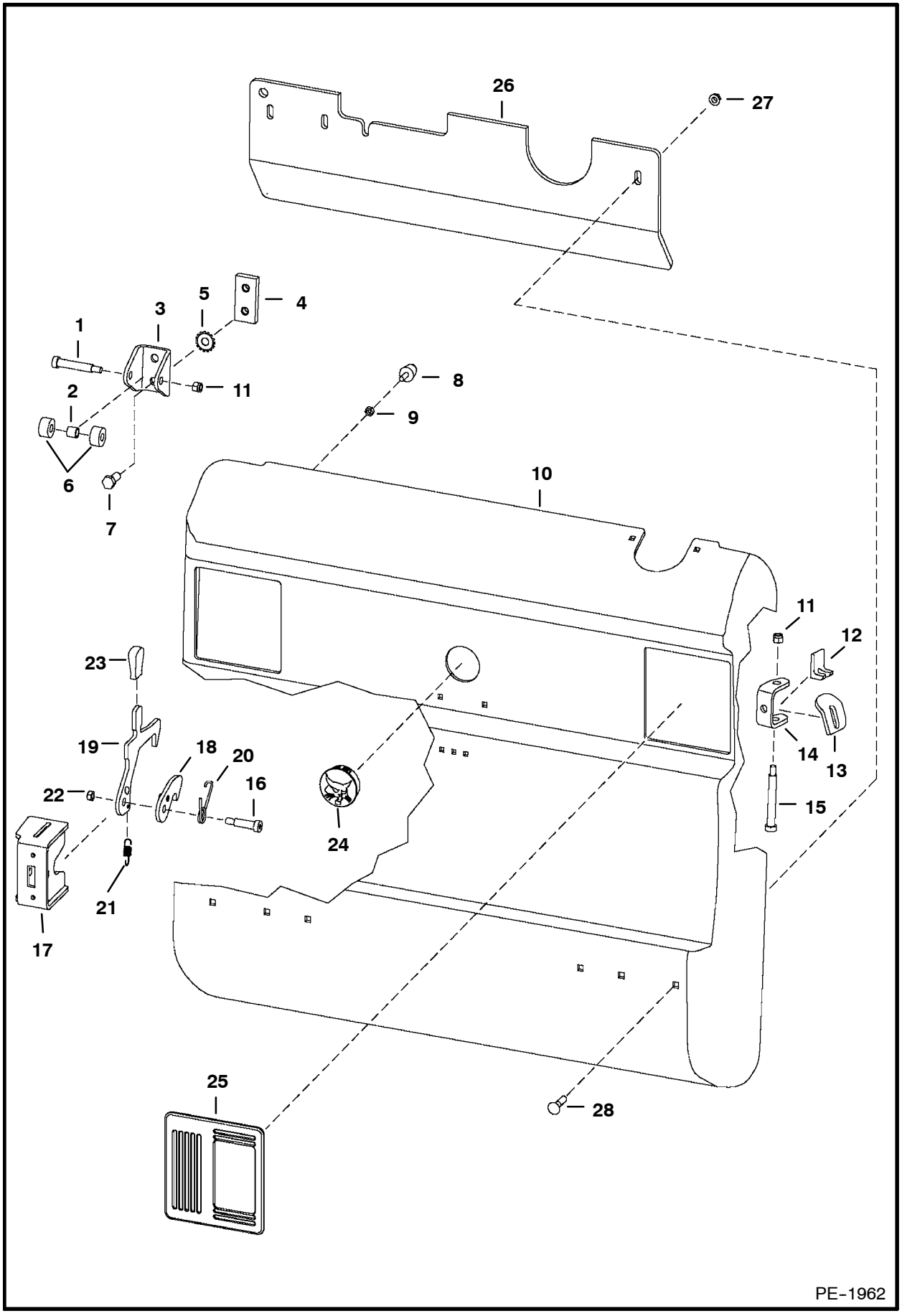
26
27
1
3
5
4
2
11
8
9
6
7
10
11
12
23
19
18
20
16
22
14
13
15
24
21
17
25
28
PE-1962

REAR DOOR (Cont'd)

Ref. No.	Part Number	Description	Remarks	Serial Number	Qty.
1	38C-840	BOLT	carriage		1
2	6809734	BUSHING			1
3	6809727	CHANNEL			1
4	6719525	BAR	threaded striker		1
5	6675273	WASHER	lock		2
6	6809726	ROLLER			2
7	17C-820	BOLT			2
8	6733616	BUMPER	tapered		2
9	61D-6	NUT			2
10	6729991	REAR DOOR			1
11	59D-6	NUT			3
12	6719766	STOP			1
13	6714126	DOOR STOP			1
14	6733575	HINGE	weld on		2
15	6809845	BOLT			2
16	38C-824	BOLT			1
17	6729939	LATCH PLATE	weld on		1
18	6733667	LATCH	latch		1
19	6732715	LATCH			1
20	6810132	SPRING			1
21	6810141	SPRING			1
22	85D-6	NUT			1
23	6564452	GRIP			1
24	6718796	PLUG			1
25	6670287	COVER			2
26	6725256	COUNTERWEIGHT			1
27	57D-6	NUT			2
28	37C-624	BOLT			2

LIFT ARM & BOB-TACH

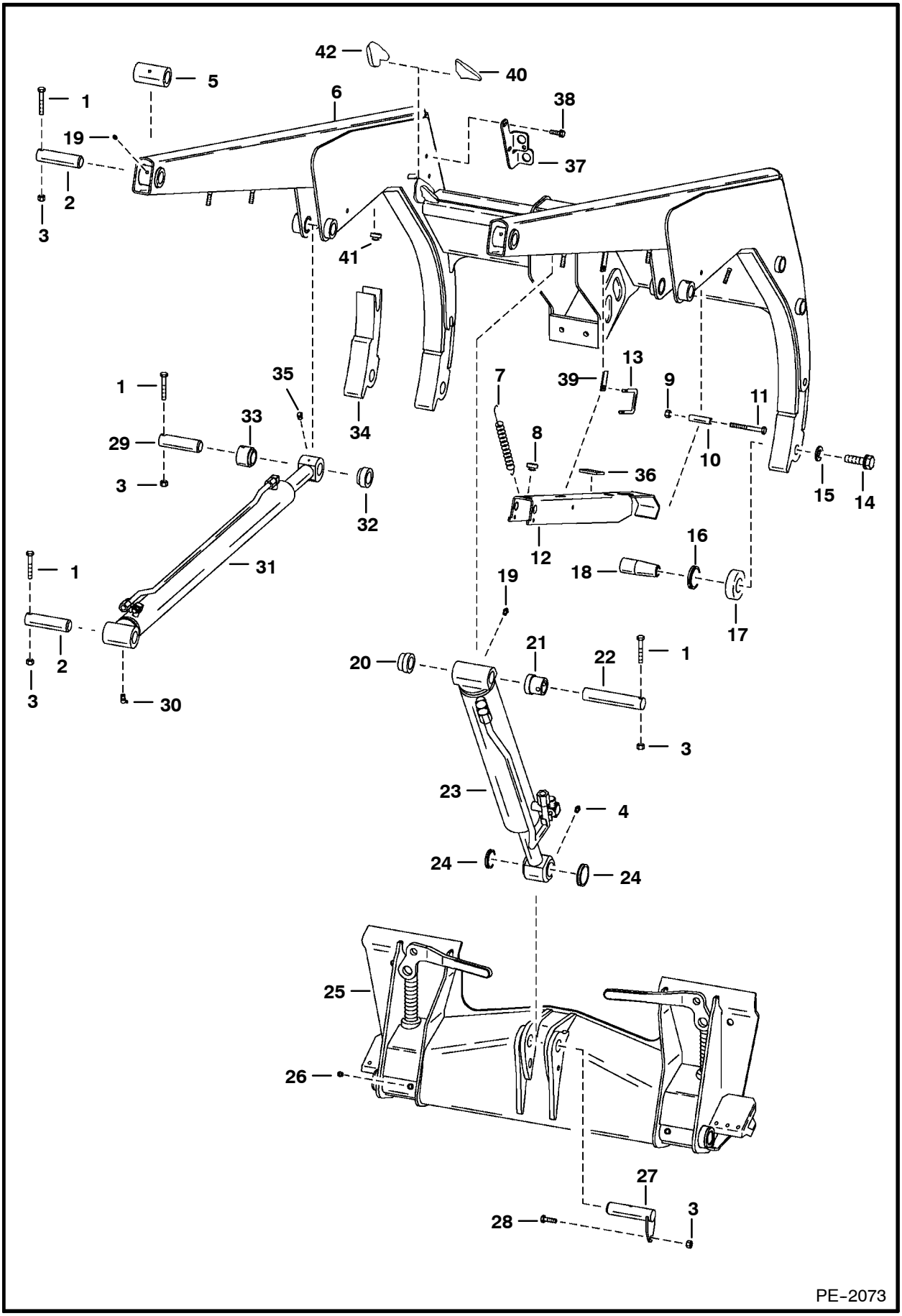

LIFT ARM & BOB-TACH (Cont'd)

Ref. No.	Part Number	Description	Remarks	Serial Number	Qty.
1	17C-640	BOLT			8
2	6577954	PIN			4
3	85D-6	NUT			9
4	10H-35	GREASE ZERK			1
5	6578356	BUSHING	Weld On		2
6	6730797	LIFT ARM	1.50" (38,1 mm) dia. Bob-Tach		
			pins		1
7	6700743	SPRING			1
8	6519178	BUMPER	rubber		1
9	61D-6	NUT			1
10	6700469	SPACER			1
11	17C-648	BOLT			1
12	6705089	LIFT ARM STOP			1
13	6714810	PIN	retainer		1
14	31C-1264	BOLT			2
15	6718723	WASHER			2
16	6651709	SEAL			2
17	6700463	CUP	seal		2
18	6730263	PIN	1.50"(38,1 mm) dia.		2
19	10H-25	GREASE ZERK			3
20	6703363	BUSHING	Weld On - Also Order Ref. 22		1
21	6704287	BUSHING	Weld On - Also Order Ref. 22		1
22	6704288	PIN	1.25"(31,8 mm) dia. - 7"(177,8 mm) long		1
23		CYLINDER	tilt - See Page 57		1
24	225855	SEAL			2
25		BOB-TACH	See Page 33		1
26	743332	GREASE ZERK			2
27	6716601	PIN			1
28	17C-620	BOLT			1
29	6547593	PIN			2
30	11H-15	GREASE ZERK			2
31		CYLINDER	lift - See Page 59		2
32	6555989	BUSHING	Weld On		2
33	6555987	BUSHING	Weld On		2
34	NAP	ARM	R.H. - Weld On		1
	NAP	ARM	L.H. - Weld On		1
35	12H-15	GREASE ZERK			2
36	6704436	PAD	foam - self adhesive		1
37	6713850	MOUNT			1
38	84G-3112	BOLT			2
39	6705091	TAB	weld on		1
40	6727545	PLATE	weld on		2
41	6704403	STOP	weld on		2
42	6727544	PLATE	weld on		2

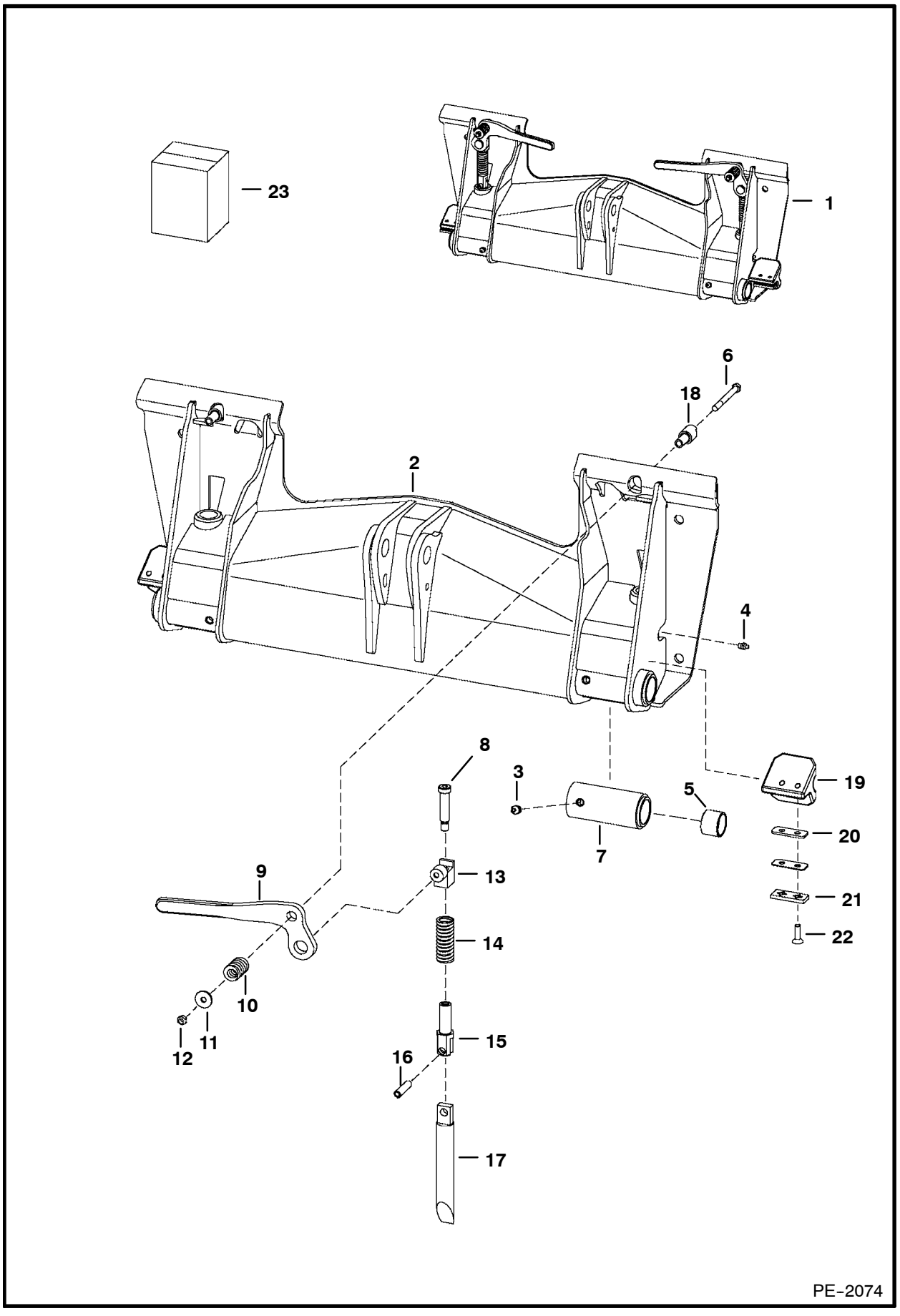
23
1
6
18
2
4
8
3
5
19
20
9
13
7
21
14
22
10
11
12
15
16
17
PE-2074

BOB-TACH (Cont'd)

Ref. No.	Part Number	Description	Remarks	Serial Number	Qty.
1	6709215	BOB-TACH	W/Ref. 5 & 7 - 2.50"(63,5 mm) O.D. weld on bushings - Also Order 6561383 Decal - See Page 227		1
2	NAP	FRAME			1
3	743332	GREASE ZERK			2
4	10H-35	GREASE ZERK			2
5	6730997	BUSHING	press fit		2
6	17C-660	BOLT			2
7	6731979	BUSHING	weld on - Also Order Ref. 5		2
8	6728473	BOLT	shoulder		2
9	6702904	LEVER	R.H.		1
	6702903	LEVER	L.H.		1
10	6713040	SPRING			2
11	619021	WASHER			2
12	85D-6	NUT			2
13	6704240	PIVOT ASSY.			2
14	6562018	SPRING			2
15	6704248	PIVOT	wedge		2
16	14J-5032	PIN			2
17	6704242	WEDGE ASSY.			2
18	6702958	BUSHING	weld on		2
19	6704600	STOP	R.H. - Weld on - Shown		1
	6704601	STOP	L.H. - Weld on - Not shown		1
20	6707514	SHIM	.060		2
	6579106	SHIM	.125		2
21	6579104	SHIM	.25		2
22	9G-620	BOLT			4
23	6724775	LEVER KIT	R.H. - Bob-Tach - Ref. 4 & 8-17		1
	6724776	LEVER KIT	L.H. - Bob-Tach - Ref. 4 & 8-17		1

FUEL SYSTEM

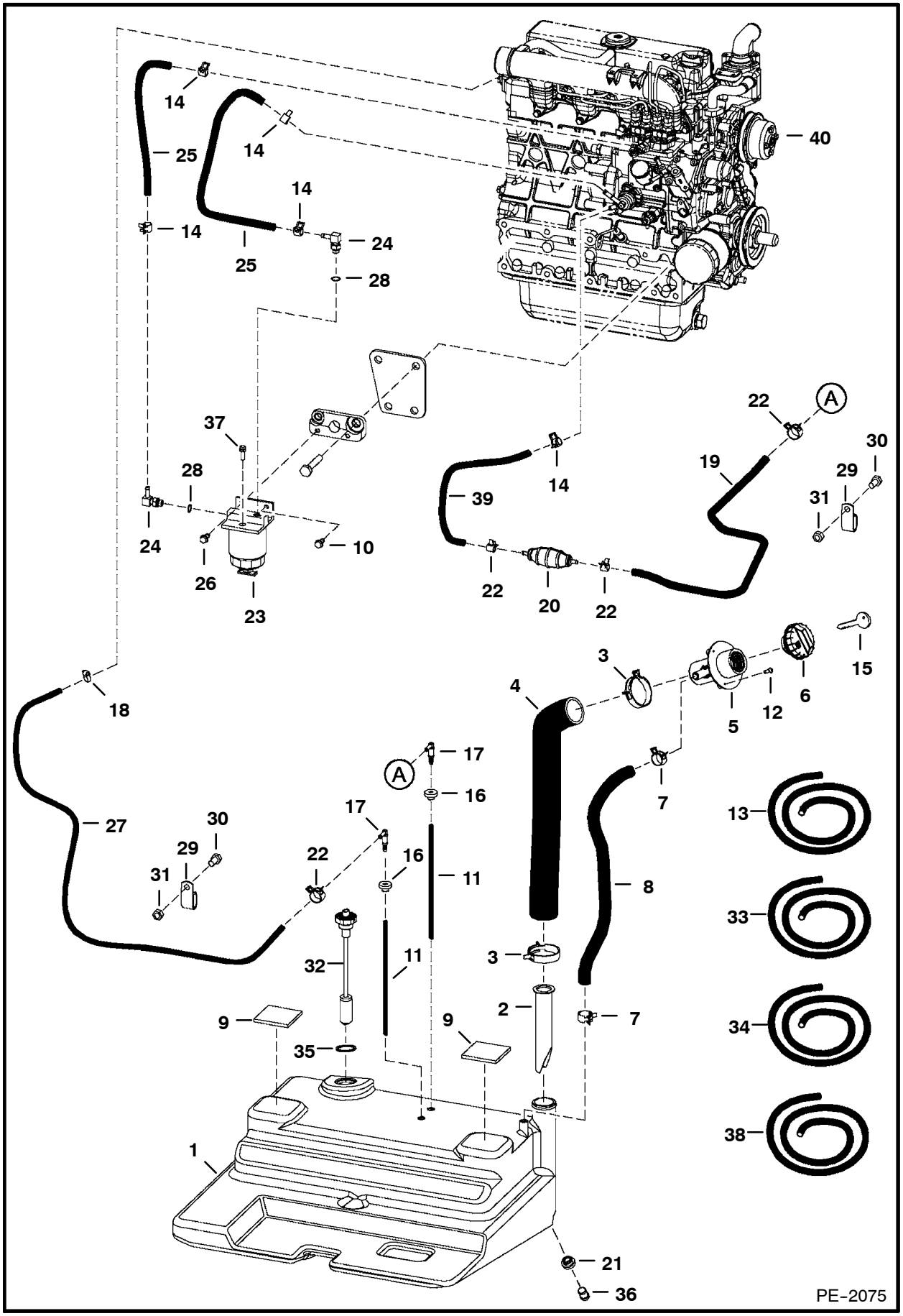
14
25
14
14
14
24
25
28
40
37
28
24
26
23
10
22
A
19
30
29
31
39
14
22
20
22
18
3
4
5
12
6
15
7
27
17
A
16
17
30
29
31
22
16
11
32
11
3
2
7
8
9
9
35
1
21
36
13
33
34
38
PE-2075

Ref. No.	Part Number	Description	Remarks	Serial Number	Qty.
1	6736659	TANK			1
2	6569219	SCREEN			1
3	42H-32	CLAMP	worm gear		2
	5HM-58	CLAMP	constant tension		2
4	6710653	HOSE			1
5	6701449	FILLER TUBE			1
6	6661114	CAP	green		1
	NAP	CAP	locking -W/Ref. 15 Code GC020		1
	6661696	CAP	locking - W/Ref. 15 Code PK510		1
7	42H-10	CLAMP	worm gear		2
	5HM-24	CLAMP	constant tension		2
8	NAP	HOSE	21.5" (546,1 mm) long -		
			Order Ref. 13		1
9	6578278	PAD	self adhesive one side		2
10	84G-3116	BOLT			1
11	6729853	HOSE	10.25"(260,4 mm) long		2
12	6706517	SCREW			3
13	6578172	HOSE	bulk - Sold Per Foot		x
14	5HM-14	CLAMP			5
15	6654374	KEY	Code GC020		1
	6587458	KEY	Code PK510		1
16	6553411	BUSHING	.5" I.D.		2
17	6681462	ELBOW			2
18	42HS-4	CLAMP			2
19	NAP	HOSE	35" (889,0 mm) long -		
			Order Ref. 33		1
20	6657734	PUMP	hand primer		1
21	6717402	BUSHING	.75" I.D.		1
22	5HM-13	CLAMP			4
23	6667353	FILTER ASSY.			1
	6667352	ELEMENT			1
	72F-1	DRAIN COCK			1
24	6715183	ELBOW	W/Ref. 28		2
25	NAP	HOSE	13"(330,2 mm)long-Order Ref. 34		
			- end of hose connects to Ref. 12		
			See Page 171		2
26	84G-3112	BOLT			1
27	NAP	HOSE	53"(1346, 2mm)long-Order Ref. 38		1
28	79K-5	O-RING			x
29	30H-35	CLAMP			2
30	17C-612	BOLT			2
31	61D-6	NUT			1
32	6680438	SENSOR	fuel - W/Ref. 35 - See Page 103		1
33	6577821	HOSE	bulk - Sold Per Foot		x
34	6577822	HOSE	bulk - Sold Per Foot		x
35	6717579	GASKET			1
36	6599645	PLUG	fuel drain - .5" O.D.		1
	6717401	PLUG	fuel drain - .75" O.D.		1
37	6658180	PLUG	breather		1
38	6578169	HOSE	bulk - Sold Per Foot		x
39	NAP	HOSE	18" (457,2 mm) - Order Ref. 33		1

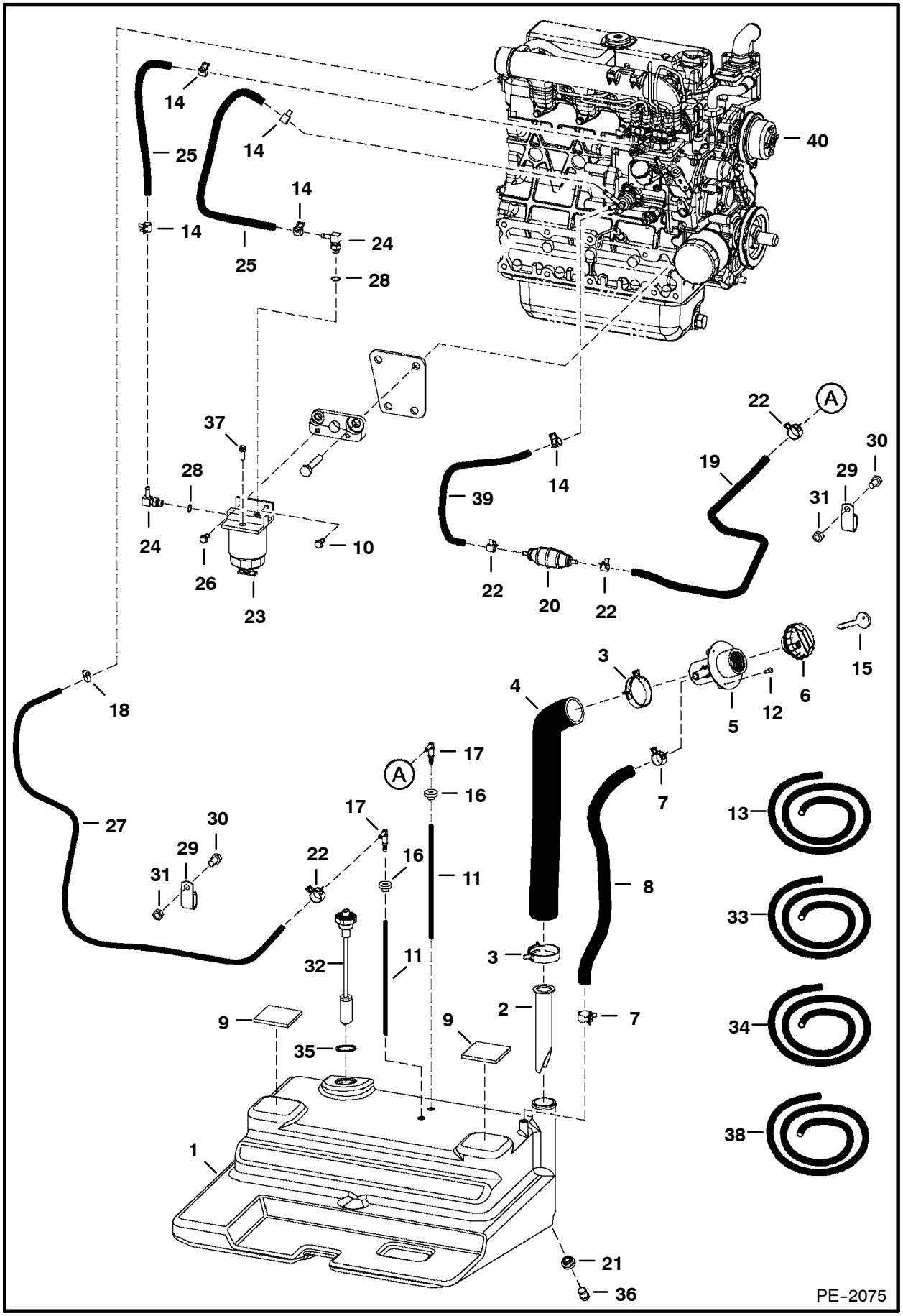
14
25
14
14
14
24
25
28
40
37
28
24
26
23
10
22
A
19
30
29
31
39
14
22
20
22
18
3
4
5
12
6
15
7
27
17
A
16
17
30
29
31
22
16
11
32
11
3
2
7
8
9
9
35
1
21
36
13
33
34
38
PE-2075

Ref. No.	Part Number	Description	Remarks	Serial Number	Qty.
40		ENGINE	See Page 139		1

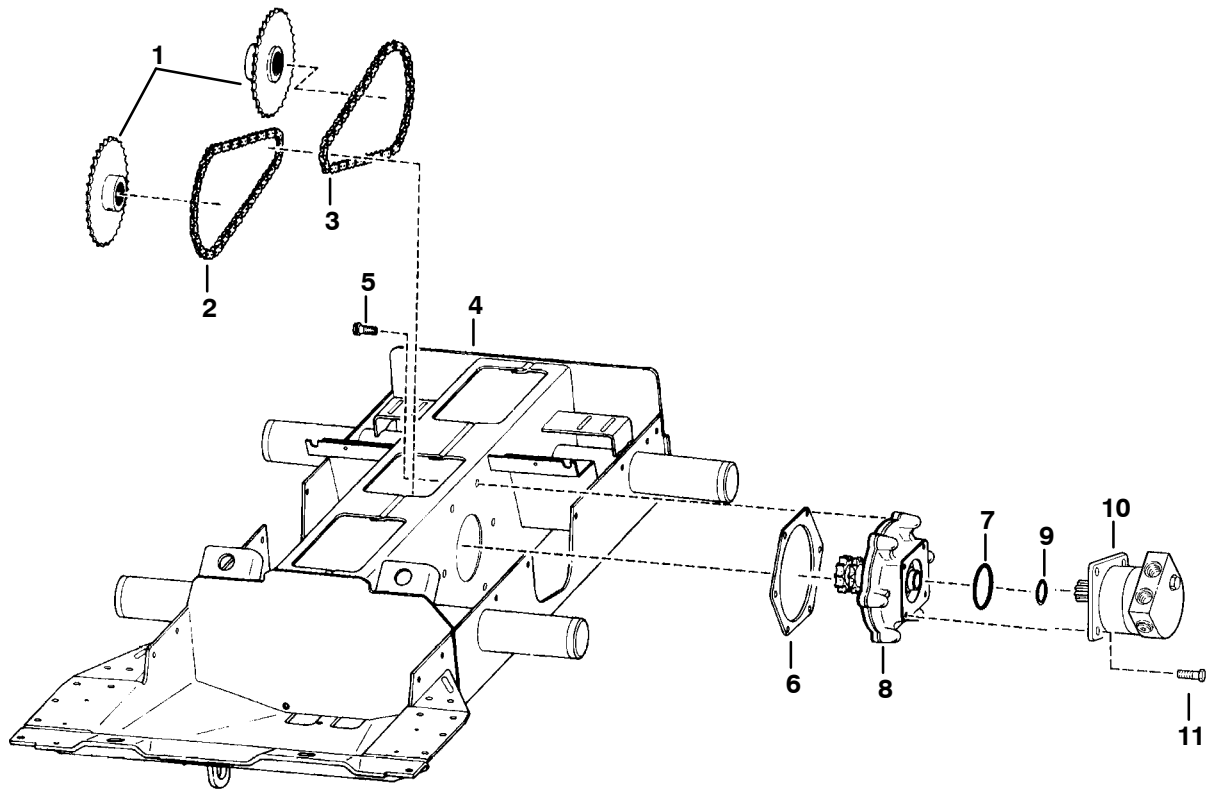

D-1886

DRIVE TRAIN (Cont'd)

Ref. No.	Part Number	Description	Remarks	Serial Number	Qty.
1	6577204	SPROCKET			4
2	6579126	CHAIN	58 pitch - hour glass shape link		2
	6731219	CHAIN	58 pitch - oval shape link		2
3	6579127	CHAIN	62 pitch - hour glass shape link		2
	6731218	CHAIN	62 pitch - oval shape link		2
	6510171	LINK	conn. - hour glass shape		x
	6675332	LINK	conn. - oval shape		x
4	6712827	CHAINCASE			1
5	35C-1032	BOLT			12
6	6704878	GASKET	install W/rib toward chaincase		2
7	25K-30508	O-RING			2
8		MOUNT ASSY.	drive motor - See Page 41		2
9	25K-30202	O-RING	Supplied W/Motor		2
10		MOTOR	W/Ref. 9 - See Page 85		2
11	93G-824	BOLT			8

MOTOR CARRIER
(Drive Motor Mount Assy.)

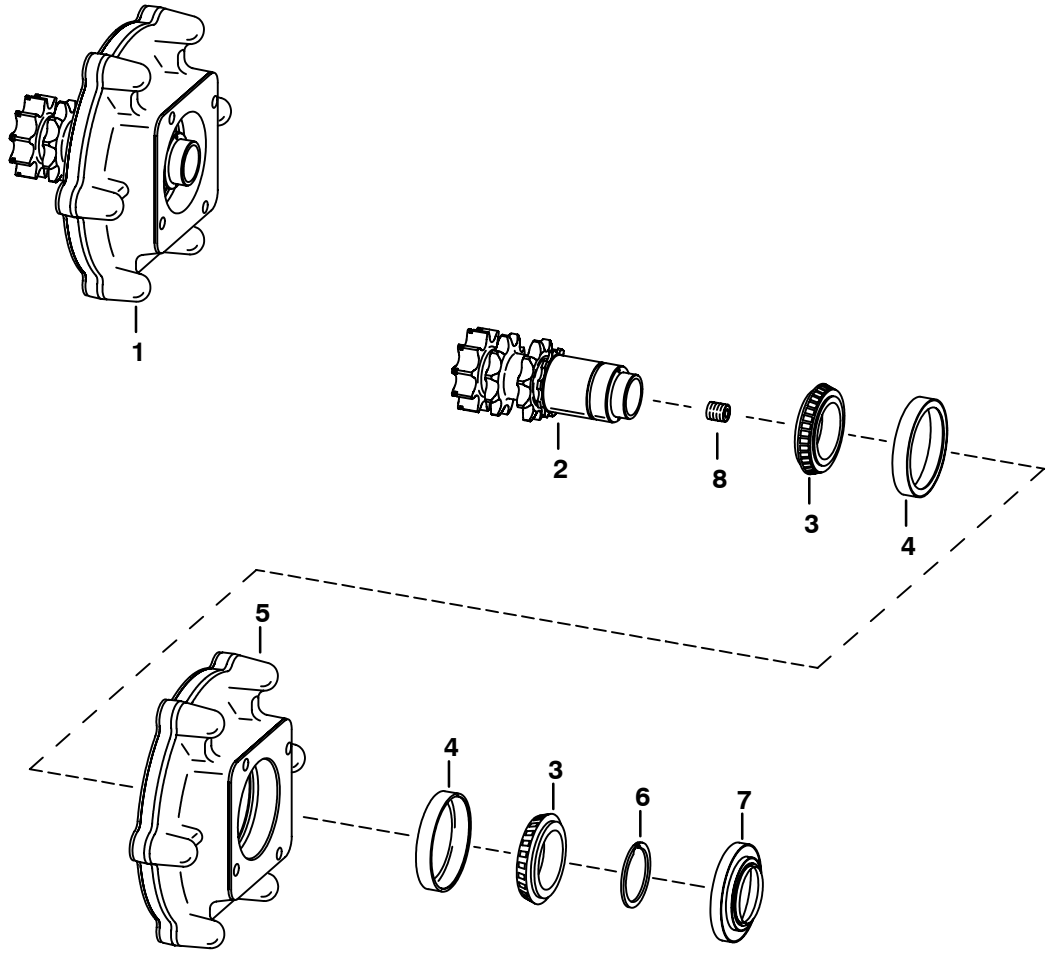

MC–1937

MOTOR CARRIER (Cont'd)
(Drive Motor Mount Assy.)

Ref. No.	Part Number	Description	Remarks	Serial Number	Qty.
1	6733695	MOUNT ASSY.	drive motor - Ref. 2 - 8		1
2	6733621	SHAFT	W/double snap ring groove		1
3	6632218	BEARING			2
4	6632541	RACE			2
5	6733694	HOUSING			1
6	6571851	SNAP RING	.118" (3,0 mm) thickness		1
	6571852	SNAP RING	.125" (3,2 mm) thickness		1
7	6705847	SEAL			1
8	NSS	PLUG	Was 16F-6 [B]		1

DISC BRAKE

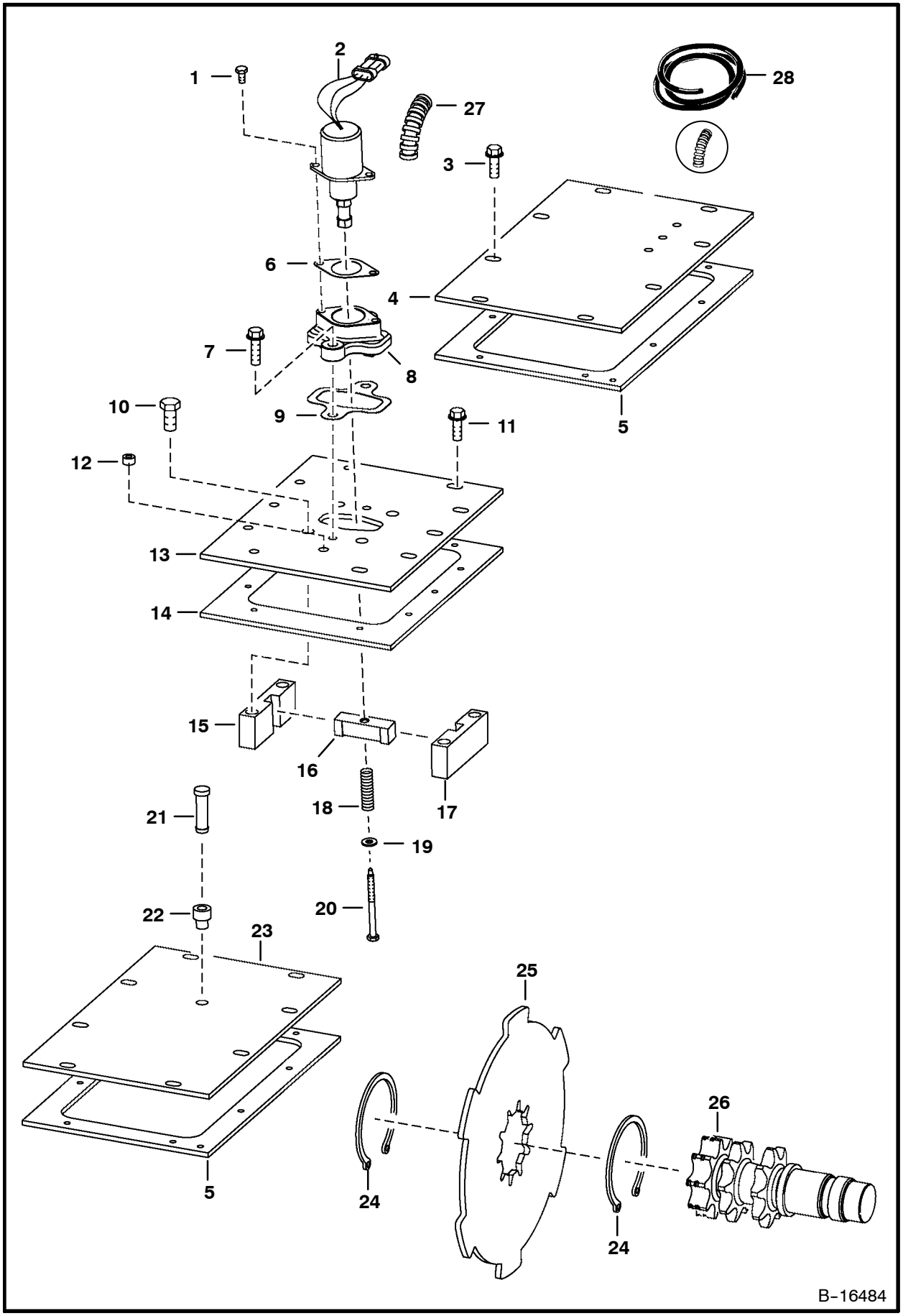
1
2
3
4
5
6
7
8
9
10
11
12
13
14
15
16
17
18
19
20
21
22
23
24
25
26
27
28
B-16484

DISC BRAKE (Cont'd)

Ref. No.	Part Number	Description	Remarks	Serial Number	Qty.
1	17C-412	BOLT			2
2	6681512	SOLENOID			1
3	84G-3712	BOLT			14
4	6729173	COVER			1
5	6703097	GASKET			2
6	6706737	GASKET			1
7	84G-3720	BOLT			2
8	6706718	MOUNT			1
9	6708016	GASKET			1
10	17C-820	BOLT			4
	47C-820	BOLT			4
11	84G-3716	BOLT			10
12	6544654	BUSHING	spacer		1
13	6706042	COVER			1
14	6706968	GASKET			1
15	6719057	BLOCK	guide - L.H.		1
16	6714278	GUIDE			1
17	6719056	BLOCK	guide - R.H.		1
18	6708018	SPRING			1
19	25E-13	WASHER			1
20	6708267	BOLT			1
21	6680970	BREATHER			1
22	6553411	BUSHING			1
23	6700330	COVER			1
24	6658672	SNAP RING			4
25	6716228	BRAKE	disc		2
26	6713456	SHAFT	double snap ring groove -		
			See Page 41		2
27	NAP	CONDUIT	5" (127 mm) long - Order Ref. 28		1
28	6584978	CONDUIT	bulk - Sold Per Foot		x

AXLE

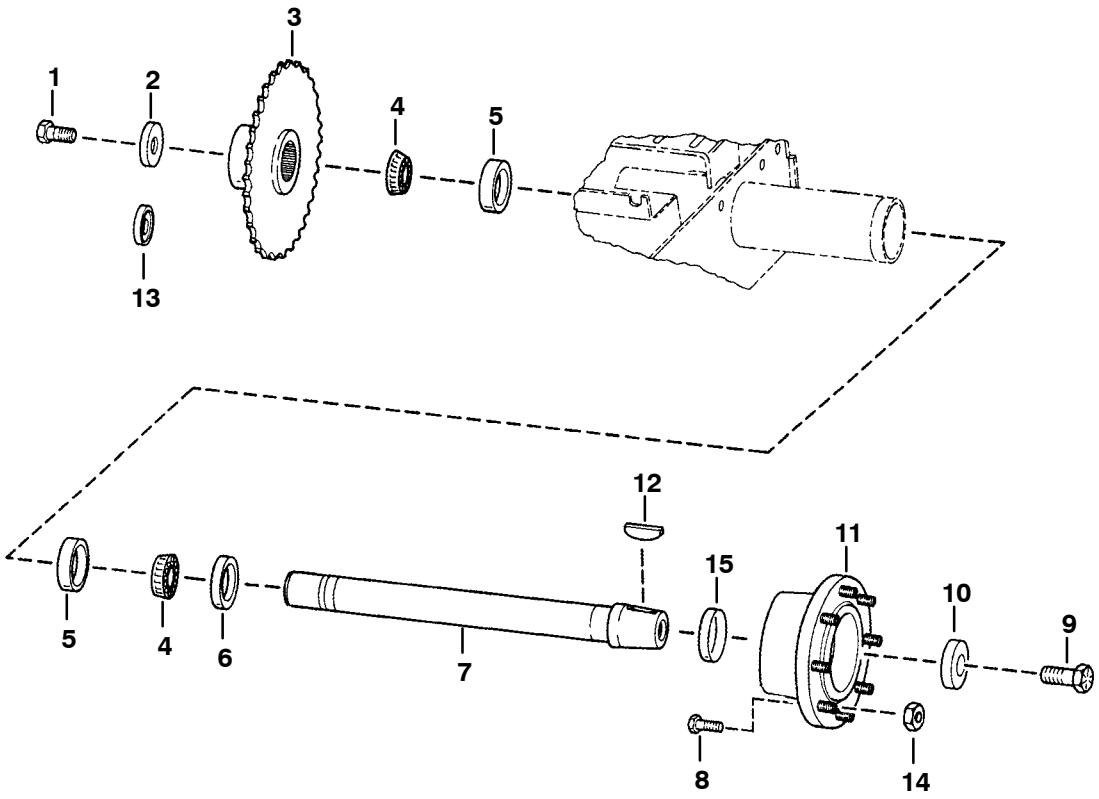

C-3270

AXLE (Cont'd)

Ref. No.	Part Number	Description	Remarks	Serial Number	Qty.
1	6679247	BOLT	1.75"(44,5 mm) long & plated		1
2	6552871	WASHER			1
3	6577204	SPROCKET			1
4	6519925	BEARING			2
5	6634609	RACE			2
6	6658228	SEAL			1
7	6569465	AXLE			1
8	6709170	STUD	wheel		8
9	18C-1636	BOLT			1
10	6716843	WASHER	recessed		1
11	6578689	HUB			1
12	6J-1664	KEY			1
13	6563606	WASHER	recessed - Used to take up .005 or .010 end play on axle		1
14	6564669	NUT	wheel		8
15	6662306	RING	wear - service part only		1
	6722907	KIT	axle seal & wear sleeve - See Page 191		4

HYDRAULIC CIRCUITRY
(W/O Bucket Positioning Valve)

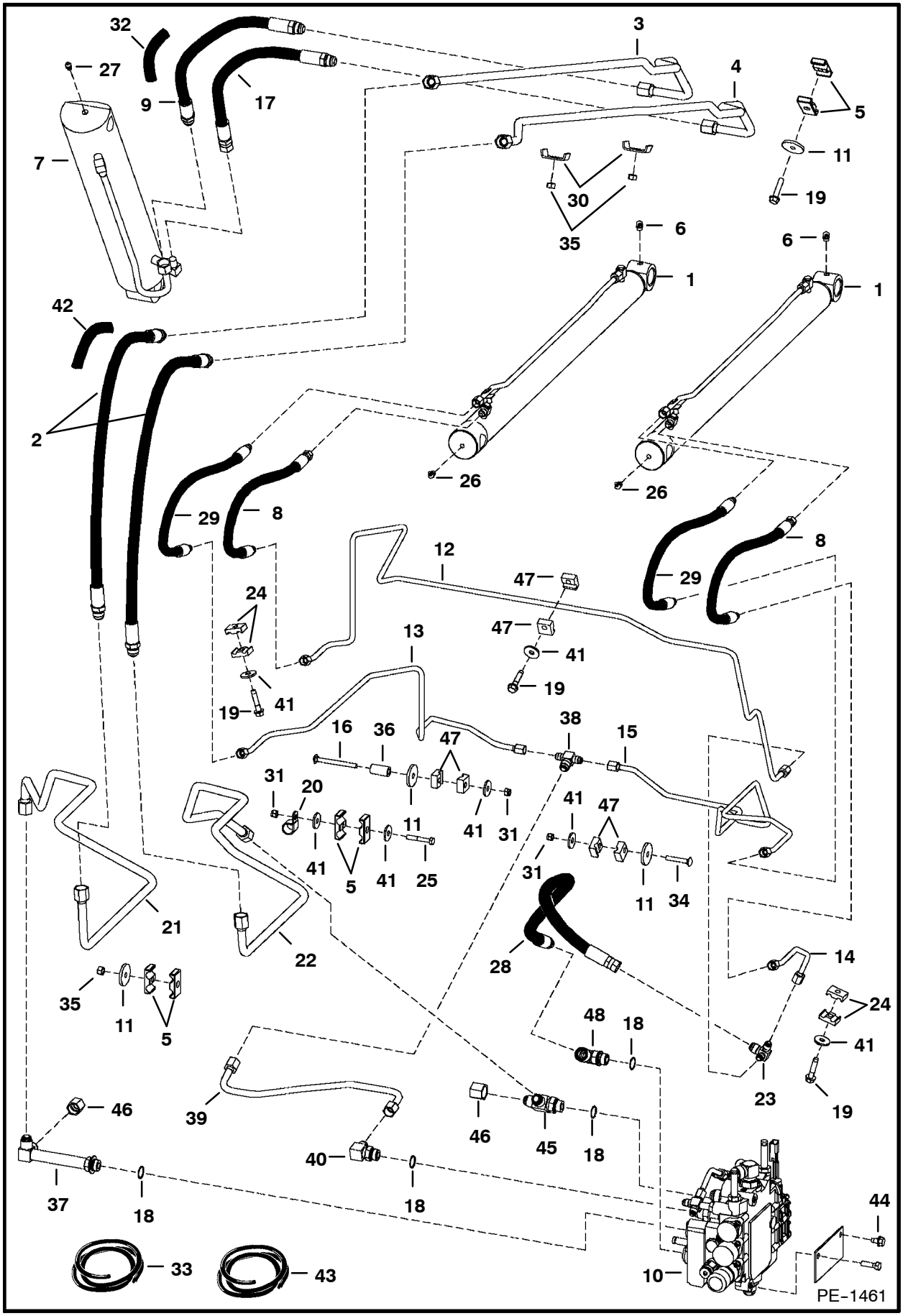

HYDRAULIC CIRCUITRY (Cont'd)
(W/O Bucket Positioning Valve)

Ref. No.	Part Number	Description	Remarks	Serial Number	Qty.
1		CYLINDER	lift - See Page 59		2
2	6577669	HOSE			2
3	6733356	TUBE			1
4	6733357	TUBE			1
5	6701893	CLAMP			6
6	12H-15	GREASE ZERK			2
7		CYLINDER	tilt - See Page 57		1
8	6727686	HOSE			2
9	6704335	HOSE			1
10		VALVE	See Page 63		1
11	872229	WASHER			3
12	6727635	TUBE			1
13	6727634	TUBE			1
14	6727633	TUBE			1
15	6733271	TUBE			1
16	37C-556	BOLT			1
17	6704336	HOSE			1
18	79K-10	O-RING			4
19	84G-3728	BOLT			3
20	30H-46	CLAMP			1
21	6727636	TUBE			1
22	6729902	TUBE			1
23	6729903	TEE			1
24	6726277	CLAMP			4
25	17C-532	BOLT			1
26	11H-15	GREASE ZERK			2
27	10H-25	GREASE ZERK			1
28	6729905	HOSE			1
29	6727687	HOSE			2
30	6502203	CLAMP			2
31	59D-5	NUT			3
32	NAP	COVER	18" (457,2 mm) - Order Ref. 33		2
33	6656155	COVER	bulk - Sold Per Foot		x
34	37C-532	BOLT			1
35	95D-6	NUT			2
36	6714428	SPACER			1
37	6730142	ELBOW	W/Ref. 18		1
38	6727659	TEE			1
39	6727630	TUBE			1
40	17KB-810	ELBOW	W/Ref. 18		1
41	619021	WASHER			7
42	NAP	COVER	36"(914,4 mm) - Order Ref. 43		1
43	6705749	COVER	bulk-Sold Per Foot		x
44	17C-620	BOLT			2
45	21KB-1010	TEE	W/Ref. 18		1
46	36K-7	CAP			2
47	6727707	CLAMP			6
48	6814531	ELBOW	W/Ref. 18		1

HYDRAULIC CIRCUITRY
(W/Bucket Positioning Valve)

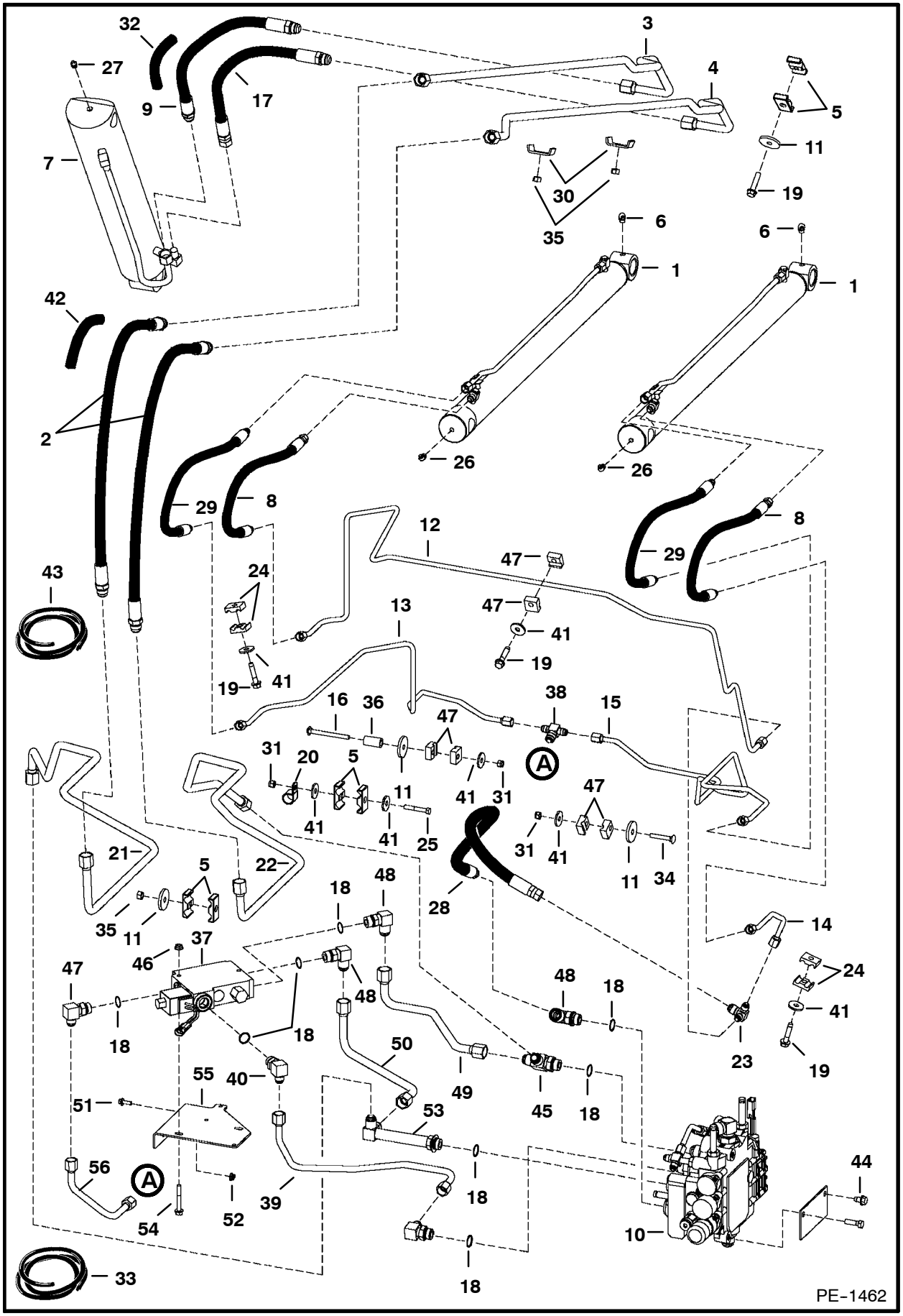

HYDRAULIC CIRCUITRY (Cont'd)
(W/Bucket Positioning Valve)

Ref. No.	Part Number	Description	Remarks	Serial Number	Qty.
1		CYLINDER	lift - See Page 59		2
2	6577669	HOSE			2
3	6733356	TUBE			1
4	6733357	TUBE			1
5	6701893	CLAMP			6
6	12H-15	GREASE ZERK			2
7		CYLINDER	tilt - See Page 57		1
8	6727686	HOSE			2
9	6704335	HOSE			1
10		VALVE	See Page 63		1
11	872229	WASHER			3
12	6727635	TUBE			1
13	6727634	TUBE			1
14	6727633	TUBE			1
15	6733271	TUBE			1
16	37C-556	BOLT			1
17	6704336	HOSE			1
18	79K-10	O-RING			4
19	84G-3728	BOLT			3
20	30H-46	CLAMP			1
21	6734377	TUBE			1
22	6734376	TUBE			1
23	6729903	TEE	W/Ref. 18		1
24	6726277	CLAMP			4
25	17C-532	BOLT			1
26	11H-15	GREASE ZERK			2
27	10H-25	GREASE ZERK			1
28	6729905	HOSE			1
29	6727687	HOSE			2
30	6502203	CLAMP			2
31	59D-5	NUT			3
32	NAP	COVER	18" (457,2 mm) - Order Ref. 33		2
33	6656155	COVER	bulk - Sold Per Foot		x
34	37C-532	BOLT			1
35	95D-6	NUT			2
36	6714428	SPACER			1
37	6666341	VALVE	bucket pos. - See Page 75		1
38	6727659	TEE			1
39	6727628	TUBE			1
40	17KB-810	ELBOW	W/Ref. 18		1
41	619021	WASHER			7
42	NAP	COVER	36"(914,4 mm) - Order Ref. 43		1
43	6705749	COVER	bulk - Sold Per Foot		x
44	17C-620	BOLT			2
45	21KB-1010	TEE	W/Ref. 18		1
46	57D-5	NUT			2
47	6727707	CLAMP			6
48	17KB-1010	ELBOW	W/Ref. 18		3
49	6727629	TUBE			1
50	6727626	TUBE			1
51	35C-412	BOLT			2

HYDRAULIC CIRCUITRY (Cont'd)
(W/Bucket Positioning Valve)

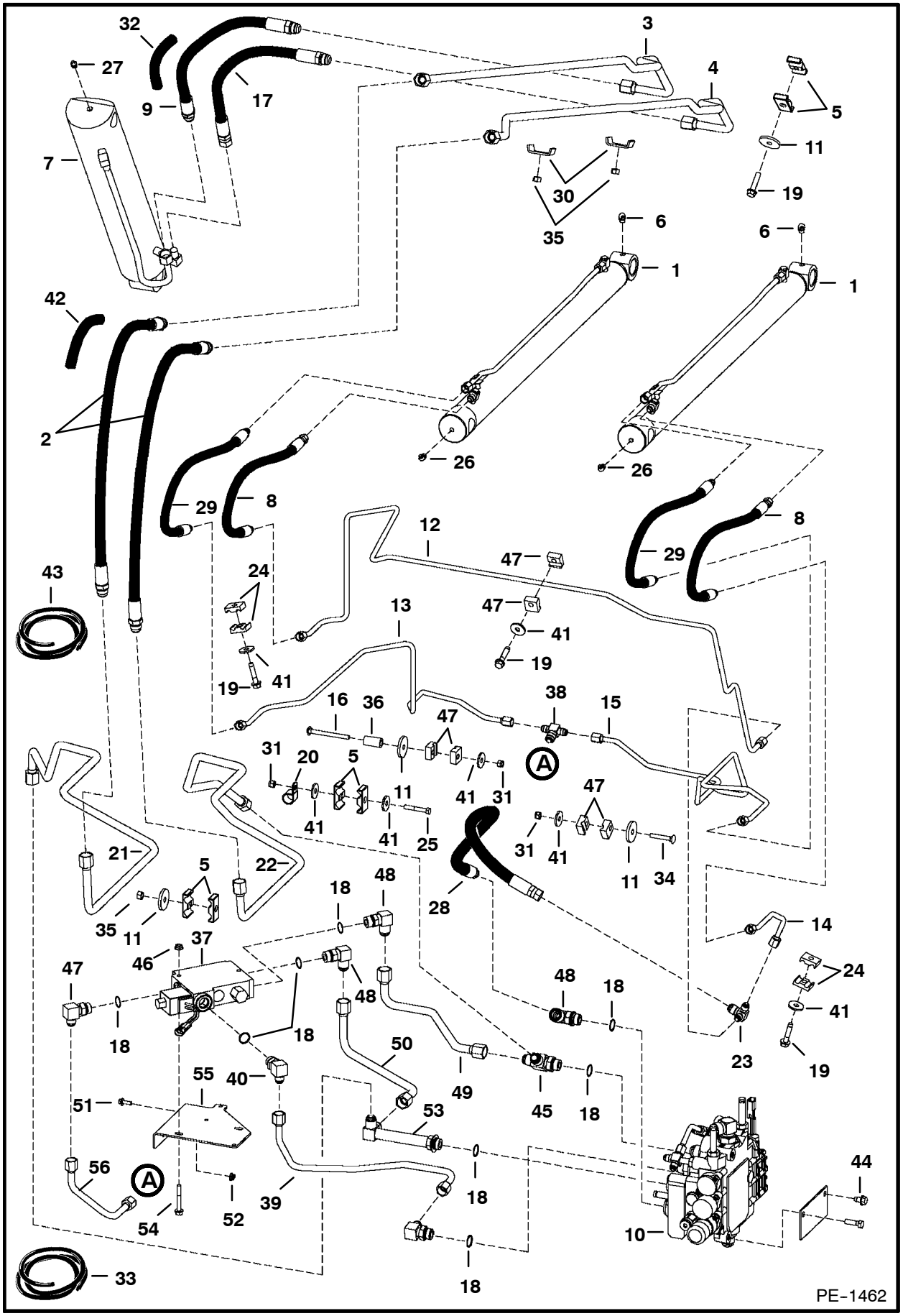

HYDRAULIC CIRCUITRY (Cont'd)
(W/Bucket Positioning Valve)

Ref. No.	Part Number	Description	Remarks	Serial Number	Qty.
52	55D-4	NUT			2
53	6730142	TEE			1
54	35C-536	BOLT			2
55	6704833	BRACKET			1
56	6727627	TUBE			1

MANUAL LIFT RELEASE SYSTEM

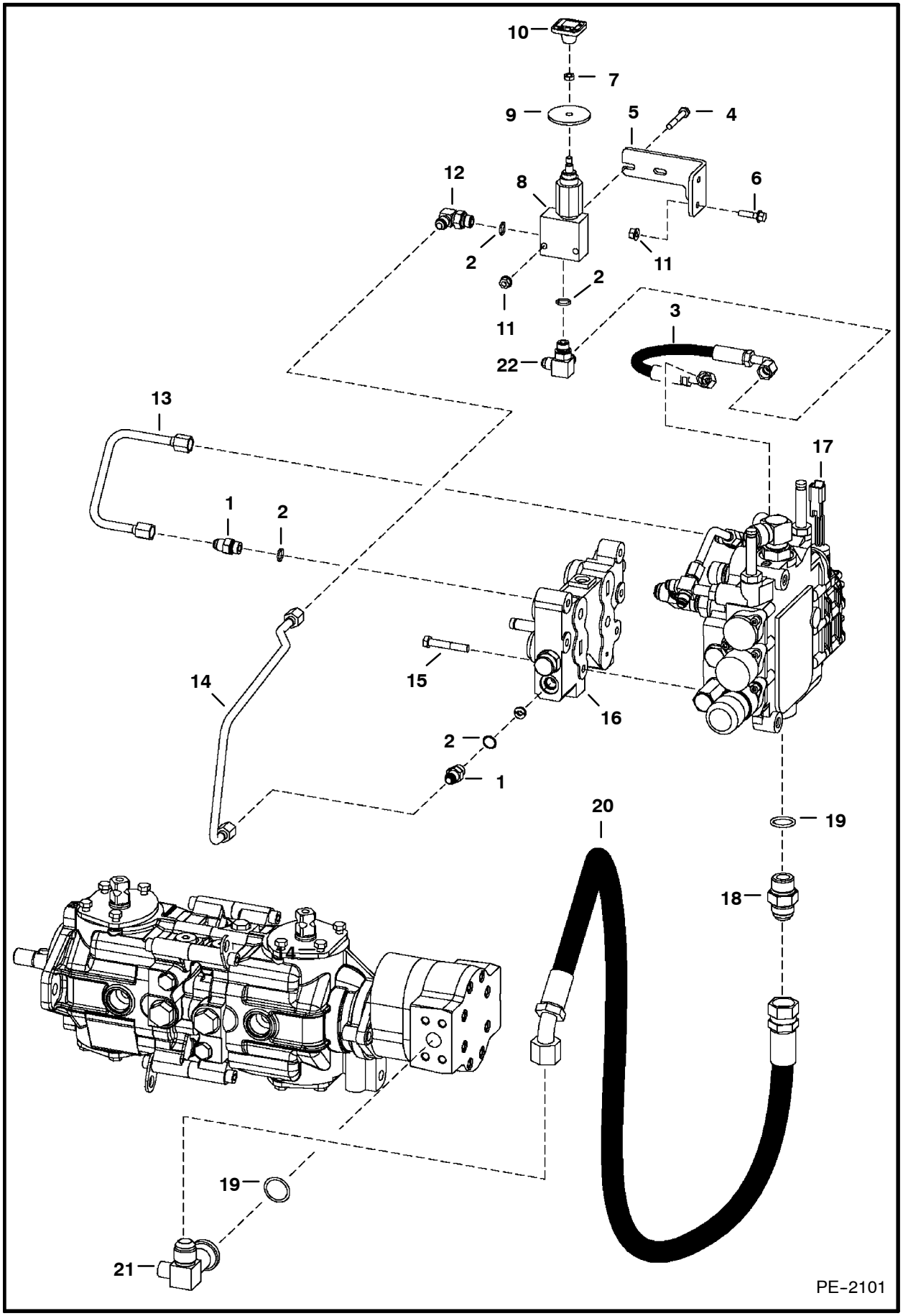

MANUAL LIFT RELEASE SYSTEM (Cont'd)

Ref. No.	Part Number	Description	Remarks	Serial Number	Qty.
1	15KB-606	ADAPTER	W/Ref. 2		2
2	79K-6	O-RING			x
3	6732613	HOSE			1
4	17C-428	BOLT			2
5	6729908	MOUNT			1
6	35C-416	BOLT			2
7	7D-4	NUT			1
8	6667844	VALVE	manual lift release - See Page 73		1
9	6707101	SEAL	neoprene		1
10	6668913	KNOB	red square		1
11	83D-4	NUT			4
12	17KB-606	ELBOW	W/Ref. 2		2
13	6735837	TUBE			1
14	6729909	TUBE			1
15	43C-532	BOLT			6
16	6628571	VALVE	BICS control - See Page 71		1
17	NSS	VALVE	control - Order 6814995 Valve - See Page 63		1
18	15KB-1212	ADAPTER	W/Ref. 19		1
19	79K-12	O-RING			2
20	6734246	HOSE			1
21	18KB-1212	ELBOW	W/Ref. 19		1
22	6725182	TEE	W/Ref. 2		2

AUXILIARY HYDRAULICS
(W/Pressure Relief)

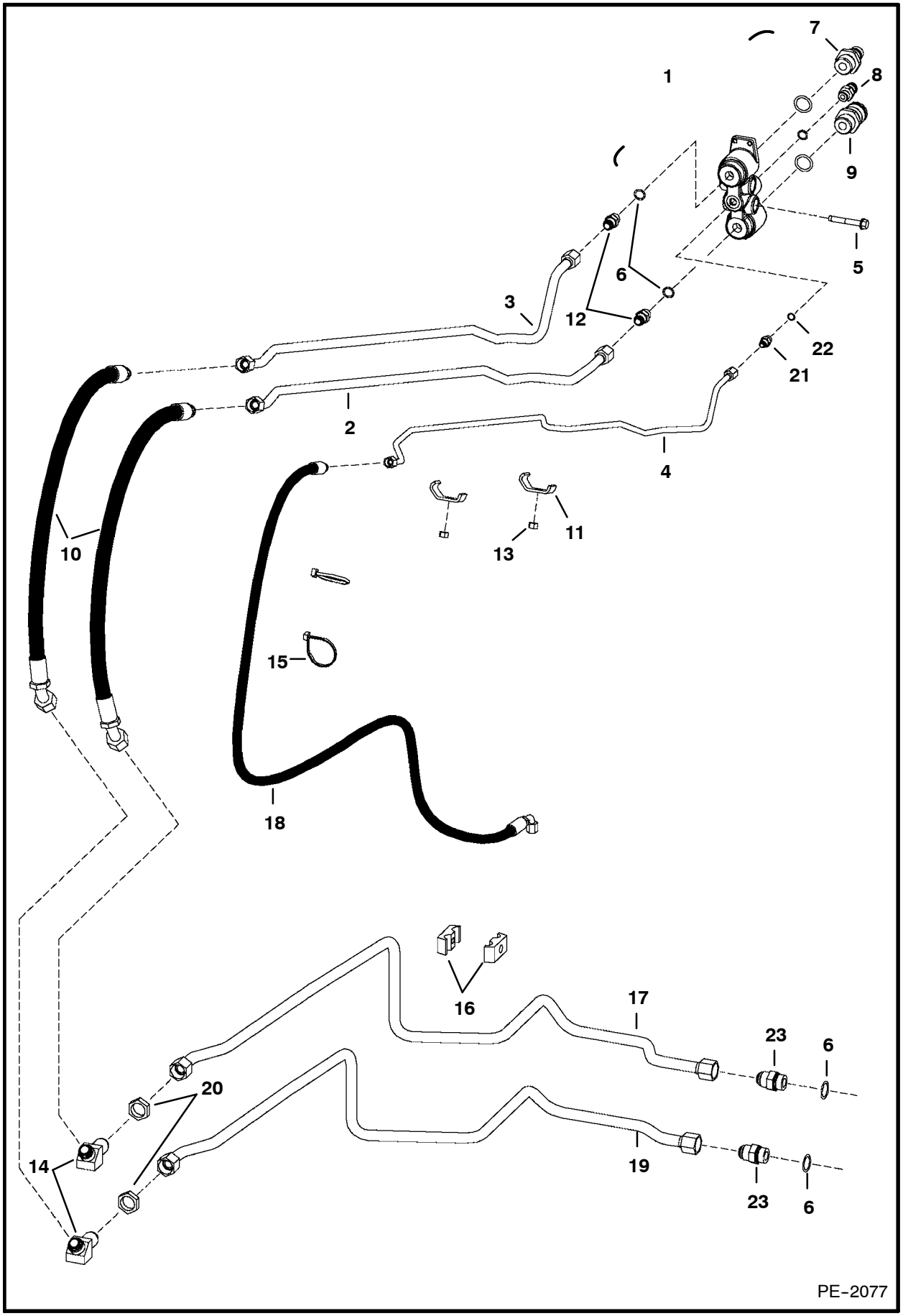

AUXILIARY HYDRAULICS (Cont'd)
(W/Pressure Relief)

Ref. No.	Part Number	Description	Remarks	Serial Number	Qty.
1	6678951	BLOCK ASSY.	coupler		1
2	6731730	TUBE			1
3	6731731	TUBE			1
4	6731908	TUBE			1
5	84G-3740	BOLT			2
6	79K-12	O-RING			x
7	6679837	KIT	coupler - male		1
8	6679838	KIT	coupler - male		1
9	6679839	KIT	coupler - female		1
10	6729153	HOSE	W/cover		2
11	6731732	CLAMP			2
12	6679835	KIT	adapter - W/NSS spring & Ref. 6		2
13	91D-6	NUT			2
14	46K-8	ELBOW			2
15	6624289	TIE			4
16	6592506	CLAMP			2
17	6731729	TUBE			1
18	6732220	HOSE			1
19	6731728	TUBE			1
20	86F-8	NUT			2
21	15KB-606	ADAPTER	W/Ref. 22		2
22	79K-6	O-RING			1
23	15KB-1212	ADAPTER	W/Ref. 6		2

TILT CYLINDER

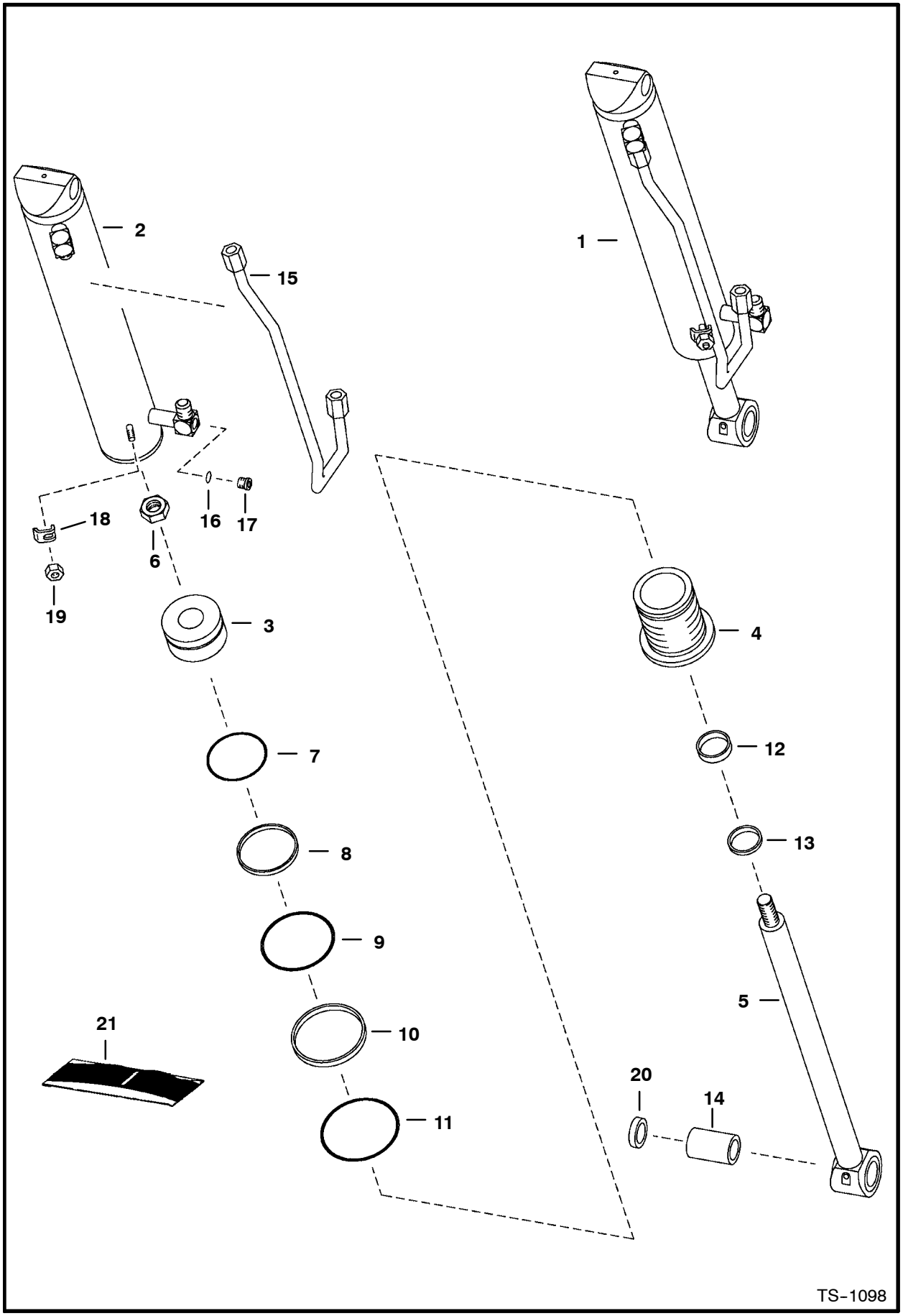

TILT CYLINDER (Cont'd)

Ref. No.	Part Number	Description	Remarks	Serial Number	Qty.
1	6804630	CYLINDER	tilt - Ref. 2-19		1
2	NAP	CASE	3.5" (88,9 mm) I.D. - Order Ref. 1		1
3	6804632	PISTON	1.125" (28,6 mm) I.D.		1
4	6539934	HEAD			1
5	6804631	ROD	1.5" (38,1 mm) O.D - W/Ref. 14- W/ grease zerk hole		1
6	6810539	NUT			1
7	54K-30300	O-RING			1
8	1530265	SEAL	piston		1
9	54K-60304	O-RING			1
10	80K-338	WASHER	back-up		1
11	58K-238	O-RING			1
12	6667326	SEAL			1
13	6665086	SEAL	wiper		1
14	6805150	BUSHING	wear - W/ grease zerk hole		1
15	6586586	TUBE			1
16	75K-6	O-RING			2
17	6812171	PLUG	W/Ref. 16		2
18	6562266	CLAMP			1
19	95D-6	NUT			1
20	225855	SEAL			2
21	6816323	SEAL KIT	Ref. 6 - 13		1

LIFT CYLINDER

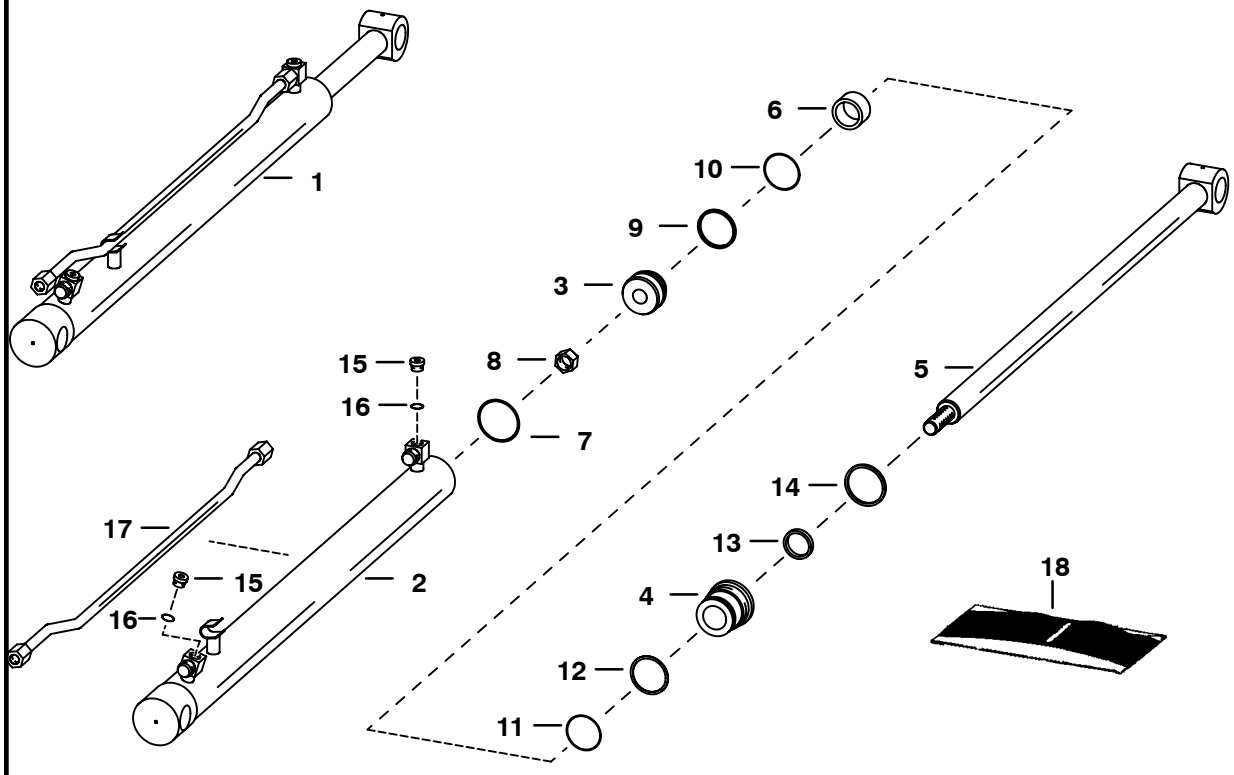

TS-1097

LIFT CYLINDER (Cont'd)

Ref. No.	Part Number	Description	Remarks	Serial Number	Qty.
1	6809201	CYLINDER	Ref. 2 - 17		2
2	6809209	CASE			1
3	6677195	PISTON	W/Ref. 9 & 10 - W/Non-		
			Replaceable wear sleeves		1
4	6539323	HEAD			1
5	6809759	ROD	1.25" dia.		1
6	6539299	SPACER			1
7	58K-136	O-RING			1
8	92D-14	NUT			1
9	6516231	RING			1
10	54K-30118	O-RING			1
11	54K-40124	O-RING			1
12	73K-224	WASHER	back-up		1
13	6667324	SEAL	rod		1
14	6665208	SEAL	wiper		1
15	6812170	PLUG	W/Ref. 16		2
16	75K-3	O-RING			2
17	6809202	TUBE			1
18	6804927	SEAL KIT	Ref. 7 - 14		1

CONTROL PEDALS

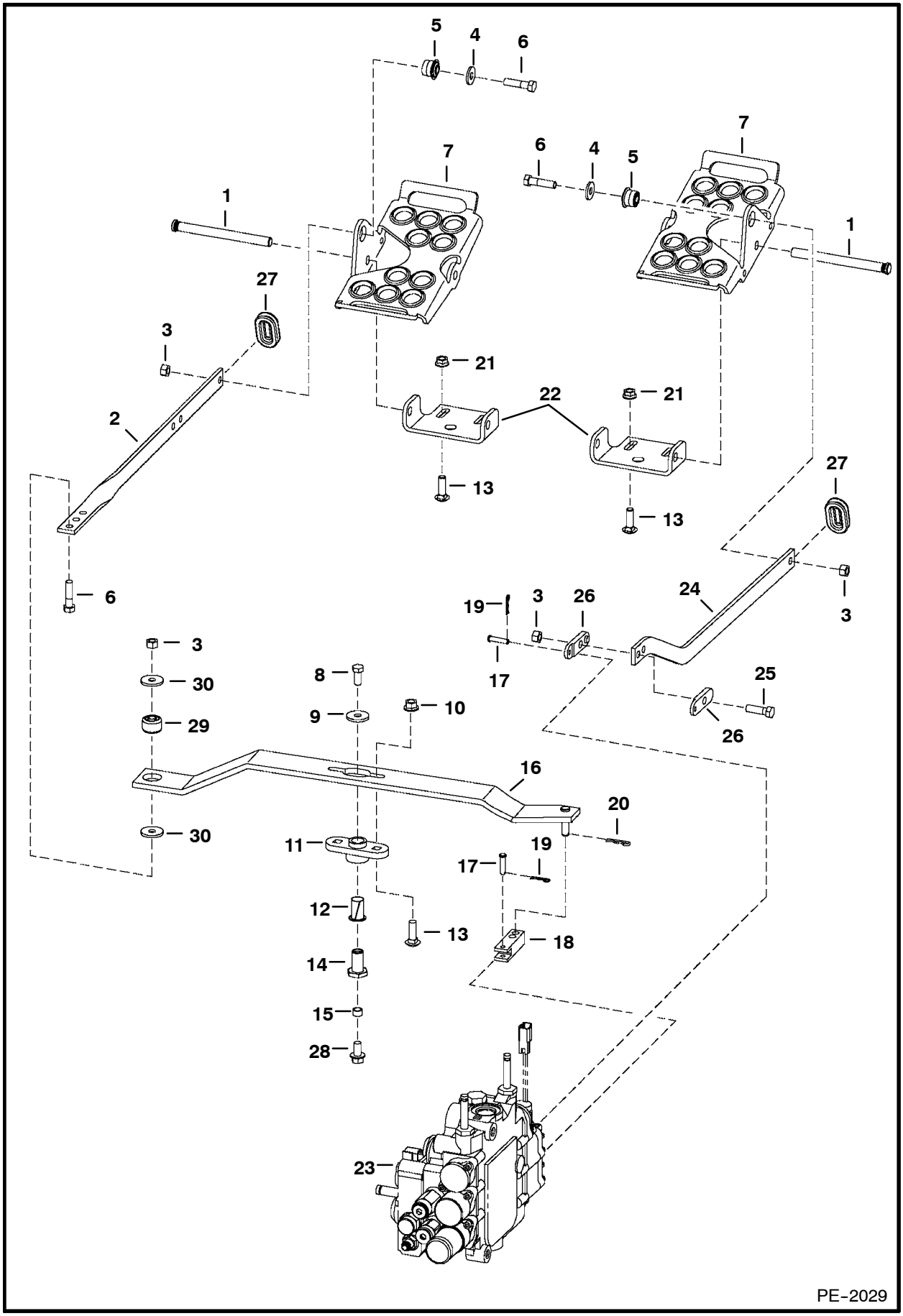

CONTROL PEDALS (Cont'd)

Ref. No.	Part Number	Description	Remarks	Serial Number	Qty.
1	6564657	PIN			2
2	6576302	BAR			1
3	95D-6	NUT			5
4	6563914	WASHER			2
5	6665701	BUSHING			2
6	17C-624	BOLT			3
7	6726680	PEDAL			2
8	6665839	BOLT			1
9	619021	WASHER			2
10	83D-6	NUT			2
11	6708043	BUSHING	flange		1
12	6512026	BUSHING			1
13	37C-620	BOLT			6
14	6706104	RETAINING NUT			1
15	6544654	BUSHING	spacer		1
16	6733942	LEVER			1
17	6564654	PIN			2
18	6706105	YOKE			1
19	6513495	COTTER PIN			2
20	1306637	PIN			1
21	57D-6	NUT			4
22	6726679	MOUNT			2
23		VALVE	See Page 63		1
24	6577813	BAR			1
25	17C-620	BOLT			1
26	6708009	LINK			2
27	6577961	GROMMET			2
28	35C-612	BOLT			1
29	6678067	BUSHING	torsion		1
30	6737388	WASHER			2

HYDRAULIC CONTROL VALVE
(BICS Combo Valve)

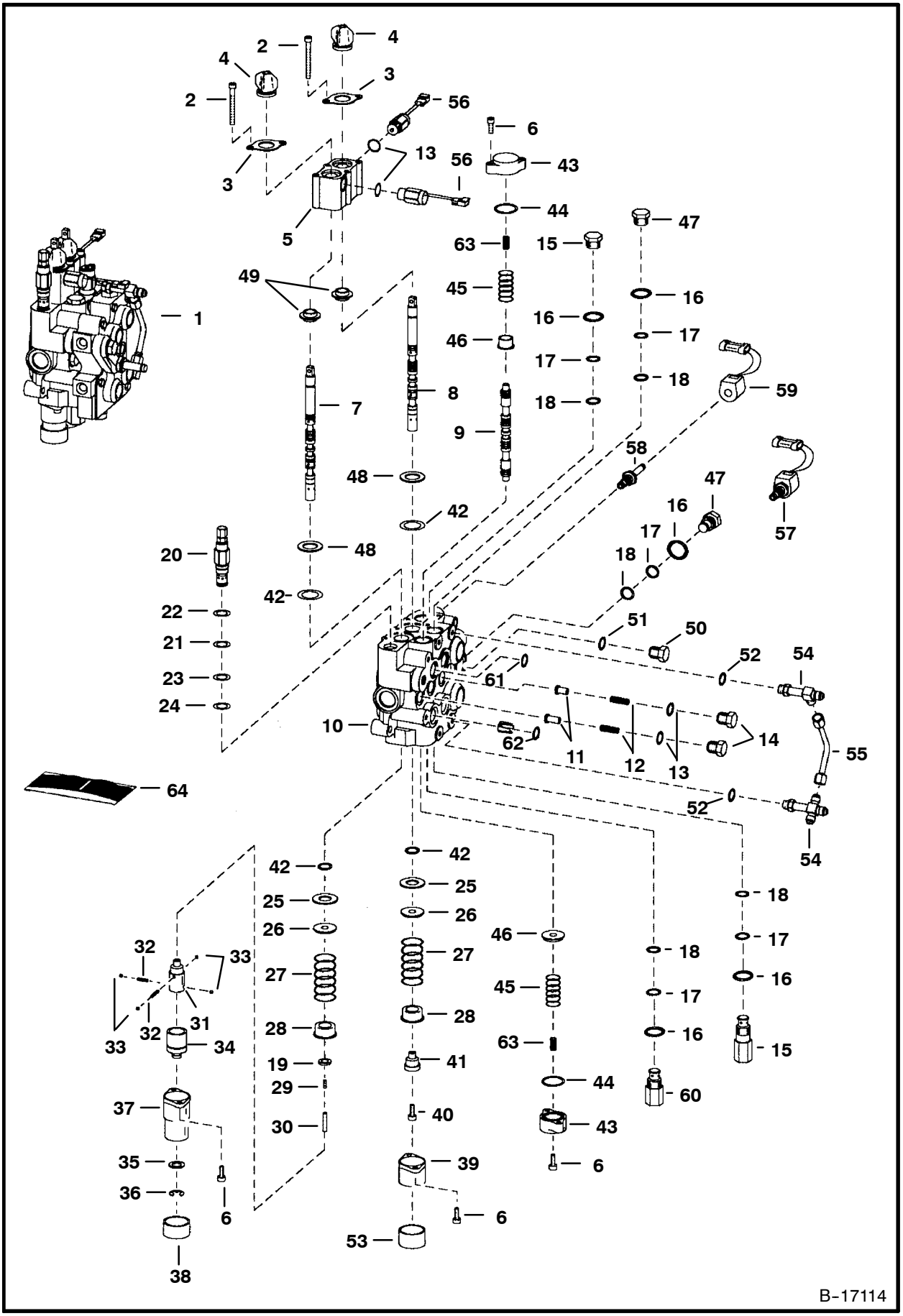

HYDRAULIC CONTROL VALVE (Cont'd)
(BICS Combo Valve)

Ref. No.	Part Number	Description	Remarks	Serial Number	Qty.
1	6814995	VALVE	W/Fittings		1
	6628571	VALVE	BICS control - See Page 71		1
2	29G-444	BOLT			4
3	6589564	RETAINER			2
4	6587763	BOOT			2
5	6812031	BLOCK	lock		1
6	29G-416	BOLT			8
7	6674808	SPOOL	lift - # 1 or Red		1
	6674809	SPOOL	lift - # 2 or Green		1
	6674810	SPOOL	lift - # 3 or Black		1
8	6674814	SPOOL	tilt - # 1 or Red		1
	6674815	SPOOL	tilt - # 2 or Green		1
	6674816	SPOOL	tilt - # 3 or Black		1
9	6588074	SPOOL	auxiliary		3
10	NSS	BODY			1
11	6592115	SEAT	load check		3
12	6592117	SPRING			3
13	79K-8	O-RING			3
14	6592116	NUT	load check		3
15	6667549	VALVE	anti-cavity check -W/Ref. 16-18		2
16	79K-10	O-RING			2
17	80K-14	WASHER	back-up		5
18	58K-14	O-RING			5
19	54K-20002	O-RING			1
20	6678571	VALVE	main relief - W/Ref. 21-24		1
21	58K-17	O-RING			1
22	6665569	WASHER	back-up		1
23	25K-20016	O-RING			1
24	6665570	RING	glide		1
25	6595663	BUSHING			2
26	6587523	WASHER			2
27	6587580	SPRING			2
28	6592100	COLLAR			2
29	6596807	PLUG			1
30	6586918	SCREW			1
31	6587575	ADAPTER			1
32	6592107	SPRING			2
33	6592105	BALL			4
34	6531270	SLEEVE			1
35	6592098	WASHER			1
36	799119	SNAP RING			1
37	6589226	BONNET	.625" flange		1
38	6660644	CAP			1
39	6587633	BONNET			1
40	30G-416	BOLT			1
41	6592109	ADAPTER			1
42	6683274	SEAL			4
43	6588781	END CAP			2
44	58K-124	O-RING			2
45	6806007	SPRING			2
46	6595951	SLEEVE			2

HYDRAULIC CONTROL VALVE (Cont'd)
(BICS Combo Valve)

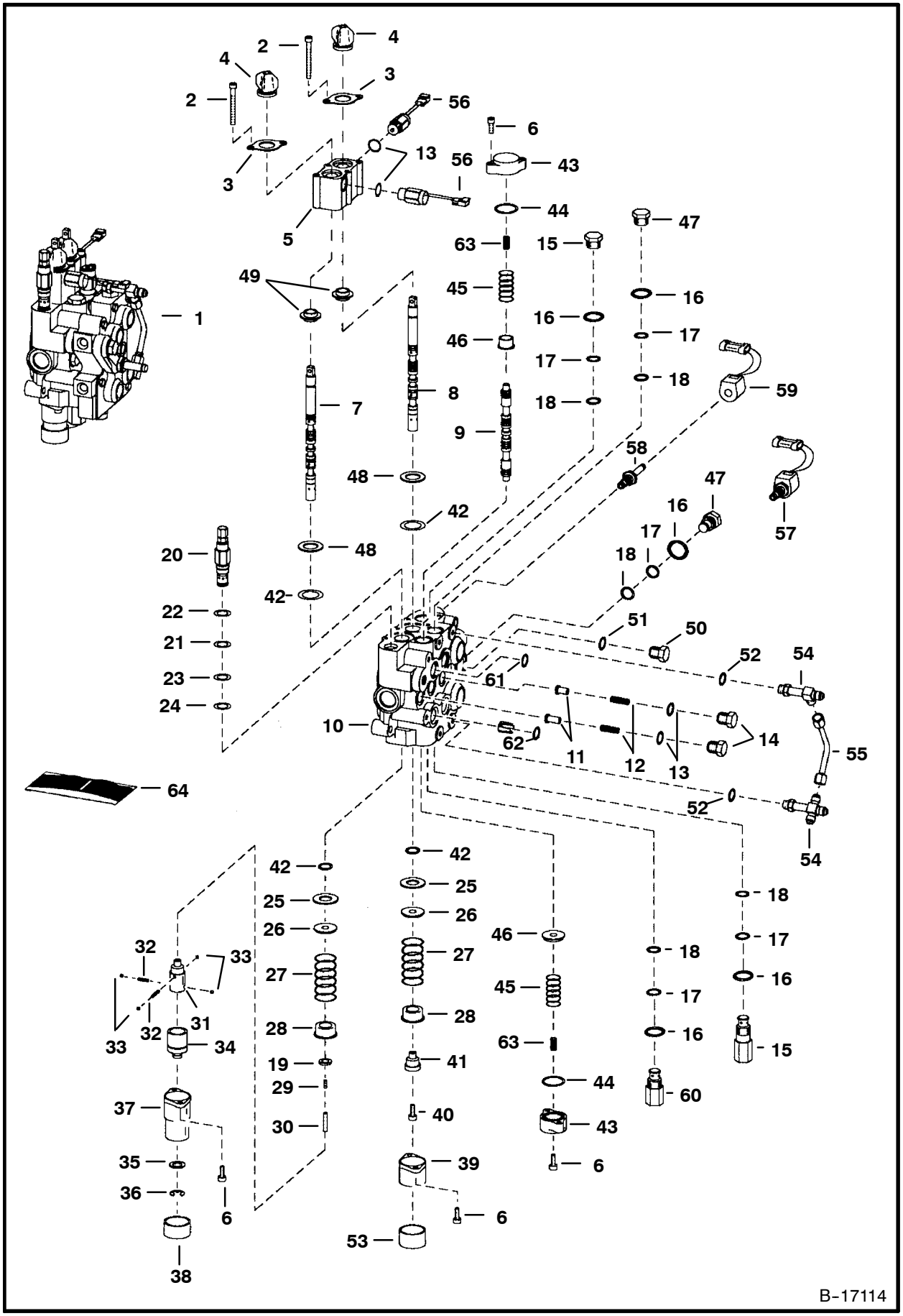

HYDRAULIC CONTROL VALVE (Cont'd)
(BICS Combo Valve)

Ref. No.	Part Number	Description	Remarks	Serial Number	Qty.
47	6592720	PLUG	W/Ref. 16-18		2
48	58K-127	O-RING			2
49	6805102	BUSHING			2
50	90K-8	PLUG	W/Ref. 51		1
51	75K-12	O-RING			1
52	79K-6	O-RING			x
53	6662848	CAP			1
54	6805241	CONNECTOR	W/Ref. 52		2
55	6577690	TUBE			1
56	6677383	SOLENOID	W/Ref. 13 - 5"(127 mm) wire		2
57		VALVE	solenoid - W/Ref. 58 & 59		2
		SEAL KIT			x
58	6681932	STEM	W/O screen		2
	79K-10	O-RING			2
59		COIL	10 volt - W/Nut		2
60	6678574	VALVE	optional - port relief & anti-cav. W/Ref. 16-18 - 3500 PSI - use in tilt cylinder base end port		1
61	55K-204	O-RING	See Page 71		1
62	55K-212	O-RING	See Page 71		4
63	6596332	SPRING			2
64	6816252	SEAL KIT	two spool - Ref. 2, 4, 19, 29, 42 & 48		x
	6632279	SEAL KIT	main relief - Ref. 21-24		x
	6809425	SEAL KIT	Ref. 13 & 16-18		x
	6816253	SEAL KIT	complete - Ref. 2, 4, 13, 16-18, 21-24, 42, 44, 48, 61 & 62 - Also includes seal for Ref. 57		x

HYDRAULIC CONTROL VALVE
(ACS) (W/BICS Combo Valve)

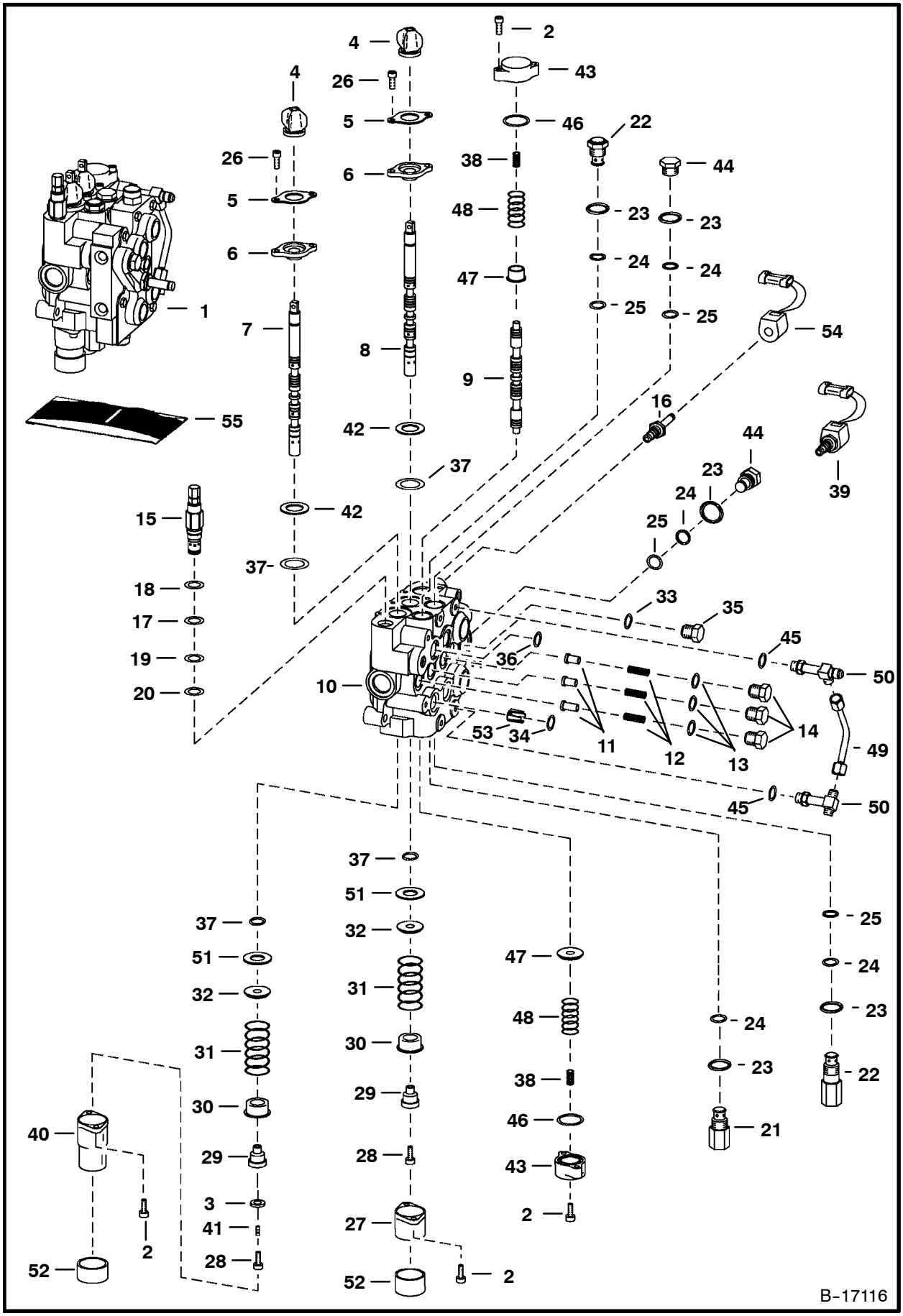

HYDRAULIC CONTROL VALVE (Cont'd)
(ACS) (W/BICS Combo Valve)

Ref. No.	Part Number	Description	Remarks	Serial Number	Qty.
1	6814997	VALVE			1
	6628571	VALVE	BICS control - See Page 71		1
2	29G-416	BOLT			8
3	54K-20002	O-RING			1
4	6587763	BOOT			2
5	6589564	RETAINER			2
6	6589565	RETAINER	seal		2
7	6677660	SPOOL	lift - # 1 or Red		1
	6677661	SPOOL	lift - # 2 or Green		1
8	6677662	SPOOL	tilt - # 1 or Red		1
	6677663	SPOOL	tilt - # 2 or Green		1
9	6588074	SPOOL	auxiliary		3
10	NSS	BODY			1
11	6592115	SEAT	load check		3
12	6592117	SPRING			3
13	79K-8	O-RING			3
14	6592116	NUT	load check		3
15	6678571	VALVE	main relief - W/Ref. 17-20		
			2025 PSI		1
16	6681932	STEM			2
17	58K-17	O-RING			1
18	6665569	WASHER	back-up		1
19	25K-20016	O-RING			1
20	6665570	RING	glide		1
21	6678574	VALVE	port relief - 3400-3600 PSI -		
			W/Ref. 23-25		1
22	6667549	VALVE	anti-cavity check -W/Ref. 23-25		2
23	79K-10	O-RING			2
24	80K-14	WASHER	back-up		5
25	6677106	O-RING			5
26	29G-412	BOLT			4
27	6587633	BONNET			1
28	30G-416	BOLT			2
29	6592109	ADAPTER			2
30	6592100	COLLAR			2
31	6587580	SPRING			2
32	6587523	WASHER			2
33	75K-12	O-RING			1
34	55K-212	O-RING			4
35	90K-8	PLUG	W/Ref. 33		1
36	55K-204	O-RING			1
37	6683274	SEAL			4
38	6806007	SPRING	white		2
39		VALVE	solenoid - W/Ref. 16 & 54		2
		SEAL KIT			x
40	6803092	BONNET	.625" flange		1
41	6801167	PLUG	plastic		1
42	58K-127	O-RING			2
43	6588781	END CAP			2
44	6592720	PLUG	W/Ref. 23-25		2
45	79K-6	O-RING			x

HYDRAULIC CONTROL VALVE (Cont'd)
(ACS) (W/BICS Combo Valve)

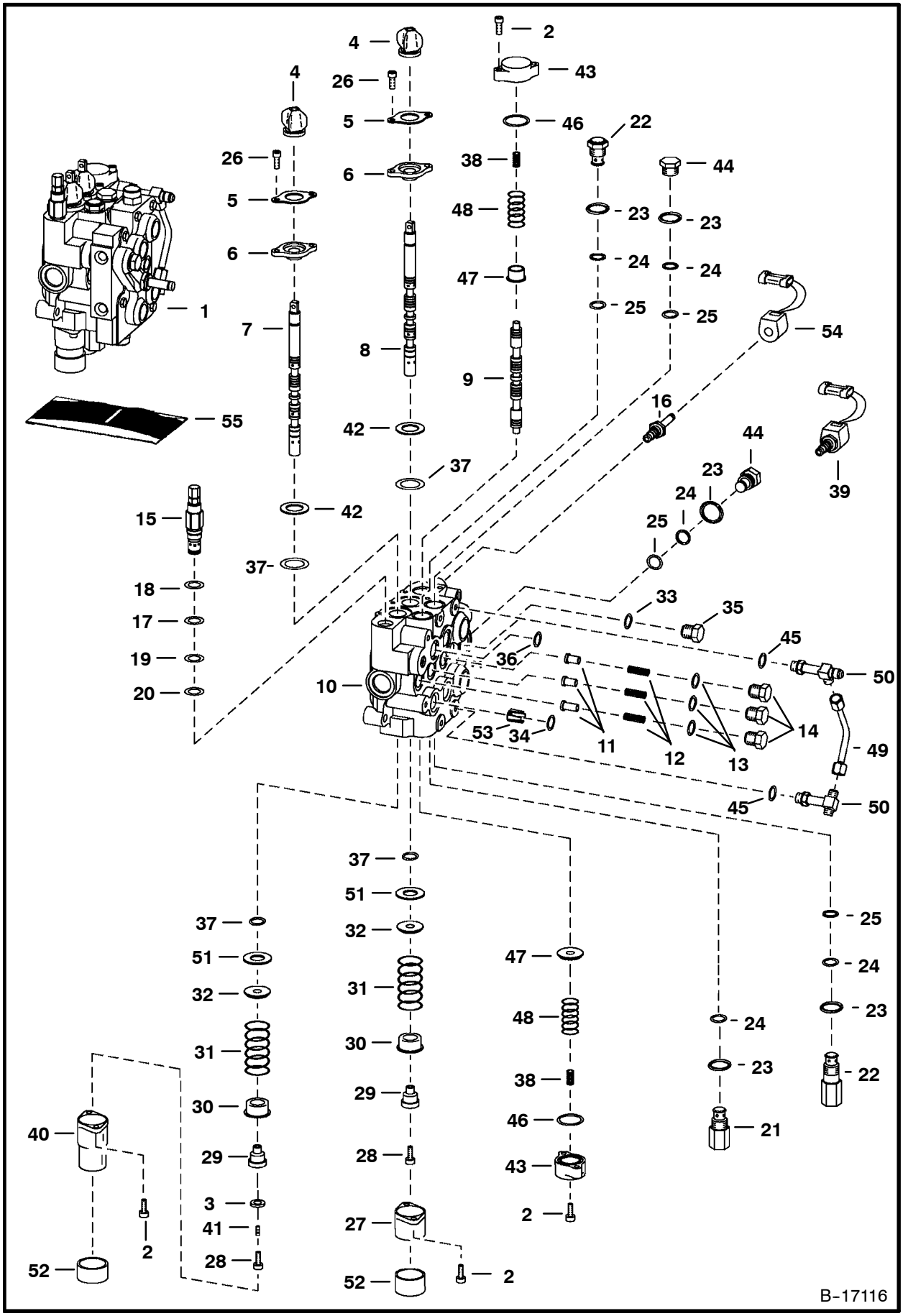

HYDRAULIC CONTROL VALVE (Cont'd)
(ACS) (W/BICS Combo Valve)

Ref. No.	Part Number	Description	Remarks	Serial Number	Qty.
46	58K-124	O-RING			2
47	6595951	SLEEVE			2
48	6596332	SPRING			2
49	6577690	TUBE			1
50	6805241	CONNECTOR	W/Ref. 45		2
51	6595663	BUSHING			2
52	6662848	CAP			2
53	6534630	RESTRICTOR	.183/.187		1
54		COIL	10 volt - W/nut		2
55	6816250	SEAL KIT	one spool - Ref. 2, 4, 26, 37 & 41		x
	6632279	SEAL KIT	main relief - Ref. 17-20		x
	6809425	SEAL KIT	Ref. 13 & 23-25		x
	6816253	SEAL KIT	complete - Ref. 2, 4, 13, 17-20, 23-25, 34, 35, 37, 42 & 46		x

BICS CONTROL VALVE

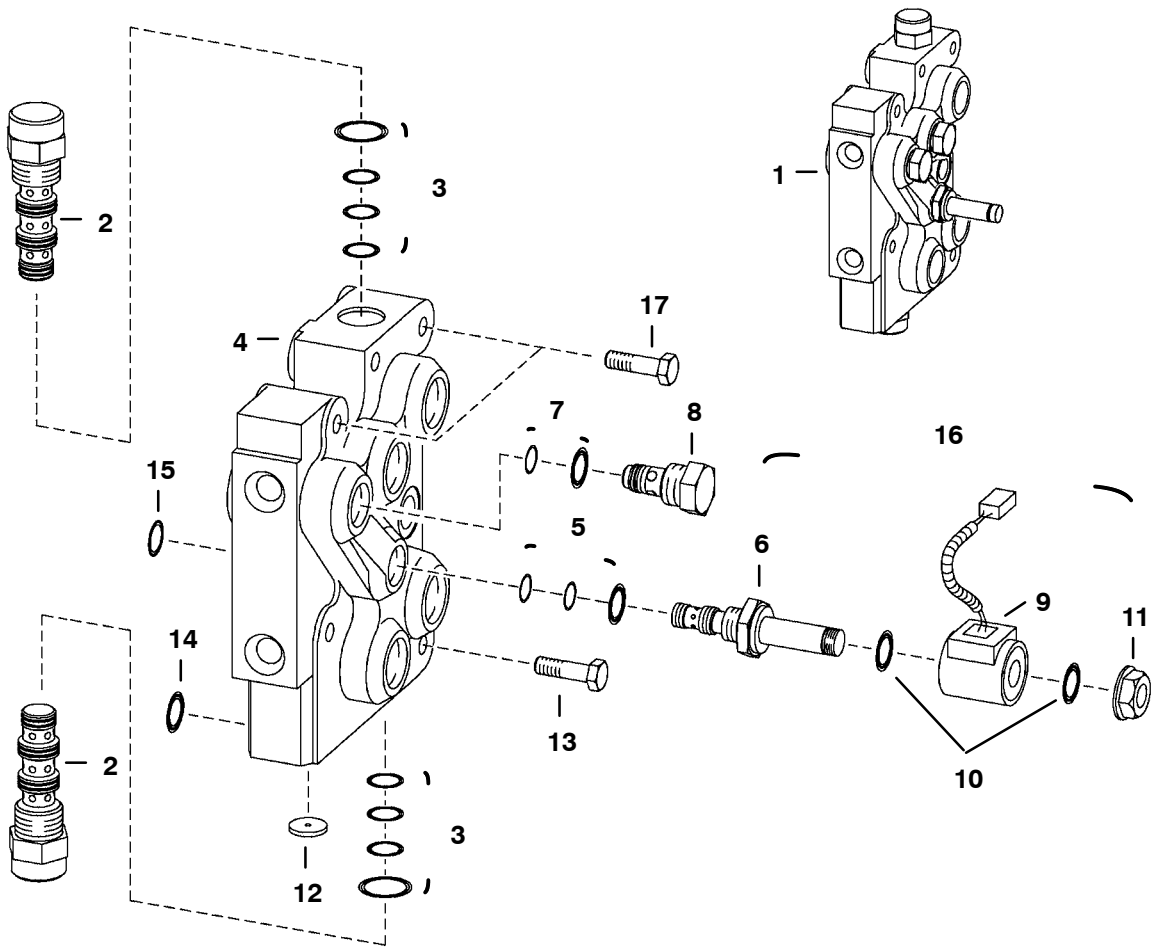

ICS CONTROL VALVE (Cont'd)

Ref. No.	Part Number	Description	Remarks	Serial Number	Qty.
1	6628571	VALVE	Ref. 2 - 8		1
2	6668765	VALVE	pilot operated		2
3	6669734	SEAL KIT			x
4	NSS	BODY			1
5	6669732	SEAL KIT			x
6	6667687	STEM	solenoid valve		1
7	6669733	SEAL KIT			x
8	6669057	CHECK VALVE	filter		1
9	6671025	COIL	W/ diode		x
10	54K-20028	O-RING			2
11	6668820	NUT			1
12	6668791	ORIFICE			1
13	43C-532	BOLT			4
14	55K-212	O-RING			4
15	55K-204	O-RING			1
16	6672471	VALVE	solenoid - Ref. 5, 6 & 9 - 11		x
17	43C-524	BOLT			2

MANUAL LIFT RELEASE VALVE

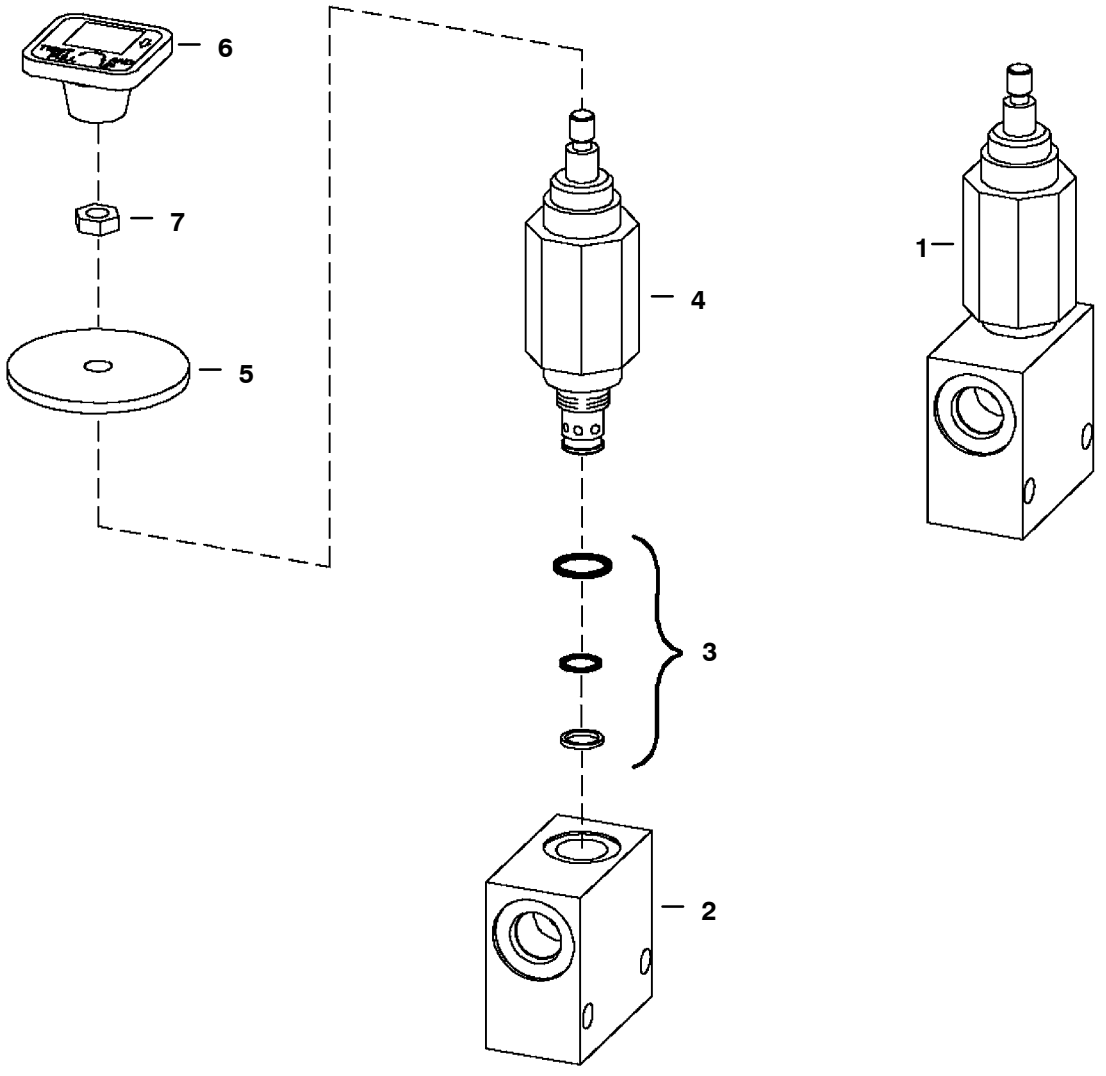

PE-1547

MANUAL LIFT RELEASE VALVE (Cont'd)

Ref. No.	Part Number	Description	Remarks	Serial Number	Qty.
1	6667844	VALVE	Ref. 2-4		1
2	NSS	BLOCK			1
3	6669087	SEAL KIT			1
4	6669085	VALVE			1
5	6707101	SEAL	neoprene		1
6	6668913	KNOB	red square		1
7	7D-4	NUT			1

BUCKET POSITIONING VALVE

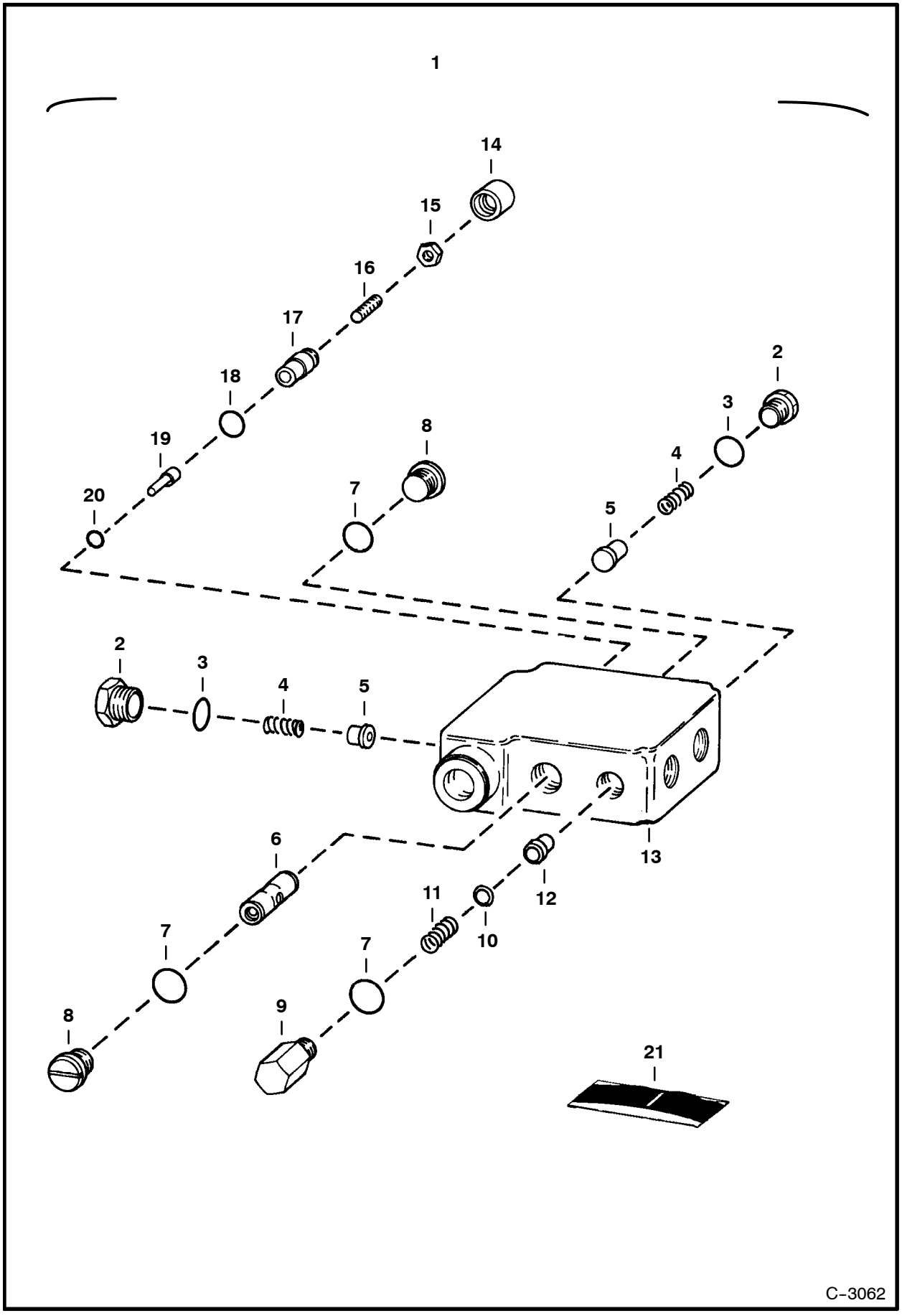

BUCKET POSITIONING VALVE (Cont'd)

Ref. No.	Part Number	Description	Remarks	Serial Number	Qty.
1	6666341	VALVE	Ref. 2-20		1
2	6647784	PLUG	W/Ref. 3		2
3	79K-8	O-RING			2
4	6647785	SPRING			2
5	6647783	LOAD CHECK			2
6	NSS	SPOOL			1
7	58K-116	RING	backup		3
8	6647780	PLUG	W/Ref. 7		2
9	6667176	PLUG	W/Ref. 7		1
10	6667680	SNAP RING			1
11	6648294	SPRING			1
12	NSS	SPOOL			1
13	NSS	BODY			1
14	6667676	COVER			1
15	6631561	NUT			1
16	6648293	SCREW			1
17	6647778	CAP			1
18	79K-6	O-RING			1
19	6647777	PIN			1
20	6667677	O-RING			1
21	6647786	SEAL KIT	Ref. 3, 7, 14, 18 & 20		1

HYDROSTATIC CIRCUITRY

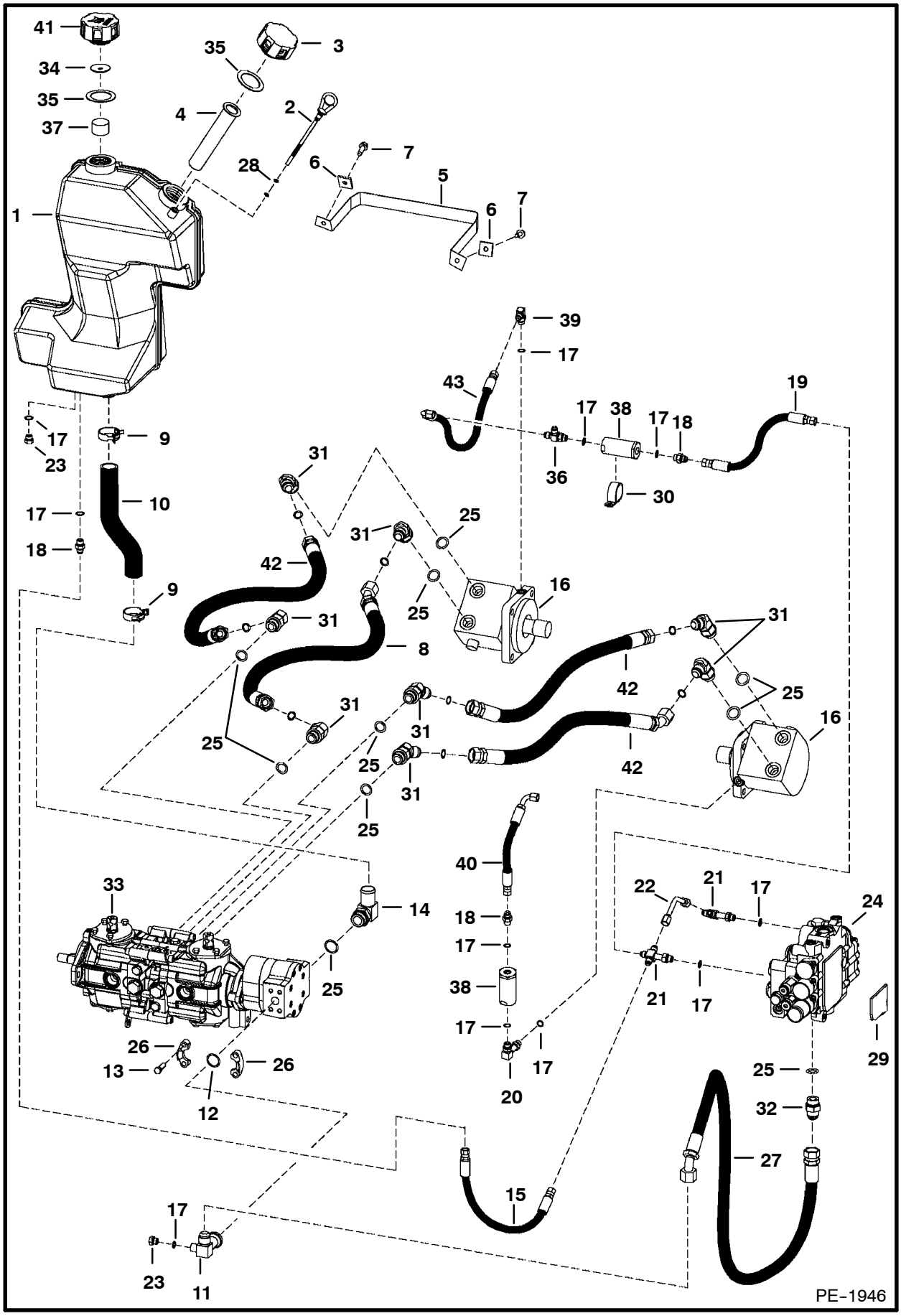

HYDROSTATIC CIRCUITRY (Cont'd)

Ref. No.	Part Number	Description	Remarks	Serial Number	Qty.
1	6732278	TANK			1
2	6577459	DIPSTICK	W/Ref. 28		1
3	6532508	CAP	breather		1
4	6569219	SCREEN			1
5	6734272	BAND			1
6	6559447	WASHER			2
7	84G-3712	BOLT			2
8	6737501	HOSE	mega seal		1
9	5HM-42	CLAMP	constant tension		2
10	6732935	HOSE	1.25" (31,8 mm) I.D.		1
11	6734048	TEE	split flange		1
12	55K-214	O-RING			1
13	17C-620	BOLT			4
14	6715191	ELBOW	W/Ref. 25		1
15	6735840	HOSE			2
16		MOTOR	See Page 85		2
17	79K-6	O-RING			x
18	15KB-606	ADAPTER	W/Ref. 17		3
19	6717385	HOSE	14.5"(368,3 mm) long		1
20	6715190	ADAPTER	W/Ref. 25		1
21	6805241	CONNECTOR	W/Ref. 17		2
22	6577690	TUBE			1
23	24K-5	PLUG	W/Ref. 17		2
24		VALVE	See Page 63		1
25	79K-12	O-RING			8
26	19J-12	CLAMP			2
27	6737504	HOSE			2
28	25K-20010	O-RING			1
29		COVER	side of main frame - See Page 17		1
30	30H-79	CLAMP			1
31	6737453	ELBOW	W/Ref. 25 - mega seal		8
32	15KB-1212	ADAPTER	W/Ref. 25		1
33		PUMP	See Page 87		1
34	6701552	BAFFLE			1
35	6700631	GASKET			2
36	21KB-606	TEE	W/Ref. 17		1
37	6703427	FOAM FILTER			1
38	6661022	FILTER	in-line - See Page 97		2
39	17KB-606	ELBOW	W/Ref. 17		1
40	6735839	HOSE			1
41	6577785	CAP	W/Ref. 17		1
42	6737500	HOSE	mega seal		3
43	6702079	HOSE			1

HYDROSTATIC CIRCUITRY

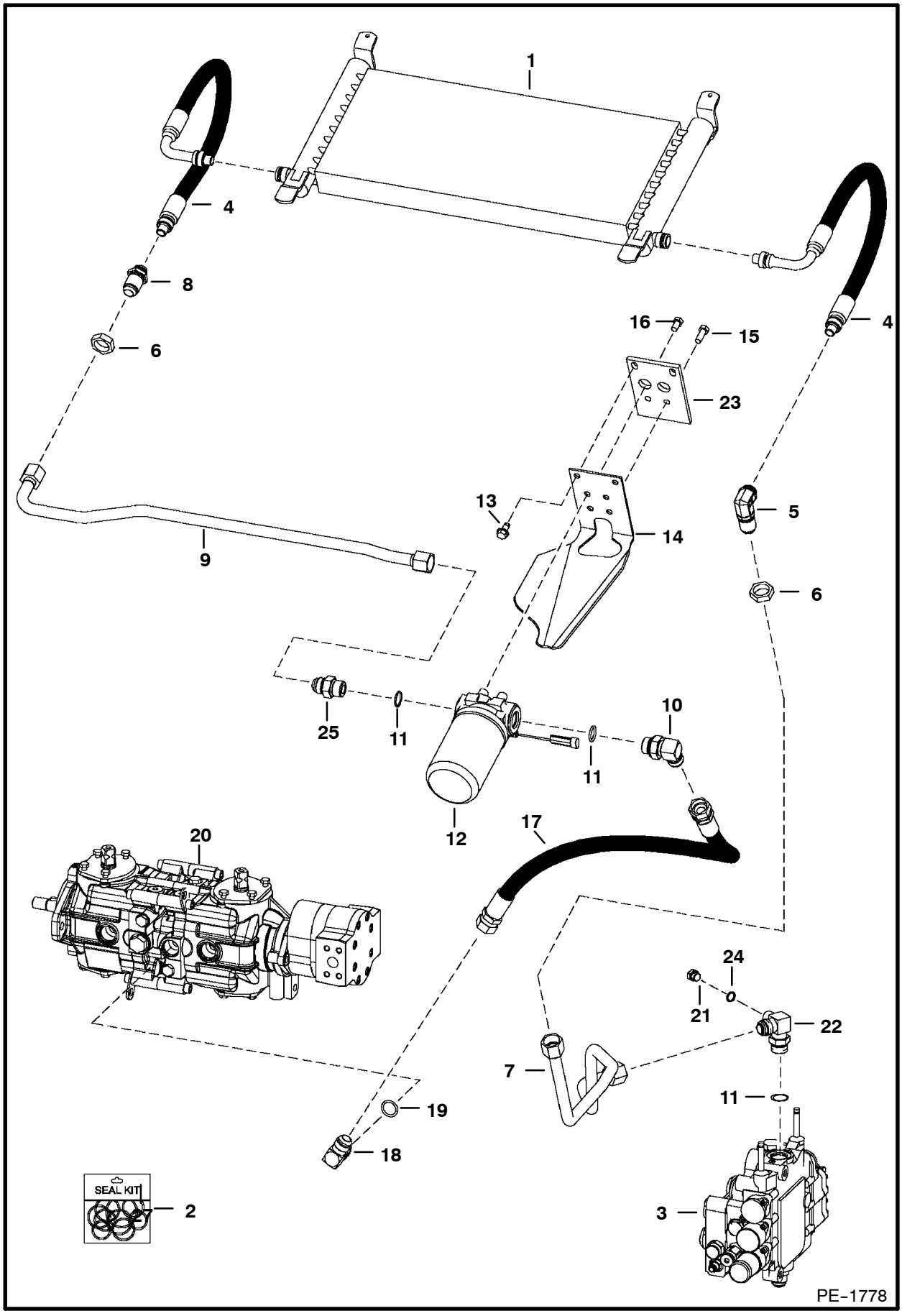

HYDROSTATIC CIRCUITRY (Cont'd)

Ref. No.	Part Number	Description	Remarks	Serial Number	Qty.
1	6674150	OIL COOLER			1
2	6674798	REPAIR KIT	For Ref. 4, 5 or 8 - includes internal retaining ring (1), back-up ring (1) & O-ring (1)		x
3		VALVE	hyd. control - See Page 63		1
4	6673828	HOSE			2
5	6670831	ELBOW			1
6	86F-8	NUT			2
7	6708748	TUBE			1
8	6670830	ADAPTER			1
9	6727347	TUBE			1
10	17KB-1212	ELBOW	W/Ref. 11		1
11	79K-12	O-RING			x
12	6676969	FILTER ASSY.	See Page 99		1
	6661248	ELEMENT			1
13	84G-3712	BOLT			2
14	6727345	MOUNT	filter drain		1
15	17C-616	BOLT			2
16	17C-610	BOLT			2
17	6704159	HOSE			1
18	17KB-1210	ELBOW	W/Ref. 19		1
19	79K-10	O-RING			x
20		PUMP	See Page 87		1
21	24K-5	PLUG	W/Ref. 24		1
22	6817326	TEE	W/Ref. 11		1
23	6704341	MOUNT			1
24	79K-6	O-RING			1
25	15KB-1212	ADAPTER	W/Ref. 11		1

HAND CONTROLS

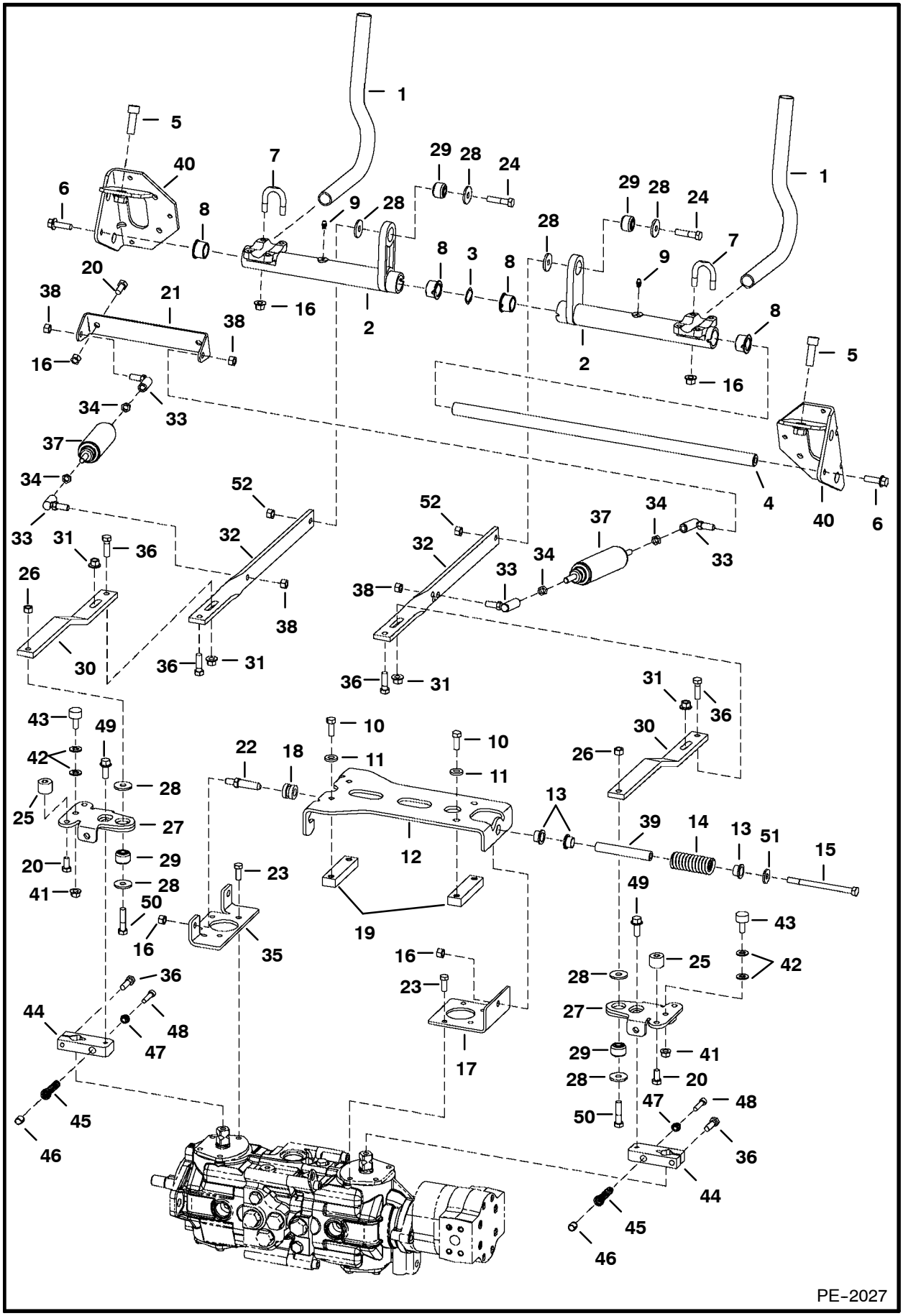

HAND CONTROLS (Cont'd)

Ref. No.	Part Number	Description	Remarks	Serial Number	Qty.
1	6702543	LEVER			2
2	7101047	BELLCRANK	W/notch for bushing tab		2
3	6599741	WASHER	wave		1
4	6716545	ROD			1
5	73G-824	BOLT			2
6	45C-620	BOLT			2
7	6732997	U-BOLT			4
8	6703879	BUSHING	W/tab		4
	6673710	BEARING	needle - AHC		2
9	10H-35	GREASE ZERK			2
10	17C-616	BOLT			4
11	6557831	WASHER			4
12	6734298	MOUNT			1
13	6715163	BUSHING			3
14	6701535	SPRING			1
15	17C-680	BOLT			1
16	91D-6	NUT			18
17	6734742	BRACKET			1
18	6706098	GUIDE			2
19	6702716	BLOCK			2
20	17C-612	BOLT			2
21	6706106	MOUNT			1
22	6577058	PIN			2
23	1CM-820	BOLT			8
24	17C-628	BOLT			4
25	6711643	CAM			4
26	63D-6	NUT			2
27	6734429	LEVER			2
28	6737388	WASHER			8
29	6685060	BUSHING			4
30	6737389	LINK			2
31	83D-6	NUT			4
32	7100265	LINK			2
33	6599744	BALL JOINT			4
34	8D-6	NUT			4
35	6736764	BRACKET			1
36	17C-620	BOLT			6
37	6649551	SHOCK			2
38	62D-6	NUT			2
39	6715164	SLEEVE			1
40	6733022	BRACKET	R.H.		1
	6733024	BRACKET	L.H.		1
41	98D-6	NUT	AHC		4
42	25E-17	WASHER	AHC		8
43	6673789	BEARING	roller - AHC		4
44	6734299	BRACKET	centering		2
45	6734433	SPRING			2
46	4JM-1214	ROLL PIN			2
47	6737378	INSERT	threaded		2
48	74G-520	BOLT			2
49	49C-616	BOLT			4

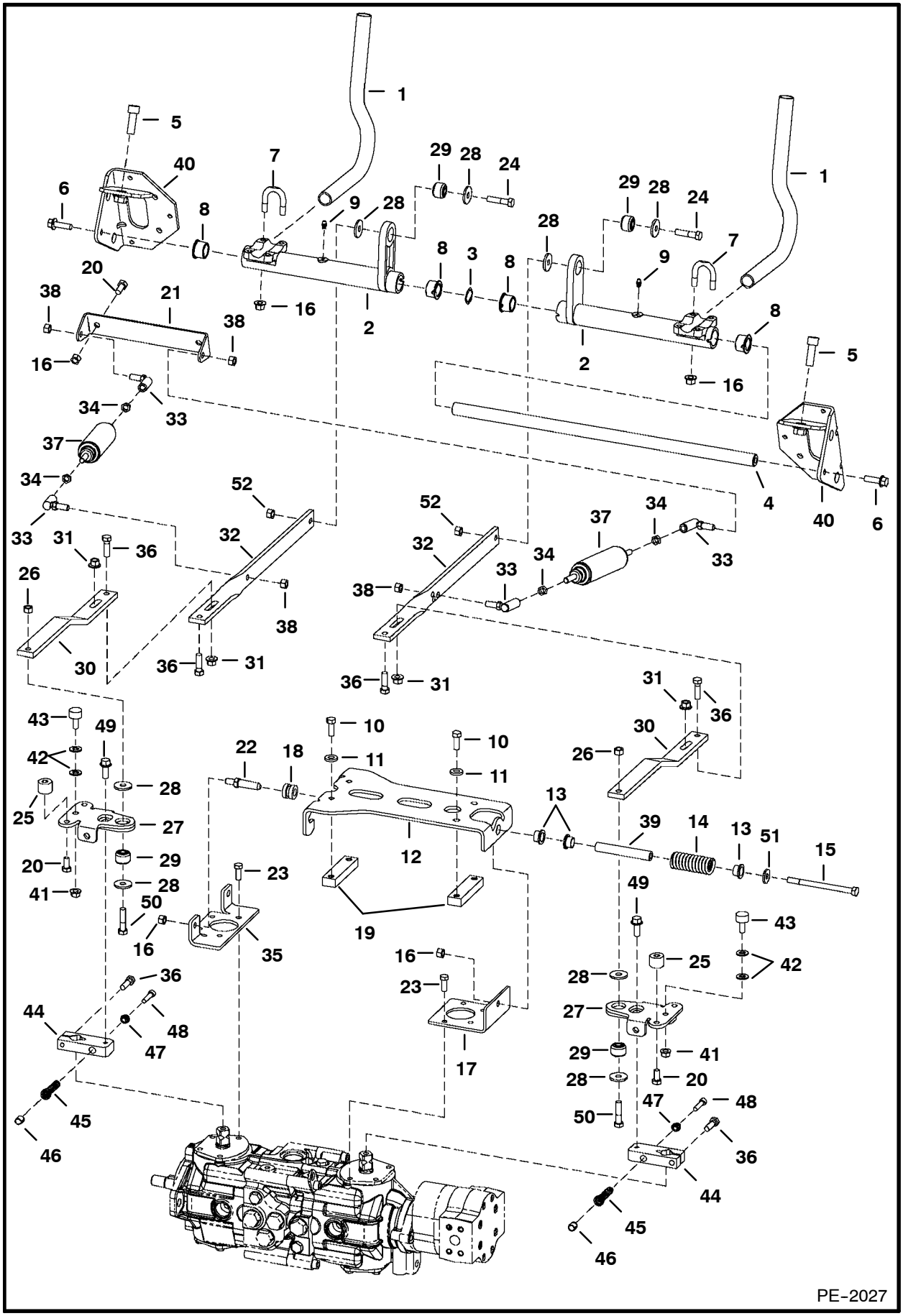
PE-2027

HAND CONTROLS (Cont'd)

Ref. No.	Part Number	Description	Remarks	Serial Number	Qty.
50	49C-628	BOLT			2
51	6563914	WASHER			1
52	53D-6	NUT			2

HYDROSTATIC MOTOR

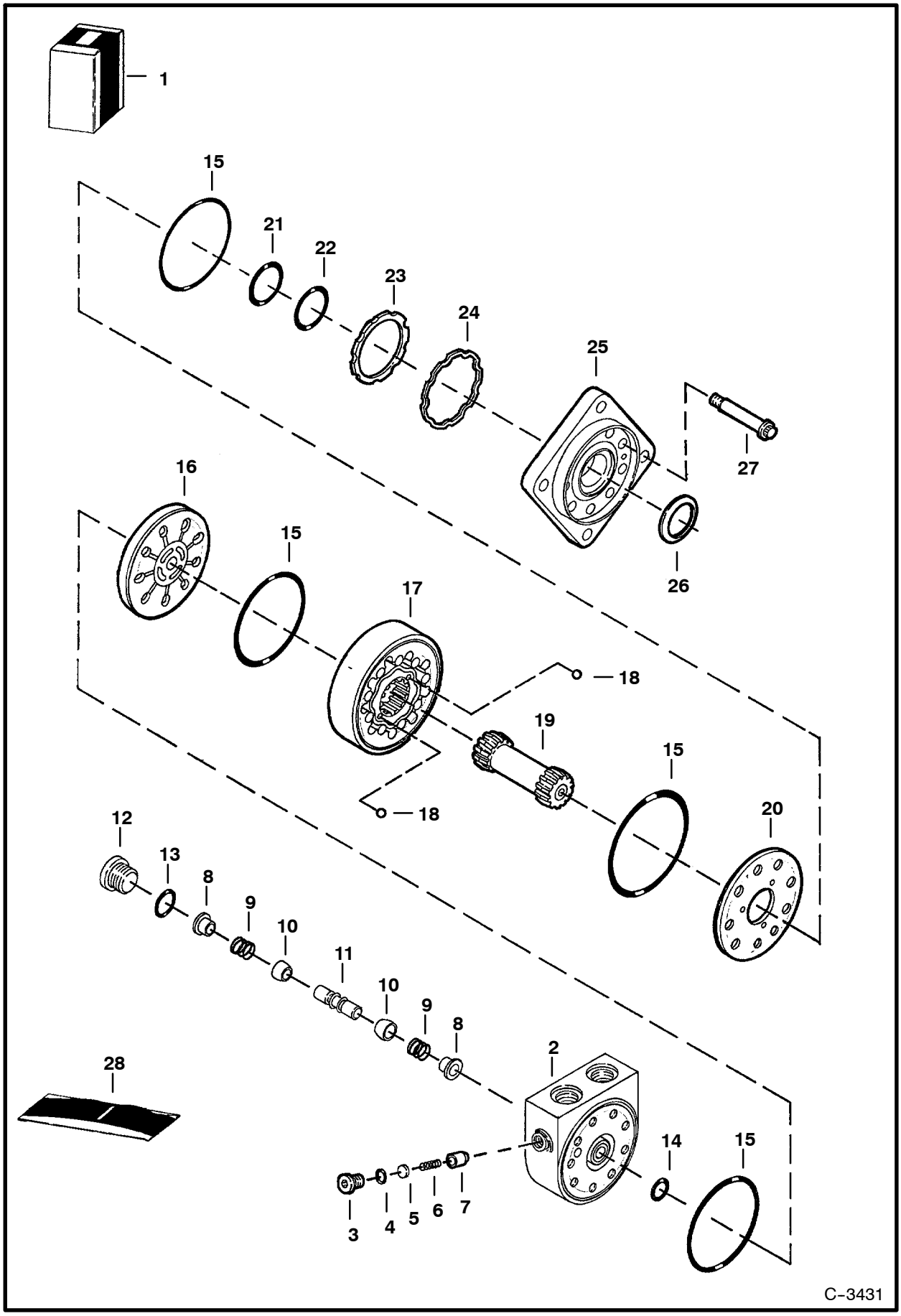

HYDROSTATIC MOTOR (Cont'd)

Ref. No.	Part Number	Description	Remarks	Serial Number	Qty.
1	6671617	MOTOR	Ref. 2 - 27		1
2	6669442	HOUSING	W/Ref. 3-7		1
3	6668079	PLUG	W/Ref. 4		1
4	79K-5	O-RING			1
5	6668080	SHIM			x
6	6669444	SPRING			1
7	6668082	POPPET			1
8	6561218	SHUTTLE			2
9	6513533	SPRING			2
10	6513532	POPPET			2
11	6668088	PISTON	shuttle		1
12	6668089	PLUG	W/Ref. 13		1
13	79K-6	O-RING			1
14	6669452	O-RING			1
15	6669446	O-RING			4
16	6669447	PLATE	valve		1
17	6672126	GEROLER			1
18	6651542	BALL			2
19	6669469	SHAFT			1
20	6669448	PLATE	balance		1
21	6669450	RING	backup		1
22	6669449	O-RING			1
23	6669453	SEAL			1
24	6669454	RING	backup		1
25	6669451	FLANGE	mounting		1
26	6664815	SEAL			1
27	6669470	BOLT			9
28	6669455	SEAL KIT	W/Ref. 4, 13, 14, 21-24 & 26		1

HYDROSTATIC PUMP

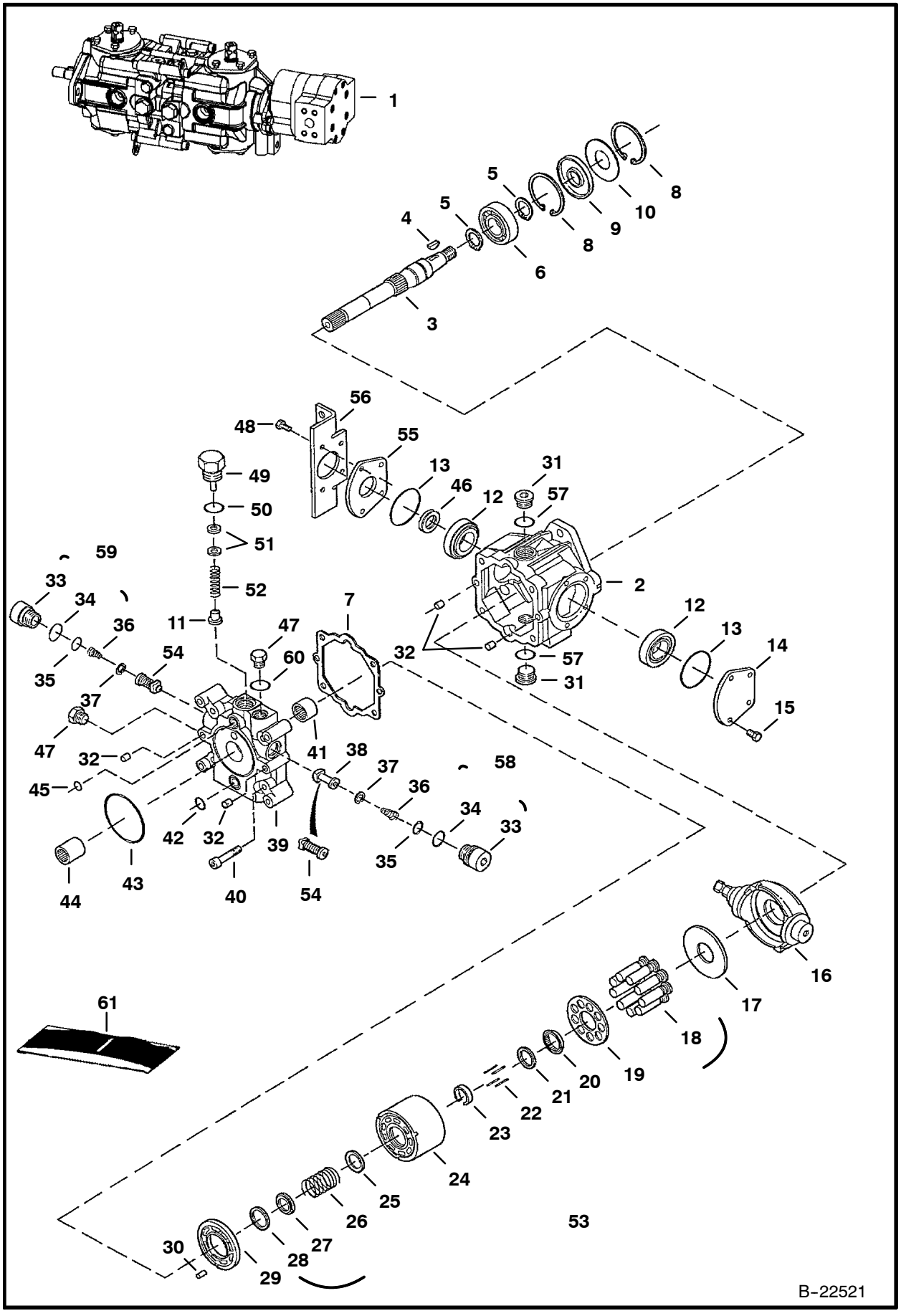

HYDROSTATIC PUMP (Cont'd)

Ref. No.	Part Number	Description	Remarks	Serial Number	Qty.
1	6685032	PUMP	Model 4445160		1
2	6669402	HOUSING			1
3	6682260	SHAFT	W/square key		1
4	6682261	KEY			1
5	658128	SNAP RING			2
6	654299	BEARING			1
7	6650634	GASKET			1
8	669863	SNAP RING			2
9	6645090	SEAL			1
10	6669409	WASHER			1
11	6650652	POPPET	charge relief		1
12	6669411	BEARING			2
13	6660814	O-RING			2
14	6657068	COVER			2
15	6650668	BOLT			4
16	6671513	SWASH PLATE			1
17	6650627	WEAR PLATE			1
18	NAP	PISTON ASSY	Order Ref. 53		1
19	NAP	RETAINER	Order Ref. 53		1
20	NAP	RETAINER	guide - Order Ref. 53		1
21	6666338	WASHER			1
22	6650629	PIN			4
23	6650630	RETAINER			1
24	NAP	BLOCK	Order Ref. 53		1
25	NAP	WASHER	Order Ref. 53		1
26	NAP	SPRING	Order Ref. 53		1
27	NAP	WASHER	Order Ref. 53		1
28	NAP	WASHER	Order Ref. 53		1
29	6675340	VALVE PLATE			1
30	6650636	PIN			1
31	47K-8	PLUG	W/Ref. 57		2
32	6518460	PIN			4
33	NAP	PLUG	Order Ref. 58 or 59		2
34	6657028	O-RING			2
35	79K-8	O-RING			2
36	NAP	SPRING	Order Ref. 58 or 59		2
37	NAP	RETAINER	Order Ref. 58 or 59		2
38	NAP	CHECK VALVE	poppet - Order Ref. 58		1
39	6669406	END PLATE			1
40	6650637	BOLT			4
41	6650635	BEARING			1
42	6650647	O-RING			1
43	6645081	O-RING			1
44	6650675	COUPLER			1
45	6650646	O-RING			1
46	6673881	SEAL			1
47	6645086	PLUG	W/Ref. 60		2
48	6671518	BOLT			4
49	6650648	PLUG	charge relief		1
50	79K-10	O-RING			1
51	6669410	SHIM KIT	charge relief		1

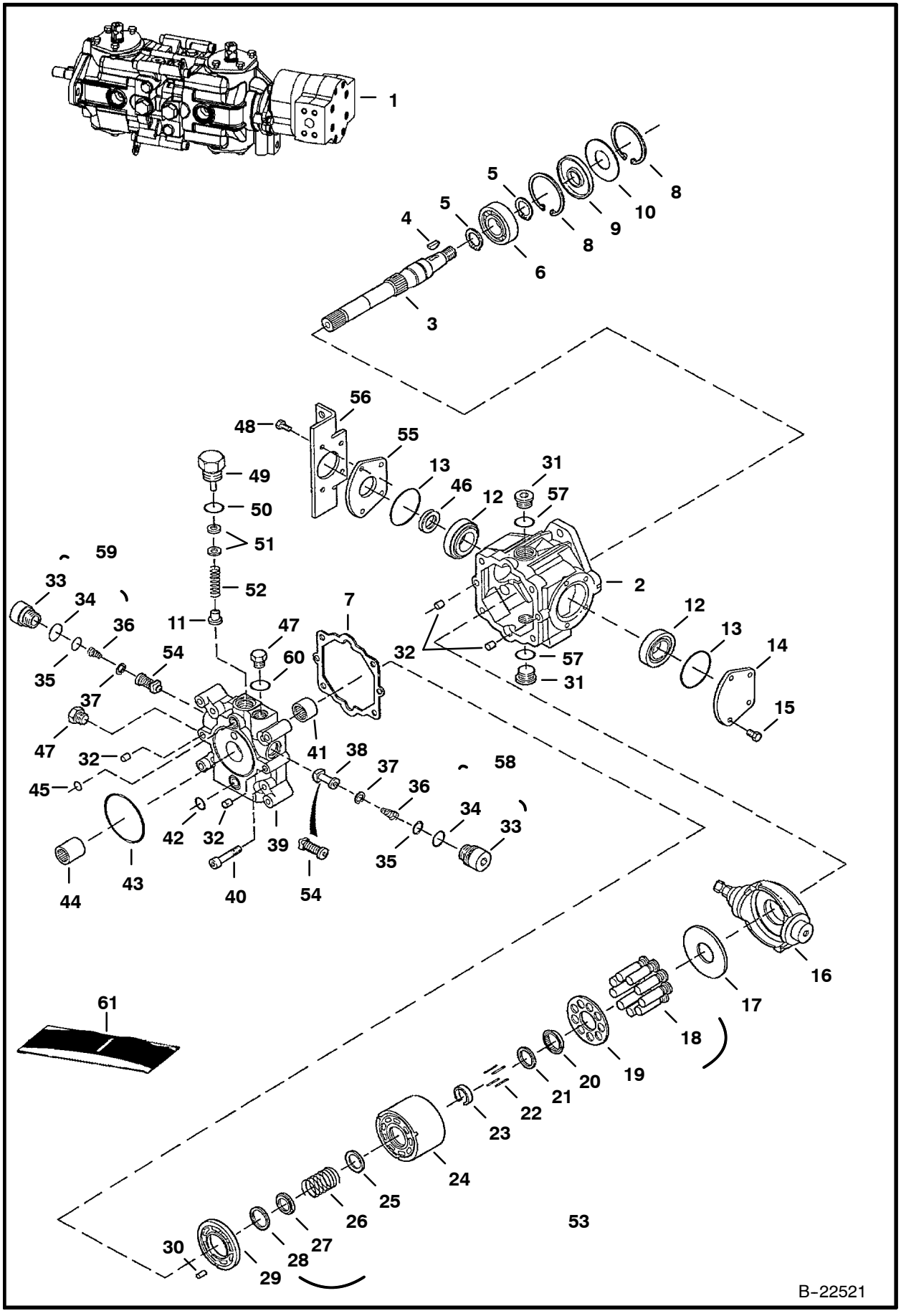
1
5
5
4
8
9
10
8
6
3
56
48
55
13
31
49
46
12
57
50
51
59
52
2
33
34
11
7
12
36
47
13
54
60
32
14
35
57
37
31
15
47
32
41
38
58
45
37
36
42
32
39
34
33
35
44
43
40
54
61
16
17
18
19
20
21
22
23
24
25
26
53
30
27
28
29
B-22521

HYDROSTATIC PUMP (Cont'd)

Ref. No.	Part Number	Description	Remarks	Serial Number	Qty.
52	6658301	SPRING			1
53	6671512	BLOCK ASSY			1
54	NAP	RELIEF VALVE	5000 PSI (345 bar)- Order Ref. 59		1
55	6657067	COVER			1
56	6736764	BRACKET			1
57	79K-12	O-RING			2
58	6670684	CHECK VALVE			1
59	6671510	RELIEF VALVE			1
60	6661481	O-RING			2
61	6671516	SEAL KIT	Ref. 7, 9, 13, 34, 35, 42, 43, 45, 46, 50, 51 & 60 - Also includes Ref. 2, 3, 12, 31, 41 & 50		
			See Page 91		1

HYDROSTATIC PUMP

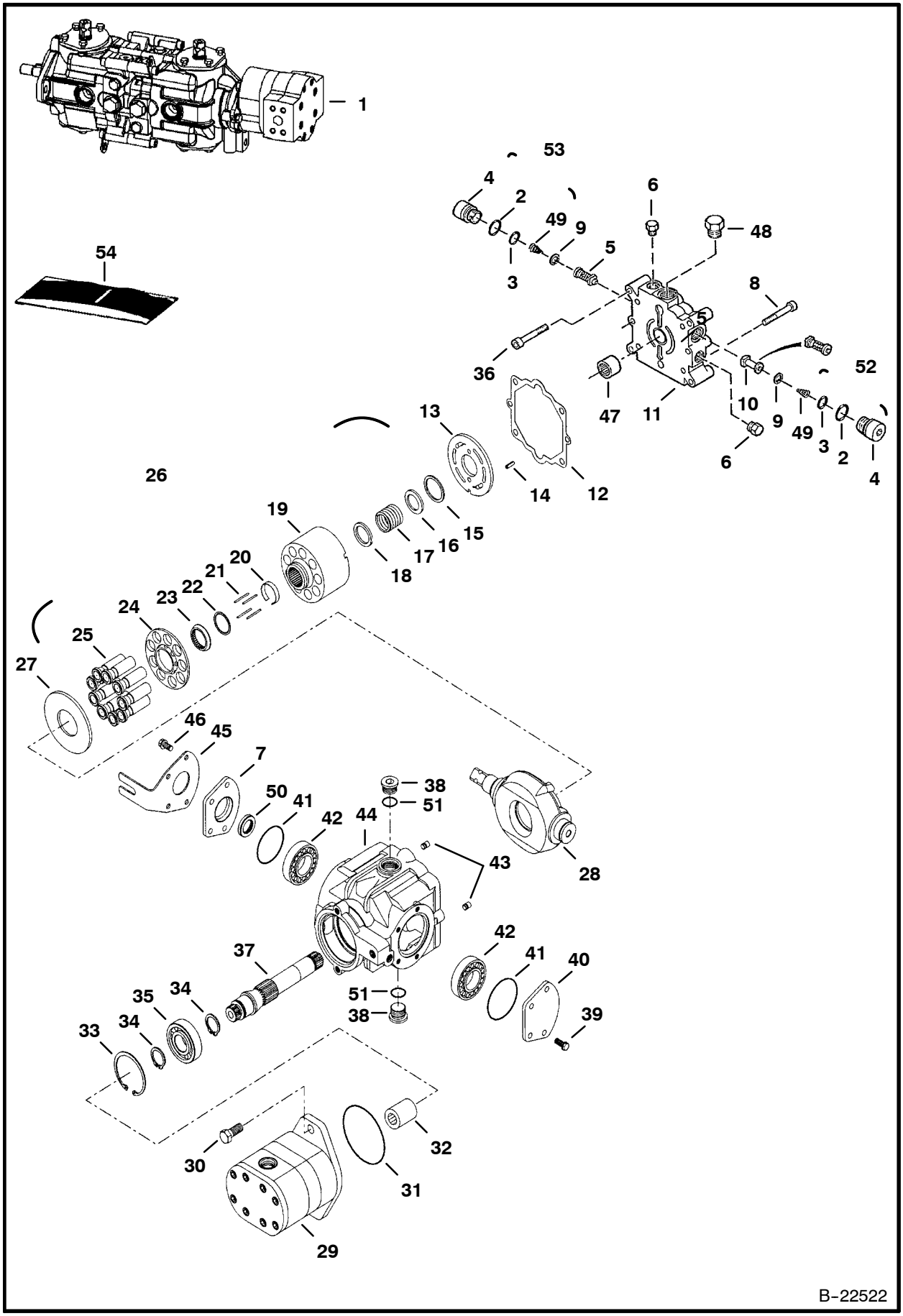

HYDROSTATIC PUMP (Cont'd)

Ref. No.	Part Number	Description	Remarks	Serial Number	Qty.
1	6685032	PUMP	Model 4445160		1
2	6657028	O-RING			2
3	79K-8	O-RING			2
4	NAP	PLUG	Order Ref. 52 or 53		2
5	NAP	RELIEF VALVE	5000 PSI (345 bar)- Order Ref. 53		1
6	6645086	PLUG			4
7	6657067	COVER			1
8	6650637	BOLT			2
9	NAP	RETAINER	Order Ref. 52 or 53		4
10	NAP	CHECK VALVE	poppet - Order Ref. 52		1
11	6669405	END CAP			1
12	6650634	GASKET			1
13	6671514	VALVE PLATE			1
14	6650636	PIN			2
15	NAP	RETAINER	Order Ref. 26		1
16	NAP	WASHER	Order Ref. 26		1
17	NAP	SPRING	Order Ref. 26		1
18	NAP	WASHER	Order Ref. 26		1
19	NAP	BLOCK	Order Ref. 26		1
20	6650630	RETAINER			1
21	6650629	PIN			4
22	6666338	WASHER			1
23	NAP	RETAINER	Order Ref. 26		1
24	NAP	RETAINER	Order Ref. 26		1
25	NAP	PISTON ASSY	Order Ref. 26		1
26	6671512	BLOCK ASSY			1
27	6650627	PLATE			1
28	6671513	SWASH PLATE			1
29		GEAR PUMP	See Page 95		1
30	6666339	BOLT			2
31	6645080	O-RING			1
32	6671509	COUPLER			1
33	669863	SNAP RING			1
34	658128	SNAP RING			2
35	654299	BEARING			1
36	6652018	BOLT			4
37	6669407	SHAFT			1
38	47K-8	PLUG	W/Ref. 51		1
39	6650668	BOLT			4
40	6657068	COVER			1
41	6660814	O-RING			2
42	6669411	BEARING			2
43	6518460	PIN			2
44	6669403	HOUSING			1
45	6734742	BRACKET			1
46	6650668	BOLT			4
47	6650635	BEARING			1
48	6645086	PLUG			1
49	NAP	SPRING	Order Ref. 52 or 53		2
50	6673881	SEAL			1
51	79K-12	O-RING			1

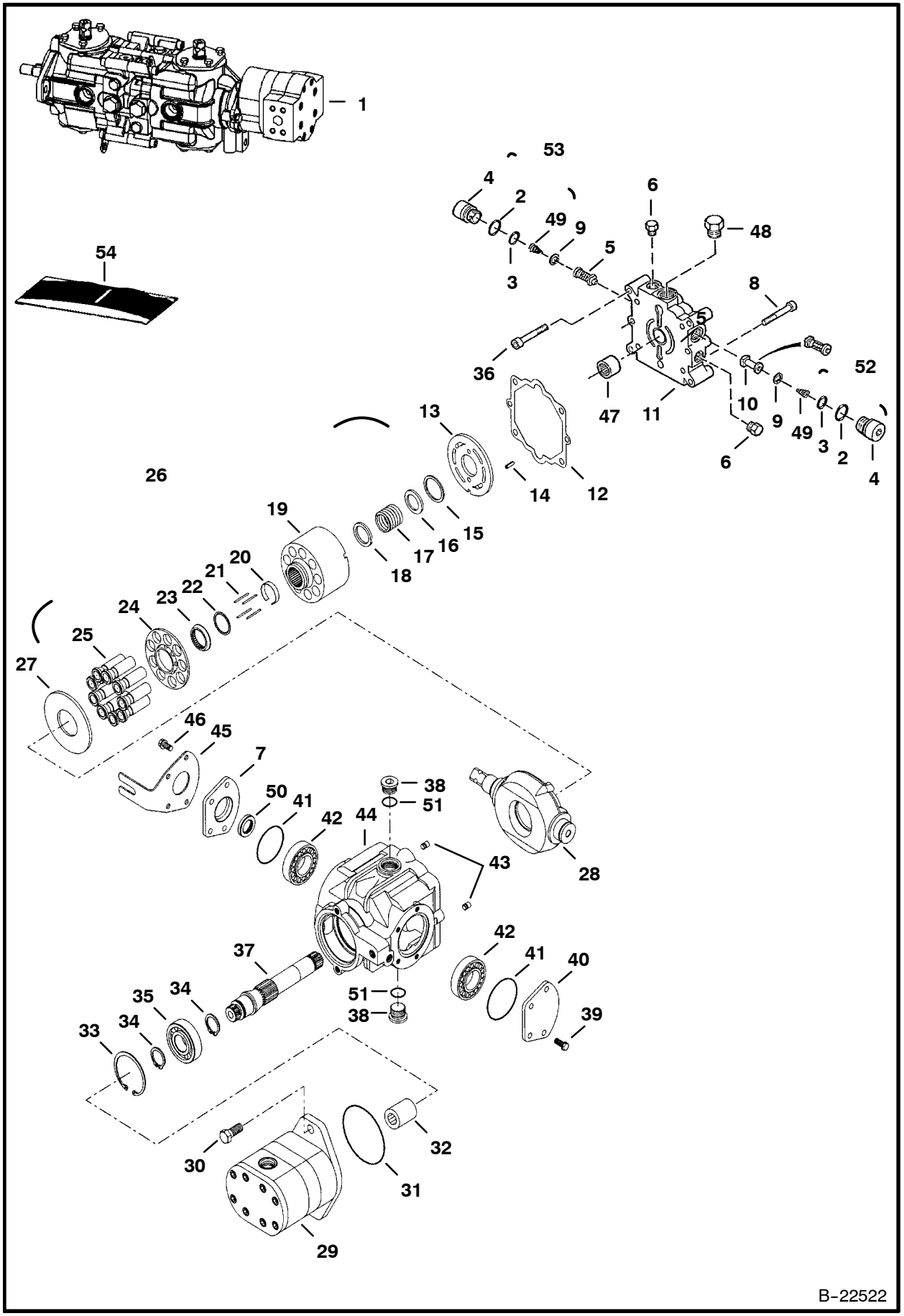
1
53
4
2
49
9
5
3
6
48
54
8
36
5
52
47
11
10
9
49
3
2
4
6
13
26
14
12
19
15
16
17
18
20
21
22
23
24
25
27
46
45
7
50
41
42
44
38
51
43
28
37
35
34
34
33
51
38
42
41
40
39
30
32
31
29

B-22522

HYDROSTATIC PUMP (Cont'd)

Ref. No.	Part Number	Description	Remarks	Serial Number	Qty.
52	6670684	CHECK VALVE			1
53	6671510	RELIEF VALVE			1
54	6671516	SEAL KIT	Ref. 2, 3, 12, 31, 41 & 50 - Also		
			includes Ref. 7, 9, 13, 34, 35, 42, 43, 45, 46, 50, 51 & 60		
			See Page 87		1

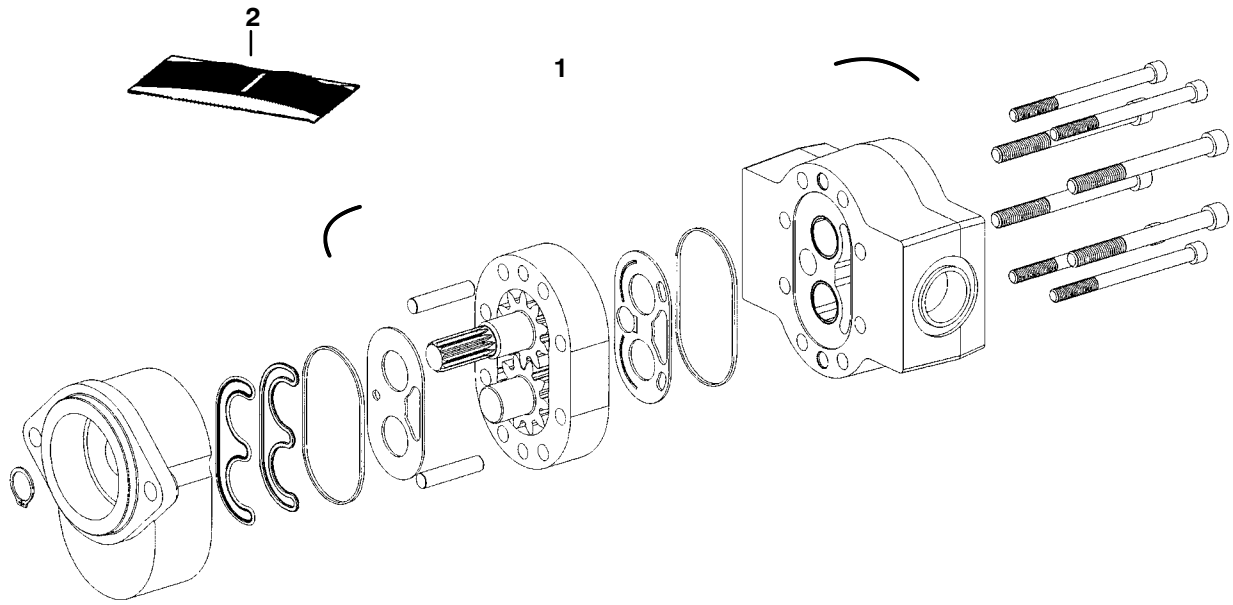

B-16050

GEAR PUMP (Cont'd)

Ref. No.	Part Number	Description	Remarks	Serial Number	Qty.
1	6681602	PUMP	cast iron - Model 163D-1309		1
2	6681581	SEAL KIT			1

HYDROSTATIC OIL FILTER
(In-Line)

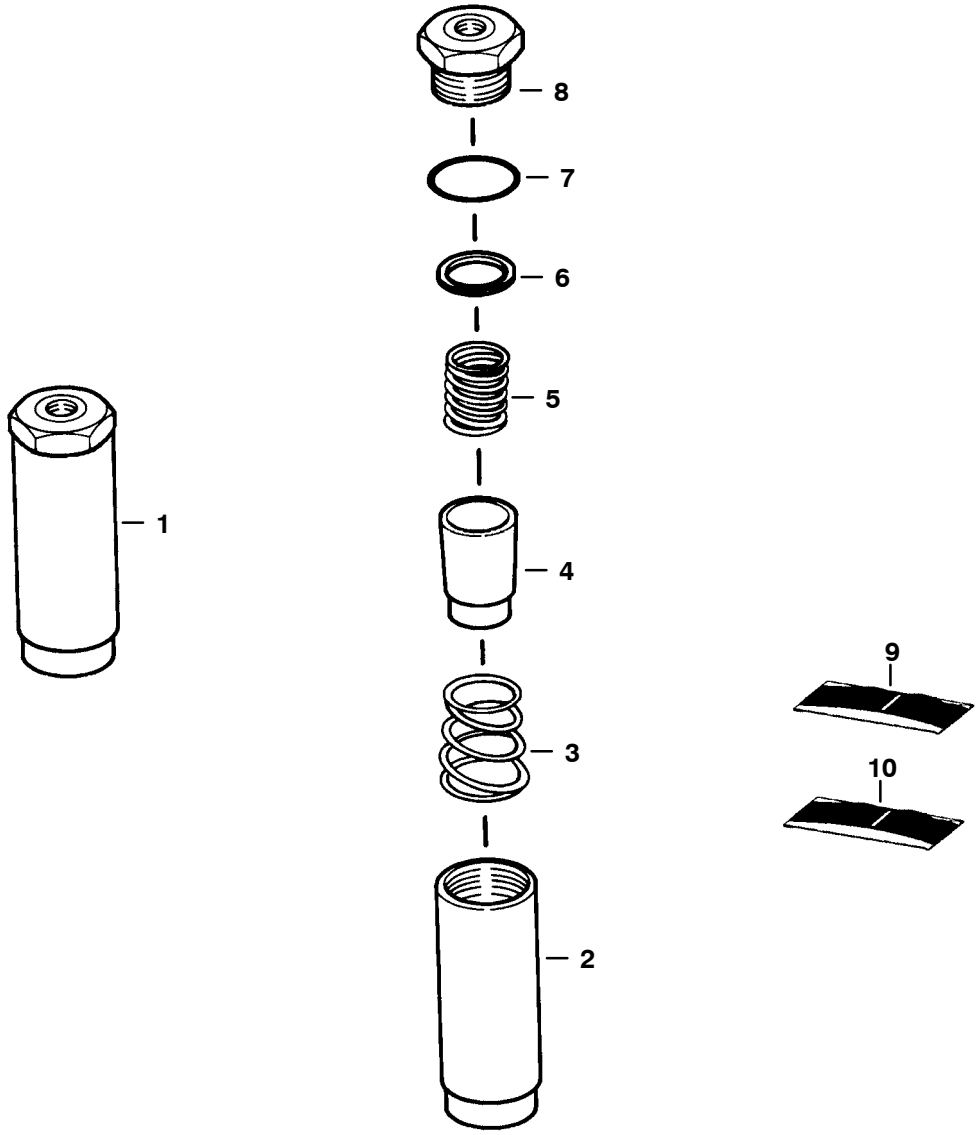

HYDROSTATIC OIL FILTER (Cont'd)
(In-Line)

Ref. No.	Part Number	Description	Remarks	Serial Number	Qty.
1	6661022	FILTER	Ref. 2 - 8		1
2	NAP	HOUSING			1
3	NAP	SPRING			1
4	NAP	ELEMENT			1
5	NAP	SPRING			1
6	NAP	GASKET			1
7	NAP	O-RING			1
8	NAP	PLUG			1
9	6661807	KIT	element - Ref. 4, 6 & 7		1
10	6661808	KIT	spring - Ref. 3 & 5		1

HYDROSTATIC OIL FILTER

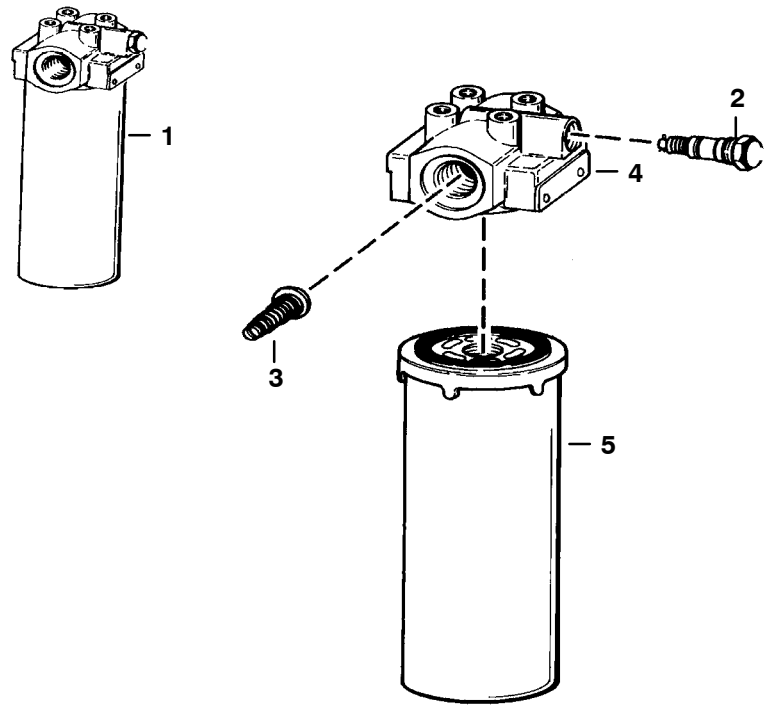

B-16487

HYDROSTATIC OIL FILTER (Cont'd)

Ref. No.	Part Number	Description	Remarks	Serial Number	Qty.
1	6676969	FILTER ASSY.	W/Ref. 2 - 5 (50 PSI by-pass & switch)		1
2	6660260	SWITCH	pressure - normally open		1
3	NAP	VALVE	by-pass (50 PSI - Order Ref. 1)		1
4	NSS	HEAD	Order Ref. 1		1
5	6661248	ELEMENT			1

CAB ELECTRICAL CIRCUITRY

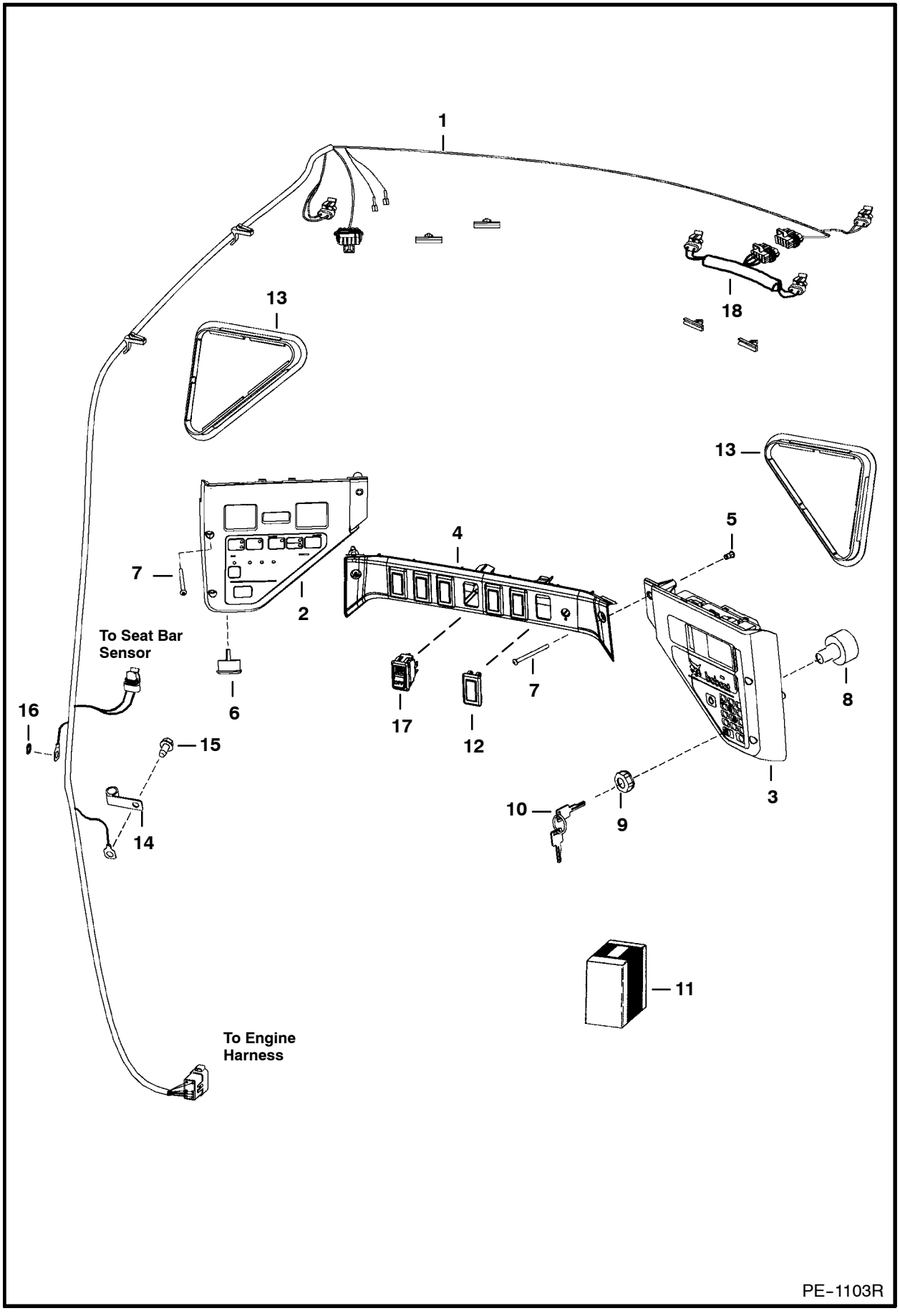

CAB ELECTRICAL CIRCUITRY (Cont'd)
(Front & Rear Lights located See Page 275)

Ref. No.	Part Number	Description	Remarks	Serial Number	Qty.
1	6727178	HARNESS			1
2	6678680	PANEL	L.H. - W/Ref. 6		1
	6675982	PLUG	backlighting service hole		1
	6679855	BULB			2
3	6678681	PANEL	R.H. - keyed - W/Ref. 8 & 9		1
	6683395	PANEL	R.H. - deluxe - keyless		1
	NAP	INSTRUCTIONS	for deluxe panel - See Service Manual		1
4	6679845	CROSSMEMBER			1
5	6675033	INSERT	threaded		6
6	6679856	ALARM	W/nut		1
7	6719084	BOLT			6
8	6675470	SWITCH	ignition - W/Ref. 9		1
9	6674202	NUT			2
10	6709527	KEY	ignition		1
11	NAP	KIT	keyless ign. - Order 6672348 Panel - See Service Manual		1
12	6665314	PLUG	cover		x
13	6674403	COVER			2
14	6675171	CLAMP			1
15	84G-3712	BOLT			1
16	6E-5	WASHER			1
17	6676536	SWITCH	park brake		1

ENGINE ELECTRICAL CIRCUITRY

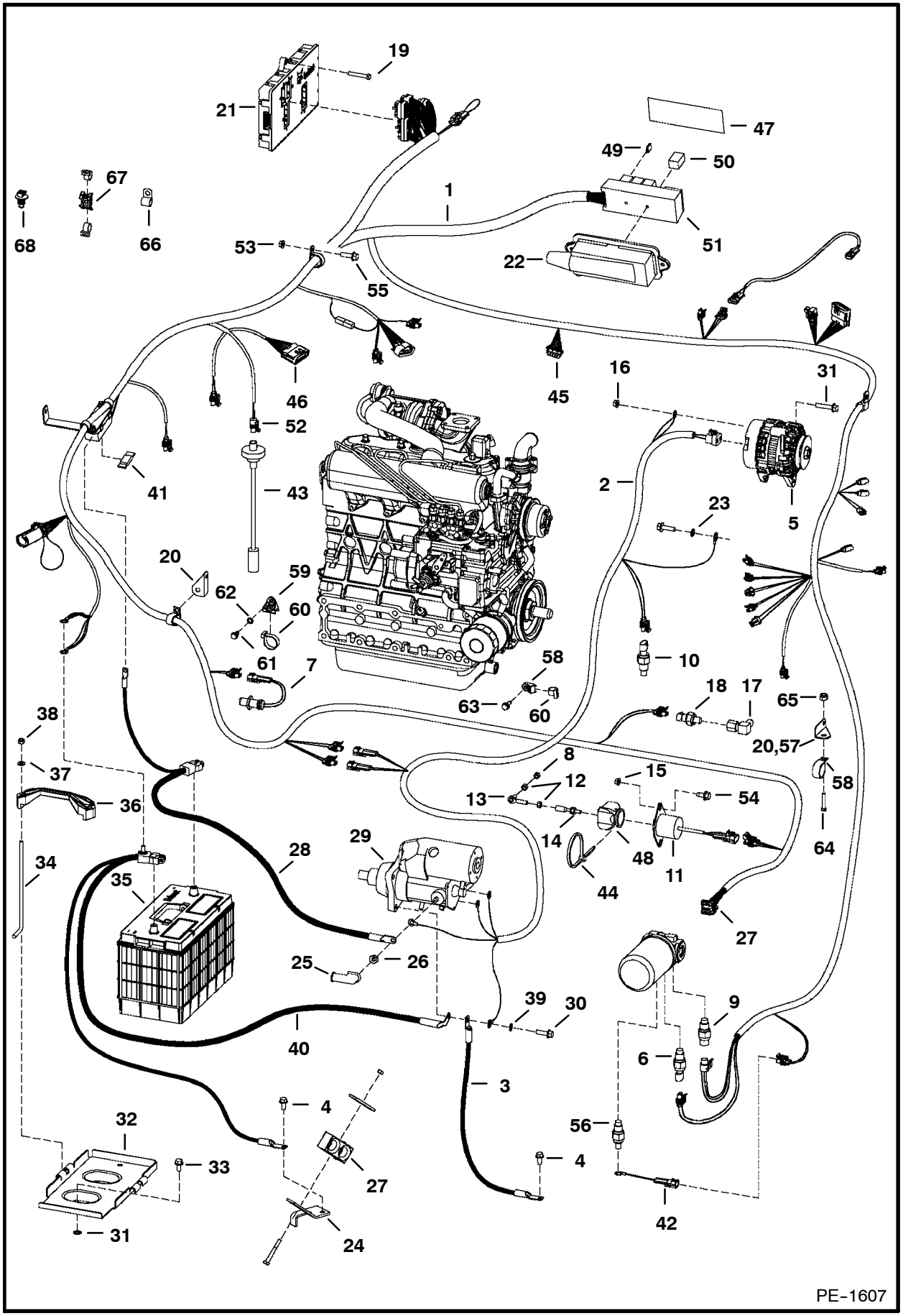

ENGINE ELECTRICAL CIRCUITRY (Cont'd)
(Front & Rear Lights located See Page 275)

Ref. No.	Part Number	Description	Remarks	Serial Number	Qty.
1	6732801	HARNESS	main frame		1
2	6729973	HARNESS	starter/alt.		1
3	6565170	CABLE	neg.		1
4	84G-3712	BOLT			4
5		ALTERNATOR	See Page 117		1
6	6727869	SENDER	hyd. temp.		1
7	6684037	SENSOR	rpm		1
8	66D-4	NUT			1
9	6674316	SWITCH	hyd. chg. press. - 3-pin molded		
			connector		1
10	6718415	SWITCH	eng. temp.		1
11	6681513	SOLENOID	fuel shut off		1
12	62D-4	NUT			2
13	6578363	ROD END	swivel		1
14	6578366	BALL JOINT			1
15	61D-4	NUT			2
16	43DM-8	NUT			1
17	6707040	ELBOW			1
18	6674315	SWITCH	eng. oil press.		1
19	43C-616	BOLT			3
20					x
21	6678674	CONTROLLER	Bobcat		1
22	6718659	HOUSING	fuse - boot		1
23	6E-5	WASHER			1
24	6727508	BRACKET			1
25	6560172	COVER			1
26	4DM-10	NUT			1
27	6715197	CLAMP			1
28	6731256	CABLE	pos.		1
29		STARTER	See Page 119		1
30	35C-620	BOLT			3
31	616783	WASHER			2
32	6718260	BATTERY PAN			1
33	84G-3716	BOLT			2
34	6576280	BOLT			2
35	6674687	BATTERY			1
36	6569203	CLAMP			1
37	25E-15	WASHER			2
38	59D-5	NUT			2
39	6E-6	WASHER			1
40	6729008	CABLE	ground		1
41	6675155	FUSE	100 amp		1
	6675154	HOLDER	high amp fuse		1
42	6728626	HARNESS			1
43	6680438	SENSOR	fuel -W/gasket		1
	6717579	GASKET			1
44	6610510	TIE			3
45	6676400	CONNECTOR	16 pin		x
46	6677216	CONNECTOR	16 pin		x
47	6718774	DECAL	2" x 7" (50,8 mm x 177,8 mm) - See Page 27		1

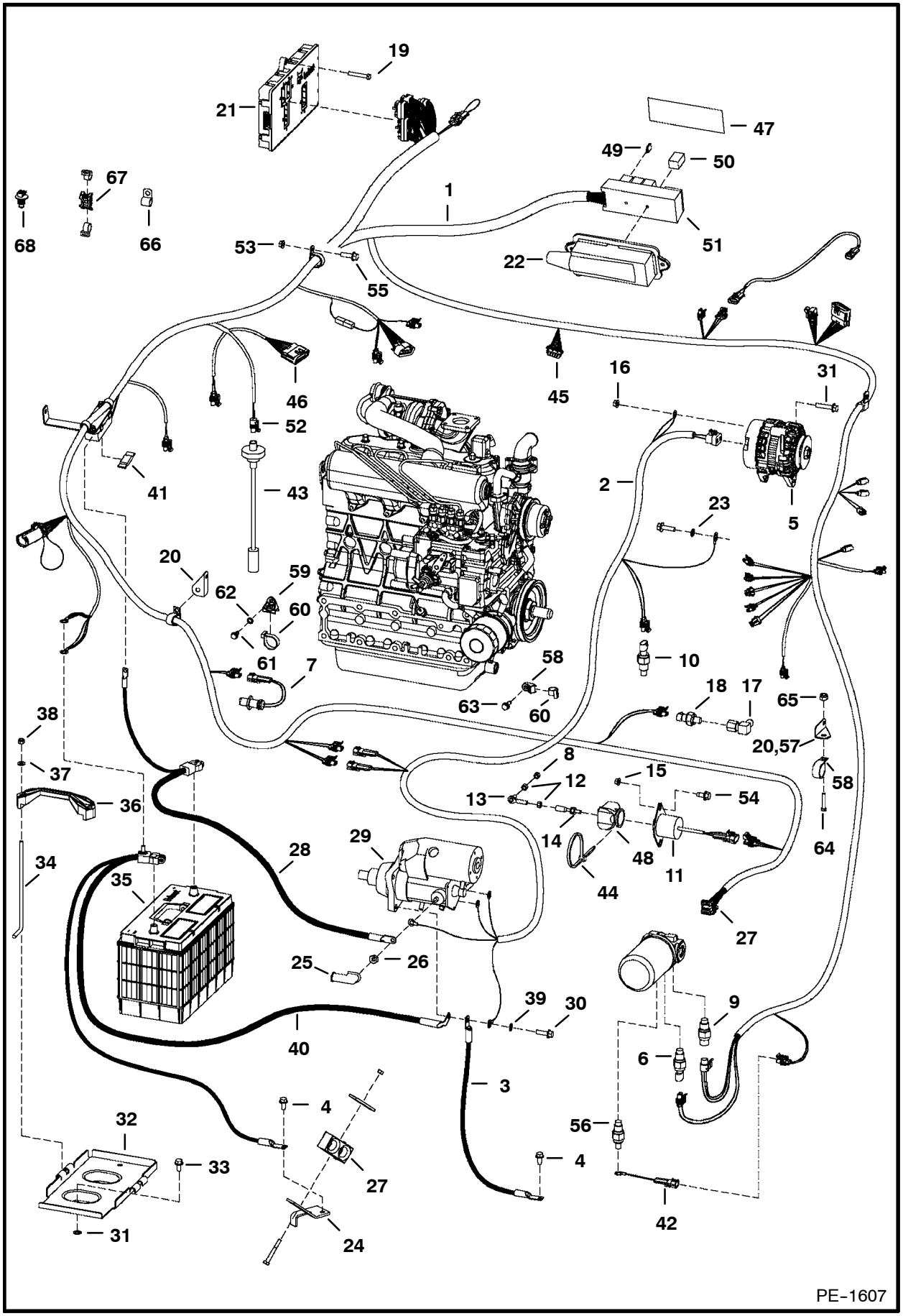
19
21
47
49
50
67
1
68
66
53
51
22
55
46
45
16
31
52
41
43
2
23
5
20
59
62
60
61
7
10
58
63
60
18
17
65
38
20,57
37
8
15
12
58
13
54
36
14
48
64
29
28
34
35
11
44
27
25
26
39
30
9
40
6
3
4
32
56
33
27
4
31
24
42
PE-1607

ENGINE ELECTRICAL CIRCUITRY (Cont'd)
(Front & Rear Lights located See Page 275)

Ref. No.	Part Number	Description	Remarks	Serial Number	Qty.
48	6664286	BOOT	Also Order Ref. 44		1
49	6654806	FUSE	15 amp		2
	6702444	FUSE	25 amp		6
	6718034	FUSE	30 amp		2
50	6679820	SWITCH	relay		7
51	6673200	FUSE BLOCK			1
52	6646383	CONNECTOR	fuel sender		1
	6648330	TERMINAL	female		2
53	91D-6	NUT			2
54	17C-410	BOLT			2
55	35C-616	BOLT			1
56	6660260	SWITCH			1
57	6714979	BRACKET			1
58	6678667	MOUNT			3
59	6678818	MOUNT			1
60	6624289	TIE			10
61	1CM-825	BOLT			1
62	25E-14	WASHER			1
63	1CM-870	BOLT			2
64	17C-516	BOLT			1
65	85D-5	NUT			1
66	30H-60	CLAMP			2
67	6678668	STRAP			1
68	6678666	MOUNT			1

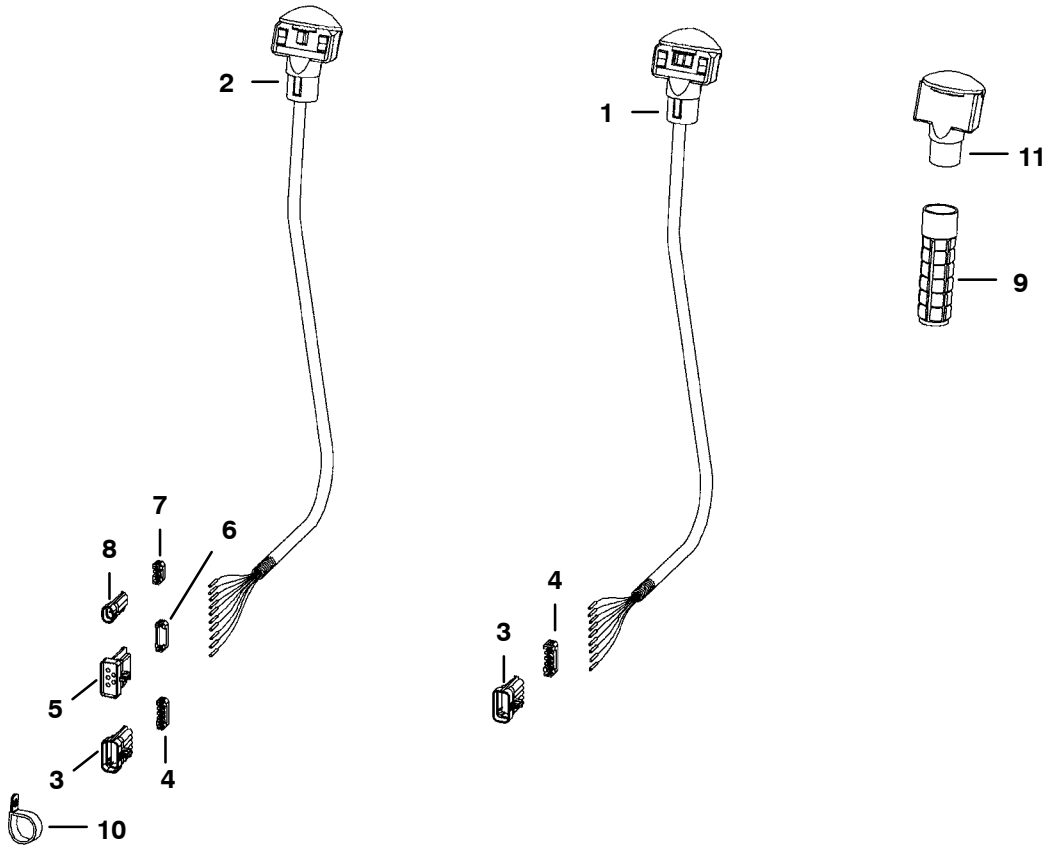

PE-1041

CONTROLS ELECTRICAL (Cont'd)

Ref. No.	Part Number	Description	Remarks	Serial Number	Qty.
1	6680418	HANDLE ASSY.	R.H. - Also Order Ref. 3 & 4		1
	6640690	PIN			9
	6641176	SEAL			9
2	6680419	HANDLE ASSY.	L.H. - Also Order Ref. 3, 4, 6 & 7		1
	6640690	PIN			10
	6641176	SEAL			10
	6680447	DECAL			1
3	6640692	CONNECTOR	10-pin		2
4	6640694	LOCK	10-pin		2
5	6667144	CONNECTOR	5 - way		1
6	6667145	LOCK	5 - way		1
7	6641180	LOCK	2 - pin		1
8	6641179	CONNECTOR	2 - pin		2
9	6702621	GRIP			2
10	6674000	CLAMP			2
11	6680415	HANDLE	L.H. - blank		2

CONTROLS ELECTRICAL
(AHC) (ACS)

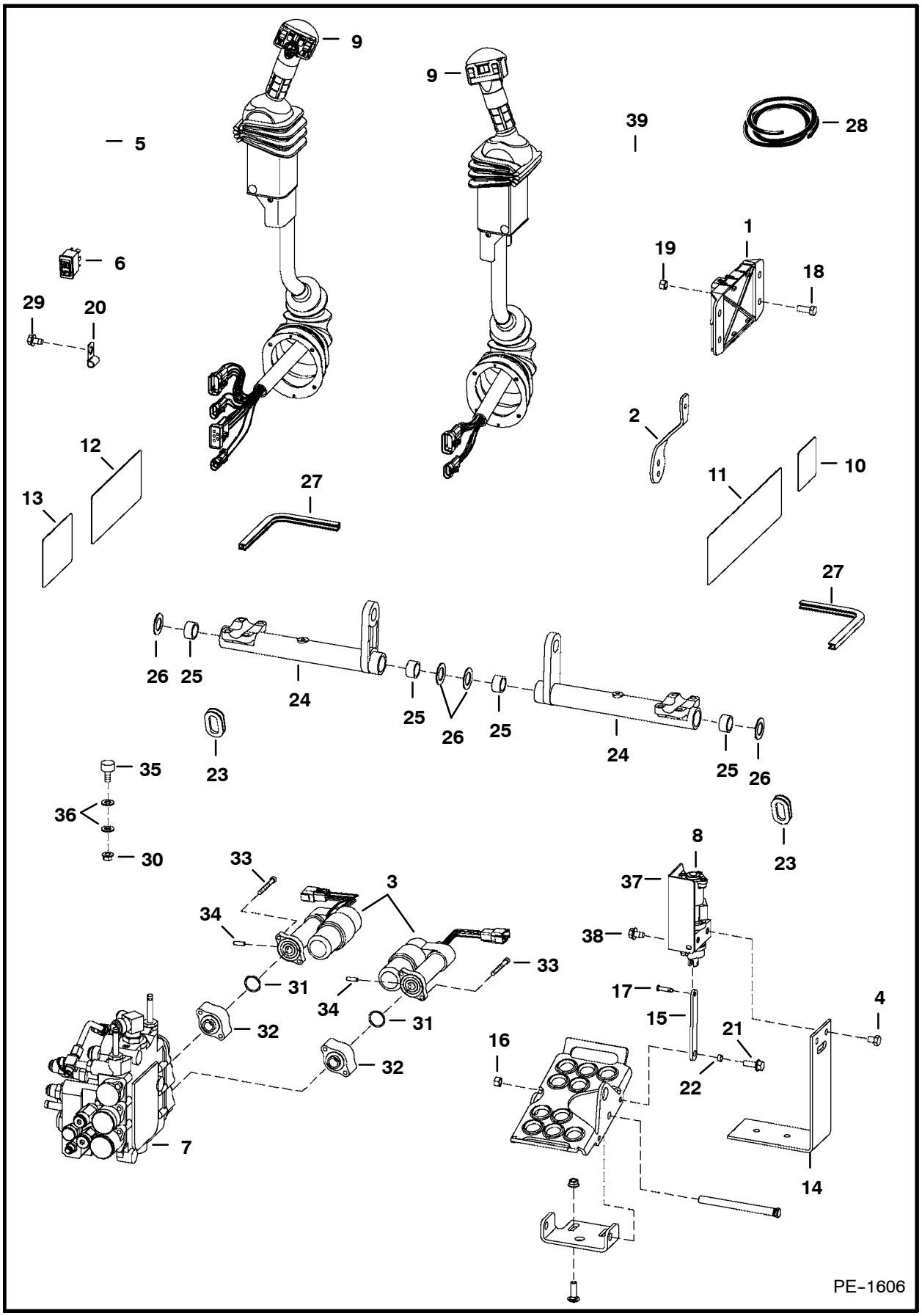

CONTROLS ELECTRICAL (Cont'd)
(AHC) (ACS)

Ref. No.	Part Number	Description	Remarks	Serial Number	Qty.
1	6680410	CONTROLLER	metal		1
2	6717393	LEVER	throttle		1
3	6678775	ACTUATOR			2
4	17C-608	BOLT			4
5	6729023	HARNESS			1
6	6676537	SWITCH			2
7		VALVE	See Page 63		1
8	6680420	SENSOR	foot pedal - R.H. - See Page 115		1
	6676029	SOLENOID			1
	6680421	SENSOR	foot pedal - L.H. - See Page 115		1
	6676029	SOLENOID			1
9	6680424	LEVER	tilt - R.H. - See Page 111		1
	6680423	LEVER	lift - L.H. - See Page 111		1
10	6718706	DECAL			1
11	6728539	DECAL			1
12	6727926	DECAL			1
13	6727941	DECAL			1
14	6726573	BRACKET			2
15	6726681	LINK			2
16	95D-5	NUT			2
17	6727496	PIN			2
18	17C-616	BOLT			2
19	95D-6	NUT			6
20	30H-62	CLAMP			4
21	17C-514	BOLT			2
22	6729467	SPACER			2
23	6714726	PLUG			2
24	6716977	BELLCRANK			2
25	6673710	BEARING			4
26	6716916	WASHER	plastic		4
27	NAP	MOULDING	10.5"(266,7 mm) long - Order Ref. 28		1
28	6654139	MOULDING	bulk - Sold Per Foot		x
29	84G-3710	BOLT			6
30	98D-6	NUT			2
31	58K-120	O-RING			2
32	6725128	ADAPTER			2
33	69G-436	BOLT			4
34	6718506	PIN			2
35	6673789	BEARING			4
36	25E-17	WASHER			8
37	6680478	SHIELD	R.H.		1
	6680479	SHIELD	L.H.		1
38	43C-408	BOLT			4
39	17C-612	BOLT			2

CONTROLS ELECTRICAL
(AHC) (ACS) (Handle Assembly)

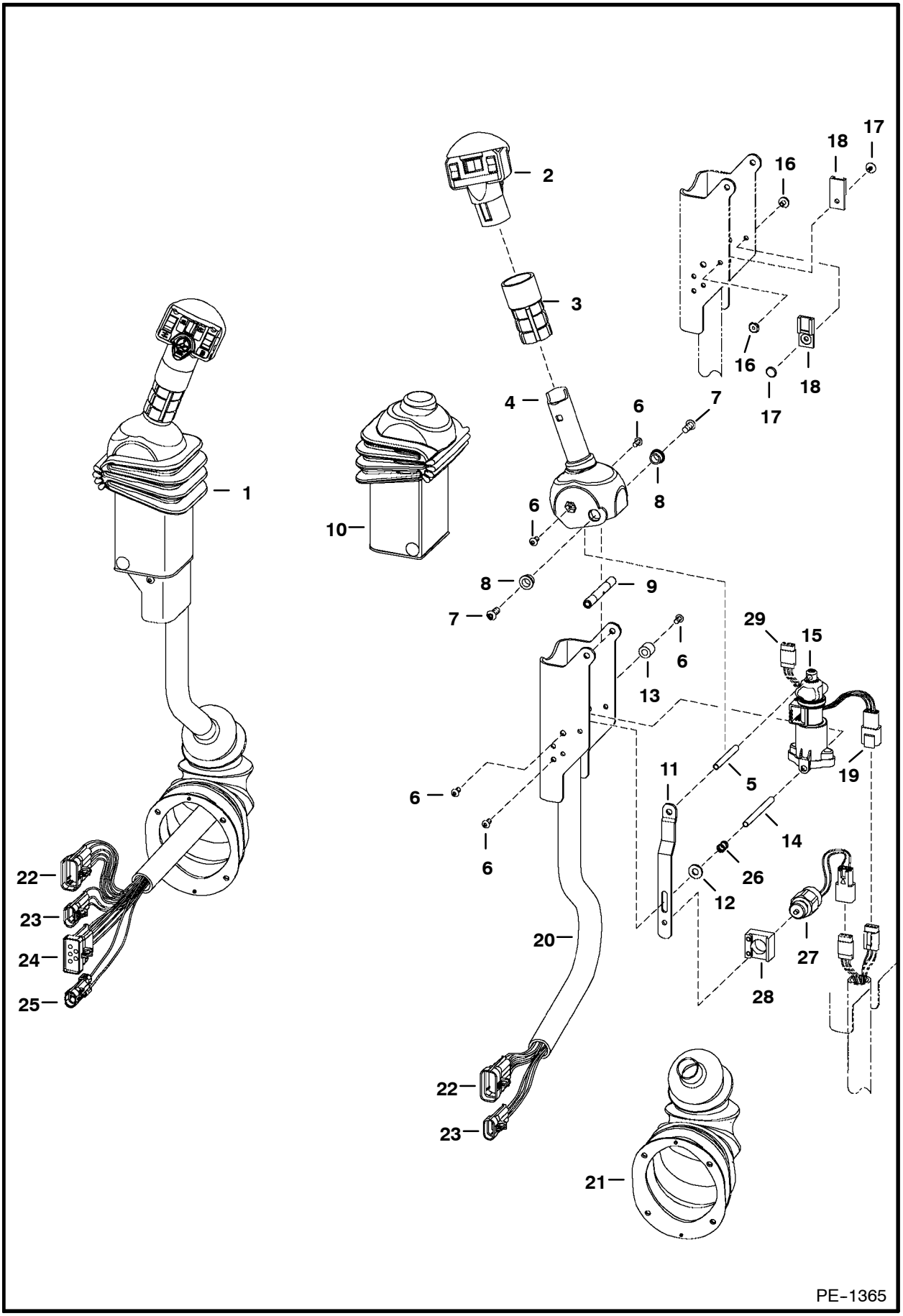

CONTROLS ELECTRICAL (Cont'd)
(AHC) (ACS) (Handle Assembly)

Ref. No.	Part Number	Description	Remarks	Serial Number	Qty.
1	6680424	LEVER	tilt - R.H.		1
	6680423	LEVER	lift - L.H.		1
2	6680462	HANDLE	lift - R.H.		1
	6680417	HANDLE	lift - L.H.		1
3	NAP	GRIP	Order 6702621 Grip & cut to 2.8" (71,1 mm) long		2
4	6729594	HANDLE	R.H.		1
	6729595	HANDLE	L.H.		1
5	6680469	SPACER	threaded		1
6	6727065	BOLT			6
7	25GT-410	BOLT			8
8	6702990	BUSHING			4
9	6713043	SPACER			4
10	6680471	COVER			2
11	6680477	STRAP	stop		1
12	25E-13	WASHER			1
13	6719835	SLEEVE			4
14	6719834	SPACER	threaded		2
15	6680422	SENSOR			2
	6670706	CONNECTOR			1
	6670715	PIN			3
	6670710	LOCK			1
16	6665322	RIVET	female		2
17	6665321	RIVET	male		2
18	6665000	CLIP			2
19	6670707	CONNECTOR			1
	6670715	PIN			3
	6670711	LOCK			1
20	6680481	CHANNEL	R.H.		1
	6680480	CHANNEL	L.H.		1
21	6532127	BOOT			2
22	6640692	CONNECTOR	10-pin		1
	6640690	PIN			8
	6640694	LOCK			1
	6641176	SEAL			8
	6646582	PLUG	cavity		1
23	6640699	CONNECTOR	3-pin		2
	6640690	PIN			3
	6641176	SEAL			3
	6640700	LOCK			3
24	6667144	CONNECTOR	5-pin		2
	6640690	PIN			3
	6641176	SEAL			3
	6646582	PLUG	cavity		1
	6641180	LOCK			1
25	6641179	CONNECTOR	2-pin		1
	6640690	PIN			2
	6641176	SEAL			2
	6641180	LOCK			1
26	6680470	SPRING			1
27	6676029	SOLENOID			1

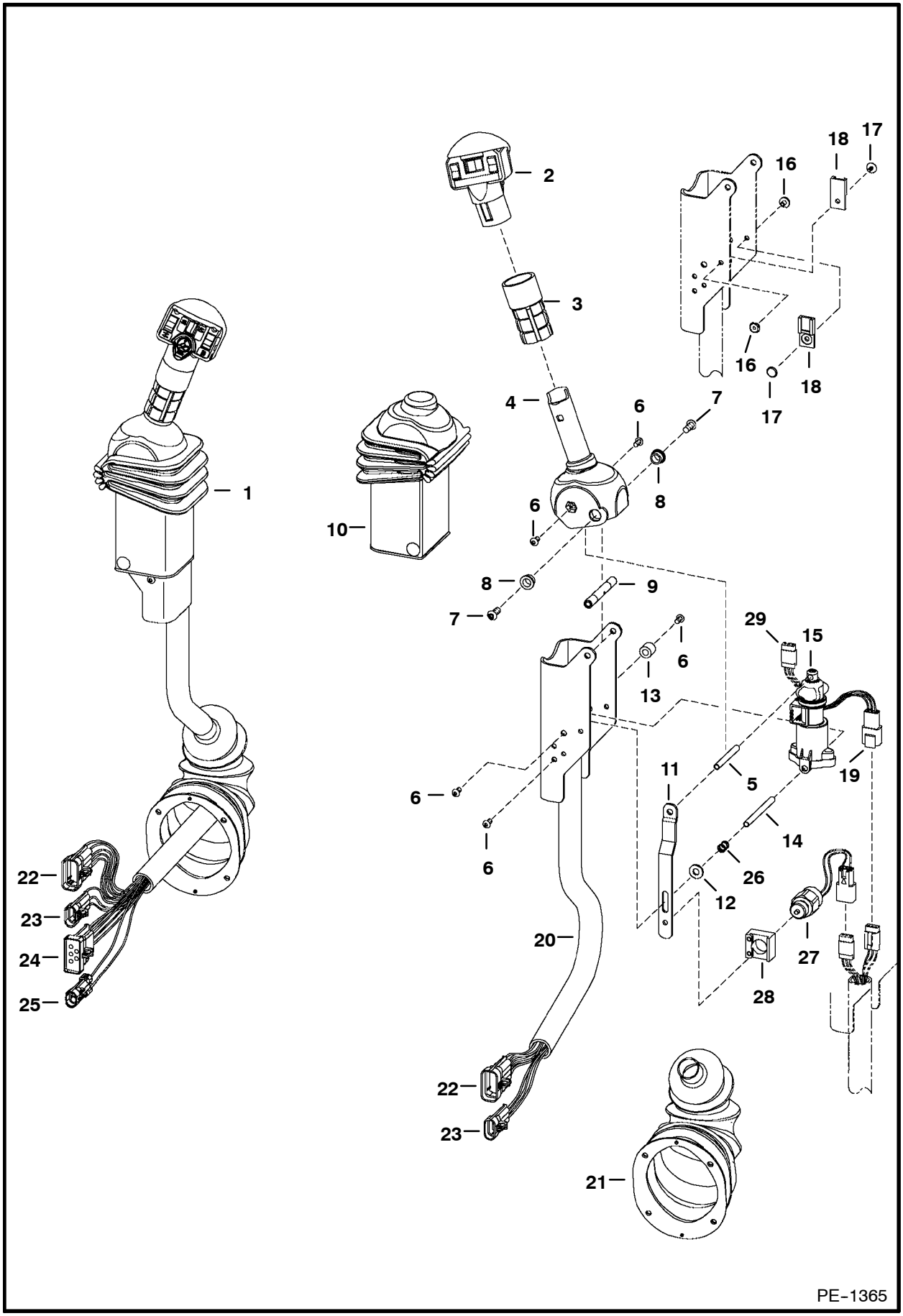
1
2
3
4
6
7
8
6
10
8
9
7
18
17
16
16
18
17
29
15
6
13
19
6
11
5
14
6
26
12
20
27
28
22
23
21
22
23
24
25
PE-1365

CONTROLS ELECTRICAL (Cont'd)
(AHC) (ACS) (Handle Assembly)

Ref. No.	Part Number	Description	Remarks	Serial Number	Qty.
28	6680468	MOUNT			1
29	6676870	CONNECTOR	3-pin		1
	6670711	LOCK			1
	6670715	PIN			1
	6676640	SEAL			5

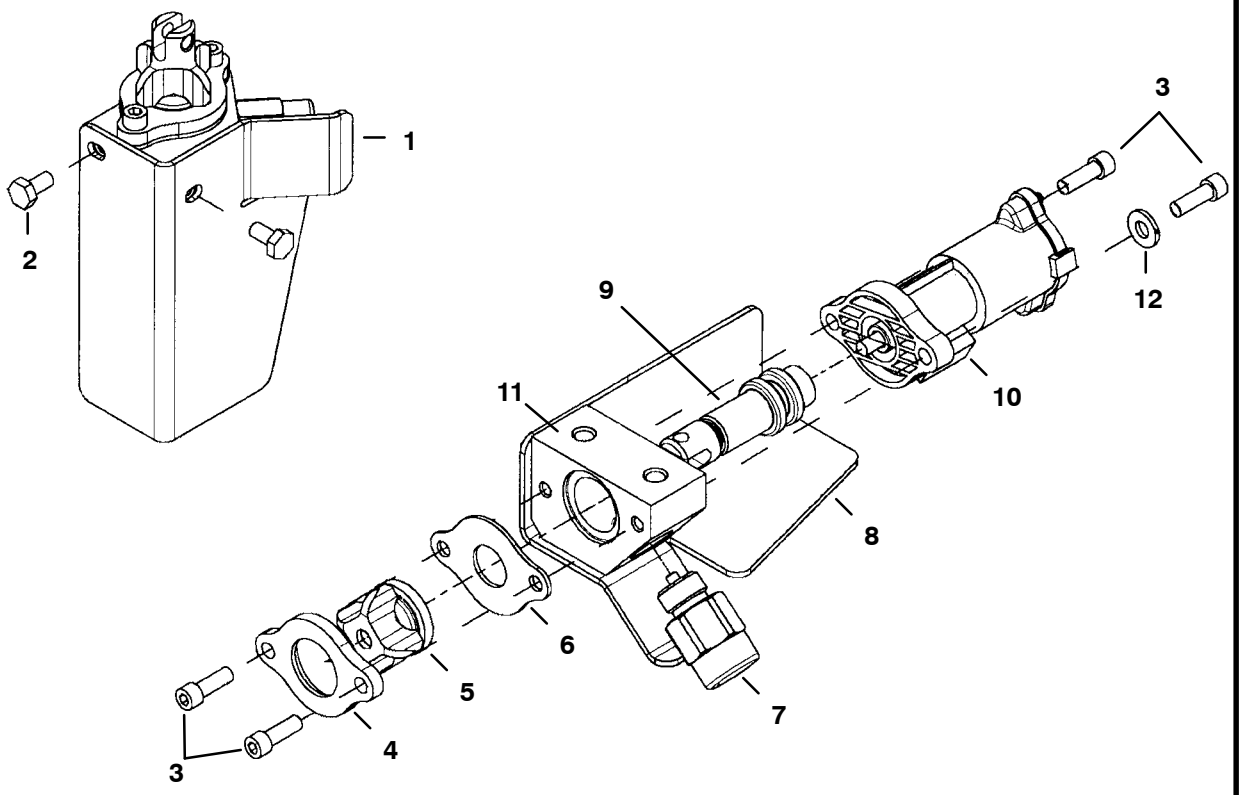

PE-1553

CONTROLS ELECTRICAL (Cont'd)
(AHC) (ACS) (Foot Pedal Assy.)

Ref. No.	Part Number	Description	Remarks	Serial Number	Qty.
1	6680420	SENSOR	foot pedal - R.H.		1
	6680421	SENSOR	foot pedal - L.H.		1
2	43C-408	BOLT			2
3	98G-412	BOLT			4
4	NAP	RETAINER	boot		1
5	6587763	BOOT			1
6	NAP	STOP PLATE			1
7	6676029	SOLENOID			1
8	6680478	SHIELD	R.H.		1
	6680479	SHIELD	L.H.		1
9	NSS	SPOOL			1
10	NSS	SENSOR			1
11	NSS	BLOCK			1
12	25E-13	WASHER			2

ALTERNATOR

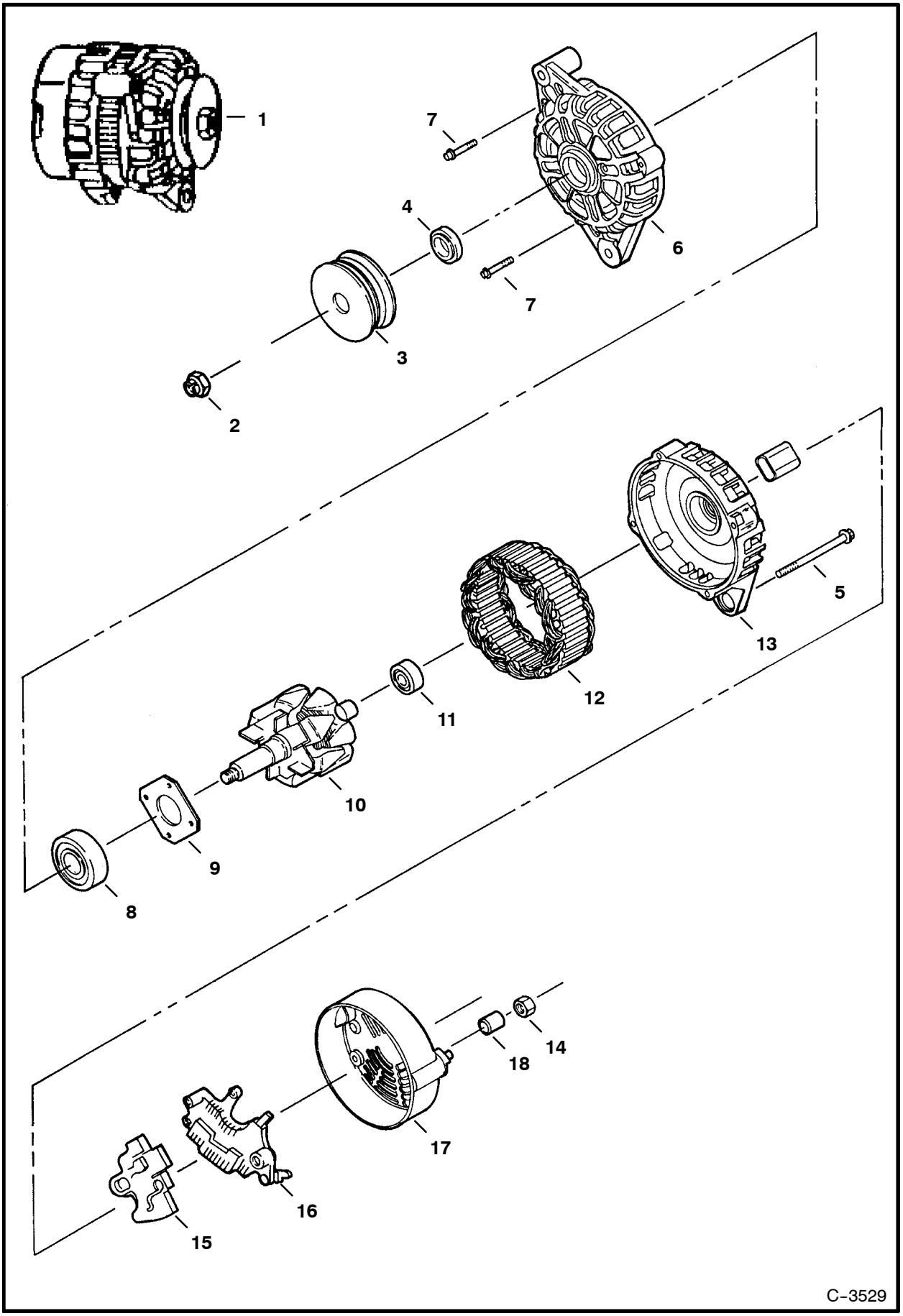

ALTERNATOR (Cont'd)

Ref. No.	Part Number	Description	Remarks	Serial Number	Qty.
1	6678205	ALTERNATOR	90 amp		1
2	6677497	NUT			1
3	6677496	PULLEY			1
4	6677495	SPACER	front		1
5	6677494	BOLT			4
6	6677491	BRACKET	rear		1
7	6677817	BOLT			4
8	6677818	BEARING			1
9	6677819	RETAINER			1
10	6677492	ROTOR ASSY			1
11	6677820	BEARING			1
12	6677493	STATOR ASSY			1
13	6677490	BRACKET			1
14	6677486	NUT			1
15	NAP	REGULATOR ASSY	Order Ref. 1		1
16	6677488	RECTIFIER ASSY			1
17	6677487	COVER			1
18	6677485	SPACER	rear		1

STARTER
(Valeo)

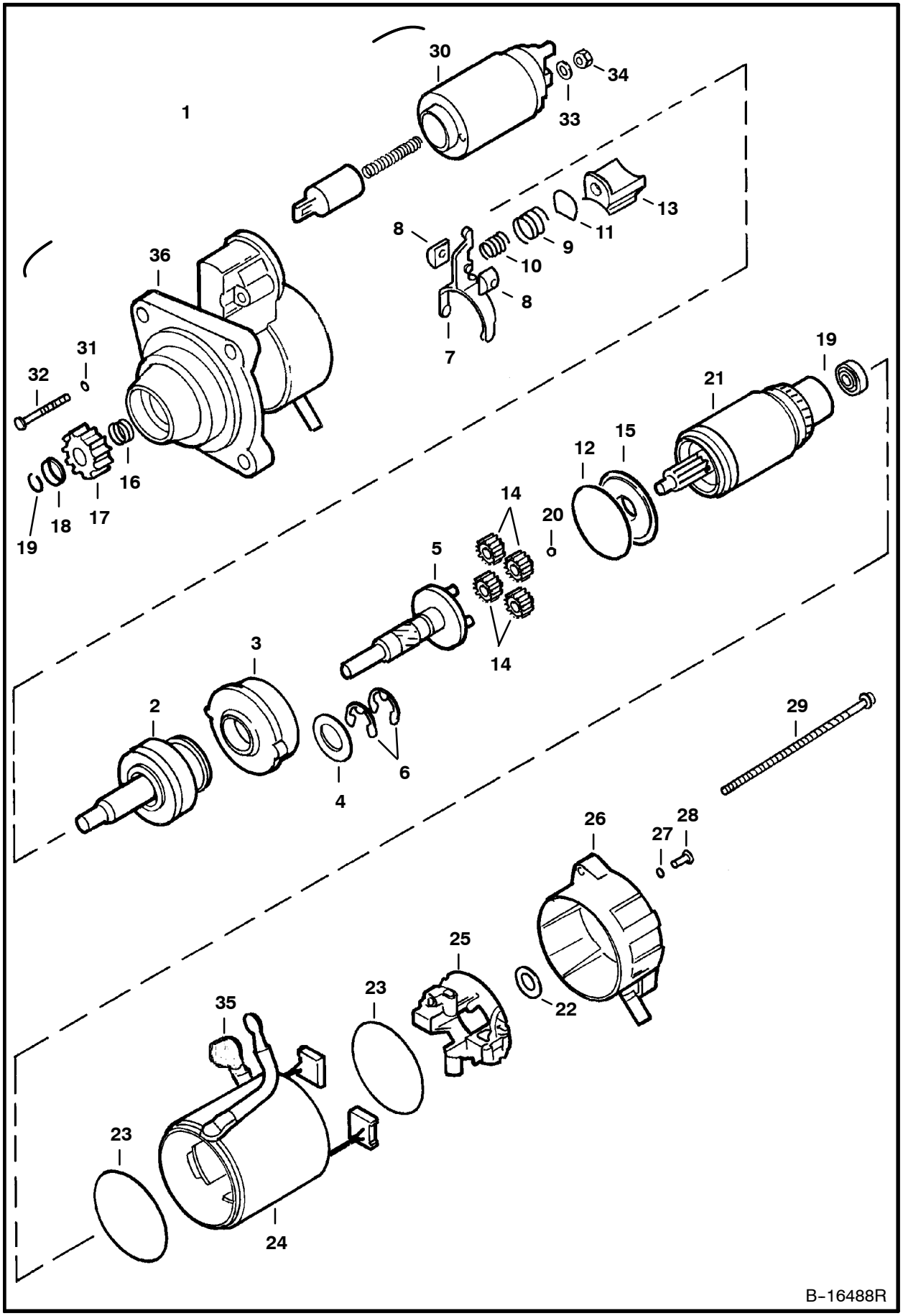

STARTER
(Valeo)

Ref. No.	Part Number	Description	Remarks	Serial Number	Qty.
1	6685190	STARTER			1
2	6680375	SHAFT	O.R.C. assy.		1
3	6680367	GEAR			1
4	6680378	WASHER			1
5	6680365	SHAFT			1
6	6680368	STOP RING			2
7	NSS	LEVER			1
8	NSS	HOLDER			2
9	NSS	SPRING			1
10	NSS	SPRING			1
11	NSS	PLATE			1
12	6680369	SEAL			1
13	6680371	LEVER			1
14	6680366	GEAR			4
15	6680372	BRACKET			1
16	6680361	SPRING			1
17	6680390	GEAR			1
18	6680360	STOP			1
19	6680359	STOP RING			1
20	6680362	BALL			1
21	6680374	ARMATURE			1
22	6680363	WASHER			1
23	6680380	SEAL			2
24	6680373	YOKE			1
25	6680377	HOLDER			1
26	6680389	BRACKET			1
27	6680358	RING	rubber		2
28	6680384	BOLT			2
29	6680356	BOLT			2
30	6680376	SWITCH			1
31	6680379	SEAL			2
32	6680383	BOLT			2
33	6EM-80	WASHER			1
34	4DM-8	NUT			1
35	6680355	BOOT			1
36	6680388	BRACKET	W/Ref. 7-11		1

COOLING SYSTEM

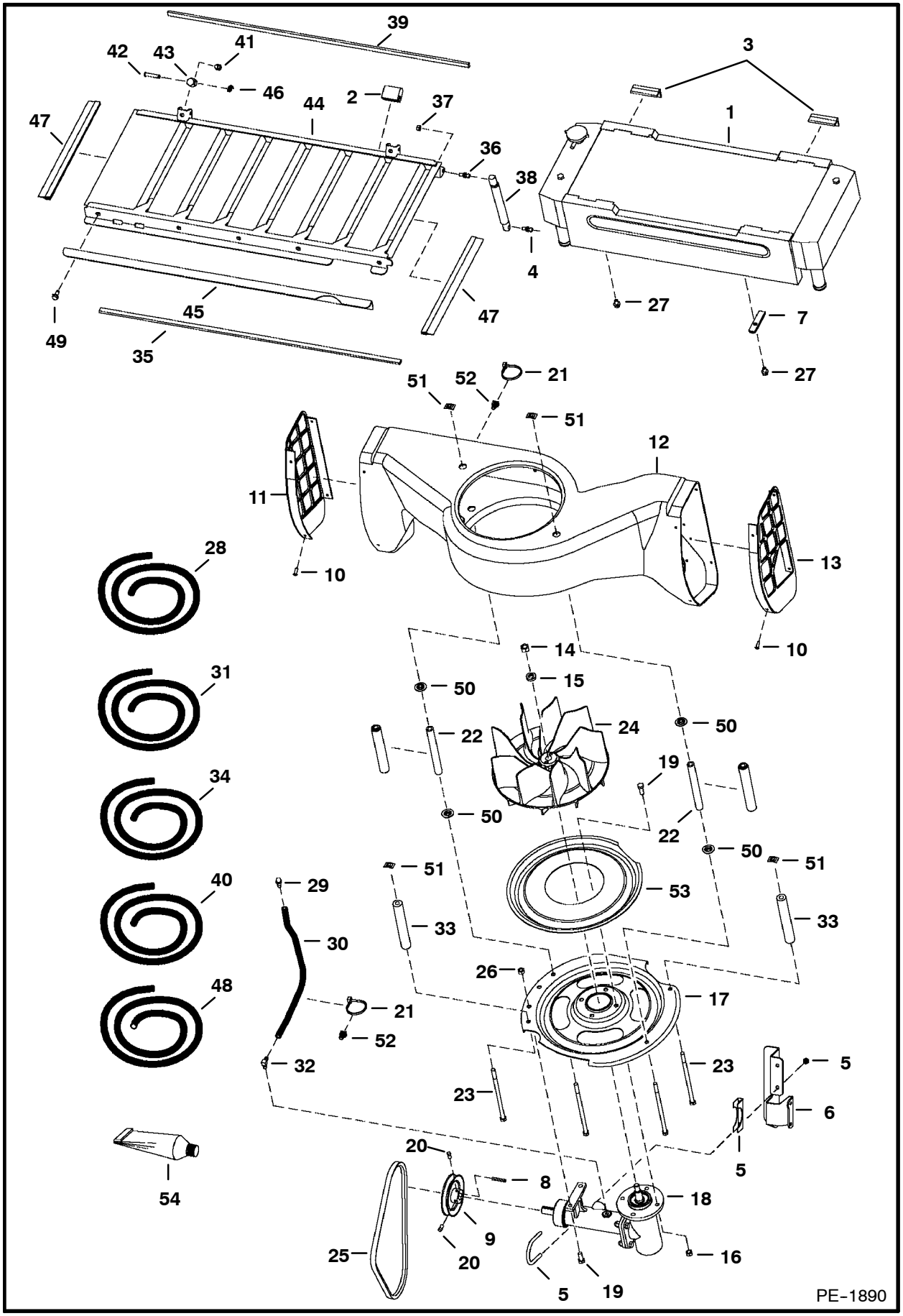

COOLING SYSTEM (Cont'd)

Ref. No.	Part Number	Description	Remarks	Serial Number	Qty.
1	6666384	RADIATOR			1
2	6579613	STOP			2
3	NAP	MOULDING	3" (76,2 mm) long -Order Ref. 28		2
4	6705052	BALL STUD	weld on		1
5	6626631	CLAMP			1
6	6719851	SHIELD	belt		1
7	6679991	SEAL	washer		1
8	7J-2108	KEY			1
9	7100034	PULLEY			1
10	6706517	SCREW			8
11	6716571	LOUVER	L.H. - plastic		1
12	6700329	HOUSING			1
13	6716572	LOUVER	R.H. - plastic		1
14	86D-8	NUT			1
15	6701097	WASHER			1
16	7D-6	NUT			4
17	6717478	INLET	4 slot		1
18	6734104	HOUSING ASSY.	See Page 137		1
19	17C-616	BOLT			6
20	6715143	SET SCREW			1
21	6624289	TIE			1
22	6577382	SPACER			2
23	17C-6116	BOLT			4
24	6715142	FAN			1
25	6732416	BELT	fan - 41"(1041,4 mm) long		1
26	61D-6	NUT			4
27	35C-508	BOLT			2
28	6649402	MOULDING	bulk - Sold Per Foot		x
29	6680970	BREATHER			1
30	NAP	HOSE	19-1/2" (495,3 mm) long - Order Ref. 31		1
31	6577822	HOSE	bulk - Sold Per Foot		x
32	6657376	ELBOW			1
33	6732318	SPACER			2
34	6511855	FOAM	bulk - Sold Per Foot - self adhesive		x
35	NAP	FOAM	42"(1067mm)long -Order Ref. 34		1
36	6649244	BALL STUD			1
37	61D-5	NUT			1
38	6674285	GAS SPRING			1
39	NAP	FOAM STRIP	34.5"(876,3 mm) long - Order Ref. 40		2
40	6511855	FOAM	bulk - Sold Per Foot		x
41	17C-608	BOLT			2
42	6567743	PIN			2
43	6579326	MOUNT			2
44	6718291	GRILL			1
45	6708981	BRACKET			1
46	6631418	PIN			2
47	NAP	MOULDING	14.65"(372,1 mm) long - Order Ref. 48		2

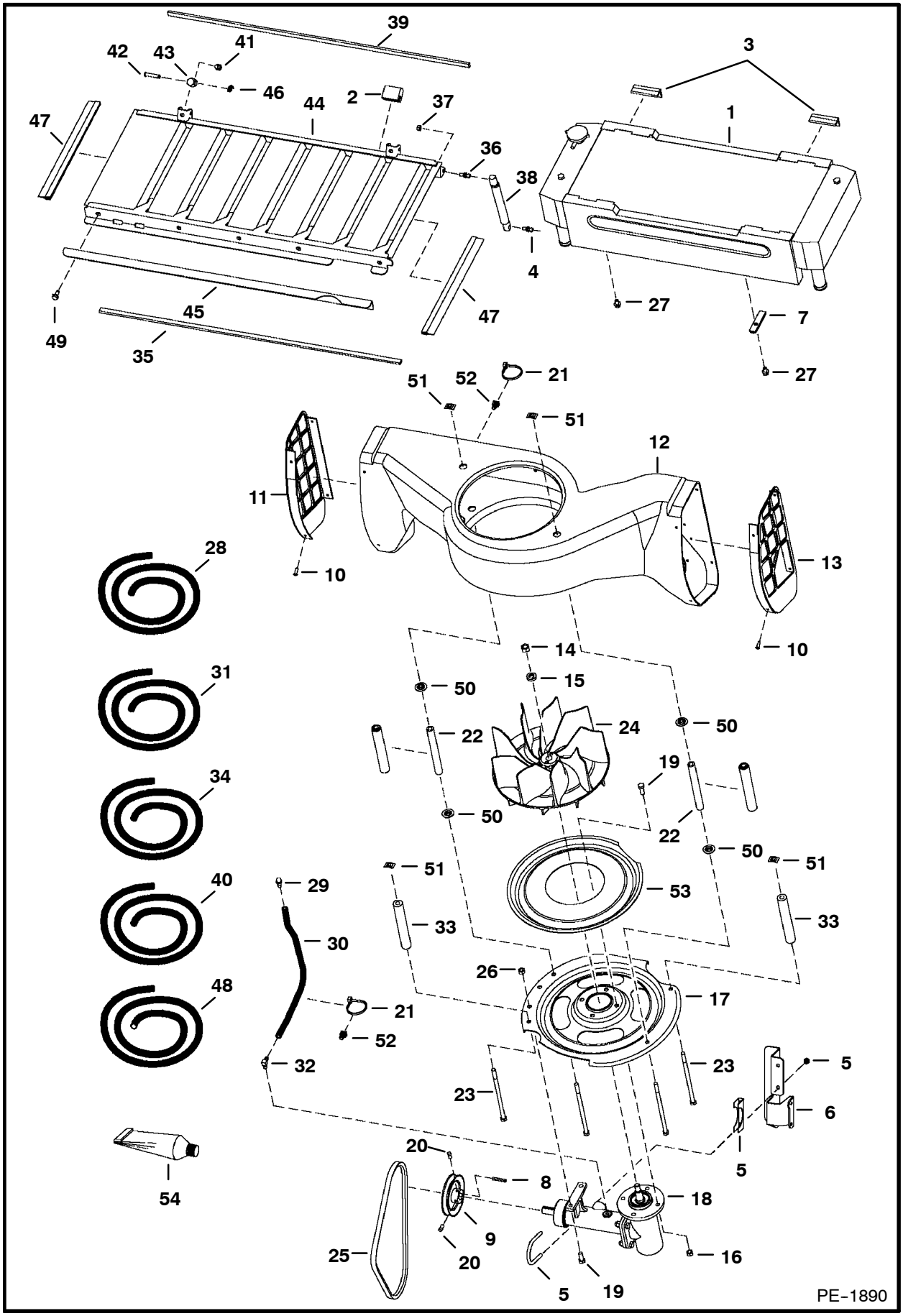
39
42
43
41
46
2
37
3
1
47
44
36
38
4
27
7
49
45
47
35
27
51
52
21
51
12
11
10
13
10
28
14
31
50
15
50
22
24
50
19
34
50
22
50
51
51
40
29
53
33
33
30
26
48
17
21
52
32
23
5
23
6
5
20
8
18
54
9
25
20
16
5
19
PE-1890

COOLING SYSTEM (Cont'd)

Ref. No.	Part Number	Description	Remarks	Serial Number	Qty.
48	6646705	MOULDING	bulk - Sold Per Foot		x
49	84G-3112	BOLT			3
50	6732457	WASHER			2
51	6684033	NUT	spring		4
52	6678666	MOUNT			2
53	6735204	SCREEN	inlet		1
54	6650407	ADHESIVE	1 oz. tube		x

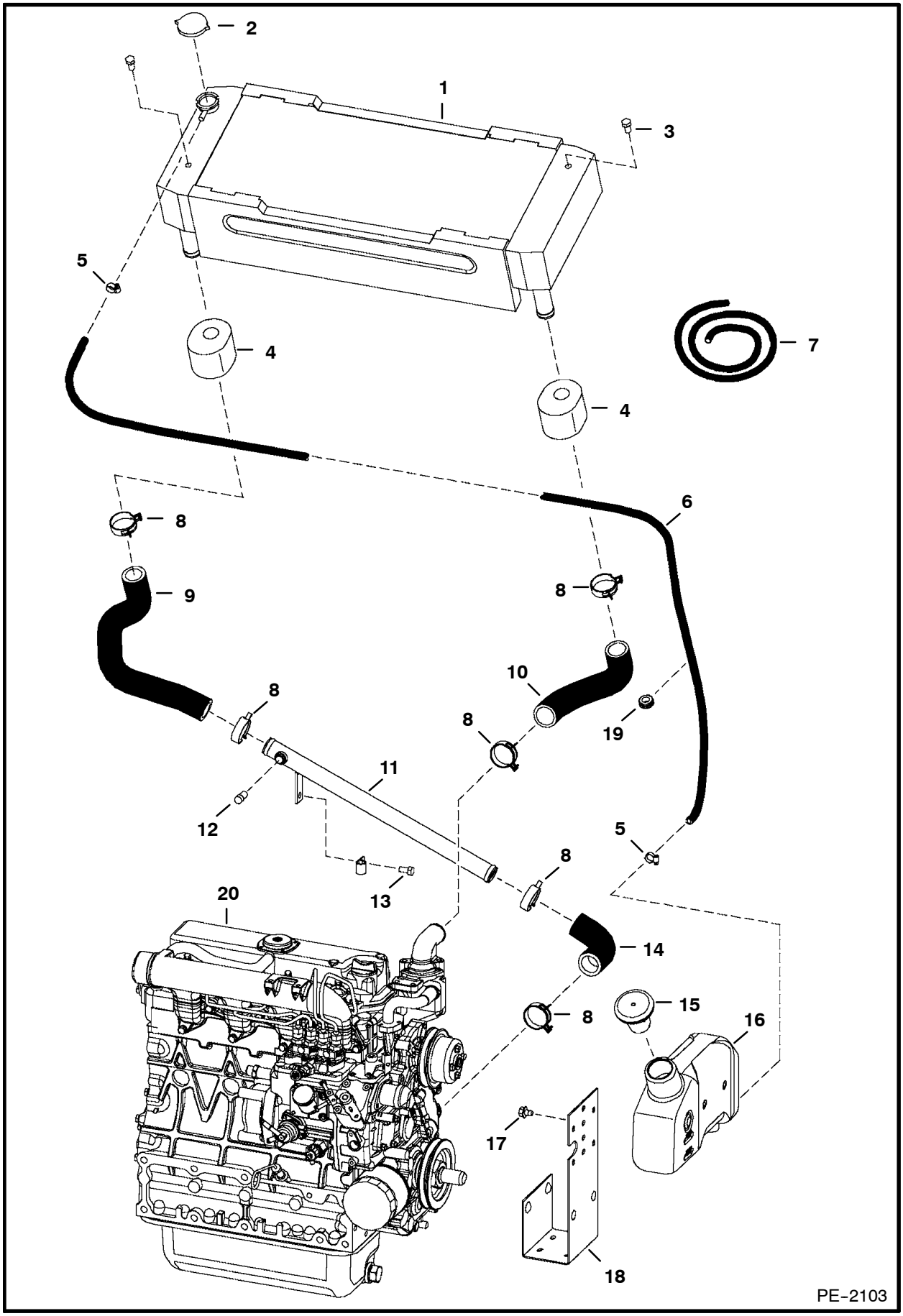
2
1
3
5
4
7
4
6
8
9
8
10
8
19
8
11
12
5
13
8
20
14
8
15
16
17
18
PE-2103

Ref. No.	Part Number	Description	Remarks	Serial Number	Qty.
1	6666384	RADIATOR			1
2	6646678	CAP	14 psi		1
3	6704753	PLUG	brass - .25"		2
4	6726433	SPACER			2
5	42HS-4	CLAMP			2
6	NAP	HOSE	62"(1574,8 mm) long -		
			Order Ref. 7		1
7	6667189	HOSE	bulk - Sold Per Foot		x
8	5HM-42	CLAMP			6
9	6578279	HOSE			1
10	6578280	HOSE			1
11	6730999	TUBE ASSY.	W/Ref. 12		1
12	40K-6	PLUG			1
13	17C-612	BOLT			1
14	6576028	HOSE			1
15	6702797	CAP			1
16	6576660	TANK			1
17	84G-3708	BOLT			2
18	6709415	MOUNT			1
19	1303932	GROMMET			1
20		ENGINE	See Page 139		1

ENGINE & ATTACHING PARTS
(Air Cleaner & Muffler)

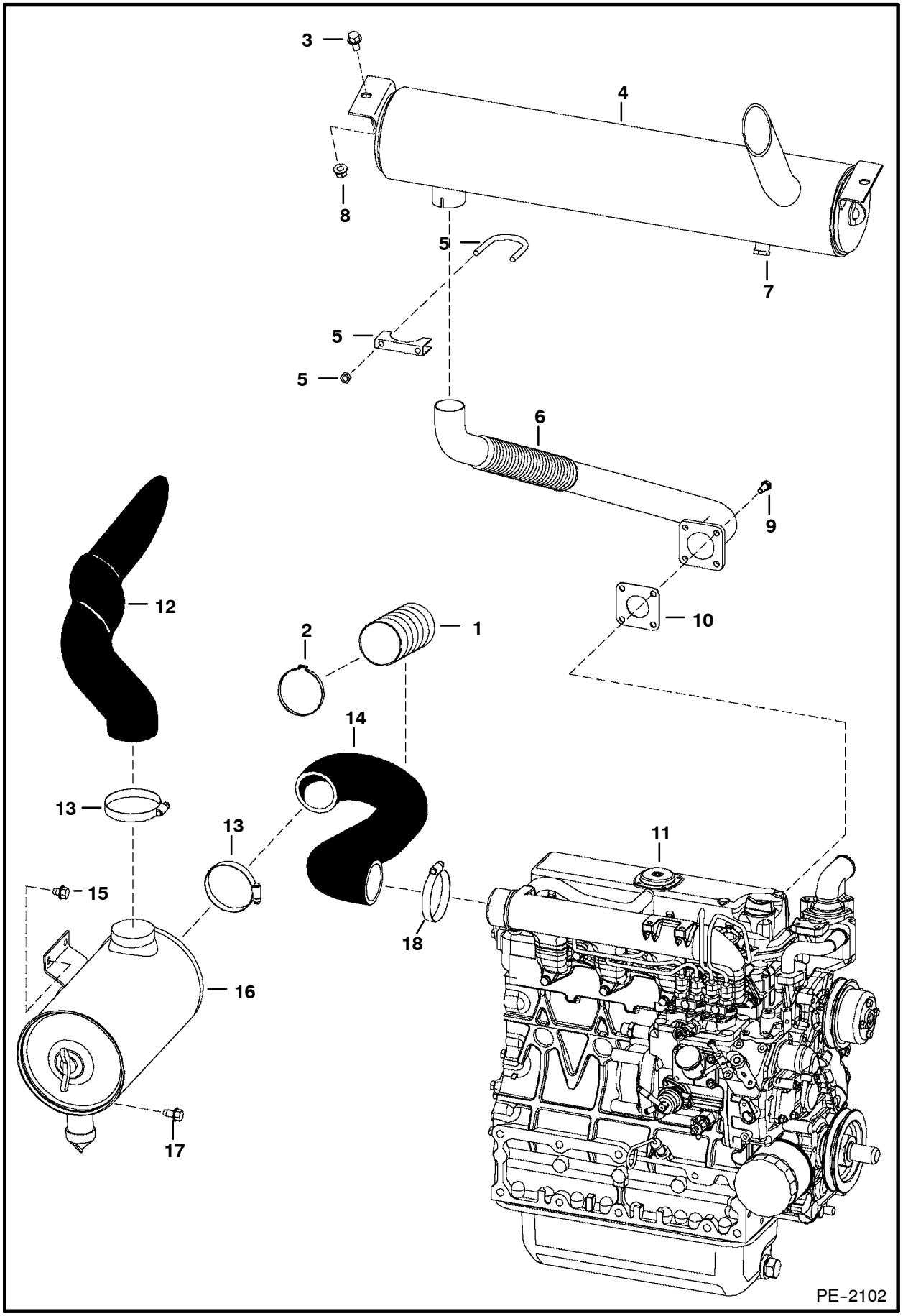

ENGINE & ATTACHING PARTS (Cont'd)
(Air Cleaner & Muffler)

Ref. No.	Part Number	Description	Remarks	Serial Number	Qty.
1	6706393	SHIELD	5"(127 mm) long		1
2	6664004	CLAMP			1
3	35C-612	BOLT			2
4	6671667	MUFFLER			1
5	6677363	CLAMP			1
6	6701151	PIPE			1
7	6661062	PLUG	brass 3/8" (9,5 mm)		1
8	83D-6	NUT			2
9	6701123	BOLT			4
10	6727752	GASKET			1
11		ENGINE	See Page 139		1
12	6718237	HOSE			1
13	42H-44	CLAMP			2
14	6714889	HOSE	W/Ref. 1 & 2		1
15	84G-3708	BOLT			2
16		AIR CLEANER	See Page 179		1
17	84G-3712	BOLT			1
18	42H-32	CLAMP			1

ENGINE & ATTACHING PARTS
(Belt Drive System)

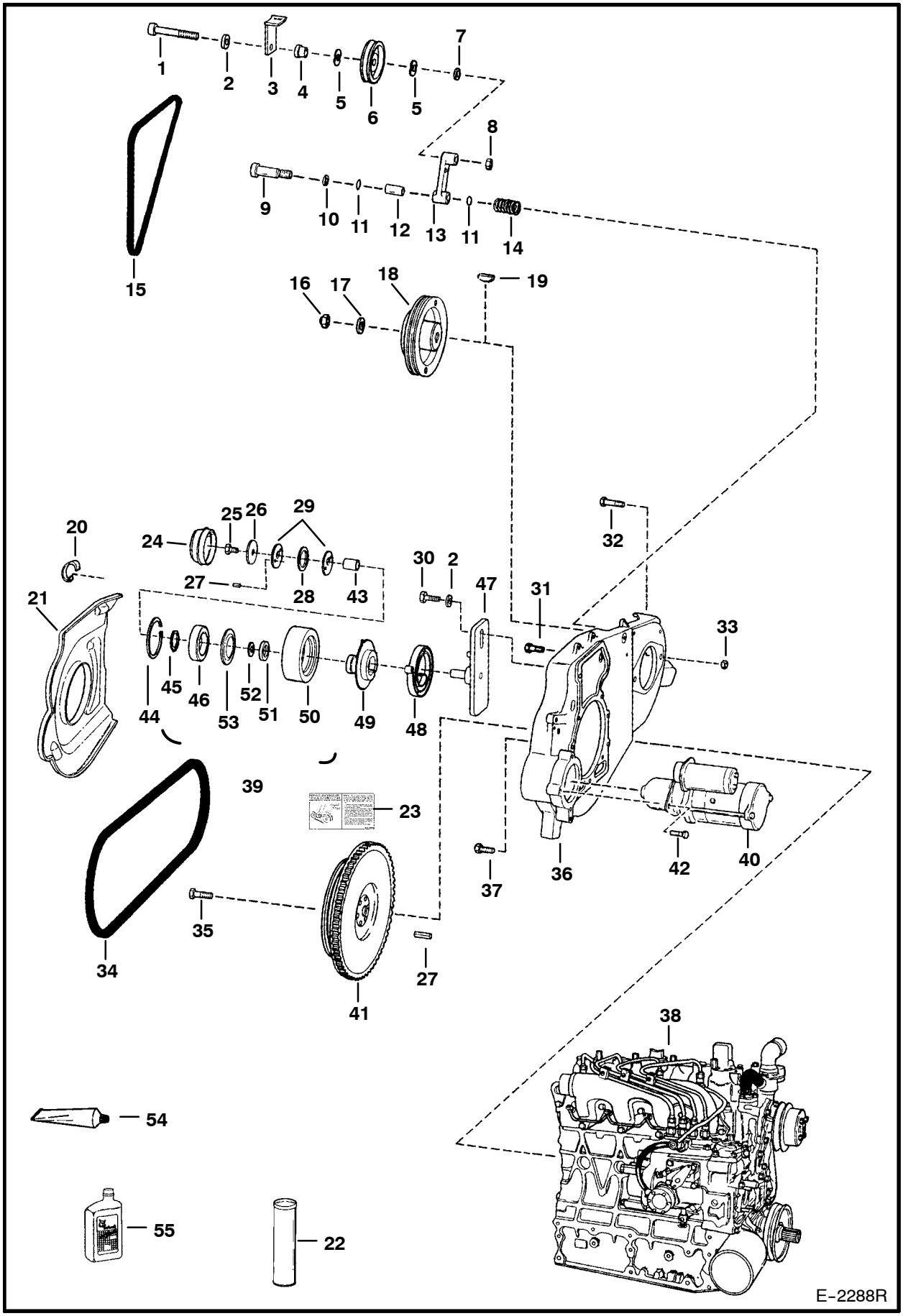

ENGINE & ATTACHING PARTS (Cont'd)
(Belt Drive System)

Ref. No.	Part Number	Description	Remarks	Serial Number	Qty.
1	73G-656	BOLT			1
2	6704484	WASHER	thrust		3
3	6702474	RETAINER	fan drive idler belt		1
4	6704443	BUSHING	spacer		1
5	6660995	RING	grease		2
6	6662997	PULLEY	fan drive idler		1
7	6704444	WASHER			1
8	61D-6	NUT			1
9	38C-820	BOLT	shoulder		1
10	6655781	BEARING			1
11	6704820	O-RING			2
12	6670682	BEARING	nylon		1
13	6725212	IDLER ARM	W/Ref. 12		1
14	6700115	SPRING			1
15		BELT	fan drive - See Page 121		1
16	92D-12	NUT			1
17	6576033	WASHER			1
18	6726539	PULLEY	to hyd. pump - 3 groove -		
			7.95" (202 mm) dia.		1
19	6J-807	KEY			1
20	6703022	CLIP			3
21	6726937	SHIELD			1
22	6599719	GREASE	Use W/Ref. 39		x
23	6709030	DECAL	belt tension spring loaded idler		1
24	6708770	CAP	dust		1
25	17C-610	BOLT			1
26	6705232	WASHER			1
27	14J-1808	PIN			2
28	6710585	WASHER	wave spring		1
29	6705231	WASHER			2
30	17C-620	BOLT			1
31	6719828	BOLT			2
32	17C-828	BOLT	hyd. pump mount		2
33	85D-8	NUT			2
34	6736775	BELT	pump drive		1
35	6598275	BOLT			6
36	6728062	MOUNT			1
37	6719825	BOLT			7
38		ENGINE	See Page 139		1
39	6735884	IDLER ASSY.	spring loaded - Ref. 24 - 29 &		
			43 - 53 - Also Order Ref. 23		1
	6714212	PULLEY ASSY.	Ref. 43 - 46 & 49 - 53,		1
40		STARTER	See Page 119		1
41	6736807	FLYWHEEL ASSY	W/Ring Gear		1
	6510470	RING GEAR			1
42	35C-620	BOLT			3
43	6682442	BEARING	bronze sleeve		1
44	6658847	SNAP RING			1
45	6658536	SNAP RING			1
46	6668114	BEARING	ball		1
47	6735883	BRACKET			1

ENGINE & ATTACHING PARTS (Cont'd)
(Belt Drive System)

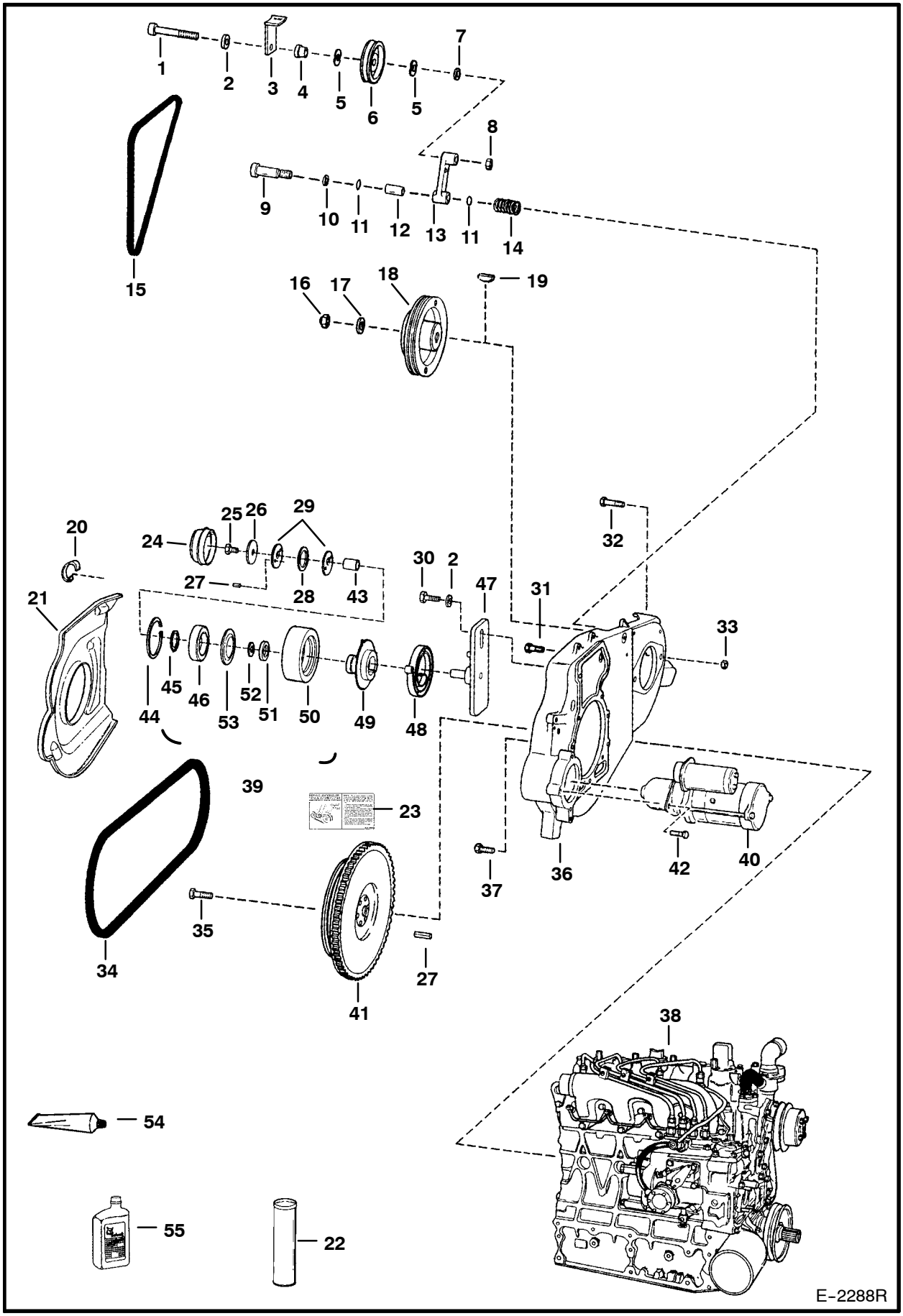

ENGINE & ATTACHING PARTS (Cont'd)
(Belt Drive System)

Ref. No.	Part Number	Description	Remarks	Serial Number	Qty.
48	6705491	SPRING	torsion		1
49	6711699	HUB ASSY.			1
50	6704391	PULLEY	idler		1
51	6661112	SEAL			1
52	6703168	BEARING	thrust		1
53	6664209	SEAL			1
54	6633583	SEALANT			x
55	6661405	OIL			x

ENGINE & ATTACHING PARTS
(Engine Mounts)

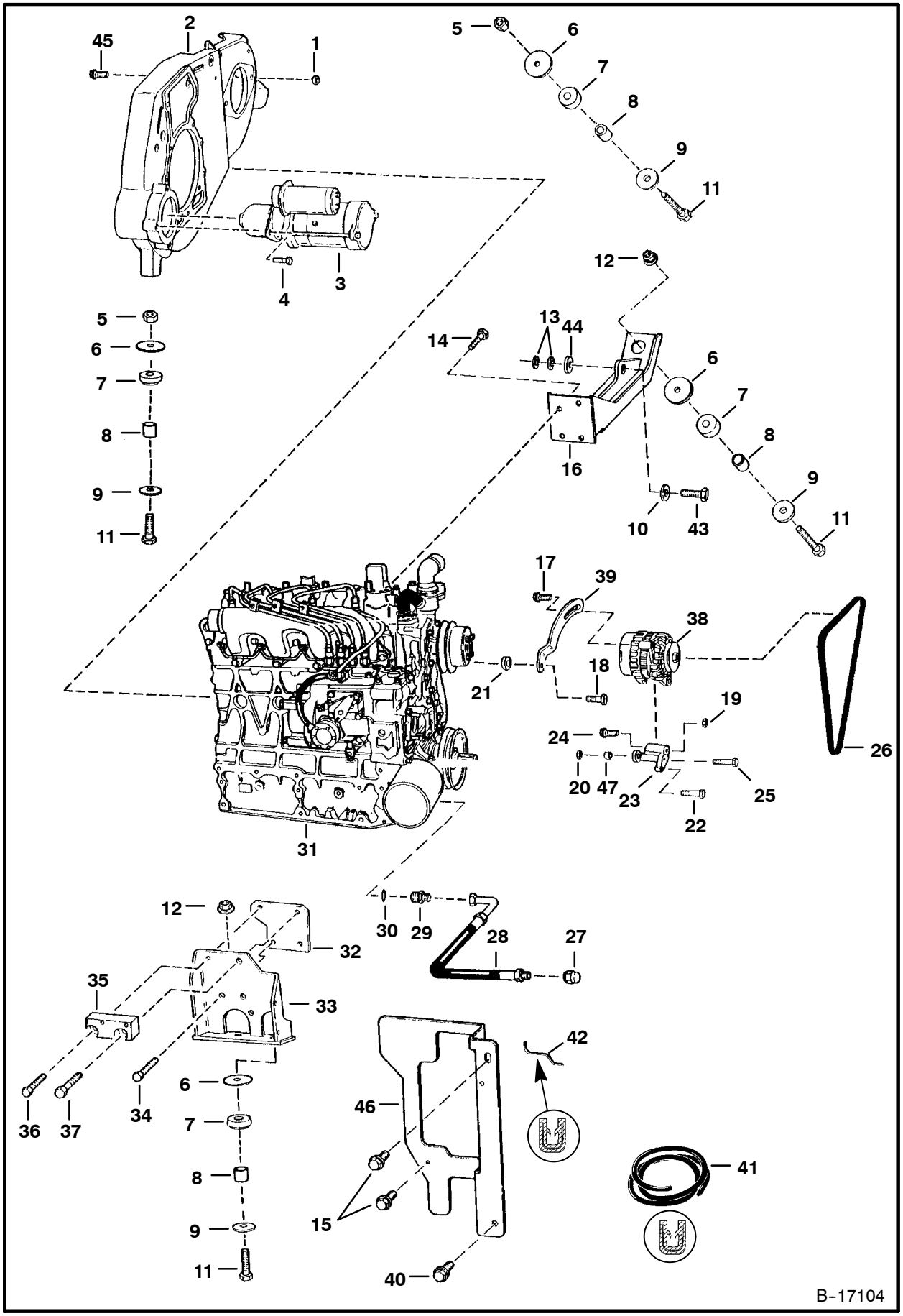

ENGINE & ATTACHING PARTS (Cont'd)
(Engine Mounts)

Ref. No.	Part Number	Description	Remarks	Serial Number	Qty.
1	85D-8	NUT			2
2		MOUNT	See Page 133		1
3		STARTER	See Page 119		1
4	35C-620	BOLT			3
5	6652918	NUT			2
6	6705106	WASHER			4
7	6661785	MOUNT			4
8	6706043	BUSHING			4
9	6661787	WASHER			4
10	6734432	SPACER			1
11	43C-852	BOLT			4
12	83D-8	NUT			2
13	25E-21	WASHER	use 2 max.		x
14	6719827	BOLT			4
15	84G-3712	BOLT			2
16	6712161	MOUNT	engine & hyd. pump for horizontal mount		1
17	35C-516	BOLT			3
18	29CM-820	BOLT			1
19	57D-5	NUT			1
20	53DM-8	NUT			2
21	6E-5	WASHER			1
22	1CM-890	BOLT			1
23	6725427	BRACKET			1
24	17C-556	BOLT			1
25	1CM-8100	BOLT			2
26	7100572	BELT	alternator		1
27	36K-6	CAP			1
28	6704012	HOSE			1
29	15KB-808	ADAPTER	W/Ref. 30		1
30	79K-8	O-RING			x
31		ENGINE	See Page 139		1
32	6700535	SPACER			1
33	6703981	MOUNT			1
34	6719828	BOLT			2
35	6736817	MOUNT	fuel filter		1
36	6719826	BOLT			1
37	6719829	BOLT			1
38		ALTERNATOR	90 amp. - See Page 117		1
39	6730867	BRACKET			1
40	84G-3716	BOLT			2
41	6654139	MOULDING	bulk - Sold Per Foot		x
42	NAP	MOULDING	5.5"(139,7 mm) long - Order Ref. 41		1
43	6675221	BOLT	hyd. pump mount		1
44	6703140	WASHER			1
45	17C-828	BOLT	hyd. pump mount		2
46	6731060	SHIELD	bolts to upright		1
47	6675838	BUSHING	Use W/Ref. 38		1

THROTTLE

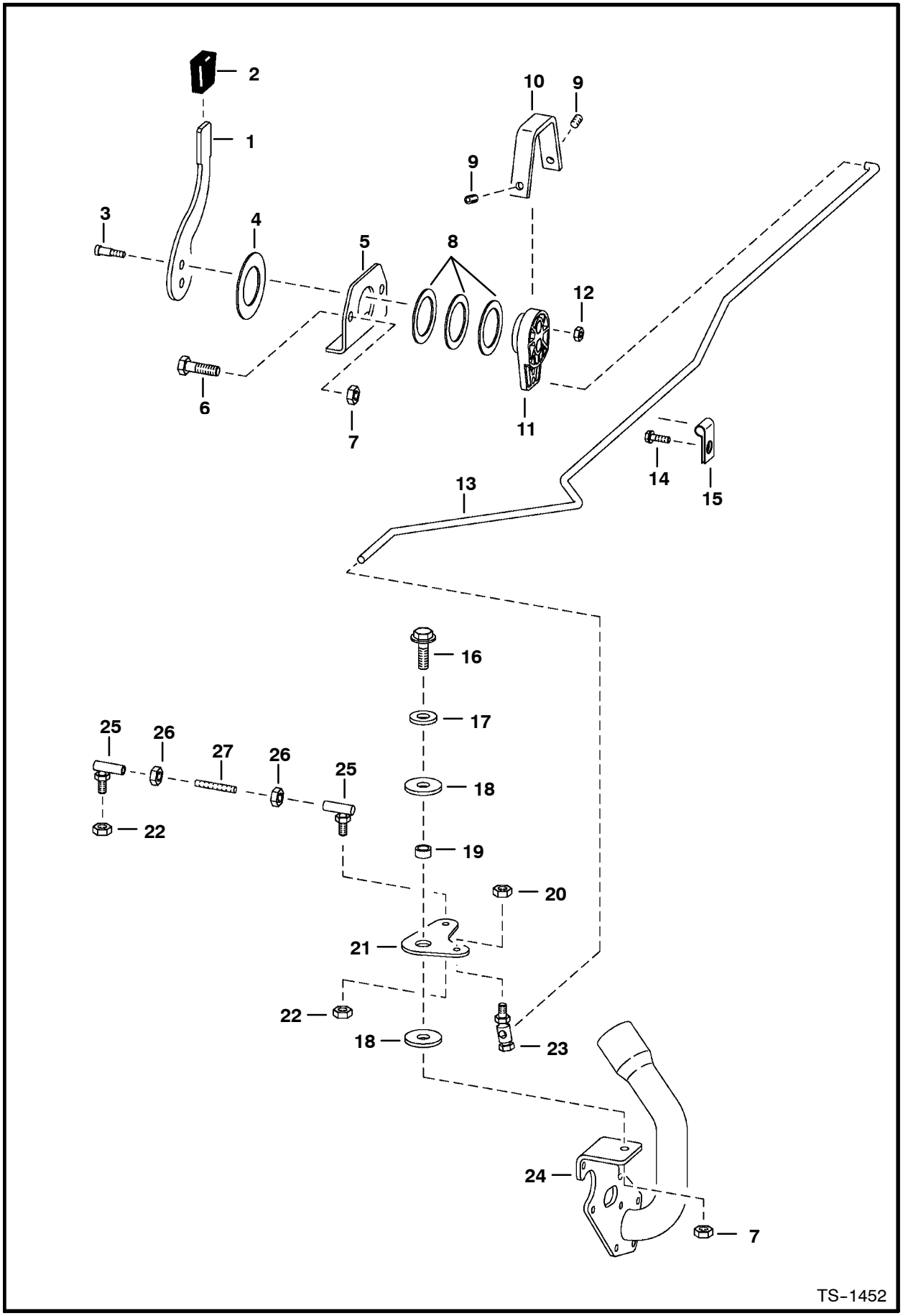
2
1
10
9
9
3
4
5
8
12
6
7
11
14
15
13
16
17
25
26
27
26
25
18
22
19
20
21
22
18
23
24
7
TS-1452

Ref. No.	Part Number	Description	Remarks	Serial Number	Qty.
1	6705452	LEVER			1
2	6564452	GRIP			1
3	38C-610	BOLT	shoulder		2
4	6567962	WASHER			1
5	6576262	MOUNT			1
6	17C-626	BOLT			2
7	95D-6	NUT			3
8	6630945	WASHER			3
9	6706572	SET SCREW			2
10	6576261	COVER			1
11	6709022	LEVER			1
12	85D-5	NUT			2
13	6702397	ROD			1
14	84G-3712	BOLT			1
15	30H-23	CLAMP			1
16	84G-3716	BOLT			1
17	25E-18	WASHER			1
18	6700170	WASHER	plastic		2
19	6564343	BUSHING			1
20	59D-4	NUT			1
21	6578268	BELLCRANK			1
22	66D-4	NUT			2
23	6557291	BALL JOINT			1
24	6719048	MOUNT	fuel shutoff solenoid & oil fill -		
			See Page 141		1
25	6554858	BALL JOINT			2
26	62D-4	NUT			2
27	6576252	ROD			1

COOLING FAN DRIVE ASSY.

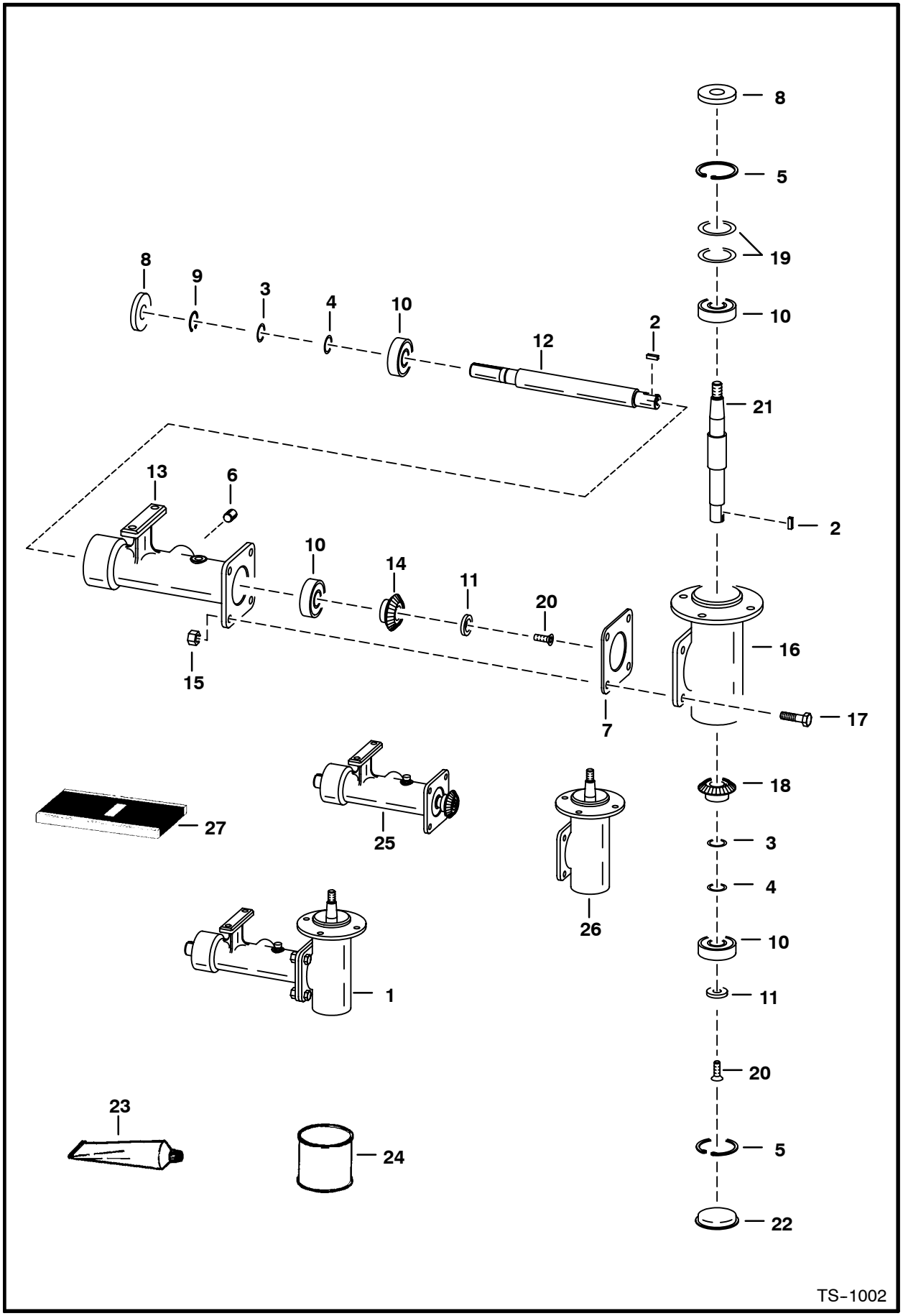

COOLING FAN DRIVE ASSY. (Cont'd)

Ref. No.	Part Number	Description	Remarks	Serial Number	Qty.
1	6734104	HOUSING ASSY.	Ref. 2 - 22		1
2	7J-2010	KEY			2
3	6702165	SHIM	.002"(0,05 mm) thickness -		
4	6701159	SHIM	1"(25,4 mm) O.D. .005"(0,13 mm) thickness - 1"(25,4 mm) O.D.		x x
5	6653758	SNAP RING			2
6	16F-8	PLUG			1
7	6578284	SHIM	.003" (0,08 mm) thickness		x
8	6653702	SEAL			2
9	6653757	SNAP RING			1
10	6646627	BEARING			4
11	6702140	WASHER	countersink		2
12	6702137	SHAFT	keyed		1
13	6579641	HOUSING			1
14	6702103	GEAR	keyed		1
15	95D-6	NUT			4
16	NSS	HOUSING	Order 6702138 Housing or Ref. 26		1
17	17C-620	BOLT			4
18	6702102	GEAR	keyed		1
19	6702166	SHIM	.002" (0,05 mm) thickness -		
	6702144	SHIM	2"(50,8 mm) O.D. .005" (0,13 mm) thickness - 2"(50,8 mm) O.D.		x x
20	9G-512	SCREW			2
21	6702135	SHAFT	keyed		1
22	6700782	CAP	grease		1
23	6672486	SEALANT	Use W/Ref. 7 & 22		x
24	6634393	LUBRICANT	gear - 1 pint		x
25	6707078	HOUSING ASSY.	half		1
26	6707077	HOUSING ASSY.	half		1
27	6669384	SPEEDY SLEEVE	repair kit		1

ENGINE & GASKET KITS
(Kubota - V2203)

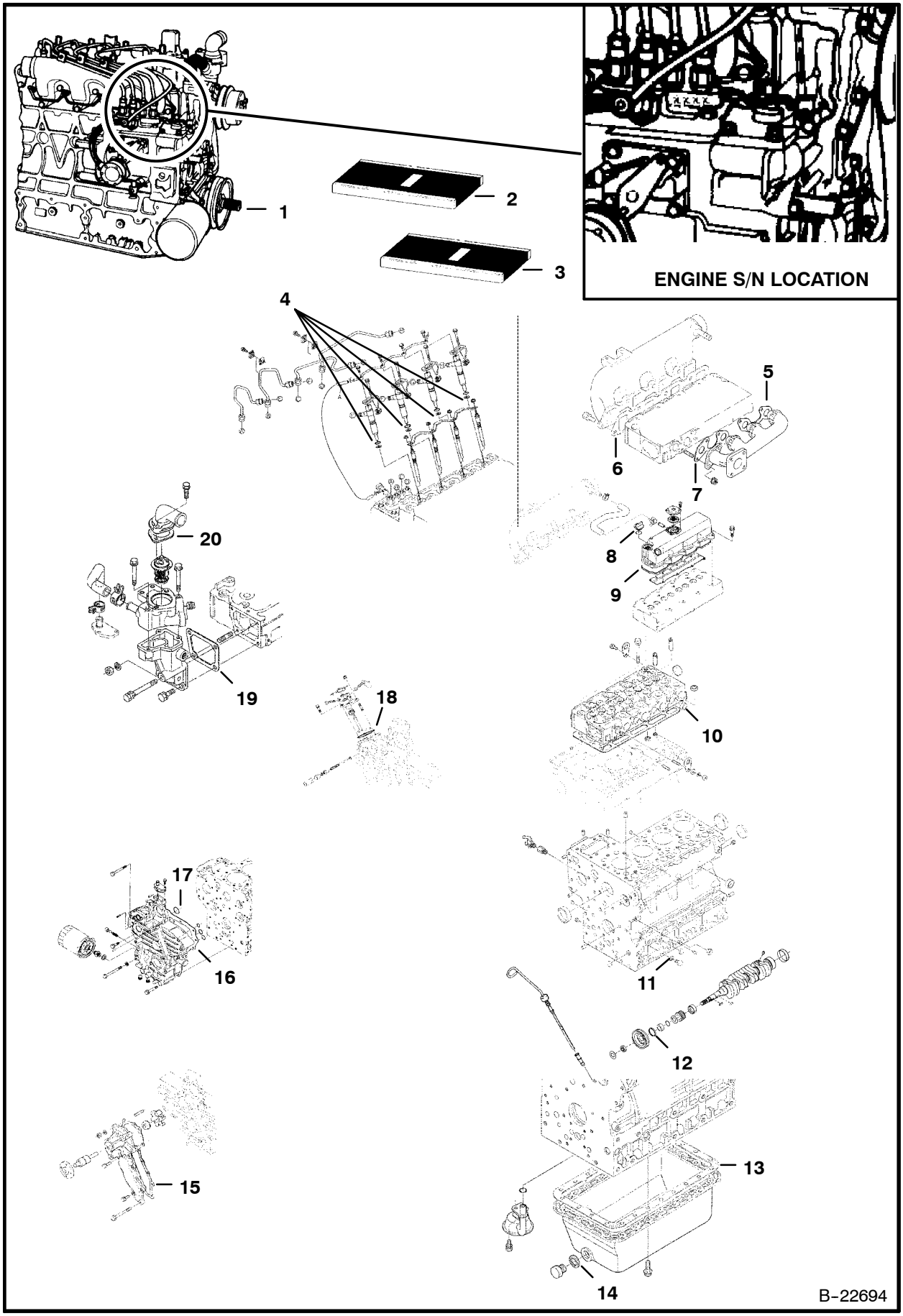

& GASKET KITS (Cont'd)
(Kubota - V2203)

Ref. No.	Part Number	Description	Remarks	Serial Number	Qty.
1	6683202	ENGINE	Does not include starter, alternator, flywheel, & flywheel housing		1
2		GASKET KIT	Upper		1
3		GASKET KIT	Lower		1
4	6670769	GASKET	See Page 175		4
5	6666781	GASKET	See Page 163		1
6	6684877	GASKET	See Page 163		1
7	6684879	GASKET	See Page 163		4
8	6684782	O-RING	See Page 145		1
9	6684780	GASKET	See Page 145		1
10		GASKET	cylinder head - See Page 149		x
11	3974095	GASKET	See Page 143		7
12	3974577	O-RING	See Page 153		1
13	6684753	GASKET	oil pan - See Page 151		1
14	6631046	GASKET	See Page 151		1
15	6684870	GASKET	See Page 159		1
16	6684770	GASKET	gearcase - See Page 141		1
17	6685468	O-RING	See Page 141		1
18	6684824	GASKET	speed control plate - See Page 169		1
19	6666802	GASKET	water flange - See Page 161		1
20	6684863	GASKET	thermostat cover - See Page 161		1

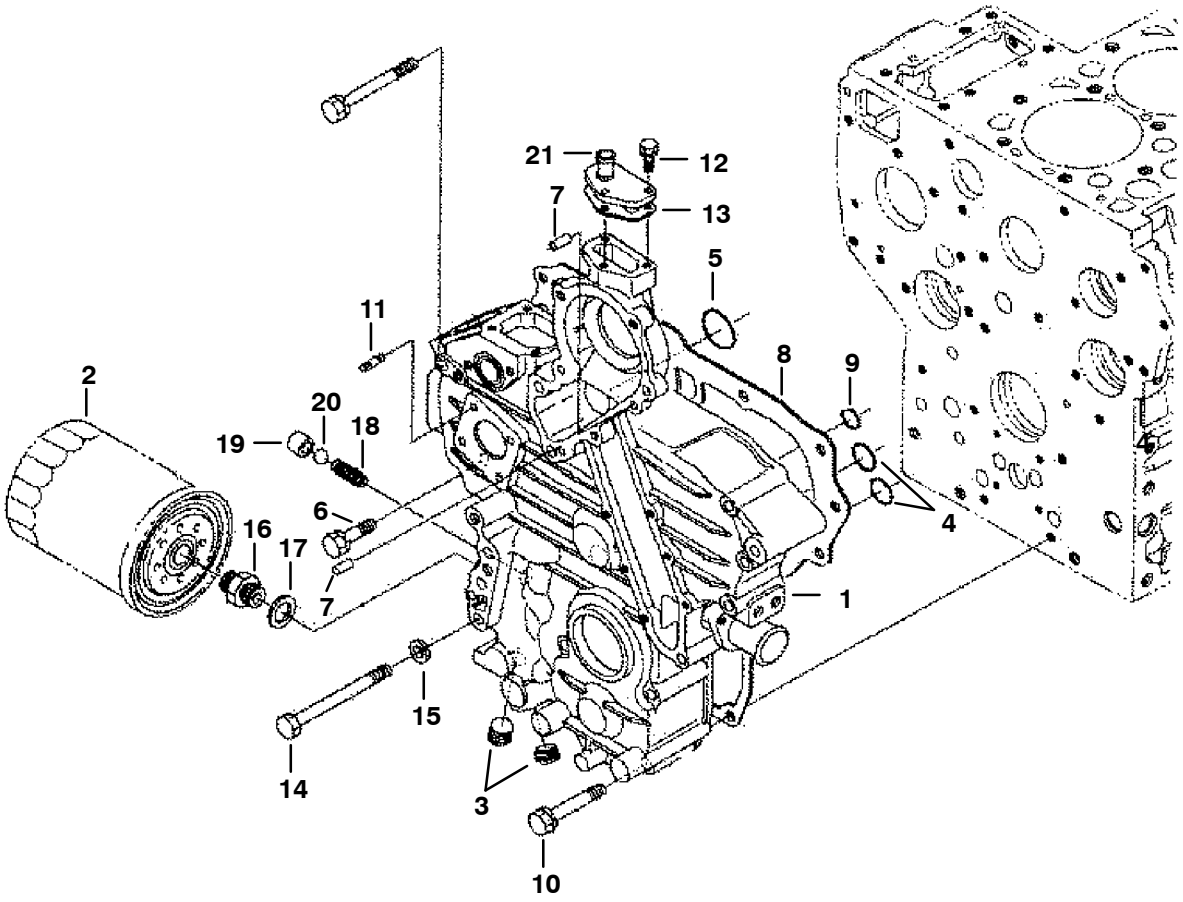

B-22675

GEARCASE (Cont'd)

Ref. No.	Part Number	Description	Remarks	Serial Number	Qty.
1	6685523	GEARCASE	assy. - W/Ref. 3 - 6 & 9		1
2	6684783	FILTER	oil		1
3	6672360	PLUG	pin		2
4	6685467	O-RING			2
5	6685468	O-RING			1
6	1CM-835	BOLT			1
7	3974395	PIN	straight		2
8	6684770	GASKET	gearcase		1
9	6685466	O-RING			1
10	1CM-870	BOLT			7
11	6652764	STUD			4
12	4CM-620	BOLT			3
13	6684774	GASKET	water return flange		1
14	6684772	BOLT			2
15	6667422	WASHER			9
16	6653809	ADAPTER			1
17	6685501	WASHER			1
18	6652652	SPRING			1
19	3974893	SEAT	valve		1
20	10J-13	BALL			1
21	3974894	FLANGE	water return		1

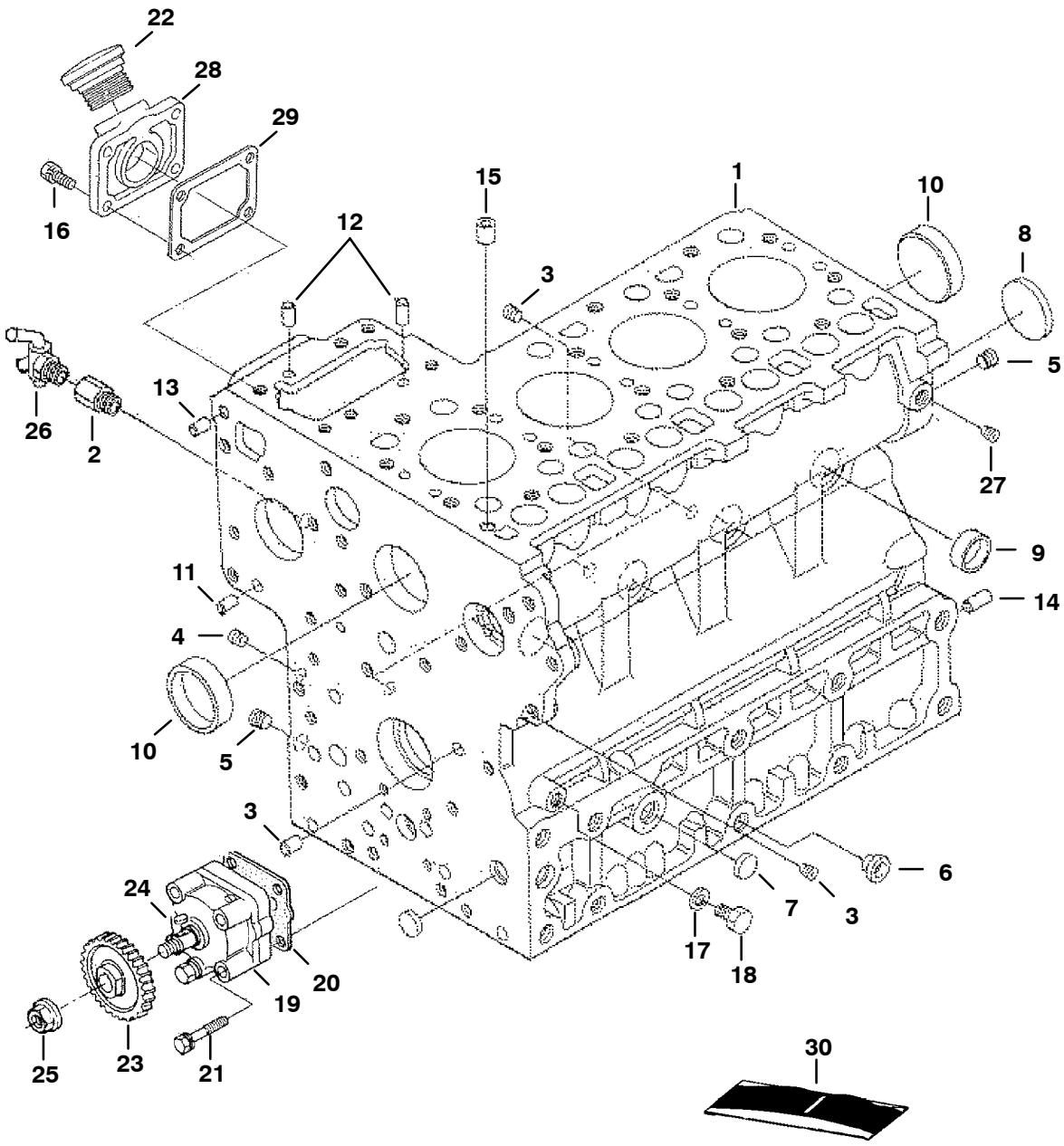
22
28
29
16
15
1
10
12
8
3
5
26
2
13
27
9
11
14
4
10
5
3
6
24
7
3
17
18
20
19
25
23
21
30
B-22676

CRANKCASE (Cont'd)

Ref. No.	Part Number	Description	Remarks	Serial Number	Qty.
1	6685522	CRANKCASE	assy. - W/Ref. 2 - 15		1
2	3974871	ADAPTER			1
3	6652574	PLUG			6
4	6685477	PLUG			12
5	6652575	PLUG			2
6	6598187	PLUG			21
7	6667418	PLUG	expansion		3
8	6657663	PLUG	expansion		1
9	3974389	CAP	sealing		6
10	6680639	CAP	sealing		2
11	3974393	PIN	straight		2
12	3974394	PIN	straight		2
13	3974395	PIN	straight		2
14	3974868	PIN	straight		1
15	3974037	PIN	pipe		1
16	3974038	O-RING			1
17	3974095	GASKET			1
18	6655884	PLUG			1
19	3975426	OIL PUMP			1
20	6666782	GASKET			1
21	6655195	BOLT			4
22	6685472	CAP	oil fill		1
23	3975441	GEAR			1
24	15JM-410	KEY			1
25	6653888	NUT			1
26	6672190	DRAINCOCK			1
27	16F-2	PLUG			1
28	6685478	FLANGE	oil fill		1
29	6684752	GASKET			1
30	6652580	BOLT			4
31	6657402	GASKET KIT	Lower - Does not include rear oil seal - See Page 139		1

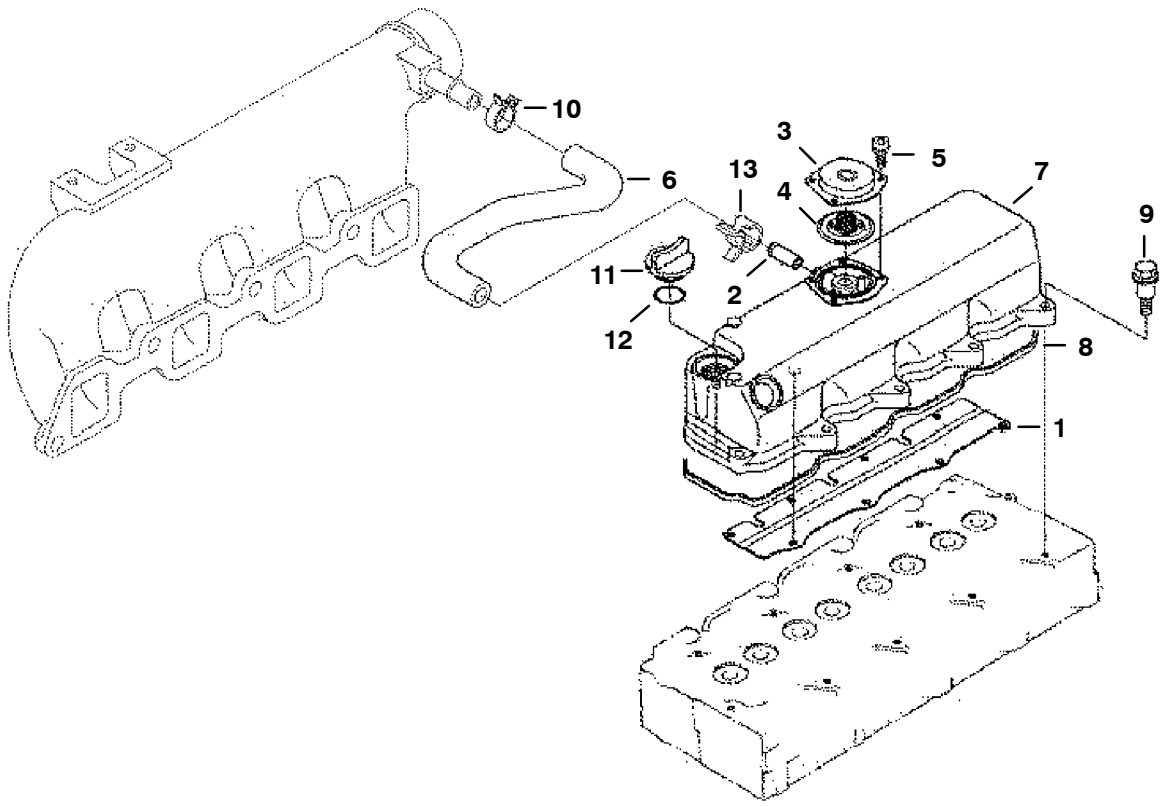

B-22674

ROCKER ARM COVER (Cont'd)

Ref. No.	Part Number	Description	Remarks	Serial Number	Qty.
1	6684779	SHIELD	breather		1
2	6655880	PIPE			1
3	6685086	COVER			1
4	6685087	VALVE			1
5	3974928	SCREW	W/Washer		4
6	6685524	PIPE	breather		1
7	6685085	COVER	valve		1
8	6684780	GASKET			1
9	6684781	BOLT			10
10	3974679	CLAMP	pipe		2
11	6652653	PLUG	oil filler		1
12	6684782	O-RING			1

VALVE ROCKER ARM

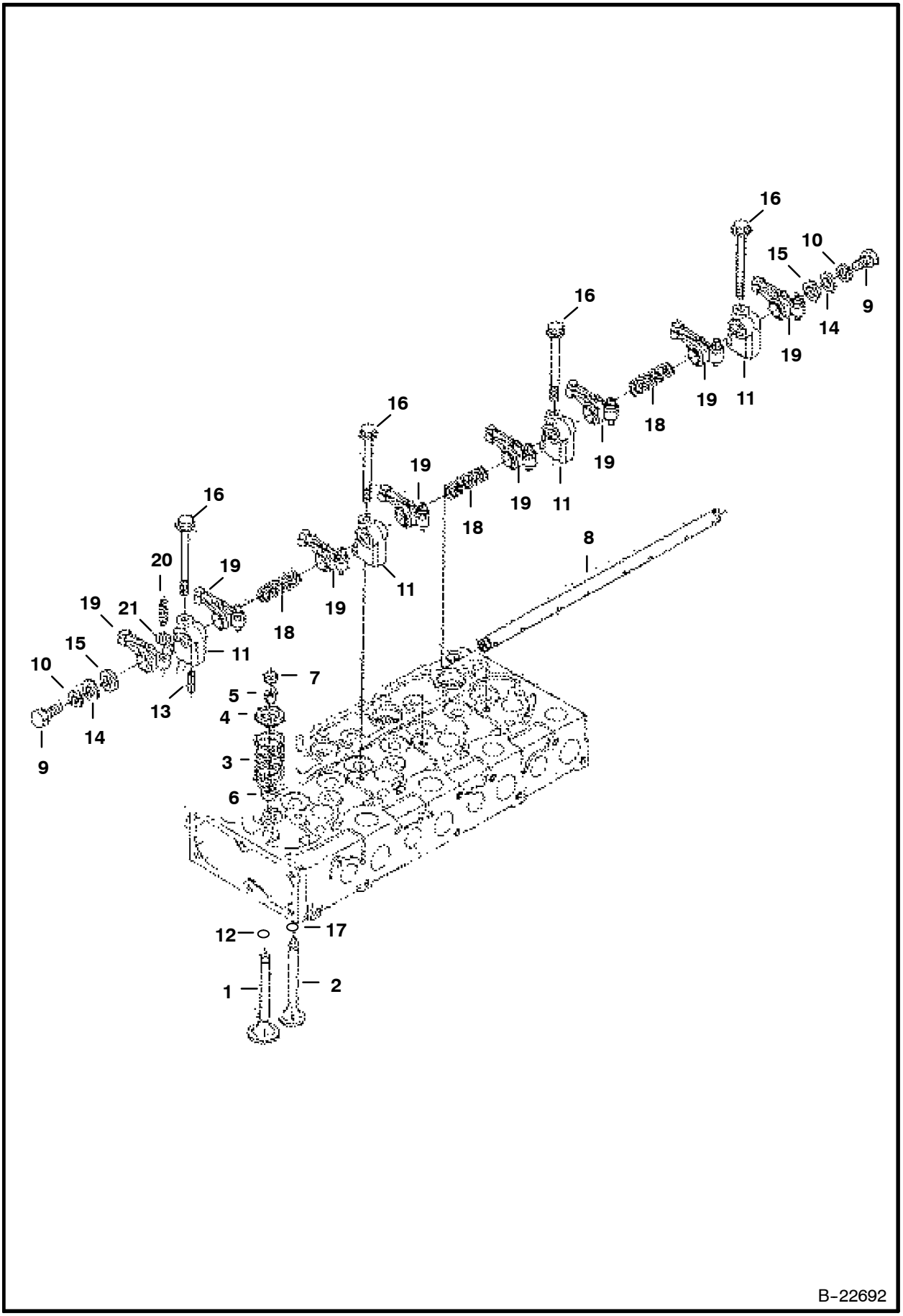

VALVE ROCKER ARM (Cont'd)

Ref. No.	Part Number	Description	Remarks	Serial Number	Qty.
1	6684872	VALVE	inlet		4
2	6684873	VALVE	exhaust		4
3	3974514	SPRING	valve		8
4	3974515	RETAINER	valve spring		8
5	3974516	COLLET	valve spring - complete set		1
6	6653830	SEAL	valve stem		8
7	3974518	CAP	valve		8
8	6684875	SHAFT	rocker arm		1
9	5CM-812	BOLT			2
10	6667422	WASHER	external		2
11	3974521	BRACKET	rocker arm		4
12	6655155	SEAT	valve inlet		4
13	6667461	PIN	spring		4
14	6667451	WASHER	spring		4
15	3974524	WASHER			2
16	6680685	BOLT			1
17	6655156	SEAT	valve exhaust		4
18	6653833	SPRING	rocker arm		3
19	6655870	ARM	rocker - W/Ref. 20 & 21		8
20	3974920	SCREW	adjusting		8
21	2DM-8	NUT			8

CYLINDER HEAD

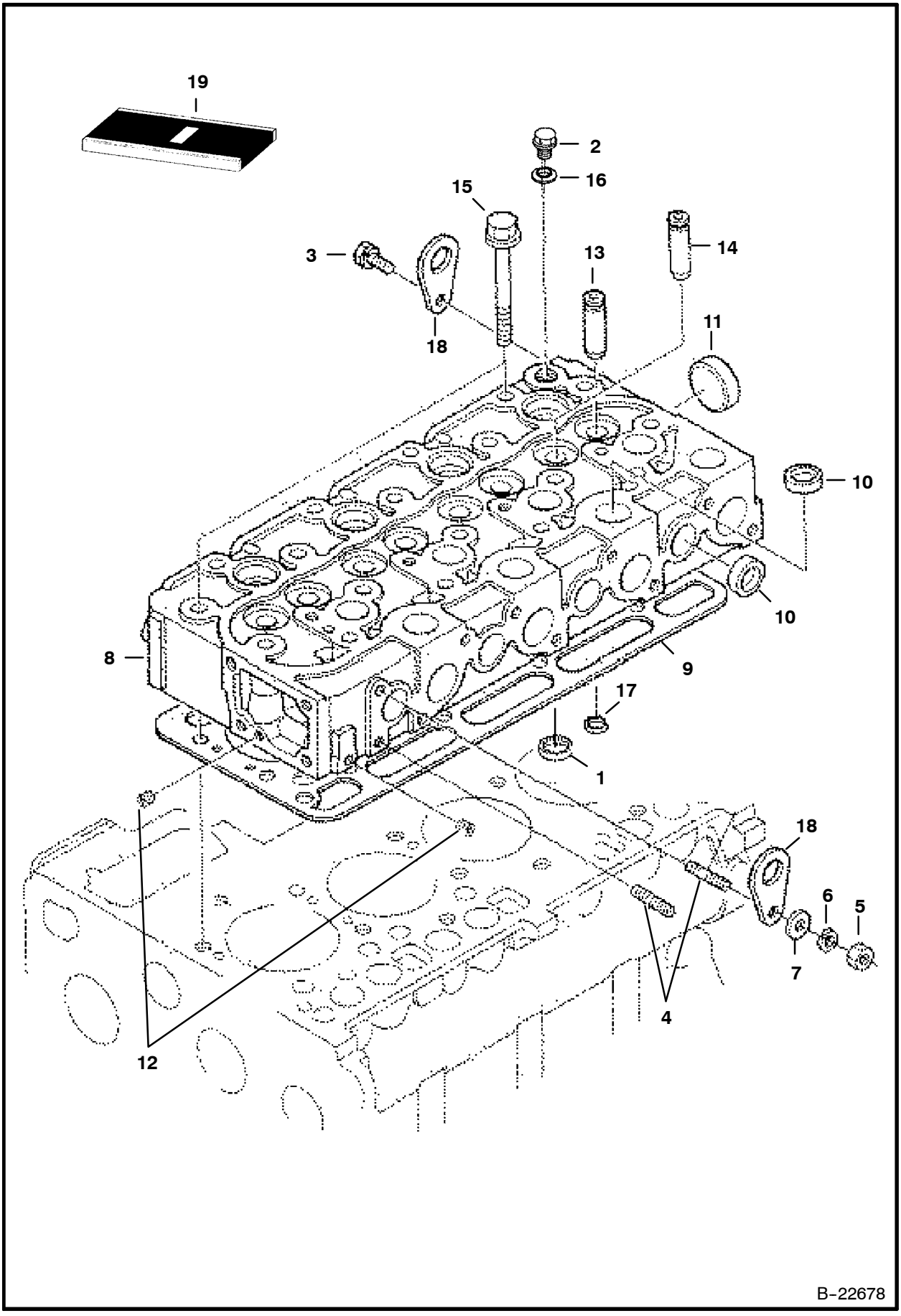

CYLINDER HEAD (Cont'd)

Ref. No.	Part Number	Description	Remarks	Serial Number	Qty.
1	6684762	SEAT	inlet valve		4
2	6655160	PLUG			1
3	6667421	BOLT			1
4	6598156	STUD			2
5	6652792	NUT			2
6	6667422	WASHER	spring		2
7	2EM-8	WASHER	plain		2
8	6685503	HEAD	cylinder - W/Ref. 10 - 14		1
9	6685077	GASKET	cylinder head - 1.20 mm		1
	6685078	GASKET	cylinder head - 1.15 mm		1
	6685079	GASKET	cylinder head - 1.25 mm		1
	6685080	GASKET	cylinder head - 1.30 mm		1
	6685081	GASKET	cylinder head - 1.35 mm		1
10	3974432	CAP	sealing		12
11	3974433	CAP	sealing		1
12	6598116	PLUG			2
13	6655154	GUIDE	intake valve		4
14	6684756	GUIDE	exhaust valve		4
15	6655158	BOLT			18
16	6655161	WASHER			1
17	6684763	SEAT	exhaust valve		4
18	3974882	HOOK			1
19		GASKET KIT	upper - See Page 139		1

OIL PAN

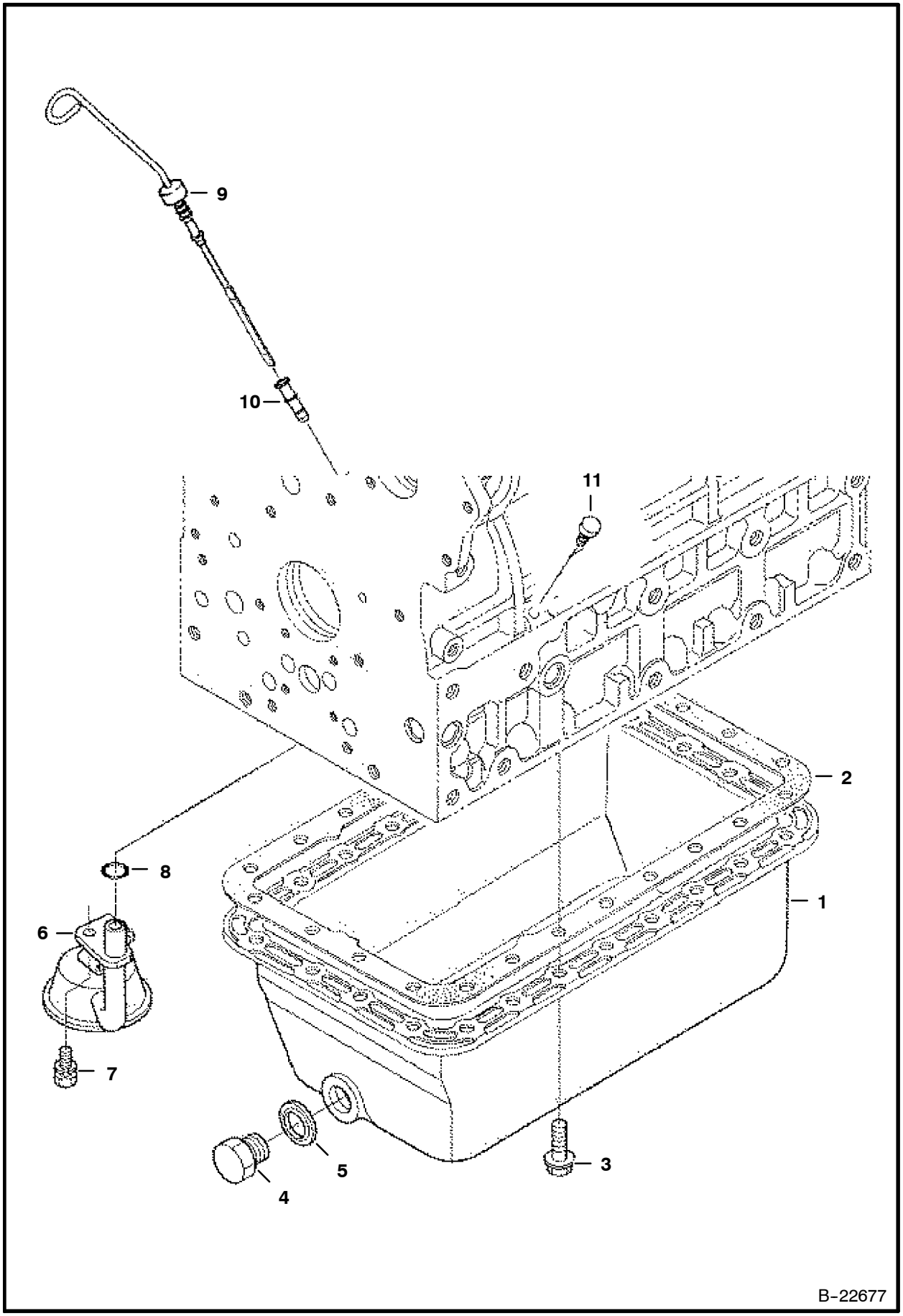

OIL PAN (Cont'd)

Ref. No.	Part Number	Description	Remarks	Serial Number	Qty.
1	6685518	OIL PAN			1
2	6684753	GASKET	oil pan		1
3	6653798	BOLT			24
4	6680567	PLUG	drain		1
5	6631046	GASKET			1
6	6682500	OIL FILTER			1
7	6667420	BOLT			1
8	6684754	O-RING			1
9	6685499	DIPSTICK	oil		1
10	6677203	TUBE	Use W/Ref. 9 (6677202 Dipstick)		1
11	6684785	PLUG			1

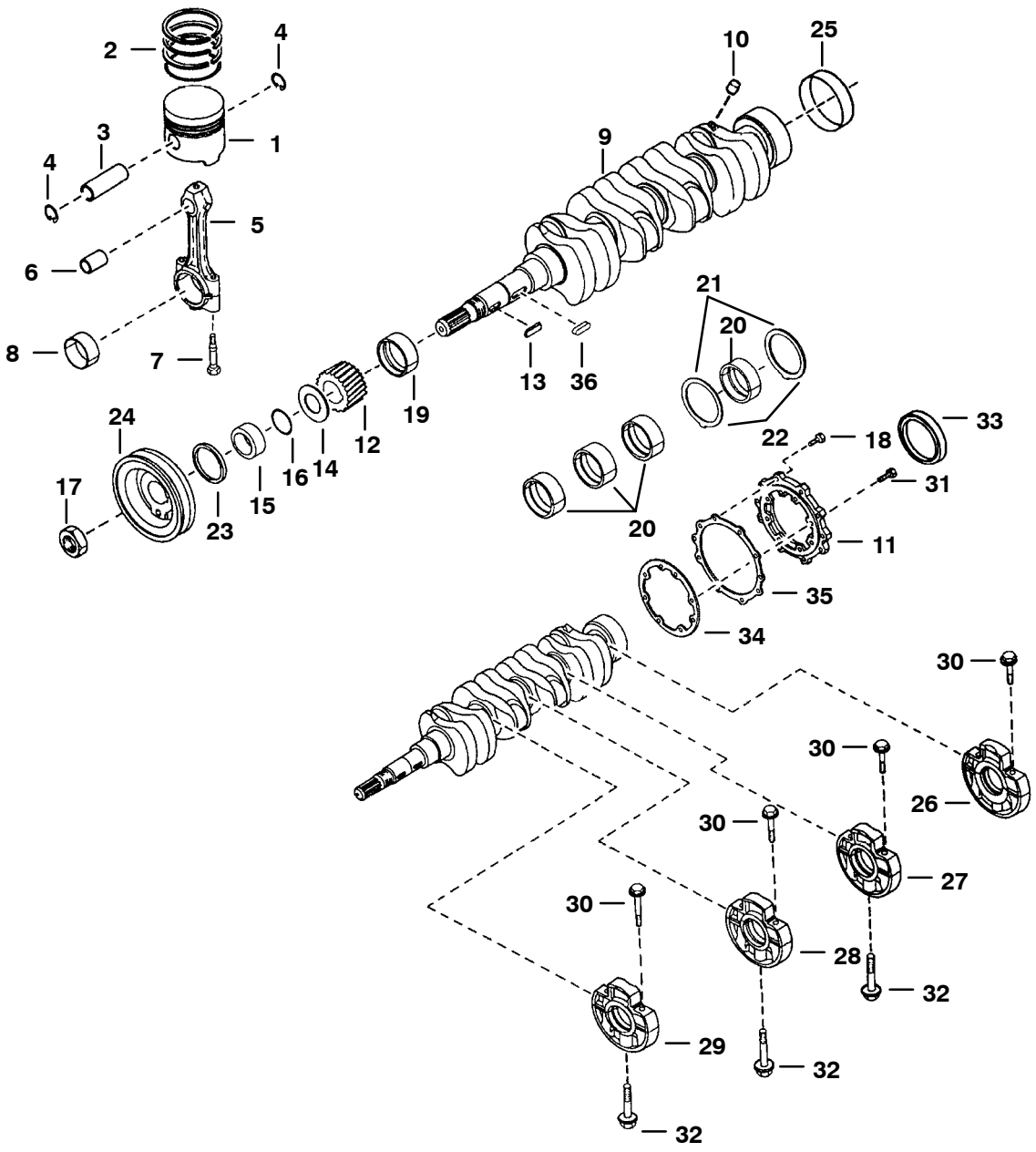
2
4
3
1
4
5
6
8
7
10
25
9
21
20
13
36
19
12
14
16
15
24
17
23
22
18
33
31
11
20
35
34
30
26
27
28
32
29

B-22684

PISTON & CRANKSHAFT (Cont'd)

Ref. No.	Part Number	Description	Remarks	Serial Number	Qty.
1	6685506	PISTON	Std.		4
	6685509	PISTON	+.25		4
2	6685095	RINGS	piston - Std. - Was 6655178 [A]		4
	6685096	RINGS	piston - +.25		4
3	6655179	PIN			4
4	6655180	CIR-CLIP			8
5	6655181	ROD	connecting - W/Ref. 6, 7 & 8		4
6	6655243	BUSHING			4
7	6655498	BOLT			8
8	6655183	BEARING	rod - Std.		4
	6655236	BEARING	rod (0,2 mm-.0079)		4
	6655237	BEARING	rod (0,4 mm-.0157)		4
9	6684806	CRANKSHAFT	Ref. 10 & 25 - Ref. 10 must be installted before using		1
10	6652633	PLUG	Must be installed before using Ref. 9 crankshaft - See S/L dated 3 Jan 85		4
11	6685515	COVER			1
12	6685481	GEAR			1
13	3974546	KEY			2
14	6653861	SLINGER	oil		1
15	3975337	COLLAR			1
16	3974577	O-RING			1
17	3974671	NUT			1
18	4CM-825	BOLT			8
19	6685486	BEARING	main - Std.		1
	6685490	BEARING	main (0,2 mm-.0079)		1
	6685491	BEARING	main (0,4 mm-.0157)		1
20	6685487	BEARING	main - Std.		4
	6685492	BEARING	main (0,2 mm-.0079)		4
	6685493	BEARING	main (0,4 mm-.0157)		4
21	6685488	WASHER	thrust - Std.		2
	6685494	WASHER	thrust (0,2 mm-.0079)		2
	6685495	WASHER	thrust (0,4 mm-.0157)		2
22	6685489	WASHER	thrust - Std.		2
	6685496	WASHER	thrust (0,2 mm-.0079)		2
	6685497	WASHER	thrust (0,4 mm-.0157)		2
23	6631664	SEAL	oil		1
24	6685521	PULLEY			1
25	6653859	SLEEVE			1
26	6685480	CASE	main bearing - W/Ref. 30		1
27	6685485	CASE	main bearing - W/Ref. 30		1
28	6685484	CASE	main bearing - W/Ref. 30		1
29	6685483	CASE	main bearing - W/Ref. 30		1
30	6685482	BOLT			8
31	4CM-828	BOLT			8
32	6653821	BOLT			3
33	6684789	SEAL	oil		1
34	6684788	GASKET			1
35	6666814	GASKET			1
36	6685469	KEY			1

FUEL CAMSHAFT

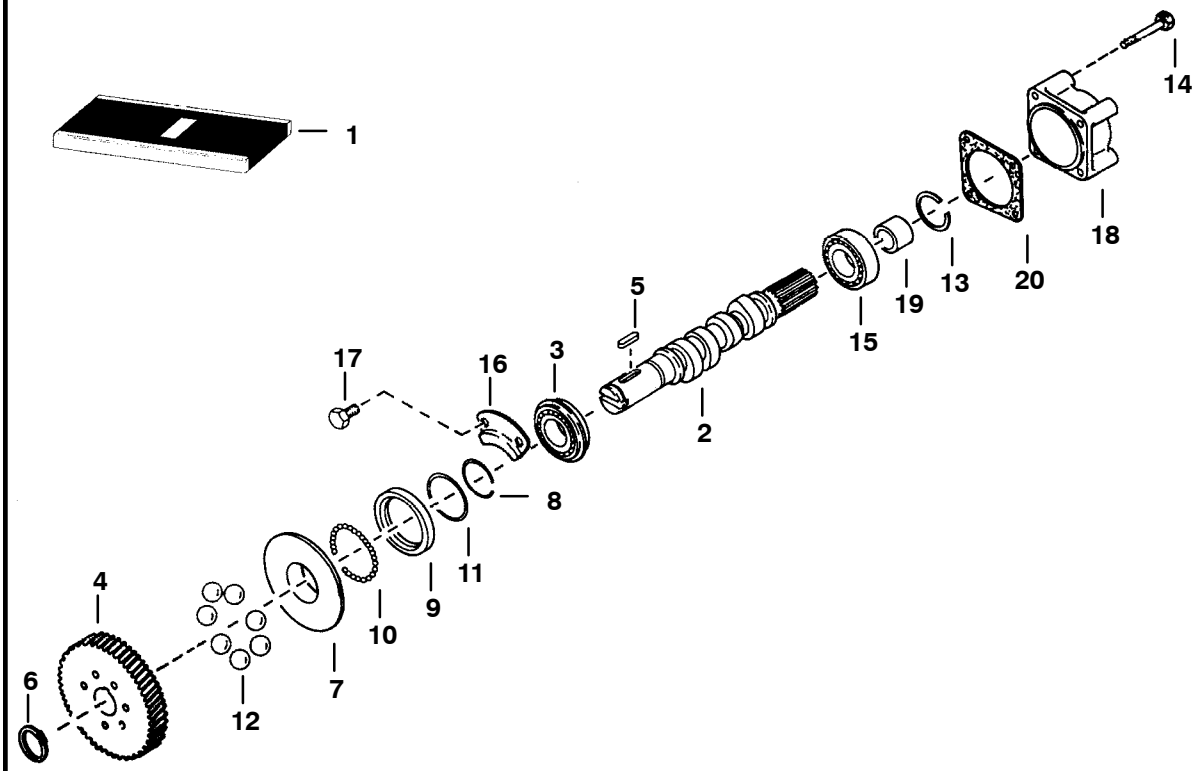

B-13144

FUEL CAMSHAFT (Cont'd)

Ref. No.	Part Number	Description	Remarks	Serial Number	Qty.
1	6685504	CAMSHAFT	assy. - Ref. 2-14		1
2	NAP	CAMSHAFT	fuel		1
3	851242	BALL BEARING			1
4	6655212	GEAR	injection pump		1
5	6598099	KEY			1
6	5JM-24	CIR-CLIP	external		1
7	6655213	SLEEVE	governor		1
8	3974618	CIR-CLIP	sleeve		1
9	6655214	CASE	governor ball		1
10	10J-5	BALL			39
11	3974620	CIR-CLIP	ball case		1
12	6655215	BALL			7
13	6598158	CIR-CLIP	governor ball		1
14	6651934	RIVET			7
15	6685479	BALL BEARING			1
16	6685517	STOPPER			1
17	6667420	BOLT			2
18	3974996	COVER	fuel camshaft		1
19	6685516	COLLAR			1
20	6684813	GASKET			1

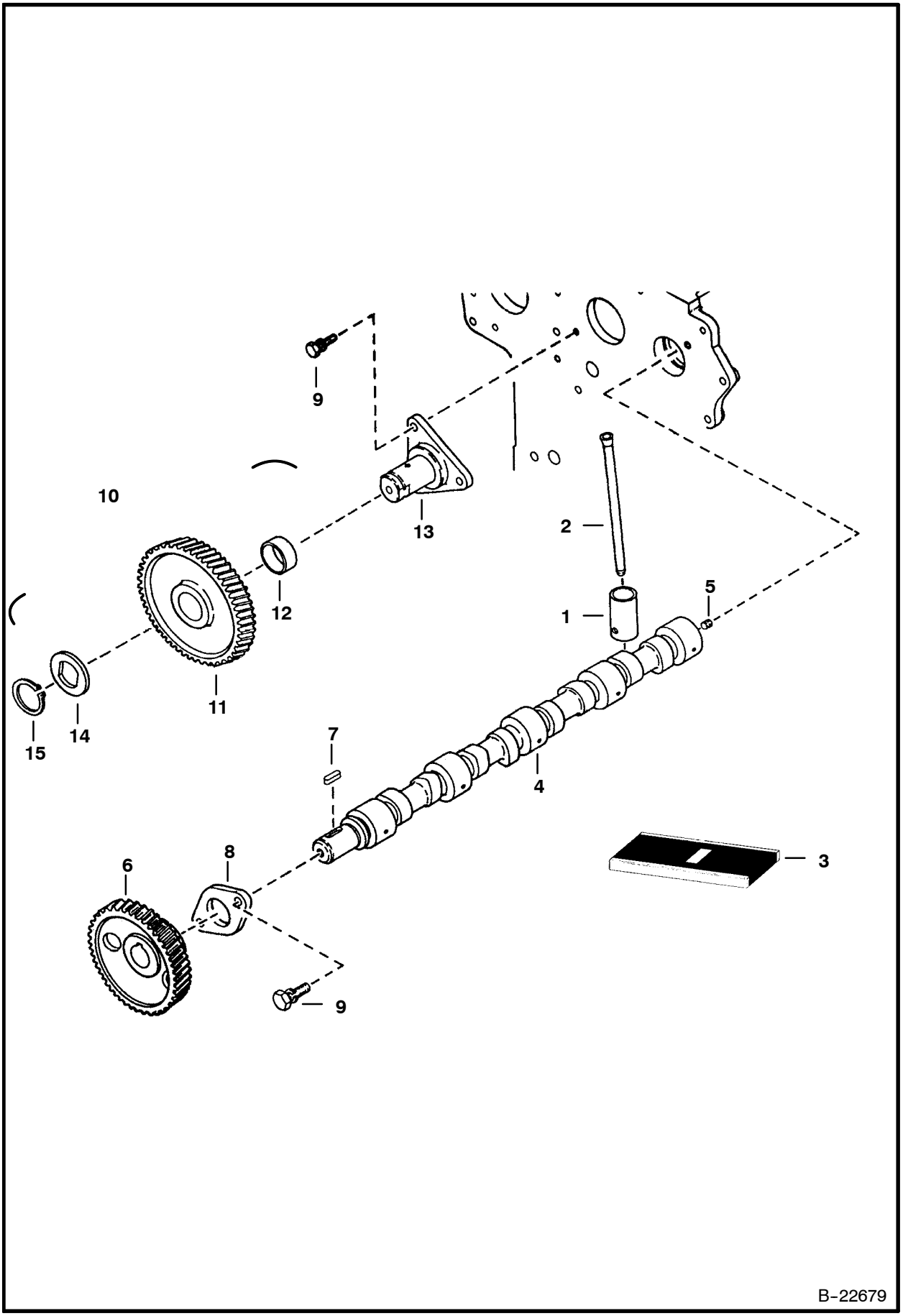
9
10
13
2
12
1
5
11
14
15
7
4
6
8
3
9
B-22679

CAMSHAFT (Cont'd)

Ref. No.	Part Number	Description	Remarks	Serial Number	Qty.
1	6667428	TAPPET			8
2	6655176	PUSH ROD			8
3	6684791	CAMSHAFT	assy. - Ref. 4-8		1
4	6655384	CAMSHAFT			1
5	6652633	PLUG	seat		1
6	6684792	GEAR	camshaft		1
7	3974546	KEY			1
8	3974547	STOPPER	camshaft		1
9	4CM-818	BOLT			5
10	6684793	GEAR ASSY.	idle - W/Ref. 11 & 12		1
11	NSS	GEAR	idle - Order Ref. 10		2
12	6684794	BUSHING	idle gear		1
13	6685519	SHAFT	idle gear		1
14	6684795	COLLAR			1
15	6667433	CIR-CLIP	external		1

WATER PUMP

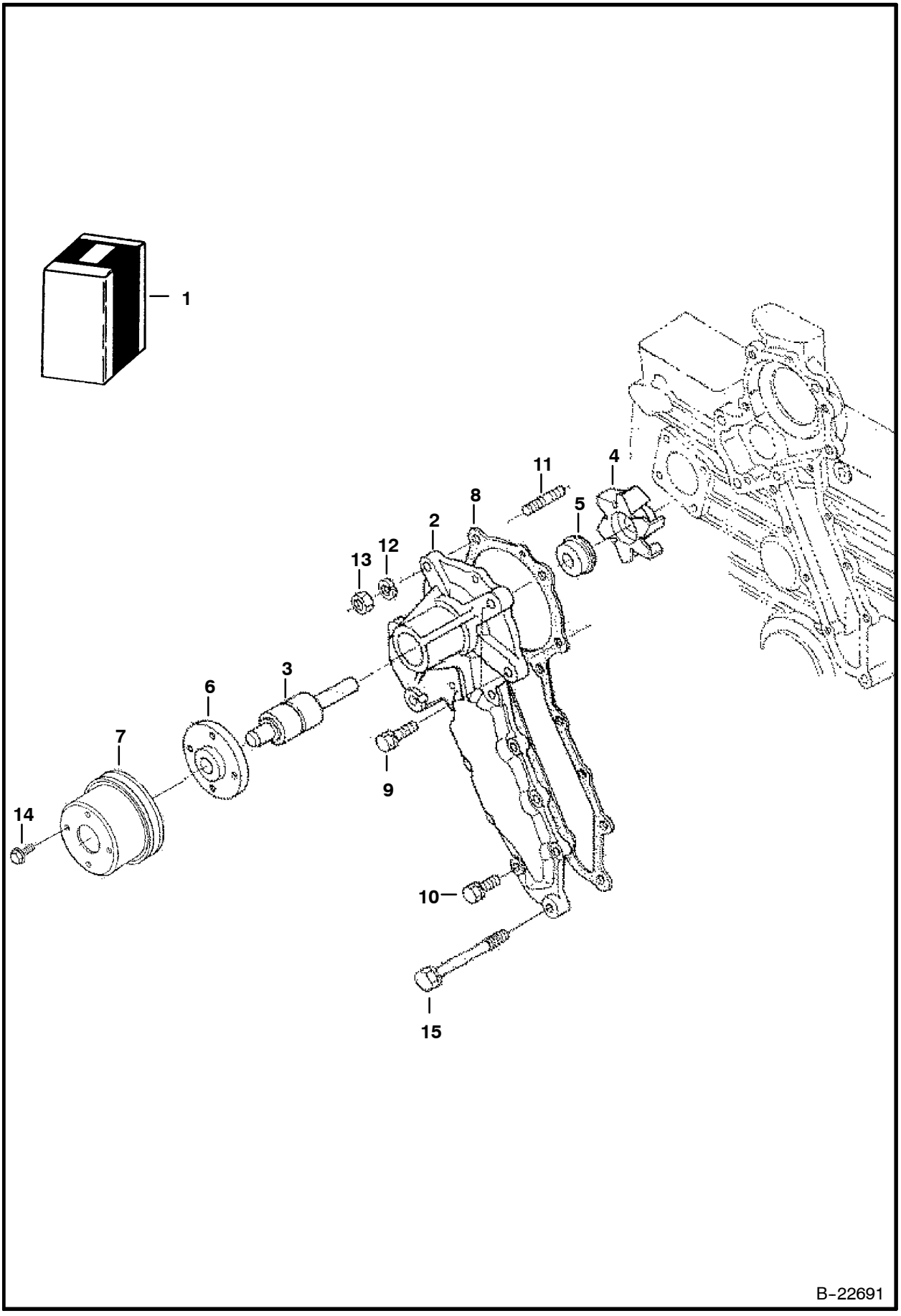

WATER PUMP (Cont'd)

Ref. No.	Part Number	Description	Remarks	Serial Number	Qty.
1	6685105	WATER PUMP	Ref. 2-6		1
2	6685106	BODY			1
3	6685474	BEARING			1
4	6684867	IMPELLER			1
5	6684868	SET SEAL			1
6	6684869	FLANGE			1
7	6674169	PULLEY	fan		1
8	6684870	GASKET			1
9	4CM-828	BOLT			2
10	6652580	BOLT			6
11	6653946	STUD			2
12	6667422	WASHER	spring		2
13	6652792	NUT			2
14	6652762	BOLT			4
15	6653808	BOLT			4

WATER FLANGE & THERMOSTAT

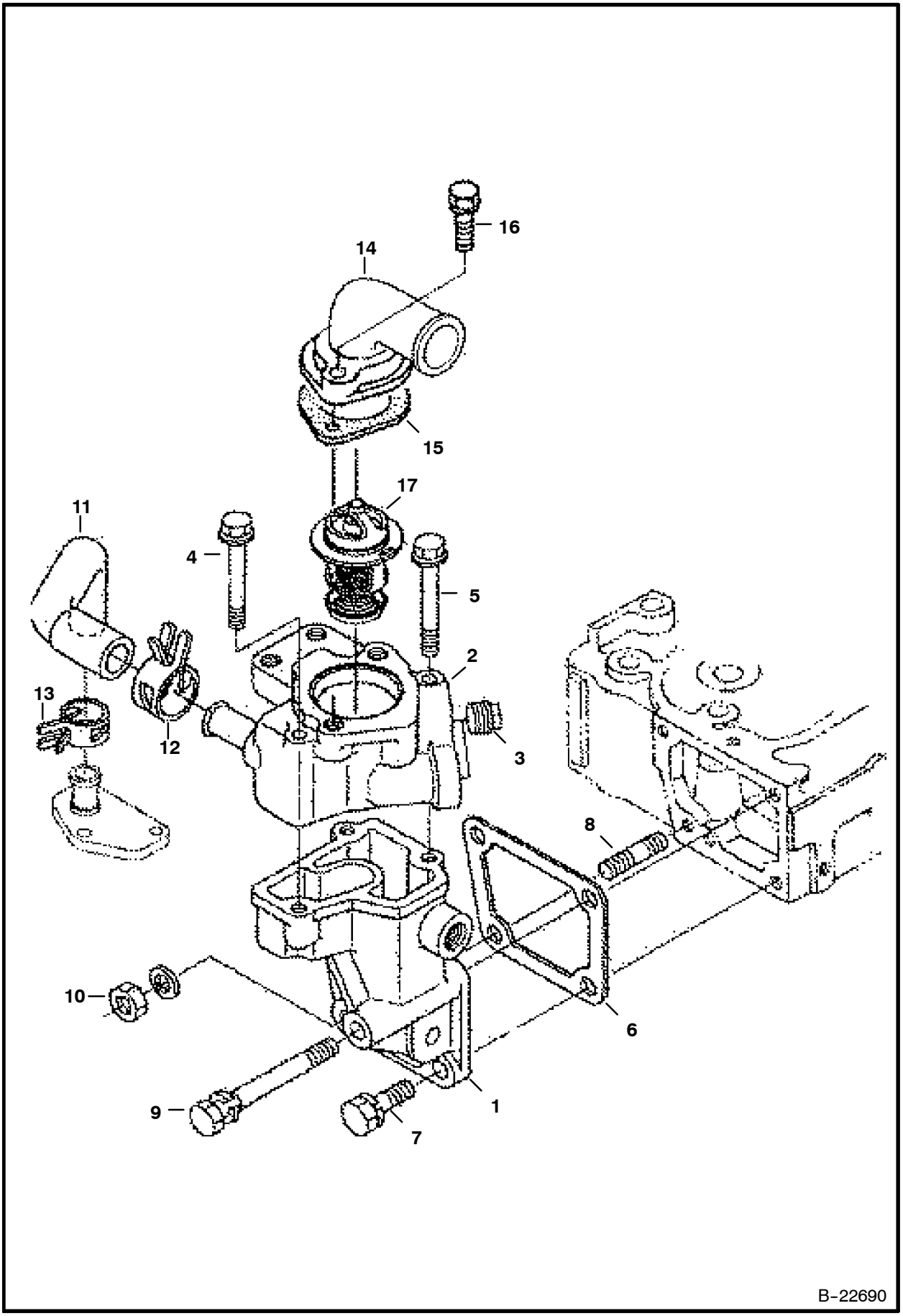

WATER FLANGE & THERMOSTAT (Cont'd)

Ref. No.	Part Number	Description	Remarks	Serial Number	Qty.
1	6684855	FLANGE			1
2	6684856	FLANGE			1
3	6684857	PLUG			2
4	6683159	BOLT			2
5	6685104	BOLT			1
6	6666802	GASKET			1
7	6657415	BOLT			2
8	6652670	STUD			1
9	1CM-875	BOLT			1
10	6652792	NUT			1
11	6684862	PIPE			1
12	6675618	CLAMP			1
13	6684889	CLAMP			1
14	6651489	COVER			1
15	6684863	GASKET			1
16	1CM-835	BOLT			2
17	6685520	THERMOSTAT			1
18	6667422	WASHER	spring		1

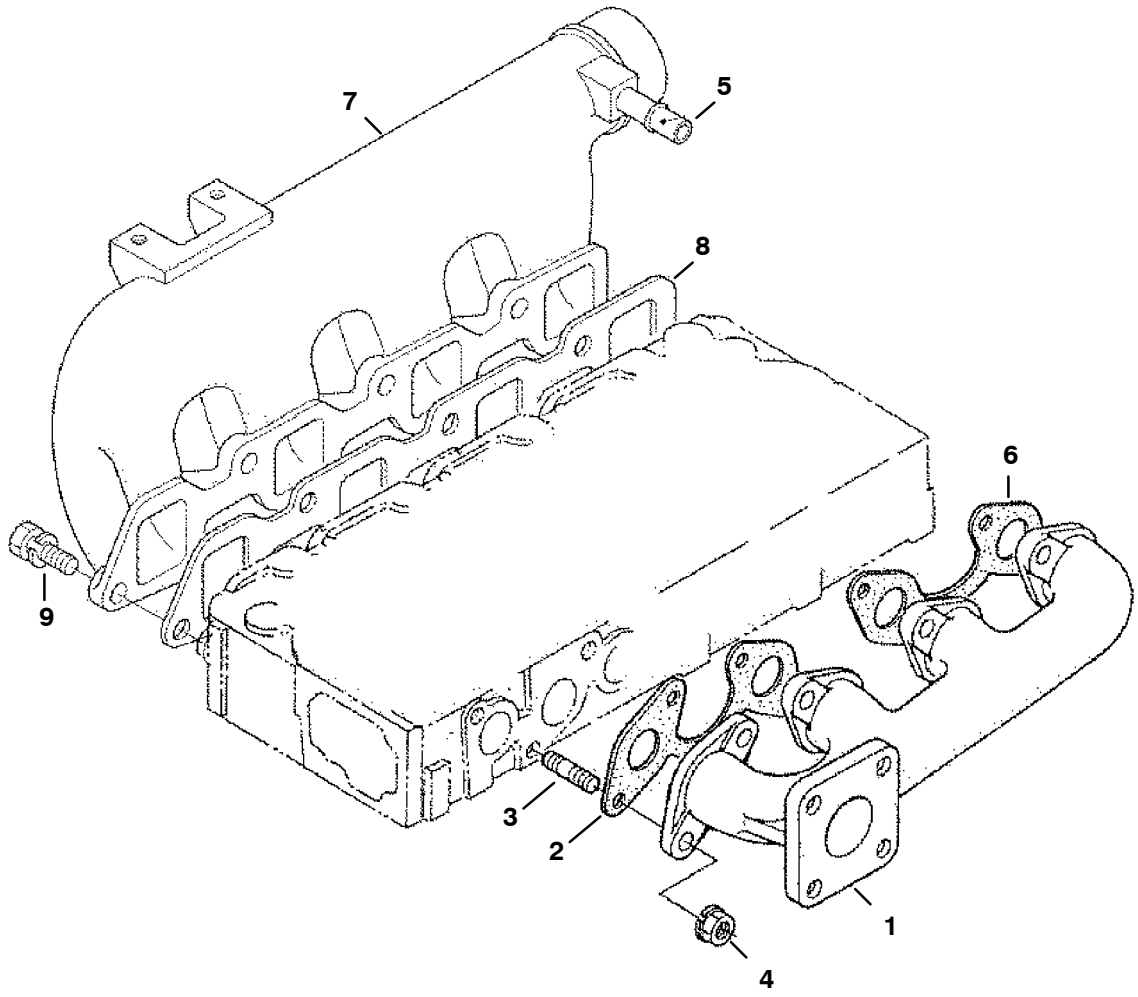

B-22693

MANIFOLDS (Cont'd)

Ref. No.	Part Number	Description	Remarks	Serial Number	Qty.
1	6685475	MANIFOLD	exhaust		1
2	6684879	GASKET			1
3	6652670	STUD			8
4	6682532	NUT			8
5	6655880	PIPE			1
6	6666781	GASKET			1
7	6685525	MANIFOLD	intake - W/Ref. 5		1
8	6684877	GASKET			1
9	4CM-822	BOLT			7

ENGINE STOP LEVER

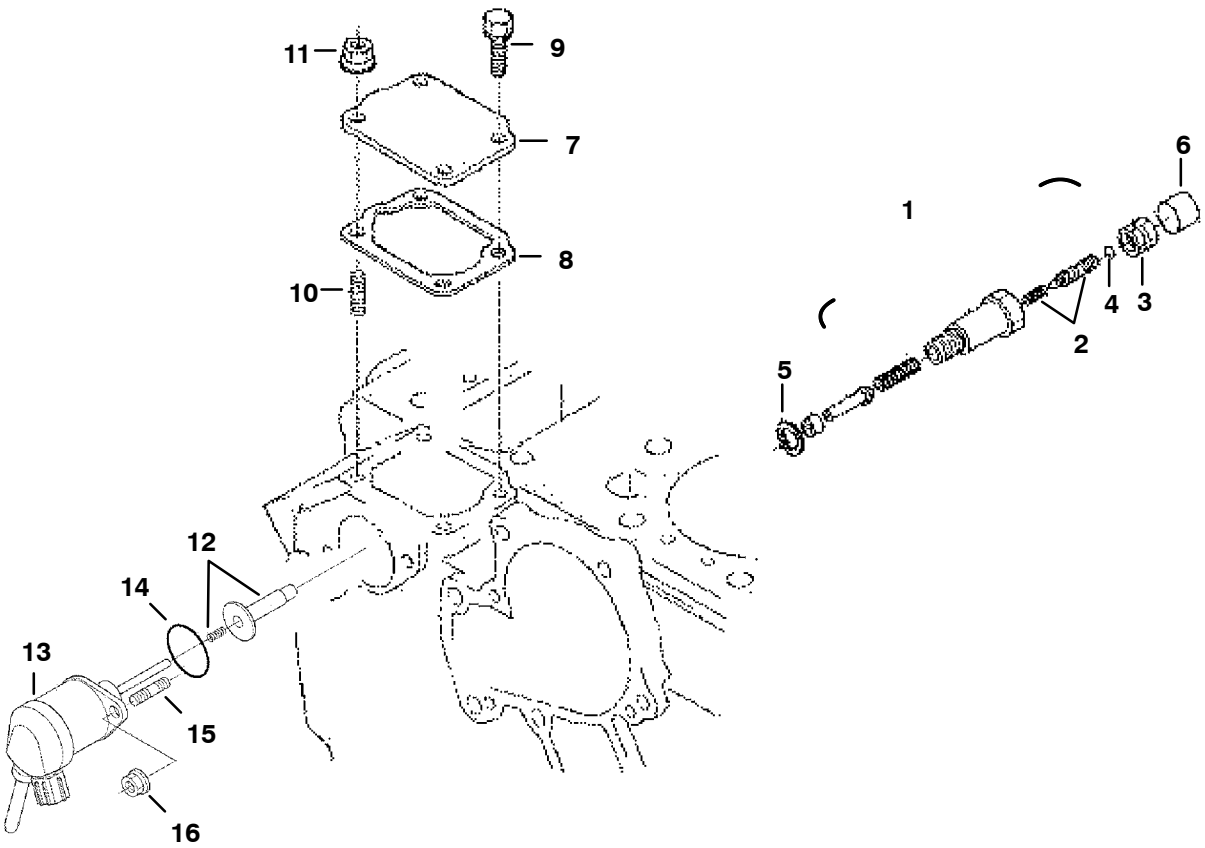

B-22685

ENGINE STOP LEVER (Cont'd)

Ref. No.	Part Number	Description	Remarks	Serial Number	Qty.
1	NAP	APPARATUS	assy., idle - Ref. 2-6		1
2	6685513	BOLT ASSY.	adjusting		1
3	6684817	NUT	adjusting		1
4	6684891	NUT			1
5	6684818	GASKET			2
6	6684819	CAP			1
7	6685500	COVER			1
8	6684841	GASKET			1
9	4CM-616	BOLT			2
10	6683087	STUD			2
11	6653561	NUT			2
12	6684825	GUIDE	solenoid		1
13	6684826	SOLENOID			1
14	6685465	O-RING			1
15	6652764	STUD			2
16	6684827	NUT			2

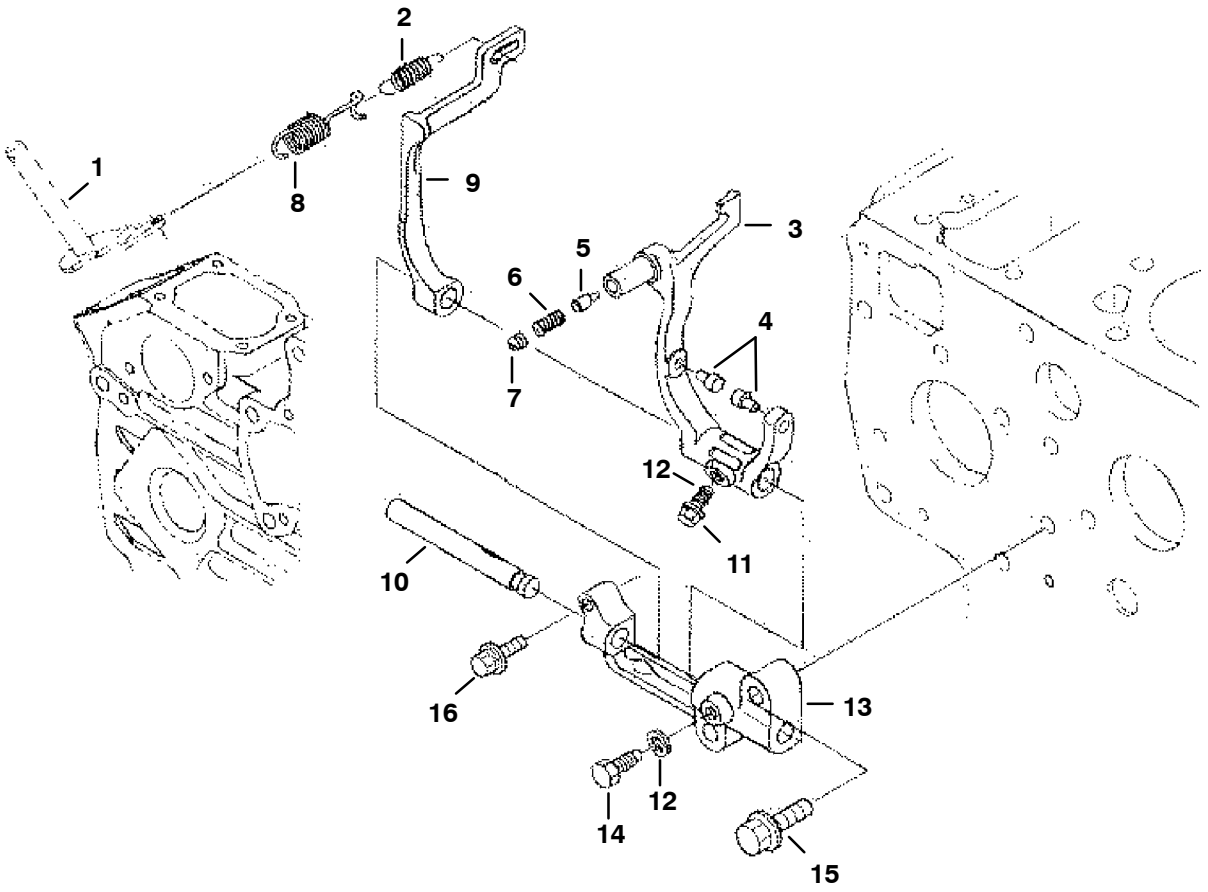

B-22687

GOVERNOR (Cont'd)

Ref. No.	Part Number	Description	Remarks	Serial Number	Qty.
1	6684838	LEVER	governor		1
2	6685514	SPRING			1
3	6655224	LEVER	fork - W/Ref. 4-7		1
4	NSS	PIN			2
5	NSS	PIN			1
6	NSS	SPRING			1
7	NSS	SCREW			1
8	6685502	SPRING	governor		1
9	6684832	LEVER			1
10	6684833	SHAFT			1
11	6680830	BOLT			1
12	6667419	WASHER			2
13	6653916	HOLDER			1
14	3974192	BOLT			1
15	6680706	BOLT			2
16	6685464	BOLT			1

SPEED CONTROL PLATE

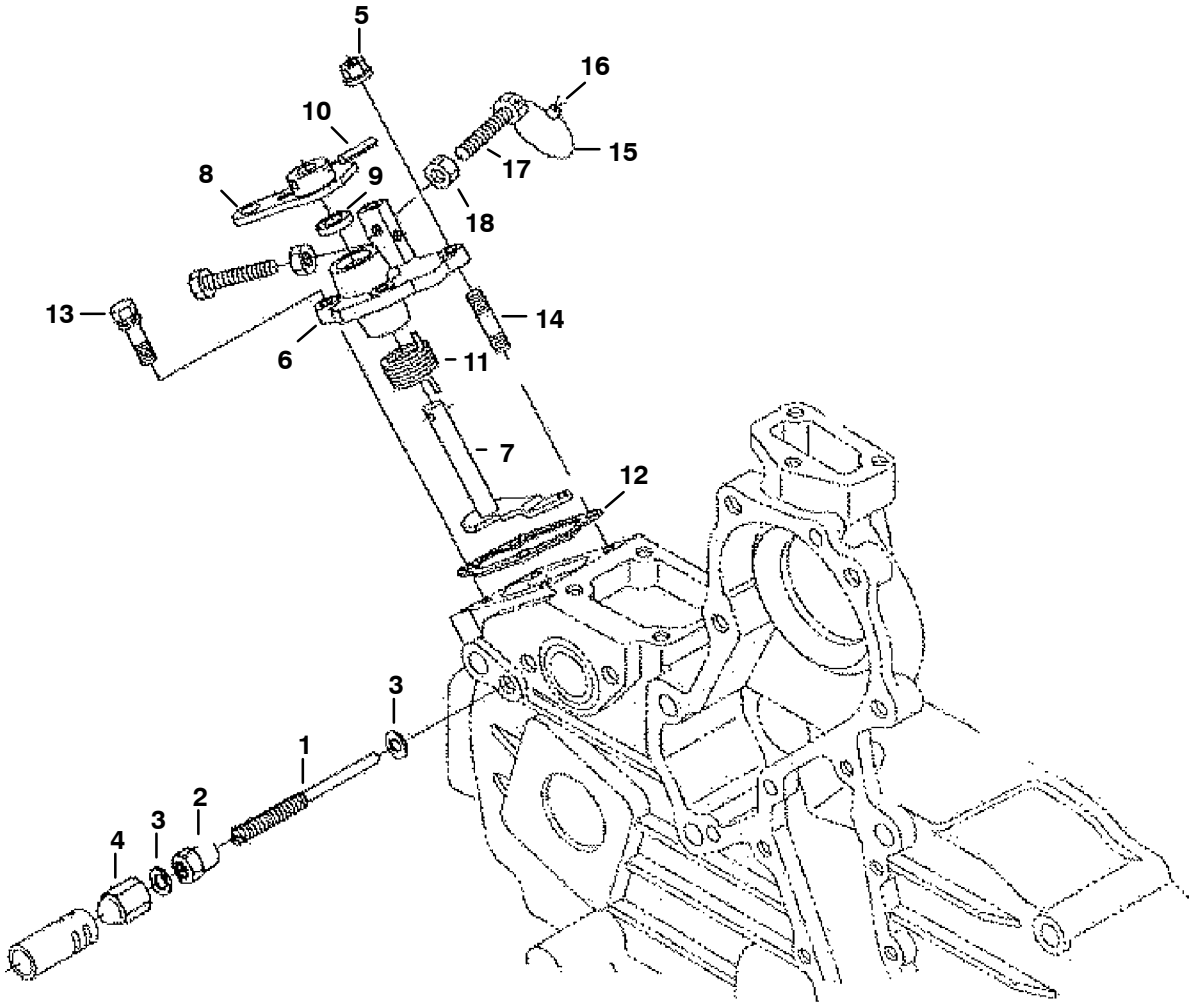

B-22688

SPEED CONTROL PLATE (Cont'd)

Ref. No.	Part Number	Description	Remarks	Serial Number	Qty.
1	6684836	BOLT	adjusting - W/Ref. 2		1
2	3974971	NUT			1
3	3974972	GASKET			2
4	6655223	NUT	cap		1
5	6653561	NUT			2
6	6685526	PLATE	control assy. - Ref. 7-11, 17 &18		1
7	6684838	LEVER			1
8	6684839	LEVER			1
9	6685476	SEAL			1
10	6598098	PIN	spring		1
11	6684823	SPRING			1
12	6684824	GASKET			1
13	4CM-20	BOLT			2
14	6652764	STUD			2
15	NAP	WIRE			1
16	NAP	LEAD	sealing		1
17	NAP	STOPPER			2
18	NAP	NUT			2

INJECTION PUMP

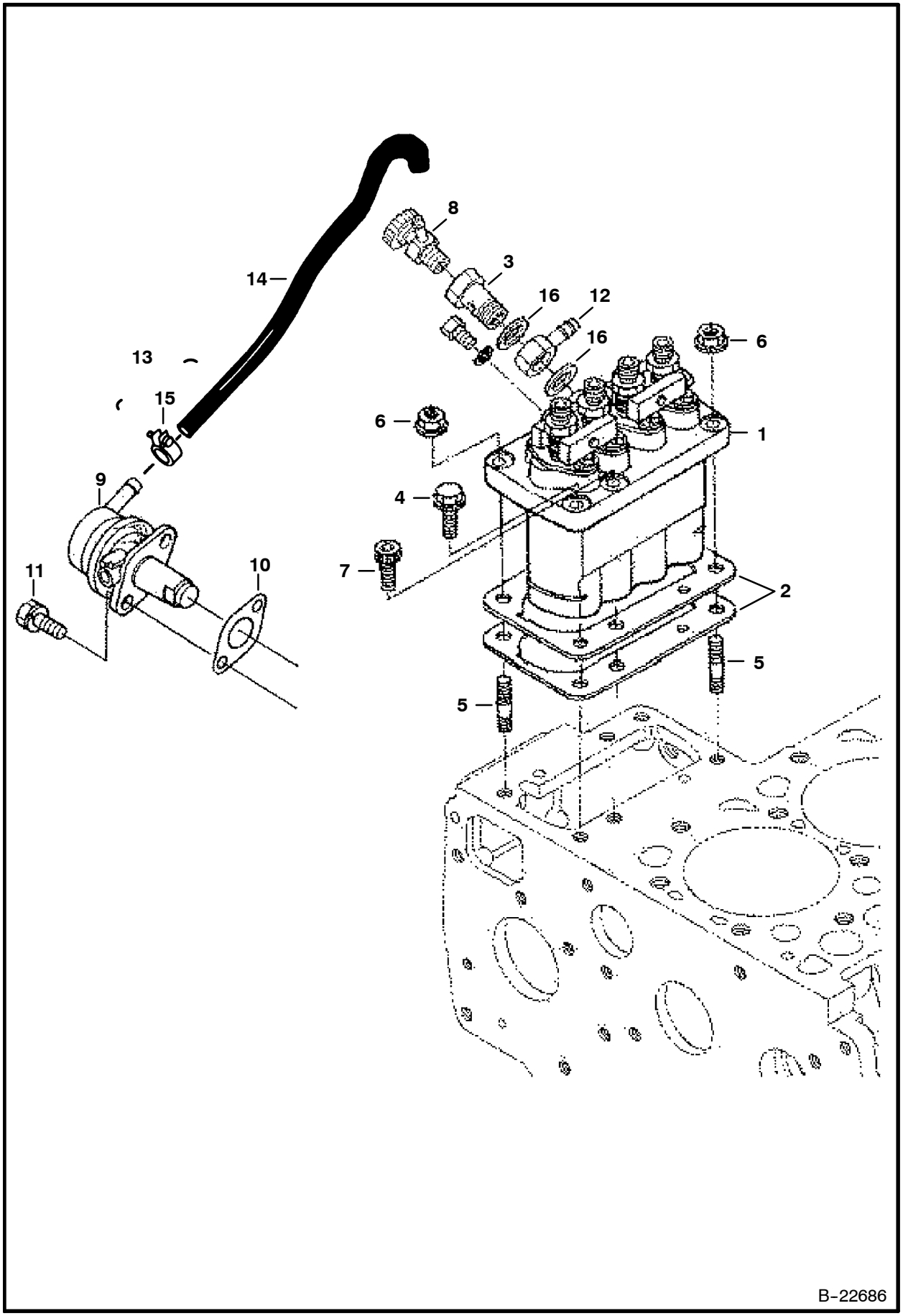

INJECTION PUMP (Cont'd)

Ref. No.	Part Number	Description	Remarks	Serial Number	Qty.
1	6685511	PUMP	See Page 173		1
2	3974626	SHIM	0.20 mm		2
	6682515	SHIM	0.25 mm		1
	6655210	SHIM	0.30 mm		1
	6684829	SHIM	0.35 mm		1
3	6685473	JOINT			1
4	6680801	BOLT			4
5	6652670	STUD			2
6	6680663	NUT			2
7	6684830	BOLT			1
8	6598102	COCK	jet start		1
9	6655216	FUEL PUMP			1
10	3974502	GASKET	fuel pump		1
11	4CM-616	BOLT			2
12	6513707	JOINT	eye - connect to Ref. 25		
			See Page 35		1
13	6655197	PIPE ASSY.	fuel - W/Ref. 14 & 15		1
14	NSS	PIPE	fuel		1
15	6655874	CLIP	pipe		2
16	6599118	GASKET			2

INJECTION PUMP

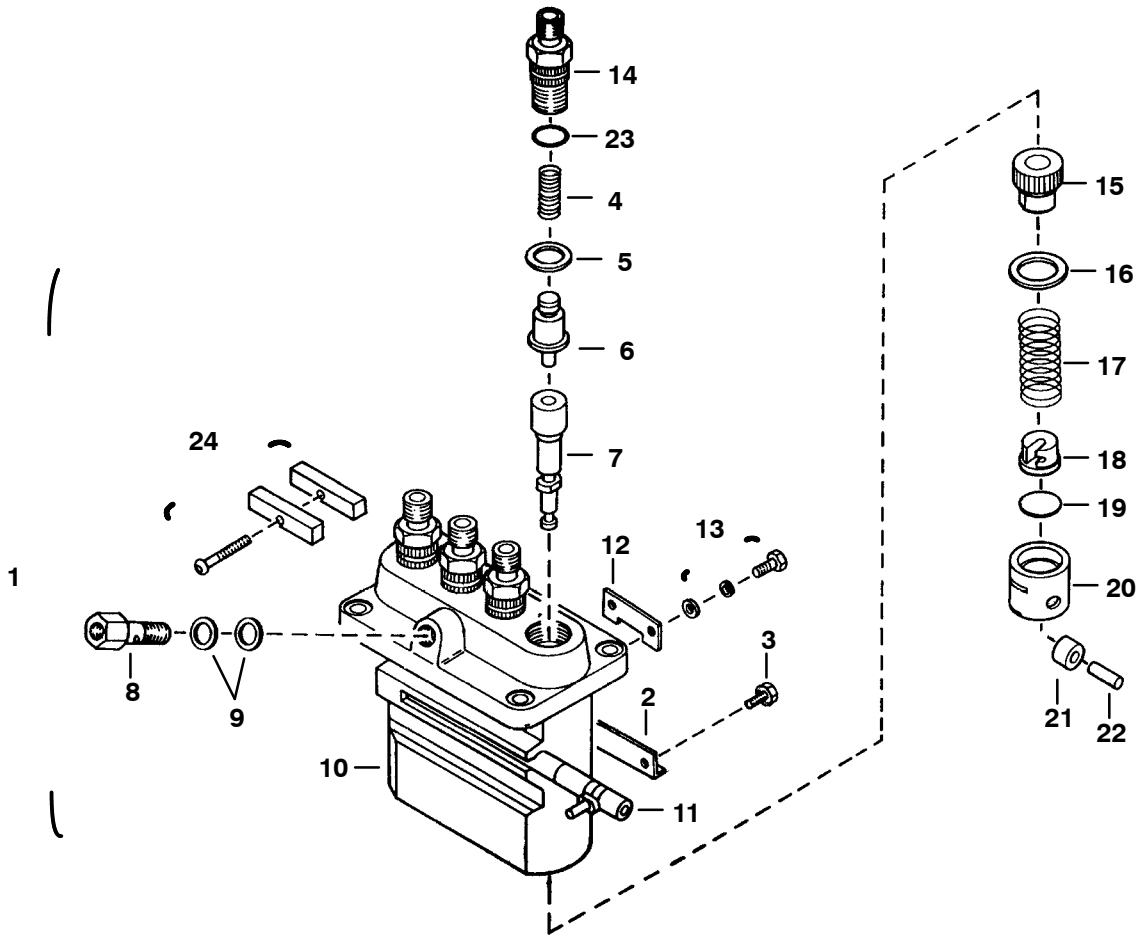

B-13156

INJECTION PUMP (Cont'd)

Ref. No.	Part Number	Description	Remarks	Serial Number	Qty.
1	6685511	PUMP	injection - No serviceable parts available - Take to injection pump specialist		1
2	6655207	PLATE	adjust		3
3	6655206	BOLT			3
4	6655203	SPRING	delivery valve		4
5	3974368	GASKET	delivery valve		4
6	6655202	VALVE	delivery		4
7	6655201	ELEMENT	pump		4
8	6685470	SCREW			1
9	6599119	GASKET			2
10	NSS	HOUSING	pump		1
11	3974787	RACK	control		1
12	6655209	PLATE	adjusting		3
13	3974366	BOLT			3
14	6655204	HOLDER	delivery valve		4
15	6653894	SLEEVE	control		4
16	3974381	SEAT	spring - Upper		4
17	3974382	SPRING	plunger		4
18	3974383	SEAT	spring - Under		4
19	3974384	SHIM			4
20	3974385	TAPPET	W/Ref. 21, 22		4
21	NSS	ROLLER			4
22	NSS	PIN			4
23	6655518	O-RING			4
24	6655205	PLATE ASSY.			2

INJECTOR NOZZLES

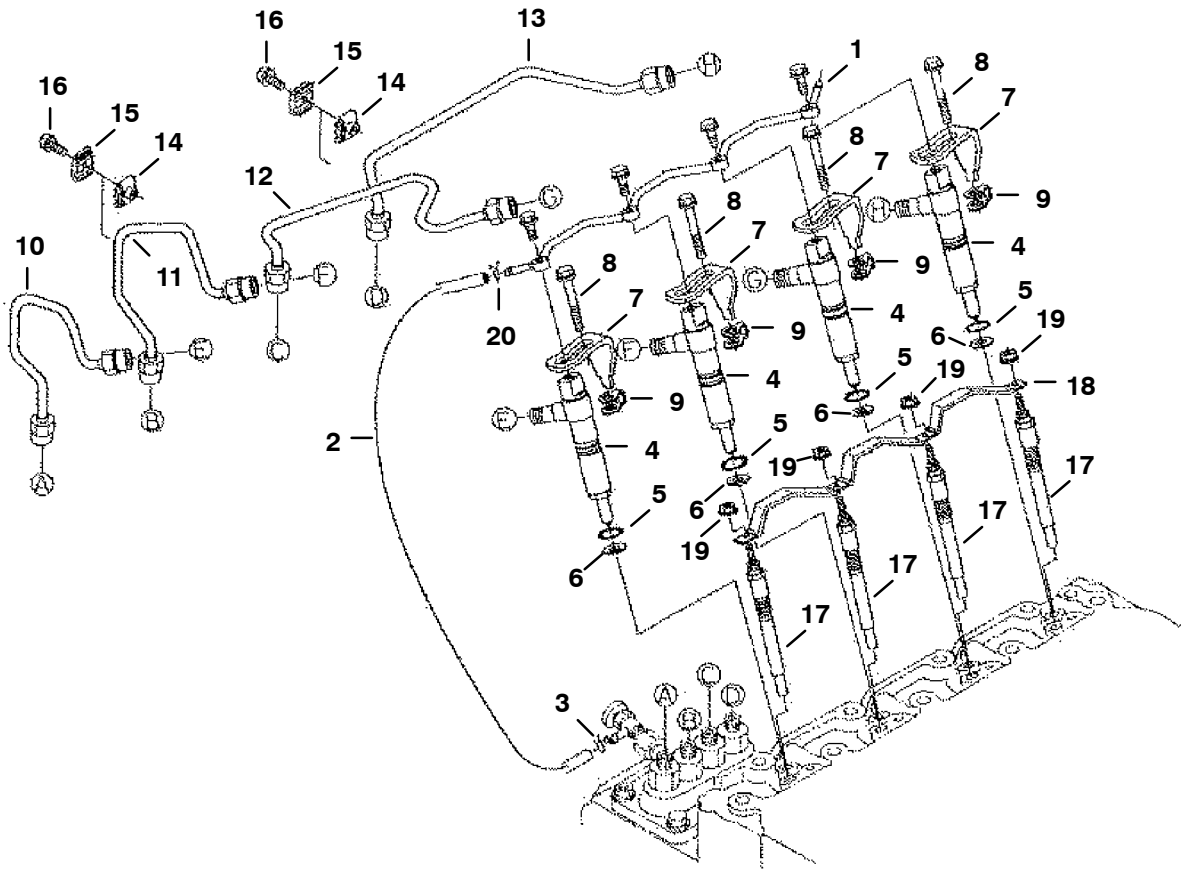

INJECTOR NOZZLES (Cont'd)

Ref. No.	Part Number	Description	Remarks	Serial Number	Qty.
1	6684842	PIPE	fuel over flow		1
2	6598146	PIPE	fuel over flow (2) - W/Ref. 3 & 20		1
3	6599136	CLIP	pipe		1
4	6685512	HOLDER KIT	nozzle-W/Ref. 5 - See Page 177		4
5	6670769	GASKET			4
6	6680779	GASKET			4
7	6684845	CLAMP			4
8	6684844	BOLT			4
9	6685498	GASKET			4
10	6685102	PIPE	injection (1)		1
11	6685103	PIPE	injection (2)		1
12	6684848	PIPE	injection (3)		1
13	6684849	PIPE	injection (4)		1
14	6652688	CLAMP	pipe (1)		3
15	6652689	CLAMP	pipe (2)		3
16	3974260	SCREW	with washer		3
17	6684850	GLOW PLUG			4
18	6684851	CORD	glow plug		1
19	6670472	NUT			4
20	6654718	CLIP	pipe		1

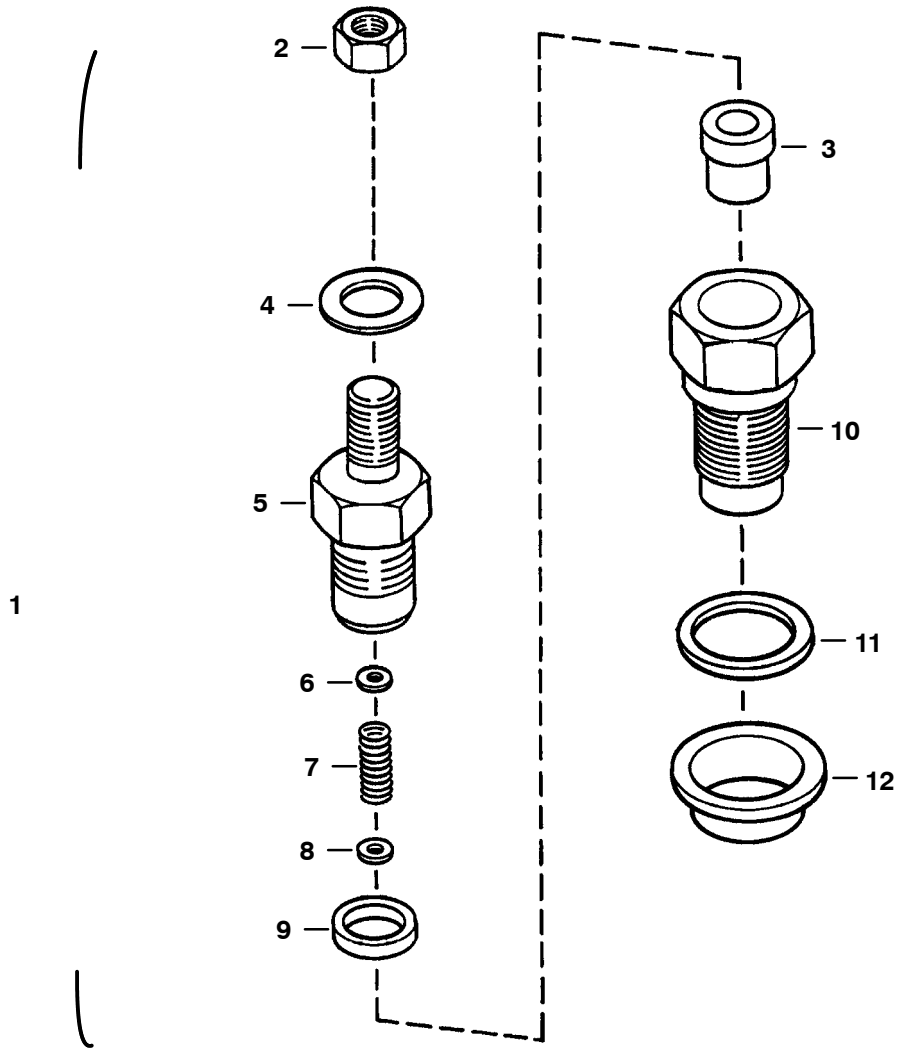

B-13154

INJECTOR HOLDER (Cont'd)

Ref. No.	Part Number	Description	Remarks	Serial Number	Qty.
1	6722147	HOLDER KIT	nozzle - Ref. 5 - 12		4
2	6657460	NUT			1
3	6655873	PIECE	nozzle		1
4	6657463	WASHER	plain		1
5	NSS	BODY	nozzle holder		1
6	6657742	KIT	washer - (.900mm thru 1.950mm)		x
	6656126	WASHER	adj. (1.00 mm)		x
	6656127	WASHER	adj. (1.05 mm)		x
	6656128	WASHER	adj. (1.10 mm)		x
	6656129	WASHER	adj. (1.15 mm)		x
	6656130	WASHER	adj. (1.20 mm)		x
	6656131	WASHER	adj. (1.25 mm)		x
	6656132	WASHER	adj. (1.30 mm)		x
7	NSS	SPRING	nozzle		1
8	NSS	PIECE	distance		1
9	NSS	PUSH ROD			1
10	NSS	NUT	nozzle		1
11	6655218	GASKET			1
12	6655872	HEAT SEAL			1

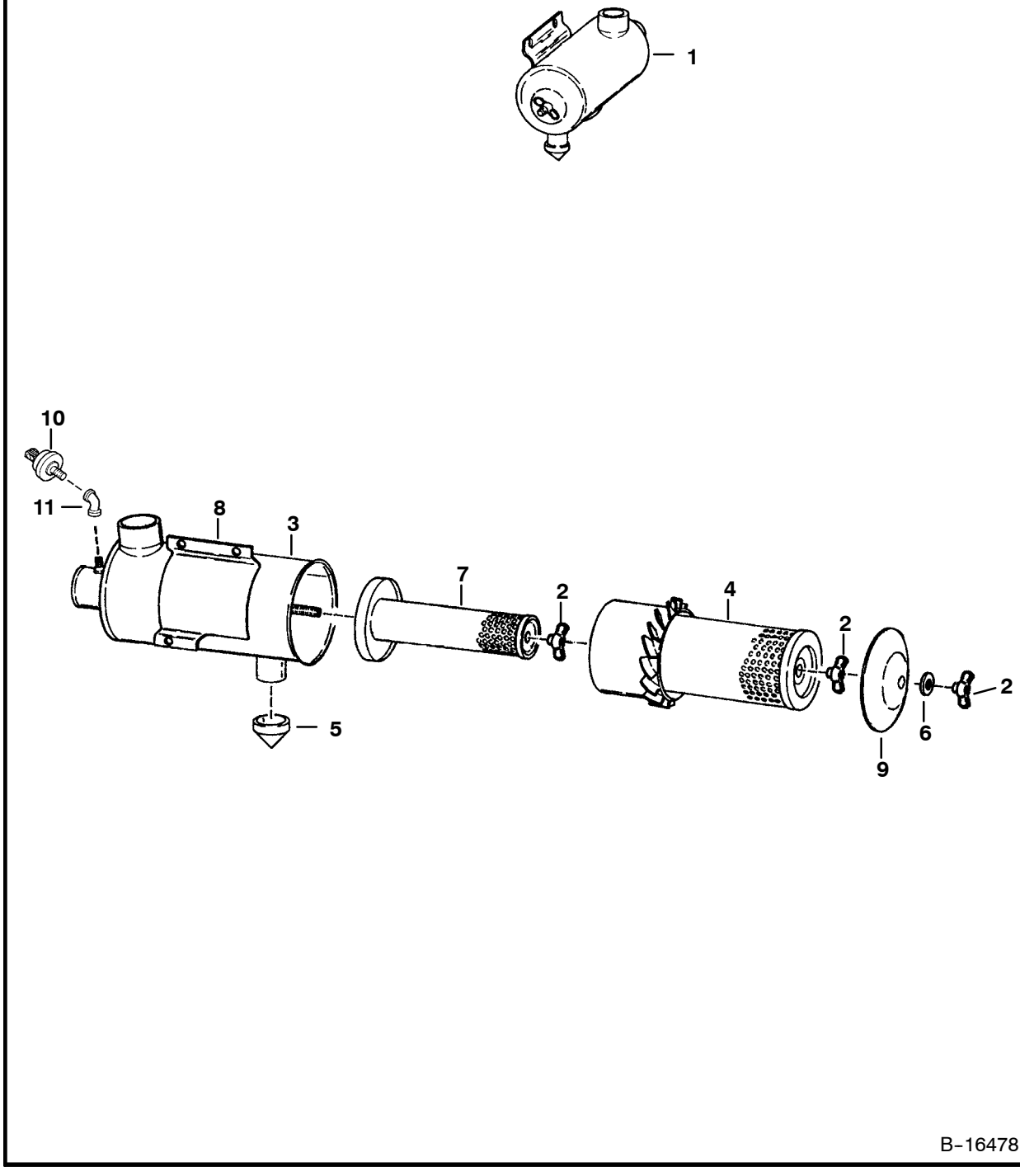
1
10
11
8
3
7
2
4
2
2
6
9
5
B-16478

AIR CLEANER (Cont'd)

Ref. No.	Part Number	Description	Remarks	Serial Number	Qty.
1	6700711	AIR CLEANER			1
	6735285	AIR CLEANER	European		1
2	6661243	WING NUT			3
3	NAP	TANK			1
4	6598492	CARTRIDGE	outer		1
5	6655938	VALVE			1
6	6661244	WASHER			1
7	6598362	CARTRIDGE	inner		1
8	866028	CLAMP			1
9	6661242	COVER			1
10	6665371	SWITCH			1
11	6725502	ELBOW			1

MAIN FRAME 17-38
MAIN FRAME 17
OPERATOR CAB 19
SEAT & SEAT BAR 23
SEAT 25
PANELS 27
REAR DOOR 29
LIFT ARM & BOB-TACH 31
BOB-TACH 33
FUEL SYSTEM 35-38
DRIVE TRAIN 39-46
DRIVE TRAIN 39
MOTOR CARRIER 41
DISC BRAKE 43
AXLE 45
HYDRAULIC CIRCIUTRY 47-76
HYDRAULIC CIRCUITRY 47-52
MANUAL LIFT RELEASE SYSTEM 53
AUXILIARY HYDRAULICS 55
TILT CYLINDER 57
LIFT CYLINDER 59
CONTROL PEDALS 61
HYDRAULIC CONTROL VALVE 63-70
BICS CONTROL VALVE 71
MANUAL LIFT RELEASE VALVE 73
BUCKET POSITIONING VALVE 75
HYDROSTATIC CIRCUITRY 77-100
HYDROSTATIC CIRCUITRY 77-80
HAND CONTROLS 81-84
HYDROSTATIC MOTOR 85
HYDROSTATIC PUMP 87-94
GEAR PUMP 95
HYDROSTATIC OIL FILTER 97-100
ELECTRICAL SYSTEM 101-120
CAB ELECTRICAL CIRCUITRY 101
ENGINE ELECTRICAL CIRCUITRY 103-106
CONTROLS ELECTRICAL 107-116
ALTERNATOR 117
STARTER 119
POWER UNIT 121-180
COOLING SYSTEM 121-124
ENGINE & ATTACHING PARTS 125-134
THROTTLE 135
COOLING FAN DRIVE ASSY. 137
ENGINE & GASKET KITS 139
ENGINE BREAKDOWN 141-178
AIR CLEANER 179
ACCECCORIES & OPTIONS
ACS CONVERSION KIT 183
ACCESS COVER 185
ACCESSORIES HARNESS 187
AIR DEFLECTOR KIT 189

ACCECCORIES & OPTIONS (Cont'd)

AXLE SEAL KIT 191
BACK-UP ALARM 193
BEACON 195
BLOCK HEATER 197
BOB-TACH LEVERS 199
BUCKET POSITIONING VALVE KIT 201
CAB DOOR 203-216
CAB ENCLOSURE 217-220
CAB WINDOWS 221-224
COUNTERWEIGHT KIT 225
DECALS 227-230
DELUXE CAB 231
ELECTRICAL CONNECTOR KIT 233
ELECTRICAL CONTROLS KIT 235-240
ENGINE MOUNT KIT 241
EUROPEAN ACCESSORIES 243-246
FIRE EXTINGUISHER 247
F.O.P.S. KIT 249
FLASHER LIGHTS 251
GAS SPRING KIT 253
HAND CONTROL KIT 255-258
HEATER KIT 259
HEATER 261-266
HEATER PLUMBING KIT 267
HORN KIT 269
LIFT KIT 271-274
LIGHT KIT 275
MUFFLER/PURIFIER KIT 277
POWER BOB-TACH KIT 279
POWER BOB-TACH 281-284
RADIATOR SCREEN KIT 285
REAR AUXILIARY KIT 287
REAR AUXILIARY VALVE 289
REAR DOOR LOCK 291
REAR WIPER 293
SEAL ENCLOSURE KIT 295
SEAT 297-300
SEAT BELT 301-306
SOUND KIT 307
SOUND OPTION 309
SOUND REDUCTION HARDHAT 311
STROBE LIGHT 313
TIRES & RIMS 315-318

BULK ITEMS 319

NUMERICAL INDEX 321-360

ACS CONVERSION KIT

NOTE: Loader must be equipped W/Advanced Hand Control Option for this kit to function.

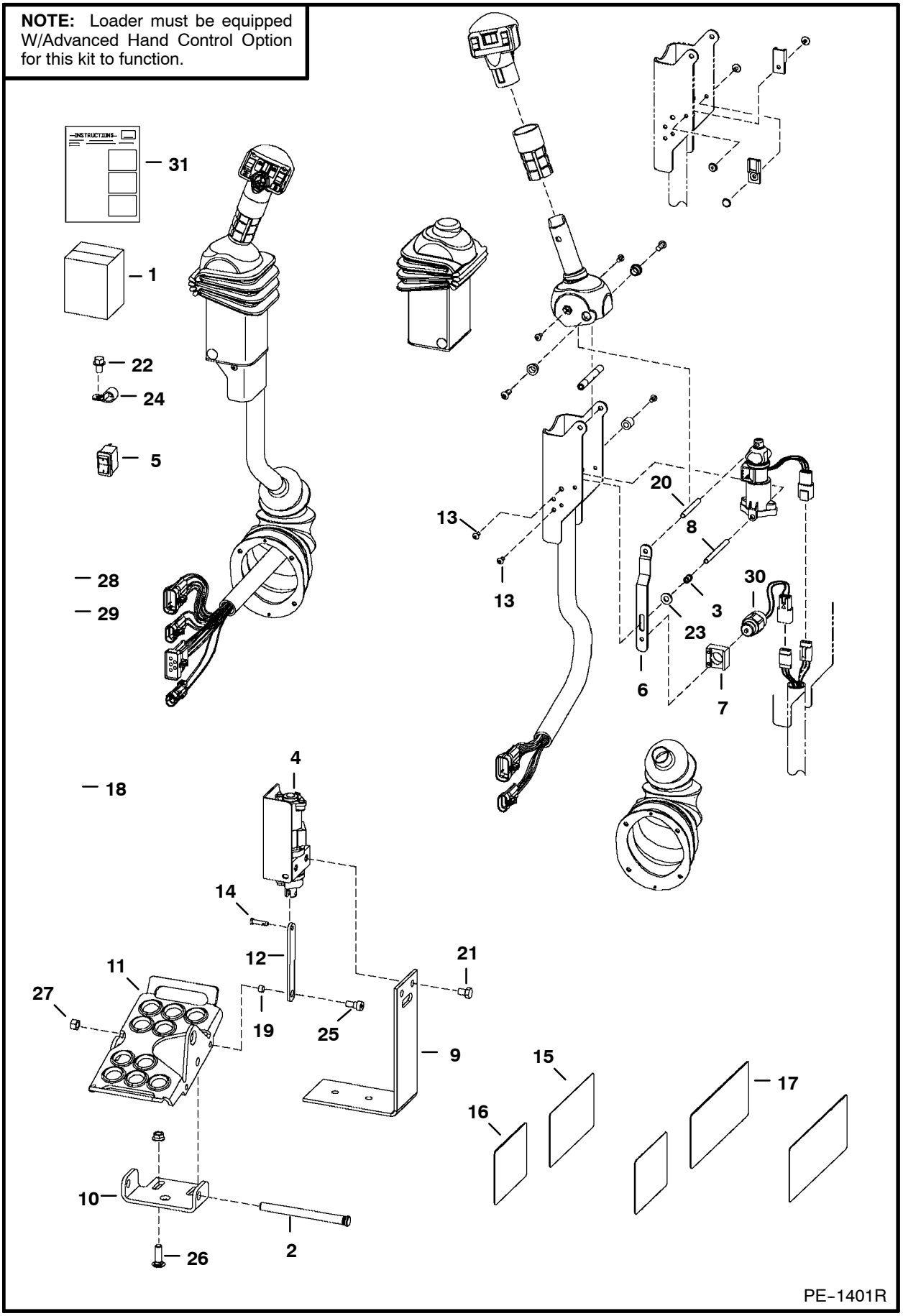

ACS CONVERSION KIT (Cont'd)

Ref. No.	Part Number	Description	Remarks	Serial Number	Qty.
1	6731150	KIT	foot control - SEE NOTE		1
2	6564657	PIN			2
3	6680470	SPRING			2
4	6680420	SENSOR	foot pedal - R.H.		1
	6676029	SOLENOID			1
	6680421	SENSOR	foot pedal - L.H.		1
	6676029	SOLENOID			1
5	6676537	SWITCH			2
6	6680477	STRAP			2
7	6680468	MOUNT	solenoid		2
8	6719834	SPACER	threaded		2
9	6726573	BRACKET			2
10	6726679	MOUNT	pedal		2
11	6726680	PEDAL			2
12	6726681	LINK			2
13	6727065	BOLT			12
14	6727496	PIN			2
15	6727926	DECAL			1
16	6727941	DECAL			1
17	6728539	DECAL			1
18	6733430	HARNESS			1
19	6729467	SPACER			2
20	6680469	SPACER	threaded		2
21	17C-608	BOLT			4
22	17C-612	BOLT			4
23	25E-13	WASHER			2
24	30H-38	CLAMP			4
25	17C-514	BOLT			2
26	37C-620	BOLT			4
27	57D-6	NUT			4
28	95D-5	NUT			2
29	95D-6	NUT			4
30	6676029	SOLENOID			2
31	6901492	INSTRUCTIONS			1

ACCESS COVER
(Cleanout - Lower Front of Chaincase)

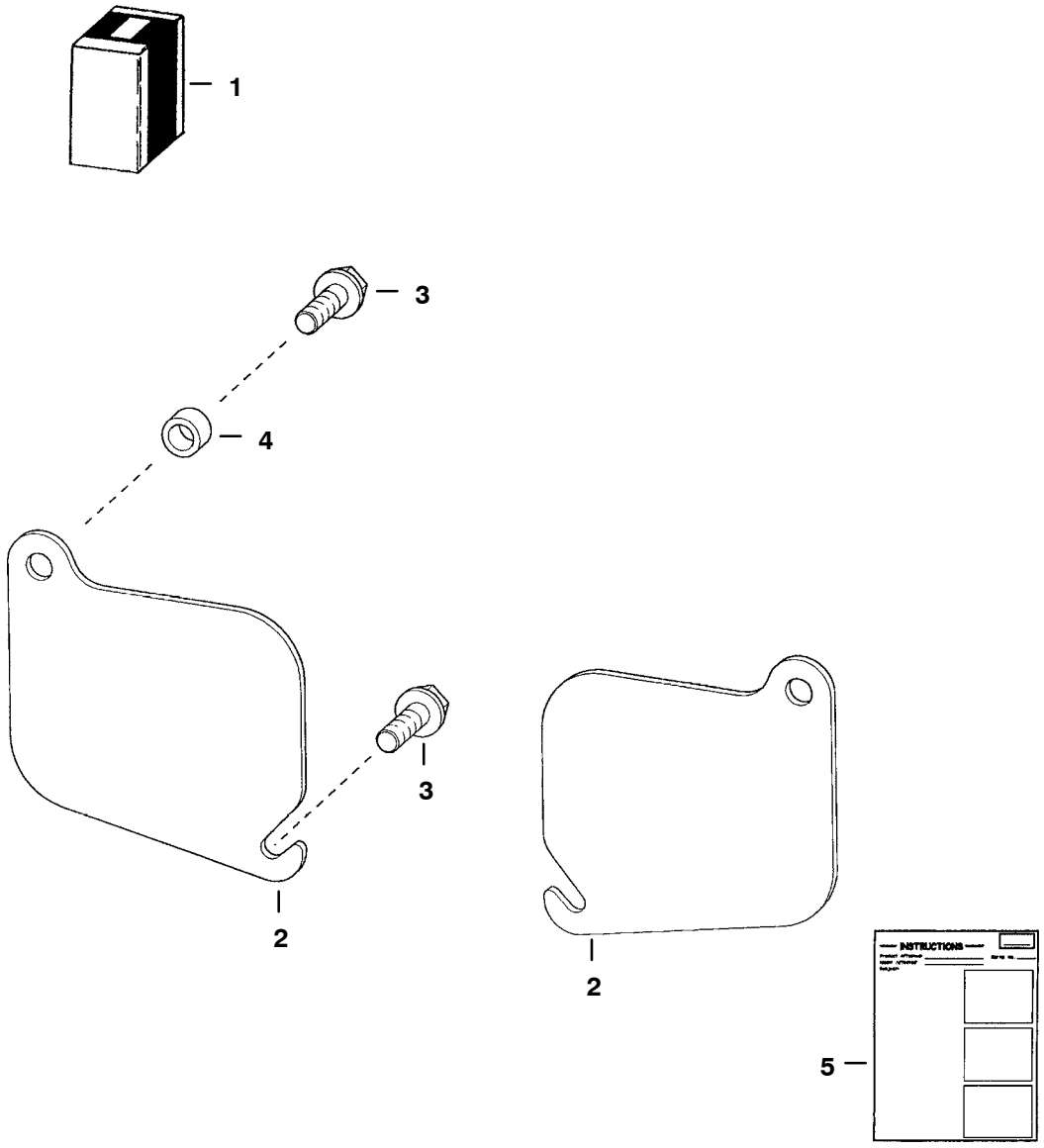

TS-1049

ACCESS COVER (Cont'd)
(Cleanout - Lower Front of Chaincase)

Ref. No.	Part Number	Description	Remarks	Serial Number	Qty.
1	6577880	KIT	Ref. 2-5		1
2	6577812	COVER			2
3	84G-3720	BOLT			4
4	6562619	BUSHING			2
5	6570931	INSTRUCTIONS			1

ACCESSORIES HARNESS
(Standard – Non Deluxe Cab)

NOTE: If loader is not equipped with Deluxe Cab Option, this harness must be used to run Flasher Lights, Turn Indicators, Hazard LIghts, Rotating Beacon and/or Strobe Lights.

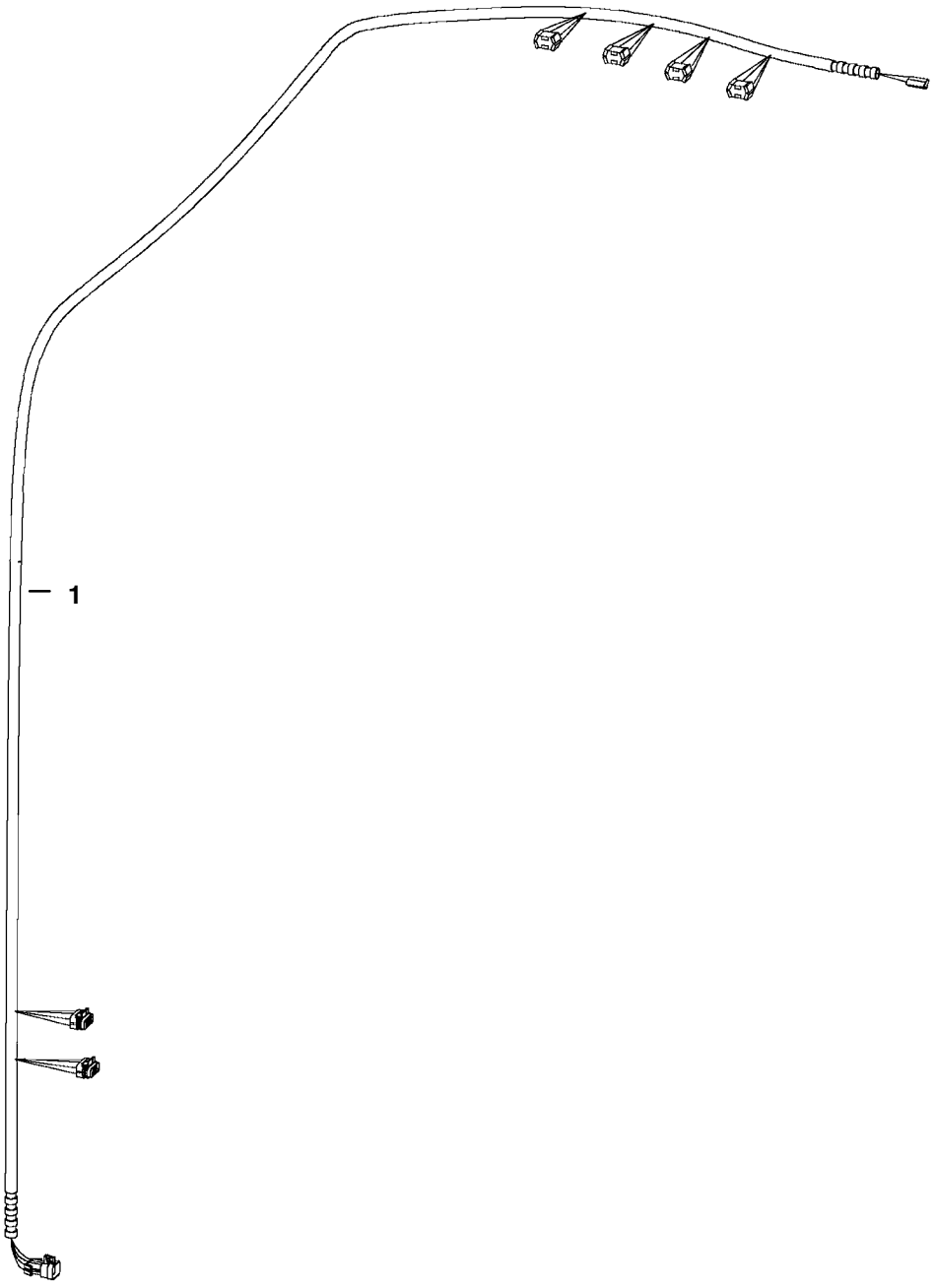

PE–1557

ACCESSORIES HARNESS (Cont'd)
(Standard – Non Deluxe Cab)

Ref. No.	Part Number	Description	Remarks	Serial Number	Qty.
1	6727468	HARNESS	SEE NOTE		1

AIR DEFLECTOR KIT

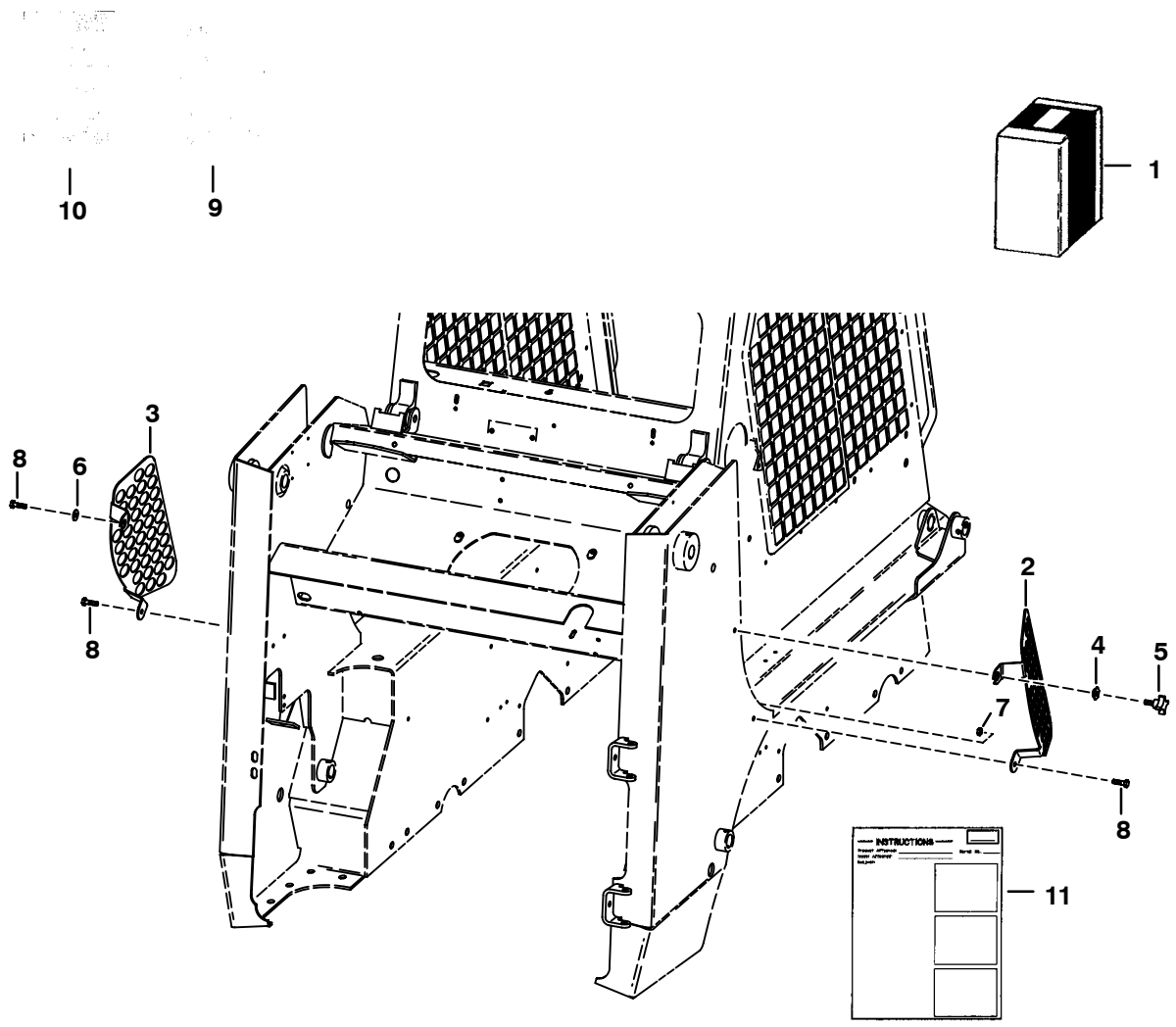

TS-1116

AIR DEFLECTOR KIT (Cont'd)

Ref. No.	Part Number	Description	Remarks	Serial Number	Qty.
1	6702351	KIT	air deflector		1
2	6702346	SCREEN	R.H.		1
3	6702347	SCREEN	L.H.		1
4	6702986	NUT	spacer		1
5	6703090	HANDLE			1
6	27E-6	WASHER			1
7	61D-6	NUT			1
8	84G-3716	BOLT			3
9	NAP	TEMPLATE	R.H.-Order Ref. 11		1
10	NAP	TEMPLATE	L.H.-Order Ref. 11		1
11	6720621	INSTRUCTIONS			1

AXLE SEAL KIT

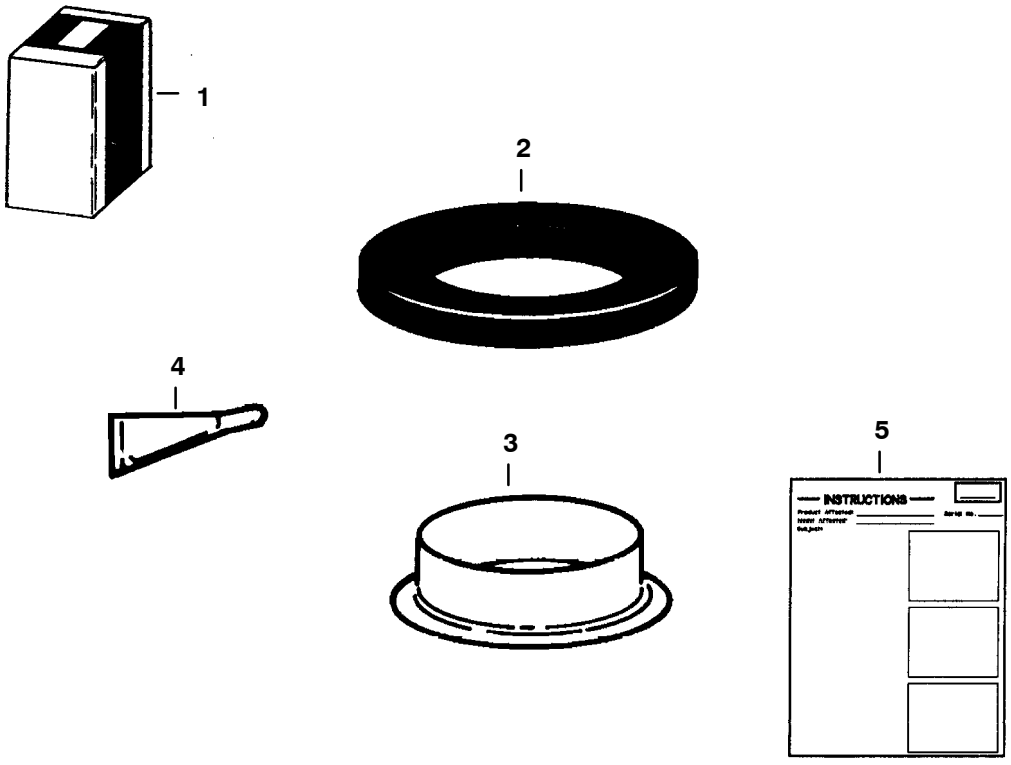

B-4041

AXLE SEAL KIT (Cont'd)

Ref. No.	Part Number	Description	Remarks	Serial Number	Qty.
1	6722907	KIT	Ref. 2 - 5		1
2	6658228	SEAL			1
3	6662306	RING			1
4	6598485	SEALANT			1
5	6722908	INSTRUCTIONS			1

BACK-UP ALARM

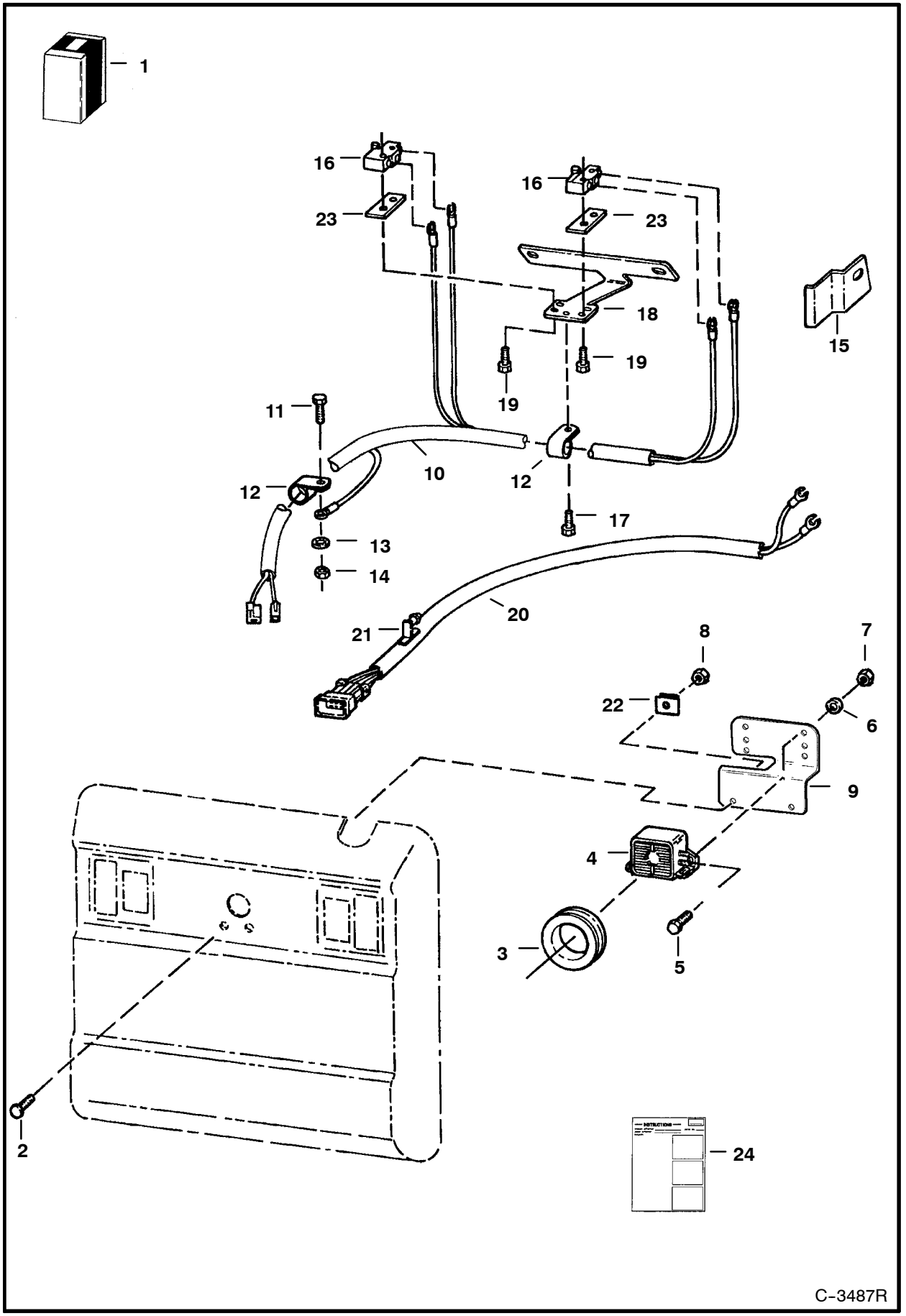

BACK-UP ALARM (Cont'd)

Ref. No.	Part Number	Description	Remarks	Serial Number	Qty.
1	6718822	KIT	backup alarm - Ref. 2 - 24		1
2	37C-512	BOLT			2
3	6577545	GROMMET			1
4	6599931	ALARM	backup		1
	6668879	DECAL			1
5	35C-410	BOLT			2
6	25E-13	WASHER	Not in Kit		2
7	61D-5	NUT			2
8	97D-4	NUT			2
9	6733970	MOUNT			1
10	6718820	HARNESS			1
11	17C-412	BOLT			1
12	30H-19	CLAMP	insulated		2
13	6E-4	WASHER			1
14	61D-4	NUT			1
15	6713793	BRACKET	switch		2
16	6646781	SWITCH	alarm		2
17	84G-3112	BOLT			1
18	7100153	MOUNT	switch		1
19	59G-616	BOLT			4
20	6715659	HARNESS	Used on loaders W/O rear lights		
			- comes W/Ref. 21		1
21	6672492	RETAINER			1
22	774220	NUT			2
23	6702593	SPACER			2
24	6900857	INSTRUCTIONS			1

BEACON

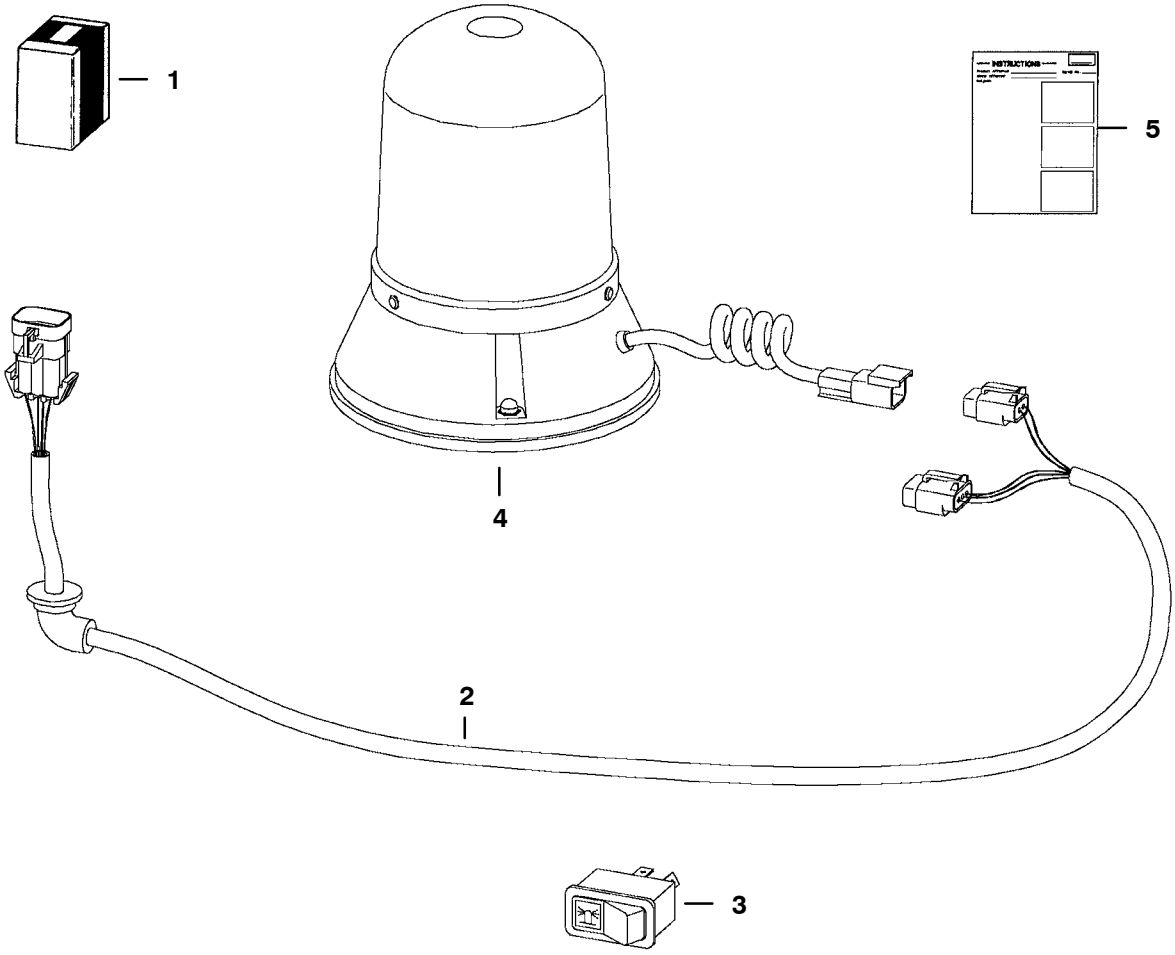

TS-1978

BEACON (Cont'd)

Ref. No.	Part Number	Description	Remarks	Serial Number	Qty.
1	6719854	KIT	rotating beacon - If loader is not equipped W/Deluxe Cab Option also order 6727468 Harness -		
			See Page 187		1
2	6718872	HARNESS			1
3	6665317	SWITCH	horizontal		1
	6668816	SWITCH	vertical		1
4	6675523	BEACON			1
	6666571	BULB			1
5	6900991	INSTRUCTIONS			1

BLOCK HEATER
(Engine)

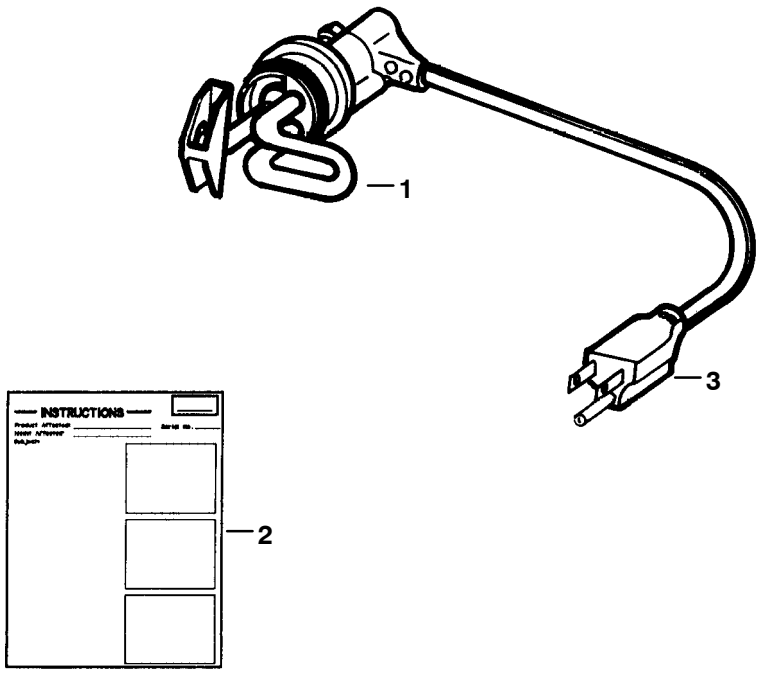

B-12299

BLOCK HEATER (Cont'd)
(Engine)

Ref. No.	Part Number	Description	Remarks	Serial Number	Qty.
1	6720736	HEATER	W/Ref. 2 & 3		1
2	6720038	INSTRUCTIONS			1
3	6668881	CORD			1

BOB-TACH LEVERS
(For Use W/Industrial Grapple Fork)

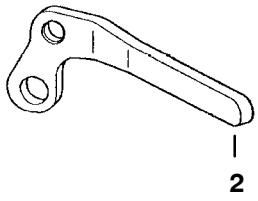



TS-1019

BOB-TACH LEVERS (Cont'd)
(For Use W/Industrial Grapple Fork)

Ref. No.	Part Number	Description	Remarks	Serial Number	Qty.
1	6578139	LEVER	R.H.		1
2	6578140	LEVER	L.H.		1

BUCKET POSITIONING VALVE KIT

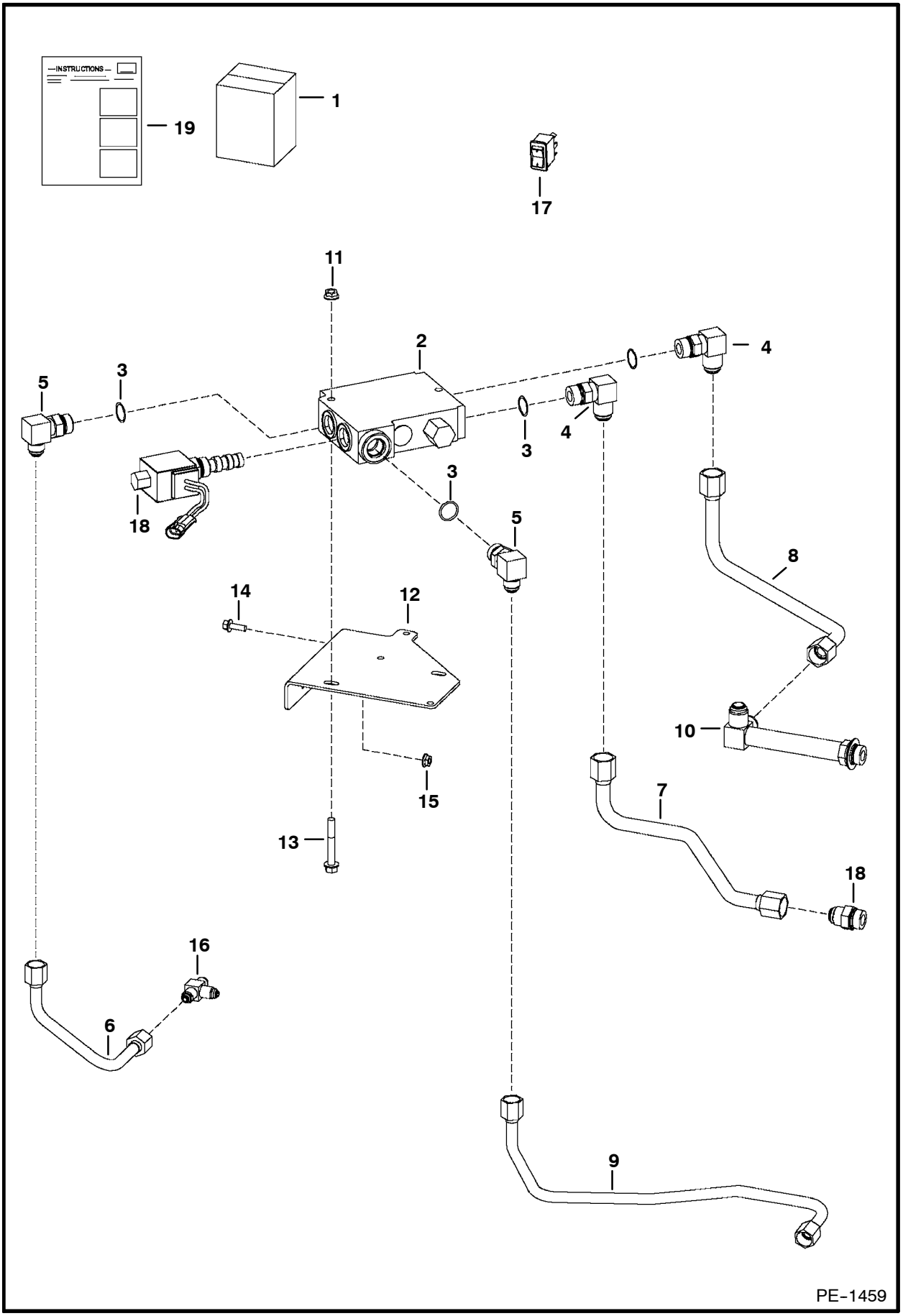

BUCKET POSITIONING VALVE KIT (Cont'd)

Ref. No.	Part Number	Description	Remarks	Serial Number	Qty.
1	6727619	KIT	Ref. 2 - 9, 11 - 15 & 17 - 19		1
2	6666341	VALVE	bucket pos. - See Page 75		1
3	79K-10	O-RING			x
4	17KB-1010	ELBOW	W/Ref. 3		2
5	17KB-810	ELBOW	W/Ref. 3		2
6	6727627	TUBE			1
7	6727629	TUBE			1
8	6727626	TUBE			1
9	6727628	TUBE			1
10	6730142	TEE	Not in Kit		1
11	57D-5	NUT			2
12	6704833	BRACKET			1
13	35C-536	BOLT			2
14	35C-412	BOLT			2
15	55D-4	NUT			2
16		TEE	Not in Kit		1
17	6668814	SWITCH			1
18	6672863	SOLENOID			1
	6670634	SEAL KIT			1
	6671527	NUT			1
19	6902324	INSTRUCTIONS			1

CAB DOOR

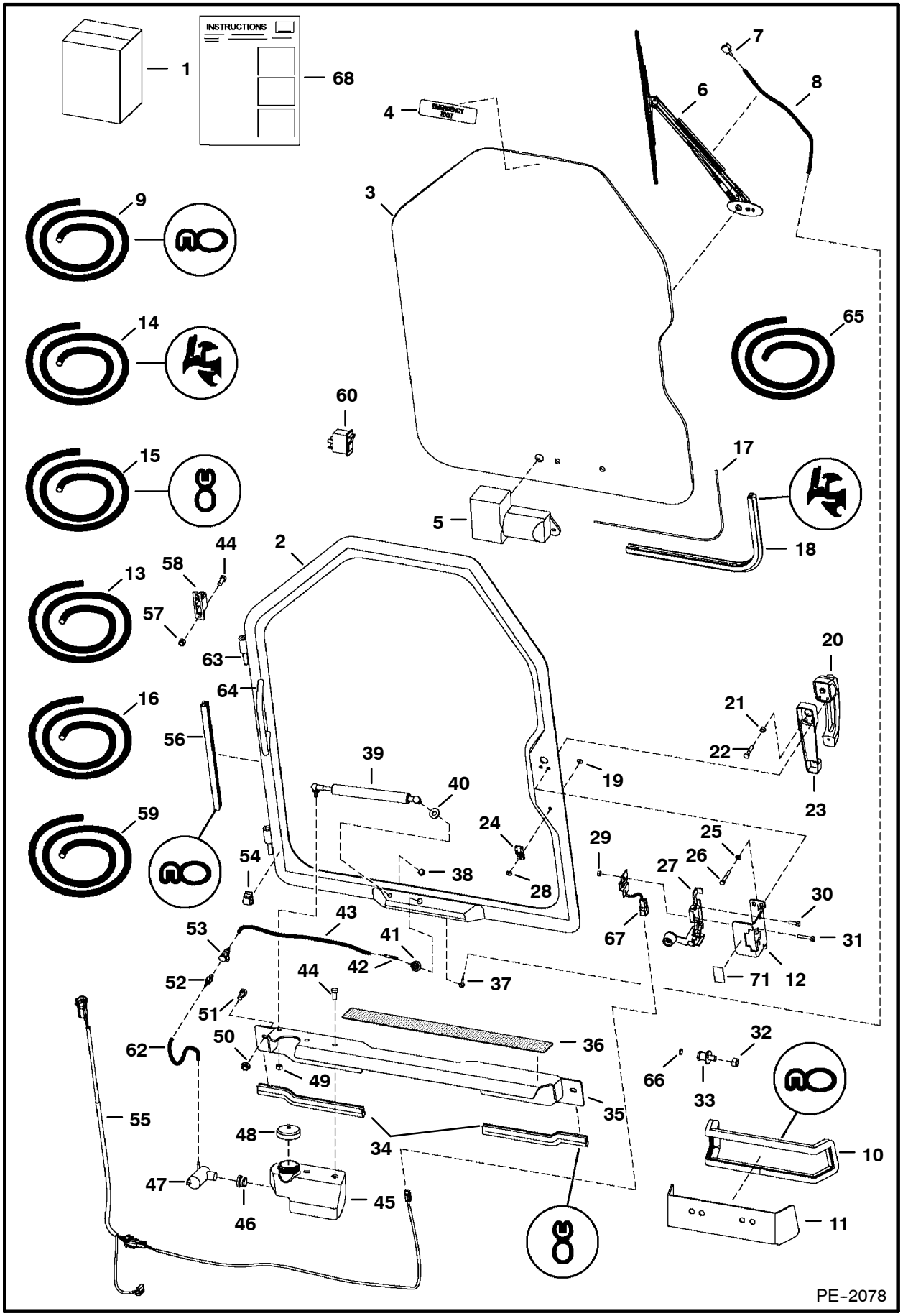

CAB DOOR (Cont'd)

Ref. No.	Part Number	Description	Remarks	Serial Number	Qty.
1	6718808	KIT	door - Ref. 1 - 65 & 68		1
2	6726435	DOOR			1
3	6717360	WINDOW	.25" thick - glass - See Page 207		1
4	6707852	DECAL	exit		1
5		MOTOR	See Page 207		1
6		ARM	wiper - See Page 207		1
7		NOZZLE	wiper arm mounted -See Page 207		1
8		HOSE	See Page 207		1
9	6555351	SEAL	bulk - Sold Per Foot		x
10	NAP	SEAL	40"(1016 mm) long - Order Ref. 9		1
11	6725200	PLATE			1
12	6717369	BRACKET	latch		1
13	6676918	HOSE	50' (15,240 mm) long roll - .125" I.D. - black		x
14	6665568	SEAL	bulk - Sold Per Foot		x
15	6675558	SEAL	bulk - Sold Per Foot		x
16	6554149	CORD	bulk - Sold Per Foot		x
17	NAP	CORD	window - 113.3" (2877,8mm) - Order Ref. 16		1
18	NAP	SEAL	window - 113.3" (2877,8mm) - Order Ref. 14		1
19	6665321	RIVET	male plastic		1
20	6674667	HANDLE			1
	6709527	KEY	ign. & rear door		1
21	61D-4	NUT			1
22	17C-420	BOLT			1
23	6717146	SPACER	handle		1
24	6665000	CLIP			1
25	6EM-60	WASHER			3
26	1CM-640	BOLT			3
27	6674666	LATCH			1
28	6665322	RIVET	female plastic		1
29	4DM-6	NUT			2
30	1CM-620	BOLT			2
31	4CM-635	BOLT			2
32	91D-7	NUT			1
33	6677194	STRIKER BOLT			1
34	NAP	SEAL	threshold - 11" (279,4mm) - Order Ref. 15		2
35	6725042	SHIELD			1
36	6542731	SAFETY TREAD			1
37	6676500	ELBOW			1
38	46D-5	NUT	acorn		1
39	6682586	GAS SPRING			1
	6678548	SOCKET	ball		2
	6649244	BALL STUD			2
	6649245	RETAINER	spring		2
40	25E-16	WASHER			1
41	6676499	GROMMET	wiper		1
42	6676917	ELBOW			1

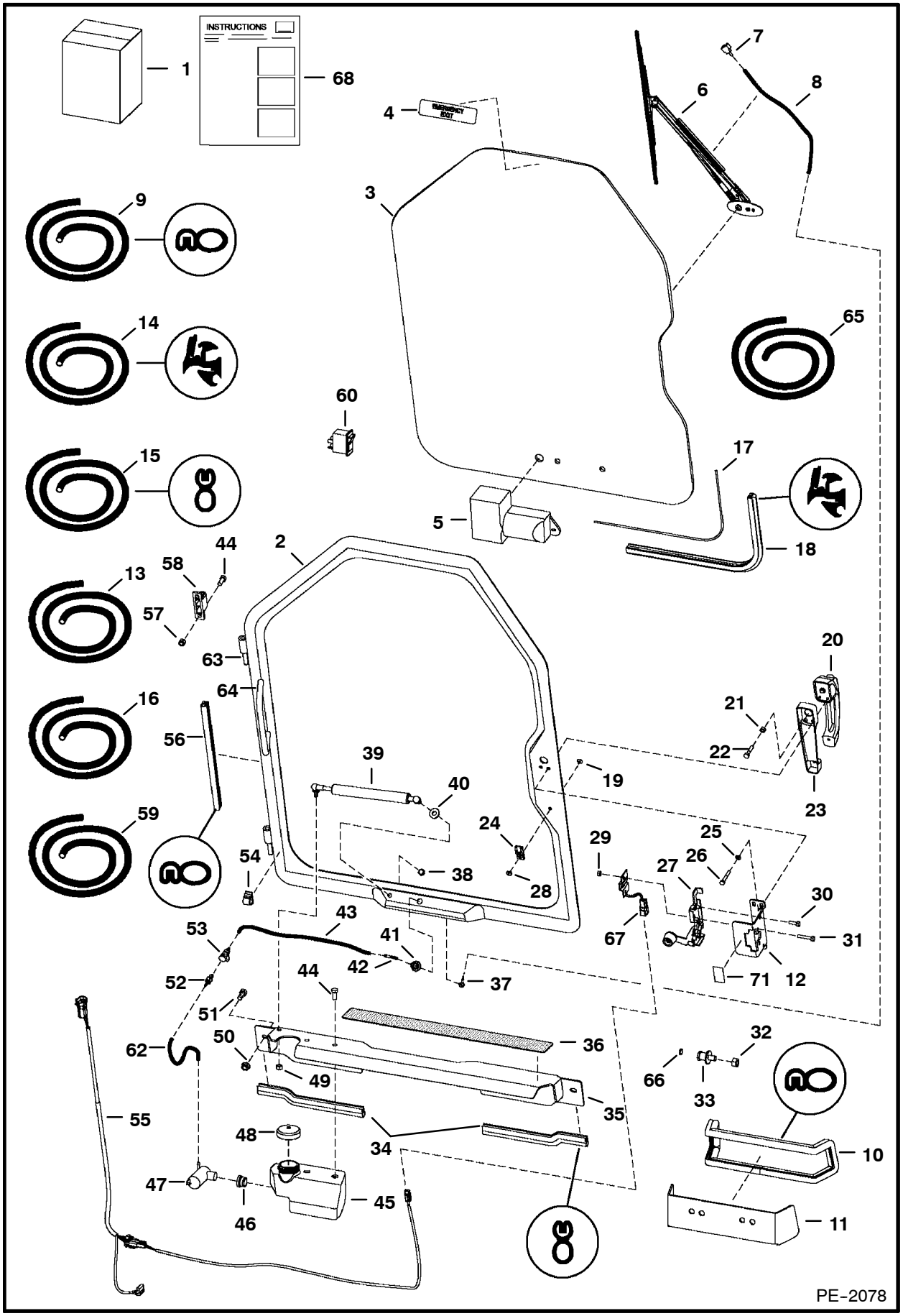
INSTRUCTIONS
1
68
4
7
6
8
3
9
65
14
60
17
15
5
18
2
44
58
13
57
63
64
20
16
56
21
22
39
40
19
23
59
24
25
29
26
27
54
38
28
30
43
53
41
67
31
52
42
37
71
12
44
51
62
50
36
32
49
66
33
35
55
48
34
10
47
45
46
11
PE-2078

CAB DOOR (Cont'd)

Ref. No.	Part Number	Description	Remarks	Serial Number	Qty.
43	NAP	HOSE	18.25" (463,6 mm) long - Order Ref. 59		1
44	17C-512	BOLT			6
45	6730830	TANK	washer		1
46	6666766	GROMMET			1
47	6664554	PUMP	washer bottle		1
48	6674993	CAP	vented		1
49	61D-5	NUT			5
50	61D-6	NUT			2
51	17C-612	BOLT			2
52	6675299	COUPLER	insert		1
53	6675298	COUPLER	body		1
54	6675378	CLIP			1
55	6730885	HARNESS	wiper		1
56	NAP	SEAL	127.3"(3233,4mm) -Order Ref. 15		1
57	59D-5	NUT			4
58	6717593	HINGE	base		2
59	6676003	HOSE	bulk - Sold Per Foot - .109" I.D. - black		x
60	6665707	SWITCH	front wiper		1
61	6664097	COVER	wiper		1
62	NAP	HOSE	washer - 4.25" (108 mm) long - Order Ref. 65		1
63	6718376	HINGE	door		2
64	6718521	HANDLE	grab		1
65	6708310	HOSE	bulk - Sold Per Foot - .149" I.D. - clear		1
66	6677192	MAGNET			1
67	6731212	SENSOR	door		1
	6677193	RIVET	plastic		2
68	6901013	INSTRUCTIONS			1

CAB DOOR
(Window & Wiper)

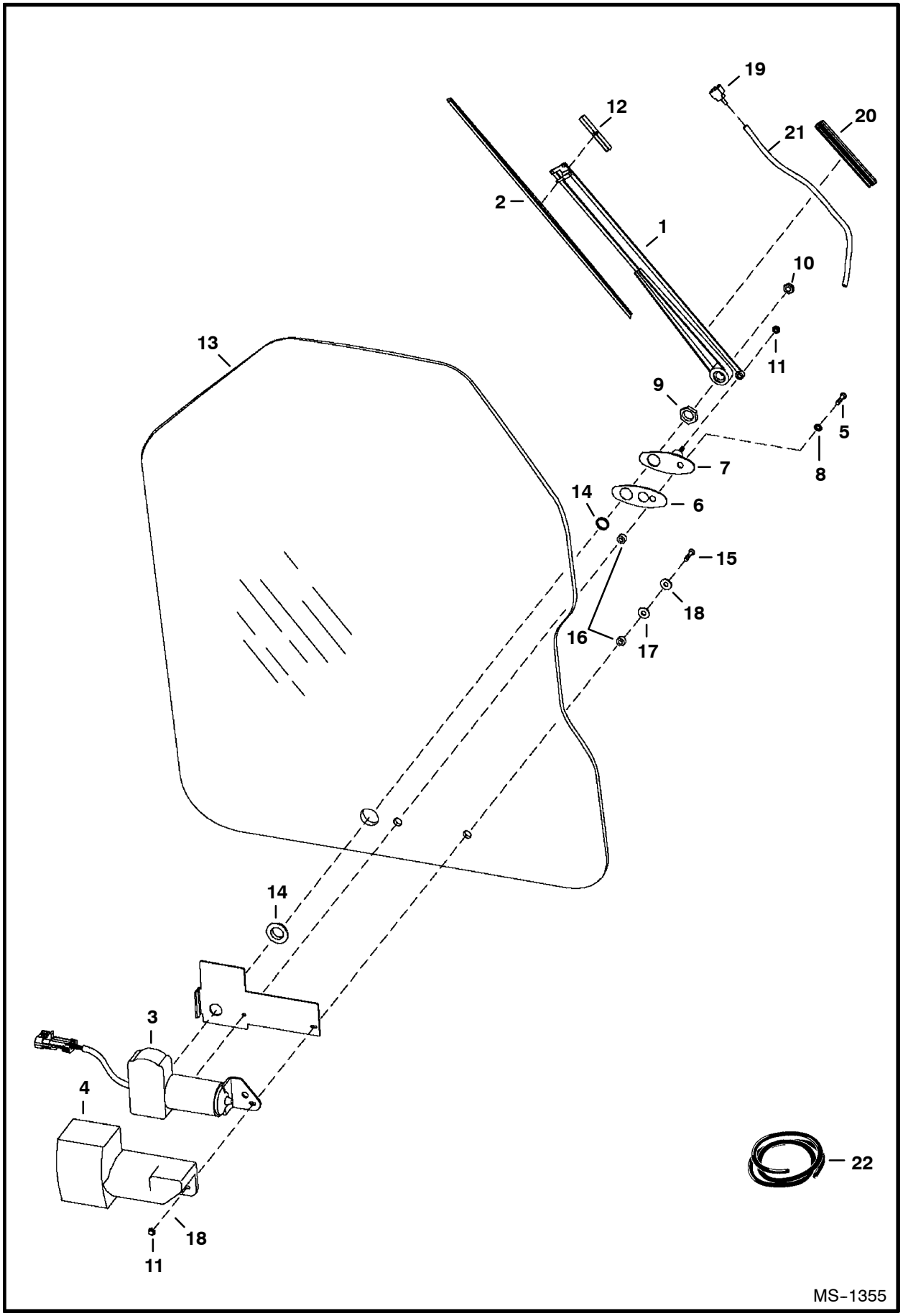

CAB DOOR (Cont'd)
(Window & Wiper)

Ref. No.	Part Number	Description	Remarks	Serial Number	Qty.
1	6677833	ARM ASSY	W/Ref. 19 - 21		1
2	6677834	BLADE			1
3	6679476	MOTOR	W/threaded shaft end & built in		
			fuse		1
4	6677836	COVER			1
5	6677837	BOLT			1
6	6677839	GASKET			1
7	6677840	SWIVEL ASSY			1
8	6677841	WASHER	tooth lock		1
9	6677842	NUT			1
10	6677843	NUT			1
11	6677844	NUT			2
12	6677845	ADAPTER	arm		1
13	6729776	WINDOW	.25" thick glass		1
14	6677847	GROMMET	rubber		1
15	6678198	BOLT			1
16	6664085	BUSHING	nylon		2
17	6801059	WASHER	neoprene		1
18	6678739	WASHER	steel		2
19	6678920	NOZZLE			1
20	6678921	GUIDE	hose		1
21	NAP	HOSE	18"(457,2 mm) long -		
			Order Ref. 22		x
22	6676003	HOSE	bulk - Sold Per Foot -		
			.109" I.D. - black		x

CAB DOOR
(Special Applications)

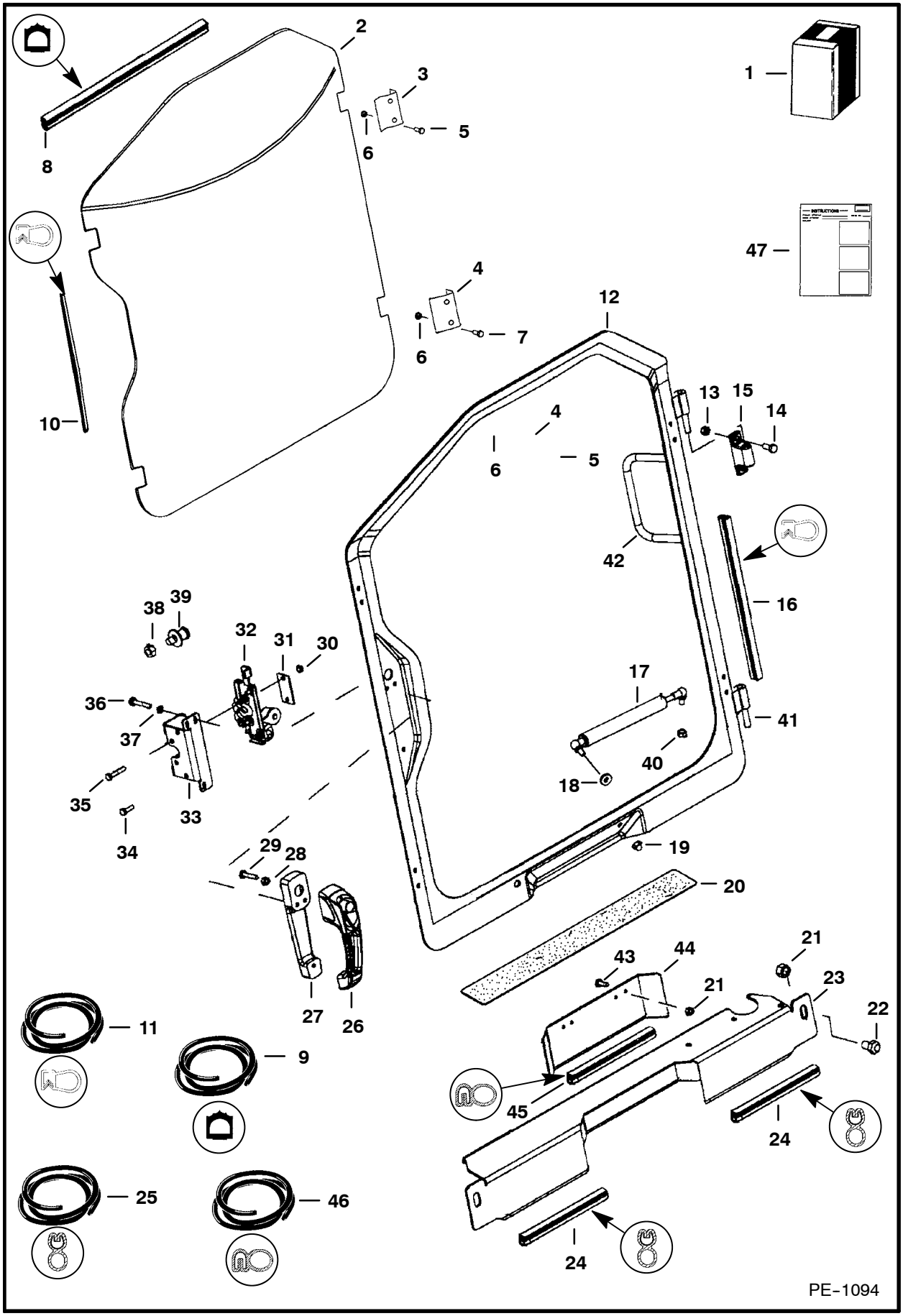

CAB DOOR (Cont'd)
(Special Applications)

Ref. No.	Part Number	Description	Remarks	Serial Number	Qty.
1	6725941	KIT	door		1
2	6732351	WINDOW			1
3	6725938	CLAMP			2
4	6725937	CLAMP			3
5	17C-628	BOLT			6
6	95D-6	NUT			10
7	17C-624	BOLT			4
8	NAP	SEAL	12"(304,8 mm) long - Order Ref. 9 - Used W/Ref. 2 W/O top notch		1
9	6670759	SEAL	bulk - Sold Per Foot		x
10	NAP	SEAL	115"(2921 mm) long -Order Ref. 11		1
11	6675558	SEAL	bulk - Sold Per Foot		x
12	6726932	DOOR	W/Ref. 41 & 42		1
13	59D-5	NUT			4
14	17C-512	BOLT			6
15	6717593	HINGE	base		2
16	NAP	SEAL	127.3"(3233,4 mm) long - Order Ref. 11		1
17	6682586	GAS SPRING			1
	6678548	SOCKET	ball		2
	6649245	RETAINER	spring		2
18	25E-16	WASHER			1
19	46D-5	NUT	acorn		1
20	6542731	SAFETY TREAD			1
21	55D-6	NUT			4
22	17C-612	BOLT			2
23	6725042	SHIELD			1
24	NAP	SEAL	11"(279,4 mm) long -Order Ref. 25		2
25	6513152	SEAL	bulk - Sold Per Foot		x
26	6674667	HANDLE			1
	6709527	KEY	ign. & rear door		1
27	6717146	SPACER	handle		1
28	61D-4	NUT			1
29	17C-420	BOLT			1
30	4DM-6	NUT			2
31	6718520	COVER	latch		1
32	6674666	LATCH			1
33	6717369	BRACKET	latch		1
34	1CM-620	BOLT			2
35	1CM-635	BOLT			2
36	1CM-640	BOLT			3
37	6EM-60	WASHER			3
38	91D-7	NUT			1
39	6654170	STRIKER BOLT			1
40	61D-5	NUT			5
41	6718376	HINGE	door		2
42	6718521	HANDLE	grab		1
43	35C-620	BOLT			2
44	6725200	PLATE			1
45	NAP	SEAL	40"(1016 mm) long - Order Ref. 46		1
46	6555351	SEAL	bulk - Sold Per Foot		x

CAB DOOR (Cont'd)
(Special Applications)

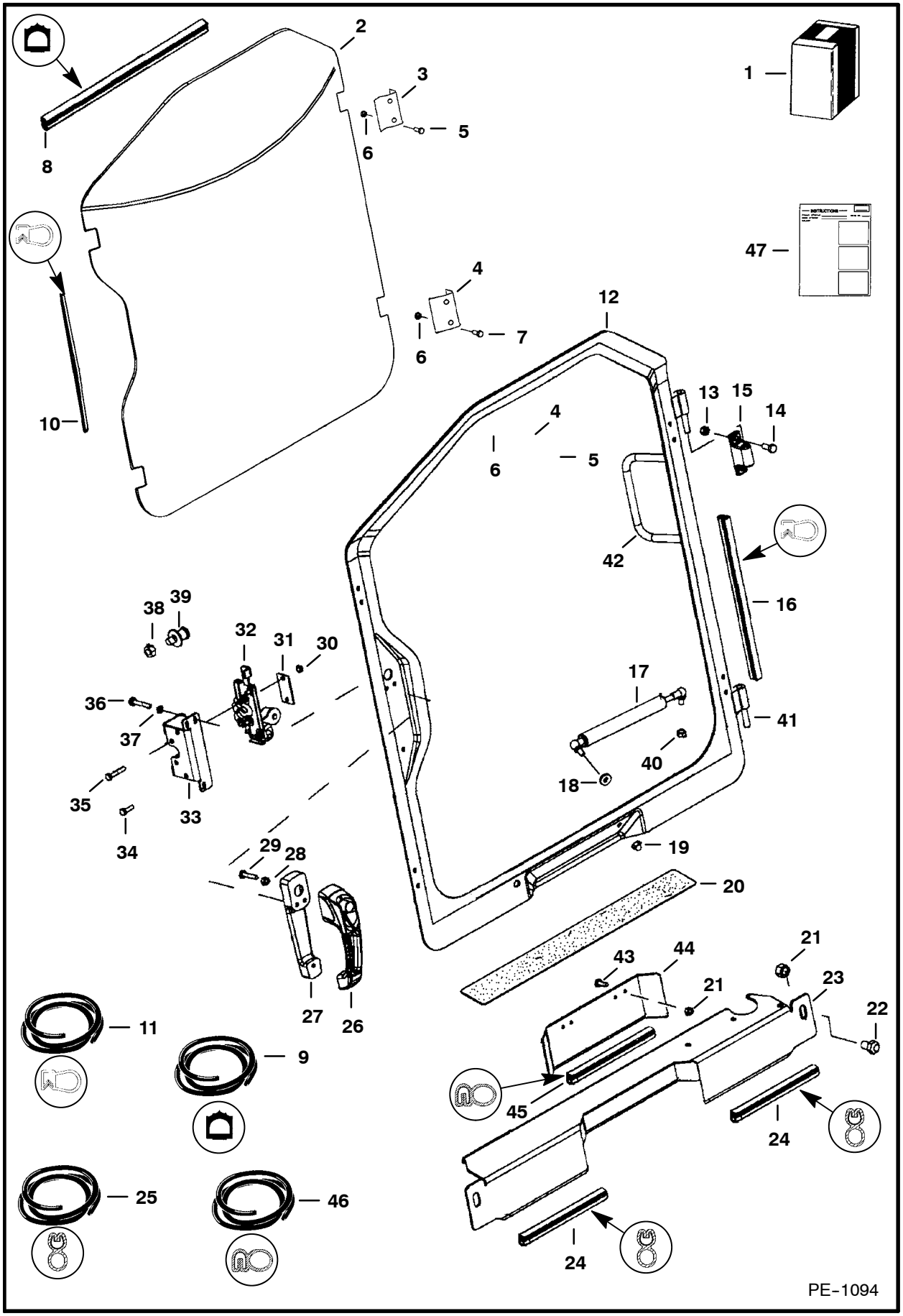

CAB DOOR (Cont'd)
(Special Applications)

Ref. No.	Part Number	Description	Remarks	Serial Number	Qty.
47	6901013	INSTRUCTIONS			1

CAB DOOR
(Lexan Window)

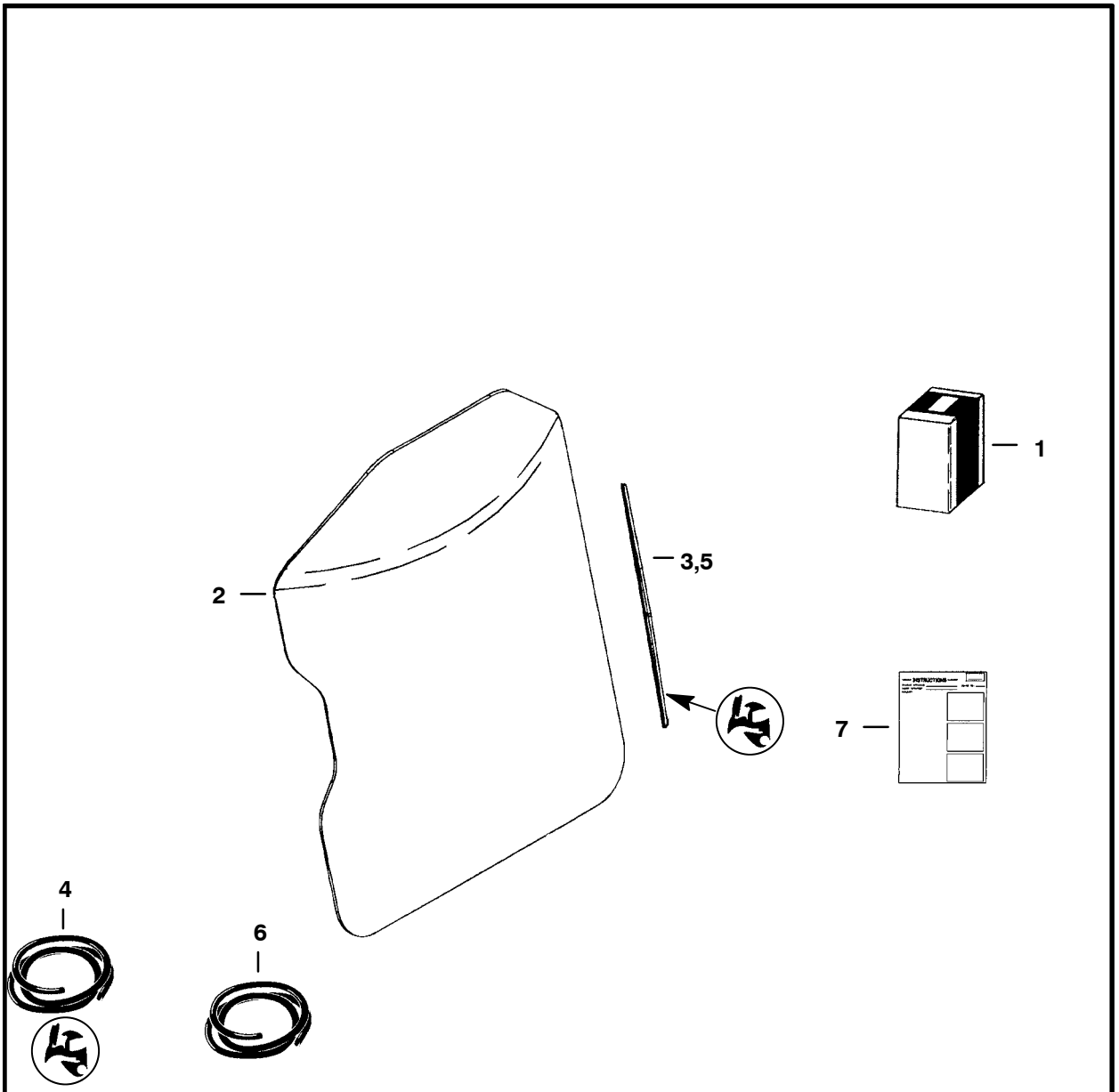

NOTE: This Lexan window is NOT approved as a Special Applications Kit. This window does not provide additional protection from materials entering cab openings.

PE-1558

CAB DOOR (Cont'd)
(Lexan Window)

Ref. No.	Part Number	Description	Remarks	Serial Number	Qty.
1	6726427	KIT	Ref. 2 - 7 - SEE NOTE		1
2	6732350	WINDOW	lexan		1
3	NAP	SEAL	113.3"(2877,8 mm) long -		
			Order Ref. 4		1
4	6665568	SEAL	bulk - Sold Per Foot		x
5	NAP	CORD	113.3"(2877,8 mm) long -		
			Order Ref. 6		1
6	6554149	CORD	bulk - Sold Per Foot		x
7	6901036	INSTRUCTIONS			1

CAB DOOR
(Sensor Kit)

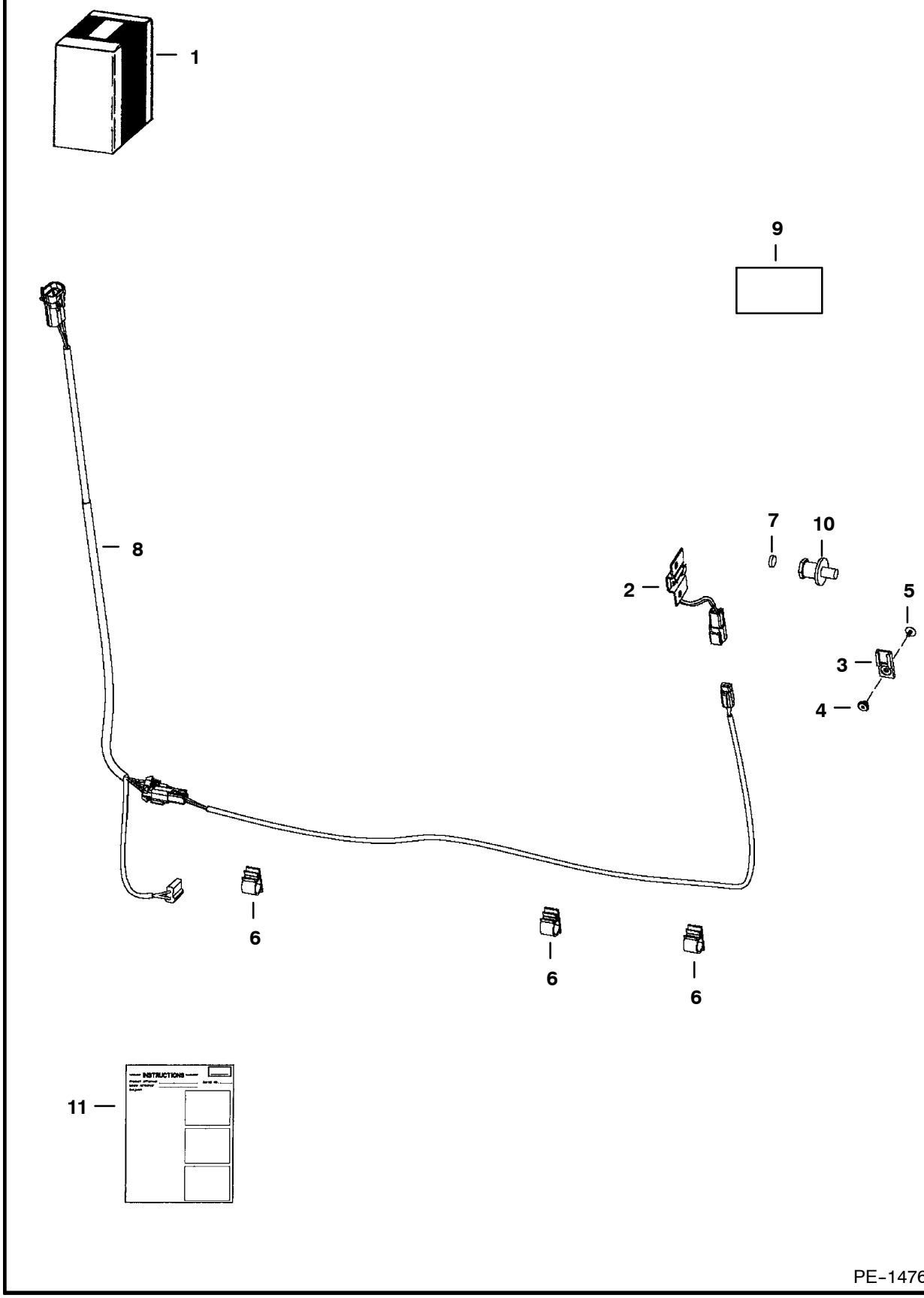

CAB DOOR (Cont'd)
(Sensor Kit)

Ref. No.	Part Number	Description	Remarks	Serial Number	Qty.
1	6732451	KIT			1
2	6731212	SENSOR			1
	6677193	RIVET	plastic		2
3	6665000	CLIP			1
4	6665322	RIVET			1
5	6665321	RIVET			1
6	6675378	CLIP			1
7	6677192	MAGNET			1
8	6730885	HARNESS			1
9	6732975	DECAL			1
10	6677194	STRIKER BOLT			1
11	6901734	INSTRUCTIONS			1

CAB ENCLOSURE

NOTE: Order Cab Enclosure Kit from Gwinner SALES #6719667.
Order Special Applications Kit from Gwinner SALES # 6719390.

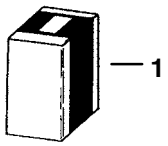

B-16410

CAB ENCLOSURE (Cont'd)

Ref. No.	Part Number	Description	Remarks	Serial Number	Qty.
1	SALES	KIT	cab enclosure - SEE NOTE - includes items See Pages 203 See Page 221		1
	SALES	KIT	special cab enclosure - SEE NOTE - includes items See Page 209 See Page 221		1

CAB ENCLOSURE
(Envelope)

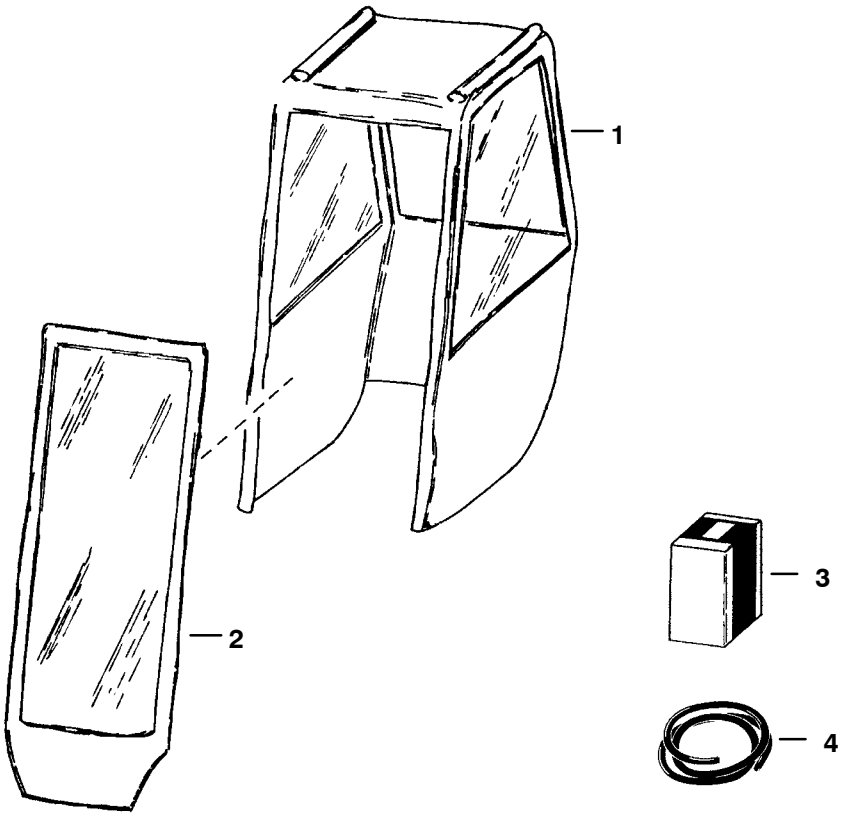

B-1413

CAB ENCLOSURE (Cont'd)
(Envelope)

Ref. No.	Part Number	Description	Remarks	Serial Number	Qty.
1	6675544	VINYLCAB	fastens inside of cab W/velcro - W/Ref. 2		1
2	6675590	DOOR	vinyl		1
3	6675591	HINGE KIT			1
4	6722597	VELCRO	27' (8229,6 mm) roll		1

CAB WINDOWS

NOTE: Order Top & Rear WIndow Kit from Gwinner Sales # 6718805.
Order Side Window Kit from Gwinner Sales # 6718806.

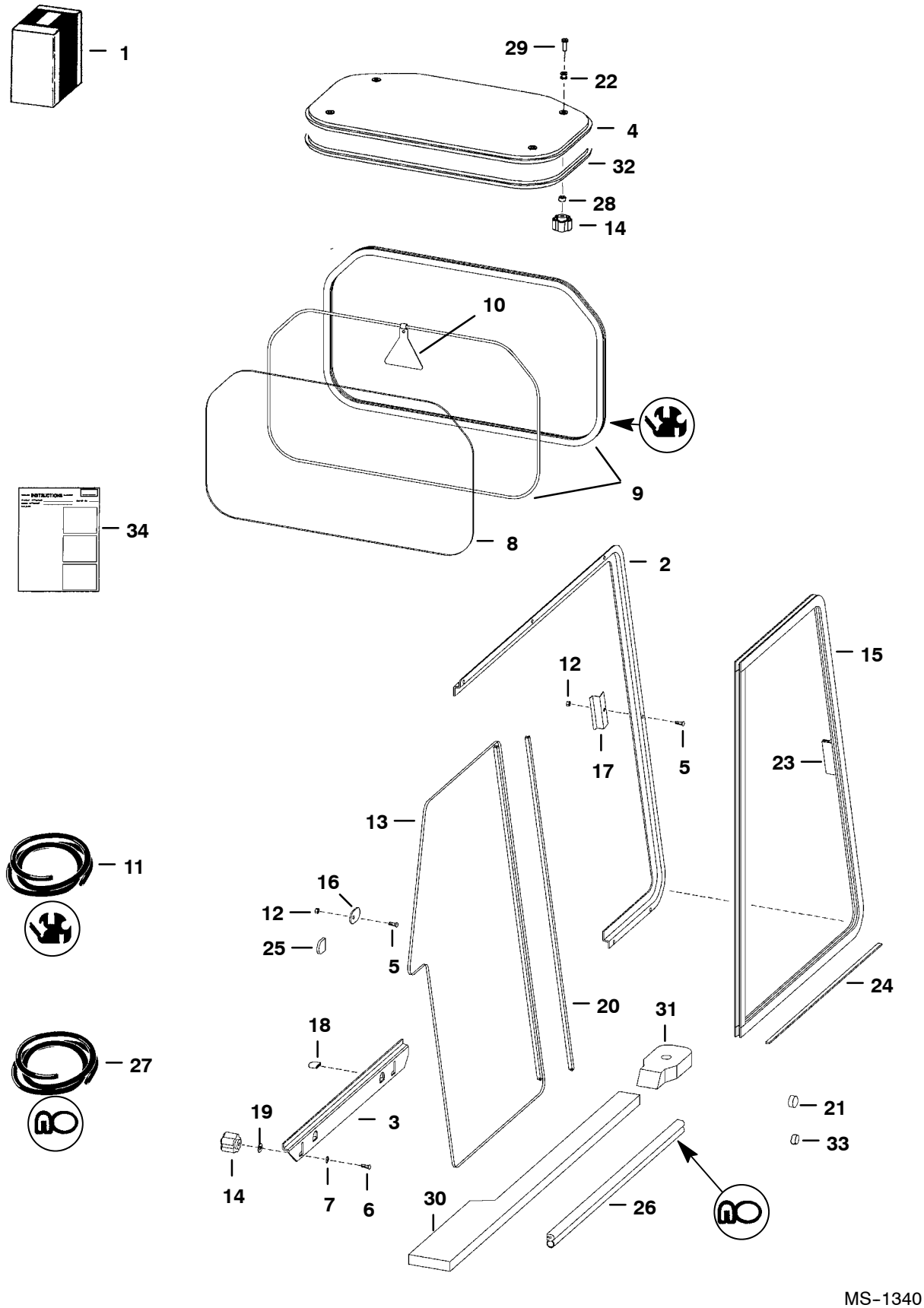

MS-1340

CAB WINDOWS (Cont'd)

Ref. No.	Part Number	Description	Remarks	Serial Number	Qty.
1	SALES	KIT	Top & Rear Window - SEE NOTE		1
	SALES	KIT	Side Window - SEE NOTE		1
2	6717870	TRACK	L.H. side		1
	6717872	TRACK	R.H. side		1
3	6717871	TRACK	L.H. bottom		1
	6717873	TRACK	R.H. bottom		1
4	6728629	WINDOW	assy. - lexan - W/Ref. 22 & 32		1
5	10C-410	BOLT	carriage		18
6	10C-416	BOLT	carriage		4
7	25E-14	WASHER			4
8	6717874	WINDOW	rear		1
	6719413	WINDOW	rear - lexan		1
9	NAP	EXTRUSION	75.75"(1924 mm) long -		
			Order Ref. 11		x
	NAP	CORD	75.75"(1924 mm) long -		
			Order Ref. 11		x
10	6731478	EXIT TAG			1
11	6675387	EXTRUSION	bulk - Sold Per Foot		x
	6554149	CORD	bulk - Sold Per Foot		x
12	59D-4	NUT			18
13	6674520	WINDOW	L.H. rear - W/Ref. 20		1
	6674522	WINDOW	R.H. rear - W/Ref. 20		1
14	6681614	KNOB			8
15	6674519	WINDOW	L.H. front - W/Ref. 23		1
	6674521	WINDOW	R.H. front - W/Ref. 23		1
16	6719063	STOP			2
17	6719037	STRIKER			2
18	6719065	COVER	tab		4
19	6675212	RETAINER	bolt		4
20	6675833	SEAL	rear window dual wiper W/tape		2
21	6657719	PLUG	for .75" dia. hole		2
22	6675545	GROMMET			4
23	6678283	HANDLE	W/tape & instructions		2
24	6676927	FELT STRIP	20.38" (517,7 mm) long		2
25	6677198	CAP	tab		2
26	NAP	SEAL	24"(609,6 mm) long -		
			Order Ref. 27		1
27	6555351	SEAL	bulk - Sold Per Foot		x
28	6664085	BUSHING	nylon		4
29	91G-420	BOLT			4
30	6729010	SEAL	L.H. - cab to main frame - foam		1
	6729009	SEAL	R.H. - cab to main frame - foam		1
31	6729011	SEAL	cab mount		2
32	NAP	SEAL	Order Ref. 4		1
33	6677973	PLUG	for .22" dia. hole		2
34	6901013	INSTRUCTIONS			1
	6900853	INSTRUCTIONS	Side Windows		1

CAB WINDOWS
(Rear Window Removal Kit)

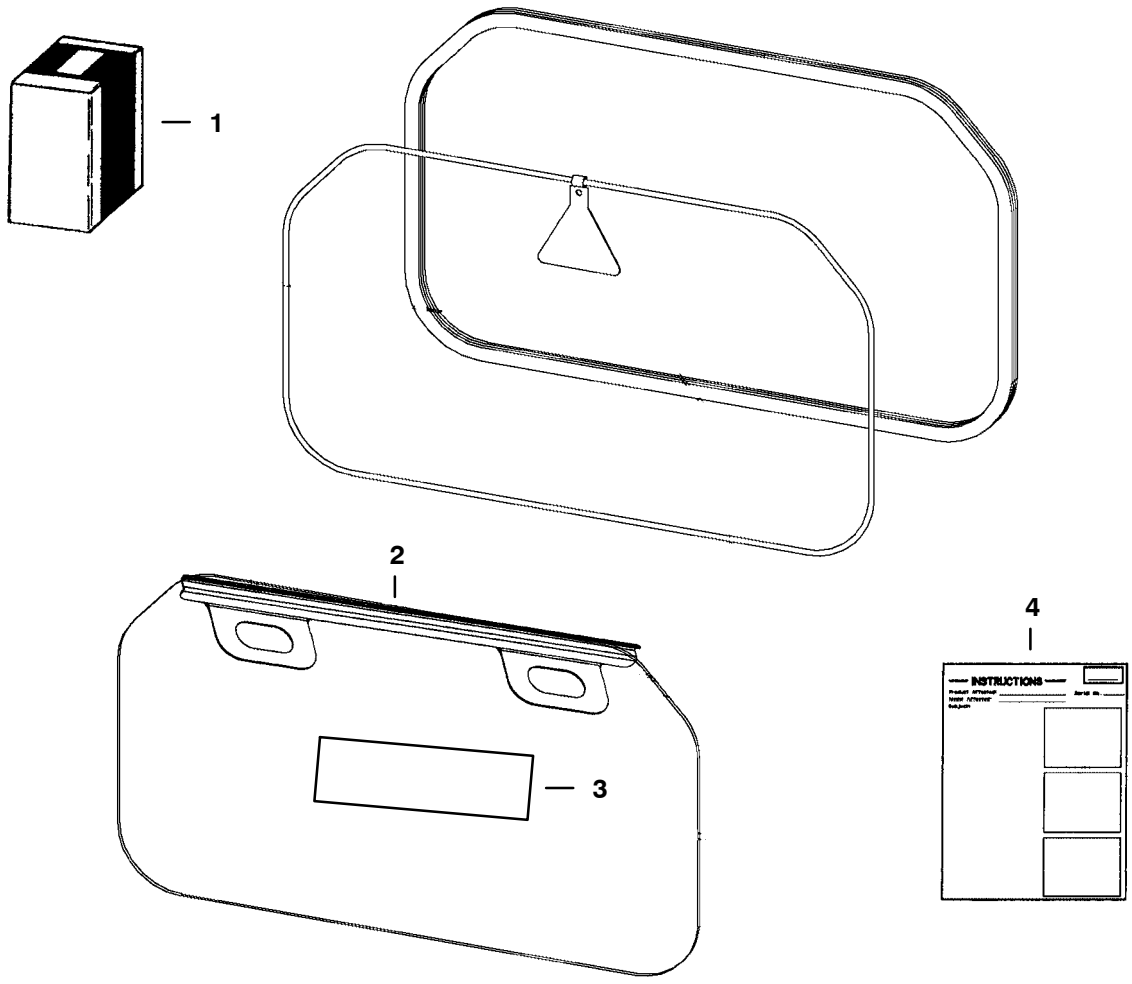

TS-2006

CAB WINDOWS (Cont'd)
(Rear Window Removal Kit)

Ref. No.	Part Number	Description	Remarks	Serial Number	Qty.
1	6725946	KIT	Ref. 2 - 4		1
2	6725421	HANDLE			1
3	6726303	DECAL			1
4	6901029	INSTRUCTIONS			1

COUNTERWEIGHT KIT
(1400 lb.)

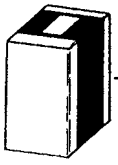



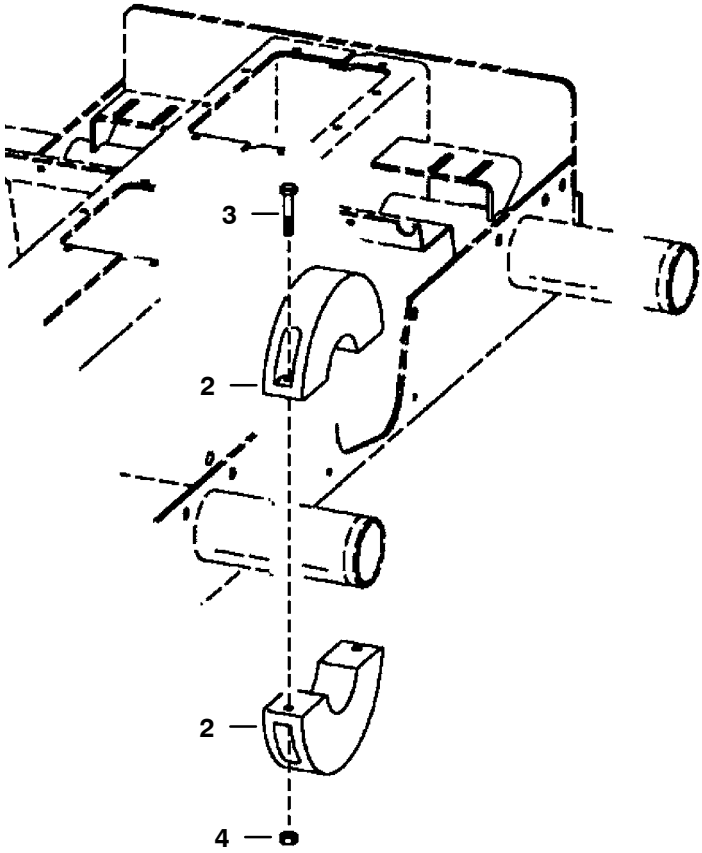

NOTE: Order Counterweight Kit from Gwinner Sales # 6704284.
NOTE: 1400 lb. R.O.C.is achieved W/(1) rear door counterweight & (1) set of rear axle weights.

TS-1491

COUNTERWEIGHT KIT (Cont'd)
(1400 lb.)

Ref. No.	Part Number	Description	Remarks	Serial Number	Qty.
1	SALES	KIT	counterweight - SEE NOTE		1
2	6714361	WEIGHT	rear axle - 38.7 lbs (17,6 kg) - 4.5"(114,3 mm) wide		4
3	17C-640	BOLT			4
4	61D-6	NUT			4
5	6900366	INSTRUCTIONS			1

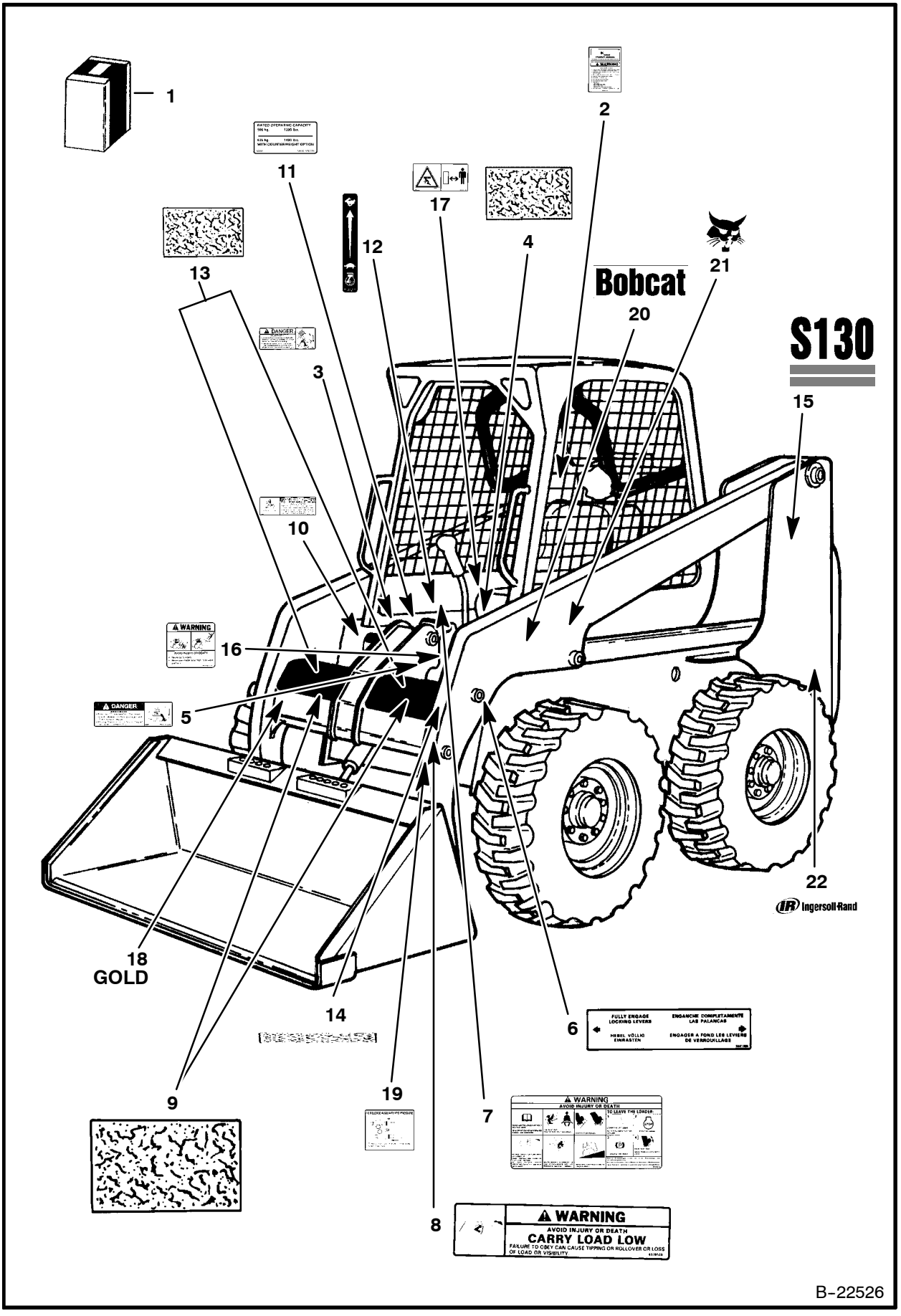
1
2
11
17
4
13
12
21
Bobcat
20
S130
3
15
10
16
5
22
Ingersoll-Rand
18
GOLD
14
6
9
19
7
8
WARNING
AVOID INJURY OR DEATH
CARRY LOAD LOW
FAILURE TO OBEY CAN CAUSE TIPPING OR ROLLOVER OR LOSS OF LOAD OR VISIBILITY
B-22526

DECALS (Cont'd)

Ref. No.	Part Number	Description	Remarks	Serial Number	Qty.
1	6902763	KIT	decal		1
	6725366AR	KIT	decal		1
	6725366BR	KIT	decal		1
	6725366JP	KIT	decal		1
	6725500AR	KIT	translation		1
	6725500BR	KIT	translation		1
2	6719563	KIT	handbook - W/Wire Rope		1
	6558309	WIRE ROPE	33" (838,2 mm) long - Bulk - Sold Per Foot - Also Order (2) of 6558310		x
	6558310	SLEEVE	wire rope		2
	17C-512	BOLT			1
	61D-5	NUT			1
3	6717343	DECAL	danger		2
4	6554100	SAFETY TREAD	6" x 6" (152,4 mm x 152,4 mm)		4
5	6702302	DECAL	danger		1
6	6561383	DECAL	Bob-tach		1
7	6728539	DECAL	warning		1
8	6579528	DECAL	carry load low		1
9	6577947	SAFETY TREAD	7.5" x 15" (190,5 mm x 381,0 mm) - Not in Kit		2
10	6702301	DECAL	danger		1
11	6727223	DECAL	capacity		1
12	6735140	DECAL	throttle		1
13	6577949	SAFETY TREAD	6.8" x 8.75" - (172,7 mm x 222,3 mm)		2
14	6727917	SAFETY TREAD	1.25"x10.5"(31,8 mm x 266,7 mm)		2
15	7100619	DECAL	model		2
16	6710358	DECAL	warning		1
17	6713507	DECAL	stay clear -European - Not in Kit		2
18	6735862	DECAL	gold package		1
19	6731757	DECAL	front aux. coupler block - Not in Kit		1
20	6731336	DECAL	Bobcat		1
21	6731508	DECAL	Logo - L.H.		1
22	6735864	DECAL	IR Logo		1

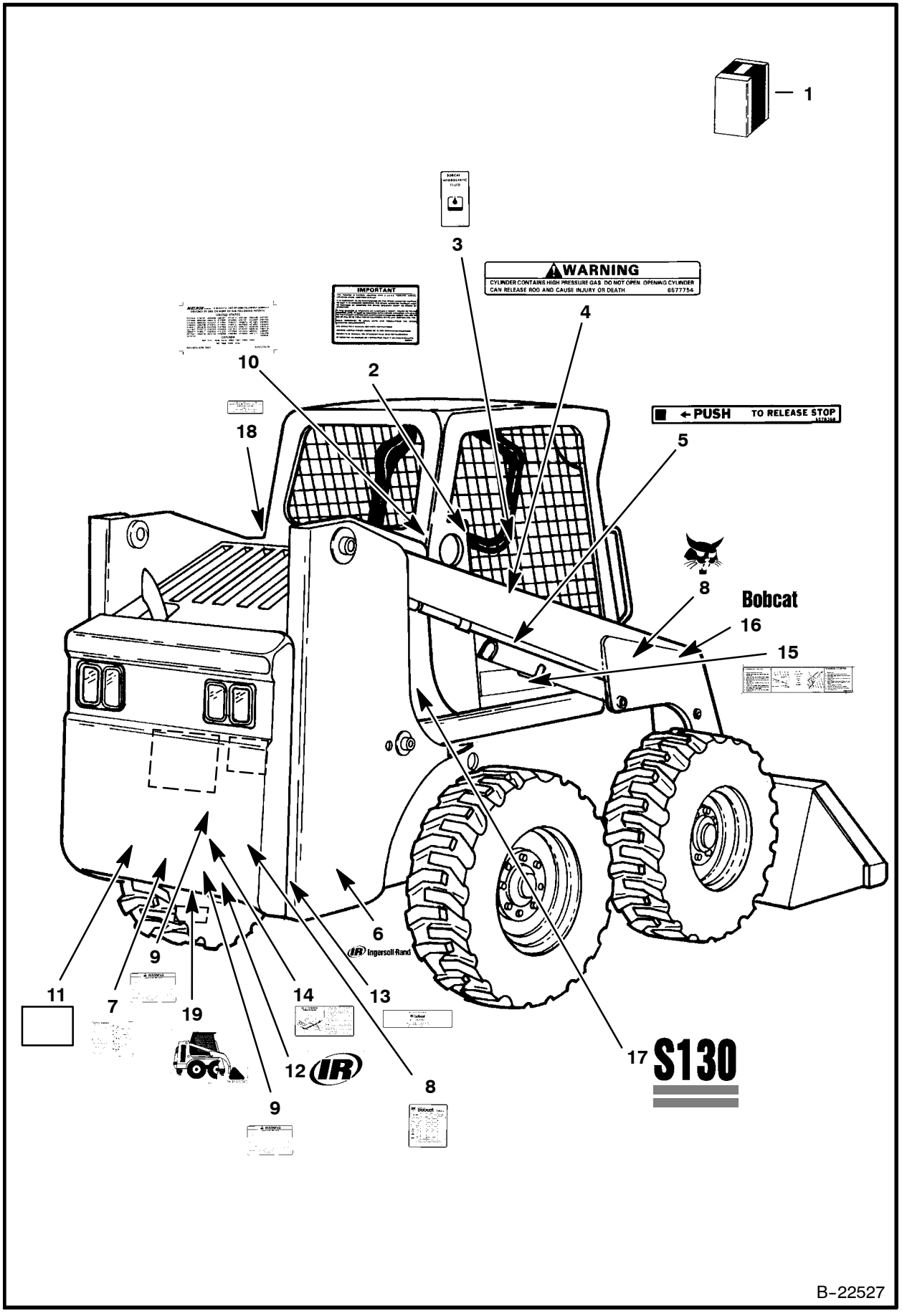
1
3
WARNING
CYLINDER CONTAINS HIGH PRESSURE GAS. DO NOT OPEN. OPENING CYLINDER CAN RELEASE ROD AND CAUSE INJURY OR DEATH.
6577754
4
IMPORTANT
10
2
18
PUSH TO RELEASE STOP
5
8
Bobcat
16
15
6
Ingersoll-Rand
9
11
7
19
14
13
12
IR
8
9
17
S130
B-22527

Ref. No.	Part Number	Description	Remarks	Serial Number	Qty.
1	6902763	KIT	decal		1
	6725366AR	KIT	decal		1
	6725366BR	KIT	decal		1
	6725366JP	KIT	decal		1
	6725500AR	KIT	translation		1
	6725500BR	KIT	translation		1
2	6560573	DECAL	spark arrestor		1
3	6565990	DECAL	hydraulic fluid		1
4	6577754	DECAL	gas spring warning		2
5	6578368	DECAL	push		1
6	6735864	DECAL	IR - black		1
7	6727926	DECAL	operations		1
8	6731507	DECAL	R.H. - Bobcat head - black		1
9	6734534	DECAL	warning/service schedule/ service parts		1
10	6557224	DECAL	patent		1
11	6735901	DECAL	Bobcat W/head - white		1
12	6595014	DECAL	tow hook		1
13	6565200	DECAL	engine oil filter		1
14	6709030	DECAL	belt tension		1
15	6706558	DECAL	boom stop		1
16	6731336	DECAL	Bobcat - black		1
17	7100619	DECAL	model		1
18	6708929	DECAL	propylene gylcol antifreeze		1

DELUXE CAB

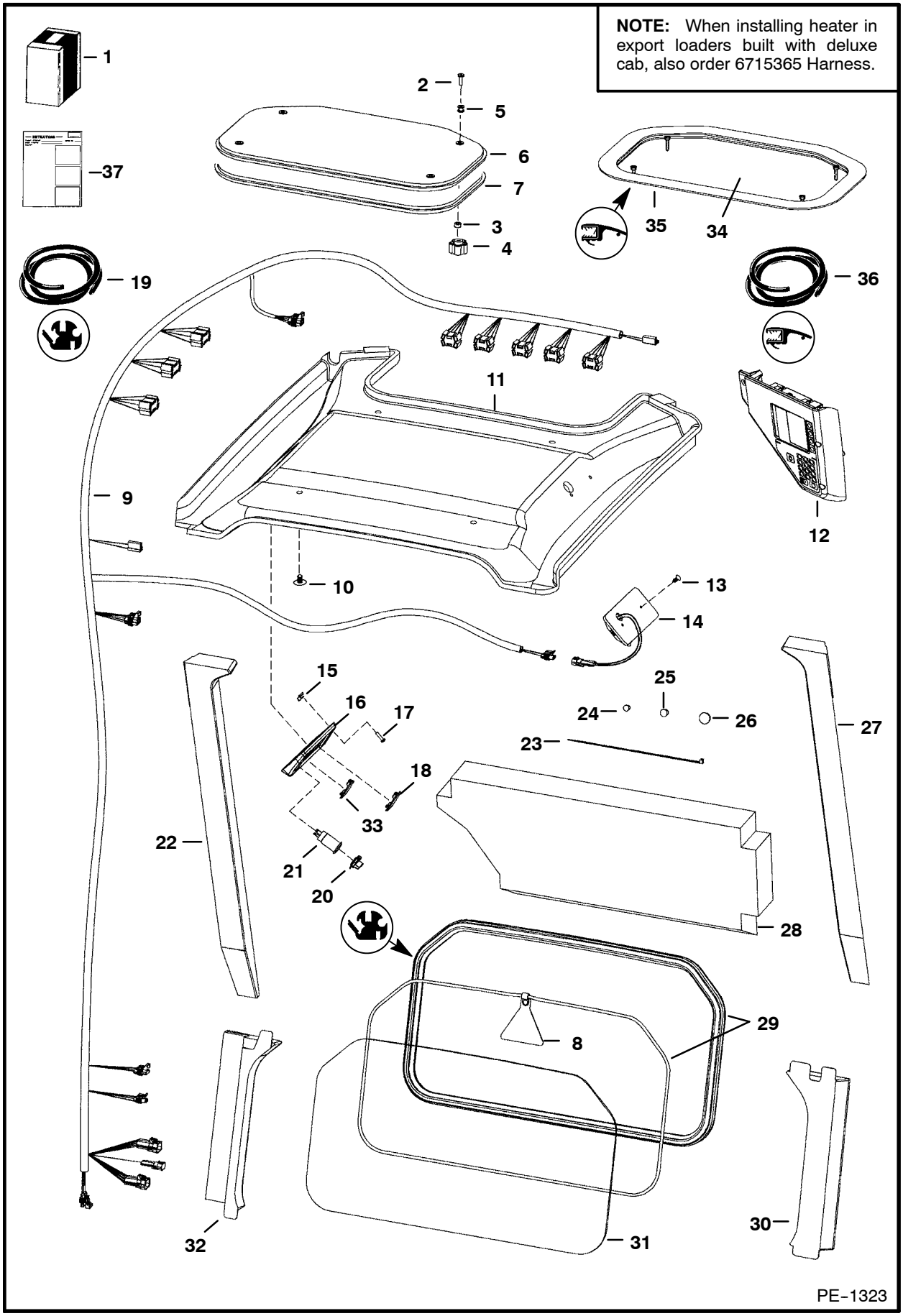
NOTE: When installing heater in export loaders built with deluxe cab, also order 6715365 Harness.
1
2
5
6
7
3
4
37
35
34
19
36
11
9
12
10
13
14
15
16
17
18
33
22
21
20
25
24
26
23
27
28
29
8
32
31
30
PE-1323

DELUXE CAB (Cont'd)

Ref. No.	Part Number	Description	Remarks	Serial Number	Qty.
1	6729233	KIT	deluxe cab - Ref. 8 - 37		1
2	91G-420	BOLT			4
3	6664085	BUSHING	nylon		4
4	6681614	KNOB			4
5	6675545	GROMMET			4
6	6728629	WINDOW	assy. - W/Ref. 5 & 7		1
7	NAP	SEAL	Order Ref. 6		x
8	6731478	EXIT TAG			1
9	6727190	HARNESS			1
10	6674895	RETAINER	snap in		4
11	6717515	INSULATION	headliner		1
12	6683395	PANEL	R.H. - deluxe - keyless		1
	NAP	INSTRUCTIONS	See Loader Service Manual		1
13	6664221	RETAINER	snap in		2
14	6680326	LIGHT	dome		1
	6665367	BULB			1
15	6669091	CLIP			4
16	6718580	PANEL			1
17	6669224	BOLT			4
18	6665314	PLUG			5
19	6675387	EXTRUSION	bulk - Sold Per Foot		x
	6554149	CORD	bulk - Sold Per Foot		x
20	6664224	CAP			1
21	6664223	OUTLET			1
22	6717519	INSULATION			1
23	6610510	TIE			6
24	5289686	PLUG	black		5
25	6649949	PLUG			2
26	6657719	PLUG			1
27	6717520	INSULATION			1
28	6727299	INSULATION	cab back		1
29	NAP	EXTRUSION	75.75"(1924 mm) long - Order Ref. 19		x
	NAP	CORD	75.75"(1924 mm) long - Order Ref. 19		x
30	6717518	INSULATION			1
31	6717874	WINDOW	rear		1
32	6717517	INSULATION			1
33	6668742	SWITCH	travel control - export		1
34	NAP	WINDOW	Order Ref. 6		1
35	NAP	SEAL	Order Ref. 6		x
36	NAP	SEAL	bulk - Sold Per Foot - Order Ref. 6		x
37	6900851	INSTRUCTIONS			1

ELECTRICAL CONNECTOR KIT
(7-Pin)

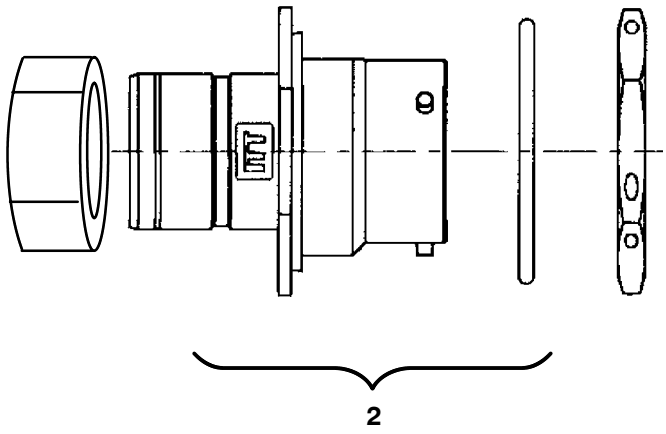

2

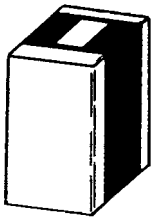

1

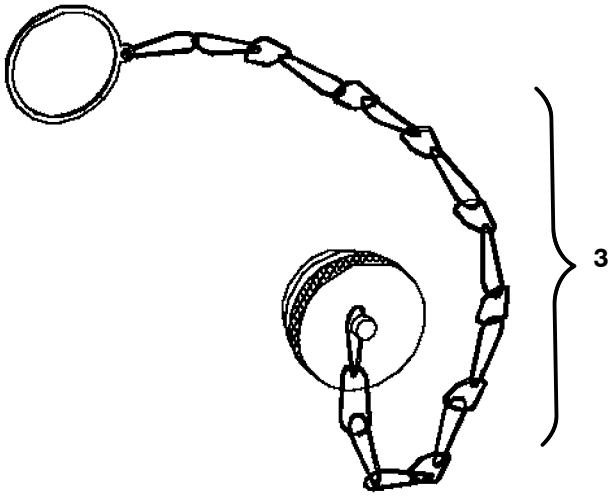

3

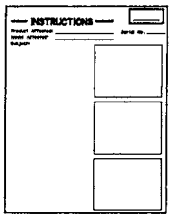

4

P-16385

ELECTRICAL CONNECTOR KIT (Cont'd)
(7-Pin)

Ref. No.	Part Number	Description	Remarks	Serial Number	Qty.
1	6727176	KIT			1
2	6674802	CONNECTOR	7-pin		1
	6669549	SOCKET	small		4
	6677136	SOCKET	12 ga		3
3	6675026	CAP			1
4	6901076	INSTRUCTIONS			1

ELECTRICAL CONTROLS KIT
(14 Pin Attachments)

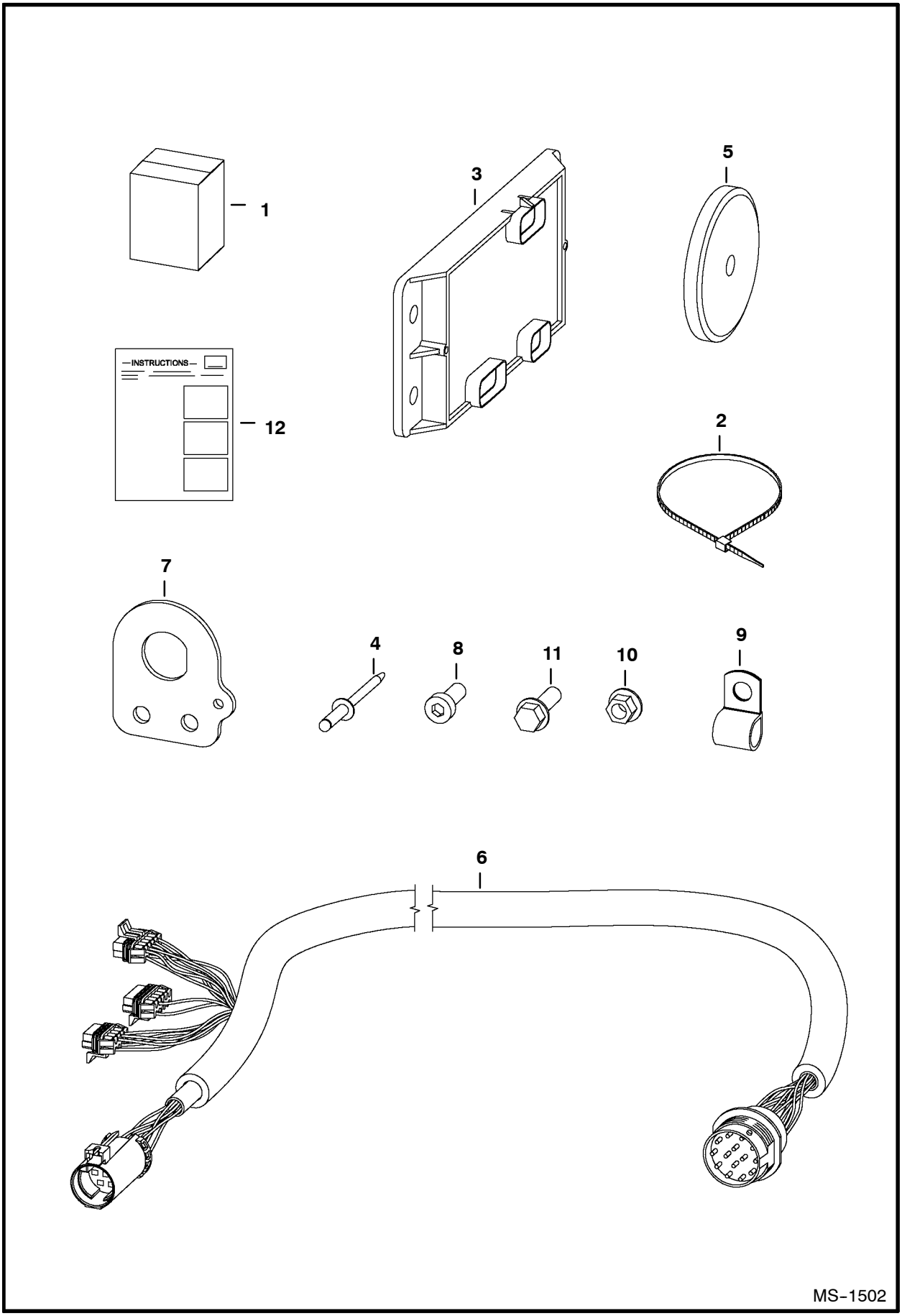

ELECTRICAL CONTROLS KIT (Cont'd)
(14 Pin Attachments)

Ref. No.	Part Number	Description	Remarks	Serial Number	Qty.
1	6733136	KIT			1
2	6624289	TIE			7
3	6678675	CONTROLLER			1
4	6704892	RIVET			1
5	6719448	MAGNET			2
6	6732730	HARNESS			1
7	6733144	MOUNT			1
8	25G-612	BOLT			2
9	30H-50	CLAMP			6
10	83D-6	NUT			2
11	84G-3112	BOLT			2
12	6901872	INSTRUCTIONS			1

ELECTRICAL CONTROLS KIT
(To Run ”G” Series Attachments & Old Attachments) (W/O Toggle Switch)

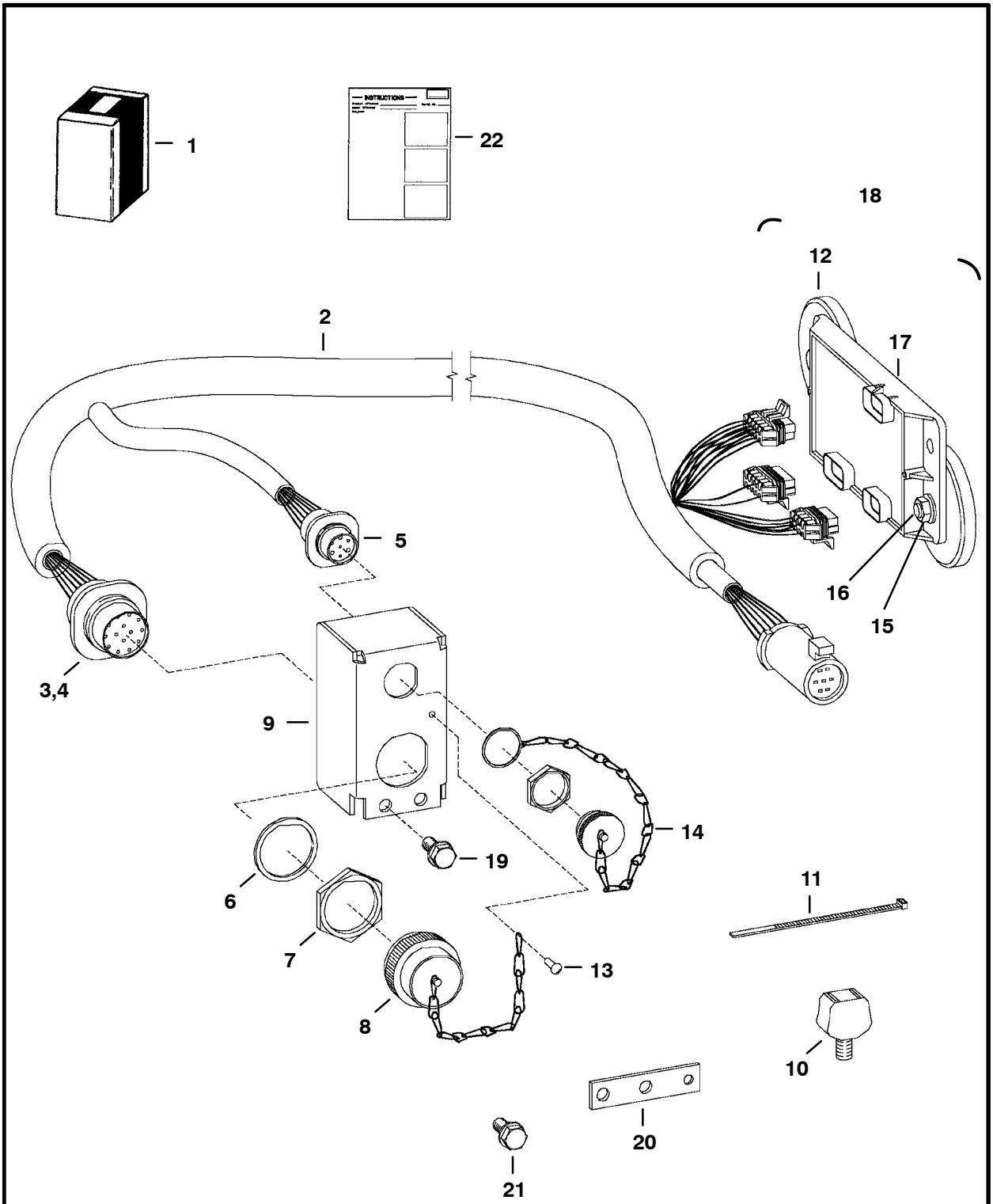

ELECTRICAL CONTROLS KIT (Cont'd)
(To Run "G" Series Attachments & Old Attachments) (W/O Toggle Switch)

Ref. No.	Part Number	Description	Remarks	Serial Number	Qty.
1	6727739	KIT			1
2	6729380	HARNESS	W/Ref. 3 - 7 & 14		1
3	6667569	CONNECTOR	Also Order (14) of Ref. 4		1
4	6664040	PIN	male		x
5	6674802	CONNECTOR	7-pin - See Page 233		1
	6669549	SOCKET	small		4
	6677136	SOCKET	large - 12 ga.		3
6	6664037	WASHER			2
7	6664036	NUT			2
8	6664035	CAP			1
9	6726945	MOUNT			1
10	6675281	MOUNT	773G only		1
11	6624289	TIE			8
12	6719448	MAGNET	100 lb. force		4
13	6704892	RIVET			1
14	6675026	CAP			2
15	83D-6	NUT			2
16	25G-612	BOLT			2
17	6678675	CONTROLLER			1
18	NAP	CONTROLLER	assy - Ref. 12 & 15 - 17 - Order Ref. 17 & (2) ea. of Ref. 12, 15 & 16		1
19	84G-3112	BOLT			2
20	6730291	BRACKET	873G & 883 only		1
21	35C-512	BOLT			2
22	6901116	INSTRUCTIONS			1

ELECTRICAL CONTROLS KIT
(7 Pin Attachments)

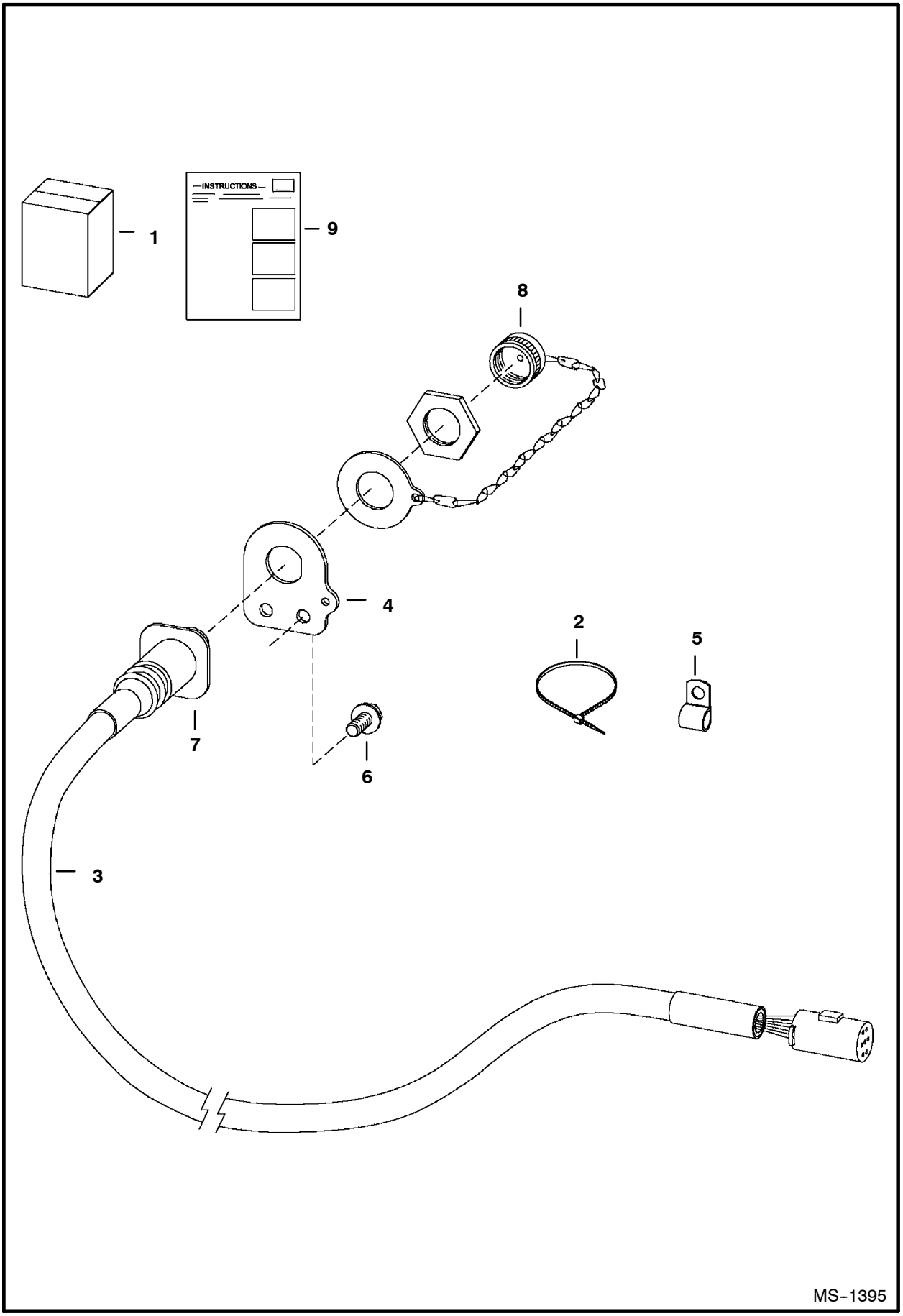

ELECTRICAL CONTROLS KIT (Cont'd)
(7 Pin Attachments)

Ref. No.	Part Number	Description	Remarks	Serial Number	Qty.
1	6733142	KIT	Ref. 2 - 8		1
2	6624289	TIE			4
3	6718426	HARNESS	W/Ref. 4		1
4	6718750	MOUNT			1
5	30H-27	CLAMP			6
6	84G-3112	BOLT			8
7	6674802	CONNECTOR	7-pin		1
	6669549	SOCKET	small		4
	6677136	SOCKET	large - 12 ga.		3
8	6675026	CAP			1
9	6674799	ADAPTER	heat shrink		1
10	6901871	INSTRUCTIONS			1

ENGINE MOUNT KIT
(For Rough Application)

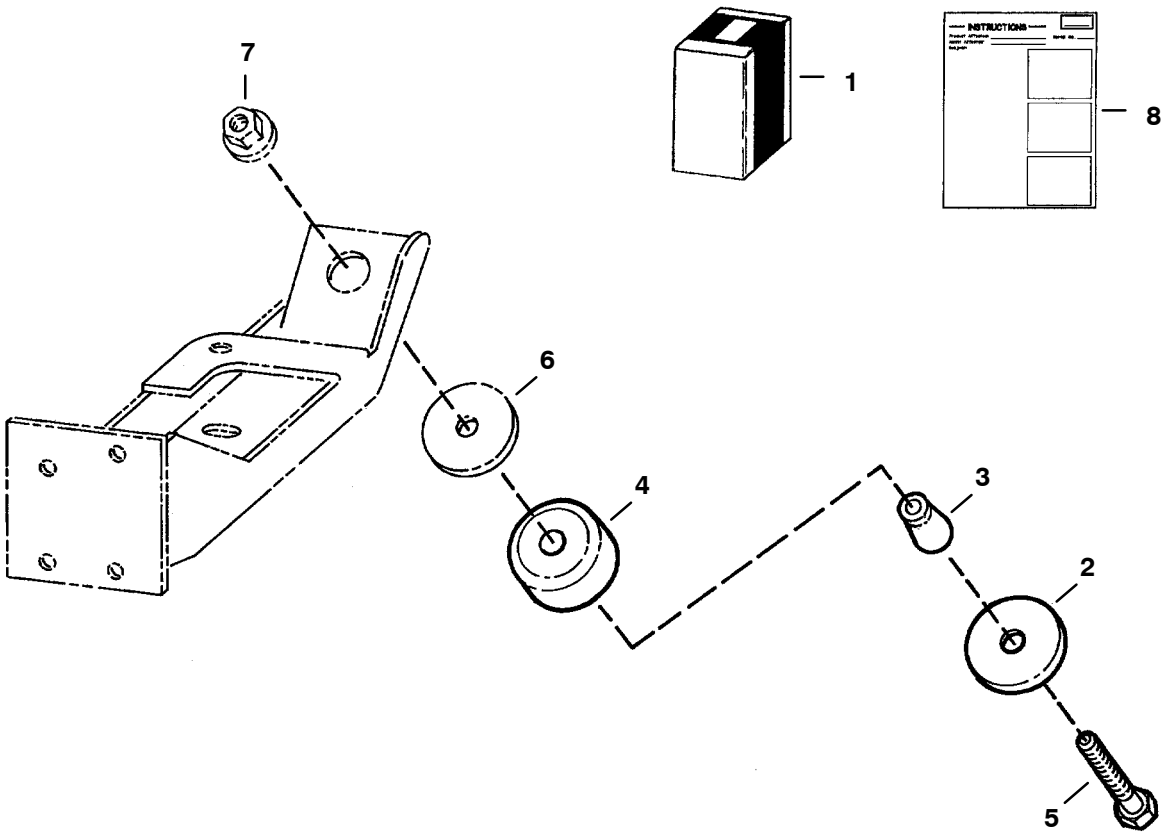

B-14623

ENGINE MOUNT KIT (Cont'd)
(For Rough Application)

Ref. No.	Part Number	Description	Remarks	Serial Number	Qty.
1	6711632	MOUNTING KIT	Ref. 2 - 8		1
2	6661787	WASHER			4
3	6715287	SPACER			4
4	6668104	MOUNT			4
5	43C-852	BOLT			4
6	6705106	WASHER			4
7	6652918	NUT			4
8	6724482	INSTRUCTION			1

EUROPEAN ACCESSORIES
(Road Kit)

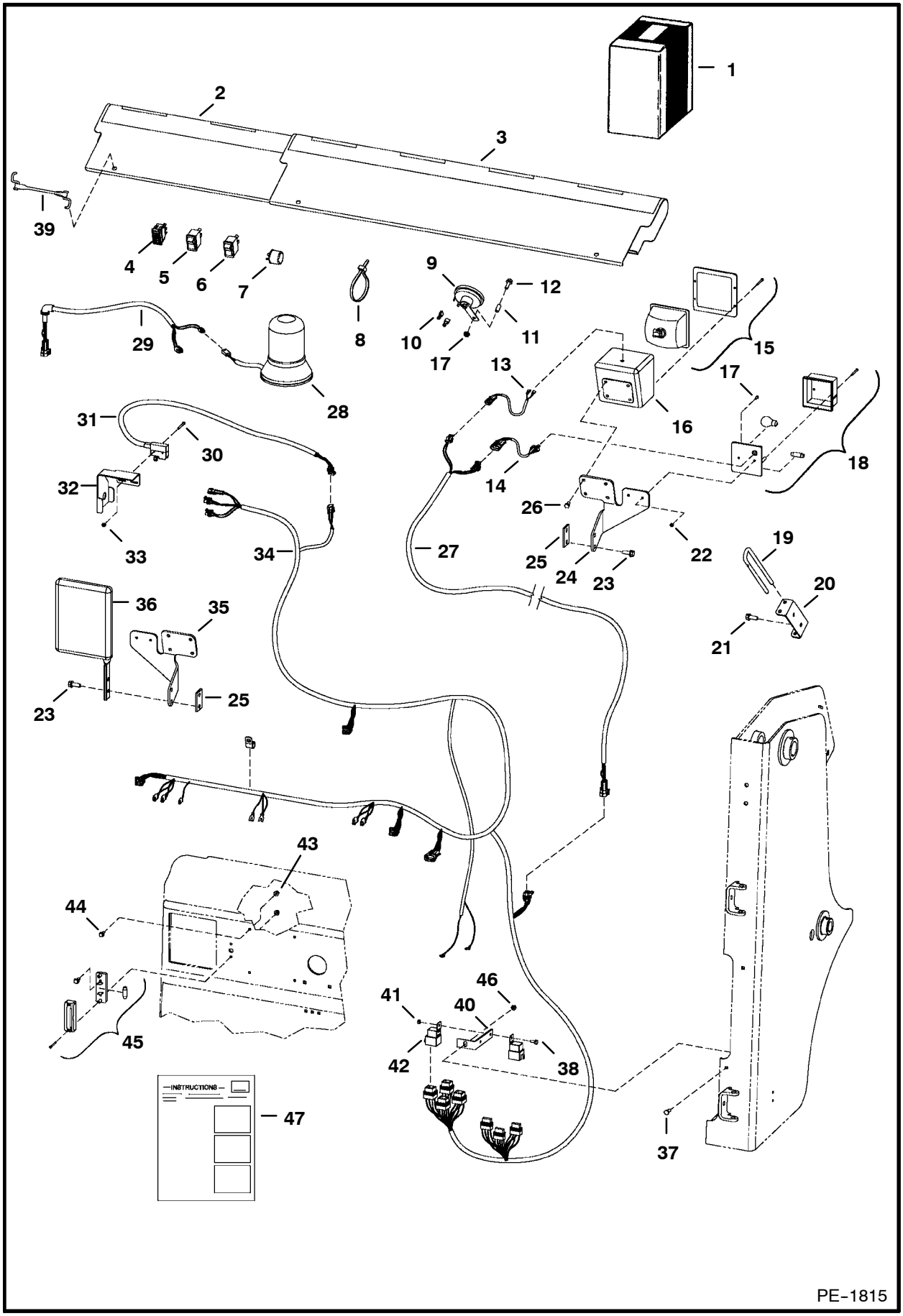

EUROPEAN ACCESSORIES (Cont'd)
(Road Kit)

Ref. No.	Part Number	Description	Remarks	Serial Number	Qty.
1	SALES	KIT			1
2	6713841	SHIELD	bucket		1
3	6714820	SHIELD	bucket		1
	6713840	DECAL			1
4	6676872	TURN SIGNAL			1
5	6668815	SWITCH	hazard		1
6	6668816	SWITCH	beacon		1
7	6557904	FLASHER			1
8	6624289	TIE			26
9	6671106	HORN			1
10	6675064	TERMINAL			2
11	6732206	SPACER			1
12	35C-536	BOLT			1
13	6713994	HARNESS	adapter - headlight		2
14	6713993	HARNESS	adapter - light		2
15	6665728	LIGHT	front		2
16	6707804	HOUSING			2
17	85G-808	BOLT			4
18	6665727	LIGHT	front turn		2
19	6731222	PIN	Bob-tach		1
20	6731973	HOLDER	pin		1
21	84G-3712	BOLT			2
22	12D-8	NUT			4
23	84G-3716	BOLT			4
24	6713151	MOUNT	light - R.H.		1
25	6735825	SPACER			2
26	17C-508	BOLT			8
27	6731239	HARNESS	boom light		2
28	6675523	BEACON	light		1
29	6718872	HARNESS	cab exterior		1
30	85G-616	BOLT			2
31	6661150	SWITCH			1
32	6713736	BRACKETS			1
33	12D-6	NUT			2
34	6726430	HARNESS	engine/tail - Italian		1
35	6713150	MOUNT	light - L.H.		1
36	6665860	KIT	side mirror		1
37	17C-512	BOLT			1
38	17C-410	BOLT			2
39	6731819	STRAP	rubber		3
40	6702650	MOUNT	fuse		1
41	85D-4	NUT			2
42	6670312	SOLENOID	magnetic		4
43	83D-4	NUT			4
44	35C-410	BOLT			4
45	6665729	LIGHT	license plate		1
46	55D-5	NUT			2
47	6901663	INSTRUCTIONS			1

EUROPEAN ACCESSORIES
(Sound Option)

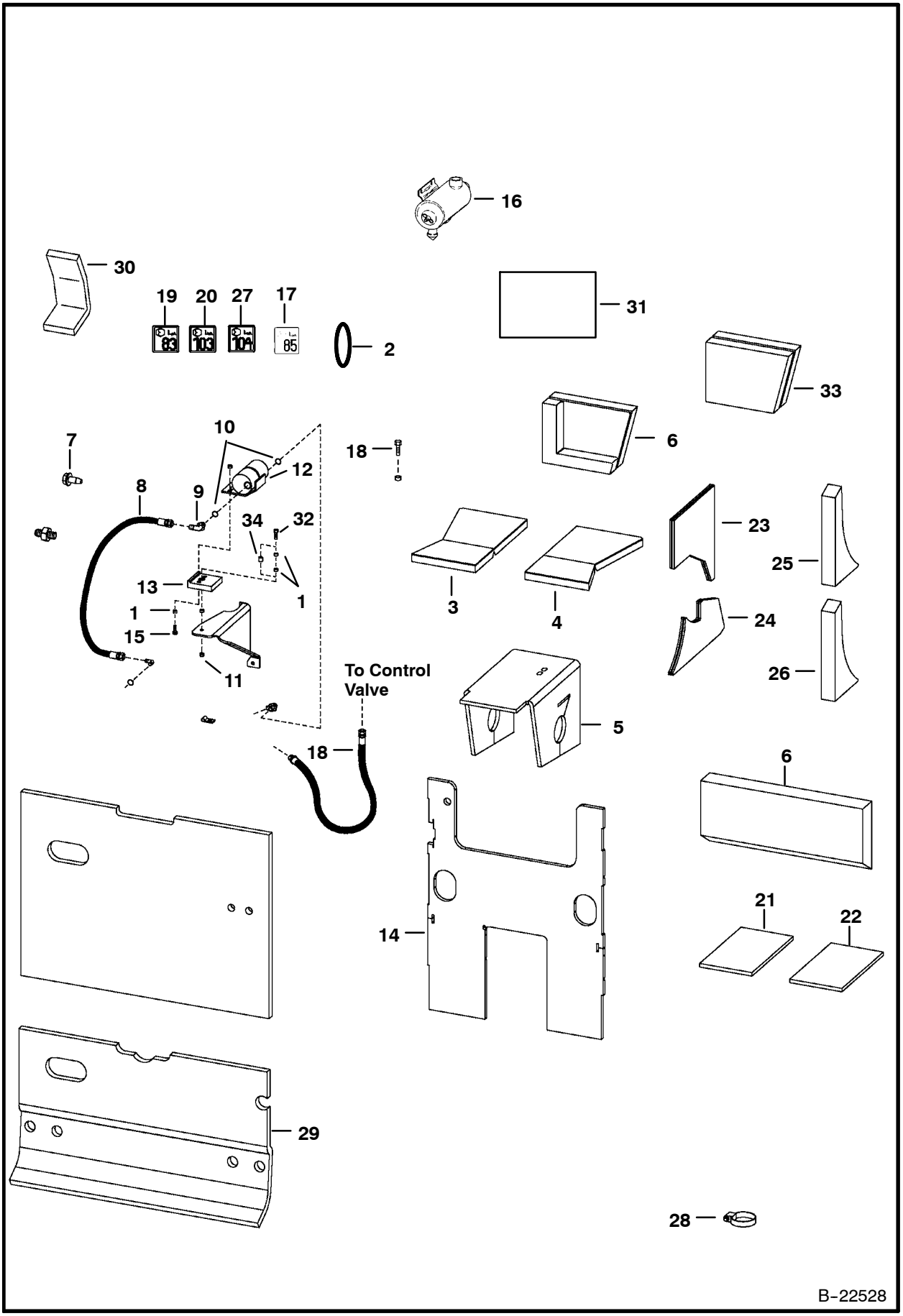

EUROPEAN ACCESSORIES (Cont'd)
(Sound Option)

Ref. No.	Part Number	Description	Remarks	Serial Number	Qty.
1	6562619	BUSHING			2
2	6703483	PULLEY			1
3	6732722	INSULATION	cross member - L.H.		1
4	6732723	INSULATION	cross member - R.H.		1
5	6715372	INSULATION	pedal		1
6	6725316	INSULATION	transmission		1
7	84G-3716	BOLT			2
8	6729144	HOSE	pump to hyd. muffler		1
9	17KB-1212	ELBOW	W/Ref. 10		1
10	79K-12	O-RING			x
11	85D-6	NUT			2
12	6659982	MUFFLER	hydraulic		1
13	6705333	MOUNT	rubber		1
14	6719372	INSULATION	steering panel		1
15	35C-616	BOLT			2
16	6735285	AIR CLEANER			1
17	6579385	DECAL	85db		1
18	6729155	HOSE	muffler to control valve		1
19	6579399	DECAL	83 db noise level		1
20	6579403	DECAL	103 db noise level		1
21	6705849	INSULATION	brace		1
22	6705850	INSULATION	brace		1
23	6719332	INSULATION	blower housing		1
24	6704769	INSULATION	blower housing		1
25	6707923	INSULATION	upright		1
26	6707924	INSULATION	upright		1
27	6731994	DECAL	104 db noise level		1
28	42H-44	CLAMP			2
29	6715106	INSULATION	rear door		1
30	6703331	INSULATION	air inlet		1
31	6715371	INSULATION	transmission		1
32	84G-3724	BOLT			1
33	6705848	INSULATION	transmission		2
34	6715744	BUSHING			1

FIRE EXTINGUISHER

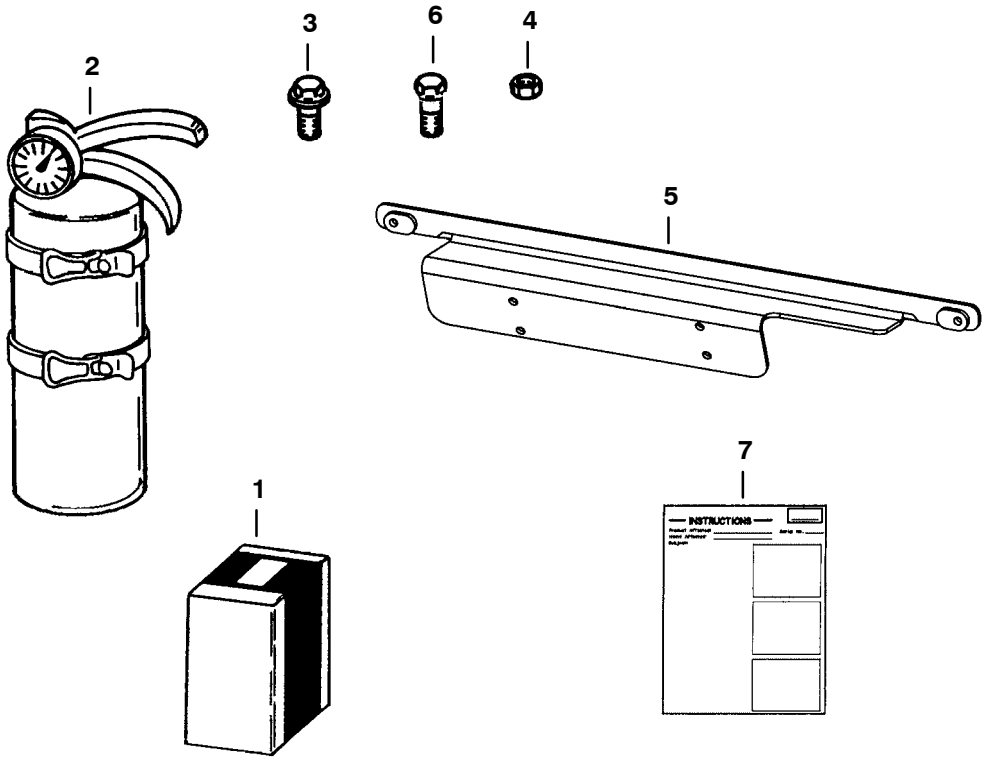

A-2386

FIRE EXTINGUISHER (Cont'd)

Ref. No.	Part Number	Description	Remarks	Serial Number	Qty.
1	6725898	KIT	fire extinguisher - Ref. 2 - 7		1
2	6675581	EXTINGUISHER			1
3	45G-1006	BOLT			4
4	12D-10	NUT			4
5	6725906	BRACKET			1
6	31C-410	BOLT			2
7	6901025	INSTRUCTIONS			1

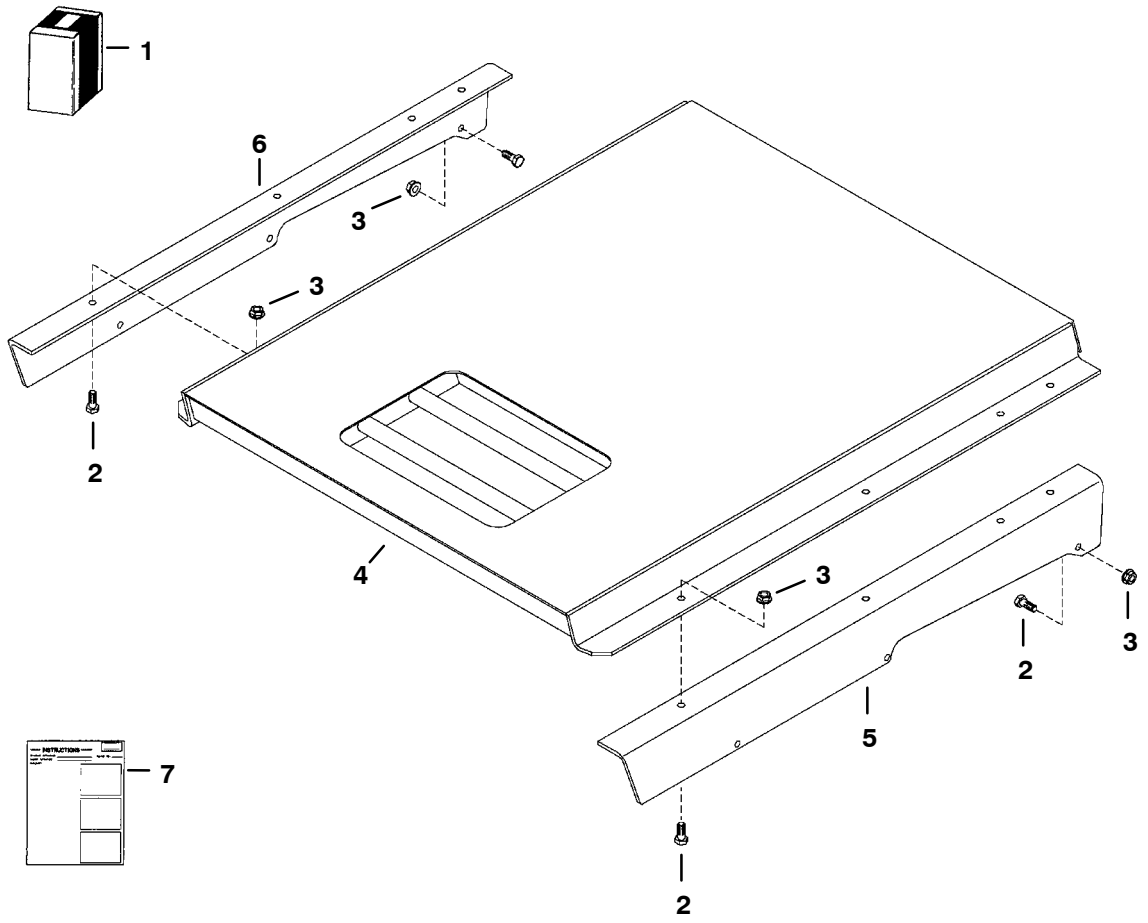

TS-2052

F.O.P.S. KIT (Cont'd)

Ref. No.	Part Number	Description	Remarks	Serial Number	Qty.
1	6718924	KIT	Ref. 2 - 7		1
2	17C-616	BOLT			14
3	83D-6	NUT			14
4	6702402	SHIELD			1
5	6718833	BRACKET	L.H.		1
6	6718834	BRACKET	R.H.		1
7	6720592	INSTRUCTIONS			1

FLASHER LIGHTS
(4-Way/Turn Indicators)

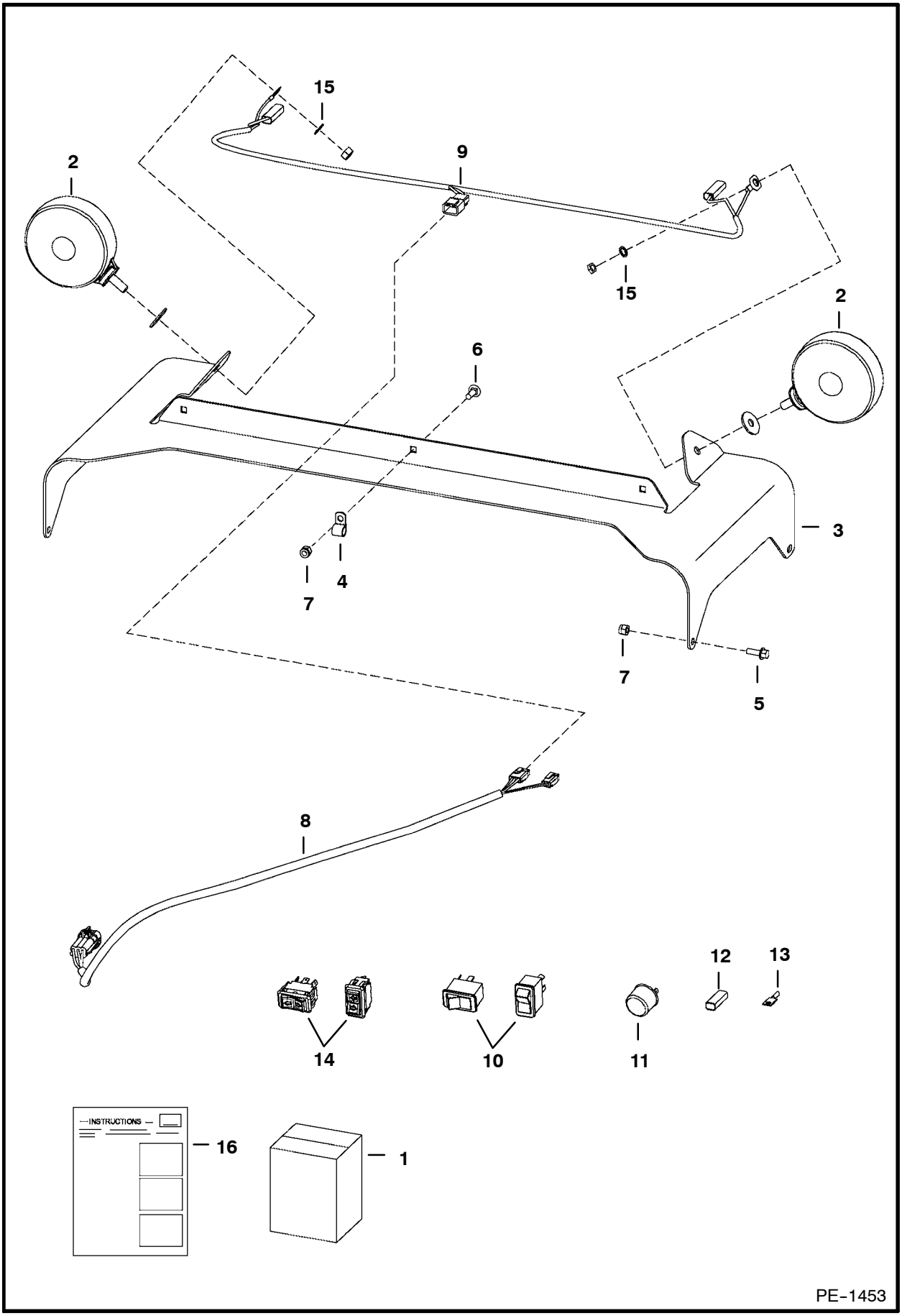

FLASHER LIGHTS (Cont'd)
(4-Way/Turn Indicators)

Ref. No.	Part Number	Description	Remarks	Serial Number	Qty.
1	6718411	KIT	Ref. 2, 3 & 5-16 - If loader is equipped W/Deluxe Cab Option also order 6727468 Harness -		
			See Page 187		1
2	6517516	LIGHT			2
3	6718326	MOUNT			1
4	30H-21	CLAMP	Not in Kit		3
5	35C-412	BOLT			4
6	37C-412	BOLT			3
7	59D-4	NUT			7
8	6718872	HARNESS	ext. cab		1
9	6718873	HARNESS	4-way flasher		1
10	6665316	SWITCH	horizontal		1
	6668815	SWITCH	vertical		1
11	6557904	FLASHER			1
12	614142	SLEEVE			1
13	6515131	TERMINAL			1
14	6675835	TURN SIGNAL	dash - horizontal		1
	6676872	TURN SIGNAL	dash - vertical		1
15	6E-5	WASHER			1
16	6900848	INSTRUCTIONS			1

GAS SPRING KIT

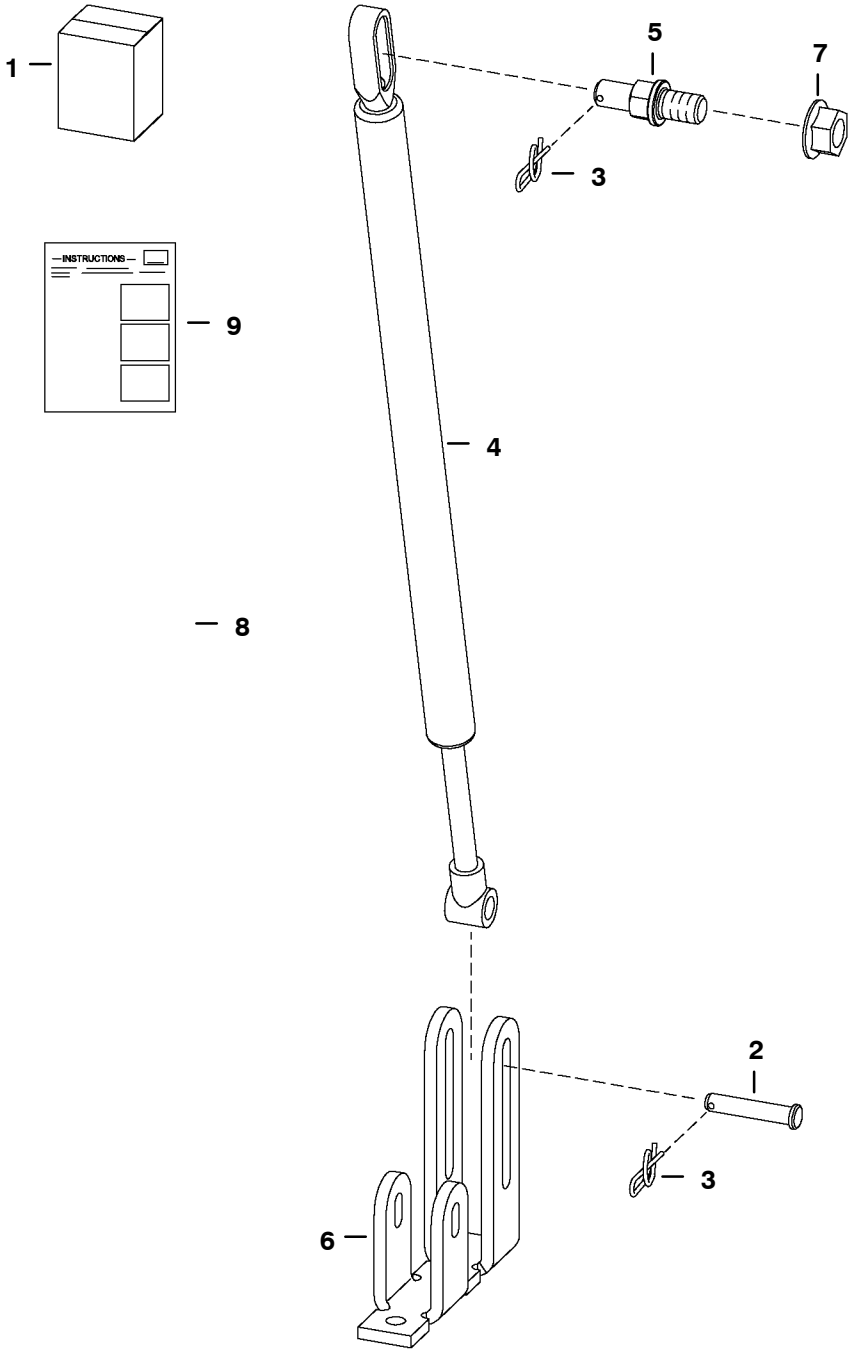

PE-1710

GAS SPRING KIT (Cont'd)

Ref. No.	Part Number	Description	Remarks	Serial Number	Qty.
1	6732928	KIT			1
2	6567743	PIN			1
3	6631418	PIN			2
4	6678292	GAS SPRING			1
5	6719064	MOUNT			1
6	6729141	MOUNT			1
7	97D-8	NUT			1
8	21G-804	BOLT			1
9	6901816	INSTRUCTIONS			1

HAND CONTROL KIT
(W/Push Button Float)

NOTE: Also order 6900842 O/M with revised date of 6/00 or newer.

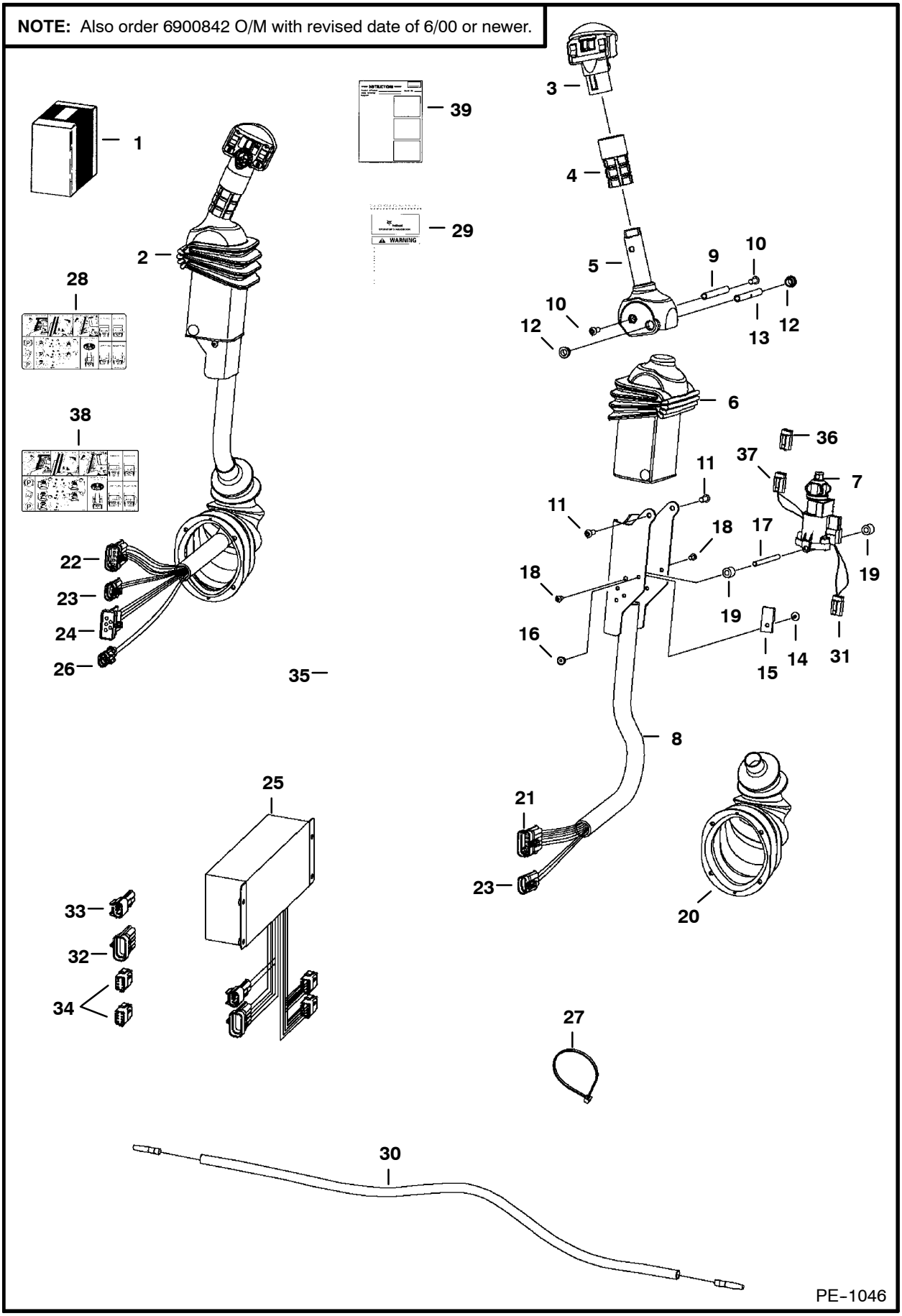

HAND CONTROL KIT (Cont'd)
(W/Push Button Float)

Ref. No.	Part Number	Description	Remarks	Serial Number	Qty.
1	6727298	KIT	SEE NOTE		1
2	6684913	LEVER	tilt - R.H.		1
	6684914	LEVER	lift - L.H.		1
3	NAP	HANDLE	tilt - R.H. - SEE BTI 335		1
	6680417	HANDLE	lift - L.H.		1
4	NAP	GRIP	Order 6702621 Grip & cut to		
			2.8" long		2
5	6729594	HANDLE	R.H.		1
	6729595	HANDLE	L.H.		1
6	6680471	COVER			2
7	6684910	SENSOR			2
	6670706	CONNECTOR	3-pin		1
	6670714	PIN			3
	6670710	LOCK			1
8	6680481	CHANNEL	R.H.		1
	6680480	CHANNEL	L.H.		1
9	6680469	SPACER			1
10	6727065	BOLT			2
11	25GT-410	BOLT			8
12	6702990	BUSHING			4
13	NAP	SPACER			4
14	6665321	RIVET	male		2
15	6665000	CLIP			2
16	6665322	RIVET	female		2
17	6719834	SPACER	threaded		2
18	6727065	BOLT			4
19	6719835	SLEEVE			4
20	6532127	BOOT			2
21	6640692	CONNECTOR	10-pin		1
	6640690	PIN			8
	6640694	LOCK			1
	6641176	SEAL			8
	6646582	PLUG	cavity		2
22	6640692	CONNECTOR	10-pin		1
	6640690	PIN			6
	6640694	LOCK			1
	6641176	SEAL			6
	6646582	PLUG	cavity		4
23	6640699	CONNECTOR	3-pin		2
	6640690	PIN			3
	6641176	SEAL			3
	6640700	LOCK			3
24	6667144	CONNECTOR	5-pin		1
	6640690	PIN			3
	6641176	SEAL			3
	6646582	PLUG	cavity		1
	6667145	LOCK			1
25	6676153	CONTROLLER			1
26	6641179	CONNECTOR	2-pin		1
	6640690	PIN			2
	6641176	SEAL			2
	6641180	LOCK			1

HAND CONTROL KIT (Cont'd)
(W/Push Button Float)

NOTE: Also order 6900842 O/M with revised date of 6/00 or newer.

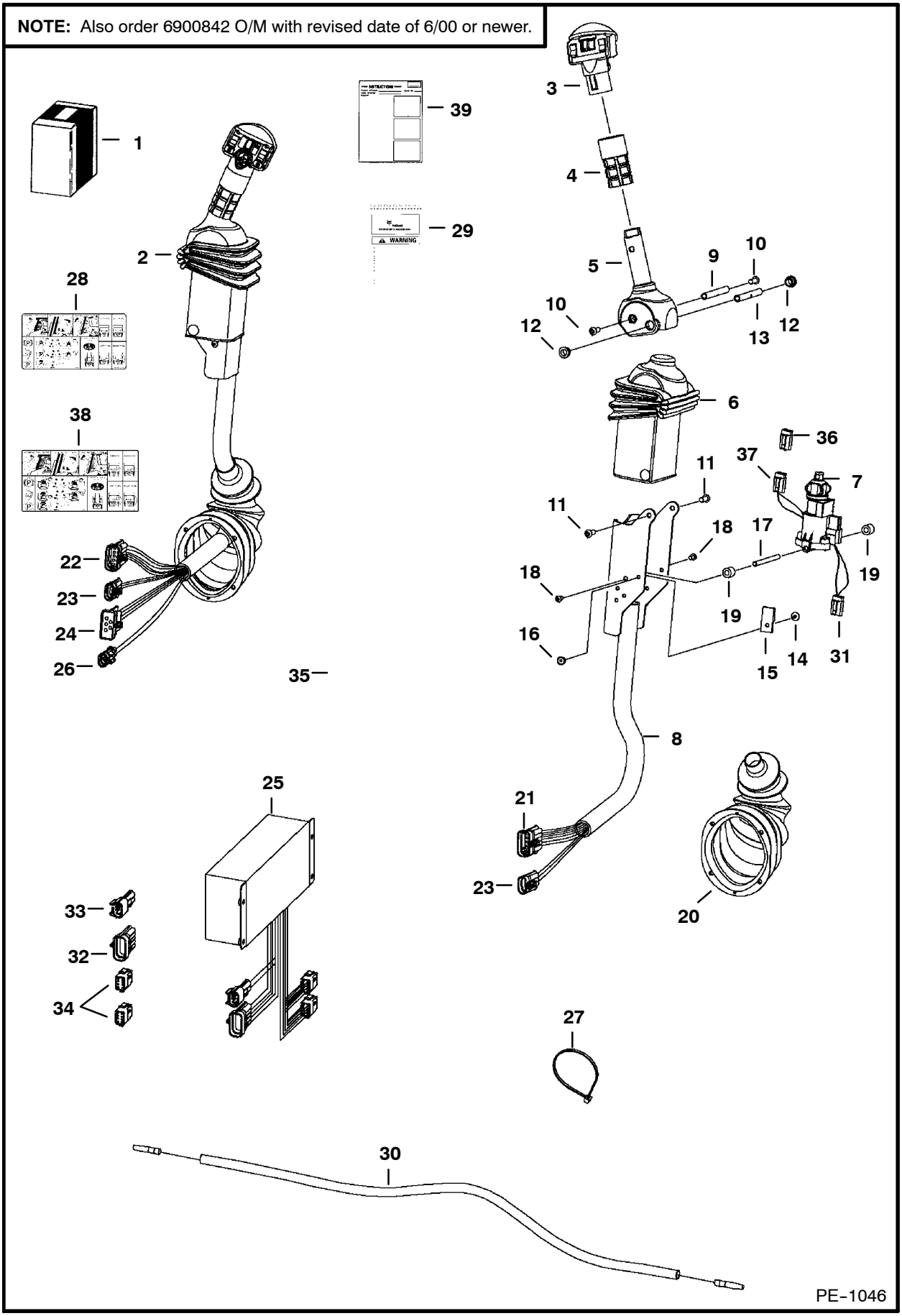

HAND CONTROL KIT (Cont'd)
(W/Push Button Float)

Ref. No.	Part Number	Description	Remarks	Serial Number	Qty.
27	6610510	TIE			11
28	6727155	DECAL			1
29	6719563	KIT	handbook		1
30	6727328	HARNESS			1
31	6670707	CONNECTOR	3-pin		1
	6670715	PIN			3
	6670711	LOCK			1
32	6640692	CONNECTOR	10-pin		1
	6640690	PIN			9
	6640694	LOCK			1
	6641176	SEAL			9
	6646582	PLUG	cavity		1
33	6648307	CONNECTOR	2-pin		1
34	6670709	CONNECTOR	8-pin		2
35	6728742	HARNESS	W/capacitor		1
36	6677364	CONNECTOR	3-pin		1
	6676640	SEAL			3
37	6676870	CONNECTOR	3-pin		1
	6676640	SEAL			3
	6670715	PIN			1
	6670711	LOCK			1
38	6727243	DECAL			1
39	6901100	INSTRUCTIONS			1

HEATER KIT

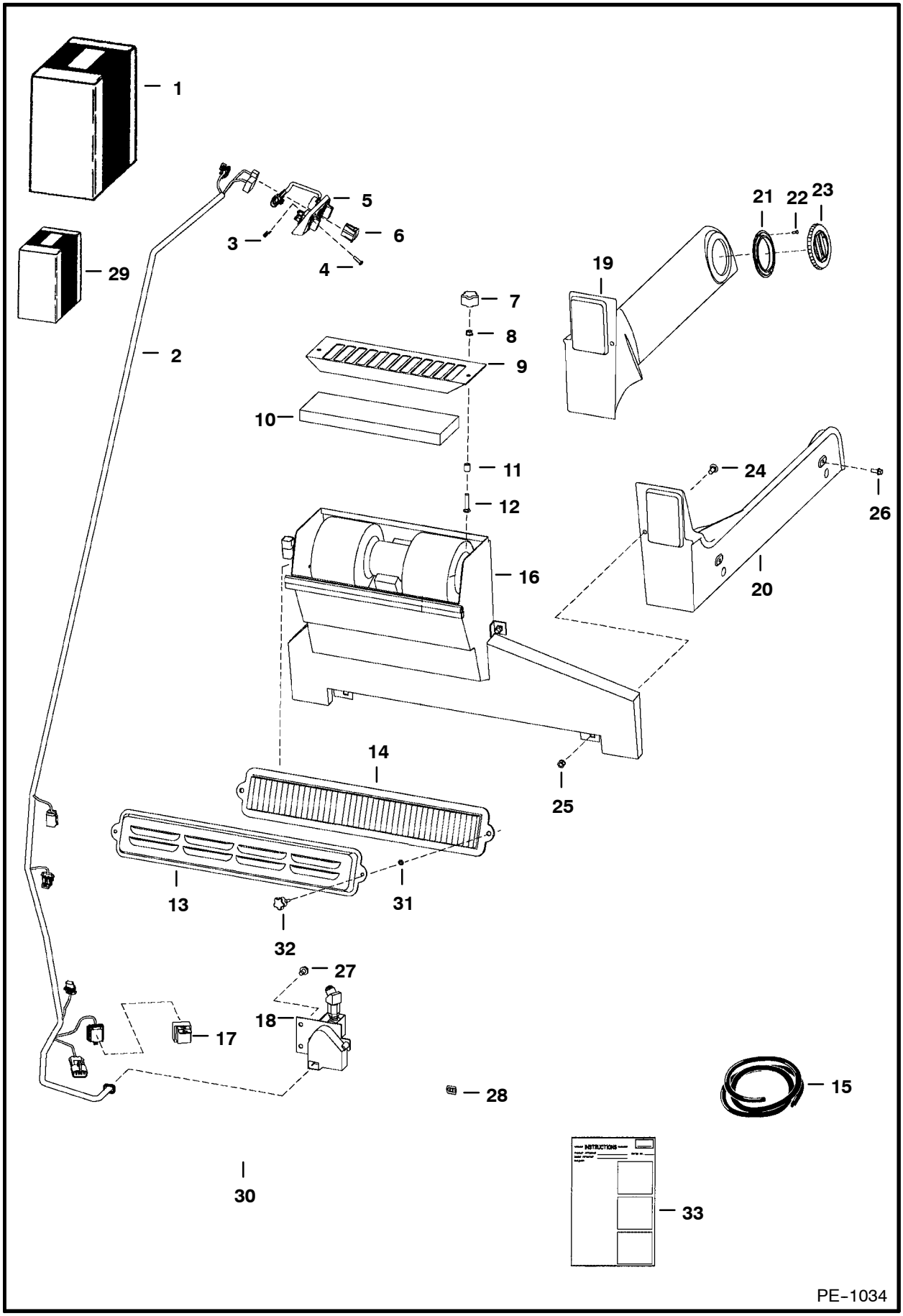
1
29
2
3
4
5
6
7
8
9
10
11
12
16
19
21
22
23
20
24
26
25
14
13
31
32
27
18
17
28
15
30
33
INSTRUCTIONS
PE-1034

HEATER KIT (Cont'd)

Ref. No.	Part Number	Description	Remarks	Serial Number	Qty.
1	6718803	HEATER KIT	Ref. 2-12, 16-28 & 30-33		1
2	6725933	HARNESS	hvac-W/Ref. 17		1
	6725273	HARNESS	AHC		1
3	6669091	CLIP	retainer		3
4	6669224	BOLT			3
5	6674228	PANEL	control		1
	6640699	CONNECTOR			1
	6718579	DECAL			1
	6718887	PANEL	A/C		1
	6675176	SWITCH	blower		1
	6675177	KNOB			1
	6675846	POTENTIOMETER			1
6	6675181	PLUG	switch hole		1
7	6681614	KNOB			2
8	83D-4	NUT			2
9	6718175	SCREEN	filter		1
10	6678207	FILTER	recirculation		1
11	6718837	SPACER			2
12	37C-424	BOLT			2
13	6727847	COVER			1
14	6677983	FILTER			1
15	6513152	SEAL	bulk - Sold Per Foot		x
16		HEATER	See Page 261		1
17	6670312	SOLENOID	relay		1
18	6682459	VALVE			1
	6640699	CONNECTOR			1
	6675175	BRACKET			1
	6675172	BRACKET			1
	6675173	ACTUATOR	pig tail		1
	6680054	ACTUATOR	square plug		1
	6675174	BODY			1
19	6717644	DUCT	L.H.		1
20	6717643	DUCT	R.H.		1
21	6675179	FLANGE			4
22	57G-608	SCREW			16
23	6674231	VENT	round		4
24	37C-512	BOLT			4
25	59D-5	NUT			4
26	35C-410	BOLT			4
27	84G-3110	BOLT			2
28	774220	NUT	spring		2
29	6725513	PACKAGE	decal		1
30	NAP	SEAL	16.25"(412,8 mm) long - Order Ref. 15		1
31	6676516	NUT	push		2
32	6726386	KNOB			2
33	6900850	INSTRUCTIONS			1

HEATER

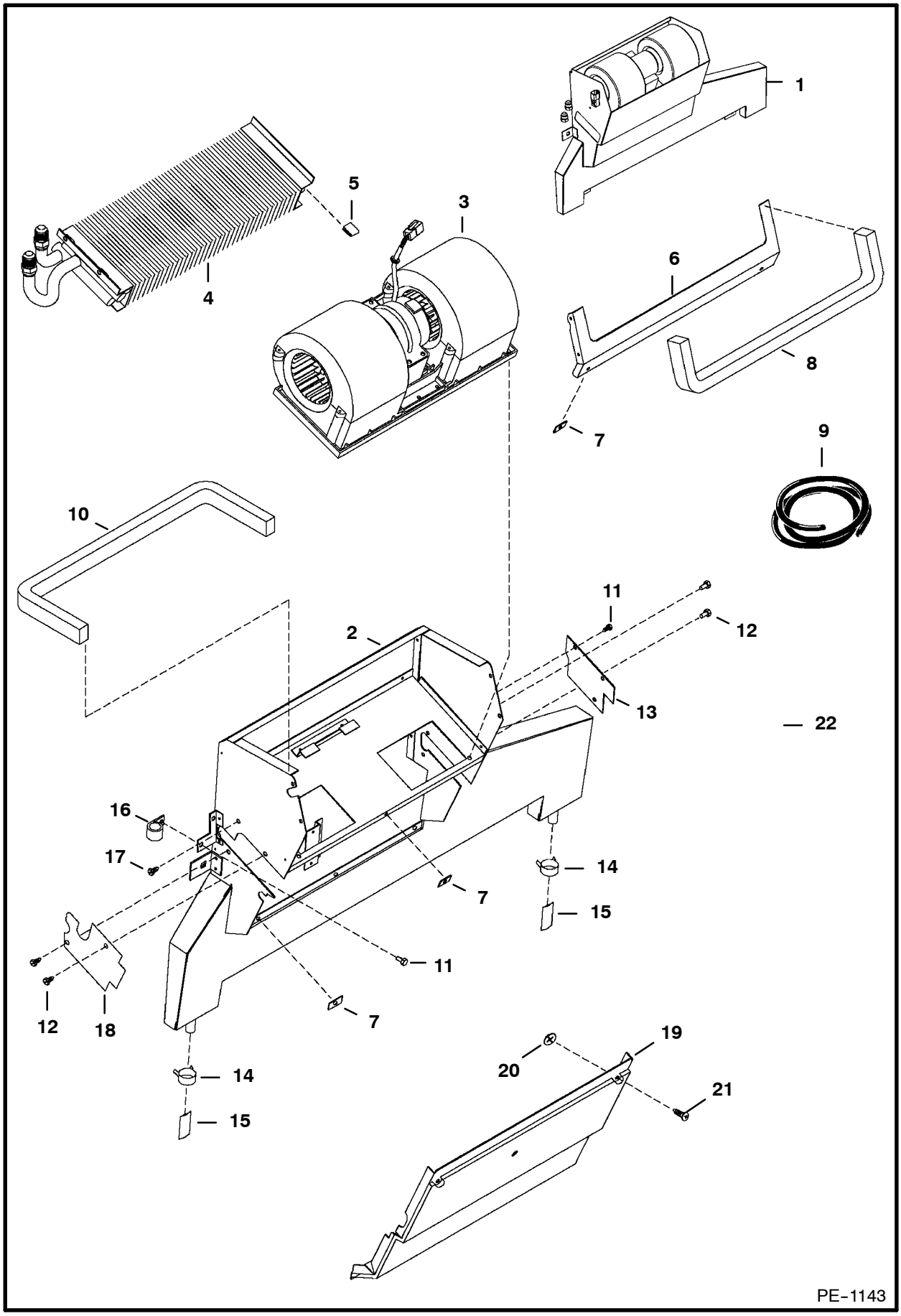
1
5
3
4
6
8
7
9
10
11
12
2
13
22
16
17
14
7
15
11
12
18
7
14
15
19
20
21
PE-1143

HEATER (Cont'd)

Ref. No.	Part Number	Description	Remarks	Serial Number	Qty.
1	6676562	HEATER	Ref. 2-22		1
2	6677108	HOUSING			1
3	6675497	BLOWER	assy		1
4	NAP	COIL	heater		1
5	6676539	CLIP			3
6	6678152	FLANGE			1
7	6677115	RECEPTACLE			6
8	NAP	SEAL	22.6"(575mm) long - Order Ref. 9		1
9	6677111	SEAL	bulk - Sold Per Foot		x
10	NAP	SEAL	25"(635mm) long - Order Ref. 9		1
11	6677119	SCREW	sheetmetal		7
12	6677118	SCREW	w/washer		4
13	6677120	COVER			1
14	6675510	CLAMP	drain hose		2
15	6675511	DRAIN VALVE			2
16	6675512	CLAMP	hose		2
17	6675513	GROMMET			1
18	6677504	COVER			1
19	NAP	COVER	Order Ref. 6 (6678152 Flange) & 6678151 Cover		1
20	6677116	RETAINER			6
21	6677117	SCREW	captive		6
22	6676606	SPACER			1

HEATER
(Blower Seal Kit)

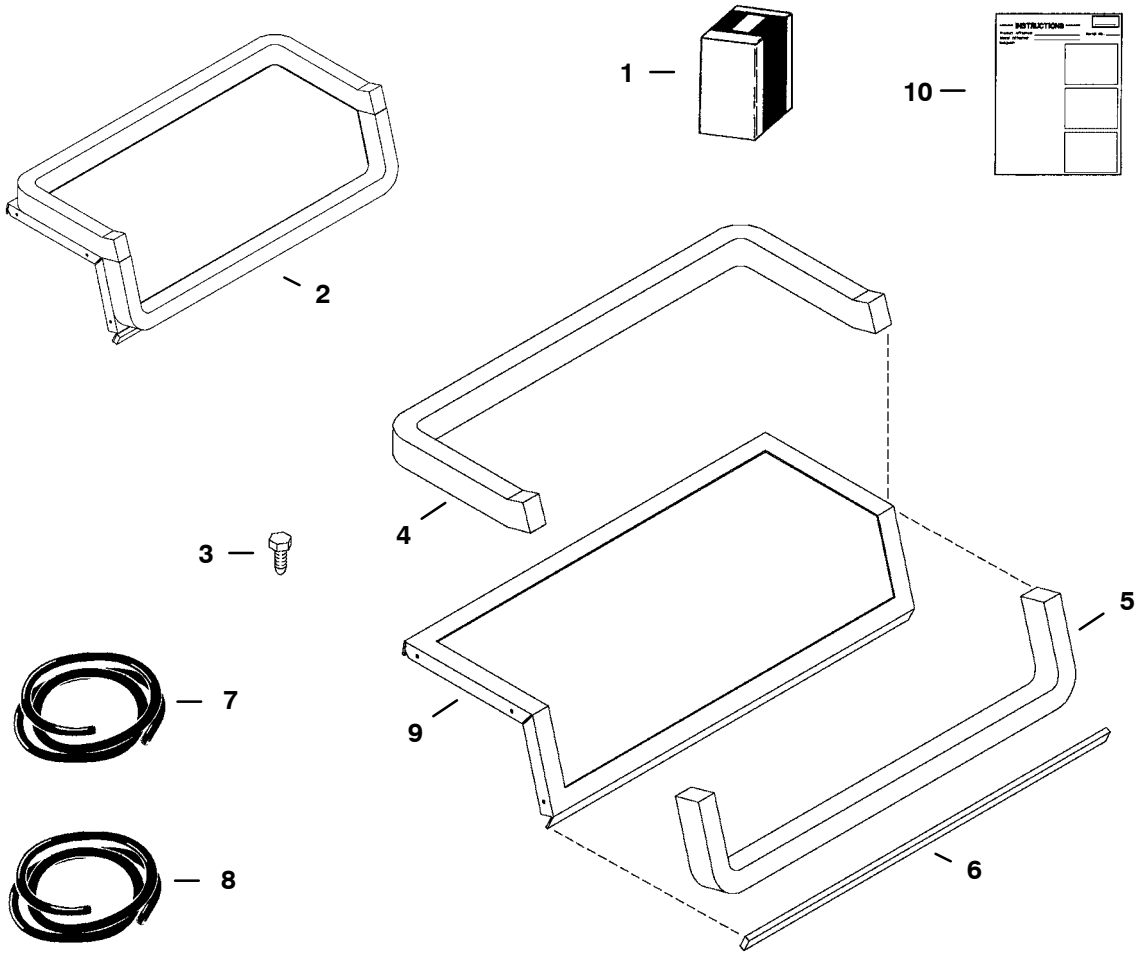

PE-1151

HEATER (Cont'd)
(Blower Seal Kit)

Ref. No.	Part Number	Description	Remarks	Serial Number	Qty.
1	6728567	KIT	blower seal - W/Ref. 2, 3 & 10		1
2	NSS	FLANGE SEAL	assy - Ref. 4, 5, 6 & 9 - Order Ref. 1		1
3	6726621	SCREW			7
4	NAP	SEAL	27"(686mm) long - Order Ref. 8		1
5	NAP	SEAL	21"(534mm) long - Order Ref. 8		1
6	NAP	SEAL	15"(384mm) long - Order Ref. 7		1
7	6675611	SEAL	bulk - Sold Per Foot		x
8	6677111	SEAL	bulk - Sold Per Foot		x
9	NSS	FLANGE	Order Ref. 1		1
10	6901213	INSTRUCTIONS			1

HEATER
(Heater Coil Kit)

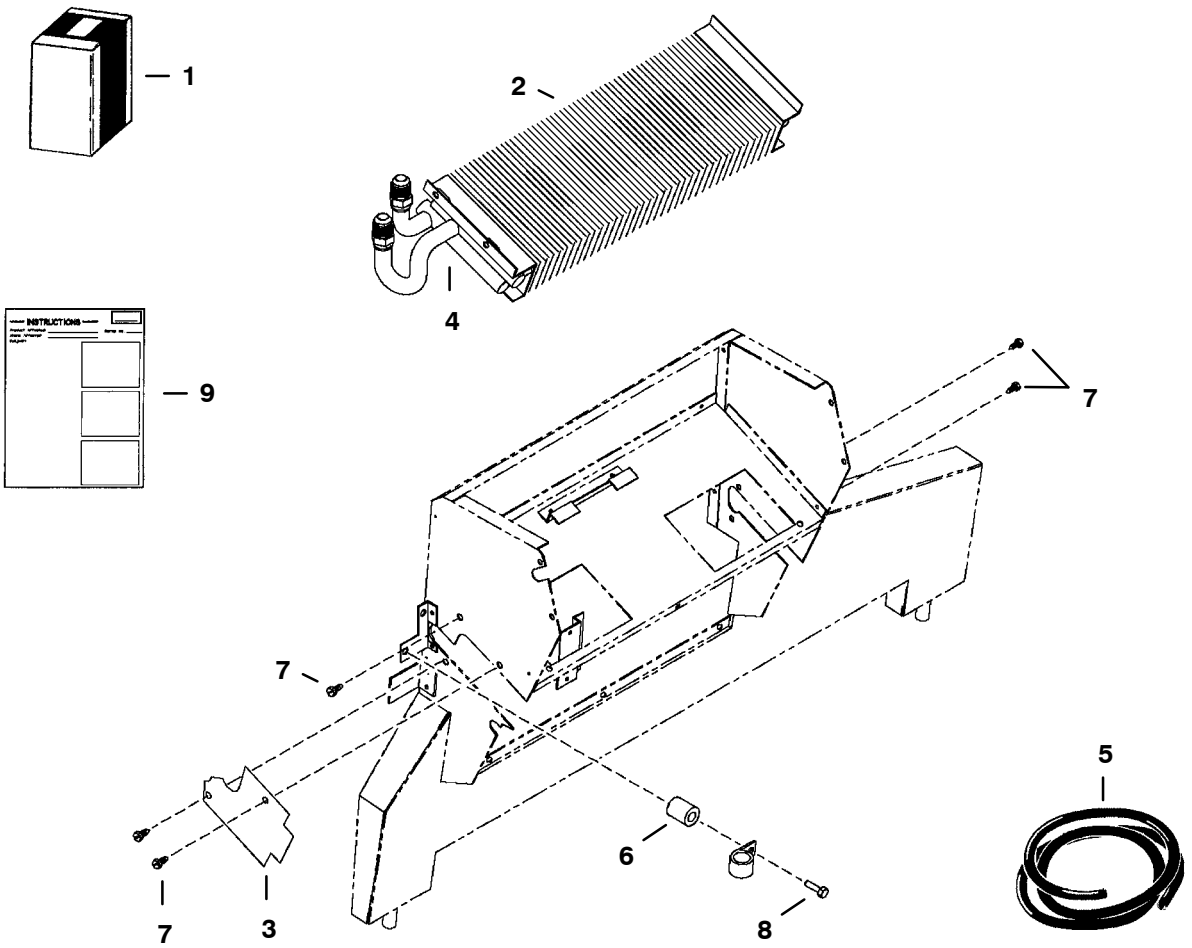

PE-1228

HEATER (Cont'd)
(Heater Coil Kit)

Ref. No.	Part Number	Description	Remarks	Serial Number	Qty.
1	6727786	KIT	heater coil - W/Ref. 2-9		1
2	NSS	HEATER COIL	Order Ref. 1		1
3	6677504	COVER	.279"(7,1mm) thickness		1
4	NAP	INSULATION	6"(152.4mm) long - Order Ref. 5		1
5	6676538	INSULATION	bulk - Sold Per Foot		x
6	6676606	SPACER			1
7	6726621	SCREW			2
8	6676653	SCREW			1
9	6901120	INSTRUCTIONS			1

HEATER PLUMBING KIT

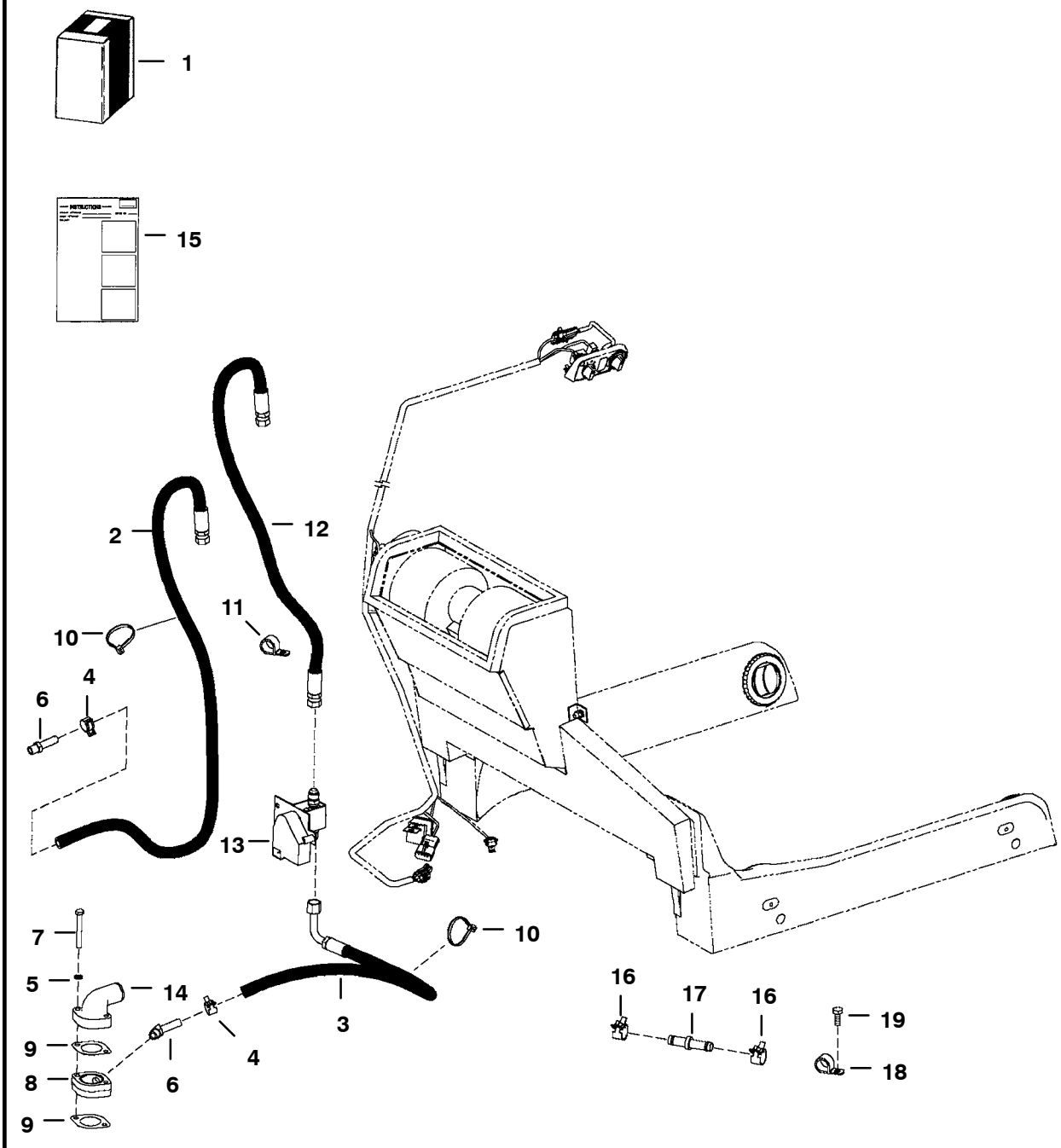

HEATER PLUMBING KIT (Cont'd)

Ref. No.	Part Number	Description	Remarks	Serial Number	Qty.
1	6731158	KIT	Ref. 2-5 - For Heater Kit See Page 259		1
2	6730996	HOSE	W/10" spring guard		1
3	6730998	HOSE			1
4	5HM-20	CLAMP	hose		2
5	6EM-80	WASHER			2
6	6731085	ELBOW	45°		2
7	1CM-870	BOLT			2
8	6731049	ADAPTER			1
9	6732199	GASKET	thermostat		2
10	6624289	TIE			3
11	30H-45	CLAMP	insulated		1
12	6719144	HOSE	34"(863,6 mm) long - W/spring guard		1
13		VALVE	Not in Kit - See Page 259		1
14		HOUSING	thermostat - Not in Kit - See Page 161		1
15	6900850	INSTRUCTIONS	Not in Kit		1
16	30H-50	CLAMP	Not in Kit - Used in factory option only		1
17	6732023	CONNECTOR	Not in Kit - Used in factory option only		1
18	5HM-20	CLAMP	Not in Kit - Used in factory option only		2
19	84G-3712	BOLT	Not in Kit - Used in factory option only		1

HORN KIT

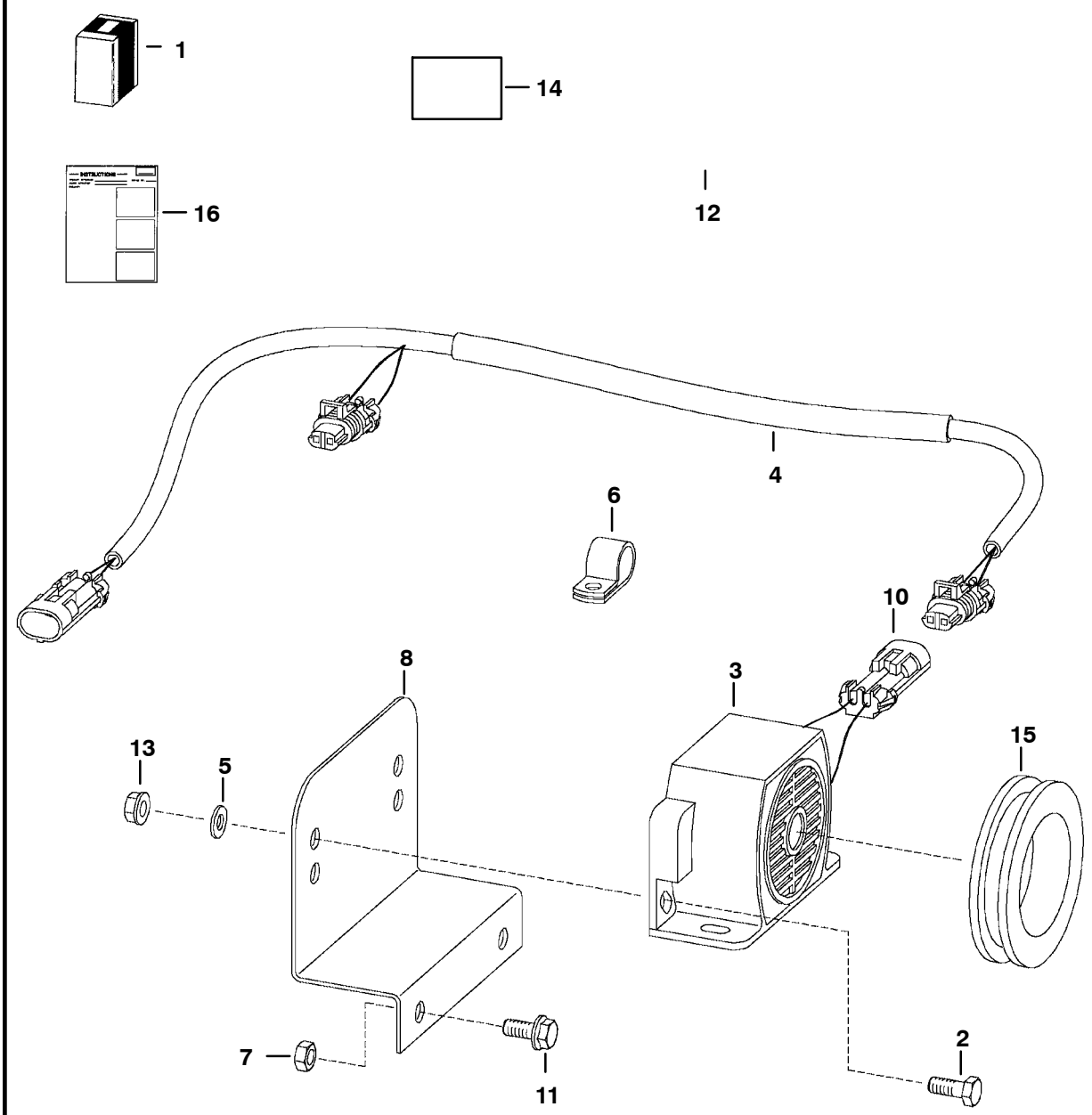

HORN KIT (Cont'd)

Ref. No.	Part Number	Description	Remarks	Serial Number	Qty.
1	6719043	HORN KIT	Ref. 2 - 16		1
2	17C-410	BOLT			2
3	6675099	HORN			1
4	6719151	HARNESS	113"(2870,2 mm) long		1
5	25E-13	WASHER			1
6	30H-23	CLAMP			1
7	83D-5	NUT			2
8	6733970	MOUNT			1
9	6641180	LOCK	2 - pin		2
	6640700	LOCK	3 - pin		2
10	6641179	CONNECTOR	2 - pin		2
	6640699	CONNECTOR	3 - pin		2
11	35C-512	BOLT			2
12	6680414	HANDLE ASSY.			1
	6640690	PIN			5
	6641176	SEAL			5
13	83D-4	NUT			2
14	6703727	DECAL			1
15	6577545	GROMMET			1
16	6900913	INSTRUCTIONS			1

LIFT KIT
(Four Point - .75" Thick Lift Eye)

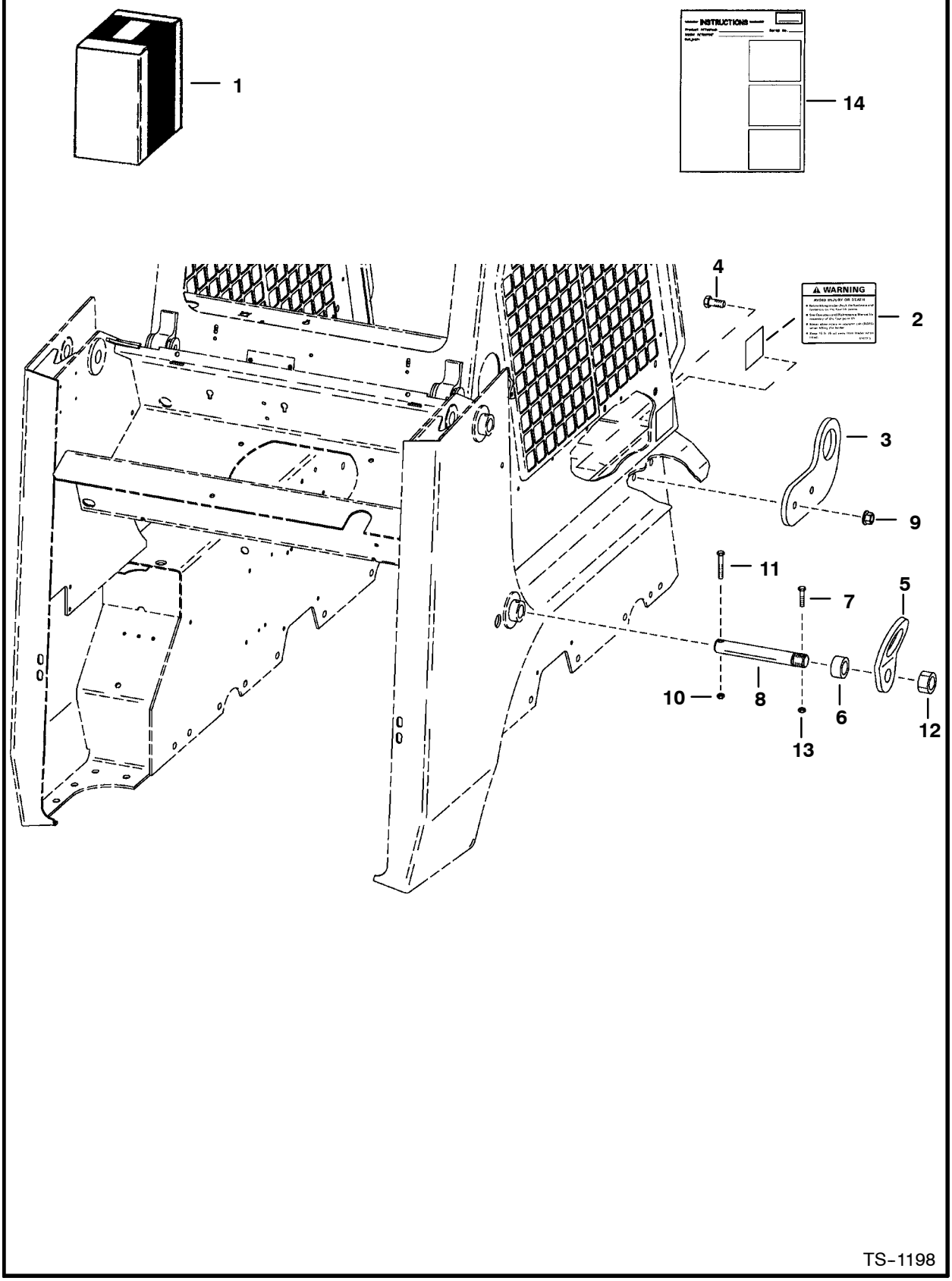

LIFT KIT (Cont'd)
(Four Point - .75" Thick Lift Eye)

Ref. No.	Part Number	Description	Remarks	Serial Number	Qty.
1	6725224	KIT	Ref. 2 - 14		1
2	6726423	DECAL			2
3	6719490	LIFT EYE	front		2
4	17C-1028	BOLT			4
5	6706825	LIFT EYE	rear		2
6	6702921	SPACER	1.00" thick - 751 & 753		2
	6719906	SPACER	.70" thick - 763		2
7	17C-540	BOLT			2
8	6706807	PIN			2
9	83D-10	NUT			4
10	85D-6	NUT	Not in Kit		2
11	17C-640	BOLT	Not in Kit		2
12	4D-20	NUT			2
13	87D-5	NUT			2
14	6722872	INSTRUCTIONS			1

LIFT KIT
(Single Point)

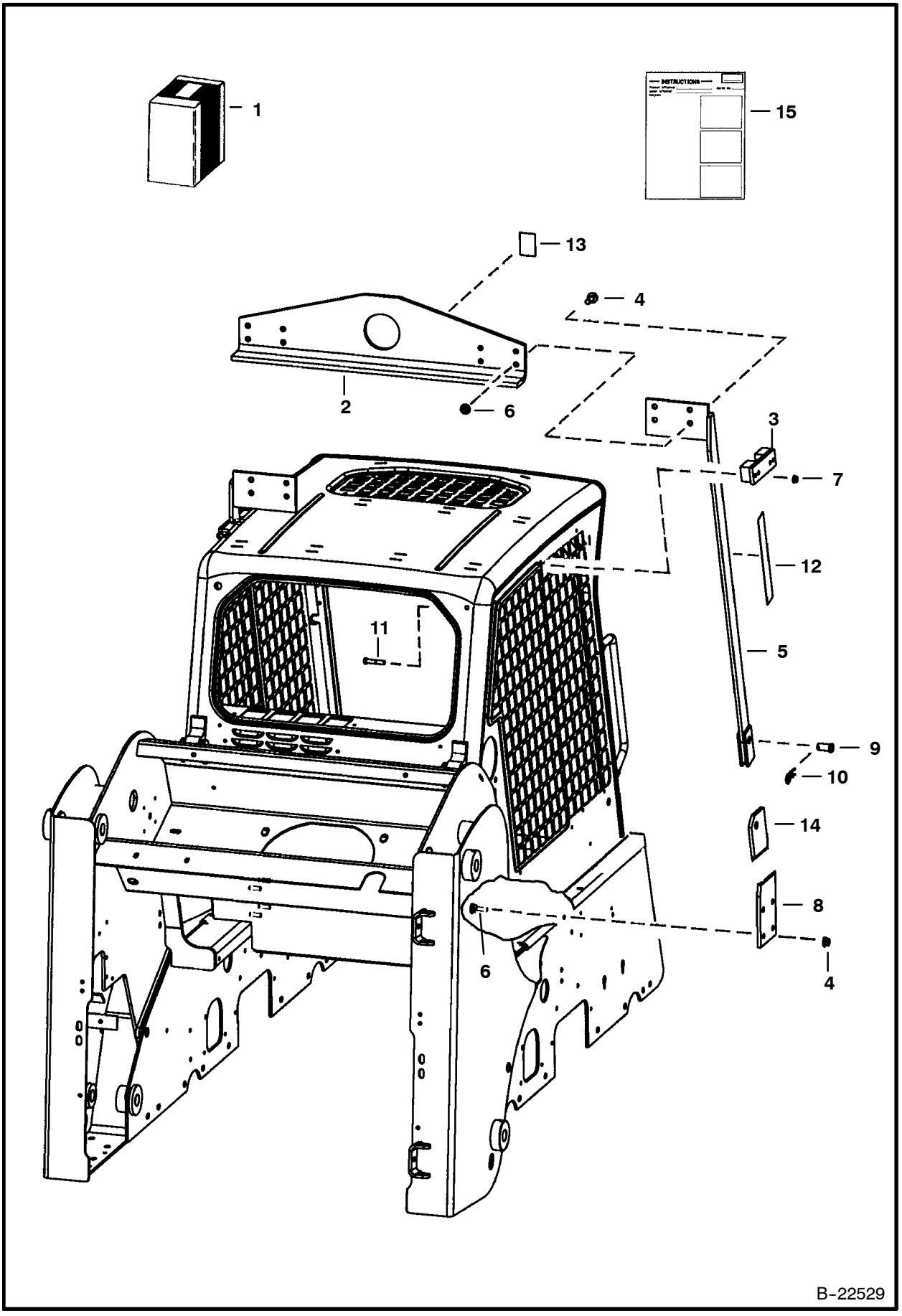

LIFT KIT (Cont'd)
(Single Point)

Ref. No.	Part Number	Description	Remarks	Serial Number	Qty.
1	6719323	KIT	Ref. 2 - 15		1
2	6567827	ANGLE			1
3	6719184	BRACKET	L.H.		1
	6719185	BRACKET	R.H.		1
4	31C-824	BOLT			16
5	6725299	BRACKET	R.H.		1
	6725300	BRACKET	L.H.		1
6	57D-8	NUT			12
7	57D-6	NUT			8
8	6704149	BRACKET			2
9	6567838	PIN			2
10	1320075	COTTER PIN			2
11	17C-632	BOLT			8
12	6704786	DECAL	warning		2
13	6533898	DECAL	hook		1
14	6725297	BRACKET			2
15	6900888	INSTRUCTIONS			1

LIGHT KIT

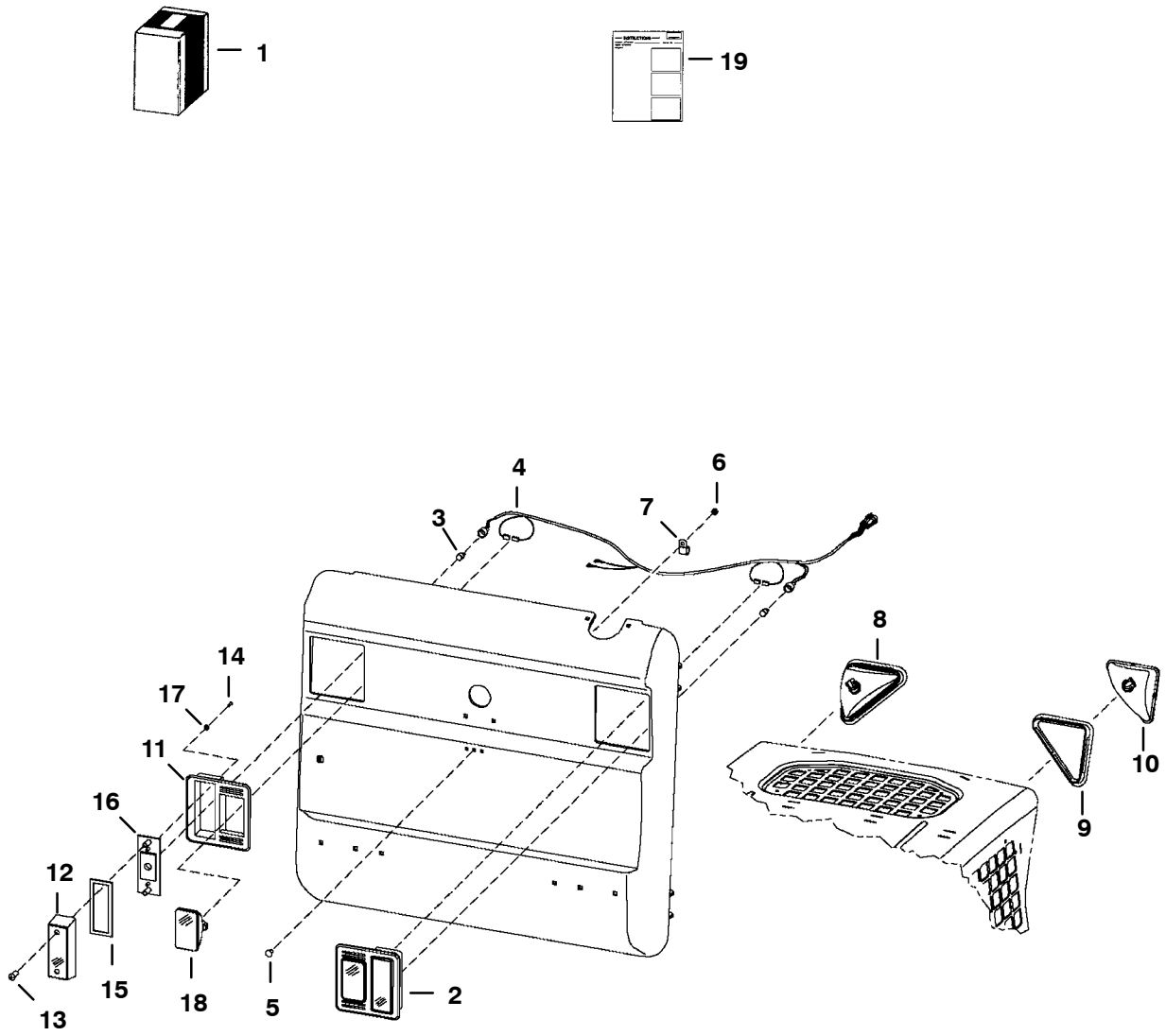

PE-1062

LIGHT KIT (Cont'd)

Ref. No.	Part Number	Description	Remarks	Serial Number	Qty.
1	NAP	KIT	Order components		1
2	6670284	LIGHT	rear		2
3	6649481	BULB			2
4	6716419	HARNESS			1
5	37C-512	BOLT			1
6	85D-5	NUT			1
7	30H-42	CLAMP			1
8	NAP	LIGHT ASSY	R.H. - Ref. 9 & 10		1
	NAP	LIGHT ASSY	L.H. - Ref. 9 & 10		1
9	6674401	HOUSING	R.H.		1
	6675336	BULB	55 watt		1
	6674400	HOUSING	L.H.		1
	6675336	BULB	55 watt		1
10	6674402	MOUNT			1
11	6672279	MOUNT	rubber		2
12	6672276	LENS	red		2
13	6672274	SCREW			4
14	6672273	SCREW			2
15	6672275	GASKET			2
16	6672277	BRACKET			2
17	6672272	WASHER			4
18	6661353	LIGHT ASSY	W/bulb - white		2
	898731	BULB			2
19	NAP	INSTRUCTIONS			1

MUFFLER/PURIFIER KIT

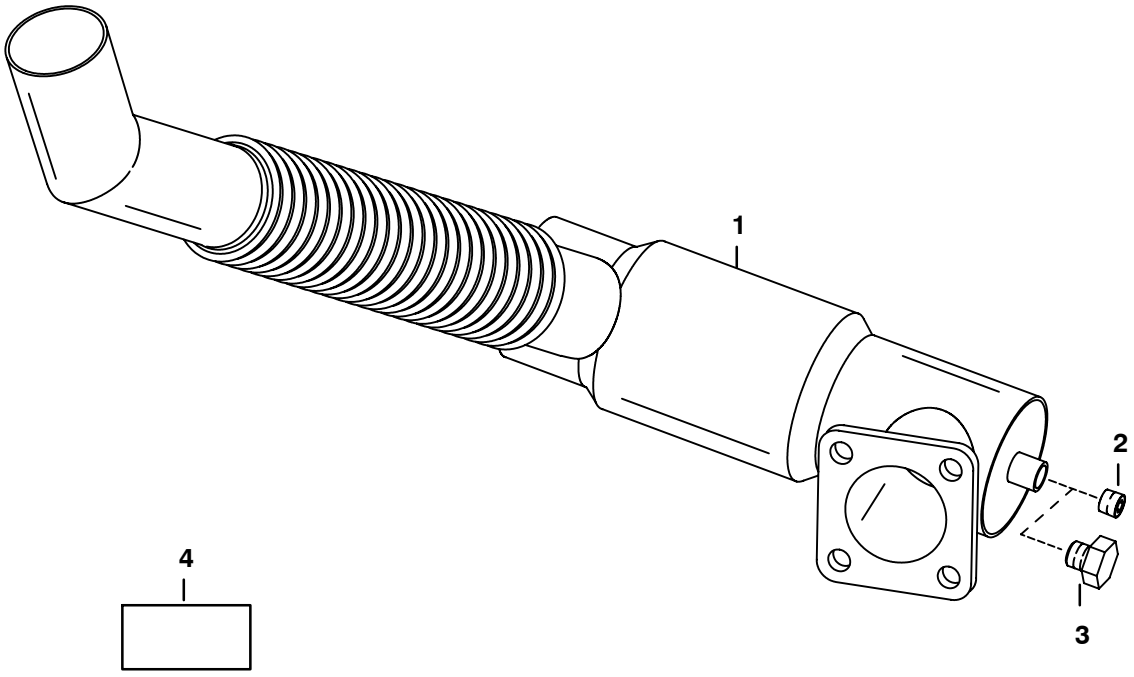

TS-1130

MUFFLER/PURIFIER KIT (Cont'd)

Ref. No.	Part Number	Description	Remarks	Serial Number	Qty.
1	6661616	MUFFLER	W/Ref. 2		1
2	NAP	PLUG	1/8" brass Allen Head - Order Ref. 3		1
3	6659543	PLUG	1/8" brass - hex head		1
4	6667573	DECAL			1

POWER BOB-TACH KIT

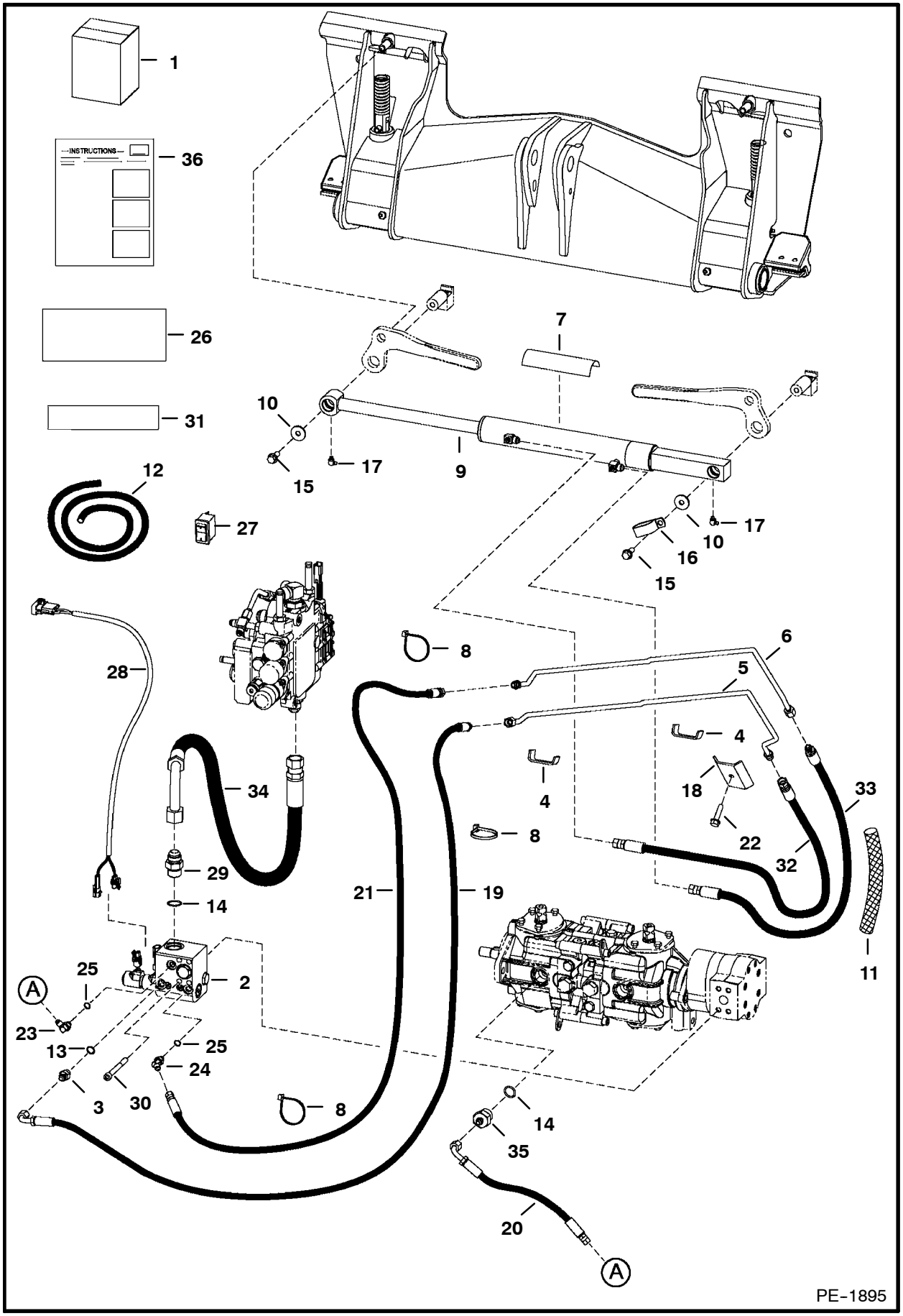

POWER BOB-TACH KIT (Cont'd)

Ref. No.	Part Number	Description	Remarks	Serial Number	Qty.
1	6735459	KIT	Ref. 2 - 36		1
2		VALVE	See Page 283		1
3	18KB-606	ADAPTER	W/Ref. 13		1
4	6703615	CLAMP			2
5	6733354	TUBE			1
6	6733355	TUBE			1
7	6554100	SAFETY TREAD			1
8	6624289	TIE			4
9		CYLINDER	See Page 281		1
10	619021	WASHER			2
11	NAP	COVER	32"(813 mm) long - Order Ref. 12		1
12	6656155	COVER			x
13	79K-6	O-RING			x
14	79K-12	O-RING			x
15	35C-616	BOLT			2
16	31H-42	CLAMP			1
17	12H-25	GREASE ZERK			2
18	6719884	CLAMP			1
19	6806987	HOSE			1
20	6806403	HOSE			1
21	6731082	HOSE			1
22	84G-3724	BOLT			1
23	17KB-404	ELBOW	W/Ref. 25		1
24	18KB-404	ELBOW	W/Ref. 25		1
25	79K-4	O-RING			x
26	6725907	DECAL			1
27	6676732	SWITCH	vertical		1
28	6730770	HARNESS			1
29	15KB-1212	ADAPTER	W/Ref. 14		1
30	73G-656	BOLT			4
31	6719888	DECAL	power Bob-tach		1
32	6725198	HOSE			1
33	6725199	HOSE			1
34	6734247	HOSE			1
35	15KB-612	ADAPTER	W/Ref. 14		1
36	6901815	INSTRUCTIONS			1

POWER BOB-TACH
(Cylinder)

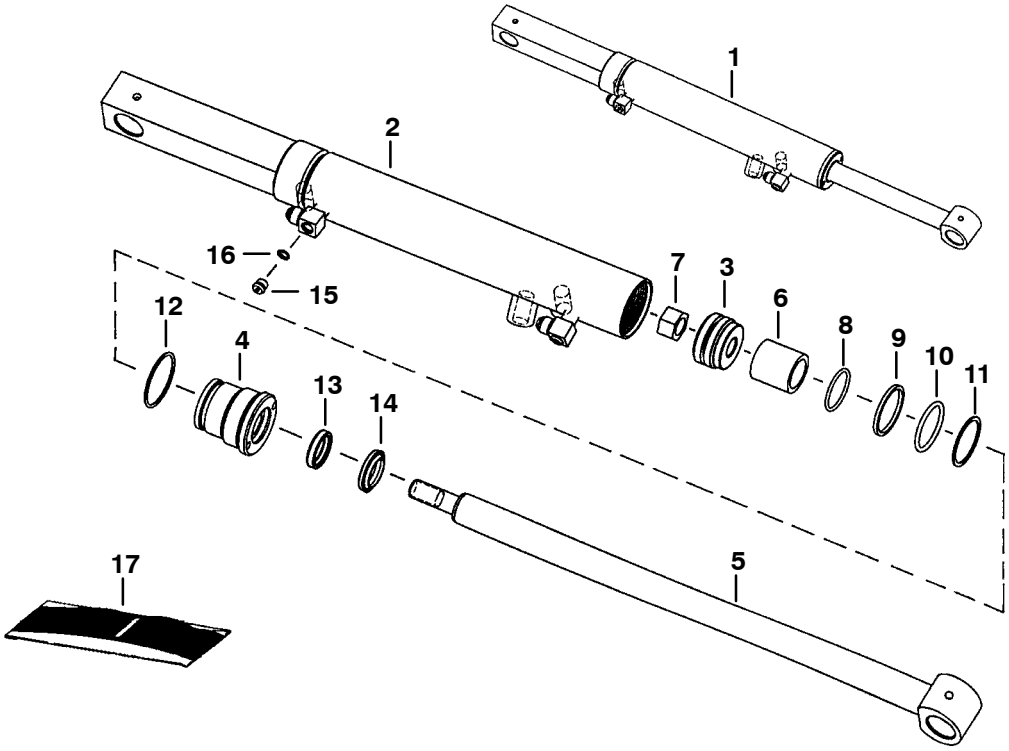

PE-1064

POWER BOB-TACH (Cont'd)
(Cylinder)

Ref. No.	Part Number	Description	Remarks	Serial Number	Qty.
1	6810611	CYLINDER	Ref. 2-16		1
2	6810349	CASE	1.75" I.D.		1
3	6586543	PISTON			1
4	6586542	HEAD			1
5	6810612	ROD	18.6" (472mm) long - W/ .25" grease zerk hole		1
6	6810356	SPACER			1
7	92D-10	NUT			1
8	54K-30110	O-RING			1
9	6532453	RING			1
10	54K-40116	O-RING			1
11	73K-222	WASHER	back-up		1
12	58K-132	O-RING			1
13	6667323	SEAL	rod		1
14	6666542	SEAL	wiper		1
15	6812170	PLUG	W/Ref. 16		2
16	79K-3	O-RING			2
17	6803473	SEAL KIT	Ref. 7-14		1

POWER BOB-TACH
(Valve Assembly)

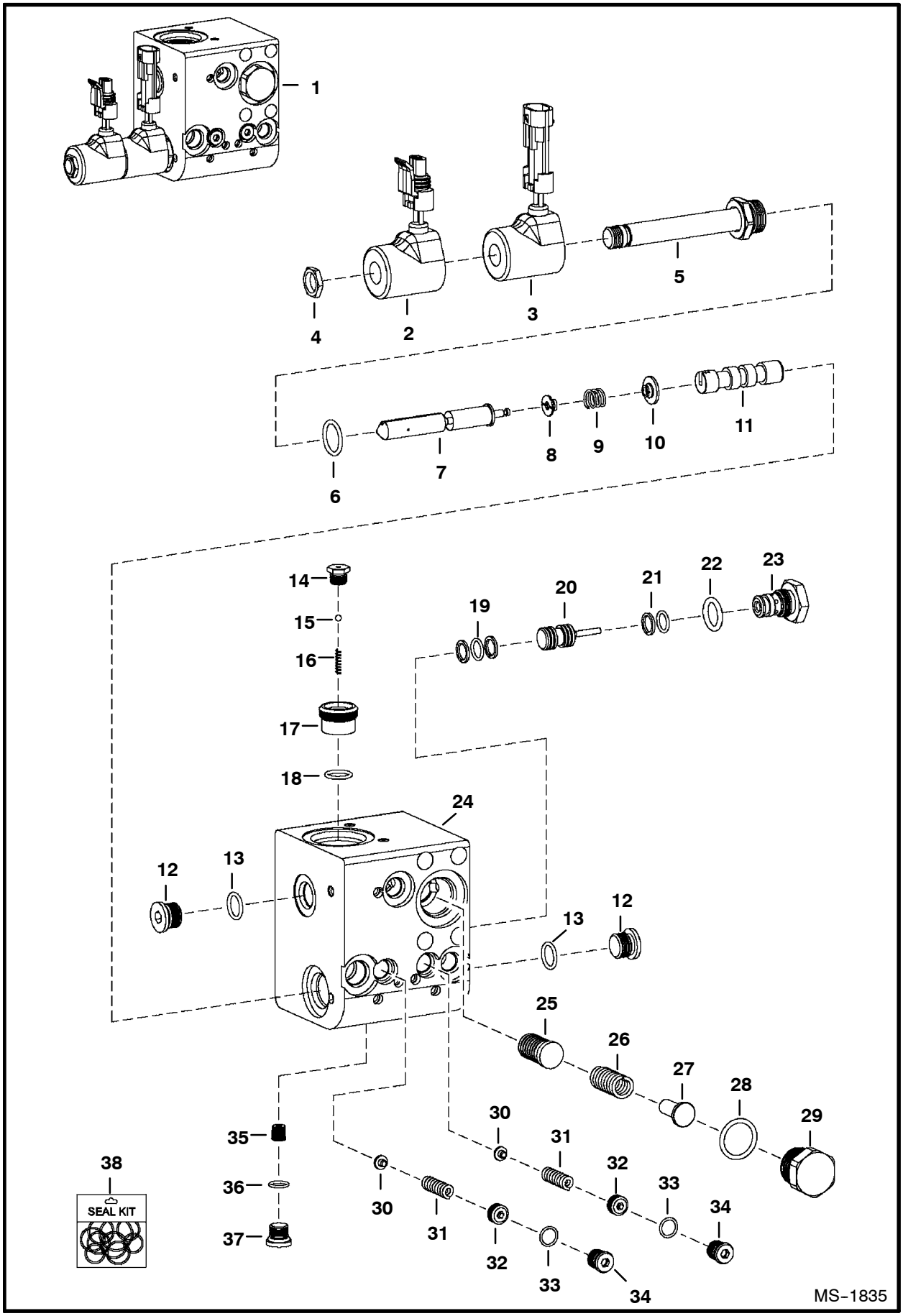

POWER BOB-TACH (Cont'd)
(Valve Assembly)

Ref. No.	Part Number	Description	Remarks	Serial Number	Qty.
1	6681864	VALVE			1
2	6684743	SOLENOID	W/male connector		1
3	6684744	SOLENOID	W/female connector		1
4	6684742	NUT			1
5	NSS	STEM			x
6	79K-8	O-RING			x
7	NSS	STEM			x
8	NSS	RETAINER			x
9	NSS	SPRING			x
10	NSS	WASHER			x
11	NSS	PISTON			x
12	NSS	PLUG			x
13	NSS	O-RING			x
14	NSS	PLUG			x
15	NSS	BALL			x
16	NSS	SPRING			x
17	NSS	VALVE			x
18	NSS	O-RING			x
19	NSS	RINGS			x
20	6684745	PISTON			1
21	NSS	RINGS			x
22	79K-7	O-RING			x
23	6684746	CHECK VALVE	W/Ref. 22		1
24	NSS	BLOCK			x
25	NSS	STEM			x
26	NSS	SPRING			x
27	NSS	POPPET			x
28	79K-10	O-RING			x
29	NSS	PLUG			x
30	NSS	POPPET			x
31	NSS	SPRING			x
32	NSS	PLUG			x
33	NSS	O-RING			x
34	NSS	PLUG			x
35	NSS	POPPET			x
36	NSS	O-RING			x
37	NSS	PLUG			x
38	6684747	SEAL KIT	complete		1

RADIATOR SCREEN KIT

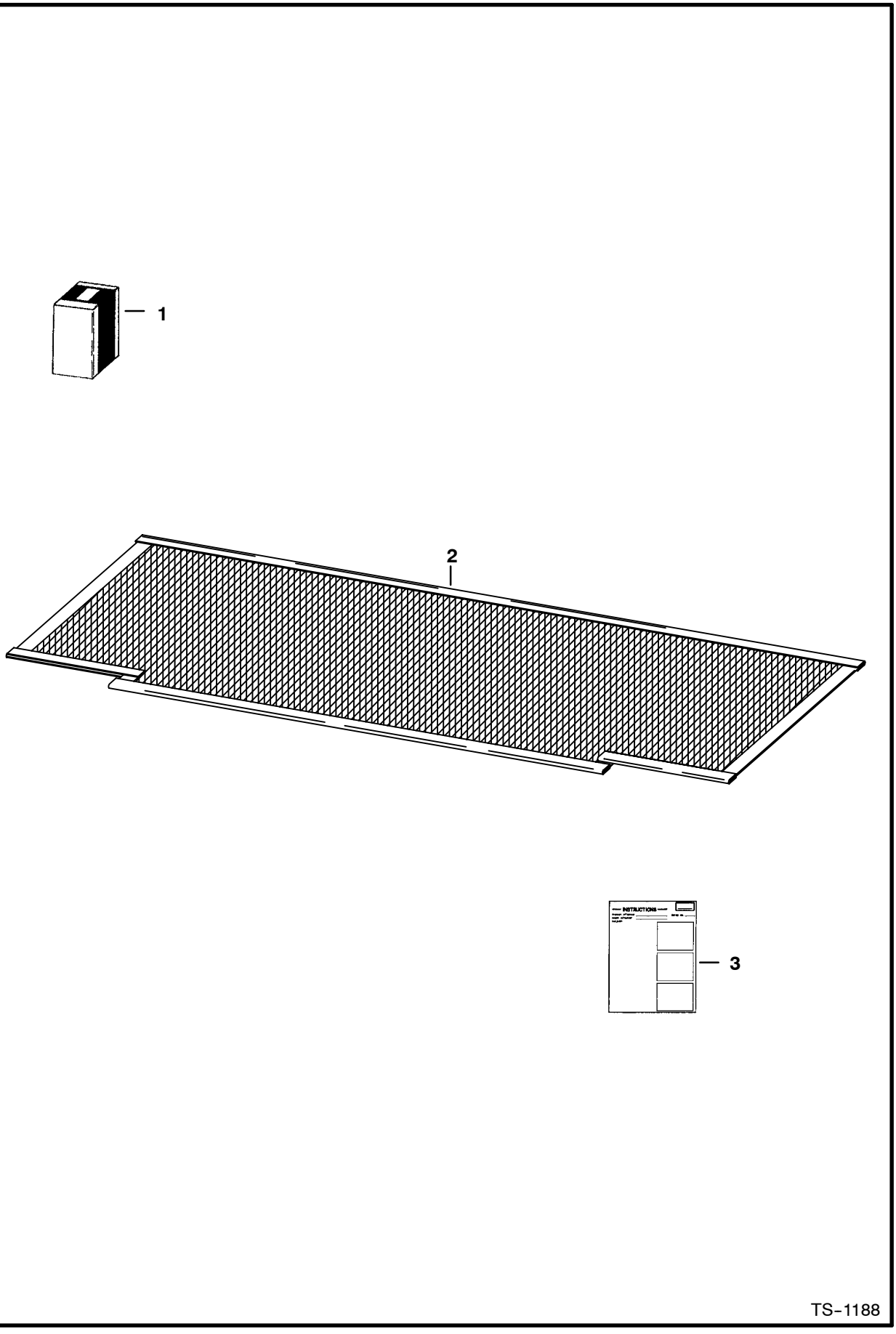

RADIATOR SCREEN KIT (Cont'd)

Ref. No.	Part Number	Description	Remarks	Serial Number	Qty.
1	6706939	KIT	Ref. 2 & 3		1
2	6706285	SCREEN			1
3	6722861	INSTRUCTIONS			1

REAR AUXILIARY KIT

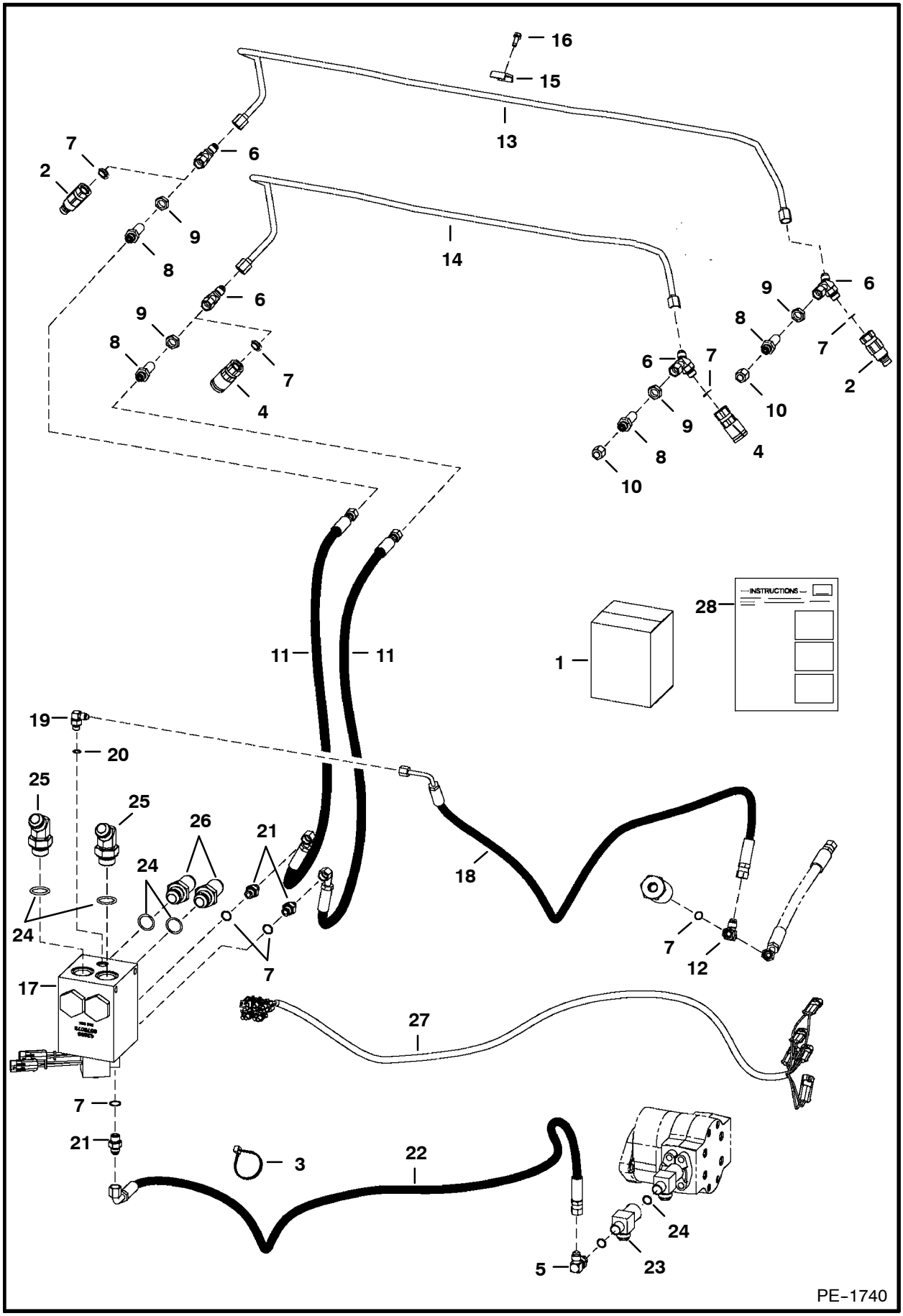

REAR AUXILIARY KIT (Cont'd)

Ref. No.	Part Number	Description	Remarks	Serial Number	Qty.
1	6732937	KIT	SEE NOTE		1
2	6667804	QUICK COUPLER			2
	6669657	O-RING			x
3	6624289	TIE			4
4	6667803	QUICK COUPLER			2
5	17KB-606	ELBOW	W/Ref. 7		1
6	6706220	TEE	W/Ref. 7		4
7	79K-6	O-RING			x
8	51E-404	ADAPTER			4
9	61E-4	NUT			4
10	63E-4	PLUG			2
11	6706089	HOSE			2
12	21KB-606	TEE	W/Ref. 7		1
13	6718570	TUBE			1
14	6718571	TUBE			1
15	6500989	CLAMP			1
16	84G-3716	BOLT			2
17		VALVE	See Page 289		1
18	6727108	HOSE			1
19	17KB-404	ELBOW	W/Ref. 20		1
20	79K-4	O-RING			x
21	15KB-606	ADAPTER	W/Ref. 7		4
22	6728337	HOSE			1
23	6717662	TEE	Not in Kit		1
24	79K-12	O-RING			x
25	18KB-1212	ELBOW	W/Ref. 24		2
26	45K-8	ADAPTER			2
27	6718645	HARNESS			1
28	6901814	INSTRUCTIONS			1

REAR AUXILIARY VALVE
(For Use W/FF Couplers)

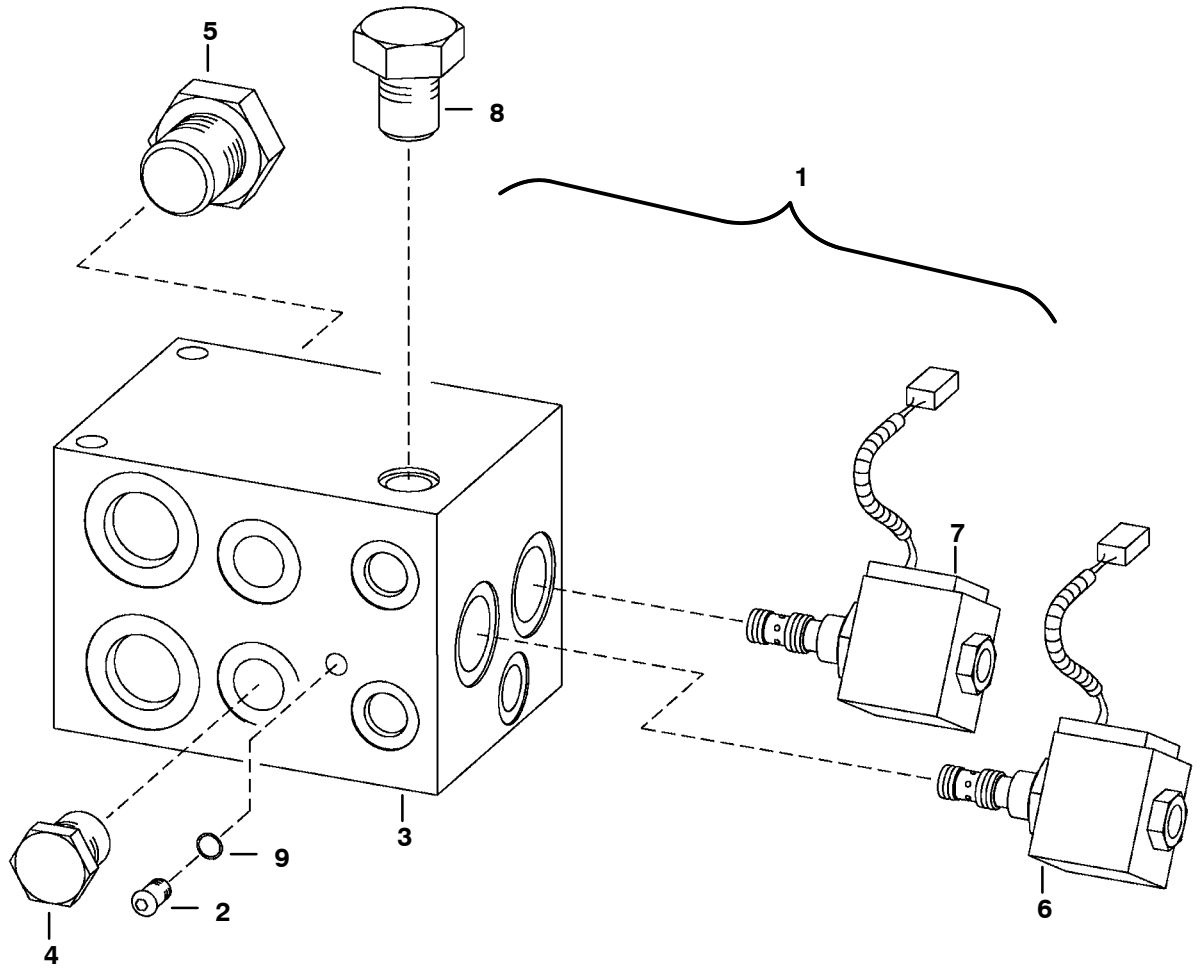

TS-1362

REAR AUXILIARY VALVE (Cont'd)
(For Use W/FF Couplers)

Ref. No.	Part Number	Description	Remarks	Serial Number	Qty.
1	6675073	VALVE	diverter - gold - front & rear pressure release function		1
2	6676152	PLUG	W/Ref. 9		18
3	NSS	BODY			1
4	6664212	CHECK VALVE			2
	6653487	SEAL KIT			2
5	6653484	VALVE			2
	6653485	SEAL KIT			2
6	6669218	VALVE	solenoid - W/Connector - SV2 port		1
	6676151	COIL			1
	6669188	STEM			1
	6669217	SEAL KIT			1
7	6669219	VALVE	solenoid - W/Connector - SV1 port		1
	6669190	COIL			1
	6669189	STEM			1
	6669216	SEAL KIT			1
8	6669187	VALVE			1
	6653487	SEAL KIT			1
9	79K-2	O-RING			x

REAR DOOR LOCK

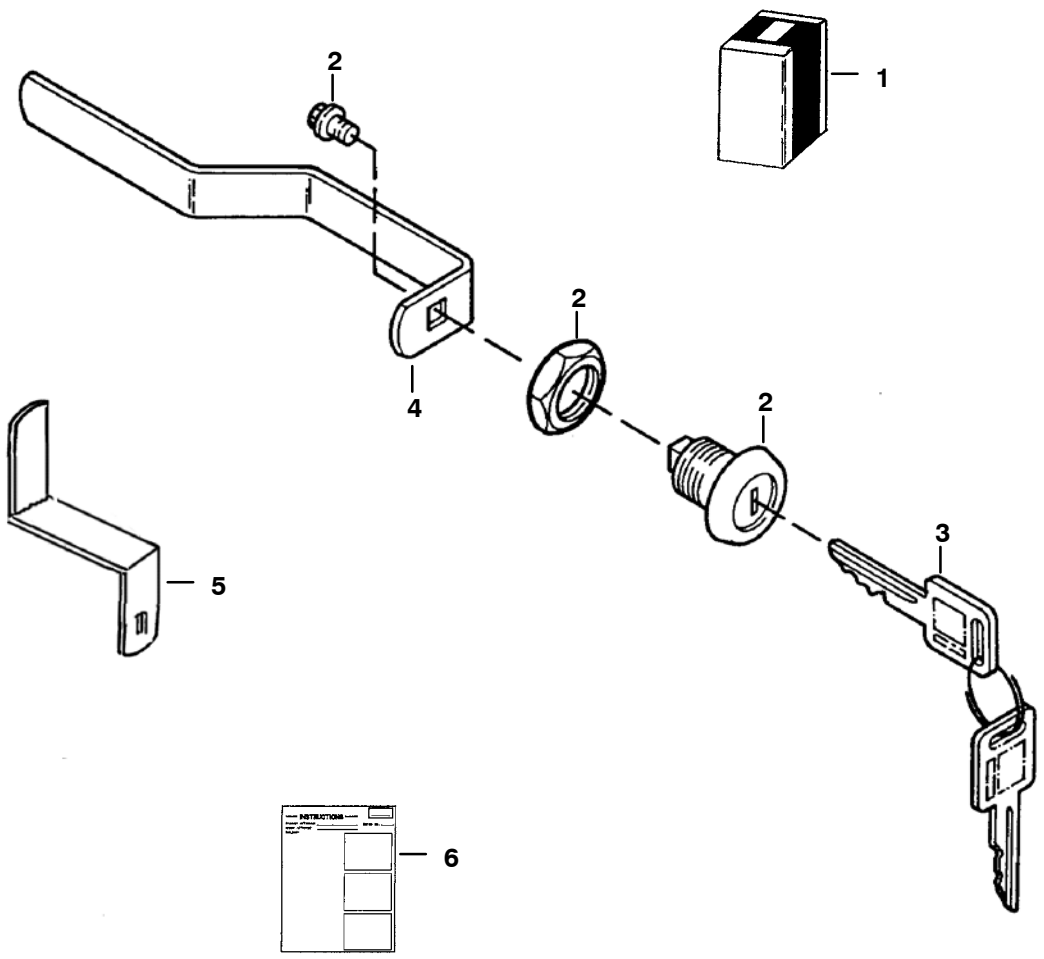

B-15018

REAR DOOR LOCK (Cont'd)

Ref. No.	Part Number	Description	Remarks	Serial Number	Qty.
1	6732001	KIT	lock - Ref. 2-6		1
2	6670726	LOCK			1
3	6709527	KEY	ignition		1
4	6714037	LATCH	Use W/6711524 Rear Door		1
5	6729688	LATCH	Use W/6729991 Rear Door		1
6	6901656	INSTRUCTIONS			1

REAR WIPER

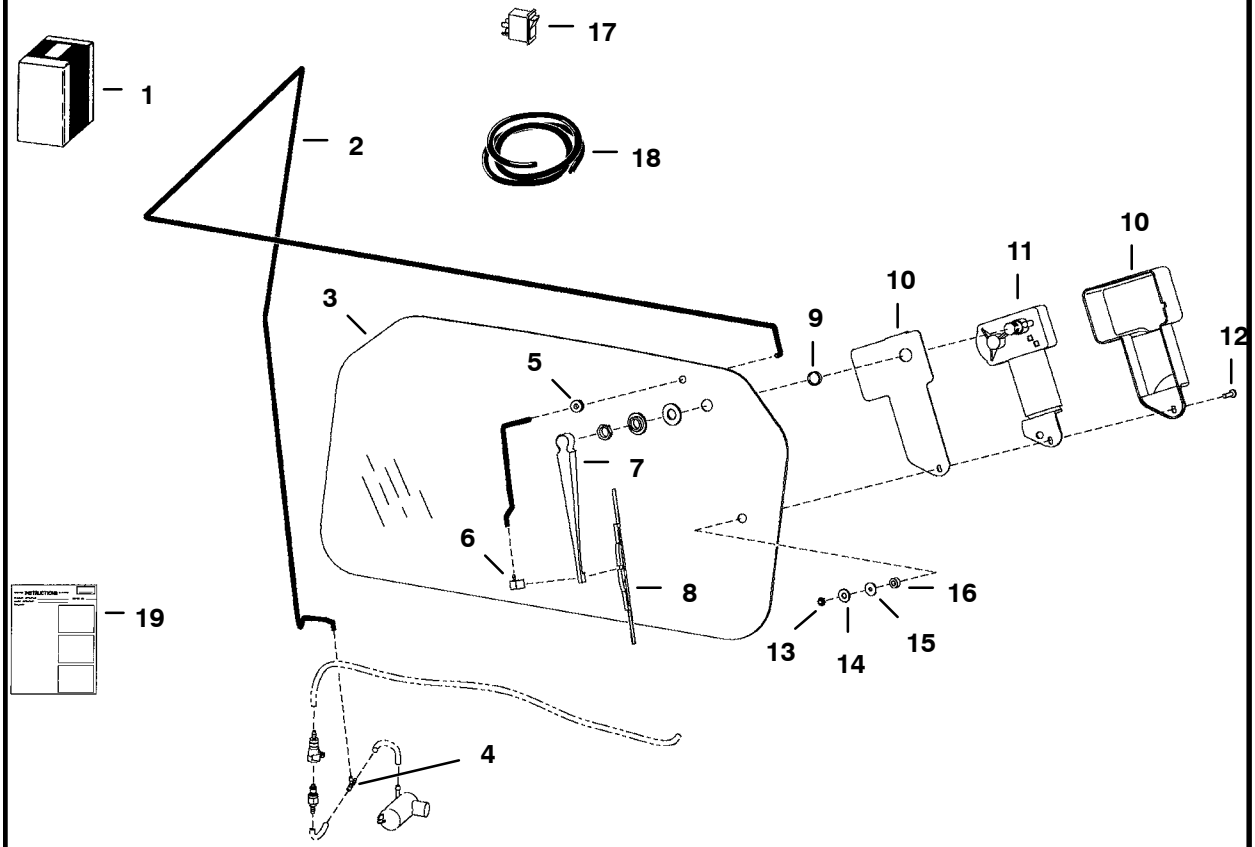

REAR WIPER (Cont'd)

Ref. No.	Part Number	Description	Remarks	Serial Number	Qty.
1	6726655	KIT	rear wiper		1
2	NAP	HOSE	96"(2438,4 mm) long - Order Ref. 18		1
3	6719317	WINDOW			1
4	6676000	TEE			1
5	6557493	GROMMET			1
6	6676028	NOZZLE			1
7	6676001	ARM			1
8	6676002	BLADE			1
9	6667201	SPACER	nylon		1
10	6664097	COVER	wiper		1
11	6665602	MOTOR			1
12	6664566	SCREW			1
13	6664103	NUT			1
14	6664065	WASHER	nylon		1
15	6801059	WASHER	neoprene		1
16	6664085	BUSHING	nylon		1
17	6675999	SWITCH			1
18	6676003	HOSE	bulk - Sold Per Foot		x
19	6901061	INSTRUCTIONS			1

SEAL ENCLOSURE KIT

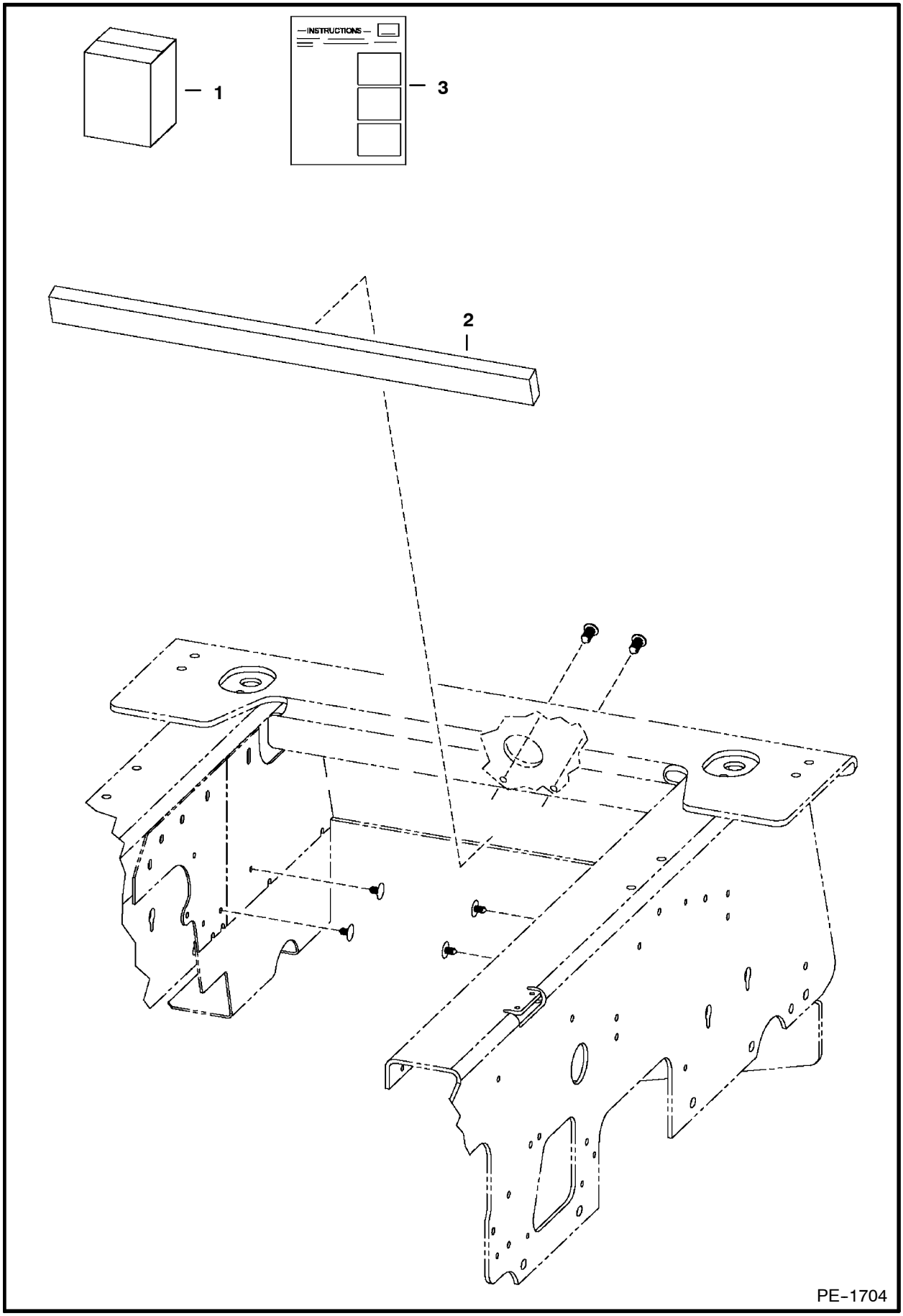

SEAL ENCLOSURE KIT (Cont'd)

Ref. No.	Part Number	Description	Remarks	Serial Number	Qty.
1	6732717	KIT	enclosure		1
2	6732658	SEAL	panel		2
3	6901774	INSTRUCTIONS			1

SEAT
(Suspension - Sears)

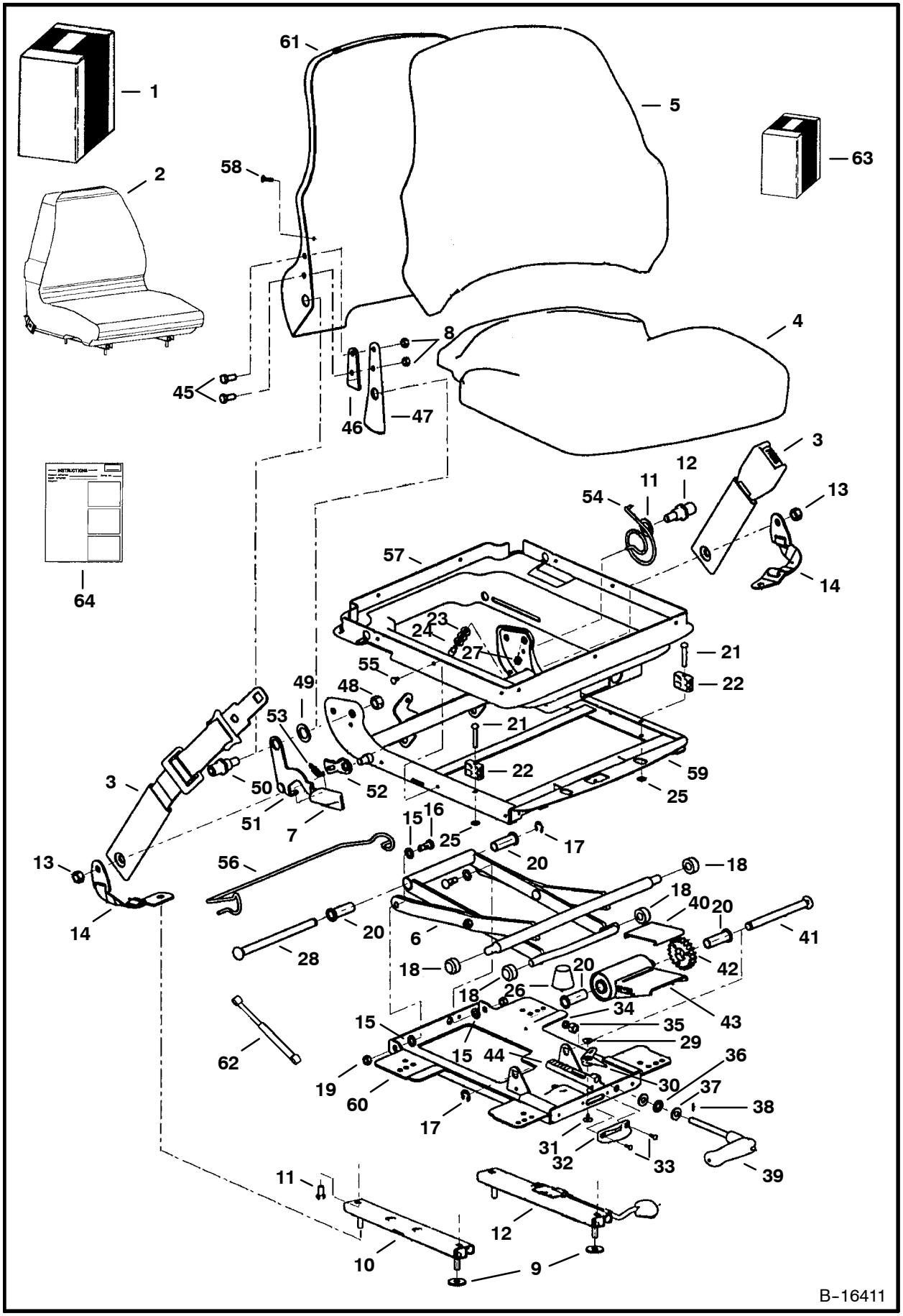

SEAT (Cont'd)
(Suspension - Sears)

Ref. No.	Part Number	Description	Remarks	Serial Number	Qty.
1	NAP	KIT	vinyl seat - Order Ref. 2, 3 & 64		1
	NAP	KIT	fabric seat - Order Ref. 2, 3 & 64		1
2	6675595	SEAT	vinyl - W/Ref. 4 - 61 - W/L.H.		
			recliner lever		1
	6675596	SEAT	fabric - W/Ref. 4 - 61 - W/L.H.		
			recliner lever		1
3	6675170	SEAT BELT	lap		1
4	6675320	CUSHION	seat - fabric		1
	6675322	CUSHION	seat - vinyl		1
5	6675319	CUSHION	backrest - fabric - W/Ref. 58		1
	6675321	CUSHION	backrest - vinyl - W/Ref. 58		1
6	6675317	SCISSORS			1
7	6675323	KNOB	recliner		1
8	NSS	NUT			6
9	619021	WASHER			2
10	NSS	SLIDE	slave		1
11	NSS	BOLT			4
12	NSS	SLIDE	locking		1
13	NSS	NUT			2
14	NSS	BELT	tether		2
15	NSS	WASHER	cross pivot		4
16	NSS	BOLT	pivot		2
17	NSS	RING	retaining		2
18	NSS	ROLLER			4
19	NSS	NUT			2
20	NSS	BUSHING	wt adjustment		4
21	NSS	RIVET			2
22	NSS	BLOCK	up stop		2
23	NSS	WASHER			3
24	NSS	STOP	armrest		1
25	NSS	PUSHNUT			2
26	NSS	BUMPER			1
27	NSS	NUT			1
28	NSS	SHAFT	bearing		1
29	NSS	RIVET	female snap		1
30	NSS	INDICATOR	weight		1
31	NSS	RIVET	male snap		1
32	NSS	DIAL	weight indicator		1
33	NSS	POP RIVET			2
34	NSS	SPACER			1
35	NSS	NUT			1
36	NSS	BEARING	thrust		1
37	NSS	RACE	thrust		2
38	NSS	SHEAR PIN			1
39	NSS	HANDLE	weight adjustment		1
40	NSS	PLATE	wear		1
41	NSS	SHAFT	torsion		1
42	NSS	DRIVE GEAR			1
43	NSS	BUSHING	torsion		1
44	NSS	RACK	wt adjustment		1
45	NSS	BOLT			2

SEAT (Cont'd)
(Suspension - Sears)

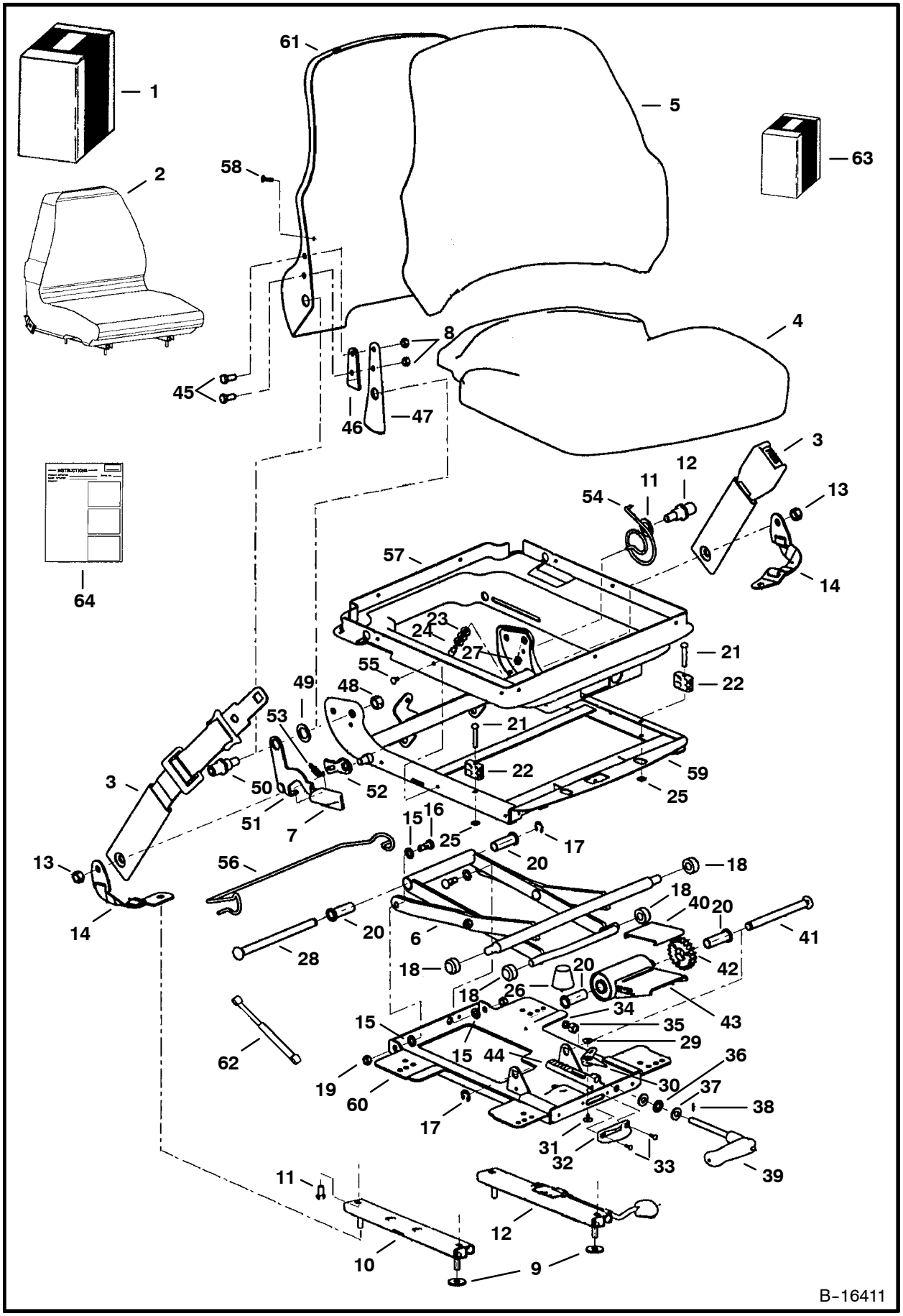

SEAT (Cont'd)
(Suspension - Sears)

Ref. No.	Part Number	Description	Remarks	Serial Number	Qty.
46	NSS	SPACER	recliner		1
47	NSS	BRACKET	back tilt		1
48	NSS	NUT			2
49	NSS	WASHER	plastic		2
50	NSS	BOSS	back pan pivot		2
51	NSS	HANDLE	recliner (RH)		1
52	NSS	LATCH	recliner		1
53	NSS	SPRING	extension		1
54	NSS	SPRING	tilt latch		1
55	NSS	CLIP			6
56	NSS	WIRE	boot support		1
57	NSS	SUSPENSION	boot		1
58	NSS	SCREW			2
59	NSS	HOUSING	upper		1
60	NSS	HOUSING	lower		1
61	NSS	BACK PAN			1
62	6676338	GAS SPRING			1
63	6675309	KIT	slides - W/Ref. 8 - 12		1
	6675310	KIT	tether belt - W/Ref. 9, 13 & 14		1
	6675311	KIT	suspension rollers & bearings - W/Ref. 15 - 20		1
	6675312	KIT	suspension bumpers & stops - W/Ref. 21 - 27		1
	6675313	KIT	rear tube - W/Ref. 17, 20 & 28		1
	6675314	KIT	weight adj. indicator - W/Ref. 29 - 33		1
	6675315	KIT	weight adj. handle - W/Ref. 34 - 39		1
	6675316	KIT	weight adj. - W/Ref. 17, 20 & 40 - 44		1
	6676034	KIT	L.H. recliner - Ref. 7, 8 & 45 - 54		1
	6675308	KIT	susp. boot - W/Ref. 55 - 57		1
64	6900861	INSTRUCTIONS			1

SEAT BELT
(Three Point Retractable)

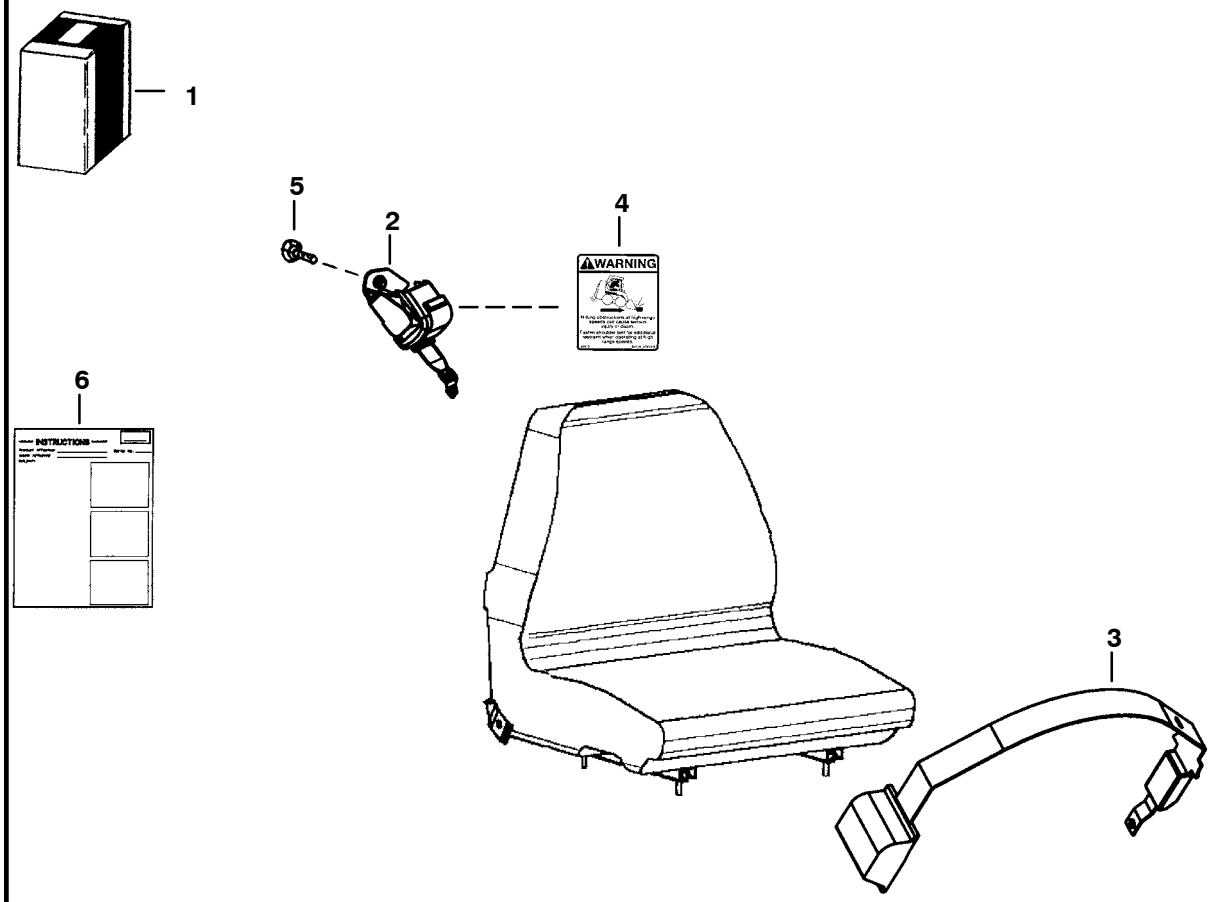

PE–1507

SEAT BELT (Cont'd)
(Three Point Retractable)

Ref. No.	Part Number	Description	Remarks	Serial Number	Qty.
1	6732219	KIT	three point retractable seat belt - Use W/Sears brand suspension seat W/L.H. reliner lever -		
			See Page 297		1
2	6674407	SHOULDER BELT			1
3	6679308	SEAT BELT			1
4	6725370	DECAL			1
5	35C-612	BOLT			1
6	6901010	INSTRUCTIONS			1

SEAT BELT
(3” Wide Retractable)

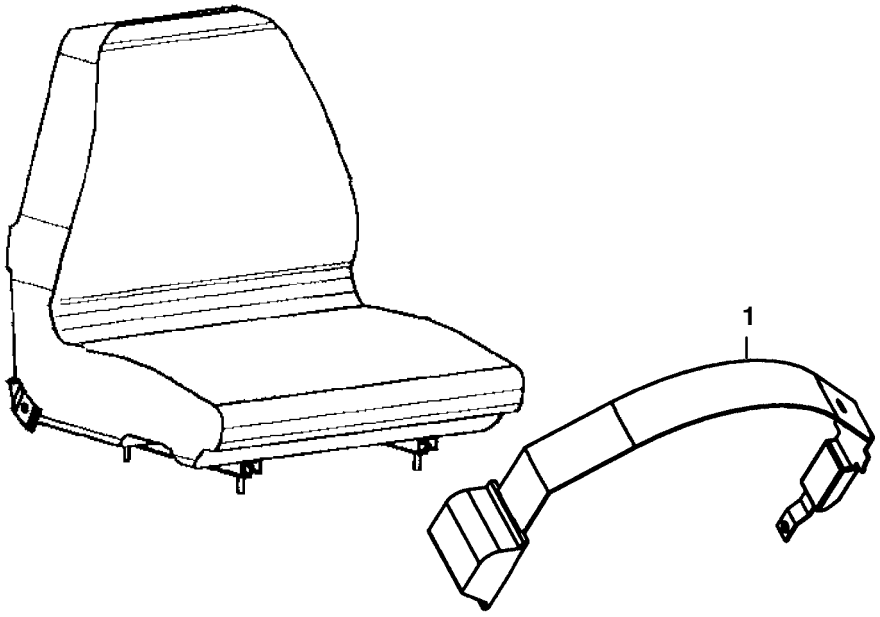

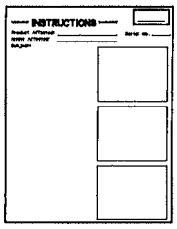

PE-1508

SEAT BELT (Cont'd)
(3" Wide Retractable)

Ref. No.	Part Number	Description	Remarks	Serial Number	Qty.
1	6675562	SEAT BELT	3" wide retractable- Use W/Sears brand suspension seat W/L.H. reliner lever - See Page 297		1
2	6901011	INSTRUCTIONS			1

SEAT BELT
(3” Wide)

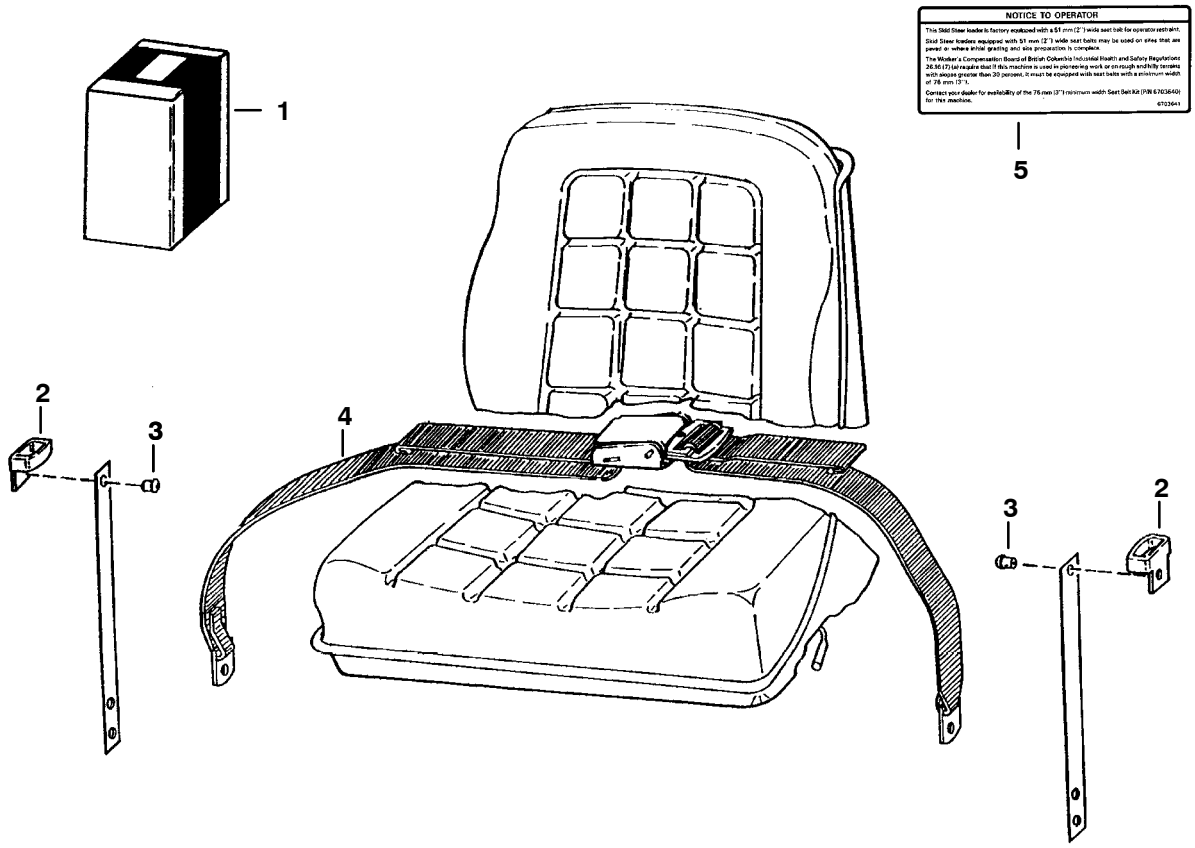

NOTE: Complies with British Columbia Industrial Health and Safety Regulations 26.16 (7) (a).

B-13601

SEAT BELT (Cont'd)
(3" Wide)

Ref. No.	Part Number	Description	Remarks	Serial Number	Qty.
1	6703640	KIT	W/Ref. 2-5		1
2	6703703	GUIDE			2
3	6512797	RIVET			4
4	6659999	BELT			1
5	6703641	DECAL			1

SOUND KIT

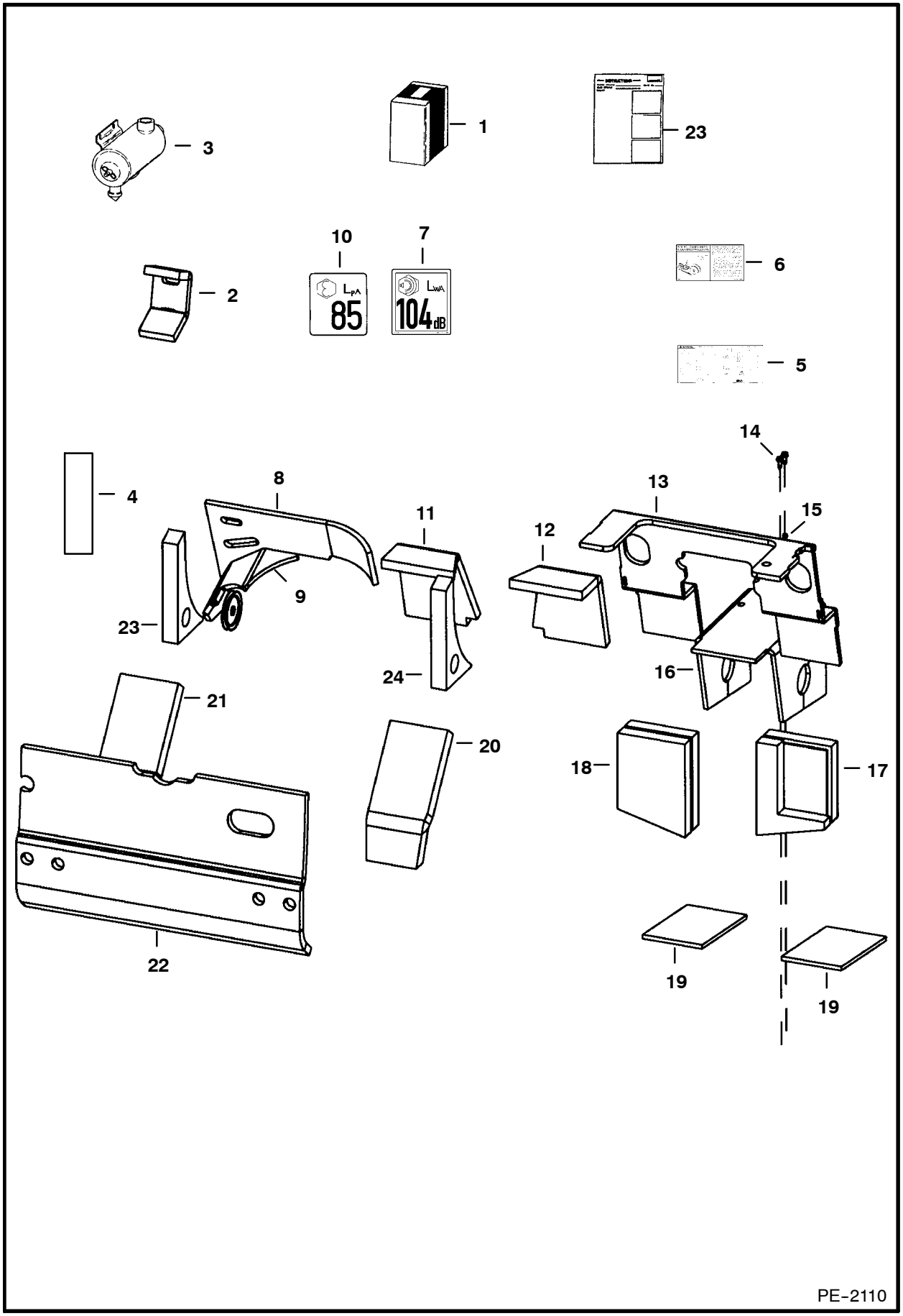
1
2
3
4
5
6
7
104dB
8
9
10
85
11
12
13
14
15
16
17
18
19
19
20
21
22
23
23
24
PE-2110

SOUND KIT (Cont'd)

Ref. No.	Part Number	Description	Remarks	Serial Number	Qty.
1	7100097	KIT			1
2	6703331	INSULATION	air inlet		1
3	6735285	AIR CLEANER			1
4	6727299	INSULATION	cab back		1
5	6734534	DECAL	warning/service schedule/service parts		1
6	6709030	DECAL	belt tension idler		1
7	6731994	DECAL	noise level - 104db		1
8	6719332	INSULATION	blower housing		1
9	6704769	INSULATION	blower housing		1
10	6579385	DECAL	noise level - 85db		1
11	6732722	INSULATION	cross member - L.H.		1
12	6732723	INSULATION	cross member - R.H.		1
13	6719372	INSULATION	steering panel		1
14	84G-3716	BOLT			2
15	6562619	BUSHING			2
16	6715372	INSULATION	pedal		1
17	6725316	INSULATION	transmission		1
18	6705848	INSULATION	transmission		1
19	6715371	INSULATION	transmission		2
20	6705850	INSULATION	brace		1
21	6705849	INSULATION	brace		1
22	6715106	INSULATION	rear door		1
23	6901003	INSTRUCTIONS			1

SOUND OPTION

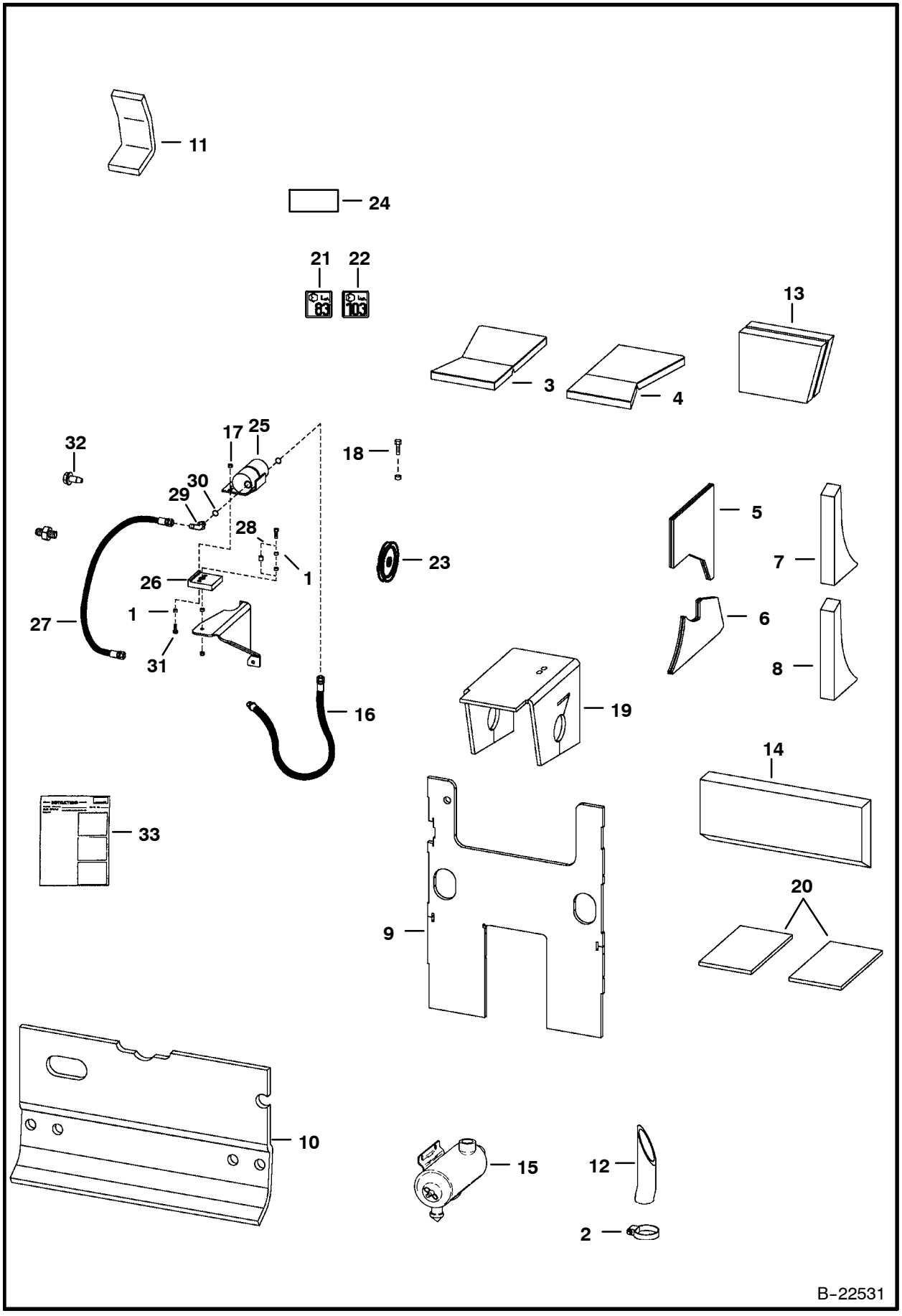

SOUND OPTION (Cont'd)

Ref. No.	Part Number	Description	Remarks	Serial Number	Qty.
1	6562619	BUSHING			2
2	42H-44	CLAMP			2
3	6732722	INSULATION	cross member - L.H.		1
4	6732723	INSULATION	cross member - R.H.		1
5	6719332	INSULATION	blower housing		1
6	6704769	INSULATION	blower housing		1
7	6705849	INSULATION	brace		1
8	6705850	INSULATION	brace		1
9	6725316	INSULATION	transmission		1
10	6715106	INSULATION	rear door		1
11	6703331	INSULATION	air inlet		1
12	6735349	HOSE			1
13	6705848	INSULATION	transmission		2
14	6719372	INSULATION	steering panel		1
15	6735285	AIR CLEANER			1
16	6729154	HOSE			1
17	85D-6	NUT			2
18	84G-3716	BOLT			2
19	6715371	INSULATION	transmission		1
20	6715372	INSULATION	pedal		1
21	6579399	DECAL	sound level warning - 83 db		1
22	6579403	DECAL	sound level warning -103 db		1
23	6712970	PULLEY	4.75"(120,7 mm) O.D.		1
	6712971	PULLEY	5.00"(127 mm) O.D.		1
24	6715428	DECAL			1
25	6659982	MUFFLER	hyd.		1
26	6705333	MOUNT	rubber		1
27	6729144	HOSE			1
28	6715744	BUSHING			1
29	17KB-1212	ELBOW	W/Ref. 30		2
30	79K-12	O-RING			2
31	35C-616	BOLT			2
32	84G-3724	BOLT			1
33	6901003	INSTRUCTIONS			1

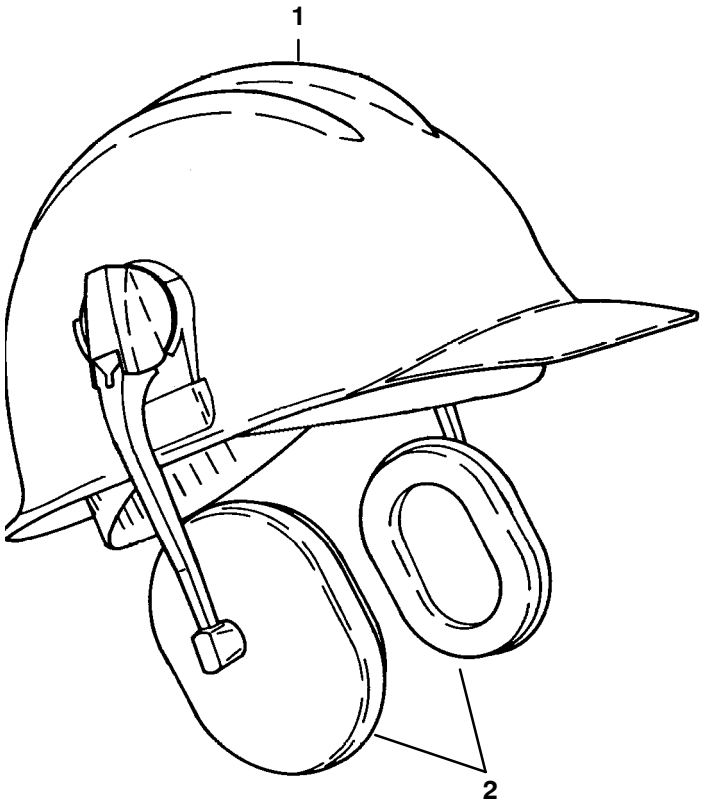

B-3111

SOUND REDUCTION HARDHAT (Cont'd)

Ref. No.	Part Number	Description	Remarks	Serial Number	Qty.
1	6559552	HARDHAT			1
2	6559775	EARMUFFS			1

STROBE LIGHT

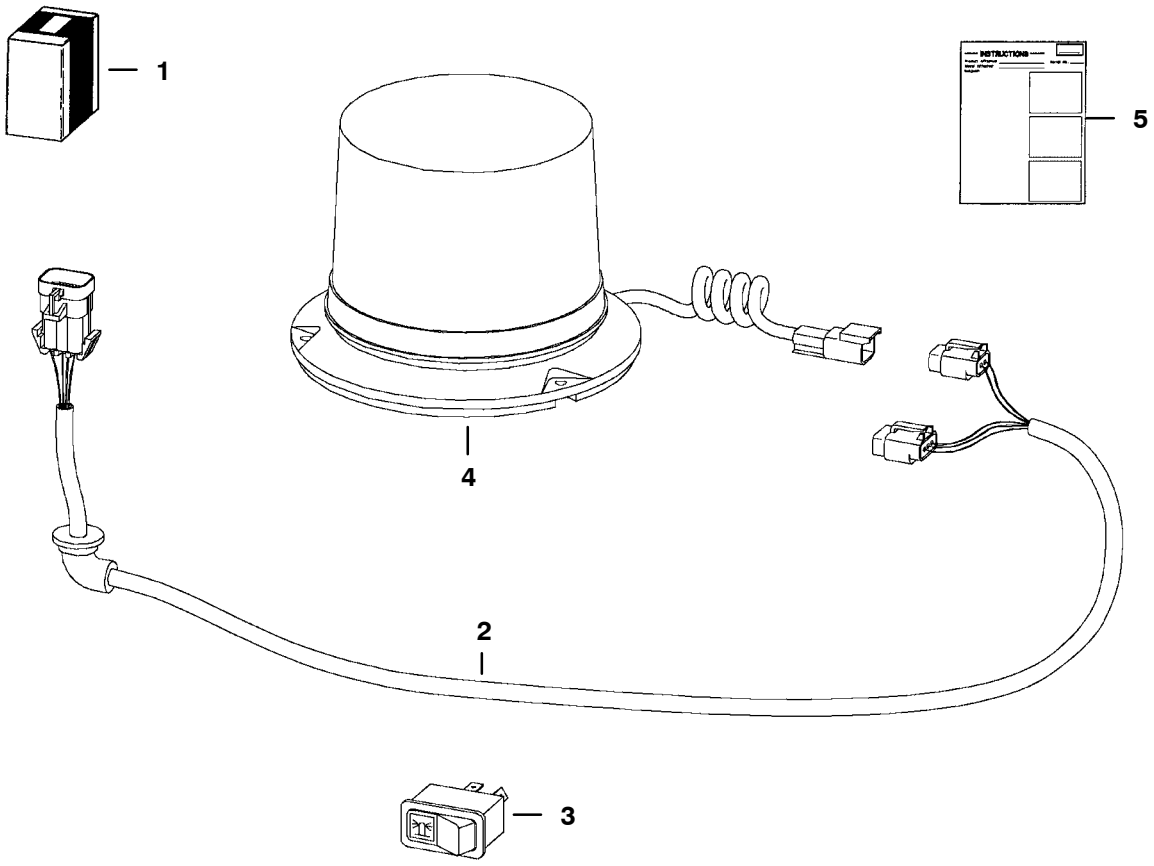

TS-1977

STROBE LIGHT (Cont'd)

Ref. No.	Part Number	Description	Remarks	Serial Number	Qty.
1	6719857	KIT	strobe light - If loader is equipped W/Deluxe Cab Option also order 6727468 Harness - See Page 187		1
2	6718872	HARNESS			1
3	6665317	SWITCH	horizontal		1
	6668816	SWITCH	vertical		1
4	6675522	STROBE			1
	6675858	FLASH TUBE			1
5	6900992	INSTRUCTIONS			1

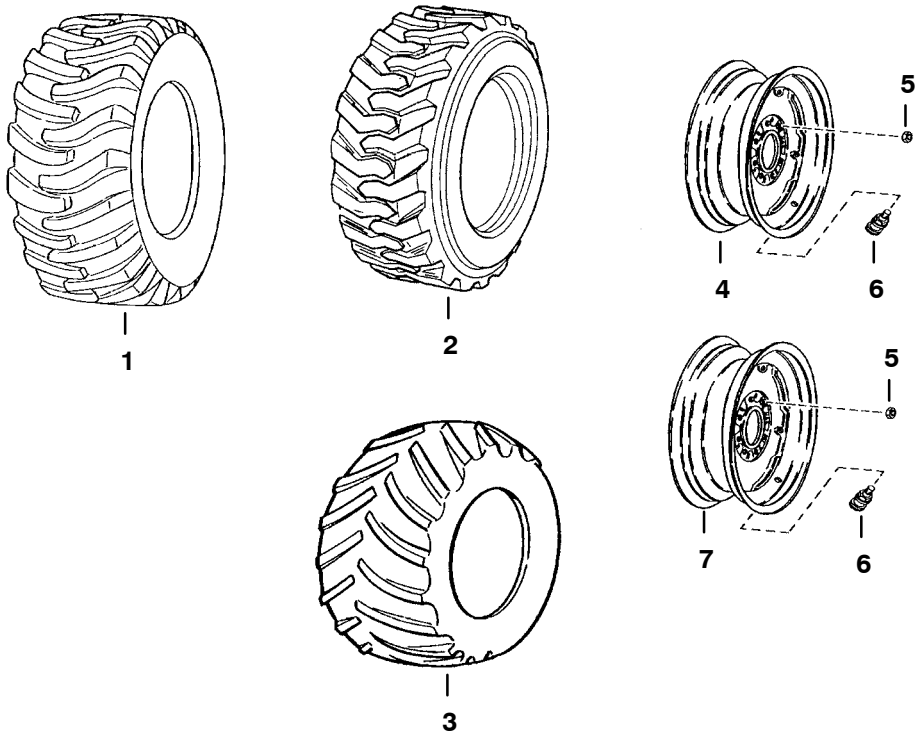

B-22533

Ref. No.	Part Number	Description	Remarks	Serial Number	Qty.
1	6729896	TIRE	10.00-16.5, 8 ply - Bobcat Brand - standard duty		4
	6729900	TIRE	10.00-16.5, 10 ply - Bobcat Brand - heavy duty		4
2	6730106	TIRE	10.00 - 16.5 - 10 ply - Bobcat brand - severe duty		4
3	6730107	TIRE	31 - 13 x 16.5 - Bobcat Brand - hippo super float		4
4	6730771	RIM	Used W/Ref. 1		4
	6730772	RIM	Used W/Ref. 3		4
5	6564669	NUT	wheel		32
6	1614765	VALVE	tubeless tire		4
7	6730775	RIM	inverted - Use W/Ref. 1 - For 60" width		4

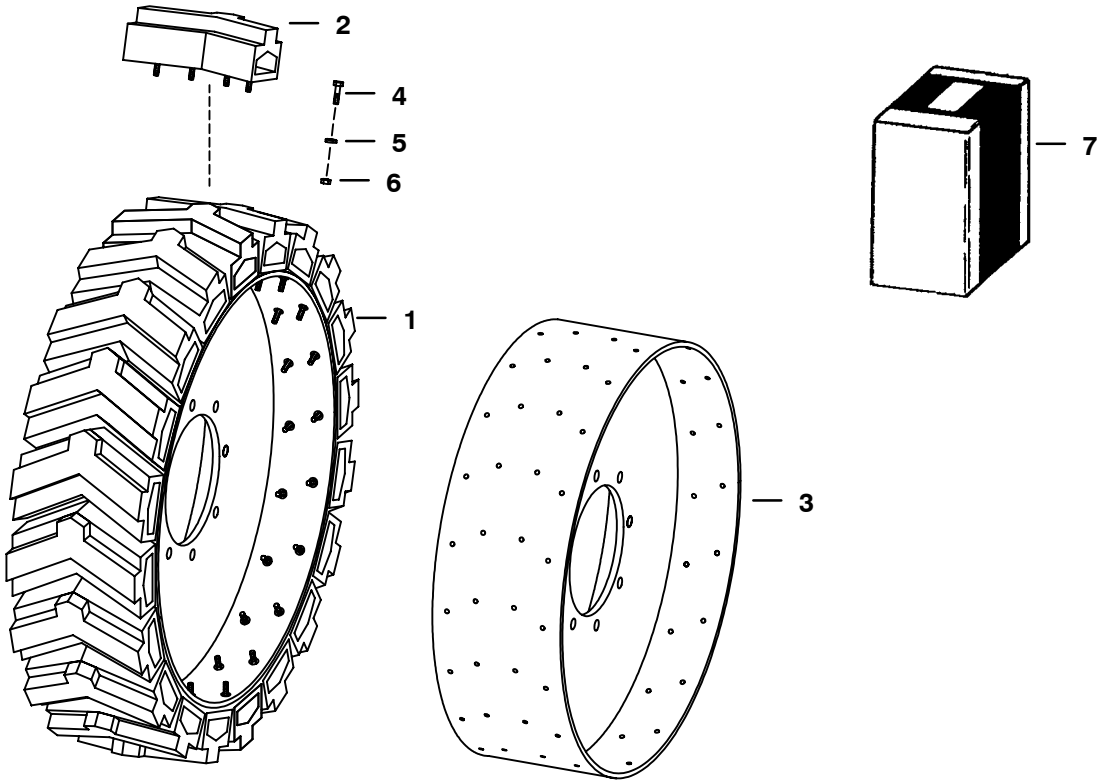

TS-1082

TIRES & RIMS (Cont'd)
(Solid Tire)

Ref. No.	Part Number	Description	Remarks	Serial Number	Qty.
1	6674003	TIRE & RIM	Assy. - R.H. - 10 x 16.5		2
	6674004	TIRE & RIM	Assy. - L.H. - 10 x 16.5		2
2	6674007	KIT	Box of (10) segments - 10 x 16.5 W/Ref. 4 - 6 (20) segments/tire		x
3	NAP	RIM	R.H. - 10 x 16.5 - Order Ref. 1		2
	NAP	RIM	L.H. - 10 x 16.5 - Order Ref. 1		2
4	1CM-830	BOLT			x
5	25E-15	WASHER			x
6	40DM-8	NUT			x
7	6718298	KIT	wheel - Set of (4) 10 x 16.5 Tire & Rim Assys. - Ref. 1 - (2) R.H. & (2) L.H.		1

BULK ITEMS
(SEE NOTE)

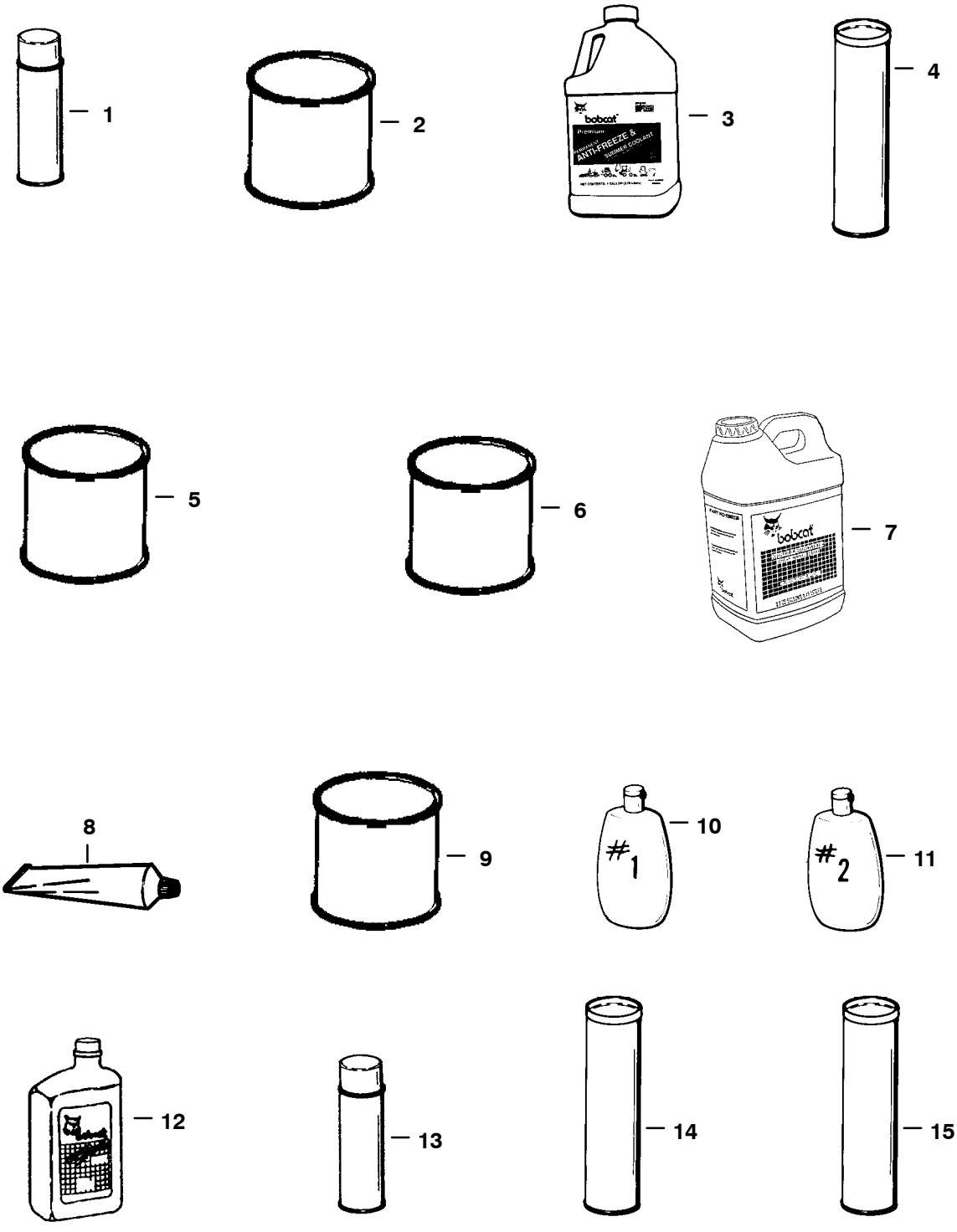

NOTE: Some of these bulk items may not be used on this particular model Bobcat.

NOTE: See Merchandising catalog for more products & information.

NOTE: Paint spray cans are packaged 6 per box.
Motor oil quarts are packaged 12 per box.
Motor oil 5 qt. jugs are packaged 4 per box.
Motor oil 2.5 gal. jugs are packaged 2 per box.

B-16462R

BULK ITEMS (Cont'd)
(SEE NOTE)

Ref. No.	Part Number	Description	Remarks	Serial Number	Qty.
1	6902228	PAINT	orange - Spray Can - SEE NOTE		x
	6902229	PAINT	charcoal -Spray Can -SEE NOTE		x
	6902230	PAINT	white - Spray Can - SEE NOTE		x
2	6902233	PAINT	orange - Qt. - Also Order Ref. 5		x
	6902234	PAINT	charcoal - Qt. - Also Order Ref. 5		x
	6902235	PAINT	white - Qt. Also Order Ref. 5		x
3	6724094	ANTI-FREEZE	gallon - PG - premixed		x
	6724354	ANTI-FREEZE	gallon - PG - concentrate		x
4	6633583	SEALANT	chaincase covers		x
5	NAP	REDUCER	gallon		x
6	NAP	PRIMER	gallon		x
	6653519	PRIMER	Qt.		x
7	6563328	FLUID	Hydraulic/Hydrostatic Transmission Fluid - 5 Gallons - 2-2 1/2 Gallon Containers		x
	6722344	FLUID	Hydraulic/Hydrostatic Trans. Fluid - 5 Gal. Container		x
	6563330	FLUID	55 Gallon Drum		x
8	6599360	SEALANT	electrical - 3 oz. tube		x
9	6634393	LUBRICANT	90 wt. gear - pint - For use in cooling fan drive assy.		x
10	6630188	POLISH	window-1 (8 oz.)		x
11	6630189	POLISH	window-2 (8 oz.) - scratch remover		x
12	6657303	OIL	30 CE/SG - 1 Qt. - SEE NOTE		x
	6724559	OIL	SAE 30 - 1 Gal.		x
	6674206	OIL	30 CE/SG - 2.5 Gal. - SEE NOTE		x
	6657301	OIL	10W30 CE/SG - 1 Qt. -SEE NOTE		x
	6724557	OIL	SAE 10W30 - 1 Gal. - SEE NOTE		x
	6674205	OIL	10W30 CE/SG-2.5 Gal.-SEE NOTE		x
	6657299	OIL	15W40 CE/SG - 1 Qt. -SEE NOTE		x
	6724558	OIL	SAE 15W40 - 1 Gal. - SEE NOTE		x
	6674204	OIL	15W40 CE/SG-2.5 Gal.-SEE NOTE		x
13	6652818	ADHESIVE	insulation - spray can		x
14	6658266	GREASE	general purpose		x
15	6599719	GREASE	14.5 oz. cartridge - For fan idler bearing & spring loaded drive idler		x
16	6650407	ADHESIVE	1 oz. tube		x
17	6650388	SEALANT	flange		x
18	6736644	PAINT	orange - .5 oz. spray can		x
	6736641	PAINT	charcoal - .5 oz. spray can		x
	6736642	PAINT	white - .5 oz. spray can		x
	6736645	PAINT	red - .5 oz. spray can		x

Part No.	Description	Was	Code	Page
225855	SEAL			32
614142	SLEEVE			252
616783	WASHER			104
619021	WASHER			20, 34, 62, 280, 298
654299	BEARING			88, 92
658128	SNAP RING			88, 92
669863	SNAP RING			88, 92
743332	GREASE ZERK			32, 34
774220	NUT			194, 260
799119	SNAP RING			64
851242	BALL BEARING			156
866028	CLAMP			180
872229	WASHER			48, 50
898731	BULB			276
1303932	GROMMET			126
1306637	PIN			62
1320075	COTTER PIN			274
1530265	SEAL			58
1614765	VALVE			316
3974037	PIN			144
3974038	O-RING			144
3974095	GASKET			140, 144
3974192	BOLT			168
3974260	SCREW			176
3974366	BOLT			174
3974368	GASKET			174
3974381	SEAT			174
3974382	SPRING			174
3974383	SEAT			174
3974384	SHIM			174
3974385	TAPPET			174
3974389	CAP			144
3974393	PIN			144
3974394	PIN			144
3974395	PIN			142, 144
3974432	CAP			150
3974433	CAP			150
3974502	GASKET			172
3974514	SPRING			148
3974515	RETAINER			148
3974516	COLLET			148
3974518	CAP			148
3974521	BRACKET			148
3974524	WASHER			148
3974546	KEY			154, 158
3974547	STOPPER			158
3974577	O-RING			140, 154
3974618	CIR-CLIP			156
3974620	CIR-CLIP			156
3974626	SHIM			172
3974671	NUT			154

Code for disposition of old part number

A — Use up

B — Use on other application (See PNI)

C — File PDR Report with Bobcat Parts Sales

D — Part Number Error

Part No.	Description	Was	Code	Page
3974679	CLAMP			146
3974787	RACK			174
3974868	PIN			144
3974871	ADAPTER			144
3974882	HOOK			150
3974893	SEAT			142
3974894	FLANGE			142
3974920	SCREW			148
3974928	SCREW			146
3974971	NUT			170
3974972	GASKET			170
3974996	COVER			156
3975337	COLLAR			154
3975426	OIL PUMP			144
3975441	GEAR			144
5289686	PLUG			232
6500989	CLAMP			288
6502203	CLAMP			48, 50
6510171	LINK			40
6510470	RING GEAR			130
6511855	FOAM			122
6512026	BUSHING			62
6512797	RIVET			306
6513152	SEAL			210, 260
6513495	COTTER PIN			62
6513532	POPPET			86
6513533	SPRING			86
6513707	JOINT			172
6515131	TERMINAL			252
6515817	WASHER			20
6516231	RING			60
6517516	LIGHT			252
6519178	BUMPER			24, 32
6519925	BEARING			46
6531270	SLEEVE			64
6532127	BOOT			28, 112, 256
6532453	RING SEAL			282
6532508	CAP			78
6533898	DECAL			274
6534630	RESTRICTOR			70
6539299	SPACER			60
6539323	HEAD			60
6539934	HEAD			58
6542731	SAFETY TREAD			204, 210
6544654	BUSHING			44, 62
6547593	PIN			32
6552871	WASHER			46
6553411	BUSHING			18, 36, 44
6553709	WASHER			20
6554100	SAFETY TREAD			228, 280
6554149	CORD			204, 214, 222, 232

Code for disposition of old part number
A — Use up
B — Use on other application (See PNI)
C — File PDR Report with Bobcat Parts Sales
D — Part Number Error

Part No.	Description	Was	Code	Page
6554858	BALL JOINT			136
6555351	SEAL			204, 210, 222
6555987	BUSHING			18, 32
6555989	BUSHING			32
6557224	DECAL			230
6557291	BALL JOINT			136
6557493	GROMMET			294
6557831	WASHER			82
6557904	FLASHER			244, 252
6558309	WIRE ROPE			228
6558310	SLEEVE			228
6559447	WASHER			78
6559552	HARDHAT			312
6559775	EARMUFFS			312
6560172	COVER			104
6560573	DECAL			230
6560633	MOUNT			20
6561218	SHUTTLE			86
6561383	DECAL			228
6562018	SPRING			34
6562266	CLAMP			58
6562602	BUSHING			20
6562619	BUSHING			186, 246, 308, 310
6562769	RIM			316
6563328	FLUID			2, 6, 320
6563330	FLUID			2, 6, 320
6563606	WASHER			46
6563914	WASHER			62
6564343	BUSHING			136
6564452	GRIP			30, 136
6564654	PIN			62
6564657	PIN			62, 184
6564669	NUT			46, 316
6565170	CABLE			104
6565200	DECAL			230
6565355	GUIDE			22
6565990	DECAL			230
6567743	PIN			20, 122, 254
6567827	ANGLE			274
6567838	PIN			274
6567962	WASHER			136
6569203	CLAMP			104
6569219	SCREEN			36, 78
6569465	AXLE			46
6570931	INSTRUCTIONS			186
6571851	SNAP RING			42
6571852	SNAP RING			42
6576028	HOSE			126
6576033	WASHER			130
6576252	ROD			136
6576261	COVER			136

Code for disposition of old part number

A — Use up

B — Use on other application (See PNI)

C — File PDR Report with Bobcat Parts Sales

D — Part Number Error

Part No.	Description	Was	Code	Page
6576262	MOUNT			136
6576280	BOLT			104
6576302	BAR			62
6576660	TANK			126
6577058	PIN			82
6577204	SPROCKET			40, 46
6577382	SPACER			122
6577459	DIPSTICK			78
6577545	GROMMET			194, 270
6577669	HOSE			48, 50
6577690	TUBE			66, 70, 78
6577754	DECAL			230
6577785	CAP			78
6577812	COVER			186
6577821	HOSE			36
6577822	HOSE			36, 122
6577880	KIT			186
6577947	SAFETY TREAD			228
6577949	SAFETY TREAD			228
6577954	PIN			32
6577961	GROMMET			28, 62
6578139	LEVER			200
6578140	LEVER			200
6578169	HOSE			36
6578172	HOSE			36
6578268	BELLCRANK			136
6578278	PAD			36
6578279	HOSE			126
6578280	HOSE			126
6578284	SHIM			138
6578356	BUSHING			32
6578363	ROD END			104
6578366	BALL JOINT			104
6578368	DECAL			230
6578505	COVER			18
6578689	HUB			46
6579104	SHIM			34
6579106	SHIM			34
6579126	CHAIN			40
6579127	CHAIN			40
6579326	MOUNT			122
6579385	DECAL			246, 308
6579399	DECAL			246, 310
6579403	DECAL			246, 310
6579528	DECAL			228
6579613	STOP			20, 122
6579641	HOUSING			138
6584978	CONDUIT			44
6586542	HEAD			282
6586543	PISTON			282
6586586	TUBE			58

Code for disposition of old part number

A — Use up

B — Use on other application (See PNI)

C — File PDR Report with Bobcat Parts Sales

D — Part Number Error

Part No.	Description	Was	Code	Page
6586918	SCREW			64
6587458	KEY			36
6587523	WASHER			64, 68
6587575	ADAPTER			64
6587580	SPRING			64, 68
6587633	BONNET			64, 68
6587763	BOOT			64, 68, 116
6588074	SPOOL			64, 68
6588781	END CAP			64, 68
6589226	BONNET			64
6589564	RETAINER			64, 68
6589565	RETAINER			68
6592098	WASHER			64
6592100	COLLAR			64, 68
6592105	BALL			64
6592107	SPRING			64
6592109	ADAPTER			64, 68
6592115	SEAT			64, 68
6592116	NUT			64, 68
6592117	SPRING			64, 68
6592506	CLAMP			56
6592720	PLUG			66, 68
6595014	DECAL			230
6595663	BUSHING			64, 70
6595951	SLEEVE			64, 70
6596332	SPRING			66, 70
6596807	PLUG			64
6598098	PIN			170
6598099	KEY			156
6598102	COCK			172
6598116	PLUG			150
6598146	PIPE			176
6598156	STUD			150
6598158	CIR-CLIP			156
6598187	PLUG			144
6598275	BOLT			130
6598362	CARTRIDGE			2, 180
6598485	SEALANT			192
6598492	CARTRIDGE			2, 180
6599118	GASKET			172
6599119	GASKET			174
6599136	CLIP			176
6599360	SEALANT			320
6599645	PLUG			18, 36
6599719	GREASE			130, 320
6599741	WASHER			82
6599744	BALL JOINT			82
6599931	ALARM			194
6610510	TIE			104, 232, 258
6624289	TIE			56, 122, 236, 238, 240, 244, 268, 280, 288

Code for disposition of old part number

A — Use up

B — Use on other application (See PNI)

C — File PDR Report with Bobcat Parts Sales

D — Part Number Error

Part No.	Description	Was	Code	Page
6626631	CLAMP			122
6628571	VALVE			54, 64, 68, 72
6630188	POLISH			320
6630189	POLISH			320
6630207	RIVET			22, 28
6630945	WASHER			136
6631046	GASKET			140, 152
6631418	PIN			20, 24, 122, 254
6631561	NUT			76
6631664	SEAL			154
6632218	BEARING			42
6632279	SEAL KIT			66, 70
6632541	RACE			42
6633583	SEALANT			132, 320
6634393	LUBRICANT			4, 138, 320
6634609	RACE			46
6640690	PIN			108, 112, 256, 258, 270
6640692	CONNECTOR			108, 112, 256, 258
6640694	LOCK			108, 112, 256, 258
6640699	CONNECTOR			112, 256, 260, 270
6640700	LOCK			112, 256, 270
6641176	SEAL			108, 112, 256, 258, 270
6641179	CONNECTOR			108, 112, 256, 270
6641180	LOCK			108, 112, 256, 270
6645080	O-RING			92
6645081	O-RING			88
6645086	PLUG			88, 92
6645090	SEAL			88
6646383	CONNECTOR			106
6646582	PLUG			112, 256, 258
6646627	BEARING			138
6646678	CAP			126
6646705	MOULDING			124
6646781	SWITCH			194
6647777	PIN			76
6647778	CAP			76
6647780	PLUG			76
6647783	LOAD CHECK			76
6647784	PLUG			76
6647785	SPRING			76
6647786	SEAL KIT			76
6648293	SCREW			76
6648294	SPRING			76
6648307	CONNECTOR			258
6648330	TERMINAL			106
6648348	PLUG			28
6649244	BALL STUD			122, 204
6649245	RETAINER			204, 210
6649402	MOULDING			122
6649481	BULB			276
6649551	SHOCK			82

Code for disposition of old part number

A — Use up

B — Use on other application (See PNI)

C — File PDR Report with Bobcat Parts Sales

D — Part Number Error

Part No.	Description	Was	Code	Page
6649949	PLUG			232
6650388	SEALANT			320
6650407	ADHESIVE			124, 320
6650627	PLATE			88, 92
6650629	PIN			88, 92
6650630	RETAINER			88, 92
6650634	GASKET			88, 92
6650635	BEARING			88, 92
6650636	PIN			88, 92
6650637	BOLT			88, 92
6650646	O-RING			88
6650647	O-RING			88
6650648	PLUG			88
6650652	POPPET			88
6650668	BOLT			88, 92
6650675	COUPLER			88
6651489	COVER			162
6651542	BALL			86
6651709	SEAL			32
6651934	RIVET			156
6652018	BOLT			92
6652574	PLUG			144
6652575	PLUG			144
6652580	BOLT			144, 160
6652633	PLUG			154, 158
6652652	SPRING			142
6652653	PLUG			146
6652670	STUD			162, 164, 172
6652688	CLAMP			176
6652689	CLAMP			176
6652762	BOLT			160
6652764	STUD			142, 166, 170
6652792	NUT			150, 160, 162
6652818	ADHESIVE			320
6652918	NUT			134, 242
6653484	VALVE			290
6653485	SEAL KIT			290
6653487	SEAL KIT			290
6653519	PRIMER			320
6653561	NUT			166, 170
6653702	SEAL			138
6653757	SNAP RING			138
6653758	SNAP RING			138
6653798	BOLT			152
6653808	BOLT			160
6653809	ADAPTER			142
6653821	BOLT			154
6653830	SEAL			148
6653833	SPRING			148
6653859	SLEEVE			154
6653861	SLINGER			154

Code for disposition of old part number
A — Use up
B — Use on other application (See PNI)
C — File PDR Report with Bobcat Parts Sales
D — Part Number Error

Part No.	Description	Was	Code	Page
6653888	NUT			144
6653894	SLEEVE			174
6653916	WASHER			168
6653946	STUD			160
6654139	MOULDING			110, 134, 256
6654170	STRIKER BOLT			210
6654374	KEY			36
6654718	CLIP			176
6654806	FUSE			106
6655154	GUIDE			150
6655155	SEAT			148
6655156	SEAT			148
6655158	BOLT			150
6655160	PLUG			150
6655161	WASHER			150
6655176	PUSH ROD			158
6655179	PIN			154
6655180	CIR-CLIP			154
6655181	ROD			154
6655183	BEARING			154
6655195	BOLT			144
6655197	PIPE ASSY			172
6655201	ELEMENT			174
6655202	VALVE			174
6655203	SPRING			174
6655204	HOLDER			174
6655205	PLATE ASSY			174
6655206	BOLT			174
6655207	PLATE			174
6655209	PLATE			174
6655210	SHIM			172
6655212	GEAR			156
6655213	SLEEVE			156
6655214	CASE			156
6655215	BALL			156
6655216	FUEL PUMP			172
6655218	GASKET			178
6655223	NUT			170
6655224	LEVER			168
6655236	BEARING			154
6655237	BEARING			154
6655243	BUSHING			154
6655384	CAMSHAFT			158
6655498	BOLT			154
6655518	O-RING			174
6655781	BEARING			130
6655870	ARM			148
6655872	HEAT SEAL			178
6655873	PIECE			178
6655874	CLIP			172
6655880	PIPE			146, 164

Code for disposition of old part number
A — Use up
B — Use on other application (See PNI)
C — File PDR Report with Bobcat Parts Sales
D — Part Number Error

Part No.	Description	Was	Code	Page
6655884	PLUG			144
6655938	VALVE			180
6656126	WASHER			178
6656127	WASHER			178
6656128	WASHER			178
6656129	WASHER			178
6656130	WASHER			178
6656131	WASHER			178
6656132	WASHER			178
6656155	COVER			48, 50, 280
6657028	O-RING			88, 92
6657067	COVER			92
6657068	COVER			88, 92
6657299	OIL			2, 4, 320
6657301	OIL			2, 4, 320
6657303	OIL			2, 4, 320
6657376	ELBOW			122
6657402	GASKET KIT			144
6657415	BOLT			162
6657460	NUT			178
6657463	WASHER			178
6657663	PLUG			144
6657719	PLUG			28, 222, 232
6657734	PUMP			36
6657742	KIT			178
6658180	PLUG			36
6658228	SEAL			46, 192
6658266	GREASE			4, 320
6658301	SPRING			90
6658536	SNAP RING			130
6658672	SNAP RING			44
6658847	SNAP RING			130
6659543	PLUG			278
6659982	MUFFLER			246, 310
6659999	BELT			306
6660260	SWITCH			100, 106
6660644	CAP			64
6660814	O-RING			88, 92
6660995	RING			130
6661022	FILTER			6, 78, 98
6661062	PLUG			128
6661112	SEAL			132
6661114	CAP			36
6661150	SWITCH			244
6661242	COVER			180
6661243	WING NUT			180
6661244	WASHER			180
6661248	ELEMENT			2, 6, 100
6661353	LIGHT ASSY			276
6661405	OIL			132
6661481	O-RING			90

Code for disposition of old part number
A — Use up
B — Use on other application (See PNI)
C — File PDR Report with Bobcat Parts Sales
D — Part Number Error

Part No.	Description	Was	Code	Page
6661616	MUFFLER			278
6661696	CAP			36
6661785	MOUNT			134
6661787	WASHER			134, 242
6661807	KIT			98
6661808	KIT			98
6662306	RING			46, 192
6662848	CAP			66, 70
6662997	PULLEY			130
6664004	CLAMP			128
6664035	CAP			238
6664036	NUT			238
6664037	WASHER			238
6664040	PIN			238
6664065	WASHER			294
6664085	BUSHING			208, 222, 232, 294
6664097	COVER			206, 294
6664103	NUT			294
6664209	SEAL			132
6664212	CHECK VALVE			290
6664221	RETAINER			232
6664223	OUTLET			232
6664224	CAP			232
6664286	BOOT			106
6664554	PUMP			206
6664566	SCREW			294
6664815	SEAL			86
6665000	CLIP			112, 204, 216, 256
6665086	SEAL			58
6665208	SEAL			60
6665314	PLUG			102, 232
6665316	SWITCH			252
6665317	SWITCH			196, 314
6665321	RIVET			112, 204, 216, 256
6665322	RIVET			112, 204, 216, 256
6665367	BULB			232
6665371	SWITCH			180
6665568	SEAL			204, 214
6665569	WASHER			64, 68
6665570	RING			64, 68
6665602	MOTOR			294
6665701	BUSHING			62
6665707	SWITCH			206
6665727	LIGHT			244
6665728	LIGHT			244
6665729	LIGHT			244
6665839	BOLT			62
6665860	KIT			244
6666338	WASHER			88, 92
6666339	BOLT			92
6666341	VALVE			50, 76, 202

Code for disposition of old part number

A — Use up

B — Use on other application (See PNI)

C — File PDR Report with Bobcat Parts Sales

D — Part Number Error

Part No.	Description	Was	Code	Page
6666384	RADIATOR			122, 126
6666542	SEAL			282
6666571	BULB			196
6666766	GROMMET			206
6666781	GASKET			140, 164
6666782	GASKET			144
6666802	GASKET			140, 162
6666814	GASKET			154
6667144	CONNECTOR			108, 112, 256
6667145	LOCK			108, 256
6667176	PLUG			76
6667189	HOSE			126
6667201	SPACER			294
6667323	SEAL			282
6667324	SEAL			60
6667326	SEAL			58
6667352	ELEMENT			2, 4, 36
6667353	FILTER ASSY			36
6667418	PLUG			144
6667419	WASHER			168
6667420	BOLT			152, 156
6667421	BOLT			150
6667422	WASHER			142, 148, 150, 160, 162
6667428	TAPPET			158
6667433	CIR-CLIP			158
6667451	WASHER			148
6667461	PIN			148
6667549	VALVE			64, 68
6667569	CONNECTOR			238
6667573	DECAL			278
6667676	COVER			76
6667677	O-RING			76
6667680	SNAP RING			76
6667687	VALVE			72
6667803	QUICK COUPLER			288
6667804	QUICK COUPLER			288
6667844	VALVE			54, 74
6668079	PLUG			86
6668080	SHIM			86
6668082	POPPET			86
6668088	PISTON			86
6668089	PLUG			86
6668104	MOUNT			242
6668114	BEARING			130
6668742	SWITCH			232
6668765	VALVE			72
6668791	ORIFICE			72
6668814	SWITCH			202
6668815	SWITCH			244, 252
6668816	SWITCH			196, 244, 314
6668820	NUT			72

Code for disposition of old part number
A — Use up
B — Use on other application (See PNI)
C — File PDR Report with Bobcat Parts Sales
D — Part Number Error

Part No.	Description	Was	Code	Page
6668879	DECAL			194
6668881	CORD			198
6668913	KNOB			54, 74
6668953	BRACKET			26
6669057	CHECK VALVE			72
6669085	VALVE			74
6669087	SEAL KIT			74
6669089	TRACK			26
6669091	CLIP			232, 260
6669135	SEAT			22, 24, 26
6669187	VALVE			290
6669188	SEAL KIT			290
6669189	STEM			290
6669190	COIL			290
6669216	SEAL KIT			290
6669217	SEAL KIT			290
6669218	VALVE			290
6669219	VALVE			290
6669224	BOLT			232, 260
6669384	SPEEDY SLEEVE			138
6669402	HOUSING			88
6669403	HOUSING			92
6669405	END CAP			92
6669406	END PLATE			88
6669407	SHAFT			92
6669409	WASHER			88
6669410	SHIM KIT			88
6669411	BEARING			88, 92
6669442	HOUSING			86
6669444	SPRING			86
6669446	O-RING			86
6669447	PLATE			86
6669448	PLATE			86
6669449	O-RING			86
6669450	RING			86
6669451	FLANGE			86
6669452	O-RING			86
6669453	SEAL			86
6669454	RING			86
6669455	SEAL KIT			86
6669469	SHAFT			86
6669470	BOLT			86
6669549	SOCKET			234, 238, 240
6669657	O-RING			288
6669732	SEAL KIT			72
6669733	SEAL KIT			72
6669734	SEAL KIT			72
6670160	CUSHION			26
6670284	LIGHT			276
6670287	COVER			30
6670312	SOLENOID			244, 260

Code for disposition of old part number
A — Use up
B — Use on other application (See PNI)
C — File PDR Report with Bobcat Parts Sales
D — Part Number Error

Part No.	Description	Was	Code	Page
6670471	COVER			112
6670472	NUT			176
6670634	SEAL KIT			202
6670682	BEARING			130
6670684	CHECK VALVE			90, 94
6670706	CONNECTOR			112, 256
6670707	CONNECTOR			112, 258
6670709	CONNECTOR			258
6670710	LOCK			112, 256
6670711	LOCK			112, 114, 258
6670714	PIN			256
6670715	PIN			112, 114, 258
6670726	LOCK			292
6670759	SEAL			210
6670769	GASKET			140, 176
6670830	ADAPTER			80
6670831	ELBOW			80
6671025	COIL			72
6671106	HORN			244
6671509	COUPLER			92
6671510	RELIEF VALVE			90, 94
6671512	BLOCK ASSY			90, 92
6671513	SWASH PLATE			88, 92
6671516	SEAL KIT			90, 94
6671518	BOLT			88
6671527	NUT			202
6671617	MOTOR			86
6671667	MUFFLER			128
6672126	GEROLER			86
6672190	DRAINCOCK			144
6672272	WASHER			276
6672273	SCREW			276
6672274	SCREW			276
6672275	GASKET			276
6672276	LENS			276
6672277	BRACKET			276
6672279	MOUNT			276
6672348	PANEL			102
6672360	PLUG			142
6672471	VALVE			72
6672486	SEALANT			138
6672492	RETAINER			194
6672715	SPACER			26
6672863	SOLENOID			202
6673200	FUSE BLOCK			106
6673710	BEARING			82, 110
6673789	BEARING			82, 110
6673828	HOSE			80
6673881	SEAL			88, 92
6674000	CLAMP			108
6674003	TIRE & RIM			318

Code for disposition of old part number

A — Use up

B — Use on other application (See PNI)

C — File PDR Report with Bobcat Parts Sales

D — Part Number Error

Part No.	Description	Was	Code	Page
6674004	TIRE & RIM			318
6674007	KIT			318
6674013	TRACK			26
6674150	OIL COOLER			80
6674169	PULLEY			160
6674202	NUT			102
6674204	OIL			2, 4, 320
6674205	OIL			2, 4, 320
6674206	OIL			2, 4, 320
6674228	PANEL			260
6674231	VENT			260
6674285	GAS SPRING			122
6674315	SWITCH			104
6674316	SWITCH			104
6674400	HOUSING			276
6674401	HOUSING			276
6674402	MOUNT			276
6674403	COVER			22, 102
6674407	SHOULDER BELT			302
6674519	WINDOW			222
6674520	WINDOW			222
6674521	WINDOW			222
6674522	WINDOW			222
6674666	LATCH			204, 210
6674667	HANDLE			204, 210
6674687	BATTERY			2, 104
6674798	REPAIR KIT			80
6674799	ADAPTER			240
6674802	CONNECTOR			234, 238, 240
6674808	SPOOL			64
6674809	SPOOL			64
6674810	SPOOL			64
6674814	SPOOL			64
6674815	SPOOL			64
6674816	SPOOL			64
6674895	REATAINER			232
6674993	CAP			206
6675026	CAP			234, 238, 240
6675033	INSERT			20, 22, 102
6675064	TERMINAL			244
6675073	VALVE			290
6675074	SEAT BELT			22
6675099	HORN			270
6675134	GAS SPRING			20
6675135	GAS SPRING			20
6675136	GAS SPRING			20
6675140	SNAP RING			20
6675154	HOLDER			104
6675155	FUSE			104
6675170	SEAT BELT			298
6675171	CLAMP			102

Code for disposition of old part number
A — Use up
B — Use on other application (See PNI)
C — File PDR Report with Bobcat Parts Sales
D — Part Number Error

Part No.	Description	Was	Code	Page
6675172	BRACKET			260
6675173	ACTUATOR			260
6675174	BODY			260
6675175	BRACKET			260
6675176	SWITCH			260
6675177	KNOB			260
6675179	FLANGE			260
6675181	PLUG			260
6675212	RETAINER			222
6675221	BOLT			134
6675257	ROD END			20
6675273	WASHER			30
6675281	MOUNT			238
6675298	COUPLER			206
6675299	COUPLER			206
6675308	KIT			300
6675309	KIT			300
6675310	KIT			300
6675311	KIT			300
6675312	KIT			300
6675313	KIT			300
6675314	KIT			300
6675315	KIT			300
6675316	KIT			300
6675317	SCISSORS			298
6675319	CUSHION			298
6675320	CUSHION			298
6675321	CUSHION			298
6675322	CUSHION			298
6675323	KNOB			298
6675332	LINK			40
6675336	BULB			276
6675340	VALVE PLATE			88
6675378	CLIP			206, 216
6675387	EXTRUSION			222, 232
6675470	SWITCH			102
6675497	BLOWER			262
6675510	CLAMP			262
6675511	DRAIN VALVE			262
6675512	CLAMP			262
6675513	GROMMET			262
6675517	FILTER			4
6675522	STROBE			314
6675523	BEACON			196, 244
6675524	CLIP			22
6675544	CANVAS CAB			220
6675545	GROMMET			222, 232
6675558	SEAL			204, 210
6675562	SEAT BELT			304
6675581	EXTINGUISHER			248
6675590	DOOR			220

Code for disposition of old part number
A — Use up
B — Use on other application (See PNI)
C — File PDR Report with Bobcat Parts Sales
D — Part Number Error

Part No.	Description	Was	Code	Page
6675591	HINGE KIT			220
6675595	SEAT			298
6675596	SEAT			298
6675611	SEAL			264
6675618	CLAMP			162
6675833	SEAL			222
6675835	TURN SIGNAL			252
6675838	BUSHING			134
6675846	POTENTIOMETER			260
6675858	FLASH TUBE			314
6675982	PLUG			102
6675999	SWITCH			294
6676000	TEE			294
6676001	ARM			294
6676002	BLADE			294
6676003	HOSE			206, 208, 294
6676028	NOZZLE			294
6676029	SOLENOID			110, 112, 116, 184
6676034	KIT			300
6676151	COIL			290
6676152	PLUG			290
6676338	GAS SPRING			300
6676400	CONNECTOR			104
6676497	LEVER			110, 112
6676499	GROMMET			204
6676500	ELBOW			204
6676516	NUT			260
6676536	SWITCH			102
6676537	SWITCH			110, 184
6676538	INSULATION			266
6676539	CLIP			262
6676562	HEATER			262
6676606	SPACER			262, 266
6676640	SEAL			114, 258
6676653	SCREW			266
6676732	SWITCH			280
6676870	CONNECTOR			114, 258
6676872	TURN SIGNAL			244, 252
6676917	ELBOW			204
6676918	HOSE			204
6676927	FELT STRIP			222
6676969	FILTER ASSY			100
6677106	O-RING			68
6677108	HOUSING			262
6677111	SEAL			262, 264
6677115	RECEPTACLE			262
6677116	RETAINER			262
6677117	SCREW			262
6677118	SCREW			262
6677119	SCREW			262
6677120	COVER			262

Code for disposition of old part number
A — Use up
B — Use on other application (See PNI)
C — File PDR Report with Bobcat Parts Sales
D — Part Number Error

Part No.	Description	Was	Code	Page
6677136	SOCKET			234, 238, 240
6677192	MAGNET			206, 216
6677193	RIVET			206, 216
6677194	STRIKER BOLT			204, 216
6677198	CAP			222
6677202	DIPSTICK			152
6677203	TUBE			152
6677216	CONNECTOR			104
6677363	CLAMP			128
6677364	CONNECTOR			258
6677485	SPACER			118
6677486	NUT			118
6677487	COVER			118
6677488	RECTIFER ASSY			118
6677490	BRACKET			118
6677491	BRACKET			118
6677492	ROTOR ASSY			118
6677493	STATOR ASSY			118
6677494	BOLT			118
6677495	SPACER			118
6677496	PULLEY			118
6677497	NUT			118
6677504	COVER			262, 266
6677660	SPOOL			68
6677661	SPOOL			68
6677662	SPOOL			68
6677663	SPOOL			68
6677817	BOLT			118
6677818	BEARING			118
6677819	RETAINER			118
6677820	BEARING			118
6677833	ARM ASSY			208
6677834	BLADE			208
6677836	COVER			208
6677837	BOLT			208
6677839	GASKET			208
6677840	SWIVEL ASSY			208
6677841	WASHER			208
6677842	NUT			208
6677843	NUT			208
6677844	NUT			208
6677845	ADAPTER			208
6677847	GROMMET			208
6677973	PLUG			222
6677983	FILTER			260
6678067	BUSHING			62
6678152	FLANGE			262
6678198	BOLT			208
6678205	ALTERNATOR			118
6678207	FILTER			260
6678283	HANDLE			222

Code for disposition of old part number
A — Use up
B — Use on other application (See PNI)
C — File PDR Report with Bobcat Parts Sales
D — Part Number Error

Part No.	Description	Was	Code	Page
6678292	GAS SPRING			254
6678548	SOCKET			204, 210
6678571	VALVE			68
6678574	VALVE			68
6678666	MOUNT			124
6678675	CONTROLLER			236, 238
6678680	PANEL			102
6678681	PANEL			102
6678739	WASHER			208
6678775	ACTUATOR			110
6678920	NOZZLE			208
6678921	GUIDE			208
6678951	BLOCK ASSY			56
6679247	BOLT			46
6679308	SEAT BELT			302
6679476	MOTOR			208
6679820	SWITCH			106
6679835	KIT			56
6679837	KIT			56
6679838	KIT			56
6679839	KIT			56
6679845	CROSSMEMBER			102
6679855	BULB			102
6679856	ALARM			102
6679990	CLIP			20
6679991	SEAL			122
6679994	SEAL			20
6680054	ACTUATOR			260
6680326	LIGHT			232
6680390	GEAR			120
6680410	CONTROLLER			110
6680414	HANDLE ASSY			270
6680415	HANDLE			108
6680417	HANDLE			112, 256
6680418	HANDLE ASSY			108
6680419	HANDLE ASSY			108
6680420	SENSOR			110, 116, 184
6680421	SENSOR			110, 116, 184
6680422	SENSOR			112
6680424	LEVER			110, 112
6680429	SENSOR			24
6680438	SENSOR			36, 104
6680441	BUSHING			24
6680443	BUSHING			24
6680447	DECAL			108
6680462	HANDLE			112
6680468	MOUNT			114, 184
6680469	SPACER			112, 184, 256
6680470	SPRING			112, 184
6680471	COVER			256
6680477	STRAP			112, 184

Code for disposition of old part number
A — Use up
B — Use on other application (See PNI)
C — File PDR Report with Bobcat Parts Sales
D — Part Number Error

Part No.	Description	Was	Code	Page
6680478	SHIELD			110, 116
6680479	SHIELD			110, 116
6680480	CHANNEL			112, 256
6680481	CHANNEL			112, 256
6680567	PLUG			152
6680639	CAP			144
6680663	NUT			172
6680685	BOLT			148
6680706	BOLT			168
6680779	GASKET			176
6680801	BOLT			172
6680830	BOLT			168
6680970	BREATHER			18, 44, 122
6681462	ELBOW			36
6681512	SOLENOID			44
6681513	SOLENOID			104
6681581	SEAL KIT			96
6681602	PUMP			96
6681614	KNOB			222, 232, 260
6681864	VALVE			284
6682442	BEARING			130
6682459	VALVE			260
6682500	OIL FILTER			152
6682515	SHIM			172
6682532	NUT			164
6682586	GAS SPRING			204, 210
6683087	STUD			166
6683159	BOLT			162
6683202	ENGINE			140
6683274	SEAL			64, 68
6683395	PANEL			102, 232
6684033	NUT			24, 124
6684037	SENSOR			104
6684742	NUT			284
6684743	SOLENOID			284
6684744	SOLENOID			284
6684745	PISTON			284
6684746	CHECK VALVE			284
6684747	SEAL KIT			284
6684752	GASKET			144
6684753	GASKET			140, 152
6684754	O-RING			152
6684756	GUIDE			150
6684762	SEAT			150
6684763	SEAT			150
6684770	GASKET			140, 142
6684772	BOLT			142
6684774	GASKET			142
6684779	SHIELD			146
6684780	GASKET			140, 146
6684781	BOLT			146

Code for disposition of old part number
A — Use up
B — Use on other application (See PNI)
C — File PDR Report with Bobcat Parts Sales
D — Part Number Error

Part No.	Description	Was	Code	Page
6684782	O-RING			140, 146
6684783	FILTER			2, 142
6684785	PLUG			152
6684788	GASKET			154
6684789	SEAL			154
6684791	CAMSHAFT			158
6684792	GEAR			158
6684793	GEAR ASSY			158
6684794	BUSHING			158
6684795	COLLAR			158
6684806	CRANKSHAFT			154
6684813	GASKET			156
6684817	NUT			166
6684818	GASKET			166
6684819	CAP			166
6684823	SPRING			170
6684824	GASKET			140, 170
6684825	GUIDE			166
6684826	SOLENOID			166
6684827	NUT			166
6684829	SHIM			172
6684830	BOLT			172
6684832	LEVER			168
6684833	SHAFT			168
6684836	BOLT			170
6684838	LEVER			168, 170
6684839	LEVER			170
6684841	GASKET			166
6684842	PIPE			176
6684844	BOLT			176
6684845	CLAMP			176
6684848	PIPE			176
6684849	PIPE			176
6684850	GLOW PLUG			176
6684851	CORD			176
6684855	FLANGE			162
6684856	FLANGE			162
6684857	PLUG			162
6684862	PIPE			162
6684863	GASKET			140, 162
6684867	IMPELLER			160
6684868	SET SEAL			160
6684869	FLANGE			160
6684870	GASKET			140, 160
6684872	VALVE			148
6684873	VALVE			148
6684875	SHAFT			148
6684877	GASKET			140, 164
6684879	GASKET			140, 164
6684889	CLAMP			162
6684891	NUT			166

Code for disposition of old part number
A — Use up
B — Use on other application (See PNI)
C — File PDR Report with Bobcat Parts Sales
D — Part Number Error

Part No.	Description	Was	Code	Page
6684910	SENSOR			256
6684913	LEVER			256
6684914	LEVER			256
6685077	GASKET			150
6685078	GASKET			150
6685079	GASKET			150
6685080	GASKET			150
6685081	GASKET			150
6685085	COVER			146
6685086	COVER			146
6685087	VALVE			146
6685095	RINGS			154
6685096	RINGS			154
6685102	PIPE			176
6685103	PIPE			176
6685104	BOLT			162
6685105	WATER PUMP			160
6685106	BODY			160
6685464	BOLT			168
6685465	O-RING			166
6685466	O-RING			142
6685467	O-RING			142
6685468	O-RING			140, 142
6685469	KEY			154
6685470	SCREW			174
6685472	CAP			144
6685474	BEARING			160
6685475	MANIFOLD			164
6685476	SEAL			170
6685477	PLUG			144
6685478	FLANGE			144
6685479	BALL BEARING			156
6685480	CASE			154
6685481	GEAR			154
6685482	BOLT			154
6685483	CASE			154
6685484	CASE			154
6685485	CASE			154
6685486	BEARING			154
6685487	BEARING			154
6685488	WASHER			154
6685489	WASHER			154
6685490	BEARING			154
6685491	BEARING			154
6685492	BEARING			154
6685493	BEARING			154
6685494	WASHER			154
6685495	WASHER			154
6685496	WASHER			154
6685497	WASHER			154
6685498	GASKET			176

Code for disposition of old part number
A — Use up
B — Use on other application (See PNI)
C — File PDR Report with Bobcat Parts Sales
D — Part Number Error

Part No.	Description	Was	Code	Page
6685499	DIPSTICK			152
6685500	LEVER ASSY			166
6685501	WASHER			142
6685502	SPRING			168
6685503	HEAD			150
6685504	CAMSHAFT			156
6685506	PISTON			154
6685509	PISTON			154
6685511	PUMP			172, 174
6685512	HOLDER KIT			176
6685513	BOLT ASSY			166
6685514	SPRING			168
6685515	COVER			154
6685516	COLLAR			156
6685517	STOPPER			156
6685518	OIL PAN			152
6685519	SHAFT			158
6685520	THERMOSTAT			162
6685521	PULLEY			154
6685522	CRANKCASE			144
6685523	GEAR CASE			142
6685524	PIPE			146
6685525	MANIFOLD			164
6685526	PLATE			170
6700115	SPRING			130
6700170	WASHER			136
6700182	COVER			18
6700329	HOUSING			122
6700330	COVER			18, 44
6700463	CUP			32
6700469	SPACER			32
6700535	SPACER			134
6700631	GASKET			78
6700711	AIR CLEANER			180
6700743	SPRING			32
6700782	CAP			138
6701097	WASHER			122
6701123	BOLT			128
6701151	PIPE			128
6701159	SHIM			138
6701174	WASHER			20
6701449	FILLER TUBE			36
6701535	SPRING			24, 82
6701552	BAFFLE			78
6701893	CLAMP			48, 50
6702102	GEAR			138
6702103	GEAR			138
6702135	SHAFT			138
6702137	SHAFT			138
6702140	WASHER			138
6702144	SHIM			138

Code for disposition of old part number
A — Use up
B — Use on other application (See PNI)
C — File PDR Report with Bobcat Parts Sales
D — Part Number Error

Part No.	Description	Was	Code	Page
6702165	SHIM			138
6702166	SHIM			138
6702301	DECAL			228
6702302	DECAL			228
6702346	SCREEN			190
6702347	SCREEN			190
6702351	KIT			190
6702397	ROD			136
6702402	SHIELD			250
6702444	FUSE			106
6702474	RETAINER			130
6702543	LEVER			82
6702583	BUSHING			18
6702584	BUSHING			18
6702593	SPACER			194
6702621	GRIP			108
6702650	MOUNT			244
6702716	BLOCK			82
6702797	CAP			126
6702903	LEVER			34
6702904	LEVER			34
6702921	SPACER			272
6702958	BUSHING			34
6702971	BOLT			20
6702986	NUT			190
6702990	BUSHING			112, 256
6703022	CLIP			130
6703090	HANDLE			190
6703097	GASKET			44
6703140	WASHER			134
6703168	BEARING			132
6703331	INSULATION			246, 308, 310
6703363	BUSHING			32
6703427	FOAM FILTER			78
6703483	PULLEY			246
6703507	IDLER ARM			130
6703615	CLAMP			280
6703640	KIT			306
6703641	DECAL			306
6703703	GUIDE			306
6703727	DECAL			270
6703879	BUSHING			82
6703981	MOUNT			134
6704012	HOSE			134
6704149	BRACKET			274
6704159	HOSE			80
6704240	PIVOT ASSY			34
6704242	WEDGE ASSY			34
6704248	PIVOT			34
6704287	BUSHING			32
6704288	PIN			32

Code for disposition of old part number
A — Use up
B — Use on other application (See PNI)
C — File PDR Report with Bobcat Parts Sales
D — Part Number Error

Part No.	Description	Was	Code	Page
6704335	HOSE			48, 50
6704336	HOSE			48, 50
6704341	MOUNT			80
6704391	PULLEY			132
6704403	STOP			32
6704436	PAD			32
6704443	BUSHING			130
6704444	WASHER			130
6704484	WASHER			130
6704600	STOP			34
6704601	STOP			34
6704753	PLUG			126
6704769	INSULATION			246, 308, 310
6704786	DECAL			274
6704820	O-RING			130
6704833	BRACKET			52, 202
6704878	GASKET			40
6704892	RIVET			236, 238
6705052	SHIELD			122
6705089	LIFT ARM STOP			32
6705091	TAB			32
6705106	WASHER			134, 242
6705231	WASHER			130
6705232	WASHER			130
6705333	MOUNT			246, 310
6705452	LEVER			136
6705491	SPRING			132
6705749	COVER			48, 50
6705847	SEAL			42
6705848	INSULATION			246, 308, 310
6705849	INSULATION			246, 308, 310
6705850	INSULATION			246, 308, 310
6706042	COVER			18, 44
6706043	BUSHING			134
6706089	HOSE			288
6706098	GUIDE			82
6706104	RETAINING NUT			62
6706105	YOKE			62
6706106	MOUNT			82
6706220	TEE			288
6706285	SCREEN			286
6706349	MOUNT			20
6706393	SHIELD			128
6706485	HOOK			18
6706517	SCREW			36, 122
6706558	DECAL			230
6706572	SET SCREW			136
6706718	MOUNT			44
6706737	GASKET			44
6706807	PIN			272
6706825	LIFT EYE			272

Code for disposition of old part number
A — Use up
B — Use on other application (See PNI)
C — File PDR Report with Bobcat Parts Sales
D — Part Number Error

Part No.	Description	Was	Code	Page
6706939	KIT			286
6706968	GASKET			44
6707040	ELBOW			104
6707077	HOUSING ASSY			138
6707078	HOUSING ASSY			138
6707101	SEAL			54, 74
6707514	SHIM			34
6707804	HOUSING			244
6707852	DECAL			204
6707923	INSULATION			246
6707924	INSULATION			246
6708009	LINK			62
6708016	GASKET			44
6708018	SPRING			44
6708043	BUSHING			62
6708189	TUBE			20
6708267	BOLT			44
6708310	HOSE			206
6708748	TUBE			80
6708770	CAP			130
6708929	DECAL			230
6708981	BRACKET			122
6708987	BRACKET			18
6709022	LEVER			136
6709030	DECAL			130, 230, 308
6709170	STUD			46
6709215	BOB-TACH			34
6709415	MOUNT			126
6709527	KEY			102, 204, 210, 292
6710358	DECAL			228
6710585	WASHER			130
6710653	HOSE			36
6710659	BUSHING			24
6711527	LATCH PLATE			30
6711632	MOUNTING KIT			242
6711643	CAM			82
6711699	HUB ASSY			132
6712161	MOUNT			134
6712827	CHAINCASE			18, 40
6712970	PULLEY			310
6712971	PULLEY			310
6713040	SPRING			34
6713043	SPACER			112
6713150	MOUNT			244
6713151	MOUNT			244
6713456	SHAFT			44
6713507	DECAL			228
6713589	CLEVIS			24
6713736	BRACKET			244
6713793	BRACKET			194
6713840	DECAL			244

Code for disposition of old part number
A — Use up
B — Use on other application (See PNI)
C — File PDR Report with Bobcat Parts Sales
D — Part Number Error

Part No.	Description	Was	Code	Page
6713841	SHIELD			244
6713850	MOUNT			32
6713887	BOLT			24
6713993	HARNESS			244
6713994	HARNESS			244
6714037	LATCH			292
6714126	DOOR STOP			30
6714212	PULLEY ASSY			130
6714278	WEDGE			44
6714361	WEIGHT			226
6714590	MAIN FRAME			18
6714726	PLUG			110
6714810	PIN			32
6714820	SHIELD			244
6714889	HOSE			128
6715106	INSULATION			246, 308, 310
6715142	FAN			122
6715143	SET SCREW			122
6715163	BUSHING			82
6715164	SLEEVE			82
6715183	ELBOW			36
6715191	ELBOW			78
6715197	CLAMP			104
6715287	SPACER			242
6715365	HARNESS			231
6715371	INSULATION			246, 308, 310
6715372	INSULATION			246, 308, 310
6715428	DECAL			310
6715659	HARNESS			194
6715744	BUSHING			246, 310
6715860	SEAT BAR			24
6715863	BRACKET			24
6715864	BUSHING			24
6715865	BUSHING			24
6715866	BUSHING			24
6716228	BRAKE			44
6716419	HARNESS			276
6716545	ROD			82
6716571	LOUVER			122
6716572	LOUVER			122
6716601	PIN			32
6716621	COVER			28
6716843	WASHER			46
6716916	WASHER			110
6716977	BELLCRANK			110
6717146	SPACER			204, 210
6717208	SHIELD			28
6717343	DECAL			228
6717360	WINDOW			204
6717369	BRACKET			204, 210
6717393	LEVER			110

Code for disposition of old part number
A — Use up
B — Use on other application (See PNI)
C — File PDR Report with Bobcat Parts Sales
D — Part Number Error

Part No.	Description	Was	Code	Page
6717401	PLUG			36
6717402	BUSHING			36
6717478	INLET			122
6717515	INSULATION			232
6717517	INSULATION			232
6717518	INSULATION			232
6717519	INSULATION			232
6717520	INSULATION			232
6717579	GASKET			36, 104
6717593	HINGE			206, 210
6717643	DUCT			260
6717644	DUCT			260
6717662	TEE			288
6717870	TRACK			222
6717871	TRACK			222
6717872	TRACK			222
6717873	TRACK			222
6717874	WINDOW			222, 232
6718034	FUSE			106
6718101	COVER			22
6718175	SCREEN			260
6718237	HOSE			128
6718260	BATTERY PAN			104
6718291	GRILL			122
6718298	KIT			318
6718326	MOUNT			252
6718376	HINGE			206, 210
6718411	KIT			252
6718415	SWITCH			104
6718426	HARNESS			240
6718489	INSULATION			22
6718506	PIN			110
6718520	COVER			210
6718521	HANDLE			206, 210
6718570	TUBE			288
6718571	TUBE			288
6718579	DECAL			260
6718580	PANEL			232
6718645	HARNESS			288
6718659	HOUSING			104
6718706	DECAL			110
6718719	HANDBOOK			2
6718723	WASHER			32
6718750	MOUNT			240
6718760	COVER			28
6718774	DECAL			28, 104
6718784	COVER			20
6718796	PLUG			18, 30
6718803	KIT			260
6718808	KIT			204
6718820	HARNESS			194

Code for disposition of old part number
A — Use up
B — Use on other application (See PNI)
C — File PDR Report with Bobcat Parts Sales
D — Part Number Error

Part No.	Description	Was	Code	Page
6718822	KIT			194
6718833	BRACKET			250
6718834	BRACKET			250
6718837	SPACER			260
6718872	HARNESS			196, 244, 252, 314
6718873	HARNESS			252
6718887	PANEL			260
6718924	KIT			250
6719005	MOUNT			20
6719037	STRIKER			222
6719043	HORN KIT			270
6719048	MOUNT			136
6719056	BLOCK			44
6719057	BLOCK			44
6719063	STOP			222
6719064	MOUNT			254
6719065	COVER			222
6719084	BOLT			102
6719144	HOSE			268
6719151	HARNESS			270
6719184	BRACKET			274
6719185	BRACKET			274
6719317	WINDOW			294
6719323	KIT			274
6719332	INSULATION			246, 308, 310
6719372	INSULATION			246, 308, 310
6719413	WINDOW			222
6719448	MAGNET			236, 238
6719490	LIFT EYE			272
6719503	CONTAINER			22
6719504	INSULATION			22
6719525	BAR			30
6719563	KIT			228, 258
6719672	OPERATOR CAB			20, 22
6719766	STOP			30
6719825	BOLT			130
6719826	BOLT			134
6719827	BOLT			134
6719828	BOLT			130, 134
6719829	BOLT			134
6719834	SPACER			112, 184, 256
6719835	SLEEVE			112, 256
6719851	SHIELD			122
6719854	KIT			196
6719857	KIT			314
6719884	CLAMP			280
6719888	DECAL			280
6719906	SPACER			272
6720038	INSTRUCTIONS			198
6720592	INSTRUCTIONS			250
6720621	INSTRUCTIONS			190

Code for disposition of old part number
A — Use up
B — Use on other application (See PNI)
C — File PDR Report with Bobcat Parts Sales
D — Part Number Error

Part No.	Description	Was	Code	Page
6720736	HEATER			198
6722147	HOLDER			178
6722344	FLUID			2, 6, 320
6722597	VELCRO			220
6722861	INSTRUCTIONS			286
6722872	INSTRUCTIONS			272
6722907	KIT			46, 192
6722908	INSTRUCTIONS			192
6724094	ANTI-FREEZE			320
6724354	ANTI-FREEZE			320
6724482	INSTRUCTION			242
6724557	OIL			2, 4, 320
6724558	OIL			2, 4, 320
6724559	OIL			2, 4, 320
6724775	LEVER KIT			34
6724776	LEVER KIT			34
6725042	SHIELD			204, 210
6725128	ADAPTER			110
6725198	HOSE			280
6725199	HOSE			280
6725200	PLATE			204, 210
6725224	KIT			272
6725256	COUNTERWEIGHT			30
6725273	HARNESS			260
6725297	BRACKET			274
6725299	BRACKET			274
6725300	BRACKET			274
6725301	COVER			22
6725302	GASKET			28
6725303	FRAME			22
6725316	INSULATION			246, 308, 310
6725366AR	KIT			228, 230
6725366BR	KIT			228, 230
6725366JP	KIT			228, 230
6725370	DECAL			302
6725373	SPRING PLATE			22
6725421	HANDLE			224
6725427	BRACKET			134
6725500AR	KIT			228, 230
6725500BR	KIT			228, 230
6725502	ELBOW			180
6725513	PACKAGE			260
6725898	KIT			248
6725906	BRACKET			248
6725907	DECAL			280
6725933	HARNESS			260
6725937	CLAMP			210
6725938	CLAMP			210
6725941	KIT			210
6725946	KIT			224
6726303	DECAL			224

Code for disposition of old part number
A — Use up
B — Use on other application (See PNI)
C — File PDR Report with Bobcat Parts Sales
D — Part Number Error

Part No.	Description	Was	Code	Page
6726386	KNOB			260
6726423	DECAL			272
6726427	KIT			214
6726430	HARNESS			244
6726433	SPACER			126
6726435	DOOR			204
6726539	PULLEY			130
6726573	BRACKET			110, 184
6726621	SCREW			264, 266
6726655	KIT			294
6726679	MOUNT			184
6726680	PEDAL			62, 184
6726681	LINK			110, 184
6726932	DOOR			210
6726937	SHIELD			130
6726945	MOUNT			238
6727065	BOLT			112, 184, 256
6727108	HOSE			288
6727155	DECAL			258
6727176	KIT			234
6727178	HARNESS			102
6727190	HARNESS			232
6727223	DECAL			228
6727243	DECAL			258
6727298	KIT			256
6727299	INSULATION			232, 308
6727328	HARNESS			258
6727345	MOUNT			80
6727468	HARNESS			188
6727496	PIN			110, 184
6727508	BRACKET			104
6727544	PLATE			32
6727545	PLATE			32
6727619	KIT			202
6727626	TUBE			202
6727627	TUBE			202
6727628	TUBE			202
6727629	TUBE			202
6727739	KIT			238
6727752	GASKET			128
6727786	KIT			266
6727847	COVER			260
6727869	SENDER			104
6727917	SAFETY TREAD			228
6727926	DECAL			110, 184, 230
6727941	DECAL			110, 184
6728062	MOUNT			130
6728337	HOSE			288
6728473	BOLT			34
6728539	DECAL			110, 184, 228
6728567	KIT			264

Code for disposition of old part number
A — Use up
B — Use on other application (See PNI)
C — File PDR Report with Bobcat Parts Sales
D — Part Number Error

Part No.	Description	Was	Code	Page
6728626	HARNESS			104
6728629	WINDOW			222, 232
6728742	HARNESS			258
6729008	CABLE			104
6729009	SEAL			222
6729010	SEAL			222
6729011	SEAL			222
6729012	INSULATION			20
6729013	INSULATION			20
6729141	MOUNT			254
6729144	HOSE			246, 310
6729153	HOSE			56
6729154	HOSE			310
6729155	HOSE			246
6729173	COVER			44
6729233	KIT			232
6729380	HARNESS			238
6729467	SPACER			110, 184
6729594	HANDLE			112, 256
6729595	HANDLE			112, 256
6729688	LATCH			292
6729776	WINDOW			208
6729853	HOSE			36
6729896	TIRE			316
6729900	TIRE			316
6729908	MOUNT			54
6729909	TUBE			54
6729939	LATCH PLATE			30
6729973	HARNESS			104
6729991	REAR DOOR			30
6730106	TIRE			316
6730107	TIRE			316
6730142	TEE			202
6730263	PIN			32
6730291	BRACKET			238
6730770	HARNESS			280
6730771	RIM			316
6730775	RIM			316
6730797	LIFT ARM			32
6730830	TANK			206
6730867	BRACKET			134
6730885	HARNESS			206, 216
6730996	HOSE			268
6730997	BUSHING			34
6730998	HOSE			268
6730999	TUBE ASSY			126
6731049	ADAPTER			268
6731060	SHIELD			134
6731082	HOSE			280
6731085	ELBOW			268
6731121	PLUG			18

Code for disposition of old part number
A — Use up
B — Use on other application (See PNI)
C — File PDR Report with Bobcat Parts Sales
D — Part Number Error

Part No.	Description	Was	Code	Page
6731150	KIT			184
6731158	KIT			268
6731212	SENSOR			206, 216
6731218	CHAIN			40
6731219	CHAIN			40
6731222	PIN			244
6731231	TUBE			56
6731239	HARNESS			244
6731275	INSULATION			28
6731336	DECAL			228, 230
6731478	EXIT TAG			222, 232
6731507	DECAL			230
6731508	DECAL			228
6731728	TUBE			56
6731729	TUBE			56
6731730	TUBE			56
6731731	TUBE			56
6731732	CLAMP			56
6731757	DECAL			228
6731819	STRAP			244
6731973	HOLDER			244
6731979	BUSHING			34
6731994	DECAL			246, 308
6732001	KIT			292
6732023	CONNECTOR			268
6732199	GASKET			268
6732206	SPACER			244
6732219	KIT			302
6732220	HOSE			56
6732278	TANK			78
6732318	SPACER			122
6732350	WINDOW			214
6732351	WINDOW			210
6732416	BELT			122
6732451	KIT			216
6732457	WASHER			124
6732508	CAP			6
6732658	SEAL			296
6732715	LATCH			30
6732717	KIT			296
6732722	INSULATION			246, 308, 310
6732723	INSULATION			246, 308, 310
6732730	HARNESS			236
6732928	KIT			254
6732937	KIT			288
6732975	DECAL			216
6732997	U-BOLT			82
6733022	BRACKET			82
6733024	BRACKET			82
6733107	PLUG ASSY			20
6733136	KIT			236

Code for disposition of old part number
A — Use up
B — Use on other application (See PNI)
C — File PDR Report with Bobcat Parts Sales
D — Part Number Error

Part No.	Description	Was	Code	Page
6733142	KIT			240
6733144	MOUNT			236
6733354	TUBE			280
6733355	TUBE			280
6733356	TUBE			48, 50
6733357	TUBE			48, 50
6733430	HARNESS			184
6733575	HINGE			30
6733616	BUMPER			30
6733621	SHAFT			42
6733667	LATCH			30
6733694	HOUSING			42
6733695	MOUNT ASSY			42
6733701	COVER			18
6733942	LEVER			62
6733970	MOUNT			194, 270
6734104	HOUSING ASSY			122, 138
6734246	HOSE			54
6734247	HOSE			280
6734272	BAND			78
6734376	TUBE			50
6734377	TUBE			50
6734420	COVER			18
6734432	SPACER			134
6734534	DECAL			230, 308
6735140	DECAL			228
6735204	SCREEN			124
6735285	AIR CLEANER			180, 246, 308, 310
6735349	HOSE			310
6735459	KIT			280
6735825	SPACER			244
6735862	DECAL			228
6735864	DECAL			228, 230
6735883	BRACKET			130
6735884	IDLER ASSY			130
6735901	DECAL			230
6736071	KIT			28
6736641	PAINT			320
6736642	PAINT			320
6736644	PAINT			320
6736645	PAINT			320
6736659	TANK			36
6736775	BELT			4, 130
6736807	FLYWHEEL ASSY			130
6736817	MOUNT			134
6801059	WASHER			208, 294
6801167	PLUG			68
6803092	BONNET			68
6803473	SEAL KIT			282
6804630	CYLINDER			58
6804631	ROD			58

Code for disposition of old part number
A — Use up
B — Use on other application (See PNI)
C — File PDR Report with Bobcat Parts Sales
D — Part Number Error

Part No.	Description	Was	Code	Page
6804632	PISTON			58
6804790	DECAL			22
6805102	BUSHING			66
6805150	BUSHING			58
6805241	CONNECTOR			66, 70, 78
6806007	SPRING			64
6806403	HOSE			280
6806987	HOSE			280
6809425	SEAL KIT			66, 70
6809726	ROLLER			30
6809727	CHANNEL			30
6809734	BUSHING			30
6809845	BOLT			30
6810132	SPRING			30
6810141	SPRING			30
6810349	CASE			282
6810356	SPACER			282
6810539	NUT			58
6810611	CYLINDER			282
6810612	ROD			282
6812031	BLOCK			64
6812170	PLUG			60, 282
6812171	PLUG			58
6814531	ELBOW			48
6816250	SEAL KIT			70
6816252	SEAL KIT			66
6816253	SEAL KIT			66, 70
6816323	SEAL KIT			58
6900366	INSTRUCTIONS			226
6900848	INSTRUCTIONS			252
6900850	INSTRUCTIONS			260, 268
6900851	INSTRUCTIONS			232
6900853	INSTRUCTIONS			222
6900857	INSTRUCTIONS			194
6900861	INSTRUCTIONS			300
6900888	INSTRUCTIONS			274
6900913	INSTRUCTIONS			270
6900991	INSTRUCTIONS			196
6900992	INSTRUCTIONS			314
6901003	INSTRUCTIONS			308, 310
6901010	INSTRUCTIONS			302
6901011	INSTRUCTIONS			304
6901013	INSTRUCTIONS			206, 212, 222
6901025	INSTRUCTIONS			248
6901029	INSTRUCTIONS			224
6901036	INSTRUCTIONS			214
6901061	INSTRUCTIONS			294
6901076	INSTRUCTIONS			234
6901100	INSTRUCTIONS			258
6901116	INSTRUCTIONS			238
6901120	INSTRUCTIONS			266

Code for disposition of old part number

A — Use up

B — Use on other application (See PNI)

C — File PDR Report with Bobcat Parts Sales

D — Part Number Error

Part No.	Description	Was	Code	Page
6901213	INSTRUCTIONS			264
6901492	INSTRUCTIONS			184
6901656	INSTRUCTIONS			292
6901663	INSTRUCTIONS			244
6901734	INSTRUCTIONS			216
6901774	INSTRUCTIONS			296
6901814	INSTRUCTIONS			288
6901815	INSTRUCTIONS			280
6901816	INSTRUCTIONS			254
6901871	INSTRUCTIONS			240
6901872	INSTRUCTIONS			236
6902228	PAINT			320
6902229	PAINT			320
6902230	PAINT			320
6902233	PAINT			320
6902234	PAINT			320
6902235	PAINT			320
6902324	INSTRUCTIONS			202
6902679	MANUAL			2
6902680	MANUAL			2
6902763	KIT			228, 230
7100034	PULLEY			122
7100097	KIT			308
7100153	MOUNT			194
7100572	BELT			4, 134
7100619	DECAL			228, 230
1CM-620	BOLT			204, 210
1CM-635	BOLT			210
1CM-640	BOLT			204, 210
1CM-820	BOLT			82
1CM-830	BOLT			318
1CM-835	BOLT			142, 162
1CM-870	BOLT			142, 268
1CM-875	BOLT			162
1CM-890	BOLT			134
1CM-8100	BOLT			134
2DM-8	NUT			148
2EM-8	WASHER			150
4CM-20	BOLT			170
4CM-616	BOLT			166, 172
4CM-620	BOLT			142
4CM-635	BOLT			204
4CM-818	BOLT			158
4CM-822	BOLT			164
4CM-825	BOLT			154
4CM-828	BOLT			154, 160
4D-20	NUT			272
4DM-6	NUT			204, 210
4DM-10	NUT			104
4F-6106	PIN			24
5CM-812	BOLT			148

Code for disposition of old part number
A — Use up
B — Use on other application (See PNI)
C — File PDR Report with Bobcat Parts Sales
D — Part Number Error

Part No.	Description	Was	Code	Page
5HM-13	CLAMP			36
5HM-14	CLAMP			36
5HM-20	CLAMP			268
5HM-24	CLAMP			36
5HM-42	CLAMP			78, 126
5HM-58	CLAMP			36
5JM-24	CIR-CLIP			156
6E-4	WASHER			194
6E-5	WASHER			102, 104, 134, 252
6E-6	WASHER			104
6EM-60	WASHER			204, 210
6EM-80	WASHER			268
6J-807	KEY			130
6J-1664	KEY			46
7D-4	NUT			54
7D-6	NUT			122
7J-2010	KEY			138
7J-2108	KEY			122
8D-6	NUT			82
9G-512	SCREW			138
9G-620	BOLT			34
10C-410	BOLT			222
10C-416	BOLT			222
10C-616	BOLT			24
10H-25	GREASE ZERK			32, 48, 50
10H-35	GREASE ZERK			32, 34, 82
10J-5	BALL			156
10J-13	BALL			142
11H-15	GREASE ZERK			32, 48, 50
12D-6	NUT			244
12D-8	NUT			244
12D-10	NUT			248
12H-15	GREASE ZERK			32, 48, 50
12H-25	GREASE ZERK			280
14J-1808	PIN			130
14J-5032	PIN			34
15JM-410	KEY			144
15KB-606	ADAPTER			54, 56, 78, 288
15KB-612	ADAPTER			280
15KB-808	ADAPTER			134
15KB-1212	ADAPTER			54, 56, 78, 80, 280
16F-2	PLUG			144
16F-8	PLUG			138
17C-410	BOLT			106, 244, 270
17C-412	BOLT			44, 194
17C-420	BOLT			204, 210
17C-428	BOLT			54
17C-508	BOLT			244
17C-512	BOLT			206, 210, 228, 244
17C-514	BOLT			110, 184
17C-532	BOLT			48, 50

Code for disposition of old part number
A — Use up
B — Use on other application (See PNI)
C — File PDR Report with Bobcat Parts Sales
D — Part Number Error

Part No.	Description	Was	Code	Page
17C-540	BOLT			272
17C-556	BOLT			134
17C-608	BOLT			110, 122, 184
17C-610	BOLT			80, 130
17C-612	BOLT			22, 36, 82, 110, 126, 184, 206, 210
17C-616	BOLT			80, 82, 110, 122, 250
17C-620	BOLT			18, 32, 48, 50, 62, 78, 82, 130, 138
17C-624	BOLT			62, 210
17C-626	BOLT			136
17C-628	BOLT			82, 210
17C-632	BOLT			274
17C-640	BOLT			24, 32, 226, 272
17C-648	BOLT			32
17C-660	BOLT			34
17C-680	BOLT			82
17C-716	BOLT			22
17C-820	BOLT			30, 44
17C-828	BOLT			130, 134
17C-1028	BOLT			272
17C-1056	BOLT			20
17C-6116	BOLT			122
17KB-404	ELBOW			280, 288
17KB-606	ELBOW			54, 78, 288
17KB-810	ELBOW			48, 50, 202
17KB-1010	ELBOW			50, 202
17KB-1210	ELBOW			80
17KB-1212	ELBOW			80, 246, 310
18C-1636	BOLT			46
18KB-404	ELBOW			280
18KB-606	ADAPTER			280
18KB-1212	ELBOW			54, 288
19J-12	CLAMP			78
21G-804	BOLT			254
21KB-606	TEE			288
21KB-1010	TEE			48, 50
25E-13	WASHER			44, 112, 116, 184, 194, 270
25E-14	WASHER			222
25E-15	WASHER			104, 318
25E-16	WASHER			204, 210
25E-17	WASHER			82, 110
25E-18	WASHER			136
25E-21	WASHER			134
25G-512	BOLT			20, 26
25G-520	BOLT			26
25G-612	BOLT			236, 238
25GT-410	BOLT			112, 256
25K-20010	O-RING			78
25K-20016	O-RING			64, 68
25K-30202	O-RING			40
25K-30508	O-RING			40
27E-6	WASHER			190

Code for disposition of old part number
A — Use up
B — Use on other application (See PNI)
C — File PDR Report with Bobcat Parts Sales
D — Part Number Error

Part No.	Description	Was	Code	Page
29CM-820	BOLT			134
29G-412	BOLT			68
29G-416	BOLT			64, 68
29G-444	BOLT			64
30G-416	BOLT			64, 68
30H-19	CLAMP			194
30H-21	CLAMP			252
30H-23	CLAMP			136, 270
30H-27	CLAMP			240
30H-35	CLAMP			36
30H-42	CLAMP			276
30H-45	CLAMP			268
30H-50	CLAMP			236, 268
30H-62	CLAMP			110
30H-38	CLAMP			184
31C-410	BOLT			248
31C-820	BOLT			18
31C-824	BOLT			18, 274
31C-1264	BOLT			32
31H-42	CLAMP			280
35C-410	BOLT			194, 244, 260
35C-412	BOLT			24, 202, 252
35C-416	BOLT			54
35C-508	BOLT			122
35C-512	BOLT			238, 270
35C-516	BOLT			134
35C-536	BOLT			202, 244
35C-612	BOLT			62, 128, 302
35C-616	BOLT			106, 246, 280, 310
35C-620	BOLT			104, 130, 134, 210
35C-1032	BOLT			40
36K-6	CAP			134
36K-7	CAP			48
37C-412	BOLT			252
37C-424	BOLT			260
37C-512	BOLT			194, 260, 276
37C-556	BOLT			50
37C-620	BOLT			62, 184
37C-624	BOLT			30
38C-610	BOLT			136
38C-820	BOLT			130
38C-824	BOLT			30
38C-840	BOLT			30
40DM-8	NUT			318
40K-6	PLUG			126
42H-10	CLAMP			36
42H-32	CLAMP			36, 128
42H-44	CLAMP			128, 246, 310
42HS-4	CLAMP			36, 126
43C-408	BOLT			110, 116
43C-524	BOLT			72

Code for disposition of old part number

A — Use up

B — Use on other application (See PNI)

C — File PDR Report with Bobcat Parts Sales

D — Part Number Error

Part No.	Description	Was	Code	Page
43C-532	BOLT			54, 72
43C-616	BOLT			104
43C-852	BOLT			134, 242
43DM-8	NUT			104
45C-620	BOLT			82
45G-1006	BOLT			248
45K-8	ADAPTER			288
46D-5	NUT			204, 210
46K-8	ELBOW			56
47C-820	BOLT			44
47K-8	PLUG			88, 92
51E-404	ADAPTER			288
53D-6	NUT			20, 24
53D-10	NUT			20
53DM-8	NUT			134
54K-20002	O-RING			64, 68
54K-20028	O-RING			72
54K-30110	O-RING			282
54K-30118	O-RING			60
54K-30300	O-RING			58
54K-40116	O-RING			282
54K-40124	O-RING			60
54K-60304	O-RING			58
55D-4	NUT			52, 202
55D-5	NUT			244
55D-6	NUT			210
55K-204	O-RING			66, 68, 72
55K-212	O-RING			66, 68, 72
55K-214	O-RING			78
57D-5	NUT			50, 134, 202
57D-6	NUT			30, 62, 184, 274
57D-8	NUT			274
57G-608	SCREW			260
58K-14	O-RING			64
58K-17	O-RING			64, 68
58K-116	RING			76
58K-120	O-RING			110
58K-124	O-RING			64, 70
58K-127	O-RING			66, 68
58K-132	O-RING			282
58K-136	O-RING			60
58K-238	O-RING			58
59D-4	NUT			136, 222, 252
59D-5	NUT			20, 48, 50, 104, 206, 210, 260
59D-6	NUT			30
59D-8	NUT			20
59G-616	BOLT			194
61D-4	NUT			104, 194, 204, 210
61D-5	NUT			122, 194, 206, 210, 228
61D-6	NUT			30, 32, 36, 122, 130, 190, 206, 226
61E-4	NUT			288

Code for disposition of old part number
A — Use up
B — Use on other application (See PNI)
C — File PDR Report with Bobcat Parts Sales
D — Part Number Error

Part No.	Description	Was	Code	Page
62D-4	NUT			104, 136
62D-6	NUT			82
63E-4	PLUG			288
66D-4	NUT			104, 136
69G-436	BOLT			110
72F-1	DRAIN COCK			36
73G-656	BOLT			130, 280
73G-824	BOLT			82
73K-222	WASHER			282
73K-224	WASHER			60
75K-3	O-RING			60
75K-6	O-RING			58
79K-2	O-RING			290
79K-3	O-RING			282
79K-4	O-RING			280, 288
79K-5	O-RING			36, 86
79K-6	O-RING			54, 56, 66, 76, 78, 80, 86, 280, 288
79K-7	O-RING			284
79K-8	O-RING			64, 68, 76, 88, 92, 134, 284
79K-10	O-RING			48, 50, 64, 66, 68, 80, 88, 202, 284
79K-12	O-RING			54, 56, 78, 80, 90, 92, 246, 280, 288, 310
80K-14	WASHER			64, 68
80K-338	WASHER			58
83D-10	NUT			272
83D-4	NUT			24, 54, 244, 260, 270
83D-5	NUT			270
83D-6	NUT			62, 82, 128, 236, 238, 250
83D-8	NUT			18, 134
84G-3112	BOLT			20, 28, 32, 36, 124, 194, 236, 238, 240
84G-3116	BOLT			36
84G-3708	BOLT			126, 128
84G-3710	BOLT			18, 110
84G-3712	BOLT			18, 28, 44, 78, 80, 102, 104, 128, 134, 136, 244, 268
84G-3716	BOLT			44, 104, 134, 136, 190, 244, 246, 288, 308, 310
84G-3720	BOLT			44, 186
84G-3724	BOLT			246, 280, 310
84G-3728	BOLT			48, 50
84G-3740	BOLT			56
85D-4	NUT			244
85D-5	NUT			136, 276
85D-6	NUT			22, 30, 32, 34, 246, 272, 310
85D-7	NUT			22
85D-8	NUT			20, 130, 134
85G-616	BOLT			244
85G-808	BOLT			244
86D-8	NUT			122
86F-8	NUT			56, 80
87D-5	NUT			272

Code for disposition of old part number
A — Use up
B — Use on other application (See PNI)
C — File PDR Report with Bobcat Parts Sales
D — Part Number Error

Part No.	Description	Was	Code	Page
91D-6	NUT			56, 82, 106
91D-7	NUT			204, 210
91G-420	BOLT			222, 232
92D-10	NUT			282
92D-12	NUT			130
92D-14	NUT			60
93G-824	BOLT			40
95D-5	NUT			20, 110, 184
95D-6	NUT			58, 62, 110, 136, 138, 184, 210
95D-8	NUT			20
97D-4	NUT			194
97D-8	NUT			254
98D-6	NUT			82, 110
98G-412	BOLT			116

Code for disposition of old part number
A — Use up
B — Use on other application (See PNI)
C — File PDR Report with Bobcat Parts Sales
D — Part Number Error