RUTHZIL TRATOR COMERCIAL DE PEÇAS LTDA 11 97083-6812 ROLANDO CITRANGULO

Bobcat®

Parts Manual
S150 Skid-Steer Loader

FEVEREIRO 2008

S/N A3L111001 & Above

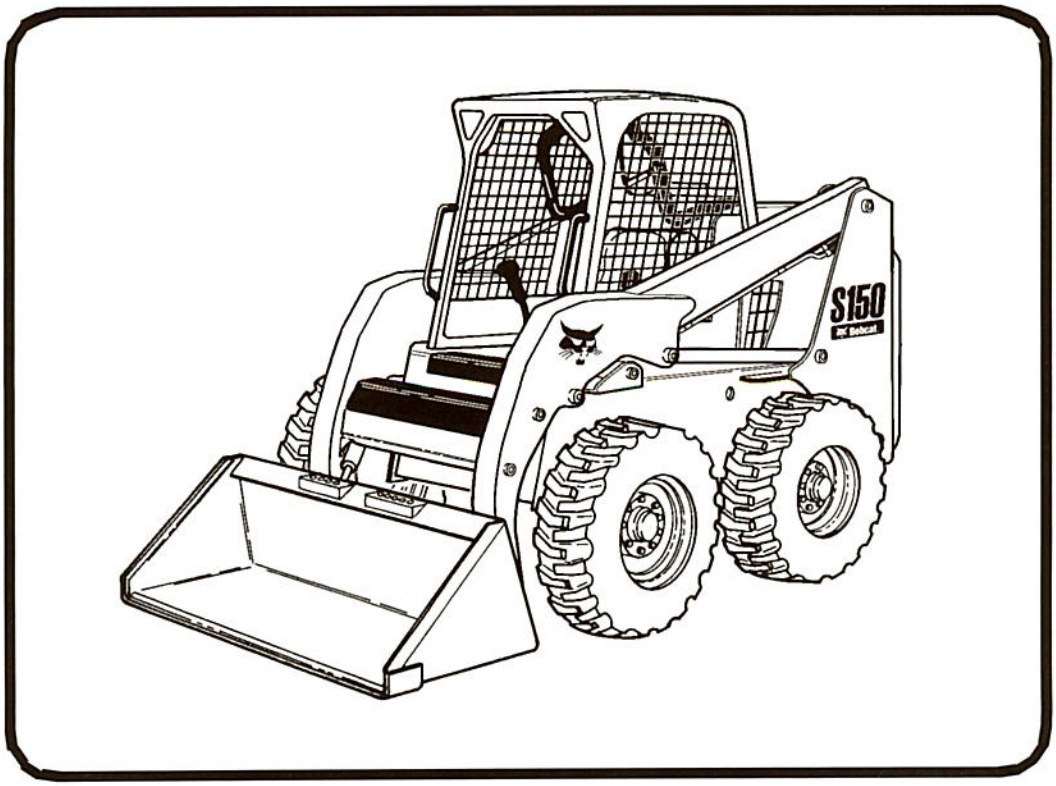

EQUIPPED WITH BOBCAT INTERLOCK CONTROL SYSTEM (BICS)

6986835 (2-08)

Printed in U.S.A.

© Bobcat Company 2008

GENERAL INFORMATION

Before ordering parts, ALWAYS provide dealer with your product model number and complete serial number information. Before ordering parts, verify correct part numbers and/or serial numbers with your dealer. When using the machine serial number, use the complete number.

Some serial number breaks are not available at time of printing.
These are listed as & Bel or & Abv or - (thru)

The number shown in the quantity column in this manual is the number of parts needed for the illustration on the page. For some parts an "x" will be shown in the quantity column. This "x" indicates that the quantity to be used is "As Needed".

When references L.H. (Left Hand) and R.H. (Right Hand) are used in this manual, it is done from the operator's seat in the forward operating position.

When "See Illustration...." appears in the remarks column, refer to the contents page for the illustration title to find page number location.

Some of the illustrations and information found in this parts manual were supplied to Bobcat by machine component companies.

For additional information on the Bobcat website visit www.bobcat.com

ABBREVIATIONS

SALES = Order from Gwinner Sales Department
NSS = Not Serviced Separately
NAP = Not Available as Parts
BTI = Bobcat Technical Information Bulletin
O/M = Operation & Maintenance Manual
S/M = Service Manual
AHC = Advanced Hand Controls
ACS = Advanced Control System
SJC = Selectable Joystick Controls

P/M = Parts Manual
S/L = Service Letter
W/ = With
W/O = Without
I.D. = Inside Diameter
O.D. = Outside Diameter
" = Inches
' = Feet
mm = Millimeters

TRANSLATION KITS & DECAL KITS

AR = Argentina (Spanish) BR = Brazil (Portugese) JP = Japanese
(Translation Kit includes Safety Manual, Operators Manual & Decal Kit)

DISPOSITION

(Found in the Remarks Column)

[A] = Use Up
[B] = Use Up on Other Applications
[C] = File PDR Report with Bobcat Parts Sales
[D] = Part Number Error

NOTE D'INFORMATION

Pour toute référence au numéro de série de l'engin, toujours donner le numéro complet.

Le chiffré apparaissant dans la colonne des quantités de ce manuel représentent le nombre de pièces nécessaires pour l'illustration reprise sur la page. Dans certains cas, on lira un "x" dans la colonne des quantités. Cet "x" indique que la quantité nécessaire est "selon besoin".

Pour toute référence vers la GAUCHE ou la DROITE dans ce manuel, considérer que la personne se trouve assise dans le siège de l'opérateur, en position de fonctionnement en marche avant.

Certaines illustrations et informations reprises dans ce manuel de pièces de rechange ont été fournies à Bobcat/Ingersoll-Rand par des fabricants de composants.

ABREVIATIONS & SYMBOLES

SALES	= Commander au Service Ventes à Bruxelles
NSS	= Pas vendu séparément
NAP	= Non disponible comme pièce de rechange
*	= Chapitre, page ou numéro de pièce modifié ou supplémentaire
BTI	= Bobcat Technical Information Bulletin : voir à la fin de la microfiché du modèle concerné ou la microfiche générale reprenant l' ensemble des "BTI".
was 6535403	= était avant 6535403
adj. (adjustment)	= réglage
Assembly	= ensemble
available W/Ref.	= disponible avec réf.
bulk/sold per foot	= en vrac/vendu par pied
does not include	= ne comprend pas
included with	= compris dans
I.D.	= D.I. (diamètre intérieur)
O.D.	= D.E. (diamètre extérieur)
not in kit	= pas en kit
W/ - WO/	= inclus/ - non inclus/
Qty	= quantité requise
see page/ref.	= voir page/réf.
used with ref/	= utilisé avec réf.
0,05 inch thickness	= 0,05 pouce d'épaisseur (un pouce = 25.4 mm)
weld on	= à souder

ALLGEMEINE INFORMATIONEN

Bei Angabe der Maschinen-Seriennummer stets die komplette Nummer angeben.

Bei der in der Mengenspalte (Anzahl) in diesem Handbuch angegebenen Zahl handelt es sich um die Anzahl von Teilen, die für die Abbildung auf der betreffenden Seite benötigt werden. Bei manchen Teilen in der Mengenspalte ist ein "x" angegeben. Dieses "x" weist darauf hin, dass sich die Anzahl der verwendeten Teile auf den "Bedarf" bezieht.

Bei Verwendung der Seitenangaben links und rechts in diesem Handbuch gelten diese für die Blickrichtung vom Fahrersitz aus, und zwar in Vorwärts-Betriebsrichtung.

Einige der in diesem Ersatzteilhandbuch aufgeführten Abbildungen und Informationen wurden der Bobcat/Ingersoll-Rand von den Herstellern von Maschinenbauteilen zur Verfügung gestellt.

ABKÜRZUNGEN UND SYMBOLE

SALES	= Bestellung bei der Verkaufsabteilung in Brüssel
NSS	= Nicht einzeln erhältlich
NAP	= Nicht als Ersatzteil erhältlich
*	= Geänderte oder hinzugefügte Abschnitte, Seiten oder Teilenummern
BTI	= Bobcat Technical Information Bulletin : Siehe am Ende der Mikrokarte des jeweiligen Modells oder der allgemeinen Mikrokarte der BTI.
was 6535403	= War 6535403
adj.	= Einstellung
Assembly	= Baugruppe
available W/Ref.	= erhältlich mit der Referenz
bulk/sold per foot	= Mengenabnahme / Verkauf pro Fuss
does not include	= beinhaltet nicht
included with	= enthalten in
I.D.	= Innendurchmesser
O.D.	= Aussendurchmesser
not in kit	= nicht in Bausatz
W/ - WO/	= mit/ - ohne/
Qty	= Anzahl
see page/ref.	= Siehe Seite / Referenz
used with ref.	= verwendet mit Referenz
0.05 inch thickness	= Dicke : 0.05 Zoll (ein Zoll = 25.4 mm)
weld on	= anschweissen

INFORMAZIONI GENERALI

Quando si usa il numero di serie della macchina usare il numero completo.

Il numero mostrato nella colonna della quantità di questo manuale corrisponde al numero di componenti necessari per l'illustrazione della pagina. Per alcuni componenti appare "X" nella colonna delle quantità. Questa "X" indica che la quantità da usare è "come necessario".

See in questo manuale si fa riferimento alla parte destra o sinistra, si intende dal sedile dell'operatore nella posizione in avanti di funzionamento.

Alcune delle illustrazioni e informazioni trovate in questo manuale di componenti sono state fornite alla Bobcat/Ingersoll-Rand da società di componenti di macchine.

SIMBOLI E ABBREVIAZIONI

SALES	= Ordinare al servizio vendite di Bruxelles
NSS	= Non vendute separatamente
NAP	= Non disponibile come componente
*	= Sezioni, pagine o numeri di componente cambiati o aggiunti
BTI	= (Bobcat Technical information) Ved. al termine del microfiche del modello relativo oppure microfiche generale
was 6535403	= era 6535403
adj. (adjustment)	= regol. (regolazione)
Assembly	= Complessivo
available W/Ref.	= disponibile con rif.
bulk/sold per foot	= alla rinfusa/venduto al piede
does not include	= non comprende
Included with	= compreso con
I.D.	= d. i.
O.D.	= d. e.
not in kit	= non fa parte del kit
W/ - WO/	= con - senza
Qty	= Qtà
see page/ref	= ved. pagina/rif.
used with ref.	= usato con il rif.
0,05 inch thickness	= spessore 0,05 pollici (un pollice = 25,4 mm)
weld on	= a saldare

INFORMACION GENERAL

Al utilizar el número de serie de la máquina, debe emplearse el número completo.

El número que figura en la columna de "Unidades" en este manual es el número de piezas que se necesitan para la ilustración que consta en la página. En algunas piezas aparece una "x" en la columna de "Unidades". Esta "x" indica que las unidades a utilizar son "según sea necesario".

Cuando se empleen las referencias izq. y dcha., éstas se entienden mirando desde el asiento del conductor, en posición de marcha adelante.

Algunas de las ilustraciones y la información que figuran en este manual de piezas han sido facilitadas a Bobcat/Ingersoll-Rand por empresas de componentes de máquinas.

ABREVIATURAS Y SIMBOLOS

VENTAS	= Pedido al Departamento de Ventas de Bruselas
NSS	= No se vende por separado
NAP	= No disponible como pieza de repuesto
*	= Secciones, páginas o referencias modificadas o añadidas
BTI	= (Bobcat Tecnical Information) Ver al final de la microficha del modelo afectado o en la microficha general "Boletín de Información Técnica Bobcat".
was 6535403	= era anteriormente el 6535403
adj. (adjustment)	= ajuste
assembly	= conjunto
available W/Ref.	= disponible con la ref.
bulk/sold per foot	= a granel/vendido por pies
does not include	= no incluye
included with	= incluido en
I.D.	= diámetro interior
O.D.	= diámetro exterior
not in kit	= no en el kit
W/ - WO/	= con/ - sin
Qty	= Unidades
see page /ref.	= ver página/ref.
used with ref.	= empleado con la ref.
0,05 inch thickness	= 0,05 pulgadas de espesor (1 pulgada = 25,4 mm)
weld on	= debe ser soldado

Page 550 - BOBM0292439B1001 - 04/08/2009 12:26:17 - Printed by Ken Cook Co. - eXprint.exe [v2.24.7 4/7/2009

ALGEMENE INFORMATIE

Als u het serienummer van de machine gebruikt, geef dan het gehele serienummer.

Het cijfer dat voorkomt in de kolom "Aantal", in deze handleiding, is het aantal onderdelen dat nodig is van de illustratie op de pagina. Voor sommige onderdelen staat er een "x" in de kolom "Aantal". Deze "x" betekent dat er een aantal "zoals nodig" vereist is.

Wanneer er in deze handleiding naar "links" en naar "rechts" gerefereerd wordt, moet dit verstaan worden voor een bestuurder die in de bestuurdersstoel zit in de voorwaartse bedrijfsstand.

Sommige van de illustraties en informatie in deze onderdelen-handleiding werden door firma's van machine-componenten geleverd aan Bobcat/Ingersoll-Rand.

AFKORTINGEN EN SYMBOLEN

SALES	= Bestellen bij de Verkoopafdeling te Brussel
NSS	= Niet afzonderlijk te verkrijgen
NAP	= Niet beschikbaar als onderdeel
*	= Gewijzigde of toegevoegde paragrafen, pagina's of onderdeelnummers
BTI	= Bobcat Technical Information Bulletin : Zie einde van de microfiche van het desbetreffende model of einde van de algemene microfiche die het geheel van alle "BTI" herneemt.
was 6535403	= was vroeger 6535403
adj. (adjustment)	= afstelling
Assembly	= geheel
available W/Ref.	= beschikbaar met ref.
bulk/sold per foot	= bulk/aan de meter verkocht
does not include	= bevat niet
includes with	= is bevat in
I.D.	= ϕ inw. (inwendige diameter)
O.D.	= ϕ uitw. (uitwendige diameter)
not in kit	= niet in de kit
W/ - WO/	= met/ - zonder/
Qty	= vereiste aantal
see page/ref.	= zie pagina/ref.
used with ref/	= gebruikt met ref.
0,05 inch thickness	= 0.05 inch dik (een inch = 25.4 mm)
weld on	= te lassen

Use only Bobcat belts and hoses to maintain maximum service life.

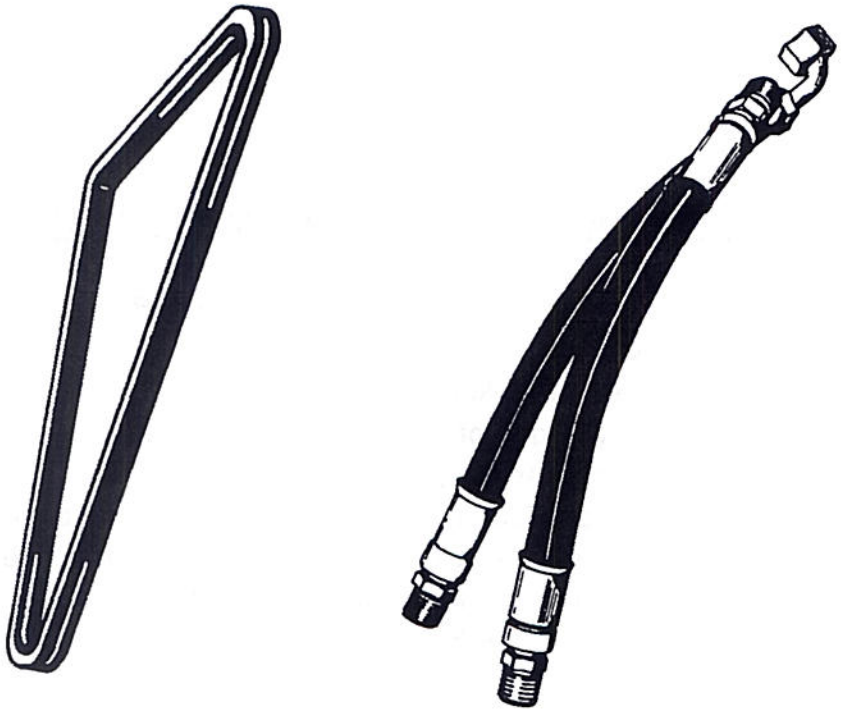

Available from Bobcat Parts.

Bobcat®

CONTENTS

MAINTENANCE ITEMS **1-10**
MAINTENANCE ITEMS 1
SCHEDULED MAINTENANCE ITEMS 3-10

MAIN FRAME **11-36**
MAIN FRAME 11
OPERATOR CAB 13-18
SEAT & SEAT BAR 19
SEAT 21
PANELS 23-26
REAR DOOR 27
LIFT ARMS & BOBTACH 29
BOB-TACH 31
FUEL SYSTEM 33-36

DRIVE TRAIN **37-52**
DRIVE TRAIN 37
AXLE 39
MOTOR CARRIER 41-48
DISC BRAKE 49-52

HYDRAULIC SYSTEM **53-84**
HYDRAULIC CIRCUITRY 53-60
MANUAL LIFT RELEASE SYSTEM 61
AUXILIARY HYDRAULICS 63
TILT CYLINDER 65
LIFT CYLINDER 67
CONTROL PEDALS 69
HYDRAULIC CONTROL VALVE 71-82
MANUAL LIFT RELEASE VALVE 83

HYDROSTATIC SYSTEM **85-144**
HAND CONTROLS 101-104
HYDROSTATIC MOTOR 105-108
HYDROSTATIC PUMP/GEAR PUMP 109
HYDROSTATIC PUMP 111-132
GEAR PUMP 133
COOLING FAN MOTOR 135
HYDROSTATIC OIL FILTER 137-144
HYDROSTATIC CIRCUITRY 85-100

ELECTRICAL SYSTEM **145-166**
CAB ELECTRICAL CIRCUITRY 145
ENGINE ELECTRICAL CIRCUITRY 147-150
CONTROLS ELECTRICAL 151-162
ALTERNATOR 163
STARTER 165

POWER UNIT **167-218**
COOLING SYSTEM 167
ENGINE & ATTACHING PARTS 169-174
ENGINE SPEED CONTROL 175-178
ENGINE & UPPER GASKET KIT 179
ENGINE & LOWER GASKET KIT 181
GEARCASE 183
CRANKCASE 185
ROCKER ARM COVER 187
VALVE AND ROCKER ARM 189

CONTENTS (Cont'd)

POWER UNIT
CYLINDER HEAD 191
OIL PAN 193
PISTON & CRANKSHAFT 195
FUEL CAMSHAFT 197
CAMSHAFT 199
WATER PUMP 201
WATER FLANGE & THERMOSTAT 203
MANIFOLDS 205
ENGINE STOP LEVER 207
GOVERNOR 209
SPEED CONTROL PLATE 211
FUEL AND INJECTION PUMP 213
INJECTOR NOZZLES 215
AIR CLEANER 217

ACCESSORIES & OPTIONS 219-384
ACCESS COVER 219
ACS CONVERSION KIT 221
AXLE SEAL KIT 223
BACK-UP ALARM KIT 225-228
BEACON 229
BLOCK HEATER 231
BOB-TACH LEVERS 233
BUCKET POSITIONING VALVE KIT 235
BUCKET POSITIONING VALVE 237
CAB DOOR 239-246
CAB ENCLOSURE 247-250
CAB WINDOWS 251-256
COUNTERWEIGHT KIT 257-260
DECALS 261-264
DUAL BATTERY KIT 265
ELECTRICAL CONNECTOR KIT 267
ELECTRICAL CONTROLS KIT 269-274
ENGINE MOUNT KIT 275
EUROPEAN ACCESSORIES 277-286
EUROPEAN ACCESSORIES 279-288
FIRE EXTINGUISHER 289
F.O.P.S. KIT 291
FLASHER LIGHTS 293
FRONT AUXILIARY 295
GAS SPRING KIT 297
GUN MOUNT 299
HEATER 301-310
HORN KIT 311-314
HOSE GUIDE KIT 315
LIFT KIT 317-324
LIGHT KIT 325
MINE SAFETY & HEALTH ADMINISTRATION 327
MUFFLER/PURIFIER KIT 329
PEDAL EXTENDERS 331
POWER BOB-TACH KIT 333
POWER BOB-TACH 335-338

CONTENTS (Cont'd)

ACCESSORIES & OPTIONS

RADIATOR SCREEN KIT 339
REAR AUXILIARY 341
REAR AUXILIARY VALVE 343
REAR DOOR LOCK 345
REAR WIPER 347
REMOTE CONTROL KIT 349
SEAL ENCLOSURE KIT 351
SEAT 353-356
SEAT BELT 357-362
SOUND/NOISE REDUCTION KIT 363-366
SOUND/NOISE REDUCTION OPTION 367-372
SOUND REDUCTION HARDHAT 373
STROBE LIGHT 375
TIRES & RIMS 377-380
WHITE DECAL KIT 381
BULK ITEMS 383

NUMERICAL INDEX 386-434

MAINTENANCE ITEMS

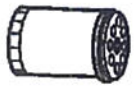
— 1


— 2


— 3


— 4


— 5


— 6


— 7

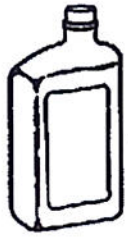
— 8



— 9



— 10

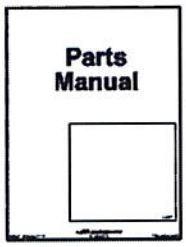

— 11


— 12

B–22668

Ref No	Part Number	Description	Remarks	Serial Number	Qty
1	6675517	FILTER, OIL ENG			x
2	6667352	FILTER FUEL			x
3	6598362	ELEMENT	INNER AIR CLEANER		x
4	6598492	ELEMENT	OUTER AIR CLEANER		x
5	6661248	ELEMENT	HYDROSTATIC # 3 MEDIA		x
6	6674687	BATTERY			x
7	6903117	FLUID, OIL HYD 2.5 GAL 2			x
7	6903118	FLUID, OIL HYD 5 GAL			x
7	6903119	FLUID, OIL HYD 55 GAL			x
8	6903107	OIL, 10W30 QT. 12			x
8	6903108	OIL, 10W30 GAL. 6			x
8	6903112	OIL, 10W30 2.5 GAL 2			x
8	6903105	OIL, 15W40 QT. 12			x
8	6903106	OIL, 15W40 GAL. 6			x
8	6903113	OIL, 15W40 2.5 GAL. 2			x
8	6903109	OIL 30W QT. 12			x
8	6903110	OIL, 30W GAL. 6			x
8	6903111	OIL 30W 2.5 GAL 2			x
9	6986566	MANUAL SERVICE S150 LOADER	printed		1
9	6986566-CD	MANUAL SERVICE S150 LOADER CD	CD		1
10	6986966	MANUAL OPERATION & MAINTENANCE S150 LOADER	printed		1
10	6986966-CD	MANUAL OPERATION & MAINTENANCE S150 LOADER CD	CD		1
11	6986835	MANUAL PARTS S150 LOADER	printed		1
11	6986834-CD	MANUAL PARTS S130 LOADER-CD	CD		1
12	6902600	MANUAL	operation & maintenance - W/wire rope		1

SCHEDULED MAINTENANCE ITEMS
(50 HOUR)



B–22774

SCHEDULED MAINTENANCE ITEMS (Cont'd)
(50 HOUR)

Ref No	Part Number	Description	Remarks	Serial Number	Qty
1	6675517	FILTER, OIL ENG			x
2	6903107	OIL, 10W30 QT. 12			x
2	6903108	OIL, 10W30 GAL. 6			x
2	6903112	OIL, 10W30 2.5 GAL 2			x
2	6903105	OIL, 15W40 QT. 12			x
2	6903106	OIL, 15W40 GAL. 6			x
2	6903113	OIL, 15W40 2.5 GAL. 2			x
2	6903109	OIL 30W QT. 12			x
2	6903110	OIL, 30W GAL. 6			x
2	6903111	OIL 30W 2.5 GAL 2			x

SCHEDULED MAINTENANCE ITEMS
(250 HOUR)

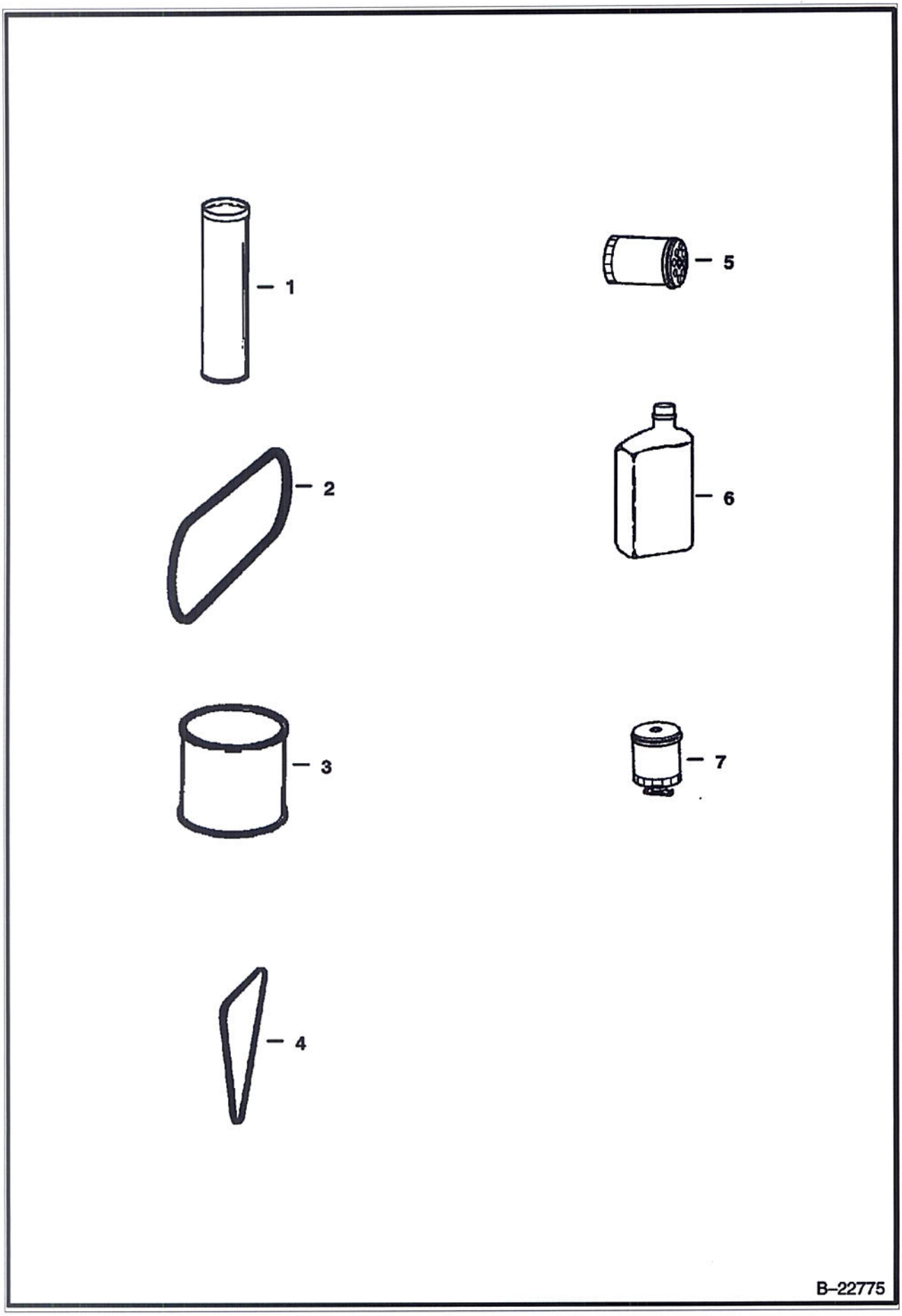

SCHEDULED MAINTENANCE ITEMS (Cont'd)
(250 HOUR)

Ref No	Part Number	Description	Remarks	Serial Number	Qty
1	6903122	GREASE, TUBE 10			x
2	6667322	BELT	ENG./HYDRO. DRIVE		x
3	6903121	LUBE, GEAR 12			x
4	7100104	BELT	alternator		x
5	6675517	FILTER, OIL ENG			x
6	6903107	OIL, 10W30 QT. 12			x
6	6903108	OIL, 10W30 GAL. 6			x
6	6903112	OIL, 10W30 2.5 GAL 2			x
6	6903105	OIL, 15W40 QT. 12			x
6	6903106	OIL, 15W40 GAL. 6			x
6	6903113	OIL, 15W40 2.5 GAL. 2			x
6	6903109	OIL 30W QT. 12			x
6	6903110	OIL, 30W GAL. 6			x
6	6903111	OIL 30W 2.5 GAL 2			x
7	6667352	FILTER FUEL			x

SCHEDULED MAINTENANCE ITEMS
(500 HOUR)



B–22776

SCHEDULED MAINTENANCE ITEMS (Cont'd)
(500 HOUR)

Ref No	Part Number	Description	Remarks	Serial Number	Qty
1	6728149	CAP , HYD NON VENTED	HYD. RESERVOIR BREATHER		x
2	6661248	ELEMENT	HYD./HYDRO.		x
2	6686926	FILTER, OIL HYD			1

age 563 - BOBM029239B1001 - 04/08/2009 12:26:17 - Printed by Ken Cook Co. - eXprint.exe (V2.24.7 4/7/2009)

SCHEDULED MAINTENANCE ITEMS
(1000 HOUR)



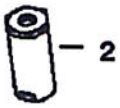

B–22777

Page 564 - BOBM029239B1001 - 04/08/2009 12:26:17 - Printed by Ken Cook Co. - eXprint.exe (v2.24.7 4/7/20

SCHEDULED MAINTENANCE ITEMS (Cont'd)
(1000 HOUR)

Ref No	Part Number	Description	Remarks	Serial Number	Qty
1	6903117	FLUID, OIL HYD 2.5 GAL 2			x
1	6903118	FLUID, OIL HYD 5 GAL			x
1	6903119	FLUID, OIL HYD 55 GAL			x
2	6661022	FILTER	CASE DRAIN		x

MAIN FRAME

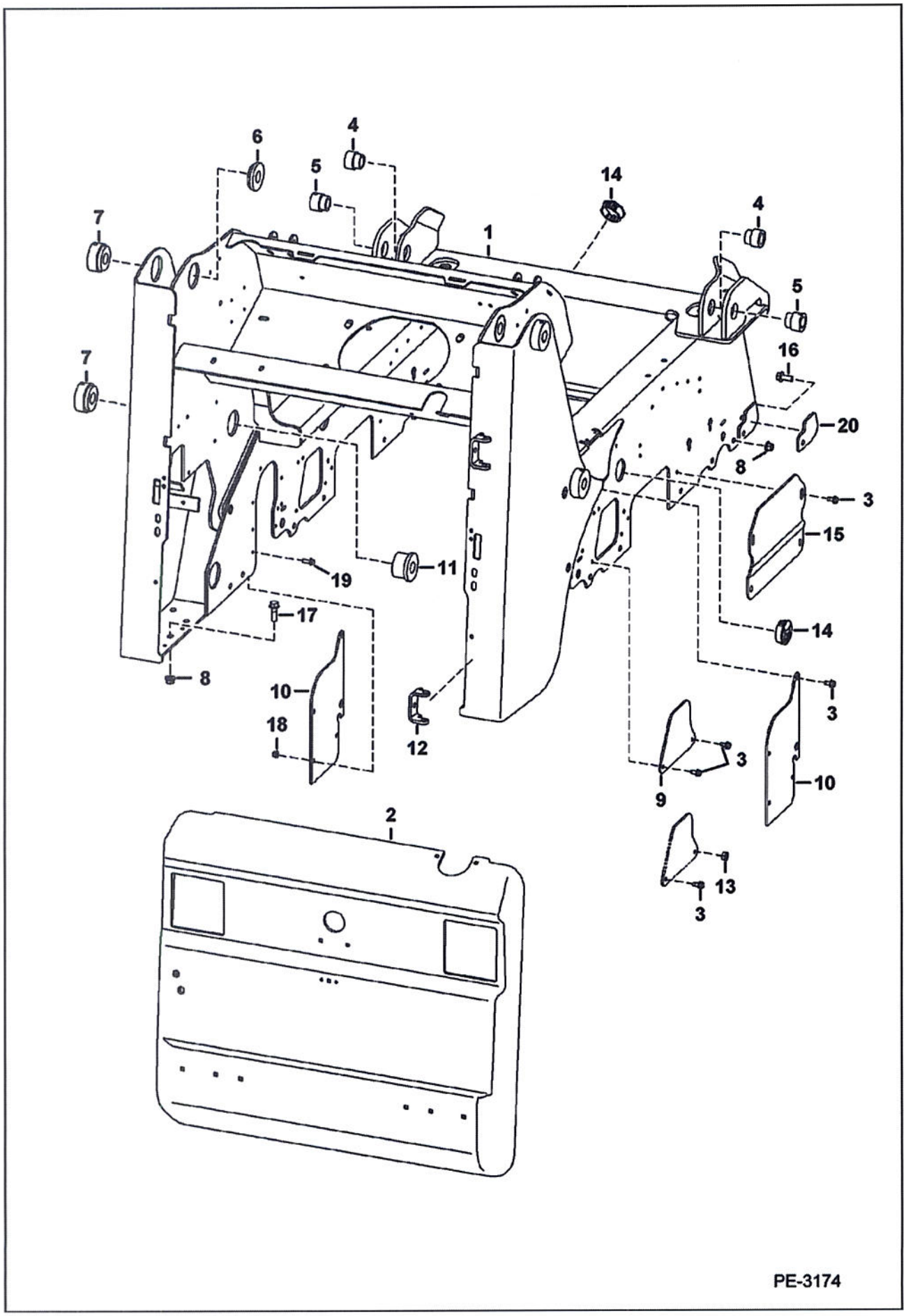

Ref No	Part Number	Description	Remarks	Serial Number	Qty
1	7141606	MAINFRAME			1
2	6729991	REAR DOOR	See Illustration REAR DOOR/ PE2252		1
3	84G3712	BOLT			19
4	6717278	BUSHING	weld on		2
5	6717277	BUSHING	weld on		2
6	6717356	BUSHING	weld on		2
7	6731578	BUSHING	weld on		4
8	83D8	NUT 5			26
9	7136696	COVER			2
10	7152006	SHIELD			2
11	6737131	BUSHING	weld on		2
12	6708987	HINGE	hinge - weld on		2
13	61D6	NUT 5		& Bel	1
14	6718796	PLUG			3
15	6719201	COVER			2
16	31C820	BOLT			16
17	31C828	BOLT			10
18	83D6	NUT 5		& Abv	1
19	84G3720	BOLT		& Abv	1
20	7141656	PLATE	weld-on		2

OPERATOR CAB

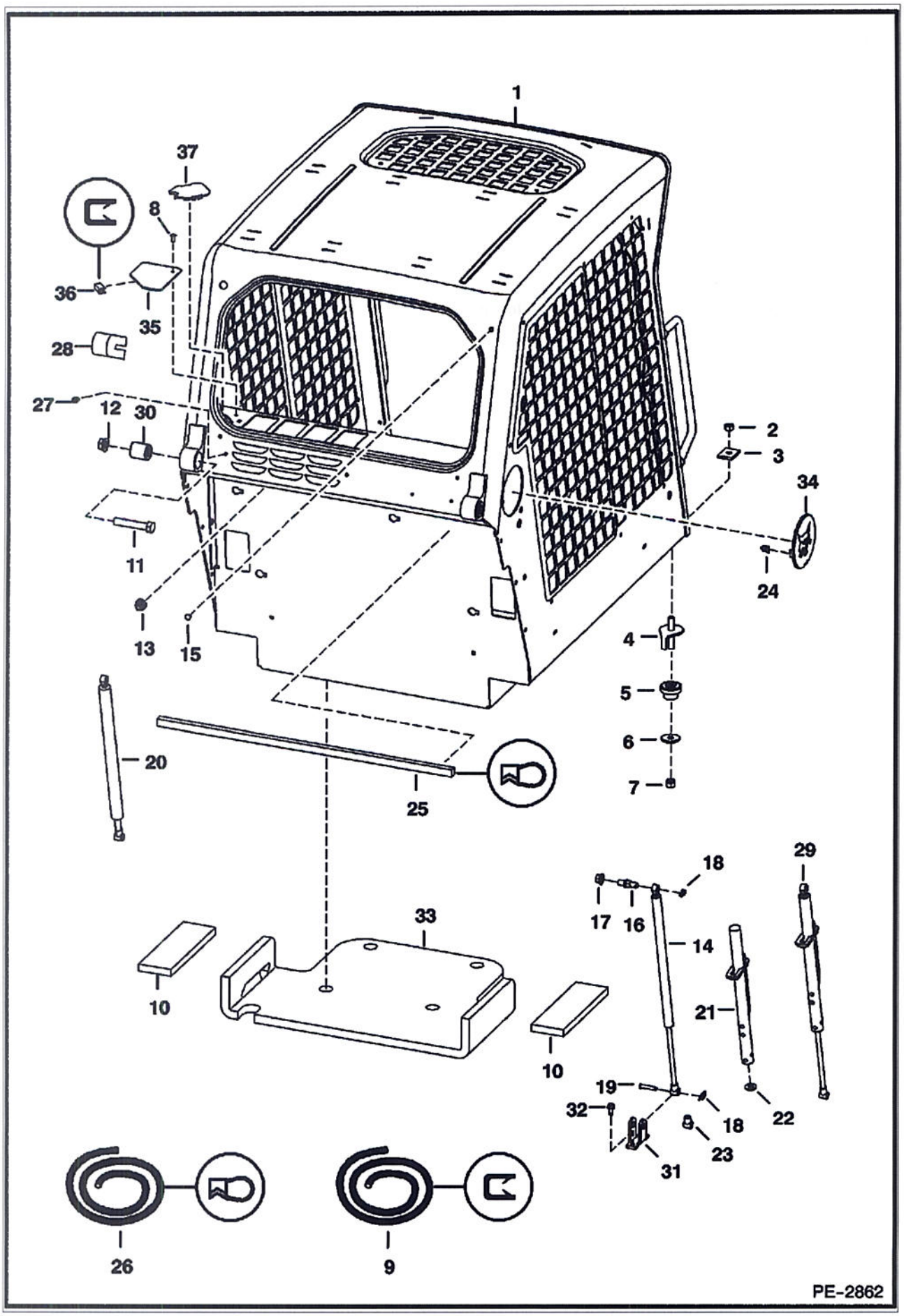

Ref No	Part Number	Description	Remarks	Serial Number	Qty
1		OPERATOR CAB	Does not include cab decals - Order 6719672 cab & Ref. 37 - Was 6719672 [B]		1
2	59D8	NUT 5			2
3	6553709	WASHER	rectangular		2
4	6702971	BOLT			2
5	6560633	DAMPENER			2
6	6515817	WASHER			2
7	85D8	NUT, 5			2
8	6630207	RIVET			1
9	6654139	MOULDING	bulk - sold per foot		x
10	6729012	INSULATION	seat pan		2
11	17C1056	BOLT			2
12	53D10	NUT			2
13	53D6	NUT			4
14	7100506	GAS SPRING	RH		1
15	5289686	PLUG			1
16	6719064	MOUNT			2
17	97D8	NUT			2
18	6631418	PIN	ring		4
19	6567743	PIN			2
20	7100508	GAS SPRING	LH		1
20	6675136	GAS SPRING	LH - heavy duty		1
21	6708189	TUBE	stop - RH		1
22	6701174	WASHER			1
23	6675257	CLEVIS			1
24	6679990	CLIP			2
25		SEAL	NAP -bulk - Sold Per Foot - Order Ref. 26		1
26	6679994	SEAL	32" (812,8 mm) long		x
27	6675033	INSERT	filter cover		2
28	6579613	STOP			2
29		GAS SPRING	NSS - R.H. - W/latch - Order Ref. 14 & 21-23		1
30	6562602	BUSHING			2
31	6706349	MOUNT	gas spring		2
32	84G3112	BOLT 5			4
33	6729013	INSULATION	seat pan		1
34	6733107	PLUG ASSY	W/ Bobcat head - W/Ref. 24		2
35		COVER	NAP - Order Ref. 37 - Was 7122338 [A]		1
36		MOULDING	NAP - 1" (25,4 mm) long - Order Ref. 9		1
37	7129949	COVER	snap		1

OPERATOR CAB

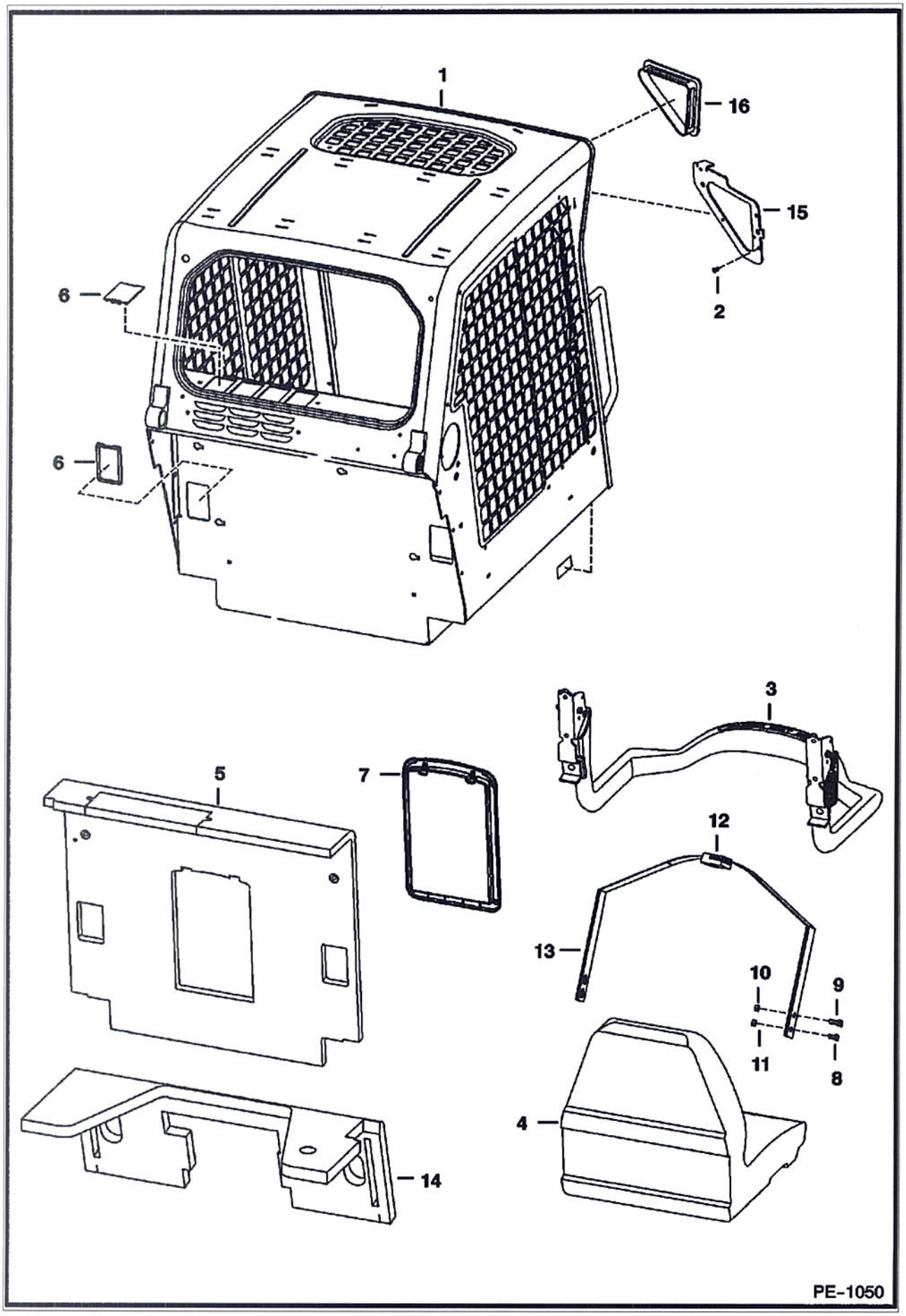

Ref No	Part Number	Description	Remarks	Serial Number	Qty
1		OPERATOR CAB	See Illustration OPERATOR CAB/ PE2862 Does not include cab decals		1
2	6675033	INSERT			6
3		SEAT BAR	See Illustration SEAT & SEAT BAR/ PE2950		1
4		SEAT			1
5	6719504	INSULATION	W/Ref. 7		1
6	6718101	COVER			6
7		CONTAINER	NAP - manuals - Order 6725301 container & 6725303 cover - Was 6719503 [A]		1
7	6675524	CLIP			2
7	6725301	COVER			1
7	6725303	FRAME			1
8	17C612	BOLT 5			2
9	17C716	BOLT			4
10	85D7	NUT			4
11	85D6	LOCK NUT			2
12	6675074	SEAT BELT	Also Order (2) of Ref. 13		1
13	6725373	SPRING PLATE			2
14	7139184	INSULATION	steering panel - Was 6718489 [A]		1
15		PLATE	NSS - R.H. - weld on		1
15		PLATE	NSS - L.H. - weld on		1
16	6674403	COVER	no lights		2

OPERATOR CAB
(Deluxe)

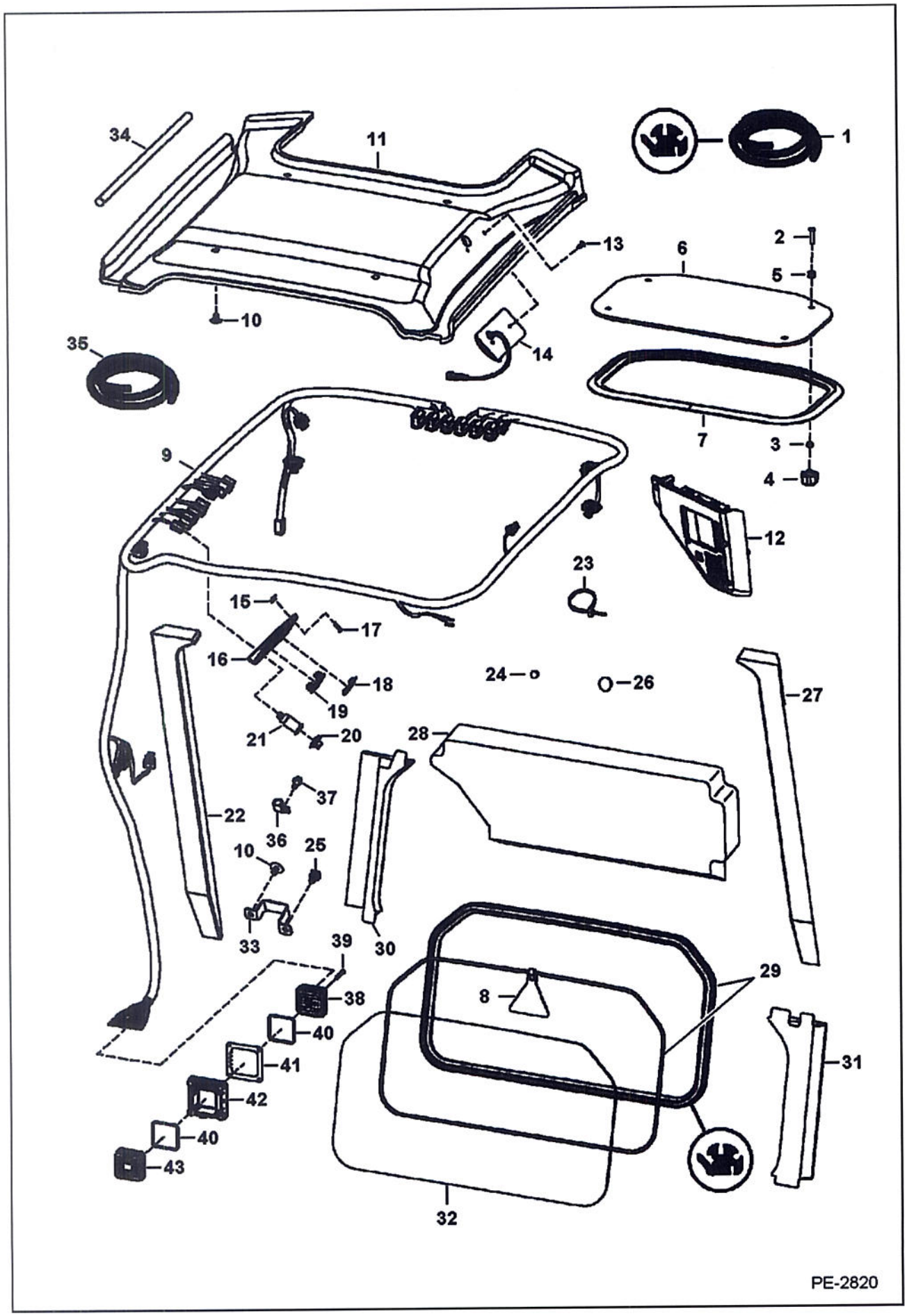

Ref No	Part Number	Description	Remarks	Serial Number	Qty
1	6675387	EXTRUSION	bulk - sold per foot		x
1	6554149	CORD	bulk - sold per foot		x
2	91G420	SCREW			4
3	6664085	BUSHING	nylon		4
4	6681614	KNOB	11/16" deep thread		4
5	6675545	GROMMET			4
6	7105035	WINDOW	assy. - W/Ref. 2, 3, 5 & 7		1
7		SEAL	NAP - Order Ref. 6		1
8	6731478	EXIT TAG			1
9	7143070	HARNESS	standard		1
9	7143071	HARNESS	deluxe - required to operate beacon, 4-way flashers, power bobtach & strobe lights		1
10	6674895	RETAINER	snap in		5
11	7148195	INSULATION	headliner		1
12	6688403	PANEL	deluxe - RH - keyless - export		1
13	6664221	RETAINER	snap in		2
14	6680326	LIGHT	dome		1
14	6665367	BULB			1
15	6669091	CLIP			4
16	6718580	PANEL			1
17	6669224	BOLT			4
18	6665314	PLUG	switch		5
19	6668742	SWITCH	travel control - export		1
20	6664224	CAP			1
21	6664223	OUTLET			1
22	7148199	INSULATION			1
23	6610510	TIE			6
24	5289686	PLUG	black - .375" hole		1
25	6678666	TREE MOUNT	push in - Use W/tie strap		1
26	6657719	PLUG	.75" hole		1
27	7148200	INSULATION			1
28	6727299	INSULATION	cab back		1
29		EXTRUSION	NAP - 75.75" (1924 mm) long - Order Ref. 1		x
29		CORD	NAP - 75.75" (1924 mm) long - Order Ref. 1		x
30	7148197	INSULATION			1
31	7148198	INSULATION			1
32	6717874	WINDOW	rear		1
33	7138645	BRACKET			1
34		FOAM	NAP - 7" (177,8 mm) long - Order Ref. 35 - W/O Heat or HVAC		2
34		FOAM	NAP - 12" (304,8 mm) long - Order Ref. 35 - W/ Heat or HVAC		2
35	6511855	SEAL	self adhesive - bulk - sold per foot		x
36	30H75	CLAMP			1
37	84G3712	BOLT			1
38	6688834	CONNECTOR	W/Ref. 39 & 40		1
39		BOLT	NSS - Order Ref. 38		1
40	6697794	SEAL			2
41	6697793	SEAL			1
42	6688836	FLANGE	W/Ref. 41		1
43		CONNECTOR	See Illustration ENGINE ELECTRICAL CIRCUITRY/ PE2822		1

SEAT & SEAT BAR

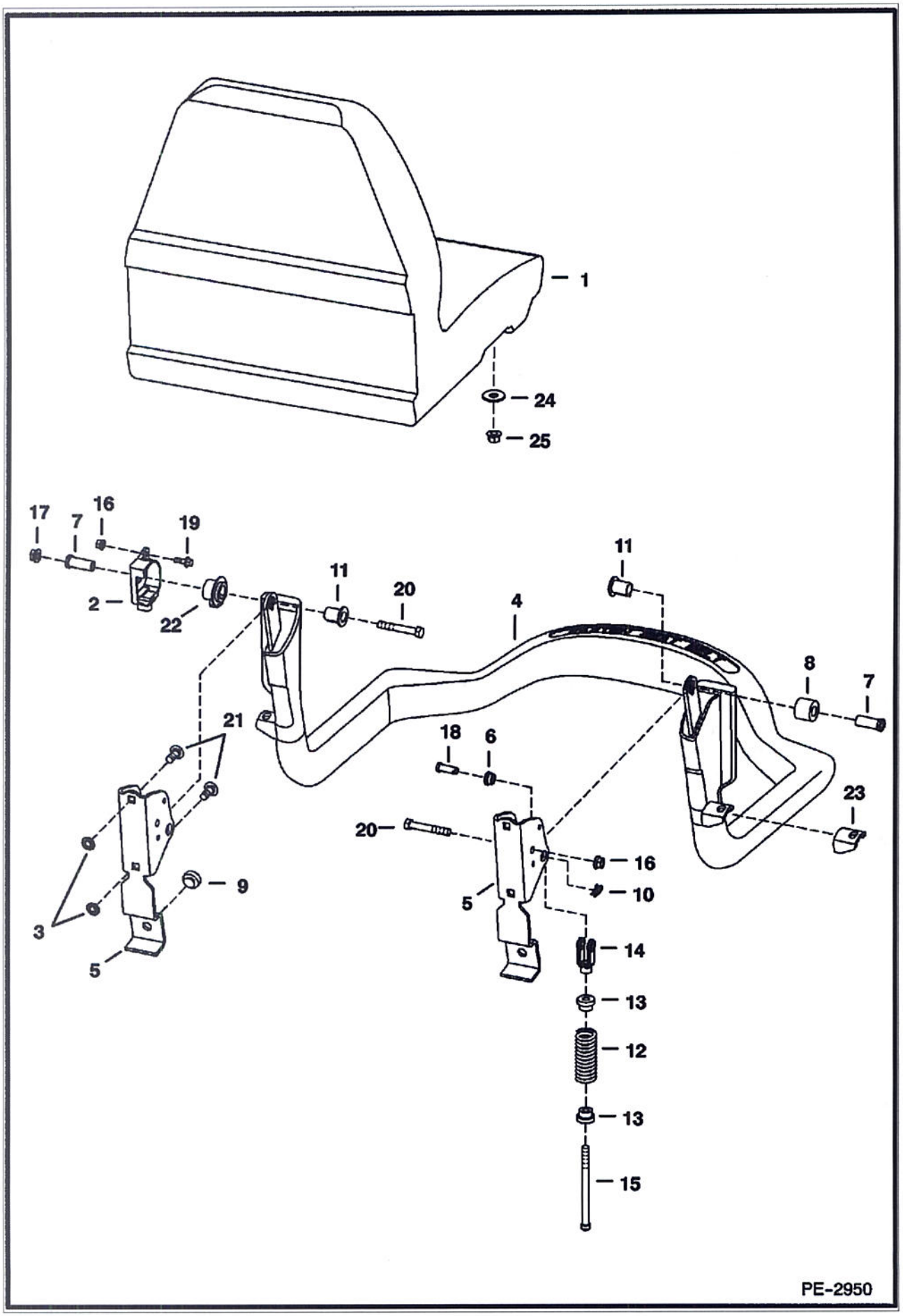

Ref No	Part Number	Description	Remarks	Serial Number	Qty
1		SEAT	See Illustration SEAT/ B26226		1
2	6691714	SENSOR, SEATBAR BICS			1
3	6674894	NUT			4
4	6715860	SEAT BAR			1
5	6715863	BRACKET			1
6	6715864	BUSHING			2
7	6715865	BUSHING			2
8	6715866	BUSHING			1
9	6519178	BUMPER			2
10	6631418	PIN	ring		2
11	6680441	BUSHING	keyed		2
12	6701535	SPRING			2
13	6710659	BUSHING			2
14	6713589	CLEVIS			2
15	6713887	BOLT			2
16	83D4	NUT 10			1
17	97D6	NUT 10			2
18	4F6106	PIN			2
19	35C412	BOLT			1
20	17C640	BOLT 5			2
21	10C616	BOLT 10			4
22	6680443	BUSHING, MAGNET			1
23		MOUNT	NAP - Order Ref. 4		2
24	619021	WASHER, 5			6
25	59D5	NUT 5			4

SEAT
(Michigan)

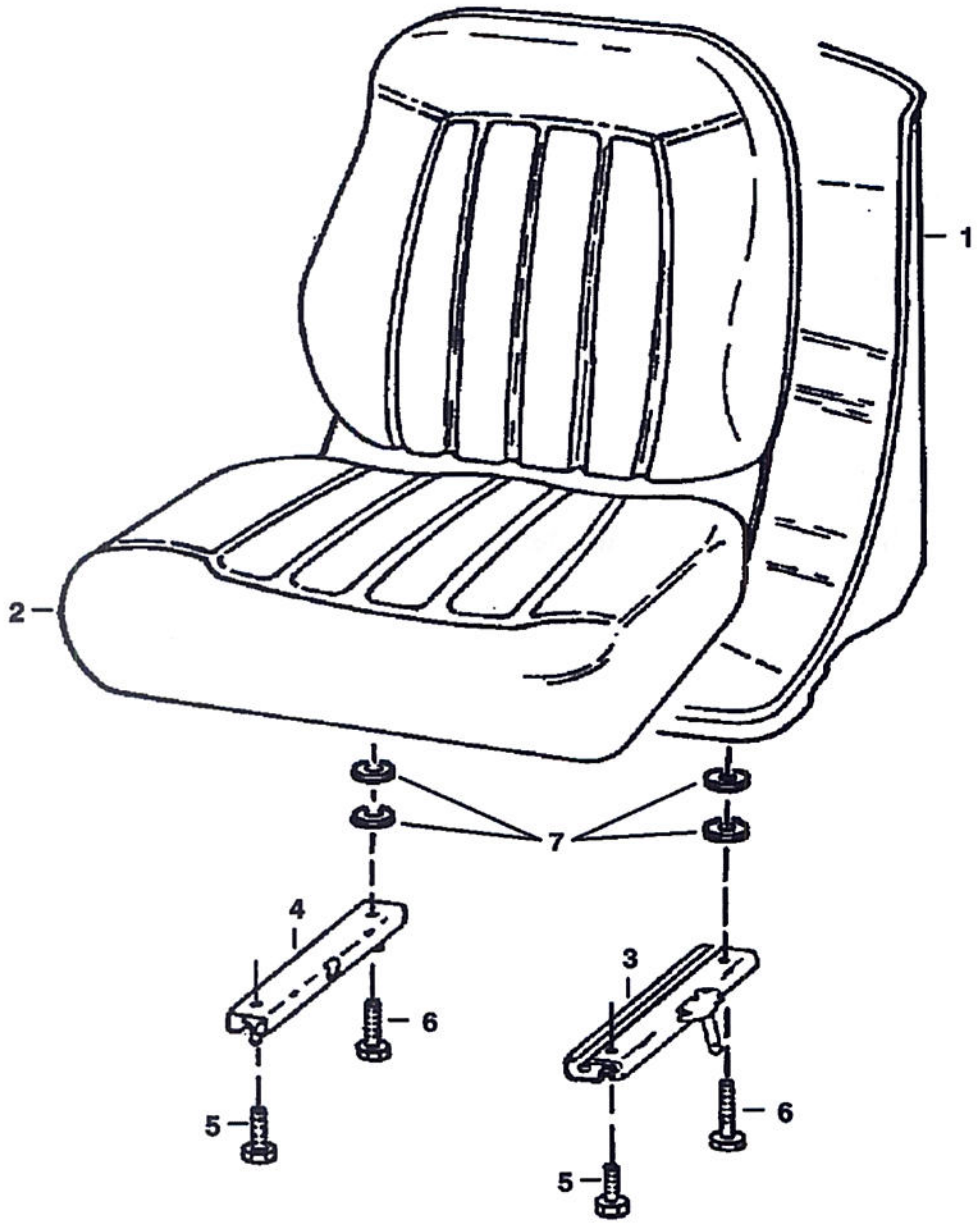

B-26226

SEAT (Cont'd)
(Michigan)

Ref No	Part Number	Description	Remarks	Serial Number	Qty
1	6669135	SEAT	W/Ref. 2-7		1
2	6670160	CUSHION	W/edging, clip & (2) grommets		1
2		EDGING	NSS		1
2		CLIP	NSS		1
3	6674013	TRACK	LH - W/ 8" (203,2 mm) latch		1
4	6669089	TRACK	RH - W/O latch		1
5	25G512	SCREW			2
6	25G520	SCREW			2
7	6672715	SPACER			4

PANELS
(Manual Controls)

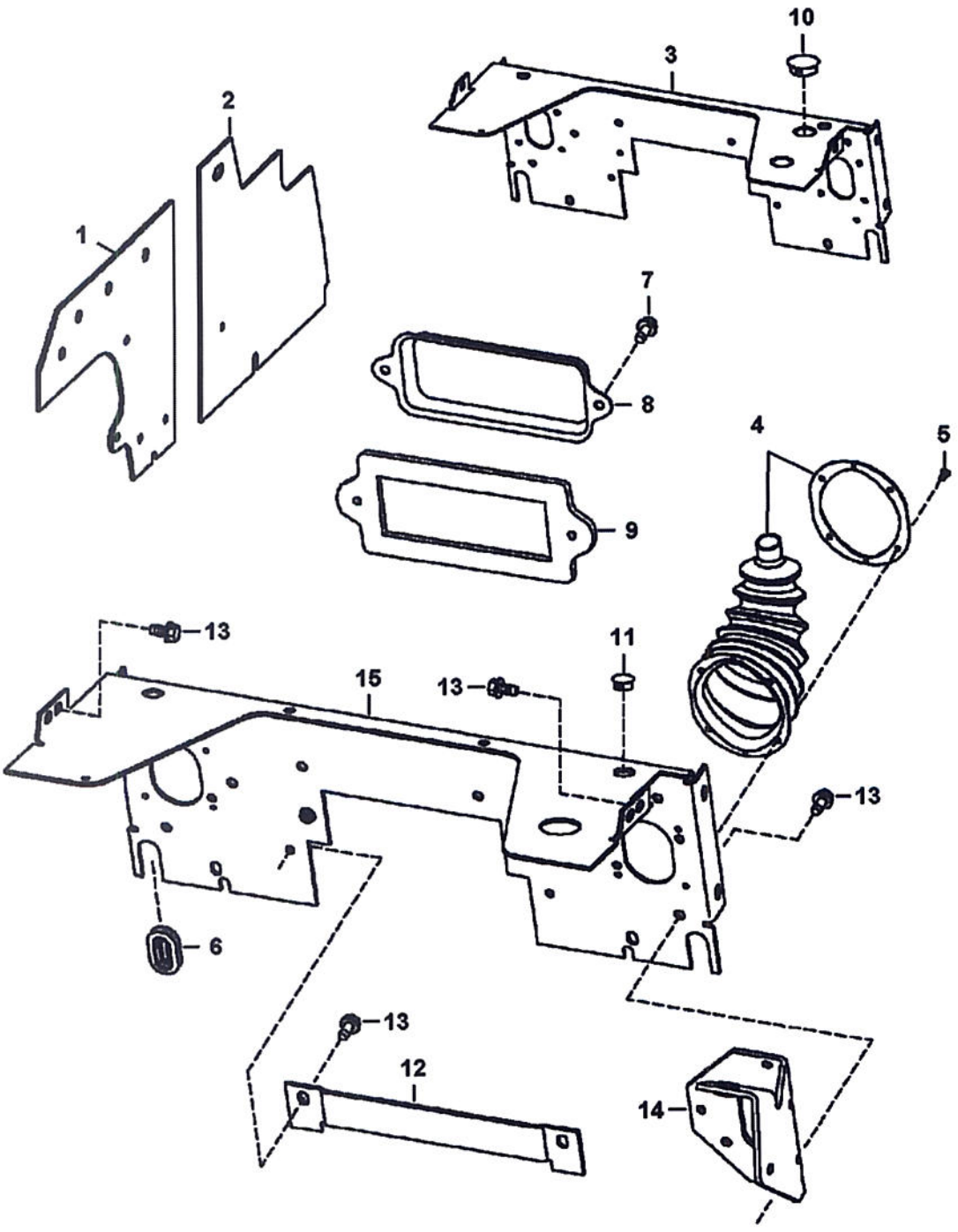

PANELS (Cont'd)
(Manual Controls)

Ref No	Part Number	Description	Remarks	Serial Number	Qty
1	7117232	PANEL	side rear		2
2	7117123	PANEL	side front		2
3		SHIELD	NAP - Order Ref. 15 - Was 7106687 [A]		1
4	6532127	BOOT	W/mounting ring		2
4		RING	NSS - mounting ring		2
5	6630207	RIVET			12
6	6577961	GROMMET			2
7	84G3112	BOLT 5			2
8	6716621	COVER	fuse/relay		1
9	6725302	GASKET			1
10	6681469	PLUG	for 1.375" (34,9 mm) dia hole		1
11	6648348	PLUG	for .812" (20,6 mm) dia hole		2
12	6717890	COVER			1
13	84G3712	BOLT			26
14		BRACKET	See Illustration HAND CONTROLS/ PE2366 - RH		1
14		BRACKET	See Illustration HAND CONTROLS/ PE2366 - LH		1
15	7139183	SHIELD			1

PANELS
(Selectable Joystick Controls)

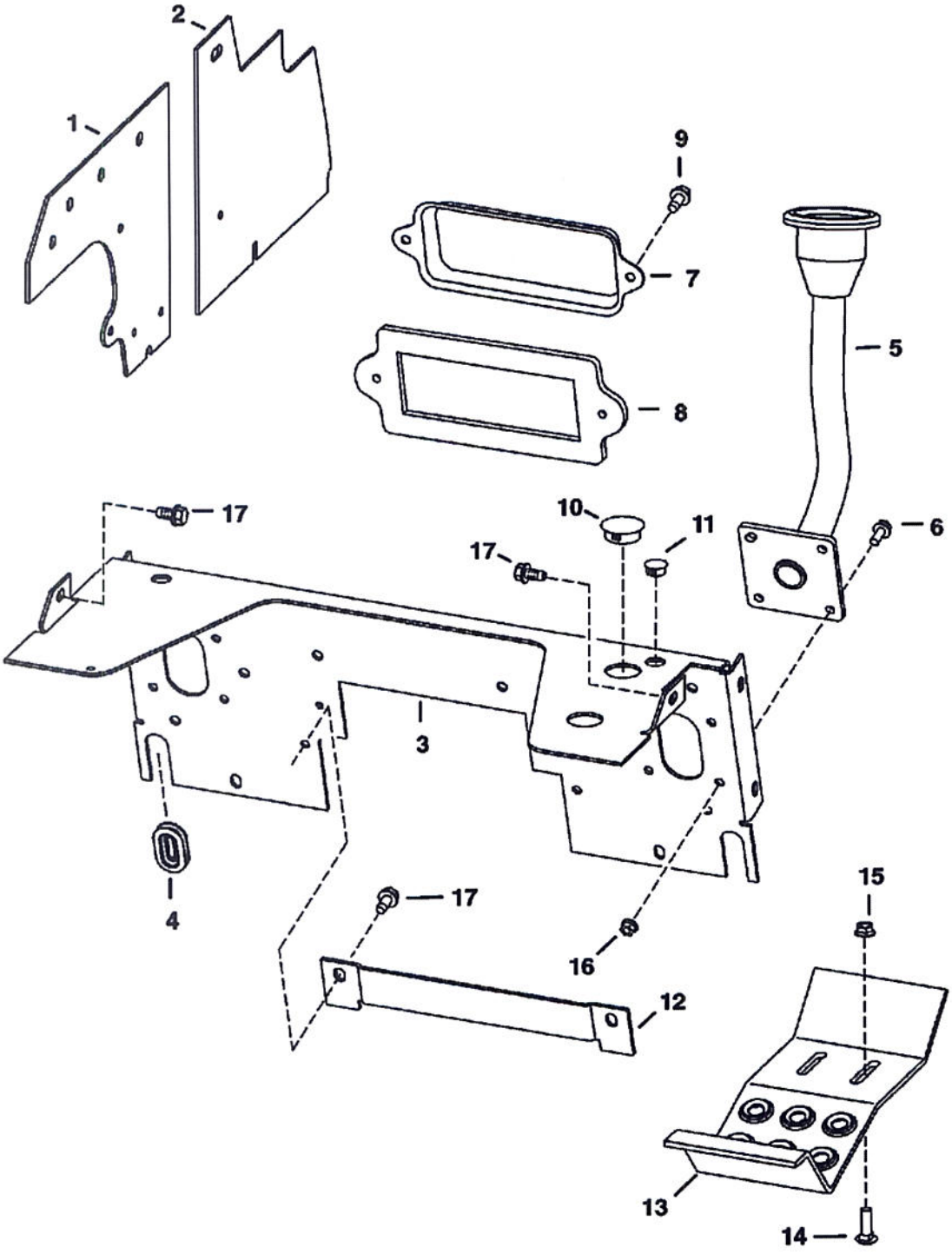

PANELS (Cont'd)
(Selectable Joystick Controls)

Ref No	Part Number	Description	Remarks	Serial Number	Qty
1	7117232	PANEL	side rear		2
2	7117123	PANEL	side front		2
3		SHIELD	NAP - Order Ref. 18 - Was 7106687 [A]		1
4	6714726	GROMMET			2
5		HANDLE	- RH		1
5		HANDLE	- LH		1
6	35C512	BOLT			8
7	6716621	COVER	fuse/relay		1
8	6725302	GASKET			1
9	84G3112	BOLT 5			2
10	6681469	PLUG	for 1.375" (34,9 mm) dia hole		1
11	6648348	PLUG	for .812" (20,6 mm) dia hole		2
12	6717890	COVER			1
13	6712365	STEP			2
14	37C620	BOLT			4
15	57D6	NUT 5			4
16	89D5	NUT			8
17	84G3712	BOLT			26
18	7139183	SHIELD			1

REAR DOOR

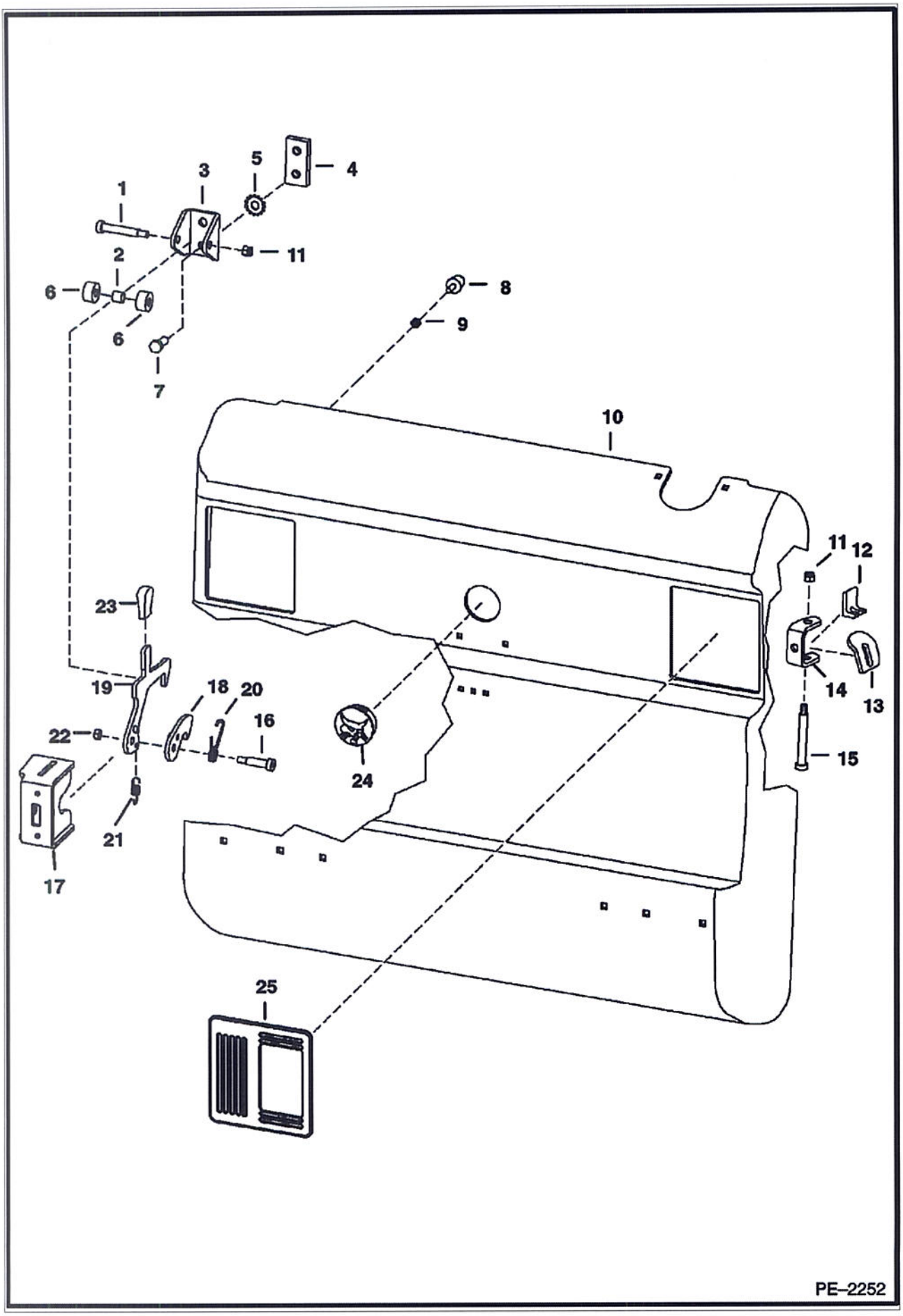
1
2
3
4
5
6
6
7
8
9
10
11
11
12
13
14
15
16
17
18
19
20
21
22
23
24
25
PE–2252

Ref No	Part Number	Description	Remarks	Serial Number	Qty
1	38C840	BOLT	carriage		1
2	6809734	BUSHING			1
3	6809727	CHANNEL			1
4	6719525	BAR	threaded striker		1
5	6675273	WASHER	lock		2
6	6809726	ROLLER			2
7	17C820	BOLT			2
8	6733616	BUMPER	tapered		2
9	61D5	NUT			2
10	6729991	REAR DOOR			1
11	59D6	NUT			3
12	6719766	STOP			1
13	6714126	DOOR STOP			2
14	6733575	HINGE	weld on		2
15	6809845	BOLT			2
16	38C824	SCREW			1
17	6729939	LATCH PLATE	weld on		1
18	6733667	LATCH, REAR DOOR			1
19	6732715	LATCH			1
20	6810132	SPRING			1
21	6810141	SPRING			1
22	85D6	LOCK NUT			1
23	6564452	GRIP			1
24	6718796	PLUG			1
25	6670287	COVER			2

LIFT ARMS & BOBTACH

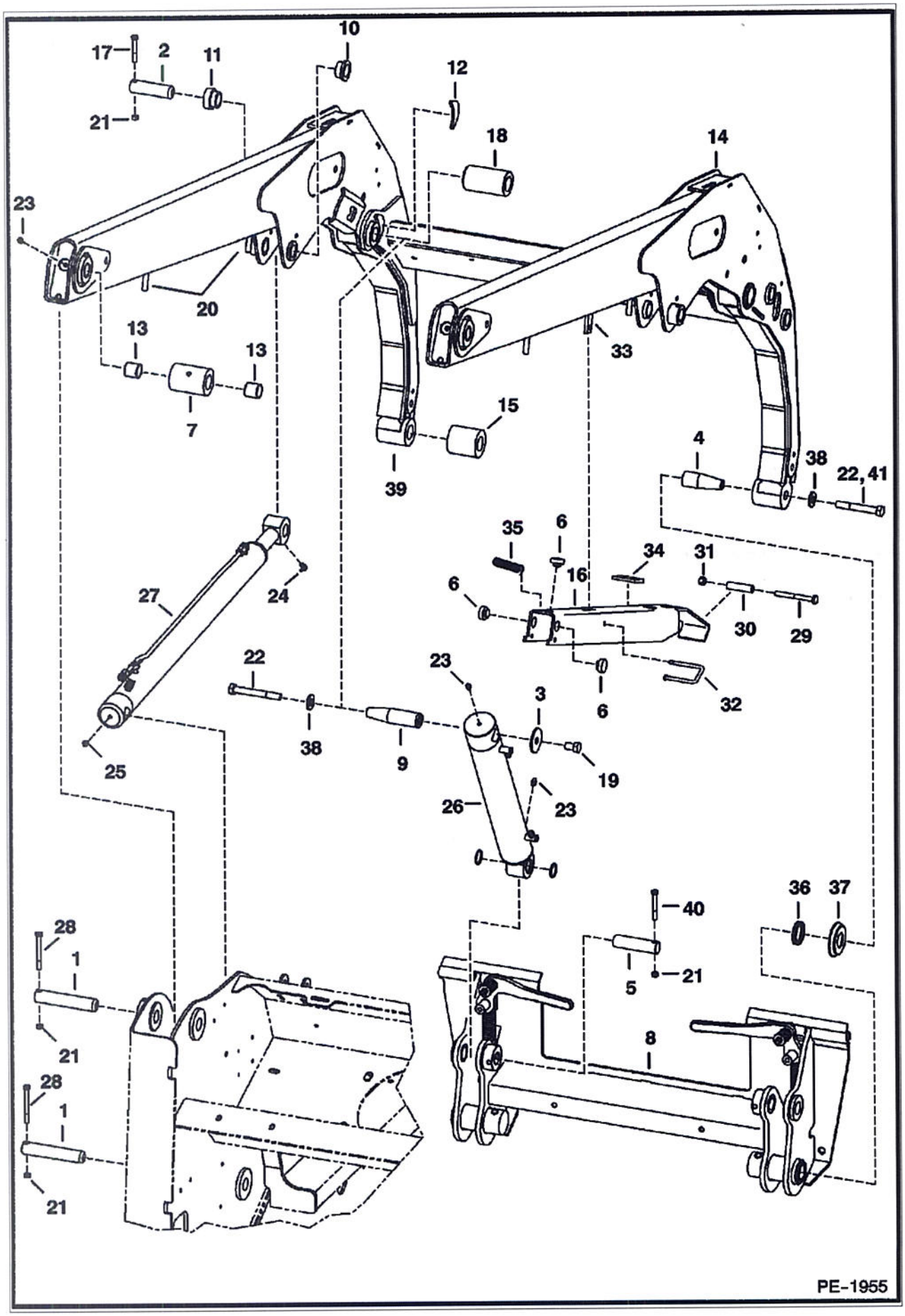

Ref No	Part Number	Description	Remarks	Serial Number	Qty
1	6717560	PIN	1.25" x 6.20" (31,8 mm x 157,5 mm)		4
2	6718789	PIN	1.25" x 4.24" (31,8 mm x 107,7 mm)		2
3	6731160	WASHER			2
4	7101078	PIN, PIVOT TAPERED	tapered - 1.5" x 4.05" (38,1 mm x 102,9 mm)		2
5	6577954	PIN	1.25" x 4.65" (31,7 mm x 118 mm)		4
6	6519178	BUMPER			3
7	6732265	BUSHING	weld on		2
8		BOB-TACH	See Illustration BOB-TACH/ PE1540 SALES		2
9	6734662	PIN, PIVOT TAPERED	tapered - 1.5" x 6.2" - (38,1 mm x 157,5 mm)		2
10	6703616	BUSHING	weld on		2
11	6555987	BUSHING	weld on		2
12	6733749	GUSSET			2
13	6717562	BUSHING	wear		4
14	7114258	LIFT ARM			1
15		BUSHING	weld on		2
16	6734538	STOP	lift arm		1
17	17C640	BOLT 5			2
18	6734660	BUSHING	weld on		2
19	17C1016	SCREW			2
20	1313995	STUD	weld on		4
21	85D6	LOCK NUT			8
22	17C1080	SCREW			2
23	10H25	FITTING, GREASE			6
24	12H15	GREASE ZERK			2
25	11H15	GREASE FITTING			2
26		CYLINDER	TILT		2
27		CYLINDER	LIFT		2
28	17C660	BOLT			4
29	17C656	BOLT			1
30	6700533	SPACER			1
31	61D6	NUT 5			1
32	6714810	PIN	retainer		1
33	6705091	TAB	weld on		1
34	6704436	PAD			1
35	6579072	SPRING			1
36	6651709	SEAL			2
37	6732443	CUP	seal		2
38	27E10	WASHER			4
39		ARM	NSS - lower - weld on		2
40	17C648	BOLT 5			2
41	47C1080	BOLT	W/preapplied thread lock - Use W/Ref. 14 (NAP/ 6734088 lift arm)		2
41	47C1088	BOLT	W/preapplied thread lock - Use W/Ref. 14 (7114258 lift arm)		2

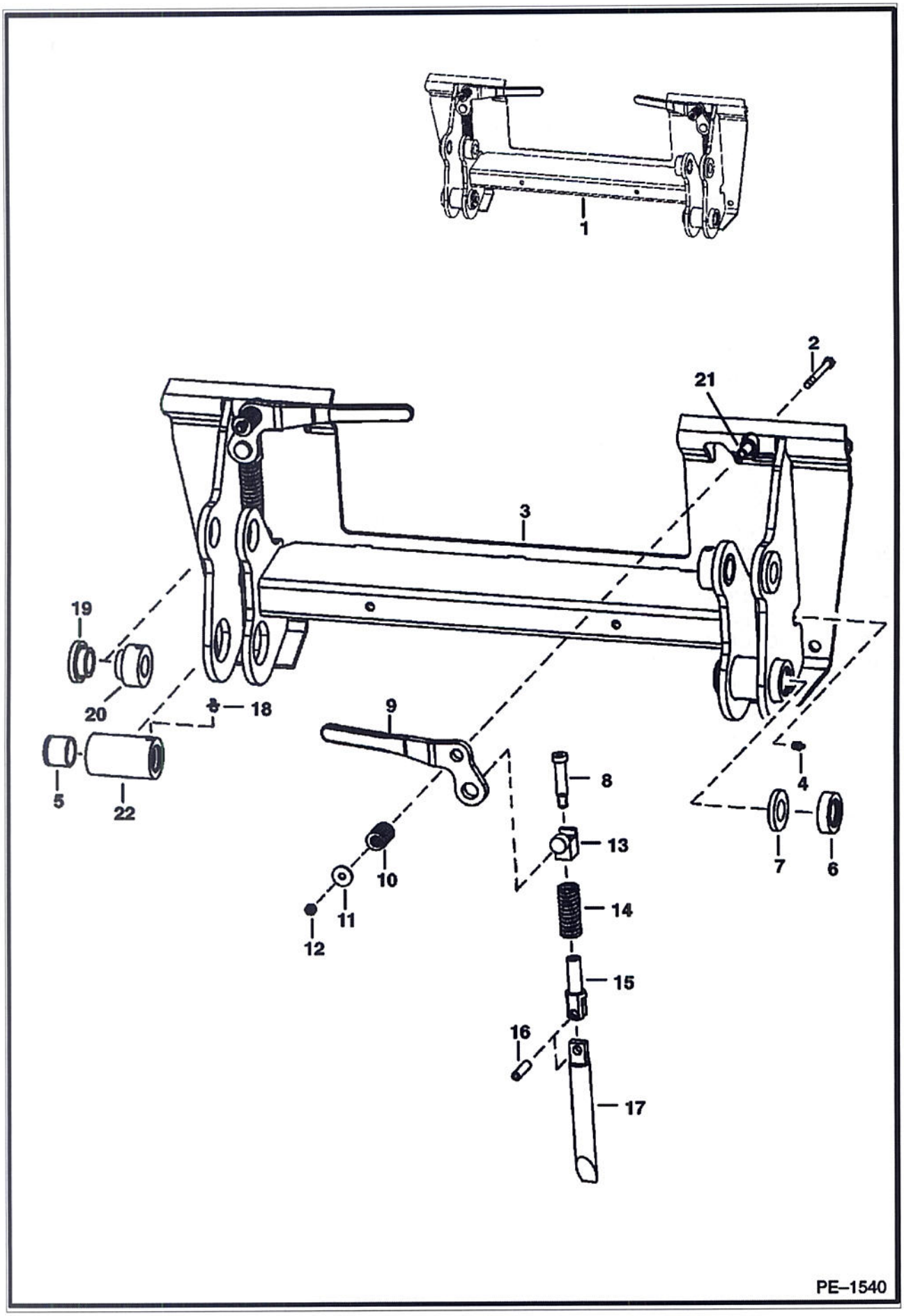
1
2
21
3
19
20
18
9
8
4
5
22
13
7
6
10
14
11
12
15
16
17
PE–1540

Ref No	Part Number	Description	Remarks	Serial Number	Qty
1	7143508	BOB-TACH	Also Order 6561383 decal		1
1		KIT	See Illustration POWER BOB-TACH KIT/ PE2869 POWER BOB-TACH		1
2	17C660	BOLT			2
3		FRAME	NAP		1
4	10H35	GREASE ZERK			2
5	6730997	BUSHING	press fit		2
6	6732443	CUP	seal		2
7	6651709	SEAL			2
8	6728473	BOLT	shoulder		2
9	6702904	LEVER	RH		1
9	6702903	LEVER	LH		1
10	6713040	SPRING			2
11	619021	WASHER, 5			2
12	85D6	LOCK NUT			2
13	6731119	PIVOT ASSY			2
14	6578253	SPRING, COMPRESSION			2
15	6704248	PIVOT	wedge		2
16	14J5032	PIN, STRAIGHT			2
17	6737191	WEDGE			2
18	743332	GREASE ZERK 5			2
19	6717259	BUSHING	weld on		2
20	6717260	BUSHING	weld on		2
21	6702958	BUSHING	weld on		2
22	6731979	BUSHING	weld on - Also Order Ref. 5 & 18		2

FUEL SYSTEM

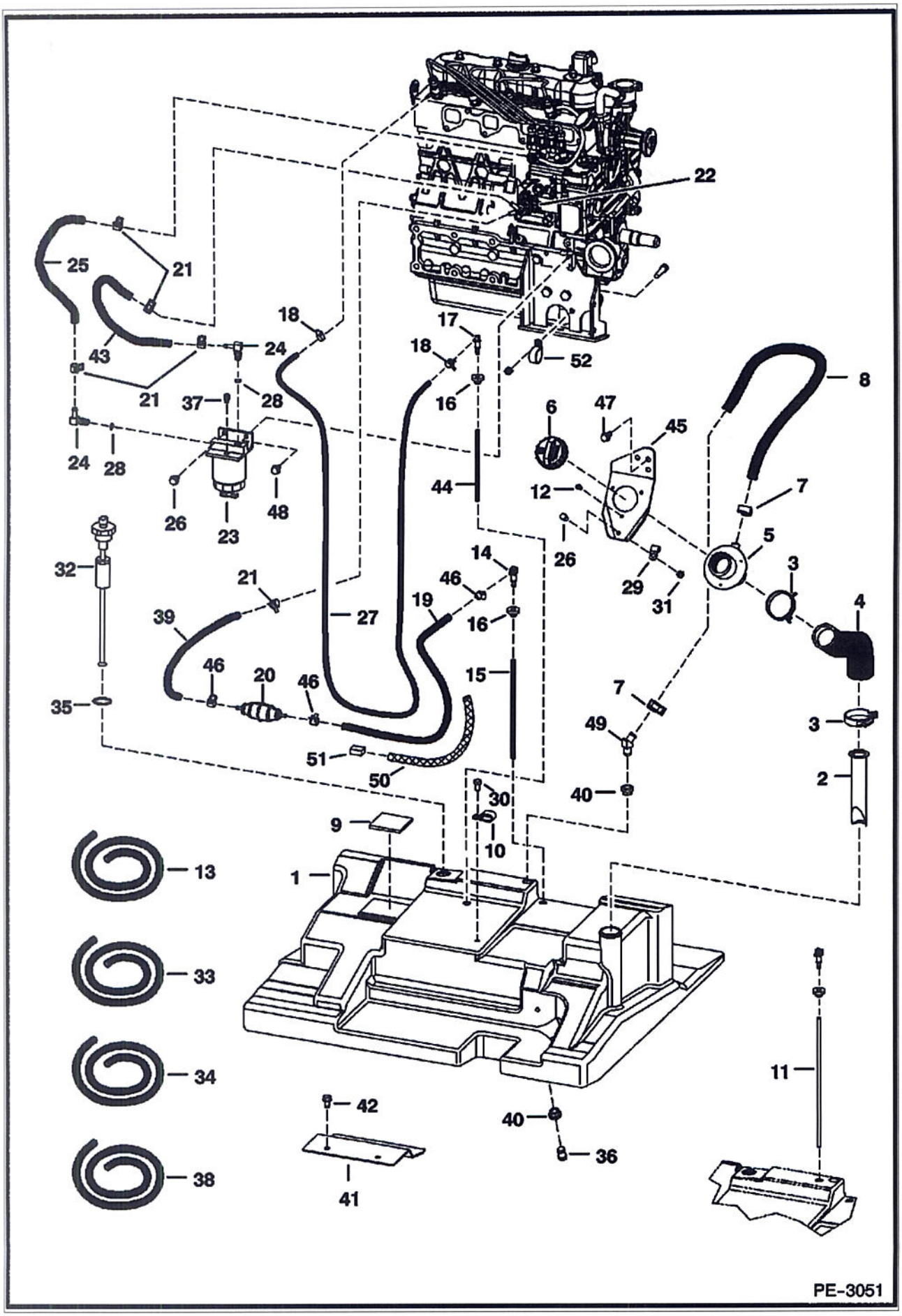

Ref No	Part Number	Description	Remarks	Serial Number	Qty
1	7136378	TANK, FUEL			1
2	6569219	SCREEN			1
3	42H32	HS CLAMP5	worm gear		2
3	5HM58	CLAMP	constant tension		2
4	7142832	HOSE, FUEL FORMED			1
5	6701449	FILLER TUBE			1
6	6661114	CAP	green		1
6		CAP	NAP - locking - W/Key - Code GC020		1
6	6654374	KEY	Code GC020		1
6	6661696	CAP	locking - W/Key - Code PK510		1
6	6587458	KEY	Code PK510		1
6	7113340	CAP	non-locking - European		1
6	7121223	CAP	locking - European		1
6		KEY	European		x
7	42H10	HOSECLAM5	worm gear		2
7	5HM24	CLAMP	constant tension		2
8		HOSE	NAP - 50" (1270 mm) long - Order Ref. 13		1
9	6578278	PAD	self adhesive one side		2
10	31H27	CLIP			1
11	6729854	HOSE	12.5" (317,5 mm) long		1
12	6706517	SCREW			3
13	6578172	HOSE	bulk - sold per foot		x
14	6598908	ELBOW			1
15	6729853	HOSE	10.25" (260,4 mm) long		1
16	6553411	BUSHING	.375" (9,53 mm) ID		2
17	7101291	ELBOW			2
18	42HS4	CLAMP			2
19		HOSE	NAP - 37" (939,8 mm) long - Order Ref. 33		1
20	6657734	PUMP	hand primer - 4.88" long (123.9 mm)		1
21	5HM14	CLAMP			5
22	6655216	FUEL PUMP			1
23	6667353	FILTER ASSY			1
23	6667352	FILTER FUEL			1
23	72F1	FITTING			1
24	6715183	ELBOW	W/Ref. 28		2
25		HOSE	NAP - 13" (330,2 mm) long - Order Ref. 34		2
26	84G3112	BOLT 5			3
27		HOSE	NAP - 62" (1574,8 mm) long - Order Ref. 38		1
28	79K5	O RING 10			x
29	30H22	CLIP			1
30	17C610	BOLT			1
31	85D5	NUT 5			1
32	6680436	SENSOR	fuel - W/Ref. 35		1
33	6577821	HOSE	bulk - sold per foot		x
34	6577822	HOSE	bulk - sold per foot		x
35	6717579	GASKET			1
36	6717401	PLUG	fuel drain		1
37	6658180	BREATHER	breather		1
38	6578169	HOSE	.187" (4,75 mm) ID - bulk - sold per foot		x
39		HOSE	NAP - 23" (584,2 mm) long - Order Ref. 33		1
40	6717402	BUSHING			2
41	6737368	BRACKET			1
42	84G3712	BOLT			2
43			NAP - 50" (1270 mm) long - Order Ref. 13		1

ge 589 - BOBM029239B1001 - 04/08/2009 12:26:17 - Printed by Ken Cook Co. - eXprint.exe [V4.44.7 W/CAVS7]

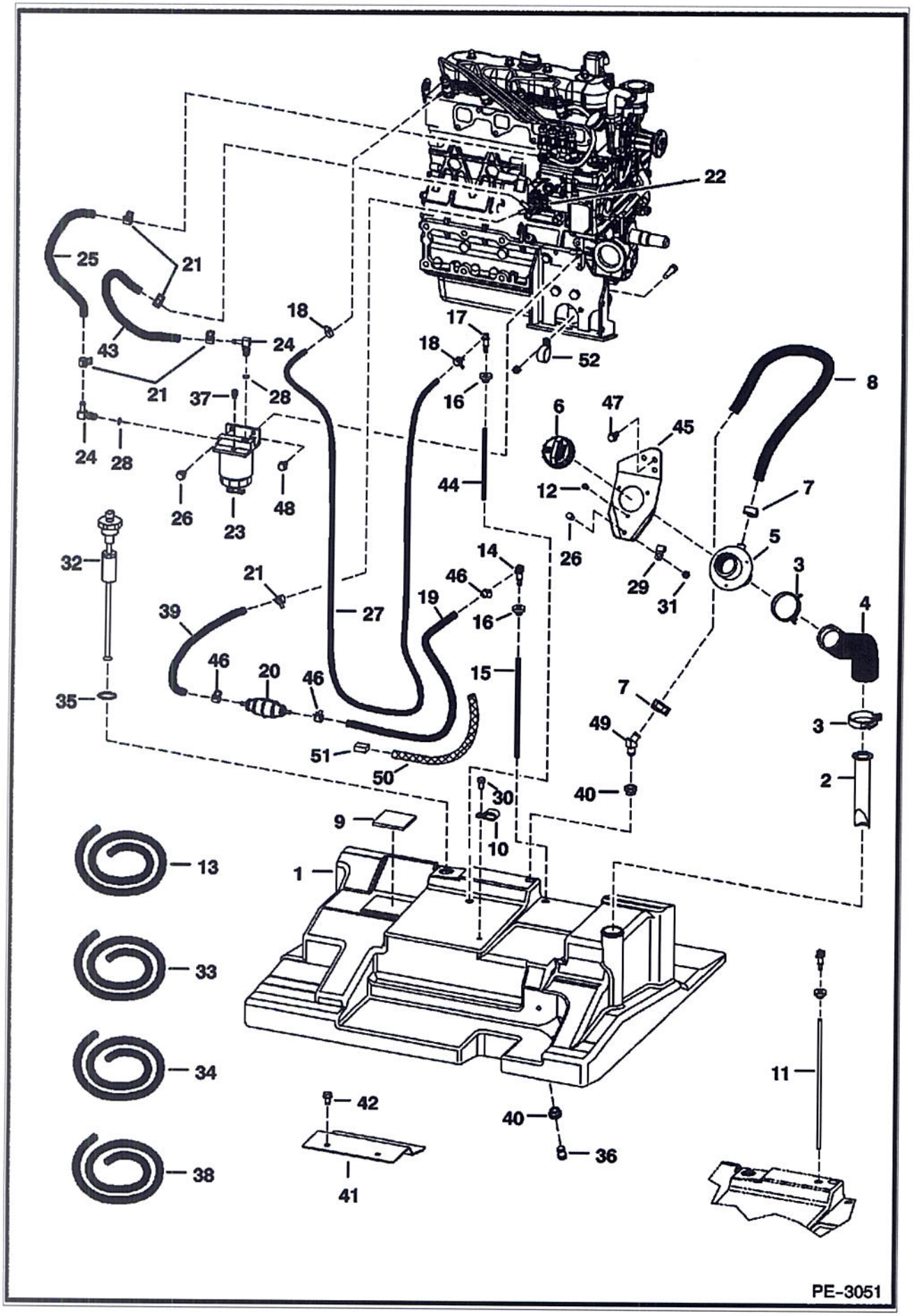

Page 590 - BOBM029239B1001 - 04/08/2009 12:26:17 - Printed by Ken Cook Co. - eXprint.exe (v2.24.7 4/7/200

Ref No	Part Number	Description	Remarks	Serial Number	Qty
44	7126472	HOSE	10.60" (269,2 mm) long		1
45	6731059	INLET	fuel fill		1
46	5HM13	CLAMP			3
47	84G3716	SCREW 5			2
48	84G3116	SCREW			1
49	7122519	ELBOW	45 degree		1
50	7124294	GUARD	18" (457,2 mm) long		1
51	7124326	RETAINER	foam - 3" (76,2 mm) long		1
52	30H75	CLAMP			1

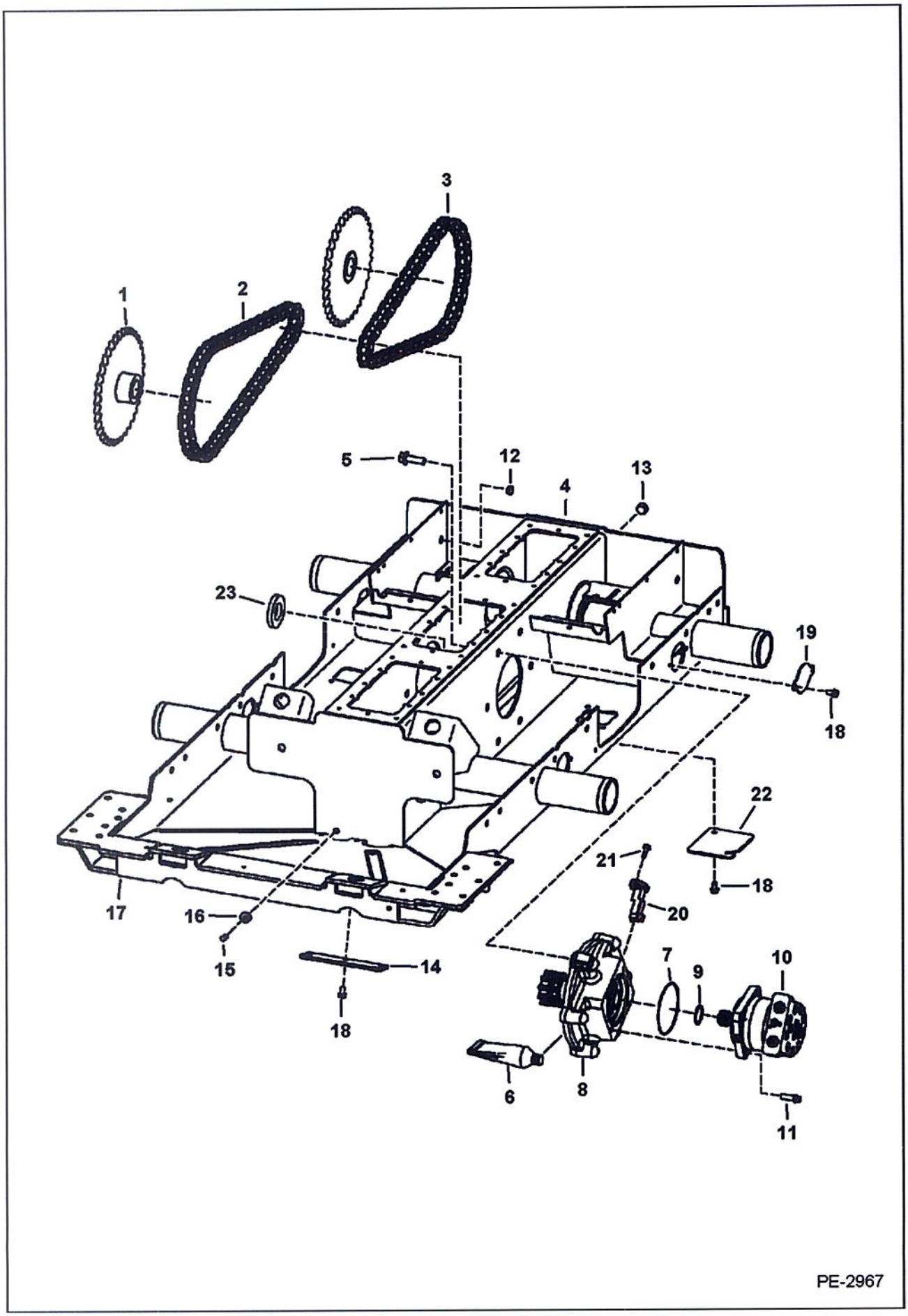
1
2
3
5
12
13
4
23
19
18
22
21
18
20
17
16
15
14
18
7
9
10
6
8
11
PE-2967

Ref No	Part Number	Description	Remarks	Serial Number	Qty
1	6577204	SPROCKET			4
2	6689652	CHAIN, DRIVE	68 pitch - hour glass shape link - Tsubaki		2
2	6690709	LINK	conn. - hour glass shape - Tsubaki		x
3	6689651	CHAIN, DRIVE	62 pitch - hour glass shape link - Tsubaki		2
3	6690709	LINK	conn. - hour glass shape - Tsubaki		x
4	7122291	CHAINCASE	single speed motor		1
4	7130074	CHAINCASE	2-speed motor		1
5	35C1032	BOLT			12
6	6685372	SEALANT, GASKET LIQUID	tube - 20 oz		x
7	25K30508	O-RING, 10			2
8		MOUNT ASSY.	See Illustration MOTOR CARRIER/ PE3454 single speed motor - manual controls		2
8		MOUNT ASSY	See Illustration MOTOR CARRIER/ PE1818 single speed motor - selectable joystick controls		2
8		MOUNT ASSY.	See Illustration MOTOR CARRIER/ PE3455 2-speed motor - manual controls		2
8		MOUNT ASSY	See Illustration MOTOR CARRIER/ PE3118 2-speed motor - selectable joystick controls		2
9	6664815	SEAL, OIL	supplied W/motor		2
10		MOTOR	See Illustration HYDROSTATIC MOTOR/ PE2620 W/Ref. 9 - single speed		2
10		MOTOR	See Illustration HYDROSTATIC MOTOR/ MS2315 W/Ref. 9 - 2-speed		2
11	93G824	BOLT	single speed motor		8
11	93G1032	BOLT	2-speed motor		6
12	6657719	PLUG			2
13	6731121	PLUG	chaincase fill		1
14	6700182	COVER, DRAIN			1
15	6599645	PLUG, STEEL	chaincase drain		1
16	6553411	BUSHING			2
17	6706485	HOOK	tie down - weld on		2
18	84G3712	BOLT	single speed motor		11
18	84G3712	BOLT	2-speed motor		15
19	6730078	COVER			2
20	6677181	SENSOR, SPEED WHEEL	wheel speed - selectable joystick controls		2
21	35C412	BOLT	selectable joystick controls		4
22	6716010	COVER	2-speed motor		2
23	6680055	MAGNET	selectable joystick controls		2

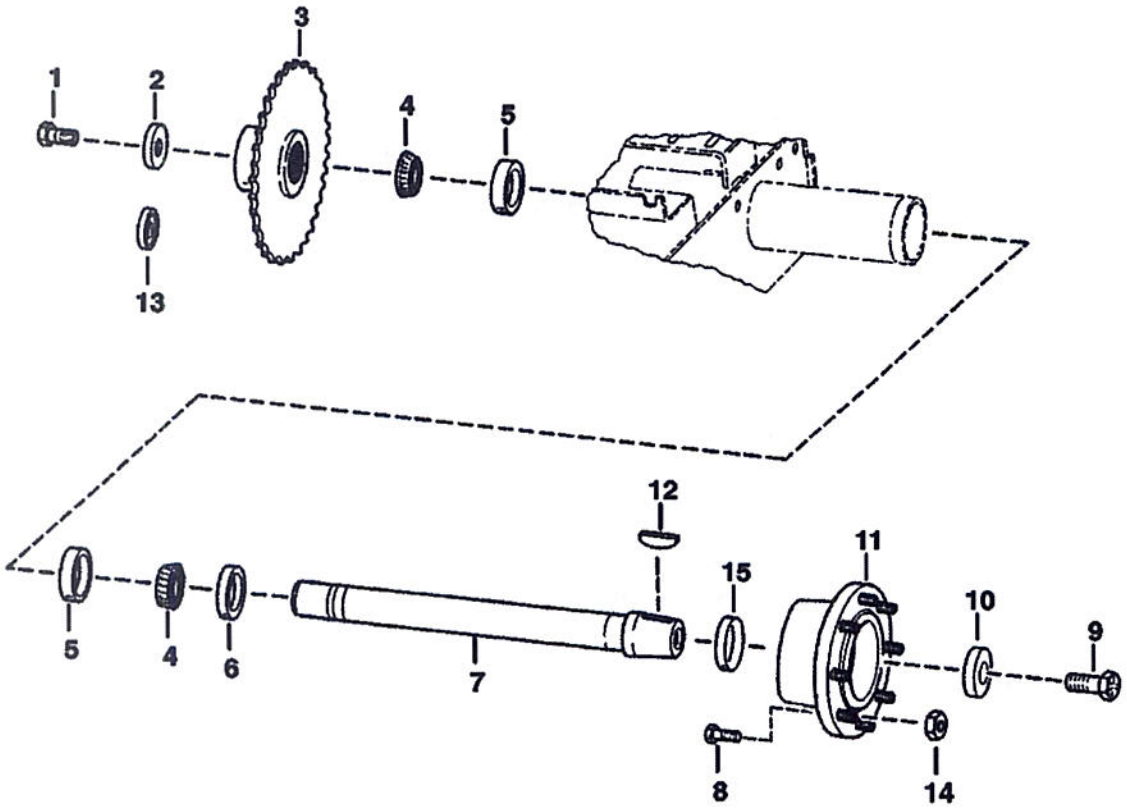

C–3270

Ref No	Part Number	Description	Remarks	Serial Number	Qty
1	6679247	BOLT	plated - 1.75" (44,5 mm) long		1
2	6552871	WASHER			1
3	6577204	SPROCKET			1
4	6689775	BEARING, AXLE			2
5	6689638	CUP, BEARING			2
6	6658228	SEAL, OIL			1
7	6706427	AXLE			1
8	6709170	STUD	wheel		8
9	18C1636	BOLT	2.25"(57,2 mm) long		1
10	6716843	WASHER	recessed		1
11	6578689	HUB	W/Ref. 8		1
12	6J1664	KEY			1
13	6563606	WASHER	recessed - Used to take up .005 or .010 end play on axle		1
14	6564669	NUT	wheel		8
15	6662306	RING	wear - service part only		1
15	6722907	KIT	See Illustration AXLE SEAL KIT/ B4041 AXLE SEAL & WEAR SLEEVE		4

MOTOR CARRIER
(Drive Motor Mount Assy.) (Single Speed Motor) (Manual Controls)

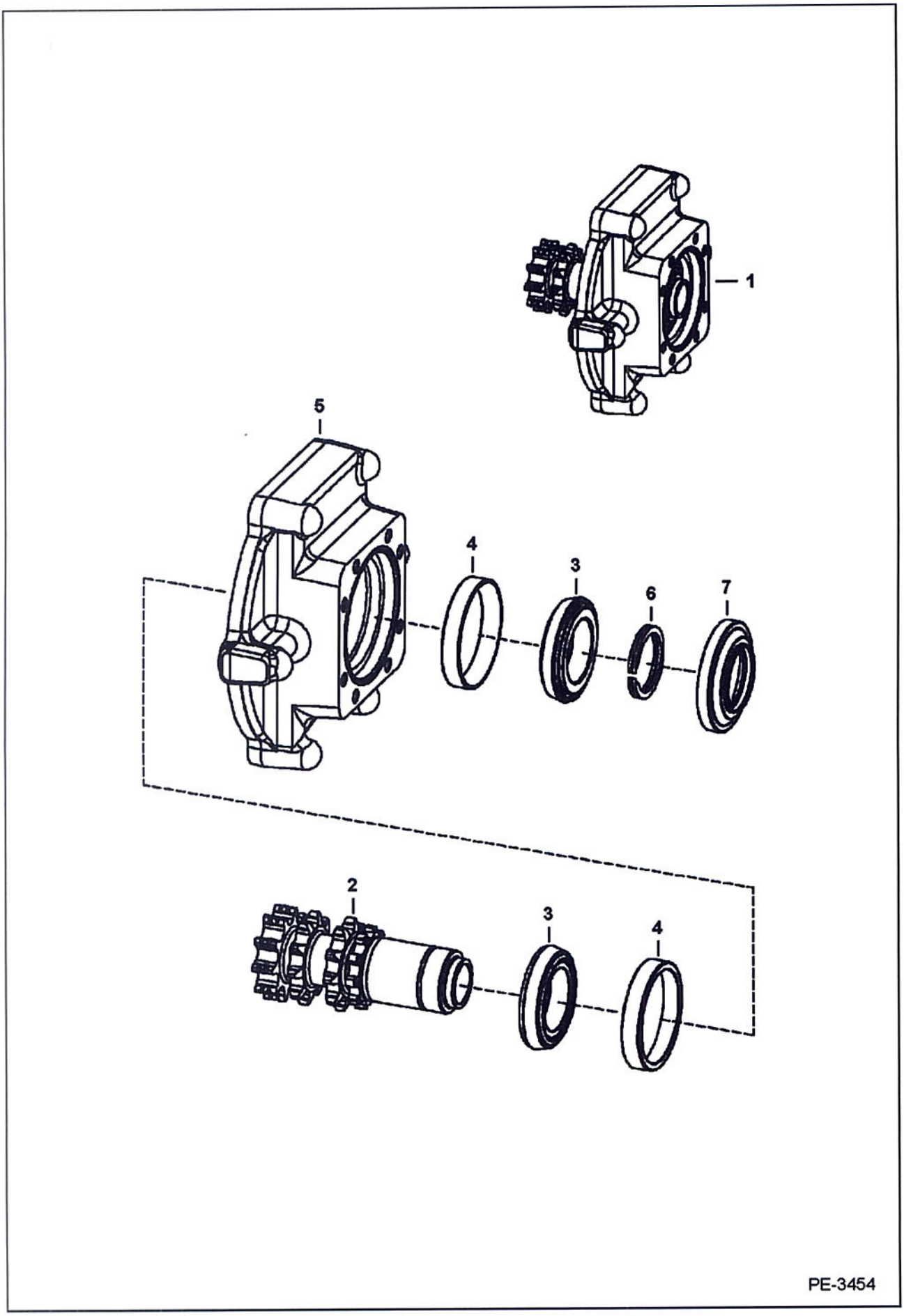

MOTOR CARRIER (Cont'd)
(Drive Motor Mount Assy.) (Single Speed Motor) (Manual Controls)

Ref No	Part Number	Description	Remarks	Serial Number	Qty
1		MOUNT ASSY.	See Illustration MOTOR CARRIER/ PE1818 NAP - drive motor - Ref. 2-7 - Order 6733617 mount assy. - Was 7148363 [D]		1
2	6733621	SHAFT	double snap ring groove		1
3	6632218	CONE, BEARING			2
4	6632541	RACE			1
5		HOUSING	See Illustration MOTOR CARRIER/ PE1818 NAP - Order 7133921 housing, 6730013 cover, 7110287 gasket & (2) of 35C412 bolt - Was 7147871 [D]		1
6	6571851	SNAP RING	.118" (3,0 mm) thickness		1
6	6571852	SNAP RING	.125" (3,18 mm) thickness		1
7	6705847	SEAL, OIL			1

MOTOR CARRIER
(Drive Motor Mount Assy.) (Single Speed Motor)
(Selectable Joystick Controls)

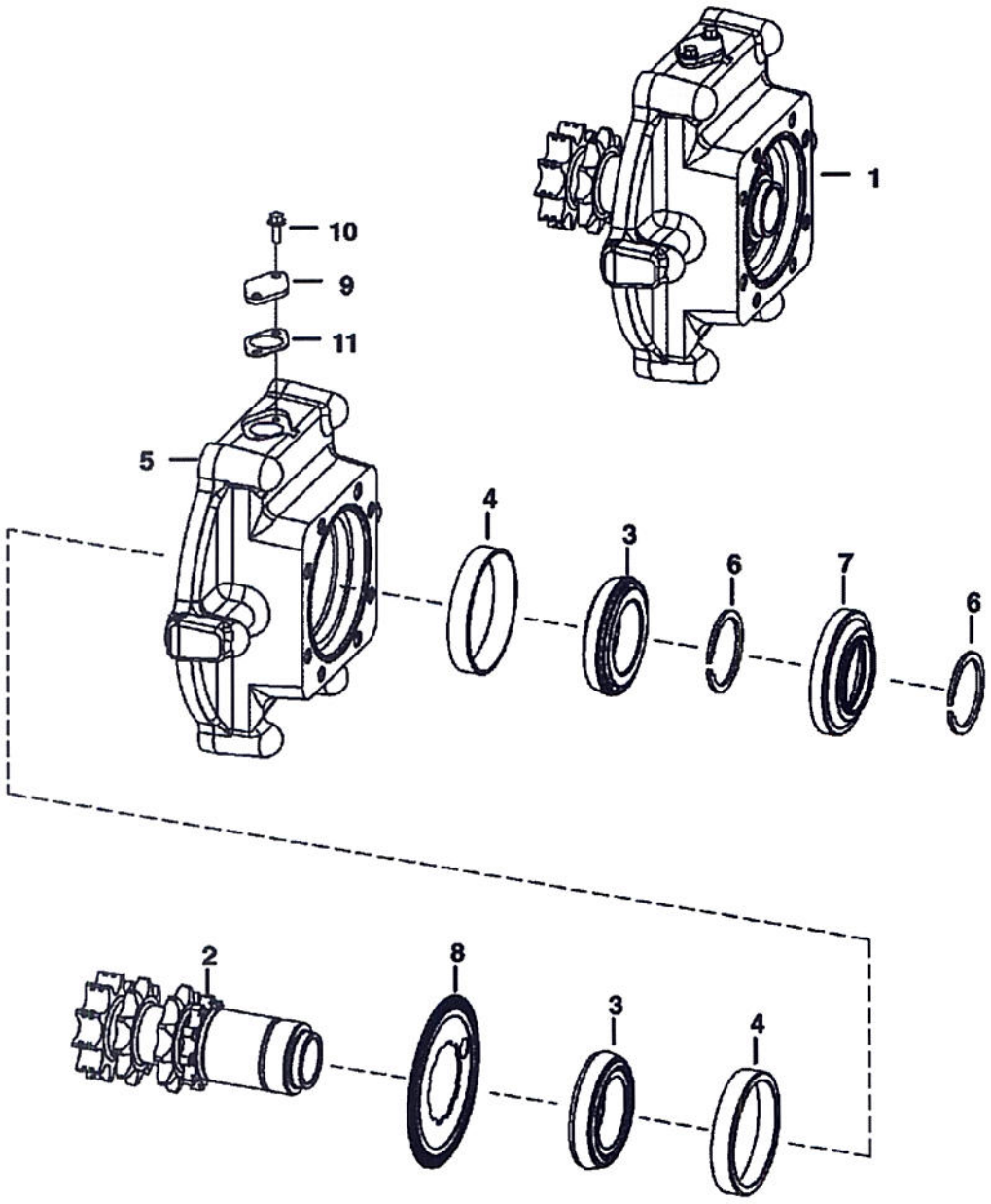

PE–1818

MOTOR CARRIER (Cont'd)
(Drive Motor Mount Assy.) (Single Speed Motor)
(Selectable Joystick Controls)

Ref No	Part Number	Description	Remarks	Serial Number	Qty
1	6733617	MOUNT, DRIVE	drive motor - Ref. 2-11		1
2	6733621	SHAFT	double snap ring groove		1
3	6632218	CONE, BEARING			2
4	6632541	RACE			1
5	7133921	HOUSING			1
6	6571851	SNAP RING	.118" (3,0 mm) thickness		1
6	6571852	SNAP RING	.125" (3,18 mm) thickness		1
7	6705847	SEAL, OIL			1
8	6690561	MAGNET	speed sensor		1
9	6730013	COVER			1
10	35C412	BOLT			2
11	7110287	GASKET			1

MOTOR CARRIER
(Drive Motor Mount Assy.) (2-Speed Motor) (Manual Controls)

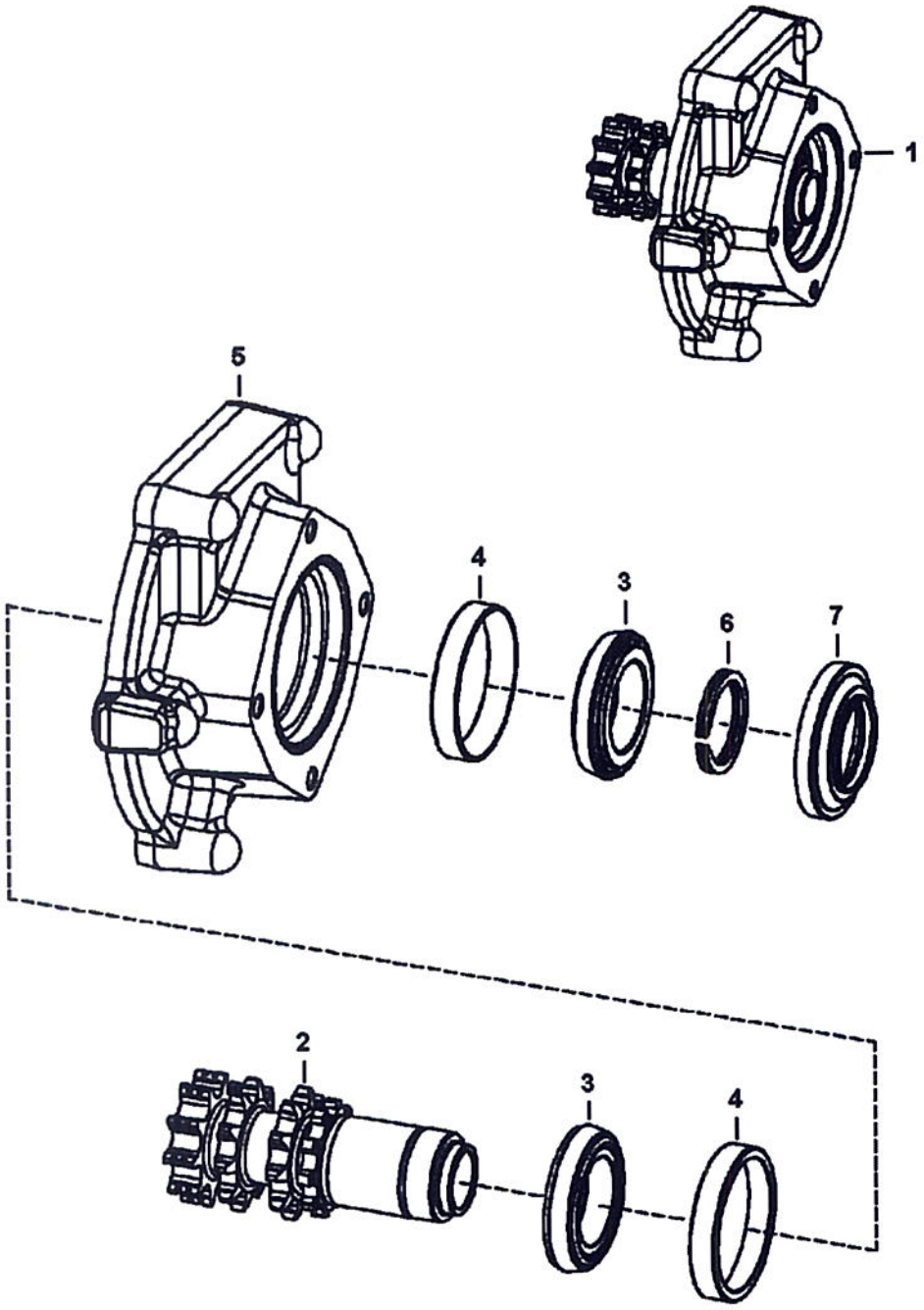

PE-3455

MOTOR CARRIER (Cont'd)
(Drive Motor Mount Assy.) (2-Speed Motor) (Manual Controls)

Ref No	Part Number	Description	Remarks	Serial Number	Qty
1		MOUNT ASSY	See Illustration MOTOR CARRIER/ PE3118 NAP - drive motor - Ref. 2-7 - Order 7126159 mount assy		1
2	7120109	SHAFT	double snap ring groove		1
3	6632218	CONE, BEARING			2
4	6632541	RACE			2
5		HOUSING	See Illustration MOTOR CARRIER/ PE3118 NAP - Order 7135506 housing, 6730013 cover, 7110287 gasket & (2) of 35C412 bolt		1
6	6571851	SNAP RING	.118" (3,0 mm) thickness		1
6	6571852	SNAP RING	.125" (3,18 mm) thickness		1
7	6705847	SEAL, OIL			1

MOTOR CARRIER
(Drive Motor Mount Assy.) (2-Speed Motor)
(Selectable Joystick Controls)

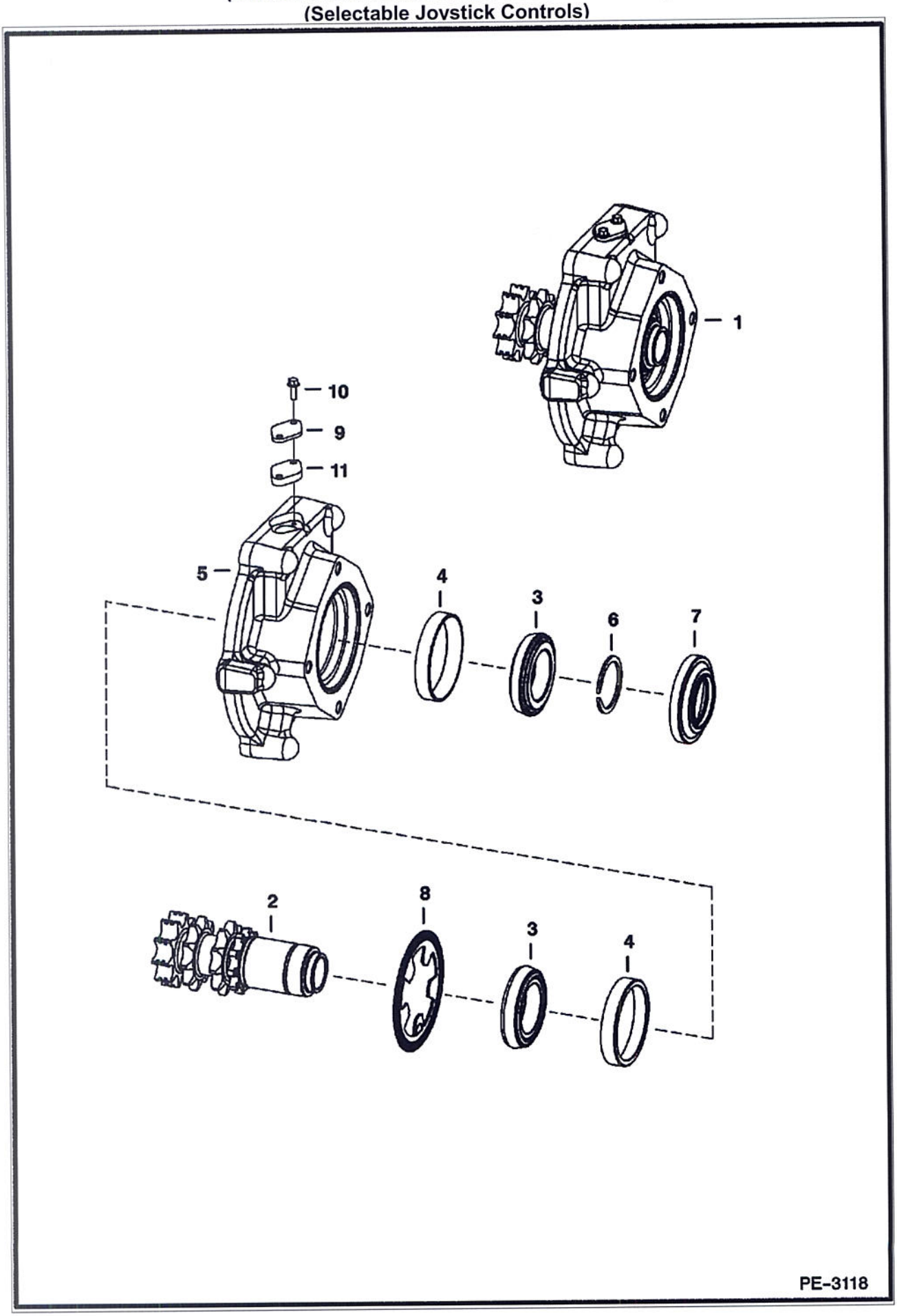

MOTOR CARRIER (Cont'd)
(Drive Motor Mount Assy.) (2-Speed Motor)
(Selectable Joystick Controls)

Ref No	Part Number	Description	Remarks	Serial Number	Qty
1	7126159	MOUNT ASSY	See Illustration HYDROSTATIC CIRCUITRY/ PE3117 drive motor - Ref. 2-11		1
2	7120109	SHAFT	double snap ring groove		1
3	6632218	CONE, BEARING			2
4	6632541	RACE			2
5	7135506	HOUSING			1
6	6571851	SNAP RING	.118" (3,0 mm) thickness		1
6	6571852	SNAP RING	.125" (3,18 mm) thickness		1
7	6705847	SEAL, OIL			1
8	6690561	MAGNET	speed sensor		1
9	6730013	COVER			1
10	35C412	BOLT			2
11	7110287	GASKET			1

DISC BRAKE
(Single Speed Motor)

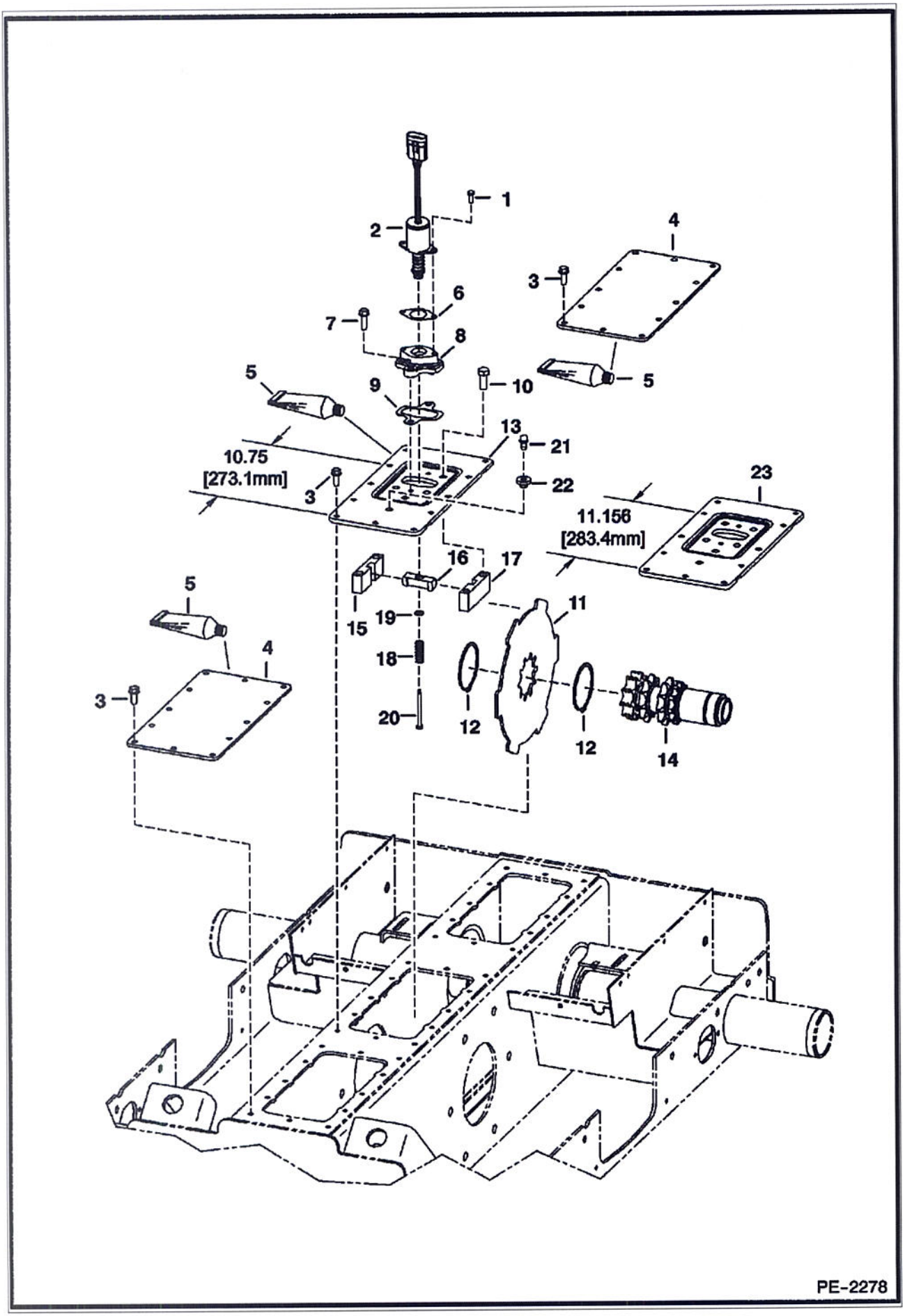

DISC BRAKE (Cont'd)
(Single Speed Motor)

Ref No	Part Number	Description	Remarks	Serial Number	Qty
1	17C412	BOLT 5			2
2	6681512	SOLENOID			1
3	84G3716	SCREW 5			36
4	7129987	COVER			2
5	6685372	SEALANT, GASKET LIQUID	tube - 20 oz		x
6	6706737	GASKET			1
7	84G3720	BOLT			2
8	6706718	MOUNT			1
9	6708016	GASKET			1
10	47C820	BOLT			4
11	7120111	BRAKE, DISC	disc		2
12	6658672	SNAP RING			4
13	6735316	COVER	B stamped		1
14	6733621	SHAFT	See Illustration MOTOR CARRIER/ PE1818 - double snap ring groove		2
15	6719056	BLOCK	guide - LH		1
16	6714278	GUIDE			1
17	6719057	BLOCK	guide - RH		1
18	6708018	SPRING			1
19	25E13	WASHER 5			1
20	6708267	BOLT			1
21	6680970	BREATHER			1
22	6553411	BUSHING			1
23		COVER	NAP - M stamped - Order Ref. 24, 17C612 bolt & 6557831 washer		1
24	7156265	COVER	M stamped		1

DISC BRAKE
(2-Speed Motor)

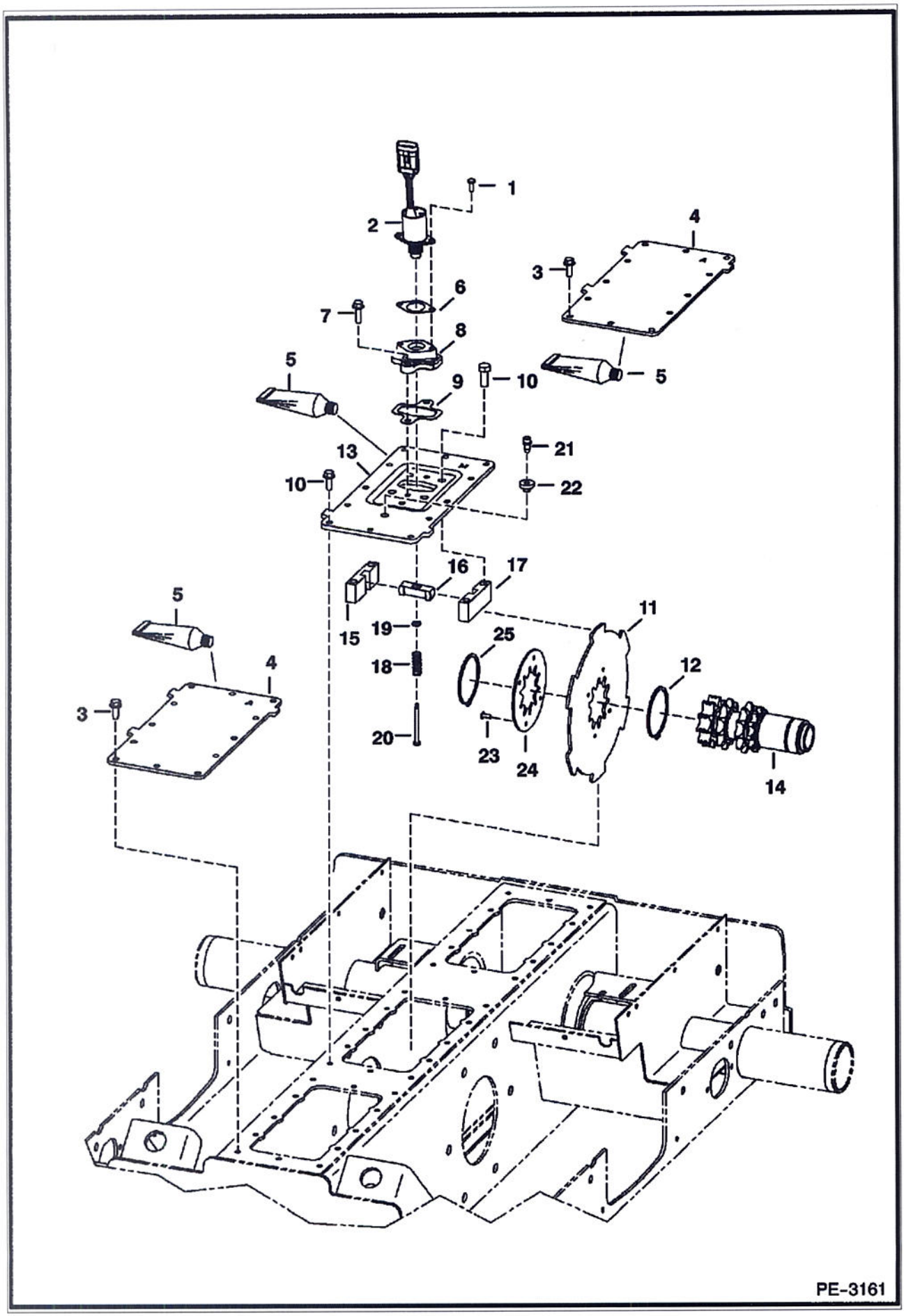

DISC BRAKE (Cont'd)
(2-Speed Motor)

Ref No	Part Number	Description	Remarks	Serial Number	Qty
1	17C412	BOLT 5			2
2	6681512	SOLENOID			1
3	84G3716	SCREW 5			36
4	7129987	COVER			2
5	6685372	SEALANT, GASKET LIQUID	tube - 20 oz		x
6	6706737	GASKET			1
7	84G3720	BOLT			2
8	6706718	MOUNT			1
9	6708016	GASKET			1
10	47C820	BOLT			4
11	7120107	BRAKE	disc		2
12	6658672	SNAP RING			2
13		COVER	NAP - M stamped - Order Ref. 26, 17C612 bolt & 6557831 washer		1
14	7120109	SHAFT	See Illustration MOTOR CARRIER/ PE3118 double snap ring groove		2
15	6719056	BLOCK	guide - LH		1
16	6714278	GUIDE			1
17	6719057	BLOCK	guide - RH		1
18	6708018	SPRING			1
19	25E13	WASHER 5			1
20	6708267	BOLT			1
21	6680970	BREATHER			1
22	6553411	BUSHING			1
23	6668955	POP RIVET			8
24	7120108	DISC	isolator		2
25	6691500	SNAP RING			2
26	7156265	COVER	M stamped		1

HYDRAULIC CIRCUITRY
(W/O Bucket Positioning Valve)

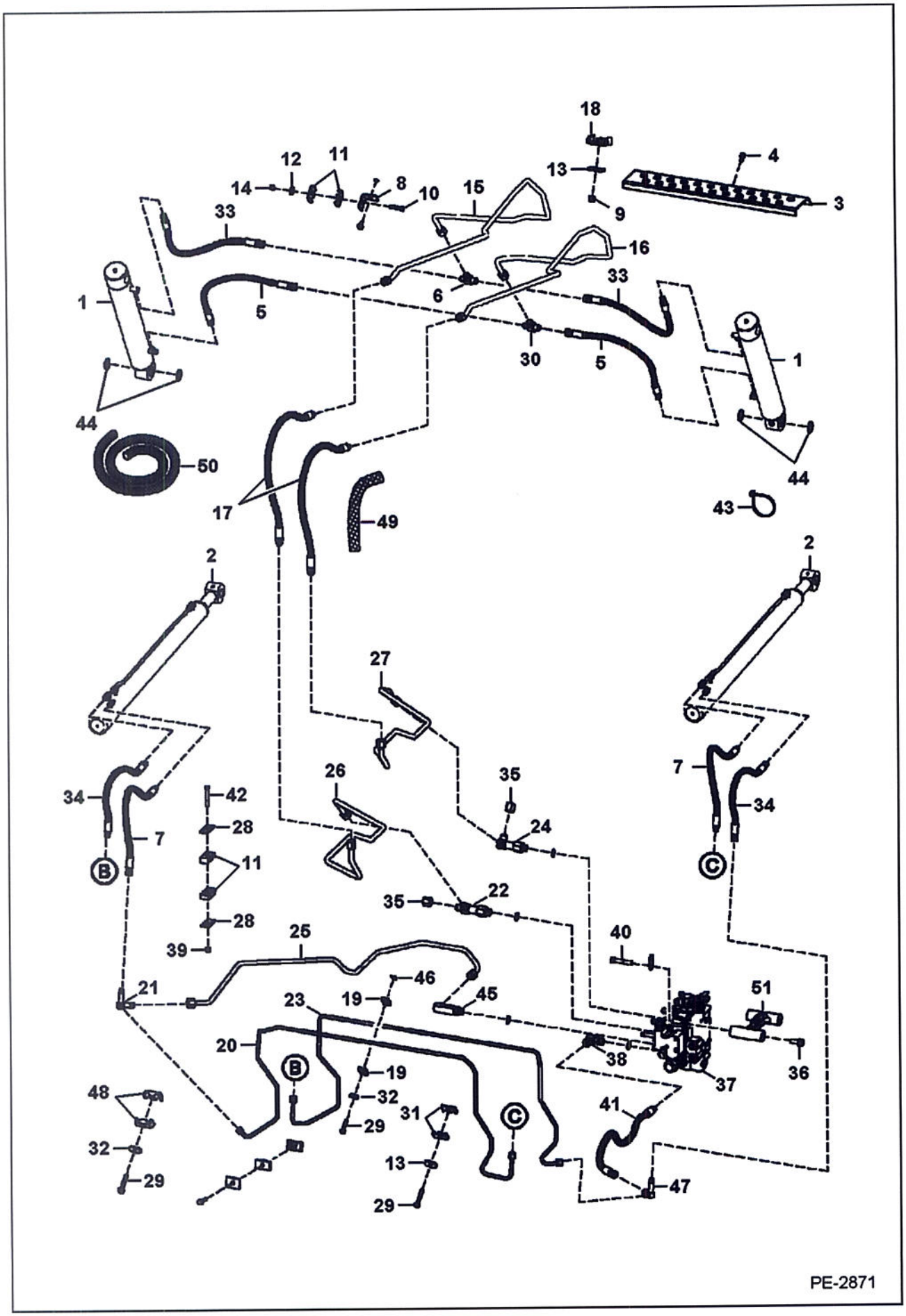

Ref No	Part Number	Description	Remarks	Serial Number	Qty
1		CYLINDER	See Illustration TILT CYLINDER/ PE2870 TILT		2
2		CYLINDER	See Illustration LIFT CYLINDER/ TS1097 LIFT		2
3	6735669	BOOM STEP	boom stop		1
4	84G3712	BOLT			4
5	6718066	HOSE	.5625" thread & .75" thread female ends - Use (1) per tilt cylinder W/.75" thread base end fitting		2
5	7114050	HOSE	.5625" thread female ends (2) - Use (1) per tilt cylinder W/.75" thread base end fitting		2
6	6716061	TEE	.75" thread (2) & .875" thread - Use W/Ref. 5 (7114050 hose)		1
7	7116564	HOSE			2
8	6718238	BRACKET			1
9	59D8	NUT 5			2
10	17C628	BOLT			1
11	6701893	CLAMP			2
12	27E6	WASHER 5			1
13	6553709	WASHER			2
14	59D6	NUT			1
15	6734495	TUBE			1
16	6734496	TUBE			1
17	6539418	HOSE	W/Ref. 49		2
18	6717933	CLAMP			2
19	6726277	CLAMP			4
20	7114710	TUBE			1
21	7101648	TEE			1
22	7112910	ELBOW			1
22	79K10	O RING 10			1
23	7114711	TUBE			1
24	6733190	TEE			1
24	79K10	O RING 10			1
25	7101646	TUBE			1
26	7112911	TUBE			1
27	7110262	TUBE			1
28	872229	WASHER			2
29	84G3728	BOLT			3
30	7114053	TEE	.5625" thread (2) & .875" thread - Use W/Ref. 5 (6718066 hose)		1
31	6727708	CLAMP			2
32	619021	WASHER, 5			4
33	7114236	HOSE	.75" thread female ends - Use (1) per tilt cylinder W/.75" thread base end fitting		2
34	7116565	HOSE			2
35	36K7	FITTING			1
36	31C820	BOLT			2
37		VALVE	See Illustration HYDRAULIC CONTROL VALVE/ PE2734		1
38	6814531	ELBOW			1
38	79K10	O RING 10			1
39	59D6	NUT			1
40	17C844	BOLT			2
41	6727705	HOSE			1
41	6809511	DECAL	danger		2
42	17C632	BOLT 5			1
43	6624289	TIE STRAP			5
44	225855	SEAL, OIL			4
45	6733191	ELBOW			1
45	79K10	O RING 10			1

HYDRAULIC CIRCUITRY (Cont'd)
(W/O Bucket Positioning Valve)

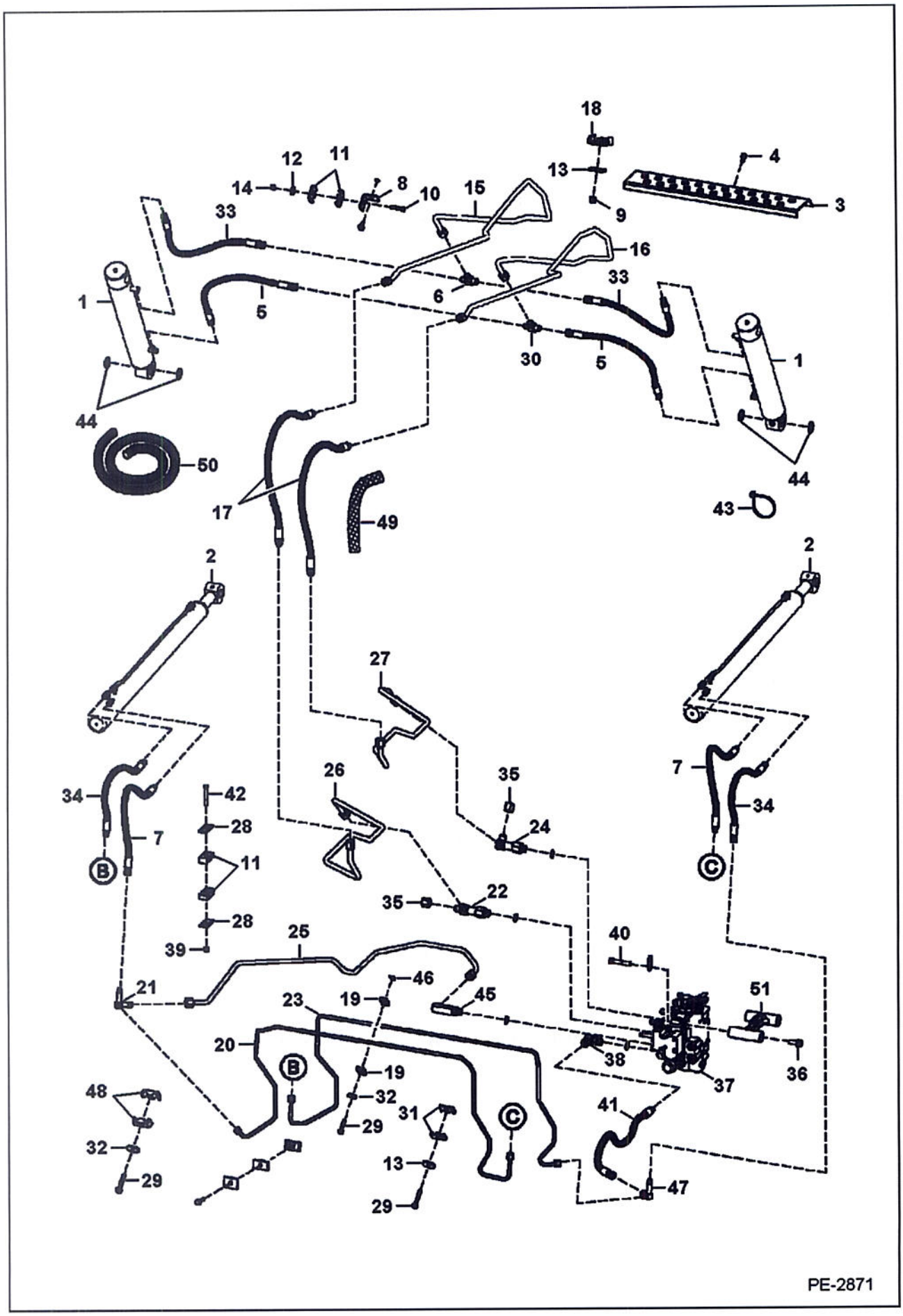

PE-2871

Ref No	Part Number	Description	Remarks	Serial Number	Qty
46	6684033	NUT			1
47	6727638	TEE			1
48	6592506	CLAMP			2
49		CONDUIT	NAP - 30" (762 mm) long - Order Ref. 50		2
50	6643249	CONDUIT	bulk - sold per foot		x
51	7109934	MOUNT, VALVE			1

HYDRAULIC CIRCUITRY
(W/Bucket Positioning Valve)

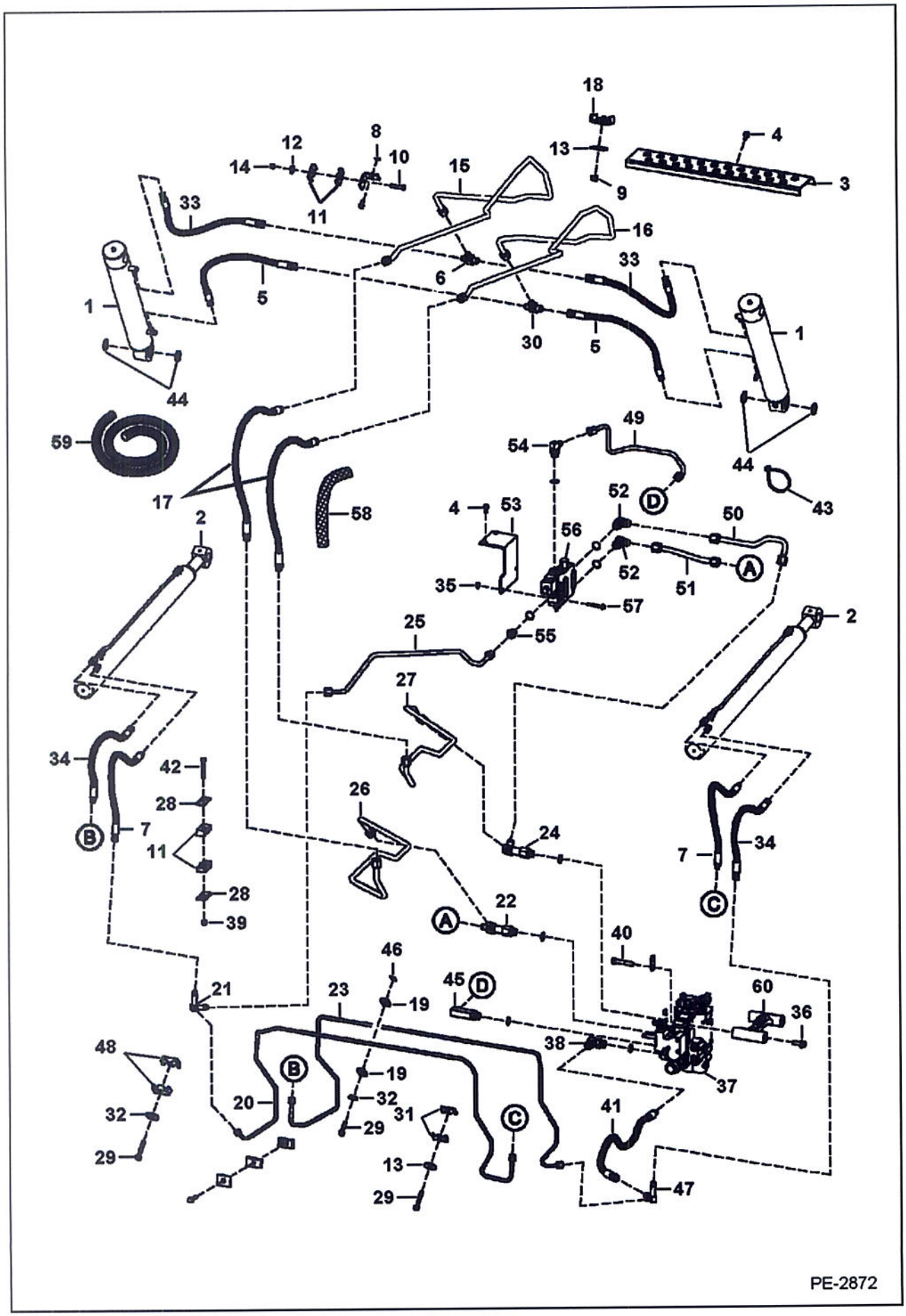

Ref No	Part Number	Description	Remarks	Serial Number	Qty
1		CYLINDER	See Illustration TILT CYLINDER/ PE2870 TILT		2
2		CYLINDER	See Illustration LIFT CYLINDER/ TS1097 LIFT		2
3	6735669	BOOM STEP	boom stop		1
4	84G3712	BOLT			6
5	6718066	HOSE	.5625" thread & .75" thread female ends - Use (1) per tilt cylinder W/.75" thread base end fitting		2
5	7114050	HOSE	.5625" thread female ends (2) - Use (1) per tilt cylinder W/.75" thread base end fitting		2
6	6716061	TEE	.75" thread (2) & .875" thread - Use W/Ref. 5 (7114050 hose)		1
7	7116564	HOSE			2
8	6718238	BRACKET			1
9	59D8	NUT 5			2
10	17C628	BOLT			1
11	6701893	CLAMP			2
12	27E6	WASHER 5			1
13	6553709	WASHER			2
14	59D6	NUT			1
15	6734495	TUBE			1
16	6734496	TUBE			1
17	6539418	HOSE	W/Ref. 58		2
18	6717933	CLAMP			2
19	6726277	CLAMP			4
20	7114710	TUBE			1
21	7101648	TEE			1
22	7112910	ELBOW			1
22	79K10	O RING 10			x
23	7114711	TUBE			1
24	6733190	TEE			1
25	7101647	TUBE			1
26	7112911	TUBE			1
27	7110262	TUBE			1
28	872229	WASHER			2
29	84G3728	BOLT			1
30	7114053	TEE	.5625" thread (2) & .875" thread - Use W/Ref. 5 (6718066 hose)		1
31	6727708	CLAMP			2
32	619021	WASHER, 5			4
33	7114236	HOSE	.75" thread female ends - Use (1) per tilt cylinder W/.75" thread base end fitting		2
34	7116565	HOSE			2
35	57D5	NUT			2
36	31C820	BOLT			2
37		VALVE	See Illustration HYDRAULIC CONTROL VALVE/ PE2734		1
38	6814531	ELBOW			1
38	79K10	O RING 10			1
39	59D6	NUT			1
40	17C844	BOLT			2
41	6727705	HOSE			1
41	6809511	DECAL	danger		2
42	17C632	BOLT 5			1
43	6624289	TIE STRAP			5
44	225855	SEAL, OIL			4
45	6733191	ELBOW			2
45	79K10	O RING 10			2
46	6684033	NUT			2

HYDRAULIC CIRCUITRY (Cont'd)
(W/Bucket Positioning Valve)

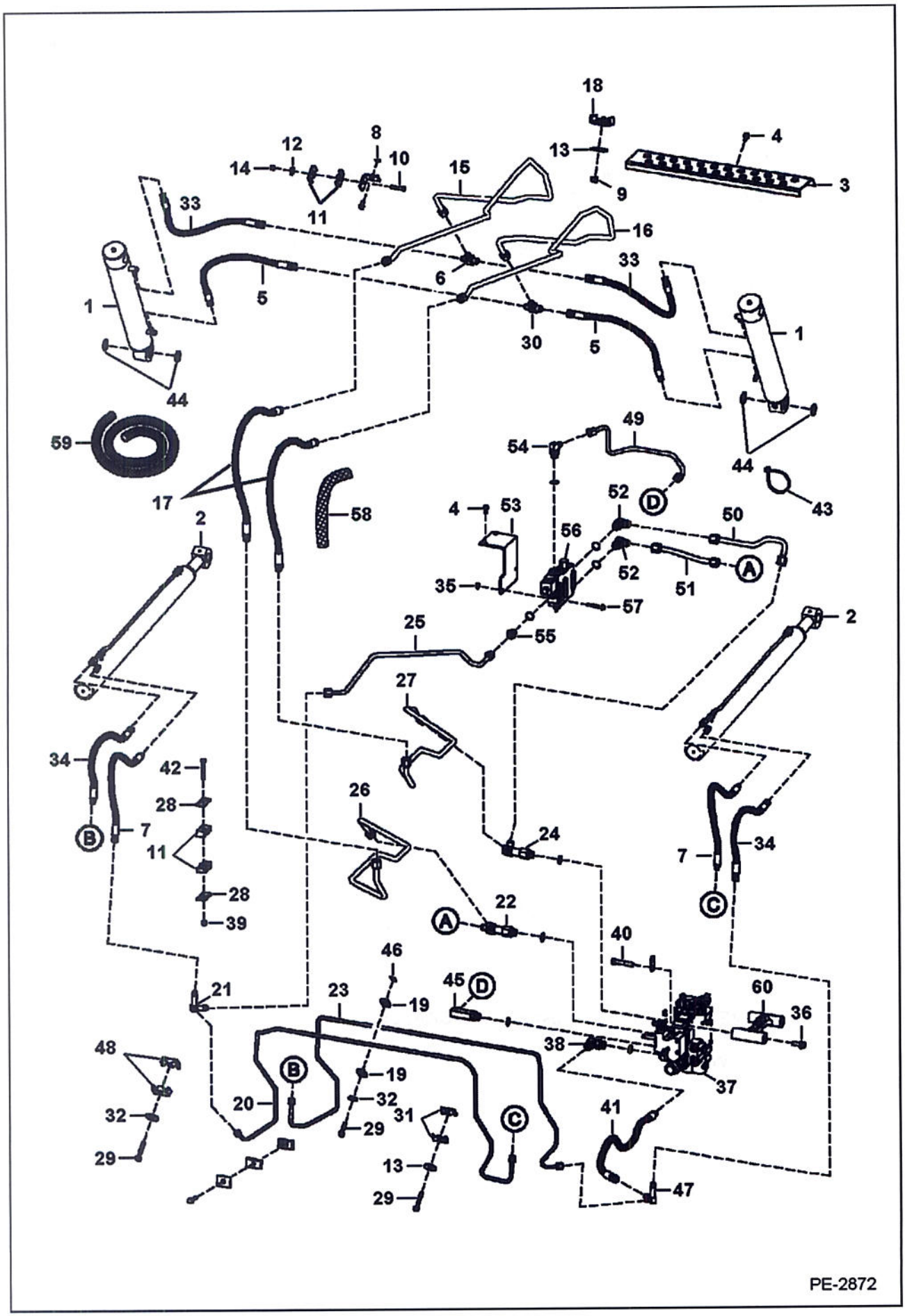

Ref No	Part Number	Description	Remarks	Serial Number	Qty
47	6727638	TEE			1
48	6592506	CLAMP			2
49	6734192	TUBE			1
50	6733196	TUBE			1
51	7112912	TUBE			1
52	17KB1010	ELBOW			2
52	79K10	O RING 10			2
53	6727646	BRACKET			1
54	17KB810	ELBOW			1
54	79K10	O RING 10			1
55	15KB810	CONNECTOR			1
55	79K10	O RING 10			1
56		VALVE	See Illustration BUCKET POSITIONING VALVE/ MS1943 NAP - Order 6673959 valve		1
57	35C536	BOLT			2
58		CONDUIT	NAP - 30" (762 mm) long - Order Ref. 59		2
59	6643249	CONDUIT	bulk - sold per foot		x
60	7109934	MOUNT, VALVE			1

MANUAL LIFT RELEASE SYSTEM

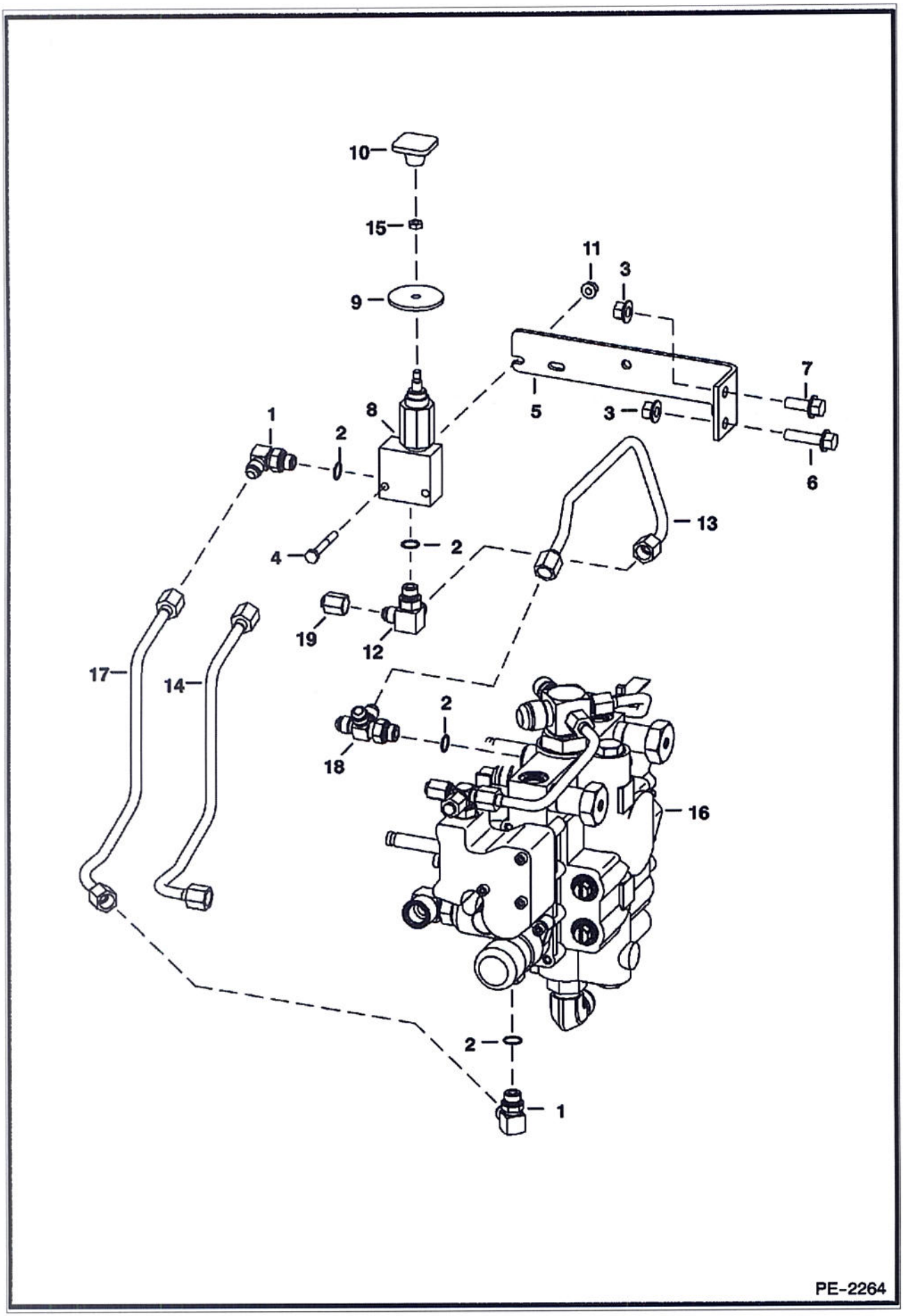

Ref No	Part Number	Description	Remarks	Serial Number	Qty
1	17KB606	ELBOW	W/Ref. 2		2
2	79K6	O RING 10			x
3	83D6	NUT 5			2
4	17C432	BOLT			2
5	6717151	MOUNT			1
6	35C616	BOLT 5			1
7	35C616	BOLT 5			1
8	6667844	VALVE ASSY	See Illustration MANUAL LIFT RELEASE VALVE/ PE1547 MANUAL LIFT RELEASE		1
9	6707101	SEAL	neoprene		1
10	6737524	KNOB	red square		1
11	83D4	NUT 10			2
12	6725182	TEE	W/Ref. 2		2
13	7117380	TUBE			1
14		TUBE	NAP - W/Decals - Order Ref. 17 and adjust Ref. 1 to fit		1
14	6809511	DECAL	danger		2
15	7D4	NUT			1
16		VALVE	See Illustration HYDRAULIC CONTROL VALVE/ PE2734 NSS - CONTROL - ORDER COMPLETE VALVE		1
17	6734206	TUBE	W/decals		1
18	6718031	TEE			1
18	79K6	O RING 10			1
19	36K5	CAP	2-speed motor		2

AUXILIARY HYDRAULICS
(W/Pressure Relief Coupler Block)

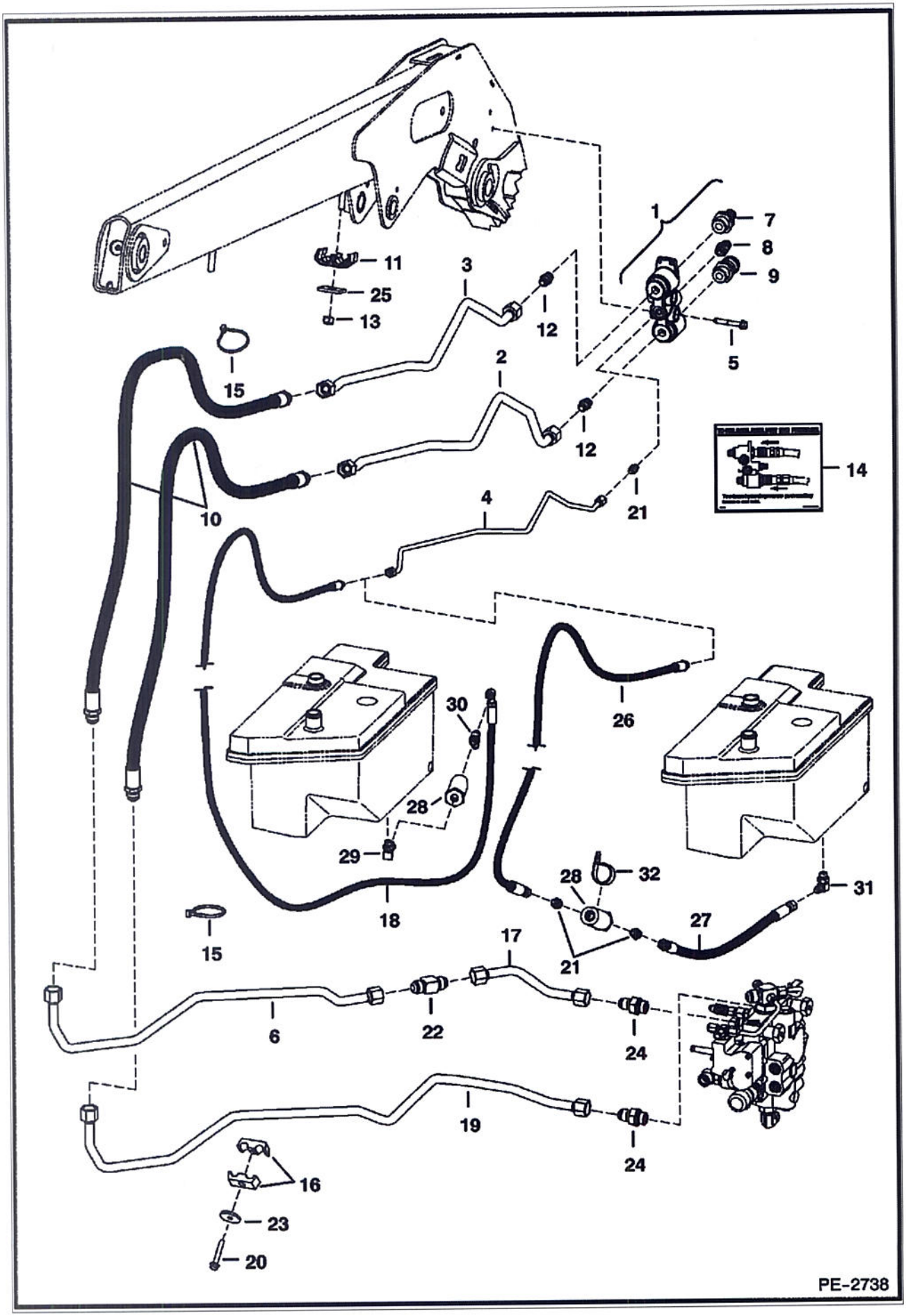

(W/Pressure Relief Coupler Block)

Ref No	Part Number	Description	Remarks	Serial Number	Qty
1	6678076	BLOCK	coupler - Ref. 6 - 9 & (2) of Ref. 12		1
2	7102164	TUBE			1
3	6735114	TUBE			1
4	7102163	TUBE			1
5	84G3740	BOLT			2
6	7115413	TUBE			1
7	6679837	COUPLER	coupler - male - FF		1
7	6679841	SEAL	blue		1
7	6680020	SEAL KIT	O-rings & back-up rings		1
8	6679838	COUPLER	coupler - male		1
8	6679840	SEAL	blue		1
9	6680018	KIT	coupler - female - Use W/hydraulic breaker		1
9	6680020	SEAL KIT	O-rings & back-up rings		1
10	6735138	HOSE	W/cover		2
11	6717951	CLAMP			2
12	6679836	ADAPTER	W/spring		2
12	79K12	O RING 10			2
13	59D8	NUT 5			2
14	6731757	DECAL			1
15	6624289	TIE STRAP			2
16	6592506	CLAMP			2
17	7115412	TUBE			1
18	7102202	HOSE			1
19	7110264	TUBE			1
20	84G3740	BOLT			1
21	15KB606	ADAPTER	selectable joystick controls		3
21	79K6	O RING 10			3
22	7114294	ADAPTER			1
23	872229	WASHER			1
24	15KB1216	ADAPTER			2
24	79K6	O RING 10			1
25	6553709	WASHER			2
26	7126167	HOSE ASSY	2-speed motor		1
27	7126166	HOSE	2-speed motor		1
28	6661022	FILTER	See Illustration HYDROSTATIC CIRCUITRY/ PE3100 See Illustration HYDROSTATIC CIRCUITRY/ PE2743 inline		2
29	6715190	ELBOW	See Illustration HYDROSTATIC CIRCUITRY/ PE3100 See Illustration HYDROSTATIC CIRCUITRY/ PE2743		1
29	79K6	O RING 10			1
30	21KB606	TEE	See Illustration HYDROSTATIC CIRCUITRY/ PE3100 See Illustration HYDROSTATIC CIRCUITRY/ PE2743		1
30	79K6	O RING 10			1
31	17KB606	ELBOW			1
31	79K6	O RING 10			1
32	30H79	CLAMP			1

TILT CYLINDER

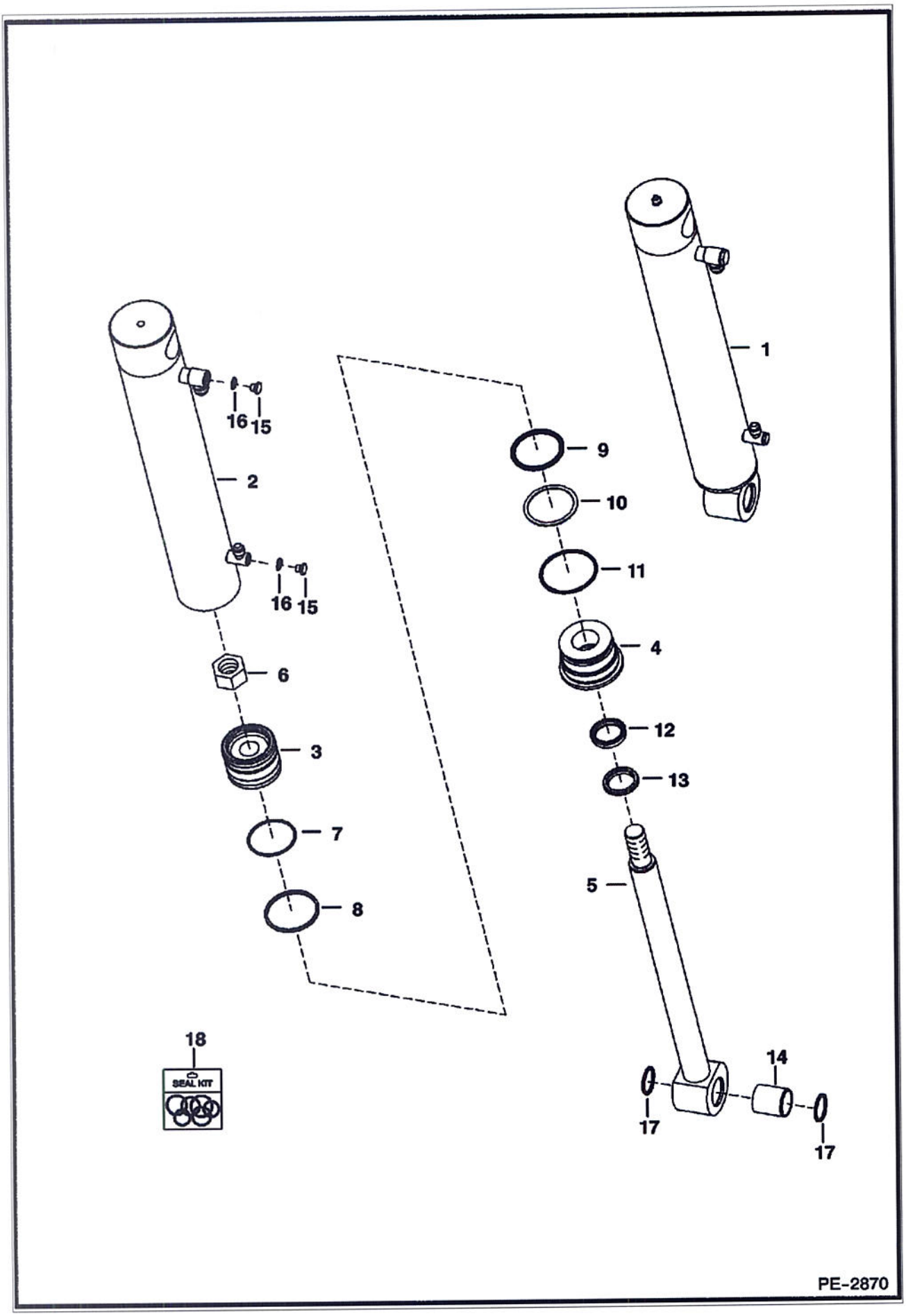

Ref No	Part Number	Description	Remarks	Serial Number	Qty
1	7117174	CYLINDER, TILT	tilt - Ref. 2-16 - .75" thread base end fitting		2
2	7117175	TUBE, CASE CYL TILT	2.75" (69,9 mm) ID - .75" base end fitting		1
3	6806315	PISTON			1
4	6536968	HEAD			1
5	6809903	SHAFT, ROD CYL TILT	1.375" (34,9 mm) - W/Ref. 14		1
6	92D16	NUT			1
7	25K30210	O-RING			1
8	6516229	PISTON SEAL			1
9	25K60212	O RING 10			1
10	80K332	WASHER	back-up		1
11	25K40224	O RING 10			1
12	6667325	SEAL	rod		1
13	6666543	SEAL	wiper		1
14	6805453	BUSHING	wear		1
15	6812170	PLUG	W/Ref. 16 - hex head		2
16	75K3	O-RING			2
17	225855	SEAL, OIL			2
18	6806330	KIT, SEAL	Ref. 6-13		1

LIFT CYLINDER

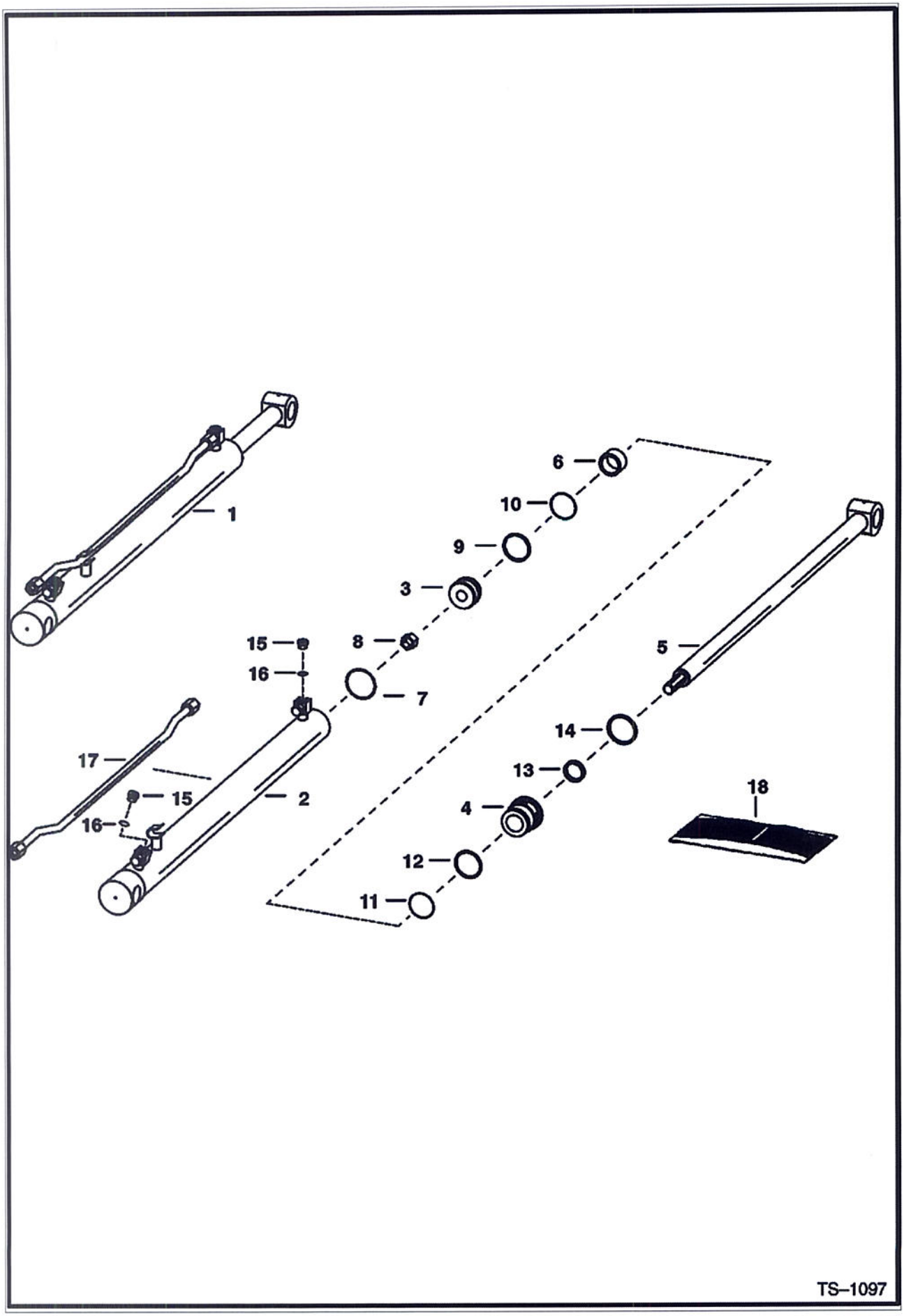

Ref No	Part Number	Description	Remarks	Serial Number	Qty
1	6811994	CYLINDER, LIFT			2
2	6809210	CASE			1
3	6677196	PISTON	W/Ref. 9 & 10 - W/non-replaceable wear sleeves		1
4	6539236	HEAD			1
5	6809639	ROD	1.5" (38,1 mm) dia		1
6	6539645	SPACER			1
7	82K140	O-RING			1
8	6810539	NUT			1
9	6519328	SEAL			1
10	25K30126	O RING 10			1
11	25K60128	O RING 10			1
12	73K328	RING	back-up		1
13	6667326	SEAL	rod		1
14	6690707	SEAL	wiper		1
15	6812171	PLUG	W/Ref. 16		2
16	75K6	O-RING			2
17	6809203	TUBE			1
18	7135557	SEAL KIT	Ref. 7-14		1

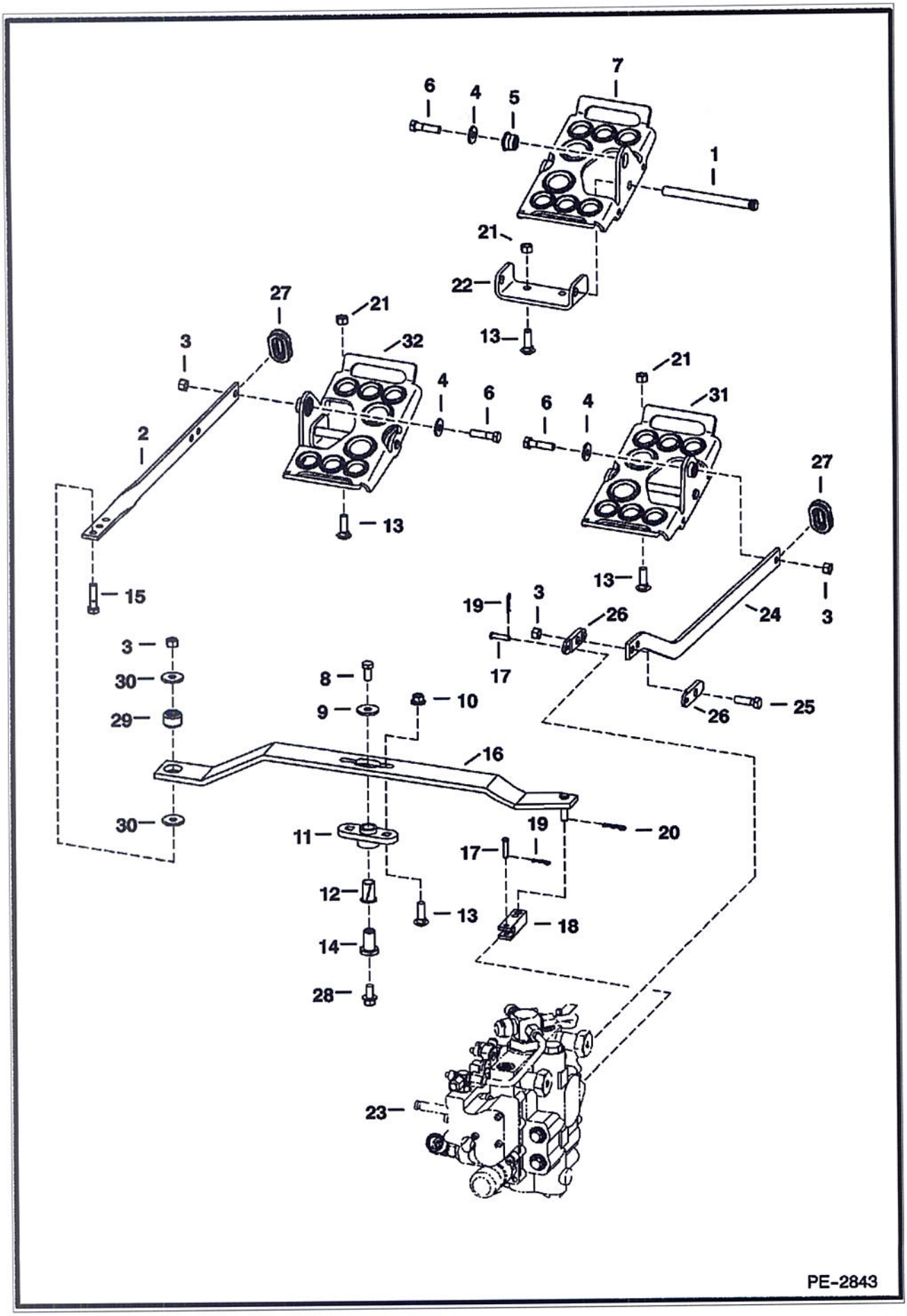
7
6
4
5
1
21
22
13
27
21
3
32
4
6
2
13
15
21
31
6
4
27
13
3
19
26
24
17
3
3
30
29
8
9
10
26
25
16
30
11
19
20
17
12
13
18
14
28
23
PE-2843

Ref No	Part Number	Description	Remarks	Serial Number	Qty
1	6564657	PIN			2
2	6576302	BAR			1
3	95D6	NUT			4
4	6563914	WASHER			2
5	6665701	BUSHING, PRESS FIT			2
6	17C624	BOLT 5			2
7	7115219	PEDAL			2
8	17C616	BOLT 5			1
9	619021	WASHER, 5	1.25" (31,8 mm) OD		1
10	53D6	NUT	flanged head - pre-applied loctite		2
11	6708043	BUSHING	flange		1
12	6512026	BUSHING			1
13	37C620	BOLT			6
14	6706104	RETAINING NUT			1
15	49C628	BOLT			1
16	7108408	LEVER			1
17	6564654	PIN			2
18	6706105	YOKE			1
19	6513495	COTTER PIN			2
20	1306637	CLIP			1
21	57D6	NUT 5			4
22	7115220	MOUNT			2
23		VALVE	See Illustration HYDRAULIC CONTROL VALVE/ PE2734		1
24	6717820	BAR			1
25	17C620	BOLT			1
26	6708009	LINK	2.69" (68,3 mm) long		2
27	6577961	GROMMET			2
28	43C612	BOLT			1
29	6685060	BUSHING, TORSION	torsion - 1.055" (26,797 mm) OD		1
30	6737388	WASHER			2
31	7123942	PEDAL ASSEMBLY	RH - W/Ref. 1, 5, 7 & 22		1
32	7123941	PEDAL ASSEMBLY	LH - W/Ref. 1, 5, 7 & 22		1
33	17C612	BOLT 5			1
34	6557831	WASHER	.875" (22,23 mm) OD		1

HYDRAULIC CONTROL VALVE
(Manual Controls)

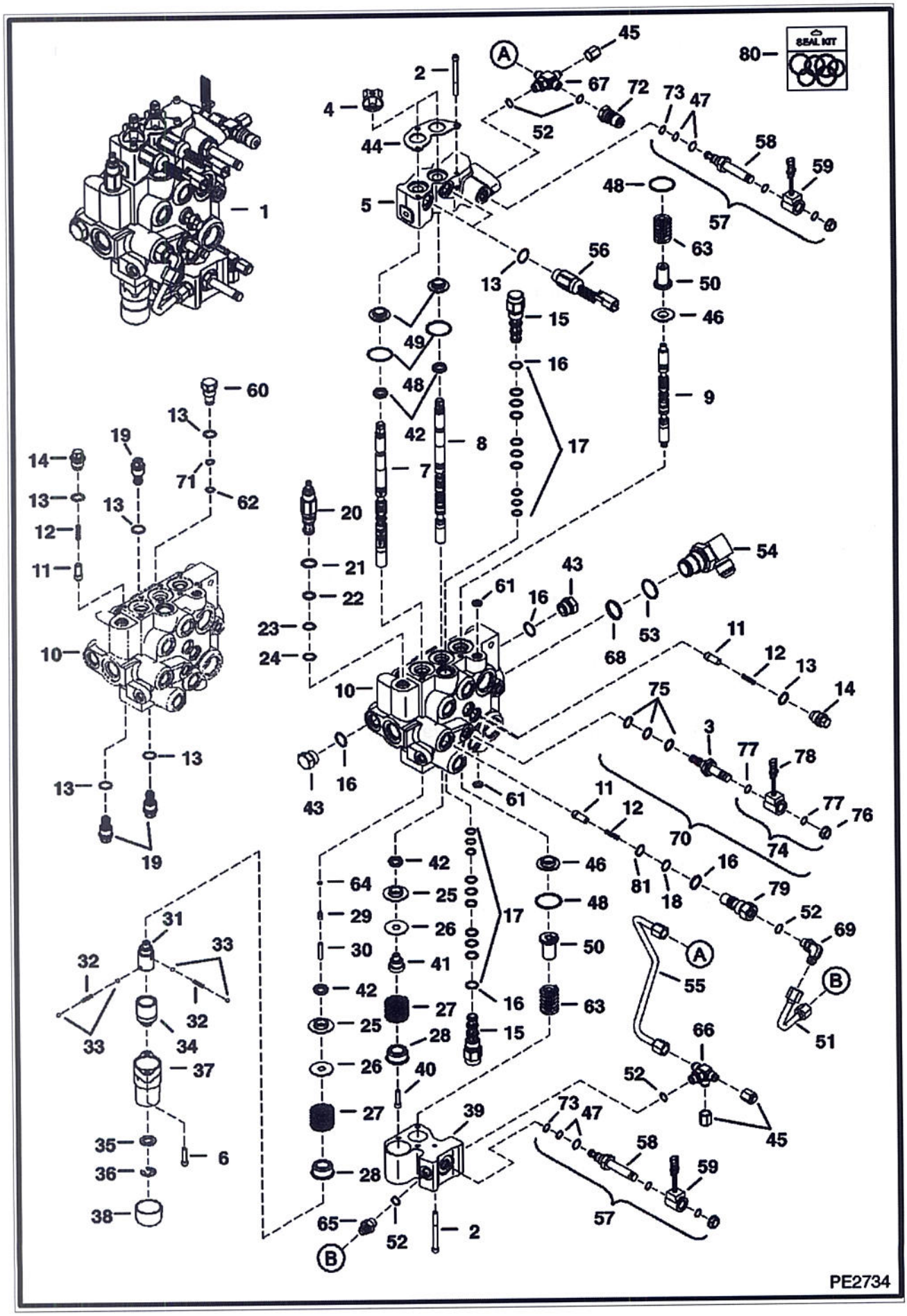

Ref No	Part Number	Description	Remarks	Serial Number	Qty
1	6818039	VALVE, CONTROL			1
2	29G444	BOLT			7
3	6667687	STEM			1
4	6587763	BOOT			2
5	6817003	BODY			1
6	29G416	BOLT			2
7	7108781	SPOOL	lift		1
8	6815152	SPOOL	tilt		1
9	7112383	AUX SPOOL	auxiliary		1
10		BODY	NSS		1
11	7106712	SEAT	load check		4
12	6592117	SPRING			4
13	79K8	O RING 10			3
14	7134520	PLUG	load check - W/Ref. 13		3
15	6689739	VALVE	pilot operated - W/Ref. 16-18		2
16	79K10	O RING 10			5
17	6690431	SEAL KIT	W/Ref. 16		2
18	73K16	RING			1
19	6684645	VALVE, ANTI CAV	anti-cav - W/Ref. 13		3
20	6686360	VALVE	main relief - W/Ref. 21-24 - pressure to be set in field		1
21	58K17	O RING 10			1
22	6665569	WASHER	back-up		1
23	25K20016	O RING 10			1
24	6665570	RING	glide		1
25	6595663	BUSHING			2
26	6587523	WASHER			2
27	6587580	SPRING			2
28	6592100	COLLAR			2
29	6596807	PLUG	plastic - .460" long		1
30	6586918	SCREW			1
31	6587575	ADAPTER			1
32	6592107	SPRING			2
33	6592105	BALL			4
34	6531270	SLEEVE			1
35	6592098	WASHER			1
36	799119	RING			1
37	6589226	BONNET	.625" flange		1
38	6660644	CAP			1
39	6814279	BLOCK			1
40	30G416	BOLT			1
41	6592109	ADAPTER			1
42	6683274	SEAL, SPOOL			4
43	24K7	PLUG	W/Ref. 16		2
44	6813153	PLATE			1
45	36K5	CAP			1
46	7138376	BUSHING			2
47	6685603	SEAL KIT	solenoid valve		2
48	1K127	O-RING 10			4
49	6805102	BUSHING			2
50	6814694	RETAINER	spring		2
51	7116995	TUBELINE			1
52	79K6	O RING 10			x
53	79K16	O RING 10			x
54	7101371	ELBOW	W/Ref. 53 & 68		1

HYDRAULIC CONTROL VALVE (Cont'd)
(Manual Controls)

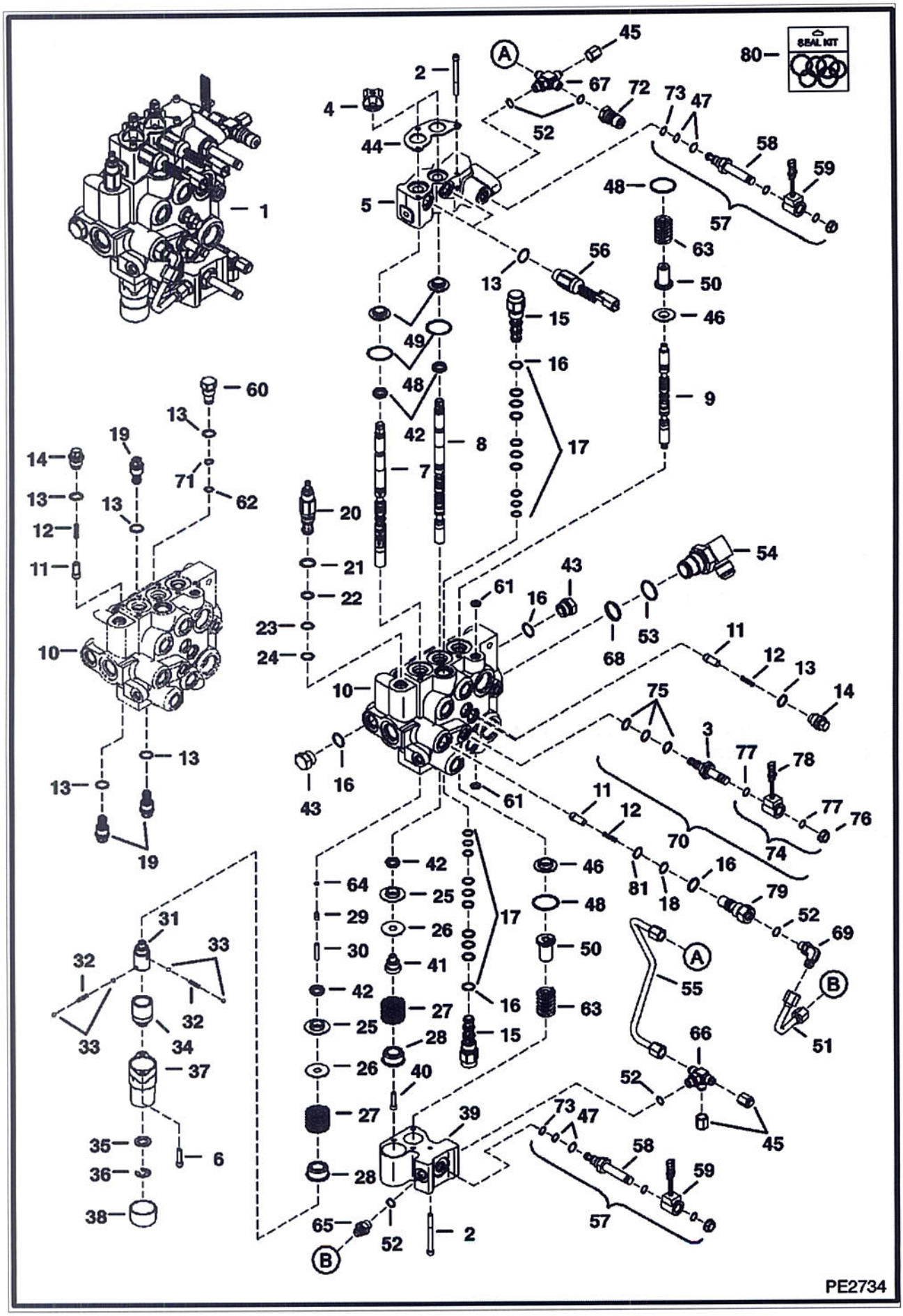

Ref No	Part Number	Description	Remarks	Serial Number	Qty
55	7110914	TUBELINE			1
56	6676029	SOLENOID	spool lock - 5" (127 mm) wire - Was 6677383 [B]		2
57	6686868	SOLENOID	W/Ref. 47, 58, 59, 69 & 73		2
58	6688743	STEM, VALVE CONTROL	W/Ref. 47, 69, & 73		2
59	6678891	COIL	10 volt - W/nut		2
59	6691022	NUT			2
60	6816549	VALVE	port relief - W/Ref. 13, 62 & 71		1
61	55K204	O RING 10			2
62	80K13	WASHER	back-up		4
63	7121399	SPRING			2
64	58K4	O-RING			1
65	6688845	VALVE	check - W/screen & Ref. 52		1
66	7102019	CROSS	W/Ref. 52		1
67	7102066	CROSS	W/Ref. 52		1
68	58K22	O RING 10			1
69	17KB606	ELBOW	W/Ref. 52		1
70		SOLENOID	Ref. 3 & 75-78		1
71	58K13	O-RING			1
72	6684125	COUPLER			1
73	58K16	O RING 10			2
74	6675559	COIL	assy - Ref. 76-78		1
75	6669732	SEAL KIT			1
76	6668820	NUT			1
77	54K20028	O RING 10			4
78	6671025	COIL	8 volt		2
79	7134522	PLUG			1
80	7123964	SEAL KIT, COMPLETE	includes 7123963, 7123965, 6632279, 6669732 & (2) each of 6685603 & 6690431		x
80	7123963	SEAL KIT	3 spool - Ref. 4, 29, 42, 48, 61 & 62		x
80	6685603	SEAL KIT	solenoid valve - Ref. 47		x
80	6632279	SEAL KIT	main relief - Ref. 21-24		x
80	7123965	SEAL KIT	external fitting - Ref. 13, 16, 18, 52, 53, 62, 68, 71, 73, & 77		x
80	6669732	SEAL KIT	solenoid valve - Ref. 75		x
80	6690431	SEAL KIT	pilot valve - Ref. 17		x

HYDRAULIC CONTROL VALVE
(Spool Lock) (Service Valve)

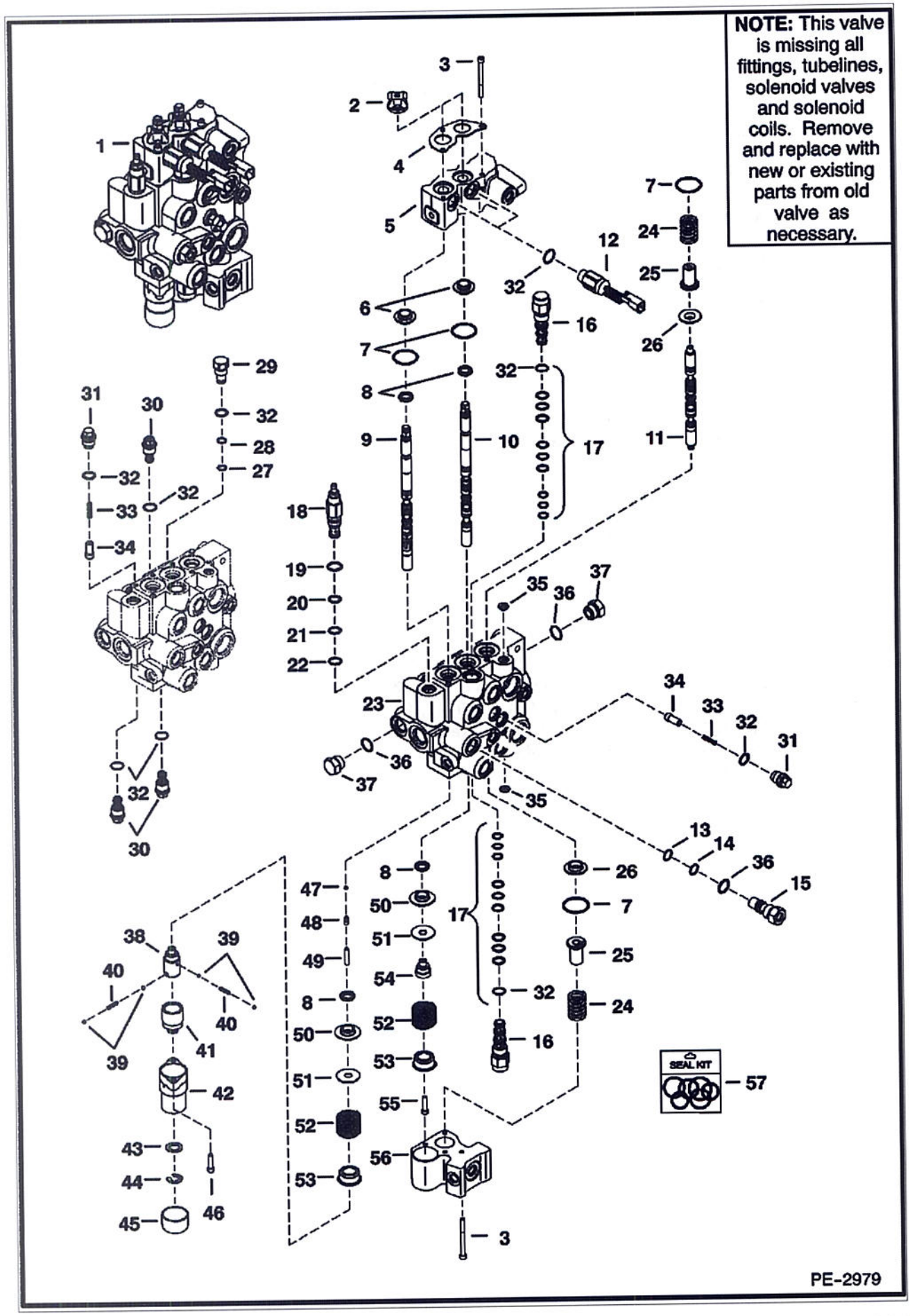

Model S150 KT4
6986835

HYDRAULIC CONTROL VALVE (Cont'd)
(Spool Lock) (Service Valve)

Ref No	Part Number	Description	Remarks	Serial Number	Qty
1	7124362	VALVE, CONTROL SERVICE			1
2	6587763	BOOT			2
3	29G444	BOLT			7
4	6813153	PLATE	retainer		1
5	6817003	BODY			1
6	6805102	BUSHING			2
7	1K127	O-RING 10			x
8	6683274	SEAL, SPOOL			4
9	7108781	SPOOL	lift		1
10	6815152	SPOOL			1
11	7112383	AUX SPOOL			1
12	6676029	SOLENOID	W/Ref. 32		2
13	73K16	RING	back-up		x
14	58K16	O RING 10			x
15	6685157	VALVE	W/Ref. 33, 34 & 36		1
16	6689739	VALVE	pilot operated - W/Ref. 21		2
17	6690431	SEAL KIT	W/Ref. 32		2
18	6686360	VALVE	main relief - W/Ref. 19-22 - pressure to be set in field		1
19	58K17	O RING 10			x
20	6665569	WASHER	back-up		x
21	25K20016	O RING 10			x
22	6665570	RING	guide		x
23		VALVE BODY	NSS		1
24	7121399	SPRING			2
25	6814694	RETAINER			2
26	7138376	BUSHING			2
27	73K13	RING			x
28	58K13	O-RING			x
29	6816549	VALVE	port relief - W/Ref. 27, 28 & 32		1
30	6684645	VALVE, ANTI CAV	anti-cav - 3500 psi - W/Ref. 32		3
31	7134520	PLUG	check valve - W/Ref. 32		3
32	79K8	O RING 10			x
33	6592117	SPRING			3
34	7106712	SEAT			3
35	55K204	O RING 10			x
36	79K10	O RING 10			x
37	24K7	PLUG	W/Ref. 36		2
38	6587575	ADAPTER			1
39	6592105	BALL			4
40	6592107	SPRING			2
41	6531270	SLEEVE			1
42	6589226	BONNET			1
43	6592098	WASHER			1
44	799119	RING			1
45	6660644	CAP			1
46	29G416	BOLT			2
47	58K4	O-RING			1
48	6596807	PLUG	plastic - .460" long		1
49	6586918	SCREW			1
50	6595663	BUSHING			2
51	6587523	WASHER			2
52	6587580	SPRING			2
53	6592100	COLLAR			2
54	6592109	ADAPTER			1

HYDRAULIC CONTROL VALVE (Cont'd)
(Spool Lock) (Service Valve)

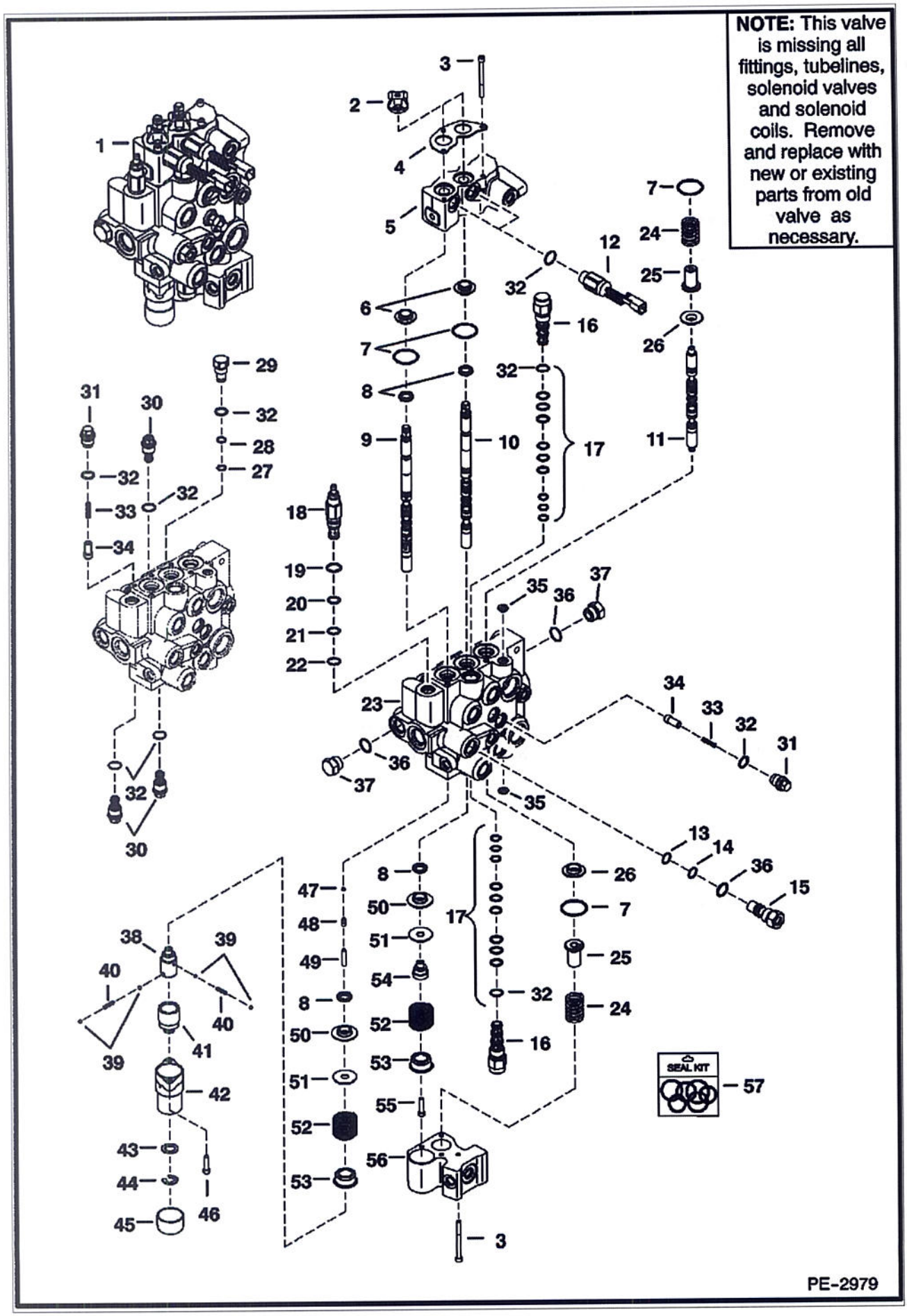

Ref No	Part Number	Description	Remarks	Serial Number	Qty
55	7102652	SCREW			1
56	6814279	BLOCK			1
57	7123964	SEAL KIT, COMPLETE	includes 7123963, 7123965, 6632279, 6669732 & (2) each of 6685603 & 6690431		x
57	7123963	SEAL KIT	3 spool - Ref. 2, 7, 8, 35, 47, & 48		x
57	7123965	SEAL KIT	external fitting		x
57	6685603	SEAL KIT	solenoid valve		x
57	6632279	SEAL KIT	main relief - Ref. 19-22		x
57	6669732	SEAL KIT	solenoid valve		x
57	6690431	SEAL KIT	pilot valve - Ref. 21		x

HYDRAULIC CONTROL VALVE
(AHC/ACS/SJC)

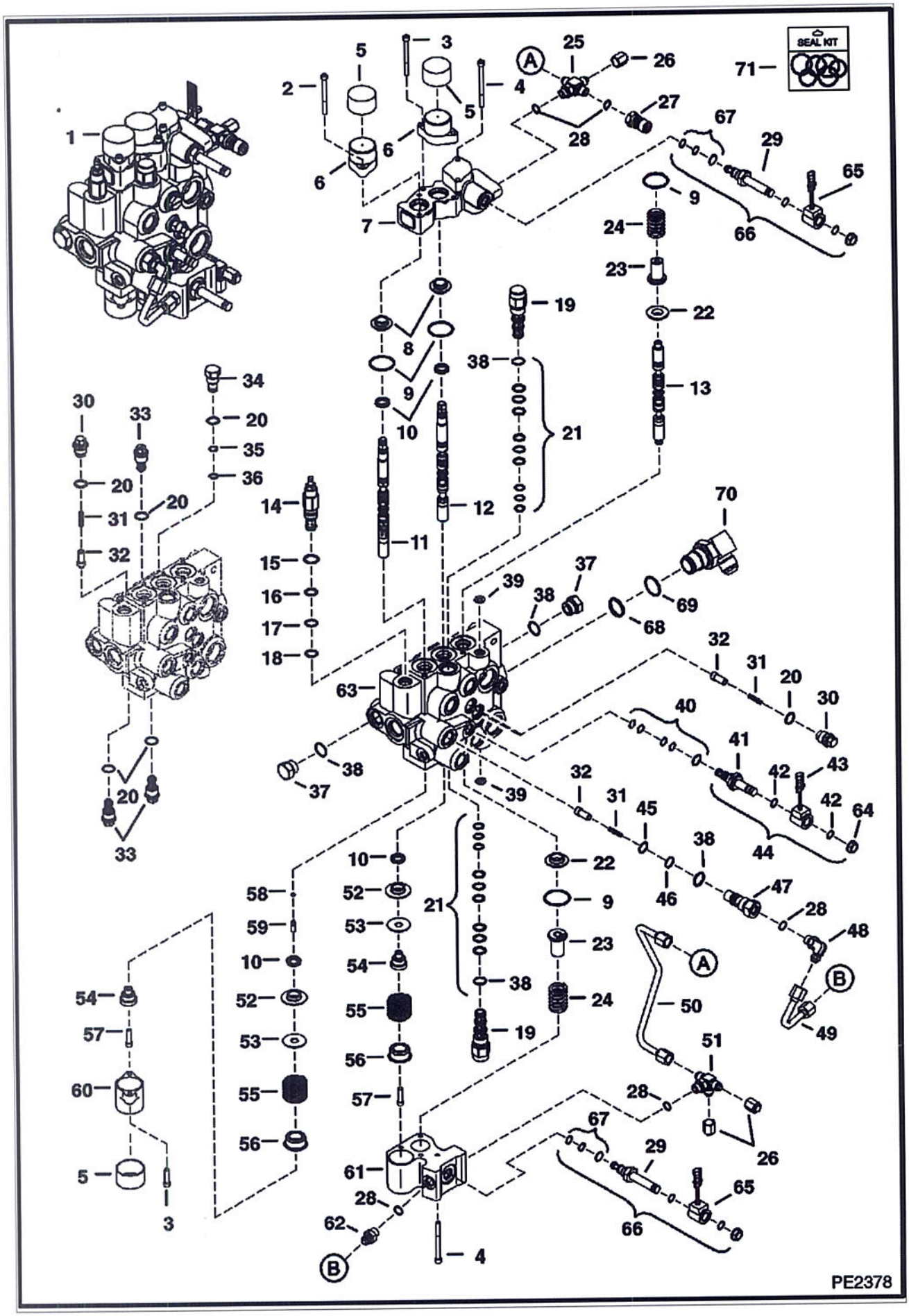

Ref No	Part Number	Description	Remarks	Serial Number	Qty
1	7101354	VALVE, CONTROL	W/fittings		1
2	69G436	BOLT			2
3	29G416	BOLT			4
4	29G444	BOLT			5
5	6662848	CAP			3
6	7101345	BONNET, DETENT HYD VALVE			2
7	6817004	BODY			1
8	6805102	BUSHING			2
9	1K127	O-RING 10			4
10	6683274	SEAL, SPOOL			4
11	7108241	LIFT SPOOL	lift		1
12	7108242	TILT SPOOL	tilt		1
13	7112383	AUX SPOOL			1
14	6686360	VALVE	main relief - W/Ref. 15-18 - pressure to be set in field		1
15	58K17	O RING 10			x
16	6665569	WASHER	back-up		x
17	25K20016	O RING 10			x
18	6665570	RING	guide		x
19	6689739	VALVE	pilot operated - W/Ref. 21		2
20	79K8	O RING 10			x
21	6690431	SEAL KIT	W/Ref. 38		2
22	7138376	BUSHING			2
23	6814694	RETAINER			2
24	7121399	SPRING			2
25	7102066	CROSS	W/Ref. 28		1
26	36K5	CAP			2
27	6684125	COUPLER	male		1
28	79K6	O RING 10			x
29	6688743	STEM, VALVE CONTROL			2
30	7134520	PLUG	check valve - W/Ref. 20		3
31	6592117	SPRING			4
32	7106712	SEAT			4
33	6684645	VALVE, ANTI CAV	anti-cav - W/Ref. 20		3
34	6816549	VALVE	port relief - W/Ref. 20, 35 & 36		1
35	58K13	O-RING			x
36	73K13	RING			x
37	24K7	PLUG	W/Ref. 38		2
38	79K10	O RING 10			x
39	55K204	O RING 10			x
40	6669732	SEAL KIT			1
41	6667687	STEM			1
42	54K20028	O RING 10			x
43	6671025	COIL			1
44	6672471	VALVE	solenoid - W/Ref. 40-43 & 64		1
45	58K16	O RING 10			x
46	73K16	RING	back-up		x
47	7134522	PLUG	W/Ref. 38, 45 & 46		1
48	17KB606	ELBOW	W/Ref. 28		1
49	7116995	TUBELINE			1
50	7110914	TUBELINE			1
51	7102018	TEE	W/Ref. 28		1
52	6595663	BUSHING			2

HYDRAULIC CONTROL VALVE (Cont'd)
(AHC/ACS/SJC)

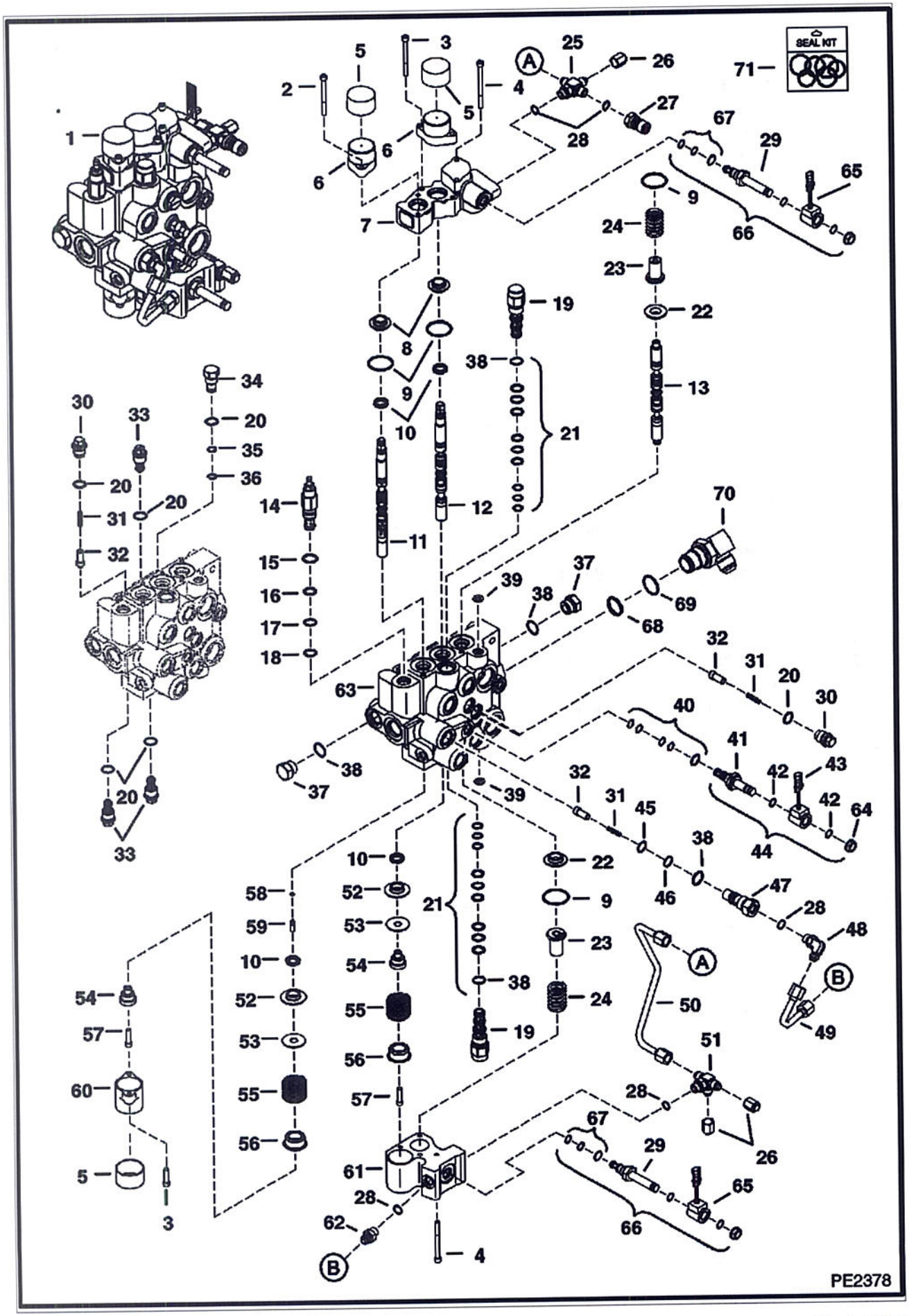

Ref No	Part Number	Description	Remarks	Serial Number	Qty
53	6587523	WASHER			2
54	6592109	ADAPTER			2
55	6587580	SPRING			2
56	6592100	COLLAR			2
57	7102652	SCREW			2
58	58K4	O-RING			1
59	6801167	PLUG	plastic - .685" long		1
60	6803092	BONNET			1
61	6814279	BLOCK			1
62	6688845	VALVE	check - W/Ref. 28		1
63		BODY	NSS		1
64	6668820	NUT			1
65	6678891	COIL	10 volt - W/nut		2
65	6691022	NUT			2
66	6690991	VALVE, SOLENOID	W/Ref. 29 & 65 - Was 6688499 [A]		2
67	6685603	SEAL KIT	solenoid valve		1
68	58K22	O RING 10			1
69	79K16	O RING 10			1
70	7101371	ELBOW	W/Ref. 68 & 69		1
71	7123964	SEAL KIT, COMPLETE	includes 7123963, 7123965, 6632279, 6669732 & (2) each of 6685603 & 6690431		x
71	7123963	SEAL KIT	3 spool - Ref. 9, 10, 39, 58, & 59		x
71	7123965	SEAL KIT	external fitting - Ref. 20, 28, 35, 36, 38, 42, 45, 46, 68, & 69		x
71	6685603	SEAL KIT	solenoid valve -Ref. 67		x
71	6632279	SEAL KIT	main relief - Ref. 15-18		x
71	6669732	SEAL KIT	solenoid valve - Ref. 40		x
71	6690431	SEAL KIT	pilot valve - Ref. 21		x

MANUAL LIFT RELEASE VALVE

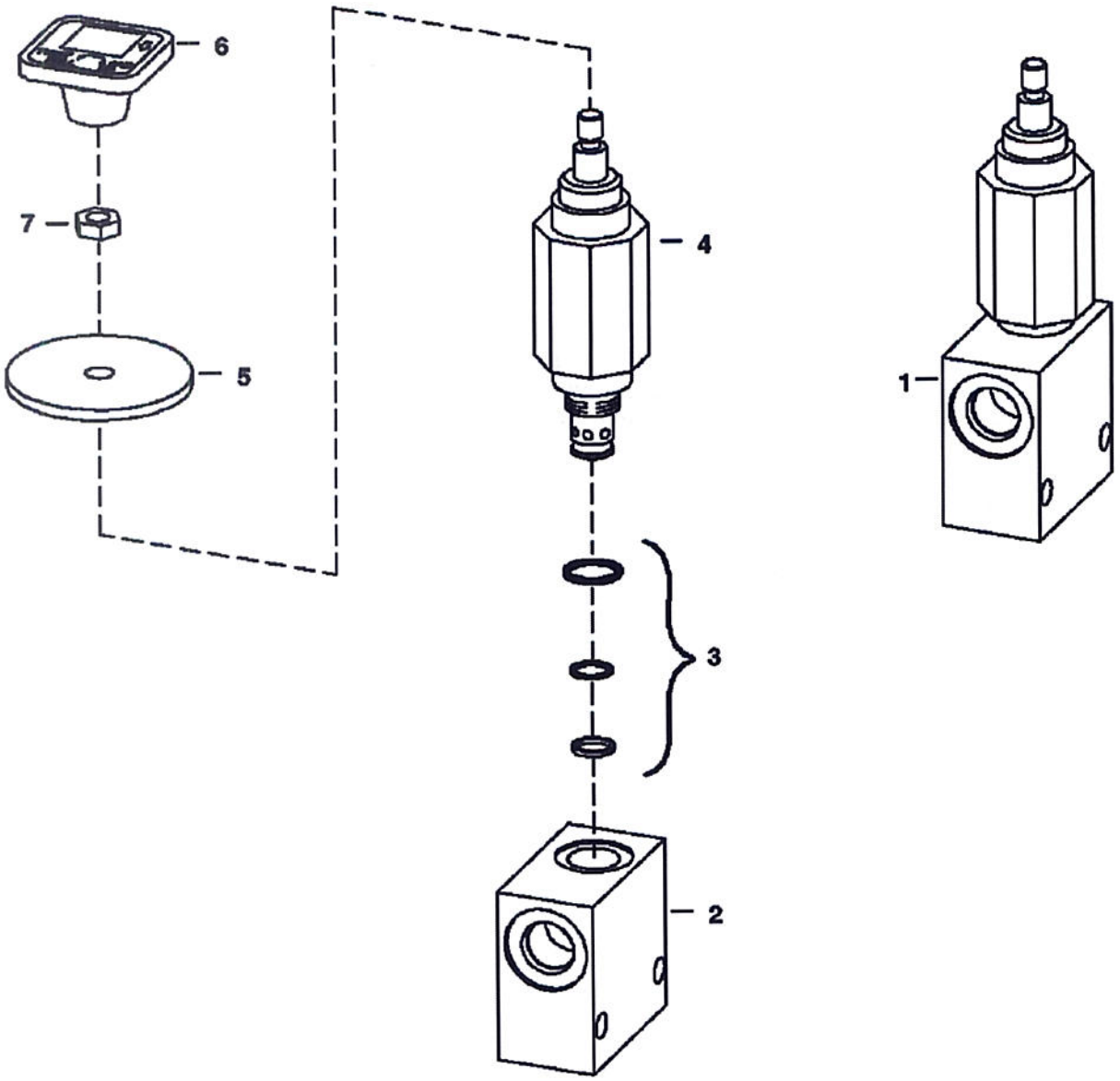

Ref No	Part Number	Description	Remarks	Serial Number	Qty
1	6667844	VALVE ASSY	Ref. 2-4		1
2		BLOCK	NSS		1
3	6669087	SEAL KIT			1
4		VALVE	NSS - Order Ref. 1		1
5	6707101	SEAL	neoprene		1
6	6737524	KNOB	red square		1
7	7D4	NUT			1

HYDROSTATIC CIRCUITRY
(Manual Controls)

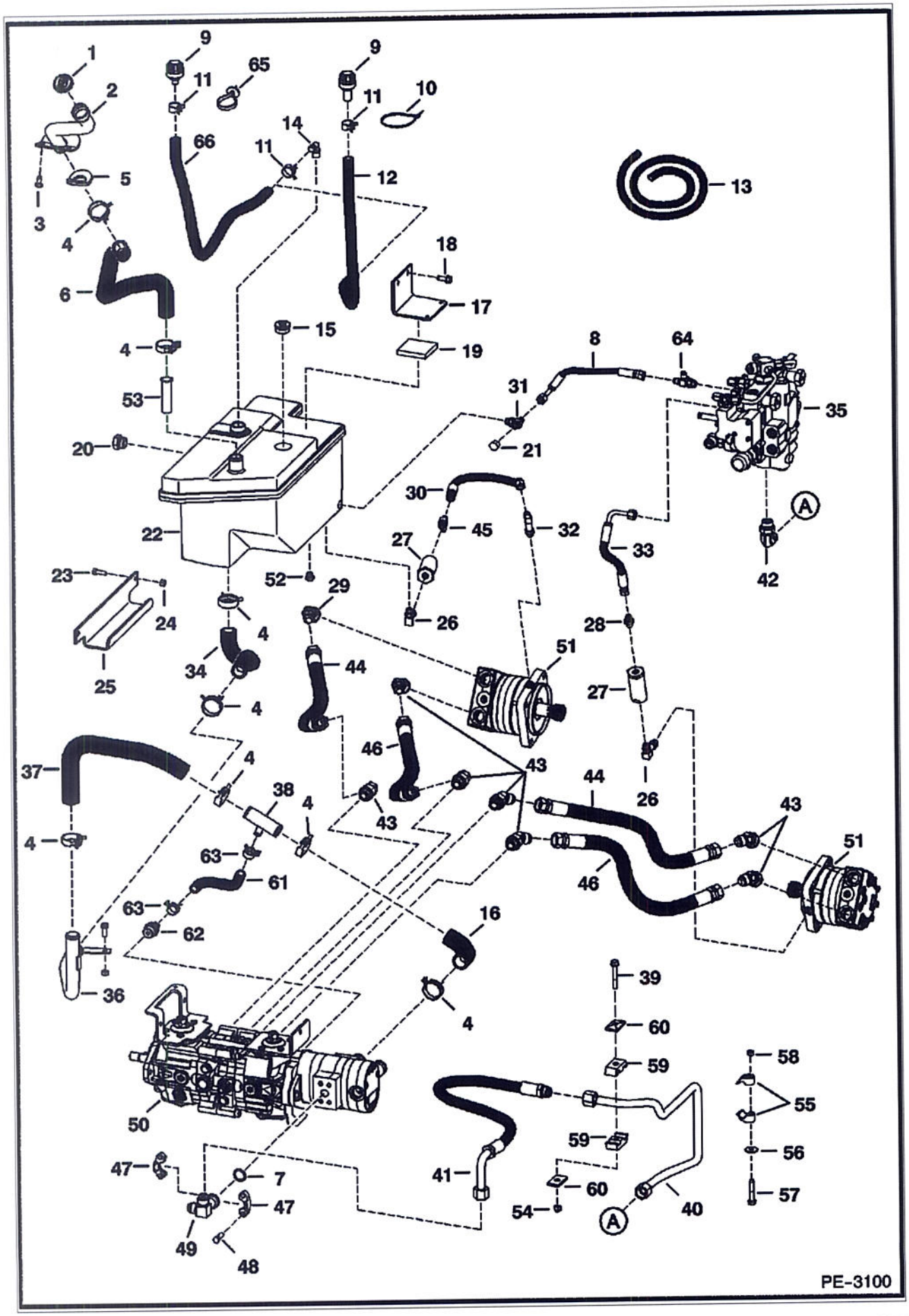

Ref No	Part Number	Description	Remarks	Serial Number	Qty
1	6717827	CAP			1
2	6717830	TUBE			1
3	84G3710	SCREW			2
4	5HM42	HOSECLAMP			6
5	6718772	GASKET			1
6	6718020	HOSE			1
7	55K214	O-RING			1
8	7108406	HOSE			1
9	6684923	BREATHER	breather		1
10	6610510	TIE			1
11	5HM24	CLAMP			2
12		HOSE	NAP - 21.5" (546,1 mm) long - Order 3 ft. of Ref. 13 & Ref. 65		1
13	6578172	HOSE	bulk - sold per foot		x
14	6727637	ELBOW	barbed		1
15	47K10	PLUG			1
15	79K16	O RING 10			1
16	7124128	HOSE			1
17	6726254	BRACKET			1
18	84G3716	SCREW 5			2
19	6726255	PAD	bumper		1
20	6665915	GAUGE			1
20	79K12	O RING 10			1
20	6734563	WASHER KIT			1
20	6734561	WASHER			1
20	25K30118	O RING 10			1
21	36K5	CAP			1
22	6728673	TANK			1
23	17C616	BOLT 5			2
24	61D6	NUT 5			2
25	6726162	BRACKET			1
26	6715190	ELBOW			2
26	79K6	O RING 10			x
27	6661022	FILTER			2
28	15KB606	ADAPTER			1
28	79K6	O RING 10			x
29	6734623	ELBOW			1
29	79K12	O RING 10			x
30	7106205	HOSE			1
31	19KB606	TEE			1
31	79K6	O RING 10			x
32	6812815	FITTING			1
33	6542521	HOSE			1
34	6733652	HOSE			1
35		VALVE	See Illustration HYDRAULIC CONTROL VALVE/ PE2734		1
36	6735922	TUBE			1
37	7124129	HOSE			1
38	7124127	TEE			1
38	79K16	O RING 10			x
39	17C644	BOLT			1
40	7109922	TUBE	single speed motor		1
40	7122185	TUBE	2-speed motor		1
41	6733197	HOSE			1
42	7101797	ELBOW			1
42	79K12	O RING 10			x

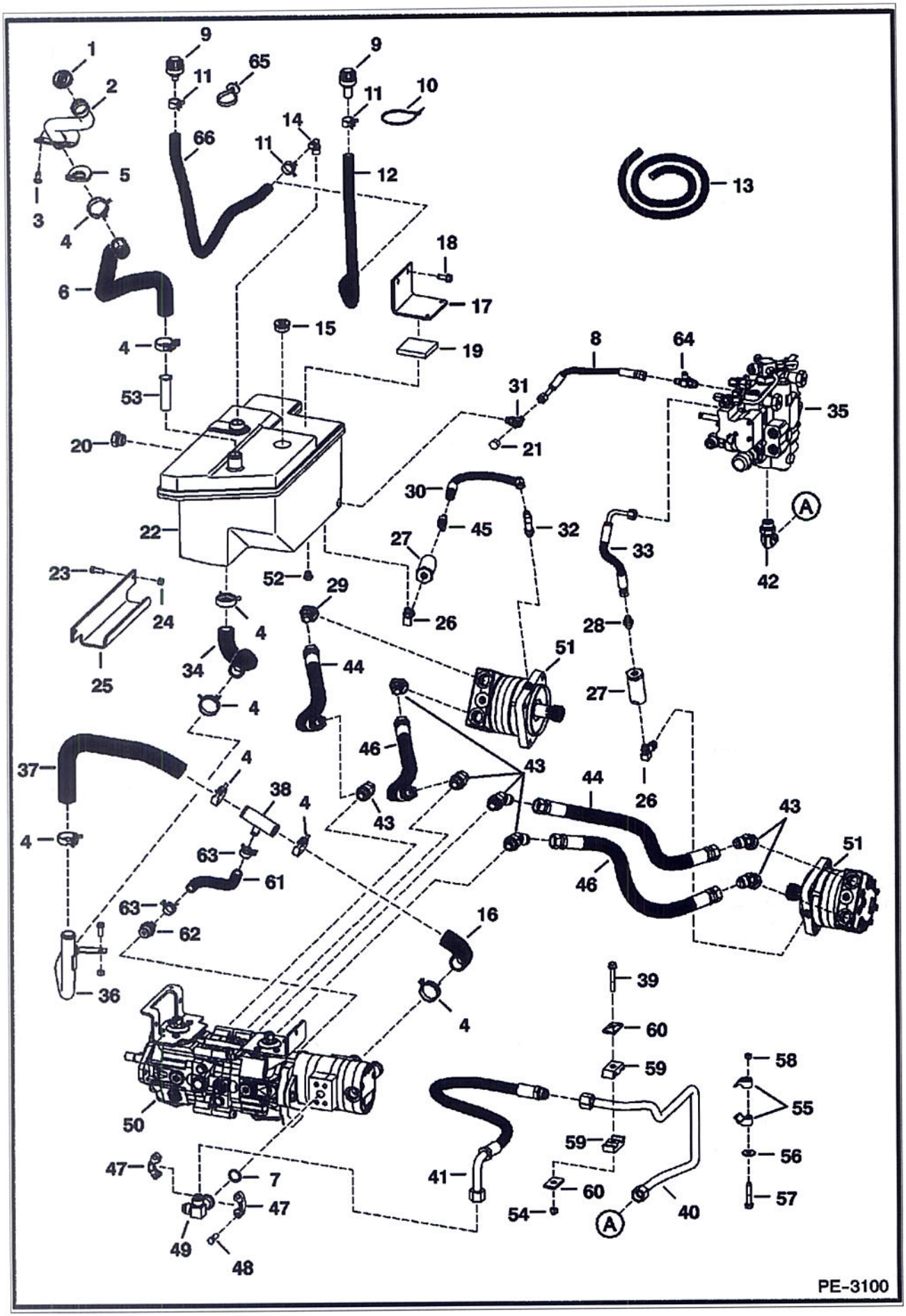
1
2
3
4
5
6
9
11
65
66
14
10
12
13
18
17
19
15
8
64
31
21
35
53
20
22
30
45
32
27
26
33
42
A
23
24
25
52
29
28
34
44
51
46
43
37
38
63
61
62
16
36
39
60
59
58
55
56
57
50
47
7
49
48
41
54
40
PE-3100

Ref No	Part Number	Description	Remarks	Serial Number	Qty
43	6737453	ELBOW			7
43	79K12	O RING 10			9
44	6688938	HOSE	mega seal		2
45	21KB606	TEE	See Illustration AUXILIARY HYDRAULICS/ PE2738		1
45	79K6	O RING 10			x
46	6688937	HOSE	mega seal		2
47	19J12	CLAMP			2
48	17C620	BOLT			4
49	7106040	ELBOW	split flange - one leg		1
49	7113262	ELBOW	split flange - two leg - Use W/hydraulic muffler hose		1
50		PUMP	See Illustration HYDROSTATIC PUMP/ MS2184		1
51		MOTOR	See Illustration HYDROSTATIC MOTOR/ PE2620		1
52	24K5	PLUG			1
52	79K6	O RING 10			x
52	17KB606	ELBOW	rear aux.		1
52	79K6	O RING 10			x
52	21KB606	TEE	high flow hydraulics		1
52	79K6	O RING 10			x
53	6732215	FILTER			1
54	59D6	NUT			1
55	7100462	CLAMP			2
56	619021	WASHER, 5			1
57	84G3732	BOLT			1
58	83D6	NUT 5			1
59	6592506	CLAMP			2
60	6592507	PLATE			2
61	7124130	HOSE			1
62	7124133	ADAPTER			1
62	79K12	O RING 10			1
63	5HM23	CLAMP			2
64	6718031	TEE			1
64	79K6	O RING 10			1
65	6675734	STRAP	button head		1
66		HOSE	NAP - 28" (711,2 mm) long - Order Ref. 13		1

HYDROSTATIC CIRCUITRY
(Selectable Joystick Controls)

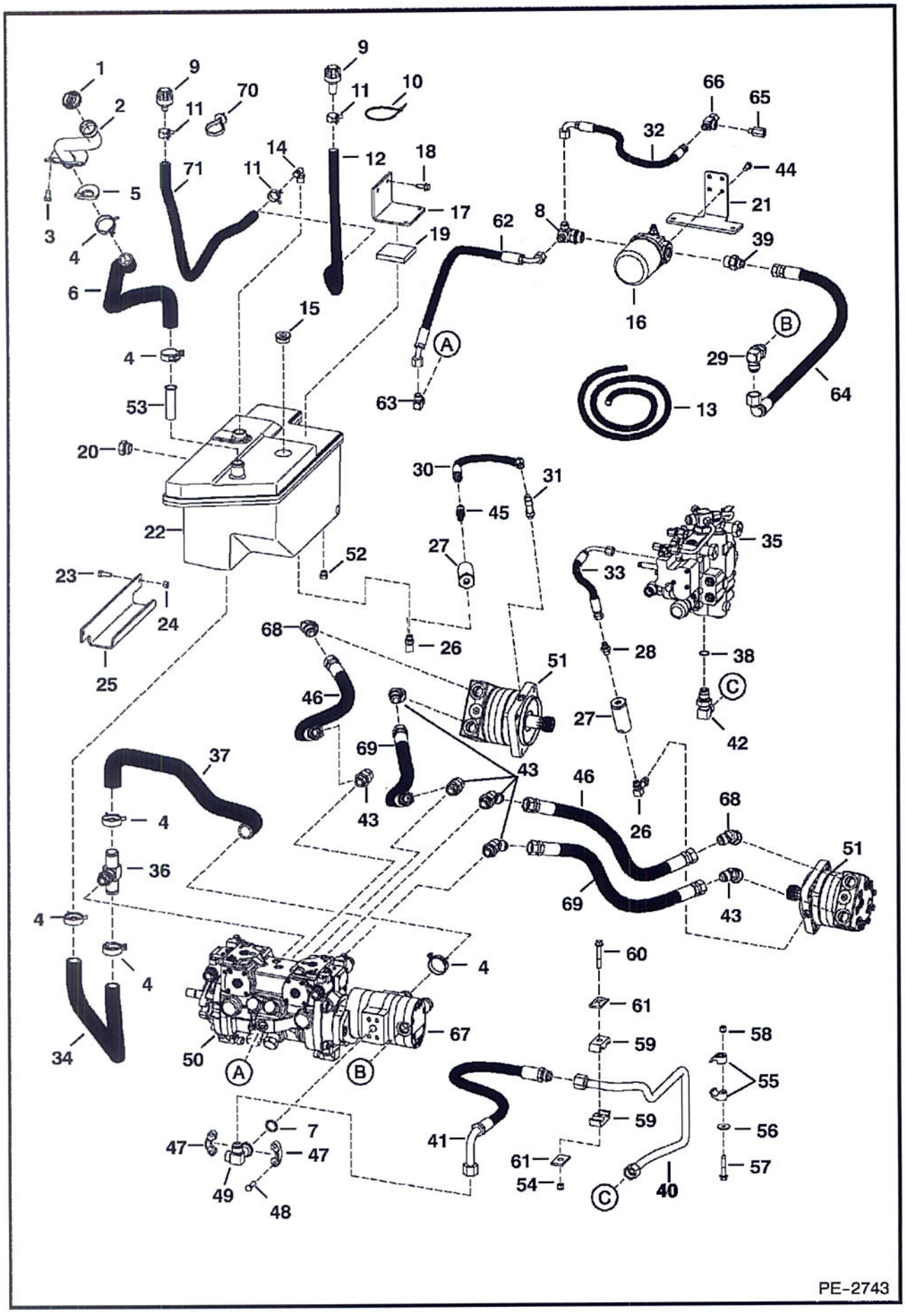

Ref No	Part Number	Description	Remarks	Serial Number	Qty
1	6717827	CAP			1
2	6717830	TUBE			1
3	84G3710	SCREW			2
4	5HM42	HOSECLAMP			6
5	6718772	GASKET			1
6	6718020	HOSE			1
7	55K214	O-RING			1
8	7108846	TEE			1
8	79K12	O RING 10			x
9	6684923	BREATHER	breather		1
10	6610510	TIE			1
11	5HM24	CLAMP			2
12		HOSE	NAP - 21.5" (546,1 mm) long - Order 3 ft. Ref. 13 & Ref. 70		1
13	6578172	HOSE	bulk - sold per foot		x
14	6727637	ELBOW	barbed		1
15	47K10	PLUG			1
15	79K16	O RING 10			1
16	6686922	FILTER ASMBLY 12	See Illustration HYDROSTATIC OIL FILTER/ B16487A		1
16	6686926	FILTER, OIL HYD			1
16	6687834	SENSOR			1
17	6726254	BRACKET			1
18	84G3716	SCREW 5			2
19	6726255	PAD	bumper		1
20	6665915	GAUGE			1
20	79K12	O RING 10			x
20	6734563	WASHER KIT			1
20	6734561	WASHER			1
20	25K30118	O RING 10			1
21	7108398	BRACKET, FILTER			1
22	6728673	TANK			1
23	17C616	BOLT 5			2
24	61D6	NUT 5			2
25	6726162	BRACKET			1
26	6715190	ELBOW			2
26	79K6	O RING 10			x
27	6661022	FILTER			2
28	15KB606	ADAPTER			1
28	79K6	O RING 10			x
29	17KB1212	ELBOW			1
29	79K12	O RING 10			x
30	7106205	HOSE			1
31	6812815	FITTING			1
31	79K6	O RING 10			x
32	7108845	HOSE			1
33	6542521	HOSE			1
34	7103861	HOSE			1
35		VALVE	See Illustration HYDRAULIC CONTROL VALVE/ PE2734		1
36	7103648	TEE			1
36	79K12	O RING 10			x
37	7107562	HOSE			1
38	58K22	O RING 10			1
39	15KB1012	ADAPTER			1
39	79K12	O RING 10			x

HYDROSTATIC CIRCUITRY (Cont'd)
(Selectable Joystick Controls)

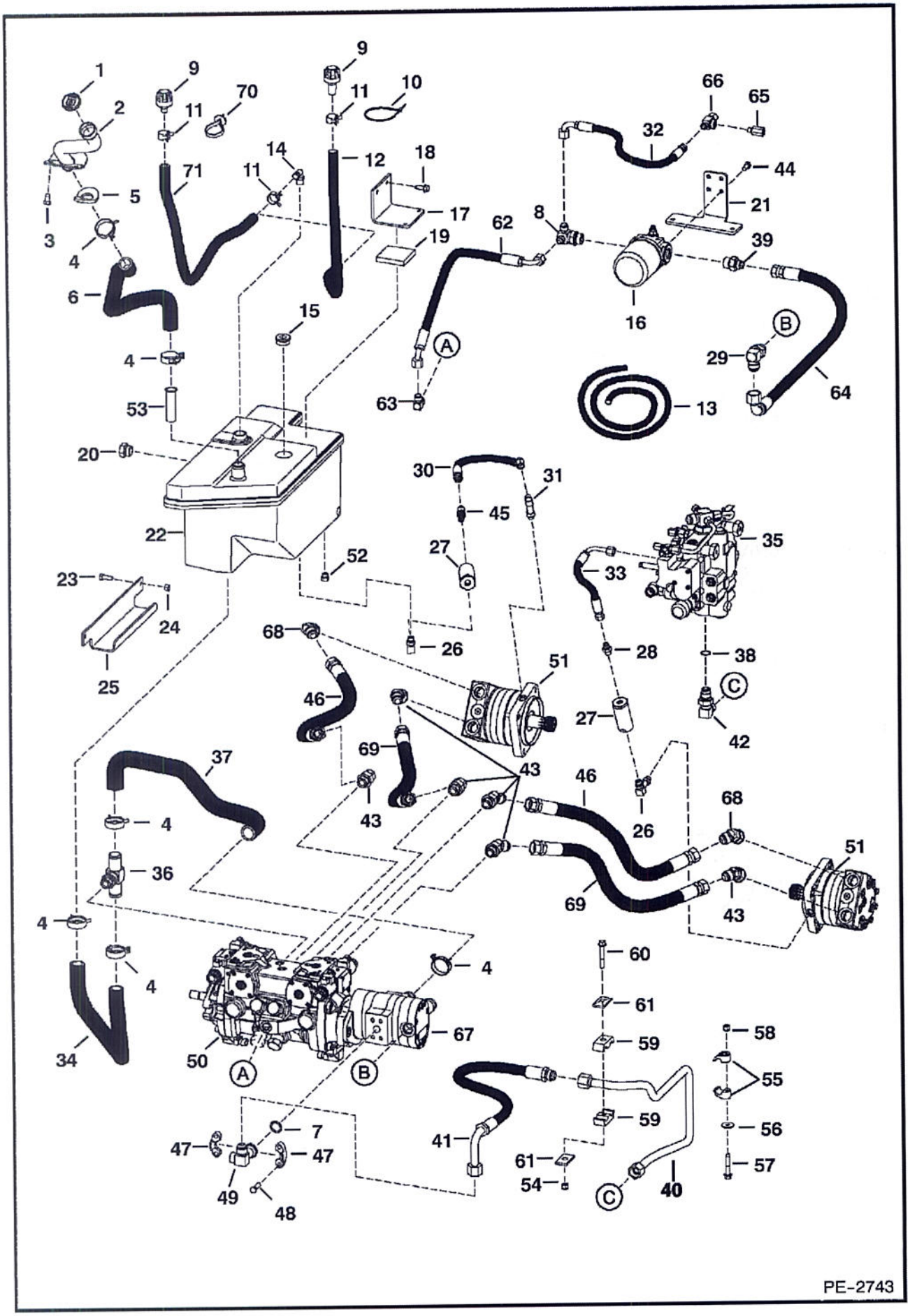

Ref No	Part Number	Description	Remarks	Serial Number	Qty
40	7109922	TUBE	single speed motor		1
40	7122185	TUBE	2-speed motor		1
41	6733197	HOSE			1
42	7101371	ELBOW	W/Ref. 38		1
42	79K12	O RING 10			x
43	6737453	ELBOW			6
43	79K12	O RING 10			x
44	17C612	BOLT 5			4
45	21KB606	TEE			1
45	79K6	O RING 10			x
46	6688938	HOSE	mega seal		2
47	19J12	CLAMP			2
48	17C620	BOLT			4
49	7106040	ELBOW	split flange - one leg		1
49	7113262	ELBOW	split flange - two leg - Use W/hydraulic muffler hose		1
50		PUMP	See Illustration HYDROSTATIC PUMP/ B25010		1
51		MOTOR	See Illustration HYDROSTATIC MOTOR/ PE2620		1
52	24K5	PLUG			1
52	79K6	O RING 10			x
52	17KB606	ELBOW	rear aux.		1
52	79K6	O RING 10			x
52	21KB606	TEE	high flow hydraulics		1
52	79K6	O RING 10			x
53	6732215	FILTER			1
54	59D6	NUT			1
55	7100462	CLAMP			2
56	619021	WASHER, 5			2
57	84G3732	BOLT			1
58	83D6	NUT 5			1
59	6592506	CLAMP			2
60	84G3720	BOLT			1
61	6592507	PLATE			1
62	7108844	HOSE			1
63	17KB808	ELBOW			2
63	79K8	O RING 10			x
64	7108843	HOSE			1
65	6718948	SNUBBER			1
66	6718660	TEE			1
67		PUMP	See Illustration GEAR PUMP/ MS2185 gear		1
68	6734623	ELBOW			2
68	79K12	O RING 10			x
69	6688937	HOSE	mega seal		2
70	6675734	STRAP			1
71		HOSE	NAP - 28" (711,2 mm) long - Order Ref. 13		1

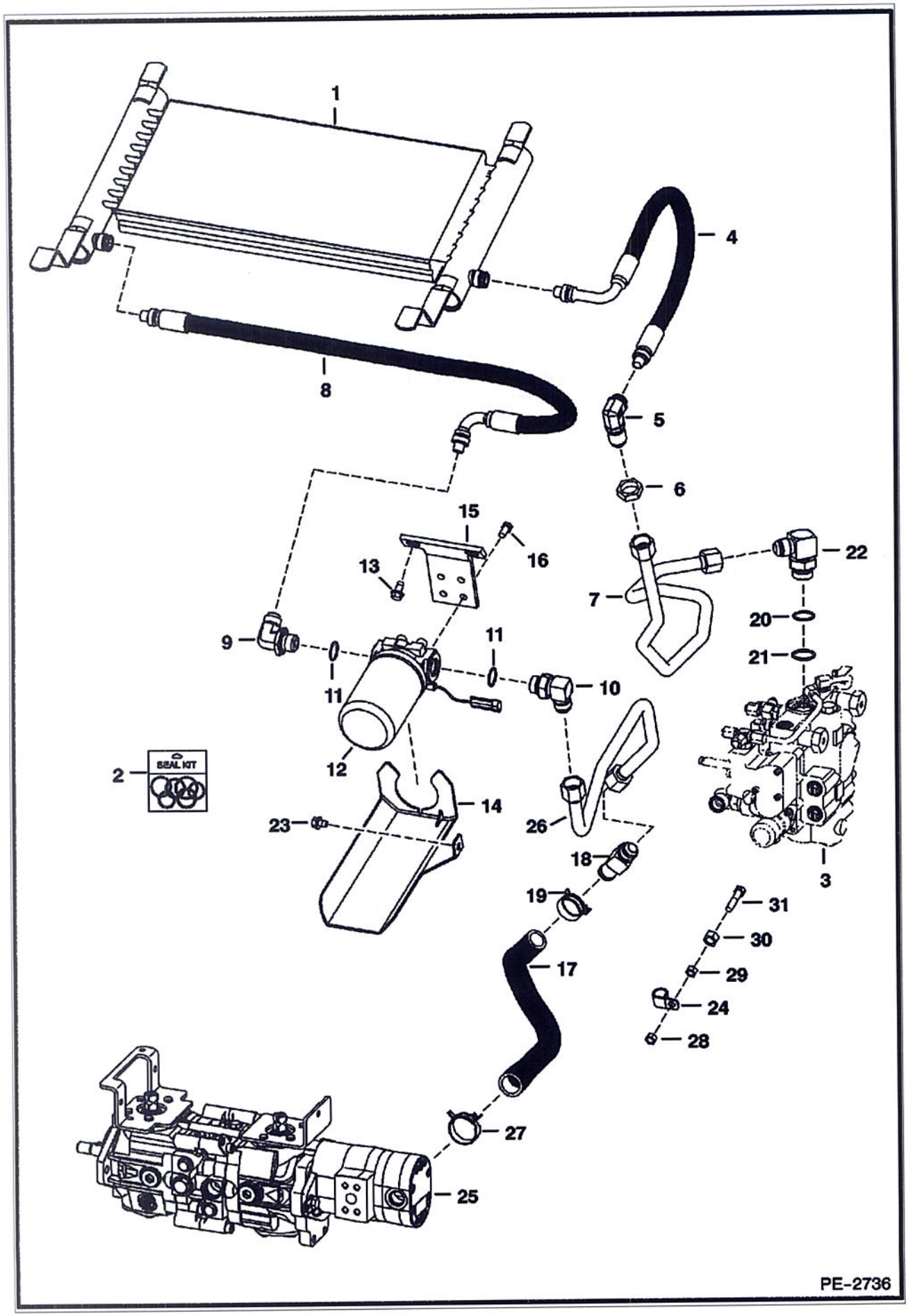
1
4
8
5
6
15
16
13
22
7
20
9
11
21
11
10
12
2
SEAL KIT
14
23
26
18
3
19
31
30
17
29
24
28
27
25
PE-2736

Ref No	Part Number	Description	Remarks	Serial Number	Qty
1	7109582	OIL COOLER	W/Qty. (2) of Ref 2		1
2	6674798	REPAIR KIT	For Ref. 1, 5 or 9 - includes internal retaining ring (1), O-ring (1) & back-up ring (1)		2
3		VALVE	See Illustration HYDRAULIC CONTROL VALVE/ PE2734 See Illustration HYDRAULIC CONTROL VALVE/ PE2378		1
4	6673828	HOSE, HYD ASSY			1
5	6670831	ELBOW	STC		1
5	6690949	O-RING			1
6	86F8	NUT 5			1
7	7109923	TUBE			1
8	6681944	HOSE			1
9	6681945	ELBOW	STC		1
9	6690949	O-RING			1
10	17KB1212	ELBOW	W/Ref. 11		1
11	79K12	O RING 10			x
12		FILTER ASSY	See Illustration HYDROSTATIC OIL FILTER/ B16487		1
12	6661248	ELEMENT			1
13	84G3712	BOLT			2
14	7110695	MOUNT			1
15	6729082	MOUNT			1
16	17C612	BOLT 5			4
17	7106024	HOSE			1
18	7106004	TEE			1
19	5HM35	HOSECLAMP			1
20	79K16	O RING 10			x
21	58K22	O RING 10			1
22	7101371	ELBOW	W/Ref. 20 & 21		1
23	84G3708	SCREW			1
24	30H65	CLIP			1
25		PUMP	See Illustration HYDROSTATIC PUMP/ MS2184 See Illustration HYDROSTATIC PUMP/ B25010		1
26	7106056	TUBE			1
27	5HM42	HOSECLAMP			1
28	95D6	NUT			1
29	61D6	NUT 5			1
30	61D8	NUT 5	used as a spacer		1
31	17C628	BOLT			1

HYDROSTATIC CIRCUITRY
(Cooling Fan)

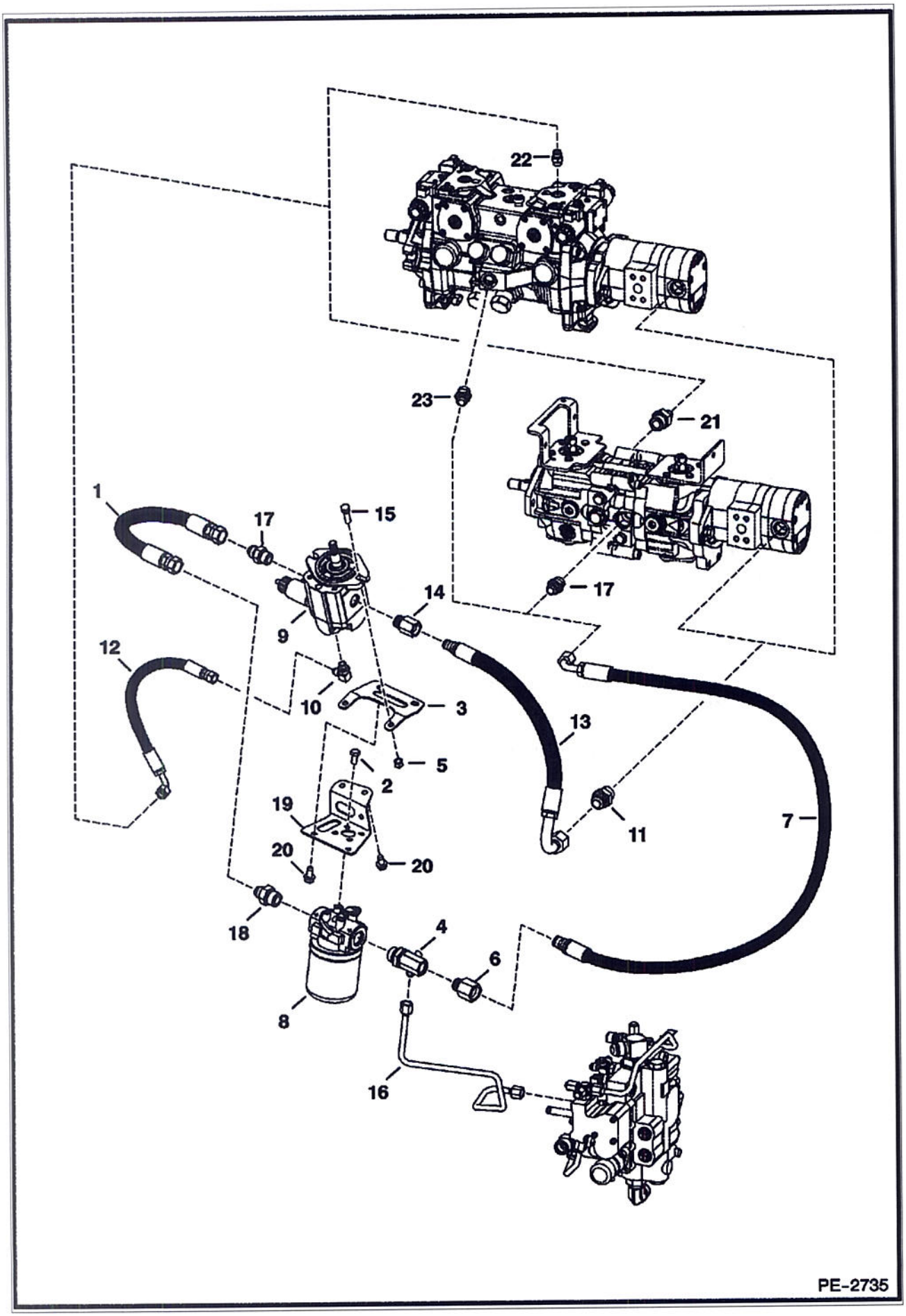

Ref No	Part Number	Description	Remarks	Serial Number	Qty
1	7110809	HOSE			1
2	17C612	BOLT 5			4
3	7110243	BRACKET			1
4	7108685	TEE			1
4	79K12	O RING 10			1
5	95D6	NUT			2
6	15HB1210	ADAPTER, COUPLER	quick lock - Also Order Ref. 7		1
6	79K10	O RING 10			x
7	6689690	HOSE	27" (685,0 mm) long - Also Order Ref. 6		1
8	6687266	FILTER ASSY			1
8	6686926	FILTER, OIL HYD			1
8	6660260	SWITCH			1
9	6687142	MOTOR, FAN DRIVE	See Illustration COOLING FAN MOTOR/ PE2811 aluminum - W/proportional valve		1
9	6689058	MOTOR, FAN	aluminum - W/O proportional valve		1
9	6689059	VALVE, RELIEF	proportional		1
9	6689060	COIL ASSY	W/nut & O-ring		1
9	6683206	SEAL KIT	for proportional valve		1
10	17KB606	ELBOW			1
10	79K6	O RING 10			1
11	15KB1212	ADAPTER			1
11	79K12	O RING 10			1
12	7107179	HOSE			1
13	6691636	HOSE *SEE NOTES*	20.25" (514,35 mm) long - Also Order Ref. 14		1
14	15HB1010	ADAPTER, COUPLER	quick lock - Also Order Ref. 13		1
14	79K10	O RING 10			1
15	17C620	BOLT			2
16	7108980	TUBE			1
17	15KB1010	FITTING			2
17	79K10	O RING 10			1
18	15KB1012	ADAPTER			1
18	79K12	O RING 10			1
19	7110244	BRACKET			1
20	84G3712	BOLT			4
21	15KB612	ADAPTER	manual controls		1
21	79K12	O RING 10			1
22	15KB606	ADAPTER	SJC		1
22	79K6	O RING 10			1
23	15KB1008	ADAPTER			1
23	79K8	O RING 10			1

HYDROSTATIC CIRCUITRY
(2-Speed Motor)

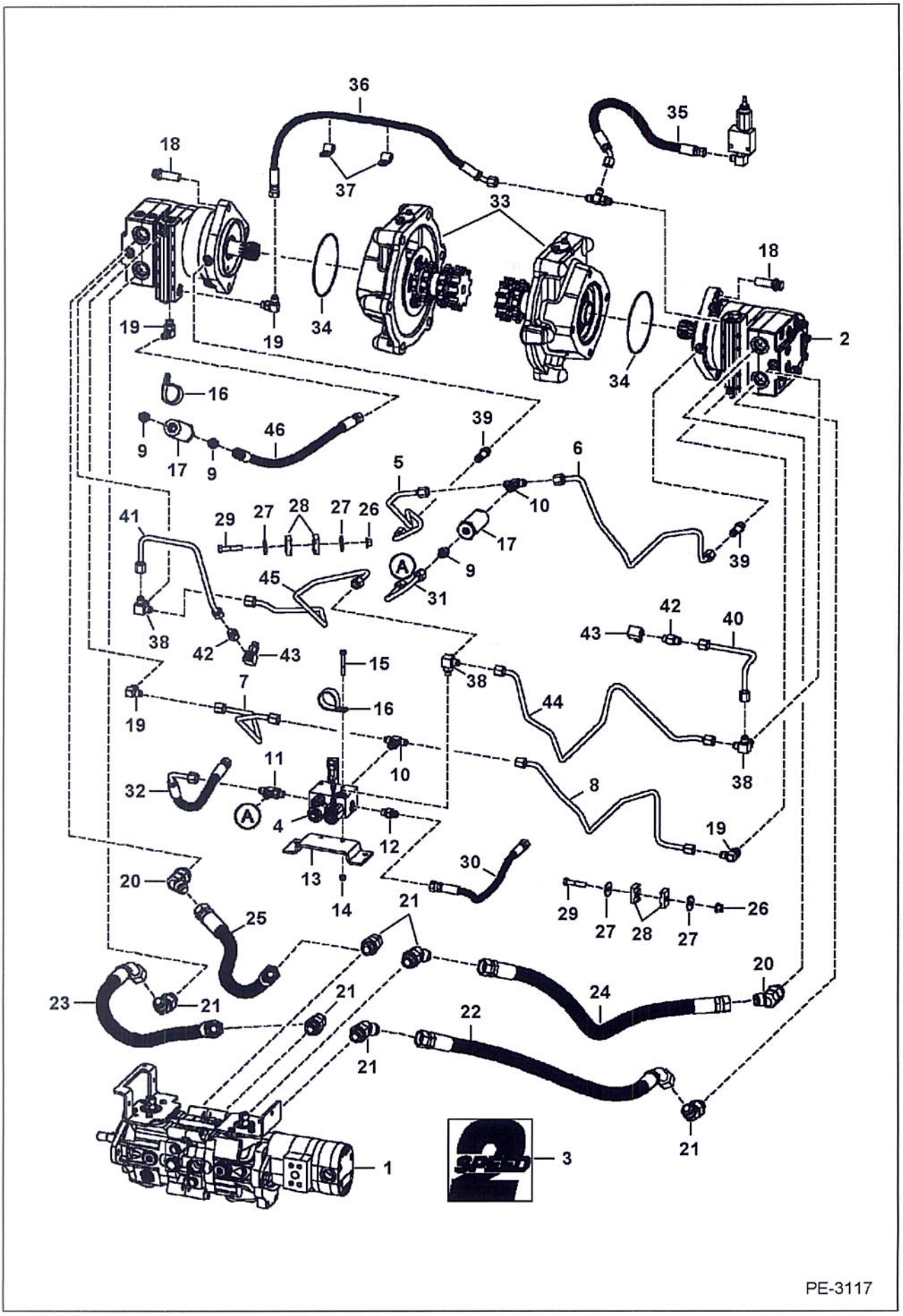

Ref No	Part Number	Description	Remarks	Serial Number	Qty
1		PUMP	See Illustration HYDROSTATIC PUMP/ MS2184 See Illustration HYDROSTATIC PUMP/ B25010		1
2		MOTOR	See Illustration HYDROSTATIC MOTOR/ MS2315		2
3	6729078	DECAL	2-speed		2
4	6692925	VALVE			1
4	6691066	SEAL KIT			1
4	6691067	COIL			1
4	6676243	COIL			1
5	7140865	TUBE			1
6	7140866	TUBE			1
7	7144131	TUBE			1
8	7144132	TUBE			1
9	15KB606	ADAPTER			3
9	79K6	O RING 10			3
10	19KB606	TEE			2
10	79K6	O RING 10			2
11	21KB606	TEE			2
11	79K6	O RING 10			2
12	6669676	CHECK VALVE	inline		1
12	79K6	O RING 10			1
13	7125072	MOUNT			1
14	59D4	NUT 5			2
15	17C444	SCREW			2
16	30H79	CLAMP			2
17	6661022	FILTER	inline		1
18	73G1028	BOLT			6
19	17KB606	ELBOW			4
19	79K6	O RING 10			4
20	6734623	ELBOW			2
20	79K12	O RING 10			2
21	6737453	ELBOW			6
21	79K12	O RING 10			6
22	6690239	HOSE			1
23	6690240	HOSE			1
24	6690241	HOSE			1
25	6690242	HOSE			1
26	83D6	NUT 5			2
27	619021	WASHER, 5			8
28	6726277	CLAMP			8
29	17C628	BOLT			4
30	6803157	HOSE ASSY			1
31	7144130	TUBE			1
32	7125070	HOSE			1
33	7126159	MOUNT ASSY	See Illustration MOTOR CARRIER/ PE3118 drive motor		2
34	25K30508	O-RING, 10			2
35	7138452	HOSE			1
36	7138454	HOSE			1
37	30H31	CLAMP 10			2
38	6725182	TEE			3
39	7122214	ADAPTER			2
40	7140589	TUBE			1
41	7140590	TUBE			1
42	7140928	VALVE	relief		2
43	7141805	ELBOW			2
43	79K6	O RING 10			2

HYDROSTATIC CIRCUITRY (Cont'd)
(2-Speed Motor)

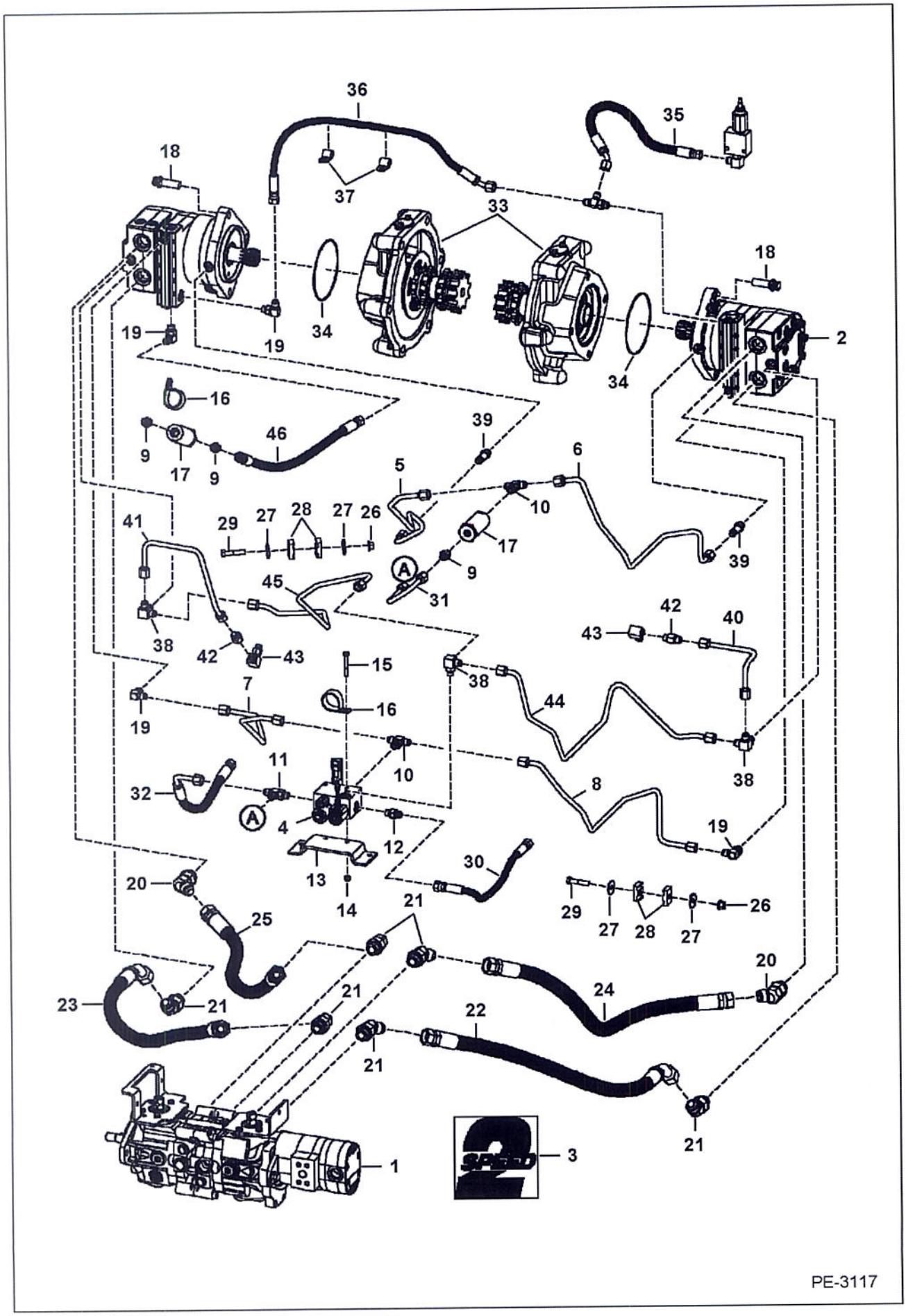

PE-3117

Ref No	Part Number	Description	Remarks	Serial Number	Qty
44	7143188	TUBE			1
45	7143189	TUBE			1
46	7126166	HOSE			1

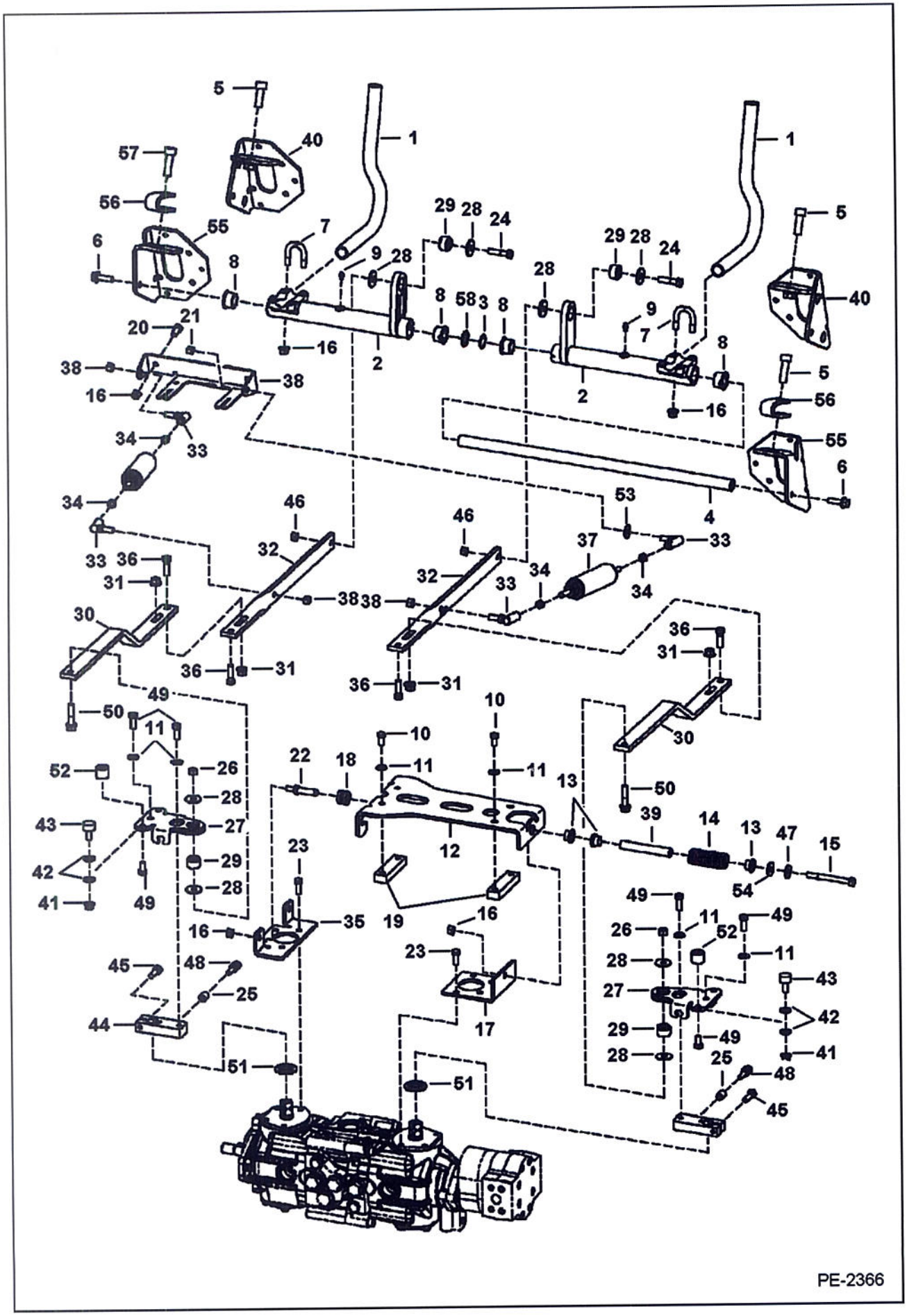
PE-2366

Ref No	Part Number	Description	Remarks	Serial Number	Qty
1	6702543	LEVER, STEERING			2
2	7110571	BELLCRANK, STEERING			2
3	6599741	WASHER	wave		1
4	6716545	ROD			1
5	93G824	BOLT			2
6	45C620	BOLT			2
7	6732997	U-BOLT			4
8	6703879	BUSHING, PLASTIC	W/tab		4
8	6673710	BEARING, NEEDLE	See Illustration CONTROLS ELECTRICAL/ PE2723 needle - AHC		2
9	10H35	GREASE ZERK			2
10	7105192	BOLT			8
11	7103217	WASHER			8
12	6734298	MOUNT			1
13	6715163	BUSHING, PRESS FIT			3
14	6701535	SPRING			1
15	17C680	BOLT			1
16	95D6	NUT			13
17	7109904	BRACKET			1
18	6706098	GUIDE			2
19	6702716	BLOCK			2
20	17C612	BOLT 5			2
21	7147580	MOUNT	damper - W/mount for back-up alarm switch		1
22	6577058	PIN			2
23	1CM820	BOLT			8
24	17C628	BOLT			2
25	7105223	SPACER			2
26	63D6	NUT			2
27	7110365	ARM, PINTLE			2
28	6737388	WASHER			8
29	6685060	BUSHING, TORSION			4
30	7139421	LINK	16" (406,4 mm) long		2
31	83D6	NUT 5			4
32	7139420	LINK	23.07" (586 mm) long		2
33	6599744	BALL JOINT			4
34	8D6	NUT 5			4
35	7109905	BRACKET			1
36	17C620	BOLT			4
37	6649551	SHOCK			2
38	62D6	NUT 5			8
39	6715164	SLEEVE, SPRING			1
40		BRACKET	RH - Order Ref. 55-57		1
40		BRACKET	LH - Order Ref. 55-57		1
41	98D6	NUT	See Illustration CONTROLS ELECTRICAL/ PE2723 AHC		4
42	7100699	WASHER	See Illustration CONTROLS ELECTRICAL/ PE2723 AHC		4
43	6673789	BEARING	See Illustration CONTROLS ELECTRICAL/ PE2723 ROLLER - AHC		4
44	7103708	BRACKET	centering		2
45	7105194	BOLT			2
46	53D6	NUT			2

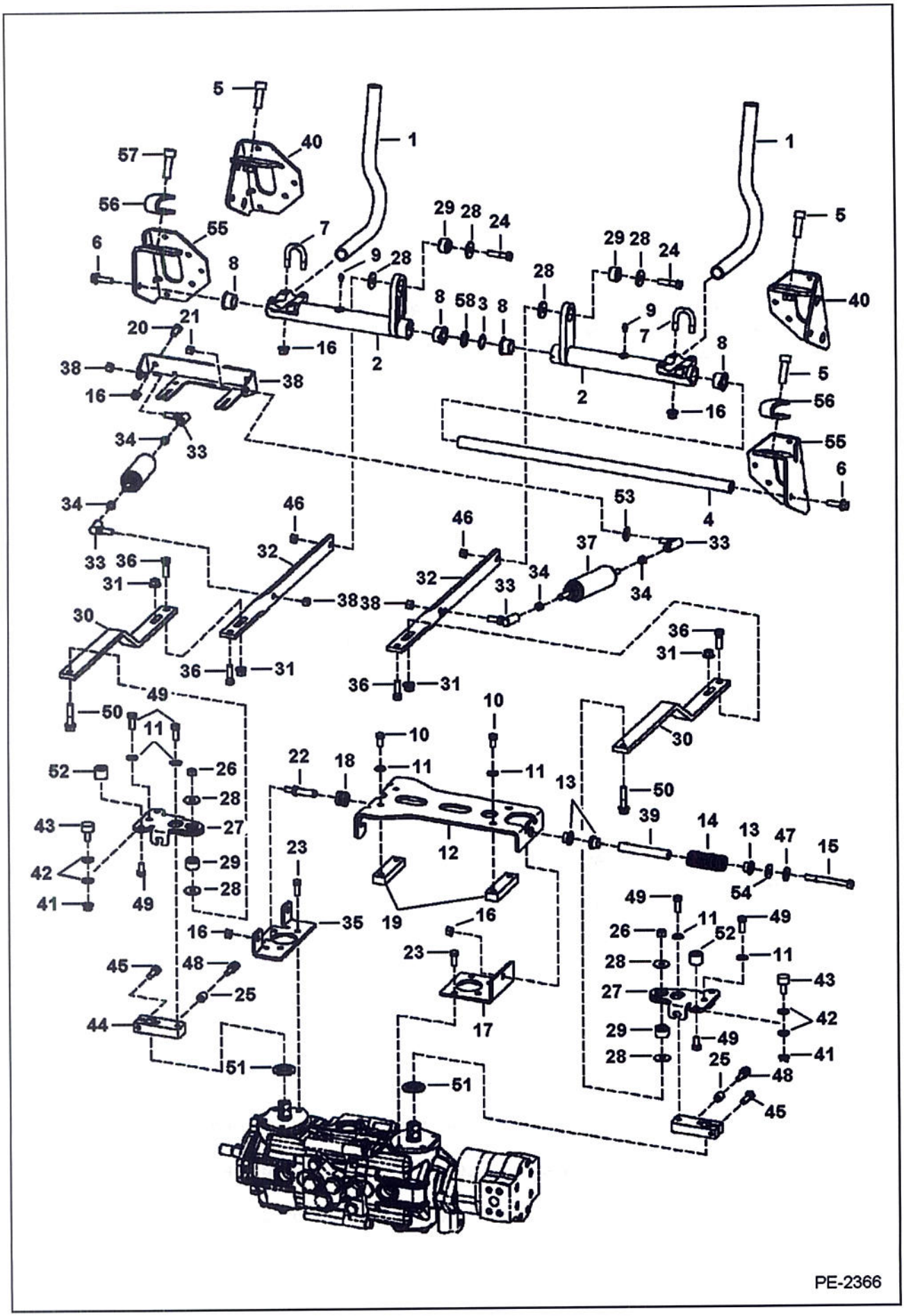
PE-2366

Ref No	Part Number	Description	Remarks	Serial Number	Qty
47	6563914	WASHER			1
48	7103711	BOLT			2
49	47C620	BOLT			4
50	49C628	BOLT			2
51	6687913	SEAL	dust		2
52	6711643	CAM			4
53		SPACER	NAP - Order Ref. 34		1
54	25E24	WASHER	AHC		1
55	7128600	BRACKET	RH		1
55	7128601	BRACKET	LH		1
56	7121779	PAD			2
57	73G828	BOLT			2
58	6716916	WASHER	plastic		1

HYDROSTATIC MOTOR
(Single Speed)

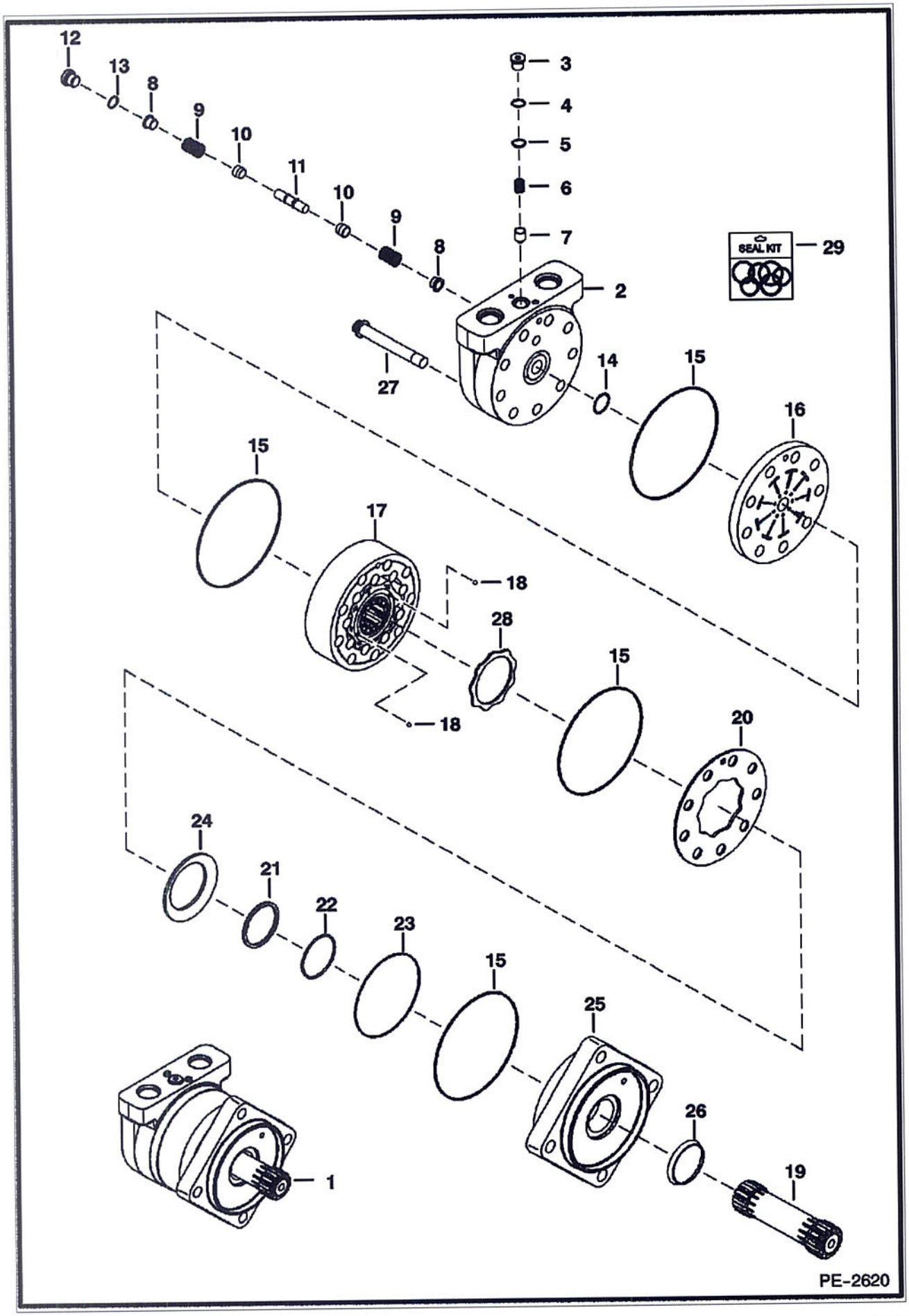

(Single Speed)

Ref No	Part Number	Description	Remarks	Serial Number	Qty
1	6682034	MOTOR	Ref. 2-27		1
2	6689697	HOUSING	W/Ref. 3-7		1
3	6668079	PLUG	W/Ref. 4		1
4	79K5	O RING 10			1
5	6668080	SHIM			x
6	6688521	SPRING			1
7	6668082	POPPET			1
8	6685065	SHUTTLE			2
9	6513533	SPRING			2
10	6513532	POPPET			2
11	6668088	PISTON	shuttle - W/flat - fast acting		1
12	6668089	PLUG	W/Ref. 13		1
13	79K6	O RING 10			1
14	6669452	O-RING			1
15	6678000	SEAL			4
16	6689698	PLATE	valve		1
17	6691343	GEROLER			1
18	6651542	BALL			2
19	6682862	SHAFT, DRIVE			1
20	6689700	PLATE	balance - outer		1
21	6678006	BACK-UP RING	backup		1
22	6682860	O-RING			1
23	6682897	SEAL			1
24	6685069	RING,BACK-UP	backup		1
25	6685068	FLANGE	mounting		1
26	6664815	SEAL, OIL			1
27	6682863	BOLT			9
28	6678004	PLATE	balance - inner		1
29	6685070	KIT, SEAL COMPLETE	W/Ref. 4, 13-15, 21-23 & 26		1

HYDROSTATIC MOTOR
(2-Speed)

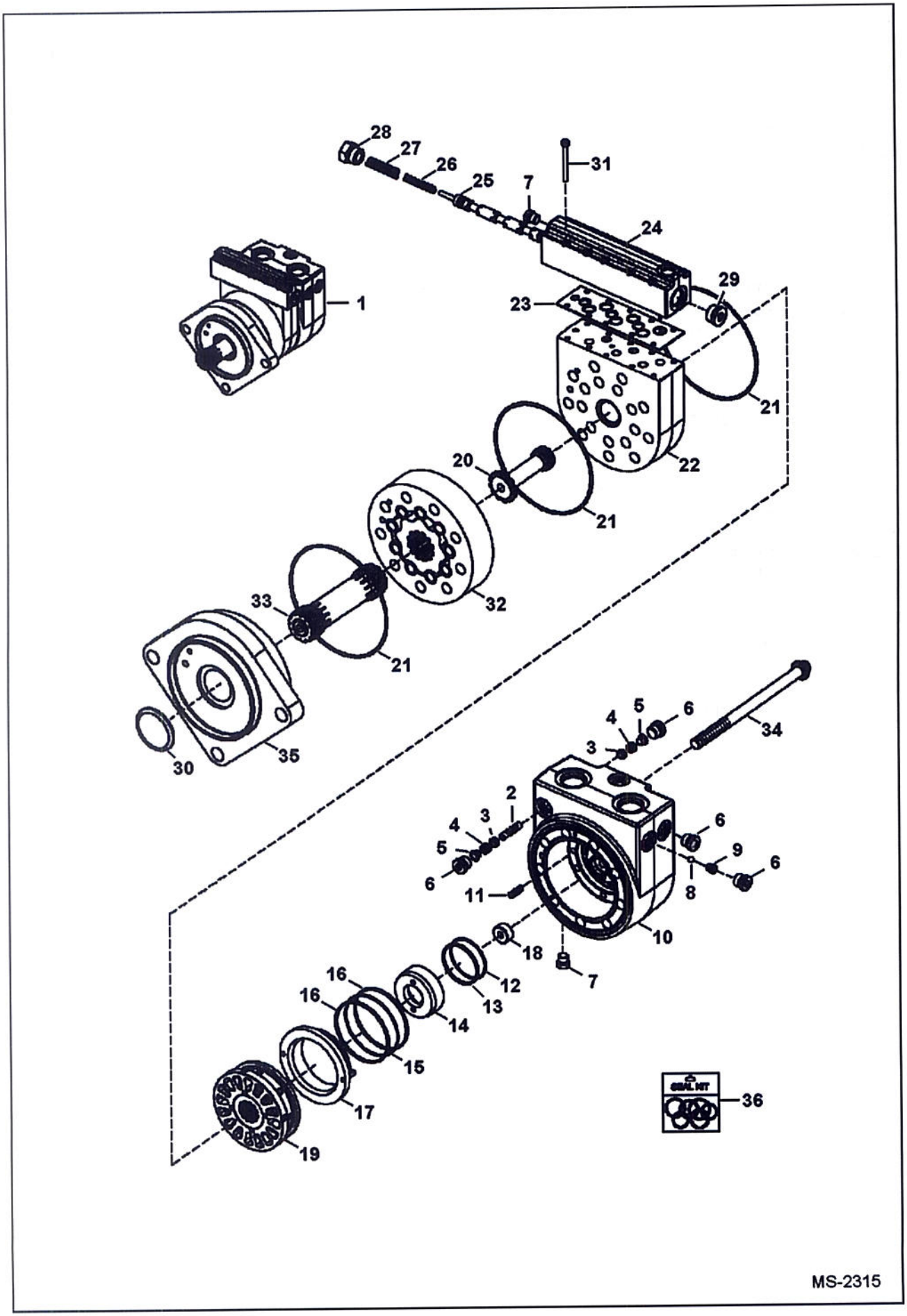

Ref No	Part Number	Description	Remarks	Serial Number	Qty
1	6688565	MOTOR			1
2	6668088	PISTON			1
3	6513532	POPPET			2
4	6513533	SPRING			2
5	6685065	SHUTTLE			2
6	6668089	PLUG			4
7	6691541	PLUG			2
8	10J8	BALL			1
9	6691542	SEAT	ball		1
10	6691566	HOUSING			1
11	6190121	SPRING			10
12	6691543	O-RING			1
13	6691544	RING	back-up		1
14	6691545	RING			1
15	6691546	O-RING			1
16	6691547	RING	back-up		2
17	6691548	RING	balance		1
18	6691549	PIN	dowel		1
19	6691550	VALVE			1
20	6691551	SHAFT			1
21	6691552	O-RING			3
22	6691553	PLATE			1
23	6691554	GASKET			1
24	6691555	HOUSING			1
25	6691556	SPOOL			1
26	6691557	SPRING	compression		1
27	6691558	SPRING	compression		1
28	6651974	PLUG			1
29	6599910	PLUG ASSY.			1
30	6664815	SEAL, OIL			1
31	6691559	BOLT			10
32	6691560	GEROLER			1
33	6691561	SHAFT			1
34	6691562	BOLT			9
35	6691563	FLANGE			1
36	6691565	SEAL KIT	Ref. 6, 7, 9, 12, 13, 15, 16, 21, 23 & 28-30		1

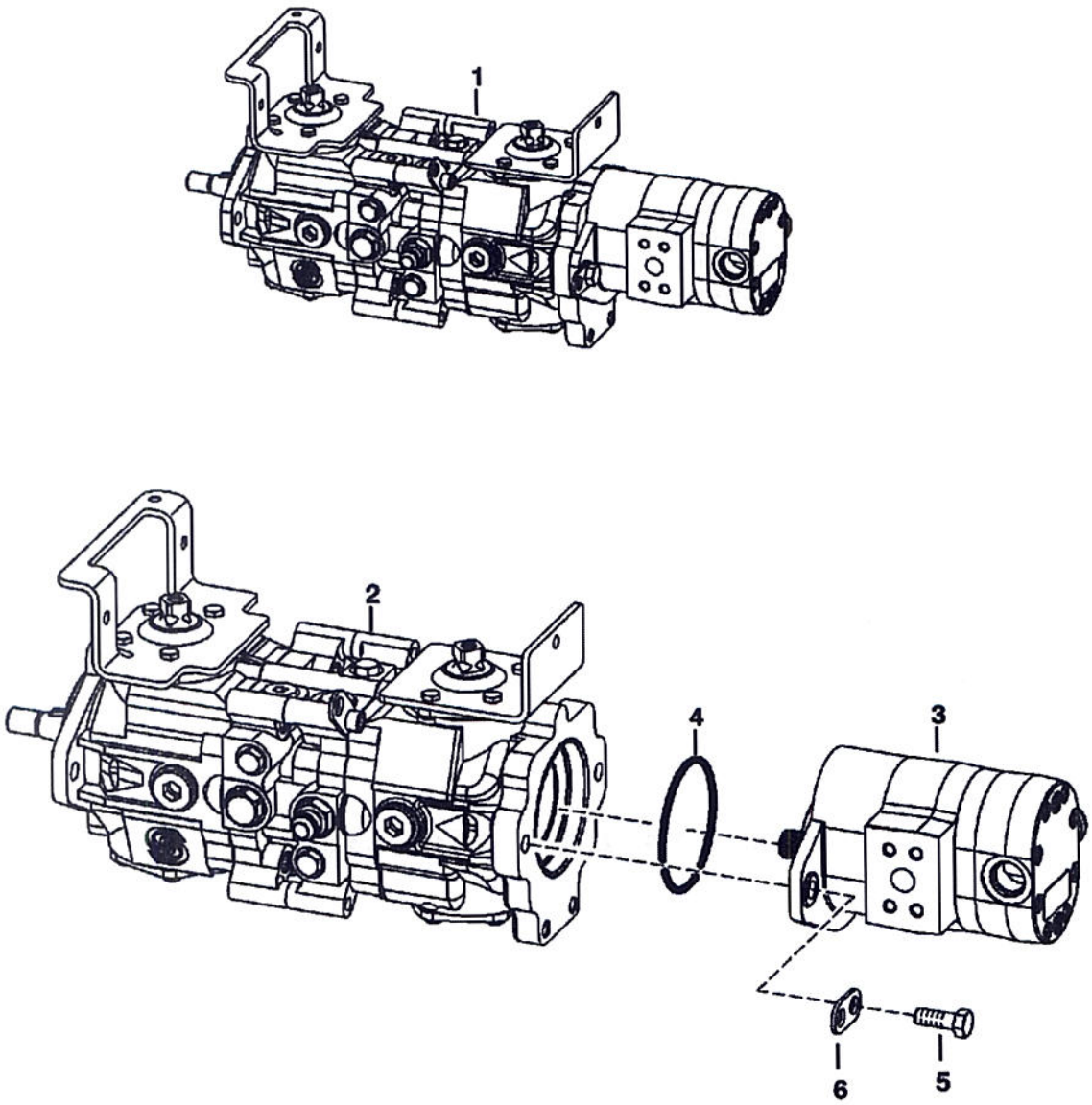

PE-2824

Ref No	Part Number	Description	Remarks	Serial Number	Qty
1		PUMP ASSY	NAP		x
2		HYDROSTATIC PUMP	See Illustration HYDROSTATIC PUMP/ MS2184 manual controls		1
2		HYDROSTATIC PUMP	See Illustration HYDROSTATIC PUMP/ B25010 selectable joystick controls		1
3		GEAR PUMP	See Illustration GEAR PUMP/ MS2185 manual controls or selectable joystick controls		1
4	6671520	O-RING	manual controls		1
4	6682949	O-RING	selectable joystick controls		1
5	45C820	BOLT	manual controls		2
5	59CM1240	BOLT	selectable joystick controls		2
6	6662126	BRACKET			2

HYDROSTATIC PUMP
(Manual Controls & ACS)

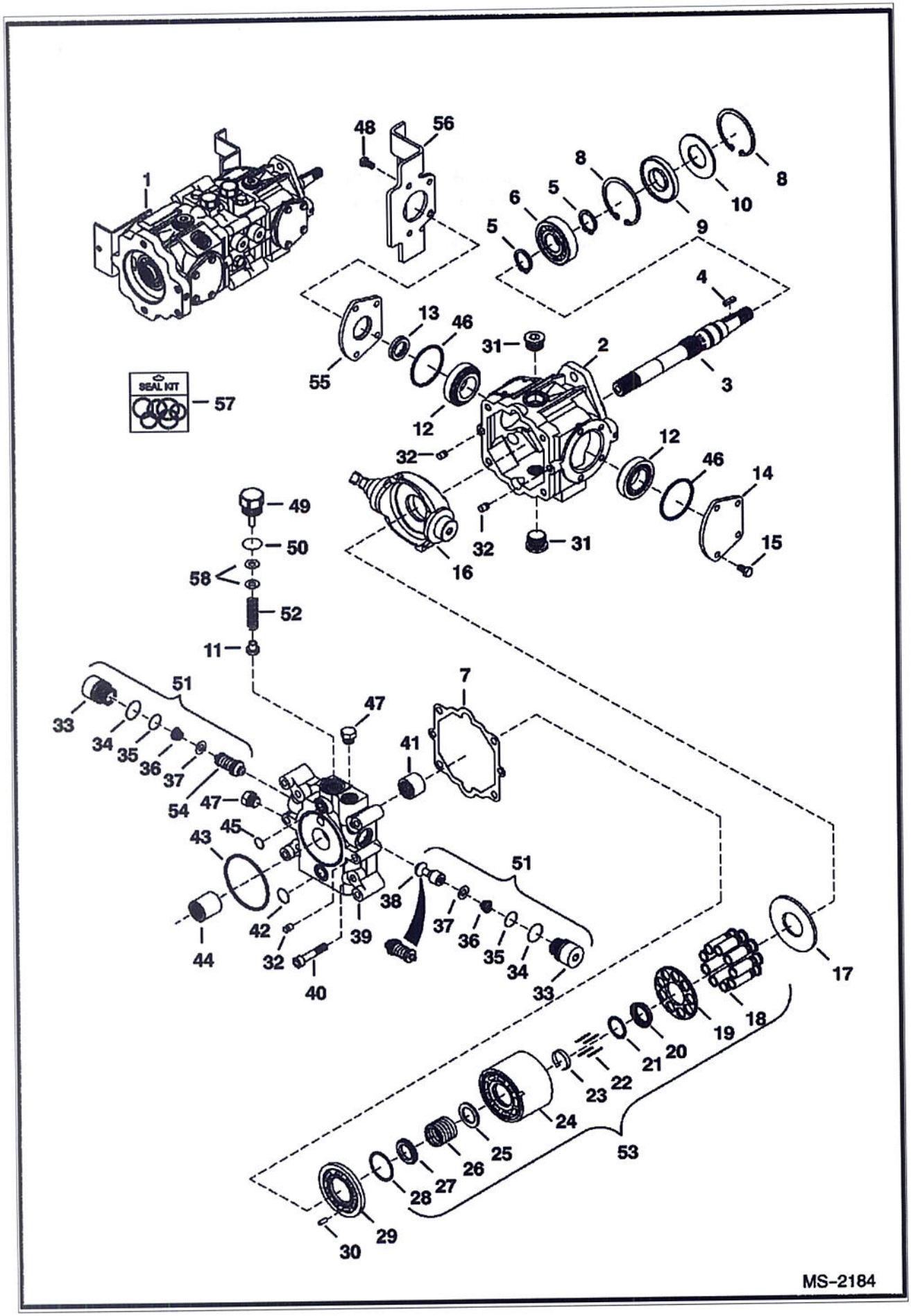

Ref No	Part Number	Description	Remarks	Serial Number	Qty
1	6687863	PUMP, HYD TANDEM	Model 4445203		1
2	6669402	HOUSING			1
3	6682260	SHAFT	W/square key		1
4	6682261	KEY			1
5	658128	RING			2
6	654299	BEARING			1
7	6650634	GASKET			1
8	669863	RING			2
9	6687191	SEAL, OIL			1
10	6669409	WASHER			1
11	6650652	POPPET	charge relief		1
12	6669411	BEARING			2
13	6660814	O-RING			2
14	6657068	COVER			2
15	6650668	BOLT			4
16	6685344	PLATE, SWASH	W/threaded shaft hole		1
17	6650627	PLATE			1
18		PISTON ASSY	NAP - Order Ref. 53		1
19		RETAINER	NAP - Order Ref. 53		1
20		RETAINER	NAP - guide - Order Ref. 53		1
21	6666338	WASHER			1
22	6650629	PIN			4
23	6650630	RETAINER			1
24		BLOCK	NAP - Order Ref. 53		1
25		WASHER	NAP - Order Ref. 53		1
26		SPRING	NAP - Order Ref. 53		1
27		WASHER	NAP - Order Ref. 53		1
28		WASHER	NAP - Order Ref. 53		1
29	6687774	PLATE, PUMP HYD			1
30	6650636	PIN			1
31	47K8	PLUG			2
31	6645083	O-RING			2
32	6675342	PIN			4
33		PLUG	NAP - Order Ref. 51		2
34	6657028	O-RING			2
35	79K8	O RING 10			2
36		SPRING	NAP - Order Ref. 51		2
37		RETAINER	NAP - Order Ref. 51		2
38		CHECK VALVE	NAP - poppet - Order Ref. 51		1
39	6669406	END PLATE			1
40	6650637	BOLT			4
41	6650635	BEARING			1
42	6650647	O-RING			1
43	6673884	O-RING			1
44	6650675	COUPLER			1
45	6650646	O-RING			1
46	6678226	SEAL, OIL			1
47	6645086	PLUG			2
47	6661481	O-RING			1
48	6671518	BOLT			4
49	6650648	PLUG	charge relief - W/Ref. 50		1
50	79K10	O RING 10			1
51	6670685	RELIEF VALVE	Ref. 33-37 & 54		1
52	6673882	SPRING			1

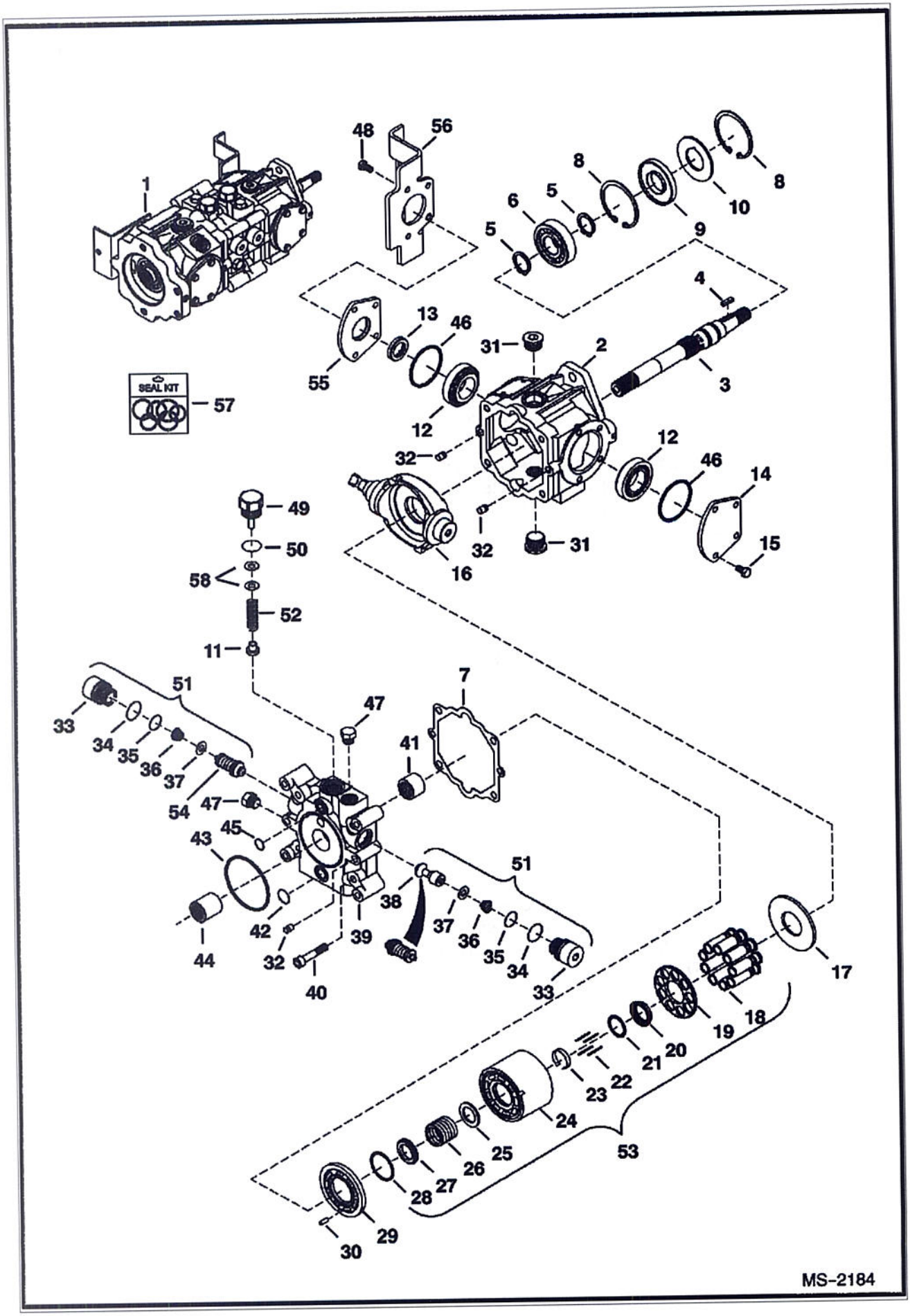
SEAL KIT
MS-2184

Ref No	Part Number	Description	Remarks	Serial Number	Qty
53	6671512	BLOCK ASSY			1
54		RELIEF VALVE	NAP - 5000 PSI (345 bar)- Order Ref. 51		1
55	6657067	COVER	W/Ref. 46		1
56	7109905	BRACKET			1
57	6671516	KIT, SEAL	Ref. 7, 9, 13, 34, 35, 42, 43, 45, 46 & 50 - Also includes Ref. 2, 3, 12, 31 & 41 on next page		1
58	6669410	SHIM KIT	for Ref. 49 - (2) each of .010, .020 and .050 thick		1

HYDROSTATIC PUMP
(Manual Controls & ACS)

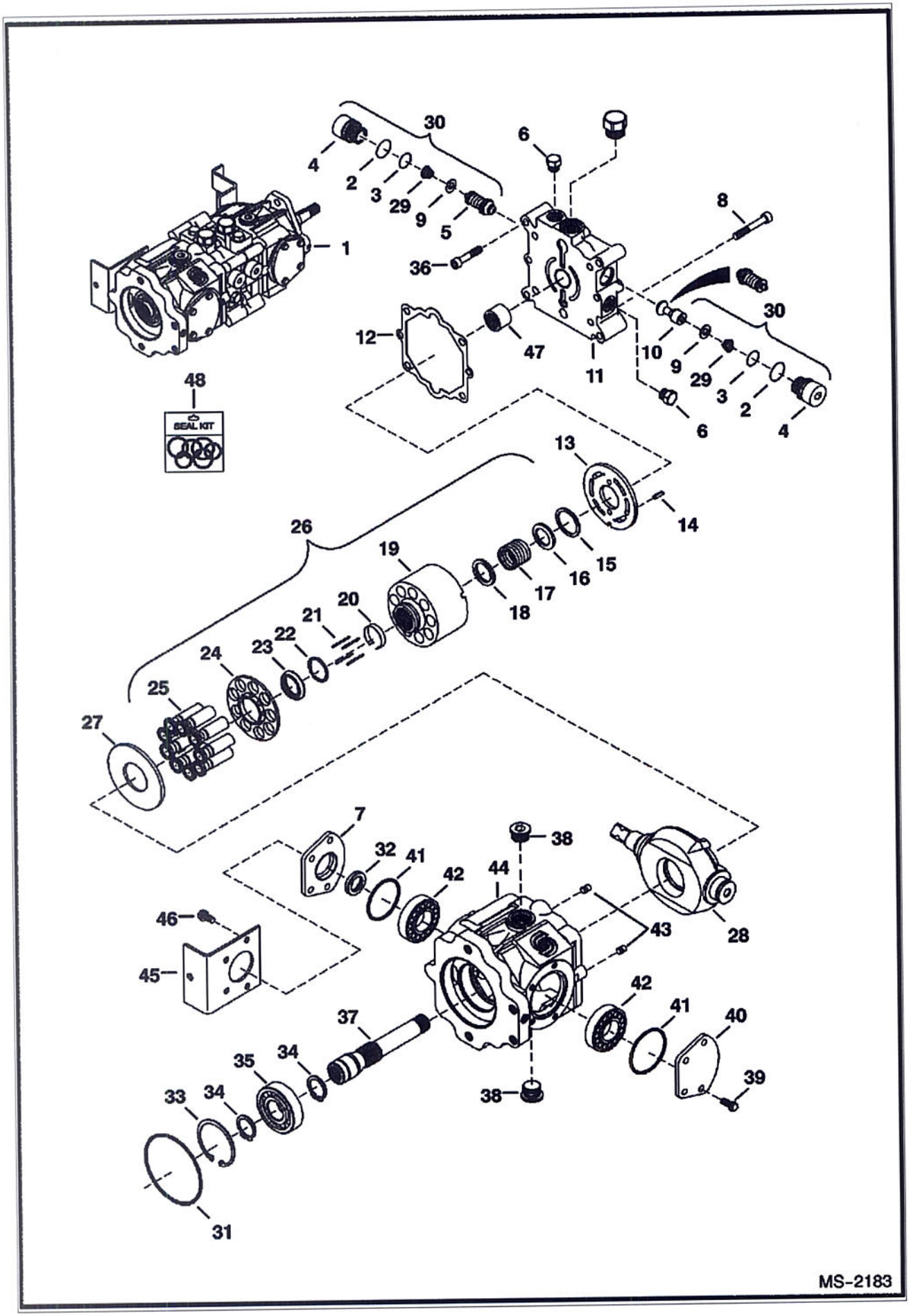

HYDROSTATIC PUMP (Cont'd)
(Manual Controls & ACS)

Ref No	Part Number	Description	Remarks	Serial Number	Qty
1	6687863	PUMP, HYD TANDEM	Model 4445203		1
2	6657028	O-RING			2
3	79K8	O RING 10			2
4		PLUG	NAP - Order Ref. 30		2
5		RELIEF VALVE	NAP - 5000 PSI (345 bar)- Order Ref. 30		2
6	6645086	PLUG			4
7	6657067	COVER	W/Ref. 32		1
8	6650637	BOLT			2
9		RETAINER	NAP - Order Ref. 30		4
10		CHECK VALVE	NAP - poppet - Order Ref. 30		1
11	6669405	END CAP			1
12	6650634	GASKET			1
13	6687773	PLATE, PUMP HYD			1
14	6650636	PIN			2
15		RETAINER	NAP - Order Ref. 26		1
16		WASHER	NAP - Order Ref. 26		1
17		SPRING	NAP - Order Ref. 26		1
18		WASHER	NAP - Order Ref. 26		1
19		BLOCK	NAP - Order Ref. 26		1
20	6650630	RETAINER			1
21	6650629	PIN			4
22	6666338	WASHER			1
23		RETAINER	NAP - Order Ref. 26		1
24		RETAINER	NAP - Order Ref. 26		1
25		PISTON ASSY	NAP - Order Ref. 26		1
26	6671512	BLOCK ASSY			1
27	6650627	PLATE			1
28	6685344	PLATE, SWASH	W/threaded shaft hole		1
29		SPRING	NAP - Order Ref. 30		2
30	6670685	RELIEF VALVE	Ref. 2-5, 9, 10 & 29		2
31	6671520	O-RING			1
32	6678226	SEAL, OIL			1
33	669863	RING			1
34	658128	RING			2
35	654299	BEARING			1
36	6652018	BOLT			4
37	6682264	SHAFT			1
38	47K8	PLUG			1
38	79K12	O RING 10			2
39	6650668	BOLT			4
40	6657068	COVER			1
41	6660814	O-RING			2
42	6669411	BEARING			2
43	6675342	PIN			2
44	6682262	HOUSING			1
45	7109904	BRACKET			1
46	6650668	BOLT			4
47	6650635	BEARING			1
48	6671516	KIT, SEAL	Ref. 2, 3, 12, 31 & 41 - Also includes Ref. 7, 9, 13, 34, 35, 42, 43, 45, 46 & 50 on previous page		1

HYDROSTATIC PUMP
(Selectable Joystick Controls)

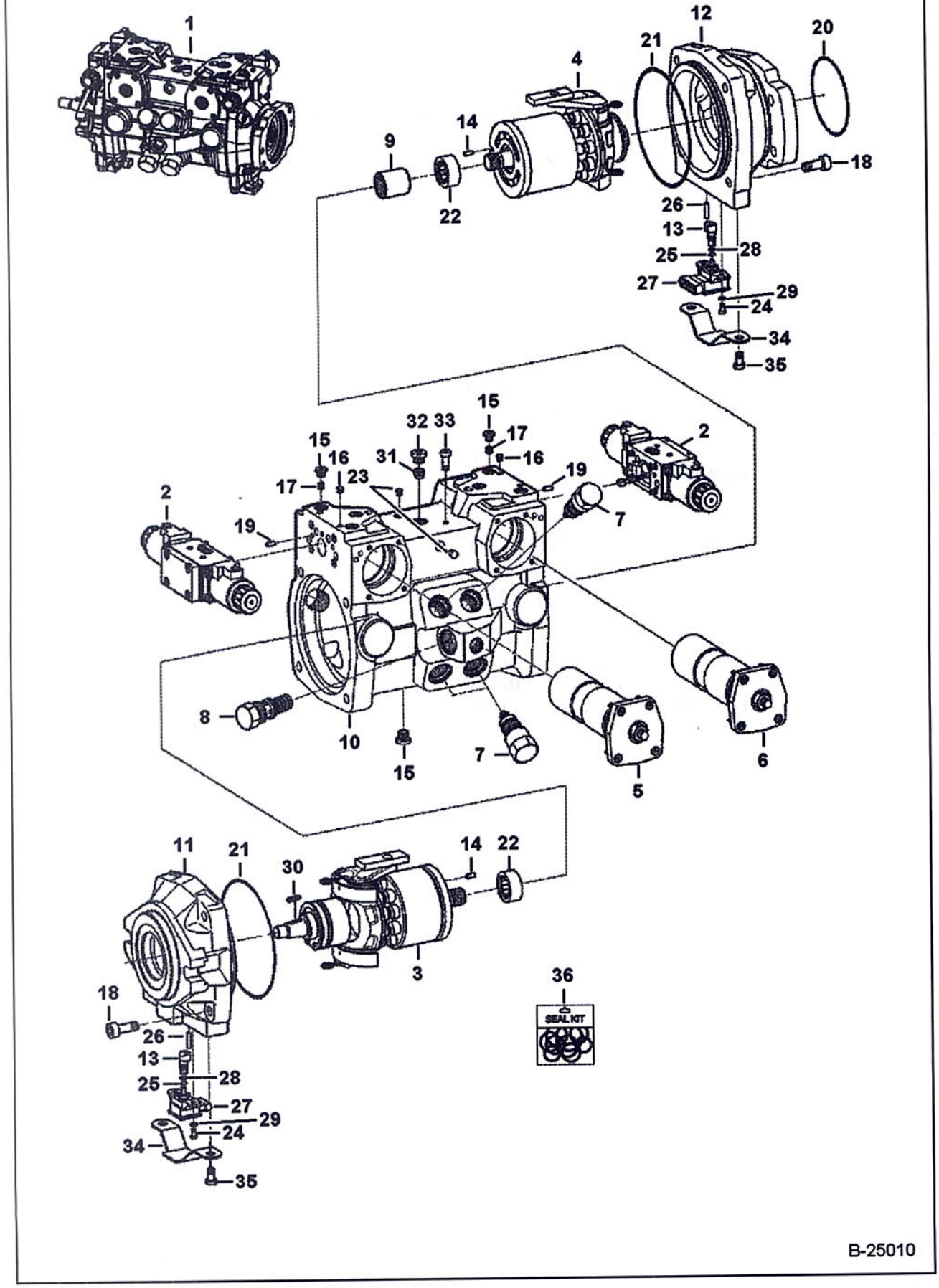

HYDROSTATIC PUMP (Cont'd)
(Selectable Joystick Controls)

Ref No	Part Number	Description	Remarks	Serial Number	Qty
1	6686267	PUMP, HYD TANDEM			1
2	6687970	MODULATOR	See Illustration HYDROSTATIC PUMP/ B25016		2
3	6687957	GROUP	See Illustration HYDROSTATIC PUMP/ B25011 - LH rotation		1
4	6687958	GROUP	See Illustration HYDROSTATIC PUMP/ B25012 - RH rotation		1
5	6687960	CONTROL	See Illustration HYDROSTATIC PUMP/ B25013		1
6	6687961	CONTROL	See Illustration HYDROSTATIC PUMP/ B25013A		1
7	6692332	VALVE,RELIEF	See Illustration HYDROSTATIC PUMP/ B25014 preset at 350 bar		4
8	6687938	VALVE	See Illustration HYDROSTATIC PUMP/ B25015		1
9	6687941	COUPLER			1
10	6687964	HOUSING			1
11	6687973	FLANGE			1
12	6687974	FLANGE			1
13	6687965	SHAFT			2
14	6688011	PIN			2
15	6682875	PLUG			11
16	6682879	PIN			3
17	6967419	ORIFICE	vendor serial number listed		4
18	6688008	SCREW			8
19	6682919	PIN			2
20	6682949	O-RING			1
21	6688009	SEAL			2
22	6688040	BEARING			2
23	6687932	PIN			2
24	6687994	SCREW			4
25	6687990	RING			2
26	6688014	PIN			2
27	6687984	SENSOR, PUMP HYD POSITION			2
28	6688007	SEAL			2
29	6687998	SHIM			4
30	6687991	KEY			1
31	6687988	FILTER			1
32	6682877	PLUG			1
33	6687992	SCREW			1
34	7131322	COVER			2
35	6688003	SCREW			4
36	6689021	SEAL KIT	complete		1

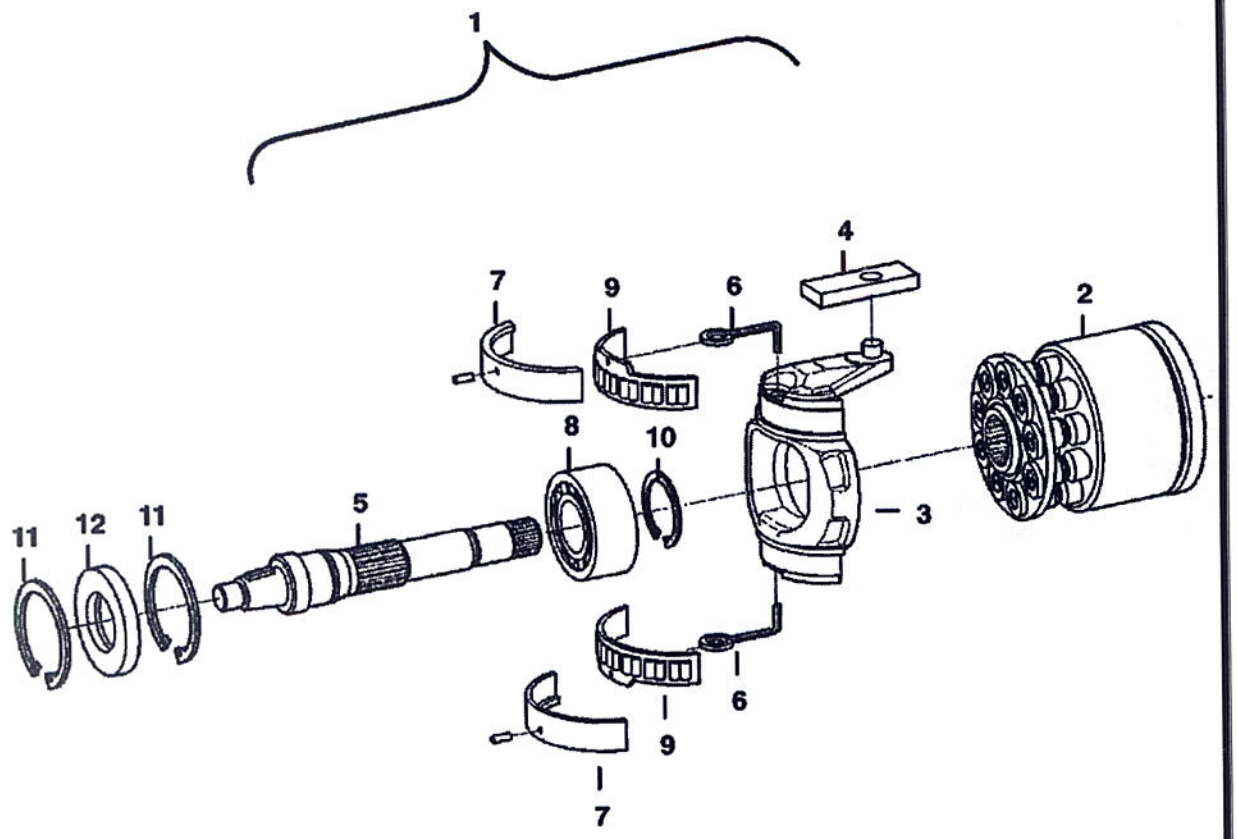

B–25011

HYDROSTATIC PUMP (Cont'd)
(Rotary Group - L.H.)
(Selectable Joystick Controls)

Ref No	Part Number	Description	Remarks	Serial Number	Qty
1	6687957	GROUP	LH rotation		1
2	6687977	GROUP			1
2	6687979	GROUP			1
2	6687976	PLATE			1
3	6687951	BRACKET			1
4	6687940	RING			1
5	6687959	SHAFT			1
6	6687930	WIRE			2
7	6687956	BEARING			1
8	6688018	BEARING			1
9	6687987	BEARING			1
10	6687999	RING			1
11	6671741	SNAP RING			2
12	6688038	RING			1

Page 0/0 - 04/08/2009 12:26:17 - Printed by Ken Cook Co. - eXprint.exe (V2.24.7 4///2009)

HYDROSTATIC PUMP
(Rotary Group - R.H.)
(Selectable Jovstick Controls)

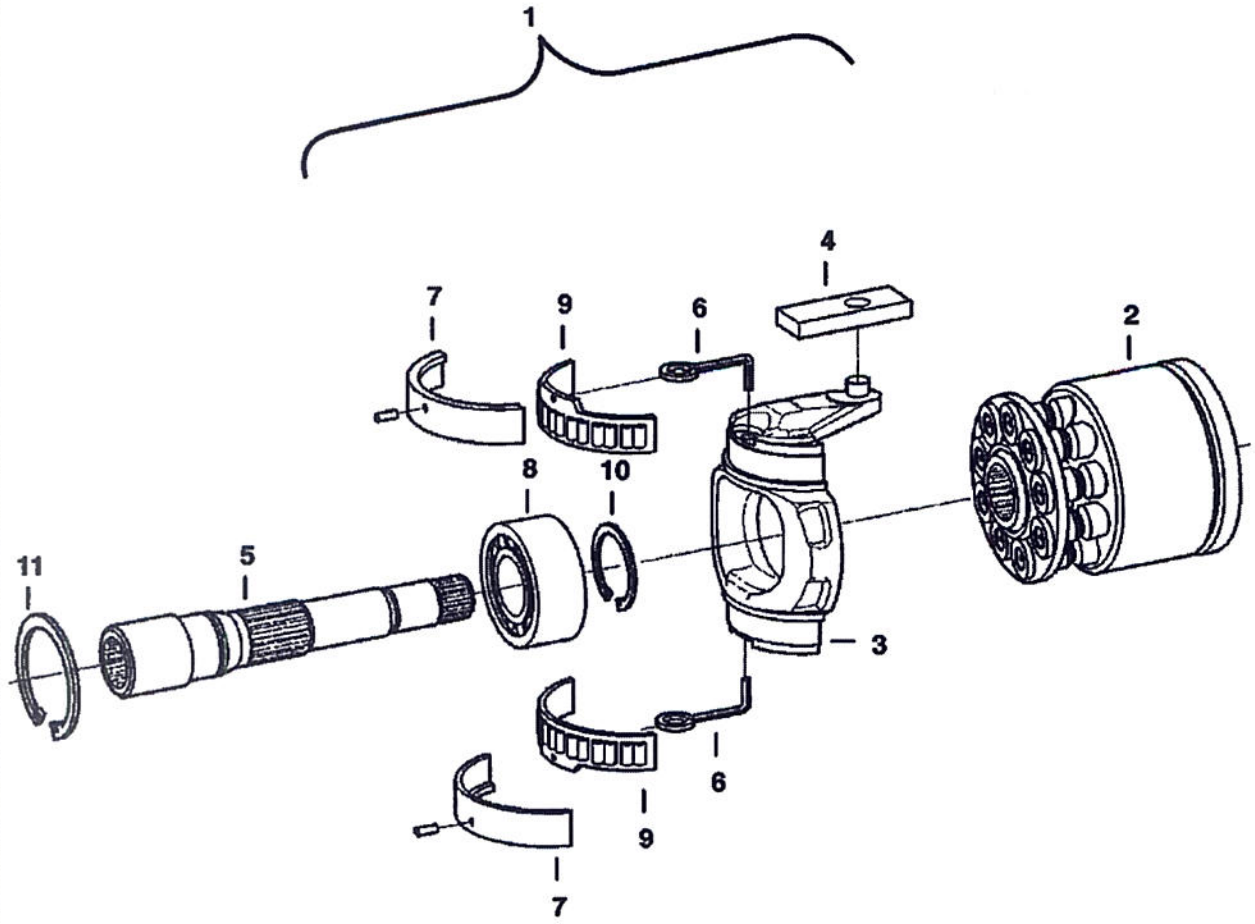

Page 676 - BOBM029239B1001 - 04/08/2009 12:26:17 - Printed by Ken Cook Co. - eXprint.exe (v2.24.7 4/7/2009)

HYDROSTATIC PUMP (Cont'd)
(Rotary Group - R.H.)
(Selectable Jovstick Controls)

Ref No	Part Number	Description	Remarks	Serial Number	Qty
1	6687958	GROUP	RH rotation		1
2	6687978	GROUP			1
2	6687979	GROUP			1
2	6687975	PLATE			1
3	6687951	BRACKET			1
4	6687940	RING			1
5	6687943	SHAFT			1
6	6687930	WIRE			2
7	6687956	BEARING			1
8	6688018	BEARING			1
9	6687987	BEARING			1
10	6687999	RING			1
11	6671741	SNAP RING			2

ge 677 - BOBM029239B1001 - 04/08/2009 12:26:17 - Printed by Ken Cook Co. - eXprint.exe (v2.24.7 4/7/2009)

HYDROSTATIC PUMP
(Control)
(Selectable Joystick Controls)

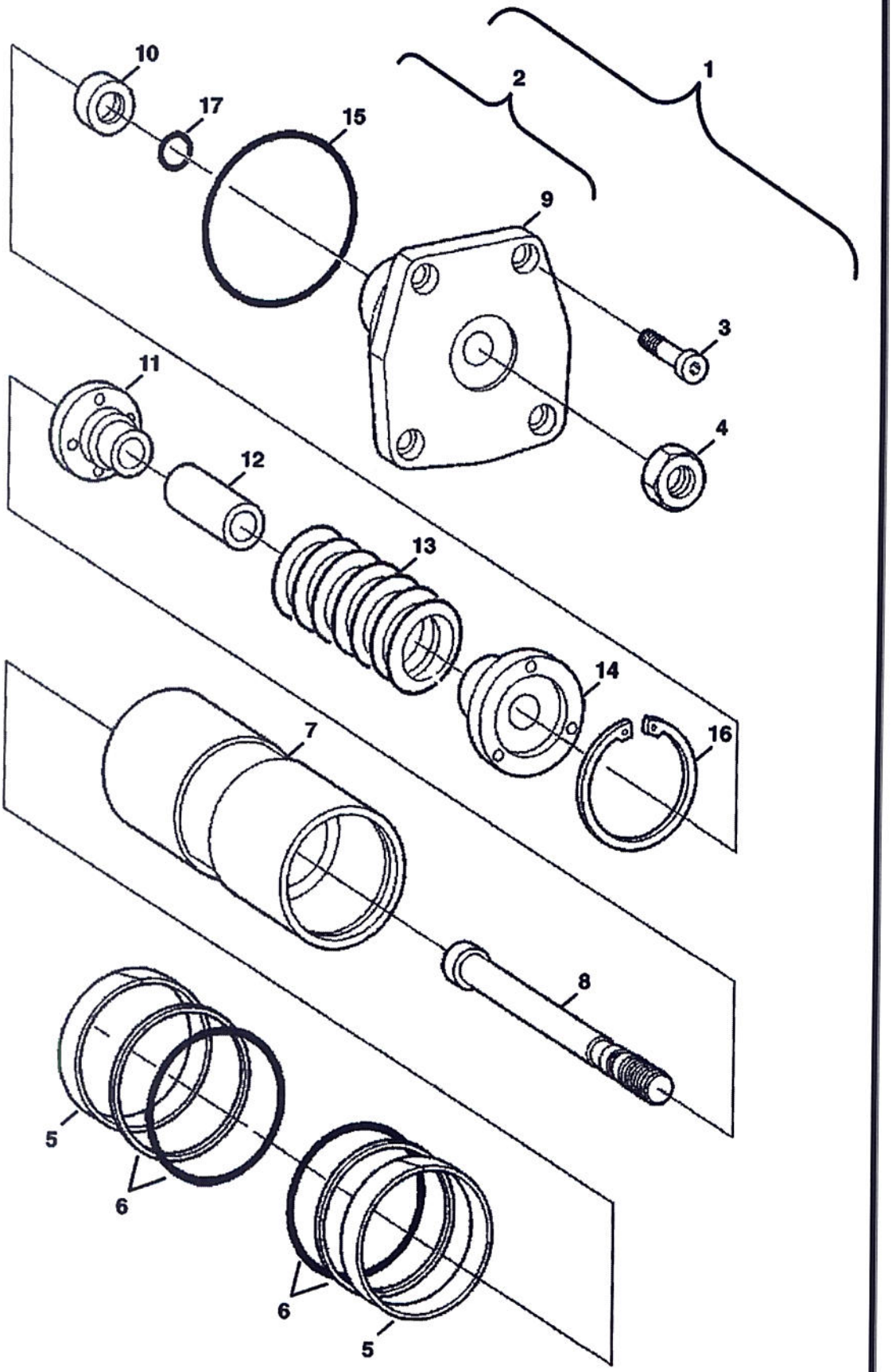

Page 678 - BOBM0292398I001 - 04/08/2009 12:26:17 - Printed by Ken Cook Co. - eXprint.exe (v2.24.7 4/7/200

(Control)

(Selectable Joystick Controls)

Ref No	Part Number	Description	Remarks	Serial Number	Qty
1	6687960	CONTROL			1
2	6687962	PISTON			1
3	6682968	SCREW			4
4	6674907	NUT			1
5	6687985	RING			2
6	6687986	KIT			2
7	6687953	PISTON			1
8	6688031	ROD			1
9	6671760	COVER			1
10	6688037	RING	6,70 mm		1
10	6682902	RING	6,75 mm		1
10	6682901	RING	6,80 mm		1
10	6688025	RING	6,85 mm		1
10	6688026	RING	6,90 mm		1
10	6688027	RING	6,95 mm		1
10	6688028	RING	7,00 mm		1
10	6671803	RING	7,05 mm		1
10	6688030	RING	7,10 mm		1
11	6687926	COLLAR			1
12	6688033	SPACER	54,60 cm		1
12	6687942	SPACER	54,65 cm		1
12	6688032	SPACER	54,70 cm		1
12	6687948	SPACER	54,75 cm		1
12	6687949	SPACER	54,80 cm		1
13	6687928	SPRING			1
14	6674215	COLLAR			1
15	6688005	SEAL			1
16	6688002	RING			1
17	6682913	O-RING			1

Page 679 - BOBM023239B1001 - 04/08/2009 12:26:17 - Printed by Ken Cook Co. - eXprint.exe (v2.24.7 4/7/2009)

HYDROSTATIC PUMP
(Control)
(Selectable Joystick Controls)

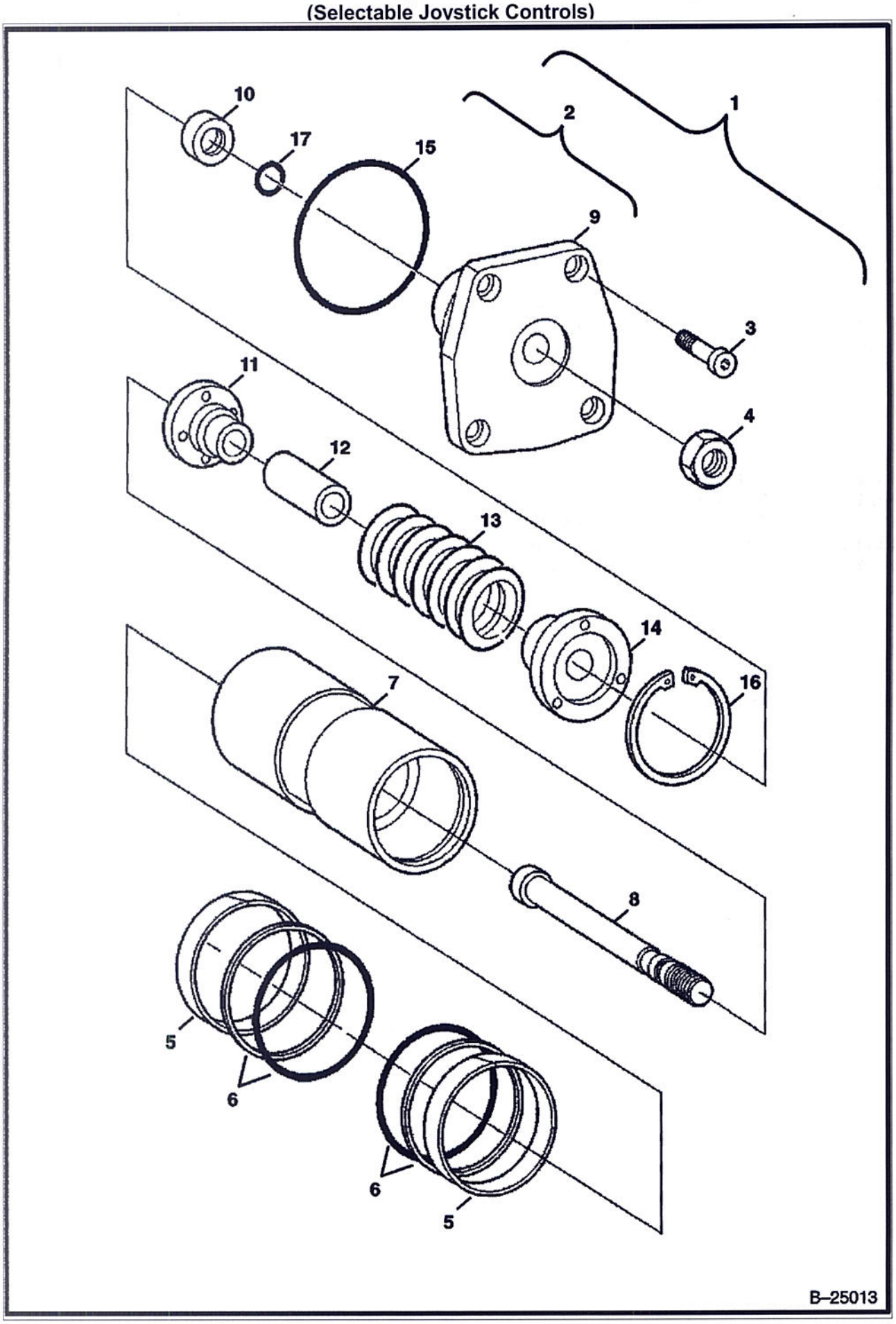

Page 680 - BOBM029239B1001 - 04/08/2009 12:26:17 - Printed by Ken Cook Co. - eXprint.exe (v2.24.7 4/7/2009)

Ref No	Part Number	Description	Remarks	Serial Number	Qty
1	6687961	CONTROL			1
2	6687963	PISTON			1
3	6682968	SCREW			4
4	6674907	NUT			1
5	6687985	RING			2
6	6687986	KIT			2
7	6687953	PISTON			1
8	6688031	ROD			1
9	6671760	COVER			1
10	6688037	RING	6,70 mm		1
10	6682902	RING	6,75 mm		1
10	6682901	RING	6,80 mm		1
10	6688025	RING	6,85 mm		1
10	6688026	RING	6,90 mm		1
10	6688027	RING	6,95 mm		1
10	6688028	RING	7,00 mm		1
10	6671803	RING	7,05 mm		1
10	6688030	RING	7,10 mm		1
11	6687926	COLLAR			1
12	6688033	SPACER	54,60 cm		1
12	6687942	SPACER	54,65 cm		1
12	6688032	SPACER	54,70 cm		1
12	6687948	SPACER	54,75 cm		1
12	6687949	SPACER	54,80 cm		1
13	6687928	SPRING			1
14	6674215	COLLAR			1
15	6688005	SEAL			1
16	6688002	RING			1
17	6682913	O-RING			1

HYDROSTATIC PUMP
(High Pressure Relief Valve)
(Selectable Jovstick Controls)

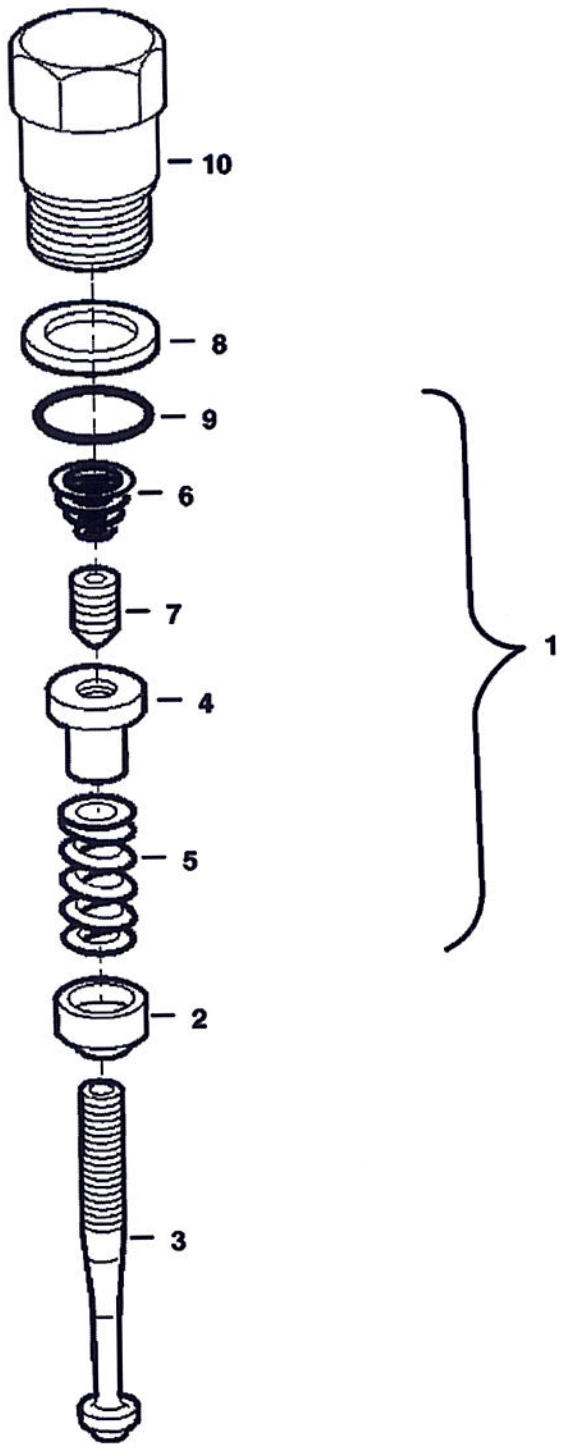

B–25014

(High Pressure Relief Valve)
(Selectable Joystick Controls)

Ref No	Part Number	Description	Remarks	Serial Number	Qty
1	6692332	VALVE,RELIEF	preset at 350 bar		1
2	6687921	COLLAR			1
3	6967523	SPINDLE			1
4		NUT	NAP		1
5	6967525	SPRING			1
6	6967526	SPRING			1
7	6967527	PIN			1
8	6682930	O-RING			1
9	6682929	O-RING			1
10	6688034	SCREW			1

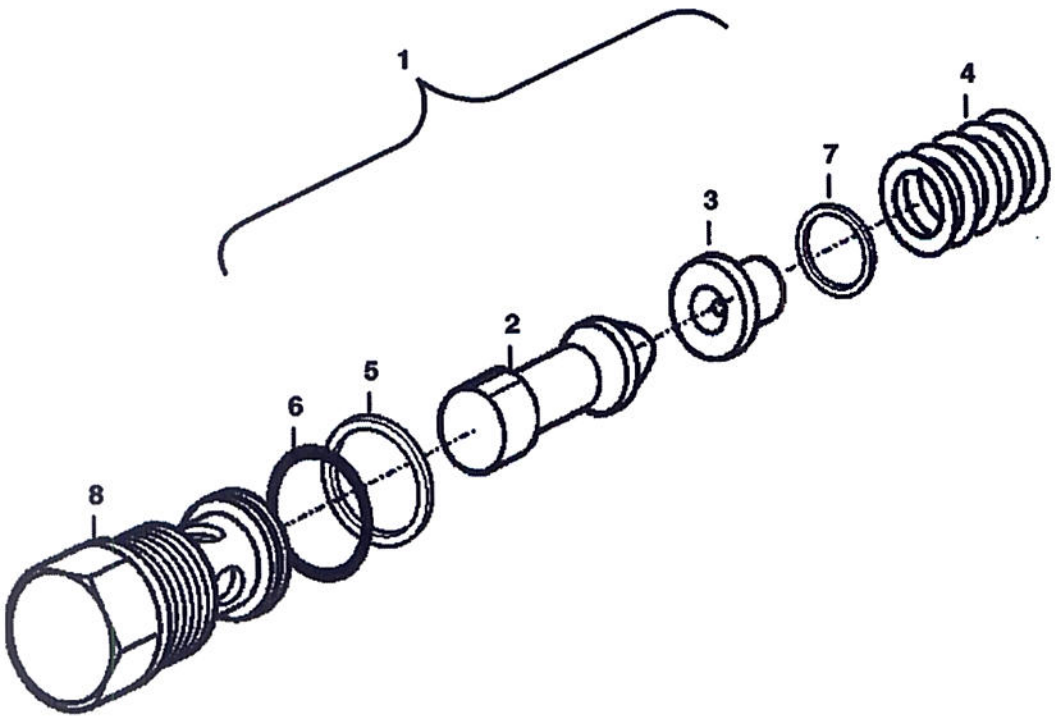

B–25015

(Charge Pressure Relief Valve)
(Selectable Jovstick Controls)

Ref No	Part Number	Description	Remarks	Serial Number	Qty
1	6687938	VALVE			1
2	6967534	PISTON			1
3	6967535	COLLAR			1
4	6967536	SPRING			1
5		RING	NAP		1
6	6682936	O-RING			1
7	6688017	SHIM	1.0 mm		1
8	6687939	SCREW			1

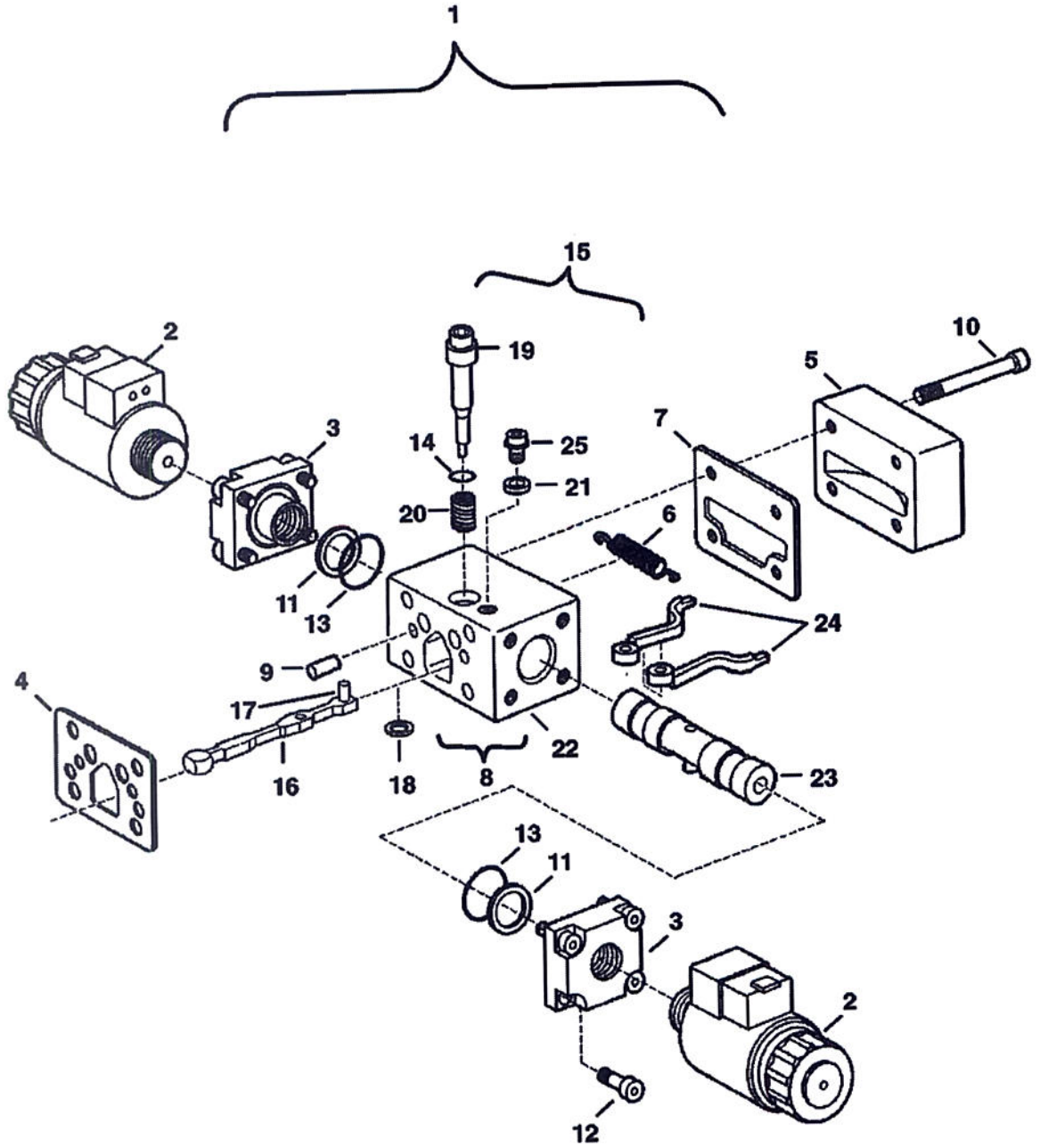
1
15
2
19
10
5
3
14
25
7
21
20
6
11
13
24
9
4
17
22
16
18
8
23
13
11
3
2
12
B–25016

Ref No	Part Number	Description	Remarks	Serial Number	Qty
1	6687970	MODULATOR	Ref. 2-25		2
2	6687989	SOLENOID			2
3	6687931	BUSHING			2
4	6687954	GASKET			1
5	6687969	COVER			1
6	6687967	SPRING			1
7	6687950	GASKET			1
8	6687972	MODULE	Ref. 15-18		1
9	6688010	PIN			2
10	6687996	SCREW			4
11	6687982	SPRING			2
12	6687997	SCREW			8
13	6688001	SEAL			2
14	6688004	SEAL			1
15	6687971	ROLLER	Ref. 14 & 19-25		1
16	6687929	LEVER			1
17	6688012	ROLLER			1
18	6687944	SHIM	0,60 mm		1
18	6687933	SHIM	0,80 mm		1
18	6687934	SHIM	1,00 mm		1
18	6687935	SHIM	1,20 mm		1
18	6687936	SHIM	1,40 mm		1
18	6687937	SHIM	1,60 mm		1
19	6687947	PIN			1
20	6687946	SPRING			1
21	6687945	PLATE			1
22	6687955	HOUSING			1
23	6687966	PISTON			1
24	6687968	LEVER			2
25	6687981	SCREW			1

GEAR PUMP

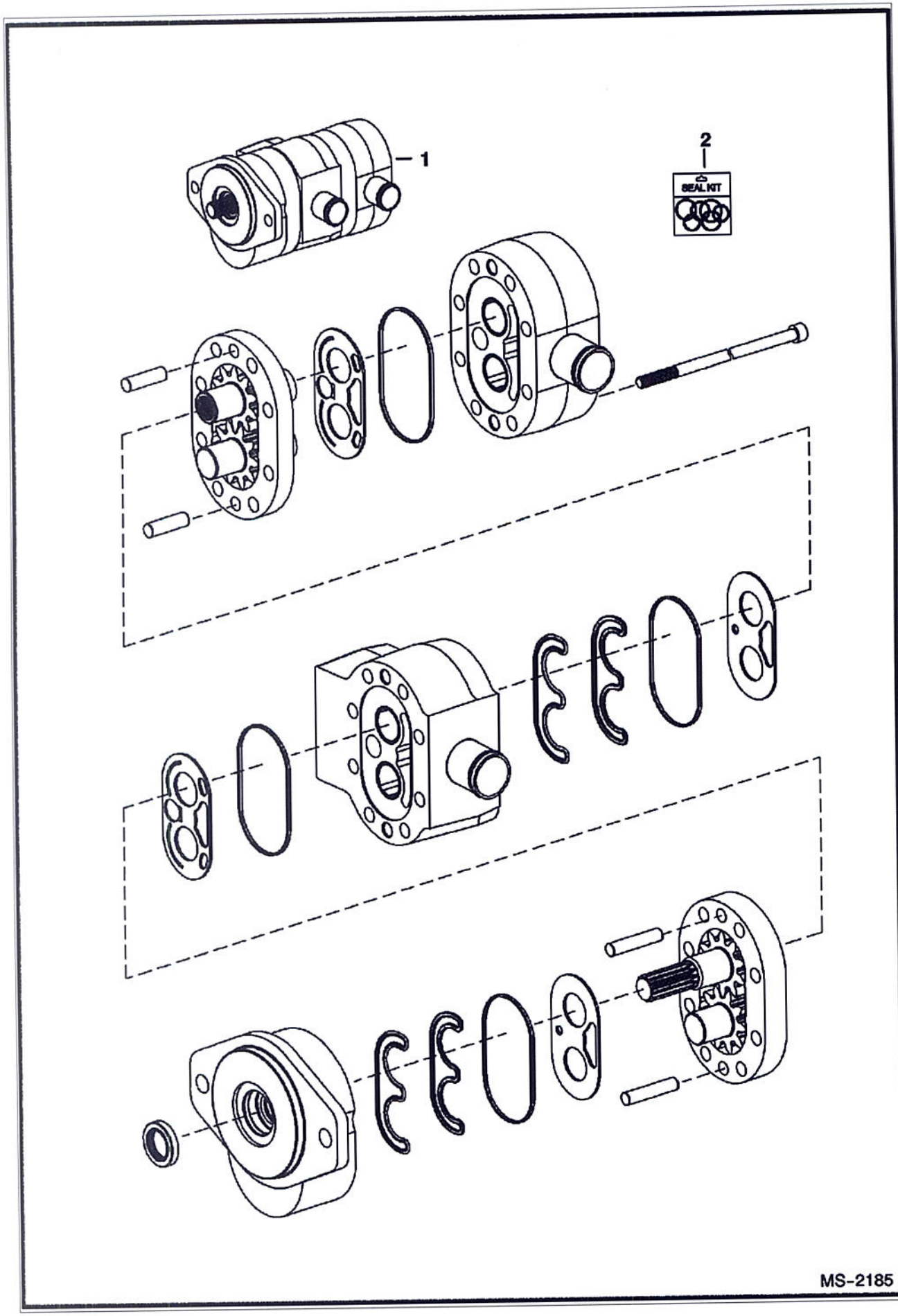

Ref No	Part Number	Description	Remarks	Serial Number	Qty
1	6687864	GEAR PUMP	Model 163D-71019 - for 6687863 (4445203) pump		1
2	6687866	SEAL KIT			1

COOLING FAN MOTOR
(Aluminum)

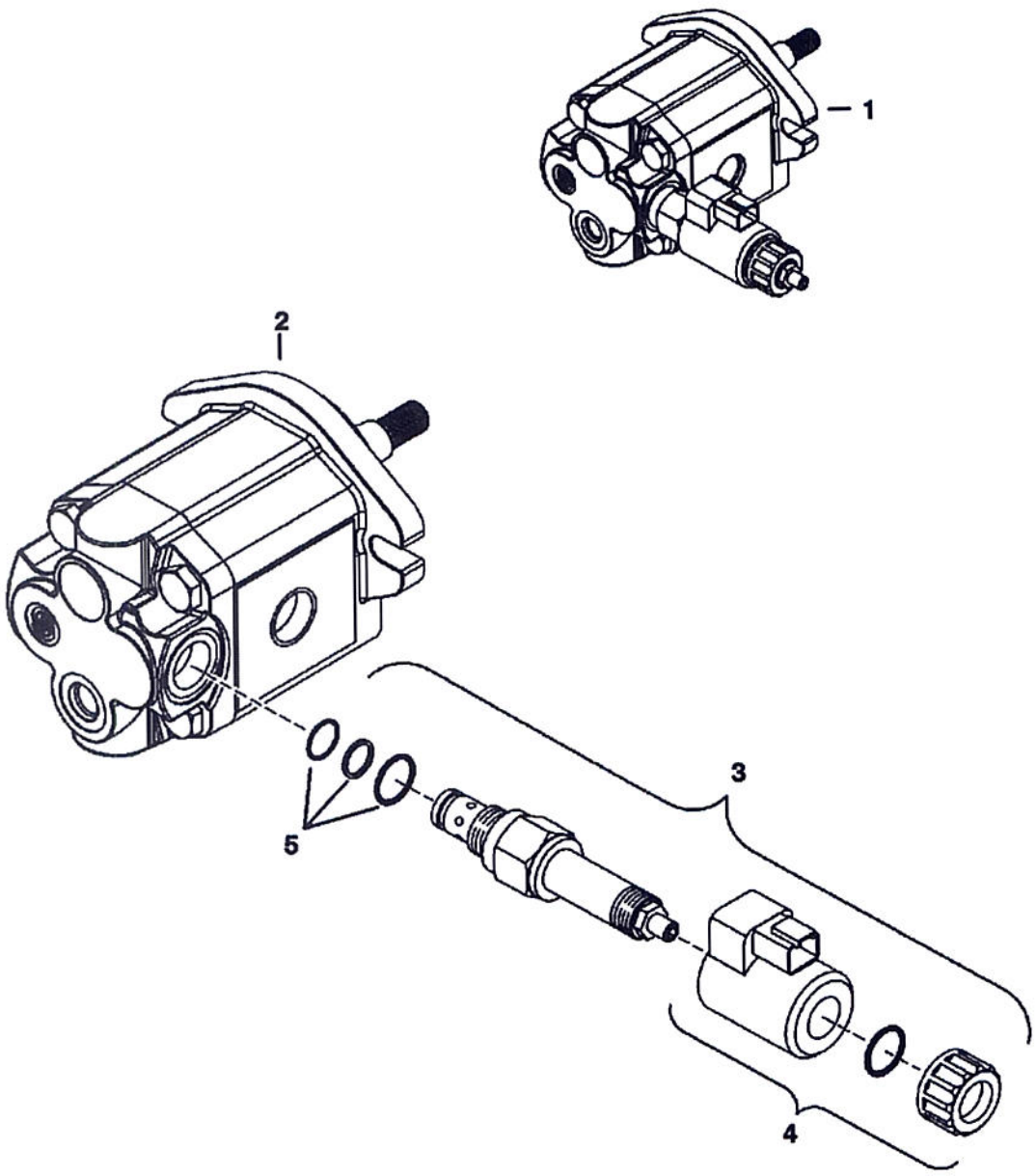

PE-2811

COOLING FAN MOTOR (Cont'd)
(Aluminum)

Ref No	Part Number	Description	Remarks	Serial Number	Qty
1	6687142	MOTOR, FAN DRIVE	aluminum - W/proportional valve		1
2	6689058	MOTOR, FAN	aluminum - W/O proportional valve		1
3	6689059	VALVE, RELIEF			1
4	6689060	COIL ASSY			1
5	6683206	SEAL KIT			1

HYDROSTATIC OIL FILTER
(In-Line)

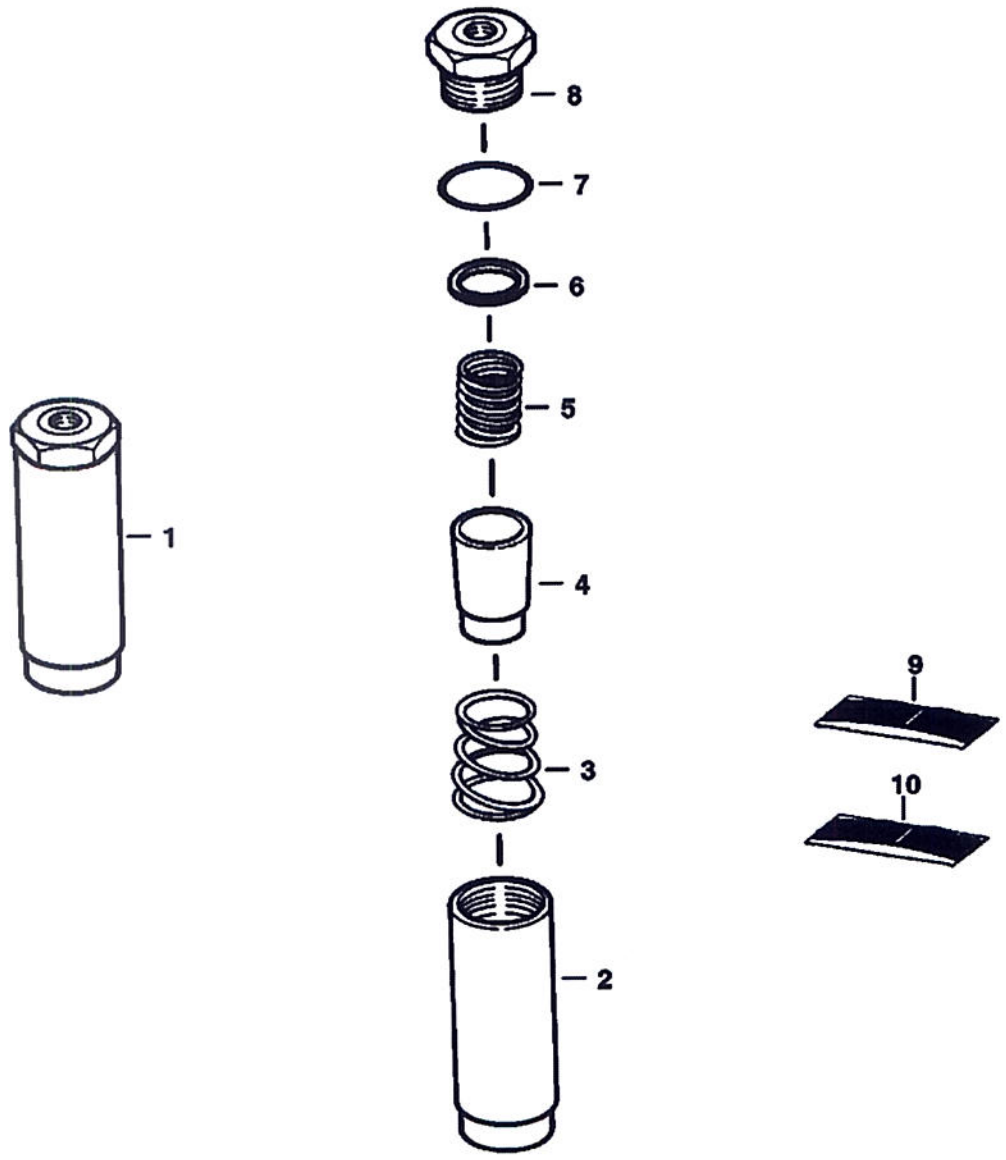

HYDROSTATIC OIL FILTER (Cont'd)
(In-Line)

Ref No	Part Number	Description	Remarks	Serial Number	Qty
1	6661022	FILTER	Ref. 2-8		1
2		HOUSING	NSS		1
3		SPRING	NSS		1
4		ELEMENT	NSS		1
5		SPRING	NSS		1
6		GASKET	NSS		1
7		O-RING	NSS		1
8		PLUG	NSS		1
9	6661807	KIT	element - Ref. 4, 6 & 7		1
10	6661808	KIT	spring - Ref. 3 & 5		1

HYDROSTATIC OIL FILTER

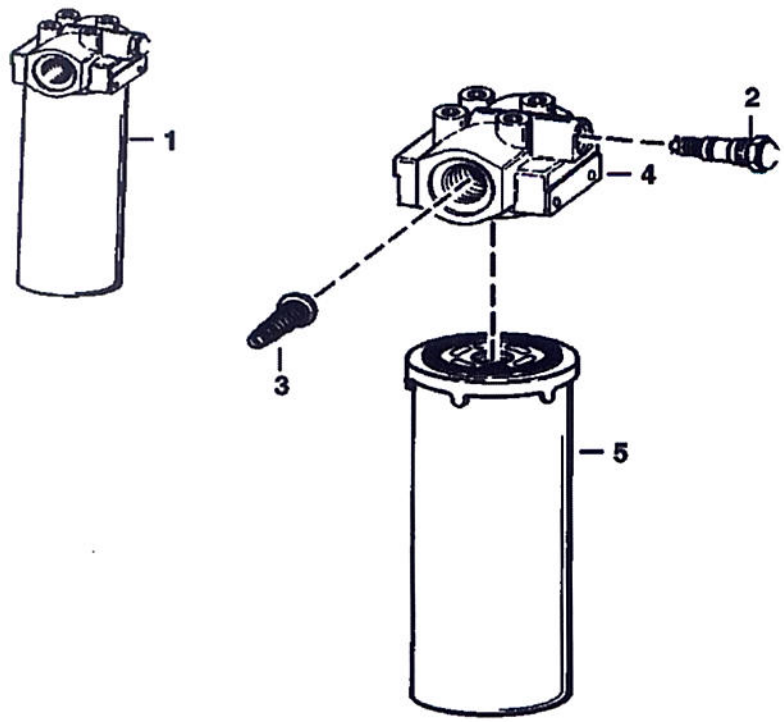

B–16487

Ref No	Part Number	Description	Remarks	Serial Number	Qty
1	6688385	HYD FILTER ASSY			1
2	6660260	SWITCH	pressure - normally closed		1
2	6599365	KIT	nut, washer & O-rings for 6660260 switch		1
3		VALVE	NAP - by-pass (50 PSI) - Order Ref. 1		1
4		HEAD	NSS - Order Ref. 1		1
5	6661248	ELEMENT			1

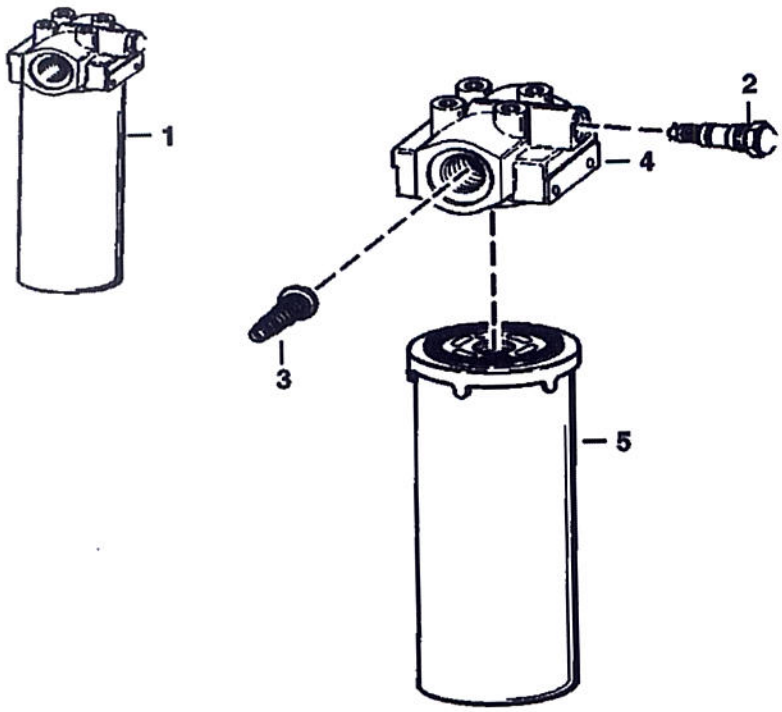

B-16487A

HYDROSTATIC OIL FILTER (Cont'd)
(Selectable Joystick Controls)

Ref No	Part Number	Description	Remarks	Serial Number	Qty
1	6686922	FILTER ASMBLY 12	W/Ref. 2-5		1
2	6687834	SENSOR	pressure - normally open		1
3		VALVE	NAP - by-pass		1
4		HEAD	NSS - Order Ref. 1		1
5	6686926	FILTER, OIL HYD			1

HYDROSTATIC OIL FILTER

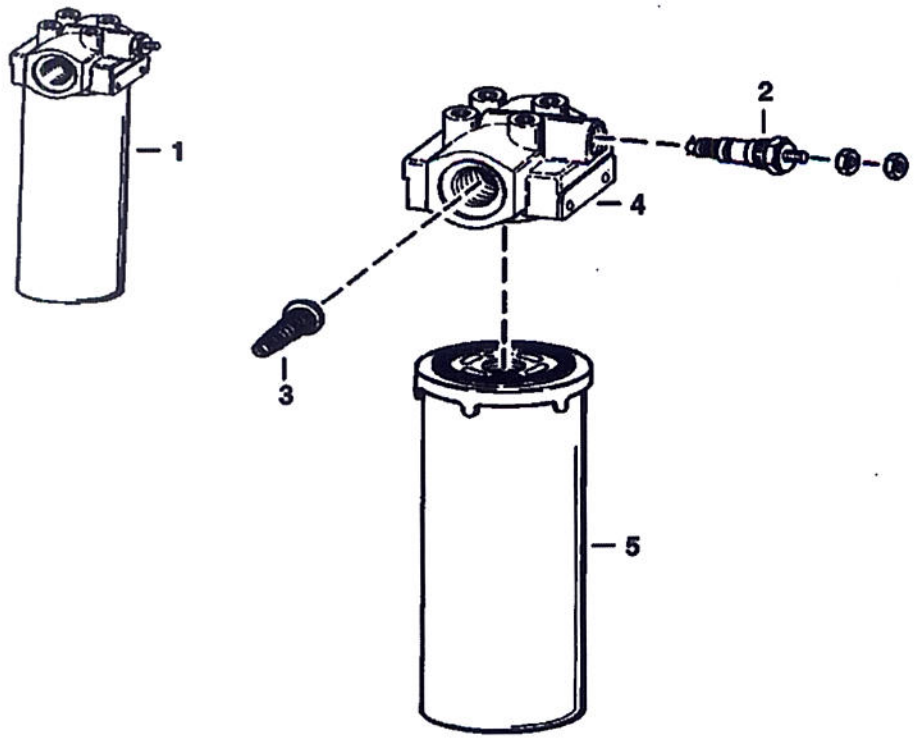

C–2818

Ref No	Part Number	Description	Remarks	Serial Number	Qty
1	6687266	FILTER ASSY	W/Ref. 2-5 - 50 PSI by-pass & switch - charge		1
2	6660260	SWITCH	pressure - normally closed		1
2	6599365	KIT	nut, washer & O-rings for switch		1
3		VALVE	NAP - by-pass - 50 PSI - Order Ref. 1		1
4		HEAD	NSS - Order Ref. 1 filter assy		1
5	6686926	FILTER, OIL HYD	4.5" (113,5 mm) long - charge		1

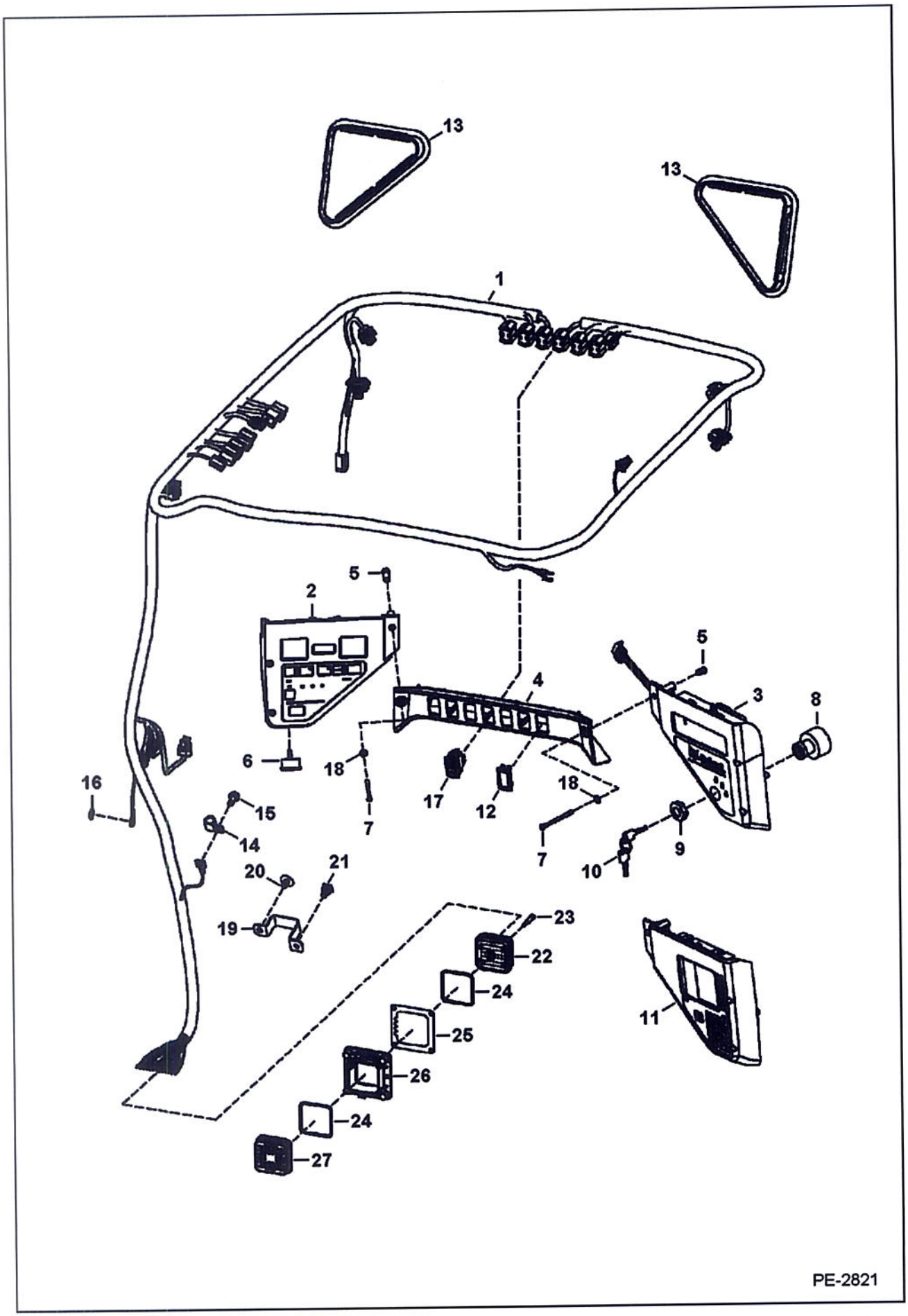
13
13
1
5
2
5
4
3
8
6
18
17
12
18
16
15
14
7
7
9
10
20
21
19
23
22
24
25
26
24
27
11
PE-2821

Ref No	Part Number	Description	Remarks	Serial Number	Qty
1	7143070	HARNESS	standard		1
1	7143071	HARNESS	deluxe - required to operate beacon, 4-way flashers, power bobtach & strobe lights		1
2	6689754	PANEL, INSTRUMENT	LH - W/Ref. 6 - lit guages		1
2	6679855	BULB			2
2	6675982	PLUG	backlighting service hole		1
3	6688404	PANEL	RH - keyed - W/Ref. 8 & 9		1
4	6679845	CROSSMEMBER			1
5	6675033	INSERT	threaded		6
6	6679856	ALARM	W/nut		1
7	7105983	BOLT			6
8	6679842	SWITCH	ignition - W/Ref. 9		1
9	6674202	NUT			2
10	6693241	KEY-SINGLE	single key W/O ring		x
11	6692935	PANEL, INSTRUMENTATION DELUXE	RH - deluxe - keyless - export		1
12	6665314	PLUG	cover		x
13	6674403	COVER			2
14	30H75	CLAMP			1
15	84G3712	BOLT			1
16	6E5	WASHER			1
17	6676536	SWITCH	park brake		1
18	25E10	WASHER			2
19	7138645	BRACKET			1
20	6674895	RETAINER			1
21	6678666	TREE MOUNT	push in - Use W/tie strap		1
22	6688834	CONNECTOR	W/Ref. 23 & 24		1
23		BOLT	NSS - Order Ref. 22		1
24	6697794	SEAL			2
25	6697793	SEAL			1
26	6688836	FLANGE	W/Ref. 25		1
27		CONNECTOR	See Illustration ENGINE ELECTRICAL CIRCUITRY/ PE2822		1

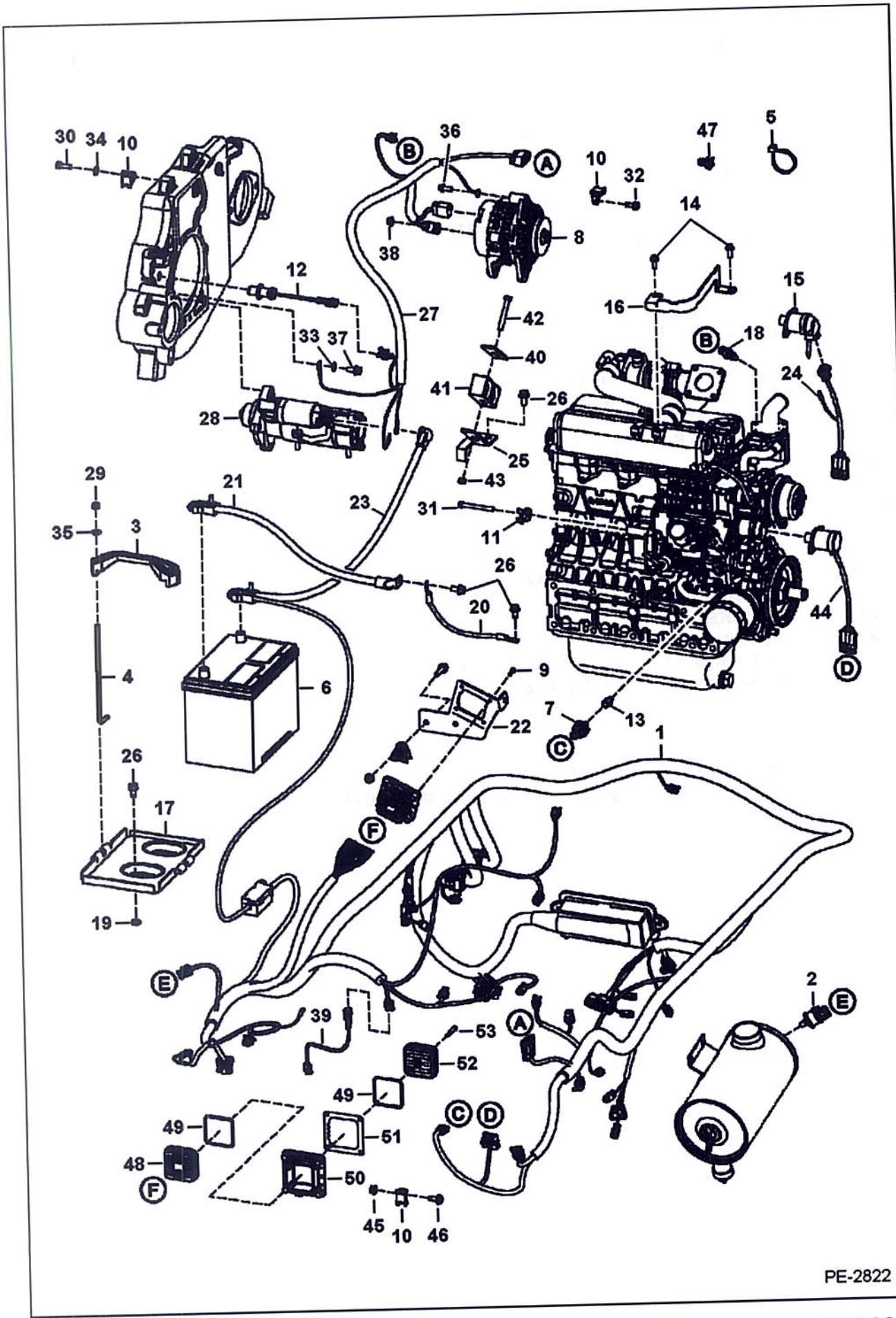
30
34
10
36
B
A
10
32
47
5
14
38
8
12
27
42
16
15
33
37
40
B
18
41
26
24
28
25
43
29
21
23
31
35
3
11
26
20
44
4
6
9
7
13
22
C
1
26
17
F
19
E
39
53
52
2
E
A
49
C
D
49
51
48
F
50
45
10
46
PE-2822

Ref No	Part Number	Description	Remarks	Serial Number	Qty
1	7142376	HARNESS	loader - 2 speed option - extra connector for pre-warming solenoid		1
2	6665371	SWITCH	condition indicator		1
3	6569203	CLAMP			1
4	6576280	BOLT			2
5	6624289	TIE STRAP			17
6	6674687	BATTERY			1
6		BATTERY CAP			2
7	6674315	SENSOR	eng oil pressure		1
8		ALTERNATOR	See Illustration ALTERNATOR/ C3529		1
9	6688980	BOLT			4
10	6678818	MOUNT			3
11	6679034	MOUNT			5
12	6684037	SENSOR	rpm		1
13	7102451	FITTING			1
14	1CM8100	SCREW			1
15		SOLENOID	NAP- fuel shutoff W/molded connector - Order Ref. 44	& Bel	1
16	7116956	BRACKET			1
17	6718260	BATTERY PAN			1
18	6718414	SENDER	eng temp		1
19	616783	WASHER			2
20	6565170	CABLE	neg		1
21	6729008	CABLE	ground		1
22	7113162	BRACKET			1
23	6731256	CABLE	pos		1
24	6814830	HARNESS	fuel solenoid		1
25	6715131	BRACKET			1
26	84G3712	BOLT			6
27	7104379	HARNESS	starter/alt		1
27	6688073	CONNECTOR			1
28		STARTER	See Illustration STARTER/ B16488R		1
29	59D5	NUT 5			2
30	1CM825	BOLT			1
31	1CM870	BOLT			2
32	84G3112	BOLT 5			1
33	6E6	WASHER			1
34	25E14	WSHR			1
35	25E15	WASHER			2
36	29CM820	SCREW			4
37	35C612	BOLT			2
38	43DM8	NUT			1
39	7117788	HARNESS	fuel sender		1
40	6715132	RETAINER			1
41	6715197	CLAMP			1
42	17C540	BOLT			2
43	95D5	NUT			1
44	6691498	SOLENOID, FUEL	fuel shutoff - W/ 9.45" (240,03 mm) lead		1
45	97D5	NUT			1
46	17C512	BOLT 5			1
47	6678666	TREE MOUNT	push in - Use W/tie strap		1
48	6688833	CONNECTOR	W/Ref.49		1
49	6697794	SEAL			2
50	6688836	FLANGE	W/Ref. 51		1
51	6697793	SEAL			1
52		CONNECTOR	See Illustration CAB ELECTRICAL CIRCUITRY/ PE2821		1

ENGINE ELECTRICAL CIRCUITRY

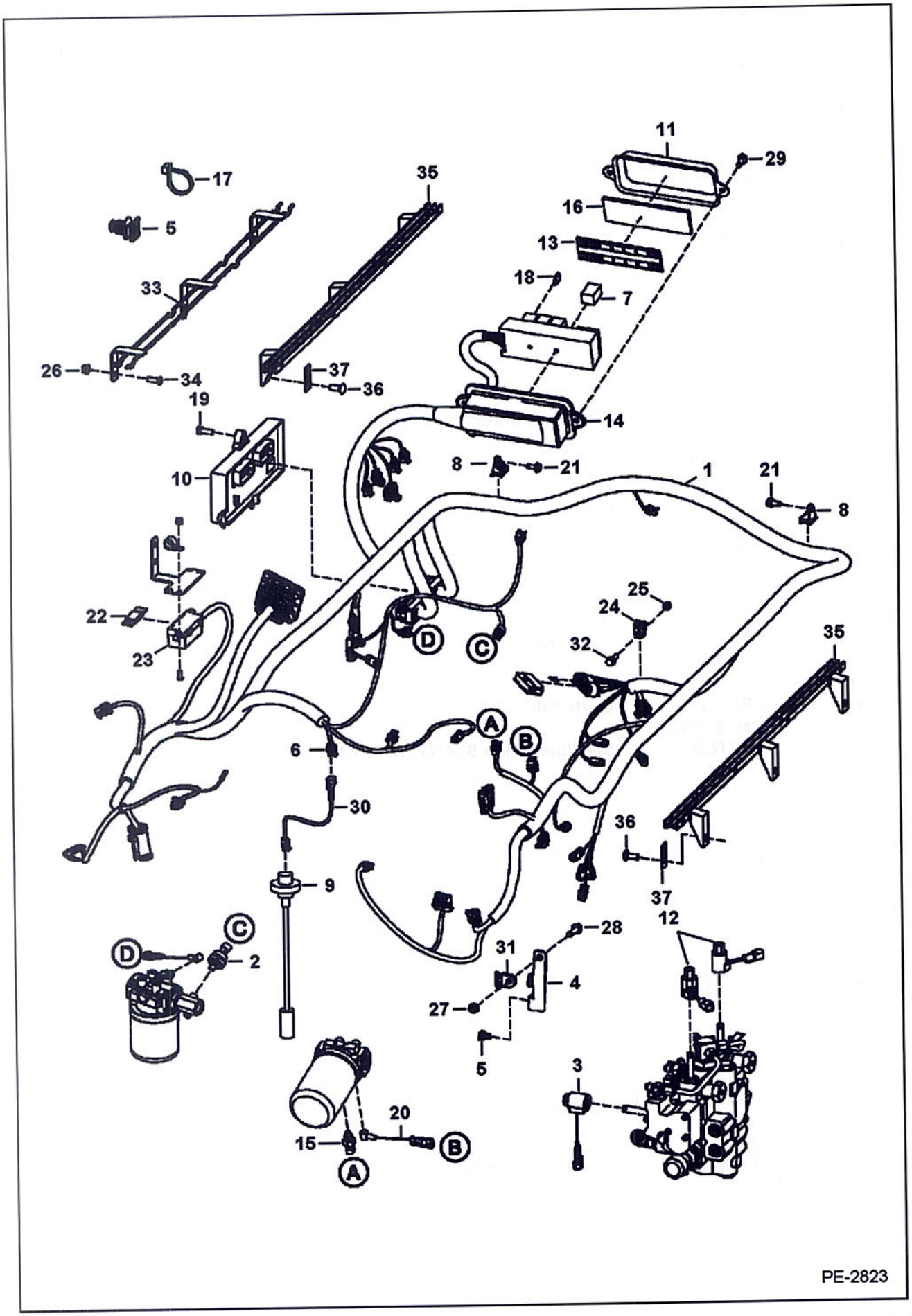

Ref No	Part Number	Description	Remarks	Serial Number	Qty
1	7142376	HARNESS	loader - 2 speed option - extra connector for pre-warming solenoid		1
2	6674316	SENSOR	hyd pressure - 3-pin molded connector		1
3	6675559	COIL			1
4	7109495	MOUNT			1
5	6678666	TREE MOUNT	push in - Use W/tie strap		2
6	6646383	CONNECTOR	fuel sender		1
6	6648330	TERMINAL			2
7	6679820	RELAY			7
8	6678818	MOUNT			3
9	6680436	SENSOR	fuel - W/gasket		1
9	6717579	GASKET			1
10	6688439	CONTROLLER, BOBCAT	Bobcat		1
11	6716621	COVER			1
12	6678891	COIL	10 volt - W/nut		2
12	6691022	NUT			2
13	7117407	DECAL			1
14	6718659	HOUSING			1
14	6673200	FUSE BLOCK			1
15	6727869	SENDER	hyd temp		1
16	6731275	INSULATION			1
17	6624289	TIE STRAP			17
18	6654806	FUSE	15 amp		2
18	6702444	FUSE	25 amp		6
18	6718034	FUSE	30 amp		2
19	43C616	BOLT			3
20	6728626	HARNESS			1
21	84G3112	BOLT 5			2
22	6675155	FUSE	100 amp		1
23	6675154	HOLDER	high amp fuse		1
24	6678667	MOUNT			2
25	83D4	NUT 10			1
26	97D6	NUT 10			7
27	97D5	NUT			3
28	35C520	BOLT			3
29	84G3116	SCREW			2
30	7117788	HARNESS	fuel sender		1
31	6679034	MOUNT			1
32	17C412	BOLT 5			1
33		BRACKET	NSS - W/Ref. 34 - Order Ref. 35 & (3) each of Ref. 36 & 37		2
34	6689032	STUD			6
35	7131254	BRACKET, MOLDED SKI			2
36	37C620	BOLT			6
37	6698084	PLATE, REINFORCEMENT			6

Page 705 - BOBM02923981001 - 04/08/2009 12:26:18 - Printed by Ken Cook Co. - eXprint.exe (v2.24.7 4/7/2009)

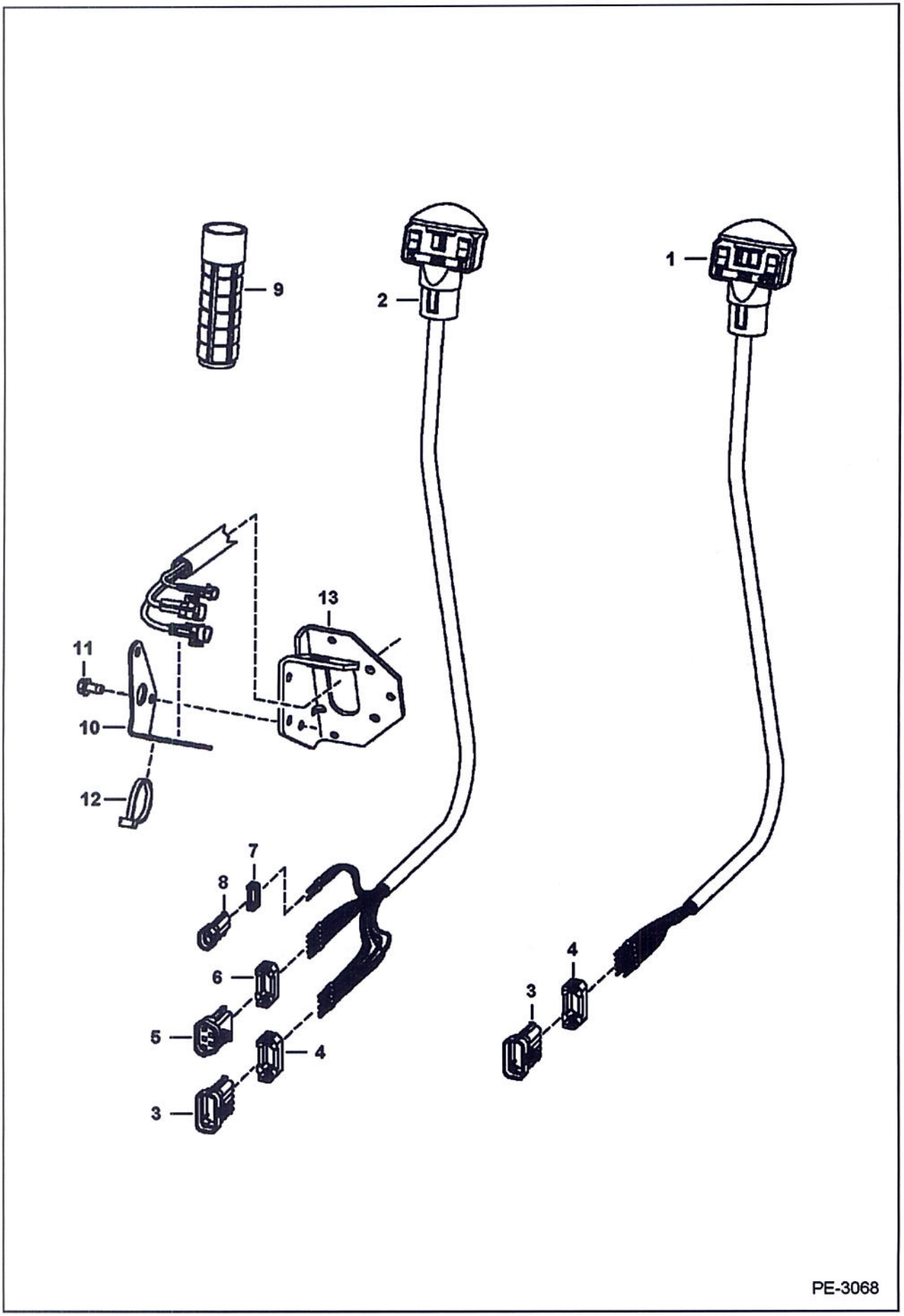

Page 706 - BOBM029239B1001 - 04/08/2009 12:26:18 - Printed by Ken Cook Co. - eXprint.exe (v2.24.7 4/7/2009

(Manual Controls)

Ref No	Part Number	Description	Remarks	Serial Number	Qty
1	6680418	HANDLE ASSY.	RH - Also Order Ref. 3 & 4		1
1	6640690	PIN			9
1	6641176	SEAL			9
2	6680419	HANDLE ASSY.	LH - Also Order Ref. 3-8		1
2	6640690	PIN			10
2	6641176	SEAL			10
2	6680447	DECAL			1
3	6640692	CONNECTOR	10-pin		2
4	6640694	LOCK	Use W/ 10-pin connector		2
5	6667144	CONNECTOR	5-pin		1
6	6667145	LOCK	Use W/ 5-pin connector		1
7	6641180	LOCK	Use W/ 2-pin connector		1
8	6641179	CONNECTOR	2-pin		2
9	6702621	GRIP			2
10	7144550	BRACKET, TIEDOWN			1
11	84G3712	BOLT			2
12	6624289	TIE STRAP			2
13	7128601	BRACKET	See Illustration HAND CONTROLS/ PE2366 - LH		1

CONTROLS ELECTRICAL
(Selectable Joystick Controls)

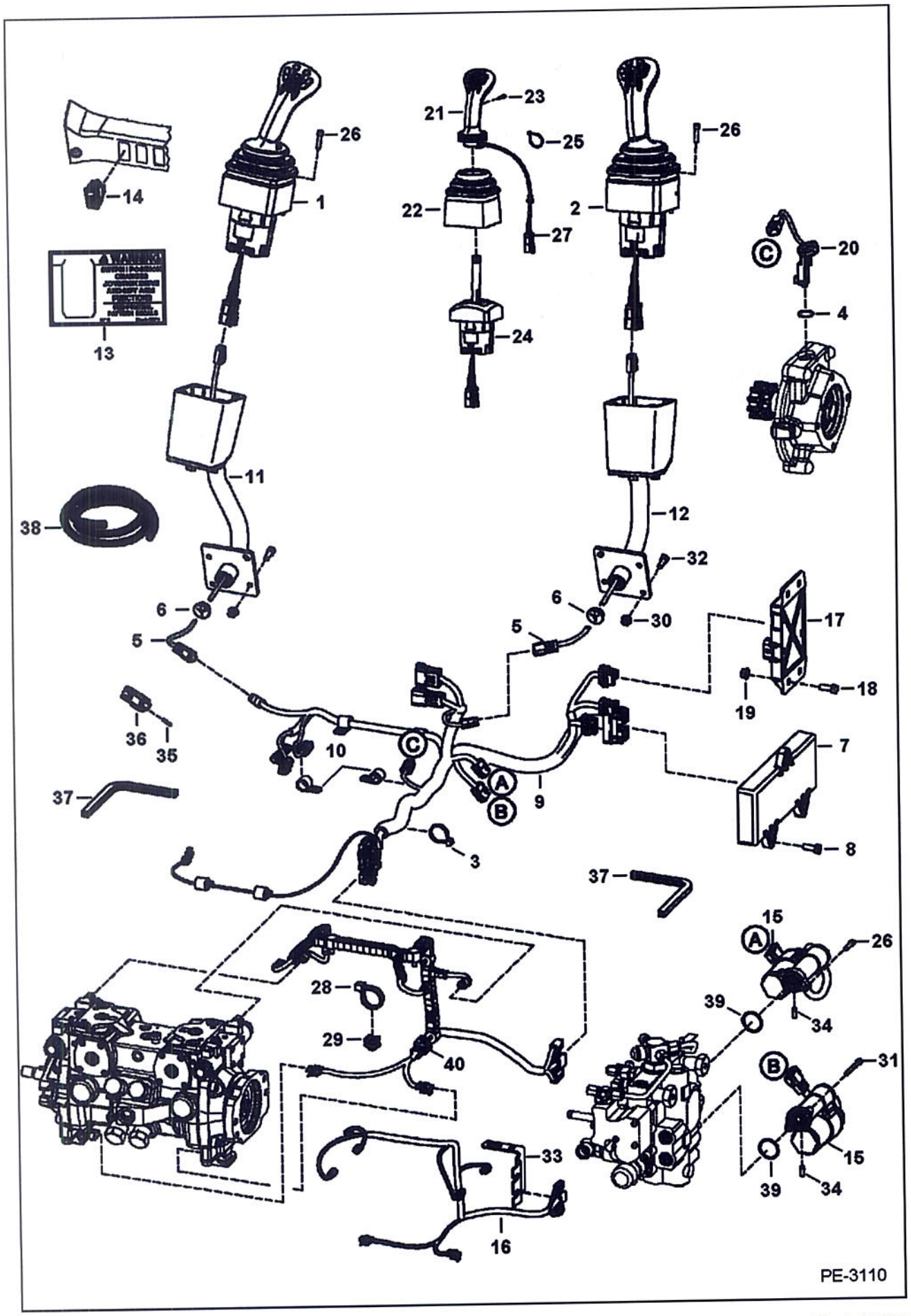

Ref No	Part Number	Description	Remarks	Serial Number	Qty
1	6689920	JOYSTICK, LH			1
2	6689921	JOYSTICK, RH			1
3	6624289	TIE STRAP			2
4	25K20100	O RING 10			2
5	7112828	HARNESS			2
6	6684294	GROMMET			4
7	6679485	CONTROLLER SJC	drive - W/single 50 pin connector		1
8	43C616	BOLT			3
9	7136044	HARNESS			1
10	30H42	CLAMP			2
11	7123812	HANDLE	LH		1
12	7123811	HANDLE	RH		1
13	6737248	DECAL			1
14	6683812	SWITCH	H/ISO		1
15	7101672	ACTUATOR	W/Ref. 39		2
16	7131601	HARNESS	A22 pump		1
17	6680410	CONTROLLER	plastic - W/ 3 connector plug		1
18	17C616	BOLT 5			2
19	97D6	NUT 10			2
20	6677181	SENSOR, SPEED WHEEL	wheel speed		2
21	6689922	HANDLE	LH		1
21	6689923	HANDLE	RH		1
22	6689926	BOOT			2
23	6689927	BOLT			2
24	6689924	BASE, AJ4 SJC RH	RH		1
24	6689925	BASE, AJ4 SJC LH	LH		1
25	6691589	100 TIE	packaged as 100 pieces		x
26	29G416	BOLT			10
27		HARNESS	NSS - Order Ref. 21		2
28	6690690	TIE			1
29	6690688	TREE MOUNT			4
30	89D5	NUT			4
31	69G436	BOLT			2
32	35C512	BOLT			4
33	7122359	BRACKET			1
34	7108236	PIN			2
35	6665370	PLUG			12
36	6662246	CONNECTOR			2
37		MOULDING	NAP - 10.5" (267 mm) long - Order Ref. 38		2
38	6654139	MOULDING	bulk - sold per foot		x
39	58K120	O-RING			2
40	7139761	HARNESS			1
40	6664969	CONNECTOR			x
40	6664185	CONNECTOR			x
40	6687268	FEMALE CONNECTOR	black - 3 pin oval		x
40	6691421	FEMALE CONNECTOR	grey - 4 pin rectangular		x
40	6662248	4 PIN PLUG	black - 4 pin plug		x

CONTROLS ELECTRICAL (ACS)

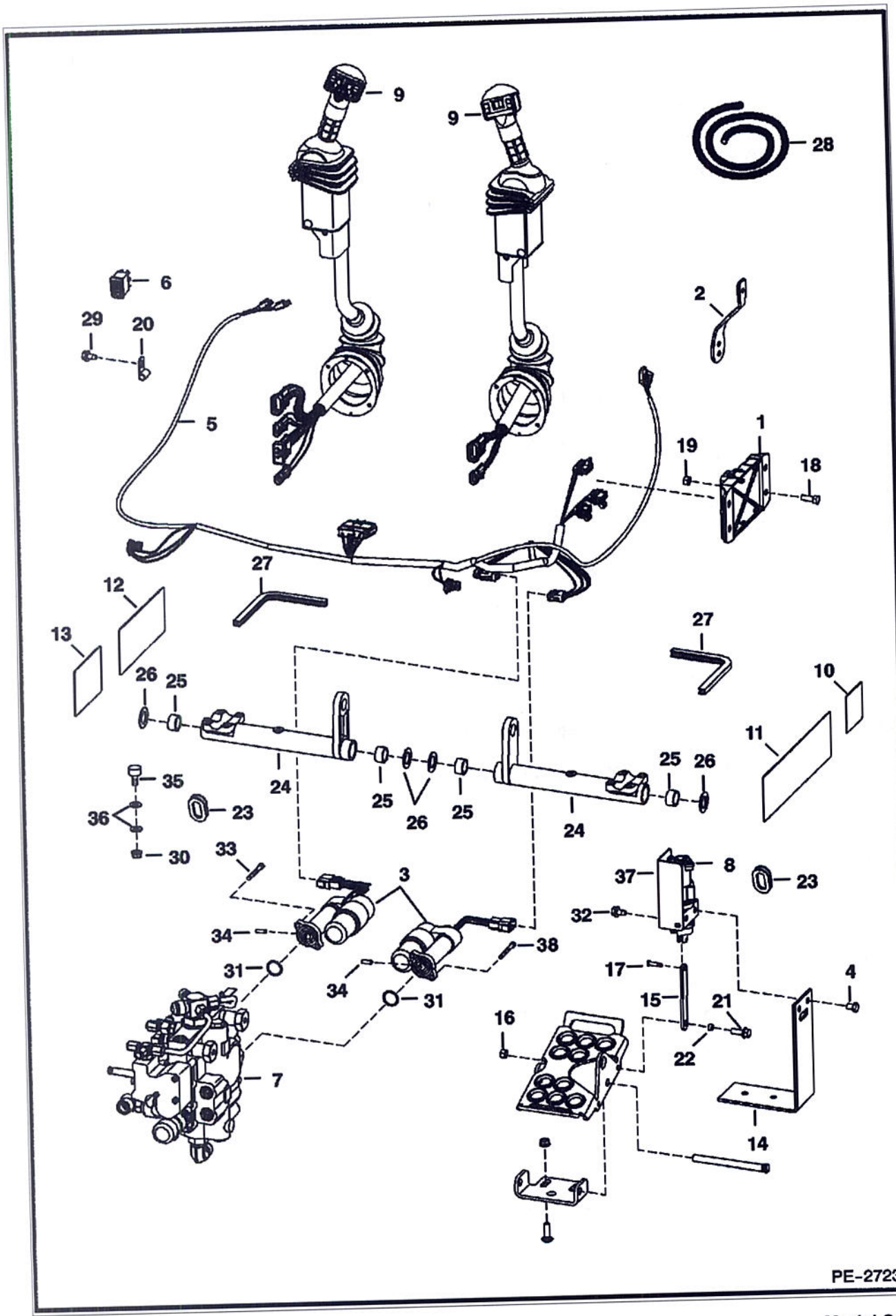

Ref No	Part Number	Description	Remarks	Serial Number	Qty
1	6680410	CONTROLLER	plastic - W/ 3 connector plug		1
2	6717393	LEVER	throttle		1
3	7101672	ACTUATOR	W/Ref. 31		2
4	17C612	BOLT 5			4
5	7124893	HARNESS	ACS		1
5	7138770	HARNESS	AHC - Europe only		1
6	6665314	PLUG	AHC		2
6	6665314	PLUG	ACS		1
6	6676537	SWITCH	ACS		1
7		VALVE	See Illustration HYDRAULIC CONTROL VALVE/ PE2378		1
8	6684912	SENSOR, FOOT RH	See Illustration CONTROLS ELECTRICAL/ PE1553 - foot pedal - RH		1
8	6676029	SOLENOID			1
8	6684911	SENSOR, FOOT LH	See Illustration CONTROLS ELECTRICAL/ PE1553 - foot pedal - LH		1
8	6676029	SOLENOID			1
9	6684913	LEVER	tilt - RH - AHC		1
9	6684914	LEVER	lift - LH - AHC		1
9	6684915	LEVER, ACS RH	See Illustration CONTROLS ELECTRICAL/ PE1365 - tilt - RH - ACS		1
9	6684916	LEVER, ACS LH	See Illustration CONTROLS ELECTRICAL/ PE1365 - lift - LH - ACS		1
10	6718706	DECAL			1
11	6728539	DECAL			1
11	6734646	DECAL	warning - selectable joystick controls		1
12	6727926	DECAL			1
13	6727926	DECAL	ACS operations		1
14	7126869	BRACKET			2
15	6726681	LINK			2
16	95D5	NUT			2
17	6727496	PIN			2
18	17C616	BOLT 5			2
19	95D6	NUT			6
20	30H62	CLIP			2
21	17C514	BOLT			2
22	6729467	SPACER			2
23	6714726	GROMMET			2
24		BELLCRANK	See Illustration HAND CONTROLS/ PE2366		2
25		BEARING	See Illustration HAND CONTROLS/ PE2366		4
26	6716916	WASHER	plastic		4
27		MOULDING	NAP - 10.5" (266,7 mm) long - Order Ref. 28		1
28	6654139	MOULDING	bulk - sold per foot		x
29	84G3710	SCREW			2
30	98D6	NUT	See Illustration HAND CONTROLS/ PE2366		2
31	58K120	O-RING			2
32	43C408	BOLT			4
33	69G436	BOLT			2
34	7108236	PIN			2
35	6673789	BEARING	See Illustration HAND CONTROLS/ PE2366		4
36	7100699	WASHER	See Illustration HAND CONTROLS/ PE2366		8
37	6680478	SHIELD	RH		1
37	6680479	SHIELD	LH		1
38	29G416	BOLT			2

printed by Ken Cook Co. - eXprint.exe (v2.24.7 4/7/2009)

CONTROLS ELECTRICAL
(AHC) (ACS) (Handle Assembly)

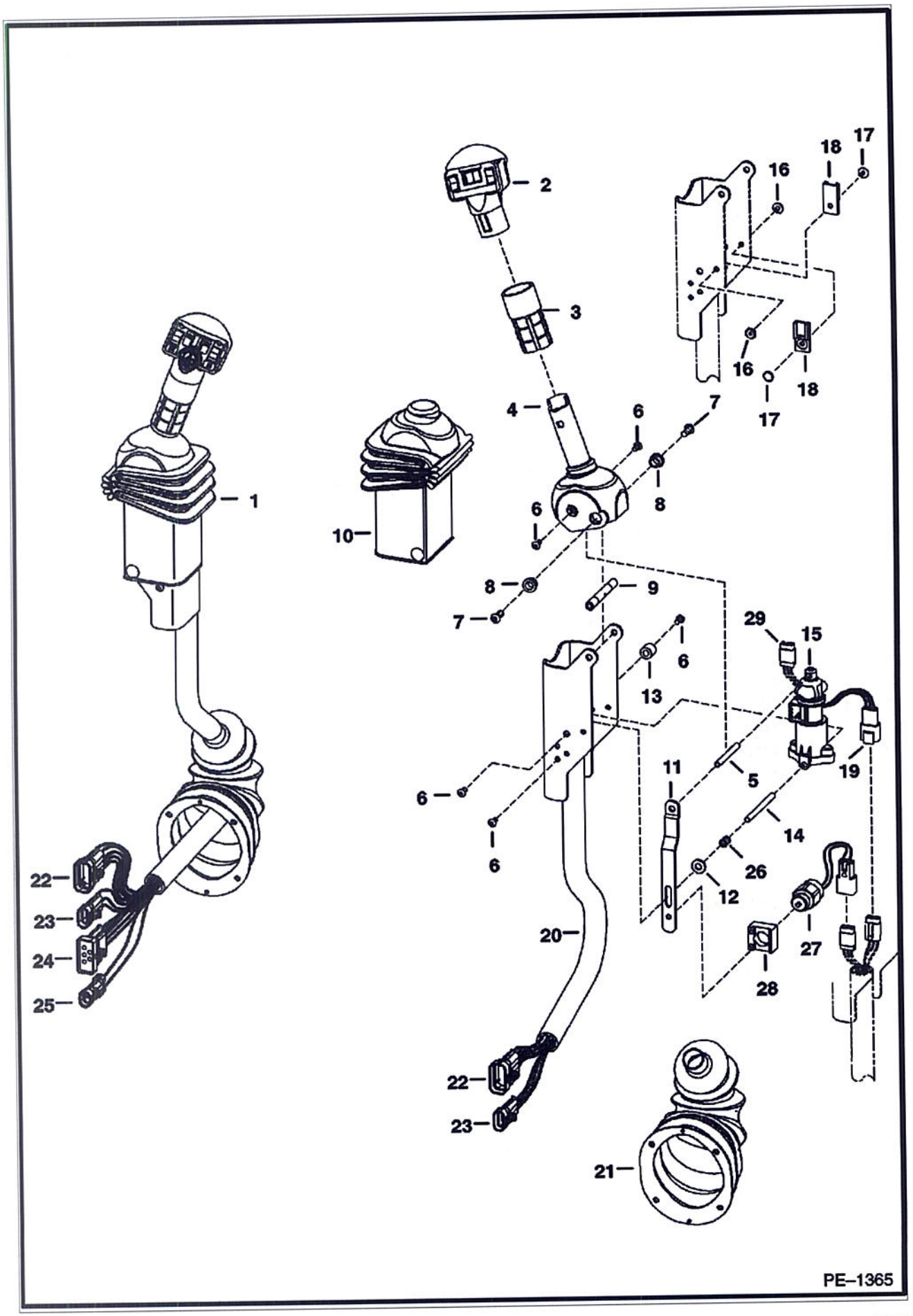

Page 712 - BOBM029239B1001 - 04/08/2009 12:28:18 - Printed by New User (en) - Unpublished - Internal Use Only

Ref No	Part Number	Description	Remarks	Serial Number	Qty
1	6684915	LEVER, ACS RH	tilt - RH		1
1	6684916	LEVER, ACS LH	lift - LH		1
2	6680462	HANDLE, ACS RH	tilt - RH		1
2	6680417	HANDLE	lift - LH		1
3		GRIP	NAP - Order 6702621 Grip & cut to 2.8" long		2
4	6729594	HANDLE	RH		1
4	6729595	HANDLE	LH		1
5	6680469	SPACER	threaded		1
6	6727065	BOLT			6
7	25GT410	SCREW			8
8	6702990	BUSHING			4
9	6713043	SPACER			4
10	6680471	COVER			2
11	6680477	STRAP	stop		1
12	25E13	WASHER 5			1
13	6719835	SLEEVE			4
14	6719834	SPACER	threaded		2
15	6684910	SENSOR, ELEC AHC			2
15	6670706	CONNECTOR			1
15	6670715	PIN			3
15	6670710	LOCK			1
16	6665322	RIVET	female		2
17	6665321	RIVET	male		2
18	6665000	CLIP			2
19	6670707	CONNECTOR			1
19	6670715	PIN			3
19	6670711	LOCK			1
20	6680481	CHANNEL	RH		1
20	6680480	CHANNEL	LH		1
21	6532127	BOOT			2
22	6640692	CONNECTOR	10-pin		1
22	6640690	PIN			8
22	6640694	LOCK	Use W/ 10-pin connector		1
22	6641176	SEAL			8
22	6646582	PLUG	cavity		1
23	6640699	CONNECTOR	3-pin		2
23	6640690	PIN			3
23	6641176	SEAL			3
23	6640700	LOCK			3
24	6667144	CONNECTOR	5-pin		2
24	6640690	PIN			3
24	6641176	SEAL			3
24	6646582	PLUG	cavity		1
24	6641180	LOCK	Use W/ 2-pin connector		1
25	6641179	CONNECTOR	2-pin		1
25	6640690	PIN			2
25	6641176	SEAL			2
25	6641180	LOCK	Use W/ 2-pin connector		1
26	6680470	SPRING			1
27	6676029	SOLENOID			1
28	6680468	MOUNT			1
29	6676870	CONNECTOR	3-pin		1
29	6670711	LOCK			1
29	6670715	PIN			1

CONTROLS ELECTRICAL (Cont'd)
(AHC) (ACS) (Handle Assembly)

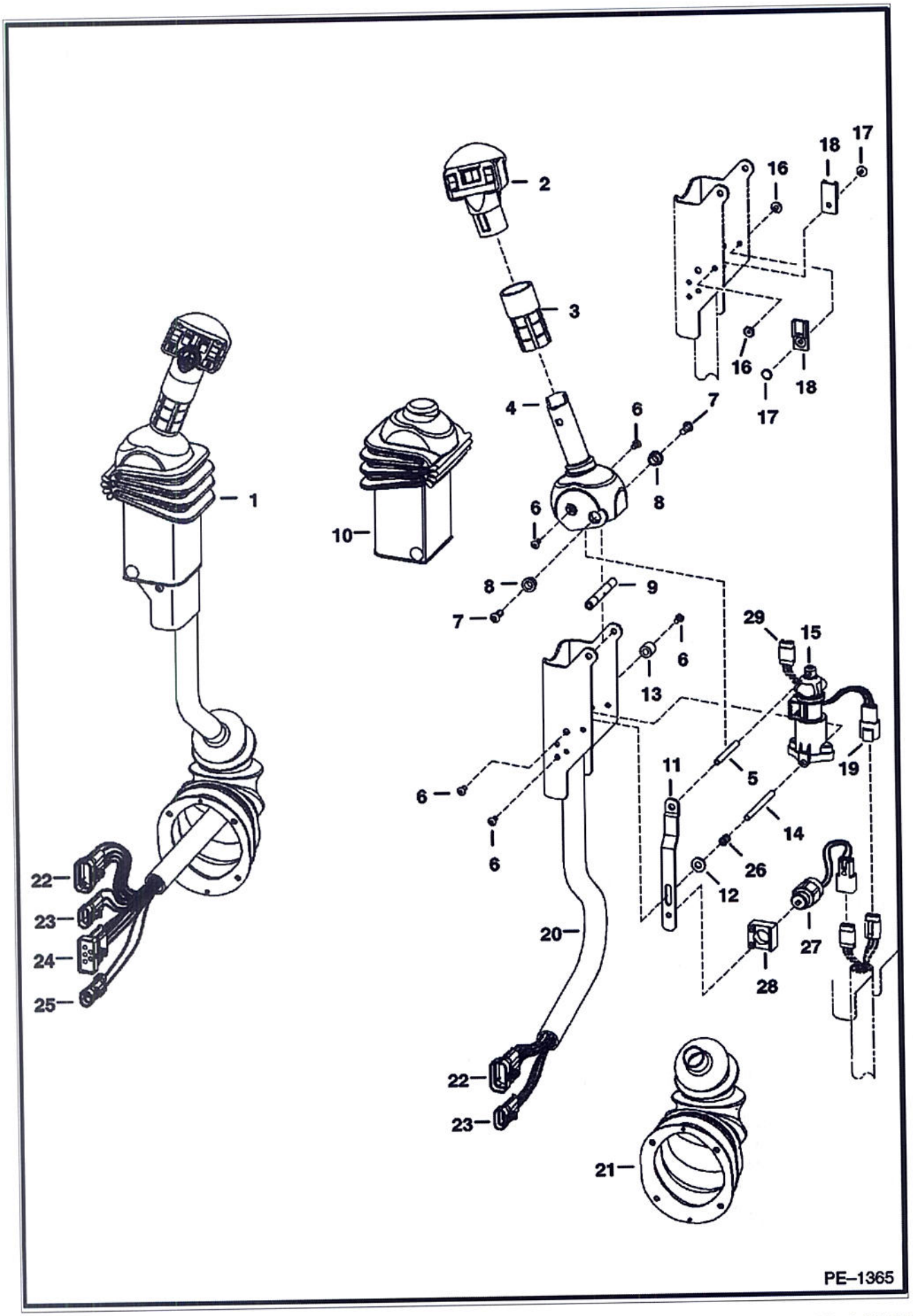

Ref No	Part Number	Description	Remarks	Serial Number	Qty
29	6676640	SEAL			5

Generated on 07/09/2009 16:45:18 - Printed by Ken Cook Co. - eXprint.exe (v2.24.7 4/7/2009)

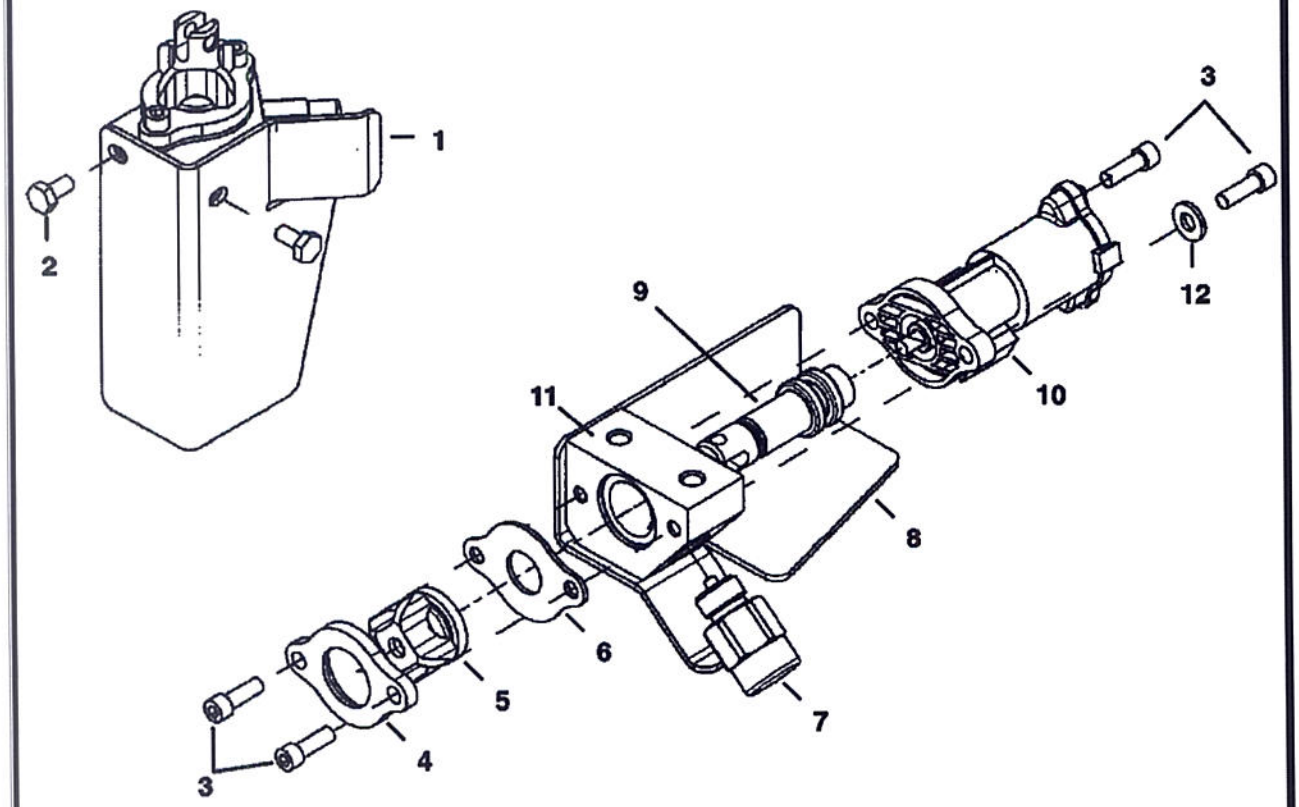

PE–1553

Page 716 - BOBM029239B1001 - 04/08/2009 12:26:18 - Printed by New Look Co. - Copyright (c) Bobcat Company

Ref No	Part Number	Description	Remarks	Serial Number	Qty
1	6684912	SENSOR, FOOT RH	foot pedal - RH		1
1	6684911	SENSOR, FOOT LH	foot pedal - LH		1
2	43C408	BOLT			2
3	98G412	BOLT			4
4		RETAINER	NAP - boot		1
5	6587763	BOOT			1
6		STOP PLATE	NAP		1
7	6676029	SOLENOID			1
8	6680478	SHIELD	RH		1
8	6680479	SHIELD	LH		1
9		SPOOL	NSS		1
10		SENSOR	NSS		1
11		BLOCK	NSS		1
12	25E13	WASHER 5			2

ALTERNATOR

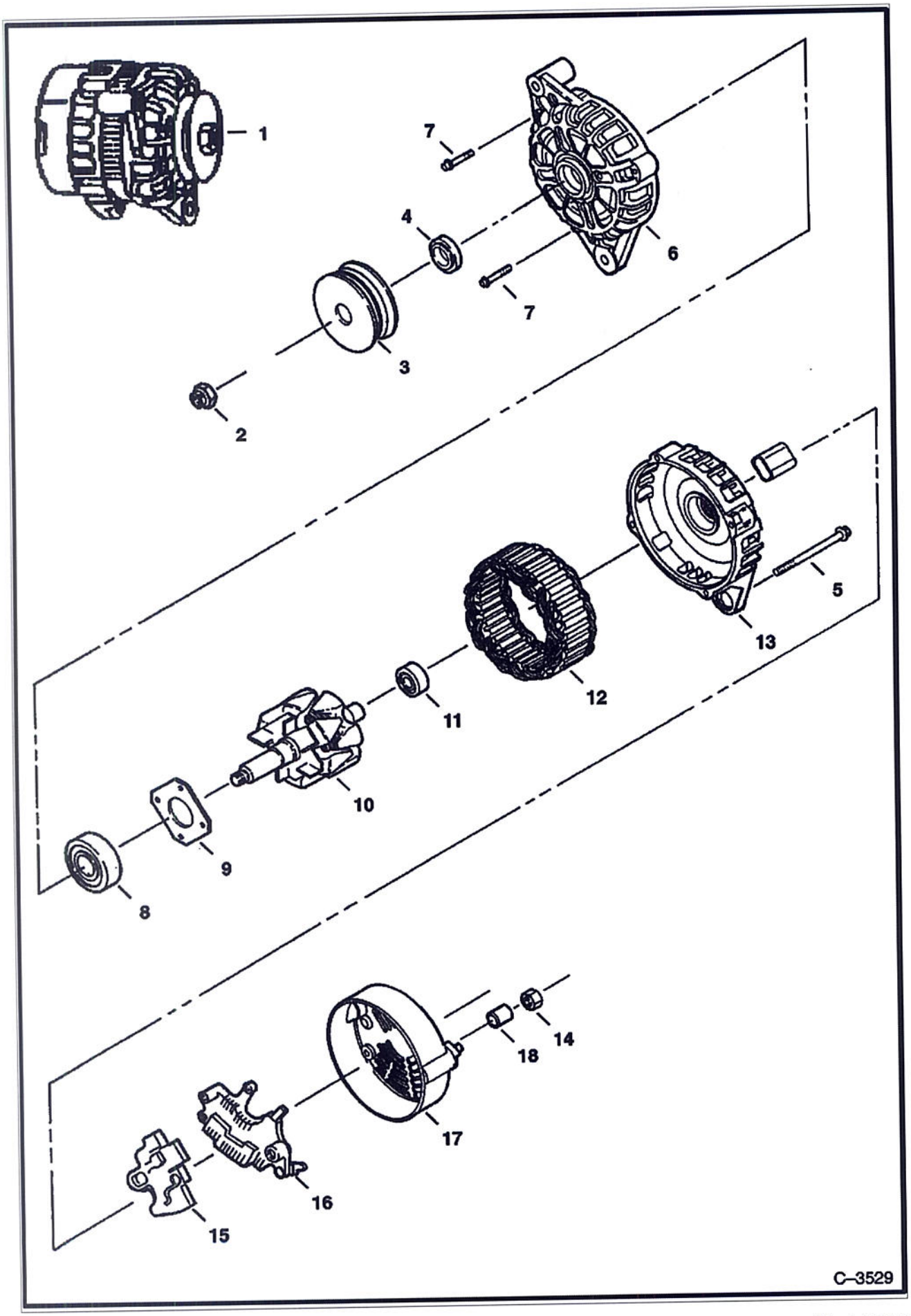

Ref No	Part Number	Description	Remarks	Serial Number	Qty
1	6678205	ALTERNATOR, 90 AMP	90 amp		1
2	6677497	NUT			1
3	6677496	PULLEY			1
4	6677495	SPACER	front		1
5	6677494	BOLT			4
6	6677491	BRACKET	rear		1
7	6677817	BOLT			4
8	6677818	BEARING			1
9	6677819	RETAINER			1
10	6677492	ROTOR			1
11	6677820	BEARING			1
12	6677493	STATOR			1
13	6677490	BRACKET			1
14	6677486	NUT			1
15	6677489	REGULATOR ASSY	Order Ref. 1		1
16	6677488	RECTIFIER			1
17	6677487	COVER			1
18	6677485	SPACER	rear		1

Generated by mss vvvv vv. - sapiens.exe (v4.48.7 4/7/2009)

STARTER
(Valeo)

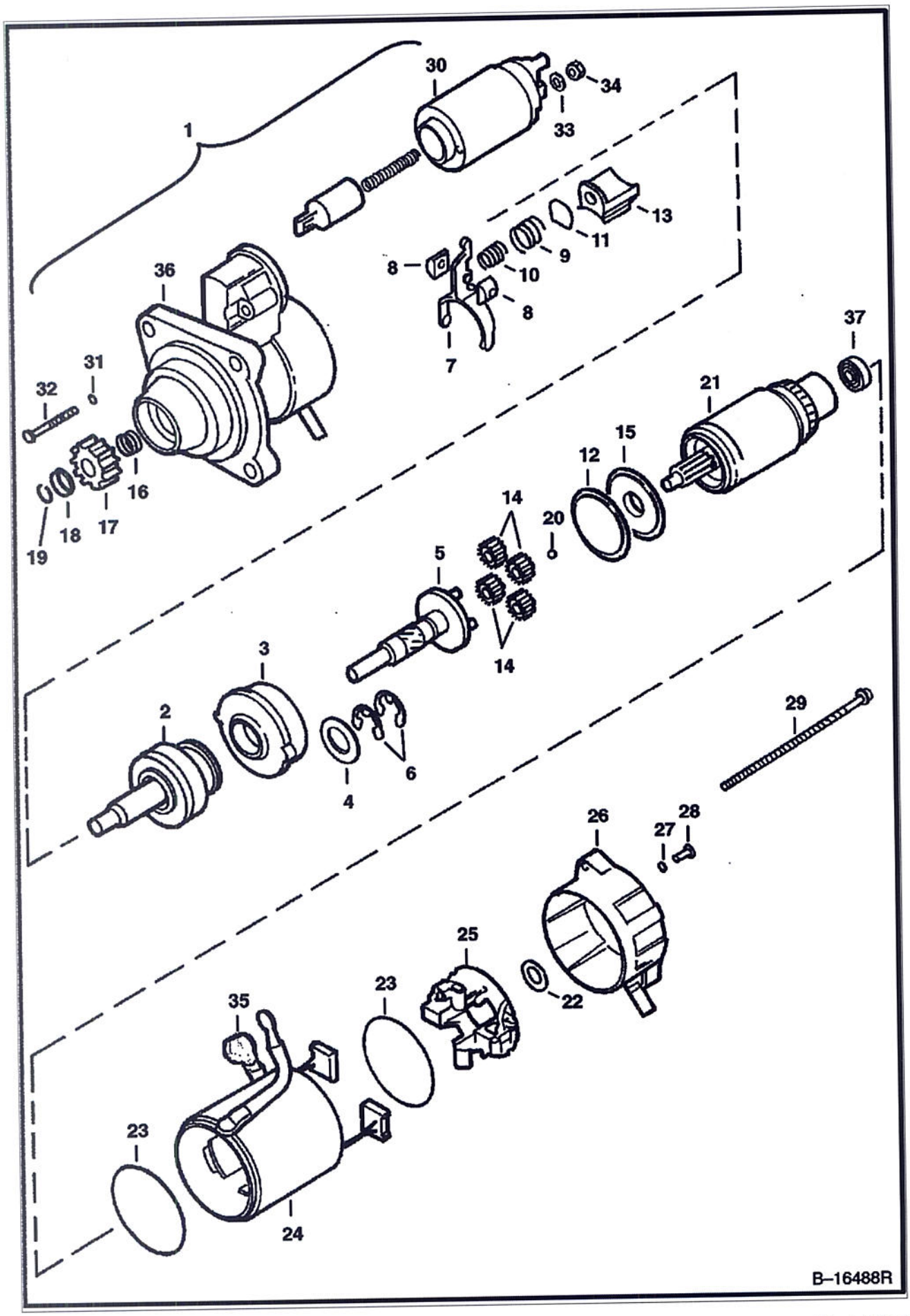

STARTER (Cont'd)
(Valeo)

Ref No	Part Number	Description	Remarks	Serial Number	Qty
1	6685190	STARTER			1
2	6680375	SHAFT	O.R.C. assy.		1
3	6680367	GEAR			1
4	6680378	WASHER			1
5	6680365	SHAFT			1
6	6680368	STOP RING			2
7		LEVER	NSS - Order Ref. 36		1
8		HOLDER	NSS - Order Ref. 36		2
9		SPRING	NSS - Order Ref. 36		1
10		SPRING	NSS - Order Ref. 36		1
11		PLATE	NSS - Order Ref. 36		1
12	6680369	SEAL			1
13	6680371	LEVER			1
14	6680366	GEAR			4
15	6680372	BRACKET			1
16	6680361	SPRING			1
17	6680390	GEAR			1
18	6680360	STOP			1
19	6680359	STOP RING			1
20	6680362	BALL			1
21	6680374	ARMATURE	W/Ref. 37		1
22	6680363	WASHER			1
23	6680380	SEAL			2
24	6680373	YOKE			1
25	6680377	HOLDER			1
26	6680389	BRACKET			1
27	6680358	RING	rubber		2
28	6680384	BOLT			2
29	6680356	BOLT			2
30	6680376	SWITCH			1
31	6680379	SEAL			2
32	6680383	BOLT			2
33	6EM80	WASHER, SPRING			1
34	4DM8	NUT			1
35	6680355	BOOT			1
36	6680388	BRACKET	includes ball bearing, drain tube, front bracket & oil seal - Also includes Ref. 7-11		1
37		BEARING	NAP - Order Ref. 21		1

Printed by Am Tool Co., - Paprint.exe (V4.44.7 4/7/2003)

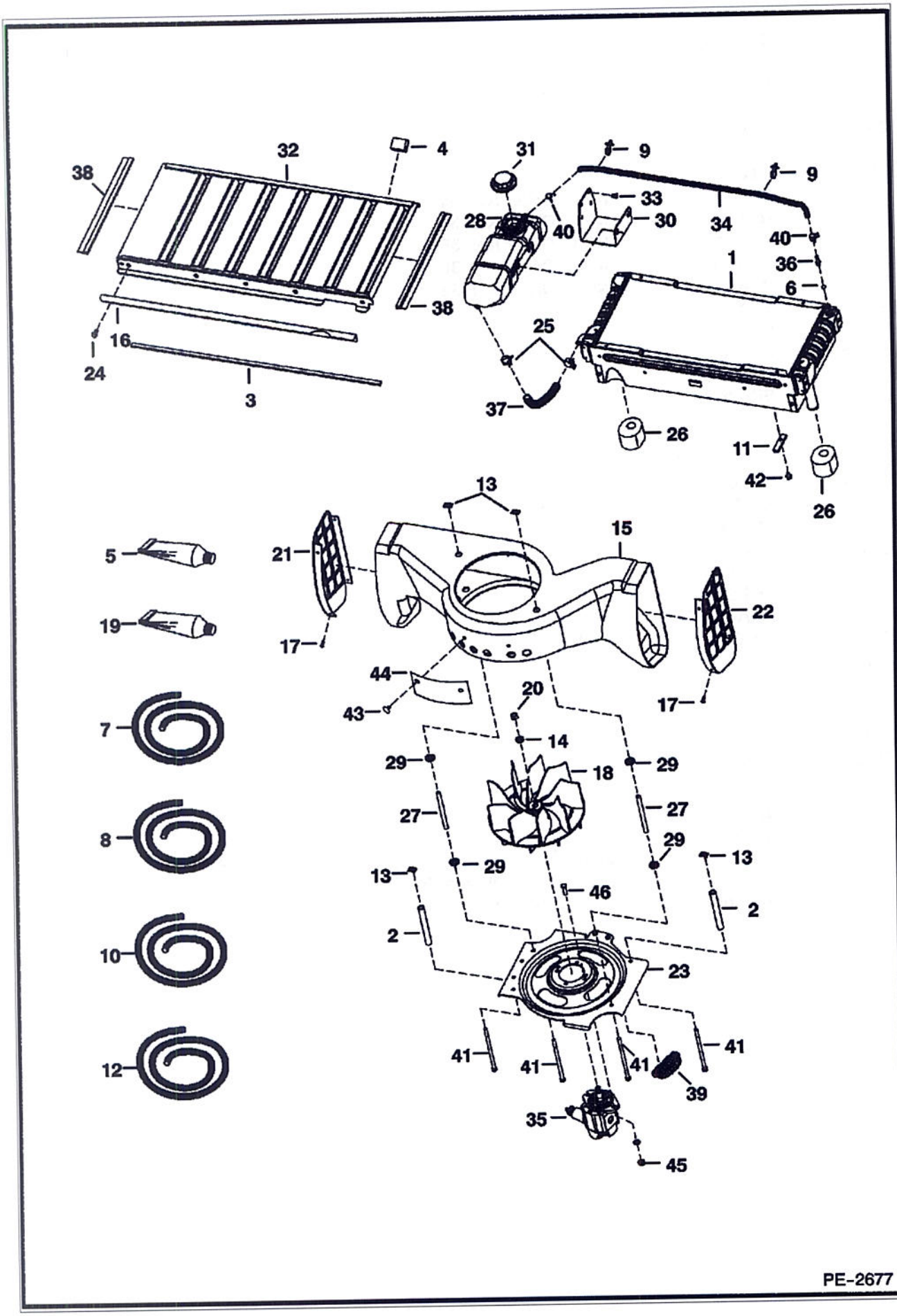
32
4
31
9
9
38
33
28
40
30
34
40
1
36
6
38
25
16
24
3
37
26
11
42
26
13
15
5
21
22
19
17
17
44
20
43
14
7
29
18
29
27
27
29
29
8
13
13
46
2
2
10
23
41
41
41
41
39
12
35
45
PE-2677

Ref No	Part Number	Description	Remarks	Serial Number	Qty
1	6686077	EXCHANGER, WATER RADIATOR			1
2	6577382	SPACER			2
3		FOAM STRIP	NAP - 34.5" (876,3 mm) long - Order Ref. 8		2
4	6579613	STOP			2
5	6633583	SEALANT	oil cooler grill		x
6	79K2	O RING 10			1
7	6578172	HOSE	bulk - sold per foot		1
8	6511855	SEAL	self adhesive - bulk - sold per foot		x
9	6675734	STRAP	button head		2
10	6646705	SEAL	bulk - sold per foot		x
11	6679991	SEAL	washer		1
12	6577822	HOSE	bulk - sold per foot		x
13	6684033	NUT			4
14	6701097	WASHER			1
15	7104117	HOUSING			1
16	6703471	BRACKET			1
17	6706517	SCREW	plastic louvers		8
18	6715142	FAN			1
19	6650407	ADHESIVE	tube - 1 oz		x
20	96D8	NUT			1
21	6716571	LOUVER, PLASTIC LH	plastic - LH		1
22	6716573	LOUVER	plastic - RH		1
23	7107175	INLET	4 slot		1
24	84G3112	BOLT 5			3
25	5HM24	CLAMP			2
26	6726433	SPACER			2
27	7131872	SPACER	.625" (15,875 mm) OD		2
28	6732375	TANK	expansion		1
29	7131873	WASHER	step - 1.38" (35,05 mm) OD		4
30	6732870	MOUNT			1
31	6733429	CAP			1
31	6733996	DECAL	14 psi		1
32	6733804	GRILL			1
33	84G3708	SCREW			2
34		HOSE	NAP - 36" (914,4 mm) long - Order Ref. 12		1
35	6687142	MOTOR, FAN DRIVE	See Illustration COOLING FAN MOTOR/ PE2811 See Illustration HYDROSTATIC CIRCUITRY/ PE2735 aluminum - W/proportional valve		1
35	6689058	MOTOR, FAN	aluminum - W/O proportional valve		1
35	6689059	VALVE, RELIEF	proportional		1
35	6689060	COIL ASSY	W/nut & O-ring		1
35	6683206	SEAL KIT	for proportional valve		1
36	6734236	ADAPTER	W/Ref. 6		1
37		HOSE	NAP - 8.25" (209,6 mm) long - Order Ref. 7		1
38		MOULDING	NAP - 16.8" (426,7 mm) long - Order Ref. 10		2
39	6684474	INSERT FAN INLET			4
40	5HM14	CLAMP			2
41	17C6116	BOLT			4
42	35C516	BOLT 10			2
43	6674895	RETAINER			2
44	6715819	INSULATOR			1
45	95D6	NUT			2
46	17C620	BOLT			2

ENGINE & ATTACHING PARTS
(Air Cleaner, Muffler, Radiator Water Exchanger)

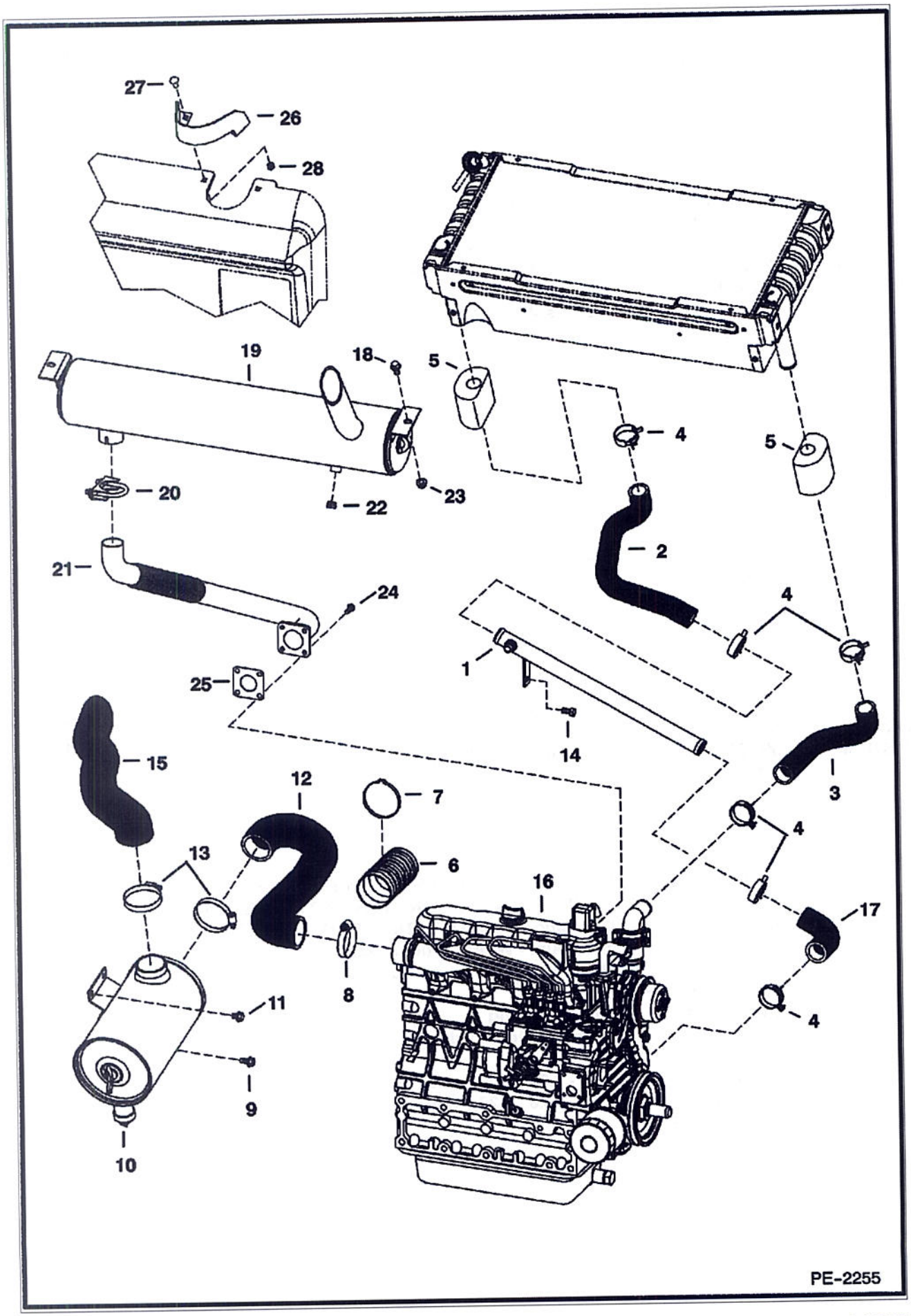

Ref No	Part Number	Description	Remarks	Serial Number	Qty
1	6730999	TUBE ASSY			1
1	40K6	PLUG			1
2	6717592	HOSE			1
3	6717591	HOSE			1
4	5HM42	HOSECLAMP			6
5	6726433	SPACER			2
6	6706394	SHIELD	8" (203,2 mm) long		1
7	6664004	CLAMP			2
8	42HL325	CLAMP			1
9	84G3712	BOLT			1
10	6700711	AIR CLEANER	See Illustration AIR CLEANER/ MS2186		1
11	84G3708	SCREW			2
12	7100573	HOSE	W/Ref. 6 & (2) of Ref. 7		1
13	42HL300	CLAMP			2
14	17C612	BOLT 5			2
15	7102656	HOSE			1
16		ENGINE	See Illustration ENGINE & UPPER GASKET KIT/ B27060 See Illustration ENGINE & LOWER GASKET KIT/ B27061		1
17	7100024	HOSE			1
18	35C616	BOLT 5			2
19	7100840	MUFFLER, EXHAUST			1
20	7101708	CLAMP			1
21	7137825	TUBE, EXHAUST			1
22	6661062	PLUG	brass 3/8" (9,5 mm)		1
23	61D6	NUT 5			2
24	6701123	SCREW			4
25	6727752	GASKET			1
26	6714624	SHIELD	(ESA) only		1
27	37C512	BOLT			2
28	61D5	NUT			2

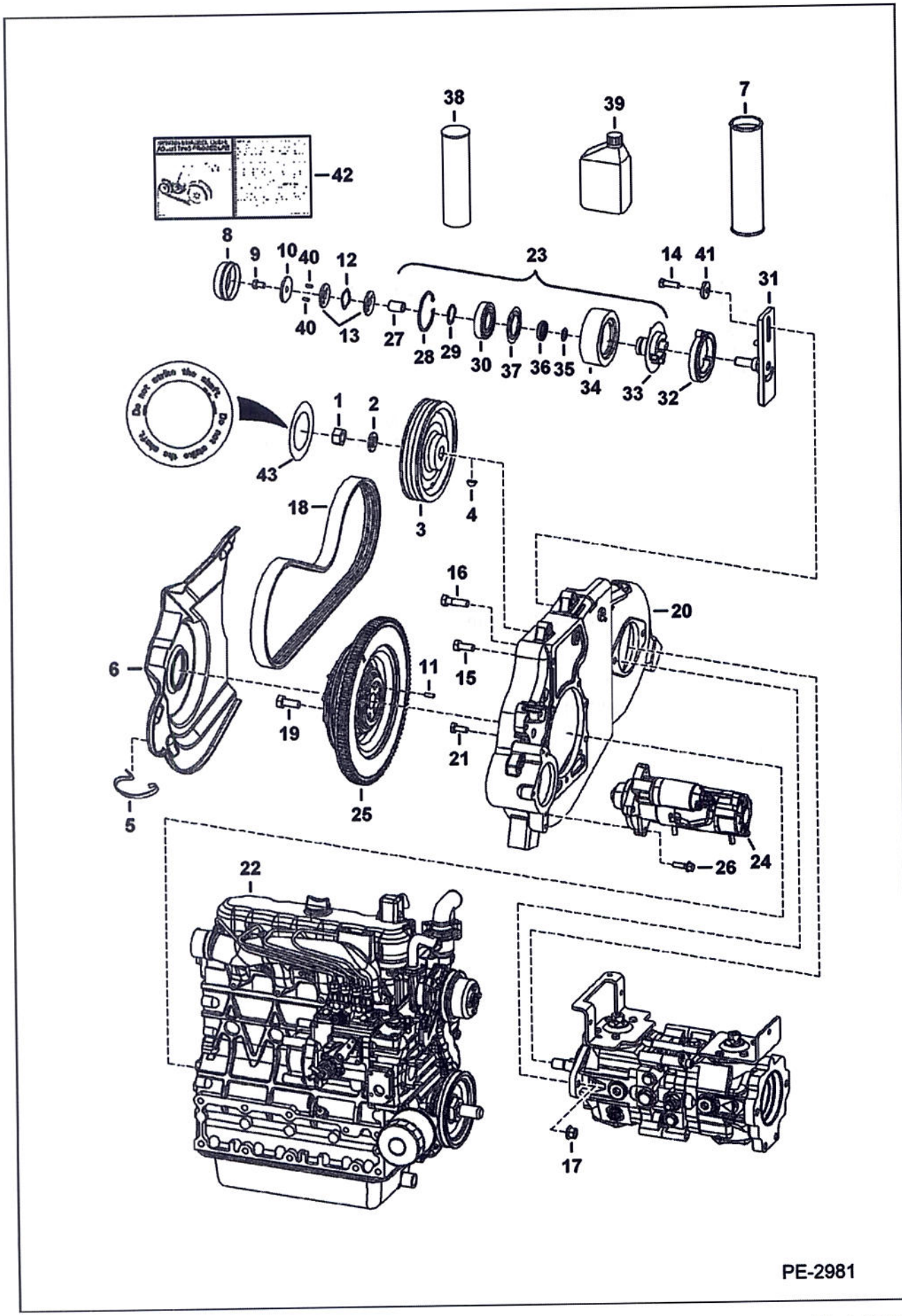
38
39
7
42
8
9
10
40
12
23
14
41
31
40
13
27
28
29
30
37
36
35
34
33
32
Do not strike the shaft.
Do not strike the shaft.
1
2
43
18
3
4
16
20
6
11
15
19
21
25
5
26
24
22
17
PE-2981

(Belt Drive System)

Ref No	Part Number	Description	Remarks	Serial Number	Qty
1	92D12	NUT			1
2	6576033	WASHER			1
3	7113635	PULLEY	to hyd pump - 3 groove - 7.95" (202 mm) dia		1
4	6J807	WOODRUFF KEY			1
5	6703022	CLIP			3
6	7109712	SHIELD			1
7	6903122	GREASE, TUBE 10	Use W/Ref. 23		x
8	6708770	CAP	dust		1
9	17C610	BOLT			1
10	6705232	WASHER			1
11		PIN			2
12	6710585	WASHER	wave spring		1
13	6705231	WASHER			2
14	17C620	BOLT			1
15	6719828	BOLT			2
16	17C828	BOLT	hyd pump mount		2
17	85D8	NUT, 5			2
18	6667322	BELT	pump drive		1
19		BOLT			6
20	7133636	MOUNT			1
21	6719825	BOLT			7
22		ENGINE	See Illustration ENGINE & UPPER GASKET KIT/ B27060 See Illustration ENGINE & LOWER GASKET KIT/ B27061		1
23	6735884	IDLER ASSY.	spring loaded - Ref. 8-13 & 27-37 - Also Order Ref. 42		1
23	6714212	PULLEY ASSY.	Ref. 27-30 & 33-37		1
24		STARTER	See Illustration STARTER/ B16488R		1
25	7109872	FLYWHEEL, ENGINE	W/ring gear		1
25	6510470	RING GEAR			1
26	35C620	BOLT 5			3
27	6682442	SLEEVE	bronze sleeve		1
28	6658847	RING			1
29	6658536	RING			1
30	6668114	BEARING	ball		1
31	6735883	BRACKET			1
32	6705491	SPRING	torsion		1
33	6711699	HUB ASSY.			1
34	6704391	PULLEY	idler		1
35	6685735	SEAL			1
36	6703168	BEARING	thrust		1
37	6664209	SEAL			1
38	6633583	SEALANT	tube - 300 ml		x
39	6661405	OIL			x
40	6713370	PIN			2
41	6704484	WASHER			1
42	6709030	DECAL	belt tension spring loaded idler		1
43		DECAL	NAP - pulley - do not strike		1

ENGINE & ATTACHING PARTS
(Engine Mounts)

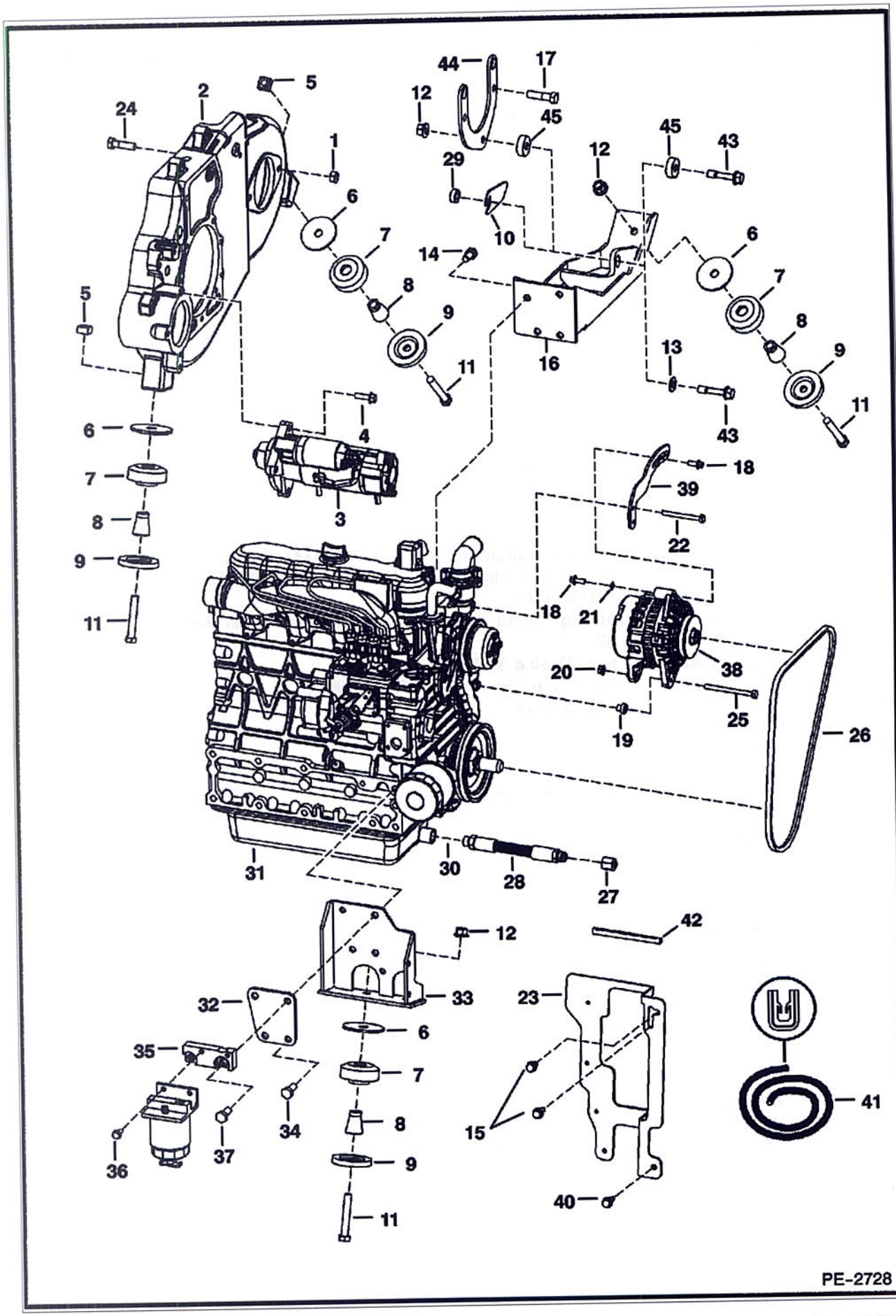

Ref No	Part Number	Description	Remarks	Serial Number	Qty
1	85D8	NUT, 5			2
2		MOUNT	See Illustration ENGINE & ATTACHING PARTS/ PE2981		1
3		STARTER	See Illustration STARTER/ B16488R		1
4	35C620	BOLT 5			3
5	6652918	NUT			2
6	6705106	WASHER			4
7	6661785	MOUNT, ENG			4
8	7110276	SPACER, TAPERED			4
9	6661787	WASHER			4
10	7114739	SPACER			1
11	43C852	BOLT			4
12	83D8	NUT 5			2
13	25E21	WASHER 5	use (2) max		x
14	6719827	BOLT			4
15	84G3712	BOLT			2
16	7104568	MOUNT	engine & hyd. pump - for horizontal hardware mounting of hydrostatic pump		1
17	7131273	SCREW	hyd. pump mount - selectable joystick controls		2
18	29CM820	SCREW			1
19	6817566	BUSHING			1
20	53DM8	NUT			2
21	6E5	WASHER			1
22	1CM890	BOLT			1
23	6731060	SHIELD	bolts to upright		1
24	17C828	BOLT	hyd pump mount		2
25	1CM8100	SCREW			2
26	7100104	BELT	alternator		1
27	36K6	CAP			1
28	6563445	HOSE			1
29	7113010	SPACER	1" (25,4 mm) thick x 1.25" (31,8 mm) OD - manual controls		1
29	7121454	SPACER	.329" (8,35 mm) thick x 1.25" (38,1 mm) OD - selectable joystick controls		1
30	79K8	O RING 10	flat boss face		x
31		ENGINE	See Illustration ENGINE & UPPER GASKET KIT/ B27060 See Illustration ENGINE & LOWER GASKET KIT/ B27061		1
32	6700535	SPACER			1
33	6703981	MOUNT	W/Ref. 32		1
34	6719828	BOLT			2
35	6736817	MOUNT	fuel filter		1
36	6719826	BOLT			1
37	6719829	BOLT			1
38		ALTERNATOR	See Illustration ALTERNATOR/ C3529 90 AMP		1
39	6730867	BRACKET			1
40	84G3716	SCREW 5			2
41	6654139	MOULDING	bulk - sold per foot		x
42		MOULDING	NAP - 5.5" (139,7 mm) long - Order Ref. 41		1
43	6675221	BOLT	hyd. pump mount		1
44	7107849	MOUNT	pump - selectable joystick controls		1
45	7104608	BUSHING	spacer - .50" (12,7 mm) thick x 1.25" (31,8 mm) OD - selectable joystick controls		2

ENGINE SPEED CONTROL
(Manual Controls)

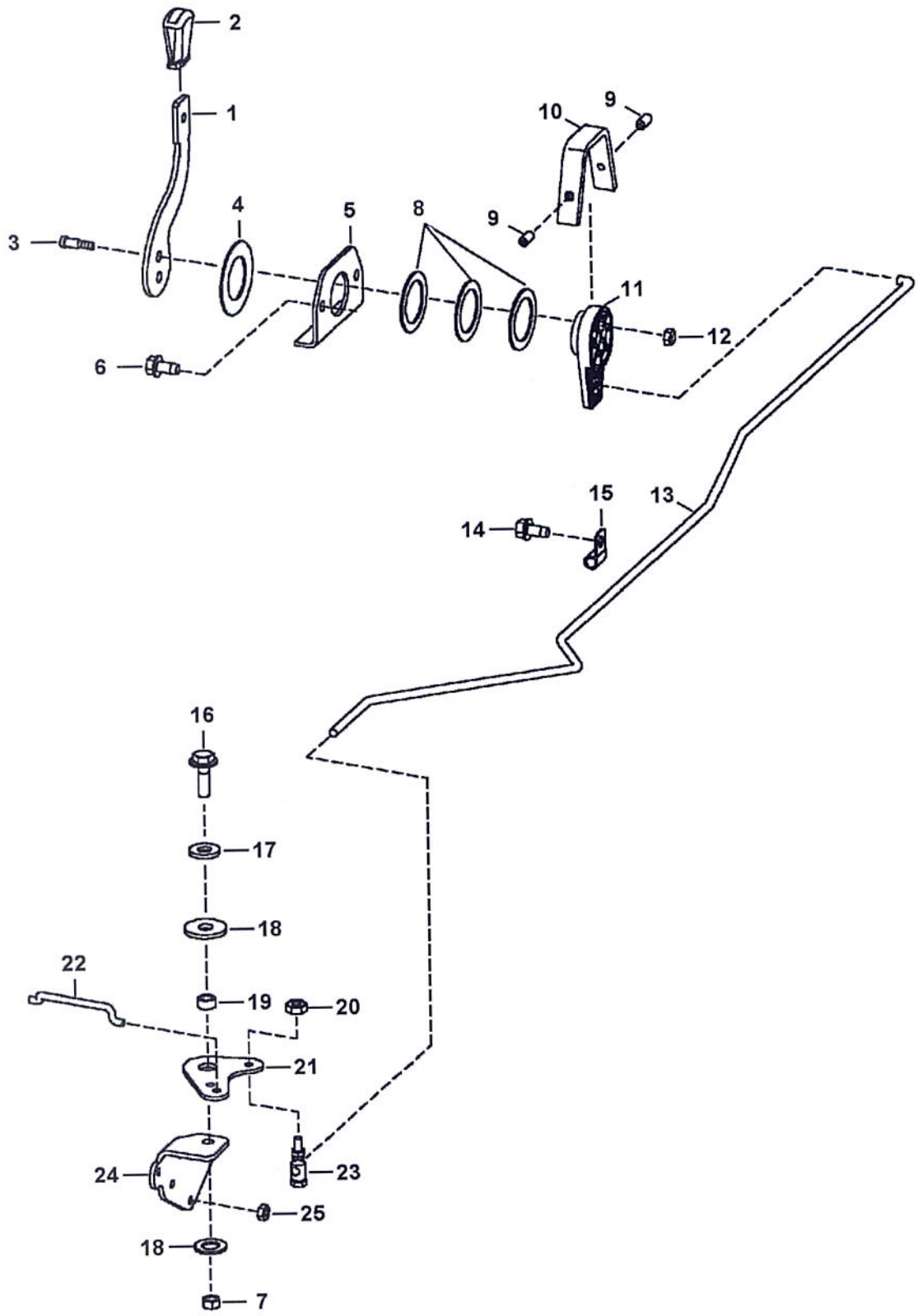

ENGINE SPEED CONTROL (Cont'd)
(Manual Controls)

Ref No	Part Number	Description	Remarks	Serial Number	Qty
1	6705452	LEVER			1
2	6564452	GRIP			1
3	38C610	BOLT	shoulder		2
4	6567962	WASHER			1
5	6576262	MOUNT			1
6	84G3728	BOLT			2
7	95D6	NUT			1
8	6630945	WASHER			3
9	6706572	SET SCREW			2
10	6576261	COVER			1
11	6734416	LEVER			1
12	85D5	NUT 5			2
13	7114667	ROD	throttle		1
14	84G3712	BOLT			1
15	31H12	CLIP			1
16	84G3716	SCREW 5			1
16	17C716	BOLT			1
17	25E18	WASHER			1
18	6700170	WASHER	plastic		2
19	6564343	SPACER			1
20	59D4	NUT 5			1
21	6578268	BELLCRANK			1
22	6736195	ROD			2
23	6557291	BALL JOINT			1
24	7109314	MOUNT			1
25	1DM6	NUT			3

ENGINE SPEED CONTROL
(Selectable Joystick Controls)

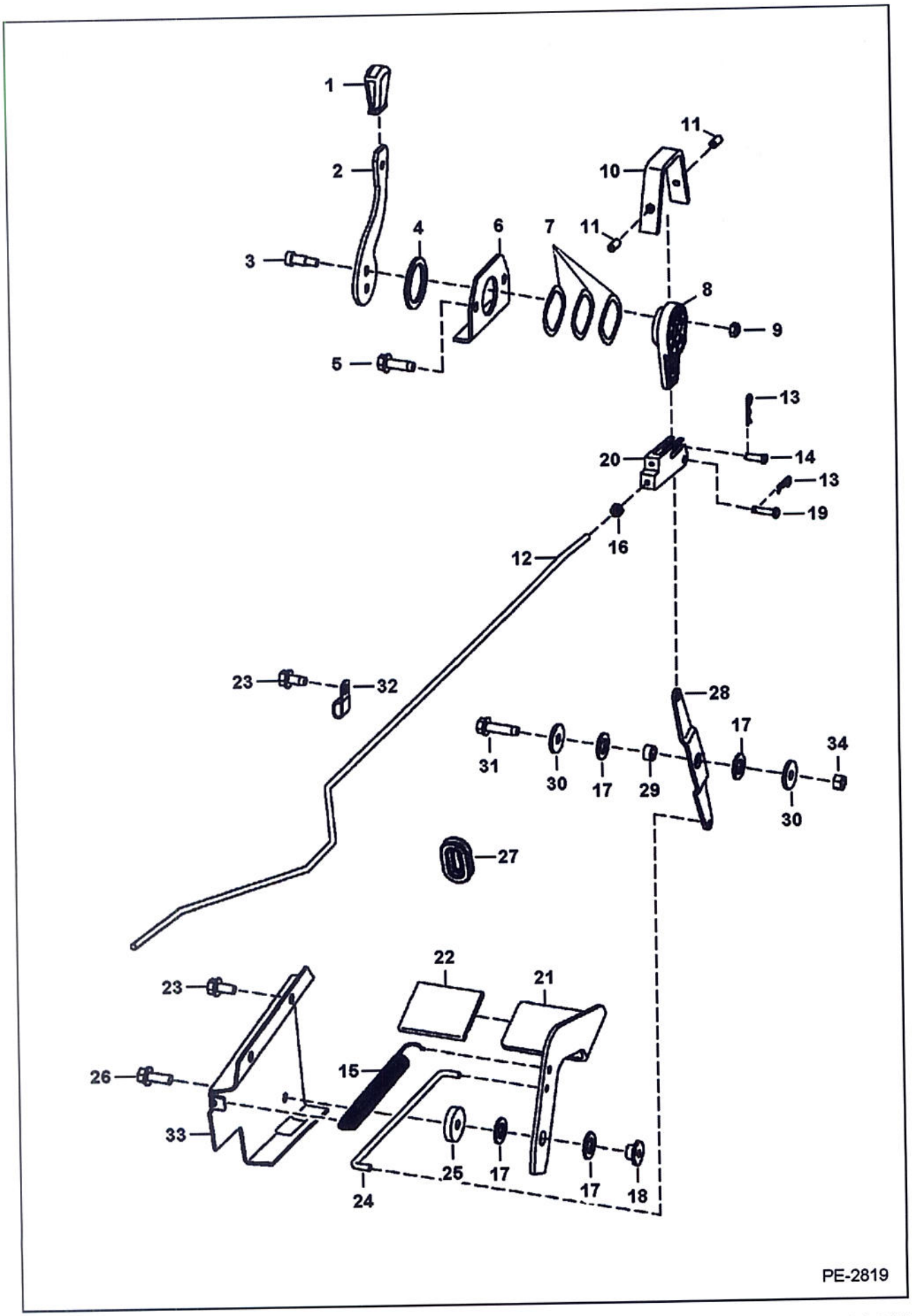

ENGINE SPEED CONTROL (Cont'd)
(Selectable Joystick Controls)

Ref No	Part Number	Description	Remarks	Serial Number	Qty
1	6564452	GRIP			1
2	6730270	LEVER			1
3	38C610	BOLT	shoulder		2
4	6567962	WASHER			1
5	84G3728	BOLT	Was 84G3724 [B]		2
6	6576262	MOUNT			1
7	6630945	WASHER			3
8	6734416	LEVER			1
9	85D5	NUT 5			2
10	6576261	COVER	Was 6734520 [A]		1
11	6706572	SET SCREW			2
12	7116280	ROD			1
13	6513495	COTTER PIN			2
14	2F4051	PIN			1
15	6700743	SPRING			1
16	62D4	NUT			2
17	6700170	WASHER	plastic		4
18	6559479	NUT	retaining		1
19	1304227	PIN			1
20	6734503	CLEVIS			1
21	6735680	FOOT PEDAL			1
22	6554100	TREAD	3" x 6" (76,2 mm x 152,4 mm)		1
23	84G3712	BOLT			3
24	6731900	ROD			1
25	6732322	SPACER			1
26	45C616	BOLT			1
27	6577961	GROMMET			1
28	6734417	LEVER			1
29	6564343	SPACER			1
30	619021	WASHER, 5			2
31	84G3720	BOLT			1
32	31H38	CLAMP			1
33	6732323	BRACKET			1
34	85D6	LOCK NUT			1

ENGINE & UPPER GASKET KIT

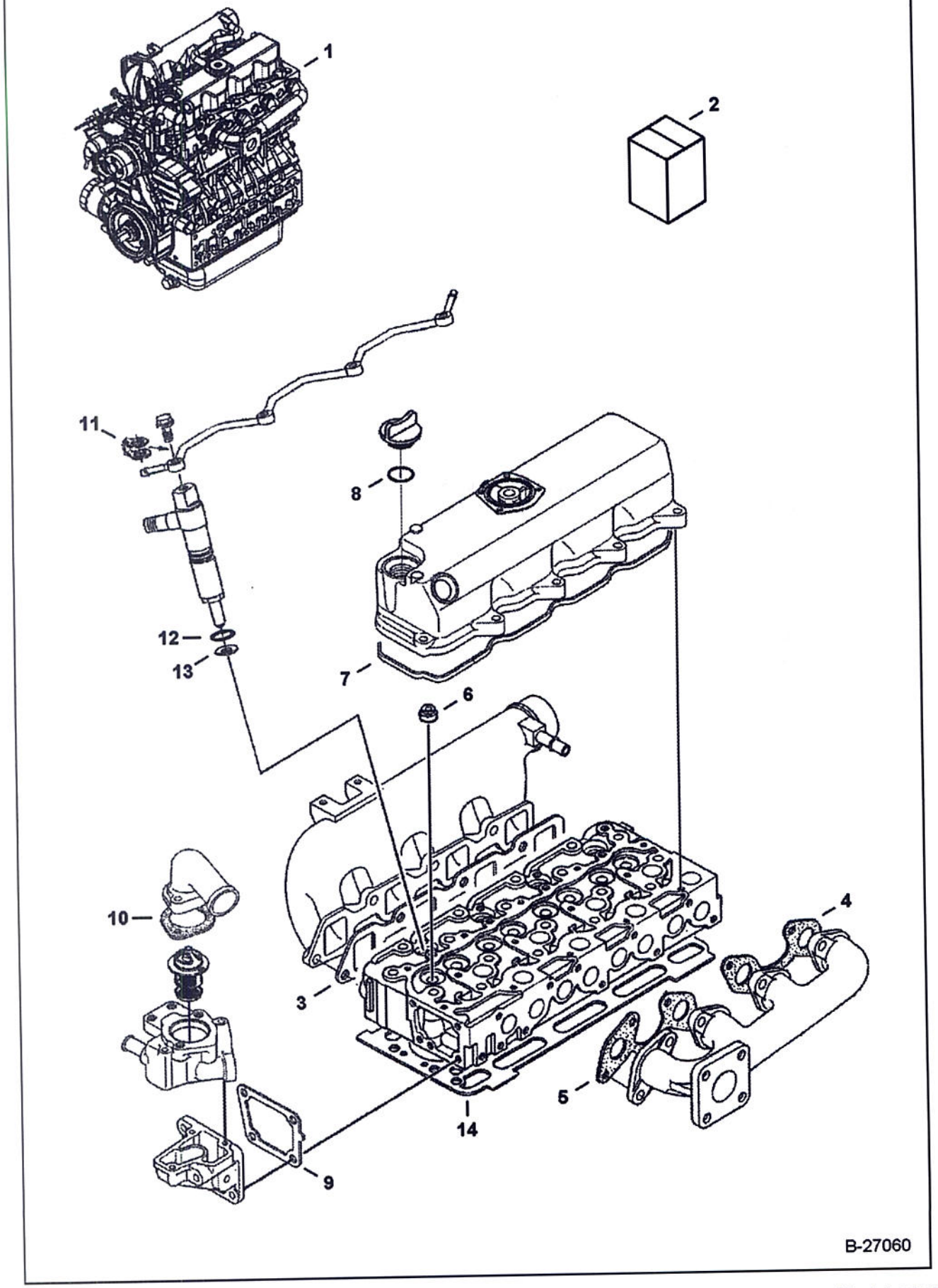

Ref No	Part Number	Description	Remarks	Serial Number	Qty
1	7121052	ENGINE, V2403NA			1
2	6689012	UPPER GASKET KIT TIER II ENGINE	Ref. 3-13		1
3	6684877	GASKET	See Illustration MANIFOLDS/ B27073 - intake manifold		1
4	6666791	GASKET	See Illustration MANIFOLDS/ B27073 - exhaust - rear		1
5	6666781	GASKET	See Illustration MANIFOLDS/ B27073 - exhaust - front		1
6	6653830	SEAL, STEM VALVE	See Illustration CYLINDER HEAD/ B27066		8
7	6684780	GASKET	See Illustration ROCKER ARM COVER/ B27064 - rocker arm cover		1
8	6684782	O-RING	See Illustration ROCKER ARM COVER/ B27064 - oil filler cap		1
9	6666802	GASKET	See Illustration WATER FLANGE & THERMOSTAT/ B27072 - water flange		1
10	6684863	GASKET	See Illustration WATER FLANGE & THERMOSTAT/ B27072 - thermostat		1
11	6685498	GASKET	See Illustration INJECTOR NOZZLES/ B27078 - return line		4
12	6670769	O-RING	See Illustration INJECTOR NOZZLES/ B27078 - injector nozzle		4
13	6969824	GASKET	See Illustration INJECTOR NOZZLES/ B27078 - heat shield		4
14		GASKET, HEAD	See Illustration CYLINDER HEAD/ B27066 - not in kit		x

ENGINE & LOWER GASKET KIT

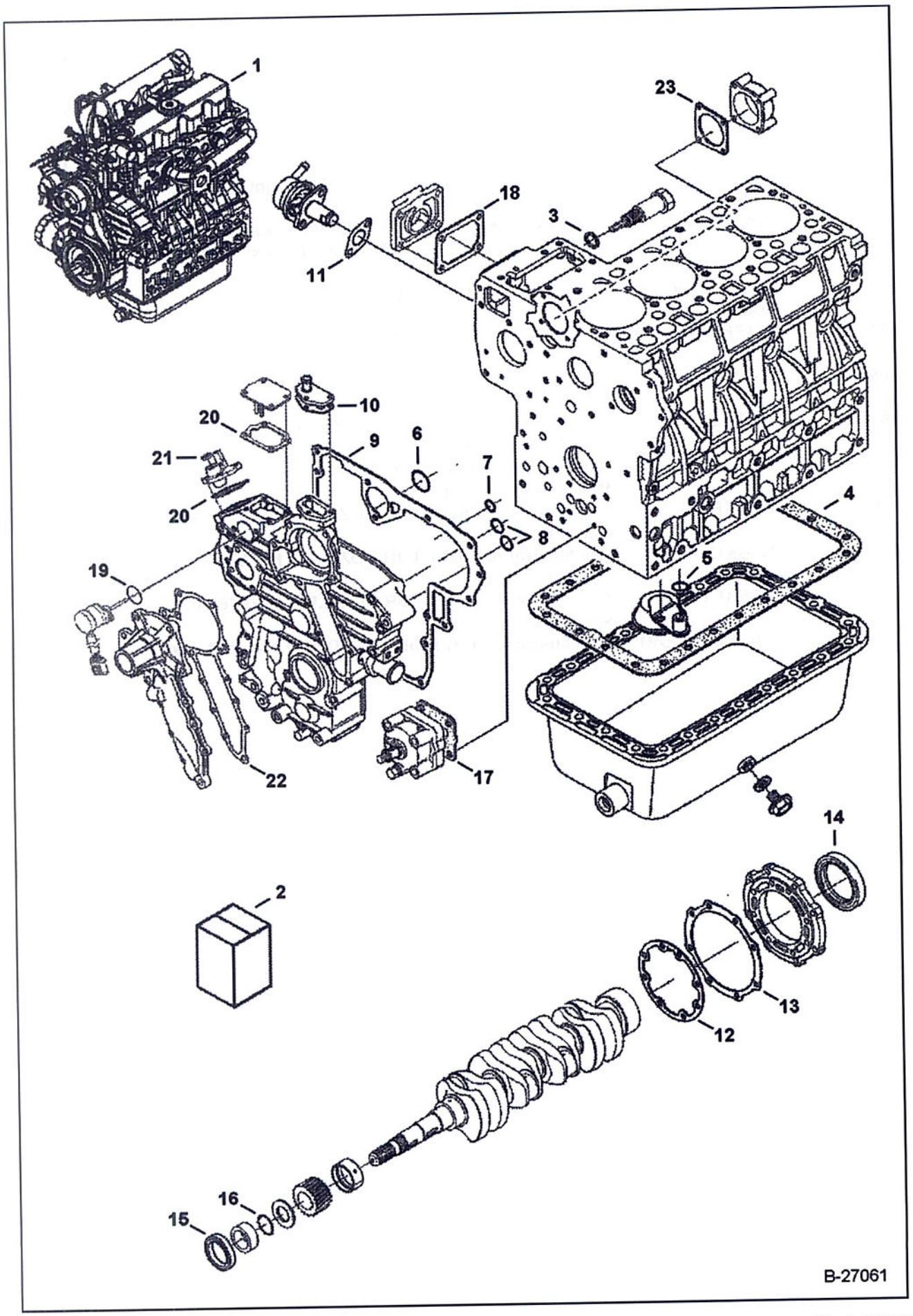

Ref No	Part Number	Description	Remarks	Serial Number	Qty
1	7121052	ENGINE, V2403NA			1
2	6689018	LOWER GASKET KIT TIER II ENGINE	Ref. 3-23		1
3	6684818	SEAL	See Illustration SPEED CONTROL PLATE/ B27076		1
4	6666817	GASKET	See Illustration OIL PAN/ B27067 - oil pan		1
5	6684754	O-RING	See Illustration OIL PAN/ B27067		1
6	6685466	O-RING	See Illustration GEARCASE/ B27062		1
7	6685467	O-RING	See Illustration GEARCASE/ B27062		2
8	6685468	O-RING	See Illustration GEARCASE/ B27062		1
9	6684770	GASKET	See Illustration GEARCASE/ B27062 - gear case		1
10	6666803	GASKET	See Illustration GEARCASE/ B27062 - return flange		1
11	6686037	GASKET	See Illustration FUEL AND INJECTION PUMP/ B27077 - fuel pump		1
12	6684788	GASKET	See Illustration CRANKCASE/ B27063 - bearing case		1
13	6666814	GASKET	See Illustration CRANKCASE/ B27063 - case cover		1
14	6684789	SEAL	See Illustration CRANKCASE/ B27063 - oil		1
15	6631664	SEAL	See Illustration CRANKCASE/ B27063 - oil		1
16	3974577	O RING	See Illustration CRANKCASE/ B27063		1
17	6666782	GASKET	See Illustration CRANKCASE/ B27063 - oil pump		1
18	6666783	GASKET	See Illustration CRANKCASE/ B27063 - pump cover		1
19	6685465	O-RING	See Illustration ENGINE STOP LEVER/ B27074		1
20	6684841	GASKET	See Illustration ENGINE STOP LEVER/ B27074 See Illustration SPEED CONTROL PLATE/ B27076 - plate		2
21	6685476	SEAL	See Illustration SPEED CONTROL PLATE/ B27076		1
22	6684870	GASKET	See Illustration WATER PUMP/ B27071 - water pump		1
23	6692386	GASKET	See Illustration FUEL CAMSHAFT/ B27069		1

GEARCASE

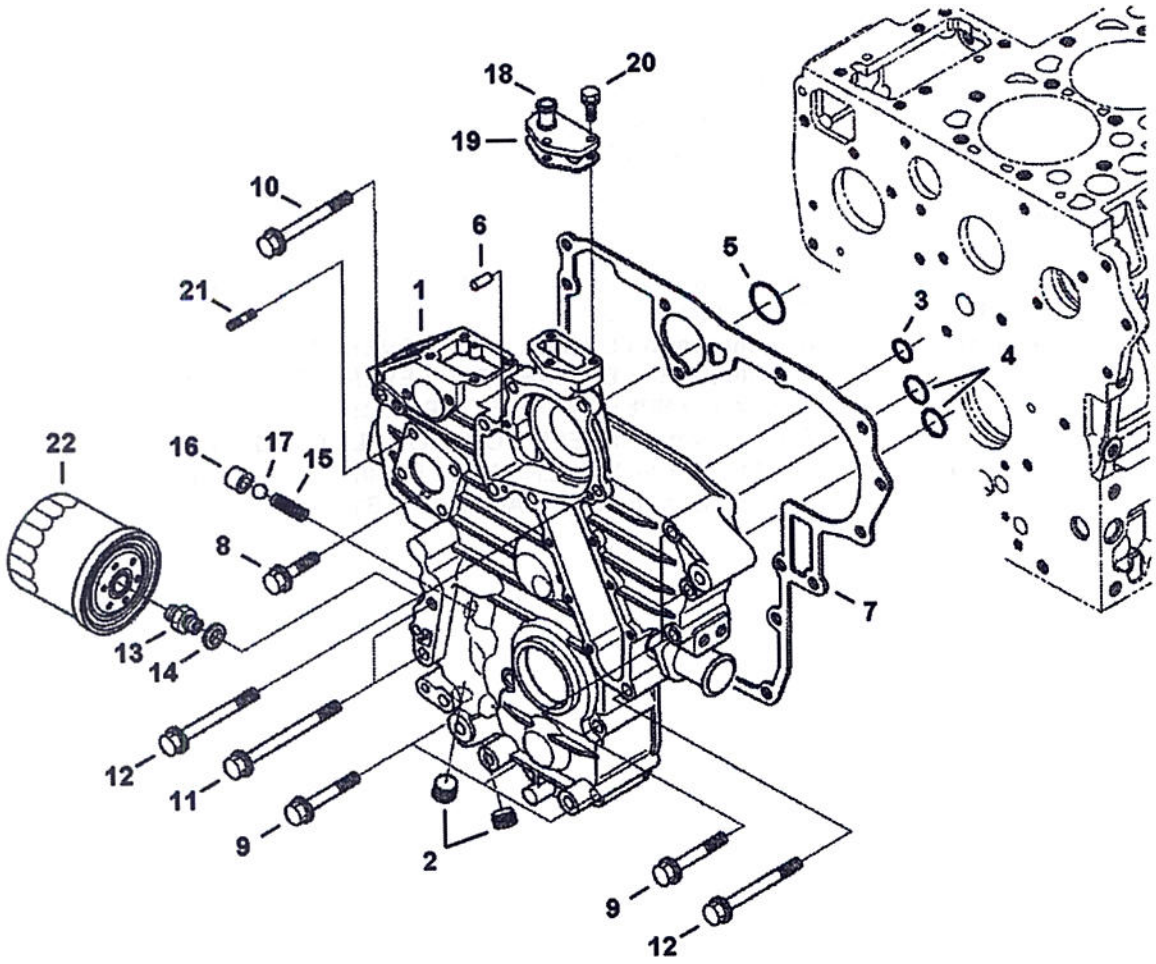

B-27062

Page 738 - BOBMO2923B1001 - 04/08/2009 12:26:18 - Printed by Bob Cook Co. - Copyrighted Material

Ref No	Part Number	Description	Remarks	Serial Number	Qty
1	6686045	HOUSING, GEARCASE	W/Ref. 2		1
2	6672360	PLUG			2
3	6685466	O-RING			1
4	6685467	O-RING			2
5	6685468	O-RING			1
6	3974395	PIN			2
7	6684770	GASKET			1
8	6680706	BOLT			1
9	6692375	BOLT			7
10	6680686	BOLT			1
11	6692376	BOLT			2
12	6692377	BOLT			4
13	6653809	CONNECTOR			1
14	6685501	WASHER			1
15	6652652	SPRING			1
16	3974893	SEAT			1
17	6969574	BALL			1
18	3974894	FLANGE			1
19	6666803	GASKET			1
20	4CM620	BOLT			3
21	6652764	STUD			4
22	6675517	FILTER, OIL ENG			1

CRANKCASE

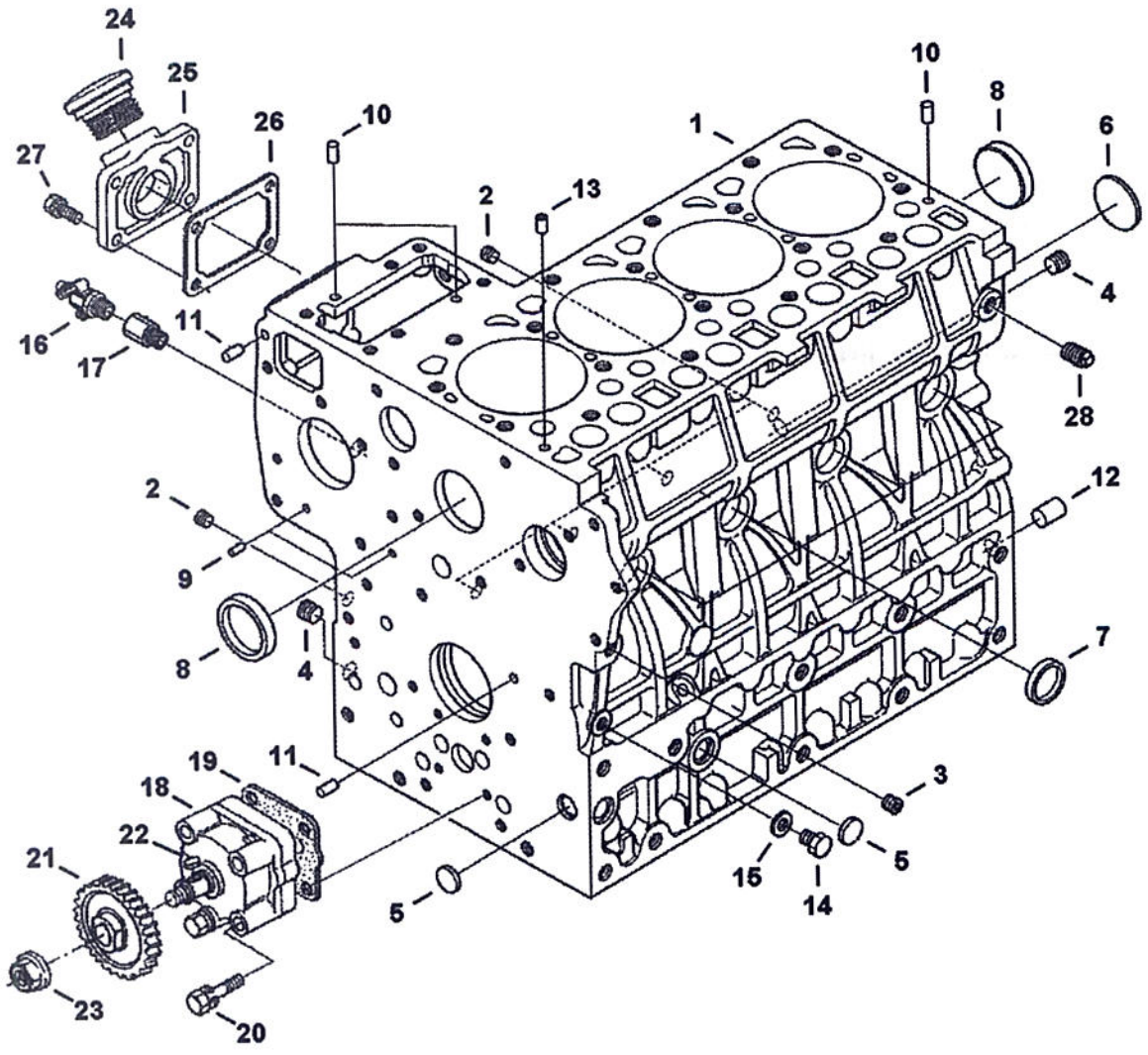

B-27063

Ref No	Part Number	Description	Remarks	Serial Number	Qty
1	6698098	BLOCK, ENGINE	W/Ref. 2-13		1
2	6652574	PLUG			5
3	6655869	PLUG			1
4	6652575	PLUG			2
5	6667418	PLUG			3
6	6657663	PLUG			1
7	3974389	CAP, SEALING			6
8	3974390	PLUG			2
9	3974393	PIN			2
10	3974394	PIN			3
11	3974395	PIN			2
12	3974868	PIN			1
13	3974037	PIN			1
14	6683104	PLUG			1
15	3974095	MET-GASK			1
16	6672190	DRAINCOCK			1
17	3974871	CONNECTOR			1
18	6689441	PUMP, OIL ENG			1
19	6666782	GASKET			1
20	6670770	BOLT			4
21	3975441	GEAR			1
22	6969805	KEY,FEATHER			1
23	6653888	NUT			1
24	6685472	CAP			1
25	6685478	FLANGE			1
26	6666783	GASKET			1
27	6652580	BOLT			4
28	16F2	PLUG			1

ROCKER ARM COVER

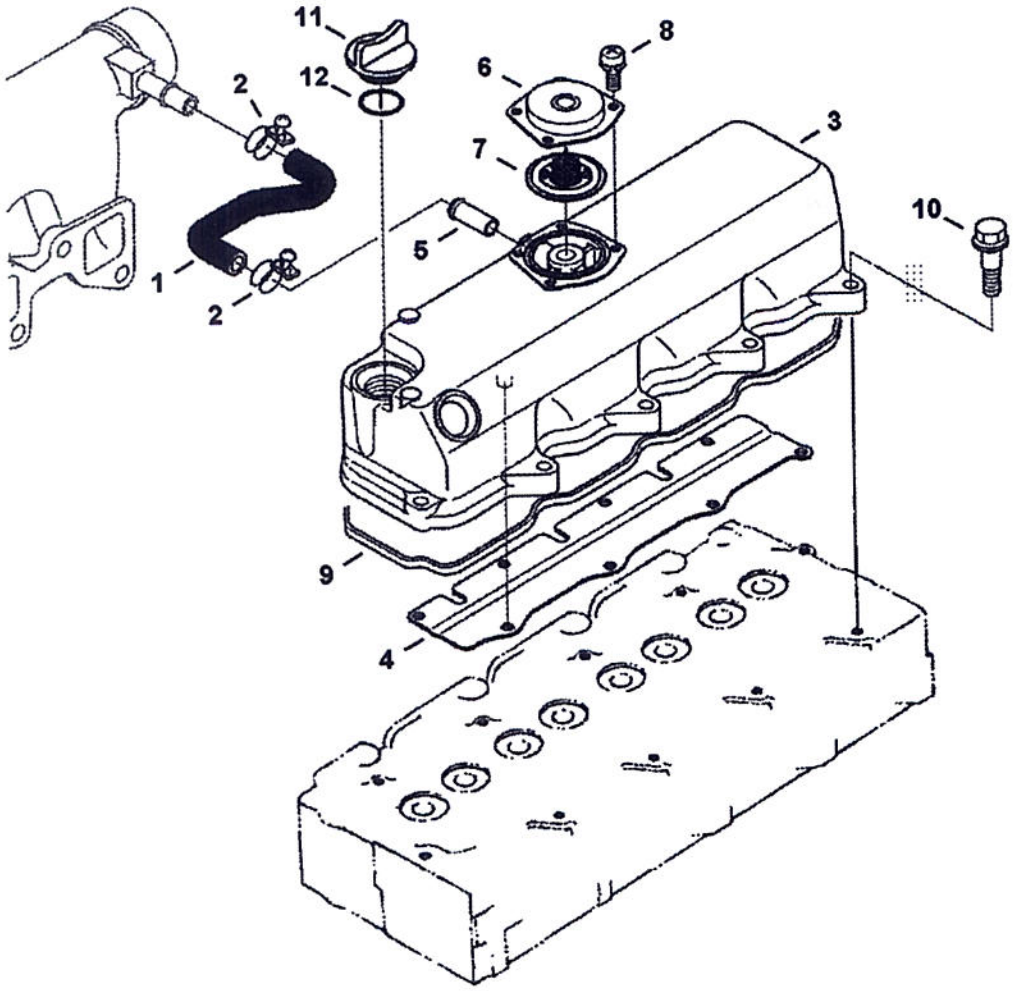

B-27064

Ref No	Part Number	Description	Remarks	Serial Number	Qty
1	6685524	PIPE			1
2	3974679	BAND			2
3	6685085	COVER	W/Ref. 4-8		1
4	6684779	SHIELD			1
5	6655880	PIPE			1
6	6969803	COVER, BREATHER			1
7	6685087	VALVE			1
8	3975436	SCREW			4
9	6684780	GASKET			1
10	6684781	BOLT			10
11	6652653	PLUG			1
12	6684782	O-RING			1

VALVE AND ROCKER ARM

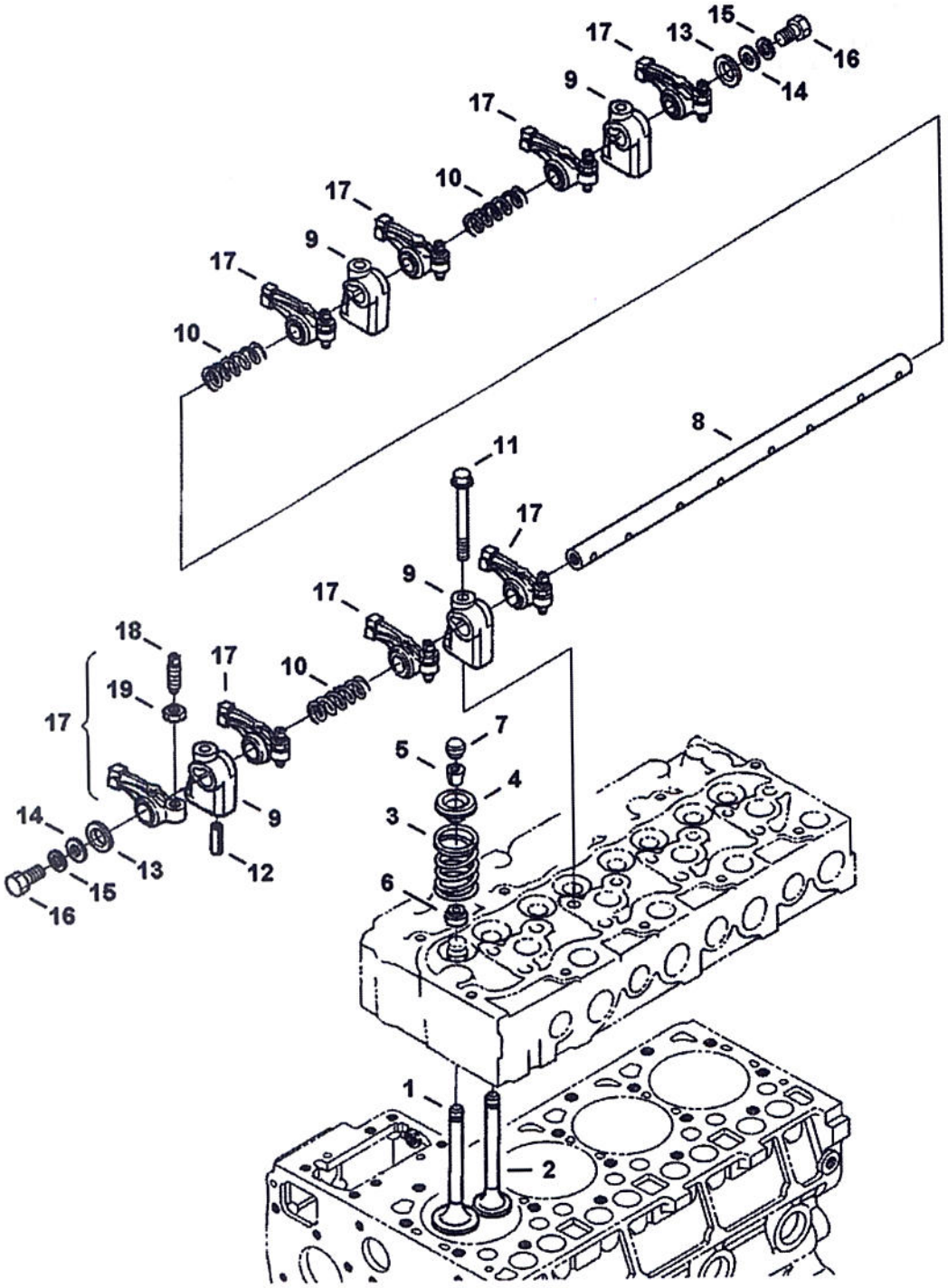

Ref No	Part Number	Description	Remarks	Serial Number	Qty
1	6684872	VALVE	intake		4
2	6684873	VALVE	exhaust		4
3	3974514	SPRING 5	valve		8
4	3974515	RETAINER	valve spring		8
5	6684874	COLLAR	set		8
6	6653830	SEAL, STEM VALVE			8
7	3974518	CAP	valve		8
8	6684875	SHAFT	rocker arm		1
9	3974521	MOUNT	rocker arm		4
10	6653833	SPRING	rocker arm		3
11	6680685	BOLT			4
12	6667461	PIN	spring		1
13	3974524	WASHER	rocker arm		2
14	6667451	WASHER	plain		2
15	6667422	WASHER	spring		2
16	5CM812	BOLT			2
17	6655870	ROCKER ARM	W/Ref. 18 & 19		8
18	3974920	SCREW	adjusting		8
19	2DM8	NUT			8

CYLINDER HEAD

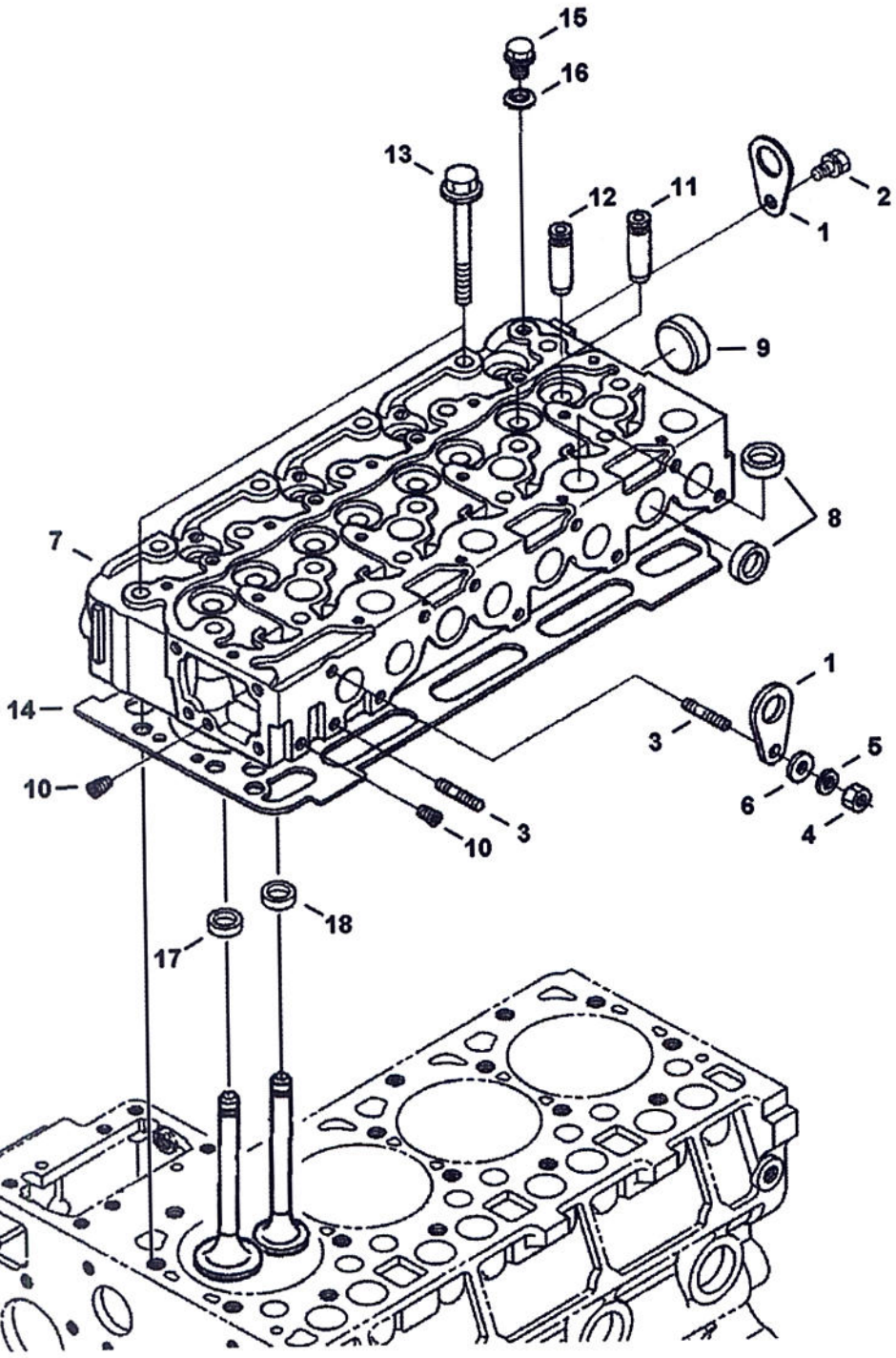

Ref No	Part Number	Description	Remarks	Serial Number	Qty
1	3974882	HOOK			2
2	6667421	BOLT			1
3	6598156	STUD			2
4	6652792	NUT			1
5	6667422	WASHER			1
6	6969796	WASHER, PLAIN			1
7	6698099	HEAD, CYLINDER	W/Ref. 8-12		1
8	3974432	PLUG			12
9	3974433	PLUG			1
10	6598116	PLUG			2
11	6655154	GUIDE			4
12	6969990	GUIDE			4
13	6655158	BOLT			18
14	6685078	GASKET	- 15		1
14	6685077	GASKET	- 20		1
14	6685079	GASKET	- 25		1
14	6685080	GASKET	- 30		1
14	6685081	GASKET	- 35		1
15	6655160	PLUG			1
16	6655161	WASHER			1
17	6655155	SEAT	valve		4
18	6655156	SEAT	valve		4

OIL PAN

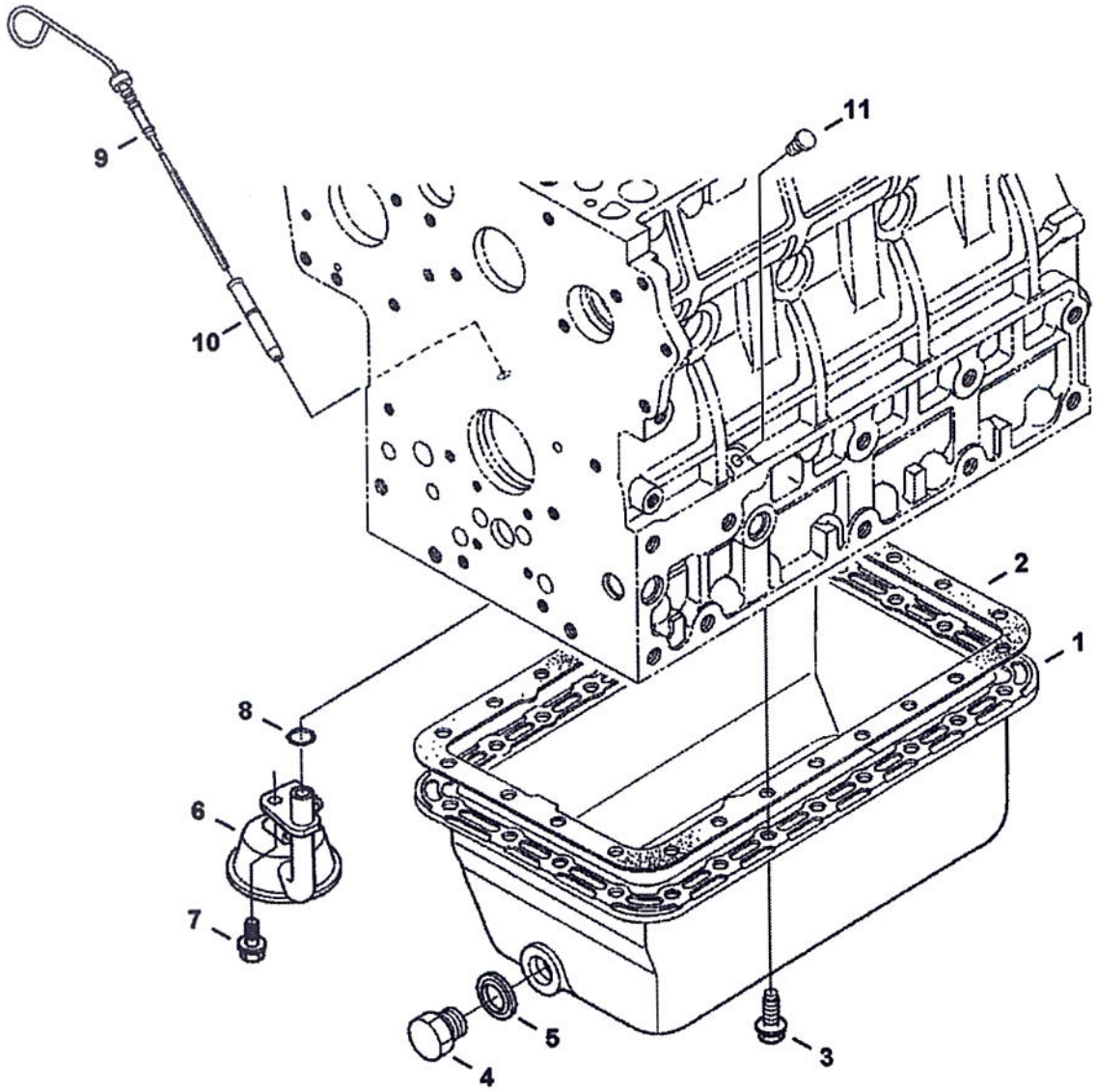

B-27067

Ref No	Part Number	Description	Remarks	Serial Number	Qty
1	6685518	OIL PAN			1
2	6666817	GASKET			1
3	6698100	BOLT, FLANGE			24
4	6680657	PLUG			1
5	6631046	SEAL			1
6	6682500	FILTER			1
7	6685109	BOLT			1
8	6684754	O-RING			1
9	6685499	DIPSTICK			1
10	6677203	GUIDE			1
11	6969804	PLUG,OIL GAUGE			1

PISTON & CRANKSHAFT

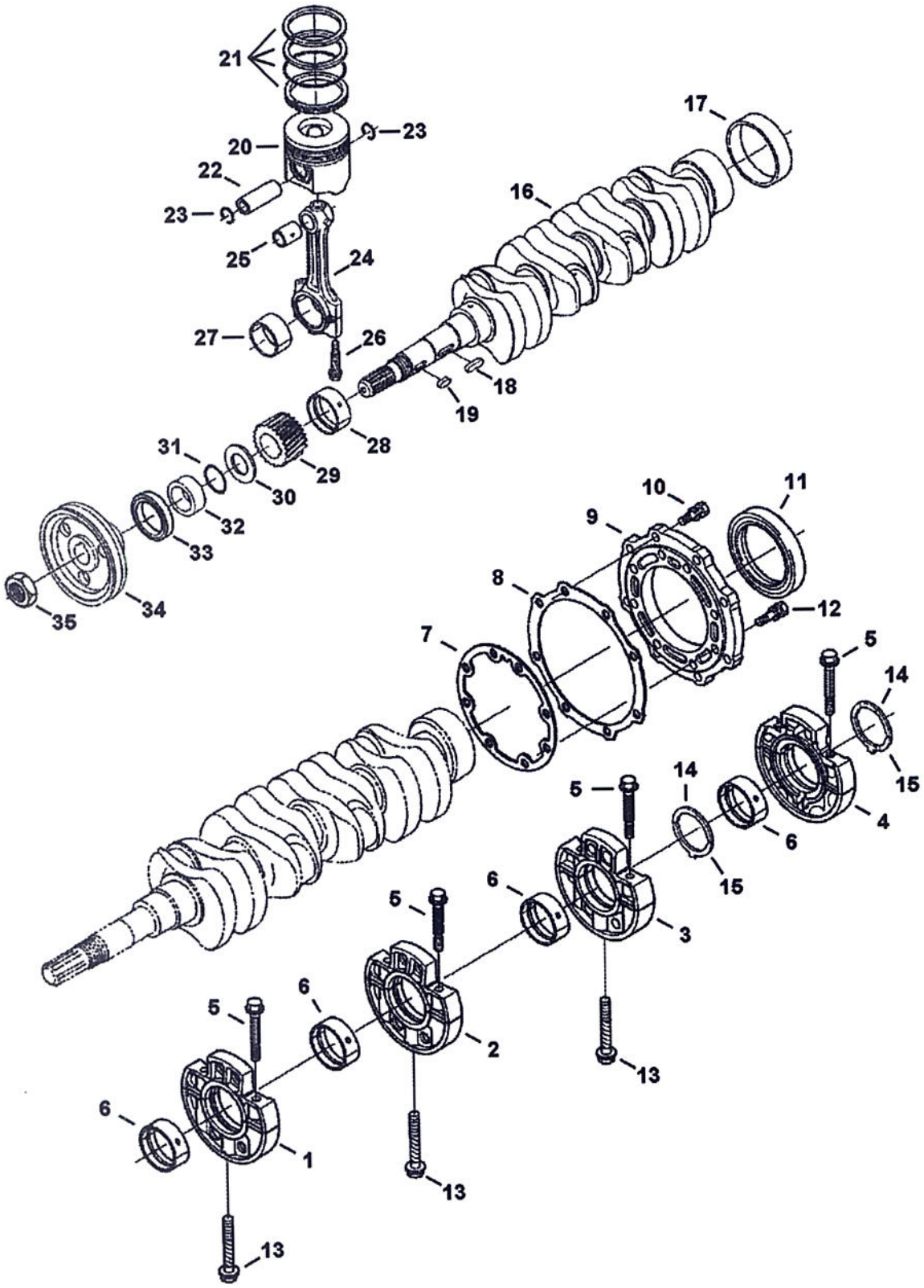

Ref No	Part Number	Description	Remarks	Serial Number	Qty
1	6685483	CASE, MAIN BRG.	W/Ref. 5 & 6		1
2	6685484	CASE, MAIN BRG.	W/Ref. 5 & 6		1
3	6685485	CASE	W/Ref. 5 & 6		1
4	6689503	CASE MAIN BRG	W/Ref. 5 & 6		1
5	6685482	BOLT			2
6	6685487	BEARING	main - std.		1
6	6685492	BEARING	main (-0,20 mm)		1
6	6685493	BEARING	main (-0,40 mm)		1
7	6684788	GASKET			1
8	6666814	GASKET			1
9	6698101	COVER, BRG CASE			1
10	6969807	BOLT			8
11	6684789	SEAL			1
12	6969808	BOLT			8
13	6653821	BOLT			3
14	6685488	WASHER	side thrust - std		2
14	6685494	WASHER	side thrust - (+0,20 mm)		2
14	6685495	WASHER	side thrust - (+0,40 mm)		2
15	6685489	WASHER	side thrust - std		2
15	6685496	WASHER	side thrust - (+0,20 mm)		2
15	6685497	WASHER	side thrust - (+0,40 mm)		2
16	6698108	CRANKSHAFT			1
17	6653859	SLEEVE			1
18	6684809	KEY			1
19	3974546	KEY			1
20	6698102	PISTON	std (00)		4
20	6698103	PISTON	+0,25 mm (00)		4
20	6698104	PISTON	std (05)		4
20	6698105	PISTON	+0,25 mm (05)		4
20	6698106	PISTON	std (10)		4
20	6698107	PISTON	+0,25 mm (10)		4
21	6685095	RING	piston - std		4
21	6685096	RING	piston - (+0,25 mm)		4
22	6692396	PIN			4
23	6686997	CIR-CLIP			8
24	6655181	ROD, CONNECTING	W/Ref. 25-27		4
25	6655243	BUSHING			4
26	6655498	BOLT			8
27	6655183	BEARING	rod - std.		4
27	6655236	BEARING	rod (-0,20 mm)		4
27	6655237	BEARING	rod (-0,40 mm)		4
28	6685486	BEARING	main - std.		1
28	6685490	BEARING	main (-0,20 mm)		1
28	6685491	BEARING	main (-0,40 mm		1
29	6684808	GEAR			1
30	6653861	SLINGER, OIL			1
31	3974577	O RING			1
32	3975337	COLLAR			1
33	6631664	SEAL			1
34	6685521	PULLEY			1
35	3974671	NUT			1

FUEL CAMSHAFT

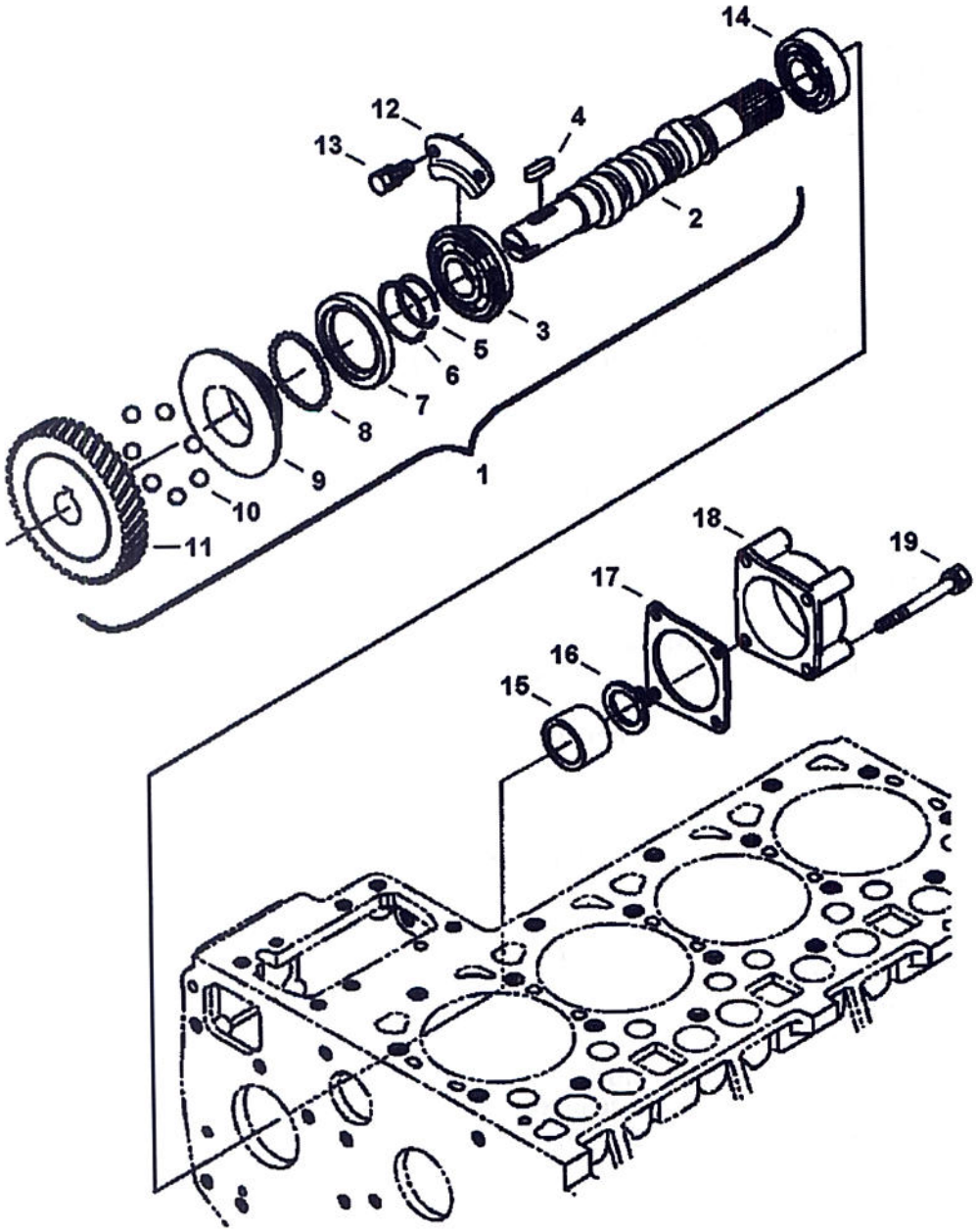

B-27069

Ref No	Part Number	Description	Remarks	Serial Number	Qty
1	6698109	CAMSHAFT, FUEL	Ref. 2-11		1
2		CAMSHAFT	NSS - Order Ref. 1		1
3	6698110	BEARING, BALL			1
4	6598099	KEY			1
5	3974618	CIR-CLIP	governor sleeve		1
6	3974620	CIR-CLIP			1
7	6692385	CASE	governor ball		1
8	6969817	BALL			39
9	6655213	SLEEVE	governor		1
10	6655215	BALL			7
11	6655212	GEAR			1
12	6686047	STOPPER	fuel camshaft		1
13	6667420	BOLT			2
14	6686042	BEARING, BALL			1
15	6686041	COLLAR			1
16	6698111	CIRCLIP			1
17	6692386	GASKET	cover		1
18	3974996	COVER	fuel camshaft		1
19	6651934	BOLT			4

CAMSHAFT

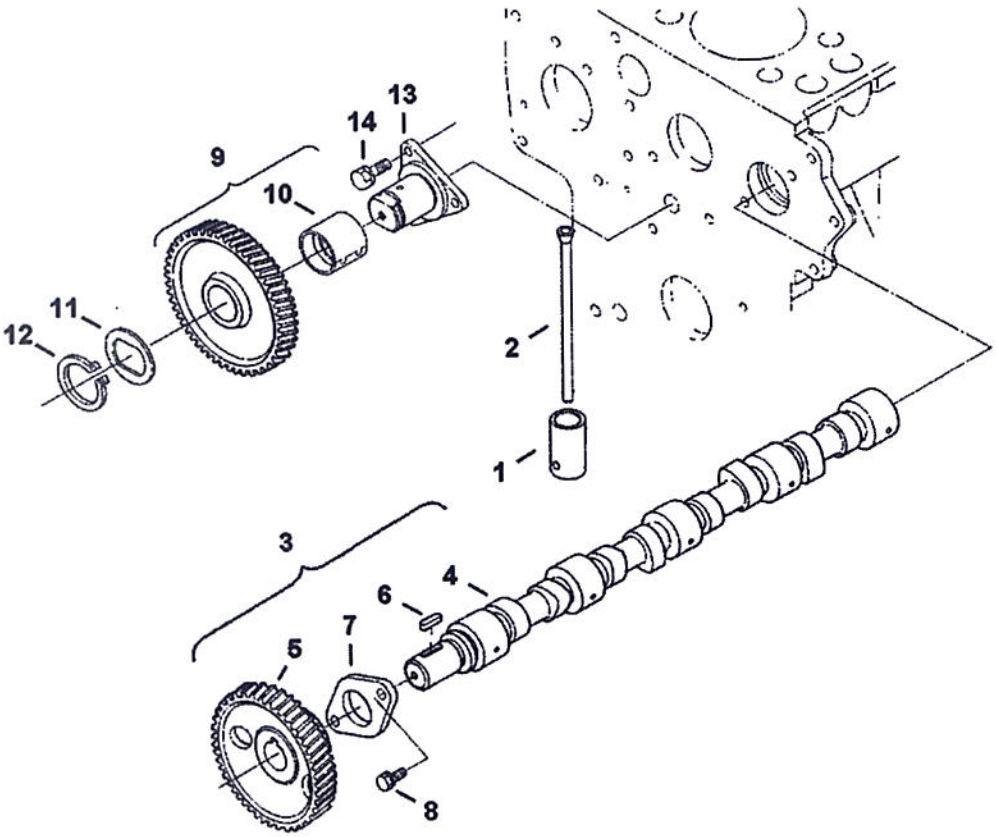

B-27070

Page 754 - BOBM029239B1001 - 04/08/2009 14:40:18 - Printed by John Deere

Ref No	Part Number	Description	Remarks	Serial Number	Qty
1	6667428	TAPPET			8
2	6686035	PUSH ROD			8
3	6698112	CAMSHAFT	Ref. 4-7		1
4		CAMSHAFT	NSS - Order Ref. 3		1
5	6684792	GEAR	camshaft		1
6	3974546	KEY			1
7	3974547	STOPPER	camshaft		1
8	6969812	BOLT			2
9	6684793	GEAR	idle - W/Ref. 10		1
10	6684794	BUSHING	idle gear		1
11	6684795	COLLAR			1
12	6667433	CIRCLIP			1
13	6698113	SHAFT, IDLE GEAR			1
14	6969812	BOLT			3

WATER PUMP

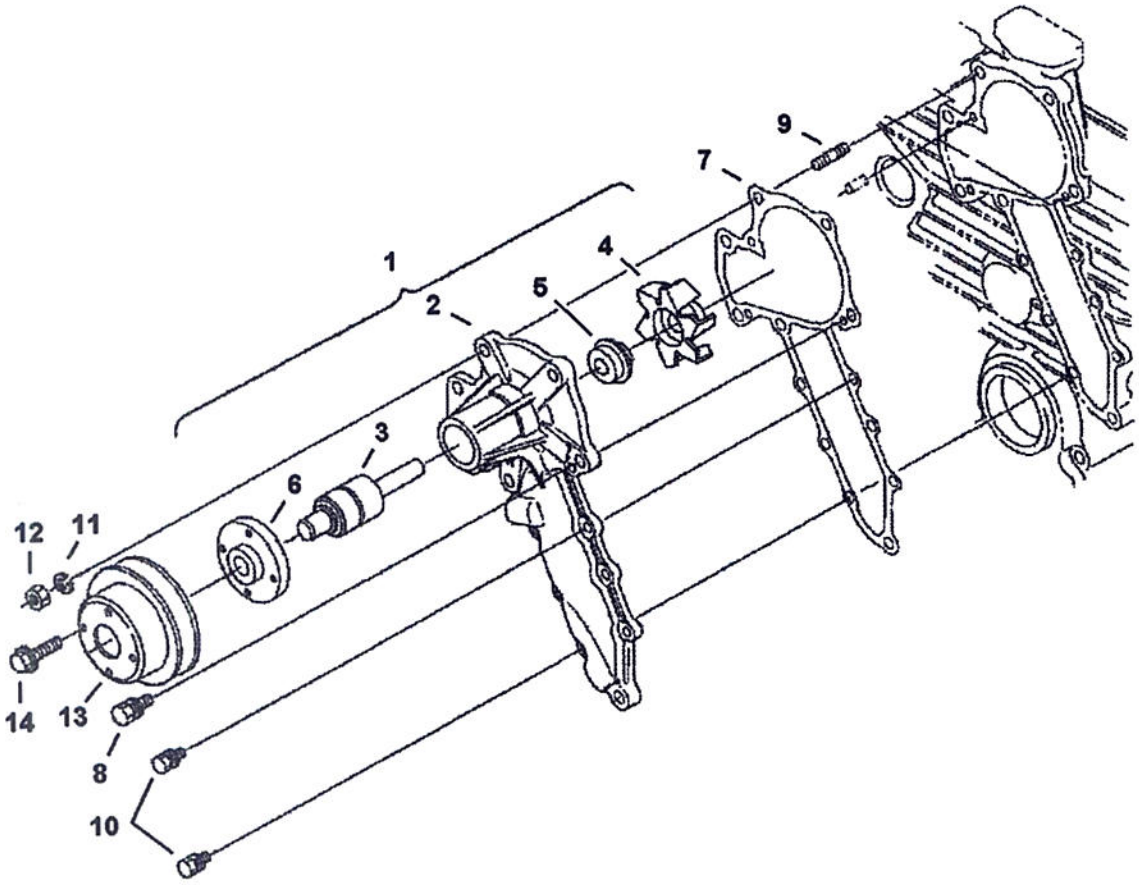

B-27071

Ref No	Part Number	Description	Remarks	Serial Number	Qty
1	6685105	PUMP	Ref. 2-6		1
2		HOUSING	NAP - Order Ref. 1		1
3	6685474	BEARING			1
4	6667460	IMPELLER			1
5	6684868	SEAL			1
6	6684869	FLANGE			1
7	6684870	GASKET			1
8	6969808	BOLT			2
9	3974267	STUD			1
10	6652580	BOLT			6
11	6667422	WASHER			1
12	6652792	NUT			1
13	6674169	PULLEY			1
14	29CM612	BOLT			4

Page 757 - BUBM02923981001 - 04/08/2009 12:26:18 - Printed by Ken Cook Co. - eXprint.exe (v2.24.7 4/7/2009)

WATER FLANGE & THERMOSTAT

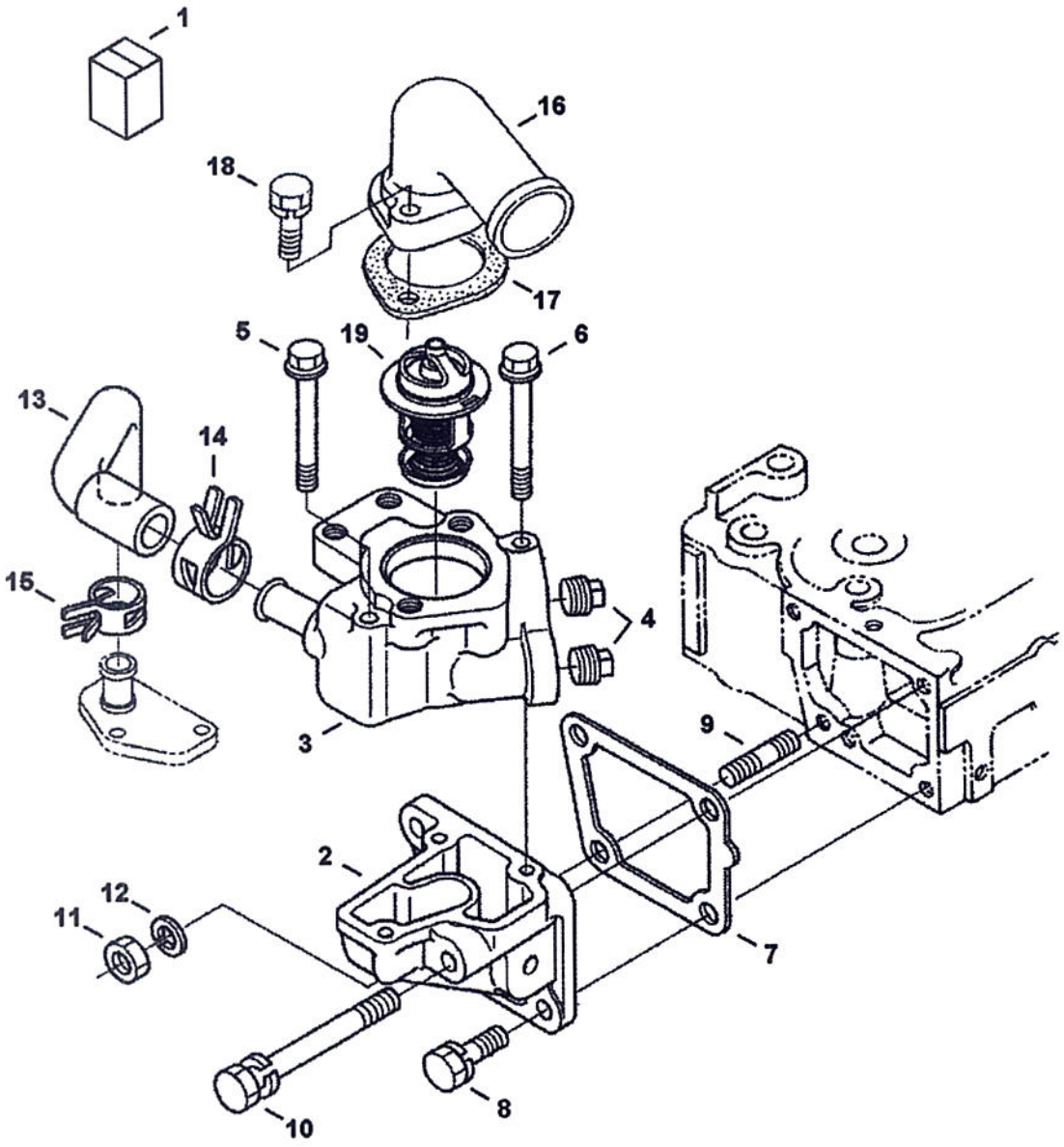

B-27072

Page 758 - BORM0232391001 - 04/08/2009 12:26:18 - Printed by Ken Cook Co. - eXprint.exe (v2.24.7 4/7/2009)

Ref No	Part Number	Description	Remarks	Serial Number	Qty
1	6684854	FLANGE ASSY	Ref. 2-6		1
2		FLANGE, WATER LOWER	NSS - Order Ref. 1		1
3		FLANGE, WATER UPPER	NSS - Order Ref. 1		1
4	6684857	PLUG			2
5	6684858	BOLT			2
6	6685104	BOLT			1
7	6666802	GASKET			1
8	6657415	BOLT			2
9	6652670	STUD			1
10	6974675	BOLT			1
11	6652792	NUT			1
12	6667422	WASHER			1
13	6684862	PIPE			1
14	6698115	CLAMP, HOSE			1
15	6684889	CLAMP			1
16	6674173	COVER			1
17	6684863	GASKET			1
18	6969799	BOLT			2
19	6685520	THERMOSTAT			1

Page 759 - BOBM0292398B1001 - 04/08/2009 12:26:18 - Printed by Ken Cook Co. - eXprint.exe (v2.24.7 4/7/2009)

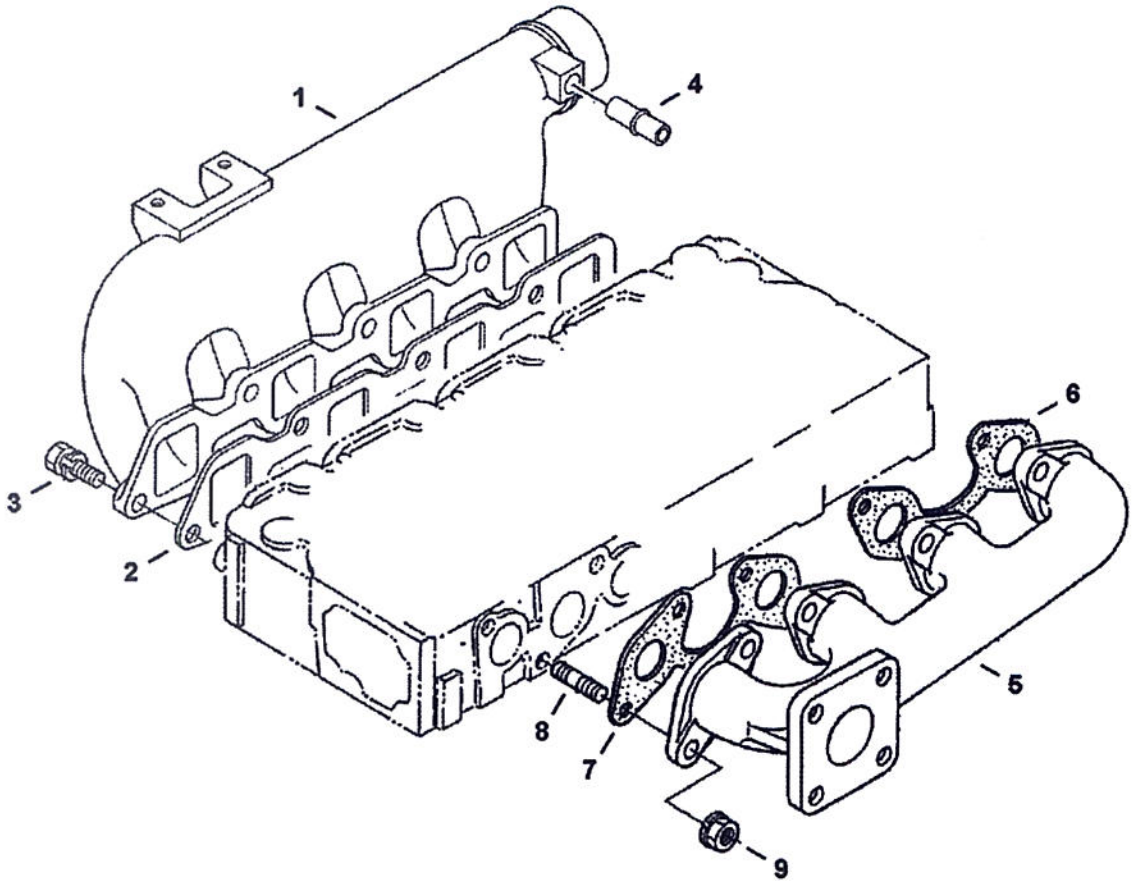

B-27073

Page 760 - BOBM02923901001 - 04/08/2009 12:26:18 - Printed by Ken Cook Co. - eXprint.exe (v2.24.7 4/7/2009

Ref No	Part Number	Description	Remarks	Serial Number	Qty
1	6685525	MANIFOLD	intake - W/Ref. 4		1
2	6684877	GASKET	intake manifold		1
3	4CM822	BOLT			7
4	6655880	PIPE			7
5	6685475	MANIFOLD	exhaust		1
6	6666791	GASKET	exhaust - rear		1
7	6666781	GASKET	exhaust - front		1
8	6652670	STUD			8
9	6682532	NUT			8

ENGINE STOP LEVER

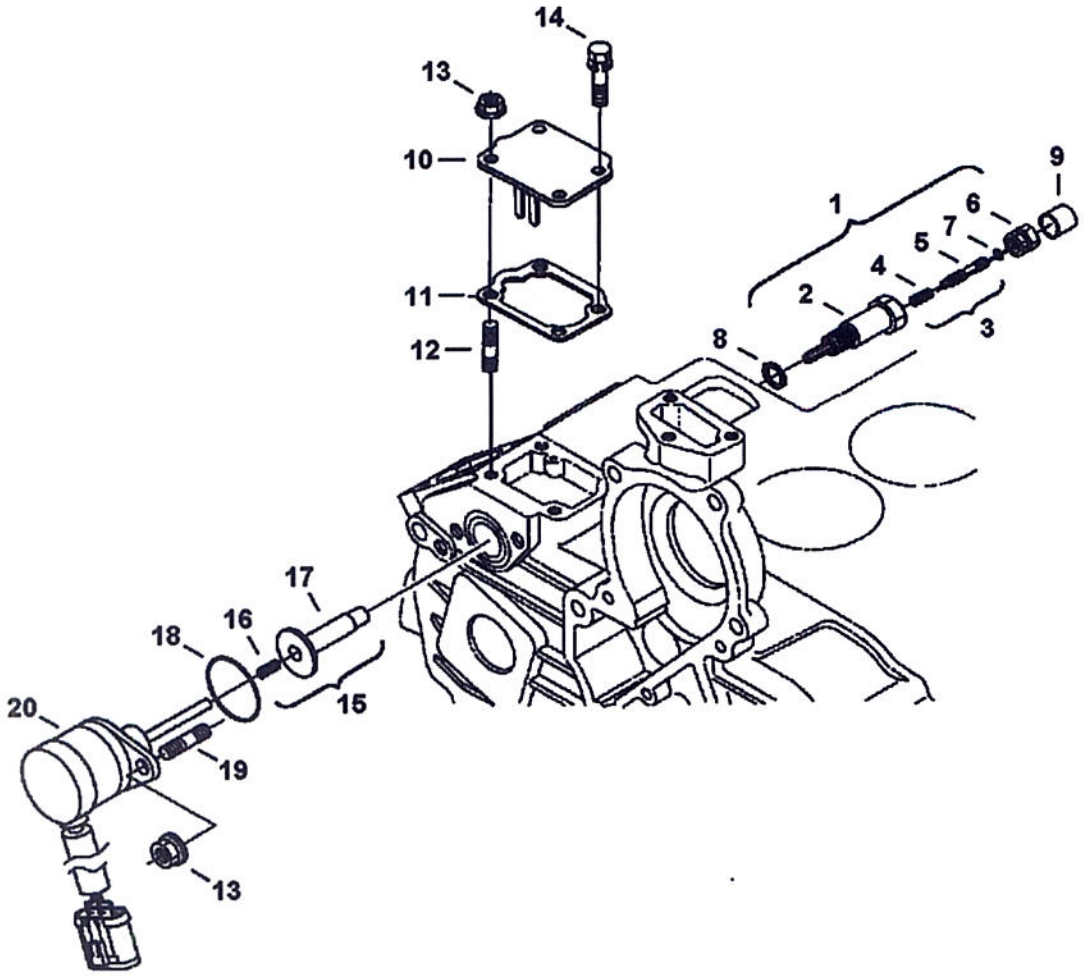

B-27074

Ref No	Part Number	Description	Remarks	Serial Number	Qty
1	6686334	CAMSHAFT	Ref. 2-6		1
2		APPARATUS, IDLE	NSS - Order Ref. 1		1
3	6685513	BOLT	assy - Ref. 4 & 5		1
4		SPRING	NSS - Order Ref. 3		1
5		BOLT, ADJUSTING	NSS - Order Ref. 3		1
6	6684817	NUT	spring		1
7	6684891	SEAL			1
8	6684818	SEAL			1
9	6684819	CAP			1
10	6698116	COVER	boost housing		1
11	6684841	GASKET	boost housing		1
12	6683087	STUD			2
13	6670533	NUT			4
14	4CM616	BOLT			2
15	6684825	GUIDE, SOLENOID			1
16		SPRING	NSS - Order Ref. 15		1
17		PLUNGER	NSS - Order Ref. 15		1
18	6685465	O-RING			1
19	6652764	STUD			2
20	6691498	SOLENOID, FUEL	stop		1

GOVERNOR

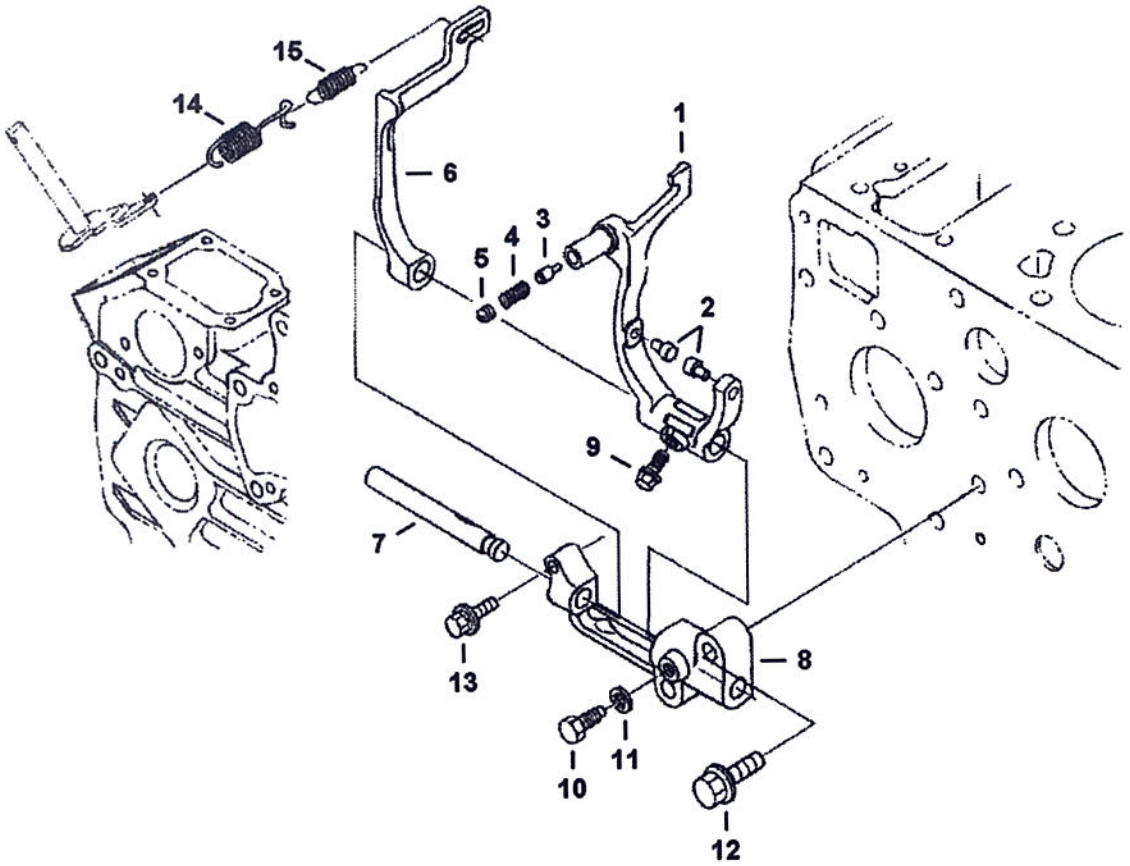

B-27037

Ref No	Part Number	Description	Remarks	Serial Number	Qty
1	6698426	LEVER, FORK	W/Ref. 2-11		1
2		PIN	NSS - Order Ref. 1		2
3		PIN	NSS - Order Ref. 1		1
4		SPRING	NSS - Order Ref. 1		1
5		SCREW, SET	NSS - Order Ref. 1		1
6	6684832	LEVER	fork		1
7	6684833	SHAFT	fork lever		1
8	6653916	HOLDER	fork lever		1
9	6680830	BOLT			1
10	3974662	BOLT			1
11	6667419	WASHER	spring		1
12	6680706	BOLT			2
13	6685464	BOLT			1
14	6689599	SPRING	governor		1
15	6685514	SPRING	governor		1

Page 765 - BOBM029239B1001 - 04/08/2009 12:26:18 - Printed by Ken Cook Co. - eXprint.exe (v2.24.7 4/7/2009)

SPEED CONTROL PLATE

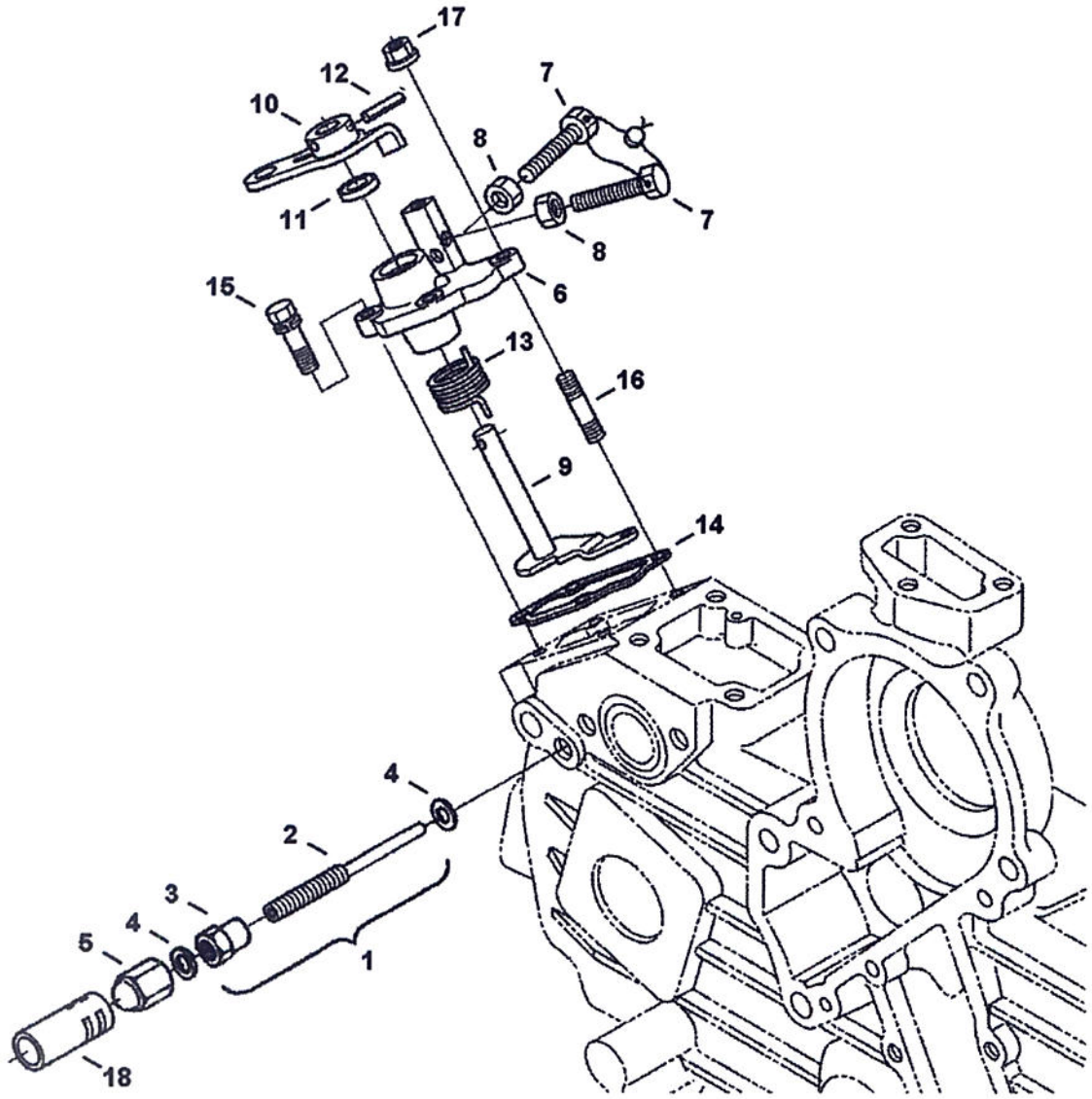

B-27076

Page 766 - BOBM029239B1001 - 04/08/2009 12:26:18 - Printed by Ken Cook Co. - eXprint.exe (v2.24.7 4/7/2009

SPEED CONTROL PLATE (Cont'd)

Ref No	Part Number	Description	Remarks	Serial Number	Qty
1	6684836	BOLT, ADJUSTING	assy - Ref. 2 & 3		1
2	6686985	BOLT, ADJUSTING			1
3	3974971	NUT			1
4	3974972	GASKET			2
5	6655223	NUT			1
6	6685526	PLATE, CONTROL	W/Ref. 7-13		1
7		BOLT	NSS - Order Ref. 6		2
8		NUT	NSS - Order Ref. 6		2
9	6684838	LEVER	governor		1
10	6684839	LEVER	speed control		1
11	6685476	SEAL	oil		1
12	6598098	PIN	spring		1
13	6684823	SPRING	return		1
14	6684841	GASKET	control plate		1
15	4CM620	BOLT			2
16	6652764	STUD			2
17	6670533	NUT			2
18		CAP, SECURITY	NAP		1

Page 767 - BOBM0292139B1001 - 04/08/2009 12:26:18 - Printed by Ken Cook Co. - eXprint.exe (v2.24.7 4/7/2009)

FUEL AND INJECTION PUMP

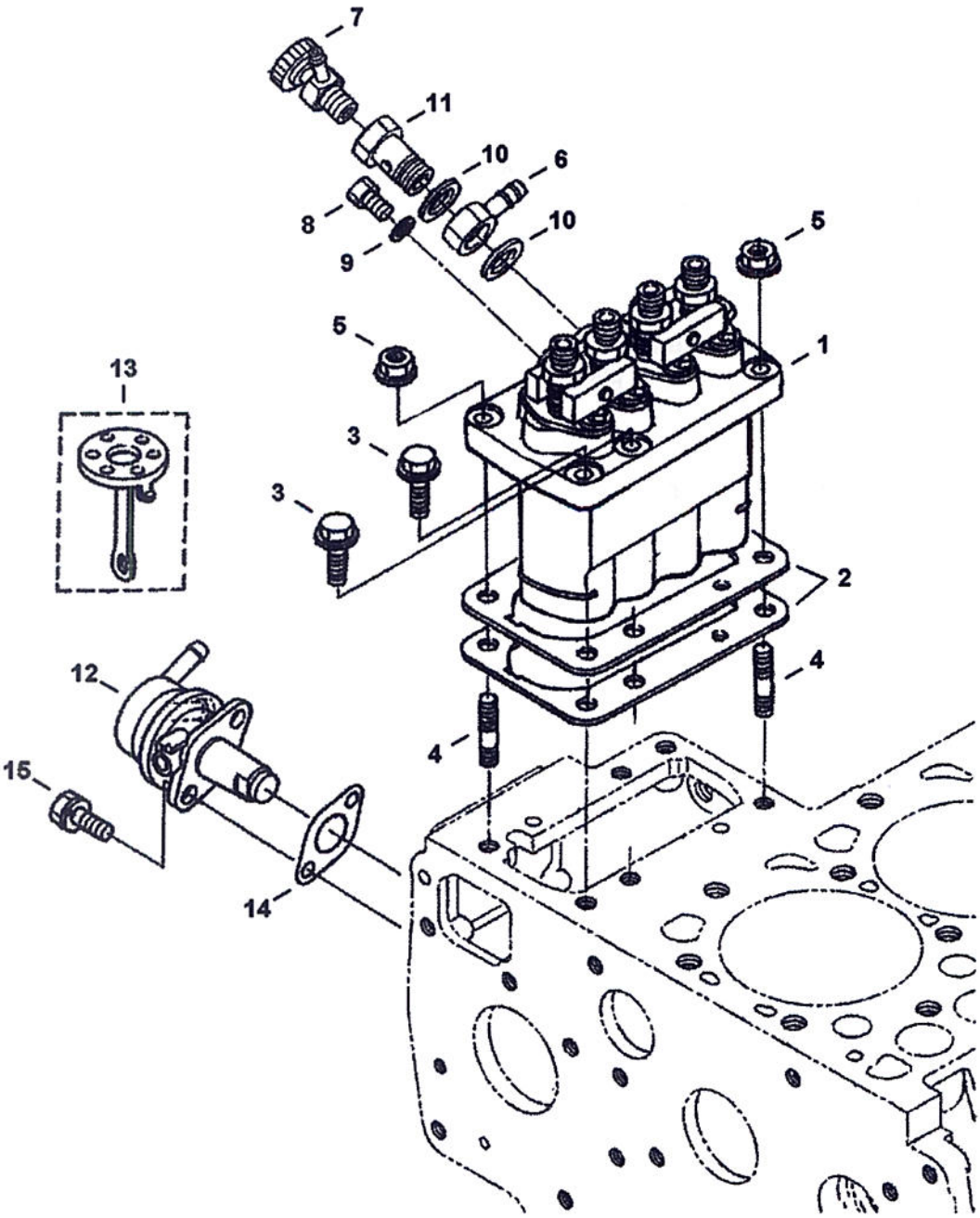

Page 768 - BOBM029239B1001 - 04/08/2009 12:26:18 - Printed by Ken Cook Co. - eXprint.exe (v2.24.7 4/7/2009

Ref No	Part Number	Description	Remarks	Serial Number	Qty
1	6698118	PUMP, INJECTION	assy		1
2	6698119	SHIM	0,175 mm - injection pump		1
2	3974626	SHIM	0,20 mm - injection pump		1
2	6682515	SHIM	0,25 mm - injection pump		1
2	6655210	SHIM	0,30 mm - injection pump		1
2	6684829	SHIM	0,35 mm - injection pump		1
3	6680801	BOLT			4
4	6652670	STUD			2
5	6969819	NUT, FLANGE			2
6	6513707	JOINT	eye		1
7	6598102	VALVE	jet start		1
8	6599084	SCREW	bleed		2
9	6685471	GASKET			2
10	3974403	GASKET			2
11	6685473	BOLT			1
12	6655216	FUEL PUMP	W/Ref. 13		1
13	6667458	DIAPHRAGM	replacement		1
14	6686037	GASKET	fuel pump		1
15	4CM616	BOLT			2

age 769 - BOBM0292398l001 - 04/08/2009 12:26:18 - Printed by Ken Cook Co. - eXprint.exe (v2.24.7 4/7/2009)

INJECTOR NOZZLES

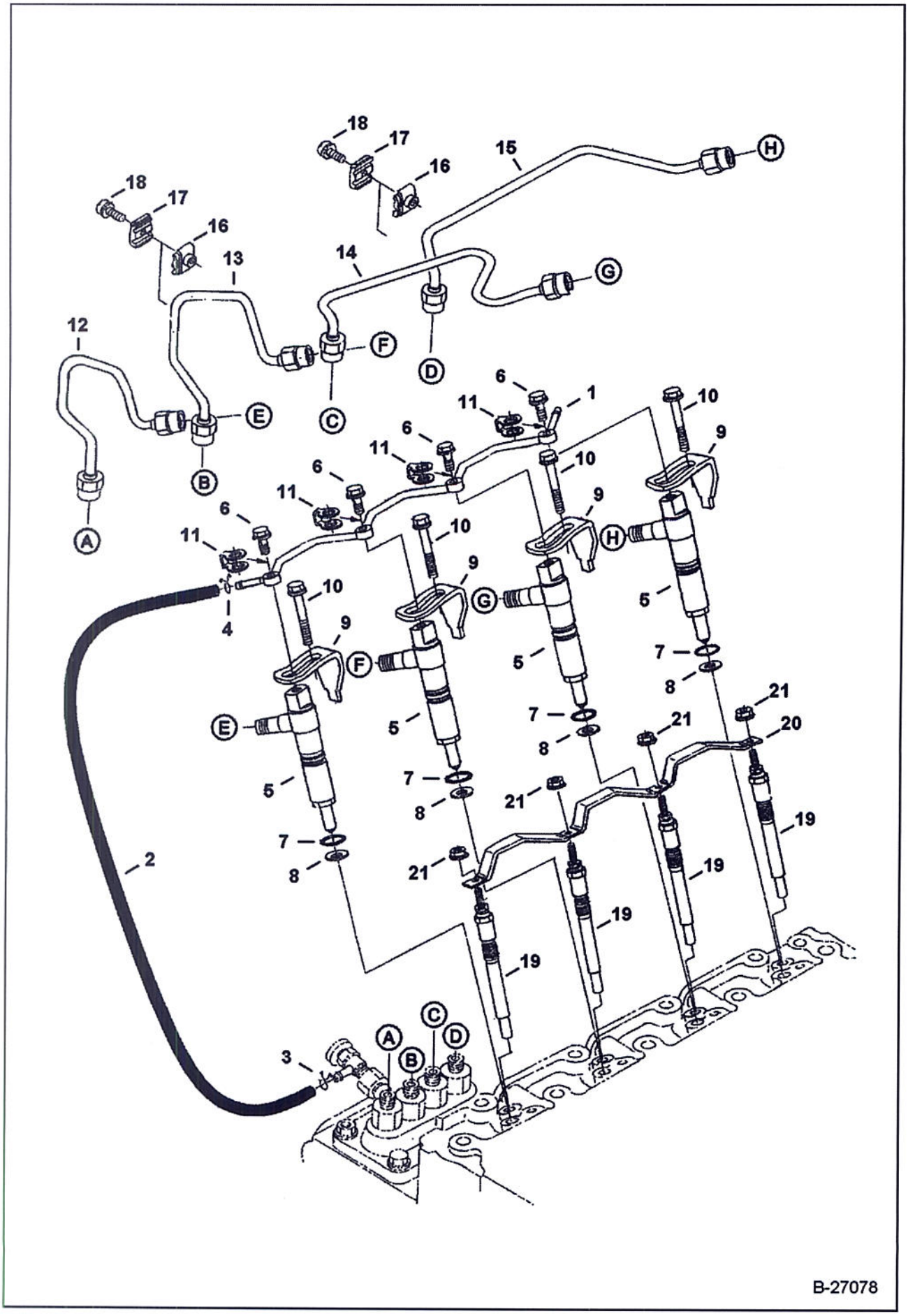

Page 770 - BOBM029239B1001 - 04/08/2009 12:26:18 - Printed by Ken Cook Co. - eXprint.exe (v2.24.7 4/7/200

Ref No	Part Number	Description	Remarks	Serial Number	Qty
1	6684842	PIPE, OVERFLOW			1
2	6974656	TUBE ASSY, OVERFLOW	W/Ref. 3		1
3	6654718	CLAMP			1
4	6698122	HOLDER, NOZZLE	W/Ref. 6		4
5	6689528	BOLT, EYE			4
6	6670769	O-RING			4
7	6969824	GASKET			4
8	6684845	CLAMP			4
9	6684844	BOLT			4
10	6685498	GASKET			4
11	6685102	PIPE			1
12	6685103	PIPE			1
13	6684848	PIPE, INJECTION			1
14	6684849	PIPE, INJECTION			1
15	6652688	CLAMP			2
16	6652689	CLAMP			2
17	3974260	SCREW			2
18	6684850	GLOW PLUG			4
19	6969825	CORD, GLOW PLUG			1
20	6670472	NUT			4

AIR CLEANER

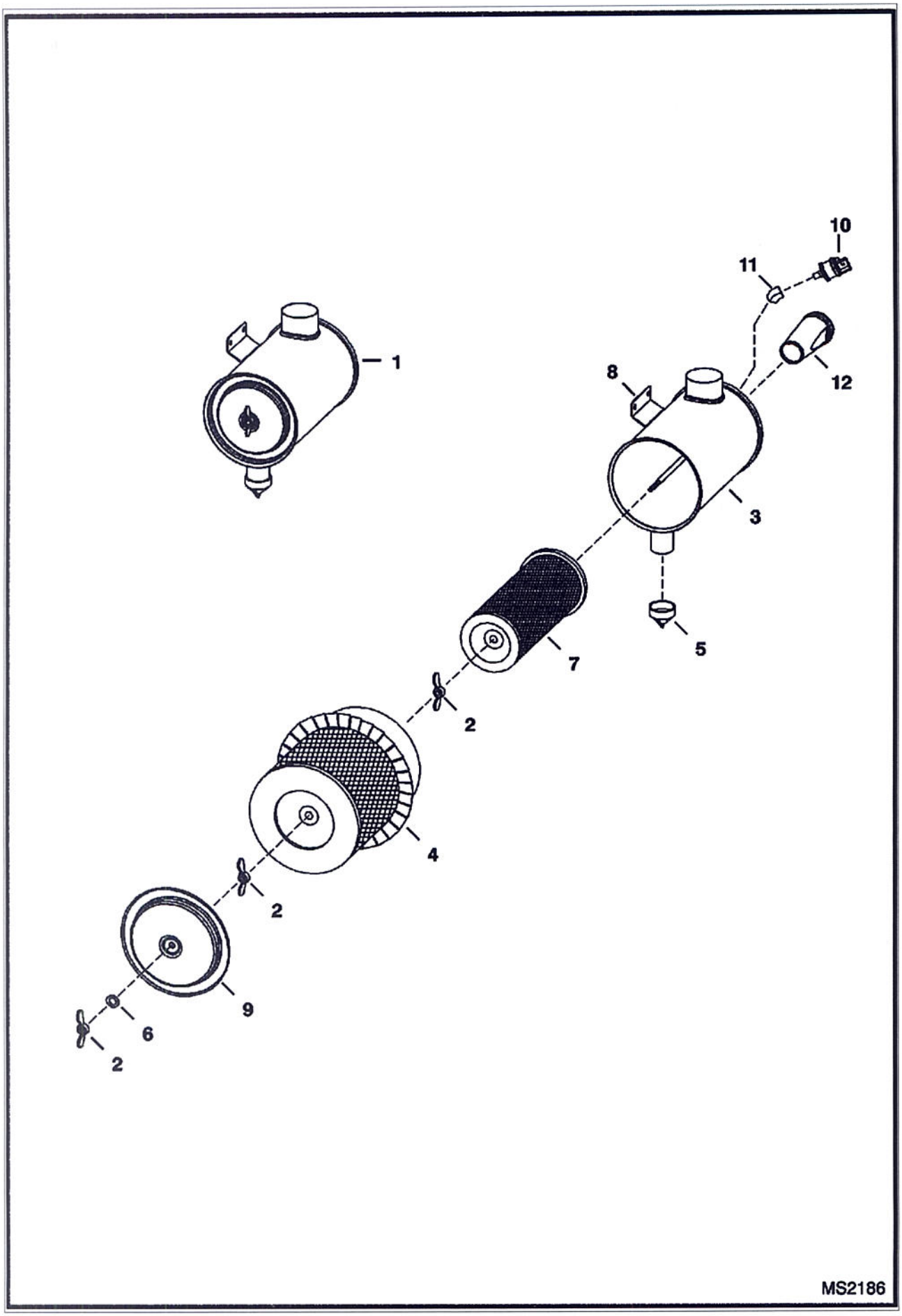

Ref No	Part Number	Description	Remarks	Serial Number	Qty
1	6700711	AIR CLEANER			1
2	6661243	WING NUT			3
3		TANK	NAP		1
4	6598492	ELEMENT	outer		1
5	6655938	VALVE	evacuator - 1.5" (38,1 mm) ID		1
6	6661244	WASHER			1
7	6598362	ELEMENT	inner		1
8	866028	CLAMP			1
9	6661242	COVER			1
10	6665371	SWITCH	condition indicator		1
11	6725502	ELBOW			1
12	7114604	CHOKE	intake - European		1

ACCESS COVER
(Cleanout - Lower Front of Chaincase)

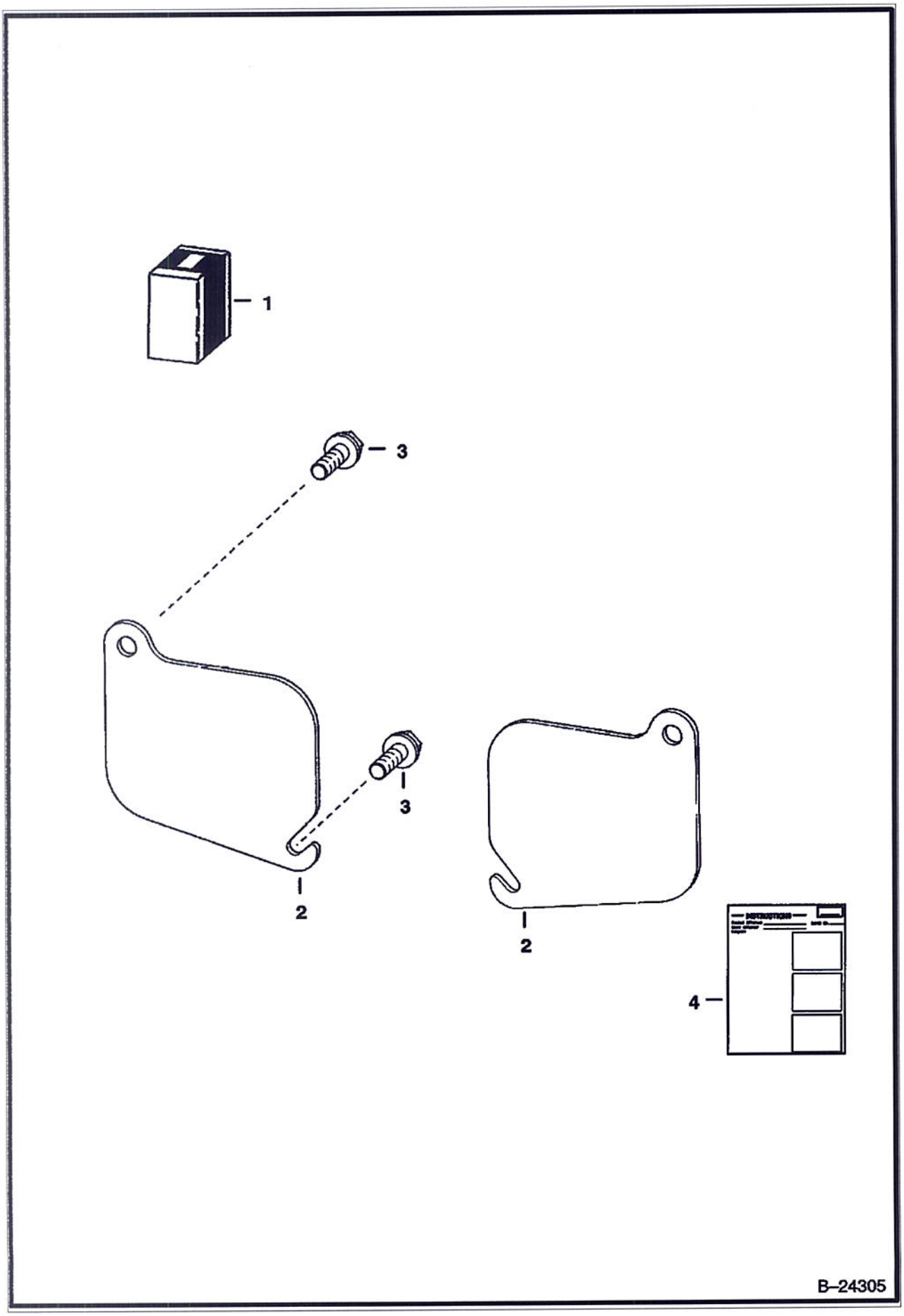

ACCESS COVER (Cont'd)
(Cleanout - Lower Front of Chaincase)

Ref No	Part Number	Description	Remarks	Serial Number	Qty
1	6577880	KIT	Ref. 2-4		1
2	6737088	COVER, FRONT ACCESS			2
3	84G3720	BOLT			4
4	6570931	INSTRUCTIONS			1

Page 775 - BOEM0292398101 - 04/08/2009 12:26:18 - Printed by Ken Cook Co. - eXprint.exe (v2.24.7 4/7/2009)

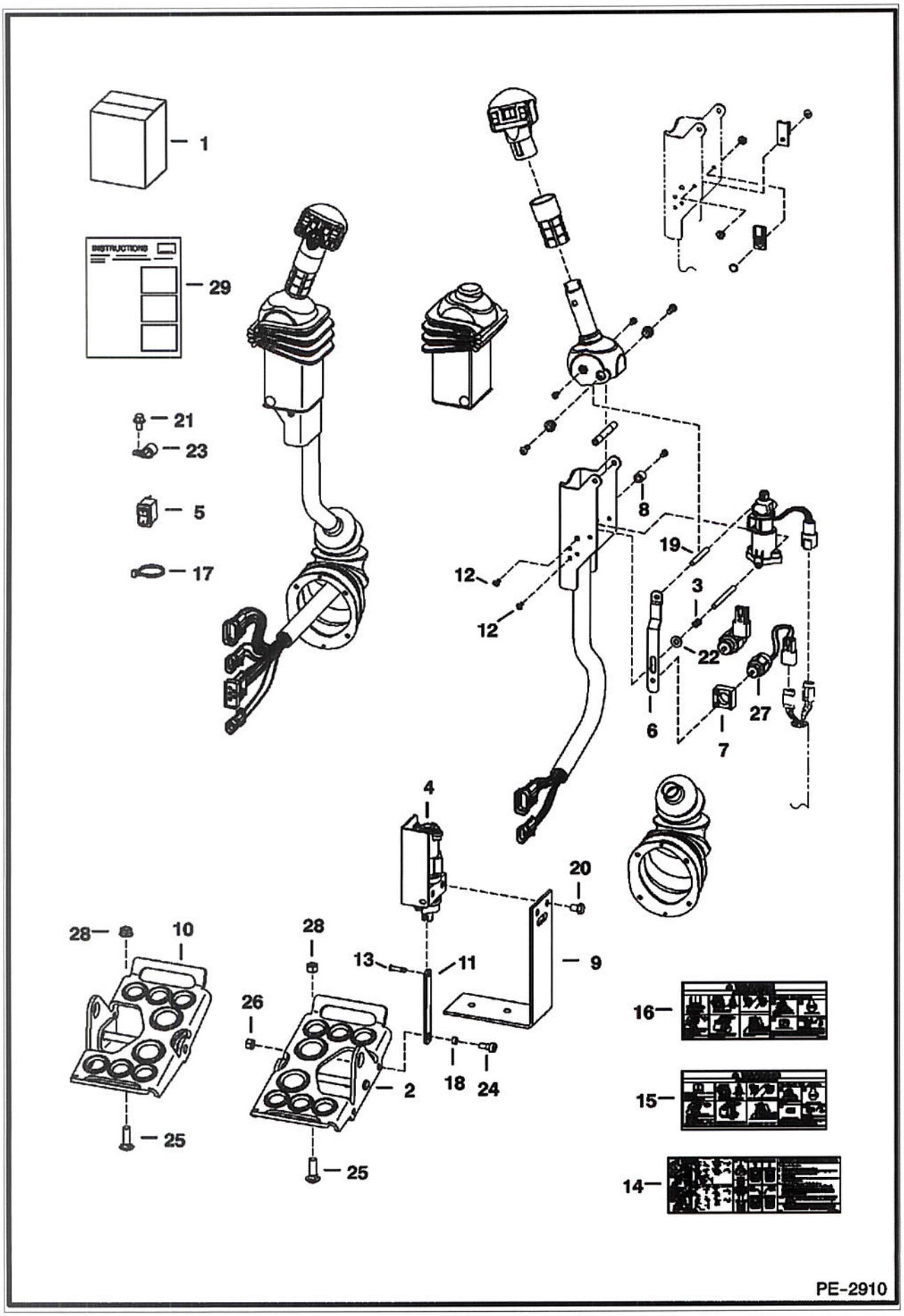

Page 776 - BOBM0292398001 - 04/08/2009 12:26:18 - Printed by Ken Cook Co. - eXprint.exe (v2.24.7 4/7/2009)

Ref No	Part Number	Description	Remarks	Serial Number	Qty
1	6731151	KIT	foot control - Ref. 2-29 - Loader must be equipped W/advanced hand control option for this kit to function		1
2	7123942	PEDAL ASSEMBLY			1
3	6680470	SPRING			2
4	6684912	SENSOR, FOOT RH	foot pedal - RH		1
4	6676029	SOLENOID			1
4	6684911	SENSOR, FOOT LH	foot pedal - LH		1
4	6676029	SOLENOID			1
5	6676537	SWITCH			1
6	6680477	STRAP			2
7	6680468	MOUNT	solenoid		2
8	6719834	SPACER			2
9	7126869	BRACKET			2
10	7123941	PEDAL ASSEMBLY			1
11	6726681	LINK			2
12	6727065	BOLT			12
13	6727496	PIN			2
14	6727926	DECAL	ACS operations		1
15	6728540	DECAL	warning		1
16	6728539	DECAL	warning		1
17	6624289	TIE STRAP			2
18	6729467	SPACER			2
19	6680469	SPACER	threaded		2
20	17C608	BOLT			4
21	84G3710	SCREW			2
22	25E13	WASHER 5			2
23	30H62	CLIP			2
24	35C514	BOLT			2
25	37C620	BOLT			4
26	95D5	NUT			2
27	6676029	SOLENOID			2
28	61D6	NUT 5			4
29	6901492	INSTRUCTIONS			1

page 111 - 6986835KT4S150U1 - 04/08/2009 12:26:18 - Printed by Ken Cook Co. - eXprint.exe (v2.24.7 4/7/2009)

AXLE SEAL KIT

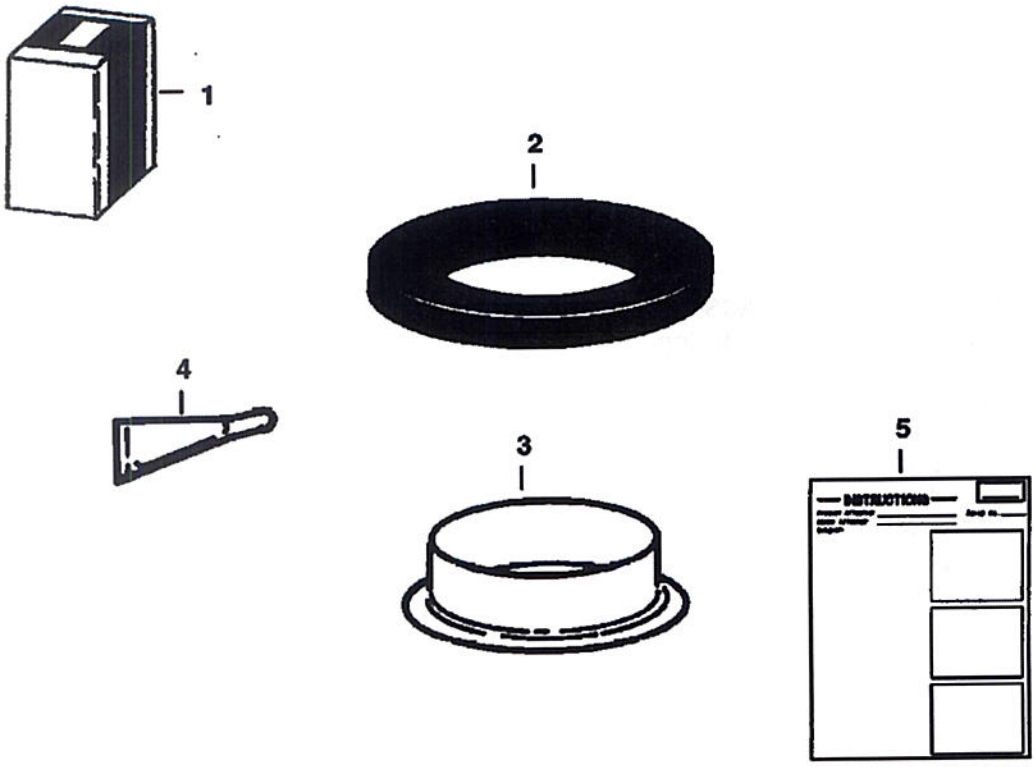

B–4041

Page 778 - BOBM02923B1001 - 04/08/2009 12:26:18 - Printed by Ken Cook Co. - eXprint.exe (v2.24.7 4/7/2009)

Ref No	Part Number	Description	Remarks	Serial Number	Qty
1	6722907	KIT	Ref. 2-5		1
2	6658228	SEAL, OIL			1
3	6662306	RING			1
4	6598485	SEALANT			1
5	6722908	INSTRUCTIONS			1

BACK-UP ALARM KIT
(Manual Controls, AHC & ACS)

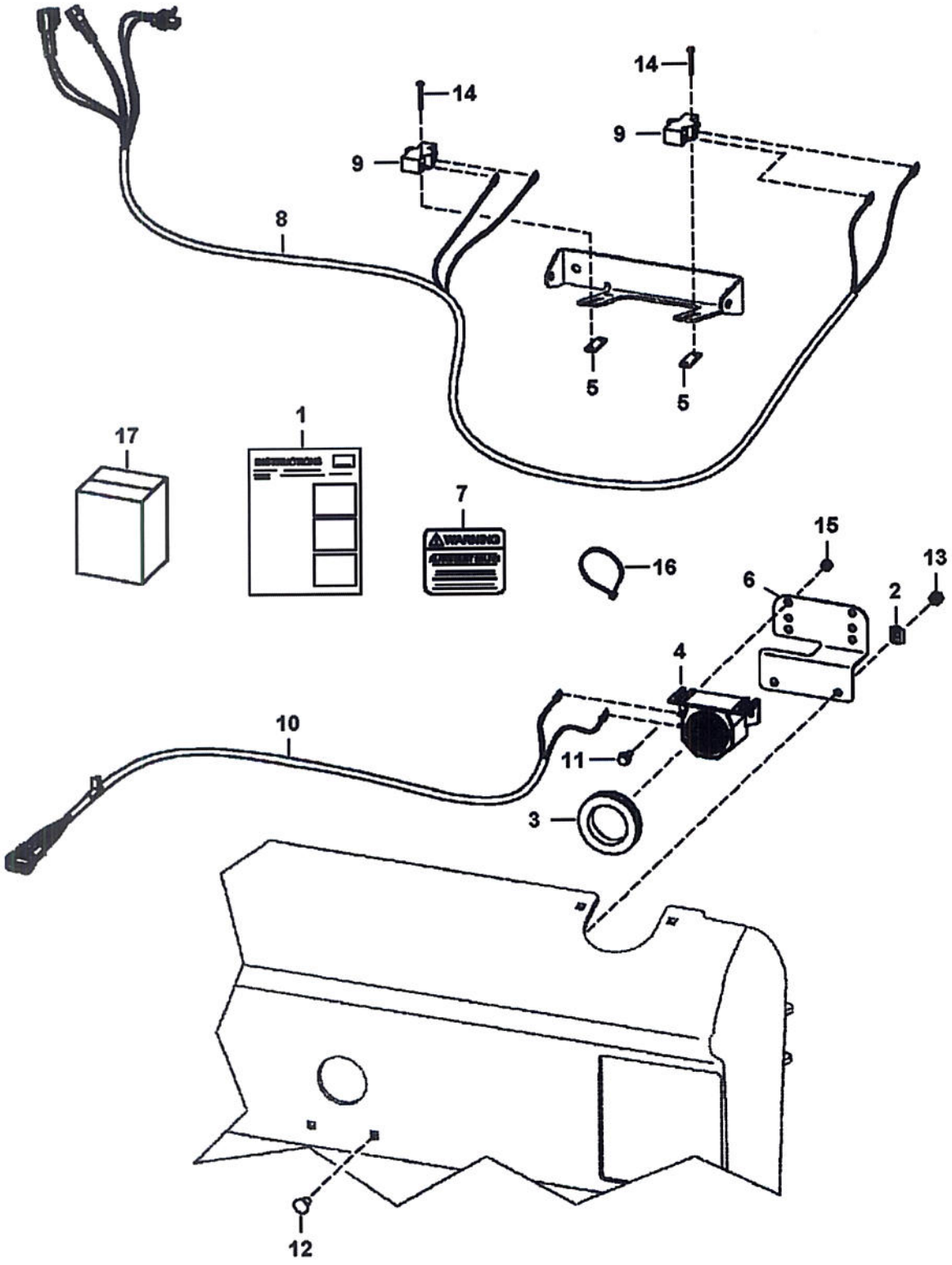

BACK-UP ALARM KIT (Cont'd)
(Manual Controls, AHC & ACS)

Ref No	Part Number	Description	Remarks	Serial Number	Qty
1	7107829	KIT, BACK-UP ALARM			1
2	774220	NUT			2
3	6577545	GROMMET			1
4	6599931	ALARM			1
5	6702593	SPACER			2
6	6733970	MOUNT			1
7	6737189	DECAL			1
8	7107544	HARNESS			1
9	6646781	SWITCH			2
10	6715659	HARNESS			1
11	35C410	BOLT 5			2
12	10C512	BOLT			2
13	57D5	NUT			2
14	84G1320	BOLT			4
15	97D4	NUT			2
16	6624289	TIE STRAP			2
17	6903293	INSTRUCTIONS			1

BACK-UP ALARM KIT
(Selectable Joystick Controls)

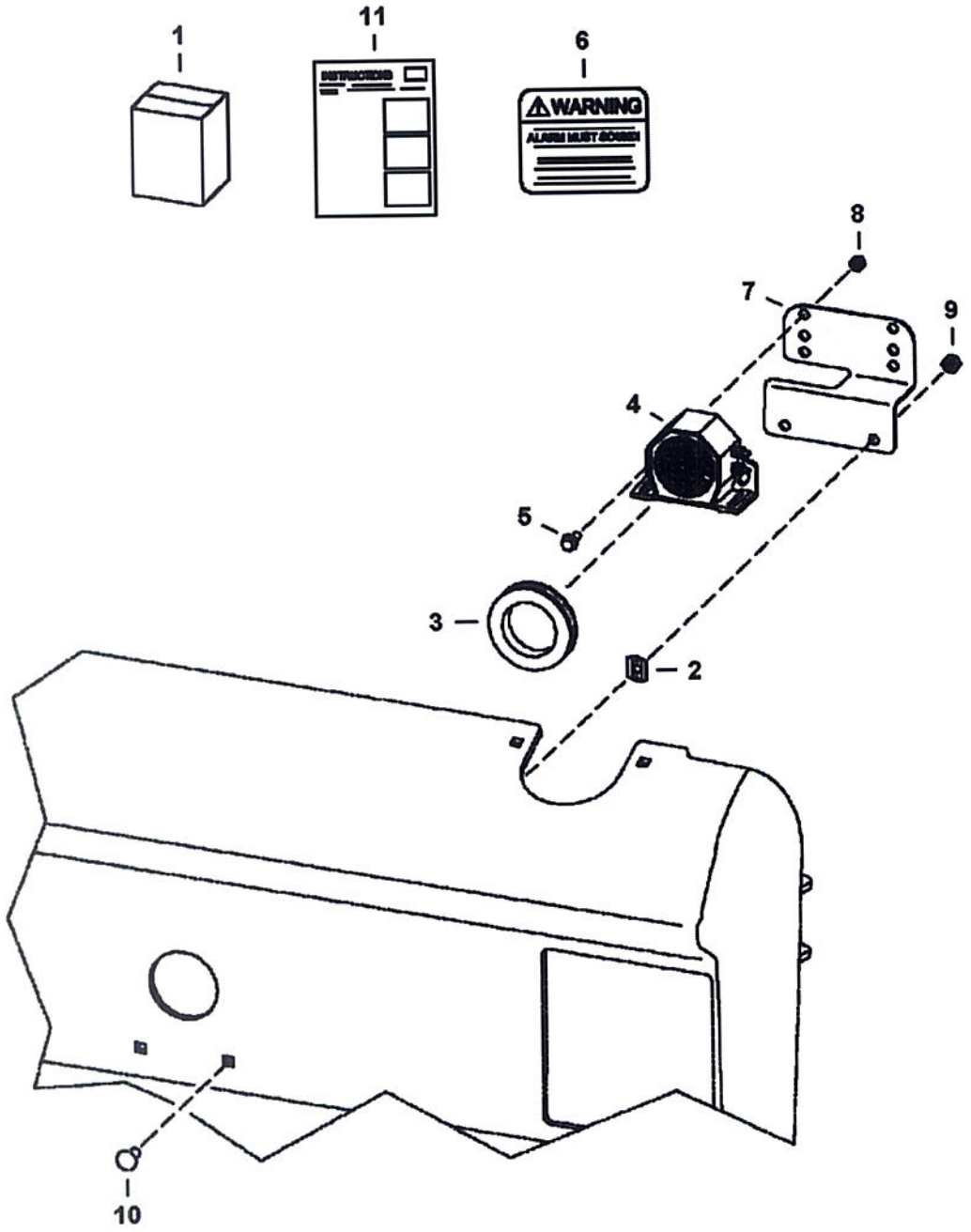

BACK-UP ALARM KIT (Cont'd)
(Selectable Joystick Controls)

Ref No	Part Number	Description	Remarks	Serial Number	Qty
1	6732235	KIT	Ref. 2-11		1
2	774220	NUT	spring		2
3	6577545	GROMMET			1
4	6599931	ALARM			1
5	35C410	BOLT 5			2
6	6737189	DECAL			1
7	6733970	MOUNT			1
8	97D4	NUT			2
9	61D5	NUT			2
10	37C516	BOLT			2
11	6901690	INSTRUCTIONS			1

eXprint.exe (v2.24.7 4/7/2009) - Printed by Ken Cook Co. - 14:26:18

BEACON

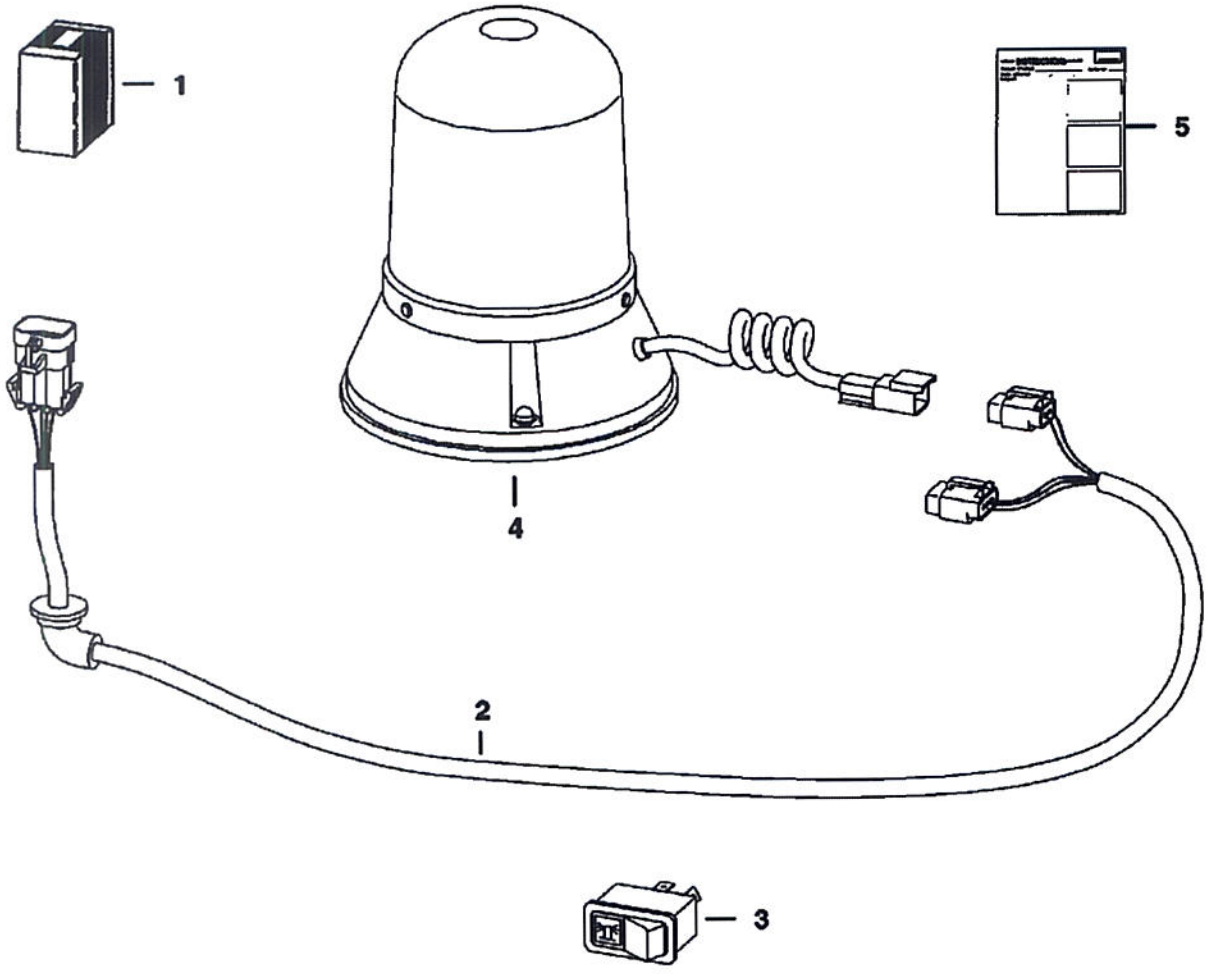

TS–1978

Page 784 - BOBM0292398101 - 04/08/2009 12:26:18 - Printed by Ken Lock Co. - Equip.cat (v6.4.1.3)

Ref No	Part Number	Description	Remarks	Serial Number	Qty
1	6719854	KIT	rotating beacon - If loader is not equipped W/deluxe cab accessories harness, heater, air conditioning, SJC, ACS, cab enclosuer kit, rear wiper kit, Power Bob-Tach, strobe lights (non-power port plug-in) and/or 4-way flashers (non-power port plug-in) , Also Order 7143071 deluxe harness		1
2	6718872	HARNESS			1
3	6668816	SWITCH	vertical		1
4	6675523	BEACON			1
4	6666571	BULB			1
5	6900991	INSTRUCTIONS			1

*** 102 - 0000042633D1VVA - 05/08/2009 14:49:18 - Printed by Ken Cook Co. - eXprint.exe (v2.24.7 4/7/2009)

BLOCK HEATER
(Engine)

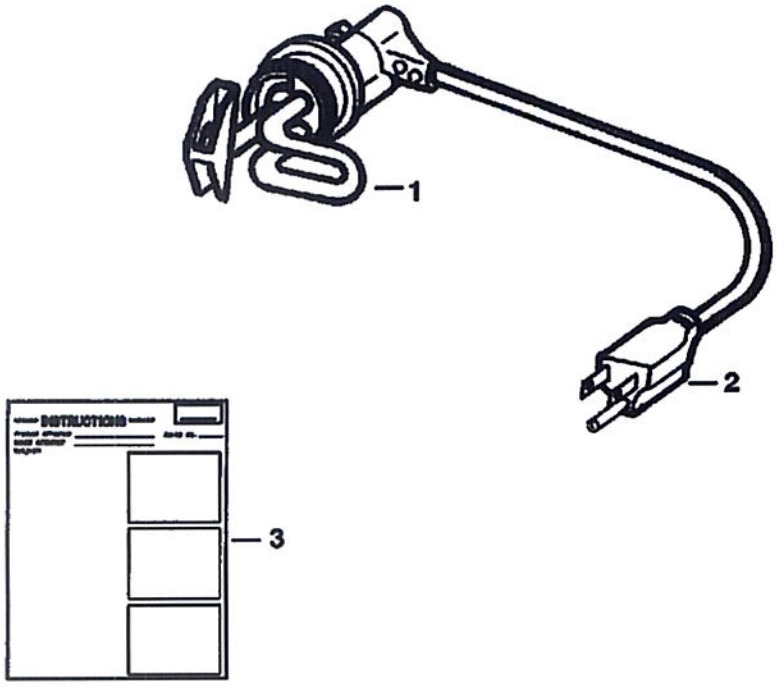

B–12299

Page 786 - BOBM0292398I001 - 04/08/2009 12:26:18 - Printed by Ken Lock Co. - eapiml.exe (V6.24.) 4/7/2009

BLOCK HEATER (Cont'd)
(Engine)

Ref No	Part Number	Description	Remarks	Serial Number	Qty
1	6720736	PLUG	W/Ref. 2		1
2	6668881	CORD			1
3	6720038	INSTRUCTIONS			1

Printed by Bill Lock Co. - Bailiff.EXE [V4.49.] 9/17/2007

BOB-TACH LEVERS
(For Use W/Industrial Grapple Fork)

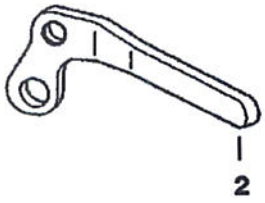

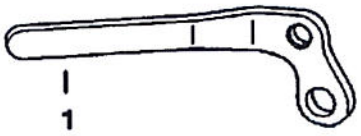

TS–1019

BOB-TACH LEVERS (Cont'd)
(For Use W/Industrial Grapple Fork)

Ref No	Part Number	Description	Remarks	Serial Number	Qty
1	6578139	LEVER	RH		1
2	6578140	LEVER	LH		1

BUCKET POSITIONING VALVE KIT

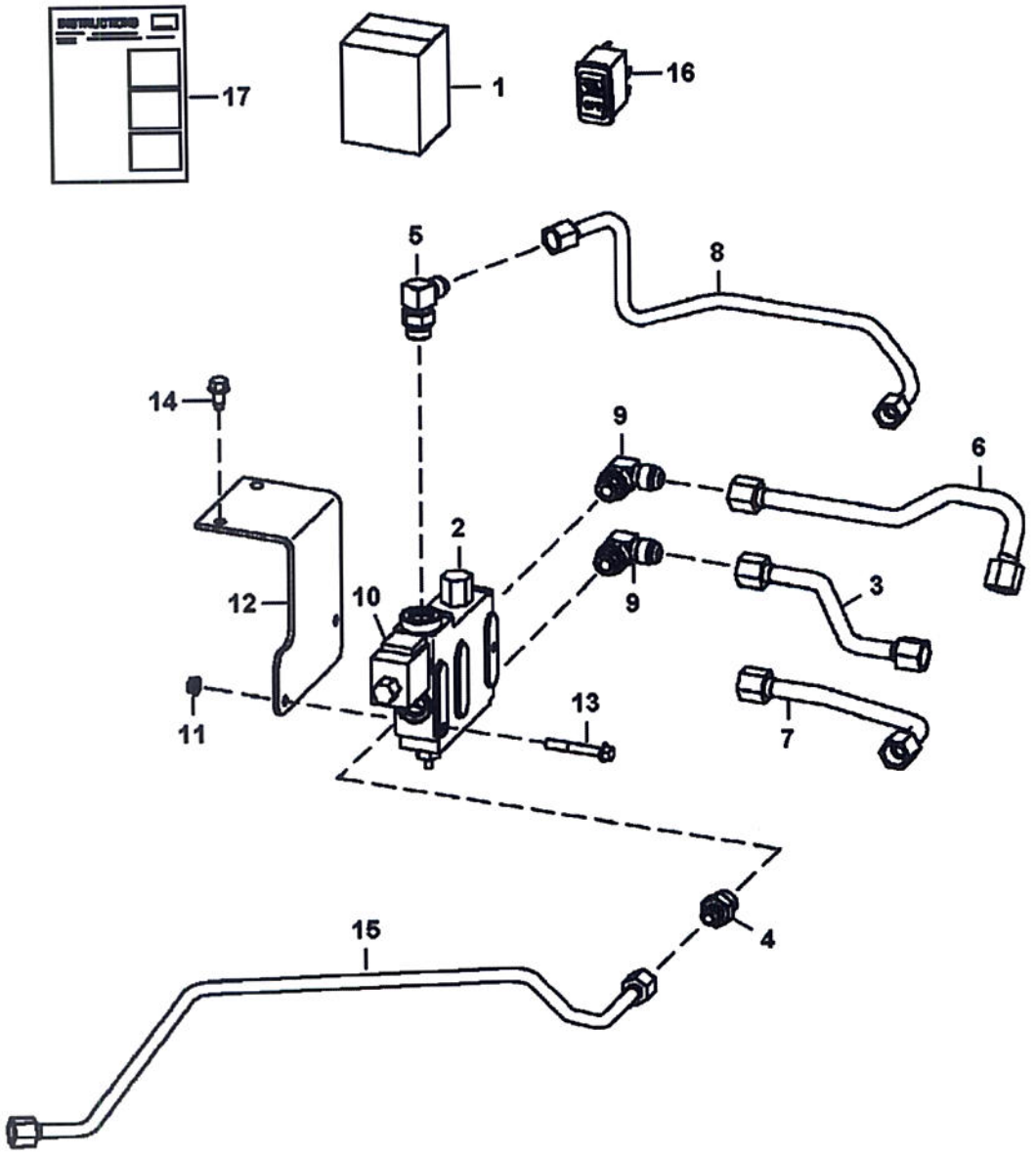

PE-2271

Ref No	Part Number	Description	Remarks	Serial Number	Qty
1	7102869	KIT	Ref. 2-17		1
2		VALVE	See Illustration BUCKET POSITIONING VALVE/ MS1943 NAP - Order 6673959 valve		1
3	7112912	TUBE			1
4	15KB810	CONNECTOR			1
4	79K10	O RING 10			x
5	17KB810	ELBOW			1
5	79K10	O RING 10			x
6	6733196	TUBE			1
7	6733195	TUBE			1
8	6734192	TUBE			1
9	17KB1010	ELBOW			2
9	79K10	O RING 10			x
10	6672863	VALVE, SOLENOID			1
10		CARTRIDGE	W/nut		1
10		COIL			1
10	6671527	NUT			1
10	6670634	SEAL KIT			1
11	57D5	NUT			2
12	6727646	BRACKET			1
13	35C536	BOLT			2
14	84G3712	BOLT			2
15	7101647	TUBE			1
16	6690947	SWITCH BUCKET LEVEL			1
17	6902833	INSTRUCTIONS			1

BUCKET POSITIONING VALVE

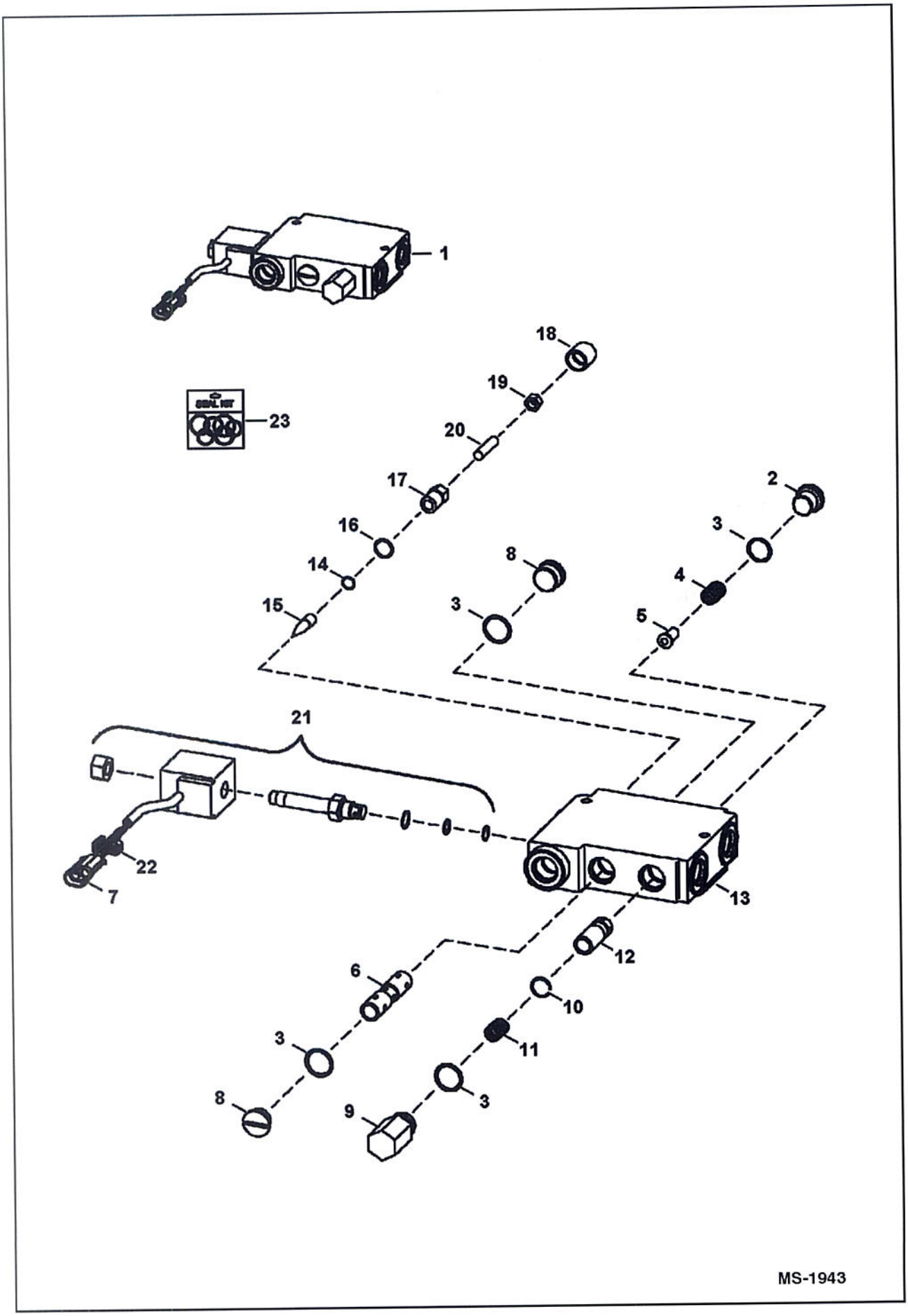

Ref No	Part Number	Description	Remarks	Serial Number	Qty
1	6673959	VALVE, BPV	Ref. 2-23 - white		1
2	6647784	PLUG	W/Ref. 3		1
3	79K10	O RING 10			4
4	6647785	SPRING			1
5	6647783	LOAD CHECK			1
6		SPOOL	NSS		1
7	6641179	CONNECTOR	2-pin		1
8	6676543	PLUG	W/Ref. 3		2
9	6667176	PLUG	W/Ref. 3		1
10	6667680	SNAP RING			1
11	6648294	SPRING			1
12		SPOOL	NSS		1
13		BODY	NSS		1
14	6667677	O-RING			1
15	6647777	PIN			1
16	79K6	O RING 10			1
17	6647778	CAP			1
18	6667676	COVER			1
19	8D4	NUT			1
20	6648293	SCREW			1
21	6672863	VALVE, SOLENOID			1
21	6671527	NUT			1
21	6670634	SEAL KIT			1
21	6675781	COIL	W/Ref. 7 & 22		1
21	6675780	CARTRIDGE			1
22	6641180	LOCK	Use W/ 2-pin connector		1
23	6647786	SEAL KIT	Ref. 3, 14, 16, & 18		1

CAB DOOR

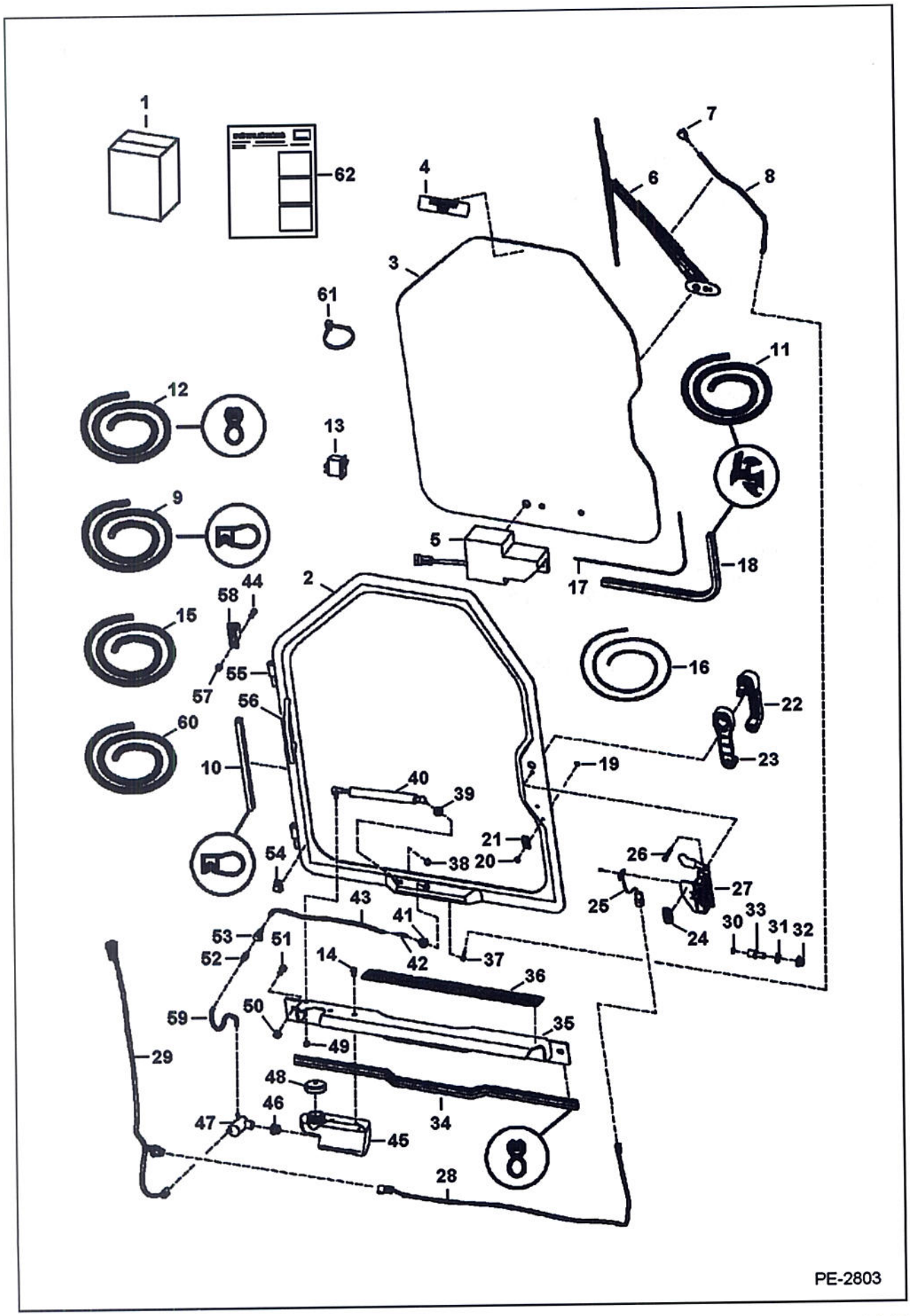

Model S150 KT4
6986835

Ref No	Part Number	Description	Remarks	Serial Number	Qty
1	6730822	KIT	See Illustration CAB DOOR/ MS1355 Ref. 1-21 - Also includes Ref. 2-62 on this page		1
2	7109665	FRAME, DOOR CAB	W/Ref. 55 & 56		1
3		WINDOW	See Illustration CAB DOOR/ MS1355 - .25" thick glass		1
4	6707852	DECAL	exit		1
5		MOTOR	See Illustration CAB DOOR/ MS1355 - wiper		1
6		ARM ASSY	See Illustration CAB DOOR/ MS1355 - wiper		1
7		NOZZLE	See Illustration CAB DOOR/ MS1355 - wiper arm mounted		1
8		HOSE	See Illustration CAB DOOR/ MS1355		1
9	6675558	SEAL	bulk - sold per foot		x
10		SEAL	NAP - 127.3" (3233 mm) - Order Ref. 9		1
11	6665568	EXTRUSION	bulk - sold per foot		x
12	6513152	SEAL	bulk - sold per foot		x
13	6665707	SWITCH	front wiper		1
14	35C408	BOLT			2
15	6676003	HOSE	black - .109" (2,77 mm) ID - bulk - sold per foot		x
16	6554149	CORD	bulk - sold per foot		x
17		CORD	NAP - window - 113" (2878 mm) - Order Ref. 16		1
18		SEAL	NAP - window - 113" (2878 mm) - Order Ref. 11		1
19	6665321	RIVET	male - plastic		1
20	6665322	RIVET	female - plastic		1
21	6665000	CLIP			1
22	7109662	HANDLE, LATCH DOOR			1
22	6693241	KEY-SINGLE	single key W/O ring		x
23	7109663	SPACER			1
24	7110316	DECAL	door switch		1
25	6728459	DOOR SENSOR			1
25	6677193	RIVET	plastic		2
26	1CM640	SCREW			2
27	7109661	LATCH, DOOR W/SENSOR	W/Ref. 25		1
28	7104465	DOOR SWITCH HARNESS			1
29	7117322	HARNESS, WIPER	wiper		1
30	6677192	MAGNET			1
31	18EM1224	WASHER			1
32	51DM12	NUT	12 mm thread		1
33	7109664	BOLT	striker - 12 mm thread		1
34		SEAL	NAP - threshold - 36" (914 mm) - Order Ref. 12		1
35	6730816	SHIELD			1
36	6542731	SAFETY TREAD			1
37	6676500	ELBOW			1
38	46D5	NUT	acorn		1
39	25E16	WSHR			1
40	6682586	GAS SPRING			1
40	6678548	SOCKET	ball		2
40	6649244	STUD			2
40	6649245	RETAINER	spring		2
41	6676499	GROMMET	wiper		1
42	6676917	ELBOW			1
43		HOSE	NAP - 20.25" (514,4 mm) - Order Ref. 15		1
44	17C512	BOLT 5			4

printed by MAN LOOK LO. - eaprint.exe [V4.44./ 4///40b9]

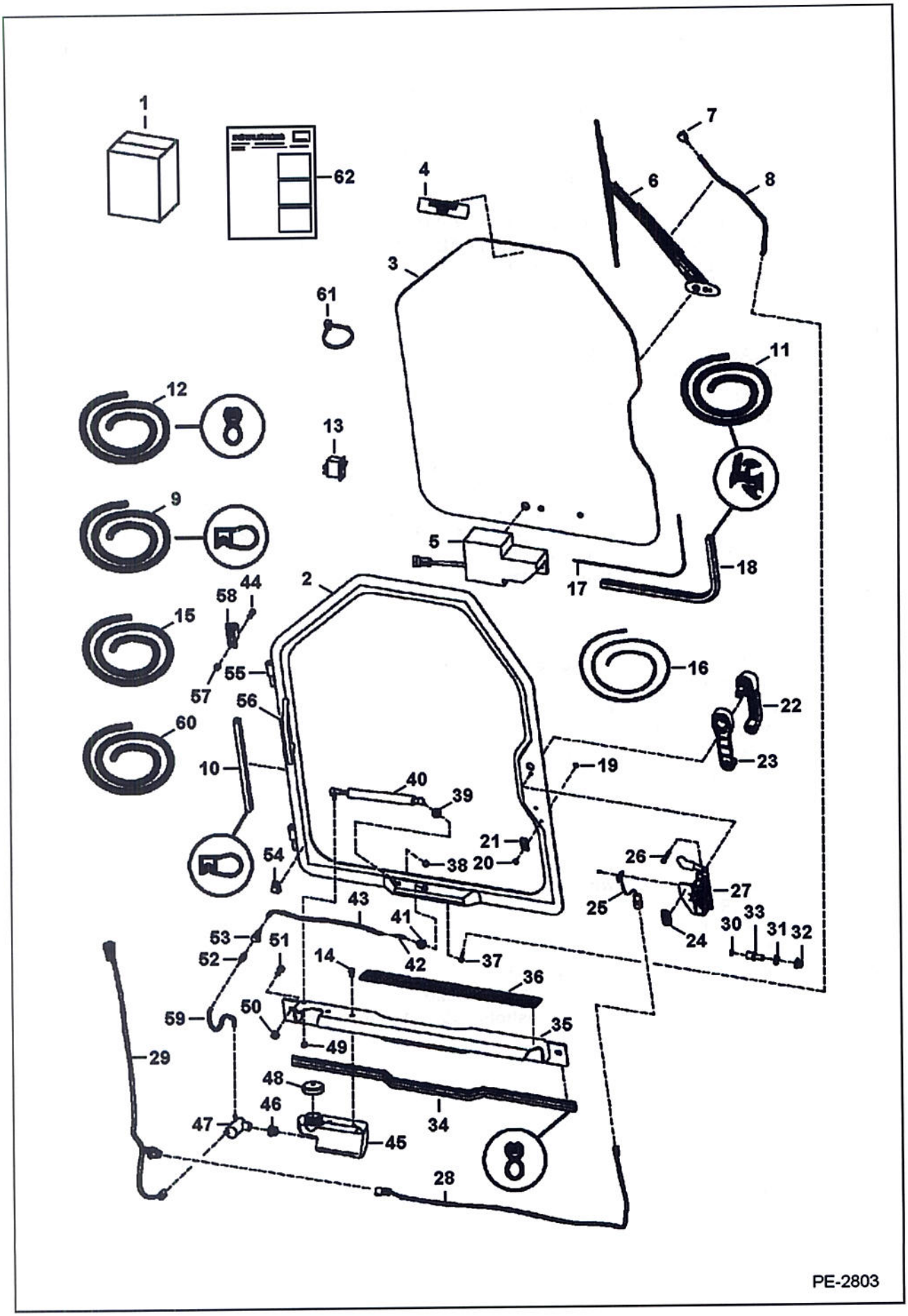

Page 796 - BOBM023239B1001 - 04/08/2009 12:26:18 - Printed by Ken Cook Co. - Equipment Data (v6.01.1.7)

Ref No	Part Number	Description	Remarks	Serial Number	Qty
45	7133211	TANK, WASHER	washer		1
46	6666766	GROMMET			1
47	6664554	PUMP, WIPER WASHER	washer bottle		1
48	6674993	CAP	vented		1
49	61D5	NUT			1
50	61D6	NUT 5			2
51	17C612	BOLT 5			2
52	6675299	COUPLER	insert		1
53	6675298	COUPLER, BODY	body		1
54	6675378	CLIP	wire - W/adhesive back		3
55	6718376	HINGE	door		2
56	7138347	HANDLE	grab		1
57	59D5	NUT 5			4
58	6717593	HINGE	base		2
59		HOSE	NAP - 4.25" (108 mm) long - Order Ref. 60		1
60	6708310	HOSE	clear - .154" (3,91 mm) ID - bulk - sold per foot		x
61	6610510	TIE	cord removal		1
62	6900854	INSTRUCTIONS INSTL	INSTRUCTIONS INSTL		1

CAB DOOR
(Window & Wiper)

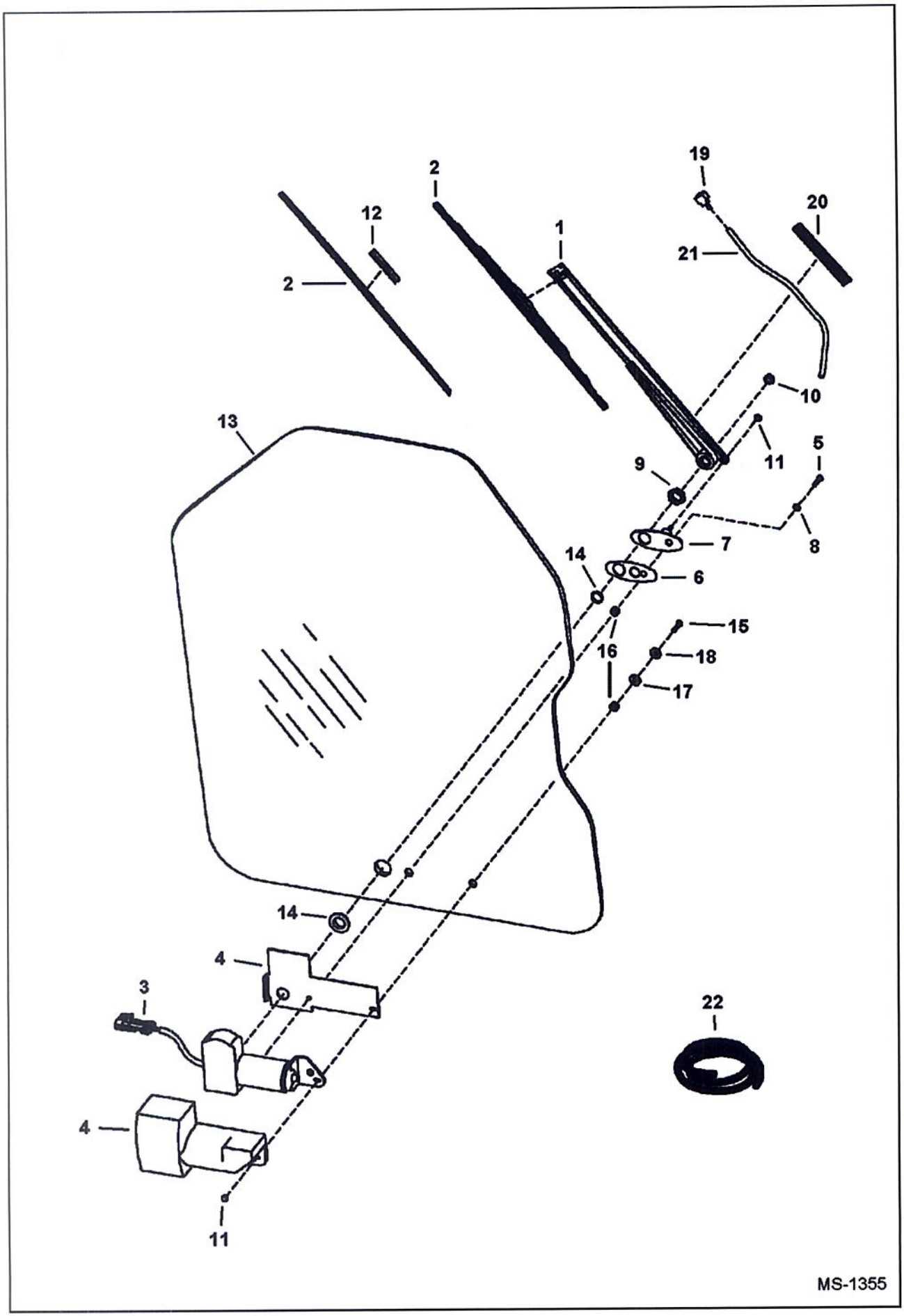

Page 798 - BOBM02923981001 - 04/08/2009 12:26:18 - Printed by Ken Cook Co. - eXprint.exe (v2.24.7 4/7/2009)

Ref No	Part Number	Description	Remarks	Serial Number	Qty
1	6677833	ARM ASSY	W/Ref. 19-21		1
2	6677834	BLADE	Also Order Ref. 12		1
2	7147359	BLADE, WIPER WINDOW	one piece blade		1
3	6679476	MOTOR	W/threaded shaft end & built in fuse		1
3	6640699	CONNECTOR	electrical connector		1
4	6677836	COVER			1
5	6677837	BOLT			1
6	6677839	GASKET			1
7	6677840	SWIVEL, PLATE ASSY			1
8	6677841	WASHER	tooth lock		1
9	6677842	NUT			1
10	6677843	NUT			1
11	6677844	NUT			2
12	6677845	ADAPTER	arm - use W/Ref. 2 (6677834 blade)		1
13	6729776	WINDOW, DOOR CURVED CAB	.25" thick glass		1
14	6677847	GROMMET	rubber		1
15	6678198	BOLT			1
16	6664085	BUSHING	nylon		2
17	6801059	WASHER	neoprene		1
18	6678739	WASHER	steel		2
19	6678920	NOZZLE			1
20	6678921	GUIDE	hose		1
21		HOSE	NAP - 18"(457,2 mm) long - Order Ref. 22		x
22	6676003	HOSE	black - .109" (2,77 mm) ID - bulk - sold per foot		x

CAB DOOR
(Special Applications)

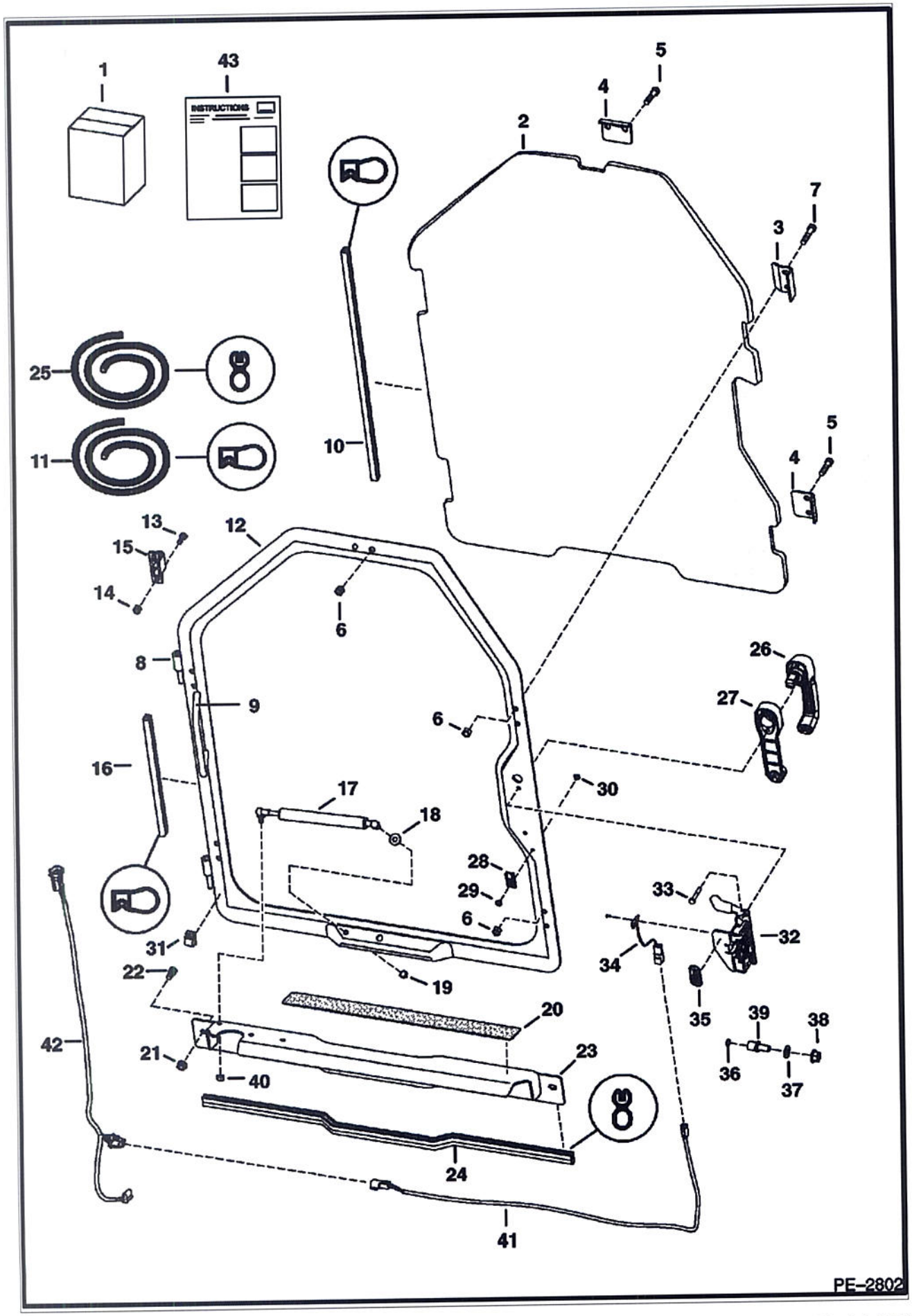

Model S150 KT4
6986835

Ref No	Part Number	Description	Remarks	Serial Number	Qty
1	6730823	KIT	door - Ref. 2-43		1
2	6732351	WINDOW	.5" thick polycarbonate		1
3	6725938	CLAMP			3
4	6725937	CLAMP			2
5	17C628	BOLT			6
6	95D6	NUT			10
7	17C624	BOLT 5			4
8	6718376	HINGE	door		2
9	7138347	HANDLE	grab		1
10		SEAL	NAP - 115" (2921 mm) long - Order Ref. 11		1
11	6675558	SEAL	bulk - sold per foot		x
12	7110430	SPECIAL APPS DOOR	W/Ref. 8 & 9		1
13	59D5	NUT 5			4
14	17C512	BOLT 5			4
15	6717593	HINGE	base		2
16		SEAL	NAP - 127.3" (3233,4 mm) long - Order Ref. 11		1
17	6682586	GAS SPRING			1
17	6678548	SOCKET	ball		2
17	6649244	STUD	ball		2
17	6649245	RETAINER	spring		2
18	25E16	WSHR			1
19	46D5	NUT	acorn		1
20	6542731	SAFETY TREAD			1
21	55D6	NUT			2
22	17C612	BOLT 5			2
23	6730816	SHIELD			1
24		SEAL	NAP - 36" (914,4 mm) long - Order Ref 25		1
25	6513152	SEAL	bulk - sold per foot		x
26	7109662	HANDLE, LATCH DOOR			1
26	6693241	KEY-SINGLE	single key W/O ring		x
27	7109663	SPACER			1
28	6665000	CLIP			1
29	6665321	RIVET	male - plastic		1
30	6665322	RIVET	female - plastic		1
31	6675378	CLIP	wire - W/adhesive back		3
32	7109661	LATCH, DOOR W/SENSOR	W/Ref. 34		1
33	1CM640	SCREW			2
34	6728459	DOOR SENSOR			1
34	6677193	RIVET	plastic		2
35	7110316	DECAL			1
36	6677192	MAGNET			1
37	18EM1224	WASHER			1
38	51DM12	NUT	12 mm thread		1
39	7109664	BOLT	striker - 12 mm thread		1
40	61D5	NUT			1
41	7104465	DOOR SWITCH HARNESS	door sensor		1
42	7117322	HARNESS, WIPER	wiper		1
43	6901013	INSTRUCTIONS			1

CAB ENCLOSURE
(Envelope)

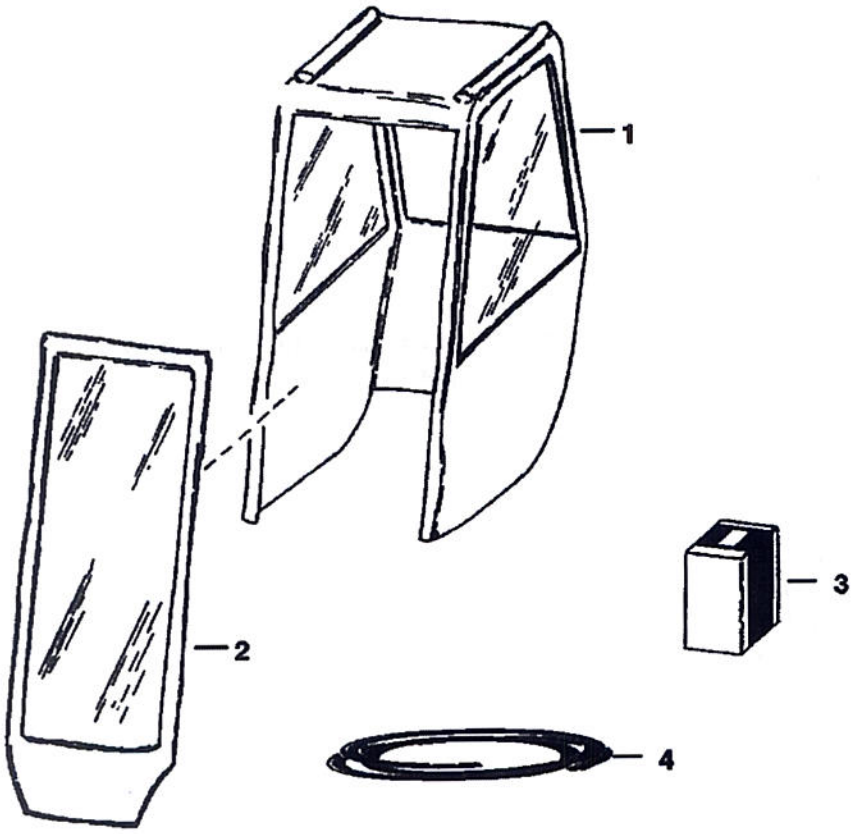

B–1413

(Envelope)

Ref No	Part Number	Description	Remarks	Serial Number	Qty
1	6675544	CANVAS CAB	fits over cab - W/Ref. 2		1
2	6675590	DOOR	vinyl		1
3	6675591	HINGE KIT			1
4	6722597	VELCRO	27 feet (8,2 m)		1

Printed by Am Look Co. - eAprint.exe (V4.49.7 9/17/2009)

CAB ENCLOSURE
(Cab Enclosure Kit) (Special Applications Kit)



NOTE:

Ref. 1 - Cab Enclosure Kit

Ref. 2 - Special Applications Kit
To complete the Cab Enclosure Also Order Side Windows Kit, 3rd Gas Spring Kit & Access Cover Kit.

B–17100

(Cab Enclosure Kit) (Special Applications Kit)

Ref No	Part Number	Description	Remarks	Serial Number	Qty
1		KIT	SALES #6731938 cab enclosure kit - SEE NOTE		1
1		KIT	SALES #6731937 special applications kit - SEE NOTE		1

CAB WINDOWS
(Top, Rear & Side)

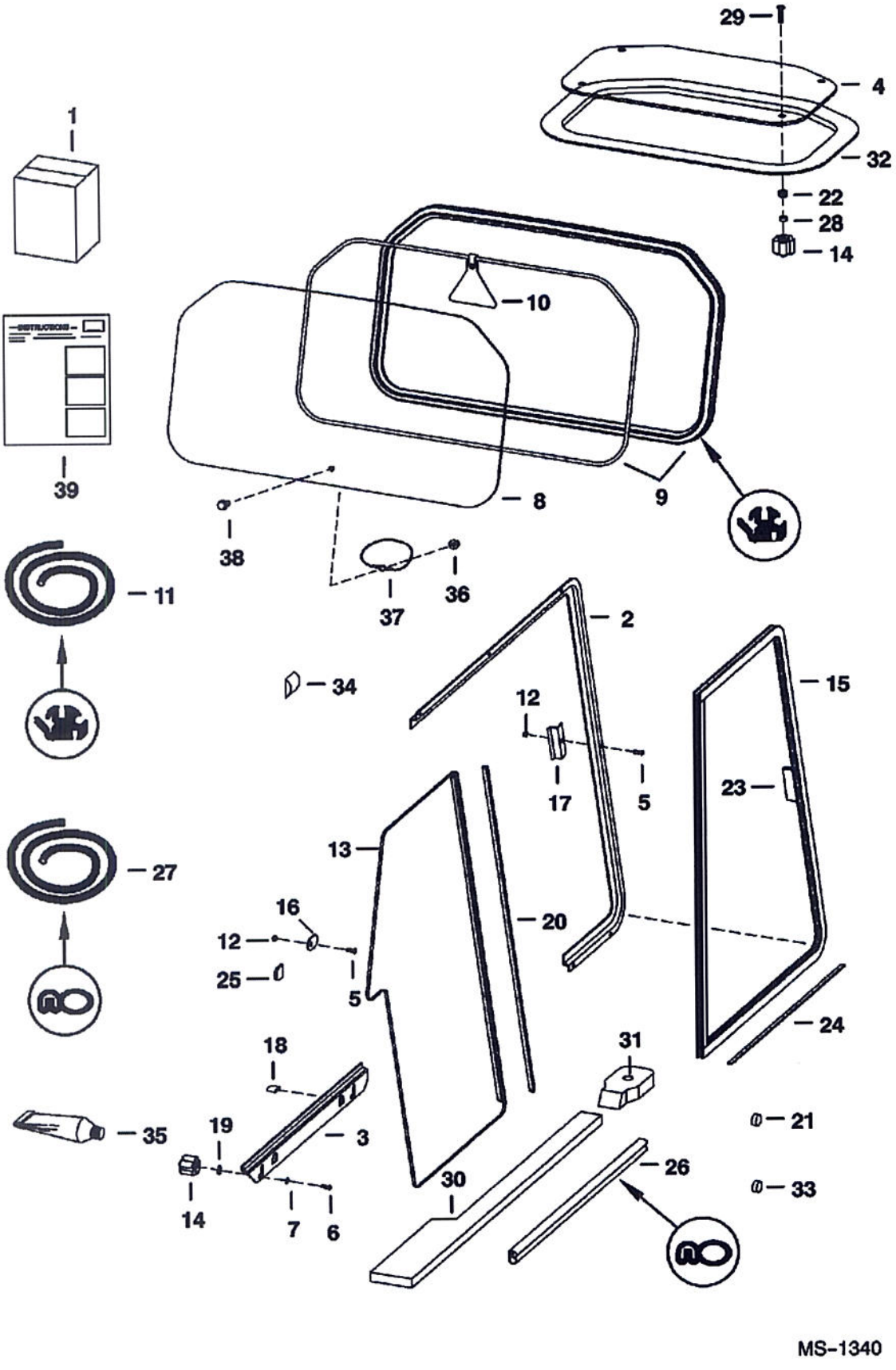

(Top, Rear & Side)

Ref No	Part Number	Description	Remarks	Serial Number	Qty
1	6718805	KIT	top & rear window - Ref. 4, 8-10, 14 & 39 - Was SALES		1
1		KIT	SALES - side windows - Order SALES # 7131580		1
2	6717870	FRAME	LH side		1
2	6717872	FRAME	RH side		1
3	6717871	FRAME	LH bottom		1
3	6717873	FRAME	RH bottom		1
4	7105035	WINDOW	assy. - top - lexan - W/Ref. 22, 28, 29 & 32		1
5	10C410	BOLT	carriage		14
6	10C416	BOLT	carriage		8
7	25E14	WSHR			4
8	6717874	WINDOW	rear		1
8	6719413	WINDOW	rear - lexan		1
9		EXTRUSION	NAP - 75.75" (1924 mm) long - Order Ref. 11		x
9		CORD	NAP - 75.75" (1924 mm) long - Order Ref. 11		x
10	6731478	EXIT TAG			1
11	6675387	EXTRUSION	bulk - sold per foot		x
11	6554149	CORD	bulk - sold per foot		x
12	59D4	NUT 5			18
13	6691001	WINDOW	LH rear - W/Ref. 20		1
13	6691003	WINDOW	RH rear - W/Ref. 20		1
14	6681614	KNOB			8
15	6691000	WINDOW ASSY	LH front - W/Ref. 23		1
15	6691002	WINDOW ASSY	RH front - W/Ref. 23		1
16	6719063	STOP			2
17	6719037	STRIKER			2
18	6719065	COVER TAB	tab		4
19	6675212	RETAINER	bolt		4
20	6675833	SEAL	rear window dual wiper W/tape		2
21	6657719	PLUG	for .75" dia. hole		2
22	6675545	GROMMET			4
23	6678283	HANDLE	side window		2
24	6676927	FELT STRIP	20.38" (517,7 mm) long		x
25	6677198	TAB	tab		2
26		SEAL	NAP - 24" (609,6 mm) long - Order Ref. 27		1
27	6555351	SEAL	bulk - sold per foot		x
28	6664085	BUSHING	nylon		4
29	91G420	SCREW			4
30	6729010	SEAL	foam - LH		1
30	6729009	SEAL	foam - RH		1
31	6729011	SEAL	cab mount		2
32		SEAL	NAP - Order Ref. 4		1
33	6677973	PLUG	for .22" dia hole		2
34	7103075	SEAL	side screen		2
35		ADHESIVE	NAP - 1 oz - for top window seal Ref. 1		1
36	83D5	NUT 5			1
37	6555331	WIRE ROPE			1
38	35C516	BOLT 10			1
39	6901013	INSTRUCTIONS	INSTRUCTIONS top & rear window		1
39	6900853	INSTRUCTIONS	INSTRUCTIONS side windows		1

CAB WINDOWS
(Window Rib Kit)

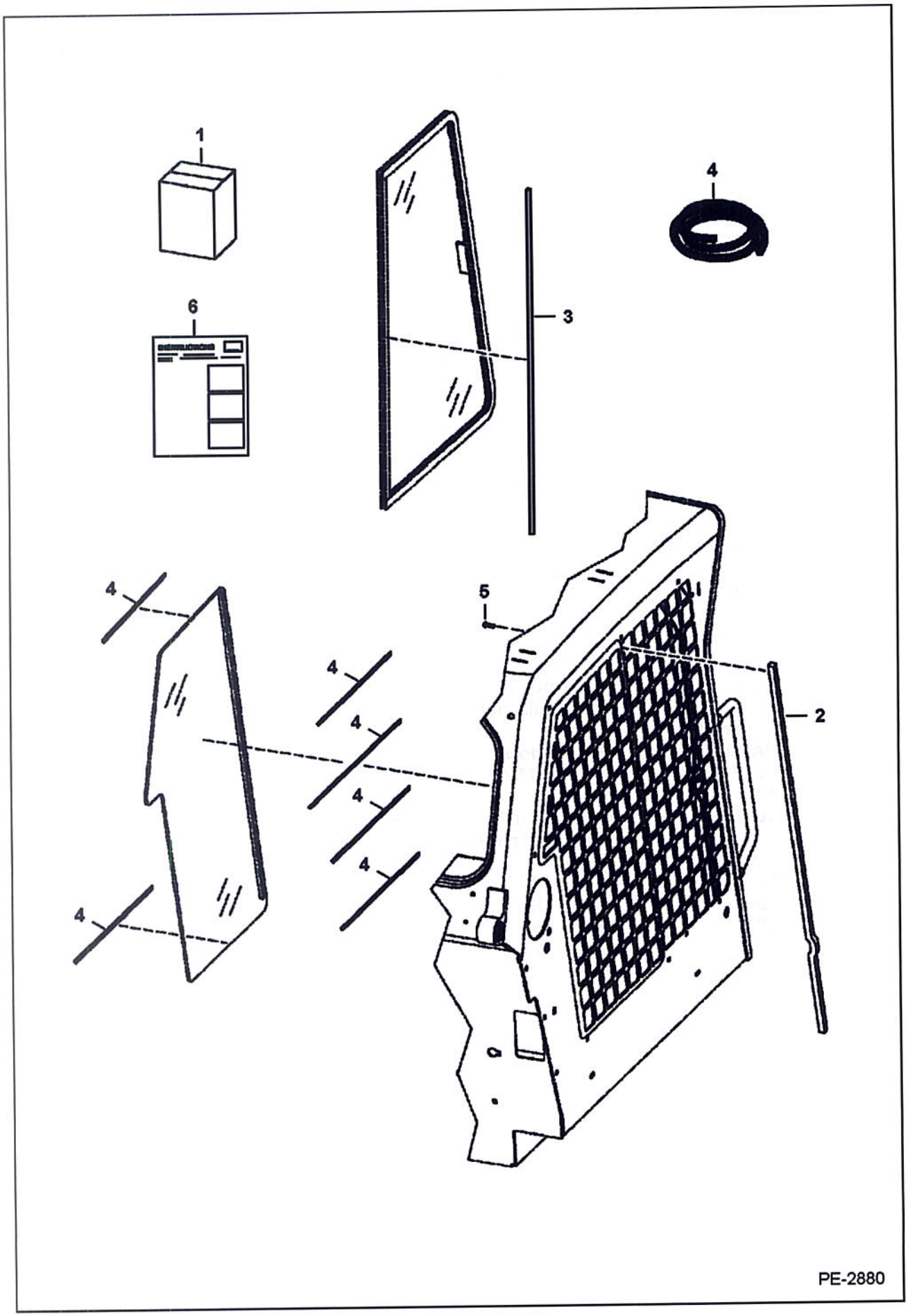

(Window Rib Kit)

Ref No	Part Number	Description	Remarks	Serial Number	Qty
1	7122462	KIT, RIB WINDOW	Ref. 2-6 - can NOT use W/single point lift kits - Ref. 2 & 5 may already be installed		1
2	7153099	BRACE, CAB			2
3	7122487	2 SEAL, WIPER			2
4	7122488	SEAL, BULB	180" (4572 mm) long - cut to fit		1
5	25GT410	SCREW			8
6	6904744	INSTRUCTIONS			1

CAB WINDOWS
(Rear Window Removal Kit)

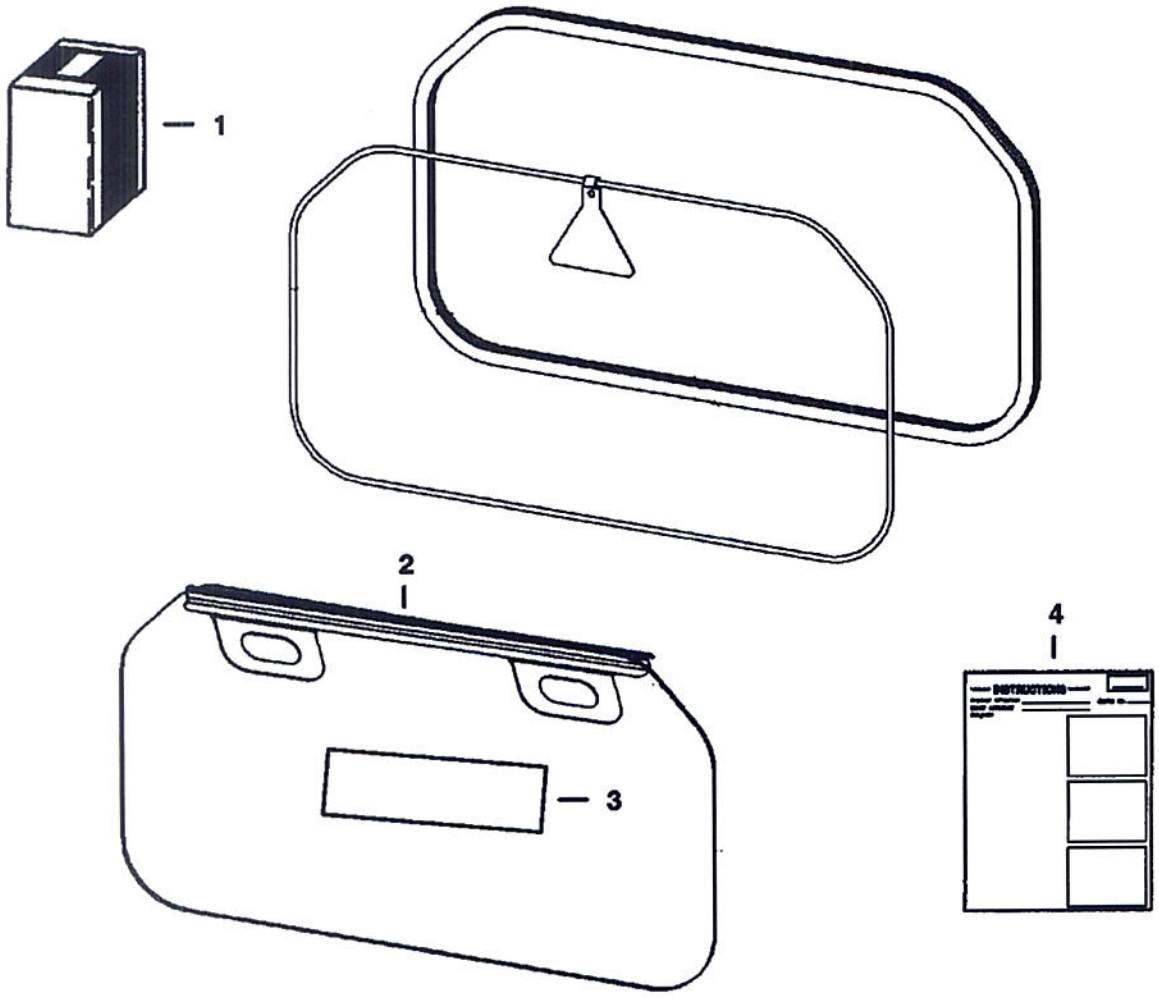

TS–2006

(Rear Window Removal Kit)

Ref No	Part Number	Description	Remarks	Serial Number	Qty
1	6725946	KIT	Ref. 2-4		1
2	6725421	HANDLE			1
3	6726303	DECAL			1
4	6901029	INSTRUCTIONS			1

COUNTERWEIGHT KIT
(Front Axle)

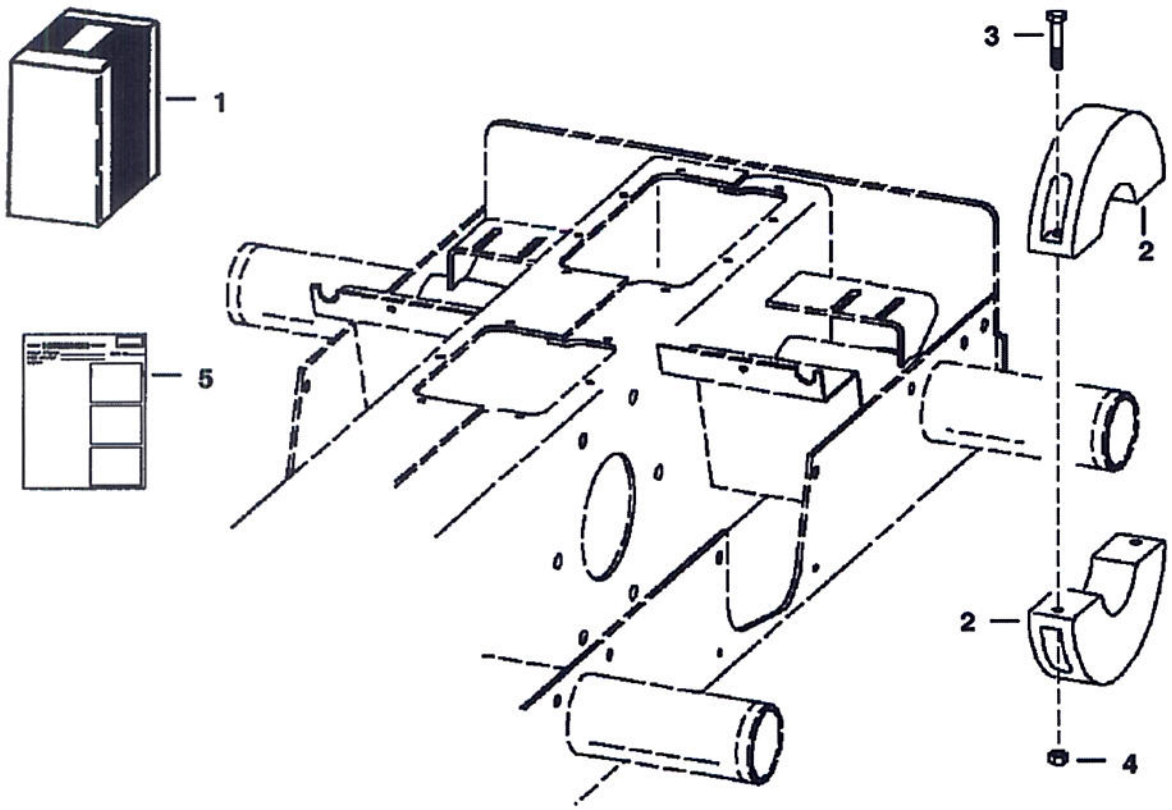

TS–1020

COUNTERWEIGHT KIT (Cont'd)
(Front Axle)

Ref No	Part Number	Description	Remarks	Serial Number	Qty
1	6704284	KIT, COUNTERWEIGHT	counterweight		1
2	6714361	WEIGHT	38.7 lbs (17,6 kg) - 4.5" (114,3 mm) wide		4
3	17C640	BOLT 5			8
4	61D6	NUT 5			8
5	6900366	INSTRUCTIONS			1

Page 813 - BOBM02923981001 - 04/08/2009 12:26:18 - Printed by Ken Cook Co. - eXprint.exe (v2.24.7 4/7/2009)

COUNTERWEIGHT KIT
(1600 lb.)

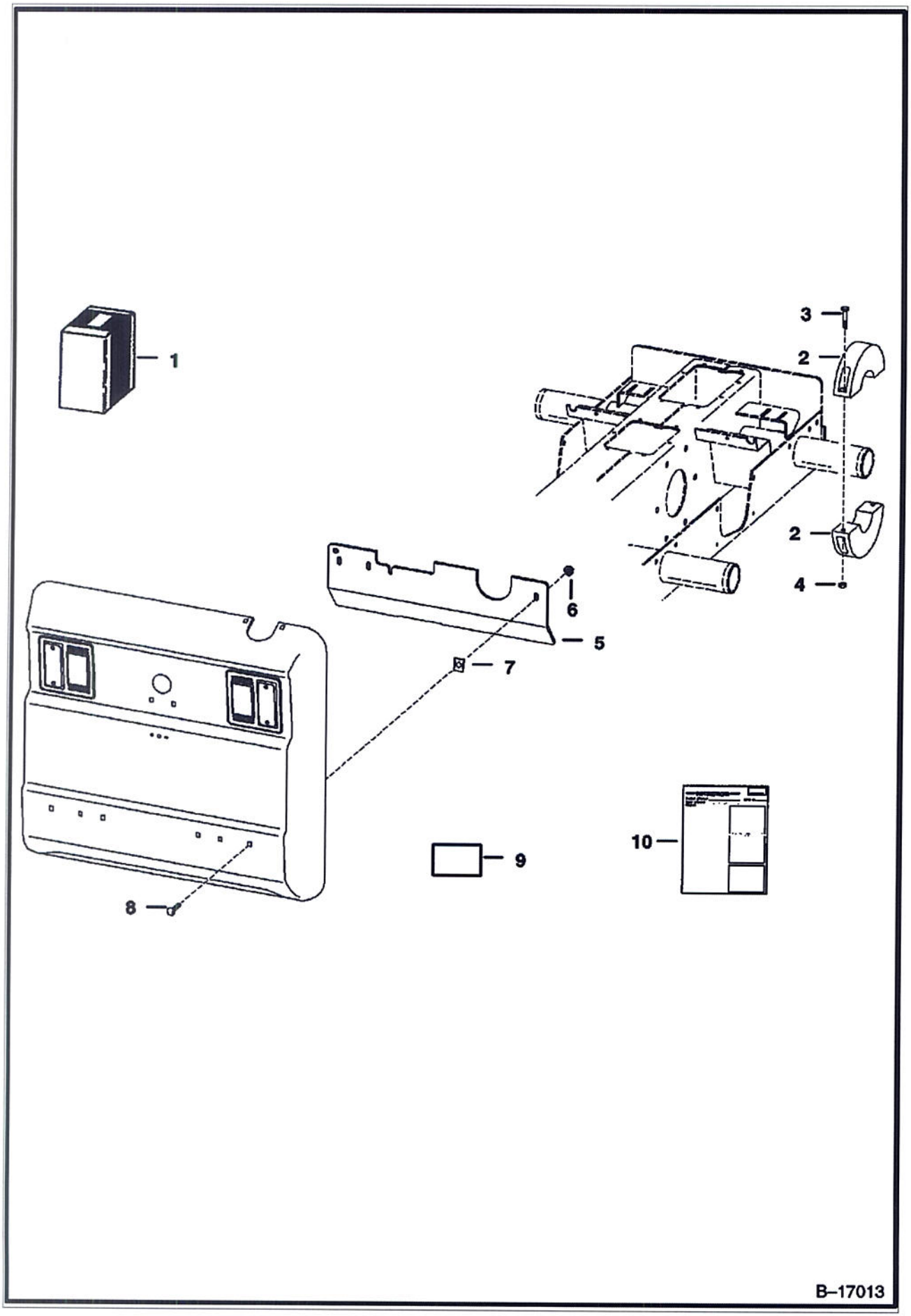

Page 814 - BOBM02923B1001 - 04/08/2009 12:26:18 - Printed by Ken Cook Co. - eXprint.exe (v2.24.7 4/7/200

COUNTERWEIGHT KIT (Cont'd)
(1600 lb.)

Ref No	Part Number	Description	Remarks	Serial Number	Qty
1	6714932	KIT, COUNTERWEIGHT	counterweight		1
2	6714361	WEIGHT	front axle - 38.7 lbs (17,6 kg) - 4.5" (114,3 mm) wide		4
3	17C640	BOLT 5			4
4	61D6	NUT 5			4
5	6725256	COUNTERWEIGHT			3
6	57D6	NUT 5			3
7	1612281	SPRINGNUT	spring - not in kit		3
8	37C632	BOLT			3
9	6725528	DECAL	1600 lb. - not in kit		1
10	6900410	INSTRUCTIONS			1

Printed by Am Look Co. - Baptiste.exe [74.44.*.*] - 8/18/2014 8:47:47 AM

DECALS
(Inside)

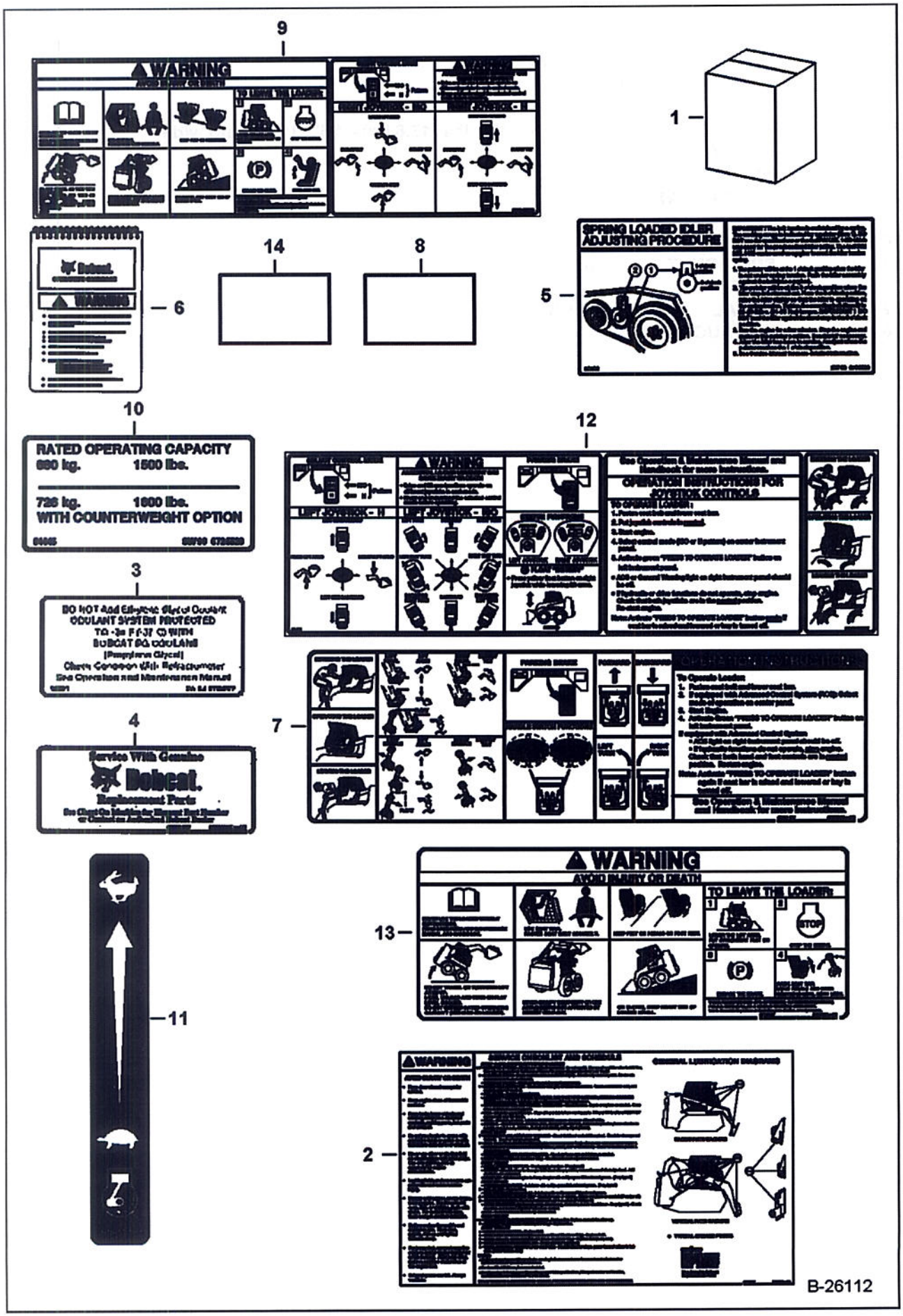

Page 816 - BOBM0Z9239B1001 - 04/08/2009 12:26:18 - Printed by Ken Cook Co. - eAprint.exe (V4.49.0.0)

DECALS (Cont'd)
(Inside)

Ref No	Part Number	Description	Remarks	Serial Number	Qty
1	6904994	DECAL KIT			1
1	7120277AR	KIT, DECAL			1
1	7120277BR	KIT, DECAL			1
1	7120277JP	KIT, DECAL			1
1	7120276AR	KIT, TRANSLATION S150 SPANISH			1
1	7120276BR	KIT, TRANSLATION S150 PORTUGUESE			1
2	6734534	DECAL	service checklist & schedule		1
3	6708929	DECAL	propylene gylcol antifreeze		1
4	6565200	DECAL	engine oil filter - not in kit		1
5	6709030	DECAL	belt tension idler		1
6	6902600	MANUAL	operation & maintenance - W/wire rope - not in kit		1
6	6558309	WIRE ROPE	bulk - sold per foot - Also Order (2) of 6558310 sleeve		1
6	6558310	SLEEVE	wire rope		2
6	17C512	BOLT 5			1
6	84G3112	BOLT 5			1
7	6727926	DECAL	operating		1
7	6734647	DECAL	operation - selectable joystick controls		1
8	6554100	TREAD	3" x 6" (76,2 mm x 152,4 mm)		3
9	6734646	DECAL	warning - selectable joystick controls		1
10	6725528	DECAL	capacity		1
11	6735140	DECAL	throttle		1
12	6734647	DECAL	operation - selcetable joystick controls - not in kit		1
13	6728539	DECAL	operation (ACS)		1
14	6553976	SAFETY TREAD	5" x 8" (127 mm x 203,2 mm)		1

DECALS
(Outside)

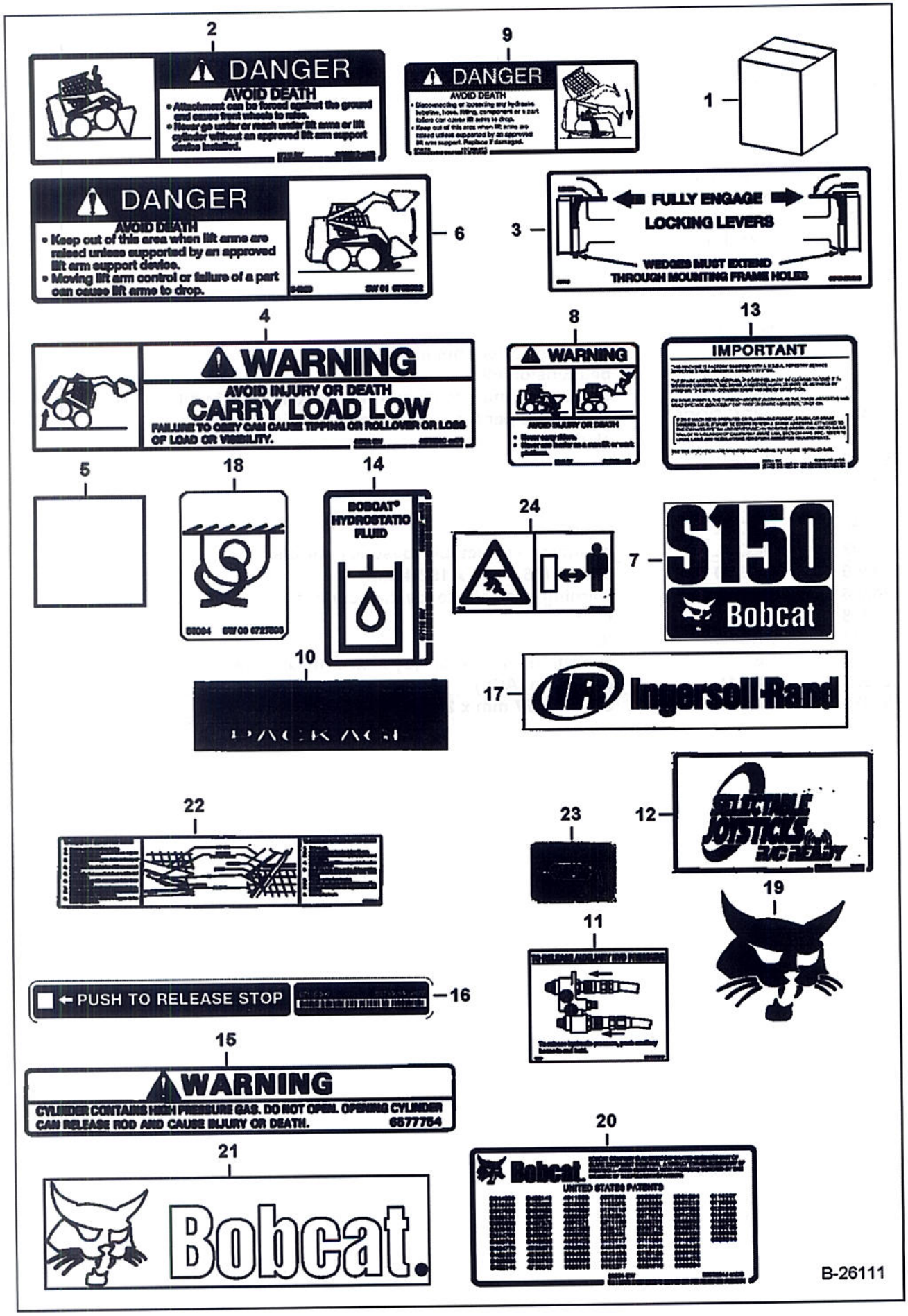

DECALS (Cont'd)
(Outside)

Ref No	Part Number	Description	Remarks	Serial Number	Qty
1	6904994	DECAL KIT			1
1	7120277AR	KIT, DECAL			1
1	7120277BR	KIT, DECAL			1
1	7120277JP	KIT, DECAL			1
1	7120276AR	KIT, TRANSLATION S150 SPANISH			1
1	7120276BR	KIT, TRANSLATION S150 PORTUGUESE			1
2	6702301	DECAL	danger		1
3	6561383	DECAL	Bob-tach		1
4	6579528	DECAL	carry load low		1
5	7108222	SAFETY TREAD	22.5" (571,5 mm) wide irregular shape		1
6	6702302	DECAL	danger		1
7	7120591	DECAL	model		1
8	6710358	DECAL	warning		1
9	6717343	DECAL	danger		2
10	6735862	DECAL	gold package - not in kit		1
11	6731757	DECAL	front aux. coupler		1
12	7145528	DECAL	selectable joystick controls - not in kit		1
13	6560573	DECAL	spartk arrestor		1
14	6565990	DECAL	hydrostatic fluid fill		1
15	6577754	DECAL	gas spring warning		3
16	6578368	DECAL	push		1
17	6735864	DECAL	IR - black		2
18	6727595	DECAL	tie down		5
19	7116870	DECAL	Bobcat head		2
20	6557224	DECAL	patent		1
21	6735901	DECAL, BOBCAT	Bobcat W/head		1
22	6706558	DECAL	boom stop		1
23	6705340	DECAL	lube - European - not in kit		2
24	6713507	DECAL	stay clear - European - Not in Kit		2

DUAL BATTERY KIT
(W/O Starter)

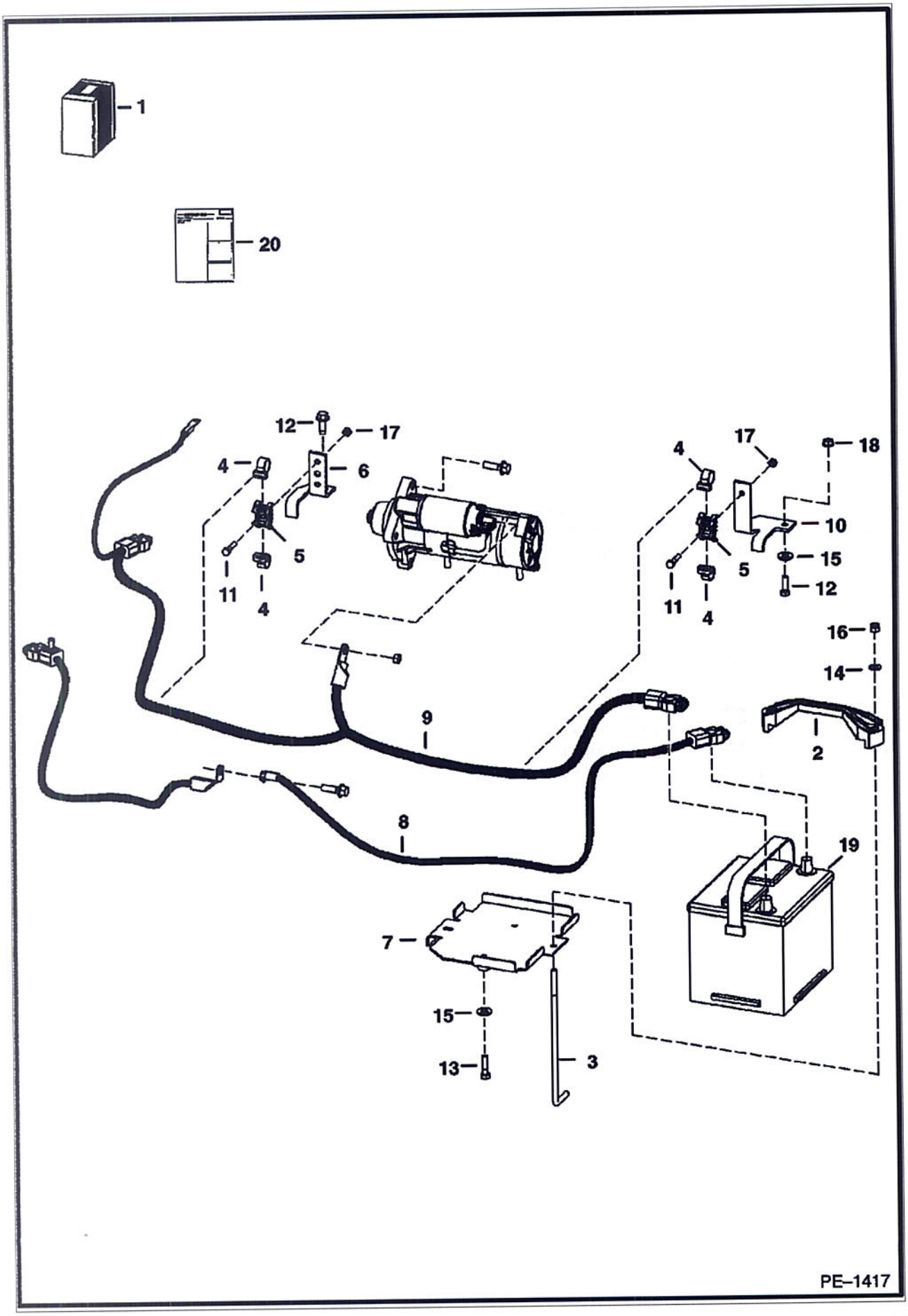

DUAL BATTERY KIT (Cont'd)
(W/O Starter)

Ref No	Part Number	Description	Remarks	Serial Number	Qty
1	6731694	KIT	dual battery - Ref. 2-18 & 20		1
2	6569203	CLAMP			1
3	6576280	BOLT			2
4	6678669	STRAP			4
5	6678974	MOUNT			2
6	6715131	BRACKET			1
7	6731617	PAN	battery		1
8	6731665	CABLE	negative		1
9	6731666	CABLE	positive		1
10	6731746	BRACKET			1
11	17C420	CAPSCREW			2
12	17C516	BOLT			3
13	17C520	BOLT 5			2
14	25E15	WASHER			2
15	25E16	WSHR			3
16	59D5	NUT 5			2
17	61D4	NUT 5			2
18	97D5	NUT			1
19	6670251	BATTERY, DRY 530 AMP	not in kit		1
20	6901602	INSTRUCTIONS			1

ELECTRICAL CONNECTOR KIT
(7-Pin)

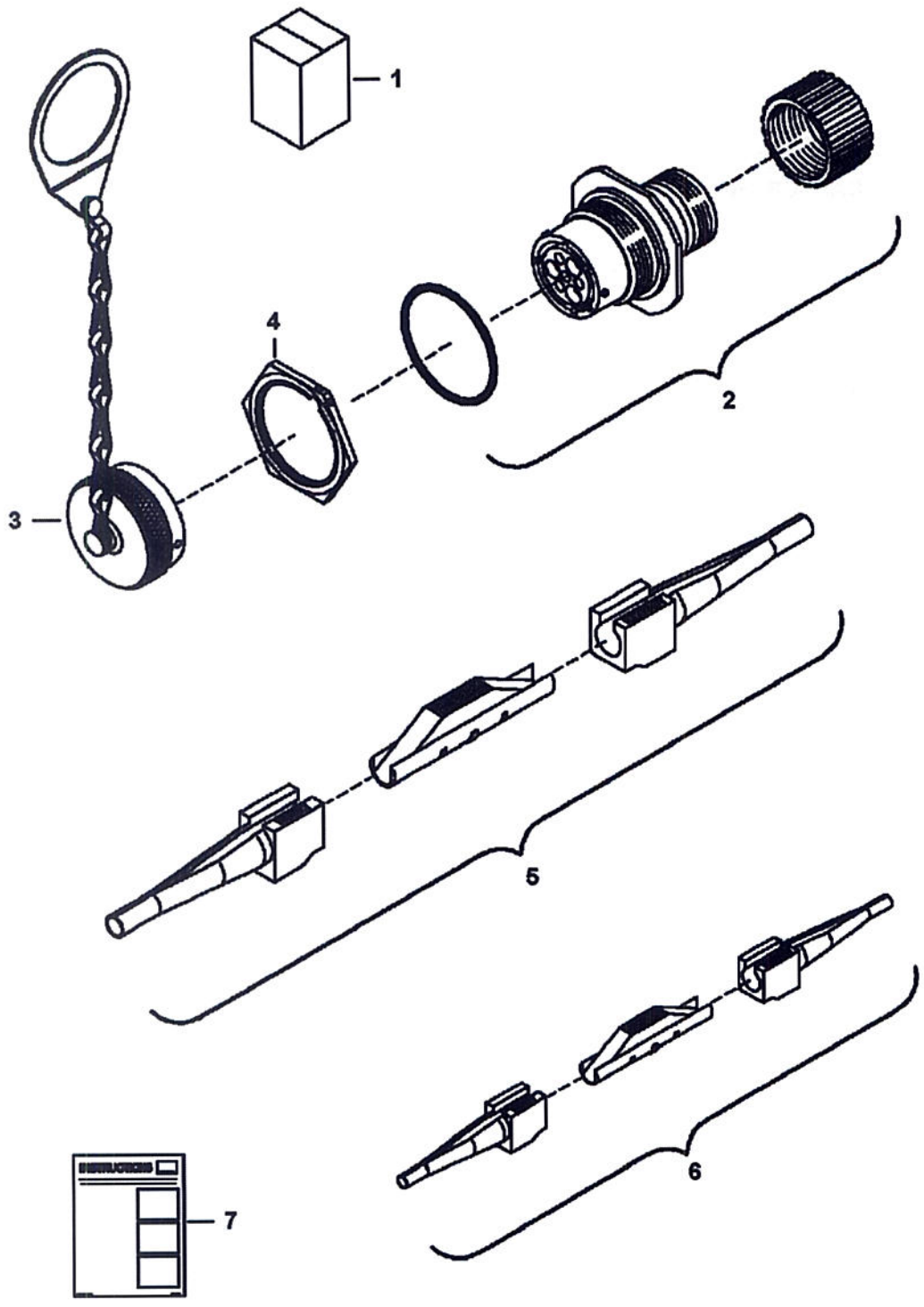

ELECTRICAL CONNECTOR KIT (Cont'd)
(7-Pin)

Ref No	Part Number	Description	Remarks	Serial Number	Qty
1	6727176	KIT	Ref. 2-4 & 7		1
2	6674802	CONNECTOR	7-pin		1
2	6669549	SOCKET	small		4
2	6677136	SOCKET	large - 12 ga		3
3	6675026	CAP			1
4	6688338	NUT			1
5	7000461	TOOL, DISCONNECT TERMINAL	yellow/white		1
6	7000460	TOOL, DISCONNECT TERMINAL	blue/white		1
7	6901076	INSTRUCTIONS			1

ELECTRICAL CONTROLS KIT
(7 Pin Attachments)

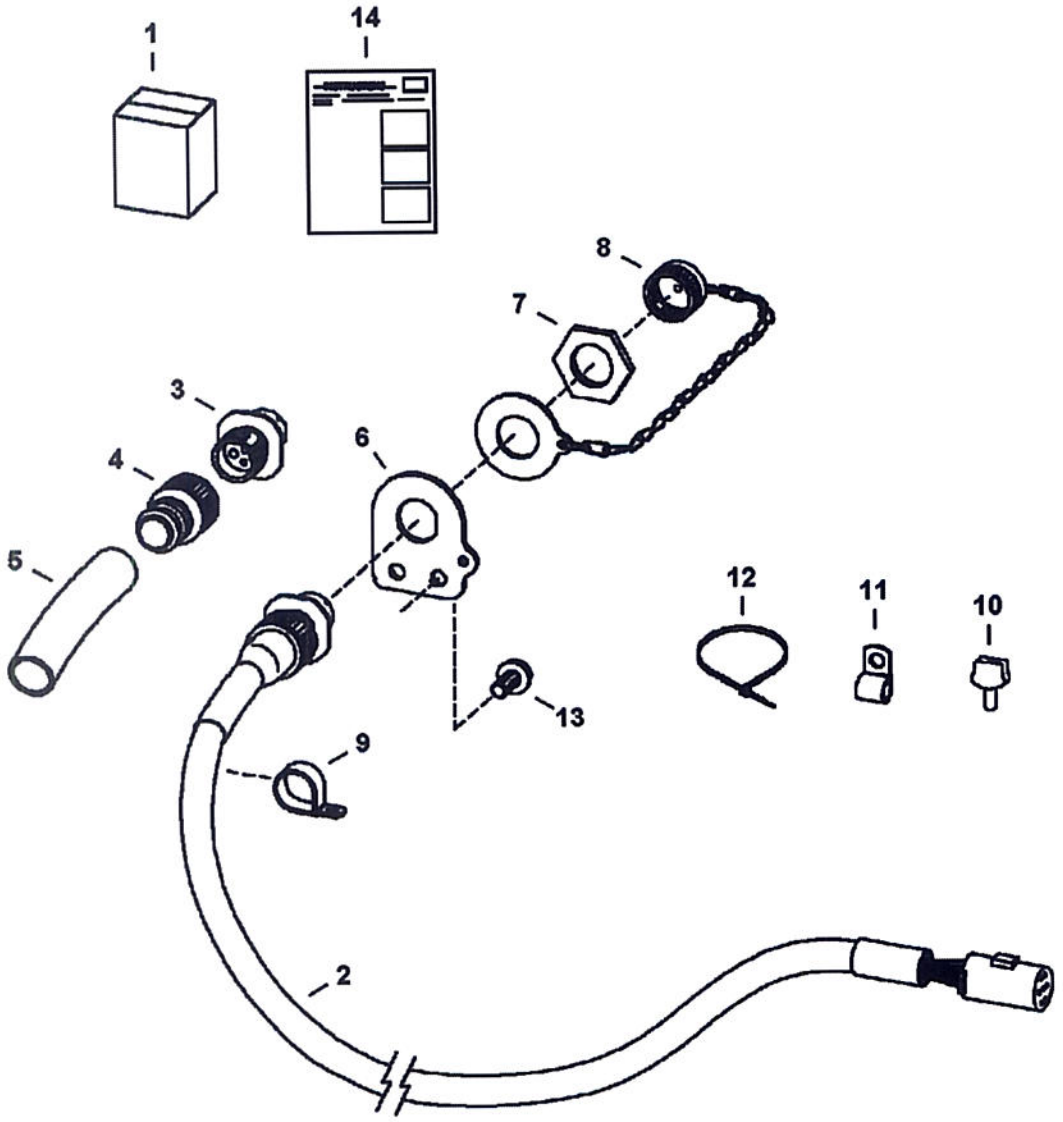

MS-1395

ELECTRICAL CONTROLS KIT (Cont'd)
(7 Pin Attachments)

Ref No	Part Number	Description	Remarks	Serial Number	Qty
1	6733142	KIT	Ref. 2-14		1
2	6718426	HARNESS, BOOM	W/Ref. 3-8		1
3	6674802	CONNECTOR	See Illustration ELECTRICAL CONNECTOR KIT/ MS2627 7-PIN - W/Ref. 7		1
3	6669549	SOCKET	small		4
3	6677136	SOCKET	large - 12 ga		3
4	6674799	ADAPTER	heat shrink		1
5		HEAT SHRINK	NSS - purchase locally		1
6	6718750	MOUNT			1
7	6688338	NUT	jam		1
8	6675026	CAP			1
9	30H35	CLAMP 10			1
10	6675281	MOUNT			1
11	30H27	CLAMP			6
12	6624289	TIE STRAP			7
13	84G3112	BOLT 5			8
14	6901871	INSTRUCTIONS			1

ELECTRICAL CONTROLS KIT
(14 Pin Attachments)

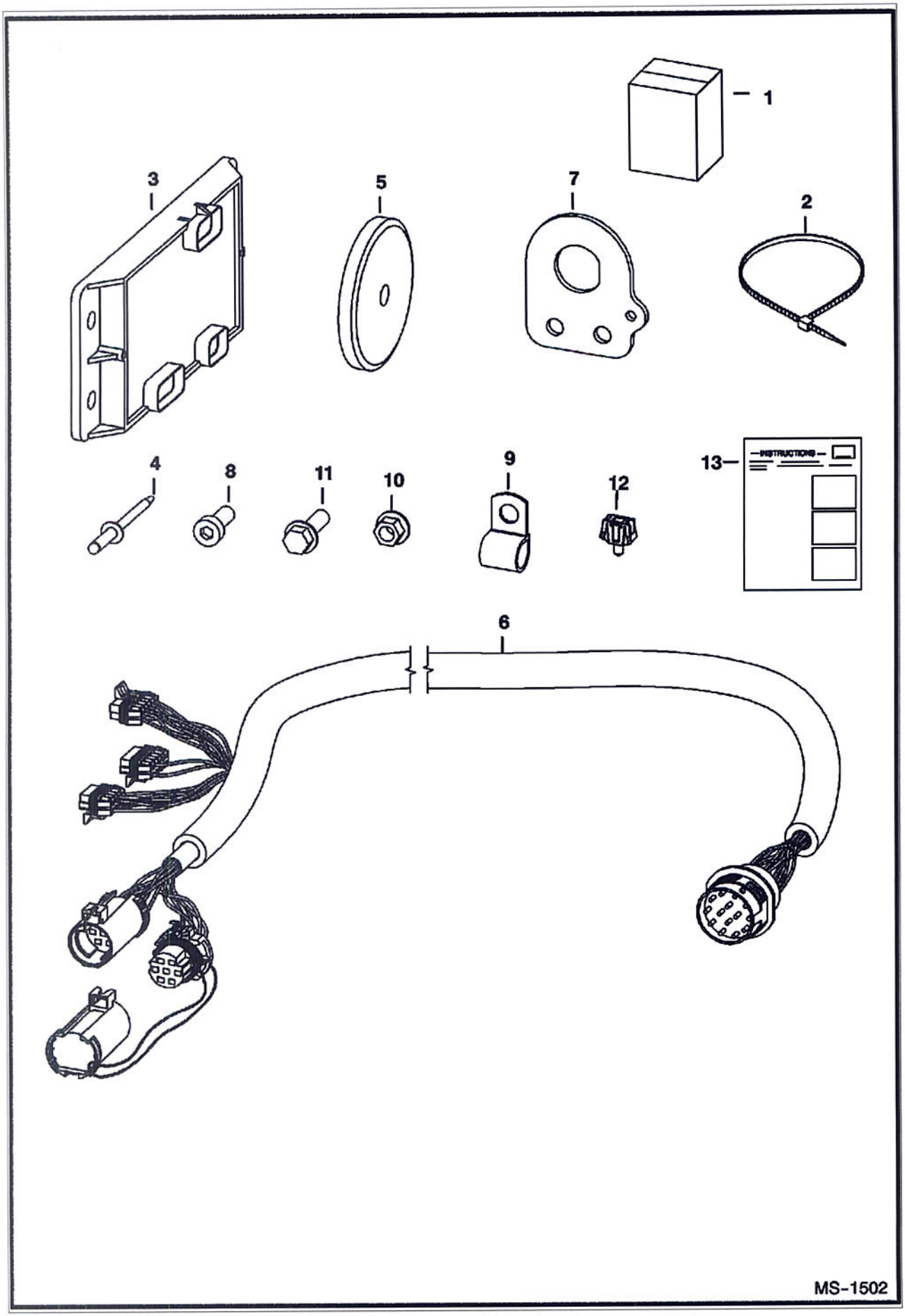

ELECTRICAL CONTROLS KIT (Cont'd)
(14 Pin Attachments)

Ref No	Part Number	Description	Remarks	Serial Number	Qty
1	6733136	KIT			1
2	6624289	TIE STRAP			4
3	6678675	CONTROLLER, ACD DELUXE			1
4	6704892	RIVET			1
5	6719448	MAGNET, CONTROL ATTACH	100 lbs (45,5 kg) force		2
6	6732730	HARNESS			1
7	6733144	MOUNT			1
8	25G612	SCREW			2
9	30H50	CLIP			6
10	83D6	NUT 5			2
11	84G3112	BOLT 5			8
12	6675281	MOUNT			1
13	6901872	INSTRUCTIONS			1

ELECTRICAL CONTROLS KIT
(To Run G-Series Attachments & Old Attachments)

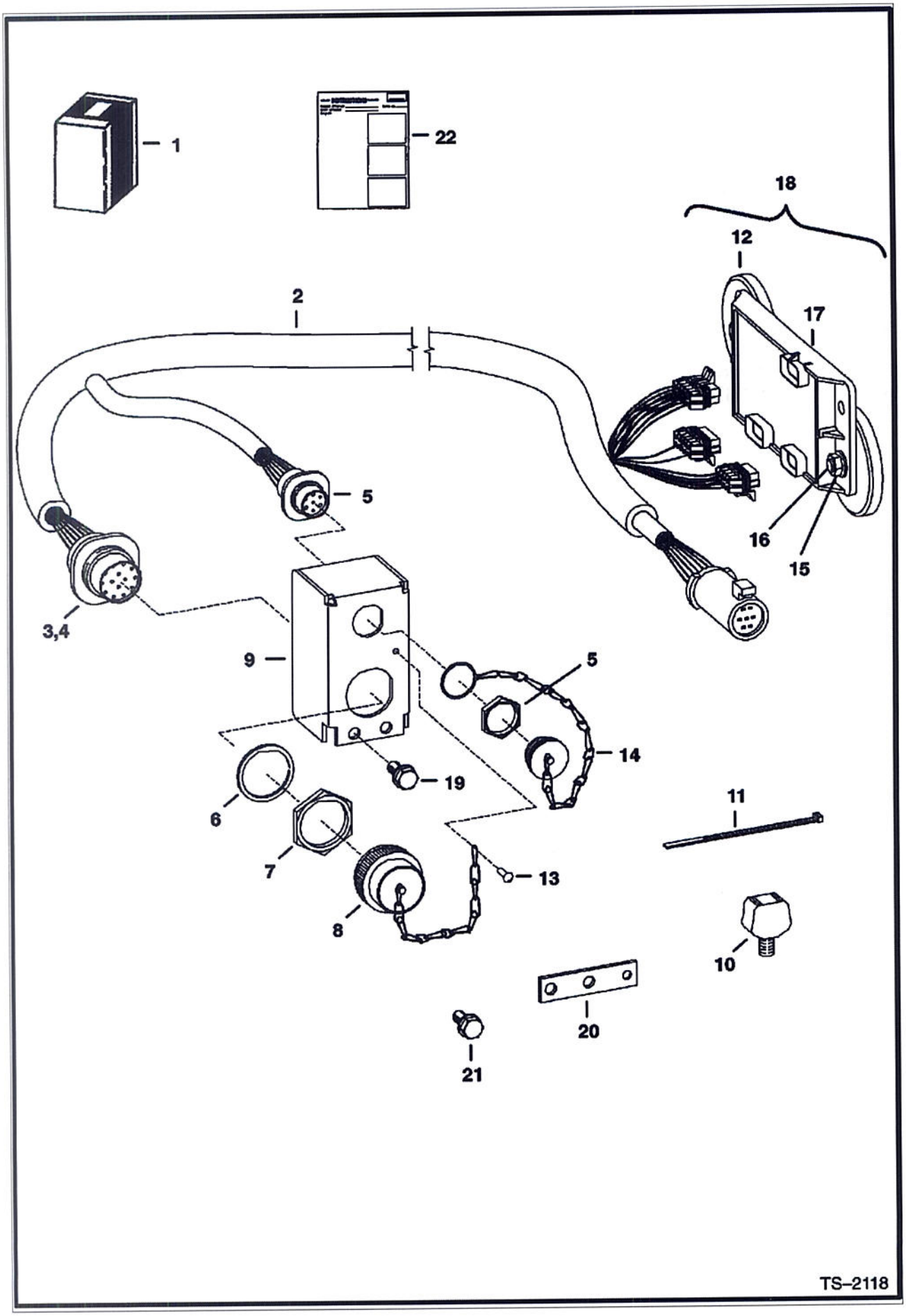

ELECTRICAL CONTROLS KIT (Cont'd)
(To Run G-Series Attachments & Old Attachments)

Ref No	Part Number	Description	Remarks	Serial Number	Qty
1	6727739	KIT			1
2	6729380	HARNESS, CONTROL ATTACH DLX	W/Ref. 3-8 & 14		1
3	6667569	CONNECTOR, RECEPTICAL	Also Order (14) of Ref. 4		1
4	6664040	PIN	male		x
5	6674802	CONNECTOR	See Illustration ELECTRICAL CONNECTOR KIT/ MS2627 7-pin		1
5	6669549	SOCKET	small		4
5	6677136	SOCKET	large - 12 ga		3
6	6664037	WASHER			2
7	6664036	NUT			2
8	6664035	CAP			1
9	6726945	MOUNT			1
10	6675281	MOUNT			1
11	6624289	TIE STRAP			8
12	6719448	MAGNET, CONTROL ATTACH	100 lbs (45,5 kg) force		4
13	6704892	RIVET			1
14	6675026	CAP			2
15	83D6	NUT 5			2
16	25G612	SCREW			2
17	6678675	CONTROLLER, ACD DELUXE			1
18		CONTROLLER	NAP - assy - Ref. 12 & 15-17 - Order Ref. 17 & (2) ea. of Ref. 12, 15 & 16		1
19	84G3112	BOLT 5			2
20	6730291	BRACKET	models 873G - 883		1
21	35C512	BOLT			2
22	6901116	INSTRUCTIONS			1

ENGINE MOUNT KIT
(For Rough Application)

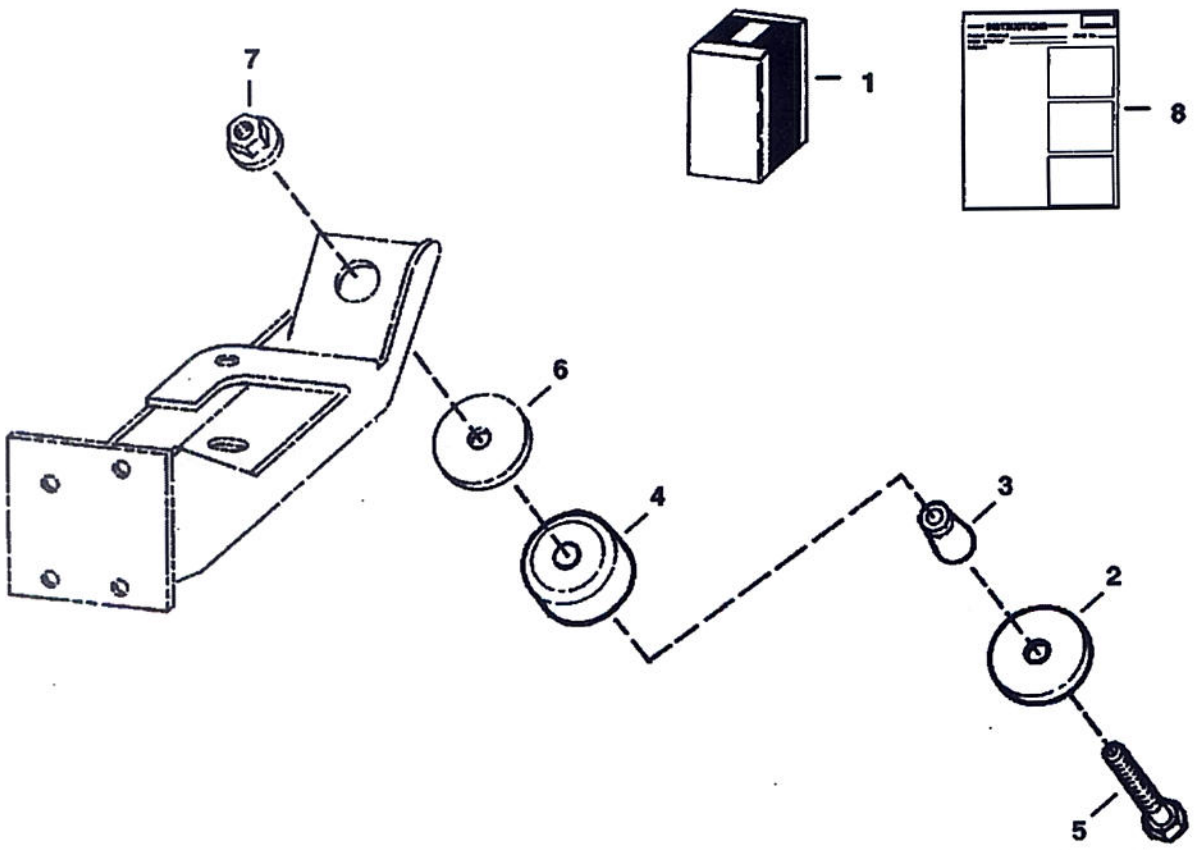

B–14623

ENGINE MOUNT KIT (Cont'd)
(For Rough Application)

Ref No	Part Number	Description	Remarks	Serial Number	Qty
1	6711632	MOUNTING KIT	Ref. 2-8		1
2	6661787	WASHER			4
3	7110276	SPACER, TAPERED	tapered		4
4	6668104	MOUNT, ENG			4
5	43C852	BOLT			4
6	6705106	WASHER			4
7	6652918	NUT			4
8	6724482	INSTRUCTION			1

EUROPEAN ACCESSORIES
(Caliper Brake Kit)

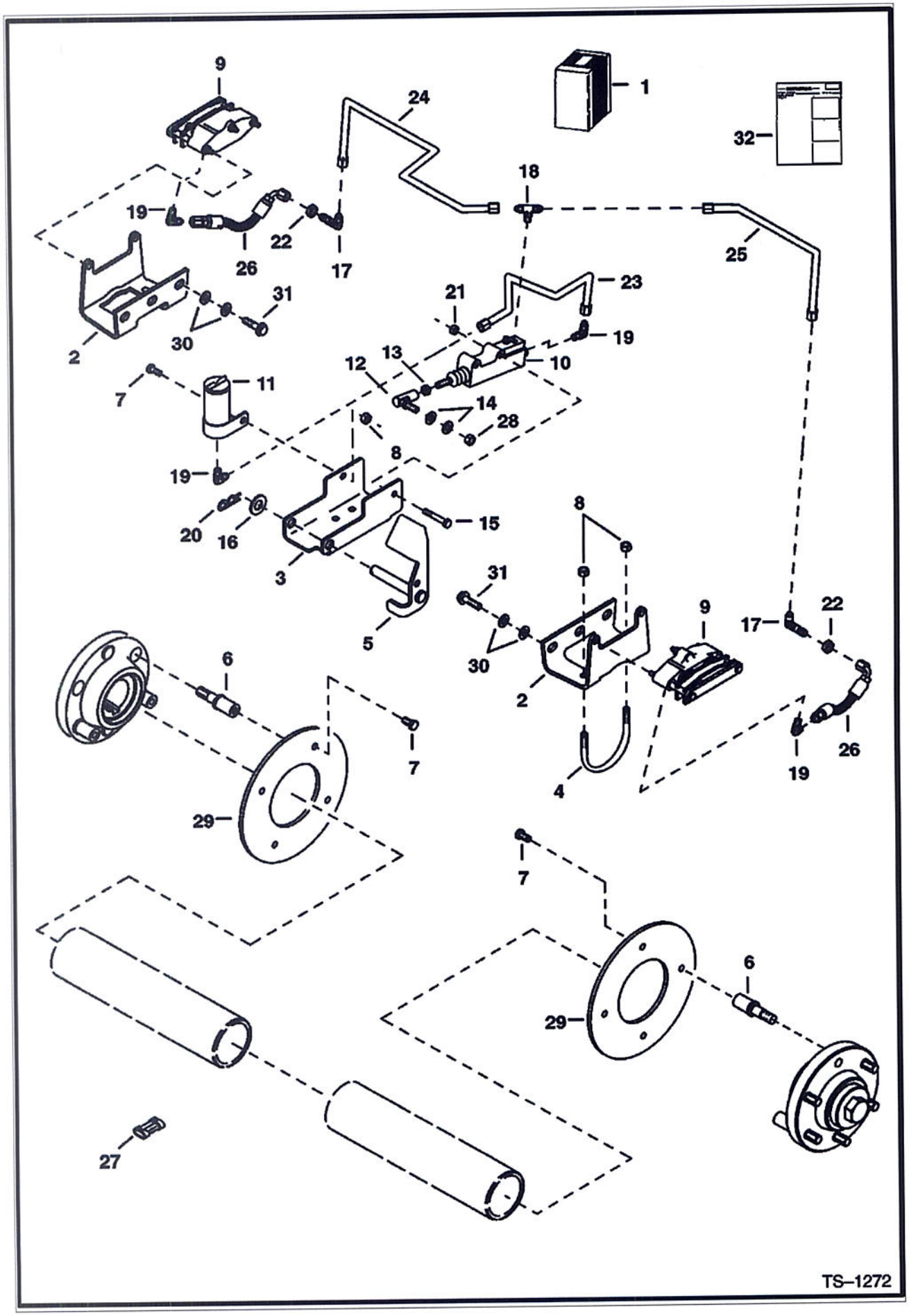

(Caliper Brake Kit)

Ref No	Part Number	Description	Remarks	Serial Number	Qty
1	6719150	KIT	Ref. 2-32		1
2	6718728	MOUNT ASSY.	caliper		2
3	6709236	MOUNT	pedal		1
4	6709237	CLAMP			2
5	6709239	PEDAL ASSY.	brake		1
6	6709229	BOLT	wheel		8
7	17C612	BOLT 5			9
8	95D6	NUT			5
9	6666932	BRAKE	See Illustration EUROPEAN ACCESSORIES/ B14851		2
10	6666933	CYLINDER	See Illustration EUROPEAN ACCESSORIES/ B14851		1
11	6661117	TANK			1
12	6599744	BALL JOINT			1
13	8D6	NUT 5			1
14	25E17	WASHER 5			2
15	17C532	BOLT 5			2
16	25E25	WASHER 10			1
17	45K3	FITTING			2
18		TEE	NAP		1
19	83F3	ELBOW 5			4
20	1318565	COTTER PIN			1
21	91D5	NUT 5			2
22	86F3	LOCKNUT			2
23	6709400	TUBE			1
24	6718205	TUBE			1
25	6718206	TUBE			1
26	6709547	HOSE			2
27	6667139	CAP			1
28	62D6	NUT 5			1
29	6709234	DISC	brake		2
30	25E11	WASHER			8
31	31C824	BOLT 10			4
32	6900934	INSTRUCTIONS			1

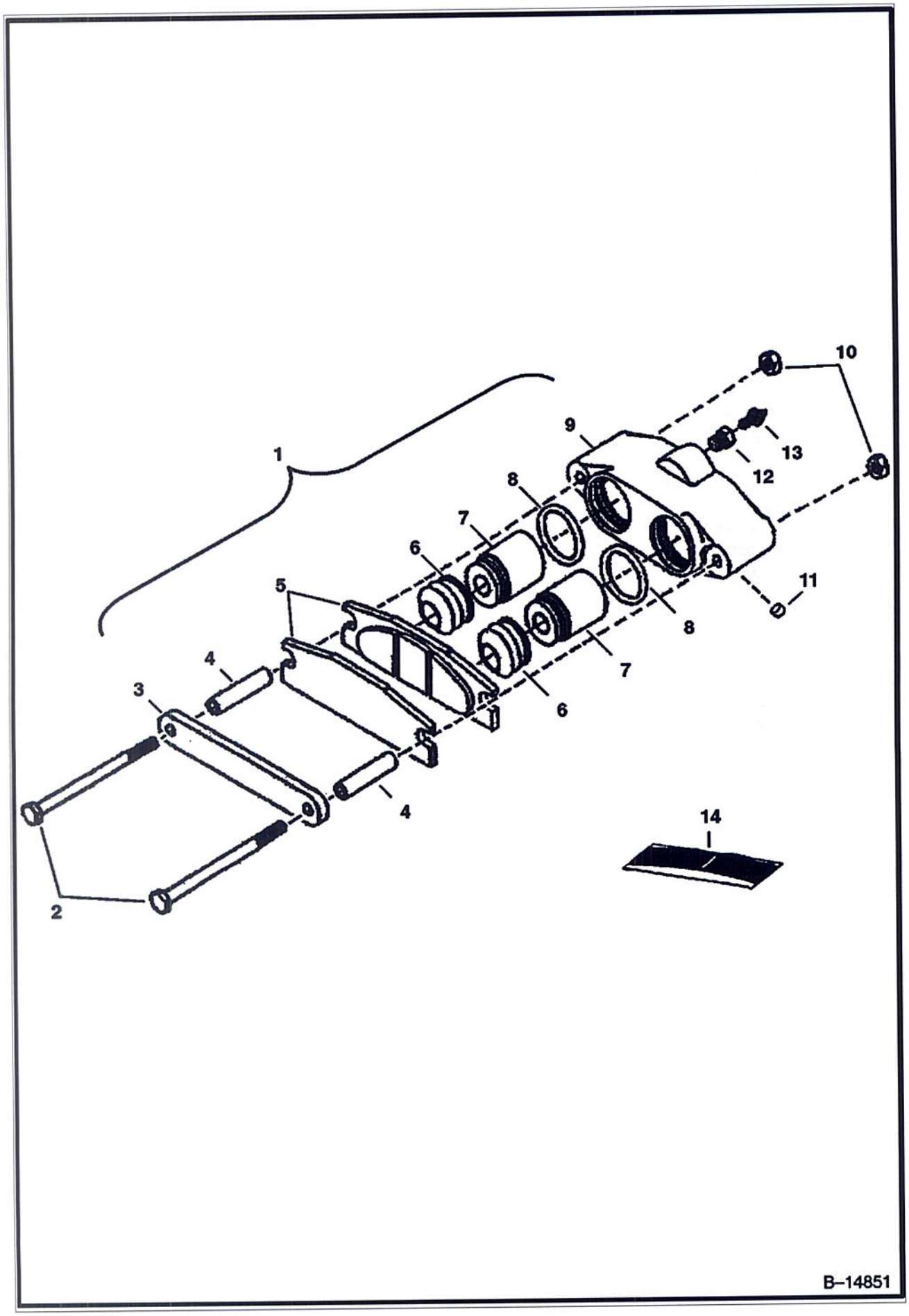
1
2
3
4
4
5
6
6
7
7
8
8
9
10
11
12
13
14
B–14851

(Caliper Brake)

Ref No	Part Number	Description	Remarks	Serial Number	Qty
1	6666932	BRAKE	W/Ref. 2-12		1
2	6669154	BOLT			2
3	6669155	PLATE			1
4	6669156	SPACER			2
5	6669184	STATOR ASSY.			1
6		BOOT	NSS - Order Ref. 14		2
7	6669159	PISTON			2
8		O-RING	NSS - Order Ref. 14		2
9		HOUSING	NSS - Order Ref. 1		1
10	6669162	NUT			2
11	6669163	PLUG			1
12	6669164	ADAPTER			1
13	6669165	SCREW	bleeder		1
14	6669185	SEAL KIT	W/Ref. 6 & 8		1

EUROPEAN ACCESSORIES
(Caliper Brakes - Master Cylinder)

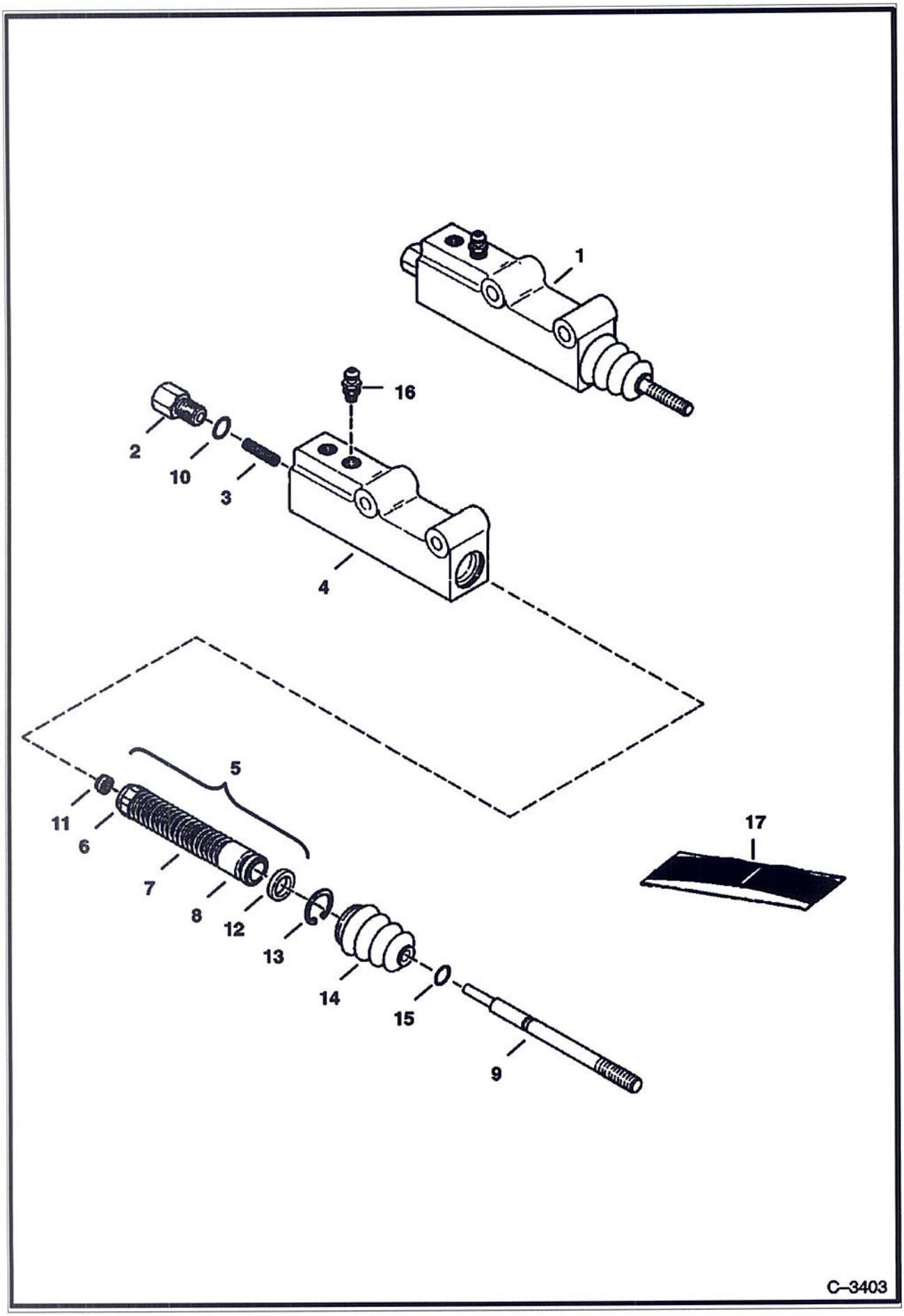

(Caliper Brakes - Master Cylinder)

Ref No	Part Number	Description	Remarks	Serial Number	Qty
1	6666933	CYLINDER	master brake - Ref. 2-16		1
2		ADAPTER	NSS		1
3		SPRING	NSS		1
4		BODY	NSS		1
5		SPRING ASSY.	NSS - Ref. 6-8 & 11		1
6		RETAINER	NSS		1
7		SPRING	NSS		1
8		PISTON	NSS		1
9		PUSH ROD	NSS		1
10		O-RING	NSS		1
11		SEAT	NSS		1
12		CUP	NSS		1
13		SNAP RING	NSS		1
14		BOOT	NSS		1
15		O-RING	NSS		1
16	6668097	SCREW	bleeder		1
17	6661608	SEAL KIT	Ref. 10-15		1

Printed by Am Look Co. - aprint.exe (V4.49.) 9/17/2002

EUROPEAN ACCESSORIES
(Rear Door Lights)

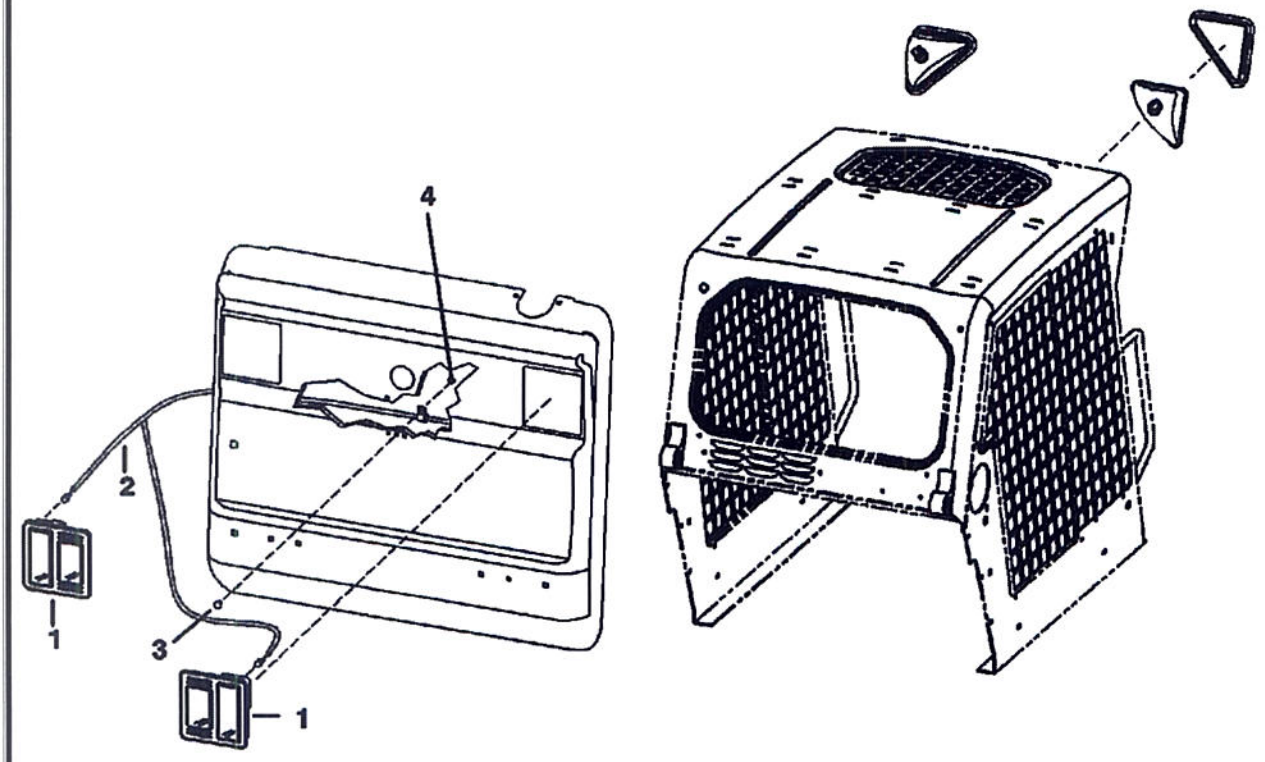

PE–1602

(Rear Door Lights)

Ref No	Part Number	Description	Remarks	Serial Number	Qty
1	7101384	LIGHT	rear		2
1	6686097	BULB	turn		1
1	6686096	LENS	amber - turn		1
1	6686098	BULB	stop		1
1	6686099	LENS	red - stop		1
1	6686100	SCREW			2
2	6718198	HARNESS	deluxe		1
3	37C512	BOLT			1
4	4DM5	NUT			4

EUROPEAN ACCESSORIES
(Road Kit)

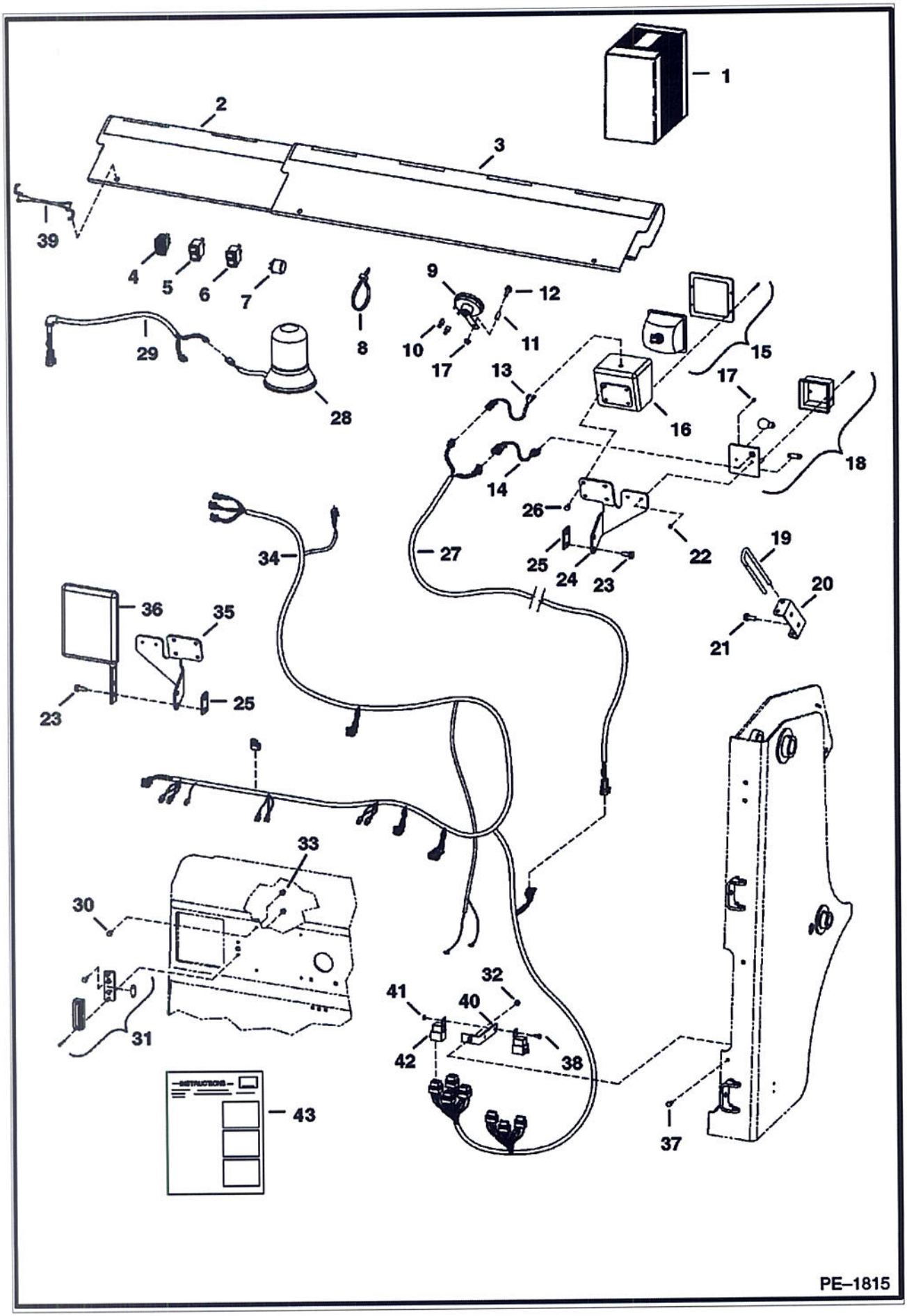

(Road Kit)

Ref No	Part Number	Description	Remarks	Serial Number	Qty
1		KIT	SALES - for Europe only - Sales #6731237		1
2	6713841	SHIELD	bucket		1
3	6714820	SHIELD	bucket		1
3		DECAL	NAP - stripe		1
4	6676872	TURN SIGNAL			1
5	6668815	SWITCH	hazard		1
6	6668816	SWITCH	beacon		1
7	6557904	FLASHER			1
8	6624289	TIE STRAP			26
9	6671106	HORN			1
10	6675064	TERMINAL			2
11	6732206	SPACER			1
12	35C536	BOLT			1
13	6713994	HARNESS	adapter - headlight		2
14	6713993	HARNESS	adapter - light		2
15	6665728	LIGHT	front		2
16	6707804	HOUSING			2
17	85G808	SCREW			4
18	6665727	LIGHT	front turn		2
19	6731222	PIN	Bob-Tach		1
20	6731973	HOLDER	pin		1
21	84G3712	BOLT			2
22	12D8	NUT			4
23	84G3716	SCREW 5			4
24		MOUNT	NAP - light - RH		1
25	6735825	SPACER			2
26	17C508	SCREW			8
27	6731239	HARNESS	boom light		2
28	6675523	BEACON	light		1
29	6718872	HARNESS	cab exterior		1
30	35C410	BOLT 5			4
31	6665729	LIGHT			1
32	55D5	NUT			2
33	83D4	NUT 10			4
34	6726430	HARNESS	engine/tail - Italian		1
35		MOUNT	NAP - light - LH		1
36	6665860	KIT	side mirror		1
37	17C512	BOLT 5			1
38	17C410	BOLT 10			2
39	6731819	STRAP	rubber		3
40	6702650	MOUNT	fuse		1
41	85D4	NUT 5			2
42	6670312	RELAY	magnetic		4
43	6901663	INSTRUCTIONS			1

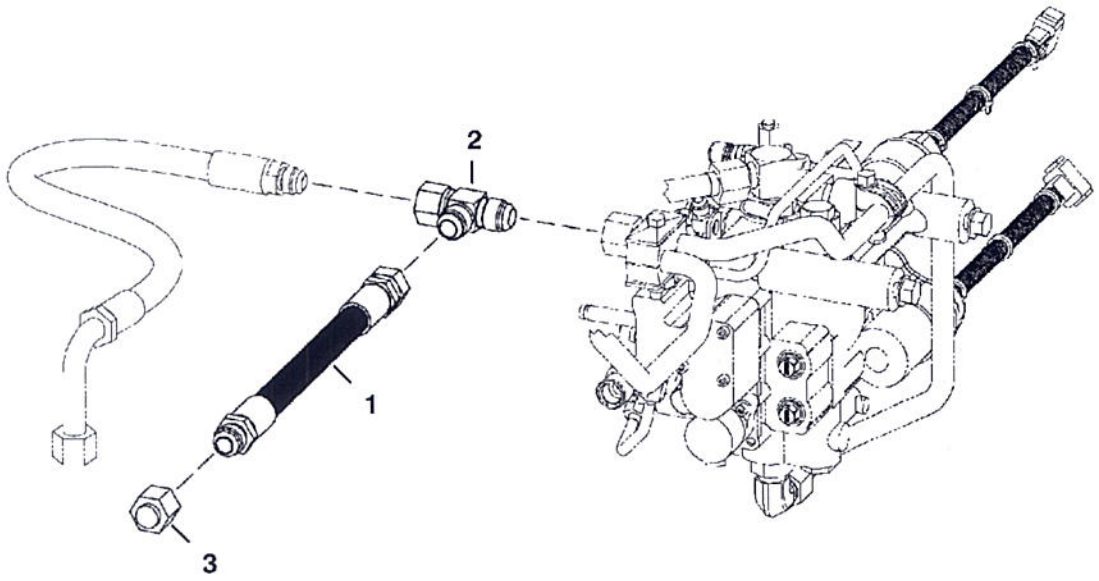

PE-2847

(Sound Option) (Hydraulic Muffler for Selectable Joystick Controls)

Ref No	Part Number	Description	Remarks	Serial Number	Qty
1	7112651	HOSE	hydraulic muffler		1
2	13K8	TEE			1
3	36K8	CAP			1

FIRE EXTINGUISHER

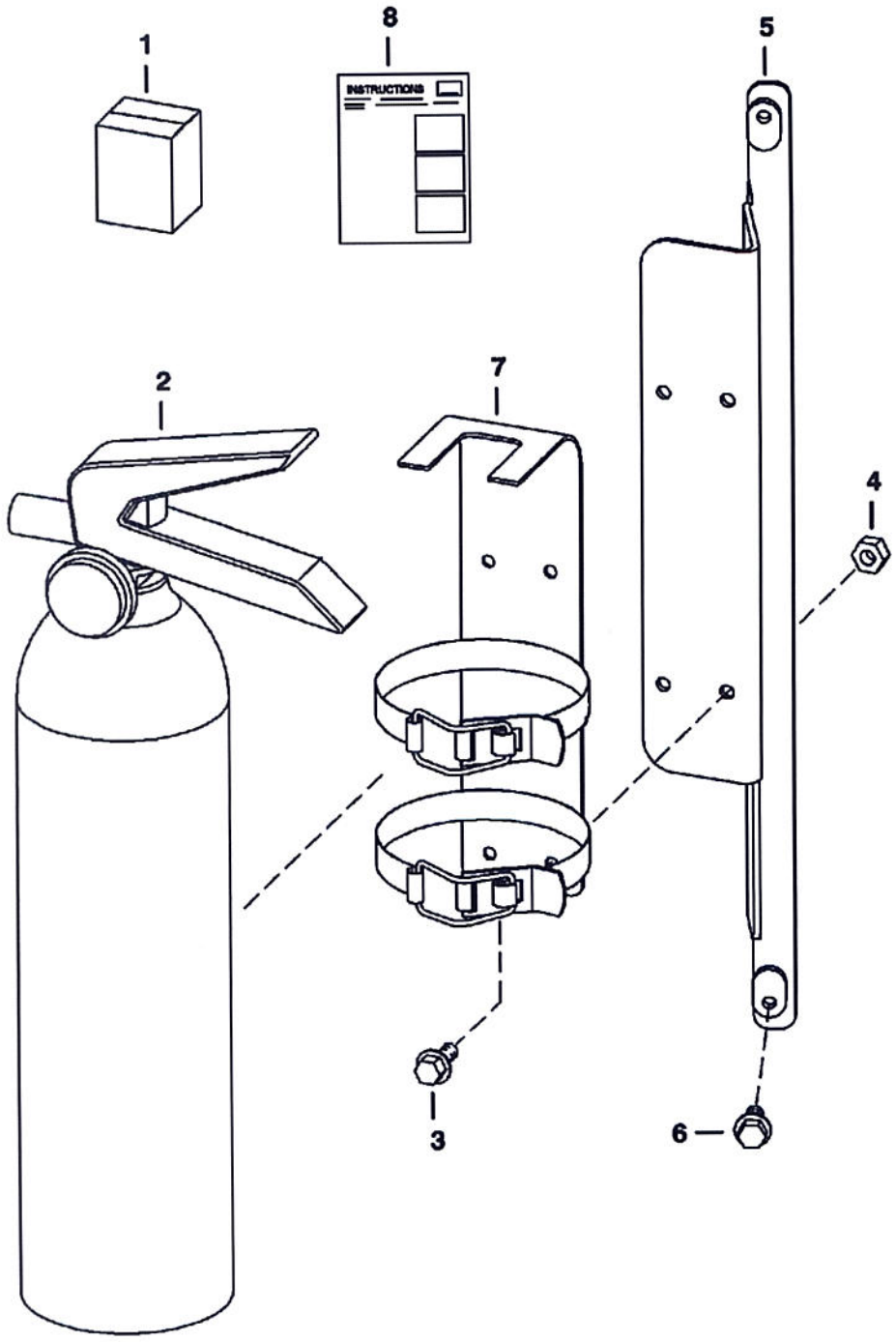

PE-1172

Ref No	Part Number	Description	Remarks	Serial Number	Qty
1	6725898	KIT	fire extinguisher - Ref. 2-8		1
2	6675581	EXTINGUISHER			1
3	45G1006	BOLT			4
4	12D10	NUT			4
5	6725906	BRACKET			1
6	31C410	BOLT			2
7	6691173	BRACKET			1
8	6901025	INSTRUCTIONS			1

F.O.P.S. KIT

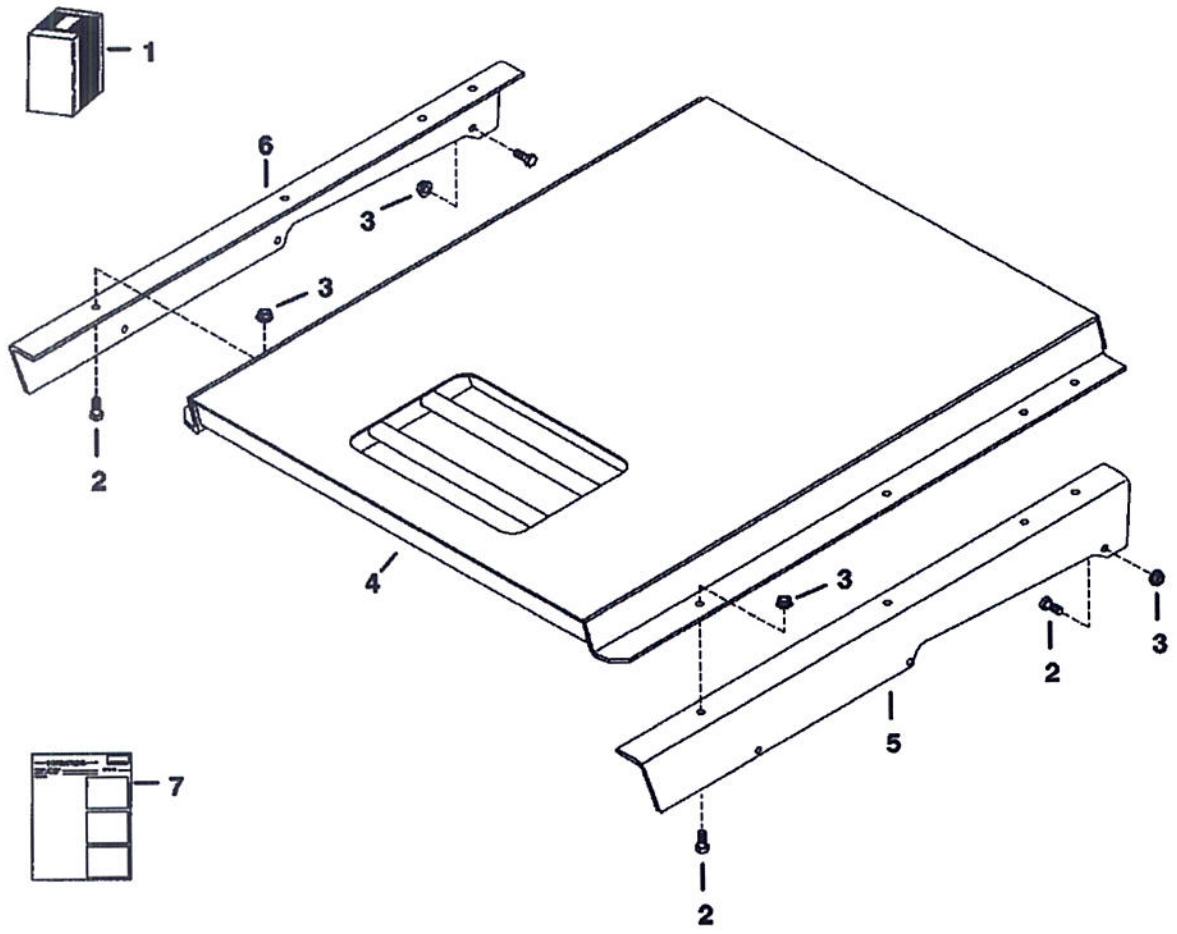

TS–2052

Ref No	Part Number	Description	Remarks	Serial Number	Qty
1	6718924	KIT	Ref. 2-7		1
2	17C616	BOLT 5			14
3	83D6	NUT 5			14
4	6702402	SHIELD			1
5	6718833	BRACKET	LH		1
6	6718834	BRACKET	RH		1
7	6720592	INSTRUCTIONS			1

FLASHER LIGHTS
(4-Way) (Turn Indicators)

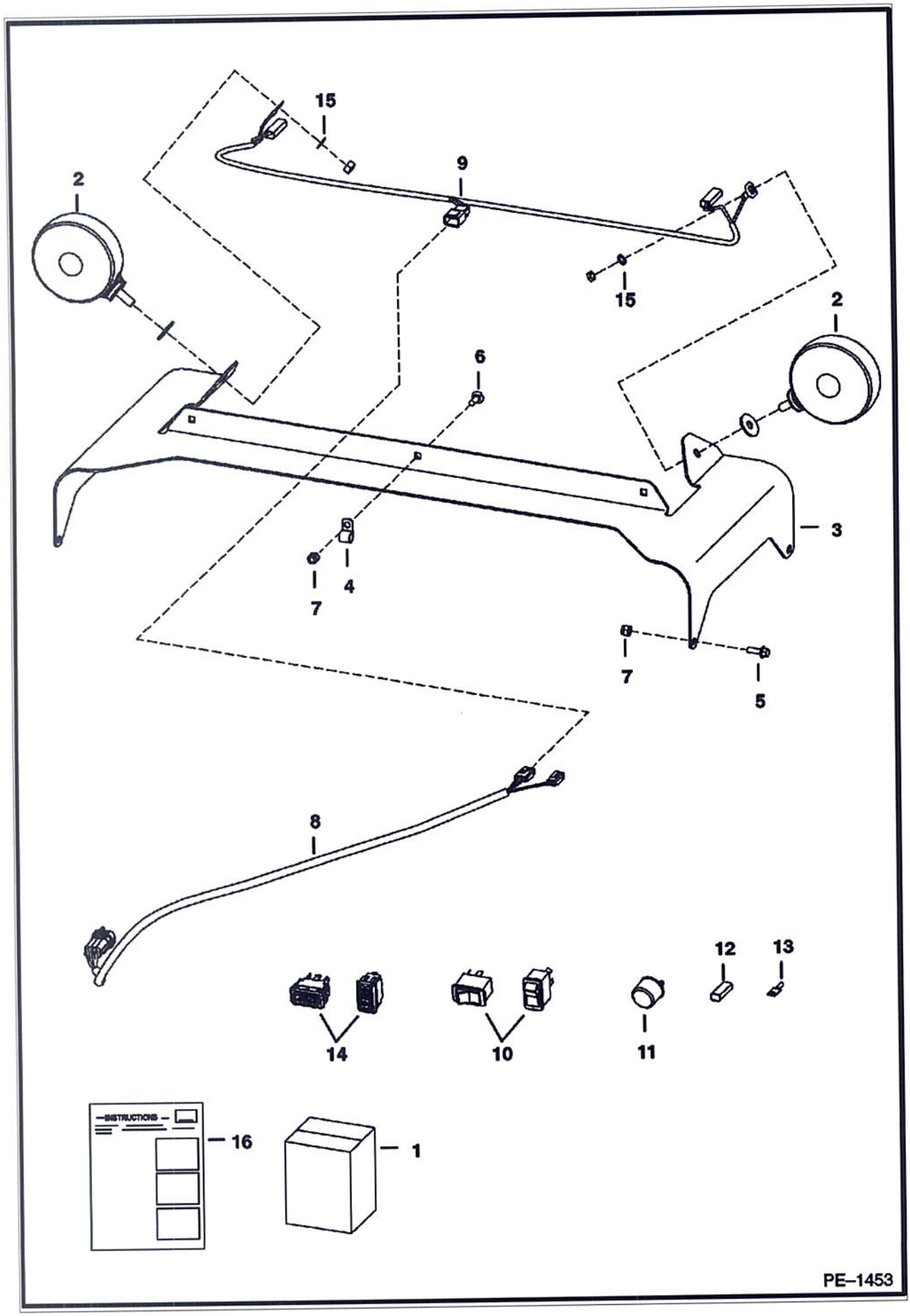

Ref No	Part Number	Description	Remarks	Serial Number	Qty
1	6718411	KIT	flasher lights - Ref. 2-16 - If loader is not equipped / deluxe cab accessories harness, heater, air conditioning, SJC, ACS, Power Bob-Tach, strobe lights (non-power port plug-in) and/or rotating beacon, Also Order 7143071 deluxe harness - If equipped W/SJC, Also Order 6726662 harness		1
2	6517516	LIGHT			2
3	6718326	MOUNT			1
4	30H21	CLAMP 10			3
5	35C412	BOLT			4
6	37C412	BOLT			3
7	59D4	NUT 5			7
8	6718872	HARNESS	cab exterior		1
9	6718873	HARNESS	4-way flasher		1
10	6665316	SWITCH	horizontal		1
10	6668815	SWITCH	vertical		1
11	6557904	FLASHER			1
12	614142	SLEEVE 10			2
13	6515131	TERMINAL			2
14	6675835	TURN SIGNAL	horizontal		1
14	6676872	TURN SIGNAL	vertical		1
15	6E5	WASHER	lock		2
16	6900848	INSTRUCTIONS			1

FRONT AUXILIARY
(R.H. Kit)

NOTE: This front aux kit requires the rear aux kit or factory installed option in order to operate.

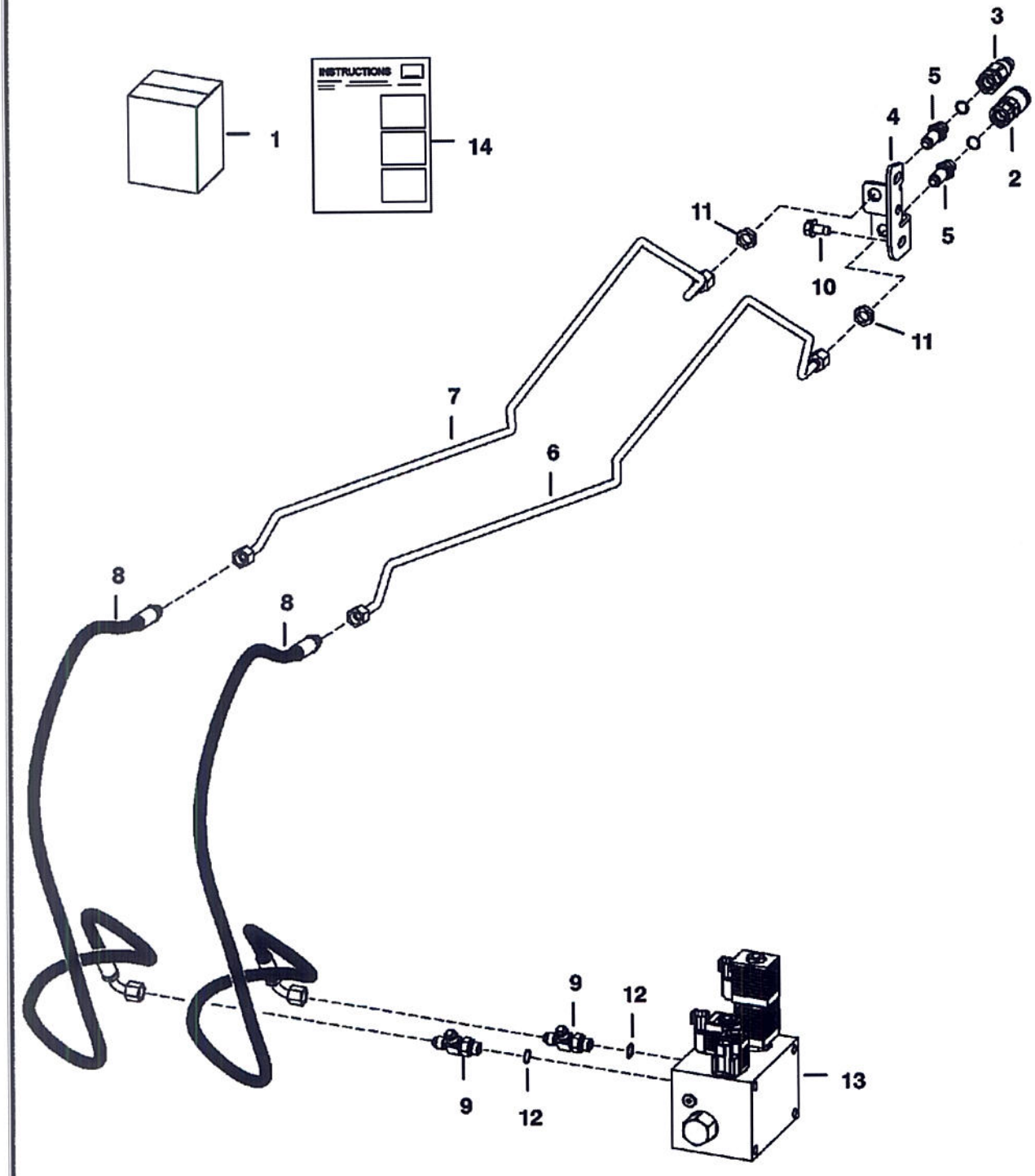

(R.H. Kit)

Ref No	Part Number	Description	Remarks	Serial Number	Qty
1	6736791	KIT	requires rear auxiliaries		1
2	6667803	COUPLER	female		1
3	6667804	COUPLER	male		1
3	6669657	SEAL KIT			1
4	6711674	MOUNT			1
5	6716089	CONNECTOR	W/ O-rings		2
6	6736934	TUBE			1
7	6736935	TUBE			1
8	6736856	HOSE			2
9	21KB606	TEE	W/Ref. 12		2
10	84G3712	BOLT			2
11	86F5	NUT			2
12	79K6	O RING 10			x
13		VALVE	select - not in kit		1
14	6901515	INSTRUCTIONS			1

GAS SPRING KIT

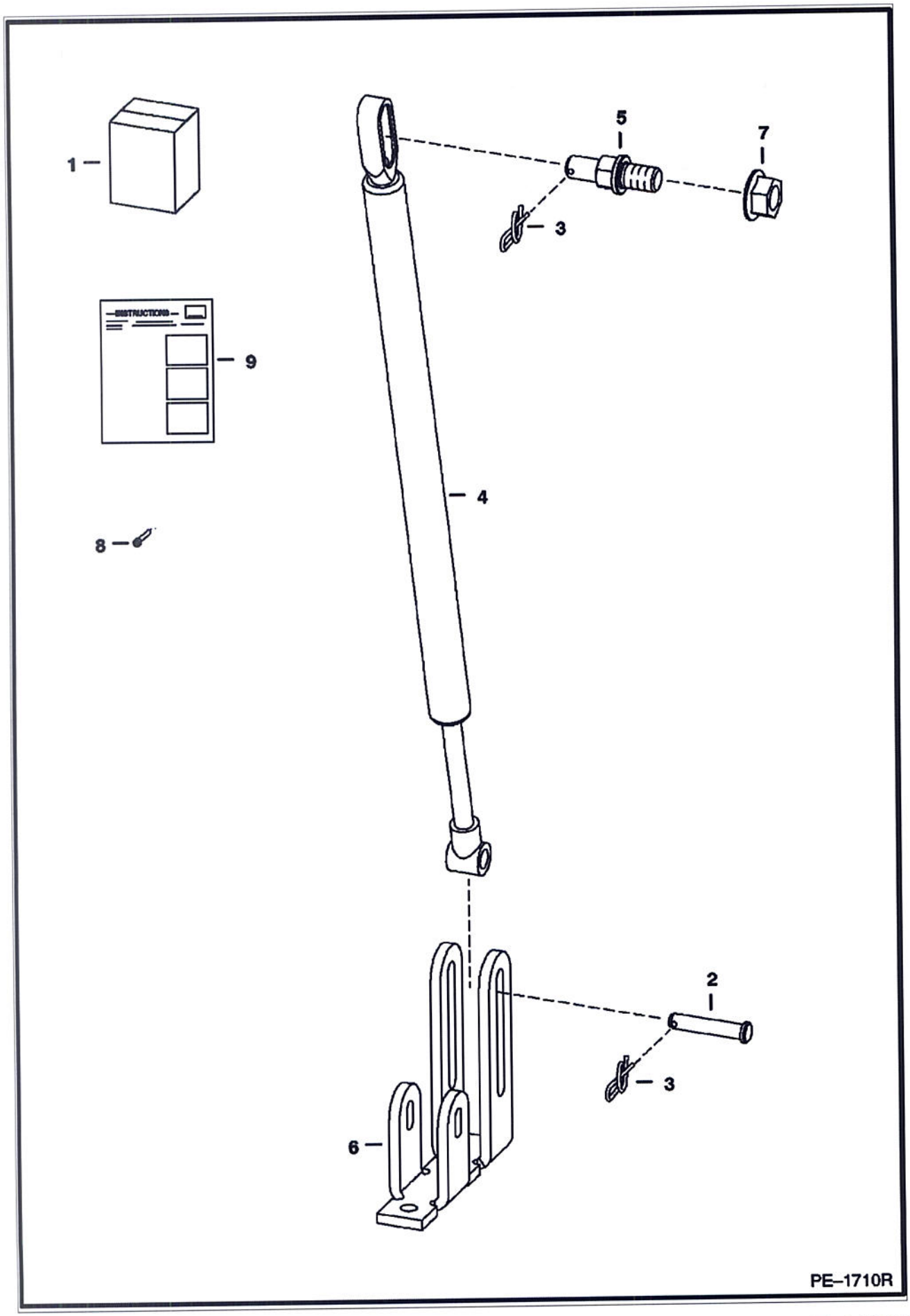

Ref No	Part Number	Description	Remarks	Serial Number	Qty
1	6732928	KIT			1
2	6567743	PIN			1
3	6631418	PIN			2
4	6678292	GAS SPRING			1
5	6719064	MOUNT			1
6	6729141	MOUNT			1
7	97D8	NUT			1
8	21G804	BOLT			1
9	6901816	INSTRUCTIONS			1

GUN MOUNT
(Army)

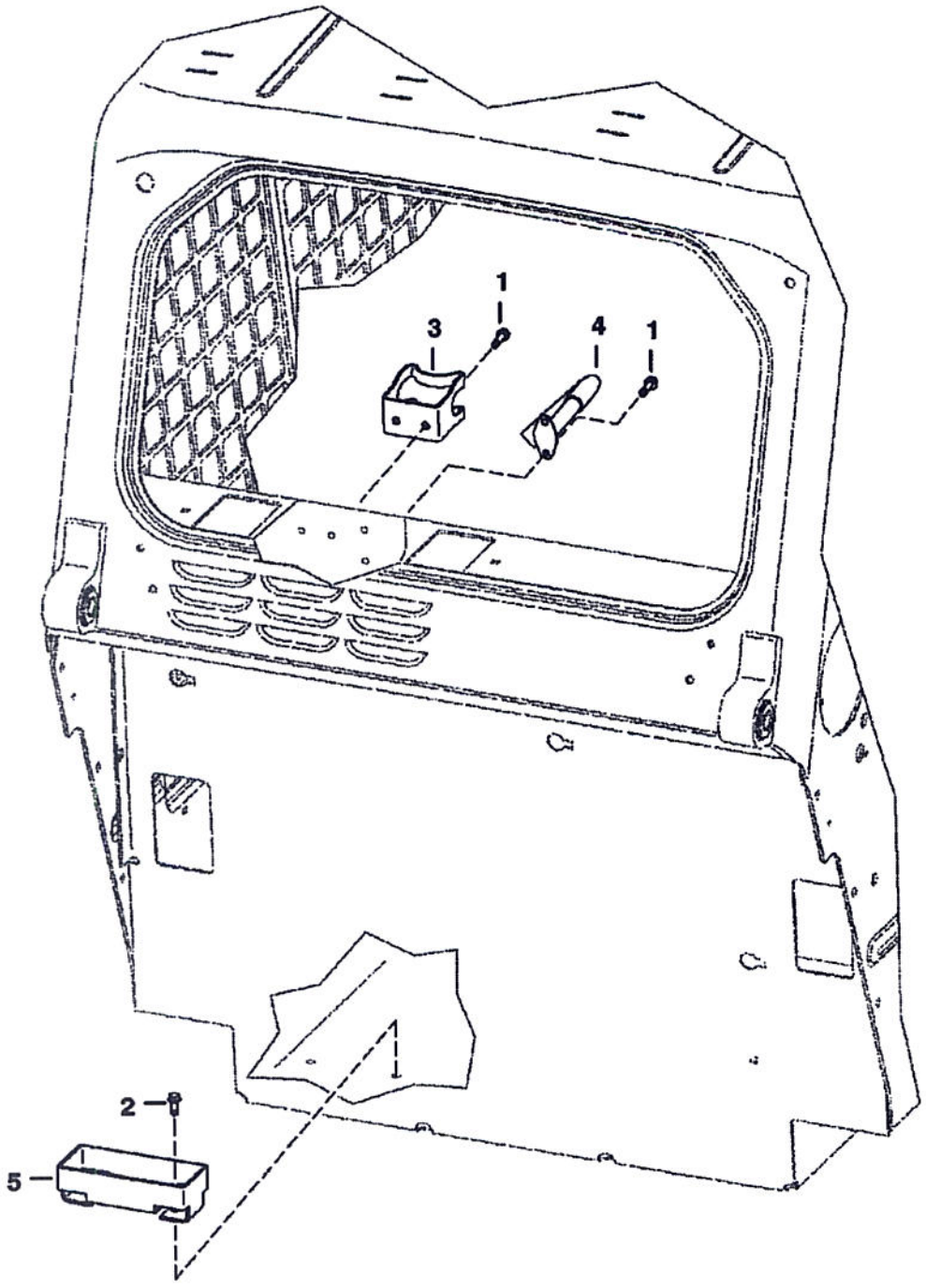

PE–2451

Ref No	Part Number	Description	Remarks	Serial Number	Qty
1	7105324	BOLT			4
2	7105325	BOLT			2
3		MOUNT	NAP - supplied by Army		1
4		MOUNT	NAP - supplied by Army		1
5		MOUNT	NAP - supplied by Army		1

page 855 - HGAMU29X39H1001 - 04/08/2009 12:26:18 - Printed by Ken Cook Co. - eXprint.exe (v2.24.7 4/7/2009)

HEATER
(Heater Kit)

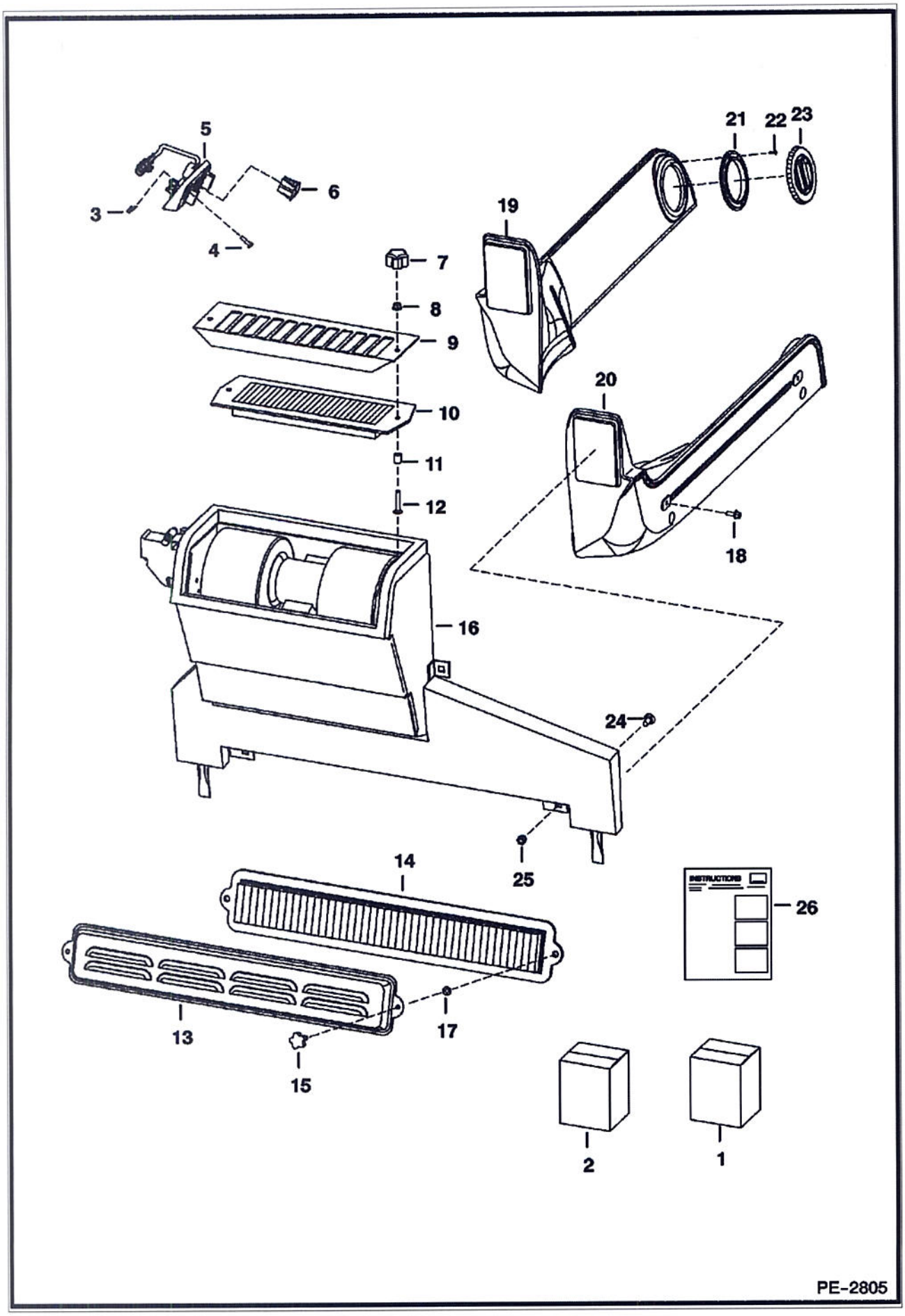

Page 856 - BOBM0292398B1001 - 04/08/2009 12:26:18 - Printed by Ken Cook Co. - exprint.exe (v2.44.7 4/7/2009)

(Heater Kit)

Ref No	Part Number	Description	Remarks	Serial Number	Qty
1	7116899	KIT, HEATER CAB	If loader is not equipped W/deluxe cab harness, heater, A/C, SJC, ACS, power Bob-tach, cab enclosure door kit, rear wiper, or any of the following cab harness connected rotating beacon, 4-way flasher or strobe light, Also Order 7143071 deluxe cab harness		1
2	7121572	DECAL PACKAGE			1
3	6669091	CLIP	retainer		3
4	6669224	BOLT			3
5	6674228	PANEL	control		1
5	6640699	CONNECTOR			1
5	6718579	DECAL			1
5	6718887	PANEL			1
5	6675176	SWITCH	blower		1
5	6675177	KNOB			1
5	6675846	POTENTIOMETER			1
6	6675181	PLUG	switch hole - AC		1
7	6681614	KNOB			2
8	59D4	NUT 5			2
9	6718175	SCREEN	filter		1
10	6678207	FILTER	recirculation		1
11	6718837	SPACER			2
12	37C424	BOLT			2
13	6727847	COVER	W/Ref. 15 & 17		1
14	6677983	FILTER, AIR HEATER CAB			1
15	6726386	KNOB			2
16	6688543	HEATER	See Illustration HEATER/ PE3077		1
17	6676516	NUT	Push		2
18	35C410	BOLT 5			4
19	6735246	DUCT	LH		1
20	6735245	DUCT	RH		1
21	6675179	FLANGE	round		4
22	57G608	SCREW			16
23	6674231	VENT, HEATER CAB ROUND	round		4
24	37C512	BOLT			4
25	59D5	NUT 5			4
26	6904255	INSTRUCTIONS			1

HEATER
(Heater Assembly)

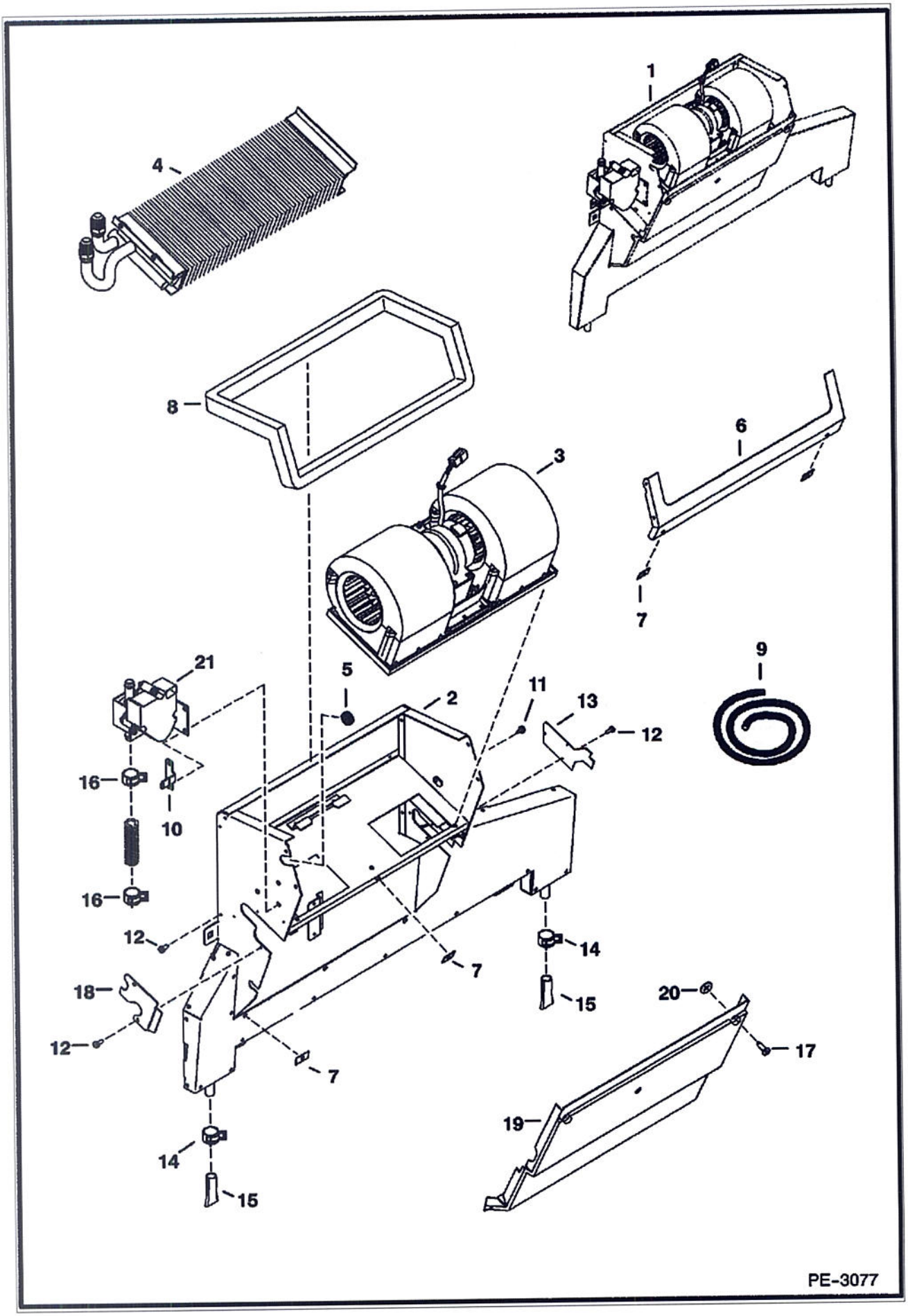

(Heater Assembly)

Ref No	Part Number	Description	Remarks	Serial Number	Qty
1	6688543	HEATER	Ref. 2-22		1
2	6690478	HOUSING			1
3	6689762	BLOWER	See Illustration HEATER/ B26156 assy		1
4		COIL	See Illustration HEATER/ PE1228 NAP - Order 6689770 heater coil kit		1
5	6690482	GROMMET			1
6	6678152	SEAL FLANGE			1
7	6677115	RECEPTACLE			6
8		SEAL	NAP - 48.75" (1238,25 mm) long - Order Ref. 9		1
9	6677111	SEAL	bulk - sold per foot		x
10	6690481	BRACKET	harness		1
11	6677119	SCREW	sheetmetal		7
12	6677118	SCREW	W/washer		4
13	6690487	COVER			1
14	6675510	CLAMP	drain hose		2
15	6675511	DRAIN VALVE			2
16	6675512	CLAMP	hose		2
17	6677117	SCREW	captive		1
18	6690479	COVER			1
19	6690476	COVER			1
20	6677116	RETAINER			6
21	6689696	VALVE, HEATER CAB			1
22	6698501	HARNESS, HEATER			1

HEATER
(Blower Assembly)

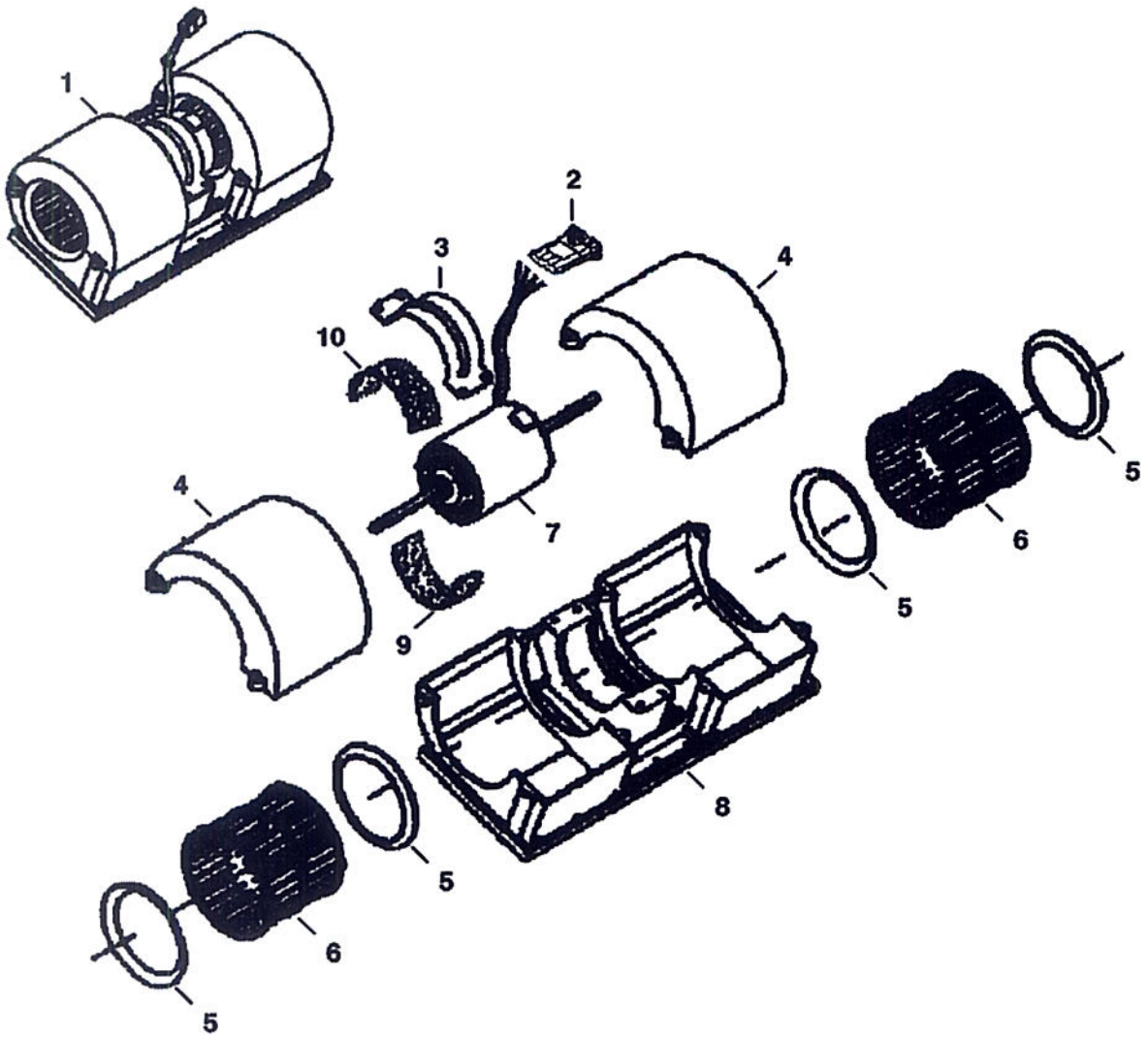

B-26156

(Blower Assembly)

Ref No	Part Number	Description	Remarks	Serial Number	Qty
1	6689762	BLOWER	Ref. 2-10		1
2	6665017	CONNECTOR	4-pin		1
2	6665018	LOCK	4-pin		1
2	6648312	TERMINAL			4
2	6648320	SEAL			4
2	6650107	SEAL			4
3	6675506	MOUNT			1
4	6675507	COVER			2
5	6675504	RING			4
6	6675505	BLOWER WHEEL			2
6	6676618	CLIP			2
7	6689766	MOTOR	W/Ref. 2		1
8	6675503	HOUSING			1
9	6689765	PAD	bottom		1
10	6689764	PAD	top		1

HEATER
(Heater Coil Kit)

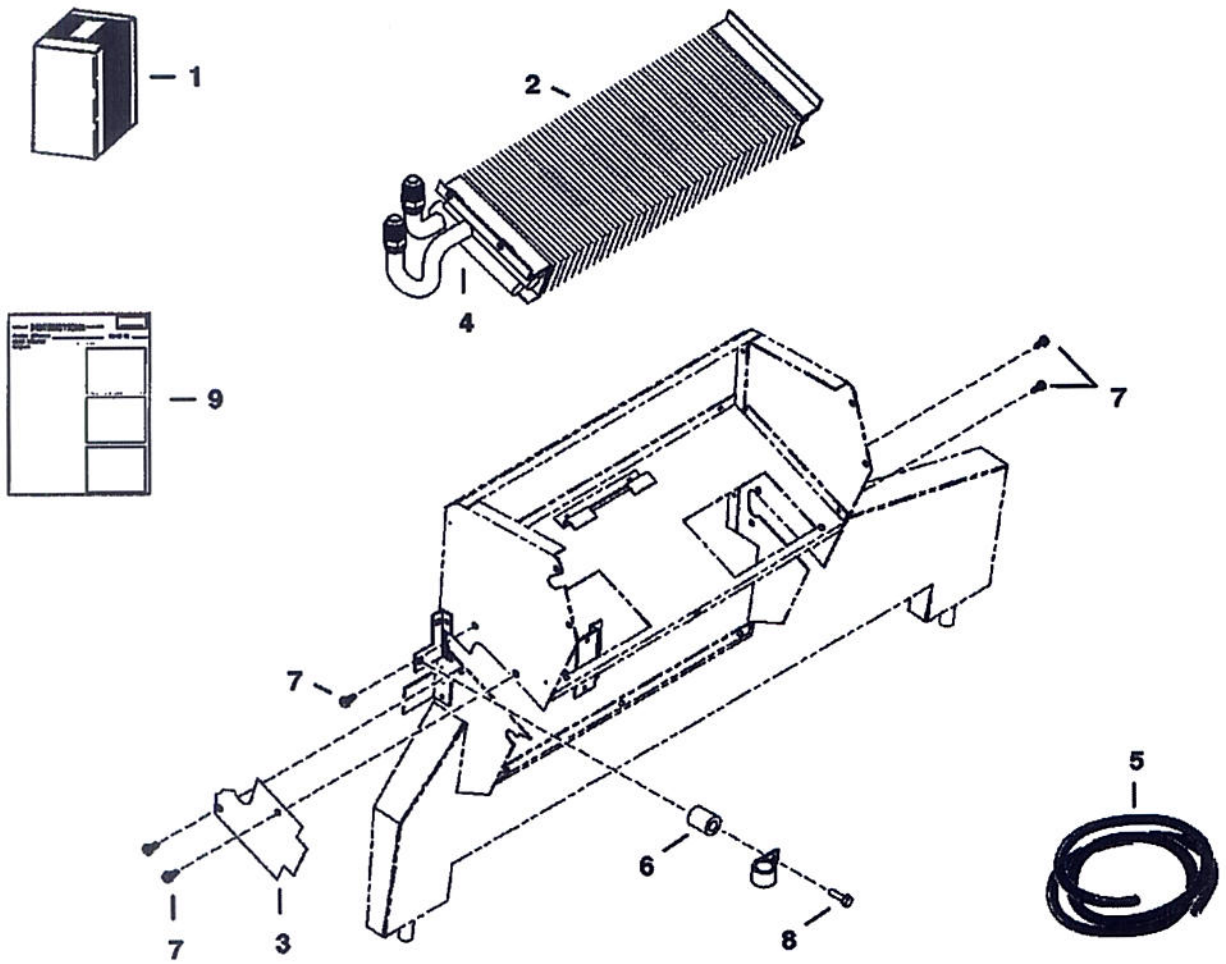

PE–1228

(Heater Coil Kit)

Ref No	Part Number	Description	Remarks	Serial Number	Qty
1	7129922	HEATER COIL KIT	heater coil - barbed hose connectors - Ref. 2, 4 & 9		1
2		HEATER COIL	NSS - Order Ref. 1 W/barbed hose connectors		1
3	6677504	COVER	.279" (7,1 mm) thick		1
4		INSULATION	NAP - 6" (152,4 mm) long - Order Ref. 5		1
5	6676538	INSULATION	bulk - sold per foot		x
6	6676606	SPACER			1
7	6726621	SCREW			2
8	6676653	SCREW			1
9	6901120	INSTRUCTIONS			1

HEATER
(Heater Plumbing Kit)

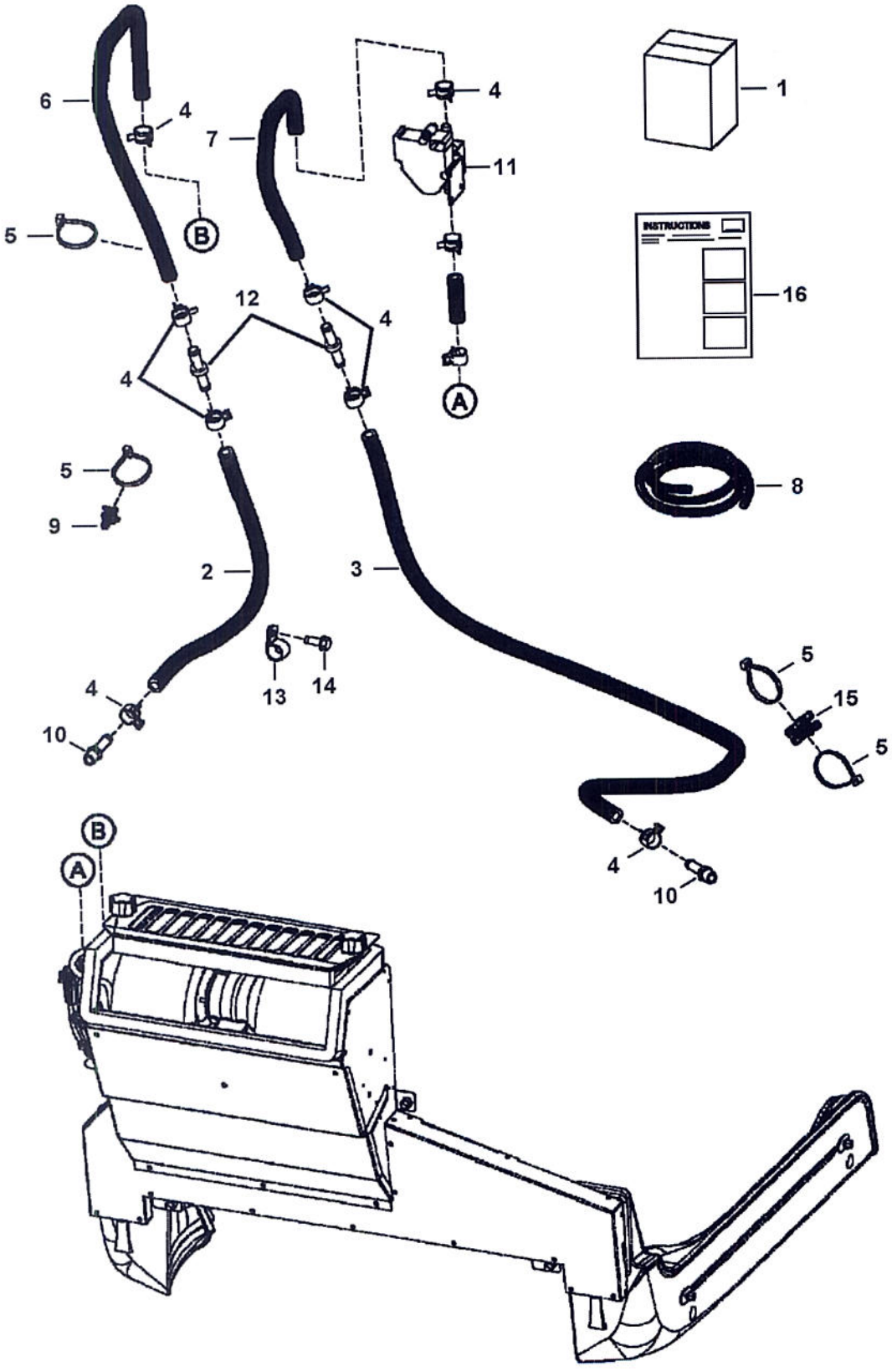

(Heater Plumbing Kit)

Ref No	Part Number	Description	Remarks	Serial Number	Qty
1	7116901	HTR PLUMBING KIT	- Ref. 2-10 & 12-15		1
2		HOSE	NAP - 25" (635 mm) long - Order Ref. 8		1
3		HOSE	NAP - 58" (1473,2 mm) long - Order Ref. 8		1
4	5HM20	CLAMP			8
5	6624289	TIE STRAP			6
6	7125557	HOSE, HEATER FORMED			1
7	7113209	HOSE			1
8	6565977	HOSE	bulk - sold per foot		x
9	6678666	TREE MOUNT	push in - Use W/tie strap		2
10	6731084	ADAPTER			2
11		VALVE	See Illustration HEATER/ PE2805 - not in kit		1
12	6732023	CONNECTOR			2
13	30H46	CLIP			1
14	84G3716	SCREW 5			1
15	6686385	MOUNT, SADDLE SWIVEL			1
16	6904255	INSTRUCTIONS	INSTRUCTIONS - not in kit - part of heater kit		1

HORN KIT
(Manual Controls, AHC & ACS)

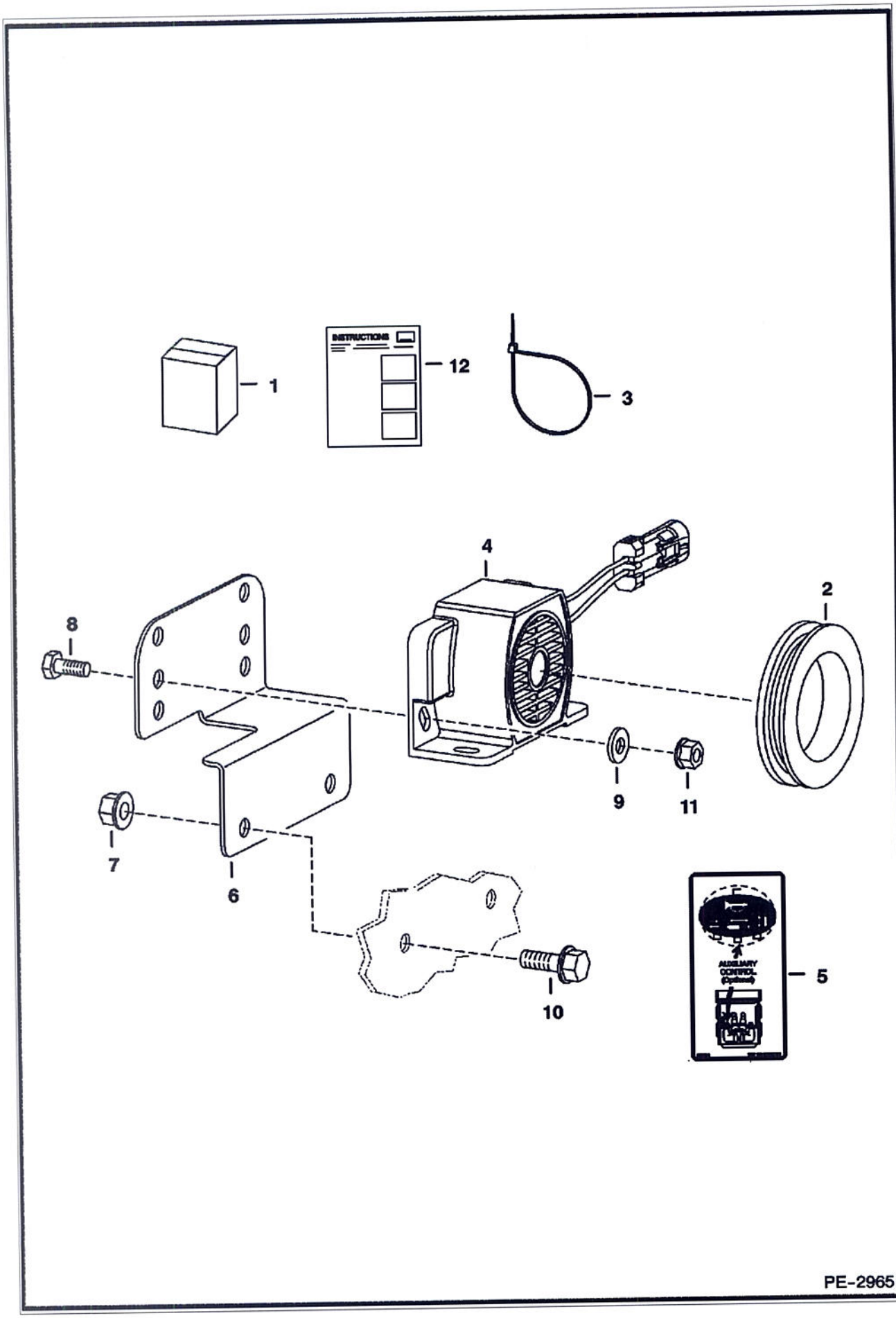

HORN KIT (Cont'd)
(Manual Controls, AHC & ACS)

Ref No	Part Number	Description	Remarks	Serial Number	Qty
1	7122028	KIT, HORN	horn - Ref. 2-12		1
2	6577545	GROMMET			1
3	6610510	TIE			3
4	6675099	ALARM			1
5	6703727	DECAL	not in kit		1
6	6733970	MOUNT			1
7	83D5	NUT 5			2
8	17C410	BOLT 10			2
9	25E13	WASHER 5			2
10	35C512	BOLT			2
11	83D4	NUT 10			2
12	6904732	INSTRUCTIONS			1

HORN KIT
(Selectable Joystick Controls)

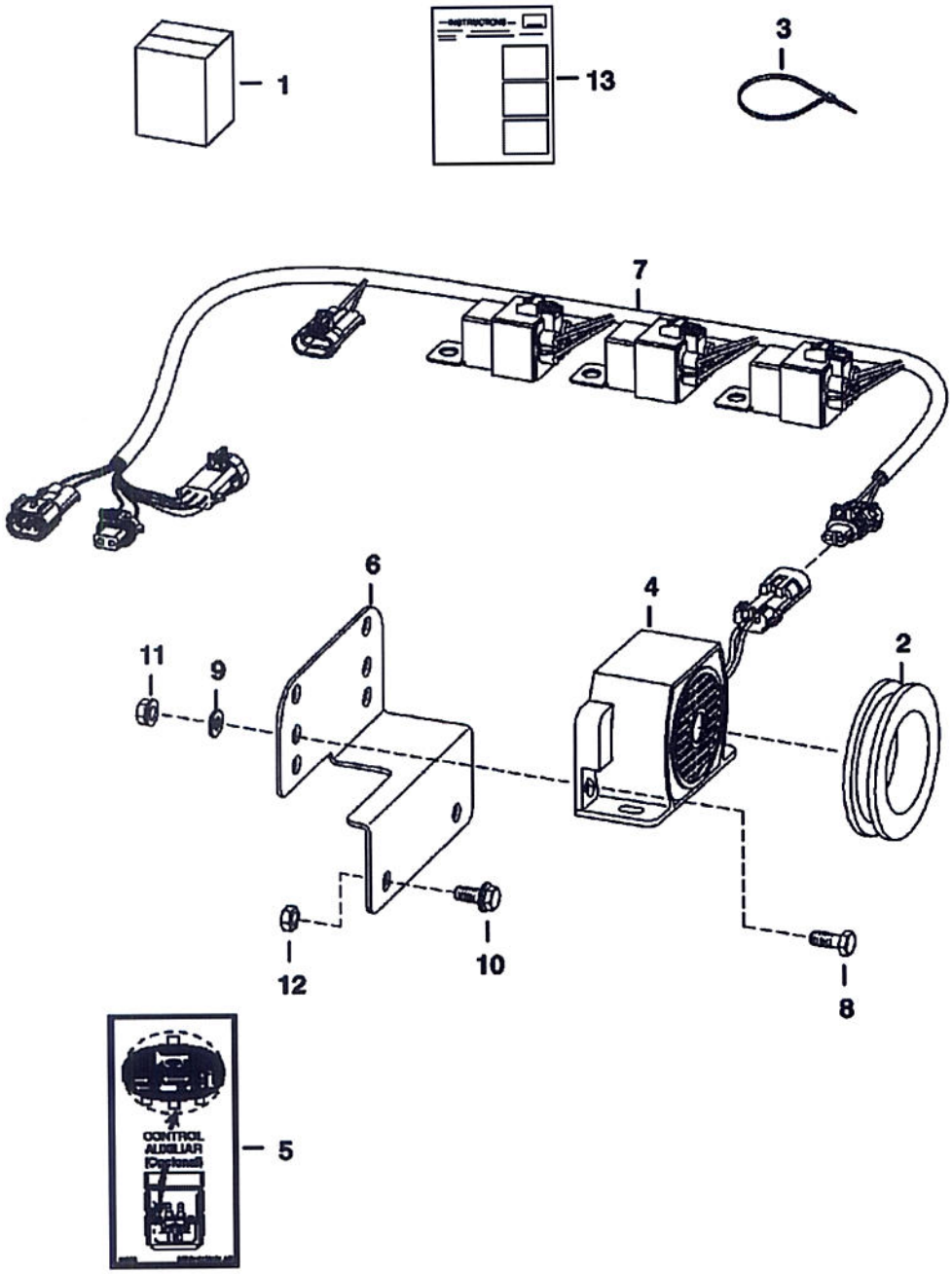

MS-1813

Page 868 - BOBM0292398100I - 04/08/2009 12:49:18 - Printed by Bob Cat Co. - Confidential Information

HORN KIT (Cont'd)
(Selectable Joystick Controls)

Ref No	Part Number	Description	Remarks	Serial Number	Qty
1	6732234	KIT	horn - Ref. 2-13		1
2	6577545	GROMMET			1
3	6610510	TIE			3
4	6675099	ALARM	horn		1
5	6703727	DECAL	horn/aux.		1
6	6733970	MOUNT			1
7	6726662	HARNESS			1
8	17C410	BOLT 10			2
9	25E13	WASHER 5			2
10	35C512	BOLT			2
11	83D4	NUT 10			2
12	83D5	NUT 5			2
13	6901691	INSTRUCTIONS			1

HOSE GUIDE KIT

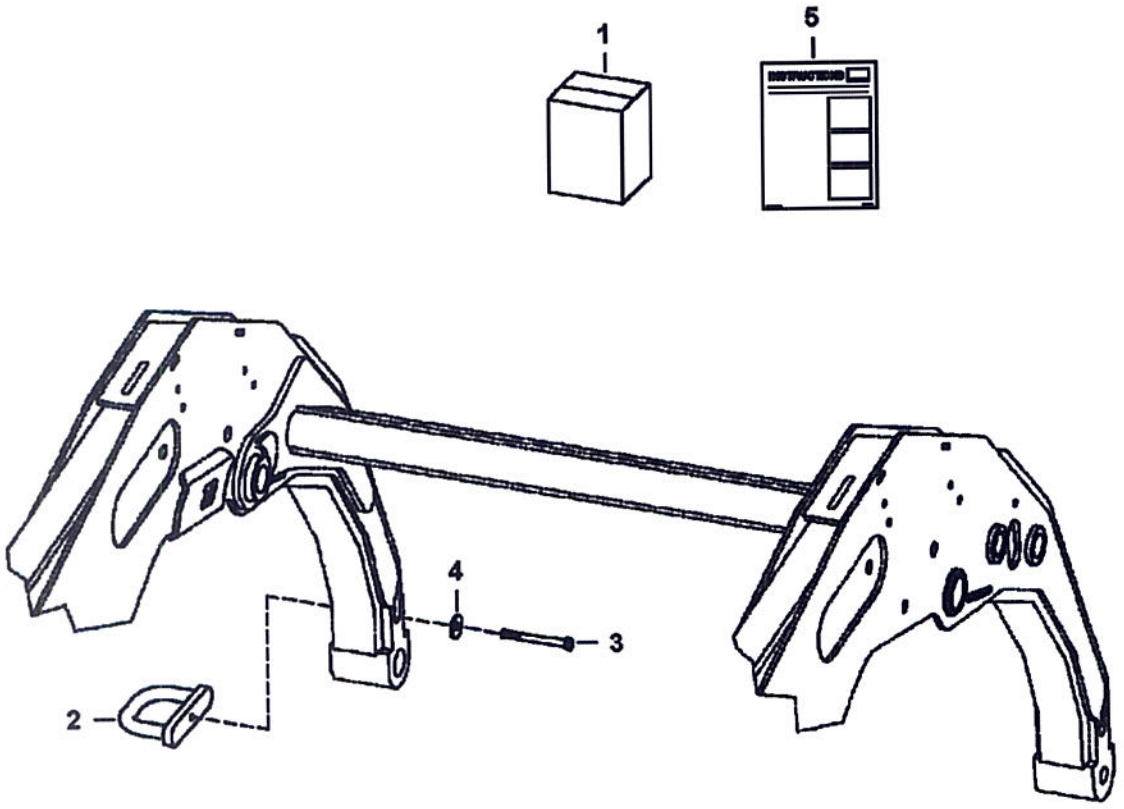

PE-3443

Ref No	Part Number	Description	Remarks	Serial Number	Qty
1	7141766	KIT	Ref. 2-5		1
2	7117875	MOUNT			1
3	17C652	SCREW			1
3	17C660	BOLT			1
3	17C668	BOLT			1
4	619021	WASHER, 5			1
5	6986563	INSTRUCTIONS			1

LIFT KIT
(Single Point)

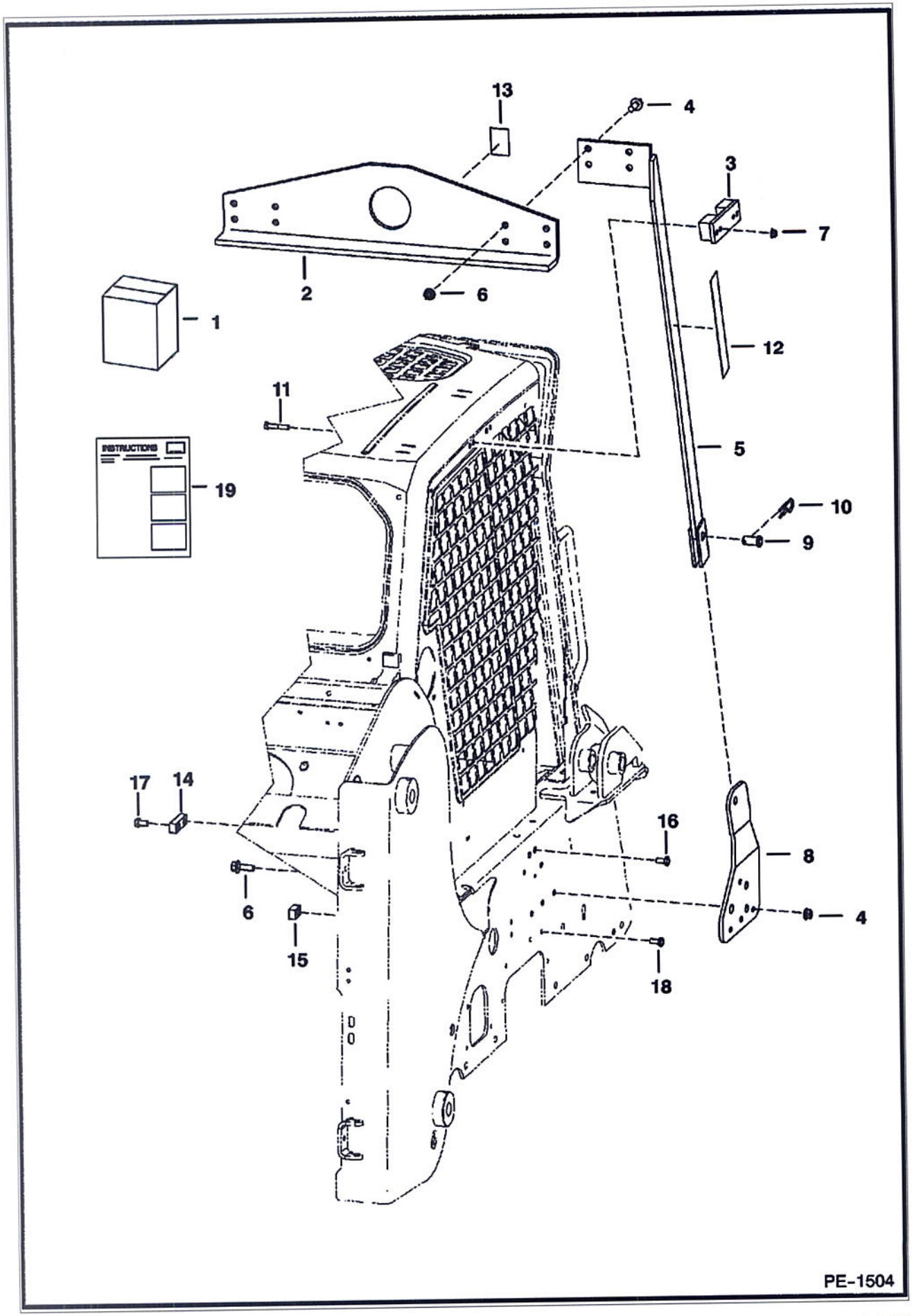

LIFT KIT (Cont'd)
(Single Point)

Ref No	Part Number	Description	Remarks	Serial Number	Qty
1	6719264	KIT	Ref. 2-19 - NOT compatable W/ 7122462 window rib kit		1
2	6567827	ANGLE			1
3	6719184	MOUNT	LH		1
3	6719185	MOUNT	RH		1
4	31C824	BOLT 10			16
5	6704146	BRACKET	RH		1
5	6704147	BRACKET	LH		1
6	57D8	NUT 10			16
7	57D6	NUT 5			8
8	6731658	BRACKET	RH		1
8	6731657	BRACKET	LH		1
9	6567838	PIN			2
10	1320075	COTTER PIN			2
11	17C632	BOLT 5			8
12	6704786	DECAL	warning		2
13	6533898	DECAL	hook		1
14	7124571	SPACER			1
15	7124572	SPACER			1
16	17C512	BOLT 5			1
17	17C612	BOLT 5			1
18	17C628	BOLT			1
19	6900888	INSTRUCTIONS			1

LIFT KIT
(Four Point - .75" Thick Lift Eye) (Army)

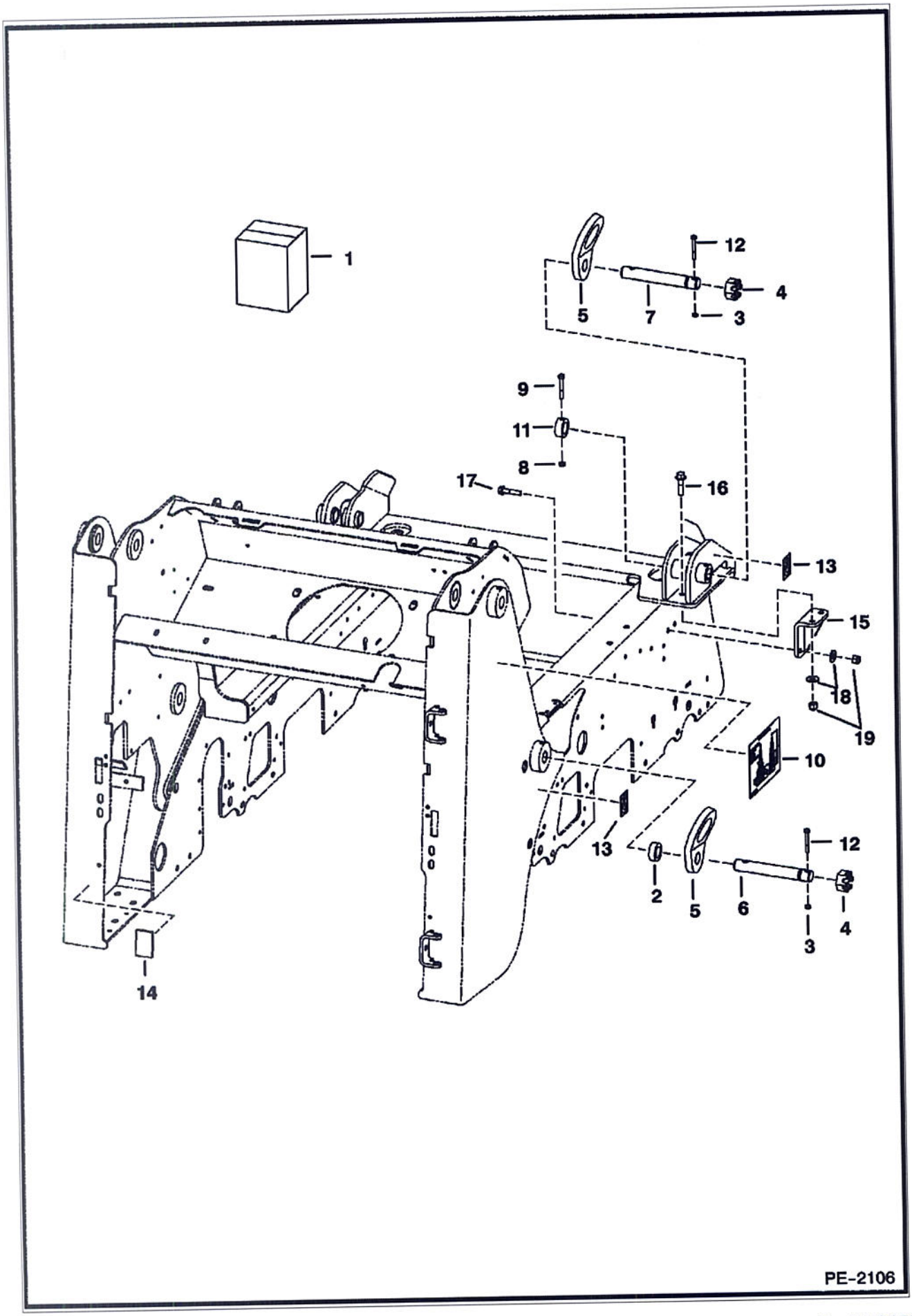

LIFT KIT (Cont'd)
(Four Point - .75" Thick Lift Eye) (Army)

Ref No	Part Number	Description	Remarks	Serial Number	Qty
1		KIT	NAP - Factory Option Only		4
2	6719906	SPACER			2
3	87D5	NUT			4
4	4D20	NUT			4
5	6735890	LIFT EYE	olive drab		4
6	6737132	PIN			2
7	7100444	PIN			2
8	85D6	LOCK NUT			2
9	17C640	BOLT 5			2
10	7100467	DATA PLATE			2
11	7100445	SPACER			2
12	17C540	BOLT			4
13	6533898	DECAL			4
14	7104803	DECAL	battery		1
15	7107353	GUSSET			2
16	31C832	BOLT			4
17	31C824	BOLT 10			4
18	27E8	WASHER 10			8
19	59D8	NUT 5			8

LIFT KIT
(Four Point) (.75" Thick Lift Eye)

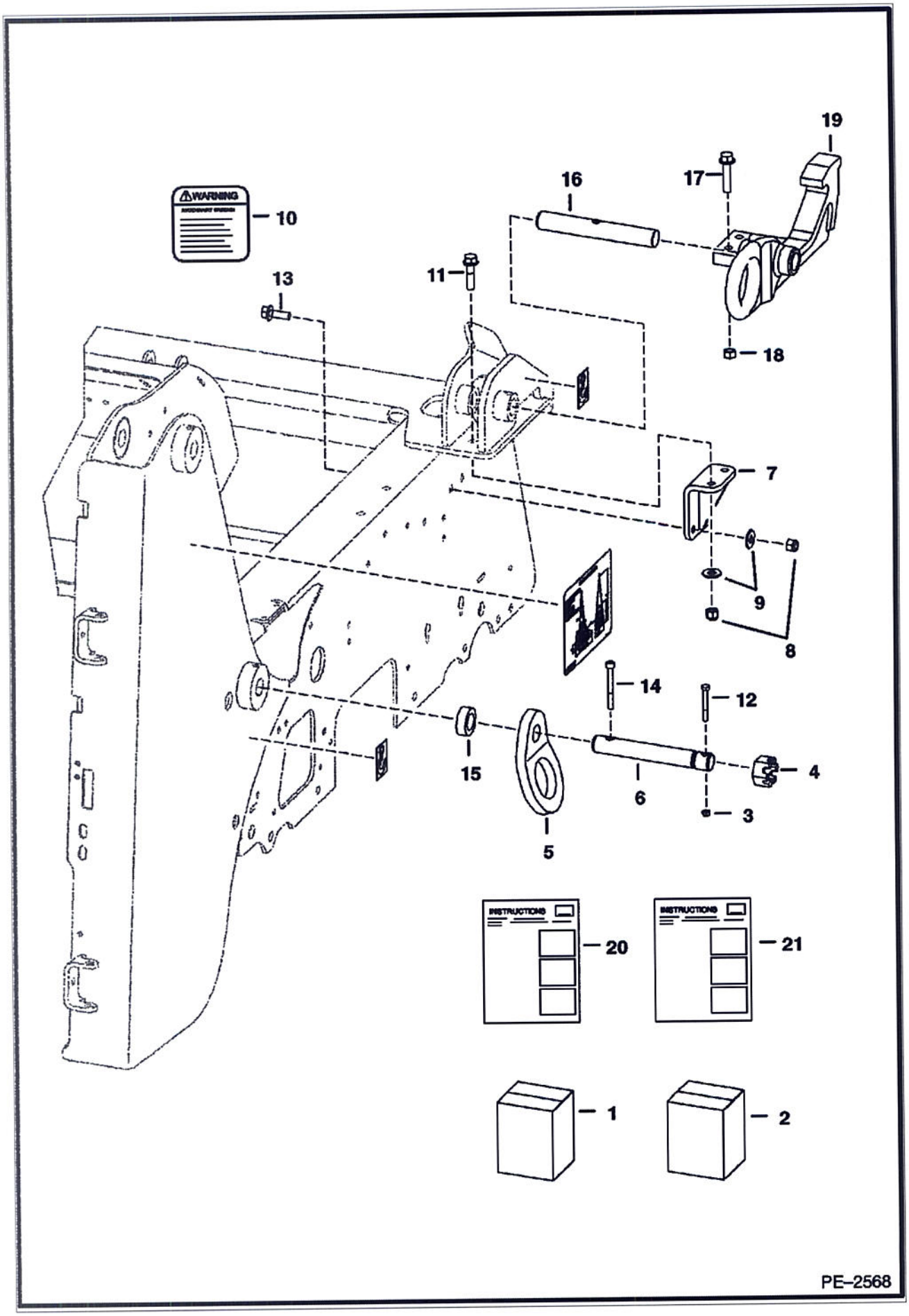

LIFT KIT (Cont'd)
(Four Point) (.75" Thick Lift Eye)

Ref No	Part Number	Description	Remarks	Serial Number	Qty
1	7108394	KIT,4 PT LIFT KIT	Ref. 3-15		1
2		KIT	Sales # 7101325		1
3	87D5	NUT			2
4	4D20	NUT			2
5	6706825	LIFT EYE			2
6	6737132	PIN			2
7	7107353	GUSSET			2
8	59D8	NUT 5			8
9	27E8	WASHER 10			8
10	6726423	DECAL			2
11	31C832	BOLT			4
12	17C540	BOLT			2
13	31C824	BOLT 10			4
14	73G632	SCREW			2
15	6719906	SPACER			2
16	6717707	PIN			2
17	31C836	BOLT			4
18	63D8	NUT			4
19	6718122	MOUNT	LH		1
19	6717293	MOUNT	RH		1
20	6903359	INSTRUCTIONS	For Ref. 1		1
21	6902798	INSTRUCTIONS	For Ref. 2		1

LIFT KIT

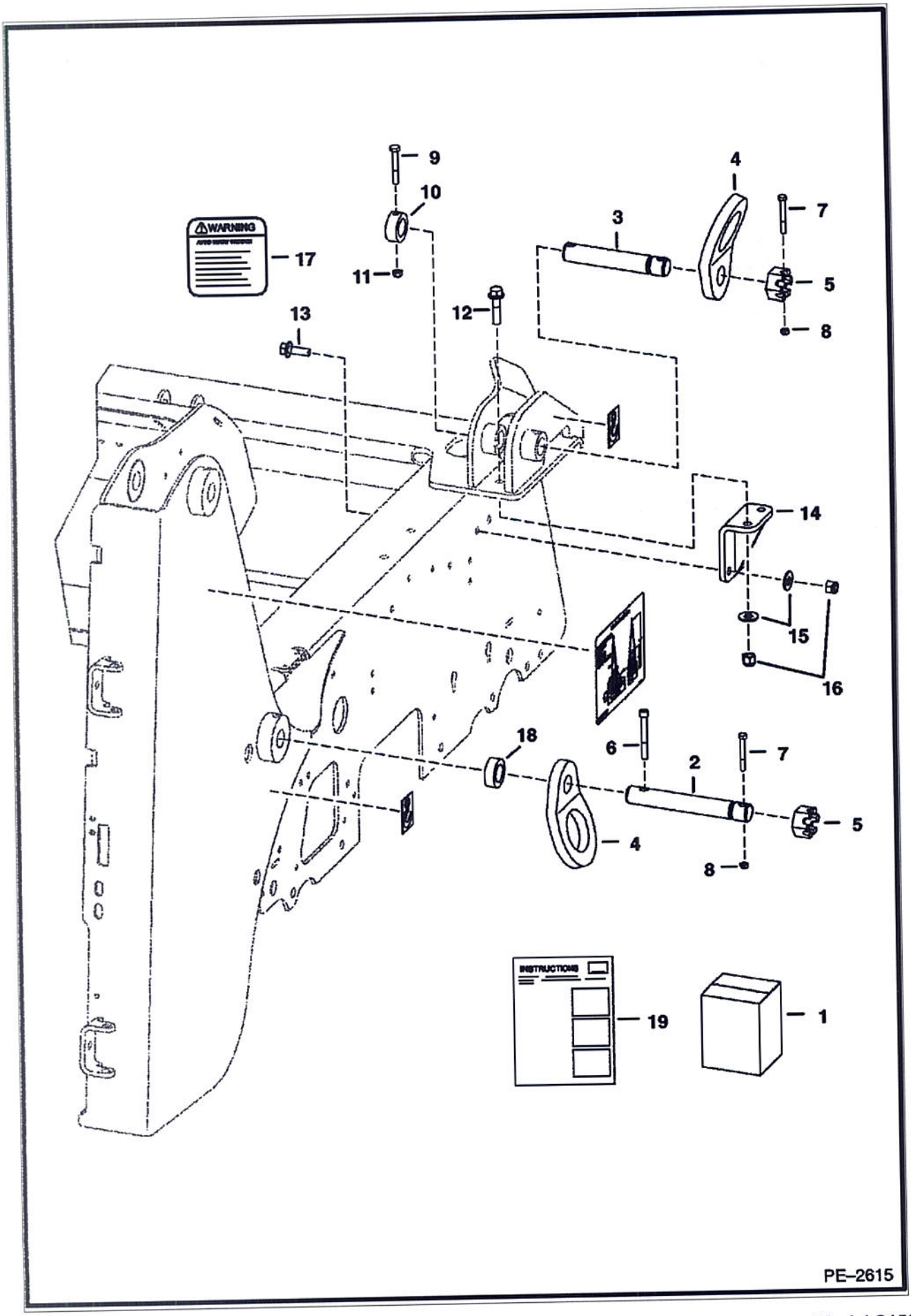
9
10
11
17
WARNING
13
12
3
4
7
5
8
14
15
16
18
6
2
7
5
4
8
INSTRUCTIONS
19
1
PE–2615

Ref No	Part Number	Description	Remarks	Serial Number	Qty
1	7112328	KIT, 4 PT LIFT	Ref. 2-19		1
2	6737132	PIN			2
3	7100444	PIN			2
4	6706825	LIFT EYE			4
5	4D20	NUT			4
6	73G652	SCREW HEX SOCKET HD			2
7	17C540	BOLT			4
8	87D5	NUT			4
9	17C640	BOLT 5			2
10	7100445	SPACER			2
11	85D6	LOCK NUT			2
12	31C832	BOLT			4
13	31C824	BOLT 10			4
14	7107353	GUSSET			2
15	27E8	WASHER 10			8
16	59D8	NUT 5			8
17	6726423	DECAL			2
18	6719906	SPACER			2
19	6904112	INSTRUCTIONS			1

LIGHT KIT

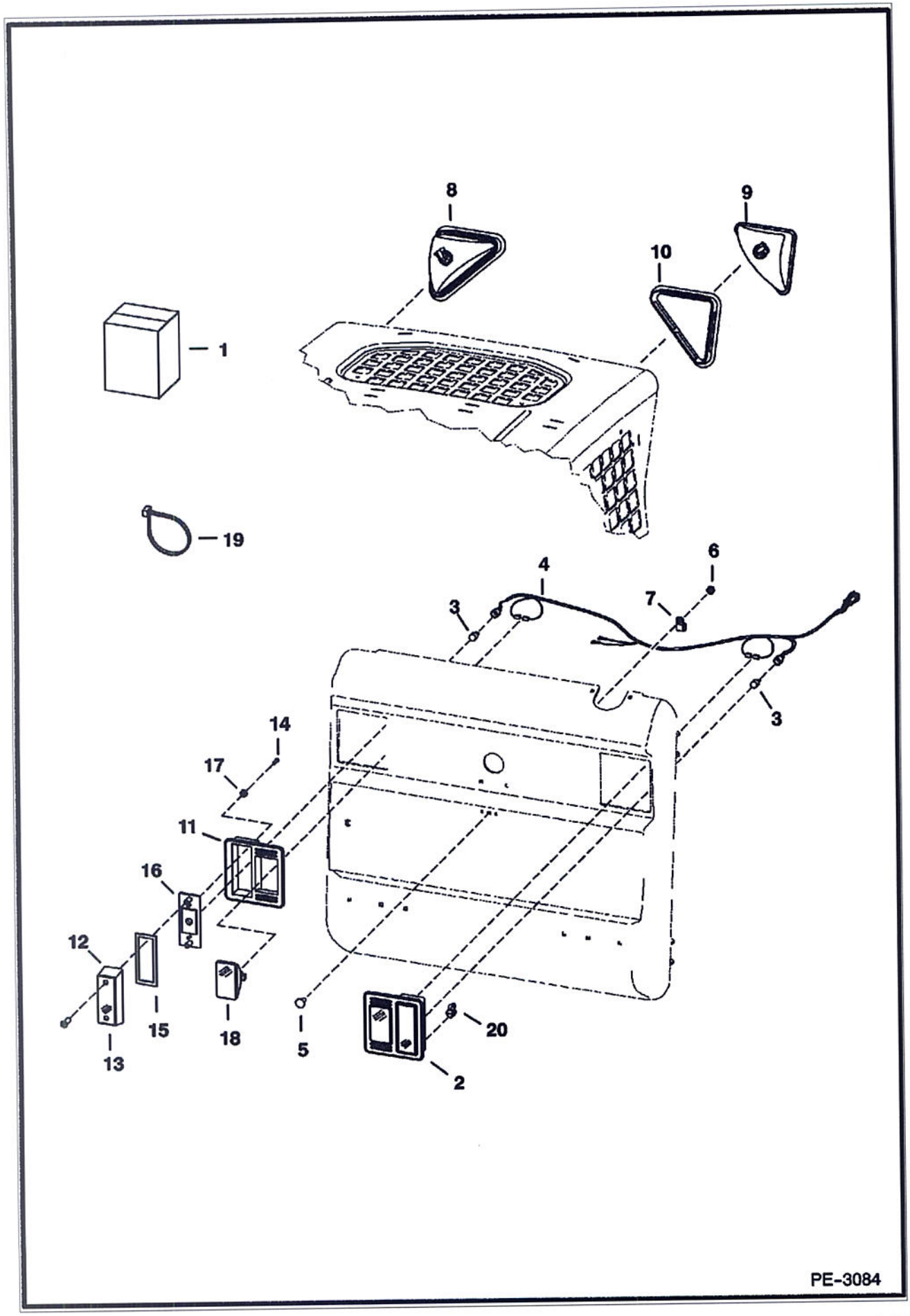

Model S150 KT4
6986835

Ref No	Part Number	Description	Remarks	Serial Number	Qty
1		KIT	NAP - Order components		1
2	6670284	LIGHT ASSY	rear		2
2	7104670	LIGHT	rear - RH European		1
2	7104671	LIGHT	rear - LH European		1
3	6649481	LAMP, WEDGE BASE			2
4	7109403	HARNESS	standard		1
4	7109404	HARNESS	deluxe		1
5	37C512	BOLT			4
6	95D5	NUT			4
7	30H42	CLAMP			1
8		LIGHT ASSY	NAP - RH - Ref. 9 & 10		1
8		LIGHT ASSY	NAP - LH - Ref. 9 & 10		1
9	6674401	HOUSING	RH		1
9	6675336	BULB	55 watt		1
9	6674400	HOUSING	LH		1
9	6675336	BULB	55 watt		1
10	6674402	MOUNT, LIGHT			2
11	6672279	MOUNT, LIGHT RUBBER	rubber		2
12	6672276	LENS, LIGHT RED	red		2
13	6672274	SCREW			4
14	6672273	SCREW			2
15	6672275	GASKET			2
16	6672277	BRACKET			2
17	6672272	WASHER			4
18	6661353	LIGHT ASSY	W/bulb - white work		2
18	898731	1156 BULB			2
19	6624289	TIE STRAP			1
20	6688637	MOUNT	mounts European rear light assys		2





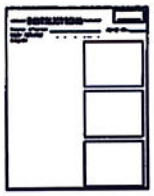

PE-3088

Ref No	Part Number	Description	Remarks	Serial Number	Qty
1	6904751	MSHA KIT	V2203MDI Kubota engine		1
2		DECAL	NSS - Order Ref. 1		1
3	6904752	INSTRUCTION			1

MUFFLER/PURIFIER KIT

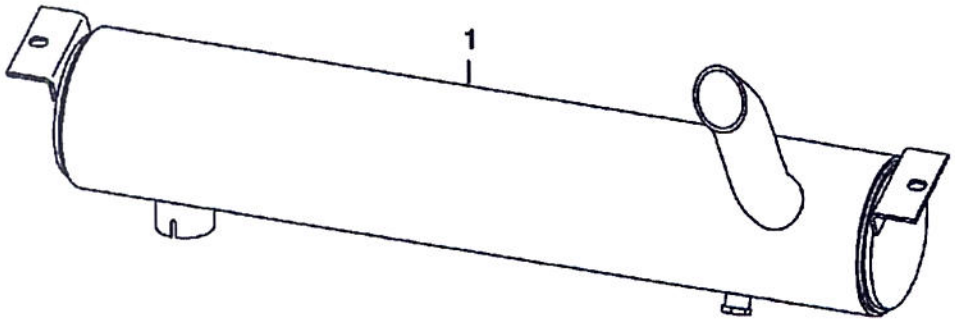

PE-2721

Ref No	Part Number	Description	Remarks	Serial Number	Qty
1	7103790	MUFFLER			1

Printed by Aeu Look Up - eAprint.exe (V2.24.7 4/7/2009)

PEDAL EXTENDERS

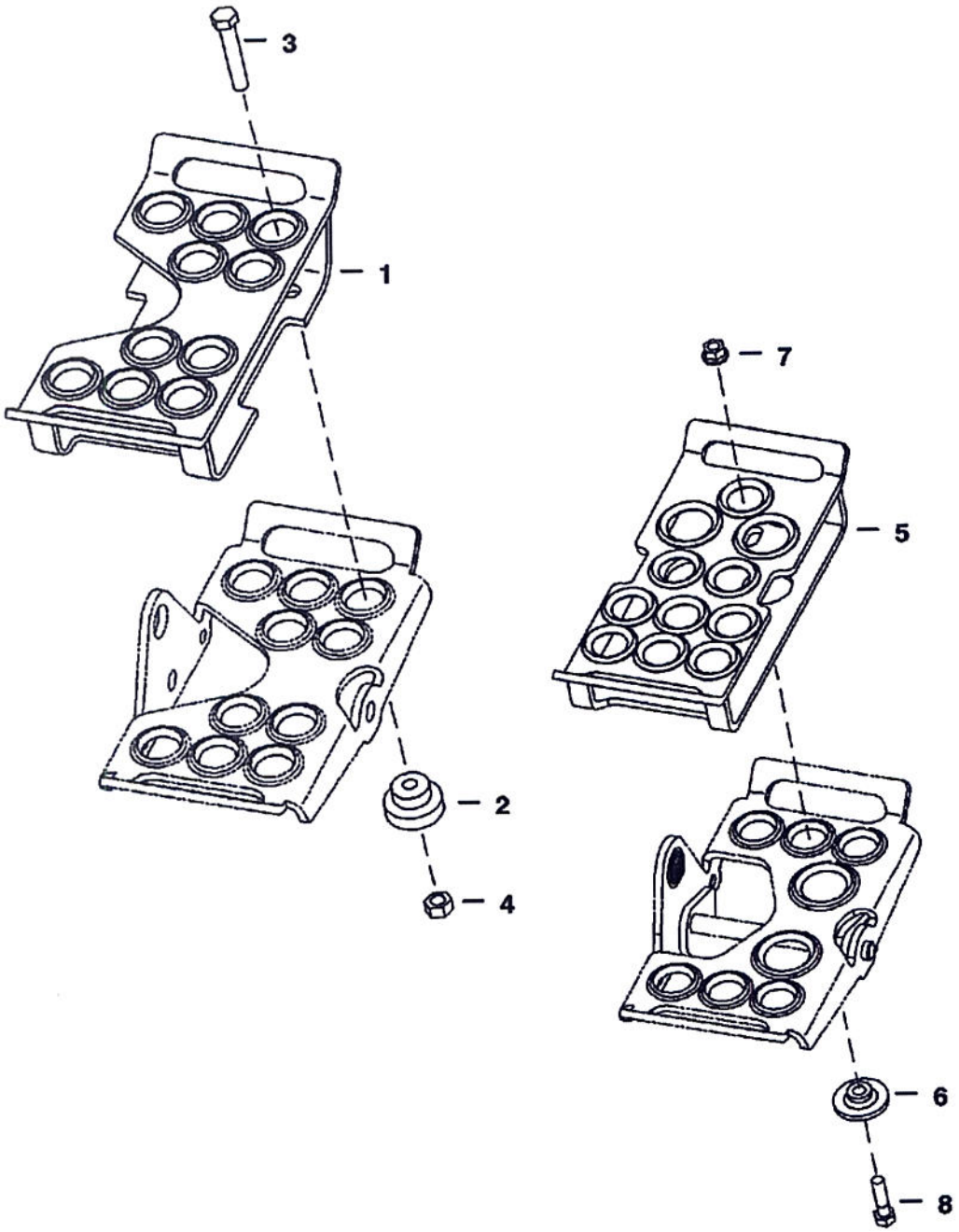

Ref No	Part Number	Description	Remarks	Serial Number	Qty
1		PEDAL	NAP - extender - Order Ref. 5 & (3) each of Ref. 6-8		2
2	6713116	BUSHING			8
3	17C516	BOLT			8
4	85D5	NUT 5			8
5	7131233	PEDAL			2
6	7131236	BUSHING			6
7	89D5	NUT			6
8	17C520	BOLT 5			6

"S150.pdf" - 6986835KT4.WW4 - 05/08/2009 12:26:18 - Printed by Ken Cook Co. - eXprint.exe (v2.24.7 4/7/2009)

POWER BOB-TACH KIT

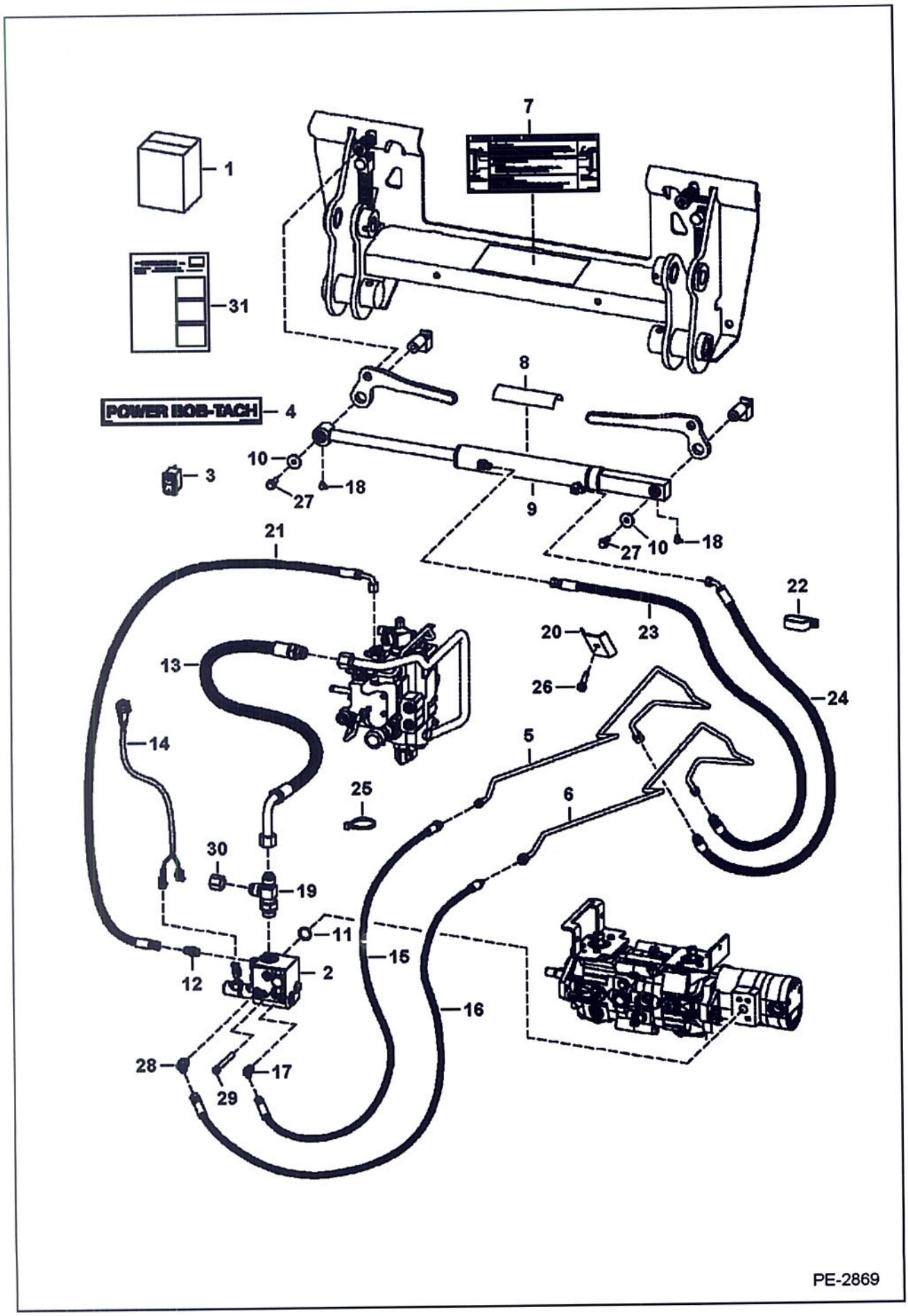

Model S150 KT4
6986835

Page 888 - BOBM0292398B1001 - 04/08/2009 12:26:18 - Printed by Ken Cook Co. - eXprint.exe (V2.49.1 9/17/2007)

Ref No	Part Number	Description	Remarks	Serial Number	Qty
1	7120899	KIT, POWER BOB-TACH	If loader is not equipped W/deluxe cab accessories harness, heater, air conditioning, selectable joystick controls, advanced control system, rotating beacon, cab enclosure kit, rear wiper kit, strobe lights (non-power port plug-in), and/or 4-way flashers (non-power port plug-in), Also Order 7143071 deluxe cab harness		1
2		VALVE	See Illustration POWER BOB-TACH/ MS1835		1
3	6676732	SWITCH	vertical		1
4	6719888	DECAL			1
5	6734906	TUBE			1
6	6734907	TUBE			1
7	6725907	DECAL			1
8	6555341	SAFETY TREAD			1
9		CYLINDER	See Illustration POWER BOB-TACH/ PE1064		1
10	619021	WASHER, 5			2
11	55K214	O-RING			1
12	15KB404	CONNECTOR			1
13	7115185	HOSE			1
14	7112290	HARNESS			1
15	6726987	HOSE			1
16	6719628	HOSE			1
17	18KB404	ELBOW			1
18	12H25	FITTING	90 degree		2
19	21KB1212	TEE			1
20	6719884	BRACKET			1
21	7110367	HOSE	45" (1143 mm) long - selectable joystick controls		1
22	31H49	CLAMP			1
23	6729202	HOSE			1
24	6729203	HOSE			1
25	6624289	TIE STRAP			5
26	84G3724	BOLT			1
27	35C616	BOLT 5			2
28	18KB606	ELBOW	45 degree		1
28	17KB606	ELBOW	90 degree		1
29	73G656	SCREW			4
30	36K8	CAP			1
31	6904714	INSTRUCTIONS			1

Printed by Am Look Co. - eAprint.exe (V4.44.7 4/7/2009)

POWER BOB-TACH
(Cylinder)

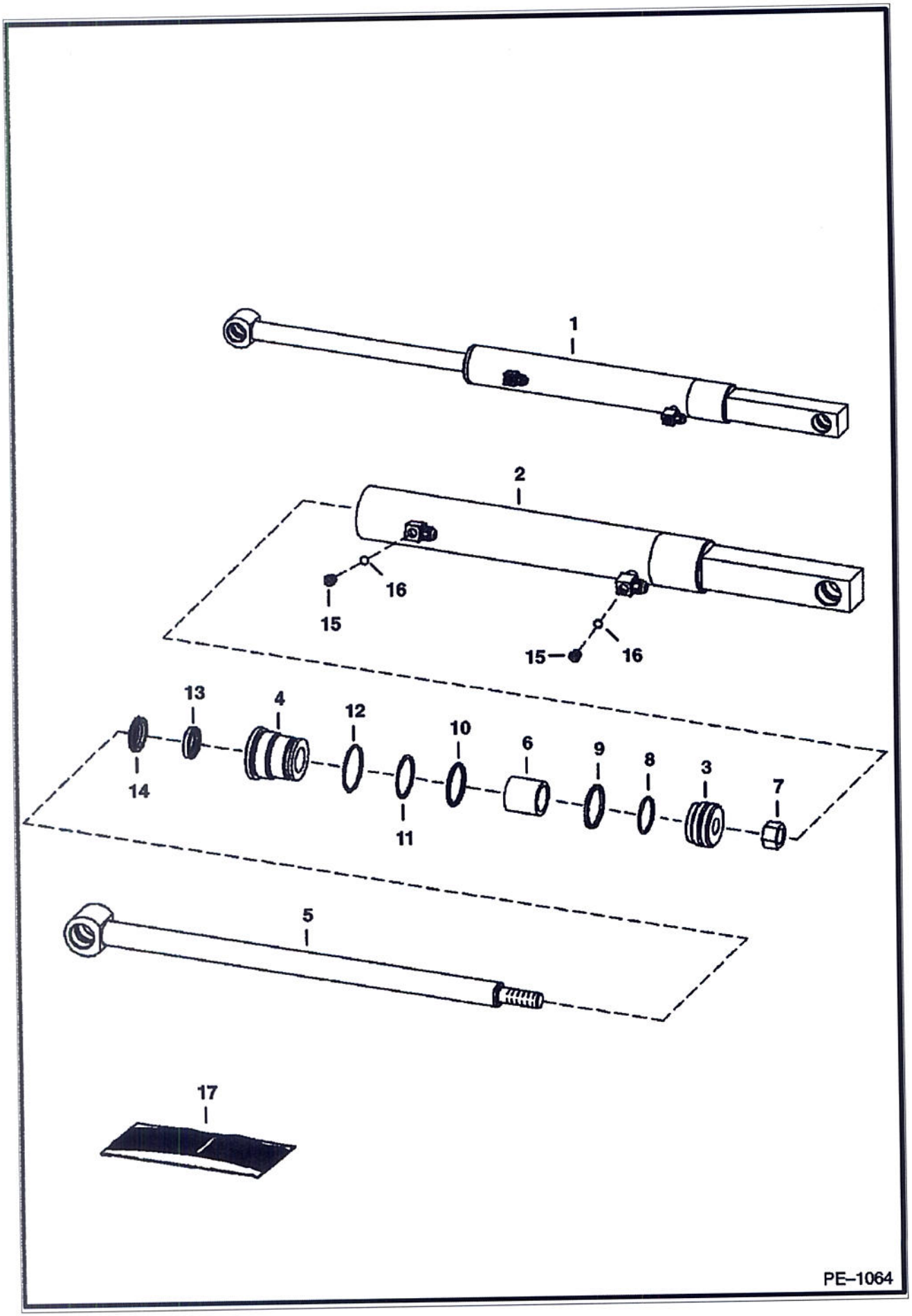

Page 890 - BOBM02923981001 - 04/08/2009 12:26:18 - Printed by Ken Cook Co. - Capitalized Version

(Cylinder)

Ref No	Part Number	Description	Remarks	Serial Number	Qty
1	6807503	CYLINDER PARTS LIST	Ref. 2-16		1
2	6810349	CASE	1.75" (44,45 mm) ID		1
3	6586543	PISTON			1
4	6586542	HEAD			1
5	6810612	SHAFT, ROD CYL POWER BOB-TACH	1" (25,4 mm) OD - 18.6" (422,4 mm) long		1
6	6810356	SPACER			1
7	92D10	NUT			1
8	25K30110	O RING 10			1
9	6532453	RING			1
10	54K40116	O-RING			1
11	73K222	RING	back-up		1
12	58K132	O'RING			1
13	6667323	SEAL	rod		1
14	6666542	SEAL	wiper		1
15	6812170	PLUG	W/Ref. 16 - hex head		2
16	75K3	O-RING			2
17	7138014	SEAL KIT	Ref. 7-14		1

POWER BOB-TACH
(Valve Assembly)

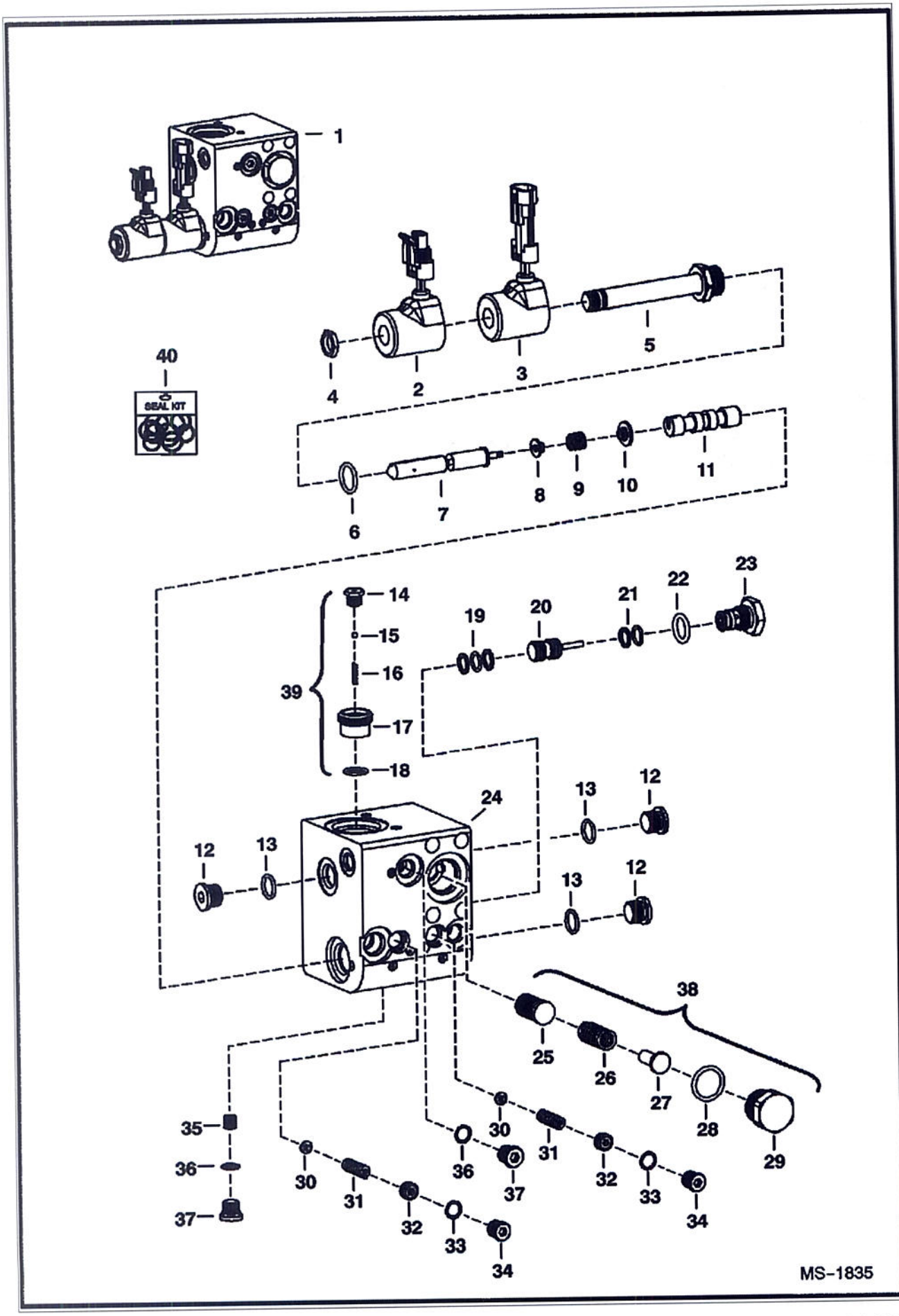

Ref No	Part Number	Description	Remarks	Serial Number	Qty
1	6686949	VALVE, POWER BOB-TACH			1
2	6684743	SOLENOID	W/male connector		1
3	6684744	SOLENOID	W/female connector		1
4	6684742	NUT			1
5		STEM	NSS		x
6	79K8	O RING 10			x
7		STEM	NSS		x
8		RETAINER	NSS		x
9		SPRING	NSS		x
10		WASHER	NSS		x
11		PISTON	NAP		x
12	6685545	PLUG	W/Ref. 13		x
13		O-RING	NSS		x
14		PLUG	NSS		x
15		BALL	NSS		x
16		SPRING	NSS		x
17		VALVE	NSS		x
18	6685542	O-RING			x
19		RINGS	NSS		x
20	6684745	PISTON			1
21		RINGS	NSS		x
22	79K7	O RING 10			x
23	6684746	CHECK VALVE	W/Ref. 22		1
24		BLOCK	NSS		x
25		STEM	NSS		x
26		SPRING	NSS		x
27		POPPET	NSS		x
28	79K10	O RING 10			x
29		PLUG	NSS		x
30		POPPET	NSS		x
31		SPRING	NSS		x
32		PLUG	NSS		x
33		O-RING	NSS		x
34		PLUG	NSS		x
35	6685541	POPPET			x
36		O-RING	NSS		x
37	6685546	PLUG			x
38	6685544	COMPENSATOR	Ref. 25-29		1
39	6685543	CHECK VALVE	Ref. 14-18		1
40	6684747	SEAL KIT	Ref. 18, 19 & 21 - consists of (5) O-rings & (1) back-up washer		1

RADIATOR SCREEN KIT



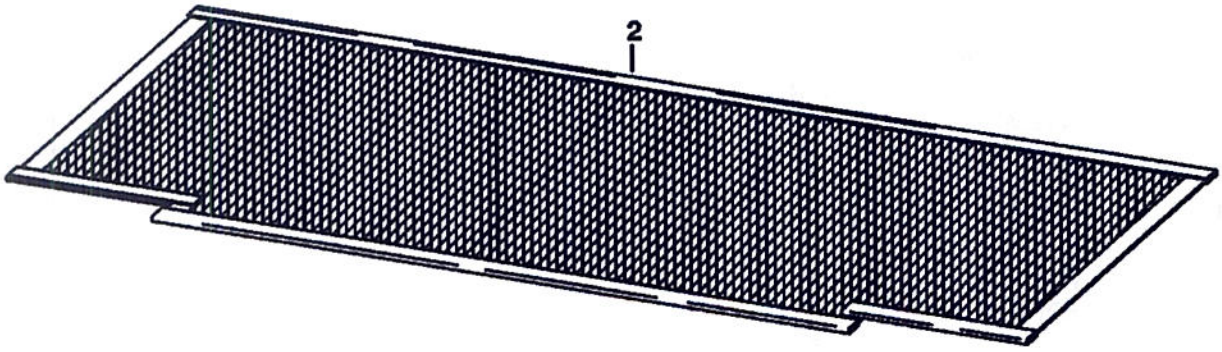

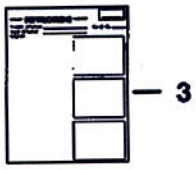

TS–1188

Ref No	Part Number	Description	Remarks	Serial Number	Qty
1	6706939	KIT	Ref. 2 & 3		1
2	6706285	SCREEN			1
3	6722861	INSTRUCTIONS			1

REAR AUXILIARY

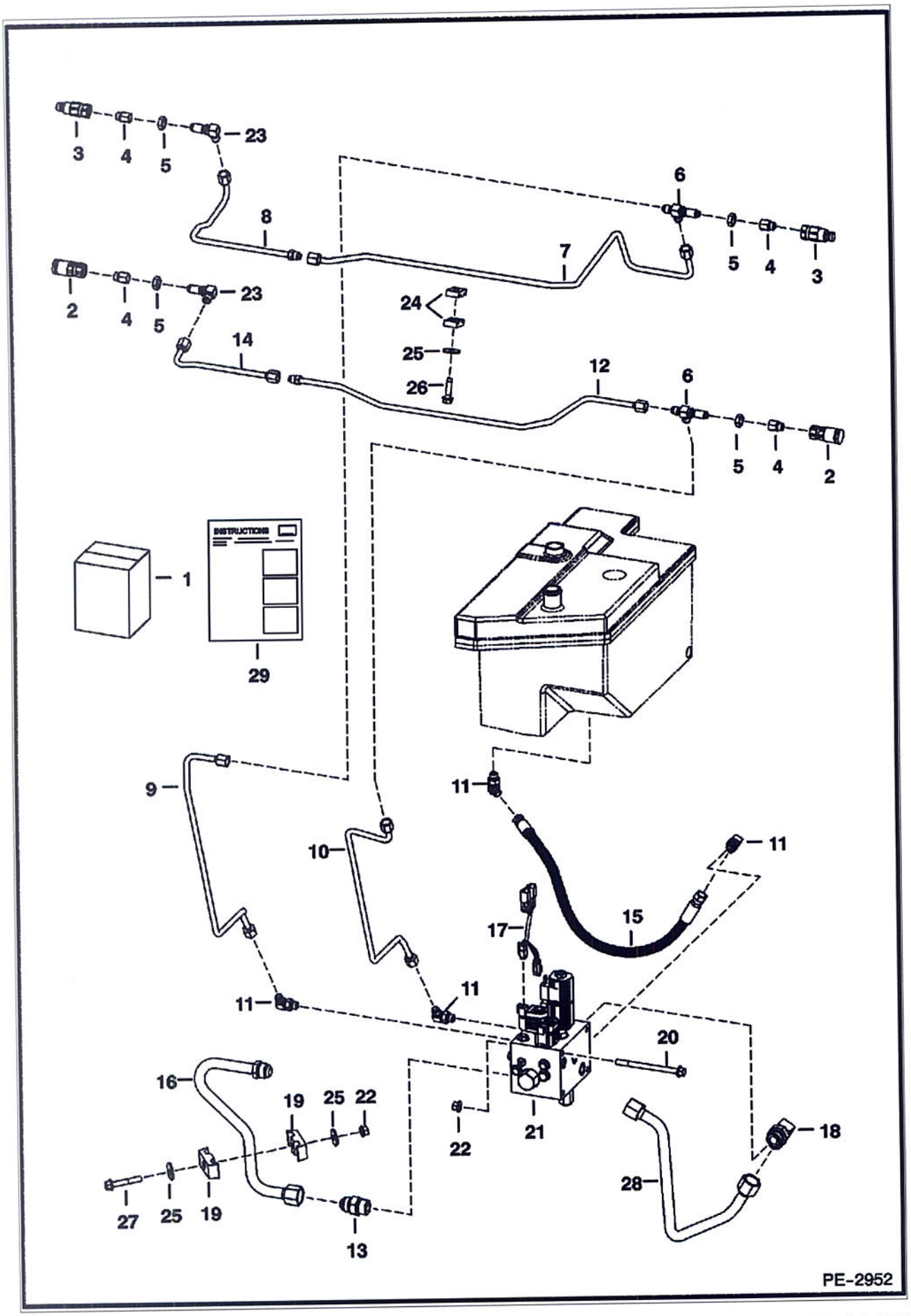

Ref No	Part Number	Description	Remarks	Serial Number	Qty
1	7121568	KIT, REAR AUX			1
2	6667803	COUPLER	female		2
3	6667804	COUPLER	male		2
3	6669657	SEAL KIT			x
4	6706633	ADAPTER			4
5	86F5	NUT			4
6	91K5	TEE			2
7	7124255	TUBE			1
8	7124256	TUBE			1
9	7121695	TUBE			1
10	7121696	TUBE			1
11	17KB606	ELBOW			4
11	79K6	O RING 10			4
12	7124257	TUBE			1
13	15KB1212	ADAPTER			1
13	79K12	O RING 10			1
14	7124258	TUBE			1
15	6700282	HOSE			1
16	7109927	TUBE			1
17	7101973	HARNESS	jumper - W/ 2-pin connectors (4)		1
17	7102338	HARNESS	jumper - W/ 6-pin connector & 2-pin connectors (4)		1
18	17KB1212	ELBOW			1
18	79K12	O RING 10			1
19	6592506	CLAMP			2
20	17C680	BOLT			2
21		VALVE	See Illustration REAR AUXILIARY VALVE/ MS2255		1
22	83D6	NUT 5			3
23	88F5	ELBOW			3
24	6726277	CLAMP			2
25	619021	WASHER, 5			3
26	84G3724	BOLT			1
27	35C636	BOLT			1
28	6733192	TUBE			1
29	6904727	INSTRUCTIONS			1

REAR AUXILIARY VALVE

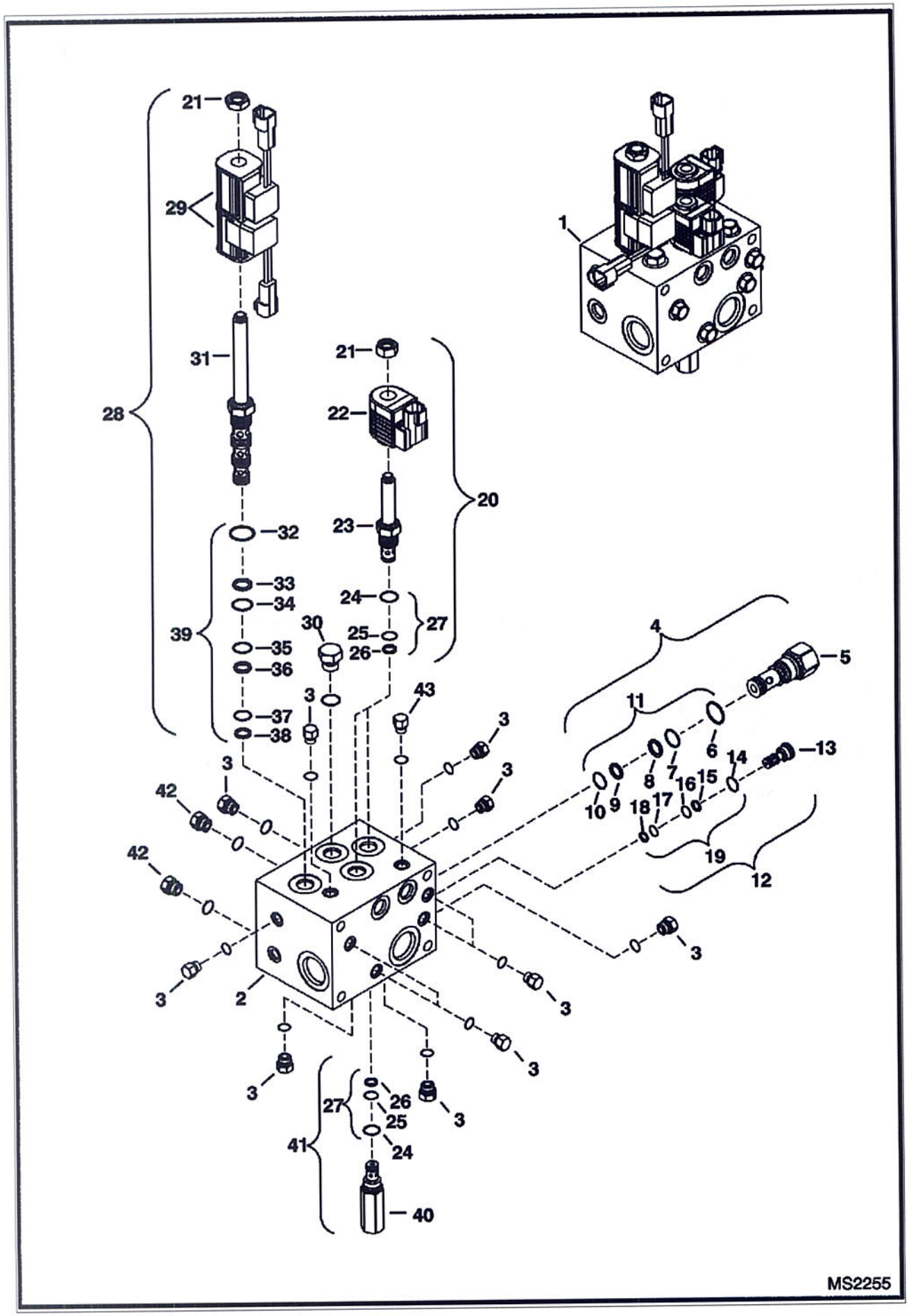

Ref No	Part Number	Description	Remarks	Serial Number	Qty
1	6685624	CONTROL VALVE	CP12646		1
2		BLOCK	NSS		1
3		PLUG	NSS - #4 SAE W/ O-ring		11
4	6684044	VALVE	differential sensing - Ref. 5-10		1
5		VALVE	NSS - Order Ref. 4		1
6	6684046	O-RING			1
7	6684048	O-RING			1
8	6684047	BACK-UP RING			1
9	6684050	BACK-UP RING			1
10	6684049	O-RING			1
11	6684045	SEAL KIT	Ref. 6-10		1
12	6684061	VALVE	shuttle - Ref. 13-18		1
13		VALVE	NSS - Order Ref. 12		1
14	6684063	O-RING			1
15	6684064	BACK-UP RING			1
16	6684065	O-RING			1
17	6684066	O-RING			1
18	6684067	BACK-UP RING			1
19	6684062	SEAL KIT	Ref. 14-18		1
20	6685061	VALVE	solenoid - Ref. 21-26		2
21	6684060	NUT			2
22	6684073	COIL	12 volt		2
23		VALVE	NSS - Order Ref. 20		2
24	6684070	O-RING			2
25	6684071	O-RING			2
26	6684072	BACK-UP RING			2
27	6684069	SEAL KIT	Ref. 24-26		2
28	6688933	VALVE ASSY	solenoid W/coils - Ref. 21, 29 & 31-38		1
29	6688934	COIL			2
30		PLUG	NSS - #8 SAE W/ O-ring		1
31		VALVE	NSS - Order Ref. 28		1
32		O-RING	NAP - Order Ref. 39		1
33	6684053	BACK-UP RING			1
34	6684054	O-RING			1
35	6684056	O-RING			1
36	6684055	BACK-UP RING			1
37		O-RING	NAP - Order Ref. 39		1
38	6684057	BACK-UP RING			1
39	6684052	SEAL KIT	Ref. 32-38		1
40		VALVE	NSS - Order Ref. 41		x
41	6685328	RELIEF VALVE	W/Ref. 24-26		1
42		PLUG	NSS - #6 SAE W/ O-ring		4
43		PLUG	NSS - metric		1

REAR DOOR LOCK

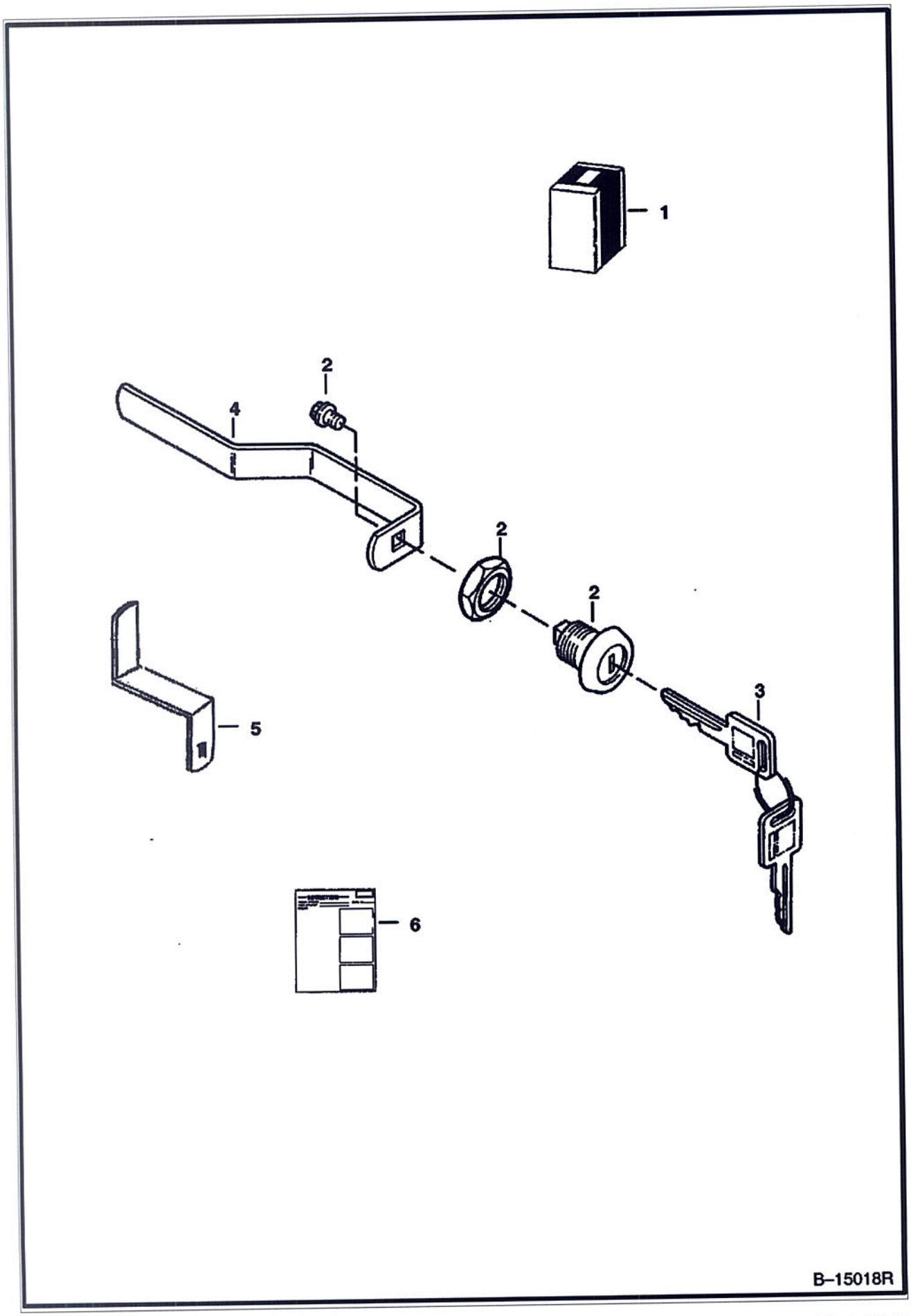

Ref No	Part Number	Description	Remarks	Serial Number	Qty
1	6732001	KIT	lock - Ref. 2-6		1
2	6670726	LOCK			1
3	6693241	KEY-SINGLE	single key W/O ring		x
4	6714037	LATCH	Use W/ 6711524 rear door		1
5	6729688	LATCH	Use W/ 6729991 rear door		1
6	6901656	INSTRUCTIONS			1

REAR WIPER

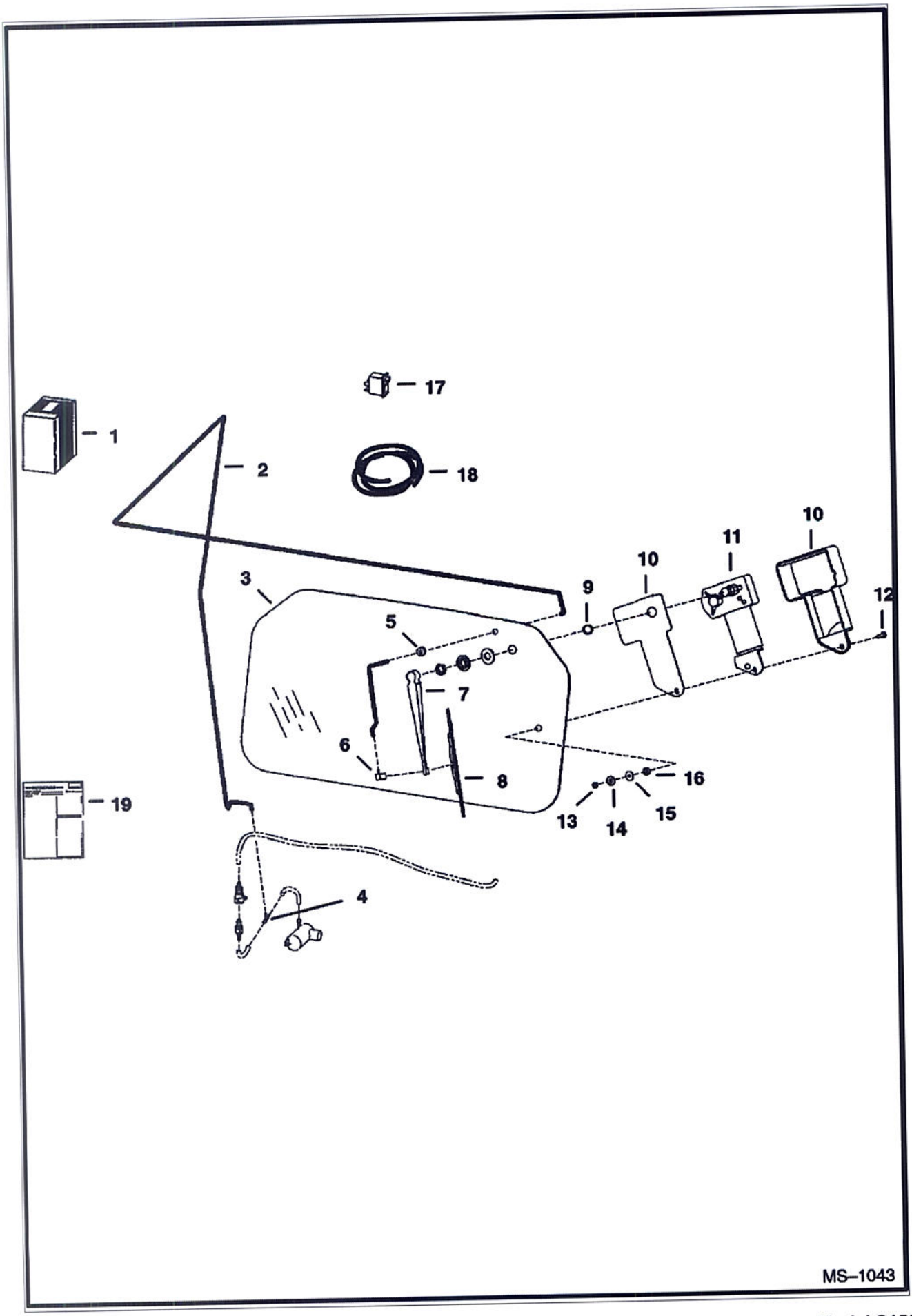

Ref No	Part Number	Description	Remarks	Serial Number	Qty
1	6726655	KIT	rear wiper		1
2		HOSE	NAP - 96" (2438,4 mm) long - Order Ref. 18		1
3	6719317	WINDOW			1
4	6676000	TEE			1
5	6557493	GROMMET			1
6	6676028	NOZZLE			1
7	6676001	ARM			1
8	6676002	BLADE			1
9	6667201	SPACER	nylon		1
10	6664097	COVER	wiper		1
11	6665602	MOTOR			1
12	6664566	BOLT			1
13	6664103	NUT			1
14	6664065	WASHER	nylon		1
15	6801059	WASHER	neoprene		1
16	6664085	BUSHING	nylon		1
17	6675999	SWITCH			1
18	6676003	HOSE	black - .109" (2,77 mm) ID - bulk - sold per foot		x
19	6901061	INSTRUCTIONS			1

REMOTE CONTROL KIT
(Selectable Joystick Controls)

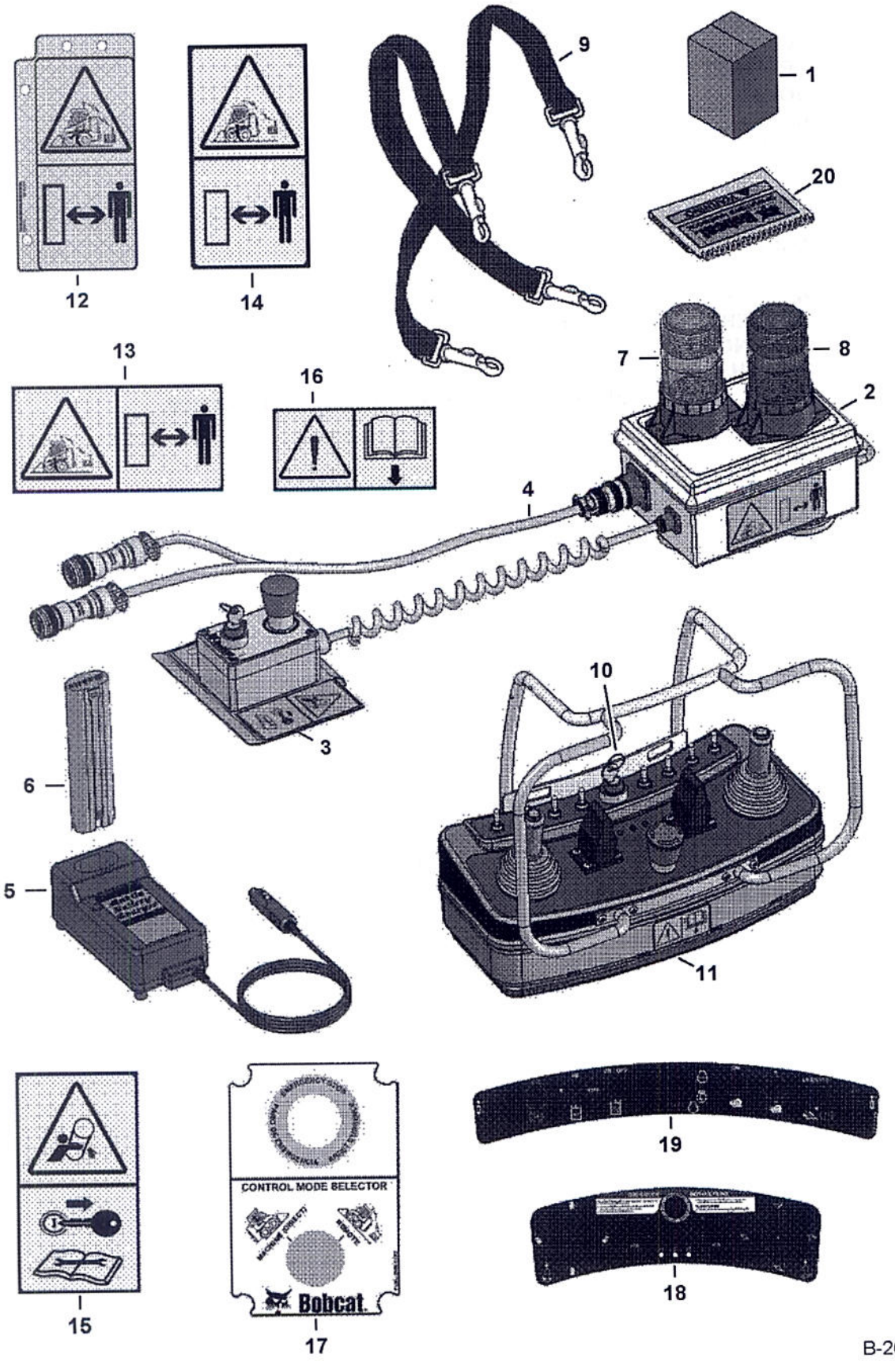

REMOTE CONTROL KIT (Cont'd)
(Selectable Joystick Controls)

Ref No	Part Number	Description	Remarks	Serial Number	Qty
1	7141291	REMOTE CONTROL SYSTEM 2.4GHZ	radio remote control		1
2	6692756	RECEIVER, 2.4GHZ			1
3	6692766	E-STOP BOX	mode selector/E-stop box - W/Ref. 17		1
4	6692764	RECIEVER CABLE			1
5	6692769	CHARGER, MAKITA DC1422, 12-24VDC	W/Ref. 6		1
6	6692770	BATTERY, NICD, 9.6V, 1.3AH, MAKITA 9000			1
7	6693411	LENS	green		1
7	6693409	BULB, STROBE			1
8	6693410	LENS	amber		1
8	6693409	BULB, STROBE			1
9	6692771	SHOULER HARNESS			1
10	6692762	KEYS, SET OF 2	set of (2)		x
11	6692761	2.4GHZ TRANSMITTER	transmitter - W/Ref. 18 & 19		1
12	7135569	DECAL	remote ready identification tag		1
13	6692757	DECAL, "REMOTE CONTROL OPERATION", LARGE	operation		1
14	6692768	DECAL, "REMOTE CONTROL OPERATION", SMALL	operation		1
15	6692767	DECAL, "ROTATING PARTS"	rotating parts		1
16	6692763	DECAL WARNING, "READ THE MANUAL"	operating instructions		1
17		DECAL	NAP - Order Ref. 3		1
18		DECAL	NAP - Order Ref. 11		1
19		DECAL	NAP - Order Ref. 11		1
20	6904709	MANUAL	operation, maintenance and parts		1

SEAL ENCLOSURE KIT

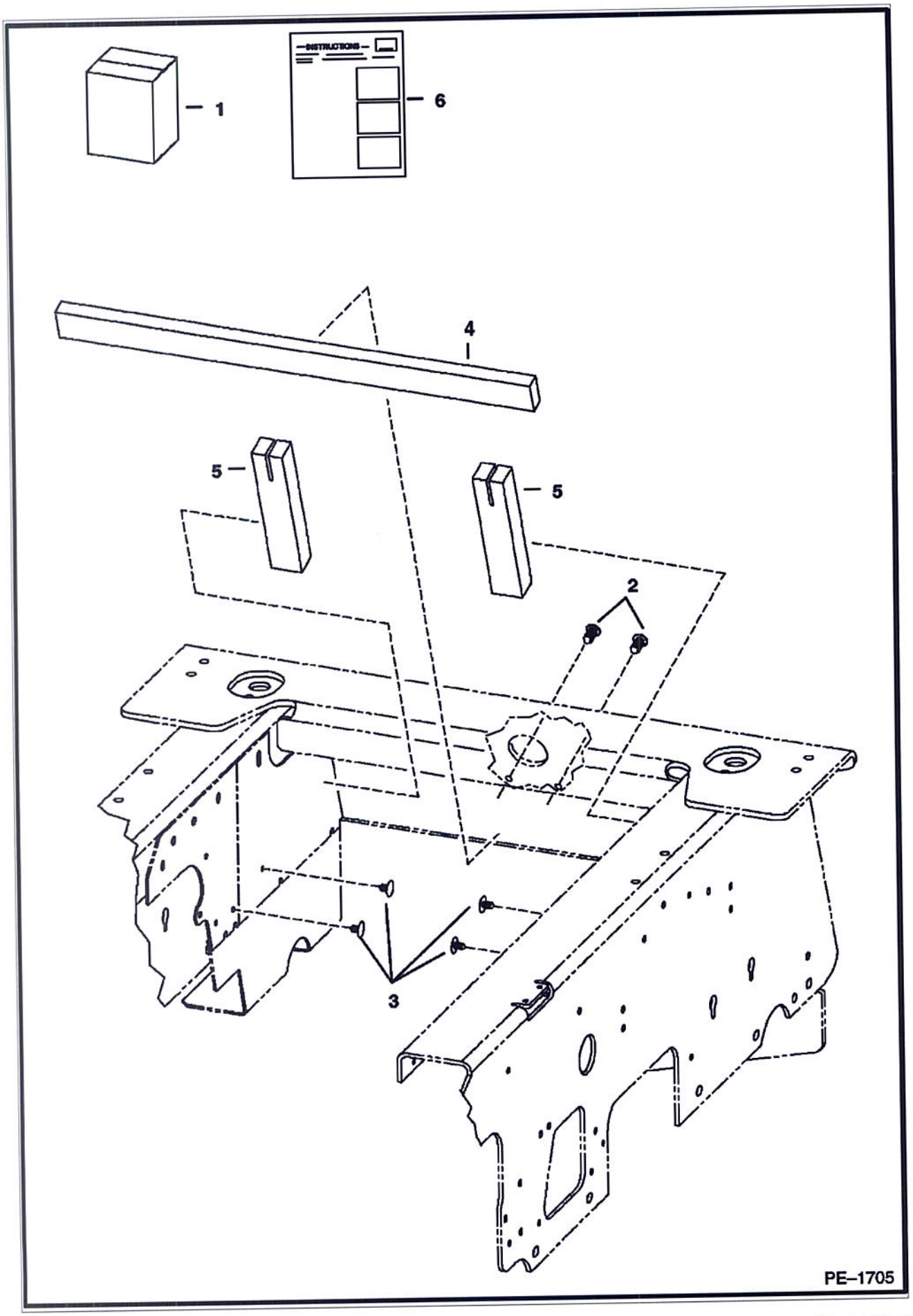

Ref No	Part Number	Description	Remarks	Serial Number	Qty
1	6732718	KIT	enclosure		1
2	6669308	RETAINER			2
3	6674895	RETAINER			4
4	6731108	SEAL	retainer		1
5	6732619	SEAL	panel		2
6	6901774	INSTRUCTIONS			1

Page 907 - BOBW029239B1001 - 04/08/2009 12:26:19 - Printed by Ken Cook Co. - eXprint.exe (v2.24.7 4/7/2009)

SEAT
(Suspension - Sears)

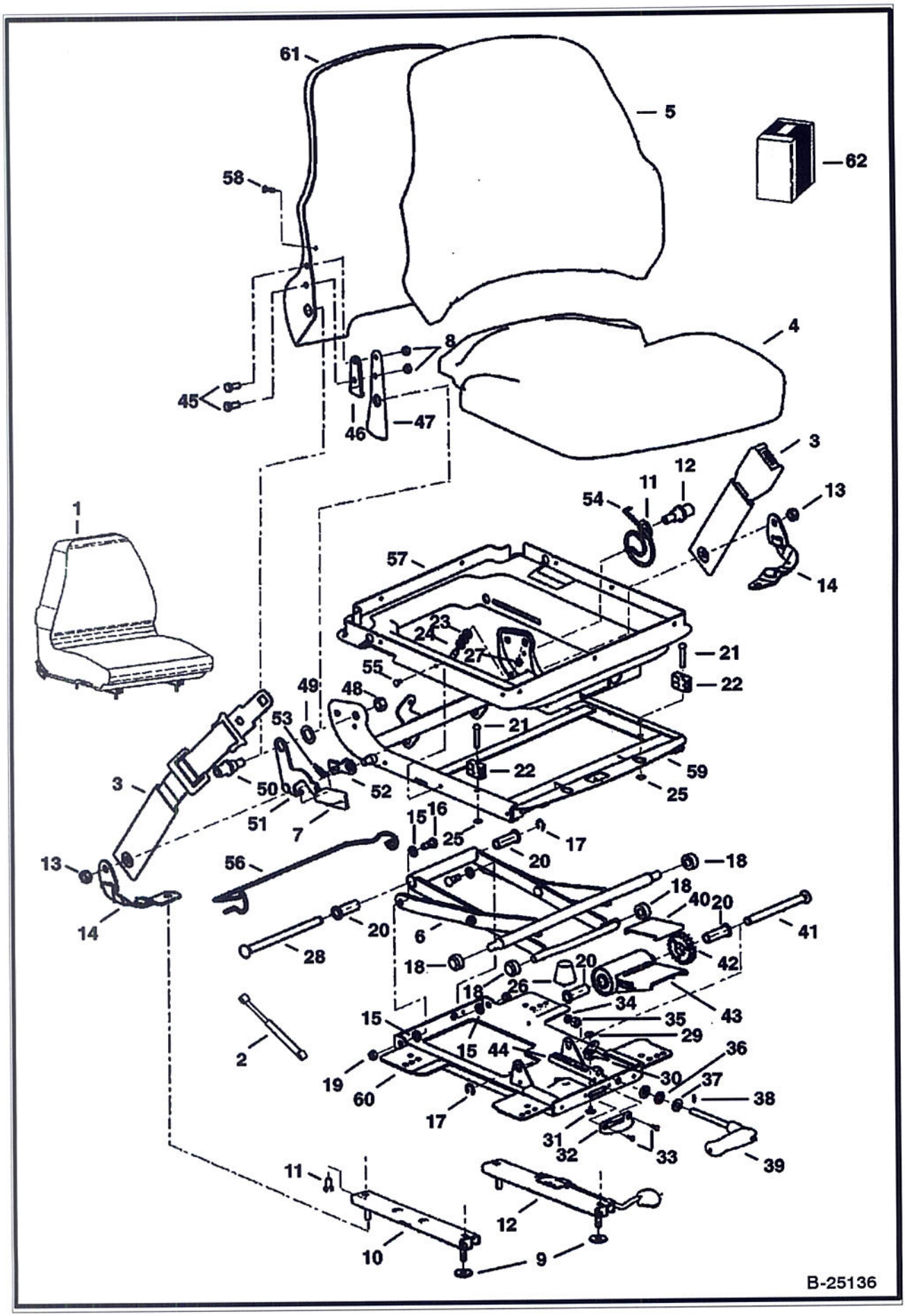

Model S150 KT4
6986835

Page 908 - BOBM0232981001 - 04/08/2009 12:26:19 - Printed by Ken Cook Co. - eXprint.exe (v2.24.7 4/7/2009)

Ref No	Part Number	Description	Remarks	Serial Number	Qty
1	6675595	SEAT	vinyl - LH recliner lever		1
1	6675596	SEAT	fabric - LH recliner lever		1
2	6676338	GAS SPRING			1
3	6675170	SEAT BELT	lap		1
4	6675320	SEAT	seat - fabric		1
4	6675322	SEAT	seat - vinyl		1
5	6675319	SEAT	backrest - fabric - W/Ref. 58		1
5	6675321	SEAT	backrest - vinyl - W/Ref. 58		1
6	6675317	SCISSORS			1
7	6675323	KNOB	recliner		1
8		NUT	NSS		6
9	619021	WASHER, 5			4
10		SLIDE	NSS - slave		1
11		BOLT	NSS		4
12		SLIDE	NSS - locking		1
13		NUT	NSS		2
14		BELT	NSS - tether		2
15		WASHER	NSS - cross pivot		4
16		BOLT	NSS - pivot		2
17		RING	NSS - retaining		2
18		ROLLER	NSS		4
19		NUT	NSS		2
20		BUSHING	NSS - wt adjustment		4
21		RIVET	NSS		2
22		BLOCK	NSS - up stop		2
23		WASHER	NSS		3
24		STOP	NSS - armrest		1
25		PUSHNUT	NSS		2
26		BUMPER	NSS		1
27		NUT	NSS		1
28		SHAFT	NSS - bearing		1
29		RIVET	NSS - female snap		1
30		INDICATOR	NSS - weight		1
31		RIVET	NSS - male snap		1
32		DIAL	NSS - weight indicator		1
33		POP RIVET	NSS		2
34		SPACER	NSS		1
35		NUT	NSS		1
36		BEARING	NSS - thrust		1
37		RACE	NSS - thrust		2
38		SHEAR PIN	NSS		1
39		HANDLE	NSS - weight adjustment		1
40		PLATE	NSS - wear		1
41		SHAFT	NSS - torsion		1
42		DRIVE GEAR	NSS		1
43		BUSHING	NSS - torsion		1
44		RACK	NSS - wt adjustment		1
45		BOLT	NSS		2
46		SPACER	NSS - recliner		1
47		BRACKET	NSS - back tilt		1
48		NUT	NSS		2
49		WASHER	NSS - plastic		2
50		BOSS	NSS - back pan pivot		2
51		HANDLE	NSS - recliner - RH		1

SEAT (Cont'd)
(Suspension - Sears)

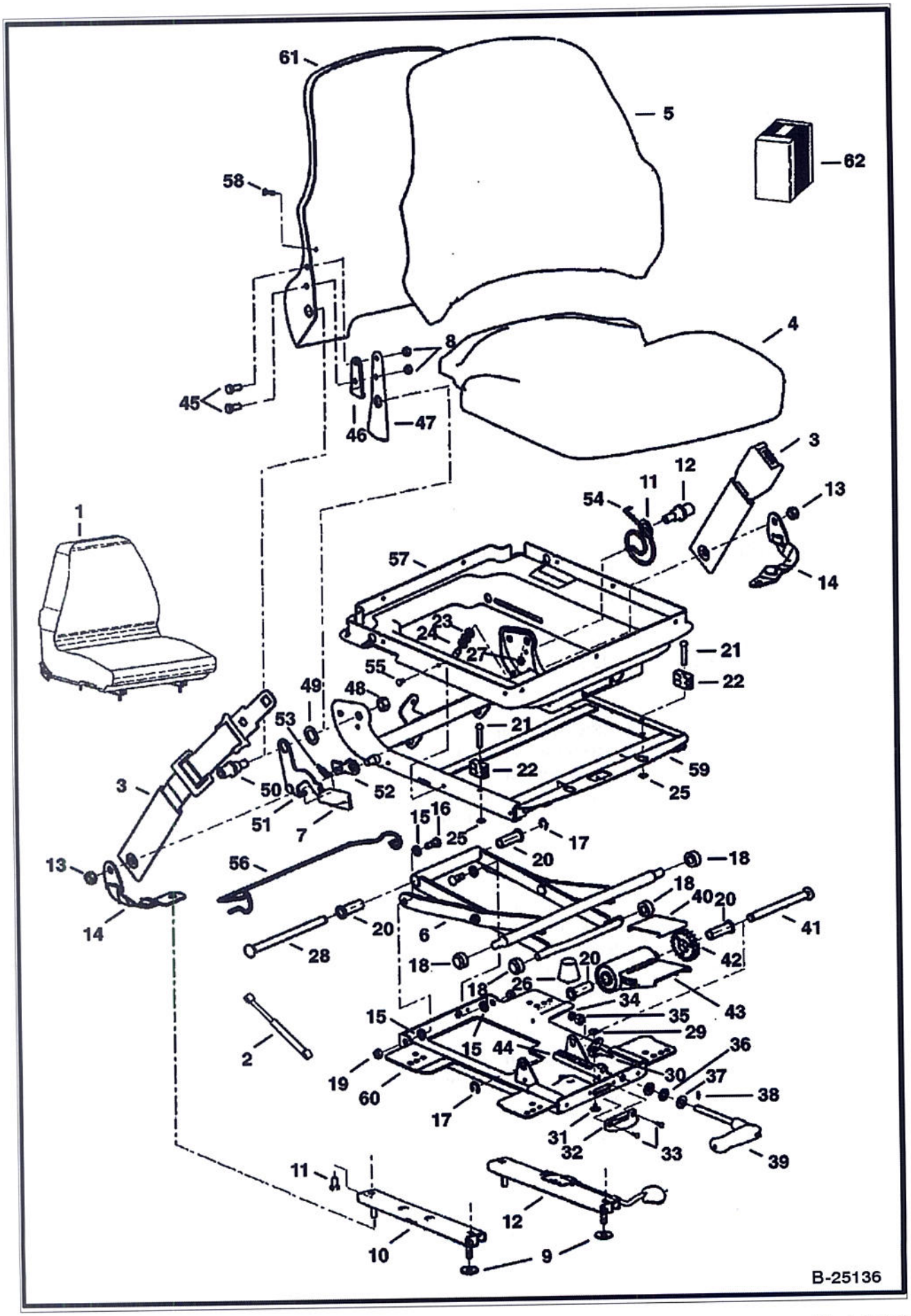

Model S150 KT4
6986835

Ref No	Part Number	Description	Remarks	Serial Number	Qty
52		LATCH	NSS - recliner		1
53		SPRING	NSS - extension		1
54		SPRING	NSS - tilt latch		1
55		CLIP	NSS		6
56		WIRE	NSS - boot support		1
57		SUSPENSION	NSS - boot		1
58		SCREW	NSS		2
59		HOUSING	NSS - upper		1
60		HOUSING	NSS - lower		1
61		BACK PAN	NSS		1
62	6675309	KIT	slides - Ref. 8-12		1
62	6675310	KIT	tether belt - Ref. 9, 13 & 14		1
62	6675311	KIT	suspension rollers & bearing - Ref. 15-20		1
62	6675312	KIT	suspension bumpers & stops - Ref. 21-27		1
62	6675313	KIT	rear tube - Ref. 17, 20 & 28		1
62	6675314	KIT	weight adjustment indicator - Ref. 29-33		1
62	6675315	KIT	weight adjustment handle - Ref. 34-39		1
62	6675316	KIT	weight adjustment - Ref. 17, 20 & 40-44		1
62	6675318	KIT	RH recliner - Ref. 7, 8 & 45-54		1
62	6676034	KIT	LH recliner - Ref. 7, 8 & 45-54		1
62	6675308	KIT	suspension boot - Ref. 55-57		1

SEAT BELT
(Three Point Retractable)

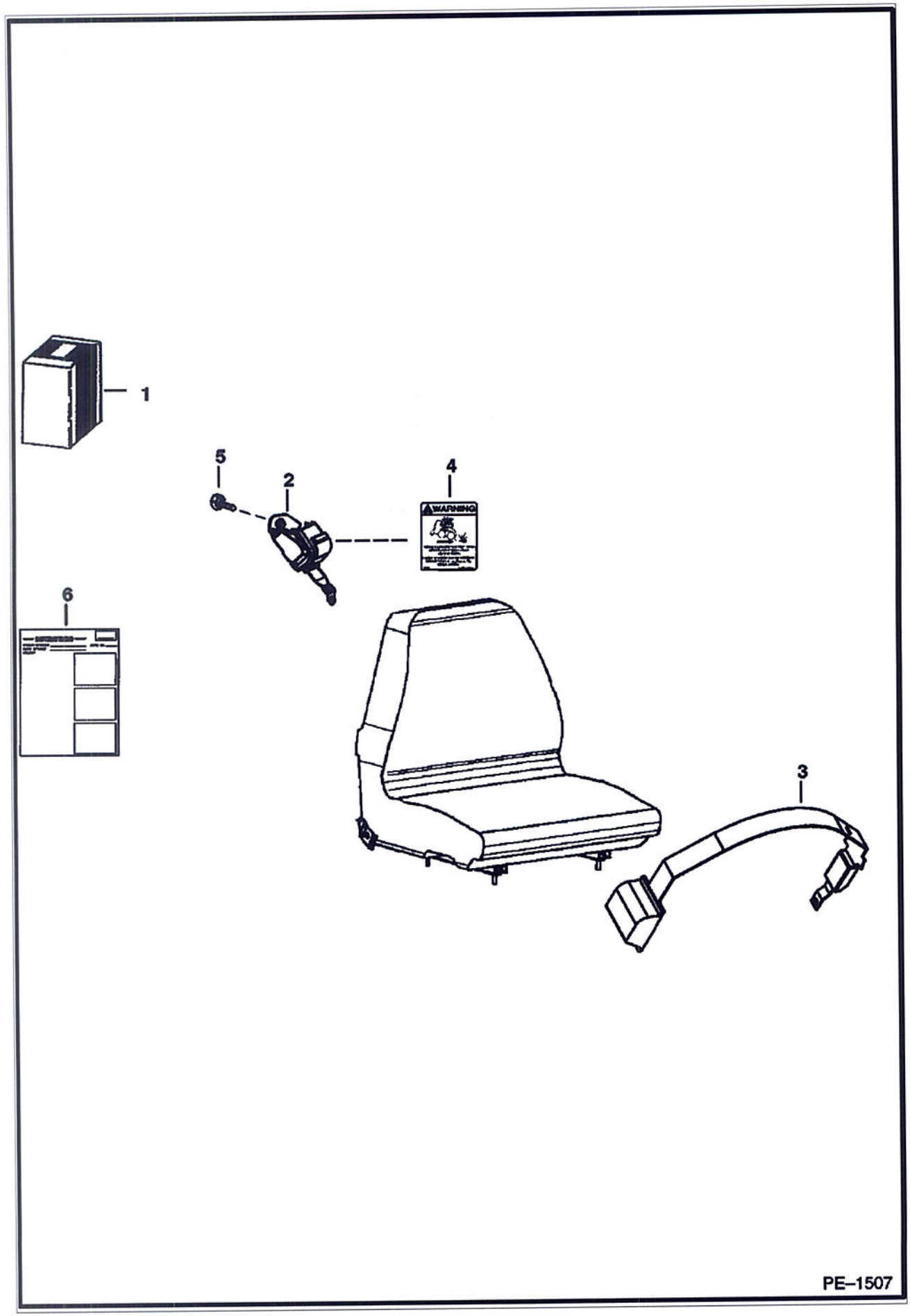

SEAT BELT (Cont'd)
(Three Point Retractable)

Ref No	Part Number	Description	Remarks	Serial Number	Qty
1	6732219	KIT	three point retractable seat belt - Use W/Sears brand suspension seats W/LH recliner lever		1
2	6674407	SHOULDER BELT			1
3	6679308	SEAT BELT			1
4	6725370	DECAL			1
5	35C612	BOLT			1
6	6901010	INSTRUCTIONS			1

Illustrated by ASN Book Co. - eXprint.exe (V4.24.7 4/7/2009)

SEAT BELT
(3" Wide Retractable)

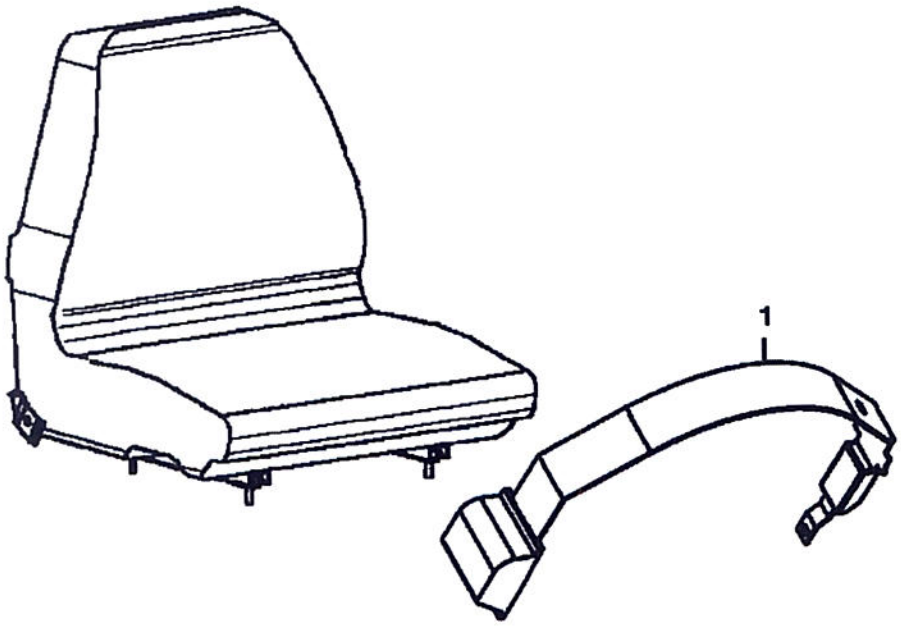

PE–1508

Page 914 - BOBM029239B1001 - 04/08/2009 14:40:13 - Electronic Parts Manual

SEAT BELT (Cont'd)
(3" Wide Retractable)

Ref No	Part Number	Description	Remarks	Serial Number	Qty
1	6675562	SEAT BELT	3" wide retractable - Use W/Sears brand suspension seats W/LH recliner lever		1
2	6901011	INSTRUCTIONS			1

SEAT BELT
(3" Wide)

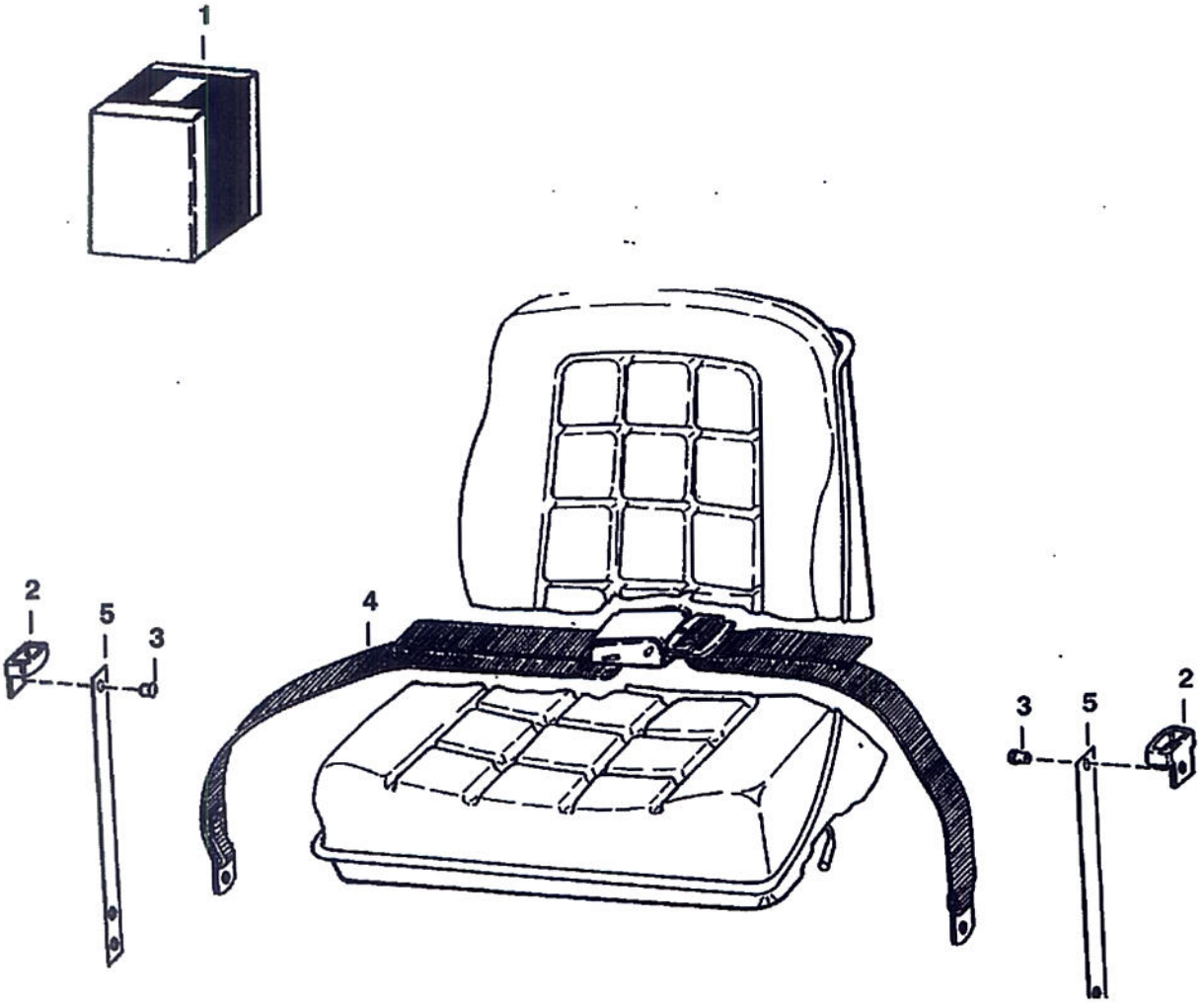

NOTE: Complies with British Columbia Industrial Health & Safety Regulations 26.16 (7) (a).

B-13601

SEAT BELT (Cont'd)
(3" Wide)

Ref No	Part Number	Description	Remarks	Serial Number	Qty
1	6703640	KIT	W/Ref. 2-6		1
2	6703703	GUIDE			2
3	6630207	RIVET			4
4	6659999	BELT			1
5	6711908	SPRING PLATE			2
6	6703641	DECAL			1

SOUND/NOISE REDUCTION KIT
(Manual Controls)

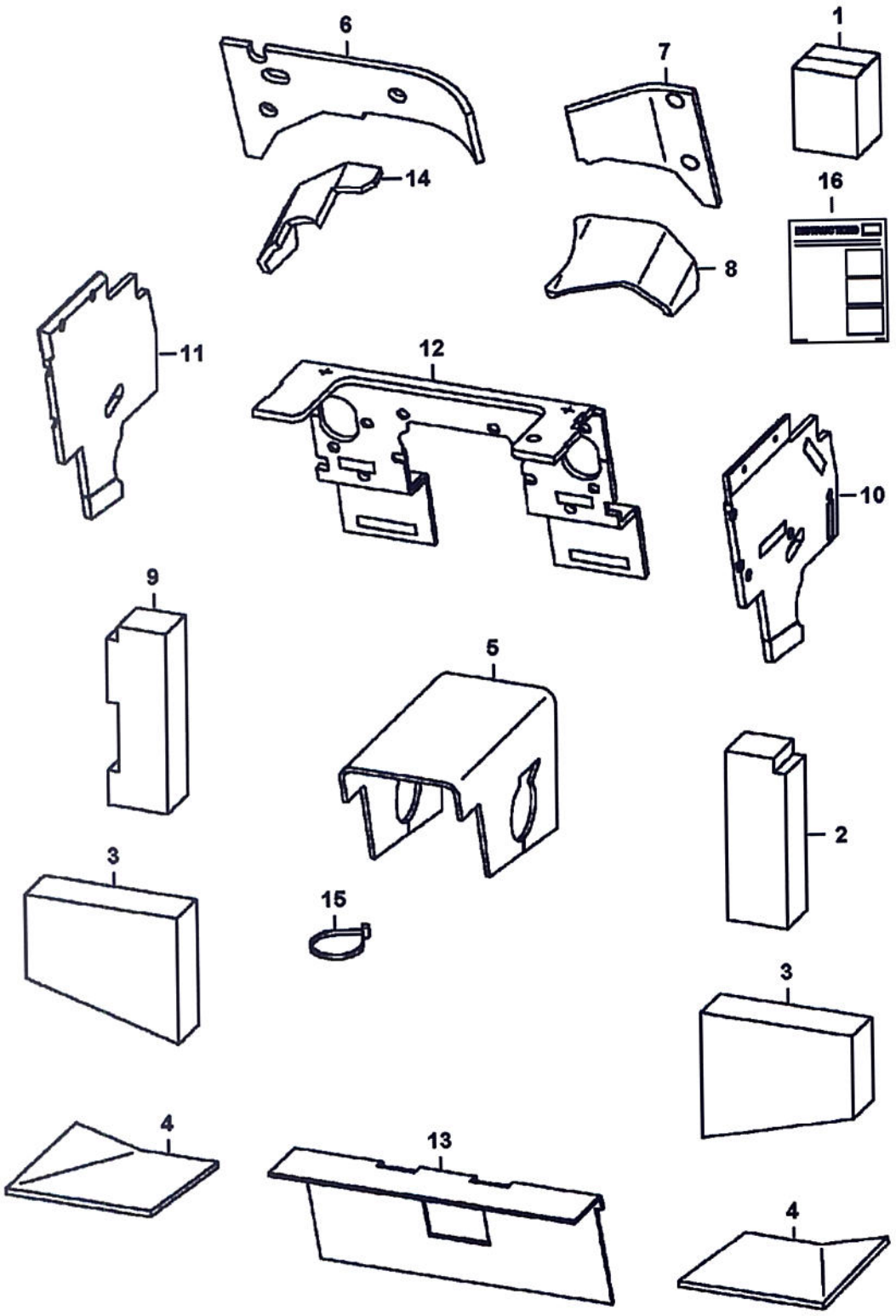

SOUND/NOISE REDUCTION KIT (Cont'd)
(Manual Controls)

Ref No	Part Number	Description	Remarks	Serial Number	Qty
1	7140056	SOUND KIT			1
2	6719328	INSULATION			1
3	6703968	INSULATION	side transmission		2
4	6719330	INSULATION			2
5	7101527	INSULATION	transmission		1
6	6719332	INSULATION	blower housing		1
7	6719333	INSULATION			1
8	6719334	INSULATION			1
9	6719327	INSULATION			1
10	7122095	INSULATION	left panel		1
11	7122096	INSULATION	right panel		1
12	7101529	INSULATION	steering column		1
13	7101543	INSULATION	crossmember		1
14	6704769	INSULATION	blower housing		1
15	6624289	TIE STRAP			8
16	7152163	INSULATION, STRIP			1
17	6986545	INSTRUCTIONS			1

SOUND/NOISE REDUCTION KIT
(Selectable Joystick Controls)

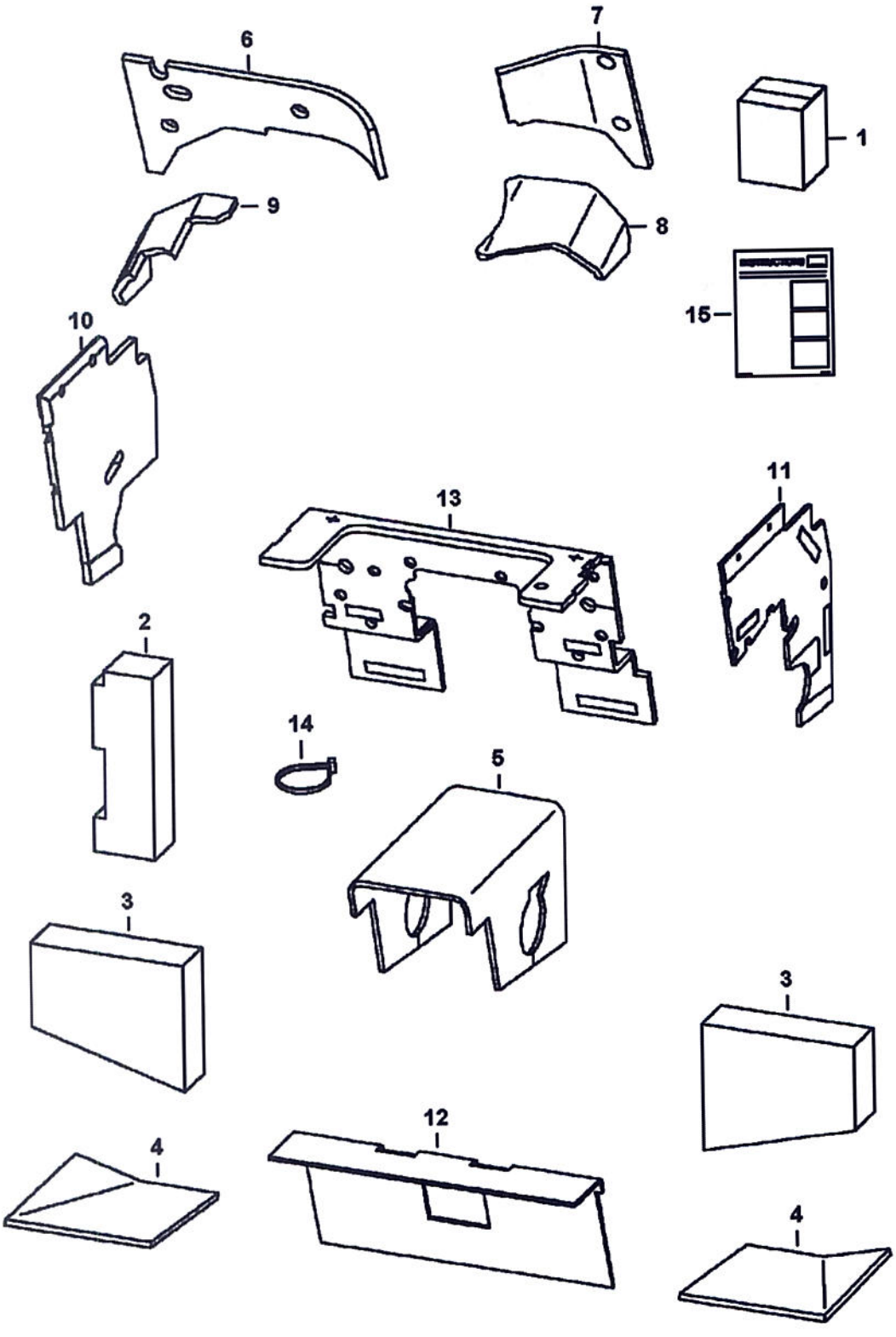

SOUND/NOISE REDUCTION KIT (Cont'd)
(Selectable Joystick Controls)

Ref No	Part Number	Description	Remarks	Serial Number	Qty
1	7140057	SOUND KIT			1
2	6719327	INSULATION			1
3	6703968	INSULATION	side transmission		2
4	6719330	INSULATION			2
5	7101527	INSULATION	transmission		1
6	6719332	INSULATION	blower housing		1
7	6719333	INSULATION			1
8	6719334	INSULATION			1
9	6704769	INSULATION	blower housing		1
10	7122096	INSULATION	left panel [A]		1
11	7109125	INSULATION	right panel		1
12	7101543	INSULATION	crossmember		1
13	7101528	INSULATION	steering column		1
14	6624289	TIE STRAP			8
15	7152163	INSULATION, STRIP			1
16	6986547	INSTRUCTIONS			1

SOUND/NOISE REDUCTION OPTION
(Manual Controls & SJC)

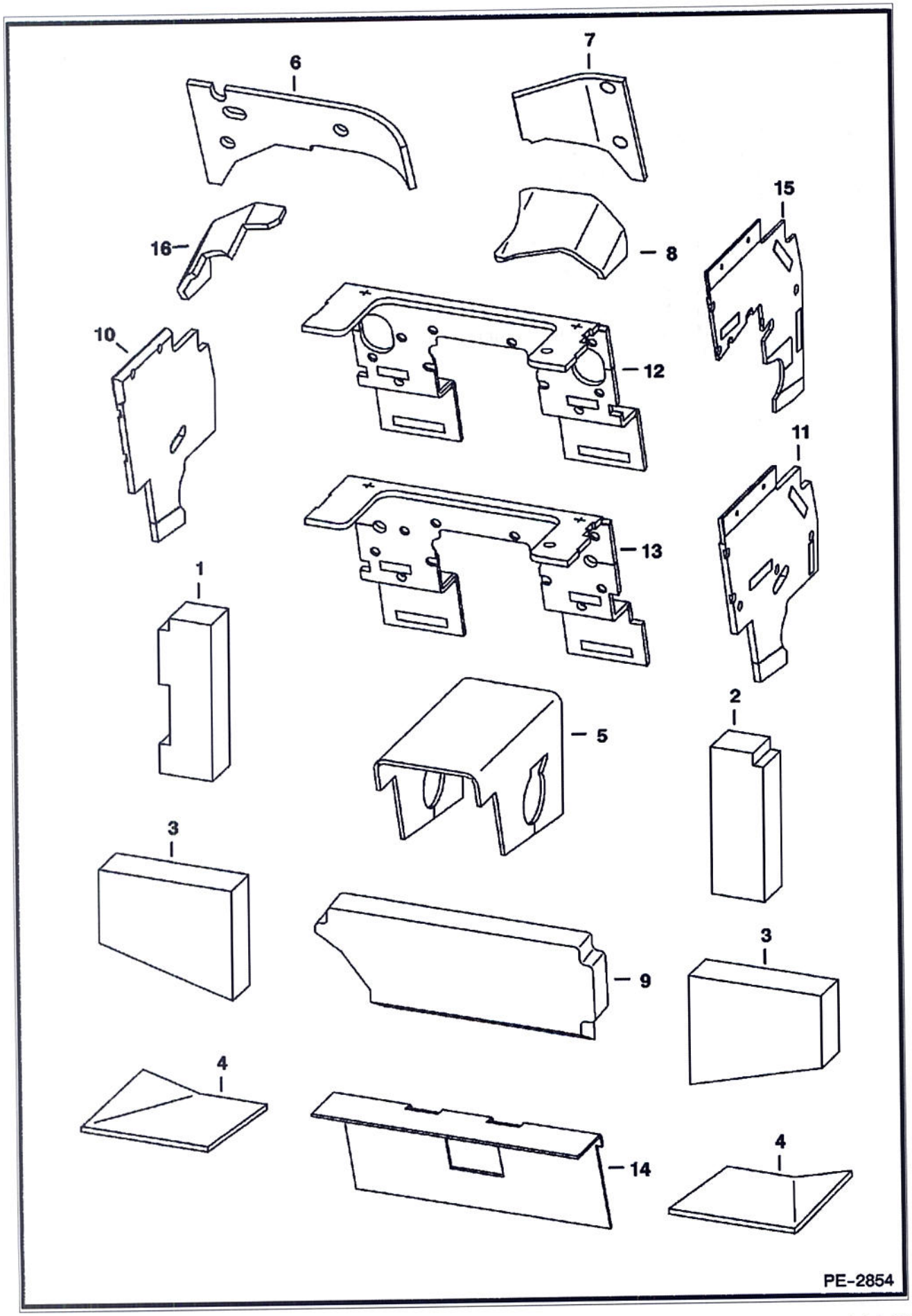

Ref No	Part Number	Description	Remarks	Serial Number	Qty
1	6719327	INSULATION			1
2	6719328	INSULATION			1
3	6703968	INSULATION	side transmission		2
4	6719330	INSULATION			2
5	7101527	INSULATION	transmission		1
6	6719332	INSULATION	blower housing		1
7	6719333	INSULATION			1
8	6719334	INSULATION			1
9	6727299	INSULATION			1
10	7122096	INSULATION	left panel - standard hand controls & selectable joystick controls		1
11	7122095	INSULATION	right panel - standard hand controls		1
12	7101529	INSULATION	steering column		1
13	7101528	INSULATION	steering column - selectable joystick controls		1
14	7101543	INSULATION	crossmember		1
15	7109125	INSULATION	right panel - selectable joystick controls		1
16	6704769	INSULATION	blwr hsg		1

SOUND/NOISE REDUCTION OPTION (W/ACS)

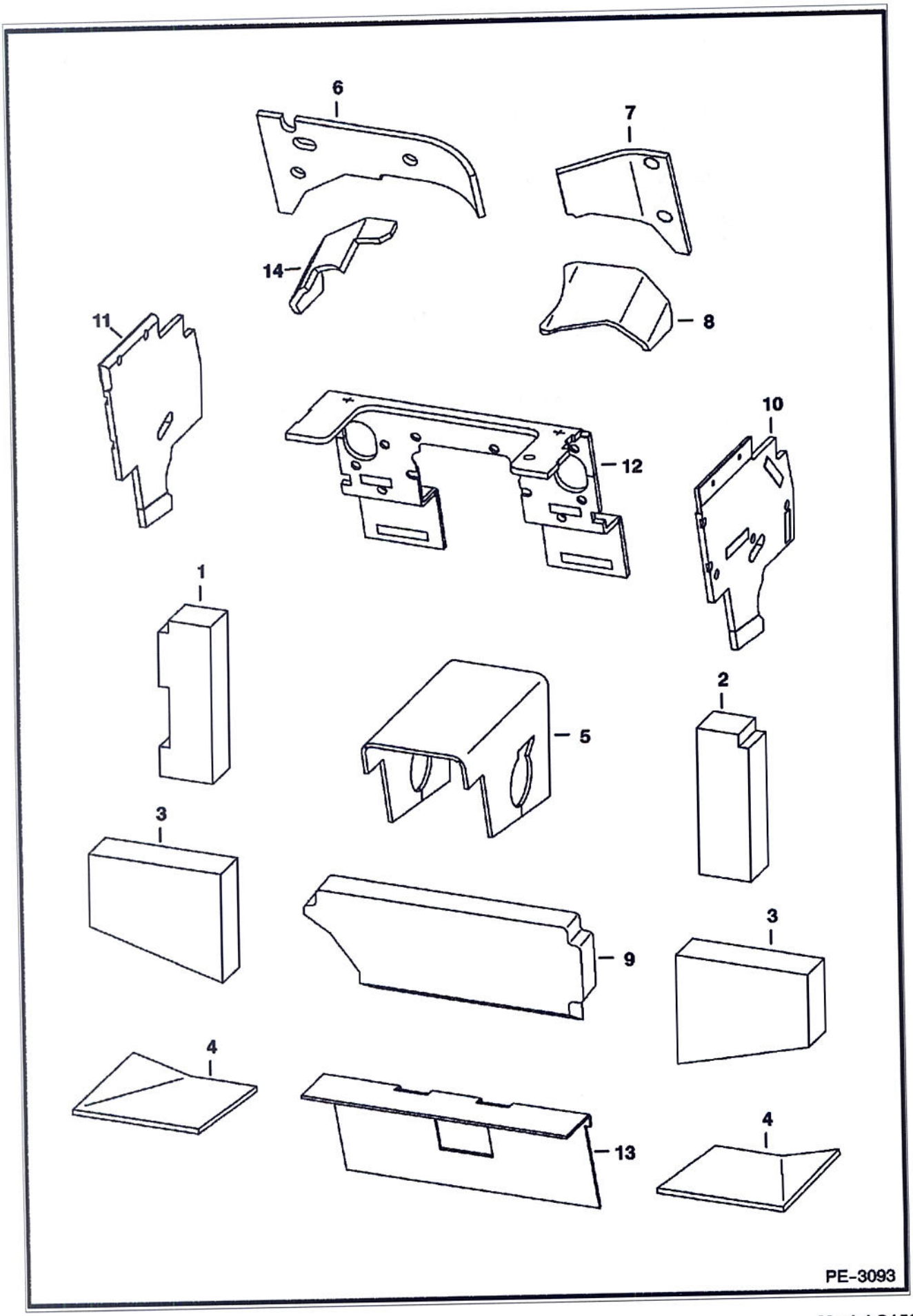

SOUND/NOISE REDUCTION OPTION (Cont'd) (W/ACS)

Ref No	Part Number	Description	Remarks	Serial Number	Qty
1	6719327	INSULATION			1
2	6719328	INSULATION			1
3	6703968	INSULATION	side transmission		2
4	6719330	INSULATION			2
5	7101527	INSULATION	transmission		1
6	6719332	INSULATION	blower housing		1
7	6719333	INSULATION			1
8	6719334	INSULATION			1
9	6727299	INSULATION			1
10	7122503	INSULATION	left panel - ACS		1
11	7122502	INSULATION	right panel - ACS		1
12	7101529	INSULATION	steering column - standard hand controls		1
13	7101543	INSULATION	crossmember		1
14	6704769	INSULATION	blwr hsg		1

SOUND/NOISE REDUCTION OPTION
(Bystander)

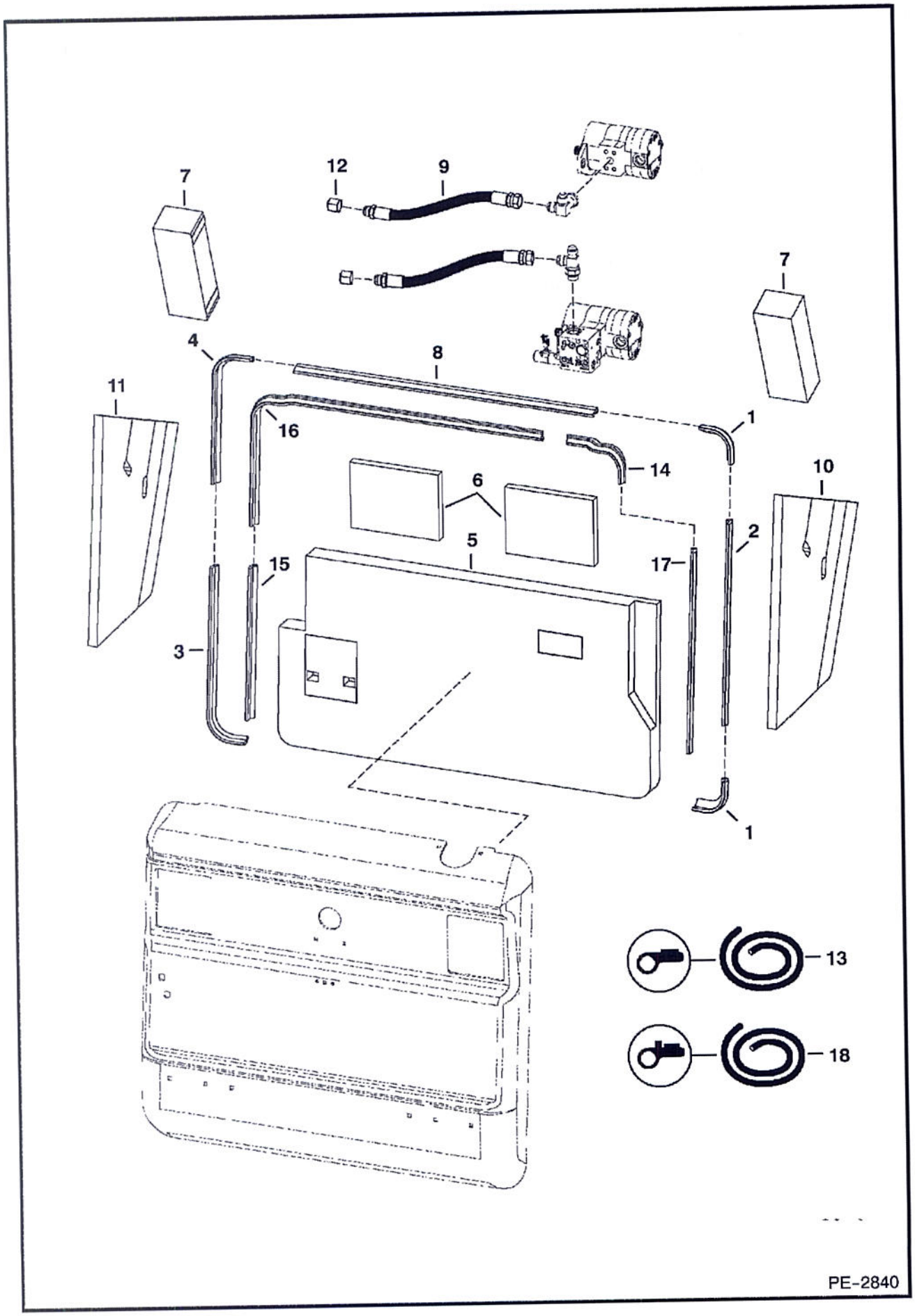

SOUND/NOISE REDUCTION OPTION (Cont'd)
(Bystander)

Ref No	Part Number	Description	Remarks	Serial Number	Qty
1		SEAL	NAP - 6.50" (165,1 mm) long - Order Ref. 13	& Bel	2
2		SEAL	NAP - 22.10" (561,3 mm) long - Order Ref. 18	& Bel	1
3		SEAL	NAP - 22.10" (561,3 mm) long - Order Ref. 13	& Bel	1
4		SEAL	NAP - 17.60" (447,04 mm) long - Order Ref. 13	& Bel	1
5	7109317	INSULATOR	tailgate		1
6	7109318	INSULATOR	upper tailgate		2
7	7110410	INSULATION	upright		2
8		SEAL	NAP - 27.25" (692,15 mm) long - Order Ref. 13	& Bel	1
9	7112651	HOSE			1
10	7116699	INSULATION	upright		1
11	7116700	INSULATION	upright		1
12	36K8	CAP			1
13	7108716	SEAL, BULK/FOOT	bulk - sold per foot		x
14		SEAL	NAP - 8.65" (219,71 mm) long - Order Ref. 13	& Abv	1
15		SEAL	NAP - 16.75" (425,45 mm) long - Order Ref. 13	& Abv	1
16		SEAL	NAP - 45.25" (1149,35 mm) long - Order Ref. 13	& Abv	1
17		SEAL	NAP - 21.25" (539,75 mm) long - Order Ref. 18	& Abv	1
18	7108677	SEAL - BULK/FT	bulk - sold per foot		x

SOUND REDUCTION HARDHAT

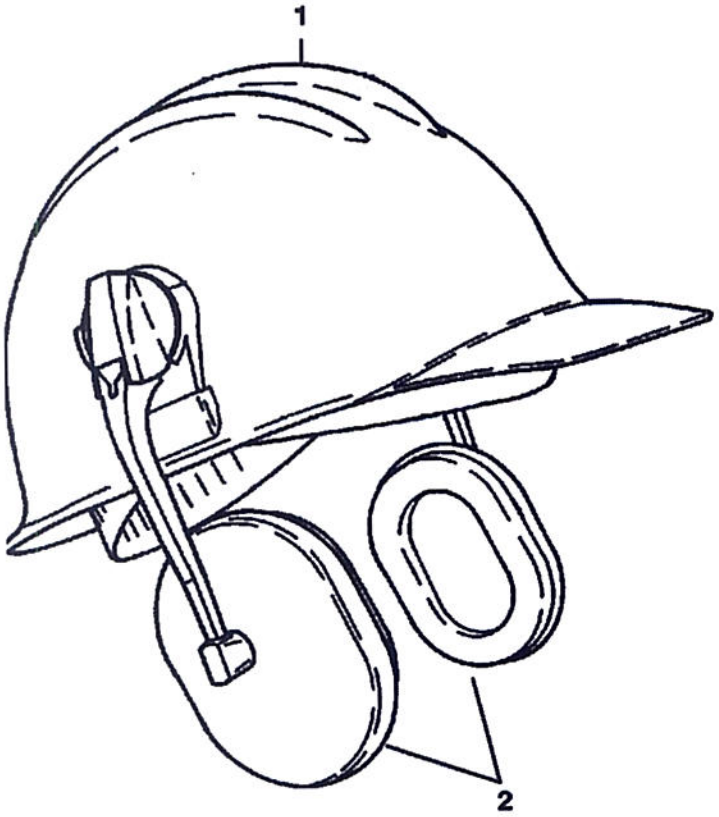

B–3111

Ref No	Part Number	Description	Remarks	Serial Number	Qty
1	6902390	HARD HAT WHITE			1
2	6559775	EARMUFFS			1

STROBE LIGHT

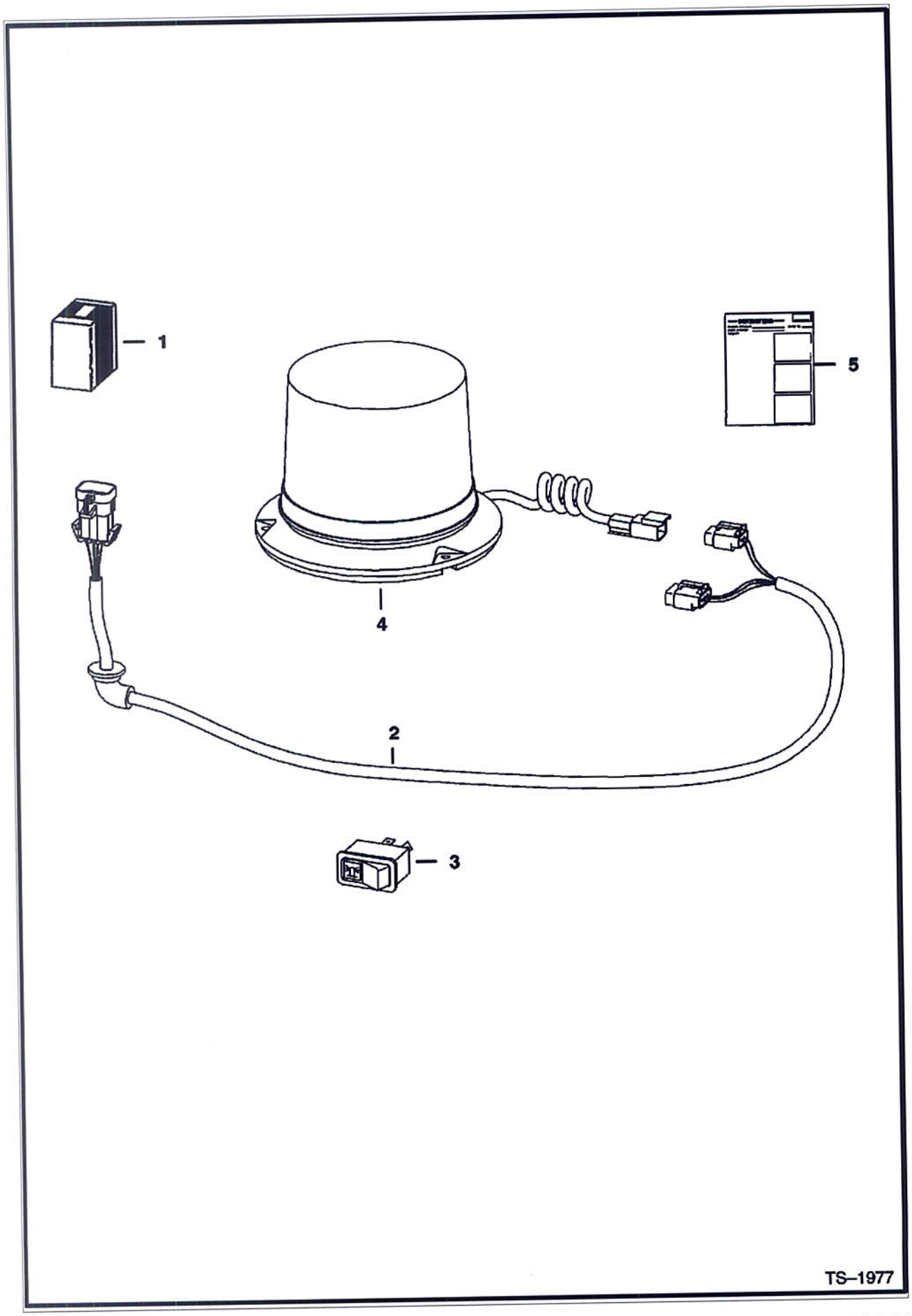

Ref No	Part Number	Description	Remarks	Serial Number	Qty
1	6719857	KIT	strobe light - If loader is not equipped W/deluxe cab accessories harness, heater, air conditioning, SJC, ACS, Power Bob-Tach, rotating beacon and/or 4 way flashers (non-power port plug-in), Also Order 7143071 deluxe harness		1
2	6718872	HARNESS			1
3	6668816	SWITCH	vertical		1
4	6697800	AMBER STROBE	4200 series light		1
4	6697796	FLASHTUBE	3 pin rectangular base bulb		1
4	6697797	AMBER LENS			1
5	6900992	INSTRUCTIONS			1

Page 711 - BOOM0429498101 - 04/08/2009 12:26:19 - Printed by Ken Cook Co. - eXprint.exe (v2.24.7 4/7/2009)

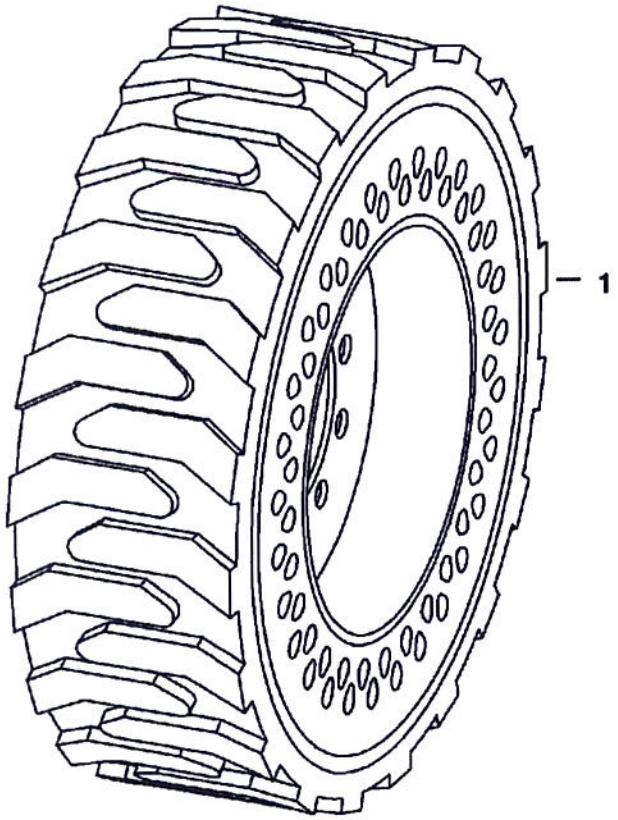

MS-2192

Page 932 - BOBM029239B1001 - 04/08/2009 12:26:19 - Printed by Ken Cook Co. - eXprint.exe (v2.24.7 4/7/2009)

Ref No	Part Number	Description	Remarks	Serial Number	Qty
1	6903766	TIRE, SOLID FLEX 31X6X10 LH			2
1	6903767	TIRE, SOLID FLEX 31X6X10 RH			2

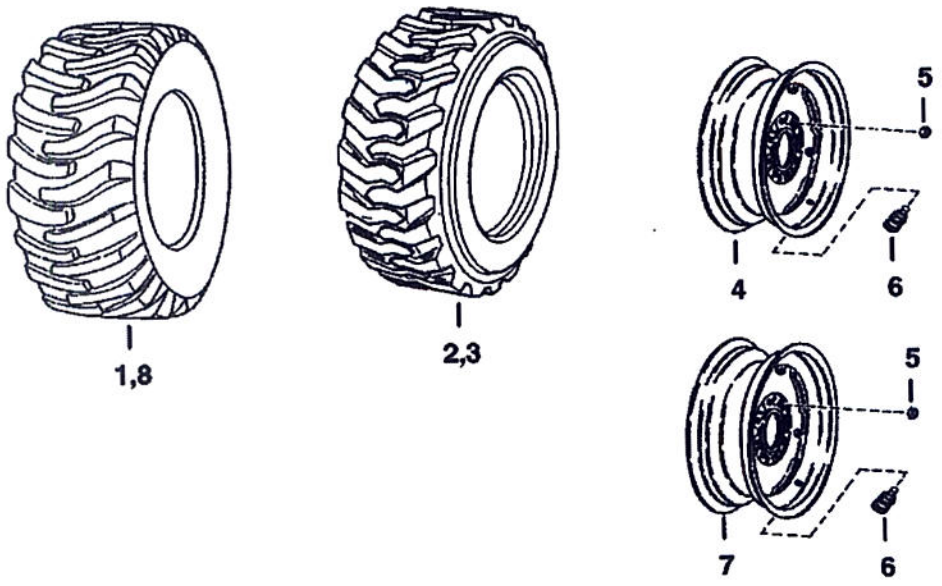

B–17101R

Ref No	Part Number	Description	Remarks	Serial Number	Qty
1	6550826	TIRE	10.00-16.5, 6 Ply Rating - General		4
2	6730106	TIRE	10.00 - 16.5 - 10 ply - Bobcat - severe duty		4
3	7101734	TIRE, STANDARD DUTY - 10X16.5 - 8 PLY	Bobcat brand		4
3	6729900	TIRE	10.00-16.5, 10 ply - heavy duty - Bobcat brand		4
3	7101735	TIRE - HEAVY DUTY - 10.00X16.5 - 10 PLY	Bobcat brand		4
4	6730771	RIM	See BTI197ldr Used W/Ref. 1, 2 & 3		4
4	6730772	RIM	Used W/Ref. 8		4
5	6564669	NUT	wheel		32
6	1614765	STEM	tubeless tire		4
7	6730775	RIM	inverted - Use W/Ref. 3 - For 60" width		4
8		TIRE	NAP - 31.5 - 13 - 16.5 - 10 ply - Bobcat brand - super float - Order 7105756 - 31.5 - 12 x 16.5 -10 ply - Bobcat brand - super float		4

WHITE DECAL KIT

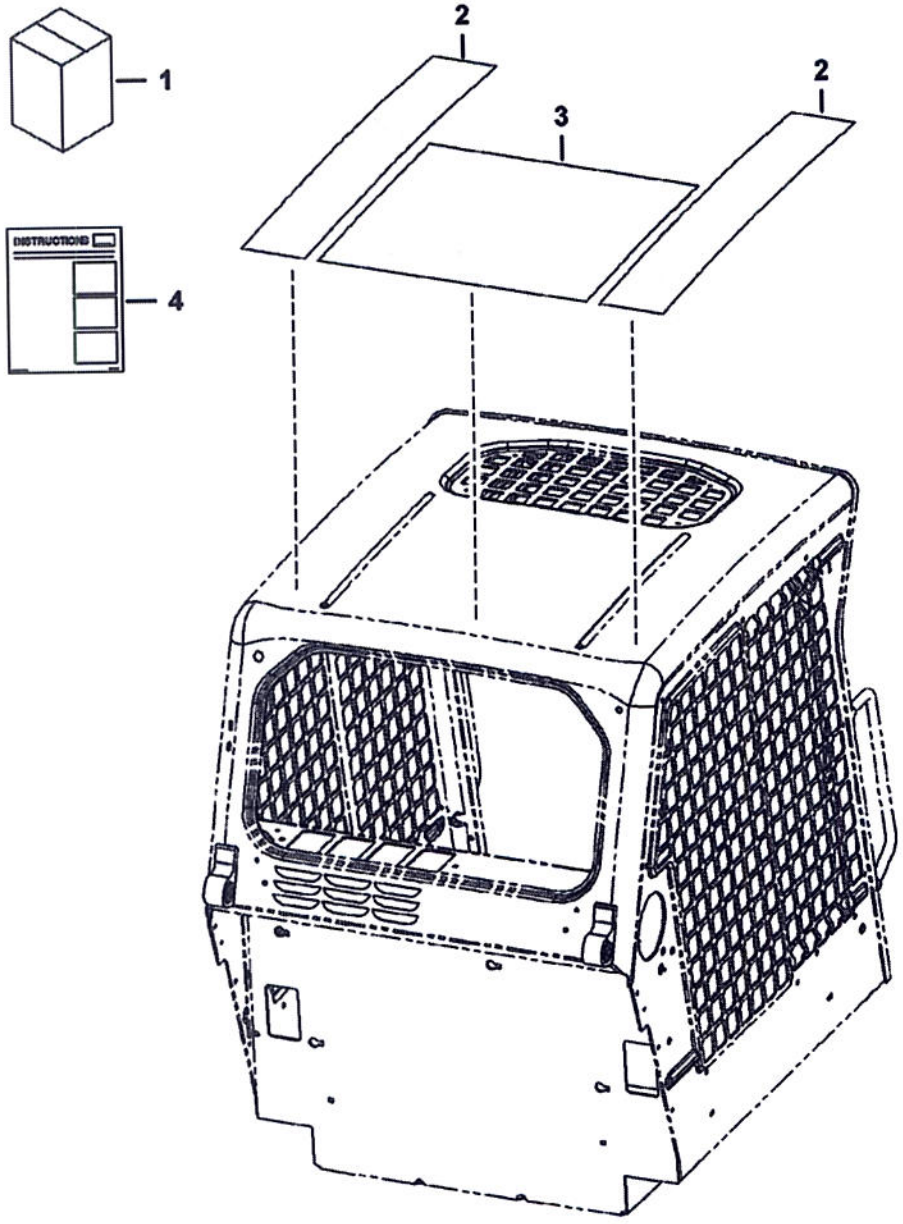

PE-3373

Ref No	Part Number	Description	Remarks	Serial Number	Qty
1	7140768	KIT	white decal - Ref. 2-4		1
2	7136678	DECAL	top side		2
3	7136679	DECAL	middle top		1
4	6986573	INSTRUCTIONS			1

BULK ITEMS
(SEE NOTE)

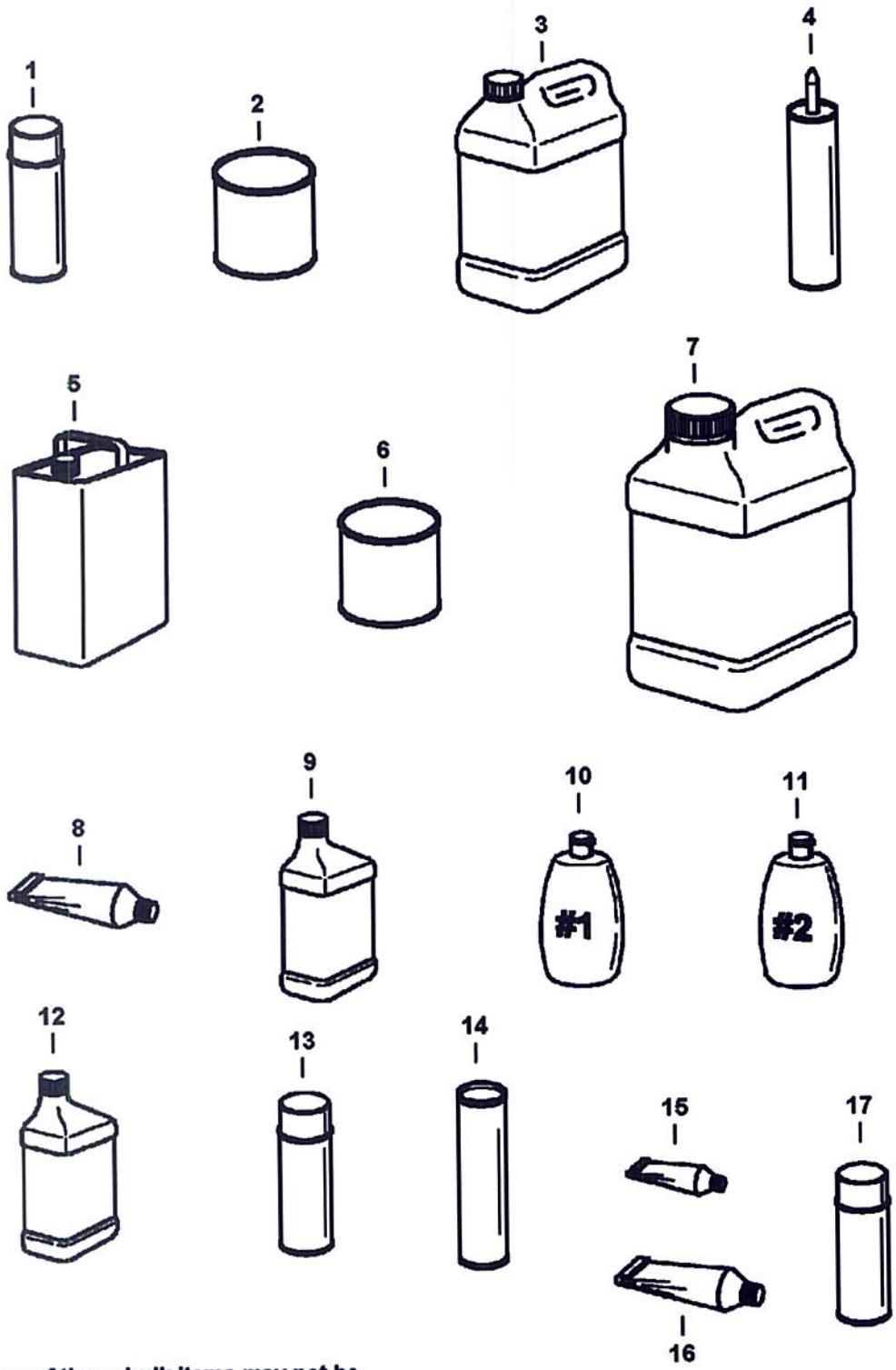

NOTE: Some of these bulk items may not be used on this particular model Bobcat.

NOTE: See Merchandising catalog for more products & information.

NOTE: Paint spray cans are packaged 6 per box.
Motor oil quarts are packaged 12 per box.
Motor oil 1 gal. jugs are packaged 6 per box.
Motor oil 2.5 gal. jugs are packaged 2 per box.

B-16415

BULK ITEMS (Cont'd)
(SEE NOTE)

Ref No	Part Number	Description	Remarks	Serial Number	Qty
1	6902228	PAINT	orange - Spray Can - SEE NOTE		x
1	6902229	PAINT	charcoal - spray can - SEE NOTE		x
1	6902230	PAINT	white - Spray Can - SEE NOTE		x
2	6902233	PAINT	orange - quart		x
2	6902234	PAINT	charcoal - quart		x
2	6902235	PAINT	white - quart		x
3	6983128	ANTI-FREEZE PG 53/47 PREMIX GAL 6	gallon - 53/47 premixed PG		x
3	6983129	ANTI-FREEZE PG CONCENTRATE 6	gallon - PG - concentrate		x
4	6633583	SEALANT	tube - 300 ml		x
5		REDUCER	NAP - gallon		x
6		PRIMER	NAP - gallon		X
6	6902232	PRIMER	spray can - 16 oz		x
7	6903117	FLUID, OIL HYD 2.5 GAL 2			x
7	6903118	FLUID, OIL HYD 5 GAL			x
7	6903119	FLUID, OIL HYD 55 GAL			x
8	6599360	SEALANT	electrical - tube - 3 oz		x
8	6685372	SEALANT, GASKET LIQUID	tube - 20 oz		x
9	6903121	LUBE, GEAR 12			x
10	6630188	POLISH	window - #1 - 8 oz		x
10		POLISH	NAP - window - #1 - 64 oz - Order 6630188 Polish		x
11	6630189	POLISH	window - scratch remover - #2 - 8 oz		x
11		POLISH	NAP - window - #2 - 64 oz - scratch remover - Order 6630189 Polish		x
12	6903109	OIL 30W QT. 12			x
12	6903110	OIL, 30W GAL. 6			x
12	6903111	OIL 30W 2.5 GAL 2			x
12	6903107	OIL, 10W30 QT. 12			x
12	6903108	OIL, 10W30 GAL. 6			x
12	6903112	OIL, 10W30 2.5 GAL 2			x
12	6903105	OIL, 15W40 QT. 12			x
12	6903106	OIL, 15W40 GAL. 6			x
12	6903113	OIL, 15W40 2.5 GAL. 2			x
13	6675380	ADHESIVE	insulation - spray can		x
14	6903122	GREASE, TUBE 10			x
15	6650407	ADHESIVE	tube - 1 oz		x
16	6650388	SEALANT	flange		x
17	6736644	PAINT	orange - spray can - .5 oz		x
17	6736641	PAINT	charcoal - spray can - .5 oz		x
17	6736642	PAINT	white - spray can - .5 oz		x
17	6736645	PAINT	red - spray can - .5 oz		x

Page 940 - BOOKMARK1 - 7/10/2007 10:10:47 AM

Part No.	Description	Was	Code	Page
10C410	BOLT			252
10C416	BOLT			252
10C512	BOLT			226
10C616	BOLT 10			20
10H25	FITTING, GREASE			30
10H35	GREASE ZERK			32, 102
10J8	BALL			108
11H15	GREASE FITTING			30
12D10	NUT			290
12D8	NUT			286
12H15	GREASE ZERK			30
12H25	FITTING			334
1304227	PIN			178
1306637	CLIP			70
1313995	STUD			30
1318565	COTTER PIN			278
1320075	COTTER PIN			318
13K8	TEE			288
14J5032	PIN, STRAIGHT			32
15HB1010	ADAPTER, COUPLER			96
15HB1210	ADAPTER, COUPLER			96
15KB1008	ADAPTER			96
15KB1010	FITTING			96
15KB1012	ADAPTER			90, 96
15KB1212	ADAPTER			96, 342
15KB1216	ADAPTER			64
15KB404	CONNECTOR			334
15KB606	ADAPTER			64, 86, 90, 96, 98
15KB612	ADAPTER			96
15KB810	CONNECTOR			60, 236
1612281	SPRINGNUT			260
1614765	STEM			380
16F2	PLUG			186
17C1016	SCREW			30
17C1056	BOLT			14
17C1080	SCREW			30
17C410	BOLT 10			286, 312, 314
17C412	BOLT 5			49, 50, 51, 52, 150
17C420	CAPSCREW			266
17C432	BOLT			62
17C444	SCREW			98
17C508	SCREW			286
17C512	BOLT 5			148, 240, 246, 262, 286, 318
17C514	BOLT			156
17C516	BOLT			266, 332
17C520	BOLT 5			266, 332
17C532	BOLT 5			278
17C540	BOLT			148, 320, 322, 324
17C608	BOLT			222
17C610	BOLT			34, 172
17C6116	BOLT			168
17C612	BOLT 5			16, 70, 92, 94, 96, 102, 156, 170, 242, 246, 278, 318

Code for disposition of old part number
A -- Use up
B -- Use on other application (See PNI)
C -- File PDR Report with Bobcat Parts Sales
D -- Part Number Error

Printed by ARI LOOK CO. - Saprint.exe [V4.44.7 9/7/2005]

Part No.	Description	Was	Code	Page
17C616	BOLT 5			70, 86, 90, 154, 156, 292
17C620	BOLT			70, 88, 92, 96, 102, 168, 172
17C624	BOLT 5			70, 246
17C628	BOLT			54, 58, 94, 98, 102, 246, 31
17C632	BOLT 5			54, 58, 318
17C640	BOLT 5			20, 30, 258, 260, 320, 324
17C644	BOLT			86
17C648	BOLT 5			30
17C652	SCREW			316
17C656	BOLT			30
17C660	BOLT			30, 32, 316
17C668	BOLT			316
17C680	BOLT			102, 342
17C716	BOLT			16, 176
17C820	BOLT			28
17C828	BOLT			172, 174
17C844	BOLT			54, 58
17KB1010	ELBOW			60, 236
17KB1212	ELBOW			90, 94, 342
17KB606	ELBOW			61, 62, 64, 74, 80, 88, 92, 96, 98, 334, 342
17KB808	ELBOW			92
17KB810	ELBOW			60, 236
18C1636	BOLT			40
18EM1224	WASHER			240, 246
18KB404	ELBOW			334
18KB606	ELBOW			334
19J12	CLAMP			88, 92
19KB606	TEE			86, 98
1CM640	SCREW			240, 246
1CM8100	SCREW			148, 17
1CM820	BOLT			102
1CM825	BOLT			148
1CM870	BOLT			148
1CM890	BOLT			174
1DM6	NUT			176
1K127	O-RING 10			72, 76, 80
21G804	BOLT			298
21KB1212	TEE			334
21KB606	TEE			64, 88, 92, 98, 296
225855	SEAL, OIL			54, 58, 66
24K5	PLUG			88, 92
24K7	PLUG			72, 76, 80
25E10	WASHER			146
25E11	WASHER			278
25E13	WASHER 5			50, 52, 158, 162, 222, 312, 314
25E14	WSHR			148, 252
25E15	WASHER			148, 266
25E16	WSHR			240, 246, 266
25E17	WASHER 5			278
25E18	WASHER			176
25E21	WASHER 5			174
25E24	WASHER			104
25E25	WASHER 10			278
25G512	SCREW			22

Code for disposition of old part number
A -- Use up
B -- Use on other application (See PNI)
C -- File PDR Report with Bobcat Parts Sales
D -- Part Number Error

Page 942 - BOBM029239B1001 - 04/08/2009 12:26:19 - Printed by Ken Cook Co. - Baptistcare (NSW) Ltd

Part No.	Description	Was	Code	Page
25G520	SCREW			22
25G612	SCREW			272, 274
25GT410	SCREW			158, 254
25K20016	O RING 10			72, 76, 80
25K20100	O RING 10			154
25K30110	O RING 10			336
25K30118	O RING 10			86, 90
25K30126	O RING 10			68
25K30210	O-RING			66
25K30508	O-RING, 10			38, 98
25K40224	O RING 10			66
25K60128	O RING 10			68
25K60212	O RING 10			66
27E10	WASHER			30
27E6	WASHER 5			54, 58
27E8	WASHER 10			320, 322, 324
29CM612	BOLT			202
29CM820	SCREW			148, 174
29G416	BOLT			72, 76, 80, 154, 156
29G444	BOLT			72, 76, 80
2DM8	NUT			190
2F4051	PIN			178
30G416	BOLT			72
30H21	CLAMP 10			294
30H22	CLIP			34
30H27	CLAMP			270
30H31	CLAMP 10			98
30H35	CLAMP 10			270
30H42	CLAMP			154, 326
30H46	CLIP			310
30H50	CLIP			272
30H62	CLIP			156, 222
30H65	CLIP			94
30H75	CLAMP			18, 36, 146
30H79	CLAMP			64, 98
31C410	BOLT			290
31C820	BOLT			12, 54, 58
31C824	BOLT 10			278, 318, 320, 322, 324
31C828	BOLT			12
31C832	BOLT			320, 322, 324
31C836	BOLT			322
31H12	CLIP			176
31H27	CLIP			34
31H38	CLAMP			178
31H49	CLAMP			334
35C1032	BOLT			38
35C408	BOLT			240
35C410	BOLT 5			226, 228, 286, 302
35C412	BOLT			20, 38, 44, 48, 294
35C512	BOLT			26, 154, 274, 312, 314
35C514	BOLT			222
35C516	BOLT 10			168, 252
35C520	BOLT			150
35C536	BOLT			60, 236, 286

Code for disposition of old part number
A -- Use up
B -- Use on other application (See PNI)
C -- File PDR Report with Bobcat Parts Sales
D -- Part Number Error

Part No.	Description	Was	Code	Page
35C612	BOLT			148, 358
35C616	BOLT 5			62, 170, 334
35C620	BOLT 5			172, 174
35C636	BOLT			34(
36K5	CAP			62, 72, 80, 86
36K6	CAP			174
36K7	FITTING			54
36K8	CAP			288, 334, 372
37C412	BOLT			294
37C424	BOLT			302
37C512	BOLT			170, 284, 302, 326
37C516	BOLT			228
37C620	BOLT			26, 70, 150, 222
37C632	BOLT			260
38C610	BOLT			176, 178
38C824	SCREW			28
38C840	BOLT			27, 28
3974037	PIN			186
3974095	MET-GASK			186
3974260	SCREW			216
3974267	STUD			202
3974389	CAP, SEALING			186
3974390	PLUG			186
3974393	PIN			186
3974394	PIN			186
3974395	PIN			184, 186
3974403	GASKET			214
3974432	PLUG			192
3974433	PLUG			192
3974514	SPRING 5			19(
3974515	RETAINER			190
3974518	CAP			190
3974521	MOUNT			190
3974524	WASHER			190
3974546	KEY			196, 200
3974547	STOPPER			200
3974577	O RING			182, 196
3974618	CIR-CLIP			198
3974620	CIR-CLIP			198
3974626	SHIM			214
3974662	BOLT			210
3974671	NUT			196
3974679	BAND			188
3974868	PIN			186
3974871	CONNECTOR			186
3974882	HOOK			191, 192
3974893	SEAT			184
3974894	FLANGE			184
3974920	SCREW			190
3974971	NUT			212
3974972	GASKET			212
3974996	COVER			198
3975337	COLLAR			196
3975436	SCREW			188

Code for disposition of old part number
A -- Use up
B -- Use on other application (See PNI)
C -- File PDR Report with Bobcat Parts Sales
D -- Part Number Error

Page 944 - BOBM0292639B1001 - 04/08/2009 14:40:17 - Electronic Ma

Part No.	Description	Was	Code	Page
3975441	GEAR			186
40K6	PLUG			170
42H10	HOSECLAM5			34
42H32	HS CLAMP5			34
42HL300	CLAMP			170
42HL325	CLAMP			170
42HS4	CLAMP			34
43C408	BOLT			156, 162
43C612	BOLT			70
43C616	BOLT			150, 154
43C852	BOLT			174, 276
43DM8	NUT			148
45C616	BOLT			178
45C620	BOLT			102
45C820	BOLT			110
45G1006	BOLT			290
45K3	FITTING			278
46D5	NUT			240, 246
47C1080	BOLT			30
47C1088	BOLT			30
47C620	BOLT			104
47C820	BOLT			50, 52
47K10	PLUG			86, 90
47K8	PLUG			112, 116
49C628	BOLT			70, 104
4CM616	BOLT			208, 214
4CM620	BOLT			184, 212
4CM822	BOLT			206
4D20	NUT			320, 322, 324
4DM5	NUT			284
4DM8	NUT			166
4F6106	PIN			20
51DM12	NUT			240, 246
5289686	PLUG			14, 18
53D10	NUT			14
53D6	NUT			14, 70, 102
53DM8	NUT			174
54K20028	O RING 10			74, 80
54K40116	O-RING			336
55D5	NUT			286
55D6	NUT			246
55K204	O RING 10			74, 76, 80
55K214	O-RING			86, 90, 334
57D5	NUT			58, 226, 236
57D6	NUT 5			26, 70, 260, 318
57D8	NUT 10			318
57G608	SCREW			302
58K120	O-RING			154, 156
58K13	O-RING			74, 76, 80
58K132	O'RING			336
58K16	O RING 10			74, 76, 80
58K17	O RING 10			72, 76, 80
58K22	O RING 10			74, 82, 90, 94
58K4	O-RING			74, 76, 82

Code for disposition of old part number
A -- Use up
B -- Use on other application (See PNI)
C -- File PDR Report with Bobcat Parts Sales
D -- Part Number Error

Printed by Aem Look Lo. - epprint.exe (V4.44.7 4/7/2009)

Part No.	Description	Was	Code	Page
59CM1240	BOLT			110
59D4	NUT 5			98, 176, 252, 294, 302
59D5	NUT 5			20, 148, 242, 246, 266, 302
59D6	NUT			28, 54, 58, 88, 9
59D8	NUT 5			14, 54, 58, 64, 320, 322, 324
5CM812	BOLT			190
5HM13	CLAMP			36
5HM14	CLAMP			34, 168
5HM20	CLAMP			310
5HM23	CLAMP			88
5HM24	CLAMP			34, 86, 90, 168
5HM35	HOSECLAMP			94
5HM42	HOSECLAMP			86, 90, 94, 170
5HM58	CLAMP			34
614142	SLEEVE 10			294
616783	WASHER			148
6190121	SPRING			108
619021	WASHER, 5			20, 32, 54, 58, 70, 88, 92, 98, 178, 316, 334, 342, 354
61D4	NUT 5			266
61D5	NUT			28, 170, 228, 242, 246
61D6	NUT 5			12, 30, 86, 90, 94, 170, 222, 242, 258, 260
61D8	NUT 5			94
62D4	NUT			178
62D6	NUT 5			102, 278
63D6	NUT			102
63D8	NUT			322
6510470	RING GEAR			172
6511855	SEAL			18, 168
6512026	BUSHING			7(
6513152	SEAL			240, 246
6513495	COTTER PIN			70, 178
6513532	POPPET			106, 108
6513533	SPRING			106, 108
6513707	JOINT			214
6515131	TERMINAL			294
6515817	WASHER			14
6516229	PISTON SEAL			66
6517516	LIGHT			294
6519178	BUMPER			20, 30
6519328	SEAL			68
6531270	SLEEVE			72, 76
6532127	BOOT			24, 158
6532453	RING			336
6533898	DECAL			318, 320
6536968	HEAD			66
6539236	HEAD			68
6539418	HOSE			54, 58
6539645	SPACER			68
6542521	HOSE			86, 90
6542731	SAFETY TREAD			240, 246
654299	BEARING			112, 116
6550826	TIRE			379, 380
6552871	WASHER			40
6553411	BUSHING			34, 38, 50, 52

Code for disposition of old part number
A -- Use up
B -- Use on other application (See PNI)
C -- File PDR Report with Bobcat Parts Sales
D -- Part Number Error

Page 946 - BOBM029239B1001 - 04/08/2009 12:26:19 - Printed by KEN LOCK CO. - [illegible]

Part No.	Description	Was	Code	Page
6553709	WASHER			14, 54, 58, 64
6553976	SAFETY TREAD			262
6554100	TREAD			178, 262
6554149	CORD			18, 240, 252
6555331	WIRE ROPE			252
6555341	SAFETY TREAD			334
6555351	SEAL			252
6555987	BUSHING			30
6557224	DECAL			264
6557291	BALL JOINT			176
6557493	GROMMET			348
6557831	WASHER			70
6557904	FLASHER			286, 294
6558309	WIRE ROPE			262
6558310	SLEEVE			262
6559479	NUT			178
6559775	EARMUFFS			374
6560573	DECAL			264
6560633	DAMPENER			14
6561383	DECAL			264
6562602	BUSHING			14
6563445	HOSE			174
6563606	WASHER			40
6563914	WASHER			70, 102, 103, 104
6564343	SPACER			176, 178
6564452	GRIP			28, 176, 177, 178
6564654	PIN			70
6564657	PIN			69, 70
6564669	NUT			40, 380
6565170	CABLE			148
6565200	DECAL			262
6565977	HOSE			310
6565990	DECAL			264
6567743	PIN			14, 298
6567827	ANGLE			318
6567838	PIN			318
6567962	WASHER			176, 178
6569203	CLAMP			148, 266
6569219	SCREEN			34
6570931	INSTRUCTIONS			220
6571851	SNAP RING			42, 44, 46, 48
6571852	SNAP RING			42, 44, 46, 48
6576033	WASHER			172
6576261	COVER	6734520	A	176, 178
6576261	COVER			176, 178
6576262	MOUNT			176, 178
6576280	BOLT			148, 266
6576302	BAR			70
6577058	PIN			102
6577204	SPROCKET			37, 38, 40
6577382	SPACER			168
6577545	GROMMET			226, 228, 312, 314
6577754	DECAL			264
6577821	HOSE			34

Code for disposition of old part number
A -- Use up
B -- Use on other application (See PNI)
C -- File PDR Report with Bobcat Parts Sales
D -- Part Number Error

Part No.	Description	Was	Code	Page
6577822	HOSE			34, 168
6577880	KIT			219, 220
6577954	PIN			30
6577961	GROMMET			24, 70, 17
6578139	LEVER			233, 234
6578140	LEVER			234
6578169	HOSE			34
6578172	HOSE			34, 86, 90, 168
6578253	SPRING, COMPRESSION			32
6578268	BELLCRANK			176
6578278	PAD			34
6578368	DECAL			264
6578689	HUB			40
6579072	SPRING			30
6579528	DECAL			264
6579613	STOP			14, 168
658128	RING			112, 116
6586542	HEAD			336
6586543	PISTON			336
6586918	SCREW			72, 76
6587458	KEY			34
6587523	WASHER			72, 76, 80, 81, 82
6587575	ADAPTER			72, 76
6587580	SPRING			72, 76, 82
6587763	BOOT			72, 76, 162
6589226	BONNET			72, 76
6592098	WASHER			72, 76
6592100	COLLAR			72, 76, 82
6592105	BALL			72, 7(
6592107	SPRING			72, 76
6592109	ADAPTER			72, 76, 82
6592117	SPRING			72, 76, 80
6592506	CLAMP			56, 60, 64, 88, 92, 342
6592507	PLATE			88, 92
6595663	BUSHING			72, 76, 80
6596807	PLUG			72, 76
6598098	PIN			212
6598099	KEY			198
6598102	VALVE			214
6598116	PLUG			192
6598156	STUD			192
6598362	ELEMENT			2, 218
6598485	SEALANT			224
6598492	ELEMENT			2, 218
6598908	ELBOW			34
6599084	SCREW			214
6599360	SEALANT			384
6599365	KIT			140, 144
6599645	PLUG, STEEL			38
6599741	WASHER			102
6599744	BALL JOINT			102, 278
6599910	PLUG ASSY.			108
6599931	ALARM			226, 228
6610510	TIE			18, 86, 90, 242, 312, 314

Code for disposition of old part number
A -- Use up
B -- Use on other application (See PNI)
C -- File PDR Report with Bobcat Parts Sales
D -- Part Number Error

Page 948 - BOBM029239B1001 - 04/08/2009 14:49:17 - Printed by [illegible]

Part No.	Description	Was	Code	Page
6624289	TIE STRAP			54, 58, 64, 148, 150, 152, 154, 222, 226, 270, 272, 274, 286, 310, 326, 334, 364, 366
6630188	POLISH			384
6630189	POLISH			384
6630207	RIVET			14, 24, 362
6630945	WASHER			176, 178
6631046	SEAL			194
6631418	PIN			14, 20, 298
6631664	SEAL			182, 196
6632218	CONE, BEARING			42, 44, 46, 48
6632279	SEAL KIT			74, 78, 82
6632541	RACE			42, 44, 46, 48
6633583	SEALANT			168, 172, 384
6640690	PIN			152, 158
6640692	CONNECTOR			152, 158
6640694	LOCK			152, 158
6640699	CONNECTOR			158, 244, 302
6640700	LOCK			158
6641176	SEAL			152, 158
6641179	CONNECTOR			152, 158, 238
6641180	LOCK			152, 158, 238
6643249	CONDUIT			56, 60
6645083	O-RING			112
6645086	PLUG			112, 116
6646383	CONNECTOR			150
6646582	PLUG			158
6646705	SEAL			168
6646781	SWITCH			226
6647777	PIN			238
6647778	CAP			238
6647783	LOAD CHECK			238
6647784	PLUG			238
6647785	SPRING			238
6647786	SEAL KIT			238
6648293	SCREW			238
6648294	SPRING			238
6648312	TERMINAL			306
6648320	SEAL			306
6648330	TERMINAL			150
6648348	PLUG			24, 26
6649244	STUD			240, 246
6649245	RETAINER			240, 246
6649481	LAMP, WEDGE BASE			326
6649551	SHOCK			102
6650107	SEAL			306
6650388	SEALANT			384
6650407	ADHESIVE			168, 384
6650627	PLATE			112, 116
6650629	PIN			112, 116
6650630	RETAINER			112, 116
6650634	GASKET			112, 116
6650635	BEARING			112, 116
6650636	PIN			112, 116
6650637	BOLT			112, 116

Code for disposition of old part number
A -- Use up
B -- Use on other application (See PNI)
C -- File PDR Report with Bobcat Parts Sales
D -- Part Number Error

Part No.	Description	Was	Code	Page
6650646	O-RING			112
6650647	O-RING			112
6650648	PLUG			112
6650652	POPPET			11
6650668	BOLT			112, 116
6650675	COUPLER			112
6651542	BALL			106
6651709	SEAL			30, 32
6651934	BOLT			198
6651974	PLUG			108
6652018	BOLT			116
6652574	PLUG			186
6652575	PLUG			186
6652580	BOLT			186, 202
6652652	SPRING			184
6652653	PLUG			188
6652670	STUD			204, 206, 214
6652688	CLAMP			216
6652689	CLAMP			216
6652764	STUD			184, 208, 212
6652792	NUT			192, 202, 204
6652918	NUT			174, 276
6653809	CONNECTOR			184
6653821	BOLT			196
6653830	SEAL, STEM VALVE			180, 190
6653833	SPRING			190
6653859	SLEEVE			196
6653861	SLINGER, OIL			196
6653888	NUT			186
6653916	HOLDER			21
6654139	MOULDING			14, 154, 156, 174
6654374	KEY			34
6654718	CLAMP			216
6654806	FUSE			150
6655154	GUIDE			192
6655155	SEAT			192
6655156	SEAT			192
6655158	BOLT			192
6655160	PLUG			192
6655161	WASHER			192
6655181	ROD, CONNECTING			196
6655183	BEARING			196
6655210	SHIM			214
6655212	GEAR			198
6655213	SLEEVE			198
6655215	BALL			198
6655216	FUEL PUMP			34, 214
6655223	NUT			212
6655236	BEARING			196
6655237	BEARING			196
6655243	BUSHING			196
6655498	BOLT			196
6655869	PLUG			186
6655870	ROCKER ARM			190

Code for disposition of old part number
A -- Use up
B -- Use on other application (See PNI)
C -- File PDR Report with Bobcat Parts Sales
D -- Part Number Error

Page 950 - BOBM029239B1001 - 04/08/2009 14:49:13 - Printed by [illegible]

Part No.	Description	Was	Code	Page
6655880	PIPE			188, 206
6655938	VALVE			218
6657028	O-RING			112, 116
6657067	COVER			114, 116
6657068	COVER			112, 116
6657415	BOLT			204
6657663	PLUG			186
6657719	PLUG			18, 38, 252
6657734	PUMP			34
6658180	BREATHER			34
6658228	SEAL, OIL			40, 224
6658536	RING			172
6658672	SNAP RING			50, 52
6658847	RING			172
6659999	BELT			362
6660260	SWITCH			96, 140, 144
6660644	CAP			72, 76
6660814	O-RING			112, 116
6661022	FILTER			10, 64, 86, 90, 98, 137, 138
6661062	PLUG			170
6661114	CAP			34
6661117	TANK			278
6661242	COVER			218
6661243	WING NUT			218
6661244	WASHER			218
6661248	ELEMENT			2, 8, 94, 140
6661353	LIGHT ASSY			326
6661405	OIL			172
6661481	O-RING			112
6661608	SEAL KIT			282
6661696	CAP			34
6661785	MOUNT, ENG			174
6661787	WASHER			174, 276
6661807	KIT			138
6661808	KIT			138
6662126	BRACKET			110
6662246	CONNECTOR			154
6662248	4 PIN PLUG			154
6662306	RING			40, 224
6662848	CAP			80
6664004	CLAMP			170
6664035	CAP			274
6664036	NUT			274
6664037	WASHER			274
6664040	PIN			274
6664065	WASHER			348
6664085	BUSHING			18, 244, 252, 348
6664097	COVER			348
6664103	NUT			348
6664185	CONNECTOR			154
6664209	SEAL			172
6664221	RETAINER			18
6664223	OUTLET			18
6664224	CAP			18

Code for disposition of old part number
A -- Use up
B -- Use on other application (See PNI)
C -- File PDR Report with Bobcat Parts Sales
D -- Part Number Error

Part No.	Description	Was	Code	Page
6664554	PUMP, WIPER WASHER			242
6664566	BOLT			348
6664815	SEAL, OIL			38, 106, 10
6664969	CONNECTOR			154
6665000	CLIP			158, 240, 246
6665017	CONNECTOR			306
6665018	LOCK			306
6665314	PLUG			18, 146, 156
6665316	SWITCH			294
6665321	RIVET			158, 240, 246
6665322	RIVET			158, 240, 246
6665367	BULB			18
6665370	PLUG			154
6665371	SWITCH			148, 218
6665568	EXTRUSION			240
6665569	WASHER			72, 76, 80
6665570	RING			72, 76, 80
6665602	MOTOR			348
6665701	BUSHING, PRESS FIT			70
6665707	SWITCH			240
6665727	LIGHT			286
6665728	LIGHT			286
6665729	LIGHT			286
6665860	KIT			286
6665915	GAUGE			86, 90
6666338	WASHER			112, 116
6666542	SEAL			336
6666543	SEAL			6(
6666571	BULB			230
6666766	GROMMET			242
6666781	GASKET			180, 206
6666782	GASKET			182, 186
6666783	GASKET			182, 186
6666791	GASKET			180, 206
6666802	GASKET			180, 204
6666803	GASKET			182, 184
6666814	GASKET			182, 196
6666817	GASKET			182, 194
6666932	BRAKE			278, 279, 280
6666933	CYLINDER			278, 281, 282
6667139	CAP			278
6667144	CONNECTOR			152, 158
6667145	LOCK			152
6667176	PLUG			238
6667201	SPACER			348
6667322	BELT			6, 172
6667323	SEAL			336
6667325	SEAL			66
6667326	SEAL			68
6667352	FILTER FUEL			2, 6, 34
6667353	FILTER ASSY			34
6667418	PLUG			186
6667419	WASHER			210

Code for disposition of old part number
A -- Use up
B -- Use on other application (See PNI)
C -- File PDR Report with Bobcat Parts Sales
D -- Part Number Error

Part No.	Description	Was	Code	Page
6667420	BOLT			198
6667421	BOLT			192
6667422	WASHER			190, 192, 202, 204
6667428	TAPPET			199, 200
6667433	CIRCLIP			200
6667451	WASHER			190
6667458	DIAPHRAGM			214
6667460	IMPELLER			202
6667461	PIN			190
6667569	CONNECTOR, RECEPTICAL			274
6667676	COVER			238
6667677	O-RING			238
6667680	SNAP RING			238
6667687	STEM			72, 80
6667803	COUPLER			296, 342
6667804	COUPLER			296, 342
6667844	VALVE ASSY			62, 83, 84
6668079	PLUG			106
6668080	SHIM			106
6668082	POPPET			106
6668088	PISTON			106, 108
6668089	PLUG			106, 108
6668097	SCREW			282
6668104	MOUNT, ENG			276
6668114	BEARING			172
6668742	SWITCH			18
6668815	SWITCH			286, 294
6668816	SWITCH			230, 286, 376
6668820	NUT			74, 82
6668881	CORD			232
6668955	POP RIVET			52
6669087	SEAL KIT			84
6669089	TRACK			22
6669091	CLIP			18, 302
6669135	SEAT			21, 22
6669154	BOLT			280
6669155	PLATE			280
6669156	SPACER			280
6669159	PISTON			280
6669162	NUT			280
6669163	PLUG			280
6669164	ADAPTER			280
6669165	SCREW			280
6669184	STATOR ASSY.			280
6669185	SEAL KIT			280
6669224	BOLT			18, 302
6669308	RETAINER			352
6669402	HOUSING			112
6669405	END CAP			116
6669406	END PLATE			112
6669409	WASHER			112
6669410	SHIM KIT			114
6669411	BEARING			112, 116
6669452	O-RING			106

Code for disposition of old part number
A -- Use up
B -- Use on other application (See PNI)
C -- File PDR Report with Bobcat Parts Sales
D -- Part Number Error

Part No.	Description	Was	Code	Page
6669549	SOCKET			268, 270, 274
6669657	SEAL KIT			296, 342
6669676	CHECK VALVE			98
6669732	SEAL KIT			74, 78, 80, 8
6670160	CUSHION			22
6670251	BATTERY, DRY 530 AMP			266
6670284	LIGHT ASSY			326
6670287	COVER			28
6670312	RELAY			286
6670472	NUT			216
6670533	NUT			208, 212
6670634	SEAL KIT			236, 238
6670685	RELIEF VALVE			112, 116
6670706	CONNECTOR			158
6670707	CONNECTOR			158
6670710	LOCK			158
6670711	LOCK			158
6670715	PIN			158
6670726	LOCK			346
6670769	O-RING			180, 216
6670770	BOLT			186
6670831	ELBOW			94
6671025	COIL			74, 80
6671106	HORN			286
6671512	BLOCK ASSY			113, 114, 116
6671516	KIT, SEAL			114, 116
6671518	BOLT			112
6671520	O-RING			110, 116
6671527	NUT			236, 23
6671741	SNAP RING			120, 122
6671760	COVER			124, 126
6671803	RING			124, 126
6672190	DRAINCOCK			186
6672272	WASHER			326
6672273	SCREW			326
6672274	SCREW			326
6672275	GASKET			326
6672276	LENS, LIGHT RED			326
6672277	BRACKET			326
6672279	MOUNT, LIGHT RUBBER			326
6672360	PLUG			184
6672471	VALVE			80
6672715	SPACER			22
6672863	VALVE, SOLENOID			236, 238
6673200	FUSE BLOCK			150
6673710	BEARING, NEEDLE			102
6673789	BEARING			102, 156
6673828	HOSE, HYD ASSY			94
6673882	SPRING			112
6673884	O-RING			112
6673959	VALVE, BPV			237, 238
6674013	TRACK			22
6674169	PULLEY			202

Code for disposition of old part number
A -- Use up
B -- Use on other application (See PNI)
C -- File PDR Report with Bobcat Parts Sales
D -- Part Number Error

Part No.	Description	Was	Code	Page
6674173	COVER			204
6674202	NUT			146
6674215	COLLAR			124, 126
6674228	PANEL			302
6674231	VENT, HEATER CAB ROUND			302
6674315	SENSOR			148
6674316	SENSOR			150
6674400	HOUSING			326
6674401	HOUSING			326
6674402	MOUNT, LIGHT			326
6674403	COVER			16, 146
6674407	SHOULDER BELT			358
6674687	BATTERY			2, 148
6674798	REPAIR KIT			94
6674799	ADAPTER			270
6674802	CONNECTOR			268, 270, 274
6674894	NUT			20
6674895	RETAINER			18, 146, 168, 352
6674907	NUT			124, 126
6674993	CAP			242
6675026	CAP			268, 270, 274
6675033	INSERT			14, 16, 146
6675064	TERMINAL			286
6675074	SEAT BELT			16
6675099	ALARM			312, 314
6675136	GAS SPRING			14
6675154	HOLDER			150
6675155	FUSE			150
6675170	SEAT BELT			354
6675176	SWITCH			302
6675177	KNOB			302
6675179	FLANGE			302
6675181	PLUG			302
6675212	RETAINER			252
6675221	BOLT			174
6675257	CLEVIS			14
6675273	WASHER			28
6675281	MOUNT			270, 272, 274
6675298	COUPLER, BODY			242
6675299	COUPLER			242
6675308	KIT			356
6675309	KIT			356
6675310	KIT			356
6675311	KIT			356
6675312	KIT			356
6675313	KIT			356
6675314	KIT			356
6675315	KIT			356
6675316	KIT			356
6675317	SCISSORS			354
6675318	KIT			356
6675319	SEAT			354
6675320	SEAT			354
6675321	SEAT			354

Code for disposition of old part number
A -- Use up
B -- Use on other application (See PNI)
C -- File PDR Report with Bobcat Parts Sales
D -- Part Number Error

Part No.	Description	Was	Code	Page
6675322	SEAT			354
6675323	KNOB			354
6675336	BULB			326
6675342	PIN			112, 11(
6675378	CLIP			242, 246
6675380	ADHESIVE			384
6675387	EXTRUSION			17, 18, 252
6675503	HOUSING			306
6675504	RING			306
6675505	BLOWER WHEEL			306
6675506	MOUNT			306
6675507	COVER			306
6675510	CLAMP			304
6675511	DRAIN VALVE			304
6675512	CLAMP			304
6675517	FILTER, OIL ENG			1, 2, 3, 4, 6, 184
6675523	BEACON			230, 286
6675524	CLIP			16
6675544	CANVAS CAB			247, 248
6675545	GROMMET			18, 252
6675558	SEAL			240, 246
6675559	COIL			74, 150
6675562	SEAT BELT			359, 360
6675581	EXTINGUISHER			290
6675590	DOOR			248
6675591	HINGE KIT			248
6675595	SEAT			353, 354
6675596	SEAT			354
6675734	STRAP			88, 92, 168
6675780	CARTRIDGE			23(
6675781	COIL			238
6675833	SEAL			252
6675835	TURN SIGNAL			294
6675846	POTENTIOMETER			302
6675982	PLUG			146
6675999	SWITCH			348
6676000	TEE			348
6676001	ARM			348
6676002	BLADE			348
6676003	HOSE			240, 244, 348
6676028	NOZZLE			348
6676029	SOLENOID	6677383	B	74, 76, 156, 158, 162, 222
6676029	SOLENOID			74, 76, 156, 158, 162, 222
6676034	KIT			356
6676243	COIL			98
6676338	GAS SPRING			354
6676499	GROMMET			240
6676500	ELBOW			240
6676516	NUT			302
6676536	SWITCH			146
6676537	SWITCH			156, 222
6676538	INSULATION			308
6676543	PLUG			238
6676606	SPACER			308

Code for disposition of old part number
A -- Use up
B -- Use on other application (See PNI)
C -- File PDR Report with Bobcat Parts Sales
D -- Part Number Error

Part No.	Description	Was	Code	Page
6676618	CLIP			306
6676640	SEAL			159, 160
6676653	SCREW			308
6676732	SWITCH			334
6676870	CONNECTOR			158
6676872	TURN SIGNAL			286, 294
6676917	ELBOW			240
6676927	FELT STRIP			252
6677111	SEAL			304
6677115	RECEPTACLE			304
6677116	RETAINER			304
6677117	SCREW			304
6677118	SCREW			304
6677119	SCREW			304
6677136	SOCKET			268, 270, 274
6677181	SENSOR, SPEED WHEEL			38, 154
6677192	MAGNET			240, 246
6677193	RIVET			240, 246
6677196	PISTON			68
6677198	TAB			252
6677203	GUIDE			194
6677485	SPACER			164
6677486	NUT			164
6677487	COVER			164
6677488	RECTIFIER			164
6677489	REGULATOR ASSY			164
6677490	BRACKET			164
6677491	BRACKET			164
6677492	ROTOR			164
6677493	STATOR			164
6677494	BOLT			164
6677495	SPACER			164
6677496	PULLEY			164
6677497	NUT			164
6677504	COVER			308
6677817	BOLT			164
6677818	BEARING			164
6677819	RETAINER			164
6677820	BEARING			164
6677833	ARM ASSY			243, 244
6677834	BLADE			244
6677836	COVER			244
6677837	BOLT			244
6677839	GASKET			244
6677840	SWIVEL, PLATE ASSY			244
6677841	WASHER			244
6677842	NUT			244
6677843	NUT			244
6677844	NUT			244
6677845	ADAPTER			244
6677847	GROMMET			244
6677973	PLUG			252

Code for disposition of old part number
A -- Use up
B -- Use on other application (See PNI)
C -- File PDR Report with Bobcat Parts Sales
D -- Part Number Error

Part No.	Description	Was	Code	Page
6677983	FILTER, AIR HEATER CAB			302
6678000	SEAL			106
6678004	PLATE			10(
6678006	BACK-UP RING			106
6678076	BLOCK			63, 64
6678152	SEAL FLANGE			304
6678198	BOLT			244
6678205	ALTERNATOR, 90 AMP			163, 164
6678207	FILTER			302
6678226	SEAL, OIL			112, 116
6678283	HANDLE			252
6678292	GAS SPRING			298
6678548	SOCKET			240, 246
6678666	TREE MOUNT			18, 146, 148, 150, 310
6678667	MOUNT			150
6678669	STRAP			266
6678675	CONTROLLER, ACD DELUXE			272, 274
6678739	WASHER			244
6678818	MOUNT			148, 150
6678891	COIL			74, 82, 150
6678920	NOZZLE			244
6678921	GUIDE			244
6678974	MOUNT			266
6679034	MOUNT			148, 150
6679247	BOLT			39, 40
6679308	SEAT BELT			358
6679476	MOTOR			24(
6679485	CONTROLLER SJC			154
6679820	RELAY			150
6679836	ADAPTER			64
6679837	COUPLER			64
6679838	COUPLER			64
6679840	SEAL			64
6679841	SEAL			64
6679842	SWITCH			146
6679845	CROSSMEMBER			146
6679855	BULB			146
6679856	ALARM			146
6679990	CLIP			14
6679991	SEAL			168
6679994	SEAL			14
6680018	KIT			64
6680020	SEAL KIT			64
6680055	MAGNET			38
6680326	LIGHT			18
6680355	BOOT			166
6680356	BOLT			166
6680358	RING			166
6680359	STOP RING			166
6680360	STOP			166
6680361	SPRING			166
6680362	BALL			166

Code for disposition of old part number
A -- Use up
B -- Use on other application (See PNI)
C -- File PDR Report with Bobcat Parts Sales
D -- Part Number Error

Page 958 - BOBM029239B1001 - 04/08/2009 12:26:19 - Printed by Net Book UK - Copyrighted Material

Part No.	Description	Was	Code	Page
6680363	WASHER			166
6680365	SHAFT			166
6680366	GEAR			166
6680367	GEAR			166
6680368	STOP RING			166
6680369	SEAL			166
6680371	LEVER			166
6680372	BRACKET			166
6680373	YOKE			166
6680374	ARMATURE			166
6680375	SHAFT			166
6680376	SWITCH			166
6680377	HOLDER			166
6680378	WASHER			166
6680379	SEAL			166
6680380	SEAL			166
6680383	BOLT			166
6680384	BOLT			166
6680388	BRACKET			166
6680389	BRACKET			166
6680390	GEAR			166
6680410	CONTROLLER			154, 155, 156
6680417	HANDLE			158
6680418	HANDLE ASSY.			151, 152
6680419	HANDLE ASSY.			152
6680436	SENSOR			34, 150
6680441	BUSHING			20
6680443	BUSHING, MAGNET			20
6680447	DECAL			152
6680462	HANDLE, ACS RH			158
6680468	MOUNT			158, 222
6680469	SPACER			158, 222
6680470	SPRING			158, 222
6680471	COVER			158
6680477	STRAP			158, 222
6680478	SHIELD			156, 162
6680479	SHIELD			156, 162
6680480	CHANNEL			158
6680481	CHANNEL			158
6680657	PLUG			194
6680685	BOLT			190
6680686	BOLT			184
6680706	BOLT			184, 210
6680801	BOLT			214
6680830	BOLT			210
6680970	BREATHER			50, 52
6681469	PLUG			24, 26
6681512	SOLENOID			50, 52
6681614	KNOB			18, 252, 302
6681945	ELBOW			94
6682034	MOTOR			105, 106
6682260	SHAFT			112
6682261	KEY			112
6682262	HOUSING			116

Code for disposition of old part number
A -- Use up
B -- Use on other application (See PNI)
C -- File PDR Report with Bobcat Parts Sales
D -- Part Number Error

Page 332 - 6986835.eXp - 04/08/2009 12:26:19 - Printed by Ken Cook Co. - eXprint.exe (v2.24.7 4/7/2009)

Part No.	Description	Was	Code	Page
6682264	SHAFT			116
6682442	SLEEVE			172
6682500	FILTER			194
6682515	SHIM			21
6682532	NUT			206
6682586	GAS SPRING			240, 246
6682860	O-RING			106
6682862	SHAFT, DRIVE			106
6682863	BOLT			106
6682875	PLUG			118
6682877	PLUG			118
6682879	PIN			118
6682897	SEAL			106
6682901	RING			124, 126
6682902	RING			124, 126
6682913	O-RING			124, 126
6682919	PIN			118
6682929	O-RING			128
6682930	O-RING			128
6682936	O-RING			130
6682949	O-RING			110, 118
6682968	SCREW			124, 126
6683087	STUD			208
6683104	PLUG			186
6683206	SEAL KIT			96, 136, 168
6683274	SEAL, SPOOL			72, 76, 80
6683812	SWITCH			154
6684033	NUT			54, 55, 56, 58, 168
6684037	SENSOR			148
6684044	VALVE			34
6684045	SEAL KIT			344
6684046	O-RING			344
6684047	BACK-UP RING			344
6684048	O-RING			344
6684049	O-RING			344
6684050	BACK-UP RING			344
6684052	SEAL KIT			344
6684053	BACK-UP RING			344
6684054	O-RING			344
6684055	BACK-UP RING			344
6684056	O-RING			344
6684057	BACK-UP RING			344
6684060	NUT			344
6684061	VALVE			344
6684062	SEAL KIT			344
6684063	O-RING			344
6684064	BACK-UP RING			344
6684065	O-RING			344
6684066	O-RING			344
6684067	BACK-UP RING			344
6684069	SEAL KIT			344
6684070	O-RING			344
6684071	O-RING			344
6684072	BACK-UP RING			344

Code for disposition of old part number
A -- Use up
B -- Use on other application (See PNI)
C -- File PDR Report with Bobcat Parts Sales
D -- Part Number Error

Page 960 - BOBM02923PB1001 - 04/08/2009 12:26:19 - Printed by Ken Cook Co. - eXprint.exe (V2.49.1 x/xx/xxxx)

Part No.	Description	Was	Code	Page
6684073	COIL			344
6684125	COUPLER			74, 80
6684294	GROMMET			154
6684474	INSERT FAN INLET			168
6684645	VALVE, ANTI CAV			72, 76, 80
6684742	NUT			338
6684743	SOLENOID			338
6684744	SOLENOID			338
6684745	PISTON			338
6684746	CHECK VALVE			338
6684747	SEAL KIT			338
6684754	O-RING			182, 194
6684770	GASKET			182, 184
6684779	SHIELD			188
6684780	GASKET			180, 188
6684781	BOLT			188
6684782	O-RING			180, 188
6684788	GASKET			182, 196
6684789	SEAL			182, 196
6684792	GEAR			200
6684793	GEAR			200
6684794	BUSHING			200
6684795	COLLAR			200
6684808	GEAR			196
6684809	KEY			196
6684817	NUT			208
6684818	SEAL			182, 208
6684819	CAP			208
6684823	SPRING			212
6684825	GUIDE, SOLENOID			208
6684829	SHIM			214
6684832	LEVER			210
6684833	SHAFT			210
6684836	BOLT, ADJUSTING			211, 212
6684838	LEVER			212
6684839	LEVER			212
6684841	GASKET			182, 208, 212
6684842	PIPE, OVERFLOW			215, 216
6684844	BOLT			216
6684845	CLAMP			216
6684848	PIPE, INJECTION			216
6684849	PIPE, INJECTION			216
6684850	GLOW PLUG			216
6684854	FLANGE ASSY			203, 204
6684857	PLUG			204
6684858	BOLT			204
6684862	PIPE			204
6684863	GASKET			180, 204
6684868	SEAL			202
6684869	FLANGE			202
6684870	GASKET			182, 202
6684872	VALVE			189, 190
6684873	VALVE			190
6684874	COLLAR			190

Code for disposition of old part number
A -- Use up
B -- Use on other application (See PNI)
C -- File PDR Report with Bobcat Parts Sales
D -- Part Number Error

Part No.	Description	Was	Code	Page
6684875	SHAFT			190
6684877	GASKET			180, 206
6684889	CLAMP			204
6684891	SEAL			208
6684910	SENSOR, ELEC AHC			158
6684911	SENSOR, FOOT LH			156, 162, 222
6684912	SENSOR, FOOT RH			156, 161, 162, 222
6684913	LEVER			156
6684914	LEVER			156
6684915	LEVER, ACS RH			156, 157, 158
6684916	LEVER, ACS LH			156, 158
6684923	BREATHER			86, 90
6685060	BUSHING, TORSION			70, 102
6685061	VALVE			344
6685065	SHUTTLE			106, 108
6685068	FLANGE			106
6685069	RING,BACK-UP			106
6685070	KIT, SEAL COMPLETE			106
6685077	GASKET			192
6685078	GASKET			192
6685079	GASKET			192
6685080	GASKET			192
6685081	GASKET			192
6685085	COVER			188
6685087	VALVE			188
6685095	RING			196
6685096	RING			196
6685102	PIPE			216
6685103	PIPE			216
6685104	BOLT			204
6685105	PUMP			201, 202
6685109	BOLT			194
6685157	VALVE			76
6685190	STARTER			165, 166
6685328	RELIEF VALVE			344
6685344	PLATE, SWASH			112, 116
6685372	SEALANT, GASKET LIQUID			38, 50, 52, 384
6685464	BOLT			210
6685465	O-RING			182, 208
6685466	O-RING			182, 184
6685467	O-RING			182, 184
6685468	O-RING			182, 184
6685471	GASKET			214
6685472	CAP			186
6685473	BOLT			214
6685474	BEARING			202
6685475	MANIFOLD			206
6685476	SEAL			182, 212
6685478	FLANGE			186
6685482	BOLT			196
6685483	CASE, MAIN BRG.			195, 196
6685484	CASE, MAIN BRG.			196
6685485	CASE			196

Code for disposition of old part number
A -- Use up
B -- Use on other application (See PNI)
C -- File PDR Report with Bobcat Parts Sales
D -- Part Number Error

Page 962 - BOBM023939B1001 - 04/08/2009 12:26:19 - Printed by Bob Cook

Part No.	Description	Was	Code	Page
6685486	BEARING			196
6685487	BEARING			196
6685488	WASHER			196
6685489	WASHER			196
6685490	BEARING			196
6685491	BEARING			196
6685492	BEARING			196
6685493	BEARING			196
6685494	WASHER			196
6685495	WASHER			196
6685496	WASHER			196
6685497	WASHER			196
6685498	GASKET			180, 216
6685499	DIPSTICK			194
6685501	WASHER			184
6685513	BOLT			208
6685514	SPRING			210
6685518	OIL PAN			193, 194
6685520	THERMOSTAT			204
6685521	PULLEY			196
6685524	PIPE			187, 188
6685525	MANIFOLD			205, 206
6685526	PLATE, CONTROL			212
6685541	POPPET			338
6685542	O-RING			338
6685543	CHECK VALVE			338
6685544	COMPENSATOR			338
6685545	PLUG			338
6685546	PLUG			338
6685603	SEAL KIT			72, 74, 78, 82
6685624	CONTROL VALVE			343, 344
6685735	SEAL			172
6686035	PUSH ROD			200
6686037	GASKET			182, 214
6686041	COLLAR			198
6686042	BEARING, BALL			198
6686045	HOUSING, GEARCASE			183, 184
6686047	STOPPER			198
6686077	EXCHANGER, WATER RADIATOR			167, 168
6686096	LENS			284
6686097	BULB			284
6686098	BULB			284
6686099	LENS			284
6686100	SCREW			284
6686267	PUMP, HYD TANDEM			117, 118
6686334	CAMSHAFT			207, 208
6686360	VALVE			72, 76, 80
6686385	MOUNT, SADDLE SWIVEL			310
6686868	SOLENOID			74
6686922	FILTER ASMBLY 12			90, 141, 142
6686926	FILTER, OIL HYD			8, 90, 96, 142, 144

Code for disposition of old part number
A -- Use up
B -- Use on other application (See PNI)
C -- File PDR Report with Bobcat Parts Sales
D -- Part Number Error

Part No.	Description	Was	Code	Page
6686949	VALVE, POWER BOB-TACH			337, 338
6686985	BOLT, ADJUSTING			212
6686997	CIR-CLIP			19(
6687142	MOTOR, FAN DRIVE			96, 135, 136, 168
6687191	SEAL, OIL			112
6687266	FILTER ASSY			96, 143, 144
6687268	FEMALE CONNECTOR			154
6687773	PLATE, PUMP HYD			116
6687774	PLATE, PUMP HYD			112
6687834	SENSOR			90, 142
6687863	PUMP, HYD TANDEM			111, 112, 115, 116
6687864	GEAR PUMP			133, 134
6687866	SEAL KIT			134
6687913	SEAL			104
6687921	COLLAR			128
6687926	COLLAR			124, 126
6687928	SPRING			124, 126
6687929	LEVER			132
6687930	WIRE			120, 122
6687931	BUSHING			132
6687932	PIN			118
6687933	SHIM			132
6687934	SHIM			132
6687935	SHIM			132
6687936	SHIM			132
6687937	SHIM			132
6687938	VALVE			118, 129, 13(
6687939	SCREW			130
6687940	RING			120, 122
6687941	COUPLER			118
6687942	SPACER			124, 126
6687943	SHAFT			122
6687944	SHIM			132
6687945	PLATE			132
6687946	SPRING			132
6687947	PIN			132
6687948	SPACER			124, 126
6687949	SPACER			124, 126
6687950	GASKET			132
6687951	BRACKET			120, 122
6687953	PISTON			124, 126
6687954	GASKET			132
6687955	HOUSING			132
6687956	BEARING			120, 122
6687957	GROUP			118, 119, 120
6687958	GROUP			118, 121, 122
6687959	SHAFT			120
6687960	CONTROL			118, 123, 124
6687961	CONTROL			118, 125, 126
6687962	PISTON			124
6687963	PISTON			126
6687964	HOUSING			118

Code for disposition of old part number
A -- Use up
B -- Use on other application (See PNI)
C -- File PDR Report with Bobcat Parts Sales
D -- Part Number Error

Part No.	Description	Was	Code	Page
6687965	SHAFT			118
6687966	PISTON			132
6687967	SPRING			132
6687968	LEVER			132
6687969	COVER			132
6687970	MODULATOR			118, 131, 132
6687971	ROLLER			132
6687972	MODULE			132
6687973	FLANGE			118
6687974	FLANGE			118
6687975	PLATE			122
6687976	PLATE			120
6687977	GROUP			120
6687978	GROUP			122
6687979	GROUP			120, 122
6687981	SCREW			132
6687982	SPRING			132
6687984	SENSOR, PUMP HYD POSITION			118
6687985	RING			124, 126
6687986	KIT			124, 126
6687987	BEARING			120, 122
6687988	FILTER			118
6687989	SOLENOID			132
6687990	RING			118
6687991	KEY			118
6687992	SCREW			118
6687994	SCREW			118
6687996	SCREW			132
6687997	SCREW			132
6687998	SHIM			118
6687999	RING			120, 122
6688001	SEAL			132
6688002	RING			124, 126
6688003	SCREW			118
6688004	SEAL			132
6688005	SEAL			124, 126
6688007	SEAL			118
6688008	SCREW			118
6688009	SEAL			118
6688010	PIN			132
6688011	PIN			118
6688012	ROLLER			132
6688014	PIN			118
6688017	SHIM			130
6688018	BEARING			120, 122
6688025	RING			124, 126
6688026	RING			124, 126
6688027	RING			124, 126
6688028	RING			124, 126
6688030	RING			124, 126
6688031	ROD			124, 126
6688032	SPACER			124, 126
6688033	SPACER			124, 126
6688034	SCREW			128

Code for disposition of old part number
A -- Use up
B -- Use on other application (See PNI)
C -- File PDR Report with Bobcat Parts Sales
D -- Part Number Error

Part No.	Description	Was	Code	Page
6688037	RING			124, 126
6688038	RING			120
6688040	BEARING			118
6688073	CONNECTOR			14(
6688338	NUT			268, 270
6688385	HYD FILTER ASSY			139, 140
6688403	PANEL			18
6688404	PANEL			146
6688439	CONTROLLER, BOBCAT			150
6688521	SPRING			106
6688543	HEATER			302, 303, 304
6688565	MOTOR			107, 108
6688637	MOUNT			326
6688743	STEM, VALVE CONTROL			74, 80
6688833	CONNECTOR			148
6688834	CONNECTOR			18, 146
6688836	FLANGE			18, 146, 148
6688845	VALVE			74, 82
6688933	VALVE ASSY			344
6688934	COIL			344
6688937	HOSE			88, 92
6688938	HOSE			88, 92
6688980	BOLT			148
6689012	UPPER GASKET KIT TIER II ENGINE			180
6689018	LOWER GASKET KIT TIER II ENGINE			182
6689021	SEAL KIT			11(
6689032	STUD			150
6689058	MOTOR, FAN			96, 136, 168
6689059	VALVE, RELIEF			96, 136, 168
6689060	COIL ASSY			96, 136, 168
6689441	PUMP, OIL ENG			186
6689503	CASE MAIN BRG			196
6689528	BOLT, EYE			216
6689599	SPRING			210
6689638	CUP, BEARING			40
6689651	CHAIN, DRIVE			38
6689652	CHAIN, DRIVE			38
6689690	HOSE			96
6689696	VALVE, HEATER CAB			304
6689697	HOUSING			106
6689698	PLATE			106
6689700	PLATE			106
6689739	VALVE			72, 76, 80
6689754	PANEL, INSTRUMENT			146
6689762	BLOWER			304, 305, 306
6689764	PAD			306
6689765	PAD			306
6689766	MOTOR			306
6689775	BEARING, AXLE			40

Code for disposition of old part number
A -- Use up
B -- Use on other application (See PNI)
C -- File PDR Report with Bobcat Parts Sales
D -- Part Number Error

Page 966 - BOBM023239B1001 - 04/08/2009 14:49:17 - Printed by [illegible]

Part No.	Description	Was	Code	Page
6689920	JOYSTICK, LH			153, 154
6689921	JOYSTICK, RH			154
6689922	HANDLE			154
6689923	HANDLE			154
6689924	BASE, AJ4 SJC RH			154
6689925	BASE, AJ4 SJC LH			154
6689926	BOOT			154
6689927	BOLT			154
6690239	HOSE			98
6690240	HOSE			98
6690241	HOSE			98
6690242	HOSE			98
6690431	SEAL KIT			72, 74, 76, 78, 80, 82
6690476	COVER			304
6690478	HOUSING			304
6690479	COVER			304
6690481	BRACKET			304
6690482	GROMMET			304
6690487	COVER			304
6690561	MAGNET			44, 48
6690688	TREE MOUNT			154
6690690	TIE			154
6690707	SEAL			68
6690709	LINK			38
6690947	SWITCH BUCKET LEVEL			236
6690949	O-RING			94
6690991	VALVE, SOLENOID	6688499	A	82
6691000	WINDOW ASSY			252
6691001	WINDOW			252
6691002	WINDOW ASSY			252
6691003	WINDOW			252
6691022	NUT			74, 82, 150
6691066	SEAL KIT			98
6691067	COIL			98
6691173	BRACKET			290
6691343	GEROLER			106
6691421	FEMALE CONNECTOR			154
6691498	SOLENOID, FUEL			148, 208
6691500	SNAP RING			52
6691541	PLUG			108
6691542	SEAT			108
6691543	O-RING			108
6691544	RING			108
6691545	RING			108
6691546	O-RING			108
6691547	RING			108
6691548	RING			108
6691549	PIN			108
6691550	VALVE			108
6691551	SHAFT			108
6691552	O-RING			108
6691553	PLATE			108
6691554	GASKET			108

Code for disposition of old part number
A -- Use up
B -- Use on other application (See PNI)
C -- File PDR Report with Bobcat Parts Sales
D -- Part Number Error

Part No.	Description	Was	Code	Page
6691555	HOUSING			108
6691556	SPOOL			108
6691557	SPRING			108
6691558	SPRING			10(
6691559	BOLT			108
6691560	GEROLER			108
6691561	SHAFT			108
6691562	BOLT			108
6691563	FLANGE			108
6691565	SEAL KIT			108
6691566	HOUSING			108
6691589	100 TIE			154
6691636	HOSE *SEE NOTES*			96
6691714	SENSOR, SEATBAR BICS			20
6692332	VALVE,RELIEF			118, 127, 128
6692375	BOLT			184
6692376	BOLT			184
6692377	BOLT			184
6692385	CASE			198
6692386	GASKET			182, 198
6692396	PIN			196
6692756	RECEIVER, 2.4GHZ			350
6692757	DECAL, "REMOTE CONTROL OPERATION", LARGE			350
6692761	2.4GHZ TRANSMITTER			350
6692762	KEYS, SET OF 2			35(
6692763	DECAL WARNING, "READ THE MANUAL"			350
6692764	RECIEVER CABLE			350
6692766	E-STOP BOX			350
6692767	DECAL, "ROTATING PARTS"			350
6692768	DECAL, "REMOTE CONTROL OPERATION", SMALL			350
6692769	CHARGER, MAKITA DC1422, 12-24VDC			350
6692770	BATTERY, NICD, 9.6V, 1.3AH, MAKITA 9000			350
6692771	SHOULER HARNESS			350
6692925	VALVE			98
6692935	PANEL, INSTRUMENTATION DELUXE			146
6693241	KEY-SINGLE			146, 240, 246, 346
6693409	BULB, STROBE			350
6693410	LENS			350

Code for disposition of old part number
A -- Use up
B -- Use on other application (See PNI)
C -- File PDR Report with Bobcat Parts Sales
D -- Part Number Error

Page 968 - BOBM029239B1001 - 04/08/2009

Part No.	Description	Was	Code	Page
6693411	LENS			350
6697793	SEAL			18, 146, 148
6697794	SEAL			18, 146, 148
6697796	FLASHTUBE			376
6697797	AMBER LENS			376
6697800	AMBER STROBE			376
6698084	PLATE, REINFORCEMENT			150
6698098	BLOCK, ENGINE			185, 186
6698099	HEAD, CYLINDER			192
6698100	BOLT, FLANGE			194
6698101	COVER, BRG CASE			196
6698102	PISTON			196
6698103	PISTON			196
6698104	PISTON			196
6698105	PISTON			196
6698106	PISTON			196
6698107	PISTON			196
6698108	CRANKSHAFT			196
6698109	CAMSHAFT, FUEL			197, 198
6698110	BEARING, BALL			198
6698111	CIRCLIP			198
6698112	CAMSHAFT			200
6698113	SHAFT, IDLE GEAR			200
6698115	CLAMP, HOSE			204
6698116	COVER			208
6698118	PUMP, INJECTION			213, 214
6698119	SHIM			214
6698122	HOLDER, NOZZLE			216
6698426	LEVER, FORK			209, 210
6698501	HARNESS, HEATER			304
669863	RING			112, 116
6700170	WASHER			176, 178
6700182	COVER, DRAIN			38
6700282	HOSE			342
6700533	SPACER			30
6700535	SPACER			174
6700711	AIR CLEANER			170, 217, 218
6700743	SPRING			178
6701097	WASHER			168
6701123	SCREW			170
6701174	WASHER			14
6701449	FILLER TUBE			34
6701535	SPRING			20, 102
6701893	CLAMP			54, 58
6702301	DECAL			264
6702302	DECAL			264
6702402	SHIELD			292
6702444	FUSE			150
6702543	LEVER, STEERING			101, 102
6702593	SPACER			226
6702621	GRIP			152
6702650	MOUNT			286
6702716	BLOCK			102
6702903	LEVER			32

Code for disposition of old part number
A -- Use up
B -- Use on other application (See PNI)
C -- File PDR Report with Bobcat Parts Sales
D -- Part Number Error

Part No.	Description	Was	Code	Page
6702904	LEVER			32
6702958	BUSHING			32
6702971	BOLT			14
6702990	BUSHING			15
6703022	CLIP			172
6703168	BEARING			172
6703471	BRACKET			168
6703616	BUSHING			30
6703640	KIT			361, 362
6703641	DECAL			362
6703703	GUIDE			362
6703727	DECAL			312, 314
6703879	BUSHING, PLASTIC			102
6703968	INSULATION			364, 366, 368, 370
6703981	MOUNT			174
6704146	BRACKET			318
6704147	BRACKET			318
6704248	PIVOT			32
6704284	KIT, COUNTERWEIGHT			257, 258
6704391	PULLEY			172
6704436	PAD			30
6704484	WASHER			172
6704769	INSULATION			364, 366, 368, 370
6704786	DECAL			318
6704892	RIVET			272, 274
6705091	TAB			30
6705106	WASHER			174, 276
6705231	WASHER			172
6705232	WASHER			17
6705340	DECAL			264
6705452	LEVER			175, 176
6705491	SPRING			172
6705847	SEAL, OIL			42, 44, 46, 48
6706098	GUIDE			102
6706104	RETAINING NUT			70
6706105	YOKE			70
6706285	SCREEN			340
6706349	MOUNT			14
6706394	SHIELD			170
6706427	AXLE			40
6706485	HOOK			38
6706517	SCREW			34, 168
6706558	DECAL			264
6706572	SET SCREW			176, 178
6706633	ADAPTER			342
6706718	MOUNT			50, 52
6706737	GASKET			50, 52
6706825	LIFT EYE			322, 324
6706939	KIT			339, 340
6707101	SEAL			62, 84
6707804	HOUSING			286
6707852	DECAL			240
6708009	LINK			70
6708016	GASKET			50, 52

Code for disposition of old part number
A -- Use up
B -- Use on other application (See PNI)
C -- File PDR Report with Bobcat Parts Sales
D -- Part Number Error

Part No.	Description	Was	Code	Page
6708018	SPRING			50, 52
6708043	BUSHING			70
6708189	TUBE			14
6708267	BOLT			50, 52
6708310	HOSE			242
6708770	CAP			172
6708929	DECAL			262
6708987	HINGE			12
6709030	DECAL			172, 262
6709170	STUD			40
6709229	BOLT			278
6709234	DISC			278
6709236	MOUNT			278
6709237	CLAMP			278
6709239	PEDAL ASSY.			278
6709400	TUBE			278
6709547	HOSE			278
6710358	DECAL			264
6710585	WASHER			172
6710659	BUSHING			20
6711632	MOUNTING KIT			275, 276
6711643	CAM			104
6711674	MOUNT			296
6711699	HUB ASSY.			172
6711908	SPRING PLATE			362
6712365	STEP			26
6713040	SPRING			32
6713043	SPACER			158
6713116	BUSHING			332
6713370	PIN			172
6713507	DECAL			264
6713589	CLEVIS			20
6713841	SHIELD			286
6713887	BOLT			20
6713993	HARNESS			286
6713994	HARNESS			286
6714037	LATCH			346
6714126	DOOR STOP			28
6714212	PULLEY ASSY.			172
6714278	GUIDE			50, 52
6714361	WEIGHT			258, 260
6714624	SHIELD			170
6714726	GROMMET			26, 156
6714810	PIN			30
6714820	SHIELD			286
6714932	KIT, COUNTERWEIGHT			259, 260
6715131	BRACKET			148, 266
6715132	RETAINER			148
6715142	FAN			168
6715163	BUSHING, PRESS FIT			102
6715164	SLEEVE, SPRING			102
6715183	ELBOW			34
6715190	ELBOW			64, 86, 90

Code for disposition of old part number
A -- Use up
B -- Use on other application (See PNI)
C -- File PDR Report with Bobcat Parts Sales
D -- Part Number Error

Part No.	Description	Was	Code	Page
6715197	CLAMP			148
6715659	HARNESS			226
6715819	INSULATOR			168
6715860	SEAT BAR			2
6715863	BRACKET			20
6715864	BUSHING			20
6715865	BUSHING			20
6715866	BUSHING			20
6716010	COVER			38
6716061	TEE			54, 58
6716089	CONNECTOR			296
6716545	ROD			102
6716571	LOUVER, PLASTIC LH			168
6716573	LOUVER			168
6716621	COVER			24, 26, 150
6716843	WASHER			40
6716916	WASHER			104, 156
6717151	MOUNT			62
6717259	BUSHING			32
6717260	BUSHING			32
6717277	BUSHING			12
6717278	BUSHING			12
6717293	MOUNT			322
6717343	DECAL			264
6717356	BUSHING			12
6717393	LEVER			156
6717401	PLUG			34
6717402	BUSHING			34
6717560	PIN			29, 3
6717562	BUSHING			30
6717579	GASKET			34, 150
6717591	HOSE			170
6717592	HOSE			170
6717593	HINGE			242, 246
6717707	PIN			322
6717820	BAR			70
6717827	CAP			85, 86, 89, 90
6717830	TUBE			86, 90
6717870	FRAME			252
6717871	FRAME			252
6717872	FRAME			252
6717873	FRAME			252
6717874	WINDOW			18, 252
6717890	COVER			24, 26
6717933	CLAMP			54, 58
6717951	CLAMP			64
6718020	HOSE			86, 90
6718031	TEE			62, 88
6718034	FUSE			150
6718066	HOSE			54, 58
6718101	COVER			16
6718122	MOUNT			322
6718175	SCREEN			302
6718198	HARNESS			284

Code for disposition of old part number
A -- Use up
B -- Use on other application (See PNI)
C -- File PDR Report with Bobcat Parts Sales
D -- Part Number Error

Part No.	Description	Was	Code	Page
6718205	TUBE			278
6718206	TUBE			278
6718238	BRACKET			54, 58
6718260	BATTERY PAN			148
6718326	MOUNT			294
6718376	HINGE			242, 246
6718411	KIT			293, 294
6718414	SENDER			148
6718426	HARNESS, BOOM			270
6718579	DECAL			302
6718580	PANEL			18
6718659	HOUSING			150
6718660	TEE			92
6718706	DECAL			156
6718728	MOUNT ASSY.			278
6718750	MOUNT			270
6718772	GASKET			86, 90
6718789	PIN			30
6718796	PLUG			12, 28
6718805	KIT	SALES		251, 252
6718833	BRACKET			292
6718834	BRACKET			292
6718837	SPACER			302
6718872	HARNESS			230, 286, 294, 376
6718873	HARNESS			294
6718887	PANEL			302
6718924	KIT			291, 292
6718948	SNUBBER			92
6719037	STRIKER			252
6719056	BLOCK			50, 52
6719057	BLOCK			50, 52
6719063	STOP			252
6719064	MOUNT			14, 298
6719065	COVER TAB			252
6719150	KIT			277, 278
6719184	MOUNT			318
6719185	MOUNT			318
6719201	COVER			12
6719264	KIT			317, 318
6719317	WINDOW			348
6719327	INSULATION			364, 366, 367, 368, 369, 370
6719328	INSULATION			364, 368, 370
6719330	INSULATION			364, 366, 368, 370
6719332	INSULATION			364, 366, 368, 370
6719333	INSULATION			364, 366, 368, 370
6719334	INSULATION			364, 366, 368, 370
6719413	WINDOW			252
6719448	MAGNET, CONTROL ATTACH			272, 274
6719504	INSULATION			16
6719525	BAR			28
6719628	HOSE			334
6719766	STOP			28
6719825	BOLT			172
6719826	BOLT			174

Code for disposition of old part number
A -- Use up
B -- Use on other application (See PNI)
C -- File PDR Report with Bobcat Parts Sales
D -- Part Number Error

Part No.	Description	Was	Code	Page
6719827	BOLT			174
6719828	BOLT			172, 174
6719829	BOLT			174
6719834	SPACER			158, 227
6719835	SLEEVE			158
6719854	KIT			229, 230
6719857	KIT			375, 376
6719884	BRACKET			334
6719888	DECAL			334
6719906	SPACER			320, 322, 324
6720038	INSTRUCTIONS			232
6720592	INSTRUCTIONS			292
6720736	PLUG			231, 232
6722597	VELCRO			248
6722861	INSTRUCTIONS			340
6722907	KIT			40, 223, 224
6722908	INSTRUCTIONS			224
6724482	INSTRUCTION			276
6725182	TEE			62, 98
6725256	COUNTERWEIGHT			260
6725301	COVER			16
6725302	GASKET			24, 26
6725303	FRAME			16
6725370	DECAL			358
6725373	SPRING PLATE			16
6725421	HANDLE			256
6725502	ELBOW			218
6725528	DECAL			260, 262
6725898	KIT			289, 290
6725906	BRACKET			290
6725907	DECAL			334
6725937	CLAMP			246
6725938	CLAMP			246
6725946	KIT			255, 256
6726162	BRACKET			86, 90
6726254	BRACKET			86, 90
6726255	PAD			86, 90
6726277	CLAMP			54, 58, 98, 342
6726303	DECAL			256
6726386	KNOB			302
6726423	DECAL			322, 324
6726430	HARNESS			286
6726433	SPACER			168, 170
6726621	SCREW			308
6726655	KIT			347, 348
6726662	HARNESS			314
6726681	LINK			156, 222
6726945	MOUNT			274
6726987	HOSE			334
6727065	BOLT			158, 222
6727176	KIT			267, 268
6727299	INSULATION			18, 368, 370
6727496	PIN			156, 222
6727595	DECAL			264

Code for disposition of old part number
A -- Use up
B -- Use on other application (See PNI)
C -- File PDR Report with Bobcat Parts Sales
D -- Part Number Error

Page 974 - BOBM0292X8100 - 04/08/2009 16:50:17 - Bobcat Company

Part No.	Description	Was	Code	Page
6727637	ELBOW			86, 90
6727638	TEE			56, 58, 59, 60
6727646	BRACKET			60, 236
6727705	HOSE			54, 58
6727708	CLAMP			54, 58
6727739	KIT			273, 274
6727752	GASKET			170
6727847	COVER			302
6727869	SENDER			150
6727926	DECAL			156, 222, 262
6728149	CAP , HYD NON VENTED			7, 8
6728459	DOOR SENSOR			240, 246
6728473	BOLT			32
6728539	DECAL			156, 222, 262
6728540	DECAL			222
6728626	HARNESS			150
6728673	TANK			86, 90
6729008	CABLE			148
6729009	SEAL			252
6729010	SEAL			252
6729011	SEAL			252
6729012	INSULATION			14
6729013	INSULATION			14
6729078	DECAL			98
6729141	MOUNT			298
6729202	HOSE			334
6729203	HOSE			334
6729380	HARNESS, CONTROL ATTACH DLX			274
6729467	SPACER			156, 222
6729594	HANDLE			158
6729595	HANDLE			158
6729688	LATCH			346
6729776	WINDOW, DOOR CURVED CAB			244
6729853	HOSE			34
6729854	HOSE			34
6729900	TIRE			380
6729939	LATCH PLATE			28
6729991	REAR DOOR			12, 28
6730013	COVER			44, 48
6730078	COVER			38
6730106	TIRE			380
6730270	LEVER			178
6730291	BRACKET			274
6730771	RIM			380
6730772	RIM			380
6730775	RIM			380
6730816	SHIELD			240, 246
6730822	KIT			239, 240
6730823	KIT			245, 246
6730867	BRACKET			174
6730997	BUSHING			32

Code for disposition of old part number
A -- Use up
B -- Use on other application (See PNI)
C -- File PDR Report with Bobcat Parts Sales
D -- Part Number Error

Part No.	Description	Was	Code	Page
6730999	TUBE ASSY			169, 170
6731059	INLET			36
6731060	SHIELD			174
6731084	ADAPTER			310
6731108	SEAL			352
6731119	PIVOT ASSY			32
6731121	PLUG			38
6731151	KIT			221, 222
6731160	WASHER			30
6731222	PIN			286
6731239	HARNESS			286
6731256	CABLE			148
6731275	INSULATION			150
6731478	EXIT TAG			18, 252
6731578	BUSHING			12
6731617	PAN			266
6731657	BRACKET			318
6731658	BRACKET			318
6731665	CABLE			266
6731666	CABLE			266
6731694	KIT			265, 266
6731746	BRACKET			266
6731757	DECAL			64, 264
6731819	STRAP			286
6731900	ROD			178
6731973	HOLDER			286
6731979	BUSHING			32
6732001	KIT			345, 346
6732023	CONNECTOR			310
6732206	SPACER			280
6732215	FILTER			88, 92
6732219	KIT			357, 358
6732234	KIT			313, 314
6732235	KIT			227, 228
6732265	BUSHING			30
6732322	SPACER			178
6732323	BRACKET			178
6732351	WINDOW			246
6732375	TANK			168
6732443	CUP			30, 32
6732619	SEAL			352
6732715	LATCH			28
6732718	KIT			351, 352
6732730	HARNESS			272
6732870	MOUNT			168
6732928	KIT			297, 298
6732997	U-BOLT			102
6733107	PLUG ASSY			14
6733136	KIT			271, 272
6733142	KIT			269, 270
6733144	MOUNT			272
6733190	TEE			54, 58
6733191	ELBOW			54, 58
6733192	TUBE			342

Code for disposition of old part number
A -- Use up
B -- Use on other application (See PNI)
C -- File PDR Report with Bobcat Parts Sales
D -- Part Number Error

Page 976 - BOBM029239B1001 - 04/08/2009 14:49:13 - Printed by [illegible]

Part No.	Description	Was	Code	Page
6733195	TUBE			236
6733196	TUBE			60, 236
6733197	HOSE			86, 92
6733429	CAP			168
6733575	HINGE			28
6733616	BUMPER			28
6733617	MOUNT, DRIVE			43, 44
6733621	SHAFT			42, 44, 50
6733652	HOSE			86
6733667	LATCH, REAR DOOR			28
6733749	GUSSET			30
6733804	GRILL			168
6733970	MOUNT			226, 228, 312, 314
6733996	DECAL			168
6734192	TUBE			60, 236
6734206	TUBE			62
6734236	ADAPTER			168
6734298	MOUNT			102
6734416	LEVER			176, 178
6734417	LEVER			178
6734495	TUBE			54, 58
6734496	TUBE			54, 58
6734503	CLEVIS			178
6734534	DECAL			262
6734538	STOP			30
6734561	WASHER			86, 90
6734563	WASHER KIT			86, 90
6734623	ELBOW			86, 92, 98
6734646	DECAL			156, 262
6734647	DECAL			262
6734660	BUSHING			30
6734662	PIN, PIVOT TAPERED			30
6734906	TUBE			334
6734907	TUBE			334
6735114	TUBE			64
6735138	HOSE			64
6735140	DECAL			262
6735245	DUCT			302
6735246	DUCT			302
6735316	COVER			50
6735669	BOOM STEP			54, 58
6735680	FOOT PEDAL			178
6735825	SPACER			286
6735862	DECAL			264
6735864	DECAL			264
6735883	BRACKET			172
6735884	IDLER ASSY.			172
6735890	LIFT EYE			320
6735901	DECAL, BOBCAT			264
6735922	TUBE			86
6736195	ROD			176
6736641	PAINT			384
6736642	PAINT			384

Code for disposition of old part number
A -- Use up
B -- Use on other application (See PNI)
C -- File PDR Report with Bobcat Parts Sales
D -- Part Number Error

Part No.	Description	Was	Code	Page
6736644	PAINT			384
6736645	PAINT			384
6736791	KIT			295, 296
6736817	MOUNT			17
6736856	HOSE			296
6736934	TUBE			296
6736935	TUBE			296
6737088	COVER, FRONT ACCESS			220
6737131	BUSHING			12
6737132	PIN			320, 322, 324
6737189	DECAL			226, 228
6737191	WEDGE			32
6737248	DECAL			154
6737368	BRACKET			34
6737388	WASHER			70, 102
6737453	ELBOW			87, 88, 92, 98
6737524	KNOB			62, 84
6801059	WASHER			244, 348
6801167	PLUG			82
6803092	BONNET			82
6803157	HOSE ASSY			98
6805102	BUSHING			72, 76, 80
6805453	BUSHING			66
6806315	PISTON			66
6806330	KIT, SEAL			66
6807503	CYLINDER PARTS LIST			335, 336
6809203	TUBE			68
6809210	CASE			6
6809511	DECAL			54, 58, 62
6809639	ROD			68
6809726	ROLLER			28
6809727	CHANNEL			28
6809734	BUSHING			28
6809845	BOLT			28
6809903	SHAFT, ROD CYL TILT			66
6810132	SPRING			28
6810141	SPRING			28
6810349	CASE			336
6810356	SPACER			336
6810539	NUT			68
6810612	SHAFT, ROD CYL POWER BOB-TACH			336
6811994	CYLINDER, LIFT			67, 68
6812170	PLUG			66, 336
6812171	PLUG			68
6812815	FITTING			86, 90
6813153	PLATE			72, 76
6814279	BLOCK			72, 78, 82
6814531	ELBOW			54, 58
6814694	RETAINER			72, 76, 80
6814830	HARNESS			148
6815152	SPOOL			72, 76

Code for disposition of old part number
A -- Use up
B -- Use on other application (See PNI)
C -- File PDR Report with Bobcat Parts Sales
D -- Part Number Error

Part No.	Description	Was	Code	Page
6816549	VALVE			74, 76, 80
6817003	BODY			72, 76
6817004	BODY			80
6817566	BUSHING			174
6818039	VALVE, CONTROL			71, 72
6900366	INSTRUCTIONS			258
6900410	INSTRUCTIONS			260
6900848	INSTRUCTIONS			294
6900853	INSTRUCTIONS			252
6900854	INSTRUCTIONS INSTL			242
6900888	INSTRUCTIONS			318
6900934	INSTRUCTIONS			278
6900991	INSTRUCTIONS			230
6900992	INSTRUCTIONS			376
6901010	INSTRUCTIONS			358
6901011	INSTRUCTIONS			360
6901013	INSTRUCTIONS			246, 252
6901025	INSTRUCTIONS			290
6901029	INSTRUCTIONS			256
6901061	INSTRUCTIONS			348
6901076	INSTRUCTIONS			268
6901116	INSTRUCTIONS			274
6901120	INSTRUCTIONS			308
6901492	INSTRUCTIONS			222
6901515	INSTRUCTIONS			296
6901602	INSTRUCTIONS			266
6901656	INSTRUCTIONS			346
6901663	INSTRUCTIONS			286
6901690	INSTRUCTIONS			228
6901691	INSTRUCTIONS			314
6901774	INSTRUCTIONS			352
6901816	INSTRUCTIONS			298
6901871	INSTRUCTIONS			270
6901872	INSTRUCTIONS			272
6902228	PAINT			383, 384
6902229	PAINT			384
6902230	PAINT			384
6902232	PRIMER			384
6902233	PAINT			384
6902234	PAINT			384
6902235	PAINT			384
6902390	HARD HAT WHITE			373, 374
6902600	MANUAL			2, 262
6902798	INSTRUCTIONS			322
6902833	INSTRUCTIONS			236
6903105	OIL, 15W40 QT. 12			2, 4, 6, 384
6903106	OIL, 15W40 GAL. 6			2, 4, 6, 384
6903107	OIL, 10W30 QT. 12			2, 4, 6, 384
6903108	OIL, 10W30 GAL. 6			2, 4, 6, 384
6903109	OIL 30W QT. 12			2, 4, 6, 384
6903110	OIL, 30W GAL. 6			2, 4, 6, 384
6903111	OIL 30W 2.5 GAL 2			2, 4, 6, 384
6903112	OIL, 10W30 2.5 GAL 2			2, 4, 6, 384

Code for disposition of old part number
A -- Use up
B -- Use on other application (See PNI)
C -- File PDR Report with Bobcat Parts Sales
D -- Part Number Error

Part No.	Description	Was	Code	Page
6903113	OIL, 15W40 2.5 GAL. 2			2, 4, 6, 384
6903117	FLUID, OIL HYD 2.5 GAL 2			2, 9, 10, 384
6903118	FLUID, OIL HYD 5 GAL			2, 10, 384
6903119	FLUID, OIL HYD 55 GAL			2, 10, 384
6903121	LUBE, GEAR 12			6, 384
6903122	GREASE, TUBE 10			5, 6, 172, 384
6903293	INSTRUCTIONS			226
6903359	INSTRUCTIONS			322
6903766	TIRE, SOLID FLEX 31X6X10 LH			377, 378
6903767	TIRE, SOLID FLEX 31X6X10 RH			378
6904112	INSTRUCTIONS			324
6904255	INSTRUCTIONS			302, 310
6904709	MANUAL			350
6904714	INSTRUCTIONS			334
6904727	INSTRUCTIONS			342
6904732	INSTRUCTIONS			312
6904744	INSTRUCTIONS			254
6904751	MSHA KIT			327, 328
6904752	INSTRUCTION			328
6904994	DECAL KIT			261, 262, 263, 264
6967419	ORIFICE			118
6967523	SPINDLE			128
6967525	SPRING			128
6967526	SPRING			12[illegible]
6967527	PIN			128
6967534	PISTON			130
6967535	COLLAR			130
6967536	SPRING			130
6969574	BALL			184
6969796	WASHER, PLAIN			192
6969799	BOLT			204
6969803	COVER, BREATHER			188
6969804	PLUG,OIL GAUGE			194
6969805	KEY,FEATHER			186
6969807	BOLT			196
6969808	BOLT			196, 202
6969812	BOLT			200
6969817	BALL			198
6969819	NUT, FLANGE			214
6969824	GASKET			180, 216
6969825	CORD, GLOW PLUG			216
6969990	GUIDE			192
6974656	TUBE ASSY, OVERFLOW			216
6974675	BOLT			204
6983128	ANTI-FREEZE PG 53/47 PREMIX GAL 6			384
6983129	ANTI-FREEZE PG CONCENTRATE 6			384

Code for disposition of old part number
A -- Use up
B -- Use on other application (See PNI)
C -- File PDR Report with Bobcat Parts Sales
D -- Part Number Error

Part No.	Description	Was	Code	Page
6986545	INSTRUCTIONS			364
6986547	INSTRUCTIONS			366
6986563	INSTRUCTIONS			316
6986566	MANUAL SERVICE S150 LOADER			2
6986566-CD	MANUAL SERVICE S150 LOADER CD			2
6986573	INSTRUCTIONS			382
6986834-CD	MANUAL PARTS S130 LOADER-CD			2
6986835	MANUAL PARTS S150 LOADER			2
6986966	MANUAL OPERATION & MAINTENANCE S150 LOADER			2
6986966-CD	MANUAL OPERATION & MAINTENANCE S150 LOADER CD			2
69G436	BOLT			80, 154, 156
6E5	WASHER			146, 174, 294
6E6	WASHER			148
6EM80	WASHER, SPRING			166
6J1664	KEY			40
6J807	WOODRUFF KEY			172
7000460	TOOL, DISCONNECT TERMINAL			268
7000461	TOOL, DISCONNECT TERMINAL			268
7100024	HOSE			170
7100104	BELT			6, 174
7100444	PIN			320, 324
7100445	SPACER			320, 324
7100462	CLAMP			88, 92
7100467	DATA PLATE			320
7100506	GAS SPRING			14
7100508	GAS SPRING			14
7100573	HOSE			170
7100699	WASHER			102, 156
7100840	MUFFLER, EXHAUST			170
7101078	PIN, PIVOT TAPERED			30
7101291	ELBOW			34
7101345	BONNET, DETENT HYD VALVE			80
7101354	VALVE, CONTROL			79, 80
7101371	ELBOW			72, 82, 92, 94
7101384	LIGHT			283, 284
7101527	INSULATION			364, 366, 368, 370
7101528	INSULATION			366, 368
7101529	INSULATION			364, 368, 370
7101543	INSULATION			364, 366, 368, 370
7101646	TUBE			54

Code for disposition of old part number
A -- Use up
B -- Use on other application (See PNI)
C -- File PDR Report with Bobcat Parts Sales
D -- Part Number Error

Part No.	Description	Was	Code	Page
7101647	TUBE			58, 236
7101648	TEE			54, 58
7101672	ACTUATOR			154, 156
7101708	CLAMP			17
7101734	TIRE, STANDARD DUTY - 10X16.5 - 8 PLY			380
7101735	TIRE - HEAVY DUTY - 10.00X16.5 - 10 PLY			380
7101797	ELBOW			86
7101973	HARNESS			342
7102018	TEE			80
7102019	CROSS			74
7102066	CROSS			74, 80
7102163	TUBE			64
7102164	TUBE			64
7102202	HOSE			64
7102338	HARNESS			342
7102451	FITTING			148
7102652	SCREW			77, 78, 82
7102656	HOSE			170
7102869	KIT			235, 236
7103075	SEAL			252
7103217	WASHER			102
7103648	TEE			90
7103708	BRACKET			102
7103711	BOLT			104
7103790	MUFFLER			329, 330
7103861	HOSE			90
7104117	HOUSING			16
7104379	HARNESS			148
7104465	DOOR SWITCH HARNESS			240, 246
7104568	MOUNT			174
7104608	BUSHING			174
7104670	LIGHT			326
7104671	LIGHT			326
7104803	DECAL			320
7105035	WINDOW			18, 252
7105192	BOLT			102
7105194	BOLT			102
7105223	SPACER			102
7105324	BOLT			299, 300
7105325	BOLT			300
7105983	BOLT			146
7106004	TEE			94
7106024	HOSE			94
7106040	ELBOW			88, 92
7106205	HOSE			86, 90
7106712	SEAT			72, 76, 80
7107175	INLET			168
7107179	HOSE			96
7107353	GUSSET			320, 322, 324
7107544	HARNESS			226
7107562	HOSE			90

Code for disposition of old part number
A -- Use up
B -- Use on other application (See PNI)
C -- File PDR Report with Bobcat Parts Sales
D -- Part Number Error

Part No.	Description	Was	Code	Page
7107829	KIT, BACK-UP ALARM			225, 226
7107849	MOUNT			174
7108222	SAFETY TREAD			264
7108236	PIN			154, 156
7108241	LIFT SPOOL			80
7108242	TILT SPOOL			80
7108394	KIT,4 PT LIFT KIT			321, 322
7108398	BRACKET, FILTER			90
7108406	HOSE			86
7108408	LEVER			70
7108677	SEAL - BULK/FT			372
7108685	TEE			96
7108716	SEAL, BULK/FOOT			372
7108781	SPOOL			72, 76
7108843	HOSE			92
7108844	HOSE			92
7108845	HOSE			90
7108846	TEE			90
7108980	TUBE			96
7109125	INSULATION			366, 368
7109314	MOUNT			176
7109317	INSULATOR			372
7109318	INSULATOR			372
7109403	HARNESS			326
7109404	HARNESS			326
7109495	MOUNT			150
7109582	OIL COOLER			93, 94
7109661	LATCH, DOOR W/SENSOR			240, 246
7109662	HANDLE, LATCH DOOR			240, 246
7109663	SPACER			240, 246
7109664	BOLT			240, 246
7109665	FRAME, DOOR CAB			240
7109712	SHIELD			172
7109872	FLYWHEEL, ENGINE			172
7109904	BRACKET			102, 116
7109905	BRACKET			102, 114
7109922	TUBE			86, 90, 91, 92
7109923	TUBE			94
7109927	TUBE			342
7109934	MOUNT, VALVE			56, 60
7110243	BRACKET			96
7110244	BRACKET			96
7110262	TUBE			54, 58
7110264	TUBE			64
7110276	SPACER, TAPERED			174, 276
7110287	GASKET			44, 48
7110316	DECAL			240, 246
7110365	ARM, PINTLE			102
7110367	HOSE			334
7110410	INSULATION			372
7110430	SPECIAL APPS DOOR			246

Code for disposition of old part number
A -- Use up
B -- Use on other application (See PNI)
C -- File PDR Report with Bobcat Parts Sales
D -- Part Number Error

Page 983 - BOBM029239B1001 - 04/08/2009 12:26:19 - Printed by Ken Cook Co. - eXprint.exe (v2.24.7 4/7/2009)

Part No.	Description	Was	Code	Page
7110571	BELLCRANK, STEERING			102
7110809	HOSE			95, 96
7110914	TUBELINE			73, 74, 8(
7112290	HARNESS			334
7112328	KIT, 4 PT LIFT			323, 324
7112383	AUX SPOOL			72, 76, 80
7112651	HOSE			287, 288, 372
7112828	HARNESS			154
7112910	ELBOW			54, 58
7112911	TUBE			54, 58
7112912	TUBE			60, 236
7113010	SPACER			174
7113162	BRACKET			148
7113209	HOSE			310
7113262	ELBOW			88, 92
7113340	CAP			34
7113635	PULLEY			172
7114050	HOSE			54, 58
7114053	TEE			54, 58
7114236	HOSE			54, 58
7114258	LIFT ARM			30
7114294	ADAPTER			64
7114604	CHOKE			218
7114667	ROD			176
7114710	TUBE			54, 58
7114711	TUBE			54, 58
7114739	SPACER			174
7115185	HOSE			334
7115219	PEDAL			7(
7115220	MOUNT			70
7115412	TUBE			64
7115413	TUBE			64
7116280	ROD			178
7116564	HOSE			54, 58
7116565	HOSE			54, 58
7116699	INSULATION			372
7116700	INSULATION			372
7116870	DECAL			264
7116899	KIT, HEATER CAB			301, 302
7116901	HTR PLUMBING KIT			309, 310
7116956	BRACKET			148
7116995	TUBELINE			72, 80
7117123	PANEL			24, 26
7117174	CYLINDER, TILT			65, 66
7117175	TUBE, CASE CYL TILT			66
7117232	PANEL			23, 24, 25, 26
7117322	HARNESS, WIPER			240, 246
7117380	TUBE			62
7117407	DECAL			150
7117788	HARNESS			148, 150
7117875	MOUNT			316
7120107	BRAKE			52
7120108	DISC			52

Code for disposition of old part number
A -- Use up
B -- Use on other application (See PNI)
C -- File PDR Report with Bobcat Parts Sales
D -- Part Number Error

Page 984 - BOBM0292398I001 - 04/08/2009 12:26:19 - Printed by Ken Cook Co. - eXprint.exe (v2.24.7 4/7/2009)

Part No.	Description	Was	Code	Page
7120109	SHAFT			46, 48, 52
7120111	BRAKE, DISC			50
7120276AR	KIT, TRANSLATION S150 SPANISH			262, 264
7120276BR	KIT, TRANSLATION S150 PORTUGUESE			262, 264
7120277AR	KIT, DECAL			262, 264
7120277BR	KIT, DECAL			262, 264
7120277JP	KIT, DECAL			262, 264
7120591	DECAL			264
7120899	KIT, POWER BOB-TACH			333, 334
7121052	ENGINE, V2403NA			179, 180, 181, 182
7121223	CAP			34
7121399	SPRING			74, 76, 80
7121454	SPACER			174
7121568	KIT, REAR AUX			341, 342
7121572	DECAL PACKAGE			302
7121695	TUBE			342
7121696	TUBE			342
7121779	PAD			104
7122028	KIT, HORN			311, 312
7122095	INSULATION			364, 368
7122096	INSULATION		A	364, 366, 368
7122096	INSULATION			364, 366, 368
7122185	TUBE			86, 92
7122214	ADAPTER			98
7122291	CHAINCASE			38
7122359	BRACKET			154
7122462	KIT, RIB WINDOW			253, 254
7122487	2 SEAL, WIPER			254
7122488	SEAL, BULB			254
7122502	INSULATION			370
7122503	INSULATION			370
7122519	ELBOW			36
7123811	HANDLE			154
7123812	HANDLE			154
7123941	PEDAL ASSEMBLY			70, 222
7123942	PEDAL ASSEMBLY			70, 222
7123963	SEAL KIT			74, 78, 82
7123964	SEAL KIT, COMPLETE			74, 78, 82
7123965	SEAL KIT			74, 78, 82
7124127	TEE			86
7124128	HOSE			86
7124129	HOSE			86
7124130	HOSE			88
7124133	ADAPTER			88
7124255	TUBE			342
7124256	TUBE			342
7124257	TUBE			342
7124258	TUBE			342
7124294	GUARD			36
7124326	RETAINER			36

Code for disposition of old part number
A -- Use up
B -- Use on other application (See PNI)
C -- File PDR Report with Bobcat Parts Sales
D -- Part Number Error

Part No.	Description	Was	Code	Page
7124362	VALVE, CONTROL SERVICE			75, 76
7124571	SPACER			318
7124572	SPACER			31(
7124893	HARNESS			156
7125070	HOSE			98
7125072	MOUNT			98
7125557	HOSE, HEATER FORMED			310
7126159	MOUNT ASSY			47, 48, 98
7126166	HOSE			64, 100
7126167	HOSE ASSY			64
7126472	HOSE			35, 36
7126869	BRACKET			156, 222
7128600	BRACKET			104
7128601	BRACKET			104, 152
7129922	HEATER COIL KIT			307, 308
7129949	COVER			14
7129987	COVER			50, 52
7130074	CHAINCASE			38
7131233	PEDAL			332
7131236	BUSHING			332
7131254	BRACKET, MOLDED SKI			150
7131273	SCREW			174
7131322	COVER			118
7131601	HARNESS			154
7131872	SPACER			168
7131873	WASHER			168
7133211	TANK, WASHER			240, 241, 24:
7133636	MOUNT			172
7133921	HOUSING			44
7134520	PLUG			72, 76, 80
7134522	PLUG			74, 80
7135506	HOUSING			48
7135557	SEAL KIT			68
7135569	DECAL			350
7136044	HARNESS			154
7136378	TANK, FUEL			33, 34
7136678	DECAL			382
7136679	DECAL			382
7136696	COVER			12
7137825	TUBE, EXHAUST			170
7138014	SEAL KIT			336
7138347	HANDLE			242, 246
7138376	BUSHING			72, 76, 80
7138452	HOSE			98
7138454	HOSE			98
7138645	BRACKET			18, 146
7138770	HARNESS			156
7139183	SHIELD			24, 26
7139184	INSULATION	6718489	A	16
7139420	LINK			102
7139421	LINK			102
7139761	HARNESS			154

Code for disposition of old part number
A -- Use up
B -- Use on other application (See PNI)
C -- File PDR Report with Bobcat Parts Sales
D -- Part Number Error

Page 986 - BOBM029239B1001 - 04/08/2009 14:26:17 - Printed by [illegible]

Part No.	Description	Was	Code	Page
7140056	SOUND KIT			363, 364
7140057	SOUND KIT			365, 366
7140589	TUBE			98
7140590	TUBE			98
7140768	KIT			381, 382
7140865	TUBE			98
7140866	TUBE			98
7140928	VALVE			98
7141291	REMOTE CONTROL SYSTEM 2.4GHZ			349, 350
7141606	MAINFRAME			11, 12
7141656	PLATE			12
7141766	KIT			315, 316
7141805	ELBOW			98
7142376	HARNESS			147, 148, 149, 150
7142832	HOSE, FUEL FORMED			34
7143070	HARNESS			18, 145, 146
7143071	HARNESS			18, 146
7143188	TUBE			99, 100
7143189	TUBE			100
7143508	BOB-TACH			31, 32
7144130	TUBE			98
7144131	TUBE			98
7144132	TUBE			98
7144550	BRACKET, TIEDOWN			152
7145528	DECAL			264
7147359	BLADE, WIPER WINDOW			244
7147580	MOUNT			102
7148195	INSULATION			18
7148197	INSULATION			18
7148198	INSULATION			18
7148199	INSULATION			18
7148200	INSULATION			18
7152006	SHIELD			12
7152163	INSULATION, STRIP			364, 366
7153099	BRACE, CAB			254
7156265	COVER			50, 52
72F1	FITTING			34
73G1028	BOLT			98
73G632	SCREW			322
73G652	SCREW HEX SOCKET HD			324
73G656	SCREW			334
73G828	BOLT			104
73K13	RING			76, 80
73K16	RING			72, 76, 80
73K222	RING			336
73K328	RING			68
743332	GREASE ZERK 5			32
75K3	O-RING			66, 336
75K6	O-RING			68
774220	NUT			226, 228

Code for disposition of old part number
A -- Use up
B -- Use on other application (See PNI)
C -- File PDR Report with Bobcat Parts Sales
D -- Part Number Error

Part No.	Description	Was	Code	Page
799119	RING			72, 76
79K10	O RING 10			54, 58, 60, 72, 76, 80, 96, 112, 236, 238, 338
79K12	O RING 10			64, 86, 88, 90, 92, 94, 96, 98, 116, 342
79K16	O RING 10			72, 82, 86, 90, 9
79K2	O RING 10			168
79K5	O RING 10			34, 106
79K6	O RING 10			62, 64, 72, 80, 86, 88, 90, 92, 96, 98, 106, 238, 296, 342
79K7	O RING 10			338
79K8	O RING 10			72, 76, 80, 92, 96, 112, 116, 174, 338
7D4	NUT			62, 84
80K13	WASHER			74
80K332	WASHER			66
82K140	O-RING			68
83D4	NUT 10			20, 62, 150, 286, 312, 314
83D5	NUT 5			252, 312, 314
83D6	NUT 5			12, 62, 88, 92, 98, 102, 272, 274, 292, 342
83D8	NUT 5			12, 174
83F3	ELBOW 5			278
84G1320	BOLT			226
84G3112	BOLT 5			14, 24, 26, 34, 148, 150, 168, 262, 270, 272, 274
84G3116	SCREW			36, 150
84G3708	SCREW			94, 168, 170
84G3710	SCREW			86, 90, 156, 222
84G3712	BOLT			12, 18, 24, 26, 34, 38, 54, 58, 94, 96, 146, 148, 152, 170, 174, 176, 178, 236, 286, 296
84G3716	SCREW 5			36, 50, 52, 86, 90, 174, 176, 286, 310
84G3720	BOLT			12, 50, 52, 92, 178, 220
84G3724	BOLT			334, 34
84G3728	BOLT	84G3724	B	54, 58, 176, 178
84G3728	BOLT			54, 58, 176, 178
84G3732	BOLT			88, 92
84G3740	BOLT			64
85D4	NUT 5			286
85D5	NUT 5			34, 176, 178, 332
85D6	LOCK NUT			16, 28, 30, 32, 178, 320, 324
85D7	NUT			16
85D8	NUT, 5			14, 172, 173, 174
85G808	SCREW			286
866028	CLAMP			218
86F3	LOCKNUT			278
86F5	NUT			296, 342
86F8	NUT 5			94
872229	WASHER			54, 58, 64
87D5	NUT			320, 322, 324
88F5	ELBOW			342
898731	1156 BULB			326
89D5	NUT			26, 154, 332
8D4	NUT			238
8D6	NUT 5			102, 278
91D5	NUT 5			278
91G420	SCREW			18, 252
91K5	TEE			342
92D10	NUT			336

Code for disposition of old part number
A -- Use up
B -- Use on other application (See PNI)
C -- File PDR Report with Bobcat Parts Sales
D -- Part Number Error

Page 988 - BOBM029239B1001 - 04/08/2009 12:26:17 - Printed by [illegible]

Part No.	Description	Was	Code	Page
92D12	NUT			171, 172
92D16	NUT			66
93G1032	BOLT			38
93G824	BOLT			38, 102
95D5	NUT			148, 156, 222, 326
95D6	NUT			70, 94, 96, 102, 156, 168, 176, 246, 278
96D8	NUT			168
97D4	NUT			226, 228
97D5	NUT			148, 150, 266
97D6	NUT 10			20, 150, 154
97D8	NUT			14, 298
98D6	NUT			102, 156
98G412	BOLT			162

Code for disposition of old part number
A -- Use up
B -- Use on other application (See PNI)
C -- File PDR Report with Bobcat Parts Sales
D -- Part Number Error