RUTHZIL TRATOR COMERCIAL DE PEÇAS LTDA 11 97083-6812 ROLANDO

Bobcat®

Parts Manual
S160 Skid-Steer Loader

S/N 529911001 & Above
S/N 530011001 & Above
S/N AHWA11001 & Above
S/N AC3211001 & Above

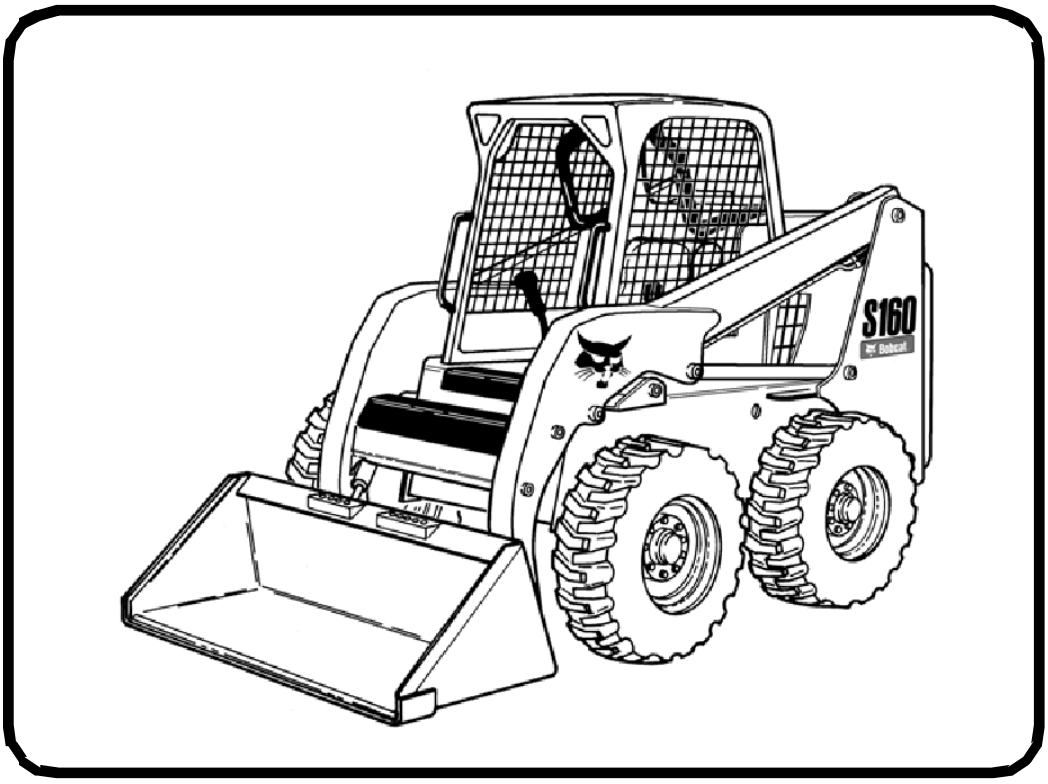

EQUIPPED WITH BOBCAT INTERLOCK CONTROL SYSTEM (BICS™)

Doosan purchased Bobcat Company from Ingersoll-Rand Company in 2007. Any reference to Ingersoll-Rand Company or use of trademarks, service marks, logos, or other proprietary identifying marks belonging to Ingersoll-Rand Company in this manual is historical or nominative in nature, and is not meant to suggest a current affiliation between Ingersoll-Rand Company and Bobcat Company or the products of either.

6904270 (5-12) Revised (05-15) (A)

Printed in U.S.A.

© Bobcat Company 2015

Page 1 - OSS# 6300202494 - All rights reserved by Bobcat Company - 02/11/2016 - 14:15:02 - Produced by Ken Cook Co. with media1off

GENERAL INFORMATION

Before ordering parts, ALWAYS provide dealer with your product model number and complete serial number information. Before ordering parts, verify correct part numbers and / or serial numbers with your dealer. When using the machine serial number, use the complete number.

The number shown in the quantity column in this manual is the number of parts needed for the illustration on the page. For some parts, an “x” is shown in the quantity column. This “x” indicates that the quantity to be ordered / used is “As Needed”.

When references to LH (Left Hand) and RH (Right Hand) are used in this manual, they apply when an operator is situated in the operator’s seat in the operating position.

When “See Illustration….” appears in the Remarks column, refer to the Contents page for the illustration title to find page number location.

When “See BTI….” appears in the remarks column, contact a Bobcat dealer.

For additional information on the Bobcat website visit:
www.bobcat.com **or** www.bobcat.eu

TRANSLATED DECAL KITS

AR = Argentina (Spanish)
BR = Brazil (Portuguese)
CA = French Canadian
JP = Japanese

DISPOSITION

(Found in the Remarks Column)
[A] = Use Up
[B] = Use Up on Other Applications
[C] = File SDR Report with Bobcat Parts Sales
[D] = Part Number Error

Page 2 - OSS# 6300202494 - All rights reserved by Bobcat Company - 02/11/2016 - 14:15:02 - Produced by Ken Cook Co. with mediaioff

ABBREVIATIONS/ACRONYM LIST

A/C = Air Condition
ACD = Active Center Differential
ACS = Advanced Control System
AGM – Absorbent Glass Mat
AHC = Advanced Hand Controls
AIC = Air Idle Control
ALT = Alternator
AMP = Ampere
ASSY = Assembly
AUX = Auxiliary
AWS = All Wheel Steer
BICS= Bobcat Interlock Control System
BPV = Bucket Positioning Valve
BT = Bluetooth®
BTI = Bobcat Technical Information Bulletin
CD = Compact Disk
C/I = Construction/Industrial
CPL = Complete
CRS = Common Rail System
CT = Compact Tractor
CTL = Compact Track Loader
CVT = Continuously Variable Transmission
CYL = Cylinder
DEF = Diesel Exhaust Fluid
DIA = Diameter
DIFF = Differential
DIN = (German Institute for Standardization)
DIR = Directory
DLX = Deluxe
DOC = Diesel Oxidation Catalyst
DPF = Diesel Particulate Filter
ECU = Electronic Control Unit
EF = EarthForce™
EGR = Exhaust Gas Recirculation
EH = Electro-Hydraulic
ELEC = Electrical
EMEA = Europe/Middle East/Africa
ENG = Engine
EPA = Environmental Protection Agency
EU = Europe
EXC = Excavator
EXT = Extendable
FF = Flush Face
FM = Front Mounted
FOPS = Falling Object Protective Structure
FSR = Forward, Stop, Reverse
FT = Feet
GA = Gauge
GAL = Gallon
GCR = Grade Control Receiver
GFCI = Ground Fault Circuit Interrupter
GPM = Gallons per Minute
GPS = Global Positioning System
HD = Heavy Duty
HEX = Hexagon
HI-LO = High-Low
HP = Horse Power
HST = Hydrostatic
HVAC = Heating Ventilation & Air Condition
HYD = Hydraulic
HZ = Hertz
ID = Inside Diameter
IGN = Ignition
IN = Inches
IND = Industrial
INJ = Injection
ISO = International Organization for Standardization
IT4 = Interim Tier Four/IV
JPS = Joystick Pattern Selector
KG = Kilogram
KM/H = Kilometers per Hour
KW = Kilowatt
L = Liter
LA = Long Arm
LASD = Lift Arm Safety Device
LB = Pound
LCD = Liquid Crystal Display
LDR = Loader
LED = Light Emitting Diode
LF = Large Frame
LH = Left Hand
LORS™ = Lateral Operator Restrain System
L/min. = Liters per Minute
L/P = Low Profile
MAX = Maximum
MEA = Middle East Africa
MFR = Main Frame
MID = Middle
MLS = Mita Load Sensing
MM = Millimeters
MSHA = Mine Safety & Health Administration
N/A = Not Applicable
NA = North America
NIA = No Image Available
NLA = No Longer Available
NSS = Not Serviced Separately

Page 3 - OSS# 6300202494 - All rights reserved by Bobcat Company - 02/11/2016 - 14:15:02 - Produced by Ken Cook Co. with mediaioff

ABBREVIATIONS/ACRONYM LIST

NO. = Number
OD = Outside Diameter
OHB = Operator's Handbook
OM = Operation & Maintenance Manual
OZ = Ounce
PKG = Package
PM = Parts Manual
POLY = Polycarbonate
PRESS = Pressure
PSI = Pounds per Square Inch
PT = Point
PTO = Power Take Off
PVC = Polyvinyl Chloride
PWM = Pulse Width Modulation
QT = Quart
QTY = Quantity
RD = Round Drive
REF = Reference
REM = Remanufactured
RFID = Radio Frequency Identification
RH = Right Hand
ROC = Rated Operating Capacity
ROPS = Rollover Protective Structure
RPM = Revolutions per Minute
SA = Standard Arm
SALES = (Order through Sales Department)
SCPA = Standard Controls W/Power Assist
SCR = Selective Catalytic Reduction
SD = Severe Duty
SDR = Shipping Discrepancy Report
SEA = Southeast Asia
SF = Small Frame
SJC = Selectable Joystick Controls
SL = Service Letter
SM = Service Manual
SSL = Skid Steer Loader
STC = Snap To Connect
STD = Standard
STG = Stage
STRG = Steering
T1 = Tier 1/I
T2 = Tier 2/II
T3 = Tier 3/III
T4 = Tier 4/IV
TEMP = Temperature
THL = (Control Pattern)
THRU = Through
TICS = Toolcat® Interlock Control System
TRANS = Transmission
UBS = Universal Bearing Stress
USB = Universal Serial Bus
UTV = Utility Vehicle
VEH = Vehicle
W/A = Welded Assembly
W/ = With
W/O = Without
WM = Work Machine

CONTENTS

MAINTENANCE ITEMS..... 1-12
MAINTENANCE ITEMS..... 1-4
SCHEDULED MAINTENANCE ITEMS..... 5-12
MAIN FRAME..... 13-44
MAIN FRAME..... 13
OPERATOR CAB..... 15-26
SEAT & SEAT BAR..... 27
PANELS..... 31-34
REAR DOOR..... 35
LIFT ARMS & BOB-TACH..... 37
BOB-TACH..... 39
FUEL SYSTEM..... 41-44
DRIVE TRAIN..... 45-62
DRIVE TRAIN..... 45-48
AXLE..... 49
MOTOR CARRIER..... 51-58
DISC BRAKE..... 59-62
HYDRAULIC SYSTEM..... 63-114
HYDRAULIC CIRCUITRY..... 63-70
MANUAL LIFT RELEASE SYSTEM..... 71
AUXILIARY HYDRAULICS..... 73-76
TILT CYLINDER..... 77
LIFT CYLINDER..... 79
CONTROL PEDALS..... 81-84
HYDRAULIC CONTROL VALVE..... 85-112
MANUAL LIFT RELEASE VALVE..... 113
HIGH FLOW HYDRAULICS..... 115-120
HIGH FLOW HYDRAULICS..... 115-120
HYDROSTATIC SYSTEM..... 121-222
HYDROSTATIC CIRCUITRY..... 121-142
HAND CONTROLS..... 143-146
HYDROSTATIC MOTOR..... 147-150
HYDROSTATIC PUMP/GEAR PUMP..... 151
HYDROSTATIC PUMP..... 153-206
GEAR PUMP..... 207-210
COOLING FAN MOTOR..... 211-214
HYDROSTATIC OIL FILTER..... 215-222
ELECTRICAL SYSTEM..... 223-270
CAB ELECTRICAL CIRCUITRY..... 223-228
ENGINE ELECTRICAL CIRCUITRY..... 229-240
CONNECTOR HARNESS ASSEMBLY..... 241
CONTROLS ELECTRICAL..... 243-266
ALTERNATOR..... 267
STARTER..... 269
POWER UNIT..... 271-344
COOLING SYSTEM..... 271-274
ENGINE & ATTACHING PARTS..... 275-284
ENGINE SPEED CONTROL..... 285-288
ENGINE & GASKET KITS..... 289
UPPER GASKET KIT..... 291
LOWER GASKET KIT..... 293-296
GEARCASE..... 297-300
OIL COOLER..... 301
CRANKCASE..... 303
ROCKER ARM COVER..... 305
VALVE ROCKER ARM..... 307
CYLINDER HEAD..... 309
OIL PAN..... 311
PISTON & CRANKSHAFT..... 313-316
FUEL CAMSHAFT..... 317

Page 5 - OSS# 6300202494 - All rights reserved by Bobcat Company - 02/11/2016 - 14:15:02 - Produced by Ken Cook Co. with mediaioff

CONTENTS (Cont'd)

POWER UNIT..... 271-344
CAMSHAFT..... 319
WATER PUMP..... 321
WATER FLANGE & THERMOSTAT..... 323
MANIFOLDS..... 325
TURBO CHARGER..... 327
OIL PIPE..... 329
ENGINE STOP LEVER..... 331
GOVERNOR..... 333
SPEED CONTROL PLATE..... 335
BOOST COMPENSATOR..... 337
FUEL & INJECTION PUMP..... 339
INJECTOR NOZZLES..... 341
AIR CLEANER..... 343
ACCESSORIES & OPTIONS..... 345-584
SEAT..... 29-552
ACCESS COVER..... 345
ACS CONVERSION KIT..... 347
AXLE SEAL KIT..... 349
BACK-UP ALARM KIT..... 351-354
BEACON..... 355
BLOCK HEATER..... 357
BOB-TACH LEVERS..... 359
BUCKET POSITIONING VALVE KIT..... 361
BUCKET POSITIONING VALVE..... 363
CAB DOOR..... 365-378
CAB ENCLOSURE..... 379-384
CAB WINDOWS..... 385-392
COUNTERWEIGHT KIT..... 393-396
COUNTERWIEGHT KIT..... 397
DECALS..... 399-406
DUAL BATTERY KIT..... 407
ELECTRICAL CONNECTOR KIT..... 409
ELECTRICAL CONTROLS KIT..... 411-416
ENGINE MOUNT KIT..... 417
EUROPEAN ACCESSORIES..... 419-430
EUROPEAN ACCESSORIES..... 421-434
F.O.P.S. KIT..... 435
FIRE EXTINGUISHER..... 437
FLASHER LIGHTS..... 439-442
FRONT AUXILIARY..... 443
GAS SPRING KIT..... 445
GUN MOUNT..... 447
HEATER & A/C..... 449-490
HEATER..... 453
HEATER & A/C OPTION..... 491-494
HORN KIT..... 495-500
HOSE GUIDE KIT..... 501
KEYLESS PANEL KIT..... 503
LIFT KIT..... 505-510
LIGHT KIT..... 511
MINE SAFETY & HEALTH ADMINISTRATION..... 513
MUFFLER/PURIFIER KIT..... 515
PEDAL EXTENDERS..... 517
POWER BOB-TACH..... 519-532
RADIATOR SCREEN KIT..... 533
REAR AUXILIARY..... 535-538
REAR AUXILIARY VALVE..... 539
REAR DOOR LOCK..... 541
REAR WIPER..... 543

Page 6 - OSS# 6300202494 - All rights reserved by Bobcat Company - 02/11/2016 - 14:15:02 - Produced by Ken Cook Co. with mediaoff

CONTENTS (Cont'd)

ACCESSORIES & OPTIONS..... 345-584
REMOTE CONTROL KIT..... 545
SEAL ENCLOSURE KIT..... 547
SEAT BELT..... 553-558
SEAT COVERS..... 559
SOUND/NOISE REDUCTION KIT..... 561-564
SOUND/NOISE REDUCTION OPTION..... 565-570
SOUND REDUCTION HARDHAT..... 571
STROBE LIGHT..... 573
TIRES & RIMS..... 575-578
WHITE DECAL KIT..... 579
BULK ITEMS..... 581-584
NUMERICAL INDEX..... 585-646

Page 7 - OSS# 6300202494 - All rights reserved by Bobcat Company - 02/11/2016 - 14:15:02 - Produced by Ken Cook Co. with mediaioff

MAINTENANCE ITEMS

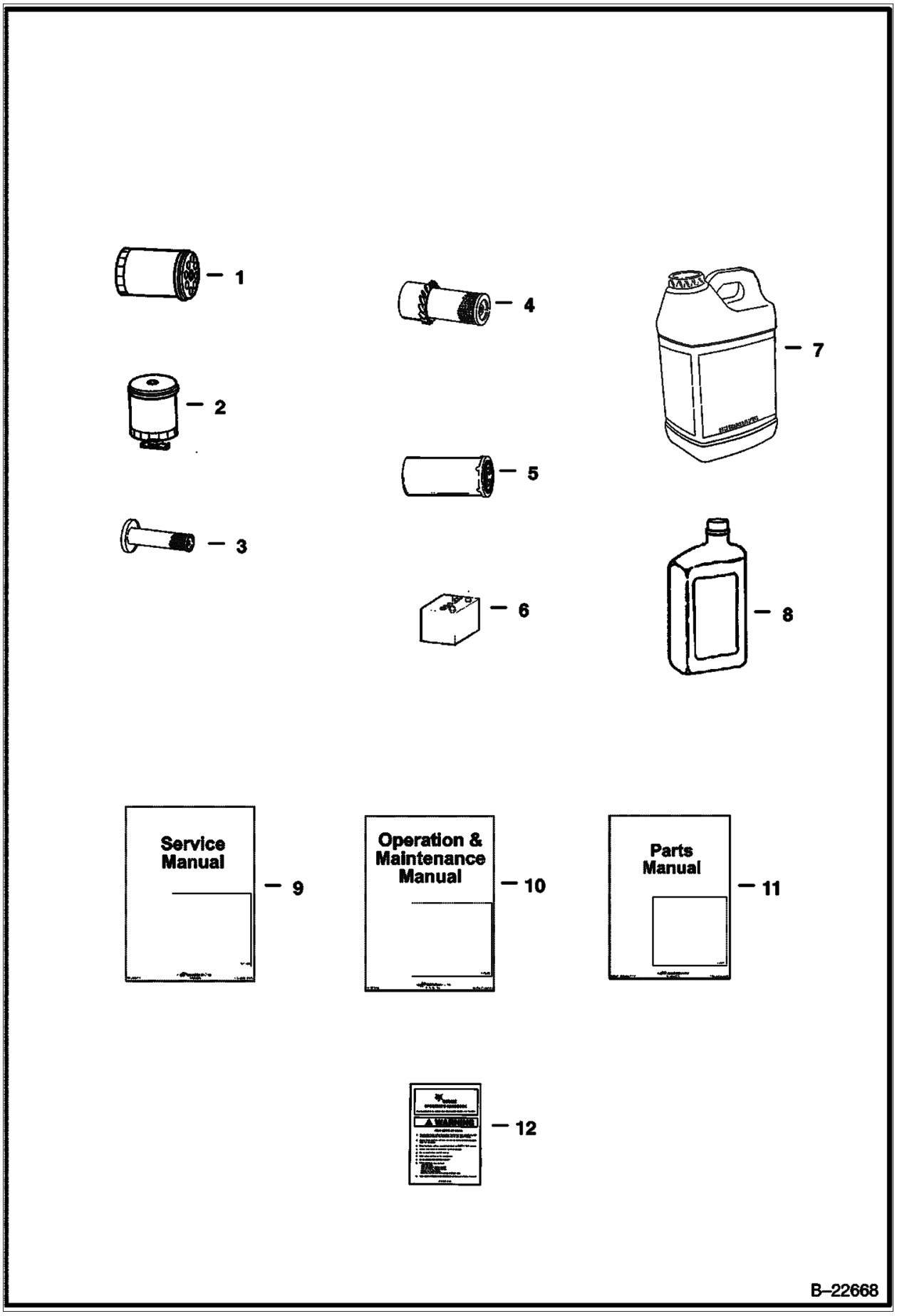

Illustration B22668

Model S160 K
6904270

Page 8 - OSS# 6300202494 - All rights reserved by Bobcat Company - 02/11/2016 - 14:15:02 - Produced by Ken Cook Co. with mediaoff

MAINTENANCE ITEMS (Cont'd)

Ref No	Part Number	Description	Remarks	Serial Number	Qty
1	6675517	FILTER, OIL ENG 12	See Illustration GEARCASE / B22736		x
2	6667352	FILTER, FUEL W/SEPARATOR 12	See Illustration FUEL SYSTEM / PE3051		x
3	6598362	FILTER, AIR INNER	See Illustration AIR CLEANER / B16478 - inner air cleaner		x
4	6598492	FILTER, AIR OUTER	See Illustration AIR CLEANER / B16478 - outer air cleaner		x
5	6661248	FILTER, OIL HYD 12	See Illustration HYDROSTATIC OIL FILTER / NA1844 - #3 media - 152,4 mm (6") long		x
5	6661807	FILTER, OIL HYD	See Illustration HYDROSTATIC OIL FILTER / B13527 - in-line		x
5	6686926	FILTER, OIL HYD	See Illustration HYDROSTATIC OIL FILTER / B16487A - 113,5 mm (4.5") long , See Illustration HYDROSTATIC OIL FILTER / C2818 - 113,5 mm (4.5") long , See Illustration HYDROSTATIC CIRCUITRY / PE2735 - 113,5 mm (4.5") long , See Illustration HYDROSTATIC CIRCUITRY / PE2743 - 113,5 mm (4.5") long		x
5	6661022	FILTER, OIL HYD IN-LINE	See Illustration HYDROSTATIC OIL FILTER / B13527		x
6	6674687	BATTERY, DRY 600 AMP	See Illustration ENGINE ELECTRICAL CIRCUITRY / PE2822		x
7	6903117	FLUID, OIL HYD 2.5 GAL 2	See Illustration BULK ITEMS / B16415		x
7	6903118	FLUID, OIL HYD 5 GAL	See Illustration BULK ITEMS / B16415		x
7	6903119	FLUID, OIL HYD 55 GAL DRUM	See Illustration BULK ITEMS / B16415		x
8	7023076	OIL, 10W30 QT 12	See Illustration BULK ITEMS / B16415 Was 6903107 [A]		x
8	7023077	OIL, 10W30 GAL 6	See Illustration BULK ITEMS / B16415 Was 6903108 [A]		x
8	7023078	OIL, 10W30 2.5 GAL 2	See Illustration BULK ITEMS / B16415 Was 6903112 [A]		x
8	7023080	OIL, 15W40 QT 12	See Illustration BULK ITEMS / B16415 Was 6903105 [A]		x
8	7023081	OIL, 15W40 GAL 6	See Illustration BULK ITEMS / B16415 Was 6903106 [A]		x
8	7023082	OIL, 15W40 2.5 GAL 2	See Illustration BULK ITEMS / B16415 Was 6903113 [A]		x
8	6903109	OIL 30W QT. 12	See Illustration BULK ITEMS / B16415		x
8	6903110	OIL, 30W GAL. 6	See Illustration BULK ITEMS / B16415		x
8	6903111	OIL 30W 2.5 GAL 2	See Illustration BULK ITEMS / B16415		x
9	6904126	SM, S150 S160 LDR	printed	529911001 - 59999	1
9	6904126	SM, S150 S160 LDR	printed	530011001 - 59999	1
9	6904126-CD	SM, S150 S160 LDR CD		529911001 - 59999	1
9	6904126-CD	SM, S150 S160 LDR CD		530011001 - 59999	1
9	6987034	SM, S160 LDR	printed	529960001 & Above	1

Page 9 - OSS# 6300202494 - All rights reserved by Bobcat Company - 02/11/2016 - 14:15:02 - Produced by Ken Cook Co. with mediaoff

MAINTENANCE ITEMS (Cont'd)

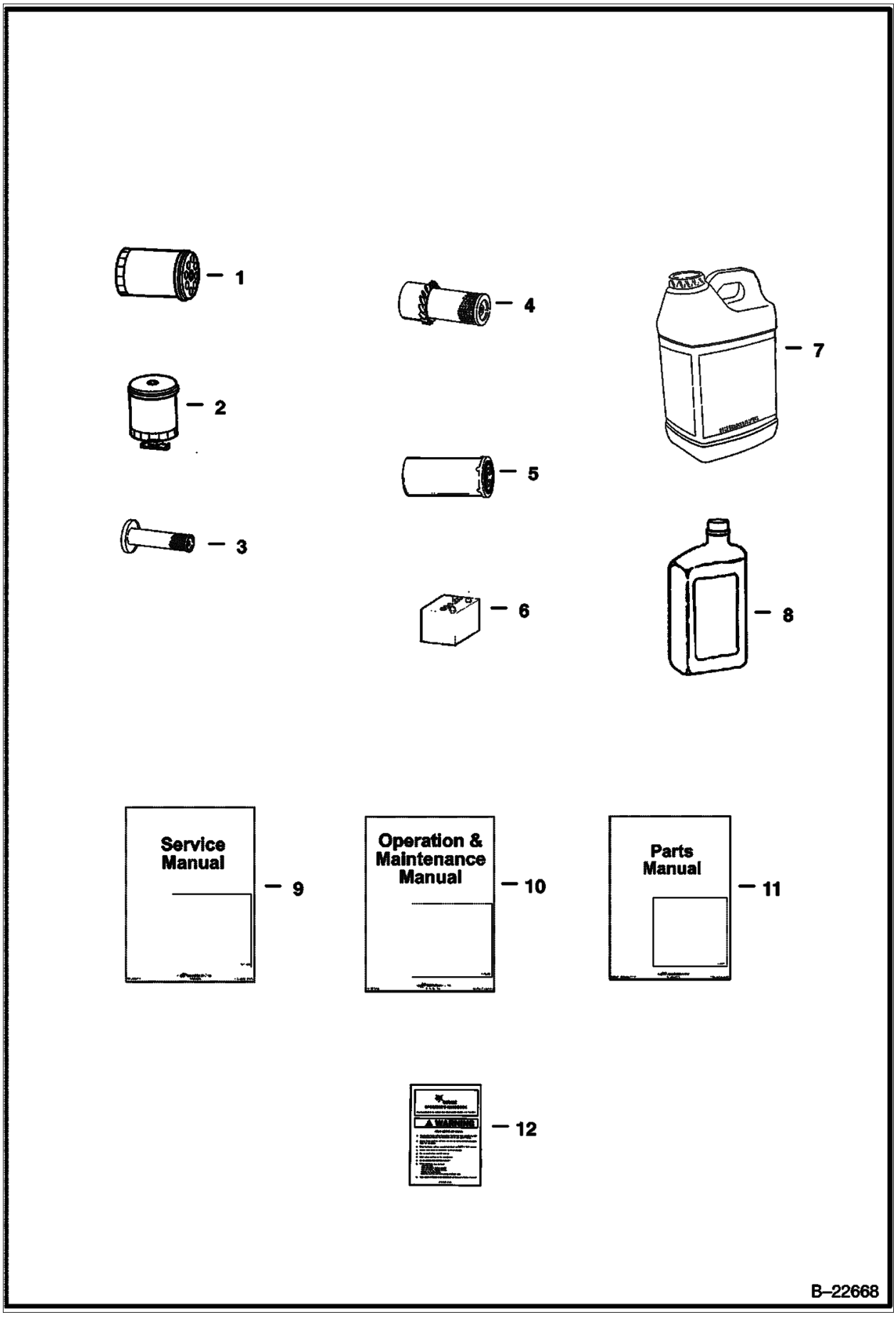

Illustration B22668

Model S160 K
6904270

Page 10 - OSS# 6300202494 - All rights reserved by Bobcat Company - 02/11/2016 - 14:15:02 - Produced by Ken Cook Co. with mediaioff

MAINTENANCE ITEMS (Cont'd)

Ref No	Part Number	Description	Remarks	Serial Number	Qty
9	6987034	SM, S160 LDR	printed	AHWA11001 & Above	1
9	6987034	SM, S160 LDR	printed	530060001 & Above	1
9	6987034-CD	SM, S160 LDR CD		AHWA11001 & Above	1
9	6987034-CD	SM, S160 LDR CD		529960001 & Above	1
9	6987034-CD	SM, S160 LDR CD		530060001 & Above	1
10	6904128	OM, S160 LDR	printed	529911001 - 59999	1
10	6904128	OM, S160 LDR	printed	530011001 - 59999	1
10	6904128-CD	OM, S160 LDR CD		530011001 - 59999	1
10	6904128-CD	OM, S160 LDR CD		529911001 - 59999	1
10	6986981	OM, S160 LDR	printed	530060001 & Above	1
10	6986981	OM, S160 LDR	printed	529960001 & Above	1
10	6986981-CD	OM, S160 LDR CD		529960001 & Above	1
10	6986981-CD	OM, S160 LDR CD		530060001 & Above	1
10	6989453	OM, S160 LDR		AHWA11001 & Above	1
10	6989453-CD	OM, S160 LDR CD		AHWA11001 & Above	1
11	6904270	PM, S160 LDR	printed		1
11	6904270-CD	PM, S160 LDR CD			1
12	6902600	HANDBOOK, OPERATOR'S	See Illustration DECALS / B26113 - W/wire rope - Was 6737783 [D]		1

Page 11 - OSS# 6300202494 - All rights reserved by Bobcat Company - 02/11/2016 - 14:15:02 - Produced by Ken Cook Co. with media1off

SCHEDULED MAINTENANCE ITEMS
(50 HOUR)

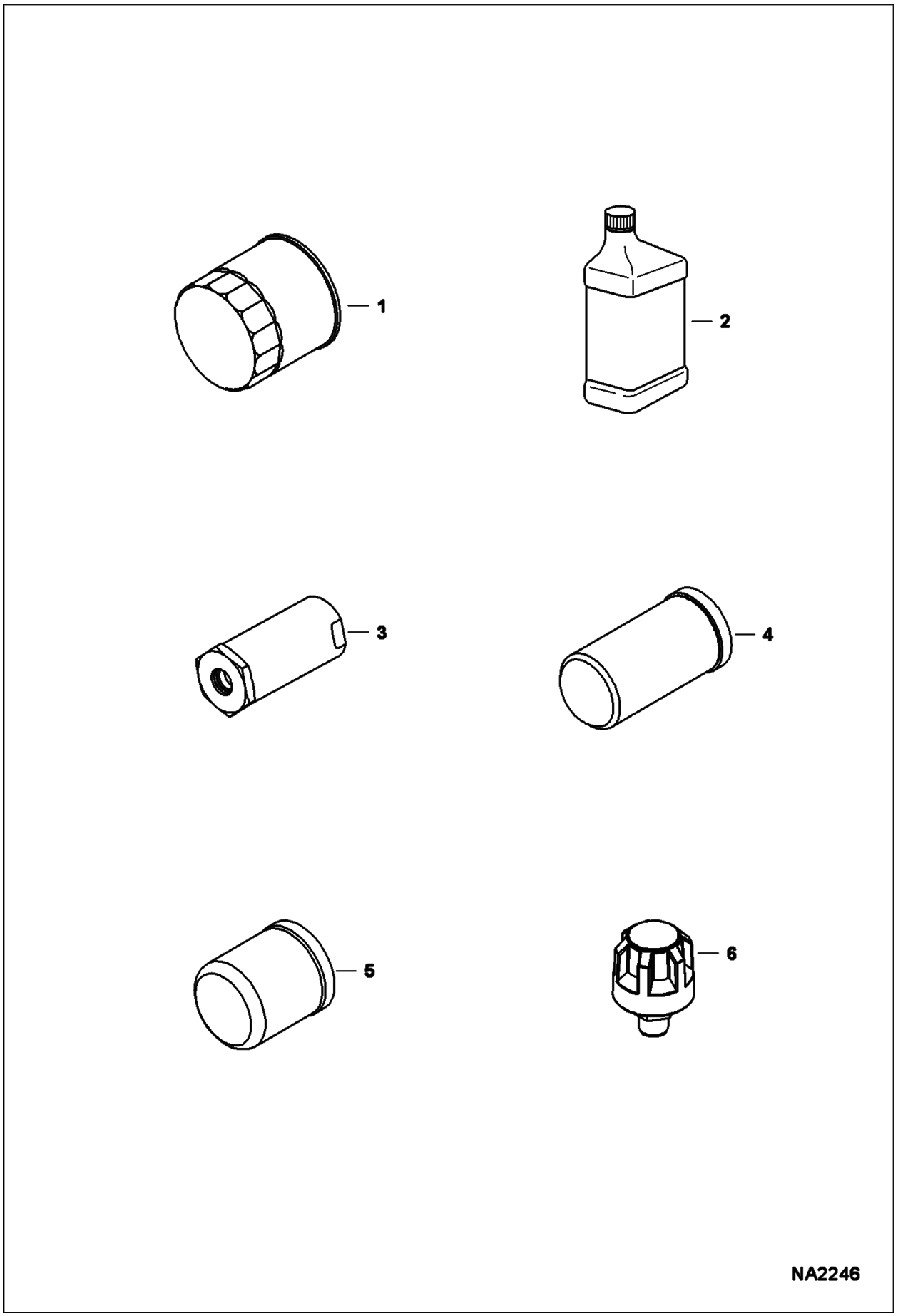

Illustration NA2246

Model S160 K
6904270

Page 12 - OSS# 6300202494 - All rights reserved by Bobcat Company - 02/11/2016 - 14:15:02 - Produced by Ken Cook Co. with mediaioff

SCHEDULED MAINTENANCE ITEMS (Cont'd)
(50 HOUR)

Ref No	Part Number	Description	Remarks	Serial Number	Qty
1	6675517	FILTER, OIL ENG 12	See Illustration / , See Illustration GEARCASE / B22736		x
2	7023076	OIL, 10W30 QT 12	See Illustration BULK ITEMS / B16415 Was 6903107 [A]		x
2	7023077	OIL, 10W30 GAL 6	See Illustration BULK ITEMS / B16415 Was 6903108 [A]		x
2	7023078	OIL, 10W30 2.5 GAL 2	See Illustration BULK ITEMS / B16415 Was 6903112 [A]		x
2	7023080	OIL, 15W40 QT 12	See Illustration BULK ITEMS / B16415 Was 6903105 [A]		x
2	7023081	OIL, 15W40 GAL 6	See Illustration BULK ITEMS / B16415 Was 6903106 [A]		x
2	7023082	OIL, 15W40 2.5 GAL 2	See Illustration BULK ITEMS / B16415 Was 6903113 [A]		x
2	6903109	OIL 30W QT. 12	See Illustration BULK ITEMS / B16415		x
2	6903110	OIL, 30W GAL. 6	See Illustration BULK ITEMS / B16415		x
2	6903111	OIL 30W 2.5 GAL 2	See Illustration BULK ITEMS / B16415		x
3	6661022	FILTER, OIL HYD IN-LINE	See Illustration HYDROSTATIC OIL FILTER / B13527		2
4	6661248	FILTER, OIL HYD 12	See Illustration HYDROSTATIC OIL FILTER / NA1844 - #3 media - 152,4 mm (6") long		1
5	6686926	FILTER, OIL HYD	See Illustration HYDROSTATIC OIL FILTER / C2818 - 113,5 mm (4.5") long - charge		1
6	7025626	VENT, BREATHER	See Illustration HYDROSTATIC CIRCUITRY / PE3100 - Was 6684923 [A]		1

Page 13 - OSS# 6300202494 - All rights reserved by Bobcat Company - 02/11/2016 - 14:15:02 - Produced by Ken Cook Co. with media1off

SCHEDULED MAINTENANCE ITEMS
(250 HOUR)

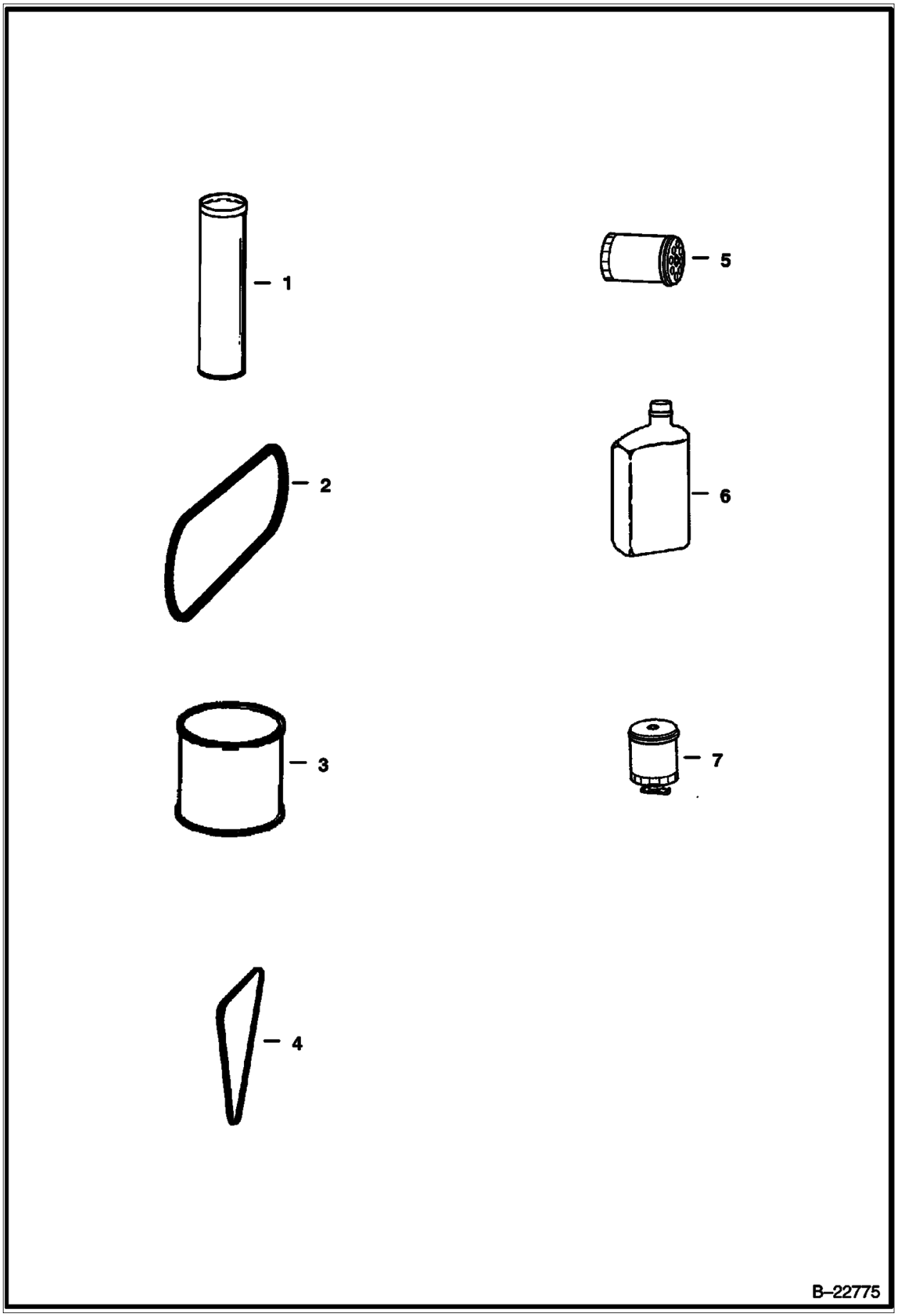

Illustration B22775

Model S160 K
6904270

Page 14 - OSS# 6300202494 - All rights reserved by Bobcat Company - 02/11/2016 - 14:15:02 - Produced by Ken Cook Co. with mediaioff

SCHEDULED MAINTENANCE ITEMS (Cont'd)
(250 HOUR)

Ref No	Part Number	Description	Remarks	Serial Number	Qty
1	6903122	GREASE, MULTI PURPOSE	See Illustration BULK ITEMS / B16415		x
2	6736775	BELT, DRIVE	See Illustration ENGINE & ATTACHING PARTS / PE2981 ENG./HYDRO. DRIVE - Was 6726898 [B]		x
3	6903121	LUBE, GEAR 12	See Illustration BULK ITEMS / B16415		x
4	7100104	BELT, ALT	See Illustration ENGINE & ATTACHING PARTS / PE2728 Was 7100572 [A]		x
5	6675517	FILTER, OIL ENG 12	See Illustration GEARCASE / B22736		x
6	7023076	OIL, 10W30 QT 12	See Illustration BULK ITEMS / B16415 Was 6903107 [A]		x
6	7023077	OIL, 10W30 GAL 6	See Illustration BULK ITEMS / B16415 Was 6903108 [A]		x
6	7023078	OIL, 10W30 2.5 GAL 2	See Illustration BULK ITEMS / B16415 Was 6903112 [A]		x
6	7023080	OIL, 15W40 QT 12	See Illustration BULK ITEMS / B16415 Was 6903105 [A]		x
6	7023081	OIL, 15W40 GAL 6	See Illustration BULK ITEMS / B16415 Was 6903106 [A]		x
6	7023082	OIL, 15W40 2.5 GAL 2	See Illustration BULK ITEMS / B16415 Was 6903113 [A]		x
6	6903109	OIL 30W QT. 12	See Illustration BULK ITEMS / B16415		x
6	6903110	OIL, 30W GAL. 6	See Illustration BULK ITEMS / B16415		x
6	6903111	OIL 30W 2.5 GAL 2	See Illustration BULK ITEMS / B16415		x
7	6667352	FILTER, FUEL W/SEPARATOR 12	See Illustration BULK ITEMS / B16415		x

Page 15 - OSS# 6300202494 - All rights reserved by Bobcat Company - 02/11/2016 - 14:15:02 - Produced by Ken Cook Co. with media1off

SCHEDULED MAINTENANCE ITEMS
(500 HOUR)

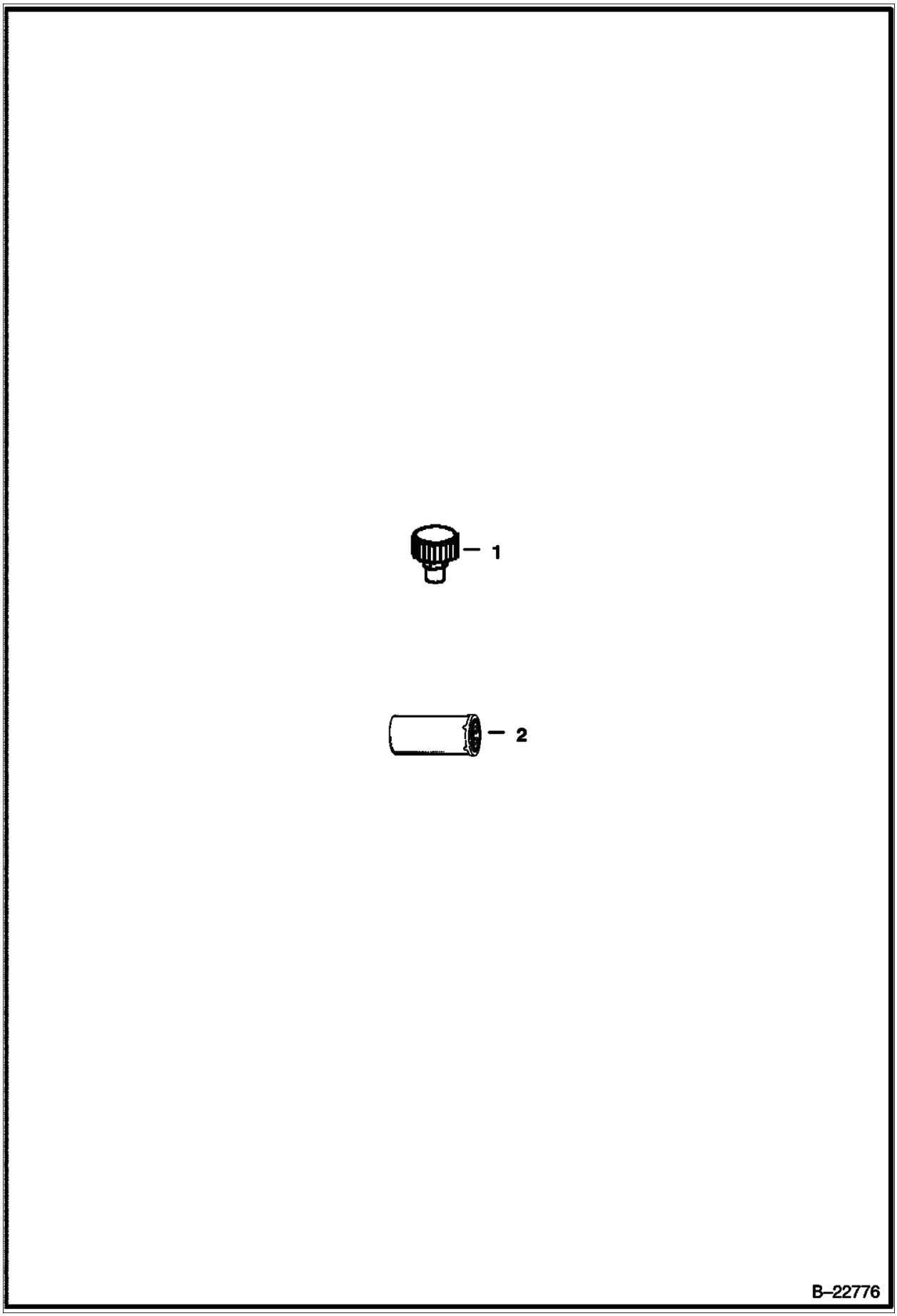

Illustration B22776

Model S160 K
6904270

Page 16 - OSS# 6300202494 - All rights reserved by Bobcat Company - 02/11/2016 - 14:15:02 - Produced by Ken Cook Co. with mediaioff

SCHEDULED MAINTENANCE ITEMS (Cont'd)
(500 HOUR)

Ref No	Part Number	Description	Remarks	Serial Number	Qty
1	7025626	VENT, BREATHER	See Illustration / - Was 6684923 [A]		x
2	6661248	FILTER, OIL HYD 12	See Illustration HYDROSTATIC OIL FILTER / NA1844 - #3 media - 152,4 mm (6") long		x
2	6686926	FILTER, OIL HYD	See Illustration HYDROSTATIC OIL FILTER / B16487A - 113,5 mm (4.5") long , See Illustration HYDROSTATIC CIRCUITRY / PE2735 - 113,5 mm (4.5") long , See Illustration HYDROSTATIC CIRCUITRY / PE2743 - 113,5 mm (4.5") long		1

Page 17 - OSS# 6300202494 - All rights reserved by Bobcat Company - 02/11/2016 - 14:15:02 - Produced by Ken Cook Co. with media1off

SCHEDULED MAINTENANCE ITEMS
(1000 HOUR)

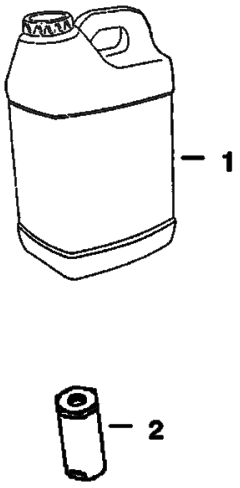

Illustration B22777

Model S160 K
6904270

Page 18 - OSS# 6300202494 - All rights reserved by Bobcat Company - 02/11/2016 - 14:15:02 - Produced by Ken Cook Co. with mediaioff

SCHEDULED MAINTENANCE ITEMS (Cont'd)
(1000 HOUR)

Ref No	Part Number	Description	Remarks	Serial Number	Qty
1	6903117	FLUID, OIL HYD 2.5 GAL 2	See Illustration BULK ITEMS / B16415		x
1	6903118	FLUID, OIL HYD 5 GAL	See Illustration BULK ITEMS / B16415		x
1	6903119	FLUID, OIL HYD 55 GAL DRUM	See Illustration BULK ITEMS / B16415		x
2	6661022	FILTER, OIL HYD IN-LINE	See Illustration HYDROSTATIC OIL FILTER / B13527 - case drain		x

Page 19 - OSS# 6300202494 - All rights reserved by Bobcat Company - 02/11/2016 - 14:15:02 - Produced by Ken Cook Co. with media1off

MAIN FRAME

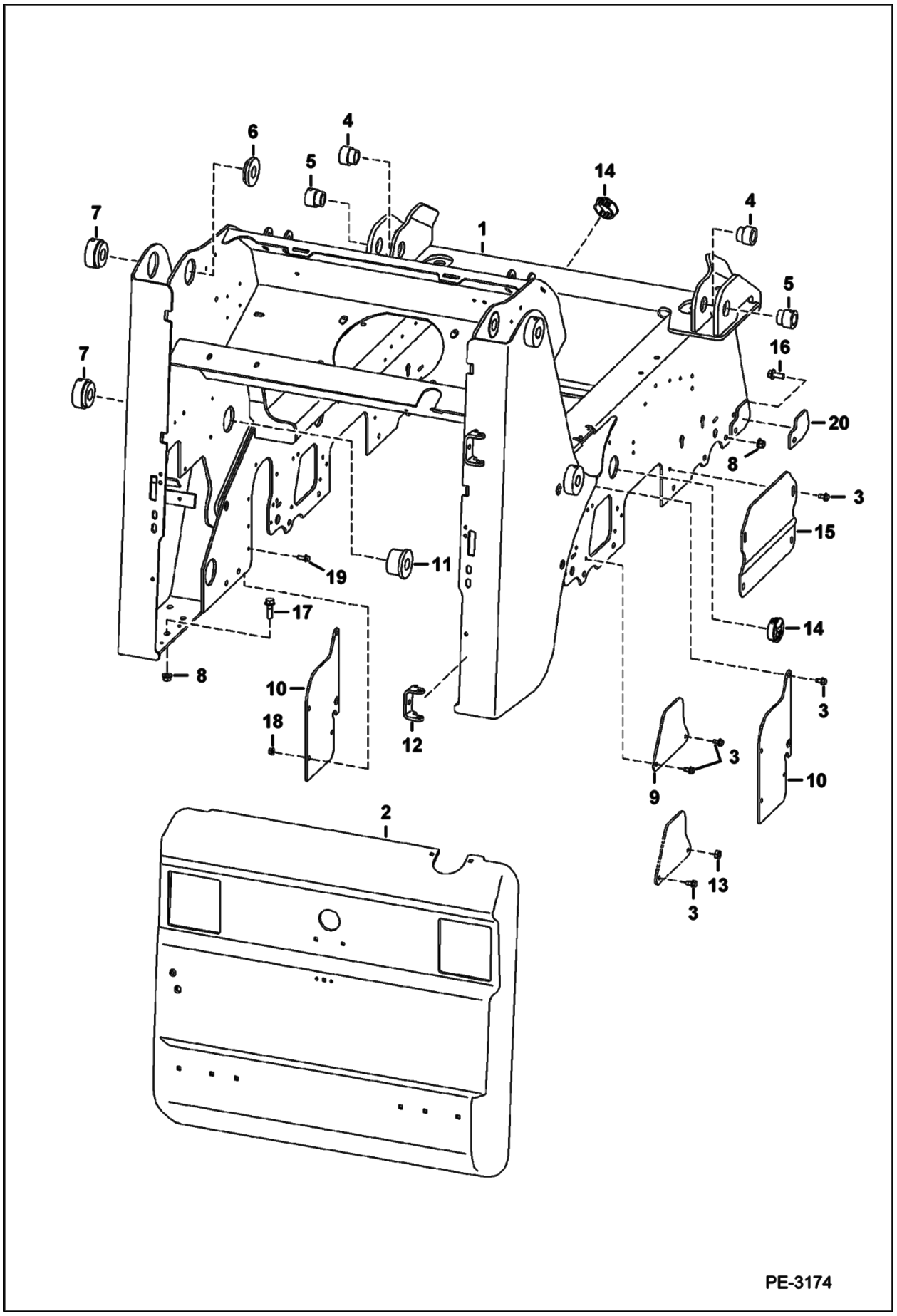

Illustration PE3174

Model S160 K
6904270

Page 20 - OSS# 6300202494 - All rights reserved by Bobcat Company - 02/11/2016 - 14:15:02 - Produced by Ken Cook Co. with mediaioff

MAIN FRAME (Cont'd)

Ref No	Part Number	Description	Remarks	Serial Number	Qty
1		MAINFRAME	See Illustration HYDROSTATIC CIRCUITRY / PE2736 - NLA - Uses hyd oil filter mounted W/horizontal ports - Order 7141606 mainframe, 7132554 hose, 7132542 tubeline, 7136052 mount & 7141653 plate - Was 7103784 [A]		1
1	7141606	MAINFRAME	See Illustration HYDROSTATIC CIRCUITRY / PE3729 - Uses hyd oil filter mounted W/vertical ports		1
2	6729991	REAR DOOR	See Illustration REAR DOOR / PE1962		1
3	84G3712	BOLT 5			19
4	6717278	BUSHING, WELD-ON			2
5	6717277	BUSHING, WELD-ON	weld on		2
6	6717356	BUSHING, WELD-ON	weld on		2
7	6731578	BUSHING, WELD-ON			4
8	83D8	NUT 5			26
9	7136696	COVER	Was 6726069 [A]		2
10	7152006	SHIELD	Was 6733912 [A]		2
11	6737131	BUSHING, WELD ON	weld on		2
12	6708987	HINGE, WELD-ON			2
13	61D6	NUT 5		& Bel	1
14	6718796	PLUG			3
15	6719201	COVER, MOTOR			2
16	31C820	BOLT			16
17	31C828	BOLT			10
18	83D6	NUT 5		& Abv	1
19	84G3712	BOLT 5		& Abv	1
20	7141656	PLATE	weld-on		2

Page 21 - OSS# 6300202494 - All rights reserved by Bobcat Company - 02/11/2016 - 14:15:02 - Produced by Ken Cook Co. with media1off

OPERATOR CAB

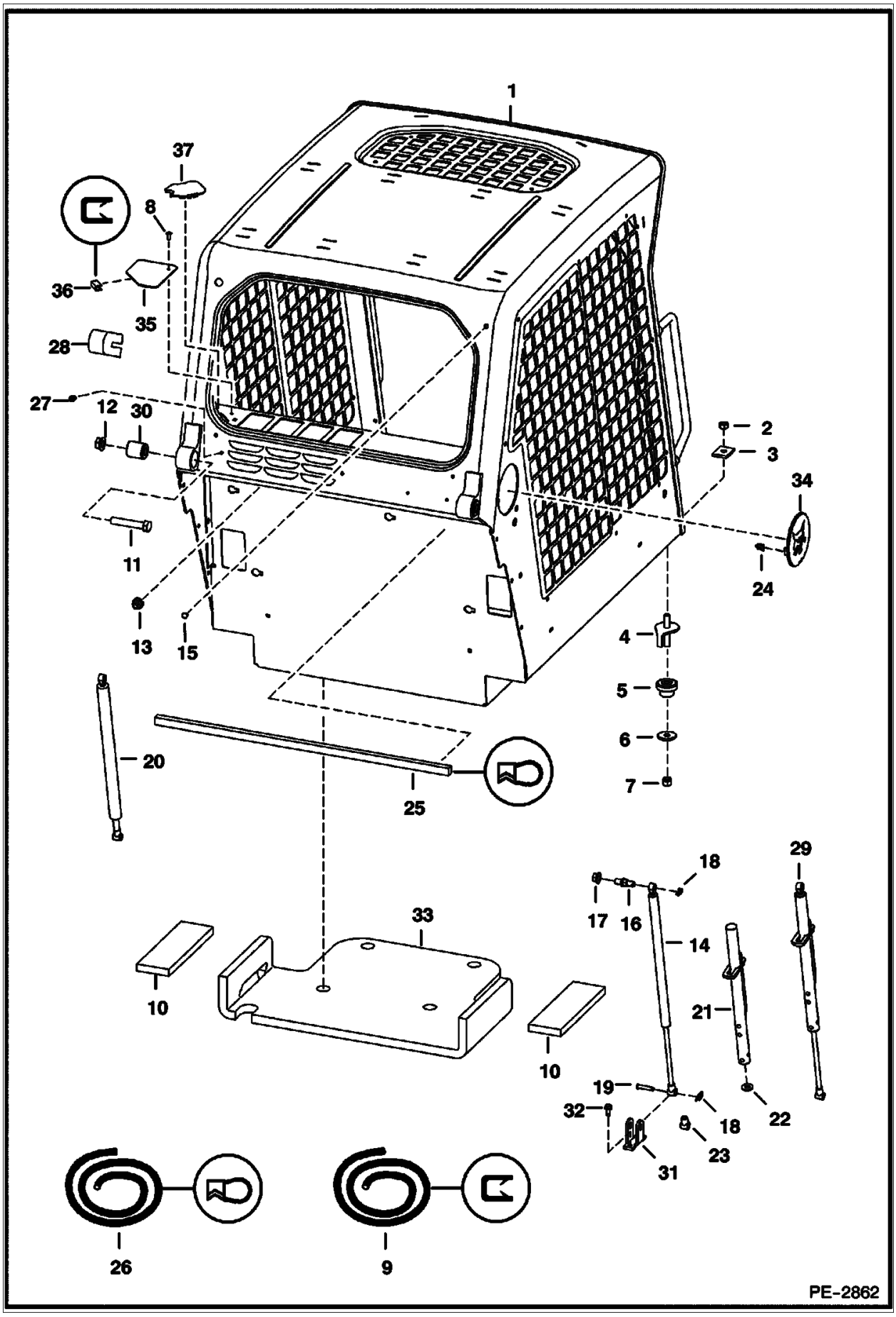

Illustration PE2862

Model S160 K
6904270

Page 22 - OSS# 6300202494 - All rights reserved by Bobcat Company - 02/11/2016 - 14:15:02 - Produced by Ken Cook Co. with mediaioff

OPERATOR CAB (Cont'd)

Ref No	Part Number	Description	Remarks	Serial Number	Qty
1		OPERATOR CAB	Does not include cab decals - Order 6719672 cab & Ref. 37 - Was 6719672 [B]		1
2	59D8	NUT 5			2
3	6553709	WASHER	rectangular		2
4	6702971	BOLT ASSY			2
5	6560633	DAMPER, VIBRATION			2
6	6515817	WASHER			2
7	85D8	NUT, 5			2
8	6630207	RIVET 5			1
9	6654139	MOULDING BULK/FT	bulk - sold per foot		x
10	6729012	INSULATION	seat pan		2
11	17C1056	BOLT			2
12	53D10	NUT			2
13	53D6	NUT			4
14	7157892	GAS SPRING	RH - Was 7100506 [A]		1
15	5289686	PLUG	black - 0.38" dia hole		1
16	6719064	MOUNT			2
17	97D8	NUT			2
18	6631418	RING, RETAINING			4
19	6567743	PIN			2
20	7157891	GAS SPRING	LH - Was 7100508 [A]		1
20	6675136	GAS SPRING	LH - heavy duty		1
21	6708189	TUBE, STOP ASSY	stop - RH		1
22	6701174	WASHER			1
23	6675257	CLEVIS			1
24	6679990	CLIP			2
25	6679994	SEAL	787,4 mm (31.5") long		1
26		SEAL	NLA - bulk - sold per foot - Order Ref. 25		x
27	6675033	INSERT, THREADED	filter cover		2
28	6579613	STOP			2
29		GAS SPRING	NSS - R.H. - W/latch - Order Ref. 14 & 21-23		1
30	6562602	BUSHING			2
31	6706349	MOUNT	gas spring		2
32	84G3112	BOLT 5			4
33	6729013	INSULATION	seat pan		1
34	6733107	PLUG ASSY	W/Bobcat head & Ref. 24		2
35		COVER	NLA - Order Ref. 37 - Was 7122338 [A]		1
36		MOULDING	NLA - 1" (25,4 mm) long - Order Ref. 9		1
37	7129949	COVER	snap		1

Page 23 - OSS# 6300202494 - All rights reserved by Bobcat Company - 02/11/2016 - 14:15:02 - Produced by Ken Cook Co. with media1off

OPERATOR CAB

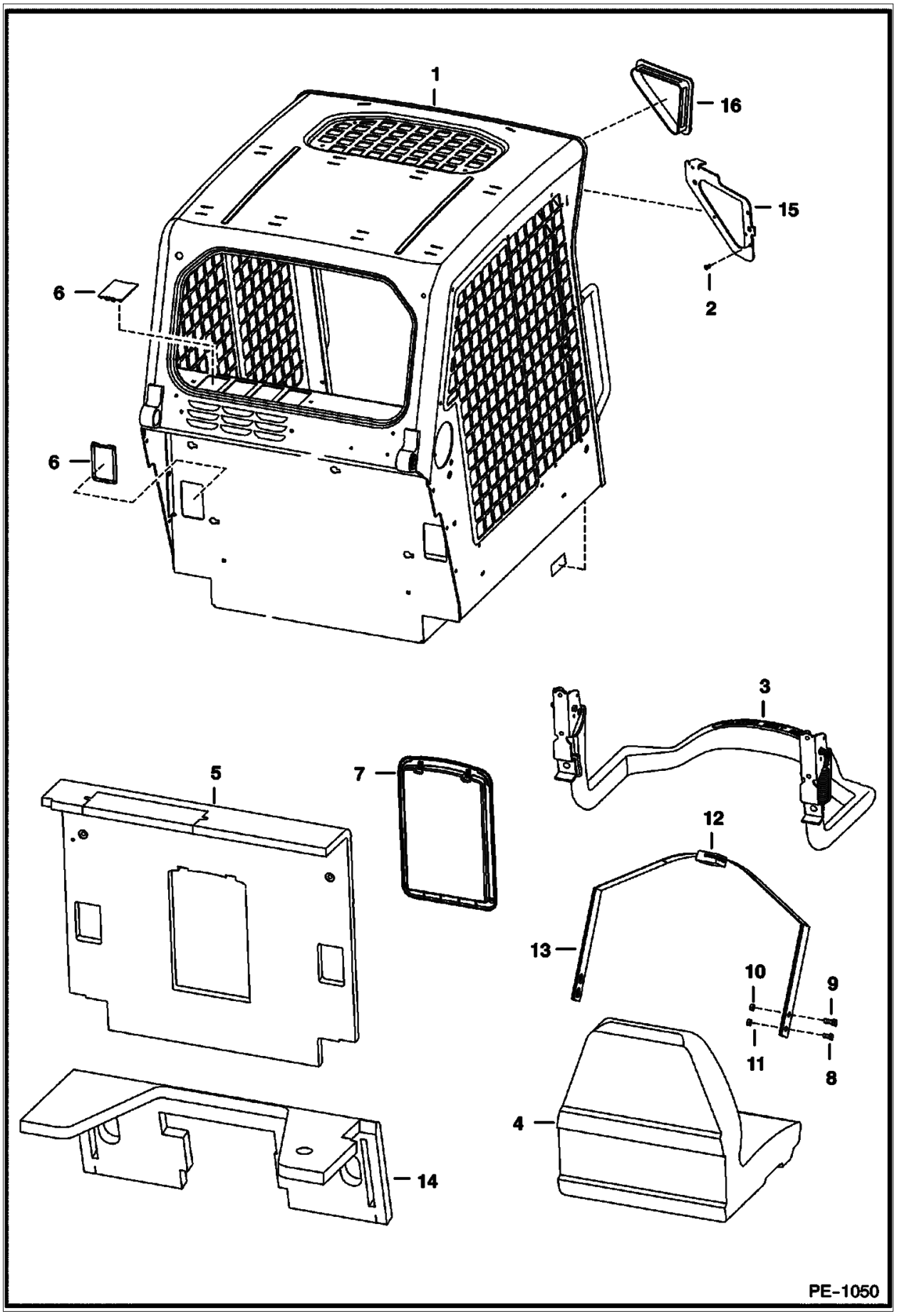

Illustration PE1050

Model S160 K
6904270

Page 24 - OSS# 6300202494 - All rights reserved by Bobcat Company - 02/11/2016 - 14:15:02 - Produced by Ken Cook Co. with mediaioff

OPERATOR CAB (Cont'd)

Ref No	Part Number	Description	Remarks	Serial Number	Qty
1		OPERATOR CAB	See Illustration OPERATOR CAB / PE2862 Does not include cab decals		1
2	6675033	INSERT, THREADED			6
3		SEAT BAR	See Illustration SEAT & SEAT BAR / PE2950		1
4		SEAT	See Illustration SEAT / B25136 , See Illustration SEAT / B26226		1
5	6719504	INSULATION, CAB BACK	W/Ref. 7		1
6	6718101	COVER			6
7		CONTAINER	NLA - manuals - Order 6725303 container & 6725301 cover - Was 6719503 [A]		1
7	6675524	CLIP			2
7	6725301	OP MANUAL COVER			1
7	6725303	OP MANUAL PAN			1
8	17C612	BOLT 5			2
9	17C716	BOLT			4
10	85D7	NUT			4
11	85D6	NUT, 5			2
12	6675074	SEAT BELT	W/O spring plates		1
13	6725373	SPRING PLATE			2
14	7139184	INSULATION	steering panel - Was 6718489 [A]		1
15		PLATE	NSS - R.H. - weld on		1
15		PLATE	NSS - L.H. - weld on		1
16	6674403	COVER	no lights		2

Page 25 - OSS# 6300202494 - All rights reserved by Bobcat Company - 02/11/2016 - 14:15:02 - Produced by Ken Cook Co. with media1off

OPERATOR CAB
(Deluxe) (S/N 529911001 - 59999, 530011001 - 59999)

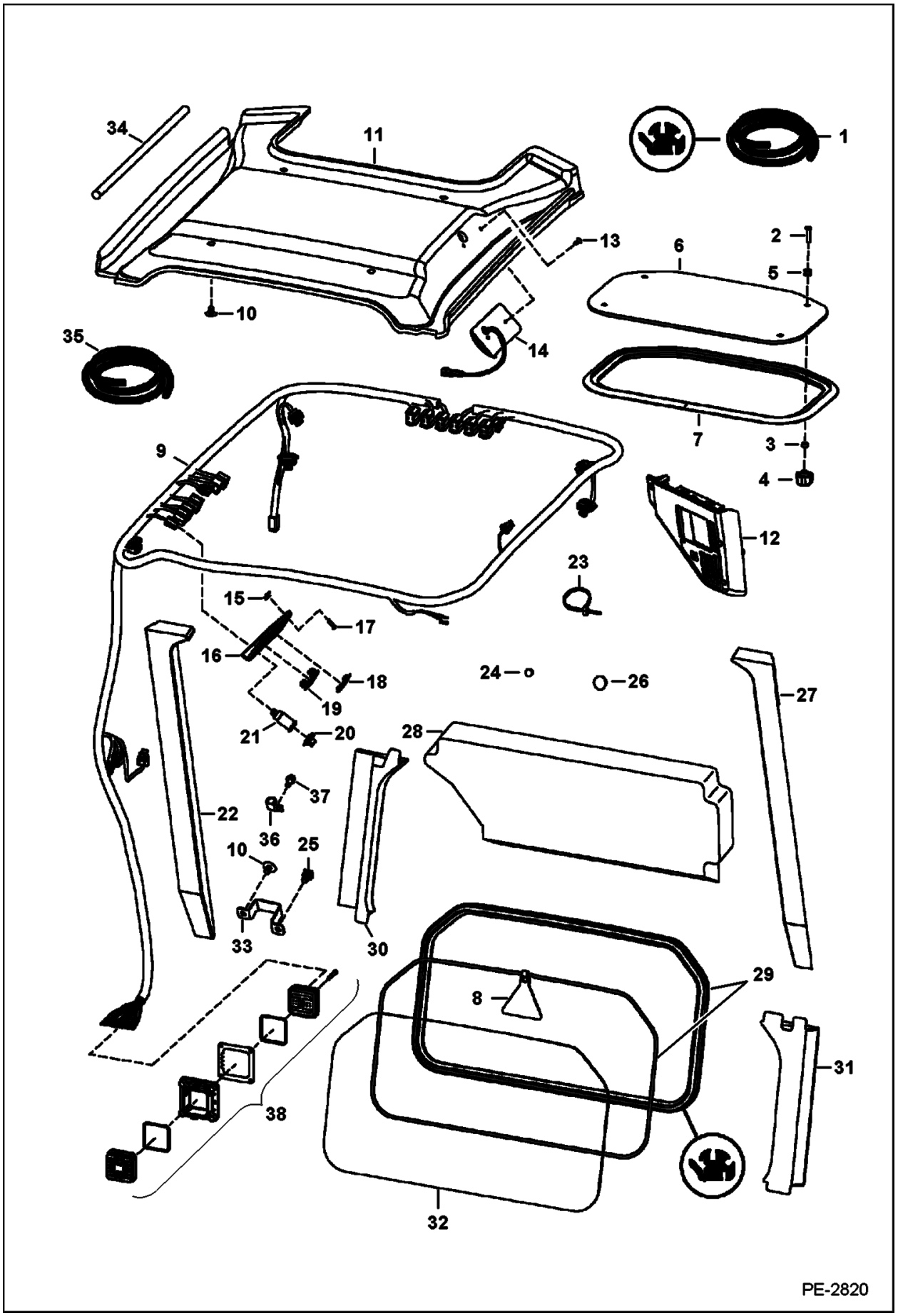

Illustration PE2820

Model S160 K
6904270

Page 26 - OSS# 6300202494 - All rights reserved by Bobcat Company - 02/11/2016 - 14:15:02 - Produced by Ken Cook Co. with mediaioff

OPERATOR CAB (Cont'd)
(Deluxe) (S/N 529911001 - 59999, 530011001 - 59999)

Ref No	Part Number	Description	Remarks	Serial Number	Qty
1	6675387	SEAL, BULK/FT	bulk - sold per foot		x
1	6554149	CORD, BULK/FT	bulk - sold per foot		x
2	91G420	SCREW			4
3	6664085	BUSHING	nylon		4
4	6681614	KNOB	0.69" deep thread		4
5	6675545	GROMMET			4
6	7105034	WINDOW TOP	Was 7105035 [A]		1
7	7165265	SEAL, WINDOW			1
8	6731478	TAG EXIT			1
9		HARNESS, CAB DLX	See Illustration CAB ELECTRICAL CIRCUITRY / PE2821		1
10	6674895	RETAINER	snap in	& Bel.	4
10	6674895	RETAINER	snap in	& Abv.	5
11		INSULATION	NLA - headliner - Use W/Ref. 30 (6717517 insulation) & Ref. 31 (6717518 insulation) - Order 7148195 insulation, Ref. 30 (7148197 insulation) & Ref. 31 (7148198 insulation) - Was 6737704 [A]		1
11	7148195	INSULATION HEADLINER	Use W/Ref. 30 (7148197 insulation) & Ref. 31 (7148198 insulation)		1
12	6688403	PANEL, INSTRUMENT DLX	deluxe - RH - keyless		1
13	6664221	RETAINER	snap in		2
14	7249162	LIGHT ASSY DOME LED	Was 6680326 [A]		1
14	6665367	BULB	Use W/NAP/6680326 dome light		1
15	6669091	CLIP			4
16	6718580	PANEL			1
17	6669224	TAP SCREW			4
18	6665314	PLUG	switch		5
19	6668742	SWITCH	travel control - export		1
20	6664224	CAP			1
21	6664223	OUTLET			1
22	7148199	INSULATION	Was 6717519 [A]		1
23	6610510	STRAP, TIE 10			6
24	5289686	PLUG	black - 0.38" dia hole		1
25	7015668	MOUNT, STRAP TIE	push in - Use W/tie strap - Was 6678666 [B]		1
26	6657719	PLUG	0.75" dia hole		1
27	7148200	INSULATION	Was 6717520 [A]		1
28	6727299	INSULATOR CAB BACK	cab back		1
29		EXTRUSION	NLA - 75.75" (1924mm) long - Order Ref. 1		x
29		CORD	NLA - 75.75" (1924mm) long - Order Ref. 1 - Also Order Ref. 8 (6731478 exit tag)		x
30	6717517	INSULATION	Use W/Ref. 11 (NLA/ 6737704 insulation)		1
30	7148197	INSULATION	Use W/Ref. 11 (7148195 insulation)		1
31	6717518	INSULATION	Use W/Ref. 11 (NLA/ 6737704 insulation)		1
31	7148198	INSULATION	Use W/Ref. 11 (7148195 insulation)		1
32	6717874	WINDOW, CAB REAR	rear		1
33	7138645	BRACKET		& Abv	1
34		FOAM	NLA - 7" (177,8 mm) long - Order Ref. 35 - W/O Heat or HVAC		2

Page 27 - OSS# 6300202494 - All rights reserved by Bobcat Company - 02/11/2016 - 14:15:02 - Produced by Ken Cook Co. with media1off

OPERATOR CAB (Cont'd)
(Deluxe) (S/N 529911001 - 59999, 530011001 - 59999)

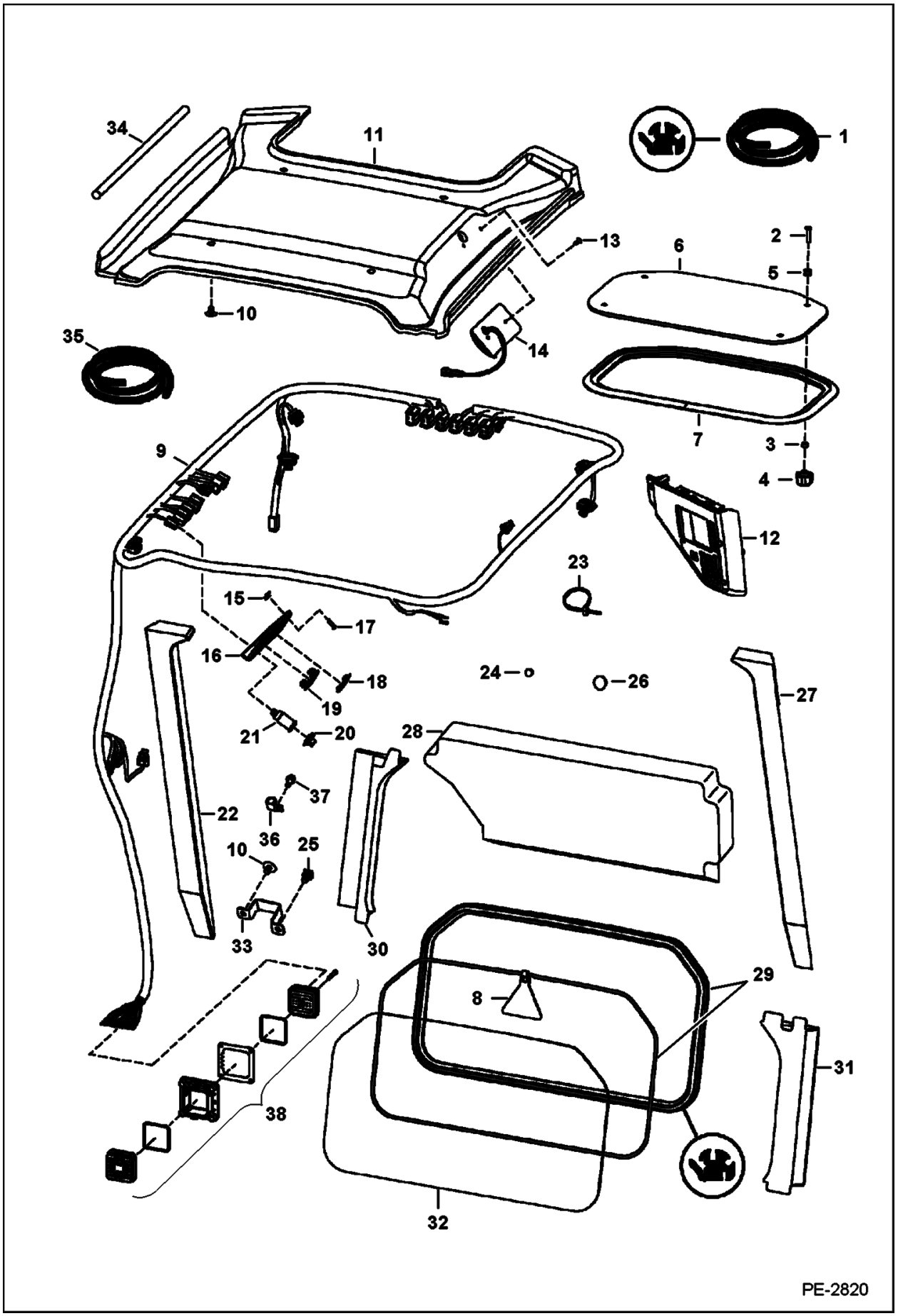

Illustration PE2820

Model S160 K
6904270

Page 28 - OSS# 6300202494 - All rights reserved by Bobcat Company - 02/11/2016 - 14:15:02 - Produced by Ken Cook Co. with mediaioff

OPERATOR CAB (Cont'd)
(Deluxe) (S/N 529911001 - 59999, 530011001 - 59999)

Ref No	Part Number	Description	Remarks	Serial Number	Qty
34		FOAM	NLA - 12" (304,8 mm) long - Order Ref. 35 - W/ Heat or HVAC		2
35	6511855	TAPE BULK/FT 25'	self adhesive - bulk - sold per foot		x
36	30H75	CLAMP			1
37	84G3712	BOLT 5			1
38		CONNECTOR ASSEMBLY	See Illustration CONNECTOR HARNESS ASSEMBLY / PE3684 - NSS		1

Page 29 - OSS# 6300202494 - All rights reserved by Bobcat Company - 02/11/2016 - 14:15:02 - Produced by Ken Cook Co. with media1off

OPERATOR CAB
(Deluxe) (S/N 529960001 & Above, 530060001 & Above, AHWA11001 & Above)

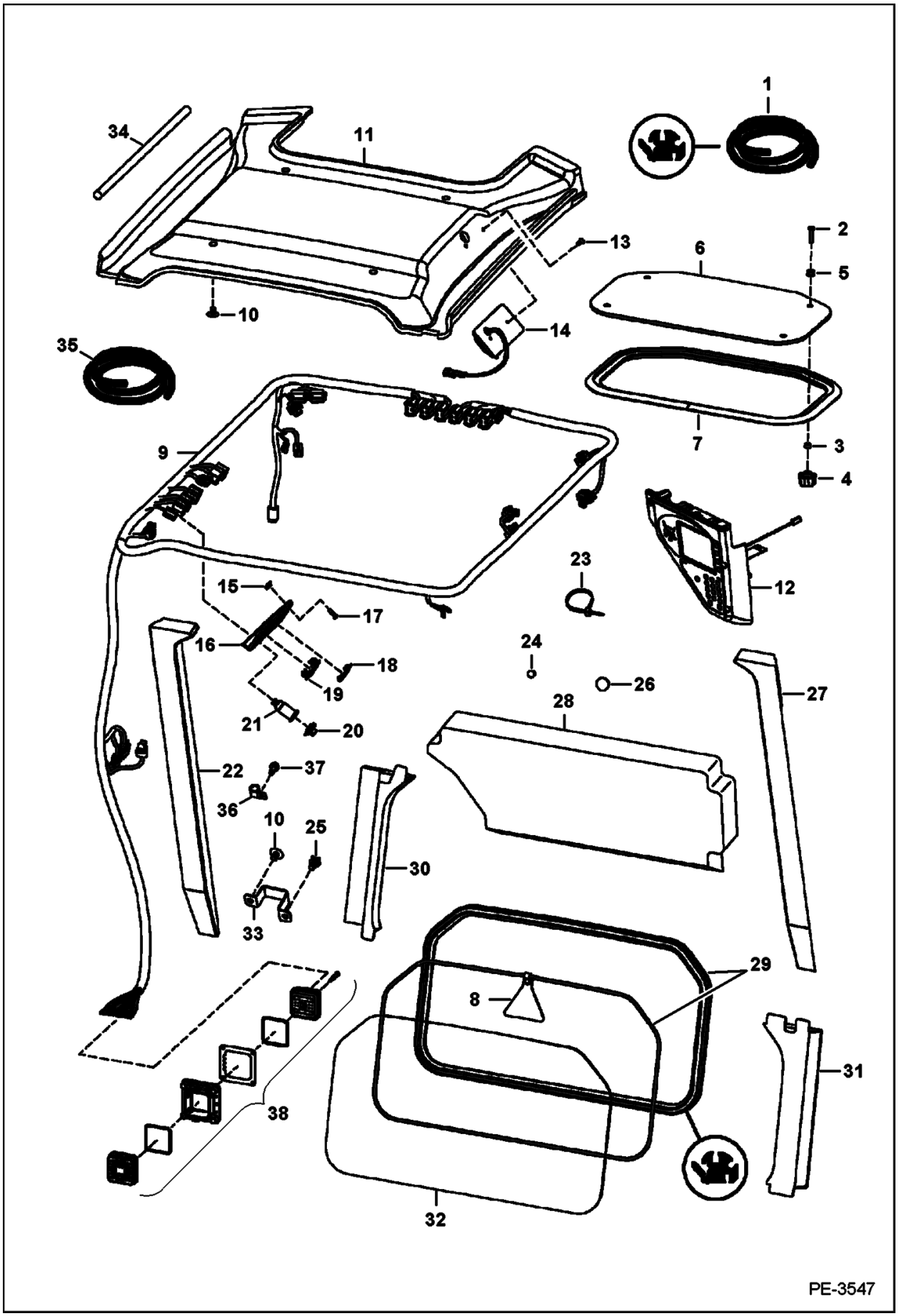

Illustration PE3547 **Model S160 K**
6904270

Page 30 - OSS# 6300202494 - All rights reserved by Bobcat Company - 02/11/2016 - 14:15:02 - Produced by Ken Cook Co. with mediaioff

OPERATOR CAB (Cont'd)
(Deluxe) (S/N 529960001 & Above, 530060001 & Above, AHWA11001 & Above)

Ref No	Part Number	Description	Remarks	Serial Number	Qty
1	6675387	SEAL, BULK/FT	bulk - sold per foot		x
1	6554149	CORD, BULK/FT	bulk - sold per foot		x
2	91G420	SCREW			4
3	6664085	BUSHING	nylon		4
4	6681614	KNOB	0.69" deep thread		4
5	6675545	GROMMET			4
6	7105034	WINDOW TOP	Was 7105035 [A]		1
7	7165265	SEAL, WINDOW			1
8	6731478	TAG EXIT			1
9		HARNESS, CAB	See Illustration CAB ELECTRICAL CIRCUITRY / PE3548		1
10	6674895	RETAINER	snap in		5
11		INSULATION	NLA - headliner - Use W/Ref. 30 (6717517 insulation) & Ref. 31 (6717518 insulation) - Order 7148195 insulation, Ref. 30 (7148197 insulation) & Ref. 31 (7148198 insulation) - Was 6737704 [A]		1
11	7148195	INSULATION HEADLINER	Use W/Ref. 30 (7148197 insulation) & Ref. 31 (7148198 insulation)		1
12	6692935	PANEL, INSTRUMENTATION DELUXE	RH - keyless		1
13	6664221	RETAINER	snap in		2
14	7249162	LIGHT ASSY DOME LED	Was 6680326 [A]		1
14	6665367	BULB	Use W/NAP/6680326 dome light		1
15	6669091	CLIP			4
16	6718580	PANEL			1
17	6669224	TAP SCREW			4
18	6665314	PLUG	switch		5
19	6668742	SWITCH	travel control - export		1
20	6664224	CAP			1
21	6664223	OUTLET			1
22	7148199	INSULATION	Was 6717519 [A]		1
23	6624289	STRAP, TIE	Was 6610510 [B]		3
24	5289686	PLUG	black - 0.38" dia hole		1
25	7015668	MOUNT, STRAP TIE	push in - Use W/tie strap - Was 6678666 [B]		1
26	6657719	PLUG	0.75" dia hole		1
27	7148200	INSULATION	Was 6717520 [A]		1
28	6727299	INSULATOR CAB BACK	cab back		1
29		EXTRUSION	NLA - 75.75" (1924mm) long - Order Ref. 1		x
29		CORD	NLA - 75.75" (1924mm) long - Order Ref. 1 - Also Order Ref. 8 (6731478 exit tag)		x
30	6717517	INSULATION	Use W/Ref. 11 (NLA/ 6737704 insulation)		1
30	7148197	INSULATION	Use W/Ref. 11 (7148195 insulation)		1
31	6717518	INSULATION	Use W/Ref. 11 (NLA/ 6737704 insulation)		1
31	7148198	INSULATION	Use W/Ref. 11 (7148195 insulation)		1
32	6717874	WINDOW, CAB REAR	rear		1
33	7138645	BRACKET			1
34		FOAM	NLA - 7" (177,8 mm) long - Order Ref. 35 - W/O Heat or HVAC		2
34		FOAM	NLA - 12" (304,8 mm) long - Order Ref. 35 - W/ Heat or HVAC		2

Page 31 - OSS# 6300202494 - All rights reserved by Bobcat Company - 02/11/2016 - 14:15:02 - Produced by Ken Cook Co. with media1off

OPERATOR CAB (Cont'd)
(Deluxe) (S/N 529960001 & Above, 530060001 & Above, AHWA11001 & Above)

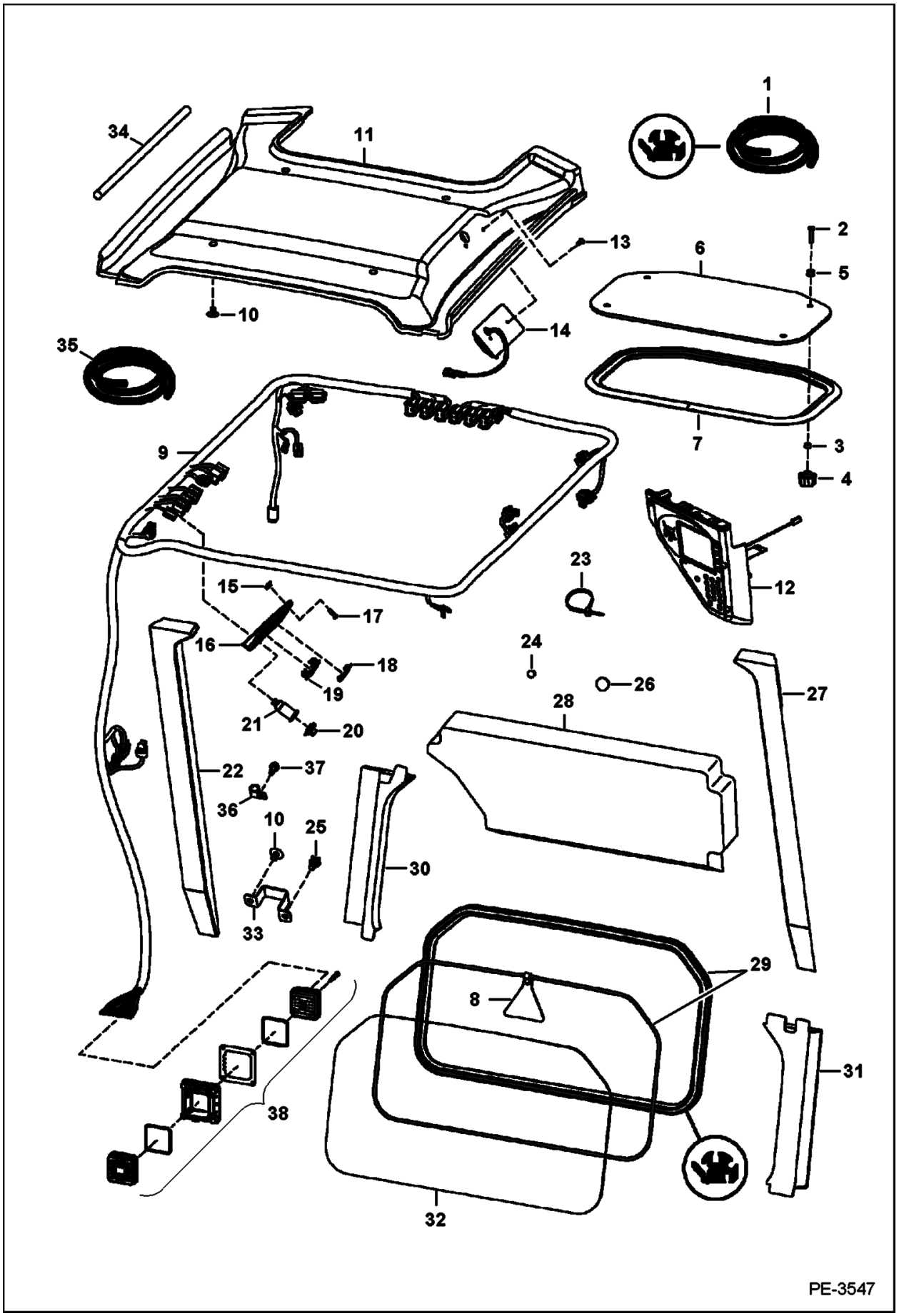

Illustration PE3547 **Model S160 K**
6904270

Page 32 - OSS# 6300202494 - All rights reserved by Bobcat Company - 02/11/2016 - 14:15:02 - Produced by Ken Cook Co. with mediaioff

OPERATOR CAB (Cont'd)
(Deluxe) (S/N 529960001 & Above, 530060001 & Above, AHWA11001 & Above)

Ref No	Part Number	Description	Remarks	Serial Number	Qty
35	6511855	TAPE BULK/FT 25'	self adhesive - bulk - sold per foot		x
36	30H75	CLAMP			1
37	84G3712	BOLT 5			1
38		CONNECTOR ASSEMBLY	See Illustration CONNECTOR HARNESS ASSEMBLY / PE3684 NSS - engine & cab - Order components		1

Page 33 - OSS# 6300202494 - All rights reserved by Bobcat Company - 02/11/2016 - 14:15:02 - Produced by Ken Cook Co. with media1off

SEAT & SEAT BAR

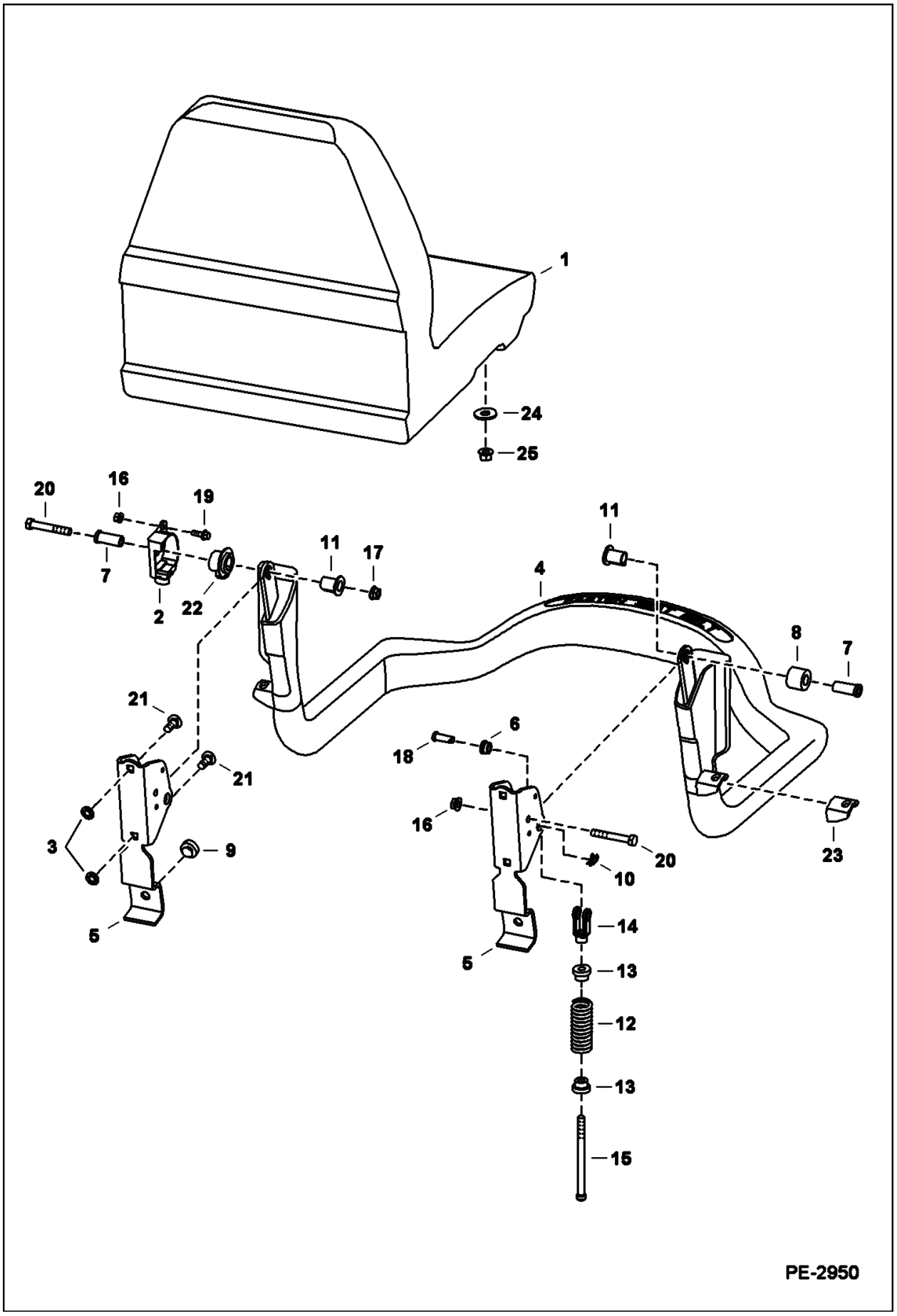

Illustration PE2950

Model S160 K
6904270

Page 34 - OSS# 6300202494 - All rights reserved by Bobcat Company - 02/11/2016 - 14:15:02 - Produced by Ken Cook Co. with mediaioff

SEAT & SEAT BAR (Cont'd)

Ref No	Part Number	Description	Remarks	Serial Number	Qty
1		SEAT	See Illustration SEAT / B25136 , See Illustration SEAT / B26226		1
2	6691714	SENSOR, SEATBAR BICS	Was 6680429 [A]		1
3	6674894	NUT, LOCK			4
4	6715860	ARM, SEAT BAR			1
5	6715863	BRACKET			1
6	6715864	BUSHING			2
7	6715865	BUSHING			2
8	6715866	BUSHING			1
9	6519178	BUMPER			2
10	6631418	RING, RETAINING			2
11	6680441	BUSHING	keyed		2
12	6701535	SPRING, CENTERING			2
13	6710659	BUSHING			2
14	6713589	CLEVIS			2
15	6713887	BOLT			2
16	83D4	NUT 10			1
17	97D6	NUT 10			2
18	4F6106	PIN			2
19	35C412	BOLT			1
20	17C640	BOLT			2
21	10C616	BOLT 10			4
22	6680443	BUSHING, MAGNET			1
23		MOUNT	NLA - Order Ref. 4		2
24	619021	WASHER, 5			6
25	59D5	NUT 5			4

Page 35 - OSS# 6300202494 - All rights reserved by Bobcat Company - 02/11/2016 - 14:15:02 - Produced by Ken Cook Co. with media1off

SEAT
(Michigan)

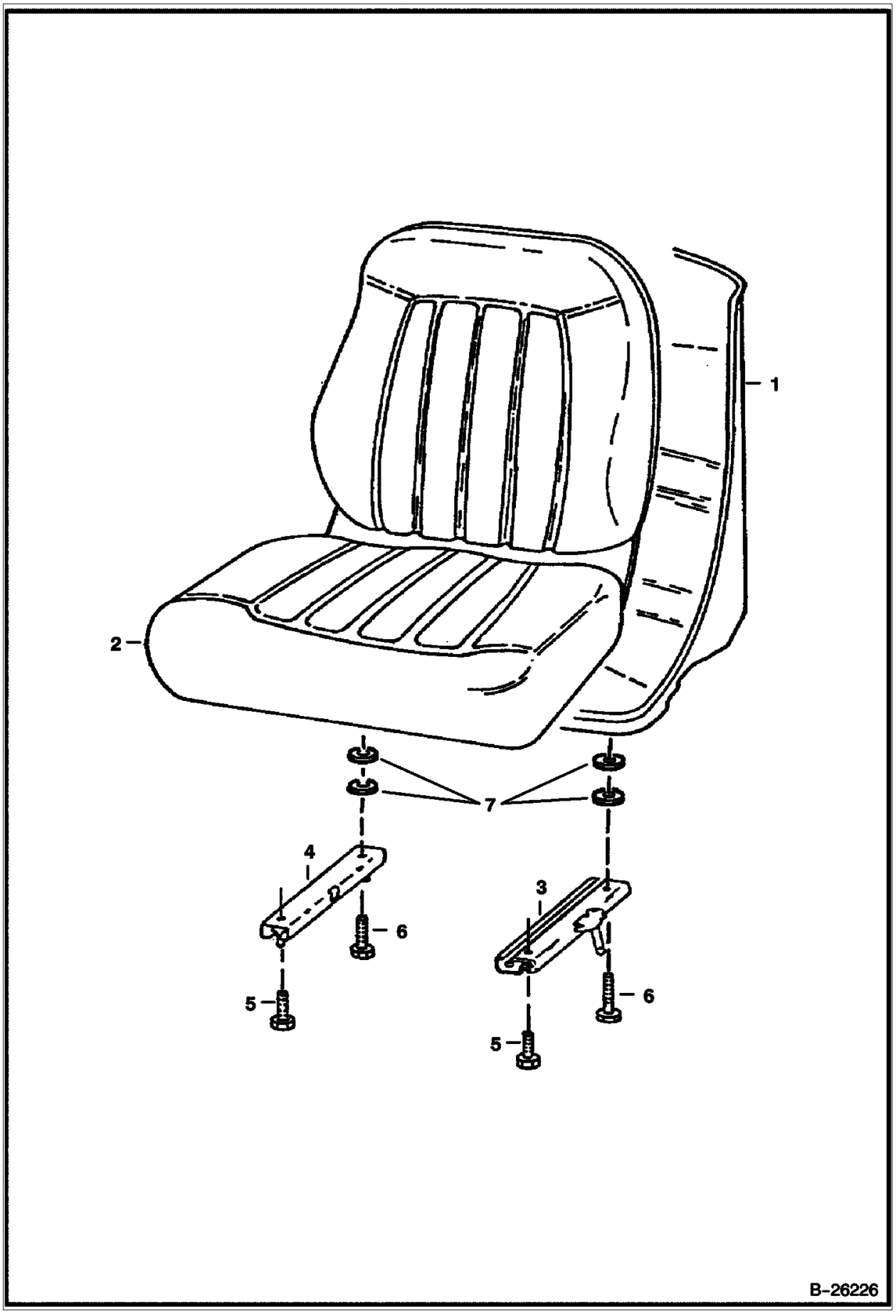

Illustration B26226

Model S160 K
6904270

Page 36 - OSS# 6300202494 - All rights reserved by Bobcat Company - 02/11/2016 - 14:15:02 - Produced by Ken Cook Co. with mediaioff

SEAT (Cont'd)
(Michigan)

Ref No	Part Number	Description	Remarks	Serial Number	Qty
1	6669135	SEAT, OPERATOR VINYL	See Illustration SEAT COVERS / NA10386 W/Ref. 2-7		1
2	6670160	CUSHION, SEAT	W/edging, clip & (2) grommets		1
2		EDGING	NSS		1
2		CLIP	NSS		1
3	6674013	TRACK	LH - W/ 8" (203,2 mm) latch		1
4	6669089	RH TRACK	RH - W/O latch		1
5	25G512	SCREW			2
6	25G520	SCREW			2
7	6672715	NYLNSPACR			4

Page 37 - OSS# 6300202494 - All rights reserved by Bobcat Company - 02/11/2016 - 14:15:02 - Produced by Ken Cook Co. with media1off

PANELS
(Manual Controls)

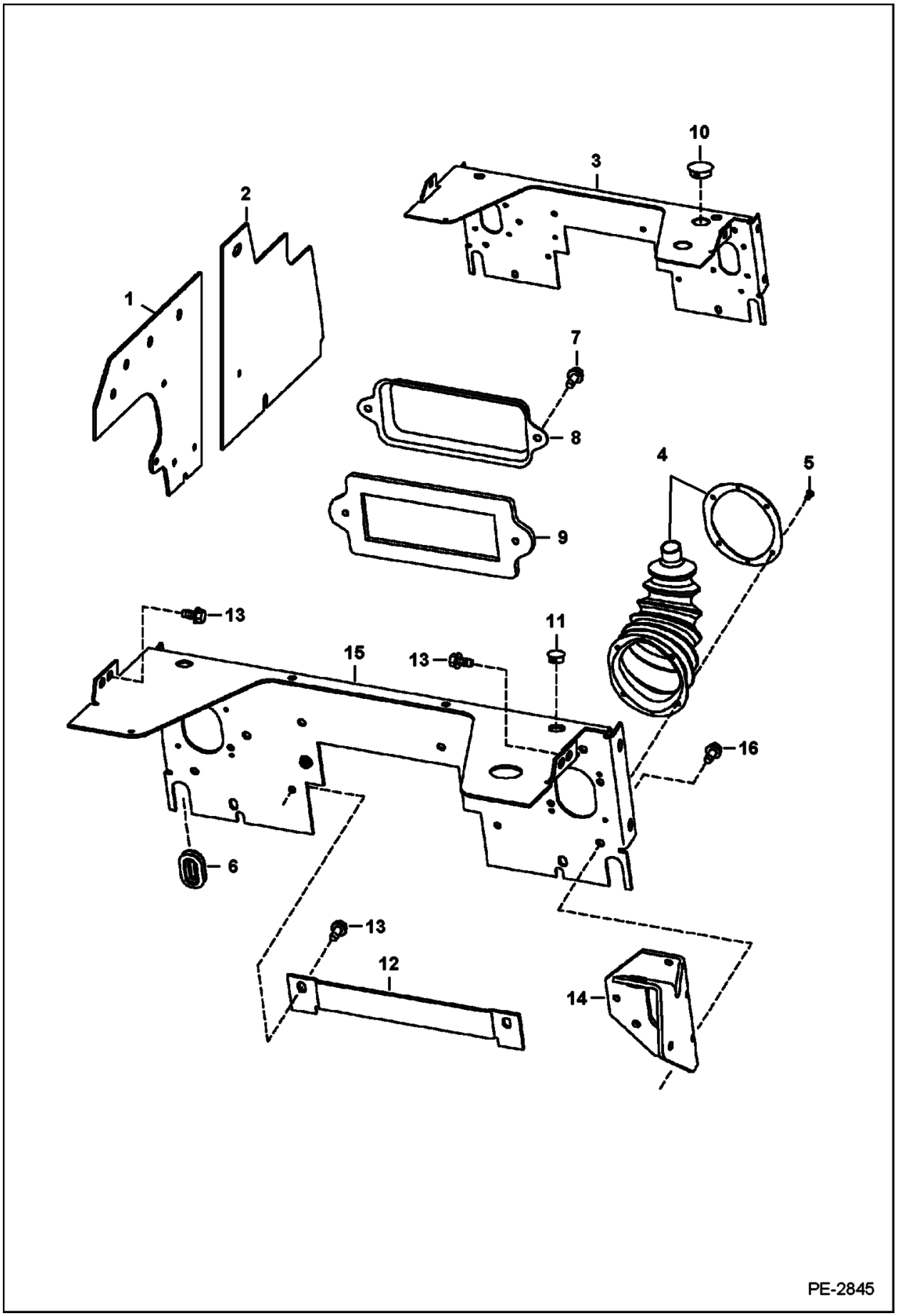

Illustration PE2845

Model S160 K
6904270

Page 38 - OSS# 6300202494 - All rights reserved by Bobcat Company - 02/11/2016 - 14:15:02 - Produced by Ken Cook Co. with mediaioff

PANELS (Cont'd)
(Manual Controls)

Ref No	Part Number	Description	Remarks	Serial Number	Qty
1	7117232	PANEL	side rear		1
1	7141968	PANEL, RH	side rear		1
2	7117123	PANEL	side front		2
3		SHIELD	NLA - Order Ref. 15 - Was 7106687 [A]		1
4	6532127	BOOT, RUBBER	W/mounting ring		2
4		RING	NSS - mounting ring		2
5	6630207	RIVET 5			12
6	6577961	GROMMET			2
7	84G3112	BOLT 5			2
8	6716621	FUSE BOX COVER	Was 7176546 [A]		1
9	6725302	GASKET			1
10	6681469	PLUG	35 mm (1.38") dia hole		1
11	6648348	PLUG	0.81" dia hole		2
12	6717890	COVER			1
13	84G3712	BOLT 5			24
14		BRACKET	See Illustration HAND CONTROLS / NA6667 - RH - Was 6733022 [A]		1
14		BRACKET	See Illustration HAND CONTROLS / NA6667 - LH - Was 6733024 [A]		1
15	7139183	SHIELD			1
16	84G3708	SCREW			2

Page 39 - OSS# 6300202494 - All rights reserved by Bobcat Company - 02/11/2016 - 14:15:02 - Produced by Ken Cook Co. with media1off

PANELS
(Selectable Joystick Controls)

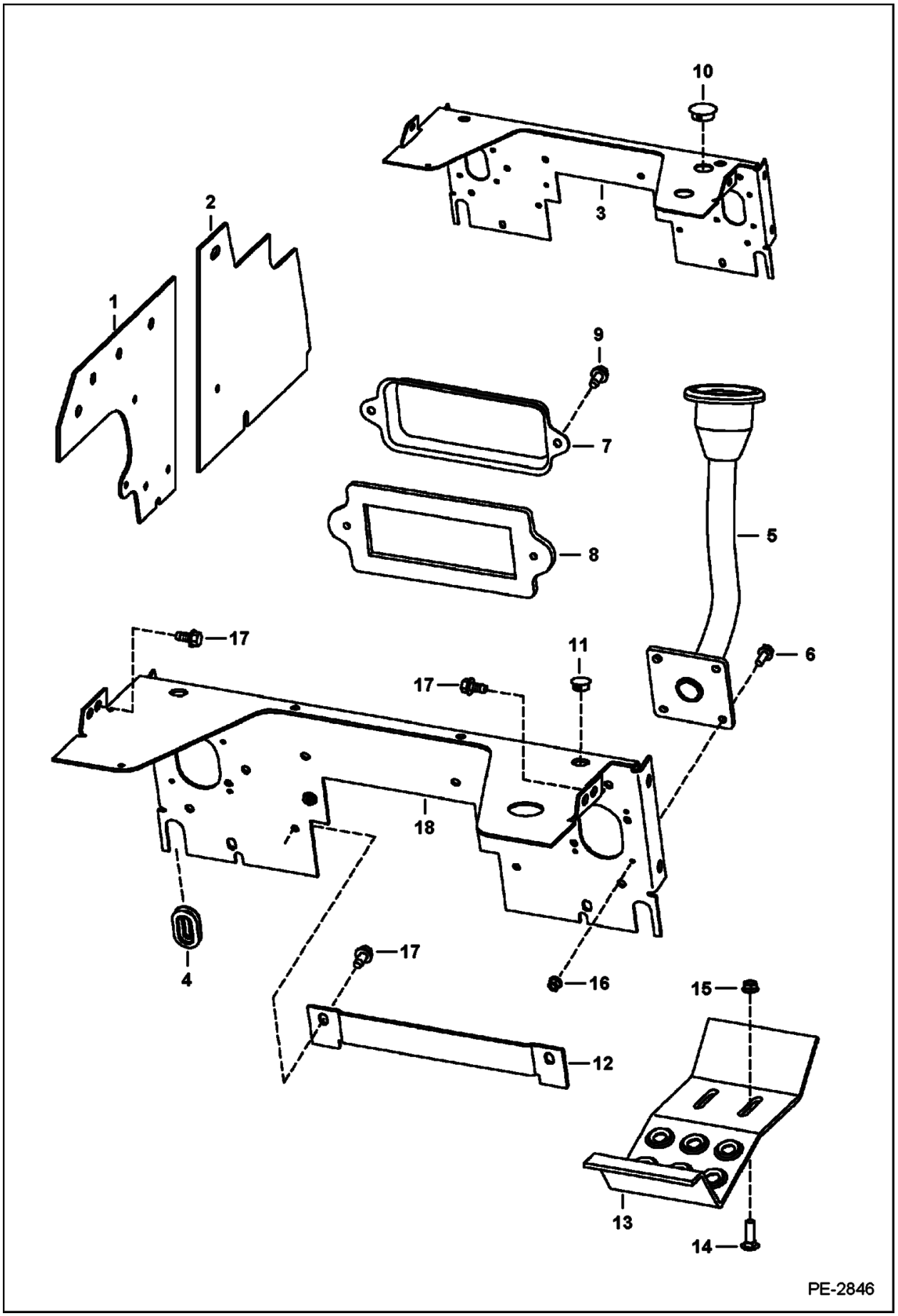

Illustration PE2846

Model S160 K
6904270

Page 40 - OSS# 6300202494 - All rights reserved by Bobcat Company - 02/11/2016 - 14:15:02 - Produced by Ken Cook Co. with mediaioff

PANELS (Cont'd)
(Selectable Joystick Controls)

Ref No	Part Number	Description	Remarks	Serial Number	Qty
1	7117232	PANEL	side rear		1
1	7141968	PANEL, RH	side rear		1
2	7117123	PANEL	side front		2
3		SHIELD	NLA - Order Ref. 18 - Was 7106687 [A]		1
4	6714726	PLUG			2
5		HANDLE	See Illustration CONTROLS ELECTRICAL / PE2681 - NLA - joystick - RH - Was 6729791 [A]		1
5		HANDLE	See Illustration CONTROLS ELECTRICAL / PE2681 - NLA - joystick - LH - Was 6729792 [A]		1
6	35C512	BOLT			8
7	6716621	FUSE BOX COVER	Was 7176546 [A]		1
8	6725302	GASKET			1
9	84G3112	BOLT 5			2
10	6681469	PLUG	35 mm (1.38") dia hole		1
11	6648348	PLUG	0.81" dia hole		2
12	6717890	COVER			1
13	6712365	STEP			2
14	37C620	BOLT			4
15	57D6	NUT 5			4
16	89D5	NUT			8
17	84G3712	BOLT 5			26
18	7139183	SHIELD			1

Page 41 - OSS# 6300202494 - All rights reserved by Bobcat Company - 02/11/2016 - 14:15:02 - Produced by Ken Cook Co. with media1off

REAR DOOR

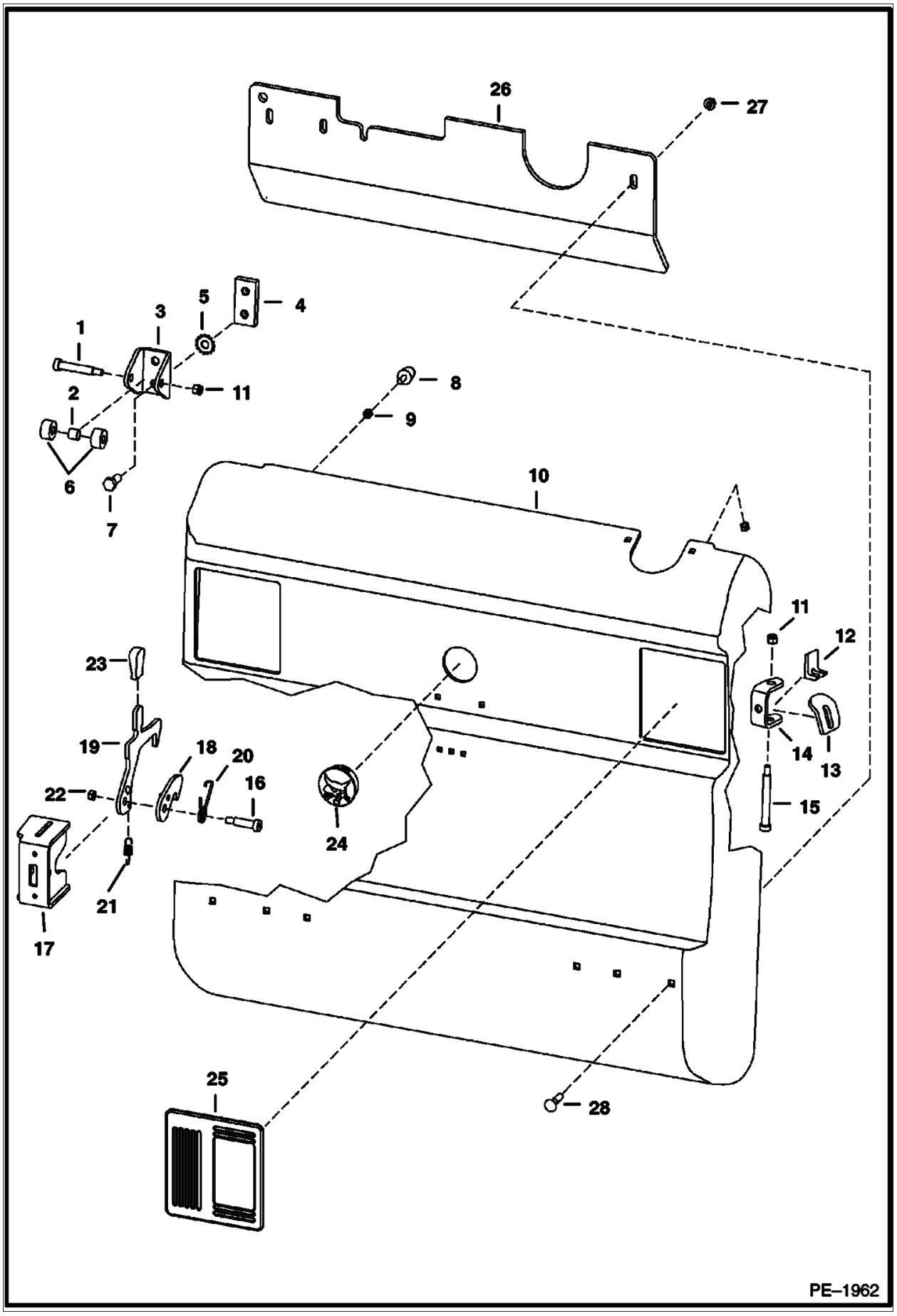

Illustration PE1962

Model S160 K
6904270

Page 42 - OSS# 6300202494 - All rights reserved by Bobcat Company - 02/11/2016 - 14:15:02 - Produced by Ken Cook Co. with mediaoff

REAR DOOR (Cont'd)

Ref No	Part Number	Description	Remarks	Serial Number	Qty
1	38C840	BOLT	carriage		1
2	6809734	BUSHING			1
3	6809727	CHANNEL			1
4	6719525	BAR	threaded striker		1
5	6675273	WASHER	lock		2
6	6809726	ROLLER			2
7	17C820	BOLT 5			2
8	6733616	BUMPER	tapered		2
9	61D5	NUT 10			4
10	6729991	REAR DOOR			1
11	59D6	NUT			3
12	6719766	STOP			1
13	6714126	STOP			2
14	6733575	HINGE, REAR DOOR	weld on		2
15	6809845	BOLT			2
16	38C824	SCREW			1
17	6729939	LATCH PLATE	weld on		1
18	6733667	LATCH, REAR DOOR			1
19	6732715	LATCH			1
20	6810132	SPRING			1
21	6810141	SPRING			1
22	85D6	NUT, 5			1
23	6564452	LEVERGRIP			1
24	6718796	PLUG			1
25	6670287	COVER			2
26	6725256	COUNTERWEIGHT			3
27	57D6	NUT 5			3
28	37C632	BOLT			3

Page 43 - OSS# 6300202494 - All rights reserved by Bobcat Company - 02/11/2016 - 14:15:02 - Produced by Ken Cook Co. with media1off

LIFT ARMS & BOB-TACH

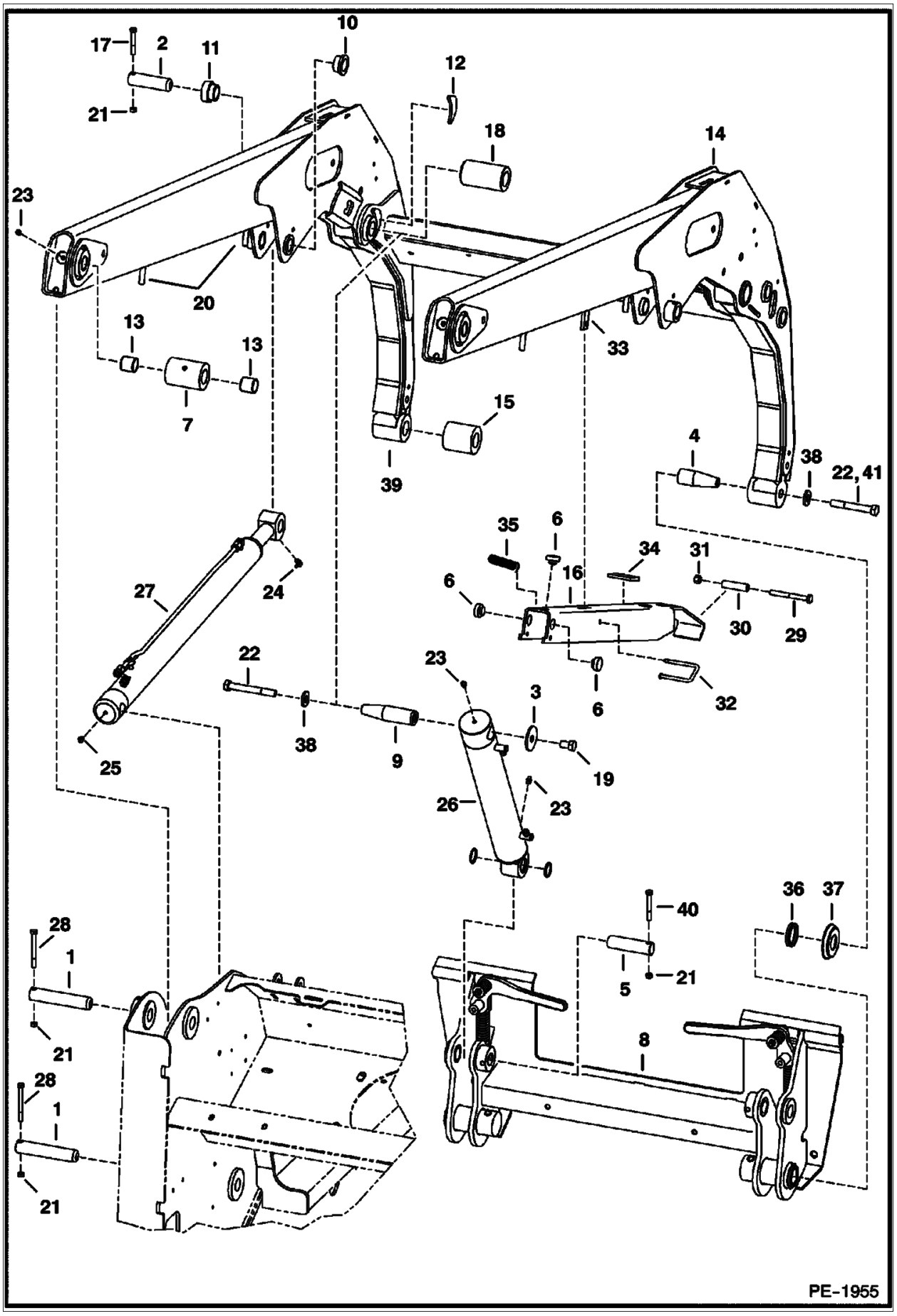

Illustration PE1955

Model S160 K
6904270

Page 44 - OSS# 6300202494 - All rights reserved by Bobcat Company - 02/11/2016 - 14:15:02 - Produced by Ken Cook Co. with mediaioff

LIFT ARMS & BOB-TACH (Cont'd)

Ref No	Part Number	Description	Remarks	Serial Number	Qty
1	6717560	PIN, PIVOT	1.25" x 6.46" (31,8 mm x 164,0 mm)		4
2	6718789	PIN, PIVOT	1.25" x 4.40" (31,8 mm x 111,8 mm)		2
3	6731160	WASHER			2
4	7101078	PIN, PIVOT TAPERED	tapered - 38 x 103 mm (1.5 x 4.05")		2
5	6577954	PIN, PIVOT	1.25" x 4.65" (31,7 mm x 118 mm)		4
6	6519178	BUMPER			3
7	7216445	BUSHING, WELD-ON	W/Ref. 13 - Was 6732265		2
8		BOB-TACH	See Illustration BOB-TACH / PE1540 SALES		2
9	6734662	PIN, PIVOT TAPERED	tapered - 1.5" x 5.7" (38,1 mm x 144,8 mm)		2
10	6717025	BUSHING	weld-on - Was 6703616 [B]		2
11	6555987	BUSHING	weld on		2
12	6733749	GUSSET			2
13	6717562	BUSHING, WEAR			4
14		LIFT ARM	Contact your Local Dealer for Bobcat Technical Information BTI380 NLA - Was 6734088 [A]		1
15	7120498	BUSHING, TAPERED	weld on - service only - 3.05" (77,5 mm) long - W/tapered hole for 1.5" (38,1 mm) dia. pin - Use W/Ref. 14 (NLA/6734088 lift arm)		2
15	7160425	BUSHING, TAPERED	weld on - service only - 3.50" (87,6 mm) long - W/tapered hole for 1.5" (38,1 mm) dia pin		2
16	6734538	STOP	lift arm		1
17	17C640	BOLT			2
18	6734660	BUSHING, WELD ONQ	weld on		2
19	17C1016	BOLT			2
20	1313995	STUD	weld on		4
21	85D6	NUT, 5			8
22	17C1080	SCREW			2
23	10H25	FITTING, GREASE 5			6
24	12H15	FITTING, GREASE 5			2
25	11H15	FITTING10			2
26		CYLINDER	See Illustration TILT CYLINDER / PE2870 TILT		2
27		CYLINDER	See Illustration LIFT CYLINDER / TS1097 LIFT		2
28	17C660	BOLT			4
29	17C656	BOLT			1
30	6700533	TUBE SPAC			1
31	61D6	NUT 5			1
32	6714810	PIN, RETAINER	retainer		1
33	6705091	TAB	weld on		1
34	6704436	RUBBERPAD			1
35	6579072	SPRING			1
36	6651709	SEAL, OIL			2
37	6732443	CUP, SEAL	seal		2
38	27E10	WASHER			4
39		ARM	NSS - lower - weld on		2
40	17C648	BOLT 5			2
41	47C1080	BOLT	W/pre-applied thread lock - Use W/Ref. 14 (NLA/ 6734088 lift arm)		2
41	47C1088	BOLT	W/pre-applied thread lock - Use W/Ref. 14 (7114258 lift arm)		2

Page 45 - OSS# 6300202494 - All rights reserved by Bobcat Company - 02/11/2016 - 14:15:02 - Produced by Ken Cook Co. with media1off

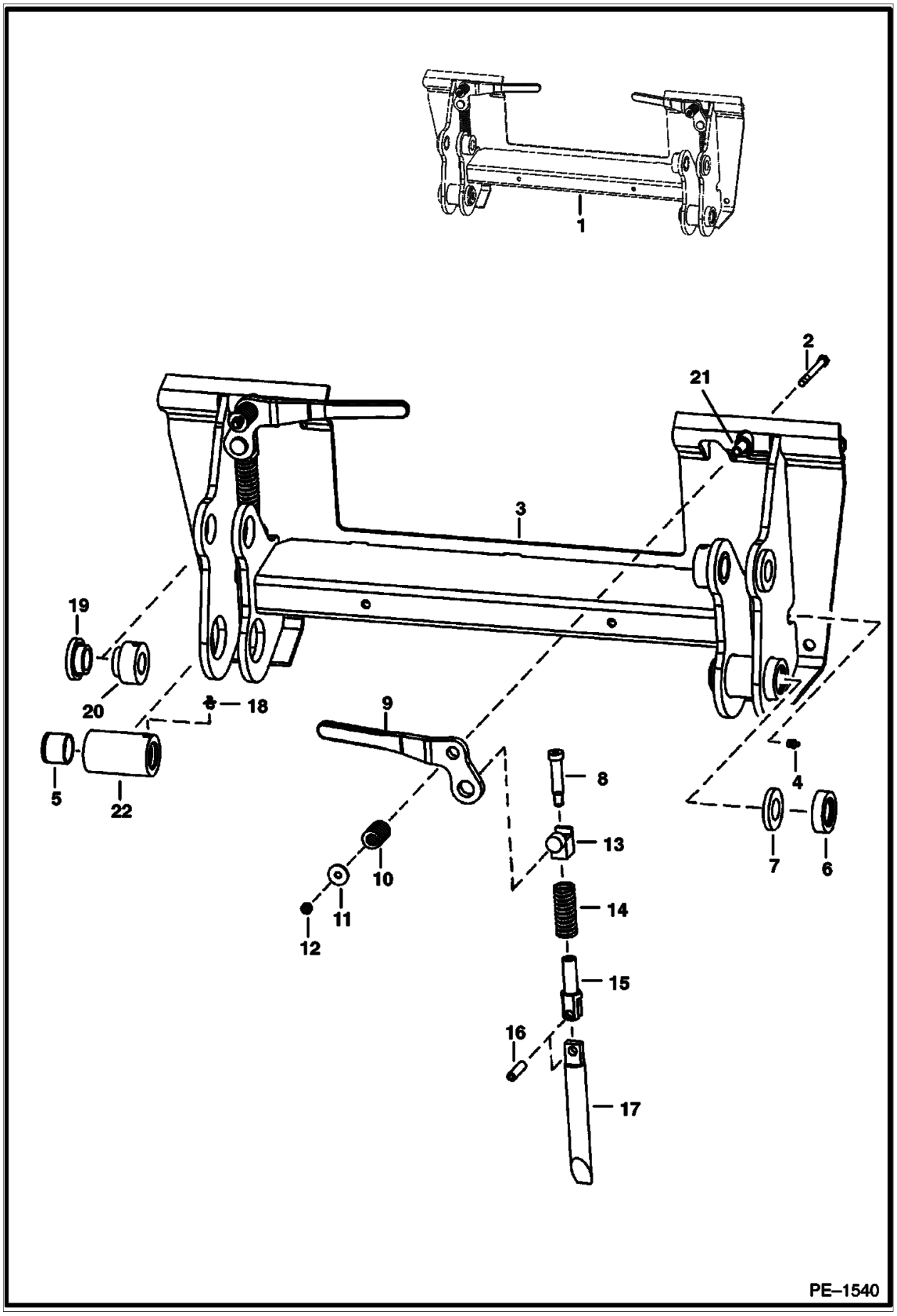

Illustration PE1540

Model S160 K
6904270

Page 46 - OSS# 6300202494 - All rights reserved by Bobcat Company - 02/11/2016 - 14:15:02 - Produced by Ken Cook Co. with mediaioff

BOB-TACH (Cont'd)

Ref No	Part Number	Description	Remarks	Serial Number	Qty
1	7143508	BOB-TACH	See Illustration DECALS / B26113 Also Order 6561383 decal - Was 6732537 [A]		1
1		KIT, POWER BOB-TACH	See Illustration POWER BOB-TACH / PE2869		1
2	17C660	BOLT			2
3		FRAME	NLA		1
4	10H35	FITTING, GREASE 10			2
5	6730997	BUSHING, WELD-ON	press fit		2
6	6732443	CUP, SEAL	seal		2
7	6651709	SEAL, OIL			2
8	6728473	BOLT, SHOULDER	pre-applied thread locker		2
9	6702904	LEVER, BOB-TACH RH			1
9	6702903	LEVER, BOB-TACH LH			1
10	6713040	SPRING, COMPRESSION			2
11	619021	WASHER, 5			2
12	85D6	NUT, 5			2
13	6731119	PIVOT, WEDGE			2
14	6578253	SPRING, COMPRESSION	Was 6562018 [A]		2
15	6704248	PIVOT, WEDGE			2
16	14J5032	PIN, STRAIGHT			2
17	6737191	WEDGE, BOB-TACH			2
18	743332	FITTING, GREASE 5			2
19	6717259	BUSHING	weld on		2
20	6717260	BUSHING	weld on		2
21	6702958	BUSHING, WELD-ON			2
22	6731979	BUSHING, WELD-ON	weld on - Also Order Ref. 5 & 18		2

Page 47 - OSS# 6300202494 - All rights reserved by Bobcat Company - 02/11/2016 - 14:15:02 - Produced by Ken Cook Co. with media1off

FUEL SYSTEM

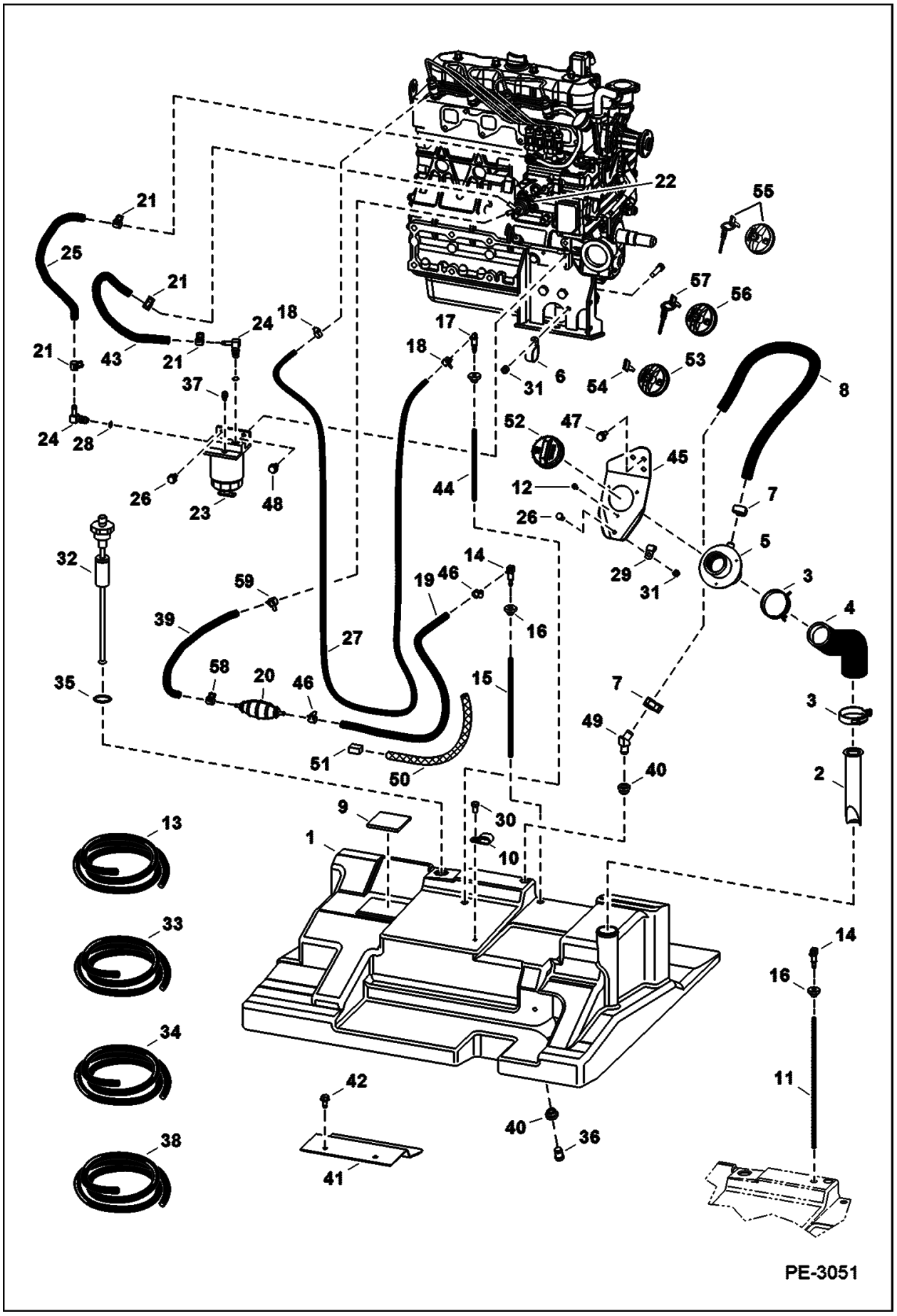

Illustration PE3051

Model S160 K
6904270

Page 48 - OSS# 6300202494 - All rights reserved by Bobcat Company - 02/11/2016 - 14:15:02 - Produced by Ken Cook Co. with mediaioff

FUEL SYSTEM (Cont'd)

Ref No	Part Number	Description	Remarks	Serial Number	Qty
1		TANK FUEL	Use W/Ref. 11 - Order 7136378 tank & Ref. 44 - Was 7112782 [A]		1
1	7136378	TANK, FUEL	Use W/Ref. 44 - Was 7112782 [A]		1
2	7120881	SCREEN, FILLER	Was 6569219 [A]		1
3	42H32	HS CLAMP5	worm gear		2
3	5HM58	CLAMP	constant tension		2
4	6717704	HOSE			1
5	6701449	FLR.TUBE			1
6	30H75	CLAMP			1
7	42H10	HOSECLAM5	worm gear		2
7	5HM24	CLAMP	constant tension		2
8		HOSE	NLA - 1270 mm (50") long - Order Ref. 13		1
9	6578278	BUMP.PAD	self adhesive one side		2
10	31H27	CLIP			1
11	6729854	HOSE	317,5 mm (12.5") long		1
12	6706517	SCREW 10			3
13	6578172	HOSE, BULK	bulk - sold per foot		x
14	6598908	ELBOW			1
15	6729853	HOSE	260,4 mm (10.25") long		1
16	6553411	BUSHING, PRESS FIT 5	0.38" ID		2
17	7101291	ELBOW	3 barb on outlet end		2
18	42HS04	CLAMP, HOSE			2
19		HOSE	NLA - 939,8 mm (37") long - Order Ref. 33		1
20	6657734	PUMP, PRIMER HAND	barbed fittings for 6,35 mm (.25") ID hose		1
20	7219755	PUMP, PRIMER HAND	(1) barbed fitting for 6,35 mm (.25") ID hose & (1) barbed fitting for 7,94 mm (.3125') ID hose		1
21	5HM14	CLAMP			5
22	6655216	PUMP, FUEL	See Illustration FUEL & INJECTION PUMP / B22686		1
23	6667353	FILTER, FUEL ASSY	W/Ref. 37		1
23	6667352	FILTER, FUEL W/SEPARATOR 12			1
23	72F1	FITTING			1
24	6715183	ELBOW	W/Ref. 28		2
25		HOSE	NLA - 381 mm (15") long - Order Ref. 34		1
26	84G3112	BOLT 5			3
27		HOSE	NLA - 1574,8 mm (32") long - Order Ref. 38		1
28	79K5	O RING 10			x
29	30H22	CLIP			1
30	17C610	BOLT			1
31	85D5	NUT 5			1
32	7179837	SENSOR FUEL	W/Ref. 35 - Was 6680436 [A]		1
33	6577821	HOSE, BULK	bulk - sold per foot - .25" ID		x
34	6577822	HOSE, BULK	bulk - sold per foot - .3125" ID		x
35	6717579	GASKET			1
36	7203382	PLUG, STEEL	fuel drain - .75" shoulder - Was 6717401 [A]		1
37	6658180	PLUG, BLEED			1
38	6578169	HOSE, BULK/FT	bulk - sold per foot - 0.19" ID		x
39		HOSE	NLA - 6,35 mm (.25") ID - 431,8 mm (17") long - Order Ref. 33		1
39		HOSE, FUEL	NLA - 7,94 mm (.3125") ID - 432 mm (17") long - Order Ref. 34		1

Page 49 - OSS# 6300202494 - All rights reserved by Bobcat Company - 02/11/2016 - 14:15:02 - Produced by Ken Cook Co. with media1off

FUEL SYSTEM (Cont'd)

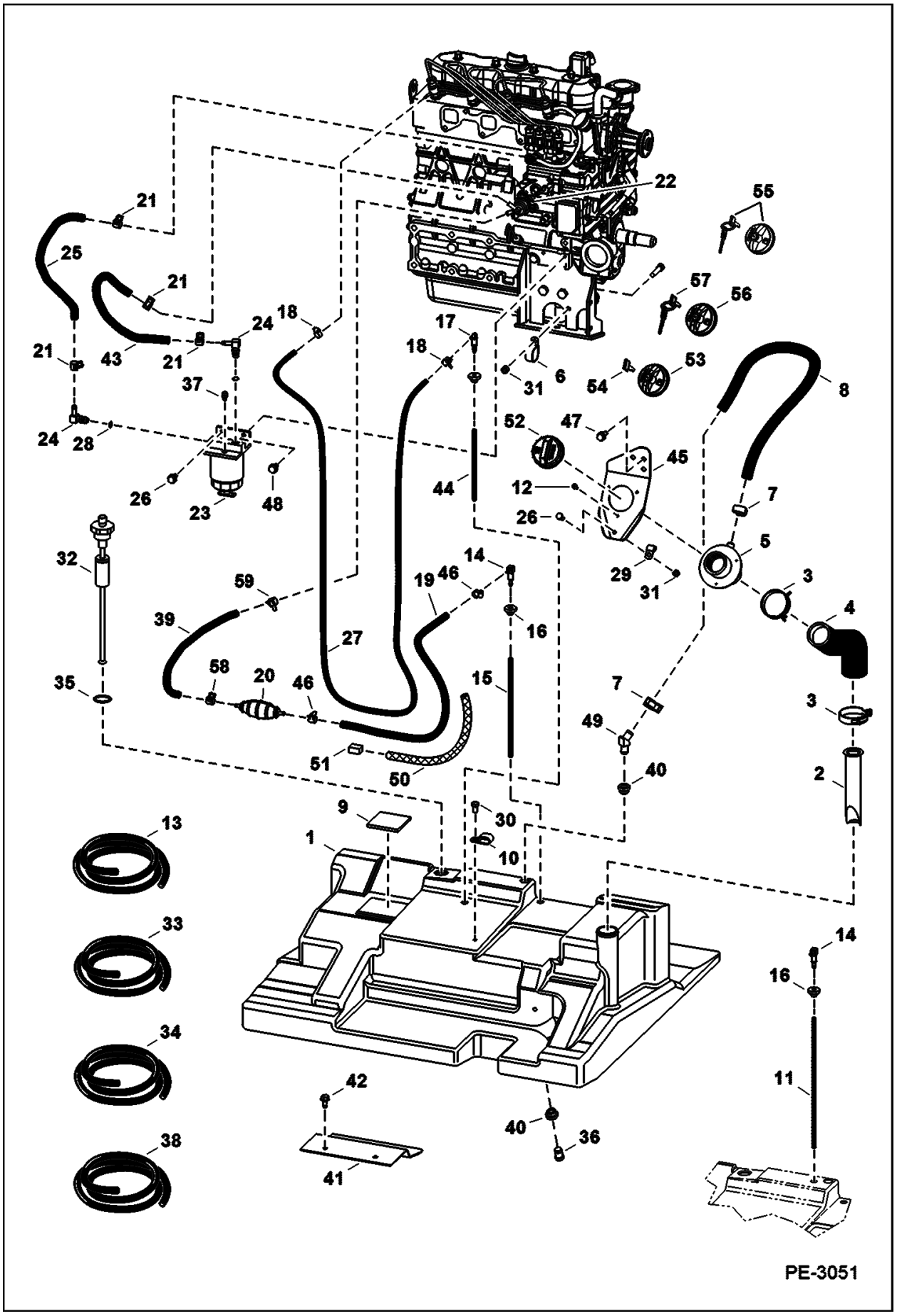

Illustration PE3051

Model S160 K
6904270

Page 50 - OSS# 6300202494 - All rights reserved by Bobcat Company - 02/11/2016 - 14:15:02 - Produced by Ken Cook Co. with mediaioff

FUEL SYSTEM (Cont'd)

Ref No	Part Number	Description	Remarks	Serial Number	Qty
40	6717402	BUSHING	0.54" ID		2
41	6737368	BRACKET			1
42	84G3712	BOLT 5			2
43		HOSE	NLA - 330 mm (13") long - Order Ref. 34		1
44		HOSE	284,5 mm (11.20") long - Order 7126464 hose W/elbow		1
44		HOSE	269,2 mm (10.60") long - Order 7126464 hose W/elbow - Was 7126472 [A]		1
44	7126464	HOSE, FUEL W/ELBOW			1
45	6731059	BRACKET	fuel fill		1
46	5HM13	CLAMP			3
47	84G3716	SCREW 5			2
48	84G3116	SCREW			1
49			NLA - 90 degree - Order 7122519 elbow - Was 6808798 [B]		1
49	7122519	ELBOW	45 degree		1
50	7124294	GUARD	457,2 mm (18") long		1
51	7124326	RETAINER	foam - 76,2 mm (3") long		1
52	6661114	CAP. DIESEL	green		1
52	7113340	CAP. DIESEL	non-locking - European		1
53		CAP	NLA - locking - W/Key - Code GC020		1
53	6661696	CAP, FUEL LOCKING	locking - W/Key - Code PK510		1
54	6654374	2 KEYS	Code GC020		1
54	6587458	KEY, CAP FUEL 5	Code PK510		1
55	7121223	CAP. DIESEL LOCKING	black		1
56	7023550	CAP, DIESEL LOCKING			1
57	6693241	KEY 10	ignition - single key W/O ring		1
58	5HM13	CLAMP	Use W/Ref. 33		1
58	5HM15	CLAMP	Use W/Ref. 34		1
59	5HM14	CLAMP	Use W/Ref. 33		1
59	5HM15	CLAMP	Use W/Ref. 34		1

Page 51 - OSS# 6300202494 - All rights reserved by Bobcat Company - 02/11/2016 - 14:15:02 - Produced by Ken Cook Co. with media1off

DRIVE TRAIN

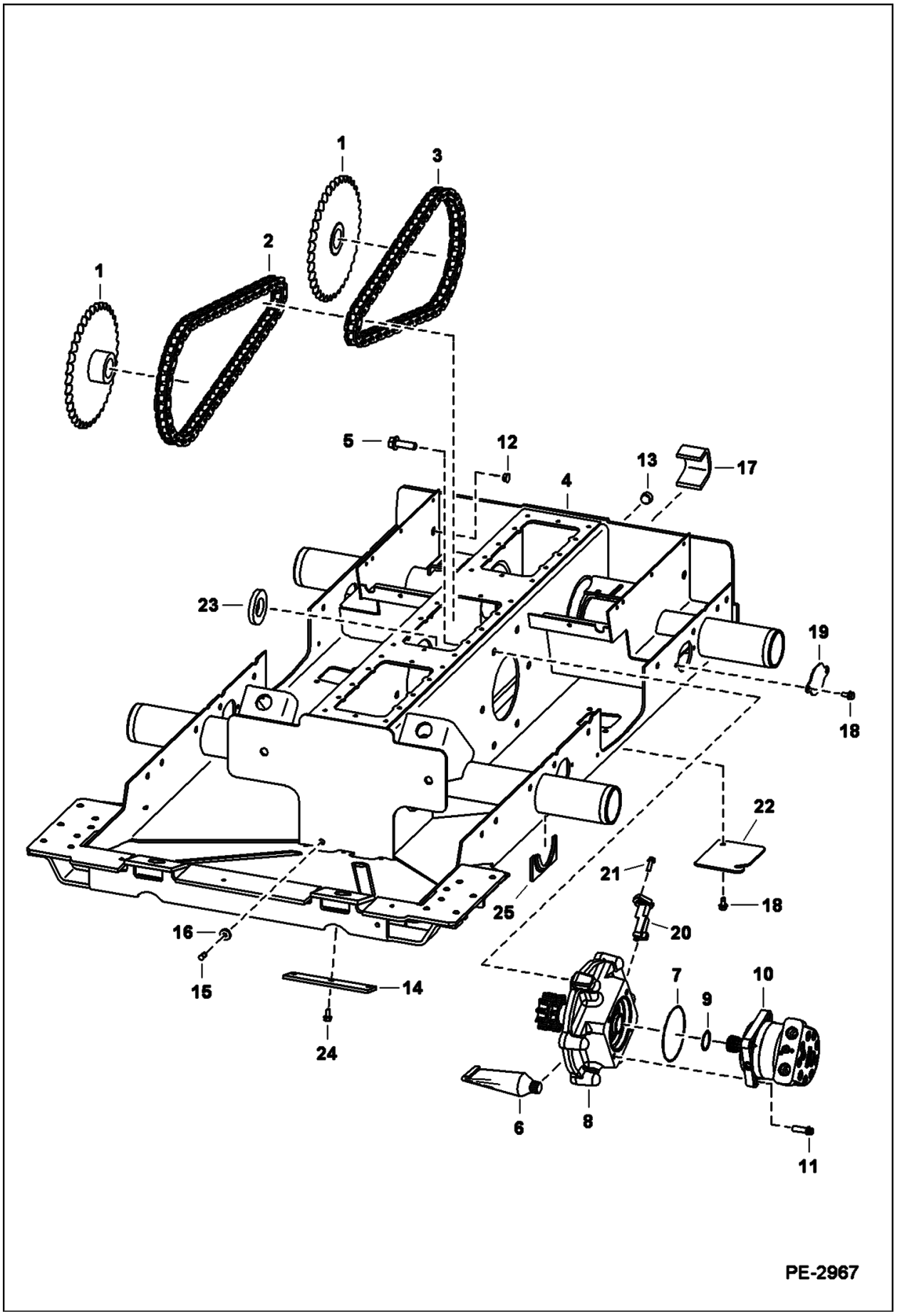

Illustration PE2967

Model S160 K
6904270

Page 52 - OSS# 6300202494 - All rights reserved by Bobcat Company - 02/11/2016 - 14:15:02 - Produced by Ken Cook Co. with mediaioff

DRIVE TRAIN (Cont'd)

Ref No	Part Number	Description	Remarks	Serial Number	Qty
1	7134137	SPROCKET	Was 6577204 [A]		4
2		CHAIN	NLA - 68 pitch - hour glass shape link - Diamond - Was 6703915 [A]		2
2		CHAIN	NLA - 68 pitch - oval shape link - Diamond - Was 6731217 [A]		2
2	6689652	CHAIN, DRIVE	68 pitch - hour glass shape link - Tsubaki		2
2	6510171	LINK	conn. - hour glass shape - Diamond		x
2	6675332	CHAIN LNK	conn. - oval shape - Diamond		x
2	6690709	LINK	conn. - hour glass shape - Tsubaki		x
3		CHAIN	NLA - 62 pitch - hour glass shape link - Diamond - Was 6579127 [A]		2
3		CHAIN	NLA - 62 pitch - oval shape link - Diamond - Was 6731218 [A]		2
3	6689651	CHAIN, DRIVEx	62 pitch - hour glass shape link - Tsubaki		2
3	6510171	LINK	conn. - hour glass shape - Diamond		x
3	6675332	CHAIN LNK	conn. - oval shape - Diamond		x
3	6690709	LINK	conn. - hour glass shape - Tsubaki		x
4		CHAINCASE	See Illustration DISC BRAKE / PE2278 NLA - Order 7122291 chaincase & 7121922 cover - Was 7106531 [A]		1
4	7122291	CHAINCASE	single speed motor		1
4	7130074	CHAINCASE	2-speed motor		1
5	35C1032	BOLT			12
6	6685372	SEALANT, GASKET LIQUID 10.1 OZ	tube - 0.57 kg (20 oz)		x
7	25K30508	RING,O			2
8		MOUNT ASSY.	See Illustration MOTOR CARRIER / PE3454 single speed motor - manual controls		2
8		MOUNT ASSY	See Illustration MOTOR CARRIER / PE1818 single speed motor - selectable joystick controls		2
8		MOUNT ASSY.	See Illustration MOTOR CARRIER / PE3455 2-speed motor - manual controls		2
8		MOUNT ASSY	See Illustration MOTOR CARRIER / PE3118 2-speed motor - selectable joystick controls		2
9	6664815	SEAL, OIL	supplied W/motor		2
10		MOTOR	See Illustration HYDROSTATIC MOTOR / PE2620 W/Ref. 9 - single speed		2
10		MOTOR	See Illustration HYDROSTATIC MOTOR / MS2315 W/Ref. 9 - 2-speed		2
11	93G824	BOLT	single speed motor - Was 73G824 [A]		8
11	93G1032	BOLT	2-speed motor		6
12	6657719	PLUG	0.75" dia hole		2
13	6731121	PLUG	chaincase fill		1
14	6700182	COVER, DRAIN			1
15	6599645	PLUG, STEEL	chaincase drain		1
16	6553411	BUSHING, PRESS FIT 5			2
17	6706485	BRACKET	tie down - weld-on		1
18	84G3712	BOLT 5	single speed motor		8
18	84G3712	BOLT 5	2-speed motor		12
19	6730078	COVER			2
20		SENSOR, SPEED TRAVEL	Contact your Local Dealer for Bobcat Technical Information BTI419 - NLA - Was 6677181 [A]		2
21	35C412	BOLT	selectable joystick controls		4
22	7240780	COVER, ACCESS	2-speed motor - Was 6716010 [A]		2

Page 53 - OSS# 6300202494 - All rights reserved by Bobcat Company - 02/11/2016 - 14:15:02 - Produced by Ken Cook Co. with media1off

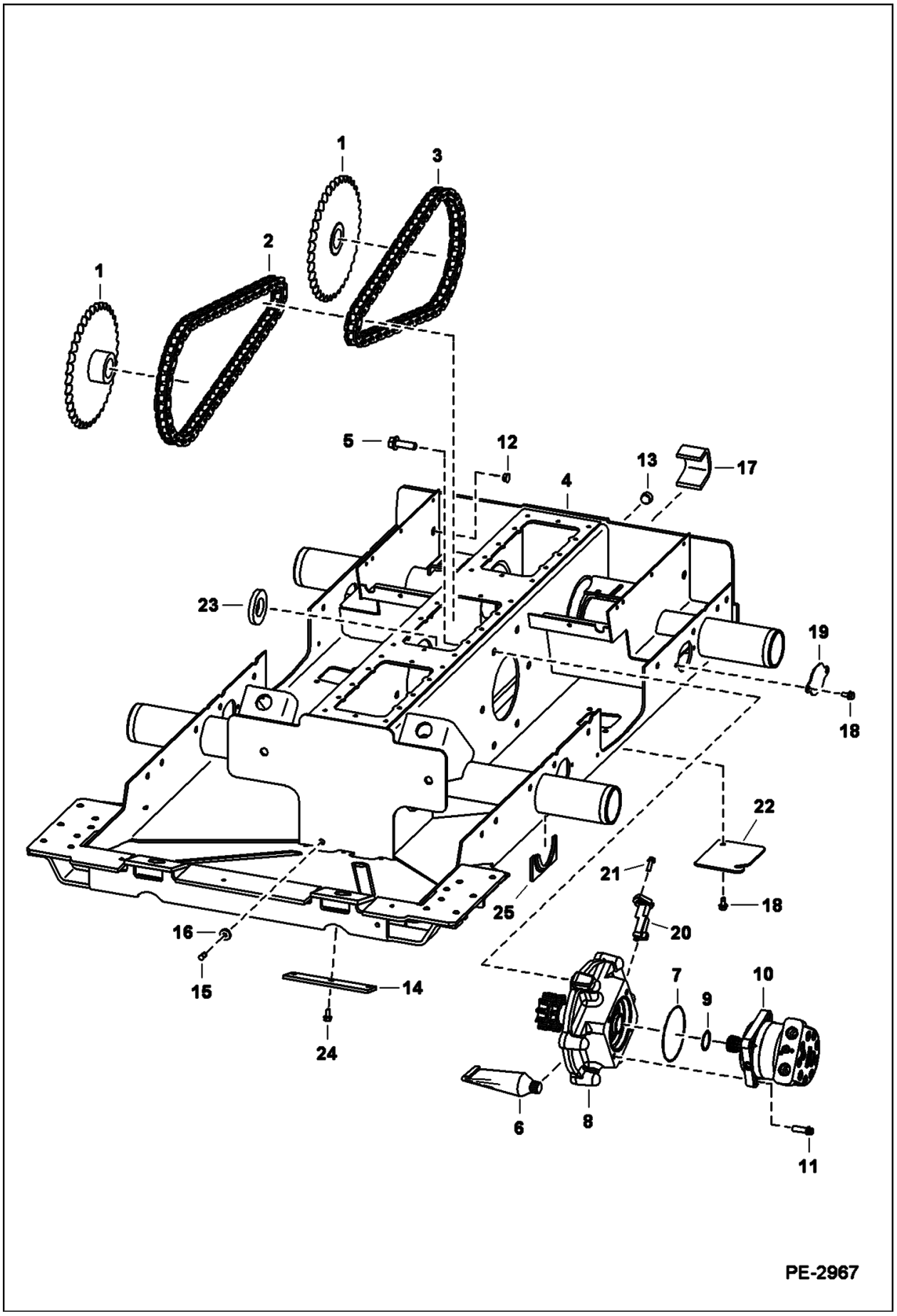

Illustration PE2967

Model S160 K
6904270

Page 54 - OSS# 6300202494 - All rights reserved by Bobcat Company - 02/11/2016 - 14:15:02 - Produced by Ken Cook Co. with mediaioff

DRIVE TRAIN (Cont'd)

Ref No	Part Number	Description	Remarks	Serial Number	Qty
23	6680055	MAGNET	selectable joystick controls		2
24	84G3712	BOLT 5			3
24	84G3716	SCREW 5			3
25	7191233	BRACE, AXLE	weld-on		4

Page 55 - OSS# 6300202494 - All rights reserved by Bobcat Company - 02/11/2016 - 14:15:02 - Produced by Ken Cook Co. with media1off

AXLE

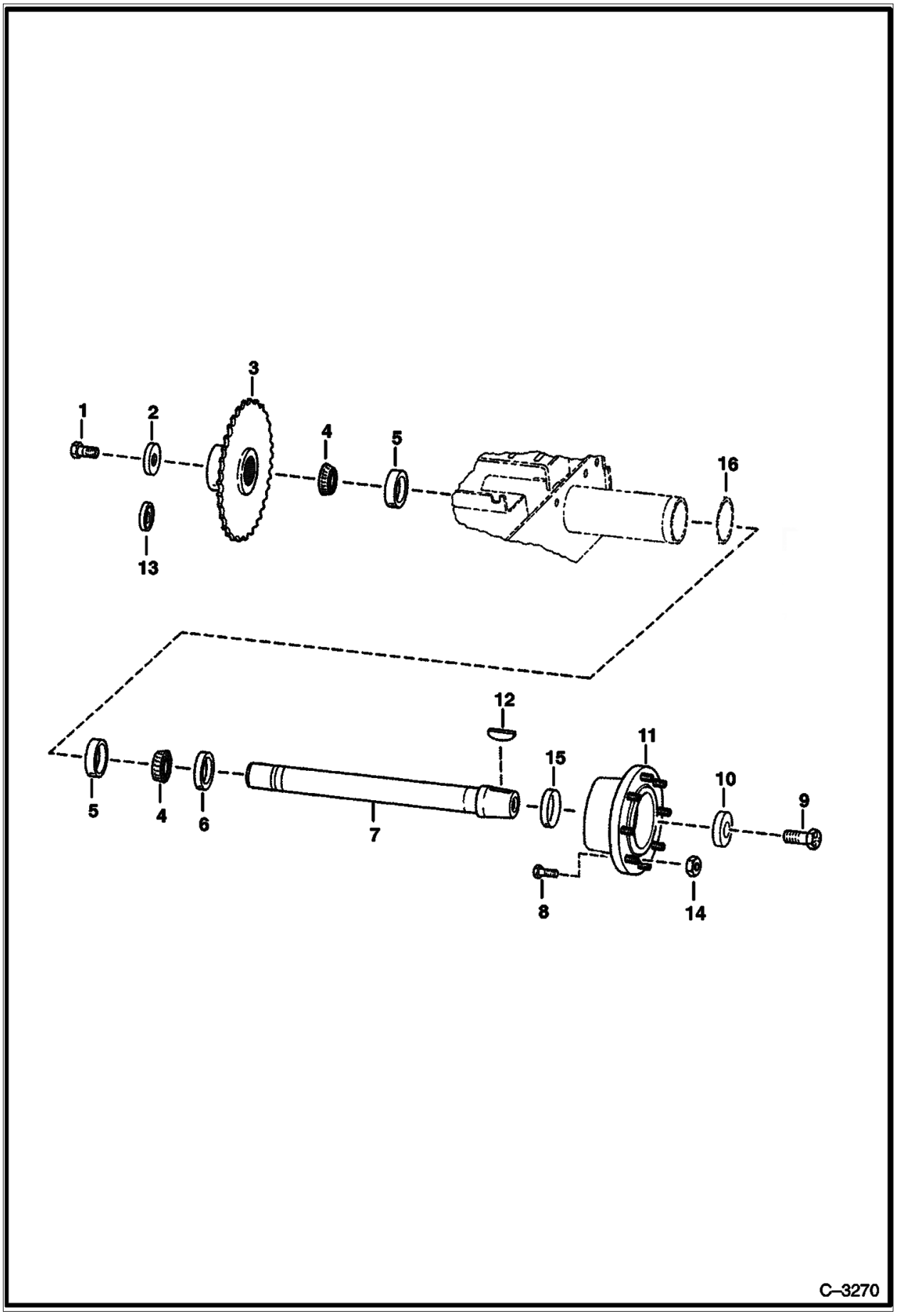

Illustration C3270

Model S160 K
6904270

Page 56 - OSS# 6300202494 - All rights reserved by Bobcat Company - 02/11/2016 - 14:15:02 - Produced by Ken Cook Co. with mediaioff

AXLE (Cont'd)

Ref No	Part Number	Description	Remarks	Serial Number	Qty
1	6679247	BOLT	plated - 1.75" (44,5 mm) long		1
2	6552871	WASHER			1
3	7134137	SPROCKET	Was 6577204 [A]		1
4	6689775	BEARING, AXLE	Was 6519925 [A]		2
5	6689638	CUP, BEARING	Was 6634609 [A]		2
6	6658228	SEAL, OIL			1
7	6706427	SHAFT, AXLE			1
8	6709170	BOLT, WHEEL			8
9	18C1636	BOLT	2.25"(57,2 mm) long		1
10	6716843	WASHER	recessed		1
11	6578689	HUB, WHEEL	W/Ref. 8		1
12	6J1664	KEY			1
13	6563606	WASHER	recessed - Used to take up .005 or .010 end play on axle		1
14	6564669	NUT, 10	wheel		8
15	6662306	RING, WEAR	wear - service part only		1
15	6722907	KIT, SEAL	See Illustration AXLE SEAL KIT / B4041 - axle seal & wear sleeve		4
16		O-RING	NSS - if equipped - for production use only		1

Page 57 - OSS# 6300202494 - All rights reserved by Bobcat Company - 02/11/2016 - 14:15:02 - Produced by Ken Cook Co. with media1off

MOTOR CARRIER
(Drive Motor Mount Assy.) (Single Speed Motor) (W/O Speed Sensor)

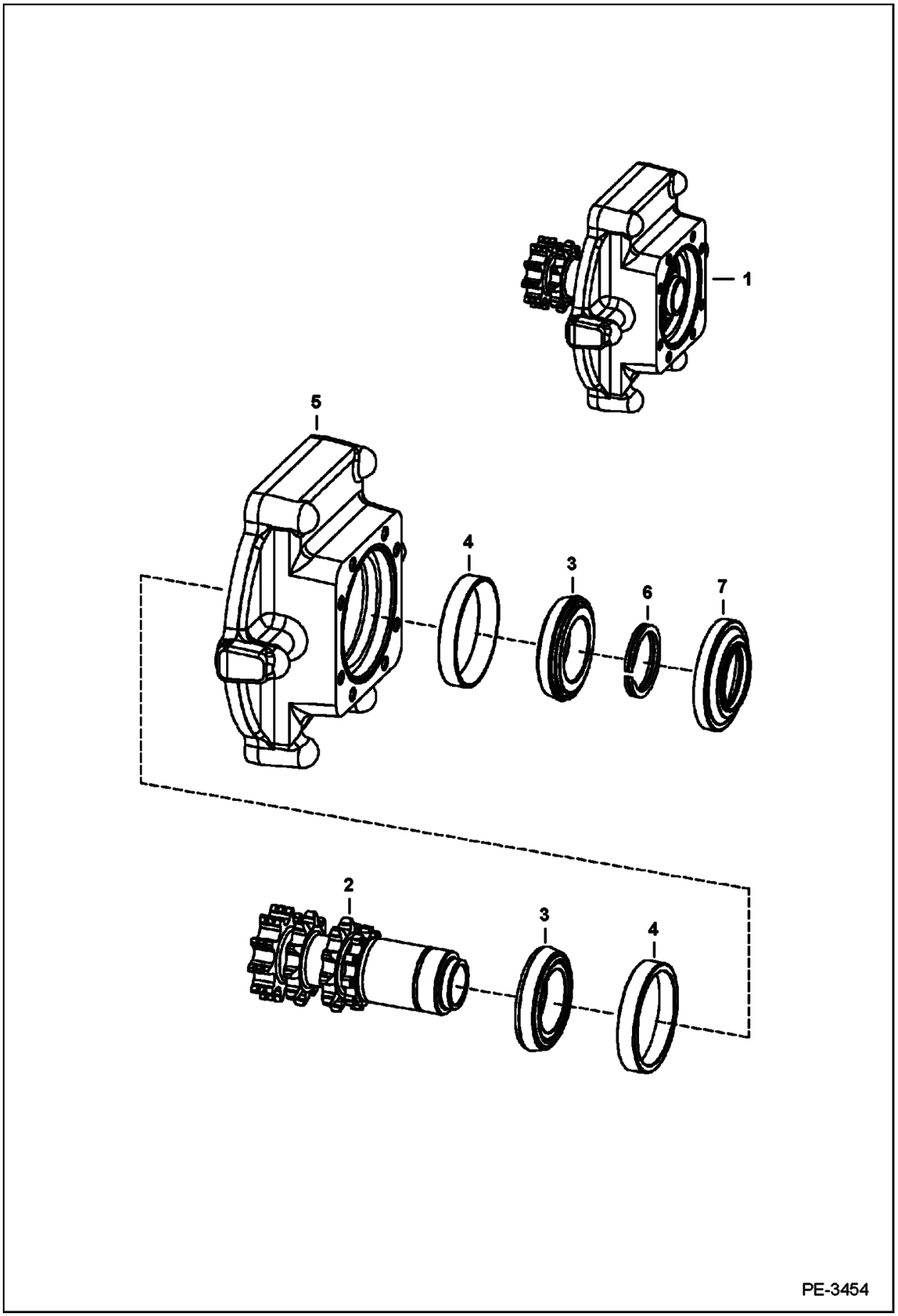

Illustration PE3454

Model S160 K
6904270

Page 58 - OSS# 6300202494 - All rights reserved by Bobcat Company - 02/11/2016 - 14:15:02 - Produced by Ken Cook Co. with mediaioff

MOTOR CARRIER (Cont'd)
(Drive Motor Mount Assy.) (Single Speed Motor) (W/O Speed Sensor)

Ref No	Part Number	Description	Remarks	Serial Number	Qty
1	7218166	CARRIER, MOTOR	NLA - Ref. 2-7 - Was 7148363 [A]		1
2	7161187	SHAFT, TRANS	double snap ring groove - Was 6733621 [A]		1
3	6632218	CONE, BEARING			2
4	6632541	RACE			1
5		HOUSING	NLA - Order Ref. 1 - Was 7218165 [A]		1
6	6571851	SNAP RING	0.118" thickness		1
6	6571852	SNAP RING	0.125" thickness		1
7	6705847	SEAL, OIL			1

Page 59 - OSS# 6300202494 - All rights reserved by Bobcat Company - 02/11/2016 - 14:15:02 - Produced by Ken Cook Co. with media1off

MOTOR CARRIER
(Drive Motor Mount Assy) (Single Speed Motor) (W/Speed Sensor)

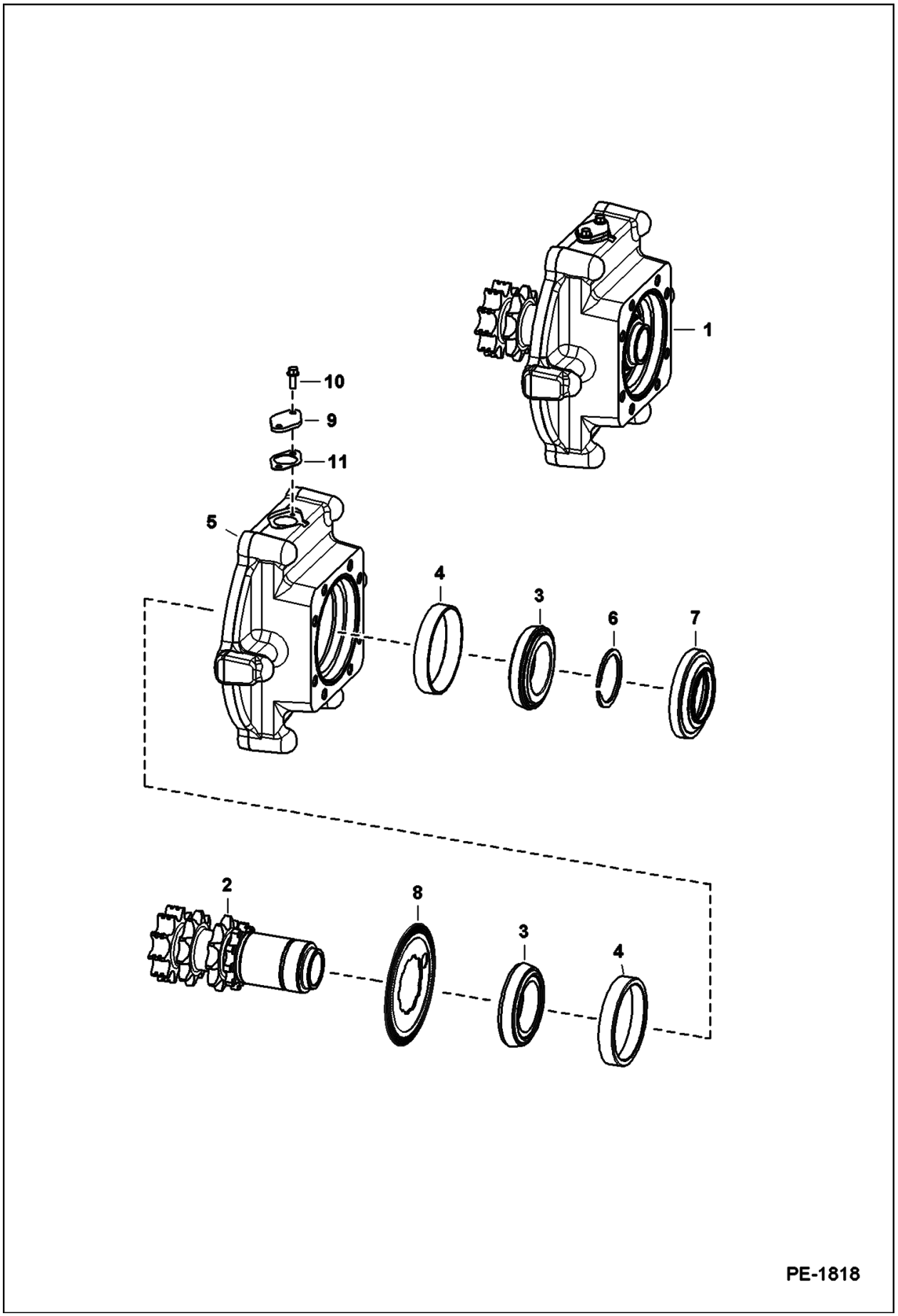

Illustration PE1818

Model S160 K
6904270

Page 60 - OSS# 6300202494 - All rights reserved by Bobcat Company - 02/11/2016 - 14:15:02 - Produced by Ken Cook Co. with mediaioff

MOTOR CARRIER (Cont'd)
(Drive Motor Mount Assy) (Single Speed Motor) (W/Speed Sensor)

Ref No	Part Number	Description	Remarks	Serial Number	Qty
1		MOUNT ASMBLY	Contact your Local Dealer for Bobcat Technical Information BTI419 - NLA - drive motor - Ref. 2-11 - Was 6733617 [A]		1
2	7161187	SHAFT, TRANS	double snap ring groove - Was 6733621 [A]		1
3	6632218	CONE, BEARING			2
4	6632541	RACE			1
5		HOUSING	Contact your Local Dealer for Bobcat Technical Information BTI419 - NLA - Order Ref. 1 - Was 7133921 [A]		1
6	6571851	SNAP RING	0.118" thickness		1
6	6571852	SNAP RING	0.125" thickness		1
7	6705847	SEAL, OIL			1
8	6690561	MAGNET	speed sensor - Was 6688924 [A]		1
9	6730013	COVER			1
10	35C412	BOLT			2
11	7110287	GASKET			1

Page 61 - OSS# 6300202494 - All rights reserved by Bobcat Company - 02/11/2016 - 14:15:02 - Produced by Ken Cook Co. with media1off

MOTOR CARRIER
(Drive Motor Mount Assy.) (2-Speed Motor) (W/O Speed Sensor)

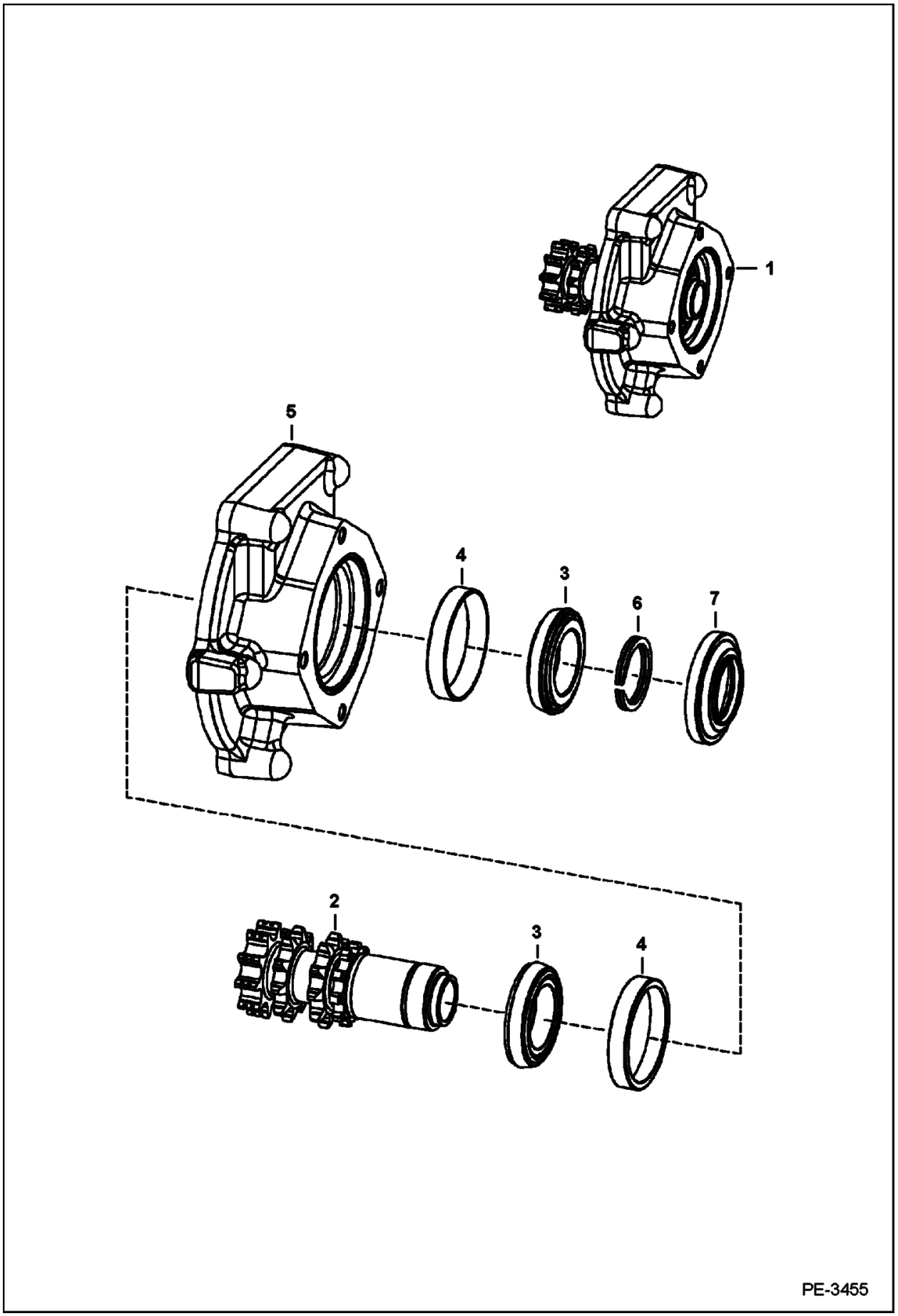

Illustration PE3455

Model S160 K
6904270

Page 62 - OSS# 6300202494 - All rights reserved by Bobcat Company - 02/11/2016 - 14:15:02 - Produced by Ken Cook Co. with mediaioff

MOTOR CARRIER (Cont'd)
(Drive Motor Mount Assy.) (2-Speed Motor) (W/O Speed Sensor)

Ref No	Part Number	Description	Remarks	Serial Number	Qty
1	7214504	CARRIER, MOTOR	NLA - Ref. 2-7 - Was 7148364		1
2	7120109	SHAFT	double snap ring groove		1
3	6632218	CONE, BEARING			2
4	6632541	RACE			2
5		HOUSING	NLA - Order Ref. 1 - Was 7214503 [A]		1
6	6571851	SNAP RING	0.118" thickness		1
6	6571852	SNAP RING	0.125" thickness		1
7	6705847	SEAL, OIL			1

Page 63 - OSS# 6300202494 - All rights reserved by Bobcat Company - 02/11/2016 - 14:15:02 - Produced by Ken Cook Co. with media1off

MOTOR CARRIER
(Drive Motor Mount Assy.) (2-Speed Motor) (W/Speed Sensor)

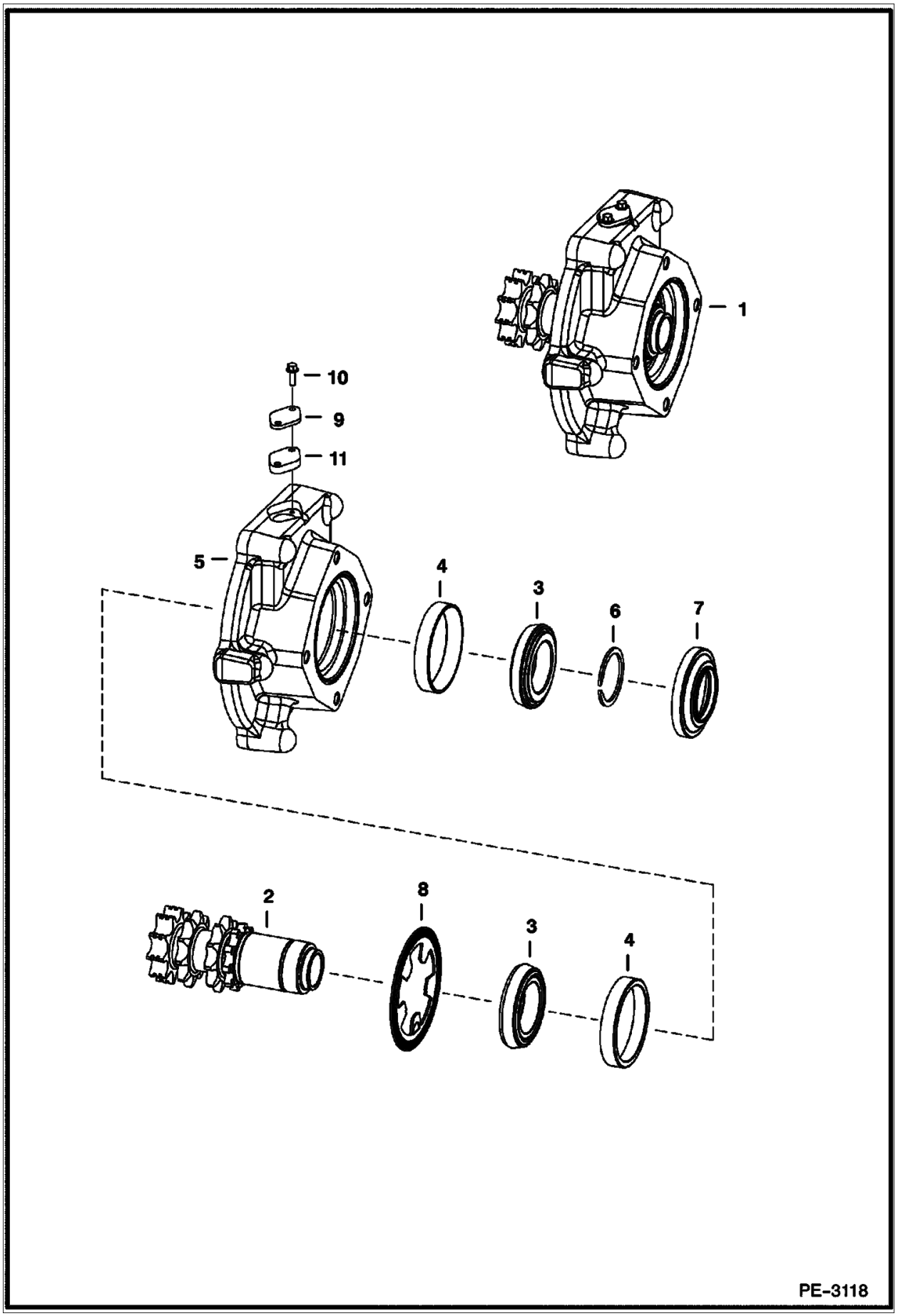

Illustration PE3118

Model S160 K
6904270

Page 64 - OSS# 6300202494 - All rights reserved by Bobcat Company - 02/11/2016 - 14:15:02 - Produced by Ken Cook Co. with mediaioff

MOTOR CARRIER (Cont'd)
(Drive Motor Mount Assy.) (2-Speed Motor) (W/Speed Sensor)

Ref No	Part Number	Description	Remarks	Serial Number	Qty
1		MOUNT ASSY	Contact your Local Dealer for Bobcat Technical Information BTI419 - NLA - drive motor - Ref. 2-11 - Was 7126159 [A]		1
2	7120109	SHAFT	double snap ring groove		1
3	6632218	CONE, BEARING			2
4	6632541	RACE			2
5		HOUSING	Contact your Local Dealer for Bobcat Technical Information BTI419 - NLA - Was 7135506 [A]		1
6	6571851	SNAP RING	0.118" thickness		1
6	6571852	SNAP RING	0.125" thickness		1
7	6705847	SEAL, OIL			1
8	6690561	MAGNET	speed sensor		1
9	6730013	COVER			1
10	35C412	BOLT			2
11	7110287	GASKET			1

Page 65 - OSS# 6300202494 - All rights reserved by Bobcat Company - 02/11/2016 - 14:15:02 - Produced by Ken Cook Co. with media1off

DISC BRAKE
(Single Speed Motor)

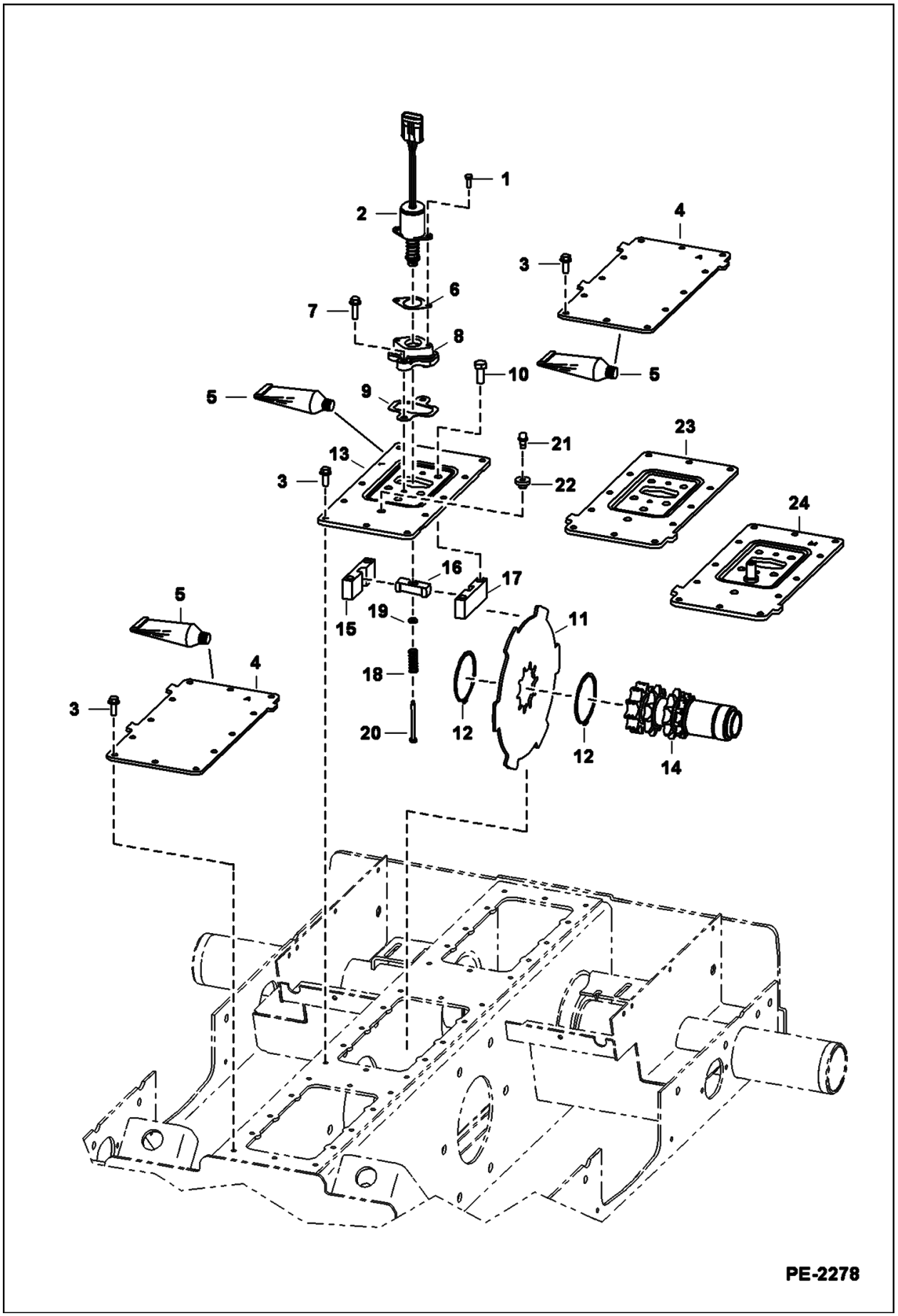

Illustration PE2278

Model S160 K
6904270

Page 66 - OSS# 6300202494 - All rights reserved by Bobcat Company - 02/11/2016 - 14:15:02 - Produced by Ken Cook Co. with mediaioff

DISC BRAKE (Cont'd)
(Single Speed Motor)

Ref No	Part Number	Description	Remarks	Serial Number	Qty
1	17C412	BOLT 5			2
2	6681512	SOLENOID, LOCK BRAKE			1
3	84G3716	SCREW 5			36
4	7129987	COVER	Was 6733956 [A]		2
5	6685372	SEALANT, GASKET LIQUID 10.1 OZ	tube - 0.57 kg (20 oz)		x
6	6706737	GASKET			1
7	84G3720	BOLT			2
8	6706718	MOUNT			1
9	6708016	GASKET			1
10	47C820	BOLT			4
11	7120111	BRAKE, DISC	disc - Was 6716228 [A]		2
12	6658672	RING, RETAINER			4
13	6735316	COVER	B stamped		1
14	7161187	SHAFT, TRANS	See Illustration MOTOR CARRIER / PE1818 - double snap ring groove - Was 6733621 [A]		2
15	6719056	BLOCK(LH)	guide - LH		1
16	6714278	WEDGE, LOCK TRACTION			1
17	6719057	BLOCK(RH)	guide - RH		1
18	6708018	SPRING			1
19	25E13	WASHER 5			1
20	6708267	BOLT			1
21	6680970	BREATHER			1
22	6553411	BUSHING, PRESS FIT 5			1
23		COVER	NLA - M stamped - Order Ref. 24, 17C612 bolt & 6557831 washer - Was 7130297 [A]		1
24	7156265	COVER	See Illustration CONTROL PEDALS / PE2843 - M stamped		1

Page 67 - OSS# 6300202494 - All rights reserved by Bobcat Company - 02/11/2016 - 14:15:02 - Produced by Ken Cook Co. with media1off

DISC BRAKE
(2-Speed Motor)

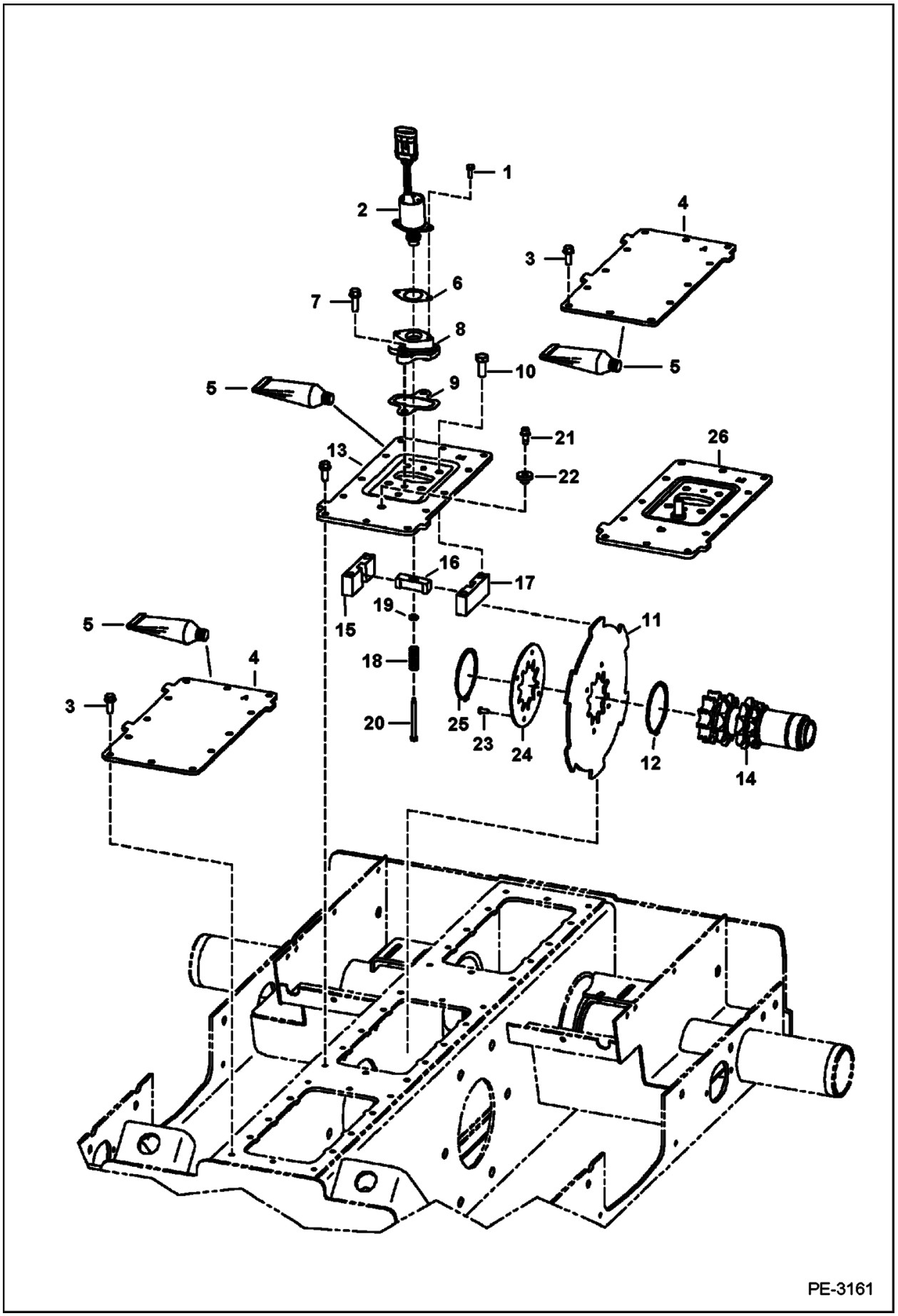

Illustration PE3161

Model S160 K
6904270

Page 68 - OSS# 6300202494 - All rights reserved by Bobcat Company - 02/11/2016 - 14:15:02 - Produced by Ken Cook Co. with mediaioff

DISC BRAKE (Cont'd)
(2-Speed Motor)

Ref No	Part Number	Description	Remarks	Serial Number	Qty
1	17C412	BOLT 5			2
2	6681512	SOLENOID, LOCK BRAKE			1
3	84G3716	SCREW 5			36
4	7129987	COVER			2
5	6685372	SEALANT, GASKET LIQUID 10.1 OZ	tube - 0.57 kg (20 oz)		x
6	6706737	GASKET			1
7	84G3720	BOLT			2
8	6706718	MOUNT			1
9	6708016	GASKET			1
10	47C820	BOLT			4
11	7120107	BRAKE	disc		2
12	6658672	RING, RETAINER			2
13		COVER	NLA - M stamped - Order Ref. 26, 17C612 bolt & 6557831 washer - Was 7130297 [A]		1
14	7120109	SHAFT	See Illustration MOTOR CARRIER / PE3118 double snap ring groove		2
15	6719056	BLOCK(LH)	guide - LH		1
16	6714278	WEDGE, LOCK TRACTION			1
17	6719057	BLOCK(RH)	guide - RH		1
18	6708018	SPRING			1
19	25E13	WASHER 5			1
20	6708267	BOLT			1
21	6680970	BREATHER			1
22	6553411	BUSHING, PRESS FIT 5			1
23	6668955	POP RIVET			8
24	7120108	DISC	isolator		2
25	6691500	SNAP RING			2
26	7156265	COVER	M stamped		1

Page 69 - OSS# 6300202494 - All rights reserved by Bobcat Company - 02/11/2016 - 14:15:02 - Produced by Ken Cook Co. with media1off

HYDRAULIC CIRCUITRY
(W/O Bucket Positioning Valve)

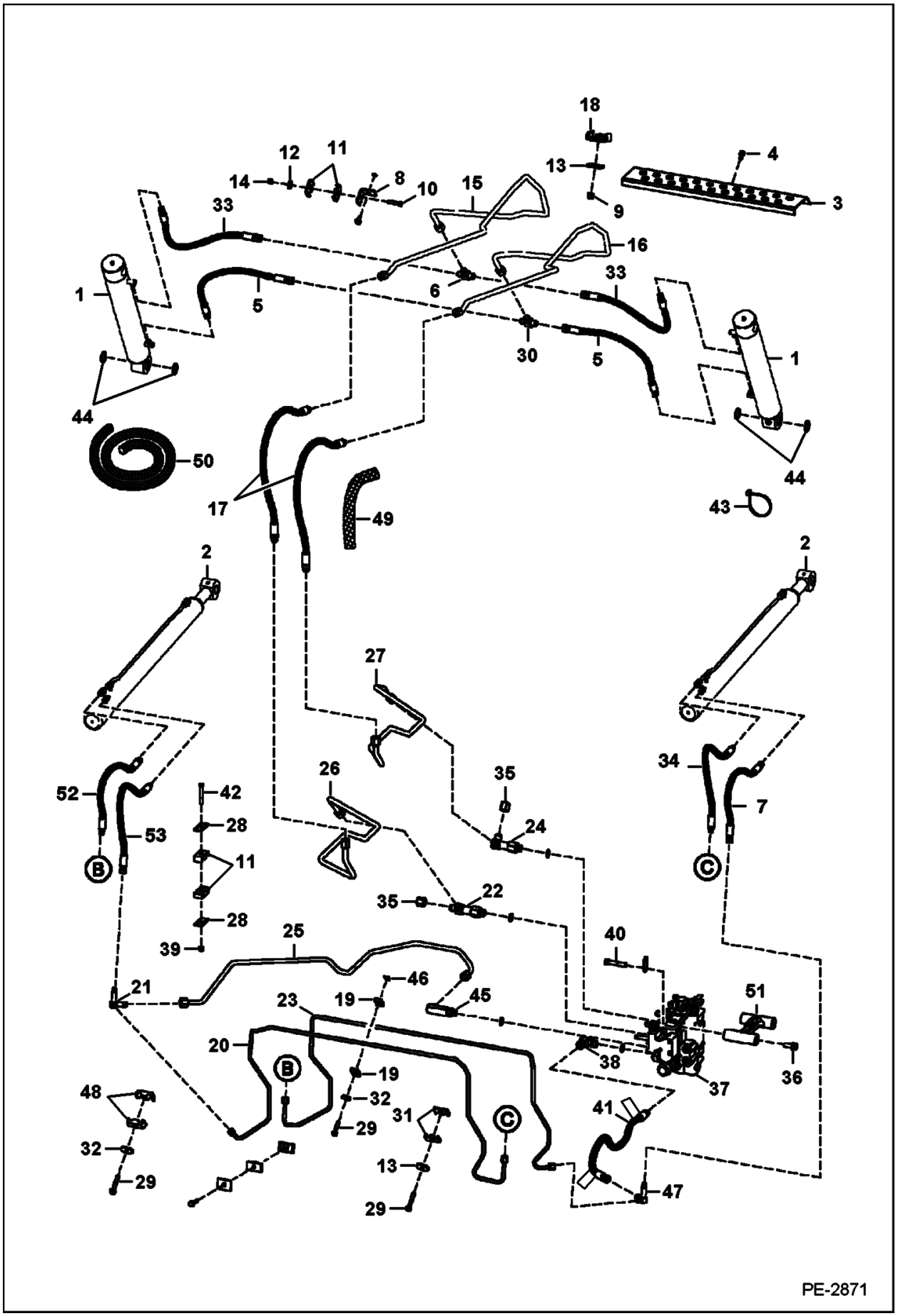

Illustration PE2871

Model S160 K
6904270

Page 70 - OSS# 6300202494 - All rights reserved by Bobcat Company - 02/11/2016 - 14:15:02 - Produced by Ken Cook Co. with mediaioff

HYDRAULIC CIRCUITRY (Cont'd)
(W/O Bucket Positioning Valve)

Ref No	Part Number	Description	Remarks	Serial Number	Qty
1		CYLINDER	See Illustration TILT CYLINDER / PE2870 TILT		2
2		CYLINDER	See Illustration LIFT CYLINDER / TS1097 LIFT		2
3	6735669	BOOM STEP			1
4	84G3712	BOLT 5			4
5	6718066	HOSE	.5625" thread & .75" thread female ends - Use (2) per tilt cylinder W/.5625" thread base end fitting	& Bel	4
5	6718066	HOSE	.5625" thread & .75" thread female ends - Use (1) per tilt cylinder W/.75" thread base end fitting	& Abv	2
5	7114050	HOSE	.5625" thread female ends (2) - Use (1) per tilt cylinder W/.75" thread base end fitting	& Abv	2
6	6716061	TEE	.75" thread (2) & .875" thread - Use W/Ref. 5 (6718066 hose)	& Bel	2
6	6716061	TEE	.75" thread (2) & .875" thread - Use W/Ref. 5 (7114050 hose)	& Abv	1
7	7116565	HOSE	Was 7116564 [B,D]		1
8	6718238	BRACKET			1
9	59D8	NUT 5			2
10	17C628	BOLT			1
11	6701893	CLAMP			2
12	27E6	WASHER 5			1
13	6553709	WASHER			2
14	59D6	NUT			1
15	6734495	TUBE			1
16	6734496	TUBE			1
17	6539418	HOSE	W/Ref. 49		2
18	6717933	CLAMP			2
19	7115645	CLAMP	Was 6726277 [A]		4
20	7114710	TUBE			1
21	7101648	TEE			1
22	7112910	ELBOW			1
22	79K10	O RING 10			1
23	7114711	TUBE			1
24	6733190	TEE			1
24	79K10	O RING 10			1
25	7101646	TUBE			1
26	7112911	TUBE			1
27	7110262	TUBE			1
28	872229	WASHER			4
29	84G3728	BOLT			3
30	7114053	TEE	.5625" thread (2) & .875" thread - Use W/Ref. 5 (6718066 hose)	& Abv	1
31	6727708	CLAMP 2			2
32	619021	WASHER, 5			4
33	7114236	HOSE	.75" thread female ends - Use (1) per tilt cylinder W/.75" thread base end fitting	& Abv	2
34	6727687	HOSE	Was 7116565 [B,D]		1
35	36K7	FITTING			1
36	31C820	BOLT			2
37		VALVE	See Illustration HYDRAULIC CONTROL VALVE / PE2734		1
38	6814531	ELBOW			1
38	79K10	O RING 10			1
39	59D6	NUT			1
40	17C844	BOLT			2

Page 71 - OSS# 6300202494 - All rights reserved by Bobcat Company - 02/11/2016 - 14:15:02 - Produced by Ken Cook Co. with media1off

HYDRAULIC CIRCUITRY (Cont'd)
(W/O Bucket Positioning Valve)

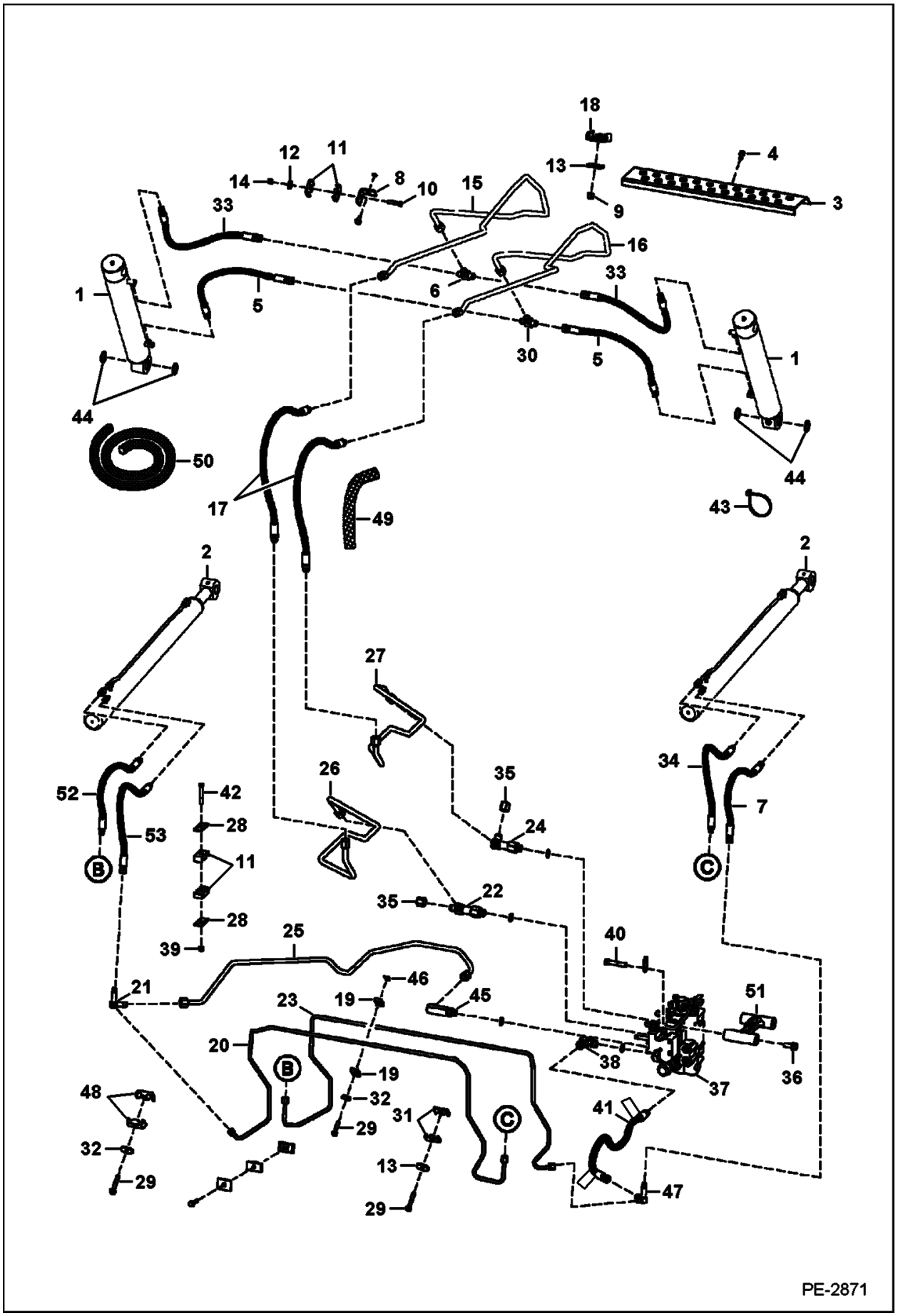

Illustration PE2871

Model S160 K
6904270

Page 72 - OSS# 6300202494 - All rights reserved by Bobcat Company - 02/11/2016 - 14:15:02 - Produced by Ken Cook Co. with mediaioff

HYDRAULIC CIRCUITRY (Cont'd)
(W/O Bucket Positioning Valve)

Ref No	Part Number	Description	Remarks	Serial Number	Qty
41	6727705	HOSE	available only as an assembly W/two danger decals installed		1
41	6809511	DECAL, DANGER			2
41	79K8	O RING 10			1
42	17C632	BOLT 5			1
43	6624289	STRAP, TIE			5
44	225855	SEAL, OIL 10	38 mm (1.5") OD		4
45	6733191	ELBOW			1
45	79K10	O RING 10			1
46	6684033	NUT			1
47	6727638	TEE			1
48	6592506	CLAMP			2
49		CONDUIT	NLA - 30" (762 mm) long - Order Ref. 50		2
50	6643249	CONDUIT BULK/FT	bulk - sold per foot		x
51	7109934	MOUNT, VALVE			1
52	7102135	HOSE			1
53	7116564	HOSE			1

Page 73 - OSS# 6300202494 - All rights reserved by Bobcat Company - 02/11/2016 - 14:15:02 - Produced by Ken Cook Co. with media1off

HYDRAULIC CIRCUITRY
(W/Bucket Positioning Valve)

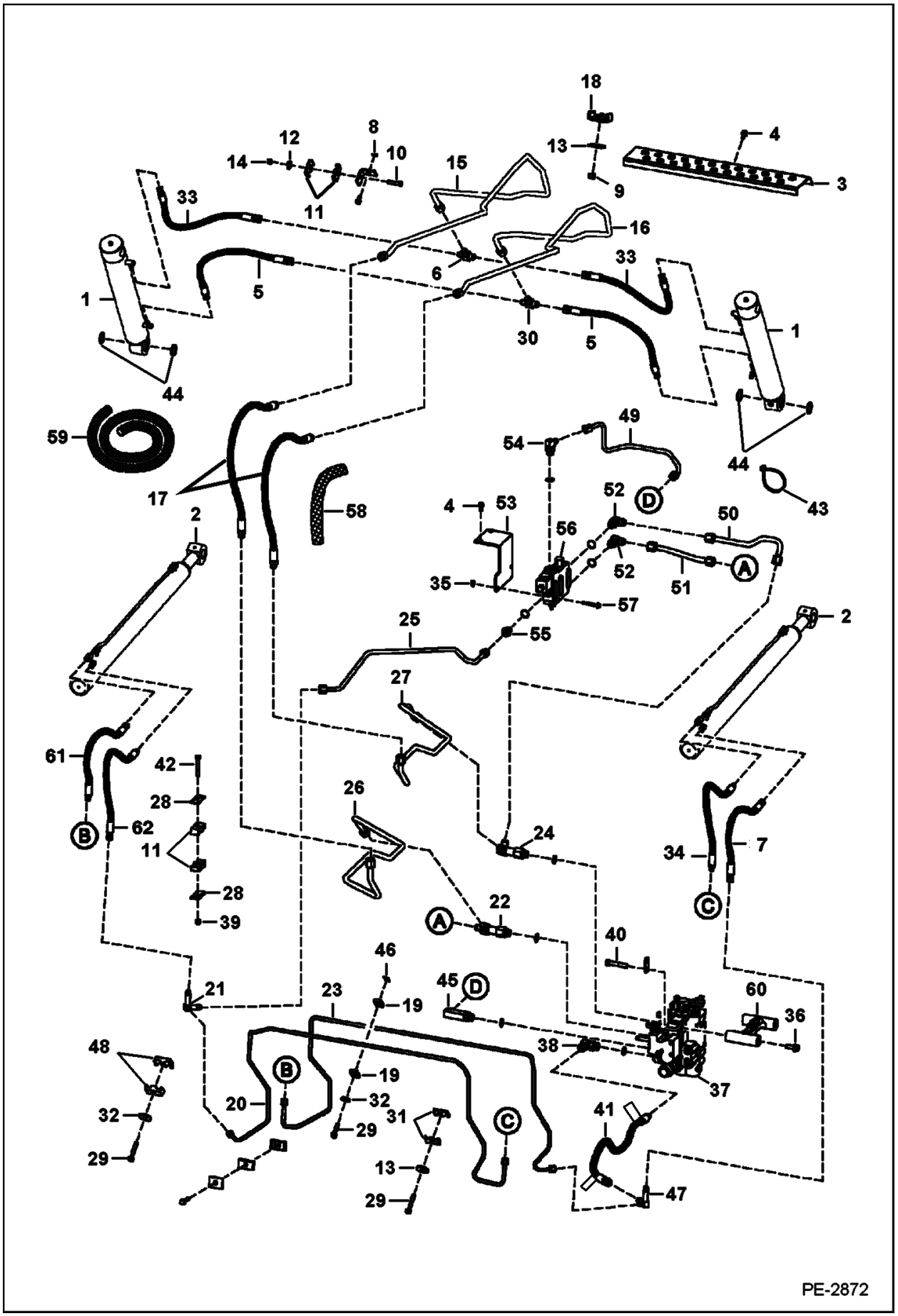

Illustration PE2872

Model S160 K
6904270

Page 74 - OSS# 6300202494 - All rights reserved by Bobcat Company - 02/11/2016 - 14:15:02 - Produced by Ken Cook Co. with mediaioff

HYDRAULIC CIRCUITRY (Cont'd)
(W/Bucket Positioning Valve)

Ref No	Part Number	Description	Remarks	Serial Number	Qty
1		CYLINDER	See Illustration TILT CYLINDER / PE2870 TILT		2
2		CYLINDER	See Illustration LIFT CYLINDER / TS1097 LIFT		2
3	6735669	BOOM STEP			1
4	84G3712	BOLT 5			6
5	6718066	HOSE	.5625" thread & .75" thread female ends - Use (2) per tilt cylinder W/.5625" thread base end fitting	& Bel	4
5	6718066	HOSE	.5625" thread & .75" thread female ends - Use (1) per tilt cylinder W/.75" thread base end fitting	& Abv	2
5	7114050	HOSE	.5625" thread female ends (2) - Use (1) per tilt cylinder W/.75" thread base end fitting	& Abv	2
6	6716061	TEE	.75" thread (2) & .875" thread - Use W/Ref. 5 (6718066 hose)	& Bel	2
6	6716061	TEE	.75" thread (2) & .875" thread - Use W/Ref. 5 (7114050 hose)	& Abv	1
7	7116565	HOSE	Was 7116564 [B,D]		1
8	6718238	BRACKET			1
9	59D8	NUT 5			2
10	17C628	BOLT			1
11	6701893	CLAMP			2
12	27E6	WASHER 5			1
13	6553709	WASHER			2
14	59D6	NUT			1
15	6734495	TUBE			1
16	6734496	TUBE			1
17	6539418	HOSE	W/Ref. 58		2
18	6717933	CLAMP			2
19	7115645	CLAMP	Was 6726277 [A]		4
20	7114710	TUBE			1
21	7101648	TEE			1
22	7112910	ELBOW			1
22	79K10	O RING 10			1
23	7114711	TUBE			1
24	6733190	TEE			1
24	79K10	O RING 10			1
25	7101647	TUBE			1
26	7112911	TUBE			1
27	7110262	TUBE			1
28	872229	WASHER			4
29	84G3728	BOLT			1
30	7114053	TEE	.5625" thread (2) & .875" thread - Use W/Ref. 5 (6718066 hose)	& Abv	1
31	6727708	CLAMP 2			2
32	619021	WASHER, 5			4
33	7114236	HOSE	.75" thread female ends - Use (1) per tilt cylinder W/.75" thread base end fitting	& Abv	2
34	6727687	HOSE	Was 7116565 [B,D]		1
35	57D5	NUT			2
36	31C820	BOLT			2
37		VALVE	See Illustration HYDRAULIC CONTROL VALVE / PE2734		1
38	6814531	ELBOW			1
38	79K10	O RING 10			1
39	59D6	NUT			1
40	17C844	BOLT			2

Page 75 - OSS# 6300202494 - All rights reserved by Bobcat Company - 02/11/2016 - 14:15:02 - Produced by Ken Cook Co. with media1off

HYDRAULIC CIRCUITRY (Cont'd)
(W/Bucket Positioning Valve)

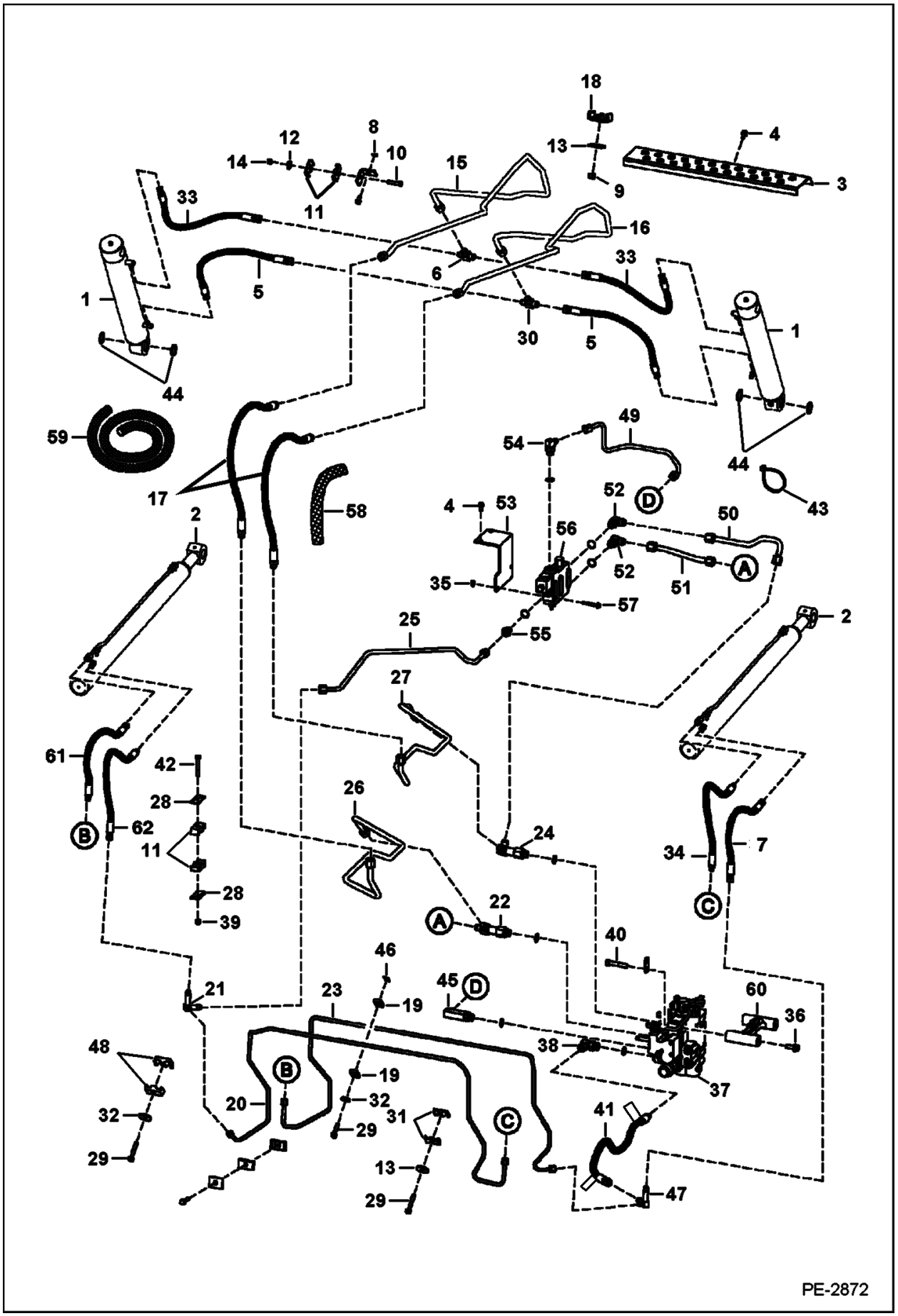

Illustration PE2872

Model S160 K
6904270

Page 76 - OSS# 6300202494 - All rights reserved by Bobcat Company - 02/11/2016 - 14:15:02 - Produced by Ken Cook Co. with mediaioff

HYDRAULIC CIRCUITRY (Cont'd)
(W/Bucket Positioning Valve)

Ref No	Part Number	Description	Remarks	Serial Number	Qty
41	6727705	HOSE	available only as an assembly W/two danger decals installed		1
41	6809511	DECAL, DANGER			2
41	79K8	O RING 10			1
42	17C632	BOLT 5			1
43	6624289	STRAP, TIE			5
44	225855	SEAL, OIL 10	38 mm (1.5") OD		4
45	6733191	ELBOW			2
45	79K10	O RING 10			2
46	6684033	NUT			2
47	6727638	TEE			1
48	6592506	CLAMP			2
49	6734192	TUBE			1
50	6733196	TUBE			1
51	7112912	TUBE			1
52	17KB1010	FITTING, HYD ELBOW			2
52	79K10	O RING 10			2
53	6727646	BRACKET			1
54	17KB0810	FITTING, HYD ELBOW			1
54	79K10	O RING 10			1
55	15KB0810	FITTING, HYD CONNECTOR			1
55	79K10	O RING 10			1
56		VALVE	See Illustration BUCKET POSITIONING VALVE / MS1943 NLA - order 6673959 valve - Was 6666341 [A]		1
57	35C536	BOLT			2
58		CONDUIT	NLA - 30"(762 mm) long - Order Ref. 59		2
59	6643249	CONDUIT BULK/FT	bulk - sold per foot		x
60	7109934	MOUNT, VALVE			1
61	7102135	HOSE			1
62	7116564	HOSE			1

Page 77 - OSS# 6300202494 - All rights reserved by Bobcat Company - 02/11/2016 - 14:15:02 - Produced by Ken Cook Co. with media1off

MANUAL LIFT RELEASE SYSTEM

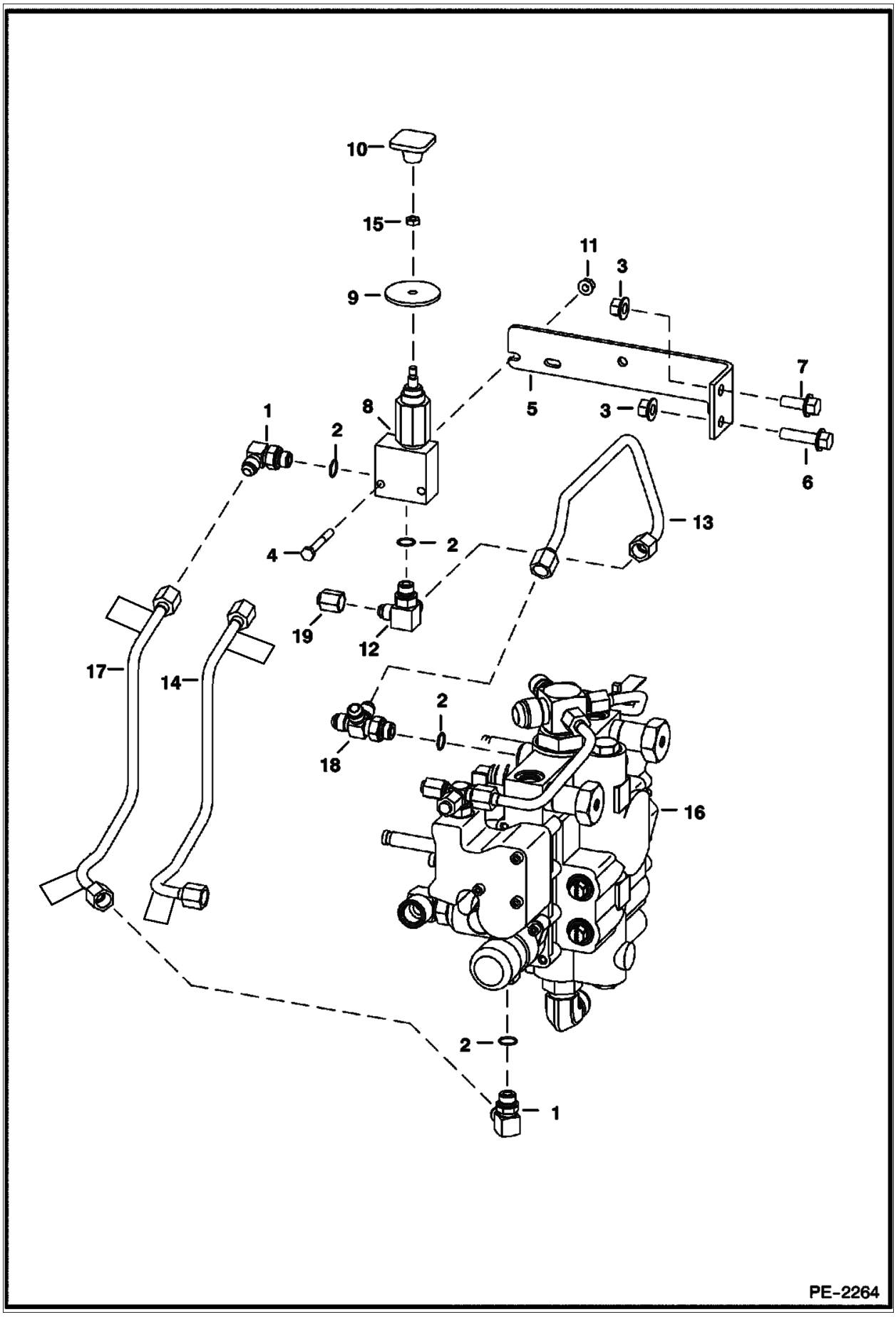

Illustration PE2264

Model S160 K
6904270

Page 78 - OSS# 6300202494 - All rights reserved by Bobcat Company - 02/11/2016 - 14:15:02 - Produced by Ken Cook Co. with mediaioff

MANUAL LIFT RELEASE SYSTEM (Cont'd)

Ref No	Part Number	Description	Remarks	Serial Number	Qty
1	17KB0606	FITTING	W/Ref. 2		2
2	79K6	O RING 10			x
3	83D6	NUT 5			2
4	17C432	BOLT			2
5	6717151	MOUNT			1
6	35C616	BOLT 5	Was 35C000624B [B]		1
7	35C616	BOLT 5			1
8	7230495	VALVE, LIFT MANUAL	See Illustration MANUAL LIFT RELEASE VALVE / PE1547 - manual lift release - Was 6667844 [A]		1
9	6707101	SEAL	neoprene		1
10	6737524	KNOB	red square		1
11	83D4	NUT 10			2
12	6725182	TEE	W/Ref. 2		2
13	7117380	TUBE			1
14		TUBE	NLA - W/Decals - Order Ref. 17 and adjust Ref. 1 to fit - Was 6734206 [D]		1
14	6809511	DECAL, DANGER			2
15	7D4	NUT			1
16		VALVE	See Illustration HYDRAULIC CONTROL VALVE / PE2734 NSS - CONTROL - ORDER COMPLETE VALVE		1
17	6734206	TUBE	available only as an assembly W/two danger decals installed		1
18	6718031	TEE			1
18	79K6	O RING 10			1
19	36K5	CAP	2-speed motor		2

Page 79 - OSS# 6300202494 - All rights reserved by Bobcat Company - 02/11/2016 - 14:15:02 - Produced by Ken Cook Co. with media1off

AUXILIARY HYDRAULICS
(W/Pressure Relief Coupler Block)

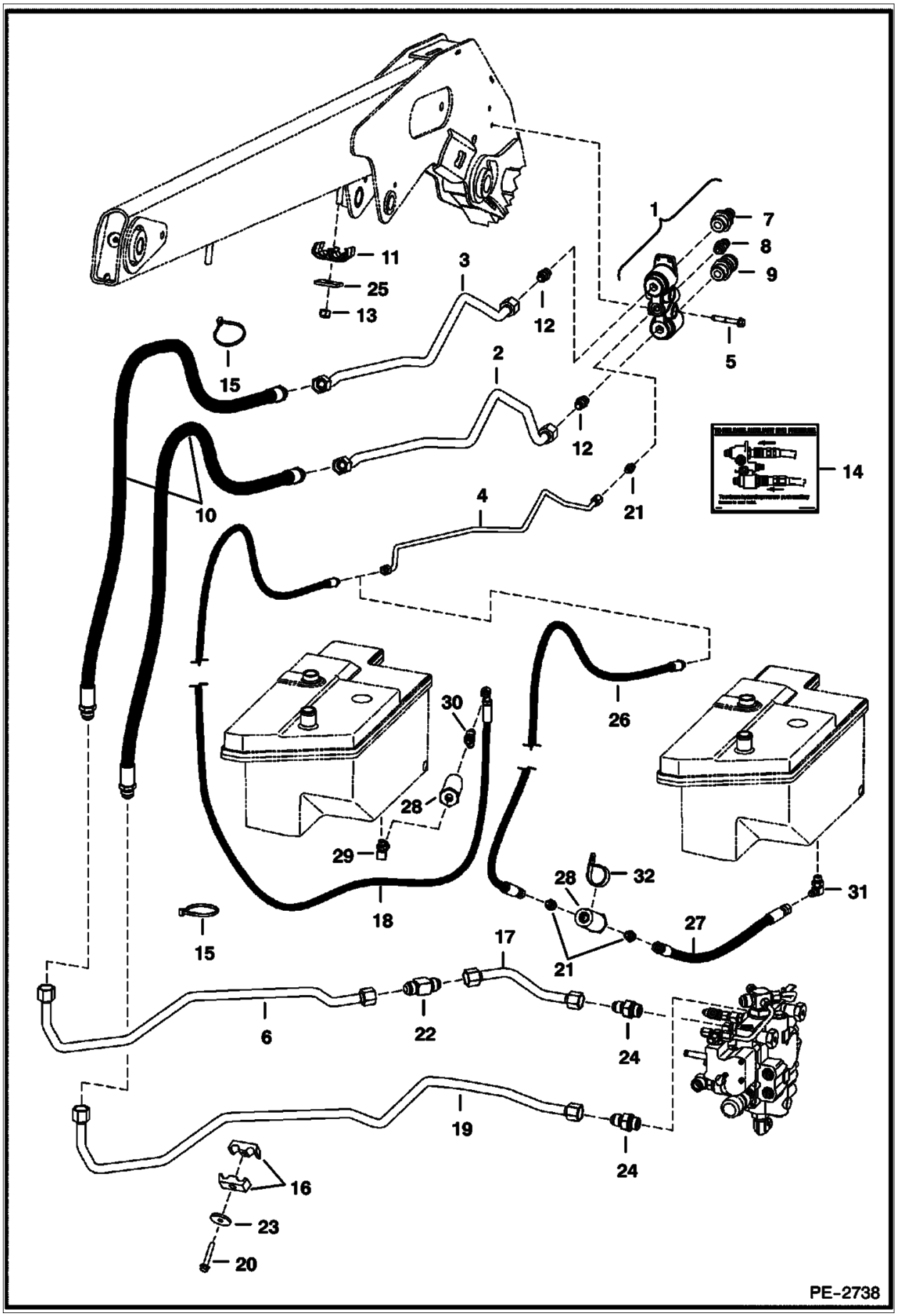

Illustration PE2738

Model S160 K
6904270

Page 80 - OSS# 6300202494 - All rights reserved by Bobcat Company - 02/11/2016 - 14:15:02 - Produced by Ken Cook Co. with mediaioff

AUXILIARY HYDRAULICS (Cont'd)
(W/Pressure Relief Coupler Block)

Ref No	Part Number	Description	Remarks	Serial Number	Qty
1		BLOCK, COUPLER ASSY	Contact your Local Dealer for Bobcat Technical Information BTI434ldr - 7246783 or 6678076 [A]		1
2	7102164	TUBE			1
3	6735114	TUBE			1
4	7102163	TUBE			1
5	84G3740	BOLT			2
6	7115413	TUBE			1
7		COUPLER, FF MALE	Contact your Local Dealer for Bobcat Technical Information BTI434ldr - 7246799 or 6679837		1
7		SEAL	Contact your Local Dealer for Bobcat Technical Information BTI434ldr - blue - front - 7251807 or 6679841		1
7		KIT, SEAL	Contact your Local Dealer for Bobcat Technical Information BTI434ldr - (3) O-rings & (3) back-up washers - 6680020		1
8		COUPLER, FF MALE	Contact your Local Dealer for Bobcat Technical Information BTI434ldr - casedrain - W/valve, spring, seal & O-ring - 7246798 or 6679838		1
8		SEAL	Contact your Local Dealer for Bobcat Technical Information BTI434ldr - blue - front - 7251808 or 6679840		1
9		KIT	Contact your Local Dealer for Bobcat Technical Information BTI434ldr NLA - coupler - female - FF - Order 6680018 coupler kit - Was 6679839 [A]		1
9		COUPLER, FF FEMALE	Contact your Local Dealer for Bobcat Technical Information BTI434ldr - Use W/hydraulic breaker - 7246802 or 6680018		1
9		KIT, SEAL	Contact your Local Dealer for Bobcat Technical Information BTI434ldr - (3) O-rings & (3) back-up washers - 6680020		1
10	6735138	HOSE	W/cover		2
11	6717951	CLAMP			2
12		FITTING, HYD CONNECTOR	Contact your Local Dealer for Bobcat Technical Information BTI434ldr - W/spring - 7246800 or 6679836		2
12	79K12	O RING 10			2
13	59D8	NUT 5			2
14	6731757	DECAL, OPERATION	to release auxiliary hyd. pressure - not in kit		1
15	6624289	STRAP, TIE			2
16	6592506	CLAMP			2
17	7115412	TUBE			1
18		HOSE	single speed motor - 99" (2514,6 mm) long - Was 7102202 [B]		1
18	7102202	HOSE	single speed motor - 92" (2336,8 mm) long		1
19	7110264	TUBE			1
20	84G3740	BOLT			1
21	15KB0606	FITTING, HYD CONNECTOR			3
21	79K6	O RING 10			3
22	7114294	ADAPTER			1
23	872229	WASHER			1
24	15KB1216	FITTING, HYD CONNECTOR			2
24	79K6	O RING 10			1
25	6553709	WASHER			2

Illustration PE2738

Model S160 K
6904270

Page 81 - OSS# 6300202494 - All rights reserved by Bobcat Company - 02/11/2016 - 14:15:02 - Produced by Ken Cook Co. with media1off

AUXILIARY HYDRAULICS (Cont'd)
(W/Pressure Relief Coupler Block)

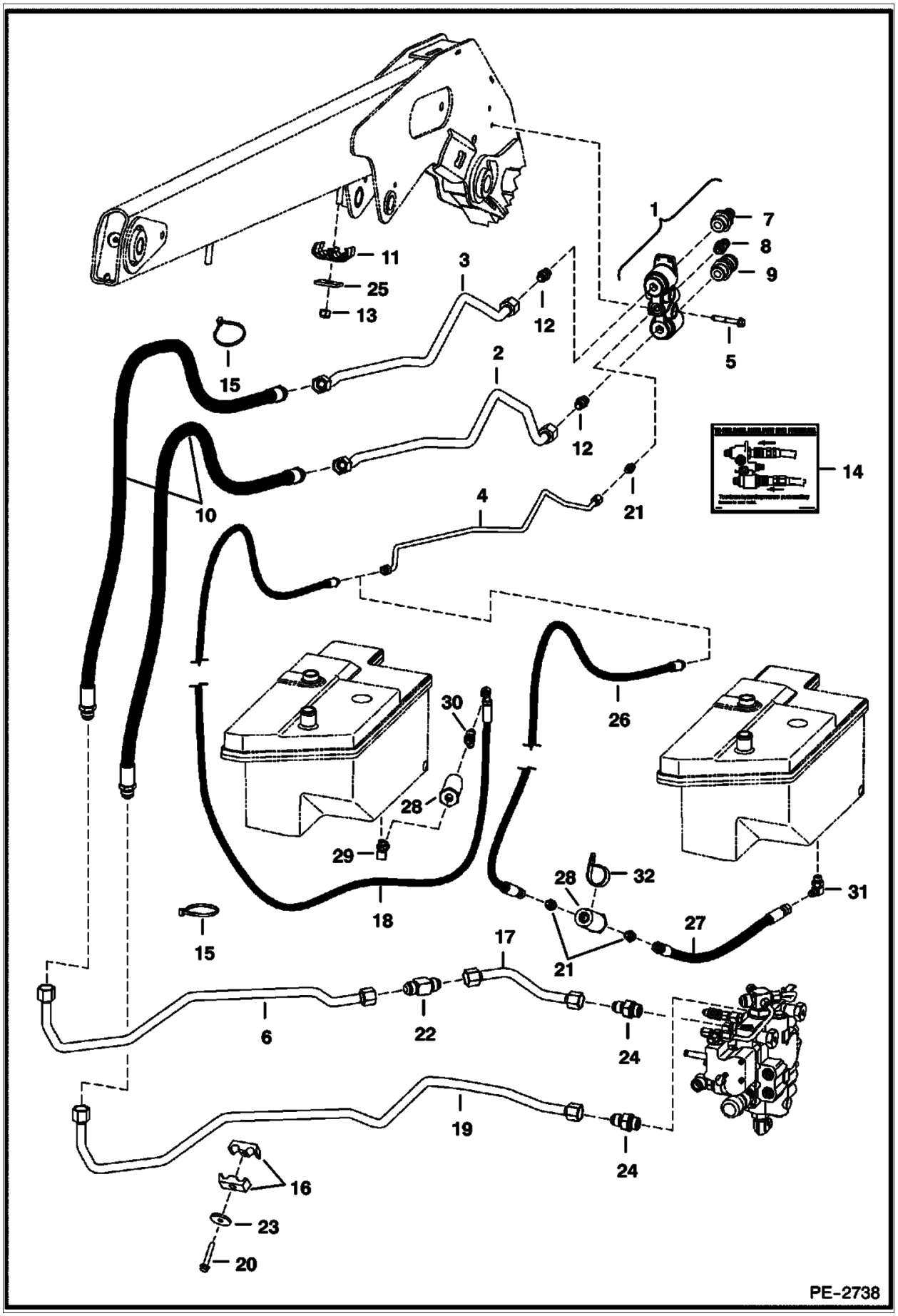

Illustration PE2738

Model S160 K
6904270

Page 82 - OSS# 6300202494 - All rights reserved by Bobcat Company - 02/11/2016 - 14:15:02 - Produced by Ken Cook Co. with mediaioff

AUXILIARY HYDRAULICS (Cont'd)
(W/Pressure Relief Coupler Block)

Ref No	Part Number	Description	Remarks	Serial Number	Qty
26	7126167	HOSE ASSY	2-speed motor		1
27	7126166	HOSE	2-speed motor		1
28	6661022	FILTER, OIL HYD IN-LINE	See Illustration HYDROSTATIC CIRCUITRY / PE2739 , See Illustration HYDROSTATIC CIRCUITRY / PE3100 , See Illustration HYDROSTATIC CIRCUITRY / PE2743		2
29	6715190	ELBOW	See Illustration HYDROSTATIC CIRCUITRY / PE2739 , See Illustration HYDROSTATIC CIRCUITRY / PE3100 , See Illustration HYDROSTATIC CIRCUITRY / PE2743		1
29	79K6	O RING 10			1
30	21KB0606	FITTING, HYD TEE	See Illustration HYDROSTATIC CIRCUITRY / PE2739 , See Illustration HYDROSTATIC CIRCUITRY / PE3100 , See Illustration HYDROSTATIC CIRCUITRY / PE2743		1
30	79K6	O RING 10			1
31	17KB0606	FITTING			1
31	79K6	O RING 10			1
32	30H79	CLAMP			1

Page 83 - OSS# 6300202494 - All rights reserved by Bobcat Company - 02/11/2016 - 14:15:02 - Produced by Ken Cook Co. with media1off

TILT CYLINDER

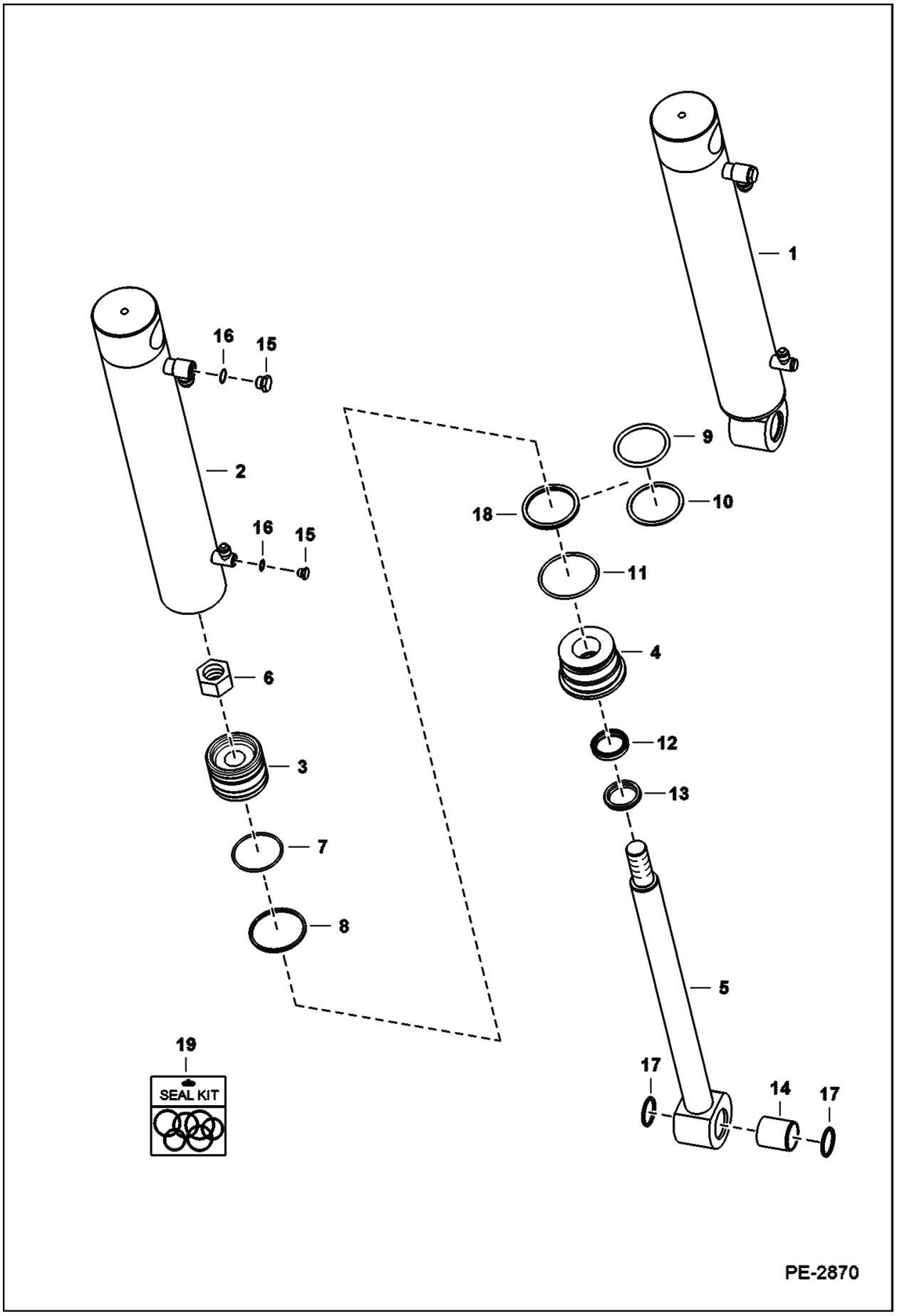

Illustration PE2870

Model S160 K
6904270

Page 84 - OSS# 6300202494 - All rights reserved by Bobcat Company - 02/11/2016 - 14:15:02 - Produced by Ken Cook Co. with mediaioff

TILT CYLINDER (Cont'd)

Ref No	Part Number	Description	Remarks	Serial Number	Qty
1		CYLINDER, TILT	NLA - Ref. 2-13, 15 & 16 - 0.563" base end fitting - Order 7117174 cylinder & 7114236 hose - Was 6809802 [A]		2
1	7117174	CYLINDER, TILT	Ref. 2-8, 11-13, 15, 16 & 18 - 0.75" base end fitting		2
1	7117174REM	CYLINDER, TILT			2
2		CASE	NLA - 70 mm (2.75") ID - 0.563" base end fitting - Order 7117175 case & 7114236 hose - Was 6809904 [A]		1
2	7117175	TUBE, CASE CYL TILT	70 mm (2.75") ID - 0.75" base end fitting		1
3	6806315	PISTON			1
4	6536968	HEAD	Was 6806332 [A]		1
5	6809903	SHAFT, ROD CYL TILT	35 mm (1.375") - W/Ref. 14		1
6	92D16	NUT			1
7	25K30210	RING,O	Was 54K30210 [A]		1
8	6516229	SEAL, PISTON			1
9	25K60212	O RING 10	Was 54K60212 [B]		1
10	80K332	WASHER	back-up		1
11	25K40224	RING,O	Was 54K40224 [B]		1
12	6667325	SEAL	rod		1
13	6666543	WIPER, ROD CYL			1
14	6805453	BUSHING, PRESS FIT	wear		1
15	6812170	PLUG	.375" thread - W/Ref. 16		2
15	6812171	PLUG	.563" thread - W/Ref. 16		1
16	75K3	RING,O	.375" ID		2
16	75K6	O-RING	.563" ID		1
17	225855	SEAL, OIL 10	38 mm (1.5") OD		2
18	7008356	SEAL, QUAD			1
19	6806330	KIT, SEAL	Ref. 6-8, 11-13 & 18		1

Page 85 - OSS# 6300202494 - All rights reserved by Bobcat Company - 02/11/2016 - 14:15:02 - Produced by Ken Cook Co. with media1off

LIFT CYLINDER

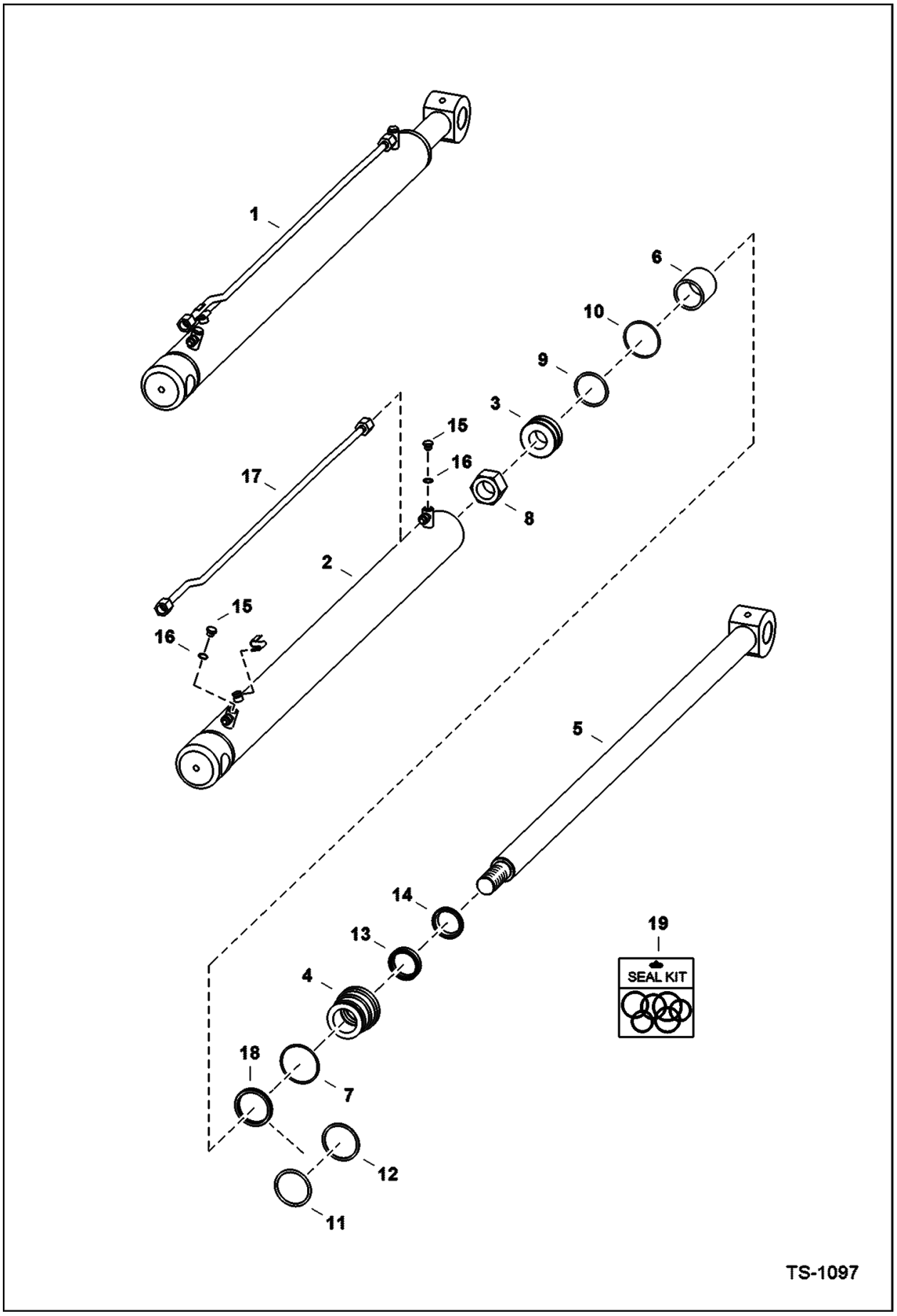

Illustration TS1097

Model S160 K
6904270

Page 86 - OSS# 6300202494 - All rights reserved by Bobcat Company - 02/11/2016 - 14:15:02 - Produced by Ken Cook Co. with mediaioff

LIFT CYLINDER (Cont'd)

Ref No	Part Number	Description	Remarks	Serial Number	Qty
1	6811994	CYLINDER, LIFT			2
2	6809210	CASE			1
3	6677196	PISTON	W/Ref. 9 & 10 - W/non-replaceable wear sleeves		1
4	6539236	HEAD, CYL LIFT			1
5	6809639	ROD	1.5" (38,1 mm) dia		1
6	6539645	SPACER			1
7	82K140	RING,O			1
8	6810539	NUT			1
9	6519328	RING, SEAL			1
10	25K30126	O RING 10	Was 54K30126 [B]		1
11	25K60128	O RING 10	Was 54K60128 [A]		1
12	73K328	RING	back-up		1
13	6667326	SEAL	rod		1
14	6690707	WIPER, ROD CYL	Was 6665086 [A]		1
15	6812170	PLUG	W/Ref. 16 - Was 6812171 [B,D]		2
16	75K3	RING,O	Was 75K8 [B,D]		2
17	6809203	TUBE			1
18		SEAL. QUAD	NLA - Order Ref. 11 & 12 - Was 7207334 [A]		1
19	7135557	KIT, SEAL	Ref. 7-10, 13, 14, & 18 - Was 6816535 [A]		1

Page 87 - OSS# 6300202494 - All rights reserved by Bobcat Company - 02/11/2016 - 14:15:02 - Produced by Ken Cook Co. with media1off

CONTROL PEDALS

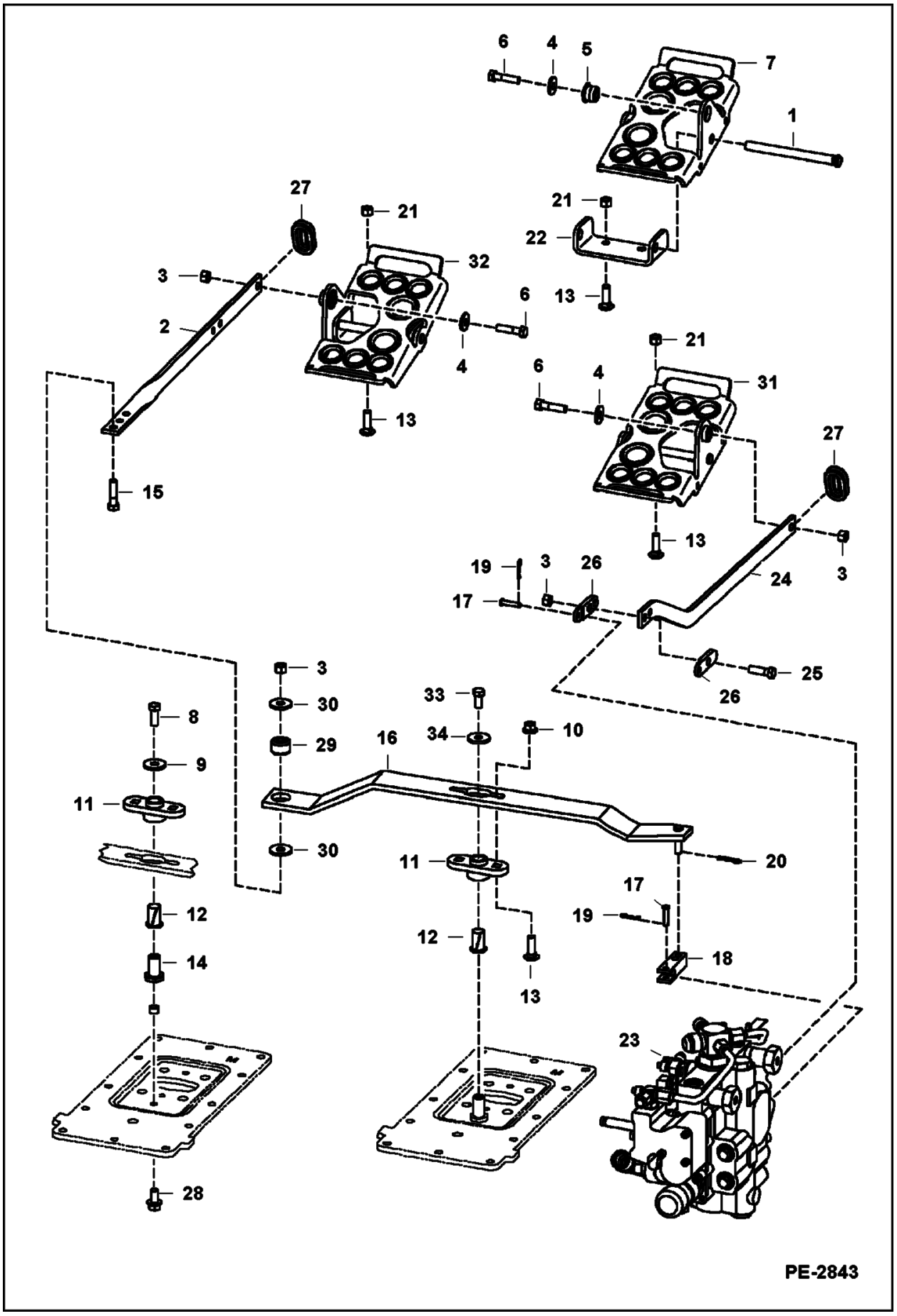

Illustration PE2843

Model S160 K
6904270

Page 88 - OSS# 6300202494 - All rights reserved by Bobcat Company - 02/11/2016 - 14:15:02 - Produced by Ken Cook Co. with mediaioff

CONTROL PEDALS (Cont'd)

Ref No	Part Number	Description	Remarks	Serial Number	Qty
1	6564657	PIN		529911001 - 11568	2
1	6564657	PIN		530011001 - 11191	2
2	6576302	LINK			1
3	95D6	NUT			4
4	6563914	WASHER			2
5	6665701	BUSHING, PRESS FIT		529911001 - 11568	2
5	6665701	BUSHING, PRESS FIT		530011001 - 11191	2
6	17C624	BOLT 5			2
7	7115219	PEDAL		529911001 - 11568	2
7	7115219	PEDAL		530011001 - 11191	2
8	17C616	BOLT 5			1
9	619021	WASHER, 5	0.13" thick - 32 mm (1.25") OD		1
10	53D6	NUT	flanged head - pre-applied loctite		2
11	6708043	FLANGE	flange		1
12	6512026	BUSHING			1
13	37C620	BOLT			6
14	6706104	NUT, RETAINING			1
15	49C628	BOLT			1
16	7108408	LEVER			1
17	6564654	PIN, CLEVIS			2
18	6706105	YOKE			1
19	6513495	PIN 5			2
20	1306637	CLIP			1
21	57D6	NUT 5			4
22	7115220	PEDAL MOUNT		530011001 - 11191	2
22	7115220	PEDAL MOUNT		529911001 - 11568	2
23		VALVE	See Illustration HYDRAULIC CONTROL VALVE / PE2734		1
24	6717820	LINK			1
25	17C620	BOLT			1
26	6708009	LINK	2.69" (68,3 mm) long		2
27	6577961	GROMMET			2
28	43C612	BOLT	Was 17C612 [B]		1
29	6685060	BUSHING, TORSION	torsion - 26,8 mm (1.055") OD		1
30	6737388	WASHER			2
31	7123942	PEDAL ASSEMBLY	RH - W/Ref. 1, 5, 7 & 22	529911569 & Above	1
31	7123942	PEDAL ASSEMBLY	RH - W/Ref. 1, 5, 7 & 22	530011192 & Above	1
31	7123942	PEDAL ASSEMBLY	RH - W/Ref. 1, 5, 7 & 22	AHWA11001 & Above	1
32	7123941	PEDAL ASSEMBLY	LH - W/Ref. 1, 5, 7 & 22	AHWA11001 & Above	1
32	7123941	PEDAL ASSEMBLY	LH - W/Ref. 1, 5, 7 & 22	529911569 & Above	1
32	7123941	PEDAL ASSEMBLY	LH - W/Ref. 1, 5, 7 & 22	530011192 & Above	1

Page 89 - OSS# 6300202494 - All rights reserved by Bobcat Company - 02/11/2016 - 14:15:02 - Produced by Ken Cook Co. with media1off

CONTROL PEDALS (Cont'd)

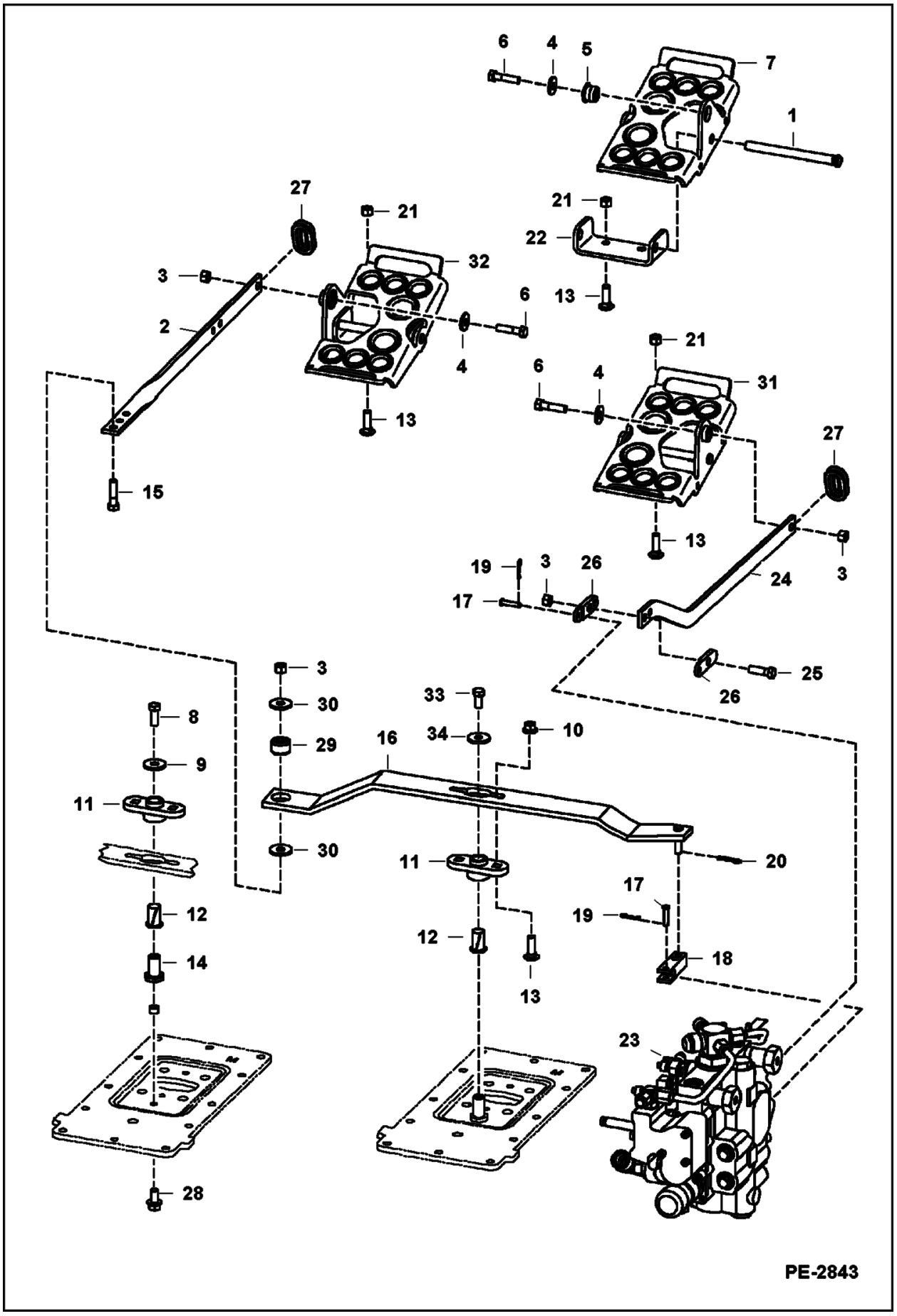

Illustration PE2843

Model S160 K
6904270

Page 90 - OSS# 6300202494 - All rights reserved by Bobcat Company - 02/11/2016 - 14:15:02 - Produced by Ken Cook Co. with mediaioff

CONTROL PEDALS (Cont'd)

Ref No	Part Number	Description	Remarks	Serial Number	Qty
33	17C612	BOLT 5			1
34	6557831	WASHER	0.15" thick - 0.88" OD		1

Page 91 - OSS# 6300202494 - All rights reserved by Bobcat Company - 02/11/2016 - 14:15:02 - Produced by Ken Cook Co. with media1off

HYDRAULIC CONTROL VALVE
(Manual Controls) (S/N 529911001 - 59999 & 530011001 - 59999)

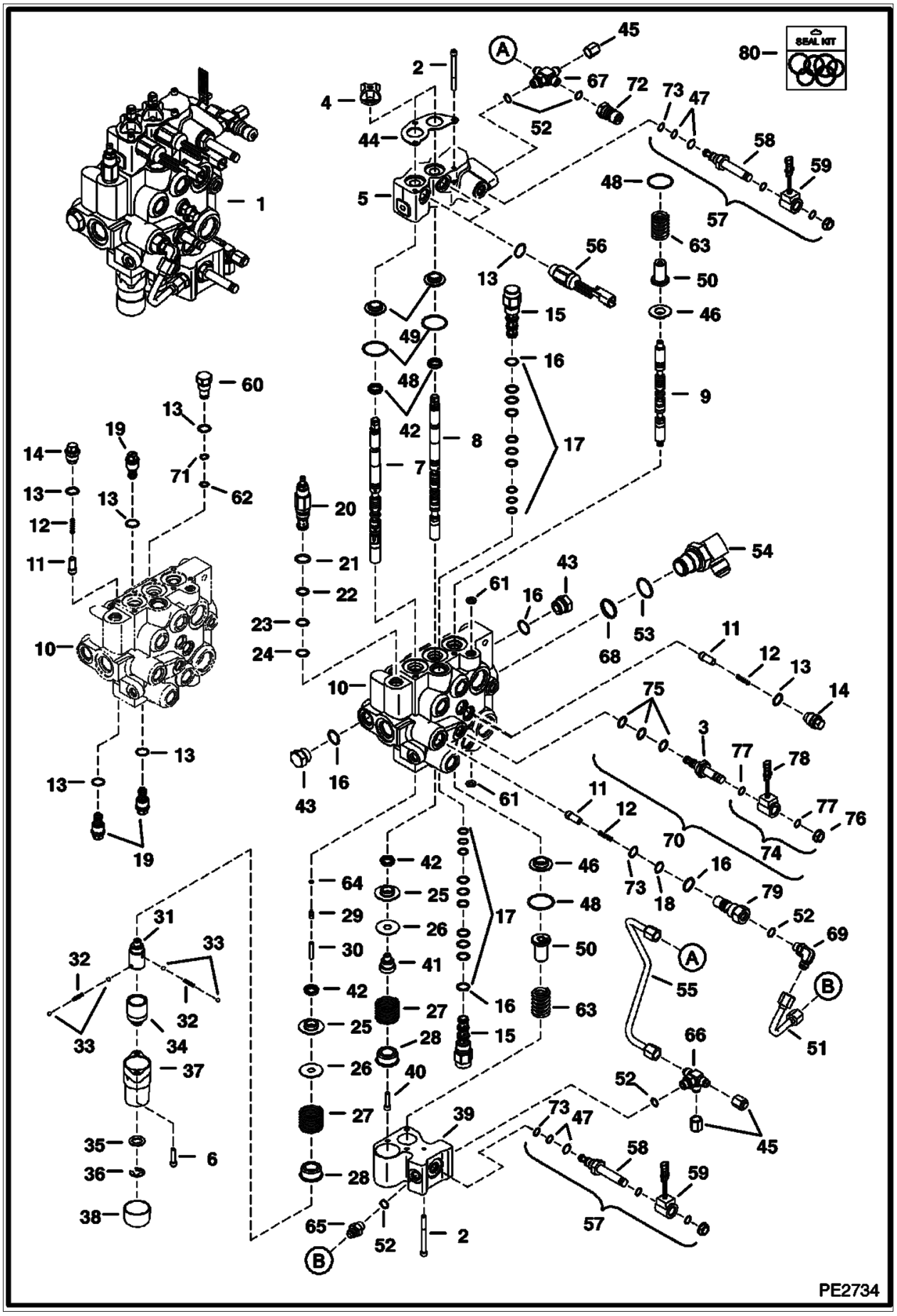

Illustration PE2734

Model S160 K
6904270

Page 92 - OSS# 6300202494 - All rights reserved by Bobcat Company - 02/11/2016 - 14:15:02 - Produced by Ken Cook Co. with mediaioff

HYDRAULIC CONTROL VALVE (Cont'd)
(Manual Controls) (S/N 529911001 - 59999 & 530011001 - 59999)

Ref No	Part Number	Description	Remarks	Serial Number	Qty
1		VALVE, CONTROL	Contact your Local Dealer for Bobcat Technical Information BTI363 - NLA - W/Fittings - Was 6818039 [A]		1
2	29G444	BOLT			7
3	6667687	VALVE, STEM SOLENOID			1
4	6587763	BOOT			2
5	6817003	BODY			1
6	29G416	BOLT			2
7	7209460	SPOOL, LIFT LOCK	Was 7108781 [C]		1
8	6815152	SPOOL, TILT			1
9	7112383	AUX SPOOL	auxiliary		1
10		BODY	NSS		1
11		SEAT, CHECK VALVE	NLA - 19 mm (0.75") ID depth - Order 7166047 seat & Ref. 12 (7166339 spring) - Was 7106712		4
11	7166047	SEAT, CHECK VALVE	27,3 mm (1.08") ID depth		4
12	6592117	SPRING, LOAD CHECK	31,4 mm (1.24") long		4
12	7166339	SPRING, LOAD CHECK	44,4 mm (1.75") long		4
13	79K8	O RING 10			3
14	7134520	PLUG	load check - W/Ref. 13 - Was 6817707 [A]		3
15	6689739	VALVE	pilot operated - W/Ref. 16-18		2
16	79K10	O RING 10			5
17	6690431	KIT, SEAL	W/Ref. 16		2
18	73K016	RING, BACK-UP			1
19	6684645	VALVE, ANTI CAV	anti-cav - W/Ref. 13		3
20	7219324	VALVE, RELIEF	W/ O-rings - pressure to be set in field - Was 6686360 [A]		1
21	58K017	O-RING 10			1
22	6665569	RING, BACK-UP	back-up		1
23	25K20016	O RING 10			1
24	6665570	CLYD RING	glide		1
25	6595663	BUSHING			2
26	7211397	WASHER, SPRING	Was 6587523 [A]		2
27	6587580	SPRING			2
28	6592100	COLLAR			2
29	6596807	PLUG	plastic - 0.46" long		1
30	6586918	Screw, detent			1
31	6587575	ADAPTER			1
32	6592107	SPRING, DETENT 5			2
33	6592105	BALL 5			4
34	6531270	SLEEVE, DETENT			1
35	6592098	WASHER			1
36	799119	RING			1
37	6589226	COVER, END	0.63" flange		1
38	6660644	CAP			1
39	6814279	BLOCK			1
40	30G416	BOLT			1

Page 93 - OSS# 6300202494 - All rights reserved by Bobcat Company - 02/11/2016 - 14:15:02 - Produced by Ken Cook Co. with media1off

HYDRAULIC CONTROL VALVE (Cont'd)
(Manual Controls) (S/N 529911001 - 59999 & 530011001 - 59999)

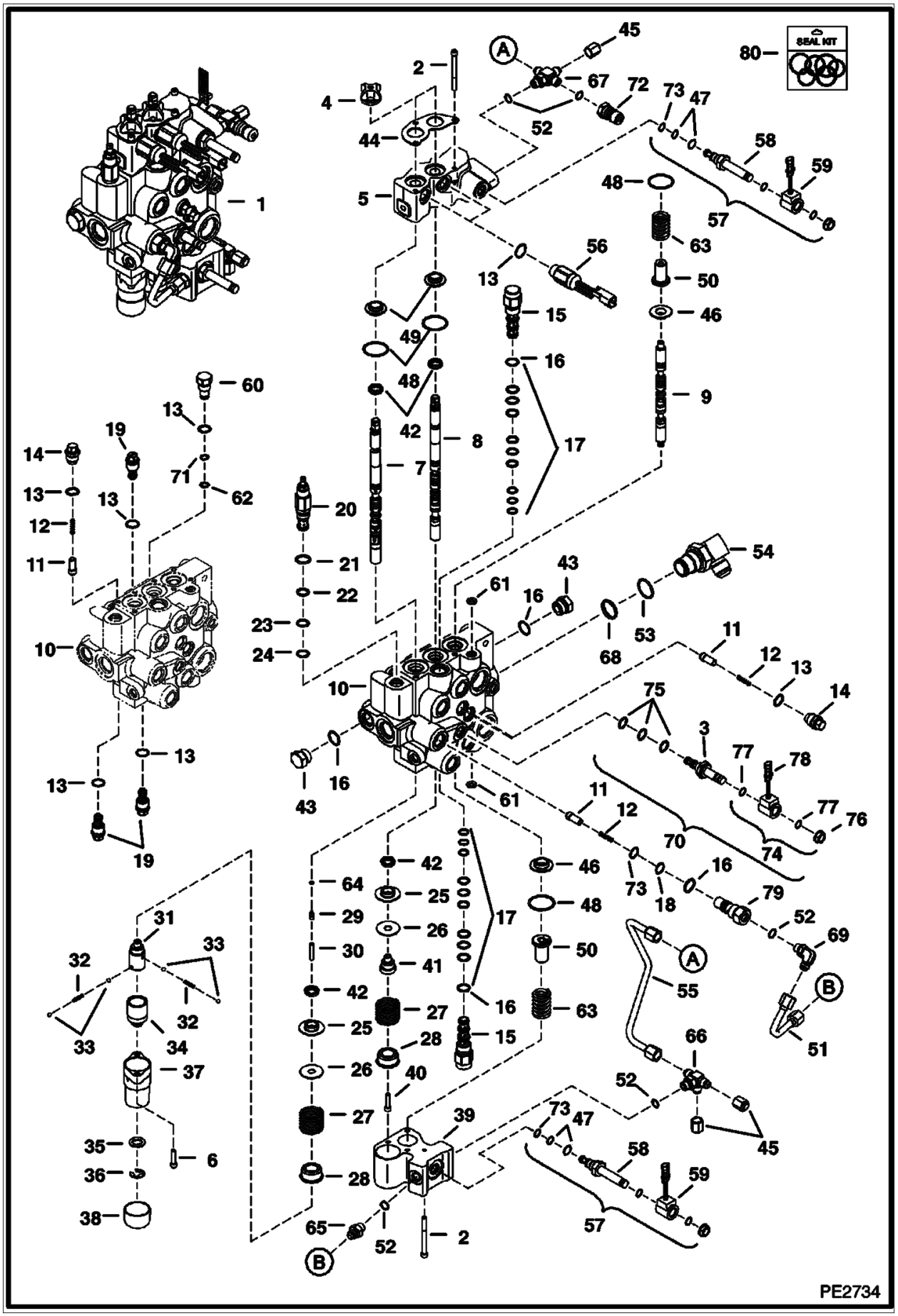

Illustration PE2734

Model S160 K
6904270

Page 94 - OSS# 6300202494 - All rights reserved by Bobcat Company - 02/11/2016 - 14:15:02 - Produced by Ken Cook Co. with mediaioff

HYDRAULIC CONTROL VALVE (Cont'd)
(Manual Controls) (S/N 529911001 - 59999 & 530011001 - 59999)

Ref No	Part Number	Description	Remarks	Serial Number	Qty
41	6592109	ADAPTER			1
42	6683274	SEAL, SPOOL 10			4
43	24K7	PLUG	W/Ref. 16		2
44	6813153	PLATE			1
45	36K5	CAP			1
46	7138376	BUSHING	Was 6804920 [B]		2
47	6685603	KIT, SEAL	solenoid valve		2
48	1K127	O-RING 10	Was 93K127 [A]		4
49	7202038	BUSHING, ALIGNMENT	Also Order 82K019 alignment O-ring - Was 6805102 [A]		2
50	6814694	RETAINER	spring		2
51	7116995	TUBELINE			1
52	79K6	O RING 10			x
53	79K16	O RING 10			x
54	7101797	ELBOW	W/Ref. 53 & 68 - Was 7101371 [B,D]		1
55	7110914	TUBELINE			1
56	6677383	SOLENOID, LOCK SPOOL	2-pin conector - 127 mm (5") wire		2
57	6686868	SOLENOID	W/Ref. 47, 58, 59, 69 & 73		2
58	6688743	STEM, VALVE CONTROL	W/Ref. 47, 69, & 73 - Was 6688397 [A]		2
59	6678891	COIL	10 volt - W/nut		2
59	6691022	NUT	Was 6690705 [A]		2
60	6816549	PLUG ASSY PORT RLF	W/Ref. 13, 62 & 71		1
61	55K204	O RING 10			2
62	80K13	WASHER	back-up		4
63	7121399	SPRING			2
64	58K4	O-RING	Was 54K020002B [B]		1
65	6688845	VALVE	check - W/screen & Ref. 52		1
66	7102019	TEE	W/Ref. 52		1
67	7102066	CROSS	W/Ref. 52		1
68	58K022	O-RING 10			1
69	17KB0606	FITTING	W/Ref. 52		1
70		SOLENOID	Ref. 3 & 75-78		1
71	58K013	O-RING 10			1
72	6684125	COUPLER			1
73	58K016	O-RING 10			x
74	6675559	COIL	assy - Ref. 76-78		1
75	6669732	KIT, SEAL			1
76	6668820	NUT			1
77	54K20028	O RING 10			4
78	6671025	COIL, SOLENOID 08-12	8 volt		2
79	7134522	PLUG	Was 6815014 [A]		1
80	7123964	KIT, SEAL	includes 7123963, 7123965, 6632279, 6669732 & (2) each of 6685603 & 6690431		x
80	7123963	SEAL KIT, EXTERNAL FITTING	3 spool - Ref. 4, 29, 42, 48, 61 & 62		x
80	6685603	KIT, SEAL	solenoid valve - Ref. 47		x
80	6632279	KIT, SEAL	main relief - Ref. 21-24		x
80	7123965	KIT, SEAL	external fitting - Ref. 13, 16, 18, 52, 53, 62, 68, 71, 73, & 77		x
80	6669732	KIT, SEAL	solenoid valve - Ref. 75		x

Page 95 - OSS# 6300202494 - All rights reserved by Bobcat Company - 02/11/2016 - 14:15:02 - Produced by Ken Cook Co. with media1off

HYDRAULIC CONTROL VALVE (Cont'd)
(Manual Controls) (S/N 529911001 - 59999 & 530011001 - 59999)

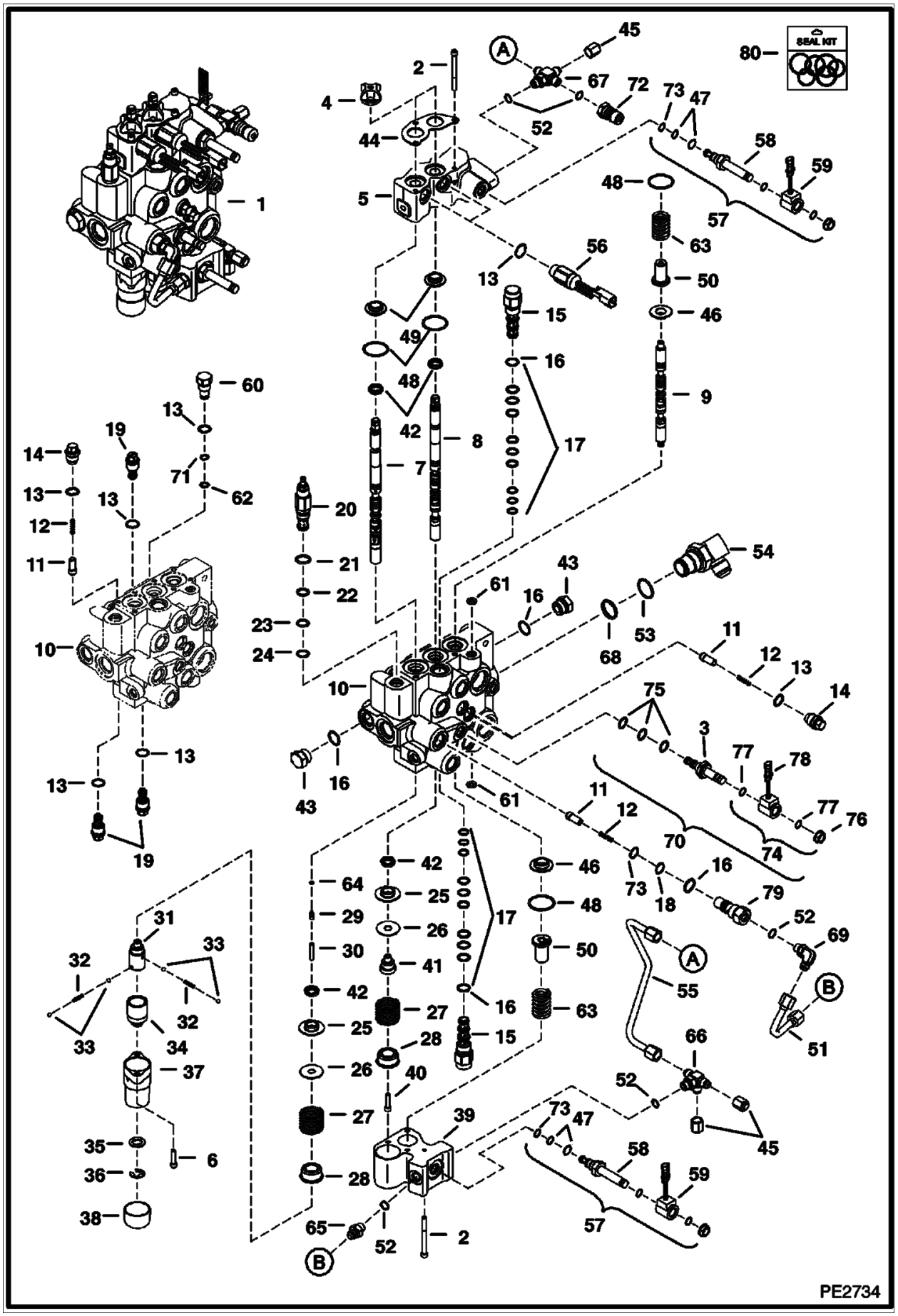

Illustration PE2734

Model S160 K
6904270

Page 96 - OSS# 6300202494 - All rights reserved by Bobcat Company - 02/11/2016 - 14:15:02 - Produced by Ken Cook Co. with mediaioff

HYDRAULIC CONTROL VALVE (Cont'd)
(Manual Controls) (S/N 529911001 - 59999 & 530011001 - 59999)

Ref No	Part Number	Description	Remarks	Serial Number	Qty
80	6690431	KIT, SEAL	pilot valve - Ref. 17		x

Page 97 - OSS# 6300202494 - All rights reserved by Bobcat Company - 02/11/2016 - 14:15:02 - Produced by Ken Cook Co. with media1off

HYDRAULIC CONTROL VALVE
(Spool Lock) (Service Valve)

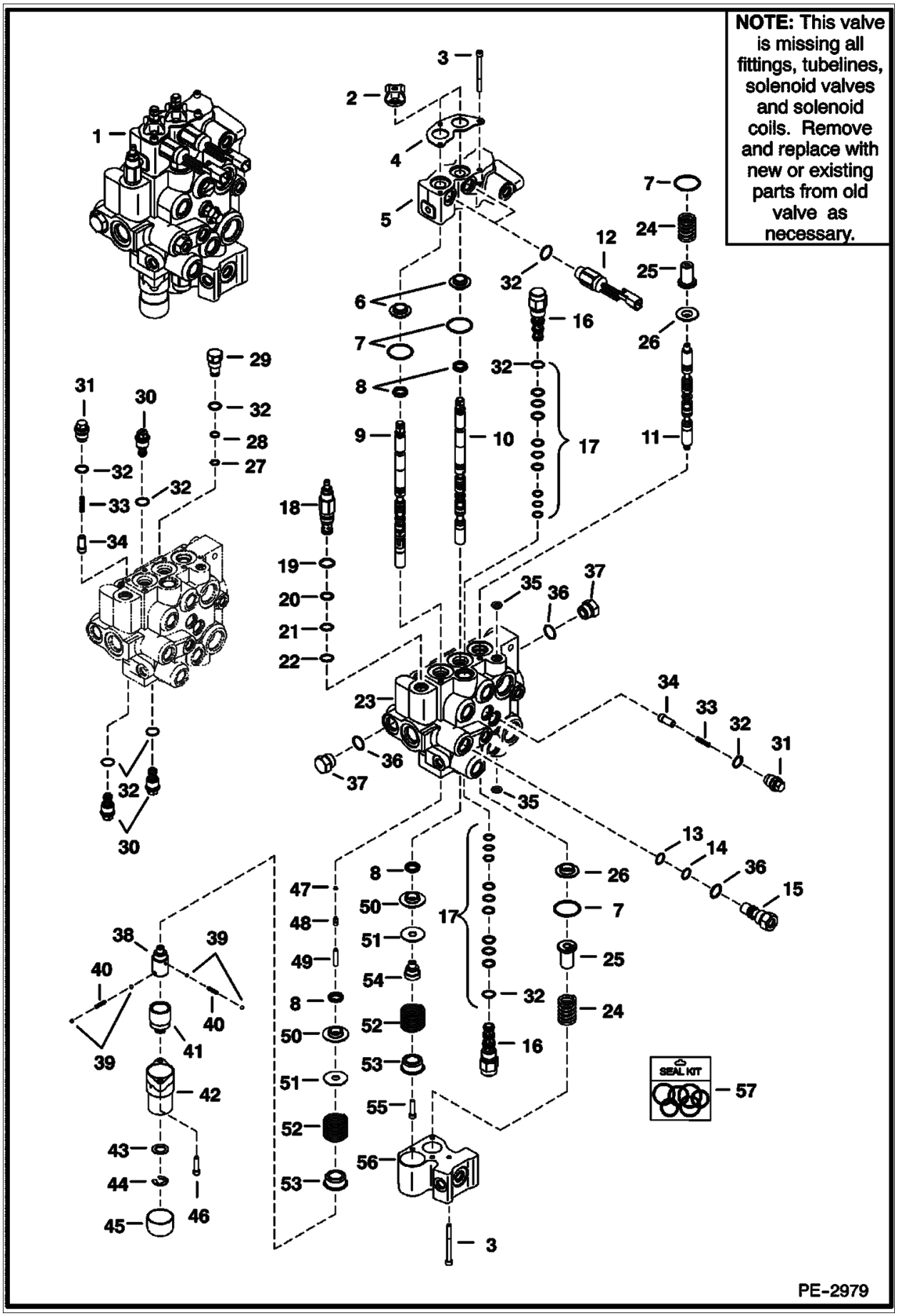

Illustration PE2979

Model S160 K
6904270

Page 98 - OSS# 6300202494 - All rights reserved by Bobcat Company - 02/11/2016 - 14:15:02 - Produced by Ken Cook Co. with mediaioff

HYDRAULIC CONTROL VALVE (Cont'd)
(Spool Lock) (Service Valve)

Ref No	Part Number	Description	Remarks	Serial Number	Qty
1		VALVE, CONTROL SERVICE	Contact your Local Dealer for Bobcat Technical Information BTI363 Was 7124362 [A]		1
2	6587763	BOOT			2
3	29G444	BOLT			7
4	6813153	PLATE	retainer		1
5	6817003	BODY			1
6	7202038	BUSHING, ALIGNMENT	Also Order 82K019 alignment O-ring - Was 6805102 [A]		2
7	1K127	O-RING 10	Was 93K127 [A]		x
8	6683274	SEAL, SPOOL 10			4
9	7209460	SPOOL, LIFT LOCK	Was 7108781 [C]		1
10	6815152	SPOOL, TILT			1
11	7112383	AUX SPOOL			1
12	6677383	SOLENOID, LOCK SPOOL	2-pin connector - 127 mm (5") wire - W/Ref. 32		2
12	6676029	SOLENOID, LOCK SPOOL	127 mm (5") wire - 3-pin connector - W/Ref. 32 - Was 6677383 [B,D]		2
13	73K016	RING, BACK-UP			x
14	58K016	O-RING 10			x
15	6685157	VALVE	W/Ref. 33, 34 & 36		1
16	6689739	VALVE	pilot operated - W/Ref. 21		2
17	6690431	KIT, SEAL	W/Ref. 32 - Was 6669734 [A]		2
18	7219324	VALVE, RELIEF	W/ O-rings - pressure to be set in field - Was 6686360 [A]		1
19	58K017	O-RING 10			x
20	6665569	RING, BACK-UP	back-up		x
21	25K20016	O RING 10			x
22	6665570	CLYD RING	guide		x
23		VALVE BODY	NSS		1
24	7121399	SPRING			2
25	6814694	RETAINER			2
26	7138376	BUSHING	Was 6804920 [B]		2
27	73K013	RING, BACK-UP			x
28	58K013	O-RING 10			x
29	6816549	PLUG ASSY PORT RLF	W/Ref. 27, 28 & 32		1
30	6684645	VALVE, ANTI CAV	anti-cav - 3500 psi - W/Ref. 32		3
31	7134520	PLUG	check valve - W/Ref. 32 - Was 6817707 [A]		3
32	79K8	O RING 10			x
33	6592117	SPRING, LOAD CHECK	31,4 mm (1.24") long		3
33	7166339	SPRING, LOAD CHECK	44,4 mm (1.75") long		3
34		SEAT, CHECK VALVE	NLA - 19 mm (0.75") ID depth - Order 7166047 seat & Ref. 33 (7166339 spring) - Was 7106712		3
34	7166047	SEAT, CHECK VALVE	27,3 mm (1.08") ID depth		3
35	55K204	O RING 10			x
36	79K10	O RING 10			x
37	24K7	PLUG	W/Ref. 36		2
38	6587575	ADAPTER			1
39	6592105	BALL 5			4

Page 99 - OSS# 6300202494 - All rights reserved by Bobcat Company - 02/11/2016 - 14:15:02 - Produced by Ken Cook Co. with media1off

HYDRAULIC CONTROL VALVE (Cont'd)
(Spool Lock) (Service Valve)

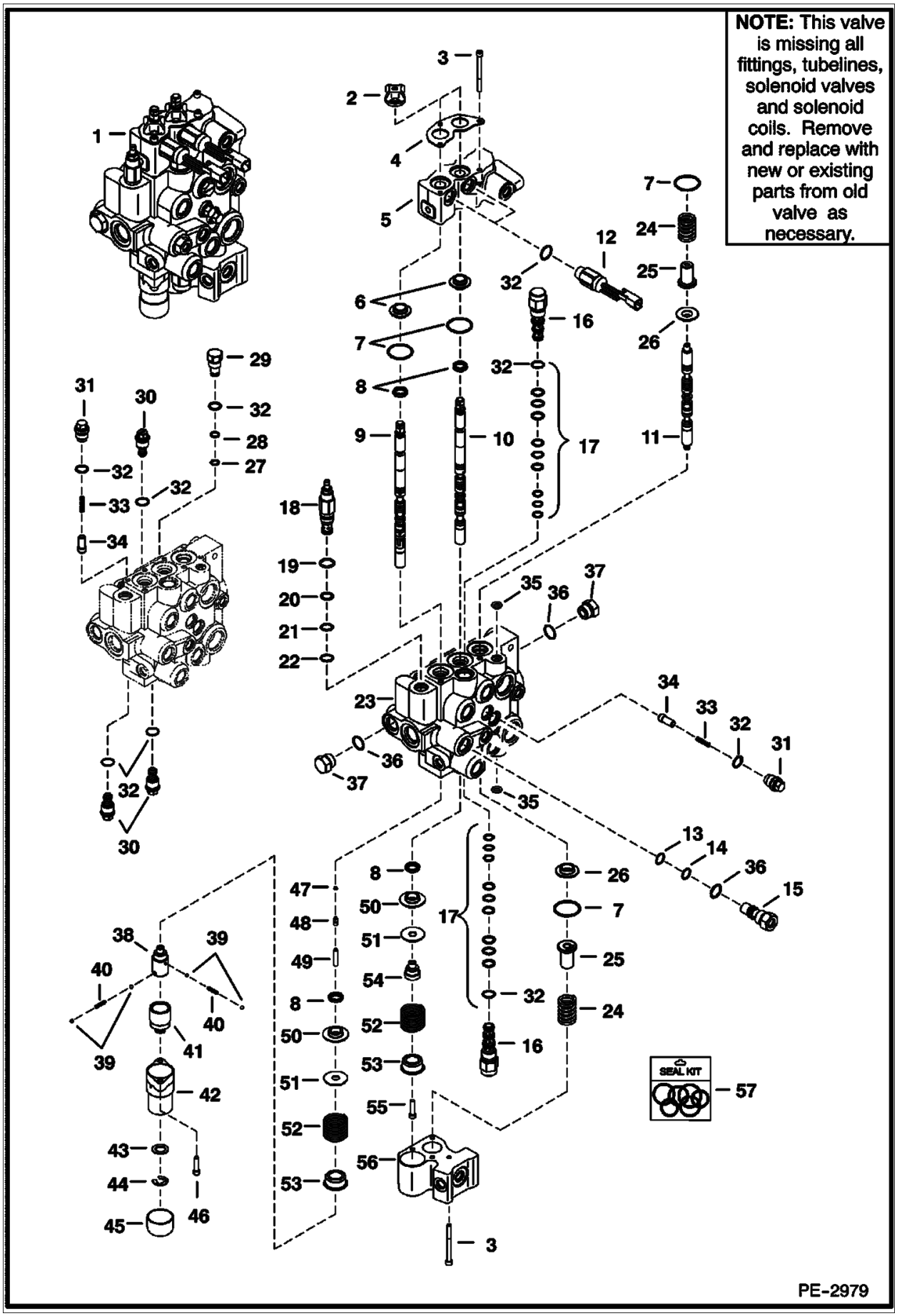

Illustration PE2979

Model S160 K
6904270

Page 100 - OSS# 6300202494 - All rights reserved by Bobcat Company - 02/11/2016 - 14:15:02 - Produced by Ken Cook Co. with mediaoff

HYDRAULIC CONTROL VALVE (Cont'd)
(Spool Lock) (Service Valve)

Ref No	Part Number	Description	Remarks	Serial Number	Qty
40	6592107	SPRING, DETENT 5			2
41	6531270	SLEEVE, DETENT			1
42	6589226	COVER, END	0.63" flange		1
43	6592098	WASHER			1
44	799119	RING			1
45	6660644	CAP			1
46	29G416	BOLT			2
47	58K4	O-RING			1
48	6596807	PLUG	plastic - 0.46" long		1
49	6586918	Screw, detent			1
50	6595663	BUSHING			2
51	7211397	WASHER, SPRING	Was 6587523 [A]		2
52	6587580	SPRING			2
53	6592100	COLLAR			2
54	6592109	ADAPTER			1
55	7102652	SCREW			1
56	6814279	BLOCK			1
57	7123964	KIT, SEAL	includes 7123963, 7123965, 6632279, 6669732 & (2) each of 6685603 & 6690431		x
57	7123963	SEAL KIT, EXTERNAL FITTING	3 spool - Ref. 2, 7, 8, 35, 47, & 48		x
57	7123965	KIT, SEAL	external fitting		x
57	6685603	KIT, SEAL	solenoid valve		x
57	6632279	KIT, SEAL	main relief - Ref. 19-22		x
57	6669732	KIT, SEAL	solenoid valve		x
57	6690431	KIT, SEAL	pilot valve - Ref. 21 - Was 6669734 [A]		x

Page 101 - OSS# 6300202494 - All rights reserved by Bobcat Company - 02/11/2016 - 14:15:02 - Produced by Ken Cook Co. with media1off

HYDRAULIC CONTROL VALVE
(Spool Lock) (Service Valve)

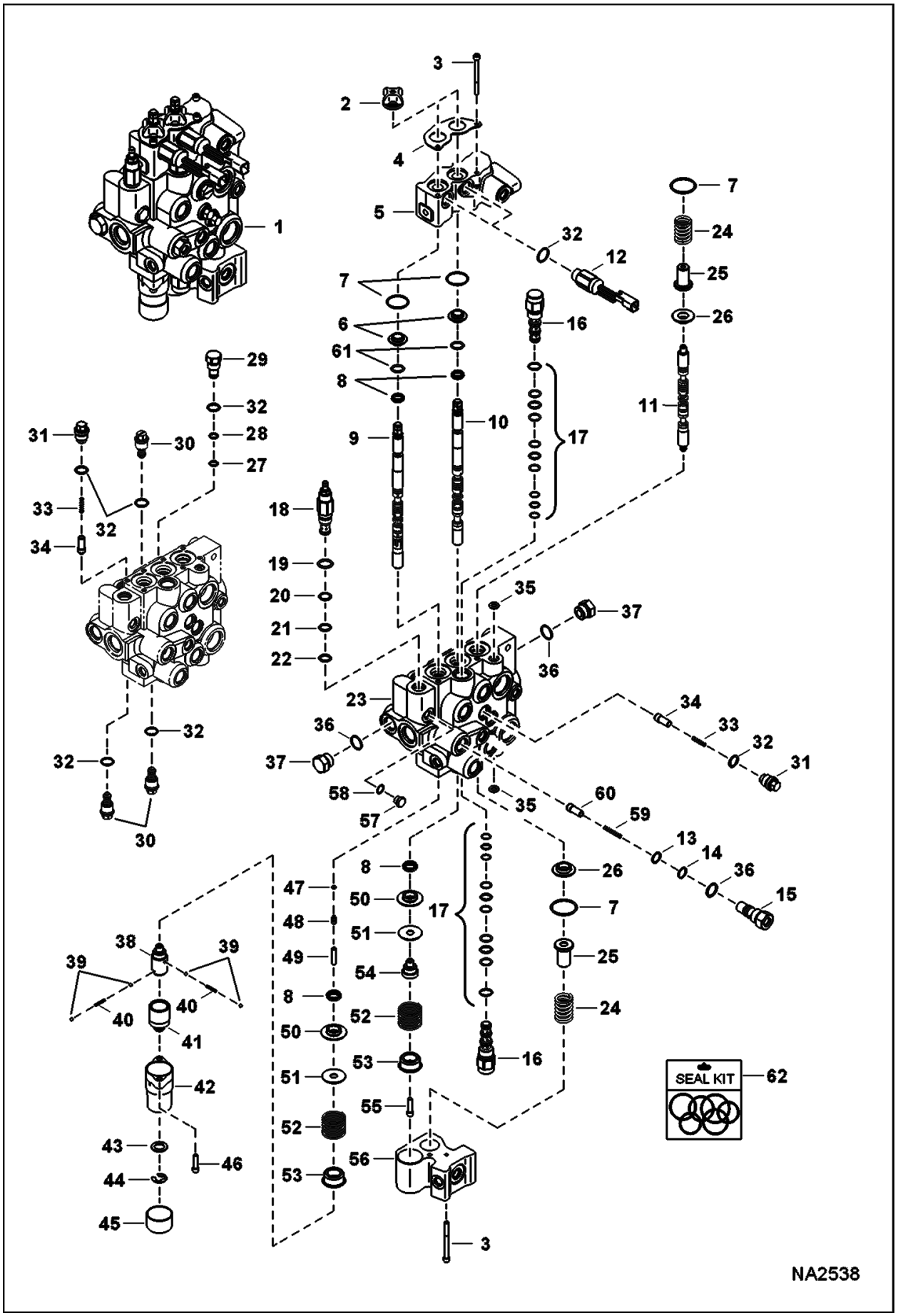

Illustration NA2538

Model S160 K
6904270

Page 102 - OSS# 6300202494 - All rights reserved by Bobcat Company - 02/11/2016 - 14:15:02 - Produced by Ken Cook Co. with mediaoff

HYDRAULIC CONTROL VALVE (Cont'd)
(Spool Lock) (Service Valve)

Ref No	Part Number	Description	Remarks	Serial Number	Qty
1	7184231	VALVE, CONTROL SERVICE			1
2	6587763	BOOT			2
3	29G444	BOLT			7
4	6813153	PLATE	retainer		1
5	6817003	BODY			1
6	7202038	BUSHING, ALIGNMENT	Also Order 82K019 alignment O-ring - Was 6805102 [A]		2
7	1K127	O-RING 10			x
8	6683274	SEAL, SPOOL 10			4
9	7266558	SPOOL, LIFT LOCK	- Was 7209460 [A]		1
10	6815152	SPOOL, TILT			1
11	7112383	AUX SPOOL			1
12	6676029	SOLENOID, LOCK SPOOL	W/Ref. 32		2
13	73K016	RING, BACK-UP			x
14	58K016	O-RING 10			x
15	7134522	PLUG	W/Ref. 33, 34 & 36		1
16	6689739	VALVE	pilot operated - W/Ref. 21		2
17	6690431	KIT, SEAL	W/Ref. 32		2
18	7219324	VALVE, RELIEF	W/ O-rings - pressure to be set in field - Was 6686360 [A]		1
19	58K017	O-RING 10			x
20	6665569	RING, BACK-UP	back-up		x
21	25K20016	O RING 10			x
22	6665570	CLYD RING	guide		x
23		VALVE BODY	NSS		1
24	7121399	SPRING			2
25	6814694	RETAINER			2
26	7138376	BUSHING			2
27	73K013	RING, BACK-UP			x
28	58K013	O-RING 10			x
29	6816549	PLUG ASSY PORT RLF	W/Ref. 27, 28 & 32		1
30	6684645	VALVE, ANTI CAV	anti-cav - 3500 psi - W/Ref. 32		3
31	7134520	PLUG	check valve - W/Ref. 32		3
32	79K8	O RING 10			x
33	6592117	SPRING, LOAD CHECK			3
34	7166047	SEAT, CHECK VALVE			3
35	55K204	O RING 10			x
36	79K10	O RING 10			x
37	24K7	PLUG	W/Ref. 36		2
38	6587575	ADAPTER			1
39	6592105	BALL 5			4
40	6592107	SPRING, DETENT 5			2
41	6531270	SLEEVE, DETENT			1
42	6589226	COVER, END	0.63" flange		1
43	6592098	WASHER			1

Page 103 - OSS# 6300202494 - All rights reserved by Bobcat Company - 02/11/2016 - 14:15:02 - Produced by Ken Cook Co. with media1off

HYDRAULIC CONTROL VALVE (Cont'd)
(Spool Lock) (Service Valve)

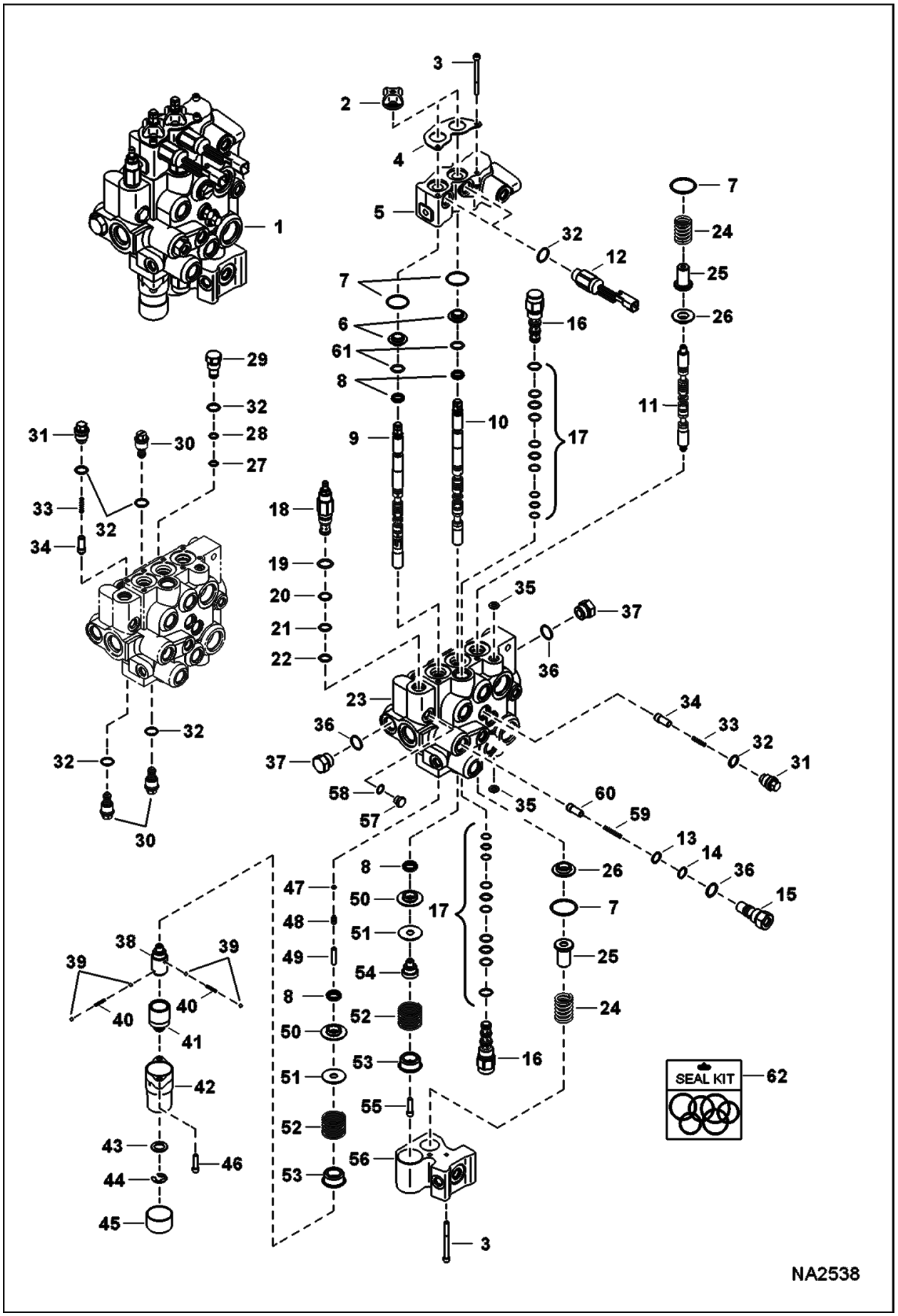

Illustration NA2538

Model S160 K
6904270

Page 104 - OSS# 6300202494 - All rights reserved by Bobcat Company - 02/11/2016 - 14:15:02 - Produced by Ken Cook Co. with mediaoff

HYDRAULIC CONTROL VALVE (Cont'd)
(Spool Lock) (Service Valve)

Ref No	Part Number	Description	Remarks	Serial Number	Qty
44	799119	RING			1
45	6660644	CAP			1
46	29G416	BOLT			2
47	58K4	O-RING			1
48	6596807	PLUG	plastic - 0.46" long		1
49	6586918	Screw, detent			1
50	6595663	BUSHING			2
51	7211397	WASHER, SPRING	Was 6587523 [A]		2
52	6587580	SPRING			2
53	6592100	COLLAR			2
54	6592109	ADAPTER			1
55	7102652	SCREW			1
56	6814279	BLOCK			1
57	6812171	PLUG	W/Ref. 58		2
58	75K6	O-RING			1
59	7166339	SPRING, LOAD CHECK			1
60	7166047	SEAT, CHECK VALVE			1
61	82K019	O-RING	alignment		2
62	7123964	KIT, SEAL	includes 7123963, 7123965, 6632279, 6669732 & (2) each of 6685603 & 6690431		x
62	7123963	SEAL KIT, EXTERNAL FITTING	3 spool - Ref. 2, 7, 8, 35, 47, & 48		x
62	7123965	KIT, SEAL	external fitting		x
62	6685603	KIT, SEAL	solenoid valve		x
62	6632279	KIT, SEAL	main relief - Ref. 19-22		x
62	6669732	KIT, SEAL	solenoid valve		x
62	6690431	KIT, SEAL	pilot valve - Ref. 21		x

Page 105 - OSS# 6300202494 - All rights reserved by Bobcat Company - 02/11/2016 - 14:15:02 - Produced by Ken Cook Co. with media1off

HYDRAULIC CONTROL VALVE
(Manual Controls) (S/N AHWA11001 & Above, 529960001 & Above, 530060001 & Above)

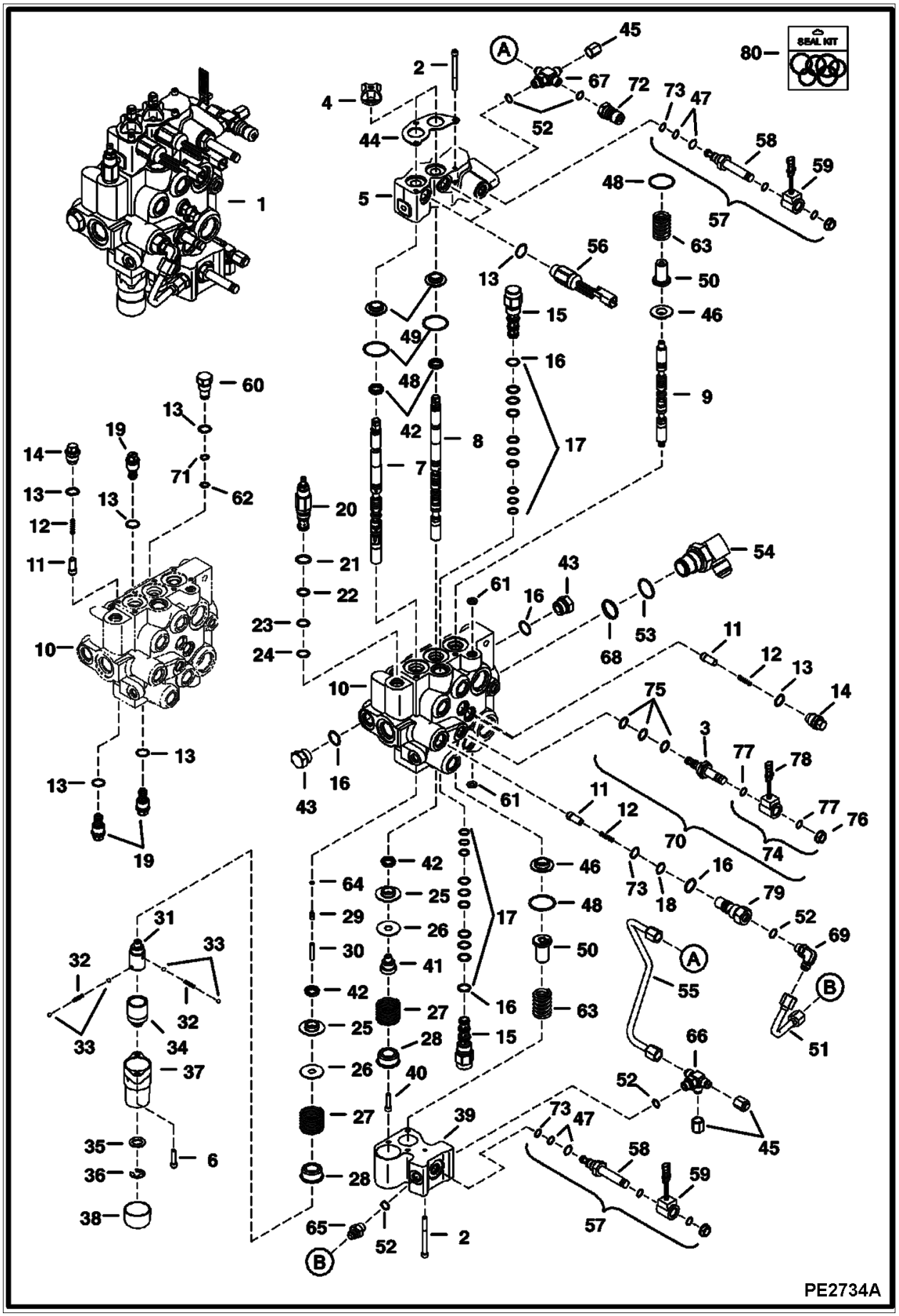

Illustration PE2734A

Model S160 K
6904270

Page 106 - OSS# 6300202494 - All rights reserved by Bobcat Company - 02/11/2016 - 14:15:02 - Produced by Ken Cook Co. with mediaoff

HYDRAULIC CONTROL VALVE (Cont'd)
(Manual Controls) (S/N AHWA11001 & Above, 529960001 & Above, 530060001 & Above)

Ref No	Part Number	Description	Remarks	Serial Number	Qty
1		VALVE, CONTROL	Contact your Local Dealer for Bobcat Technical Information BTI363 - NLA - W/fittings - Was 7160957 [A]		1
2	29G444	BOLT			7
3	6667687	VALVE, STEM SOLENOID			1
4	6587763	BOOT			2
5	6817003	BODY			1
6	29G416	BOLT			2
7	7209460	SPOOL, LIFT LOCK	Was 7108781 [C]		1
8	6815152	SPOOL, TILT			1
9	7112383	AUX SPOOL	auxiliary		1
10		BODY	NSS		1
11		SEAT, CHECK VALVE	NLA - 19 mm (0.75") ID depth - Order 7166047 seat & Ref. 12 (7166339 spring) - Was 7106712		4
11	7166047	SEAT, CHECK VALVE	27,3 mm (1.08") ID depth		4
12	6592117	SPRING, LOAD CHECK	31,4 mm (1.24") long		4
12	7166339	SPRING, LOAD CHECK	44,4 mm (1.75") long		4
13	79K8	O RING 10			3
14	7134520	PLUG	load check - W/Ref. 13		3
15	6689739	VALVE	pilot operated - W/Ref. 16-18		2
16	79K10	O RING 10			5
17	6690431	KIT, SEAL	W/Ref. 16		2
18	73K016	RING, BACK-UP			1
19	6684645	VALVE, ANTI CAV	anti-cav - W/Ref. 13		3
20	7219324	VALVE, RELIEF	W/ O-rings - pressure to be set in field - Was 6686360 [A]		1
21	58K017	O-RING 10			1
22	6665569	RING, BACK-UP	back-up		1
23	25K20016	O RING 10			1
24	6665570	CLYD RING	glide		1
25	6595663	BUSHING			2
26	7211397	WASHER, SPRING	Was 6587523 [A]		2
27	6587580	SPRING			2
28	6592100	COLLAR			2
29	6596807	PLUG	plastic - 0.46" long		1
30	6586918	Screw, detent			1
31	6587575	ADAPTER			1
32	6592107	SPRING, DETENT 5			2
33	6592105	BALL 5			4
34	6531270	SLEEVE, DETENT			1
35	6592098	WASHER			1
36	799119	RING			1
37	6589226	COVER, END	0.63" flange		1
38	6660644	CAP			1
39	6814279	BLOCK			1
40	30G416	BOLT			1

Page 107 - OSS# 6300202494 - All rights reserved by Bobcat Company - 02/11/2016 - 14:15:02 - Produced by Ken Cook Co. with media1off

HYDRAULIC CONTROL VALVE (Cont'd)
(Manual Controls) (S/N AHWA11001 & Above, 529960001 & Above, 530060001 & Above)

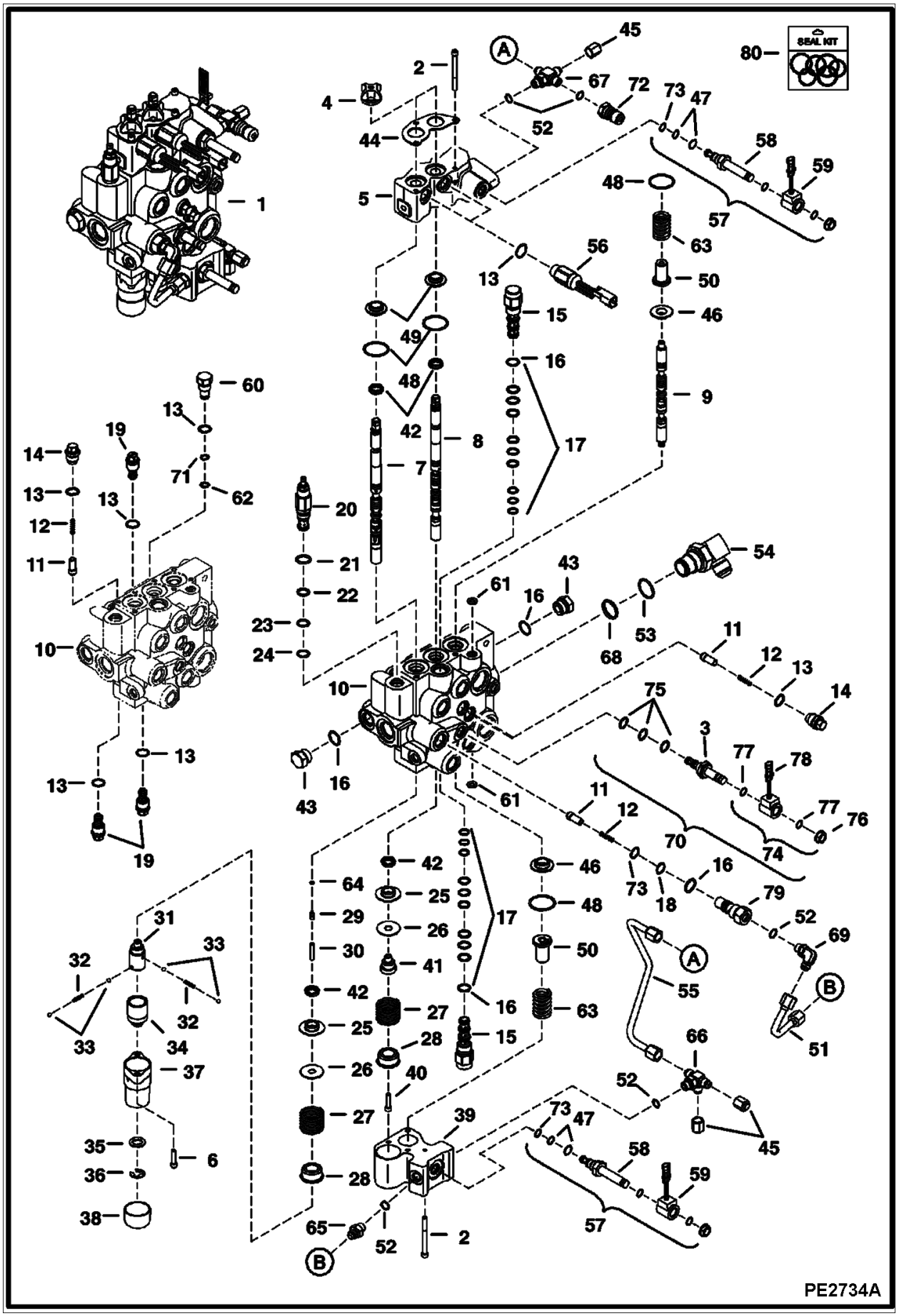

Illustration PE2734A

Model S160 K
6904270

Page 108 - OSS# 6300202494 - All rights reserved by Bobcat Company - 02/11/2016 - 14:15:02 - Produced by Ken Cook Co. with mediaoff

HYDRAULIC CONTROL VALVE (Cont'd)
(Manual Controls) (S/N AHWA11001 & Above, 529960001 & Above, 530060001 & Above)

Ref No	Part Number	Description	Remarks	Serial Number	Qty
41	6592109	ADAPTER			1
42	6683274	SEAL, SPOOL 10			4
43	24K7	PLUG	W/Ref. 16		2
44	6813153	PLATE			1
45	36K5	CAP			1
46	7138376	BUSHING			2
47	6685603	KIT, SEAL	solenoid valve		2
48	1K127	O-RING 10			4
49	7202038	BUSHING, ALIGNMENT	Also Order 82K019 alignment O-ring - Was 6805102 [A]		2
50	6814694	RETAINER	spring		2
51	7116995	TUBELINE			1
52	79K6	O RING 10			x
53	79K16	O RING 10			x
54	7101797	ELBOW	W/Ref. 53 & 68 - Was 7101371 [B,D]		1
55	7110914	TUBELINE			1
56	6676029	SOLENOID, LOCK SPOOL	127 mm (5") wire - Was 6677383 [B,D]		2
57	6686868	SOLENOID	W/Ref. 47, 58, 59, 69 & 73		2
58	6688743	STEM, VALVE CONTROL	W/Ref. 47, 69, & 73		2
59	6678891	COIL	10 volt - W/nut		2
59	6691022	NUT			2
60	6816549	PLUG ASSY PORT RLF	W/Ref. 13, 62 & 71		1
61	55K204	O RING 10			2
62	80K13	WASHER	back-up		4
63	7121399	SPRING			2
64	58K4	O-RING			1
65	6688845	VALVE	check - W/screen & Ref. 52		1
66	7102019	TEE	W/Ref. 52		1
67	7102066	CROSS	W/Ref. 52		1
68	58K022	O-RING 10			1
69	17KB0606	FITTING	W/Ref. 52		1
70		SOLENOID	Ref. 3 & 75-78		1
71	58K013	O-RING 10			1
72	6684125	COUPLER			1
73	58K016	O-RING 10			x
74	6675559	COIL	assy - Ref. 76-78		1
75	6669732	KIT, SEAL			1
76	6668820	NUT			1
77	54K20028	O RING 10			4
78	6671025	COIL, SOLENOID 08-12	8 volt		2
79	7134522	PLUG			1
80	7123964	KIT, SEAL	includes 7123963, 7123965, 6632279, 6669732 & (2) each of 6685603 & 6690431		x
80	7123963	SEAL KIT, EXTERNAL FITTING	3 spool - Ref. 4, 29, 42, 48, 61 & 62		x
80	6685603	KIT, SEAL	solenoid valve - Ref. 47		x
80	6632279	KIT, SEAL	main relief - Ref. 21-24		x
80	7123965	KIT, SEAL	external fitting - Ref. 13, 16, 18, 52, 53, 62, 68, 71, 73, & 77		x
80	6669732	KIT, SEAL	solenoid valve - Ref. 75		x

Page 109 - OSS# 6300202494 - All rights reserved by Bobcat Company - 02/11/2016 - 14:15:02 - Produced by Ken Cook Co. with media1off

HYDRAULIC CONTROL VALVE (Cont'd)
(Manual Controls) (S/N AHWA11001 & Above, 529960001 & Above, 530060001 & Above)

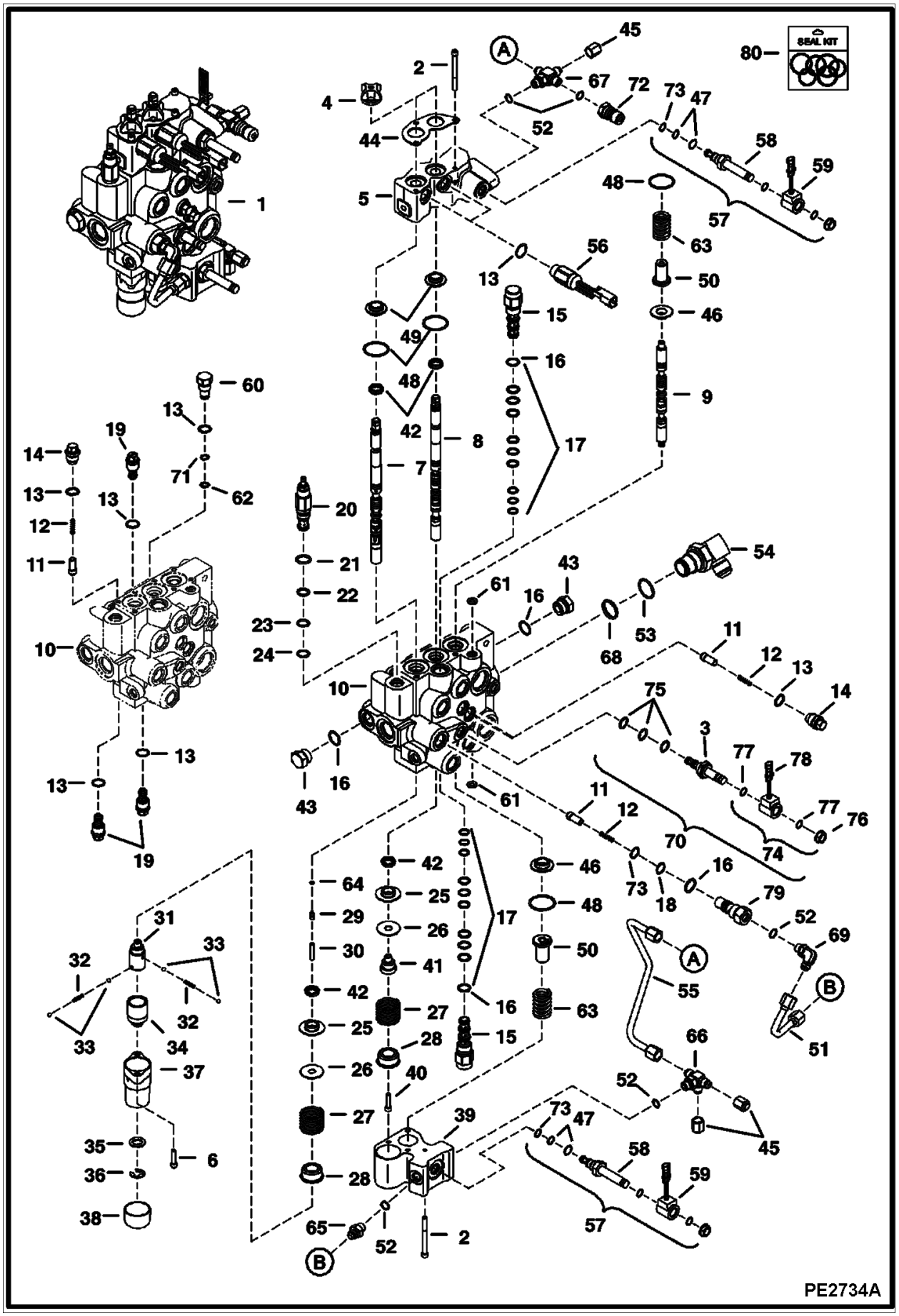

Illustration PE2734A

Model S160 K
6904270

Page 110 - OSS# 6300202494 - All rights reserved by Bobcat Company - 02/11/2016 - 14:15:02 - Produced by Ken Cook Co. with mediaoff

HYDRAULIC CONTROL VALVE (Cont'd)
(Manual Controls) (S/N AHWA11001 & Above, 529960001 & Above, 530060001 & Above)

Ref No	Part Number	Description	Remarks	Serial Number	Qty
80	6690431	KIT, SEAL	pilot valve - Ref. 17		x

Page 111 - OSS# 6300202494 - All rights reserved by Bobcat Company - 02/11/2016 - 14:15:02 - Produced by Ken Cook Co. with media1off

HYDRAULIC CONTROL VALVE
(AHC/ACS/SJC)

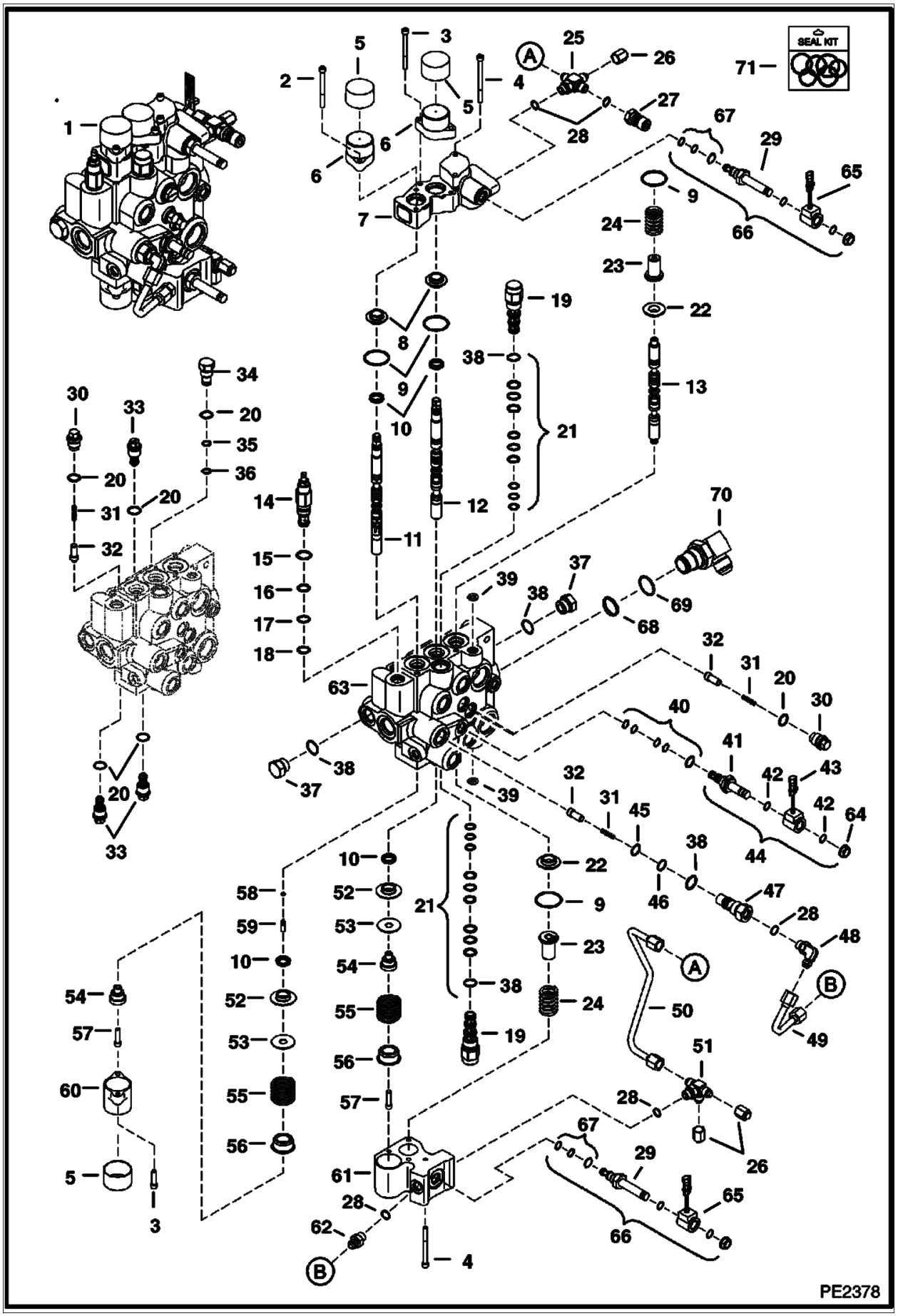

Illustration PE2378

Model S160 K
6904270

Page 112 - OSS# 6300202494 - All rights reserved by Bobcat Company - 02/11/2016 - 14:15:02 - Produced by Ken Cook Co. with mediaoff

HYDRAULIC CONTROL VALVE (Cont'd)
(AHC/ACS/SJC)

Ref No	Part Number	Description	Remarks	Serial Number	Qty
1		VALVE, CONTROL	Contact your Local Dealer for Bobcat Technical Information BTI363 - NLA - W/fittings - Was 7101354		1
2	69G436	BOLT			2
3	29G416	BOLT			4
4	29G444	BOLT			5
5	6662848	CAP			3
6	7101345	BONNET, DETENT HYD VALVE			2
7	6817004	BODY			1
8	7202038	BUSHING, ALIGNMENT	Also Order 82K019 alignment O-ring - Was 6805102 [A]		2
9	1K127	O-RING 10	Was 93K127 [A]		4
10	6683274	SEAL, SPOOL 10			4
11	7209459	SPOOL, LIFT	Was 7108241 [C]		1
12	7108242	SPOOL, TILT			1
13	7112383	AUX SPOOL	Was 6814323 [B]		1
14	7219324	VALVE, RELIEF	W/ O-rings - pressure to be set in field - Was 6686360 [A]		1
15	58K017	O-RING 10			x
16	6665569	RING, BACK-UP	back-up		x
17	25K20016	O RING 10			x
18	6665570	CLYD RING	guide		x
19	6689739	VALVE	pilot operated - W/Ref. 21		2
20	79K8	O RING 10			x
21	6690431	KIT, SEAL	W/Ref. 38		2
22	7138376	BUSHING	Was 6804920 [B]		2
23	6814694	RETAINER			2
24	7121399	SPRING	Was 6810950 [A]		2
25	7102066	CROSS	W/Ref. 28		1
26	36K5	CAP			2
27	6684125	COUPLER	male		1
28	79K6	O RING 10			x
29	6688743	STEM, VALVE CONTROL	Was 6688397 [A]		2
30	7134520	PLUG	check valve - W/Ref. 20 - Was 6817707 [A]		3
31	6592117	SPRING, LOAD CHECK	31,4 mm (1.24") long		4
31	7166339	SPRING, LOAD CHECK	44,4 mm (1.75") long		4
32		SEAT, CHECK VALVE	NLA - 19 mm (0.75") ID depth - Order 7166047 seat & Ref. 31 (7166339 spring) - Was 7106712 [A]		4
32	7166047	SEAT, CHECK VALVE	27,3 mm (1.08") ID depth		4
33	6684645	VALVE, ANTI CAV	anti-cav - W/Ref. 20		3
34	6816549	PLUG ASSY PORT RLF	W/Ref. 20, 35 & 36		1
35	58K013	O-RING 10			x
36	73K013	RING, BACK-UP			x
37	24K7	PLUG	W/Ref. 38		2
38	79K10	O RING 10			x
39	55K204	O RING 10			x
40	6669732	KIT, SEAL			1

Page 113 - OSS# 6300202494 - All rights reserved by Bobcat Company - 02/11/2016 - 14:15:02 - Produced by Ken Cook Co. with media1off

HYDRAULIC CONTROL VALVE (Cont'd)
(AHC/ACS/SJC)

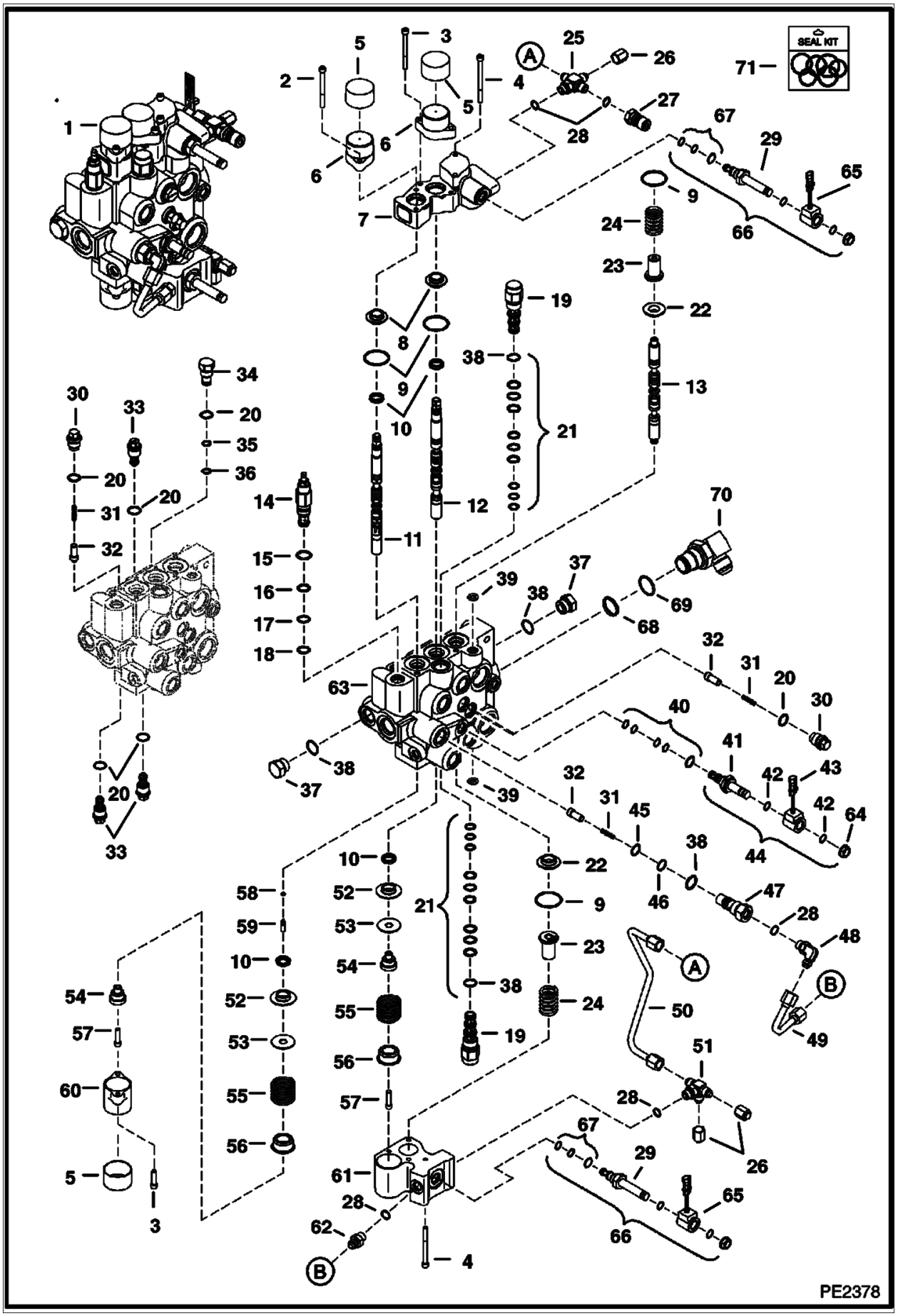

Illustration PE2378

Model S160 K
6904270

Page 114 - OSS# 6300202494 - All rights reserved by Bobcat Company - 02/11/2016 - 14:15:02 - Produced by Ken Cook Co. with mediaoff

HYDRAULIC CONTROL VALVE (Cont'd)
(AHC/ACS/SJC)

Ref No	Part Number	Description	Remarks	Serial Number	Qty
41	6667687	VALVE, STEM SOLENOID			1
42	54K20028	O RING 10			x
43	6671025	COIL, SOLENOID 08-12			1
44	6672471	VALVE, SOLENOID	Ref. 40-43 & 64		1
45	58K016	O-RING 10			x
46	73K016	RING, BACK-UP			x
47	7134522	PLUG	W/Ref. 38, 45 & 46 - Was 6815014 [A]		1
48	17KB0606	FITTING	W/Ref. 28		1
49	7116995	TUBELINE			1
50	7110914	TUBELINE			1
51	7102018	TEE	W/Ref. 28		1
52	6595663	BUSHING			2
53	7211397	WASHER, SPRING	Was 6587523 [A]		2
54	6592109	ADAPTER			2
55	6587580	SPRING			2
56	6592100	COLLAR			2
57	7102652	SCREW			2
58	58K4	O-RING	Was 54K020002B [B]		1
59	6801167	SPOOLPLUG	plastic - 0.69" long		1
60	6803092	BONNET			1
61	6814279	BLOCK			1
62	6688845	VALVE	check - W/Ref. 28		1
63		BODY	NSS		1
64	6668820	NUT			1
65	6678891	COIL	10 volt - W/nut		2
65	6691022	NUT	Was 6690705 [A]		2
66	6690991	VALVE, SOLENOID	W/Ref. 29 & 65 - Was 6688499 [A]		2
67	6685603	KIT, SEAL	solenoid valve		1
68	58K022	O-RING 10			1
69	79K16	O RING 10			1
70	7101797	ELBOW	W/Ref. 68 & 69 - Was 7101371 [B,D]		1
71	7123964	KIT, SEAL	includes 7123963, 7123965, 6632279, 6669732 & (2) each of 6685603 & 6690431		x
71	7123963	SEAL KIT, EXTERNAL FITTING	3 spool - Ref. 9, 10, 39, 58, & 59		x
71	7123965	KIT, SEAL	external fitting - Ref. 20, 28, 35, 36, 38, 42, 45, 46, 68, & 69		x
71	6685603	KIT, SEAL	solenoid valve -Ref. 67		x
71	6632279	KIT, SEAL	main relief - Ref. 15-18		x
71	6669732	KIT, SEAL	solenoid valve - Ref. 40		x
71	6690431	KIT, SEAL	pilot valve - Ref. 21		x

Page 115 - OSS# 6300202494 - All rights reserved by Bobcat Company - 02/11/2016 - 14:15:02 - Produced by Ken Cook Co. with media1off

HYDRAULIC CONTROL VALVE
(ACS/AHC/SJC) (Service Valve)

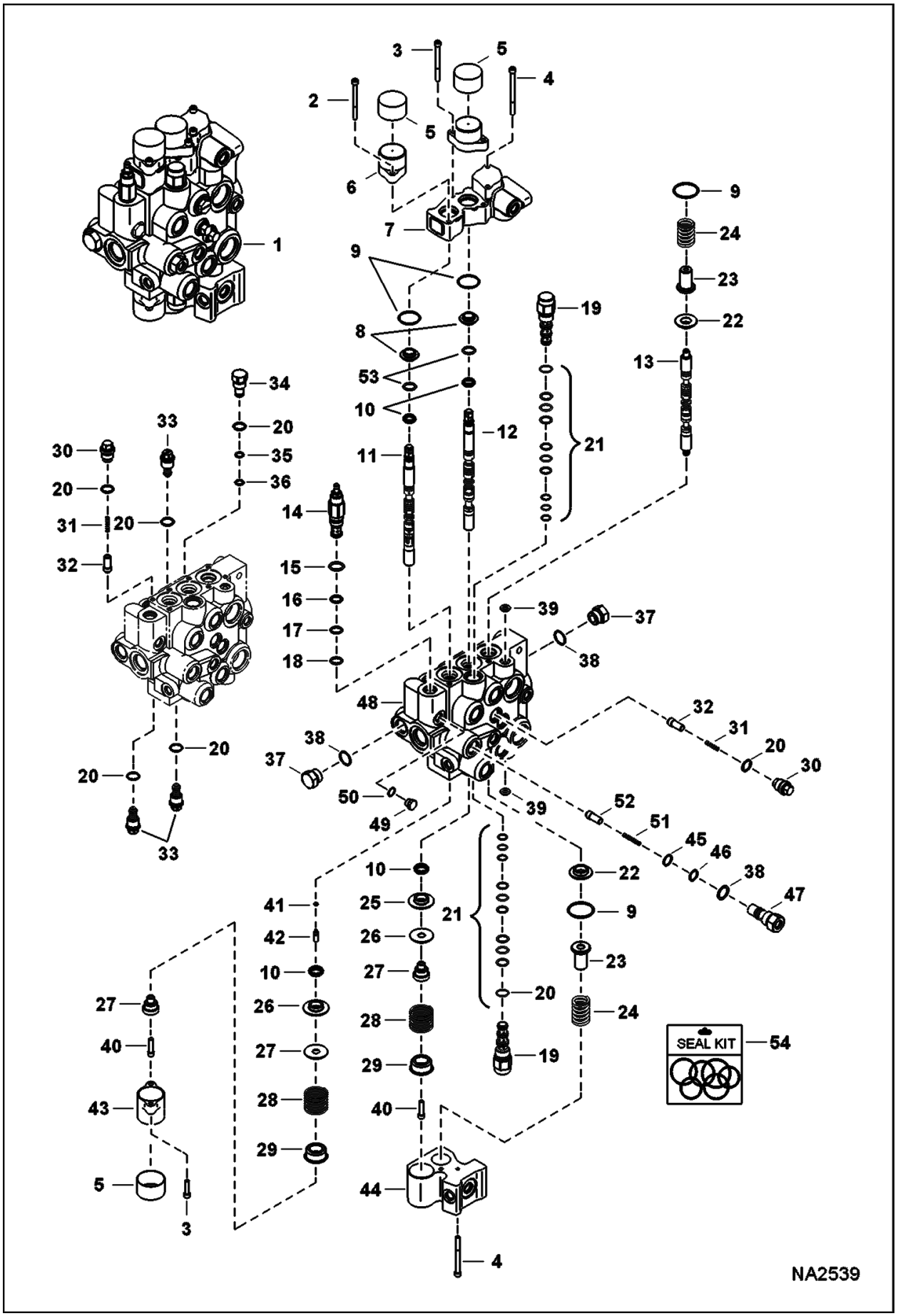

Illustration NA2539

Model S160 K
6904270

Page 116 - OSS# 6300202494 - All rights reserved by Bobcat Company - 02/11/2016 - 14:15:02 - Produced by Ken Cook Co. with mediaoff

HYDRAULIC CONTROL VALVE (Cont'd)
(ACS/AHC/SJC) (Service Valve)

Ref No	Part Number	Description	Remarks	Serial Number	Qty
1	7184230	VALVE, CONTROL SERVICE			1
2	69G436	BOLT			2
3	29G416	BOLT			4
4	29G444	BOLT			5
5	6662848	CAP			3
6	7101345	BONNET, DETENT HYD VALVE			2
7	6817004	BODY			1
8	7202038	BUSHING, ALIGNMENT	Also Order 82K019 alignment O-ring - Was 6805102 [A]		2
9	1K127	O-RING 10			4
10	6683274	SEAL, SPOOL 10			4
11	7209459	SPOOL, LIFT	Was 7108241 [C]		1
12	7108242	SPOOL, TILT			1
13	7112383	AUX SPOOL			1
14	7219324	VALVE, RELIEF	W/ O-rings - pressure to be set in field - Was 6686360 [A]		1
15	58K017	O-RING 10			x
16	6665569	RING, BACK-UP	back-up		x
17	25K20016	O RING 10			x
18	6665570	CLYD RING	guide		x
19	6689739	VALVE	pilot operated - W/Ref. 21		2
20	79K8	O RING 10			x
21	6690431	KIT, SEAL	W/Ref. 20		2
22	7138376	BUSHING			2
23	6814694	RETAINER			2
24	7121399	SPRING			2
25	6595663	BUSHING			2
26	7211397	WASHER, SPRING	Was 6587523 [A]		2
27	6592109	ADAPTER			2
28	6587580	SPRING			2
29	6592100	COLLAR			2
30	7134520	PLUG	check valve - W/Ref. 20		3
31	7166339	SPRING, LOAD CHECK			4
32	7166047	SEAT, CHECK VALVE			4
33	6684645	VALVE, ANTI CAV	anti-cav - 3500psi - W/Ref. 20		3
34	6816549	PLUG ASSY PORT RLF	W/Ref. 20, 35 & 36		1
35	58K013	O-RING 10			x
36	73K013	RING, BACK-UP			x
37	24K7	PLUG	W/Ref. 38		2
38	79K10	O RING 10			x
39	55K204	O RING 10			x
40	7102652	SCREW			2
41	58K4	O-RING			1
42	6801167	SPOOLPLUG	plastic - 0.69" long		1
43	6803092	BONNET			1
44	6814279	BLOCK			1

Page 117 - OSS# 6300202494 - All rights reserved by Bobcat Company - 02/11/2016 - 14:15:02 - Produced by Ken Cook Co. with media1off

HYDRAULIC CONTROL VALVE (Cont'd)
(ACS/AHC/SJC) (Service Valve)

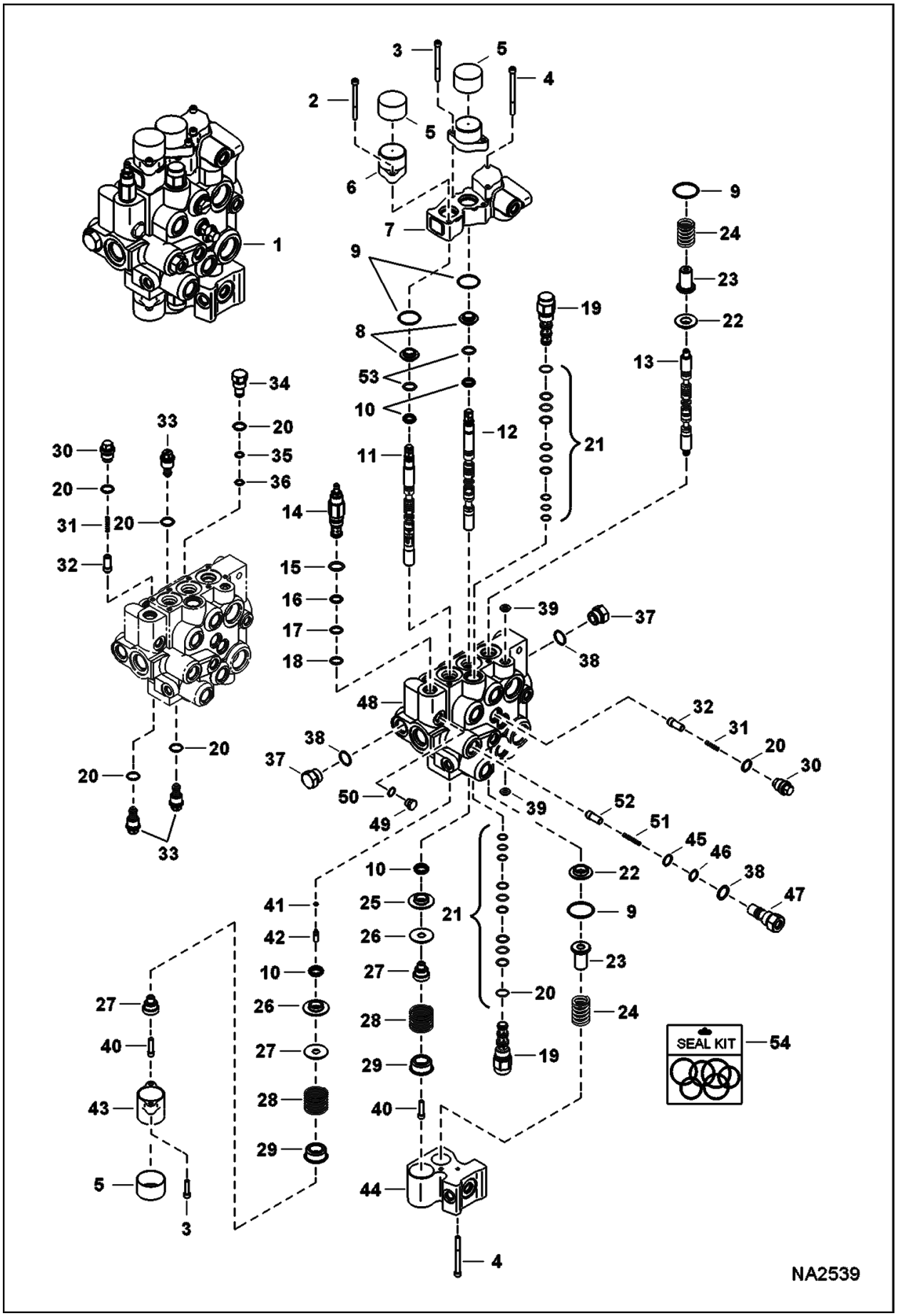

Illustration NA2539

Model S160 K
6904270

Page 118 - OSS# 6300202494 - All rights reserved by Bobcat Company - 02/11/2016 - 14:15:02 - Produced by Ken Cook Co. with mediaoff

HYDRAULIC CONTROL VALVE (Cont'd)
(ACS/AHC/SJC) (Service Valve)

Ref No	Part Number	Description	Remarks	Serial Number	Qty
45	73K016	RING, BACK-UP			x
46	58K016	O-RING 10			x
47	7134522	PLUG	W/Ref. 38, 45 & 46		1
48		BODY	NSS		1
49	6812171	PLUG	W/Ref. 50		1
50	75K6	O-RING			1
51	7166047	SEAT, CHECK VALVE			1
52	7166339	SPRING, LOAD CHECK			1
53	82K019	O-RING	alignment		2
54	7123964	KIT, SEAL	includes 7123963, 7123965, 6632279, 6669732 & (2) each of 6685603 & 6690431		x
54	7123963	SEAL KIT, EXTERNAL FITTING	3 spool - Ref. 9, 10, 39, 41 & 42		x
54	7123965	KIT, SEAL	external fitting		x
54	6685603	KIT, SEAL	solenoid valve		x
54	6632279	KIT, SEAL	main relief - Ref. 15-18		x
54	6669732	KIT, SEAL	solenoid valve		x
54	6690431	KIT, SEAL	pilot valve - Ref. 21		x

Page 119 - OSS# 6300202494 - All rights reserved by Bobcat Company - 02/11/2016 - 14:15:02 - Produced by Ken Cook Co. with mediaioff

MANUAL LIFT RELEASE VALVE

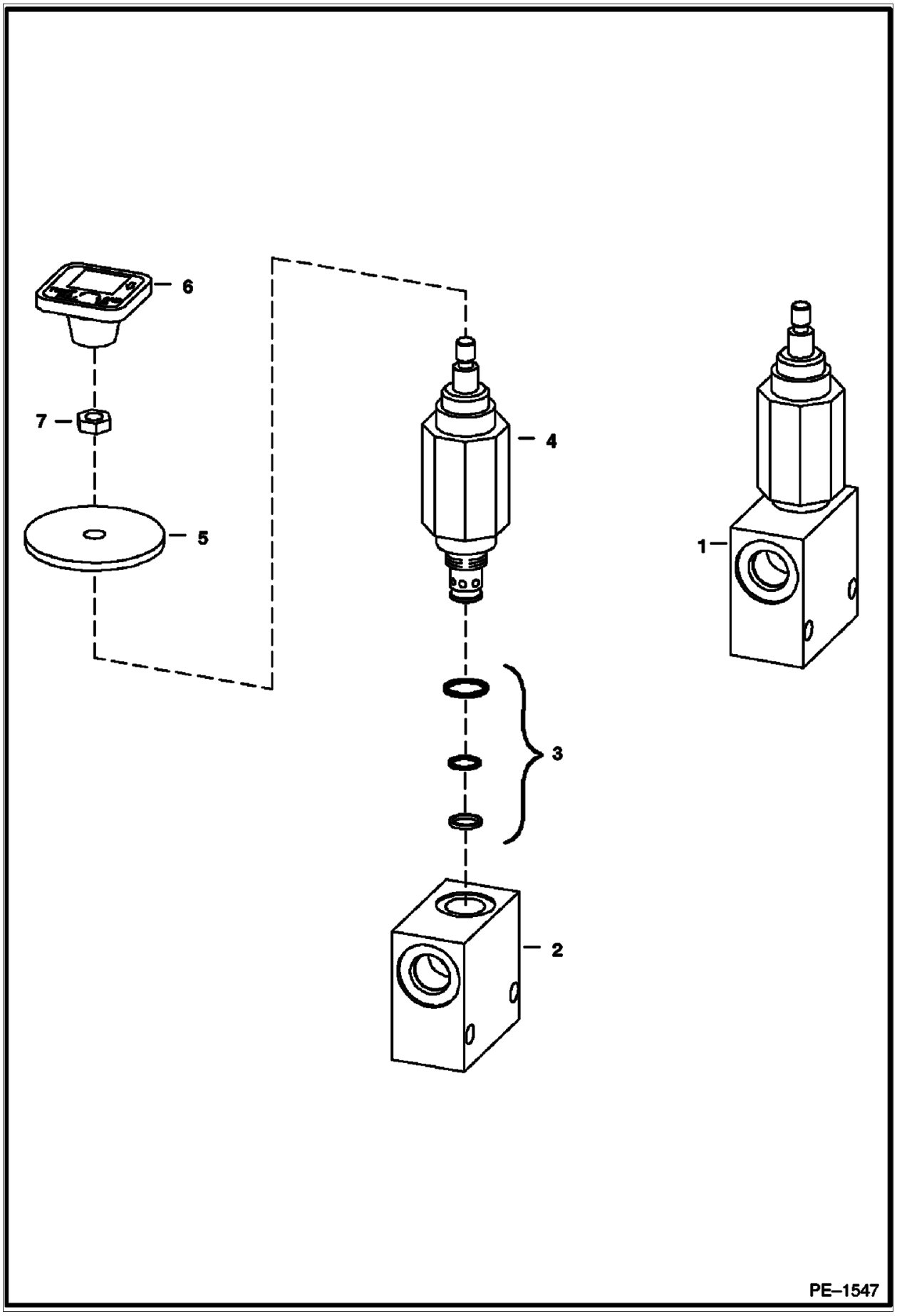

Illustration PE1547

Model S160 K
6904270

Page 120 - OSS# 6300202494 - All rights reserved by Bobcat Company - 02/11/2016 - 14:15:02 - Produced by Ken Cook Co. with mediaoff

MANUAL LIFT RELEASE VALVE (Cont'd)

Ref No	Part Number	Description	Remarks	Serial Number	Qty
1	7230495	VALVE, LIFT MANUAL	Ref. 2-4 - Was 6667844 [A]		1
2		BLOCK	NSS		1
3	6669087	SEAL KIT			1
4		VALVE	NSS - Order Ref. 1 - Was 6669085 [A]		1
5	6707101	SEAL	neoprene		1
6	6737524	KNOB	red square		1
7	7D4	NUT			1

Page 121 - OSS# 6300202494 - All rights reserved by Bobcat Company - 02/11/2016 - 14:15:02 - Produced by Ken Cook Co. with mediaioff

HIGH FLOW HYDRAULICS
(Manual Controls & ACS)

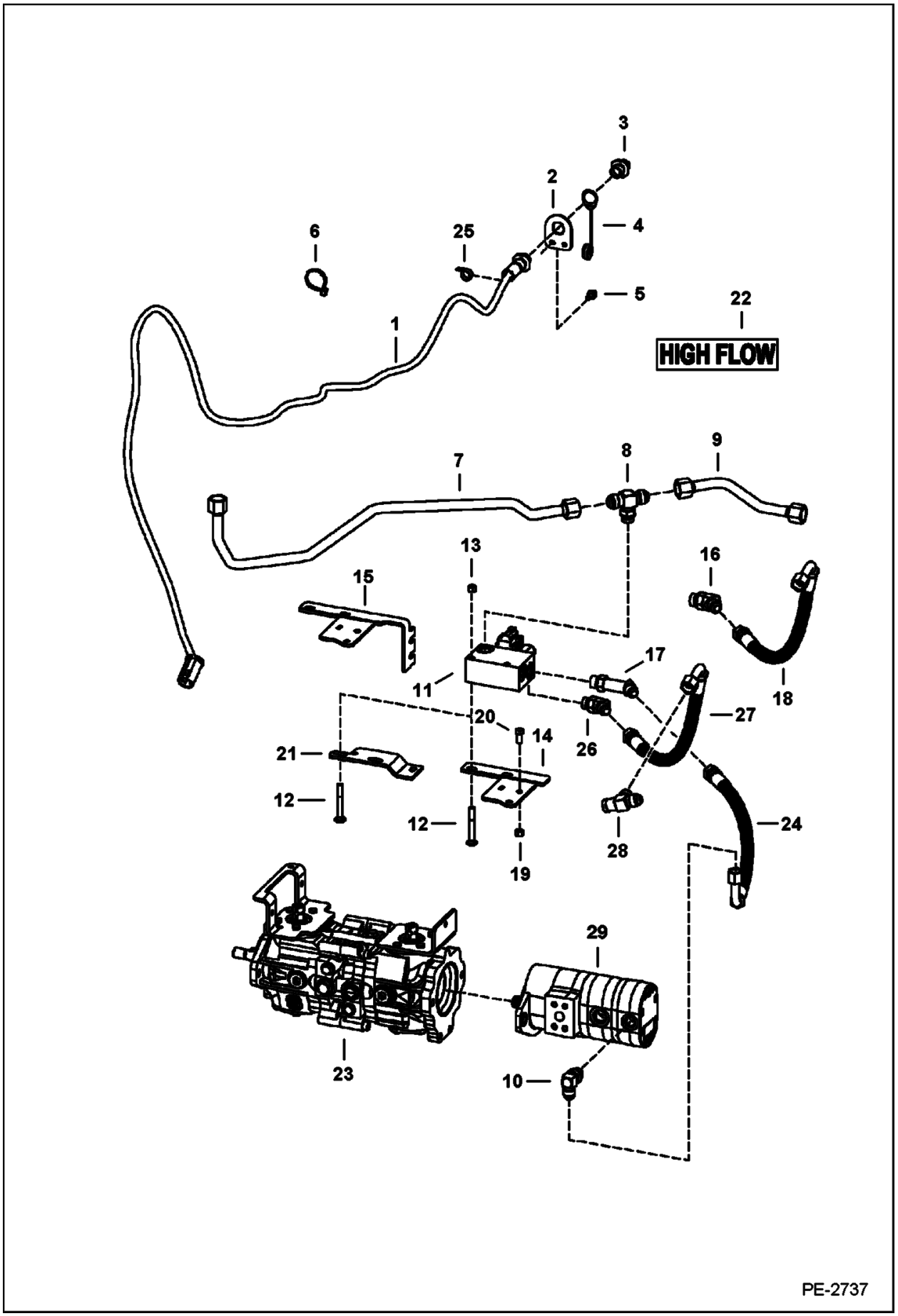

Illustration PE2737

Model S160 K
6904270

Page 122 - OSS# 6300202494 - All rights reserved by Bobcat Company - 02/11/2016 - 14:15:02 - Produced by Ken Cook Co. with mediaoff

HIGH FLOW HYDRAULICS (Cont'd)
(Manual Controls & ACS)

Ref No	Part Number	Description	Remarks	Serial Number	Qty
1	6718426	HARNESS, LIFT ARM	W/Ref. 2 & 4		1
1	6667533	COVER			1
1	6674799	ADAPTER	heat shrink		1
2	6718750	MOUNT			1
3	6674802	CONNECTOR, 7-PIN	7-pin does not include sockets		1
3	6669549	SOCKET	18 ga - not in kit		4
3	6677136	SOCKET	12 ga - not in kit		3
4	6675026	CAP, CONNECTOR			1
5	84G3112	BOLT 5			2
6	6624289	STRAP, TIE			7
7	6736685	TUBE			1
8	19KB1210	FITTING, HYD TEE			1
8	79K10	O RING 10			1
9	7113360	TUBE			1
10	17KB1010	FITTING, HYD ELBOW			1
10	79K10	O RING 10			1
11	6683819	VALVE	See Illustration HIGH FLOW HYDRAULICS / B22497		1
12	37C648	BOLT			2
13	61D6	NUT 5			2
14	7110927	BRACKET	for models T180 & T190		1
15	7136650	BRACKET	for models T180 & T190		1
16	18KB1010	FITTING, HYD ELBOW			1
16	79K10	O RING 10			1
17	6718080	ELBOW			1
17	79K10	O RING 10			1
18		HOSE	NLA - .875" threaded ends - Order Ref. 26 & 27 - Was 7115595 [A]		1
19	95D6	NUT	for models T180 & T190		2
20	17C614	BOLT	for models T180 & T190		2
21	6736810	BRACKET	for models S160, S175, S185 & S205		1
22	7120693	DECAL	high flow		1
23		PUMP	See Illustration HYDROSTATIC PUMP / MS2184		1
24	6736647	HOSE			1
25	30H35	CLAMP 10			1
26	18KB0810	FITTING, HYD ELBOW			1
26	79K10	O RING 10			1
27	7122520	HOSE	.75" threaded end & .875" threaded end		1
28		TEE	See Illustration HYDROSTATIC CIRCUITRY / PE2736 Was 7106004 [A]		1
29		GEAR PUMP	See Illustration HIGH FLOW HYDRAULICS / MS1459 triple		1

Page 123 - OSS# 6300202494 - All rights reserved by Bobcat Company - 02/11/2016 - 14:15:02 - Produced by Ken Cook Co. with media1off

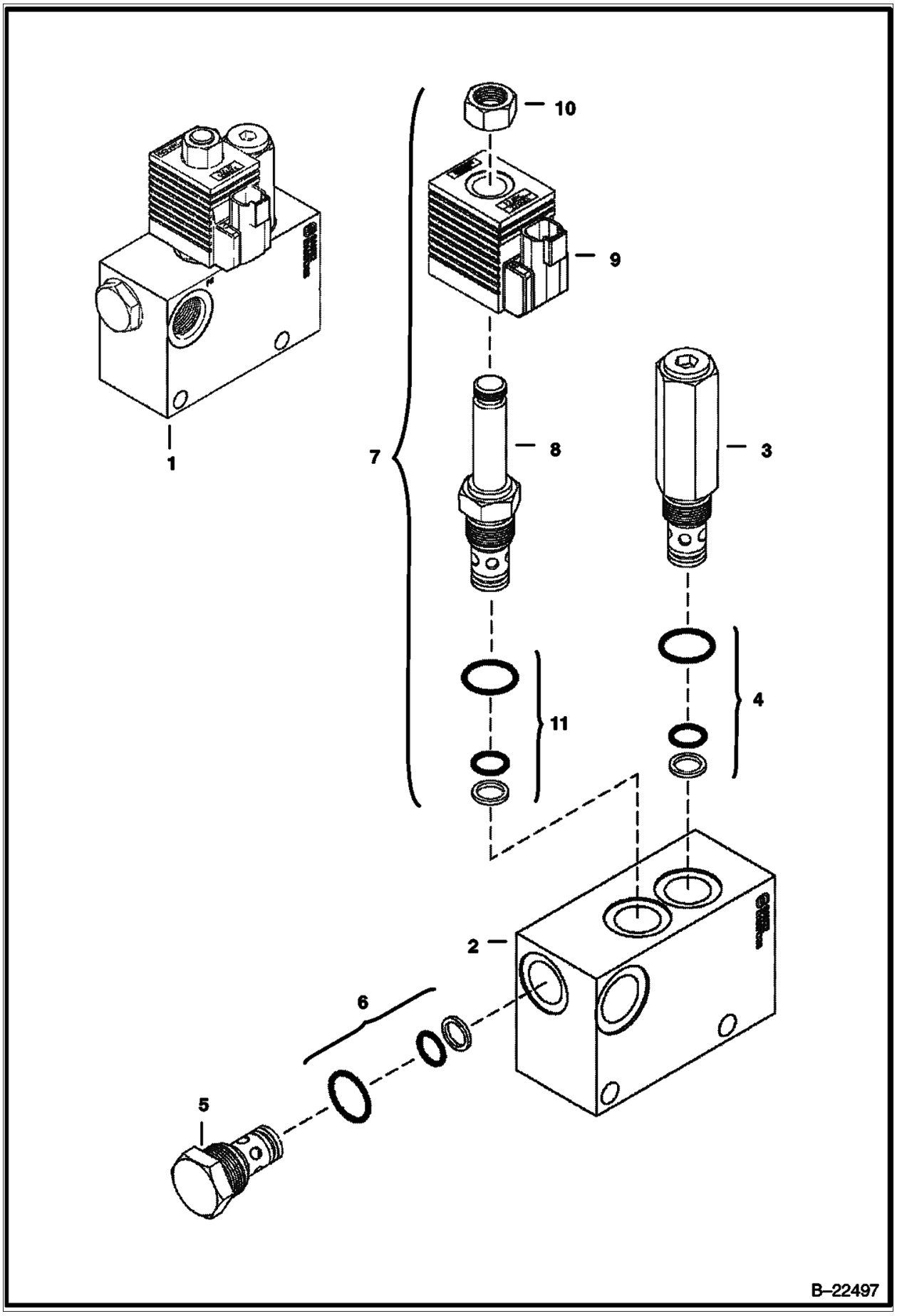

Illustration B22497

Model S160 K
6904270

Page 124 - OSS# 6300202494 - All rights reserved by Bobcat Company - 02/11/2016 - 14:15:02 - Produced by Ken Cook Co. with mediaoff

HIGH FLOW HYDRAULICS (Cont'd)

Ref No	Part Number	Description	Remarks	Serial Number	Qty
1	6683819	VALVE			1
2		BLOCK	NSS		1
3	6685185	VALVE, RELIEF			1
4	6685184	SEAL KIT			1
5	6685186	VALVE, CHECK			2
6	6672515	KIT, SEAL			1
7	6685183	SOLENOID			1
8		STEM	NSS		1
9	6684058	COIL	W/connector		2
10	6681492	NUT			1
11	6685184	SEAL KIT			1

Page 125 - OSS# 6300202494 - All rights reserved by Bobcat Company - 02/11/2016 - 14:15:02 - Produced by Ken Cook Co. with mediaioff

HIGH FLOW HYDRAULICS
(Triple Gear Pump)

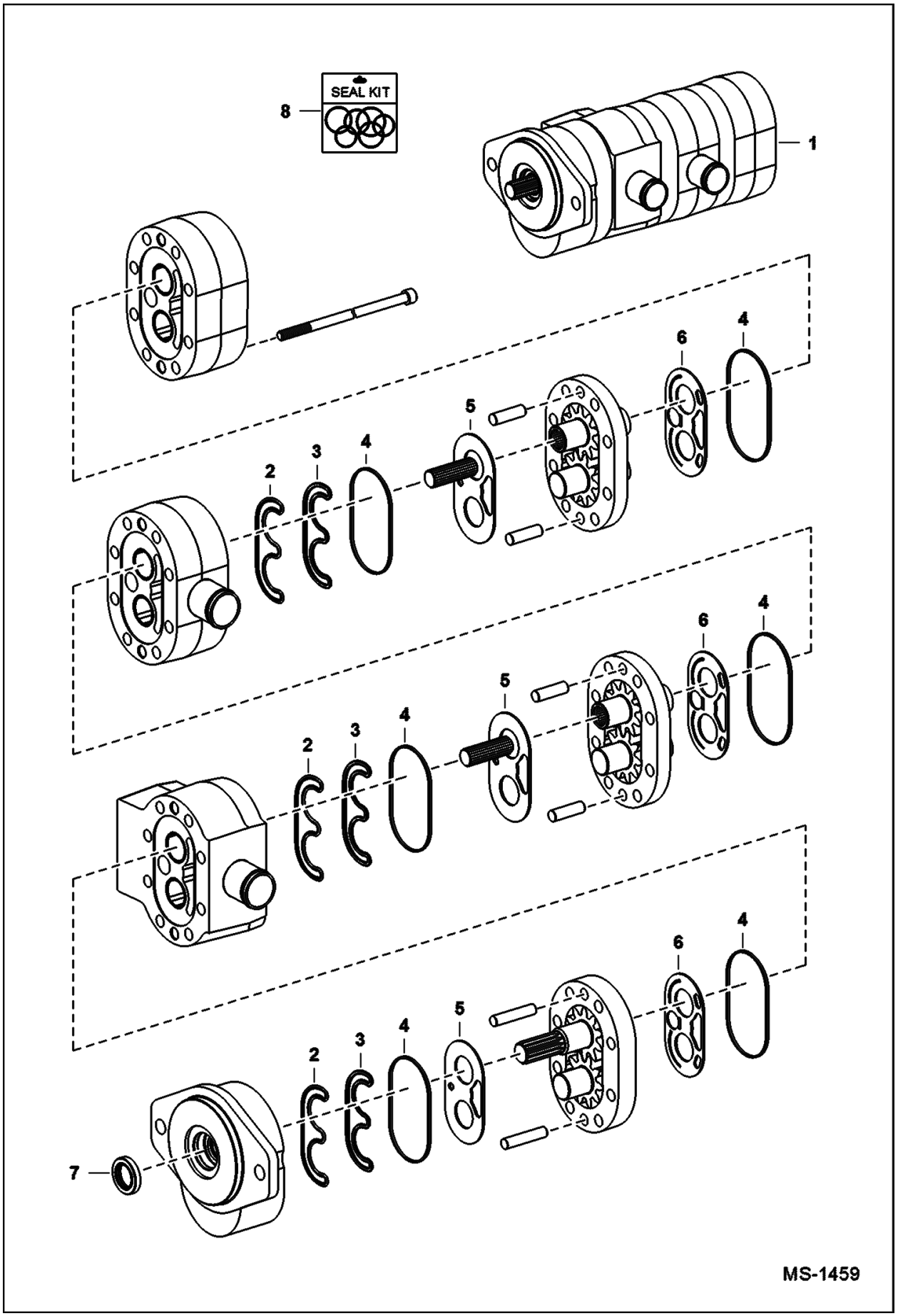

Illustration MS1459

Model S160 K
6904270

Page 126 - OSS# 6300202494 - All rights reserved by Bobcat Company - 02/11/2016 - 14:15:02 - Produced by Ken Cook Co. with mediaoff

HIGH FLOW HYDRAULICS (Cont'd)
(Triple Gear Pump)

Ref No	Part Number	Description	Remarks	Serial Number	Qty
1	6687865	PUMP, GEAR TRIPLE	Model 163D72007		1
2		SEAL, BACKUP	NSS		3
3		SEAL, LOAD	NSS		3
4		SEAL	NSS		6
5		PLATE, WEAR	NSS		3
6		PLATE, WEAR	NSS		3
7		SEAL, SHAFT	NSS		1
8	6688322	KIT, SEAL	Ref. 2-7		1

Page 127 - OSS# 6300202494 - All rights reserved by Bobcat Company - 02/11/2016 - 14:15:02 - Produced by Ken Cook Co. with media1off

HYDROSTATIC CIRCUITRY
(Manual Controls) (S/N 529911001 - 11762, 530011001 - 11281)

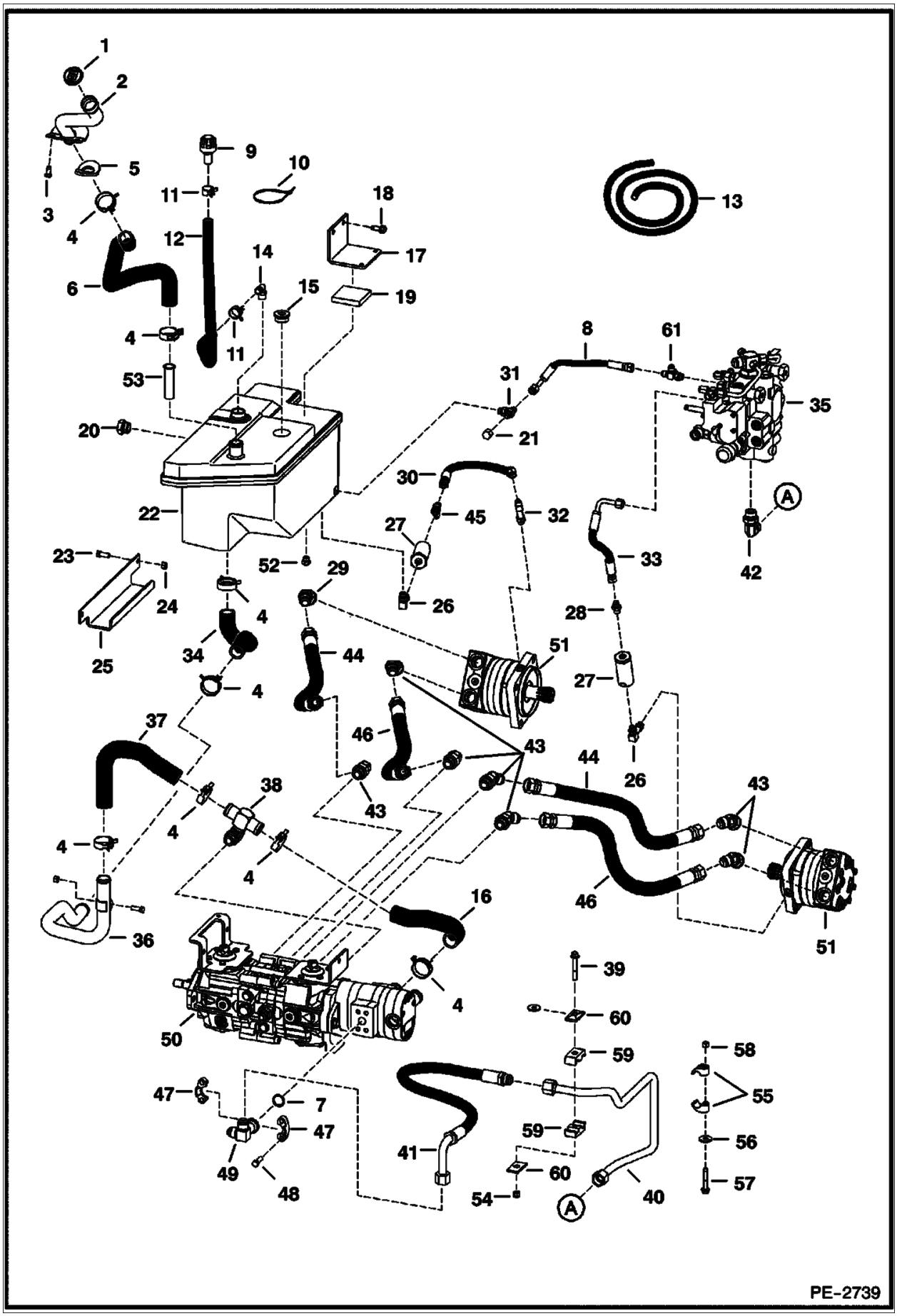

Illustration PE2739

Model S160 K
6904270

Page 128 - OSS# 6300202494 - All rights reserved by Bobcat Company - 02/11/2016 - 14:15:02 - Produced by Ken Cook Co. with mediaoff

HYDROSTATIC CIRCUITRY (Cont'd)
(Manual Controls) (S/N 529911001 - 11762, 530011001 - 11281)

Ref No	Part Number	Description	Remarks	Serial Number	Qty
1	6717827	CAP			1
2	6717830	TUBE			1
3	84G3710	SCREW			2
4	5HM42	HOSECLAMP			6
5	6718772	GASKET			1
6	6718020	HOSE			1
7	55K214	O-RING			1
8	7108406	HOSE			1
9	7025626	VENT, BREATHER	- Was 6684923 [A]		1
10	6610510	STRAP, TIE 10			2
11	5HM24	CLAMP			2
12		HOSE	NLA - 21.5" (546,1 mm) long - Order Ref. 13		1
13	6578172	HOSE, BULK	bulk - sold per foot		x
14	6727637	ELBOW	barbed		1
15	47K10	PLUG			1
15	79K16	O RING 10			1
16	7121152	HOSE	Was 7109343 [B]		1
17	6726254	BRACKET			1
18	84G3716	SCREW 5			2
19	6726255	PADBUMPR	bumper		1
20	6665915	GAUGE			1
20	79K12	O RING 10			1
20	6734563	KIT			1
20	6734561	WASHER			1
20	25K30118	O RING 10			1
21	36K5	CAP			1
22	6728673	TANK, HYD			1
23	17C616	BOLT 5			2
24	61D6	NUT 5			2
25	6726162	BRACKET			1
26	6715190	ELBOW			2
26	79K6	O RING 10			x
27	6661022	FILTER, OIL HYD IN-LINE			2
28	15KB0606	FITTING, HYD CONNECTOR			1
28	79K6	O RING 10			x
29	6734623	ELBOW			1
29	79K12	O RING 10			x
30	7106205	HOSE			1
31	19KB0606	FITTING, HYD TEE	Was 17KB606 [B,D]		1
31	79K6	O RING 10			x
32	6812815	ADAPTER			1
33	6542521	ASSY, HOSE			1
34	6733652	HOSE			1
35		VALVE	See Illustration HYDRAULIC CONTROL VALVE / PE2734		1
36	6735922	TUBE			1
37	7109344	HOSE			1
38	7107785	TEE			1
38	79K16	O RING 10			x
39	17C644	BOLT			1
40	7109922	TUBE			1

Page 129 - OSS# 6300202494 - All rights reserved by Bobcat Company - 02/11/2016 - 14:15:02 - Produced by Ken Cook Co. with media1off

HYDROSTATIC CIRCUITRY (Cont'd)
(Manual Controls) (S/N 529911001 - 11762, 530011001 - 11281)

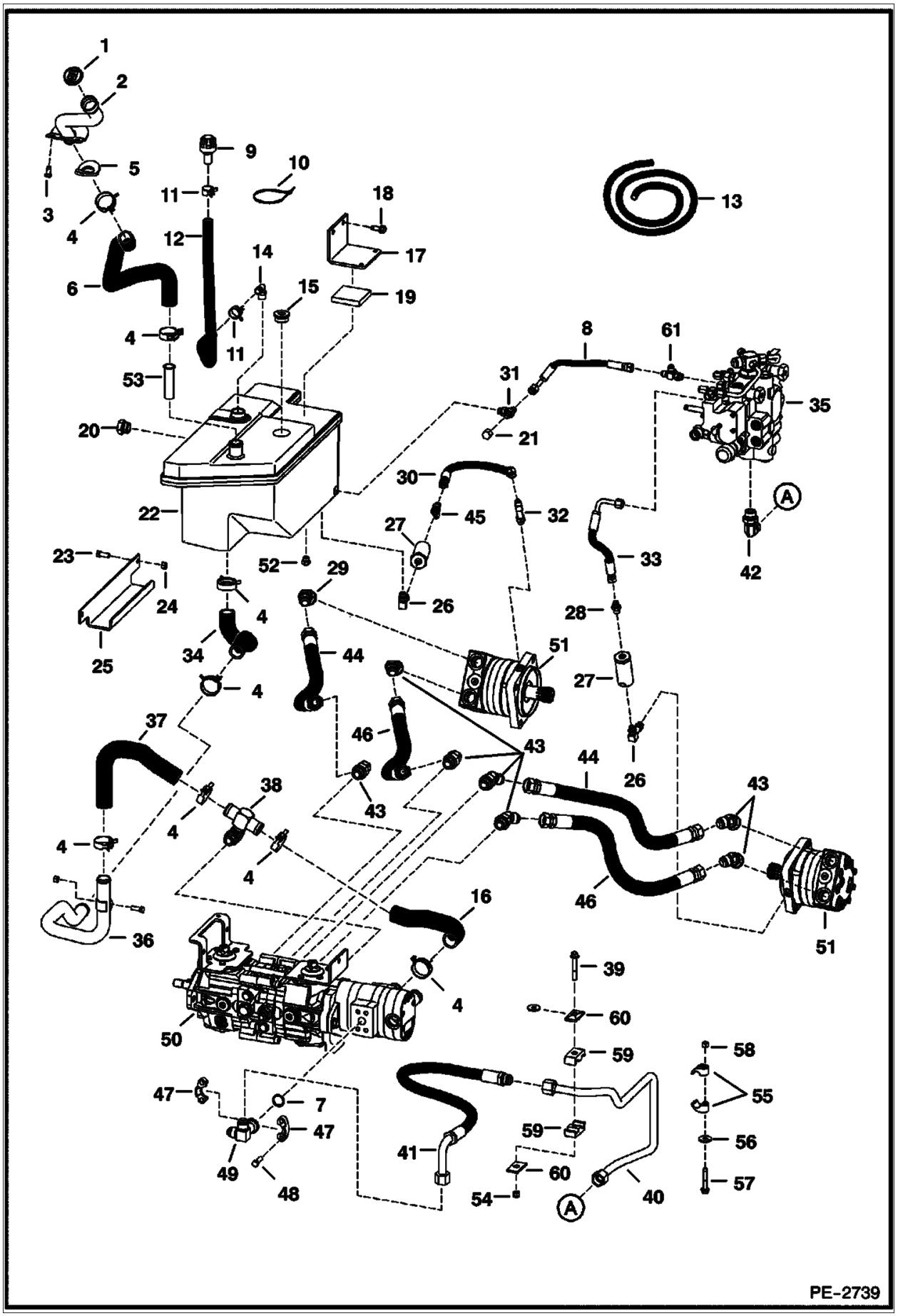

Illustration PE2739

Model S160 K
6904270

Page 130 - OSS# 6300202494 - All rights reserved by Bobcat Company - 02/11/2016 - 14:15:02 - Produced by Ken Cook Co. with mediaoff

HYDROSTATIC CIRCUITRY (Cont'd)
(Manual Controls) (S/N 529911001 - 11762, 530011001 - 11281)

Ref No	Part Number	Description	Remarks	Serial Number	Qty
41	6733197	HOSE			1
42	7101797	ELBOW			1
42	79K12	O RING 10			x
43	6737453	ELBOW			7
43	79K12	O RING 10			9
44	6688938	HOSE	mega seal		2
45	21KB0606	FITTING, HYD TEE			1
45	79K6	O RING 10			x
46	6688937	HOSE	mega seal		2
47	19J12	CLAMP			2
48	17C620	BOLT			4
49	7106040	ELBOW	split flange - one leg		1
49	7113262	ELBOW	split flange - two leg - Use W/hydraulic muffler hose		1
50		PUMP	See Illustration HYDROSTATIC PUMP / MS2184		1
51		MOTOR	See Illustration HYDROSTATIC MOTOR / PE2620		1
52	24K5	PLUG			1
52	79K6	O RING 10			x
52	17KB0606	FITTING	rear aux		1
52	79K6	O RING 10			x
52	21KB0606	FITTING, HYD TEE	high flow hydraulics		1
52	79K6	O RING 10			x
53	6732215	FILTER			1
54	59D6	NUT			1
55	7100462	CLAMP			2
56	619021	WASHER, 5			1
57	84G3732	BOLT			1
58	83D6	NUT 5			1
59	6592506	CLAMP			2
60	6592507	PLATE			2
61	6718031	TEE			1
61	79K6	O RING 10			1

Page 131 - OSS# 6300202494 - All rights reserved by Bobcat Company - 02/11/2016 - 14:15:02 - Produced by Ken Cook Co. with media1off

HYDROSTATIC CIRCUITRY
(Manual Controls) (S/N 529911763 & Above, 530011282 & Above)

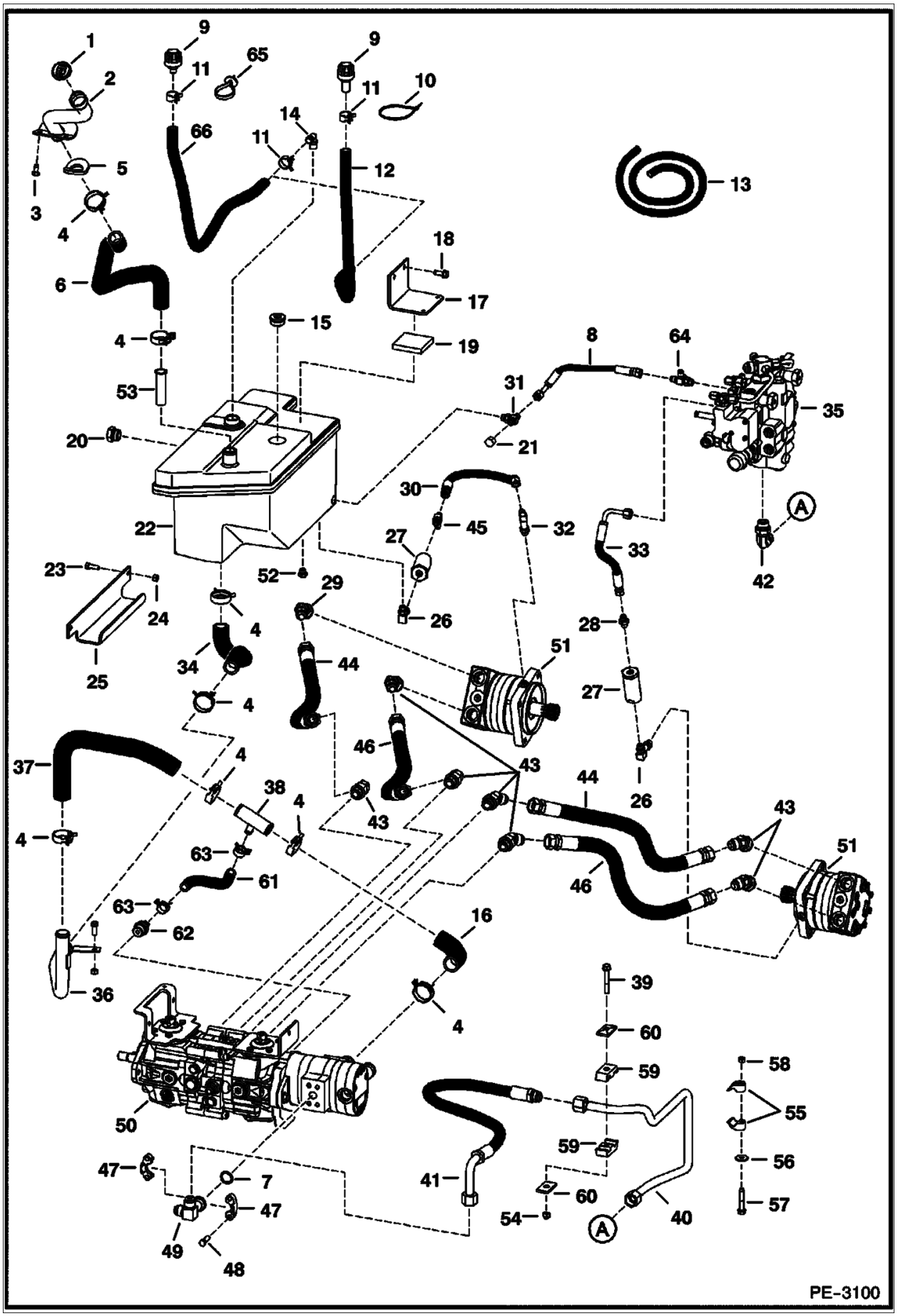

Illustration PE3100

Model S160 K
6904270

Page 132 - OSS# 6300202494 - All rights reserved by Bobcat Company - 02/11/2016 - 14:15:02 - Produced by Ken Cook Co. with mediaoff

HYDROSTATIC CIRCUITRY (Cont'd)
(Manual Controls) (S/N 529911763 & Above, 530011282 & Above)

Ref No	Part Number	Description	Remarks	Serial Number	Qty
1	6717827	CAP			1
2	6717830	TUBE			1
3	84G3710	SCREW			2
4	5HM42	HOSECLAMP			6
5	6718772	GASKET			1
6	6718020	HOSE			1
7	55K214	O-RING			1
8	7108406	HOSE			1
9	7025626	VENT, BREATHER	- Was 6684923 [A]		1
10	6610510	STRAP, TIE 10		& Bel	1
11	5HM24	CLAMP			2
12		HOSE	NLA - 21.5" (546,1 mm) long - Order 3 ft. of Ref. 13 & Ref. 65	& Bel	1
13	6578172	HOSE, BULK	bulk - sold per foot		x
14	6727637	ELBOW	barbed		1
15	47K10	PLUG			1
15	79K16	O RING 10			1
16	7124128	HOSE			1
17	6726254	BRACKET			1
18	84G3716	SCREW 5			2
19	6726255	PADBUMPR	bumper		1
20	6665915	GAUGE			1
20	79K12	O RING 10			1
20	6734563	KIT			1
20	6734561	WASHER			1
20	25K30118	O RING 10			1
21	36K5	CAP			1
22	6728673	TANK, HYD			1
23	17C616	BOLT 5			2
24	61D6	NUT 5			2
25	6726162	BRACKET			1
26	6715190	ELBOW			2
26	79K6	O RING 10			x
27	6661022	FILTER, OIL HYD IN-LINE			2
28	15KB0606	FITTING, HYD CONNECTOR			1
28	79K6	O RING 10			x
29	6734623	ELBOW			1
29	79K12	O RING 10			x
30	7106205	HOSE			1
31	19KB0606	FITTING, HYD TEE			1
31	79K6	O RING 10			x
32	6812815	ADAPTER			1
33	6542521	ASSY, HOSE			1
34	6733652	HOSE			1
35		VALVE	See Illustration HYDRAULIC CONTROL VALVE / PE2734		1
36	6735922	TUBE			1
37	7124129	HOSE			1
38	7124127	TEE			1
38	79K16	O RING 10			x
39	17C644	BOLT			1

Page 133 - OSS# 6300202494 - All rights reserved by Bobcat Company - 02/11/2016 - 14:15:02 - Produced by Ken Cook Co. with media1off

HYDROSTATIC CIRCUITRY (Cont'd)
(Manual Controls) (S/N 529911763 & Above, 530011282 & Above)

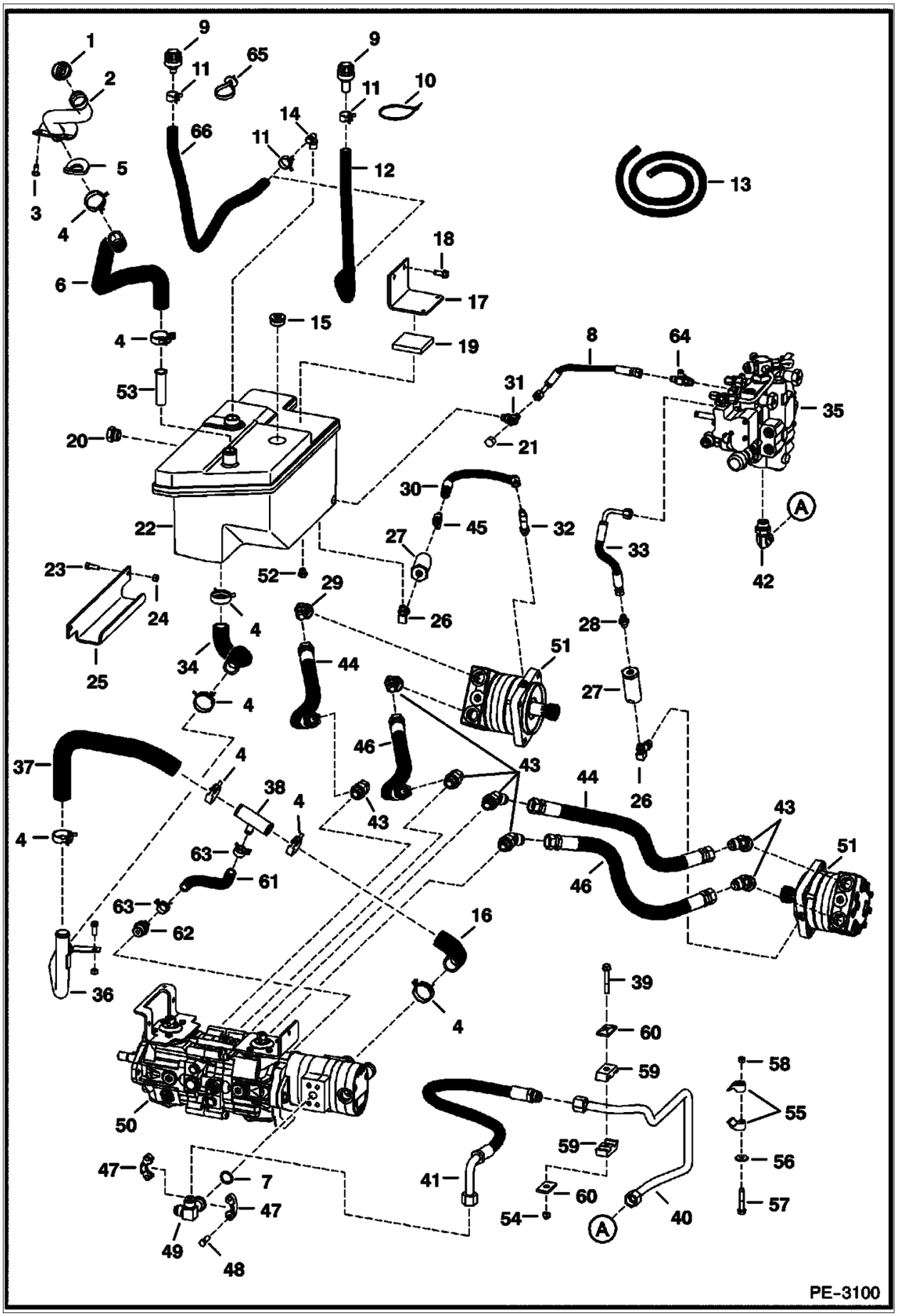

Illustration PE3100

Model S160 K
6904270

Page 134 - OSS# 6300202494 - All rights reserved by Bobcat Company - 02/11/2016 - 14:15:02 - Produced by Ken Cook Co. with mediaoff

HYDROSTATIC CIRCUITRY (Cont'd)
(Manual Controls) (S/N 529911763 & Above, 530011282 & Above)

Ref No	Part Number	Description	Remarks	Serial Number	Qty
40	7109922	TUBE	single speed motor		1
40	7122185	TUBE	2-speed motor		1
41	6733197	HOSE			1
42	7101797	ELBOW			1
42	79K12	O RING 10			x
43	6737453	ELBOW			7
43	79K12	O RING 10			9
44	6688938	HOSE	mega seal		2
45	21KB0606	FITTING, HYD TEE	See Illustration AUXILIARY HYDRAULICS / PE2738		1
45	79K6	O RING 10			x
46	6688937	HOSE	mega seal		2
47	19J12	CLAMP			2
48	17C620	BOLT			4
49	7106040	ELBOW	split flange - one leg		1
49	7113262	ELBOW	split flange - two leg - Use W/hydraulic muffler hose		1
50		PUMP	See Illustration HYDROSTATIC PUMP / MS2184		1
51		MOTOR	See Illustration HYDROSTATIC MOTOR / PE2620		1
52	24K5	PLUG			1
52	79K6	O RING 10			x
52	17KB0606	FITTING	rear aux		1
52	79K6	O RING 10			x
52	21KB0606	FITTING, HYD TEE	high flow hydraulics		1
52	79K6	O RING 10			x
53	6732215	FILTER			1
54	59D6	NUT			1
55	7100462	CLAMP			2
56	619021	WASHER, 5			1
57	84G3732	BOLT			1
58	83D6	NUT 5			1
59	6592506	CLAMP			2
60	6592507	PLATE			2
61	7124130	HOSE			1
62	7124133	ADAPTER			1
62	79K12	O RING 10			1
63	5HM23	CLAMP			2
64	6718031	TEE			1
64	79K6	O RING 10			1
65	6675734	TIE STRAP	button head	& Abv	1
66		HOSE	NLA - 28" (711,2 mm) long - Order Ref. 13	& Abv	1

Page 135 - OSS# 6300202494 - All rights reserved by Bobcat Company - 02/11/2016 - 14:15:02 - Produced by Ken Cook Co. with media1off

HYDROSTATIC CIRCUITRY
(Selectable Joystick Controls)

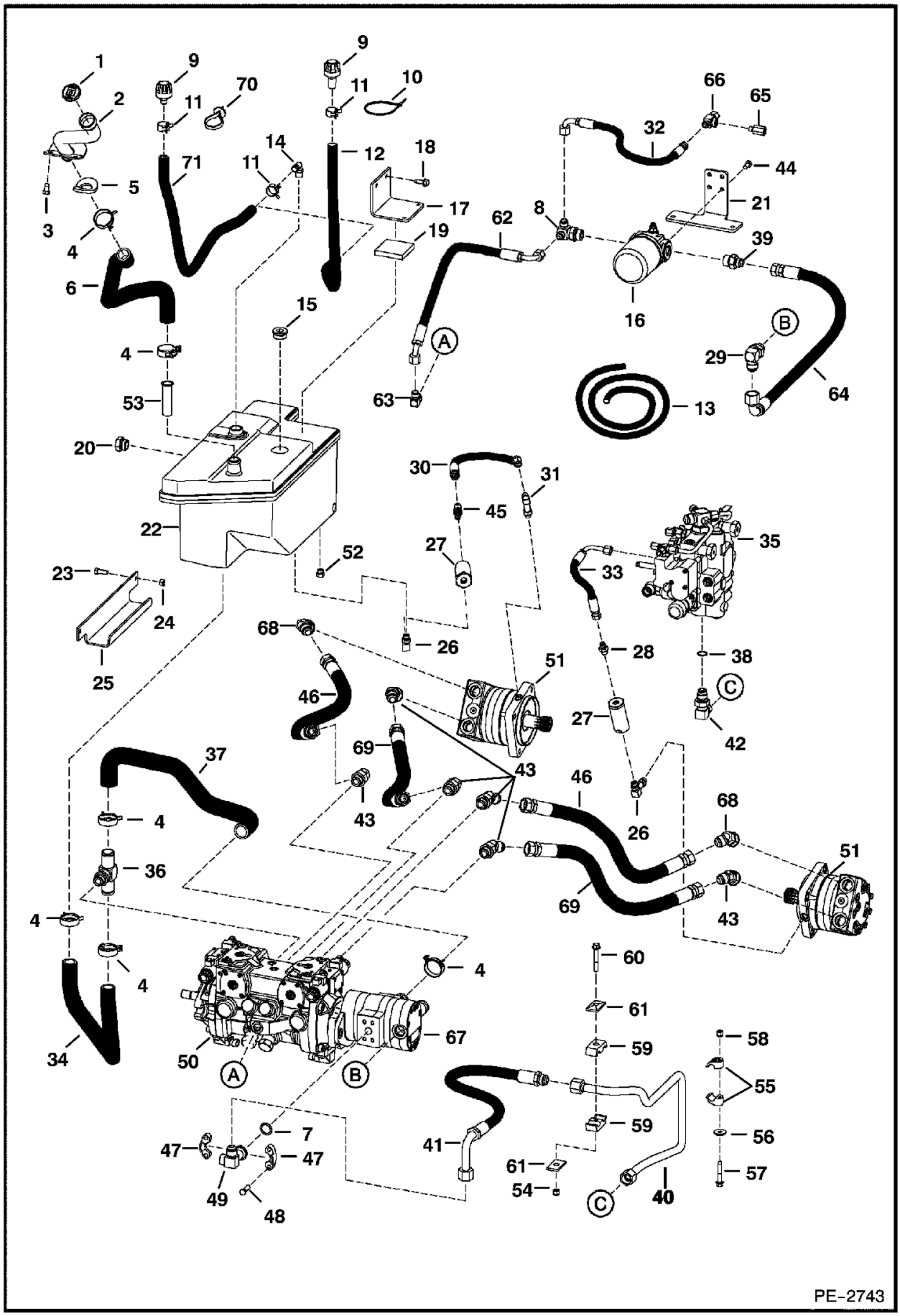

Illustration PE2743

Model S160 K
6904270

Page 136 - OSS# 6300202494 - All rights reserved by Bobcat Company - 02/11/2016 - 14:15:02 - Produced by Ken Cook Co. with mediaoff

HYDROSTATIC CIRCUITRY (Cont'd)
(Selectable Joystick Controls)

Ref No	Part Number	Description	Remarks	Serial Number	Qty
1	6717827	CAP			1
2	6717830	TUBE			1
3	84G3710	SCREW			2
4	5HM42	HOSECLAMP			6
5	6718772	GASKET			1
6	6718020	HOSE			1
7	55K214	O-RING			1
8	7108846	TEE			1
8	79K12	O RING 10			x
9	7025626	VENT, BREATHER	- Was 6684923 [A]		1
10	6610510	STRAP, TIE 10		& Bel	1
11	5HM24	CLAMP			2
12		HOSE	NLA - 21.5" (546,1 mm) long - Order 3 ft. of Ref. 13 & Ref. 70	& Bel	1
13	6578172	HOSE, BULK	bulk - sold per foot		x
14	6727637	ELBOW	barbed		1
15	47K10	PLUG			1
15	79K16	O RING 10			1
16	6686922	FILTER ASMBLY 12	See Illustration HYDROSTATIC OIL FILTER / B16487A		1
16	6686926	FILTER, OIL HYD	113,5 mm (4.5") long		1
16	6687834	SENSOR			1
17	6726254	BRACKET			1
18	84G3716	SCREW 5			2
19	6726255	PADBUMPR	bumper		1
20	6665915	GAUGE			1
20	79K12	O RING 10			x
20	6734563	KIT			1
20	6734561	WASHER			1
20	25K30118	O RING 10			1
21	7108398	BRACKET, FILTER			1
22	6728673	TANK, HYD			1
23	17C616	BOLT 5			2
24	61D6	NUT 5			2
25	6726162	BRACKET			1
26	6715190	ELBOW			2
26	79K6	O RING 10			x
27	6661022	FILTER, OIL HYD IN-LINE			2
28	15KB0606	FITTING, HYD CONNECTOR			1
28	79K6	O RING 10			x
29	17KB1212	FITTING, HYD ELBOW			1
29	79K12	O RING 10			x
30	7106205	HOSE			1
31	6812815	ADAPTER			1
31	79K6	O RING 10			x
32	7108845	HOSE			1
33	6542521	ASSY, HOSE			1
34	7103861	HOSE			1
35		VALVE	See Illustration HYDRAULIC CONTROL VALVE / PE2734		1

Page 137 - OSS# 6300202494 - All rights reserved by Bobcat Company - 02/11/2016 - 14:15:02 - Produced by Ken Cook Co. with media1off

HYDROSTATIC CIRCUITRY (Cont'd)
(Selectable Joystick Controls)

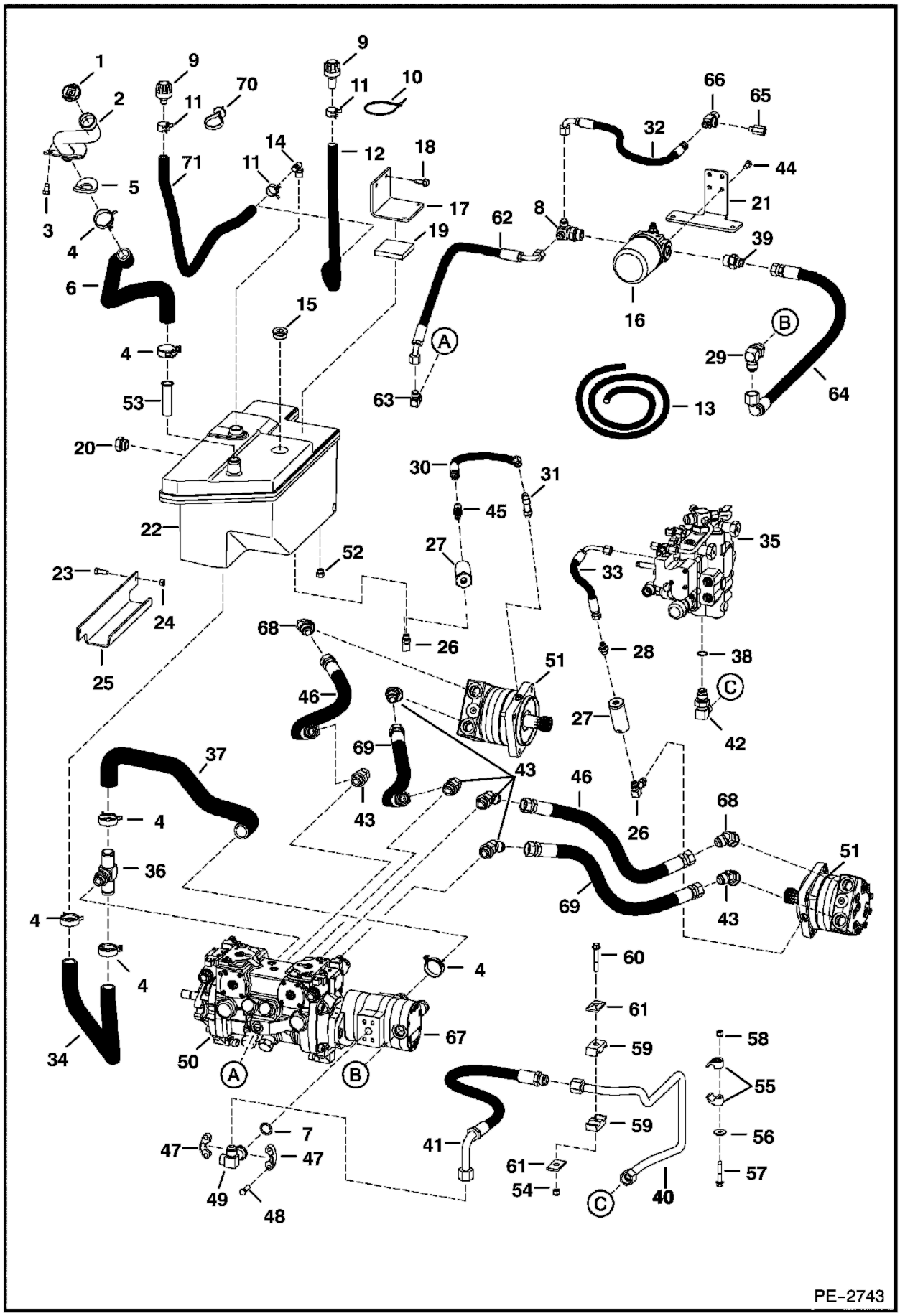

Illustration PE2743

Model S160 K
6904270

Page 138 - OSS# 6300202494 - All rights reserved by Bobcat Company - 02/11/2016 - 14:15:02 - Produced by Ken Cook Co. with mediaoff

HYDROSTATIC CIRCUITRY (Cont'd)
(Selectable Joystick Controls)

Ref No	Part Number	Description	Remarks	Serial Number	Qty
36	7103648	TEE			1
36	79K12	O RING 10			x
37	7107562	HOSE			1
38	58K022	O-RING 10			1
39	15KB1012	FITTING, HYD CONNECTOR			1
39	79K12	O RING 10			x
40	7109922	TUBE	single speed motor - Was 6736773 [B]		1
40	7122185	TUBE	2-speed motor		1
41	6733197	HOSE			1
42	7101371	ELBOW	W/Ref. 38		1
42	79K12	O RING 10			x
43	6737453	ELBOW			6
43	79K12	O RING 10			x
44	17C612	BOLT 5			4
45	21KB0606	FITTING, HYD TEE			1
45	79K6	O RING 10			x
46	6688938	HOSE	mega seal		2
47	19J12	CLAMP			2
48	17C620	BOLT			4
49	7106040	ELBOW	split flange - one leg		1
49	7113262	ELBOW	split flange - two leg - Use W/hydraulic muffler hose		1
50		PUMP	See Illustration HYDROSTATIC PUMP / B25010		1
51		MOTOR	See Illustration HYDROSTATIC MOTOR / PE2620		1
52	24K5	PLUG			1
52	79K6	O RING 10			x
52	17KB0606	FITTING	rear aux		1
52	79K6	O RING 10			x
52	21KB0606	FITTING, HYD TEE	high flow hydraulics		1
52	79K6	O RING 10			x
53	6732215	FILTER			1
54	59D6	NUT			1
55	7100462	CLAMP			2
56	619021	WASHER, 5			2
57	84G3732	BOLT			1
58	83D6	NUT 5			1
59	6592506	CLAMP			2
60	84G3720	BOLT			1
61	6592507	PLATE			1
62	7108844	HOSE			1
63	17KB0808	FITTING, HYD ELBOW			2
63	79K8	O RING 10			x
64	7108843	HOSE			1
65	6718948	SNUBBER			1
66	6718660	TEE			1
67		PUMP	See Illustration GEAR PUMP / MS2185 gear		1
68	6734623	ELBOW			2
68	79K12	O RING 10			x
69	6688937	HOSE	mega seal		2
70	6675734	TIE STRAP	button head	& Abv	1
71		HOSE	NLA - 28" (711,2 mm) long - Order Ref. 13	& Abv	1

Page 139 - OSS# 6300202494 - All rights reserved by Bobcat Company - 02/11/2016 - 14:15:02 - Produced by Ken Cook Co. with media1off

HYDROSTATIC CIRCUITRY
(Oil Filter Mounted W/Ports Horizontal)

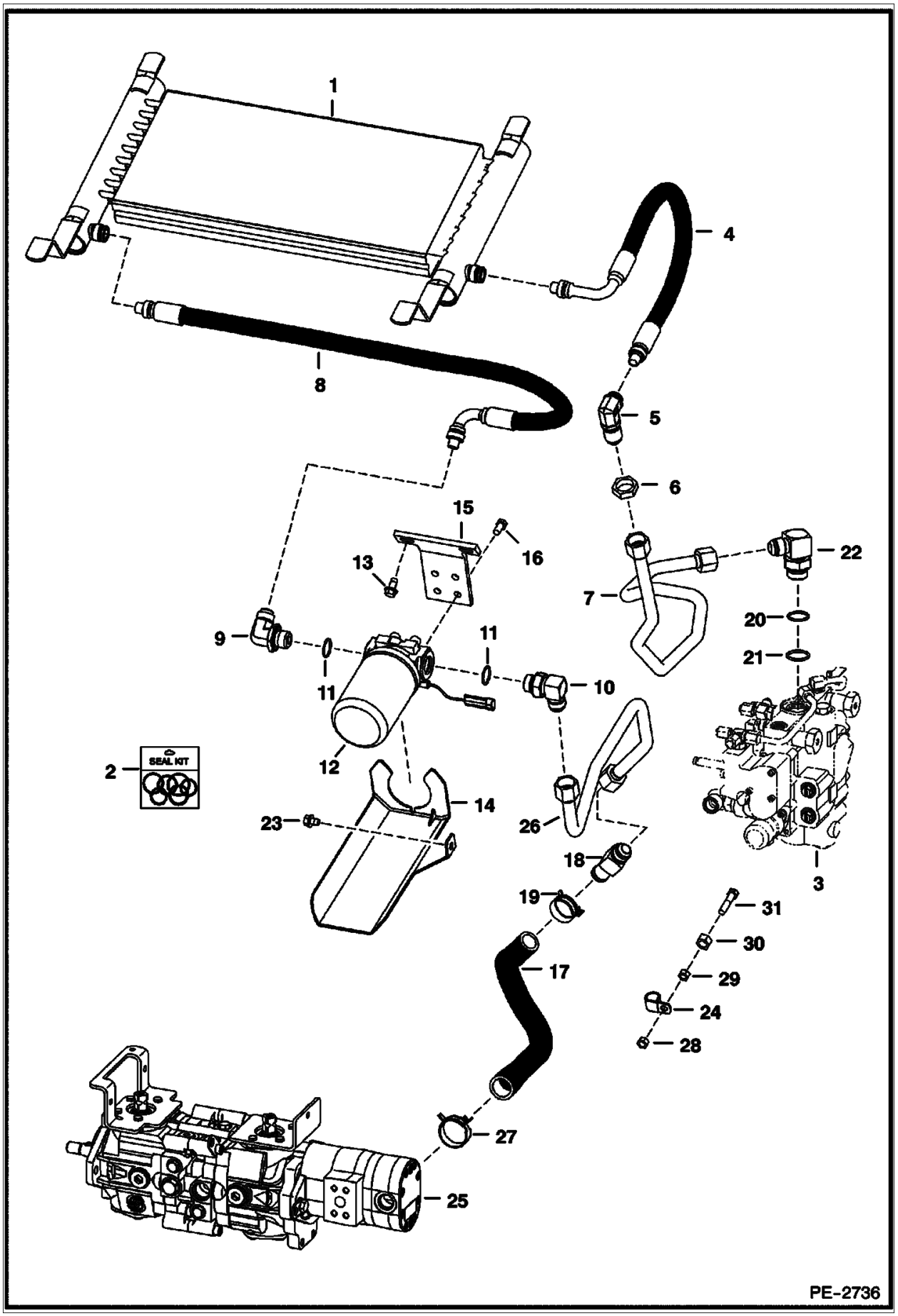

Illustration PE2736

Model S160 K
6904270

Page 140 - OSS# 6300202494 - All rights reserved by Bobcat Company - 02/11/2016 - 14:15:02 - Produced by Ken Cook Co. with mediaoff

HYDROSTATIC CIRCUITRY (Cont'd)
(Oil Filter Mounted W/Ports Horizontal)

Ref No	Part Number	Description	Remarks	Serial Number	Qty
1	7109582	EXCHANGER, OIL COOLER	W/(2) of Ref. 2 (6674798 kit) - Also Order Ref. 2 (7192812 kit) for Ref. 4		1
2	6674798	REPAIR KIT	For Ref. 1, 5 or 9 - includes internal retaining ring (1), O-ring (1) & back-up ring (1)		x
2	7192812	KIT, INSERT STC	Use Between Ref. 1 & 4		x
2	6989729	INSTRUCTIONS			1
3		VALVE	See Illustration HYDRAULIC CONTROL VALVE / PE2734 , See Illustration HYDRAULIC CONTROL VALVE / PE2378		1
4	6673828	HOSE, HYD ASSY	Also Order Ref. 2 (7192812 kit) for use at the oil cooler		1
5	6670831	ELBOW	STC - Also Order Ref. 2 (6674798 kit) to reseal to hose		1
5	6690949	O-RING			1
6	86F8	NUT 5			1
7	7109923	TUBE			1
8	6681944	HOSE			1
9	6681945	ELBOW	STC - Also Order Ref. 2 (6674798 kit) to reseal to hose		1
9	6690949	O-RING			1
10	17KB1212	FITTING, HYD ELBOW	W/Ref. 11		1
11	79K12	O RING 10			x
12		FILTER ASSY	See Illustration HYDROSTATIC OIL FILTER / NA1844		1
12	6661248	FILTER, OIL HYD 12	#3 media - 152,4 mm (6") long		1
13	84G3712	BOLT 5			2
14	7110695	MOUNT			1
15	6729082	MOUNT			1
16	17C612	BOLT 5			4
17	7106024	HOSE			1
18		TEE	Was 7106004 [A]		1
19	5HM35	HOSECLAMP			1
20	79K16	O RING 10			x
21	58K022	O-RING 10			1
22	7101371	ELBOW	W/Ref. 20 & 21		1
23	84G3708	SCREW			1
24	30H65	CLIP			1
25		PUMP	See Illustration HYDROSTATIC PUMP / MS2184 , See Illustration HYDROSTATIC PUMP / B25010		1
26	7106056	TUBE			1
27	5HM42	HOSECLAMP			1
28	95D6	NUT			1
29	61D6	NUT 5			1
30	61D8	NUT 5	Use as a spacer		1
31	17C628	BOLT			1

Page 141 - OSS# 6300202494 - All rights reserved by Bobcat Company - 02/11/2016 - 14:15:02 - Produced by Ken Cook Co. with media1off

HYDROSTATIC CIRCUITRY
(Oil Filter Mounted W/Ports Vertical)

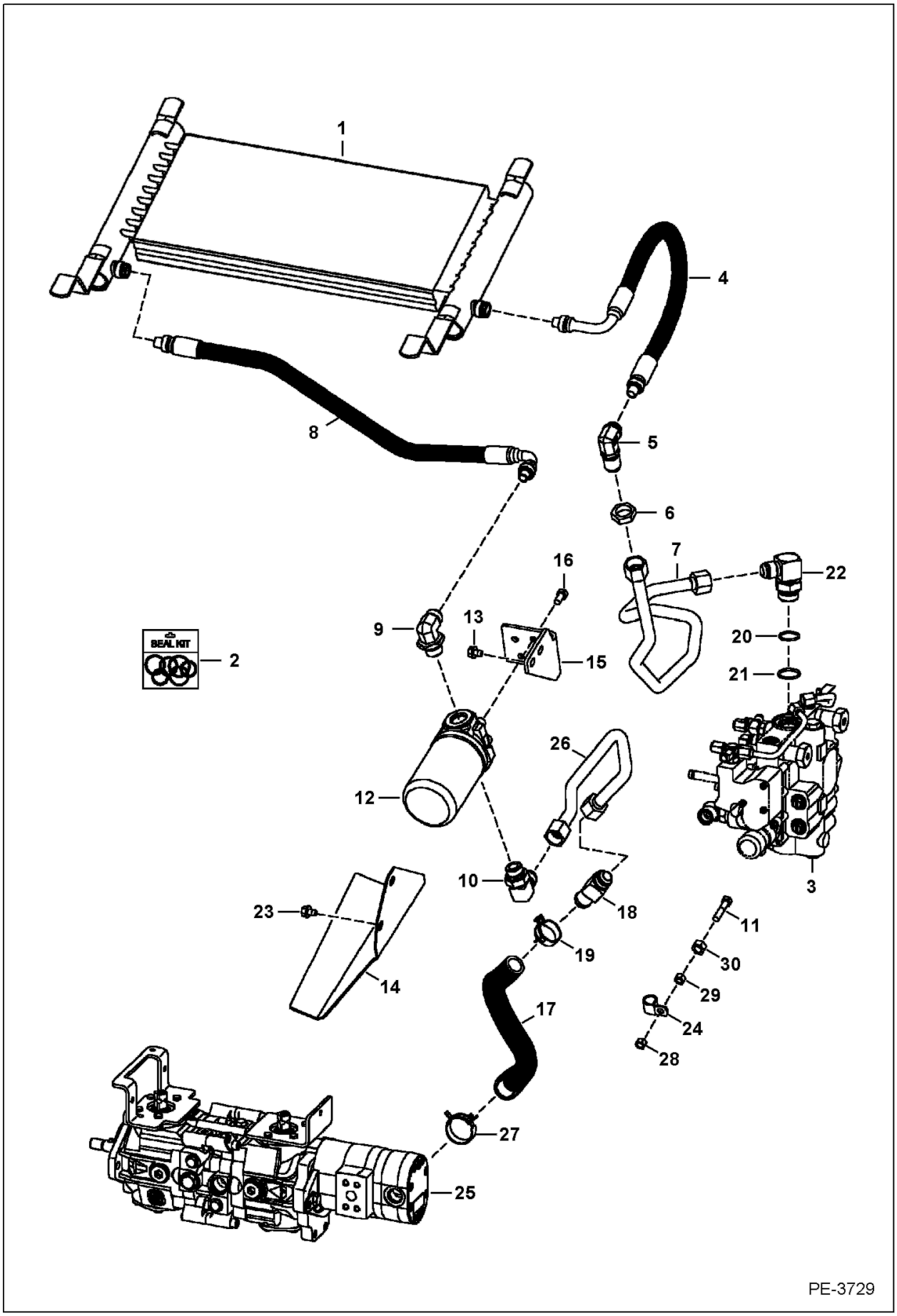

Illustration PE3729

Model S160 K
6904270

Page 142 - OSS# 6300202494 - All rights reserved by Bobcat Company - 02/11/2016 - 14:15:02 - Produced by Ken Cook Co. with mediaoff

HYDROSTATIC CIRCUITRY (Cont'd)
(Oil Filter Mounted W/Ports Vertical)

Ref No	Part Number	Description	Remarks	Serial Number	Qty
1	7109582	EXCHANGER, OIL COOLER	W/(2) of Ref. 2 (6674798 kit) - Also Order Ref. 2 (7192812 kit) for Ref. 4		1
2	6674798	REPAIR KIT	For Ref. 1, 5 or 9 - includes internal retaining ring (1), O-ring (1) & back-up ring (1)		x
2	7192812	KIT, INSERT STC	Use Between Ref. 1 & 4		x
2	6989729	INSTRUCTIONS			1
3		VALVE	See Illustration HYDRAULIC CONTROL VALVE / PE2734 , See Illustration HYDRAULIC CONTROL VALVE / PE2378		1
4	6673828	HOSE, HYD ASSY	Also Order Ref. 2 (7192812 kit) for use at the oil cooler		1
5	6670831	ELBOW	STC - Also Order Ref. 2 (6674798 kit) to reseal to hose		1
6	86F8	NUT 5			1
7	7109923	TUBE			1
8	7132554	HOSE			1
9	6681945	ELBOW	STC - Also Order Ref. 2 (6674798 kit) to reseal to hose		1
9	6690949	O-RING			1
10	17KB1212	FITTING, HYD ELBOW	W/Ref. 11		1
11	17C628	BOLT			1
12		FILTER ASSY	See Illustration HYDROSTATIC OIL FILTER / NA1844		1
12	6661248	FILTER, OIL HYD 12	#3 media - 152,4 mm (6") long		1
13	84G3710	SCREW			2
14	7141653	PLATE			1
15	7136052	MOUNT			1
16	17C612	BOLT 5			4
17	7106024	HOSE			1
18		TEE	Was 7106004 [A]		1
19	5HM35	HOSECLAMP			1
20	79K16	O RING 10			x
21	58K022	O-RING 10			1
22	7101371	ELBOW			1
23	84G3708	SCREW			2
24	30H65	CLIP			1
25		PUMP	See Illustration HYDROSTATIC PUMP / MS2184		1
26	7132542	TUBELINE			1
27	5HM42	HOSECLAMP			1
28	95D6	NUT			1
29	61D6	NUT 5			1
30	61D8	NUT 5			1

Page 143 - OSS# 6300202494 - All rights reserved by Bobcat Company - 02/11/2016 - 14:15:02 - Produced by Ken Cook Co. with media1off

HYDROSTATIC CIRCUITRY
(Cooling Fan)

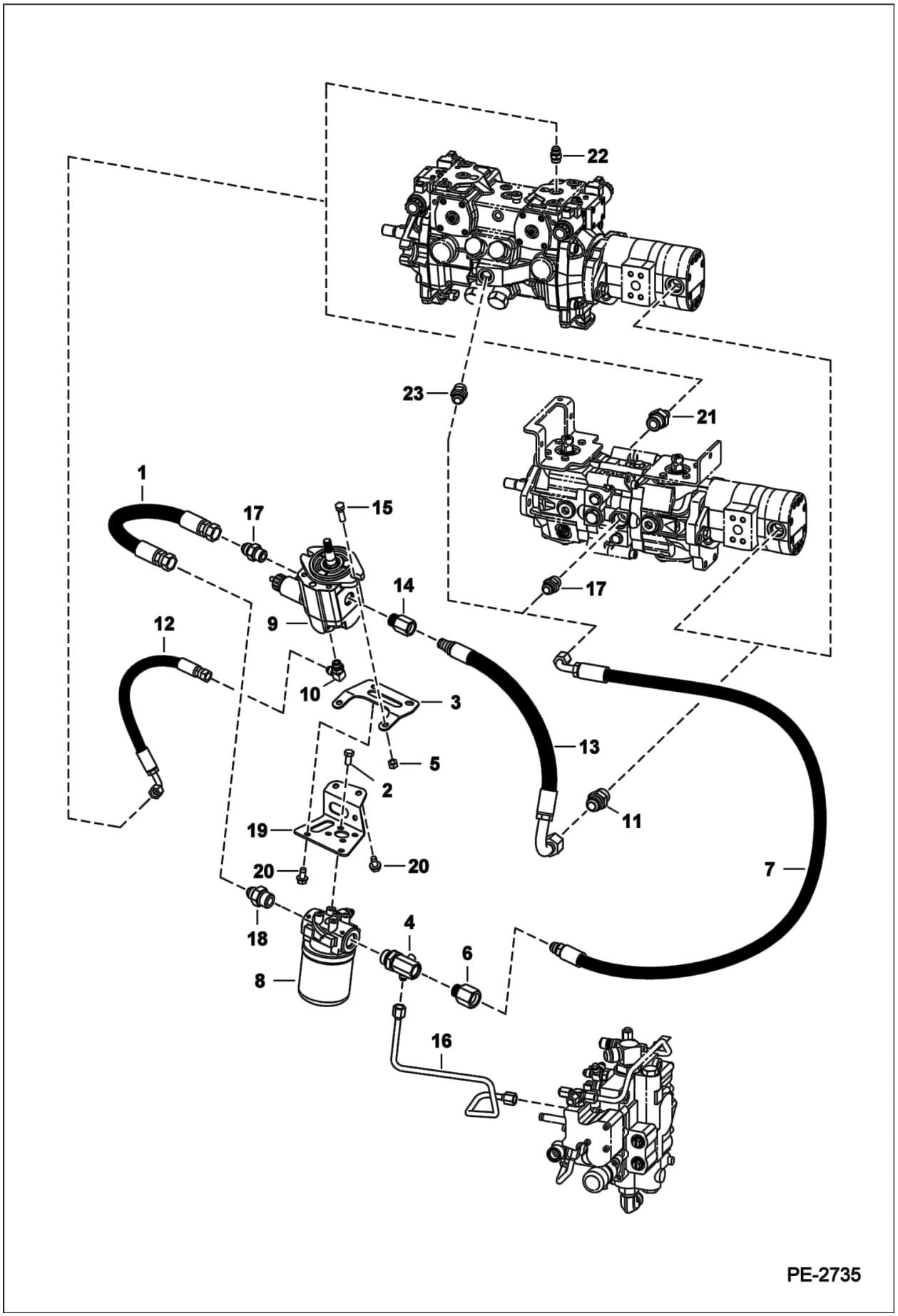

Illustration PE2735

Model S160 K
6904270

Page 144 - OSS# 6300202494 - All rights reserved by Bobcat Company - 02/11/2016 - 14:15:02 - Produced by Ken Cook Co. with mediaoff

HYDROSTATIC CIRCUITRY (Cont'd)
(Cooling Fan)

Ref No	Part Number	Description	Remarks	Serial Number	Qty
1	7110809	HOSE			1
2	17C612	BOLT 5			4
3	7110243	BRACKET			1
4	7108685	TEE			1
4	79K12	O RING 10			1
5	95D6	NUT			2
6	15HB1210	ADAPTER, COUPLER	quick lock - Was 78HA1210 [A]		1
6	79K10	O RING 10			x
7		HOSE	NLA - 26.50" (673,1 mm) long - Order 6689690 hose & Ref. 6 - Was 7114250 [A]		1
7	6689690	HOSE	27" (685,0 mm) long - Also Order Ref. 6		1
8	6687266	FILTER ASSY			1
8	6686926	FILTER, OIL HYD	113,5 mm (4.5") long		1
8	6660260	SWITCH, PRESS OIL HYD			1
9		MOTOR, HYD COOLING FAN	See Illustration COOLING FAN MOTOR / PE2811 - NLA - aluminum - W/proportional valve - Was 6687142 [A], Contact your Local Dealer for Bobcat Technical Information BTI384 - NLA - aluminum - W/proportional valve - Was 6687142 [A]		1
10	17KB0606	FITTING			1
10	79K6	O RING 10			1
11	15KB1212	FITTING, HYD CONNECTOR			1
11	79K12	O RING 10			1
12	7107179	HOSE			1
13		HOSE	NLA - 20.00" (508 mm) long - Order 6691636 hose & Ref. 14 - Was 7114251 [A]		1
13	6691636	HOSE	20.25" (514,35 mm) long - Also Order Ref. 14 - Was 6689691 [A]		1
14	15HB1010	ADAPTER, COUPLER	quick lock - Also Order Ref. 13 - Was 78HA1010 [A]		1
14	79K10	O RING 10			1
15	17C620	BOLT			2
16	7108980	TUBE			1
17	15KB1010	FITTING, HYD CONNECTOR			2
17	79K10	O RING 10			2
18	15KB1012	FITTING, HYD CONNECTOR			1
18	79K12	O RING 10			1
19	7110244	BRACKET			1
20	84G3712	BOLT 5			4
21	15KB0612	FITTING, HYD CONNECTOR	manual controls		1
21	79K12	O RING 10			1
22	15KB0606	FITTING, HYD CONNECTOR	selectable joystick controls		1
22	79K6	O RING 10			1
23	15KB1008	FITTING, HYD CONNECTOR			1
23	79K8	O RING 10			1

Page 145 - OSS# 6300202494 - All rights reserved by Bobcat Company - 02/11/2016 - 14:15:02 - Produced by Ken Cook Co. with media1off

HYDROSTATIC CIRCUITRY
(2-Speed Motor)

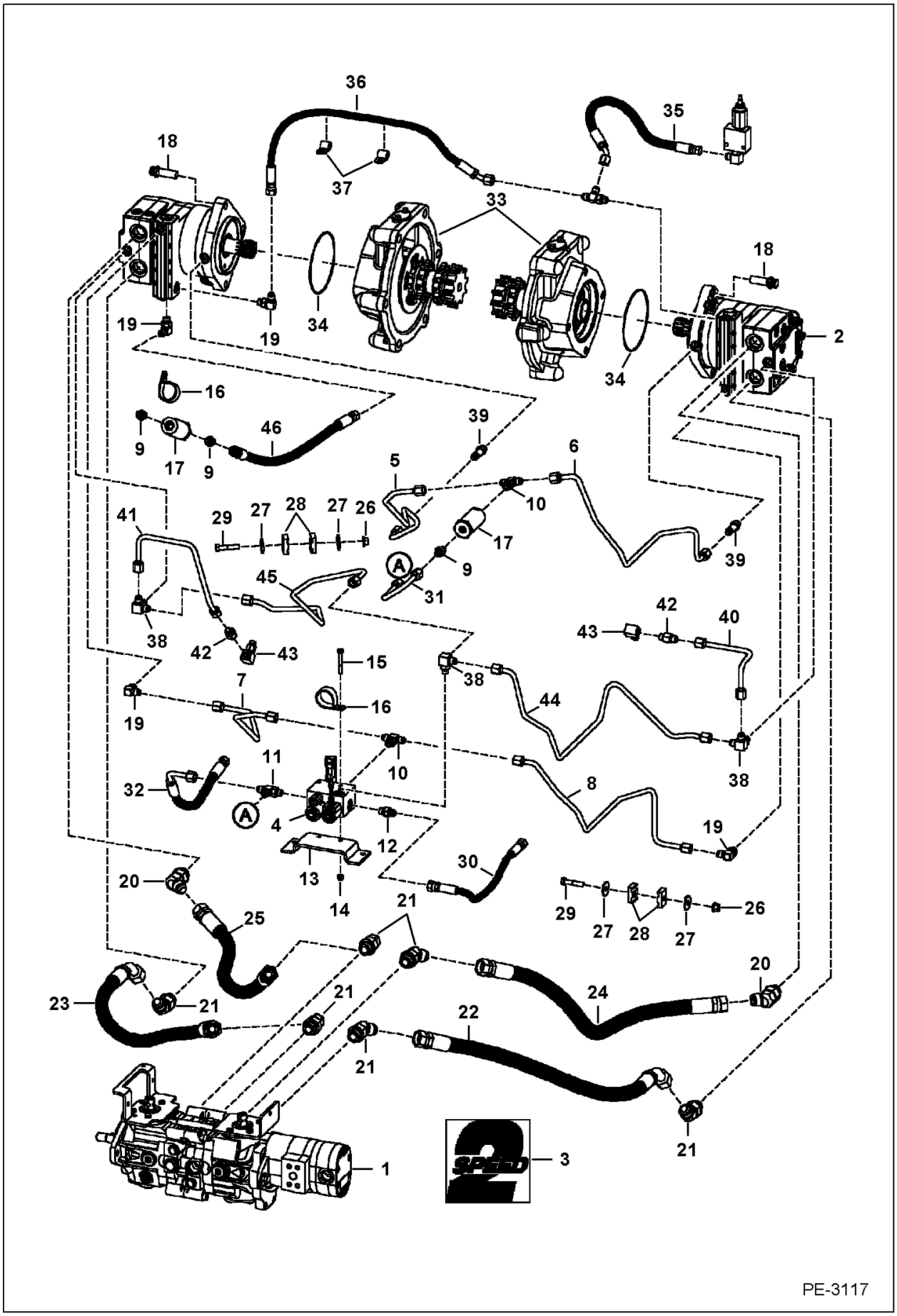

Illustration PE3117

Model S160 K
6904270

Page 146 - OSS# 6300202494 - All rights reserved by Bobcat Company - 02/11/2016 - 14:15:02 - Produced by Ken Cook Co. with mediaoff

HYDROSTATIC CIRCUITRY (Cont'd)
(2-Speed Motor)

Ref No	Part Number	Description	Remarks	Serial Number	Qty
1		PUMP	See Illustration HYDROSTATIC PUMP / MS2184 , See Illustration HYDROSTATIC PUMP / B25010		1
2		MOTOR	See Illustration HYDROSTATIC MOTOR / MS2315		2
3	6729078	DECAL	2-speed		2
4	6692925	VALVE	Was 6692372 [C]		1
4	6691066	SEAL KIT			1
4	6691067	COIL	W/molded connector - 2 speed		1
4	6676243	COIL	W/pigtail connector - warming coil		1
5	7140865	TUBE	Was 7132069 [C]		1
6	7140866	TUBE	Was 7132070 [C]		1
7	7144131	TUBE	Was 7125066 [C]		1
8	7144132	TUBE	Was 7125068 [C]		1
9	15KB0606	FITTING, HYD CONNECTOR			3
9	79K6	O RING 10			3
10	19KB0606	FITTING, HYD TEE			2
10	79K6	O RING 10			2
11	21KB0606	FITTING, HYD TEE			2
11	79K6	O RING 10			2
12	6669676	VALVE, CHECK	inline		1
12	79K6	O RING 10			1
13	7125072	MOUNT			1
14	59D4	NUT 5			2
15	17C444	BOLT	Was 17C432 [B,D]		2
16	30H79	CLAMP			2
17	6661022	FILTER, OIL HYD IN-LINE			1
18	73G1028	BOLT			6
19	17KB0606	FITTING			4
19	79K6	O RING 10			4
20	6734623	ELBOW			2
20	79K12	O RING 10			2
21	6737453	ELBOW			6
21	79K12	O RING 10			6
22	6690239	HOSE			1
23	6690240	HOSE			1
24	6690242	HOSE			1
25	6690241	HOSE			1
26	83D6	NUT 5			2
27	619021	WASHER, 5			8
28	7115645	CLAMP	Was 6726277 [A]		8
29	17C628	BOLT			4
30	6803157	HOSE ASSY			1
31	7144130	TUBE	Was 7125065 [C]		1
32	7125070	HOSE			1
33		MOUNT ASSY	Contact your Local Dealer for Bobcat Technical Information BTI419 - NLA - drive motor Was 7126159 [A]		2
34	25K30508	RING,O			2
35	7138452	HOSE			1
36	7138454	HOSE			1
37	30H31	CLAMP 10			2
38	6725182	TEE			3

Page 147 - OSS# 6300202494 - All rights reserved by Bobcat Company - 02/11/2016 - 14:15:02 - Produced by Ken Cook Co. with mediaioff

HYDROSTATIC CIRCUITRY (Cont'd)
(2-Speed Motor)

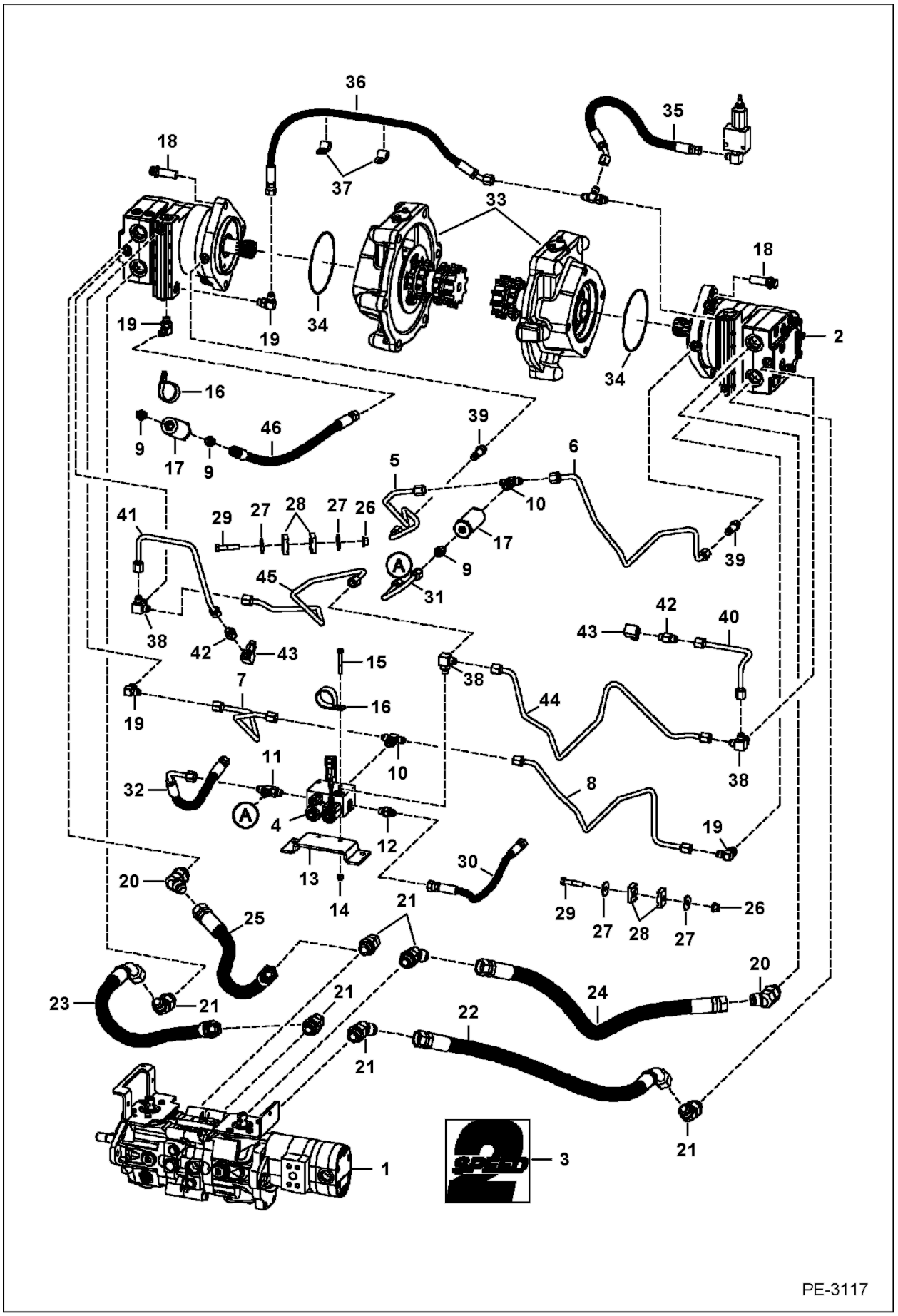

Illustration PE3117

Model S160 K
6904270

Page 148 - OSS# 6300202494 - All rights reserved by Bobcat Company - 02/11/2016 - 14:15:02 - Produced by Ken Cook Co. with mediaIoff

HYDROSTATIC CIRCUITRY (Cont'd)
(2-Speed Motor)

Ref No	Part Number	Description	Remarks	Serial Number	Qty
39	7122214	ADAPTER			2
40	7140589	TUBE			1
41	7140590	TUBE			1
42	7140928	VALVE, RELIEF	relief		2
43	7141805	ELBOW			2
43	79K6	O RING 10			2
44	7143188	TUBE			1
45	7143189	TUBE			1
46	7126166	HOSE			1

Page 149 - OSS# 6300202494 - All rights reserved by Bobcat Company - 02/11/2016 - 14:15:02 - Produced by Ken Cook Co. with media1off

HAND CONTROLS

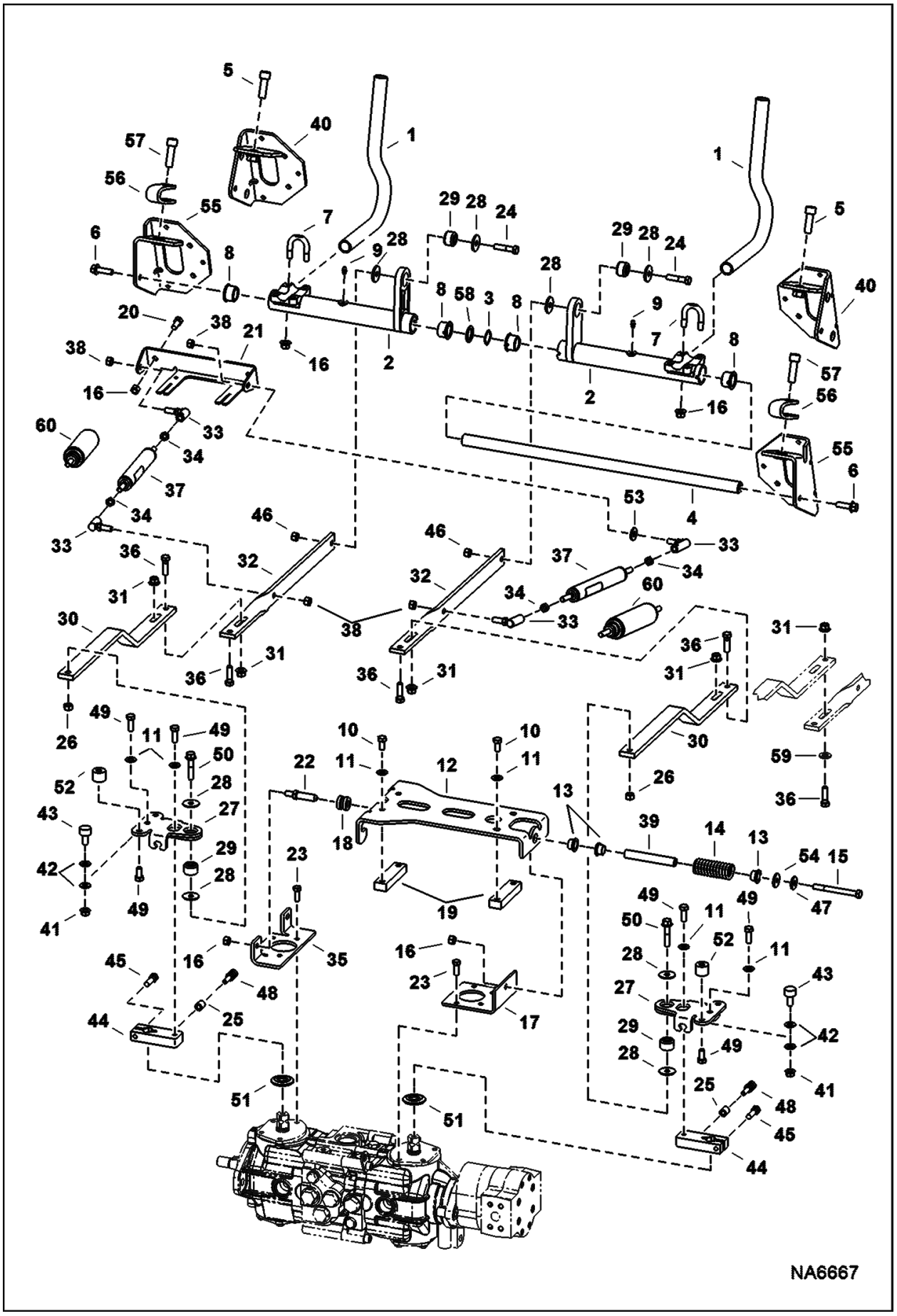

Illustration NA6667

Model S160 K
6904270

Page 150 - OSS# 6300202494 - All rights reserved by Bobcat Company - 02/11/2016 - 14:15:02 - Produced by Ken Cook Co. with mediaoff

HAND CONTROLS (Cont'd)

Ref No	Part Number	Description	Remarks	Serial Number	Qty
1	6702543	LEVER, STEERING			2
2	7110571	BELLCRANK, STEERING			2
3	6599741	WASHER	wave - Use W/Ref. 58		1
3	7154546	WASHER, WAVE			1
4	6716545	SHAFT, STRG			1
5	93G824	BOLT	Was 73G824 [A]		2
6	45C620	BOLT			2
7	6732997	U-BOLT			4
8	6703879	BUSHING, PLASTIC	W/tab		4
8	6673710	BEARING, NEEDLE	See Illustration CONTROLS ELECTRICAL / PE2723 needle - AHC		2
9	10H35	FITTING, GREASE 10			2
10	17C616	BOLT 5	Was 7105192 [B]		8
11	7103217	WASHER			8
12	6734298	BRACKET			1
13	6715163	BUSHING, PRESS FIT			3
14	6701535	SPRING, CENTERING			1
15	17C680	BOLT			1
16	95D6	NUT			13
17	7109904	BRACKET			1
18	6706098	GUIDE, PRESS FIT			2
19	6702716	BLOCK, WEAR			2
20	17C612	BOLT 5			6
21	7147580	MOUNT	damper - W/mount for back-up alarm switch - Was 7100795 [A]		1
22	6577058	PIN, HAND CONTROL			2
23	1CM820	CAP SCREW			8
24	17C628	BOLT			2
25	7105223	SPACER			2
26	53D6	NUT	Was 63D6 [B]		2
27	7110365	ARM, PINTLE			2
28	6737388	WASHER			8
29	6685060	BUSHING, TORSION			4
30		LINK	NLA - 18.5" (469,9 mm) long - Order 7139421 link & Ref. 32 (7139420 link) - Was 6735253 [A]		2
30	7139421	LINK	16" (406,4 mm) long		2
31	83D6	NUT 5			4
32		LINK	NLA - 19.57" (497,1 mm) long - Order 7139420 link & Ref. 30 (7139421 link) - Was 7107986 [A]		2
32	7139420	LINK	586 mm (23.07") long		2
33	6599744	BALL, JOINT			4
34	8D6	NUT 5		& Bel	4
35	7109905	BRACKET			1
36	17C620	BOLT			4
37		GAS SPRING	NLA - Japan Option - Order Ref. 60 - Was 6649551 [A]		2
38	62D6	NUT 5		& Bel	4

Page 151 - OSS# 6300202494 - All rights reserved by Bobcat Company - 02/11/2016 - 14:15:02 - Produced by Ken Cook Co. with media1off

HAND CONTROLS (Cont'd)

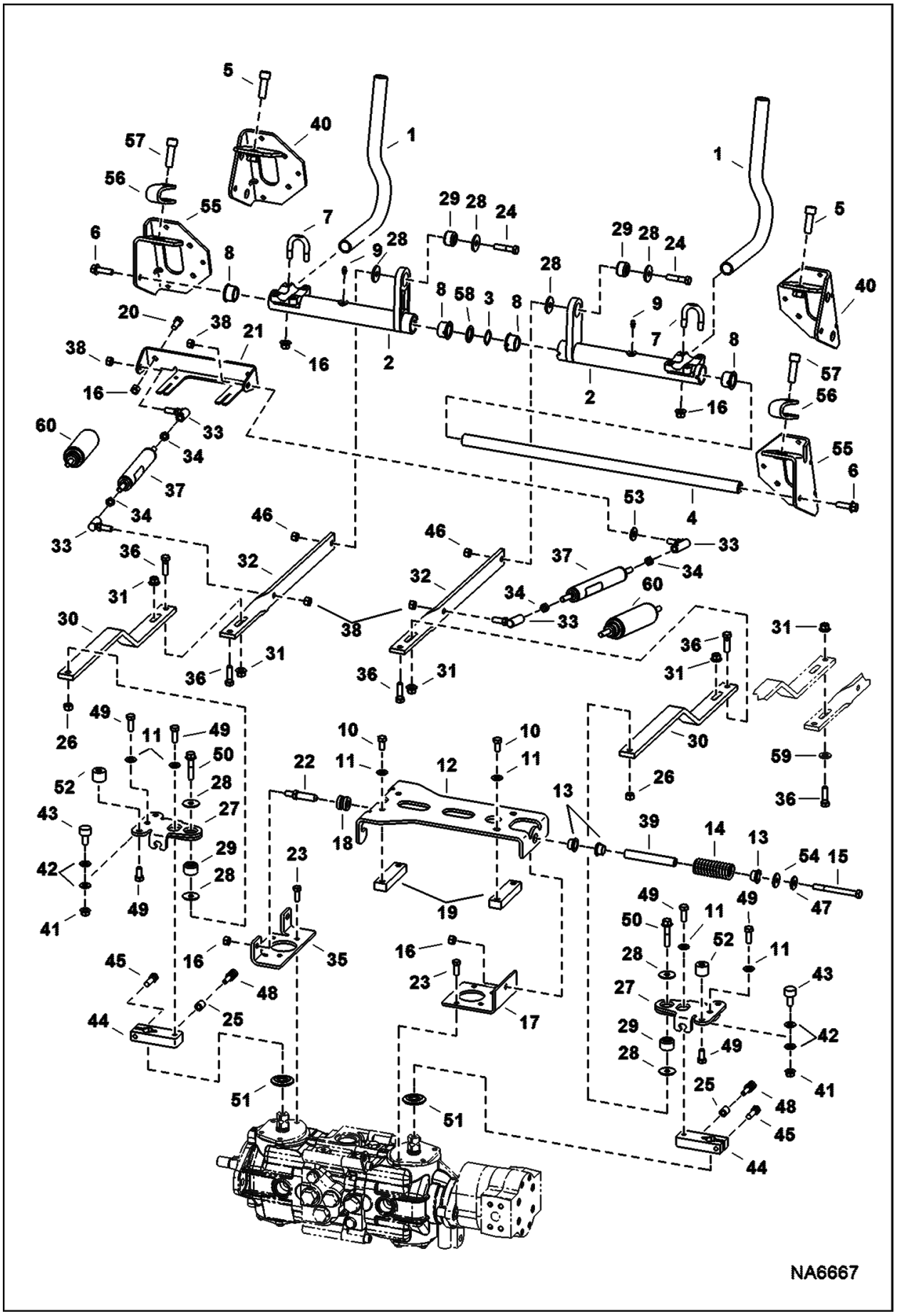

Illustration NA6667

Model S160 K
6904270

Page 152 - OSS# 6300202494 - All rights reserved by Bobcat Company - 02/11/2016 - 14:15:02 - Produced by Ken Cook Co. with mediaoff

HAND CONTROLS (Cont'd)

Ref No	Part Number	Description	Remarks	Serial Number	Qty
38	62D6	NUT 5		& Abv	8
39	6715164	SLEEVE, SPRING			1
40		BRACKET	R.H. - Order Ref. 55-57 - Was 6733022 [A]		1
40		BRACKET	L.H. - Order Ref. 55-57 - Was 6733024 [A]		1
41	98D6	NUT	See Illustration CONTROLS ELECTRICAL / PE2723 AHC		4
42	7100699	WASHER	See Illustration CONTROLS ELECTRICAL / PE2723 AHC		4
43	6673789	BEARING, ROLLER	See Illustration CONTROLS ELECTRICAL / PE2723 ROLLER - AHC		4
44	7103708	BRACKET	centering		2
45	73G624	BOLT			2
46	53D6	NUT			2
47	6563914	WASHER			1
48	7103711	BOLT			2
49	47C620	BOLT	Was 7105193 [A]		4
50	17C628	BOLT	Was 49C628 [B]		2
51	6687913	SEAL	dust		2
52	6711643	CAM, WEAR			4
53		SPACER	NLA - Order Ref. 34 - Was 7110945 [A]		1
54	25E24	WASHER	AHC - Was 25E22 [B]		1
55	7128600	BRACKET	RH		1
55	7128601	BRACKET	LH		1
56	7121779	PAD			2
57	73G828	BOLT			2
58	6716916	WASHER	plastic - Use W/Ref. 3 (6599741 washer)		1
59	6563914	WASHER	RH - 2-speed - if equipped		1
60	7188108	GAS SPRING			2

Page 153 - OSS# 6300202494 - All rights reserved by Bobcat Company - 02/11/2016 - 14:15:02 - Produced by Ken Cook Co. with media1off

HYDROSTATIC MOTOR
(Single Speed)

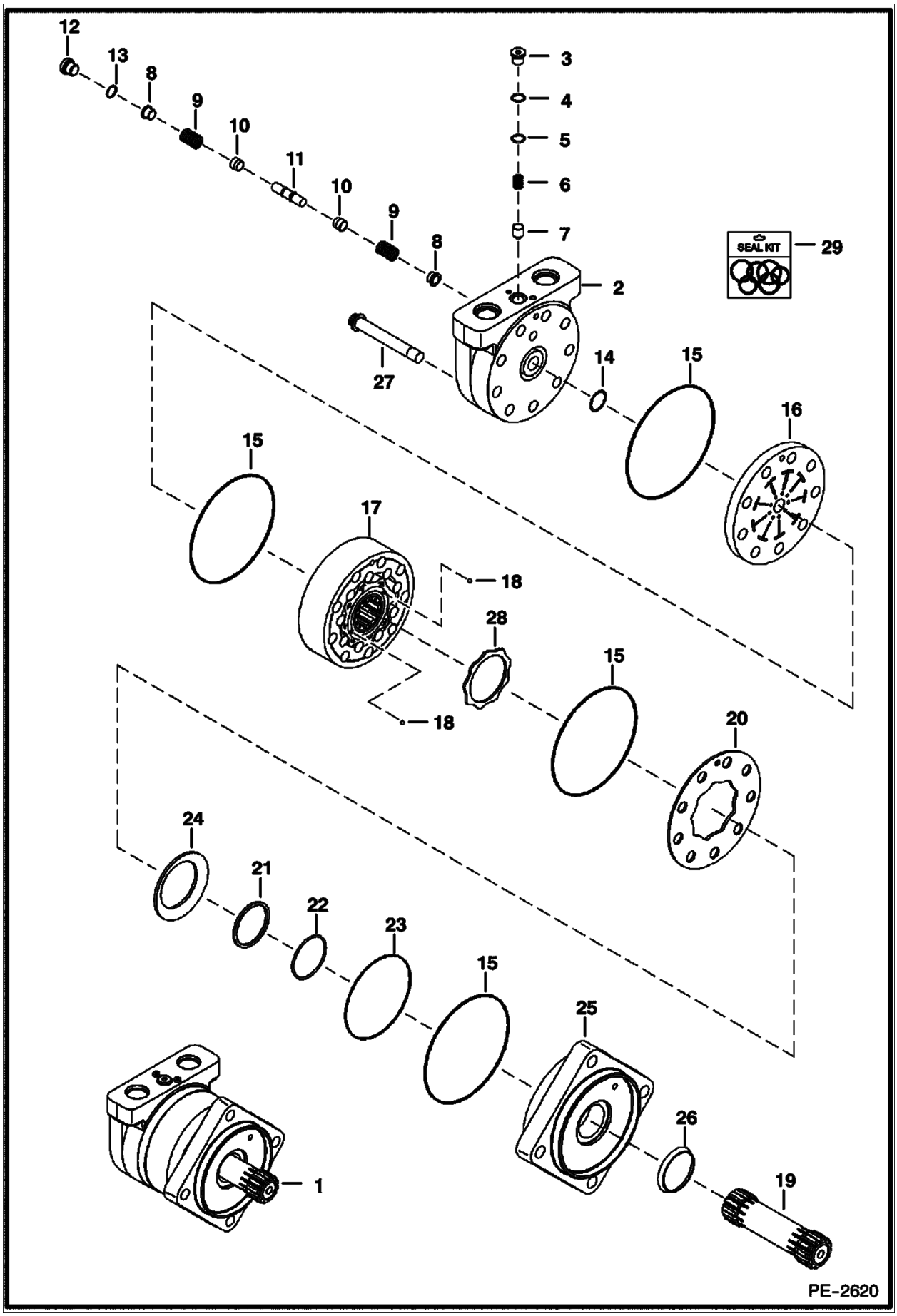

Illustration PE2620

Model S160 K
6904270

Page 154 - OSS# 6300202494 - All rights reserved by Bobcat Company - 02/11/2016 - 14:15:02 - Produced by Ken Cook Co. with mediaoff

HYDROSTATIC MOTOR (Cont'd)
(Single Speed)

Ref No	Part Number	Description	Remarks	Serial Number	Qty
1	6682034	MOTOR, DRIVE HYD	Ref. 2-27		1
2	6689697	HOUSING, MOTOR	W/Ref. 3-7 - Was 6685063 [B,D]		1
3	6668079	PLUG, MOTOR	W/Ref. 4		1
4	79K5	O RING 10			1
5	6668080	SHIM			x
6	6688521	SPRING			1
7	6668082	POPPET	Was 6685064 [A]		1
8	6685065	SHUTTLE			2
9	6513533	SPRING			2
10	6513532	POPPET			2
11	6668088	PISTON	shuttle - W/flat - fast acting - Was 6685066 [A]		1
12	6668089	PLUG, MOTOR	W/Ref. 13		1
13	79K6	O RING 10			1
14	6669452	O-RING			1
15	6678000	SEAL			4
16	6689698	PLATE	valve - Was 6678001 [B,D]		1
17	6691343	GEROLER	Was 6685067 [B,D]		1
18	6651542	BALL, STEEL			2
19	6682862	SHAFT, DRIVE			1
20	6689700	PLATE	balance - outer - Was 6678003 [B,D]		1
21	6678006	RING, BACK-UP			1
22	6682860	O-RING			1
23	6682897	SEAL			1
24	6685069	DISK, SPRING	backup		1
25	6685068	FLANGE	mounting		1
26	6664815	SEAL, OIL			1
27	6682863	BOLT			9
28	6678004	PLATE BALANCING	balance - inner		1
29	6685070	KIT, SEAL COMPLETE	W/Ref. 4, 13-15, 21-23 & 26		1

Page 155 - OSS# 6300202494 - All rights reserved by Bobcat Company - 02/11/2016 - 14:15:02 - Produced by Ken Cook Co. with media1off

HYDROSTATIC MOTOR
(2-Speed)

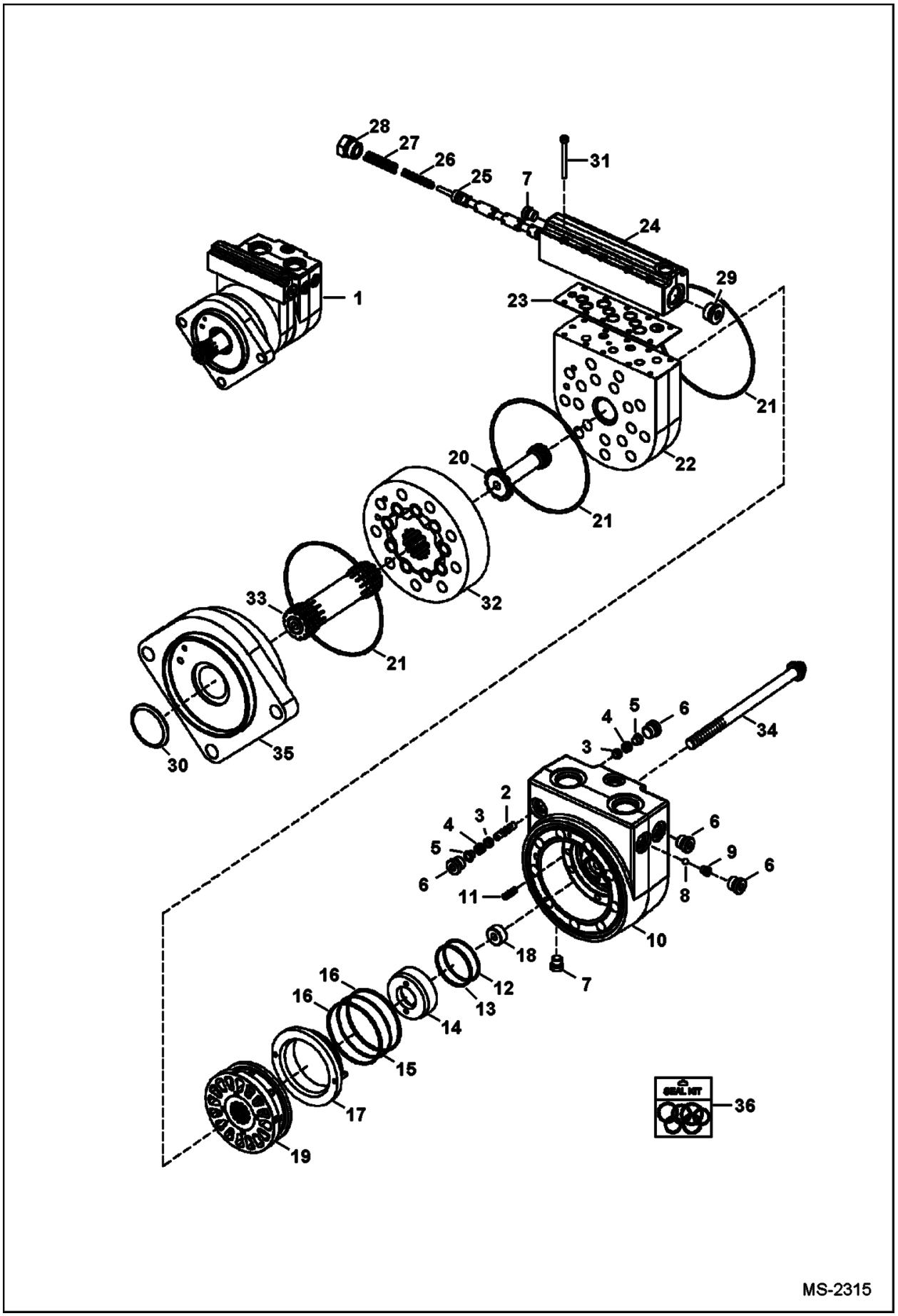

Illustration MS2315

Model S160 K
6904270

Page 156 - OSS# 6300202494 - All rights reserved by Bobcat Company - 02/11/2016 - 14:15:02 - Produced by Ken Cook Co. with mediaoff

HYDROSTATIC MOTOR (Cont'd)
(2-Speed)

Ref No	Part Number	Description	Remarks	Serial Number	Qty
1	6688565	MOTOR			1
2	6668088	PISTON			1
3	6513532	POPPET			2
4	6513533	SPRING			2
5	6685065	SHUTTLE			2
6	6668089	PLUG, MOTOR	W/ O-ring		4
6		O-RING	NSS		X
7	6691541	PLUG	W/ O-ring		2
7		O-RING	NSS		X
8	10J8	BALL			1
9	6691542	SEAT	ball - W/ O-ring		1
9		O-RING	NSS		X
10	6691566	HOUSING			1
11	6190121	SPRING			10
12	6691543	O-RING			1
13	6691544	RING	back-up		1
14	6691545	RING			1
15	6691546	O-RING			1
16	6691547	RING	back-up		2
17	6691548	RING	balance		1
18	6691549	PIN	dowel		1
19	6691550	VALVE			1
20	6691551	SHAFT			1
21	6691552	O-RING			3
22	6691553	PLATE			1
23	6691554	GASKET			1
24	6691555	HOUSING			1
25	6691556	SPOOL			1
26	6691557	SPRING	compression		1
27	6691558	SPRING	compression		1
28	6651974	PLUG	W/ O-ring		1
28		O-RING	NSS		X
29	6599910	ASSY, PLUG	W/ O-ring		1
29		O-RING	NSS		X
30	6664815	SEAL, OIL	Was 6691564 [A]		1
31	6691559	BOLT			10
32	6691560	GEROLER			1
33	6691561	SHAFT			1
34	6691562	BOLT			9
35	6691563	FLANGE			1
36	6691565	SEAL KIT	Ref. 12, 13, 15, 16, 21, 23, 30 & O-rings for Ref. 6, 7, 9, 28, & 29		1

Page 157 - OSS# 6300202494 - All rights reserved by Bobcat Company - 02/11/2016 - 14:15:02 - Produced by Ken Cook Co. with media1off

HYDROSTATIC PUMP/GEAR PUMP
(Identification)

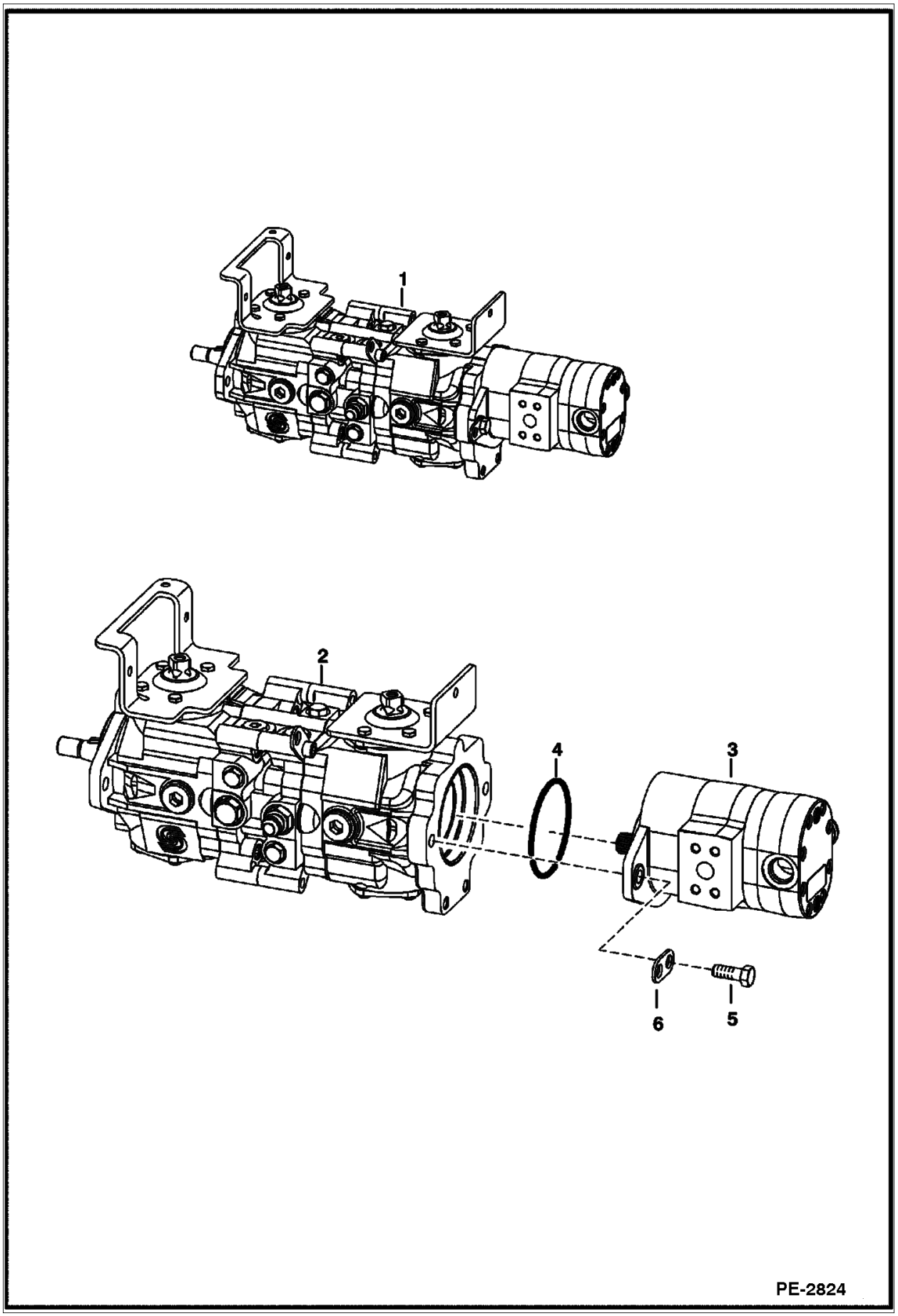

Illustration PE2824

Model S160 K
6904270

Page 158 - OSS# 6300202494 - All rights reserved by Bobcat Company - 02/11/2016 - 14:15:02 - Produced by Ken Cook Co. with mediaoff

HYDROSTATIC PUMP/GEAR PUMP (Cont'd)
(Identification)

Ref No	Part Number	Description	Remarks	Serial Number	Qty
1		PUMP ASSY	NLA		1
2		HYDROSTATIC PUMP	See Illustration HYDROSTATIC PUMP / MS2184 - manual controls		1
2		HYDROSTATIC PUMP	See Illustration HYDROSTATIC PUMP / B25010 - selectable joystick controls		1
3		GEAR PUMP	See Illustration GEAR PUMP / MS2185 - manual controls or selectable joystick controls		1
3		GEAR PUMP	See Illustration HIGH FLOW HYDRAULICS / MS1459 - high flow - manual controls or selectable joystick controls		1
4	6671520	O-RING	manual controls		1
4	6682949	O-RING	selectable joystick controls - Was 6688019 [A]		1
5	45C820	BOLT	manual controls - Was 43C820 [A]		2
5	7131273	SCREW	SJC - Was 59CM1240 [B]		2
6	6662126	BRACKET	Was 6631643 [A]		2

Page 159 - OSS# 6300202494 - All rights reserved by Bobcat Company - 02/11/2016 - 14:15:02 - Produced by Ken Cook Co. with media1off

HYDROSTATIC PUMP
(Manual Controls & ACS)

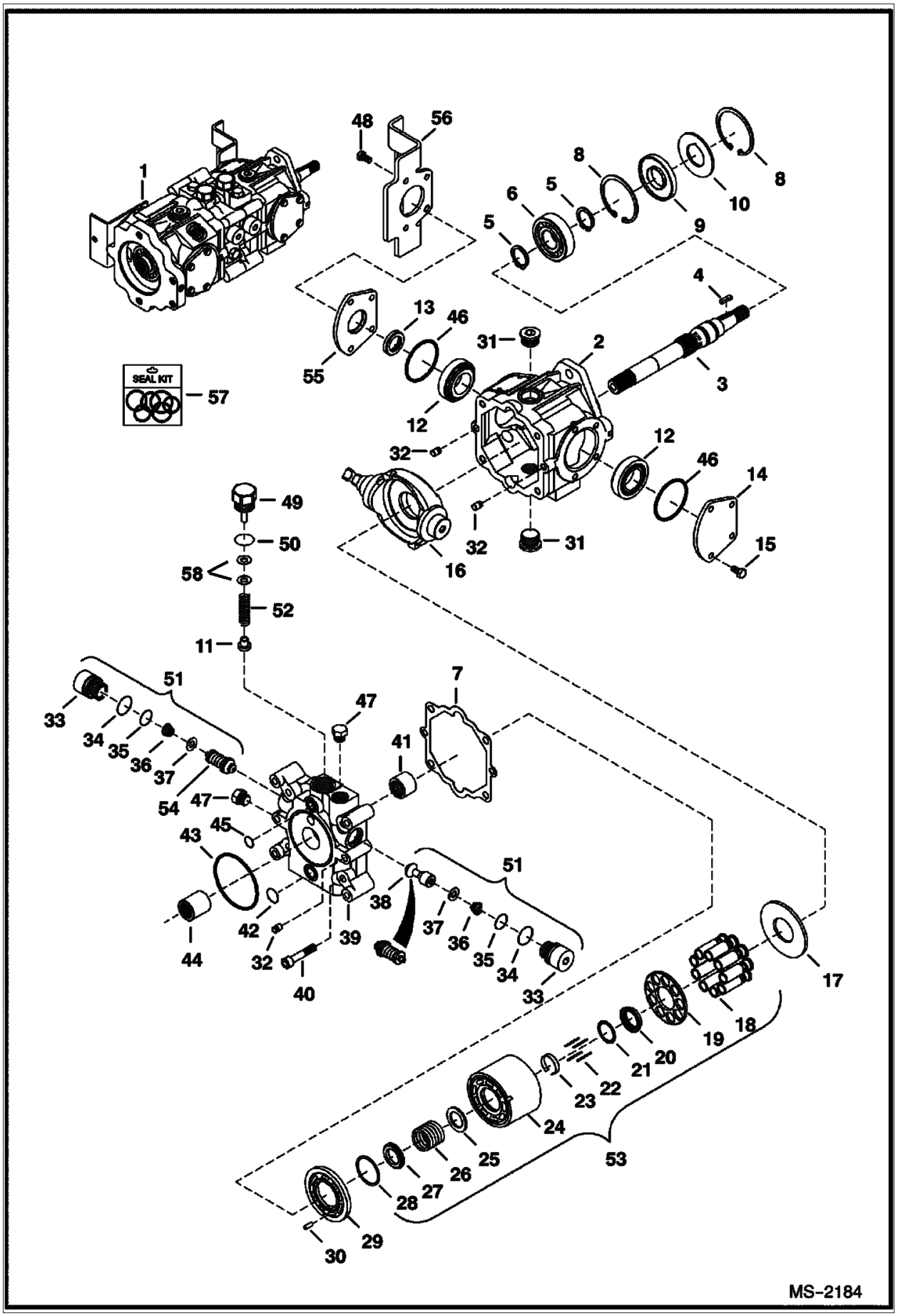

Illustration MS2184

Model S160 K
6904270

Page 160 - OSS# 6300202494 - All rights reserved by Bobcat Company - 02/11/2016 - 14:15:02 - Produced by Ken Cook Co. with mediaoff

HYDROSTATIC PUMP (Cont'd)
(Manual Controls & ACS)

Ref No	Part Number	Description	Remarks	Serial Number	Qty
1	6687863	PUMP, HYD TANDEM W/O GEAR PUMP	Model 4445203		1
1	6687863REM	PUMP, HYD TANDEM, W/O GEAR PUMP			1
2	6669402	HOUSING			1
3	6682260	FRONT SHAFT	W/square key		1
4	6682261	KEY			1
5	658128	RING, SNAP			2
6	654299	BEARING			1
7	6650634	GASKET			1
8	669863	RING, SNAP			2
9	6687191	SEAL, OIL			1
10	6669409	WASHER			1
11	6650652	CH.RELIEF	charge relief		1
12	6669411	BEARING			2
13	6678226	SEAL, OIL	Was 6660814 [D]		1
14	6657068	COVER			2
15	6650668	BOLT			4
16	6685344	SWASHPLATE	W/threaded shaft hole		1
17	6650627	PLATE THR			1
18		PISTON ASSY	NLA - Order Ref. 53		1
19		RETAINER	NLA - Order Ref. 53		1
20		RETAINER	NLA - guide - Order Ref. 53		1
21	6666338	WASHER			1
22	6650629	PIN			4
23	6650630	RETAINER			1
24		BLOCK	NLA - Order Ref. 53		1
25		WASHER	NLA - Order Ref. 53		1
26		SPRING	NLA - Order Ref. 53		1
27		WASHER	NLA - Order Ref. 53		1
28		WASHER	NLA - Order Ref. 53		1
29	6687774	PLATE, PUMP HYD			1
30	6650636	PIN			1
31	47K8	PLUG			2
31	6645083	O-RING			2
32	6675342	PIN			4
33		PLUG	NLA - Order Ref. 51		2
34	6657028	O-RING			2
35	79K8	O RING 10			2
36		SPRING	NLA - Order Ref. 51		2
37		RETAINER	NLA - Order Ref. 51		2
38		CHECK VALVE	NLA - poppet - Order Ref. 51		1
39	7023162	CAP, END	Was 6669406 [A]		1
40	6650637	BOLT			4
41	6650635	BEARING			1
42	6650647	O-RING			1
43	6645081	O-RING	Was 6673884 [B,D]		1
44	6650675	COUPLER			1
45	6650646	O-RING			1
46	6660814	RING, QUAD	Was 6678226 [D]		2
47	6645086	PLUG			2
47	6661481	O-RING			1

Page 161 - OSS# 6300202494 - All rights reserved by Bobcat Company - 02/11/2016 - 14:15:02 - Produced by Ken Cook Co. with media1off

HYDROSTATIC PUMP (Cont'd)
(Manual Controls & ACS)

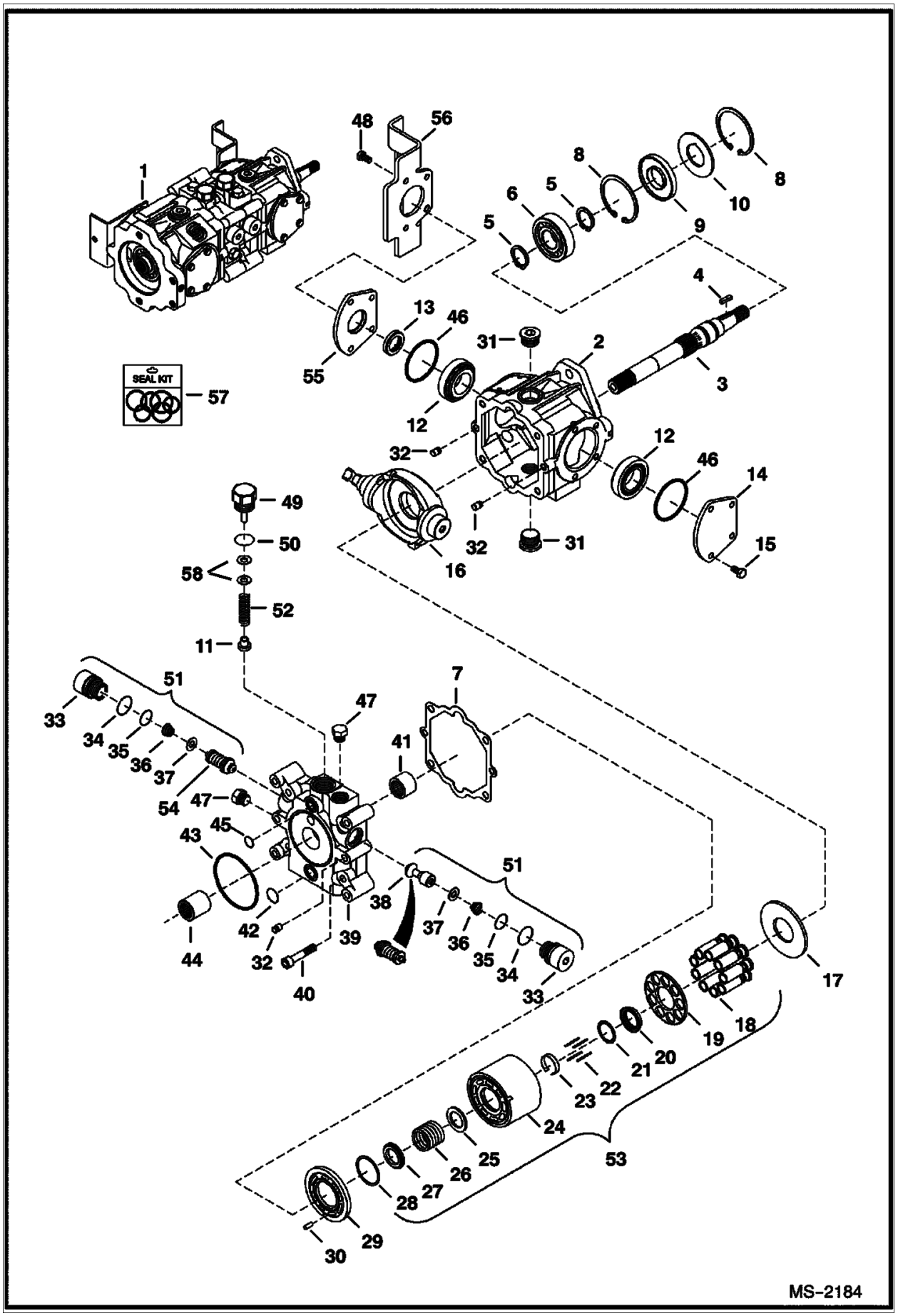

Illustration MS2184

Model S160 K
6904270

Page 162 - OSS# 6300202494 - All rights reserved by Bobcat Company - 02/11/2016 - 14:15:02 - Produced by Ken Cook Co. with mediaoff

HYDROSTATIC PUMP (Cont'd)
(Manual Controls & ACS)

Ref No	Part Number	Description	Remarks	Serial Number	Qty
48	6671518	BOLT			4
49	6650648	PLUG	charge relief - W/Ref. 50		1
50	79K10	O RING 10			1
51	6670685	VALVE, RELIEF	Ref. 33-37 & 54 - Was 6689601 [A]		1
52	6673882	SPRING	Was 6684038 [A]		1
53	6671512	GROUP, ROTARY			1
54		RELIEF VALVE	NLA - 5000 PSI (345 bar)- Order Ref. 51		1
55	6657067	COVER	W/Ref. 46		1
56	7109905	BRACKET			1
57	6671516	KIT, SEAL	Ref. 7, 9, 13, 34, 35, 42, 43, 45, 46 & 50 - Also includes Ref. 2, 3, 12, 31 & 41 on next page		1
58	6669410	KIT, SHIM	for Ref. 49 - (2) each of .010, .020 and .050 thick		1

Page 163 - OSS# 6300202494 - All rights reserved by Bobcat Company - 02/11/2016 - 14:15:02 - Produced by Ken Cook Co. with mediaioff

HYDROSTATIC PUMP
(Manual Controls & ACS)

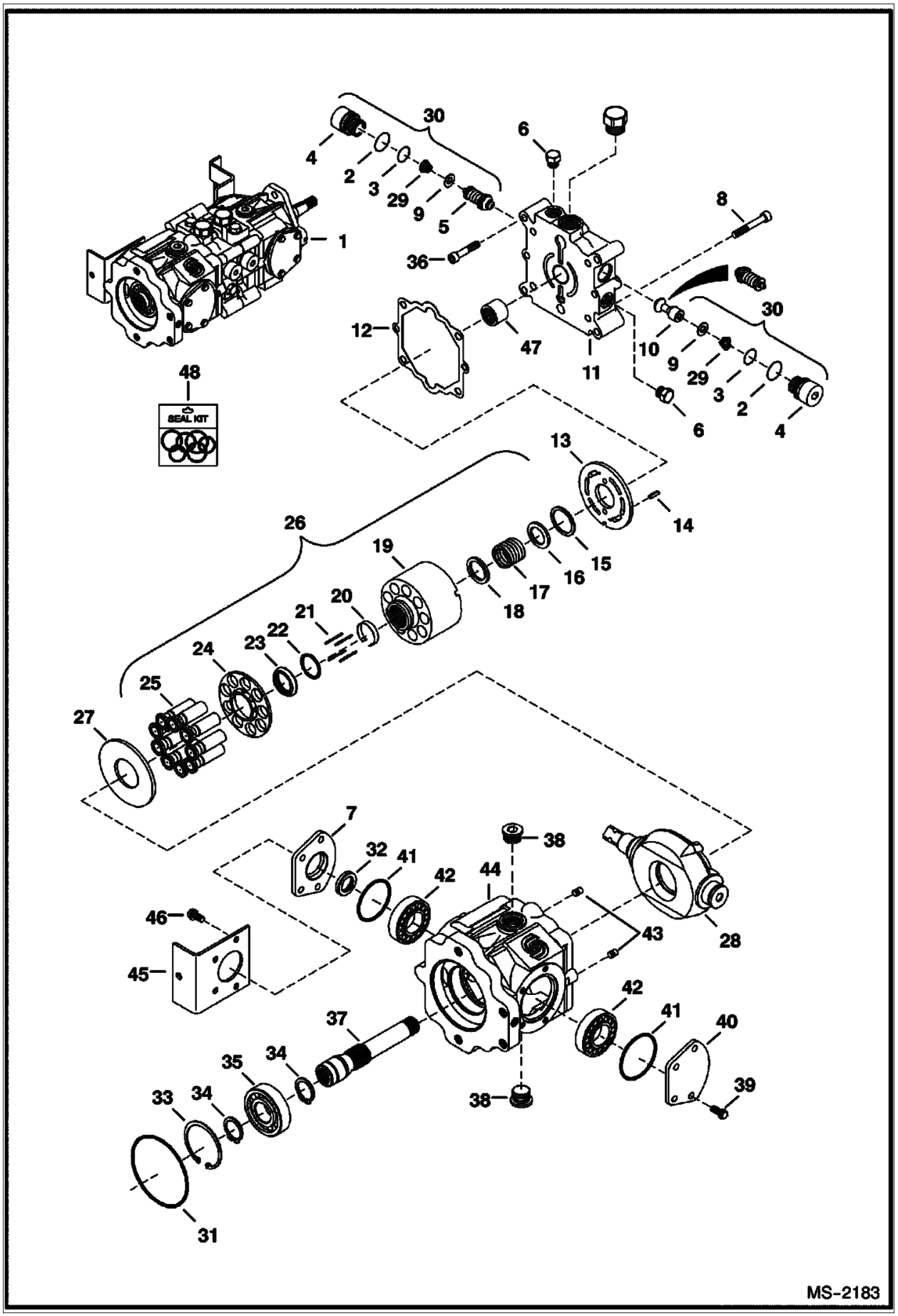

Illustration MS2183

Model S160 K
6904270

Page 164 - OSS# 6300202494 - All rights reserved by Bobcat Company - 02/11/2016 - 14:15:02 - Produced by Ken Cook Co. with mediaoff

HYDROSTATIC PUMP (Cont'd)
(Manual Controls & ACS)

Ref No	Part Number	Description	Remarks	Serial Number	Qty
1	6687863	PUMP, HYD TANDEM W/O GEAR PUMP	Model 4445203		1
1	6687863REM	PUMP, HYD TANDEM, W/O GEAR PUMP			1
2	6657028	O-RING			2
3	79K8	O RING 10			2
4		PLUG	NLA - Order Ref. 30		2
5		RELIEF VALVE	NLA - 5000 PSI (345 bar)- Order Ref. 30		2
6	6645086	PLUG			4
7	6657067	COVER	W/Ref. 32		1
8	6650637	BOLT			2
9		RETAINER	NLA - Order Ref. 30		4
10		CHECK VALVE	NLA - poppet - Order Ref. 30		1
11	6669405	CAP, END			1
12	6650634	GASKET			1
13	6687773	PLATE, PUMP HYD			1
14	6650636	PIN			2
15		RETAINER	NLA - Order Ref. 26		1
16		WASHER	NLA - Order Ref. 26		1
17		SPRING	NLA - Order Ref. 26		1
18		WASHER	NLA - Order Ref. 26		1
19		BLOCK	NLA - Order Ref. 26		1
20	6650630	RETAINER			1
21	6650629	PIN			4
22	6666338	WASHER			1
23		RETAINER	NLA - Order Ref. 26		1
24		RETAINER	NLA - Order Ref. 26		1
25		PISTON ASSY	NLA - Order Ref. 26		1
26	6671512	GROUP, ROTARY			1
27	6650627	PLATE THR			1
28	6685344	SWASHPLATE	W/threaded shaft hole		1
29		SPRING	NLA - Order Ref. 30		2
30	6670685	VALVE, RELIEF	Ref. 2-5, 9, 10 & 29 - Was 6689601 [A]		2
31	6671520	O-RING			1
32	6678226	SEAL, OIL			1
33	669863	RING, SNAP			1
34	658128	RING, SNAP			2
35	654299	BEARING			1
36	6652018	BOLT			4
37	6682264	REAR SHAFT			1
38	47K8	PLUG			1
38	79K12	O RING 10			2
39	6650668	BOLT			4
40	6657068	COVER			1
41	6660814	RING, QUAD			2
42	6669411	BEARING			2
43	6675342	PIN			2
44	6682262	HOUSING	Was 6689602 [A]		1
45	7109904	BRACKET			1
46	6650668	BOLT			4
47	6650635	BEARING			1

Page 165 - OSS# 6300202494 - All rights reserved by Bobcat Company - 02/11/2016 - 14:15:02 - Produced by Ken Cook Co. with media1off

HYDROSTATIC PUMP (Cont'd)
(Manual Controls & ACS)

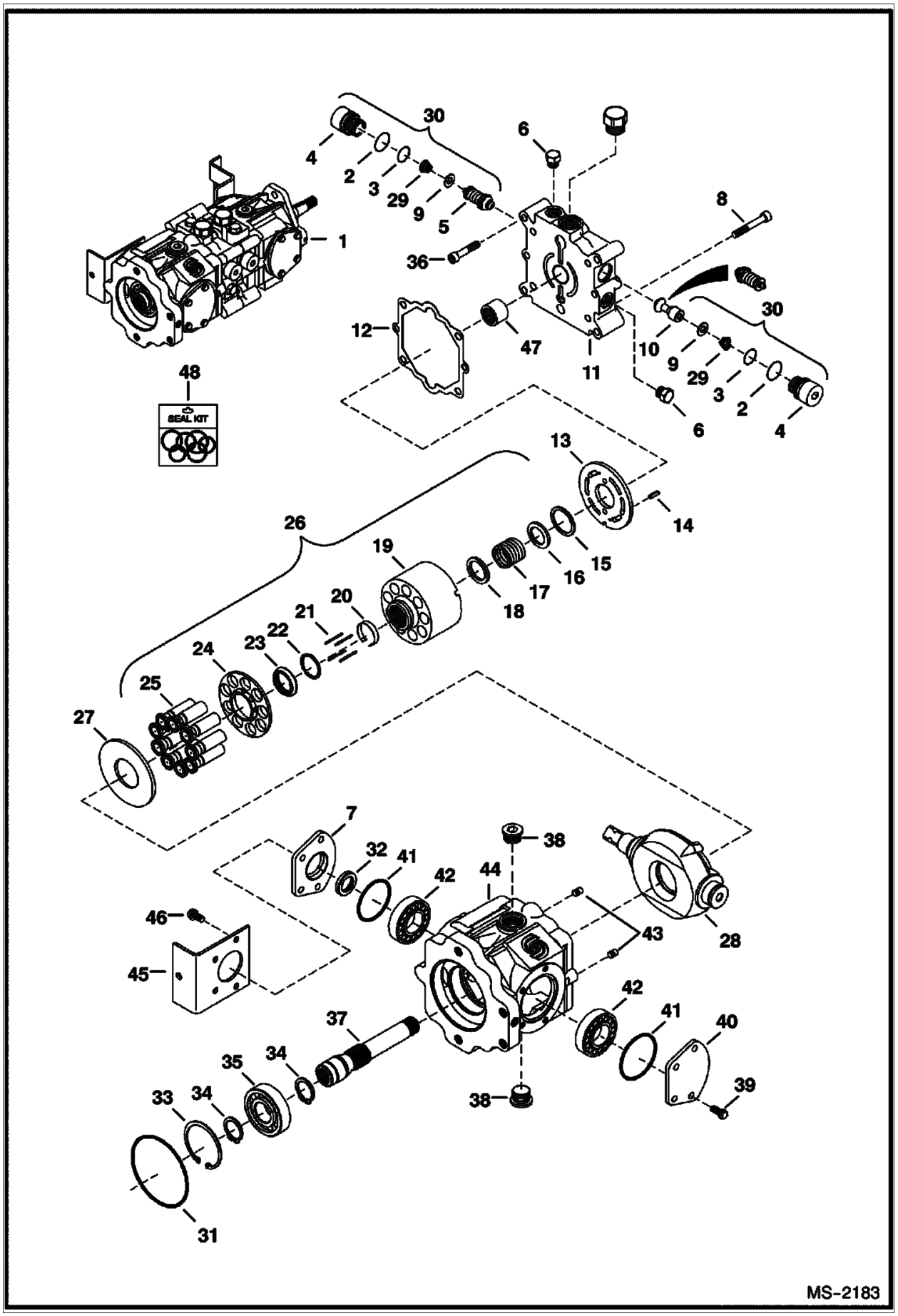

Illustration MS2183

Model S160 K
6904270

Page 166 - OSS# 6300202494 - All rights reserved by Bobcat Company - 02/11/2016 - 14:15:02 - Produced by Ken Cook Co. with mediaoff

HYDROSTATIC PUMP (Cont'd)
(Manual Controls & ACS)

Ref No	Part Number	Description	Remarks	Serial Number	Qty
48	6671516	KIT, SEAL	Ref. 2, 3, 12, 31 & 41 - Also includes Ref. 7, 9, 13, 34, 35, 42, 43, 45, 46 & 50 on previous page		1

Page 167 - OSS# 6300202494 - All rights reserved by Bobcat Company - 02/11/2016 - 14:15:02 - Produced by Ken Cook Co. with media1off

HYDROSTATIC PUMP
(Selectable Joystick Controls) (R902095064)

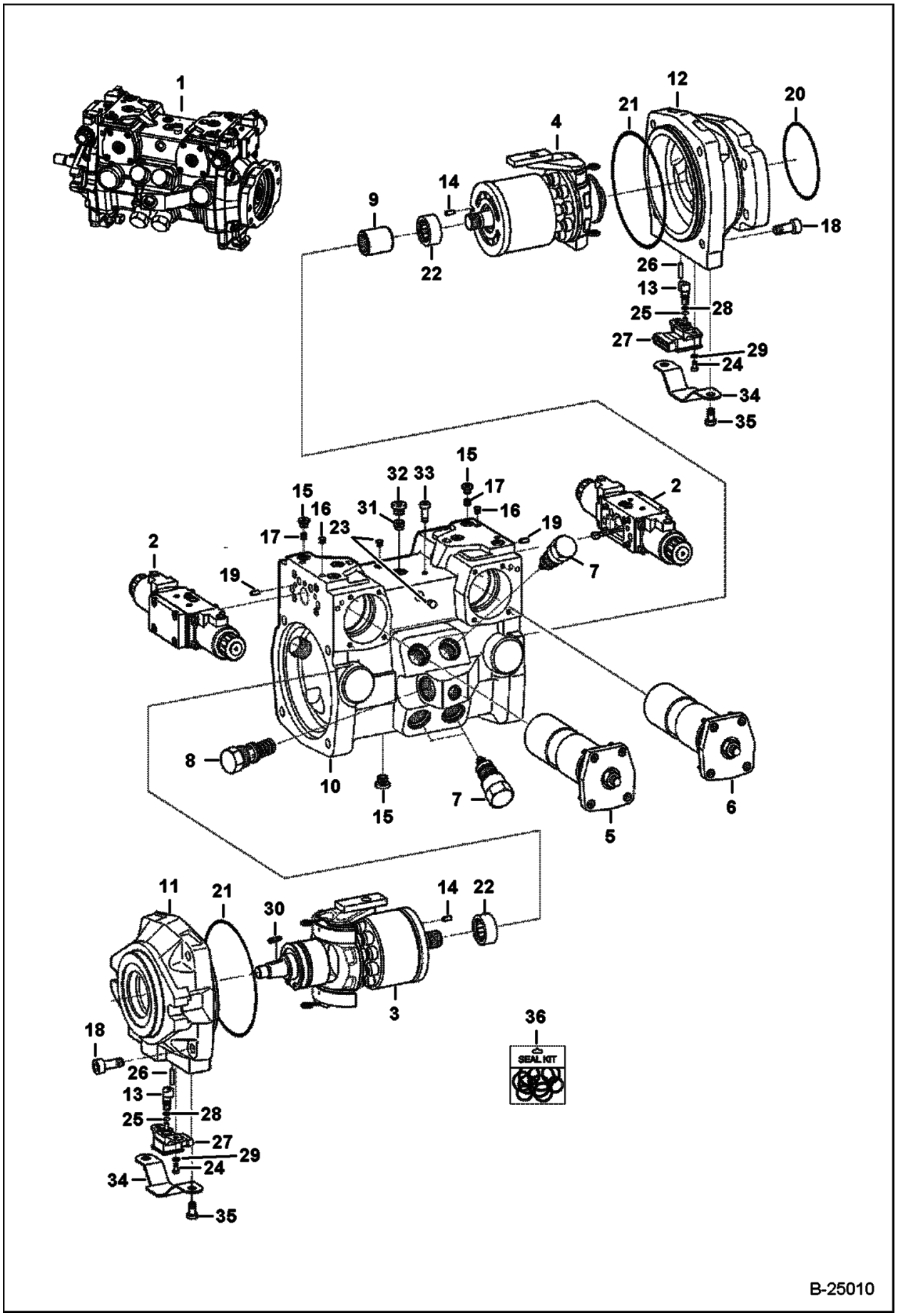

Illustration B25010

Model S160 K
6904270

Page 168 - OSS# 6300202494 - All rights reserved by Bobcat Company - 02/11/2016 - 14:15:02 - Produced by Ken Cook Co. with mediaoff

HYDROSTATIC PUMP (Cont'd)
(Selectable Joystick Controls) (R902095064)

Ref No	Part Number	Description	Remarks	Serial Number	Qty
1		PUMP, HYD TANDEM	See Illustration HYDROSTATIC PUMP / NA2245 - NLA - Model R902095064 - Order 7170197 pump & 7178411 harness - Was 6686267		1
1		PUMP, HYD TANDEM	See Illustration HYDROSTATIC PUMP / NA2245 - NLA - Model R902095064 - Order 7170197 pump & 7169309 harness - Was 6686267		1
2	6687970	MODULATOR	See Illustration HYDROSTATIC PUMP / B25016		2
3	6687957	GROUP, ROTATING	See Illustration HYDROSTATIC PUMP / B25011 - LH rotation		1
4	6687958	GROUP	See Illustration HYDROSTATIC PUMP / B25012 - RH rotation		1
5	6687960	CONTROL	See Illustration HYDROSTATIC PUMP / B25013		1
6	6687961	CONTROL	See Illustration HYDROSTATIC PUMP / B25013A		1
7	6692332	VALVE,RELIEF	See Illustration HYDROSTATIC PUMP / B25014 - preset at 350 bar - Was 6687924 [A]		4
8	6687938	VALVE	See Illustration HYDROSTATIC PUMP / B25015		1
9	6687941	COUPLER			1
10	6687964	HOUSING			1
11	6687973	FLANGE			1
12		FLANGE	NLA - Was 6687974 [A]		1
13	6687965	SHAFT			2
14	6688011	PIN			2
15	6682875	PLUG	Was 6688016 [A]		11
15	6698343	ORING			11
16	6682879	PIN	Was 6688039 [A]		3
17		ORIFICE	Contact your Local Dealer for Bobcat Technical Information BTI393 - Was 6967419 [B]		4
18	6688008	SCREW			8
19	6682919	PIN CYLINDER	Was 6686934 [A]		2
20	6682949	O-RING	Was 6688019 [A]		1
21	6688009	SEAL			2
22	6688040	BEARING			2
23	6687932	PIN			2
24	6687994	SCREW			4
25	6687990	RING			2
26	6688014	PIN			2
27	6687984	SENSOR, PUMP HYD POSITION	Model R902095064 - Use W/ 7139761 harness - oval connector		2
28	6688007	SEAL			2
29	6687998	SHIM			4
30	6J807	KEY, WOODRUFF	Was 6687991 [A]		1
31	6687988	FILTER			1
32	6682877	PLUG	Was 6688015 [A]		1
33	6687992	SCREW			1
34	7131322	COVER	Was 6687993 [C]		2
35	6688003	SCREW			4
36	6689021	SEAL KIT	complete		1

Page 169 - OSS# 6300202494 - All rights reserved by Bobcat Company - 02/11/2016 - 14:15:02 - Produced by Ken Cook Co. with media1off

HYDROSTATIC PUMP
(Rotary Group) (LH) (Selectable Joystick Controls) (R902095064)

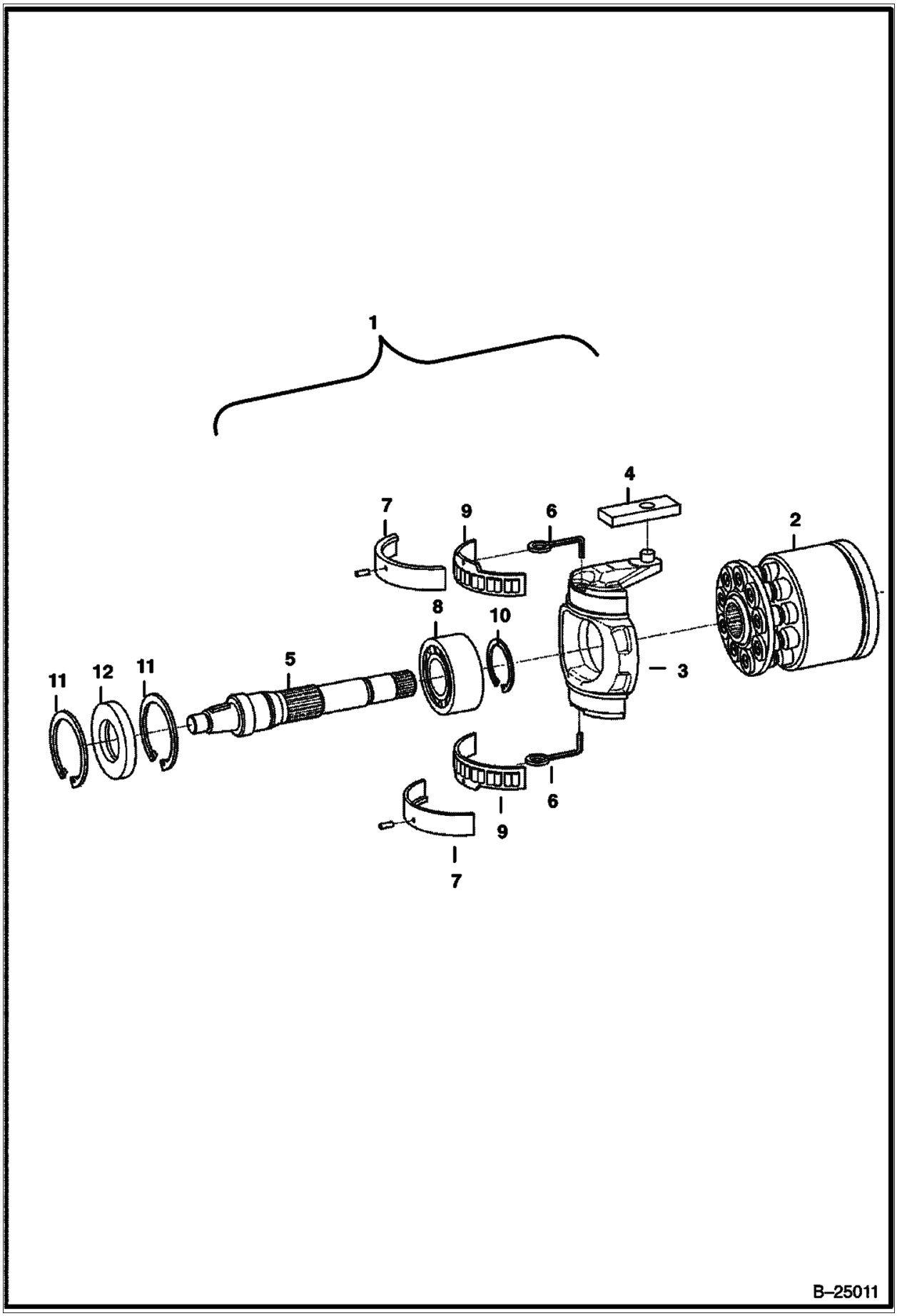

Illustration B25011

Model S160 K
6904270

Page 170 - OSS# 6300202494 - All rights reserved by Bobcat Company - 02/11/2016 - 14:15:02 - Produced by Ken Cook Co. with mediaoff

HYDROSTATIC PUMP (Cont'd)
(Rotary Group) (LH) (Selectable Joystick Controls) (R902095064)

Ref No	Part Number	Description	Remarks	Serial Number	Qty
1	6687957	GROUP, ROTATING	LH rotation		1
2	6687977	GROUP, ROTARY	rotary W/valve plate (6687976)		1
2		GROUP, ROTARY	NLA - rotary only - Was 6687979 [A]		1
2	6687976	PLATE	valve		1
3	6687951	SWASHPLATE			1
4	6687940	PLATE			1
5	6687959	SHAFT			1
6	6687930	WIRE			2
7	6687956	2 HALF BEARINGS			1
8	6688018	BEARING			1
9	6687987	2 HALF BEARINGS			1
10	6687999	RING, SNAP			1
11	6671741	SNAP RING	Was 6688042 [A]		2
12	6671742	SEAL, SHAFT			1

Page 171 - OSS# 6300202494 - All rights reserved by Bobcat Company - 02/11/2016 - 14:15:02 - Produced by Ken Cook Co. with media1off

HYDROSTATIC PUMP
(Rotary Group) (RH) (Selectable Joystick Controls) (R902095064)

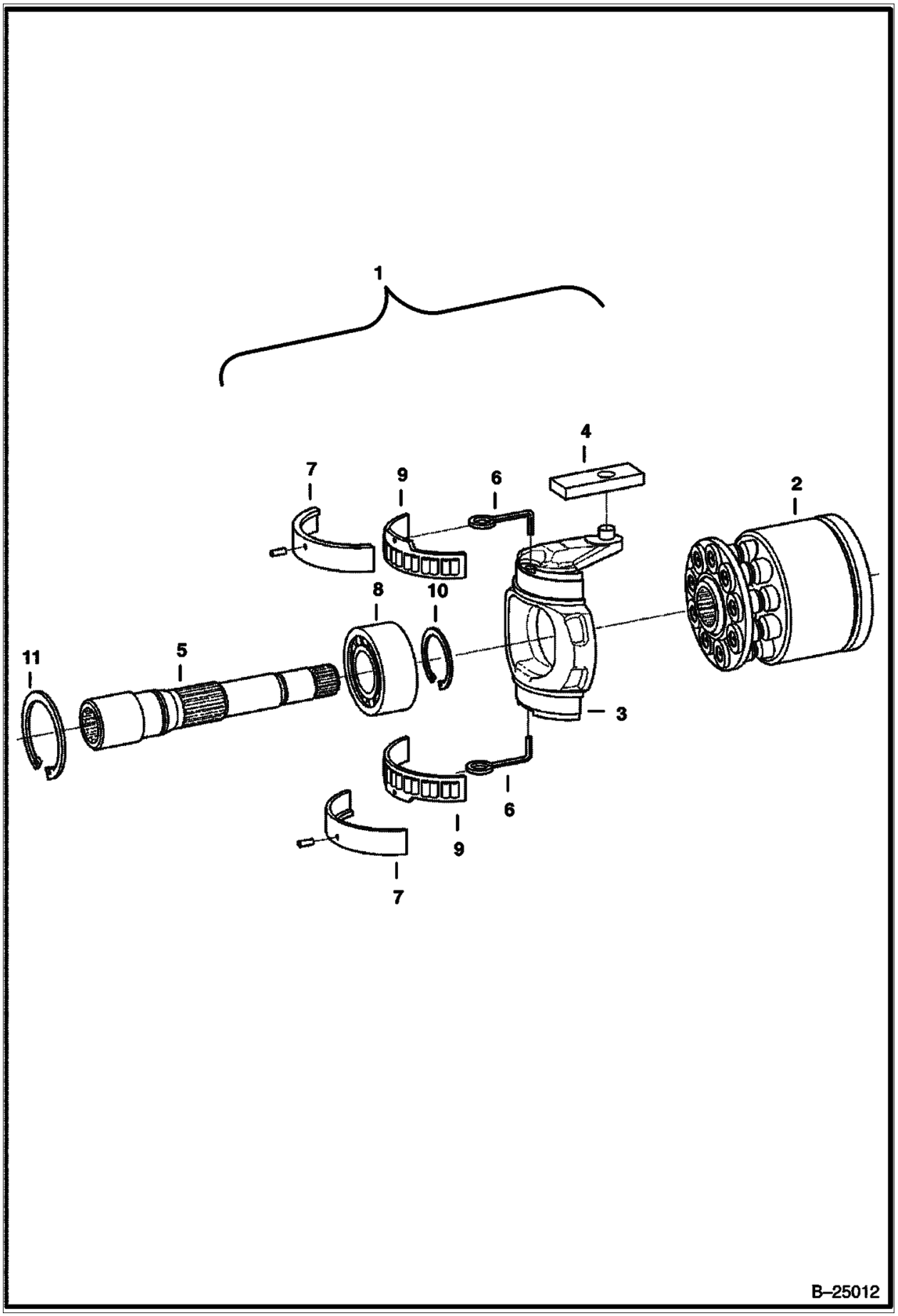

Illustration B25012

Model S160 K
6904270

Page 172 - OSS# 6300202494 - All rights reserved by Bobcat Company - 02/11/2016 - 14:15:02 - Produced by Ken Cook Co. with mediaoff

HYDROSTATIC PUMP (Cont'd)
(Rotary Group) (RH) (Selectable Joystick Controls) (R902095064)

Ref No	Part Number	Description	Remarks	Serial Number	Qty
1	6687958	GROUP	RH rotation		1
2	6687978	GROUP	rotary W/valve plate (6687975)		1
2		GROUP, ROTARY	NLA - rotary only - Was 6687979 [A]		1
2	6687975	PLATE	valve		1
3	6687951	SWASHPLATE			1
4	6687940	PLATE			1
5	6687943	SHAFT			1
6	6687930	WIRE			2
7	6687956	2 HALF BEARINGS			1
8	6688018	BEARING			1
9	6687987	2 HALF BEARINGS			1
10	6687999	RING, SNAP			1
11	6671741	SNAP RING	Was 6688042 [A]		2

Page 173 - OSS# 6300202494 - All rights reserved by Bobcat Company - 02/11/2016 - 14:15:02 - Produced by Ken Cook Co. with media1off

HYDROSTATIC PUMP
(Control) (LH) (Selectable Joystick Controls) (R902095064)

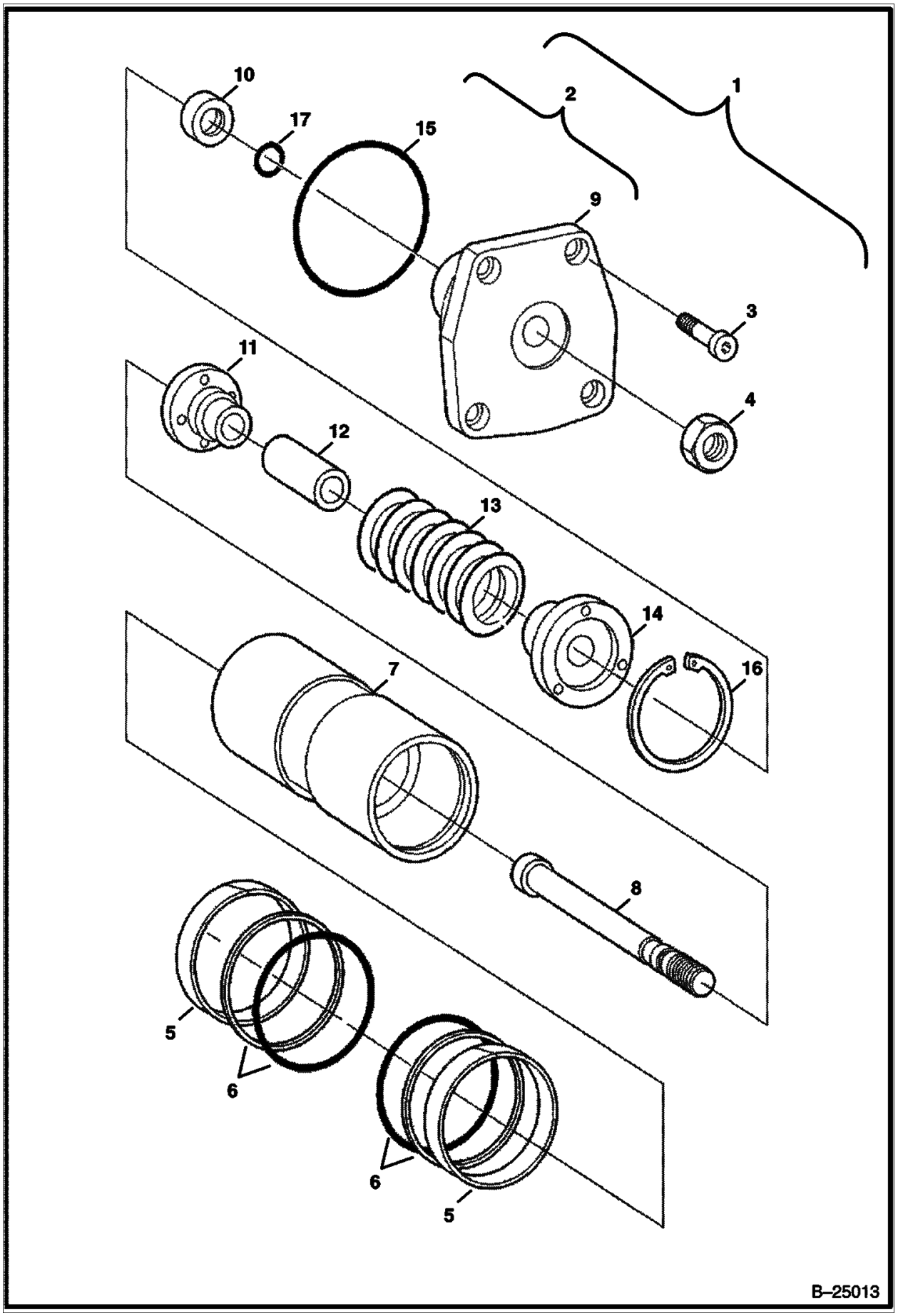

Illustration B25013

Model S160 K
6904270

Page 174 - OSS# 6300202494 - All rights reserved by Bobcat Company - 02/11/2016 - 14:15:02 - Produced by Ken Cook Co. with mediaoff

HYDROSTATIC PUMP (Cont'd)
(Control) (LH) (Selectable Joystick Controls) (R902095064)

Ref No	Part Number	Description	Remarks	Serial Number	Qty
1	6687960	CONTROL			1
2	6687962	PISTON			1
3	6682968	SCREW	Was 6687995 [A]		4
4	6674907	NUT			1
5	6687985	RING			2
6	6687986	KIT			2
7		PISTON	NLA - Order 6687961 - Was 6687953 [A]		1
8	6688031	ROD			1
9	6671760	COVER	Was 6688024 [A]		1
10	6688037	RING	6,70 mm		1
10	6682902	RING 6 75MM	6,75 mm - Was 6688036 [A]		1
10	6682901	RING 6 80MM	6,80 mm - Was 6688035 [A]		1
10	6688025	RING	6,85 mm		1
10	6688026	RING	6,90 mm		1
10	6688027	RING	6,95 mm		1
10	6688028	RING	7,00 mm		1
10	6671803	RING 7.05	7,05 mm - Was 6688029 [A]		1
10	6688030	RING	7,10 mm		1
11	6687926	COLLAR			1
12	6688033	SPACER	54,60 cm		1
12	6687942	SPACER	54,65 cm		1
12	6688032	SPACER	54,70 cm		1
12	6687948	SPACER	54,75 cm		1
12	6687949	SPACER	54,80 cm		1
13	6687928	SPRING			1
14	6674215	COLLAR	Was 6687927 [A]		1
15	6688005	SEAL			1
16	6688002	RING			1
17	6682913	O-RING	Was 6688006 [A]		1

Page 175 - OSS# 6300202494 - All rights reserved by Bobcat Company - 02/11/2016 - 14:15:02 - Produced by Ken Cook Co. with media1off

HYDROSTATIC PUMP
(Control) (RH) (Selectable Joystick Controls) (R902095064)

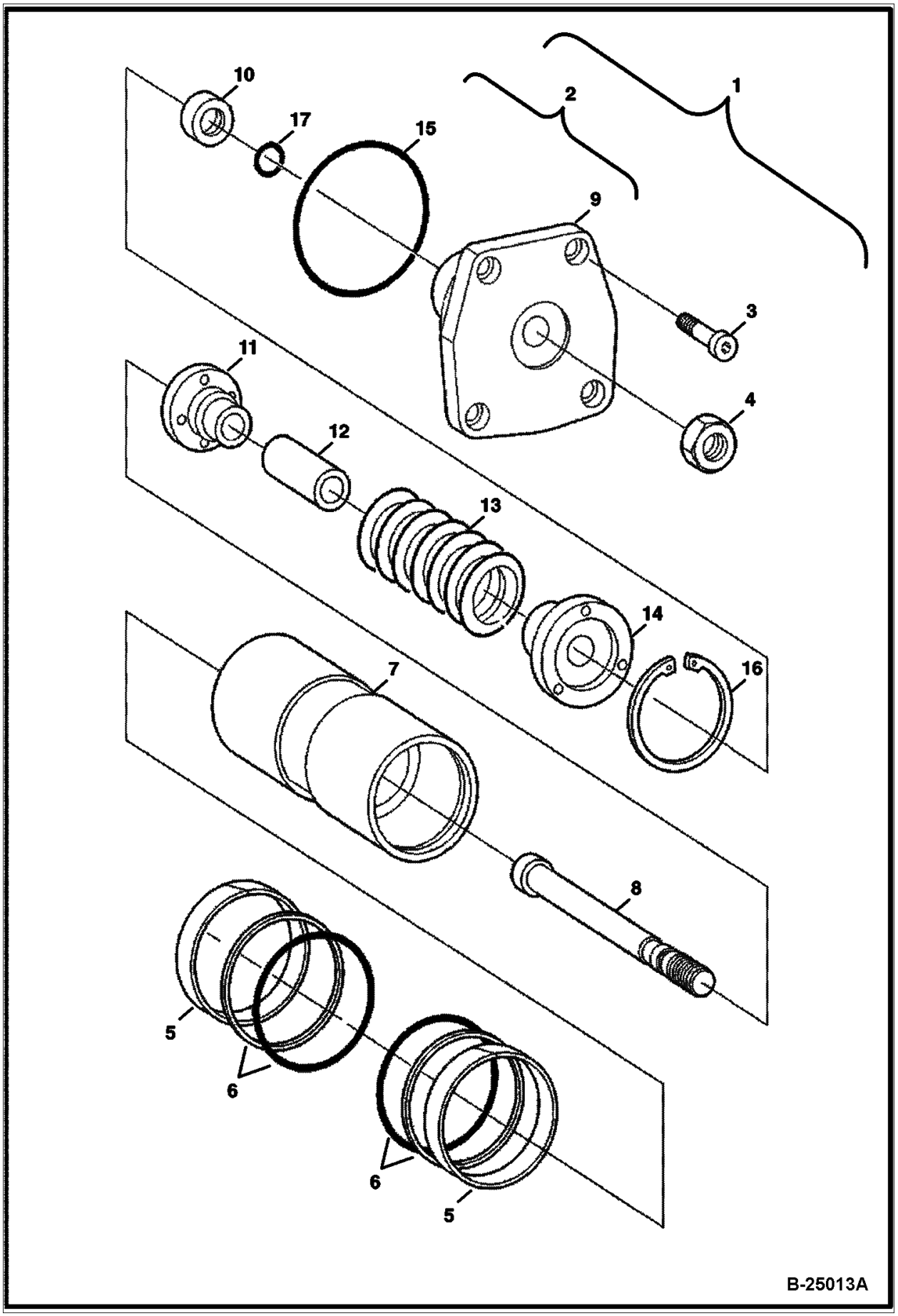

Illustration B25013A

Model S160 K
6904270

Page 176 - OSS# 6300202494 - All rights reserved by Bobcat Company - 02/11/2016 - 14:15:02 - Produced by Ken Cook Co. with mediaoff

HYDROSTATIC PUMP (Cont'd)
(Control) (RH) (Selectable Joystick Controls) (R902095064)

Ref No	Part Number	Description	Remarks	Serial Number	Qty
1	6687961	CONTROL			1
2	6687963	PISTON			1
3	6682968	SCREW	Was 6687995 [A]		4
4	6674907	NUT			1
5	6687985	RING			2
6	6687986	KIT			2
7	6687953	PISTON			1
8	6688031	ROD			1
9	6671760	COVER	Was 6688024 [A]		1
10	6688037	RING	6,70 mm		1
10	6682902	RING 6 75MM	6,75 mm - Was 6688036 [A]		1
10	6682901	RING 6 80MM	6,80 mm - Was 6688035 [A]		1
10	6688025	RING	6,85 mm		1
10	6688026	RING	6,90 mm		1
10	6688027	RING	6,95 mm		1
10	6688028	RING	7,00 mm		1
10	6671803	RING 7.05	7,05 mm - Was 6688029 [A]		1
10	6688030	RING	7,10 mm		1
11	6687926	COLLAR			1
12	6688033	SPACER	54,60 cm		1
12	6687942	SPACER	54,65 cm		1
12	6688032	SPACER	54,70 cm		1
12	6687948	SPACER	54,75 cm		1
12	6687949	SPACER	54,80 cm		1
13	6687928	SPRING			1
14	6674215	COLLAR	Was 6687927 [A]		1
15	6688005	SEAL			1
16	6688002	RING			1
17	6682913	O-RING	Was 6688006 [A]		1

Page 177 - OSS# 6300202494 - All rights reserved by Bobcat Company - 02/11/2016 - 14:15:02 - Produced by Ken Cook Co. with media1off

HYDROSTATIC PUMP
(Control Module) (Selectable Joystick Controls) (R902095064)

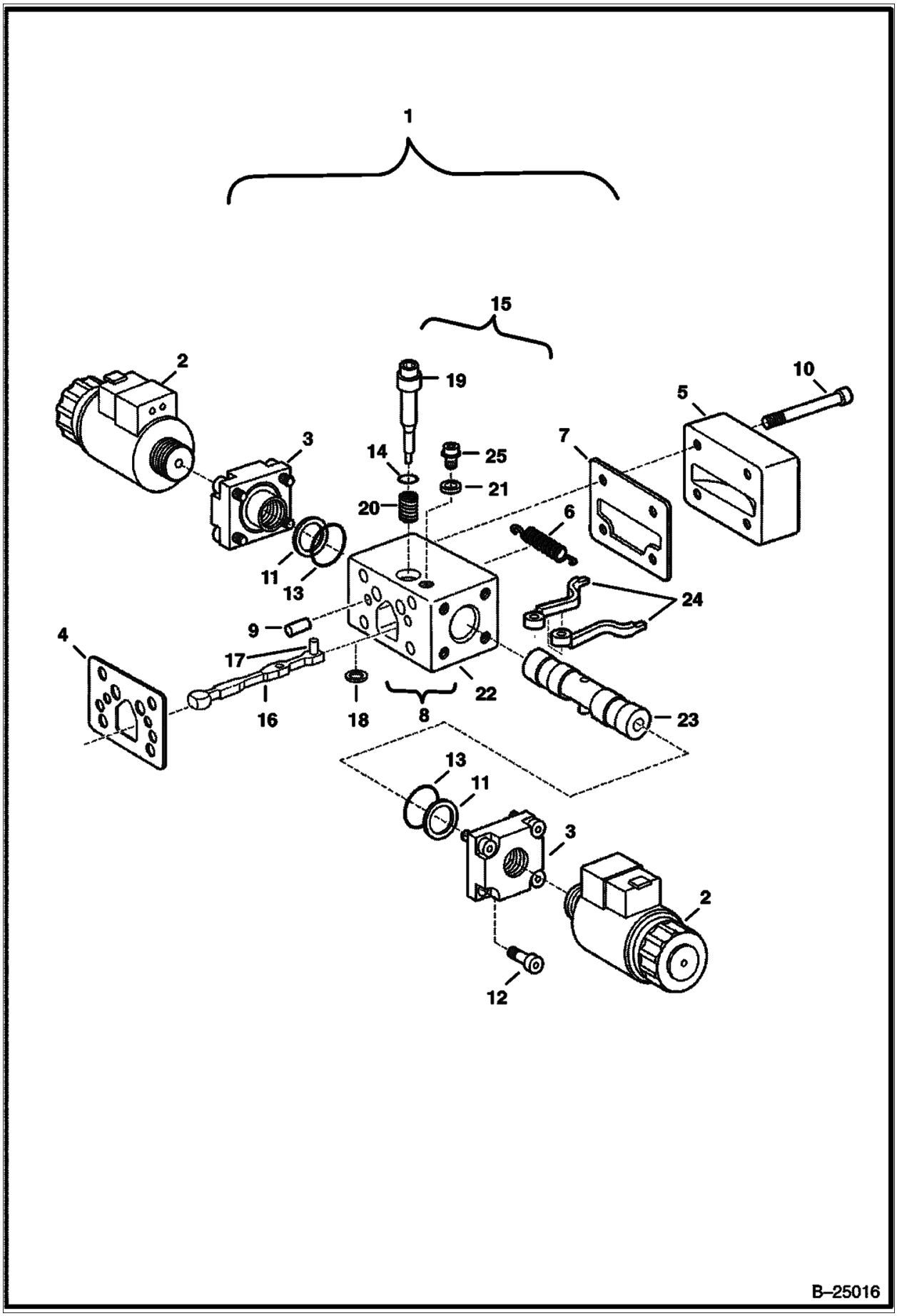

Illustration B25016

Model S160 K
6904270

Page 178 - OSS# 6300202494 - All rights reserved by Bobcat Company - 02/11/2016 - 14:15:02 - Produced by Ken Cook Co. with mediaoff

HYDROSTATIC PUMP (Cont'd)
(Control Module) (Selectable Joystick Controls) (R902095064)

Ref No	Part Number	Description	Remarks	Serial Number	Qty
1	6687970	MODULATOR	Ref. 2-25		2
2	6687989	SOLENOID			2
3	6687931	BUSHING			2
4	6687954	GASKET			1
5	6687969	COVER			1
6	6687967	SPRING			1
7	6687950	GASKET			1
8		MODULE	NLA - Order components - Ref. 15-18 - Was 6687972 [A]		1
9	6688010	PIN			2
10	6671725	BOLT	Was 6687996 [A]		4
11	6687982	SPRING			2
12	6687997	SCREW			8
13	6688001	SEAL			2
14	6688004	SEAL			1
15		ROLLER	NLA - Ref. 14 & 19-25 - Order components - Was 6687971 [A]		1
16	6687929	LEVER			1
17	6688012	ROLLER			1
18	6687944	SHIM	0,60 mm		1
18	6687933	SHIM	0,80 mm		1
18	6687934	SHIM	1,00 mm		1
18	6687935	SHIM	1,20 mm		1
18	6687936	SHIM	1,40 mm		1
18	6687937	SHIM	1,60 mm		1
19	6687947	PIN			1
20	6687946	SPRING			1
21	6687945	PLATE			1
22	6687955	HOUSING			1
23	6687966	PISTON			1
24	6687968	LEVER			2
25	6687981	SCREW			1

Page 179 - OSS# 6300202494 - All rights reserved by Bobcat Company - 02/11/2016 - 14:15:02 - Produced by Ken Cook Co. with media1off

HYDROSTATIC PUMP
(High Pressure Relief Valve) (Selectable Joystick Controls)
(R902095064)

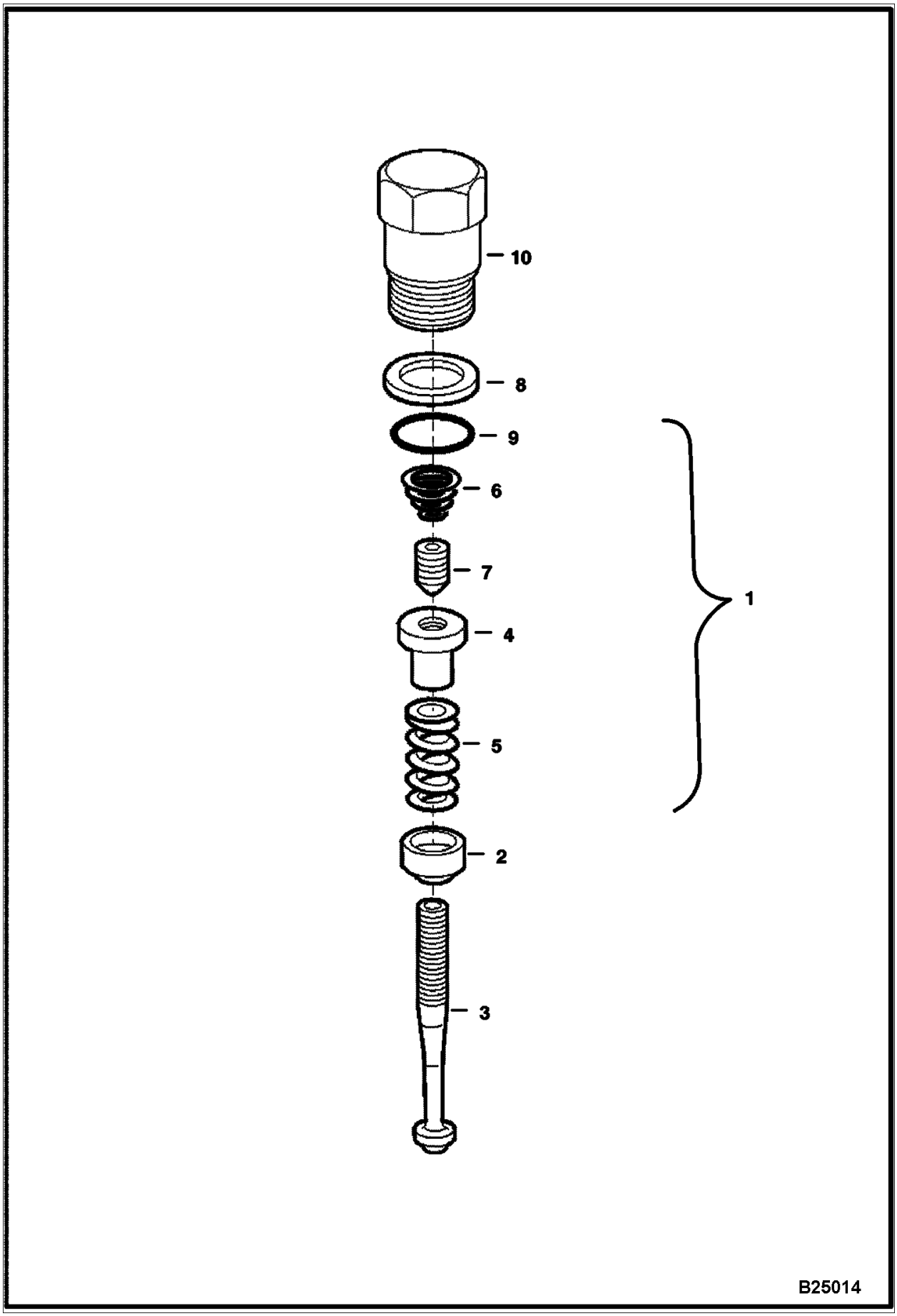

Illustration B25014

Model S160 K
6904270

Page 180 - OSS# 6300202494 - All rights reserved by Bobcat Company - 02/11/2016 - 14:15:02 - Produced by Ken Cook Co. with mediaIoff

HYDROSTATIC PUMP (Cont'd)
(High Pressure Relief Valve) (Selectable Joystick Controls) (R902095064)

Ref No	Part Number	Description	Remarks	Serial Number	Qty
1	6692332	VALVE,RELIEF	preset at 350 bar - Was 6687924 [A]		1
2	6687921	COLLAR			1
3	6967523	SPINDLE	Was 6687920 [A]		1
4		NUT	NLA - Was 6687922 [A]		1
5	6967525	SPRING	Was 6688043 [A]		1
6	6967526	SPRING	Was 6688021 [A]		1
7	6967527	PIN	Was 6687923 [A]		1
8	6682930	RING, BACK-UP	Was 6688041 [A]		1
9	6682929	O-RING	Was 6688000 [A]		1
10	6688034	SCREW			1

Page 181 - OSS# 6300202494 - All rights reserved by Bobcat Company - 02/11/2016 - 14:15:02 - Produced by Ken Cook Co. with mediaioff

HYDROSTATIC PUMP
(Charge Pressure Relief Valve) (Selectable Joystick Controls)
(R902095064)

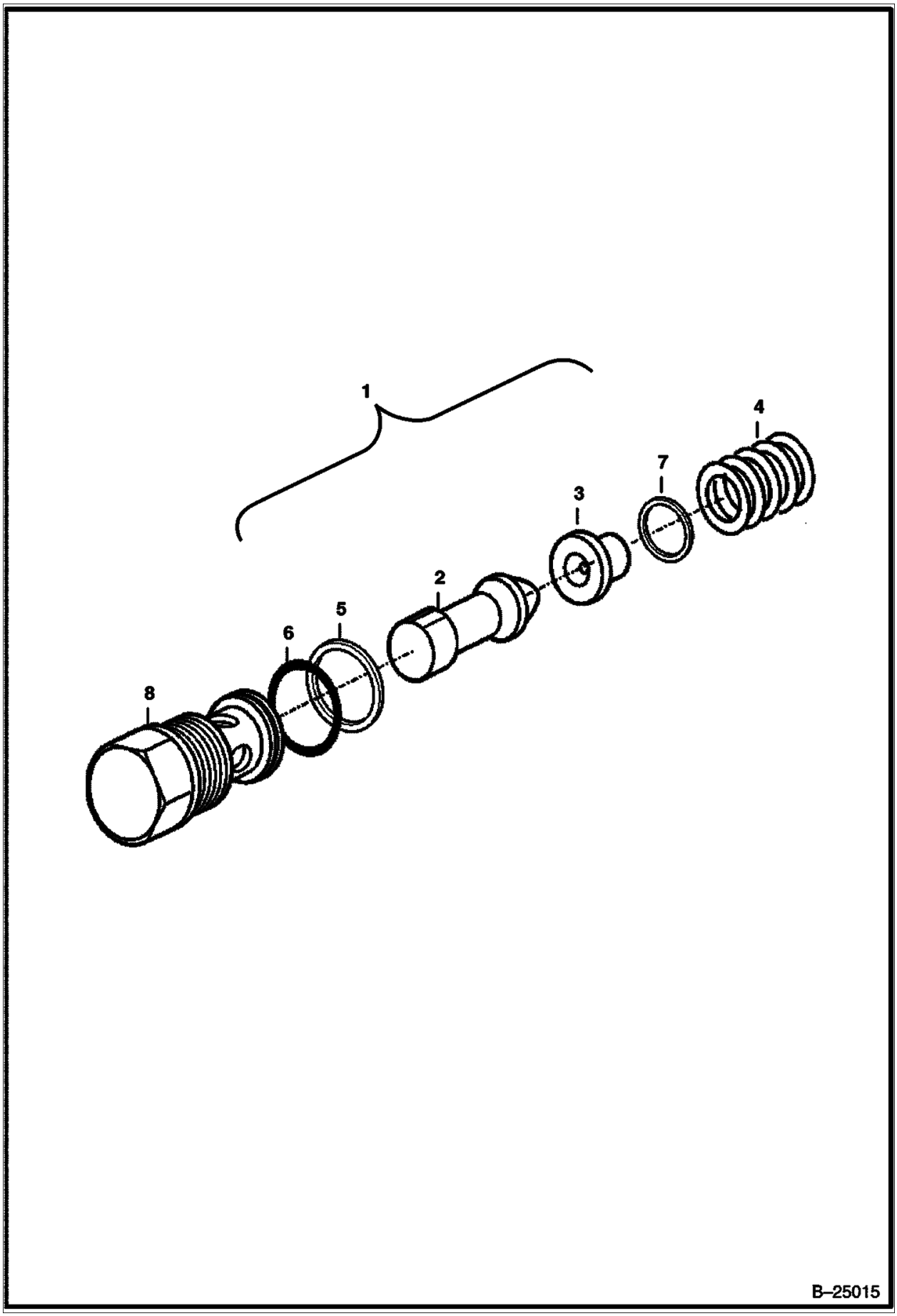

Illustration B25015

Model S160 K
6904270

Page 182 - OSS# 6300202494 - All rights reserved by Bobcat Company - 02/11/2016 - 14:15:02 - Produced by Ken Cook Co. with mediaoff

HYDROSTATIC PUMP (Cont'd)
(Charge Pressure Relief Valve) (Selectable Joystick Controls) (R902095064)

Ref No	Part Number	Description	Remarks	Serial Number	Qty
1	6687938	VALVE			1
2	6967534	PISTON	Was 6688022 [A]		1
3	6967535	COLLAR	Was 6687919 [A]		1
4	6967536	SPRING	Was 6688023 [A]		1
5		RING	NLA - Was 6687983 [A]		1
6	6682936	O-RING	Was 6688013 [A]		1
7	6688017	SHIM	0,3 mm		1
7	6967539	SHIM	0.5 mm - Was 7008766 [A]		1
7	7008767	SHIM	1.0 mm		1
8		SCREW	NLA - Was 6687939 [A]		1

Page 183 - OSS# 6300202494 - All rights reserved by Bobcat Company - 02/11/2016 - 14:15:02 - Produced by Ken Cook Co. with media1off

HYDROSTATIC PUMP
(Selectable Joystick Controls) (R902136745)

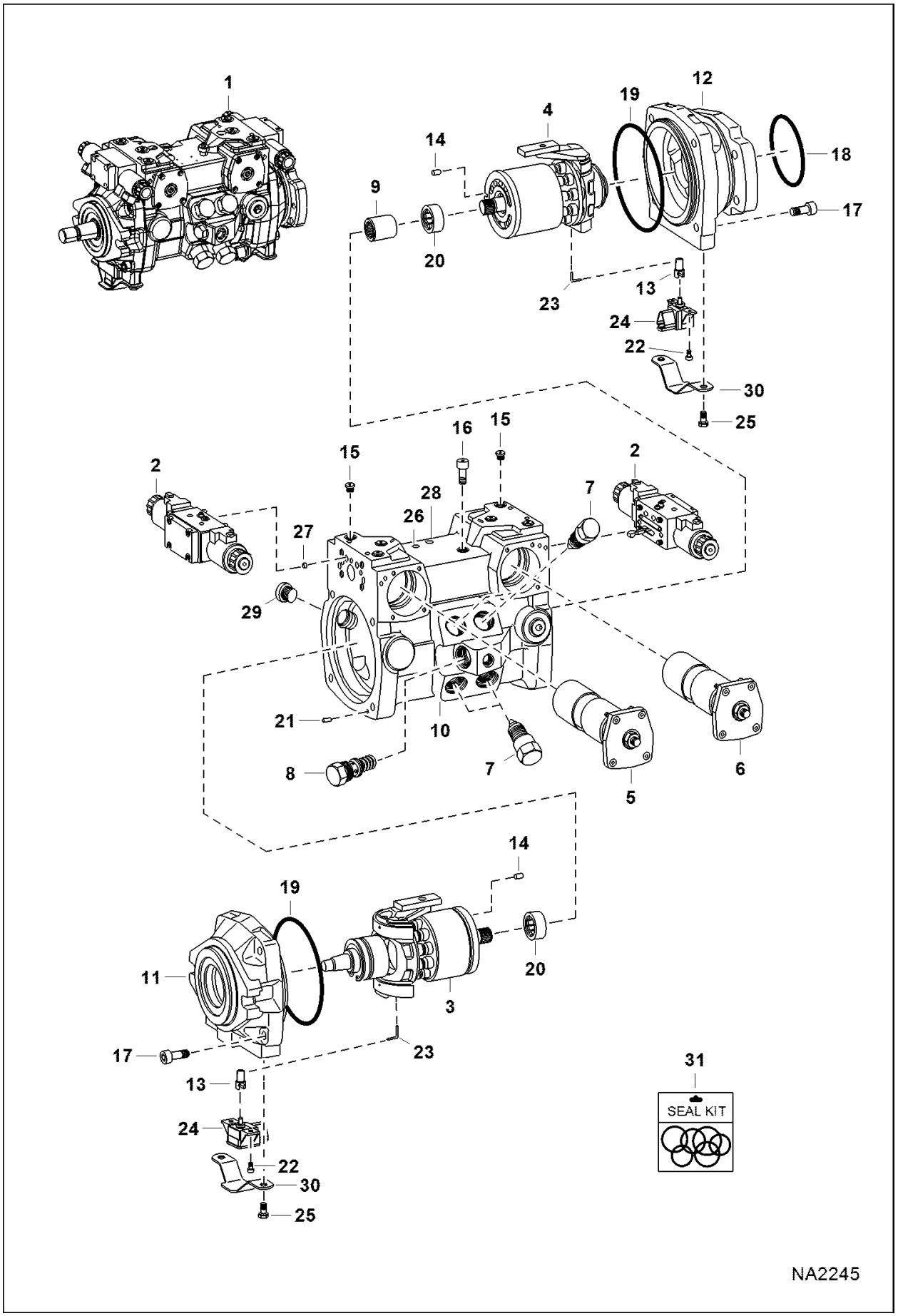

Illustration NA2245

Model S160 K
6904270

Page 184 - OSS# 6300202494 - All rights reserved by Bobcat Company - 02/11/2016 - 14:15:02 - Produced by Ken Cook Co. with mediaoff

HYDROSTATIC PUMP (Cont'd)
(Selectable Joystick Controls) (R902136745)

Ref No	Part Number	Description	Remarks	Serial Number	Qty
1		PUMP, HYD TANDEM	NLA - Model R902136745 - Order 7023794 - Was 7170197 [A]		1
1	7023794	PUMP, HYD TANDEM W/O GEAR PUMP	See Illustration HYDROSTATIC PUMP / NA8538 Model 902202746		1
2	7008109	MODULE, CONTROL	See Illustration HYDROSTATIC PUMP / B25016A		2
3	7008807	GROUP, ROTATING	See Illustration HYDROSTATIC PUMP / B25011A LH rotation		1
4	7008106	GROUP ROTATING RH	See Illustration HYDROSTATIC PUMP / B25012A RH rotation		1
5	7008107	CONTROL	See Illustration HYDROSTATIC PUMP / B25013B		1
6	7008108	CONTROL	See Illustration HYDROSTATIC PUMP / B25013C		1
7	7008124	VALVE, RELIEF	See Illustration HYDROSTATIC PUMP / B25014A preset at 350 bar		4
8	6687938	VALVE	See Illustration HYDROSTATIC PUMP / B25015A pressure relief 15-30 bar		1
9	6687941	COUPLER			1
10	7008110	HOUSING	W/Ref16		1
11	7008111	FLANGE, LH			1
12	7008112	FLANGE, RH			1
13	7008113	SHAFT			2
14	6688011	PIN			2
15	6682875	PLUG	Was 6688016 [A]		11
16	6682879	PIN	- Was 6688039 [A]		3
17	6688008	SCREW			8
18	6682949	O-RING	Was 6688019 [A]		1
19	6688009	SEAL			2
20	6688040	BEARING			2
21	6686934	PIN			2
22	7008114	SCREW			4
23	6688014	PIN			2
24	7008115	SENSOR	triangle connector		2
25	6688003	SCREW			4
26	6687932	PIN			2
27	7008116	FILTER			6
28	6688015	SCREW			1
29	6687992	SCREW			1
30	7010227	COVER			2
31	6689021	SEAL KIT			1

Page 185 - OSS# 6300202494 - All rights reserved by Bobcat Company - 02/11/2016 - 14:15:02 - Produced by Ken Cook Co. with media1off

HYDROSTATIC PUMP
(Rotary Group) (LH) (Selectable Joystick Controls) (R902136745)

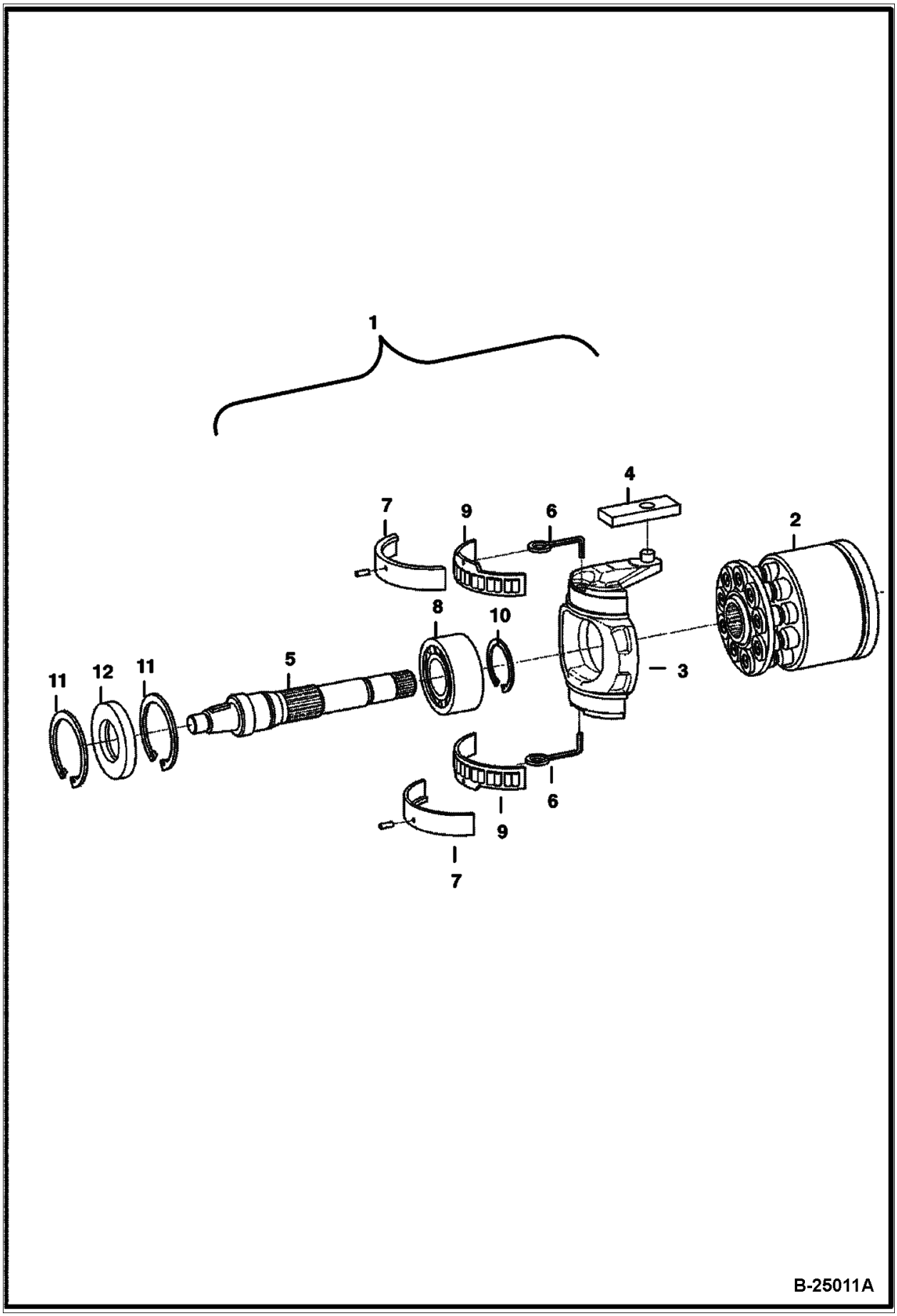

Illustration B25011A

Model S160 K
6904270

Page 186 - OSS# 6300202494 - All rights reserved by Bobcat Company - 02/11/2016 - 14:15:02 - Produced by Ken Cook Co. with mediaoff

HYDROSTATIC PUMP (Cont'd)
(Rotary Group) (LH) (Selectable Joystick Controls) (R902136745)

Ref No	Part Number	Description	Remarks	Serial Number	Qty
1	7008807	GROUP, ROTATING	LH rotation		1
2		GROUP, ROTARY	NLA - rotary W/valve plate 6687976 - Was 6687979 [A]		1
2	6693869	GROUP, ROTARY	rotary only		1
2	6687976	PLATE	valve		1
3	7008117	SWASHPLATE			1
4	6687940	PLATE			1
5	6687959	SHAFT			1
6	6687930	WIRE			2
7	6687956	2 HALF BEARINGS			1
8	6688018	BEARING			1
9	7008118	BEARING			1
10	6687999	RING, SNAP			1
11	6671741	SNAP RING			2
12	6693876	SEAL, SHAFT			1

Page 187 - OSS# 6300202494 - All rights reserved by Bobcat Company - 02/11/2016 - 14:15:02 - Produced by Ken Cook Co. with mediaioff

HYDROSTATIC PUMP
(Rotary Group) (RH) (Selectable Joystick Controls) (R902136745)

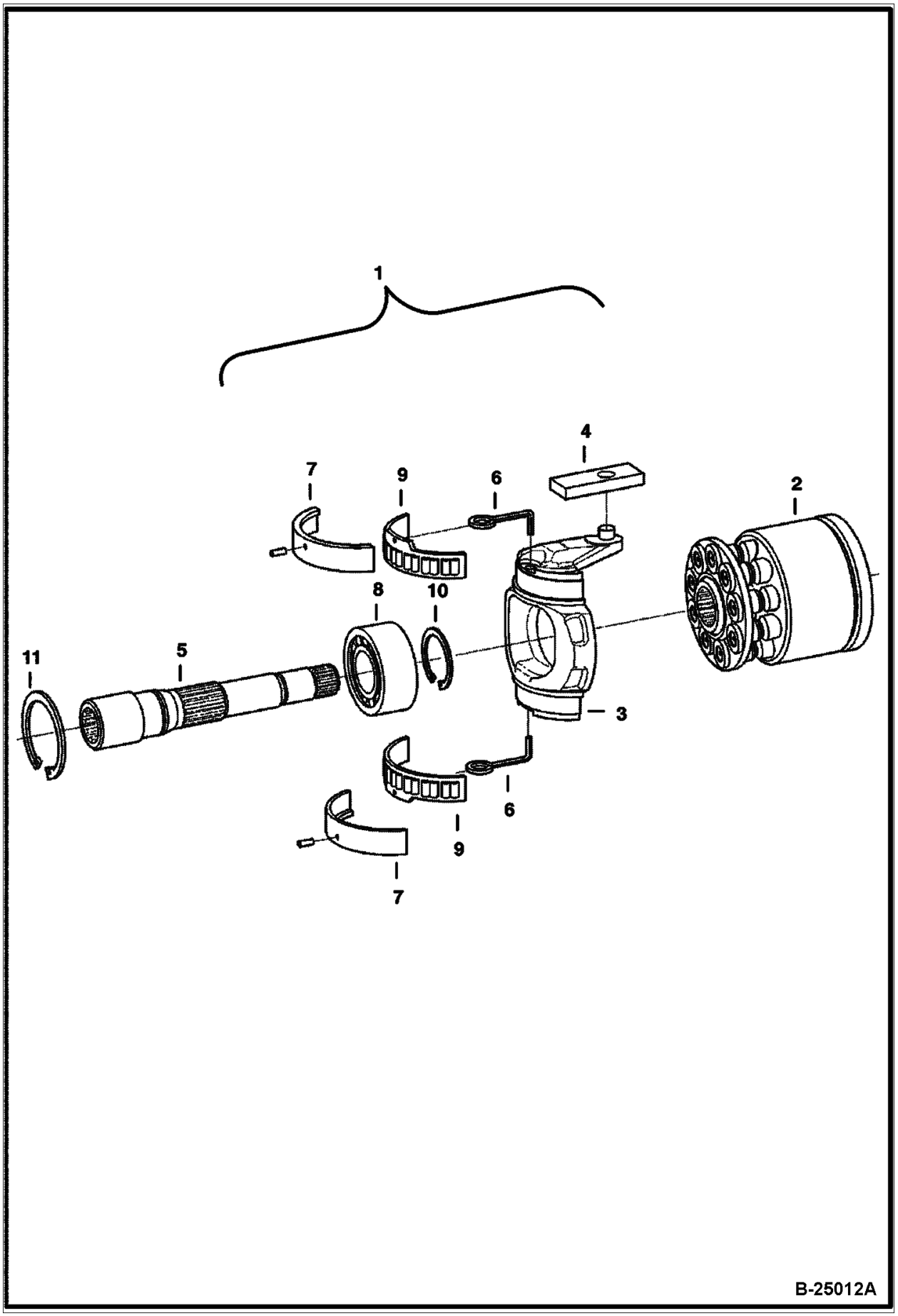

Illustration B25012A

Model S160 K
6904270

Page 188 - OSS# 6300202494 - All rights reserved by Bobcat Company - 02/11/2016 - 14:15:02 - Produced by Ken Cook Co. with mediaoff

HYDROSTATIC PUMP (Cont'd)
(Rotary Group) (RH) (Selectable Joystick Controls) (R902136745)

Ref No	Part Number	Description	Remarks	Serial Number	Qty
1	7008106	GROUP ROTATING RH	RH rotation		1
2	6687978	GROUP	rotary W/valve plate (6687975)		1
2	6693869	GROUP, ROTARY	rotary only		1
2	6687975	PLATE	valve		1
3	7008117	SWASHPLATE			1
4	6687940	PLATE			1
5	6687943	SHAFT			1
6	6687930	WIRE			2
7	6687956	2 HALF BEARINGS			1
8	6688018	BEARING			1
9	7008118	BEARING			1
10	6687999	RING, SNAP			1
11	6671741	SNAP RING			2

Page 189 - OSS# 6300202494 - All rights reserved by Bobcat Company - 02/11/2016 - 14:15:02 - Produced by Ken Cook Co. with mediaioff

HYDROSTATIC PUMP
(Control) (R902136745)

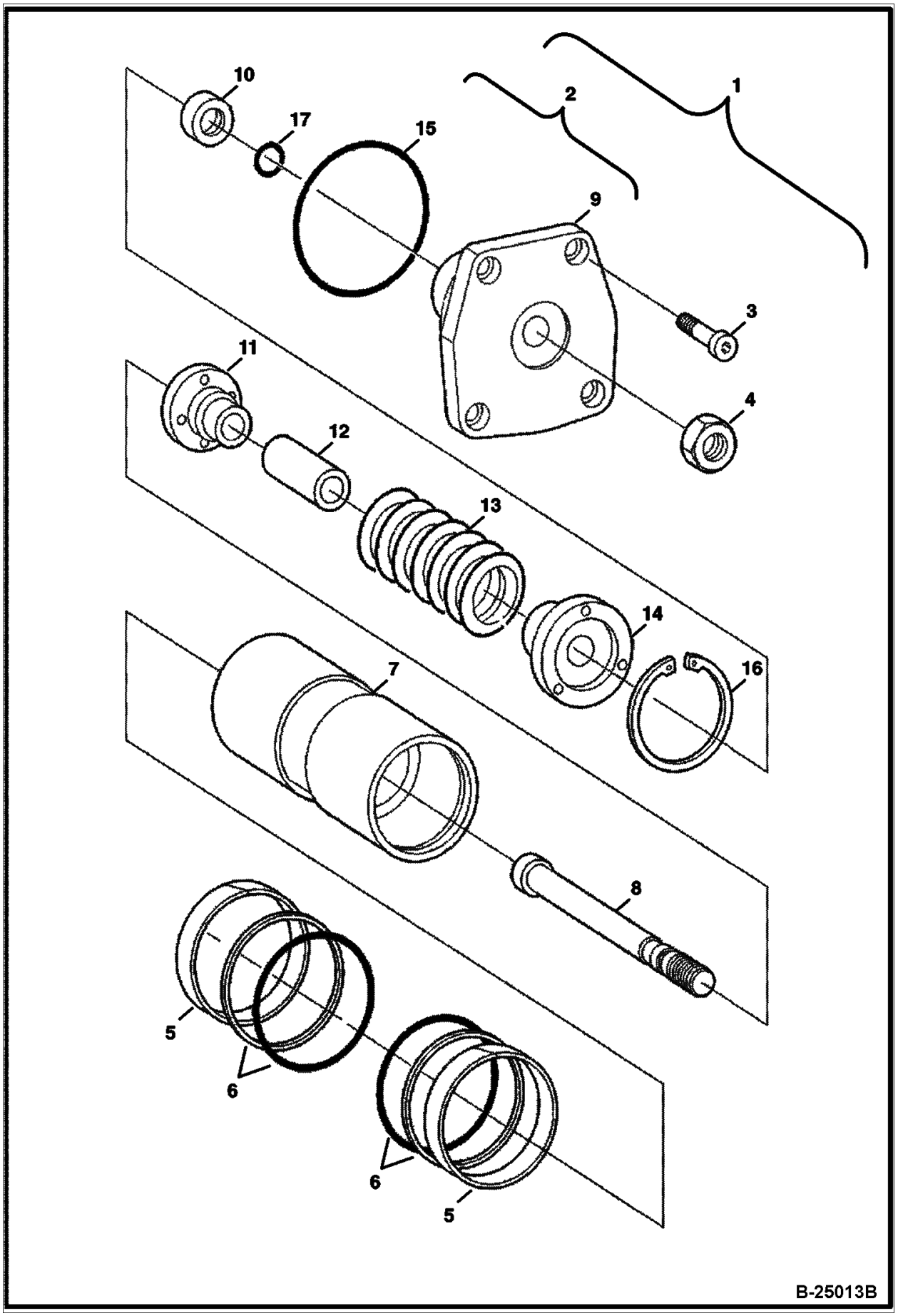

Illustration B25013B

Model S160 K
6904270

Page 190 - OSS# 6300202494 - All rights reserved by Bobcat Company - 02/11/2016 - 14:15:02 - Produced by Ken Cook Co. with mediaoff

HYDROSTATIC PUMP (Cont'd)
(Control) (R902136745)

Ref No	Part Number	Description	Remarks	Serial Number	Qty
1	7008107	CONTROL			1
2	6687962	PISTON			1
3	6682968	SCREW			4
4	6674907	NUT			1
5	7008119	RING			2
6	6687986	KIT			2
7		PISTON	NLA - Order 6687961 - Was 6687953 [A]		1
8	6688031	ROD			1
9	6671760	COVER			1
10	6688037	RING	6,70 mm		1
10	6682902	RING 6 75MM	6,75 mm		1
10	6682901	RING 6 80MM	6,80 mm		1
10	6688025	RING	6,85 mm		1
10	6688026	RING	6,90 mm		1
10	6688027	RING	6,95 mm		1
10	6688028	RING	7,00 mm		1
10	6671803	RING 7.05	7,05 mm		1
10	6688030	RING	7,10 mm		1
11	6687926	COLLAR			1
12	6688033	SPACER	54,60 cm		1
12	6687942	SPACER	54,65 cm		1
12	6688032	SPACER	54,70 cm		1
12	6687948	SPACER	54,75 cm		1
12	6687949	SPACER	54,80 cm		1
13	6687928	SPRING			1
14	6674215	COLLAR			1
15	6688005	SEAL			1
16	6688002	RING			1
17	6682913	O-RING			1

Page 191 - OSS# 6300202494 - All rights reserved by Bobcat Company - 02/11/2016 - 14:15:02 - Produced by Ken Cook Co. with media1off

HYDROSTATIC PUMP
(Control) (R902136745)

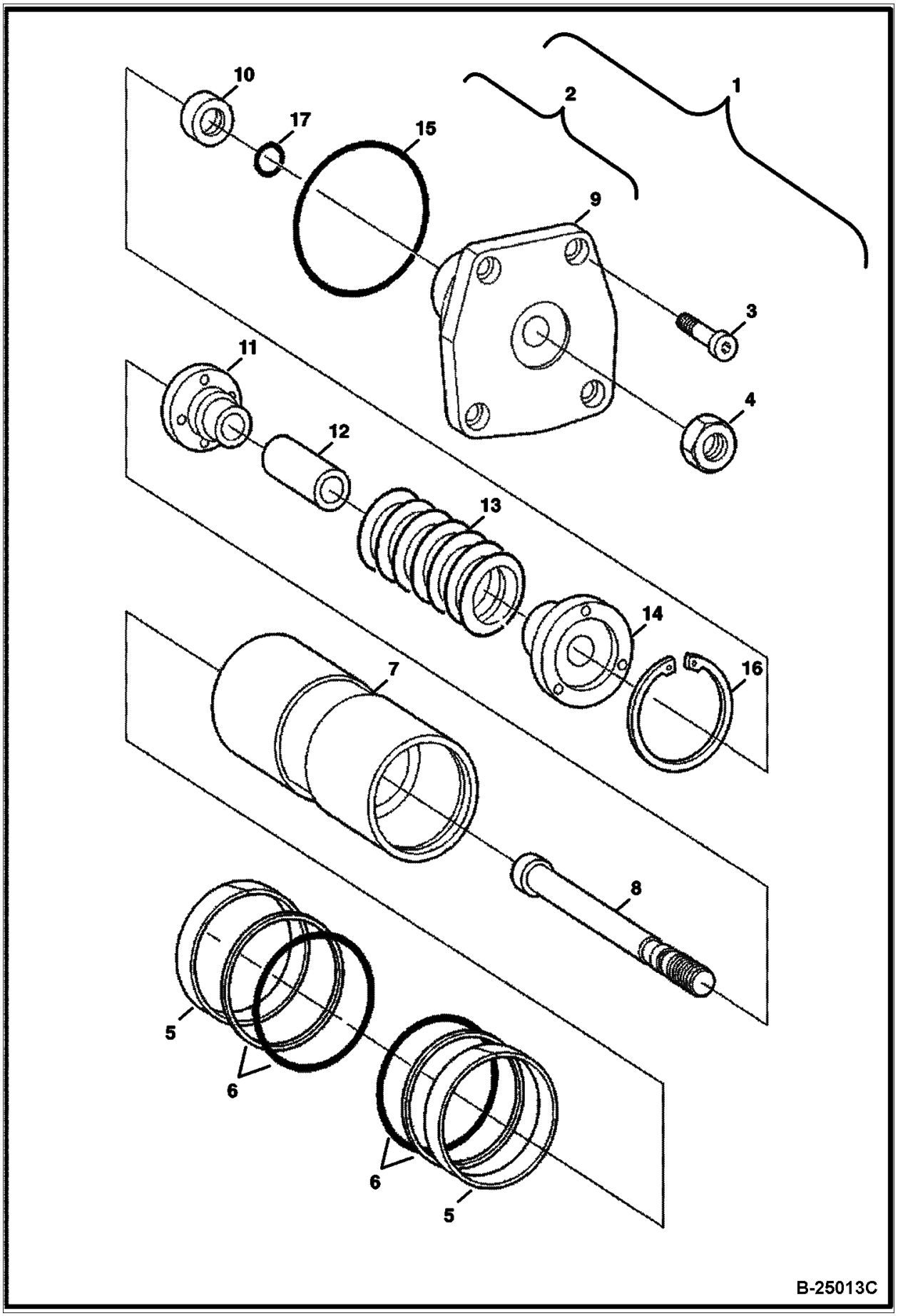

Illustration B25013C

Model S160 K
6904270

Page 192 - OSS# 6300202494 - All rights reserved by Bobcat Company - 02/11/2016 - 14:15:02 - Produced by Ken Cook Co. with mediaoff

HYDROSTATIC PUMP (Cont'd)
(Control) (R902136745)

Ref No	Part Number	Description	Remarks	Serial Number	Qty
1	7008108	CONTROL			1
2	6687963	PISTON			1
3	6682968	SCREW			4
4	6674907	NUT			1
5	7008119	RING			2
6	6687986	KIT			2
7		PISTON	NLA - Order 7008108 - Was 6687952 [A]		1
8	6688031	ROD			1
9	6671760	COVER			1
10	6688037	RING	6,70 mm		1
10	6682902	RING 6 75MM	6,75 mm		1
10	6682901	RING 6 80MM	6,80 mm		1
10	6688025	RING	6,85 mm		1
10	6688026	RING	6,90 mm		1
10	6688027	RING	6,95 mm		1
10	6688028	RING	7,00 mm		1
10	6671803	RING 7.05	7,05 mm		1
10	6688030	RING	7,10 mm		1
11	6687926	COLLAR			1
12	6688033	SPACER	54,60 cm		1
12	6687942	SPACER	54,65 cm		1
12	6688032	SPACER	54,70 cm		1
12	6687948	SPACER	54,75 cm		1
12	6687949	SPACER	54,80 cm		1
13	6687928	SPRING			1
14	6674215	COLLAR			1
15	6688005	SEAL			1
16	6688002	RING			1
17	6682913	O-RING			1

Page 193 - OSS# 6300202494 - All rights reserved by Bobcat Company - 02/11/2016 - 14:15:02 - Produced by Ken Cook Co. with media1off

HYDROSTATIC PUMP
(Control Module) (Selectable Joystick Controls) (R902136745)

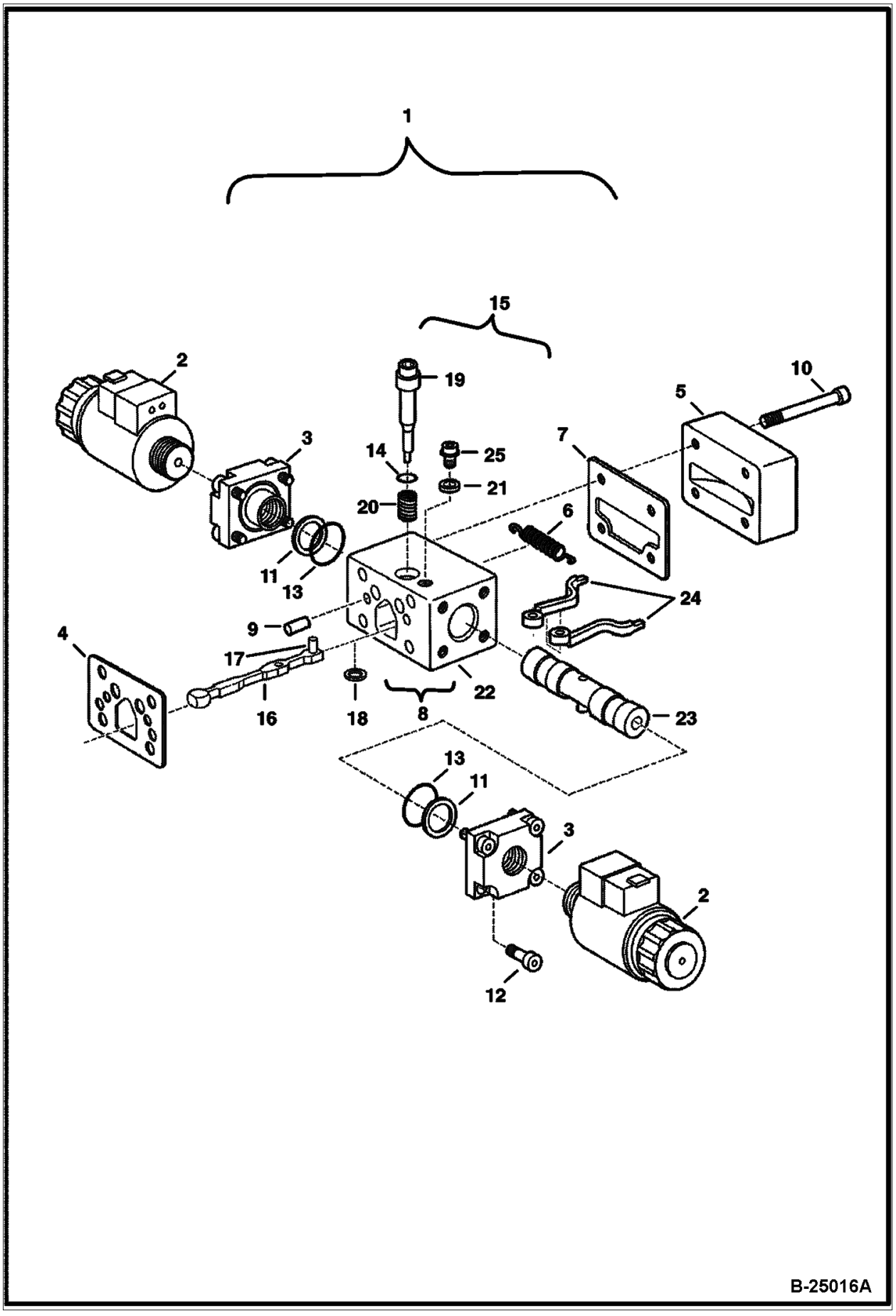

Illustration B25016A

Model S160 K
6904270

Page 194 - OSS# 6300202494 - All rights reserved by Bobcat Company - 02/11/2016 - 14:15:02 - Produced by Ken Cook Co. with mediaoff

HYDROSTATIC PUMP (Cont'd)
(Control Module) (Selectable Joystick Controls) (R902136745)

Ref No	Part Number	Description	Remarks	Serial Number	Qty
1	7008109	MODULE, CONTROL	Ref. 2-25		2
2	6697960	SOLENOID			2
3	6687931	BUSHING			2
4	7008806	GASKET	Was 7008121 [A]		1
5	7008122	COVER			1
6	6687967	SPRING			1
7	7008123	GASKET			1
8		MODULE	NLA - Ref. 15-18 - Order components - Was 7008120 [A]		1
9	6688010	PIN			2
10	6671725	BOLT	Was 6687996 [A]		4
11	6687982	SPRING			2
12	6687997	SCREW			8
13	6688001	SEAL			2
14	6688004	SEAL			1
15		ROLLER	NLA - Ref. 14 & 19-25 - Order components - Was 6687971 [A]		1
16	6687929	LEVER			1
17	6688012	ROLLER			1
18	6687944	SHIM	0,60 mm		1
18	6687933	SHIM	0,80 mm		1
18	6687934	SHIM	1,00 mm		1
18	6687935	SHIM	1,20 mm		1
18	6687936	SHIM	1,40 mm		1
18	6687937	SHIM	1,60 mm		1
19		PIN	NLA - Order 7008109 - Was 7008805 [A]		1
20	6687946	SPRING			1
21	6687945	PLATE			1
22		HOUSING	NLA - Order assembly - Was 7008803 [A]		1
23		PISTON	NLA - Order 7008109 - W/Ref. 19 (7008805 pin) - Was 7008804 [A]		1
24	6687968	LEVER			2
25	6687981	SCREW			1

Page 195 - OSS# 6300202494 - All rights reserved by Bobcat Company - 02/11/2016 - 14:15:02 - Produced by Ken Cook Co. with media1off

HYDROSTATIC PUMP
(High Pressure Relief Valve) (R902136745)

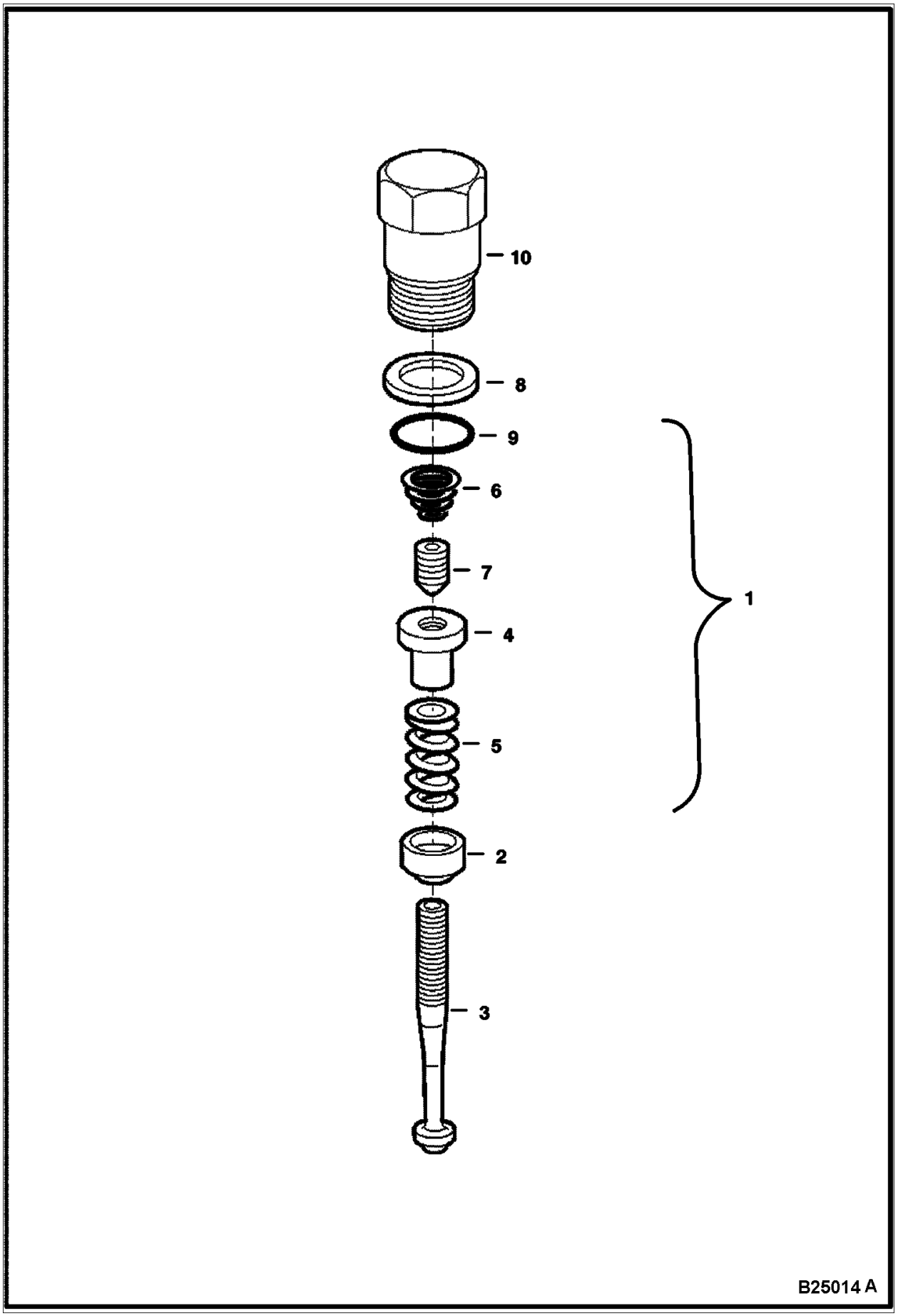

Illustration B25014A

Model S160 K
6904270

Page 196 - OSS# 6300202494 - All rights reserved by Bobcat Company - 02/11/2016 - 14:15:02 - Produced by Ken Cook Co. with mediaIoff

HYDROSTATIC PUMP (Cont'd)
(High Pressure Relief Valve) (R902136745)

Ref No	Part Number	Description	Remarks	Serial Number	Qty
1	7008124	VALVE, RELIEF	preset at 350 bar		1
2	6687921	COLLAR			1
3	6967523	SPINDLE			1
4		NUT	NLA		1
5	6967525	SPRING			1
6	6967526	SPRING			1
7	6967527	PIN			1
8	6682930	RING, BACK-UP			1
9	6682929	O-RING			1
10	6688034	SCREW			1

Page 197 - OSS# 6300202494 - All rights reserved by Bobcat Company - 02/11/2016 - 14:15:02 - Produced by Ken Cook Co. with media1off

HYDROSTATIC PUMP
(Charge Pressure Relief Valve) (R902136745)

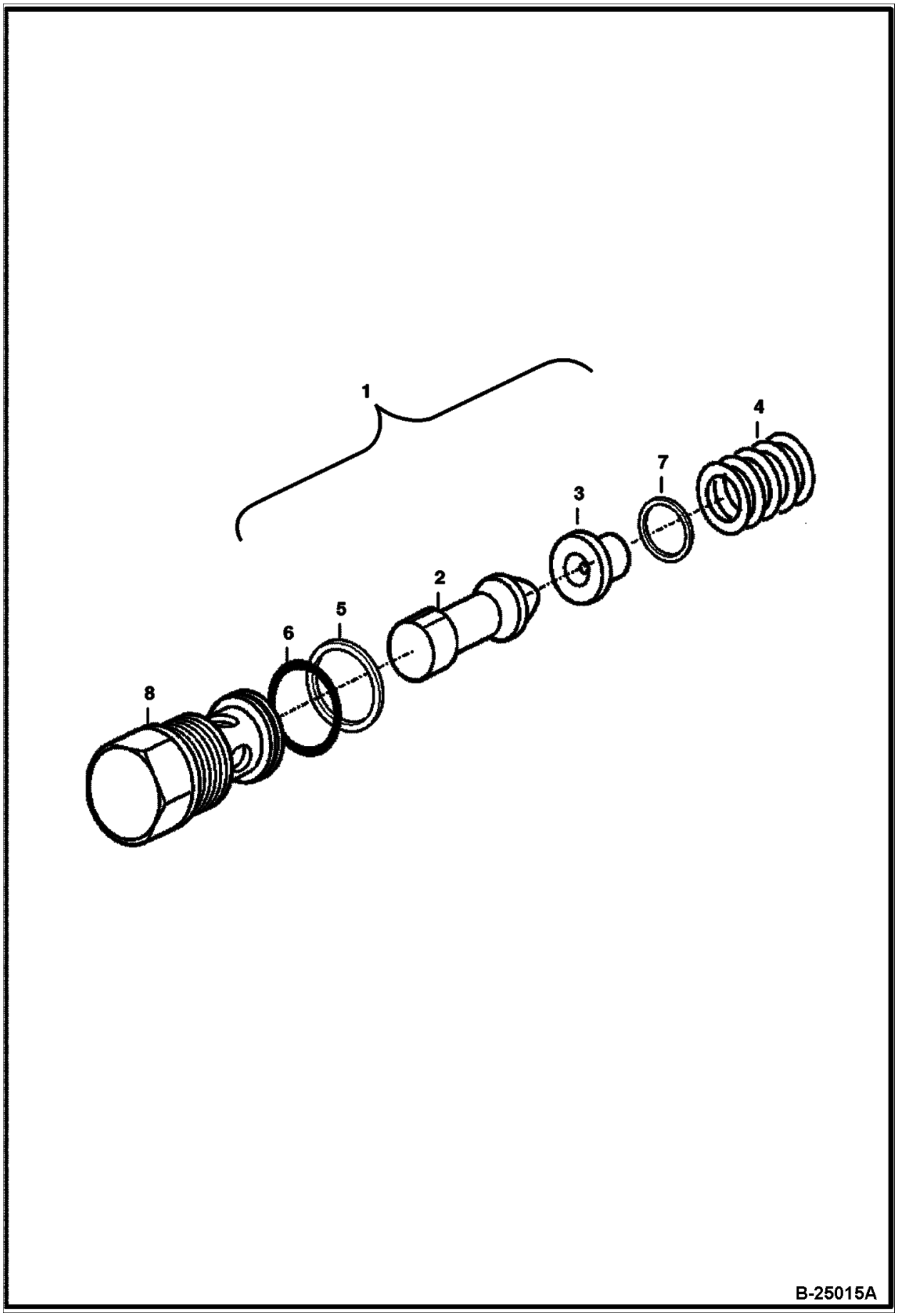

Illustration B25015A

Model S160 K
6904270

Page 198 - OSS# 6300202494 - All rights reserved by Bobcat Company - 02/11/2016 - 14:15:02 - Produced by Ken Cook Co. with mediaoff

HYDROSTATIC PUMP (Cont'd)
(Charge Pressure Relief Valve) (R902136745)

Ref No	Part Number	Description	Remarks	Serial Number	Qty
1	6687938	VALVE			1
2	6967534	PISTON			1
3	6967535	COLLAR			1
4	6967536	SPRING			1
5		RING	NLA		1
6	6682936	O-RING			1
7	6688017	SHIM	0,3 mm		1
7	6967539	SHIM	0.5 mm - Was 7008766 [A]		1
7	7008767	SHIM	1.0 mm		1
8		SCREW	NLA - Was 6687939 [A]		1

Page 199 - OSS# 6300202494 - All rights reserved by Bobcat Company - 02/11/2016 - 14:15:02 - Produced by Ken Cook Co. with media1off

HYDROSTATIC PUMP
(Selectable Joystick Controls) (R902202746)

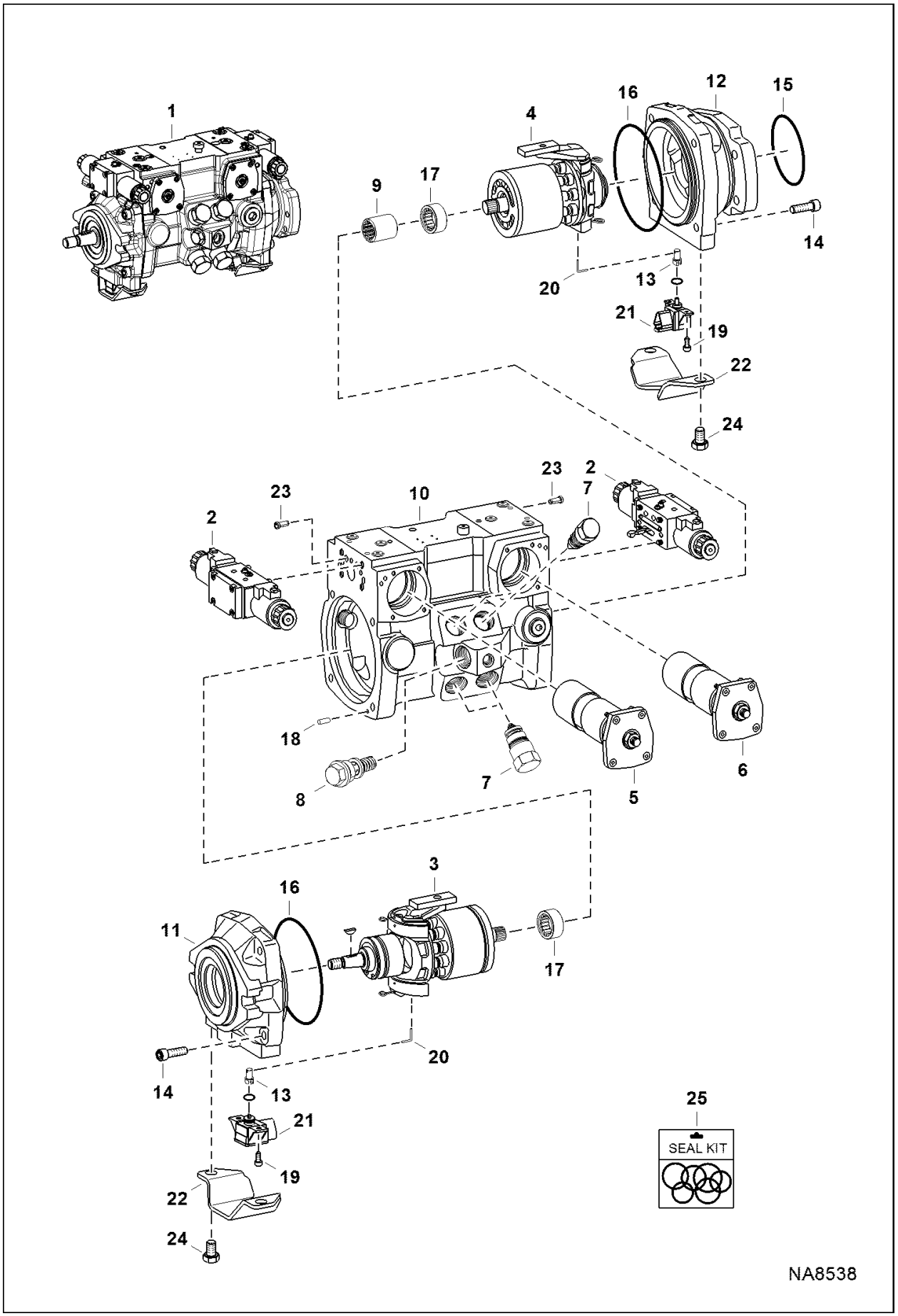

Illustration NA8538

Model S160 K
6904270

Page 200 - OSS# 6300202494 - All rights reserved by Bobcat Company - 02/11/2016 - 14:15:02 - Produced by Ken Cook Co. with mediaoff

HYDROSTATIC PUMP (Cont'd)
(Selectable Joystick Controls) (R902202746)

Ref No	Part Number	Description	Remarks	Serial Number	Qty
1	7023794	PUMP, HYD TANDEM W/O GEAR PUMP	Model R902202746 - Ref. 2-25		1
2		MODULE, CONTROL	See Illustration HYDROSTATIC PUMP / B25016B		2
3		GROUP, ROTATING	See Illustration HYDROSTATIC PUMP / NA8909 - LH rotation		1
4		GROUP, ROTATING	See Illustration HYDROSTATIC PUMP / NA8908 - RH rotation		1
5		CONTROL	See Illustration HYDROSTATIC PUMP / NA8910 - LH assy		1
6		CONTROL	See Illustration HYDROSTATIC PUMP / NA8911 - RH assy		1
7		VALVE	See Illustration HYDROSTATIC PUMP / B25014B		4
8	6687924	VALVE			1
9	7254835	COUPLER			1
10		HOUSING	NLA - Was 7254833 [A]		1
11	7008111	FLANGE, LH			1
12	7008112	FLANGE, RH			1
13	7254838	SHAFT			2
14	6688008	SCREW			8
15	6688019	O-RING			1
16	6688009	SEAL			2
17	6688040	BEARING			2
18	7254837	PIN			2
19	7008114	SCREW			4
20	7008802	WIRE			2
21	7008115	SENSOR	triangle connector		2
22	7010227	COVER			2
23	7254836	FILTER			6
24	6688003	SCREW			4
25	7254817	KIT, SEAL			1

Page 201 - OSS# 6300202494 - All rights reserved by Bobcat Company - 02/11/2016 - 14:15:02 - Produced by Ken Cook Co. with media1off

HYDROSTATIC PUMP
(Rotary Group) (LH) (Selectable Joystick Controls) (R902202746)

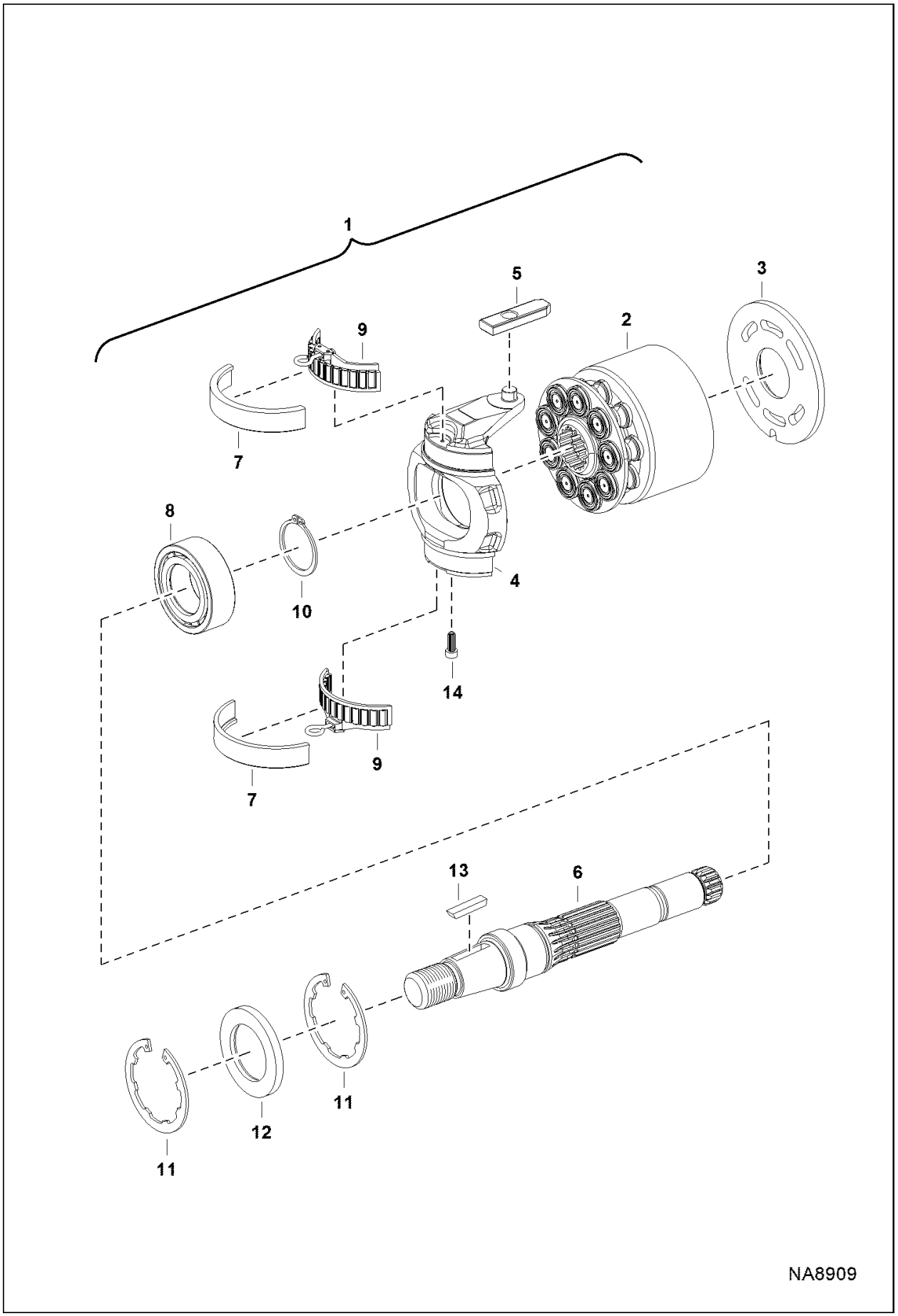

Illustration NA8909

Model S160 K
6904270

Page 202 - OSS# 6300202494 - All rights reserved by Bobcat Company - 02/11/2016 - 14:15:02 - Produced by Ken Cook Co. with mediaoff

HYDROSTATIC PUMP (Cont'd)
(Rotary Group) (LH) (Selectable Joystick Controls) (R902202746)

Ref No	Part Number	Description	Remarks	Serial Number	Qty
1	7254818	GROUP, ROTATING	Ref. 2-12 - LH rotation		1
2	7254822	GROUP, ROTATING	W/Ref. 3		1
3	7254831	PLATE, CONTROL			1
4	7008117	SWASHPLATE	Was 7254828 [A]		1
5	6687940	PLATE			1
6	6687959	SHAFT			1
7	6687956	2 HALF BEARINGS			2
8	7254827	BEARING			1
9	7008118	BEARING			2
10	6687999	RING, SNAP			1
11	6688042	RING, SNAP			2
12	6693876	SEAL, SHAFT			1
13	6687991	KEY			1
14	7254829	BUSHING			1

Page 203 - OSS# 6300202494 - All rights reserved by Bobcat Company - 02/11/2016 - 14:15:02 - Produced by Ken Cook Co. with mediaioff

HYDROSTATIC PUMP
(Rotary Group) (RH) (Selectable Joystick Controls) (R902202746)

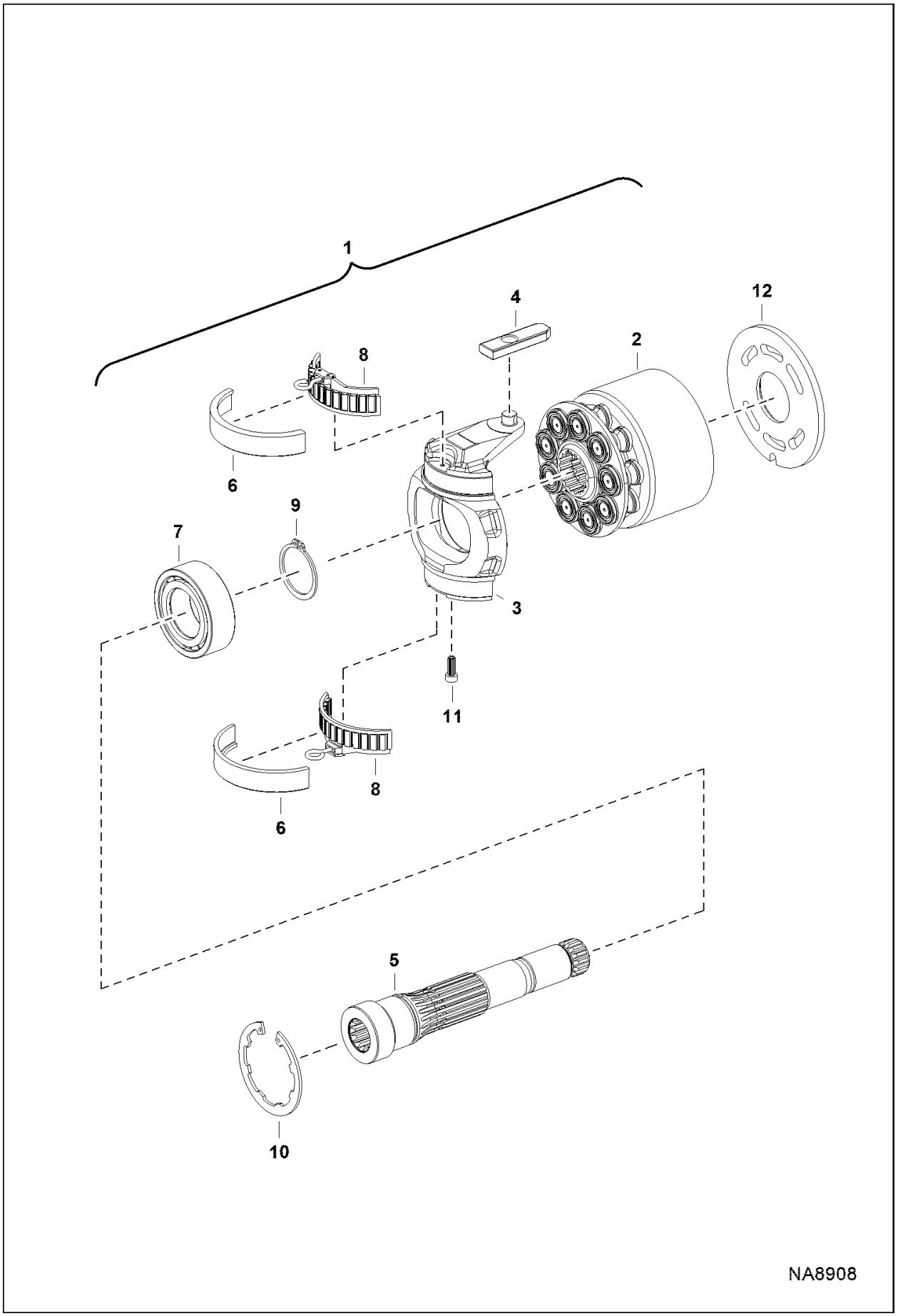

Illustration NA8908

Model S160 K
6904270

Page 204 - OSS# 6300202494 - All rights reserved by Bobcat Company - 02/11/2016 - 14:15:02 - Produced by Ken Cook Co. with mediaIoff

HYDROSTATIC PUMP (Cont'd)
(Rotary Group) (RH) (Selectable Joystick Controls) (R902202746)

Ref No	Part Number	Description	Remarks	Serial Number	Qty
1	7254811	GROUP, ROTATING	Ref. 2-11 - RH rotation		1
2	7254825	GROUP, ROTATING	W/Ref. 12		1
3	7008117	SWASHPLATE	Was 7254828 [A]		1
4	6687940	PLATE			1
5	6687943	SHAFT			1
6	6687956	2 HALF BEARINGS			2
7	7254827	BEARING			1
8	7008118	BEARING			2
9	6687999	RING, SNAP			1
10	6688042	RING, SNAP			1
11	7254829	BUSHING			1
12	7254832	PLATE, CONTROL			1

Page 205 - OSS# 6300202494 - All rights reserved by Bobcat Company - 02/11/2016 - 14:15:02 - Produced by Ken Cook Co. with mediaioff

HYDROSTATIC PUMP
(Control) (LH) (Selectable Joystick Controls) (R902202746)

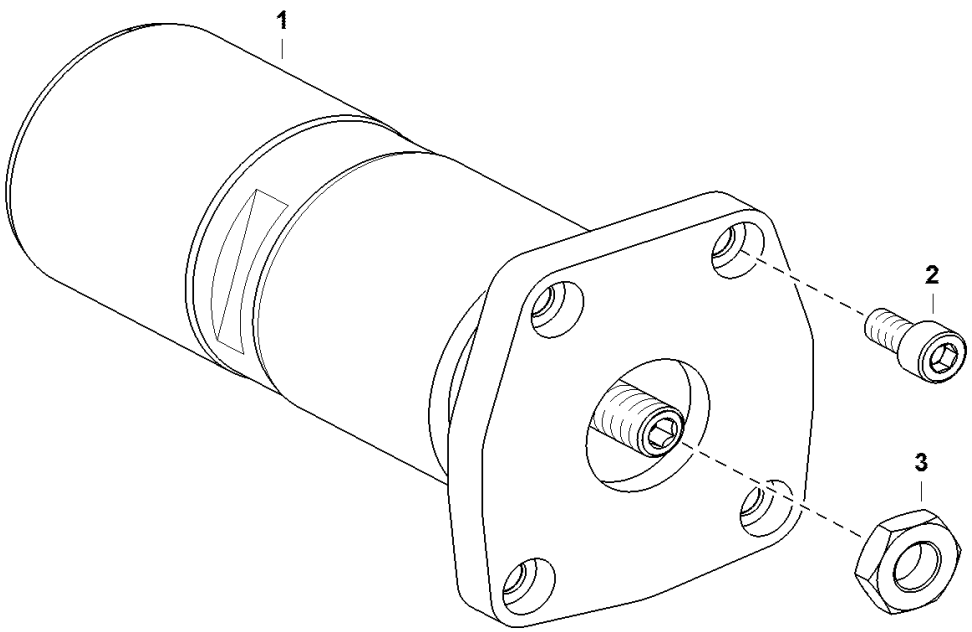

Illustration NA8910

Model S160 K
6904270

Page 206 - OSS# 6300202494 - All rights reserved by Bobcat Company - 02/11/2016 - 14:15:02 - Produced by Ken Cook Co. with mediaoff

HYDROSTATIC PUMP (Cont'd)
(Control) (LH) (Selectable Joystick Controls) (R902202746)

Ref No	Part Number	Description	Remarks	Serial Number	Qty
1	7254812	CONTROL	W/Ref. 2 & 3		1
2	6687995	SCREW			4
3	6687925	NUT			1

Page 207 - OSS# 6300202494 - All rights reserved by Bobcat Company - 02/11/2016 - 14:15:02 - Produced by Ken Cook Co. with mediaioff

HYDROSTATIC PUMP
(Control) (RH) (Selectable Joystick Controls) (R902202746)

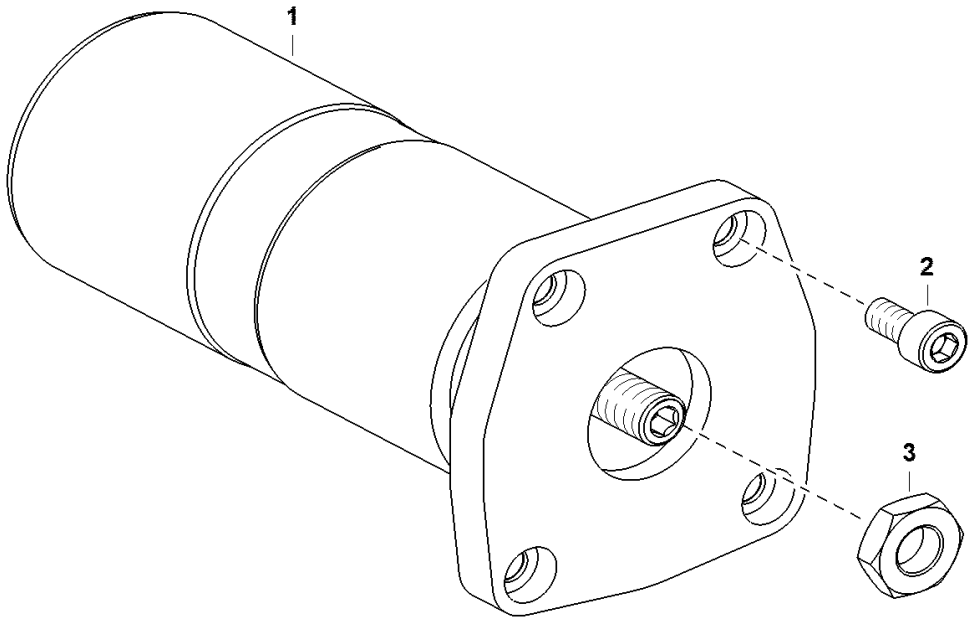

Illustration NA8911

Model S160 K
6904270

Page 208 - OSS# 6300202494 - All rights reserved by Bobcat Company - 02/11/2016 - 14:15:02 - Produced by Ken Cook Co. with mediaoff

HYDROSTATIC PUMP (Cont'd)
(Control) (RH) (Selectable Joystick Controls) (R902202746)

Ref No	Part Number	Description	Remarks	Serial Number	Qty
1	7254813	CONTROL	W/ Ref. 2-3		1
2	6687995	SCREW			4
3	6687925	NUT			1

Page 209 - OSS# 6300202494 - All rights reserved by Bobcat Company - 02/11/2016 - 14:15:02 - Produced by Ken Cook Co. with mediaioff

HYDROSTATIC PUMP
(Control Module) (Selectable Joystick Controls) (R902202746)

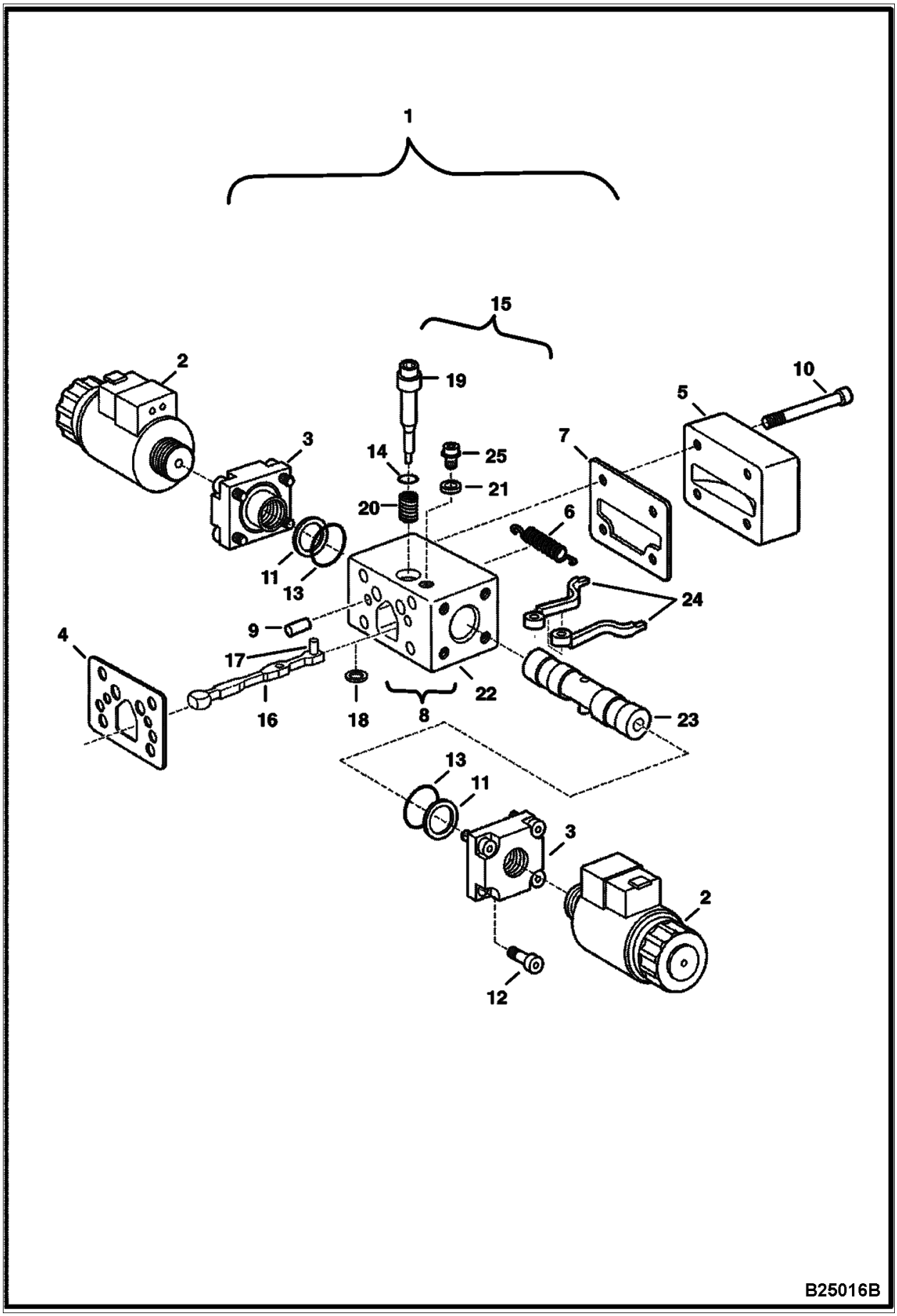

Illustration B25016B

Model S160 K
6904270

Page 210 - OSS# 6300202494 - All rights reserved by Bobcat Company - 02/11/2016 - 14:15:02 - Produced by Ken Cook Co. with mediaoff

HYDROSTATIC PUMP (Cont'd)
(Control Module) (Selectable Joystick Controls) (R902202746)

Ref No	Part Number	Description	Remarks	Serial Number	Qty
1	7008109	MODULE, CONTROL	Ref. 2-25		2
2	6697960	SOLENOID	W/ O-Ring		2
3		BUSHING	NSS		2
4	7008121	GASKET			1
5	7008122	COVER			1
6	6687967	SPRING			1
7	7008123	GASKET			1
8	7008120	HOUSING			1
9	6688010	PIN			2
10	6671725	BOLT	Was 6687996 [A]		4
11		SPRING	NSS		2
12	6687997	SCREW			8
13		SEAL KIT	NSS		2
14		SEAL	NSS - Order Ref. 8		1
15		ROLLER	NSS		1
16		LEVER	NSS		1
17		ROLLER	NSS		1
18		SHIM	NSS		1
19		PIN	NSS - Order Ref. 8		1
20		SPRING	NSS - Order Ref. 8		1
21		PLATE	NSS - Order Ref. 8		1
22		HOUSING	NSS - Order Ref. 8		1
23		SPOOL	NSS - Order Ref. 8		1
24		LEVER	NSS		2
25		SCREW	NSS - Order Ref. 8		1

Page 211 - OSS# 6300202494 - All rights reserved by Bobcat Company - 02/11/2016 - 14:15:02 - Produced by Ken Cook Co. with media1off

HYDROSTATIC PUMP
(Charge Pressure Relief Valve) (R902202746)

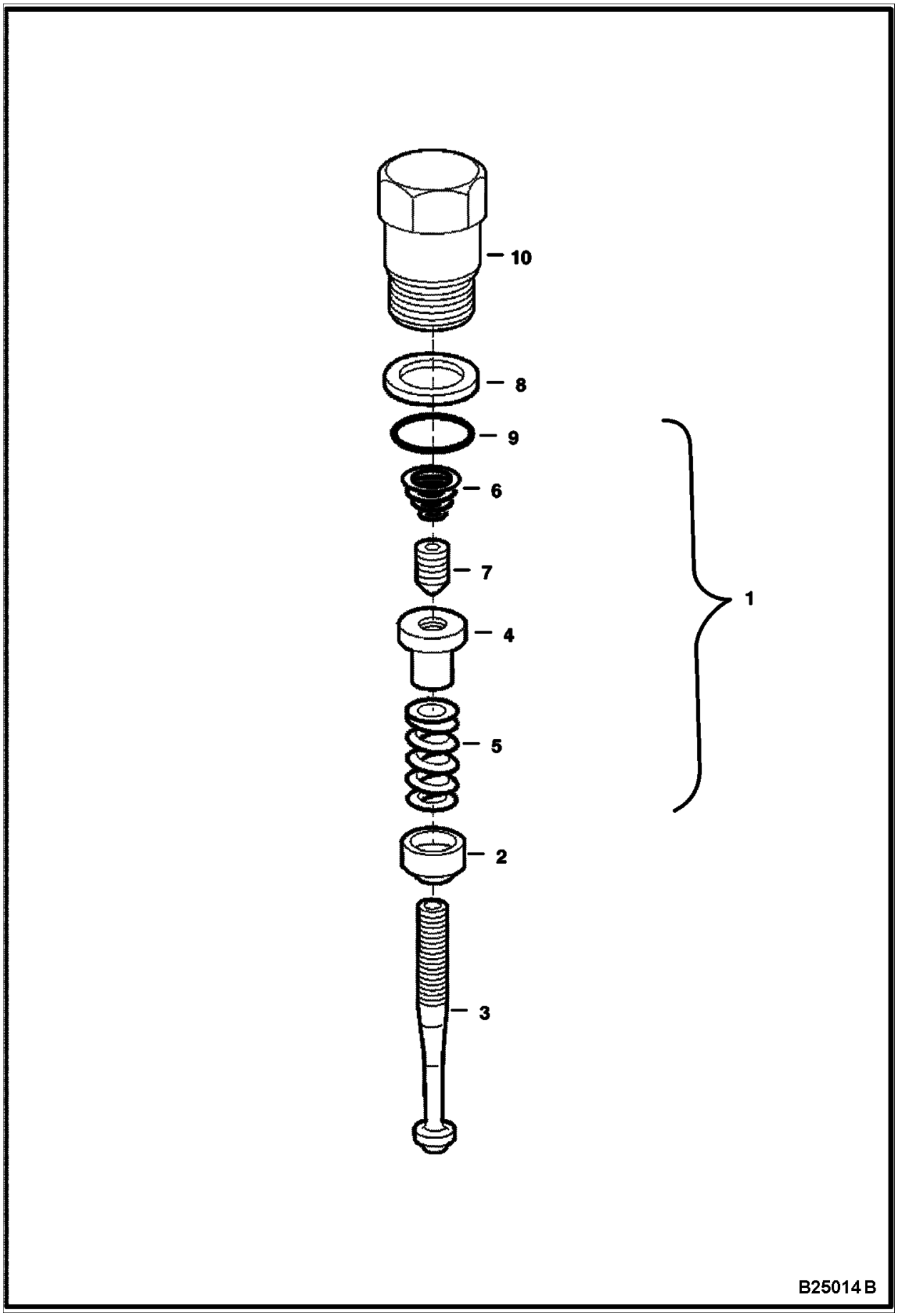

Illustration B25014B

Model S160 K
6904270

Page 212 - OSS# 6300202494 - All rights reserved by Bobcat Company - 02/11/2016 - 14:15:02 - Produced by Ken Cook Co. with mediaoff

HYDROSTATIC PUMP (Cont'd)
(Charge Pressure Relief Valve) (R902202746)

Ref No	Part Number	Description	Remarks	Serial Number	Qty
1	6687924	VALVE			1
2	6687921	COLLAR			1
3	6687920	SPINDLE			1
4	6687922	NUT			1
5	6688043	SPRING			1
6	6688021	SPRING			1
7	6687923	PIN			1
8	6688041	RING			1
9	6688000	O-RING			1
10	6688034	SCREW			1

Page 213 - OSS# 6300202494 - All rights reserved by Bobcat Company - 02/11/2016 - 14:15:02 - Produced by Ken Cook Co. with media1off

GEAR PUMP
(Double)

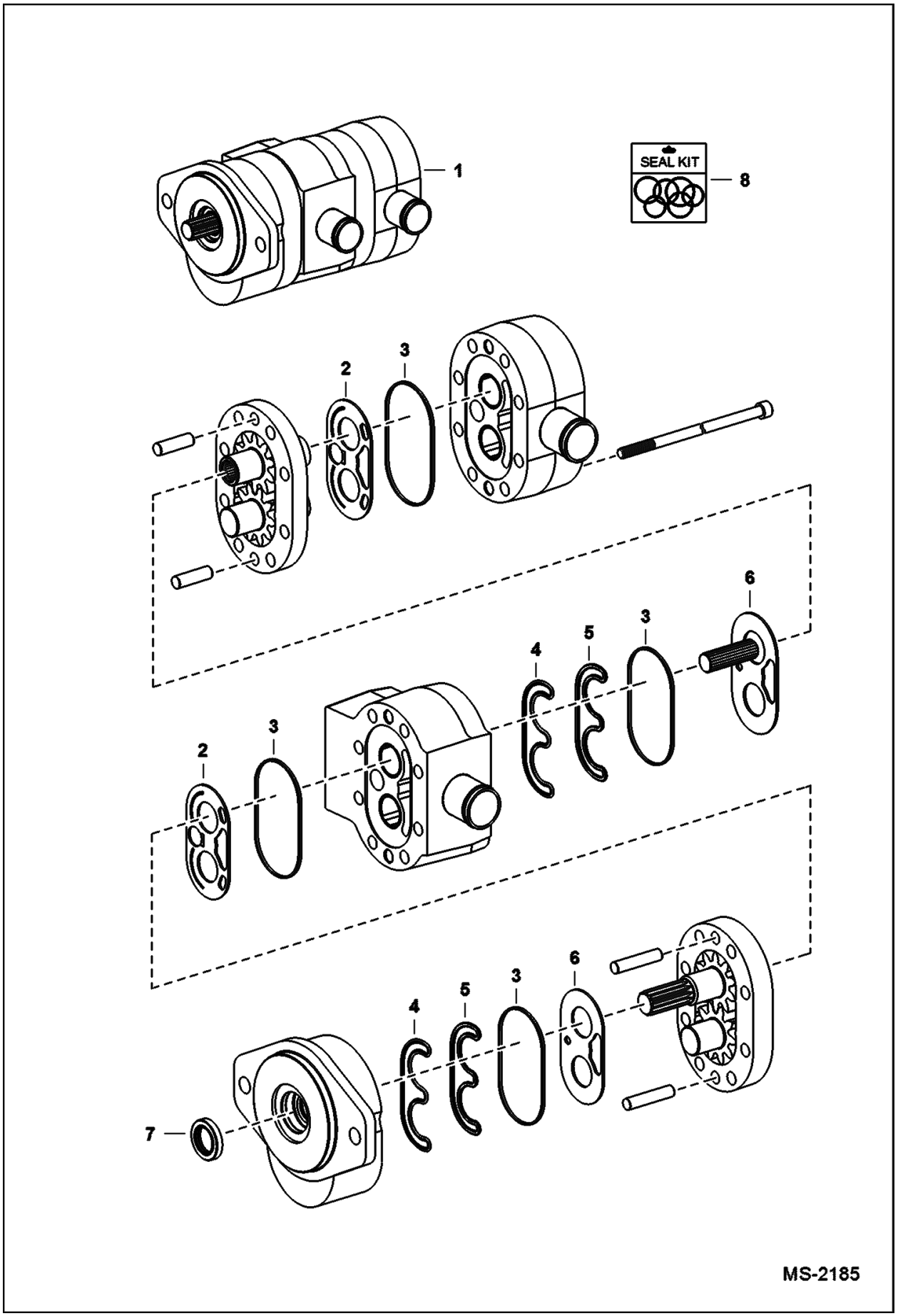

Illustration MS2185

Model S160 K
6904270

Page 214 - OSS# 6300202494 - All rights reserved by Bobcat Company - 02/11/2016 - 14:15:02 - Produced by Ken Cook Co. with mediaoff

GEAR PUMP (Cont'd)
(Double)

Ref No	Part Number	Description	Remarks	Serial Number	Qty
1	6687864	PUMP, GEAR DOUBLE	Model 163D71019 - for 6687863 (4445203) pump		1
2		PLATE, WEAR	NSS		2
3		SEAL	NSS		4
4		SEAL, BACKUP	NSS		2
5		SEAL, LOAD	NSS		2
6		PLATE, WEAR	NSS		2
7		SEAL, SHAFT	NSS		1
8	6687866	KIT, SEAL	Ref. 2-7		1

Page 215 - OSS# 6300202494 - All rights reserved by Bobcat Company - 02/11/2016 - 14:15:02 - Produced by Ken Cook Co. with mediaioff

GEAR PUMP
(Double) (EMEA)

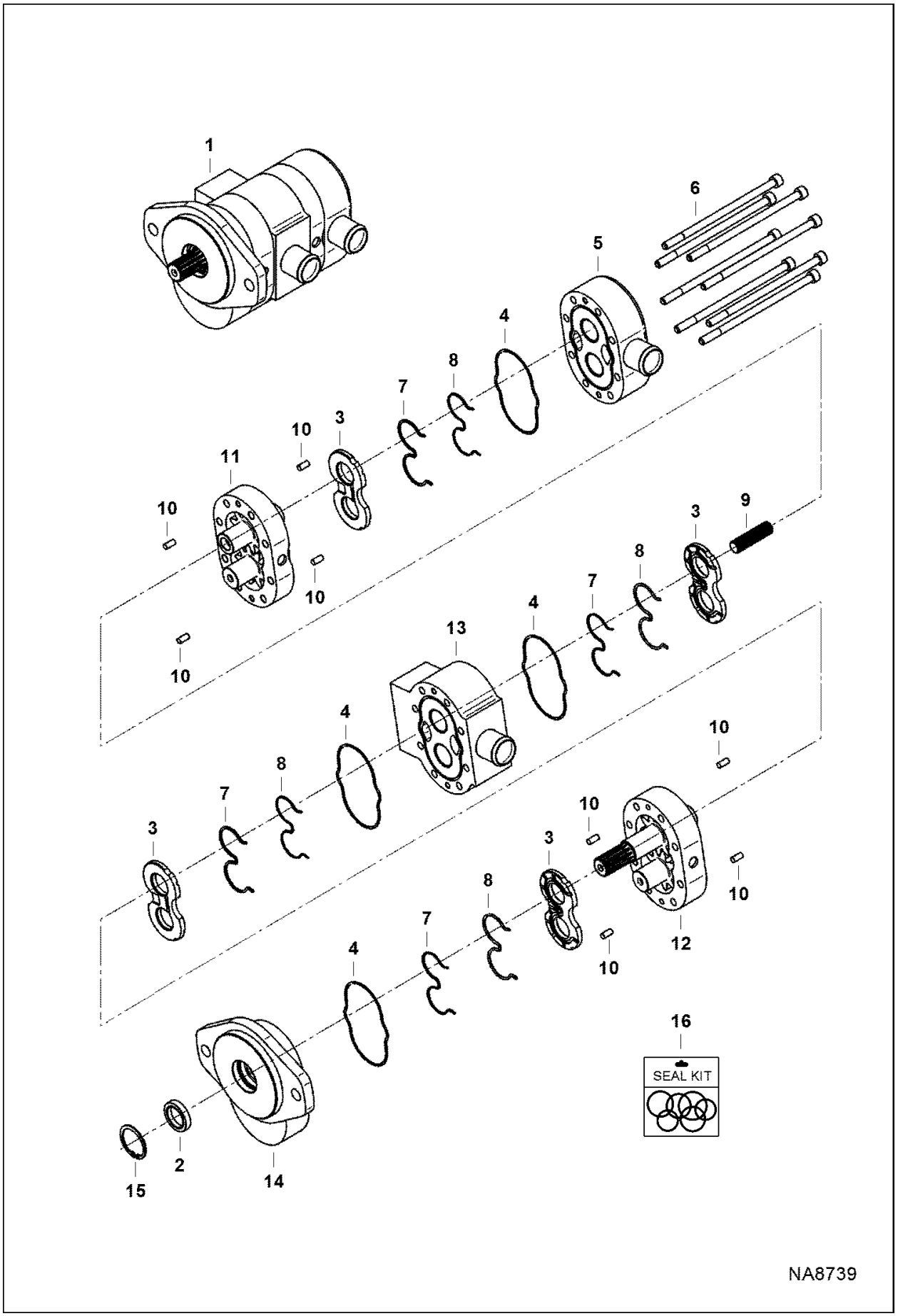

Illustration NA8739

Model S160 K
6904270

Page 216 - OSS# 6300202494 - All rights reserved by Bobcat Company - 02/11/2016 - 14:15:02 - Produced by Ken Cook Co. with mediaoff

GEAR PUMP (Cont'd)
(Double) (EMEA)

Ref No	Part Number	Description	Remarks	Serial Number	Qty
1	7025061	PUMP, GEAR	EMEA - Model GHD0-22,5/17L - for 6687863 (4445203) pump		1
2		SEAL, SHAFT	NSS		1
3		WEAR PLATE	NSS		3
4		SEAL, SECTION	NSS		4
5		HOUSING, REAR	NSS		1
6		BOLT	NSS		8
7		SEAL, PRE-LOAD	NSS		4
8		SEAL, LOAD	NSS		4
9		CONNECTOR, SPLINE	NSS		2
10		PIN	NSS		8
11		HOUSING, GEAR	NSS		1
12		HOUSING, GEAR	NSS		1
13		HOUSING, CENTER	NSS		1
14		HOUSING, FRONT	NSS		1
15		RING, SNAP	NSS		1
16	7031411	KIT, SEAL	Ref. 2, 4, 7 & 8		1

Page 217 - OSS# 6300202494 - All rights reserved by Bobcat Company - 02/11/2016 - 14:15:02 - Produced by Ken Cook Co. with mediaioff

COOLING FAN MOTOR
(Aluminum)

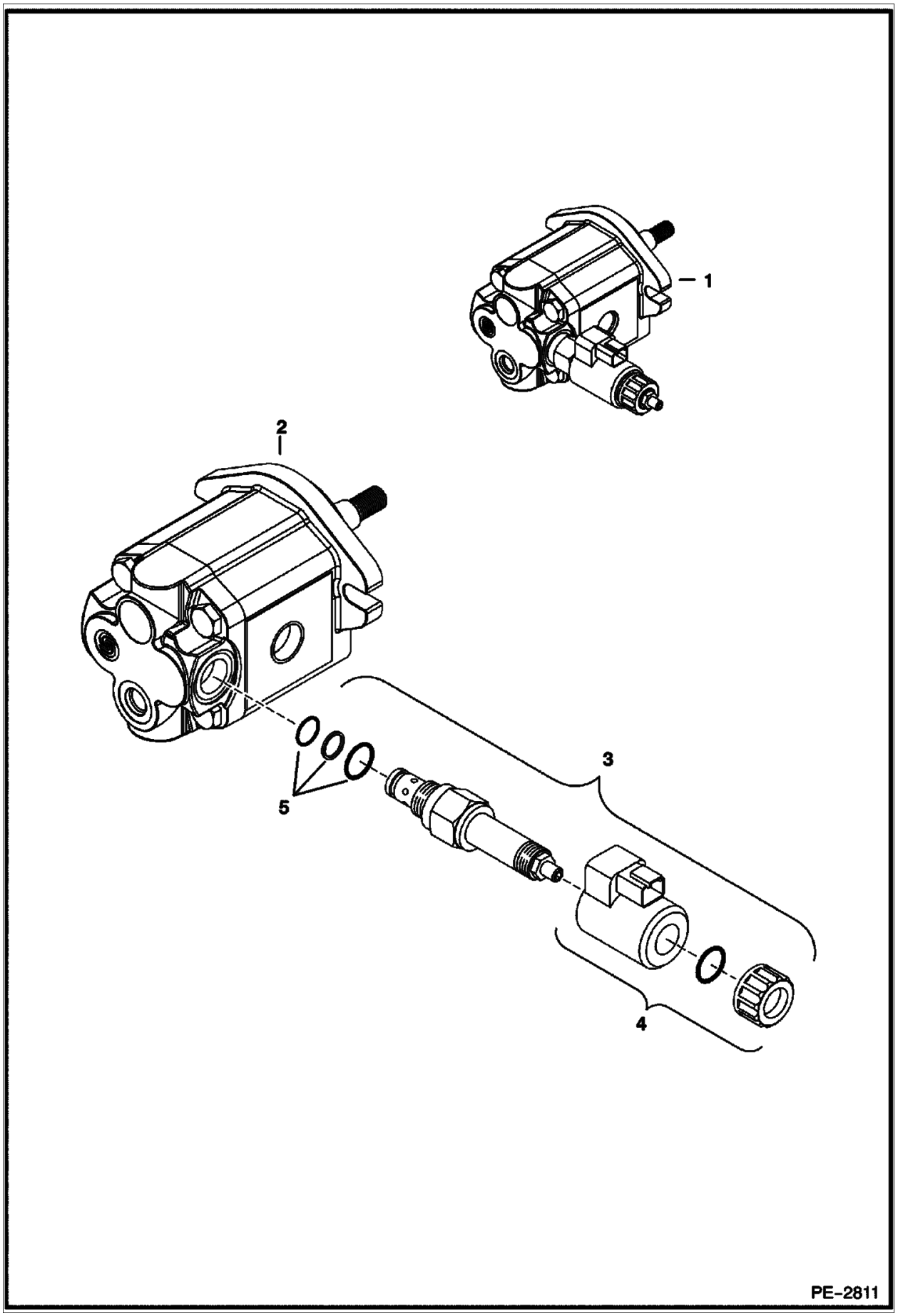

Illustration PE2811

Model S160 K
6904270

Page 218 - OSS# 6300202494 - All rights reserved by Bobcat Company - 02/11/2016 - 14:15:02 - Produced by Ken Cook Co. with mediaoff

COOLING FAN MOTOR (Cont'd)
(Aluminum)

Ref No	Part Number	Description	Remarks	Serial Number	Qty
1		MOTOR, HYD COOLING FAN	Contact your Local Dealer for Bobcat Technical Information BTI384 - NLA - aluminum - W/proportional valve - Was 6687142 [A]		1
1	7010427	KIT, SEAL	includes shaft seal, spacer, snap ring and dust cover		1
2		MOTOR, HYD COOLING FAN	- NLA - Order Ref. 1 - W/O proportional valve - Was 6689058 [A]		1
3		VALVE, RELIEF	Contact your Local Dealer for Bobcat Technical Information BTI384		1
4		COIL ASSY	Contact your Local Dealer for Bobcat Technical Information BTI384 - round		1
5	6683206	SEAL KIT			1

Page 219 - OSS# 6300202494 - All rights reserved by Bobcat Company - 02/11/2016 - 14:15:02 - Produced by Ken Cook Co. with media1off

COOLING FAN MOTOR
(Cast Iron)

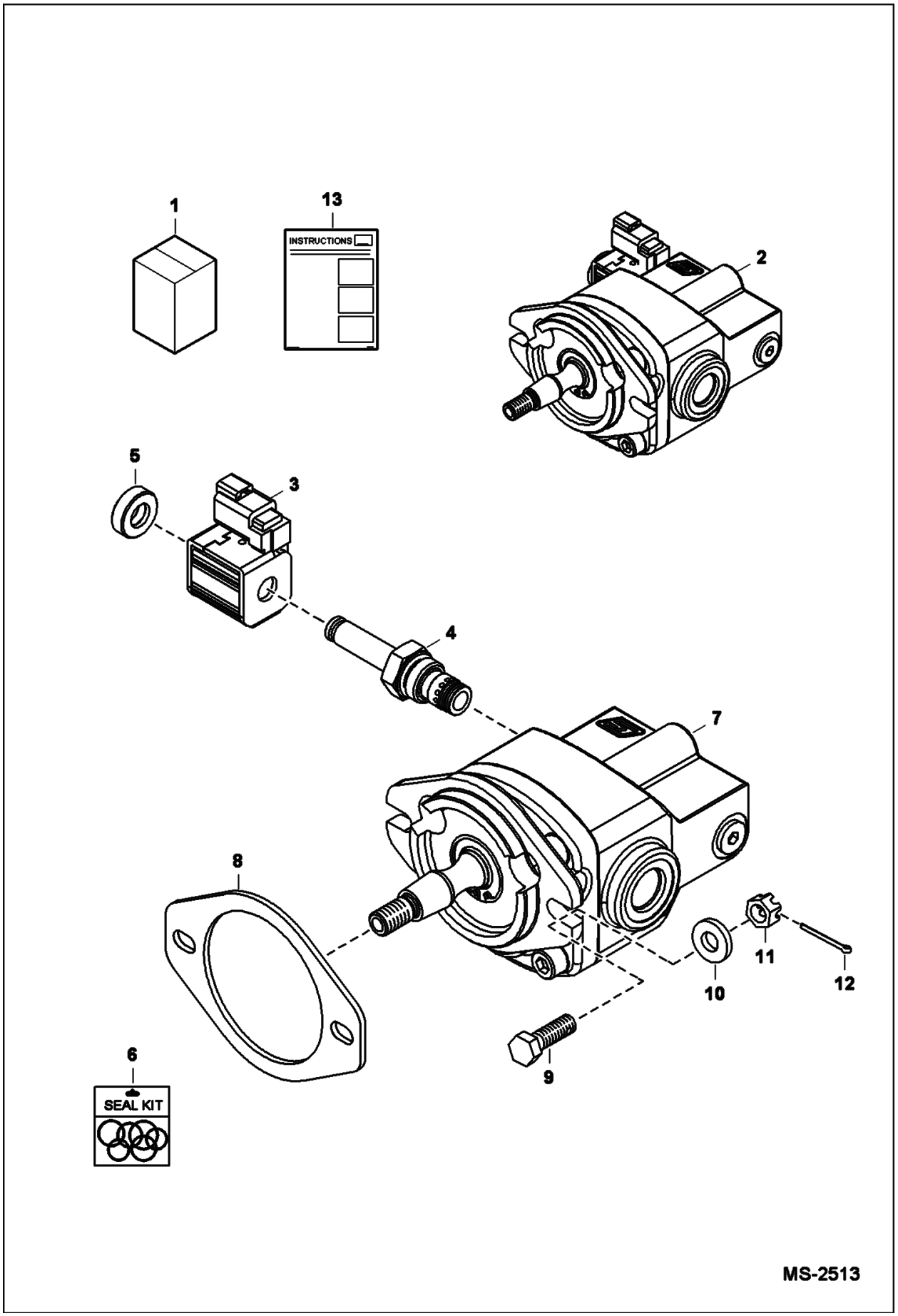

Illustration MS2513

Model S160 K
6904270

Page 220 - OSS# 6300202494 - All rights reserved by Bobcat Company - 02/11/2016 - 14:15:02 - Produced by Ken Cook Co. with mediaoff

COOLING FAN MOTOR (Cont'd)
(Cast Iron)

Ref No	Part Number	Description	Remarks	Serial Number	Qty
1		KIT, MOTOR FAN	Contact your Local Dealer for Bobcat Technical Information BTI384		1
2		MOTOR, HYD COOLING FAN	Contact your Local Dealer for Bobcat Technical Information BTI384 - cast iron - Ref. 2-8		1
3		COIL	Contact your Local Dealer for Bobcat Technical Information BTI384 - W/metal cover		1
4		VALVE	Contact your Local Dealer for Bobcat Technical Information BTI384 - stem - W/Ref. 5		1
5		NUT	W/pre-applied thread locker		1
6		KIT, SEAL	NSS - Order Ref. 1		1
7		MOTOR, HYD COOLING FAN	NSS - Order Ref. 1		1
8	6698062	GASKET, MOTOR			1
9	7147826	BOLT, CROSS DRILLED			2
10	25E17	WASHER 5	.05" thick		2
10	6557831	WASHER	0.15" thick - 0.88" OD		2
11	3D6	NUT			2
12	1F316	PIN			2
13	6986799ENUS	INSTRUCTIONS	Was 6986799 [A]		1

Page 221 - OSS# 6300202494 - All rights reserved by Bobcat Company - 02/11/2016 - 14:15:02 - Produced by Ken Cook Co. with media1off

HYDROSTATIC OIL FILTER
(In-Line)

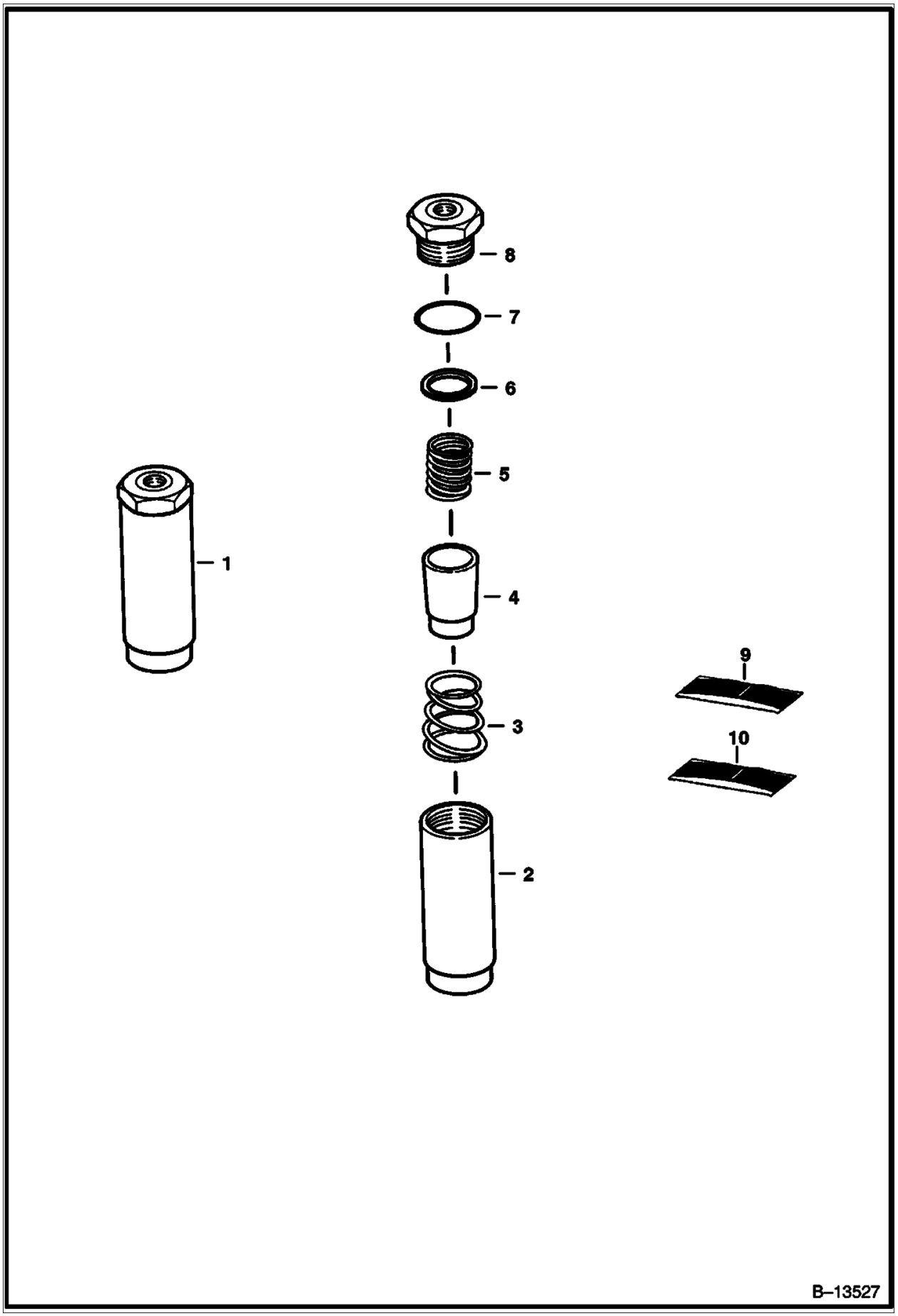

Illustration B13527

Model S160 K
6904270

Page 222 - OSS# 6300202494 - All rights reserved by Bobcat Company - 02/11/2016 - 14:15:02 - Produced by Ken Cook Co. with mediaoff

HYDROSTATIC OIL FILTER (Cont'd)
(In-Line)

Ref No	Part Number	Description	Remarks	Serial Number	Qty
1	6661022	FILTER, OIL HYD IN-LINE	Ref. 2-8		1
2		HOUSING	NSS		1
3		SPRING	NSS		1
4		ELEMENT	NSS		1
5		SPRING	NSS		1
6		GASKET	NSS		1
7		O-RING	NSS		1
8		PLUG	NSS		1
9	6661807	FILTER, OIL HYD	element - Ref. 4, 6 & 7		1
10	6661808	SPRING KT	spring - Ref. 3 & 5		1

Page 223 - OSS# 6300202494 - All rights reserved by Bobcat Company - 02/11/2016 - 14:15:02 - Produced by Ken Cook Co. with mediaioff

HYDROSTATIC OIL FILTER

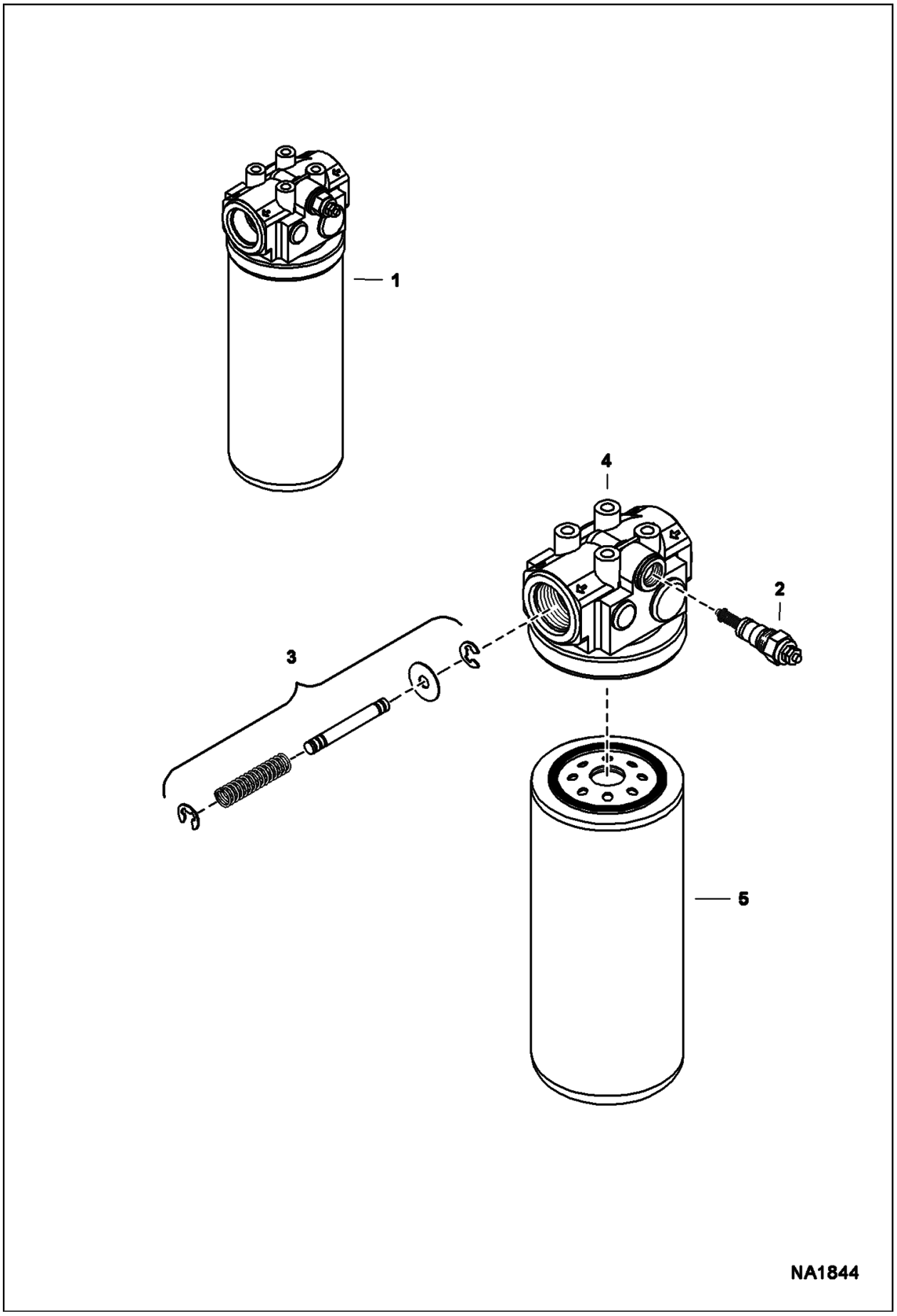

Illustration NA1844

Model S160 K
6904270

Page 224 - OSS# 6300202494 - All rights reserved by Bobcat Company - 02/11/2016 - 14:15:02 - Produced by Ken Cook Co. with mediaoff

HYDROSTATIC OIL FILTER (Cont'd)

Ref No	Part Number	Description	Remarks	Serial Number	Qty
1	6688385	HYD FILTER ASSY	W/Ref. 2-5 - 50 psi by-pass & switch		1
2	6660260	SWITCH, PRESS OIL HYD	pressure - normally closed		1
2	6599365	KIT	nut, washer & O-rings for 6660260 switch		1
3		VALVE	NLA - by-pass (50 PSI) - Order Ref. 1		1
4		HEAD	NSS - Order Ref. 1		1
5	6661248	FILTER, OIL HYD 12	#3 media - 152,4 mm (6") long		1

Page 225 - OSS# 6300202494 - All rights reserved by Bobcat Company - 02/11/2016 - 14:15:02 - Produced by Ken Cook Co. with media1off

HYDROSTATIC OIL FILTER
(Selectable Joystick Controls)

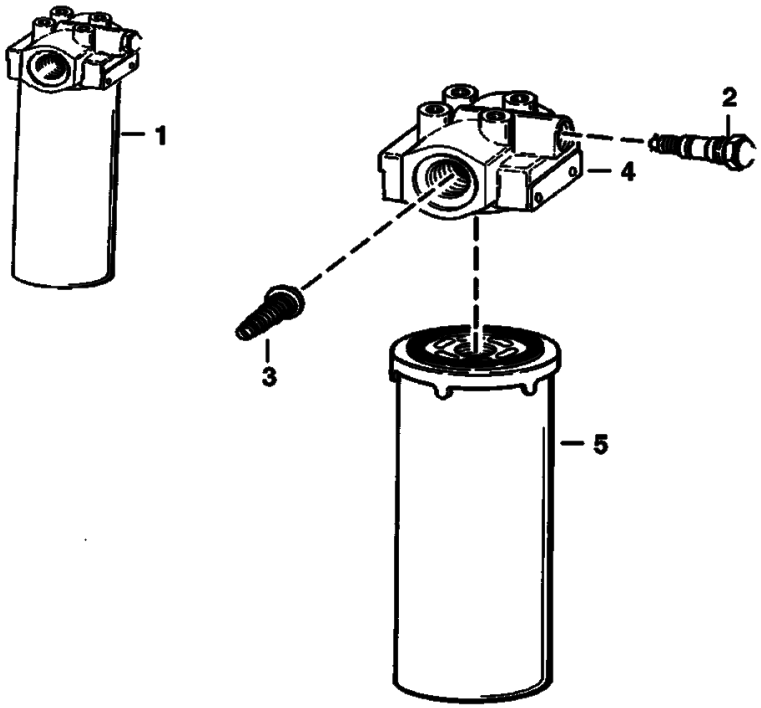

B-16487A

Illustration B16487A

Model S160 K
6904270

Page 226 - OSS# 6300202494 - All rights reserved by Bobcat Company - 02/11/2016 - 14:15:02 - Produced by Ken Cook Co. with mediaoff

HYDROSTATIC OIL FILTER (Cont'd)
(Selectable Joystick Controls)

Ref No	Part Number	Description	Remarks	Serial Number	Qty
1	6686922	FILTER ASMBLY 12	W/Ref. 2-5		1
2	6687834	SENSOR	pressure - normally open		1
3		VALVE	NLA - by-pass		1
4		HEAD	NSS - Order Ref. 1		1
5	6686926	FILTER, OIL HYD	113,5 mm (4.5") long		1

Page 227 - OSS# 6300202494 - All rights reserved by Bobcat Company - 02/11/2016 - 14:15:02 - Produced by Ken Cook Co. with mediaioff

HYDROSTATIC OIL FILTER

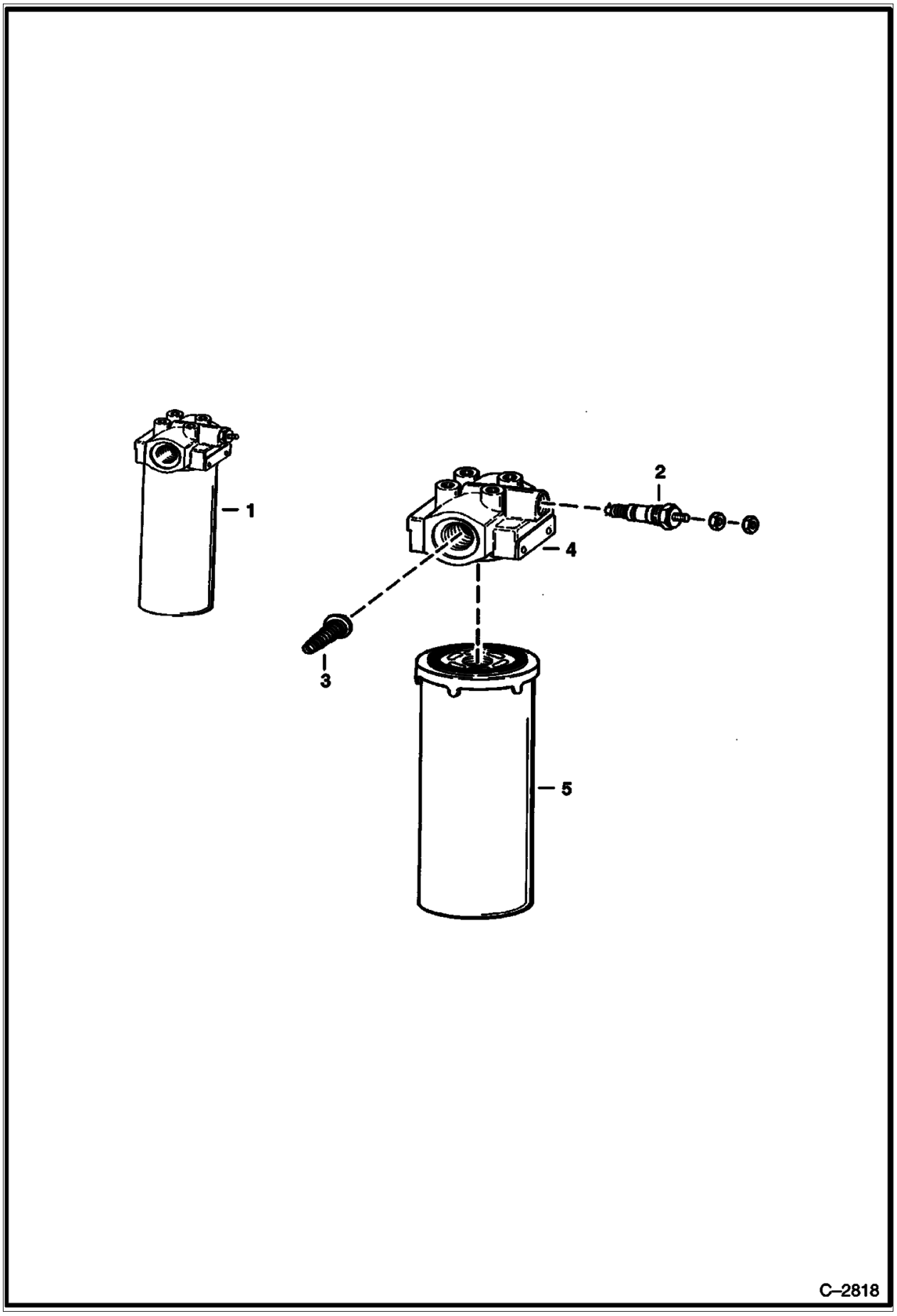

Illustration C2818

Model S160 K
6904270

Page 228 - OSS# 6300202494 - All rights reserved by Bobcat Company - 02/11/2016 - 14:15:02 - Produced by Ken Cook Co. with mediaIoff

HYDROSTATIC OIL FILTER (Cont'd)

Ref No	Part Number	Description	Remarks	Serial Number	Qty
1	6687266	FILTER ASSY	W/Ref. 2-5 - 50 PSI by-pass & switch - charge		1
2	6660260	SWITCH, PRESS OIL HYD	pressure - normally closed		1
2	6599365	KIT	nut, washer & O-rings for switch		1
3		VALVE	NLA - by-pass - 50 PSI - Order Ref. 1		1
4		HEAD	NSS - Order Ref. 1 filter assy.		1
5	6686926	FILTER, OIL HYD	113,5 mm (4.5") long - charge		1

Page 229 - OSS# 6300202494 - All rights reserved by Bobcat Company - 02/11/2016 - 14:15:02 - Produced by Ken Cook Co. with media1off

CAB ELECTRICAL CIRCUITRY
(S/N 529911001 - 59999, 530011001 - 59999)

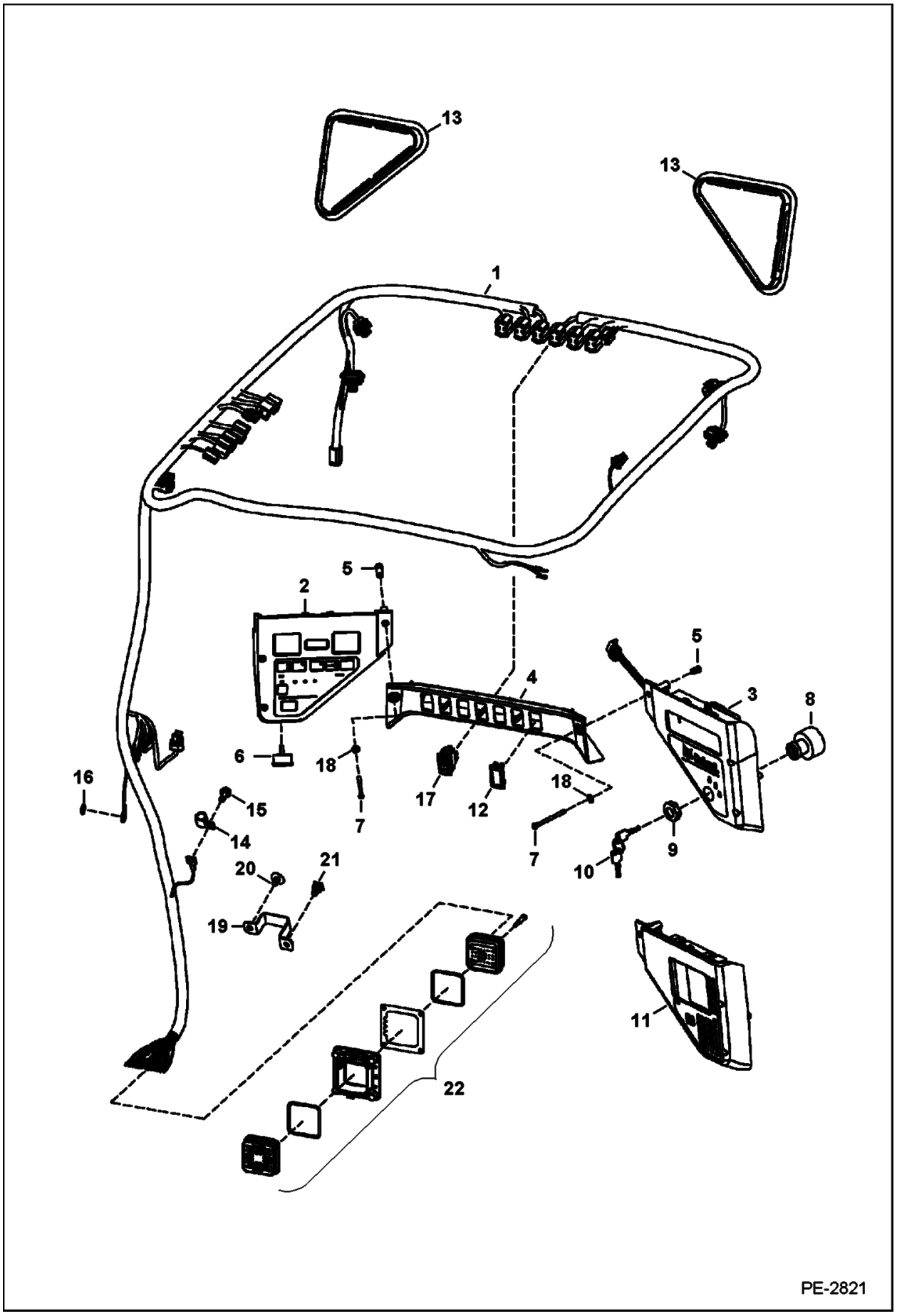

Illustration PE2821

Model S160 K
6904270

Page 230 - OSS# 6300202494 - All rights reserved by Bobcat Company - 02/11/2016 - 14:15:02 - Produced by Ken Cook Co. with mediaoff

CAB ELECTRICAL CIRCUITRY (Cont'd)
(S/N 529911001 - 59999, 530011001 - 59999)

Ref No	Part Number	Description	Remarks	Serial Number	Qty
1	7116261	HARNESS	standard - W/Ref. 22	5300 11831 & Bel	1
1	7116261	HARNESS	standard - W/Ref. 22	5299 12592 & Bel	1
1	7143070	HARNESS	standard - W/Ref. 22	5299 12593-59999	1
1	7143070	HARNESS	standard - W/Ref. 22	5300 11832-59999	1
1	7116260	HARNESS, CAB DLX	deluxe - W/Ref. 22 - required to operate rotating beacon, 4-way flasher, power Bob-Tach, heater, A/C & strobe light	5299 12592 & Bel	1
1	7116260	HARNESS, CAB DLX	deluxe - W/Ref. 22 - required to operate rotating beacon, 4-way flasher, power Bob-Tach, heater, A/C & strobe light	5300 11831 & Bel	1
1	7143071	HARNESS	deluxe - W/Ref. 22 - required to operate rotating beacon, 4-way flasher, power Bob-Tach, heater, A/C & strobe light	5299 12593-59999	1
1	7143071	HARNESS	deluxe - W/Ref. 22 - required to operate rotating beacon, 4-way flasher, power Bob-Tach, heater, A/C & strobe light	5300 11832-59999	1
2		PANEL	NLA - L.H. - W/Ref. 6 - gauges lit by bulbs - Order 6689754 panel - Was 6688405 [A]		1
2	6675982	PLUG	backlighting service hole		1
2	6679855	BULB			2
2	6689754	PANEL INSTRUMENT LH	LH - W/Ref. 6 - lit guages		1
3	6688404	PANEL, KEY STANDARD	RH - W/Ref. 8 & 9		1
4	6679845	CENTER SWITCH PANEL			1
5	6675033	INSERT, THREADED	threaded		6
6	6679856	ALARM	W/nut		1
7	7105983	BOLT			6
8		SWITCH, IGN	NLA - W/Ref. 9 & 10 - Order 6693245 switch, 6693241 key, 7000328 adapter & 6697965 harness - Was 6679842 [A]		1
8	6693245	SWITCH, IGN	W/Ref. (7119081 nut) - Also Order Ref. 10 (6693241 key)		1
8	7000328	ADAPTER, SWITCH IGN	for 6693245 switch - Was 7000329 [A]		1
8	6697965	HARNESS	for 6693245 switch		1
9	6674202	NUT	for NLA 6679842 switch		1
9	7009081	NUT	for 6693245 switch		1
10		KEY	NLA - ignition - includes two keys W/ring - Order 6693241 - Was 67095277 [A]		1
10	6693241	KEY 10	single key W/O ring - Use W/NLA 6679842 switch & 6693245 switch		x
11	6688403	PANEL, INSTRUMENT DLX	deluxe - RH - keyless		1
12	6665314	PLUG	cover		x
13	6674403	COVER			2
14	30H75	CLAMP			1
15	84G3712	BOLT 5			1
16	6E5	WASHER			1

Page 231 - OSS# 6300202494 - All rights reserved by Bobcat Company - 02/11/2016 - 14:15:02 - Produced by Ken Cook Co. with media1off

CAB ELECTRICAL CIRCUITRY (Cont'd)
(S/N 529911001 - 59999, 530011001 - 59999)

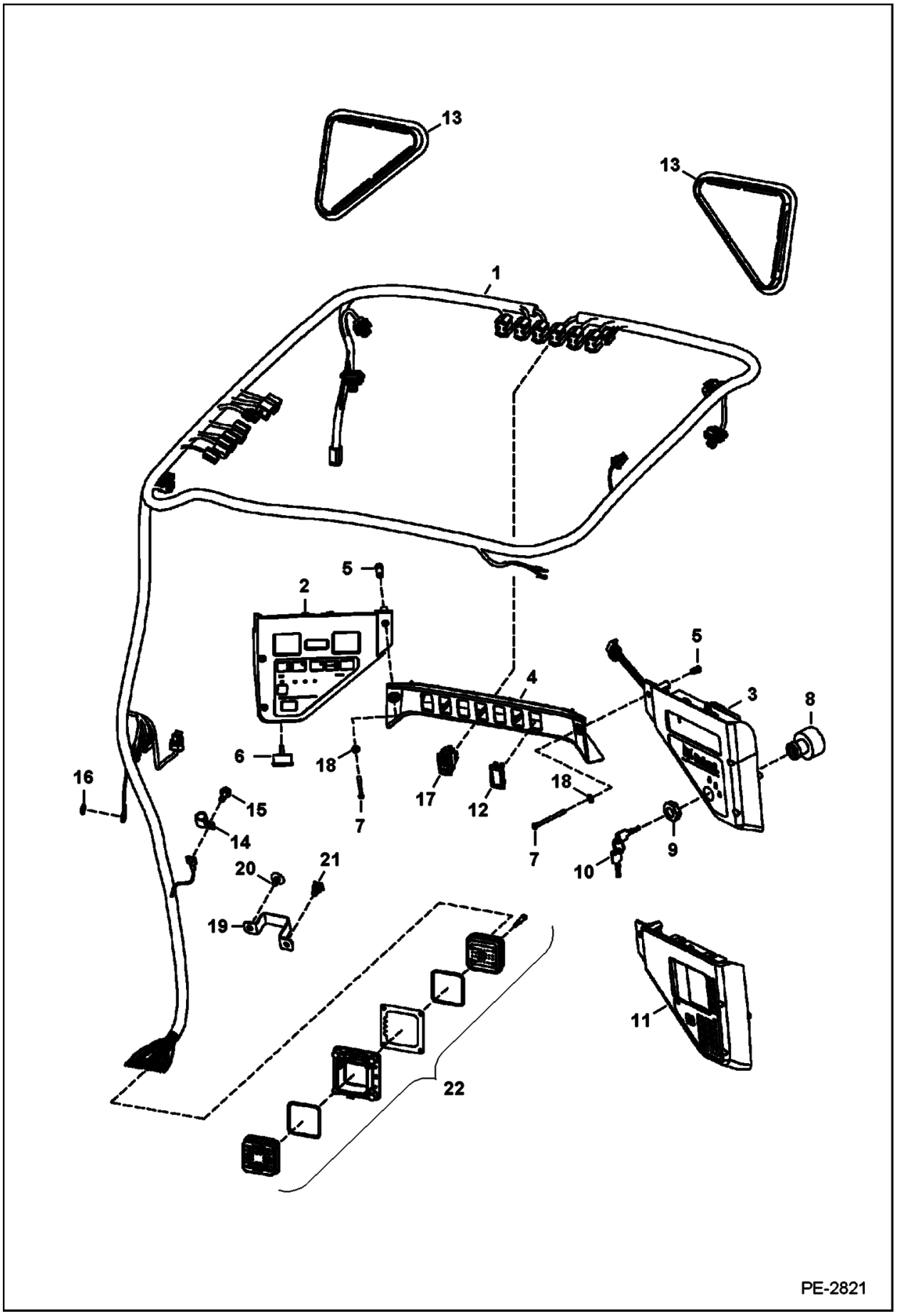

Illustration PE2821

Model S160 K
6904270

Page 232 - OSS# 6300202494 - All rights reserved by Bobcat Company - 02/11/2016 - 14:15:02 - Produced by Ken Cook Co. with mediaoff

CAB ELECTRICAL CIRCUITRY (Cont'd)
(S/N 529911001 - 59999, 530011001 - 59999)

Ref No	Part Number	Description	Remarks	Serial Number	Qty
17	6676536	SWTCH,PRK BRAKE	park brake		1
18	25E10	WASHER			2
19	7138645	BRACKET			1
20	6674895	RETAINER			1
21	7015668	MOUNT, STRAP TIE	push in - Use W/tie strap - Was 6678666 [B]		1
22		CONNECTOR ASSEMBLY	See Illustration CONNECTOR HARNESS ASSEMBLY / PE3684 NSS - engine & cab - Order components		1

Page 233 - OSS# 6300202494 - All rights reserved by Bobcat Company - 02/11/2016 - 14:15:02 - Produced by Ken Cook Co. with media1off

CAB ELECTRICAL CIRCUITRY
(S/N 529960001 & Above, 530060001 & Above, AHWA11001 & Above)

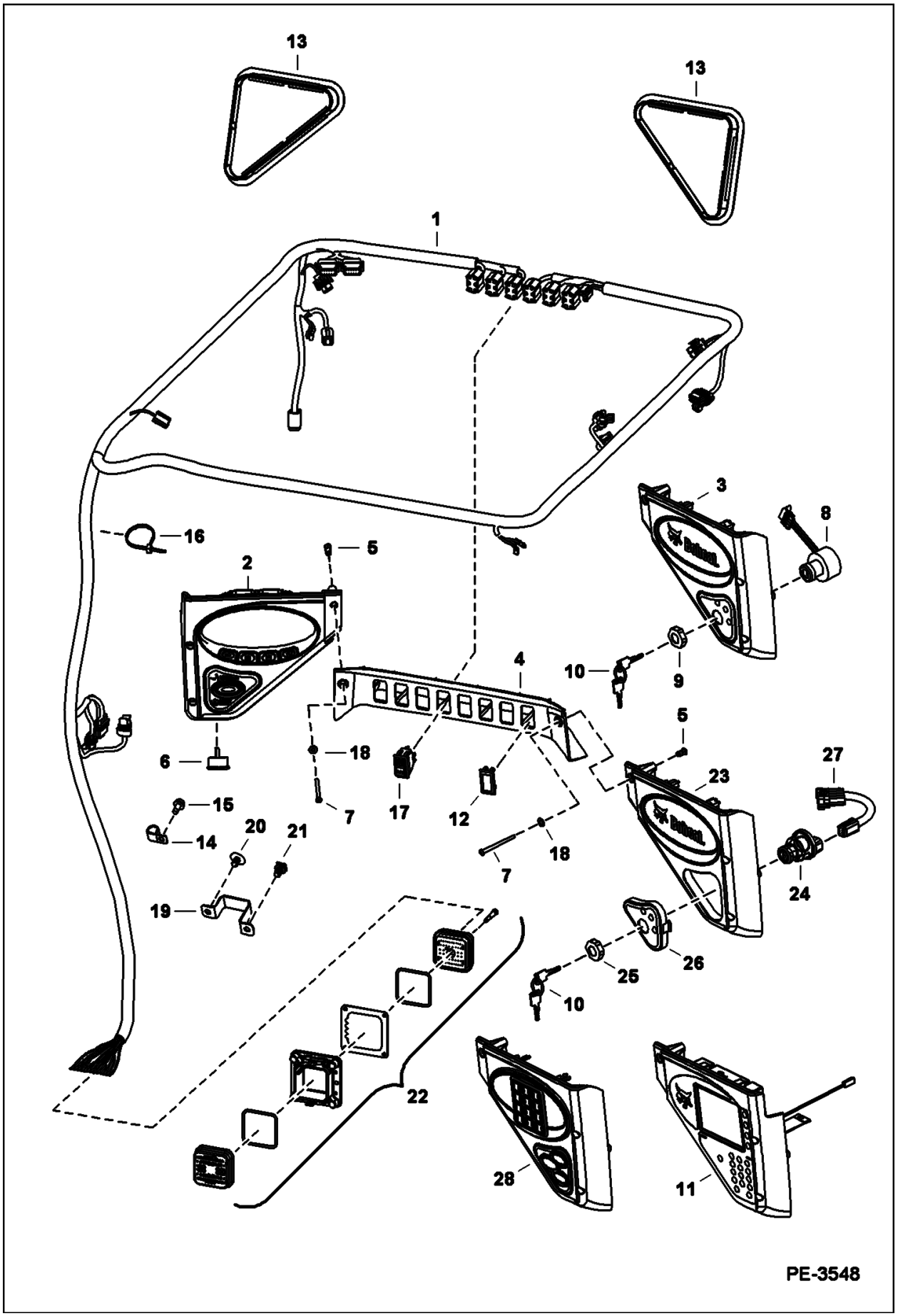

Illustration PE3548

Model S160 K
6904270

Page 234 - OSS# 6300202494 - All rights reserved by Bobcat Company - 02/11/2016 - 14:15:02 - Produced by Ken Cook Co. with mediaoff

CAB ELECTRICAL CIRCUITRY (Cont'd)
(S/N 529960001 & Above, 530060001 & Above, AHWA11001 & Above)

Ref No	Part Number	Description	Remarks	Serial Number	Qty
1	7149336	HARNESS, CAB	W/Ref. 22		1
1	7139311	HARNESS, CAB DLX	W/Ref. 22 - required to operate beacon, 4-way flashers, power bob-tach, heater & strobe lights		1
2	6693886	PANEL, LH	lit gauges - W/Ref. 6		1
2	6692545	SWITCH	press to operate		1
3		PANEL, KEY STANDARD	NLA - RH W/Ref. 8 & 9 - Order Ref. 23 & 27 - Was 6693887 [A]		1
4	6679845	CENTER SWITCH PANEL			1
5	6675033	INSERT, THREADED	threaded		6
6	6692489	ALARM, BUZZER			1
7	7105983	BOLT			6
8		SWITCH	NLA - Order Ref. 24, 26 & 27 - Was 6693246 [A]		1
9	6674202	NUT			1
10		KEY	NLA - ignition - includes two keys W/ring - Order 6693241 key - Was 6709527 [A]		1
10	6693241	KEY 10	ignition - single key W/O ring		x
11	6692935	PANEL, INSTRUMENTATION DELUXE	RH - keyless		1
12	6665314	PLUG	cover		x
13	6674403	COVER			2
14	30H75	CLAMP			1
15	84G3712	BOLT 5			1
16	6624289	STRAP, TIE	Was 6610510 [B]		3
17	6690948	SWITCH PARK BRAKE			1
18	25E10	WASHER			2
19	7138645	BRACKET			1
20	6674895	RETAINER			1
21	7015668	MOUNT, STRAP TIE	push in - Use W/tie strap - Was 6678666 [B]		1
22		CONNECTOR ASSEMBLY	See Illustration CONNECTOR HARNESS ASSEMBLY / PE3684 - NSS - engine & cab - Order components		1
23	7001039	PANEL, START KEYED	W/Ref. 24-26		1
24	6693245	SWITCH, IGN	W/Ref. 25		1
25	7009081	NUT			1
26	7000443	INSERT, SWITCH IGN			1
27	7169538	HARNESS, SWITCH IGN	Use W/Ref. 24 only		1
28		KIT, PANEL START KEYLESS	See Illustration KEYLESS PANEL KIT / NA2100		1

Page 235 - OSS# 6300202494 - All rights reserved by Bobcat Company - 02/11/2016 - 14:15:02 - Produced by Ken Cook Co. with media1off

ENGINE ELECTRICAL CIRCUITRY

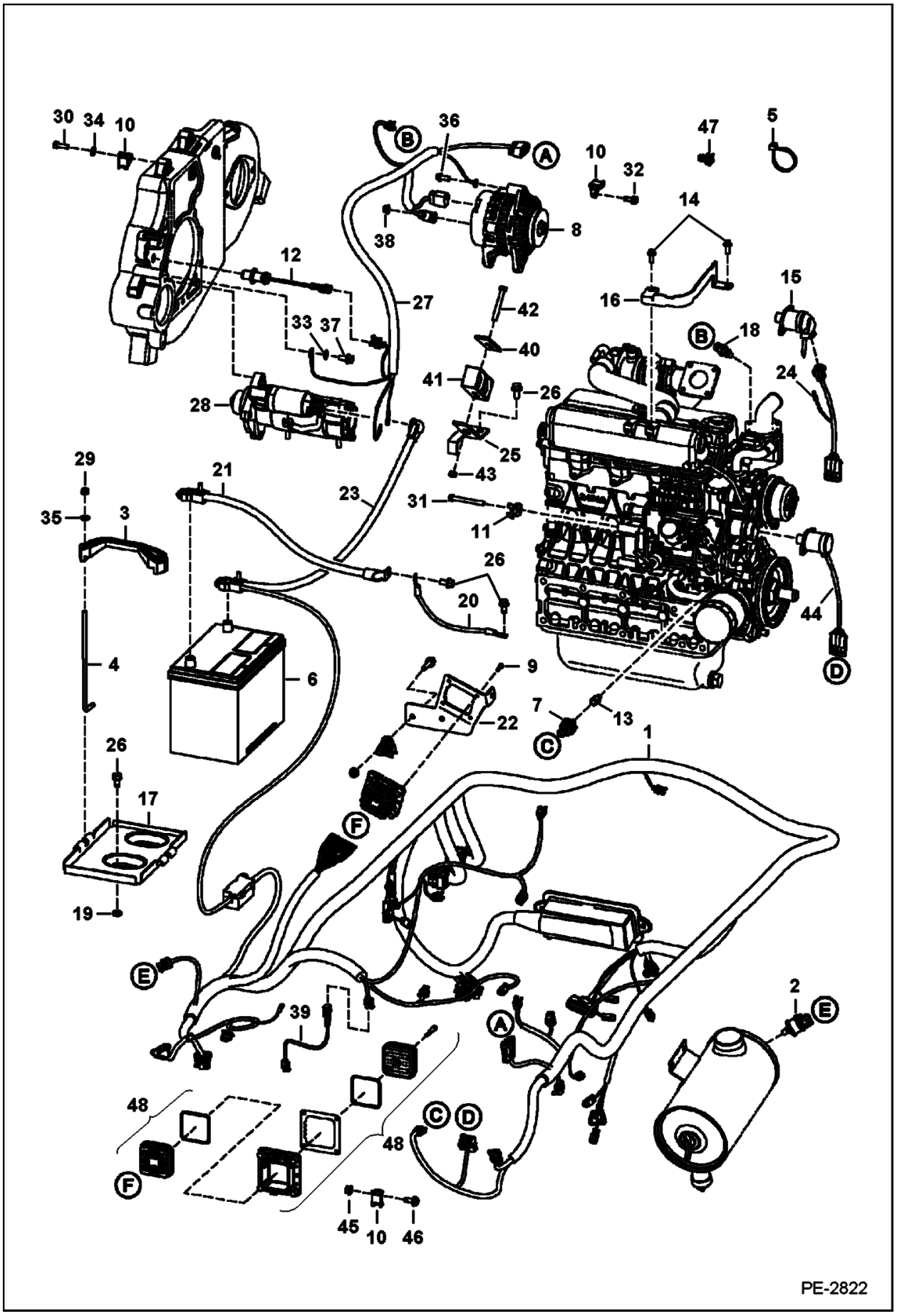

Illustration PE2822

Model S160 K
6904270

Page 236 - OSS# 6300202494 - All rights reserved by Bobcat Company - 02/11/2016 - 14:15:02 - Produced by Ken Cook Co. with mediaoff

ENGINE ELECTRICAL CIRCUITRY (Cont'd)

Ref No	Part Number	Description	Remarks	Serial Number	Qty
1		HARNESS	NLA - W/fuel sender wire, Ref. 9 & 22 - Order 7116258 harness & Ref. 39 - Was 7116258 [B,D]	5300 & Below	1
1		HARNESS	NLA - W/fuel sender wire, Ref. 9 & 22 - Order 7116258 harness & Ref. 39 - Was 7116258 [B,D]	5299 & Below	1
1	7116258	HARNESS, MFR	loader - W/O fuel sender wire & W/Ref. 9 & 22	5300 - 11366	1
1	7116258	HARNESS, MFR	loader - W/O fuel sender wire & W/Ref. 9 & 22	5299 - 11971	1
1		HARNESS	NLA - loader - single speed option - Order 7142376 harness - Was 7123793 [A]	5299 11972 & Abv	1
1		HARNESS	NLA - loader - single speed option - Order 7142376 harness - Was 7123793 [A]	5300 11367 & Abv	1
1	7142376	HARNESS	loader - 2 speed option - extra connector for pre-warming solenoid	5300 11367 - 59999	1
1	7142376	HARNESS	loader - 2 speed option - extra connector for pre-warming solenoid	5299 11972 - 59999	1
1	7159445	HARNESS	loader	AHWA11001 & Above	1
1	7159445	HARNESS	loader	530060001 & Above	1
1	7159445	HARNESS	loader	529960001 & Above	1
2	6665371	SWITCH, VACUUM	condition indicator		1
3	6569203	CLAMP			1
4	6576280	BOLT			2
5	6624289	STRAP, TIE			17
6	6674687	BATTERY, DRY 600 AMP			1
6		BATTERY CAP			2
7	6674315	SWITCH, PRESS OIL ENG	eng oil pressure	530011001 - 59999	1
7	6674315	SWITCH, PRESS OIL ENG	eng oil pressure	529911001 - 59999	1
7	6697920	SENSOR, PRESS OIL ENG		529960001 & Above	1
7	6697920	SENSOR, PRESS OIL ENG		530060001 & Above	1
7	6697920	SENSOR, PRESS OIL ENG		AHWA11001 & Above	1
8		ALTERNATOR	See Illustration ALTERNATOR / C3529		1
9	6688980	BOLT			4
10	6678818	MOUNT			3
11	6679034	MOUNT			5
12	6684037	SENSOR, SPEED ENG	rpm	529911001 - 59999	1
12	6684037	SENSOR, SPEED ENG	rpm	530011001 - 59999	1
12	6693921	SENSOR, RPM	rpm	529960001 & Above	1
12	6693921	SENSOR, RPM	rpm	530060001 & Above	1
12	6693921	SENSOR, RPM	rpm	AHWA11001 & Above	1
13	7102451	FITTING			1
14	1CM8100	SCREW			1
15		SOLENOID	NLA- fuel shutoff W/molded connector - Order Ref. 44- Was 6684826 [A]	& Bel	1

Page 237 - OSS# 6300202494 - All rights reserved by Bobcat Company - 02/11/2016 - 14:15:02 - Produced by Ken Cook Co. with media1off

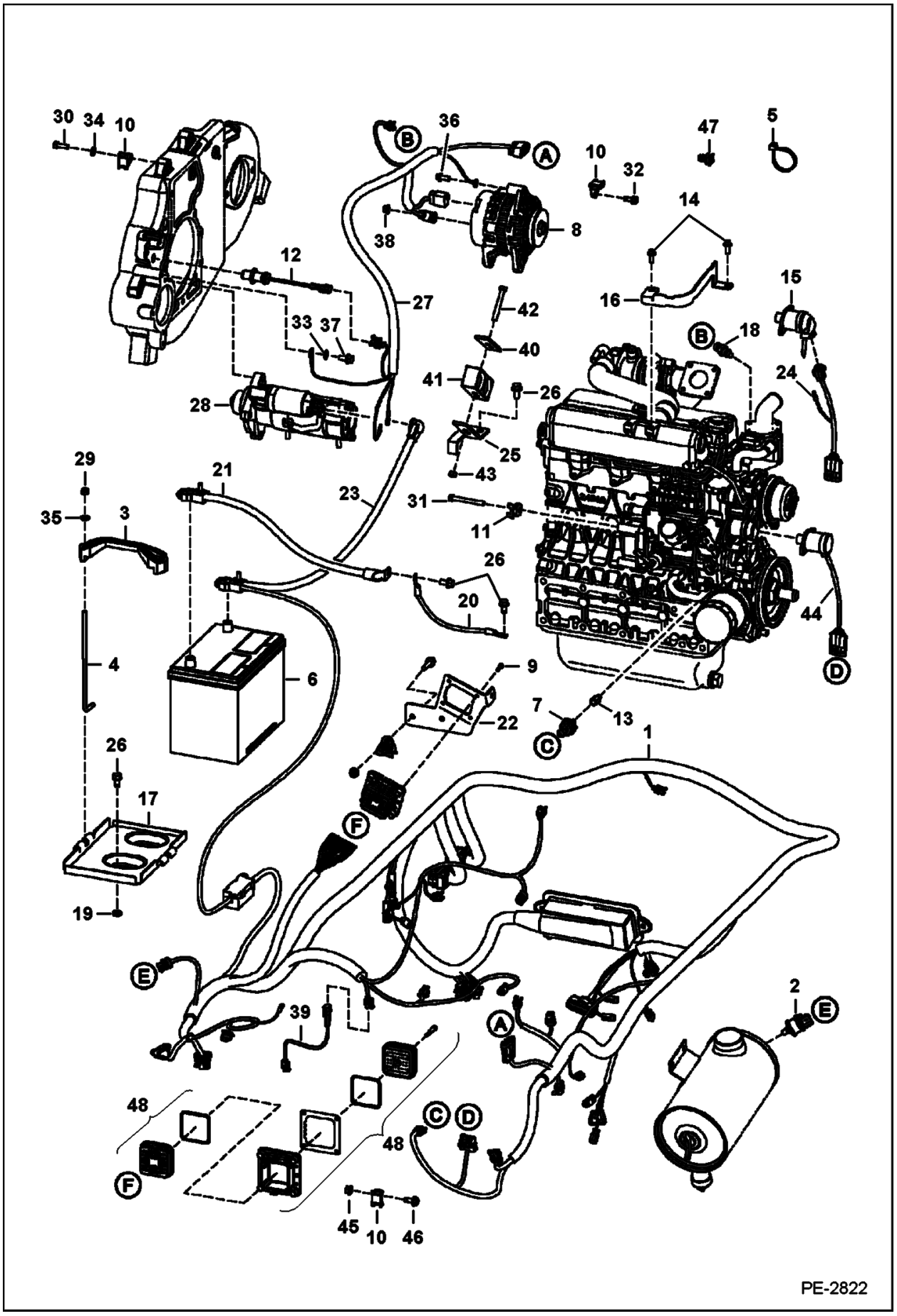

Illustration PE2822

Model S160 K
6904270

Page 238 - OSS# 6300202494 - All rights reserved by Bobcat Company - 02/11/2016 - 14:15:02 - Produced by Ken Cook Co. with mediaoff

ENGINE ELECTRICAL CIRCUITRY (Cont'd)

Ref No	Part Number	Description	Remarks	Serial Number	Qty
16	7116956	BRACKET			1
17	6718260	BATTERY PAN			1
18	6718414	SENDER, TEMP ENG			1
19	616783	WASHER			2
20	6565170	CABLE	neg		1
21	6729008	CABLE, NEGATIVE	ground		1
22	7113162	BRACKET			1
23	6731256	CABLE, POSITIVE	pos		1
24	6814830	HARNESS	fuel solenoid	& Bel	1
25	6715131	BRACKET			1
26	84G3712	BOLT 5			6
27	7104379	HARNESS	starter/alt	530011001 - 59999	1
27	7104379	HARNESS	starter/alt	529911001 - 59999	1
27	6688073	CONNECTOR			1
27	7144233	HARNESS, ENG	starter/alt	530060001 & Above	1
27	7144233	HARNESS, ENG	starter/alt	AHWA11001 & Above	1
27	7144233	HARNESS, ENG	starter/alt	529960001 & Above	1
28		STARTER	See Illustration STARTER / B16488R		1
29	59D5	NUT 5			2
30	1CM825	CAP SCREW			1
31	1CM870	BOLT			2
32	84G3112	BOLT 5			1
33	6E6	WASHER			1
34	25E14	WSHR			1
35	25E15	WASHER 5			2
36	29CM820	SCREW			4
37	35C612	BOLT 5			2
38	43DM8	NUT			1
39	7117788	HARNESS	fuel sender	& Abv	1
40	6715132	RETAINER			1
41	6715197	CLAMP			1
42	17C540	BOLT			2
43	95D5	NUT			1
44	6691498	SOLENOID, SHUTOFF FUEL	240 mm (9.45") lead	& Abv	1
45	97D5	NUT			1
46	17C512	BOLT 5			1
47	7015668	MOUNT, STRAP TIE	push in - Use W/tie strap - Was 6678666 [B]		1
48		CONNECTOR ASSEMBLY	See Illustration CONNECTOR HARNESS ASSEMBLY / PE3684 NSS - engine & cab - Order components		1

Page 239 - OSS# 6300202494 - All rights reserved by Bobcat Company - 02/11/2016 - 14:15:02 - Produced by Ken Cook Co. with media1off

ENGINE ELECTRICAL CIRCUITRY
(S/N 529911001 - 59999, 530011001 - 59999)

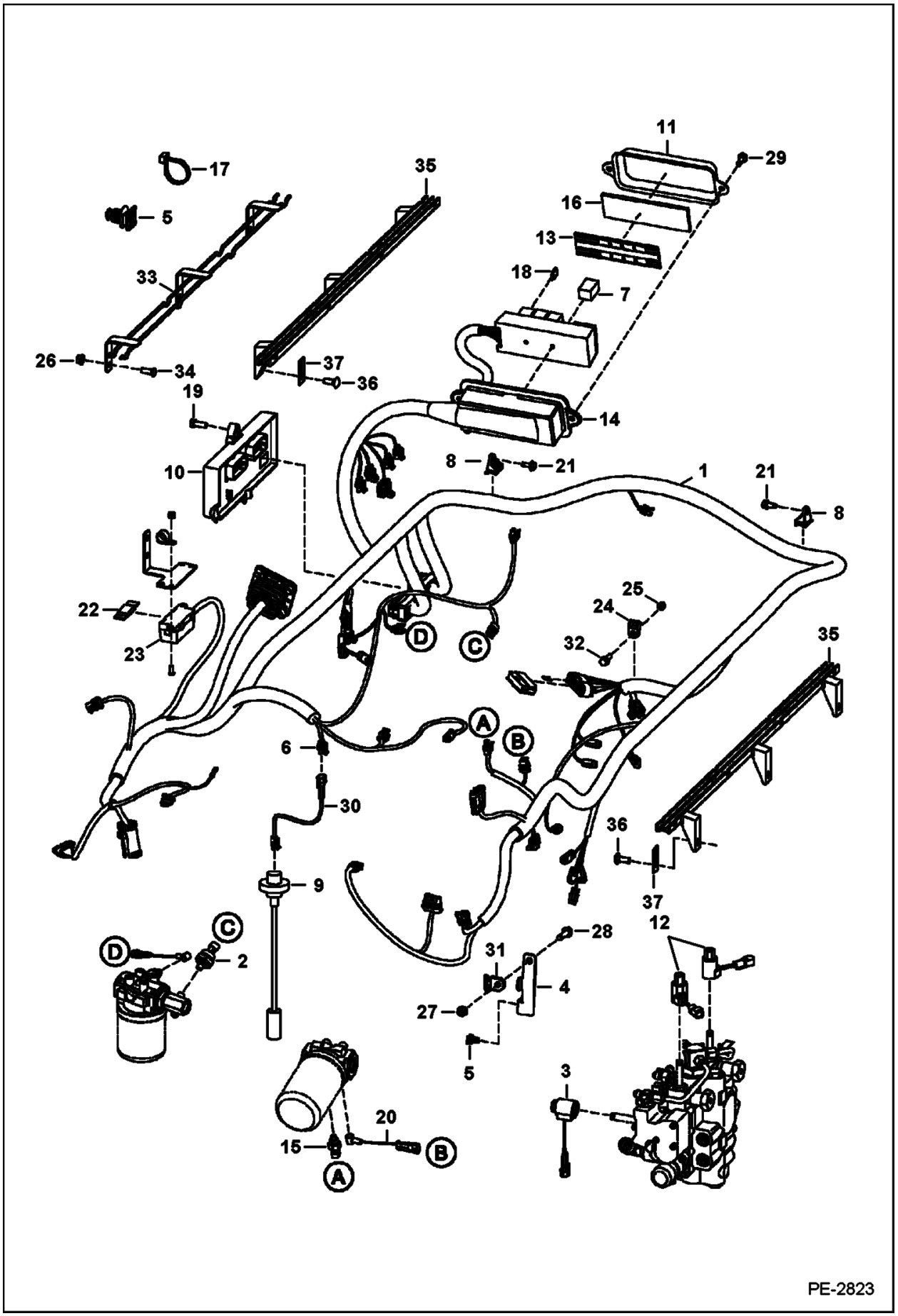

Illustration PE2823

Model S160 K
6904270

Page 240 - OSS# 6300202494 - All rights reserved by Bobcat Company - 02/11/2016 - 14:15:02 - Produced by Ken Cook Co. with mediaoff

ENGINE ELECTRICAL CIRCUITRY (Cont'd)
(S/N 529911001 - 59999, 530011001 - 59999)

Ref No	Part Number	Description	Remarks	Serial Number	Qty
1		HARNESS	NLA - loader - W/fuel sender wire - Order 7116258 Harness & Ref. 30 - Was 7116258 [B,D]	5299 & Bel	1
1		HARNESS	NLA - loader - W/fuel sender wire - Order 7116258 Harness & Ref. 30 - Was 7116258 [B,D]	5300 & Bel	1
1	7116258	HARNESS, MFR	loader - W/O fuel sender wire	5300 - 11366	1
1	7116258	HARNESS, MFR	loader - W/O fuel sender wire	5299 - 11971	1
1		HARNESS	NLA - loader - single speed option - Order 7142376 harness - Was 7123793 [A]	5299 11972-59999	1
1		HARNESS	NLA - loader - single speed option - Order 7142376 harness - Was 7123793 [A]	5300 11367-59999	1
1	7142376	HARNESS	loader - 2 speed option - extra connector for pre-warming solenoid	5299 11972-59999	1
1	7142376	HARNESS	loader - 2 speed option - extra connector for pre-warming solenoid	5300 11367-59999	1
2	6674316	SWITCH, PRESS OIL HYD	3-pin molded connector		1
3	6675559	COIL			1
4	7109495	MOUNT			1
5	7015668	MOUNT, STRAP TIE	push in - Use W/tie strap - Was 6678666 [B]		2
6	6646383	CONNECTOR	fuel sender		1
6	6648330	TERMINAL			2
7	6679820	SWITCH, RELAY MAGNETIC			7
8	6678818	MOUNT			3
9	7179837	SENSOR FUEL	W/gasket - Was 6680436 [A]		1
9	6717579	GASKET			1
10	6688439	CONTROLLER, BOBCAT	Bobcat		1
11	6716621	FUSE BOX COVER	Was 7176546 [A]		1
12	6678891	COIL	10 volt - W/nut		2
12	6691022	NUT	Was 6690705 [A]		2
13	7117407	DECAL, FUSE	inside fuse cover - 51 x 178 mm (2 x 7")		1
14	6718659	HSNG, FUSE			1
14	6673200	FUSE BLOCK			1
15	6727869	SENDER,HYD TEMP			1
16	6731275	INSULATION			1
17	6624289	STRAP, TIE			17
18	6654806	FUSE, 15A			2
18	6702444	FUSE 25A 5			6
18	6718034	FUSE, 30A			2
19	43C616	BOLT			3
20	6728626	HARNESS			1
21	84G3112	BOLT 5			2
22	6675155	FUSE, 100A	mega		1
23	6675154	HOLDER	high amp fuse		1
24	6678667	MOUNT			2
25	83D4	NUT 10			1
26	97D6	NUT 10			7
27	97D5	NUT			3
28	35C520	BOLT			3
29	84G3116	SCREW			2
30	7117788	HARNESS	fuel sender	& Abv	1

Page 241 - OSS# 6300202494 - All rights reserved by Bobcat Company - 02/11/2016 - 14:15:02 - Produced by Ken Cook Co. with media1off

ENGINE ELECTRICAL CIRCUITRY (Cont'd)
(S/N 529911001 - 59999, 530011001 - 59999)

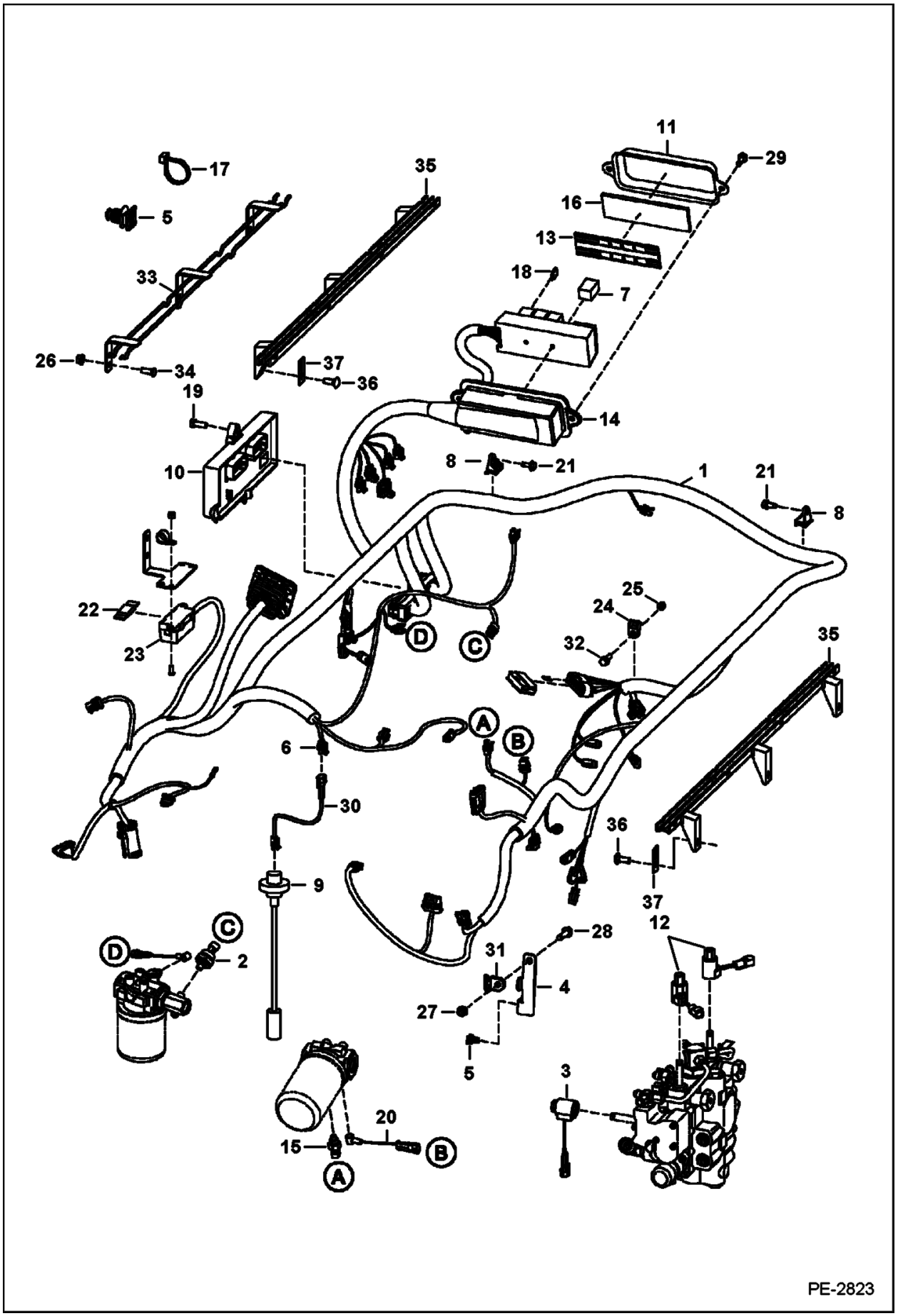

Illustration PE2823

Model S160 K
6904270

Page 242 - OSS# 6300202494 - All rights reserved by Bobcat Company - 02/11/2016 - 14:15:02 - Produced by Ken Cook Co. with mediaoff

ENGINE ELECTRICAL CIRCUITRY (Cont'd)
(S/N 529911001 - 59999, 530011001 - 59999)

Ref No	Part Number	Description	Remarks	Serial Number	Qty
31	6679034	MOUNT			1
32	17C412	BOLT 5	Was 17C416 [B]		1
33		BRACKET	NSS - W/Ref. 34 - Order Ref. 35 & (3) each of Ref. 36 & 37		2
34	6689032	STUD			6
35	7131254	BRACKET, MOLDED SKI			6
36	37C620	BOLT			6
37		PLATE, REINFORCEMENT	NLA - Was 6698084 [A]		6

Page 243 - OSS# 6300202494 - All rights reserved by Bobcat Company - 02/11/2016 - 14:15:02 - Produced by Ken Cook Co. with mediaioff

ENGINE ELECTRICAL CIRCUITRY
(S/N 529960001 & Above, (530060001 & Above, AHWA11001 & Above, AC3260001 & Above)

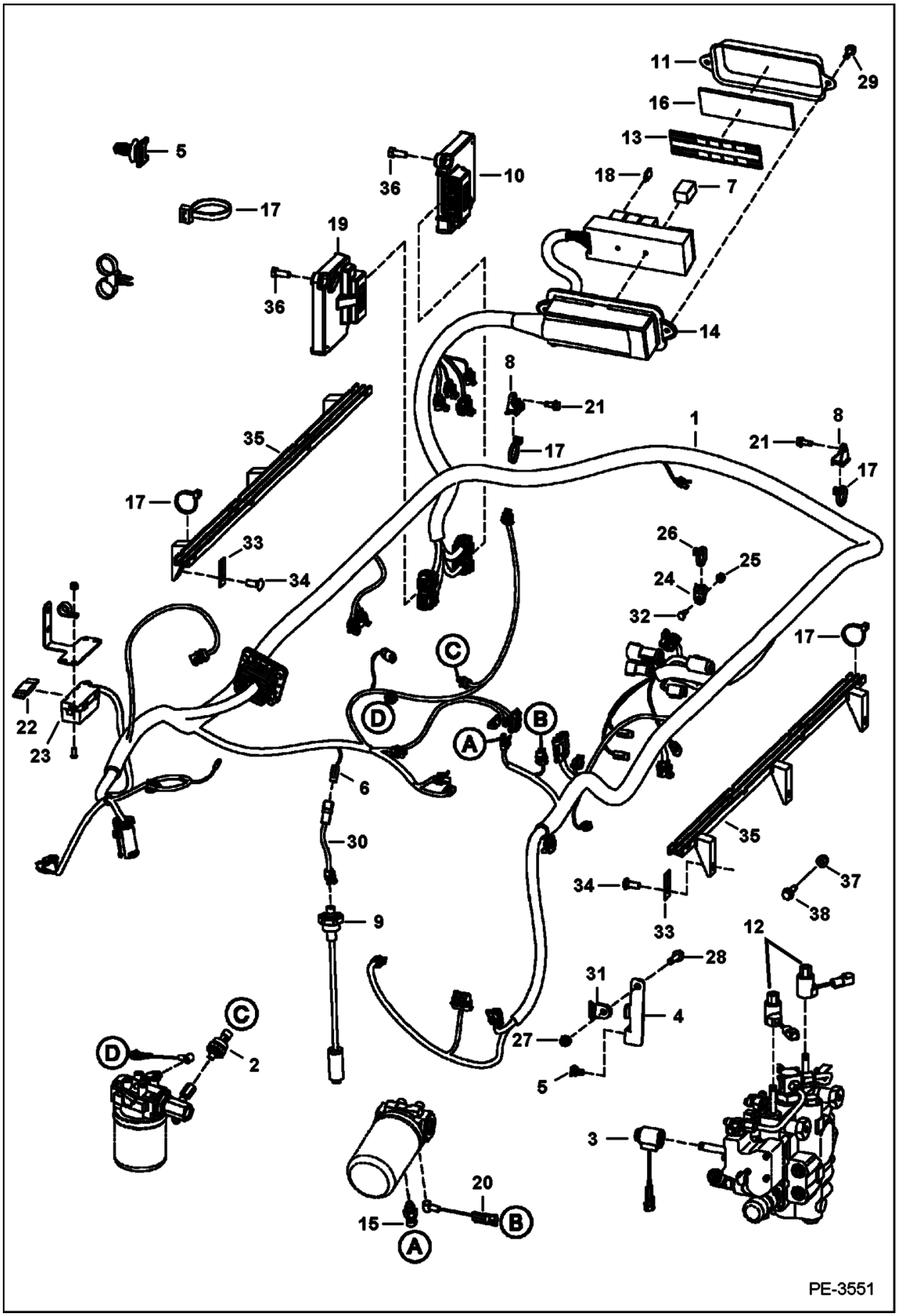

Illustration PE3551 **Model S160 K**
6904270

Page 244 - OSS# 6300202494 - All rights reserved by Bobcat Company - 02/11/2016 - 14:15:02 - Produced by Ken Cook Co. with mediaoff

ENGINE ELECTRICAL CIRCUITRY (Cont'd)
(S/N 529960001 & Above, (530060001 & Above, AHWA11001 & Above, AC3260001 & Above)

Ref No	Part Number	Description	Remarks	Serial Number	Qty
1	7159445	HARNESS		529960001 & Above	1
1	7159445	HARNESS		530060001 & Above	1
1	7159445	HARNESS		AHWA11001 & Above	1
1	7139414	HARNESS, MFR		AC3260001 & Above	1
2	6674316	SWITCH, PRESS OIL HYD	3-pin molded connector		1
3	6675559	COIL			1
4	7109495	MOUNT			1
5	7015668	MOUNT, STRAP TIE	push in - Use W/tie strap - Was 6678666 [B]		6
6	6646383	CONNECTOR	fuel sender		1
6	6648330	TERMINAL			2
7	6679820	SWITCH, RELAY MAGNETIC			8
8	6678818	MOUNT			1
9	7179837	SENSOR FUEL	W/gasket - Was 6680436 [A]		1
9	6717579	GASKET			1
10	6693353	CONTROLLER, GATEWAY	Bobcat		1
11	6716621	FUSE BOX COVER	Was 7176546 [A]		1
12	6678891	COIL	10 volt - W/nut		2
12	6691022	NUT			2
13	7159779	DECAL	fuse relay - 51 x 178 mm (2 x 7")		1
14	6718659	HSNG, FUSE			1
14	6673200	FUSE BLOCK			1
15	6727869	SENDER,HYD TEMP			1
16	6731275	INSULATION			1
17	6624289	STRAP, TIE			17
18	6663289	FUSE, 5A	5 amp		1
18	6654806	FUSE, 15A			3
18	6702444	FUSE 25A 5			6
18	6718034	FUSE, 30A			2
19	7012048	CONTROLLER, AUX CONTROL	Was 6691288 [A]		1
20	6728626	HARNESS			1
21	84G3112	BOLT 5			2
22	6675155	FUSE, 100A	mega		1
23	6675154	HOLDER	high amp fuse		1
24	6678667	MOUNT			2
25	83D4	NUT 10			1
26	6678668	STRAP			2
27	97D5	NUT			3
28	35C520	BOLT			3
29	84G3116	SCREW			2
30	7117788	HARNESS	fuel sender		1
31	6679034	MOUNT			1
32	17C412	BOLT 5			1

Page 245 - OSS# 6300202494 - All rights reserved by Bobcat Company - 02/11/2016 - 14:15:02 - Produced by Ken Cook Co. with media1off

ENGINE ELECTRICAL CIRCUITRY (Cont'd)
(S/N 529960001 & Above, (530060001 & Above, AHWA11001 & Above, AC3260001 & Above)

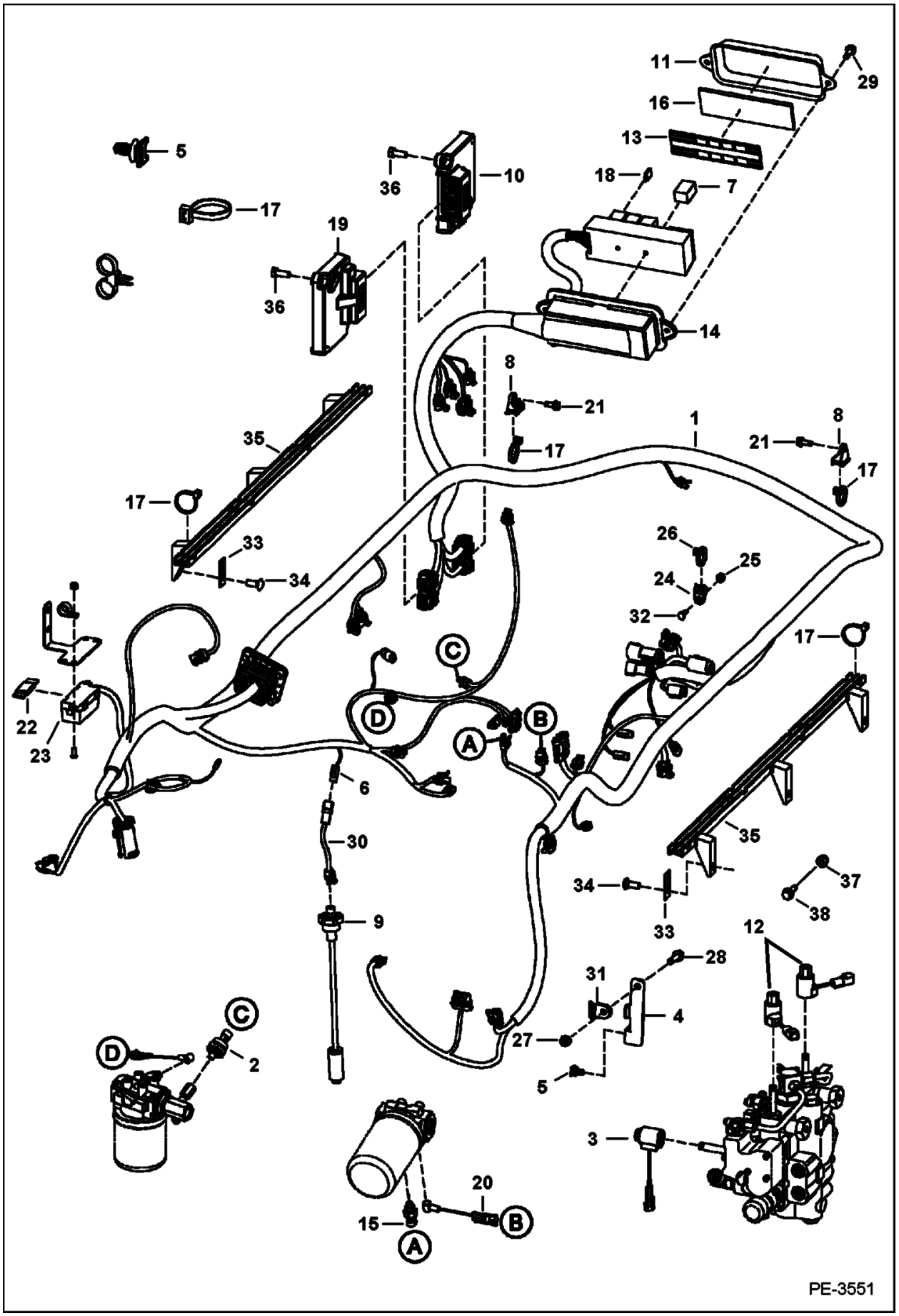

Illustration PE3551

Model S160 K
6904270

Page 246 - OSS# 6300202494 - All rights reserved by Bobcat Company - 02/11/2016 - 14:15:02 - Produced by Ken Cook Co. with mediaoff

ENGINE ELECTRICAL CIRCUITRY (Cont'd)
(S/N 529960001 & Above, (530060001 & Above, AHWA11001 & Above, AC3260001 & Above)

Ref No	Part Number	Description	Remarks	Serial Number	Qty
33		PLATE, REINFORCEMENT	NLA - Was 6698084 [A]		6
34	6689032	STUD			6
34	37C620	BOLT			6
35	7131254	BRACKET, MOLDED SKI			2
36	7157217	BOLT			4
37	97D6	NUT 10			7
38	84G3724	BOLT			1

Page 247 - OSS# 6300202494 - All rights reserved by Bobcat Company - 02/11/2016 - 14:15:02 - Produced by Ken Cook Co. with media1off

CONNECTOR HARNESS ASSEMBLY

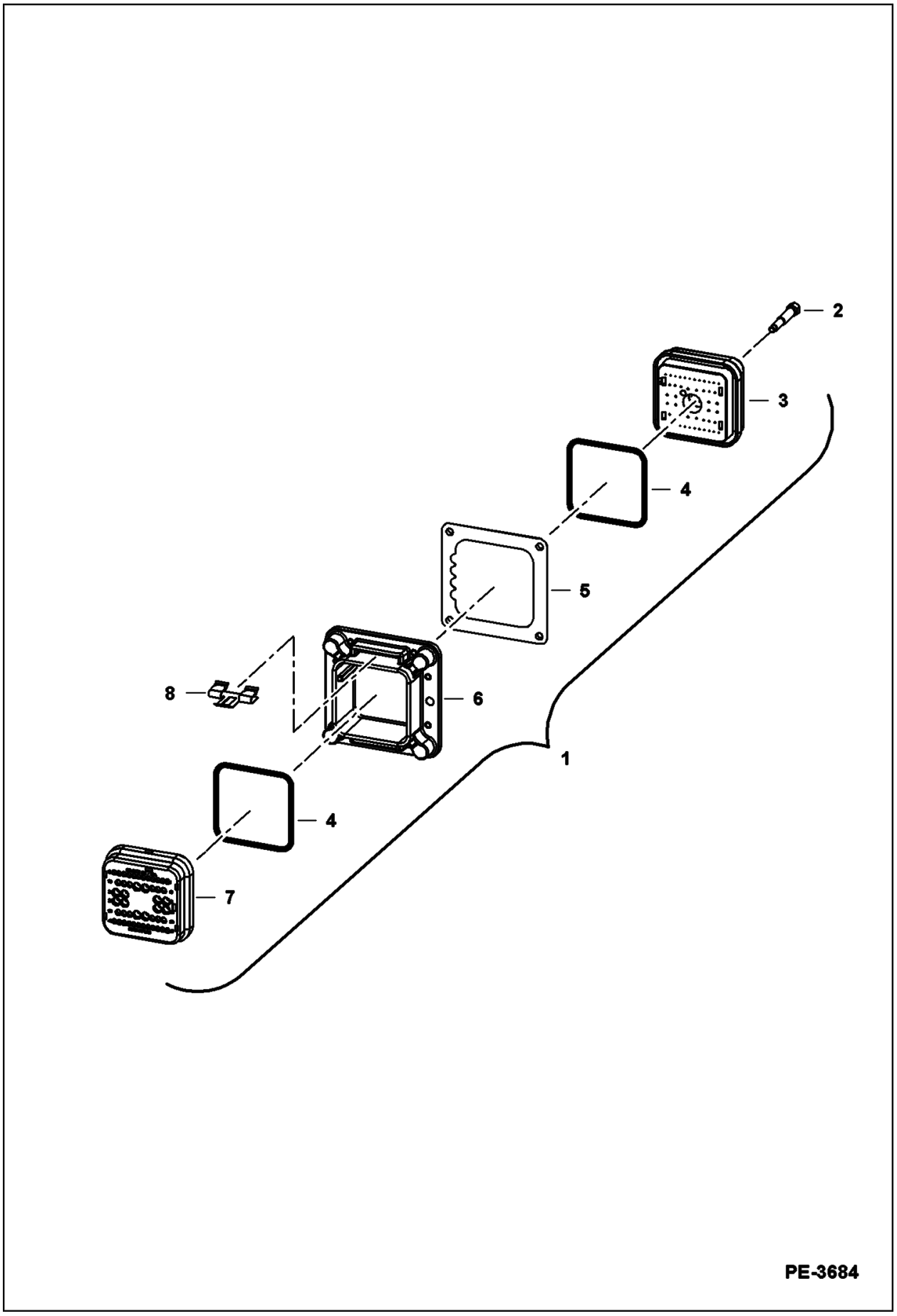

Illustration PE3684

Model S160 K
6904270

Page 248 - OSS# 6300202494 - All rights reserved by Bobcat Company - 02/11/2016 - 14:15:02 - Produced by Ken Cook Co. with mediaoff

CONNECTOR HARNESS ASSEMBLY (Cont'd)

Ref No	Part Number	Description	Remarks	Serial Number	Qty
1		CONNECTOR	NSS - Order components		1
2		BOLT	NSS - Order Ref. 3		1
3	6688834	CONNECTOR	cab - W/Ref. 2 & 4		1
4		SEAL	NSS - Order Ref. 3 or 7 - Was 6697794 [A]		1
5		SEAL	NSS - Order Ref. 6 - Was 6697793 [A]		1
6	6688836	FLANGE	W/Ref. 5 & 8		1
7	6688833	CONNECTOR	engine - W/Ref. 4		1
8		CLIP	NSS - metal - Order Ref. 6		2

Page 249 - OSS# 6300202494 - All rights reserved by Bobcat Company - 02/11/2016 - 14:15:02 - Produced by Ken Cook Co. with media1off

CONTROLS ELECTRICAL
(Manual Controls)

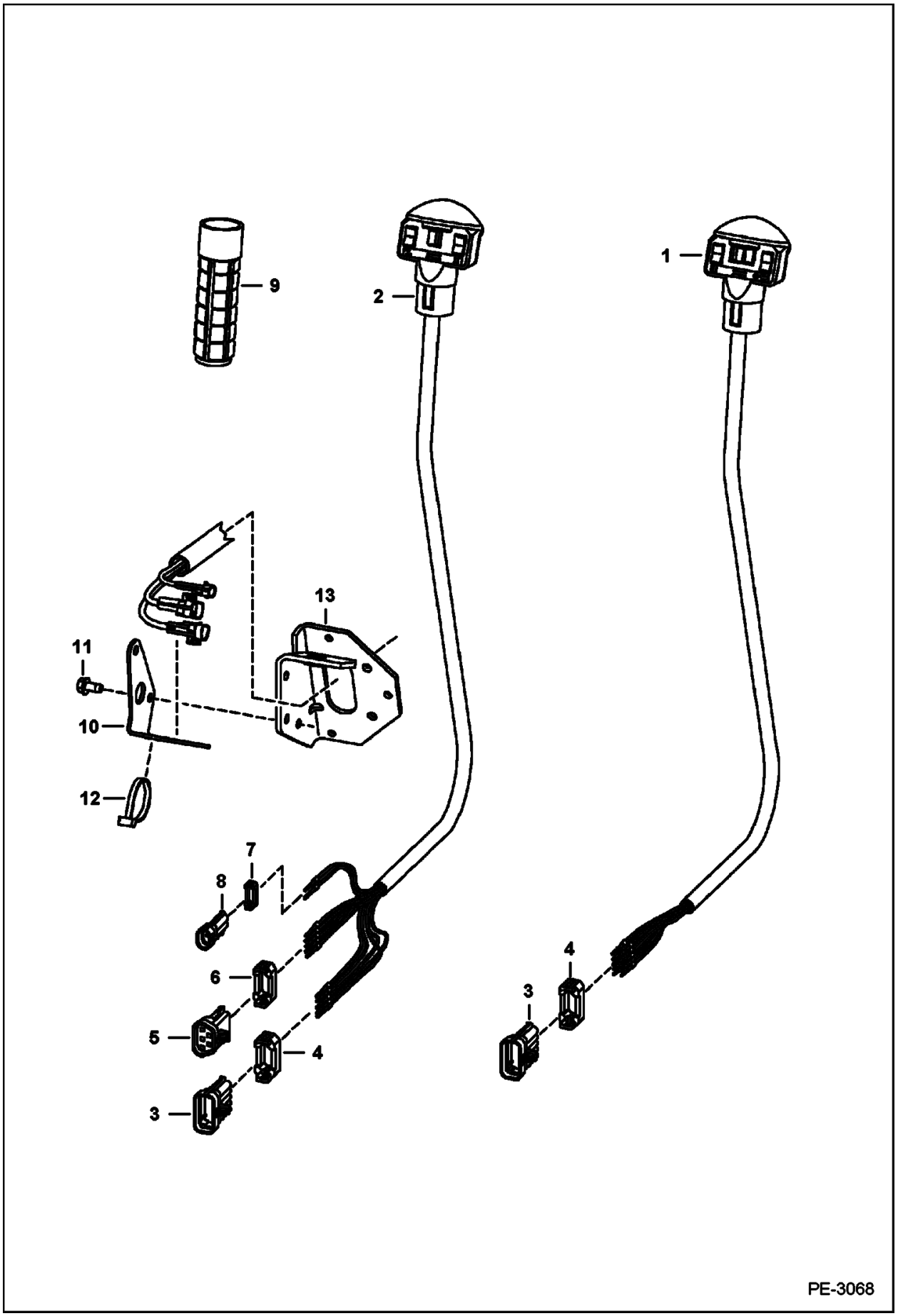

Illustration PE3068

Model S160 K
6904270

Page 250 - OSS# 6300202494 - All rights reserved by Bobcat Company - 02/11/2016 - 14:15:02 - Produced by Ken Cook Co. with mediaoff

CONTROLS ELECTRICAL (Cont'd)
(Manual Controls)

Ref No	Part Number	Description	Remarks	Serial Number	Qty
1	6680418	ASSY, HANDLE	RH - Also Order Ref. 3 & 4		1
1	6640690	PIN			9
1	6641176	SEAL			9
2	6680419	HANDLE	LH - Also Order Ref. 3-8		1
2	6640690	PIN			10
2	6641176	SEAL			10
2	6680447	DECAL			1
3	6640692	CONNECTOR	10-pin		2
4	6640694	LOCK	Use W/ 10-pin connector		2
5	6667144	CONNECTOR	5-pin		1
6	6667145	LOCK	Use W/ 5-pin connector		1
7	6641180	LOCK 5	Use W/ 2-pin connector		1
8	6641179	CONECTR 5	2-pin		2
9	6702621	GRIP			2
10	7144550	BRACKET, TIE-DOWN			1
11	84G3712	BOLT 5			2
12	6624289	STRAP, TIE			2
13	7128601	BRACKET	See Illustration HAND CONTROLS / NA6667 - LH		1

Page 251 - OSS# 6300202494 - All rights reserved by Bobcat Company - 02/11/2016 - 14:15:02 - Produced by Ken Cook Co. with mediaioff

CONTROLS ELECTRICAL
(Selectable Joystick Controls) (S/N 529911001 - 11971, 530011001 - 11366)

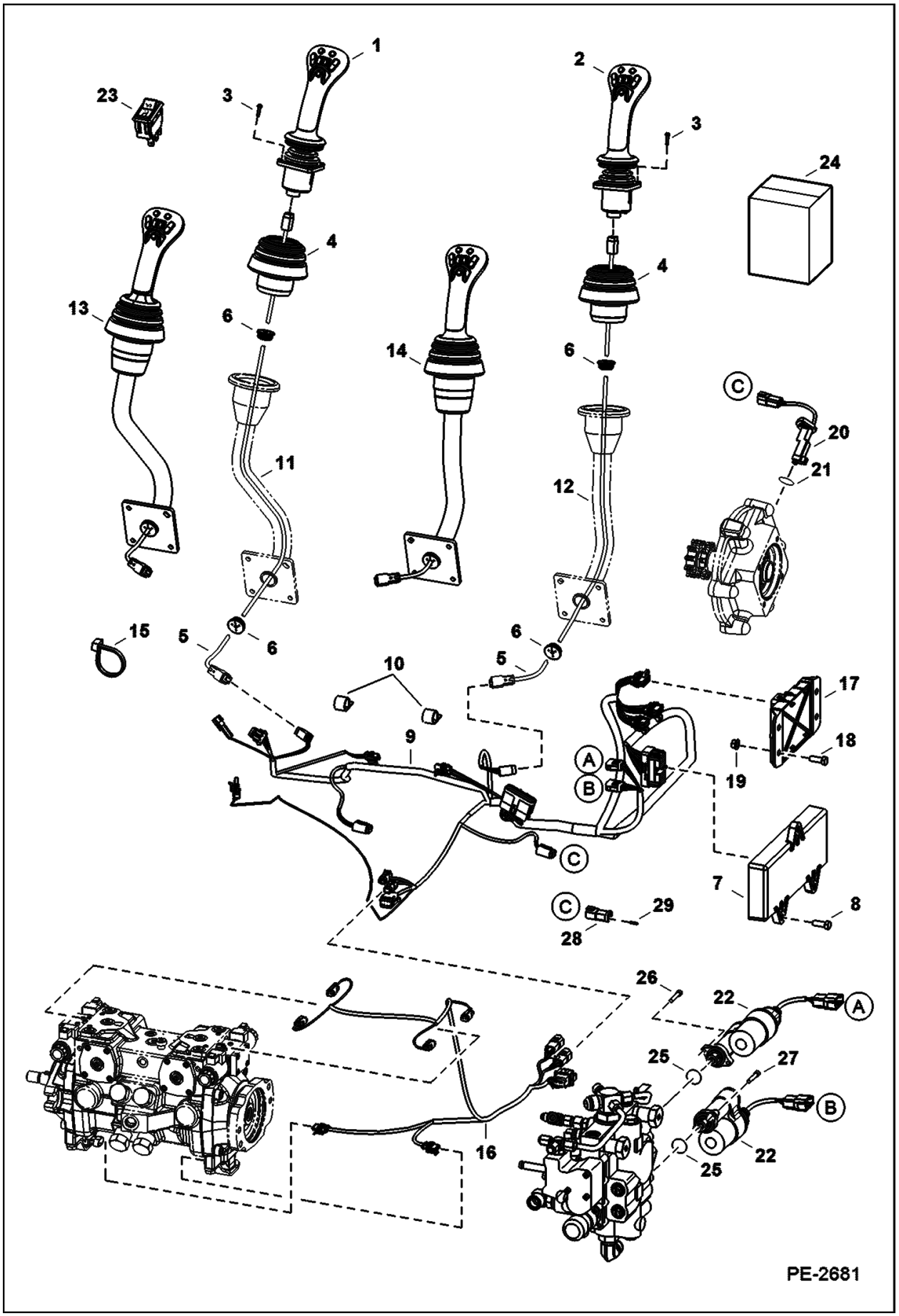

Illustration PE2681

Model S160 K
6904270

Page 252 - OSS# 6300202494 - All rights reserved by Bobcat Company - 02/11/2016 - 14:15:02 - Produced by Ken Cook Co. with mediaoff

CONTROLS ELECTRICAL (Cont'd)
(Selectable Joystick Controls) (S/N 529911001 - 11971, 530011001 - 11366)

Ref No	Part Number	Description	Remarks	Serial Number	Qty
1		JOYSTICK LH	NSS - Order Ref. 13 - Was 6687883 [A]		1
2		JOYSTICK RH	NSS - Order Ref. 14 - Was 6687882 [A]		1
3		BOLT	NSS - Order Ref. 24 - Was 6678659 [A]		8
4		BOOT	NSS - Order Ref. 24 - Was 6678903 [A]		2
5		HARNESS	NSS - Order Ref. 24 - Was 6729397 [A]		2
6	6684294	GROMMET			4
7	6679485	CONTROLLER, DRIVE	drive - W/single 50-pin connector		1
8	43C616	BOLT			3
9		HARNESS, SJC	Contact your Local Dealer for Bobcat Technical Information BTI419 - NLA - W/Speed sensor connectors - Was 7117036 [A]		1
9	7117036	HARNESS, SJC	W/O speed sensor connectors		1
10	30H46	CLIP			2
11		HANDLE	NSS - LH - Order Ref. 13 - Was 6729792 [A]		1
12		HANDLE	NSS - RH - Order Ref. 14 - Was 6729791 [A]		1
13		JOYSTICK ASMBLY LH	NLA - LH - Ref. 1, 3-6 & 11 - Order Ref. 24 - Was 7111993 [C]		1
14		JOYSTICK ASMBLY RH	NLA - RH - Ref. 2-6 & 12 - Order Ref. 24 - Was 7111992 [C]		1
15	6624289	STRAP, TIE			21
16	7131601	HARNESS, PUMP	Use W/hydrostatic pump Model R902095064 - Was 7114735 [B,D]		1
16	7178411	HARNESS, ADAPTER	Use W/hydrostatic pump Model R902136745		1
17	6680410	CONTROLLER, ACS	plastic - W/ 3-connector plug		1
18	17C616	BOLT 5			2
19	97D6	NUT 10			2
20		SENSOR, SPEED TRAVEL	Contact your Local Dealer for Bobcat Technical Information BTI419 - NLA - Was 6677181 [A]		2
21	25K20100	O RING 10			2
22	7101672	ACTUATOR	W/Ref. 25		2
23	6683812	H/ISO SWITCH	H/ISO		1
24	7126558	KIT, JOYSTICK	See Illustration /		1
25	58K120	O-RING	Use W/Ref. 22 - Was 6686220 [B,D]		2
26	29G416	BOLT			2
27	69G436	BOLT			2
28	6691419	CONNECTOR, ELECTRICAL			2
29	6665370	PLUG			8

Page 253 - OSS# 6300202494 - All rights reserved by Bobcat Company - 02/11/2016 - 14:15:02 - Produced by Ken Cook Co. with media1off

CONTROLS ELECTRICAL
(Selectable Joystick Control Service Kit) (S/N 529911001 - 11971, 530011001 - 11366)

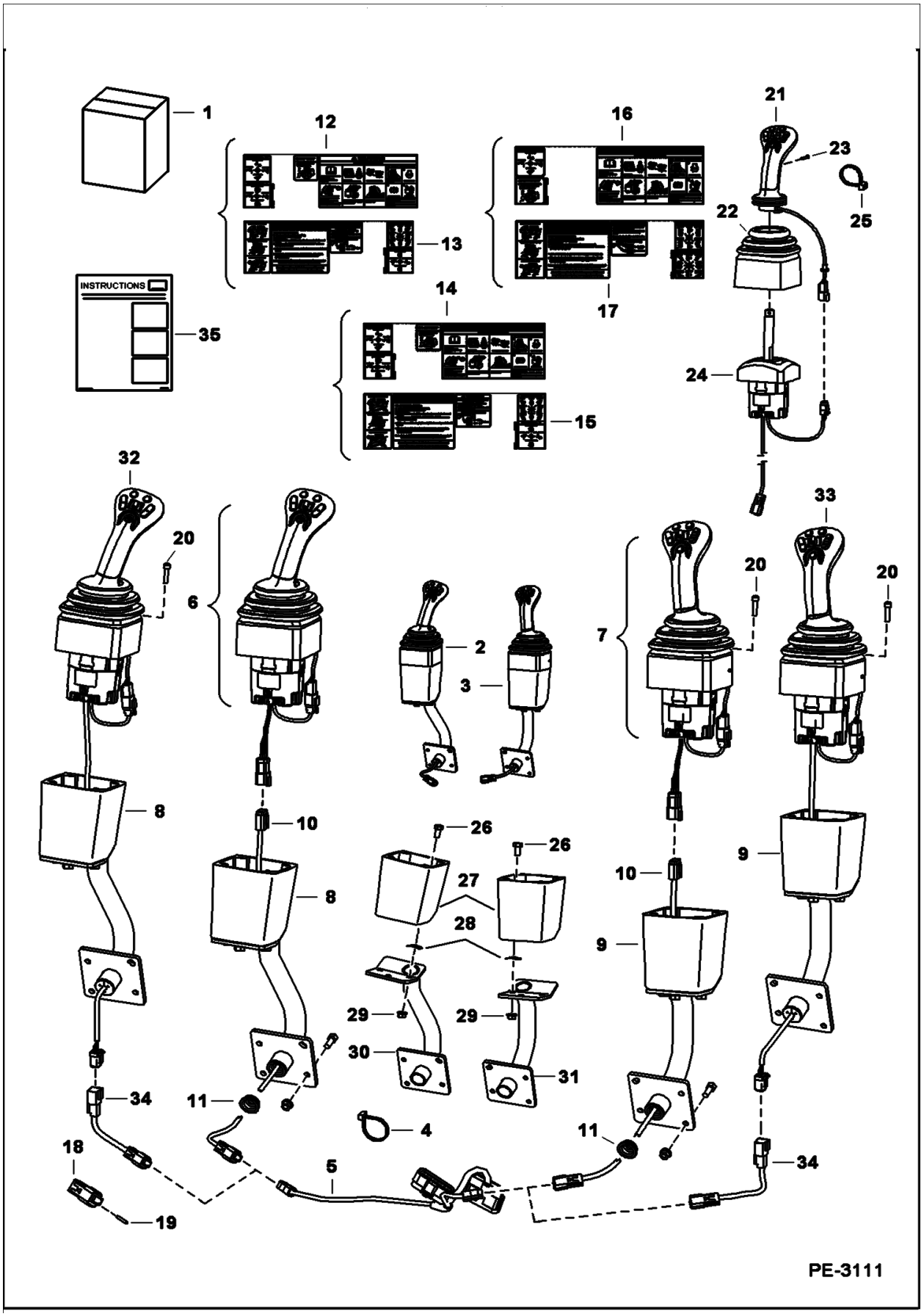

Page 254 - OSS# 6300202494 - All rights reserved by Bobcat Company - 02/11/2016 - 14:15:02 - Produced by Ken Cook Co. with mediaoff

CONTROLS ELECTRICAL (Cont'd)
(Selectable Joystick Control Service Kit) (S/N 529911001 - 11971, 530011001 - 11366)

Ref No	Part Number	Description	Remarks	Serial Number	Qty
1		KIT, JOYSTICK	NLA - Ref. 4-20 & 35 - Order 7126558 kit, joystick - Was 7126558 [A]		1
1	7126558	KIT, JOYSTICK	Ref. 4, 5, 11-20, 26-35		1
2		JOYSTICK, COMPLETE L.H	NSS - Order Ref. 6, 8, 10 & 11		1
3		JOYSTICK, COMPLETE R.H.	NSS - Order Ref. 7, 9, 10 & 11		1
4	6624289	STRAP, TIE			2
5	7122184	HARNESS			1
6		JOYSTICK, LH	NLA - Ref. 21-24 - Use W/Ref. 10 (NLA/ 7112828 harness) - Order Ref. 32 & 34 - Was 6689920 [A]		1
7		JOYSTICK, RH	NLA - Ref. 21-24 - Use W/Ref. 10 (NLA/ 7112828 harness) - Order Ref. 33 & 34 - Was 6689921 [A]		1
8		HANDLE	NLA - LH - Order Ref. 11 & 26-30 - Was 7123812 [A]		1
9		HANDLE	NLA - RH - Order Ref. 11, 26-29 & 31 - Was 7123811 [A]		1
10		HARNESS	NLA - 20" (508 mm) long - Use W/ Ref. 6 (NLA/ 6689920 joystick) & Ref. 7 (NLA/ 6689921 joystick) - Order 7112828 harness - Was 7112828 [B]		2
10	7112828	HARNESS	12" (304,8 mm) long - Use W/Ref. 6 (NLA/ 6689920 joystick) & Ref. 7 (NLA/ 6689921 joystick)		2
11	6684294	GROMMET			2
12	7131518	DECAL	for wheel SJC machines		1
13	7131519	DECAL	for wheel SJC machines		1
14	7131520	DECAL	for track SJC machines		1
15	7131521	DECAL	for track SJC machines		1
16	7131522	DECAL	for AWS SJC machines		1
17	7131523	DECAL	for AWS SJC machines		1
18	6677898	CONNECTOR NSS			2
19	6676640	PLUG,SEAL			12
20	29G416	BOLT			8
21	6689922	HANDLE	LH - Use W/Ref. 6 (NLA/ 6689920 joystick) & Ref. 32		1
21	6689923	HANDLE	RH - Use W/Ref. 7 (NLA/ 6689921 joystick) & Ref. 33		1
22	6689926	BOOT			2
23	6689927	BOLT			2
24	6689924	BASE, JOYSTICK	RH - Use W/Ref. 7 (NLA/ 6689921 joystick)		1
24	6697939	BASE, JOYSTICK	RH - Use W/Ref. 33		1
24	6689925	BASE, JOYSTICK	LH - Use W/Ref. 6 (NLA/ 6689920 joystick)		1
24	6697938	BASE, JOYSTICK	LH - Use W/Ref. 32		1
25	6691589	TIE 100	packaged as 100 pieces		x
26	17C612	BOLT 5			6
27	7124929	BASE			2
28	6684033	NUT			6
29	97D6	NUT 10			6
30	7123817	MOUNT LH			1
31	7123816	MOUNT RH			1
32	6697904	JOYSTICK, LH			1
33	6697905	JOYSTICK, RH			1
34	7152616	HARNESS, ADAPTER	4" (101,6 mm) long jumper harness		2
35	6904783	INSTRUCTIONS			1

Page 255 - OSS# 6300202494 - All rights reserved by Bobcat Company - 02/11/2016 - 14:15:02 - Produced by Ken Cook Co. with media1off

CONTROLS ELECTRICAL
(Selectable Joystick Controls) (S/N 529911972 - 59999, 53001136 - 59999)

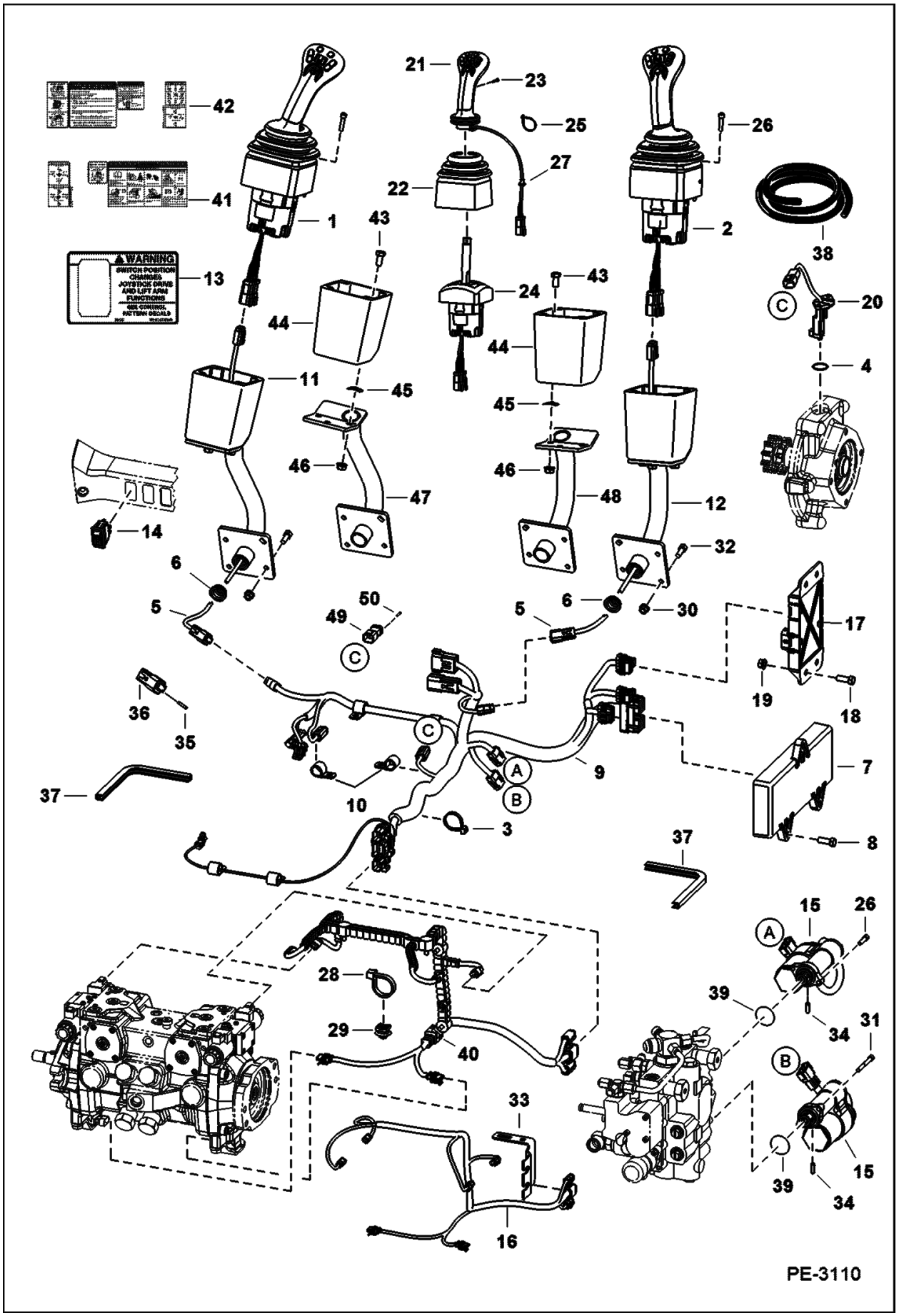

Illustration PE3110 **Model S160 K**
6904270

Page 256 - OSS# 6300202494 - All rights reserved by Bobcat Company - 02/11/2016 - 14:15:02 - Produced by Ken Cook Co. with mediaoff

CONTROLS ELECTRICAL (Cont'd)
(Selectable Joystick Controls) (S/N 529911972 - 59999, 53001136 - 59999)

Ref No	Part Number	Description	Remarks	Serial Number	Qty
1		JOYSTICK, LH	NLA - Order 6697904 LH joystick - Also Order 7152616 adapter harness to replace existing 7112828 harness - Was 6689920 [A]		1
2		JOYSTICK, RH	NLA - Order 6697905 RH joystick - Also Order 7152616 adapter harness to replace existing 7112828 harness - Was 6689921 [A]		1
3	6624289	STRAP, TIE			2
4	25K20100	O RING 10			2
5	7112828	HARNESS	Use W/Ref. 1 (6689920 joystick) & Ref. 2 (6689921 joystick)		2
6	6684294	GROMMET			4
7	6679485	CONTROLLER, DRIVE	drive - W/single 50-pin connector		1
8	43C616	BOLT			3
9		HARNESS, SJC	Contact your Local Dealer for Bobcat Technical Information BTI419 - NLA - W/Speed sensor connectors - Was 7123794 [A]	529911972-12709	1
9		HARNESS, SJC	Contact your Local Dealer for Bobcat Technical Information BTI419 - NLA - W/Speed sensor connectors - Was 7123794 [A]	5300 11367-11865	1
9	7123794	HARNESS	W/O speed sensor connectors	5300 11367-11865	1
9	7123794	HARNESS	W/O speed sensor connectors	529911972-12709	1
9		HARNESS, SJC	Contact your Local Dealer for Bobcat Technical Information BTI419 - NLA - W/Speed sensor connectors - Was 7136044 [A]	530011866 - 59999	1
9		HARNESS, SJC	Contact your Local Dealer for Bobcat Technical Information BTI419 - NLA - W/Speed sensor connectors - Was 7136044 [A]	529912710 - 59999	1
9	7136044	HARNESS	W/O speed sensor connectors	529912710 - 59999	1
9	7136044	HARNESS	W/O speed sensor connectors	530011866 - 59999	1
10	30H42	CLAMP	Was 30H46 [B,D]		2
11		HANDLE	NLA - LH - Order Ref. 6 & 43-47		1
12		HANDLE	NLA - RH - Order Ref. 6, 43-46 & 48		1
13	6737248	DECAL, WARNING	selectable joystick control		1
14	6683812	H/ISO SWITCH	H/ISO		1
15	7101672	ACTUATOR	W/Ref. 39		2
16	7131601	HARNESS, PUMP	Use W/hydrostatic pump Model R902095064 - Was 7114735 [B,D]	5300 11367-11865	1
16	7131601	HARNESS, PUMP	Use W/hydrostatic pump Model R902095064 - Was 7114735 [B,D]	5299 11972-12709	1
16	7178411	HARNESS, ADAPTER	Use W/hydrostatic pump Model R902136745	5299 11972-12709	1
16	7178411	HARNESS, ADAPTER	Use W/hydrostatic pump Model R902136745	5300 11367-11865	1
17	6680410	CONTROLLER, ACS	plastic - W/ 3-connector plug		1
18	17C616	BOLT 5			2
19	97D6	NUT 10			2
20		SENSOR, SPEED TRAVEL	Contact your Local Dealer for Bobcat Technical Information BTI419 - NLA - Was 6677181 [A]		2
21	6689922	HANDLE	LH - W/Ref. 27		1

Page 257 - OSS# 6300202494 - All rights reserved by Bobcat Company - 02/11/2016 - 14:15:02 - Produced by Ken Cook Co. with media1off

CONTROLS ELECTRICAL (Cont'd)
(Selectable Joystick Controls) (S/N 529911972 - 59999, 53001136 - 59999)

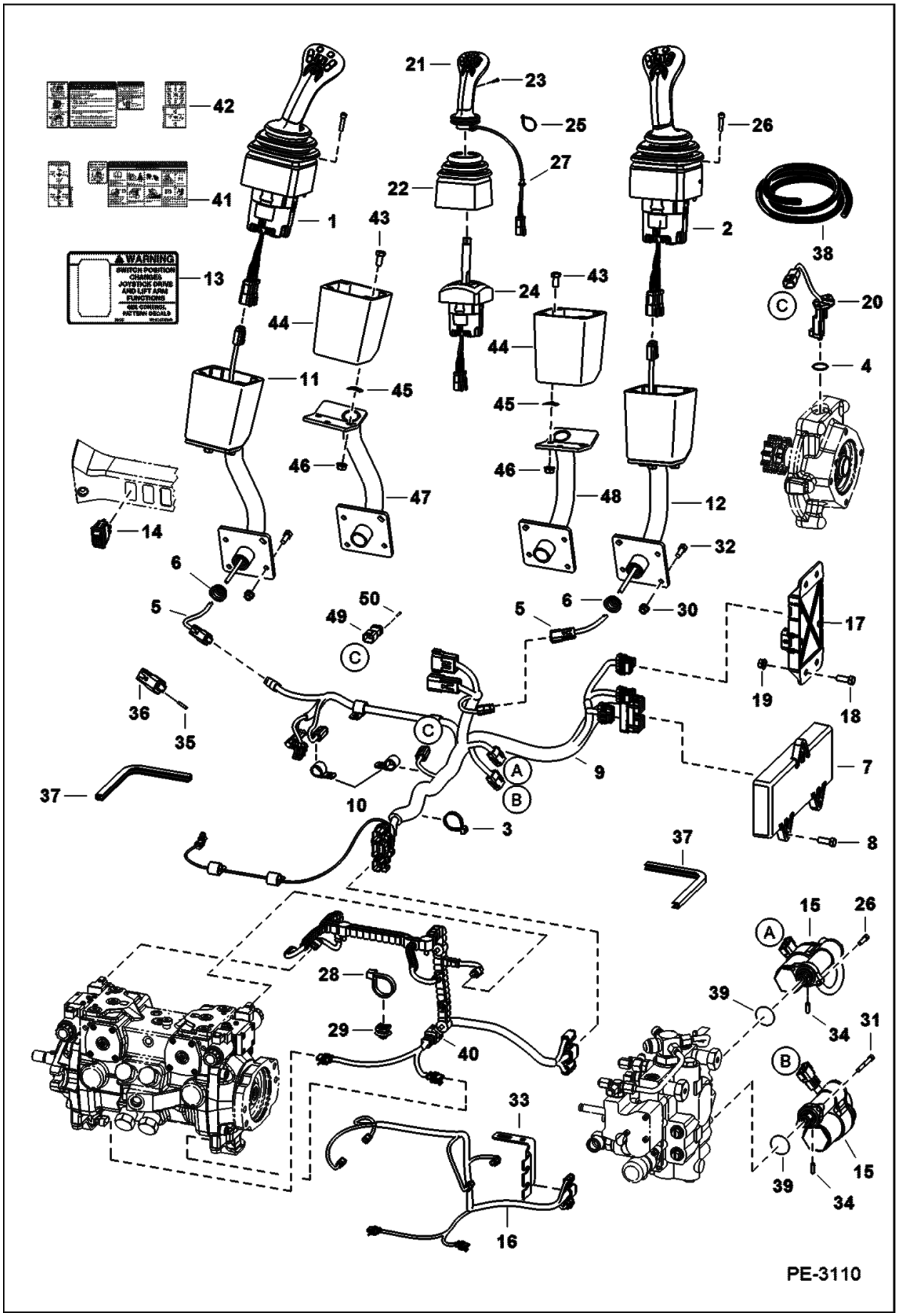

Illustration PE3110 **Model S160 K**
6904270

Page 258 - OSS# 6300202494 - All rights reserved by Bobcat Company - 02/11/2016 - 14:15:02 - Produced by Ken Cook Co. with mediaoff

CONTROLS ELECTRICAL (Cont'd)
(Selectable Joystick Controls) (S/N 529911972 - 59999, 53001136 - 59999)

Ref No	Part Number	Description	Remarks	Serial Number	Qty
21	6689923	HANDLE	RH - W/Ref. 27		1
22	6689926	BOOT			2
23	6689927	BOLT			2
24	6689924	BASE, JOYSTICK	RH		1
24	6689925	BASE, JOYSTICK	LH		1
25	6691589	TIE 100	packaged as 100 pieces		x
26	29G416	BOLT			10
27		HARNESS	NSS - Order Ref. 21		2
28	6690690	STRAP, TIE			10
29	6690688	TREE MOUNT			4
30	89D5	NUT			4
31	69G436	BOLT			2
32	35C512	BOLT			4
33	7122359	BRACKET			1
34	7108236	PIN			2
35	6665370	PLUG			12
36	6662246	CONNECTOR			2
37		MOUNLDING	NLA - 10.5" (267 mm) long - Order Ref. 38		2
38	6654139	MOULDING BULK/FT	bulk - sold per foot		x
39	58K120	O-RING	Use W/Ref. 15 - Was 6686220 [B,D]		2
40	7198706	HARNESS, PUMP	Use W/hydrostatic pump Model R902095064 - W/ 3-pin oval connectors - Was 7139761 [A]	529912710 - 59999	1
40	7198706	HARNESS, PUMP	Use W/hydrostatic pump Model R902095064 - W/ 3-pin oval connectors - Was 7139761 [A]	530011866 - 59999	1
40		HARNESS	pump - Use W/ hydrostatic pump Model R902136745 - 3 pin triangle	5300 11367-11865	1
40		HARNESS	pump - Use W/ hydrostatic pump Model R902136745 - 3 pin triangle	5299 11972-12709	1
40	7188448	HARNESS, PUMP	Use W/hydrostatic pump Model R902136745 - W/ 3-pin triangle connectors - Was 7169309 [A]	529912710 - 59999	1
40	7188448	HARNESS, PUMP	Use W/hydrostatic pump Model R902136745 - W/ 3-pin triangle connectors - Was 7169309 [A]	530011866 - 59999	1
40	6664969	CONNECTOR	8-pin		x
40	6664185	CONNECTOR	2-pin		x
40	6687268	CONNECTOR	3-pin oval - Use W/Ref. 40 (7198706 harness)		x
40	6664801	CONNECTOR	3-pin triangle - Use W/Ref. 40 (7188448 harness)		x
40	6691421	CONNECTOR	grey - 4-pin rectangular		x
40	6662248	4 PIN PLUG	black		x
41	7131518	DECAL			1
42	7131519	DECAL			1
43	17C612	BOLT 5			6
44	7124929	BASE			2
45	6684033	NUT	retaining		6
46	97D6	NUT 10			6
47	7123817	MOUNT LH			1
48	7123816	MOUNT RH			1
49	6691419	CONNECTOR, ELECTRICAL			2
50	6665370	PLUG			8

Page 259 - OSS# 6300202494 - All rights reserved by Bobcat Company - 02/11/2016 - 14:15:02 - Produced by Ken Cook Co. with media1off

CONTROLS ELECTRICAL
(Selectable Joystick Controls) (S/N 529960001 & Above, 530060001 & Above, AHWA11001 & Above)

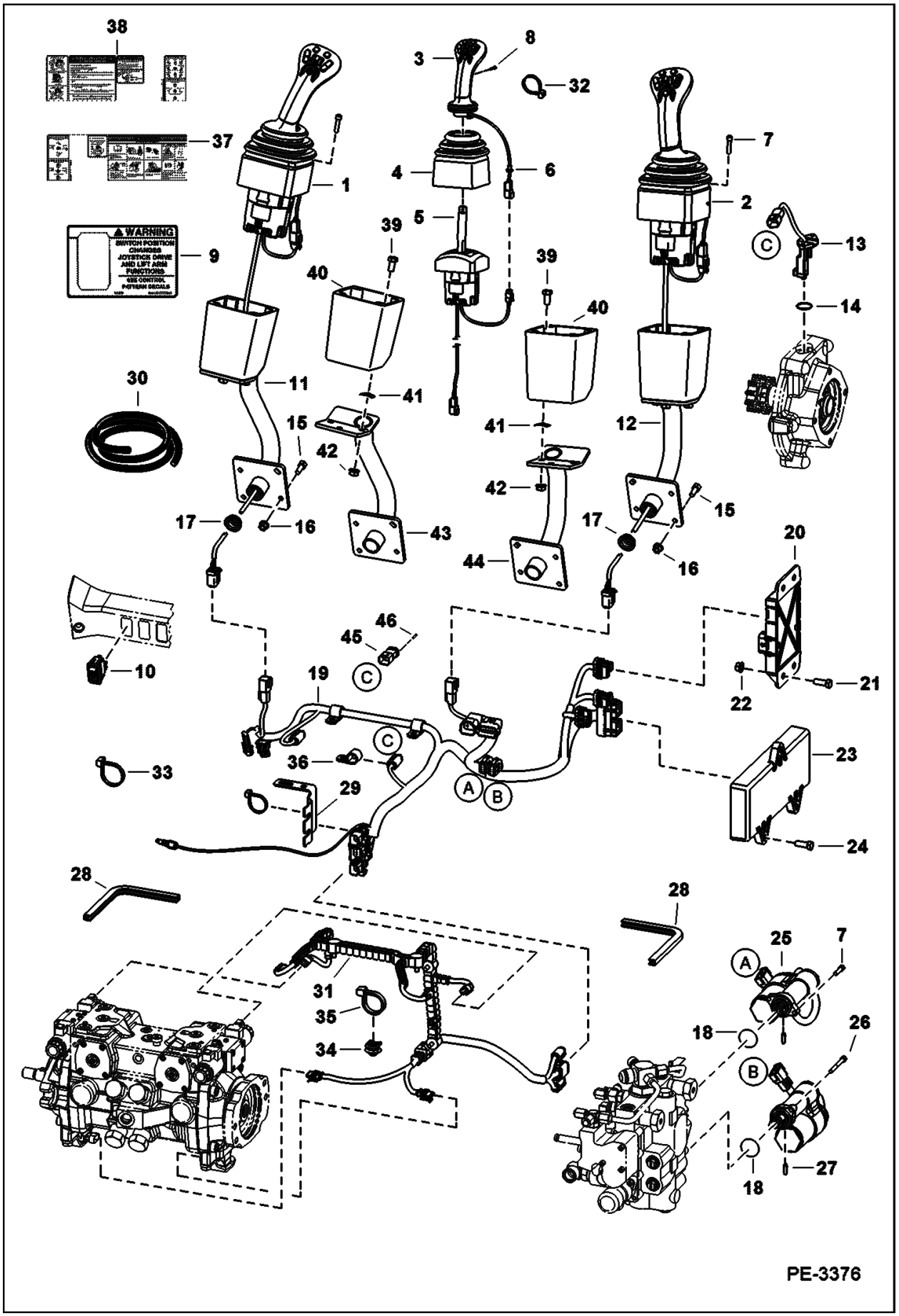

Illustration PE3376

Model S160 K
6904270

Page 260 - OSS# 6300202494 - All rights reserved by Bobcat Company - 02/11/2016 - 14:15:02 - Produced by Ken Cook Co. with mediaIoff

CONTROLS ELECTRICAL (Cont'd)
(Selectable Joystick Controls) (S/N 529960001 & Above, 530060001 & Above, AHWA11001 & Above)

Ref No	Part Number	Description	Remarks	Serial Number	Qty
1	6697904	JOYSTICK, LH	Ref. 3-6 & 8		1
2	6697905	JOYSTICK, RH	Ref. 3-6 & 8		1
3	6689922	HANDLE	LH - W/Ref. 6		1
3	6689923	HANDLE	RH - W/Ref. 6		1
4	6689926	BOOT			2
5	6697939	BASE, JOYSTICK	RH		1
5	6697938	BASE, JOYSTICK	LH		1
6		HARNESS	NSS - Order Ref. 3		2
7	29G416	BOLT			10
8	6689927	BOLT			2
9	6737248	DECAL, WARNING	selectable joystick control		1
10	6683812	H/ISO SWITCH	H/ISO		1
11		HANDLE	NLA - LH - Order Ref. 17 & 39-43		1
12		HANDLE	NLA - RH - Order Ref. 17, 39-42 & 44		1
13		SENSOR, SPEED TRAVEL	Contact your Local Dealer for Bobcat Technical Information BTI419 - NLA - Was 6677181 [A]		2
14	25K20100	O RING 10			2
15	35C512	BOLT			4
16	89D5	NUT			4
17	6684294	GROMMET			2
18	58K120	O-RING	Use W/Ref. 25 - Was 6686220 [B,D]		2
19		HARNESS	Contact your Local Dealer for Bobcat Technical Information BTI419 - NLA - W/Speed sensor connectors - Was 7159452 [A]		1
19	7214135	HARNESS, SJC	W/O speed sensor connectors		1
20	6680410	CONTROLLER, ACS	plastic - W/ 3-connector plug		1
21	17C616	BOLT 5			2
22	97D6	NUT 10			2
23	6679485	CONTROLLER, DRIVE	drive - W/single 50-pin connector		1
24	43C616	BOLT			3
25	7101672	ACTUATOR	W/Ref. 18		2
26	69G436	BOLT			2
27	7108236	PIN			2
28		MOULDING	NLA - 10.5" (267 mm) long - Order Ref. 30		2
29	7122359	BRACKET			1
30	6654139	MOULDING BULK/FT	bulk - sold per foot		x
31	7198706	HARNESS, PUMP	Use W/hydrostatic pump Model R902095064 - W/ 3-pin oval connectors - Was 7139761 [A]		1
31	7188448	HARNESS, PUMP	Use W/hydrostatic pump Model R902136745 - W/ 3-pin triangle connectors - Was 7169309 [A]		1
31	6664969	CONNECTOR	8-pin		x
31	6664185	CONNECTOR	2-pin		x
31	6687268	CONNECTOR	3-pin oval - Use W/Ref. 31 (7198706 harness)		x
31	6664801	CONNECTOR	3-pin triangle - Use W/Ref. 31 (7188448 harness)		x
31	6691421	CONNECTOR	grey - 4-pin rectangular		x
31	6662248	4 PIN PLUG	black		x
32	6691589	TIE 100	packaged as 100 pieces		x
33	6624289	STRAP, TIE			7
34	6690688	TREE MOUNT			4
35	6690690	STRAP, TIE			10
36	30H42	CLAMP			2

Page 261 - OSS# 6300202494 - All rights reserved by Bobcat Company - 02/11/2016 - 14:15:02 - Produced by Ken Cook Co. with media1off

CONTROLS ELECTRICAL (Cont'd)
(Selectable Joystick Controls) (S/N 529960001 & Above, 530060001 & Above, AHWA11001 & Above)

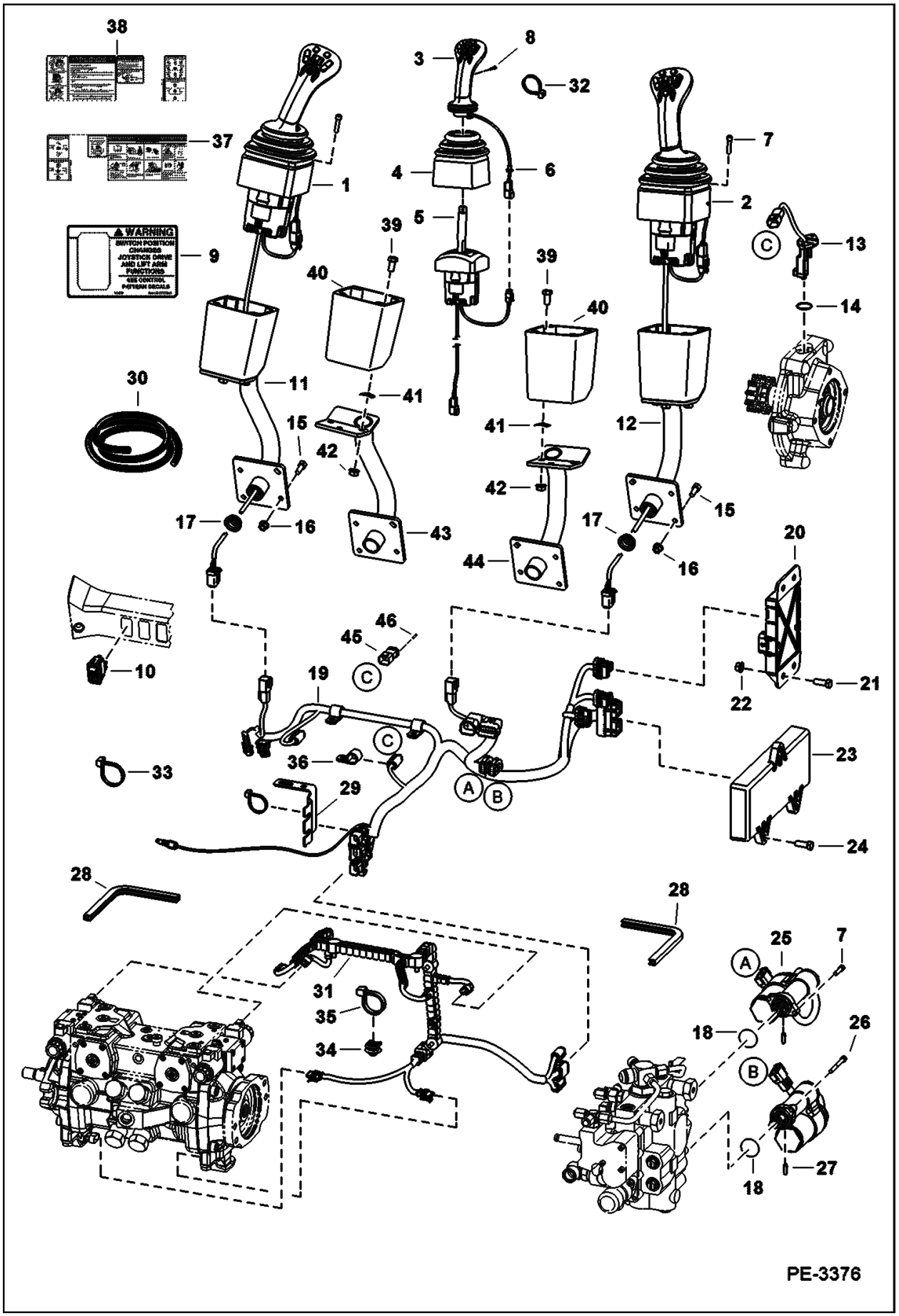

Illustration PE3376 **Model S160 K**
6904270

Page 262 - OSS# 6300202494 - All rights reserved by Bobcat Company - 02/11/2016 - 14:15:02 - Produced by Ken Cook Co. with mediaIoff

CONTROLS ELECTRICAL (Cont'd)
(Selectable Joystick Controls) (S/N 529960001 & Above, 530060001 & Above, AHWA11001 & Above)

Ref No	Part Number	Description	Remarks	Serial Number	Qty
37	7131518	DECAL			1
38	7131519	DECAL			1
39	17C612	BOLT 5			6
40	7124929	BASE			2
41	6684033	NUT	retaining		6
42	97D6	NUT 10			6
43	7123817	MOUNT LH			1
44	7123816	MOUNT RH			1
45	6691419	CONNECTOR, ELECTRICAL			2
46	6665370	PLUG			8

Page 263 - OSS# 6300202494 - All rights reserved by Bobcat Company - 02/11/2016 - 14:15:02 - Produced by Ken Cook Co. with mediaioff

CONTROLS ELECTRICAL
(ACS)

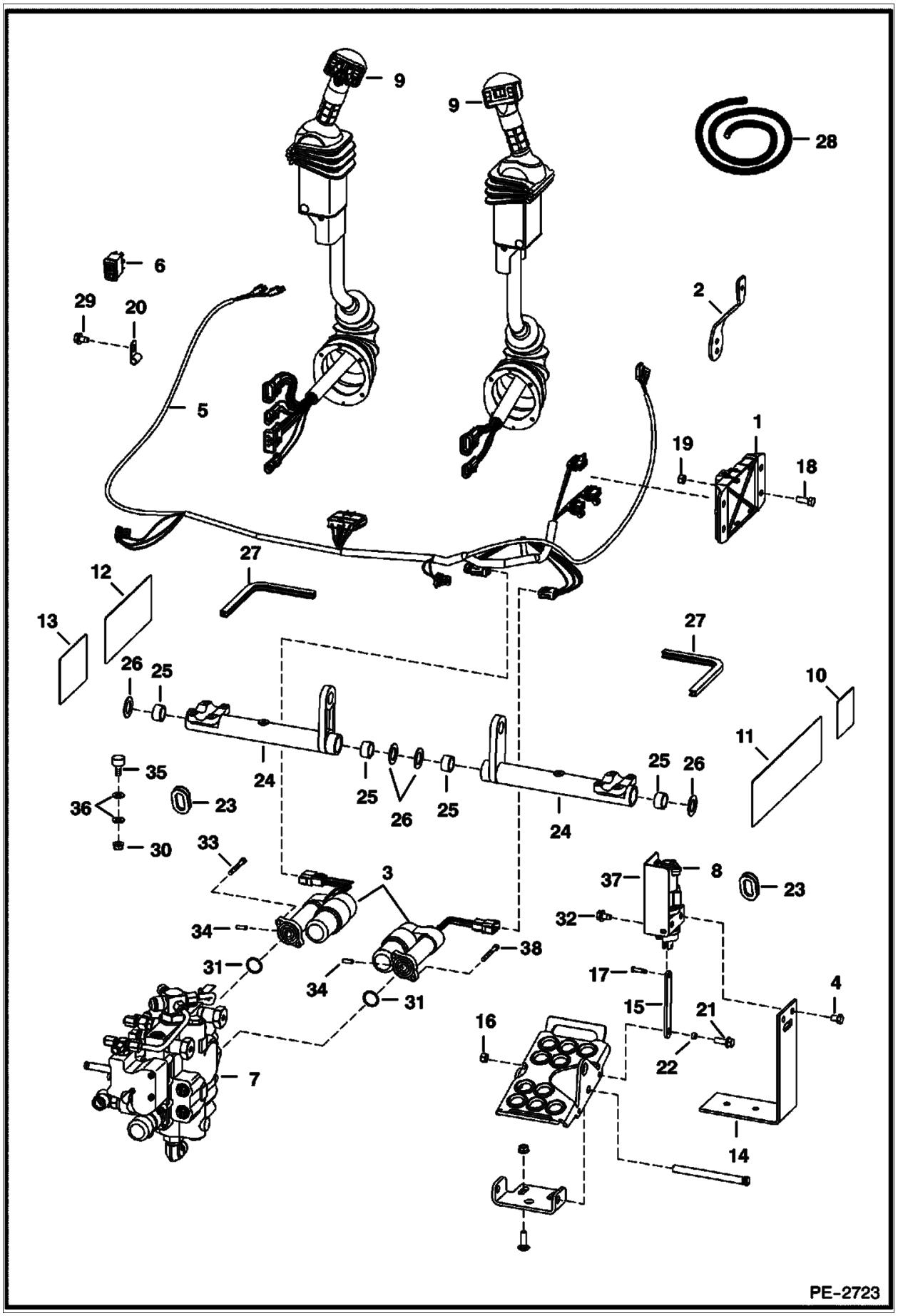

Illustration PE2723

Model S160 K
6904270

Page 264 - OSS# 6300202494 - All rights reserved by Bobcat Company - 02/11/2016 - 14:15:02 - Produced by Ken Cook Co. with mediaoff

CONTROLS ELECTRICAL (Cont'd)
(ACS)

Ref No	Part Number	Description	Remarks	Serial Number	Qty
1	6680410	CONTROLLER, ACS	plastic - W/ 3-connector plug		1
2	6717393	LEVER	throttle		1
3	7101672	ACTUATOR	W/Ref. 31		2
4	17C612	BOLT 5			4
5	6733292	HARNESS, ACS	ACS	5299 11971 & Bel	1
5	6733292	HARNESS, ACS	ACS	5300 11366 & Bel	1
5	7124893	HARNESS	ACS	530011367 - 59999	1
5	7124893	HARNESS	ACS	529911972 - 59999	1
5	7159447	HARNESS	ACS	530060001 & Above	1
5	7159447	HARNESS	ACS	AHWA11001 & Above	1
5	7159447	HARNESS	ACS	529960001 & Above	1
5	7138770	HARNESS	AHC - Europe only		1
6	6665314	PLUG	AHC		2
6	6665314	PLUG	ACS		1
6	6676537	SWITCH	ACS		1
7		VALVE	See Illustration HYDRAULIC CONTROL VALVE / PE2378		1
8	6684912	SENSOR, FOOT RH	See Illustration CONTROLS ELECTRICAL / PE1553		1
8	6676029	SOLENOID, LOCK SPOOL			1
8	6684911	SENSOR, FOOT LH	See Illustration CONTROLS ELECTRICAL / PE1553		1
8	6676029	SOLENOID, LOCK SPOOL			1
9	6684913	LEVER	tilt - RH - AHC		1
9	6684914	LEVER	lift - LH - AHC		1
9	6684915	LEVER, ACS RH	See Illustration CONTROLS ELECTRICAL / PE1365 - tilt - RH - ACS		1
9	6684916	LEVER, ACS LH	See Illustration CONTROLS ELECTRICAL / PE1365 - lift - LH - ACS		1
10	6718706	DECAL, WARNING	raising cab		1
11	6728539	DECAL, WARNING			1
11	6734646	DECAL, WARNING	selectable joystick controls		1
12	6727926	DECAL, OPERATION	hand & foot controls		1
13	6727926	DECAL, OPERATION	hand & foot controls		1
14	7126869	BRACKET	Was 6726573 [A]		2
15	6726681	LINK,AFC POD			2
16	95D5	NUT			2
17	6727496	PIN			2
18	17C616	BOLT 5			2
19	95D6	NUT			6
20	30H62	CLIP			2

Page 265 - OSS# 6300202494 - All rights reserved by Bobcat Company - 02/11/2016 - 14:15:02 - Produced by Ken Cook Co. with media1off

CONTROLS ELECTRICAL (Cont'd)
(ACS)

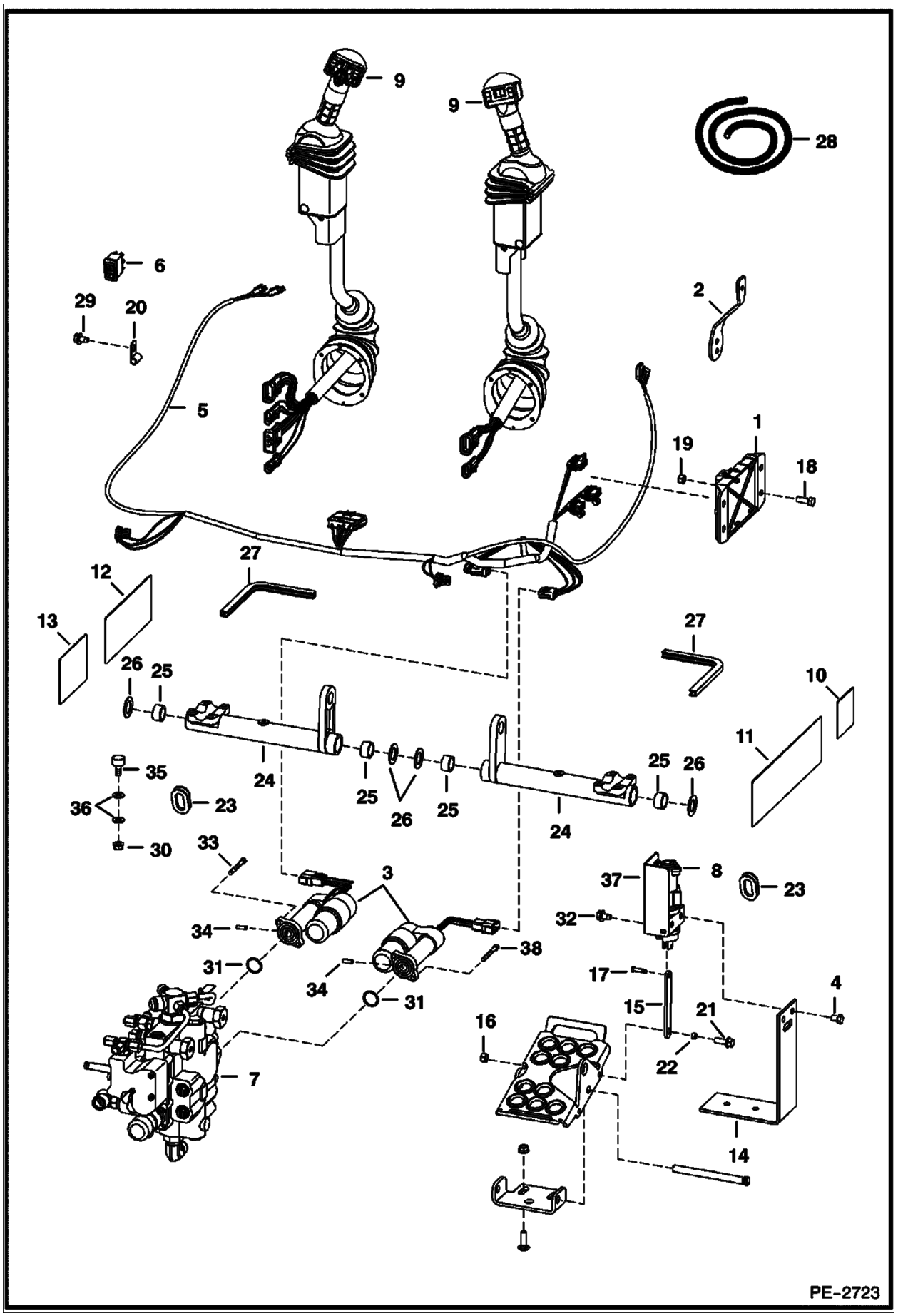

Illustration PE2723

Model S160 K
6904270

Page 266 - OSS# 6300202494 - All rights reserved by Bobcat Company - 02/11/2016 - 14:15:02 - Produced by Ken Cook Co. with mediaoff

CONTROLS ELECTRICAL (Cont'd)
(ACS)

Ref No	Part Number	Description	Remarks	Serial Number	Qty
21	17C514	BOLT			2
22	6729467	SPACER, COLLAR			2
23	6714726	PLUG			2
24		BELLCRANK	See Illustration HAND CONTROLS / NA6667		2
25		BEARING	See Illustration HAND CONTROLS / NA6667		4
26	6716916	WASHER	plastic		4
27		MOULDING	NLA - 10.5" (266,7 mm) long - Order Ref. 28		1
28	6654139	MOULDING BULK/FT	bulk - sold per foot		x
29	84G3710	SCREW			2
30	98D6	NUT	See Illustration HAND CONTROLS / NA6667		2
31	58K120	O-RING	Use W/Ref. 3 - Was 6686220 [B,D]		2
32	43C408	BOLT			4
33	69G436	BOLT			2
34	7108236	PIN			2
35	6673789	BEARING, ROLLER	See Illustration HAND CONTROLS / NA6667		4
36	7100699	WASHER	See Illustration HAND CONTROLS / NA6667		8
37	6680478	SHIELD	RH		1
37	6680479	SHIELD	LH		1
38	29G416	BOLT			2

Page 267 - OSS# 6300202494 - All rights reserved by Bobcat Company - 02/11/2016 - 14:15:02 - Produced by Ken Cook Co. with media1off

CONTROLS ELECTRICAL
(AHC) (ACS) (Handle Assembly)

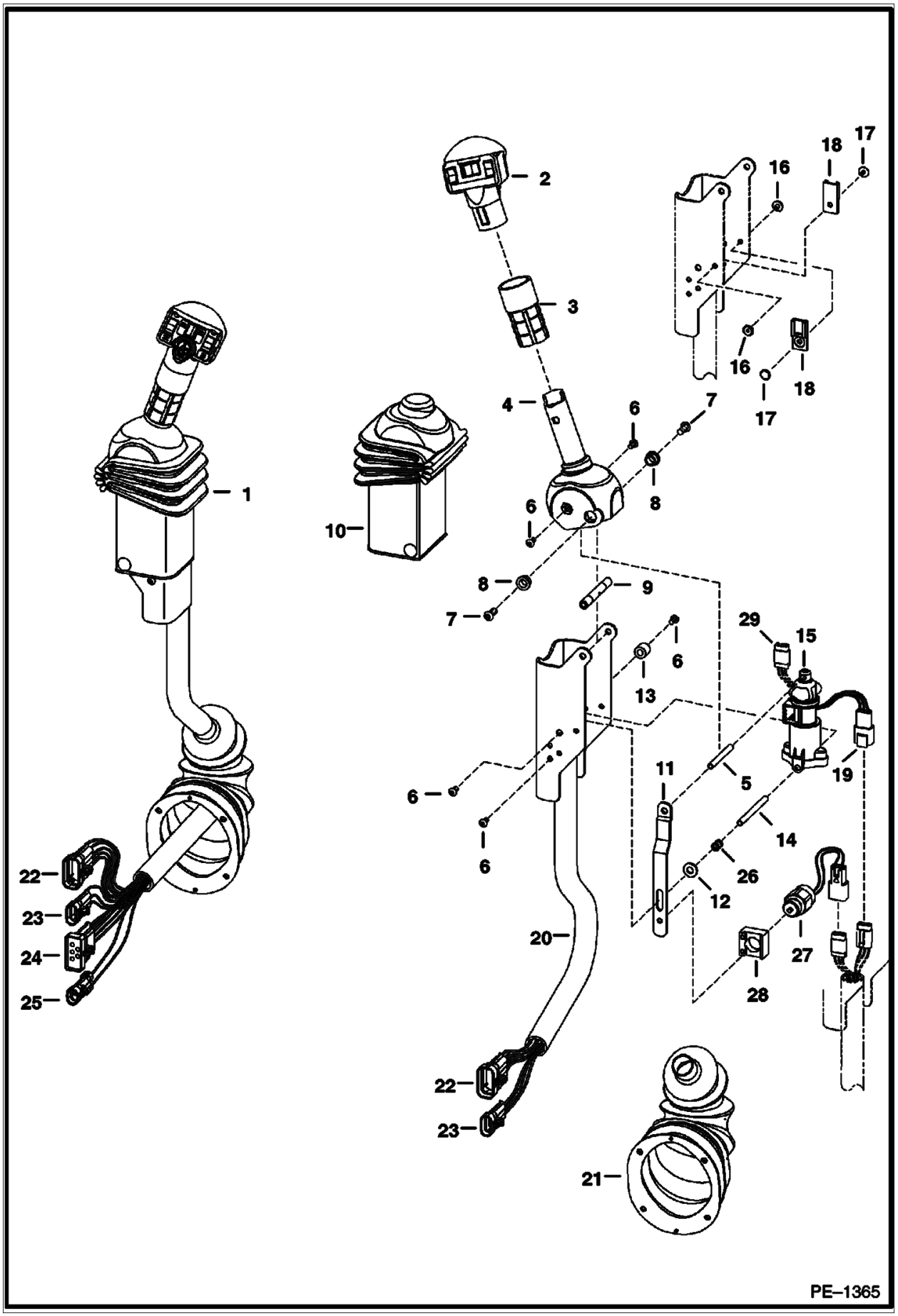

Illustration PE1365

Model S160 K
6904270

Page 268 - OSS# 6300202494 - All rights reserved by Bobcat Company - 02/11/2016 - 14:15:02 - Produced by Ken Cook Co. with mediaoff

CONTROLS ELECTRICAL (Cont'd)
(AHC) (ACS) (Handle Assembly)

Ref No	Part Number	Description	Remarks	Serial Number	Qty
1	6684915	LEVER, ACS RH	tilt - RH		1
1	6684916	LEVER, ACS LH	lift - LH		1
2	6680462	HANDLE, ACS RH	tilt - RH		1
2	6680417	HANDLE, AHC	lift - LH		1
3		GRIP	NLA - Order 6702621 Grip & cut to 2.8" long		2
4	6729594	HANDLE	RH		1
4	6729595	HANDLE	LH		1
5	6680469	SPACER	threaded		1
6	6727065	SCREW			6
7	25GT410	SCREW			8
8	6702990	BUSHING			4
9	6713043	SPACER			4
10	6680471	BOOT			2
11	6680477	STRAP	stop		1
12	25E13	WASHER 5			1
13	6719835	SLEEVE			4
14	6719834	SPACER	threaded		2
15	6684910	SENSOR, ELEC AHC			2
15	6670706	CONNECTOR			1
15	6670715	SOCKET			3
15	6670710	PLUG			1
16	6665322	RIVET	female		2
17	6665321	RIVET	male		2
18	6665000	CLIP			2
19	6670707	CONNECTOR			1
19	6670715	SOCKET			3
19	6670711	LOCK			1
20	6680481	CHANNEL	RH		1
20	6680480	CHANNEL	LH		1
21	6532127	BOOT, RUBBER			2
22	6640692	CONNECTOR	10-pin		1
22	6640690	PIN			8
22	6640694	LOCK	Use W/ 10-pin connector		1
22	6641176	SEAL			8
22	6646582	PLUG	cavity		1
23	6640699	CONECTR 5	3-pin		2
23	6640690	PIN			3
23	6641176	SEAL			3
23	6640700	LOCK 5			3
24	6667144	CONNECTOR	5-pin		2
24	6640690	PIN			3
24	6641176	SEAL			3
24	6646582	PLUG	cavity		1
24	6641180	LOCK 5	Use W/ 2-pin connector		1
25	6641179	CONECTR 5	2-pin		1
25	6640690	PIN			2
25	6641176	SEAL			2
25	6641180	LOCK 5	Use W/ 2-pin connector		1
26	6680470	SPRING			1
27	6676029	SOLENOID, LOCK SPOOL			1
28	6680468	STRAP			1
29	6676870	CONNECTOR	3-pin		1

Page 269 - OSS# 6300202494 - All rights reserved by Bobcat Company - 02/11/2016 - 14:15:02 - Produced by Ken Cook Co. with media1off

CONTROLS ELECTRICAL (Cont'd)
(AHC) (ACS) (Handle Assembly)

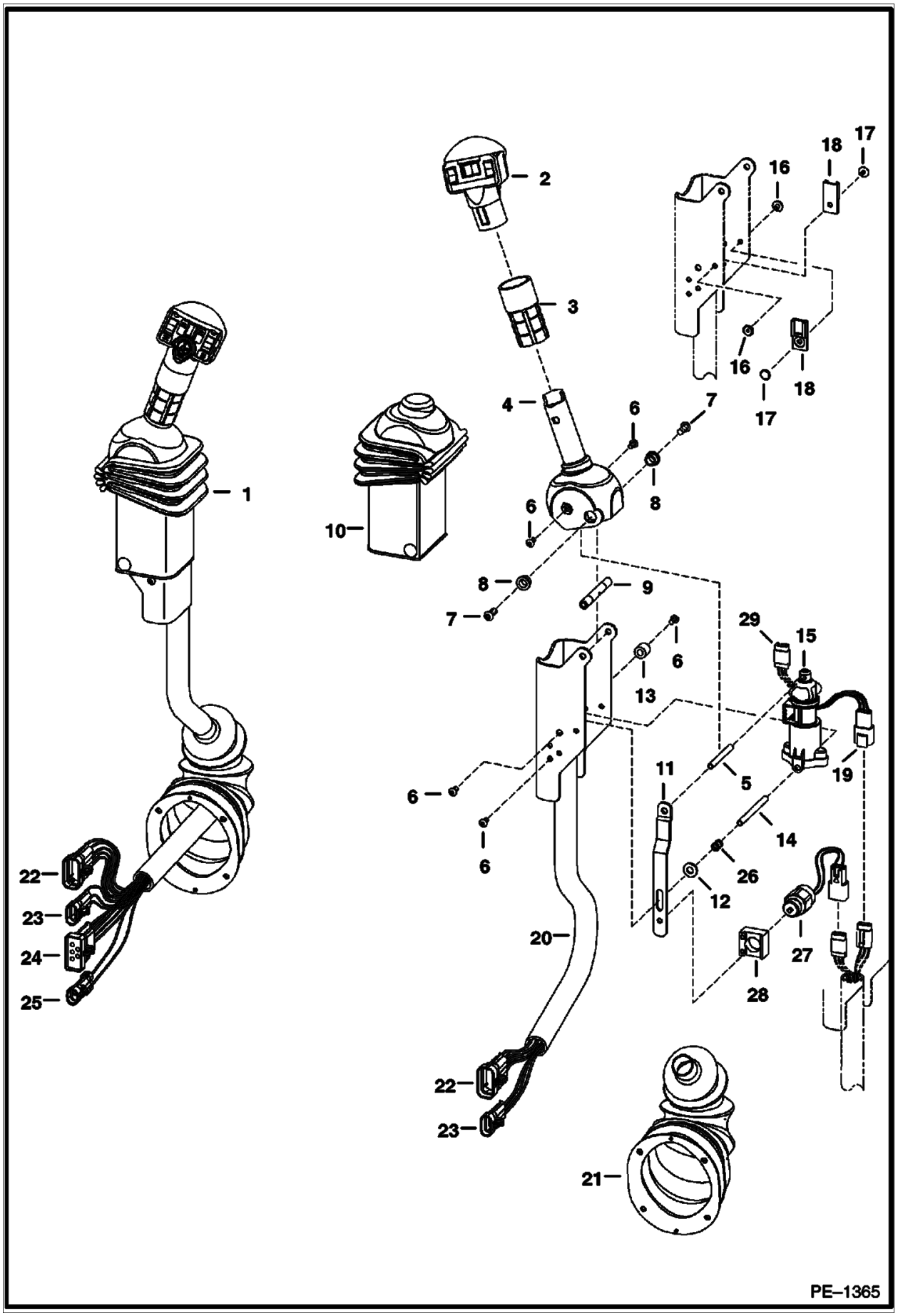

Illustration PE1365

Model S160 K
6904270

Page 270 - OSS# 6300202494 - All rights reserved by Bobcat Company - 02/11/2016 - 14:15:02 - Produced by Ken Cook Co. with mediaoff

CONTROLS ELECTRICAL (Cont'd)
(AHC) (ACS) (Handle Assembly)

Ref No	Part Number	Description	Remarks	Serial Number	Qty
29	6670711	LOCK			1
29	6670715	SOCKET			1
29	6676640	PLUG,SEAL			5

Page 271 - OSS# 6300202494 - All rights reserved by Bobcat Company - 02/11/2016 - 14:15:02 - Produced by Ken Cook Co. with mediaioff

CONTROLS ELECTRICAL
(ACS) (Foot Pedal Assembly)

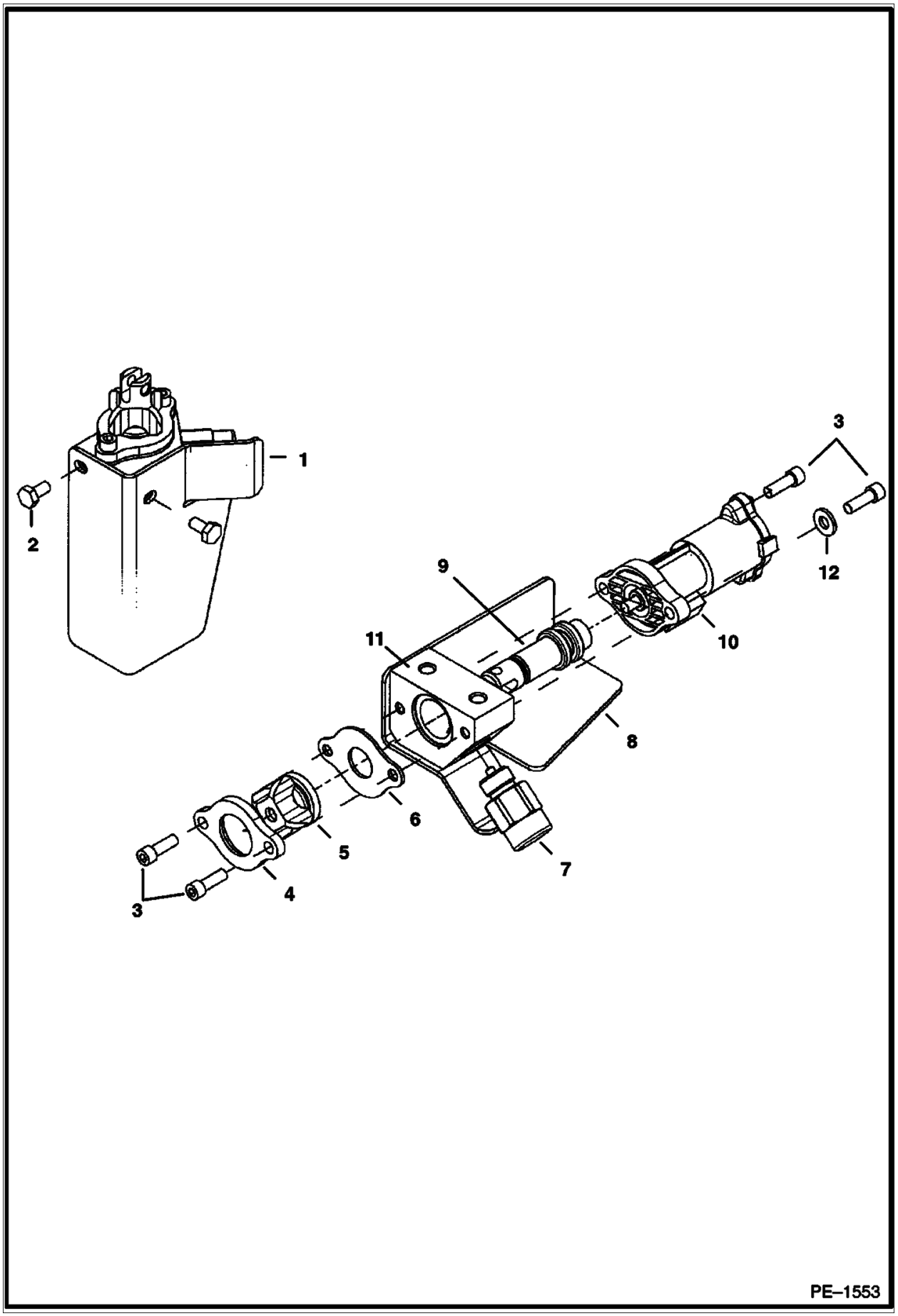

Illustration PE1553

Model S160 K
6904270

Page 272 - OSS# 6300202494 - All rights reserved by Bobcat Company - 02/11/2016 - 14:15:02 - Produced by Ken Cook Co. with mediaoff

CONTROLS ELECTRICAL (Cont'd)
(ACS) (Foot Pedal Assembly)

Ref No	Part Number	Description	Remarks	Serial Number	Qty
1	6684912	SENSOR, FOOT RH			1
1	6684911	SENSOR, FOOT LH			1
2	43C408	BOLT			2
3	98G412	BOLT			4
4		RETAINER	NLA - boot		1
5	6587763	BOOT			1
6		STOP PLATE	NLA		1
7	6676029	SOLENOID, LOCK SPOOL			1
8	6680478	SHIELD	RH		1
8	6680479	SHIELD	LH		1
9		SPOOL	NSS		1
10		SENSOR	NSS		1
11		BLOCK	NSS		1
12	25E13	WASHER 5			2

Page 273 - OSS# 6300202494 - All rights reserved by Bobcat Company - 02/11/2016 - 14:15:02 - Produced by Ken Cook Co. with media1off

ALTERNATOR

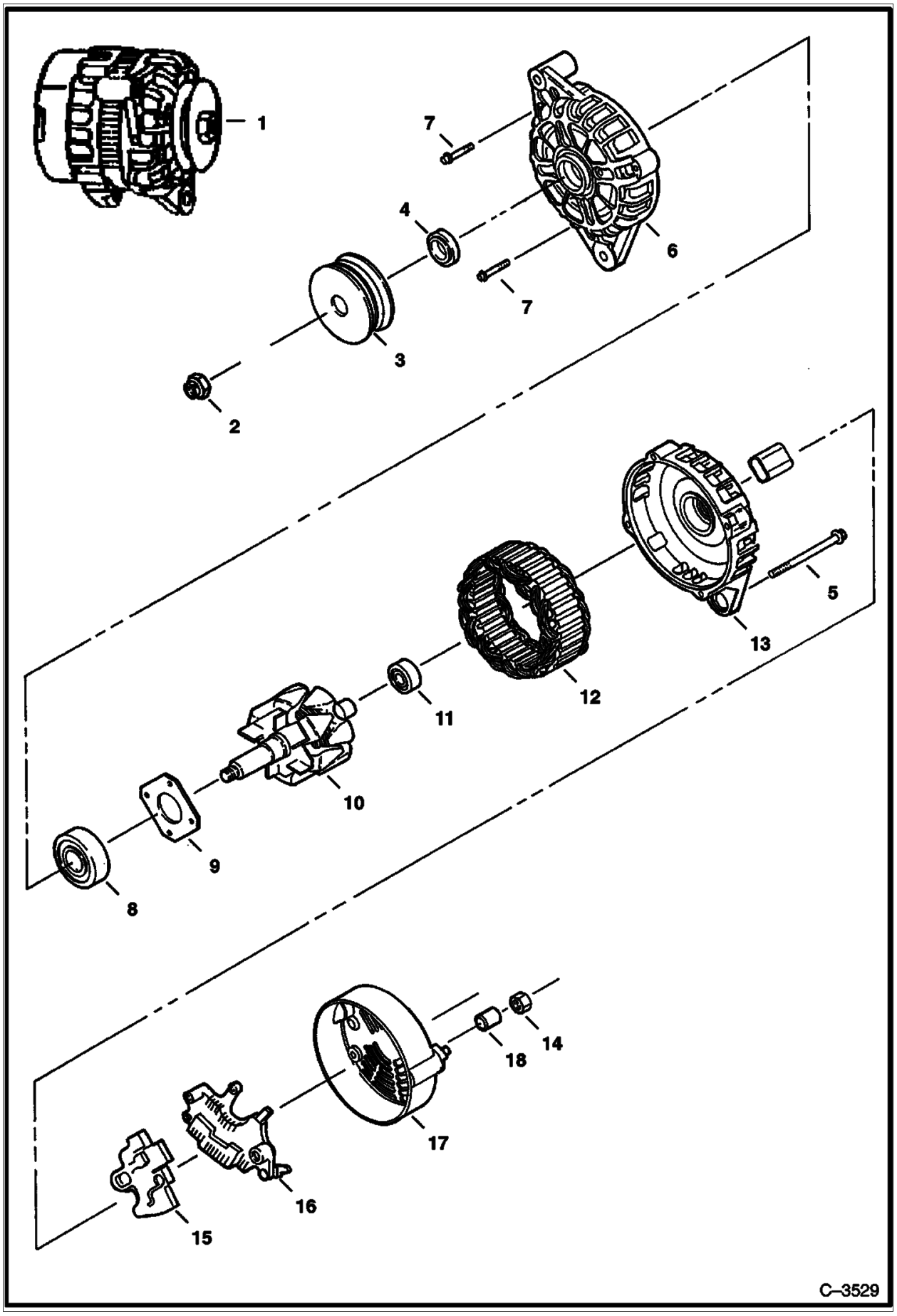

Illustration C3529

Model S160 K
6904270

Page 274 - OSS# 6300202494 - All rights reserved by Bobcat Company - 02/11/2016 - 14:15:02 - Produced by Ken Cook Co. with mediaoff

ALTERNATOR (Cont'd)

Ref No	Part Number	Description	Remarks	Serial Number	Qty
1	6678205	ALTERNATOR, 90 AMP	90 amp		1
1	6678205REM	ALTERNATOR, 90 AMP	90 amp - Ref. 2-18		1
1	6678205EF	ALTERNATOR, 90 AMP	Ref. 2-18		1
2	6677497	NUT	Was 6677497 [A]		1
3	6677496	PULLEY			1
4	6677495	SPACER	front		1
5	6684397	BOLT	Was 6677494 [B]		4
6	6677491	BRACKETFRT	rear		1
7	6677817	SCREW			4
8	6677818	BEARING			1
9	6677819	RETAINER			1
10	6677492	ASSY, ROTOR			1
11	6677820	BEARING			1
12	6677493	STATOR			1
13	6677490	BRACKETREAR			1
14	6677486	NUT			1
15	6677489	REGULATOR ASSY			1
16	6677488	RECTIFIRE ASSY			1
17	6677487	COVER			1
18	6677485	SPACER	rear		1

Page 275 - OSS# 6300202494 - All rights reserved by Bobcat Company - 02/11/2016 - 14:15:02 - Produced by Ken Cook Co. with media1off

STARTER
(Valeo)

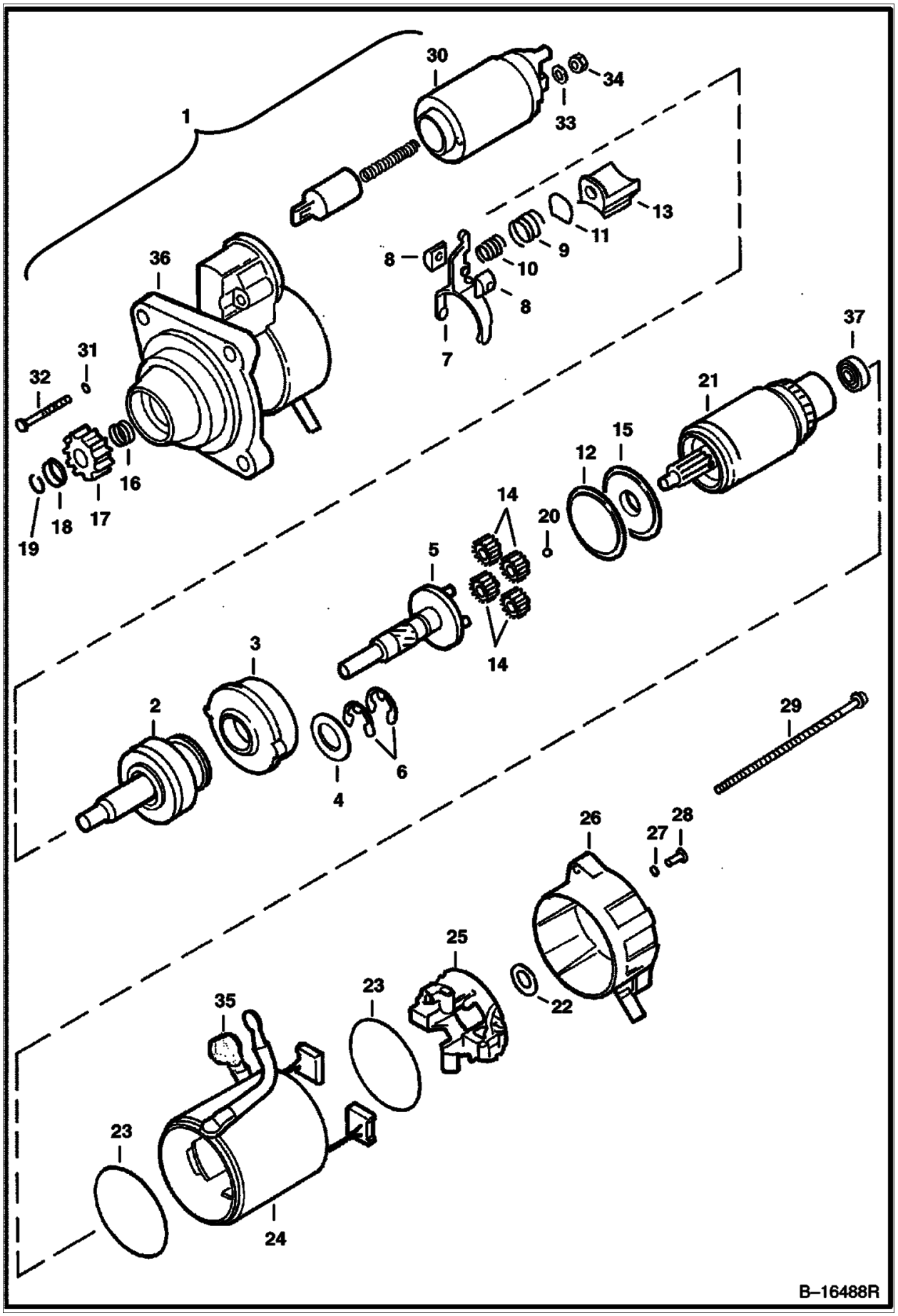

Illustration B16488R

Model S160 K
6904270

Page 276 - OSS# 6300202494 - All rights reserved by Bobcat Company - 02/11/2016 - 14:15:02 - Produced by Ken Cook Co. with mediaoff

STARTER (Cont'd)
(Valeo)

Ref No	Part Number	Description	Remarks	Serial Number	Qty
1	6685190	STARTER			1
1	6685190REM	STARTER			1
1	6685190EF	STARTER			1
2	6680375	SHAFT ORC ASSY	ORC assy		1
3	6680367	GEAR			1
4	6680378	WASHER			1
5	6680365	SHAFT			1
6	6680368	RING STOP			2
7	6680364	LEVER			1
8	6680357	HOLDER			2
9	6680381	SPRING			1
10	6680382	SPRING			1
11	6680370	PLATE			1
12	6680369	SEAL			1
13	6680371	LEVER			1
14	6680366	GEAR			4
15	6680372	BRACKET			1
16	6680361	SPRING			1
17	6680390	GEAR			1
18	6680360	STOP			1
19	6680359	RING STOP			1
20	6680362	BALL			1
21	6680374	ARMATURE	W/Ref. 37		1
22	6680363	WASHER			1
23	6680380	SEAL			2
24	6680373	YOKE			1
25	6680377	HOLDER			1
26	6680389	BRACKET			1
27	6680358	RING RUBBER	rubber		2
28	6680384	BOLT			2
29	6680356	BOLT			2
30	6680376	SWITCH			1
31	6680379	SEAL			2
32	6680383	BOLT			2
33	6EM80	WASHER, SPRING			1
34	4DM8	NUT			1
35	6680355	CAP			1
36	6680388	BRACKET	includes ball bearing, drain tube, front bracket & oil seal		1
37		BEARING	NLA - Order 6680374 - Was 6687631 [A]		1

Page 277 - OSS# 6300202494 - All rights reserved by Bobcat Company - 02/11/2016 - 14:15:02 - Produced by Ken Cook Co. with media1off

COOLING SYSTEM

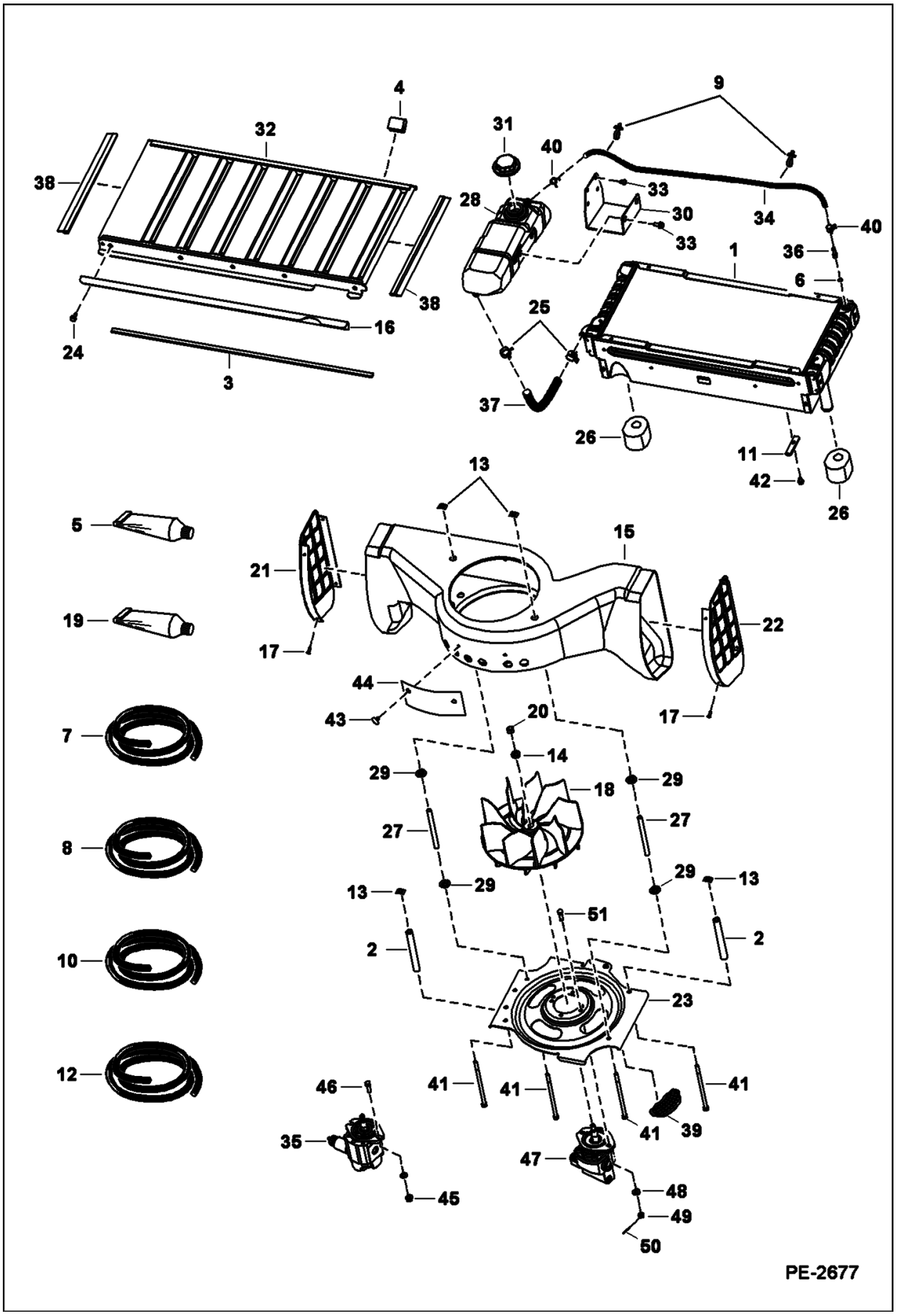

Illustration PE2677

Model S160 K
6904270

Page 278 - OSS# 6300202494 - All rights reserved by Bobcat Company - 02/11/2016 - 14:15:02 - Produced by Ken Cook Co. with mediaoff

COOLING SYSTEM (Cont'd)

Ref No	Part Number	Description	Remarks	Serial Number	Qty
1	6686077	EXCHANGER, WATER RADIATOR			1
2	6577382	BUSHING			2
3		FOAM STRIP	NLA - 34.5" (876,3 mm) long - Order Ref. 8		2
4	6579613	STOP			2
5	6633583	SEALANT, POLYURETHANE 300 ML	oil cooler grill		x
6	79K2	O RING 10			1
7	6578172	HOSE, BULK	bulk - sold per foot		1
8	6511855	TAPE BULK/FT 25'	self adhesive - bulk - sold per foot		x
9	6675734	TIE STRAP	button head		2
10	6646705	MOULDING BULK/FT	bulk - sold per foot - Was 7167241 [A]		x
11	6679991	SEAL, WASHER	washer		1
12	6577822	HOSE, BULK	bulk - sold per foot		x
13	6684033	NUT			4
14	6701097	WASHER			1
15	7153544	HOUSING	Was 7104117 [A]		1
16	6703471	BRACKET			1
17	6706517	SCREW 10	plastic louvers		8
18	6715142	FAN, ENG COOLANT			1
19	6650407	ADHESIVE	tube - 1 oz		x
20	96D8	NUT			1
21	6716571	LOUVER, PLASTIC LH	plastic - LH		1
22	6716573	LOUVER	plastic - RH		1
23	7107175	INLET	4-slot		1
24	84G3112	BOLT 5			3
25	5HM24	CLAMP			2
26	6726433	SPACER			2
27	6732318	SPACER	.500" (12,7 mm) OD - Use W/Ref. 29 (6732457 washer)		2
27	7131872	SPACER	.625" (15,875 mm) OD - Use W/Ref. 29 (7131873 washer)		2
28	6732375	TANK, WATER COOLANT	expansion		1
29	6732457	WASHER	step - 1.25" (31,8 mm) OD - Use W/Ref. 27 (6732318 spacer)		4
29	7131873	WASHER	step - 1.38" (35,05 mm) OD - Use W/Ref. 27 (7131872 spacer)		4
30	7162194	MOUNT, TANK COOLANT	W/slotted mounting holes - Was 6732870 [A]		1
31	6733429	CAP			1
31	6733996	DECAL, WARNING	engine coolant - 14 psi		1
32	6733804	SCREEN, EXCHANGER ASSY			1
33	84G3708	SCREW	Was 6733886 [B]		2
34		HOSE	NLA - 36" (914,4 mm) long - Order Ref. 12		1

Page 279 - OSS# 6300202494 - All rights reserved by Bobcat Company - 02/11/2016 - 14:15:02 - Produced by Ken Cook Co. with media1off

COOLING SYSTEM (Cont'd)

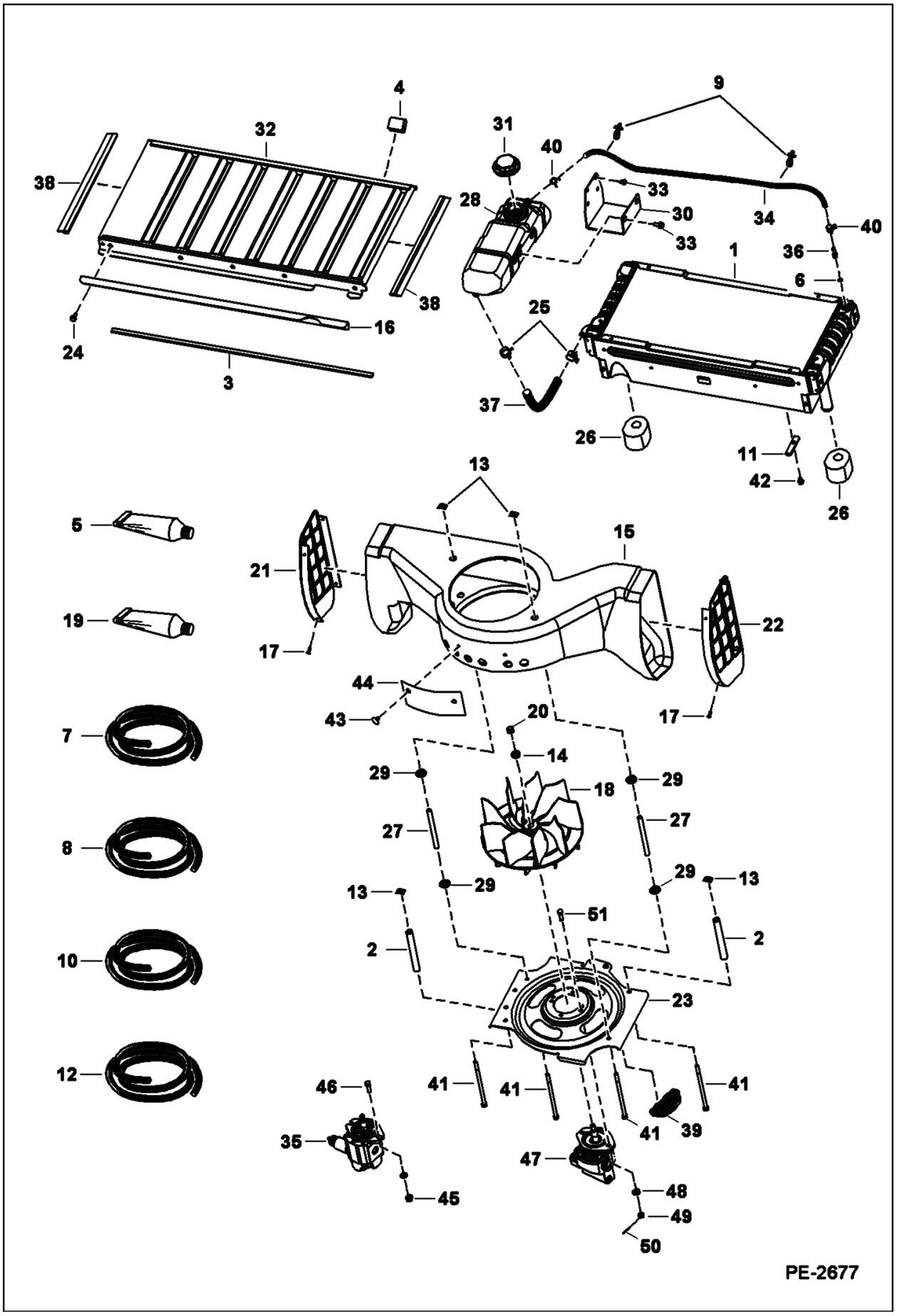

Illustration PE2677

Model S160 K
6904270

Page 280 - OSS# 6300202494 - All rights reserved by Bobcat Company - 02/11/2016 - 14:15:02 - Produced by Ken Cook Co. with mediaoff

COOLING SYSTEM (Cont'd)

Ref No	Part Number	Description	Remarks	Serial Number	Qty
35		MOTOR, HYD COOLING FAN	See Illustration COOLING FAN MOTOR / PE2811 - NLA - aluminum - W/proportional valve - Was 6687142 [A], See Illustration HYDROSTATIC CIRCUITRY / PE2735 - NLA - aluminum - W/proportional valve - Was 6687142 [A], Contact your Local Dealer for Bobcat Technical Information BTI384 - NLA - aluminum - W/proportional valve - Was 6687142 [A]		1
36	6734236	ADAPTER	W/Ref. 6		1
37		HOSE	NLA - 8.25" (209,6 mm) long - Order Ref. 7		1
38		MOULDING	NLA - 16.8" (426,7 mm) long - Order Ref. 10		2
39	6684474	INSERT FAN INLET			4
40	5HM14	CLAMP			2
41	17C6116	BOLT			4
42	35C516	BOLT 10			2
43	6674895	RETAINER			2
44	6715819	INSULATOR			1
45	95D6	NUT	Use W/Ref. 35		2
46	17C620	BOLT			2
47		MOTOR, HYD COOLING FAN	See Illustration COOLING FAN MOTOR / MS2513 - cast iron , Contact your Local Dealer for Bobcat Technical Information BTI384 - cast iron		1
48	6557831	WASHER	Use W/Ref. 47		2
49	3D6	NUT	Use W/Ref. 47		2
50	1F316	PIN	Use W/Ref. 47		2
51	7147826	BOLT, CROSS DRILLED	Use W/Ref. 47		2

Page 281 - OSS# 6300202494 - All rights reserved by Bobcat Company - 02/11/2016 - 14:15:02 - Produced by Ken Cook Co. with media1off

ENGINE & ATTACHING PARTS
(Air Cleaner, Muffler, Radiator Water Exchanger)

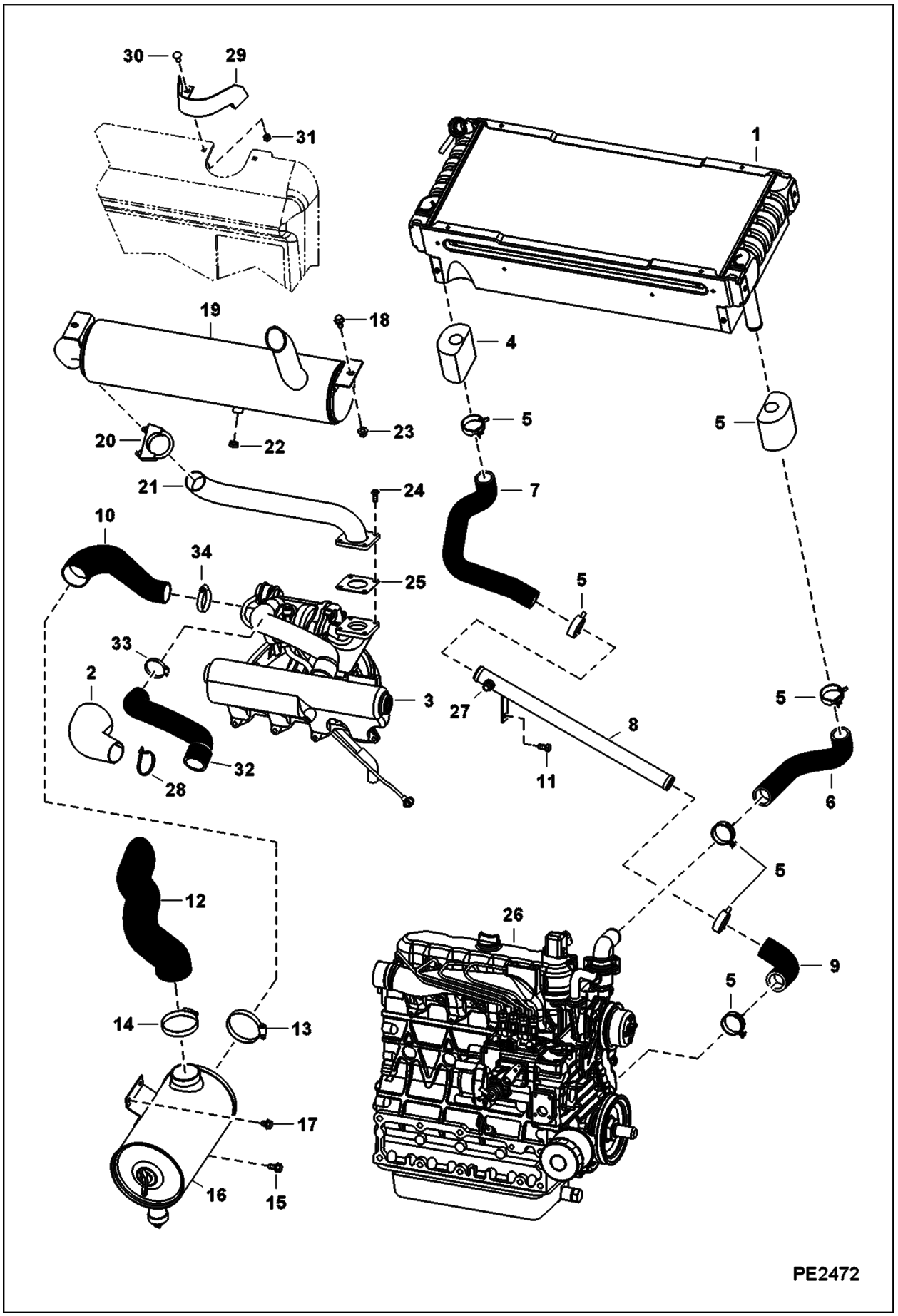

Illustration PE2472

Model S160 K
6904270

Page 282 - OSS# 6300202494 - All rights reserved by Bobcat Company - 02/11/2016 - 14:15:02 - Produced by Ken Cook Co. with mediaoff

ENGINE & ATTACHING PARTS (Cont'd)
(Air Cleaner, Muffler, Radiator Water Exchanger)

Ref No	Part Number	Description	Remarks	Serial Number	Qty
1	6686077	EXCHANGER, WATER RADIATOR			1
2	6706393	HSE,SHIEL			1
3		TURBO	See Illustration TURBO CHARGER / B22742		1
4	6726433	SPACER			2
5	5HM42	HOSECLAMP			6
6	6717591	HOSE			1
7	6717592	HOSE			1
8	6730999	ASSY, TUBE			1
9	7100024	HOSE			1
10	6737355	HOSE			1
11	17C612	BOLT 5			1
12	7102656	HOSE			1
13	42HL300	CLAMP			2
13	42H52	CLAMP			2
14	42H32	HS CLAMP5			1
15	84G3712	BOLT 5			1
16	6700711	AIR CLNR	See Illustration AIR CLEANER / B16478		1
17	84G3708	SCREW			2
18	35C616	BOLT 5			2
19	6683915	MUFFLER, EXHAUST			1
20	7101708	CLAMP			1
21	7107449	TUBE, EXHAUST			1
22	6661062	PLUG, PIPE	brass - 0.38"		1
23	61D6	NUT 5			2
24	6701123	SCREW, 5			4
25	6727753	GASKET			1
26		ENGINE	See Illustration ENGINE & GASKET KITS / NA1521		1
27	40K6	PLUG			1
28	7104076	TIE			1
29	6714624	SHIELD	Europe only		1
30	37C512	BOLT			2
31	61D5	NUT 10			2
32		HOSE	See Illustration TURBO CHARGER / B22742		1
33		CLAMP	See Illustration TURBO CHARGER / B22742		1
34	42HL250	CLAMP			1

Page 283 - OSS# 6300202494 - All rights reserved by Bobcat Company - 02/11/2016 - 14:15:02 - Produced by Ken Cook Co. with media1off

ENGINE & ATTACHING PARTS
(Belt Drive System)

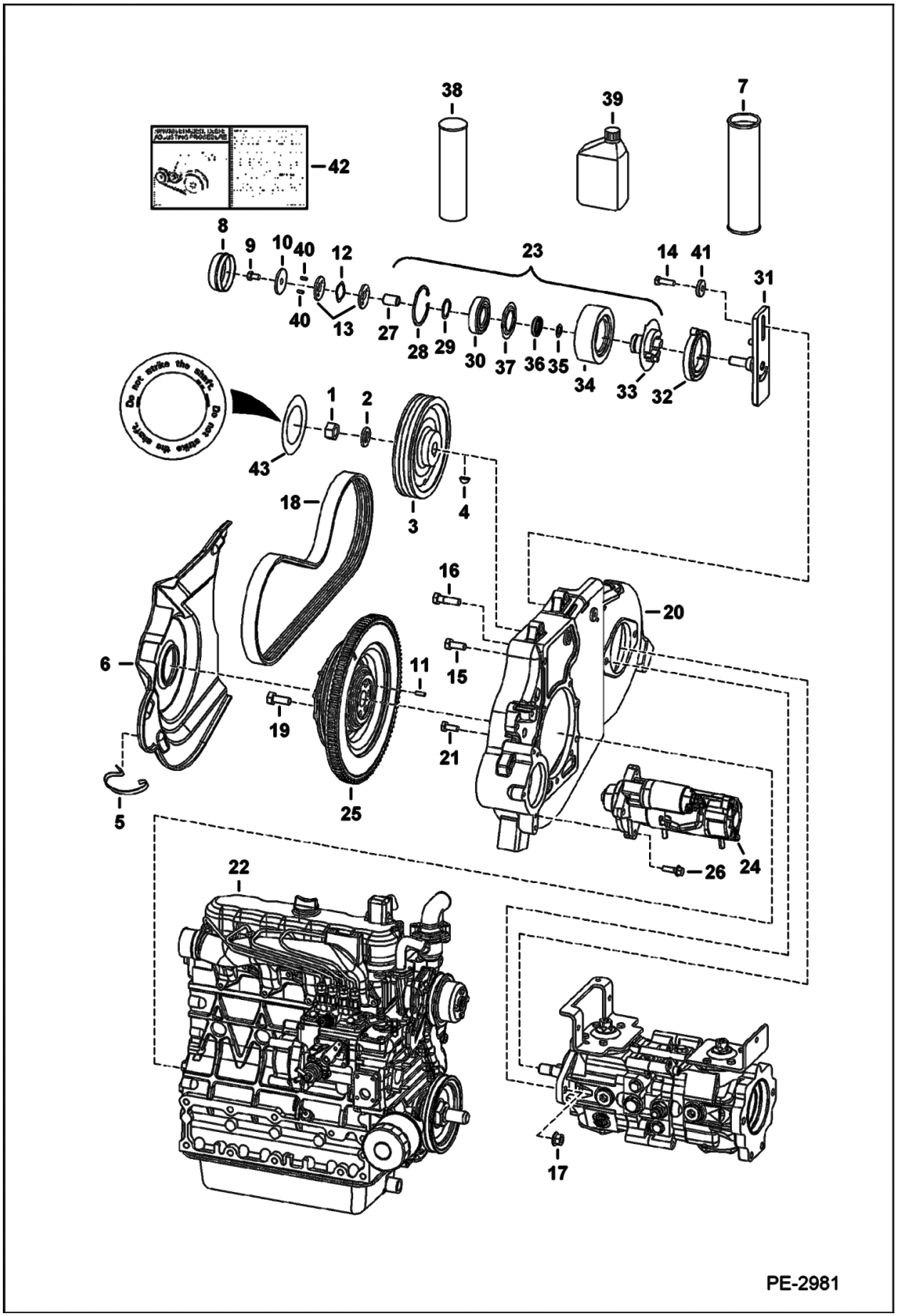

Illustration PE2981

Model S160 K
6904270

Page 284 - OSS# 6300202494 - All rights reserved by Bobcat Company - 02/11/2016 - 14:15:02 - Produced by Ken Cook Co. with mediaoff

ENGINE & ATTACHING PARTS (Cont'd)
(Belt Drive System)

Ref No	Part Number	Description	Remarks	Serial Number	Qty
1	92D12	NUT 5			1
2	6576033	WASHER 5			1
3	7113635	PULLEY	hyd pump - 3-groove - 202 mm (7.95") dia		1
4	6J807	KEY, WOODRUFF	SJC		1
4	6682261	KEY	manual controls		1
5	6703022	SPRING, CLIP			3
6	7109712	SHIELD			1
7	6903122	GREASE, MULTI PURPOSE	Use W/Ref. 23 - Was 6599719 [A]		x
8	6708770	CAP, DUST	dust		1
9	43C610	BOLT	pre-applied thread locker - Was 17C610 [B]		1
10	6705232	WASHER			1
11	14J1808	PIN			2
12	6710585	WASHER	wave spring		1
13	6705231	WASHER			2
14	17C620	BOLT			1
15	6719828	BOLT			2
16	17C828	BOLT	hyd pump mount		2
17	85D8	NUT, 5			2
18	6736775	BELT, DRIVE	pump drive		1
19	6598275	BOLT			6
20	6726613	MOUNT, ENG			1
21	6719825	BOLT			7
22		ENGINE	See Illustration ENGINE & GASKET KITS / NA1521		1
23	6735884	IDLER, BELT DRIVE ASSY	spring loaded - Ref. 8-10, 12, 13, 23, 31, 32 & 40 - Also Order Ref. 42		1
23	6714212	PULLEY, PUMP HYD IDLER	Ref. 27-30 & 33-37		1
24		STARTER	See Illustration STARTER / B16488R		1
25		FLYWHEEL ASSY	Contact your Local Dealer for Bobcat Technical Information BTI388ldr NLA - W/ring gear - Order 7155781 flywheel [A]	E/ 7Z9999 & Bel	1
25	7155781	FLYWHEEL, ENG ASSY	Contact your Local Dealer for Bobcat Technical Information BTI388ldr - W/ring gear	E/ 8A0001 & Abv	1
25	6510470	GEAR, RING STARTER			1
26	35C620	BOLT 5			3
27	6682442	BEARING	bronze sleeve		1
28	6658847	RING, SNAP			1
29	6658536	RING, SNAP			1
30	6668114	BEARING	ball		1
31	6735883	BRACKET			1
32	6705491	SPRING	torsion		1
33	6711699	HUB ASSY			1
34	6704391	PULLEY	idler		1
35	6685735	SEAL			1
36	6703168	BEARING	thrust		1
37	6664209	SEAL			1
38	6633583	SEALANT, POLYURETHANE 300 ML	tube - 300 ml		x
39		SYNTHETIC OIL, 15W50 QT	NLA - Was 6661405 [A]		x
40	6713370	PIN, ROLL			2

Page 285 - OSS# 6300202494 - All rights reserved by Bobcat Company - 02/11/2016 - 14:15:02 - Produced by Ken Cook Co. with media1off

ENGINE & ATTACHING PARTS (Cont'd)
(Belt Drive System)

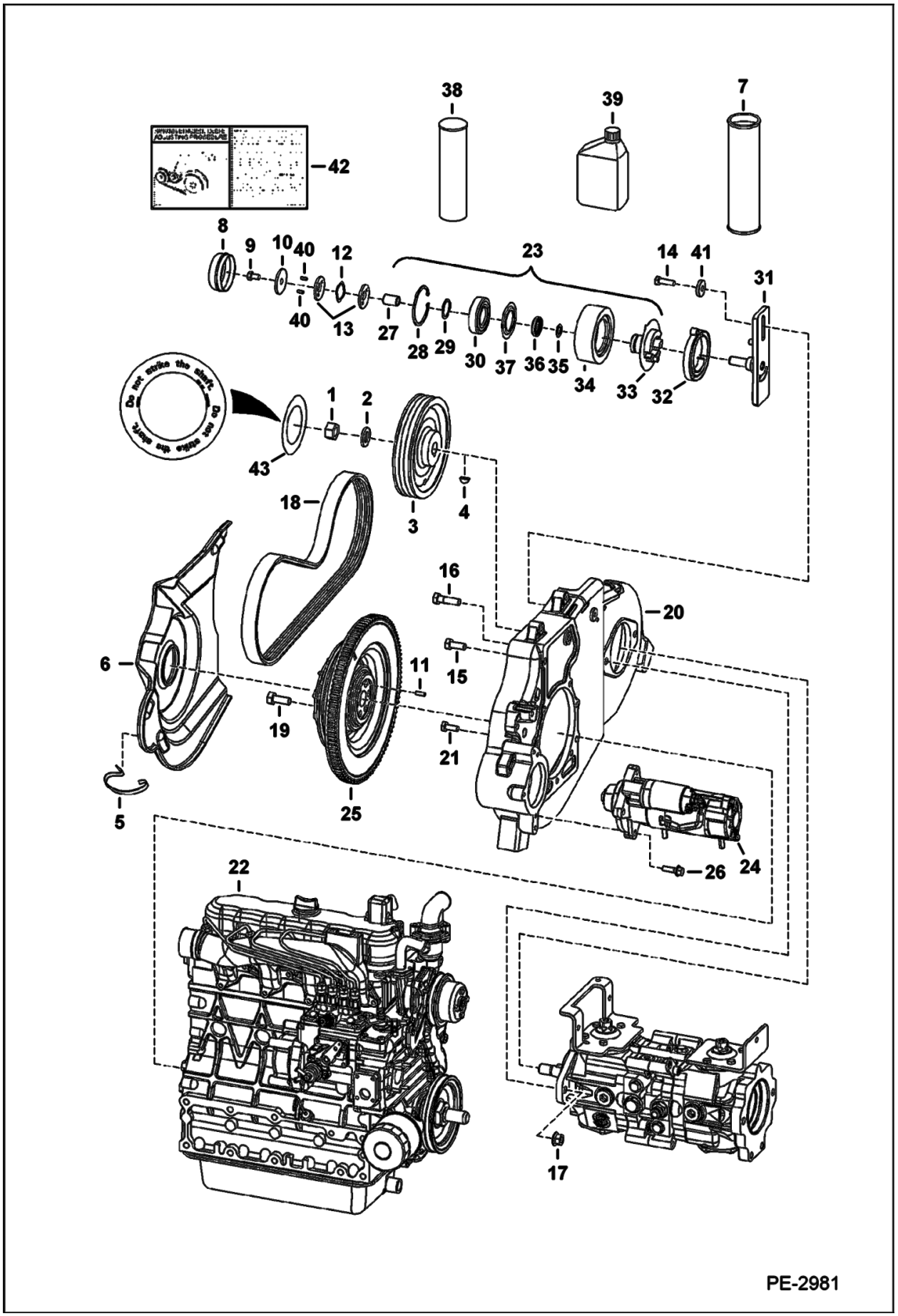

Illustration PE2981

Model S160 K
6904270

Page 286 - OSS# 6300202494 - All rights reserved by Bobcat Company - 02/11/2016 - 14:15:02 - Produced by Ken Cook Co. with mediaoff

ENGINE & ATTACHING PARTS (Cont'd)
(Belt Drive System)

Ref No	Part Number	Description	Remarks	Serial Number	Qty
41	6704484	WASHER			1
42	6709030	DECAL	belt tension - spring loaded idler		1
43		DECAL	NLA - pulley - do not strike - Was 7122009 [A]		1

Page 287 - OSS# 6300202494 - All rights reserved by Bobcat Company - 02/11/2016 - 14:15:02 - Produced by Ken Cook Co. with mediaioff

ENGINE & ATTACHING PARTS
(Engine Mounts)

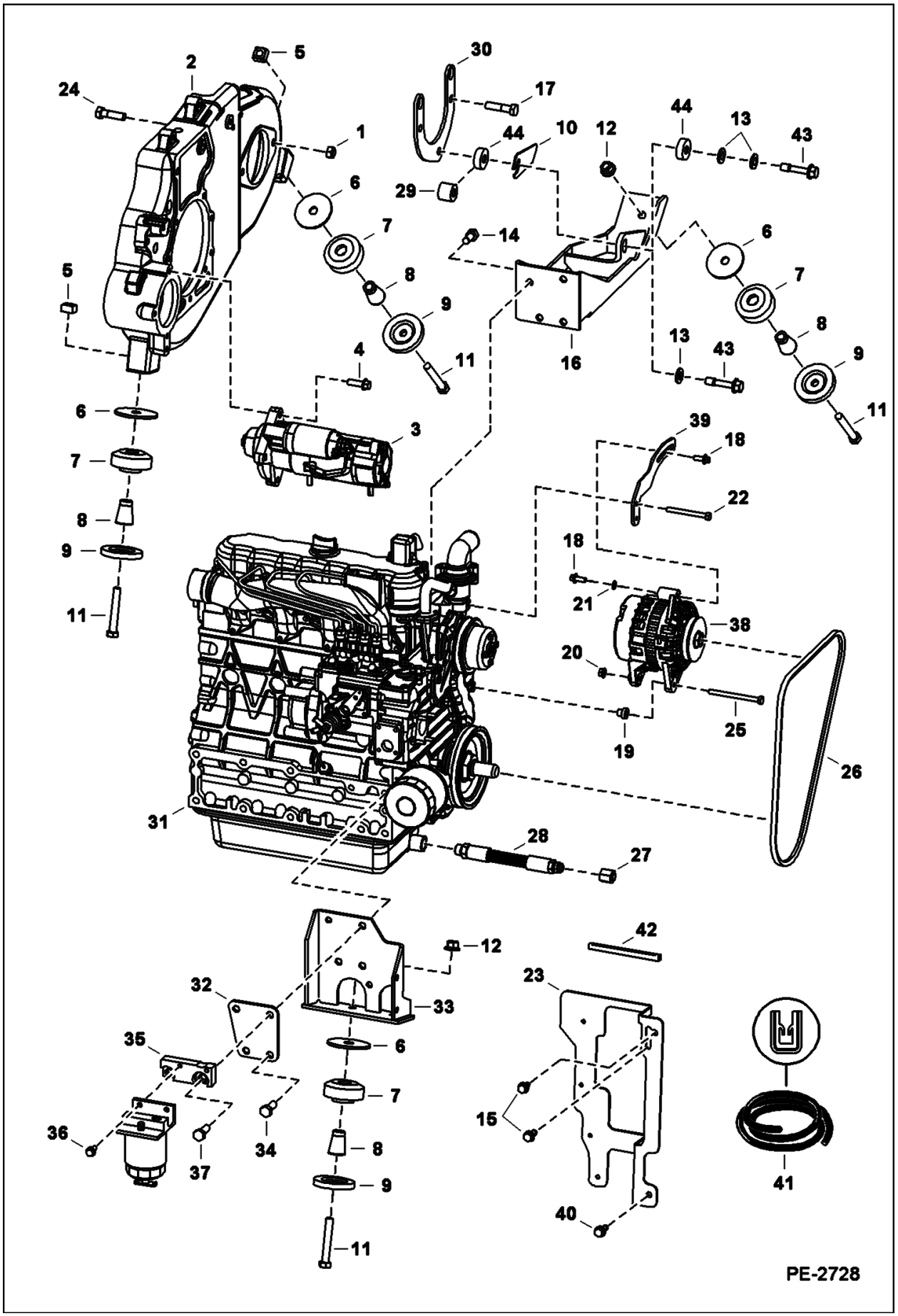

Illustration PE2728

Model S160 K
6904270

Page 288 - OSS# 6300202494 - All rights reserved by Bobcat Company - 02/11/2016 - 14:15:02 - Produced by Ken Cook Co. with mediaoff

ENGINE & ATTACHING PARTS (Cont'd)
(Engine Mounts)

Ref No	Part Number	Description	Remarks	Serial Number	Qty
1	85D8	NUT, 5			2
2		MOUNT	See Illustration ENGINE & ATTACHING PARTS / PE2981		1
3		STARTER	See Illustration STARTER / B16488R		1
4	35C620	BOLT 5			3
5	6652918	NUT			2
6	6705106	WASHER 5			4
7	6661785	MOUNT, ENG			4
8	7110276	SPACER, TAPERED	Was 6715287 [A]		4
9	6661787	WASHER			4
10	7114739	SPACER			1
11	43C852	BOLT			4
12	83D8	NUT 5			2
13	25E21	WASHER 5	for manual controls		1
13	25E21	WASHER 5	for selectable joystick controls		2
14	6719827	BOLT			4
15	84G3712	BOLT 5			2
16	7104568	MOUNT	engine & hyd. pump - for horizontal hardware mounting of hydrostatic pump		1
17	7131273	SCREW	hyd pump mount - selectable joystick controls - Was 59CM1240 [A]		2
18	29CM820	SCREW			1
19	6817566	BUSHING			1
20	53DM8	NUT			2
21	6E5	WASHER			1
22	1CM890	BOLT			1
23	6731060	SHIELD	bolts to upright		1
24	17C828	BOLT	hyd pump mount		2
25	1CM8100	SCREW			2
26	7100104	BELT, ALT	Was 7100572 [A]		1
27	36K6	CAP			1
28	6563445	HOSE			1
28	79K8	O RING 10	flat boss face		x
29		ADAPTER	NLA - 1.00" (25,4 mm) thick x 1.50" (38,1 mm) OD - manual controls - Order 7113010 spacer - Was 7113010 [D]		1
29	7113010	SPACER	25,4 x 32 mm (1 x 1.25") OD - manual controls		1
30	7107849	MOUNT	pump - selectable joystick controls		1
31		ENGINE	See Illustration ENGINE & GASKET KITS / NA1521		1
32	6700535	SPACER			1
33	6703981	MOUNT	W/Ref. 32		1
34	6719828	BOLT			2
35	6736817	MOUNT	fuel filter		1
36	6719826	BOLT			1
37	6719829	BOLT			1
38		ALTERNATOR	See Illustration ALTERNATOR / C3529 90 AMP.		1
39	6730867	MOUNT, ALT			1
40	84G3716	SCREW 5			2
41	6654139	MOULDING BULK/FT	bulk - sold per foot		x
42		MOULDING	NLA - 5.5" (139,7 mm) long - Order Ref. 41		1
43	6675221	BOLT	hyd. pump mount		1

Page 289 - OSS# 6300202494 - All rights reserved by Bobcat Company - 02/11/2016 - 14:15:02 - Produced by Ken Cook Co. with media1off

ENGINE & ATTACHING PARTS (Cont'd)
(Engine Mounts)

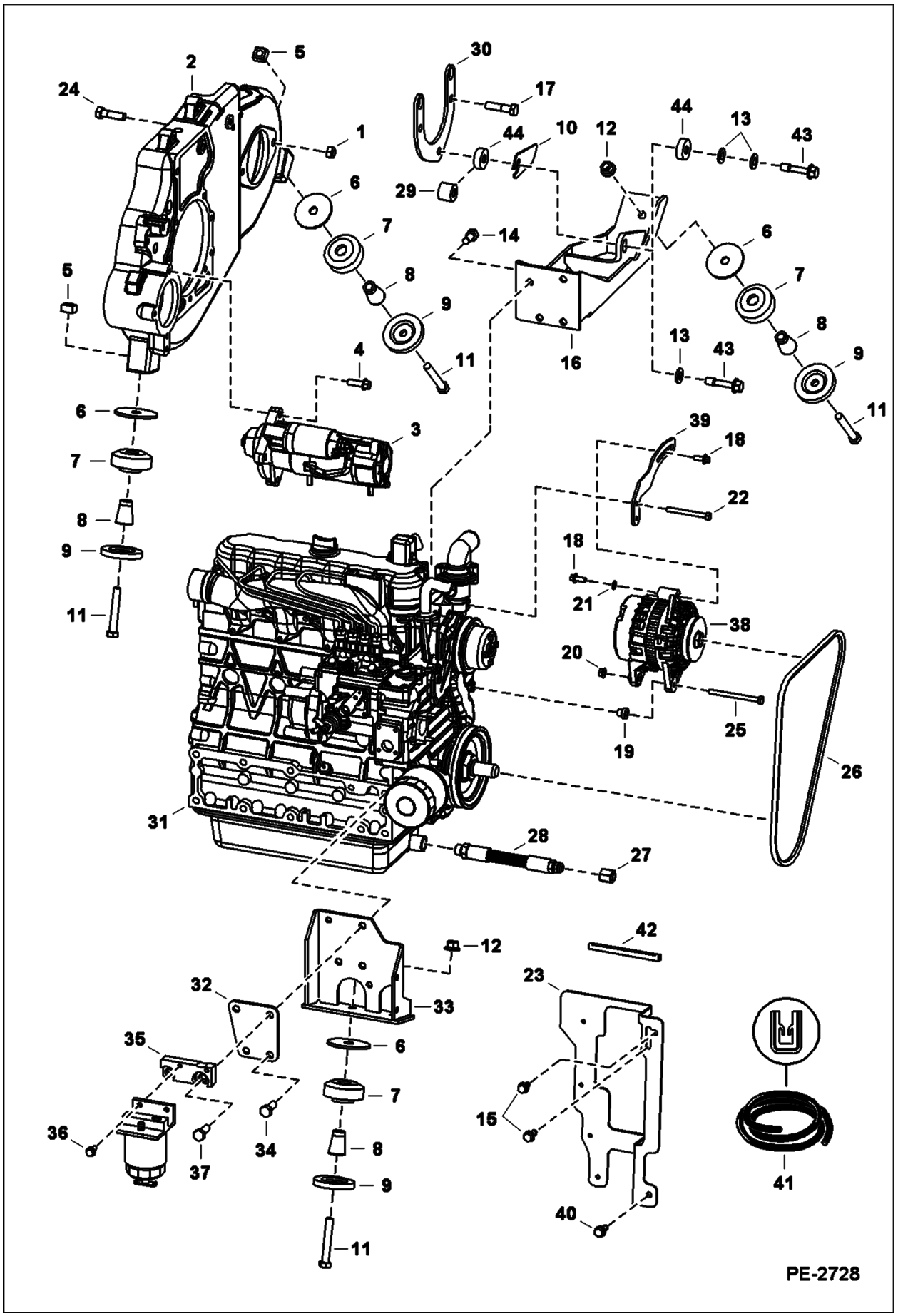

Illustration PE2728

Model S160 K
6904270

Page 290 - OSS# 6300202494 - All rights reserved by Bobcat Company - 02/11/2016 - 14:15:02 - Produced by Ken Cook Co. with mediaoff

ENGINE & ATTACHING PARTS (Cont'd)
(Engine Mounts)

Ref No	Part Number	Description	Remarks	Serial Number	Qty
44		BUSHING	NLA - spacer - .50" (12,7 mm) thick x 1.50" (38,1 mm) OD - Order 6716408 bushing - selectable joystick controls - Was 7104608 [D]		2
44	6716408	SPACER	10 x 32 mm (0.40 x 1.25") OD - selectable joystick controls - Was 7104608 [B,D]		2

Page 291 - OSS# 6300202494 - All rights reserved by Bobcat Company - 02/11/2016 - 14:15:02 - Produced by Ken Cook Co. with media1off

ENGINE SPEED CONTROL
(Manual Controls)

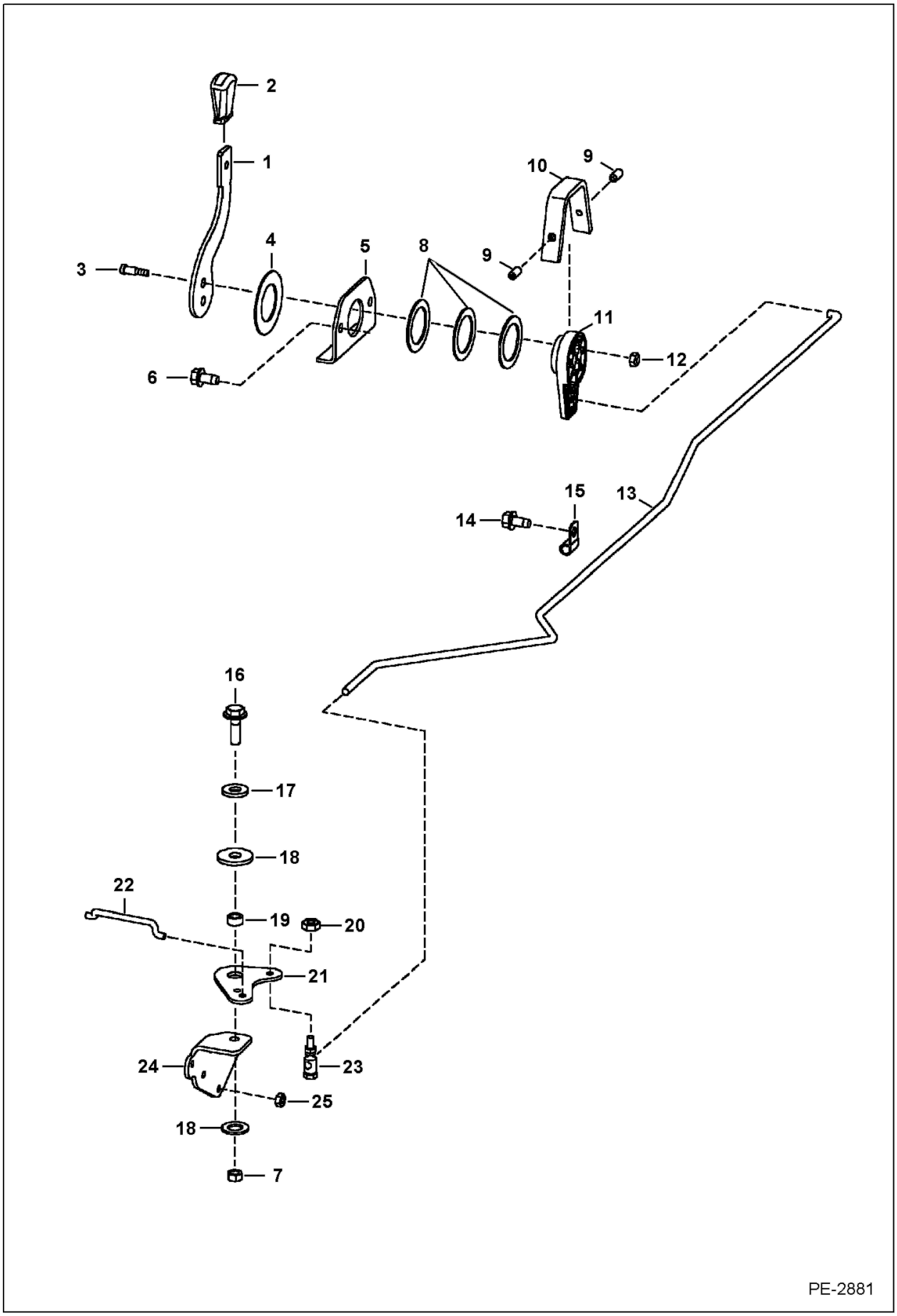

Illustration PE2881

Model S160 K
6904270

Page 292 - OSS# 6300202494 - All rights reserved by Bobcat Company - 02/11/2016 - 14:15:02 - Produced by Ken Cook Co. with mediaoff

ENGINE SPEED CONTROL (Cont'd)
(Manual Controls)

Ref No	Part Number	Description	Remarks	Serial Number	Qty
1	6705452	LEVER			1
2	6564452	LEVERGRIP			1
3	38C610	BOLT	shoulder		2
4	6567962	WASHER			1
5	6576262	MOUNT			1
6	84G3728	BOLT	Was 84G3724 [B]		2
7	95D6	NUT			1
8	6630945	WASHER			3
9	6706572	SCREW			2
10	6576261	COVER	Was 6734520 [A]		1
11	6734416	LEVER, THROTTLE			1
12	85D5	NUT 5			2
13	7125403	ROD	throttle - Was 7114667 [B,D]		1
14	84G3712	BOLT 5			1
15	31H38	CLAMP			1
16	84G3716	SCREW 5			1
16	17C716	BOLT			1
17	25E18	WASHER			1
18	6700170	WASHER	plastic		2
19	6564343	SPACER			1
20	59D4	NUT 5			1
21	6578268	THROTTLE			1
22	6736195	ROD			2
23	6557291	SWIVEL, BALL JOINT			1
24	7109314	MOUNT			1
25	1DM6	NUT	Was 4DM6 [A]		3

Page 293 - OSS# 6300202494 - All rights reserved by Bobcat Company - 02/11/2016 - 14:15:02 - Produced by Ken Cook Co. with media1off

ENGINE SPEED CONTROL
(Selectable Joystick Controls)

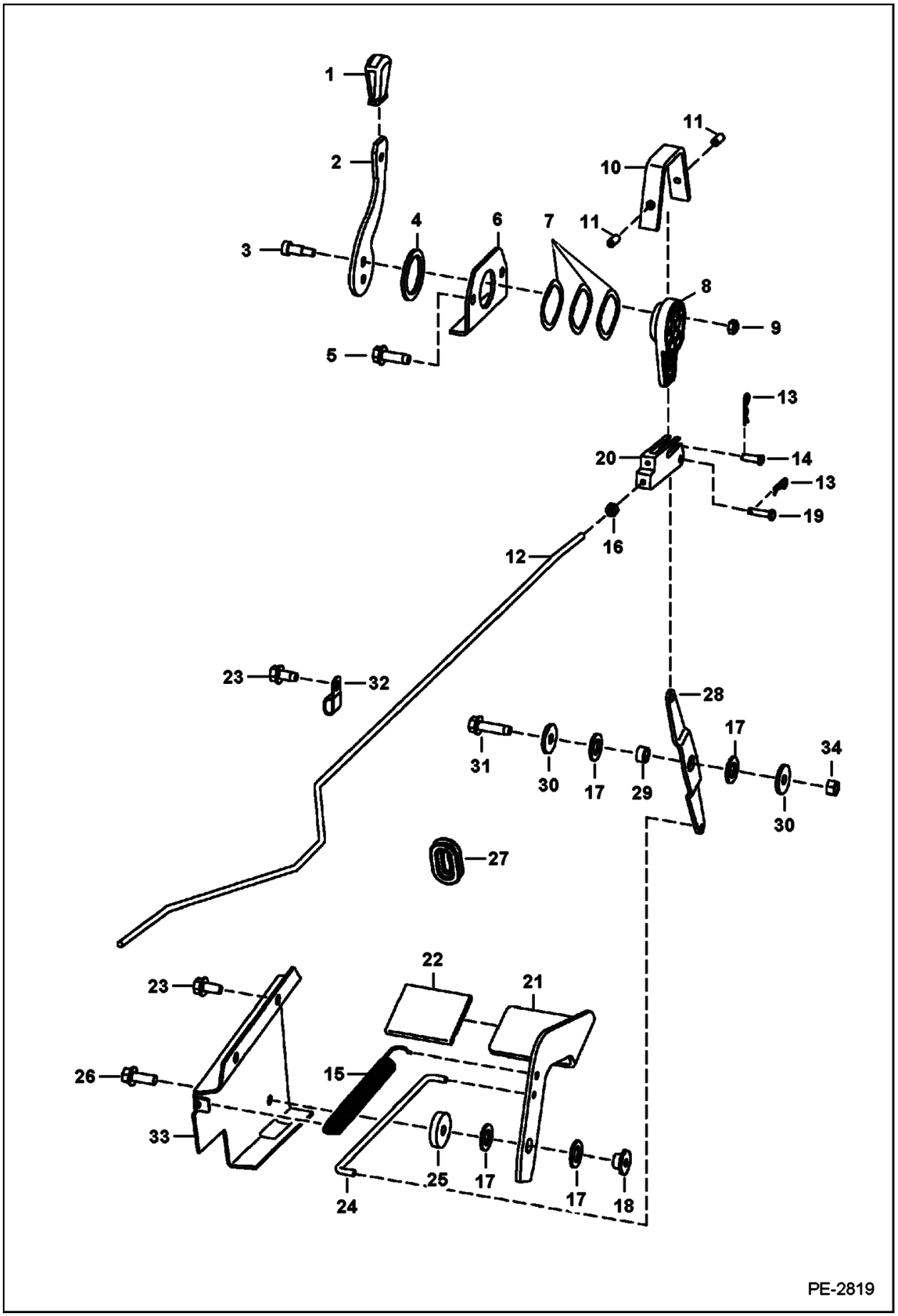

Illustration PE2819

Model S160 K
6904270

Page 294 - OSS# 6300202494 - All rights reserved by Bobcat Company - 02/11/2016 - 14:15:02 - Produced by Ken Cook Co. with mediaoff

ENGINE SPEED CONTROL (Cont'd)
(Selectable Joystick Controls)

Ref No	Part Number	Description	Remarks	Serial Number	Qty
1	6564452	LEVERGRIP			1
2	6730270	LEVER, THROTTLE			1
3	38C610	BOLT	shoulder		2
4	6567962	WASHER			1
5	84G3728	BOLT	Was 84G3724 [B]		2
6	6576262	MOUNT			1
7	6630945	WASHER			3
8	6734416	LEVER, THROTTLE			1
9	85D5	NUT 5			2
10	6576261	COVER	Was 6734520 [A]		1
11	6706572	SCREW			2
12	7116280	ROD			1
13	6513495	PIN 5			2
14	2F4051	PIN			1
15	6700743	SPRING			1
16	62D4	NUT			2
17	6700170	WASHER	plastic		4
18	6559479	NUT	retaining		1
19	1304227	PIN			1
20	6734503	CLEVIS			1
21	6735680	FOOT PEDAL			1
22	6554100	TREAD, SAFETY	76,2 x 152,4 mm (3 x 6")		1
23	84G3712	BOLT 5			3
24	6731900	ROD THROTTLE			1
25	6732322	SPACER			1
26	45C616	BOLT			1
27	6577961	GROMMET			1
28	6734417	LINK			1
29	6564343	SPACER			1
30	619021	WASHER, 5			2
31	84G3720	BOLT			1
32	31H38	CLAMP			1
33	6732323	BRACKET			1
34	85D6	NUT, 5			1

Page 295 - OSS# 6300202494 - All rights reserved by Bobcat Company - 02/11/2016 - 14:15:02 - Produced by Ken Cook Co. with media1off

ENGINE & GASKET KITS
(Kubota - V2003TMDI - Tier II)

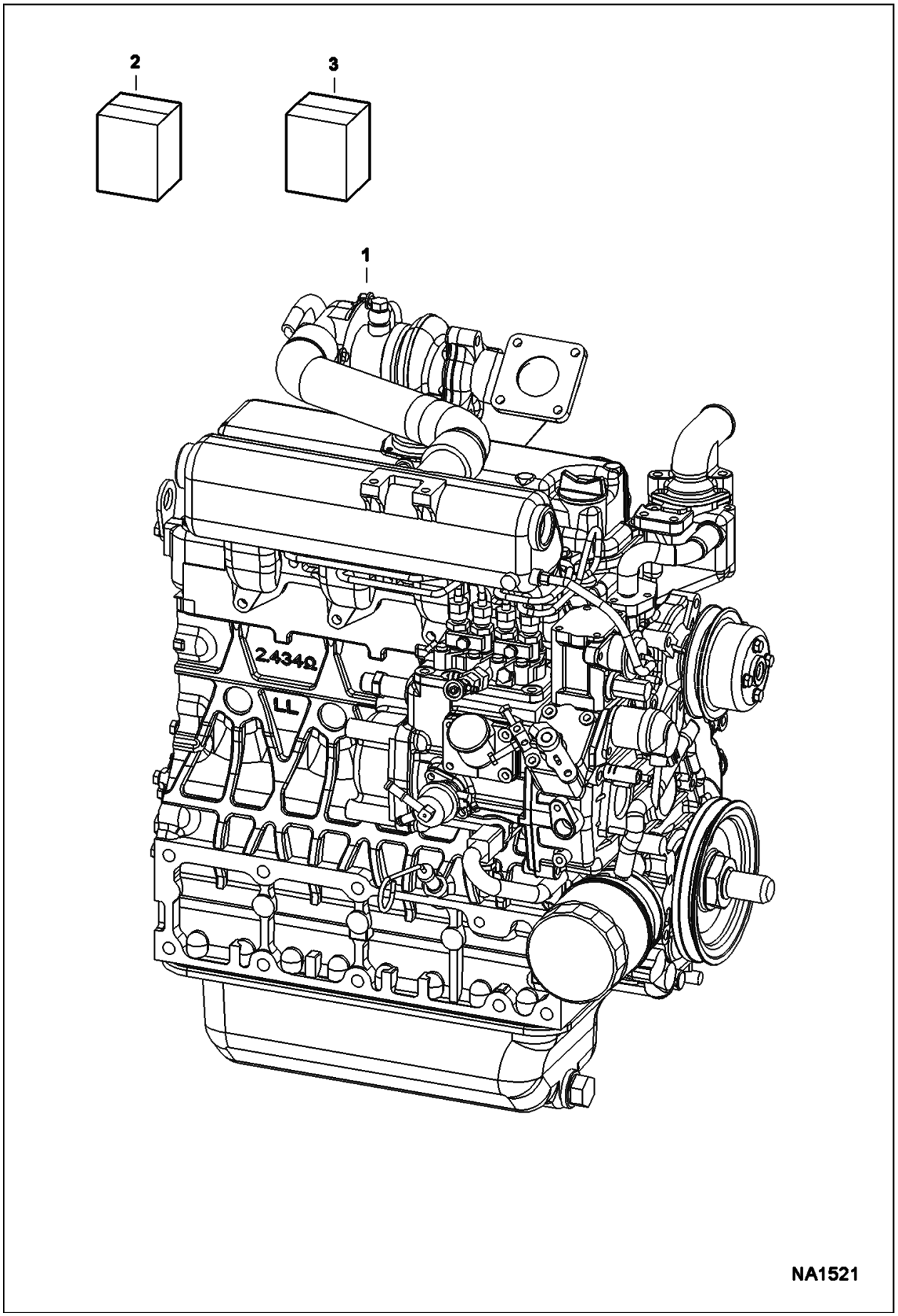

Illustration NA1521

Model S160 K
6904270

Page 296 - OSS# 6300202494 - All rights reserved by Bobcat Company - 02/11/2016 - 14:15:02 - Produced by Ken Cook Co. with mediaIoff

ENGINE & GASKET KITS (Cont'd)
(Kubota - V2003TMDI - Tier II)

Ref No	Part Number	Description	Remarks	Serial Number	Qty
1	6683203	ENGINE, V2003-M-DI-TE2B -BC-3	Contact your Local Dealer for Bobcat Technical Information BTI388ldr - Does not include starter, alternator, flywheel, & flywheel housing	529911001 & Above	1
1	6683203	ENGINE, V2003-M-DI-TE2B -BC-3	Contact your Local Dealer for Bobcat Technical Information BTI388ldr - Does not include starter, alternator, flywheel, & flywheel housing	530011001 & Above	1
1	6683203REM	ENG, KUBOTA V2003T DMI-TE2B-BC-3 TIER 2	Contact your Local Dealer for Bobcat Technical Information BTI388ldr - does not include starter, fan, alternator, flywheel & bell housing	530011001 & Above	1
1	6683203REM	ENG, KUBOTA V2003T DMI-TE2B-BC-3 TIER 2	Contact your Local Dealer for Bobcat Technical Information BTI388ldr - does not include starter, fan, alternator, flywheel & bell housing	529911001 & Above	1
1	7010757	ENGINE, V2003-M-DI-TE2B -BC-3F	- does not include turbo, starter, fan, alternator, flywheel & bell housing	AHWA11001 & Above	1
2	6689014	KIT, GASKET UPPER T2 ENG	See Illustration UPPER GASKET KIT / NA2271 - Also Order correct cylinder head gasket		1
3		KIT, GASKET ENG LOWER	See Illustration LOWER GASKET KIT / NA2273	530011001 & Above	1
3		KIT, GASKET ENG LOWER	See Illustration LOWER GASKET KIT / NA2273	529911001 & Above	1
3	7012338	KIT, GASKET ENG LOWER	See Illustration LOWER GASKET KIT / NA2628	AHWA11001 & Above	1

Page 297 - OSS# 6300202494 - All rights reserved by Bobcat Company - 02/11/2016 - 14:15:02 - Produced by Ken Cook Co. with media1off

UPPER GASKET KIT
(Kubota - V2003TMDI - Tier II)

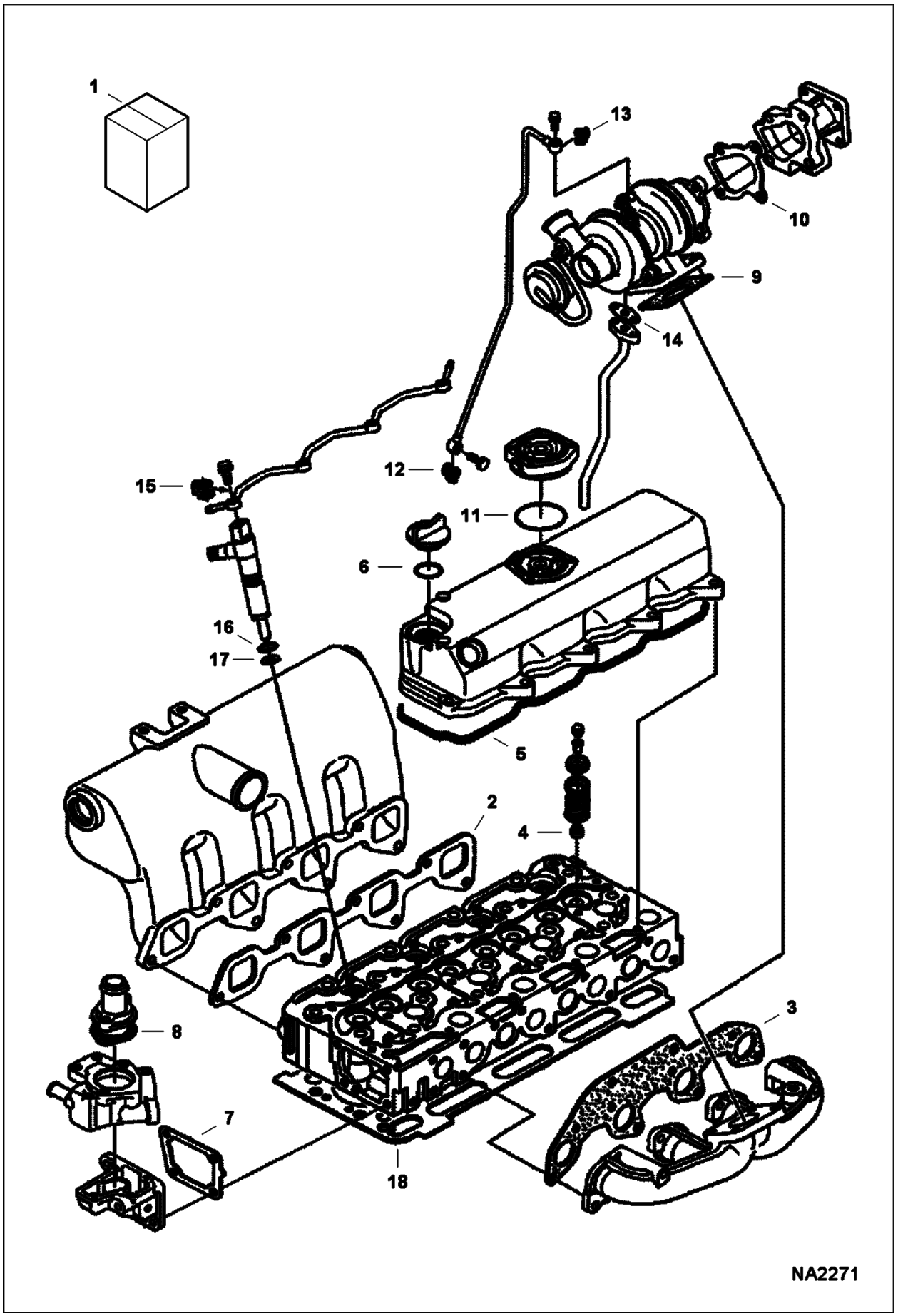

Illustration NA2271

Model S160 K
6904270

Page 298 - OSS# 6300202494 - All rights reserved by Bobcat Company - 02/11/2016 - 14:15:02 - Produced by Ken Cook Co. with mediaoff

UPPER GASKET KIT (Cont'd)
(Kubota - V2003TMDI - Tier II)

Ref No	Part Number	Description	Remarks	Serial Number	Qty
1	6689014	KIT, GASKET UPPER T2 ENG	Ref. 2-17 - does not include head gasket		1
2	6684877	GASKET	See Illustration MANIFOLDS / B22741 - intake manifold		1
3	6688382	GASKET	See Illustration MANIFOLDS / B22741 - exhaust manifold - 1-piece gasket in kit services original 2-piece gaskets - .060" thick		1
4	6653830	SEAL, STEM VALVE	See Illustration VALVE ROCKER ARM / B22692		8
5	6684780	GASKET	See Illustration ROCKER ARM COVER / B22699 - rocker arm cover		1
6	6684782	O-RING	See Illustration ROCKER ARM COVER / B22699 - oil filler cap		1
7	6666802	GASKET	See Illustration WATER FLANGE & THERMOSTAT / B22690R - water flange		1
8	6684863	GASKET	See Illustration WATER FLANGE & THERMOSTAT / B22690R - thermostat		1
9	6675636	GASKET	See Illustration TURBO CHARGER / B22742 - turbo to manifold		1
10	6675637	GASKET	See Illustration TURBO CHARGER / B22742 - turbo to flange		1
11	6685581	O-RING	See Illustration ROCKER ARM COVER / B22699 - breather		1
12	6689331	GASKET	See Illustration OIL PIPE / B22747 - oil supply tube - bottom - Was 6680792 [B]		1
13	7000642	WASHER, SEALING COPPER	See Illustration OIL PIPE / B22747 - oil supply tube - top - Was 6685962 [B]		2
14	6680570	GASKET	See Illustration OIL PIPE / B22747 - oil return tube		1
15	6685498	GASKET	See Illustration INJECTOR NOZZLES / B22738 - fuel return line		4
16	6670769	O-RING	See Illustration INJECTOR NOZZLES / B22738 - injector nozzle		4
17	6969824	GASKET, NOZZLE INJ	See Illustration INJECTOR NOZZLES / B22738 - injection nozzle - Was 6680779 [B,D]		4
18		GASKET, HEAD CYL	See Illustration CYLINDER HEAD / B22735 - not in kit		1

Page 299 - OSS# 6300202494 - All rights reserved by Bobcat Company - 02/11/2016 - 14:15:02 - Produced by Ken Cook Co. with media1off

LOWER GASKET KIT
(Kubota - V2003TMDI - Tier II) (S/N 529911001 & Abv, 530011001 & Abv)

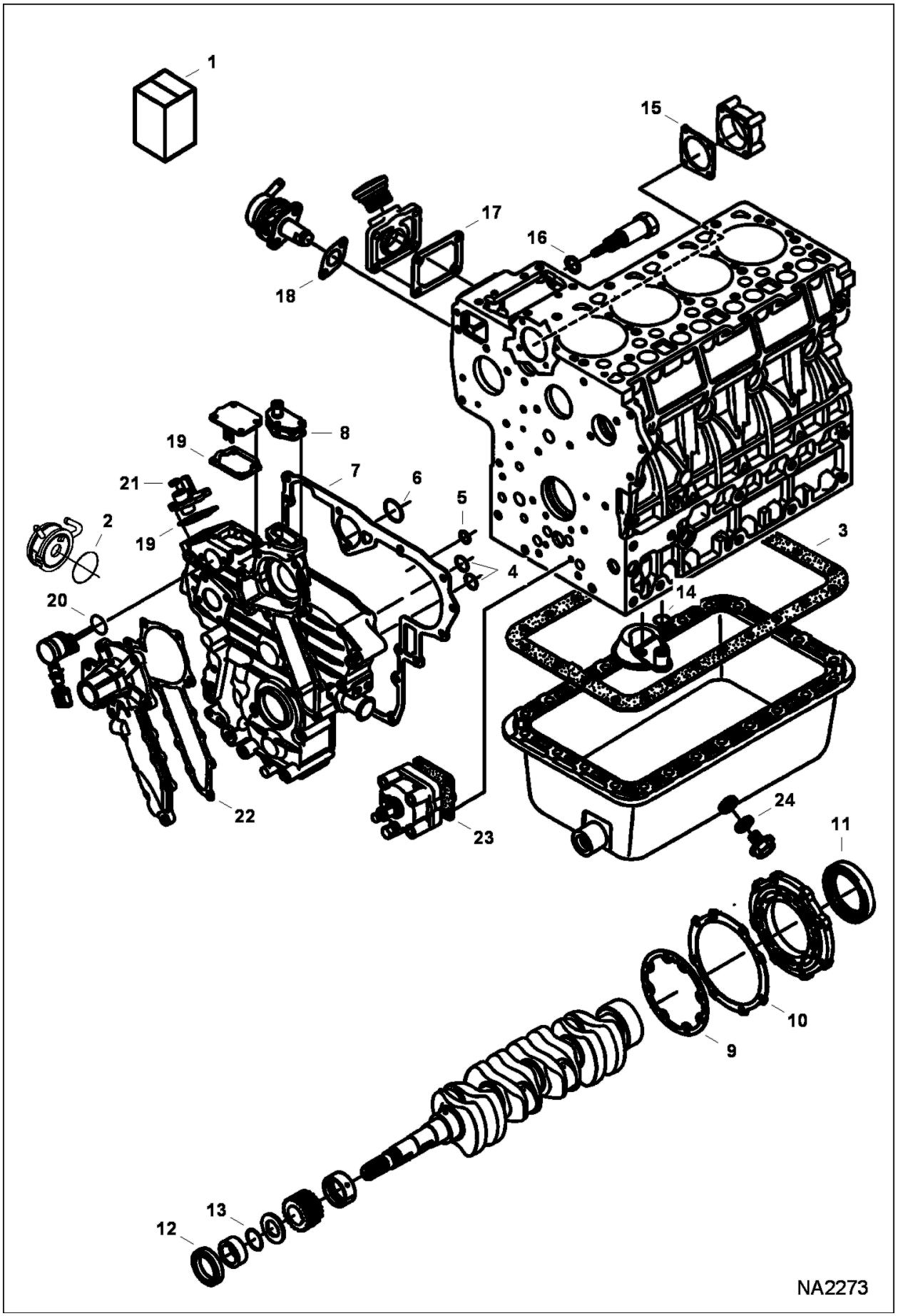

Illustration NA2273

Model S160 K
6904270

Page 300 - OSS# 6300202494 - All rights reserved by Bobcat Company - 02/11/2016 - 14:15:02 - Produced by Ken Cook Co. with mediaoff

LOWER GASKET KIT (Cont'd)
(Kubota - V2003TMDI - Tier II) (S/N 529911001 & Abv, 530011001 & Abv)

Ref No	Part Number	Description	Remarks	Serial Number	Qty
1	6689018	LOWER GASKET KIT TIER II ENGINE	Ref. 2-24	E/ 9FZ999 & Below	1
1	7012338	KIT, GASKET ENG LOWER	Ref. 2, 3 & 7-24	E/ 9G0001 & Above	1
2	6698244	ORING	See Illustration OIL COOLER / B22748 - oil cooler		1
3	6666817	GASKET	See Illustration OIL PAN / B22734 - oil pan		1
4	6685467	RING,O	See Illustration GEARCASE / B22736 - gear case	E/ 9FZ999 & Below	1
5	6685468	RING,O	See Illustration GEARCASE / B22736 - gear case	E/ 9FZ999 & Below	1
6	6685466	RING,O	See Illustration GEARCASE / B22736 - gear case	E/ 9FZ999 & Below	1
7	6684770	GASKET	See Illustration GEARCASE / B22736 - gearcase	E/ 9FZ999 & Below	1
7	7010599	GASKET, GEARCASE	See Illustration GEARCASE / B22736	E/ 9G0001 & Above	1
8	6666803	GASKET	See Illustration GEARCASE / B22736 - return flange		1
9	6684788	GASKET	See Illustration PISTON & CRANKSHAFT / B22684 - bearing case		1
10	6666814	GASKET	See Illustration PISTON & CRANKSHAFT / B22684 - case cover		1
11	6684789	SEAL, OIL	See Illustration PISTON & CRANKSHAFT / B22684 - oil rear main		1
12	7024826	SEAL, OIL	See Illustration PISTON & CRANKSHAFT / B22684 - oil frt main - oil frt main - Was 6631664		1
13	3974577	RING,O	See Illustration PISTON & CRANKSHAFT / B22684 - crankshaft frt		1
14	6684754	O-RING	See Illustration OIL PAN / B22734 - oil screen		1
15	6692386	GASKET	See Illustration FUEL CAMSHAFT / B13144 - fuel camshaft cover		1
16	6684818	SEAL	See Illustration ENGINE STOP LEVER / B22737 - idle adj. bolt		1
17	6666783	GASKET	See Illustration CRANKCASE / B22733 - oil fill flange		1
18	6686037	GASKET	See Illustration FUEL & INJECTION PUMP / B22686 - fuel pump		1
19	6684841	GASKET	See Illustration SPEED CONTROL PLATE / B22688 - boost cover		2
20	6685465	RING,O	See Illustration ENGINE STOP LEVER / B22737 - stop solenoid		1
21	6685476	SEAL	See Illustration SPEED CONTROL PLATE / B22688 - speed control lever		1
22	6684870	GASKET	See Illustration WATER PUMP / B22740 - water pump		1
23	6666782	GASKET	See Illustration CRANKCASE / B22733 - oil pump		1
24	6680484	GASKET	See Illustration OIL PAN / B22734 - drain plug		1

Page 301 - OSS# 6300202494 - All rights reserved by Bobcat Company - 02/11/2016 - 14:15:02 - Produced by Ken Cook Co. with media1off

LOWER GASKET KIT
(Kubota - V2003TMDI - Tier II) (S/N AHWA11001 & Above)

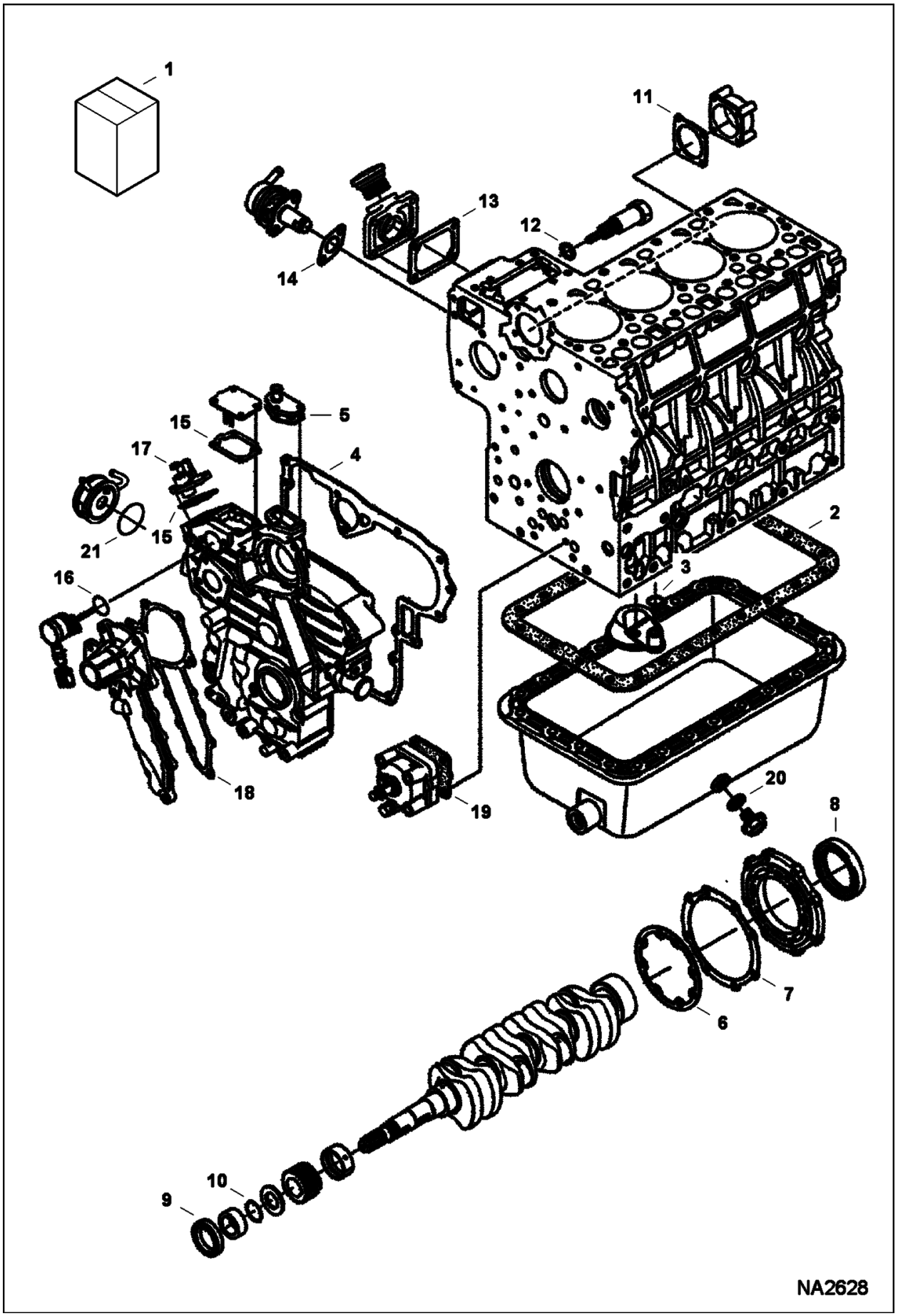

Illustration NA2628

Model S160 K
6904270

Page 302 - OSS# 6300202494 - All rights reserved by Bobcat Company - 02/11/2016 - 14:15:02 - Produced by Ken Cook Co. with mediaoff

LOWER GASKET KIT (Cont'd)
(Kubota - V2003TMDI - Tier II) (S/N AHWA11001 & Above)

Ref No	Part Number	Description	Remarks	Serial Number	Qty
1	7012338	KIT, GASKET ENG LOWER	Ref. 2-21		1
2	6666817	GASKET	See Illustration OIL PAN / B22734 - oil pan	E/ ADZ999 & Below	1
3	6684754	O-RING	See Illustration OIL PAN / B22734 - oil screen		1
4	7010599	GASKET, GEARCASE	See Illustration GEARCASE / NA2895		1
5	6666803	GASKET	See Illustration GEARCASE / NA2895 - return flange		1
6	6684788	GASKET	See Illustration PISTON & CRANKSHAFT / B22684 - bearing case		1
7	6666814	GASKET	See Illustration PISTON & CRANKSHAFT / B22684 - case cover		1
8	6684789	SEAL, OIL	See Illustration PISTON & CRANKSHAFT / B22684 - oil		1
9	7024826	SEAL, OIL	See Illustration PISTON & CRANKSHAFT / B22684 - crankshaft frt - oil frt main - Was 6631664		1
10	3974577	RING,O	See Illustration PISTON & CRANKSHAFT / B22684 - crankshaft frt		1
11	6692386	GASKET	See Illustration FUEL CAMSHAFT / B13144 - fuel camshaft cover		1
12	6684818	SEAL	See Illustration ENGINE STOP LEVER / B22737 - idle adj. bolt		1
13	6666783	GASKET	See Illustration CRANKCASE / B22733 - pump cover		1
14	6686037	GASKET	See Illustration CRANKCASE / B22733 - fuel pump		1
15	6684841	GASKET	See Illustration SPEED CONTROL PLATE / B22688 - plate		2
16	6685465	RING,O	See Illustration ENGINE STOP LEVER / B22737 - stop solenoid		1
17	6685476	SEAL	See Illustration SPEED CONTROL PLATE / B22688 - speed control lever		1
18	6684870	GASKET	See Illustration WATER PUMP / B22740 - water pump		1
19	6666782	GASKET	See Illustration CRANKCASE / B22733 - oil pump		1
20	6680484	GASKET	See Illustration OIL PAN / B22734 - drain plug		1
21	6698244	ORING	See Illustration OIL COOLER / B22748 - oil cooler		1

Page 303 - OSS# 6300202494 - All rights reserved by Bobcat Company - 02/11/2016 - 14:15:02 - Produced by Ken Cook Co. with media1off

GEARCASE
(Kubota - V2003-M-DI-TE2B-BC-3 - Tier II) (S/N 529911001 & Abv, 530011001 & Abv)

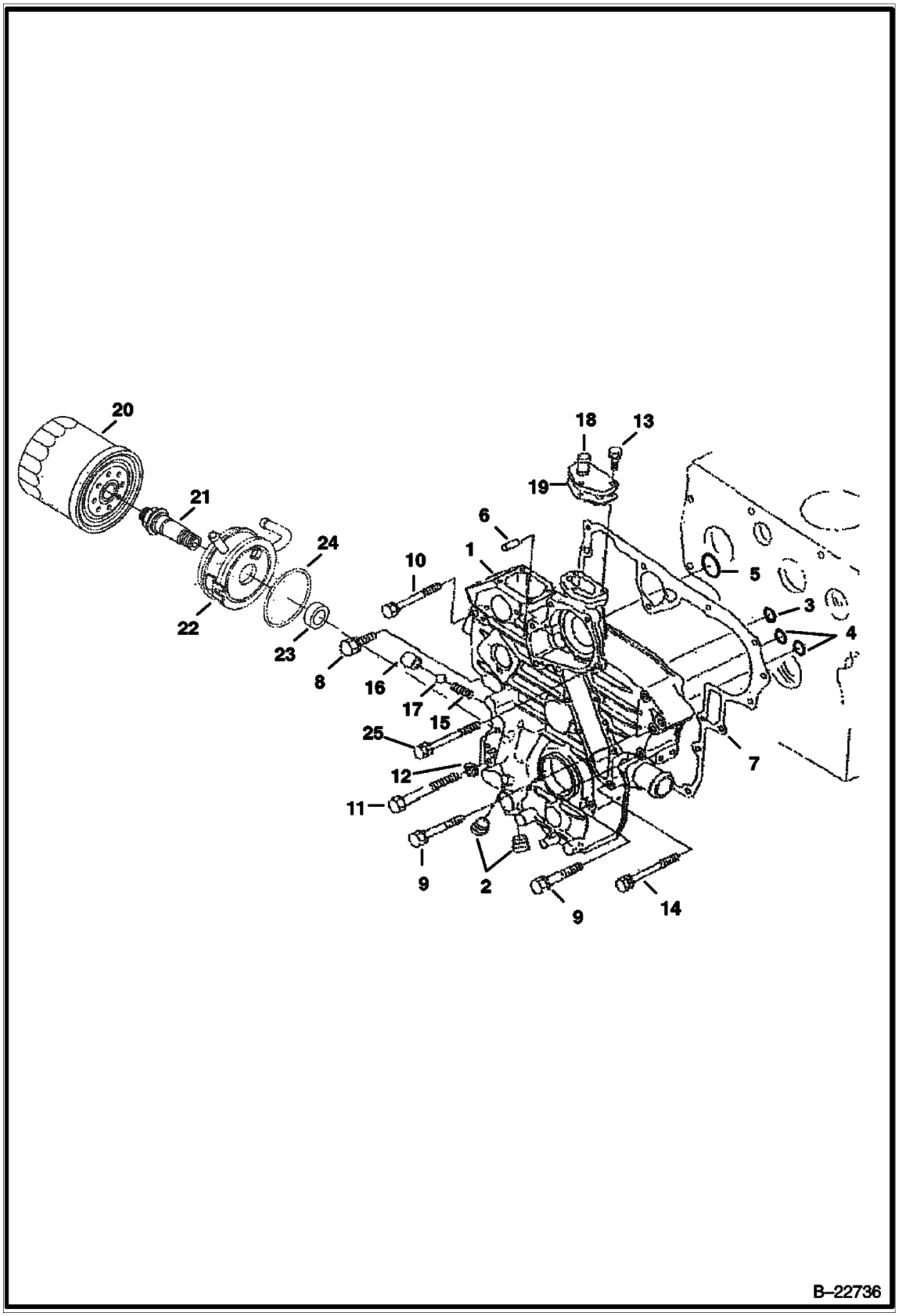

Illustration B22736

Model S160 K
6904270

Page 304 - OSS# 6300202494 - All rights reserved by Bobcat Company - 02/11/2016 - 14:15:02 - Produced by Ken Cook Co. with mediaoff

GEARCASE (Cont'd)
(Kubota - V2003-M-DI-TE2B-BC-3 - Tier II) (S/N 529911001 & Abv, 530011001 & Abv)

Ref No	Part Number	Description	Remarks	Serial Number	Qty
1		HOUSING, GEAR	NLA - W/Ref. 2 - Order 7012337 gearcase, 7010599 gasket and DO NOT USE Ref. 3-5 - Was 6688645 [A]	E/ 9FZ999 & Below	1
1	7012337	HOUSING, GEAR	W/Ref. 2 - Was 7012336 [B,D]	E/ 9G0001 & Above	1
2	6672360	PLUG			2
3	6685466	RING,O		E/ 9FZ999 & Below	1
4	6685467	RING,O		E/ 9FZ999 & Below	2
5	6685468	RING,O		E/ 9FZ999 & Below	1
6	3974395	PIN			2
7	6684770	GASKET		E/ 9FZ999 & Below	1
7	7010599	GASKET, GEARCASE		E/ 9G0001 & Above	1
8	1CM835	BOLT			1
9	1CM870	BOLT			7
10	6653807	BOLT			1
11	6684772	BOLT			2
12	6667422	WASHER			2
13	1CM620	BOLT	Was 4CM620 [A]		3
14	6653808	BOLT			4
15	6652652	SPRING			1
16	3974893	SEAT	valve		1
17	10J13	BALL			1
18	3974894	FLANGE	water return		1
19	6666803	GASKET	water return flange - Was 6684774 [A]		1
20	6675517	FILTER, OIL ENG 12			1
21		CONNECTOR	NLA - Order 7020646 connector and 7020866 collar - Was 6675681 [A]		1
22		OIL COOLER	See Illustration OIL COOLER / B22748 NLA - Was 6685641 [A]		1
23	6685637	COLLAR			1
24	6698244	ORING	Was 6657422 [B,D]		1
25	6653808	BOLT			4

Page 305 - OSS# 6300202494 - All rights reserved by Bobcat Company - 02/11/2016 - 14:15:02 - Produced by Ken Cook Co. with media1off

GEARCASE
(Kubota - V2003-M-DI-TE2B-BC-3F - Tier II) (S/N AHWA11001 & Above)

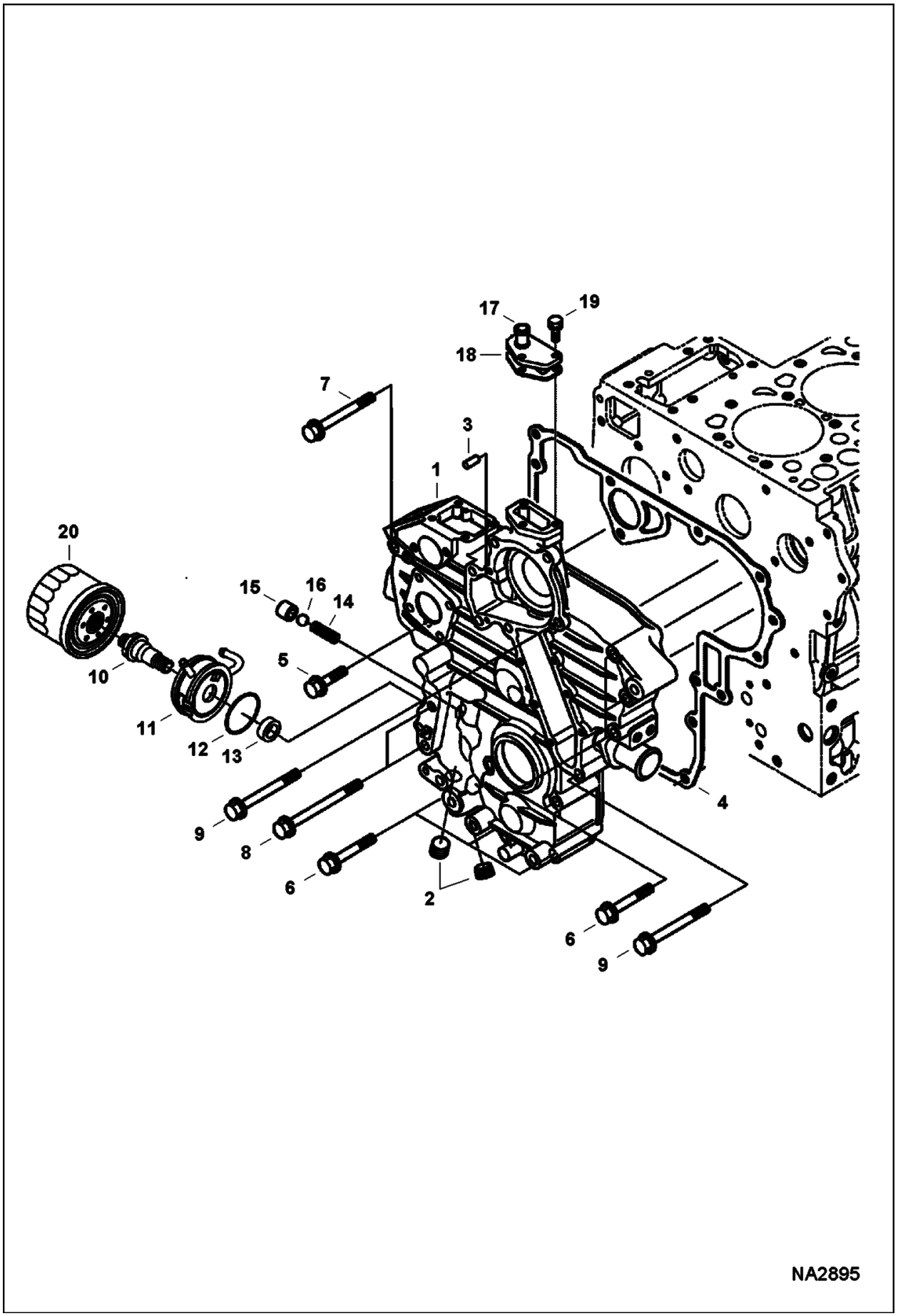

Illustration NA2895

Model S160 K
6904270

Page 306 - OSS# 6300202494 - All rights reserved by Bobcat Company - 02/11/2016 - 14:15:02 - Produced by Ken Cook Co. with mediaoff

GEARCASE (Cont'd)
(Kubota - V2003-M-DI-TE2B-BC-3F - Tier II) (S/N AHWA11001 & Above)

Ref No	Part Number	Description	Remarks	Serial Number	Qty
1	7012337	HOUSING, GEAR	W/Ref. 2		1
2	6672360	PLUG			2
3	3974395	PIN			2
4	7010599	GASKET, GEARCASE			1
5	6680706	BOLT	Was 1CM835 [B]		1
6	6692375	BOLT	Was 1CM870 [B]		7
7	6680686	BOLT	Was 6653807 [B]		1
8	6692376	BOLT	Was 6684772 [B]		2
9	6692377	BOLT	Was 6653808 [B]		4
10		CONNECTOR	NLA - Order 7020646 connector and 7020866 collar - Was 6675681 [A]		1
11	6690900	OIL COOLER			1
12	6698244	ORING			1
13	6685637	COLLAR			1
14	6652652	SPRING			1
15	3974893	SEAT			1
16	10J13	BALL			1
17	3974894	FLANGE			1
18	6666803	GASKET			1
19	1CM620	BOLT	Was 4CM620 [A]		3
20	6675517	FILTER, OIL ENG 12			1

Page 307 - OSS# 6300202494 - All rights reserved by Bobcat Company - 02/11/2016 - 14:15:02 - Produced by Ken Cook Co. with media1off

OIL COOLER
(Kubota - V2003TMDI - Tier II)

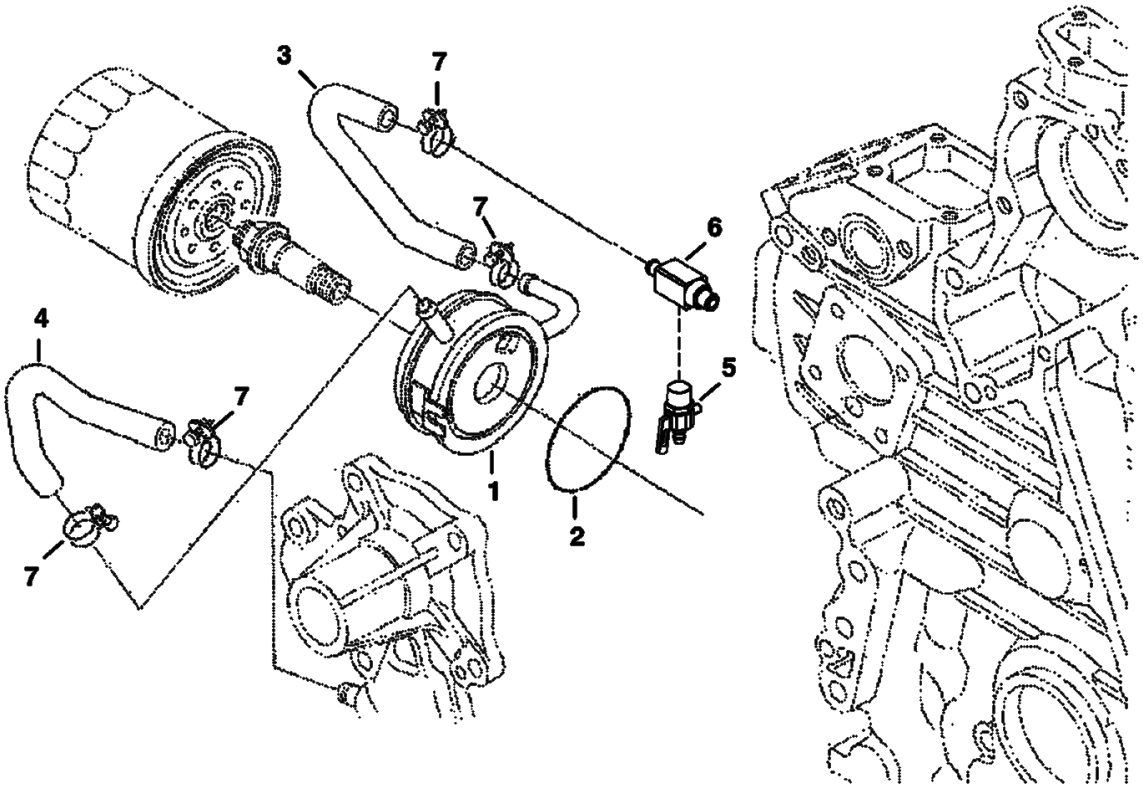

Illustration B22748

Model S160 K
6904270

Page 308 - OSS# 6300202494 - All rights reserved by Bobcat Company - 02/11/2016 - 14:15:02 - Produced by Ken Cook Co. with medialoff

OIL COOLER (Cont'd)
(Kubota - V2003TMDI - Tier II)

Ref No	Part Number	Description	Remarks	Serial Number	Qty
1		OIL COOLER	NLA - W/Ref. 2 - Order 6690900 oil cooler & 6690901 hose - Was 6685641 [A]		1
2	6698244	ORING	Was 6657422 [B,D]		1
3	6685642	HOSE			1
4	6685643	HOSE			1
5	6672190	VALVE, DRAIN			1
6	6678946	FITTING, ADAPTER			1
7	6680580	CLAMP	Was 6652748 [A]		4

Page 309 - OSS# 6300202494 - All rights reserved by Bobcat Company - 02/11/2016 - 14:15:02 - Produced by Ken Cook Co. with media1off

CRANKCASE
(Kubota - V2003TMDI - Tier II)

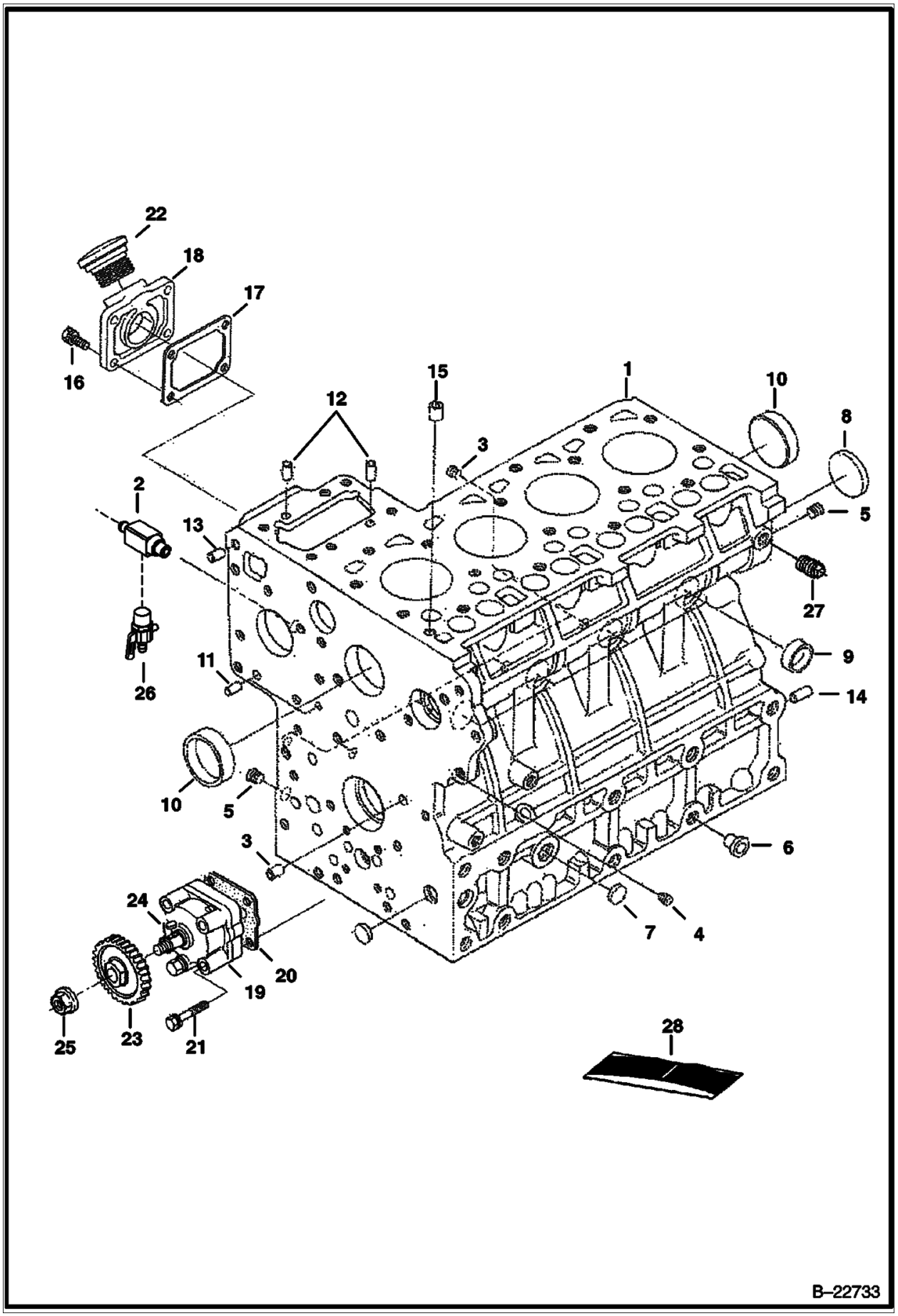

Illustration B22733

Model S160 K
6904270

Page 310 - OSS# 6300202494 - All rights reserved by Bobcat Company - 02/11/2016 - 14:15:02 - Produced by Ken Cook Co. with mediaoff

CRANKCASE (Cont'd)
(Kubota - V2003TMDI - Tier II)

Ref No	Part Number	Description	Remarks	Serial Number	Qty
1	6685579	BLOCK	assy. - W/Ref. 2 - 15		1
2	6678946	FITTING, ADAPTER			1
3	6652574	PLUG			5
4	6685477	PLUG			1
5	6652575	PLUG			2
6	6598187	PLUG			2
7	6667418	PLUG	expansion		3
8	6657663	PLUG	expansion		1
9	3974389	PLUG	sealing		6
10	3974390	PLUG	sealing - Was 6680639 [A]		2
11	3974393	PIN	straight		2
12	3974394	PIN	straight		3
13	3974395	PIN	straight		2
14	3974868	PIN	straight		1
15	3974037	PIN	pipe		1
16	6652580	BOLT			4
17	6666783	GASKET	Was 6684752 [A]		1
18	6685478	FLANGE	oil fill		1
19	6692380	OIL PUMP	Was 6682498 [D]		1
20	6666782	GASKET			1
21	6655195	BOLT			4
22	7015273	PLUG, FILL	oil fill - Was 6685472 [A]		1
23	3975441	GEAR, CAMSHAFT			1
24	6969805	KEY,FEATHER	Was 15JM00410B [A]		1
25	6653888	NUT			1
26	6672190	VALVE, DRAIN			1
27	16F2	PLUG			1
28		GASKET KIT	See Illustration LOWER GASKET KIT / NA2273		1

Page 311 - OSS# 6300202494 - All rights reserved by Bobcat Company - 02/11/2016 - 14:15:02 - Produced by Ken Cook Co. with media1off

ROCKER ARM COVER
(Kubota - V2003TMDI - Tier II)

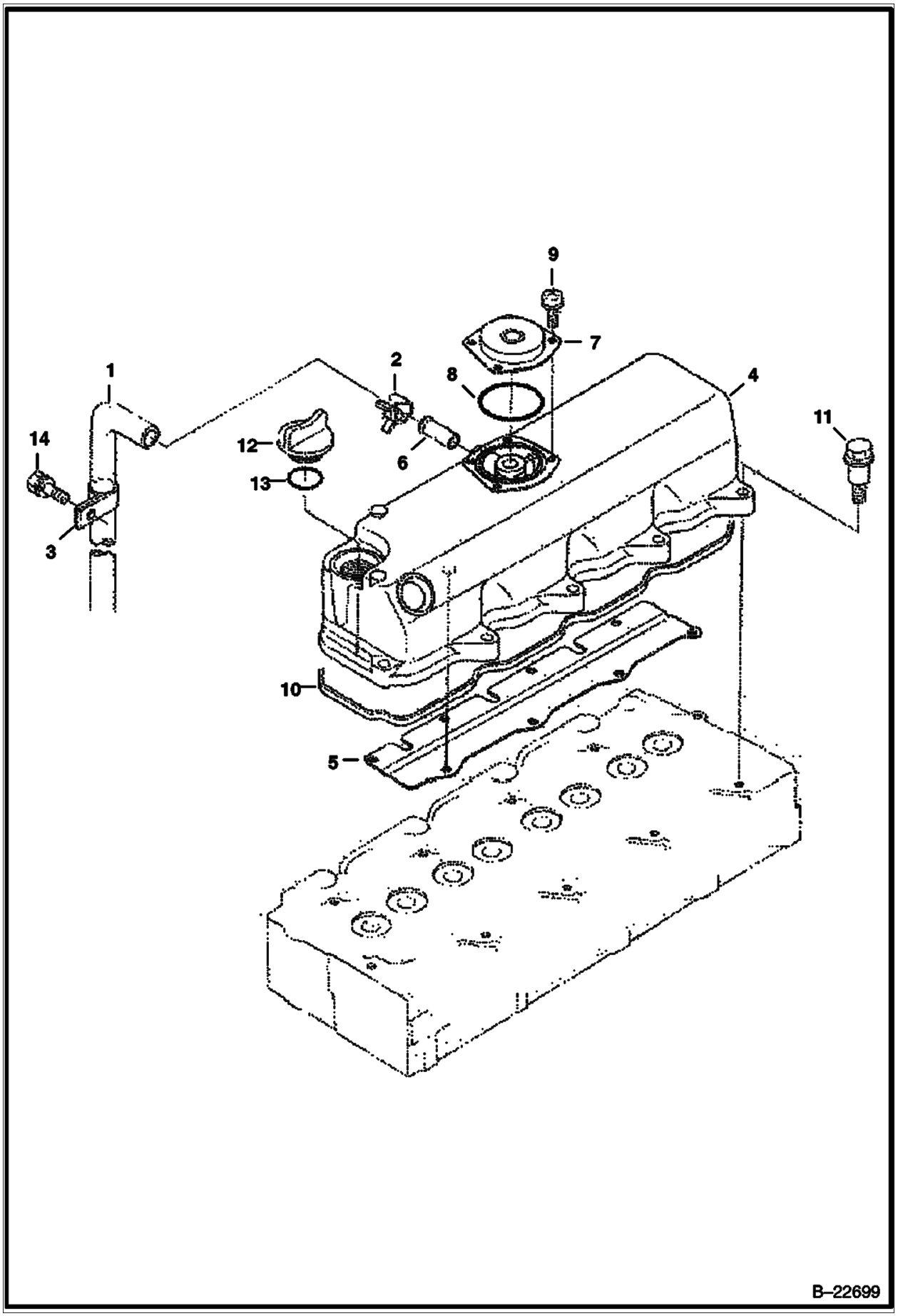

Illustration B22699

Model S160 K
6904270

Page 312 - OSS# 6300202494 - All rights reserved by Bobcat Company - 02/11/2016 - 14:15:02 - Produced by Ken Cook Co. with mediaoff

ROCKER ARM COVER (Cont'd)
(Kubota - V2003TMDI - Tier II)

Ref No	Part Number	Description	Remarks	Serial Number	Qty
1	6685580	TUBE	breather		1
2	6684776	CLAMP			1
3	6684777	CLAMP			1
4	6684778	COVER, HEAD CYL ENG		529911001 & Above	1
4	6684778	COVER, HEAD CYL ENG		530011001 & Above	1
4	6684778	COVER, HEAD CYL ENG		A15111001 & Above	1
4	7012336	COVER, HEAD CYL ENG	Was 7012337 [B,D]	AHWA11001 & Above	1
5		SHIELD	NLA - breather - Order Ref. 4 - Was 6684779 [A]		1
6	6655880	PIPE			1
7	6688655	BREATHER COVER	Was 6680692 [A]		1
8	6685581	O-RING			1
9	3975436	SCREW	W/washer - Was 3974928B [A]		4
10	6684780	GASKET			1
11	6684781	BOLT			10
12	6685924	OIL FILL CAP	oil filler - Was 6652653 [A]		1
13	6684782	O-RING			1
14	4CM822	BOLT			1

Page 313 - OSS# 6300202494 - All rights reserved by Bobcat Company - 02/11/2016 - 14:15:02 - Produced by Ken Cook Co. with media1off

VALVE ROCKER ARM
(Kubota - V2003TMDI - Tier II)

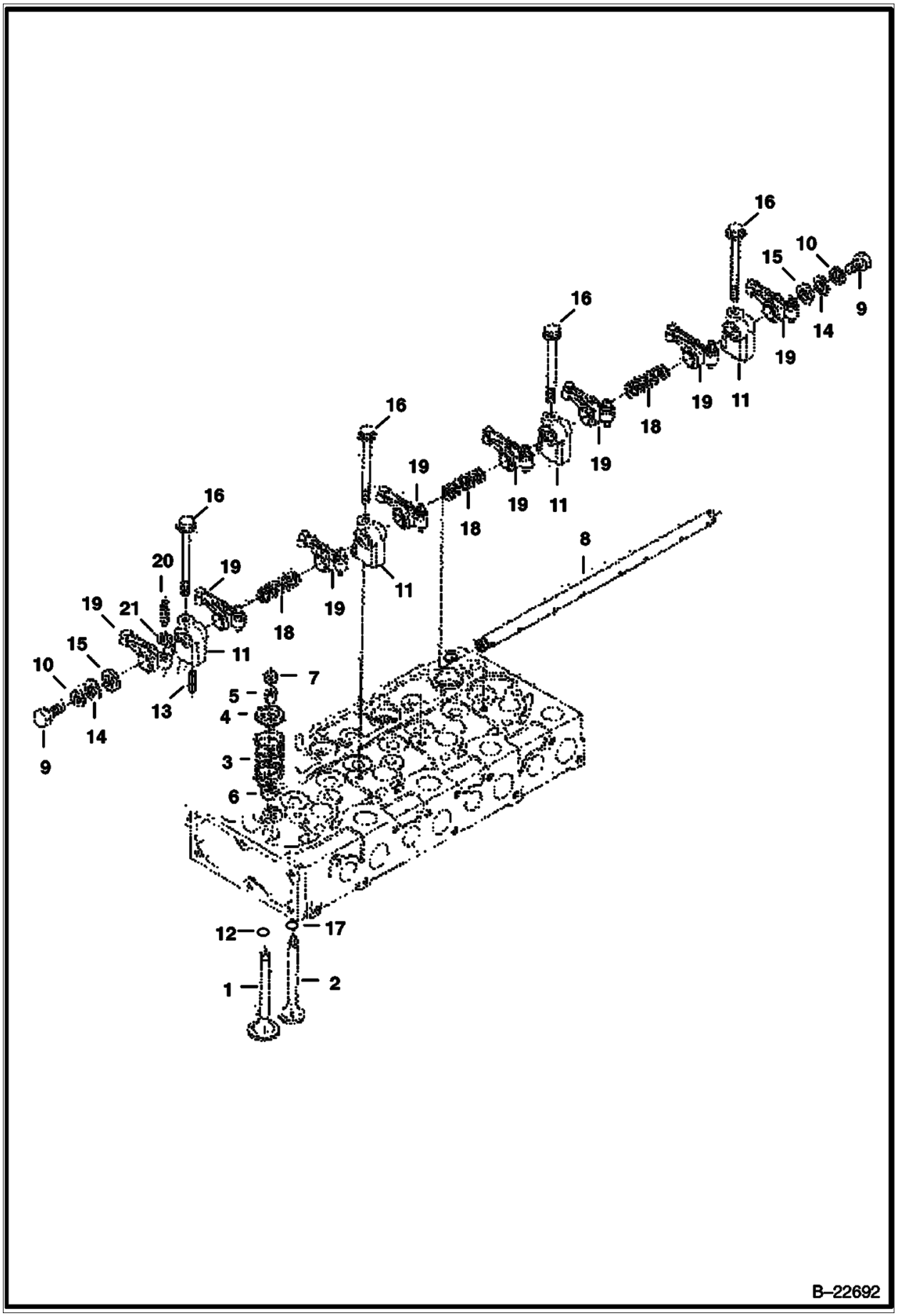

Illustration B22692

Model S160 K
6904270

Page 314 - OSS# 6300202494 - All rights reserved by Bobcat Company - 02/11/2016 - 14:15:02 - Produced by Ken Cook Co. with mediaoff

VALVE ROCKER ARM (Cont'd)
(Kubota - V2003TMDI - Tier II)

Ref No	Part Number	Description	Remarks	Serial Number	Qty
1	6684872	VALVE	inlet		4
2		VALVE	Exhaust - NLA - Order 7245897 & 7031255 - Was - 7020386 [A]		4
3	3974514	SPRING 5	valve		8
4	3974515	RETAINER	valve spring		8
5	6684874	COLLAR	valve spring - set of 2		8
6	6653830	SEAL, STEM VALVE			8
7	3974518	CAP	valve		8
8	6684875	SHAFT	rocker arm		1
9	5CM812	BOLT			2
10	6667422	WASHER	external		2
11	3974521	ARM, ROCKER	rocker arm		4
12	6684762	SEAT	valve inlet - Was 6655155 [B,D]		4
13	6667461	SPRNG PIN	spring		4
14	6667451	WASHER	plain		4
15	3974524	WASHER			2
16	6680685	BOLT			1
17	6684763	SEAT	exhaust valve - Was 6655156 [B,D]		4
18	6653833	SPRING	rocker arm		3
19	6655870	ROCK ARM	rocker - W/Ref. 20 & 21		8
20	3974920	SCREW	adjusting		8
21	2DM8	NUT			8

Page 315 - OSS# 6300202494 - All rights reserved by Bobcat Company - 02/11/2016 - 14:15:02 - Produced by Ken Cook Co. with media1off

CYLINDER HEAD
(Kubota - V2003TMDI - Tier II)

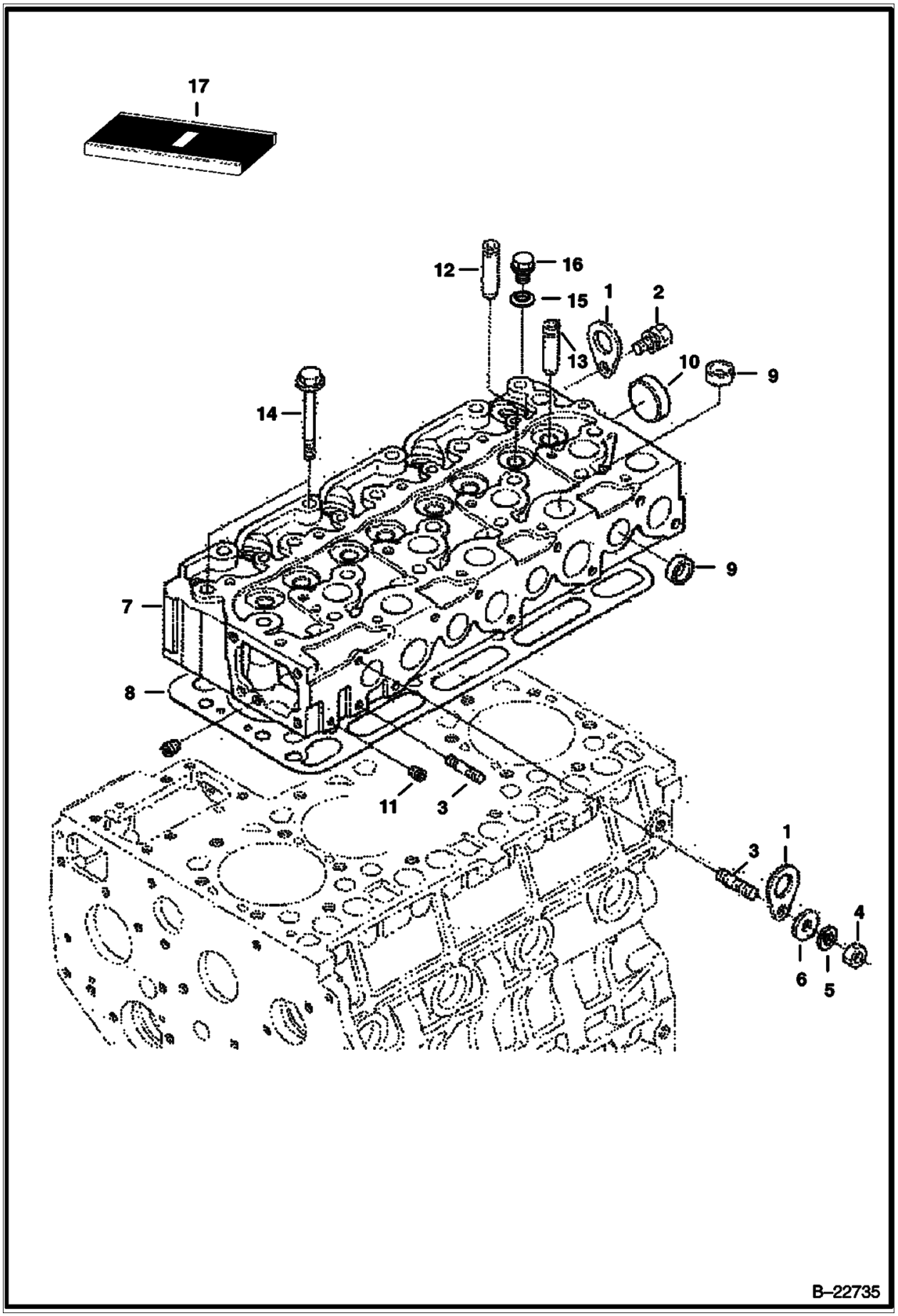

Illustration B22735

Model S160 K
6904270

Page 316 - OSS# 6300202494 - All rights reserved by Bobcat Company - 02/11/2016 - 14:15:02 - Produced by Ken Cook Co. with mediaoff

CYLINDER HEAD (Cont'd)
(Kubota - V2003TMDI - Tier II)

Ref No	Part Number	Description	Remarks	Serial Number	Qty
1	3974882	HOOK			2
2	6667421	BOLT			1
3	6598156	STUD			2
4	6652792	NUT			2
5	6667422	WASHER	spring		2
6	1EM80	WASHER	Was 2EM8 [A]		2
7	6684755	CYLINDER HEAD	cylinder - W/Ref. 10 - 14		1
7	6684755REM	HEAD, KUBOTA V2003T			1
8	6684758	GASKET	cylinder head - 20 stamped on gasket		1
8	6684757	GASKET	cylinder head - 15 stamped on gasket		1
8	6684759	GASKET	cylinder head - 25 stamped on gasket		1
8	6684760	GASKET	cylinder head - 30 stamped on gasket		1
8	6684761	GASKET	cylinder head - 35 stamped on gasket		1
9	3974432	PLUG	sealing		12
10	3974433	PLUG	sealing		1
11	6598116	PLUG			2
12	6655154	GUIDE, VALVE	intake valve		4
13	6684756	GUIDE	exhaust valve		4
14	6655158	BOLT			18
15	6655161	WASHER	W/rubber		1
16	6655160	PLUG			1
17		GASKET KIT	See Illustration ENGINE & GASKET KITS / NA1521 UPPER		1

Page 317 - OSS# 6300202494 - All rights reserved by Bobcat Company - 02/11/2016 - 14:15:02 - Produced by Ken Cook Co. with media1off

OIL PAN
(Kubota - V2003TMDI - Tier II)

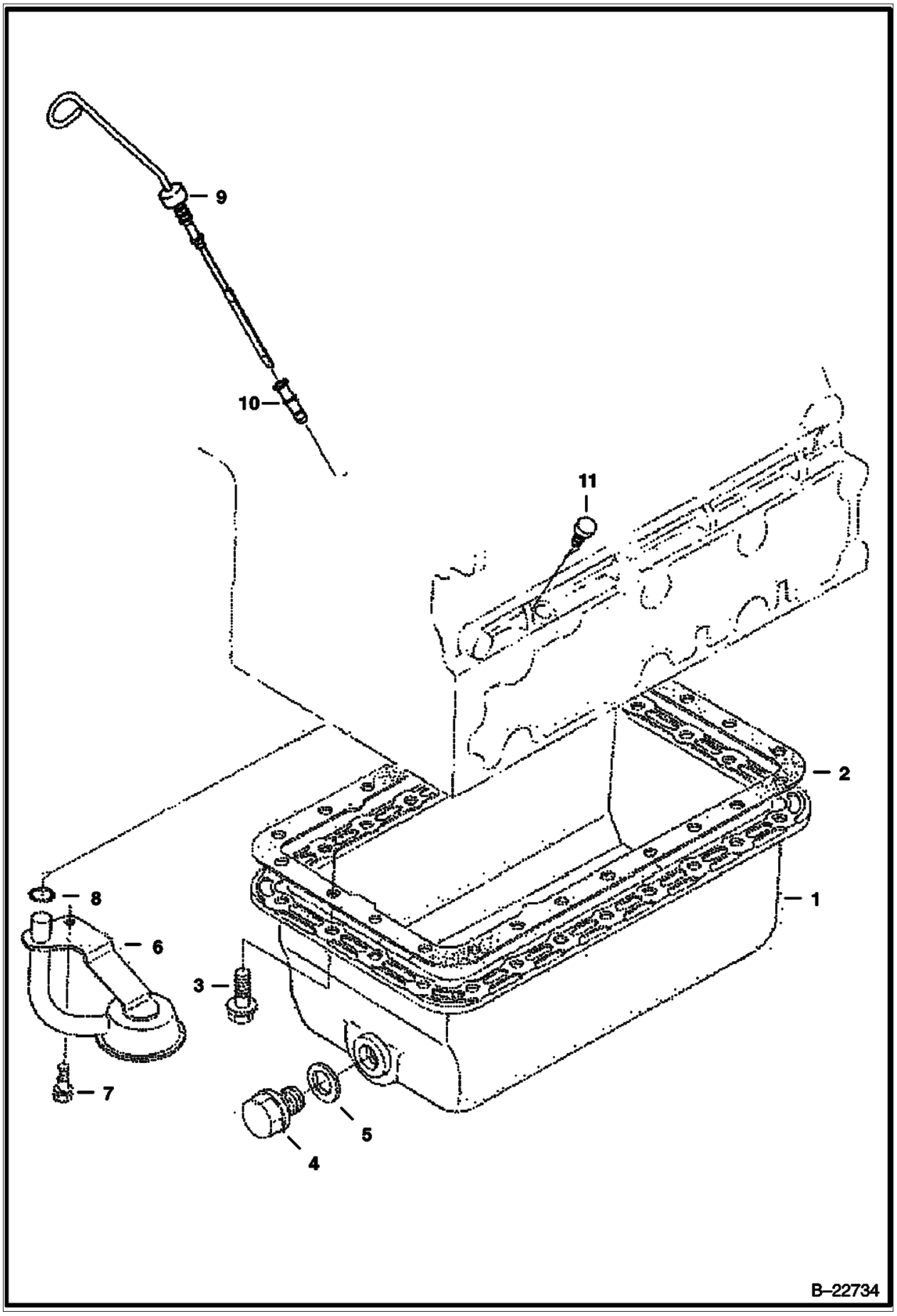

Illustration B22734

Model S160 K
6904270

Page 318 - OSS# 6300202494 - All rights reserved by Bobcat Company - 02/11/2016 - 14:15:02 - Produced by Ken Cook Co. with mediaoff

OIL PAN (Cont'd)
(Kubota - V2003TMDI - Tier II)

Ref No	Part Number	Description	Remarks	Serial Number	Qty
1		OIL PAN	NLA - Use 6685518 oil pan W/O Ref. 2 - Was 6685518 [A]	E/ ADZ999 & Below	1
1	6685518	OIL PAN		E/ AE0001 & Above	1
2	6666817	GASKET	oil pan - Was 6684753 [A]	E/ ADZ999 & Below	1
3	7001922	BOLT	Was 6653798 [B,D]	E/ 5R9999 & Bel	24
3	7001922	BOLT	Was 6698100 [A]	E/ 5S0001 & Abv	24
4	6680657	PLUG	drain		1
5	6631046	GASKET			1
6	6682500	FILTER			1
7	6667420	BOLT		E/ 5V9999 & Bel	1
7	6685109	BOLT FLANGE		E/ 5W0001 & Abv	1
8	6684754	O-RING			1
9	7019201	DIPSTICK, ENG OIL	Was 6685499 [A]		1
10	6677203	TUBE,DIPSTICK			1
11	6969804	PLUG,OIL GAUGE	Was 6684785 [A]		1

Page 319 - OSS# 6300202494 - All rights reserved by Bobcat Company - 02/11/2016 - 14:15:02 - Produced by Ken Cook Co. with media1off

PISTON & CRANKSHAFT
(Kubota - V2003TMDI - Tier II)

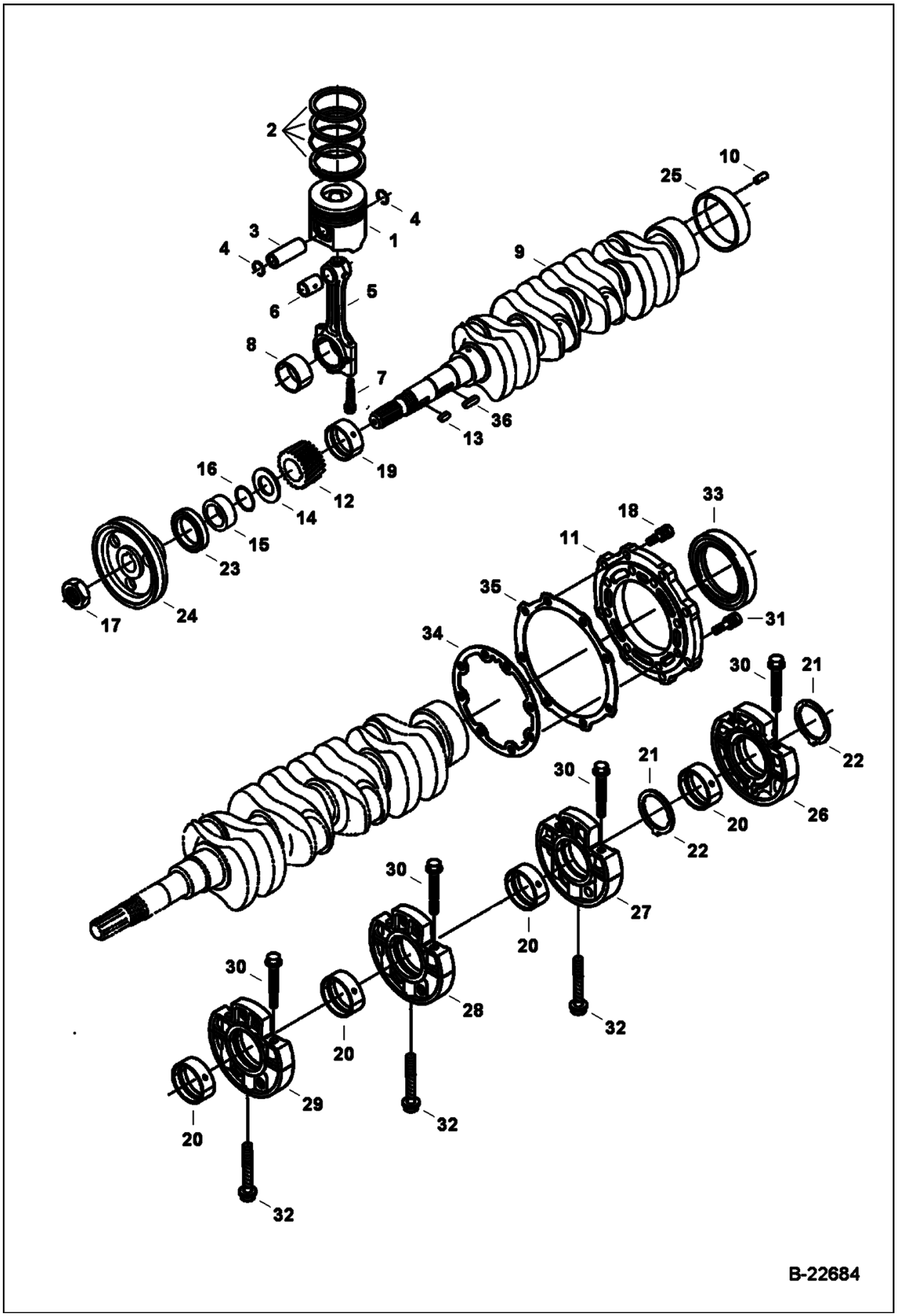

Illustration B22684

Model S160 K
6904270

Page 320 - OSS# 6300202494 - All rights reserved by Bobcat Company - 02/11/2016 - 14:15:02 - Produced by Ken Cook Co. with mediaoff

PISTON & CRANKSHAFT (Cont'd)
(Kubota - V2003TMDI - Tier II)

Ref No	Part Number	Description	Remarks	Serial Number	Qty
1		PISTON	NLA - std (00) (1G770-2112) - Order 6691712 piston - Was 6689583 [A]		4
1		PISTON, ENG OS	NLA - +.25 mm (00) (1G770-2112 OS25) - Order 7001674 - Was 7001675 [A]		4
1	6691712	PISTON	std (05) (1G770-2111)		4
1	7001674	PISTON, ENG OS	+.25 mm (05) (1G770-2111 OS25) - Was 6684798 [B,D]		4
1	7001676	PISTON, ENG	std (10) (1G770-2113) - Was 6684801 [B,D]		4
1		PISTON, ENG OS	NLA - +0,25 mm (10) (1G770-2113 OS25) - Order 7001674 piston, eng OS - Was 7001677 [A]		4
2	6684803	RING	piston - std		4
2	6684804	RING	piston - +.25		4
3	6655179	PIN, PISTON ENG			4
4	6686997	CIR-CLIP			8
5	6655181	ROD, CONNECTING	W/Ref. 6, 7 & 8		4
6	6655243	BUSHING			4
7		BOLT	NLA - Order 2 of 7020998 bolt and be advised of different torque specs		8
8	7015270	BEARING, ENG ROD CONNECTING	rod - std. - Was 6655183 [A]		4
8	6655236	BEARING, ROD	rod (-0,20 mm)		4
8	6655237	BEARING, ROD	rod (-0,40 mm)		4
9	6688546	CRANKSHAFT	W/Ref. 25 - Was 6684806 [B,D]	E/ 7Z9999 & Bel	1
9	7010238	CRANKSHAFT, ENG	W/Ref. 25 - Also order 7008888 pin	E/ 8N0001 & Abv	1
10	7000450	PIN, STRAIGHT		E/ 8A0001-8MZ999	1
10	7008888	PIN, STRAIGHT		E/ 8N0001 & Abv	1
11	6655166	COVER	Was 6685515 [A]		1
12	6685481	GEAR			1
13	3974546	KEY			2
14	6653861	LUBRCATOR	oil		1
15	3975337	COLLAR			1
16	3974577	RING,O			1
17	3974671	NUT			1
18	1CM825	CAP SCREW	Was 4CM825 [A]		8
19	7015264	BEARING, ENG CRANKSHAFT	main - Std. - Was 6685486 [A]		1
19	6685490	BEARING, MAIN	main (0,2 mm-.0079)		1
19	6685491	BEARING, MAIN	main (0,4 mm-.0157)		1
20	7015265	BEARING, ENG CRANKSHAFT	main - std. - Was 6685487 [A]		4
20	6685492	BEARING, MAIN	main (0,2 mm-.0079)		4
20	6685493	BEARING, MAIN	main (0,4 mm-.0157)		4
21	7015266	WASHER, THRUST	thrust - Std. - Was 6685488 [A]		2
21	6685494	WASHER, THRUST	thrust (0,2 mm-.0079)		2
21	6685495	WASHER, THRUST	thrust (0,4 mm-.0157)		2
22	7015267	WASHER, THRUST	std - Was 6685489 [A]		2
22	6685496	WASHER, THRUST	thrust (0,2 mm-.0079)		2

Page 321 - OSS# 6300202494 - All rights reserved by Bobcat Company - 02/11/2016 - 14:15:02 - Produced by Ken Cook Co. with media1off

PISTON & CRANKSHAFT (Cont'd)
(Kubota - V2003TMDI - Tier II)

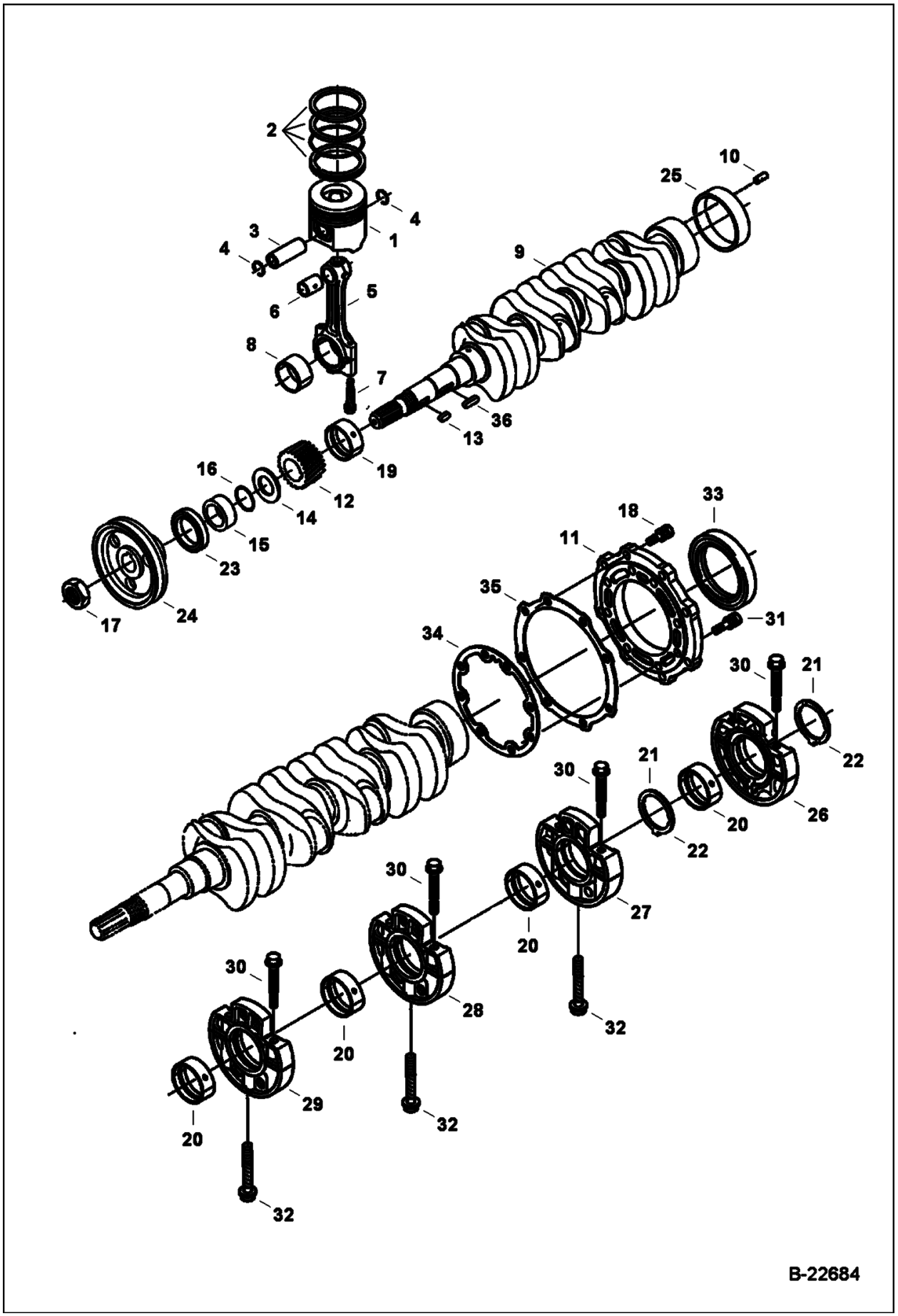

Illustration B22684

Model S160 K
6904270

Page 322 - OSS# 6300202494 - All rights reserved by Bobcat Company - 02/11/2016 - 14:15:02 - Produced by Ken Cook Co. with mediaoff

PISTON & CRANKSHAFT (Cont'd)
(Kubota - V2003TMDI - Tier II)

Ref No	Part Number	Description	Remarks	Serial Number	Qty
22	6685497	WASHER, THRUST	thrust (0,4 mm-.0157)		2
23	7024826	SEAL, OIL	oil frt main - Was 6631664 [A]		1
24	6685521	PULLEY			1
25	6653859	SLEEVE, WEAR			1
26	6689503	CASE MAIN BRG	main bearing - W/Ref. 30 - Was 6685480 [A]		1
27	6685586	BEARING CASE	main bearing - W/Ref. 30		1
28	6685585	BEARING CASE	main bearing - W/Ref. 30		1
29	6685584	BEARING CASE	main bearing - W/Ref. 30		1
30	6685482	BOLT			8
31	4CM828	BOLT			8
32	6653821	BOLT			3
33	6684789	SEAL, OIL	oil		1
34	6684788	GASKET			1
35	6666814	GASKET			1
36	6685469	KEY			1

Page 323 - OSS# 6300202494 - All rights reserved by Bobcat Company - 02/11/2016 - 14:15:02 - Produced by Ken Cook Co. with media1off

FUEL CAMSHAFT
(Kubota - V2003TMDI - Tier II)

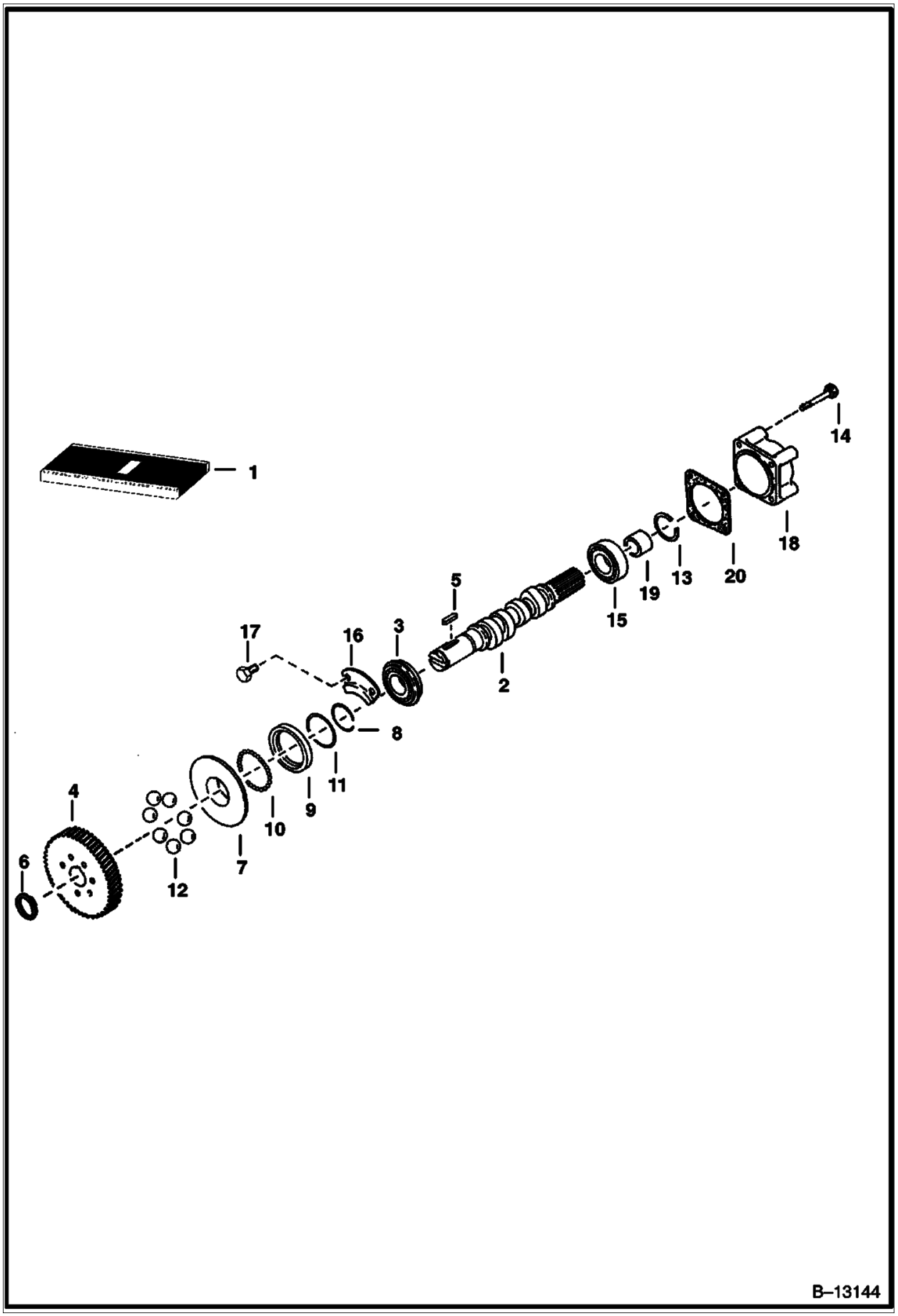

Illustration B13144

Model S160 K
6904270

Page 324 - OSS# 6300202494 - All rights reserved by Bobcat Company - 02/11/2016 - 14:15:02 - Produced by Ken Cook Co. with mediaoff

FUEL CAMSHAFT (Cont'd)
(Kubota - V2003TMDI - Tier II)

Ref No	Part Number	Description	Remarks	Serial Number	Qty
1	6692384	CAMSHAFT	assy. - Ref. 2-14 - Was 6684810 [B,D]	E/ 7F9999 & Bel	1
1	7001666	CAMSHAFT, FUEL	assy. - Ref. 2-14	E/ 7G0001 & Abv	1
2		CAMSHAFT	NLA - fuel		1
3	851242	BEARING			1
4	6684811	GEAR	injection pump		1
5	6598099	KEY			1
6	5JM24	RING, SNAP	external		1
7	6655213	SLEEVE	governor		1
8	3974618	RING, SNAP	sleeve		1
9	6692385	CASE	governor ball - Was 6655214 [B,D]		1
10	6969817	BALL	Was 10J5 [A]		39
11	3974620	CIRCLIP	ball case		1
12	6655215	BALL			7
13	6598158	RING, SNAP	external	E/ 7F9999 & Bel	1
13	5JM25	CIR-CLIP		E/ 7G0001 & Abv	1
14	6651934	BOLT			7
15	6685479	BEARING			1
16	6685517	STOPPER			1
17	6667420	BOLT			2
18	3974996	COVER	fuel camshaft		1
19	6685516	COLLAR			1
20	6692386	GASKET	Was 6684813 [A]		1

Page 325 - OSS# 6300202494 - All rights reserved by Bobcat Company - 02/11/2016 - 14:15:02 - Produced by Ken Cook Co. with media1off

CAMSHAFT
(Kubota - V2003TMDI - Tier II)

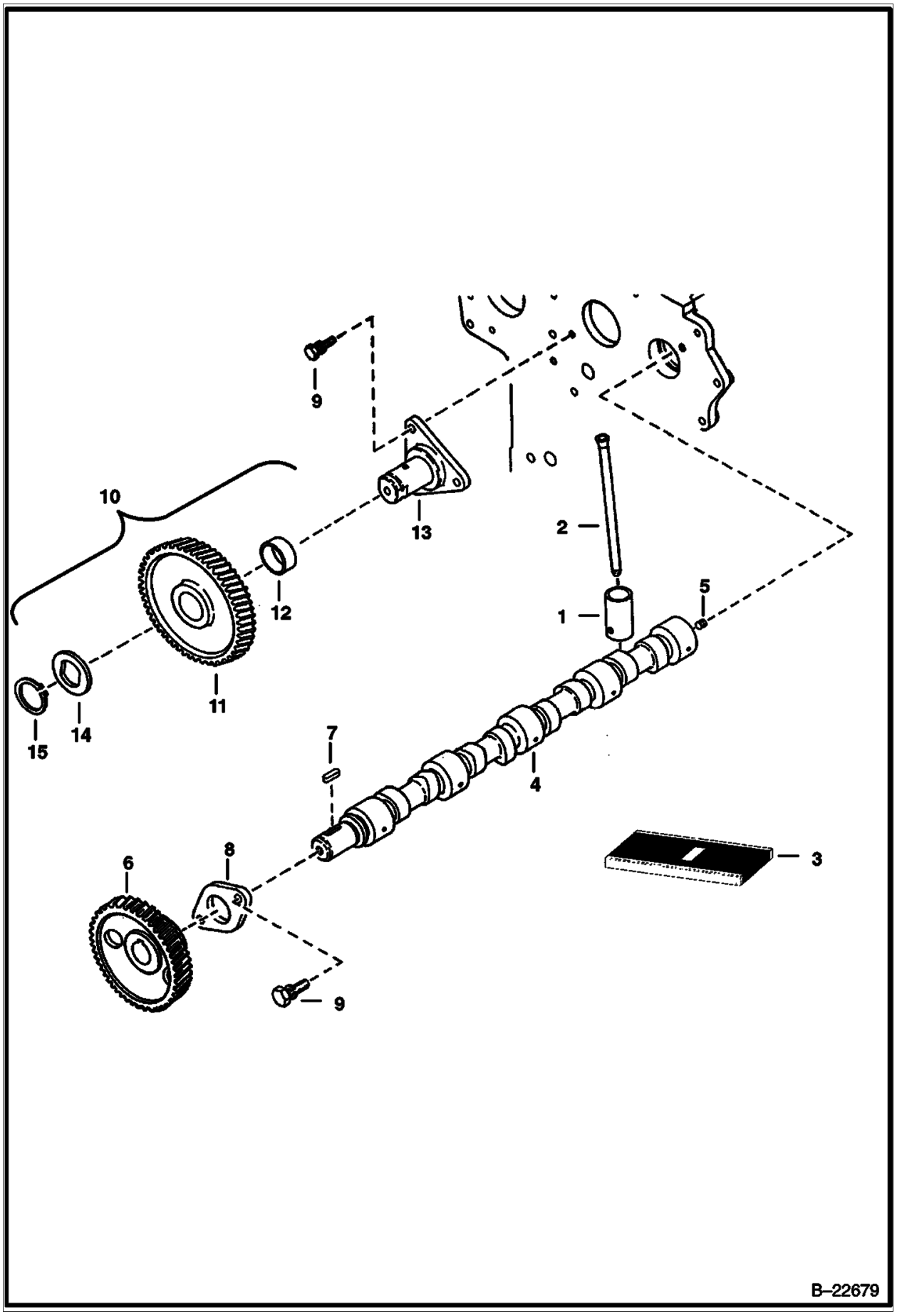

Illustration B22679

Model S160 K
6904270

Page 326 - OSS# 6300202494 - All rights reserved by Bobcat Company - 02/11/2016 - 14:15:02 - Produced by Ken Cook Co. with mediaIoff

CAMSHAFT (Cont'd)
(Kubota - V2003TMDI - Tier II)

Ref No	Part Number	Description	Remarks	Serial Number	Qty
1	7015269	TAPPET	Was 6667428 [A]		8
2	6655176	ROD			8
3	6684791	CAMSHAFT	assy. - Ref. 4-8	E/ 4QZ999 & Below	1
3	6689716	CAMSHAFT		E/ 4S0001 & Above	1
4		CAMSHAFT	NLA - Was 6655384 [A]		1
5	6652633	Ball 1/4"	seat		1
6	6684792	GEAR	camshaft	E/ 9PZ999 & Below	1
6	6692387	GEAR		E/ 9Q0001 & Above	1
7	3974546	KEY			1
8	3974547	STOPPER	camshaft		1
9	1CM818	BOLT	Was 4CM818 [A]		5
10	6684793	GEAR	idle - W/Ref. 11 & 12		1
11		GEAR	NSS - idle - Order Ref. 10		2
12	6684794	BUSHING	idle gear		1
13	6698113	SHAFT, IDLE GEAR	idle gear - Was 6685519 [A]		1
14	6684795	COLLAR			1
15	6667433	RING, SNAP	external		1

Page 327 - OSS# 6300202494 - All rights reserved by Bobcat Company - 02/11/2016 - 14:15:02 - Produced by Ken Cook Co. with media1off

WATER PUMP
(Kubota - V2003TMDI - Tier II)

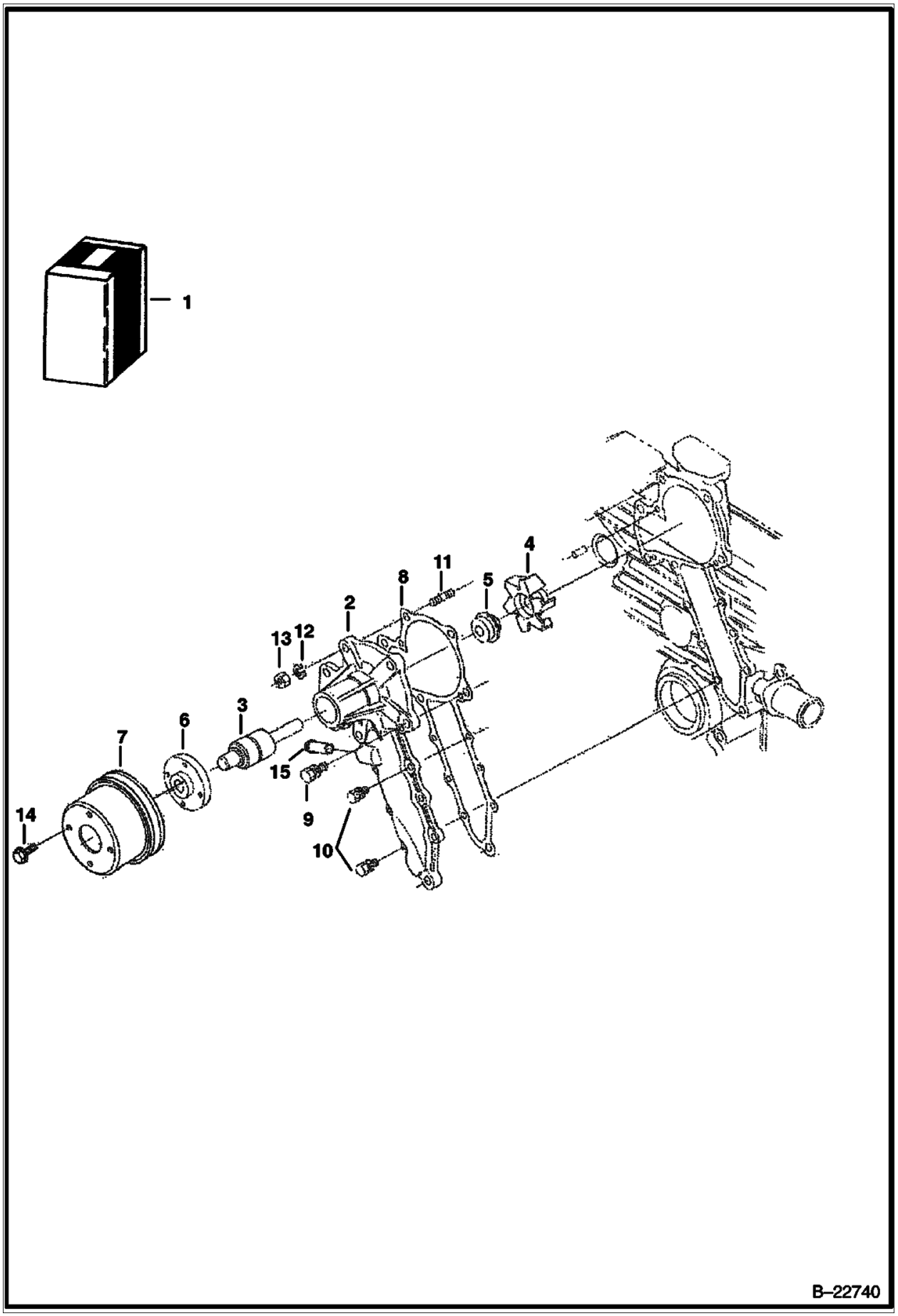

Illustration B22740

Model S160 K
6904270

Page 328 - OSS# 6300202494 - All rights reserved by Bobcat Company - 02/11/2016 - 14:15:02 - Produced by Ken Cook Co. with mediaoff

WATER PUMP (Cont'd)
(Kubota - V2003TMDI - Tier II)

Ref No	Part Number	Description	Remarks	Serial Number	Qty
1	6684865	PUMP, WATER	Ref. 2-6		1
2		PUMP	NLA - order assembly - Was 6684866 [A]		1
3	3974991	BEARING			1
4	6667460	IMPELLER	Was 6684867 [A]		1
5	6684868	SEAL			1
6	6684869	FLANGE			1
7	6674169	PULLEY	water pump - Was 6598155 [A]		1
8	6684870	GASKET			1
9	4CM828	BOLT			2
10	6652580	BOLT			6
11	3974267	STUD	Was 6653946 [A]		2
12	6667422	WASHER	spring		2
13	6652792	NUT			2
14	29CM612	BOLT, FLANGED	Was 6652762 [A]		4
15	6670785	ADAPTER			1

Page 329 - OSS# 6300202494 - All rights reserved by Bobcat Company - 02/11/2016 - 14:15:02 - Produced by Ken Cook Co. with media1off

WATER FLANGE & THERMOSTAT
(Kubota - V2003TMDI - Tier II)

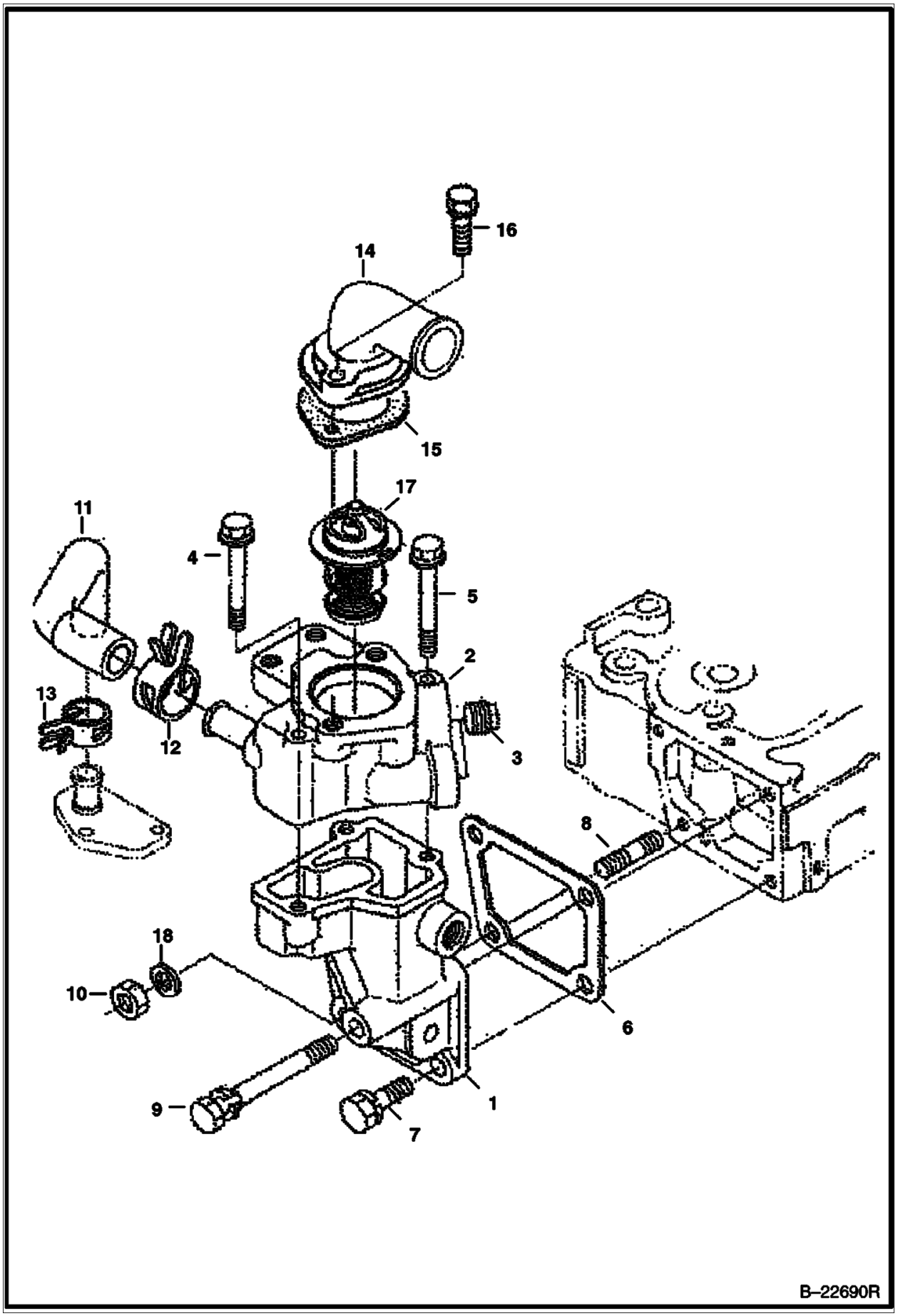

Illustration B22690R

Model S160 K
6904270

Page 330 - OSS# 6300202494 - All rights reserved by Bobcat Company - 02/11/2016 - 14:15:02 - Produced by Ken Cook Co. with mediaoff

WATER FLANGE & THERMOSTAT (Cont'd)
(Kubota - V2003TMDI - Tier II)

Ref No	Part Number	Description	Remarks	Serial Number	Qty
1		FLANGE	NLA - Order 6684854 - Was 6684855 [A]		1
2		FLANGE	NLA - Order 6684854 - Was 6684856 [A]		1
3	6684857	PLUG			2
4	6683159	BOLT, FLANGE			2
5	6685104	BOLT FLANGE			1
6	6666802	GASKET			1
7	6657415	BOLT			2
8	6652670	STUD 5			1
9	1CM875	BOLT			1
10	6652792	NUT			1
11	6684862	PIPE			1
12	6675618	CLAMP		E/ 7H9999 & Bel	1
12	6698115	CLAMP, HOSE		E/ 7J0001 & Abv	1
13	6684889	CLAMP			1
14	6651489	COVER			1
15	6684863	GASKET			1
16	1CM835	BOLT			2
17	6685520	THERMOSTAT			1
18	6667422	WASHER	spring		1

Page 331 - OSS# 6300202494 - All rights reserved by Bobcat Company - 02/11/2016 - 14:15:02 - Produced by Ken Cook Co. with media1off

MANIFOLDS
(Kubota - V2003TMDI - Tier II)

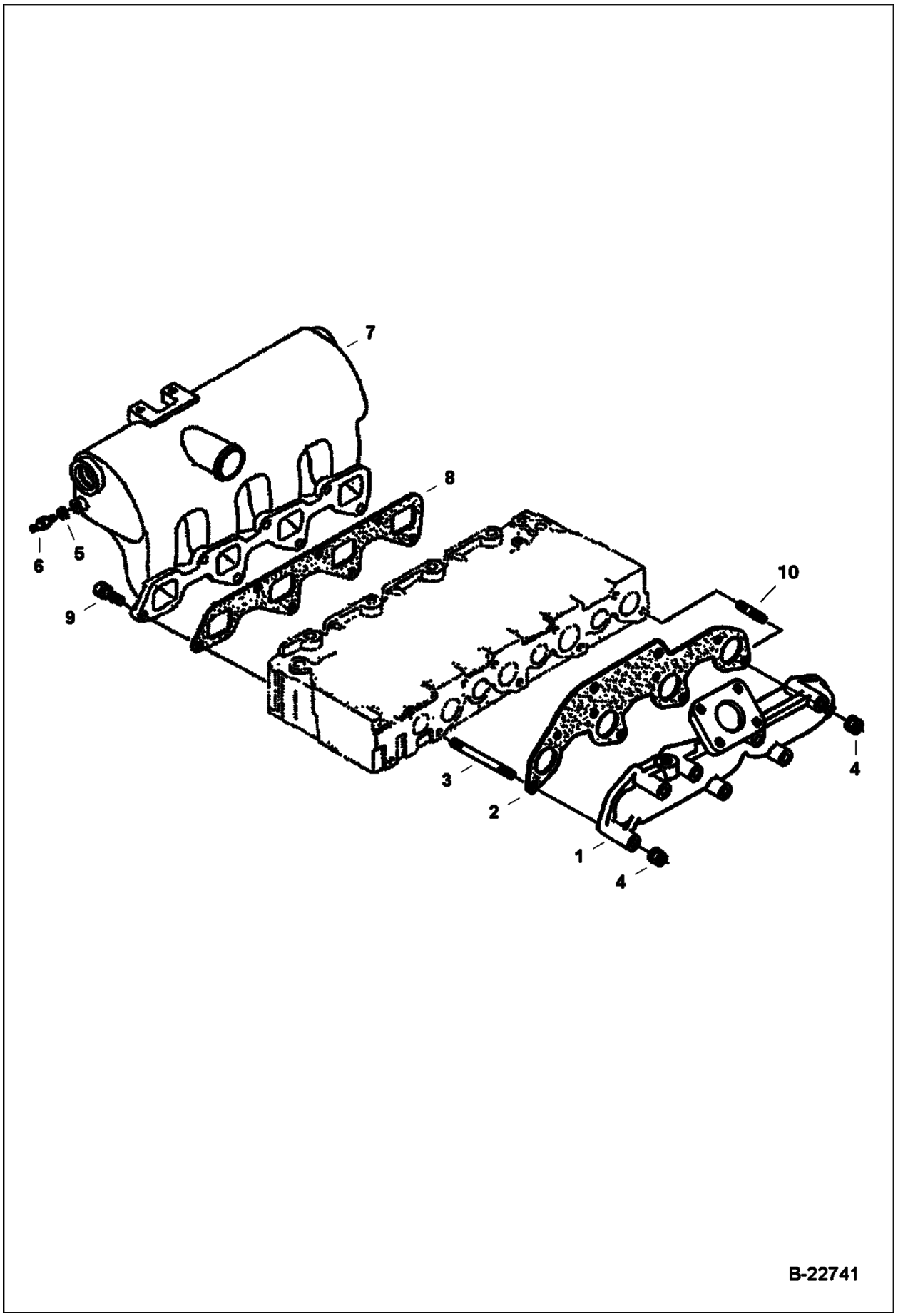

Illustration B22741

Model S160 K
6904270

Page 332 - OSS# 6300202494 - All rights reserved by Bobcat Company - 02/11/2016 - 14:15:02 - Produced by Ken Cook Co. with mediaoff

MANIFOLDS (Cont'd)
(Kubota - V2003TMDI - Tier II)

Ref No	Part Number	Description	Remarks	Serial Number	Qty
1	6685592	MANIFOLD	exhaust		1
2	6688382	GASKET	.060" thick		1
3	6655893	STUD			7
4	6682532	NUT			8
5	3974972	GASKET			1
6	6685644	SCREW, AIR BLEEDER	air bleed		1
7	6685640	MANIFOLD, INLET	intake		1
8	6684877	GASKET			1
9	4CM822	BOLT			7
10	6652670	STUD 5	Was 3974916B [A]		1

Page 333 - OSS# 6300202494 - All rights reserved by Bobcat Company - 02/11/2016 - 14:15:02 - Produced by Ken Cook Co. with media1off

TURBO CHARGER
(Kubota - V2003TMDI - Tier II)

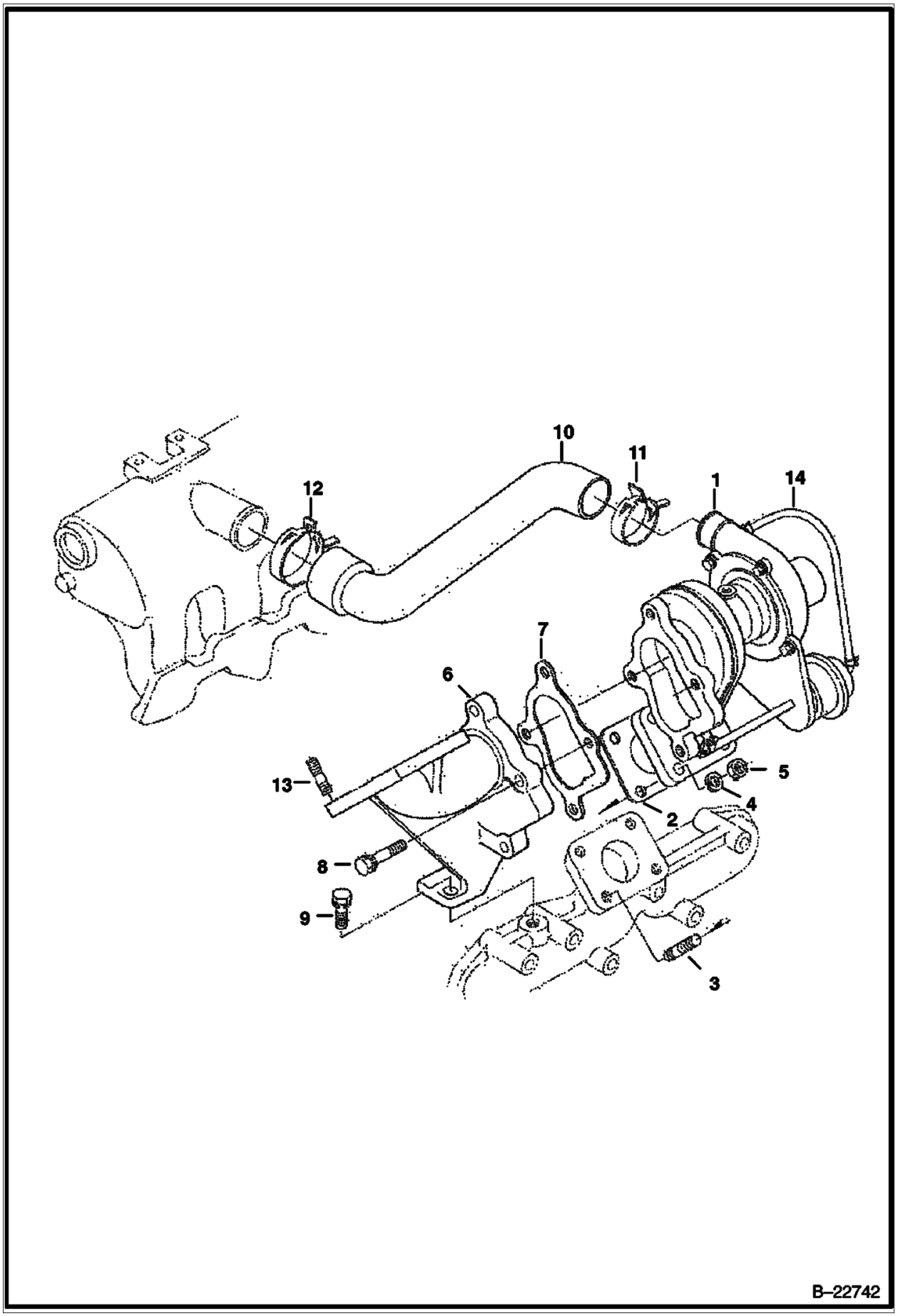

Illustration B22742

Model S160 K
6904270

Page 334 - OSS# 6300202494 - All rights reserved by Bobcat Company - 02/11/2016 - 14:15:02 - Produced by Ken Cook Co. with mediaIoff

TURBO CHARGER (Cont'd)
(Kubota - V2003TMDI - Tier II)

Ref No	Part Number	Description	Remarks	Serial Number	Qty
1	7020837	TURBOCHARGER	W/Ref. 14 - Was 6685593 [A]		1
2	6675636	GASKET			1
3	6680564	STUD			4
4	6652792	NUT			4
5	6667422	WASHER			4
6	6685595	FLANGE			1
7	6675637	GASKET			1
8	6657416	BOLT			4
9	6640728	BOLT			1
10	6685596	HOSE			1
11	6675635	BAND,PIPE			1
12	6680550	CLAMP			1
13	6652764	STUD			4
14	6685594	HOSE	W/clamps		1

Page 335 - OSS# 6300202494 - All rights reserved by Bobcat Company - 02/11/2016 - 14:15:02 - Produced by Ken Cook Co. with media1off

OIL PIPE
(Turbo Charger) (Kubota - V2003TMDI - Tier II)

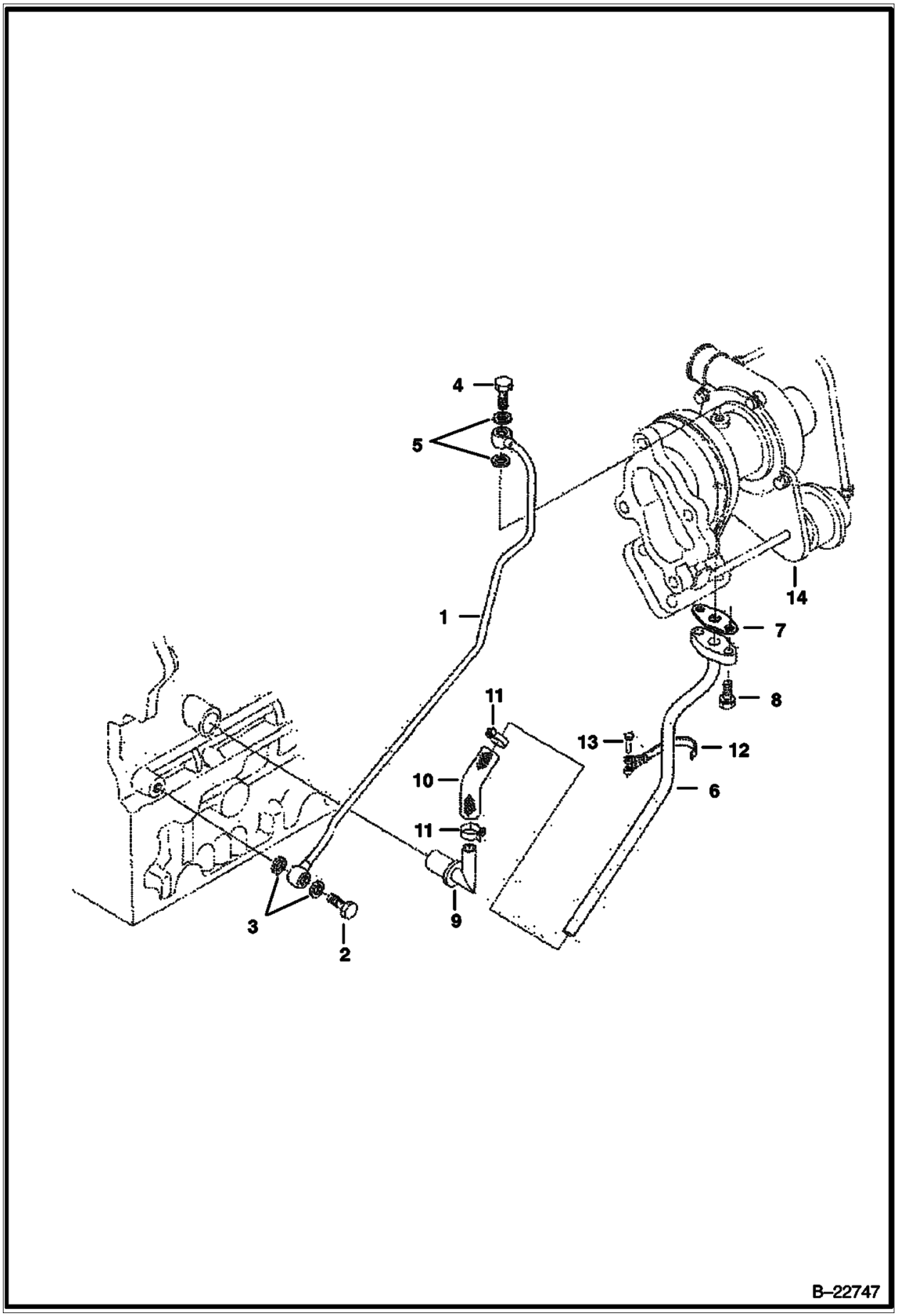

Illustration B22747

Model S160 K
6904270

Page 336 - OSS# 6300202494 - All rights reserved by Bobcat Company - 02/11/2016 - 14:15:02 - Produced by Ken Cook Co. with mediaoff

OIL PIPE (Cont'd)
(Turbo Charger) (Kubota - V2003TMDI - Tier II)

Ref No	Part Number	Description	Remarks	Serial Number	Qty
1	6685597	PIPE			1
2	7022765	BOLT, EYE	Was 7022765 [A]		1
3	3974095	MET-GASK			2
4	6685598	BOLT	eye		1
5	7000642	WASHER, SEALING COPPER	consists of 2 gaskets attached by a tab - Was 6685962 [B]		x
6	6685599	PIPE			1
7	6680570	GASKET	oil return tube - Was 6675626 [A]		1
8	1CM620	BOLT	Was 4CM620 [A]		2
9	6684884	PIPE			1
10	6685600	PIPE			1
11	6675618	CLAMP			2
12	6685601	CLAMP			1
13	6680576	PIN	Was 6675683 [A]		1
14		TURBO	See Illustration TURBO CHARGER / B22742		1

Page 337 - OSS# 6300202494 - All rights reserved by Bobcat Company - 02/11/2016 - 14:15:02 - Produced by Ken Cook Co. with mediaioff

ENGINE STOP LEVER
(Kubota - V2003TMDI - Tier II)

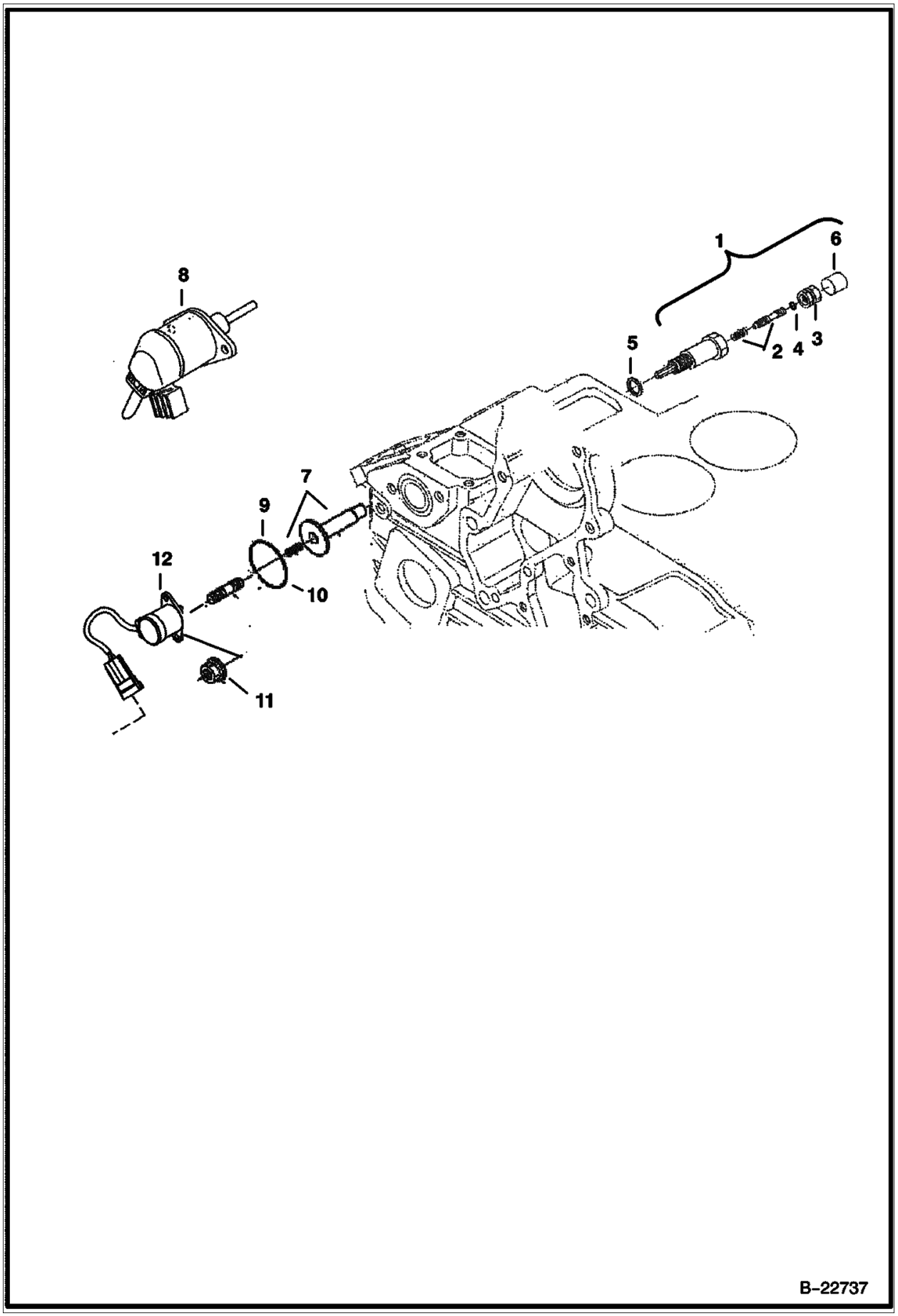

Illustration B22737

Model S160 K
6904270

Page 338 - OSS# 6300202494 - All rights reserved by Bobcat Company - 02/11/2016 - 14:15:02 - Produced by Ken Cook Co. with mediaoff

ENGINE STOP LEVER (Cont'd)
(Kubota - V2003TMDI - Tier II)

Ref No	Part Number	Description	Remarks	Serial Number	Qty
1	6684815	ASSY, IDLE	assy., idle - Ref. 2-6		1
2	6684816	BOLT	adjusting		1
3	6684817	NUT	adjusting		1
4	6684891	SEAL			1
5	6684818	SEAL			2
6	6684819	CAP			1
7	6684825	GUIDE, SOLENOID	solenoid		1
8		SOLENOID	NLA- fuel shutoff W/molded connector - Order Ref. 12 - Was 6684826 [A]	& Bel	1
9	6685465	RING,O			1
10	6652764	STUD			2
11	6684827	NUT			2
12	6691498	SOLENOID, SHUTOFF FUEL	240 mm (9.45") lead	& Abv	1

Page 339 - OSS# 6300202494 - All rights reserved by Bobcat Company - 02/11/2016 - 14:15:02 - Produced by Ken Cook Co. with mediaioff

GOVERNOR
(Kubota - V2003TMDI - Tier II)

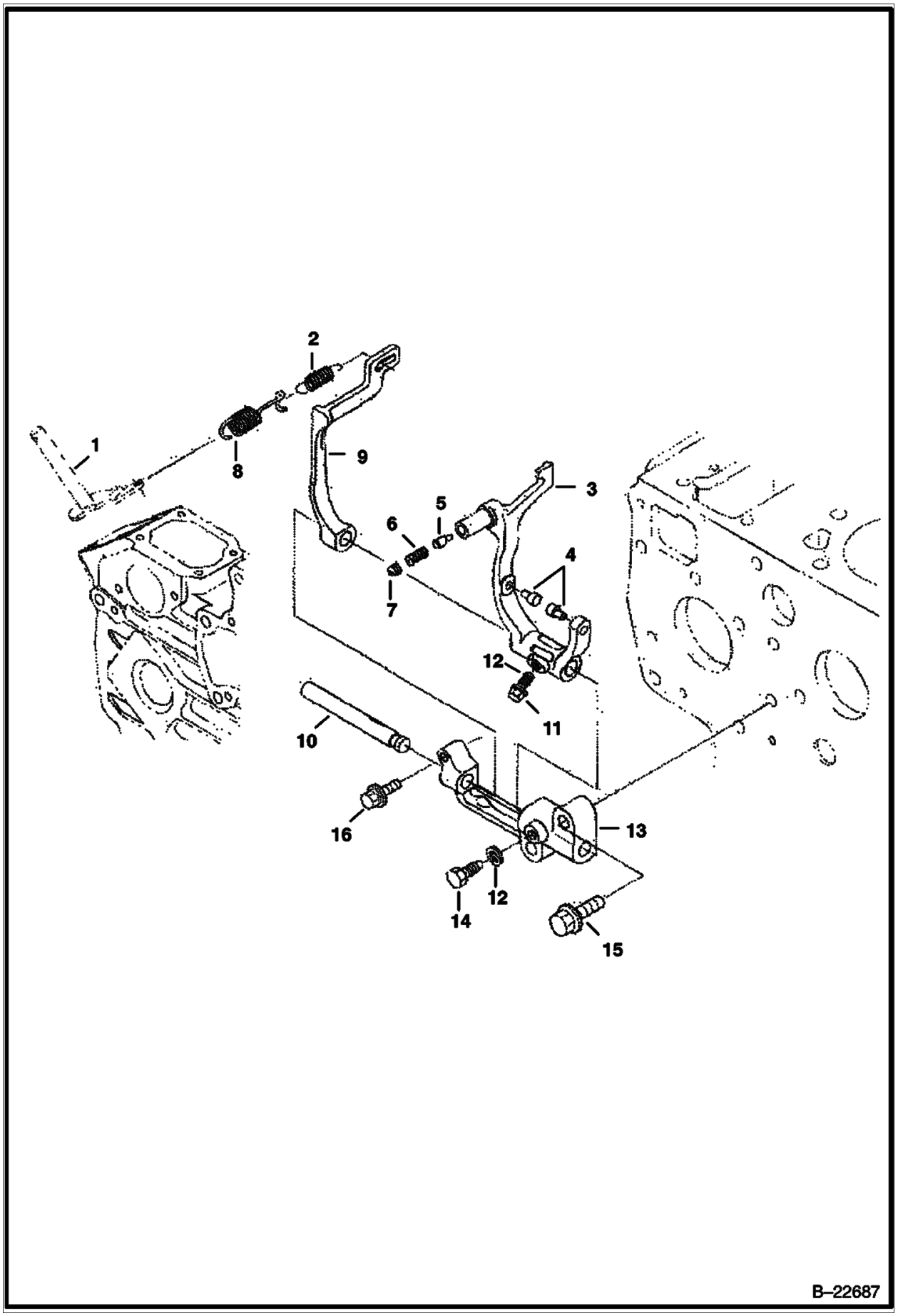

Illustration B22687

Model S160 K
6904270

Page 340 - OSS# 6300202494 - All rights reserved by Bobcat Company - 02/11/2016 - 14:15:02 - Produced by Ken Cook Co. with mediaoff

GOVERNOR (Cont'd)
(Kubota - V2003TMDI - Tier II)

Ref No	Part Number	Description	Remarks	Serial Number	Qty
1	6684838	GOVERNOR	governor		1
2	6685514	SPRING			1
3	6692383	LEVER ASSM.	fork - W/Ref. 4-14		1
4		PIN	NSS		2
5		PIN	NSS		1
6		SPRING	NSS		1
7		SCREW	NSS		1
8	6685636	SPRING	governor		1
9	6684832	LEVER			1
10	6684833	SHAFT			1
11	6680830	BOLT			1
12	6667419	WASHER			2
13	6653916	HOLDER			1
14	3974662	BOLT	Was 3974192 [A]		1
15	6680706	BOLT			2
16	6685464	BOLT			1

Page 341 - OSS# 6300202494 - All rights reserved by Bobcat Company - 02/11/2016 - 14:15:02 - Produced by Ken Cook Co. with media1off

SPEED CONTROL PLATE
(Kubota - V2003TMDI - Tier II)

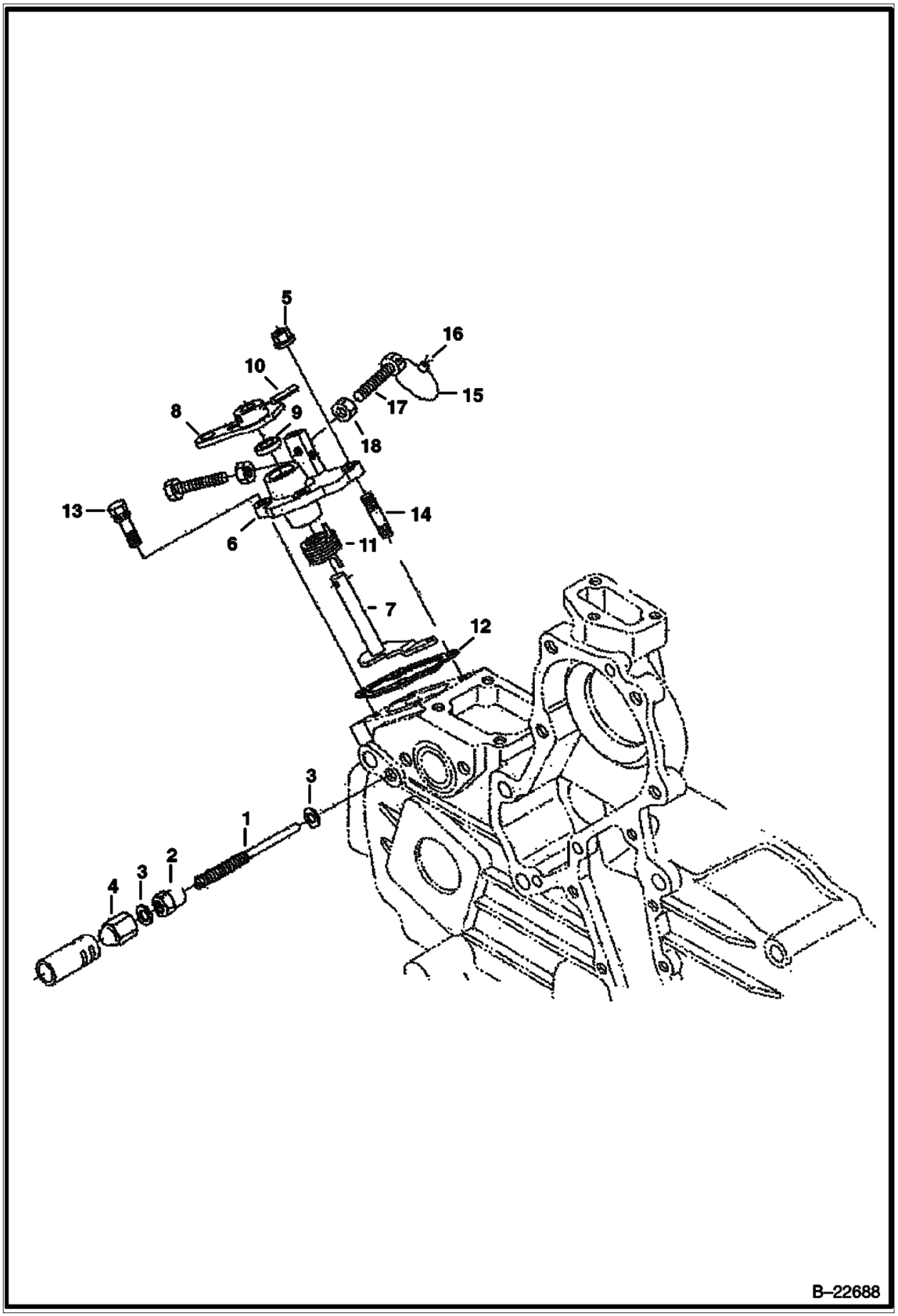

Illustration B22688

Model S160 K
6904270

Page 342 - OSS# 6300202494 - All rights reserved by Bobcat Company - 02/11/2016 - 14:15:02 - Produced by Ken Cook Co. with mediaoff

SPEED CONTROL PLATE (Cont'd)
(Kubota - V2003TMDI - Tier II)

Ref No	Part Number	Description	Remarks	Serial Number	Qty
1	6684836	BOLT	adjusting - W/Ref. 2		1
2	3974971	NUT			1
3	3974972	GASKET			2
4	6655223	CAP	cap		1
5	6670533	NUT			2
6	6685526	PLATE, CONTROL	control assy. - Ref. 7-11, 17 &18		1
7	6684838	GOVERNOR			1
8	6684839	LEVER			1
9	6685476	SEAL			1
10	6598098	PIN	spring		1
11	6684823	SPRING			1
12	6684841	GASKET	Was 6684824 [A]		1
13	1CM620	BOLT	Was 4CM620 [A]		2
14	6652764	STUD			2
15		WIRE	NLA		1
16		LEAD	NLA - sealing		1
17	7010195	BOLT, ADJUSTMENT			2
18	1DM6	NUT	Was NLA [D]		2

Page 343 - OSS# 6300202494 - All rights reserved by Bobcat Company - 02/11/2016 - 14:15:02 - Produced by Ken Cook Co. with media1off

BOOST COMPENSATOR
(Kubota - V2003TMDI - Tier II)

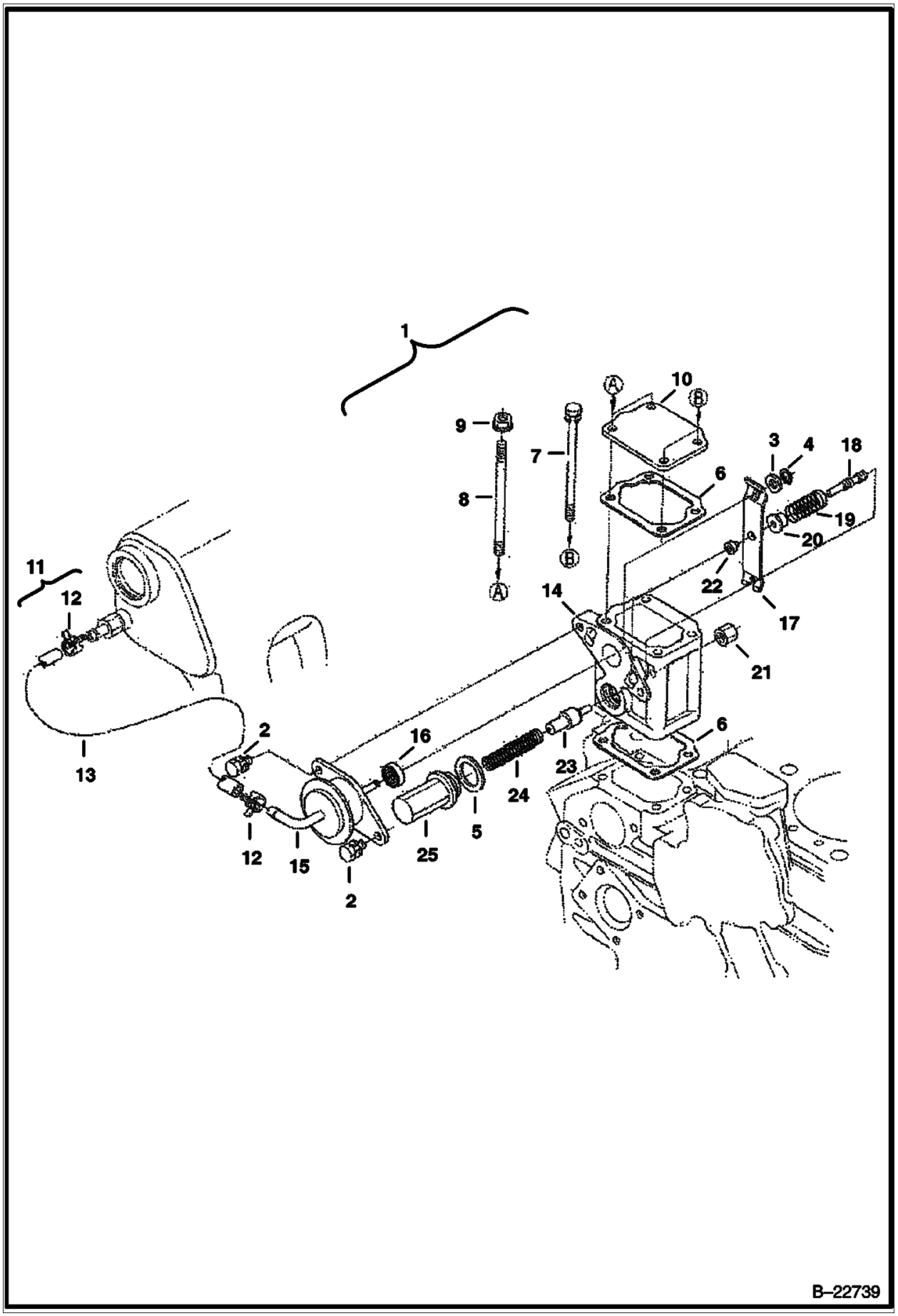

Illustration B22739

Model S160 K
6904270

Page 344 - OSS# 6300202494 - All rights reserved by Bobcat Company - 02/11/2016 - 14:15:02 - Produced by Ken Cook Co. with mediaoff

BOOST COMPENSATOR (Cont'd)
(Kubota - V2003TMDI - Tier II)

Ref No	Part Number	Description	Remarks	Serial Number	Qty
1		COMPENSATOR	Contact your Local Dealer for Bobcat Technical Information BTI407 NLA - Ref. 2-5 & 14-25 - Was 6685638 [A]		1
1	7012335	PIN, STRAIGHT			1
2	1CM612	BOLT	Was 4CM612 [A]		2
3	6652710	WASHER	Was 6685633 [A]		1
4	6680821	SNAP RING			1
5	6685634	GASKET			1
6	6684841	GASKET	Was 6684824 [A]		2
7	6657414	BOLT			2
8	6685639	STUD			2
9	6670533	NUT			2
10	6685500	COVER			1
11		PIPE ASSY	NLA - Order Ref. 12 & 13 - Was 6685645 [A]		1
12	6680628	CLAMP			2
13	6685635	TUBE			1
14		HOUSING	NSS		1
15		ELBOW	NSS		1
16		SPACER	NSS		1
17		BRACKET	NSS		1
18		PISTON	NSS		1
19		SPRING	NSS		1
20		BUSHING	NSS		1
21		NUT	NSS		1
22		BUSHING	NSS		1
23		PISTON	NSS		1
24		SPRING	NSS		1
25		VALVE	NSS		1

Page 345 - OSS# 6300202494 - All rights reserved by Bobcat Company - 02/11/2016 - 14:15:02 - Produced by Ken Cook Co. with media1off

FUEL & INJECTION PUMP
(Kubota - V2003TMDI - Tier II)

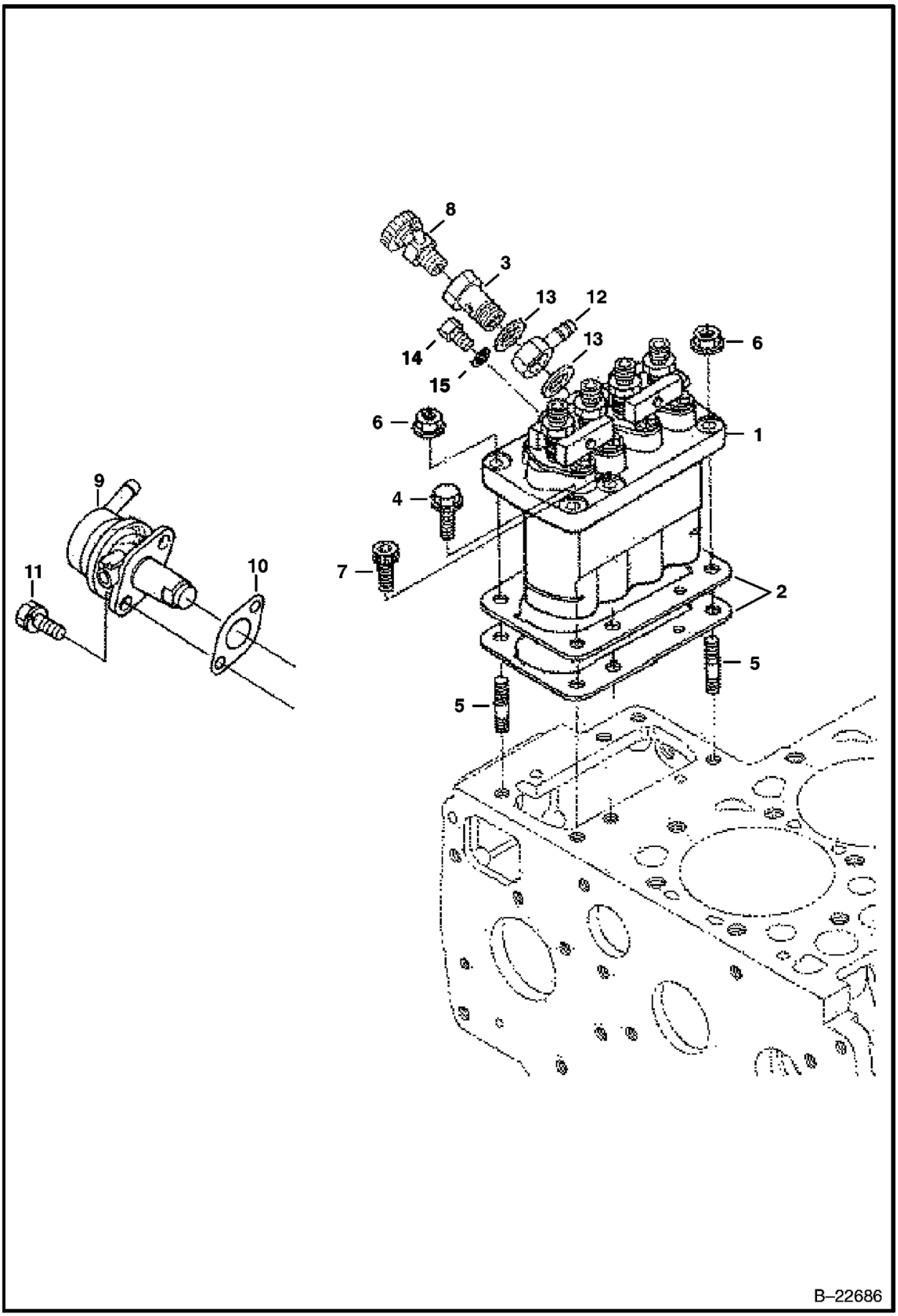

Illustration B22686

Model S160 K
6904270

Page 346 - OSS# 6300202494 - All rights reserved by Bobcat Company - 02/11/2016 - 14:15:02 - Produced by Ken Cook Co. with mediaoff

FUEL & INJECTION PUMP (Cont'd)
(Kubota - V2003TMDI - Tier II)

Ref No	Part Number	Description	Remarks	Serial Number	Qty
1	7022162	PUMP, FUEL INJ	Was 6684828 [A]		1
1	6684828REM	PUMP, FUEL INJ. KUBOTA V2003			1
2	3974626	SHIM	0,20 mm - injection pump		2
2	6682515	SHIM	0,25 mm - injection pump		1
2	6655210	SHIM	0,30 mm - injection pump		1
2	6684829	SHIM	0,35 mm - injection pump		1
3	6685473	BOLT, EYE 12MM	Use W/Ref. 13 gasket 6698120		1
3	7019023	BOLT, EYE 12MM	Use W/Ref. 13 gasket 7019024		1
4	6680801	BOLT			4
5	6652670	STUD 5			2
6	6680663	NUT			2
7	6684830	BOLT			1
8	6598102	VALVE, PUMP INJ	jet start		1
9	6655216	PUMP, FUEL			1
10	3974502	GASKET	fuel pump		1
11	1CM616	SCREW	Was 4CM616 [A]		2
12	6513707	FITTING, BANJO	eye		1
13	6698120	GASKET	Use W/Ref. 3 eye bolt 6685473 - Was 3974403 [A]		2
13	7019024	GASKET	Use W/Ref. 3 eye bolt 7019023		2
14	6599084	SCREW	Was 6969820 [A]		2
15	6685471	GASKET			2

Page 347 - OSS# 6300202494 - All rights reserved by Bobcat Company - 02/11/2016 - 14:15:02 - Produced by Ken Cook Co. with media1off

INJECTOR NOZZLES
(Kubota - V2003TMDI - Tier II)

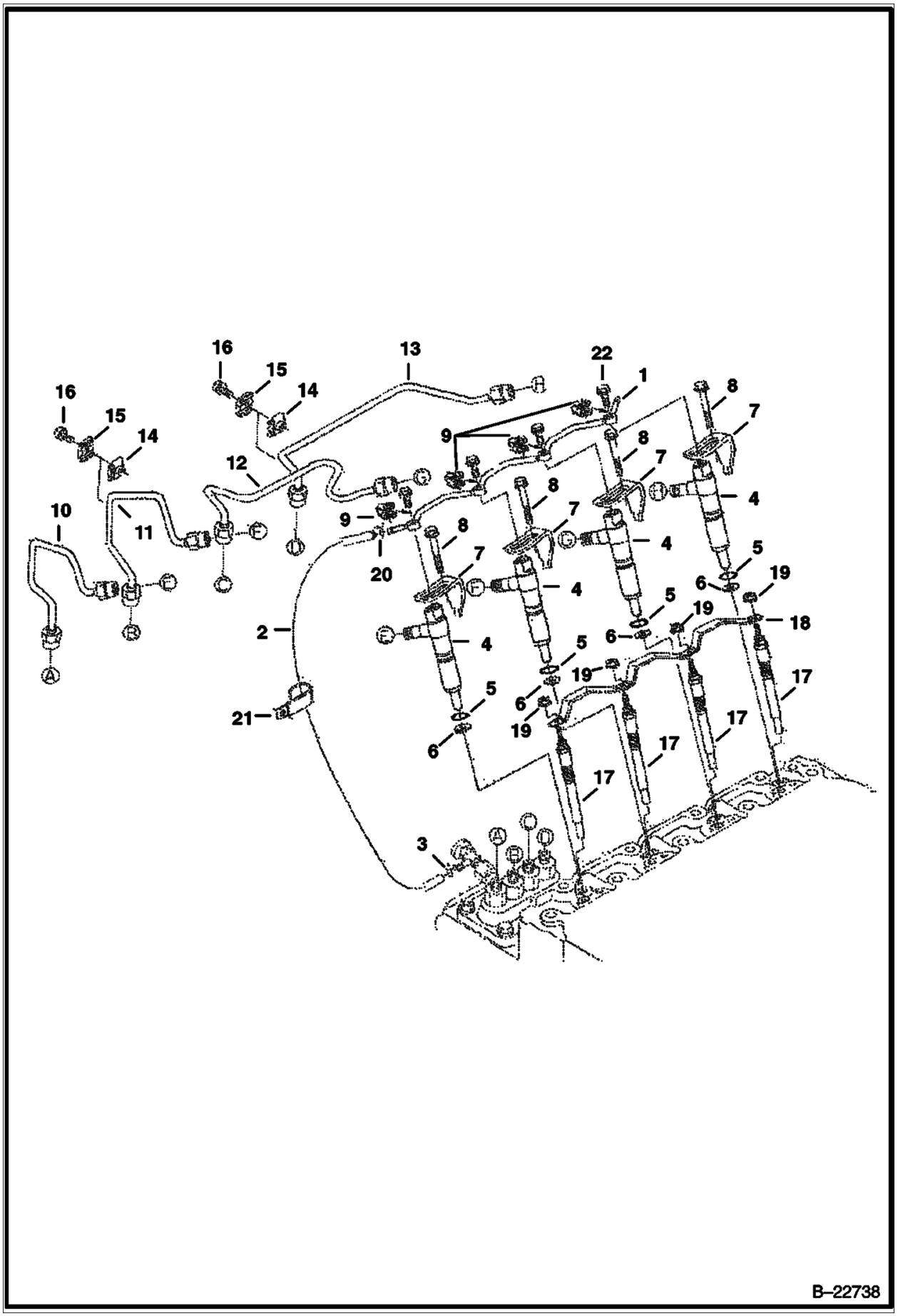

Illustration B22738

Model S160 K
6904270

Page 348 - OSS# 6300202494 - All rights reserved by Bobcat Company - 02/11/2016 - 14:15:02 - Produced by Ken Cook Co. with mediaoff

INJECTOR NOZZLES (Cont'd)
(Kubota - V2003TMDI - Tier II)

Ref No	Part Number	Description	Remarks	Serial Number	Qty
1	6684842	PIPE	fuel over flow		1
2	6598146	PIPE	fuel over flow (2) - W/Ref. 3 & 20		1
3	6654718	CLAMP 5	pipe - Was 6680795 [A]		1
4	6684843	NOZZLE, INJ FUEL	nozzle		4
4	6684843REM	NOZZLE, FUEL INJ. KUBOTA V2003T			4
5	6670769	O-RING			4
6	6969824	GASKET, NOZZLE INJ	Was 6680779 [B,D]		4
7	7015275	CLAMP, INJECTION	nozzle - Was 6684845 [A]		4
8	6684844	BOLT			4
9	6685498	GASKET			4
10	6684846	PIPE	injection (1)		1
11	6684847	PIPE	injection (2)		1
12	6684848	PIPE	injection (3)		1
13	6684849	PIPE	injection (4)		1
14	6652688	CLAMP	pipe (1)		3
15	6652689	CLAMP	pipe (2)		3
16	3974260	SCREW	with washer		3
17	6684850	GLOW PLUG			4
18	6969825	CORD, GLOW PLUG	glow plug glow plug - Was 6684851 [A]		1
19	6670472	NUT			4
20	6654718	CLAMP 5	pipe		1
21	6667457	CLAMP			1
22	6680788	BOLT	Was 6689528 [A]		4

Page 349 - OSS# 6300202494 - All rights reserved by Bobcat Company - 02/11/2016 - 14:15:02 - Produced by Ken Cook Co. with media1off

AIR CLEANER

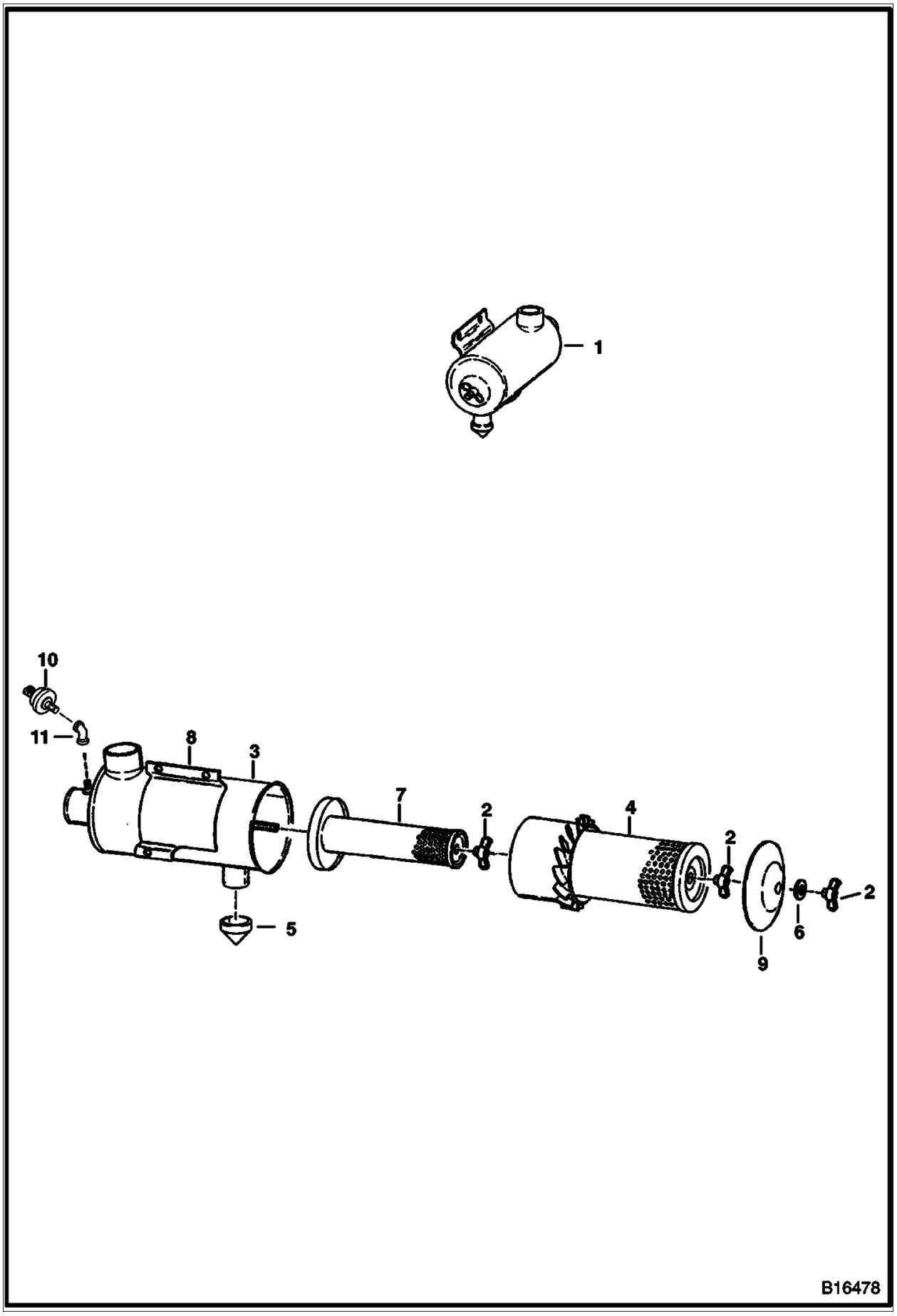

Illustration B16478

Model S160 K
6904270

Page 350 - OSS# 6300202494 - All rights reserved by Bobcat Company - 02/11/2016 - 14:15:02 - Produced by Ken Cook Co. with mediaoff

AIR CLEANER (Cont'd)

Ref No	Part Number	Description	Remarks	Serial Number	Qty
1	6700711	AIR CLNR	W/ 1.5" (38,1 mm) Evacuator Valve		1
1	6735285	AIR CLEANER	European		1
2	6661243	WING NUT			3
3		TANK	NLA		1
4	6598492	FILTER, AIR OUTER	outer		1
5	6655938	VALVE, EVACUATOR	38 mm (1.5") ID		1
6	6661244	WASHER			1
7	6598362	FILTER, AIR INNER	inner		1
8	866028	CLAMP			1
9	6661242	COVER			1
10	6665371	SWITCH, VACUUM	condition indicator		1
11	6725502	ELBOW			1

Page 351 - OSS# 6300202494 - All rights reserved by Bobcat Company - 02/11/2016 - 14:15:02 - Produced by Ken Cook Co. with media1off

ACCESS COVER
(Cleanout - Lower Front of Chaincase)

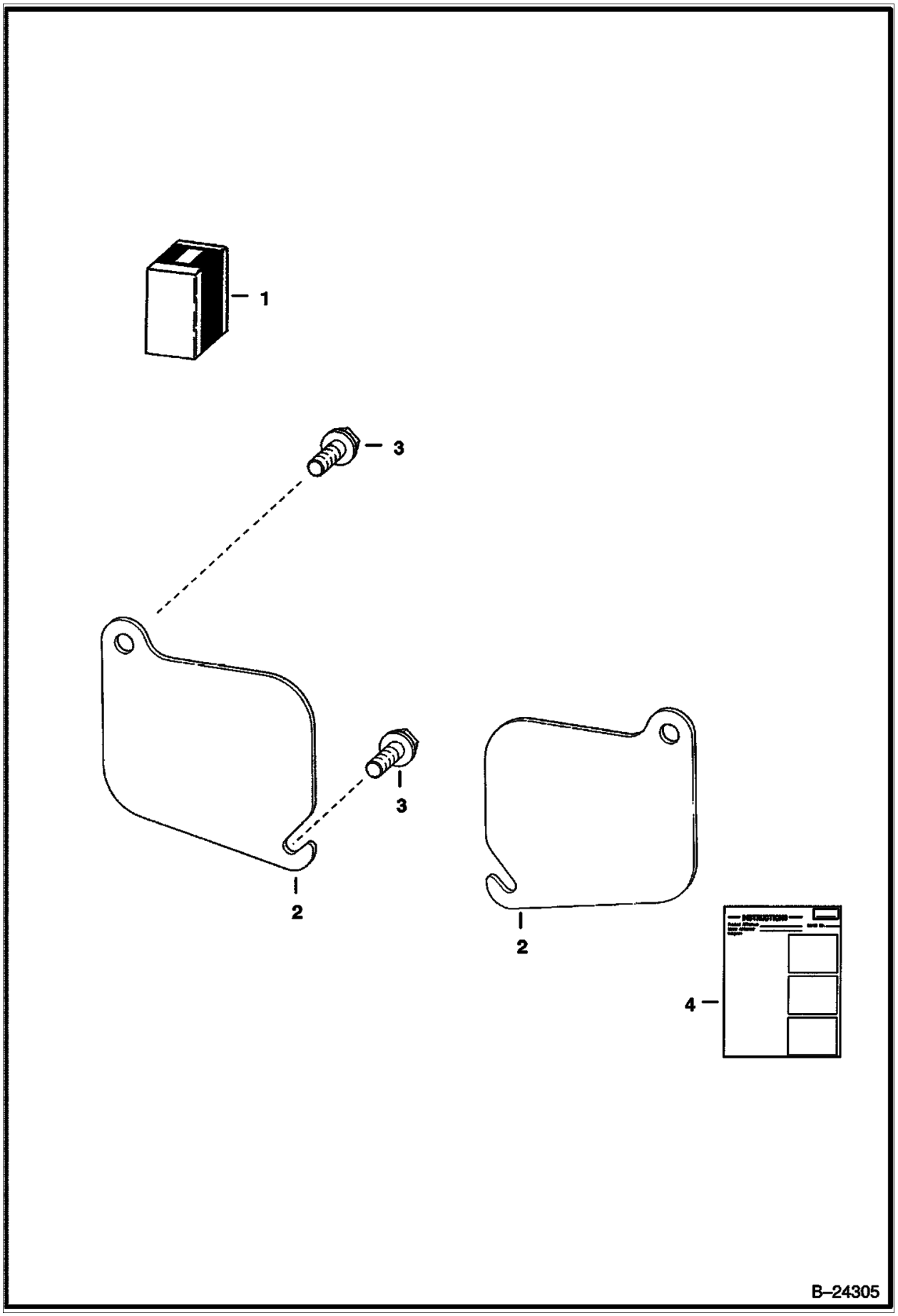

Illustration B24305

Model S160 K
6904270

Page 352 - OSS# 6300202494 - All rights reserved by Bobcat Company - 02/11/2016 - 14:15:02 - Produced by Ken Cook Co. with mediaoff

ACCESS COVER (Cont'd)
(Cleanout - Lower Front of Chaincase)

Ref No	Part Number	Description	Remarks	Serial Number	Qty
1	6577880	KIT, ACCESS COVER	Ref. 2-4		1
2	6737088	COVER, ACCESS			2
3	84G3720	BOLT			4
4	6570931ENUS	INSTRUCTIONS	WAS 6570931 [A]		1

Page 353 - OSS# 6300202494 - All rights reserved by Bobcat Company - 02/11/2016 - 14:15:02 - Produced by Ken Cook Co. with media1off

ACS CONVERSION KIT

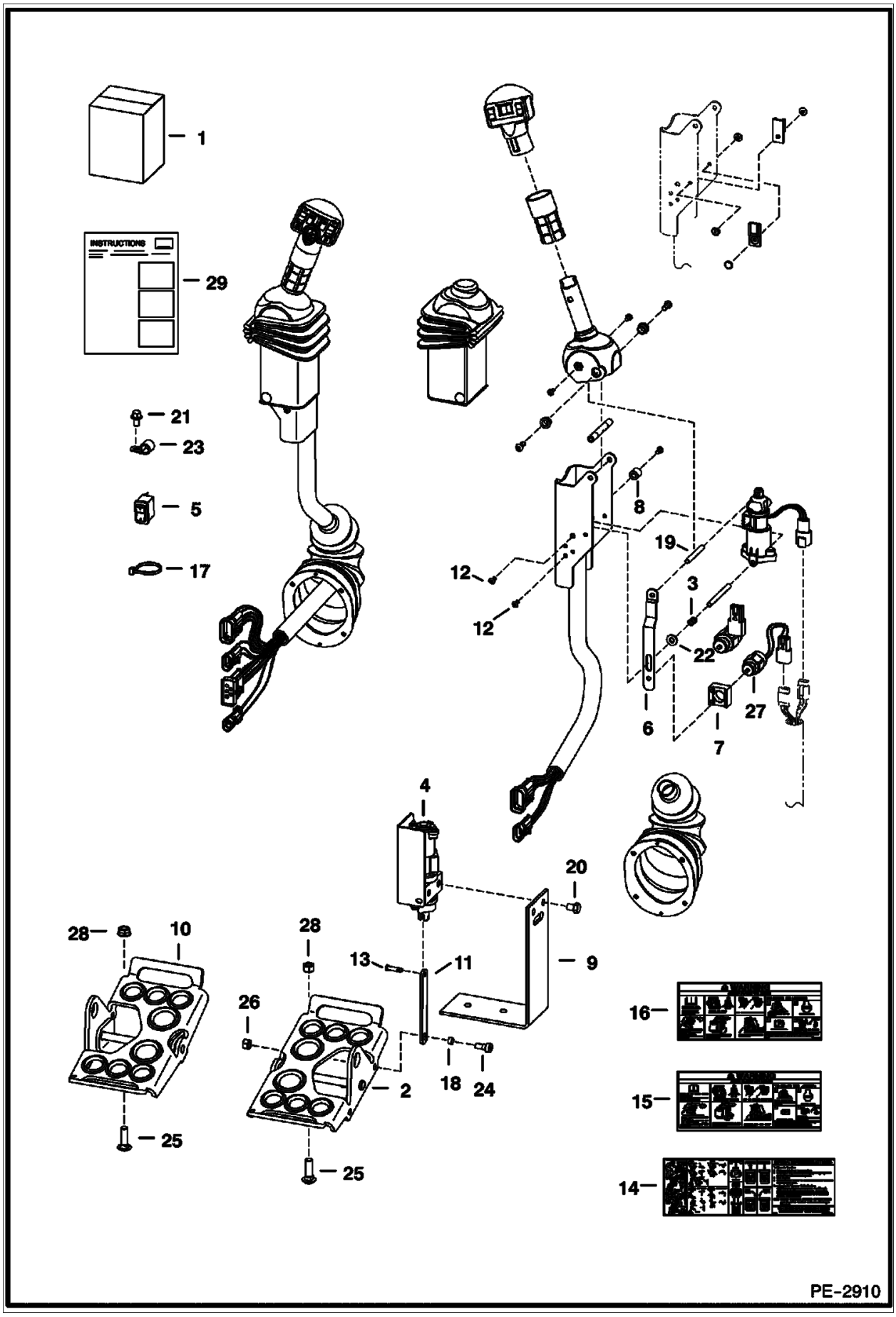

Illustration PE2910

Model S160 K
6904270

Page 354 - OSS# 6300202494 - All rights reserved by Bobcat Company - 02/11/2016 - 14:15:02 - Produced by Ken Cook Co. with mediaIoff

ACS CONVERSION KIT (Cont'd)

Ref No	Part Number	Description	Remarks	Serial Number	Qty
1	6731151	KIT, ACS CONVERSION	foot control - Ref. 2-29 - loader must be equipped W/advanced hand control option		1
2	7123942	PEDAL ASSEMBLY			1
3	6680470	SPRING			2
4	6684912	SENSOR, FOOT RH			1
4	6676029	SOLENOID, LOCK SPOOL			1
4	6684911	SENSOR, FOOT LH			1
4	6676029	SOLENOID, LOCK SPOOL			1
5	6676537	SWITCH			1
6	6680477	STRAP			2
7	6680468	STRAP	solenoid		2
8	6719834	SPACER			2
9	7126869	BRACKET	Was 6726573 [A]		2
10	7123941	PEDAL ASSEMBLY			1
11	6726681	LINK,AFC POD			2
12	6727065	SCREW			12
13	6727496	PIN			2
14	6727926	DECAL, OPERATION	hand & foot controls		1
15	6728540	DECAL, WARNING			1
16	6728539	DECAL, WARNING			1
17	6624289	STRAP, TIE			2
18	6729467	SPACER, COLLAR			2
19	6680469	SPACER	threaded		2
20	17C608	BOLT			4
21	84G3710	SCREW			2
22	25E13	WASHER 5			2
23	30H62	CLIP			2
24	35C514	BOLT			2
25	37C620	BOLT			4
26	95D5	NUT			2
27	6676029	SOLENOID, LOCK SPOOL			2
28	61D6	NUT 5			4
29	6901492	INSTRUCTIONS			1

Page 355 - OSS# 6300202494 - All rights reserved by Bobcat Company - 02/11/2016 - 14:15:02 - Produced by Ken Cook Co. with media1off

AXLE SEAL KIT

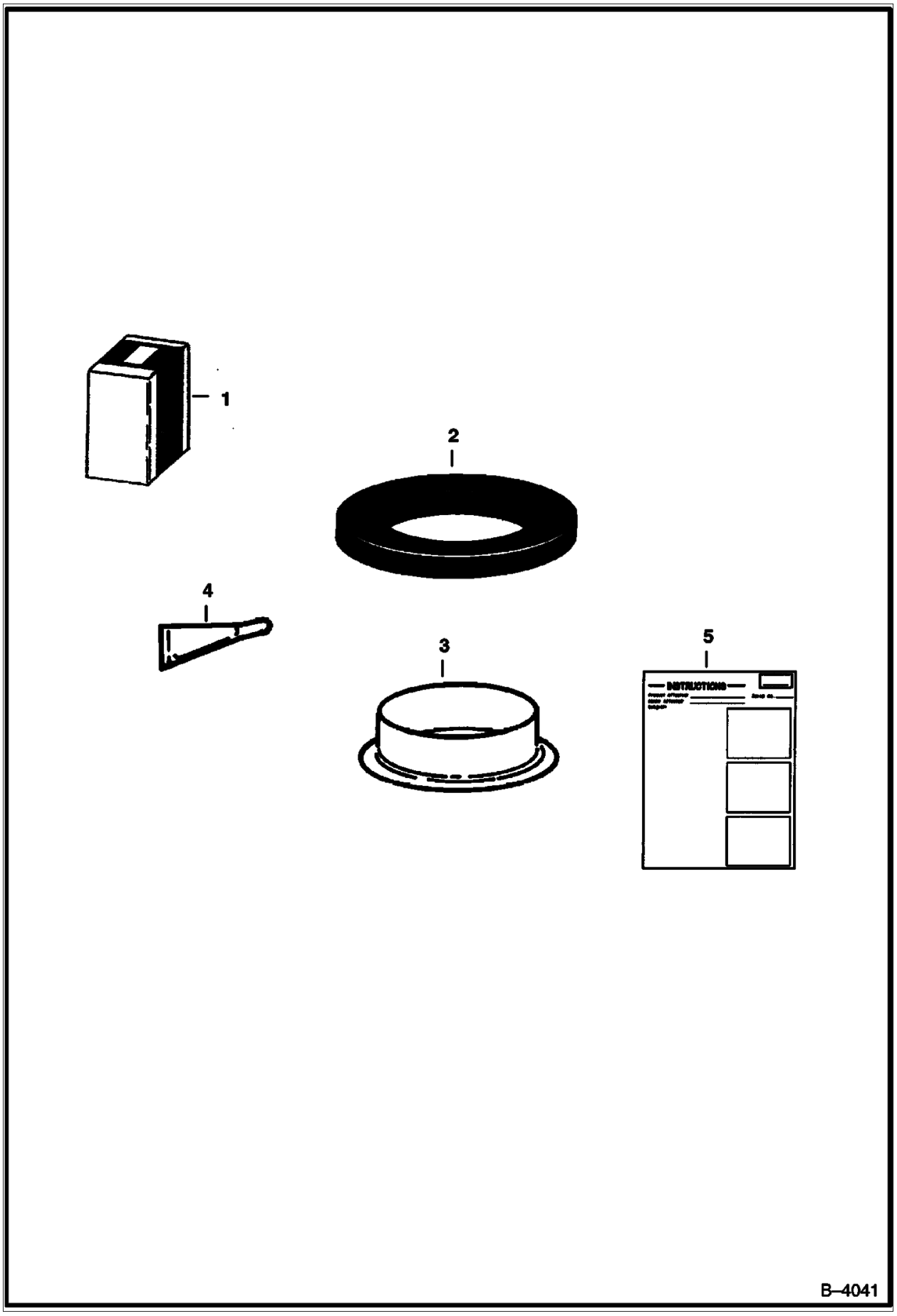

Illustration B4041

Model S160 K
6904270

Page 356 - OSS# 6300202494 - All rights reserved by Bobcat Company - 02/11/2016 - 14:15:02 - Produced by Ken Cook Co. with mediaoff

AXLE SEAL KIT (Cont'd)

Ref No	Part Number	Description	Remarks	Serial Number	Qty
1	6722907	KIT, SEAL	Ref. 2-5		1
2	6658228	SEAL, OIL			1
3	6662306	RING, WEAR			1
4	6987915	THREADLOCK, 271-HEAVY DUTY RED-0.5ml NSS	Was 6598485 [A]		1
5	6722908	INSTRUCTIONS			1

Page 357 - OSS# 6300202494 - All rights reserved by Bobcat Company - 02/11/2016 - 14:15:02 - Produced by Ken Cook Co. with media1off

BACK-UP ALARM KIT
(Manual Controls, AHC & ACS)

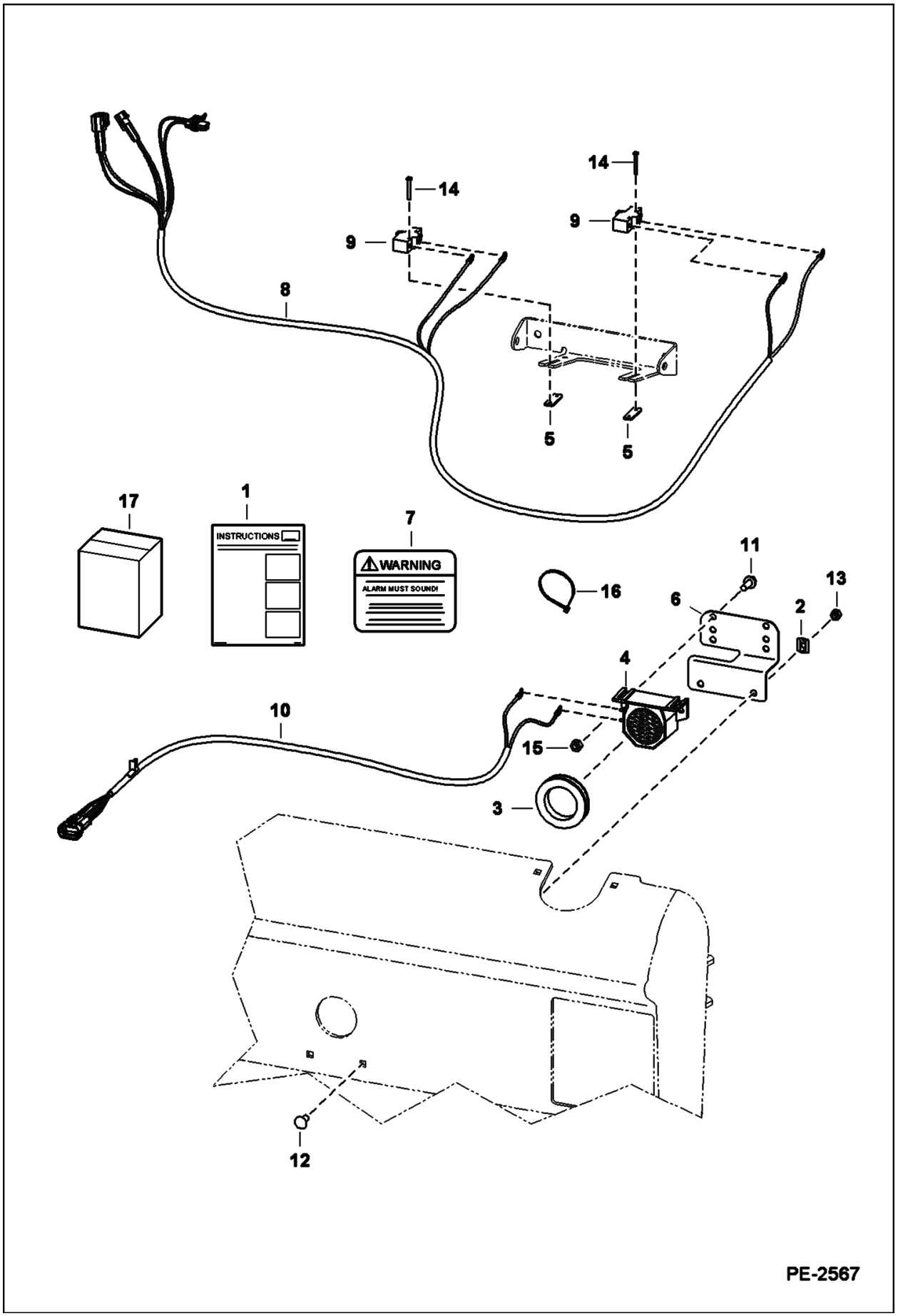

Illustration PE2567

Model S160 K
6904270

Page 358 - OSS# 6300202494 - All rights reserved by Bobcat Company - 02/11/2016 - 14:15:02 - Produced by Ken Cook Co. with mediaoff

BACK-UP ALARM KIT (Cont'd)
(Manual Controls, AHC & ACS)

Ref No	Part Number	Description	Remarks	Serial Number	Qty
1	7107829	KIT, BACK-UP ALARM	Ref. 2-17		1
2	774220	NUT			2
3	6577545	GROMMET			1
4	6651512	ALARM, BACK-UP	Was 6599931 [A]		1
5	6702593	SPACER			2
6	6733970	MOUNT			1
7	6737189	DECAL, WARNING	backup alarm		1
8	7107544	HARNESS			1
9	6646781	SWITCH, ALARM BACK-UP			2
10	6715659	HARNESS			1
11	35C410	BOLT 5			2
12	10C512	BOLT			2
13	57D5	NUT	Was 61D5 [B]		2
14	84G1320	BOLT			4
15	97D4	NUT			2
16	6624289	STRAP, TIE			2
17	6903293	INSTRUCTIONS			1

Page 359 - OSS# 6300202494 - All rights reserved by Bobcat Company - 02/11/2016 - 14:15:02 - Produced by Ken Cook Co. with media1off

BACK-UP ALARM KIT
(Selectable Joystick Controls)

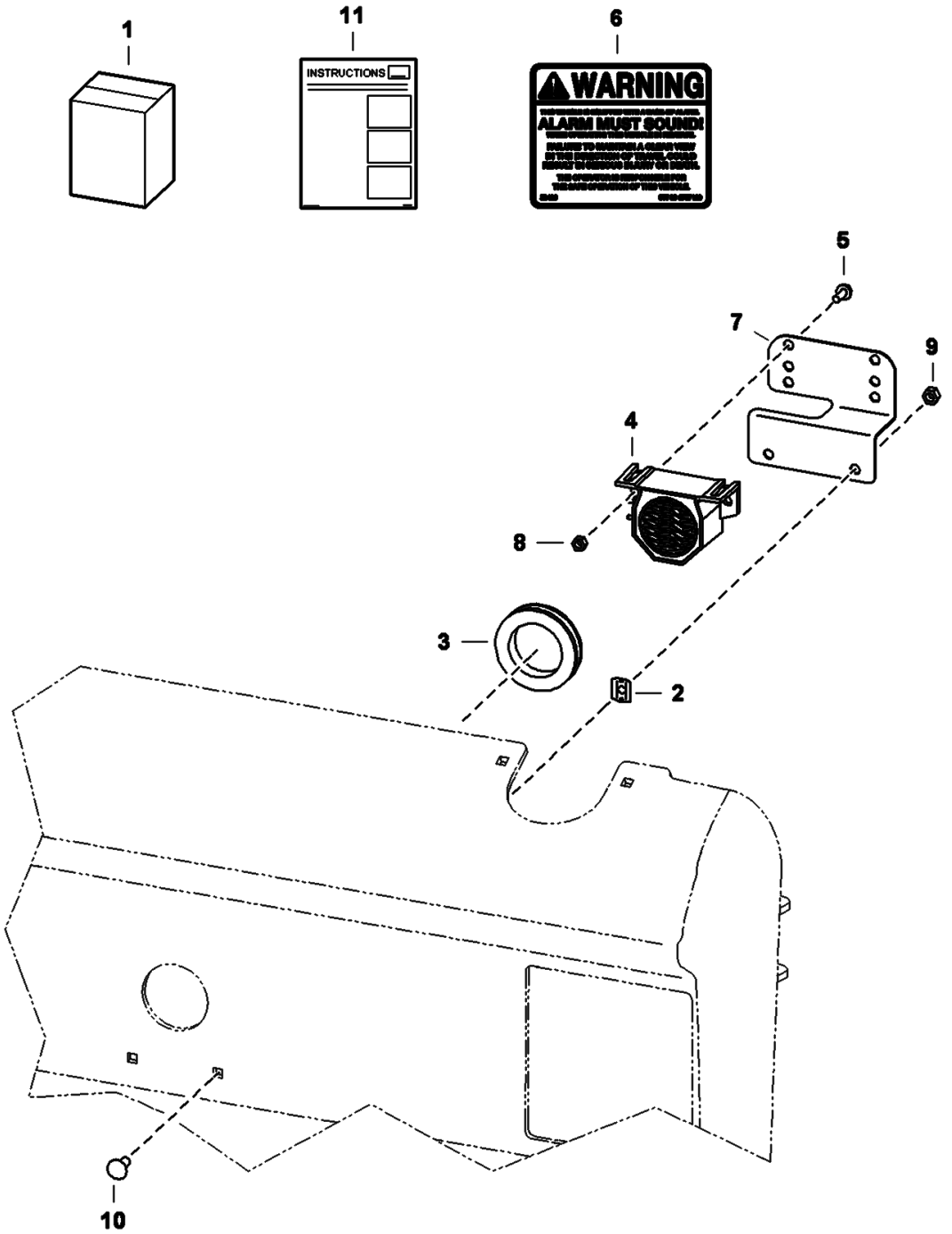

Illustration PE3083

Model S160 K
6904270

Page 360 - OSS# 6300202494 - All rights reserved by Bobcat Company - 02/11/2016 - 14:15:02 - Produced by Ken Cook Co. with mediaoff

BACK-UP ALARM KIT (Cont'd)
(Selectable Joystick Controls)

Ref No	Part Number	Description	Remarks	Serial Number	Qty
1	6732235	KIT, ALARM BACK-UP	Ref. 2-11		1
2	774220	NUT	spring		2
3	6577545	GROMMET			1
4	6651512	ALARM, BACK-UP	Was 6599931 [A]		1
5	17C410	BOLT 10	not in kit	& Bel.	2
5	25E13	WASHER 5	not in kit	& Bel.	2
5	35C410	BOLT 5		& Abv.	2
6	6737189	DECAL, WARNING	backup alarm		1
7	6733970	MOUNT			1
8	97D4	NUT	Was 83D4 [B]		2
9	61D5	NUT 10			2
10	37C516	BOLT	Was 10C512 [B]		2
11	6901690	INSTRUCTIONS			1

Page 361 - OSS# 6300202494 - All rights reserved by Bobcat Company - 02/11/2016 - 14:15:02 - Produced by Ken Cook Co. with mediaioff

BEACON

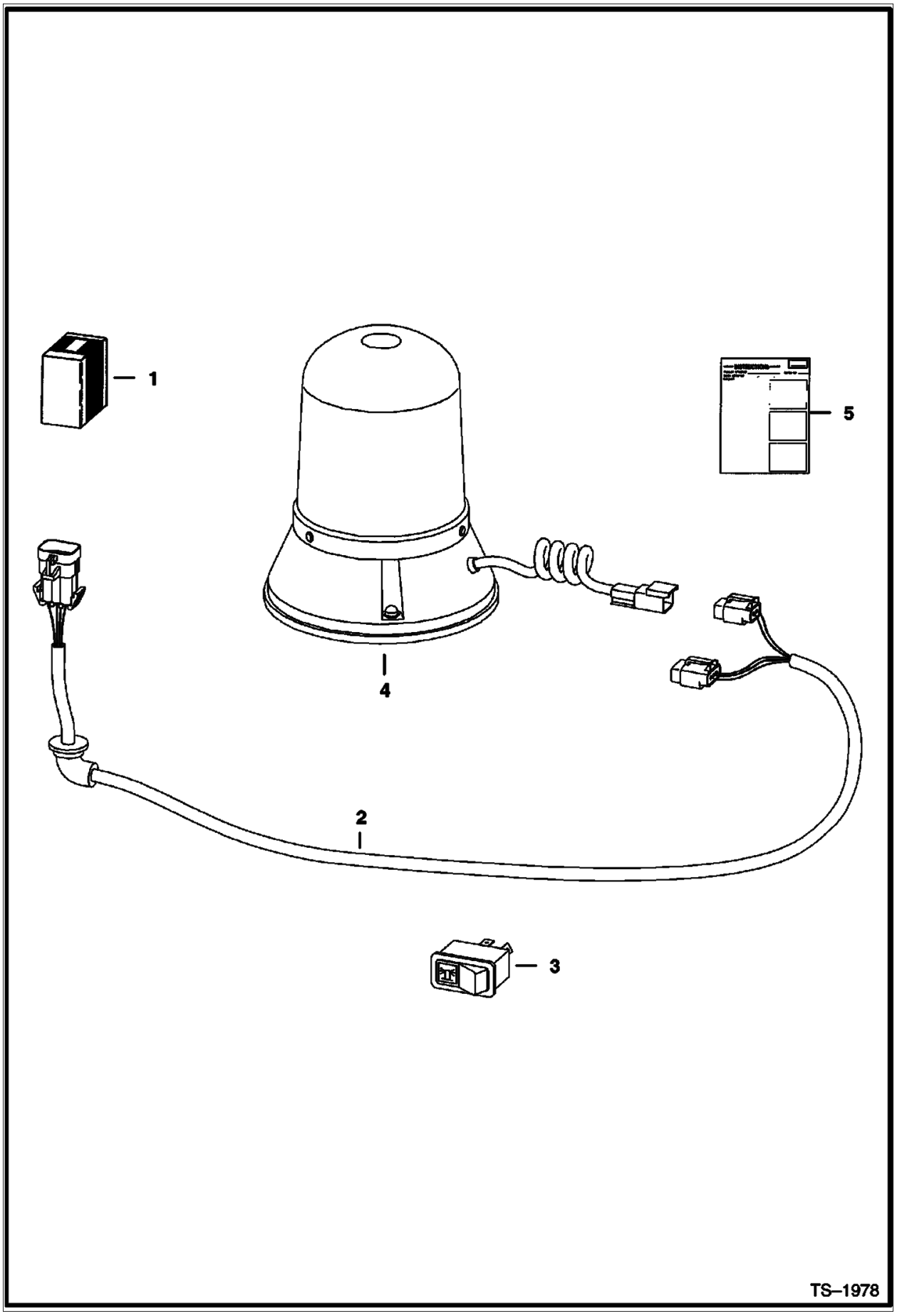

Illustration TS1978

Model S160 K
6904270

Page 362 - OSS# 6300202494 - All rights reserved by Bobcat Company - 02/11/2016 - 14:15:02 - Produced by Ken Cook Co. with mediaoff

BEACON (Cont'd)

Ref No	Part Number	Description	Remarks	Serial Number	Qty
1	6719854	KIT, BEACON LIGHT	rotating beacon - if loader is not equipped W/deluxe cab accessories harness, heater, A/C, SJC, ACS, power Bob-Tach, cab enclosure door kit, rear wiper or any of the following cab harness connected 4-way flasher or strobe light, Also Order 7116260 deluxe cab accessories harness	5299 12592 & Bel	1
1	6719854	KIT, BEACON LIGHT	rotating beacon - if loader is not equipped W/deluxe cab accessories harness, heater, A/C, SJC, ACS, power Bob-Tach, cab enclosure door kit, rear wiper or any of the following cab harness connected 4-way flasher or strobe light, Also Order 7116260 deluxe cab accessories harness	5300 11831 & Bel	1
1	6719854	KIT, BEACON LIGHT	rotating beacon - if loader is not equipped W/deluxe cab accessories harness, heater, A/C, SJC, ACS, power Bob-Tach, cab enclosure door kit, rear wiper or any of the following cab harness connected 4-way flasher or strobe light, Also Order 7116260 deluxe cab accessories harness	A15111001 & Above	1
1	6719854	KIT, BEACON LIGHT	rotating beacon - if loader is not equipped W/deluxe cab accessories harness, heater, A/C, SJC, ACS, power Bob-Tach, cab enclosure door kit, rear wiper or any of the following cab harness connected 4-way flasher or strobe light, Also Order 7143071 deluxe cab accessories harness	530011832 - 59999	1
1	6719854	KIT, BEACON LIGHT	rotating beacon - if loader is not equipped W/deluxe cab accessories harness, heater, A/C, SJC, ACS, power Bob-Tach, cab enclosure door kit, rear wiper or any of the following cab harness connected 4-way flasher or strobe light, Also Order 7143071 deluxe cab accessories harness	529912593 - 59999	1
1	6719854	KIT, BEACON LIGHT	rotating beacon - if loader is not equipped W/deluxe cab accessories harness, heater, A/C, SJC, ACS, power Bob-Tach, cab enclosure door kit, rear wiper or any of the following cab harness connected rotating beacon, 4-way flasher or strobe light, Also Order 7139311 deluxe cab accessories harness	5299 60001 & Above	1
1	6719854	KIT, BEACON LIGHT	rotating beacon - if loader is not equipped W/deluxe cab accessories harness, heater, A/C, SJC, ACS, power Bob-Tach, cab enclosure door kit, rear wiper or any of the following cab harness connected rotating beacon, 4-way flasher or strobe light, Also Order 7139311 deluxe cab accessories harness	AHWA11001 & Above	1
1	6719854	KIT, BEACON LIGHT	rotating beacon - if loader is not equipped W/deluxe cab accessories harness, heater, A/C, SJC, ACS, power Bob-Tach, cab enclosure door kit, rear wiper or any of the following cab harness connected rotating beacon, 4-way flasher or strobe light, Also Order 7139311 deluxe cab accessories harness	530060001 & Above	1
2	6718872	HARNESS			1
3	6668816	SWITCH	vertical		1
4	6675523	LIGHT EC BEACON			1
4	6666571	BULB			1
5	6900991	INSTRUCTIONS			1

Page 363 - OSS# 6300202494 - All rights reserved by Bobcat Company - 02/11/2016 - 14:15:02 - Produced by Ken Cook Co. with media1off

BLOCK HEATER
(Engine)

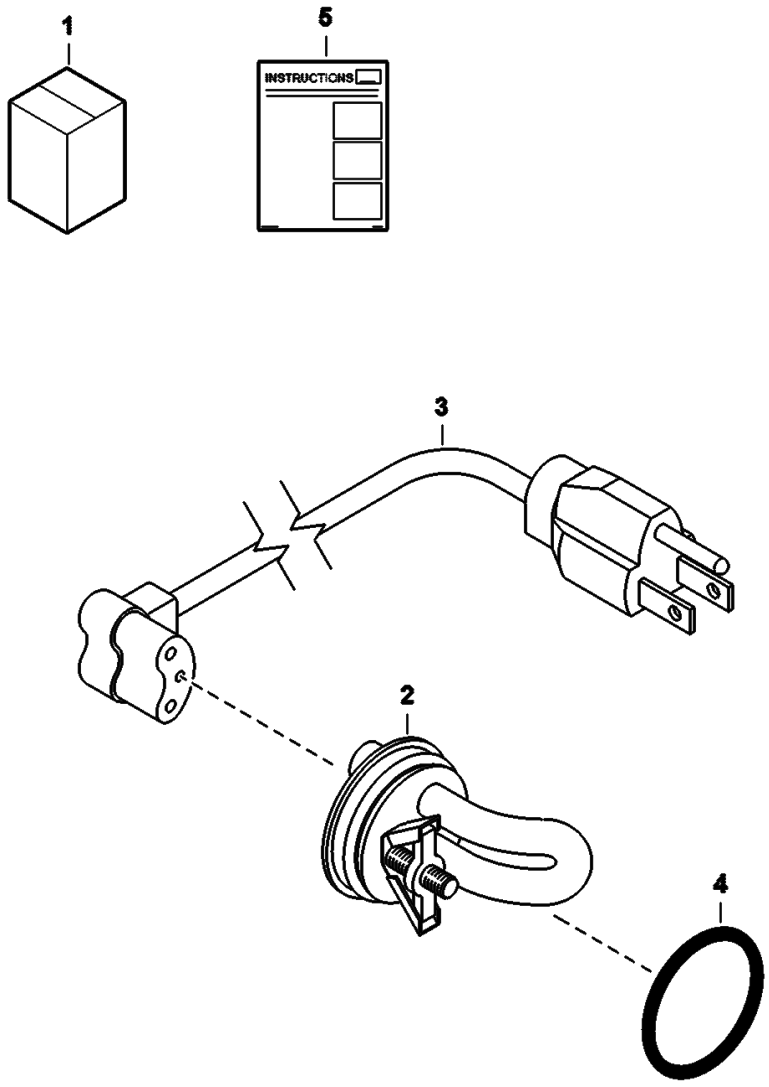

Illustration NA5715

Model S160 K
6904270

Page 364 - OSS# 6300202494 - All rights reserved by Bobcat Company - 02/11/2016 - 14:15:02 - Produced by Ken Cook Co. with mediaoff

BLOCK HEATER (Cont'd)
(Engine)

Ref No	Part Number	Description	Remarks	Serial Number	Qty
1		KIT, HEATER BLOCK ENG	NLA - Order Ref. 2 & 4		1
2	6720736	HEATER, BLOCK ENG PLUG SOFT	W/NLA O-ring, Ref. 3 & 5		1
2		O-ring	NLA - Order Ref. 4		1
3	6668881	CORD			1
4	79K14	O RING 10			1
5	6720038ENUS	INSTRUCTIONS	Was 6720038 [A]		1

Page 365 - OSS# 6300202494 - All rights reserved by Bobcat Company - 02/11/2016 - 14:15:02 - Produced by Ken Cook Co. with media1off

BOB-TACH LEVERS
(For Use W/Industrial Grapple Fork)

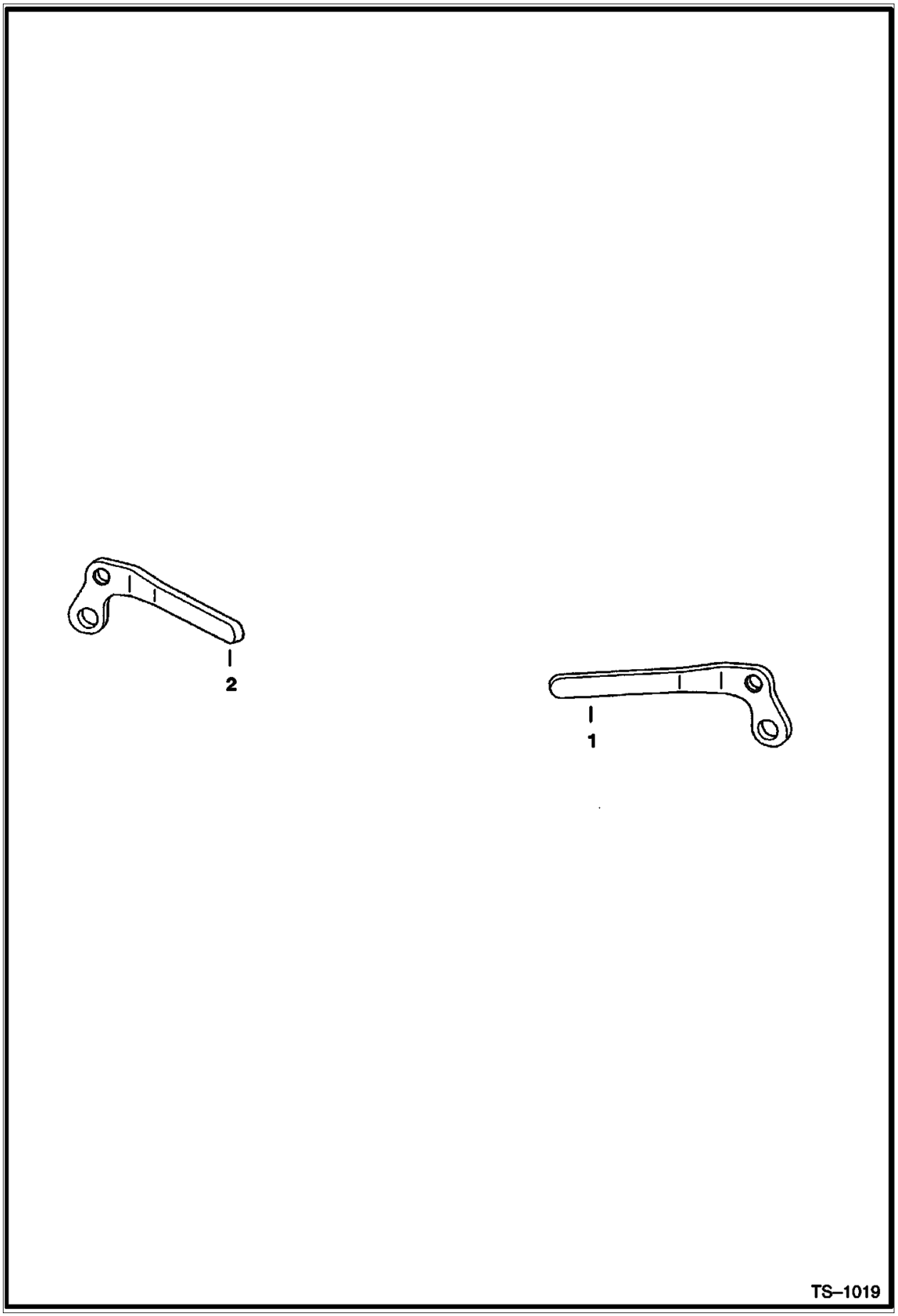

Illustration TS1019

Model S160 K
6904270

Page 366 - OSS# 6300202494 - All rights reserved by Bobcat Company - 02/11/2016 - 14:15:02 - Produced by Ken Cook Co. with mediaoff

BOB-TACH LEVERS (Cont'd)
(For Use W/Industrial Grapple Fork)

Ref No	Part Number	Description	Remarks	Serial Number	Qty
1	6578139	LEVER	RH		1
2	6578140	LEVER	LH		1

Page 367 - OSS# 6300202494 - All rights reserved by Bobcat Company - 02/11/2016 - 14:15:02 - Produced by Ken Cook Co. with mediaioff

BUCKET POSITIONING VALVE KIT

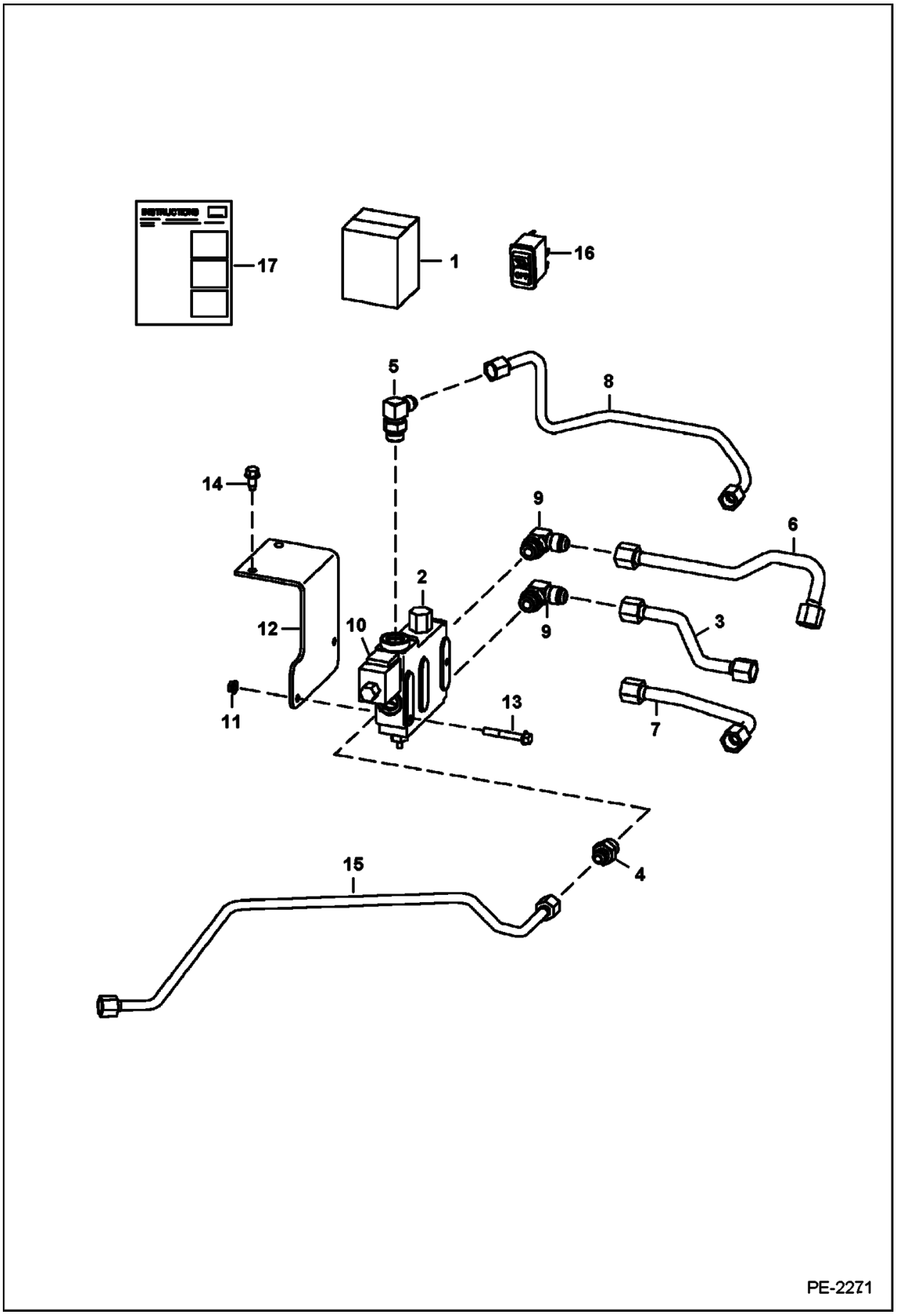

Illustration PE2271

Model S160 K
6904270

Page 368 - OSS# 6300202494 - All rights reserved by Bobcat Company - 02/11/2016 - 14:15:02 - Produced by Ken Cook Co. with mediaoff

BUCKET POSITIONING VALVE KIT (Cont'd)

Ref No	Part Number	Description	Remarks	Serial Number	Qty
1	7102869	KIT, BPV	Ref. 2-17		1
2		VALVE	See Illustration BUCKET POSITIONING VALVE / MS1943 NLA - Order 6673959 valve - Was 6666341 [A]		1
3	7112912	TUBE			1
4	15KB0810	FITTING, HYD CONNECTOR			1
4	79K10	O RING 10			x
5	17KB0810	FITTING, HYD ELBOW			1
5	79K10	O RING 10			x
6	6733196	TUBE			1
7	6733195	TUBE			1
8	6734192	TUBE			1
9	17KB1010	FITTING, HYD ELBOW			2
9	79K10	O RING 10			x
10	6672863	VALVE, SOLENOID			1
10		CARTRIDGE	W/nut		1
10		COIL			1
10	6671527	NUT			1
10	6670634	SEAL KIT			1
11	83D5	NUT 5	Was 57D5 [B]		2
12	6727646	BRACKET			1
13	35C536	BOLT			2
14	84G3710	SCREW	Was 84G3712 [B]		2
15	7101647	TUBE			1
16	6690947	SWITCH, BPV			1
17	6902833	INSTRUCTIONS			1

Page 369 - OSS# 6300202494 - All rights reserved by Bobcat Company - 02/11/2016 - 14:15:02 - Produced by Ken Cook Co. with media1off

BUCKET POSITIONING VALVE

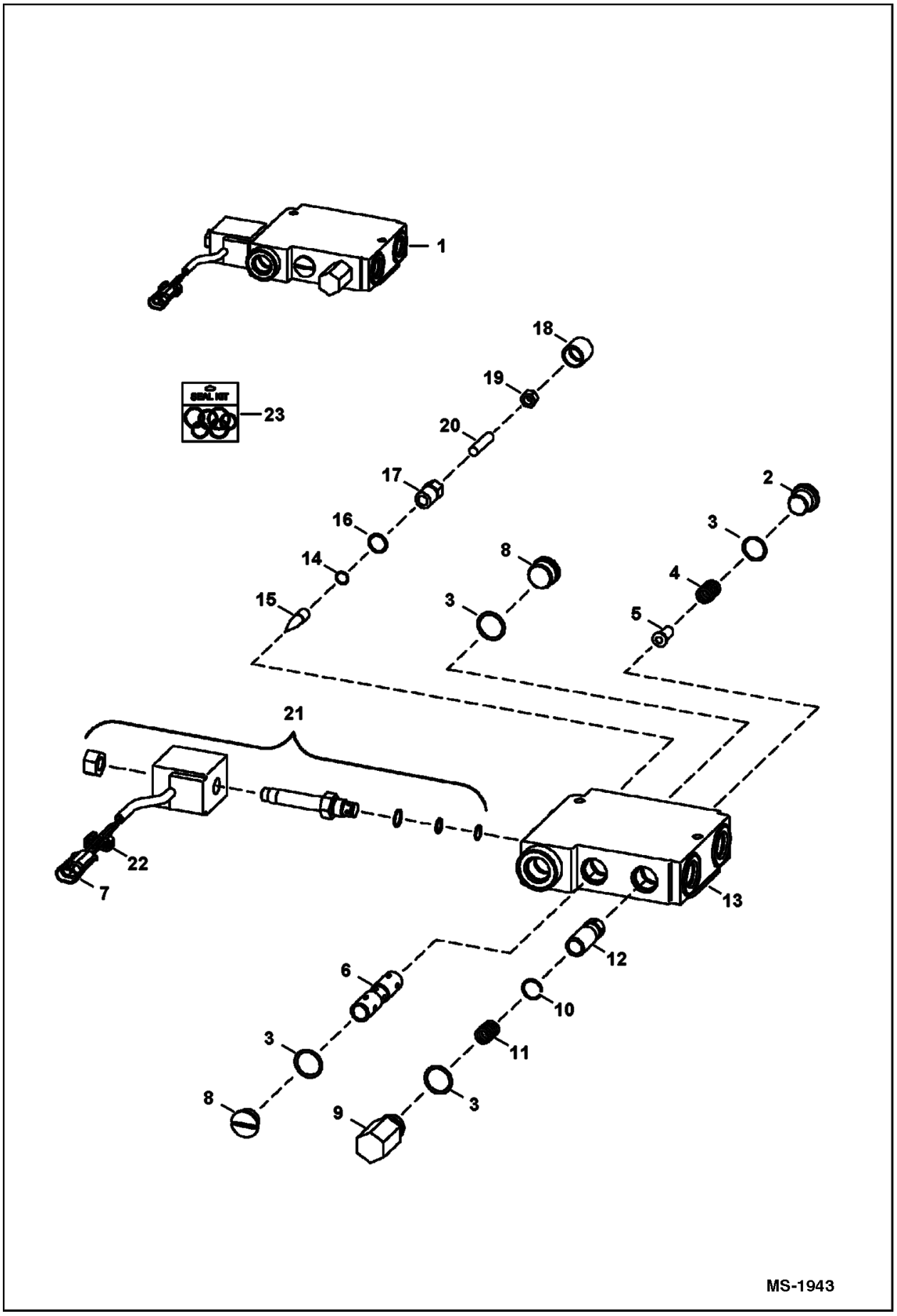

Illustration MS1943

Model S160 K
6904270

Page 370 - OSS# 6300202494 - All rights reserved by Bobcat Company - 02/11/2016 - 14:15:02 - Produced by Ken Cook Co. with mediaoff

BUCKET POSITIONING VALVE (Cont'd)

Ref No	Part Number	Description	Remarks	Serial Number	Qty
1		VALVE	NLA - W/O solenoid - Order 6673959 valve, 6647784 plug, 79K10 O-ring, 6647785 spring & 6647783 load check - Was 6666341 [A]		1
1	6673959	VALVE, BPV	white - W/solenoid - Ref. 2-23		1
2	6647784	PLUG	W/Ref. 3		1
3	79K10	O RING 10	Was 79K8 [B,D]		4
4	6647785	SPRING			1
5	6647783	LOADCHECK			1
6		SPOOL	NSS		1
7	6641179	CONECTR 5	2-pin		1
8	6676543	PLUG	W/Ref. 3		2
9	6667176	PLUG	W/Ref. 3		1
10	6667680	SNAP RING			1
11	6648294	SPRING			1
12		SPOOL	NSS		1
13		BODY	NSS		1
14	6667677	SEAL,O-RING			1
15	6647777	PIN			1
16	79K6	O RING 10			1
17	6647778	CAP			1
18	6667676	COVER			1
19	8D4	NUT	Was 6631561 [A]		1
20	6648293	SCREW			1
21	6672863	VALVE, SOLENOID			1
21	6671527	NUT			1
21	6670634	SEAL KIT			1
21	6675781	Coil	W/Ref. 7 & 22 - Was 6674331 [A]		1
21	6675780	Cartridge	Was 6676545 [A]		1
22	6641180	LOCK 5	Use W/ 2-pin connector		1
23	6647786	SEAL KIT	Ref. 3, 14, 16, & 18		1

Page 371 - OSS# 6300202494 - All rights reserved by Bobcat Company - 02/11/2016 - 14:15:02 - Produced by Ken Cook Co. with media1off

CAB DOOR

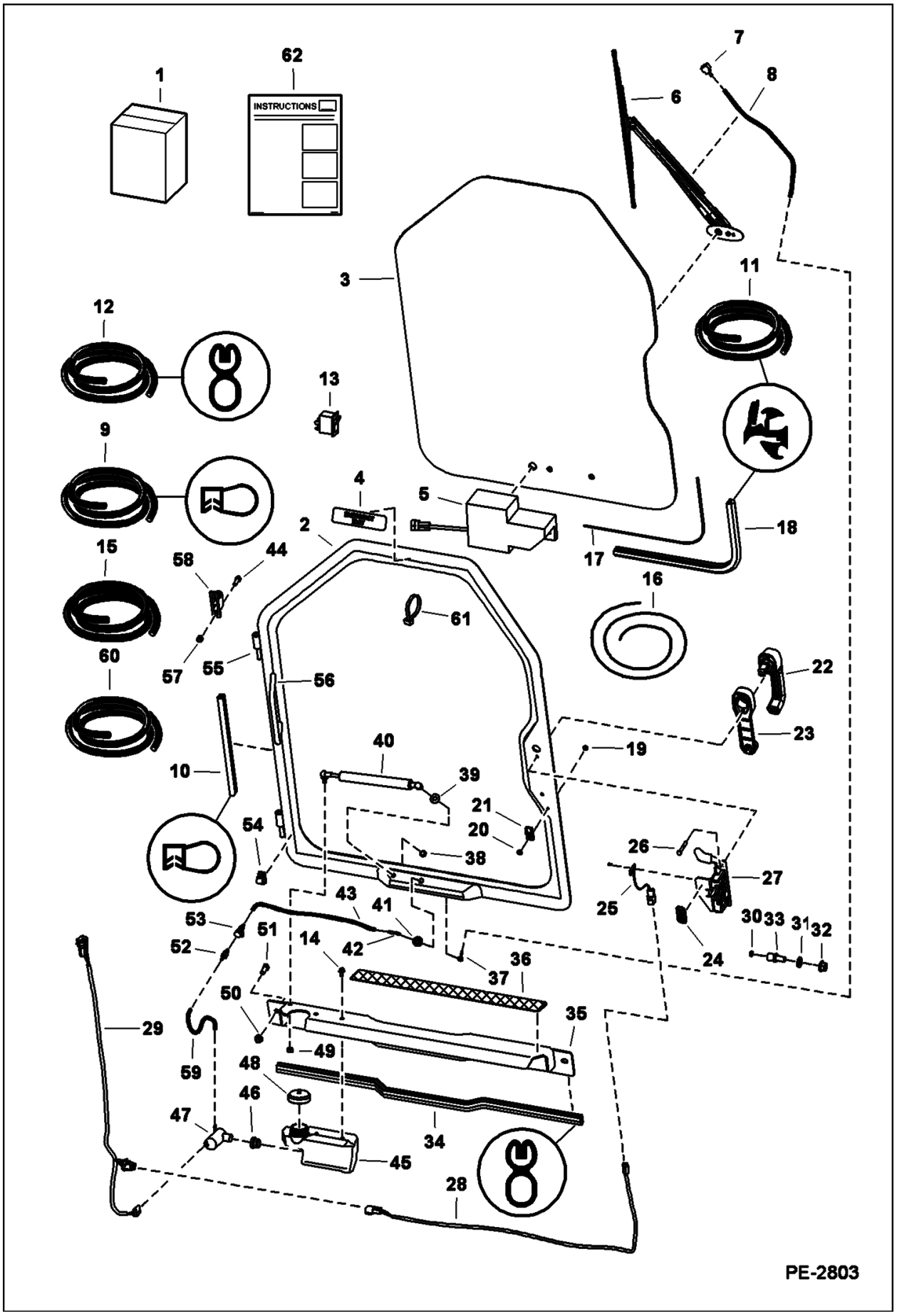

Illustration PE2803

Model S160 K
6904270

Page 372 - OSS# 6300202494 - All rights reserved by Bobcat Company - 02/11/2016 - 14:15:02 - Produced by Ken Cook Co. with mediaoff

CAB DOOR (Cont'd)

Ref No	Part Number	Description	Remarks	Serial Number	Qty
1	6730822	KIT, DOOR CAB	door - Ref. 2-62 & Ref. 1-21 on ILL. MS1355		1
1		KIT, DOOR DUAL TILT	See Illustration CAB DOOR / MS1355 Ref. 2-66 & Ref. 1-21 on ILL. MS1355 - ASIA ONLY - Order ASIA SALES # 71499017		1
2	7109665	FRAME, DOOR CAB	W/Ref. 55 & 56 - Also Order Ref. 4		1
3		WINDOW	See Illustration CAB DOOR / MS1355 - .25" thick glass		1
3		WINDOW	WUXI ONLY		1
4	7234369	DECAL, EXIT	Was 6707852 [B]		1
5		MOTOR	See Illustration CAB DOOR / MS1355 - wiper		1
6		ARM ASSY	See Illustration CAB DOOR / MS1355 - wiper		1
7		NOZZLE	See Illustration CAB DOOR / MS1355 - wiper arm mounted		1
8		HOSE	See Illustration CAB DOOR / MS1355		1
9	7011039	SEAL, BULK/FT 34	sold per foot - Was 6675558 [A]		x
10		SEAL	NLA - 127.3" (3233 mm) - Order Ref. 9		1
11	6665568	SEAL, BULK/FT 50	bulk - sold per foot		x
12	6513152	SEAL, BULK/FT 25	bulk - sold per foot		x
13	6665707	SWITCH	front wiper		1
14	35C408	BOLT			2
15	6676003	HOSE, BULK/FT	black - 0.109" ID - sold per foot		x
16	6554149	CORD, BULK/FT	bulk - sold per foot		x
17		CORD	NLA - window - 113" (2878 mm) long - Order Ref. 16 - Also Order Ref. 61 (6610510 tie)		1
18		SEAL	NLA - window - 113" (2878 mm) - Order Ref. 11		1
19	6665321	RIVET	male - plastic		1
20	6665322	RIVET	female - plastic		1
21	6665000	CLIP			1
22	7109662	HANDLE, LATCH DOOR			1
22		KEY	NLA - ignition & rear door - includes two keys W/ring - Order 6693241- Was 6709527 [A]		1
22	6693241	KEY 10	ignition - single key W/O ring		x
23	7109663	SPACER			1
24		DECAL, SAFETY	NLA - door sensor - Was 7110316 [A]		1
25	6728459	SENSOR, DOOR	Also Order (2) of Ref. 25		1
25	6677193	RIVET	plastic		2
26	1CM640	SCREW			2
27	7109661	LATCH, DOOR W/SENSOR	W/Ref. 25		1
28	7104465	DOOR SWITCH HARNESS			1
29	7117322	HARNESS, WIPER	wiper		1
29	7106277	WIPER HARNESS	WUXI ONLY		1
30	6677192	SENSOR, MAGNETIC			1
31	18EM1224	WASHER			1
32	51DM12	NUT	12 mm thread		1
33	7109664	BOLT	striker - 12 mm thread		1
34		SEAL	NLA - threshold - 36" (914 mm) - Order Ref. 12		1

Page 373 - OSS# 6300202494 - All rights reserved by Bobcat Company - 02/11/2016 - 14:15:02 - Produced by Ken Cook Co. with media1off

CAB DOOR (Cont'd)

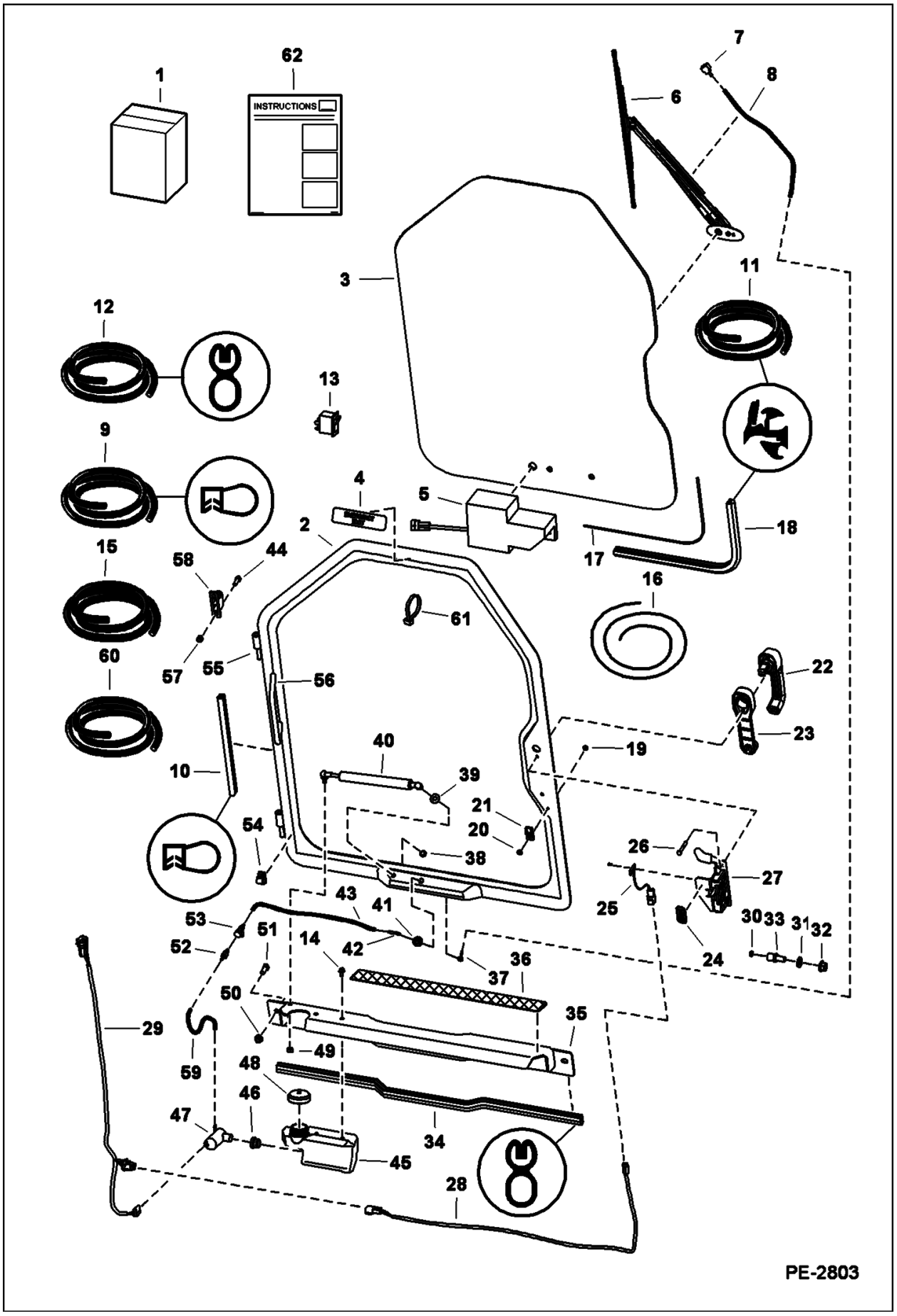

Illustration PE2803

Model S160 K
6904270

Page 374 - OSS# 6300202494 - All rights reserved by Bobcat Company - 02/11/2016 - 14:15:02 - Produced by Ken Cook Co. with mediaoff

CAB DOOR (Cont'd)

Ref No	Part Number	Description	Remarks	Serial Number	Qty
35	6730816	SHIELD			1
36	6542731	TREAD, SAFETY			1
37	6676500	ELBOW			1
38	46D5	NUT	acorn		1
39	25E16	WSHR			1
40	7157893	GAS SPRING	Was 6682586 [A]		1
40	6678548	Socket	ball		2
40	6649244	BALL STUD			2
40	6649245	CLIP	spring		2
41	6676499	GROMMET	wiper		1
42	6676917	ELBOW			1
43		HOSE	NLA - 20.25" (514,4 mm) - Order Ref. 15		1
44	17C512	BOLT 5			4
45	7133211	TANK, WASHER	Was 6736875 [A]		1
46	6666766	GROMMET			1
47	6664554	PUMP, WIPER WASHER			1
48	6674993	CAP	vented		1
49	61D5	NUT 10			1
50	61D6	NUT 5			2
51	17C612	BOLT 5			2
52	6675299	COUPLER	insert		1
53	6675298	COUPLER, BODY	body		1
54	6675378	CLIP	wire - W/adhesive back - Use W/doors W/O welded-on retainers		3
55	6718376	HINGE	door		2
56	7138347	HANDLE	grab - Was 6718521 [B]		1
57	59D5	NUT 5			4
58	6717593	HINGE	base		2
59		HOSE	NLA - 4.25" (108 mm) long - Order Ref. 60		1
60	6708310	HOSE, BULK/FT 100	clear - 0.154" ID - sold per foot		x
61	6610510	STRAP, TIE 10	cord removal		1
61	6624289	STRAP, TIE	Use W/doors W/welded-on retainers		3
62	6900854	INSTRUCTIONS			1

Page 375 - OSS# 6300202494 - All rights reserved by Bobcat Company - 02/11/2016 - 14:15:02 - Produced by Ken Cook Co. with media1off

CAB DOOR

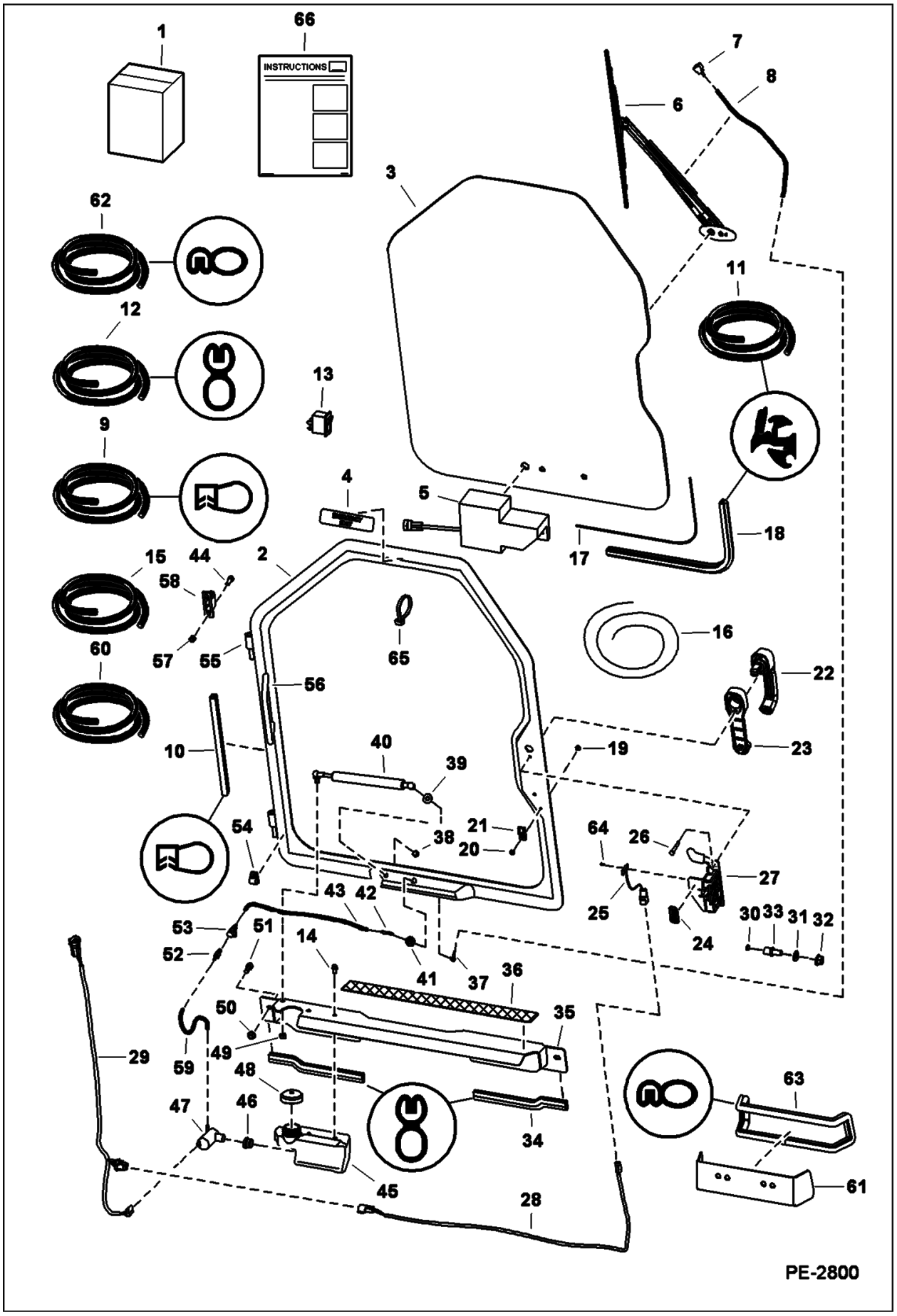

Illustration PE2800

Model S160 K
6904270

Page 376 - OSS# 6300202494 - All rights reserved by Bobcat Company - 02/11/2016 - 14:15:02 - Produced by Ken Cook Co. with mediaoff

CAB DOOR (Cont'd)

Ref No	Part Number	Description	Remarks	Serial Number	Qty
1		KIT, DOOR SINGLE TILT	Ref. 2-66 & Ref. 1-21 on ILL. MS1355 - ASIA ONLY - Order ASIA SALES # 7149957		1
2	7109665	FRAME, DOOR CAB	W/Ref. 55 & 56 - Also Order Ref. 4		1
3		WINDOW	See Illustration CAB DOOR / MS1355 WUXI ONLY		1
4	7234369	DECAL, EXIT	Was 6707852 [B]		1
5		MOTOR	See Illustration CAB DOOR / MS1355 - wiper		1
6		ARM	See Illustration CAB DOOR / MS1355 - wiper		1
7		NOZZLE	See Illustration CAB DOOR / MS1355 - wiper arm mounted		1
8		HOSE	See Illustration CAB DOOR / MS1355		1
9	7011039	SEAL, BULK/FT 34	sold per foot - Was 6675558 [A]		x
10		SEAL	NLA - 127.3" (3233 mm) - Order Ref. 9		1
11	6665568	SEAL, BULK/FT 50	bulk - sold per foot		x
12	6513152	SEAL, BULK/FT 25	bulk - sold per foot		x
13	6665707	SWITCH	front wiper		1
14	35C408	BOLT			2
15	6676003	HOSE, BULK/FT	black - 0.109" ID - sold per foot		x
16	6554149	CORD, BULK/FT	bulk - sold per foot		x
17		CORD	NLA - window - 113.3" (2878 mm) - Order Ref. 16 - Also Order 65 (6610510 tie)		1
18		SEAL	NLA - window - 113.3" (2878 mm) - Order Ref. 11		1
19	6665321	RIVET	male plastic		1
20	6665322	RIVET	female plastic		1
21	6665000	CLIP			1
22	7109662	HANDLE, LATCH DOOR			1
22		KEY	NLA - ignition & rear door - includes two keys W/ring - Order 6693241 - Was 6709527 [A]		1
22	6693241	KEY 10	ignition - single key W/O ring		x
23	7109663	SPACER			1
24		DECAL, SAFETY	NLA - door sensor - Was 7110316 [A]		1
25	6728459	SENSOR, DOOR	Also Order (2) of Ref. 64		1
26	1CM640	SCREW			2
27	7109661	LATCH, DOOR W/SENSOR	W/Ref. 25		1
28	7104465	DOOR SWITCH HARNESS	door sensor		1
29	7117322	HARNESS, WIPER	wiper		1
29	7106277	WIPER HARNESS			1
30	6677192	SENSOR, MAGNETIC			1
31	18EM1224	WASHER			1
32	51DM12	NUT	12 mm thread		1
33	7109664	BOLT	striker - 12 mm thread		1
34		SEAL	NLA - threshold - 11" (279 mm) - Order Ref. 12		2
35	6725042	SHIELD			1
36	6542731	TREAD, SAFETY			1
37	6676500	ELBOW			1
38	46D5	NUT	acorn		1

Page 377 - OSS# 6300202494 - All rights reserved by Bobcat Company - 02/11/2016 - 14:15:02 - Produced by Ken Cook Co. with media1off

CAB DOOR (Cont'd)

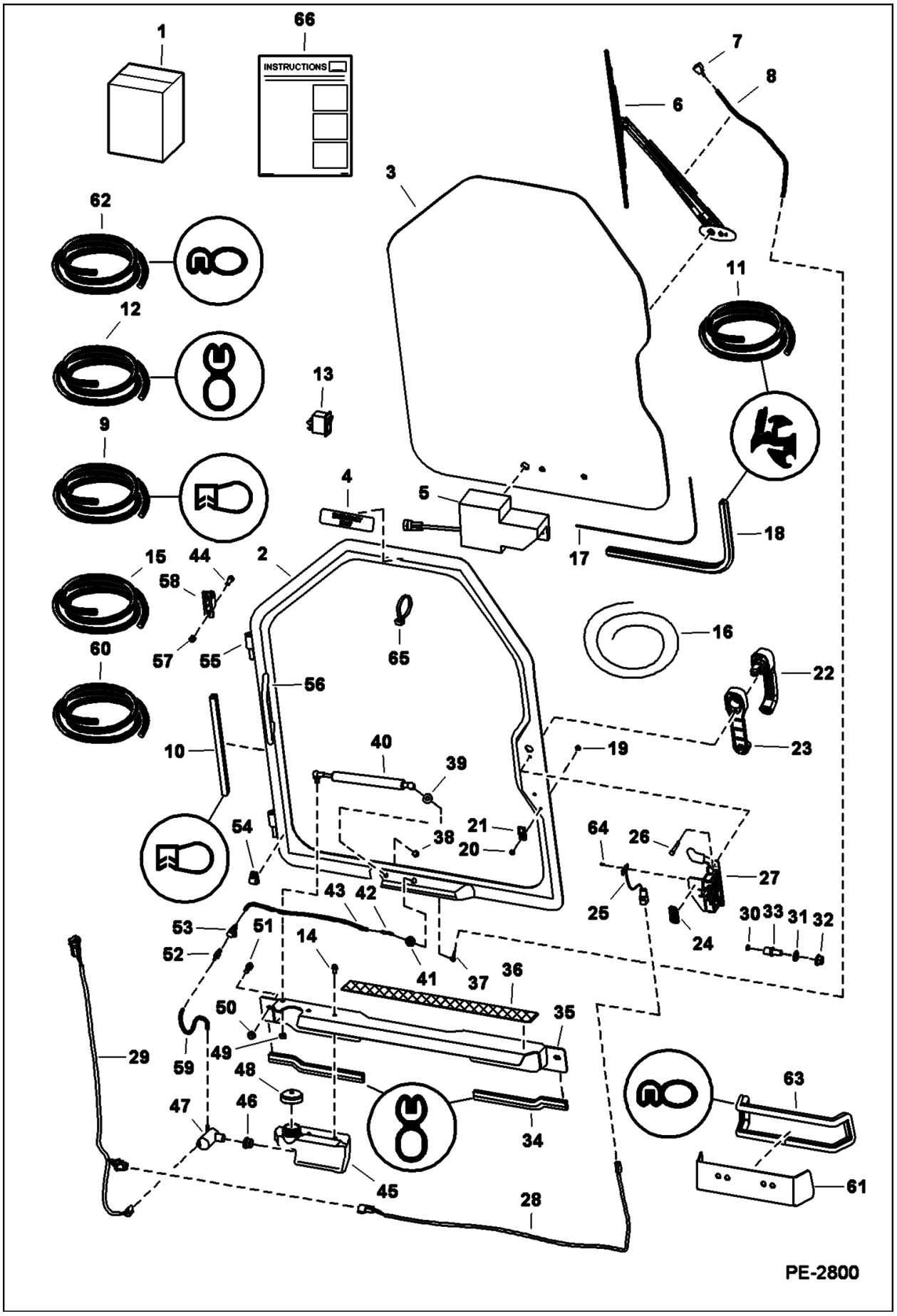

Illustration PE2800

Model S160 K
6904270

Page 378 - OSS# 6300202494 - All rights reserved by Bobcat Company - 02/11/2016 - 14:15:02 - Produced by Ken Cook Co. with mediaoff

CAB DOOR (Cont'd)

Ref No	Part Number	Description	Remarks	Serial Number	Qty
39	25E16	WSHR			1
40	7157893	GAS SPRING	Was 6682586 [A]		1
40	6678548	Socket	ball		2
40	6649244	BALL STUD			2
40	6649245	CLIP	spring		2
41	6676499	GROMMET	wiper		1
42	6676917	ELBOW			1
43		HOSE	NLA - 20.25" (514,4 mm) long - Order Ref. 15		1
44	17C512	BOLT 5			4
45	7133211	TANK, WASHER	Was 6736875 [A]		1
46	6666766	GROMMET			1
47	6664554	PUMP, WIPER WASHER			1
48	6674993	CAP	vented		1
49	61D5	NUT 10			5
50	61D6	NUT 5			2
51	17C612	BOLT 5			2
52	6675299	COUPLER	insert		1
53	6675298	COUPLER, BODY	body		1
54	6675378	CLIP	wire - W/adhesive back - Use W/doors W/O welded-on retainers		3
55	6718376	HINGE	door		2
56	7138347	HANDLE	grab - Was 6718521 [B]		1
57	59D5	NUT 5			4
58	6717593	HINGE	base		2
59		HOSE	NLA - washer - 4.25" (108 mm) long - Order Ref. 60		1
60	6708310	HOSE, BULK/FT 100	clear - 0.154" ID - sold per foot		x
61	6725200	PLATE			1
62	6555351	SEAL BULK/FT 15	bulk - sold per foot		x
63		SEAL	NLA - 40" (1016 mm) long - Order Ref. 62		1
64	6677193	RIVET	plastic		2
65	6610510	STRAP, TIE 10	cord removal		1
65	6624289	STRAP, TIE	Use W/doors W/welded-on retainers		3
66	6900854	INSTRUCTIONS			1

Page 379 - OSS# 6300202494 - All rights reserved by Bobcat Company - 02/11/2016 - 14:15:02 - Produced by Ken Cook Co. with media1off

CAB DOOR
(Window & Wiper)

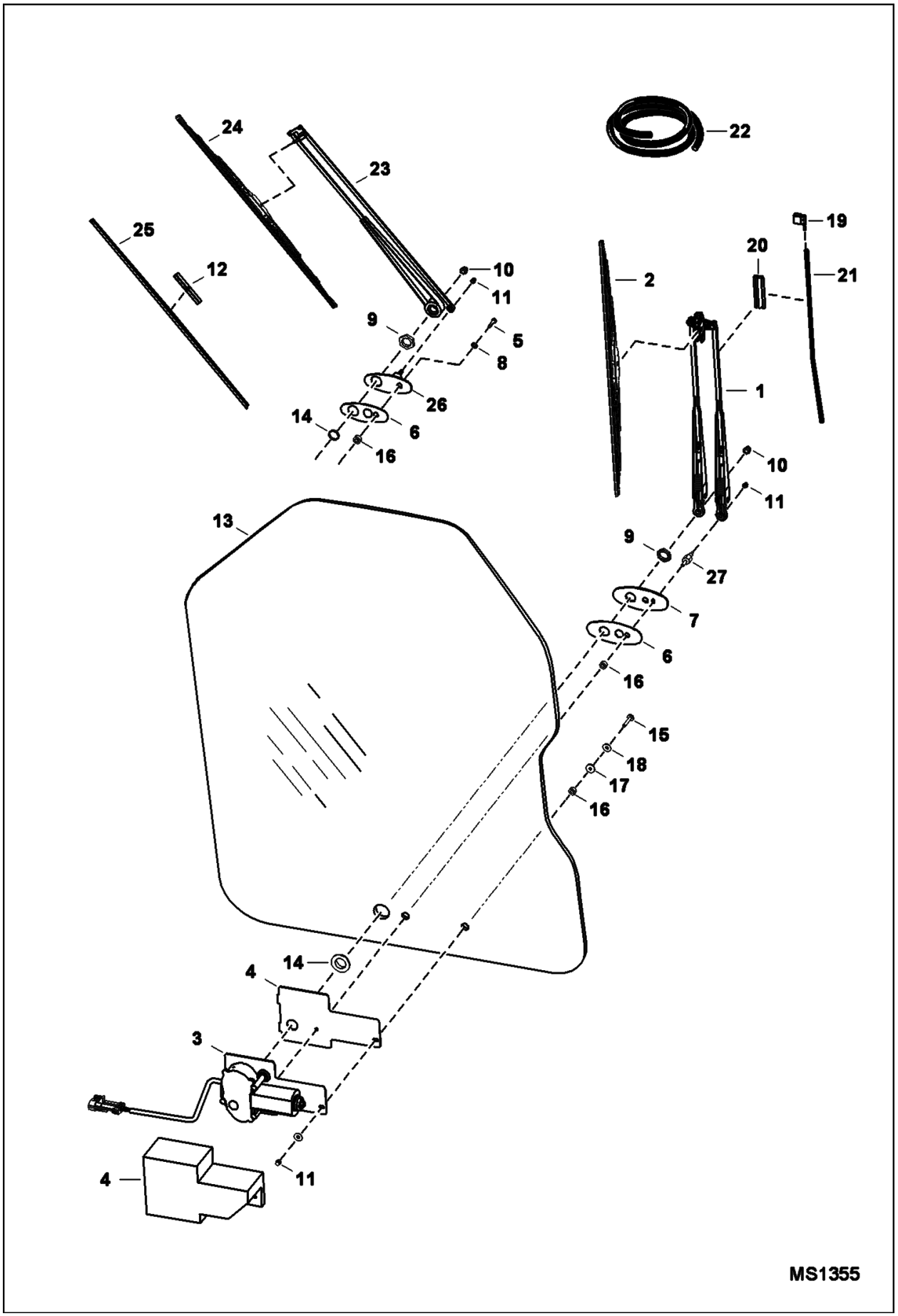

Illustration MS1355

Model S160 K
6904270

Page 380 - OSS# 6300202494 - All rights reserved by Bobcat Company - 02/11/2016 - 14:15:02 - Produced by Ken Cook Co. with mediaoff

CAB DOOR (Cont'd)
(Window & Wiper)

Ref No	Part Number	Description	Remarks	Serial Number	Qty
1	7188371	ARM, WIPER	Was 7188371 [A]		1
2	7188372	BLADE, WIPER WINDOW			1
3	6679476	MOTOR, WIPER	W/threaded shaft end & built in fuse - Was 6679476 [A]		1
3	6640699	CONECTR 5	electrical connector		1
4	6677836	COVER			1
5	6677837	BOLT			1
6	6677839	GASKET			1
7	7009047	PLATE	Was 7009047 [A]		1
8	6677841	WASHER	tooth lock		1
9	6677842	NUT			1
10	6677843	NUT			1
11	6677844	NUT			2
12	6677845	ADAPTER	wiper blade - Use W/Ref. 2 (6677834 blade)		1
13	6729776	WINDOW, DOOR CURVED CAB	0.25" thick glass - W/ 25,4 mm (1") dia wiper motor shaft hole		1
13	7147655	WINDOW, DOOR CURVED CAB	WUXI ONLY		1
14	6677847	GROMMET	rubber		1
15	6678198	BOLT			1
16	6664085	BUSHING	nylon		2
17	6801059	WASHER	neoprene		1
18	6678739	WASHER	steel		2
19	7020353	NOZZLE, WIPER	Was 6678920 [A]		1
20	6678921	GUIDE, HOSE	hose		1
21		HOSE	NLA - 18" (457,2 mm) long - Order Ref. 22		x
22	6676003	HOSE, BULK/FT	black - 0.109" ID - sold per foot		x
23		ARM, WIPER	NLA - W/Ref. 19-21 - Order Ref. 1, 2, 7 & 27 - Was 6677833 [A]		1
24	7147359	BLADE, WIPER WINDOW	one piece blade		1
25	6677834	BLADE, WIPER WINDOW	Also Order Ref. 12		1
26		SWIVEL, PLATE ASSY	NLA - Order Ref. 1, 2, 7 & 27 - Was 6677840 [A]		1
27	7255629	PLATE	Was 7188373 [A]		1

Page 381 - OSS# 6300202494 - All rights reserved by Bobcat Company - 02/11/2016 - 14:15:02 - Produced by Ken Cook Co. with media1off

CAB DOOR
(Special Applications)

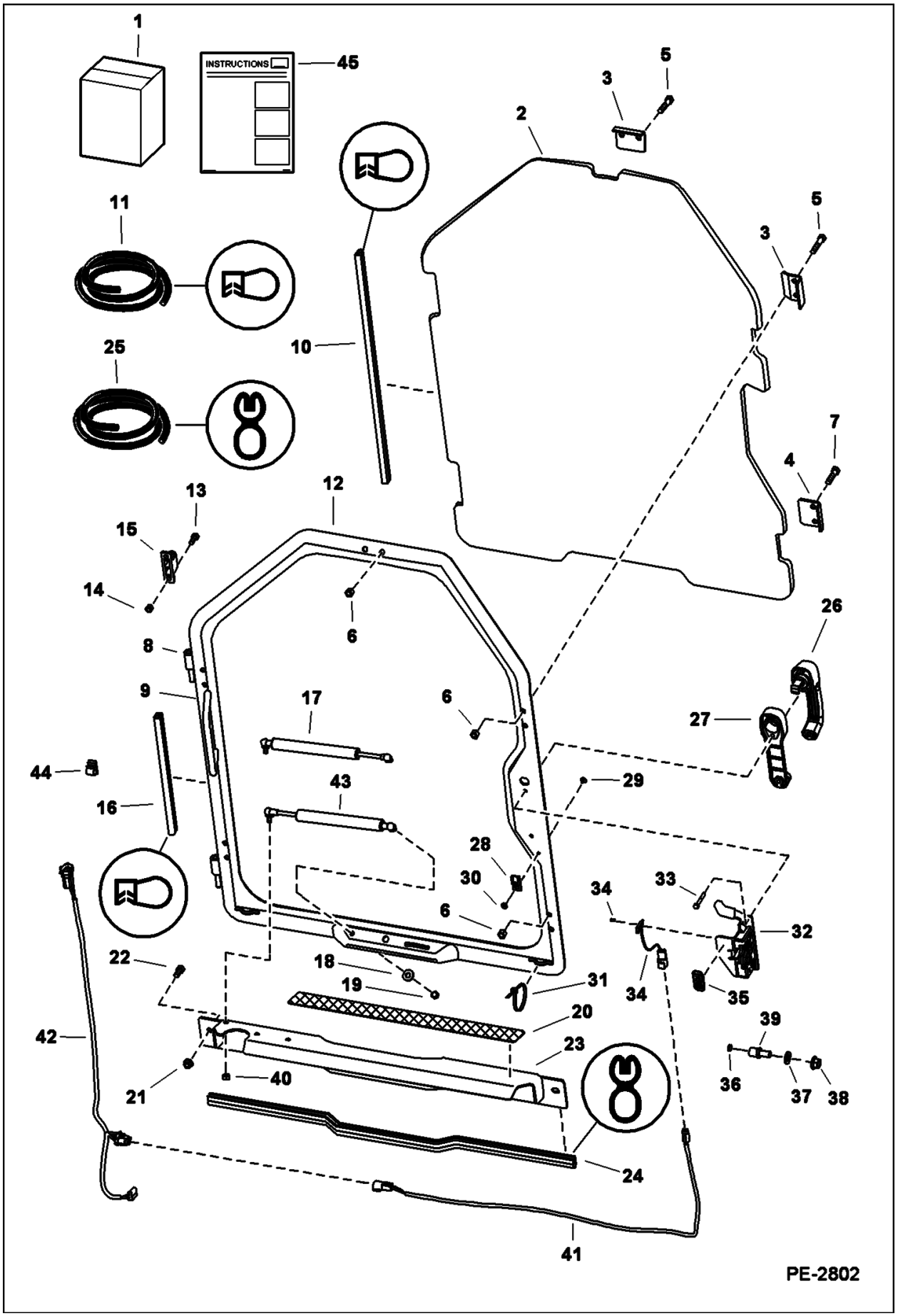

Illustration PE2802

Model S160 K
6904270

Page 382 - OSS# 6300202494 - All rights reserved by Bobcat Company - 02/11/2016 - 14:15:02 - Produced by Ken Cook Co. with mediaoff

CAB DOOR (Cont'd)
(Special Applications)

Ref No	Part Number	Description	Remarks	Serial Number	Qty
1	6730823	KIT, DOOR CAB SPECIAL APP	door - Ref. 2-43 - wiper is not included because it may scratch special applications window		1
2	6732351	WINDOW, DOOR CURVED CAB	0.5" thick polycarbonate - W/top notch		1
3	6725938	CLAMP			3
4	6725937	CLAMP			2
5	17C628	BOLT			6
6	95D6	NUT			10
7	17C624	BOLT 5			4
8	6718376	HINGE	door		2
9	7138347	HANDLE	grab - Was 6718521 [B]		1
10		SEAL	NLA - 115" (2921 mm) long - Order Ref. 11		1
11	7011039	SEAL, BULK/FT 34	sold per foot - Was 6675558 [A]		x
12	7110430	SPECIAL APPS DOOR	W/Ref. 8 & 9		1
13	59D5	NUT 5			4
14	17C512	BOLT 5			4
15	6717593	HINGE	base		2
16		SEAL	NLA - 127.3" (3233,4 mm) long - Order Ref. 11		1
17		GAS SPRING	NLA - Order Ref. 43 - Was 6682586 [A]		1
17	6678548	Socket	ball		2
17	6649244	BALL STUD			2
17	6649245	CLIP	spring		2
18	25E16	WSHR			1
19	46D5	NUT	acorn		1
20	6542731	TREAD, SAFETY			1
21	55D6	NUT			2
22	17C612	BOLT 5			2
23	6730816	SHIELD			1
24		SEAL	NLA - 36" (914,4 mm) long - Order Ref 25		1
25	6513152	SEAL, BULK/FT 25	bulk - sold per foot		x
26	7109662	HANDLE, LATCH DOOR			1
26		KEY	NLA - ignition & rear door - includes two keys W/ring - Order 6693241 key - Was 6709527 [A]		1
26	6693241	KEY 10	ignition - single key W/O ring		x
27	7109663	SPACER			1
28	6665000	CLIP			1
29	6665321	RIVET	male - plastic		1
30	6665322	RIVET	female - plastic		1
31	6624289	STRAP, TIE	Use W/doors W/welded-on retainers		3
32	7109661	LATCH, DOOR W/SENSOR	W/Ref. 34		1
33	1CM640	SCREW			2
34	6728459	SENSOR, DOOR	Also Order (2) of Ref. 34		1
34	6677193	RIVET	plastic		2
35		DECAL, SAFETY	NLA - door sensor - Was 7110316 [A]		1
36	6677192	SENSOR, MAGNETIC			1
37	18EM1224	WASHER			1
38	51DM12	NUT	12 mm thread		1
39	7109664	BOLT	striker - 12 mm thread		1
40	61D5	NUT 10			1

Page 383 - OSS# 6300202494 - All rights reserved by Bobcat Company - 02/11/2016 - 14:15:02 - Produced by Ken Cook Co. with media1off

CAB DOOR (Cont'd)
(Special Applications)

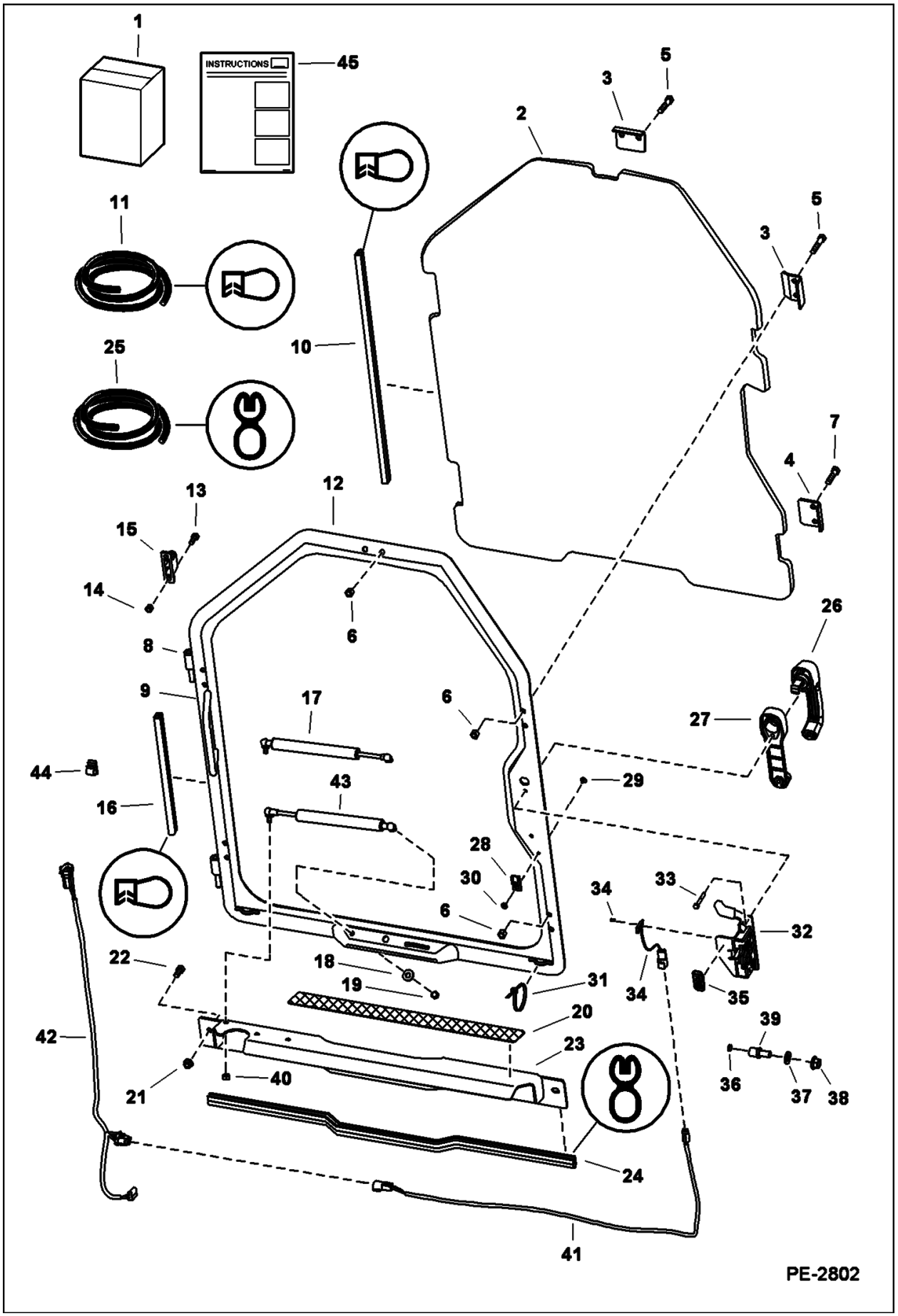

Illustration PE2802

Model S160 K
6904270

Page 384 - OSS# 6300202494 - All rights reserved by Bobcat Company - 02/11/2016 - 14:15:02 - Produced by Ken Cook Co. with mediaoff

CAB DOOR (Cont'd)
(Special Applications)

Ref No	Part Number	Description	Remarks	Serial Number	Qty
41	7104465	DOOR SWITCH HARNESS	door sensor		1
42	7117322	HARNESS, WIPER	wiper		1
43	7157893	GAS SPRING			1
44	6675378	CLIP	wire - W/adhesive back - Use W/doors W/O welded-on retainers		3
45	6901013	INSTRUCTIONS			1

Page 385 - OSS# 6300202494 - All rights reserved by Bobcat Company - 02/11/2016 - 14:15:02 - Produced by Ken Cook Co. with media1off

CAB ENCLOSURE
(Envelope)

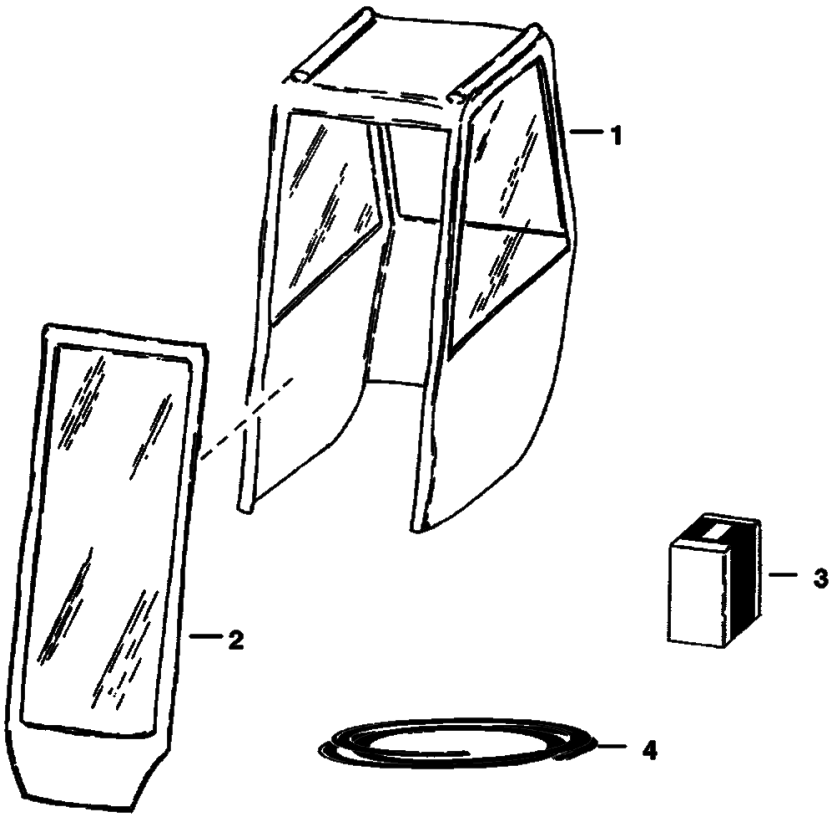

Illustration B1413

Model S160 K
6904270

Page 386 - OSS# 6300202494 - All rights reserved by Bobcat Company - 02/11/2016 - 14:15:02 - Produced by Ken Cook Co. with mediaIoff

CAB ENCLOSURE (Cont'd)
(Envelope)

Ref No	Part Number	Description	Remarks	Serial Number	Qty
1	6675544	CAB ENCL LOADER VINYL	W/Ref. 2-4 - fits over cab		1
2	6675590	ASSY, DOOR	vinyl		1
3	6675591	HINGE KIT			1
4	6722597	VELCRO KT CAB ENCL LOADER	27 feet (8,2 m)		1

Page 387 - OSS# 6300202494 - All rights reserved by Bobcat Company - 02/11/2016 - 14:15:02 - Produced by Ken Cook Co. with media1off

CAB ENCLOSURE
(Cab Enclosure Kit) (Special Applications Kit)



NOTE:

Ref. 1 - Cab Enclosure Kit

Ref. 2 - Special Applications Kit - To complete the Cab Enclosure Also Order Side Windows Kit, 3rd Gas Spring Kit & Access Cover Kit.

B–17100

Illustration B17100

Model S160 K
6904270

Page 388 - OSS# 6300202494 - All rights reserved by Bobcat Company - 02/11/2016 - 14:15:02 - Produced by Ken Cook Co. with mediaIoff

CAB ENCLOSURE (Cont'd)
(Cab Enclosure Kit) (Special Applications Kit)

Ref No	Part Number	Description	Remarks	Serial Number	Qty
1		KIT	NLA - Order 6577880 access cover kit, 6730822 cab door kit, 6732928 3rd gas spring kit & 7131580 side window kit - if loader is not equipped W/deluxe cab accessories harness, heater, A/C, SJC, ACS, rotating beacon, rear wiper kit, power Bob-Tach, (non-power port plug-in) strobe light and/or 4-way flashers, Also Order 7116260 deluxe cab accessories harness - Was 6731938 [A]	5300 11001-11831	1
1		KIT	NLA - Order 6577880 access cover kit, 6730822 cab door kit, 6732928 3rd gas spring kit & 7131580 side window kit - if loader is not equipped W/deluxe cab accessories harness, heater, A/C, SJC, ACS, rotating beacon, rear wiper kit, power Bob-Tach, (non-power port plug-in) strobe light and/or 4-way flashers, Also Order 7116260 deluxe cab accessories harness - Was 6731938 [A]	5299 11001-12592	1
1		KIT	NLA - Order 6577880 access cover kit, 6730822 cab door kit, 6732928 3rd gas spring kit & 7131580 side window kit - if loader is not equipped W/deluxe cab accessories harness, heater, A/C, SJC, ACS, rotating beacon, rear wiper kit, power Bob-Tach, (non-power port plug-in) strobe light and/or 4-way flashers, Also Order 7143071 deluxe cab accessories harness - Was 6731938 [A]	5299 12593 & Abv	1
1		KIT	NLA - Order 6577880 access cover kit, 6730822 cab door kit, 6732928 3rd gas spring kit & 7131580 side window kit - if loader is not equipped W/deluxe cab accessories harness, heater, A/C, SJC, ACS, rotating beacon, rear wiper kit, power Bob-Tach, (non-power port plug-in) strobe light and/or 4-way flashers, Also Order 7143071 deluxe cab accessories harness - Was 6731938 [A]	5300 11832 & Abv	1
2		KIT	NLA - special applications kit - Order 6726984 lexan rear window kit, 6730823 door kit, 7105035 top cab window, 6986505 instructions & (4) of 6681614 knob - if loader is not equipped W/deluxe cab accessories harness, heater, A/C, SJC, ACS, rotating beacon, rear wiper kit, power Bob-Tach, (non-power port plug-in) strobe light and/or 4-way flashers, Also Order 7116260 deluxe harness - Was 6731937 [A]	5299 11001-12592	1
2		KIT	NLA - special applications kit - Order 6726984 lexan rear window kit, 6730823 door kit, 7105035 top cab window, 6986505 instructions & (4) of 6681614 knob - if loader is not equipped W/deluxe cab accessories harness, heater, A/C, SJC, ACS, rotating beacon, rear wiper kit, power Bob-Tach, (non-power port plug-in) strobe light and/or 4-way flashers, Also Order 7116260 deluxe harness - Was 6731937 [A]	5300 11001-11831	1
2		KIT	NLA - special applications kit - Order 6726984 lexan rear window kit, 6730823 door kit, 7105035 top cab window, 6986505 instructions & (4) of 6681614 knob - if loader is not equipped W/deluxe cab accessories harness, heater, A/C, SJC, ACS, rotating beacon, rear wiper kit, power Bob-Tach, (non-power port plug-in) strobe light and/or 4-way flashers, Also Order 7143071 deluxe harness - Was 6731937 [A]	5299 12593 & Abv	1

Page 389 - OSS# 6300202494 - All rights reserved by Bobcat Company - 02/11/2016 - 14:15:02 - Produced by Ken Cook Co. with media1off



NOTE:

Ref. 1 - Cab Enclosure Kit

Ref. 2 - Special Applications Kit - To complete the Cab Enclosure Also Order Side Windows Kit, 3rd Gas Spring Kit & Access Cover Kit.

B–17100

Illustration B17100

Model S160 K
6904270

Page 390 - OSS# 6300202494 - All rights reserved by Bobcat Company - 02/11/2016 - 14:15:02 - Produced by Ken Cook Co. with mediaoff

CAB ENCLOSURE (Cont'd)
(Cab Enclosure Kit) (Special Applications Kit)

Ref No	Part Number	Description	Remarks	Serial Number	Qty
2		KIT	NLA - special applications kit - Order 6726984 lexan rear window kit, 6730823 door kit, 7105035 top cab window, 6986505 instructions & (4) of 6681614 knob - if loader is not equipped W/deluxe cab accessories harness, heater, A/C, SJC, ACS, rotating beacon, rear wiper kit, power Bob-Tach, (non-power port plug-in) strobe light and/or 4-way flashers, Also Order 7143071 deluxe harness - Was 6731937 [A]	5300 11832 & Abv	1

Page 391 - OSS# 6300202494 - All rights reserved by Bobcat Company - 02/11/2016 - 14:15:02 - Produced by Ken Cook Co. with media1off

CAB WINDOWS
(Top, Rear & Side)

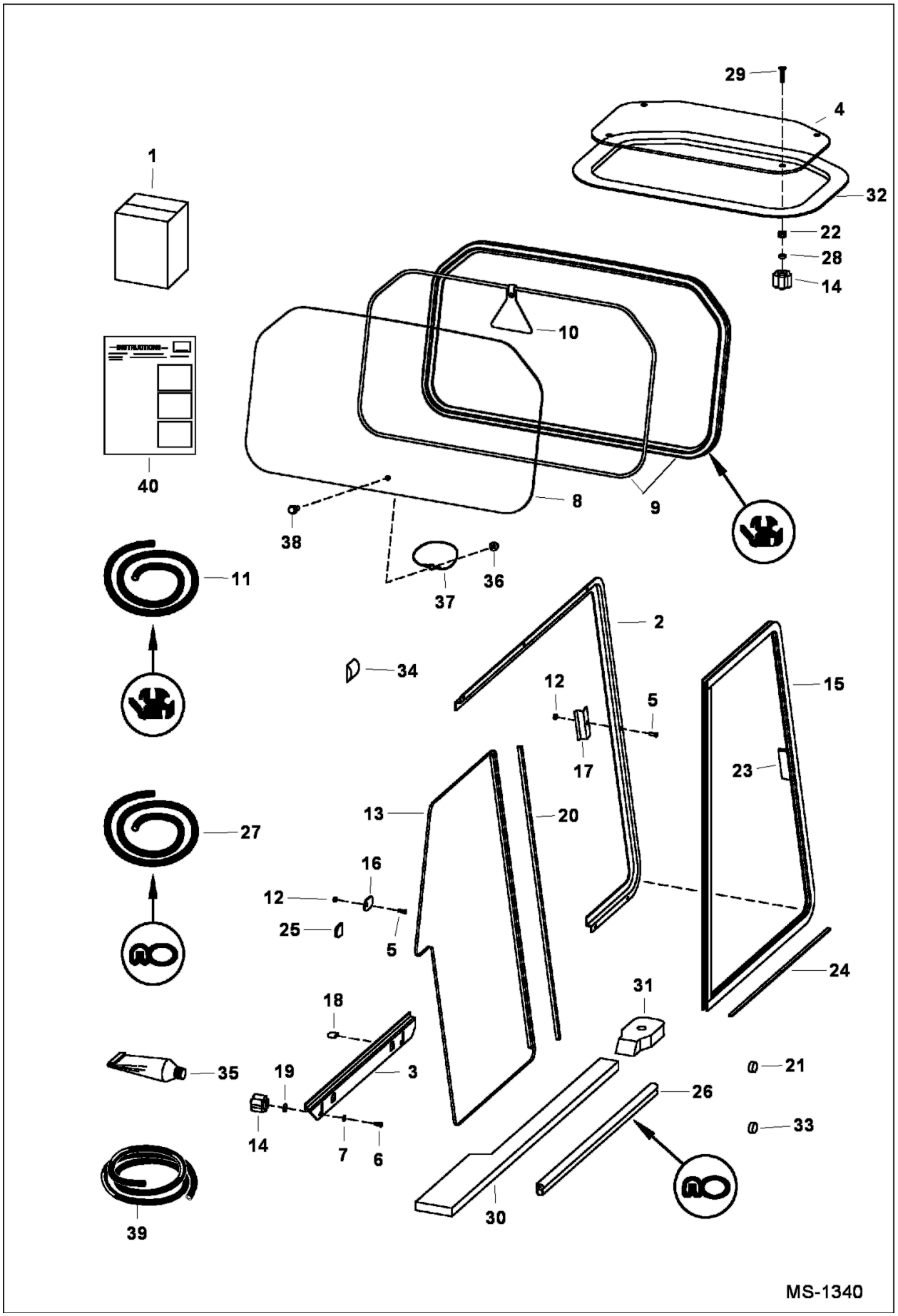

Illustration MS1340

Model S160 K
6904270

Page 392 - OSS# 6300202494 - All rights reserved by Bobcat Company - 02/11/2016 - 14:15:02 - Produced by Ken Cook Co. with mediaoff

CAB WINDOWS (Cont'd)
(Top, Rear & Side)

Ref No	Part Number	Description	Remarks	Serial Number	Qty
1	6718805	KIT, WINDOW REAR AND TOP	Ref. 4, 8-10, 14 & 39 - Was SALES [A]		1
1		KIT, WINDOW SIDE	NLA - Ref. 2, 3, 5-7, 12-19, 21, 25, 30, 31, 34 & 40 - Was 6718806 [A]		1
1		KIT	ASIA SALES - Side Window - Order ASIA SALES # 7134279		1
1	7131580	KIT, WINDOW SIDE	Ref. 2, 3, 5-7, 12-19, 21, 25, 30, 31, 34 & 40 [A]		1
2	6717870	TRACK, LEFT	LH side		1
2	6717872	TRACK RIGHT	RH side		1
3	6717871	TRACK BOTTOM LH	LH bottom		1
3	6717873	TRACK BOTTOM RH	RH bottom		1
4	7105034	WINDOW TOP	Was 7105035 [A]		1
5	10C410	BOLT	carriage		14
6	10C416	BOLT	carriage		8
7	25E14	WSHR			4
8	6717874	WINDOW, CAB REAR	rear		1
8	6719413	WINDOW, REAR	rear - polycarbonate		1
9		EXTRUSION	NLA - 1924 mm (75.75") long - Order Ref. 11		x
9		CORD	NLA - 1924 mm (75.75") long - Order Ref. 11		x
10	6731478	TAG EXIT			1
11	6675387	SEAL, BULK/FT	bulk - sold per foot		x
11	6554149	CORD, BULK/FT	bulk - sold per foot		x
12	59D4	NUT 5			18
13	6691001	WINDOW, LEFT REAR	rear - LH - W/Ref. 20 - Was 6674520 [A]		1
13	6691003	WINDOW, RIGHT REAR	rear - RH - W/Ref. 20 - Was 6674522 [A]		1
14	6681614	KNOB			8
15	7003481	ASSY, WINDOW	sliding - W/Ref. 23 - Was 6691000 [A]		1
15	7003482	WINDOW, RIGHT ASSY	sliding - W/Ref. 23 - Was 6691002 [A]		1
16	6719063	STOP WINDOW			2
17	6719037	STRIKER			2
18	6719065	COVER TAB	tab		4
19	6675212	RETAINER, BOLT	bolt		4
20	6675833	SEAL	rear window - dual wiper W/tape		2
20	7122487	2 SEAL, WIPER	rear window - dual wiper W/tape - ASIA only		2
21	6657719	PLUG	0.75" dia hole		2
22	6675545	GROMMET			4
23	6678283	HANDLE, WINDOW SIDE	W/self adhesive strip		2
24		FELT STRIP	NLA - 517,7 mm (20.38") long - Order Ref. 39 [D]		2
25	6677198	CAP	tab		2
26		SEAL	NLA - 609,6 mm (24") long - Order Ref. 27		1
27	6555351	SEAL BULK/FT 15	bulk - sold per foot		x
27	7122488	SEAL, BULB (BULK/FOOT)	bulk - sold per foot - ASIA only		x
28	6664085	BUSHING	nylon		4
29	91G420	SCREW			4
30	6729010	SEAL	foam - LH		1

Page 393 - OSS# 6300202494 - All rights reserved by Bobcat Company - 02/11/2016 - 14:15:02 - Produced by Ken Cook Co. with media1off

CAB WINDOWS (Cont'd)
(Top, Rear & Side)

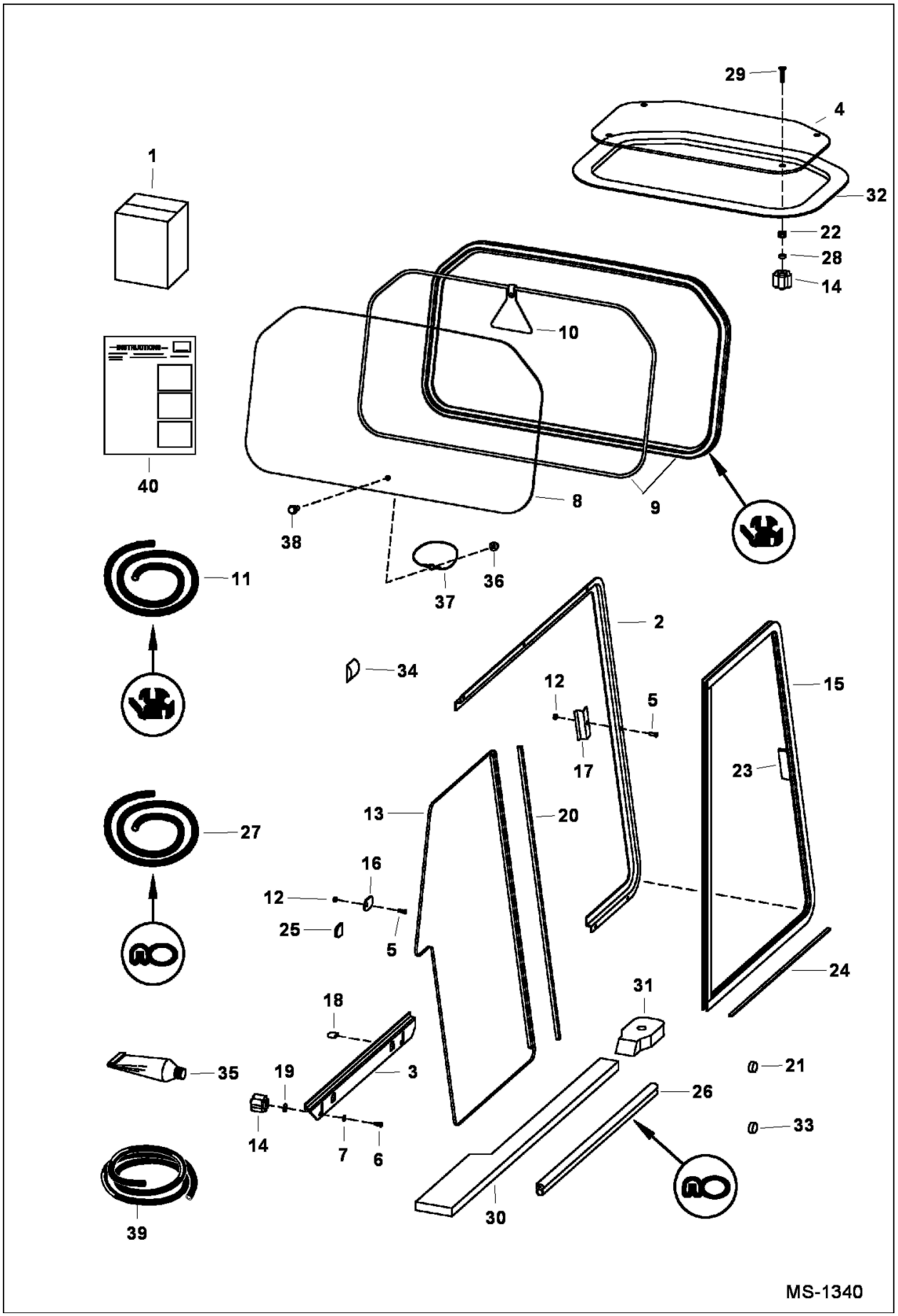

Illustration MS1340

Model S160 K
6904270

Page 394 - OSS# 6300202494 - All rights reserved by Bobcat Company - 02/11/2016 - 14:15:02 - Produced by Ken Cook Co. with mediaoff

CAB WINDOWS (Cont'd)
(Top, Rear & Side)

Ref No	Part Number	Description	Remarks	Serial Number	Qty
30	6729009	SEAL	foam - RH		1
30	7156758	INSULATION, STRIP	seal to fender - ASIA only		2
31	6729011	SEAL	cab mount		2
32	7165265	SEAL, WINDOW			1
33	6677973	PLUG	.22" dia hole		2
34	7103075	SEAL	side screen		2
35		ADHESIVE	NLA - 1 oz - top window seal		1
36	83D5	NUT 5			1
37	6555331	WIRE ROPE			1
38	35C516	BOLT 10			1
39	6676927	FELT STRIP BULK/FT	bulk - sold per foot		x
40	6900852	INSTRUCTIONS	top & rear window		1
40	6900853	INSTRUCTIONS	side windows		1

Page 395 - OSS# 6300202494 - All rights reserved by Bobcat Company - 02/11/2016 - 14:15:02 - Produced by Ken Cook Co. with media1off

CAB WINDOWS
(Window Rib Kit)

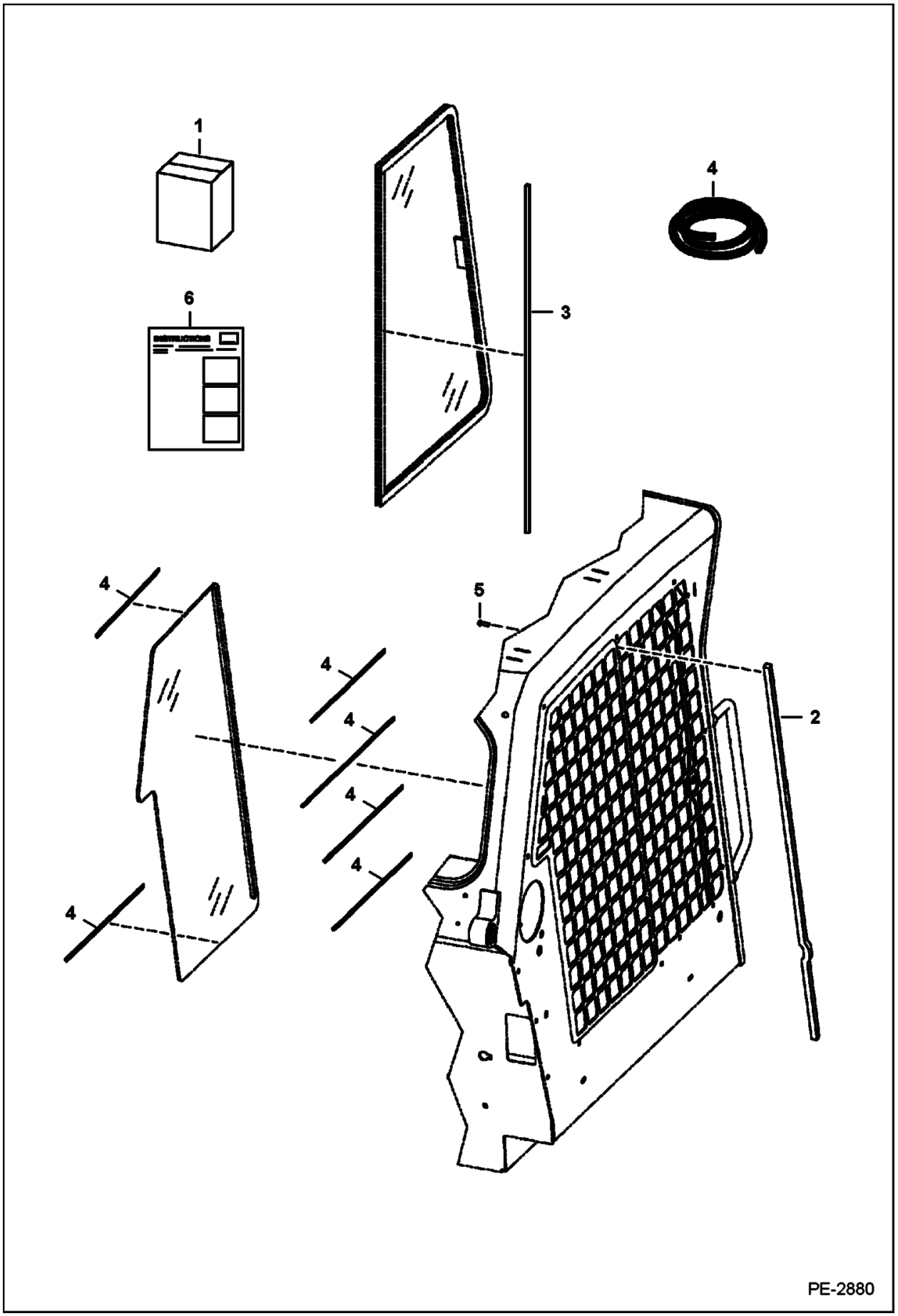

Illustration PE2880

Model S160 K
6904270

Page 396 - OSS# 6300202494 - All rights reserved by Bobcat Company - 02/11/2016 - 14:15:02 - Produced by Ken Cook Co. with mediaoff

CAB WINDOWS (Cont'd)
(Window Rib Kit)

Ref No	Part Number	Description	Remarks	Serial Number	Qty
1	7122462	KIT, RIB WINDOW	Ref. 2-6 - can NOT Use W/single point lift kits - Ref. 2 & 5 may already be installed		1
2	7153099	BRACE, CAB	Was 7121556 [A]		2
3	7122487	2 SEAL, WIPER			2
4	7122488	SEAL, BULB (BULK/FOOT)	180" (4572 mm) long - cut to fit		1
5	7142024	SCREW	Was 25GT410 [B]		8
6	6904744	INSTRUCTIONS			1

Page 397 - OSS# 6300202494 - All rights reserved by Bobcat Company - 02/11/2016 - 14:15:02 - Produced by Ken Cook Co. with media1off

CAB WINDOWS
(Rear Window Removal Kit)

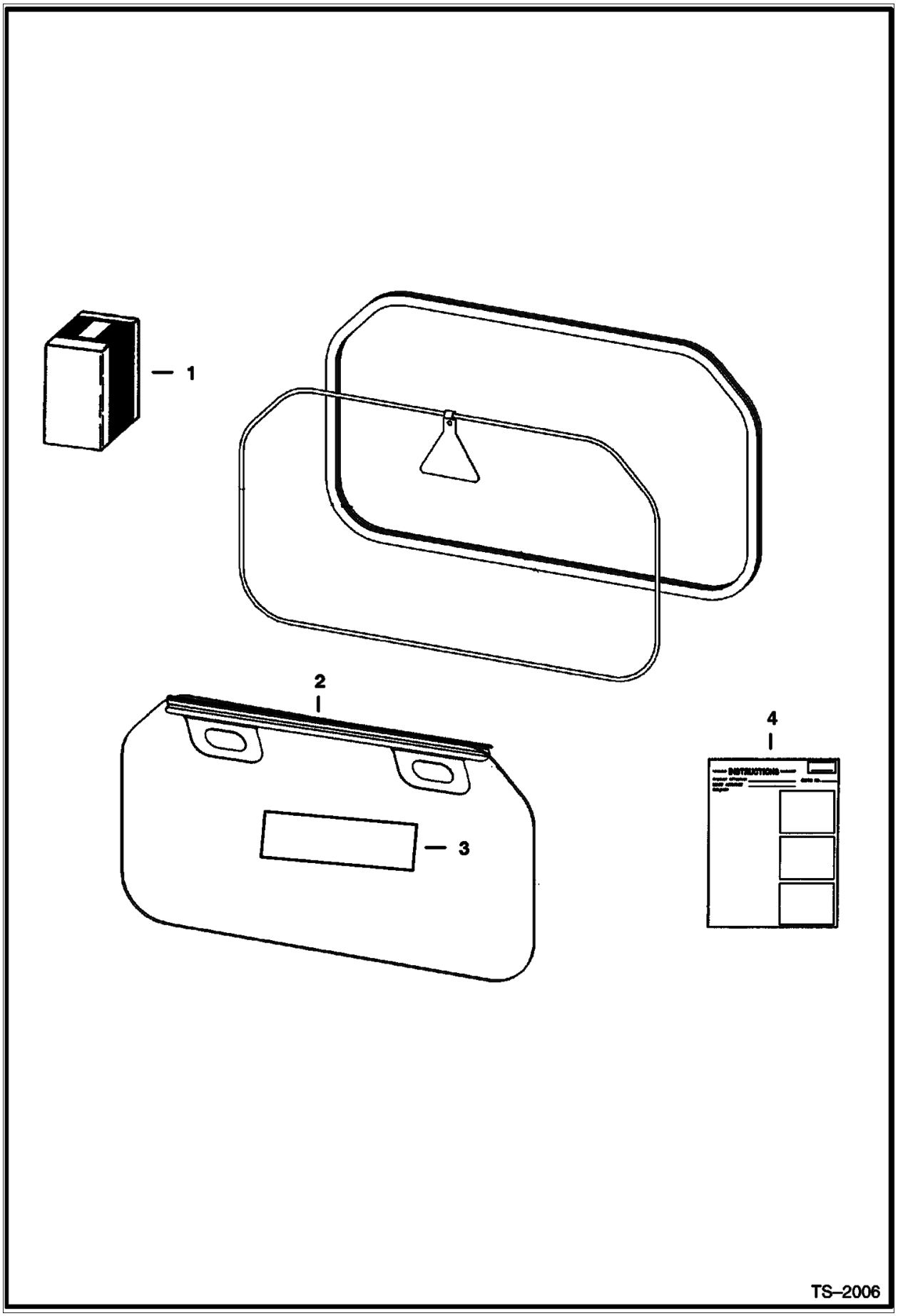

Illustration TS2006

Model S160 K
6904270

Page 398 - OSS# 6300202494 - All rights reserved by Bobcat Company - 02/11/2016 - 14:15:02 - Produced by Ken Cook Co. with mediaoff

CAB WINDOWS (Cont'd)
(Rear Window Removal Kit)

Ref No	Part Number	Description	Remarks	Serial Number	Qty
1	6725946	KIT, WINDOW REAR	Ref. 2-4		1
2	6725421	HANDLE			1
3	6726303	DECAL, OPERATION	removeable rear window		1
4	6901029ENUS	INSTRUCTIONS	WAS 6901029 [A]		1

Page 399 - OSS# 6300202494 - All rights reserved by Bobcat Company - 02/11/2016 - 14:15:02 - Produced by Ken Cook Co. with media1off

COUNTERWEIGHT KIT
(Front Axle)

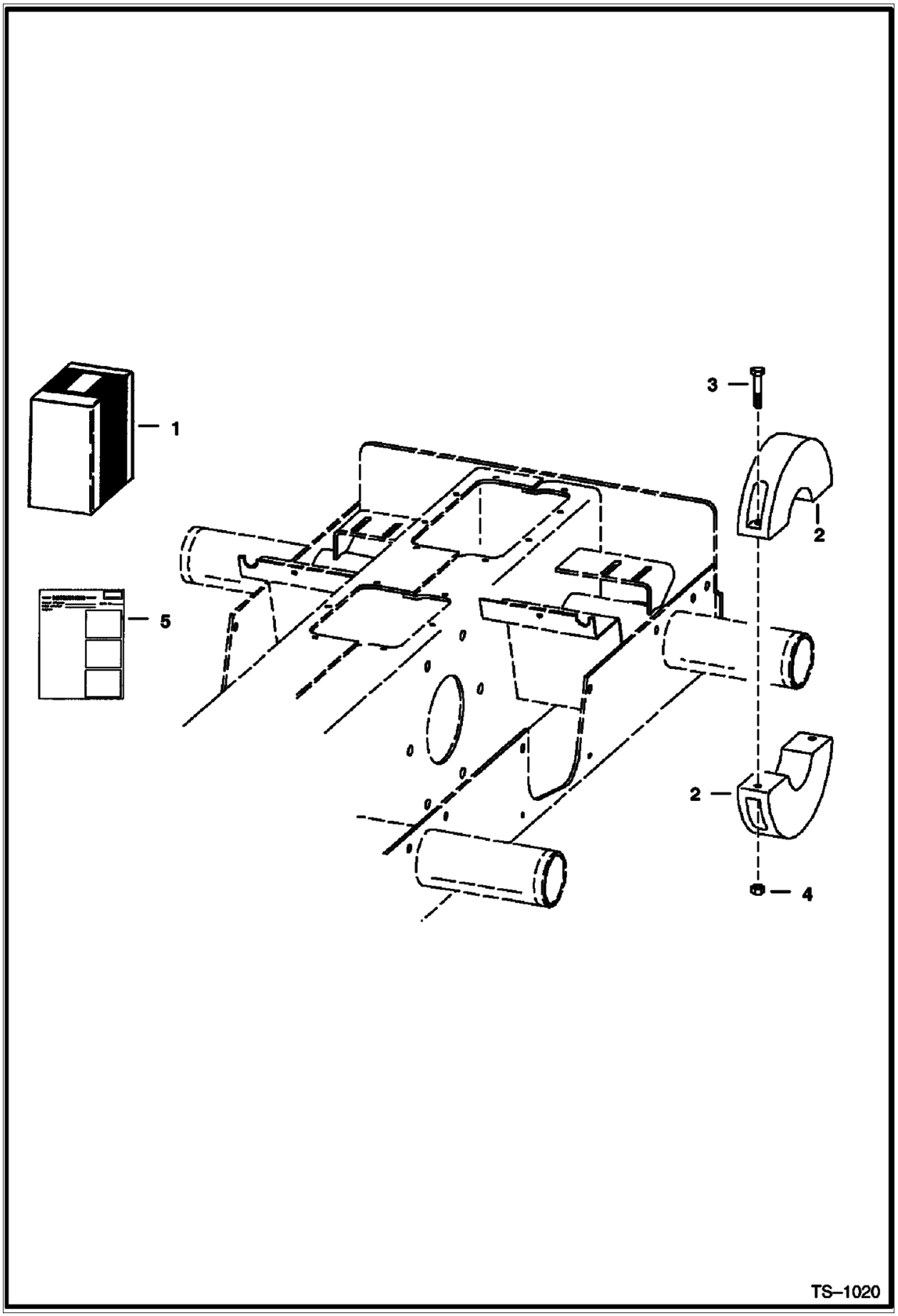

Illustration TS1020

Model S160 K
6904270

Page 400 - OSS# 6300202494 - All rights reserved by Bobcat Company - 02/11/2016 - 14:15:02 - Produced by Ken Cook Co. with mediaoff

COUNTERWEIGHT KIT (Cont'd)
(Front Axle)

Ref No	Part Number	Description	Remarks	Serial Number	Qty
1	6704284	KIT, COUNTERWEIGHT	counterweight		1
2	6714361	COUNTERWEIGHT, AXLE	front - 71,6 kg (38.7 lb) - 114,3 mm (4.5") wide		4
3	17C640	BOLT			8
4	61D6	NUT 5			8
5	6900366	INSTRUCTIONS			1

Page 401 - OSS# 6300202494 - All rights reserved by Bobcat Company - 02/11/2016 - 14:15:02 - Produced by Ken Cook Co. with media1off

COUNTERWEIGHT KIT
(1700 lb) (770 kg)

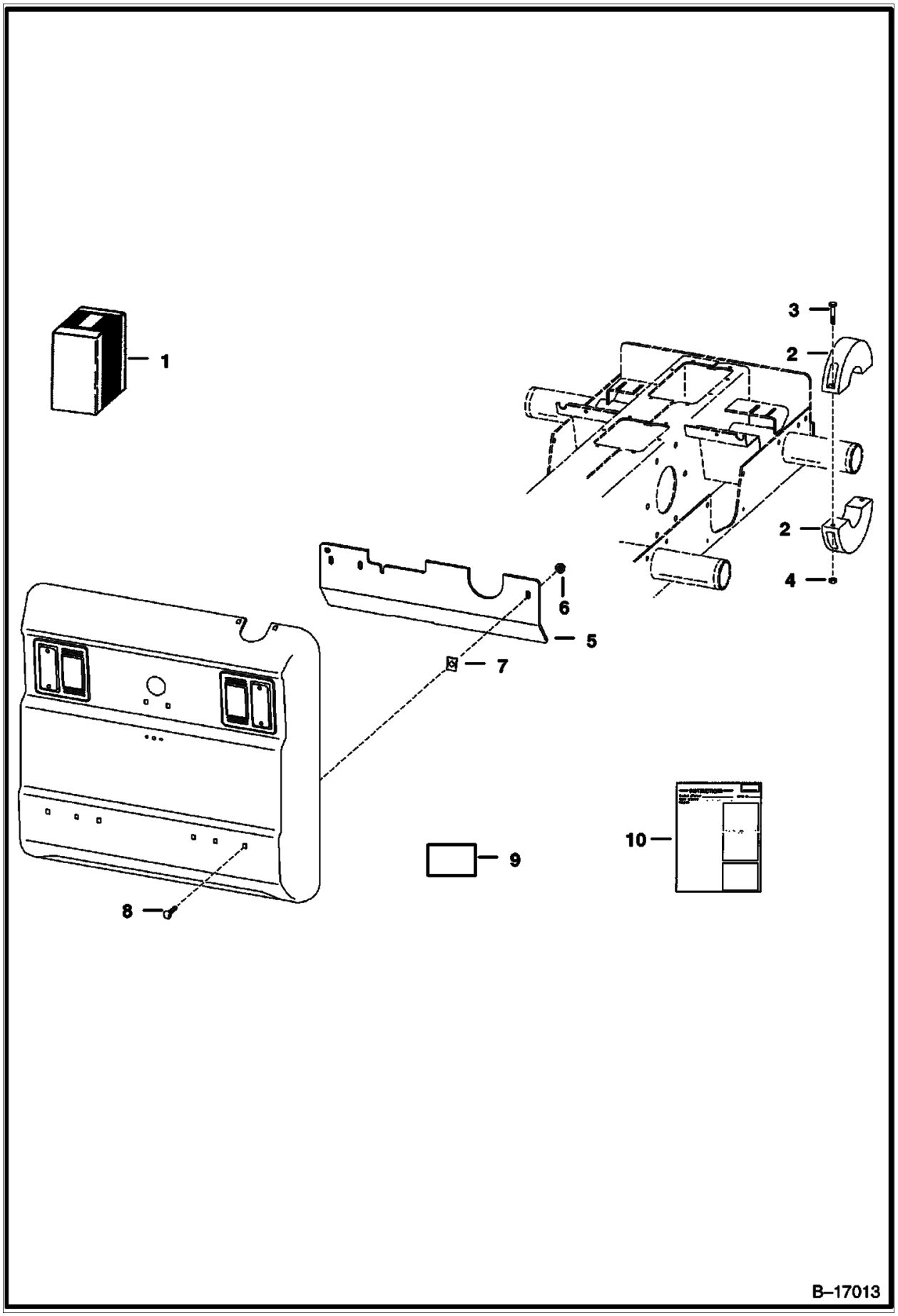

Illustration B17013

Model S160 K
6904270

Page 402 - OSS# 6300202494 - All rights reserved by Bobcat Company - 02/11/2016 - 14:15:02 - Produced by Ken Cook Co. with mediaoff

COUNTERWEIGHT KIT (Cont'd)
(1700 lb) (770 kg)

Ref No	Part Number	Description	Remarks	Serial Number	Qty
1	6714932	KIT, COUNTERWEIGHT	counterweight		1
2	6714361	COUNTERWEIGHT, AXLE	front - 71,6 kg (38.7 lb) - 114,3 mm (4.5") wide		4
3	17C640	BOLT			4
4	61D6	NUT 5			4
5	6725256	COUNTERWEIGHT			3
6	57D6	NUT 5			2
7	1612281	SPRINGNUT	spring - not in kit		2
8	37C632	BOLT			2
9	7184777	DECAL, CAPACITY LIFT	1700 lb - not in kit - Was 6737151 [A]		1
10	6900410	INSTRUCTIONS			1

Page 403 - OSS# 6300202494 - All rights reserved by Bobcat Company - 02/11/2016 - 14:15:02 - Produced by Ken Cook Co. with media1off

COUNTERWIEGHT KIT
(300 lb) (136 kg)

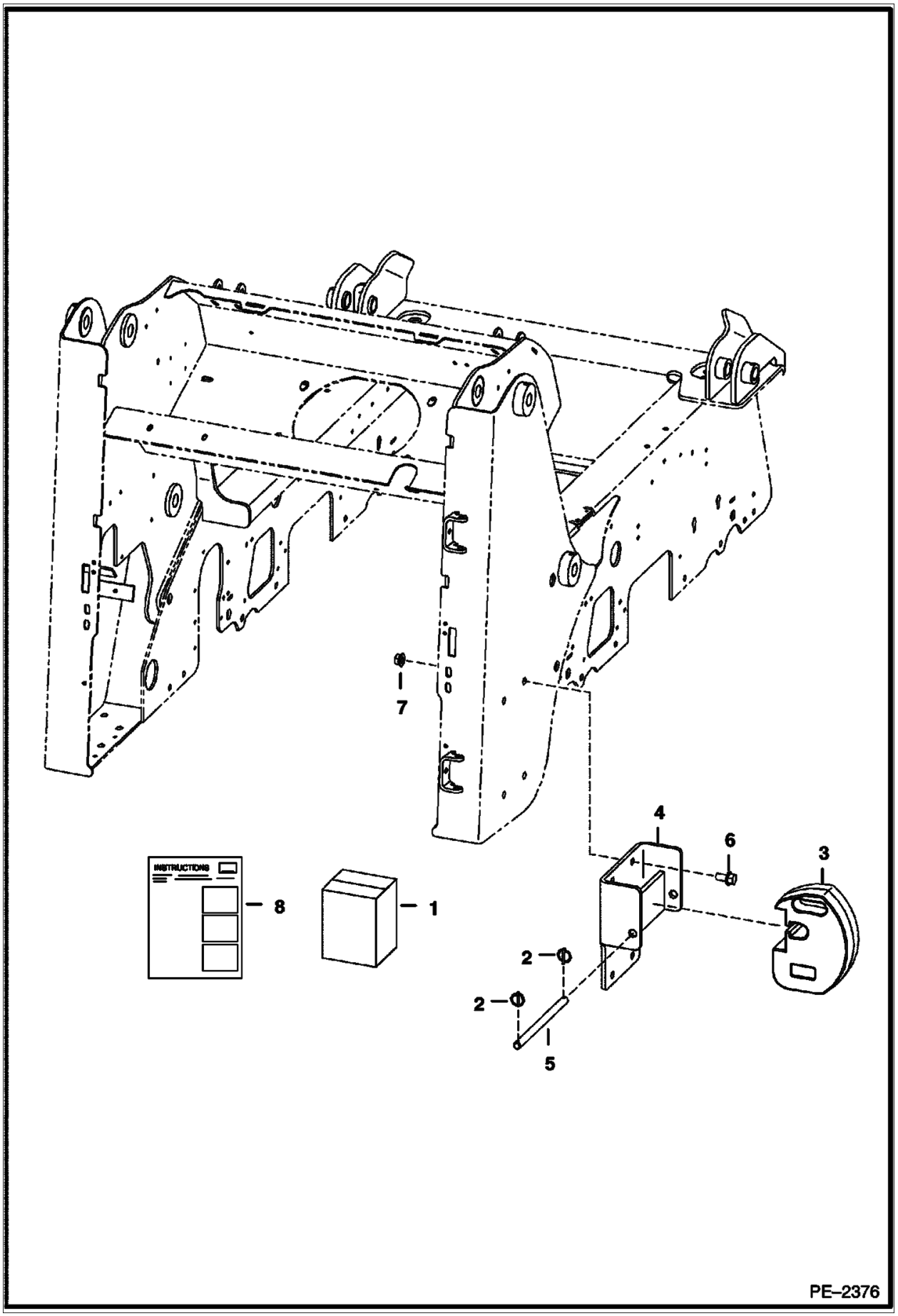

Illustration PE2376

Model S160 K
6904270

Page 404 - OSS# 6300202494 - All rights reserved by Bobcat Company - 02/11/2016 - 14:15:02 - Produced by Ken Cook Co. with mediaoff

COUNTERWIEGHT KIT (Cont'd)
(300 lb) (136 kg)

Ref No	Part Number	Description	Remarks	Serial Number	Qty
1		KIT	NLA - Was 7105763 [A]		1
2	6649706	PIN, LOCK			4
3		COUNTERWEIGHT	NLA - 49 lb (20,142 kg) - Was 6811483 [B]		6
4		MOUNT ASSY	NLA - Was 7105817 [A]		2
5		ROD	NLA - Was 7105826 [A]		2
6	35C1020	BOLT			8
7	57D10	NUT			8
8		INSTRUCTIONS	NLA - Was 6903282 [A]		1

Page 405 - OSS# 6300202494 - All rights reserved by Bobcat Company - 02/11/2016 - 14:15:02 - Produced by Ken Cook Co. with mediaioff

DECALS
(Inside)

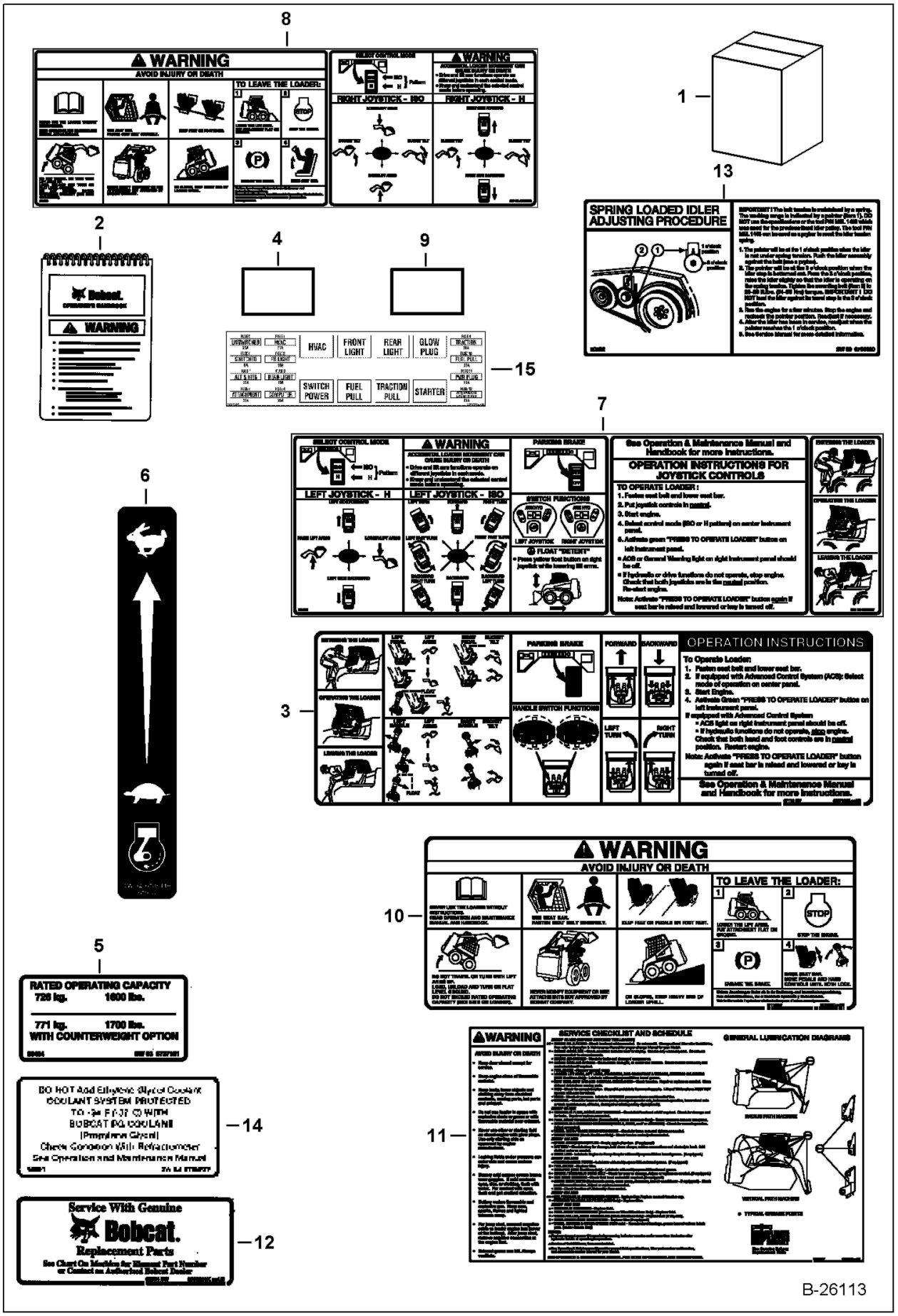

Illustration B26113

Model S160 K
6904270

Page 406 - OSS# 6300202494 - All rights reserved by Bobcat Company - 02/11/2016 - 14:15:02 - Produced by Ken Cook Co. with mediaIoff

DECALS (Cont'd)
(Inside)

Ref No	Part Number	Description	Remarks	Serial Number	Qty
1	6904995	KIT, DECAL			1
1	7120279AR	KIT, DECAL		530011001 - 59999	1
1	7120279AR	KIT, DECAL		529911001 - 59999	1
1	7120279BR	KIT, DECAL		529911001 - 59999	1
1	7120279BR	KIT, DECAL		530011001 - 59999	1
1	7120279JP	KIT, DECAL		529911001 - 59999	1
1	7120279JP	KIT, DECAL		530011001 - 59999	1
1	7163320AR	KIT, DECAL		529960001 & Above	1
1	7163320AR	KIT, DECAL		530060001 & Above	1
1	7163320BR	KIT, DECAL		530060001 & Above	1
1	7163320BR	KIT, DECAL		529960001 & Above	1
1	7163320JP	KIT, DECAL		529960001 & Above	1
1	7163320JP	KIT, DECAL		530060001 & Above	1
1		KIT, TRANSLATION S160 SPANISH	NLA - Order 6904128 OM, 6902600 OHB & 6904995 decal kit - Was 7120278AR [A]	529911001 - 59999	1
1		KIT, TRANSLATION S160 SPANISH	NLA - Order 6904128 OM, 6902600 OHB & 6904995 decal kit - Was 7120278AR [A]	530011001 - 59999	1
1		KIT, TRANSLATION S160 PORTUGUESE	NLA - Order 6904128 OM, 6902600 OHB & 6904995 decal kit - Was 7120278BR [A]	529911001 - 59999	1
1		KIT, TRANSLATION S160 PORTUGUESE	NLA - Order 6904128 OM, 6902600 OHB & 6904995 decal kit - Was 7120278BR [A]	530011001 - 59999	1
1	7152171AR	KIT, TRANSLATION		529960001 & Above	1
1	7152171AR	KIT, TRANSLATION		530060001 & Above	1
1		KIT, TRANSLATION	NLA - ORDER APPROPRIATE OM, OHB, AND DECAL KIT - Was 7152171BR [A]	529960001 & Above	1
1		KIT, TRANSLATION	NLA - ORDER APPROPRIATE OM, OHB, AND DECAL KIT - Was 7152171BR [A]	530060001 & Above	1
2	6902600	HANDBOOK, OPERATOR'S	W/wire rope - not in kit - Was 6718719 [B,D]		1
2	6558309	CABLE BULK/FT	bulk - sold per foot - Also Order (2) of 6558310 sleeve		x
2	6558310	SLEEVE	wire rope		2
2	17C512	BOLT 5			1
2	61D5	NUT 10			1
2	84G3112	BOLT 5			1
3	6727926	DECAL, OPERATION	hand & foot controls - not in kit		1

Page 407 - OSS# 6300202494 - All rights reserved by Bobcat Company - 02/11/2016 - 14:15:02 - Produced by Ken Cook Co. with media1off

DECALS (Cont'd)
(Inside)

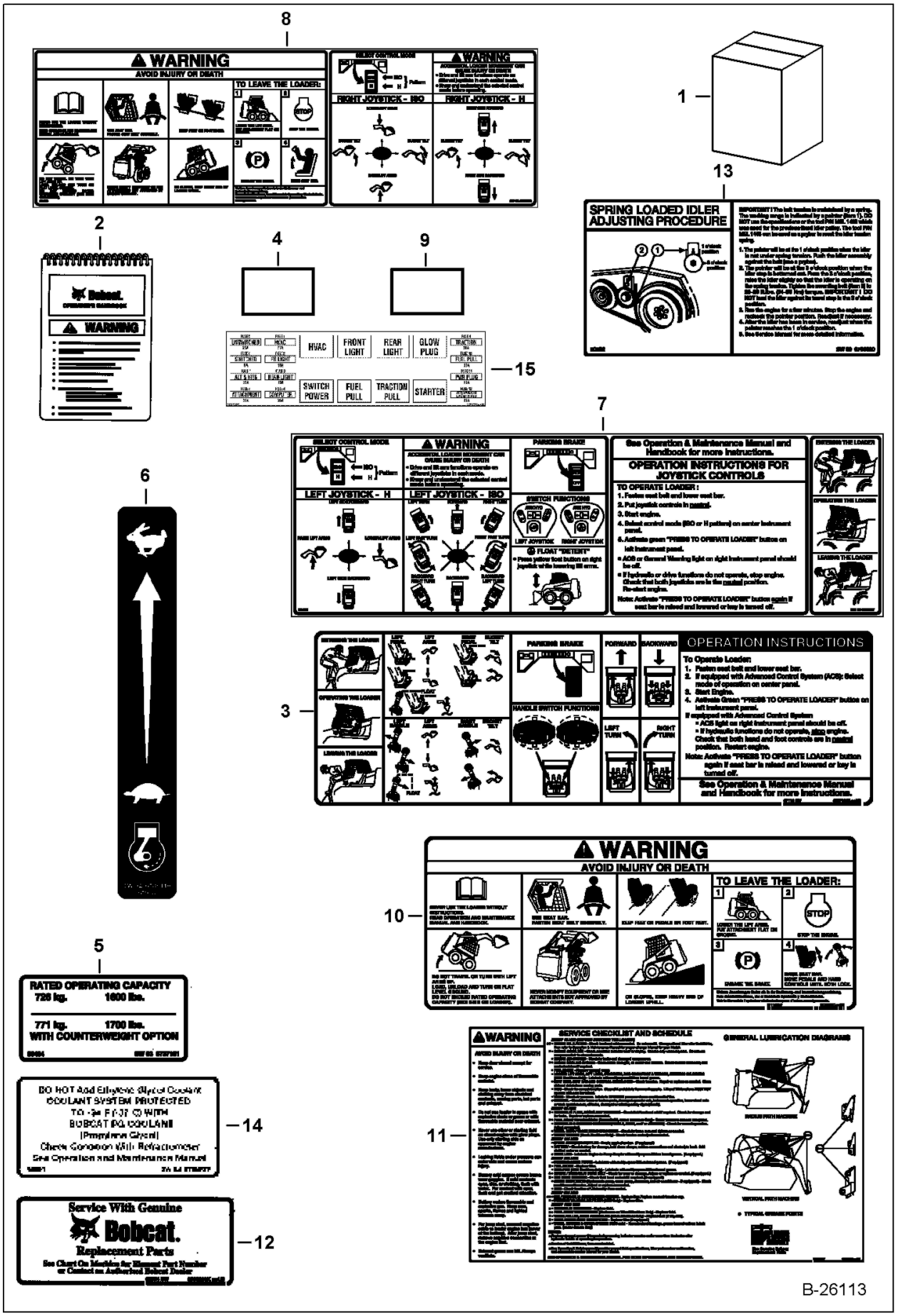

Illustration B26113

Model S160 K
6904270

Page 408 - OSS# 6300202494 - All rights reserved by Bobcat Company - 02/11/2016 - 14:15:02 - Produced by Ken Cook Co. with mediaIoff

DECALS (Cont'd)
(Inside)

Ref No	Part Number	Description	Remarks	Serial Number	Qty
4	6554100	TREAD, SAFETY	76,2 x 152,4 mm (3 x 6")		3
5	7184777	DECAL, CAPACITY LIFT	Was 6737151 [A]		1
6	6735140	DECAL, THROTTLE			1
7	6734647	DECAL, OPERATION	selectable joystick controls - not in kit		1
8	6734646	DECAL, WARNING	selectable joystick controls - not in kit		1
9	6553976	TREAD, SAFETY	127 x 203 mm (5 x 8")		1
10	6728539	DECAL, WARNING			1
11	6734534	DECAL, SERVICE	service checklist & schedule - Was 7124877 [A]		1
12	6565200	DECAL, FILTER	not in kit		1
13	6709030	DECAL	belt tension - spring loaded idler		1
14	6708929	DECAL, COOLANT	propylene glycol		1
15	7117407	DECAL, FUSE	inside fuse cover - 51 x 178 mm (2 x 7")	530011001 - 59999	1
15	7117407	DECAL, FUSE	inside fuse cover - 51 x 178 mm (2 x 7")	529911001 - 59999	1
15	7159779	DECAL	fuse relay - 51 x 178 mm (2 x 7")	529960001 & Above	1
15	7159779	DECAL	fuse relay - 51 x 178 mm (2 x 7")	530060001 & Above	1

Page 409 - OSS# 6300202494 - All rights reserved by Bobcat Company - 02/11/2016 - 14:15:02 - Produced by Ken Cook Co. with media1off

DECALS
(Outside)

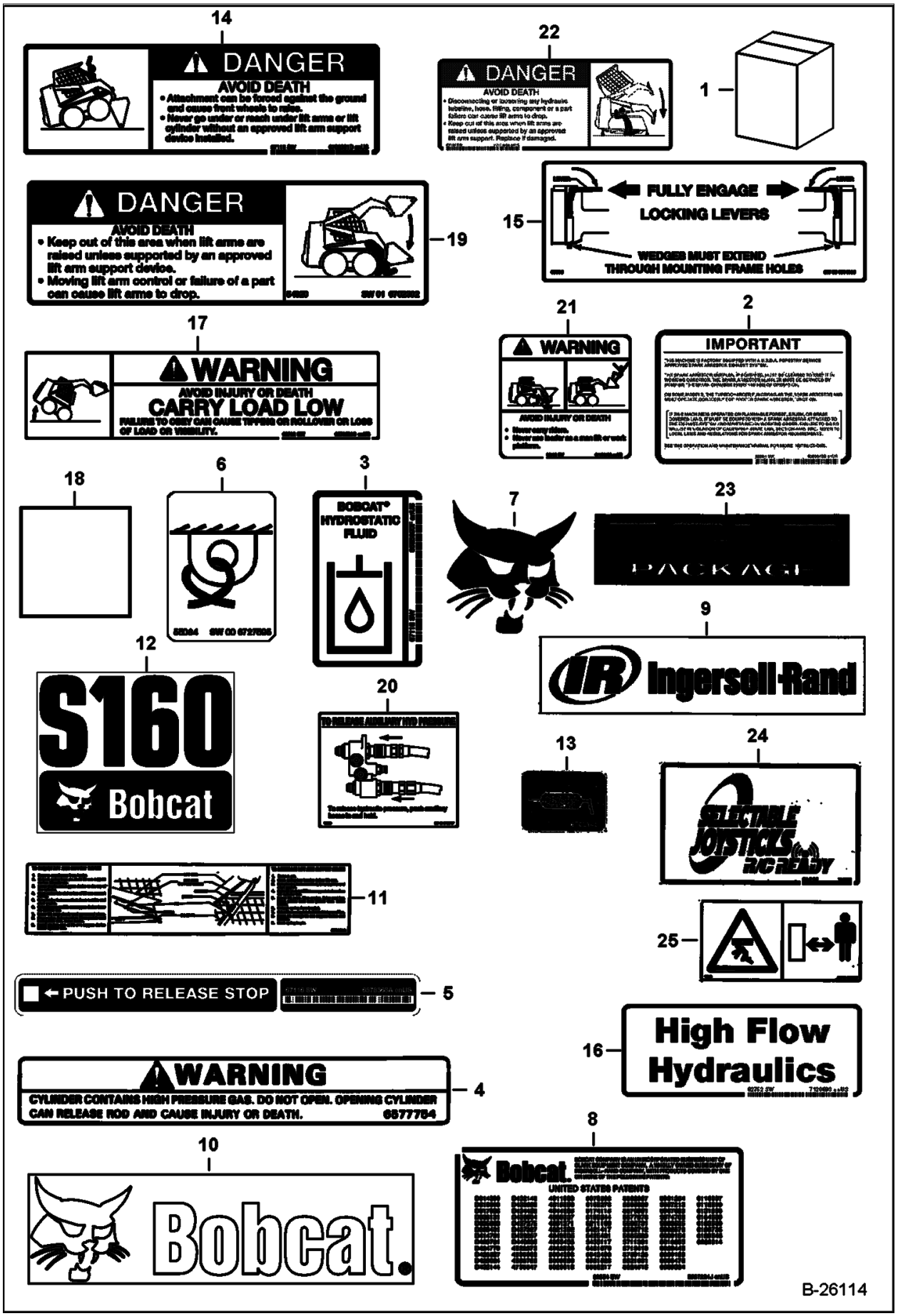

Illustration B26114

Model S160 K
6904270

Page 410 - OSS# 6300202494 - All rights reserved by Bobcat Company - 02/11/2016 - 14:15:02 - Produced by Ken Cook Co. with mediaIoff

DECALS (Cont'd)
(Outside)

Ref No	Part Number	Description	Remarks	Serial Number	Qty
1	6904995	KIT, DECAL			1
1	7120279AR	KIT, DECAL		529911001 - 59999	1
1	7120279AR	KIT, DECAL		530011001 - 59999	1
1	7120279BR	KIT, DECAL		530011001 - 59999	1
1	7120279BR	KIT, DECAL		529911001 - 59999	1
1	7120279JP	KIT, DECAL		529911001 - 59999	1
1	7120279JP	KIT, DECAL		530011001 - 59999	1
1	7163320AR	KIT, DECAL		530060001 & Above	1
1	7163320AR	KIT, DECAL		529960001 & Above	1
1	7163320BR	KIT, DECAL		530060001 & Above	1
1	7163320BR	KIT, DECAL		529960001 & Above	1
1	7163320JP	KIT, DECAL		529960001 & Above	1
1	7163320JP	KIT, DECAL		530060001 & Above	1
1		KIT, TRANSLATION S160 SPANISH	NLA - Order 6904128 OM, 6902600 OHB & 6904995 decal kit - Was 7120278AR [A]	530011001 - 59999	1
1		KIT, TRANSLATION S160 SPANISH	NLA - Order 6904128 OM, 6902600 OHB & 6904995 decal kit - Was 7120278AR [A]	529911001 - 59999	1
1		KIT, TRANSLATION S160 PORTUGUESE	NLA - Order 6904128 OM, 6902600 OHB & 6904995 decal kit - Was 7120278BR [A]	529911001 - 59999	1
1		KIT, TRANSLATION S160 PORTUGUESE	NLA - Order 6904128 OM, 6902600 OHB & 6904995 decal kit - Was 7120278BR [A]	530011001 - 59999	1
1	7152171AR	KIT, TRANSLATION		529960001 & Above	1
1	7152171AR	KIT, TRANSLATION		530060001 & Above	1
1		KIT, TRANSLATION	NLA - ORDER APPROPRIATE OM, OHB, AND DECAL KIT - Was 7152171BR [A]	530060001 & Above	1
1		KIT, TRANSLATION	NLA - ORDER APPROPRIATE OM, OHB, AND DECAL KIT - Was 7152171BR [A]	529960001 & Above	1
2	6560573	DECAL, SAFETY 5	spark arrestor		1
3	6565990	DECAL, OIL HYD 5	hydrostatic fluid fill		1
4	6577754	DECAL, WARNING 5	gas spring		3
5	6578368	DECAL, OPERATION	push to release stop		1

Page 411 - OSS# 6300202494 - All rights reserved by Bobcat Company - 02/11/2016 - 14:15:02 - Produced by Ken Cook Co. with media1off

DECALS (Cont'd)
(Outside)

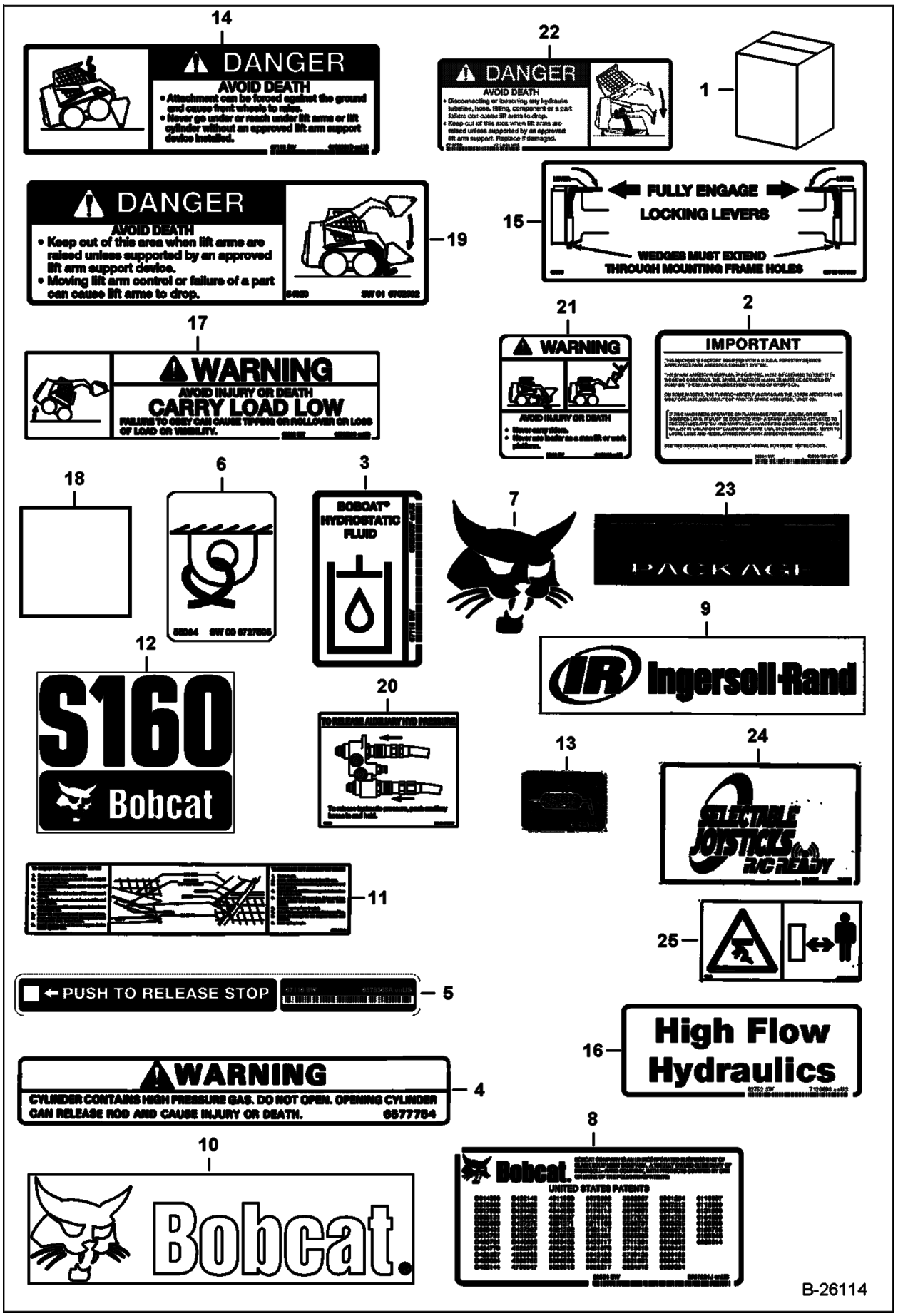

Illustration B26114

Model S160 K
6904270

Page 412 - OSS# 6300202494 - All rights reserved by Bobcat Company - 02/11/2016 - 14:15:02 - Produced by Ken Cook Co. with mediaoff

DECALS (Cont'd)
(Outside)

Ref No	Part Number	Description	Remarks	Serial Number	Qty
6	6727595	DECAL, TIE-DOWN			5
7	7116870	DECAL, LOGO BOBCAT HEAD			2
8		DECAL	NLA - patent - Was 6557224 [C]		1
9		DECAL	NLA - IR - black - not in kit - Was 6735864 [A]		2
10	6735901	DECAL, LOGO BOBCAT HEAD	white		1
11	6706558	DECAL, OPERATION	lift arm support		1
12	7120590	DECAL	model		1
13	6705340	DECAL, GREASE	EMEA - not in kit		2
14	6702301	DECAL, DANGER			1
15	6561383	DECAL, OPERATION 5	Bob-Tach locking levers		1
16	7120693	DECAL	high flow - (1) each side frame - not in kit	& Bel	2
16	7120693	DECAL	operation (ACS)	& Abv	1
17	6579528	DECAL, WARNING	carry load low		1
18	7108222	SAFETY TREAD	22.5" (571,5 mm) wide irregular shape		1
19	6702302	DECAL, DANGER			1
20	6731757	DECAL, OPERATION	to release auxiliary hyd. pressure - not in kit		1
21	6710358	DECAL, WARNING	warning		1
22	6717343	DECAL, DANGER			2
23	6735862	DECAL	gold package - not in kit		1
24	7145528	DECAL	selectable joystick controls - not in kit - Was 6737626 [A]		1
25	6713507	DECAL	stay clear - European - not in kit		2

Page 413 - OSS# 6300202494 - All rights reserved by Bobcat Company - 02/11/2016 - 14:15:02 - Produced by Ken Cook Co. with media1off

DUAL BATTERY KIT
(W/O Starter)

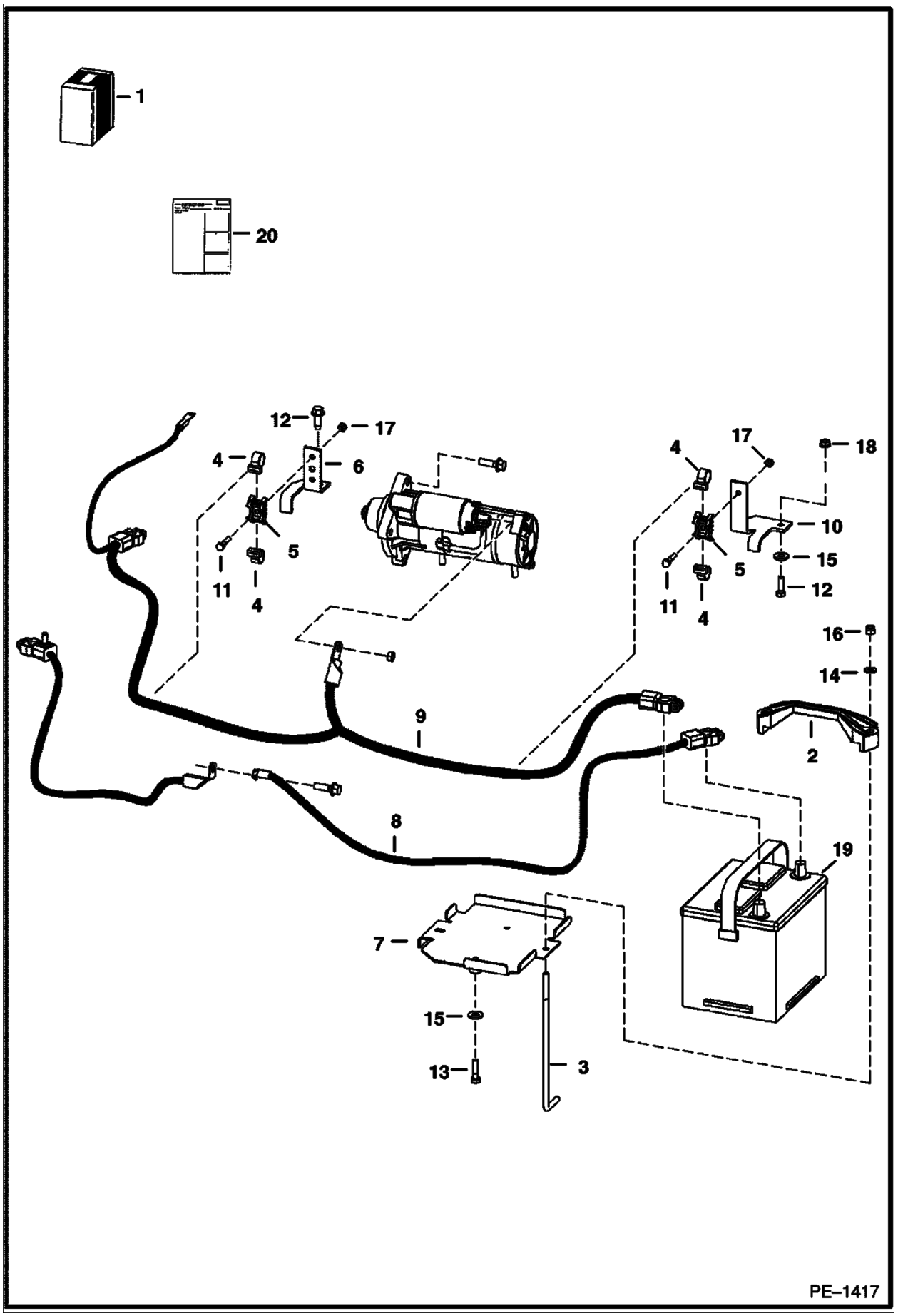

Illustration PE1417

Model S160 K
6904270

Page 414 - OSS# 6300202494 - All rights reserved by Bobcat Company - 02/11/2016 - 14:15:02 - Produced by Ken Cook Co. with mediaoff

DUAL BATTERY KIT (Cont'd)
(W/O Starter)

Ref No	Part Number	Description	Remarks	Serial Number	Qty
1	6731694	KIT, BATTERY DUAL	Ref. 2-18 & 20		1
2	6569203	CLAMP			1
3	6576280	BOLT			2
4	6678669	STRAP			4
5	6678974	MOUNT			2
6	6715131	BRACKET			1
7	6731617	PAN,BATTERY	battery		1
8	6731665	CABLE, NEGATIVE	negative		1
9	6731666	CABLE, POSITIVE	positive		1
10	6731746	BRACKET			1
11	17C420	BOLT			2
12	17C516	BOLT			3
13	17C520	BOLT 5			2
14	25E15	WASHER 5			2
15	25E16	WSHR			3
16	59D5	NUT 5			2
17	61D4	NUT 5			2
18	97D5	NUT			1
19	6670251	BATTERY, DRY 530 AMP	not in kit		1
20	6901602	INSTRUCTIONS			1

Page 415 - OSS# 6300202494 - All rights reserved by Bobcat Company - 02/11/2016 - 14:15:02 - Produced by Ken Cook Co. with mediaioff

ELECTRICAL CONNECTOR KIT
(7-Pin)

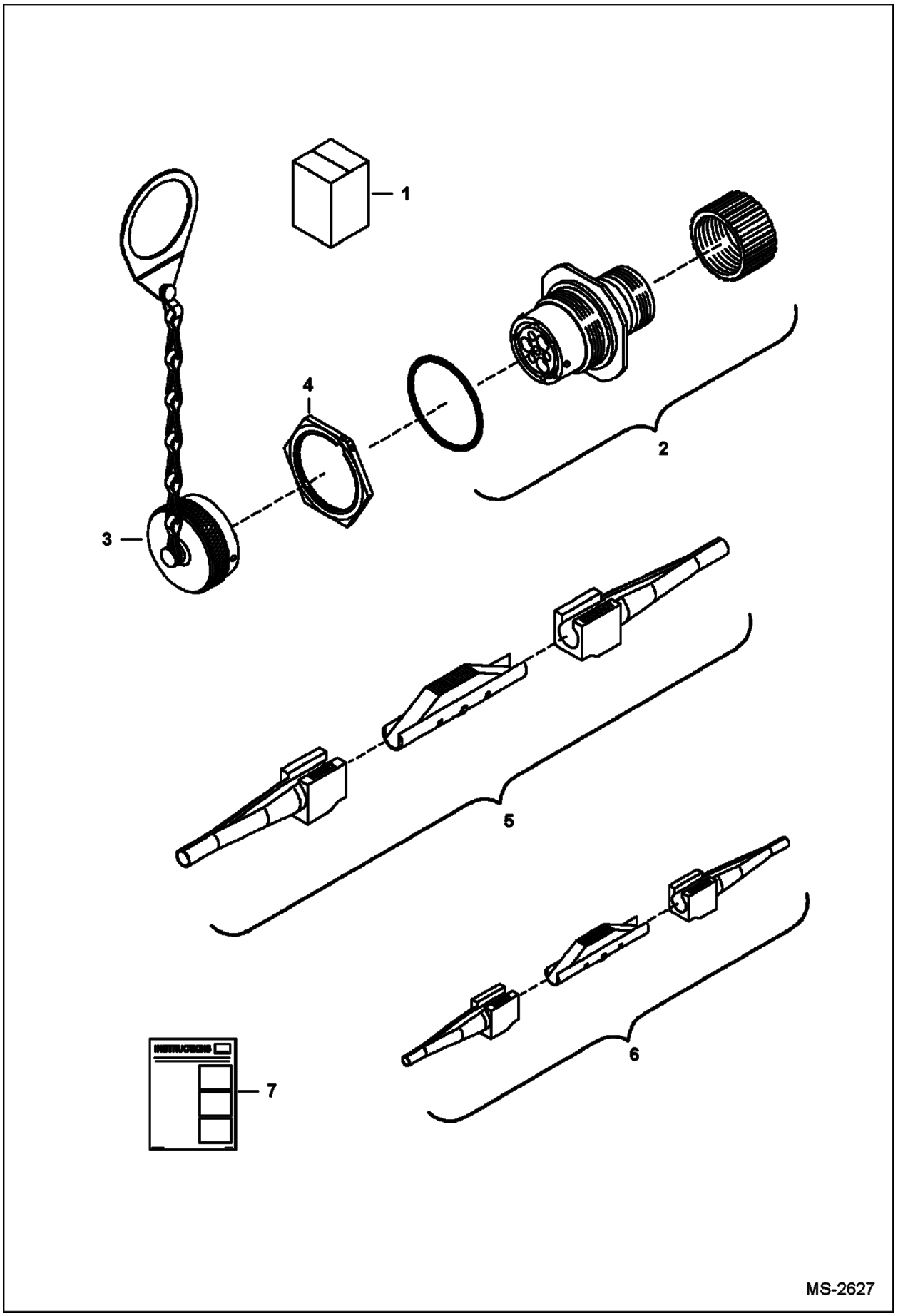

Illustration MS2627

Model S160 K
6904270

Page 416 - OSS# 6300202494 - All rights reserved by Bobcat Company - 02/11/2016 - 14:15:02 - Produced by Ken Cook Co. with mediaoff

ELECTRICAL CONNECTOR KIT (Cont'd)
(7-Pin)

Ref No	Part Number	Description	Remarks	Serial Number	Qty
1	6727176	KIT, ELECTRICAL CONNECTOR	Ref. 2-4 & 7 - Order sockets as needed		1
2	6674802	CONNECTOR, 7-PIN	7-pin does not include sockets		1
2	6669549	SOCKET	18 ga - not in kit		4
2	6677136	SOCKET	12 ga - not in kit		3
3	6675026	CAP, CONNECTOR			1
4	6688338	NUT			1
5	7000461	TOOL, DISCONNECT TERMINAL	yellow/white - Use W/Ref. 2 (6677136 socket)		1
6	7000460	TOOL, DISCONNECT TERMINAL	blue/white - Use W/Ref. 2 (6669549 socket)		1
7	6901076	INSTRUCTIONS			1

Page 417 - OSS# 6300202494 - All rights reserved by Bobcat Company - 02/11/2016 - 14:15:02 - Produced by Ken Cook Co. with mediaioff

ELECTRICAL CONTROLS KIT
(7-Pin Attachments)

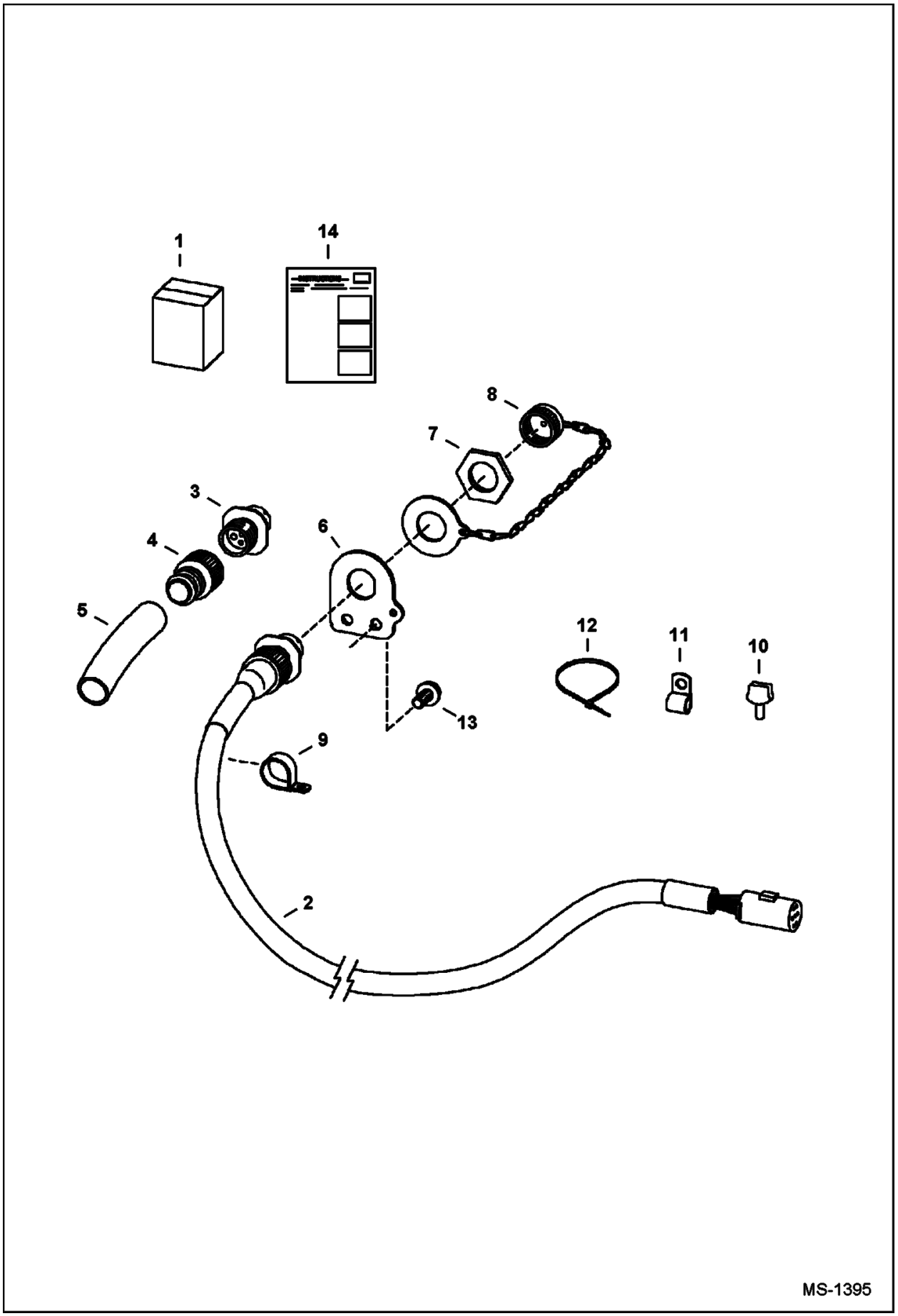

Illustration MS1395

Model S160 K
6904270

Page 418 - OSS# 6300202494 - All rights reserved by Bobcat Company - 02/11/2016 - 14:15:02 - Produced by Ken Cook Co. with mediaoff

ELECTRICAL CONTROLS KIT (Cont'd)
(7-Pin Attachments)

Ref No	Part Number	Description	Remarks	Serial Number	Qty
1	6733142	KIT, ATTACHMENT 7-PIN	Ref. 2-14		1
2	6718426	HARNESS, LIFT ARM	W/Ref. 3-8		1
3	6674802	CONNECTOR, 7-PIN	See Illustration ELECTRICAL CONNECTOR KIT / MS2627 - 7-pin - W/Ref. 7 does not include sockets		1
3	6669549	SOCKET	18 ga - not in kit		4
3	6677136	SOCKET	12 ga - not in kit		3
4	6674799	ADAPTER	heat shrink		1
5		HEAT SHRINK	NSS - purchase locally		1
6	6718750	MOUNT			1
7	6688338	NUT	jam		1
8	6675026	CAP, CONNECTOR			1
9	30H35	CLAMP 10			1
10	6675281	MOUNT			1
11	30H27	CLAMP			6
12	6624289	STRAP, TIE			7
13	84G3112	BOLT 5			8
14	6901871	INSTRUCTIONS			1

Page 419 - OSS# 6300202494 - All rights reserved by Bobcat Company - 02/11/2016 - 14:15:02 - Produced by Ken Cook Co. with media1off

ELECTRICAL CONTROLS KIT
(14-Pin Attachments)

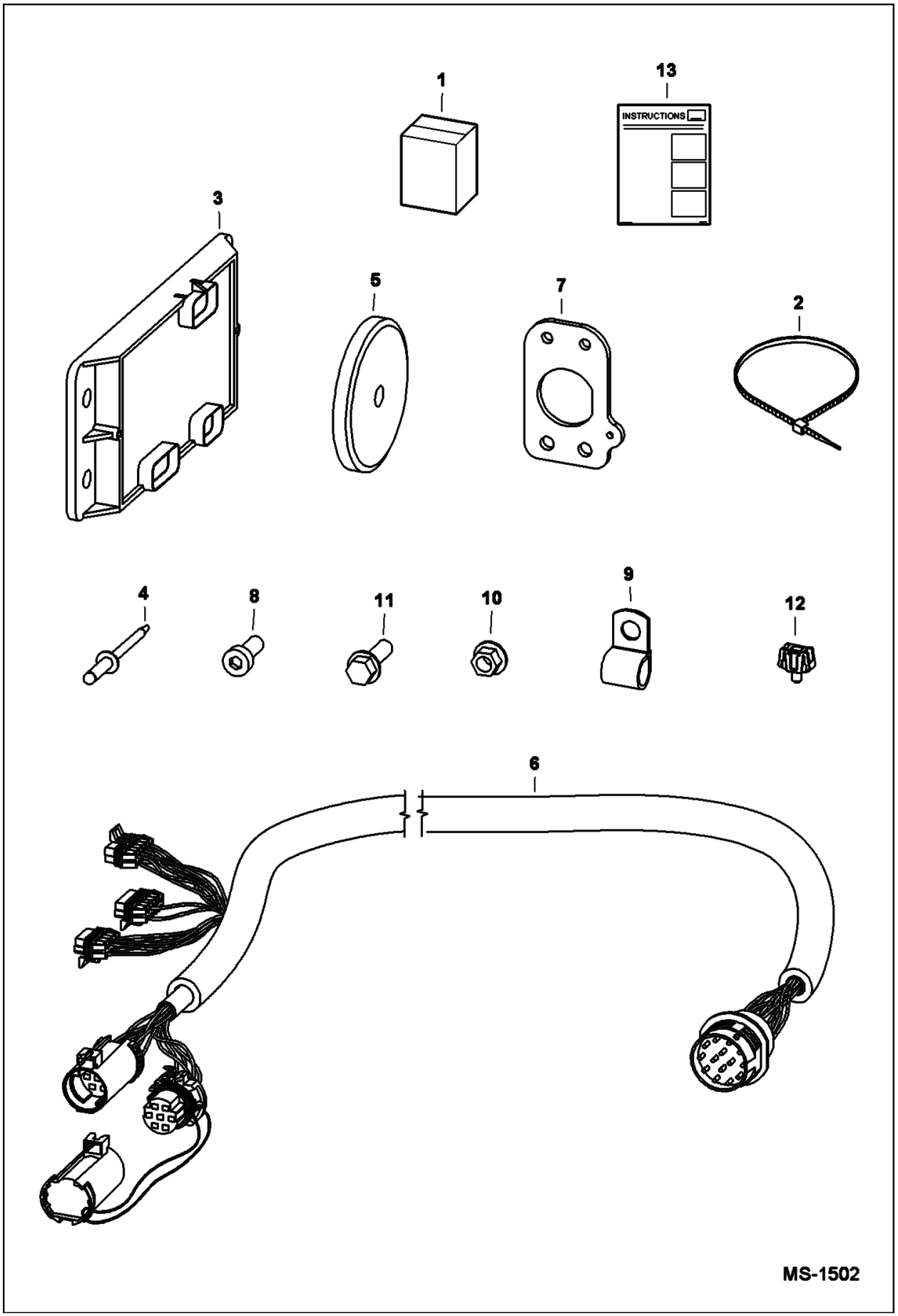

Illustration MS1502

Model S160 K
6904270

Page 420 - OSS# 6300202494 - All rights reserved by Bobcat Company - 02/11/2016 - 14:15:02 - Produced by Ken Cook Co. with mediaoff

ELECTRICAL CONTROLS KIT (Cont'd)
(14-Pin Attachments)

Ref No	Part Number	Description	Remarks	Serial Number	Qty
1	6733136	KIT, ATTACHMENT 14-PIN			1
2	6624289	STRAP, TIE			9
3	6678675	CONTROLLER, ACD DLX	3 connector		1
4	6704892	RIVET			1
5	6719448	MAGNET, CONTROL ATTACH	45 kg (100 lb) force		2
6	6732730	HARNESS			1
7	6733144	MOUNT			1
8	25G612	SCREW			2
9	30H50	CLAMP			6
10	83D6	NUT 5			2
11	84G3112	BOLT 5			8
12	6675281	MOUNT			1
13	6901872ENUS	INSTRUCTIONS			1

Page 421 - OSS# 6300202494 - All rights reserved by Bobcat Company - 02/11/2016 - 14:15:02 - Produced by Ken Cook Co. with mediaioff

ELECTRICAL CONTROLS KIT
(To Run G-Series Attachments & Old Attachments)

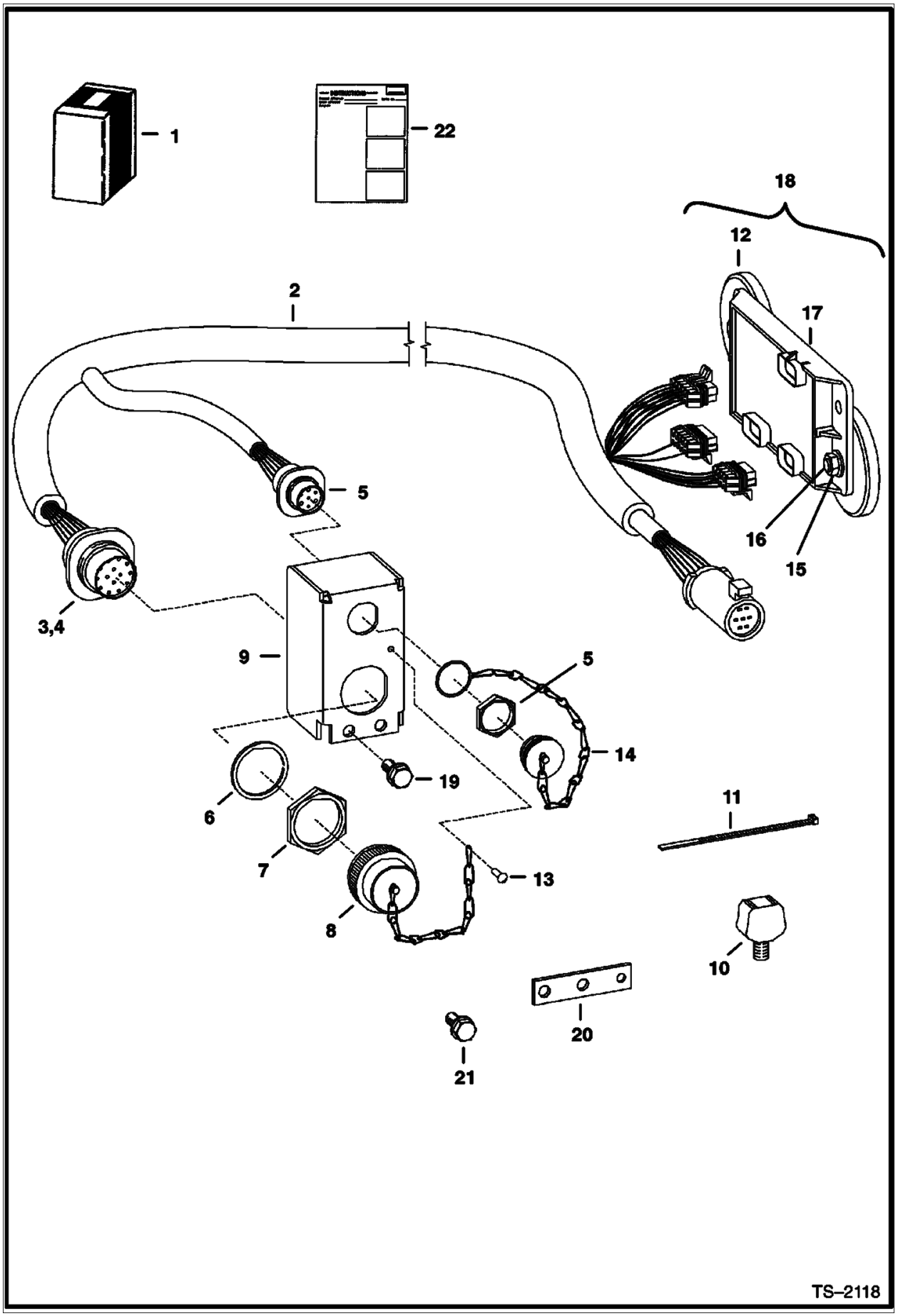

Illustration TS2118

Model S160 K
6904270

Page 422 - OSS# 6300202494 - All rights reserved by Bobcat Company - 02/11/2016 - 14:15:02 - Produced by Ken Cook Co. with mediaoff

ELECTRICAL CONTROLS KIT (Cont'd)
(To Run G-Series Attachments & Old Attachments)

Ref No	Part Number	Description	Remarks	Serial Number	Qty
1	6727739	KIT, CONTROL ATTACH DLX			1
2	6729380	HARNESS, CONTROL ATTACH DLX	W/Ref. 3-8 & 14		1
3	6667569	CONNECTOR, RECEPTACLE	Also Order (14) of Ref. 4		1
4	6664040	PIN 5	male		x
5	6674802	CONNECTOR, 7-PIN	See Illustration ELECTRICAL CONNECTOR KIT / MS2627 - 7-pin - W/Ref. 7 does not include sockets		1
5	6669549	SOCKET	18 ga - not in kit		4
5	6677136	SOCKET	12 ga - not in kit		3
6	6664037	WASHER			2
7	6664036	NUT			2
8	6664035	CAP			1
9	6726945	MOUNT			1
10	6675281	MOUNT			1
11	6624289	STRAP, TIE			8
12	6719448	MAGNET, CONTROL ATTACH	45 kg (100 lb) force		4
13	6704892	RIVET			1
14	6675026	CAP, CONNECTOR			2
15	83D6	NUT 5			2
16	25G612	SCREW			2
17	6678675	CONTROLLER, ACD DLX	3 connector		1
18		CONTROLLER	NLA - assy - Ref. 12 & 15-17 - Order Ref. 17 & (2) each of Ref. 12, 15 & 16		1
19	84G3112	BOLT 5			2
20	6730291	BRACKET	models 873G - 883		1
21	35C512	BOLT			2
22	6901116	INSTRUCTIONS			1

Page 423 - OSS# 6300202494 - All rights reserved by Bobcat Company - 02/11/2016 - 14:15:02 - Produced by Ken Cook Co. with media1off

ENGINE MOUNT KIT
(For Rough Application)

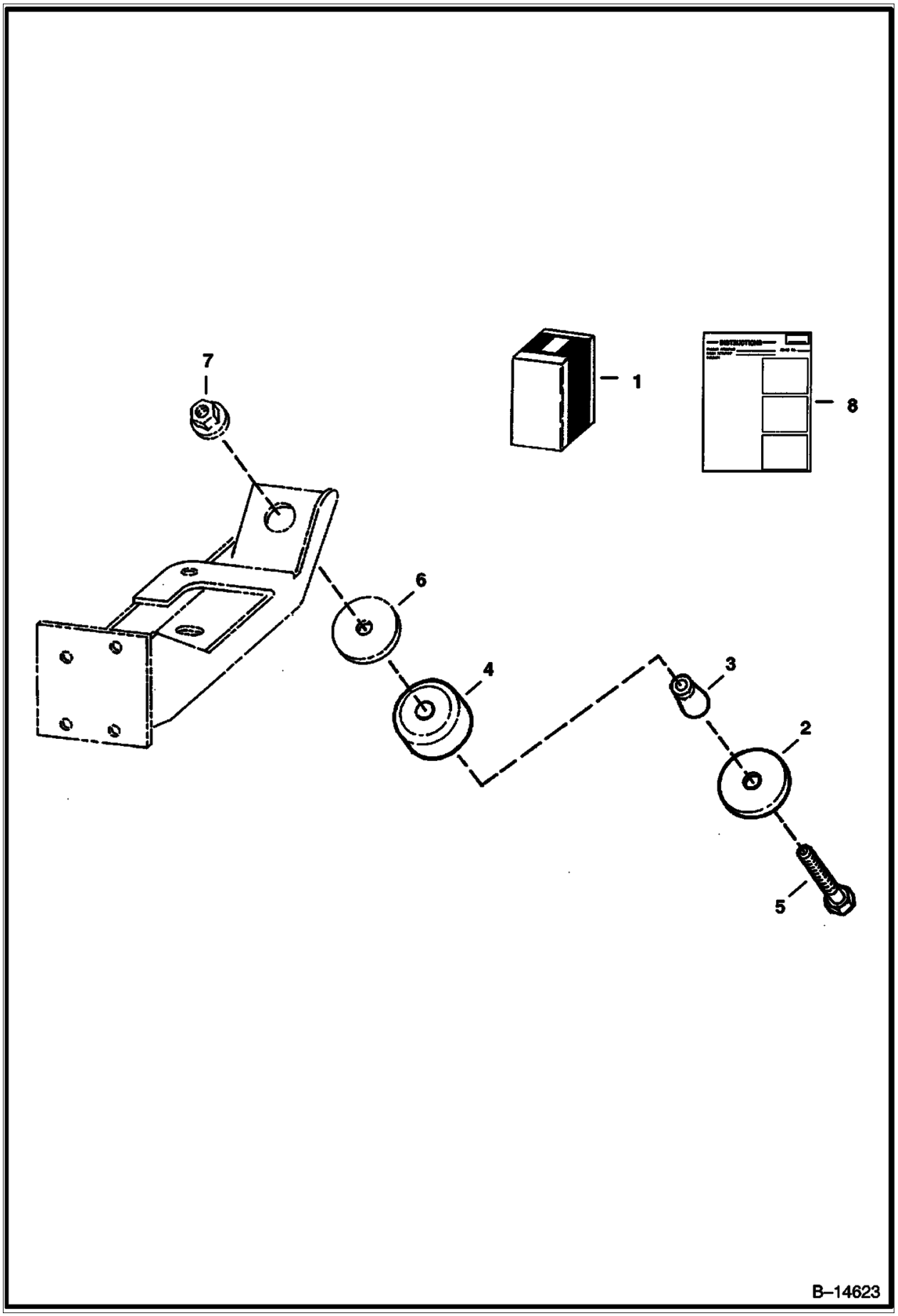

Illustration B14623

Model S160 K
6904270

Page 424 - OSS# 6300202494 - All rights reserved by Bobcat Company - 02/11/2016 - 14:15:02 - Produced by Ken Cook Co. with mediaoff

ENGINE MOUNT KIT (Cont'd)
(For Rough Application)

Ref No	Part Number	Description	Remarks	Serial Number	Qty
1	6711632	KIT, MOUNTING ENG	Ref. 2-8		1
2	6661787	WASHER			4
3	7110276	SPACER, TAPERED	tapered - Was 6715287 [A]		4
4	6668104	MOUNT, ENG			4
5	43C852	BOLT			4
6	6705106	WASHER 5			4
7	6652918	NUT			4
8	6724482	INSTRUCTIONS			1

Page 425 - OSS# 6300202494 - All rights reserved by Bobcat Company - 02/11/2016 - 14:15:02 - Produced by Ken Cook Co. with mediaioff

EUROPEAN ACCESSORIES
(Caliper Brake Kit)

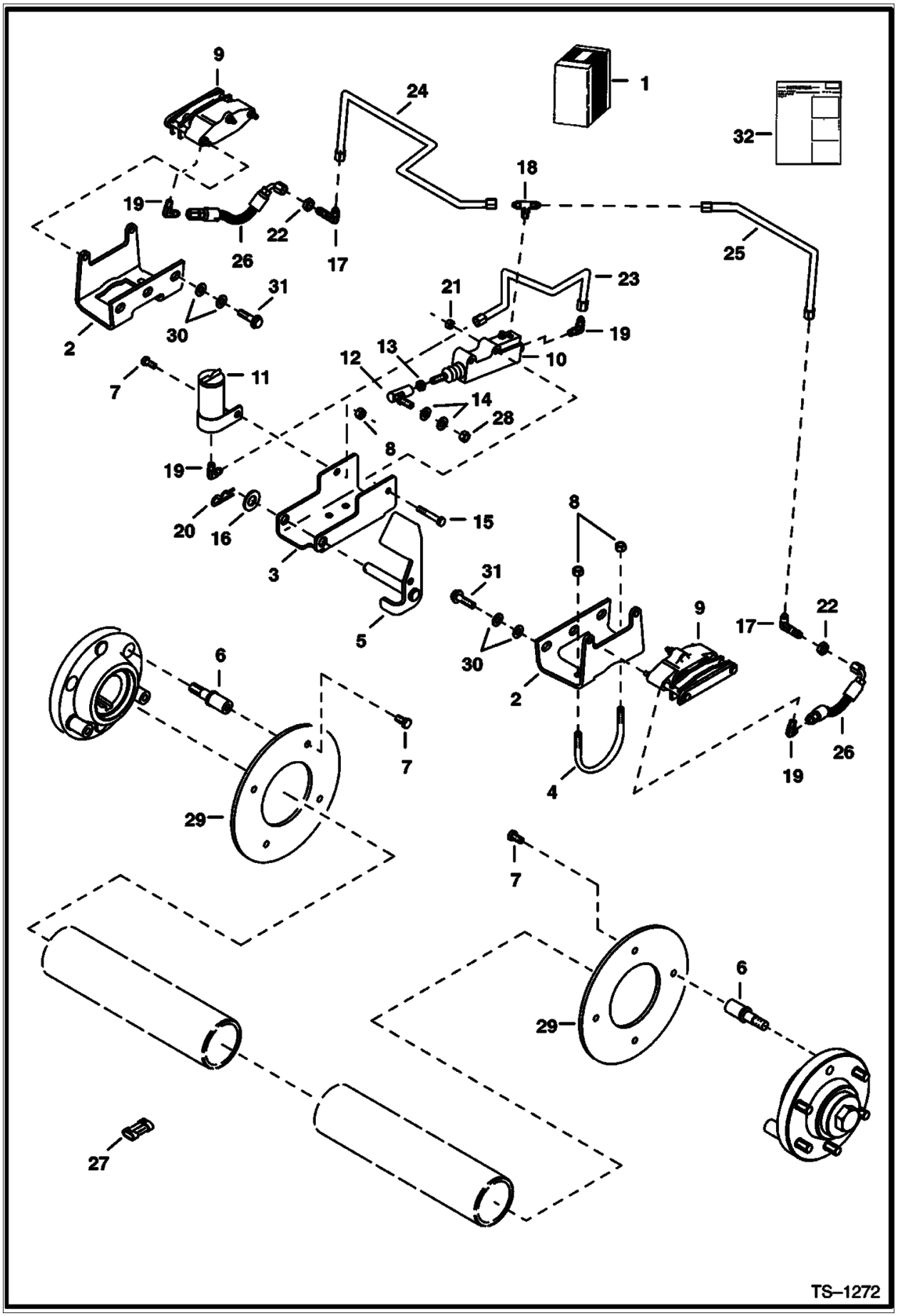

Illustration TS1272

Model S160 K
6904270

Page 426 - OSS# 6300202494 - All rights reserved by Bobcat Company - 02/11/2016 - 14:15:02 - Produced by Ken Cook Co. with mediaoff

EUROPEAN ACCESSORIES (Cont'd)
(Caliper Brake Kit)

Ref No	Part Number	Description	Remarks	Serial Number	Qty
1	6719150	BRAKE KIT	Ref. 2-32		1
2	6718728	MOUNT CALIPER BREAK ASSY	caliper		2
3	6709236	MNT PEDAL	pedal		1
4	6709237	CLAMP			2
5	6709239	ASSY, PEDAL	brake		1
6	6709229	BOLT, WHL	wheel		8
7	17C612	BOLT 5			9
8	95D6	NUT	Was 91D000006B [A]		5
9	6666932	BRAKE CYL	See Illustration EUROPEAN ACCESSORIES / B14851		2
10	6666933	CYLINDER	See Illustration EUROPEAN ACCESSORIES / B14851		1
11	6661117	TANK			1
12	6599744	BALL, JOINT			1
13	8D6	NUT 5			1
14	25E17	WASHER 5			2
15	17C532	BOLT 5			2
16	25E25	WASHER 10			1
17	45K3	FITTING			2
18		TEE	NLA - Was 98F000003B [A]		1
19	83F3	ELBOW 5			4
20	1318565	PIN 5			1
21	91D5	NUT 5			2
22	86F3	NUT 10			2
23	6709400	TBLNE CYL			1
24	6718205	TUBE			1
25	6718206	TUBE			1
26	6709547	ASSY, HOSE			2
27	6667139	CAP 5			1
28	62D6	NUT 5			1
29	6709234	BRAKE, DISC	brake		2
30	25E11	WASHER			8
31	31C824	BOLT 10			4
32	6900934	INSTRUCTIONS			1

Page 427 - OSS# 6300202494 - All rights reserved by Bobcat Company - 02/11/2016 - 14:15:02 - Produced by Ken Cook Co. with media1off

EUROPEAN ACCESSORIES
(Caliper Brake)

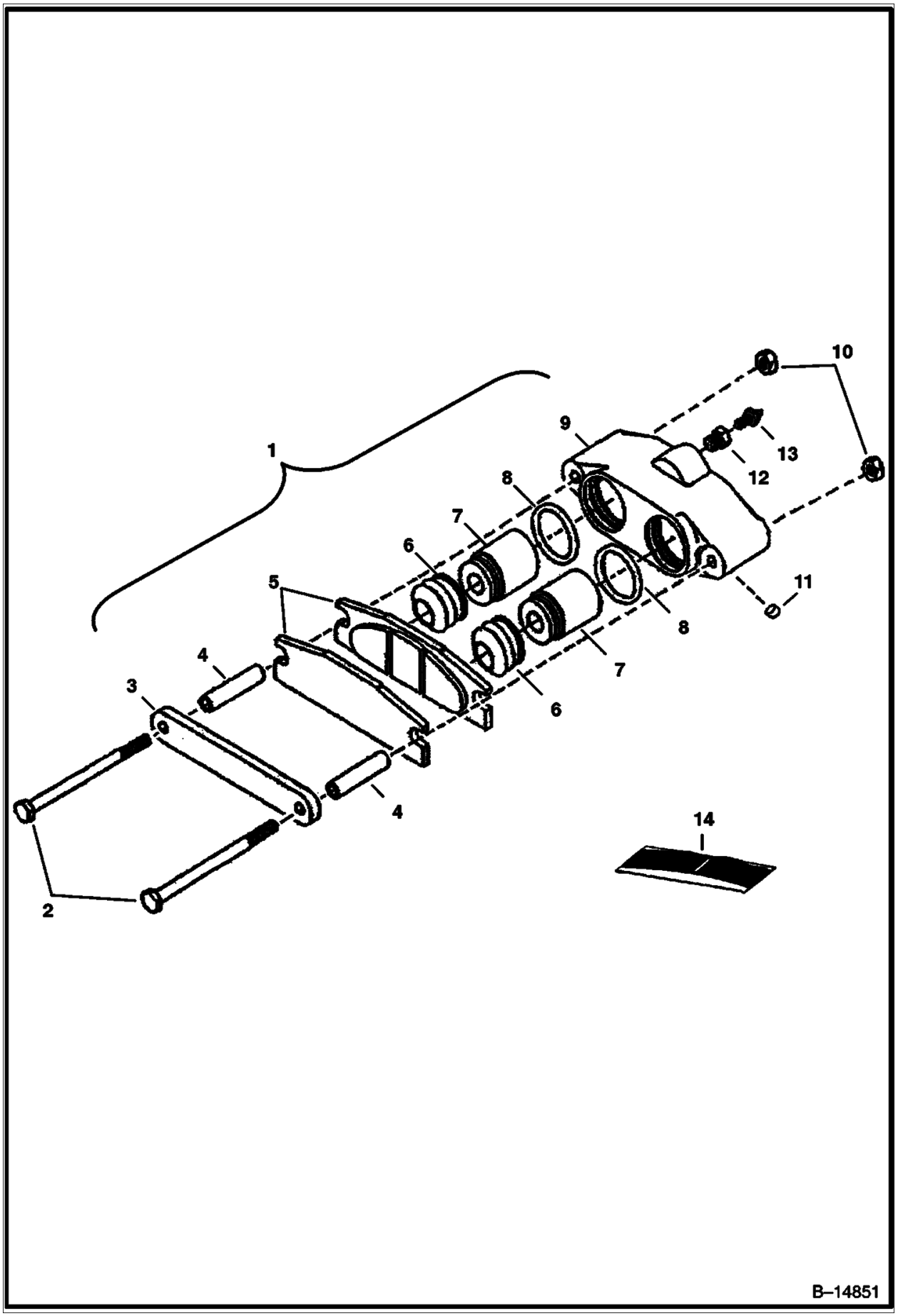

Illustration B14851

Model S160 K
6904270

Page 428 - OSS# 6300202494 - All rights reserved by Bobcat Company - 02/11/2016 - 14:15:02 - Produced by Ken Cook Co. with mediaoff

EUROPEAN ACCESSORIES (Cont'd)
(Caliper Brake)

Ref No	Part Number	Description	Remarks	Serial Number	Qty
1	6666932	BRAKE CYL	W/Ref. 2-12		1
2	6669154	BOLT			2
3	6669155	PLATE			1
4	6669156	SPACER			2
5	6669184	STATOR			1
6		BOOT	NSS - Order Ref. 14		2
7	6669159	PISTON			2
8		O-RING	NSS - Order Ref. 14		2
9		HOUSING	NSS - Order Ref. 1		1
10	6669162	NUT			2
11	6669163	PLUG			1
12	6669164	ADAPTOR			1
13	6669165	SCREW BLD	bleeder		1
14	6669185	O-RING KT	W/Ref. 6 & 8		1

Page 429 - OSS# 6300202494 - All rights reserved by Bobcat Company - 02/11/2016 - 14:15:02 - Produced by Ken Cook Co. with media1off

EUROPEAN ACCESSORIES
(Caliper Brakes - Master Cylinder)

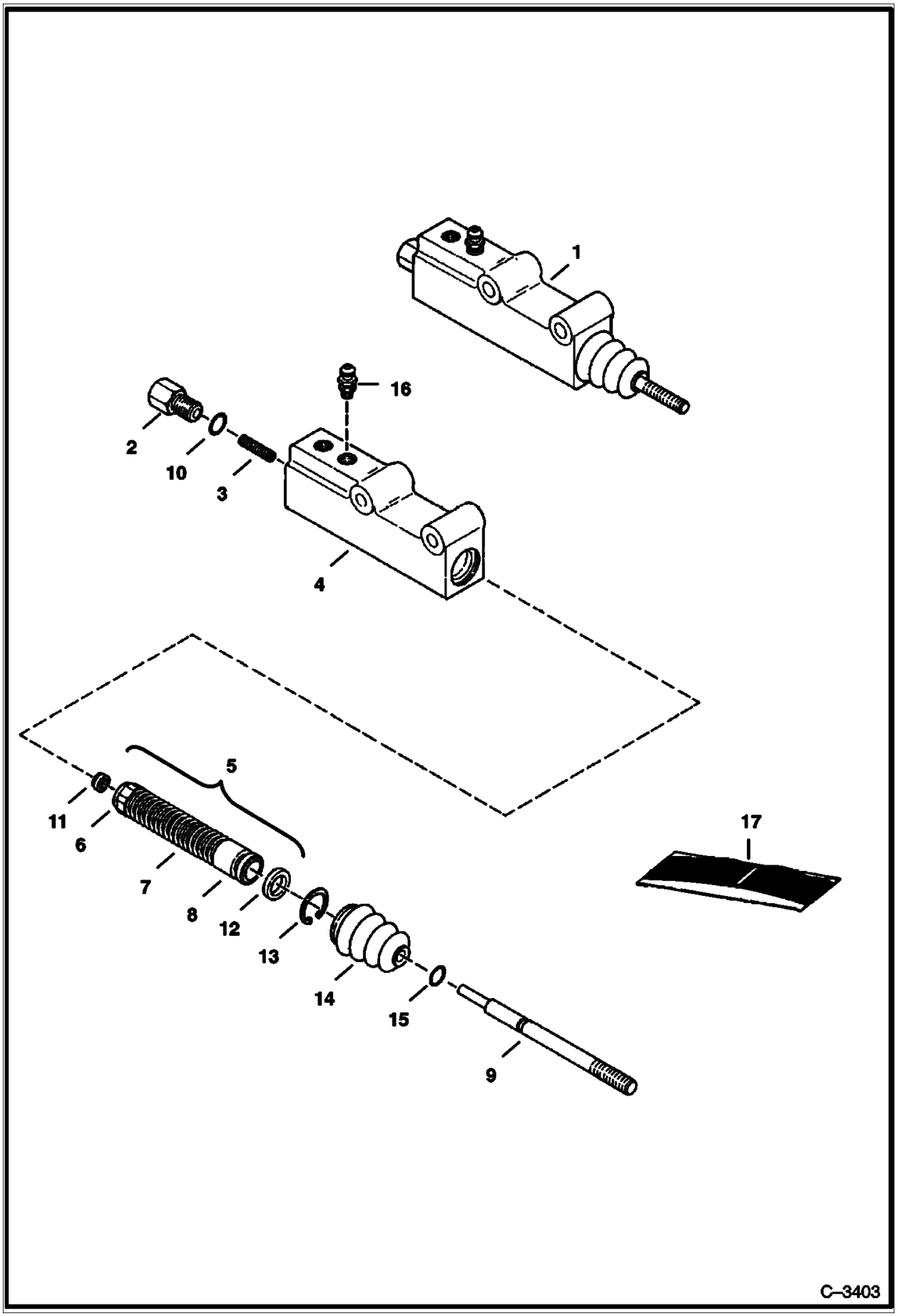

Illustration C3403

Model S160 K
6904270

Page 430 - OSS# 6300202494 - All rights reserved by Bobcat Company - 02/11/2016 - 14:15:02 - Produced by Ken Cook Co. with mediaIoff

EUROPEAN ACCESSORIES (Cont'd)
(Caliper Brakes - Master Cylinder)

Ref No	Part Number	Description	Remarks	Serial Number	Qty
1	6666933	CYLINDER	master brake - Ref. 2-16		1
2		ADAPTER	NSS		1
3		SPRING	NSS		1
4		BODY	NSS		1
5		SPRING ASSY.	NSS - Ref. 6 - 8 & 11		1
6		RETAINER	NSS		1
7		SPRING	NSS		1
8		PISTON	NSS		1
9		PUSH ROD	NSS		1
10		O-RING	NSS		1
11		SEAT	NSS		1
12		CUP	NSS		1
13		SNAP RING	NSS		1
14		BOOT	NSS		1
15		O-RING	NSS		1
16	6668097	SCREW	bleeder		1
17	6661608	KIT, SEAL	Ref. 10-15		1

Page 431 - OSS# 6300202494 - All rights reserved by Bobcat Company - 02/11/2016 - 14:15:02 - Produced by Ken Cook Co. with mediaioff

EUROPEAN ACCESSORIES
(Rear Door Lights)

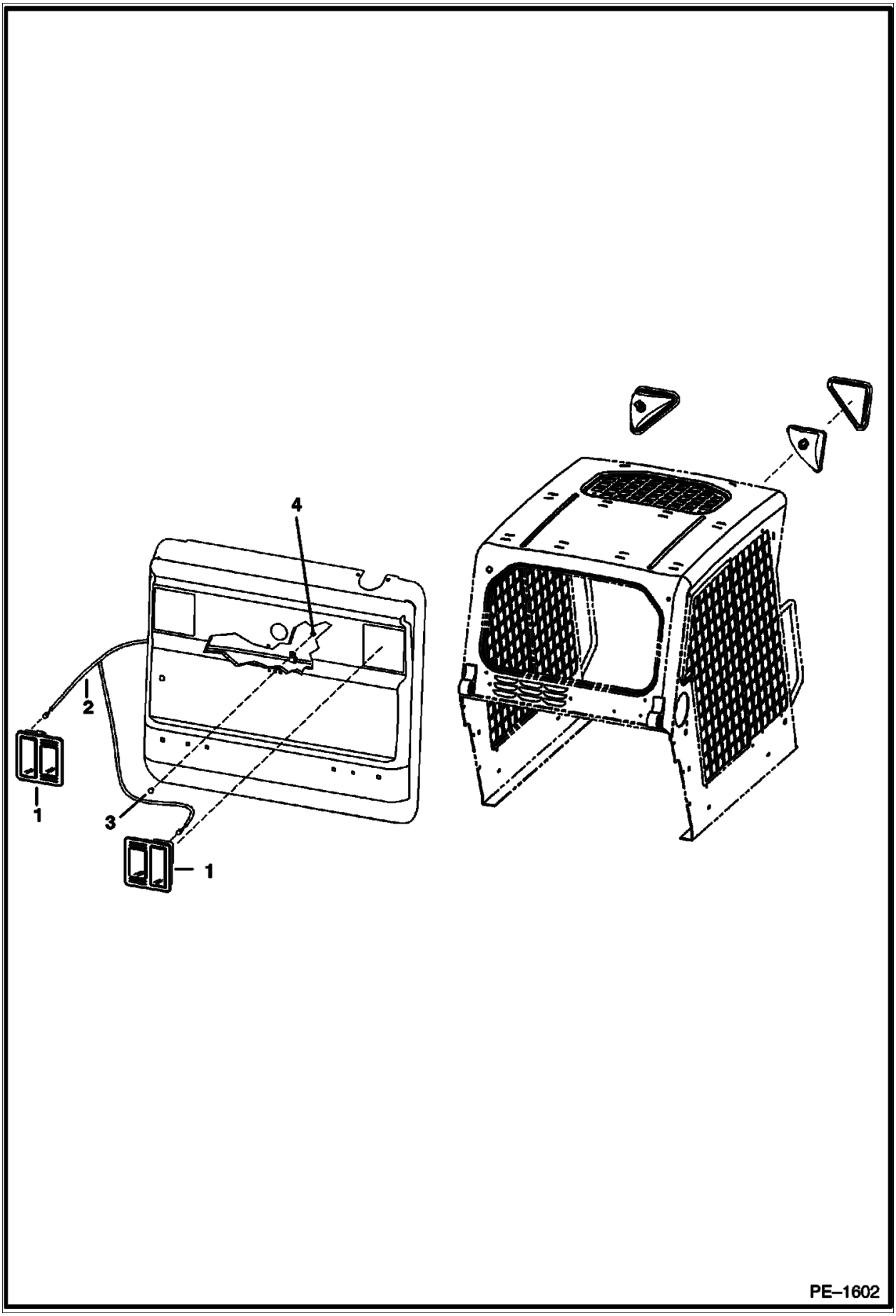

Illustration PE1602

Model S160 K
6904270

Page 432 - OSS# 6300202494 - All rights reserved by Bobcat Company - 02/11/2016 - 14:15:02 - Produced by Ken Cook Co. with mediaIoff

EUROPEAN ACCESSORIES (Cont'd)
(Rear Door Lights)

Ref No	Part Number	Description	Remarks	Serial Number	Qty
1	7101384	LIGHT, ASSY REAR			2
1	6686097	LIGHT BULB TURN	turn		1
1	6686096	LENS REAR TURN	amber - turn		1
1	6686098	LIGHT BULB STOP	stop		1
1	6686099	LENS REAR STOP	red - stop		1
1	6686100	SCREW			2
2	6718198	HARN.TLGT	deluxe		1
3	37C512	BOLT			1
4	4DM5	NUT			4

Page 433 - OSS# 6300202494 - All rights reserved by Bobcat Company - 02/11/2016 - 14:15:02 - Produced by Ken Cook Co. with media1off

EUROPEAN ACCESSORIES
(Road Kit)

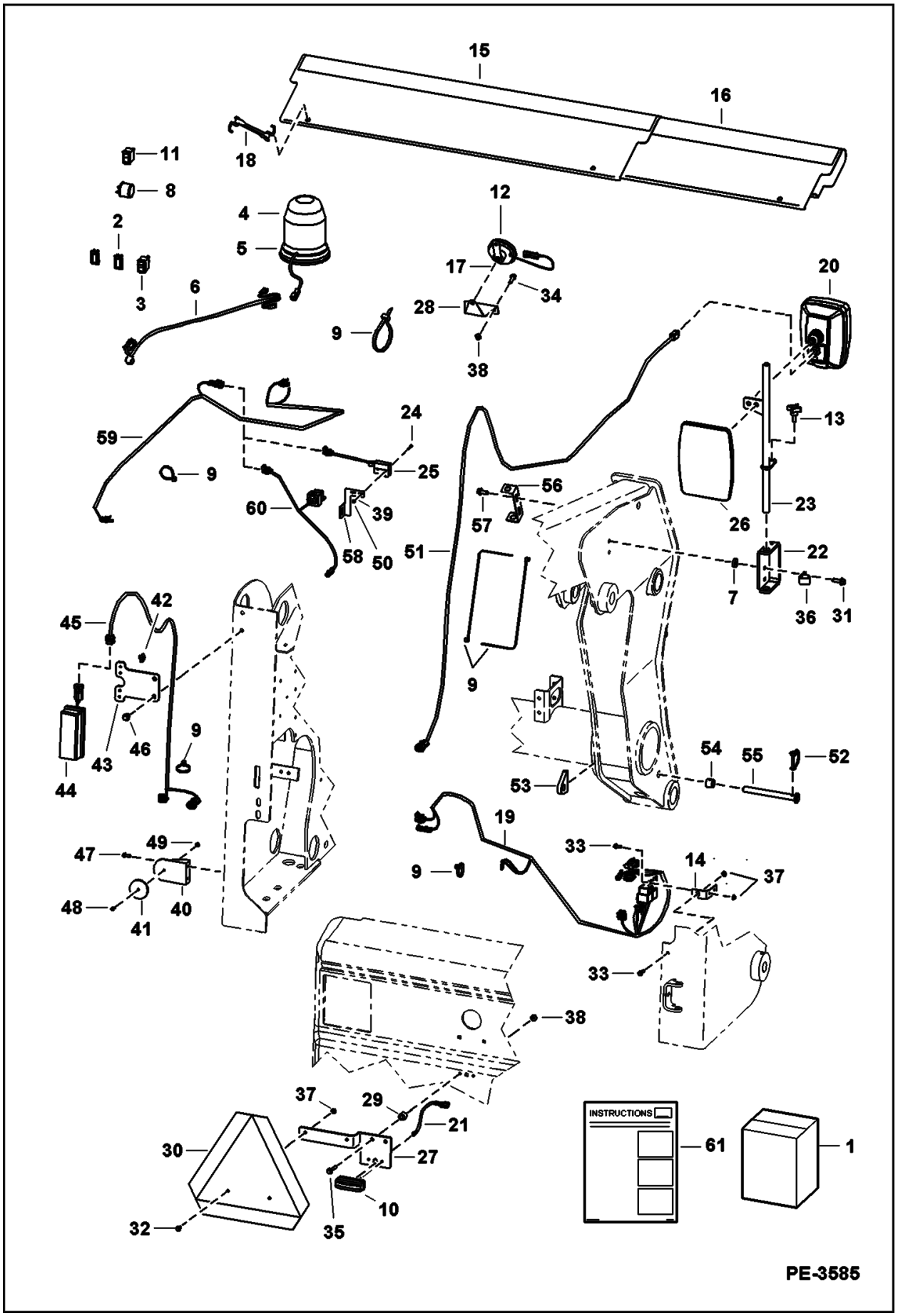

Illustration PE3585

Model S160 K
6904270

Page 434 - OSS# 6300202494 - All rights reserved by Bobcat Company - 02/11/2016 - 14:15:02 - Produced by Ken Cook Co. with mediaoff

EUROPEAN ACCESSORIES (Cont'd)
(Road Kit)

Ref No	Part Number	Description	Remarks	Serial Number	Qty
1		KIT	SALES #6731237	530011001 - 59999	1
1		KIT	SALES #6731237	A15111001 & Above	1
1		KIT	SALES #7163553	AHWA11001 & Above	1
1		KIT	SALES #7163553	530060001 & Above	1
2	6665314	PLUG			2
3	6668816	SWITCH			1
4	7241140	LIGHT, STROBE	4200 Series Light - Was 7219903 [A]		1
4	7256347	LENS, REFLECTIVE	Was 6697797 [A]		1
5	6675523	LIGHT EC BEACON			1
6	6718872	HARNESS			1
7	616783	WASHER			4
8	6557904	FLASHER			1
9	6624289	STRAP, TIE			47
10	6665729	LIC LIGHT			1
11	6668815	SWITCH			1
12	6671106	ALARM			1
13	6678755	KNOB			2
14	6702650	MOUNTFUSE	fuse		1
15	6713841	SHIELD			1
16	6713842	SHIELD			1
17	6713994	HARNESS			1
18	6731819	STRAP RUBBER			4
19	7141369	HARNESS, KIT ROAD			1
20	7153089	LIGHT, FRONT ASSY			2
21	7153090	HARNESS, LIGHT LICENSE			1
22	7153518	BRACKET	RH		1
22	7153520	BRACKET	LH		1
23	7153519	SHAFT, SPINDLE	RH		1
23	7153521	SHAFT, SPINDLE	LH		1
24	85G616	SCREW 10			2
25	6661150	SWITCH, ROLLER MICRO	manual controls only		1
26	7153522	MIRROR, SIDE HEAD			2
27	7156220	BRACKET			1
28	7156351	BRACKET			1
29	7157740	SPACER			2
30	7157745	SLOW MOVING PLATE - 12			1
31	26GM10030	BOLT			4
32	29CM616	BOLT			4
33	29CM625	BOLT			1
34	29CM825	BOLT			2
35	29CM845	BOLT			2
36	43DM8	NUT			4
37	43DM6	NUT			5

Page 435 - OSS# 6300202494 - All rights reserved by Bobcat Company - 02/11/2016 - 14:15:02 - Produced by Ken Cook Co. with media1off

EUROPEAN ACCESSORIES (Cont'd)
(Road Kit)

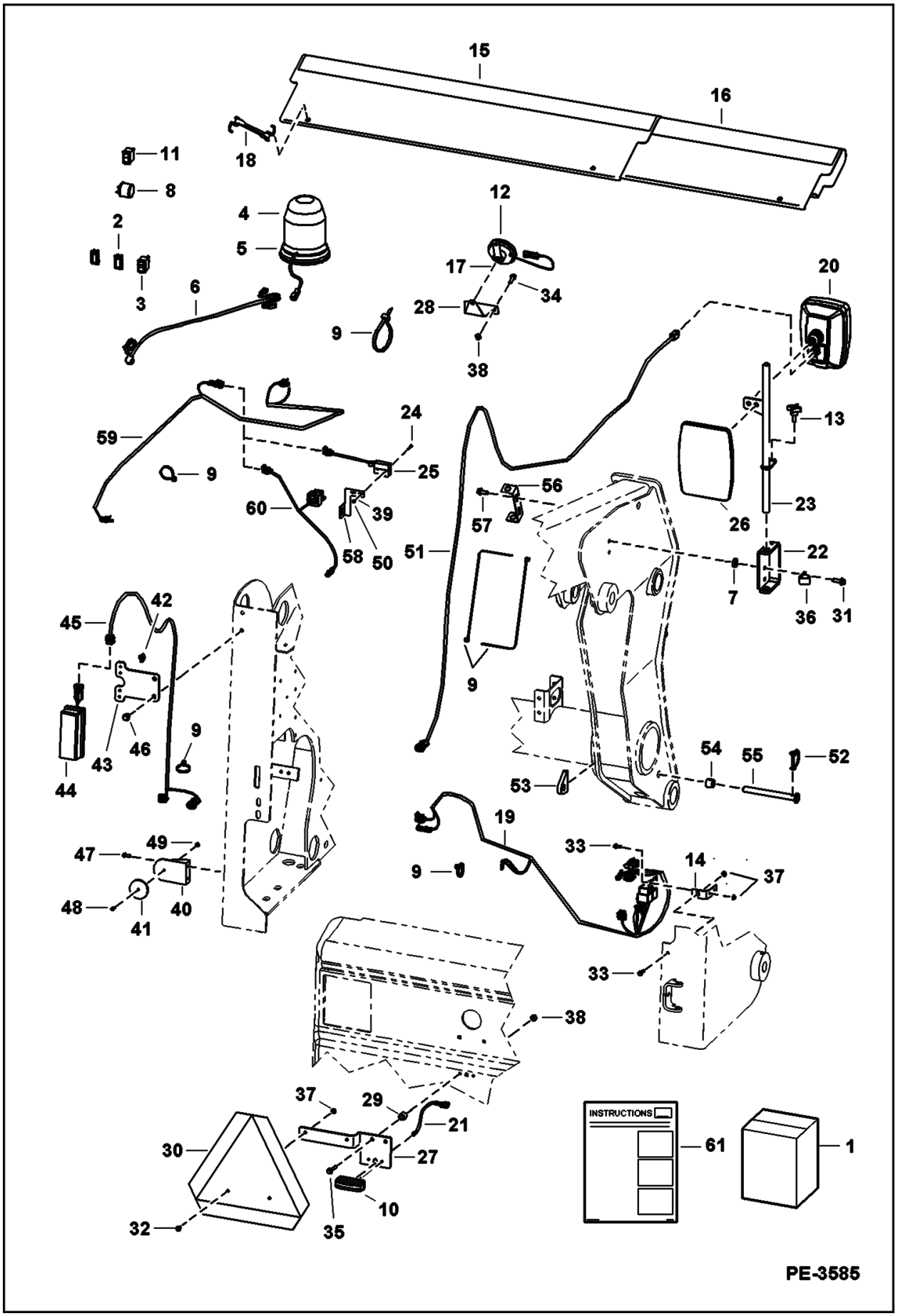

Illustration PE3585

Model S160 K
6904270

Page 436 - OSS# 6300202494 - All rights reserved by Bobcat Company - 02/11/2016 - 14:15:02 - Produced by Ken Cook Co. with mediaoff

EUROPEAN ACCESSORIES (Cont'd)
(Road Kit)

Ref No	Part Number	Description	Remarks	Serial Number	Qty
38	43DM8	NUT			4
39	12E6	WASHER			2
40	6670620	MOUNT			2
41	6670621	REFLECTOR			2
42	6688637	MOUNT			2
43	7101104	MOUNT			2
44	7101384	LIGHT, ASSY REAR			2
45		HARNESS, DOOR REAR	NLA - Was 7152344 [A]		2
46	26GM10020	BOLT			4
47	26GM6020	SCREW			4
48	3GM516	SCREW			2
49	43DM5	NUT			2
50	12D6	NUT 10			2
51	7241542	HARNESS, BOOM	Was 7152108 [A]		2
52	6656009	PIN			1
53	7157452	HOOK, BOBTACH			1
54	7157453	MOUNT, ATTACH			1
55	7157454	PIN			1
56	7157456	MOUNT, ATTACH			1
57	26GM10025	SCREW			2
58	7155044	BRACKET	manual controls only		1
59	7151691	HARNESS, BRAKE LIGHTS			1
60	7151696	HARNESS, STOP LIGHTS			1
61		INSTRUCTIONS	NLA		1

Page 437 - OSS# 6300202494 - All rights reserved by Bobcat Company - 02/11/2016 - 14:15:02 - Produced by Ken Cook Co. with media1off

EUROPEAN ACCESSORIES
(Road Kit) (Manual Controls)

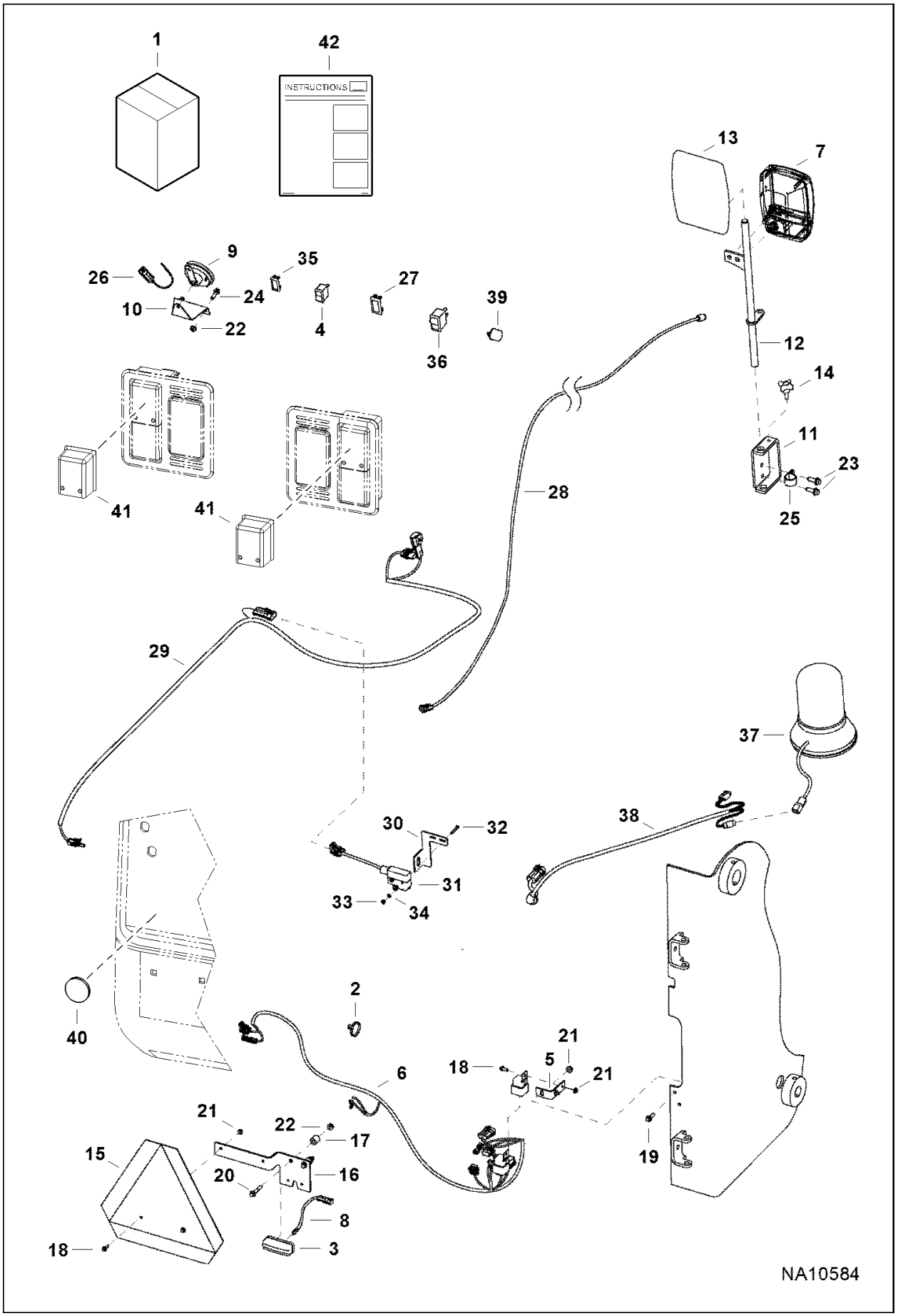

Illustration NA10584

Model S160 K
6904270

Page 438 - OSS# 6300202494 - All rights reserved by Bobcat Company - 02/11/2016 - 14:15:02 - Produced by Ken Cook Co. with mediaoff

EUROPEAN ACCESSORIES (Cont'd)
(Road Kit) (Manual Controls)

Ref No	Part Number	Description	Remarks	Serial Number	Qty
1		KIT, ROAD	SALES #7182368		1
2	6624289	STRAP, TIE			31
3	6665729	LIC LIGHT	license plate		1
4	6668815	SWITCH	hazard		1
5	6702650	MOUNTFUSE			1
6	7141369	HARNESS, KIT ROAD			1
7	7153089	LIGHT, FRONT ASSY			2
8	7153090	HARNESS, LIGHT LICENSE			1
9	6671106	ALARM			1
10	7156351	BRACKET	horn		1
11	7194092	BRACKET, RH	Was 7153518 [B]		1
11	7194093	BRACKET, LH	Was 7153520 [B]		1
12	7153519	SHAFT, SPINDLE	RH		1
12	7153521	SHAFT, SPINDLE	LH		1
13	7153522	MIRROR, SIDE HEAD			2
14	7191193	KNOB	Was 6678755 [B]		2
15	7157745	SLOW MOVING PLATE - 12			1
16	7156220	BRACKET			1
17	7157740	SPACER			2
18	29CM616	BOLT			4
19	29CM625	BOLT			1
20	29CM845	BOLT			2
21	43DM6	NUT			5
22	43DM8	NUT			4
23	26GM10020	BOLT			4
24	29CM825	BOLT			2
25	30H73	CLAMP			2
26	6713994	HARNESS	headlight adapter		1
27	6665314	PLUG			1
28	7241541	HARNESS, KIT ROAD	Was 7151706 [A]		1
29	7151691	HARNESS, BRAKE LIGHTS			1
30	7155044	BRACKET	sensor		1
31	6661150	SWITCH, ROLLER MICRO			1
32	85G616	SCREW 10			2
33	12D6	NUT 10			2
34	12E6	WASHER			2
35	6665314	PLUG			1
36	6668816	SWITCH	beacon		1
37	6675523	LIGHT EC BEACON			1
38	6718872	HARNESS	exterior cab		1
39	6557904	FLASHER			1
40	7191035	LENS, REFLECTIVE			2
41	7266394	LENS, RED STOP			2
42	6987360ENUS	INSTRUCTIONS, INSTALL	Was 6987360		1

Page 439 - OSS# 6300202494 - All rights reserved by Bobcat Company - 02/11/2016 - 14:15:02 - Produced by Ken Cook Co. with media1off

EUROPEAN ACCESSORIES
(Road Kit) (SJC)

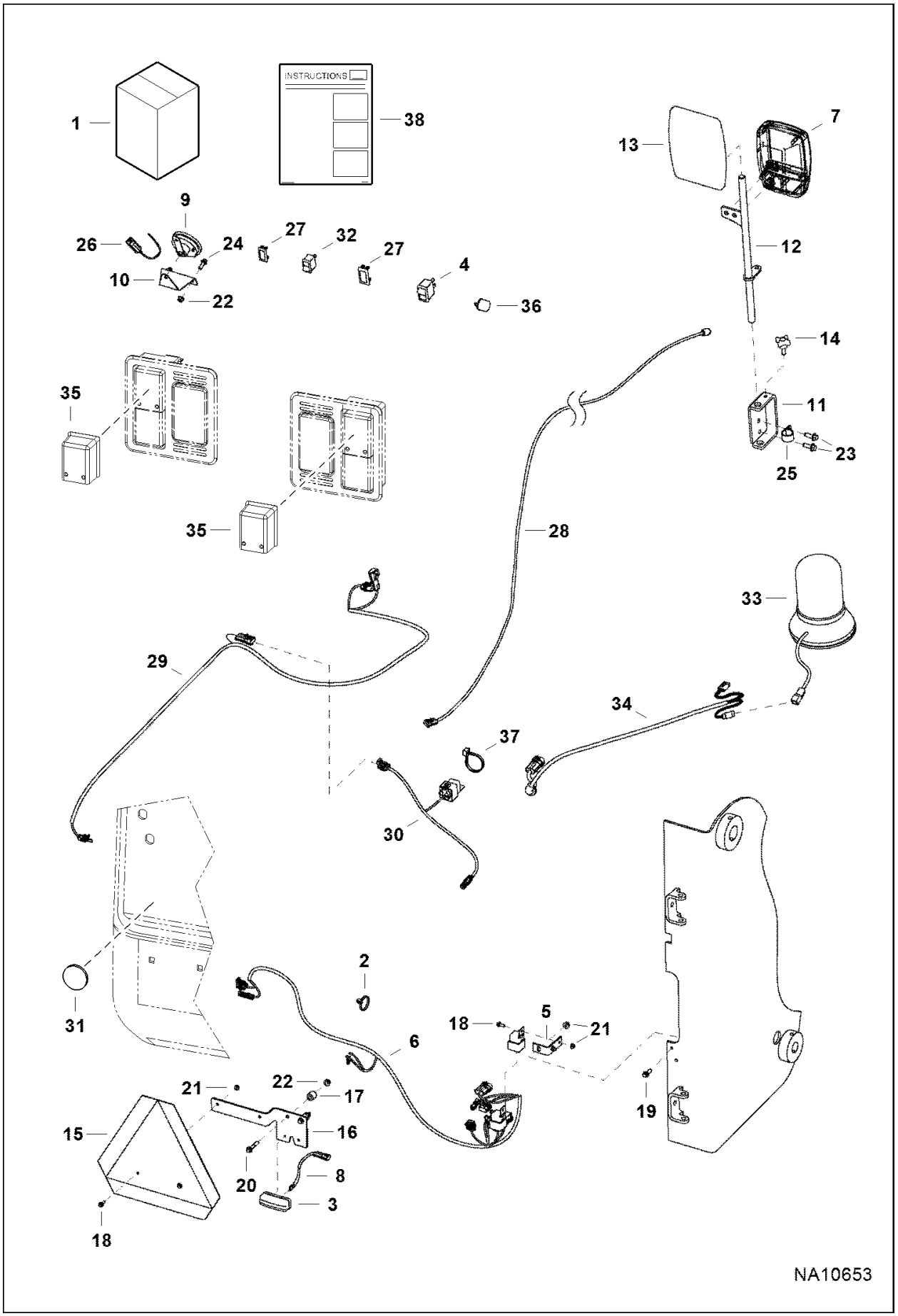

Illustration NA10653

Model S160 K
6904270

Page 440 - OSS# 6300202494 - All rights reserved by Bobcat Company - 02/11/2016 - 14:15:02 - Produced by Ken Cook Co. with mediaoff

EUROPEAN ACCESSORIES (Cont'd)
(Road Kit) (SJC)

Ref No	Part Number	Description	Remarks	Serial Number	Qty
1		KIT, ROAD	SALES #7182367		1
2	6624289	STRAP, TIE			33
3	6665729	LIC LIGHT	license plate		1
4	6668815	SWITCH	hazard		1
5	6702650	MOUNTFUSE			1
6	7141369	HARNESS, KIT ROAD			1
7	7153089	LIGHT, FRONT ASSY			2
8	7153090	HARNESS, LIGHT LICENSE			1
9	6671106	ALARM			1
10	7156351	BRACKET	horn		1
11	7194092	BRACKET, RH	Was 7153518 [B]		1
11	7194093	BRACKET, LH	Was 7153520 [B]		1
12	7153519	SHAFT, SPINDLE	RH		1
12	7153521	SHAFT, SPINDLE	LH		1
13	7153522	MIRROR, SIDE HEAD			2
14	7191193	KNOB	Was 6678755 [B]		2
15	7157745	SLOW MOVING PLATE - 12			1
16	7156220	BRACKET			1
17	7157740	SPACER			2
18	29CM616	BOLT			4
19	29CM625	BOLT			1
20	29CM845	BOLT			2
21	43DM6	NUT			5
22	43DM8	NUT			4
23	26GM10020	BOLT			4
24	29CM825	BOLT			2
25	30H73	CLAMP			2
26	6713994	HARNESS	headlight adapter		1
27	6665314	PLUG			2
28	7241541	HARNESS, KIT ROAD	Was 7151706 [A]		2
29	7151691	HARNESS, BRAKE LIGHTS			1
30	7151696	HARNESS, STOP LIGHTS	sensor		1
31	7191035	LENS, REFLECTIVE			2
32	6668816	SWITCH	beacon		1
33	6675523	LIGHT EC BEACON			1
34	6718872	HARNESS	exterior cab		1
35	7266394	LENS, RED STOP			2
36	6557904	FLASHER			1
37	6682345	STRAP, TIE 8			1
38	6987360ENUS	INSTRUCTIONS, INSTALL	Was 6987360		1

Page 441 - OSS# 6300202494 - All rights reserved by Bobcat Company - 02/11/2016 - 14:15:02 - Produced by Ken Cook Co. with media1off

F.O.P.S. KIT

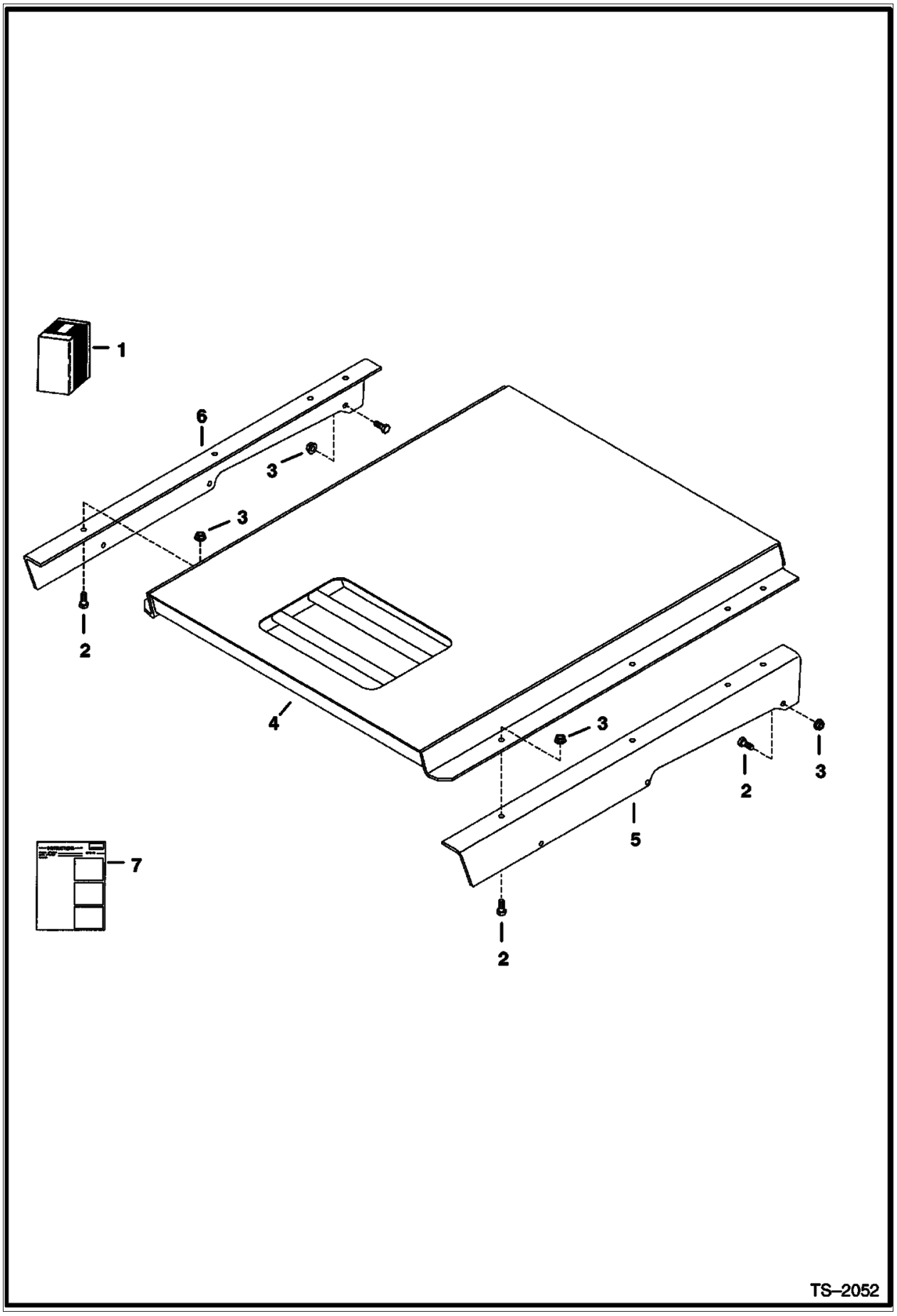

Illustration TS2052

Model S160 K
6904270

Page 442 - OSS# 6300202494 - All rights reserved by Bobcat Company - 02/11/2016 - 14:15:02 - Produced by Ken Cook Co. with mediaoff

F.O.P.S. KIT (Cont'd)

Ref No	Part Number	Description	Remarks	Serial Number	Qty
1	6718924	FOPS KIT	Ref. 2-7		1
2	17C616	BOLT 5			14
3	83D6	NUT 5			14
4	6702402	SHIELD			1
5	6718833	BRACKET	LH		1
6	6718834	BRACKET	RH		1
7	6720592	INSTRUCTIONS			1

Page 443 - OSS# 6300202494 - All rights reserved by Bobcat Company - 02/11/2016 - 14:15:02 - Produced by Ken Cook Co. with mediaioff

FIRE EXTINGUISHER

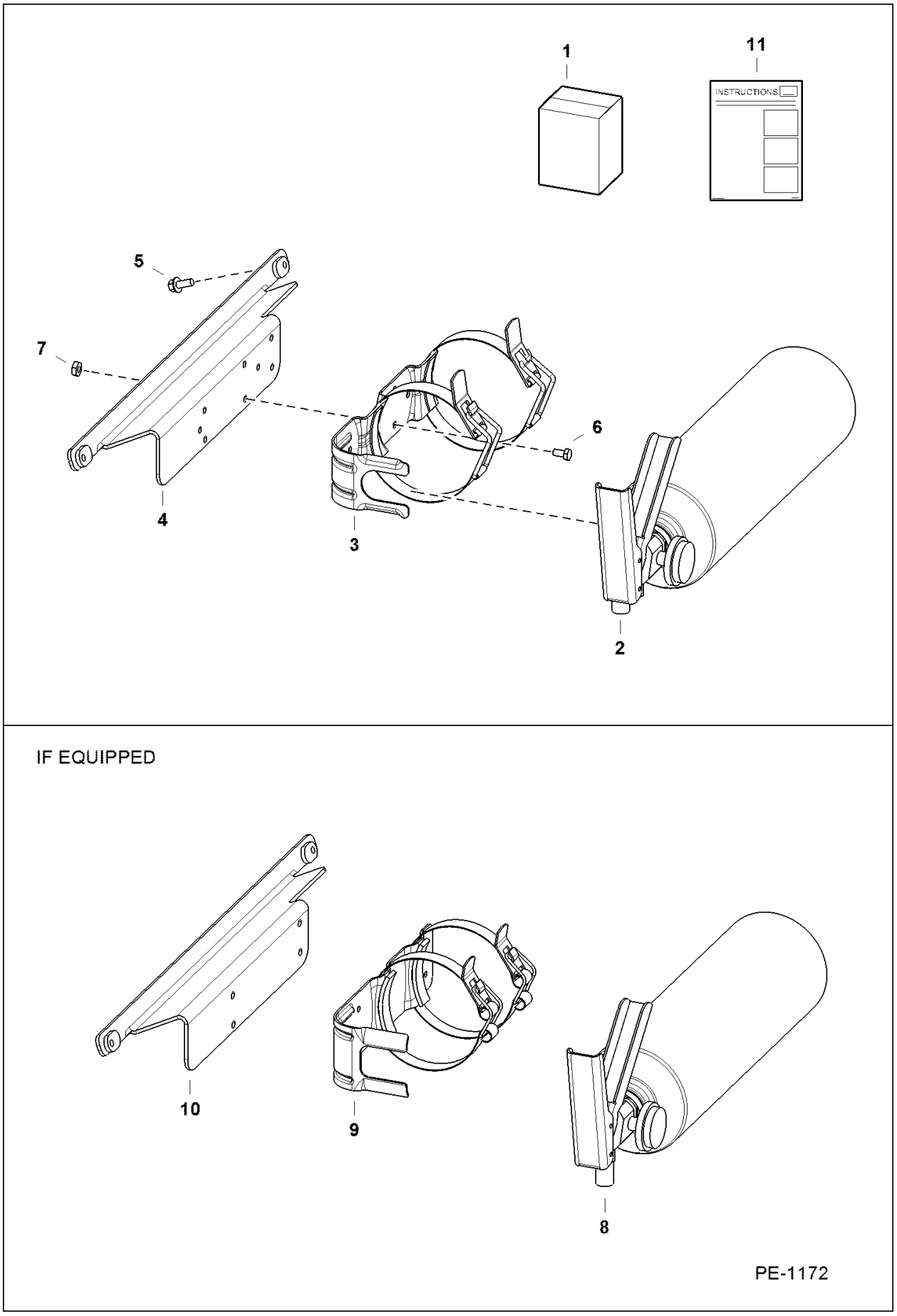

Illustration PE1172

Model S160 K
6904270

Page 444 - OSS# 6300202494 - All rights reserved by Bobcat Company - 02/11/2016 - 14:15:02 - Produced by Ken Cook Co. with mediaoff

FIRE EXTINGUISHER (Cont'd)

Ref No	Part Number	Description	Remarks	Serial Number	Qty
1		KIT, EXTINGUISHER FIRE	NLA - Ref. 5-11 - Was 6725898 [A]		1
1	6725898	KIT, EXTINGUISHER FIRE	Ref. 2-7 & 11		1
2	7224664	EXTINGUISHER, FIRE	W/Ref. 3		1
3	7224665	BRACKET, EXTINGUISHER FIRE	red - diamond hole pattern - use W/Ref. 4		1
4	7223716	BRACKET, MOUNTING			1
5	31C410	BOLT			2
6	45G1006	BOLT			4
7	12D10	NUT			4
8		EXTINQUISHER,FIRE	NLA - Order Ref. 2 and reuse Ref. 9 or Also Order Ref. 4 - Was 7168164 [A]		1
9		BRACKET	NLA - black - rectangle hole pattern - Order Ref. 2 & 3 - Was 6691173 [A]		1
10		BRACKET	NLA - rectangular hole pattern - Order Ref. 4 - Was 6725906 [A]		1
11	6901025	INSTRUCTIONS			1

Page 445 - OSS# 6300202494 - All rights reserved by Bobcat Company - 02/11/2016 - 14:15:02 - Produced by Ken Cook Co. with mediaioff

FLASHER LIGHTS
(4-Way) (Turn Indicators)

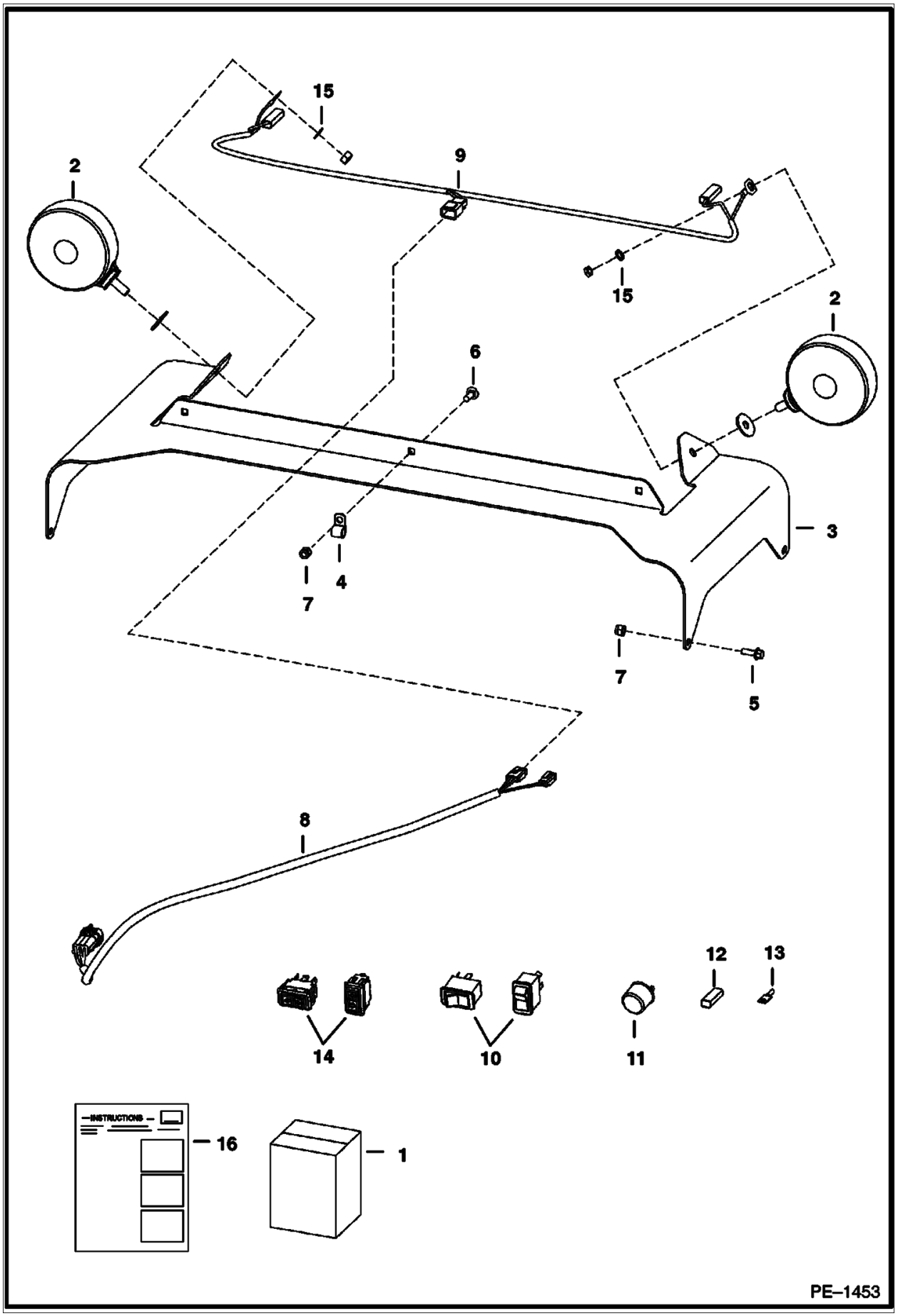

Illustration PE1453

Model S160 K
6904270

Page 446 - OSS# 6300202494 - All rights reserved by Bobcat Company - 02/11/2016 - 14:15:02 - Produced by Ken Cook Co. with mediaoff

FLASHER LIGHTS (Cont'd)
(4-Way) (Turn Indicators)

Ref No	Part Number	Description	Remarks	Serial Number	Qty
1	6718411	KIT, FLASHER 4-WAY	flasher lights - Ref. 2-16 - if loader is not equipped W/deluxe cab accessories harness, heater, A/C, SJC, ACS, power Bob-Tach, cab enclosure door kit or any of the following cab harness connected rotating beacon or strobe light, Also Order 7116260 deluxe cab harness - if equipped W/SJC, Also Order 6726662 harness	5299 12592 & Bel	1
1	6718411	KIT, FLASHER 4-WAY	flasher lights - Ref. 2-16 - if loader is not equipped W/deluxe cab accessories harness, heater, A/C, SJC, ACS, power Bob-Tach, cab enclosure door kit or any of the following cab harness connected rotating beacon or strobe light, Also Order 7116260 deluxe cab harness - if equipped W/SJC, Also Order 6726662 harness	5300 11831 & Bel	1
1	6718411	KIT, FLASHER 4-WAY	flasher lights - Ref. 2-16 - if loader is not equipped W/deluxe cab accessories harness, heater, A/C, SJC, ACS, power Bob-Tach, cab enclosure door kit or any of the following cab harness connected rotating beacon or strobe light, Also Order 7116260 deluxe cab harness - if equipped W/SJC, Also Order 6726662 harness	A15111001 & Above	1
1	6718411	KIT, FLASHER 4-WAY	flasher lights - Ref. 2-16 - if loader is not equipped W/deluxe cab accessories harness, heater, A/C, SJC, ACS, power Bob-Tach, cab enclosure door kit or any of the following cab harness connected rotating beacon or strobe light, Also Order 7143071 deluxe cab harness - if equipped W/SJC, Also Order 6726662 harness	5300 11832 - 59999	1
1	6718411	KIT, FLASHER 4-WAY	flasher lights - Ref. 2-16 - if loader is not equipped W/deluxe cab accessories harness, heater, A/C, SJC, ACS, power Bob-Tach, cab enclosure door kit or any of the following cab harness connected rotating beacon or strobe light, Also Order 7143071 deluxe cab harness - if equipped W/SJC, Also Order 6726662 harness	5299 12593 - 59999	1
1	6718411	KIT, FLASHER 4-WAY	flasher lights - Ref. 2-16 - if loader is not equipped W/deluxe cab accessories harness, heater, A/C, SJC, ACS, power Bob-Tach, cab enclosure door kit, rear wiper or any of the following cab harness connected rotating beacon, 4-way flasher or strobe light, Also Order 7139311 deluxe cab accessories harness - if equipped W/SJC, Also Order 6726662 harness	530060001 & Above	1
1	6718411	KIT, FLASHER 4-WAY	flasher lights - Ref. 2-16 - if loader is not equipped W/deluxe cab accessories harness, heater, A/C, SJC, ACS, power Bob-Tach, cab enclosure door kit, rear wiper or any of the following cab harness connected rotating beacon, 4-way flasher or strobe light, Also Order 7139311 deluxe cab accessories harness - if equipped W/SJC, Also Order 6726662 harness	AHWA11001 & Above	1
1	6718411	KIT, FLASHER 4-WAY	flasher lights - Ref. 2-16 - if loader is not equipped W/deluxe cab accessories harness, heater, A/C, SJC, ACS, power Bob-Tach, cab enclosure door kit, rear wiper or any of the following cab harness connected rotating beacon, 4-way flasher or strobe light, Also Order 7139311 deluxe cab accessories harness - if equipped W/SJC, Also Order 6726662 harness	529960001 & Above	1
2	6517516	LGHT ASY			2

Page 447 - OSS# 6300202494 - All rights reserved by Bobcat Company - 02/11/2016 - 14:15:02 - Produced by Ken Cook Co. with media1off

FLASHER LIGHTS (Cont'd)
(4-Way) (Turn Indicators)

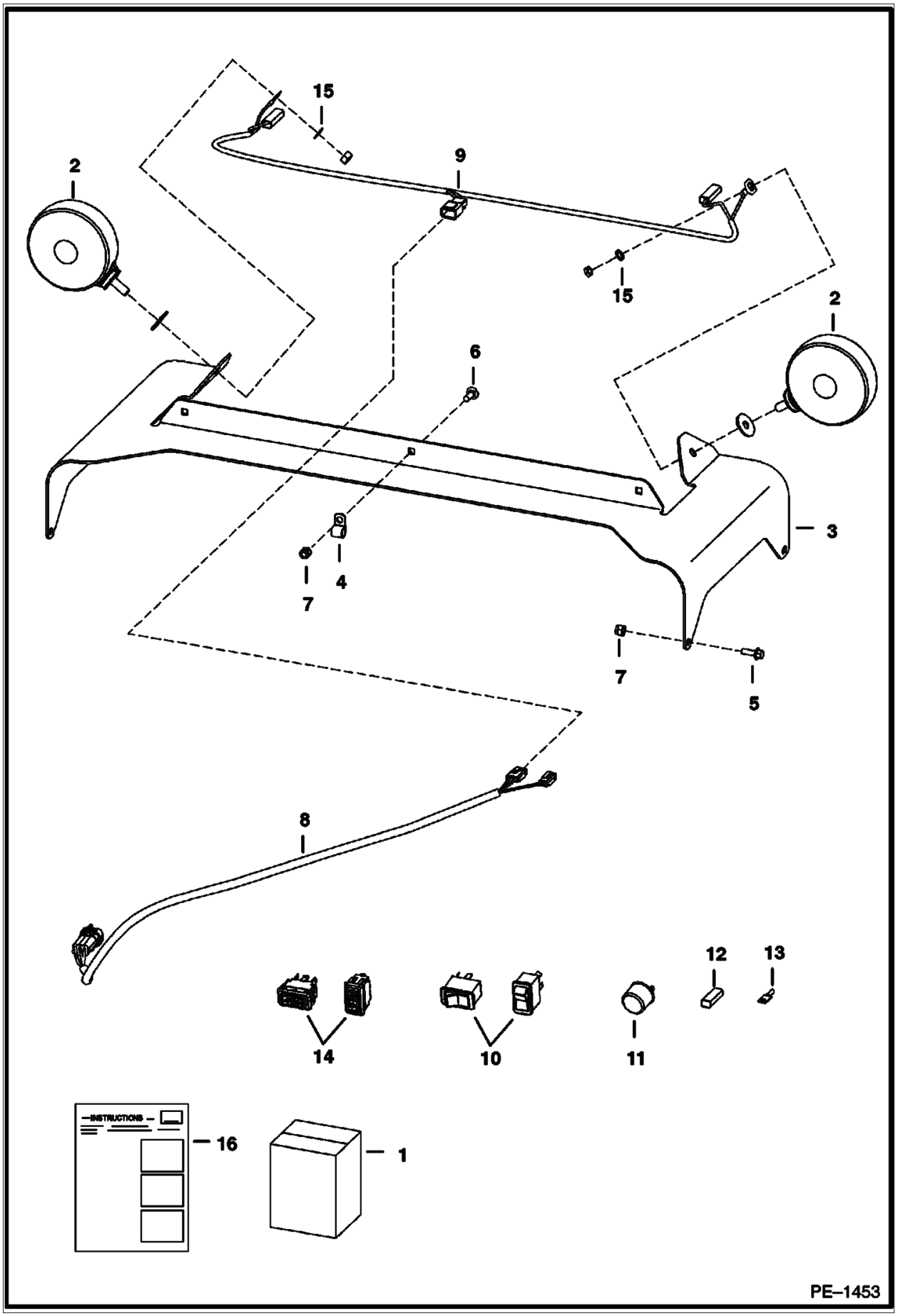

Illustration PE1453

Model S160 K
6904270

Page 448 - OSS# 6300202494 - All rights reserved by Bobcat Company - 02/11/2016 - 14:15:02 - Produced by Ken Cook Co. with mediaoff

FLASHER LIGHTS (Cont'd)
(4-Way) (Turn Indicators)

Ref No	Part Number	Description	Remarks	Serial Number	Qty
3	6718326	MOUNT			1
4	30H21	CLAMP 10			3
5	35C412	BOLT			4
6	37C412	BOLT			3
7	59D4	NUT 5			7
8	6718872	HARNESS	cab exterior		1
9	6718873	HARNESS	4-way flasher		1
10	6665316	SWITCH	horizontal		1
10	6668815	SWITCH	vertical		1
11	6557904	FLASHER			1
12	614142	SLEEVE 10			2
13	6515131	BLADE 5			2
14	6675835	INDICATOR, TURN SIGNAL	horizontal		1
14	6676872	INDICATOR, TURN SIGNAL	vertical		1
15	6E5	WASHER	lock		2
16	6900848	INSTRUCTIONS			1

Page 449 - OSS# 6300202494 - All rights reserved by Bobcat Company - 02/11/2016 - 14:15:02 - Produced by Ken Cook Co. with media1off

FRONT AUXILIARY
(RH Kit)

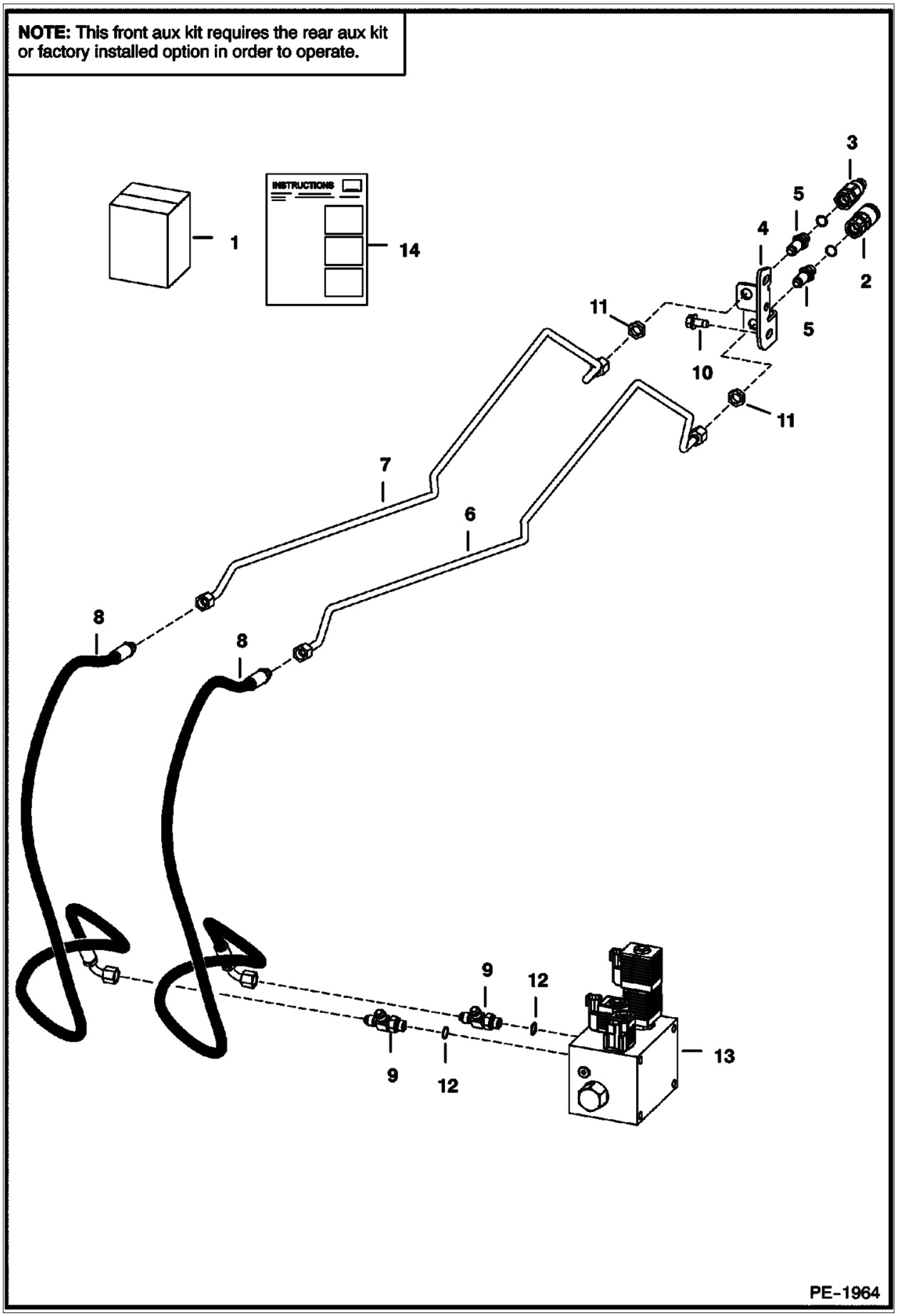

Illustration PE1964

Model S160 K
6904270

Page 450 - OSS# 6300202494 - All rights reserved by Bobcat Company - 02/11/2016 - 14:15:02 - Produced by Ken Cook Co. with mediaoff

FRONT AUXILIARY (Cont'd)
(RH Kit)

Ref No	Part Number	Description	Remarks	Serial Number	Qty
1	6736791	KIT, RH AUX	requires rear auxiliaries - Was 6731524 [B,D]		1
2	7246786	COUPLER, FF FEMALE	Contact your Local Dealer for Bobcat Technical Information BTI433ldr - Was 6667803 [A]		1
3	7246787	COUPLER, FF MALE	Contact your Local Dealer for Bobcat Technical Information BTI433ldr - Was 6667804 [A]		1
3	6669657	SEAL KIT			1
4	6711674	MOUNT			1
5	6716089	CONNECTOR	W/ O-rings		2
6	6736934	TUBE	Was 6718244 [B,D]		1
7	6736935	TUBE	Was 6718245 [B,D]		1
8	6736856	HOSE	Was 6718454 [B,D]		2
9	21KB0606	FITTING, HYD TEE	W/Ref. 12		2
10	84G3712	BOLT 5			2
11	86F5	NUT			2
12	79K6	O RING 10			x
13		VALVE, AUX REAR	See Illustration REAR AUXILIARY VALVE / MS2255 not in kit		1
14	6901515	INSTRUCTIONS			1

Page 451 - OSS# 6300202494 - All rights reserved by Bobcat Company - 02/11/2016 - 14:15:02 - Produced by Ken Cook Co. with media1off

GAS SPRING KIT

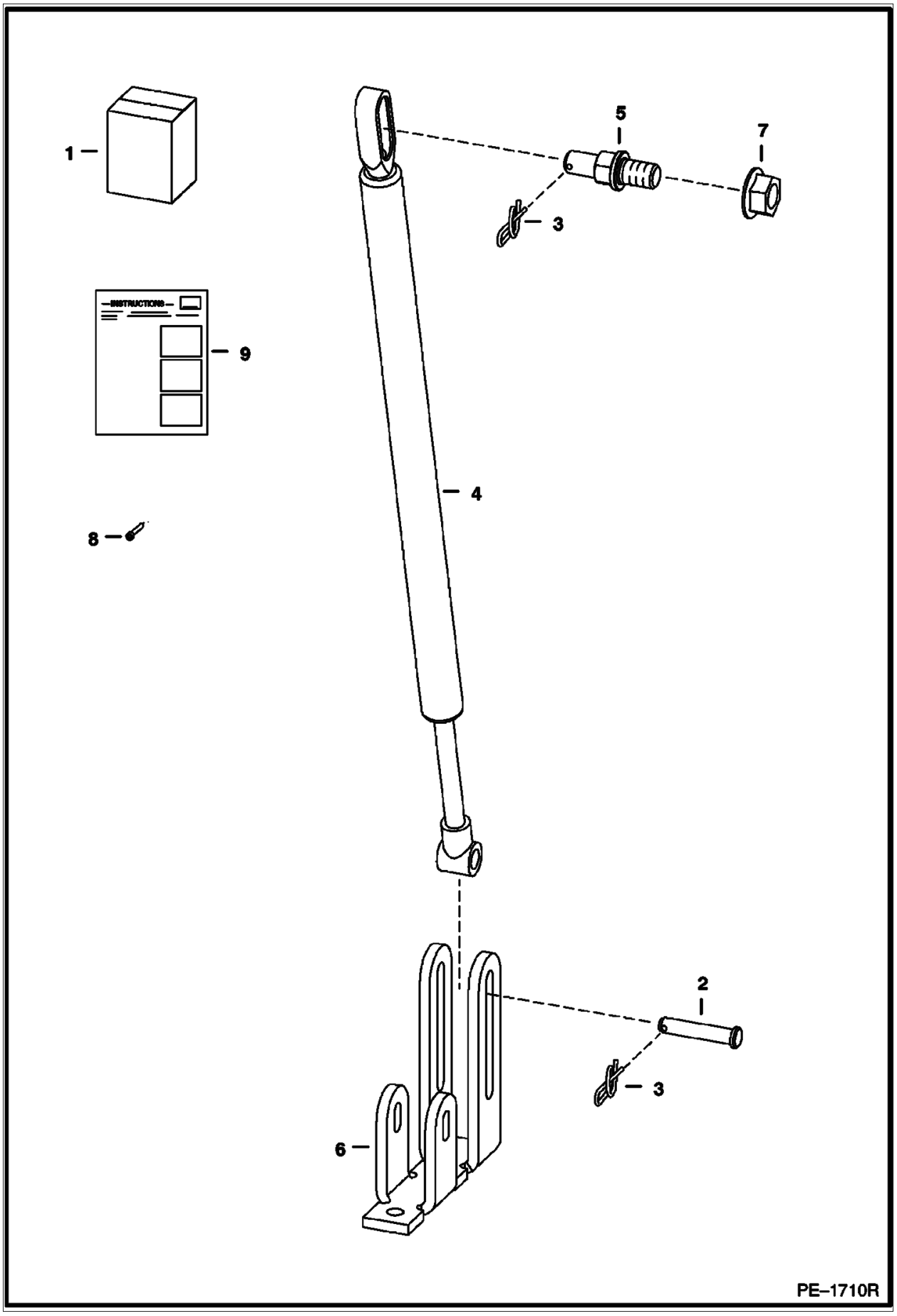

Illustration PE1710R

Model S160 K
6904270

Page 452 - OSS# 6300202494 - All rights reserved by Bobcat Company - 02/11/2016 - 14:15:02 - Produced by Ken Cook Co. with mediaoff

GAS SPRING KIT (Cont'd)

Ref No	Part Number	Description	Remarks	Serial Number	Qty
1	6732928	KIT, 3RD GAS SPRING			1
2	6567743	PIN			1
3	6631418	RING, RETAINING			2
4	7157890	GAS SPRING	Was 6678292 [A]		1
5	6719064	MOUNT			1
6	6729141	MOUNT			1
7	97D8	NUT			1
8	21G804	BOLT			1
9	6901816	INSTRUCTIONS			1

Page 453 - OSS# 6300202494 - All rights reserved by Bobcat Company - 02/11/2016 - 14:15:02 - Produced by Ken Cook Co. with mediaioff

GUN MOUNT
(Army)

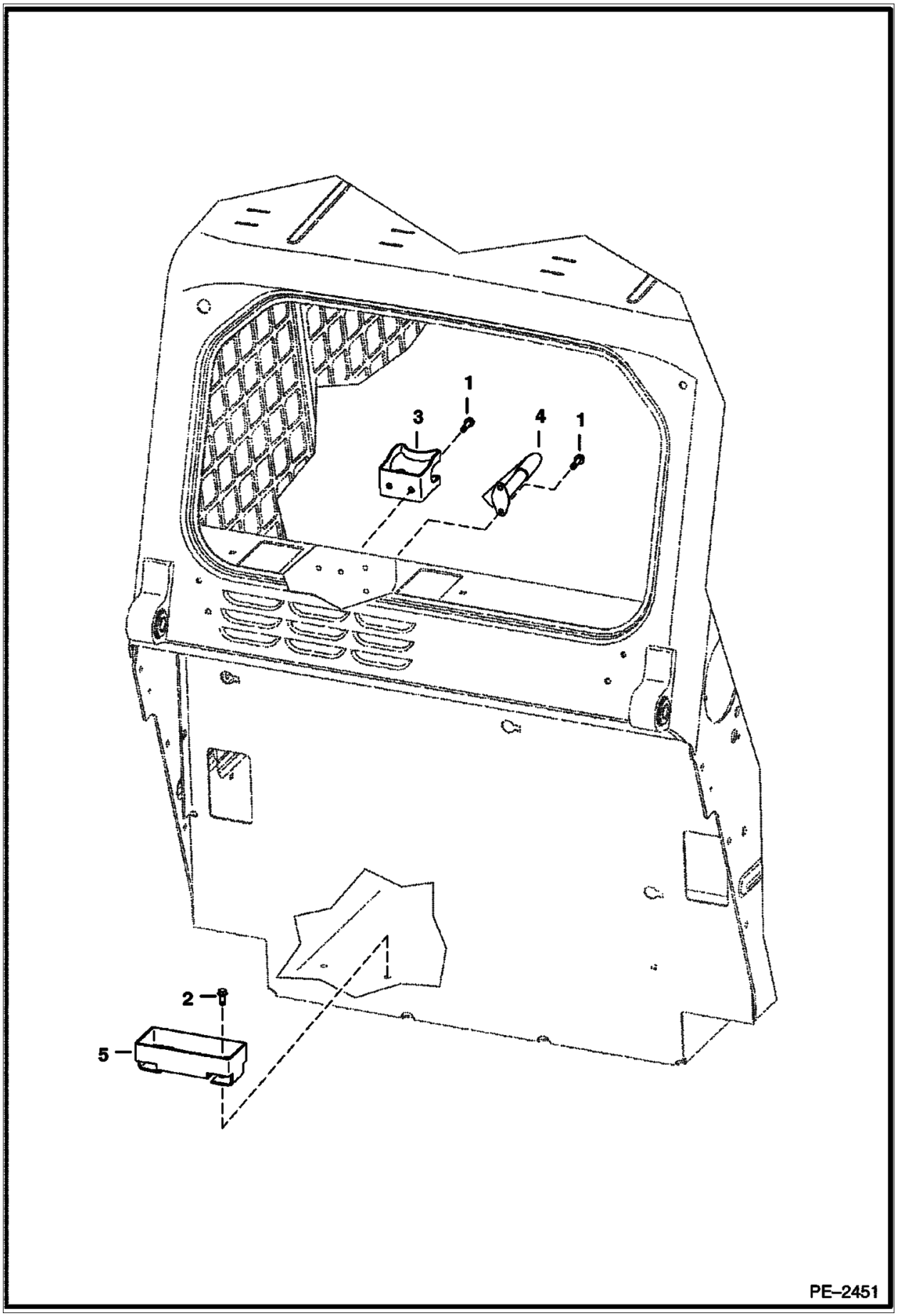

Illustration PE2451

Model S160 K
6904270

Page 454 - OSS# 6300202494 - All rights reserved by Bobcat Company - 02/11/2016 - 14:15:02 - Produced by Ken Cook Co. with mediaoff

GUN MOUNT (Cont'd)
(Army)

Ref No	Part Number	Description	Remarks	Serial Number	Qty
1	7105324	BOLT			4
2	7105325	BOLT			2
3		MOUNT	NLA - supplied by Army		1
4		MOUNT	NLA - supplied by Army		1
5		MOUNT	NLA - supplied by Army		1

Page 455 - OSS# 6300202494 - All rights reserved by Bobcat Company - 02/11/2016 - 14:15:02 - Produced by Ken Cook Co. with mediaioff

HEATER & A/C
(Heater Kit) (Metal Housing)

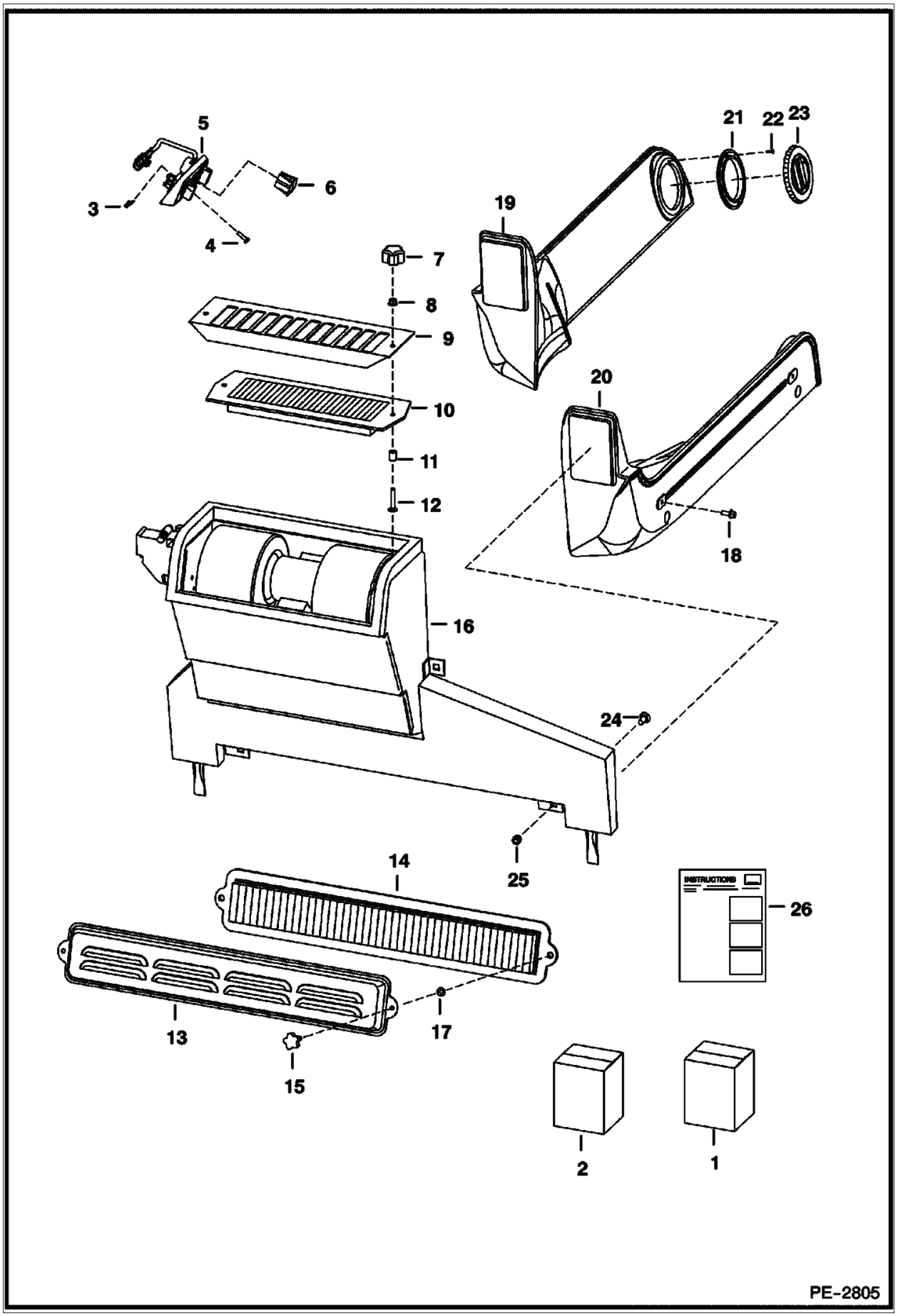

Illustration PE2805

Model S160 K
6904270

Page 456 - OSS# 6300202494 - All rights reserved by Bobcat Company - 02/11/2016 - 14:15:02 - Produced by Ken Cook Co. with mediaoff

HEATER & A/C (Cont'd)
(Heater Kit) (Metal Housing)

Ref No	Part Number	Description	Remarks	Serial Number	Qty
1		KIT, HEATER CAB	See Illustration HEATER / NA2020 - NLA - Order 7166137 kit - if loader is not equipped W/deluxe cab harness, heater, A/C, SJC, ACS, power Bob-Tach, cab enclosure door kit, rear wiper or any of the following cab harness connected rotating beacon, 4-way flasher or strobe light, Also Order 7116260 deluxe cab harness - Was 7116899 [A]	5300 11831 & Bel	1
1		KIT, HEATER CAB	See Illustration HEATER / NA2020 - NLA - Order 7166137 kit - if loader is not equipped W/deluxe cab harness, heater, A/C, SJC, ACS, power Bob-Tach, cab enclosure door kit, rear wiper or any of the following cab harness connected rotating beacon, 4-way flasher or strobe light, Also Order 7116260 deluxe cab harness - Was 7116899 [A]	A15111001 & Above	1
1		KIT, HEATER CAB	See Illustration HEATER / NA2020 - NLA - Order 7166137 kit - if loader is not equipped W/deluxe cab harness, heater, A/C, SJC, ACS, power Bob-Tach, cab enclosure door kit, rear wiper or any of the following cab harness connected rotating beacon, 4-way flasher or strobe light, Also Order 7116260 deluxe cab harness - Was 7116899 [A]	5299 12592 & Bel	1
1		KIT, HEATER CAB	See Illustration HEATER / NA2020 - NLA - Order 7166137 kit - if loader is not equipped W/deluxe cab harness, heater, A/C, SJC, ACS, power Bob-Tach, cab enclosure door kit, rear wiper or any of the following cab harness connected rotating beacon, 4-way flasher or strobe light, Also Order 7143071 deluxe cab harness - Was 7116899 [A]	530011832 - 59999	1
1		KIT, HEATER CAB	See Illustration HEATER / NA2020 - NLA - Order 7166137 kit - if loader is not equipped W/deluxe cab harness, heater, A/C, SJC, ACS, power Bob-Tach, cab enclosure door kit, rear wiper or any of the following cab harness connected rotating beacon, 4-way flasher or strobe light, Also Order 7143071 deluxe cab harness - Was 7116899 [A]	529912593 - 59999	1
1		KIT, HEATERS CAB	See Illustration HEATER / NA2020 - NLA - Order 7166137 kit - if loader is not equipped W/deluxe cab harness, heater, A/C, SJC, ACS, power Bob-Tach, cab enclosure door kit, rear wiper or any of the following cab harness connected rotating beacon, 4-way flasher or strobe light, Also Order 7139311 deluxe cab harness - Was 7116899 [A]	AHWA11001 & Above	1
1		KIT, HEATERS CAB	See Illustration HEATER / NA2020 - NLA - Order 7166137 kit - if loader is not equipped W/deluxe cab harness, heater, A/C, SJC, ACS, power Bob-Tach, cab enclosure door kit, rear wiper or any of the following cab harness connected rotating beacon, 4-way flasher or strobe light, Also Order 7139311 deluxe cab harness - Was 7116899 [A]	530060001 & Above	1
1		KIT, HEATERS CAB	See Illustration HEATER / NA2020 - NLA - Order 7166137 kit - if loader is not equipped W/deluxe cab harness, heater, A/C, SJC, ACS, power Bob-Tach, cab enclosure door kit, rear wiper or any of the following cab harness connected rotating beacon, 4-way flasher or strobe light, Also Order 7139311 deluxe cab harness - Was 7116899 [A]	529960001 & Above	1
2	7121572	DECAL PACKAGE	decal - Was 6725513 [A]		1

Page 457 - OSS# 6300202494 - All rights reserved by Bobcat Company - 02/11/2016 - 14:15:02 - Produced by Ken Cook Co. with media1off

HEATER & A/C (Cont'd)
(Heater Kit) (Metal Housing)

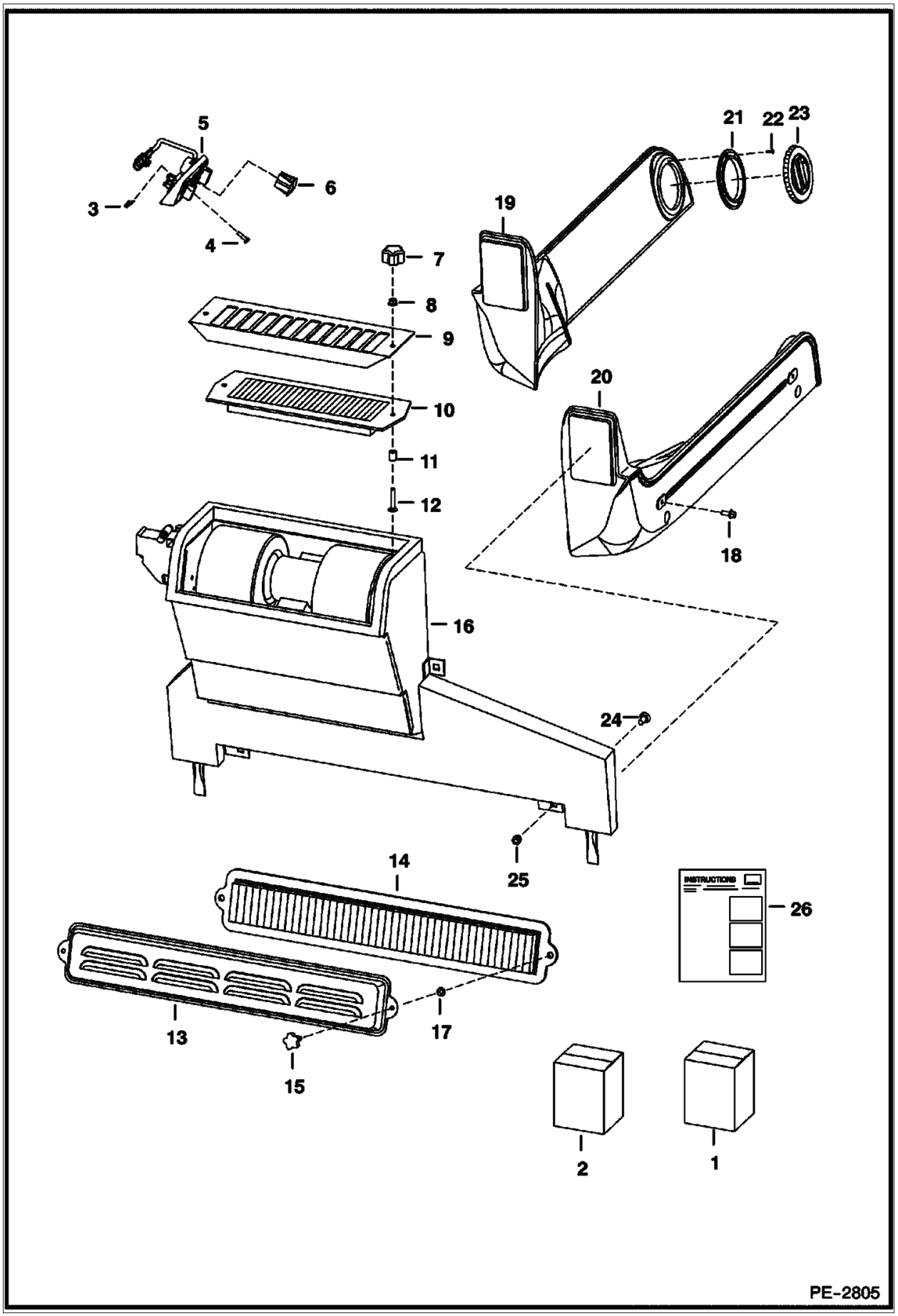

Illustration PE2805

Model S160 K
6904270

Page 458 - OSS# 6300202494 - All rights reserved by Bobcat Company - 02/11/2016 - 14:15:02 - Produced by Ken Cook Co. with mediaoff

HEATER & A/C (Cont'd)
(Heater Kit) (Metal Housing)

Ref No	Part Number	Description	Remarks	Serial Number	Qty
3	6669091	CLIP	retainer		3
4	6669224	TAP SCREW			3
5	6674228	PANEL, CONTROL	control		1
5	6640699	CONECTR 5			1
5	6718579	DECAL			1
5	6718887	PANEL HEATER			1
5	6675176	SWITCH	blower		1
5	6675177	KNOB			2
5	6675846	POTENTIOMETER			1
6	6675181	PLUG SWITCH HOLE			1
7	6681614	KNOB			2
8	59D4	NUT 5			2
9	6718175	SCREEN, FILTER HEATER	filter		1
10	6678207	FILTER, AIR HEATER CAB	recirculation		1
11	6718837	SPACER			2
12	37C424	BOLT			2
13	6727847	HEATER VENT COVER	W/Ref. 15 & 17		1
14	6677983	FILTER, AIR HEATER CAB			1
15	6726386	KNOB			2
16	6688543	HEATER	See Illustration HEATER & A/C / PE3077		1
17	6676516	NUT,PUSH	push		2
18	35C410	BOLT 5			4
19	6735246	HVAC DUCT LEFT	LH		1
20	6735245	HVAC DUCT RIGHT	RH		1
21	6675179	FLANGE	round		4
22	57G608	SCREW			16
23	6674231	VENT, HEATER CAB ROUND	round		4
24	37C512	BOLT			4
25	59D5	NUT 5			4
26	6904255	INSTRUCTIONS			1

Page 459 - OSS# 6300202494 - All rights reserved by Bobcat Company - 02/11/2016 - 14:15:02 - Produced by Ken Cook Co. with media1off

HEATER
(Heater Kit) (Plastic Housing)

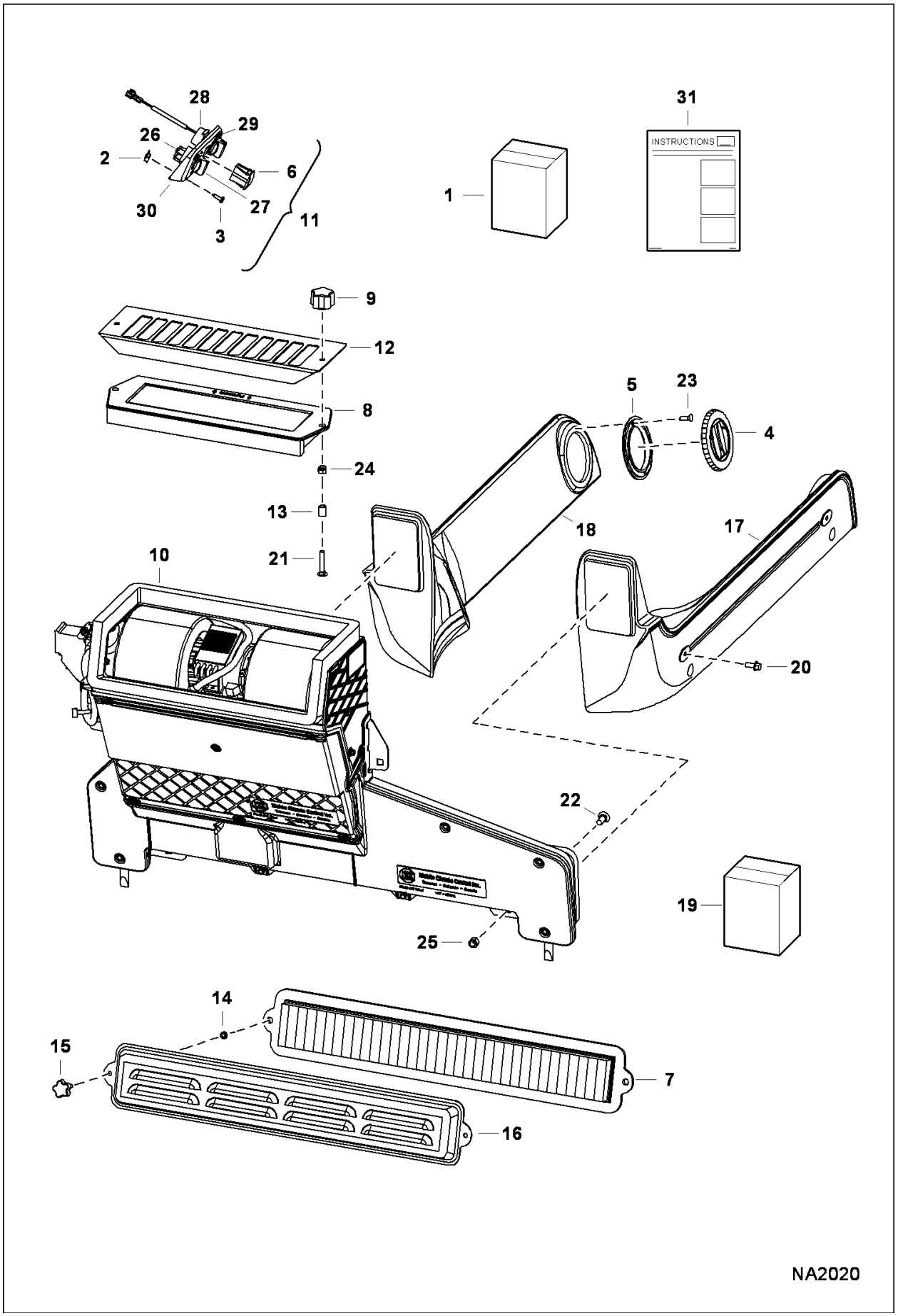

Illustration NA2020

Model S160 K
6904270

Page 460 - OSS# 6300202494 - All rights reserved by Bobcat Company - 02/11/2016 - 14:15:02 - Produced by Ken Cook Co. with mediaoff

HEATER (Cont'd)
(Heater Kit) (Plastic Housing)

Ref No	Part Number	Description	Remarks	Serial Number	Qty
1	7166137	KIT HEATER			1
2	6669091	CLIP			3
3	6669224	TAP SCREW			3
4	6674231	VENT, HEATER CAB ROUND			4
5	6675179	FLANGE			4
6	6675181	PLUG SWITCH HOLE			1
7	6677983	FILTER, AIR HEATER CAB			1
8	6678207	FILTER, AIR HEATER CAB			1
9	6681614	KNOB			2
10	7175394	HEATER CAB	See Illustration HEATER & A/C / NA1534 Was 6691439 [A]		1
11	6697906	PANEL, CONTROL	Ref. 26-30		1
12	6718175	SCREEN, FILTER HEATER			1
13	6718837	SPACER			2
14	6676516	NUT,PUSH			2
15	6726386	KNOB			2
16	6727847	HEATER VENT COVER			1
17	6735245	HVAC DUCT RIGHT	RH		1
18	6735246	HVAC DUCT LEFT	LH		1
19	7121572	DECAL PACKAGE			1
20	35C410	BOLT 5			4
21	37C424	BOLT			2
22	37C512	BOLT			4
23	57G608	SCREW			16
24	59D4	NUT 5			2
25	59D5	NUT 5			4
26	6675176	SWITCH	blower - not in kit		1
27	6675177	KNOB	not in kit		2
28	6693148	RESISTOR	temp control - not in kit		1
29	6718579	DECAL	not in kit		1
30	6718887	PANEL HEATER	not in kit		1
31	6987152	INSTRUCTIONS			1

Page 461 - OSS# 6300202494 - All rights reserved by Bobcat Company - 02/11/2016 - 14:15:02 - Produced by Ken Cook Co. with media1off

HEATER & A/C
(Heater Assembly) (Metal Housing)

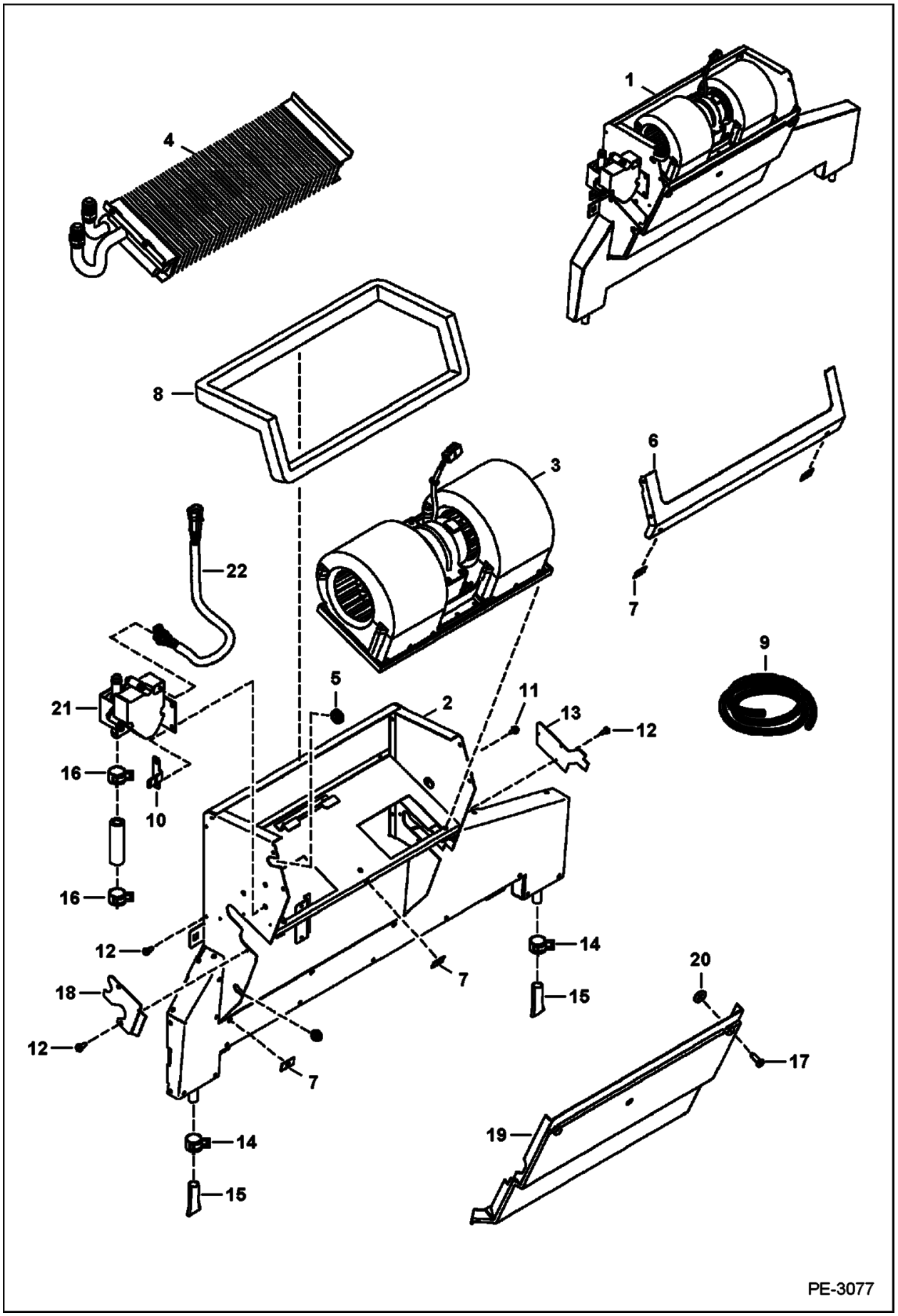

Illustration PE3077

Model S160 K
6904270

Page 462 - OSS# 6300202494 - All rights reserved by Bobcat Company - 02/11/2016 - 14:15:02 - Produced by Ken Cook Co. with mediaoff

HEATER & A/C (Cont'd)
(Heater Assembly) (Metal Housing)

Ref No	Part Number	Description	Remarks	Serial Number	Qty
1	6688543	HEATER	Ref. 2-22		1
2	6690478	HOUSING			1
3		BLOWER	See Illustration HEATER & A/C / B26156 - NLA - assy - Was 6689762 [A]		1
4		COIL	See Illustration HEATER & A/C / PE1228 NLA - Order 6689770 Heater Coil kit		1
5	6690482	GROMMET			1
6	6678152	SEAL FLANGE			1
7	6677115	RECEPTACLE			6
8		SEAL	NLA - 48.75"(1238,25mm) long - Order Ref. 9		1
9	6677111	SEAL FOAM BULK/FT	bulk - sold per foot		x
10	6690481	BRACKET	harness		1
11	6677119	SCREW	sheetmetal		7
12	6691532	SCREW	Was 6677118 [A]		4
13	6690487	COVER			1
14	6675510	CLAMP	drain hose		2
15	6675511	VALVE, DRAIN			2
16	6675512	CLAMP	hose		2
17	6677117	SCREW	captive		1
18	6690479	COVER			1
19	6690476	COVER			1
20	6677116	RETAINER			6
21	6689696	VALVE, HEATER CAB			1
22	6698501	HARNESS, HEATER			1

Page 463 - OSS# 6300202494 - All rights reserved by Bobcat Company - 02/11/2016 - 14:15:02 - Produced by Ken Cook Co. with media1off

HEATER & A/C
(Heater Assembly) (Plastic Housing) (Two Piece Blower Mount)

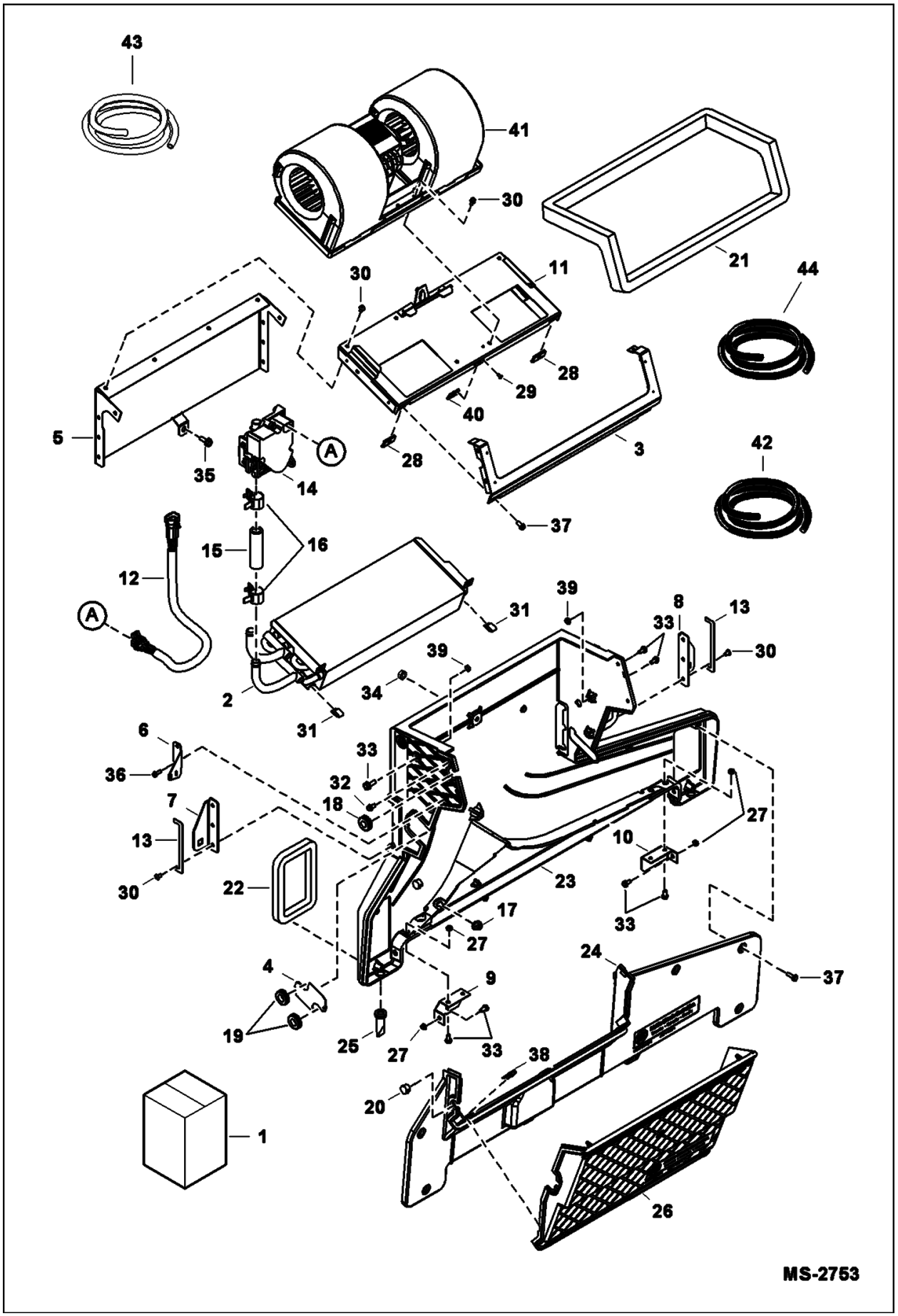

Page 464 - OSS# 6300202494 - All rights reserved by Bobcat Company - 02/11/2016 - 14:15:02 - Produced by Ken Cook Co. with mediaoff

HEATER & A/C (Cont'd)
(Heater Assembly) (Plastic Housing) (Two Piece Blower Mount)

Ref No	Part Number	Description	Remarks	Serial Number	Qty
1		HEATER, CAB	See Illustration HEATER & A/C / NA1534 NLA - Order 7175394 heater assy - Was 6691439 [A]		1
2	7003446	COIL, HEATER			1
3	7003447	FLANGE, SEAL			1
4	7003448	PLATE			1
5	7003449	PAN, COIL			1
6	7003450	BRACKET, HARNESS			1
7	7003451	BRACKET			1
8	7003452	BRACKET			1
9	7003453	BRACKET			1
10	7003454	BRACKET			1
11	7003455	PLATE			1
12	6698501	HARNESS, HEATER			1
13	6676538	BULK TAPE/FT	bulk - sold per foot		x
14	7003456	VALVE, MOTORIZED ASSY			1
15		HOSE, HEATER	NLA - 2.75" (69,85 mm) long - Order Ref. 43		2
16	7003458	CLAMP, HOSE			2
17	6675513	GROMMET			2
18	6690482	GROMMET			1
19	7003459	GROMMET			2
20	7003511	PLUG			1
21		SEAL	NLA - 48.75" (1,238.25 mm) long - Order Ref. 42		1
22		SEAL, FOAM	NLA - 15.4" (391,6 mm) long - Order Ref. 44		2
23	7003461	HOUSING, BASE			1
24	7003462	HOUSING, COVER DUST			1
25	7003463	VALVE, DRAIN			2
26	7003464	COVER, ASSY			1
27	7003465	NUT			8
28	6677115	RECEPTACLE			2
29	7003466	RIVET, POP			2
30	7003467	RIVET, POP			13
31	6676539	CLIP PANEL			2
32	6677580	SCREW			2
33	6693228	BOLT			14
34	7003468	NUT			1
35	7003469	SCREW			3
36	7003470	SCREW			4
37	7003471	SCREW			7
38	7003472	CLIP, RECEPTACLE			3
39	7003473	NUT			3
40	7003474	CLIP, RECEPTACLE			1
41		BLOWER, HEATER & A/C	See Illustration /		1
42	6677111	SEAL FOAM BULK/FT	bulk - sold per foot		x
43	6565977	HOSE, BULK	bulk - sold per foot - Was 7003457 [A]		x
44	7003460	SEAL, FOAM	bulk - sold per foot		x

Page 465 - OSS# 6300202494 - All rights reserved by Bobcat Company - 02/11/2016 - 14:15:02 - Produced by Ken Cook Co. with media1off

HEATER & A/C
(Heater Assembly) (Plastic Housing) (Blower Mount W/Coil Pan)

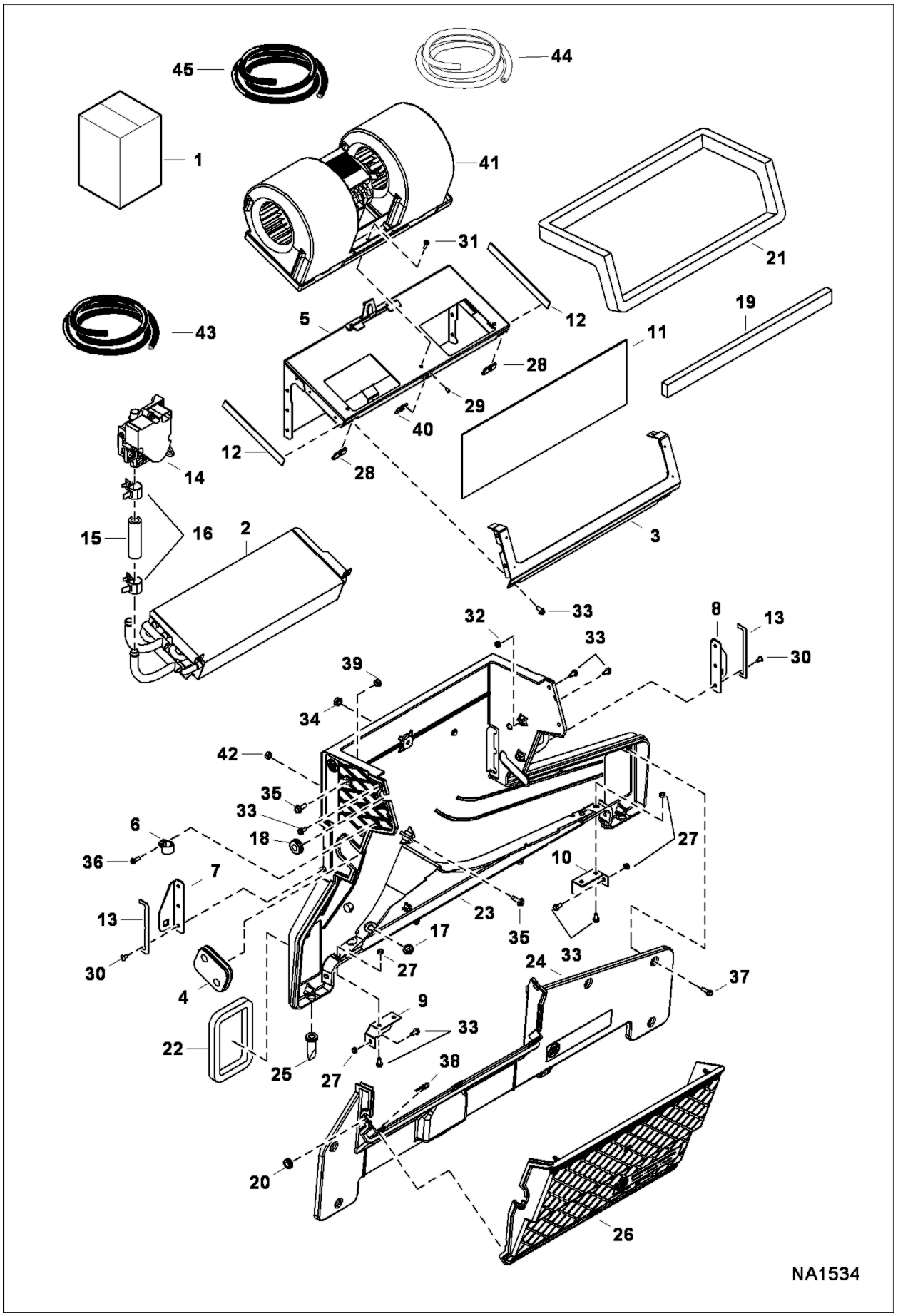

Illustration NA1534

Model S160 K
6904270

Page 466 - OSS# 6300202494 - All rights reserved by Bobcat Company - 02/11/2016 - 14:15:02 - Produced by Ken Cook Co. with mediaoff

HEATER & A/C (Cont'd)
(Heater Assembly) (Plastic Housing) (Blower Mount W/Coil Pan)

Ref No	Part Number	Description	Remarks	Serial Number	Qty
1	7175394	HEATER CAB			1
2	7003446	COIL, HEATER			1
3	7003447	FLANGE, SEAL			1
4	7175397	GROMMET			1
5	7010269	PAN, COIL			1
6	7010268	CLAMP			1
7	7003451	BRACKET			1
8	7003452	BRACKET			1
9	7003453	BRACKET			1
10	7003454	BRACKET			1
11	7010263	SHIELD, ISOLATOR BULK/FT			1
12	6693236	FOAM			2
13	6676538	BULK TAPE/FT	bulk - sold per foot		x
14	7003456	VALVE, MOTORIZED ASSY			1
14	6698501	HARNESS, HEATER			1
15		HOSE, HEATER	NLA - 2.75" (69,85 mm) long - Order Ref. 44		2
16	7003458	CLAMP, HOSE			2
17	6675513	GROMMET			2
18	6690482	GROMMET			1
19	7010264	FOAM			1
20	7003511	PLUG			1
21		SEAL	NLA - 48.75" (1,238.25 mm) long - Order Ref. 43		1
22		SEAL, FOAM	NLA - 15.4" (391,6 mm) long - Order Ref. 45		2
23	7003461	HOUSING, BASE			1
24	7003462	HOUSING, COVER DUST			1
25	7003463	VALVE, DRAIN			2
26	7003464	COVER, ASSY			1
27	7003465	NUT			8
28	6677115	RECEPTACLE			2
29	7003466	RIVET, POP			2
30	7010266	RIVET, POP			6
31	7010265	BOLT			5
32	7010267	NUT, LOCK			2
33	6691532	SCREW	Was 6677118 [A]		14
34	7003468	NUT			1
35	7003469	SCREW			3
36	7003470	SCREW			4
37	7003471	SCREW			7
38	7003472	CLIP, RECEPTACLE			3
39	7003473	NUT			3
40	7003474	CLIP, RECEPTACLE			1
41		BLOWER, HEATER & A/C	See Illustration HEATER & A/C / NA2155		1
42	6693226	NUT			1
43	6677111	SEAL FOAM BULK/FT	bulk - sold per foot		x
44	6565977	HOSE, BULK	bulk - sold per foot - Was 7003457 [A]		x

Page 467 - OSS# 6300202494 - All rights reserved by Bobcat Company - 02/11/2016 - 14:15:02 - Produced by Ken Cook Co. with media1off

HEATER & A/C (Cont'd)
(Heater Assembly) (Plastic Housing) (Blower Mount W/Coil Pan)

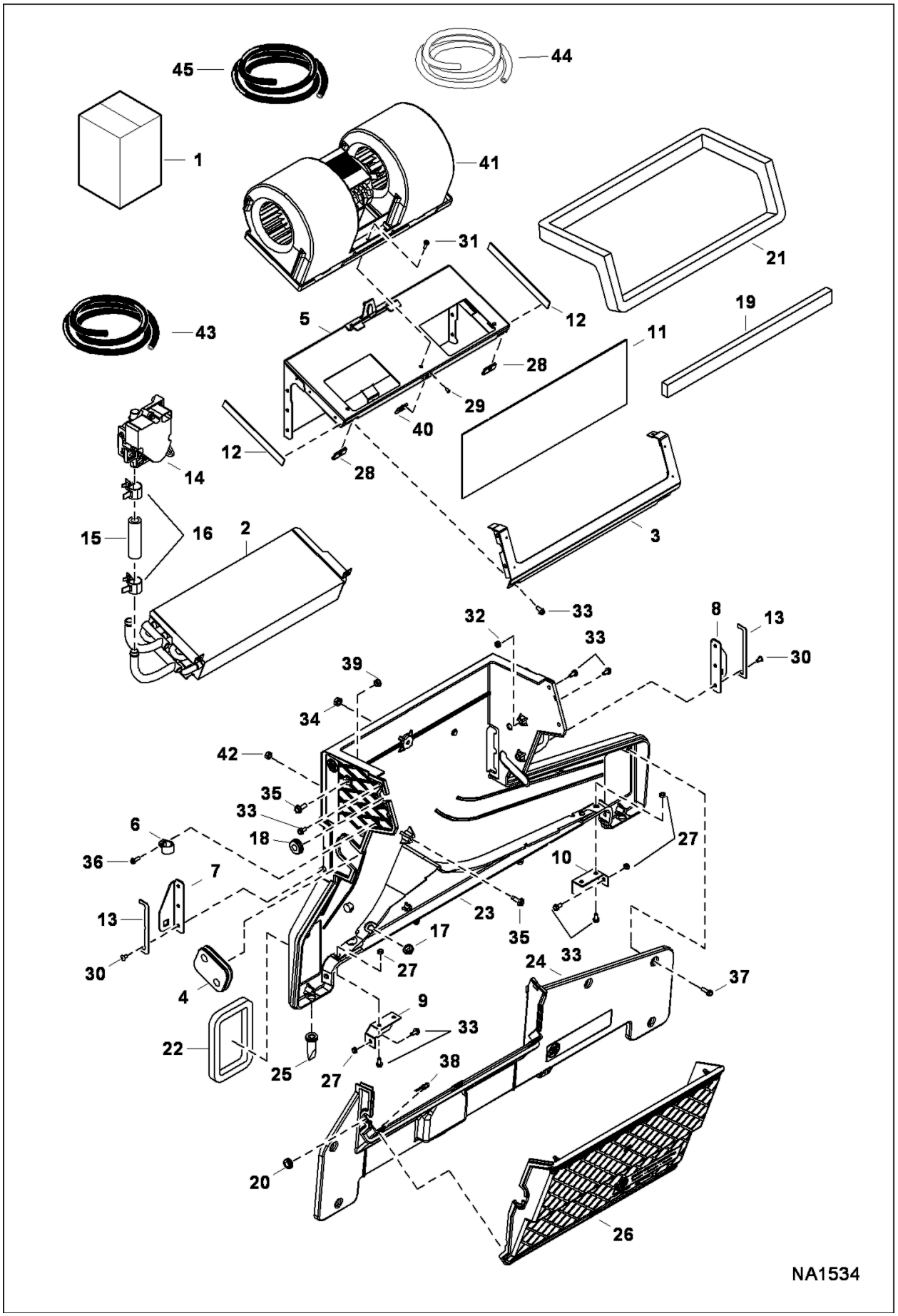

Illustration NA1534

Model S160 K
6904270

Page 468 - OSS# 6300202494 - All rights reserved by Bobcat Company - 02/11/2016 - 14:15:02 - Produced by Ken Cook Co. with mediaIoff

HEATER & A/C (Cont'd)
(Heater Assembly) (Plastic Housing) (Blower Mount W/Coil Pan)

Ref No	Part Number	Description	Remarks	Serial Number	Qty
45	7003460	SEAL, FOAM	bulk - sold per foot		x

Page 469 - OSS# 6300202494 - All rights reserved by Bobcat Company - 02/11/2016 - 14:15:02 - Produced by Ken Cook Co. with mediaioff

HEATER & A/C
(Blower Assembly) (Used on Heaters W/Metal Housing)

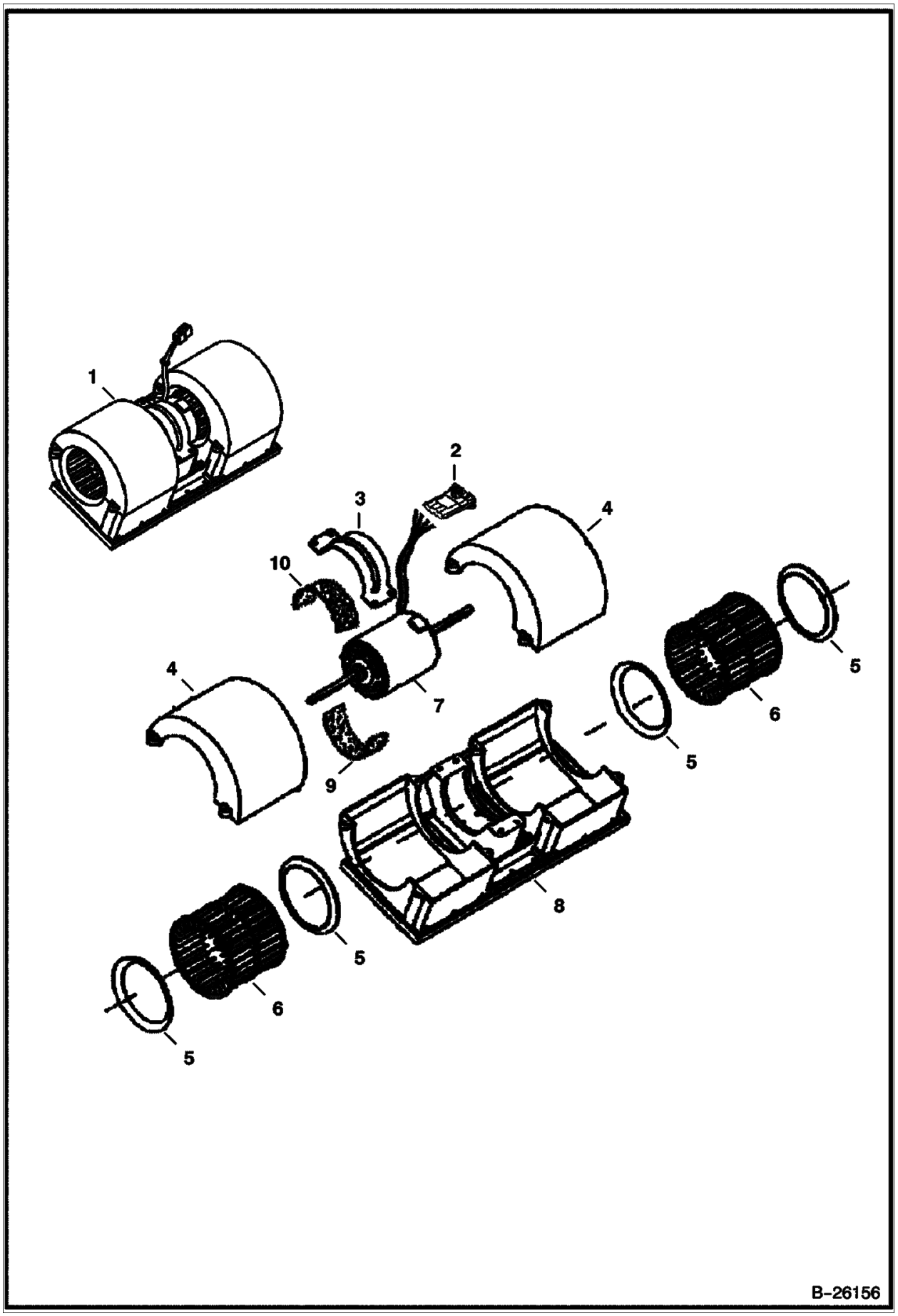

Illustration B26156

Model S160 K
6904270

Page 470 - OSS# 6300202494 - All rights reserved by Bobcat Company - 02/11/2016 - 14:15:02 - Produced by Ken Cook Co. with mediaoff

HEATER & A/C (Cont'd)
(Blower Assembly) (Used on Heaters W/Metal Housing)

Ref No	Part Number	Description	Remarks	Serial Number	Qty
1		BLOWER	See Illustration / - NLA - Ref. 2-10 - Order 7003445 blower - Was 6689762 [A]		1
2	6665017	CONNECTOR	4-pin		1
2	6665018	LOCK	4-pin		1
2	6648312	TERMINAL			4
2	6648320	SEAL			4
2	6650107	SEAL			4
3	6675506	MOUNT			1
4	6675507	COVER			2
5	6675504	RING			4
6	6675505	BLOWER, WHEEL			2
6	6676618	CLIP			2
7	6689766	MOTOR	W/Ref. 2		1
8	6675503	HOUSING			1
9	6689765	PAD	bottom		1
10	6689764	PAD	top		1

Page 471 - OSS# 6300202494 - All rights reserved by Bobcat Company - 02/11/2016 - 14:15:02 - Produced by Ken Cook Co. with media1off

HEATER & A/C
(Blower Assembly) (Heaters W/Plastic Housing)

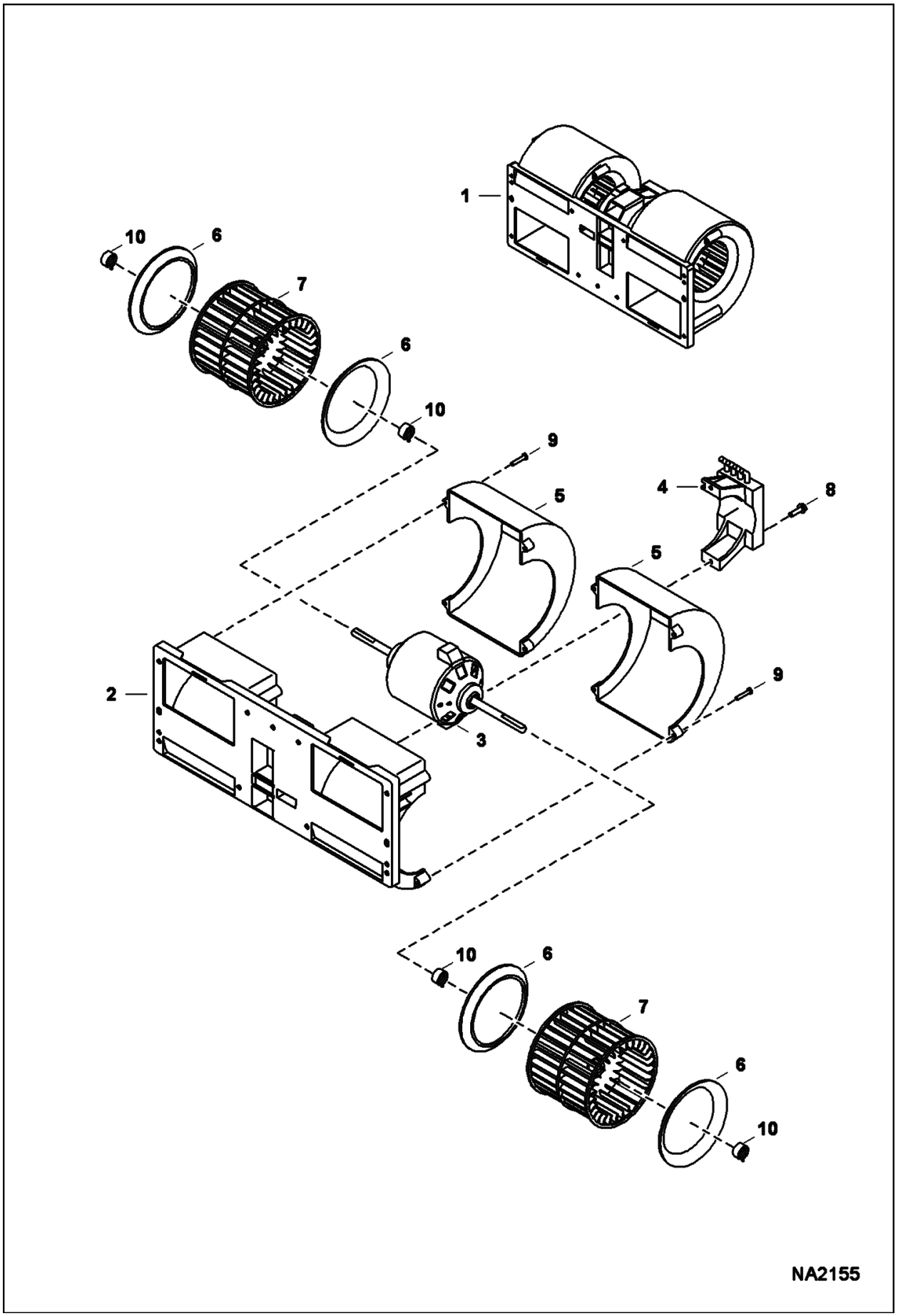

Illustration NA2155

Model S160 K
6904270

Page 472 - OSS# 6300202494 - All rights reserved by Bobcat Company - 02/11/2016 - 14:15:02 - Produced by Ken Cook Co. with mediaoff

HEATER & A/C (Cont'd)
(Blower Assembly) (Heaters W/Plastic Housing)

Ref No	Part Number	Description	Remarks	Serial Number	Qty
1	7003445	BLOWER, HEATER AND A/C			1
2	7010162	HOUSING, BLOWER			1
3	7010163	MOTOR, FAN			1
4	7010164	RESISTOR			1
5	7010165	COVER			2
6	7010166	RING, INNER			4
7	7010167	BLOWER, WHEEL			2
8	7003471	SCREW			2
9	7010168	SCREW			8
10	7010169	CLAMP, HOSE			4

Page 473 - OSS# 6300202494 - All rights reserved by Bobcat Company - 02/11/2016 - 14:15:02 - Produced by Ken Cook Co. with media1off

HEATER & A/C
(Heater Coil Kit)

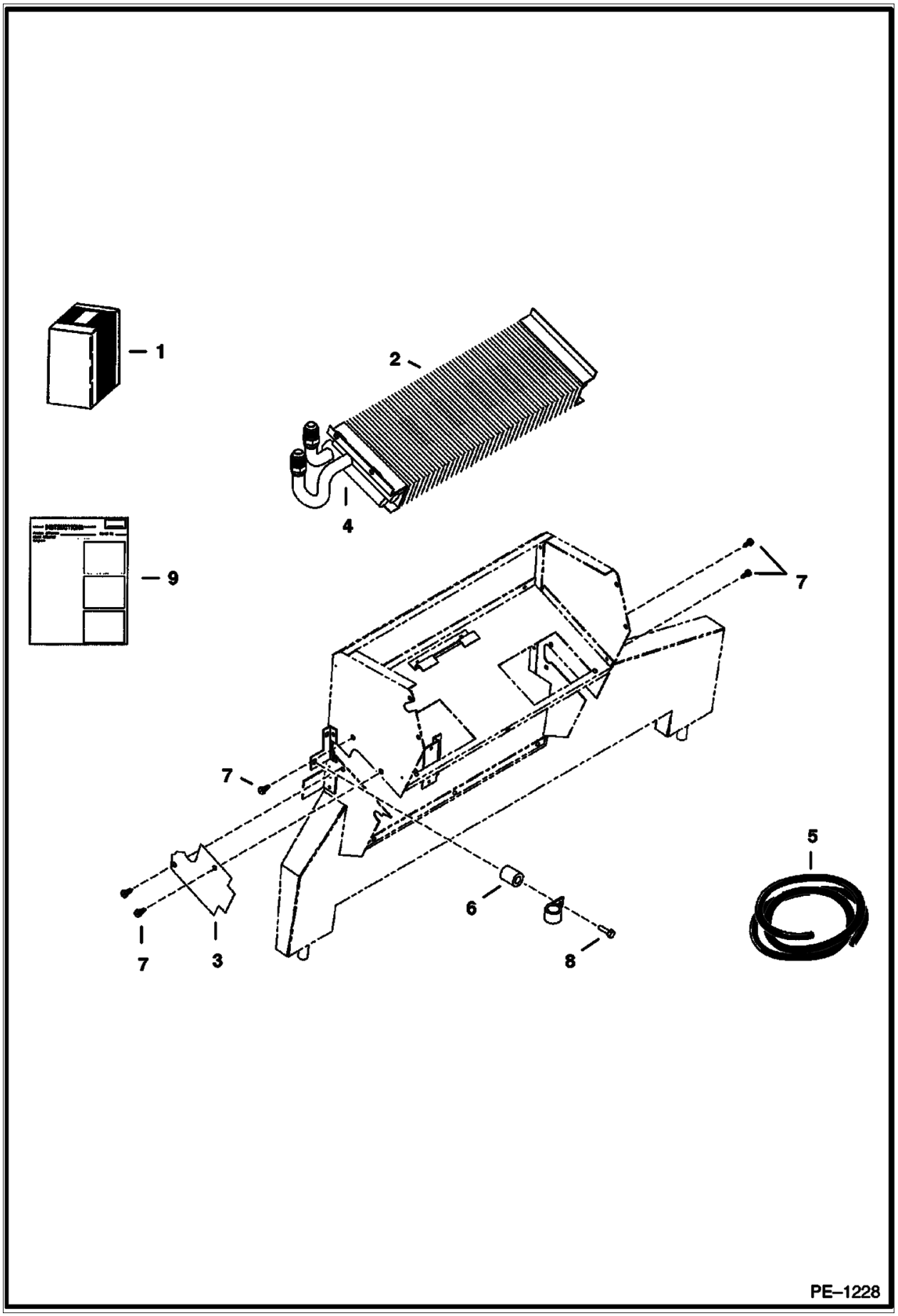

Illustration PE1228

Model S160 K
6904270

Page 474 - OSS# 6300202494 - All rights reserved by Bobcat Company - 02/11/2016 - 14:15:02 - Produced by Ken Cook Co. with mediaoff

HEATER & A/C (Cont'd)
(Heater Coil Kit)

Ref No	Part Number	Description	Remarks	Serial Number	Qty
1	7129922	HEATER COIL KIT	heater coil - barbed hose connectors - Ref. 2, 4 & 9 - Was 6689770 [A]		1
2		HEATER COIL	NSS - Order Ref. 1 W/barbed hose connectors		1
3	6677504	COVER	0.28" thick		1
4		INSULATION	NLA - 6" (152.4mm) long - Order Ref. 5		1
5	6676538	BULK TAPE/FT	bulk - sold per foot		x
6	6676606	SPACER			1
7	6726621	SCREW			2
8	6676653	SCREW			1
9	6901120	INSTRUCTIONS			1

Page 475 - OSS# 6300202494 - All rights reserved by Bobcat Company - 02/11/2016 - 14:15:02 - Produced by Ken Cook Co. with media1off

HEATER & A/C
(Heater Plumbing Kit)

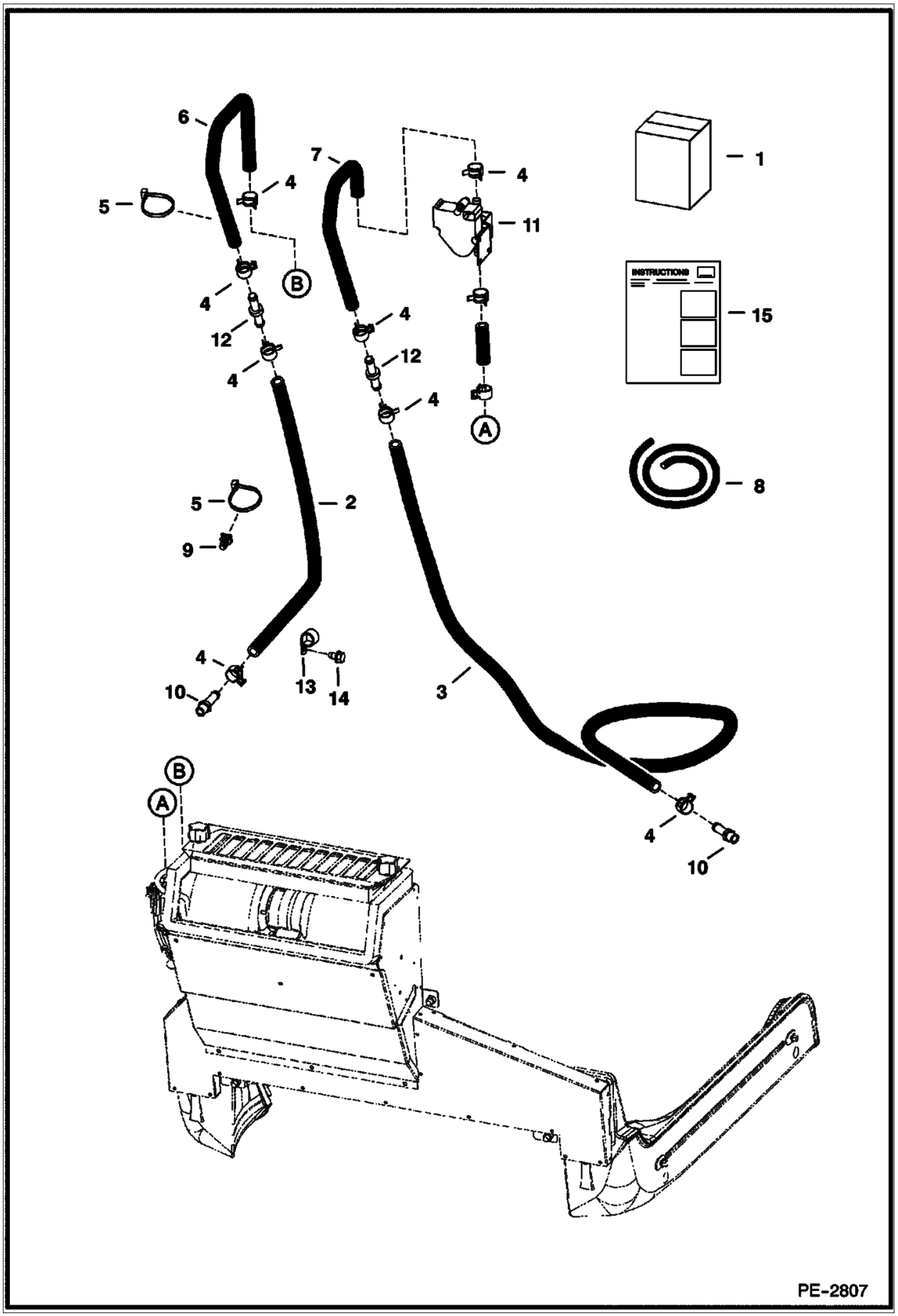

Illustration PE2807

Model S160 K
6904270

Page 476 - OSS# 6300202494 - All rights reserved by Bobcat Company - 02/11/2016 - 14:15:02 - Produced by Ken Cook Co. with mediaoff

HEATER & A/C (Cont'd)
(Heater Plumbing Kit)

Ref No	Part Number	Description	Remarks	Serial Number	Qty
1		KIT, PLUMBING HEATER	See Illustration HEATER & A/C / PE3549 - NLA - Ref. 2-10 & 12-14 - Order 7116901 kit - Was 7116900 [B], See Illustration HEATER & A/C / PE2805 - NLA - Ref. 2-10 & 12-14 - Order 7116901 kit - Was 7116900 [B]		1
2		HOSE	NLA - 28" (736 mm) long - Order Ref. 8		1
3		HOSE	NLA - 68" (1727 mm) long - Order Ref. 8		1
4	5HM20	CLAMP			8
5	6624289	STRAP, TIE			8
6	7113208	HOSE			1
7	7113209	HOSE, HEATER			1
8	6565977	HOSE, BULK	bulk - sold per foot		x
9	7015668	MOUNT, STRAP TIE	push in - Use W/tie strap - Was 6678666 [B]		2
10	6731084	CONNECTOR			2
11		VALVE	See Illustration HEATER & A/C / PE2805 not in kit		1
12	6732023	CONNECTOR, HOSE			2
13	30H45	CLIP			1
14	84G3710	SCREW			1
15	6904255	INSTRUCTIONS	not in kit - part of heater kit		1

Page 477 - OSS# 6300202494 - All rights reserved by Bobcat Company - 02/11/2016 - 14:15:02 - Produced by Ken Cook Co. with media1off

HEATER & A/C
(Heater Plumbing Kit)

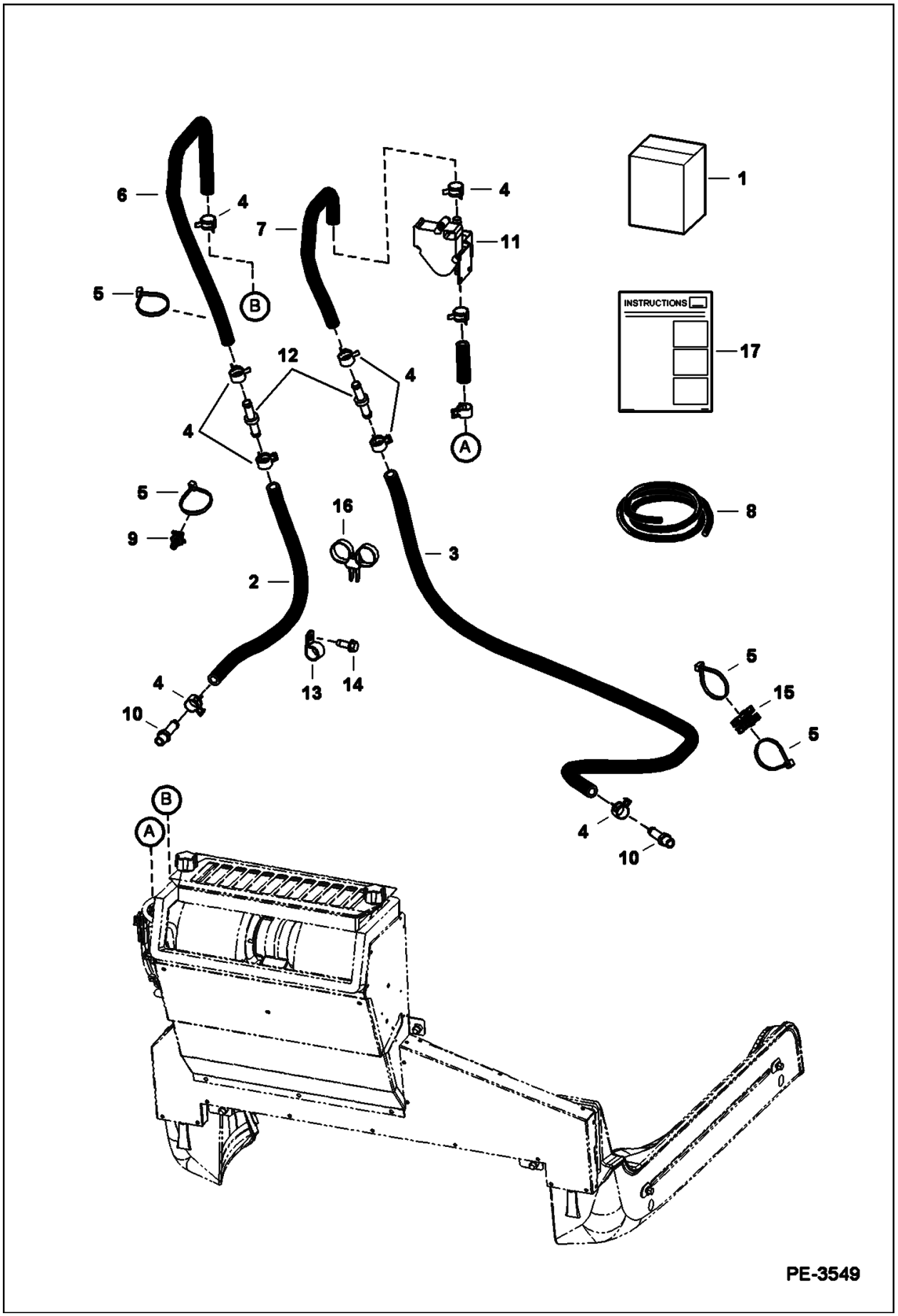

Illustration PE3549

Model S160 K
6904270

Page 478 - OSS# 6300202494 - All rights reserved by Bobcat Company - 02/11/2016 - 14:15:02 - Produced by Ken Cook Co. with mediaoff

HEATER & A/C (Cont'd)
(Heater Plumbing Kit)

Ref No	Part Number	Description	Remarks	Serial Number	Qty
1	7116901	HTR PLUMBING KIT	See Illustration HEATER & A/C / PE2805 - Ref. 2-10 & 12-15 - Was 7116900 [A]		1
2		HOSE	NLA - 25" (635 mm) long - Order Ref. 8		1
3		HOSE	NLA - 54" (1371,6 mm) long - Order Ref. 8		1
4	5HM20	CLAMP			8
5	6624289	STRAP, TIE			5
6	7125557	HOSE, HEATER FORMED			1
7	7113209	HOSE, HEATER			1
8	6565977	HOSE, BULK	bulk - sold per foot		x
9	7015668	MOUNT, STRAP TIE	push in - Use W/tie strap - Was 6678666 [B]		2
10	6731084	CONNECTOR			2
11		VALVE	See Illustration HEATER & A/C / PE2805 - not in kit		1
12	6732023	CONNECTOR, HOSE			2
13	30H46	CLIP			1
14	84G3716	SCREW 5			1
15	6686385	MOUNT, SADDLE SWIVEL			1
16	6678668	STRAP			1
17	6904255	INSTRUCTIONS	- not in kit - part of heater kit		1

Page 479 - OSS# 6300202494 - All rights reserved by Bobcat Company - 02/11/2016 - 14:15:02 - Produced by Ken Cook Co. with mediaioff

HEATER & A/C
(A/C Kit) (Used on Heaters W/Metal Housing)

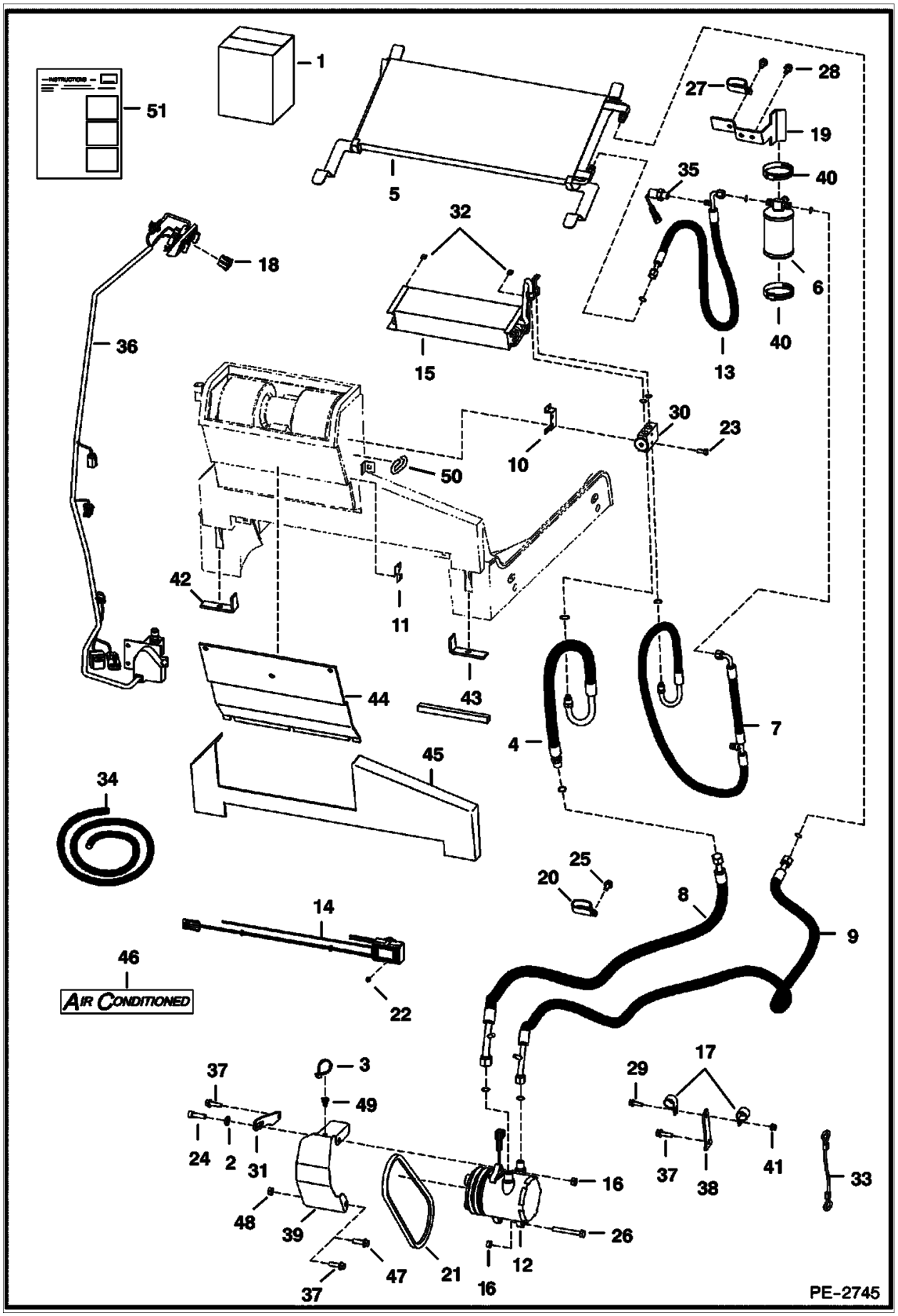

Illustration PE2745

Model S160 K
6904270

Page 480 - OSS# 6300202494 - All rights reserved by Bobcat Company - 02/11/2016 - 14:15:02 - Produced by Ken Cook Co. with mediaoff

HEATER & A/C (Cont'd)
(A/C Kit) (Used on Heaters W/Metal Housing)

Ref No	Part Number	Description	Remarks	Serial Number	Qty
1	7116903	KIT, A/C	Ref. 2-49		1
2	6557831	WASHER			1
3	6624289	STRAP, TIE			6
4	6726623	HOSE			1
4	7009978	O-RING	#10 - Was 6675825 [A]		x
5	6733001	CONDENSER	A/C		1
6	6674235	RECEIVER, DRIER A/C			1
6	6676062	VALVE, RELIEF PRESS	relief		1
7	6698442	HOSE	Was 6675075 [A]		1
7	6677122	CAP			1
7	7009976	O-RING	#6 - Was 6675824 [A]		x
8	6726656	HOSE			1
8	6685199	CAP			1
8	7009978	O-RING	#10 - Was 6675825 [A]		x
9	6726661	HOSE, A/C ASSY			1
9		CAP	NLA - Was 6685198 [A]		1
9	7009977	O-RING	#8 - Was 6675538 [A]		x
10	6676984	BRACKET, TANK	valve		1
11	6690480	COVER	plate - Was 6677105 [B]	& Bel	1
11	6692416	COVER		& Abv	1
12	6733655	COMPRESSOR, A/C	W/Ref. 46		1
12	6679145	CLUTCH			1
12	6648307	CONNECTOR	2-pin		1
12	6648308	CONNECTOR			1
13	6727414	HOSE	W/Ref. 35		1
13	7009976	O-RING	#6 - Was 6675824 [A]		x
14	6683004	THERMOSTAT			1
15	6690477	EVAPORATOR			1
15	7009977	O-RING	#8 - Was 6675538 [A]		x
16	53DM10	NUT			1
17	30H50	CLAMP			3
18	7169112	SWITCH, ROCKER A/C	Was 6719176 [A]		1
19	6726620	BRACKET	receiver drier		1
20	31H49	CLAMP			1
21	6726988	BELT	compressor		1
22	6726621	SCREW			2
23	1CM635	BOLT			2
24	2GM1040	BOLT	Was 2GM1035 [B]		1
25	84G3716	SCREW 5			1
26	5CM1080	SCREW			1
27	31H46	CLAMP			1
28	84G3710	SCREW			3
29	35C512	BOLT	Was 35C516 [B]		2
30	6675534	BLOCK, VALVE A/C	expansion valve		1
30	7009977	O-RING	#8 - Was 6675538 [A]		x
31	6726648	BRACKET	swing		1
32	6676539	CLIP PANEL			2
33	6808831	WIRE ROPE			1
34	6676538	BULK TAPE/FT	bulk - sold per foot		x
35	6675779	SWITCH, PRESS	pressure		1

Page 481 - OSS# 6300202494 - All rights reserved by Bobcat Company - 02/11/2016 - 14:15:02 - Produced by Ken Cook Co. with media1off

HEATER & A/C (Cont'd)
(A/C Kit) (Used on Heaters W/Metal Housing)

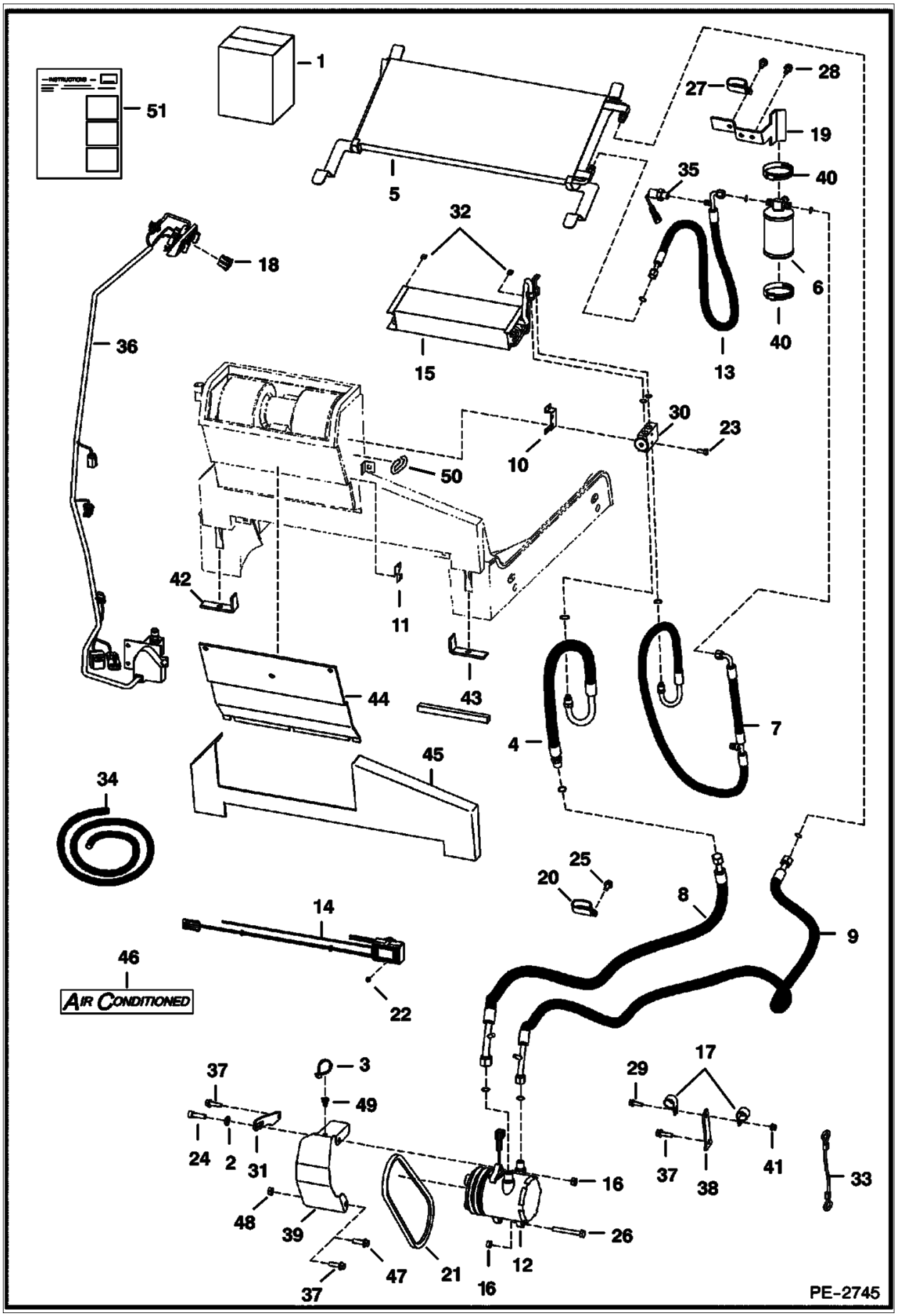

Illustration PE2745

Model S160 K
6904270

Page 482 - OSS# 6300202494 - All rights reserved by Bobcat Company - 02/11/2016 - 14:15:02 - Produced by Ken Cook Co. with mediaoff

HEATER & A/C (Cont'd)
(A/C Kit) (Used on Heaters W/Metal Housing)

Ref No	Part Number	Description	Remarks	Serial Number	Qty
36		HARNESS, CAB DLX	See Illustration CAB ELECTRICAL CIRCUITRY / PE2821 - not in kit		1
37	35C620	BOLT 5			2
38	6728011	BRACKET			1
39	6731495	SHIELD	belt		1
40	44H48	CLAMP			2
41	83D5	NUT 5			2
42	6675608	INSULATION			1
43	6675609	INSULATION			1
44	6689179	INSULATION			1
45	6689180	INSULATION			1
46	6729077	DECAL	air conditioned		2
47	35C624	BOLT			1
48	97D6	NUT 10			1
49	7015668	MOUNT, STRAP TIE	push in - Use W/tie strap - Was 6678666 [B]		1
50		INSULATION	NLA - 6" (152,4 mm) long - Order Ref. 34		1
51	6904257	INSTRUCTIONS			1

Page 483 - OSS# 6300202494 - All rights reserved by Bobcat Company - 02/11/2016 - 14:15:02 - Produced by Ken Cook Co. with media1off

HEATER & A/C
(A/C Kit) (Used on Heaters W/Plastic Housing)

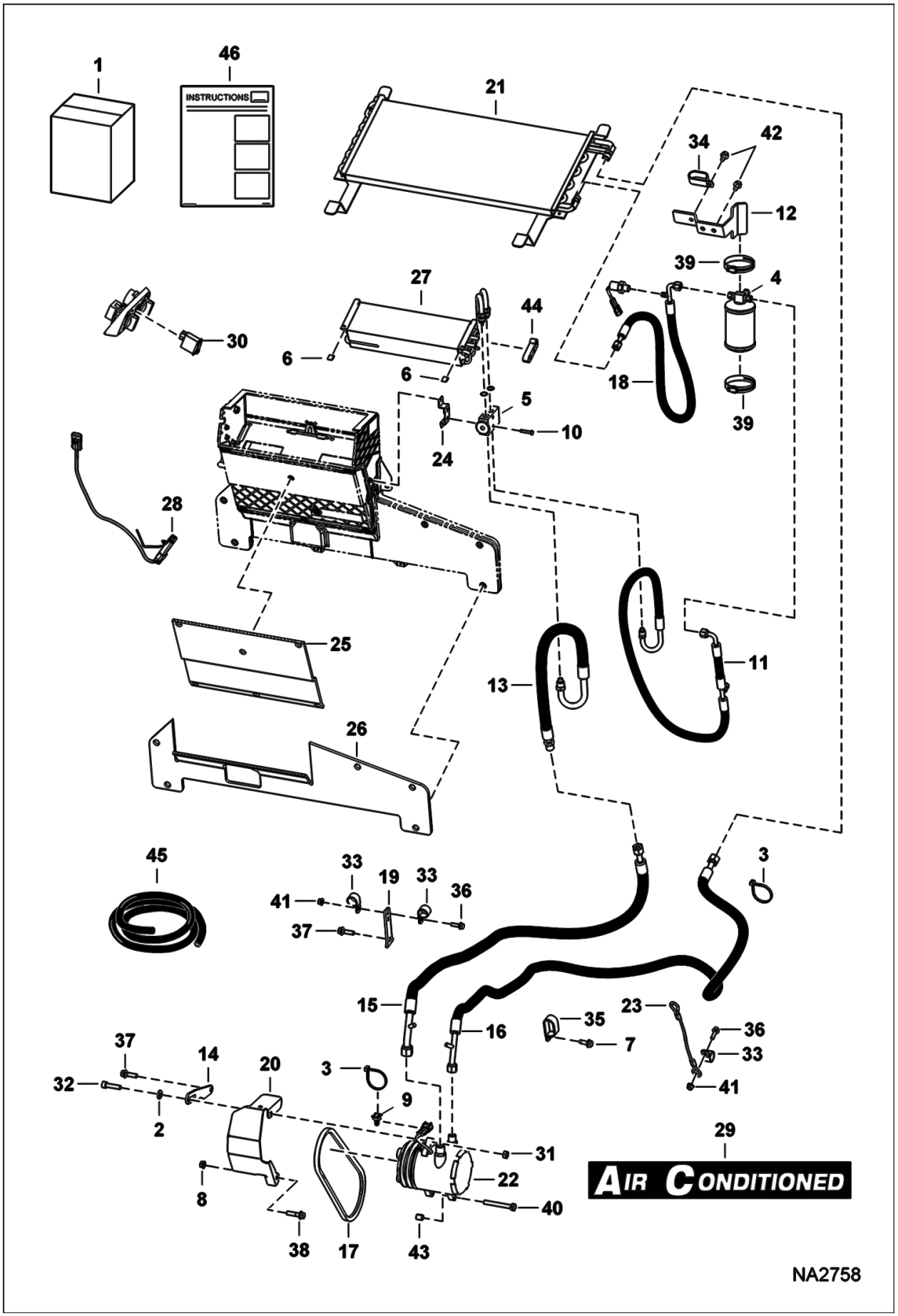

Illustration NA2758

Model S160 K
6904270

Page 484 - OSS# 6300202494 - All rights reserved by Bobcat Company - 02/11/2016 - 14:15:02 - Produced by Ken Cook Co. with mediaoff

HEATER & A/C (Cont'd)
(A/C Kit) (Used on Heaters W/Plastic Housing)

Ref No	Part Number	Description	Remarks	Serial Number	Qty
1	7166140	KIT, A/C	Ref. 2-45		1
2	6557831	WASHER			1
3	6624289	STRAP, TIE			6
4	6674235	RECEIVER, DRIER A/C			1
5	6675534	BLOCK, VALVE A/C			1
6	6676539	CLIP PANEL			2
7	84G3716	SCREW 5			1
8	97D6	NUT 10			1
9	7015668	MOUNT, STRAP TIE	push in - Use W/tie strap - Was 6678666 [B]		1
10	6691534	SCREW			2
11	6698442	HOSE			1
11	6677122	CAP			1
11	7009976	O-RING	#6		x
12	6726620	BRACKET			1
13	6726623	HOSE			1
13	7009978	O-RING	#10		x
14	6726648	BRACKET			1
15	6726656	HOSE			1
15	7009978	O-RING	#10		x
16	6726661	HOSE, A/C ASSY			1
16	7009977	O-RING	#8		x
17	6726988	BELT			1
18	6727414	HOSE			1
18	7009976	O-RING	#6		x
19	6728011	BRACKET			1
20	6731495	SHIELD			1
21	6733001	CONDENSER			1
22	6733655	COMPRESSOR, A/C			1
23	6808831	WIRE ROPE			1
24	7001669	BRACKET			1
25	7001670	INSULATION			1
26	7001671	INSULATION			1
27	7002707	EVAPORATOR			1
27		RING,O	NLA - was 6675538 - #8 [A]		x
27	7240092	O-RING			x
28	7008040	MODULE, DE-ICER ELECTRONIC			1
29	7166916	DECAL, A/C	not in kit		2
30	7169112	SWITCH, ROCKER A/C			1
31	2DM10	NUT			1
32	2GM1040	BOLT			1
33	30H50	CLAMP			3
34	31H46	CLAMP			1
35	31H49	CLAMP			1
36	35C516	BOLT 10			2
37	35C620	BOLT 5			2
38	35C624	BOLT			1
39	44H48	CLAMP			2
40	5CM1080	SCREW			1

Page 485 - OSS# 6300202494 - All rights reserved by Bobcat Company - 02/11/2016 - 14:15:02 - Produced by Ken Cook Co. with media1off

HEATER & A/C (Cont'd)
(A/C Kit) (Used on Heaters W/Plastic Housing)

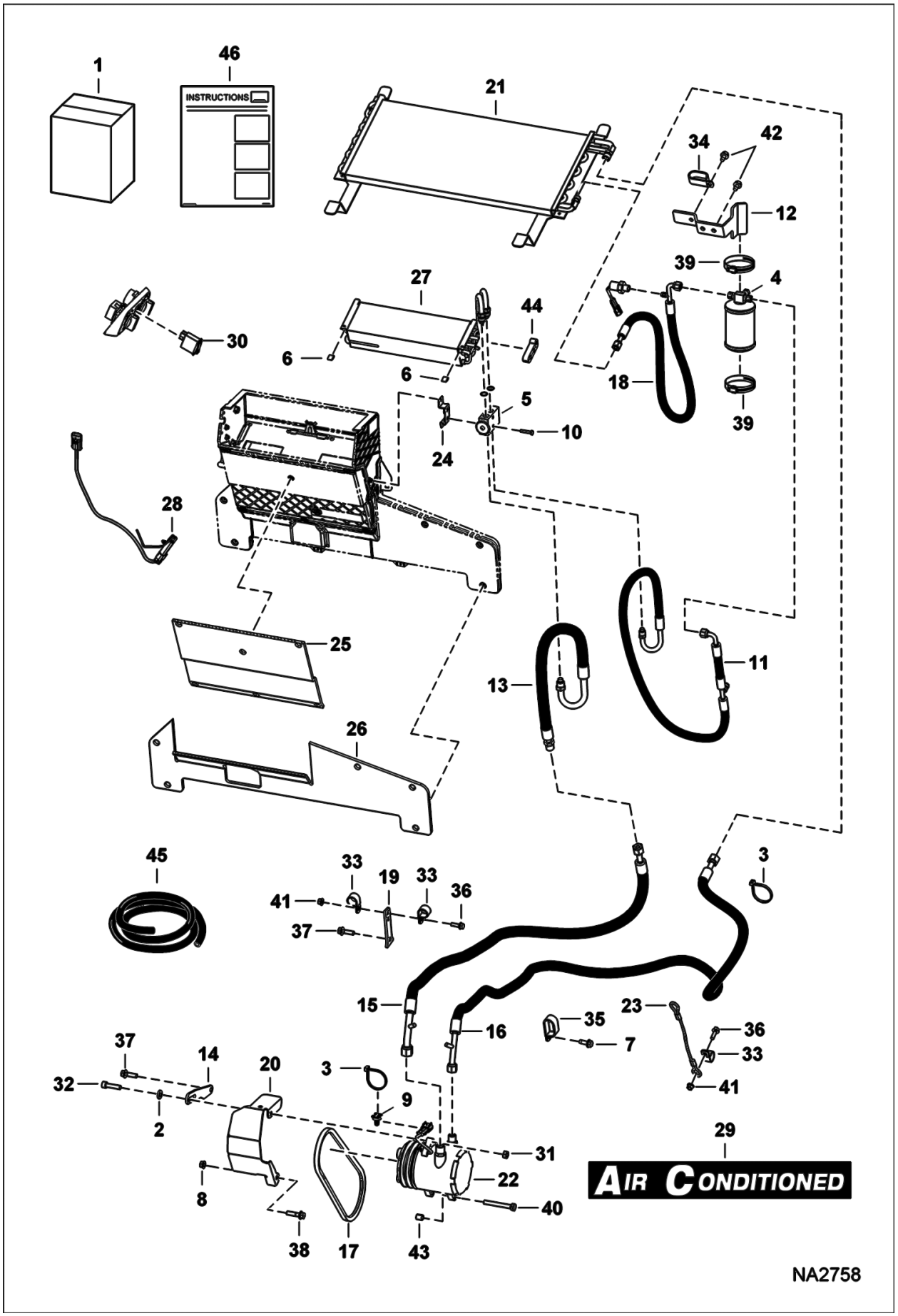

Illustration NA2758

Model S160 K
6904270

Page 486 - OSS# 6300202494 - All rights reserved by Bobcat Company - 02/11/2016 - 14:15:02 - Produced by Ken Cook Co. with mediaoff

HEATER & A/C (Cont'd)
(A/C Kit) (Used on Heaters W/Plastic Housing)

Ref No	Part Number	Description	Remarks	Serial Number	Qty
41	83D5	NUT 5			2
42	84G3710	SCREW			3
43	6732732	BUSHING			1
44		SEAL	NLA - 7.87" (200 mm) long - Order Ref. 45		1
45	6677111	SEAL FOAM BULK/FT	bulk - sold per foot		x
46	6989744	INSTRUCTIONS			1

Page 487 - OSS# 6300202494 - All rights reserved by Bobcat Company - 02/11/2016 - 14:15:02 - Produced by Ken Cook Co. with mediaioff

HEATER & A/C
(HVAC Assembly) (Metal Housing)

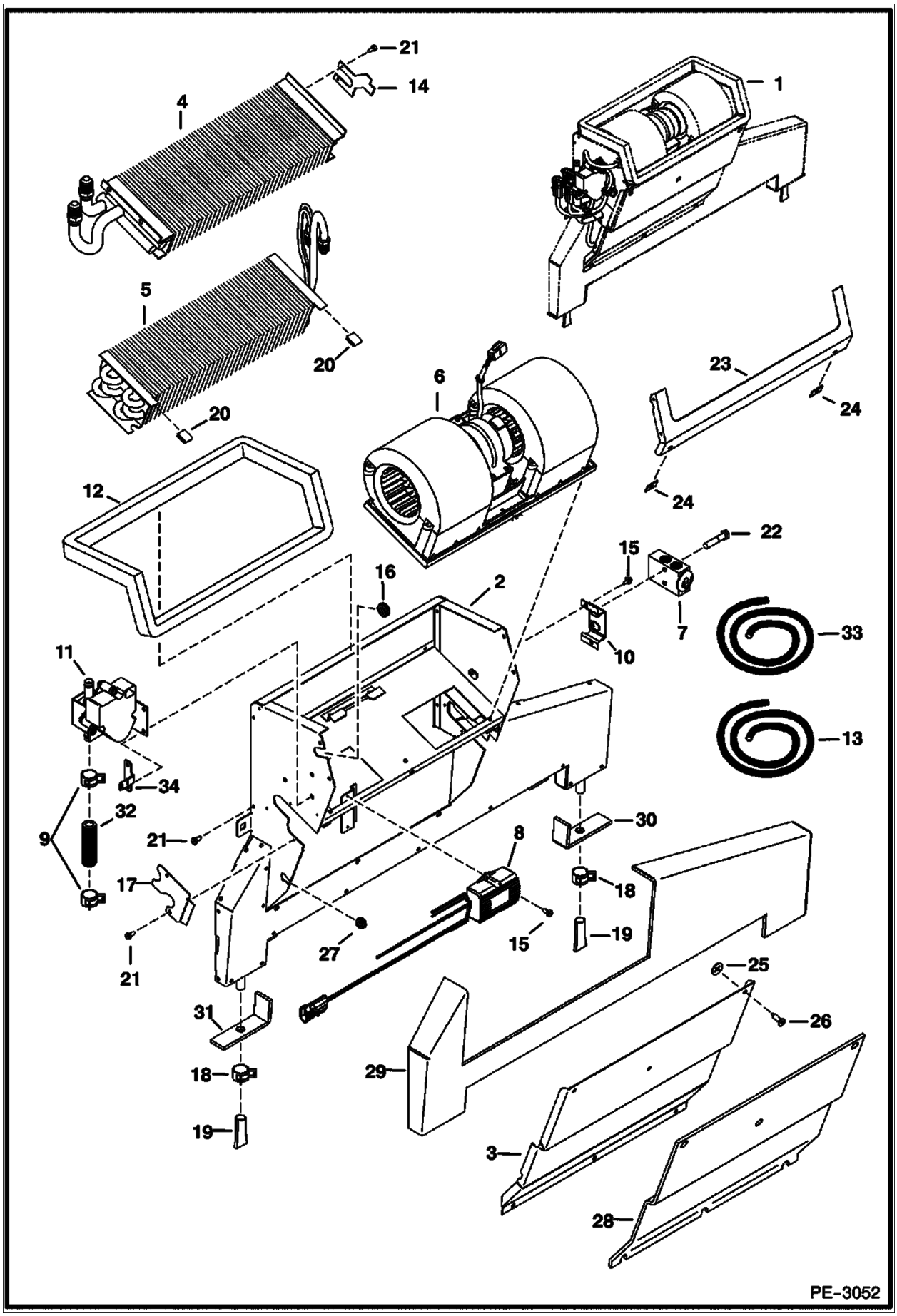

Illustration PE3052

Model S160 K
6904270

Page 488 - OSS# 6300202494 - All rights reserved by Bobcat Company - 02/11/2016 - 14:15:02 - Produced by Ken Cook Co. with mediaoff

HEATER & A/C (Cont'd)
(HVAC Assembly) (Metal Housing)

Ref No	Part Number	Description	Remarks	Serial Number	Qty
1	6688542	HVAC HEATER	assy - Ref. 2-34		1
2	6690478	HOUSING			1
3		COVER	NLA - Order 6690476, also Order Ref. 23 (6678152)		1
3	6690476	COVER			1
4		COIL	NSS - heater - Order 6689770 heater coil kit		1
5	6690477	EVAPORATOR			1
5	7009977	O-RING	#8 - Was 6675538 [A]		x
6	6689762	BLOWER	assy		1
7	6675534	BLOCK, VALVE A/C			1
8	6683004	THERMOSTAT			1
9	6675512	CLAMP	hose		2
10	6676984	BRACKET, TANK	valve		1
11	6689696	VALVE, HEATER CAB			1
12		SEAL	NLA - 48.75" (1238,25mm) - Order Ref. 13		1
13	6677111	SEAL FOAM BULK/FT	bulk - sold per foot		x
14	6690480	COVER			1
15	6691532	SCREW	Was 6677118 [A]		3
16	6690482	GROMMET			1
17	6690479	COVER			1
18	6675510	CLAMP	drain hose		2
19	6675511	VALVE, DRAIN			2
20	6676539	CLIP PANEL			2
21	6726621	SCREW	sheet metal		7
22	1CM635	BOLT			2
23		SEAL	NLA - Order 6678152, Also Order Ref. 3 (6690476)		1
23	6678152	SEAL FLANGE			1
24	6677115	RECEPTACLE			6
25	6677116	RETAINER			6
26	6677117	SCREW	captive		6
27	6684947	GROMMET			1
28	6689179	INSULATION			1
29	6689180	INSULATION			1
30	6675609	INSULATION			1
31	6675608	INSULATION			1
32		HOSE	NLA - 1/2" heater hose 2.75" (69,85mm) - Order Ref. 33		1
33	6565977	HOSE, BULK	bulk - sold per foot		x
34	6690481	BRACKET	harness		1

Page 489 - OSS# 6300202494 - All rights reserved by Bobcat Company - 02/11/2016 - 14:15:02 - Produced by Ken Cook Co. with media1off

HEATER & A/C
(HVAC Assembly) (Plastic Housing) (Two Piece Blower Mount)

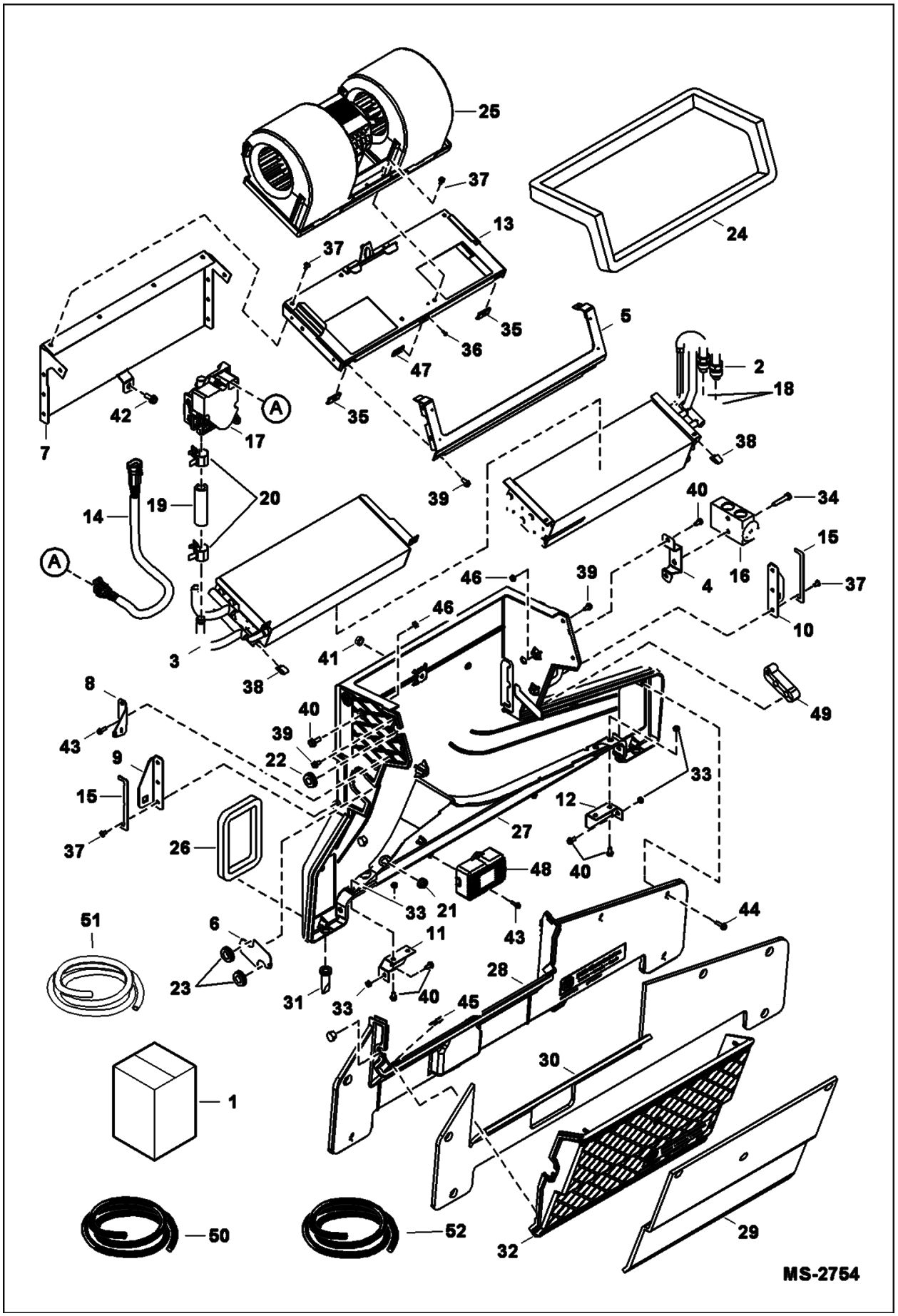

Illustration MS2754

Model S160 K
6904270

Page 490 - OSS# 6300202494 - All rights reserved by Bobcat Company - 02/11/2016 - 14:15:02 - Produced by Ken Cook Co. with mediaoff

HEATER & A/C (Cont'd)
(HVAC Assembly) (Plastic Housing) (Two Piece Blower Mount)

Ref No	Part Number	Description	Remarks	Serial Number	Qty
1		HVAC ASSY	See Illustration HEATER & A/C / NA1535 NLA - Order 7175395 HVAC assy - Was 6691438 [A]		1
2	7002707	EVAPORATOR			1
3	7003446	COIL, HEATER			1
4	7001669	BRACKET			1
5	7003447	FLANGE, SEAL			1
6	7003448	PLATE			1
7	7003449	PAN, COIL			1
8	7003450	BRACKET, HARNESS			1
9	7003451	BRACKET			1
10	7003452	BRACKET			1
11	7003453	BRACKET			1
12	7003454	BRACKET			1
13	7003455	PLATE			1
14	6698501	HARNESS, HEATER			1
15	6676538	BULK TAPE/FT	bulk - sold per foot		x
16	6675534	BLOCK, VALVE A/C			1
17	7003456	VALVE, MOTORIZED ASSY			1
18	7009977	O-RING	#8 - Was 6675538 [A]		2
19		HOSE, HEATER	NLA - 2.75" (69,85 mm) long - Order Ref. 51		1
20	7003458	CLAMP, HOSE			2
21	6675513	GROMMET			2
22	6690482	GROMMET			1
23	7003459	GROMMET			2
24		SEAL	NLA - 48.75" (1,238.25 mm) long - Order Ref. 50		1
25		BLOWER, HEATER & A/C	See Illustration /		1
26		SEAL, FOAM	NLA - 15.4" (391,6 mm) long - Order Ref. 52		2
27	7003461	HOUSING, BASE			1
28	7003462	HOUSING, COVER DUST			1
29	7001670	INSULATION			1
30	7001671	INSULATION			1
31	7003463	VALVE, DRAIN			2
32	7003464	COVER, ASSY			1
33	7003465	NUT			8
34	6691534	SCREW			2
35	6677115	RECEPTACLE			2
36	7003466	RIVET, POP			2
37	7003467	RIVET, POP			13
38	6676539	CLIP PANEL			2
39	6677580	SCREW			2
40	6691532	SCREW	Was 6677118 [A]		14
41	7003468	NUT			1
42	7003469	SCREW			3
43	7003470	SCREW			4
44	7003471	SCREW			7
45	7003472	CLIP, RECEPTACLE			3
46	7003473	NUT			3

Page 491 - OSS# 6300202494 - All rights reserved by Bobcat Company - 02/11/2016 - 14:15:02 - Produced by Ken Cook Co. with media1off

HEATER & A/C (Cont'd)
(HVAC Assembly) (Plastic Housing) (Two Piece Blower Mount)

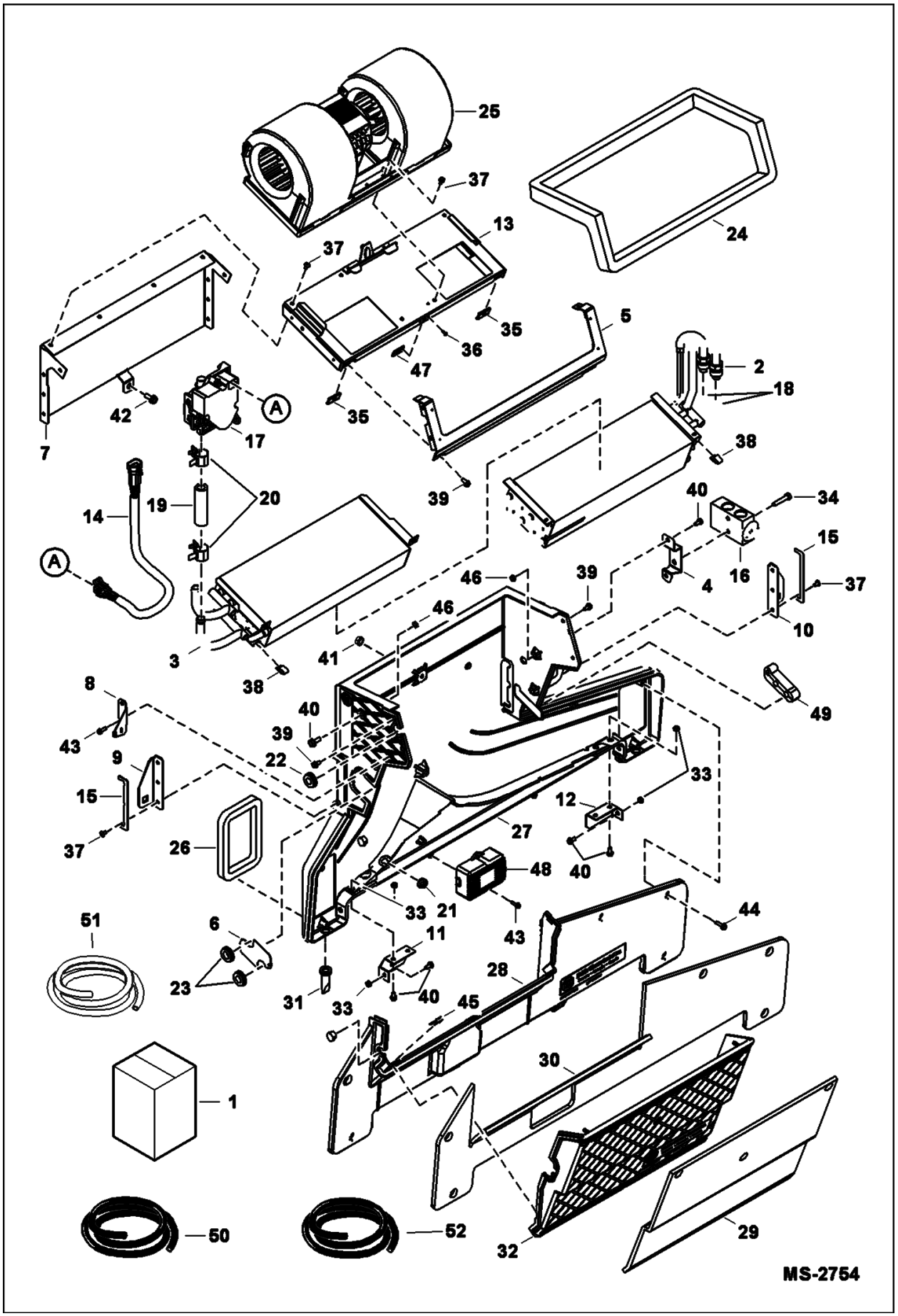

Illustration MS2754

Model S160 K
6904270

Page 492 - OSS# 6300202494 - All rights reserved by Bobcat Company - 02/11/2016 - 14:15:02 - Produced by Ken Cook Co. with mediaoff

HEATER & A/C (Cont'd)
(HVAC Assembly) (Plastic Housing) (Two Piece Blower Mount)

Ref No	Part Number	Description	Remarks	Serial Number	Qty
47	7003474	CLIP, RECEPTACLE			1
48	6683004	THERMOSTAT			1
49		SEAL	NLA - 8" (203.2 mm) long - Order Ref. 50		1
50	6677111	SEAL FOAM BULK/FT	bulk - sold per foot		x
51	6565977	HOSE, BULK	bulk - sold per foot - Was 7003457 [A]		x
52	7003460	SEAL, FOAM	bulk - sold per foot		x

Page 493 - OSS# 6300202494 - All rights reserved by Bobcat Company - 02/11/2016 - 14:15:02 - Produced by Ken Cook Co. with media1off

HEATER & A/C
(HVAC Assembly) (Plastic Housing) (One Piece Blower Mount)

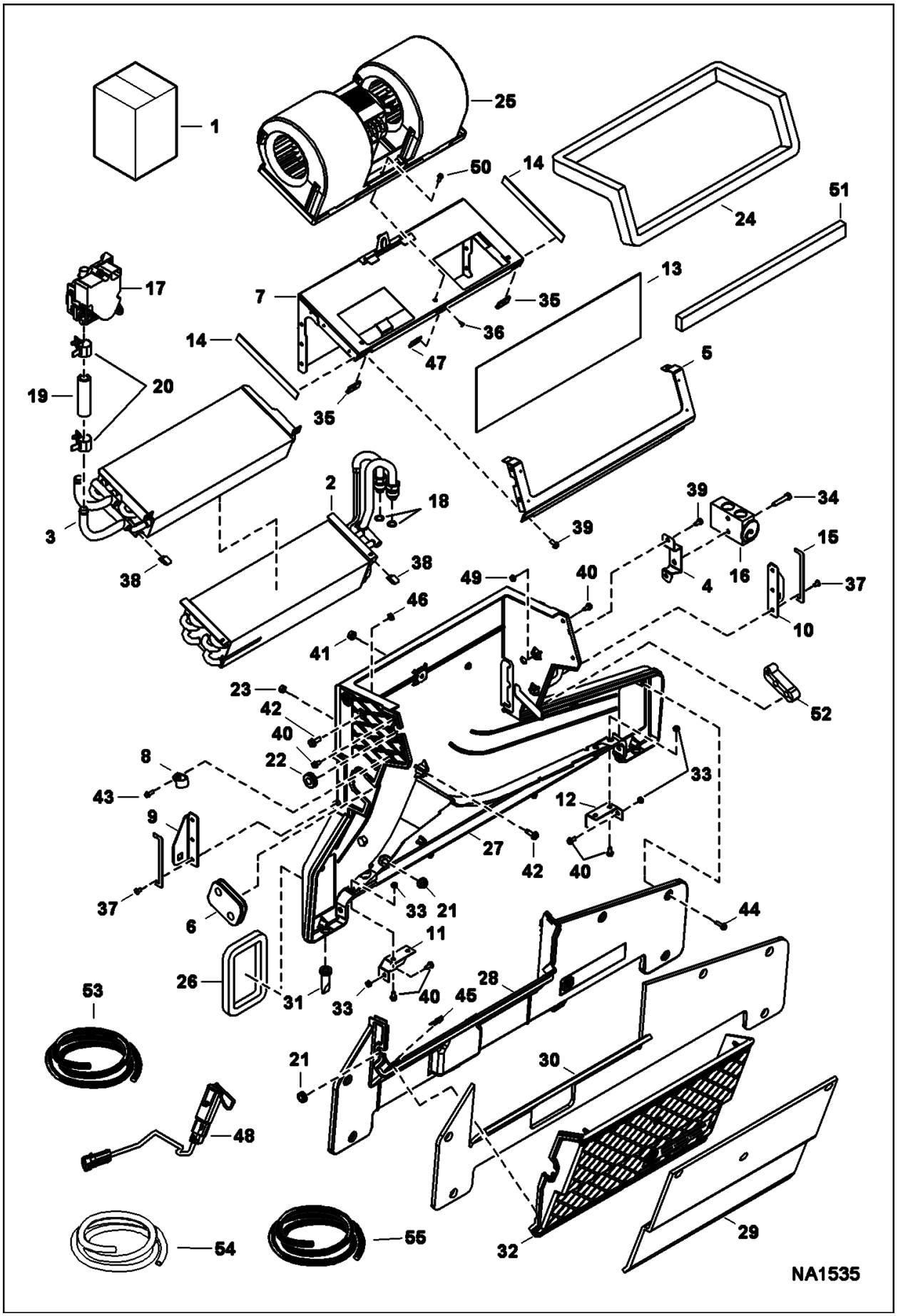

Illustration NA1535

Model S160 K
6904270

Page 494 - OSS# 6300202494 - All rights reserved by Bobcat Company - 02/11/2016 - 14:15:02 - Produced by Ken Cook Co. with mediaoff

HEATER & A/C (Cont'd)
(HVAC Assembly) (Plastic Housing) (One Piece Blower Mount)

Ref No	Part Number	Description	Remarks	Serial Number	Qty
1	7175395	HVAC ASSY			1
2	7002707	EVAPORATOR			1
3	7003446	COIL, HEATER			1
4	7001669	BRACKET			1
5	7003447	FLANGE, SEAL			1
6	7175397	GROMMET			1
7	7010269	PAN, COIL			1
8	7010268	CLAMP			1
9	7003451	BRACKET			1
10	7003452	BRACKET			1
11	7003453	BRACKET			1
12	7003454	BRACKET			1
13	7010263	SHIELD, ISOLATOR BULK/FT			1
14	6693236	FOAM			2
15	6676538	BULK TAPE/FT	bulk - sold per foot		x
16	6675534	BLOCK, VALVE A/C			1
17	7003456	VALVE, MOTORIZED ASSY			1
18	7009977	O-RING	#8 - Was 6675538 [A]		2
19		HOSE, HEATER	NLA - 2.75" (69,85 mm) long - Order Ref. 54		1
20	7003458	CLAMP, HOSE			2
21	6675513	GROMMET			2
22	6690482	GROMMET			1
23	6693226	NUT			1
24		SEAL	NLA - 48.75" (1,238.25 mm) long - Order Ref. 53		1
25		BLOWER, HEATER & A/C	See Illustration HEATER & A/C / NA2155		1
26		SEAL, FOAM	NLA - 15.4" (391,6 mm) long - Order Ref. 55		2
27	7003461	HOUSING, BASE			1
28	7003462	HOUSING, COVER DUST			1
29	7001670	INSULATION			1
30	7001671	INSULATION			1
31	7003463	VALVE, DRAIN			2
32	7003464	COVER, ASSY			1
33	7003465	NUT			8
34	6691534	SCREW			2
35	6677115	RECEPTACLE			2
36	7003466	RIVET, POP			2
37	7010266	RIVET, POP			6
38	6676539	CLIP PANEL			2
39	6693228	BOLT			2
40	6693228	BOLT			12
41	7003468	NUT			1
42	7003469	SCREW			3
43	7003470	SCREW			4
44	7003471	SCREW			7
45	7003472	CLIP, RECEPTACLE			3
46	7003473	NUT			3

Page 495 - OSS# 6300202494 - All rights reserved by Bobcat Company - 02/11/2016 - 14:15:02 - Produced by Ken Cook Co. with media1off

HEATER & A/C (Cont'd)
(HVAC Assembly) (Plastic Housing) (One Piece Blower Mount)

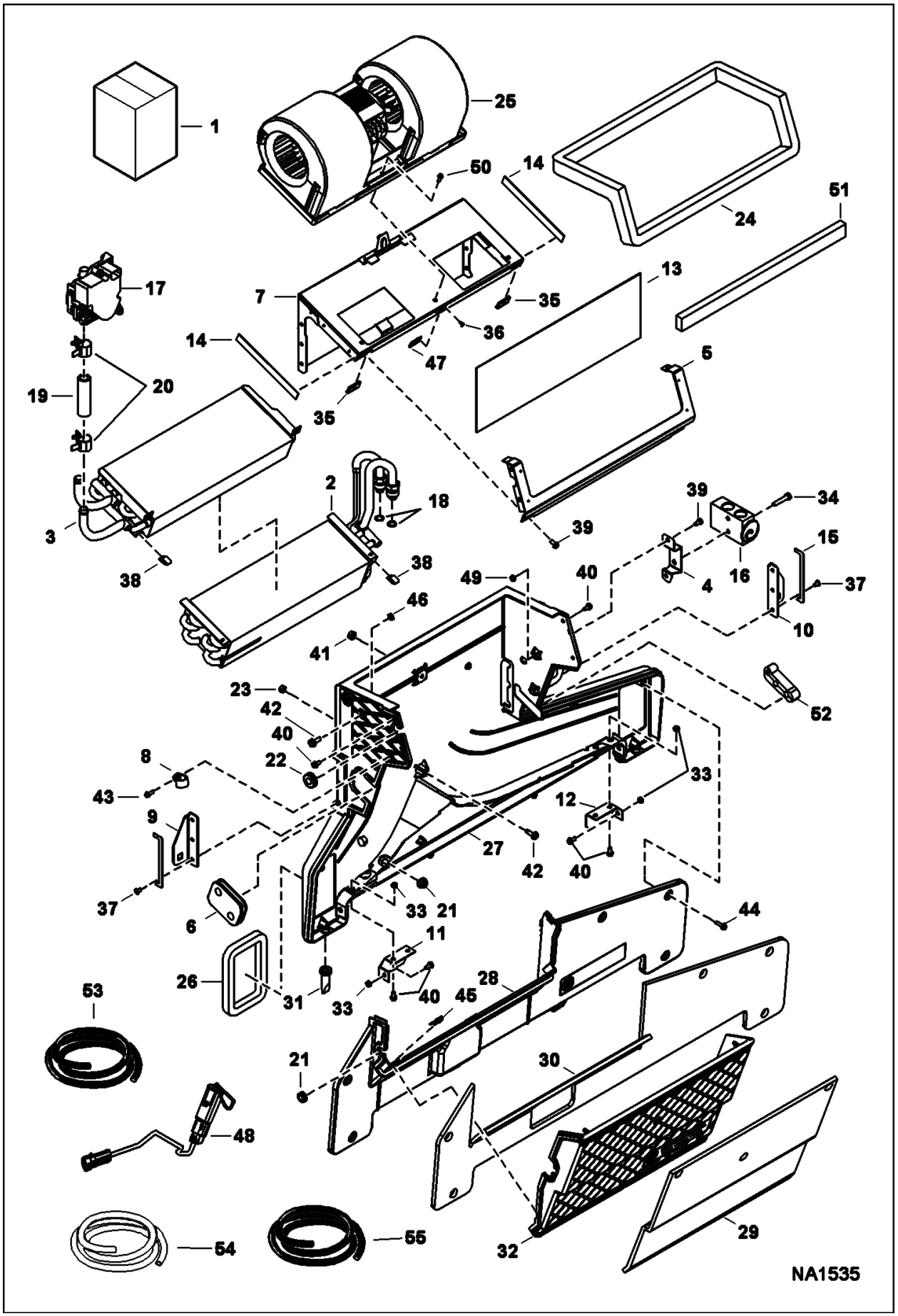

Illustration NA1535

Model S160 K
6904270

Page 496 - OSS# 6300202494 - All rights reserved by Bobcat Company - 02/11/2016 - 14:15:02 - Produced by Ken Cook Co. with mediaoff

HEATER & A/C (Cont'd)
(HVAC Assembly) (Plastic Housing) (One Piece Blower Mount)

Ref No	Part Number	Description	Remarks	Serial Number	Qty
47	7003474	CLIP, RECEPTACLE			1
48	7008040	MODULE, DE-ICER ELECTRONIC			1
48	6698501	HARNESS, HEATER			1
49	7010267	NUT, LOCK			2
50	7010265	BOLT			3
51	7010264	FOAM			1
52		SEAL	NLA - 8" (203,2 mm) long - Order Ref. 53		1
53	6677111	SEAL FOAM BULK/FT	bulk - sold per foot		x
54	6565977	HOSE, BULK	bulk - sold per foot - Was 7003457 [A]		x
55	7003460	SEAL, FOAM	bulk - sold per foot		x

Page 497 - OSS# 6300202494 - All rights reserved by Bobcat Company - 02/11/2016 - 14:15:02 - Produced by Ken Cook Co. with media1off

HEATER & A/C OPTION
(Metal Housing)

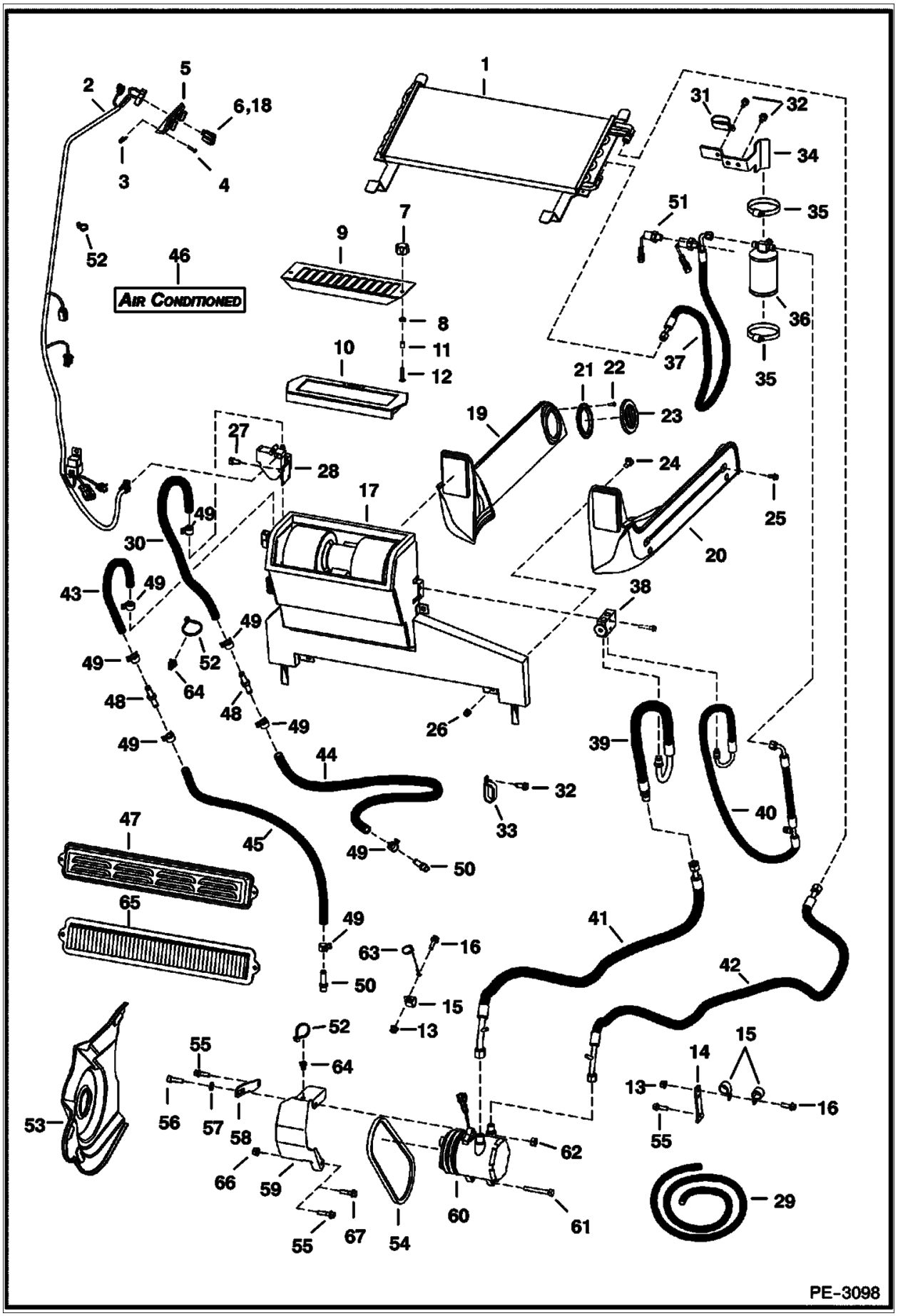

Illustration PE3098

Model S160 K
6904270

Page 498 - OSS# 6300202494 - All rights reserved by Bobcat Company - 02/11/2016 - 14:15:02 - Produced by Ken Cook Co. with mediaoff

HEATER & A/C OPTION (Cont'd)
(Metal Housing)

Ref No	Part Number	Description	Remarks	Serial Number	Qty
1	6733001	CONDENSER	A/C		1
2		HARNESS, CAB DLX	See Illustration CAB ELECTRICAL CIRCUITRY / PE2821		1
3	6669091	CLIP	retainer		3
4	6669224	TAP SCREW			3
5	6674228	PANEL, CONTROL	control		1
5	6640699	CONECTR 5			1
5	6718579	DECAL			1
5	6718887	PANEL HEATER	A/C		1
5	6675176	SWITCH	blower		1
5	6675177	KNOB			2
5	6675846	POTENTIOMETER			1
6	6675181	PLUG SWITCH HOLE			1
7	6681614	KNOB			2
8	59D4	NUT 5			2
9	6718175	SCREEN, FILTER HEATER	filter		1
10	6678207	FILTER, AIR HEATER CAB	recirculation		1
11	6718837	SPACER			2
12	37C424	BOLT			2
13	83D5	NUT 5			2
14	6728011	BRACKET			1
15	30H50	CLAMP			3
16	35C512	BOLT	Was 35C516 [B]		2
17		HVAC ASSY	See Illustration HEATER & A/C / PE3052		1
18	7169112	SWITCH, ROCKER A/C	Was 6719176 [A]		1
19	6735246	HVAC DUCT LEFT	LH		1
20	6735245	HVAC DUCT RIGHT	RH		1
21	6675179	FLANGE			4
22	57G608	SCREW			16
23	6674231	VENT, HEATER CAB ROUND	round		4
24	37C512	BOLT			4
25	35C410	BOLT 5			4
26	59D5	NUT 5			4
27	84G3110	SCREW			2
28	6689696	VALVE, HEATER CAB			1
29	6565977	HOSE, BULK	bulk - sold per foot		x
30	7113209	HOSE, HEATER			1
31	31H46	CLAMP			1
32	84G3710	SCREW			4
33	31H49	CLAMP			1
34	6726620	BRACKET			1
35	44H48	CLAMP			2
36	6674235	RECEIVER, DRIER A/C			1
37	6727414	HOSE	W/Ref. 51		1

Page 499 - OSS# 6300202494 - All rights reserved by Bobcat Company - 02/11/2016 - 14:15:02 - Produced by Ken Cook Co. with media1off

HEATER & A/C OPTION (Cont'd)
(Metal Housing)

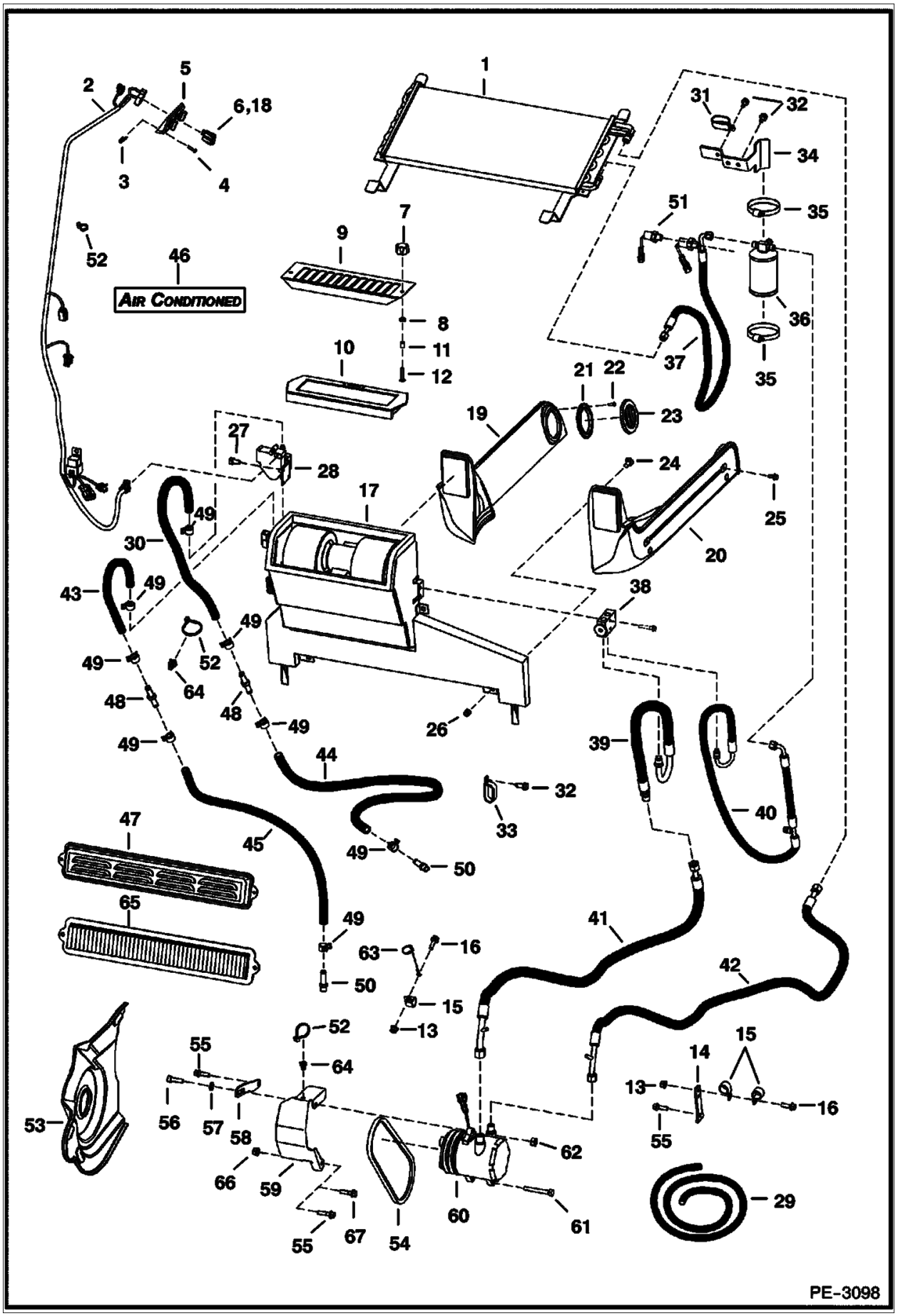

Illustration PE3098

Model S160 K
6904270

Page 500 - OSS# 6300202494 - All rights reserved by Bobcat Company - 02/11/2016 - 14:15:02 - Produced by Ken Cook Co. with mediaoff

HEATER & A/C OPTION (Cont'd)
(Metal Housing)

Ref No	Part Number	Description	Remarks	Serial Number	Qty
37	7009976	O-RING	#6 - Was 6675824 [A]		x
38	6675534	BLOCK, VALVE A/C			1
39	6726623	HOSE			1
39	7009978	O-RING	#10 - Was 6675825 [A]		x
40	6698442	HOSE	Was 6675075 [A]		1
40	6677122	CAP			1
40	7009976	O-RING	#6 - Was 6675824 [A]		x
41	6726656	HOSE			1
41	6685199	CAP			1
41	7009978	O-RING	#10 - Was 6675825 [A]		x
42	6726661	HOSE, A/C ASSY			1
42		CAP	NLA - Was 6685198 [A]		1
42	7009977	O-RING	#8 - Was 6675538 [A]		x
43	7113208	HOSE			1
44		HOSE	NLA - 68" (1727 mm) long - Order. Ref. 29		x
45		HOSE	NLA - 29" (737 mm) long - Order Ref. 29		x
46	6729077	DECAL			2
47	6727848	ASSY, COVER			1
48	6732023	CONNECTOR, HOSE			1
49	5HM20	CLAMP			8
50	6731084	CONNECTOR			2
51	6675779	SWITCH, PRESS			1
52	6624289	STRAP, TIE			7
53	7109712	SHIELD			1
54	6726988	BELT	compressor		1
55	35C620	BOLT 5			2
56	2GM1040	BOLT	Was 2GM1035 [B]		1
57	6557831	WASHER			1
58	6726648	BRACKET	swing		1
59	6731495	SHIELD	belt		1
60	6733655	COMPRESSOR, A/C	W/Ref. 64		1
60	6679145	CLUTCH			1
60	6648307	CONNECTOR	2-pin		1
60	6648308	CONNECTOR			1
61	5CM1080	SCREW			1
62	53DM10	NUT			1
63	6808831	WIRE ROPE	14" (356 mm) long		1
64	7015668	MOUNT, STRAP TIE	push in - Use W/tie strap - Was 6678666 [B]		3
65	6677983	FILTER, AIR HEATER CAB			1
66	97D6	NUT 10			1
67	35C624	BOLT			1

Page 501 - OSS# 6300202494 - All rights reserved by Bobcat Company - 02/11/2016 - 14:15:02 - Produced by Ken Cook Co. with media1off

HORN KIT
(Manual Controls, AHC & ACS)

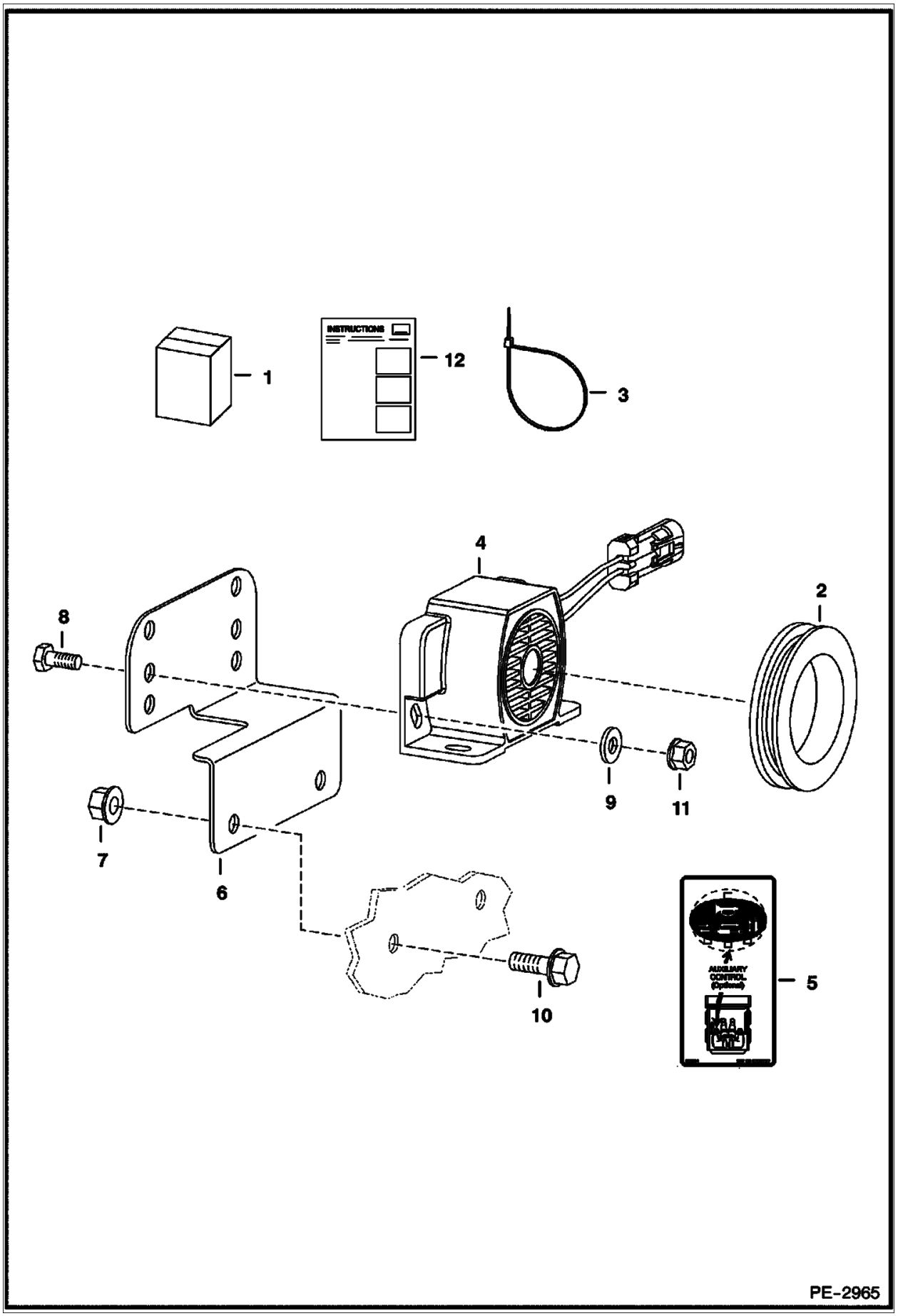

Illustration PE2965

Model S160 K
6904270

Page 502 - OSS# 6300202494 - All rights reserved by Bobcat Company - 02/11/2016 - 14:15:02 - Produced by Ken Cook Co. with mediaoff

HORN KIT (Cont'd)
(Manual Controls, AHC & ACS)

Ref No	Part Number	Description	Remarks	Serial Number	Qty
1	7122028	KIT, HORN	horn - Ref. 2-12		1
2	6577545	GROMMET			1
3	6610510	STRAP, TIE 10			3
4	7001044	HORN, ALARM	Was 6675099 [A]		1
5	6703727	DECAL	not in kit		1
6	6733970	MOUNT			1
7	83D5	NUT 5			2
8	17C410	BOLT 10			2
9	25E13	WASHER 5			2
10	35C512	BOLT			2
11	83D4	NUT 10			2
12	6904732	INSTRUCTIONS			1

Page 503 - OSS# 6300202494 - All rights reserved by Bobcat Company - 02/11/2016 - 14:15:02 - Produced by Ken Cook Co. with media1off

HORN KIT
(Selectable Joystick Controls) (S/N 529911001 - 59999, 530011001 - 59999)

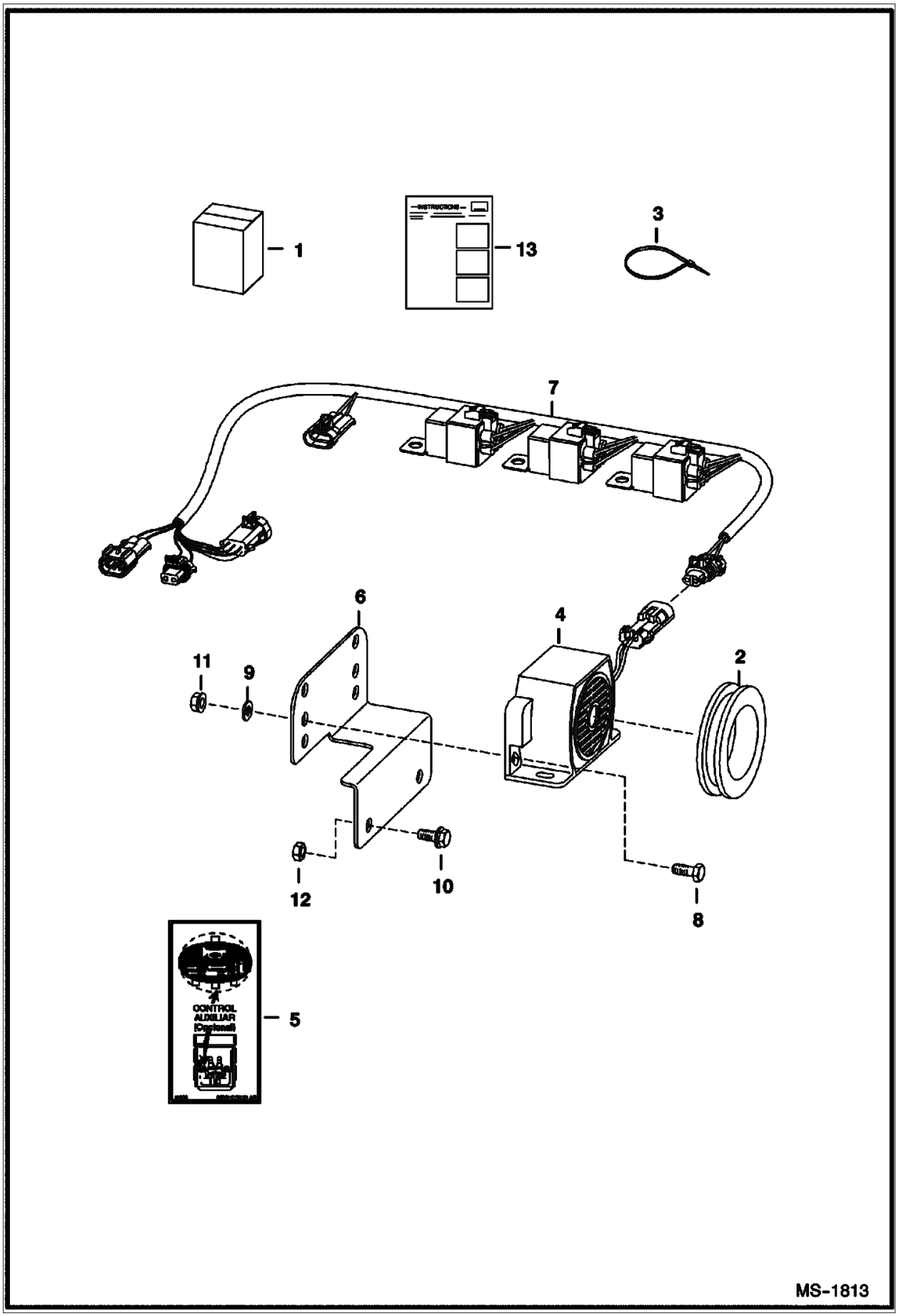

Illustration MS1813

Model S160 K
6904270

Page 504 - OSS# 6300202494 - All rights reserved by Bobcat Company - 02/11/2016 - 14:15:02 - Produced by Ken Cook Co. with mediaoff

HORN KIT (Cont'd)
(Selectable Joystick Controls) (S/N 529911001 - 59999, 530011001 - 59999)

Ref No	Part Number	Description	Remarks	Serial Number	Qty
1	6732234	KIT, HORN W/JOYSTICK	horn - Ref. 2-13		1
2	6577545	GROMMET			1
3	6610510	STRAP, TIE 10			3
4	7001044	HORN, ALARM	Was 6675099 [A]		1
5	6703727	DECAL	horn/aux		1
6	6733970	MOUNT			1
7	6726662	HARNESS HORN/BLINKER			1
8	17C410	BOLT 10			2
9	25E13	WASHER 5			2
10	35C512	BOLT			2
11	83D4	NUT 10			2
12	83D5	NUT 5			2
13	6901691	INSTRUCTIONS			1

Page 505 - OSS# 6300202494 - All rights reserved by Bobcat Company - 02/11/2016 - 14:15:02 - Produced by Ken Cook Co. with media1off

HORN KIT
(SJC) (S/N 529960001 & Above, 530060001 & Above, AHWA11001 & Above)

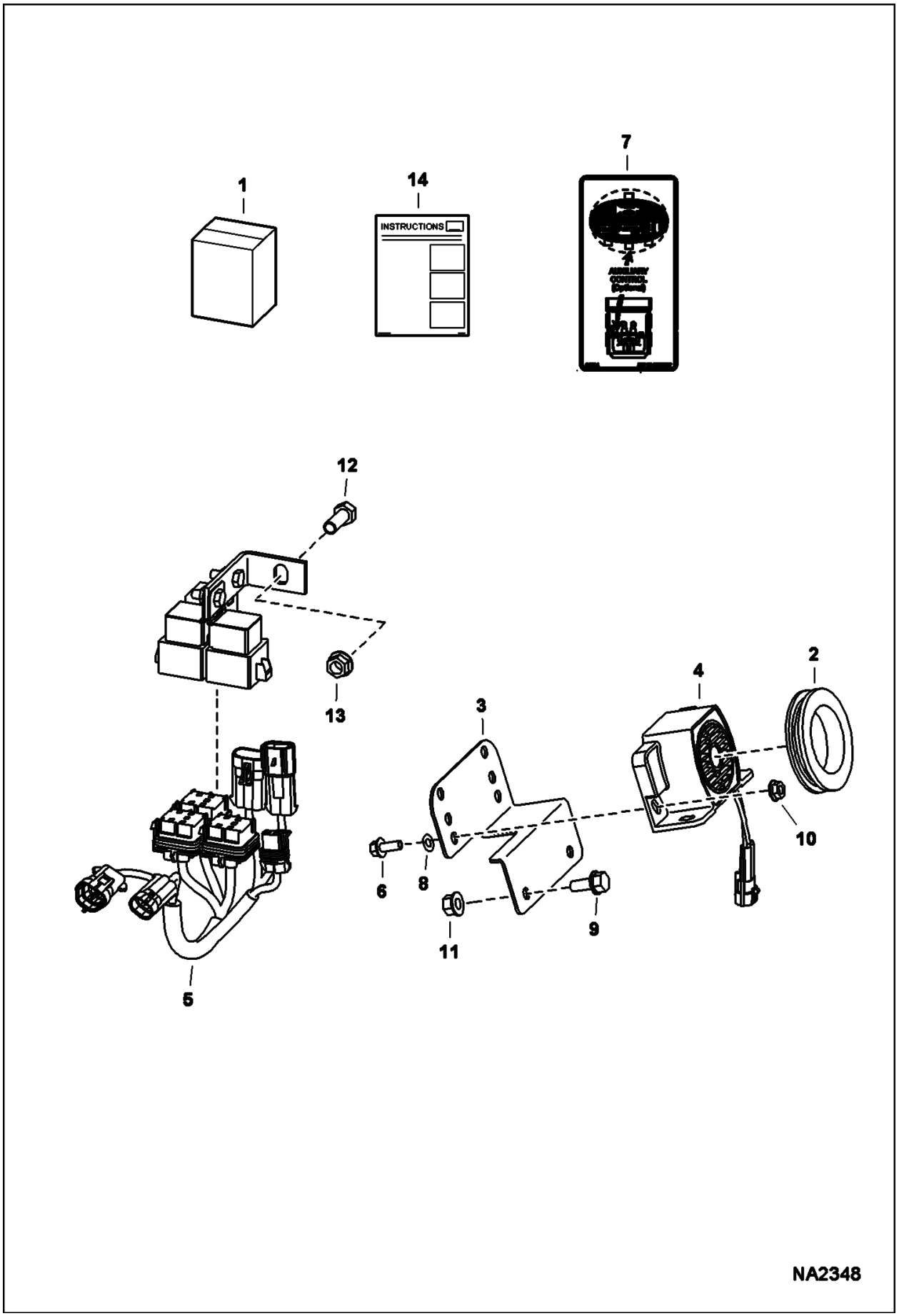

Illustration NA2348

Model S160 K
6904270

Page 506 - OSS# 6300202494 - All rights reserved by Bobcat Company - 02/11/2016 - 14:15:02 - Produced by Ken Cook Co. with mediaoff

HORN KIT (Cont'd)
(SJC) (S/N 529960001 & Above, 530060001 & Above, AHWA11001 & Above)

Ref No	Part Number	Description	Remarks	Serial Number	Qty
1	7174209	KIT, HORN W/JOYSTICK	Ref. 2-14		1
2	6577545	GROMMET			1
3	6733970	MOUNT			1
4	7001044	HORN, ALARM			1
5	7151940	HARNESS, HORN			1
6	17C410	BOLT 10			2
7	6703727	DECAL			1
8	25E13	WASHER 5			2
9	35C512	BOLT			2
10	83D4	NUT 10			2
11	83D5	NUT 5			2
12	17C616	BOLT 5			1
13	97D6	NUT 10			1
14	6987352	INSTRUCTIONS			1

Page 507 - OSS# 6300202494 - All rights reserved by Bobcat Company - 02/11/2016 - 14:15:02 - Produced by Ken Cook Co. with media1off

HOSE GUIDE KIT

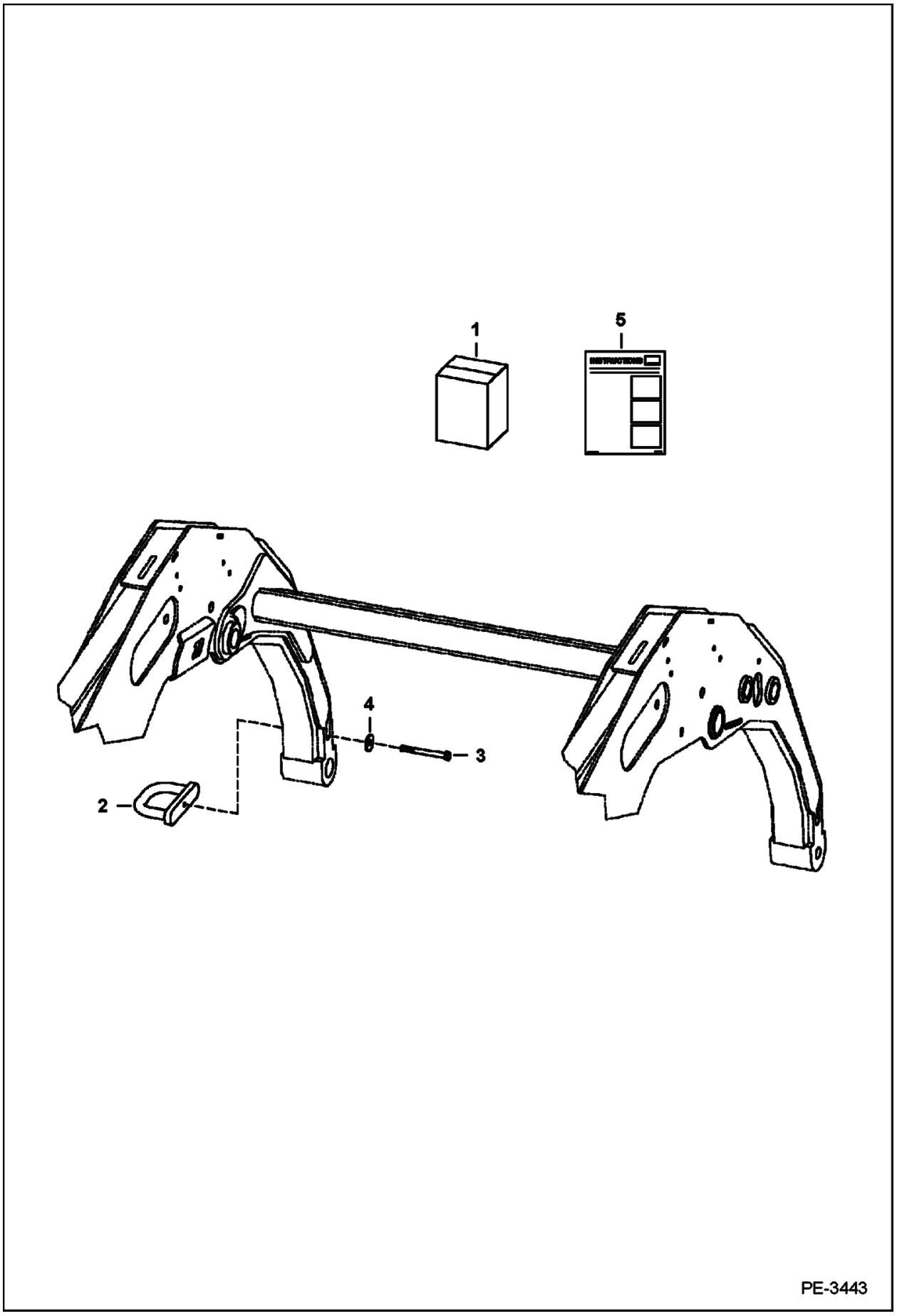

Illustration PE3443

Model S160 K
6904270

Page 508 - OSS# 6300202494 - All rights reserved by Bobcat Company - 02/11/2016 - 14:15:02 - Produced by Ken Cook Co. with mediaoff

HOSE GUIDE KIT (Cont'd)

Ref No	Part Number	Description	Remarks	Serial Number	Qty
1	7141766	KIT	Ref. 2-5		1
2	7117875	MOUNT			1
3	17C652	BOLT			1
3	17C660	BOLT			1
3	17C668	BOLT			1
4	619021	WASHER, 5			1
5	6986563	INSTRUCTIONS			1

Page 509 - OSS# 6300202494 - All rights reserved by Bobcat Company - 02/11/2016 - 14:15:02 - Produced by Ken Cook Co. with media1off

KEYLESS PANEL KIT
(S/N 529960001 & Above, 530060001 & Above, AHWA11001 & Above)

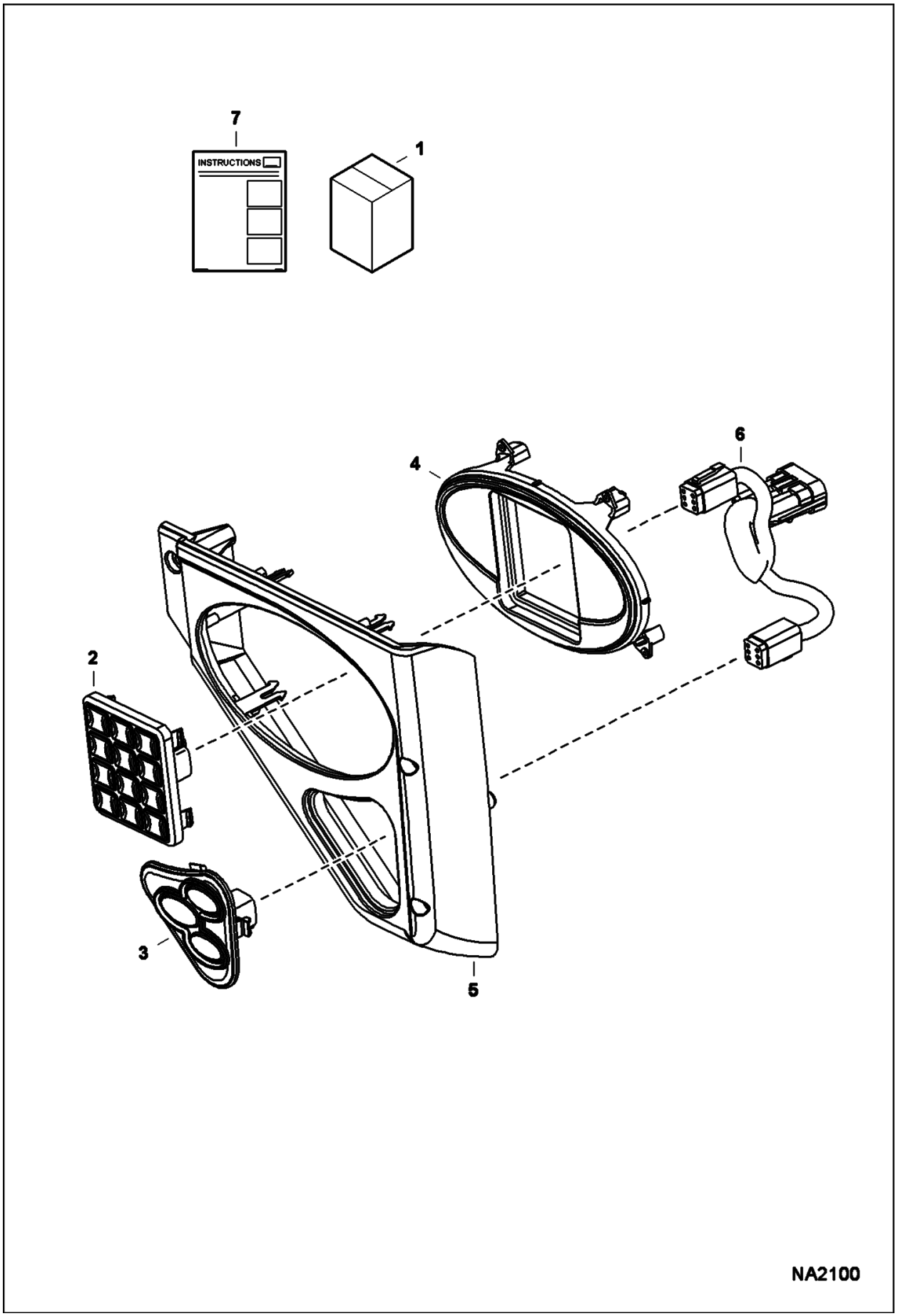

Illustration NA2100

Model S160 K
6904270

Page 510 - OSS# 6300202494 - All rights reserved by Bobcat Company - 02/11/2016 - 14:15:02 - Produced by Ken Cook Co. with mediaoff

KEYLESS PANEL KIT (Cont'd)
(S/N 529960001 & Above, 530060001 & Above, AHWA11001 & Above)

Ref No	Part Number	Description	Remarks	Serial Number	Qty
1	7170753	KIT, PANEL KEYLESS	Ref. 2-7 - Was NLA [D]		1
2	6693712	KEYPAD, PANEL			1
3	6693714	MODULE, SWITCH IGN			1
4	6693716	INSERT, KEYPAD			1
5	7008362	PANEL, RH			1
6	7170779	HARNESS, SWITCH IGN			1
7	6987283	INSTRUCTIONS			1

Page 511 - OSS# 6300202494 - All rights reserved by Bobcat Company - 02/11/2016 - 14:15:02 - Produced by Ken Cook Co. with media1off

LIFT KIT
(Single Point) (For Use W/O Window Rib Kit)

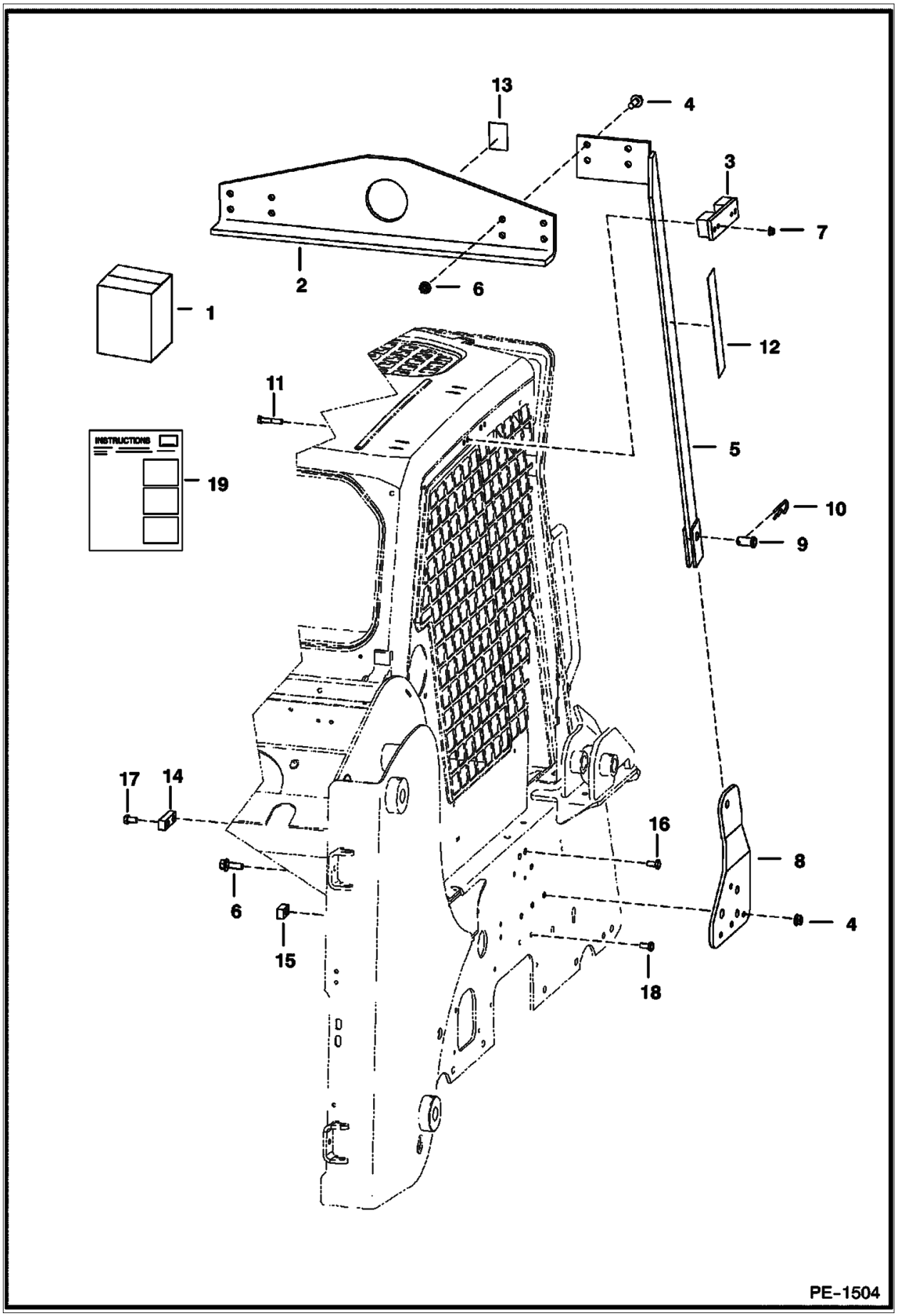

Illustration PE1504

Model S160 K
6904270

Page 512 - OSS# 6300202494 - All rights reserved by Bobcat Company - 02/11/2016 - 14:15:02 - Produced by Ken Cook Co. with mediaoff

LIFT KIT (Cont'd)
(Single Point) (For Use W/O Window Rib Kit)

Ref No	Part Number	Description	Remarks	Serial Number	Qty
1	6719264	KIT, LIFT SINGLE POINT	Ref. 2-19 - NOT compatable W/ 7122462 window rib kit		1
2	6567827	ANGLE			1
3	6719184	BRACKET, LH	LH		1
3	6719185	BRACKET, RH	RH		1
4	31C824	BOLT 10			16
5	6704146	BRACKET	RH		1
5	6704147	BRACKET	LH		1
6	57D8	NUT 10			16
7	57D6	NUT 5			8
8	6731658	MOUNT, BRACKET	RH		1
8	6731657	MOUNT, BRACKET	LH		1
9	6567838	PIN			2
10	1320075	PIN, COTTER			2
11	17C632	BOLT 5			8
12	6704786	DECAL, WARNING	check before lifting		2
13	6533898	DECAL	hook		1
14	7124571	SPACER			1
15	7124572	SPACER			1
16	17C512	BOLT 5			1
17	17C612	BOLT 5			1
18	17C628	BOLT			1
19	6900888	INSTRUCTIONS			1

Page 513 - OSS# 6300202494 - All rights reserved by Bobcat Company - 02/11/2016 - 14:15:02 - Produced by Ken Cook Co. with media1off

LIFT KIT
(Four Point)

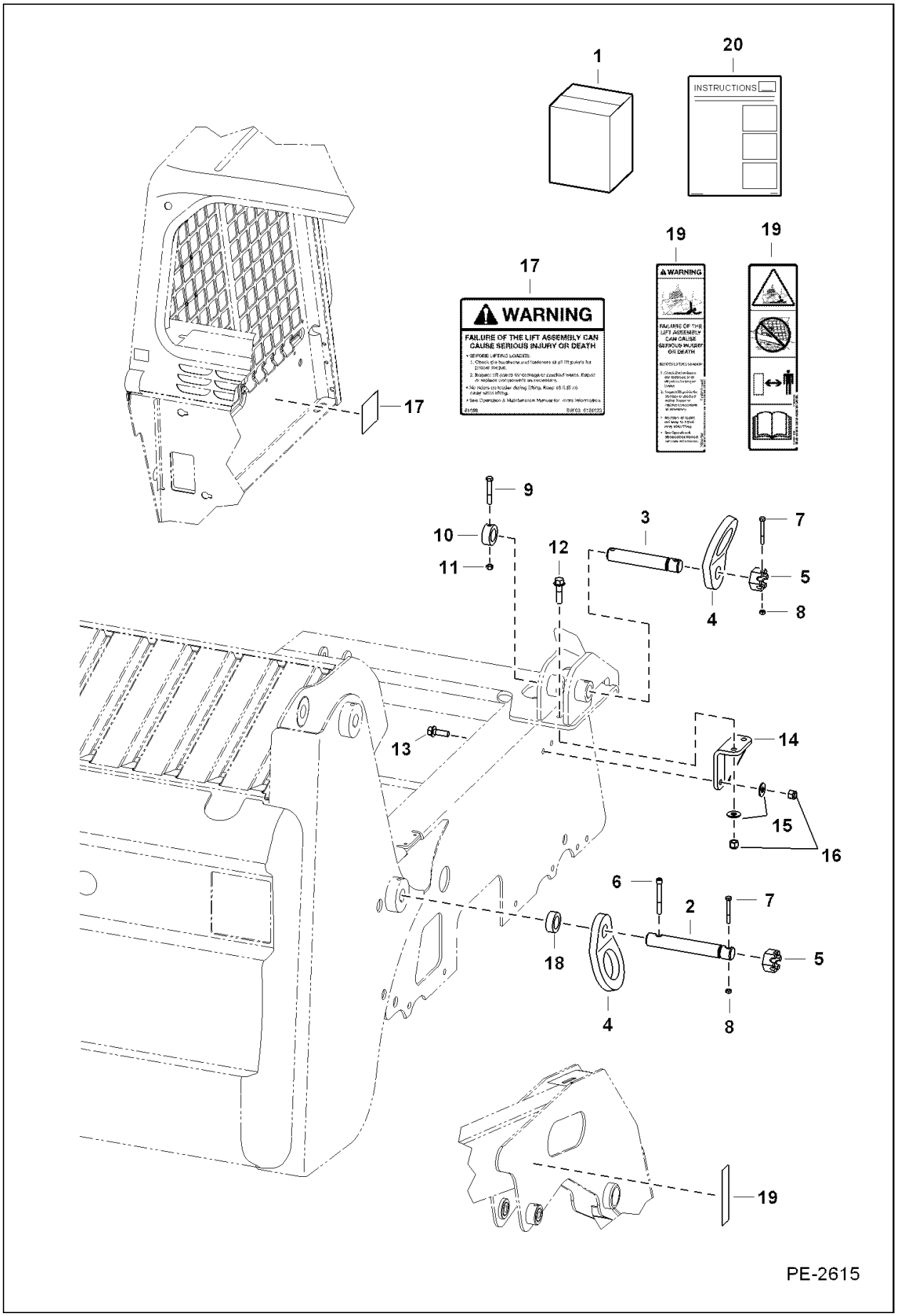

Illustration PE2615

Model S160 K
6904270

Page 514 - OSS# 6300202494 - All rights reserved by Bobcat Company - 02/11/2016 - 14:15:02 - Produced by Ken Cook Co. with mediaoff

LIFT KIT (Cont'd)
(Four Point)

Ref No	Part Number	Description	Remarks	Serial Number	Qty
1	7112328	KIT, LIFT 4-POINT	Ref. 2-16 & 18-20		1
2	6737132	PIN			2
3	7100444	PIN			2
4	6706825	LIFT EYE			4
5	4D20	NUT			4
6	73G652	SCREW HEX SOCKET HD			2
7	17C540	BOLT			4
8	87D5	NUT			4
9	17C640	BOLT			2
10	7100445	SPACER			2
11	85D6	NUT, 5			2
12	31C832	BOLT			4
13	31C824	BOLT 10			4
14	7107353	GUSSET			2
15	27E8	WASHER 10			8
16	59D8	NUT 5			8
17	6726423	DECAL, WARNING	check before lifting - not in kit		2
18	6719906	BUSHING			2
19	7168019	DECAL, WARNING			2
19	7168020	DECAL, WARNING	no text		2
20	6904112	INSTRUCTIONS			1

Page 515 - OSS# 6300202494 - All rights reserved by Bobcat Company - 02/11/2016 - 14:15:02 - Produced by Ken Cook Co. with media1off

LIFT KIT
(Four Point) (W/Backhoe Mount)

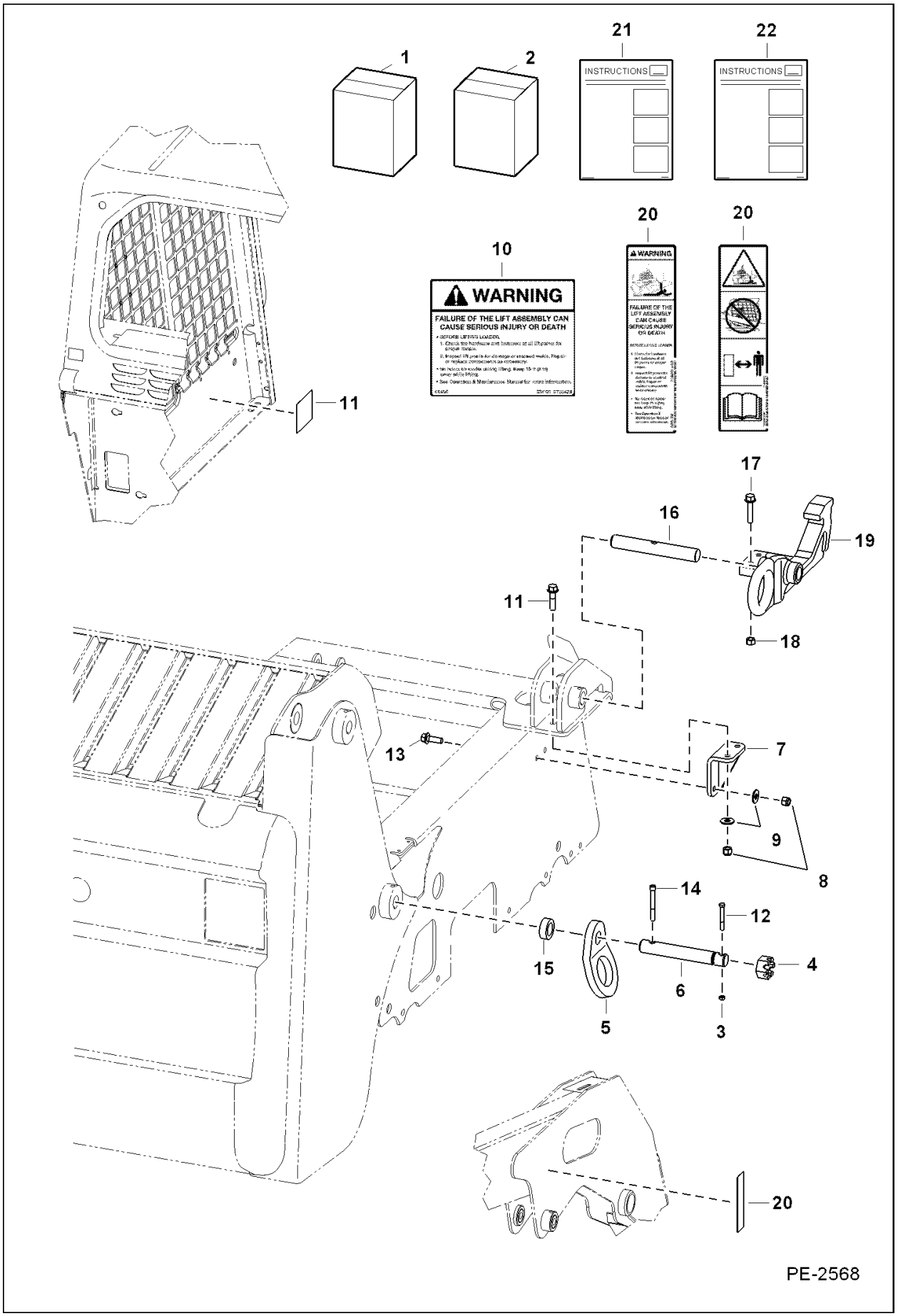

Illustration PE2568

Model S160 K
6904270

Page 516 - OSS# 6300202494 - All rights reserved by Bobcat Company - 02/11/2016 - 14:15:02 - Produced by Ken Cook Co. with mediaoff

LIFT KIT (Cont'd)
(Four Point) (W/Backhoe Mount)

Ref No	Part Number	Description	Remarks	Serial Number	Qty
1	7108394	KIT, LIFT 4-POINT	Ref. 3-9, 11-15, 20 & 22		1
2		KIT	Sales # 7101325		1
3	87D5	NUT			2
4	4D20	NUT			2
5	6706825	LIFT EYE			2
6	6737132	PIN			2
7	7107353	GUSSET			2
8	59D8	NUT 5			8
9	27E8	WASHER 10			8
10	6726423	DECAL, WARNING	check before lifting - not in kit		2
11	31C832	BOLT			4
12	17C540	BOLT			2
13	31C824	BOLT 10			4
14	73G632	SCREW			2
15	6719906	BUSHING			2
16	6717707	PIN			2
17	31C836	BOLT			4
18	63D8	NUT			4
19	6718122	MOUNT LH	LH		1
19	6717293	MOUNT RH	RH		1
20	7168019	DECAL, WARNING			2
20	7168020	DECAL, WARNING	no text		2
21	6903359	INSTRUCTIONS	For Ref. 1		1
22	6902798	INSTRUCTIONS	For Ref. 2		1

Page 517 - OSS# 6300202494 - All rights reserved by Bobcat Company - 02/11/2016 - 14:15:02 - Produced by Ken Cook Co. with media1off

LIGHT KIT

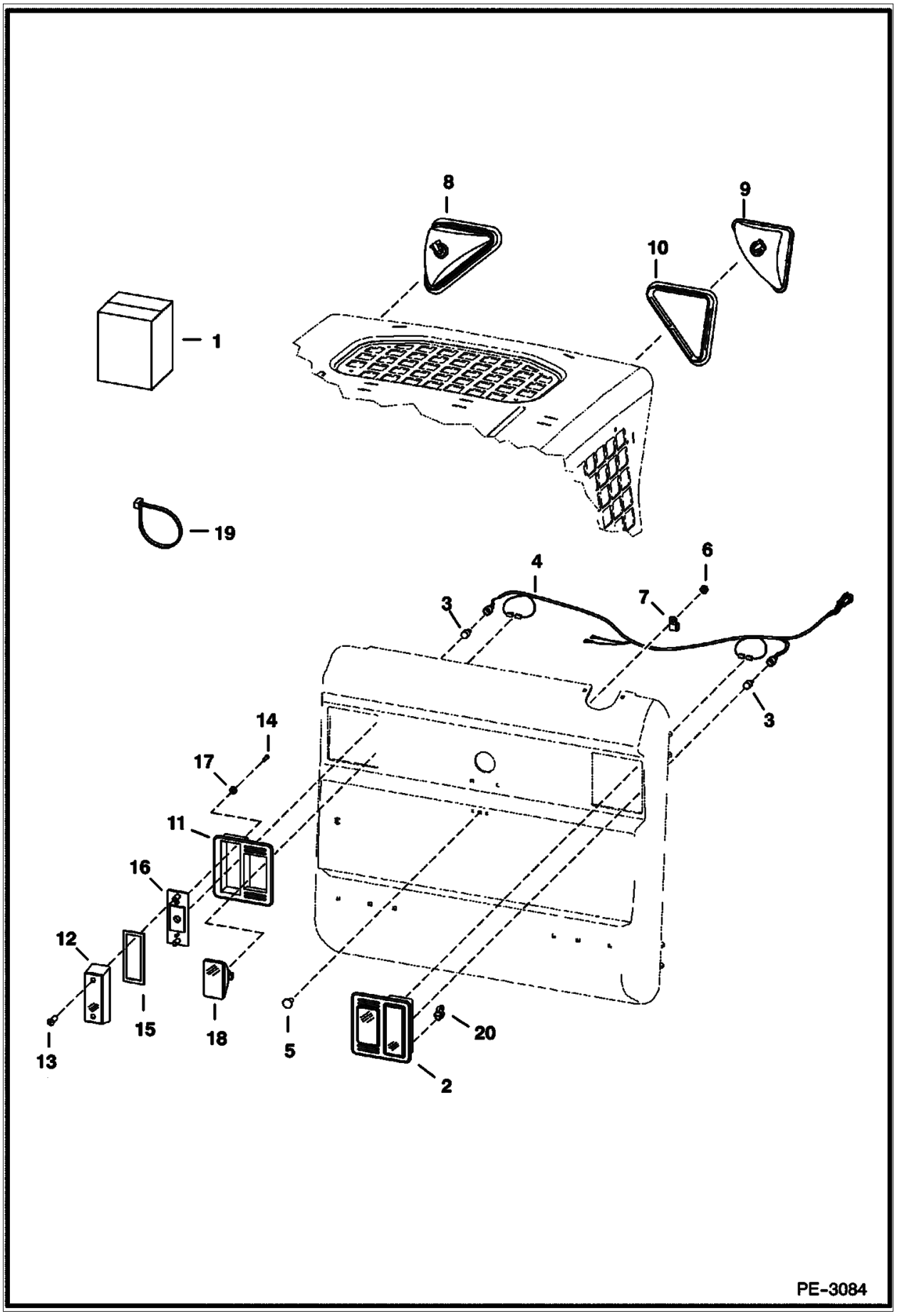

Illustration PE3084

Model S160 K
6904270

Page 518 - OSS# 6300202494 - All rights reserved by Bobcat Company - 02/11/2016 - 14:15:02 - Produced by Ken Cook Co. with mediaoff

LIGHT KIT (Cont'd)

Ref No	Part Number	Description	Remarks	Serial Number	Qty
1		KIT	NLA - Order components		1
2	6670284	LIGHT, REAR ASSY	rear		2
2	7104670	LIGHT	rear - RH - EMEA		1
2	7104671	LIGHT	rear - LH - EMEA		1
3	6649481	LIGHT, WEDGE BASE			2
4	7109403	HARNESS		529911001 - 59999	1
4	7109404	HARNESS	Europe	530011001 - 59999	1
4	7109404	HARNESS	Europe	A15111001 & Above	1
4	7139785	HARNESS, DOOR REAR	deluxe/European	529960001 & Above	1
4	7139785	HARNESS, DOOR REAR	deluxe/European	530060001 & Above	1
4	7139785	HARNESS, DOOR REAR	deluxe/European	AHWA11001 & Above	1
5	37C512	BOLT			4
6	95D5	NUT			4
7	30H42	CLAMP			1
8	6718043	LIGHT ASSY RIGHT	R.H. - Ref. 9 & 10		1
8	6718042	LIGHT ASSY LEFT	L.H. - Ref. 9 & 10		1
9	6674401	LIGHT, HOUSING RH	RH		1
9	6675336	LIGHT, BULB 50W			1
9	7259524	LIGHT, LED RH			1
9	6674400	LIGHT, HOUSING LH	LH		1
9	6675336	LIGHT, BULB 50W			1
9	7259523	LIGHT, LED LH			1
10	6674402	MOUNT, LIGHT			2
11	6672279	MOUNT, LIGHT RUBBER	rubber		2
12	6672276	LENS, LIGHT RED	red		2
13	6672273	SCREW			4
14	6672274	SCREW			4
15	6672275	GASKET			2
16	6672277	BRACKET			2
17	6672272	WASHER			4
18	6661353	LIGHT, HOUSING ASSY	W/bulb - white work		2
18	898731	1156 BULB			2
19	6624289	STRAP, TIE			1
20	6688637	MOUNT	mounts European rear light assys		2

Page 519 - OSS# 6300202494 - All rights reserved by Bobcat Company - 02/11/2016 - 14:15:02 - Produced by Ken Cook Co. with media1off

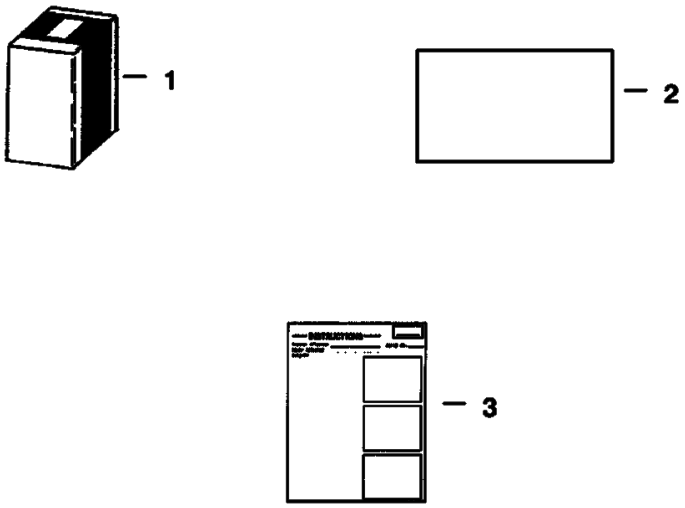

Illustration PE3088

Model S160 K
6904270

Page 520 - OSS# 6300202494 - All rights reserved by Bobcat Company - 02/11/2016 - 14:15:02 - Produced by Ken Cook Co. with mediaoff

MINE SAFETY & HEALTH ADMINISTRATION (Cont'd)

Ref No	Part Number	Description	Remarks	Serial Number	Qty
1	7126608	MSHA KIT	See Illustration ENGINE & GASKET KITS / NA1521		1
2		DECAL	NSS - Order Ref. 1		1
3	6904752ENUS	INSTRUCTIONS	Was 6904752 [A]		1

Page 521 - OSS# 6300202494 - All rights reserved by Bobcat Company - 02/11/2016 - 14:15:02 - Produced by Ken Cook Co. with media1off

MUFFLER/PURIFIER KIT

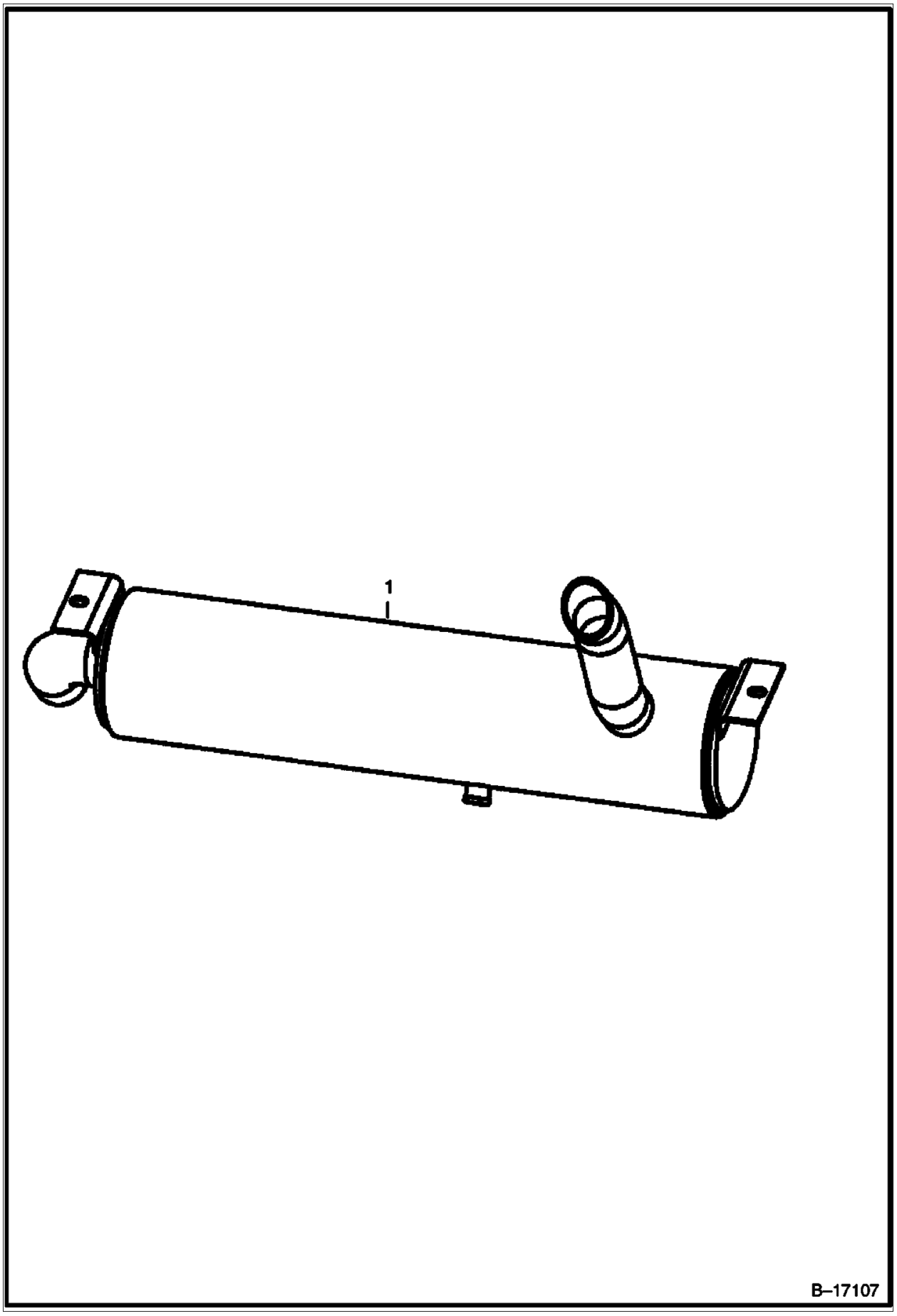

Illustration B17107

Model S160 K
6904270

Page 522 - OSS# 6300202494 - All rights reserved by Bobcat Company - 02/11/2016 - 14:15:02 - Produced by Ken Cook Co. with mediaoff

MUFFLER/PURIFIER KIT (Cont'd)

Ref No	Part Number	Description	Remarks	Serial Number	Qty
1	7103791	MUFFLER, PURIFIER			1

Page 523 - OSS# 6300202494 - All rights reserved by Bobcat Company - 02/11/2016 - 14:15:02 - Produced by Ken Cook Co. with mediaioff

PEDAL EXTENDERS

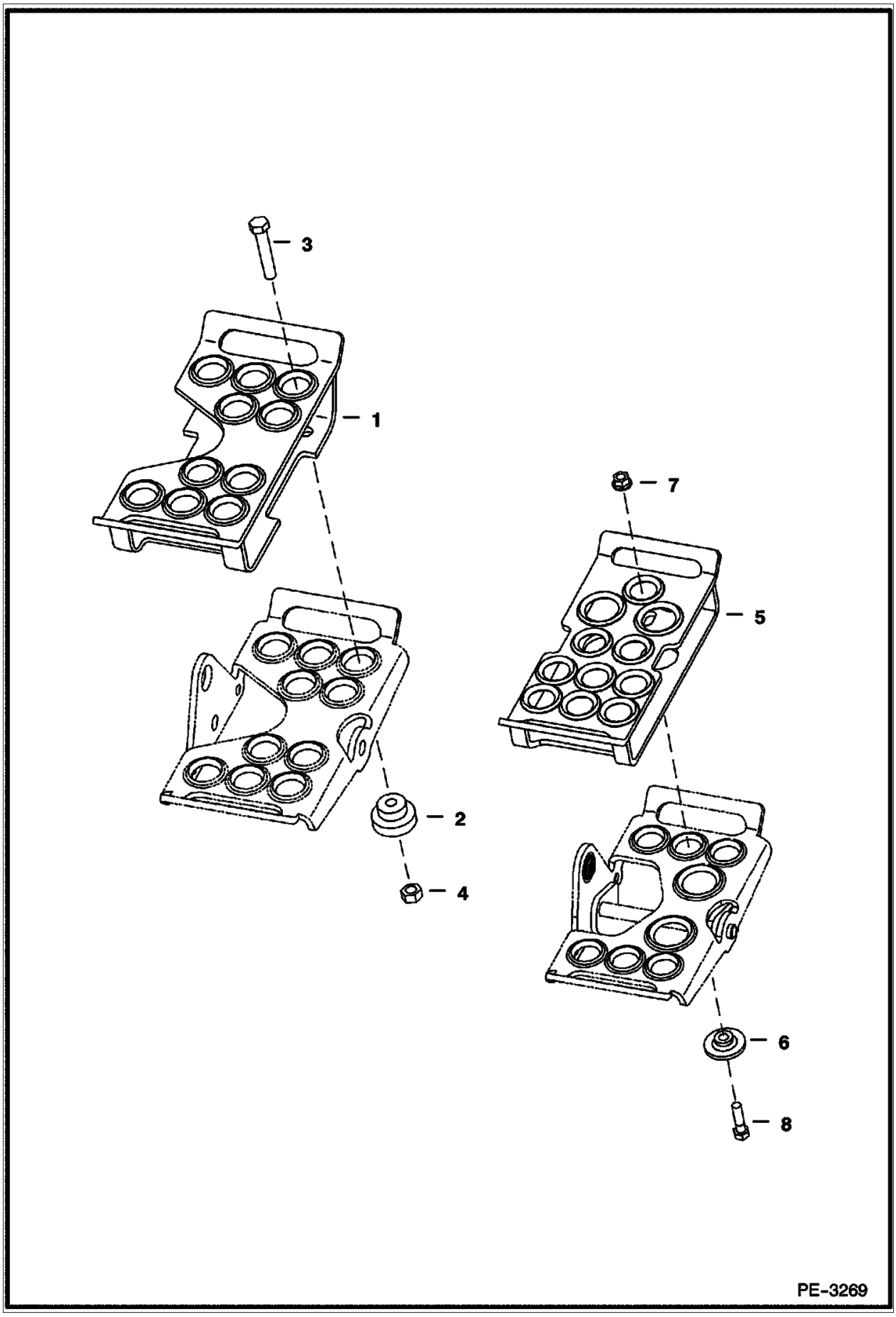

Illustration PE3269

Model S160 K
6904270

Page 524 - OSS# 6300202494 - All rights reserved by Bobcat Company - 02/11/2016 - 14:15:02 - Produced by Ken Cook Co. with mediaoff

PEDAL EXTENDERS (Cont'd)

Ref No	Part Number	Description	Remarks	Serial Number	Qty
1		PEDAL	NLA - extender - Order Ref. 5 & (3) each of Ref. 6-8 - Was 6713115 [A]		2
2	6713116	BUSHING			8
3	17C516	BOLT			8
4	85D5	NUT 5			8
5	7131233	PEDAL			2
6	7131236	BUSHING			6
7	89D5	NUT			6
8	17C520	BOLT 5			6

Page 525 - OSS# 6300202494 - All rights reserved by Bobcat Company - 02/11/2016 - 14:15:02 - Produced by Ken Cook Co. with mediaioff

POWER BOB-TACH
(Kit) (Rear Mounted Cylinder Ports)

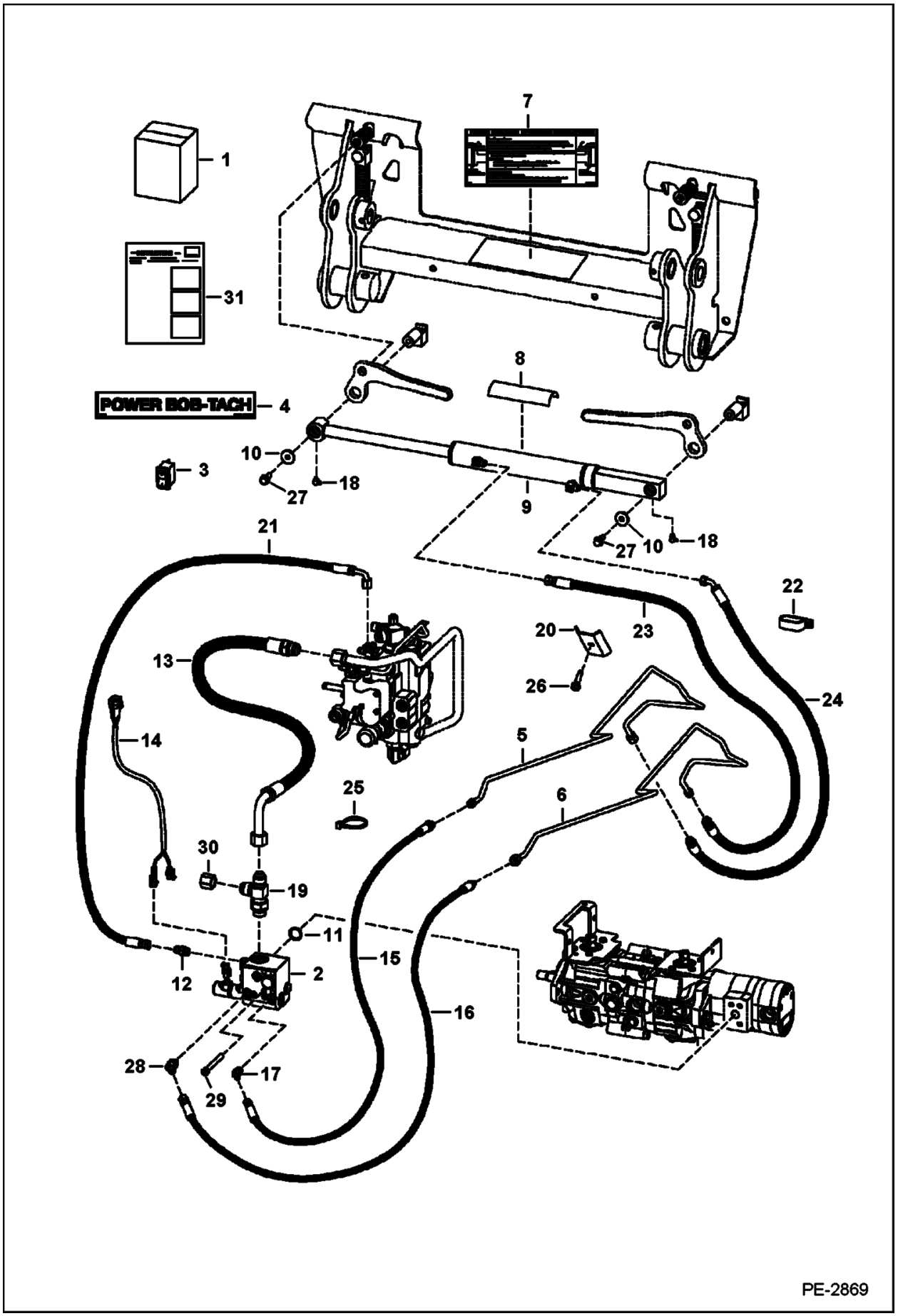

Illustration PE2869

Model S160 K
6904270

Page 526 - OSS# 6300202494 - All rights reserved by Bobcat Company - 02/11/2016 - 14:15:02 - Produced by Ken Cook Co. with mediaoff

POWER BOB-TACH (Cont'd)
(Kit) (Rear Mounted Cylinder Ports)

Ref No	Part Number	Description	Remarks	Serial Number	Qty
1		KIT, POWER BOB-TACH	See Illustration POWER BOB-TACH / PE3797 - NLA - Order 7120899 kit - If loader is not equipped W/deluxe cab accessories harness, heater, A/C, SJC, ACS, cab enclosure kit, rear wiper kit or any of the following cab harness connected rotating beacon, 4-way flasher or strobe light, Also Order 7116260 deluxe cab accessories harness - Was 7120899 [B]	A15111001 & Above	1
1		KIT, POWER BOB-TACH	See Illustration POWER BOB-TACH / PE3797 - NLA - Order 7120899 kit - If loader is not equipped W/deluxe cab accessories harness, heater, A/C, SJC, ACS, cab enclosure kit, rear wiper kit or any of the following cab harness connected rotating beacon, 4-way flasher or strobe light, Also Order 7116260 deluxe cab accessories harness - Was 7120899 [B]	5300 11831 & Below	1
1		KIT, POWER BOB-TACH	See Illustration POWER BOB-TACH / PE3797 - NLA - Order 7120899 kit - If loader is not equipped W/deluxe cab accessories harness, heater, A/C, SJC, ACS, cab enclosure kit, rear wiper kit or any of the following cab harness connected rotating beacon, 4-way flasher or strobe light, Also Order 7116260 deluxe cab accessories harness - Was 7120899 [B]	5299 12592 & Below	1
1		KIT, POWER BOB-TACH	See Illustration POWER BOB-TACH / PE3797 - NLA - Order 7120899 kit - If loader is not equipped W/deluxe cab accessories harness, heater, A/C, SJC, ACS, cab enclosure kit, rear wiper kit or any of the following cab harness connected rotating beacon, 4-way flasher or strobe light, Also Order 7143071 deluxe cab accessories harness - Was 7120899 [B]	530011832 - 59999	1
1		KIT, POWER BOB-TACH	See Illustration POWER BOB-TACH / PE3797 - NLA - Order 7120899 kit - If loader is not equipped W/deluxe cab accessories harness, heater, A/C, SJC, ACS, cab enclosure kit, rear wiper kit or any of the following cab harness connected rotating beacon, 4-way flasher or strobe light, Also Order 7143071 deluxe cab accessories harness - Was 7120899 [B]	529912593 - 59999	1
1		KIT, POWER BOB-TACH	See Illustration POWER BOB-TACH / PE3797 - NLA - Order 7120899 kit - If loader is not equipped W/deluxe cab accessories harness, heater, A/C, SJC, ACS, cab enclosure kit, rear wiper kit or any of the following cab harness connected rotating beacon, 4-way flasher or strobe light, Also Order 7139311 deluxe cab accessories harness - Was 7120899 [A]	AHWA11001 & Above	1
1		KIT, POWER BOB-TACH	See Illustration POWER BOB-TACH / PE3797 - NLA - Order 7120899 kit - If loader is not equipped W/deluxe cab accessories harness, heater, A/C, SJC, ACS, cab enclosure kit, rear wiper kit or any of the following cab harness connected rotating beacon, 4-way flasher or strobe light, Also Order 7139311 deluxe cab accessories harness - Was 7120899 [A]	530060001 & Above	1
1		KIT, POWER BOB-TACH	See Illustration POWER BOB-TACH / PE3797 - NLA - Order 7120899 kit - If loader is not equipped W/deluxe cab accessories harness, heater, A/C, SJC, ACS, cab enclosure kit, rear wiper kit or any of the following cab harness connected rotating beacon, 4-way flasher or strobe light, Also Order 7139311 deluxe cab accessories harness - Was 7120899 [A]	529960001 & Above	1
2		VALVE	See Illustration POWER BOB-TACH / MS1835		1

Page 527 - OSS# 6300202494 - All rights reserved by Bobcat Company - 02/11/2016 - 14:15:02 - Produced by Ken Cook Co. with media1off

POWER BOB-TACH (Cont'd)
(Kit) (Rear Mounted Cylinder Ports)

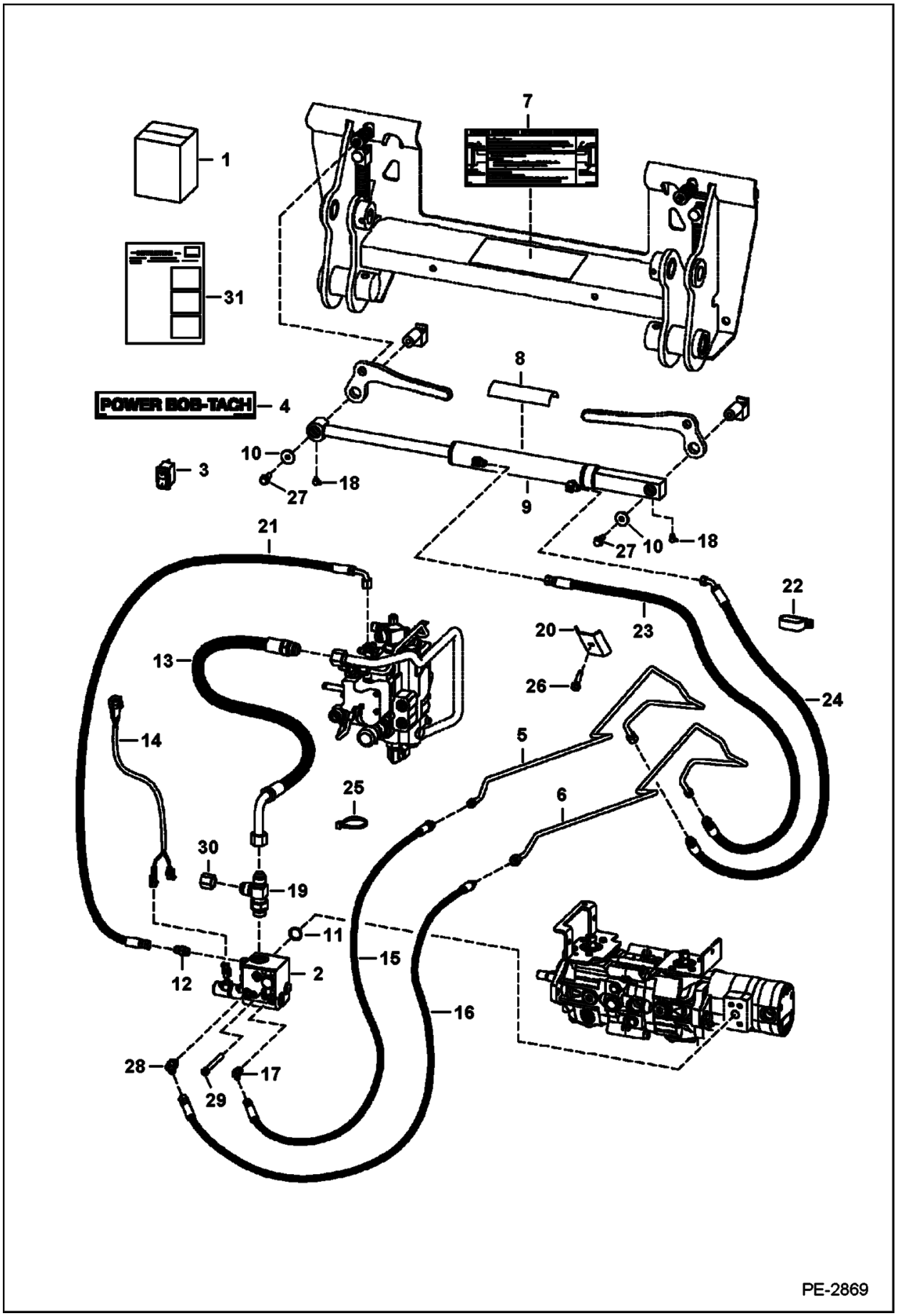

Illustration PE2869

Model S160 K
6904270

Page 528 - OSS# 6300202494 - All rights reserved by Bobcat Company - 02/11/2016 - 14:15:02 - Produced by Ken Cook Co. with mediaoff

POWER BOB-TACH (Cont'd)
(Kit) (Rear Mounted Cylinder Ports)

Ref No	Part Number	Description	Remarks	Serial Number	Qty
3	6676732	SWITCH	vertical		1
4	6719888	DECAL			1
5	6734906	TUBE			1
6	6734907	TUBE			1
7	6725907	DECAL, OPERATION	power Bob-Tach		1
8	6555341	TREAD, SAFETY			1
9		CYLINDER	See Illustration POWER BOB-TACH / PE1064		1
10	619021	WASHER, 5			2
11	55K214	O-RING			1
12	15KB0404	FITTING, HYD CONNECTOR			1
13	7115185	HOSE			1
14	7112290	HARNESS			1
15	6726987	HOSE			1
16	6719628	HOSE			1
17	18KB0404	FITTING, HYD ELBOW			1
18	12H25	FITTING	90 degree		2
19	21KB1212	FITTING, HYD TEE			1
20	6719884	BRACKET			1
21	7110367	HOSE	1143 mm (45") long - SJC		1
22	31H49	CLAMP			1
23	6729202	HOSE			1
24	6729203	HOSE			1
25	6624289	STRAP, TIE			5
26	84G3724	BOLT			1
27	35C616	BOLT 5			2
28	18KB0606	FITTING, HYD ELBOW	45 degree		1
28	17KB0606	FITTING	90 degree		1
29	73G656	SCREW			4
30	36K8	CAP			1
31	6904714	INSTRUCTIONS			1

Page 529 - OSS# 6300202494 - All rights reserved by Bobcat Company - 02/11/2016 - 14:15:02 - Produced by Ken Cook Co. with media1off

POWER BOB-TACH
(Kit) (Bottom Mounted Cylinder Ports)

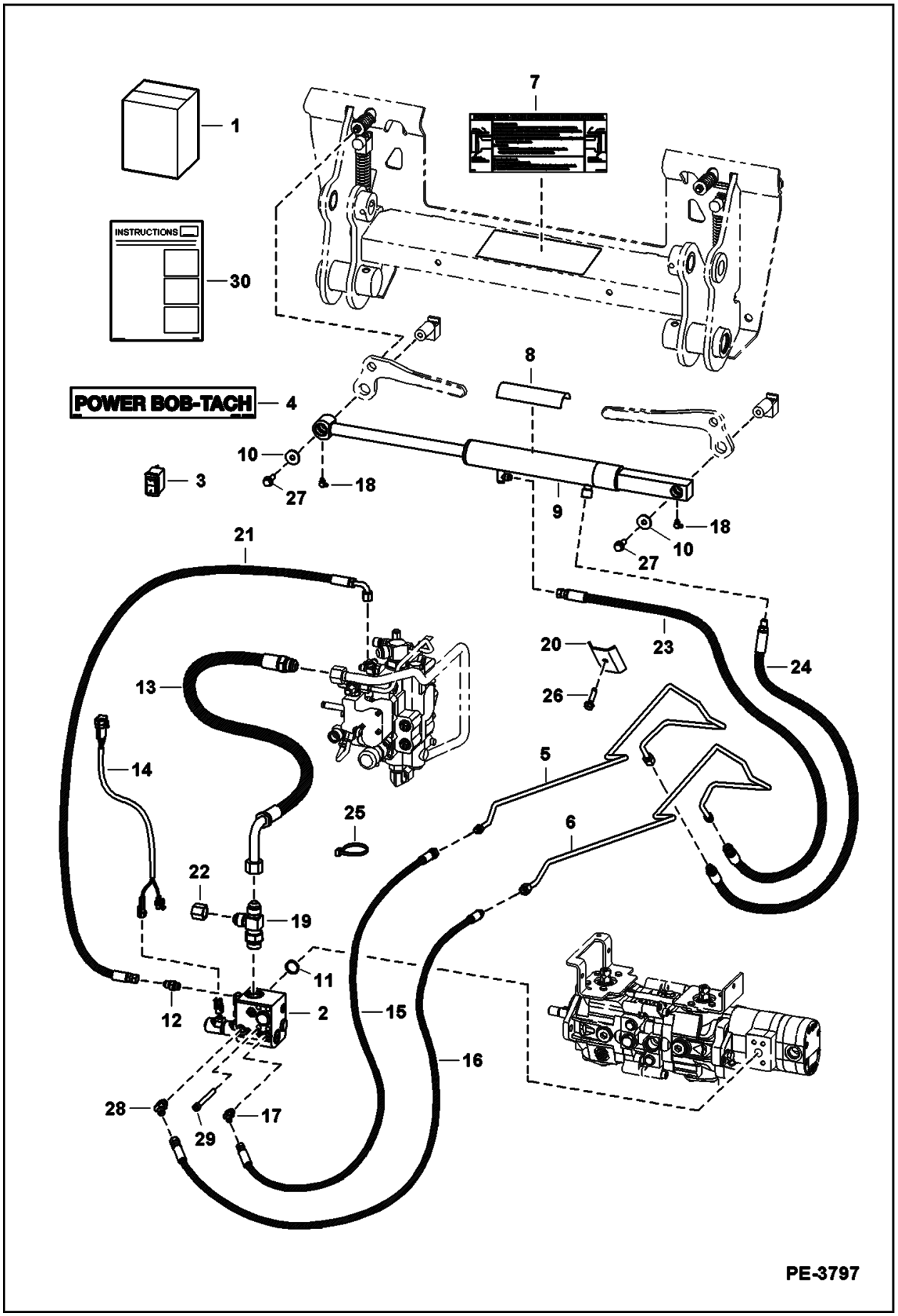

Illustration PE3797

Model S160 K
6904270

Page 530 - OSS# 6300202494 - All rights reserved by Bobcat Company - 02/11/2016 - 14:15:02 - Produced by Ken Cook Co. with mediaoff

POWER BOB-TACH (Cont'd)
(Kit) (Bottom Mounted Cylinder Ports)

Ref No	Part Number	Description	Remarks	Serial Number	Qty
1	7120899	KIT, POWER BOB-TACH			1
2		VALVE	See Illustration POWER BOB-TACH / MS2724		1
3	6676732	SWITCH	vertical		1
4	6719888	DECAL	not in kit		1
5	6734906	TUBE			1
6	6734907	TUBE			1
7	6725907	DECAL, OPERATION	power Bob-Tach		1
8	6555341	TREAD, SAFETY			1
9	7160395	CYLINDER, POWER BOB-TACH	See Illustration POWER BOB-TACH / PE3799 - W/bottom mounted ports		1
10	619021	WASHER, 5			2
11	55K214	O-RING			1
12	15KB0404	FITTING, HYD CONNECTOR			1
13	7115185	HOSE			1
14	7165185	HARNESS	Was 7112290 [B]		1
15	6726987	HOSE			1
16	6719628	HOSE			1
17	18KB0404	FITTING, HYD ELBOW			1
18	12H25	FITTING	90 degree		2
19	21KB1212	FITTING, HYD TEE			1
20	6719884	BRACKET			1
21	7110367	HOSE	1143 mm (45") long - SJC		1
22	36K8	CAP			1
23	7161046	HOSE, HYD	46" (1168,4 mm) long		1
24	7161047	HOSE, HYD	35.5" (901,7 mm) long		1
25	6624289	STRAP, TIE			3
26	84G3724	BOLT	Was 84G3724 [B]		1
27	35C616	BOLT 5			2
28	18KB0606	FITTING, HYD ELBOW	45 degree		1
28	17KB0606	FITTING	90 degree		1
29	73G656	SCREW			4
30	6904714	INSTRUCTIONS			1

Page 531 - OSS# 6300202494 - All rights reserved by Bobcat Company - 02/11/2016 - 14:15:02 - Produced by Ken Cook Co. with media1off

POWER BOB-TACH
(Cylinder) (Rear Mounted Ports)

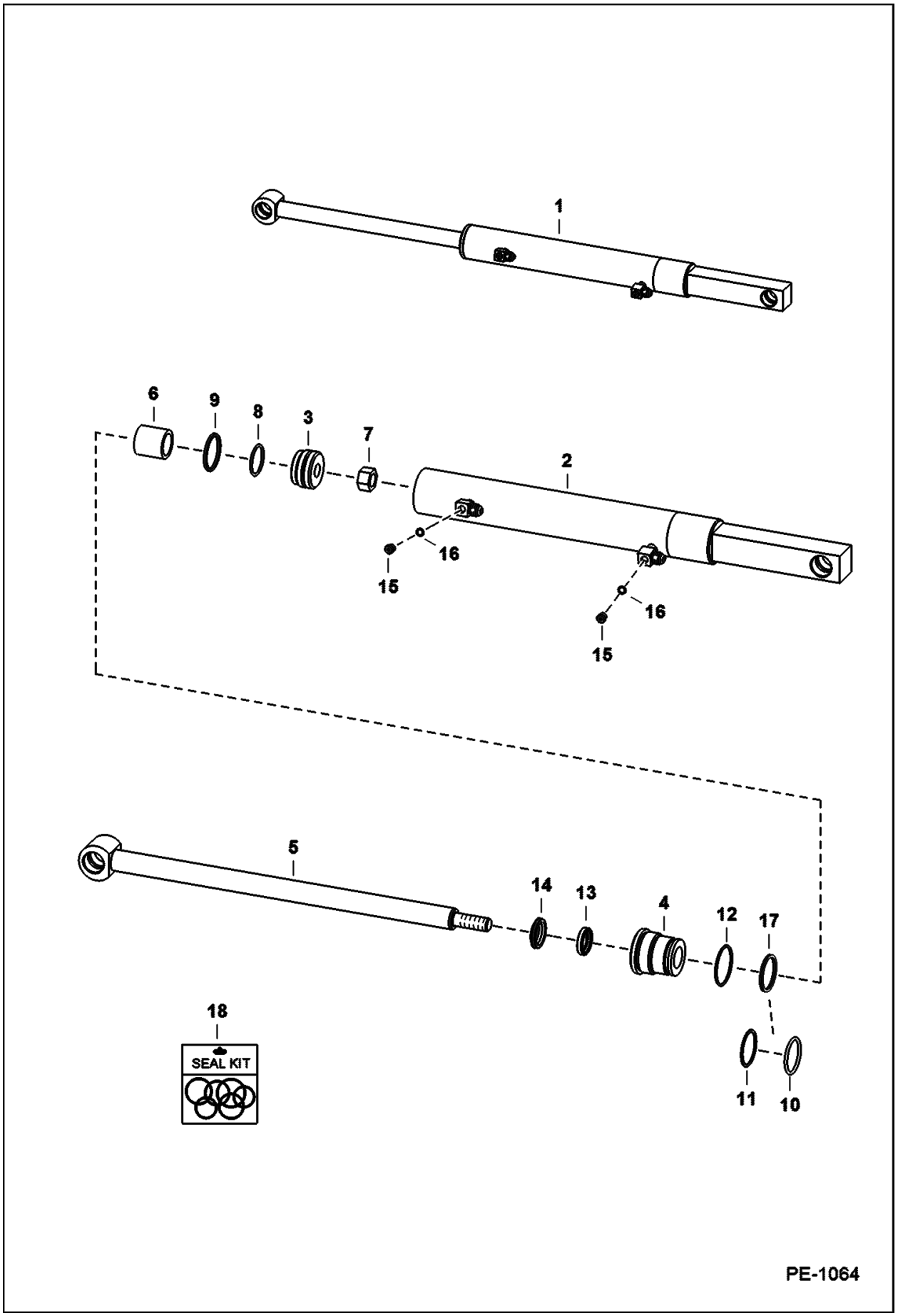

Illustration PE1064

Model S160 K
6904270

Page 532 - OSS# 6300202494 - All rights reserved by Bobcat Company - 02/11/2016 - 14:15:02 - Produced by Ken Cook Co. with mediaoff

POWER BOB-TACH (Cont'd)
(Cylinder) (Rear Mounted Ports)

Ref No	Part Number	Description	Remarks	Serial Number	Qty
1	6810611	CYLINDER, POWER BOB-TACH	Ref. 2-16 - Was 6807503 [D]		1
2	6810562	TUBE, CASE CYL POWER BOB-TACH	Was 6810349 [A]		1
3	6586543	PISTON			1
4	6586542	HEAD			1
5	6810612	SHAFT, ROD CYL POWER BOB-TACH	25,4 mm (1") OD - 472 mm (18.6") long - W/ 0.25" grease fitting hole		1
6	6810356	SPACER			1
7	92D10	NUT			1
8	25K30110	O RING 10	Was 54K30110 [A]		1
9	6532453	RING SEAL			1
10	58K222	O RING 10	Was 54K40116 [B]		1
11	73K222	RING	back-up		1
12	82K132	O-RING HYDRAULIC	Was 58K132 [B]		1
13	6667323	SEAL	rod		1
14	6666542	WIPER, ROD CYL			1
15	6812170	PLUG	W/Ref. 16 - hex head		2
16	75K3	RING,O			2
17	7008782	SEAL, QUAD			1
18	7138014	SEAL KIT	Ref. 7-9, 12-14, & 17 - Was 6803473 [A]		1

Page 533 - OSS# 6300202494 - All rights reserved by Bobcat Company - 02/11/2016 - 14:15:02 - Produced by Ken Cook Co. with media1off

POWER BOB-TACH
(Cylinder) (Bottom Mounted Ports)

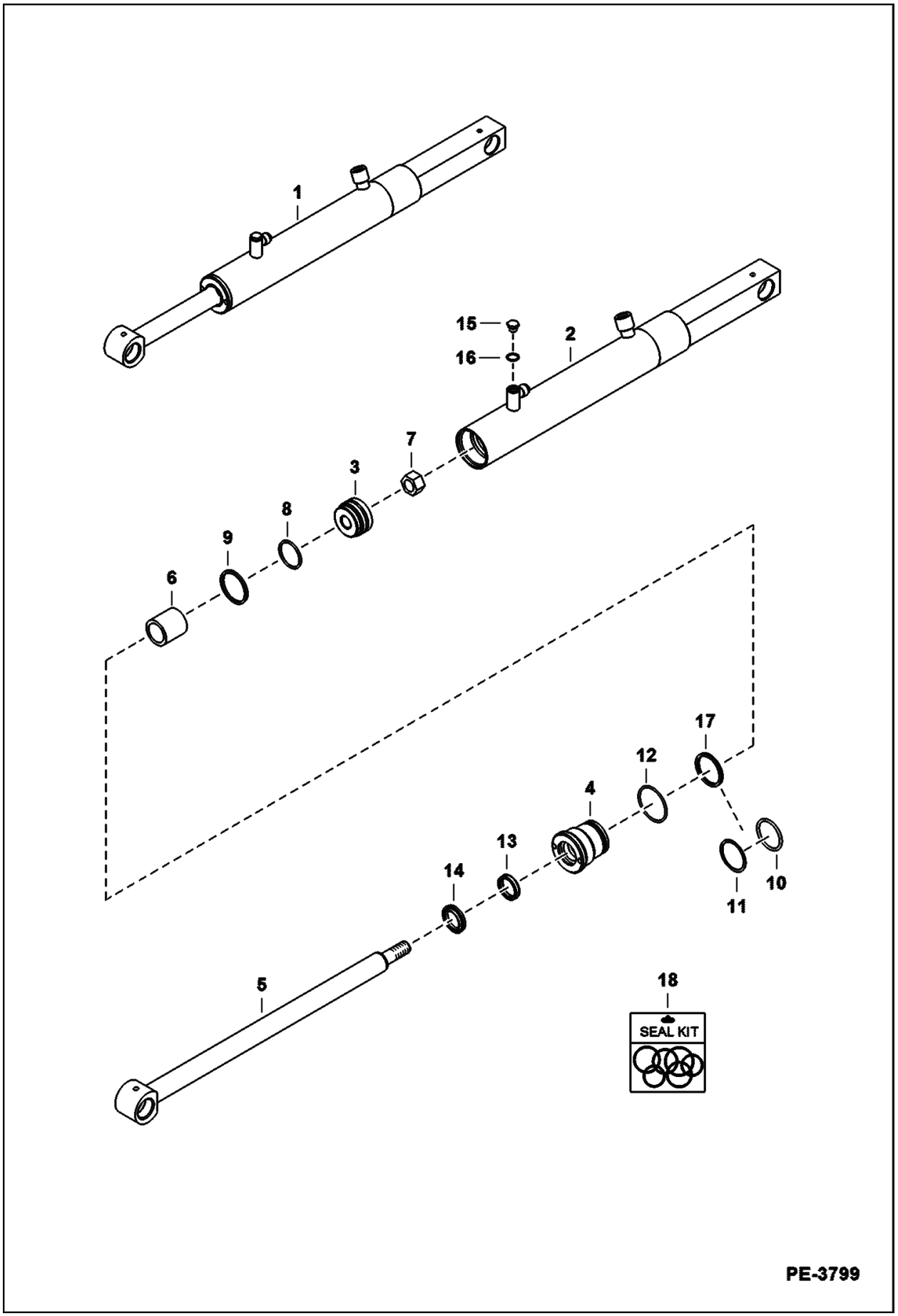

Illustration PE3799

Model S160 K
6904270

Page 534 - OSS# 6300202494 - All rights reserved by Bobcat Company - 02/11/2016 - 14:15:02 - Produced by Ken Cook Co. with mediaoff

POWER BOB-TACH (Cont'd)
(Cylinder) (Bottom Mounted Ports)

Ref No	Part Number	Description	Remarks	Serial Number	Qty
1	7160395	CYLINDER, POWER BOB-TACH	Ref. 2-16		1
2	7160396	TUBE, CYL	1.75" (44,45 mm) ID		1
3	6586543	PISTON			1
4	6586542	HEAD			1
5	6810612	SHAFT, ROD CYL POWER BOB-TACH	25,4 mm (1") OD - 472 mm (18.6") long - W/ 0.25" grease fitting hole		1
6	6810356	SPACER			1
7	92D10	NUT			1
8	25K30110	O RING 10	Was 54K30110 [A]		1
9	6532453	RING SEAL			1
10	58K222	O RING 10	Was 54K40116 [B]		1
11	73K222	RING	back-up		1
12	82K132	O-RING HYDRAULIC	Was 58K132 [B]		1
13	6667323	SEAL	rod		1
14	6666542	WIPER, ROD CYL			1
15	6812170	PLUG	W/Ref. 16 - flat boss face - hex head		1
16	75K3	RING,O	flat boss face		1
17	7008782	SEAL, QUAD			1
18	7138014	SEAL KIT	Ref. 7-9, 12-14, & 17		1

Page 535 - OSS# 6300202494 - All rights reserved by Bobcat Company - 02/11/2016 - 14:15:02 - Produced by Ken Cook Co. with media1off

POWER BOB-TACH
(Valve)

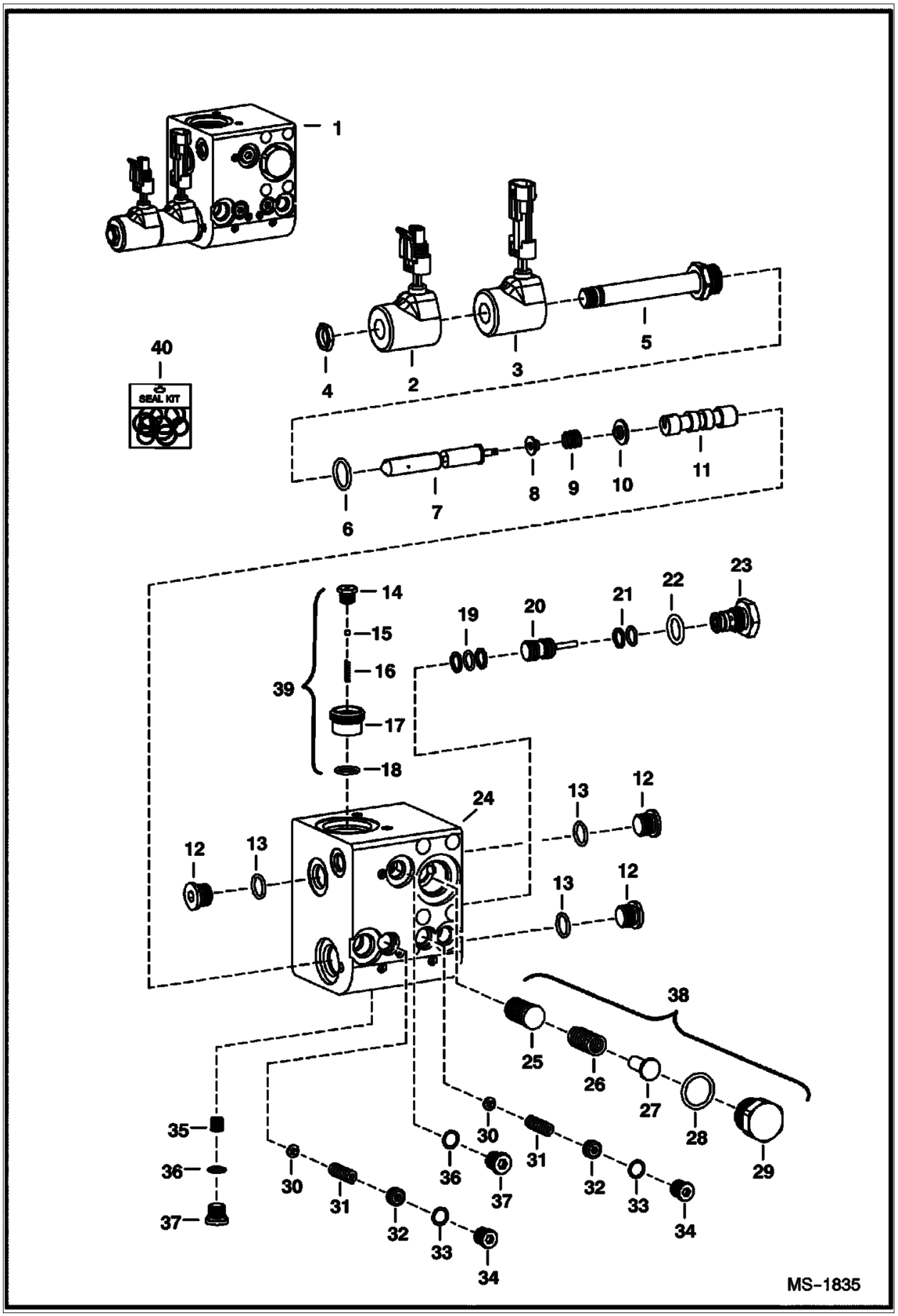

Illustration MS1835

Model S160 K
6904270

Page 536 - OSS# 6300202494 - All rights reserved by Bobcat Company - 02/11/2016 - 14:15:02 - Produced by Ken Cook Co. with mediaoff

POWER BOB-TACH (Cont'd)
(Valve)

Ref No	Part Number	Description	Remarks	Serial Number	Qty
1		VALVE, POWER BOB-TACH	NLA - Order 7161786 - Valve has 2 drain ports marked DR. Can use either port that best fits plumbing application.- Was 6686949 [A]		1
2	6684743	COIL, SOLENOID	W/male connector		1
3	6684744	COIL, SOLENOID	W/female connector		1
4	6684742	NUT			1
5		STEM	NSS		x
6	79K8	O RING 10			x
7		STEM	NSS		x
8		RETAINER	NSS		x
9		SPRING	NSS		x
10		WASHER	NSS		x
11		PISTON	NLA - Was 6685540 [A]		x
12	6685545	PLUG KIT	W/Ref. 13		x
13		O-RING	NSS		x
14		PLUG	NSS		x
15		BALL	NSS		x
16		SPRING	NSS		x
17		VALVE	NSS		x
18	6685542	O-RING			x
19		RINGS	NSS		x
20	6684745	PISTON, PILOT			1
21		RINGS	NSS		x
22	79K7	O RING 10			x
23	6684746	CHECK VALVE	W/Ref. 22		1
24		BLOCK	NSS		x
25		STEM	NSS		x
26		SPRING	NSS		x
27		POPPET	NSS		x
28	79K10	O RING 10			x
29		PLUG	NSS		x
30		POPPET	NSS		x
31		SPRING	NSS		x
32		PLUG	NSS		x
33		O-RING	NSS		x
34		PLUG	NSS		x
35	6685541	ORIFICE PLUG			x
36		O-RING	NSS - Was 6685542 [B,D]		x
37	6685546	PLUG	W/Ref. 36		x
38	6685544	COMPENSATOR	Ref. 25-29		1
39	6685543	CHECK VALVE	Ref. 14-18		1
40	6684747	SEAL KIT	Ref. 6, 21, 22, 28 & 36		1

Page 537 - OSS# 6300202494 - All rights reserved by Bobcat Company - 02/11/2016 - 14:15:02 - Produced by Ken Cook Co. with media1off

POWER BOB-TACH
(Valve)

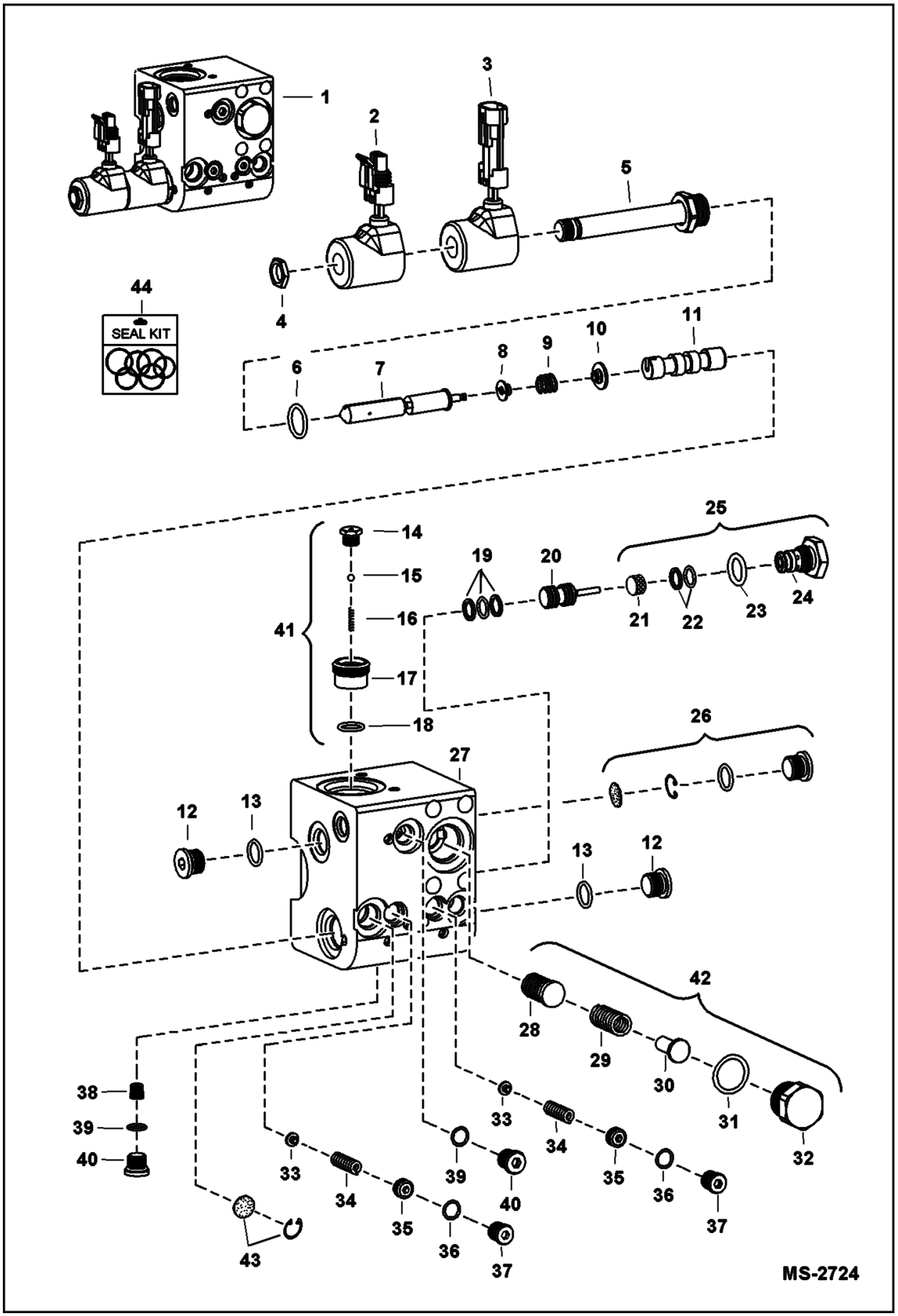

Illustration MS2724

Model S160 K
6904270

Page 538 - OSS# 6300202494 - All rights reserved by Bobcat Company - 02/11/2016 - 14:15:02 - Produced by Ken Cook Co. with mediaoff

POWER BOB-TACH (Cont'd)
(Valve)

Ref No	Part Number	Description	Remarks	Serial Number	Qty
1	7161786	VALVE, POWER BOB-TACH	valve has (2) drain ports labeled DR - use which ever port best fits plumbing application		1
2	6684743	COIL, SOLENOID	W/male connector		1
3	6684744	COIL, SOLENOID	W/female connector		1
4	6684742	NUT			1
5		STEM	NSS		x
6	79K8	O RING 10			x
7		STEM	NSS		x
8		RETAINER	NSS		x
9		SPRING	NSS		x
10		WASHER	NSS		x
11		PISTON	NLA		x
12	6685545	PLUG KIT	W/Ref. 13		x
13		ORING	NSS		x
14		PLUG	NSS		x
15		BALL	NSS		x
16		SPRING	NSS		x
17		VALVE	NSS		x
18	6685542	O-RING			x
19		RINGS	NSS		x
20	6684745	PISTON, PILOT	W/Ref. 19		1
21		STEM	NSS		1
22		RINGS	NSS		x
23	79K7	O RING 10			x
24	6684746	CHECK VALVE	W/Ref. 23		1
25	7001678	VALVE, CHECK	W/Ref. 21-24		1
26	7001673	KIT, SCREEN FILTER			1
27		BLOCK	NSS		x
28			NSS		x
29		SPRING	NSS		x
30		POPPET	NSS		x
31	79K10	O RING 10			x
32		PLUG	NSS		1
33		POPPET	NSS		x
34		SPRING	NSS		x
35		PLUG	NSS		x
36	79K4	O RING 10			x
37	24K3	PLUG	W/Ref. 36		x
38	6685541	ORIFICE PLUG			1
39		O-RING	NSS - Was 6685542 [B,D]		x
40	6685546	PLUG	W/Ref. 39		2
41	6685543	CHECK VALVE	W/Ref. 14-18		1
42	6685544	COMPENSATOR	W/Ref. 26-30		1
43	6689983	FILTER KIT			1
44	6684747	SEAL KIT	Ref. 6, 22, 23, 31 & 39 - consists of (5) O-rings & (1) back-up washer		1

Page 539 - OSS# 6300202494 - All rights reserved by Bobcat Company - 02/11/2016 - 14:15:02 - Produced by Ken Cook Co. with media1off

RADIATOR SCREEN KIT

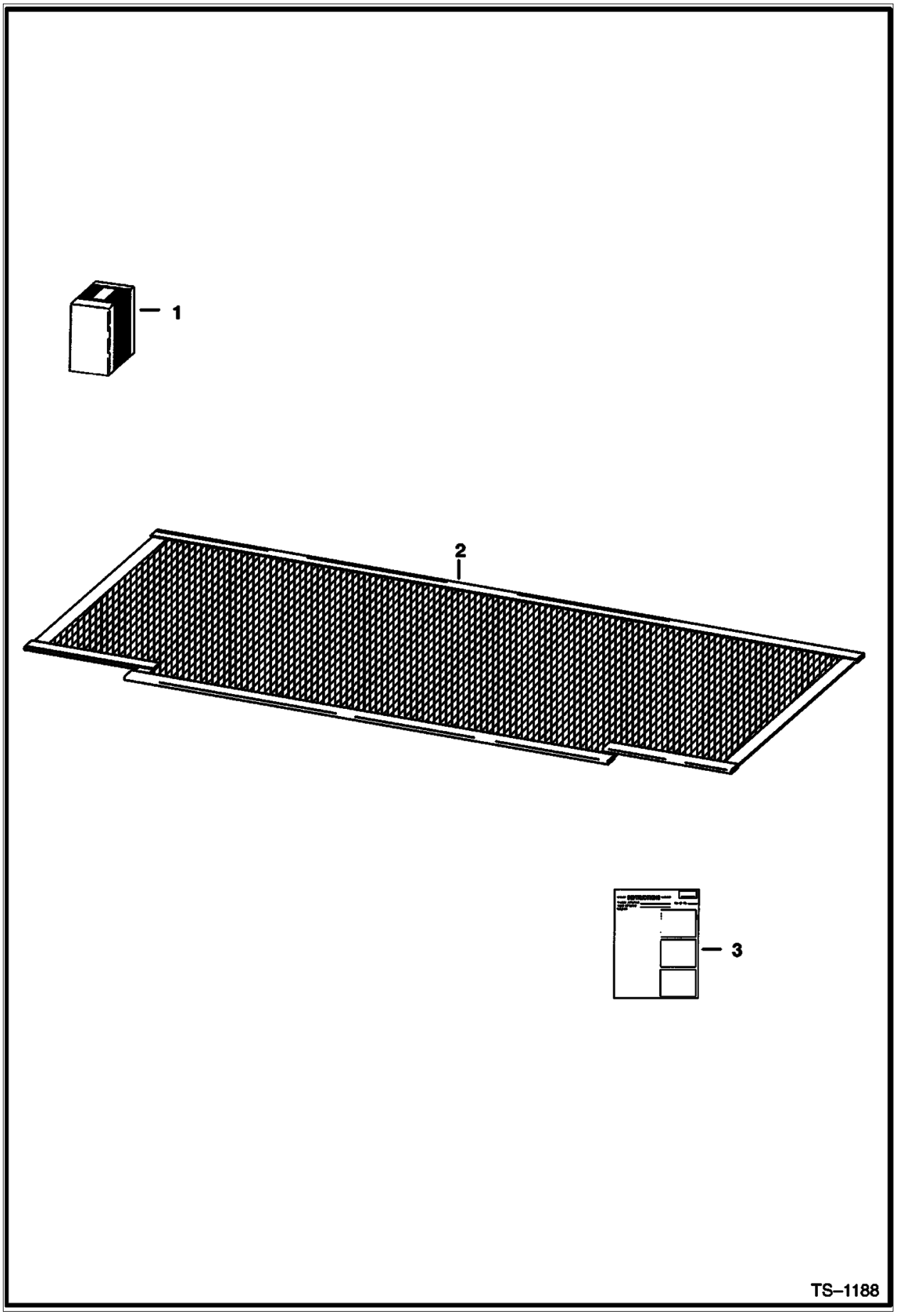

Illustration TS1188

Model S160 K
6904270

Page 540 - OSS# 6300202494 - All rights reserved by Bobcat Company - 02/11/2016 - 14:15:02 - Produced by Ken Cook Co. with mediaoff

RADIATOR SCREEN KIT (Cont'd)

Ref No	Part Number	Description	Remarks	Serial Number	Qty
1	6706939	KIT, SCREEN	Ref. 2 & 3		1
2	6706285	SCREEN			1
3	6722861	INSTRUCTIONS			1

Page 541 - OSS# 6300202494 - All rights reserved by Bobcat Company - 02/11/2016 - 14:15:02 - Produced by Ken Cook Co. with mediaioff

REAR AUXILIARY
(Kit)

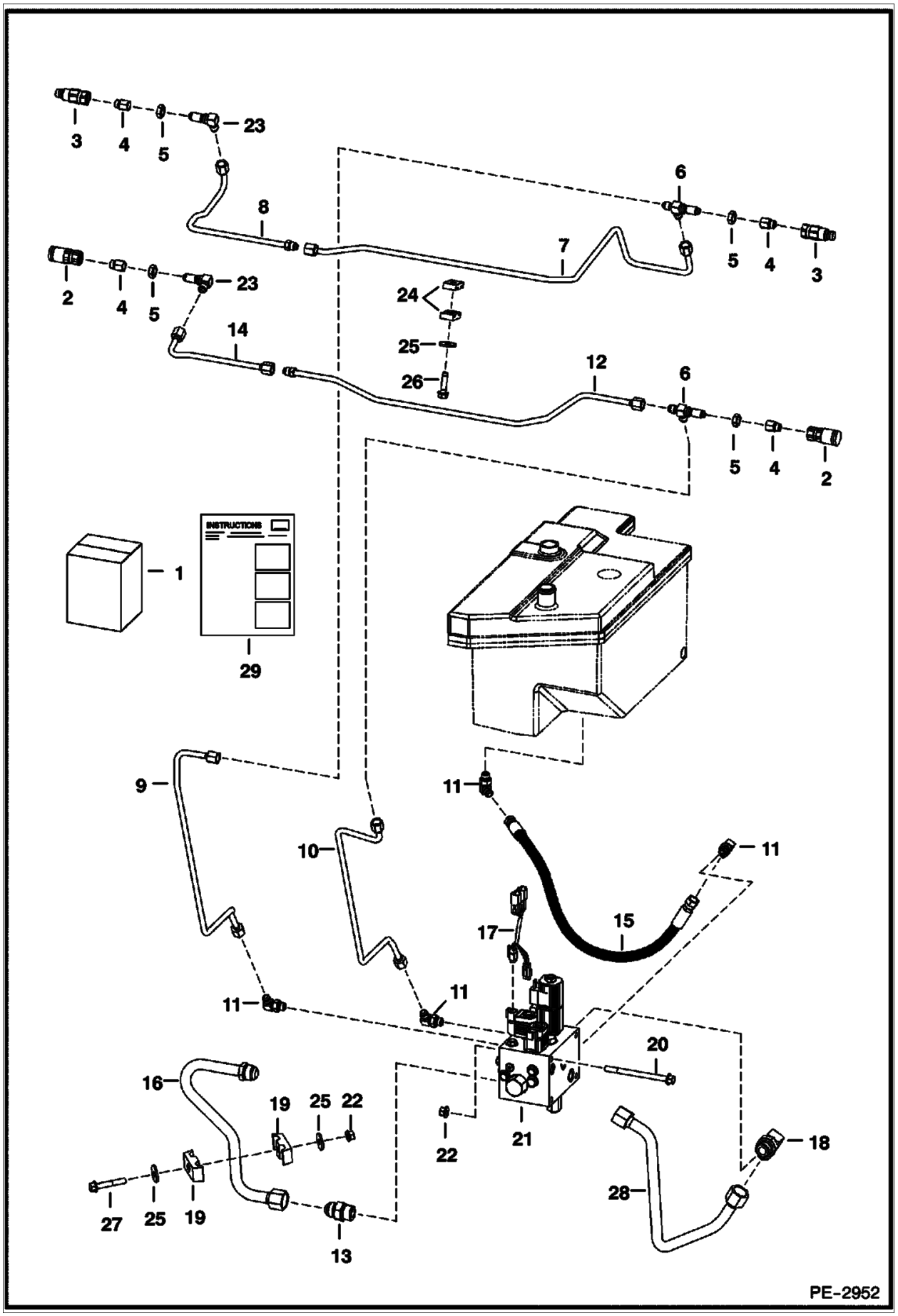

Illustration PE2952

Model S160 K
6904270

Page 542 - OSS# 6300202494 - All rights reserved by Bobcat Company - 02/11/2016 - 14:15:02 - Produced by Ken Cook Co. with mediaoff

REAR AUXILIARY (Cont'd)
(Kit)

Ref No	Part Number	Description	Remarks	Serial Number	Qty
1	7121568	KIT, REAR AUX	Ref. 2-29	530011001 - 59999	1
1	7121568	KIT, REAR AUX	Ref. 2-29	529911001 - 59999	1
1	7121568	KIT, REAR AUX	Ref. 2-29	A15111001 & Above	1
1	7154351	KIT, AUX REAR	Ref. 2-29	530060001 & Above	1
1	7154351	KIT, AUX REAR	Ref. 2-29	529960001 & Above	1
1	7154351	KIT, AUX REAR	Ref. 2-29	AHWA11001 & Above	1
2	7246786	COUPLER, FF FEMALE	Contact your Local Dealer for Bobcat Technical Information BTI433ldr - Was 6667803 [A]		2
3	7246787	COUPLER, FF MALE	Contact your Local Dealer for Bobcat Technical Information BTI433ldr - Was 6667804 [A]		2
3	6669657	SEAL KIT			x
4	6706633	CONNECTOR			4
5	86F5	NUT			4
6	91K5	TEE			2
7	7124255	TUBE			1
8	7124256	TUBE			1
9	7121695	TUBE			1
10	7121696	TUBE			1
11	17KB0606	FITTING			4
11	79K6	O RING 10			4
12	7124257	TUBE			1
13	15KB1212	FITTING, HYD CONNECTOR			1
13	79K12	O RING 10			1
14	7124258	TUBE			1
15	6700282	HOSE			1
16	7109927	TUBE			1
17	7101973	HARNESS	jumper - W/ 2-pin connectors (4) - Use W/Ref. 1 (7121568 kit)	A15111001 & Above	1
17	7101973	HARNESS	jumper - W/ 2-pin connectors (4) - Use W/Ref. 1 (7121568 kit)	529911001 - 59999	1
17	7101973	HARNESS	jumper - W/ 2-pin connectors (4) - Use W/Ref. 1 (7121568 kit)	530011001 - 59999	1
17	7102338	HARNESS	jumper - W/ 6-pin connector & 2-pin connectors (4) - Use W/Ref. 1 (7121568 kit)	529911001 - 59999	1
17	7102338	HARNESS	jumper - W/ 6-pin connector & 2-pin connectors (4) - Use W/Ref. 1 (7121568 kit)	A15111001 & Above	1
17	7102338	HARNESS	jumper - W/ 6-pin connector & 2-pin connectors (4) - Use W/Ref. 1 (7121568 kit)	530011001 - 59999	1
17	7149221	HARNESS, AUX REAR	jumper - W/ 8-pin connector - Use W/Ref. 1 (7154353 kit)	AHWA11001 & Above	1
17	7149221	HARNESS, AUX REAR	jumper - W/ 8-pin connector - Use W/Ref. 1 (7154353 kit)	530060001 & Above	1
17	7149221	HARNESS, AUX REAR	jumper - W/ 8-pin connector - Use W/Ref. 1 (7154353 kit)	529960001 & Above	1
18	17KB1212	FITTING, HYD ELBOW			1
18	79K12	O RING 10			1
19	6592506	CLAMP			2
20	17C680	BOLT			2

Page 543 - OSS# 6300202494 - All rights reserved by Bobcat Company - 02/11/2016 - 14:15:02 - Produced by Ken Cook Co. with media1off

REAR AUXILIARY (Cont'd)
(Kit)

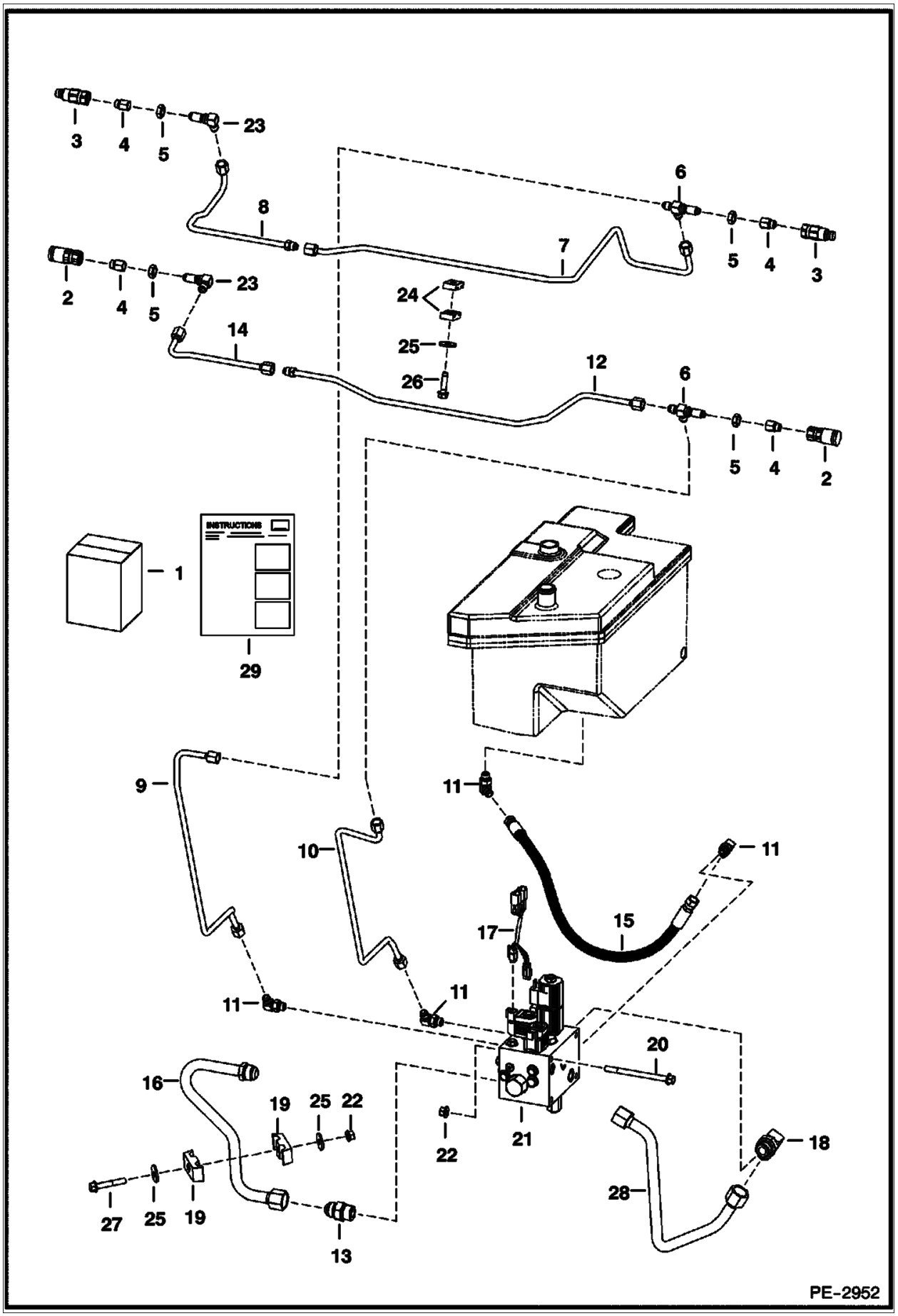

Illustration PE2952

Model S160 K
6904270

Page 544 - OSS# 6300202494 - All rights reserved by Bobcat Company - 02/11/2016 - 14:15:02 - Produced by Ken Cook Co. with mediaoff

REAR AUXILIARY (Cont'd)
(Kit)

Ref No	Part Number	Description	Remarks	Serial Number	Qty
21		VALVE	See Illustration REAR AUXILIARY VALVE / MS2255		1
22	83D6	NUT 5			3
23	88F5	ELBOW			3
24	7115645	CLAMP	Was 6726277 [A]		2
25	619021	WASHER, 5			3
26	84G3724	BOLT			1
27	35C636	BOLT			1
28	6733192	TUBE			1
29	6904727	INSTRUCTIONS	- Use W/Ref. 1 (7121568 kit)	530011001 - 59999	1
29	6904727	INSTRUCTIONS	- Use W/Ref. 1 (7121568 kit)	529911001 - 59999	1
29	6904727	INSTRUCTIONS	- Use W/Ref. 1 (7121568 kit)	A15111001 & Above	1
29	6986796	INSTRUCTIONS	- Use W/Ref. 1 (7154351 kit)	AHWA11001 & Above	1
29	6986796	INSTRUCTIONS	- Use W/Ref. 1 (7154351 kit)	529960001 & Above	1
29	6986796	INSTRUCTIONS	- Use W/Ref. 1 (7154351 kit)	530060001 & Above	1

Page 545 - OSS# 6300202494 - All rights reserved by Bobcat Company - 02/11/2016 - 14:15:02 - Produced by Ken Cook Co. with mediaioff

REAR AUXILIARY VALVE

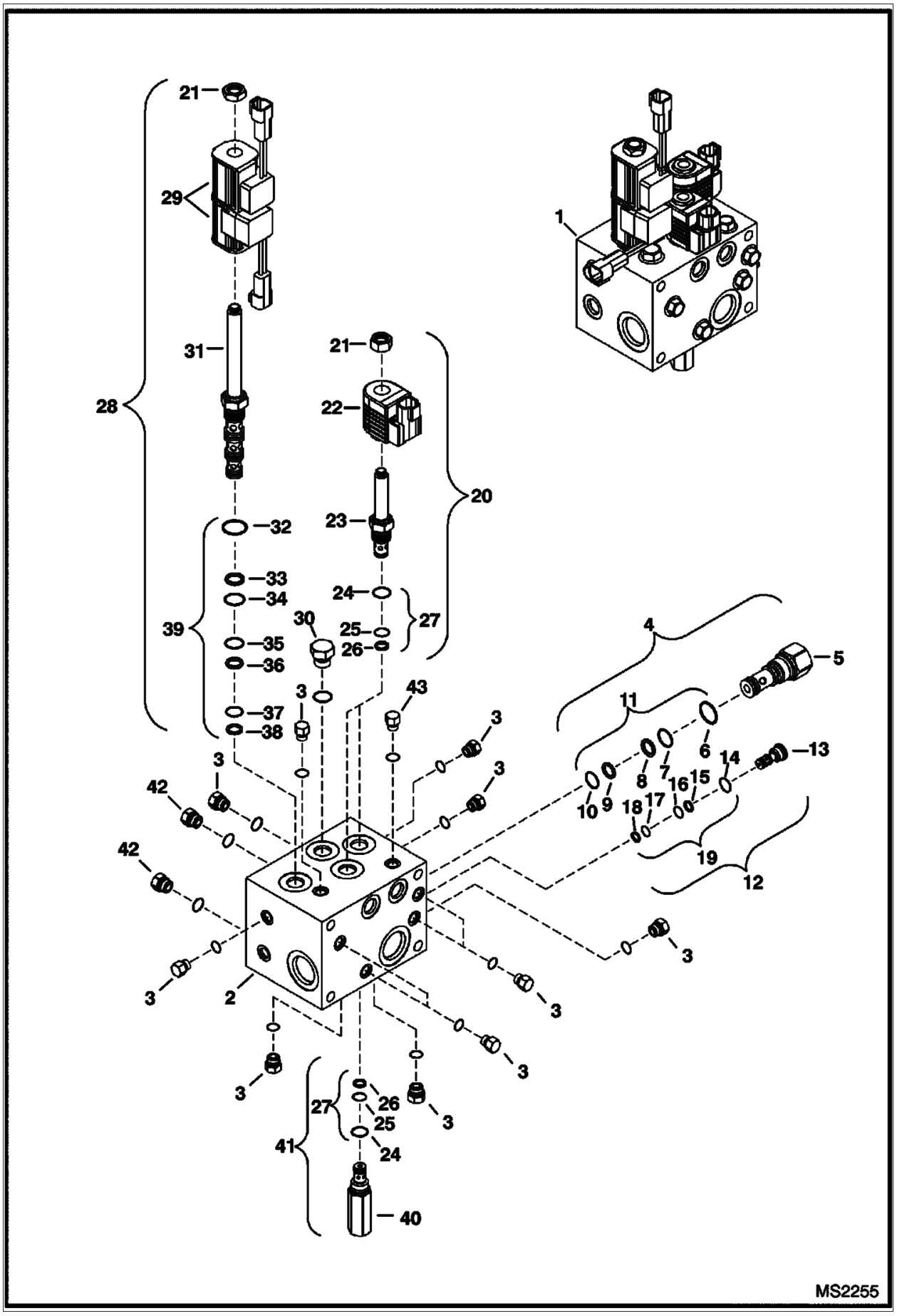

Illustration MS2255

Model S160 K
6904270

Page 546 - OSS# 6300202494 - All rights reserved by Bobcat Company - 02/11/2016 - 14:15:02 - Produced by Ken Cook Co. with mediaoff

REAR AUXILIARY VALVE (Cont'd)

Ref No	Part Number	Description	Remarks	Serial Number	Qty
1	6685624	VALVE, AUX REAR			1
2		BLOCK	NSS		1
3		PLUG	NSS - #4 SAE W/ O-ring		11
4	6684044	VALVE	differential sensing - Ref. 5-10		1
5		VALVE	NSS - Order Ref. 4		1
6	6684046	O-RING			1
7	6684048	O-RING			1
8	6684047	BACK-UP RING			1
9	6684050	BACK-UP RING			1
10	6684049	O-RING			1
11	6684045	SEAL KIT	Ref. 6-10		1
12	6684061	VALVE	shuttle - Ref. 13-18		1
13		VALVE	NSS - Order Ref. 12		1
14	6684063	O-RING			1
15	6684064	BACK-UP RING			1
16	6684065	O-RING			1
17	6684066	O-RING			1
18		BACK-UP RING	NLA - Was 6684067 [A]		1
19	6684062	SEAL KIT	Ref. 14-18		1
20		VALVE	NLA - Ref. 21-26 - .5" dia x 45 mm (1.78") long stem - Order 7021365 solenoid valve - Was 6685061 [A]		2
20	7021365	VALVE, SOLENOID	Ref. 21-26 - 13 mm dia x 38 mm (1.53") long stem		2
21	6684060	NUT	0.5" thread - Use W/Ref. 22 (6684073 coil)		2
21	7021367	NUT	13 mm thread - Use W/Ref. 22 (7021366 coil)		2
22	6684073	COIL	12 volt - Use W/ 0.5" dia x 45 mm (1.78") long stem		2
22	7021366	COIL, SOLENOID	12 volt - Use W/ 13 mm dia x 38 mm (1.53") long stem		2
23		STEM	NSS - Order Ref. 20		2
24	6684070	O-RING			3
25	6684071	O-RING			3
26	6684072	BACK-UP RING			3
27	6684069	SEAL KIT	Ref. 24-26		3
28	6688933	VALVE ASSY	solenoid W/coils - Ref. 21, 29 & 31-38		1
29	6688934	COIL			2
30		PLUG	NSS - #8 SAE W/ O-ring		1
31		VALVE	NSS - Order Ref. 28		1
32		O-RING	NLA - Order Ref. 39 - Was 6681489 [A]		1
33	6684053	BACK-UP RING			1
34	6684054	O-RING			1
35	6684056	RING,O			1
36		BACK-UP RING	NLA - Was 6684055 [A]		1
37		O-RING	NLA - Order Ref. 39 - Was 6681487 [A]		1
38		BACK-UP RING	NLA - Was 6684057 [A]		1
39	6684052	SEAL KIT	Ref. 32-38		1
40		VALVE	NSS - Order Ref. 41		x
41	6685328	RELIEF VALVE	W/Ref. 24-26		1
42		PLUG	NSS - #6 SAE W/ O-ring		4
43		PLUG	NSS - metric		1

Page 547 - OSS# 6300202494 - All rights reserved by Bobcat Company - 02/11/2016 - 14:15:02 - Produced by Ken Cook Co. with media1off

REAR DOOR LOCK

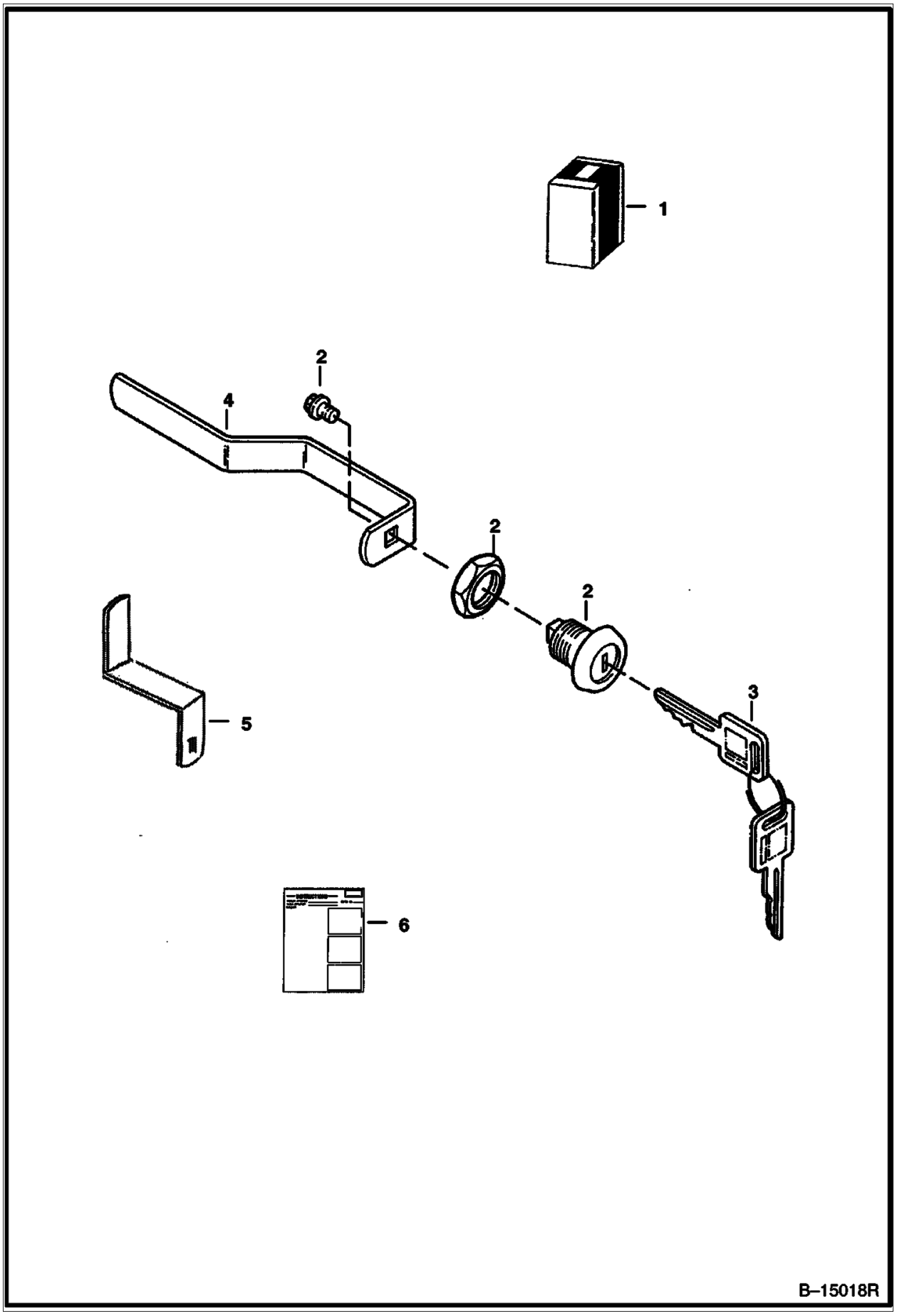

Illustration B15018R

Model S160 K
6904270

Page 548 - OSS# 6300202494 - All rights reserved by Bobcat Company - 02/11/2016 - 14:15:02 - Produced by Ken Cook Co. with mediaoff

REAR DOOR LOCK (Cont'd)

Ref No	Part Number	Description	Remarks	Serial Number	Qty
1	6732001	KIT, LOCK REAR DOOR	lock - Ref. 2-6		1
2	6670726	LOCK ONLY			1
3		KEY	NLA - ignition & rear door - includes two keys W/ring - Order 6693241 - Was 6709527 [A]		1
3	6693241	KEY 10	ignition - single key W/O ring		x
4	6714037	LATCH	Use W/ 6711524 rear door		1
5	6729688	LATCH, DOOR	Use W/ 6729991 rear door		1
6	6901656	INSTRUCTIONS			1

Page 549 - OSS# 6300202494 - All rights reserved by Bobcat Company - 02/11/2016 - 14:15:02 - Produced by Ken Cook Co. with media1off

REAR WIPER

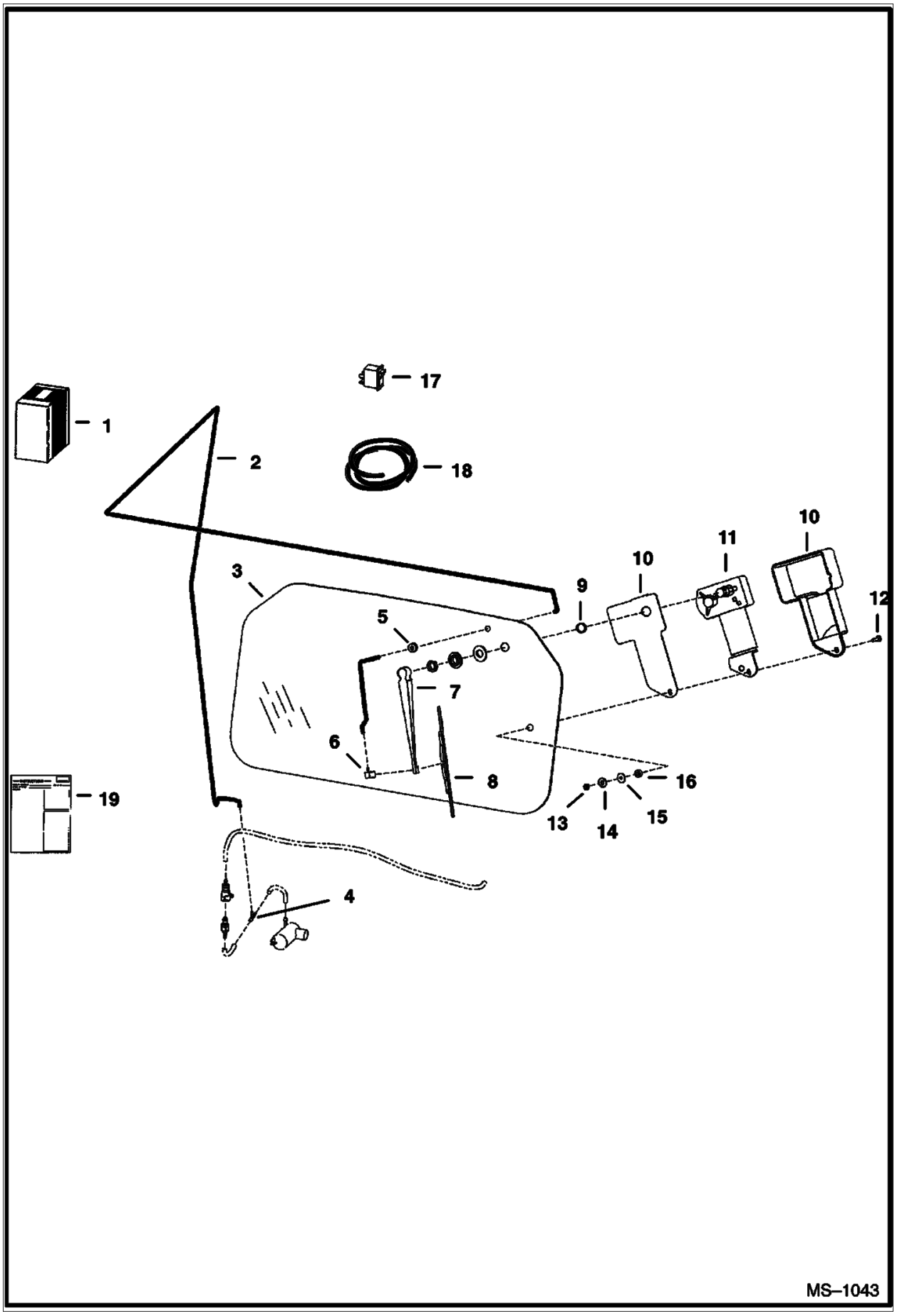

Illustration MS1043

Model S160 K
6904270

Page 550 - OSS# 6300202494 - All rights reserved by Bobcat Company - 02/11/2016 - 14:15:02 - Produced by Ken Cook Co. with mediaoff

REAR WIPER (Cont'd)

Ref No	Part Number	Description	Remarks	Serial Number	Qty
1	6726655	REAR WIPER KIT	rear wiper		1
2		HOSE	NLA - 96" (2438,4 mm) long - Order Ref. 18		1
3	6719317	WINDOW, REAR			1
4	6676000	TEE			1
5	6557493	GROMMET			1
6	6676028	NOZZLE			1
7	6676001	ARM, WIPER			1
8	6676002	BLADE, WIPER			1
9	6667201	SPACER	nylon		1
10	6664097	COVER	wiper		1
11	6665602	MOTOR			1
12	6664566	SCREW			1
13	6664103	NUT			1
14	6664065	WASHER	nylon		1
15	6801059	WASHER	neoprene		1
16	6664085	BUSHING	nylon		1
17	6675999	SWITCH			1
18	6676003	HOSE, BULK/FT	black - 0.109" ID - sold per foot		x
19	6901061	INSTRUCTIONS			1

Page 551 - OSS# 6300202494 - All rights reserved by Bobcat Company - 02/11/2016 - 14:15:02 - Produced by Ken Cook Co. with media1off

REMOTE CONTROL KIT
(Selectable Joystick Controls)

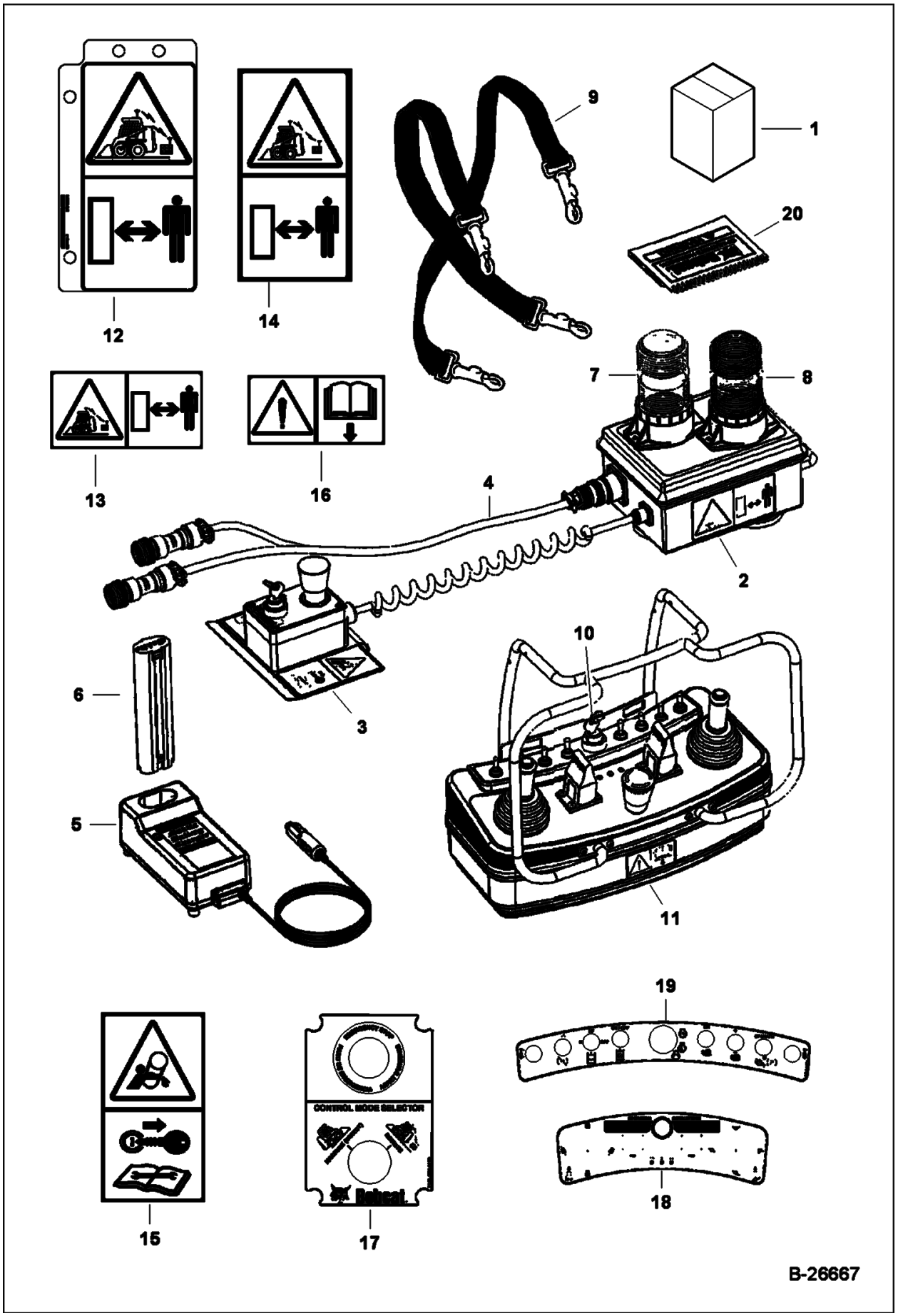

Illustration B26667

Model S160 K
6904270

Page 552 - OSS# 6300202494 - All rights reserved by Bobcat Company - 02/11/2016 - 14:15:02 - Produced by Ken Cook Co. with mediaoff

REMOTE CONTROL KIT (Cont'd)
(Selectable Joystick Controls)

Ref No	Part Number	Description	Remarks	Serial Number	Qty
1	7185234	KIT, REMOTE CONTROL	radio remote control - Was 7141291 [A]		1
2		RECEIVER, 2.4GHZ	Contact your Local Dealer for Bobcat Technical Information BTI392 - NLA - Was 6692756 [B]		1
3	7011071	CONTROL, MODE SELECTOR	mode selector/E-stop box - W/Ref. 17 - Was 6692766 [A]		1
4	7011070	HARNESS, RECEIVER	Was 6692764 [A]		1
5	6692769	CHARGER, MAKITA DC1422, 12-24VDC	W/Ref. 6		1
6	6692770	BATTERY, NiCd, 9.6V, 1.3Ah, MAKITA 9000			1
7	6693411	LENS	green		1
7	6693409	BULB, STROBE			1
8	6693410	LENS	amber		1
8	6693409	BULB, STROBE			1
9	6692771	SHOULER HARNESS			1
10	6692762	KEYS, SET OF 2	set of (2)		x
11		2.4GHZ TRANSMITTER	Contact your Local Dealer for Bobcat Technical Information BTI392 - NLA - transmitter - W/Ref. 18 & 19 - Was 6692761 [B]		1
12	7135569	DECAL	remote ready identification tag		1
13	6692757	DECAL, "REMOTE CONTROL OPERATION", LARGE	operation		1
14	6692768	DECAL, "REMOTE CONTROL OPERATION", SMALL	operation		1
15	6692767	DECAL, "ROTATING PARTS"	rotating parts		1
16	6692763	DECAL WARNING, "READ THE MANUAL"	operating instructions		1
17		DECAL	NLA - Order Ref. 3		1
18		DECAL	NLA - Order Ref. 11		1
19		DECAL	NLA - Order Ref. 11		1
20	6904709	OM, RADIO REMOTE CONTROL	operation, maintenance and parts		1
20	6904709AR	OM, RADIO REMOTE CONTROL esAR			1
20	6904709PTBR	OM, RADIO REMOTE			1

Page 553 - OSS# 6300202494 - All rights reserved by Bobcat Company - 02/11/2016 - 14:15:02 - Produced by Ken Cook Co. with mediaioff

SEAL ENCLOSURE KIT

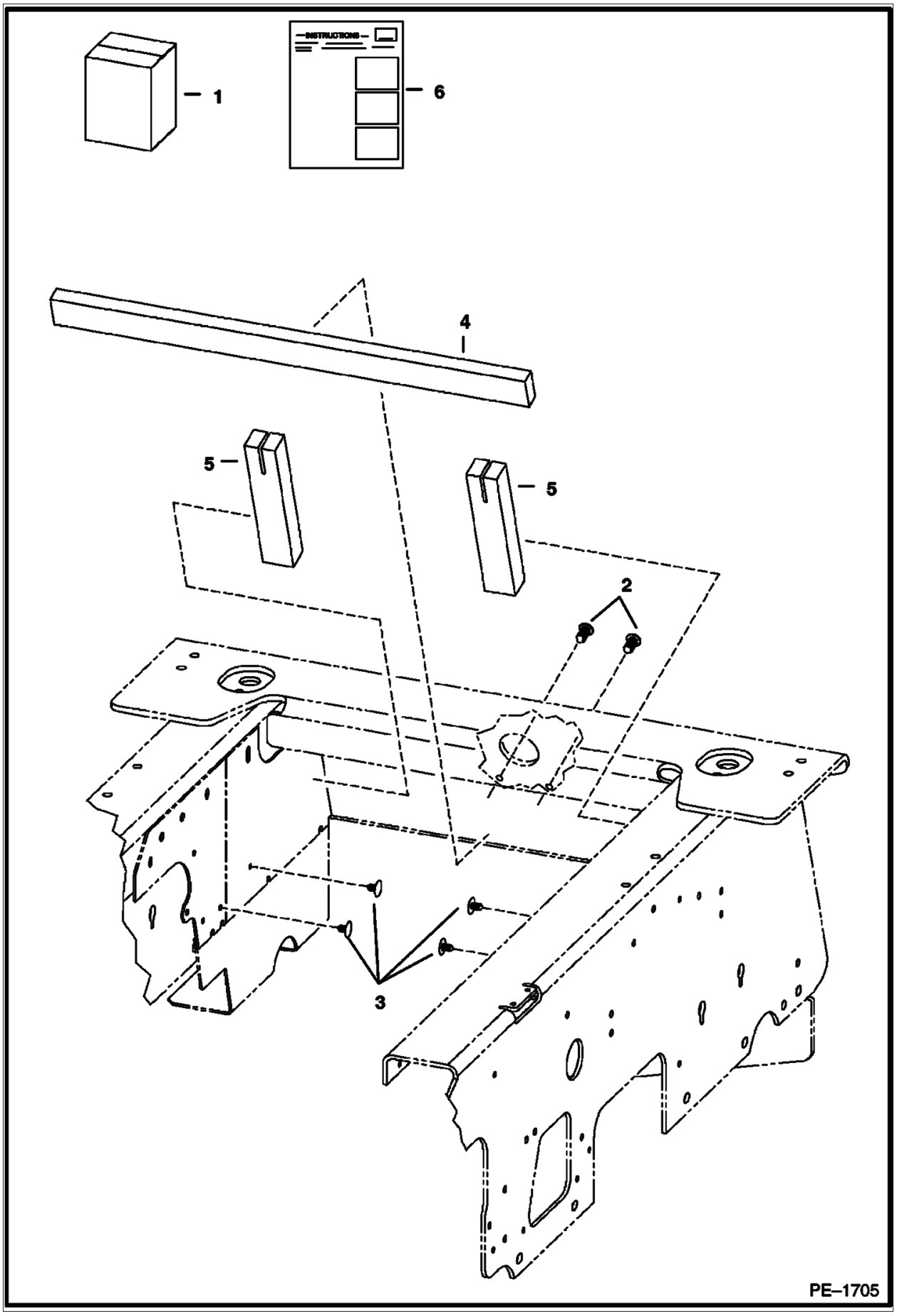

Illustration PE1705

Model S160 K
6904270

Page 554 - OSS# 6300202494 - All rights reserved by Bobcat Company - 02/11/2016 - 14:15:02 - Produced by Ken Cook Co. with mediaoff

SEAL ENCLOSURE KIT (Cont'd)

Ref No	Part Number	Description	Remarks	Serial Number	Qty
1	6732718	KIT, SEAL ENCLOSURE	enclosure		1
2	6669308	RETAINER			2
3	6674895	RETAINER			4
4	6731108	SEAL, TRANS	retainer		1
5	6732619	SEAL, PANEL	panel		2
6	6901774	INSTRUCTIONS			1

Page 555 - OSS# 6300202494 - All rights reserved by Bobcat Company - 02/11/2016 - 14:15:02 - Produced by Ken Cook Co. with mediaioff

SEAT
(Suspension - Sears)

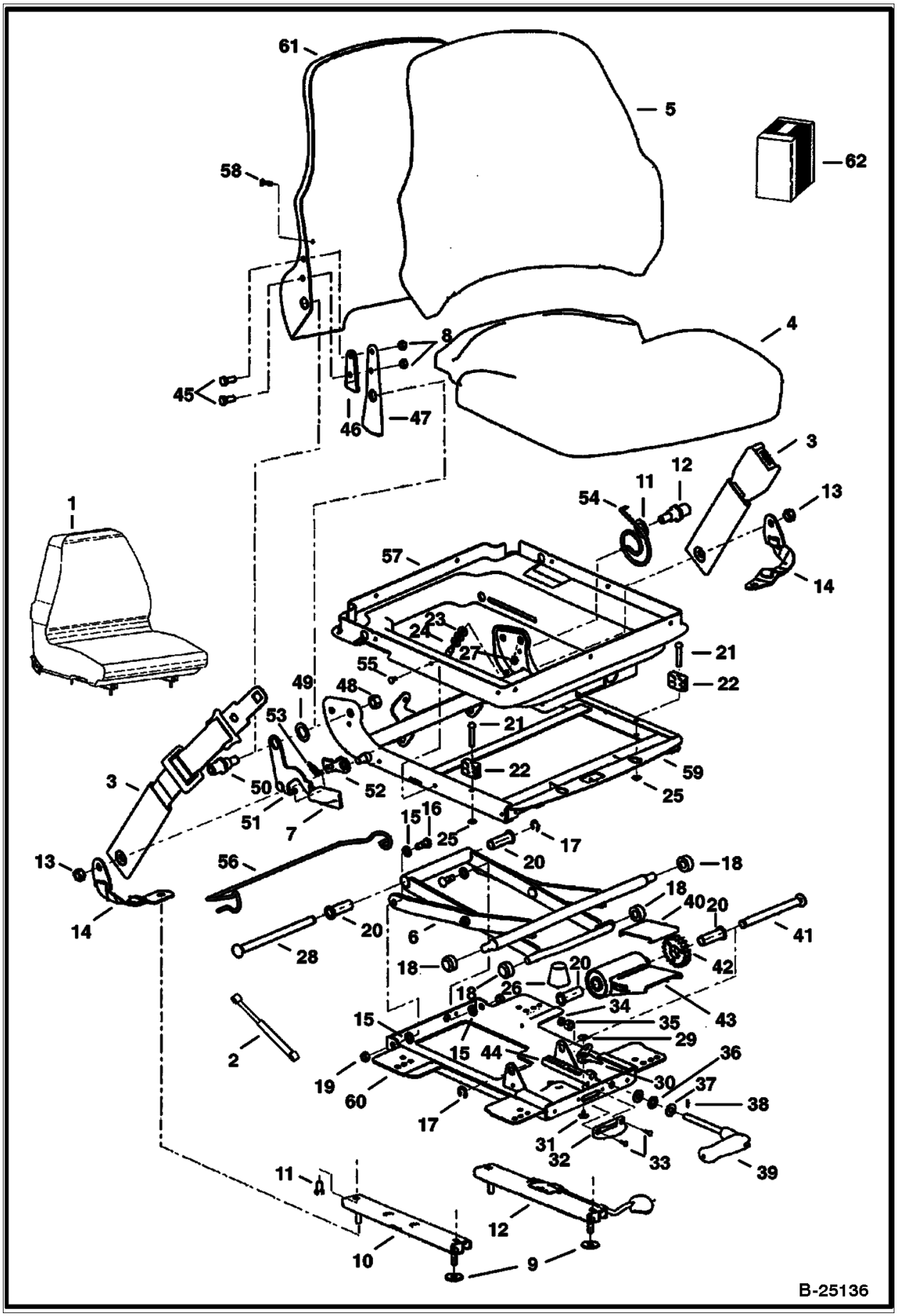

Illustration B25136

Model S160 K
6904270

Page 556 - OSS# 6300202494 - All rights reserved by Bobcat Company - 02/11/2016 - 14:15:02 - Produced by Ken Cook Co. with mediaoff

SEAT (Cont'd)
(Suspension - Sears)

Ref No	Part Number	Description	Remarks	Serial Number	Qty
1	6675595	SEAT, OPERATOR VINYL	vinyl - LH recliner lever		1
1	6675596	SEAT, FABRIC	fabric - LH recliner lever		1
2	6676338	GAS SPRING			1
3	6675170	BELT, SEAT	lap		1
4	6675320	CUSHION, SEAT FABRIC	fabric		1
4	6675322	CUSHION, SEAT VINYL	vinyl		1
5	6675319	SEAT, BACK	backrest - fabric - W/Ref. 58		1
5	6675321	VINYL BACK SEAT	backrest - vinyl - W/Ref. 58		1
6	6675317	KIT SCISSORS			1
7	6675323	KNOB RECLINER	recliner		1
8		NUT	NSS		6
9	619021	WASHER, 5			4
10		SLIDE	NSS - slave		1
11		BOLT	NSS		4
12		SLIDE	NSS - locking		1
13		NUT	NSS		2
14		BELT	NSS - tether		2
15		WASHER	NSS - cross pivot		4
16		BOLT	NSS - pivot		2
17		RING	NSS - retaining		2
18		ROLLER	NSS		4
19		NUT	NSS		2
20		BUSHING	NSS - wt adjustment		4
21		RIVET	NSS		2
22		BLOCK	NSS - up stop		2
23		WASHER	NSS		3
24		STOP	NSS - armrest		1
25		PUSHNUT	NSS		2
26		BUMPER	NSS		1
27		NUT	NSS		1
28		SHAFT	NSS - bearing		1
29		RIVET	NSS - female snap		1
30		INDICATOR	NSS - weight		1
31		RIVET	NSS - male snap		1
32		DIAL	NSS - weight indicator		1
33		POP RIVET	NSS		2
34		SPACER	NSS		1
35		NUT	NSS		1
36		BEARING	NSS - thrust		1
37		RACE	NSS - thrust		2
38		SHEAR PIN	NSS		1
39		HANDLE	NSS - weight adjustment		1
40		PLATE	NSS - wear		1
41		SHAFT	NSS - torsion		1
42		DRIVE GEAR	NSS		1
43		BUSHING	NSS - torsion		1
44		RACK	NSS - wt adjustment		1
45		BOLT	NSS		2
46		SPACER	NSS - recliner		1
47		BRACKET	NSS - back tilt		1

Page 557 - OSS# 6300202494 - All rights reserved by Bobcat Company - 02/11/2016 - 14:15:02 - Produced by Ken Cook Co. with media1off

SEAT (Cont'd)
(Suspension - Sears)

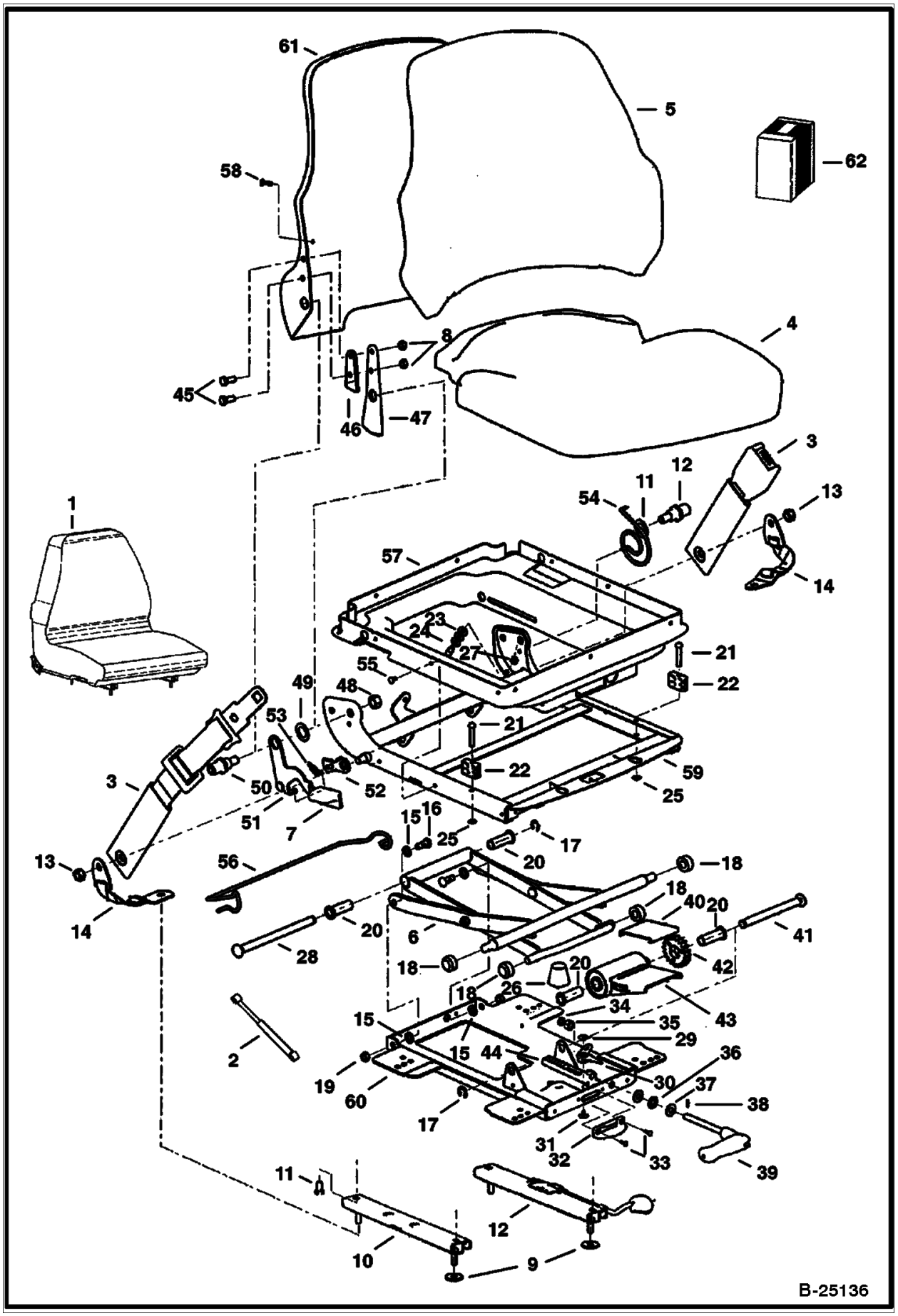

Illustration B25136

Model S160 K
6904270

Page 558 - OSS# 6300202494 - All rights reserved by Bobcat Company - 02/11/2016 - 14:15:02 - Produced by Ken Cook Co. with mediaoff

SEAT (Cont'd)
(Suspension - Sears)

Ref No	Part Number	Description	Remarks	Serial Number	Qty
48		NUT	NSS		2
49		WASHER	NSS - plastic		2
50		BOSS	NSS - back pan pivot		2
51		HANDLE	NSS - recliner (RH)		1
52		LATCH	NSS - recliner		1
53		SPRING	NSS - extension		1
54		SPRING	NSS - tilt latch		1
55		CLIP	NSS		6
56		WIRE	NSS - boot support		1
57		SUSPENSION	NSS - boot		1
58		SCREW	NSS		2
59		HOUSING	NSS - upper		1
60		HOUSING	NSS - lower		1
61		BACK PAN	NSS		1
62	6675309	KIT SLIDE	slides - Ref. 8-12		1
62	6675310	KIT TETHER	tether belt - Ref. 9, 13 & 14		1
62	6675311	KIT S R B	suspension rollers & bearing - Ref. 15-20		1
62	6675312	KIT S B S	suspension bumpers & stops - Ref. 21-27		1
62	6675313	KIT BEARING SHAFT	rear tube - Ref. 17, 20 & 28		1
62	6675314	KTWTADJIN	weight adjustment indicator - Ref. 29-33		1
62	6675315	KITWTADJHANDLE	weight adjustment handle - Ref. 34-39		1
62	6675316	KT WT ADJUST	weight adjustment - Ref. 17, 20 & 40-44		1
62	6675318	KT RECLINER	RH recliner - Ref. 7, 8 & 45-54		1
62	6676034	RCLNR KIT	LH recliner - Ref. 7, 8 & 45-54		1
62	6675308	KITS/BOOT	suspension boot - Ref. 55-57		1

Page 559 - OSS# 6300202494 - All rights reserved by Bobcat Company - 02/11/2016 - 14:15:02 - Produced by Ken Cook Co. with media1off

SEAT BELT
(Three Point Retractable)

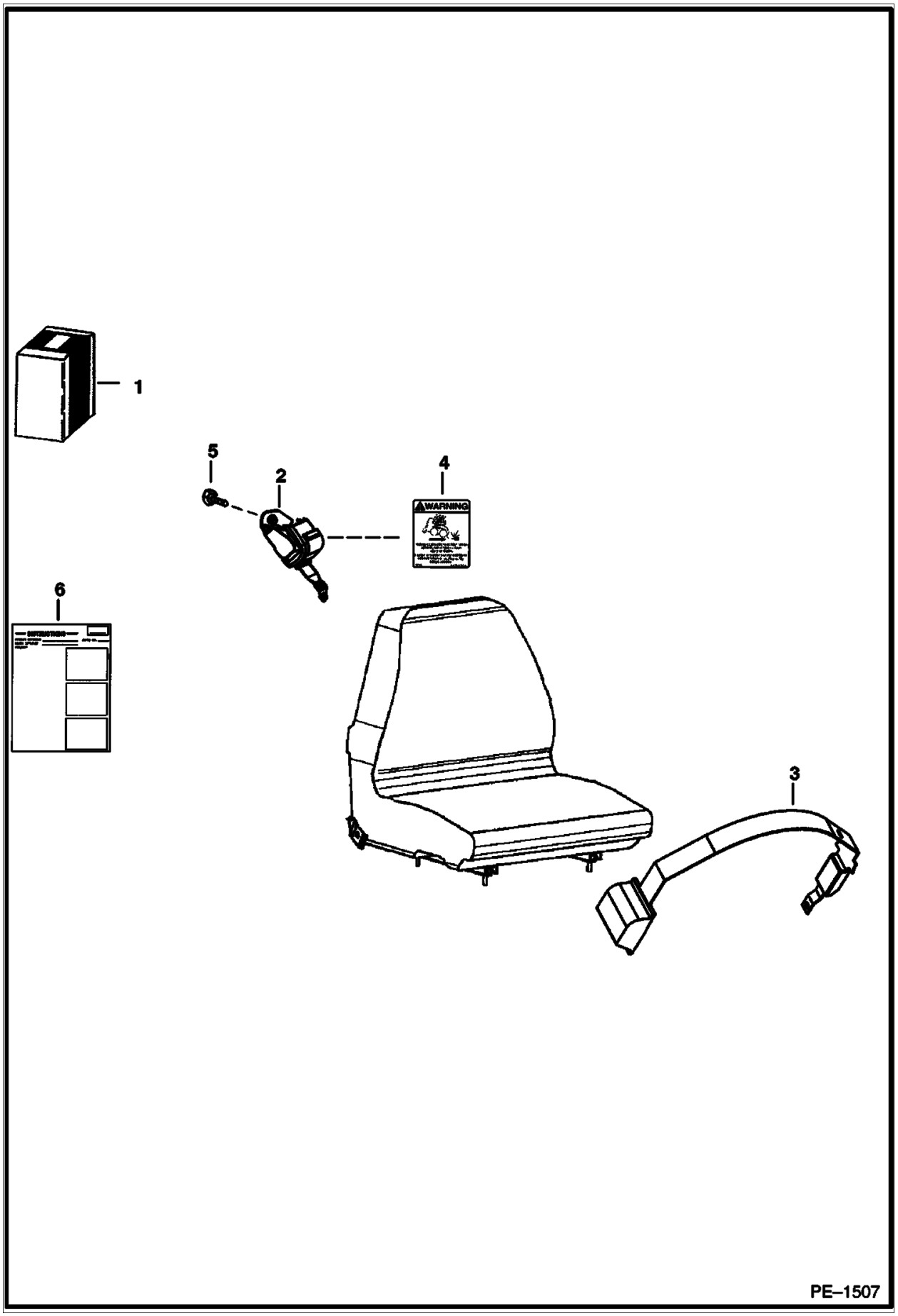

Illustration PE1507

Model S160 K
6904270

Page 560 - OSS# 6300202494 - All rights reserved by Bobcat Company - 02/11/2016 - 14:15:02 - Produced by Ken Cook Co. with mediaIoff

SEAT BELT (Cont'd)
(Three Point Retractable)

Ref No	Part Number	Description	Remarks	Serial Number	Qty
1	6732219	KIT, 3PT SEAT BELT	three point retractable seat belt - Use W/Sears brand suspension seats W/LH recliner lever		1
2	6674407	SHLDR BELT			1
3	6679308	SEAT BELT			1
4	6725370	DECAL			1
5	53C612	BOLT	Was 35C612 [B]		1
6	6901010	INSTRUCTIONS			1

Page 561 - OSS# 6300202494 - All rights reserved by Bobcat Company - 02/11/2016 - 14:15:02 - Produced by Ken Cook Co. with mediaioff

SEAT BELT
(3" Wide Retractable)

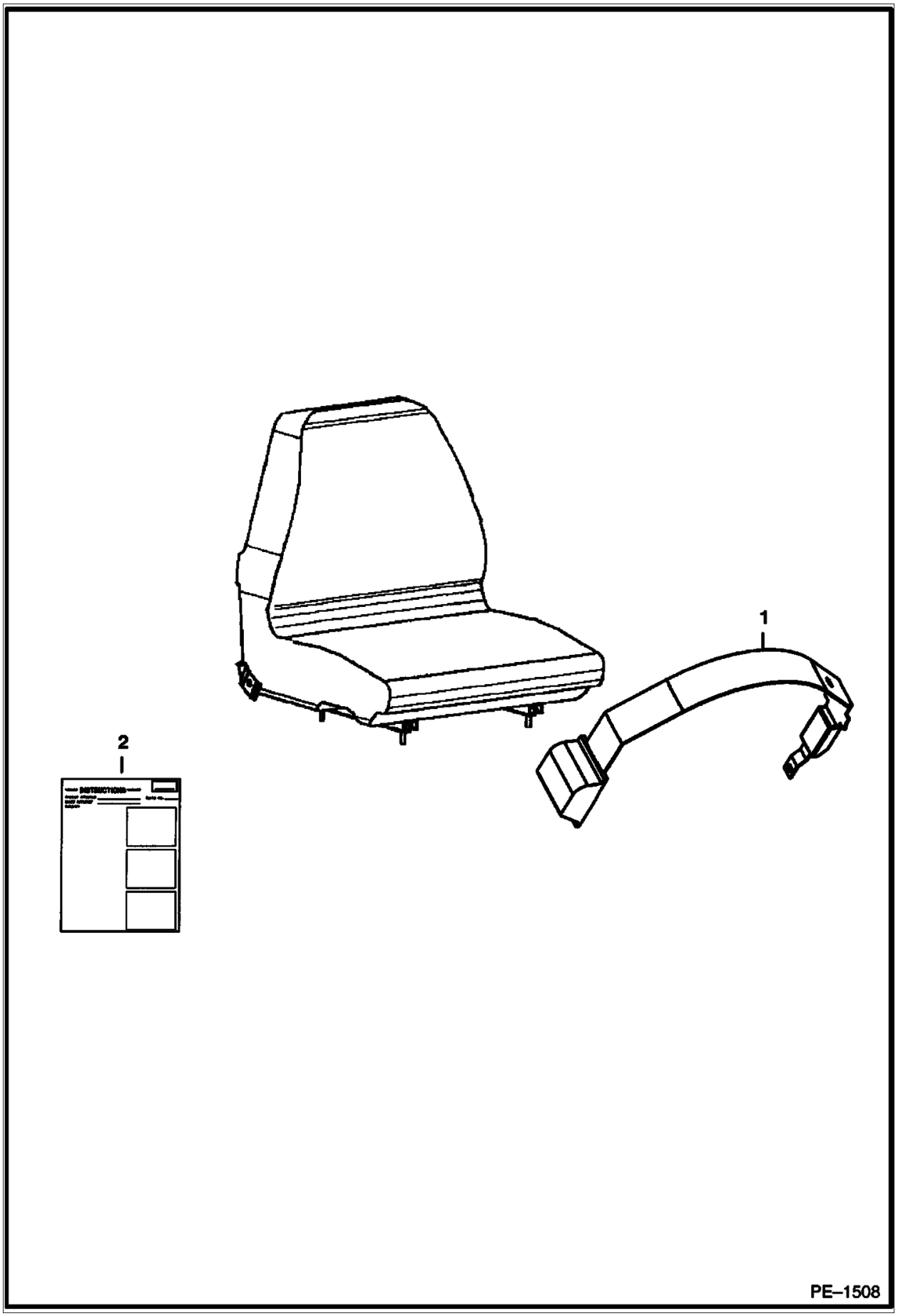

Illustration PE1508

Model S160 K
6904270

Page 562 - OSS# 6300202494 - All rights reserved by Bobcat Company - 02/11/2016 - 14:15:02 - Produced by Ken Cook Co. with mediaoff

SEAT BELT (Cont'd)
(3" Wide Retractable)

Ref No	Part Number	Description	Remarks	Serial Number	Qty
1	6675562	SEAT BELT	3" wide retractable - Use W/Sears brand suspension seats W/LH recliner lever		1
2	6901011	INSTRUCTIONS			1

Page 563 - OSS# 6300202494 - All rights reserved by Bobcat Company - 02/11/2016 - 14:15:02 - Produced by Ken Cook Co. with mediaioff

SEAT BELT
(3" Wide)

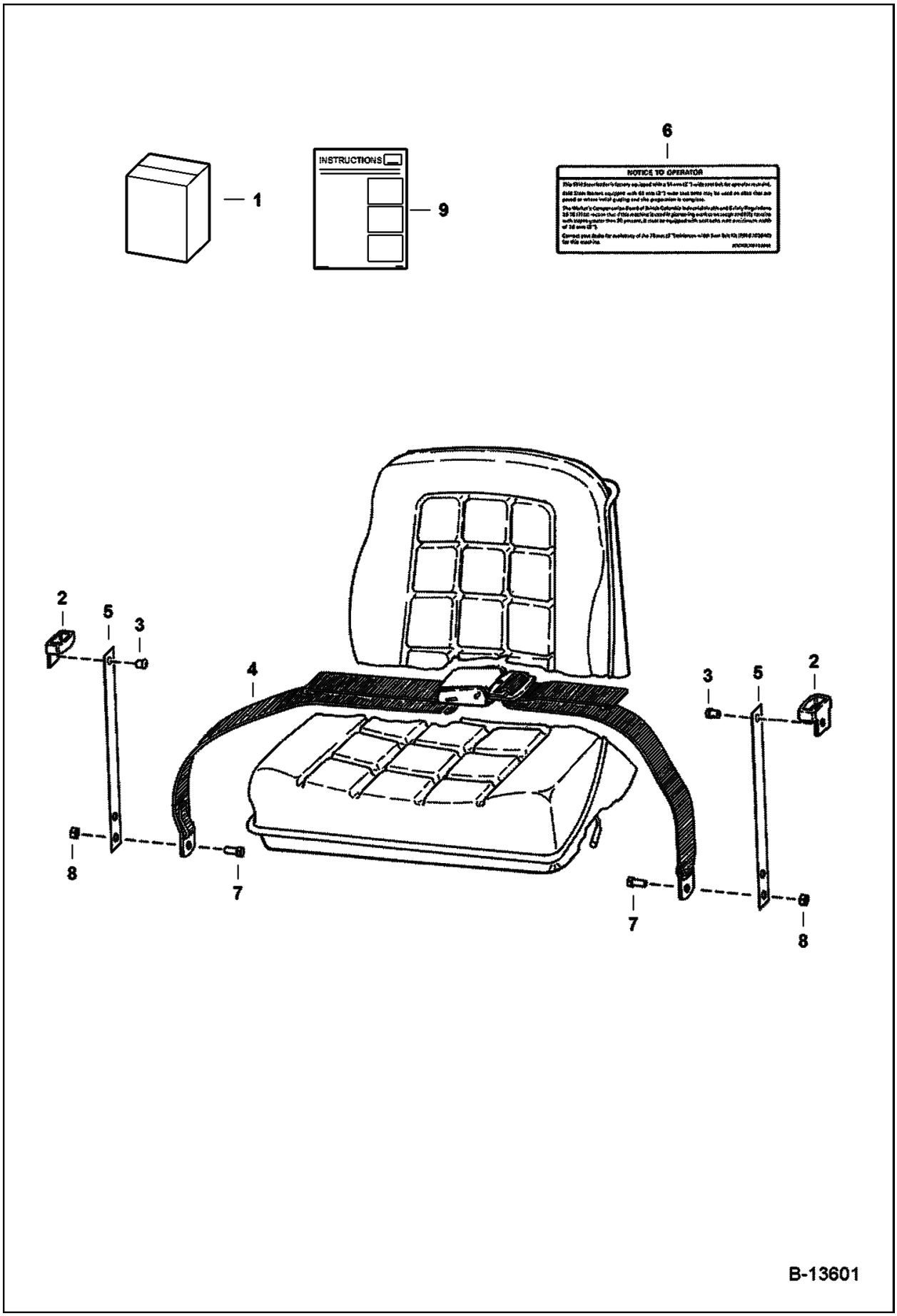

Illustration B13601

Model S160 K
6904270

Page 564 - OSS# 6300202494 - All rights reserved by Bobcat Company - 02/11/2016 - 14:15:02 - Produced by Ken Cook Co. with mediaoff

SEAT BELT (Cont'd)
(3" Wide)

Ref No	Part Number	Description	Remarks	Serial Number	Qty
1	6703640	KIT, SEAT BELT	W/Ref. 2-5 & 7-9		1
2	6703703	GUIDE, SEAT BELT			2
3	6630207	RIVET 5	Was 6512797 [A]		4
4	6659999	BELT, SEAT			1
5	6711908	SPNG PLATE			2
6	6703641	DECAL	not in kit		1
7	17C716	BOLT			4
8	85D7	NUT			4
9	6989663ENUS	INSTRUCTIONS			1

Page 565 - OSS# 6300202494 - All rights reserved by Bobcat Company - 02/11/2016 - 14:15:02 - Produced by Ken Cook Co. with media1off

SEAT COVERS
(Vinyl Seat)

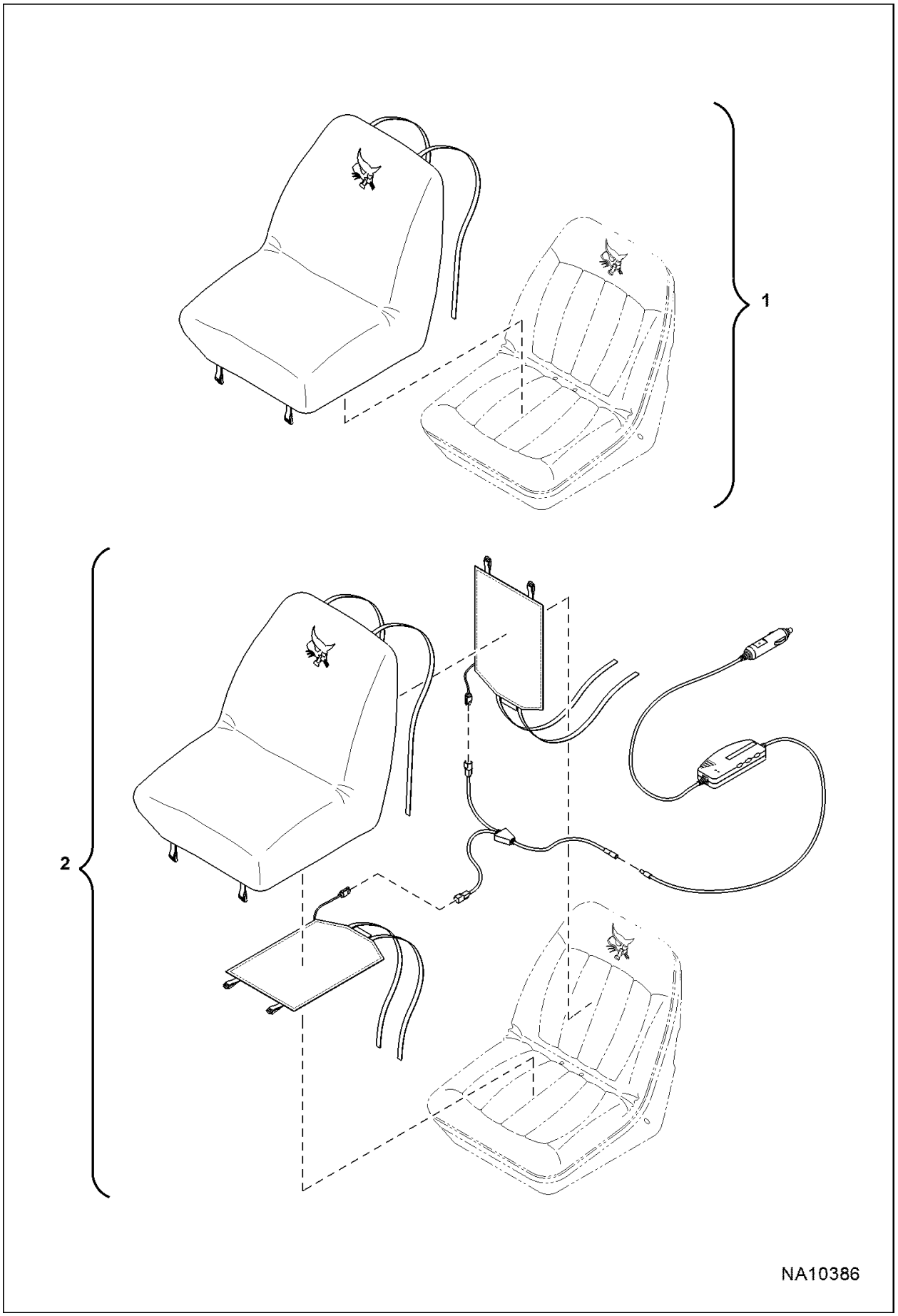

Illustration NA10386

Model S160 K
6904270

Page 566 - OSS# 6300202494 - All rights reserved by Bobcat Company - 02/11/2016 - 14:15:02 - Produced by Ken Cook Co. with mediaoff

SEAT COVERS (Cont'd)
(Vinyl Seat)

Ref No	Part Number	Description	Remarks	Serial Number	Qty
1	7260106	COVER, SEAT	See Illustration SEAT / B26226 - Use W/ 6669135 seat		1
2	7260107	COVER, SEAT HEATED	See Illustration SEAT / B26226 - Use W/ 6669135 seat		1

Page 567 - OSS# 6300202494 - All rights reserved by Bobcat Company - 02/11/2016 - 14:15:02 - Produced by Ken Cook Co. with mediaioff

SOUND/NOISE REDUCTION KIT
(Manual Controls)

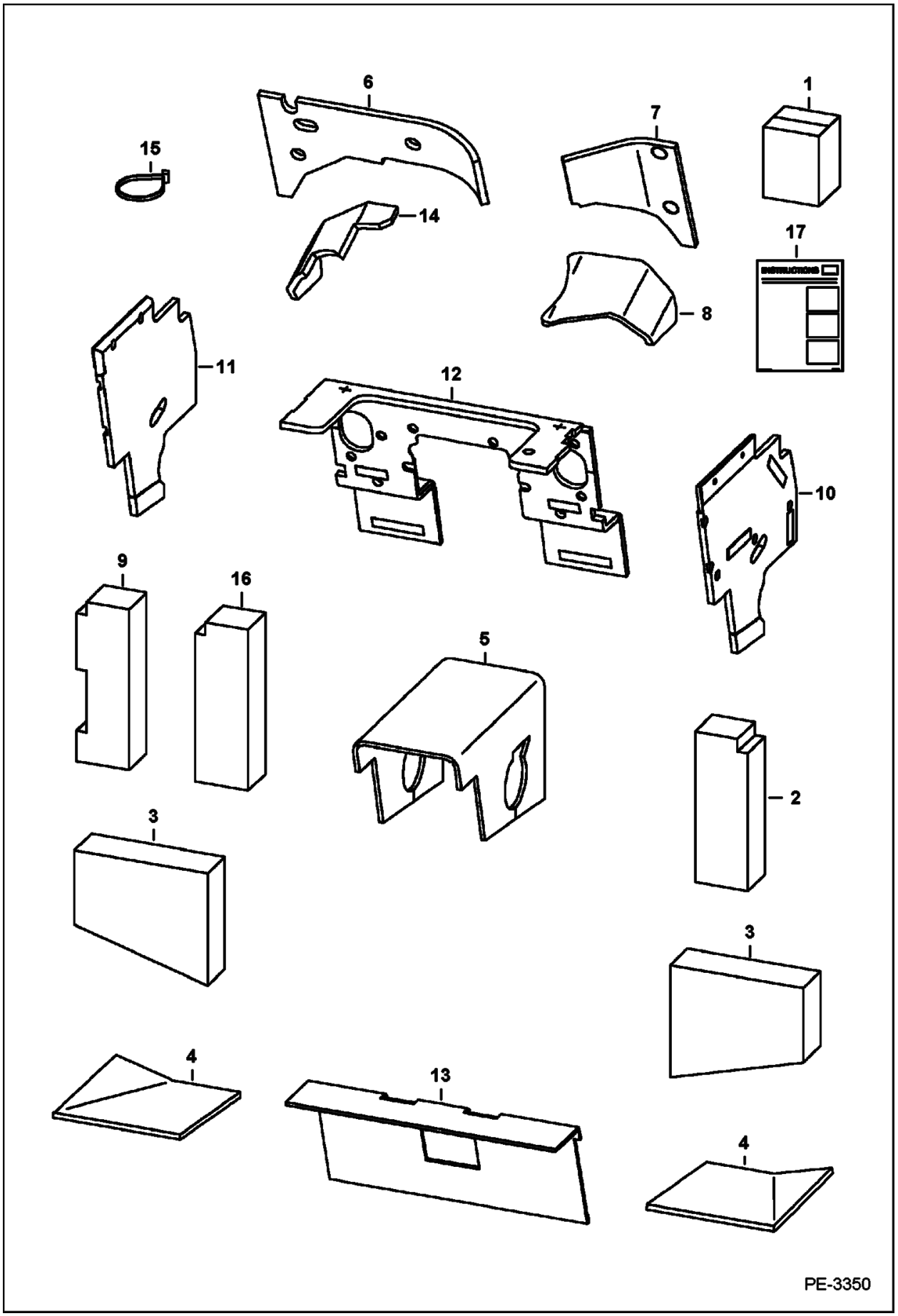

Illustration PE3350

Model S160 K
6904270

Page 568 - OSS# 6300202494 - All rights reserved by Bobcat Company - 02/11/2016 - 14:15:02 - Produced by Ken Cook Co. with mediaoff

SOUND/NOISE REDUCTION KIT (Cont'd)
(Manual Controls)

Ref No	Part Number	Description	Remarks	Serial Number	Qty
1	7140056	SOUND KIT			1
2	6719328	INSULATION, FENDER RH			1
3	6703968	INSULATION	side transmission		2
4	6719330	INSULATION, PEDAL			2
5	7101527	INSULATION	transmission		1
6	6719332	INSULATION, BLWR HSG	blower housing - Was 7123854 [D]		1
7	6719333	INSULATION, BLWR HSG			1
8	6719334	INSULATION, BLWR HSG			1
9	6719327	INSULATION, FENDER LH			1
10	7122095	INSULATION	RH panel		1
11	7122096	INSULATION	LH panel		1
12	7101529	INSULATION	steering column		1
13	7101543	INSULATION	crossmember		1
14	6704769	INSULATION	blower housing		1
15	6624289	STRAP, TIE			8
16	7152163	INSULATION, STRIP			1
17	6986545	INSTRUCTIONS			1

Page 569 - OSS# 6300202494 - All rights reserved by Bobcat Company - 02/11/2016 - 14:15:02 - Produced by Ken Cook Co. with media1off

SOUND/NOISE REDUCTION KIT
(Selectable Joystick Controls)

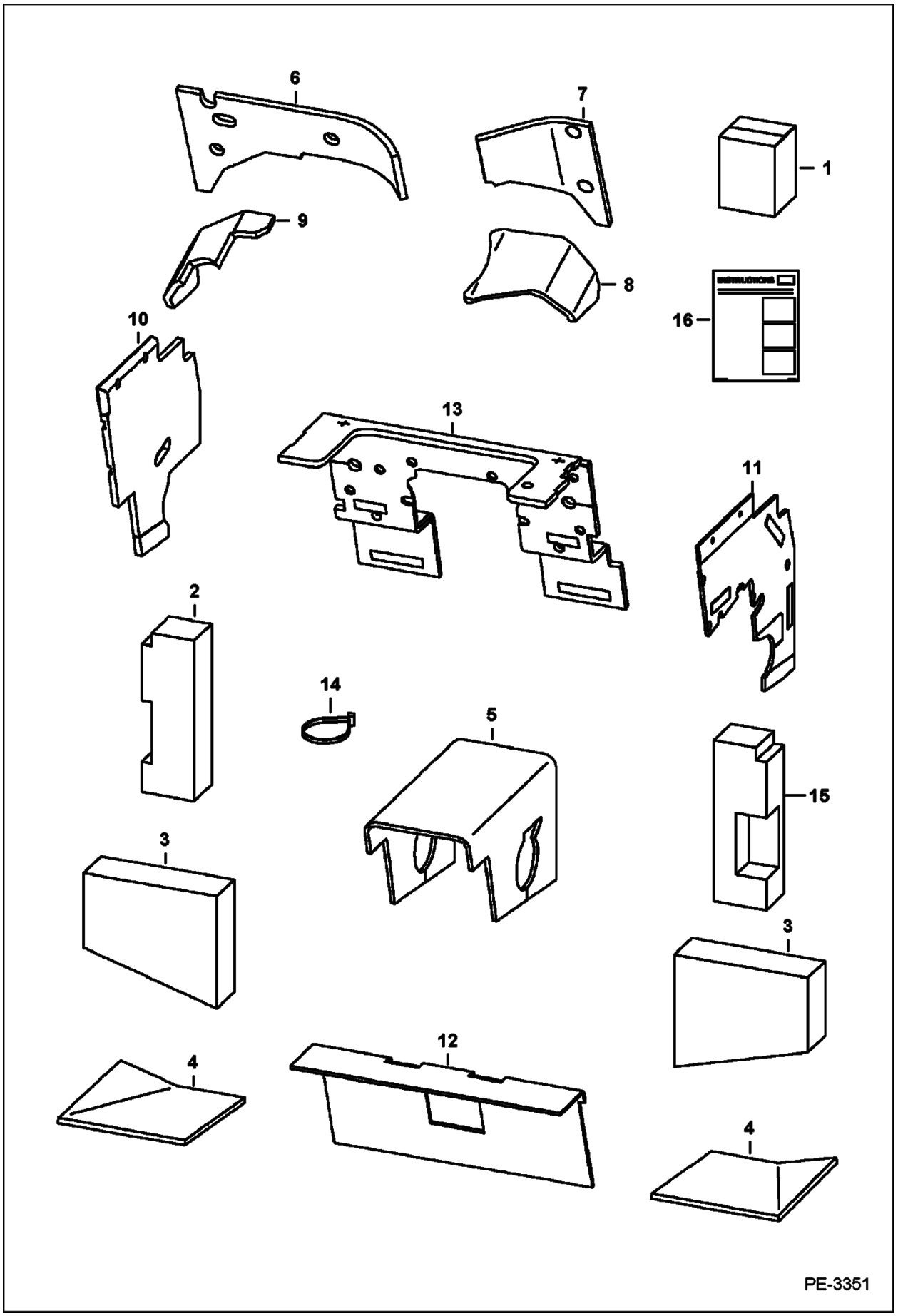

Illustration PE3351

Model S160 K
6904270

Page 570 - OSS# 6300202494 - All rights reserved by Bobcat Company - 02/11/2016 - 14:15:02 - Produced by Ken Cook Co. with mediaoff

SOUND/NOISE REDUCTION KIT (Cont'd)
(Selectable Joystick Controls)

Ref No	Part Number	Description	Remarks	Serial Number	Qty
1	7140057	SOUND KIT			1
2	6719327	INSULATION, FENDER LH			1
3	6703968	INSULATION	side transmission		2
4	6719330	INSULATION, PEDAL			2
5	7101527	INSULATION	transmission		1
6	6719332	INSULATION, BLWR HSG	blower housing - Was 7123854 [D]		1
7	6719333	INSULATION, BLWR HSG			1
8	6719334	INSULATION, BLWR HSG			1
9	6704769	INSULATION	blower housing		1
10	7122096	INSULATION	LH panel		1
11	7109125	INSULATION	right panel		1
12	7101543	INSULATION	crossmember		1
13	7101528	INSULATION	steering column		1
14	6624289	STRAP, TIE			8
15	7152163	INSULATION, STRIP			1
16	6986547	INSTRUCTIONS			1

Page 571 - OSS# 6300202494 - All rights reserved by Bobcat Company - 02/11/2016 - 14:15:02 - Produced by Ken Cook Co. with media1off

SOUND/NOISE REDUCTION OPTION
(Manual Controls & SJC)

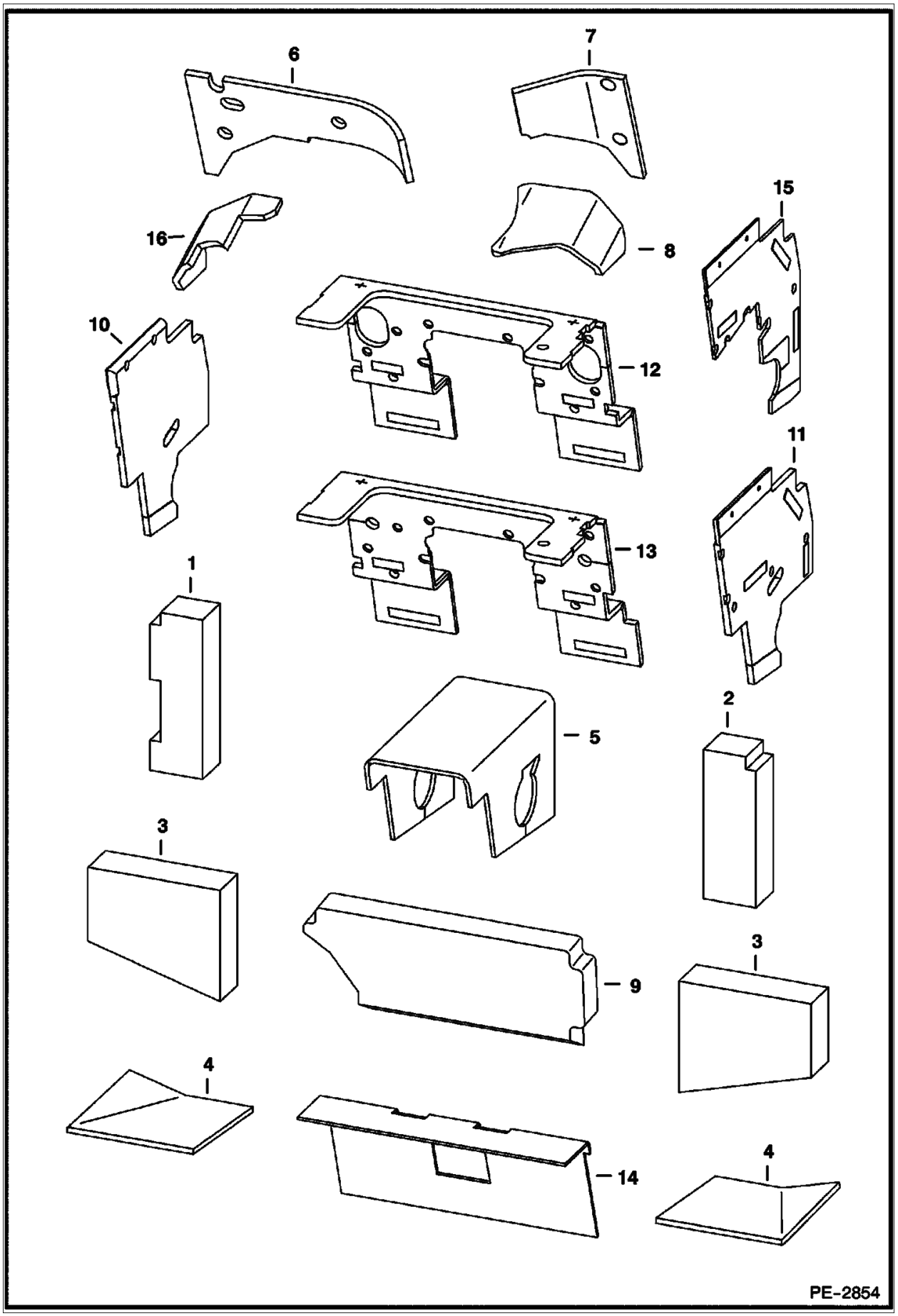

Illustration PE2854

Model S160 K
6904270

Page 572 - OSS# 6300202494 - All rights reserved by Bobcat Company - 02/11/2016 - 14:15:02 - Produced by Ken Cook Co. with mediaoff

SOUND/NOISE REDUCTION OPTION (Cont'd)
(Manual Controls & SJC)

Ref No	Part Number	Description	Remarks	Serial Number	Qty
1	6719327	INSULATION, FENDER LH			1
2	6719328	INSULATION, FENDER RH			1
3	6703968	INSULATION	side transmission		2
4	6719330	INSULATION, PEDAL			2
5	7101527	INSULATION	transmission		1
6	6719332	INSULATION, BLWR HSG	blower housing - Was 7123854 [D]		1
7	6719333	INSULATION, BLWR HSG			1
8	6719334	INSULATION, BLWR HSG			1
9	6727299	INSULATOR CAB BACK			1
10	7122096	INSULATION	LH panel - manual controls & selectable joystick controls - Was 7101530 [A]		1
11	7122095	INSULATION	RH panel - manual controls - Was 7101531 [A]		1
12	7101529	INSULATION	steering column - standard hand controls		1
13	7101528	INSULATION	steering column - selectable joystick controls		1
14	7101543	INSULATION	crossmember		1
15	7109125	INSULATION	right panel - selectable joystick controls		1
16	6704769	INSULATION	blwr hsg		1

Page 573 - OSS# 6300202494 - All rights reserved by Bobcat Company - 02/11/2016 - 14:15:02 - Produced by Ken Cook Co. with media1off

SOUND/NOISE REDUCTION OPTION (W/ACS)

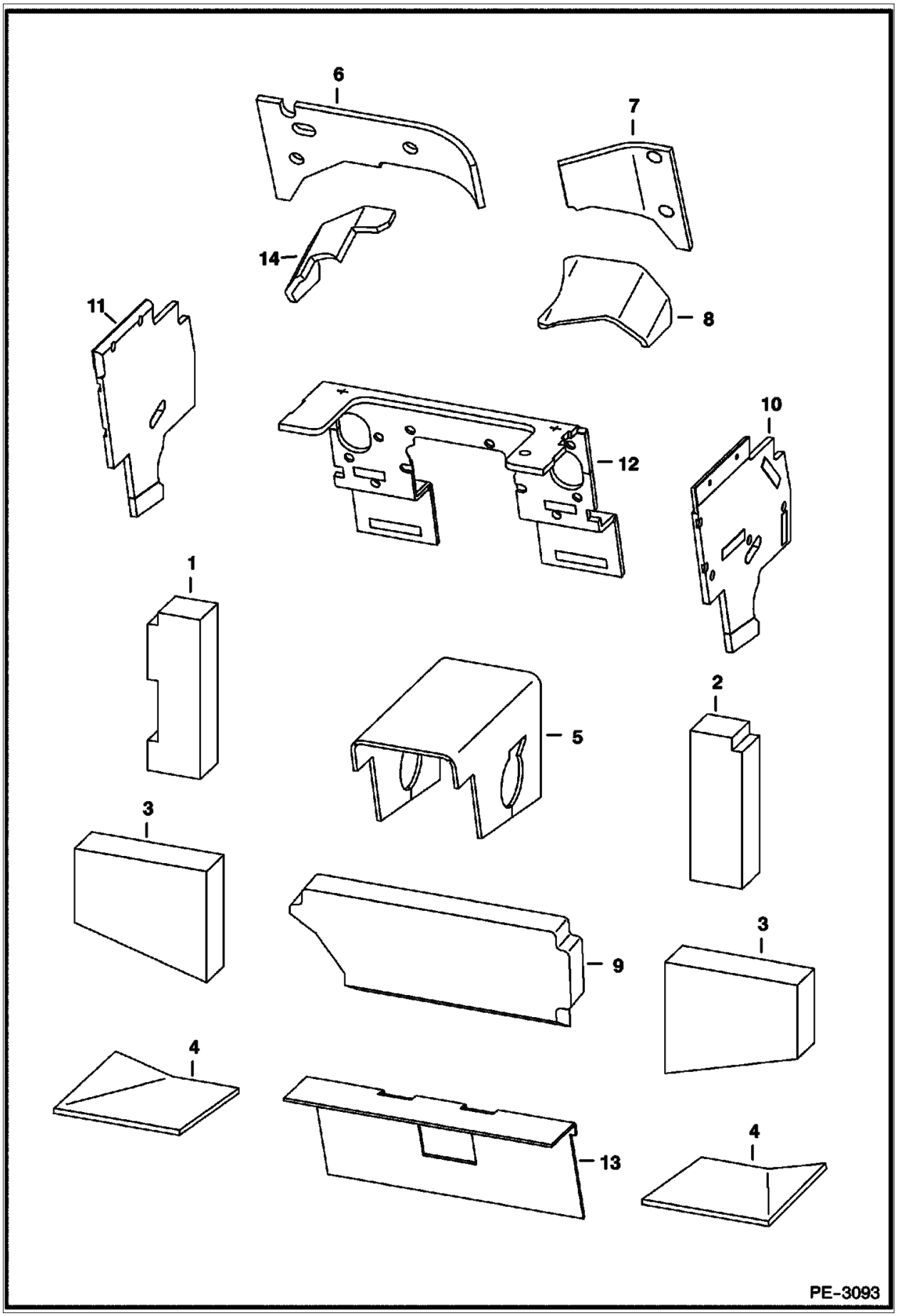

Illustration PE3093

Model S160 K
6904270

Page 574 - OSS# 6300202494 - All rights reserved by Bobcat Company - 02/11/2016 - 14:15:02 - Produced by Ken Cook Co. with mediaoff

SOUND/NOISE REDUCTION OPTION (Cont'd)
(W/ACS)

Ref No	Part Number	Description	Remarks	Serial Number	Qty
1	6719327	INSULATION, FENDER LH			1
2	6719328	INSULATION, FENDER RH			1
3	6703968	INSULATION	side transmission		2
4	6719330	INSULATION, PEDAL			2
5	7101527	INSULATION	transmission		1
6	6719332	INSULATION, BLWR HSG	blower housing - Was 7123854 [D]		1
7	6719333	INSULATION, BLWR HSG			1
8	6719334	INSULATION, BLWR HSG			1
9	6727299	INSULATOR CAB BACK			1
10	7122503	INSULATION	left panel - ACS		1
11	7122502	INSULATION	right panel - ACS		1
12	7101529	INSULATION	steering column - standard hand controls		1
13	7101543	INSULATION	crossmember		1
14	6704769	INSULATION	blwr hsg		1

Page 575 - OSS# 6300202494 - All rights reserved by Bobcat Company - 02/11/2016 - 14:15:02 - Produced by Ken Cook Co. with media1off

SOUND/NOISE REDUCTION OPTION
(Bystander)

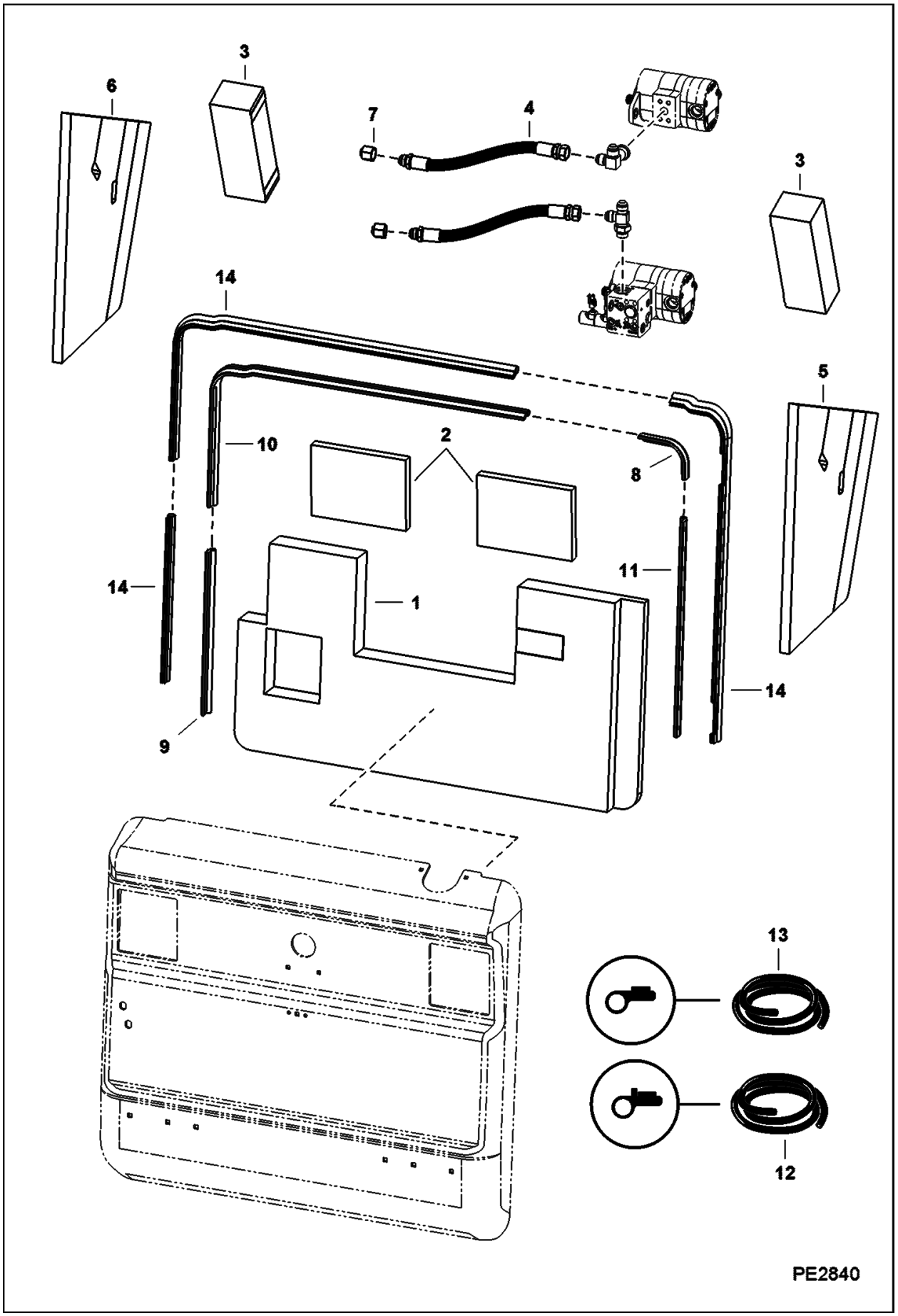

Illustration PE2840

Model S160 K
6904270

Page 576 - OSS# 6300202494 - All rights reserved by Bobcat Company - 02/11/2016 - 14:15:02 - Produced by Ken Cook Co. with mediaoff

SOUND/NOISE REDUCTION OPTION (Cont'd)
(Bystander)

Ref No	Part Number	Description	Remarks	Serial Number	Qty
1	7166676	INSULATOR	tailgate - Was 7109317 [A]		1
2	7109318	INSULATOR	upper tailgate		2
3	7110410	INSULATION	upright		2
4	7112651	HOSE	386 mm (15.18") long		1
4	7217290	HOSE, HYD	428 mm (16.85") long		1
5	7116699	INSULATION	upright		1
6	7116700	INSULATION	upright		1
7	36K8	CAP			1
8		SEAL	NLA - 8.65" (219,71 mm) long - Order Ref. 14		1
9		SEAL	NLA - 16.75" (425,45 mm) long - Order Ref. 14		1
10		SEAL	NLA - 45.25" (1149,35 mm) long - Order Ref. 14		1
11		SEAL	NLA - 21.25" (539,75 mm) long - Order Ref. 14		1
12		SEAL - BULK/FT	NLA - bulk - sold per foot - Order Ref. 14 - Was 7108677 [A]		x
13		SEAL, BULK	NLA - bulk - sold per foot - Order Ref. 14 - Was 7108716 [A]		x
14	7160443	SEAL	includes 3 seals custom cut to seal complete door		1

Page 577 - OSS# 6300202494 - All rights reserved by Bobcat Company - 02/11/2016 - 14:15:02 - Produced by Ken Cook Co. with media1off

SOUND REDUCTION HARDHAT

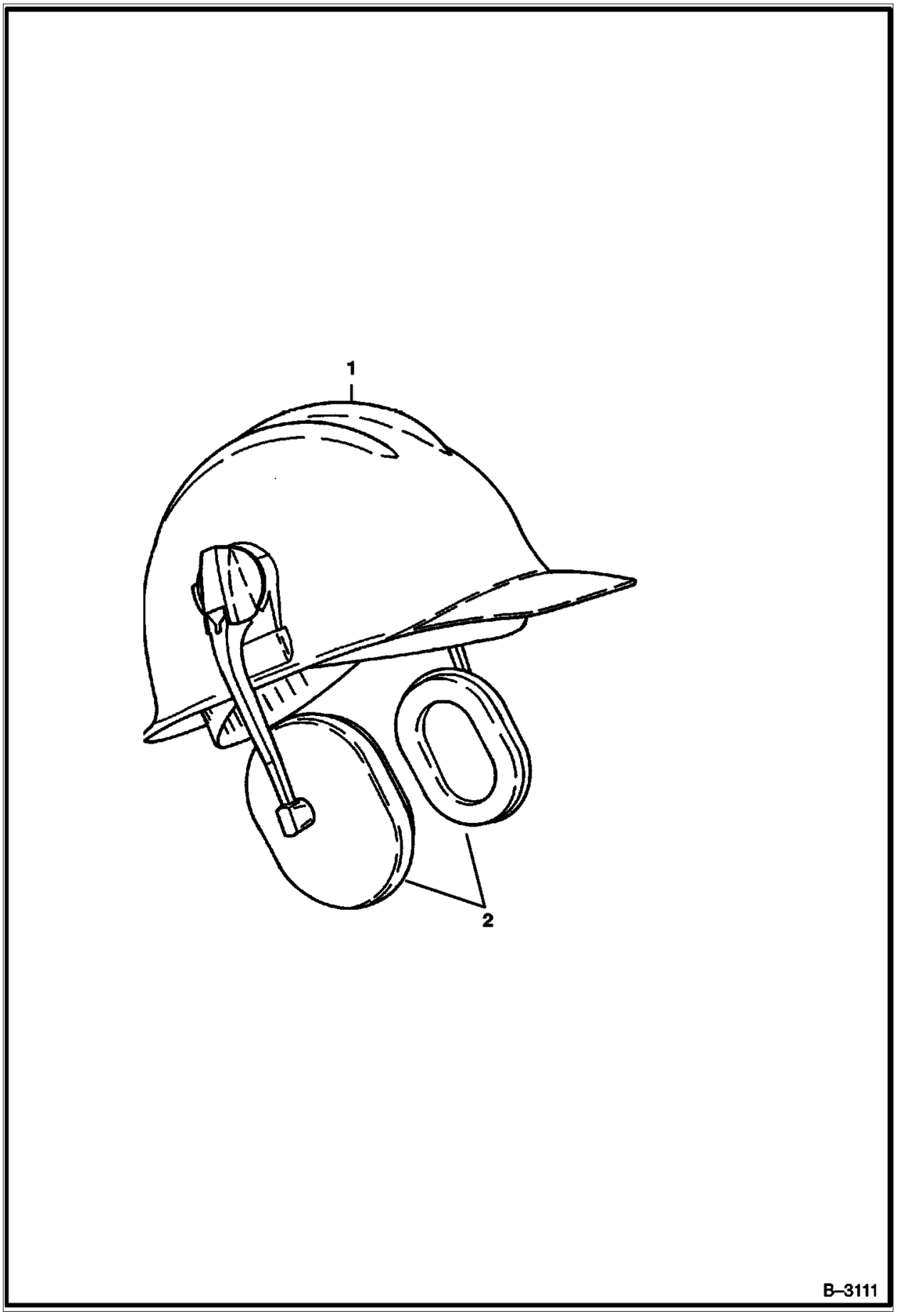

Illustration B3111

Model S160 K
6904270

Page 578 - OSS# 6300202494 - All rights reserved by Bobcat Company - 02/11/2016 - 14:15:02 - Produced by Ken Cook Co. with mediaoff

SOUND REDUCTION HARDHAT (Cont'd)

Ref No	Part Number	Description	Remarks	Serial Number	Qty
1	6902390	HARD HAT WHITE	Was 6559552 [A]		1
2		EARMUFFS	NLA - Use 6902394 - Was 6559775 [A]		1

Page 579 - OSS# 6300202494 - All rights reserved by Bobcat Company - 02/11/2016 - 14:15:02 - Produced by Ken Cook Co. with media1off

STROBE LIGHT

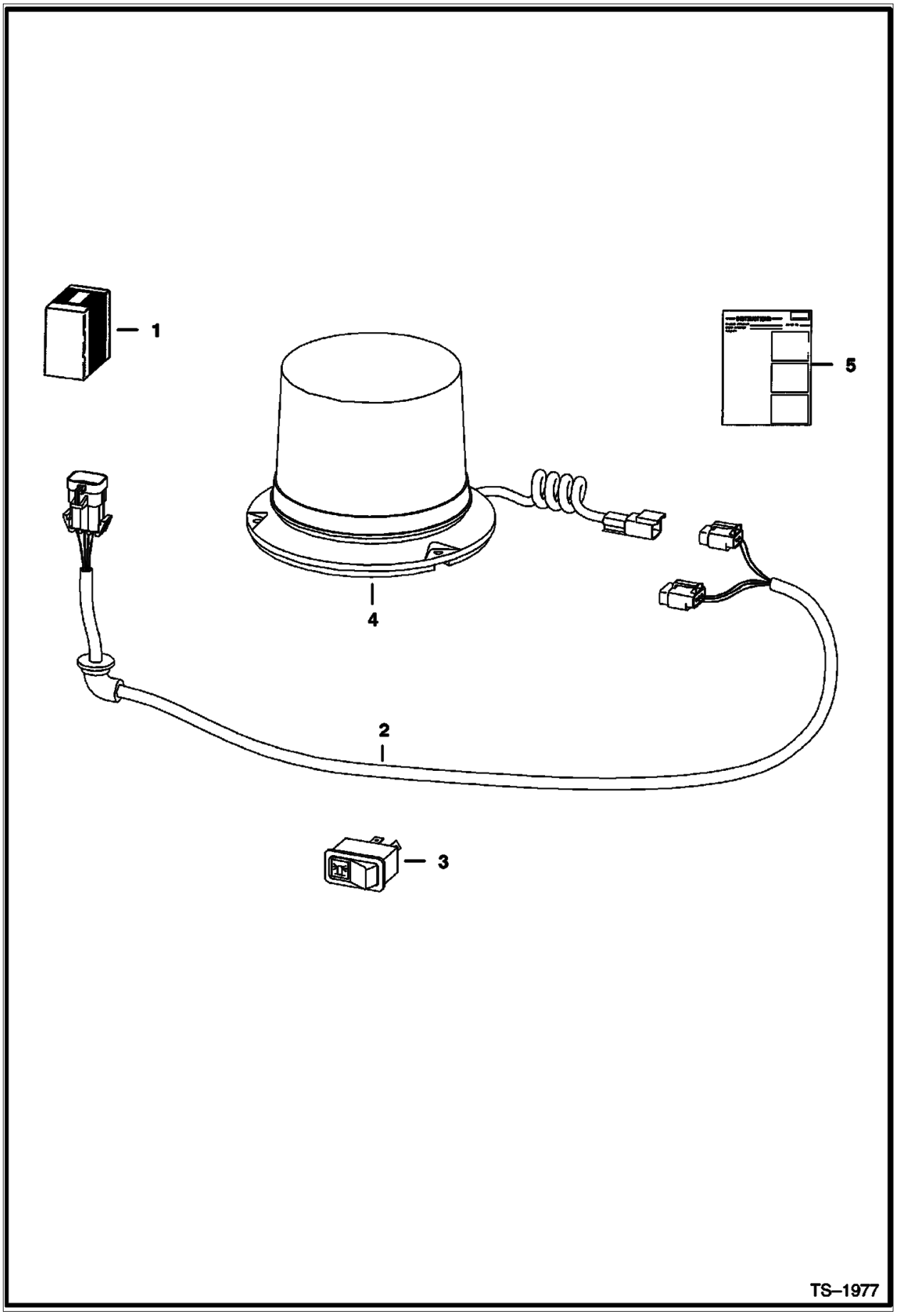

Illustration TS1977

Model S160 K
6904270

Page 580 - OSS# 6300202494 - All rights reserved by Bobcat Company - 02/11/2016 - 14:15:02 - Produced by Ken Cook Co. with mediaoff

STROBE LIGHT (Cont'd)

Ref No	Part Number	Description	Remarks	Serial Number	Qty
1	6719857	KIT, STROBE LIGHT	strobe light - if loader is not equipped W/deluxe cab accessories harness, heater, A/C, SJC, ACS, power Bob-Tach, cab enclosure door kit, rear wiper or any of the following cab harness connected rotating beacon or 4-way flasher, Also Order 7116260 deluxe cab accessories harness	5299 12592 & Bel	1
1	6719857	KIT, STROBE LIGHT	strobe light - if loader is not equipped W/deluxe cab accessories harness, heater, A/C, SJC, ACS, power Bob-Tach, cab enclosure door kit, rear wiper or any of the following cab harness connected rotating beacon or 4-way flasher, Also Order 7116260 deluxe cab accessories harness	5300 11831 & Bel	1
1	6719857	KIT, STROBE LIGHT	strobe light - if loader is not equipped W/deluxe cab accessories harness, heater, A/C, SJC, ACS, power Bob-Tach, cab enclosure door kit, rear wiper or any of the following cab harness connected rotating beacon or 4-way flasher, Also Order 7116260 deluxe cab accessories harness	A15111001 & Above	1
1	6719857	KIT, STROBE LIGHT	strobe light - if loader is not equipped W/deluxe cab accessories harness, heater, A/C, SJC, ACS, power Bob-Tach, cab enclosure door kit, rear wiper or any of the following cab harness connected rotating beacon or 4-way flasher, Also Order 7143071 deluxe cab accessories harness	5300 11832 & Abv	1
1	6719857	KIT, STROBE LIGHT	strobe light - if loader is not equipped W/deluxe cab accessories harness, heater, A/C, SJC, ACS, power Bob-Tach, cab enclosure door kit, rear wiper or any of the following cab harness connected rotating beacon or 4-way flasher, Also Order 7143071 deluxe cab accessories harness	5299 12593 & Abv	1
2	6718872	HARNESS			1
3	6668816	SWITCH	vertical		1
4	7241140	LIGHT, STROBE	4200 series - Was 7219903 [A]		1
4	6675858	FLASH TUBE	round base bulb - Use W/NLA 6675522 strobe light		1
4	6697796	FLASHTUBE	3-pin rectangular base bulb - Use W/NLA 6675522 strobe light		1
4	7025589	FLASHTUBE	Use W/ 7219903 strobe light		1
4	7256347	LENS, REFLECTIVE	Was 6697797 [A]		1
5	6900992ENUS	INSTRUCTIONS	Was 6900992 [A]		1

Page 581 - OSS# 6300202494 - All rights reserved by Bobcat Company - 02/11/2016 - 14:15:02 - Produced by Ken Cook Co. with media1off

TIRES & RIMS
(Pneumatic Tire)

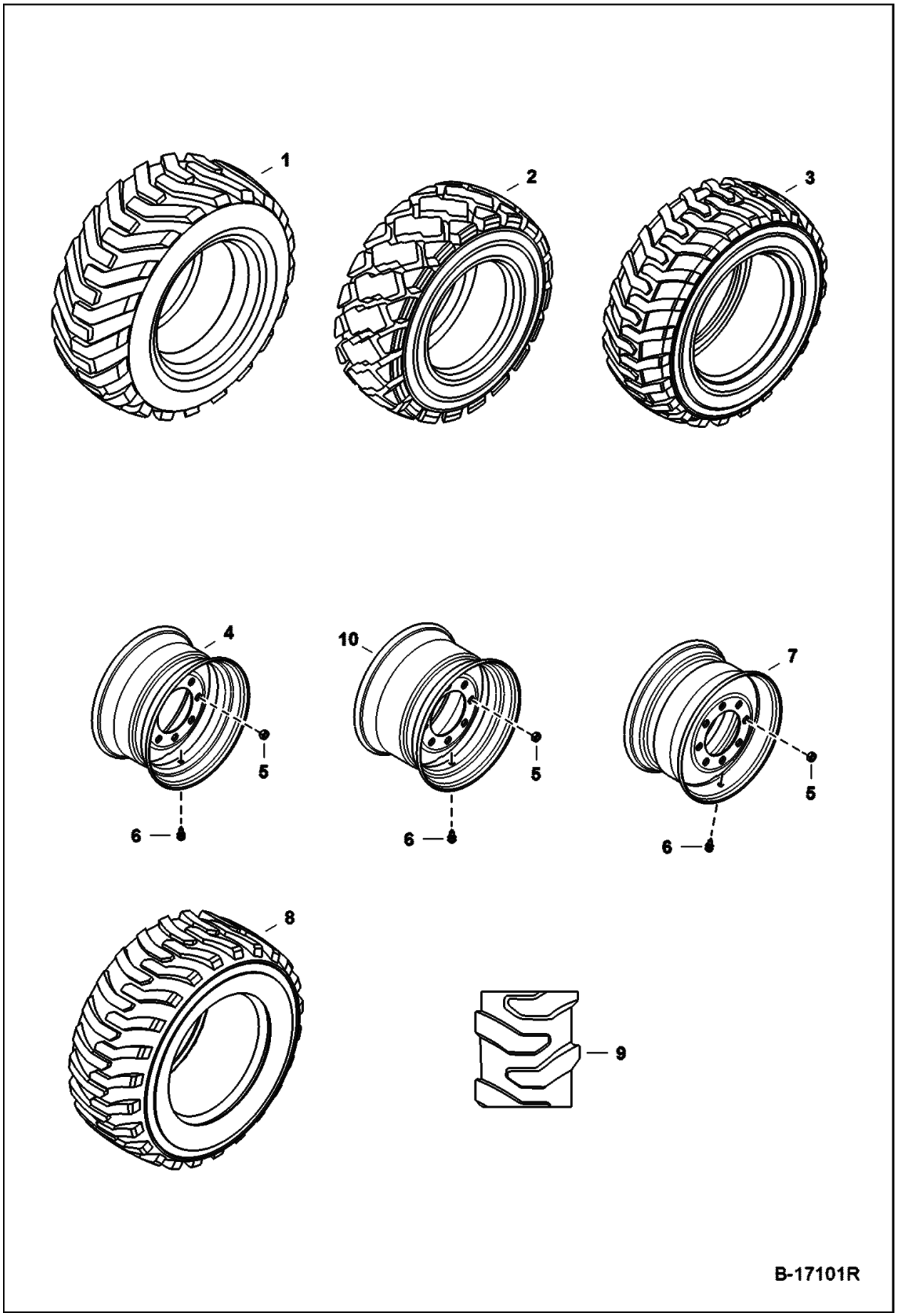

Illustration B17101R

Model S160 K
6904270

Page 582 - OSS# 6300202494 - All rights reserved by Bobcat Company - 02/11/2016 - 14:15:02 - Produced by Ken Cook Co. with mediaoff

TIRES & RIMS (Cont'd)
(Pneumatic Tire)

Ref No	Part Number	Description	Remarks	Serial Number	Qty
1		TIRE	10.00-16.5, 6 ply rating - factory option - General - Was 6550826 [A]		4
2	6730106	TIRE, SEVERE DUTY 31X10X16.5, 10 PLY	factory option - Bobcat		4
3	6729896	TIRE, STANDARD 31X10X16.5, 8 PLY	factory option - Bobcat - Was 7101734 [A]		4
3	6729900	TIRE, HEAVY DUTY 31X10X16.5, 10 PLY	factory option - Bobcat		4
3	6729900	TIRE, HEAVY DUTY 31X10X16.5, 10 PLY	factory option - Bobcat - Was 7101735 [A]		4
3	6987705	TIRE, HEAVY DUTY 10 X 16.5, 10 PLY	factory option - Bobcat		4
4	7232566	WHEEL, RIM 16.5X8.25	Contact your Local Dealer for Bobcat Technical Information BTI197ldr - Use W/Ref. 1-3 - Was 6730771 [A]		4
4	7234460	WHEEL, RIM	Contact your Local Dealer for Bobcat Technical Information BTI197ldr - Use W/Ref. 3 (6987705 tire)		4
5	6564669	NUT, 10	wheel		32
6	1614765	VALVE STEM, TIRE	tubeless tire		4
7	7232568	WHEEL, RIM 16.5X8.25	Contact your Local Dealer for Bobcat Technical Information BTI197ldr - inverted - Use W/Ref. 3 & 9 for 1524 mm (60") width - Was 6730775 [A]		4
8	7105756	TIRE, SUPER FLOAT 31X12X16.5 10PLY	factory option - Bobcat - Was 6730107 [A]		4
9	6988143	TIRE, NON-DIRECTION AL 10X16.5-12 PLY EF			4
9	6988500	TIRE, EARTHFORCE 10X16.5 - 8 PLY			4
9	7024212	TIRE, HEAVY DUTY 10X16.5, 12 PLY EF			4
10	7232567	WHEEL, RIM 16.5X9.75	Contact your Local Dealer for Bobcat Technical Information BTI197ldr - Use W/Ref. 1-3, & 9 - Was 6730772 [A]		4

Page 583 - OSS# 6300202494 - All rights reserved by Bobcat Company - 02/11/2016 - 14:15:02 - Produced by Ken Cook Co. with media1off

TIRES & RIMS
(Solid Tire)

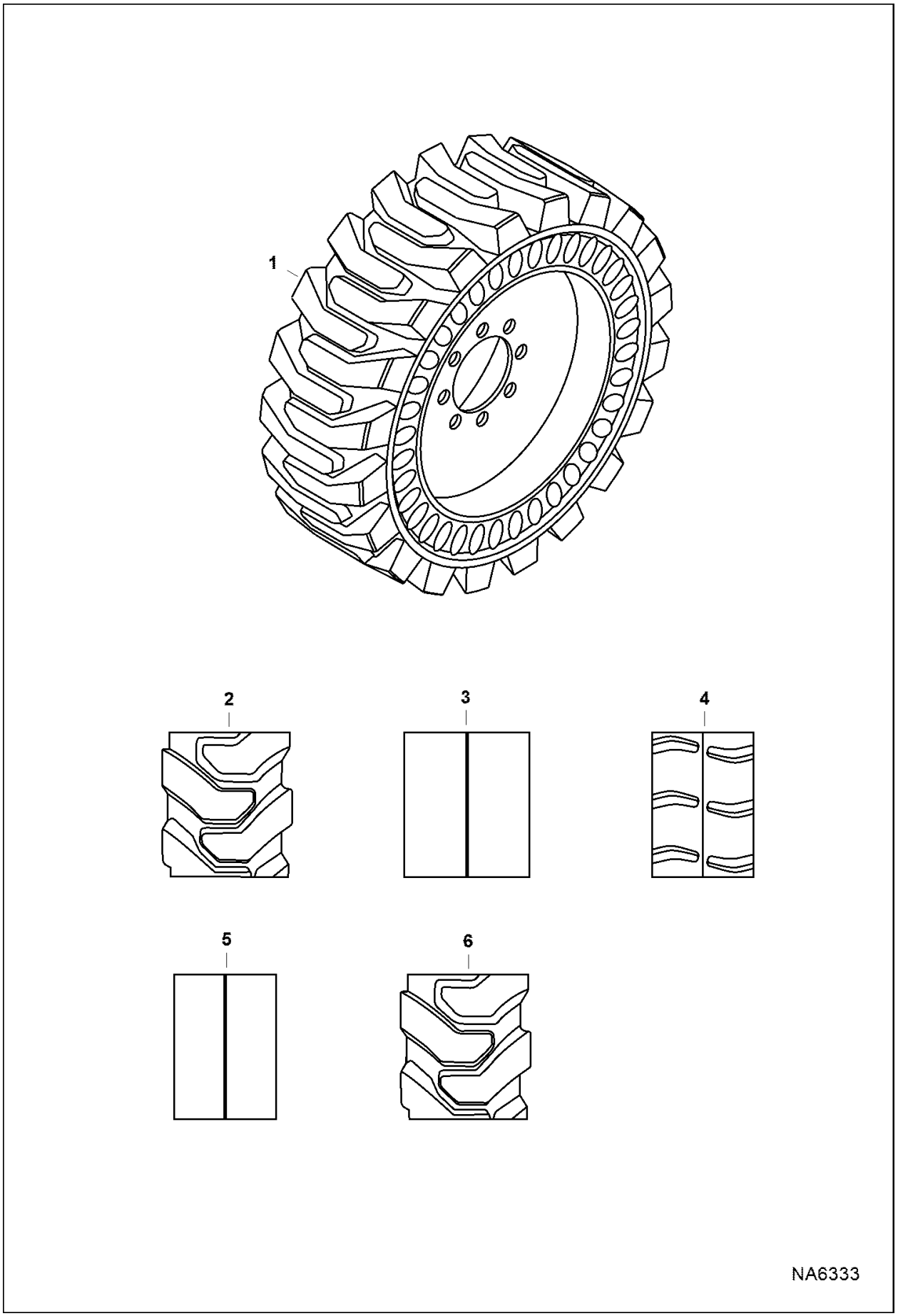

Illustration NA6333

Model S160 K
6904270

Page 584 - OSS# 6300202494 - All rights reserved by Bobcat Company - 02/11/2016 - 14:15:02 - Produced by Ken Cook Co. with mediaoff

TIRES & RIMS (Cont'd)
(Solid Tire)

Ref No	Part Number	Description	Remarks	Serial Number	Qty
1	6903766	TIRE, SOLID FLEX 31X6X10 LH	factory option - LH - 10 x 16.5 - 203 mm (8") circle bolt dia - orange rim		2
1	6903767	TIRE, SOLID FLEX 31X6X10 RH	factory option - RH - 10 x 16.5 - 203 mm (8") circle bolt dia - orange rim		2
1	7228250	TIRE, SOLID FLEX LH	factory option - LH - 10 x 16.5 - 203 mm (8") circle bolt dia - charcoal rim		2
1	7228251	TIRE, SOLID FLEX RH	factory option - RH - 10 x 16.5 - 203 mm (8") circle bolt dia - charcoal rim		2
2	6904637	TIRE, SOLID FLEX 31X6X10 NAROW OFFSET LH			2
2	6904638	TIRE, SOLID FLEX 31X6X10 NAROW OFFSET RH			2
3	6904630	TIRE, SOLID FLEX 31X5X9 SMOOTH			4
4	6903936	TIRE, NARROW BASE INVERTED TREAD 31X5X7			4
4	6903940	TIRE, WIDE BASE INVERTED TREAD 31X5X9			4
5	6903935	TIRE, NARROW BASE SMOOTH 31X5X7			4
5	6903939	TIRE, WIDE BASE SMOOTH 31X5X9			4
6	6988512	TIRE, FLEX DIRT LH 10X16.5(30X10) EF			2
6	6988513	TIRE, FLEX DIRT RH 10X16.5(30X10) EF			2
6	6988514	TIRE, FLEX DIRT W/O RIM 10X6.5(30X10)EF			4
6	7022983	TIRE, FLEX DIRT ORNG LH 10X16.5(30X10)EF			2
6	7022984	TIRE, FLEX DIRT ORNG RH 10X16.5(30X10)EF			2

Page 585 - OSS# 6300202494 - All rights reserved by Bobcat Company - 02/11/2016 - 14:15:02 - Produced by Ken Cook Co. with media1off

WHITE DECAL KIT

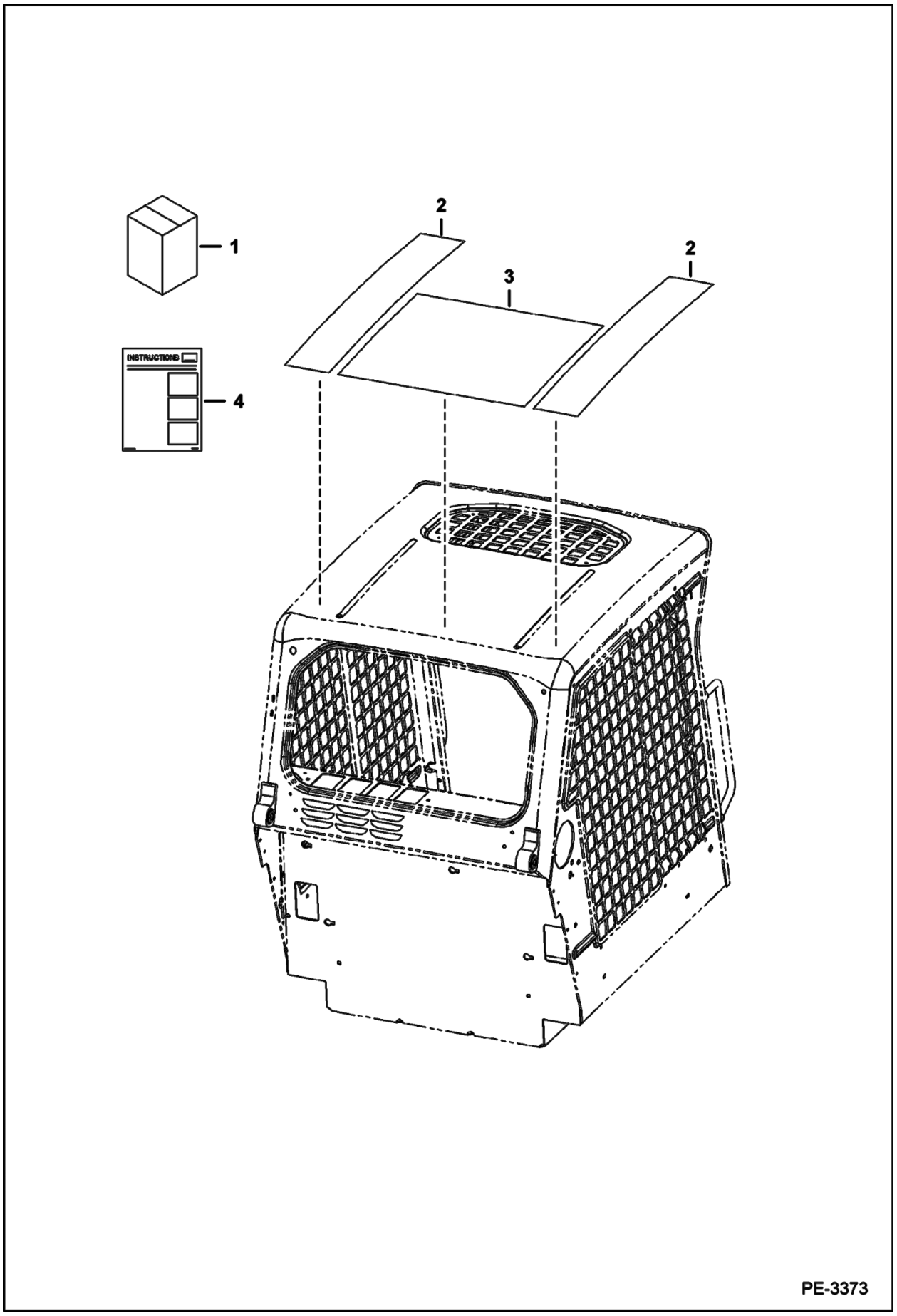

Illustration PE3373

Model S160 K
6904270

Page 586 - OSS# 6300202494 - All rights reserved by Bobcat Company - 02/11/2016 - 14:15:02 - Produced by Ken Cook Co. with mediaoff

WHITE DECAL KIT (Cont'd)

Ref No	Part Number	Description	Remarks	Serial Number	Qty
1	7140768	KIT	white decal - Ref. 2-4		1
2	7136678	DECAL	top side		2
3	7136679	DECAL	middle top		1
4	6986573	INSTRUCTIONS			1

Page 587 - OSS# 6300202494 - All rights reserved by Bobcat Company - 02/11/2016 - 14:15:02 - Produced by Ken Cook Co. with mediaioff

BULK ITEMS
(SEE NOTE)

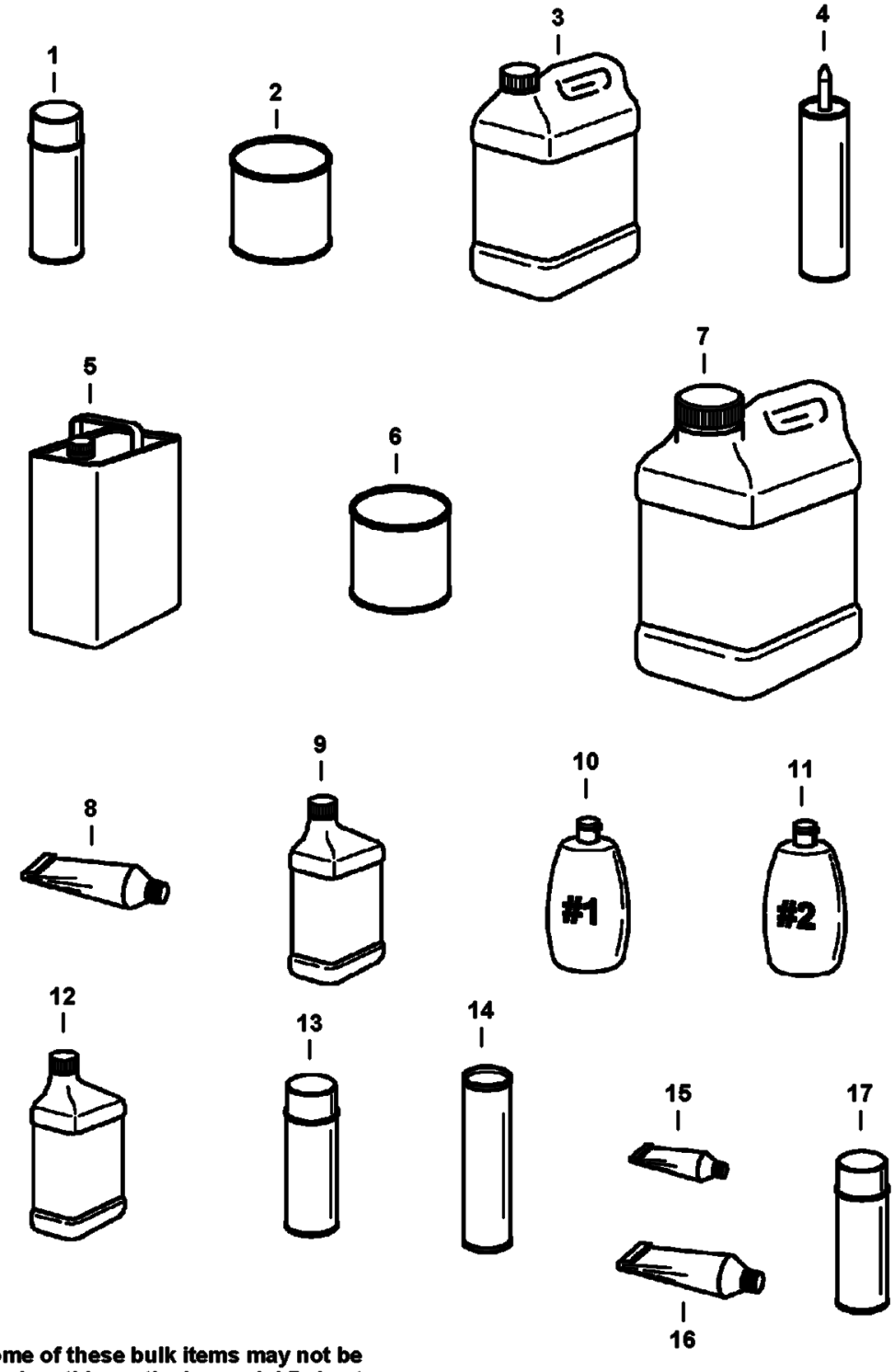

NOTE: Some of these bulk items may not be used on this particular model Bobcat.

NOTE: See Merchandising catalog for more products & information.

NOTE: Paint spray cans are packaged 6 per box.
Motor oil quarts are packaged 12 per box.
Motor oil 1 gal. jugs are packaged 6 per box.
Motor oil 2.5 gal. jugs are packaged 2 per box.

B-16415

Illustration B16415

Model S160 K
6904270

Page 588 - OSS# 6300202494 - All rights reserved by Bobcat Company - 02/11/2016 - 14:15:02 - Produced by Ken Cook Co. with mediaoff

BULK ITEMS (Cont'd)
(SEE NOTE)

Ref No	Part Number	Description	Remarks	Serial Number	Qty
1	6902228	PAINT, ORANGE SPRAY CAN 6			x
1	6902229	PAINT, CHARCOAL SPRAY CAN 6			x
1	6902230	PAINT, WHITE SPRAY CAN 6			x
2	6902233	PAINT, ORANGE QT 6			x
2	6902234	PAINT, CHARCOAL QT 6			x
2	6902235	PAINT, WHITE QT 6			x
3	6983128	ANTIFREEZE/COOLANT, PG 53/47 PREMIX GAL	Was 6724094 [A]		x
3	6983129	ANTIFREEZE/COOLANT, PG CONCENTRATE GAL	Was 6724354 [A]		x
4	6633583	SEALANT, POLYURETHANE 300 ML	tube - 300 ml		x
5		REDUCER	NLA - Gal.		x
6		PRIMER	NLA - Gal.		X
6	6902232	PRIMER, SPRAY CAN 6	spray can - 16 oz		x
7	6903117	FLUID, OIL HYD 2.5 GAL 2			x
7	6903118	FLUID, OIL HYD 5 GAL			x
7	6903119	FLUID, OIL HYD 55 GAL DRUM			x
8	6599360	SEALANT, ELEC .3 OZ	electrical - tube - 3 oz		x
8	6685372	SEALANT, GASKET LIQUID 10.1 OZ	tube - 0.57 kg (20 oz)		x
9	6903121	LUBE, GEAR 12			x
10	6630188	POLISH	window - #1 - 8 oz		x
10		POLISH	NLA - window-1 (64 oz.) -Order 6630188 Polish		x
11	6630189	POLISH	window - scratch remover - #2 - 8 oz		x
11		POLISH	NLA - window-2 (64 oz.) - scratch remover - Order 6630189 Polish		x
12	6903109	OIL 30W QT. 12			x
12	6903110	OIL, 30W GAL. 6			x
12	6903111	OIL 30W 2.5 GAL 2			x
12	7023076	OIL, 10W30 QT 12	Was 6903107 [A]		x
12	7023077	OIL, 10W30 GAL 6	Was 6903108 [A]		x
12	7023078	OIL, 10W30 2.5 GAL 2	Was 6903112 [A]		x
12	7023080	OIL, 15W40 QT 12	Was 6903105 [A]		x

Page 589 - OSS# 6300202494 - All rights reserved by Bobcat Company - 02/11/2016 - 14:15:02 - Produced by Ken Cook Co. with media1off

BULK ITEMS (Cont'd)
(SEE NOTE)

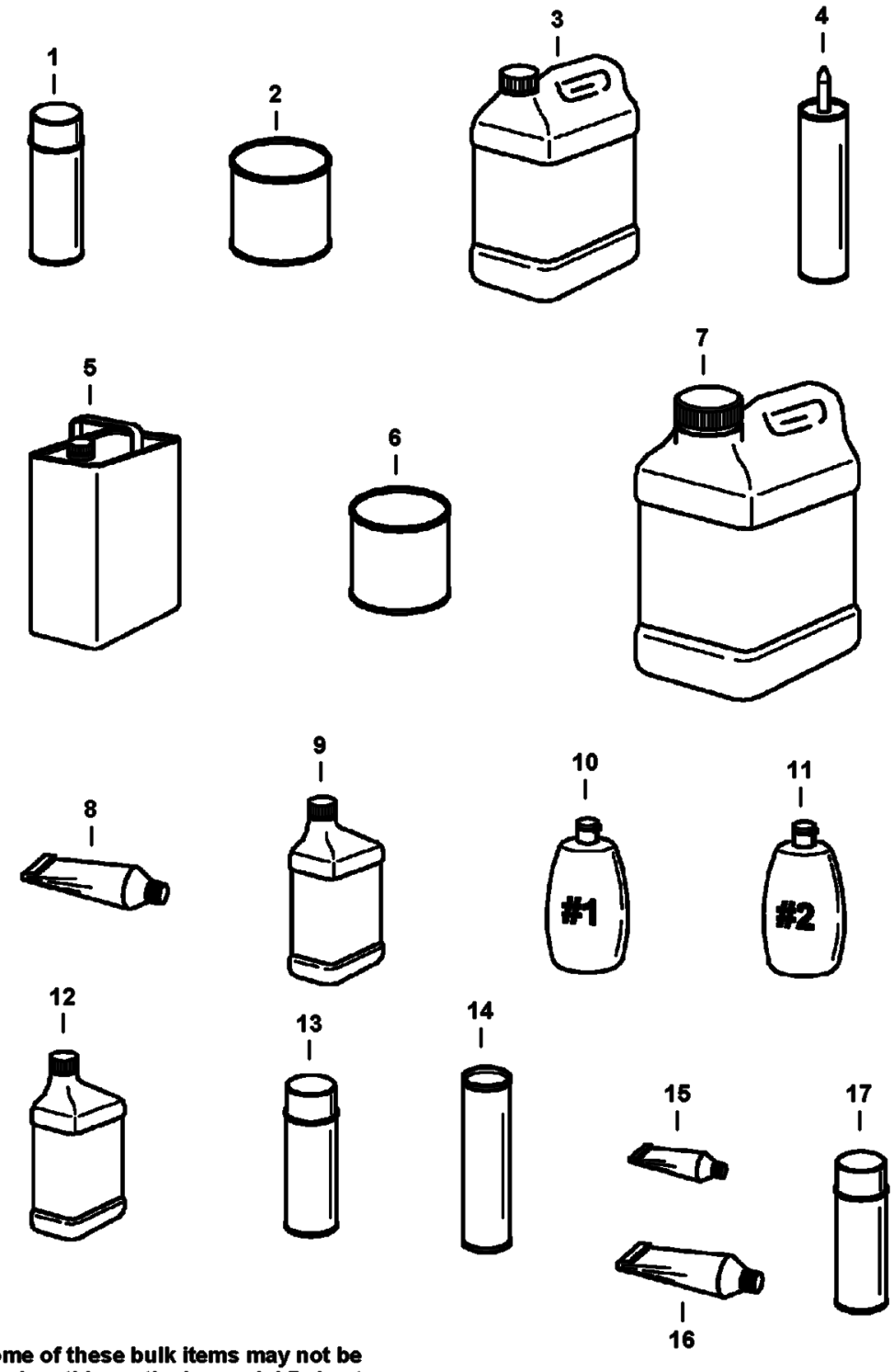

NOTE: Some of these bulk items may not be used on this particular model Bobcat.

NOTE: See Merchandising catalog for more products & information.

NOTE: Paint spray cans are packaged 6 per box.
Motor oil quarts are packaged 12 per box.
Motor oil 1 gal. jugs are packaged 6 per box.
Motor oil 2.5 gal. jugs are packaged 2 per box.

B-16415

Illustration B16415

Model S160 K
6904270

Page 590 - OSS# 6300202494 - All rights reserved by Bobcat Company - 02/11/2016 - 14:15:02 - Produced by Ken Cook Co. with mediaoff

BULK ITEMS (Cont'd)
(SEE NOTE)

Ref No	Part Number	Description	Remarks	Serial Number	Qty
12	7023081	OIL, 15W40 GAL 6	Was 6903106 [A]		x
12	7023082	OIL, 15W40 2.5 GAL 2	Was 6903113 [A]		x
13	6675380	ADHESIVE, SPRAY 10.5 oz			x
14	6903122	GREASE, MULTI PURPOSE			x
14		GREASE	NLA - 14.5 oz. cartridge - For fan idler bearing & spring loaded drive idler - Was 6599719 [A]		x
15	6650407	ADHESIVE	tube - 1 oz		x
16	6650388	SEALANT	flange		x
17	6736644	PAINT, ORANGE .5 OZ	orange - spray can - .5 oz		x
17	6736641	PAINT, CHARCOAL .5 OZ	charcoal - spray can - .5 oz		x
17	6736642	PAINT, WHITE .5 OZ	white - spray can - .5 oz		x
17	6736645	PAINT, RED .5 OZ	red - spray can - .5 oz		x

Page 591 - OSS# 6300202494 - All rights reserved by Bobcat Company - 02/11/2016 - 14:15:02 - Produced by Ken Cook Co. with media1off

NUMERICAL INDEX

Part No.	Description	Was	Code	Page
10C410	BOLT			385
10C416	BOLT			385
10C512	BOLT			351
10C616	BOLT 10			27
10H25	FITTING, GREASE 5			37
10H35	FITTING, GREASE 10			39, 143
10J13	BALL			297, 299
10J8	BALL			149
11H15	FITTING10			37
12D10	NUT			437
12D6	NUT 10			427, 431
12E6	WASHER			427, 431
12H15	FITTING, GREASE 5			37
12H25	FITTING			519, 523
1304227	PIN			287
1306637	CLIP			81
1313995	STUD			37
1318565	PIN 5			419
1320075	PIN, COTTER			505
14J1808	PIN			277
14J5032	PIN, STRAIGHT			39
15HB1010	ADAPTER, COUPLER	78HA1010	A	137
15HB1210	ADAPTER, COUPLER	78HA1210	A	137
15KB0404	FITTING, HYD CONNECTOR			519, 523
15KB0606	FITTING, HYD CONNECTOR			73, 121, 125, 129, 137, 139
15KB0612	FITTING, HYD CONNECTOR			137
15KB0810	FITTING, HYD CONNECTOR			67, 361
15KB1008	FITTING, HYD CONNECTOR			137
15KB1010	FITTING, HYD CONNECTOR			137
15KB1012	FITTING, HYD CONNECTOR			129, 137
15KB1212	FITTING, HYD CONNECTOR			137, 535
15KB1216	FITTING, HYD CONNECTOR			73
1612281	SPRINGNUT			395
1614765	VALVE STEM, TIRE			575
16F2	PLUG			303
17C1016	BOLT			37
17C1056	BOLT			15
17C1080	SCREW			37
17C410	BOLT 10			353, 495, 497, 499
17C412	BOLT 5			59, 61, 233, 237
17C420	BOLT			407
17C432	BOLT			71
17C444	BOLT	17C432	B,D	139
17C512	BOLT 5			229, 365, 369, 375, 399, 505

Code for disposition of old part number

A -- Use up
B -- Use on other application (See PNI)
C -- File PDR Report with Bobcat Parts Sales
D -- Part Number Error

Page 592 - OSS# 6300202494 - All rights reserved by Bobcat Company - 02/11/2016 - 14:15:02 - Produced by Ken Cook Co. with mediaoff

NUMERICAL INDEX (Cont'd)

Part No.	Description	Was	Code	Page
17C514	BOLT			257
17C516	BOLT			407, 517
17C520	BOLT 5			407, 517
17C532	BOLT 5			419
17C540	BOLT			229, 507, 509
17C608	BOLT			347
17C610	BOLT			41
17C6116	BOLT			271
17C612	BOLT 5			17, 81, 129, 133, 135, 137, 143, 247, 249, 253, 257, 275, 365, 369, 375, 419, 505
17C614	BOLT			115
17C616	BOLT 5			81, 121, 125, 129, 143, 245, 249, 253, 257, 435, 499
17C620	BOLT			81, 121, 125, 129, 137, 143, 271, 277
17C624	BOLT 5			81, 375
17C628	BOLT			63, 67, 133, 135, 139, 143, 375, 505
17C632	BOLT 5			63, 67, 505
17C640	BOLT			27, 37, 393, 395, 507
17C644	BOLT			121, 125
17C648	BOLT 5			37
17C652	BOLT			501
17C656	BOLT			37
17C660	BOLT			37, 39, 501
17C668	BOLT			501
17C680	BOLT			143, 535
17C716	BOLT			17, 285, 557
17C820	BOLT 5			35
17C828	BOLT			277, 281
17C844	BOLT			63, 67
17KB0606	FITTING			71, 73, 85, 99, 105, 121, 125, 129, 137, 139, 519, 523, 535
17KB0808	FITTING, HYD ELBOW			129
17KB0810	FITTING, HYD ELBOW			67, 361
17KB1010	FITTING, HYD ELBOW			67, 115, 361
17KB1212	FITTING, HYD ELBOW			129, 133, 135, 535
18C1636	BOLT			49
18EM1224	WASHER			365, 369, 375
18KB0404	FITTING, HYD ELBOW			519, 523
18KB0606	FITTING, HYD ELBOW			519, 523
18KB0810	FITTING, HYD ELBOW			115
18KB1010	FITTING, HYD ELBOW			115
19J12	CLAMP			121, 125, 129
19KB0606	FITTING, HYD TEE	17KB606	B,D	121, 125, 139
19KB1210	FITTING, HYD TEE			115
1CM612	BOLT	4CM612	A	337
1CM616	SCREW	4CM616	A	339
1CM620	BOLT	4CM620	A	297, 299, 329, 335
1CM635	BOLT			473, 481
1CM640	SCREW			365, 369, 375
1CM8100	SCREW			229, 281
1CM818	BOLT	4CM818	A	319
1CM820	CAP SCREW			143
1CM825	CAP SCREW			229, 313

Code for disposition of old part number

A -- Use up
B -- Use on other application (See PNI)
C -- File PDR Report with Bobcat Parts Sales
D -- Part Number Error

Page 593 - OSS# 6300202494 - All rights reserved by Bobcat Company - 02/11/2016 - 14:15:02 - Produced by Ken Cook Co. with media1off

NUMERICAL INDEX (Cont'd)

Part No.	Description	Was	Code	Page
1CM835	BOLT			297, 323
1CM870	BOLT			229, 297
1CM875	BOLT			323
1CM890	BOLT			281
1DM6	NUT	4DM6	A	285, 335
1EM80	WASHER	2EM8	A	309
1F316	PIN			213, 271
1K127	O-RING 10	93K127	A	85, 91, 95, 99, 105, 109
21G804	BOLT			445
21KB0606	FITTING, HYD TEE			73, 121, 125, 129, 139, 443
21KB1212	FITTING, HYD TEE			519, 523
225855	SEAL, OIL 10			63, 67, 77
24K3	PLUG			531
24K5	PLUG			121, 125, 129
24K7	PLUG			85, 91, 95, 99, 105, 109
25E10	WASHER			223, 227
25E11	WASHER			419
25E13	WASHER 5			59, 61, 261, 265, 347, 353, 495, 497, 499
25E14	WSHR			229, 385
25E15	WASHER 5			229, 407
25E16	WSHR			365, 369, 375, 407
25E17	WASHER 5			213, 419
25E18	WASHER			285
25E21	WASHER 5			281
25E24	WASHER	25E22	B	143
25E25	WASHER 10			419
25G512	SCREW			29
25G520	SCREW			29
25G612	SCREW			413, 415
25GT410	SCREW			261
25K20016	O RING 10			85, 91, 95, 99, 105, 109
25K20100	O RING 10			245, 249, 253
25K30110	O RING 10	54K30110	A	525, 527
25K30118	O RING 10			121, 125, 129
25K30126	O RING 10	54K30126	B	79
25K30210	RING,O	54K30210	A	77
25K30508	RING,O			45, 139
25K40224	RING,O	54K40224	B	77
25K60128	O RING 10	54K60128	A	79
25K60212	O RING 10	54K60212	B	77
26GM10020	BOLT			427, 431, 433
26GM10025	SCREW			427
26GM10030	BOLT			427
26GM6020	SCREW			427
27E10	WASHER			37
27E6	WASHER 5			63, 67
27E8	WASHER 10			507, 509
29CM612	BOLT, FLANGED	6652762	A	321
29CM616	BOLT			427, 431, 433
29CM625	BOLT			427, 431, 433
29CM820	SCREW			229, 281
29CM825	BOLT			427, 431, 433
29CM845	BOLT			427, 431, 433

Code for disposition of old part number

A -- Use up
B -- Use on other application (See PNI)
C -- File PDR Report with Bobcat Parts Sales
D -- Part Number Error

Page 594 - OSS# 6300202494 - All rights reserved by Bobcat Company - 02/11/2016 - 14:15:02 - Produced by Ken Cook Co. with mediaoff

NUMERICAL INDEX (Cont'd)

Part No.	Description	Was	Code	Page
29G416	BOLT			85, 91, 95, 99, 105, 109, 245, 247, 249, 253, 257
29G444	BOLT			85, 91, 95, 99, 105, 109
2DM10	NUT			477
2DM8	NUT			307
2F4051	PIN			287
2GM1040	BOLT	2GM1035	B	473, 477, 491
30G416	BOLT			85, 99
30H21	CLAMP 10			439
30H22	CLIP			41
30H27	CLAMP			411
30H31	CLAMP 10			139
30H35	CLAMP 10			115, 411
30H42	CLAMP	30H46	B,D	249, 253, 511
30H45	CLIP			469
30H46	CLIP			245, 471
30H50	CLAMP			413, 473, 477, 491
30H62	CLIP			257, 347
30H65	CLIP			133, 135
30H73	CLAMP			431, 433
30H75	CLAMP			19, 23, 41, 223, 227
30H79	CLAMP			73, 139
31C410	BOLT			437
31C820	BOLT			13, 63, 67
31C824	BOLT 10			419, 505, 507, 509
31C828	BOLT			13
31C832	BOLT			507, 509
31C836	BOLT			509
31H27	CLIP			41
31H38	CLAMP			285, 287
31H46	CLAMP			473, 477, 491
31H49	CLAMP			473, 477, 491, 519
35C1020	BOLT			397
35C1032	BOLT			45
35C408	BOLT			365, 369
35C410	BOLT 5			351, 353, 449, 453, 491
35C412	BOLT			27, 45, 53, 57, 439
35C512	BOLT			33, 249, 253, 415, 473, 491, 495, 497, 499
35C514	BOLT			347
35C516	BOLT 10			271, 385, 477
35C520	BOLT			233, 237
35C536	BOLT			67, 361
35C612	BOLT 5			229
35C616	BOLT 5	35C000624B	B	71, 275, 519, 523
35C620	BOLT 5			277, 281, 473, 477, 491
35C624	BOLT			473, 477, 491
35C636	BOLT			535
36K5	CAP			71, 85, 99, 105, 121, 125
36K6	CAP			281
36K7	FITTING			63
36K8	CAP			519, 523, 569
37C412	BOLT			439
37C424	BOLT			449, 453, 491
37C512	BOLT			275, 425, 449, 453, 491, 511

Code for disposition of old part number

A -- Use up
B -- Use on other application (See PNI)
C -- File PDR Report with Bobcat Parts Sales
D -- Part Number Error

Page 595 - OSS# 6300202494 - All rights reserved by Bobcat Company - 02/11/2016 - 14:15:02 - Produced by Ken Cook Co. with media1off

NUMERICAL INDEX (Cont'd)

Part No.	Description	Was	Code	Page
37C516	BOLT	10C512	B	353
37C620	BOLT			33, 81, 233, 237, 347
37C632	BOLT			35, 395
37C648	BOLT			115
38C610	BOLT			285, 287
38C824	SCREW			35
38C840	BOLT			35
3974037	PIN			303
3974095	MET-GASK			329
3974260	SCREW			341
3974267	STUD	6653946	A	321
3974389	PLUG			303
3974390	PLUG	6680639	A	303
3974393	PIN			303
3974394	PIN			303
3974395	PIN			297, 299, 303
3974432	PLUG			309
3974433	PLUG			309
3974502	GASKET			339
3974514	SPRING 5			307
3974515	RETAINER			307
3974518	CAP			307
3974521	ARM, ROCKER			307
3974524	WASHER			307
3974546	KEY			313, 319
3974547	STOPPER			319
3974577	RING,O			293, 295, 313
3974618	RING, SNAP			317
3974620	CIRCLIP			317
3974626	SHIM			339
3974662	BOLT	3974192	A	333
3974671	NUT			313
3974868	PIN			303
3974882	HOOK			309
3974893	SEAT			297, 299
3974894	FLANGE			297, 299
3974920	SCREW			307
3974971	NUT			335
3974972	GASKET			325, 335
3974991	BEARING			321
3974996	COVER			317
3975337	COLLAR			313
3975436	SCREW	3974928B	A	305
3975441	GEAR, CAMSHAFT			303
3D6	NUT			213, 271
3GM516	SCREW			427
40K6	PLUG			275
42H10	HOSECLAM5			41
42H32	HS CLAMP5			41, 275
42H52	CLAMP			275
42HL250	CLAMP			275
42HL300	CLAMP			275
42HS04	CLAMP, HOSE			41

Code for disposition of old part number

A -- Use up
B -- Use on other application (See PNI)
C -- File PDR Report with Bobcat Parts Sales
D -- Part Number Error

Page 596 - OSS# 6300202494 - All rights reserved by Bobcat Company - 02/11/2016 - 14:15:02 - Produced by Ken Cook Co. with mediaoff

NUMERICAL INDEX (Cont'd)

Part No.	Description	Was	Code	Page
43C408	BOLT			257, 265
43C610	BOLT	17C610	B	277
43C612	BOLT	17C612	B	81
43C616	BOLT			233, 245, 249, 253
43C852	BOLT			281, 417
43DM5	NUT			427
43DM6	NUT			427, 431, 433
43DM8	NUT			229, 427, 431, 433
44H48	CLAMP			473, 477, 491
45C616	BOLT			287
45C620	BOLT			143
45C820	BOLT	43C820	A	151
45G1006	BOLT			437
45K3	FITTING			419
46D5	NUT			365, 369, 375
47C1080	BOLT			37
47C1088	BOLT			37
47C620	BOLT	7105193	A	143
47C820	BOLT			59, 61
47K10	PLUG			121, 125, 129
47K8	PLUG			153, 157
49C628	BOLT			81
4CM822	BOLT			305, 325
4CM828	BOLT			313, 321
4D20	NUT			507, 509
4DM5	NUT			425
4DM8	NUT			269
4F6106	PIN			27
51DM12	NUT			365, 369, 375
5289686	PLUG			15, 19, 23
53C612	BOLT	35C612	B	553
53D10	NUT			15
53D6	NUT			15, 81, 143
53DM10	NUT			473, 491
53DM8	NUT			281
54K20028	O RING 10			85, 99, 105
55D6	NUT			375
55K204	O RING 10			85, 91, 95, 99, 105, 109
55K214	O-RING			121, 125, 129, 519, 523
57D10	NUT			397
57D5	NUT			67, 351
57D6	NUT 5			33, 35, 81, 395, 505
57D8	NUT 10			505
57G608	SCREW			449, 453, 491
58K013	O-RING 10			85, 91, 95, 99, 105, 109
58K016	O-RING 10			85, 91, 95, 99, 105, 109
58K017	O-RING 10			85, 91, 95, 99, 105, 109
58K022	O-RING 10			85, 99, 105, 129, 133, 135
58K120	O-RING	6686220	B,D	245, 249, 253, 257
58K222	O RING 10	54K40116	B	525, 527
58K4	O-RING	54K020002B	B	85, 91, 95, 99, 105, 109
59D4	NUT 5			139, 285, 385, 439, 449, 453, 491
59D5	NUT 5			27, 229, 365, 369, 375, 407, 449, 453, 491

Code for disposition of old part number

A -- Use up
B -- Use on other application (See PNI)
C -- File PDR Report with Bobcat Parts Sales
D -- Part Number Error

Page 597 - OSS# 6300202494 - All rights reserved by Bobcat Company - 02/11/2016 - 14:15:02 - Produced by Ken Cook Co. with media1off

NUMERICAL INDEX (Cont'd)

Part No.	Description	Was	Code	Page
59D6	NUT			35, 63, 67, 121, 125, 129
59D8	NUT 5			15, 63, 67, 73, 507, 509
5CM1080	SCREW			473, 477, 491
5CM812	BOLT			307
5HM13	CLAMP			41
5HM14	CLAMP			41, 271
5HM15	CLAMP			41
5HM20	CLAMP			469, 471, 491
5HM23	CLAMP			125
5HM24	CLAMP			41, 121, 125, 129, 271
5HM35	HOSECLAMP			133, 135
5HM42	HOSECLAMP			121, 125, 129, 133, 135, 275
5HM58	CLAMP			41
5JM24	RING, SNAP			317
5JM25	CIR-CLIP			317
614142	SLEEVE 10			439
616783	WASHER			229, 427
6190121	SPRING			149
619021	WASHER, 5			27, 39, 63, 67, 81, 121, 125, 129, 139, 287, 501, 519, 523, 535, 549
61D4	NUT 5			407
61D5	NUT 10			35, 275, 353, 365, 369, 375, 399
61D6	NUT 5			13, 37, 115, 121, 125, 129, 133, 135, 275, 347, 365, 369, 393, 395
61D8	NUT 5			133, 135
62D4	NUT			287
62D6	NUT 5			143, 419
63D8	NUT			509
6510171	LINK			45
6510470	GEAR, RING STARTER			277
6511855	TAPE BULK/FT 25'			19, 23, 271
6512026	BUSHING			81
6513152	SEAL, BULK/FT 25			365, 369, 375
6513495	PIN 5			81, 287
6513532	POPPET			147, 149
6513533	SPRING			147, 149
6513707	FITTING, BANJO			339
6515131	BLADE 5			439
6515817	WASHER			15
6516229	SEAL, PISTON			77
6517516	LGHT ASY			439
6519178	BUMPER			27, 37
6519328	RING, SEAL			79
6531270	SLEEVE, DETENT			85, 91, 95, 99
6532127	BOOT, RUBBER			31, 261
6532453	RING SEAL			525, 527
6533898	DECAL			505
6536968	HEAD	6806332	A	77
6539236	HEAD, CYL LIFT			79
6539418	HOSE			63, 67
6539645	SPACER			79
6542521	ASSY, HOSE			121, 125, 129

Code for disposition of old part number

A -- Use up
B -- Use on other application (See PNI)
C -- File PDR Report with Bobcat Parts Sales
D -- Part Number Error

Page 598 - OSS# 6300202494 - All rights reserved by Bobcat Company - 02/11/2016 - 14:15:02 - Produced by Ken Cook Co. with mediaoff

NUMERICAL INDEX (Cont'd)

Part No.	Description	Was	Code	Page
6542731	TREAD, SAFETY			365, 369, 375
654299	BEARING			153, 157
6552871	WASHER			49
6553411	BUSHING, PRESS FIT 5			41, 45, 59, 61
6553709	WASHER			15, 63, 67, 73
6553976	TREAD, SAFETY			399
6554100	TREAD, SAFETY			287, 399
6554149	CORD, BULK/FT			19, 23, 365, 369, 385
6555331	WIRE ROPE			385
6555341	TREAD, SAFETY			519, 523
6555351	SEAL BULK/FT 15			369, 385
6555987	BUSHING			37
6557291	SWIVEL, BALL JOINT			285
6557493	GROMMET			543
6557831	WASHER			81, 213, 271, 473, 477, 491
6557904	FLASHER			427, 431, 433, 439
6558309	CABLE BULK/FT			399
6558310	SLEEVE			399
6559479	NUT			287
6560573	DECAL, SAFETY 5			403
6560633	DAMPER, VIBRATION			15
6561383	DECAL, OPERATION 5			403
6562602	BUSHING			15
6563445	HOSE			281
6563606	WASHER			49
6563914	WASHER			81, 143
6564343	SPACER			285, 287
6564452	LEVERGRIP			35, 285, 287
6564654	PIN, CLEVIS			81
6564657	PIN			81
6564669	NUT, 10			49, 575
6565170	CABLE			229
6565200	DECAL, FILTER			399
6565977	HOSE, BULK	7003457	A	457, 459, 469, 471, 481, 483, 487, 491
6565990	DECAL, OIL HYD 5			403
6567743	PIN			15, 445
6567827	ANGLE			505
6567838	PIN			505
6567962	WASHER			285, 287
6569203	CLAMP			229, 407
6570931ENUS	INSTRUCTIONS	6570931	A	345
6571851	SNAP RING			51, 53, 55, 57
6571852	SNAP RING			51, 53, 55, 57
6576033	WASHER 5			277
6576261	COVER	6734520	A	285, 287
6576262	MOUNT			285, 287
6576280	BOLT			229, 407
6576302	LINK			81
6577058	PIN, HAND CONTROL			143
6577382	BUSHING			271
6577545	GROMMET			351, 353, 495, 497, 499

Code for disposition of old part number

A -- Use up
B -- Use on other application (See PNI)
C -- File PDR Report with Bobcat Parts Sales
D -- Part Number Error

Page 599 - OSS# 6300202494 - All rights reserved by Bobcat Company - 02/11/2016 - 14:15:02 - Produced by Ken Cook Co. with media1off

NUMERICAL INDEX (Cont'd)

Part No.	Description	Was	Code	Page
6577754	DECAL, WARNING 5			403
6577821	HOSE, BULK			41
6577822	HOSE, BULK			41, 271
6577880	KIT, ACCESS COVER			345
6577954	PIN, PIVOT			37
6577961	GROMMET			31, 81, 287
6578139	LEVER			359
6578140	LEVER			359
6578169	HOSE, BULK/FT			41
6578172	HOSE, BULK			41, 121, 125, 129, 271
6578253	SPRING, COMPRESSION	6562018	A	39
6578268	THROTTLE			285
6578278	BUMP.PAD			41
6578368	DECAL, OPERATION			403
6578689	HUB, WHEEL			49
6579072	SPRING			37
6579528	DECAL, WARNING			403
6579613	STOP			15, 271
658128	RING, SNAP			153, 157
6586542	HEAD			525, 527
6586543	PISTON			525, 527
6586918	Screw, detent			85, 91, 95, 99
6587458	KEY, CAP FUEL 5			41
6587575	ADAPTER			85, 91, 95, 99
6587580	SPRING			85, 91, 95, 99, 105, 109
6587763	BOOT			85, 91, 95, 99, 265
6589226	COVER, END			85, 91, 95, 99
6592098	WASHER			85, 91, 95, 99
6592100	COLLAR			85, 91, 95, 99, 105, 109
6592105	BALL 5			85, 91, 95, 99
6592107	SPRING, DETENT 5			85, 91, 95, 99
6592109	ADAPTER			85, 91, 95, 99, 105, 109
6592117	SPRING, LOAD CHECK			85, 91, 95, 99, 105
6592506	CLAMP			63, 67, 73, 121, 125, 129, 535
6592507	PLATE			121, 125, 129
6595663	BUSHING			85, 91, 95, 99, 105, 109
6596807	PLUG			85, 91, 95, 99
6598098	PIN			335
6598099	KEY			317
6598102	VALVE, PUMP INJ			339
6598116	PLUG			309
6598146	PIPE			341
6598156	STUD			309
6598158	RING, SNAP			317
6598187	PLUG			303
6598275	BOLT			277
6598362	FILTER, AIR INNER			1, 343
6598492	FILTER, AIR OUTER			1, 343
6598908	ELBOW			41
6599084	SCREW	6969820	A	339

Code for disposition of old part number

A -- Use up
B -- Use on other application (See PNI)
C -- File PDR Report with Bobcat Parts Sales
D -- Part Number Error

Page 600 - OSS# 6300202494 - All rights reserved by Bobcat Company - 02/11/2016 - 14:15:02 - Produced by Ken Cook Co. with mediaoff

NUMERICAL INDEX (Cont'd)

Part No.	Description	Was	Code	Page
6599360	SEALANT, ELEC .3 OZ			581
6599365	KIT			217, 221
6599645	PLUG, STEEL			45
6599741	WASHER			143
6599744	BALL, JOINT			143, 419
6599910	ASSY, PLUG			149
6610510	STRAP, TIE 10			19, 121, 125, 129, 365, 369, 495, 497
6624289	STRAP, TIE	6610510	B	23, 63, 67, 73, 115, 227, 229, 233, 237, 243, 245, 247, 249, 253, 347, 351, 365, 369, 375, 411, 413, 415, 427, 431, 433, 469, 471, 473, 477, 491, 511, 519, 523, 561, 563
6630188	POLISH			581
6630189	POLISH			581
6630207	RIVET 5			15, 31, 557
6630945	WASHER			285, 287
6631046	GASKET			311
6631418	RING, RETAINING			15, 27, 445
6632218	CONE, BEARING			51, 53, 55, 57
6632279	KIT, SEAL			85, 91, 95, 99, 105, 109
6632541	RACE			51, 53, 55, 57
6633583	SEALANT, POLYURETHANE 300 ML			271, 277, 581
6640690	PIN			243, 261
6640692	CONNECTOR			243, 261
6640694	LOCK			243, 261
6640699	CONECTR 5			261, 373, 449, 491
6640700	LOCK 5			261
6640728	BOLT			327
6641176	SEAL			243, 261
6641179	CONECTR 5			243, 261, 363
6641180	LOCK 5			243, 261, 363
6643249	CONDUIT BULK/FT			63, 67
6645081	O-RING	6673884	B,D	153
6645083	O-RING			153
6645086	PLUG			153, 157
6646383	CONNECTOR			233, 237
6646582	PLUG			261
6646705	MOULDING BULK/FT	7167241	A	271
6646781	SWITCH, ALARM BACK-UP			351
6647777	PIN			363
6647778	CAP			363
6647783	LOADCHECK			363
6647784	PLUG			363
6647785	SPRING			363
6647786	SEAL KIT			363
6648293	SCREW			363
6648294	SPRING			363
6648307	CONNECTOR			473, 491
6648308	CONNECTOR			473, 491
6648312	TERMINAL			463

Code for disposition of old part number

A -- Use up
B -- Use on other application (See PNI)
C -- File PDR Report with Bobcat Parts Sales
D -- Part Number Error

Page 601 - OSS# 6300202494 - All rights reserved by Bobcat Company - 02/11/2016 - 14:15:02 - Produced by Ken Cook Co. with media1off

NUMERICAL INDEX (Cont'd)

Part No.	Description	Was	Code	Page
6648320	SEAL			463
6648330	TERMINAL			233, 237
6648348	PLUG			31, 33
6649244	BALL STUD			365, 369, 375
6649245	CLIP			365, 369, 375
6649481	LIGHT, WEDGE BASE			511
6649706	PIN, LOCK			397
6650107	SEAL			463
6650388	SEALANT			581
6650407	ADHESIVE			271, 581
6650627	PLATE THR			153, 157
6650629	PIN			153, 157
6650630	RETAINER			153, 157
6650634	GASKET			153, 157
6650635	BEARING			153, 157
6650636	PIN			153, 157
6650637	BOLT			153, 157
6650646	O-RING			153
6650647	O-RING			153
6650648	PLUG			153
6650652	CH.RELIEF			153
6650668	BOLT			153, 157
6650675	COUPLER			153
6651489	COVER			323
6651512	ALARM, BACK-UP	6599931	A	351, 353
6651542	BALL, STEEL			147
6651709	SEAL, OIL			37, 39
6651934	BOLT			317
6651974	PLUG			149
6652018	BOLT			157
6652574	PLUG			303
6652575	PLUG			303
6652580	BOLT			303, 321
6652633	Ball 1/4"			319
6652652	SPRING			297, 299
6652670	STUD 5			323, 325, 339
6652688	CLAMP			341
6652689	CLAMP			341
6652710	WASHER	6685633	A	337
6652764	STUD			327, 331, 335
6652792	NUT			309, 321, 323, 327
6652918	NUT			281, 417
6653807	BOLT			297
6653808	BOLT			297
6653821	BOLT			313
6653830	SEAL, STEM VALVE			291, 307
6653833	SPRING			307
6653859	SLEEVE, WEAR			313
6653861	LUBRCATOR			313
6653888	NUT			303
6653916	HOLDER			333
6654139	MOULDING BULK/FT			15, 249, 253, 257, 281
6654374	2 KEYS			41

Code for disposition of old part number

A -- Use up
B -- Use on other application (See PNI)
C -- File PDR Report with Bobcat Parts Sales
D -- Part Number Error

Page 602 - OSS# 6300202494 - All rights reserved by Bobcat Company - 02/11/2016 - 14:15:02 - Produced by Ken Cook Co. with mediaoff

NUMERICAL INDEX (Cont'd)

Part No.	Description	Was	Code	Page
6654718	CLAMP 5	6680795	A	341
6654806	FUSE, 15A			233, 237
6655154	GUIDE, VALVE			309
6655158	BOLT			309
6655160	PLUG			309
6655161	WASHER			309
6655166	COVER	6685515	A	313
6655176	ROD			319
6655179	PIN, PISTON ENG			313
6655181	ROD, CONNECTING			313
6655195	BOLT			303
6655210	SHIM			339
6655213	SLEEVE			317
6655215	BALL			317
6655216	PUMP, FUEL			41, 339
6655223	CAP			335
6655236	BEARING, ROD			313
6655237	BEARING, ROD			313
6655243	BUSHING			313
6655870	ROCK ARM			307
6655880	PIPE			305
6655893	STUD			325
6655938	VALVE, EVACUATOR			343
6656009	PIN			427
6657028	O-RING			153, 157
6657067	COVER			153, 157
6657068	COVER			153, 157
6657414	BOLT			337
6657415	BOLT			323
6657416	BOLT			327
6657663	PLUG			303
6657719	PLUG			19, 23, 45, 385
6657734	PUMP, PRIMER HAND			41
6658180	PLUG, BLEED			41
6658228	SEAL, OIL			49, 349
6658536	RING, SNAP			277
6658672	RING, RETAINER			59, 61
6658847	RING, SNAP			277
6659999	BELT, SEAT			557
6660260	SWITCH, PRESS OIL HYD			137, 217, 221
6660644	CAP			85, 91, 95, 99
6660814	RING, QUAD	6678226	D	153, 157
6661022	FILTER, OIL HYD IN-LINE			1, 5, 11, 73, 121, 125, 129, 139, 215
6661062	PLUG, PIPE			275
6661114	CAP. DIESEL			41
6661117	TANK			419
6661150	SWITCH, ROLLER MICRO			427, 431
6661242	COVER			343
6661243	WING NUT			343
6661244	WASHER			343

Code for disposition of old part number

A -- Use up
B -- Use on other application (See PNI)
C -- File PDR Report with Bobcat Parts Sales
D -- Part Number Error

Page 603 - OSS# 6300202494 - All rights reserved by Bobcat Company - 02/11/2016 - 14:15:02 - Produced by Ken Cook Co. with media1off

NUMERICAL INDEX (Cont'd)

Part No.	Description	Was	Code	Page
6661248	FILTER, OIL HYD 12			1, 5, 9, 133, 135, 217
6661353	LIGHT, HOUSING ASSY			511
6661481	O-RING			153
6661608	KIT, SEAL			423
6661696	CAP, FUEL LOCKING			41
6661785	MOUNT, ENG			281
6661787	WASHER			281, 417
6661807	FILTER, OIL HYD			1, 215
6661808	SPRING KT			215
6662126	BRACKET	6631643	A	151
6662246	CONNECTOR			249
6662248	4 PIN PLUG			249, 253
6662306	RING, WEAR			49, 349
6662848	CAP			105, 109
6663289	FUSE, 5A			237
6664035	CAP			415
6664036	NUT			415
6664037	WASHER			415
6664040	PIN 5			415
6664065	WASHER			543
6664085	BUSHING			19, 23, 373, 385, 543
6664097	COVER			543
6664103	NUT			543
6664185	CONNECTOR			249, 253
6664209	SEAL			277
6664221	RETAINER			19, 23
6664223	OUTLET			19, 23
6664224	CAP			19, 23
6664554	PUMP, WIPER WASHER			365, 369
6664566	SCREW			543
6664801	CONNECTOR			249, 253
6664815	SEAL, OIL			45, 147, 149
6664969	CONNECTOR			249, 253
6665000	CLIP			261, 365, 369, 375
6665017	CONNECTOR			463
6665018	LOCK			463
6665314	PLUG			19, 23, 223, 227, 257, 427, 431, 433
6665316	SWITCH			439
6665321	RIVET			261, 365, 369, 375
6665322	RIVET			261, 365, 369, 375
6665367	BULB			19, 23
6665370	PLUG			245, 249, 253
6665371	SWITCH, VACUUM			229, 343
6665568	SEAL, BULK/FT 50			365, 369
6665569	RING, BACK-UP			85, 91, 95, 99, 105, 109
6665570	CLYD RING			85, 91, 95, 99, 105, 109
6665602	MOTOR			543
6665701	BUSHING, PRESS FIT			81
6665707	SWITCH			365, 369
6665729	LIC LIGHT			427, 431, 433
6665915	GAUGE			121, 125, 129

Code for disposition of old part number

A -- Use up
B -- Use on other application (See PNI)
C -- File PDR Report with Bobcat Parts Sales
D -- Part Number Error

Page 604 - OSS# 6300202494 - All rights reserved by Bobcat Company - 02/11/2016 - 14:15:02 - Produced by Ken Cook Co. with mediaoff

NUMERICAL INDEX (Cont'd)

Part No.	Description	Was	Code	Page
6666338	WASHER			153, 157
6666542	WIPER, ROD CYL			525, 527
6666543	WIPER, ROD CYL			77
6666571	BULB			355
6666766	GROMMET			365, 369
6666782	GASKET			293, 295, 303
6666783	GASKET			293, 295, 303
6666802	GASKET			291, 323
6666803	GASKET			293, 295, 297, 299
6666814	GASKET			293, 295, 313
6666817	GASKET			293, 295, 311
6666932	BRAKE CYL			419, 421
6666933	CYLINDER			419, 423
6667139	CAP 5			419
6667144	CONNECTOR			243, 261
6667145	LOCK			243
6667176	PLUG			363
6667201	SPACER			543
6667323	SEAL			525, 527
6667325	SEAL			77
6667326	SEAL			79
6667352	FILTER, FUEL W/SEPARATOR 12			1, 7, 41
6667353	FILTER, FUEL ASSY			41
6667418	PLUG			303
6667419	WASHER			333
6667420	BOLT			311, 317
6667421	BOLT			309
6667422	WASHER			297, 307, 309, 321, 323, 327
6667433	RING, SNAP			319
6667451	WASHER			307
6667457	CLAMP			341
6667460	IMPELLER	6684867	A	321
6667461	SPRNG PIN			307
6667533	COVER			115
6667569	CONNECTOR, RECEPTACLE			415
6667676	COVER			363
6667677	SEAL,O-RING			363
6667680	SNAP RING			363
6667687	VALVE, STEM SOLENOID			85, 99, 105
6668079	PLUG, MOTOR			147
6668080	SHIM			147
6668082	POPPET	6685064	A	147
6668088	PISTON	6685066	A	147, 149
6668089	PLUG, MOTOR			147, 149
6668097	SCREW			423
6668104	MOUNT, ENG			417
6668114	BEARING			277
6668742	SWITCH			19, 23
6668815	SWITCH			427, 431, 433, 439
6668816	SWITCH			355, 427, 431, 433, 573

Code for disposition of old part number

A -- Use up
B -- Use on other application (See PNI)
C -- File PDR Report with Bobcat Parts Sales
D -- Part Number Error

Page 605 - OSS# 6300202494 - All rights reserved by Bobcat Company - 02/11/2016 - 14:15:02 - Produced by Ken Cook Co. with media1off

NUMERICAL INDEX (Cont'd)

Part No.	Description	Was	Code	Page
6668820	NUT			85, 99, 105
6668881	CORD			357
6668955	POP RIVET			61
6669087	SEAL KIT			113
6669089	RH TRACK			29
6669091	CLIP			19, 23, 449, 453, 491
6669135	SEAT, OPERATOR VINYL			29
6669154	BOLT			421
6669155	PLATE			421
6669156	SPACER			421
6669159	PISTON			421
6669162	NUT			421
6669163	PLUG			421
6669164	ADAPTOR			421
6669165	SCREW BLD			421
6669184	STATOR			421
6669185	O-RING KT			421
6669224	TAP SCREW			19, 23, 449, 453, 491
6669308	RETAINER			547
6669402	HOUSING			153
6669405	CAP, END			157
6669409	WASHER			153
6669410	KIT, SHIM			153
6669411	BEARING			153, 157
6669452	O-RING			147
6669549	SOCKET			115, 409, 411, 415
6669657	SEAL KIT			443, 535
6669676	VALVE, CHECK			139
6669732	KIT, SEAL			85, 91, 95, 99, 105, 109
6670160	CUSHION, SEAT			29
6670251	BATTERY, DRY 530 AMP			407
6670284	LIGHT, REAR ASSY			511
6670287	COVER			35
6670472	NUT			341
6670533	NUT			335, 337
6670620	MOUNT			427
6670621	REFLECTOR			427
6670634	SEAL KIT			361, 363
6670685	VALVE, RELIEF	6689601	A	153, 157
6670706	CONNECTOR			261
6670707	CONNECTOR			261
6670710	PLUG			261
6670711	LOCK			261
6670715	SOCKET			261
6670726	LOCK ONLY			541
6670769	O-RING			291, 341
6670785	ADAPTER			321
6670831	ELBOW			133, 135
6671025	COIL, SOLENOID 08-12			85, 99, 105
6671106	ALARM			427, 431, 433

Code for disposition of old part number

A -- Use up
B -- Use on other application (See PNI)
C -- File PDR Report with Bobcat Parts Sales
D -- Part Number Error

Page 606 - OSS# 6300202494 - All rights reserved by Bobcat Company - 02/11/2016 - 14:15:02 - Produced by Ken Cook Co. with mediaoff

NUMERICAL INDEX (Cont'd)

Part No.	Description	Was	Code	Page
6671512	GROUP, ROTARY			153, 157
6671516	KIT, SEAL			153, 157
6671518	BOLT			153
6671520	O-RING			151, 157
6671527	NUT			361, 363
6671725	BOLT	6687996	A	171, 187, 203
6671741	SNAP RING	6688042	A	163, 165, 179, 181
6671742	SEAL, SHAFT			163
6671760	COVER	6688024	A	167, 169, 183, 185
6671803	RING 7.05	6688029	A	167, 169, 183, 185
6672190	VALVE, DRAIN			301, 303
6672272	WASHER			511
6672273	SCREW			511
6672274	SCREW			511
6672275	GASKET			511
6672276	LENS, LIGHT RED			511
6672277	BRACKET			511
6672279	MOUNT, LIGHT RUBBER			511
6672360	PLUG			297, 299
6672471	VALVE, SOLENOID			105
6672515	KIT, SEAL			117
6672715	NYLNSPACR			29
6672863	VALVE, SOLENOID			361, 363
6673200	FUSE BLOCK			233, 237
6673710	BEARING, NEEDLE			143
6673789	BEARING, ROLLER			143, 257
6673828	HOSE, HYD ASSY			133, 135
6673882	SPRING	6684038	A	153
6673959	VALVE, BPV			363
6674013	TRACK			29
6674169	PULLEY	6598155	A	321
6674202	NUT			223, 227
6674215	COLLAR	6687927	A	167, 169, 183, 185
6674228	PANEL, CONTROL			449, 491
6674231	VENT, HEATER CAB ROUND			449, 453, 491
6674235	RECEIVER, DRIER A/C			473, 477, 491
6674315	SWITCH, PRESS OIL ENG			229
6674316	SWITCH, PRESS OIL HYD			233, 237
6674400	LIGHT, HOUSING LH			511
6674401	LIGHT, HOUSING RH			511
6674402	MOUNT, LIGHT			511
6674403	COVER			17, 223, 227
6674407	SHLDR BELT			553
6674687	BATTERY, DRY 600 AMP			1, 229
6674798	REPAIR KIT			133, 135
6674799	ADAPTER			115, 411
6674802	CONNECTOR, 7-PIN			115, 409, 411, 415

Code for disposition of old part number

A -- Use up
B -- Use on other application (See PNI)
C -- File PDR Report with Bobcat Parts Sales
D -- Part Number Error

Page 607 - OSS# 6300202494 - All rights reserved by Bobcat Company - 02/11/2016 - 14:15:02 - Produced by Ken Cook Co. with media1off

NUMERICAL INDEX (Cont'd)

Part No.	Description	Was	Code	Page
6674894	NUT, LOCK			27
6674895	RETAINER			19, 23, 223, 227, 271, 547
6674907	NUT			167, 169, 183, 185
6674993	CAP			365, 369
6675026	CAP, CONNECTOR			115, 409, 411, 415
6675033	INSERT, THREADED			15, 17, 223, 227
6675074	SEAT BELT			17
6675136	GAS SPRING			15
6675154	HOLDER			233, 237
6675155	FUSE, 100A			233, 237
6675170	BELT, SEAT			549
6675176	SWITCH			449, 453, 491
6675177	KNOB			449, 453, 491
6675179	FLANGE			449, 453, 491
6675181	PLUG SWITCH HOLE			449, 453, 491
6675212	RETAINER, BOLT			385
6675221	BOLT			281
6675257	CLEVIS			15
6675273	WASHER			35
6675281	MOUNT			411, 413, 415
6675298	COUPLER, BODY			365, 369
6675299	COUPLER			365, 369
6675308	KITS/BOOT			549
6675309	KIT SLIDE			549
6675310	KIT TETHER			549
6675311	KIT S R B			549
6675312	KIT S B S			549
6675313	KIT BEARING SHAFT			549
6675314	KTWTADJIN			549
6675315	KITWTADJHANDLE			549
6675316	KT WT ADJUST			549
6675317	KIT SCISSORS			549
6675318	KT RECLINER			549
6675319	SEAT, BACK			549
6675320	CUSHION, SEAT FABRIC			549
6675321	VINYL BACK SEAT			549
6675322	CUSHION, SEAT VINYL			549
6675323	KNOB RECLINER			549
6675332	CHAIN LNK			45
6675336	LIGHT, BULB 50W			511
6675342	PIN			153, 157
6675378	CLIP			365, 369, 375
6675380	ADHESIVE, SPRAY 10.5 oz			581
6675387	SEAL, BULK/FT			19, 23, 385
6675503	HOUSING			463
6675504	RING			463
6675505	BLOWER, WHEEL			463
6675506	MOUNT			463
6675507	COVER			463
6675510	CLAMP			455, 481

Code for disposition of old part number

A -- Use up
B -- Use on other application (See PNI)
C -- File PDR Report with Bobcat Parts Sales
D -- Part Number Error

Page 608 - OSS# 6300202494 - All rights reserved by Bobcat Company - 02/11/2016 - 14:15:02 - Produced by Ken Cook Co. with mediaoff

NUMERICAL INDEX (Cont'd)

Part No.	Description	Was	Code	Page
6675511	VALVE, DRAIN			455, 481
6675512	CLAMP			455, 481
6675513	GROMMET			457, 459, 483, 487
6675517	FILTER, OIL ENG 12			1, 5, 7, 297, 299
6675523	LIGHT EC BEACON			355, 427, 431, 433
6675524	CLIP			17
6675534	BLOCK, VALVE A/C			473, 477, 481, 483, 487, 491
6675544	CAB ENCL LOADER VINYL			379
6675545	GROMMET			19, 23, 385
6675559	COIL			85, 99, 233, 237
6675562	SEAT BELT			555
6675590	ASSY, DOOR			379
6675591	HINGE KIT			379
6675595	SEAT, OPERATOR VINYL			549
6675596	SEAT, FABRIC			549
6675608	INSULATION			473, 481
6675609	INSULATION			473, 481
6675618	CLAMP			323, 329
6675635	BAND,PIPE			327
6675636	GASKET			291, 327
6675637	GASKET			291, 327
6675734	TIE STRAP			125, 129, 271
6675779	SWITCH, PRESS			473, 491
6675780	Cartridge	6676545	A	363
6675781	Coil	6674331	A	363
6675833	SEAL			385
6675835	INDICATOR, TURN SIGNAL			439
6675846	POTENTIOMETER			449, 491
6675858	FLASH TUBE			573
6675982	PLUG			223
6675999	SWITCH			543
6676000	TEE			543
6676001	ARM, WIPER			543
6676002	BLADE, WIPER			543
6676003	HOSE, BULK/FT			365, 369, 373, 543
6676028	NOZZLE			543
6676029	SOLENOID, LOCK SPOOL	6677383	B,D	91, 95, 99, 257, 261, 265, 347
6676034	RCLNR KIT			549
6676062	VALVE, RELIEF PRESS			473
6676243	COIL			139
6676338	GAS SPRING			549
6676499	GROMMET			365, 369
6676500	ELBOW			365, 369
6676516	NUT,PUSH			449, 453
6676536	SWTCH,PRK BRAKE			223
6676537	SWITCH			257, 347
6676538	BULK TAPE/FT			457, 459, 467, 473, 483, 487
6676539	CLIP PANEL			457, 473, 477, 481, 483, 487

Code for disposition of old part number

A -- Use up
B -- Use on other application (See PNI)
C -- File PDR Report with Bobcat Parts Sales
D -- Part Number Error

Page 609 - OSS# 6300202494 - All rights reserved by Bobcat Company - 02/11/2016 - 14:15:02 - Produced by Ken Cook Co. with media1off

NUMERICAL INDEX (Cont'd)

Part No.	Description	Was	Code	Page
6676543	PLUG			363
6676606	SPACER			467
6676618	CLIP			463
6676640	PLUG,SEAL			247, 261
6676653	SCREW			467
6676732	SWITCH			519, 523
6676870	CONNECTOR			261
6676872	INDICATOR, TURN SIGNAL			439
6676917	ELBOW			365, 369
6676927	FELT STRIP BULK/FT			385
6676984	BRACKET, TANK			473, 481
6677111	SEAL FOAM BULK/FT			455, 457, 459, 477, 481, 483, 487
6677115	RECEPTACLE			455, 457, 459, 481, 483, 487
6677116	RETAINER			455, 481
6677117	SCREW			455, 481
6677119	SCREW			455
6677122	CAP			473, 477, 491
6677136	SOCKET			115, 409, 411, 415
6677192	SENSOR, MAGNETIC			365, 369, 375
6677193	RIVET			365, 369, 375
6677196	PISTON			79
6677198	CAP			385
6677203	TUBE,DIPSTICK			311
6677383	SOLENOID, LOCK SPOOL			85, 91
6677485	SPACER			267
6677486	NUT			267
6677487	COVER			267
6677488	RECTIFIRE ASSY			267
6677489	REGULATOR ASSY			267
6677490	BRACKETREAR			267
6677491	BRACKETFRT			267
6677492	ASSY, ROTOR			267
6677493	STATOR			267
6677495	SPACER			267
6677496	PULLEY			267
6677497	NUT	6677497	A	267
6677504	COVER			467
6677580	SCREW			457, 483
6677817	SCREW			267
6677818	BEARING			267
6677819	RETAINER			267
6677820	BEARING			267
6677834	BLADE, WIPER WINDOW			373
6677836	COVER			373
6677837	BOLT			373
6677839	GASKET			373
6677841	WASHER			373
6677842	NUT			373
6677843	NUT			373
6677844	NUT			373

Code for disposition of old part number

A -- Use up
B -- Use on other application (See PNI)
C -- File PDR Report with Bobcat Parts Sales
D -- Part Number Error

Page 610 - OSS# 6300202494 - All rights reserved by Bobcat Company - 02/11/2016 - 14:15:02 - Produced by Ken Cook Co. with mediaoff

NUMERICAL INDEX (Cont'd)

Part No.	Description	Was	Code	Page
6677845	ADAPTER			373
6677847	GROMMET			373
6677898	CONNECTOR NSS			247
6677973	PLUG			385
6677983	FILTER, AIR HEATER CAB			449, 453, 491
6678000	SEAL			147
6678004	PLATE BALANCING			147
6678006	RING, BACK-UP			147
6678152	SEAL FLANGE			455, 481
6678198	BOLT			373
6678205	ALTERNATOR, 90 AMP			267
6678205EF	ALTERNATOR, 90 AMP			267
6678205REM	ALTERNATOR, 90 AMP			267
6678207	FILTER, AIR HEATER CAB			449, 453, 491
6678226	SEAL, OIL	6660814	D	153, 157
6678283	HANDLE, WINDOW SIDE			385
6678548	Socket			365, 369, 375
6678667	MOUNT			233, 237
6678668	STRAP			237, 471
6678669	STRAP			407
6678675	CONTROLLER, ACD DLX			413, 415
6678739	WASHER			373
6678755	KNOB			427
6678818	MOUNT			229, 233, 237
6678891	COIL			85, 99, 105, 233, 237
6678921	GUIDE, HOSE			373
6678946	FITTING, ADAPTER			301, 303
6678974	MOUNT			407
6679034	MOUNT			229, 233, 237
6679145	CLUTCH			473, 491
6679247	BOLT			49
6679308	SEAT BELT			553
6679476	MOTOR, WIPER	6679476	A	373
6679485	CONTROLLER, DRIVE			245, 249, 253
6679820	SWITCH, RELAY MAGNETIC			233, 237
6679845	CENTER SWITCH PANEL			223, 227
6679855	BULB			223
6679856	ALARM			223
6679990	CLIP			15
6679991	SEAL, WASHER			271
6679994	SEAL			15
6680055	MAGNET			45
6680355	CAP			269

Code for disposition of old part number

A -- Use up
B -- Use on other application (See PNI)
C -- File PDR Report with Bobcat Parts Sales
D -- Part Number Error

Page 611 - OSS# 6300202494 - All rights reserved by Bobcat Company - 02/11/2016 - 14:15:02 - Produced by Ken Cook Co. with media1off

NUMERICAL INDEX (Cont'd)

Part No.	Description	Was	Code	Page
6680356	BOLT			269
6680357	HOLDER			269
6680358	RING RUBBER			269
6680359	RING STOP			269
6680360	STOP			269
6680361	SPRING			269
6680362	BALL			269
6680363	WASHER			269
6680364	LEVER			269
6680365	SHAFT			269
6680366	GEAR			269
6680367	GEAR			269
6680368	RING STOP			269
6680369	SEAL			269
6680370	PLATE			269
6680371	LEVER			269
6680372	BRACKET			269
6680373	YOKE			269
6680374	ARMATURE			269
6680375	SHAFT ORC ASSY			269
6680376	SWITCH			269
6680377	HOLDER			269
6680378	WASHER			269
6680379	SEAL			269
6680380	SEAL			269
6680381	SPRING			269
6680382	SPRING			269
6680383	BOLT			269
6680384	BOLT			269
6680388	BRACKET			269
6680389	BRACKET			269
6680390	GEAR			269
6680410	CONTROLLER, ACS			245, 249, 253, 257
6680417	HANDLE, AHC			261
6680418	ASSY, HANDLE			243
6680419	HANDLE			243
6680441	BUSHING			27
6680443	BUSHING, MAGNET			27
6680447	DECAL			243
6680462	HANDLE, ACS RH			261
6680468	STRAP			261, 347
6680469	SPACER			261, 347
6680470	SPRING			261, 347
6680471	BOOT			261
6680477	STRAP			261, 347
6680478	SHIELD			257, 265
6680479	SHIELD			257, 265
6680480	CHANNEL			261
6680481	CHANNEL			261
6680484	GASKET			293, 295
6680550	CLAMP			327
6680564	STUD			327
6680570	GASKET			291, 329

Code for disposition of old part number

A -- Use up
B -- Use on other application (See PNI)
C -- File PDR Report with Bobcat Parts Sales
D -- Part Number Error

Page 612 - OSS# 6300202494 - All rights reserved by Bobcat Company - 02/11/2016 - 14:15:02 - Produced by Ken Cook Co. with mediaoff

NUMERICAL INDEX (Cont'd)

Part No.	Description	Was	Code	Page
6680576	PIN	6675683	A	329
6680580	CLAMP	6652748	A	301
6680628	CLAMP			337
6680657	PLUG			311
6680663	NUT			339
6680685	BOLT			307
6680686	BOLT	6653807	B	299
6680706	BOLT	1CM835	B	299, 333
6680788	BOLT	6689528	A	341
6680801	BOLT			339
6680821	SNAP RING			337
6680830	BOLT			333
6680970	BREATHER			59, 61
6681469	PLUG			31, 33
6681492	NUT			117
6681512	SOLENOID, LOCK BRAKE			59, 61
6681614	KNOB			19, 23, 385, 449, 453, 491
6681944	HOSE			133
6681945	ELBOW			133, 135
6682034	MOTOR, DRIVE HYD			147
6682260	FRONT SHAFT			153
6682261	KEY			153, 277
6682262	HOUSING	6689602	A	157
6682264	REAR SHAFT			157
6682345	STRAP, TIE 8			433
6682442	BEARING			277
6682500	FILTER			311
6682515	SHIM			339
6682532	NUT			325
6682860	O-RING			147
6682862	SHAFT, DRIVE			147
6682863	BOLT			147
6682875	PLUG	6688016	A	161, 177
6682877	PLUG	6688015	A	161
6682879	PIN	6688039	A	161, 177
6682897	SEAL			147
6682901	RING 6 80MM	6688035	A	167, 169, 183, 185
6682902	RING 6 75MM	6688036	A	167, 169, 183, 185
6682913	O-RING	6688006	A	167, 169, 183, 185
6682919	PIN CYLINDER	6686934	A	161
6682929	O-RING	6688000	A	173, 189
6682930	RING, BACK-UP	6688041	A	173, 189
6682936	O-RING	6688013	A	175, 191
6682949	O-RING	6688019	A	151, 161, 177
6682968	SCREW	6687995	A	167, 169, 183, 185
6683004	THERMOSTAT			473, 481, 483
6683159	BOLT, FLANGE			323
6683203	ENGINE, V2003-M-DI-TE2B-BC-3			289
6683203REM	ENG, KUBOTA V2003T DMI-TE2B-BC-3 TIER 2			289

Code for disposition of old part number

A -- Use up
B -- Use on other application (See PNI)
C -- File PDR Report with Bobcat Parts Sales
D -- Part Number Error

Page 613 - OSS# 6300202494 - All rights reserved by Bobcat Company - 02/11/2016 - 14:15:02 - Produced by Ken Cook Co. with media1off

NUMERICAL INDEX (Cont'd)

Part No.	Description	Was	Code	Page
6683206	SEAL KIT			211
6683274	SEAL, SPOOL 10			85, 91, 95, 99, 105, 109
6683812	H/ISO SWITCH			245, 249, 253
6683819	VALVE			115, 117
6683915	MUFFLER, EXHAUST			275
6684033	NUT			63, 67, 247, 249, 253, 271
6684037	SENSOR, SPEED ENG			229
6684044	VALVE			539
6684045	SEAL KIT			539
6684046	O-RING			539
6684047	BACK-UP RING			539
6684048	O-RING			539
6684049	O-RING			539
6684050	BACK-UP RING			539
6684052	SEAL KIT			539
6684053	BACK-UP RING			539
6684054	O-RING			539
6684056	RING,O			539
6684058	COIL			117
6684060	NUT			539
6684061	VALVE			539
6684062	SEAL KIT			539
6684063	O-RING			539
6684064	BACK-UP RING			539
6684065	O-RING			539
6684066	O-RING			539
6684069	SEAL KIT			539
6684070	O-RING			539
6684071	O-RING			539
6684072	BACK-UP RING			539
6684073	COIL			539
6684125	COUPLER			85, 99, 105
6684294	GROMMET			245, 247, 249, 253
6684397	BOLT	6677494	B	267
6684474	INSERT FAN INLET			271
6684645	VALVE, ANTI CAV			85, 91, 95, 99, 105, 109
6684742	NUT			529, 531
6684743	COIL, SOLENOID			529, 531
6684744	COIL, SOLENOID			529, 531
6684745	PISTON, PILOT			529, 531
6684746	CHECK VALVE			529, 531
6684747	SEAL KIT			529, 531
6684754	O-RING			293, 295, 311
6684755	CYLINDER HEAD			309
6684755REM	HEAD, KUBOTA V2003T			309
6684756	GUIDE			309
6684757	GASKET			309
6684758	GASKET			309
6684759	GASKET			309
6684760	GASKET			309
6684761	GASKET			309

Code for disposition of old part number

A -- Use up
B -- Use on other application (See PNI)
C -- File PDR Report with Bobcat Parts Sales
D -- Part Number Error

Page 614 - OSS# 6300202494 - All rights reserved by Bobcat Company - 02/11/2016 - 14:15:02 - Produced by Ken Cook Co. with mediaoff

NUMERICAL INDEX (Cont'd)

Part No.	Description	Was	Code	Page
6684762	SEAT	6655155	B,D	307
6684763	SEAT	6655156	B,D	307
6684770	GASKET			293, 297
6684772	BOLT			297
6684776	CLAMP			305
6684777	CLAMP			305
6684778	COVER, HEAD CYL ENG			305
6684780	GASKET			291, 305
6684781	BOLT			305
6684782	O-RING			291, 305
6684788	GASKET			293, 295, 313
6684789	SEAL, OIL			293, 295, 313
6684791	CAMSHAFT			319
6684792	GEAR			319
6684793	GEAR			319
6684794	BUSHING			319
6684795	COLLAR			319
6684803	RING			313
6684804	RING			313
6684811	GEAR			317
6684815	ASSY, IDLE			331
6684816	BOLT			331
6684817	NUT			331
6684818	SEAL			293, 295, 331
6684819	CAP			331
6684823	SPRING			335
6684825	GUIDE, SOLENOID			331
6684827	NUT			331
6684828REM	PUMP, FUEL INJ. KUBOTA V2003			339
6684829	SHIM			339
6684830	BOLT			339
6684832	LEVER			333
6684833	SHAFT			333
6684836	BOLT			335
6684838	GOVERNOR			333, 335
6684839	LEVER			335
6684841	GASKET			293, 295, 335, 337
6684842	PIPE			341
6684843	NOZZLE, INJ FUEL			341
6684843REM	NOZZLE, FUEL INJ. KUBOTA V2003T			341
6684844	BOLT			341
6684846	PIPE			341
6684847	PIPE			341
6684848	PIPE			341
6684849	PIPE			341
6684850	GLOW PLUG			341
6684857	PLUG			323
6684862	PIPE			323
6684863	GASKET			291, 323
6684865	PUMP, WATER			321

Code for disposition of old part number

A -- Use up
B -- Use on other application (See PNI)
C -- File PDR Report with Bobcat Parts Sales
D -- Part Number Error

Page 615 - OSS# 6300202494 - All rights reserved by Bobcat Company - 02/11/2016 - 14:15:02 - Produced by Ken Cook Co. with media1off

NUMERICAL INDEX (Cont'd)

Part No.	Description	Was	Code	Page
6684868	SEAL			321
6684869	FLANGE			321
6684870	GASKET			293, 295, 321
6684872	VALVE			307
6684874	COLLAR			307
6684875	SHAFT			307
6684877	GASKET			291, 325
6684884	PIPE			329
6684889	CLAMP			323
6684891	SEAL			331
6684910	SENSOR, ELEC AHC			261
6684911	SENSOR, FOOT LH			257, 265, 347
6684912	SENSOR, FOOT RH			257, 265, 347
6684913	LEVER			257
6684914	LEVER			257
6684915	LEVER, ACS RH			257, 261
6684916	LEVER, ACS LH			257, 261
6684947	GROMMET			481
6685060	BUSHING, TORSION			81, 143
6685065	SHUTTLE			147, 149
6685068	FLANGE			147
6685069	DISK, SPRING			147
6685070	KIT, SEAL COMPLETE			147
6685104	BOLT FLANGE			323
6685109	BOLT FLANGE			311
6685157	VALVE			91
6685183	SOLENOID			117
6685184	SEAL KIT			117
6685185	VALVE, RELIEF			117
6685186	VALVE, CHECK			117
6685190	STARTER			269
6685190EF	STARTER			269
6685190REM	STARTER			269
6685199	CAP			473, 491
6685328	RELIEF VALVE			539
6685344	SWASHPLATE			153, 157
6685372	SEALANT, GASKET LIQUID 10.1 OZ			45, 59, 61, 581
6685464	BOLT			333
6685465	RING,O			293, 295, 331
6685466	RING,O			293, 297
6685467	RING,O			293, 297
6685468	RING,O			293, 297
6685469	KEY			313
6685471	GASKET			339
6685473	BOLT, EYE 12MM			339
6685476	SEAL			293, 295, 335
6685477	PLUG			303
6685478	FLANGE			303
6685479	BEARING			317
6685481	GEAR			313
6685482	BOLT			313

Code for disposition of old part number

A -- Use up
B -- Use on other application (See PNI)
C -- File PDR Report with Bobcat Parts Sales
D -- Part Number Error

Page 616 - OSS# 6300202494 - All rights reserved by Bobcat Company - 02/11/2016 - 14:15:02 - Produced by Ken Cook Co. with mediaoff

NUMERICAL INDEX (Cont'd)

Part No.	Description	Was	Code	Page
6685490	BEARING, MAIN			313
6685491	BEARING, MAIN			313
6685492	BEARING, MAIN			313
6685493	BEARING, MAIN			313
6685494	WASHER, THRUST			313
6685495	WASHER, THRUST			313
6685496	WASHER, THRUST			313
6685497	WASHER, THRUST			313
6685498	GASKET			291, 341
6685500	COVER			337
6685514	SPRING			333
6685516	COLLAR			317
6685517	STOPPER			317
6685518	OIL PAN			311
6685520	THERMOSTAT			323
6685521	PULLEY			313
6685526	PLATE, CONTROL			335
6685541	ORIFICE PLUG			529, 531
6685542	O-RING			529, 531
6685543	CHECK VALVE			529, 531
6685544	COMPENSATOR			529, 531
6685545	PLUG KIT			529, 531
6685546	PLUG			529, 531
6685579	BLOCK			303
6685580	TUBE			305
6685581	O-RING			291, 305
6685584	BEARING CASE			313
6685585	BEARING CASE			313
6685586	BEARING CASE			313
6685592	MANIFOLD			325
6685594	HOSE			327
6685595	FLANGE			327
6685596	HOSE			327
6685597	PIPE			329
6685598	BOLT			329
6685599	PIPE			329
6685600	PIPE			329
6685601	CLAMP			329
6685603	KIT, SEAL			85, 91, 95, 99, 105, 109
6685624	VALVE, AUX REAR			539
6685634	GASKET			337
6685635	TUBE			337
6685636	SPRING			333
6685637	COLLAR			297, 299
6685639	STUD			337
6685640	MANIFOLD, INLET			325
6685642	HOSE			301
6685643	HOSE			301
6685644	SCREW, AIR BLEEDER			325
6685735	SEAL			277
6685924	OIL FILL CAP	6652653	A	305
6686037	GASKET			293, 295

Code for disposition of old part number

A -- Use up
B -- Use on other application (See PNI)
C -- File PDR Report with Bobcat Parts Sales
D -- Part Number Error

Page 617 - OSS# 6300202494 - All rights reserved by Bobcat Company - 02/11/2016 - 14:15:02 - Produced by Ken Cook Co. with media1off

NUMERICAL INDEX (Cont'd)

Part No.	Description	Was	Code	Page
6686077	EXCHANGER, WATER RADIATOR			271, 275
6686096	LENS REAR TURN			425
6686097	LIGHT BULB TURN			425
6686098	LIGHT BULB STOP			425
6686099	LENS REAR STOP			425
6686100	SCREW			425
6686385	MOUNT, SADDLE SWIVEL			471
6686868	SOLENOID			85, 99
6686922	FILTER ASMBLY 12			129, 219
6686926	FILTER, OIL HYD			1, 5, 9, 129, 137, 219, 221
6686934	PIN			177
6686997	CIR-CLIP			313
6687191	SEAL, OIL			153
6687266	FILTER ASSY			137, 221
6687268	CONNECTOR			249, 253
6687773	PLATE, PUMP HYD			157
6687774	PLATE, PUMP HYD			153
6687834	SENSOR			129, 219
6687863	PUMP, HYD TANDEM W/O GEAR PUMP			153, 157
6687863REM	PUMP, HYD TANDEM, W/O GEAR PUMP			153, 157
6687864	PUMP, GEAR DOUBLE			207
6687865	PUMP, GEAR TRIPLE			119
6687866	KIT, SEAL			207
6687913	SEAL			143
6687920	SPINDLE			205
6687921	COLLAR			173, 189, 205
6687922	NUT			205
6687923	PIN			205
6687924	VALVE			193, 205
6687925	NUT			199, 201
6687926	COLLAR			167, 169, 183, 185
6687928	SPRING			167, 169, 183, 185
6687929	LEVER			171, 187
6687930	WIRE			163, 165, 179, 181
6687931	BUSHING			171, 187
6687932	PIN			161, 177
6687933	SHIM			171, 187
6687934	SHIM			171, 187
6687935	SHIM			171, 187
6687936	SHIM			171, 187
6687937	SHIM			171, 187
6687938	VALVE			161, 175, 177, 191
6687940	PLATE			163, 165, 179, 181, 195, 197
6687941	COUPLER			161, 177
6687942	SPACER			167, 169, 183, 185
6687943	SHAFT			165, 181, 197
6687944	SHIM			171, 187
6687945	PLATE			171, 187

Code for disposition of old part number

A -- Use up
B -- Use on other application (See PNI)
C -- File PDR Report with Bobcat Parts Sales
D -- Part Number Error

Page 618 - OSS# 6300202494 - All rights reserved by Bobcat Company - 02/11/2016 - 14:15:02 - Produced by Ken Cook Co. with mediaoff

NUMERICAL INDEX (Cont'd)

Part No.	Description	Was	Code	Page
6687946	SPRING			171, 187
6687947	PIN			171
6687948	SPACER			167, 169, 183, 185
6687949	SPACER			167, 169, 183, 185
6687950	GASKET			171
6687951	SWASHPLATE			163, 165
6687953	PISTON			169
6687954	GASKET			171
6687955	HOUSING			171
6687956	2 HALF BEARINGS			163, 165, 179, 181, 195, 197
6687957	GROUP, ROTATING			161, 163
6687958	GROUP			161, 165
6687959	SHAFT			163, 179, 195
6687960	CONTROL			161, 167
6687961	CONTROL			161, 169
6687962	PISTON			167, 183
6687963	PISTON			169, 185
6687964	HOUSING			161
6687965	SHAFT			161
6687966	PISTON			171
6687967	SPRING			171, 187, 203
6687968	LEVER			171, 187
6687969	COVER			171
6687970	MODULATOR			161, 171
6687973	FLANGE			161
6687975	PLATE			165, 181
6687976	PLATE			163, 179
6687977	GROUP, ROTARY			163
6687978	GROUP			165, 181
6687981	SCREW			171, 187
6687982	SPRING			171, 187
6687984	SENSOR, PUMP HYD POSITION			161
6687985	RING			167, 169
6687986	KIT			167, 169, 183, 185
6687987	2 HALF BEARINGS			163, 165
6687988	FILTER			161
6687989	SOLENOID			171
6687990	RING			161
6687991	KEY			195
6687992	SCREW			161, 177
6687994	SCREW			161
6687995	SCREW			199, 201
6687997	SCREW			171, 187, 203
6687998	SHIM			161
6687999	RING, SNAP			163, 165, 179, 181, 195, 197
6688000	O-RING			205
6688001	SEAL			171, 187
6688002	RING			167, 169, 183, 185
6688003	SCREW			161, 177, 193
6688004	SEAL			171, 187
6688005	SEAL			167, 169, 183, 185
6688007	SEAL			161

Code for disposition of old part number

A -- Use up
B -- Use on other application (See PNI)
C -- File PDR Report with Bobcat Parts Sales
D -- Part Number Error

Page 619 - OSS# 6300202494 - All rights reserved by Bobcat Company - 02/11/2016 - 14:15:02 - Produced by Ken Cook Co. with media1off

NUMERICAL INDEX (Cont'd)

Part No.	Description	Was	Code	Page
6688008	SCREW			161, 177, 193
6688009	SEAL			161, 177, 193
6688010	PIN			171, 187, 203
6688011	PIN			161, 177
6688012	ROLLER			171, 187
6688014	PIN			161, 177
6688015	SCREW			177
6688017	SHIM			175, 191
6688018	BEARING			163, 165, 179, 181
6688019	O-RING			193
6688021	SPRING			205
6688025	RING			167, 169, 183, 185
6688026	RING			167, 169, 183, 185
6688027	RING			167, 169, 183, 185
6688028	RING			167, 169, 183, 185
6688030	RING			167, 169, 183, 185
6688031	ROD			167, 169, 183, 185
6688032	SPACER			167, 169, 183, 185
6688033	SPACER			167, 169, 183, 185
6688034	SCREW			173, 189, 205
6688037	RING			167, 169, 183, 185
6688040	BEARING			161, 177, 193
6688041	RING			205
6688042	RING, SNAP			195, 197
6688043	SPRING			205
6688073	CONNECTOR			229
6688322	KIT, SEAL			119
6688338	NUT			409, 411
6688382	GASKET			291, 325
6688385	HYD FILTER ASSY			217
6688403	PANEL, INSTRUMENT DLX			19, 223
6688404	PANEL, KEY STANDARD			223
6688439	CONTROLLER, BOBCAT			233
6688521	SPRING			147
6688542	HVAC HEATER			481
6688543	HEATER			449, 455
6688546	CRANKSHAFT	6684806	B,D	313
6688565	MOTOR			149
6688637	MOUNT			427, 511
6688655	BREATHER COVER	6680692	A	305
6688743	STEM, VALVE CONTROL	6688397	A	85, 99, 105
6688833	CONNECTOR			241
6688834	CONNECTOR			241
6688836	FLANGE			241
6688845	VALVE			85, 99, 105
6688933	VALVE ASSY			539
6688934	COIL			539
6688937	HOSE			121, 125, 129
6688938	HOSE			121, 125, 129

Code for disposition of old part number

A -- Use up
B -- Use on other application (See PNI)
C -- File PDR Report with Bobcat Parts Sales
D -- Part Number Error

Page 620 - OSS# 6300202494 - All rights reserved by Bobcat Company - 02/11/2016 - 14:15:02 - Produced by Ken Cook Co. with mediaoff

NUMERICAL INDEX (Cont'd)

Part No.	Description	Was	Code	Page
6688980	BOLT			229
6689014	KIT, GASKET UPPER T2 ENG			289, 291
6689018	LOWER GASKET KIT TIER II ENGINE			293
6689021	SEAL KIT			161, 177
6689032	STUD			233, 237
6689179	INSULATION			473, 481
6689180	INSULATION			473, 481
6689331	GASKET	6680792	B	291
6689503	CASE MAIN BRG	6685480	A	313
6689638	CUP, BEARING	6634609	A	49
6689651	CHAIN, DRIVEx			45
6689652	CHAIN, DRIVE			45
6689690	HOSE			137
6689696	VALVE, HEATER CAB			455, 481, 491
6689697	HOUSING, MOTOR	6685063	B,D	147
6689698	PLATE	6678001	B,D	147
6689700	PLATE	6678003	B,D	147
6689716	CAMSHAFT			319
6689739	VALVE			85, 91, 95, 99, 105, 109
6689754	PANEL INSTRUMENT LH			223
6689762	BLOWER			481
6689764	PAD			463
6689765	PAD			463
6689766	MOTOR			463
6689775	BEARING, AXLE	6519925	A	49
6689922	HANDLE			247, 249, 253
6689923	HANDLE			247, 249, 253
6689924	BASE, JOYSTICK			247, 249
6689925	BASE, JOYSTICK			247, 249
6689926	BOOT			247, 249, 253
6689927	BOLT			247, 249, 253
6689983	FILTER KIT			531
6690239	HOSE			139
6690240	HOSE			139
6690241	HOSE			139
6690242	HOSE			139
6690431	KIT, SEAL			85, 91, 95, 99, 105, 109
6690476	COVER			455, 481
6690477	EVAPORATOR			473, 481
6690478	HOUSING			455, 481
6690479	COVER			455, 481
6690480	COVER	6677105	B	473, 481
6690481	BRACKET			455, 481
6690482	GROMMET			455, 457, 459, 481, 483, 487
6690487	COVER			455
6690561	MAGNET	6688924	A	53, 57
6690688	TREE MOUNT			249, 253
6690690	STRAP, TIE			249, 253
6690707	WIPER, ROD CYL	6665086	A	79
6690709	LINK			45

Code for disposition of old part number

A -- Use up
B -- Use on other application (See PNI)
C -- File PDR Report with Bobcat Parts Sales
D -- Part Number Error

Page 621 - OSS# 6300202494 - All rights reserved by Bobcat Company - 02/11/2016 - 14:15:02 - Produced by Ken Cook Co. with media1off

NUMERICAL INDEX (Cont'd)

Part No.	Description	Was	Code	Page
6690900	OIL COOLER			299
6690947	SWITCH, BPV			361
6690948	SWITCH PARK BRAKE			227
6690949	O-RING			133, 135
6690991	VALVE, SOLENOID	6688499	A	105
6691001	WINDOW, LEFT REAR	6674520	A	385
6691003	WINDOW, RIGHT REAR	6674522	A	385
6691022	NUT	6690705	A	85, 99, 105, 233, 237
6691066	SEAL KIT			139
6691067	COIL			139
6691343	GEROLER	6685067	B,D	147
6691419	CONNECTOR, ELECTRICAL			245, 249, 253
6691421	CONNECTOR			249, 253
6691498	SOLENOID, SHUTOFF FUEL			229, 331
6691500	SNAP RING			61
6691532	SCREW	6677118	A	455, 459, 481, 483
6691534	SCREW			477, 483, 487
6691541	PLUG			149
6691542	SEAT			149
6691543	O-RING			149
6691544	RING			149
6691545	RING			149
6691546	O-RING			149
6691547	RING			149
6691548	RING			149
6691549	PIN			149
6691550	VALVE			149
6691551	SHAFT			149
6691552	O-RING			149
6691553	PLATE			149
6691554	GASKET			149
6691555	HOUSING			149
6691556	SPOOL			149
6691557	SPRING			149
6691558	SPRING			149
6691559	BOLT			149
6691560	GEROLER			149
6691561	SHAFT			149
6691562	BOLT			149
6691563	FLANGE			149
6691565	SEAL KIT			149
6691566	HOUSING			149
6691589	TIE 100			247, 249, 253
6691636	HOSE	6689691	A	137
6691712	PISTON			313
6691714	SENSOR, SEATBAR BICS	6680429	A	27
6692332	VALVE,RELIEF	6687924	A	161, 173
6692375	BOLT	1CM870	B	299

Code for disposition of old part number

A -- Use up
B -- Use on other application (See PNI)
C -- File PDR Report with Bobcat Parts Sales
D -- Part Number Error

Page 622 - OSS# 6300202494 - All rights reserved by Bobcat Company - 02/11/2016 - 14:15:02 - Produced by Ken Cook Co. with mediaoff

NUMERICAL INDEX (Cont'd)

Part No.	Description	Was	Code	Page
6692376	BOLT	6684772	B	299
6692377	BOLT	6653808	B	299
6692380	OIL PUMP	6682498	D	303
6692383	LEVER ASSM.			333
6692384	CAMSHAFT	6684810	B,D	317
6692385	CASE	6655214	B,D	317
6692386	GASKET			293, 295, 317
6692387	GEAR			319
6692416	COVER			473
6692489	ALARM, BUZZER			227
6692545	SWITCH			227
6692757	DECAL, "REMOTE CONTROL OPERATION", LARGE			545
6692762	KEYS, SET OF 2			545
6692763	DECAL WARNING, "READ THE MANUAL"			545
6692767	DECAL, "ROTATING PARTS"			545
6692768	DECAL, "REMOTE CONTROL OPERATION", SMALL			545
6692769	CHARGER, MAKITA DC1422, 12-24VDC			545
6692770	BATTERY, NiCd, 9.6V, 1.3Ah, MAKITA 9000			545
6692771	SHOULER HARNESS			545
6692925	VALVE	6692372	C	139
6692935	PANEL, INSTRUMENTATION DELUXE			23, 227
6693148	RESISTOR			453
6693226	NUT			459, 487
6693228	BOLT			457, 487
6693236	FOAM			459, 487
6693241	KEY 10			41, 223, 227, 365, 369, 375, 541
6693245	SWITCH, IGN			223, 227
6693353	CONTROLLER, GATEWAY			237
6693409	BULB, STROBE			545
6693410	LENS			545
6693411	LENS			545
6693712	KEYPAD, PANEL			503
6693714	MODULE, SWITCH IGN			503
6693716	INSERT, KEYPAD			503
6693869	GROUP, ROTARY			179, 181
6693876	SEAL, SHAFT			179, 195
6693886	PANEL, LH			227
6693921	SENSOR, RPM			229
6697796	FLASHTUBE			573
6697904	JOYSTICK, LH			247, 253

Code for disposition of old part number

A -- Use up
B -- Use on other application (See PNI)
C -- File PDR Report with Bobcat Parts Sales
D -- Part Number Error

Page 623 - OSS# 6300202494 - All rights reserved by Bobcat Company - 02/11/2016 - 14:15:02 - Produced by Ken Cook Co. with media1off

NUMERICAL INDEX (Cont'd)

Part No.	Description	Was	Code	Page
6697905	JOYSTICK, RH			247, 253
6697906	PANEL, CONTROL			453
6697920	SENSOR, PRESS OIL ENG			229
6697938	BASE, JOYSTICK			247, 253
6697939	BASE, JOYSTICK			247, 253
6697960	SOLENOID			187, 203
6697965	HARNESS			223
6698062	GASKET, MOTOR			213
6698113	SHAFT, IDLE GEAR	6685519	A	319
6698115	CLAMP, HOSE			323
6698120	GASKET	3974403	A	339
6698244	ORING			293, 295, 297, 299, 301
6698343	ORING			161
6698442	HOSE	6675075	A	473, 477, 491
6698501	HARNESS, HEATER			455, 457, 459, 483, 487
669863	RING, SNAP			153, 157
6700170	WASHER			285, 287
6700182	COVER, DRAIN			45
6700282	HOSE			535
6700533	TUBE SPAC			37
6700535	SPACER			281
6700711	AIR CLNR			275, 343
6700743	SPRING			287
6701097	WASHER			271
6701123	SCREW, 5			275
6701174	WASHER			15
6701449	FLR.TUBE			41
6701535	SPRING, CENTERING			27, 143
6701893	CLAMP			63, 67
6702301	DECAL, DANGER			403
6702302	DECAL, DANGER			403
6702402	SHIELD			435
6702444	FUSE 25A 5			233, 237
6702543	LEVER, STEERING			143
6702593	SPACER			351
6702621	GRIP			243
6702650	MOUNTFUSE			427, 431, 433
6702716	BLOCK, WEAR			143
6702903	LEVER, BOB-TACH LH			39
6702904	LEVER, BOB-TACH RH			39
6702958	BUSHING, WELD-ON			39
6702971	BOLT ASSY			15
6702990	BUSHING			261
6703022	SPRING, CLIP			277
6703168	BEARING			277
6703471	BRACKET			271
6703640	KIT, SEAT BELT			557
6703641	DECAL			557
6703703	GUIDE, SEAT BELT			557
6703727	DECAL			495, 497, 499

Code for disposition of old part number

A -- Use up
B -- Use on other application (See PNI)
C -- File PDR Report with Bobcat Parts Sales
D -- Part Number Error

Page 624 - OSS# 6300202494 - All rights reserved by Bobcat Company - 02/11/2016 - 14:15:02 - Produced by Ken Cook Co. with mediaoff

NUMERICAL INDEX (Cont'd)

Part No.	Description	Was	Code	Page
6703879	BUSHING, PLASTIC			143
6703968	INSULATION			561, 563, 565, 567
6703981	MOUNT			281
6704146	BRACKET			505
6704147	BRACKET			505
6704248	PIVOT, WEDGE			39
6704284	KIT, COUNTERWEIGHT			393
6704391	PULLEY			277
6704436	RUBBERPAD			37
6704484	WASHER			277
6704769	INSULATION			561, 563, 565, 567
6704786	DECAL, WARNING			505
6704892	RIVET			413, 415
6705091	TAB			37
6705106	WASHER 5			281, 417
6705231	WASHER			277
6705232	WASHER			277
6705340	DECAL, GREASE			403
6705452	LEVER			285
6705491	SPRING			277
6705847	SEAL, OIL			51, 53, 55, 57
6706098	GUIDE, PRESS FIT			143
6706104	NUT, RETAINING			81
6706105	YOKE			81
6706285	SCREEN			533
6706349	MOUNT			15
6706393	HSE,SHIEL			275
6706427	SHAFT, AXLE			49
6706485	BRACKET			45
6706517	SCREW 10			41, 271
6706558	DECAL, OPERATION			403
6706572	SCREW			285, 287
6706633	CONNECTOR			535
6706718	MOUNT			59, 61
6706737	GASKET			59, 61
6706825	LIFT EYE			507, 509
6706939	KIT, SCREEN			533
6707101	SEAL			71, 113
6708009	LINK			81
6708016	GASKET			59, 61
6708018	SPRING			59, 61
6708043	FLANGE			81
6708189	TUBE, STOP ASSY			15
6708267	BOLT			59, 61
6708310	HOSE, BULK/FT 100			365, 369
6708770	CAP, DUST			277
6708929	DECAL, COOLANT			399
6708987	HINGE, WELD-ON			13
6709030	DECAL			277, 399
6709170	BOLT, WHEEL			49
6709229	BOLT, WHL			419
6709234	BRAKE, DISC			419

Code for disposition of old part number

A -- Use up
B -- Use on other application (See PNI)
C -- File PDR Report with Bobcat Parts Sales
D -- Part Number Error

Page 625 - OSS# 6300202494 - All rights reserved by Bobcat Company - 02/11/2016 - 14:15:02 - Produced by Ken Cook Co. with media1off

NUMERICAL INDEX (Cont'd)

Part No.	Description	Was	Code	Page
6709236	MNT PEDAL			419
6709237	CLAMP			419
6709239	ASSY, PEDAL			419
6709400	TBLNE CYL			419
6709547	ASSY, HOSE			419
6710358	DECAL, WARNING			403
6710585	WASHER			277
6710659	BUSHING			27
6711632	KIT, MOUNTING ENG			417
6711643	CAM, WEAR			143
6711674	MOUNT			443
6711699	HUB ASSY			277
6711908	SPNG PLATE			557
6712365	STEP			33
6713040	SPRING, COMPRESSION			39
6713043	SPACER			261
6713116	BUSHING			517
6713370	PIN, ROLL			277
6713507	DECAL			403
6713589	CLEVIS			27
6713841	SHIELD			427
6713842	SHIELD			427
6713887	BOLT			27
6713994	HARNESS			427, 431, 433
6714037	LATCH			541
6714126	STOP			35
6714212	PULLEY, PUMP HYD IDLER			277
6714278	WEDGE, LOCK TRACTION			59, 61
6714361	COUNTERWEIGHT, AXLE			393, 395
6714624	SHIELD			275
6714726	PLUG			33, 257
6714810	PIN, RETAINER			37
6714932	KIT, COUNTERWEIGHT			395
6715131	BRACKET			229, 407
6715132	RETAINER			229
6715142	FAN, ENG COOLANT			271
6715163	BUSHING, PRESS FIT			143
6715164	SLEEVE, SPRING			143
6715183	ELBOW			41
6715190	ELBOW			73, 121, 125, 129
6715197	CLAMP			229
6715659	HARNESS			351
6715819	INSULATOR			271
6715860	ARM, SEAT BAR			27
6715863	BRACKET			27
6715864	BUSHING			27
6715865	BUSHING			27
6715866	BUSHING			27

Code for disposition of old part number

A -- Use up
B -- Use on other application (See PNI)
C -- File PDR Report with Bobcat Parts Sales
D -- Part Number Error

Page 626 - OSS# 6300202494 - All rights reserved by Bobcat Company - 02/11/2016 - 14:15:02 - Produced by Ken Cook Co. with mediaoff

NUMERICAL INDEX (Cont'd)

Part No.	Description	Was	Code	Page
6716061	TEE			63, 67
6716089	CONNECTOR			443
6716408	SPACER	7104608	B,D	281
6716545	SHAFT, STRG			143
6716571	LOUVER, PLASTIC LH			271
6716573	LOUVER			271
6716621	FUSE BOX COVER	7176546	A	31, 33, 233, 237
6716843	WASHER			49
6716916	WASHER			143, 257
6717025	BUSHING	6703616	B	37
6717151	MOUNT			71
6717259	BUSHING			39
6717260	BUSHING			39
6717277	BUSHING, WELD-ON			13
6717278	BUSHING, WELD-ON			13
6717293	MOUNT RH			509
6717343	DECAL, DANGER			403
6717356	BUSHING, WELD-ON			13
6717393	LEVER			257
6717402	BUSHING			41
6717517	INSULATION			19, 23
6717518	INSULATION			19, 23
6717560	PIN, PIVOT			37
6717562	BUSHING, WEAR			37
6717579	GASKET			41, 233, 237
6717591	HOSE			275
6717592	HOSE			275
6717593	HINGE			365, 369, 375
6717704	HOSE			41
6717707	PIN			509
6717820	LINK			81
6717827	CAP			121, 125, 129
6717830	TUBE			121, 125, 129
6717870	TRACK, LEFT			385
6717871	TRACK BOTTOM LH			385
6717872	TRACK RIGHT			385
6717873	TRACK BOTTOM RH			385
6717874	WINDOW, CAB REAR			19, 23, 385
6717890	COVER			31, 33
6717933	CLAMP			63, 67
6717951	CLAMP			73
6718020	HOSE			121, 125, 129
6718031	TEE			71, 121, 125
6718034	FUSE, 30A			233, 237
6718042	LIGHT ASSY LEFT			511
6718043	LIGHT ASSY RIGHT			511
6718066	HOSE			63, 67
6718080	ELBOW			115
6718101	COVER			17
6718122	MOUNT LH			509
6718175	SCREEN, FILTER HEATER			449, 453, 491

Code for disposition of old part number

A -- Use up
B -- Use on other application (See PNI)
C -- File PDR Report with Bobcat Parts Sales
D -- Part Number Error

Page 627 - OSS# 6300202494 - All rights reserved by Bobcat Company - 02/11/2016 - 14:15:02 - Produced by Ken Cook Co. with media1off

NUMERICAL INDEX (Cont'd)

Part No.	Description	Was	Code	Page
6718198	HARN.TLGT			425
6718205	TUBE			419
6718206	TUBE			419
6718238	BRACKET			63, 67
6718260	BATTERY PAN			229
6718326	MOUNT			439
6718376	HINGE			365, 369, 375
6718411	KIT, FLASHER 4-WAY			439
6718414	SENDER, TEMP ENG			229
6718426	HARNESS, LIFT ARM			115, 411
6718579	DECAL			449, 453, 491
6718580	PANEL			19, 23
6718659	HSNG, FUSE			233, 237
6718660	TEE			129
6718706	DECAL, WARNING			257
6718728	MOUNT CALIPER BREAK ASSY			419
6718750	MOUNT			115, 411
6718772	GASKET			121, 125, 129
6718789	PIN, PIVOT			37
6718796	PLUG			13, 35
6718805	KIT, WINDOW REAR AND TOP	SALES	A	385
6718833	BRACKET			435
6718834	BRACKET			435
6718837	SPACER			449, 453, 491
6718872	HARNESS			355, 427, 431, 433, 439, 573
6718873	HARNESS			439
6718887	PANEL HEATER			449, 453, 491
6718924	FOPS KIT			435
6718948	SNUBBER			129
6719037	STRIKER			385
6719056	BLOCK(LH)			59, 61
6719057	BLOCK(RH)			59, 61
6719063	STOP WINDOW			385
6719064	MOUNT			15, 445
6719065	COVER TAB			385
6719150	BRAKE KIT			419
6719184	BRACKET, LH			505
6719185	BRACKET, RH			505
6719201	COVER, MOTOR			13
6719264	KIT, LIFT SINGLE POINT			505
6719317	WINDOW, REAR			543
6719327	INSULATION, FENDER LH			561, 563, 565, 567
6719328	INSULATION, FENDER RH			561, 565, 567
6719330	INSULATION, PEDAL			561, 563, 565, 567
6719332	INSULATION, BLWR HSG	7123854	D	561, 563, 565, 567
6719333	INSULATION, BLWR HSG			561, 563, 565, 567

Code for disposition of old part number

A -- Use up
B -- Use on other application (See PNI)
C -- File PDR Report with Bobcat Parts Sales
D -- Part Number Error

Page 628 - OSS# 6300202494 - All rights reserved by Bobcat Company - 02/11/2016 - 14:15:02 - Produced by Ken Cook Co. with mediaoff

NUMERICAL INDEX (Cont'd)

Part No.	Description	Was	Code	Page
6719334	INSULATION, BLWR HSG			561, 563, 565, 567
6719413	WINDOW, REAR			385
6719448	MAGNET, CONTROL ATTACH			413, 415
6719504	INSULATION, CAB BACK			17
6719525	BAR			35
6719628	HOSE			519, 523
6719766	STOP			35
6719825	BOLT			277
6719826	BOLT			281
6719827	BOLT			281
6719828	BOLT			277, 281
6719829	BOLT			281
6719834	SPACER			261, 347
6719835	SLEEVE			261
6719854	KIT, BEACON LIGHT			355
6719857	KIT, STROBE LIGHT			573
6719884	BRACKET			519, 523
6719888	DECAL			519, 523
6719906	BUSHING			507, 509
6720038ENUS	INSTRUCTIONS	6720038	A	357
6720592	INSTRUCTIONS			435
6720736	HEATER, BLOCK ENG PLUG SOFT			357
6722597	VELCRO KT CAB ENCL LOADER			379
6722861	INSTRUCTIONS			533
6722907	KIT, SEAL			49, 349
6722908	INSTRUCTIONS			349
6724482	INSTRUCTIONS			417
6725042	SHIELD			369
6725182	TEE			71, 139
6725200	PLATE			369
6725256	COUNTERWEIGHT			35, 395
6725301	OP MANUAL COVER			17
6725302	GASKET			31, 33
6725303	OP MANUAL PAN			17
6725370	DECAL			553
6725373	SPRING PLATE			17
6725421	HANDLE			391
6725502	ELBOW			343
6725898	KIT, EXTINGUISHER FIRE			437
6725907	DECAL, OPERATION			519, 523
6725937	CLAMP			375
6725938	CLAMP			375
6725946	KIT, WINDOW REAR			391
6726162	BRACKET			121, 125, 129
6726254	BRACKET			121, 125, 129
6726255	PADBUMPR			121, 125, 129
6726303	DECAL, OPERATION			391

Code for disposition of old part number

A -- Use up
B -- Use on other application (See PNI)
C -- File PDR Report with Bobcat Parts Sales
D -- Part Number Error

Page 629 - OSS# 6300202494 - All rights reserved by Bobcat Company - 02/11/2016 - 14:15:02 - Produced by Ken Cook Co. with media1off

NUMERICAL INDEX (Cont'd)

Part No.	Description	Was	Code	Page
6726386	KNOB			449, 453
6726423	DECAL, WARNING			507, 509
6726433	SPACER			271, 275
6726613	MOUNT, ENG			277
6726620	BRACKET			473, 477, 491
6726621	SCREW			467, 473, 481
6726623	HOSE			473, 477, 491
6726648	BRACKET			473, 477, 491
6726655	REAR WIPER KIT			543
6726656	HOSE			473, 477, 491
6726661	HOSE, A/C ASSY			473, 477, 491
6726662	HARNESS HORN/BLINKER			497
6726681	LINK,AFC POD			257, 347
6726945	MOUNT			415
6726987	HOSE			519, 523
6726988	BELT			473, 477, 491
6727065	SCREW			261, 347
6727176	KIT, ELECTRICAL CONNECTOR			409
6727299	INSULATOR CAB BACK			19, 23, 565, 567
6727414	HOSE			473, 477, 491
6727496	PIN			257, 347
6727595	DECAL, TIE-DOWN			403
6727637	ELBOW			121, 125, 129
6727638	TEE			63, 67
6727646	BRACKET			67, 361
6727687	HOSE	7116565	B,D	63, 67
6727705	HOSE			63, 67
6727708	CLAMP 2			63, 67
6727739	KIT, CONTROL ATTACH DLX			415
6727753	GASKET			275
6727847	HEATER VENT COVER			449, 453
6727848	ASSY, COVER			491
6727869	SENDER,HYD TEMP			233, 237
6727926	DECAL, OPERATION			257, 347, 399
6728011	BRACKET			473, 477, 491
6728459	SENSOR, DOOR			365, 369, 375
6728473	BOLT, SHOULDER			39
6728539	DECAL, WARNING			257, 347, 399
6728540	DECAL, WARNING			347
6728626	HARNESS			233, 237
6728673	TANK, HYD			121, 125, 129
6729008	CABLE, NEGATIVE			229
6729009	SEAL			385
6729010	SEAL			385
6729011	SEAL			385
6729012	INSULATION			15
6729013	INSULATION			15
6729077	DECAL			473, 491

Code for disposition of old part number

A -- Use up
B -- Use on other application (See PNI)
C -- File PDR Report with Bobcat Parts Sales
D -- Part Number Error

Page 630 - OSS# 6300202494 - All rights reserved by Bobcat Company - 02/11/2016 - 14:15:02 - Produced by Ken Cook Co. with mediaoff

NUMERICAL INDEX (Cont'd)

Part No.	Description	Was	Code	Page
6729078	DECAL			139
6729082	MOUNT			133
6729141	MOUNT			445
6729202	HOSE			519
6729203	HOSE			519
6729380	HARNESS, CONTROL ATTACH DLX			415
6729467	SPACER, COLLAR			257, 347
6729594	HANDLE			261
6729595	HANDLE			261
6729688	LATCH, DOOR			541
6729776	WINDOW, DOOR CURVED CAB			373
6729853	HOSE			41
6729854	HOSE			41
6729896	TIRE, STANDARD 31X10X16.5, 8 PLY	7101734	A	575
6729900	TIRE, HEAVY DUTY 31X10X16.5, 10 PLY			575
6729939	LATCH PLATE			35
6729991	REAR DOOR			13, 35
6730013	COVER			53, 57
6730078	COVER			45
6730106	TIRE, SEVERE DUTY 31X10X16.5, 10 PLY			575
6730270	LEVER, THROTTLE			287
6730291	BRACKET			415
6730816	SHIELD			365, 375
6730822	KIT, DOOR CAB			365
6730823	KIT, DOOR CAB SPECIAL APP			375
6730867	MOUNT, ALT			281
6730997	BUSHING, WELD-ON			39
6730999	ASSY, TUBE			275
6731059	BRACKET			41
6731060	SHIELD			281
6731084	CONNECTOR			469, 471, 491
6731108	SEAL, TRANS			547
6731119	PIVOT, WEDGE			39
6731121	PLUG			45
6731151	KIT, ACS CONVERSION			347
6731160	WASHER			37
6731256	CABLE, POSITIVE			229
6731275	INSULATION			233, 237
6731478	TAG EXIT			19, 23, 385
6731495	SHIELD			473, 477, 491
6731578	BUSHING, WELD-ON			13
6731617	PAN,BATTERY			407
6731657	MOUNT, BRACKET			505
6731658	MOUNT, BRACKET			505
6731665	CABLE, NEGATIVE			407
6731666	CABLE, POSITIVE			407

Code for disposition of old part number

A -- Use up
B -- Use on other application (See PNI)
C -- File PDR Report with Bobcat Parts Sales
D -- Part Number Error

Page 631 - OSS# 6300202494 - All rights reserved by Bobcat Company - 02/11/2016 - 14:15:02 - Produced by Ken Cook Co. with media1off

NUMERICAL INDEX (Cont'd)

Part No.	Description	Was	Code	Page
6731694	KIT, BATTERY DUAL			407
6731746	BRACKET			407
6731757	DECAL, OPERATION			73, 403
6731819	STRAP RUBBER			427
6731900	ROD THROTTLE			287
6731979	BUSHING, WELD-ON			39
6732001	KIT, LOCK REAR DOOR			541
6732023	CONNECTOR, HOSE			469, 471, 491
6732215	FILTER			121, 125, 129
6732219	KIT, 3PT SEAT BELT			553
6732234	KIT, HORN W/JOYSTICK			497
6732235	KIT, ALARM BACK-UP			353
6732318	SPACER			271
6732322	SPACER			287
6732323	BRACKET			287
6732351	WINDOW, DOOR CURVED CAB			375
6732375	TANK, WATER COOLANT			271
6732443	CUP, SEAL			37, 39
6732457	WASHER			271
6732619	SEAL, PANEL			547
6732715	LATCH			35
6732718	KIT, SEAL ENCLOSURE			547
6732730	HARNESS			413
6732732	BUSHING			477
6732928	KIT, 3RD GAS SPRING			445
6732997	U-BOLT			143
6733001	CONDENSER			473, 477, 491
6733107	PLUG ASSY			15
6733136	KIT, ATTACHMENT 14-PIN			413
6733142	KIT, ATTACHMENT 7-PIN			411
6733144	MOUNT			413
6733190	TEE			63, 67
6733191	ELBOW			63, 67
6733192	TUBE			535
6733195	TUBE			361
6733196	TUBE			67, 361
6733197	HOSE			121, 125, 129
6733292	HARNESS, ACS			257
6733429	CAP			271
6733575	HINGE, REAR DOOR			35
6733616	BUMPER			35
6733652	HOSE			121, 125
6733655	COMPRESSOR, A/C			473, 477, 491
6733667	LATCH, REAR DOOR			35

Code for disposition of old part number

A -- Use up
B -- Use on other application (See PNI)
C -- File PDR Report with Bobcat Parts Sales
D -- Part Number Error

Page 632 - OSS# 6300202494 - All rights reserved by Bobcat Company - 02/11/2016 - 14:15:02 - Produced by Ken Cook Co. with mediaoff

NUMERICAL INDEX (Cont'd)

Part No.	Description	Was	Code	Page
6733749	GUSSET			37
6733804	SCREEN, EXCHANGER ASSY			271
6733970	MOUNT			351, 353, 495, 497, 499
6733996	DECAL, WARNING			271
6734192	TUBE			67, 361
6734206	TUBE			71
6734236	ADAPTER			271
6734298	BRACKET			143
6734416	LEVER, THROTTLE			285, 287
6734417	LINK			287
6734495	TUBE			63, 67
6734496	TUBE			63, 67
6734503	CLEVIS			287
6734534	DECAL, SERVICE	7124877	A	399
6734538	STOP			37
6734561	WASHER			121, 125, 129
6734563	KIT			121, 125, 129
6734623	ELBOW			121, 125, 129, 139
6734646	DECAL, WARNING			257, 399
6734647	DECAL, OPERATION			399
6734660	BUSHING, WELD ONQ			37
6734662	PIN, PIVOT TAPERED			37
6734906	TUBE			519, 523
6734907	TUBE			519, 523
6735114	TUBE			73
6735138	HOSE			73
6735140	DECAL, THROTTLE			399
6735245	HVAC DUCT RIGHT			449, 453, 491
6735246	HVAC DUCT LEFT			449, 453, 491
6735285	AIR CLEANER			343
6735316	COVER			59
6735669	BOOM STEP			63, 67
6735680	FOOT PEDAL			287
6735862	DECAL			403
6735883	BRACKET			277
6735884	IDLER, BELT DRIVE ASSY			277
6735901	DECAL, LOGO BOBCAT HEAD			403
6735922	TUBE			121, 125
6736195	ROD			285
6736641	PAINT, CHARCOAL .5 OZ			581
6736642	PAINT, WHITE .5 OZ			581
6736644	PAINT, ORANGE .5 OZ			581
6736645	PAINT, RED .5 OZ			581
6736647	HOSE			115
6736685	TUBE			115
6736775	BELT, DRIVE	6726898	B	7, 277
6736791	KIT, RH AUX	6731524	B,D	443

Code for disposition of old part number

A -- Use up
B -- Use on other application (See PNI)
C -- File PDR Report with Bobcat Parts Sales
D -- Part Number Error

Page 633 - OSS# 6300202494 - All rights reserved by Bobcat Company - 02/11/2016 - 14:15:02 - Produced by Ken Cook Co. with media1off

NUMERICAL INDEX (Cont'd)

Part No.	Description	Was	Code	Page
6736810	BRACKET			115
6736817	MOUNT			281
6736856	HOSE	6718454	B,D	443
6736934	TUBE	6718244	B,D	443
6736935	TUBE	6718245	B,D	443
6737088	COVER, ACCESS			345
6737131	BUSHING, WELD ON			13
6737132	PIN			507, 509
6737189	DECAL, WARNING			351, 353
6737191	WEDGE, BOB-TACH			39
6737248	DECAL, WARNING			249, 253
6737355	HOSE			275
6737368	BRACKET			41
6737388	WASHER			81, 143
6737453	ELBOW			121, 125, 129, 139
6737524	KNOB			71, 113
6801059	WASHER			373, 543
6801167	SPOOLPLUG			105, 109
6803092	BONNET			105, 109
6803157	HOSE ASSY			139
6805453	BUSHING, PRESS FIT			77
6806315	PISTON			77
6806330	KIT, SEAL			77
6808831	WIRE ROPE			473, 477, 491
6809203	TUBE			79
6809210	CASE			79
6809511	DECAL, DANGER			63, 67, 71
6809639	ROD			79
6809726	ROLLER			35
6809727	CHANNEL			35
6809734	BUSHING			35
6809845	BOLT			35
6809903	SHAFT, ROD CYL TILT			77
6810132	SPRING			35
6810141	SPRING			35
6810356	SPACER			525, 527
6810539	NUT			79
6810562	TUBE, CASE CYL POWER BOB-TACH	6810349	A	525
6810611	CYLINDER, POWER BOB-TACH	6807503	D	525
6810612	SHAFT, ROD CYL POWER BOB-TACH			525, 527
6811994	CYLINDER, LIFT			79
6812170	PLUG			77, 79, 525, 527
6812171	PLUG			77, 95, 109
6812815	ADAPTER			121, 125, 129
6813153	PLATE			85, 91, 95, 99
6814279	BLOCK			85, 91, 95, 99, 105, 109
6814531	ELBOW			63, 67
6814694	RETAINER			85, 91, 95, 99, 105, 109
6814830	HARNESS			229

Code for disposition of old part number

A -- Use up
B -- Use on other application (See PNI)
C -- File PDR Report with Bobcat Parts Sales
D -- Part Number Error

Page 634 - OSS# 6300202494 - All rights reserved by Bobcat Company - 02/11/2016 - 14:15:02 - Produced by Ken Cook Co. with mediaoff

NUMERICAL INDEX (Cont'd)

Part No.	Description	Was	Code	Page
6815152	SPOOL, TILT			85, 91, 95, 99
6816549	PLUG ASSY PORT RLF			85, 91, 95, 99, 105, 109
6817003	BODY			85, 91, 95, 99
6817004	BODY			105, 109
6817566	BUSHING			281
6900366	INSTRUCTIONS			393
6900410	INSTRUCTIONS			395
6900848	INSTRUCTIONS			439
6900852	INSTRUCTIONS			385
6900853	INSTRUCTIONS			385
6900854	INSTRUCTIONS			365, 369
6900888	INSTRUCTIONS			505
6900934	INSTRUCTIONS			419
6900991	INSTRUCTIONS			355
6900992ENUS	INSTRUCTIONS	6900992	A	573
6901010	INSTRUCTIONS			553
6901011	INSTRUCTIONS			555
6901013	INSTRUCTIONS			375
6901025	INSTRUCTIONS			437
6901029ENUS	INSTRUCTIONS	6901029	A	391
6901061	INSTRUCTIONS			543
6901076	INSTRUCTIONS			409
6901116	INSTRUCTIONS			415
6901120	INSTRUCTIONS			467
6901492	INSTRUCTIONS			347
6901515	INSTRUCTIONS			443
6901602	INSTRUCTIONS			407
6901656	INSTRUCTIONS			541
6901690	INSTRUCTIONS			353
6901691	INSTRUCTIONS			497
6901774	INSTRUCTIONS			547
6901816	INSTRUCTIONS			445
6901871	INSTRUCTIONS			411
6901872ENUS	INSTRUCTIONS			413
6902228	PAINT, ORANGE SPRAY CAN 6			581
6902229	PAINT, CHARCOAL SPRAY CAN 6			581
6902230	PAINT, WHITE SPRAY CAN 6			581
6902232	PRIMER, SPRAY CAN 6			581
6902233	PAINT, ORANGE QT 6			581
6902234	PAINT, CHARCOAL QT 6			581
6902235	PAINT, WHITE QT 6			581
6902390	HARD HAT WHITE	6559552	A	571
6902600	HANDBOOK, OPERATOR'S	6737783	D	1, 399
6902798	INSTRUCTIONS			509
6902833	INSTRUCTIONS			361
6903109	OIL 30W QT. 12			1, 5, 7, 581

Code for disposition of old part number

A -- Use up
B -- Use on other application (See PNI)
C -- File PDR Report with Bobcat Parts Sales
D -- Part Number Error

Page 635 - OSS# 6300202494 - All rights reserved by Bobcat Company - 02/11/2016 - 14:15:02 - Produced by Ken Cook Co. with media1off

NUMERICAL INDEX (Cont'd)

Part No.	Description	Was	Code	Page
6903110	OIL, 30W GAL. 6			1, 5, 7, 581
6903111	OIL 30W 2.5 GAL 2			1, 5, 7, 581
6903117	FLUID, OIL HYD 2.5 GAL 2			1, 11, 581
6903118	FLUID, OIL HYD 5 GAL			1, 11, 581
6903119	FLUID, OIL HYD 55 GAL DRUM			1, 11, 581
6903121	LUBE, GEAR 12			7, 581
6903122	GREASE, MULTI PURPOSE			7, 277, 581
6903293	INSTRUCTIONS			351
6903359	INSTRUCTIONS			509
6903766	TIRE, SOLID FLEX 31X6X10 LH			577
6903767	TIRE, SOLID FLEX 31X6X10 RH			577
6903935	TIRE, NARROW BASE SMOOTH 31X5X7			577
6903936	TIRE, NARROW BASE INVERTED TREAD 31X5X7			577
6903939	TIRE, WIDE BASE SMOOTH 31X5X9			577
6903940	TIRE, WIDE BASE INVERTED TREAD 31X5X9			577
6904112	INSTRUCTIONS			507
6904126	SM, S150 S160 LDR			1
6904126-CD	SM, S150 S160 LDR CD			1
6904128	OM, S160 LDR			1
6904128-CD	OM, S160 LDR CD			1
6904255	INSTRUCTIONS			449, 469, 471
6904257	INSTRUCTIONS			473
6904270	PM, S160 LDR			1
6904270-CD	PM, S160 LDR CD			1
6904630	TIRE, SOLID FLEX 31X5X9 SMOOTH			577
6904637	TIRE, SOLID FLEX 31X6X10 NAROW OFFSET LH			577
6904638	TIRE, SOLID FLEX 31X6X10 NAROW OFFSET RH			577
6904709	OM, RADIO REMOTE CONTROL			545
6904709AR	OM, RADIO REMOTE CONTROL esAR			545
6904709PTBR	OM, RADIO REMOTE			545
6904714	INSTRUCTIONS			519, 523
6904727	INSTRUCTIONS			535
6904732	INSTRUCTIONS			495
6904744	INSTRUCTIONS			389

Code for disposition of old part number

A -- Use up
B -- Use on other application (See PNI)
C -- File PDR Report with Bobcat Parts Sales
D -- Part Number Error

Page 636 - OSS# 6300202494 - All rights reserved by Bobcat Company - 02/11/2016 - 14:15:02 - Produced by Ken Cook Co. with mediaIoff

NUMERICAL INDEX (Cont'd)

Part No.	Description	Was	Code	Page
6904752ENUS	INSTRUCTIONS	6904752	A	513
6904783	INSTRUCTIONS			247
6904995	KIT, DECAL			399, 403
6967523	SPINDLE	6687920	A	173, 189
6967525	SPRING	6688043	A	173, 189
6967526	SPRING	6688021	A	173, 189
6967527	PIN	6687923	A	173, 189
6967534	PISTON	6688022	A	175, 191
6967535	COLLAR	6687919	A	175, 191
6967536	SPRING	6688023	A	175, 191
6967539	SHIM	7008766	A	175, 191
6969804	PLUG,OIL GAUGE	6684785	A	311
6969805	KEY,FEATHER	15JM00410B	A	303
6969817	BALL	10J5	A	317
6969824	GASKET, NOZZLE INJ	6680779	B,D	291, 341
6969825	CORD, GLOW PLUG	6684851	A	341
6983128	ANTIFREEZE/COOLANT PG 53/47 PREMIX GAL	7,24094	A	581
6983129	ANTIFREEZE/COOLANT PG CONCENTRATE GAL	7,24354	A	581
6986545	INSTRUCTIONS			561
6986547	INSTRUCTIONS			563
6986563	INSTRUCTIONS			501
6986573	INSTRUCTIONS			579
6986796	INSTRUCTIONS			535
6986799ENUS	INSTRUCTIONS	6986799	A	213
6986981	OM, S160 LDR			1
6986981-CD	OM, S160 LDR CD			1
6987034	SM, S160 LDR			1
6987034-CD	SM, S160 LDR CD			1
6987152	INSTRUCTIONS			453
6987283	INSTRUCTIONS			503
6987352	INSTRUCTIONS			499
6987360ENUS	INSTRUCTIONS, INSTALL	6987360		431, 433
6987705	TIRE, HEAVY DUTY 10 X 16.5, 10 PLY			575
6987915	THREADLOCK, 271-HEAVY DUTY RED-0.5ml NSS	6598485	A	349
6988143	TIRE, NON-DIRECTIONAL 10X16.5-12 PLY EF			575
6988500	TIRE, EARTHFORCE 10X16.5 - 8 PLY			575
6988512	TIRE, FLEX DIRT LH 10X16.5(30X10) EF			577
6988513	TIRE, FLEX DIRT RH 10X16.5(30X10) EF			577

Code for disposition of old part number

A -- Use up
B -- Use on other application (See PNI)
C -- File PDR Report with Bobcat Parts Sales
D -- Part Number Error

Page 637 - OSS# 6300202494 - All rights reserved by Bobcat Company - 02/11/2016 - 14:15:02 - Produced by Ken Cook Co. with media1off

NUMERICAL INDEX (Cont'd)

Part No.	Description	Was	Code	Page
6988514	TIRE, FLEX DIRT W/O RIM 10X6.5(30X10)EF			577
6989453	OM, S160 LDR			1
6989453-CD	OM, S160 LDR CD			1
6989663ENUS	INSTRUCTIONS			557
6989729	INSTRUCTIONS			133, 135
6989744	INSTRUCTIONS			477
69G436	BOLT			105, 109, 245, 249, 253, 257
6E5	WASHER			223, 281, 439
6E6	WASHER			229
6EM80	WASHER, SPRING			269
6J1664	KEY			49
6J807	KEY, WOODRUFF	6687991	A	161, 277
7000328	ADAPTER, SWITCH IGN	7000329	A	223
7000443	INSERT, SWITCH IGN			227
7000450	PIN, STRAIGHT			313
7000460	TOOL, DISCONNECT TERMINAL			409
7000461	TOOL, DISCONNECT TERMINAL			409
7000642	WASHER, SEALING COPPER	6685962	B	291, 329
7001039	PANEL, START KEYED			227
7001044	HORN, ALARM	6675099	A	495, 497, 499
7001666	CAMSHAFT, FUEL			317
7001669	BRACKET			477, 483, 487
7001670	INSULATION			477, 483, 487
7001671	INSULATION			477, 483, 487
7001673	KIT, SCREEN FILTER			531
7001674	PISTON, ENG OS	6684798	B,D	313
7001676	PISTON, ENG	6684801	B,D	313
7001678	VALVE, CHECK			531
7001922	BOLT	6653798	B,D	311
7002707	EVAPORATOR			477, 483, 487
7003445	BLOWER, HEATER AND A/C			465
7003446	COIL, HEATER			457, 459, 483, 487
7003447	FLANGE, SEAL			457, 459, 483, 487
7003448	PLATE			457, 483
7003449	PAN, COIL			457, 483
7003450	BRACKET, HARNESS			457, 483
7003451	BRACKET			457, 459, 483, 487
7003452	BRACKET			457, 459, 483, 487
7003453	BRACKET			457, 459, 483, 487
7003454	BRACKET			457, 459, 483, 487
7003455	PLATE			457, 483
7003456	VALVE, MOTORIZED ASSY			457, 459, 483, 487
7003458	CLAMP, HOSE			457, 459, 483, 487
7003459	GROMMET			457, 483
7003460	SEAL, FOAM			457, 459, 483, 487

Code for disposition of old part number

A -- Use up
B -- Use on other application (See PNI)
C -- File PDR Report with Bobcat Parts Sales
D -- Part Number Error

Page 638 - OSS# 6300202494 - All rights reserved by Bobcat Company - 02/11/2016 - 14:15:02 - Produced by Ken Cook Co. with mediaoff

NUMERICAL INDEX (Cont'd)

Part No.	Description	Was	Code	Page
7003461	HOUSING, BASE			457, 459, 483, 487
7003462	HOUSING, COVER DUST			457, 459, 483, 487
7003463	VALVE, DRAIN			457, 459, 483, 487
7003464	COVER, ASSY			457, 459, 483, 487
7003465	NUT			457, 459, 483, 487
7003466	RIVET, POP			457, 459, 483, 487
7003467	RIVET, POP			457, 483
7003468	NUT			457, 459, 483, 487
7003469	SCREW			457, 459, 483, 487
7003470	SCREW			457, 459, 483, 487
7003471	SCREW			457, 459, 465, 483, 487
7003472	CLIP, RECEPTACLE			457, 459, 483, 487
7003473	NUT			457, 459, 483, 487
7003474	CLIP, RECEPTACLE			457, 459, 483, 487
7003481	ASSY, WINDOW	6691000	A	385
7003482	WINDOW, RIGHT ASSY	6691002	A	385
7003511	PLUG			457, 459
7008040	MODULE, DE-ICER ELECTRONIC			477, 487
7008106	GROUP ROTATING RH			177, 181
7008107	CONTROL			177, 183
7008108	CONTROL			177, 185
7008109	MODULE, CONTROL			177, 187, 203
7008110	HOUSING			177
7008111	FLANGE, LH			177, 193
7008112	FLANGE, RH			177, 193
7008113	SHAFT			177
7008114	SCREW			177, 193
7008115	SENSOR			177, 193
7008116	FILTER			177
7008117	SWASHPLATE			179, 181, 195, 197
7008118	BEARING			179, 181, 195, 197
7008119	RING			183, 185
7008120	HOUSING			203
7008121	GASKET			203
7008122	COVER			187, 203
7008123	GASKET			187, 203
7008124	VALVE, RELIEF			177, 189
7008356	SEAL, QUAD			77
7008362	PANEL, RH			503
7008767	SHIM			175, 191
7008782	SEAL, QUAD			525, 527
7008802	WIRE			193
7008806	GASKET	7008121	A	187
7008807	GROUP, ROTATING			177, 179
7008888	PIN, STRAIGHT			313
7009047	PLATE	7009047	A	373
7009081	NUT			223, 227
7009976	O-RING	6675824	A	473, 477, 491
7009977	O-RING	6675538	A	473, 477, 481, 483, 487, 491

Code for disposition of old part number

A -- Use up
B -- Use on other application (See PNI)
C -- File PDR Report with Bobcat Parts Sales
D -- Part Number Error

Page 639 - OSS# 6300202494 - All rights reserved by Bobcat Company - 02/11/2016 - 14:15:02 - Produced by Ken Cook Co. with media1off

NUMERICAL INDEX (Cont'd)

Part No.	Description	Was	Code	Page
7009978	O-RING	6675825	A	473, 477, 491
7010162	HOUSING, BLOWER			465
7010163	MOTOR, FAN			465
7010164	RESISTOR			465
7010165	COVER			465
7010166	RING, INNER			465
7010167	BLOWER, WHEEL			465
7010168	SCREW			465
7010169	CLAMP, HOSE			465
7010195	BOLT, ADJUSTMENT			335
7010227	COVER			177, 193
7010238	CRANKSHAFT, ENG			313
7010263	SHIELD, ISOLATOR BULK/FT			459, 487
7010264	FOAM			459, 487
7010265	BOLT			459, 487
7010266	RIVET, POP			459, 487
7010267	NUT, LOCK			459, 487
7010268	CLAMP			459, 487
7010269	PAN, COIL			459, 487
7010427	KIT, SEAL			211
7010599	GASKET, GEARCASE			293, 295, 297, 299
7010757	ENGINE, V2003-M-DI-TE2B-BC-3F			289
7011039	SEAL, BULK/FT 34	6675558	A	365, 369, 375
7011070	HARNESS, RECEIVER	6692764	A	545
7011071	CONTROL, MODE SELECTOR	6692766	A	545
7012048	CONTROLLER, AUX CONTROL	6691288	A	237
7012335	PIN, STRAIGHT			337
7012336	COVER, HEAD CYL ENG	7012337	B,D	305
7012337	HOUSING, GEAR	7012336	B,D	297, 299
7012338	KIT, GASKET ENG LOWER			289, 293, 295
7015264	BEARING, ENG CRANKSHAFT	6685486	A	313
7015265	BEARING, ENG CRANKSHAFT	6685487	A	313
7015266	WASHER, THRUST	6685488	A	313
7015267	WASHER, THRUST	6685489	A	313
7015269	TAPPET	6667428	A	319
7015270	BEARING, ENG ROD CONNECTING	6655183	A	313
7015273	PLUG, FILL	6685472	A	303
7015275	CLAMP, INJECTION	6684845	A	341
7015668	MOUNT, STRAP TIE	6678666	B	19, 23, 223, 227, 229, 233, 237, 469, 471, 473, 477, 491
7019023	BOLT, EYE 12MM			339
7019024	GASKET			339
7019201	DIPSTICK, ENG OIL	6685499	A	311

Code for disposition of old part number

A -- Use up
B -- Use on other application (See PNI)
C -- File PDR Report with Bobcat Parts Sales
D -- Part Number Error

Page 640 - OSS# 6300202494 - All rights reserved by Bobcat Company - 02/11/2016 - 14:15:02 - Produced by Ken Cook Co. with mediaoff

NUMERICAL INDEX (Cont'd)

Part No.	Description	Was	Code	Page
7020353	NOZZLE, WIPER	6678920	A	373
7020837	TURBOCHARGER	6685593	A	327
7021365	VALVE, SOLENOID			539
7021366	COIL, SOLENOID			539
7021367	NUT			539
7022162	PUMP, FUEL INJ	6684828	A	339
7022765	BOLT, EYE	7022765	A	329
7022983	TIRE, FLEX DIRT ORNG LH 10X16.5(30X10)EF			577
7022984	TIRE, FLEX DIRT ORNG RH 10X16.5(30X10)EF			577
7023076	OIL, 10W30 QT 12	6903107	A	1, 5, 7, 581
7023077	OIL, 10W30 GAL 6	6903108	A	1, 5, 7, 581
7023078	OIL, 10W30 2.5 GAL 2	6903112	A	1, 5, 7, 581
7023080	OIL, 15W40 QT 12	6903105	A	1, 5, 7, 581
7023081	OIL, 15W40 GAL 6	6903106	A	1, 5, 7, 581
7023082	OIL, 15W40 2.5 GAL 2	6903113	A	1, 5, 7, 581
7023162	CAP, END	6669406	A	153
7023550	CAP, DIESEL LOCKING			41
7023794	PUMP, HYD TANDEM W/O GEAR PUMP			177, 193
7024212	TIRE, HEAVY DUTY 10X16.5, 12 PLY EF			575
7024826	SEAL, OIL	6631664		293, 295, 313
7025061	PUMP, GEAR			209
7025589	FLASHTUBE			573
7025626	VENT, BREATHER	6684923	A	5, 9, 121, 125, 129
7031411	KIT, SEAL			209
7100024	HOSE			275
7100104	BELT, ALT	7100572	A	7, 281
7100444	PIN			507
7100445	SPACER			507
7100462	CLAMP			121, 125, 129
7100699	WASHER			143, 257
7101078	PIN, PIVOT TAPERED			37
7101104	MOUNT			427
7101291	ELBOW			41
7101345	BONNET, DETENT HYD VALVE			105, 109
7101371	ELBOW			129, 133, 135
7101384	LIGHT, ASSY REAR			425, 427
7101527	INSULATION			561, 563, 565, 567
7101528	INSULATION			563, 565
7101529	INSULATION			561, 565, 567
7101543	INSULATION			561, 563, 565, 567
7101646	TUBE			63
7101647	TUBE			67, 361
7101648	TEE			63, 67
7101672	ACTUATOR			245, 249, 253, 257
7101708	CLAMP			275

Code for disposition of old part number

A -- Use up
B -- Use on other application (See PNI)
C -- File PDR Report with Bobcat Parts Sales
D -- Part Number Error

Page 641 - OSS# 6300202494 - All rights reserved by Bobcat Company - 02/11/2016 - 14:15:02 - Produced by Ken Cook Co. with media1off

NUMERICAL INDEX (Cont'd)

Part No.	Description	Was	Code	Page
7101797	ELBOW	7101371	B,D	85, 99, 105, 121, 125
7101973	HARNESS			535
7102018	TEE			105
7102019	TEE			85, 99
7102066	CROSS			85, 99, 105
7102135	HOSE			63, 67
7102163	TUBE			73
7102164	TUBE			73
7102202	HOSE			73
7102338	HARNESS			535
7102451	FITTING			229
7102652	SCREW			91, 95, 105, 109
7102656	HOSE			275
7102869	KIT, BPV			361
7103075	SEAL			385
7103217	WASHER			143
7103648	TEE			129
7103708	BRACKET			143
7103711	BOLT			143
7103791	MUFFLER, PURIFIER			515
7103861	HOSE			129
7104076	TIE			275
7104379	HARNESS			229
7104465	DOOR SWITCH HARNESS			365, 369, 375
7104568	MOUNT			281
7104670	LIGHT			511
7104671	LIGHT			511
7105034	WINDOW TOP	7105035	A	19, 23, 385
7105223	SPACER			143
7105324	BOLT			447
7105325	BOLT			447
7105756	TIRE, SUPER FLOAT 31X12X16.5 10PLY	6730107	A	575
7105983	BOLT			223, 227
7106024	HOSE			133, 135
7106040	ELBOW			121, 125, 129
7106056	TUBE			133
7106205	HOSE			121, 125, 129
7106277	WIPER HARNESS			365, 369
7107175	INLET			271
7107179	HOSE			137
7107353	GUSSET			507, 509
7107449	TUBE, EXHAUST			275
7107544	HARNESS			351
7107562	HOSE			129
7107785	TEE			121
7107829	KIT, BACK-UP ALARM			351
7107849	MOUNT			281
7108222	SAFETY TREAD			403
7108236	PIN			249, 253, 257
7108242	SPOOL, TILT			105, 109

Code for disposition of old part number

A -- Use up
B -- Use on other application (See PNI)
C -- File PDR Report with Bobcat Parts Sales
D -- Part Number Error

Page 642 - OSS# 6300202494 - All rights reserved by Bobcat Company - 02/11/2016 - 14:15:02 - Produced by Ken Cook Co. with mediaoff

NUMERICAL INDEX (Cont'd)

Part No.	Description	Was	Code	Page
7108394	KIT, LIFT 4-POINT			509
7108398	BRACKET, FILTER			129
7108406	HOSE			121, 125
7108408	LEVER			81
7108685	TEE			137
7108843	HOSE			129
7108844	HOSE			129
7108845	HOSE			129
7108846	TEE			129
7108980	TUBE			137
7109125	INSULATION			563, 565
7109314	MOUNT			285
7109318	INSULATOR			569
7109344	HOSE			121
7109403	HARNESS			511
7109404	HARNESS			511
7109495	MOUNT			233, 237
7109582	EXCHANGER, OIL COOLER			133, 135
7109661	LATCH, DOOR W/SENSOR			365, 369, 375
7109662	HANDLE, LATCH DOOR			365, 369, 375
7109663	SPACER			365, 369, 375
7109664	BOLT			365, 369, 375
7109665	FRAME, DOOR CAB			365, 369
7109712	SHIELD			277, 491
7109904	BRACKET			143, 157
7109905	BRACKET			143, 153
7109922	TUBE			121, 125, 129
7109923	TUBE			133, 135
7109927	TUBE			535
7109934	MOUNT, VALVE			63, 67
7110243	BRACKET			137
7110244	BRACKET			137
7110262	TUBE			63, 67
7110264	TUBE			73
7110276	SPACER, TAPERED	6715287	A	281, 417
7110287	GASKET			53, 57
7110365	ARM, PINTLE			143
7110367	HOSE			519, 523
7110410	INSULATION			569
7110430	SPECIAL APPS DOOR			375
7110571	BELLCRANK, STEERING			143
7110695	MOUNT			133
7110809	HOSE			137
7110914	TUBELINE			85, 99, 105
7110927	BRACKET			115
7112290	HARNESS			519
7112328	KIT, LIFT 4-POINT			507
7112383	AUX SPOOL			85, 91, 95, 99, 105, 109

Code for disposition of old part number

A -- Use up
B -- Use on other application (See PNI)
C -- File PDR Report with Bobcat Parts Sales
D -- Part Number Error

Page 643 - OSS# 6300202494 - All rights reserved by Bobcat Company - 02/11/2016 - 14:15:02 - Produced by Ken Cook Co. with media1off

NUMERICAL INDEX (Cont'd)

Part No.	Description	Was	Code	Page
7112651	HOSE			569
7112828	HARNESS			247, 249
7112910	ELBOW			63, 67
7112911	TUBE			63, 67
7112912	TUBE			67, 361
7113010	SPACER			281
7113162	BRACKET			229
7113208	HOSE			469, 491
7113209	HOSE, HEATER			469, 471, 491
7113262	ELBOW			121, 125, 129
7113340	CAP. DIESEL			41
7113360	TUBE			115
7113635	PULLEY			277
7114050	HOSE			63, 67
7114053	TEE			63, 67
7114236	HOSE			63, 67
7114294	ADAPTER			73
7114710	TUBE			63, 67
7114711	TUBE			63, 67
7114739	SPACER			281
7115185	HOSE			519, 523
7115219	PEDAL			81
7115220	PEDAL MOUNT			81
7115412	TUBE			73
7115413	TUBE			73
7115645	CLAMP	6726277	A	63, 67, 139, 535
7116258	HARNESS, MFR			229, 233
7116260	HARNESS, CAB DLX			223
7116261	HARNESS			223
7116280	ROD			287
7116564	HOSE			63, 67
7116565	HOSE	7116564	B,D	63, 67
7116699	INSULATION			569
7116700	INSULATION			569
7116870	DECAL, LOGO BOBCAT HEAD			403
7116901	HTR PLUMBING KIT	7116900	A	471
7116903	KIT, A/C			473
7116956	BRACKET			229
7116995	TUBELINE			85, 99, 105
7117036	HARNESS, SJC			245
7117123	PANEL			31, 33
7117174	CYLINDER, TILT			77
7117174REM	CYLINDER, TILT			77
7117175	TUBE, CASE CYL TILT			77
7117232	PANEL			31, 33
7117322	HARNESS, WIPER			365, 369, 375
7117380	TUBE			71
7117407	DECAL, FUSE			233, 399
7117788	HARNESS			229, 233, 237
7117875	MOUNT			501
7120107	BRAKE			61

Code for disposition of old part number

A -- Use up
B -- Use on other application (See PNI)
C -- File PDR Report with Bobcat Parts Sales
D -- Part Number Error

Page 644 - OSS# 6300202494 - All rights reserved by Bobcat Company - 02/11/2016 - 14:15:02 - Produced by Ken Cook Co. with mediaoff

NUMERICAL INDEX (Cont'd)

Part No.	Description	Was	Code	Page
7120108	DISC			61
7120109	SHAFT			55, 57, 61
7120111	BRAKE, DISC	6716228	A	59
7120279AR	KIT, DECAL			399, 403
7120279BR	KIT, DECAL			399, 403
7120279JP	KIT, DECAL			399, 403
7120498	BUSHING, TAPERED			37
7120590	DECAL			403
7120693	DECAL			115, 403
7120881	SCREEN, FILLER	6569219	A	41
7120899	KIT, POWER BOB-TACH			523
7121152	HOSE	7109343	B	121
7121223	CAP. DIESEL LOCKING			41
7121399	SPRING			85, 91, 95, 99, 105, 109
7121568	KIT, REAR AUX			535
7121572	DECAL PACKAGE	6725513	A	449, 453
7121695	TUBE			535
7121696	TUBE			535
7121779	PAD			143
7122028	KIT, HORN			495
7122095	INSULATION			561, 565
7122096	INSULATION			561, 563, 565
7122184	HARNESS			247
7122185	TUBE			125, 129
7122214	ADAPTER			139
7122291	CHAINCASE			45
7122359	BRACKET			249, 253
7122462	KIT, RIB WINDOW			389
7122487	2 SEAL, WIPER			385, 389
7122488	SEAL, BULB (BULK/FOOT)			385, 389
7122502	INSULATION			567
7122503	INSULATION			567
7122519	ELBOW			41
7122520	HOSE			115
7123794	HARNESS			249
7123816	MOUNT RH			247, 249, 253
7123817	MOUNT LH			247, 249, 253
7123941	PEDAL ASSEMBLY			81, 347
7123942	PEDAL ASSEMBLY			81, 347
7123963	SEAL KIT, EXTERNAL FITTING			85, 91, 95, 99, 105, 109
7123964	KIT, SEAL			85, 91, 95, 99, 105, 109
7123965	KIT, SEAL			85, 91, 95, 99, 105, 109
7124127	TEE			125
7124128	HOSE			125
7124129	HOSE			125
7124130	HOSE			125
7124133	ADAPTER			125
7124255	TUBE			535
7124256	TUBE			535

Code for disposition of old part number

A -- Use up
B -- Use on other application (See PNI)
C -- File PDR Report with Bobcat Parts Sales
D -- Part Number Error

Page 645 - OSS# 6300202494 - All rights reserved by Bobcat Company - 02/11/2016 - 14:15:02 - Produced by Ken Cook Co. with media1off

NUMERICAL INDEX (Cont'd)

Part No.	Description	Was	Code	Page
7124257	TUBE			535
7124258	TUBE			535
7124294	GUARD			41
7124326	RETAINER			41
7124571	SPACER			505
7124572	SPACER			505
7124893	HARNESS			257
7124929	BASE			247, 249, 253
7125070	HOSE			139
7125072	MOUNT			139
7125403	ROD	7114667	B,D	285
7125557	HOSE, HEATER FORMED			471
7126166	HOSE			73, 139
7126167	HOSE ASSY			73
7126464	HOSE, FUEL W/ELBOW			41
7126558	KIT, JOYSTICK			245, 247
7126608	MSHA KIT			513
7126869	BRACKET	6726573	A	257, 347
7128600	BRACKET			143
7128601	BRACKET			143, 243
7129922	HEATER COIL KIT	6689770	A	467
7129949	COVER			15
7129987	COVER	6733956	A	59, 61
7130074	CHAINCASE			45
7131233	PEDAL			517
7131236	BUSHING			517
7131254	BRACKET, MOLDED SKI			233, 237
7131273	SCREW	59CM1240	B	151, 281
7131322	COVER	6687993	C	161
7131518	DECAL			247, 249, 253
7131519	DECAL			247, 249, 253
7131520	DECAL			247
7131521	DECAL			247
7131522	DECAL			247
7131523	DECAL			247
7131580	KIT, WINDOW SIDE		A	385
7131601	HARNESS, PUMP	7114735	B,D	245, 249
7131872	SPACER			271
7131873	WASHER			271
7132542	TUBELINE			135
7132554	HOSE			135
7133211	TANK, WASHER	6736875	A	365, 369
7134137	SPROCKET	6577204	A	45, 49
7134520	PLUG	6817707	A	85, 91, 95, 99, 105, 109
7134522	PLUG	6815014	A	85, 95, 99, 105, 109
7135557	KIT, SEAL	6816535	A	79
7135569	DECAL			545
7136044	HARNESS			249
7136052	MOUNT			135
7136378	TANK, FUEL	7112782	A	41

Code for disposition of old part number

A -- Use up
B -- Use on other application (See PNI)
C -- File PDR Report with Bobcat Parts Sales
D -- Part Number Error

Page 646 - OSS# 6300202494 - All rights reserved by Bobcat Company - 02/11/2016 - 14:15:02 - Produced by Ken Cook Co. with mediaIoff

NUMERICAL INDEX (Cont'd)

Part No.	Description	Was	Code	Page
7136650	BRACKET			115
7136678	DECAL			579
7136679	DECAL			579
7136696	COVER	6726069	A	13
7138014	SEAL KIT	6803473	A	525, 527
7138347	HANDLE	6718521	B	365, 369, 375
7138376	BUSHING	6804920	B	85, 91, 95, 99, 105, 109
7138452	HOSE			139
7138454	HOSE			139
7138645	BRACKET			19, 23, 223, 227
7138770	HARNESS			257
7139183	SHIELD			31, 33
7139184	INSULATION	6718489	A	17
7139311	HARNESS, CAB DLX			227
7139414	HARNESS, MFR			237
7139420	LINK			143
7139421	LINK			143
7139785	HARNESS, DOOR REAR			511
7140056	SOUND KIT			561
7140057	SOUND KIT			563
7140589	TUBE			139
7140590	TUBE			139
7140768	KIT			579
7140865	TUBE	7132069	C	139
7140866	TUBE	7132070	C	139
7140928	VALVE, RELIEF			139
7141369	HARNESS, KIT ROAD			427, 431, 433
7141606	MAINFRAME			13
7141653	PLATE			135
7141656	PLATE			13
7141766	KIT			501
7141805	ELBOW			139
7141968	PANEL, RH			31, 33
7142024	SCREW	25GT410	B	389
7142376	HARNESS			229, 233
7143070	HARNESS			223
7143071	HARNESS			223
7143188	TUBE			139
7143189	TUBE			139
7143508	BOB-TACH	6732537	A	39
7144130	TUBE	7125065	C	139
7144131	TUBE	7125066	C	139
7144132	TUBE	7125068	C	139
7144233	HARNESS, ENG			229
7144550	BRACKET, TIE-DOWN			243
7145528	DECAL	6737626	A	403
7147359	BLADE, WIPER WINDOW			373
7147580	MOUNT	7100795	A	143
7147655	WINDOW, DOOR CURVED CAB			373

Code for disposition of old part number

A -- Use up
B -- Use on other application (See PNI)
C -- File PDR Report with Bobcat Parts Sales
D -- Part Number Error

Page 647 - OSS# 6300202494 - All rights reserved by Bobcat Company - 02/11/2016 - 14:15:02 - Produced by Ken Cook Co. with media1off

NUMERICAL INDEX (Cont'd)

Part No.	Description	Was	Code	Page
7147826	BOLT, CROSS DRILLED			213, 271
7148195	INSULATION HEADLINER			19, 23
7148197	INSULATION			19, 23
7148198	INSULATION			19, 23
7148199	INSULATION	6717519	A	19, 23
7148200	INSULATION	6717520	A	19, 23
7149221	HARNESS, AUX REAR			535
7149336	HARNESS, CAB			227
7151691	HARNESS, BRAKE LIGHTS			427, 431, 433
7151696	HARNESS, STOP LIGHTS			427, 433
7151940	HARNESS, HORN			499
7152006	SHIELD	6733912	A	13
7152163	INSULATION, STRIP			561, 563
7152171AR	KIT, TRANSLATION			399, 403
7152616	HARNESS, ADAPTER			247
7153089	LIGHT, FRONT ASSY			427, 431, 433
7153090	HARNESS, LIGHT LICENSE			427, 431, 433
7153099	BRACE, CAB	7121556	A	389
7153518	BRACKET			427
7153519	SHAFT, SPINDLE			427, 431, 433
7153520	BRACKET			427
7153521	SHAFT, SPINDLE			427, 431, 433
7153522	MIRROR, SIDE HEAD			427, 431, 433
7153544	HOUSING	7104117	A	271
7154351	KIT, AUX REAR			535
7154546	WASHER, WAVE			143
7155044	BRACKET			427, 431
7155781	FLYWHEEL, ENG ASSY			277
7156220	BRACKET			427, 431, 433
7156265	COVER			59, 61
7156351	BRACKET			427, 431, 433
7156758	INSULATION, STRIP			385
7157217	BOLT			237
7157452	HOOK, BOBTACH			427
7157453	MOUNT, ATTACH			427
7157454	PIN			427
7157456	MOUNT, ATTACH			427
7157740	SPACER			427, 431, 433
7157745	SLOW MOVING PLATE - 12			427, 431, 433
7157890	GAS SPRING	6678292	A	445
7157891	GAS SPRING	7100508	A	15
7157892	GAS SPRING	7100506	A	15
7157893	GAS SPRING	6682586	A	365, 369, 375
7159445	HARNESS			229, 237
7159447	HARNESS			257

Code for disposition of old part number

A -- Use up
B -- Use on other application (See PNI)
C -- File PDR Report with Bobcat Parts Sales
D -- Part Number Error

Page 648 - OSS# 6300202494 - All rights reserved by Bobcat Company - 02/11/2016 - 14:15:02 - Produced by Ken Cook Co. with mediaoff

NUMERICAL INDEX (Cont'd)

Part No.	Description	Was	Code	Page
7159779	DECAL			237, 399
7160395	CYLINDER, POWER BOB-TACH			523, 527
7160396	TUBE, CYL			527
7160425	BUSHING, TAPERED			37
7160443	SEAL			569
7161046	HOSE, HYD			523
7161047	HOSE, HYD			523
7161187	SHAFT, TRANS	6733621	A	51, 53, 59
7161786	VALVE, POWER BOB-TACH			531
7162194	MOUNT, TANK COOLANT	6732870	A	271
7163320AR	KIT, DECAL			399, 403
7163320BR	KIT, DECAL			399, 403
7163320JP	KIT, DECAL			399, 403
7165185	HARNESS	7112290	B	523
7165265	SEAL, WINDOW			19, 23, 385
7166047	SEAT, CHECK VALVE			85, 91, 95, 99, 105, 109
7166137	KIT HEATER			453
7166140	KIT, A/C			477
7166339	SPRING, LOAD CHECK			85, 91, 95, 99, 105, 109
7166676	INSULATOR	7109317	A	569
7166916	DECAL, A/C			477
7168019	DECAL, WARNING			507, 509
7168020	DECAL, WARNING			507, 509
7169112	SWITCH, ROCKER A/C	6719176	A	473, 477, 491
7169538	HARNESS, SWITCH IGN			227
7170753	KIT, PANEL KEYLESS	NLA	D	503
7170779	HARNESS, SWITCH IGN			503
7174209	KIT, HORN W/JOYSTICK			499
7175394	HEATER CAB	6691439	A	453, 459
7175395	HVAC ASSY			487
7175397	GROMMET			459, 487
7178411	HARNESS, ADAPTER			245, 249
7179837	SENSOR FUEL	6680436	A	41, 233, 237
7184230	VALVE, CONTROL SERVICE			109
7184231	VALVE, CONTROL SERVICE			95
7184777	DECAL, CAPACITY LIFT	6737151	A	395, 399
7185234	KIT, REMOTE CONTROL	7141291	A	545
7188108	GAS SPRING			143
7188371	ARM, WIPER	7188371	A	373
7188372	BLADE, WIPER WINDOW			373

Code for disposition of old part number

A -- Use up
B -- Use on other application (See PNI)
C -- File PDR Report with Bobcat Parts Sales
D -- Part Number Error

Page 649 - OSS# 6300202494 - All rights reserved by Bobcat Company - 02/11/2016 - 14:15:02 - Produced by Ken Cook Co. with media1off

NUMERICAL INDEX (Cont'd)

Part No.	Description	Was	Code	Page
7188448	HARNESS, PUMP	7169309	A	249, 253
7191035	LENS, REFLECTIVE			431, 433
7191193	KNOB	6678755	B	431, 433
7191233	BRACE, AXLE			45
7192812	KIT, INSERT STC			133, 135
7194092	BRACKET, RH	7153518	B	431, 433
7194093	BRACKET, LH	7153520	B	431, 433
7198706	HARNESS, PUMP	7139761	A	249, 253
7202038	BUSHING, ALIGNMENT	6805102	A	85, 91, 95, 99, 105, 109
7203382	PLUG, STEEL	6717401	A	41
7209459	SPOOL, LIFT	7108241	C	105, 109
7209460	SPOOL, LIFT LOCK	7108781	C	85, 91, 99
7211397	WASHER, SPRING	6587523	A	85, 91, 95, 99, 105, 109
7214135	HARNESS, SJC			253
7214504	CARRIER, MOTOR	7148364		55
7216445	BUSHING, WELD-ON	6732265		37
7217290	HOSE, HYD			569
7218166	CARRIER, MOTOR	7148363	A	51
7219324	VALVE, RELIEF	6686360	A	85, 91, 95, 99, 105, 109
7219755	PUMP, PRIMER HAND			41
7223716	BRACKET, MOUNTING			437
7224664	EXTINGUISHER, FIRE			437
7224665	BRACKET, EXTINGUISHER FIRE			437
7228250	TIRE, SOLID FLEX LH			577
7228251	TIRE, SOLID FLEX RH			577
7230495	VALVE, LIFT MANUAL	6667844	A	71, 113
7232566	WHEEL, RIM 16.5X8.25	6730771	A	575
7232567	WHEEL, RIM 16.5X9.75	6730772	A	575
7232568	WHEEL, RIM 16.5X8.25	6730775	A	575
7234369	DECAL, EXIT	6707852	B	365, 369
7234460	WHEEL, RIM			575
7240092	O-RING			477
7240780	COVER, ACCESS	6716010	A	45
7241140	LIGHT, STROBE	7219903	A	427, 573
7241541	HARNESS, KIT ROAD	7151706	A	431, 433
7241542	HARNESS, BOOM	7152108	A	427
7246786	COUPLER, FF FEMALE	6667803	A	443, 535
7246787	COUPLER, FF MALE	6667804	A	443, 535
7249162	LIGHT ASSY DOME LED	6680326	A	19, 23
7254811	GROUP, ROTATING			197
7254812	CONTROL			199
7254813	CONTROL			201
7254817	KIT, SEAL			193
7254818	GROUP, ROTATING			195

Code for disposition of old part number

A -- Use up
B -- Use on other application (See PNI)
C -- File PDR Report with Bobcat Parts Sales
D -- Part Number Error

Page 650 - OSS# 6300202494 - All rights reserved by Bobcat Company - 02/11/2016 - 14:15:02 - Produced by Ken Cook Co. with mediaoff

NUMERICAL INDEX (Cont'd)

Part No.	Description	Was	Code	Page
7254822	GROUP, ROTATING			195
7254825	GROUP, ROTATING			197
7254827	BEARING			195, 197
7254829	BUSHING			195, 197
7254831	PLATE, CONTROL			195
7254832	PLATE, CONTROL			197
7254835	COUPLER			193
7254836	FILTER			193
7254837	PIN			193
7254838	SHAFT			193
7255629	PLATE	7188373	A	373
7256347	LENS, REFLECTIVE	6697797	A	427, 573
7259523	LIGHT, LED LH			511
7259524	LIGHT, LED RH			511
7260106	COVER, SEAT			559
7260107	COVER, SEAT HEATED			559
7266394	LENS, RED STOP			431, 433
7266558	SPOOL, LIFT LOCK	7209460	A	95
72F1	FITTING			41
73G1028	BOLT			139
73G624	BOLT			143
73G632	SCREW			509
73G652	SCREW HEX SOCKET HD			507
73G656	SCREW			519, 523
73G828	BOLT			143
73K013	RING, BACK-UP			91, 95, 105, 109
73K016	RING, BACK-UP			85, 91, 95, 99, 105, 109
73K222	RING			525, 527
73K328	RING			79
743332	FITTING, GREASE 5			39
75K3	RING,O			77, 79, 525, 527
75K6	O-RING			77, 95, 109
774220	NUT			351, 353
799119	RING			85, 91, 95, 99
79K10	O RING 10			63, 67, 85, 91, 95, 99, 105, 109, 115, 137, 153, 361, 363, 529, 531
79K12	O RING 10			73, 121, 125, 129, 133, 137, 139, 157, 535
79K14	O RING 10			357
79K16	O RING 10			85, 99, 105, 121, 125, 129, 133, 135
79K2	O RING 10			271
79K4	O RING 10			531
79K5	O RING 10			41, 147
79K6	O RING 10			71, 73, 85, 99, 105, 121, 125, 129, 137, 139, 147, 363, 443, 535
79K7	O RING 10			529, 531
79K8	O RING 10			63, 67, 85, 91, 95, 99, 105, 109, 129, 137, 153, 157, 281, 529, 531
7D4	NUT			71, 113
80K13	WASHER			85, 99
80K332	WASHER			77
82K019	O-RING			95, 109

Code for disposition of old part number

A -- Use up
B -- Use on other application (See PNI)
C -- File PDR Report with Bobcat Parts Sales
D -- Part Number Error

Page 651 - OSS# 6300202494 - All rights reserved by Bobcat Company - 02/11/2016 - 14:15:02 - Produced by Ken Cook Co. with media1off

NUMERICAL INDEX (Cont'd)

Part No.	Description	Was	Code	Page
82K132	O-RING HYDRAULIC	58K132	B	525, 527
82K140	RING,O			79
83D4	NUT 10			27, 71, 233, 237, 495, 497, 499
83D5	NUT 5	57D5	B	361, 385, 473, 477, 491, 495, 497, 499
83D6	NUT 5			13, 71, 121, 125, 129, 139, 143, 413, 415, 435, 535
83D8	NUT 5			13, 281
83F3	ELBOW 5			419
84G1320	BOLT			351
84G3110	SCREW			491
84G3112	BOLT 5			15, 31, 33, 41, 115, 229, 233, 237, 271, 399, 411, 413, 415
84G3116	SCREW			41, 233, 237
84G3708	SCREW			31, 133, 135, 271, 275
84G3710	SCREW			121, 125, 129, 135, 257, 347, 361, 469, 473, 477, 491
84G3712	BOLT 5			13, 19, 23, 31, 33, 41, 45, 63, 67, 133, 137, 223, 227, 229, 243, 275, 281, 285, 287, 443
84G3716	SCREW 5			41, 45, 59, 61, 121, 125, 129, 281, 285, 471, 473, 477
84G3720	BOLT			59, 61, 129, 287, 345
84G3724	BOLT			237, 519, 523, 535
84G3728	BOLT			63, 67, 285, 287
84G3732	BOLT			121, 125, 129
84G3740	BOLT			73
851242	BEARING			317
85D5	NUT 5			41, 285, 287, 517
85D6	NUT, 5			17, 35, 37, 39, 287, 507
85D7	NUT			17, 557
85D8	NUT, 5			15, 277, 281
85G616	SCREW 10			427, 431
866028	CLAMP			343
86F3	NUT 10			419
86F5	NUT			443, 535
86F8	NUT 5			133, 135
872229	WASHER			63, 67, 73
87D5	NUT			507, 509
88F5	ELBOW			535
898731	1156 BULB			511
89D5	NUT			33, 249, 253, 517
8D4	NUT	6631561	A	363
8D6	NUT 5			143, 419
91D5	NUT 5			419
91G420	SCREW			19, 23, 385
91K5	TEE			535
92D10	NUT			525, 527
92D12	NUT 5			277
92D16	NUT			77
93G1032	BOLT			45
93G824	BOLT	73G824	A	45, 143
95D5	NUT			229, 257, 347, 511
95D6	NUT			81, 115, 133, 135, 137, 143, 257, 271, 285, 375, 419

Code for disposition of old part number

A -- Use up
B -- Use on other application (See PNI)
C -- File PDR Report with Bobcat Parts Sales
D -- Part Number Error

Page 652 - OSS# 6300202494 - All rights reserved by Bobcat Company - 02/11/2016 - 14:15:02 - Produced by Ken Cook Co. with mediaoff

Part No.	Description	Was	Code	Page
96D8	NUT			271
97D4	NUT			351, 353
97D5	NUT			229, 233, 237, 407
97D6	NUT 10			27, 233, 237, 245, 247, 249, 253, 473, 477, 491, 499
97D8	NUT			15, 445
98D6	NUT			143, 257
98G412	BOLT			265

Page 653 - OSS# 6300202494 - All rights reserved by Bobcat Company - 02/11/2016 - 14:15:02 - Produced by Ken Cook Co. with media1off

Code for disposition of old part number

A -- Use up
B -- Use on other application (See PNI)
C -- File PDR Report with Bobcat Parts Sales
D -- Part Number Error