RUTHZIL TRATOR COMERCIAL DE PEÇAS LTDA 11 97083-6812 ROLANDO

S175

Bobcat®

Parts Manual

5301 11001 & Above

5302 11001 & Above

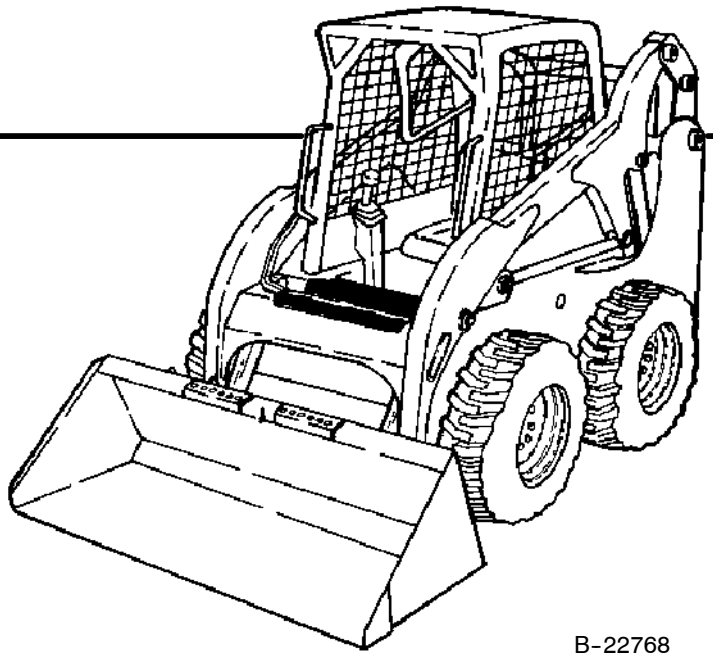

B-22768

EQUIPPED WITH BOBCAT INTERLOCK CONTROL SYSTEM (BICS™)

A Ingersoll-Rand Company

6904271 (12-05)

Printed in U.S.A.

© Bobcat Company 2005

GENERAL INFORMATION

Before ordering parts, ALWAYS provide dealer with your product model number and complete serial number information. Before ordering parts, verify correct part numbers and/or serial numbers with your dealer. When using the machine serial number, use the complete number.

Some Serial Number breaks are not available at time of printing.
These are listed as & Bel or & Abv or - (thru)

The number shown in the quantity column in this manual is the number of parts needed for the illustration on the page. For some parts an "x" will be shown in the quantity column. This "x" indicates that the quantity to be used is "As Needed".

When references L.H. (Left Hand) and R.H. (Right Hand) are used in this manual, it is done from the operator's seat in the forward operating position.

When "See Illustration...." appears in the remarks column, refer to the contents page for the illustration title to find page number location.

Some of the illustrations and information found in this parts manual were supplied to Bobcat by machine component companies.

For additional information on the Bobcat website visit www.bobcat.com

ABBREVIATIONS

SALES	=	Order from Gwinner Sales Department	W/	=	With
NSS	=	Not Serviced Seperately	W/O	=	Without
NAP	=	Not Available as Parts	I.D.	=	Inside Diameter
BTI	=	Bobcat Technical Information Bulletin	O.D.	=	Outside Diameter
P/M	=	Parts Manual	"	=	Inches
O/M	=	Operation & Maintenance Manual	'	=	Feet
S/M	=	Service Manual	mm	=	Millimeters
S/L	=	Service Letter			

DISPOSITION CODE DEFINITIONS

(Found in Remarks Column)

[A]	=	Use Up
[B]	=	Use Up on Other Application
[C]	=	File PDR Report with Bobcat Parts Sales
[D]	=	Part Number Error

NOTE D'INFORMATION

Pour toute référence au numéro de série de l'engin, toujours donner le numéro complet.

Le chiffré apparaissant dans la colonne des quantités de ce manuel représentent le nombre de pièces nécessaires pour l'illustration reprise sur la page. Dans certains cas, on lira un "x" dans la colonne des quantités. Cet "x" indique que la quantité nécessaire est "selon besoin".

Pour toute référence vers la GAUCHE ou la DROITE dans ce manuel, considérer que la personne se trouve assise dans le siège de l'opérateur, en position de fonctionnement en marche avant.

Certaines illustrations et informations reprises dans ce manuel de pièces de rechange ont été fournies à Bobcat/Ingersoll–Rand par des fabricants de composants.

ABREVIATIONS & SYMBOLES

SALES	= Commander au Service Ventes à Bruxelles
NSS	= Pas vendu séparément
NAP	= Non disponible comme pièce de rechange
*****	= Chapitre, page ou numéro de pièce modifié ou supplémentaire
BTI	= Bobcat Technical Information Bulletin : voir à la fin de la microfiché du modèle concerné ou la microfiche générale reprenant l' ensemble des "BTI".
was 6535403	= était avant 6535403
adj. (adjustment)	= réglage
Assembly	= ensemble
available W/Ref.	= disponible avec réf.
bulk/sold per foot	= en vrac/vendu par pied
does not include	= ne comprend pas
included with	= compris dans
I.D.	= D.I. (diamètre intérieur)
O.D.	= D.E. (diamètre extérieur)
not in kit	= pas en kit
W/ – WO/	= inclus/ – non inclus/
Qty	= quantité requise
see page/ref.	= voir page/réf.
used with ref/	= utilisé avec réf.
0,05 inch thickness	= 0,05 pouce d'épaisseur (un pouce = 25.4 mm)
weld on	= à souder

ALLGEMEINE INFORMATIONEN

Bei Angabe der Maschinen-Seriennummer stets die komplette Nummer angeben.

Bei der in der Mengenspalte (Anzahl) in diesem Handbuch angegebenen Zahl handelt es sich um die Anzahl von Teilen, die für die Abbildung auf der betreffenden Seite benötigt werden. Bei manchen Teilen in der Mengenspalte ist ein “x” angegeben. Dieses “x” weist darauf hin, dass sich die Anzahl der verwendeten Teile auf den “Bedarf” bezieht.

Bei Verwendung der Seitenangaben links und rechts in diesem Handbuch gelten diese für die Blickrichtung vom Fahrersitz aus, und zwar in Vorwärts-Betriebsrichtung.

Einige der in diesem Ersatzteilhandbuch aufgeführten Abbildungen und Informationen wurden der Bobcat/Ingersoll-Rand von den Herstellern von Maschinenbauteilen zur Verfügung gestellt.

ABKÜRZUNGEN UND SYMBOLE

SALES	= Bestellung bei der Verkaufsabteilung in Brüssel
NSS	= Nicht einzeln erhältlich
NAP	= Nicht als Ersatzteil erhältlich
*****	= Geänderte oder hinzugefügte Abschnitte, Seiten oder Teilenummern
BTI	= Bobcat Technical Information Bulletin : Siehe am Ende der Mikrokarte des jeweiligen Modells oder der allgemeinen Mikrokarte der BTI.
was 6535403	= War 6535403
adj.	= Einstellung
Assembly	= Baugruppe
available W/Ref.	= erhältlich mit der Referenz
bulk/sold per foot	= Mengenabnahme / Verkauf pro Fuss
does not include	= beinhaltet nicht
included with	= enthalten in
I.D.	= Innendurchmesser
O.D.	= Aussendurchmesser
not in kit	= nicht in Bausatz
W/ - WO/	= mit/ - ohne/
Qty	= Anzahl
see page/ref.	= Siehe Seite / Referenz
used with ref.	= verwendet mit Referenz
0.05 inch thickness	= Dicke : 0.05 Zoll (ein Zoll = 25.4 mm)
weld on	= anschweissen

INFORMAZIONI GENERALI

Quando si usa il numero di serie della macchina usare il numero completo.

Il numero mostrato nella colonna della quantità di questo manuale corrisponde al numero di componenti necessari per l'illustrazione della pagina. Per alcuni componenti appare "X" nella colonna delle quantità. Questa "X" indica che la quantità da usare è "come necessario".

See in questo manuale si fa riferimento alla parte destra o sinistra, si intende dal sedile dell'operatore nella posizione in avanti di funzionamento.

Alcune delle illustrazioni e informazioni trovate in questo manuale di componenti sono state fornite alla Bobcat/Ingersoll–Rand da società di componenti di macchine.

SIMBOLI E ABBREVIAZIONI

SALES	= Ordinare al servizio vendite di Bruxelles
NSS	= Non vendute separatamente
NAP	= Non disponibile come componente
*****	= Sezioni, pagine o numeri di componente cambiati o aggiunti
BTI	= (Bobcat Technical information) Ved. al termine del microfiche del modello relativo oppure microfiche generale
was 6535403	= era 6535403
adj. (adjustment)	= regol. (regolazione)
Assembly	= Complessivo
available W/Ref.	= disponibile con rif.
bulk/sold per foot	= alla rinfusa/venduto al piede
does not include	= non comprende
Included with	= compreso con
I.D.	= d. i.
O.D.	= d. e.
not in kit	= non fa parte del kit
W/ – WO/	= con – senza
Qty	= Qtà
see page/ref	= ved. pagina/rif.
used with ref.	= usato con il rif.
0,05 inch thickness	= spessore 0,05 pollici (un pollice = 25,4 mm)
weld on	= a saldare

INFORMACION GENERAL

Al utilizar el número de serie de la máquina, debe emplearse el número completo.

El número que figura en la columna de “Unidades” en este manual es el número de piezas que se necesitan para la ilustración que consta en la página. En algunas piezas aparece una “x” en la columna de “Unidades”. Esta “x” indica que las unidades a utilizar son “según sea necesario”.

Cuando se empleen las referencias izq. y dcha., éstas se entienden mirando desde el asiento del conductor, en posición de marcha adelante.

Algunas de las ilustraciones y la información que figuran en este manual de piezas han sido facilitadas a Bobcat/Ingersoll–Rand por empresas de componentes de máquinas.

ABREVIATURAS Y SIMBOLOS

VENTAS	= Pedido al Departamento de Ventas de Bruselas
NSS	= No se vende por separado
NAP	= No disponible como pieza de repuesto
*****	= Secciones, páginas o referencias modificadas o añadidas
BTI	= (Bobcat Tecnical Information) Ver al final de la microficha del modelo afectado o en la microficha general “Boletín de Información Técnica Bobcat”.
was 6535403	= era anteriormente el 6535403
adj. (adjustment)	= ajuste
assembly	= conjunto
available W/Ref.	= disponible con la ref.
bulk/sold per foot	= a granel/vendido por pies
does not include	= no incluye
included with	= incluido en
I.D.	= diámetro interior
O.D.	= diámetro exterior
not in kit	= no en el kit
W/ – WO/	= con/ – sin
Qty	= Unidades
see page /ref.	= ver página/ref.
used with ref.	= empleado con la ref.
0,05 inch thickness	= 0,05 pulgadas de espesor (1 pulgada = 25,4 mm)
weld on	= debe ser soldado

ALGEMENE INFORMATIE

Als u het serienummer van de machine gebruikt, geef dan het gehele serienummer.

Het cijfer dat voorkomt in de kolom “Aantal”, in deze handleiding, is het aantal onderdelen dat nodig is van de illustratie op de pagina. Voor sommige onderdelen staat er een “x” in de kolom “Aantal”. Deze “x” betekent dat er een aantal “zoals nodig” vereist is.

Wanneer er in deze handleiding naar “links” en naar “rechts” gerefereerd wordt, moet dit verstaan worden voor een bestuurder die in de bestuurdersstoel zit in de voorwaartse bedrijfsstand.

Sommige van de illustraties en informatie in deze onderdelen–handleiding werden door firma’s van machine–componenten geleverd aan Bobcat/Ingersoll–Rand.

AFKORTINGEN EN SYMBOLEN

SALES	= Bestellen bij de Verkoopafdeling te Brussel
NSS	= Niet afzonderlijk te verkrijgen
NAP	= Niet beschikbaar als onderdeel
*****	= Gewijzigde of toegevoegde paragrafen, pagina’s of onderdeelnummers
BTI	= Bobcat Technical Information Bulletin : Zie einde van de microfiche van het desbetreffende model of einde van de algemene microfiche die het geheel van alle “BTI” herneemt.
was 6535403	= was vroeger 6535403
adj. (adjustment)	= afstelling
Assembly	= geheel
available W/Ref.	= beschikbaar met ref.
bulk/sold per foot	= bulk/aan de meter verkocht
does not include	= bevat niet
includes with	= is bevat in
I.D.	= ϕ inw. (inwendige diameter)
O.D.	= ϕ uitw. (uitwendige diameter)
not in kit	= niet in de kit
W/ – WO/	= met/ – zonder/
Qty	= vereiste aantal
see page/ref.	= zie pagina/ref.
used with ref/	= gebruikt met ref.
0,05 inch thickness	= 0.05 inch dik (een inch = 25.4 mm)
weld on	= te lassen

Use only Bobcat belts and hoses to maintain maximum service life.

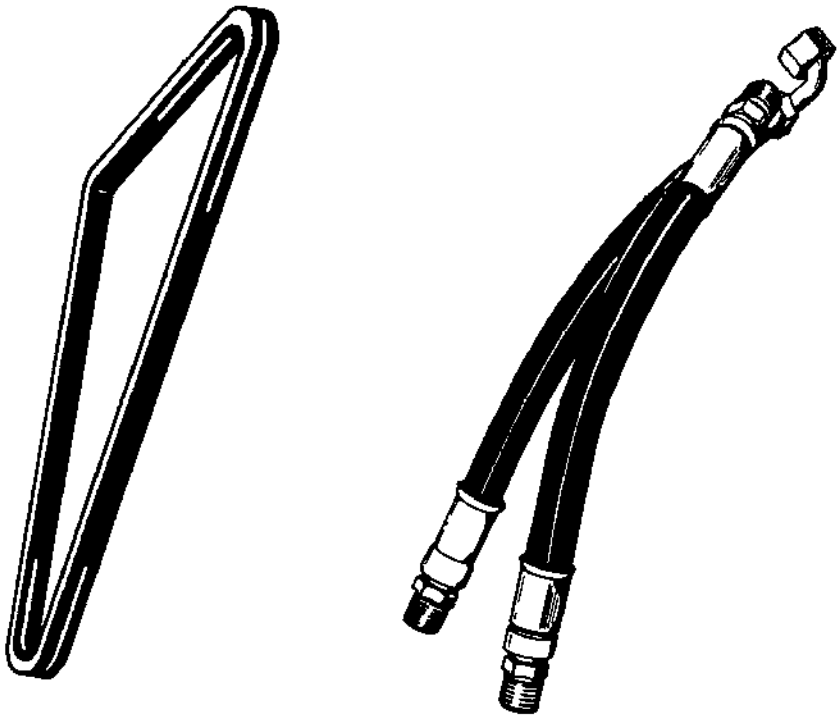

Available from Bobcat Parts.

Bobcat

CONTENTS

MAINTENANCE ITEMS 1-10
MAINTENANCE ITEMS 1
SCHEDULED MAINTENANCE ITEMS 3-10

MAIN FRAME 11-38
MAIN FRAME 11
OPERATOR CAB 13-18
SEAT & SEAT BAR 19
SEAT 21-24
PANELS 25-28
REAR DOOR 29
LIFT ARMS & BOBTACH 31
BOB-TACH 33
FUEL SYSTEM 35-38

DRIVE TRAIN 39-46
DRIVE TRAIN 39
AXLE 41
MOTOR CARRIER 43
DISC BRAKE 45

HYDRAULIC SYSTEM 47-74
HYDRAULIC CIRCUITRY 47-54
MANUAL LIFT RELEASE SYSTEM 55
AUXILIARY HYDRAULICS 57
TILT CYLINDER 59
LIFT CYLINDER 61
CONTROL PEDALS 63
HYDRAULIC CONTROL VALVE 65-72
MANUAL LIFT RELEASE VALVE 73

HIGH FLOW HYDRAULICS 75-82
HIGH FLOW HYDRAULICS 75-82

HYDROSTATIC SYSTEM 83-136
HYDROSTATIC PUMP 101-122
HYDROSTATIC PUMP/GEAR PUMP 123
GEAR PUMP 125-128
MOTOR 129
HYDROSTATIC OIL FILTER 131-136
HYDROSTATIC CIRCUITRY 83-94
HAND CONTROLS 95-98
HYDROSTATIC MOTOR 99

ELECTRICAL SYSTEM 137-158
CAB ELECTRICAL CIRCUITRY 137
ENGINE ELECTRICAL CIRCUITRY 139-142
CONTROLS ELECTRICAL 143-154
ALTERNATOR 155
STARTER 157

POWER UNIT 159-210
COOLING SYSTEM 159
ENGINE & ATTACHING PARTS 161-168
ENGINE SPEED CONTROL 169-172
ENGINE & GASKET KITS 173
GEARCASE 175
CRANKCASE 177
ROCKER ARM COVER 179

CONTENTS (Cont'd)

POWER UNIT

VALVE ROCKER ARM 181
CYLINDER HEAD 183
OIL PAN 185
PISTON & CRANKSHAFT 187
FUEL CAMSHAFT 189
CAMSHAFT 191
WATER PUMP 193
WATER FLANGE & THERMOSTAT 195
MANIFOLDS 197
ENGINE STOP LEVER 199
GOVERNOR 201
SPEED CONTROL PLATE 203
FUEL & INJECTION PUMP 205
INJECTOR NOZZLES 207
AIR CLEANER 209

ACCESSORIES & OPTIONS 211-362

ACCESS COVER 211
ACS CONVERSION KIT 213
AXLE SEAL KIT 215
BACK-UP ALARM KIT 217-220
BEACON 221
BLOCK HEATER 223
BOB-TACH LEVERS 225
BUCKET POSITIONING VALVE KIT 227
BUCKET POSITIONING VALVE 229
CAB DOOR 231-240
CAB ENCLOSURE 241-244
CAB WINDOWS 245-248
COUNTERWEIGHT KIT 249-254
DECALS 255-258
DUAL BATTERY KIT 259
ELECTRICAL CONNECTOR KIT 261
ELECTRICAL CONTROLS KIT 263-268
ENGINE MOUNT KIT 269
EXPORT ACCESSORIES 271-282
EUROPEAN ACCESSORIES 283-286
FIRE EXTINGUISHER 287
F.O.P.S. KIT 289
FLASHER LIGHTS 291
FRONT AUXILIARY 293
GAS SPRING KIT 295
HEATER & A/C 297
HEATER 299-308
HORN KIT 309-312
LIFT KIT 313-320
LIGHT KIT 321
MUFFLER/PURIFIER KIT 323
POWER BOB-TACH KIT 325
POWER BOB-TACH 327-330
REAR AUXILIARY 331
REAR AUXILIARY VALVE 333

CONTENTS (Cont'd)

ACCESSORIES & OPTIONS

REAR DOOR LOCK 335
REAR WIPER 337
SEAL ENCLOSURE KIT 339
SEAT BELT 341-346
SOUND KIT 347
SOUND OPTION 349-352
SOUND REDUCTION HARDHAT 353
STROBE LIGHT 355
TIRES & RIMS 357-360
BULK ITEMS 361

NUMERICAL INDEX 364-409

MAINTENANCE ITEMS

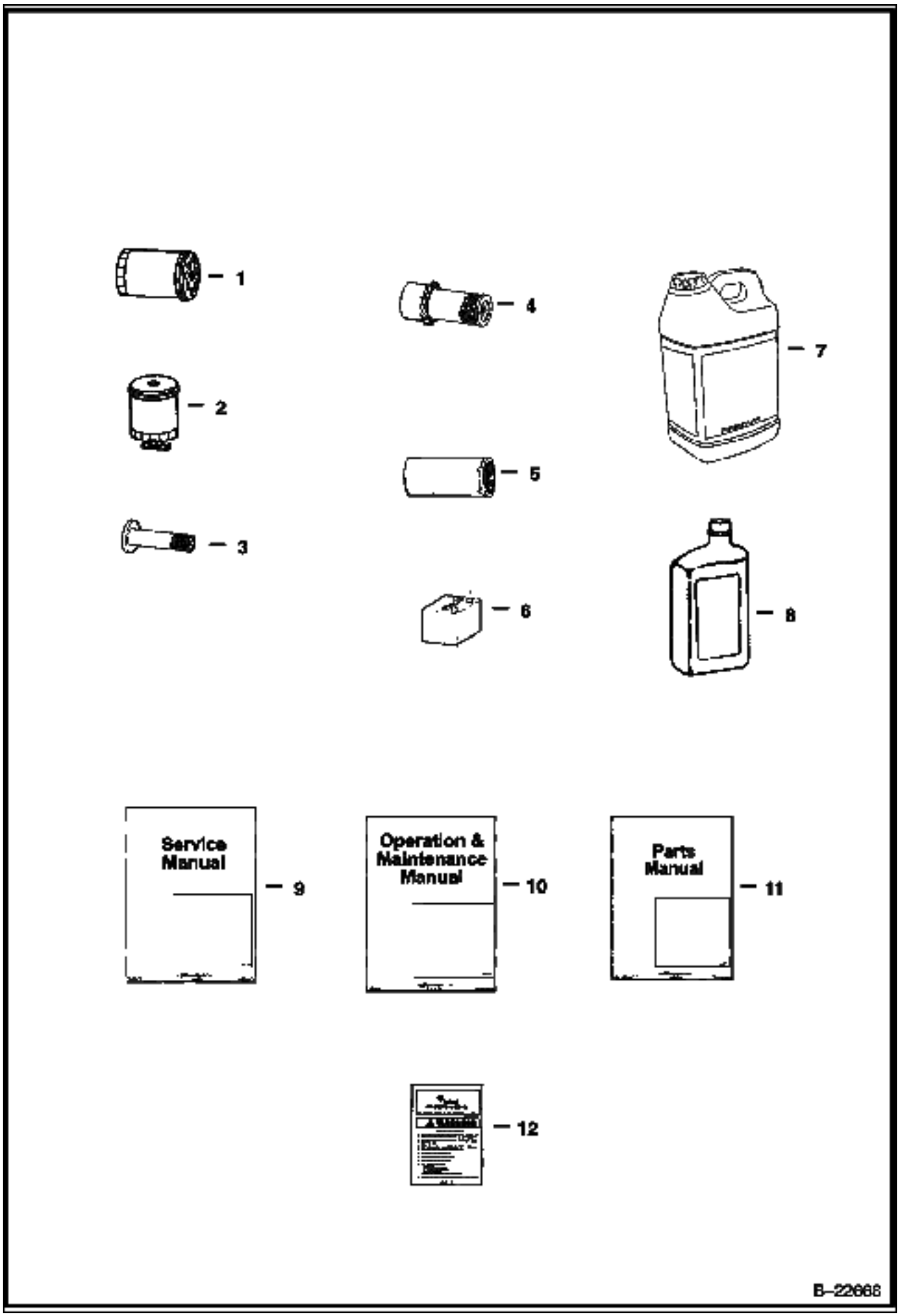

MAINTENANCE ITEMS (Cont'd)

Ref No	Part Number	Description	Remarks	Serial Number	Qty
1	6675517	FILTER	See Illustration GEARCASE/ B22675		x
2	6667352	FILTER FUEL	FUEL		x
3	6598362	ELEMENT	See Illustration AIR CLEANER/ MS2186 INNER AIR CLEANER		x
4	6598492	ELEMENT	See Illustration AIR CLEANER/ MS2186 OUTER AIR CLEANER		x
5	6661248	ELEMENT	See Illustration HYDROSTATIC OIL FILTER/ B16487 HYDROSTATIC # 3 MEDIA		x
6	6674687	BATTERY			x
7	6903117	HYD FLUID 2.5 GAL. 2	See Illustration BULK ITEMS/ B16462R		x
7	6903118	HYD. FLUID 5GAL	See Illustration BULK ITEMS/ B16462R		x
7	6903119	HYD. FLUID 55GAL	See Illustration BULK ITEMS/ B16462R		x
8	6903107	OIL 10W30 QT. 12	See Illustration BULK ITEMS/ B16462R		x
8	6903108	OIL 10W30 GAL. 6	See Illustration BULK ITEMS/ B16462R		x
8	6903112	OIL 10W30 2.5 GAL 2	See Illustration BULK ITEMS/ B16462R		x
8	6903105	OIL 15W40 QT. 12	See Illustration BULK ITEMS/ B16462R		x
8	6903106	OIL 15W40 GAL. 6	See Illustration BULK ITEMS/ B16462R		x
8	6903113	OIL 15W40 2.5 GAL. 2	See Illustration BULK ITEMS/ B16462R		x
8	6903109	OIL 30W QT. 12	See Illustration BULK ITEMS/ B16462R		x
8	6903110	OIL 30W GAL. 6	See Illustration BULK ITEMS/ B16462R		x
8	6903111	OIL 30W 2.5 GAL 2	See Illustration BULK ITEMS/ B16462R		x
9	6904132	S/M S175/S185 "K"	Service		1
10	6904130	O/M S175 "K"	Operation & Maintenance		1
11	6904271	P/M S175K	Parts		1
12	6737783	KIT	See Illustration DECALS/ B26115 Operator		1

SCHEDULED MAINTENANCE ITEMS
(50 HOUR)



B–22774

SCHEDULED MAINTENANCE ITEMS (Cont'd)
(50 HOUR)

Ref No	Part Number	Description	Remarks	Serial Number	Qty
1	6675517	FILTER	See Illustration GEARCASE/ B22675		x
2	6903107	OIL 10W30 QT. 12	See Illustration BULK ITEMS/ B16462R		x
2	6903108	OIL 10W30 GAL. 6	See Illustration BULK ITEMS/ B16462R		x
2	6903112	OIL 10W30 2.5 GAL 2	See Illustration BULK ITEMS/ B16462R		x
2	6903105	OIL 15W40 QT. 12	See Illustration BULK ITEMS/ B16462R		x
2	6903106	OIL 15W40 GAL. 6	See Illustration BULK ITEMS/ B16462R		x
2	6903113	OIL 15W40 2.5 GAL. 2	See Illustration BULK ITEMS/ B16462R		x
2	6903109	OIL 30W QT. 12	See Illustration BULK ITEMS/ B16462R		x
2	6903110	OIL 30W GAL. 6	See Illustration BULK ITEMS/ B16462R		x
2	6903111	OIL 30W 2.5 GAL 2	See Illustration BULK ITEMS/ B16462R		x

SCHEDULED MAINTENANCE ITEMS
(250 HOUR)

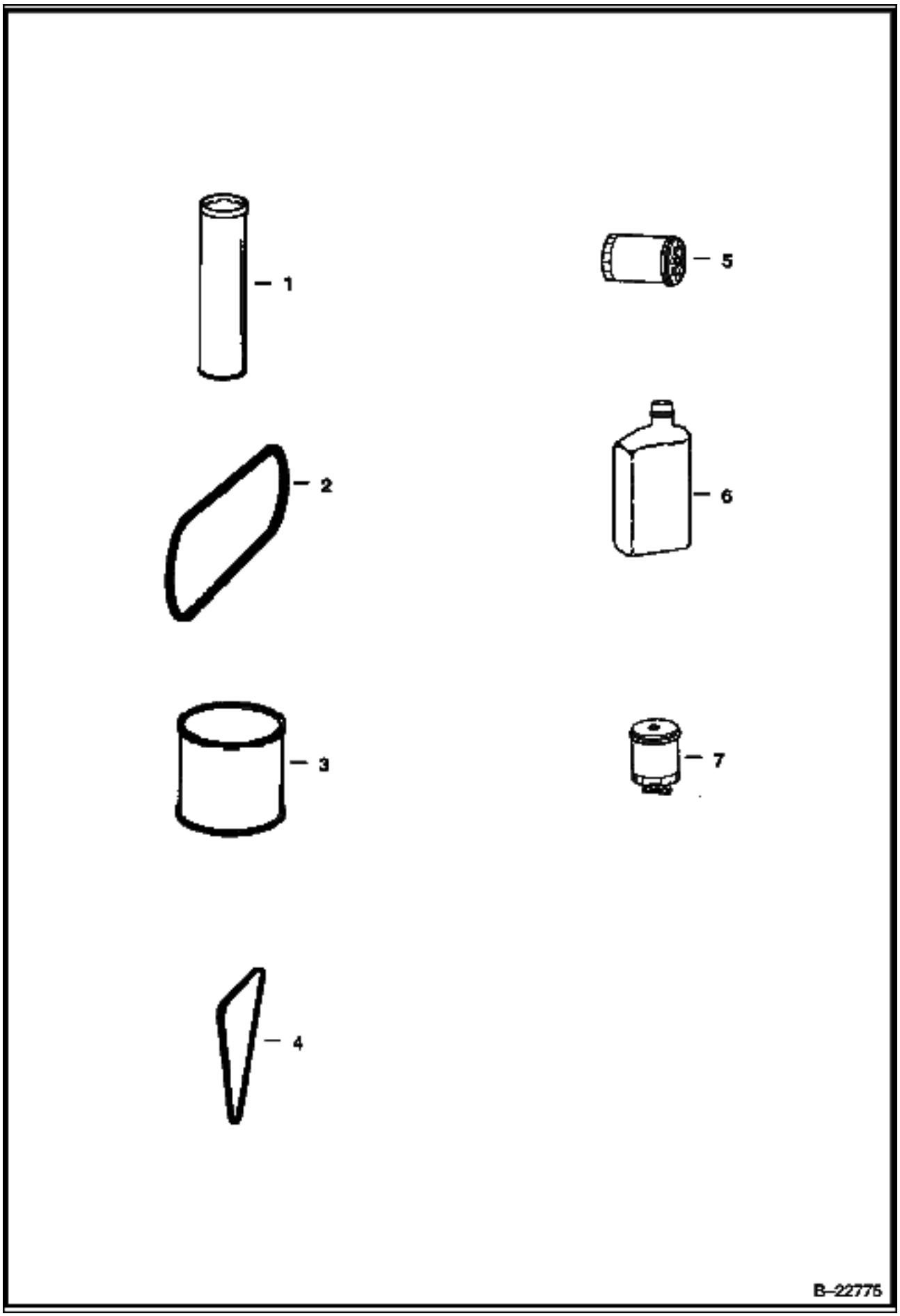

SCHEDULED MAINTENANCE ITEMS (Cont'd)
(250 HOUR)

Ref No	Part Number	Description	Remarks	Serial Number	Qty
1	6903122	GREASE 10			x
2	6726898	BELT	See Illustration ENGINE & ATTACHING PARTS/ E2288R ENG./HYDRO. DRIVE		x
3	6903121	GEAR LUBE 12			x
4	6675837	BELT	ALTERNATOR		x
5	6675517	FILTER	See Illustration GEARCASE/ B22675		x
6	6903107	OIL 10W30 QT. 12	See Illustration BULK ITEMS/ B16462R		x
6	6903108	OIL 10W30 GAL. 6	See Illustration BULK ITEMS/ B16462R		x
6	6903112	OIL 10W30 2.5 GAL 2	See Illustration BULK ITEMS/ B16462R		x
6	6903105	OIL 15W40 QT. 12	See Illustration BULK ITEMS/ B16462R		x
6	6903106	OIL 15W40 GAL. 6	See Illustration BULK ITEMS/ B16462R		x
6	6903113	OIL 15W40 2.5 GAL. 2	See Illustration BULK ITEMS/ B16462R		x
6	6903109	OIL 30W QT. 12	See Illustration BULK ITEMS/ B16462R		x
6	6903110	OIL 30W GAL. 6	See Illustration BULK ITEMS/ B16462R		x
6	6903111	OIL 30W 2.5 GAL 2	See Illustration BULK ITEMS/ B16462R		x
7	6667352	FILTER FUEL	See Illustration BULK ITEMS/ B16462R FUEL		x

SCHEDULED MAINTENANCE ITEMS
(500 HOUR)



B–22778

SCHEDULED MAINTENANCE ITEMS (Cont'd)
(500 HOUR)

Ref No	Part Number	Description	Remarks	Serial Number	Qty
1	6648944	BREATHER	HYD. RESERVOIR BREATHER		x
2	6661248	ELEMENT	See Illustration HYDROSTATIC OIL FILTER/ B16487 HYD./HYDRO.		x

SCHEDULED MAINTENANCE ITEMS
(1000 HOUR)

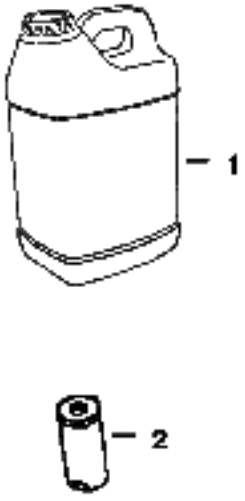

SCHEDULED MAINTENANCE ITEMS (Cont'd)
(1000 HOUR)

Ref No	Part Number	Description	Remarks	Serial Number	Qty
1	6903117	HYD FLUID 2.5 GAL. 2	See Illustration BULK ITEMS/ B16462R		x
1	6903118	HYD. FLUID 5GAL	See Illustration BULK ITEMS/ B16462R		x
1	6903119	HYD. FLUID 55GAL	See Illustration BULK ITEMS/ B16462R		x
2	6661022	FILTER	See Illustration HYDROSTATIC OIL FILTER/ B13527 CASE DRAIN		x

MAIN FRAME

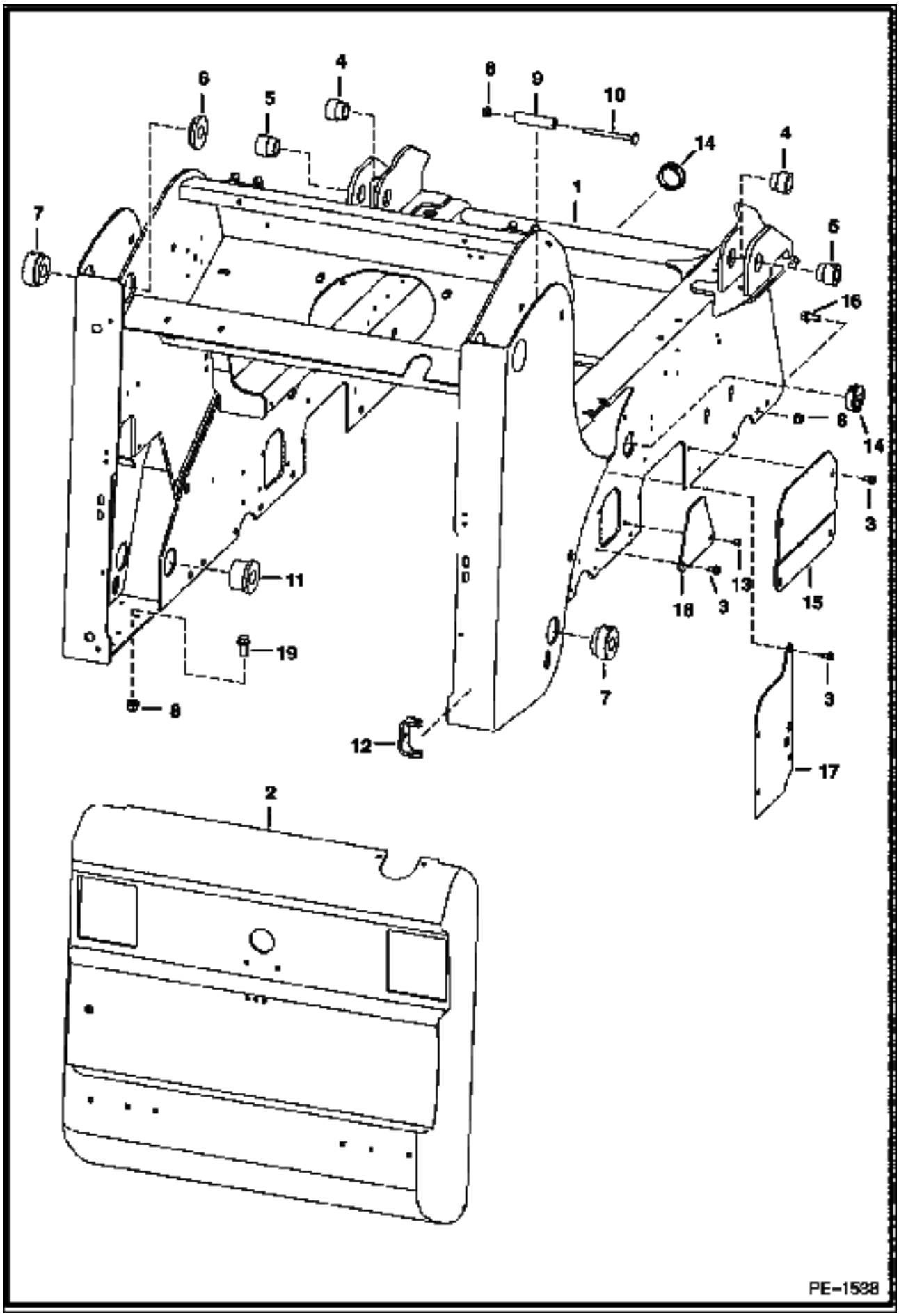

MAIN FRAME (Cont'd)

Ref No	Part Number	Description	Remarks	Serial Number	Qty
1	7103783	MAIN FRAME			1
2	6729991	REAR DOOR	See Illustration REAR DOOR/ PE2252		1
3	84G003712B	BOLT			23
4	6717278	BUSHING	weld on		2
5	6717277	BUSHING	weld on		2
6	6717356	BUSHING	weld on		2
7	6731578	BUSHING	weld on		4
8	83D000008B	NUT			28
9	6732225	SPACER	tube		2
10	37C000888B	BOLT			2
11	6717358	BUSHING	weld on		2
12	6708987	HINGE	hinge - weld on		2
13	61D000006B	NUT			1
14	6706808	COVER			3
15	6719201	COVER			2
16	31C000820B	BOLT			16
17	6726062	SHIELD			2
18	6726069	COVER			2
19	31C000828B	BOLT			10

OPERATOR CAB

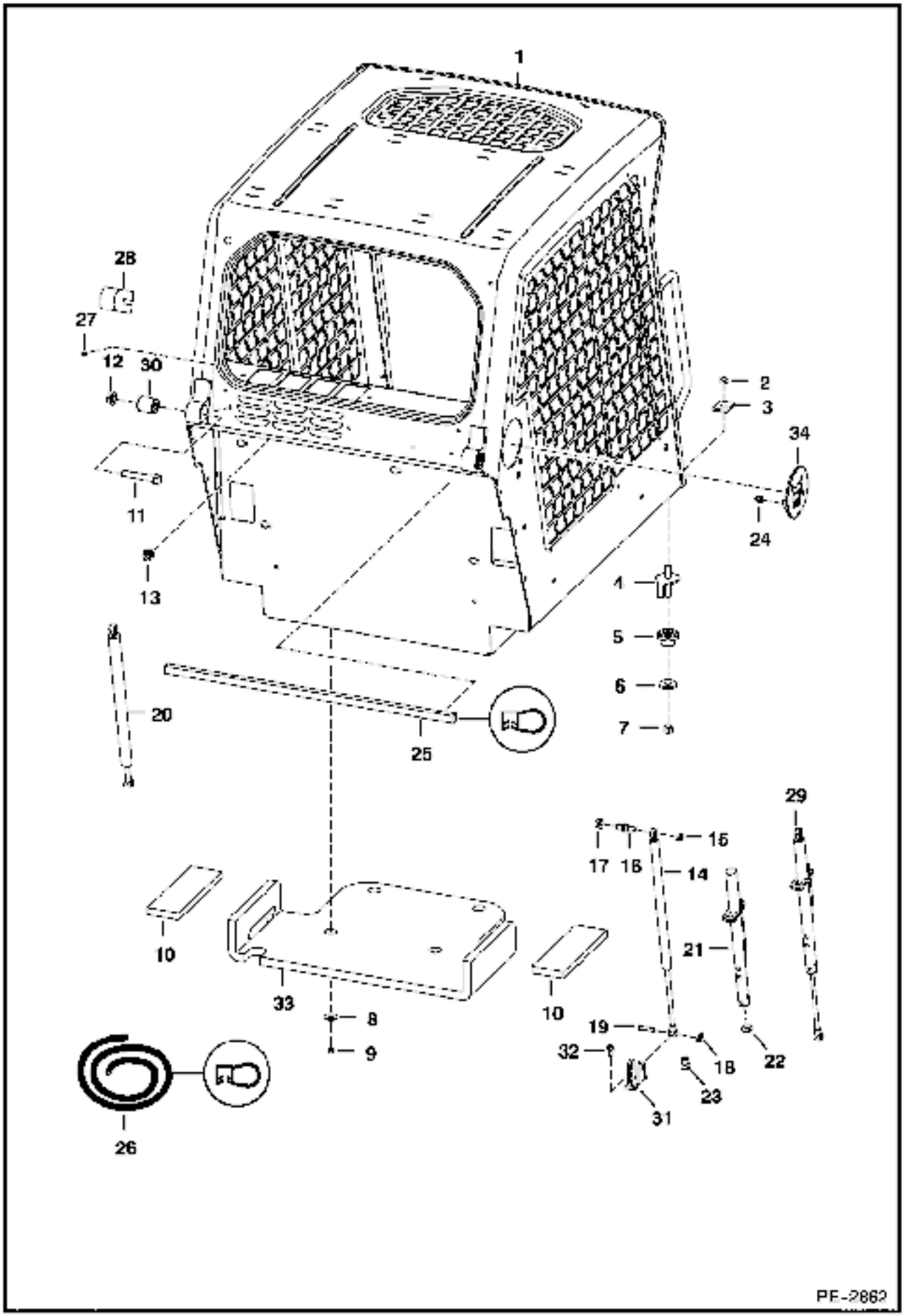

Ref No	Part Number	Description	Remarks	Serial Number	Qty
1	6719672	OPERATOR CAB	Does not include cab decals		1
2	59D000008B	NUT			2
3	6553709	WASHER	rectangular		2
4	6702971	BOLT			2
5	6560633	DAMPENER			2
6	6515817	WASHER			2
7	85D000008B	NUT			2
8	619021B	WASHER			4
9	59D000005B	NUT			4
10	6729012	INSULATION	seat pan		2
11	17C001056B	BOLT			2
12	53D000010B	NUT			2
13	53D000006B	NUT			4
14	7100506	GAS SPRING	R.H.		1
15	6675140	SNAP RING			2
16	6719064	MOUNT			2
17	95D000008B	NUT			2
18	6631418	PIN	ring		2
19	6567743	PIN			2
20	7100508	GAS SPRING	L.H.		1
20	6675136	GAS SPRING	L.H. - heavy duty		1
21	6708189	TUBE	stop - R.H.		1
22	6701174	WASHER			1
23	6675257	CLEVIS			1
24	6679990	CLIP			2
25	6733121	SEAL(31"STRIP)	31"(787,4 mm) long of Ref. 26		1
26	6679994	SEAL	bulk - sold per foot		x
27	6675033	INSERT	filter cover		2
28	6579613	STOP			2
29		GAS SPRING	NSS - R.H. - W/latch - Order Ref. 14 & 21-23		1
30	6562602	BUSHING			2
31	6706349	MOUNT	gas spring		2
32	84G003112B	BOLT			4
33	6729013	INSULATION	seat pan		1
34	6733107	PLUG ASSY	W/ Bobcat head - W/Ref. 24		2

OPERATOR CAB

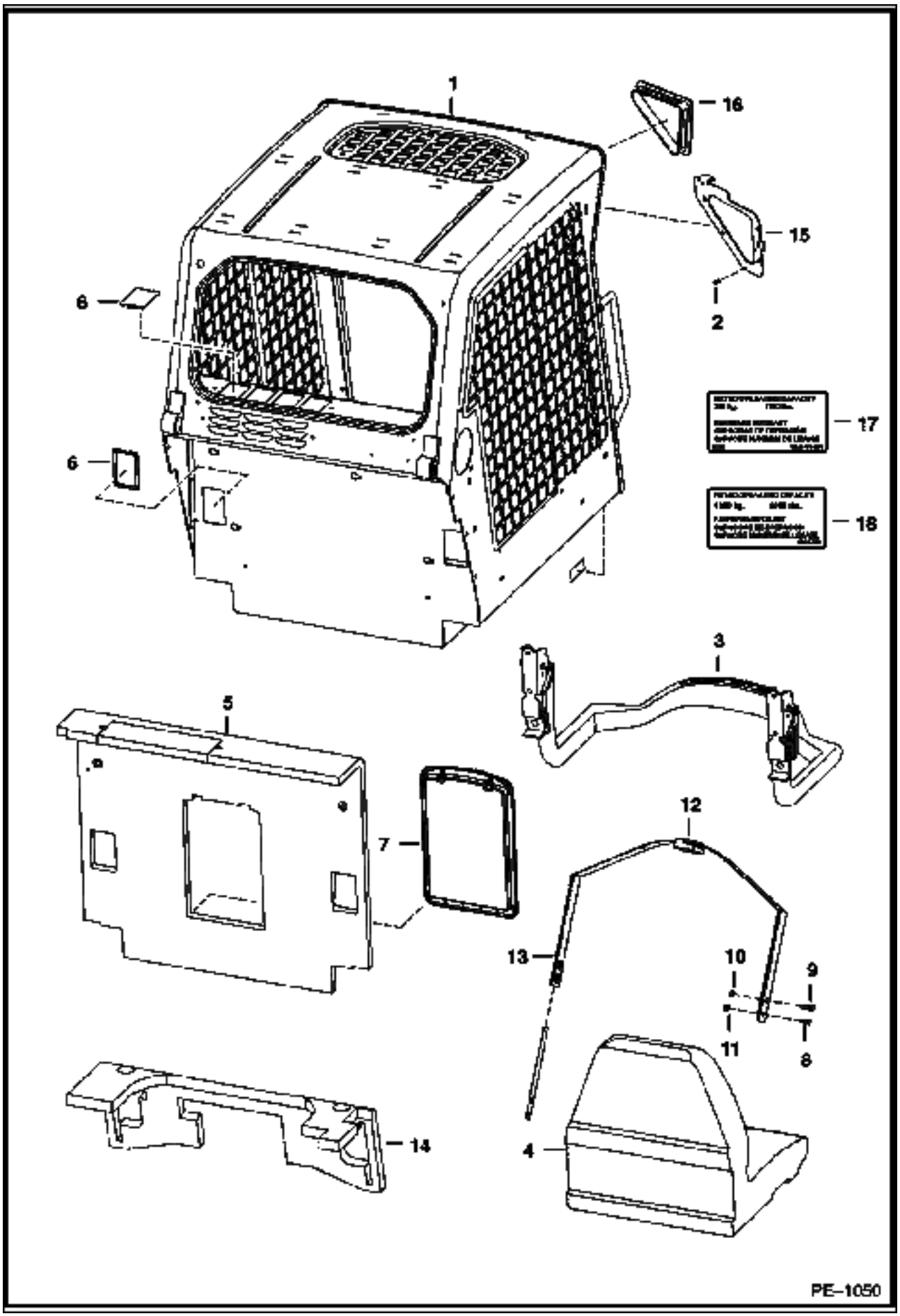

Ref No	Part Number	Description	Remarks	Serial Number	Qty
1	6719672	OPERATOR CAB	Does not include cab decals		1
2	6675033	INSERT			6
3		SEAT BAR	See Illustration SEAT & SEAT BAR/ PE1051		1
4	6669135	SEAT			1
5	6719504	INSULATION	W/Ref. 7		1
6	6718101	COVER			6
7		CONTAINER	NAP - manuals - Was 6719503 [A]		1
7	6675524	CLIP			2
7	6725301	COVER			1
7	6725303	FRAME			1
8	17C000612B	BOLT			2
9	17C000716B	BOLT			4
10	85D000007B	NUT			4
11	85D000006B	NUT			2
12	6675074	SEAT BELT	Also Order (2) of Ref. 13		1
13	6725373	SPRING PLATE			2
14	6718489	INSULATION	steering panel		1
15		PLATE	NSS - R.H. - weld on		1
15		PLATE	NSS - L.H. - weld on		1
16	6674403	COVER	no lights		2
17	6674403	COVER			1
18	6804790	DECAL	capacity		1

OPERATOR CAB
(Deluxe)

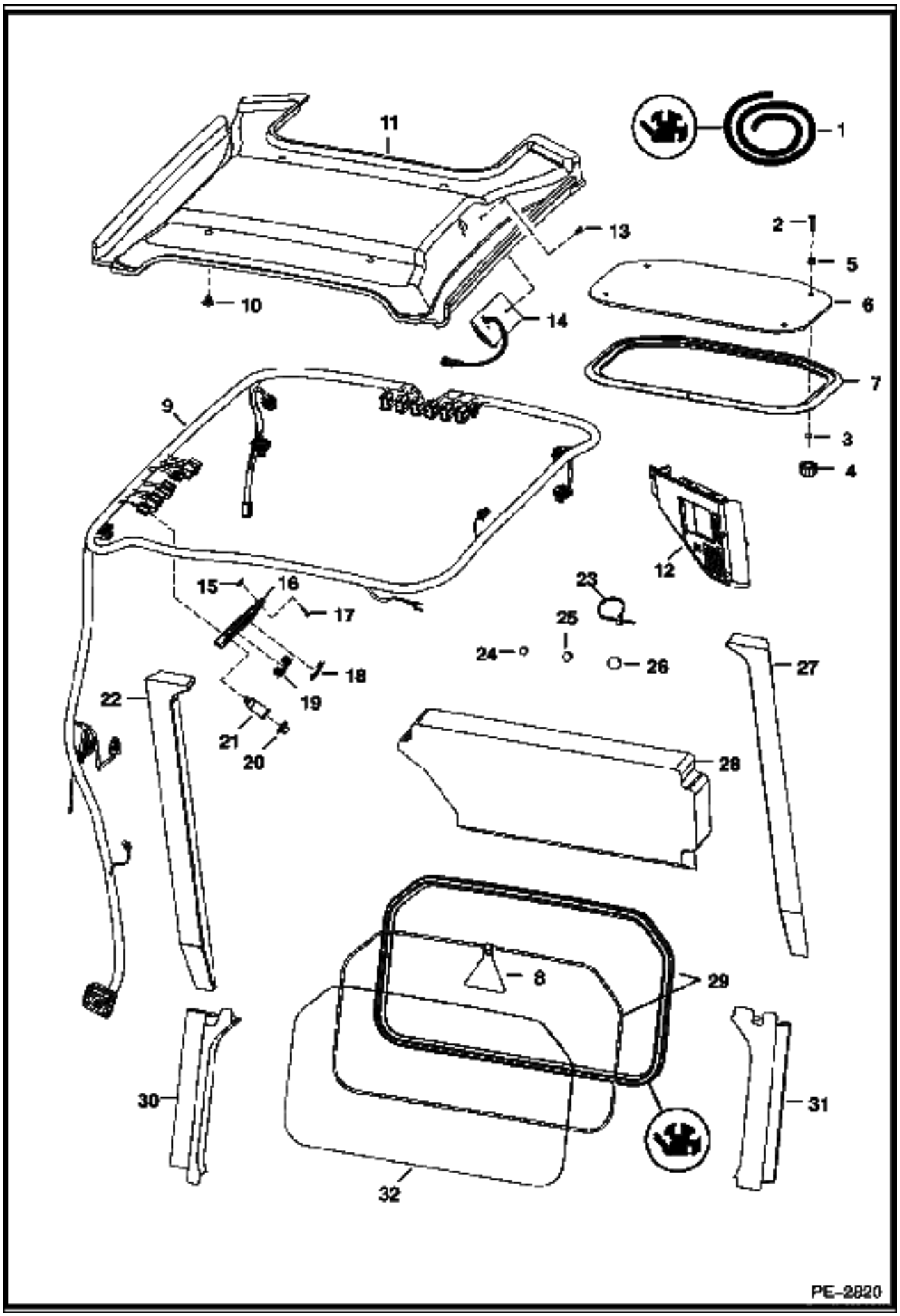

OPERATOR CAB (Cont'd)
(Deluxe)

Ref No	Part Number	Description	Remarks	Serial Number	Qty
1	6675387	EXTRUSION	bulk - Sold Per Foot		x
1	6554149	CORD	bulk - Sold Per Foot		x
2	91G000420B	BOLT			4
3	6664085	BUSHING	nylon		4
4	6681614	KNOB	11/16" deep thread		4
5	6675545	GROMMET			4
6	7105035	WINDOW	assy. - W/ Ref. 2, 3, 5 & 7		1
7		SEAL	NAP - Order Ref. 6		1
8	6731478	EXIT TAG			1
9	7116260	HARNESS	deluxe - required to operate beacon, 4-way flashers, power bob-tach & strobe lights		1
9	7116261	HARNESS	standard		1
10	6674895	RETAINER	snap in		4
11	6737704	INSULATION	headliner		1
12	6688403	PANEL	R.H. - deluxe - keyless - export		1
13	6664221	RETAINER	snap in		2
14	6680326	LIGHT	dome		1
14	6665367	BULB			1
15	6669091	CLIP			4
16	6718580	PANEL			1
17	6669224	BOLT			4
18	6665314	PLUG	switch		5
19	6668742	SWITCH	travel control - export		1
20	6664224	CAP			1
21	6664223	OUTLET			1
22	6717519	INSULATION			1
23	6610510	TIE			6
24	5289686B	PLUG	black - .375" hole		1
25	6649949	PLUG	.5" hole		2
26	6657719	PLUG	.75" hole		1
27	6717520	INSULATION			1
28	6727299	INSULATION	cab back		1
29		EXTRUSION	NAP - 75.75" (1924mm) long - Order Ref. 1		x
29		CORD	NAP - 75.75" (1924mm) long - Order Ref. 1		x
30	6717517	INSULATION			1
31	6717518	INSULATION			1
32	6717874	WINDOW	rear		1

SEAT & SEAT BAR

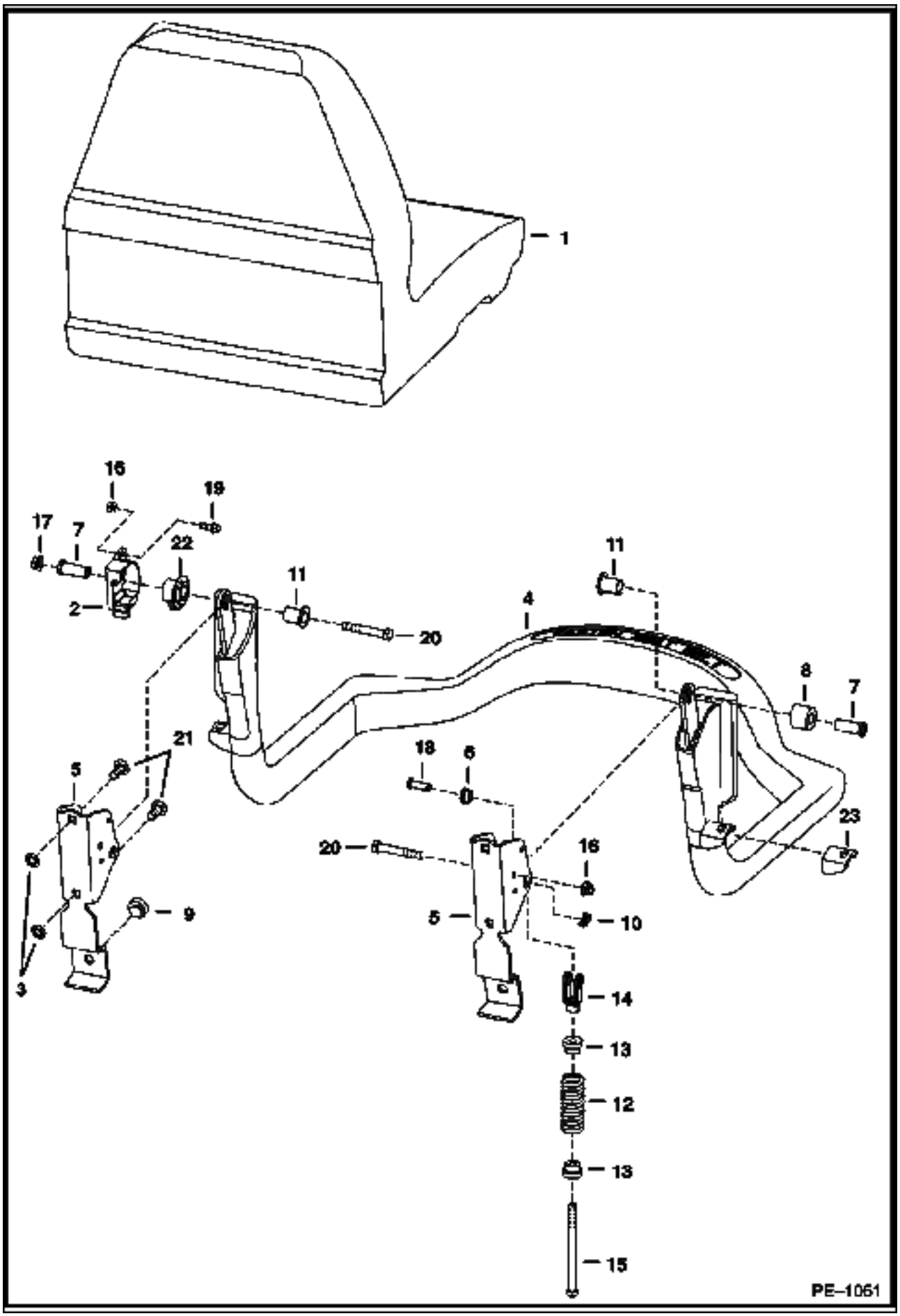

SEAT & SEAT BAR (Cont'd)

Ref No	Part Number	Description	Remarks	Serial Number	Qty
1	6669135	SEAT			1
2	6680429	SENSOR			1
3	6674894	NUT			4
4	6715860	SEAT BAR			1
5	6715863	BRACKET			1
6	6715864	BUSHING			2
7	6715865	BUSHING			2
8	6715866	BUSHING			1
9	6519178	BUMPER			2
10	6631418	PIN	ring		2
11	6680441	BUSHING	keyed		2
12	6701535	SPRING			2
13	6710659	BUSHING			2
14	6713589	CLEVIS			2
15	6713887	BOLT			2
16	83D000004B	NUT			1
17	53D000006B	NUT			2
18	4F006106B	PIN			2
19	35C000412B	BOLT			1
20	17C000640B	BOLT			2
21	10C000616B	BOLT			4
22	6680443	BUSHING			1
23		MOUNT	NAP - Order Ref. 4		1

SEAT
(Suspension - Sears)

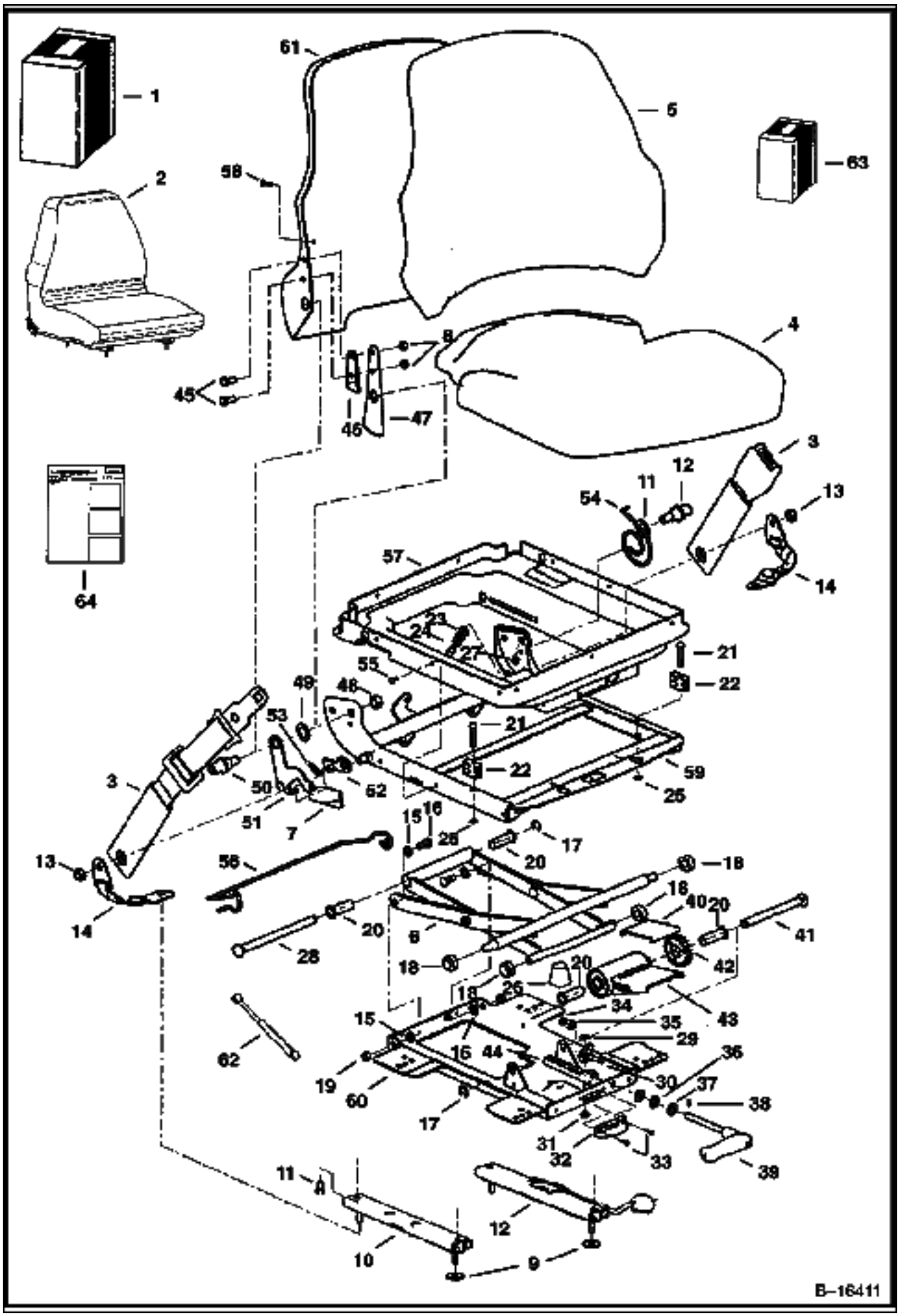

SEAT (Cont'd)
(Suspension - Sears)

Ref No	Part Number	Description	Remarks	Serial Number	Qty
1		KIT	NAP - vinyl seat - Order Ref. 2, 3 & 64		1
1		KIT	NAP - fabric seat - Order Ref. 2, 3 & 64		1
2	6675595	SEAT	vinyl - W/L.H. recliner lever -		1
2	6675596	SEAT	fabric - W/L.H. recliner lever		1
3	6675170	SEAT BELT	lap		1
4	6675320	SEAT	seat - fabric		1
4	6675322	SEAT	seat - vinyl		1
5	6675319	SEAT	backrest - fabric - W/Ref. 58		1
5	6675321	SEAT	backrest - vinyl - W/Ref. 58		1
6	6675317	SCISSORS			1
7	6675323	KNOB	recliner		1
8		NUT	NSS		6
9	619021B	WASHER			4
10		SLIDE	NSS - slave		1
11		BOLT	NSS		4
12		SLIDE	NSS - locking		1
13		NUT	NSS		2
14		BELT	NSS - tether		2
15		WASHER	NSS - cross pivot		4
16		BOLT	NSS - pivot		2
17		RING	NSS - retaining		2
18		ROLLER	NSS		4
19		NUT	NSS		2
20		BUSHING	NSS - wt adjustment		4
21		RIVET	NSS		2
22		BLOCK	NSS - up stop		2
23		WASHER	NSS		3
24		STOP	NSS - armrest		1
25		PUSHNUT	NSS		2
26		BUMPER	NSS		1
27		NUT	NSS		1
28		SHAFT	NSS - bearing		1
29		RIVET	NSS - female snap		1
30		INDICATOR	NSS - weight		1
31		RIVET	NSS - male snap		1
32		DIAL	NSS - weight indicator		1
33		POP RIVET	NSS		2
34		SPACER	NSS		1
35		NUT	NSS		1
36		BEARING	NSS - thrust		1
37		RACE	NSS - thrust		2
38		SHEAR PIN	NSS		1
39		HANDLE	NSS - weight adjustment		1
40		PLATE	NSS - wear		1
41		SHAFT	NSS - torsion		1
42		DRIVE GEAR	NSS		1
43		BUSHING	NSS - torsion		1
44		RACK	NSS - wt adjustment		1
45		BOLT	NSS		2
46		SPACER	NSS - recliner		1
47		BRACKET	NSS - back tilt		1
48		NUT	NSS		2
49		WASHER	NSS - plastic		2
50		BOSS	NSS - back pan pivot		2

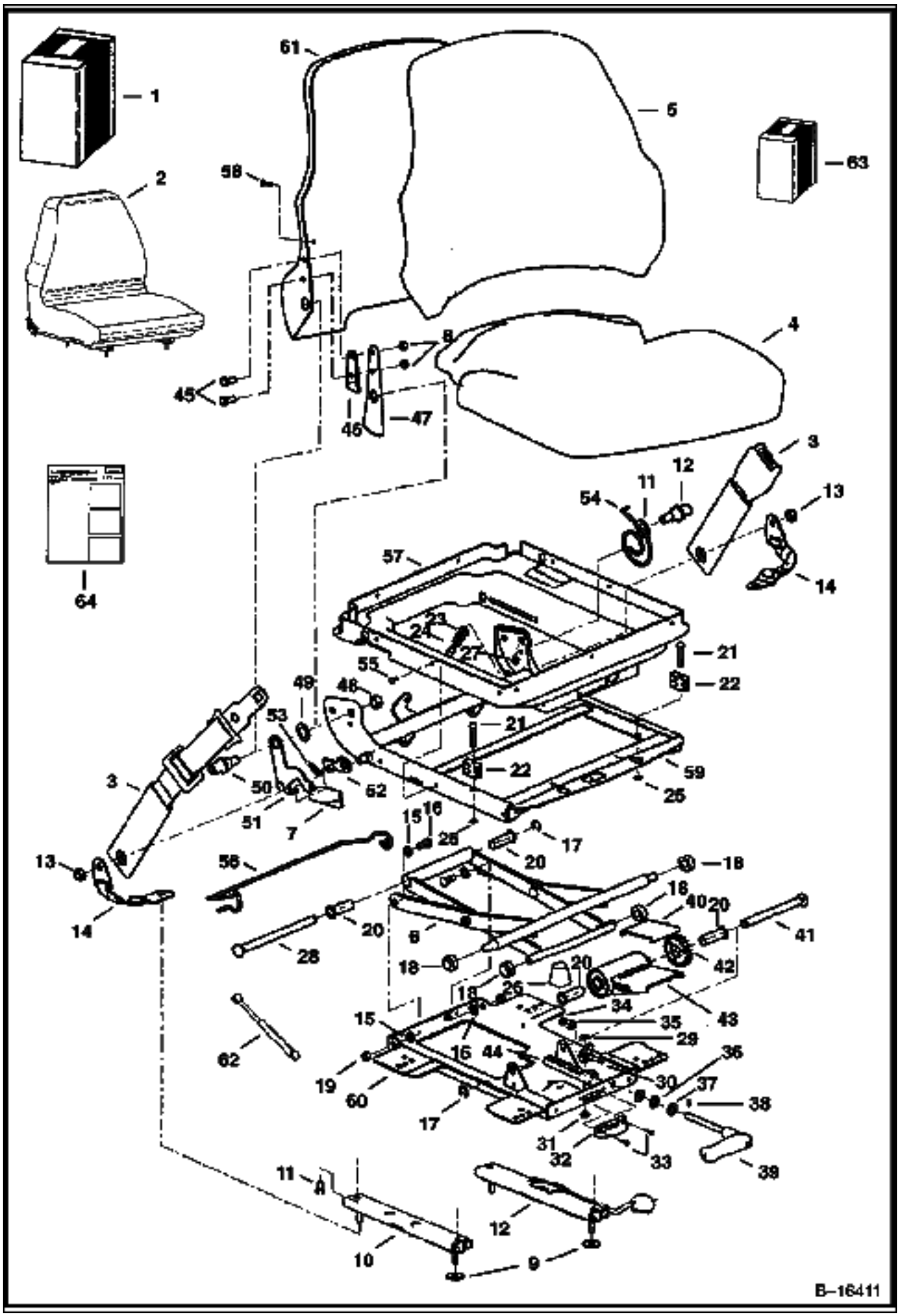
B-16411

SEAT (Cont'd)
(Suspension - Sears)

Ref No	Part Number	Description	Remarks	Serial Number	Qty
51		HANDLE	NSS - recliner (RH)		1
52		LATCH	NSS - recliner		1
53		SPRING	NSS - extension		1
54		SPRING	NSS - tilt latch		1
55		CLIP	NSS		6
56		WIRE	NSS - boot support		1
57		SUSPENSION	NSS - boot		1
58		SCREW	NSS		2
59		HOUSING	NSS - upper		1
60		HOUSING	NSS - lower		1
61		BACK PAN	NSS		1
62	6676338	GAS SPRING			1
63	6675309	KIT	slides - W/Ref. 8 - 12		1
63	6675310	KIT	tether belt - W/Ref. 9, 13 & 14		1
63	6675311	KIT	suspension rollers & bearings - W/Ref. 15 - 20		1
63	6675312	KIT	suspension bumpers & stops - W/Ref. 21 - 27		1
63	6675313	KIT	rear tube - W/Ref. 17, 20 & 28		1
63	6675314	KIT	weight adj. indicator - W/Ref. 29 - 33		1
63	6675315	KIT	weight adj. handle - W/Ref. 34 - 39		1
63	6675316	KIT	weight adj. - W/Ref. 17, 20 & 40 - 44		1
63	6675318	KIT	R.H. recliner - W/Ref. 7, 8 & 45 - 54		1
63	6676034	KIT	L.H. recliner - W/Ref. 7, 8 & 45 - 54		1
63	6675308	KIT	susp. boot - W/Ref. 55 - 57		1
64	6900861	INSTRUCTIONS			1

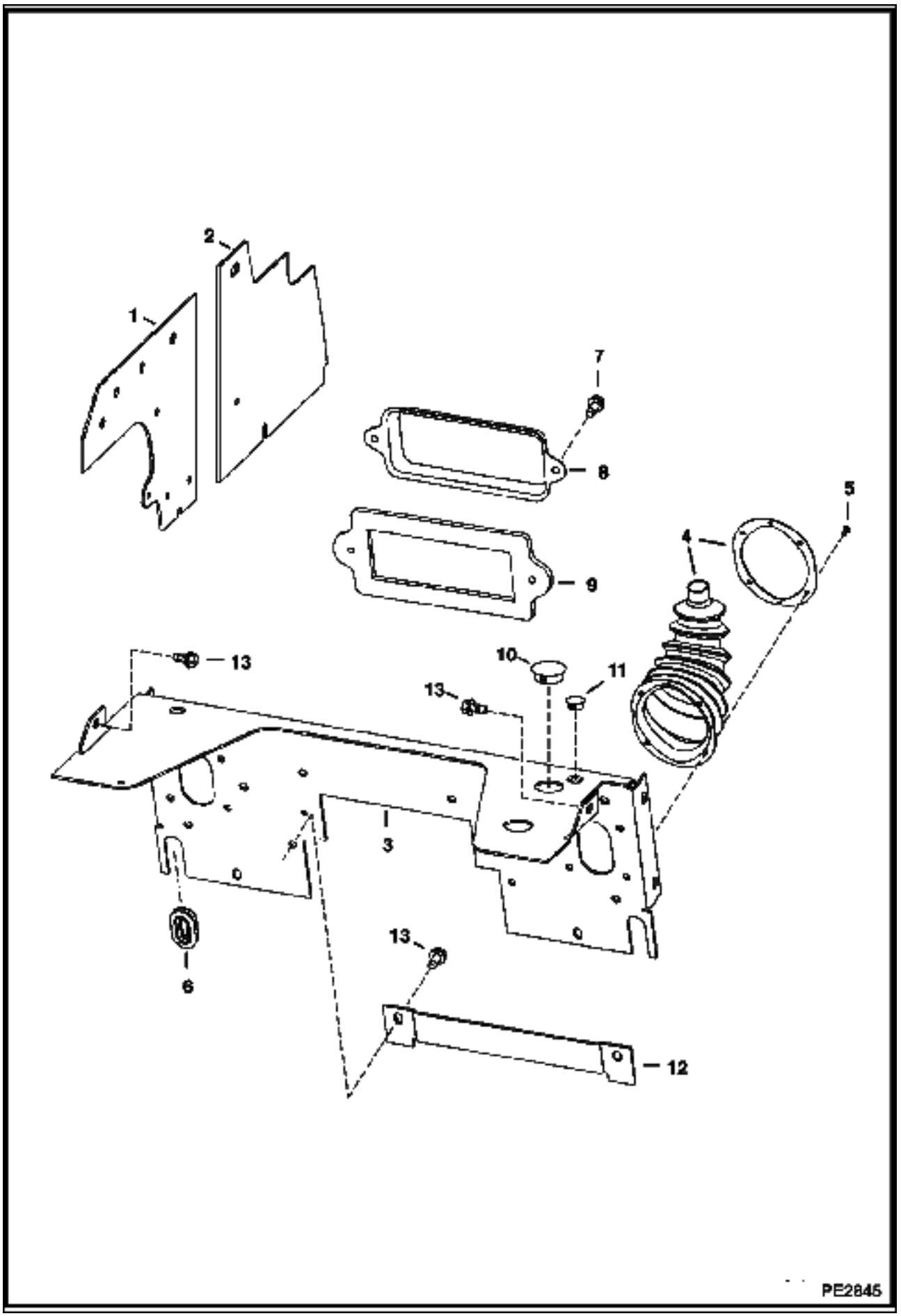
1
2
3
4
5
6
7
8
9
10
11
12
13
13
13
PE2845

PANELS (Cont'd)
(Manual Hand Controls)

Ref No	Part Number	Description	Remarks	Serial Number	Qty
1	7117232	PANEL	side rear		2
2	7117123	PANEL	side front		2
3	7106687	SHIELD			1
4	6532127	BOOT	W/ mounting ring		2
4		RING	NSS - mounting ring		2
5	6630207	RIVET			12
6	6577961	GROMMET			2
7	84G003112B	BOLT			2
8	6716621	COVER	fuse/relay		1
9	6725302	GASKET			1
10	6681469	PLUG			1
11	6648348	PLUG			2
12	6717890	COVER			1
13	84G003712B	BOLT			26

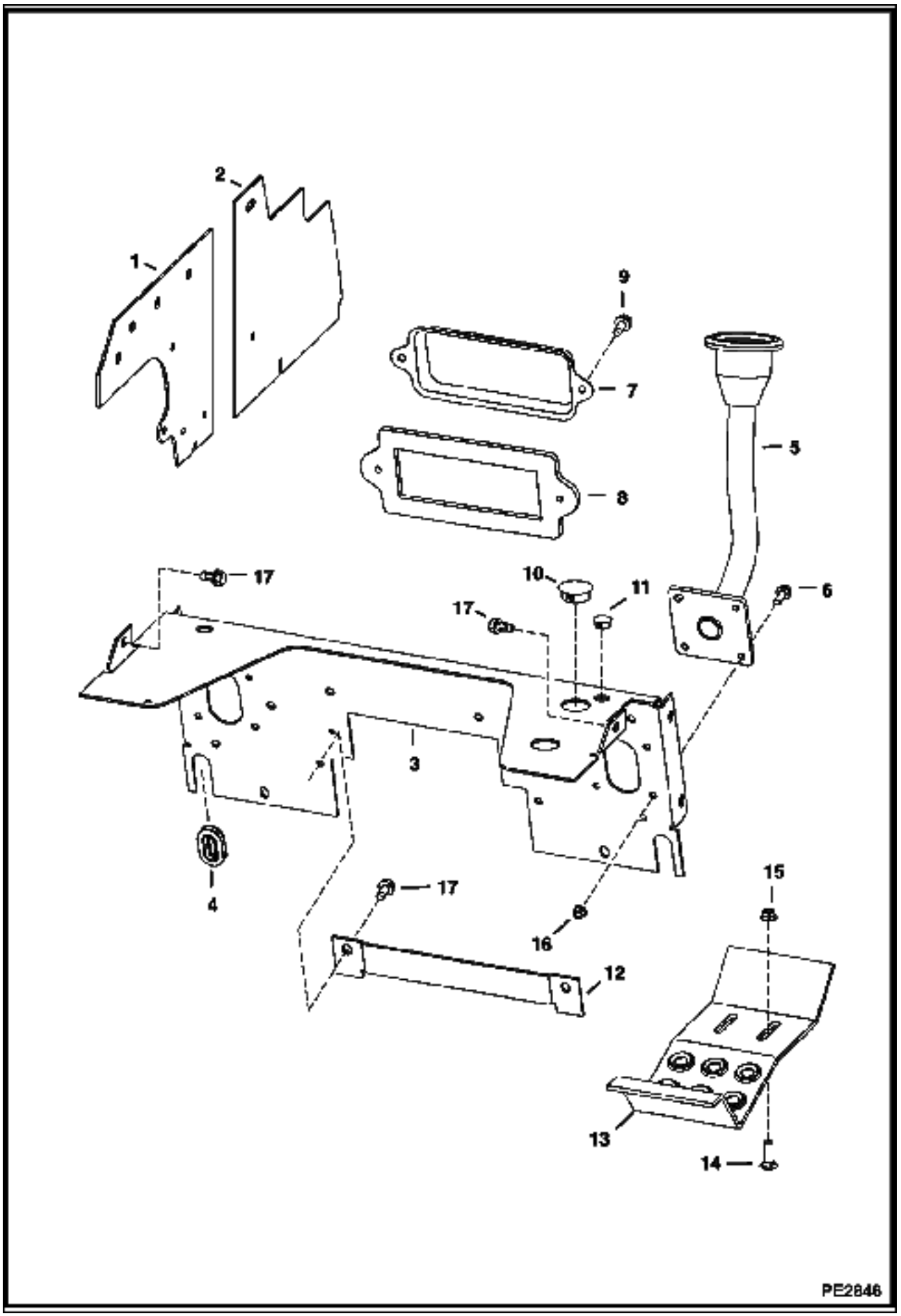
2
1
9
7
5
8
17
10
11
6
17
3
4
17
15
16
12
13
14
PE2846

PANELS (Cont'd)
(Selectable Joystick Controls)

Ref No	Part Number	Description	Remarks	Serial Number	Qty
1	7117232	PANEL	side rear		2
2	7117123	PANEL	side front		2
3	7106687	SHIELD			1
4	6577961	GROMMET			2
5	6729791	HANDLE	R.H.		1
5	6729792	HANDLE	L.H.		1
6	35C000512B	BOLT			8
7	6716621	COVER	fuse/relay		1
8	6725302	GASKET			1
9	84G003112B	BOLT			2
10	6681469	PLUG			1
11	6648348	PLUG			2
12	6717890	COVER			1
13	6712365	PLATE			2
14	37C000620B	BOLT			4
15	57D000006B	NUT			4
16	89D000005B	NUT			8
17	84G003712B	BOLT			26

REAR DOOR

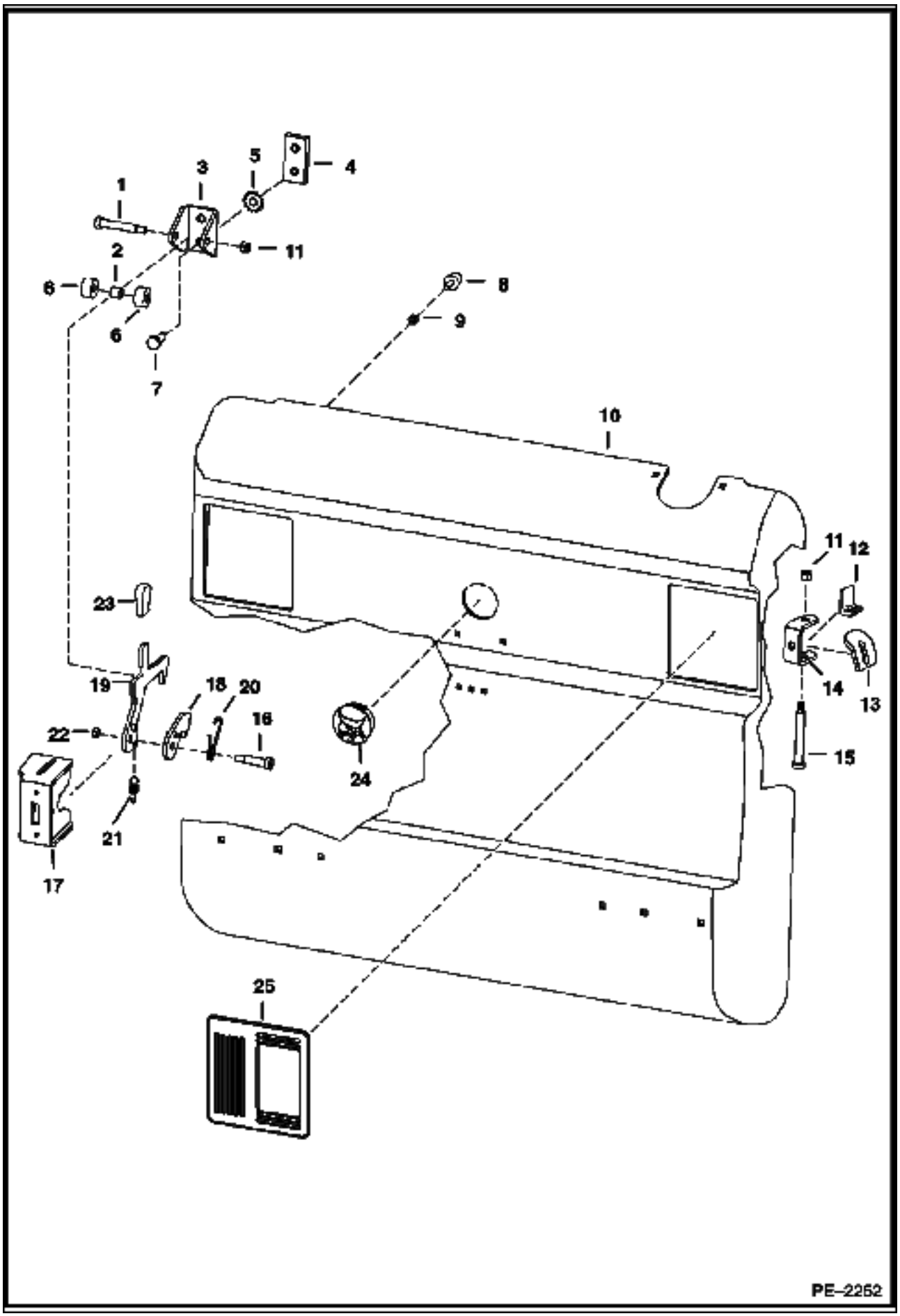
1
2
3
4
5
6
6
7
8
9
10
11
11
12
13
14
15
16
17
18
19
20
21
22
23
24
25
PE–2252

REAR DOOR (Cont'd)

Ref No	Part Number	Description	Remarks	Serial Number	Qty
1	38C000840B	BOLT	carriage		1
2	6809734	BUSHING			1
3	6809727	CHANNEL			1
4	6719525	BAR	threaded striker		1
5	6675273	WASHER	lock		2
6	6809726	ROLLER			2
7	17C000820B	BOLT			2
8	6733616	BUMPER	tapered		2
9	61D000005B	NUT			2
10	6729991	REAR DOOR			1
11	59D000006B	NUT			3
12	6719766	STOP			1
13	6714126	DOOR STOP			1
14	6733575	HINGE	weld on		2
15	6809845	BOLT			2
16	38C000824B	BOLT			1
17	6729939	LATCH PLATE	weld on		1
18	6733667	LATCH			1
19	6732715	LATCH			1
20	6810132	SPRING			1
21	6810141	SPRING			1
22	85D000006B	NUT			1
23	6564452	GRIP			1
24	6718796	PLUG			1
25	6670287	COVER			2

LIFT ARMS & BOBTACH

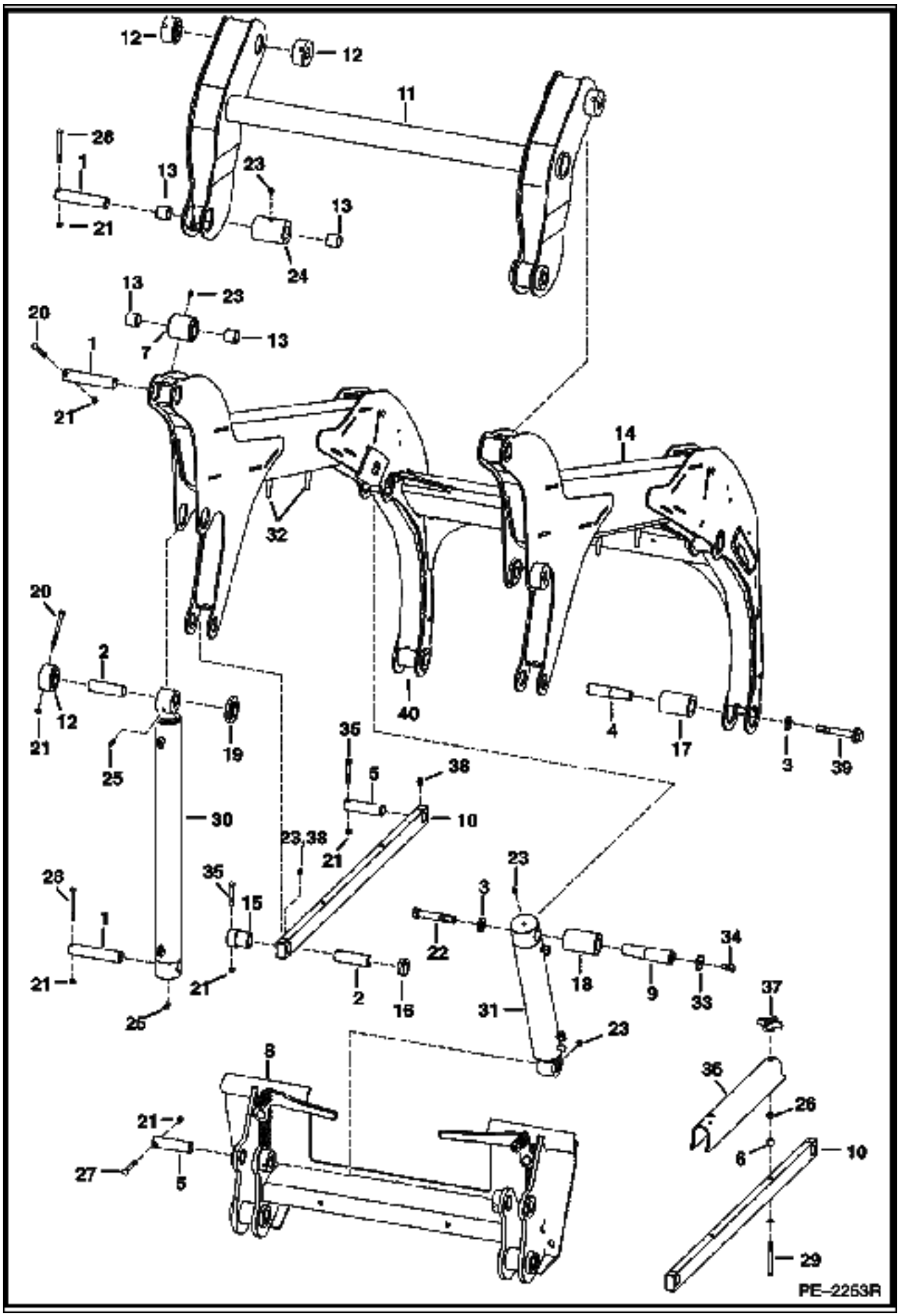

Ref No	Part Number	Description	Remarks	Serial Number	Qty
1	6717560	PIN	1.25" x 6.20" (31,8 mm x 157,5 mm)		6
2	6718789	PIN	1.25" x 4.40" (31,8 mm x 111,8 mm)		4
3	27E000010B	WASHER			4
4	6707180	PIN	tapered - 1.5 in. x 4.05 in. (38,1 mm x 102,9 mm)		2
5	6577954	PIN			4
6	6532347	SPACER			2
7	6717039	BUSHING	weld on		2
8		BOB-TACH	See Illustration BOB-TACH/ PE1540		2
9	6734662	PIN	tapered - 1.5" x 5.7" - (38,1 mm x 144,8 mm)		2
10	6727863	ROD LINK			2
11	6732264	FRAME LINK			1
12	6717246	BUSHING	weld on		6
13	6717562	BUSHING	wear		8
14	7114758	LIFT ARM			1
15	6717026	BUSHING	weld on		2
16	6717025	BUSHING	weld on		2
17	7120498	ARM	weld on - service only - w/tapered hole for 1.5" (38,1 mm) dia. pin		2
18	6734660	BUSHING	weld on		2
19	6717041	BUSHING	weld on		2
20	17C000656B	BOLT			4
21	85D000006B	NUT			14
22	31C001272B	BOLT			2
23	10H000025B	GREASE ZERK			4
24	6732265	BUSHING	weld on		2
25	11H000015B	GREASE ZERK			4
26	6718942	NUT			2
27	17C000648B	BOLT			2
28	17C000660B	BOLT			4
29	6730290	BOLT	stainless steel		2
30		CYLINDER	LIFT		2
31		CYLINDER	See Illustration TILT CYLINDER/ PE2870 TILT		2
32	1313995B	STUD	weld on		4
33	6731160	WASHER			2
34	17C001016B	BOLT			2
35	17C000640B	BOLT			4
36	6718312	STOP	lift arm		1
37	6684932	KNOB			2
38	12H000015B	GREASE ZERK			4
39	17C001072B	BOLT			2
40		ARM	NSS - lower - weld on		2

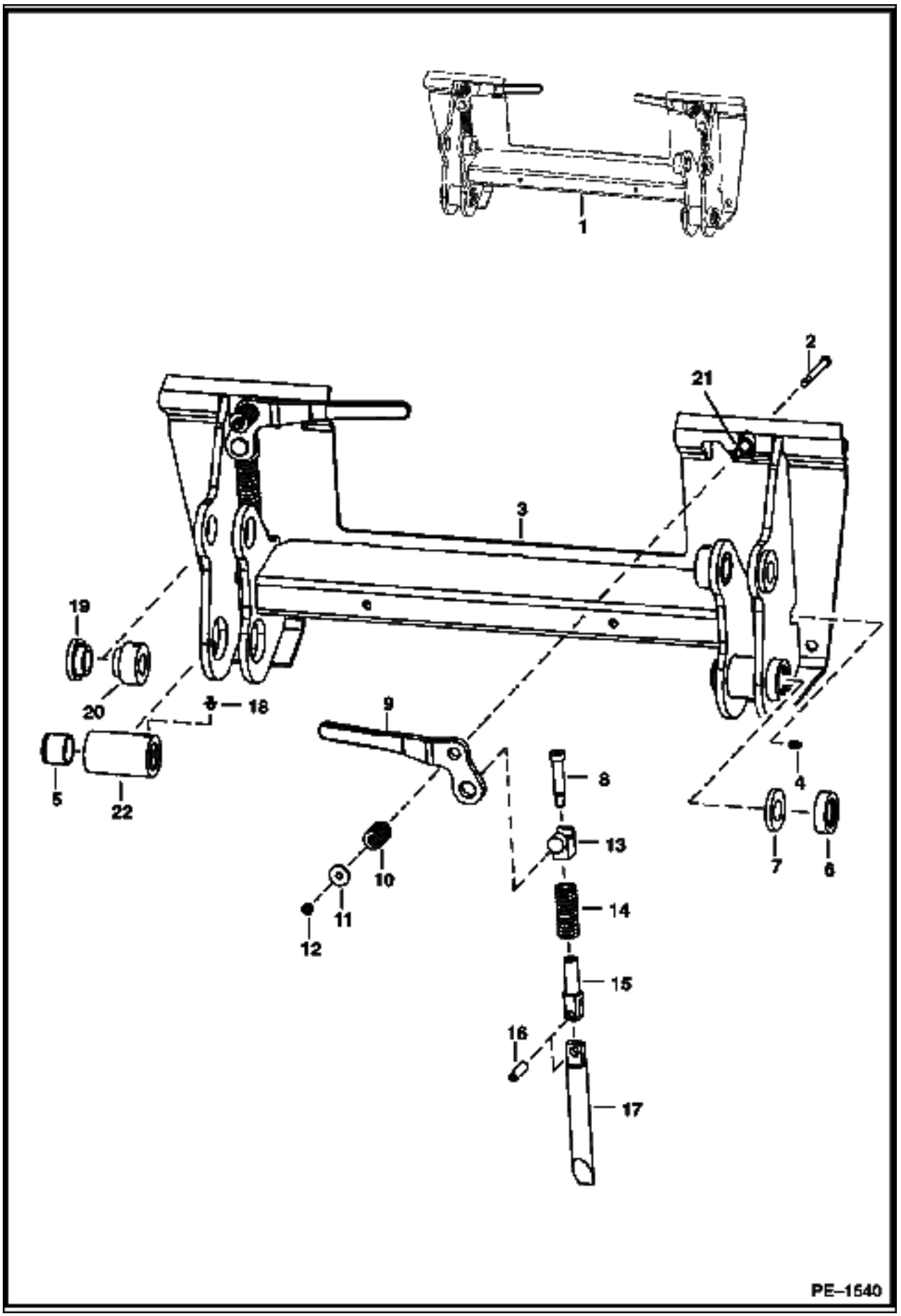
1
2
21
3
19
20
18
9
5
22
8
4
13
7
6
10
14
11
12
15
16
17
PE–1540

Ref No	Part Number	Description	Remarks	Serial Number	Qty
1	6732537	BOB-TACH	See Illustration DECALS/ B26115 ALSO ORDER 6561383 DECAL		1
1		KIT	POWER BOB-TACH		1
2	17C000660B	BOLT			2
3		FRAME	NAP		1
4	10H000035B	GREASE ZERK			2
5	6730997	BUSHING	Press Fit		2
6	6732443	CUP	seal		2
7	6651709	SEAL			2
8	6728473	BOLT	shoulder		2
9	6702904	LEVER	R.H.		1
9	6702903	LEVER	L.H.		1
10	6713040	SPRING			2
11	619021B	WASHER			2
12	85D000006B	NUT			2
13	6731119	PIVOT ASSY			2
14	6562018	SPRING			2
15	6704248	PIVOT	wedge		2
16	14J005032B	PIN			2
17	6737191	WEDGE			2
18	743332B	GREASE ZERK			2
19	6717259	BUSHING	weld on		2
20	6717260	BUSHING	weld on		2
21	6702958	BUSHING	weld on		2
22	6731979	BUSHING	weld on - Also Order Ref. 5 & 18		2

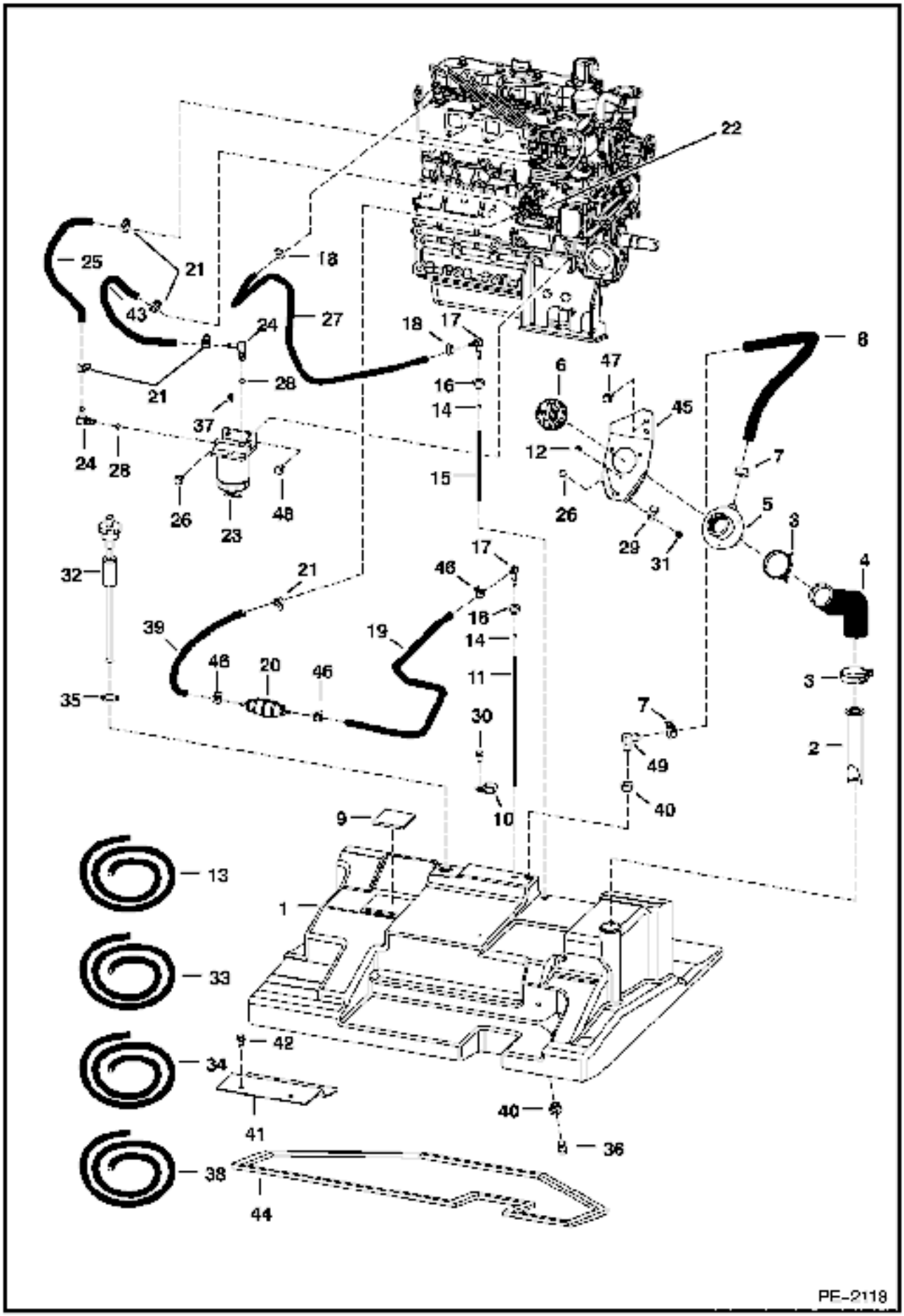
PE-2118

Ref No	Part Number	Description	Remarks	Serial Number	Qty
1	7112782	TANK FUEL			1
2	6569219	SCREEN			1
3	42H000032B	CLAMP	worm gear		2
3	5HM00058B	CLAMP	constant tension		2
4	6717704	HOSE			1
5	6701449	FILLER TUBE			1
6	6661114	CAP	green		1
6		CAP	NAP - locking - W/Key - Code GC020		1
6	6654374	KEY	Code GC020		1
6	6661696	CAP	locking - W/Key - Code PK510		1
6	6587458	KEY	Code PK510		1
6	7113340	CAP	non-locking - European		1
6	7121223	CAP	locking - European		1
6		KEY	European		1
7	42H000010B	CLAMP	worm gear		2
7	5HM00024B	CLAMP	constant tension		2
8		HOSE	NAP - 24 in. (609,6 mm) long - Order Ref. 13		1
9	6578278	PAD	self adhesive one side		2
10	31H000027B	CLAMP			1
11	6729854	HOSE	12.5"(317,5 mm) long		1
12	6706517	SCREW			3
13	6578172	HOSE	bulk - Sold Per Foot		x
14	6661213	RING			2
15	6729853	HOSE	10.25"(260,4 mm) long		1
16	6553411	BUSHING			2
17	7101291	ELBOW			2
18	42HS00004B	CLAMP			2
19		HOSE	NAP - 37 in. (939,8 mm) long - Order Ref. 33		1
20	6657734	PUMP	hand primer		1
21	5HM00014B	CLAMP			5
22	6655216	FUEL PUMP	See Illustration FUEL & INJECTION PUMP/ B22686		1
23	6667353	FILTER ASSY			1
23	6667352	FILTER FUEL			1
23	72F000001B	DRAIN COCK			1
24	6715183	ELBOW	W/Ref. 28		2
25		HOSE	See Illustration FUEL & INJECTION PUMP/ B22686 NAP - 13'' (330,2 MM) LONG - ORDER REF. 34 - CONNECTS TO REF. 12		2
26	84G003112B	BOLT			3
27		HOSE	See Illustration FUEL & INJECTION PUMP/ B22686 NAP - 62" (1574,8 mm) long - Order Ref. 38 - connects to Ref. 12		1
28	79K000005B	O-RING			x
29	30H000022B	CLIP			1
30	17C000610B	BOLT			1
31	85D000005B	NUT			1
32	6680436	SENSOR	fuel - W/Ref. 35		1
33	6577821	HOSE	bulk - Sold Per Foot		x
34	6577822	HOSE	bulk - Sold Per Foot		x
35	6717579	GASKET			1
36	6717401	PLUG	fuel drain		1
37	6658180	BREATHER	breather		1
38	6578169	HOSE	bulk - Sold Per Foot		x
39		HOSE	See Illustration FUEL & INJECTION PUMP/ B22686 NAP - 23" (584,2 mm) long - Order Ref. 33		x
40	6717402	BUSHING			2
41	6737368	BRACKET			1

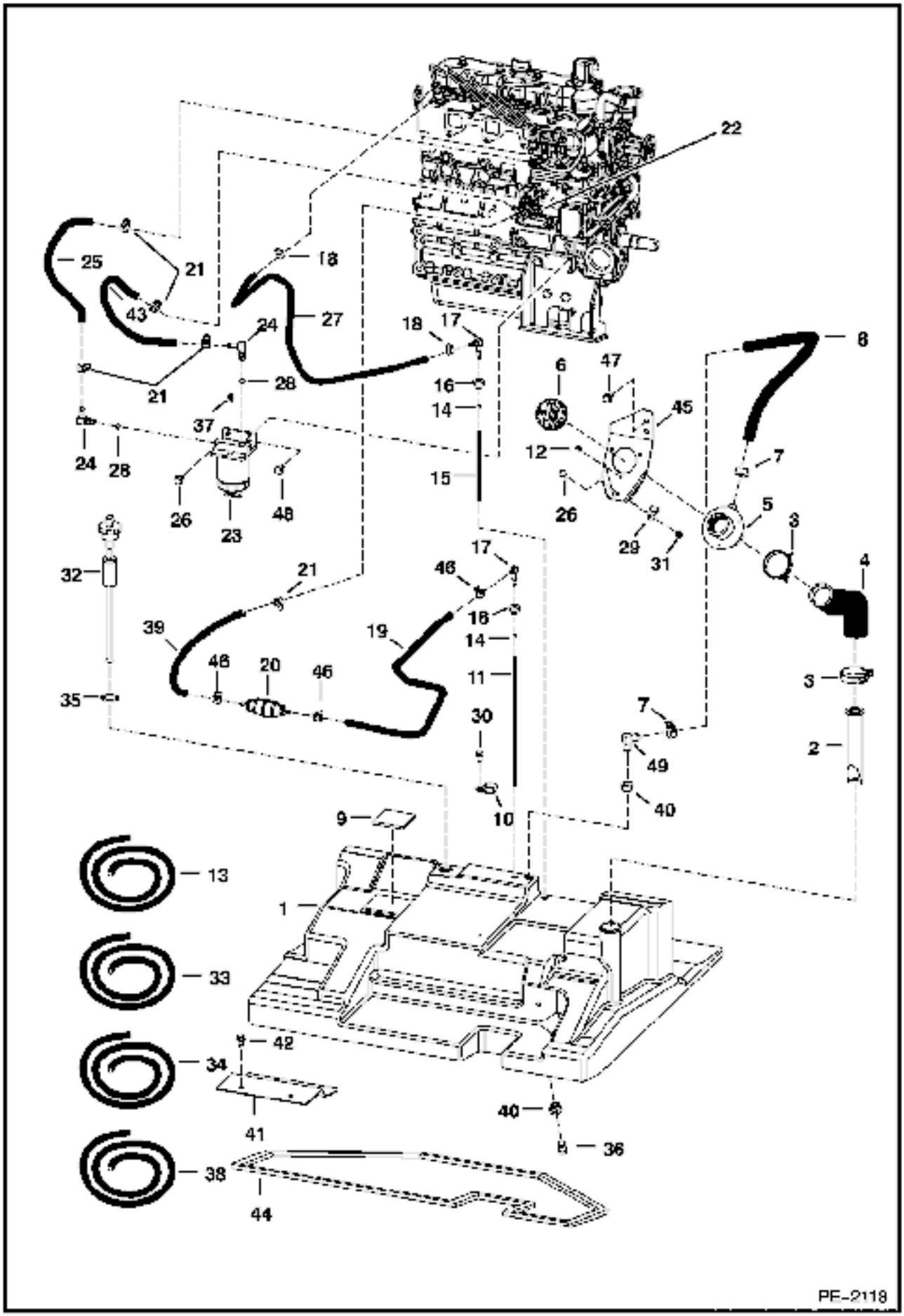
PF-2118

Ref No	Part Number	Description	Remarks	Serial Number	Qty
42	84G003712B	BOLT			2
43		HOSE	NAP - 42" (1066,8 mm) long - Order Ref. 13 - Use W/Ref. 1 (6736660 Tank) & W/Ref. 1 (NAP/7102746 Tank) [A]		1
43		HOSE	NAP - 50" (1270,0 mm) long - Order Ref. 13 - Use W/Ref. 1 (7112782 Tank)		1
44	7101557	GASKET	.375" x .75" x 99.81" long		1
45	6731059	INLET	fuel fill		1
46	5HM00013B	CLAMP			3
47	84G003716B	BOLT			2
48	84G003116B	BOLT			1
49	6808798	ELBOW			1

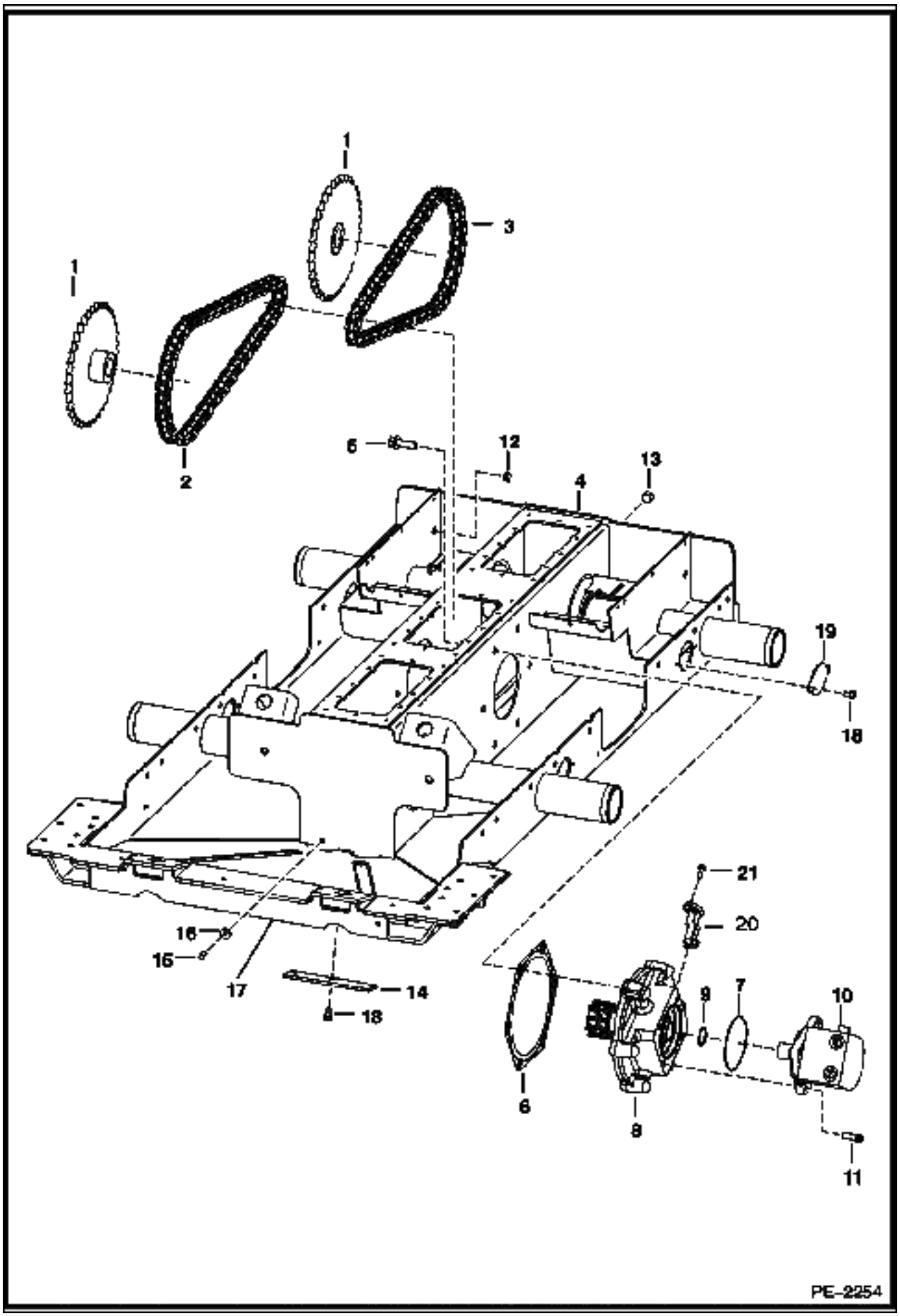
1
1
3
1
2
6
12
13
4
19
18
21
20
16
15
17
14
18
9
7
10
6
8
11
PE-2254

Ref No	Part Number	Description	Remarks	Serial Number	Qty
1	6577204	SPROCKET			4
2	6703915	CHAIN	68 pitches - hour glass shape link		2
2	6731217	CHAIN	68 pitches - oval shape link		2
3	6579127	CHAIN	62 pitches - hour glass shape link		2
3	6731218	CHAIN	62 pitches - oval shape link		2
3	6510171	LINK	conn. - hour glass shape		x
3	6675332	LINK	conn. - oval shape		x
4	7106531	CHAINCASE	flat top		1
5	35C001032B	BOLT			12
6	6704878	GASKET	install W/rib toward chaincase		2
7	25K030508B	O-RING			2
8		MOUNT ASSY	drive motor		2
9	6664815	SEAL	Supplied W/Motor		2
10		MOTOR	W/REF. 9		2
11	73G000824B	BOLT			8
12	6657719	PLUG			2
13	6731121	PLUG	chaincase fill		1
14	6700182	COVER			1
15	6599645	PLUG	chaincase drain		1
16	6553411	BUSHING			2
17	6706485	HOOK	tie down - weld on		2
18	84G003712B	BOLT			11
19	6730078	COVER			2
20	6677181	SENSOR	speed - Selectable Joystick Controls		2
21		SCREW	Selectable Joystick Controls		4

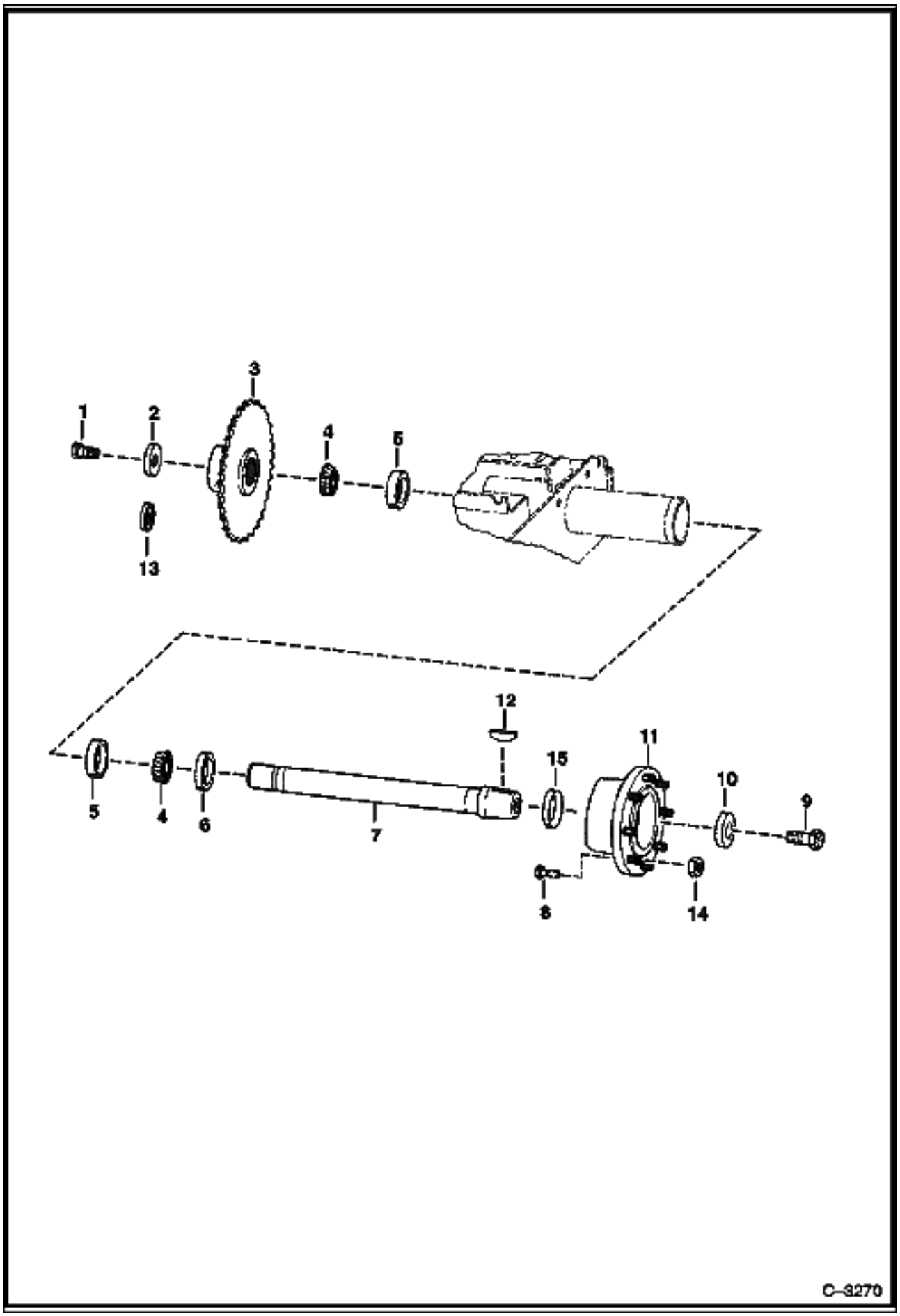
1
2
3
4
5
13
12
11
15
10
9
5
4
6
7
8
14
C–3270

Ref No	Part Number	Description	Remarks	Serial Number	Qty
1	6679247	BOLT			1
2	6552871	WASHER			1
3	6577204	SPROCKET			1
4	6519925	BEARING			2
5	6634609	RACE			2
6	6658228	SEAL			1
7	6706427	AXLE			1
8	6709170	STUD	wheel		8
9	18C001636B	BOLT	2.25"(57,2 mm) long		1
10	6716843	WASHER	recessed		1
11	6578689	HUB	W/Ref. 8		1
12	6J001664B	WOODRUFF KEY			1
13	6563606	WASHER	recessed - Used to take up .005 or .010 end play on axle		1
14	6564669	NUT	wheel		8
15	6662306	RING	wear - service part only		1
15	6722907	KIT	See Illustration AXLE SEAL KIT/ B4041 AXLE SEAL & WEAR SLEEVE		4

MOTOR CARRIER
(Drive Motor Mount Assy.)

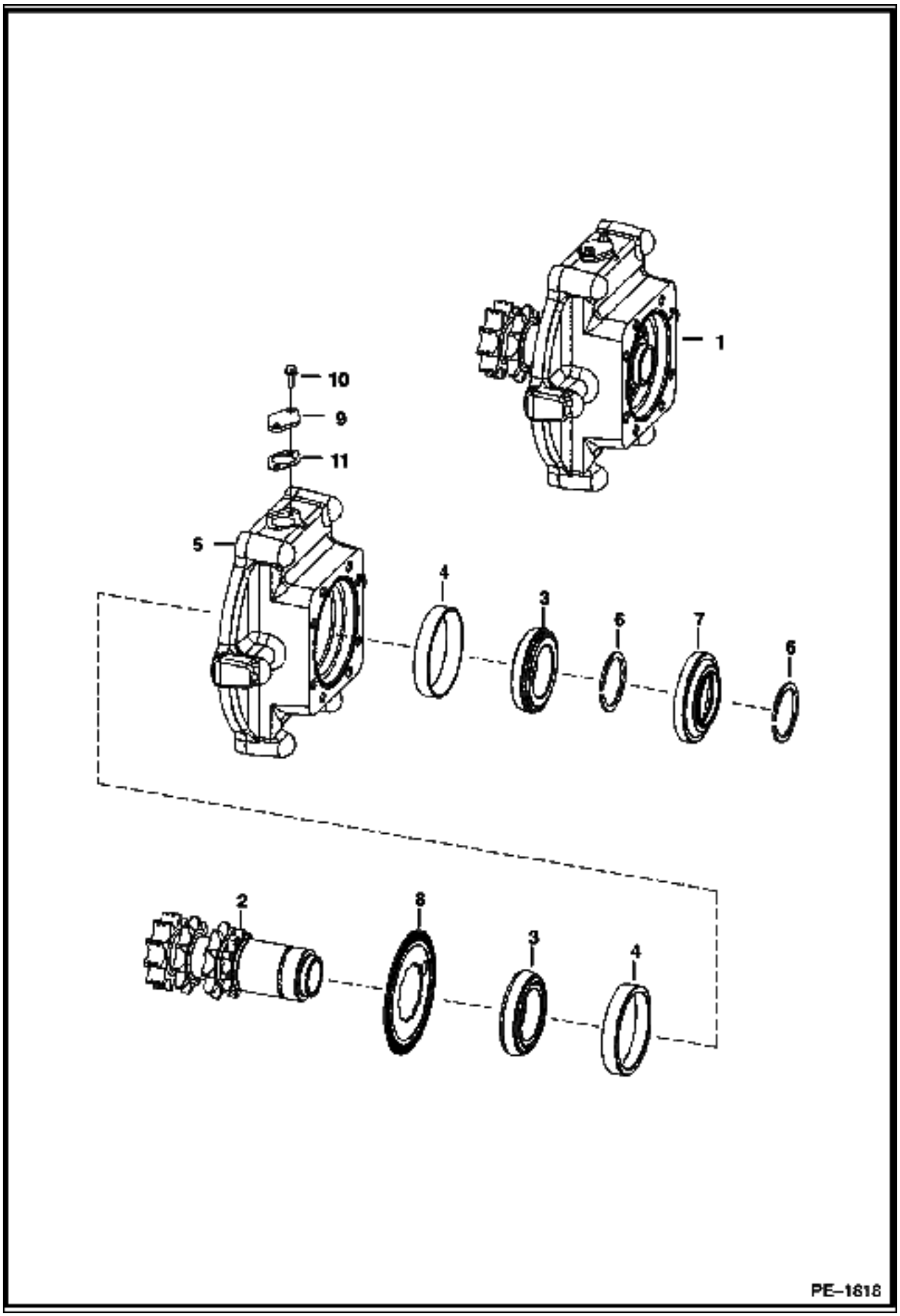

MOTOR CARRIER (Cont'd)
(Drive Motor Mount Assy.)

Ref No	Part Number	Description	Remarks	Serial Number	Qty
1	6733617	MOUNT ASSY.	drive motor - Ref. 2-11		1
2	6733621	SHAFT	W/ snap ring groove		1
3	6632218	BEARING			2
4	6632541	RACE			1
5	6733619	HOUSING			1
6	6571851	SNAP RING			1
7	6705847	SEAL			1
8	6688924	MAGNET	speed sensor - Was 6680634 [D]		1
9	6730013	COVER			1
10	35C000412B	BOLT			2
11	7110287	GASKET			1

DISC BRAKE
(Flat Top Chaincase)

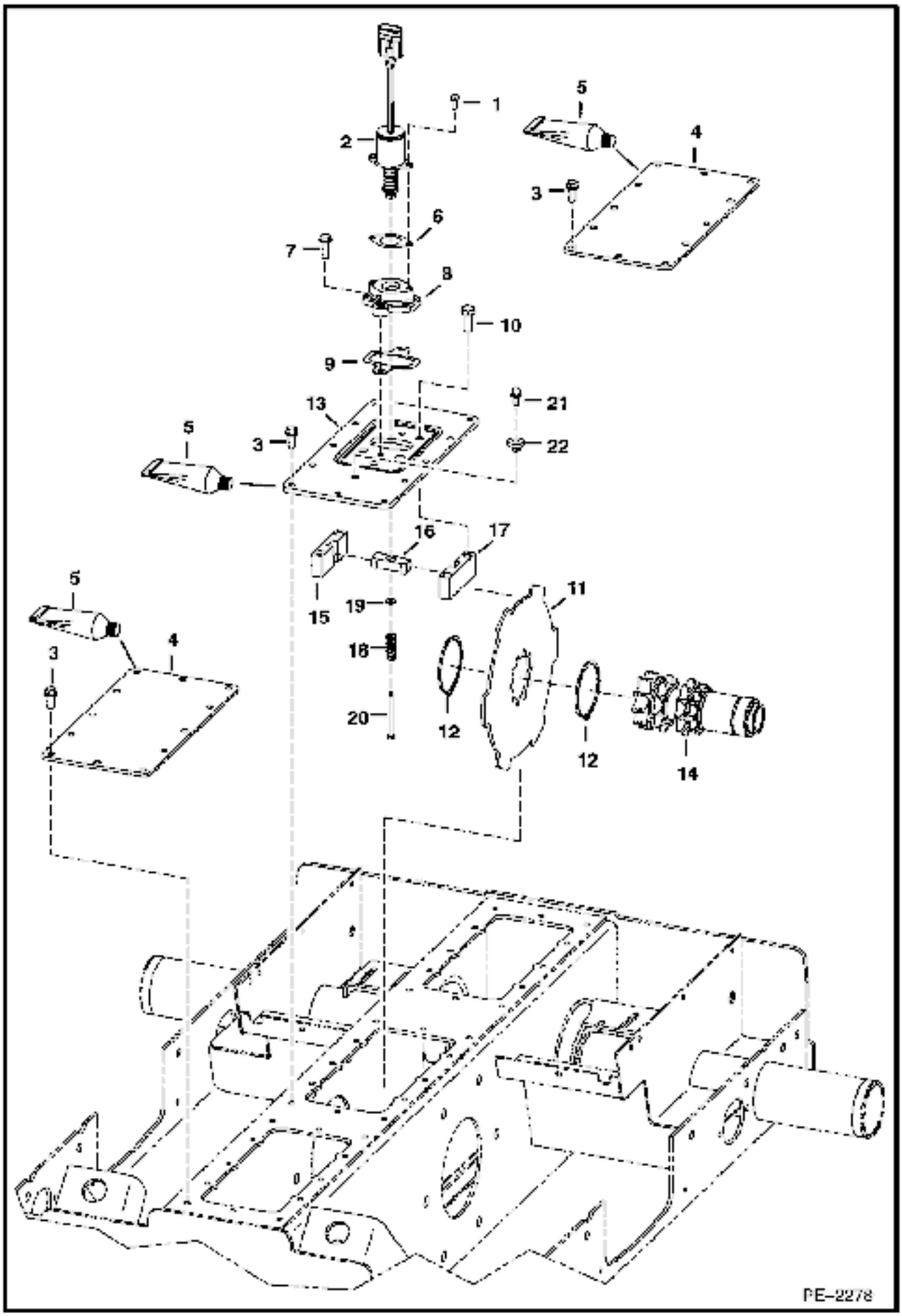

DISC BRAKE (Cont'd)
(Flat Top Chaincase)

Ref No	Part Number	Description	Remarks	Serial Number	Qty
1	17C000412B	BOLT			2
2	6681512	SOLENOID			1
3	84G003716B	BOLT			36
4	6733956	COVER			2
5	6685372	SEAL	liquid gasket - 20 oz. tube		x
6	6706737	GASKET			1
7	84G003720B	BOLT			2
8	6706718	MOUNT			1
9	6708016	GASKET			1
10	47C000820B	BOLT			4
11	6716228	BRAKE	disc		2
12	6658672	SNAP RING			4
13	6735316	COVER			1
14	6733621	SHAFT	DOUBLE SNAP RING GROOVE		2
15	6719056	BLOCK	guide - L.H.		1
16	6714278	GUIDE			1
17	6719057	BLOCK	guide - R.H.		1
18	6708018	SPRING			1
19	25E000013B	WASHER			1
20	6708267	BOLT			1
21	6680970	BREATHER			1
22	6553411	BUSHING			1

HYDRAULIC CIRCUITRY
(W/O Bucket Positioning Valve)

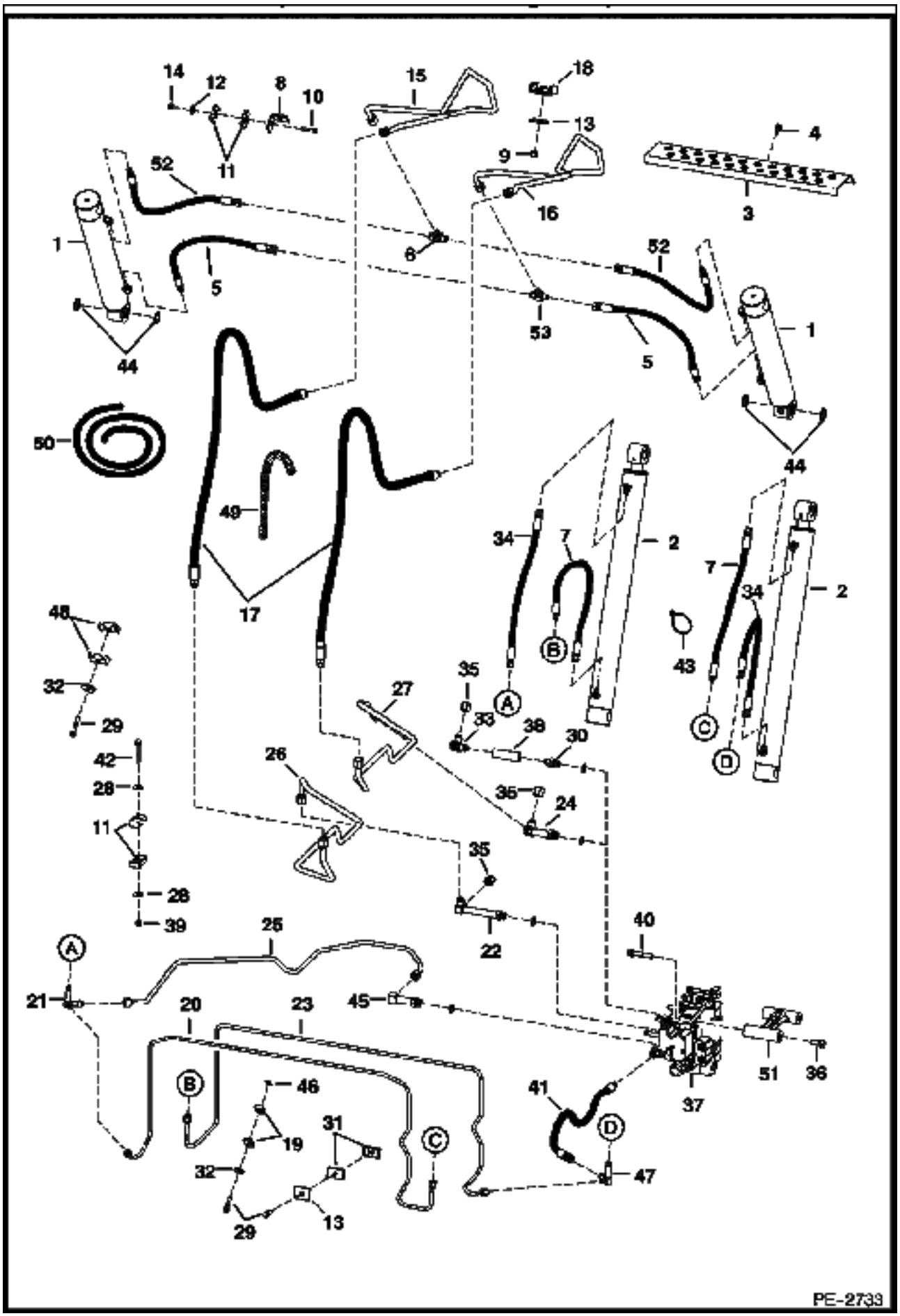

HYDRAULIC CIRCUITRY (Cont'd)
(W/O Bucket Positioning Valve)

Ref No	Part Number	Description	Remarks	Serial Number	Qty
1		CYLINDER	See Illustration TILT CYLINDER/ PE2870 TILT		2
2		CYLINDER	See Illustration LIFT CYLINDER/ PE2748 LIFT		2
3	6735669	SHIELD	boom stop		1
4	84G003712B	BOLT			4
5	7114050	HOSE	.5625" thread female ends		2
6	6716061	TEE			1
7	7116564	HOSE			2
8	6718238	BRACKET			1
9	59D000008B	NUT			2
10	17C000628B	BOLT			1
11	6701893	CLAMP			2
12	27E000006B	WASHER			1
13	6553709	WASHER			2
14	59D000006B	NUT			1
15	6718030	TUBE			1
16	6725337	TUBE			1
17	6719439	HOSE			2
18	6717933	CLAMP			2
19	6726277	CLAMP			4
20	7114710	TUBE			1
21	7101648	TEE			1
22	6730142	TEE			1
22	79K000010B	O-RING			1
23	7114711	TUBE			1
24	6733190	TEE			1
24	79K000010B	O-RING			1
25	7101646	TUBE			1
26	7112911	TUBE			1
27	7110262	TUBE			1
28	872229	WASHER			2
29	84G003728B	BOLT			3
30	15KB01010B	ADAPTER			1
31	6727708	CLAMP			2
32	619021B	WASHER			4
33	6705070	TEE			1
34	7116565	HOSE			2
35	36K000007B	CAP			1
36	31C000820B	BOLT			2
37		VALVE	See Illustration HYDRAULIC CONTROL VALVE/ PE2734		1
38	7112910	ELBOW			1
39	59D000006B	NUT			1
40	17C000844B	BOLT			2
41	6727705	HOSE			1
41	6809511	DECAL	danger		2
42	17C000632B	BOLT			1
43	6624289	STA STRAP			2
44	225855B	SEAL			4
45	6733191	ELBOW			1
45	79K000010B	O-RING			1
46	6684033	NUT			1
47	6727638	TEE			1
48	6592506	CLAMP			2
49		CONDUIT	NAP - 30"(762 mm) long - Order Ref. 50		2
50	6643249	CONDUIT	bulk - Sold Per Print		x

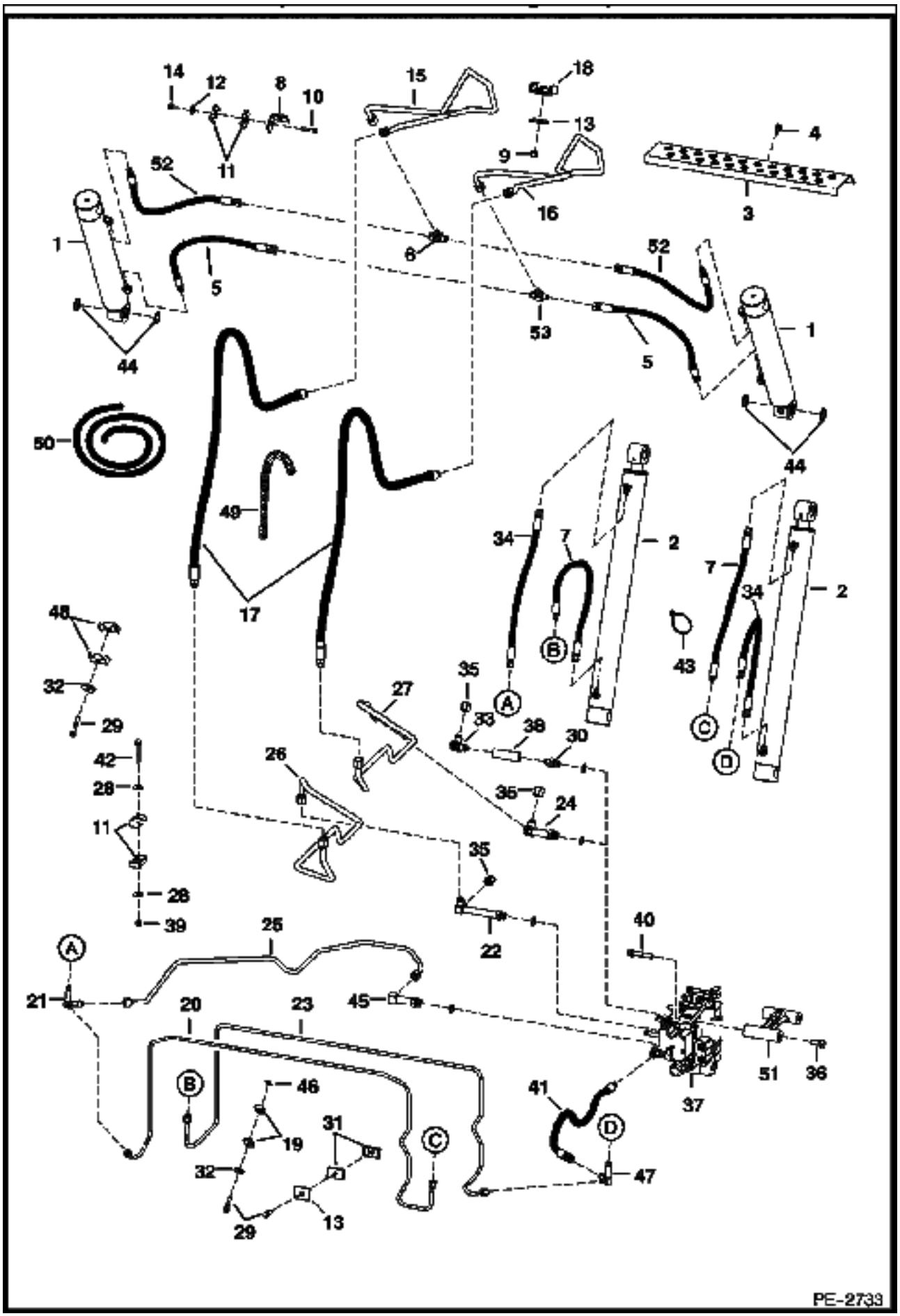
14
12
8
10
15
18
13
4
52
11
9
16
3
1
6
52
5
53
1
5
44
44
50
49
34
7
2
17
7
34
2
48
43
35
27
A
32
38
30
29
B
C
D
42
26
35
24
28
11
35
28
22
39
25
40
A
21
20
23
45
51
36
37
B
46
41
31
19
C
D
32
47
29
13
PE-2733

HYDRAULIC CIRCUITRY (Cont'd)
(W/O Bucket Positioning Valve)

Ref No	Part Number	Description	Remarks	Serial Number	Qty
51	7109934	MOUNT			1
52	7114236	HOSE	.75" thread female ends		2
53	7114053	TEE			1

HYDRAULIC CIRCUITRY
(W/Bucket Positioning Valve)

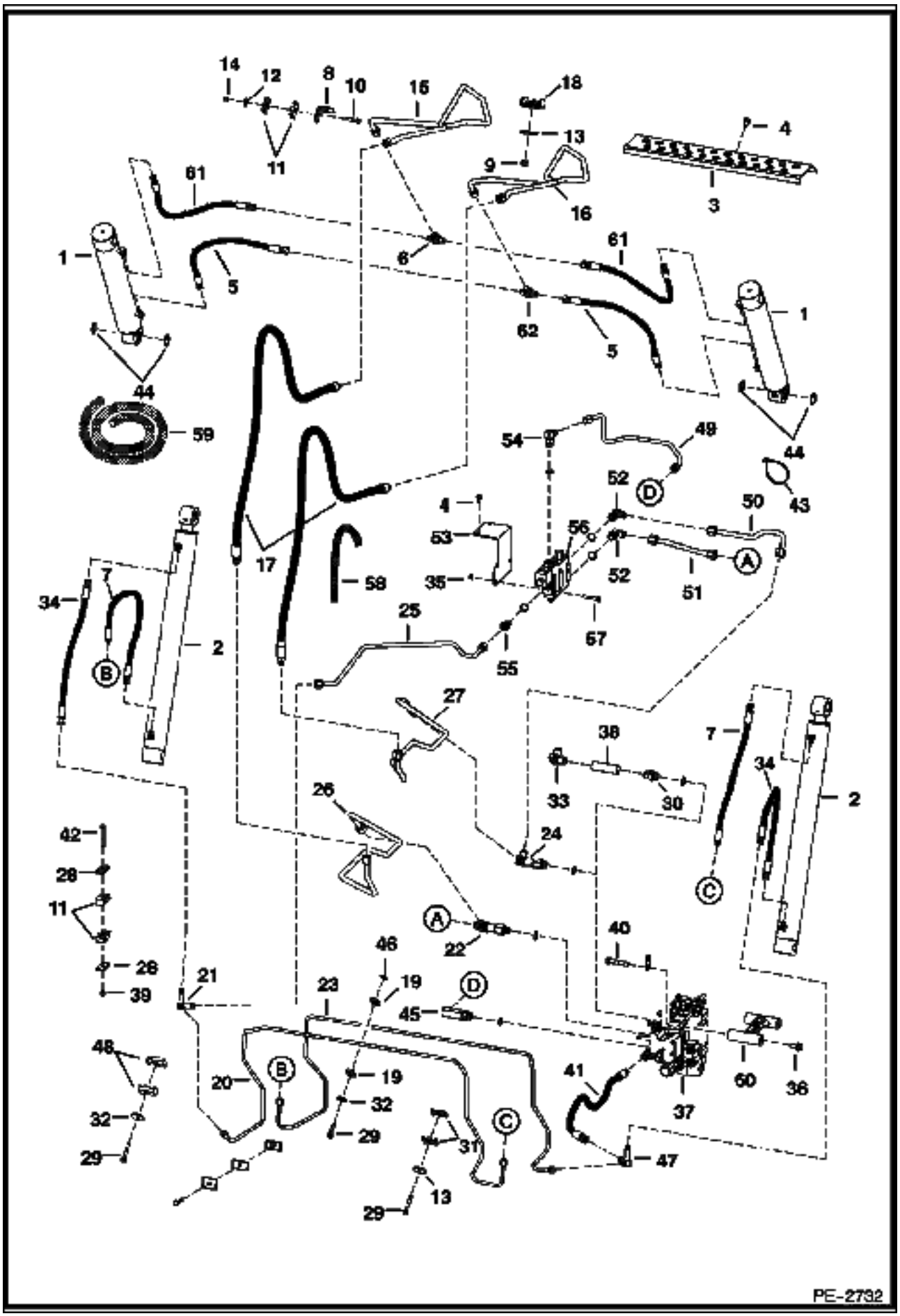

HYDRAULIC CIRCUITRY (Cont'd)
(W/Bucket Positioning Valve)

Ref No	Part Number	Description	Remarks	Serial Number	Qty
1		CYLINDER	See Illustration TILT CYLINDER/ PE2870 TILT		2
2		CYLINDER	See Illustration LIFT CYLINDER/ PE2748 LIFT		2
3	6735669	SHIELD	boom stop		1
4	84G003712B	BOLT			6
5	7114050	HOSE	.5625" thread female ends		2
6	6716061	TEE			1
7	7116564	HOSE			2
8	6718238	BRACKET			1
9	59D000008B	NUT			2
10	17C000628B	BOLT			1
11	6701893	CLAMP			2
12	27E000006B	WASHER			1
13	6553709	WASHER			2
14	59D000006B	NUT			1
15	6718030	TUBE			1
16	6725337	TUBE			1
17	6719439	HOSE	W/Ref. 58		2
18	6717933	CLAMP			2
19	6726277	CLAMP			4
20	7114710	TUBE			1
21	7101648	TEE			1
22	6730142	TEE			1
22	79K000010B	O-RING			1
23	7114711	TUBE			1
24	6733190	TEE			1
25	7101647	TUBE			1
26	7112911	TUBE			1
27	7110262	TUBE			1
28	872229	WASHER			2
29	84G003728B	BOLT			1
30	15KB01010B	ADAPTER			1
31	6727708	CLAMP			2
32	619021B	WASHER			4
33	6705070	TEE			1
34	7116565	HOSE			2
35	57D000005B	NUT			2
36	31C000820B	BOLT			2
37		VALVE	See Illustration HYDRAULIC CONTROL VALVE/ PE2734		1
38	7112910	ELBOW			1
39	59D000006B	NUT			1
40	17C000844B	BOLT			2
41	6727705	HOSE			1
41	6809511	DECAL	danger		2
42	17C000632B	BOLT			1
43	6624289	STA STRAP			2
44	225855B	SEAL			4
45	6733191	ELBOW			2
45	79K000010B	O-RING			2
46	6684033	NUT			2
47	6727638	TEE			1
48	6592506	CLAMP			2
49	6734192	TUBE			1
50	6733196	TUBE			1
51	7112912	TUBE			1

HYDRAULIC CIRCUITRY (Cont'd)
(W/Bucket Positioning Valve)

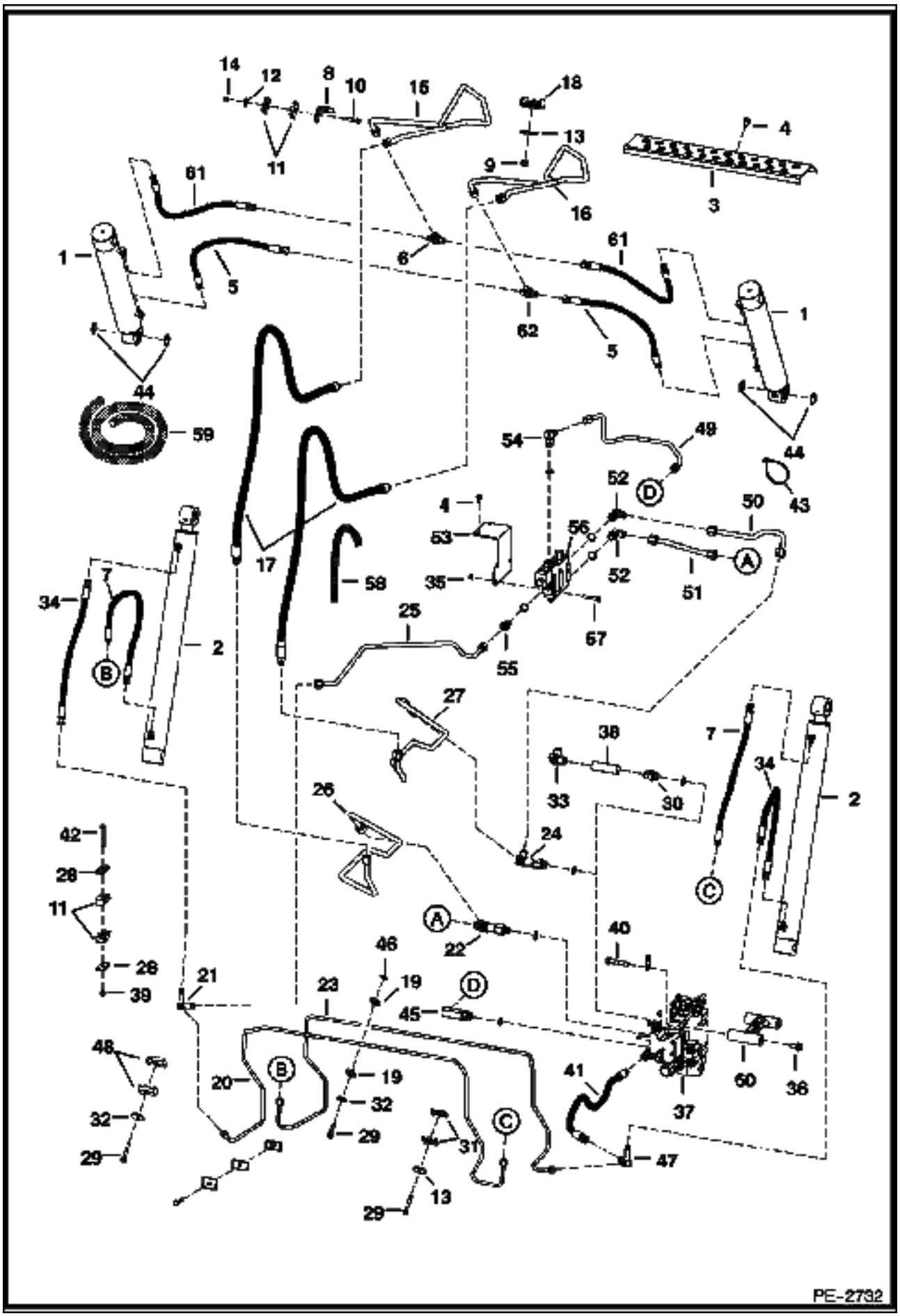

HYDRAULIC CIRCUITRY (Cont'd)
(W/Bucket Positioning Valve)

Ref No	Part Number	Description	Remarks	Serial Number	Qty
52	17KB01010B	ELBOW			2
52	79K000010B	O-RING			2
53	6727646	BRACKET			1
54	17KB00810B	ELBOW			1
54	79K000010B	O-RING			1
55	15KB00810B	CONNECTOR			1
55	79K000010B	O-RING			1
56	6666341	VALVE	See Illustration BUCKET POSITIONING VALVE/ MS1943 BUCKET POS.		1
57	35C000536B	BOLT			2
58		CONDUIT	NAP - 30"(762 mm) long - Order Ref. 59		2
59	6643249	CONDUIT	bulk - Sold Per Print		x
60	7109934	MOUNT			1
61	7114236	HOSE	.75" thread female ends		2
62	7114053	TEE			1

MANUAL LIFT RELEASE SYSTEM

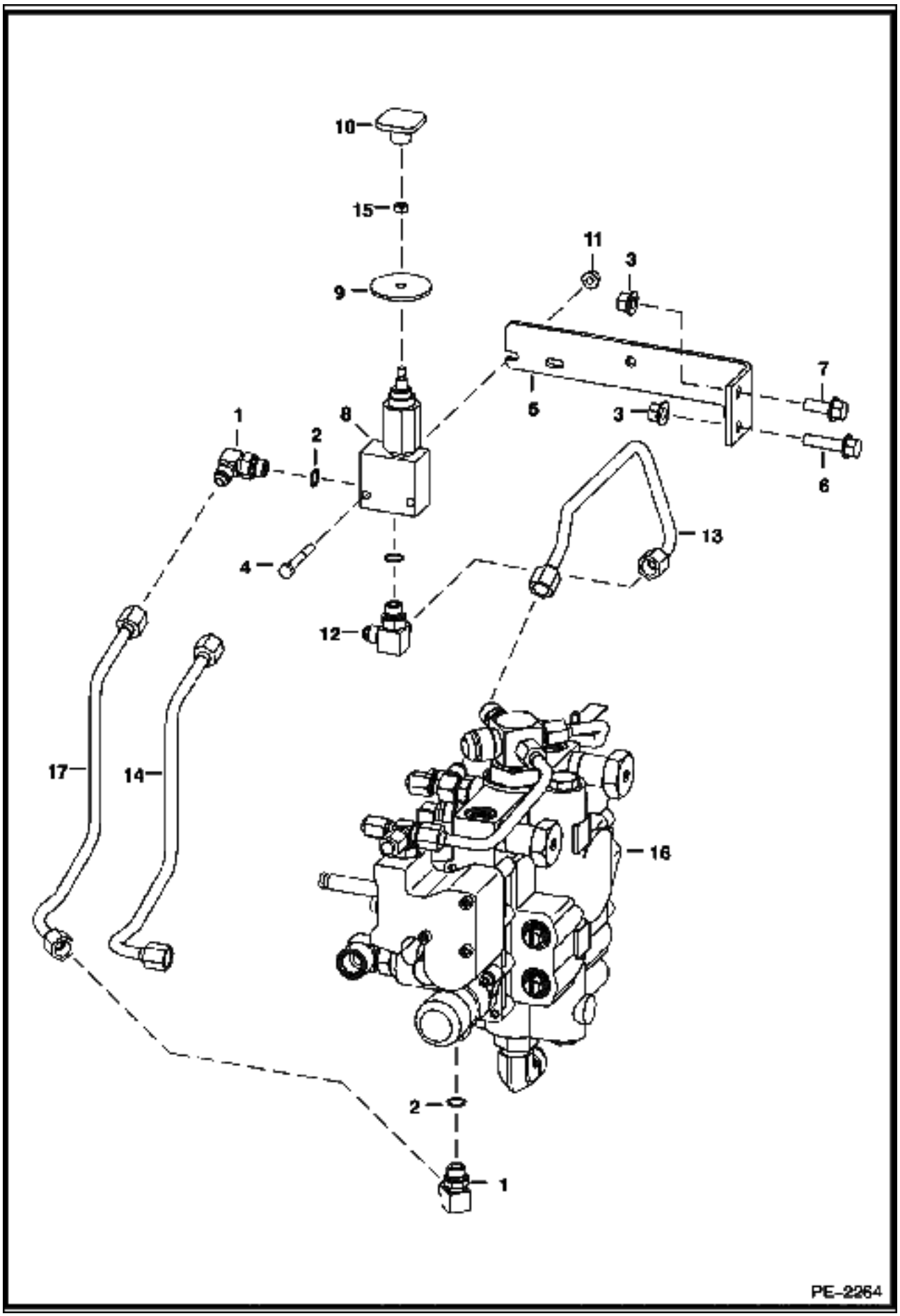

Ref No	Part Number	Description	Remarks	Serial Number	Qty
1	17KB00606B	ELBOW	W/Ref. 2		2
2	79K000006B	O-RING			x
3	83D000006B	NUT			2
4	17C000432B	BOLT			2
5	6717151	MOUNT			1
6	35C000616B	BOLT	Was 35C000624B [B]		1
7	35C000616B	BOLT			1
8	6667844	VALVE ASSY	See Illustration MANUAL LIFT RELEASE VALVE/ PE1547 MANUAL LIFT RELEASE		1
9	6707101	SEAL	neoprene		1
10	6737524	KNOB	red square		1
11	83D000004B	NUT			2
12	6725182	TEE	W/Ref. 2		2
13	7117380	TUBE			1
14		TUBE	NAP - Wdecals - Order Ref. 17 and adjust Ref. 1 to fit - Was 6734206 [D]		1
14	6809511	DECAL	danger		2
15	7D000004B	NUT			1
16		VALVE	NSS - CONTROL		1
17	6734206	TUBE	W/decals		1

AUXILIARY HYDRAULICS
(W/Pressure Relief Coupler Block)

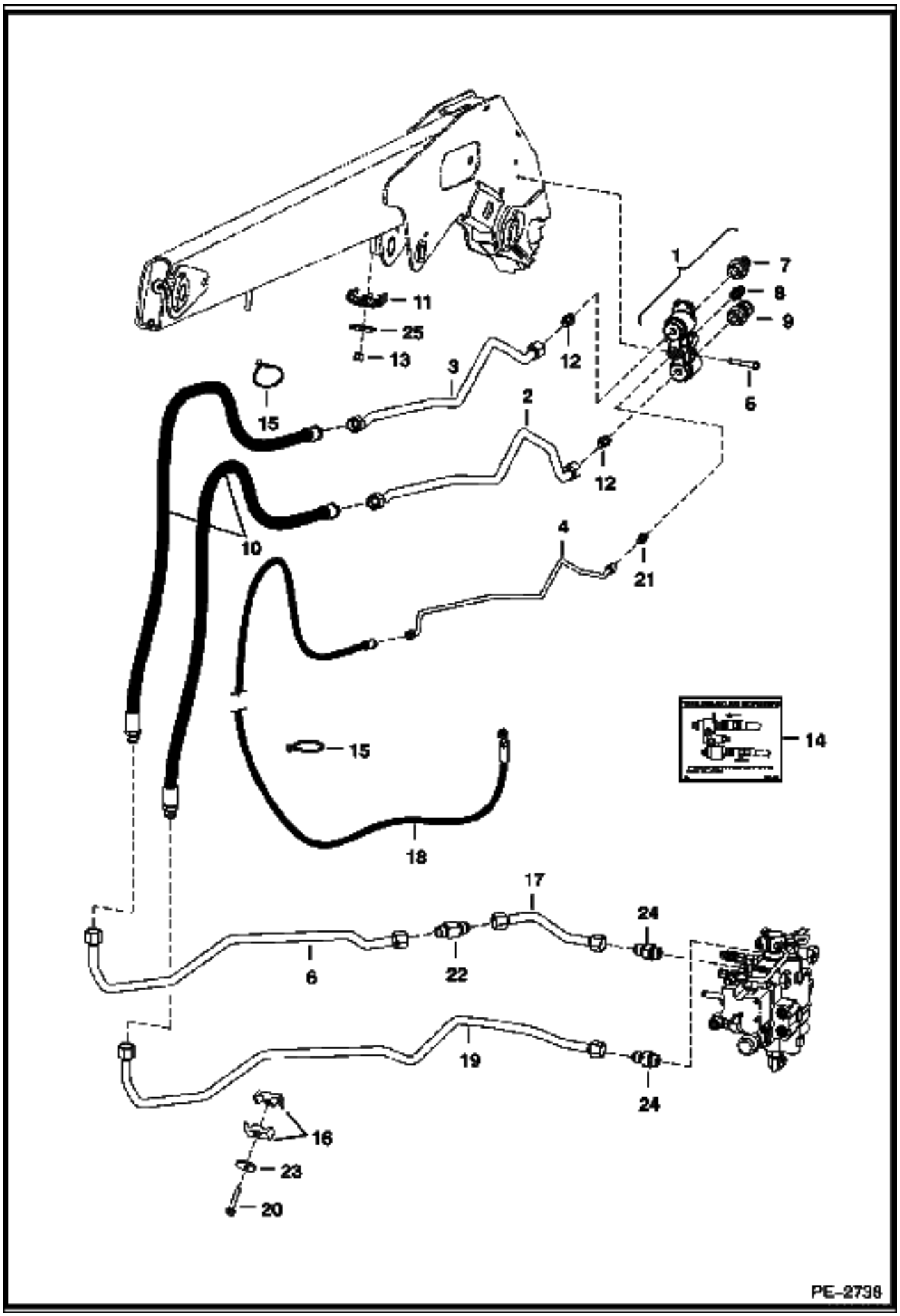

AUXILIARY HYDRAULICS (Cont'd)
(W/Pressure Relief Coupler Block)

Ref No	Part Number	Description	Remarks	Serial Number	Qty
1	6678076	BLOCK	coupler - Ref. 6 - 9 & (2) of Ref. 12		1
2	6731230	TUBE			1
3	6731229	TUBE			1
4	6731231	TUBE			1
5	84G003740B	BOLT			2
6	7115413	TUBE			1
7	6679837	COUPLER	coupler - male - FF		1
7	6679841	SEAL	blue		1
7	6680020	SEAL KIT	O-rings & back-up rings		1
8	6679838	COUPLER	coupler - male		1
8	6679840	SEAL	blue		1
9	6679839	COUPLER	coupler - female - FF		1
9	6680018	KIT	coupler - female - Use W/hydraulic breaker		1
9	6680020	SEAL KIT	O-rings & back-up rings		1
10	6727657	HOSE	W/cover		2
11	6717951	CLAMP			2
12	15KB00606B	ADAPTER			2
12	79K000006B	O-RING			1
13	59D000008B	NUT			2
14	6731757	DECAL			1
15	6624289	STA STRAP			2
16	6592506	CLAMP			2
17	7115412	TUBE			1
18	7114121	HOSE			1
19	7110264	TUBE			1
20	84G003740B	BOLT			1
21	15KB00606B	ADAPTER			1
21	79K000006B	O-RING			1
22	7114294	ADAPTER			1
23	872229	WASHER			1
24	15KB01216B	ADAPTER			2
24	79K000006B	O-RING			1
25	6553709	WASHER			2

TILT CYLINDER

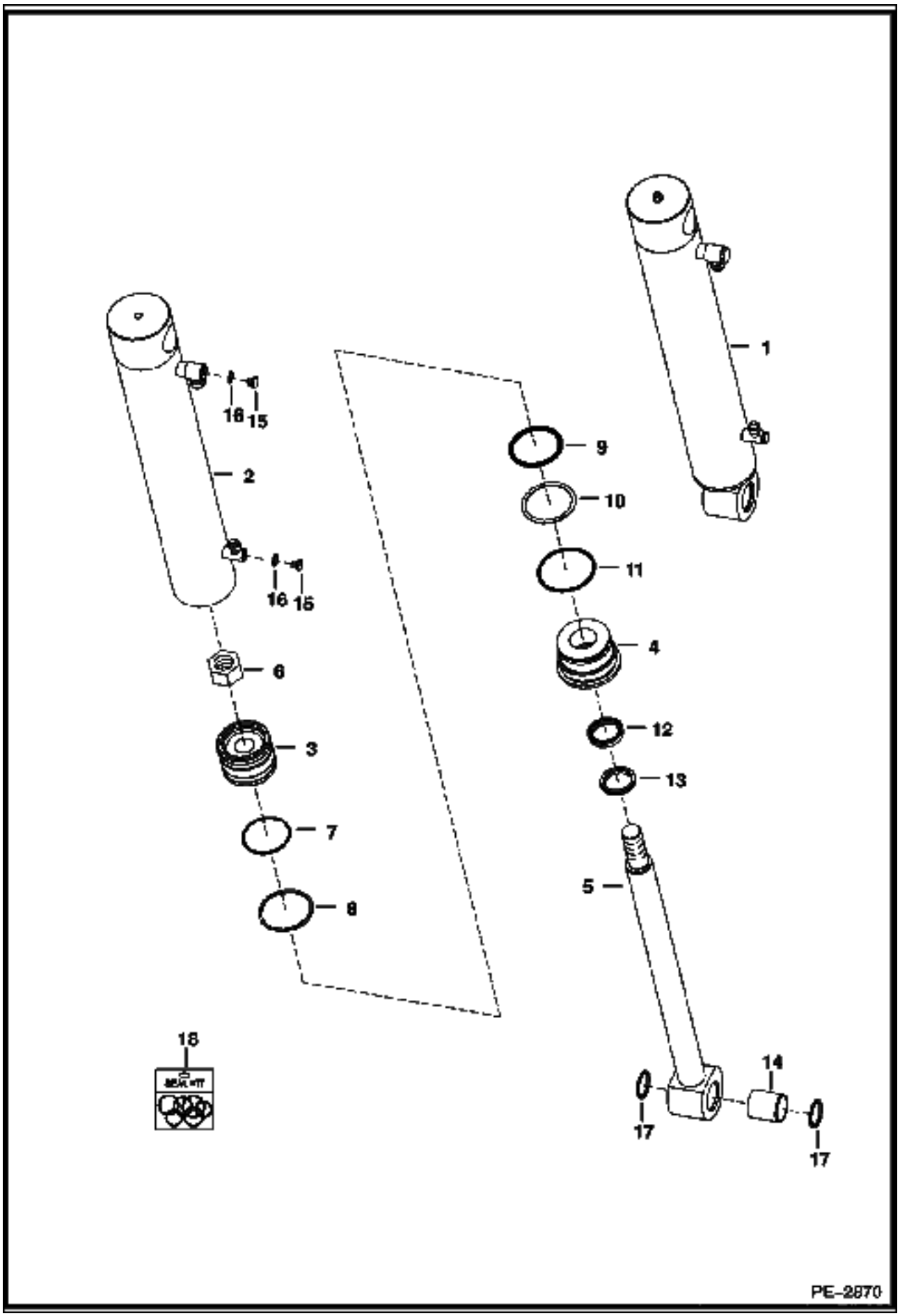

Ref No	Part Number	Description	Remarks	Serial Number	Qty
1	7117174	CYLINDER	tilt - Ref. 2-16 - .75" thread		2
2	7117175	CASE	2.75" (69,9 mm) I.D. - W/ base end fitting		1
3	6806315	PISTON			1
4	6806332	HEAD			1
5	6809903	ROD	1.375" (34,9 mm) - W/Ref. 14		1
6	92D000016B	NUT			1
7	54K030210B	O-RING			1
8	6516229	PISTON SEAL			1
9	54K060212B	O-RING			1
10	80K000332B	WASHER	back-up		1
11	54K040224B	O-RING			1
12	6667325	SEAL	rod		1
13	6666543	SEAL	wiper		1
14	6805453	BUSHING	wear		1
15	6812170	PLUG	W/Ref. 16		2
16	75K000003B	O-RING			2
17	225855B	SEAL			2
18	6806330	SEAL KIT	Ref. 6 - 13		1

LIFT CYLINDER

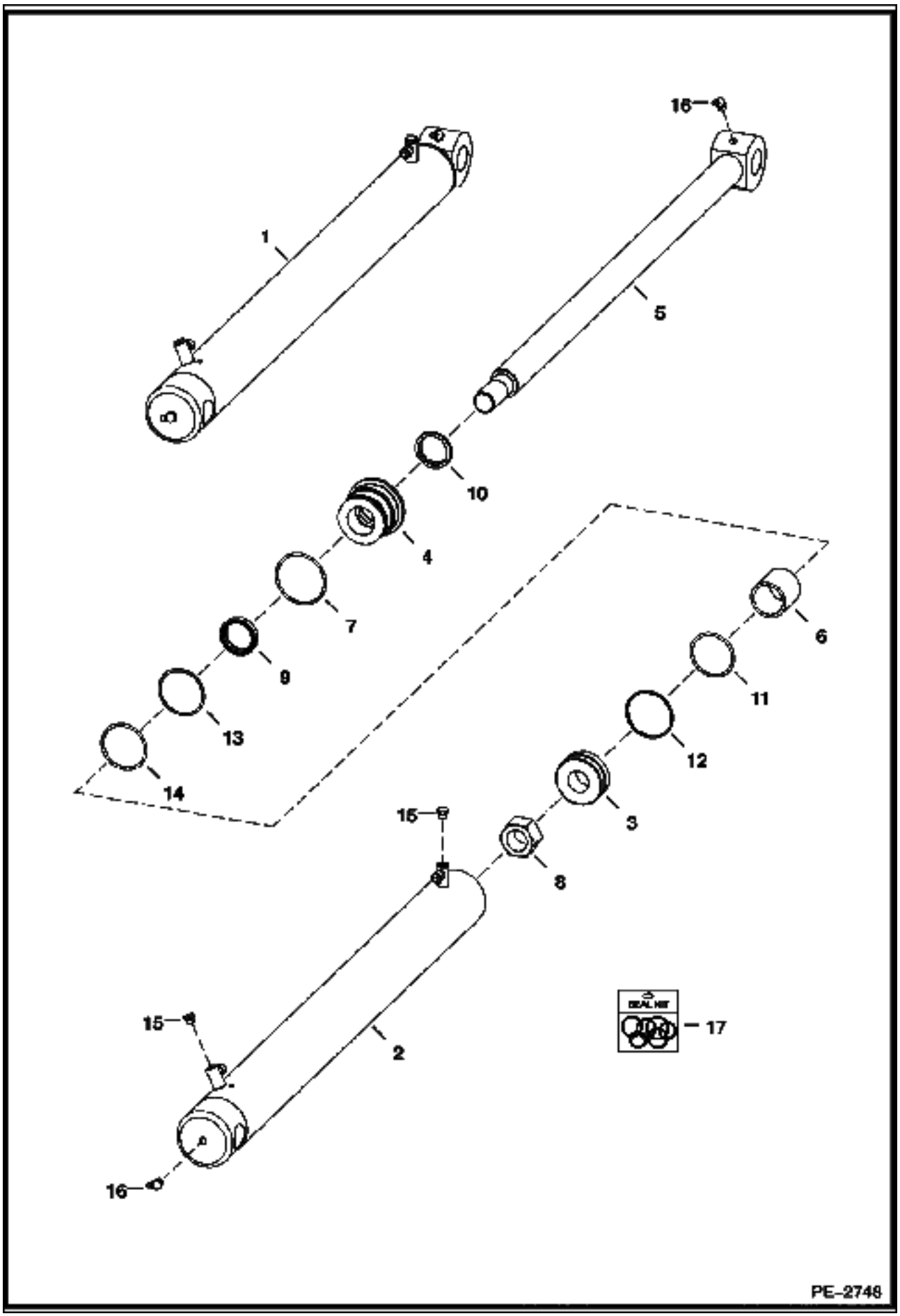

Ref No	Part Number	Description	Remarks	Serial Number	Qty
1	7117667	CYLINDER	Ref. 2 - 16		2
2	7117668	CASE			1
3	6678931	PISTON	W/Ref. 9 & 10 - Also has Non-Replaceable wear sleeves		1
4	6806124	HEAD			1
5	7107896	ROD	32.29" (820,2mm) long		1
6	6809593	SPACER			1
7	82K000230B	SEAL			1
8	6810539	NUT			1
9	1522534B	PISTON SEAL			1
10	25K030202B	O-RING			1
11	54K040208B	O-RING			1
12	73K000228B	RING	back-up		1
13	6667326	SEAL	rod		1
14	6665086	SEAL	wiper		1
15	6812170	PLUG			2
15	95K000003B	O-RING			2
16	11H000015B	GREASE ZERK			2
17	6816537	SEAL KIT	Ref. 7 - 14		1

CONTROL PEDALS

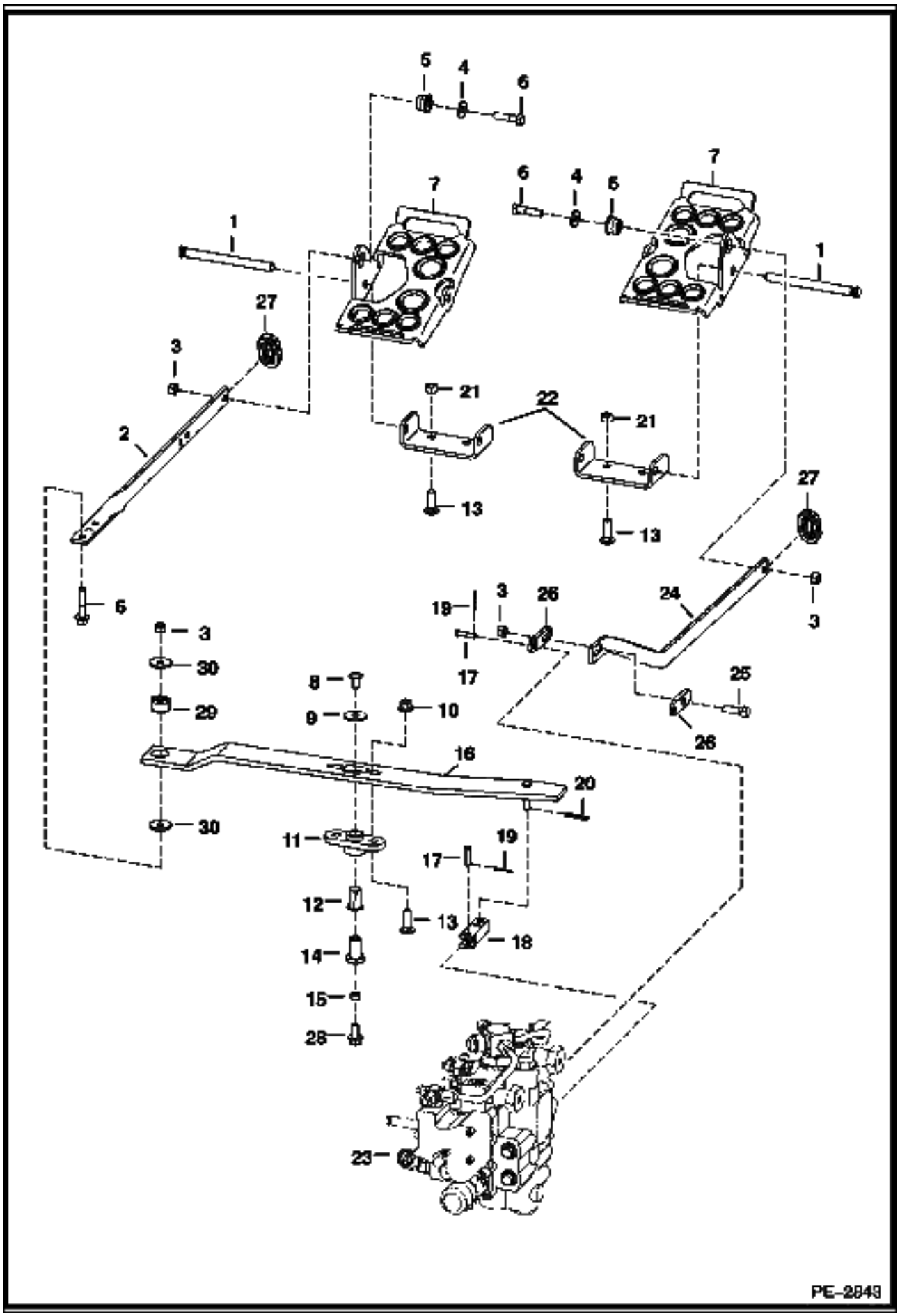

Ref No	Part Number	Description	Remarks	Serial Number	Qty
1	6564657	PIN			2
2	6576302	BAR			1
3	95D000006B	NUT			4
4	6563914	WASHER			2
5	6665701	BUSHING			2
6	17C000624B	BOLT			3
7	7115219	PEDAL			2
8	6665839	BOLT	round head allen socket - .75" long		1
8	17C000616B	BOLT	hex head - 1.0" long		1
9	619021B	WASHER			1
10	83D000006B	NUT	flanged head - prevailing torque		2
10	53D000006B	NUT	flanged head - pre-applied loctite		2
11	6708043	BUSHING	flange		1
12	6512026	BUSHING			1
13	37C000620B	BOLT			6
14	6706104	RETAINING NUT			1
15	6544654	BUSHING	spacer		1
16	7108408	LEVER			1
17		PIN	NAP - Was 6564654 [A]		2
18	6706105	YOKE			1
19	6513495	COTTER PIN			2
20	1306637B	PIN			1
21	57D000006B	NUT			4
22	7115220	MOUNT			2
23		VALVE	See Illustration HYDRAULIC CONTROL VALVE/ PE2734		1
24	6717820	BAR			1
25	17C000620B	BOLT			1
26	6708009	LINK	2.69"(68,3 mm) long		2
27	6577961	GROMMET			2
28	35C000612B	BOLT	flanged hex head		1
28	17C000612B	BOLT	hex head		1
29	6685060	BUSHING	torsion - 1.060"(26,924 mm) O.D.		1
30	6737388	WASHER			2

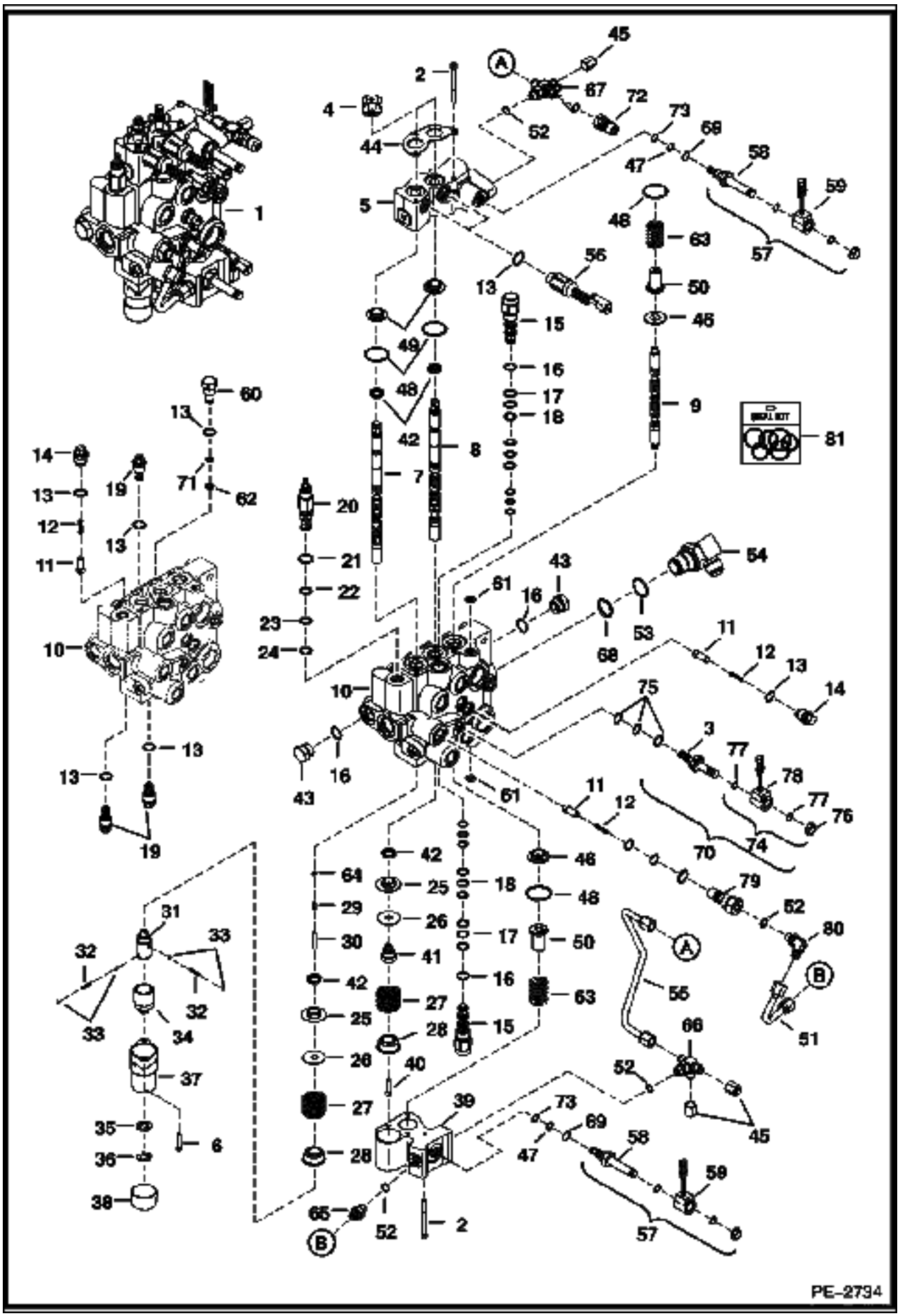
PE-2794

HYDRAULIC CONTROL VALVE (Cont'd)
Manual Hand Controls

Ref No	Part Number	Description	Remarks	Serial Number	Qty
1	6818039	VALVE	W/Fittings		1
2	29G000444B	BOLT			7
3	6667687	STEM			1
4	6587763	BOOT			2
5	6817003	BODY			1
6	29G000416B	SCREW			2
7	7108781	SPOOL	lift		1
8	6815152	SPOOL	tilt		1
9	7112383	AUX SPOOL	auxiliary		3
10		BODY	NSS		1
11	7106712	SEAT	load check		3
12	6592117	SPRING			3
13	79K000008B	O-RING			3
14	6817707	PLUG	load check - W/Ref. 13		3
15	6668765	VALVE	anti-cavity check -W/Ref. 16-18		2
16	79K000010B	O-RING			5
17	80K000014B	RING	back-up		5
18	58K000014B	O-RING			5
19	6684645	VALVE	port relief - W/Ref. 13		3
20	6686360	VALVE	main relief - W/Ref. 21-24 - pressure to be set in field		1
21	58K000017B	O-RING			1
22	6665569	WASHER	back-up		1
23	25K020016B	O-RING			1
24	6665570	RING	glide		1
25	6595663	BUSHING			2
26	6587523	WASHER			2
27	6587580	SPRING			2
28	6592100	COLLAR			2
29	6596807	PLUG			1
30	6586918	SCREW			1
31	6587575	ADAPTER			1
32	6592107	SPRING			2
33	6592105	BALL			4
34	6531270	SLEEVE			1
35	6592098	WASHER			1
36	799119B	SNAP RING			1
37	6589226	BONNET	.625" flange		1
38	6660644	CAP			1
39	6814279	BLOCK			1
40	30G000416B	BOLT			1
41	6592109	ADAPTER			1
42	6683274	SEAL			4
43	24K000007B	PLUG	W/Ref. 16		2
44	6813153	PLATE			2
45	36K000005B	CAP			3
46	6804920	BUSHING			2
47	58K000011B	O-RING			2
48	58K000127B	O-RING			2
49	6805102	BUSHING			2
50	6814694	RETAINER	spring		2
51	7116995	TUBELINE			1
52	79K000006B	O-RING			x
53	79K000016B	O-RING			x
54	7101371	ELBOW	W/Ref. 53 & 68		1

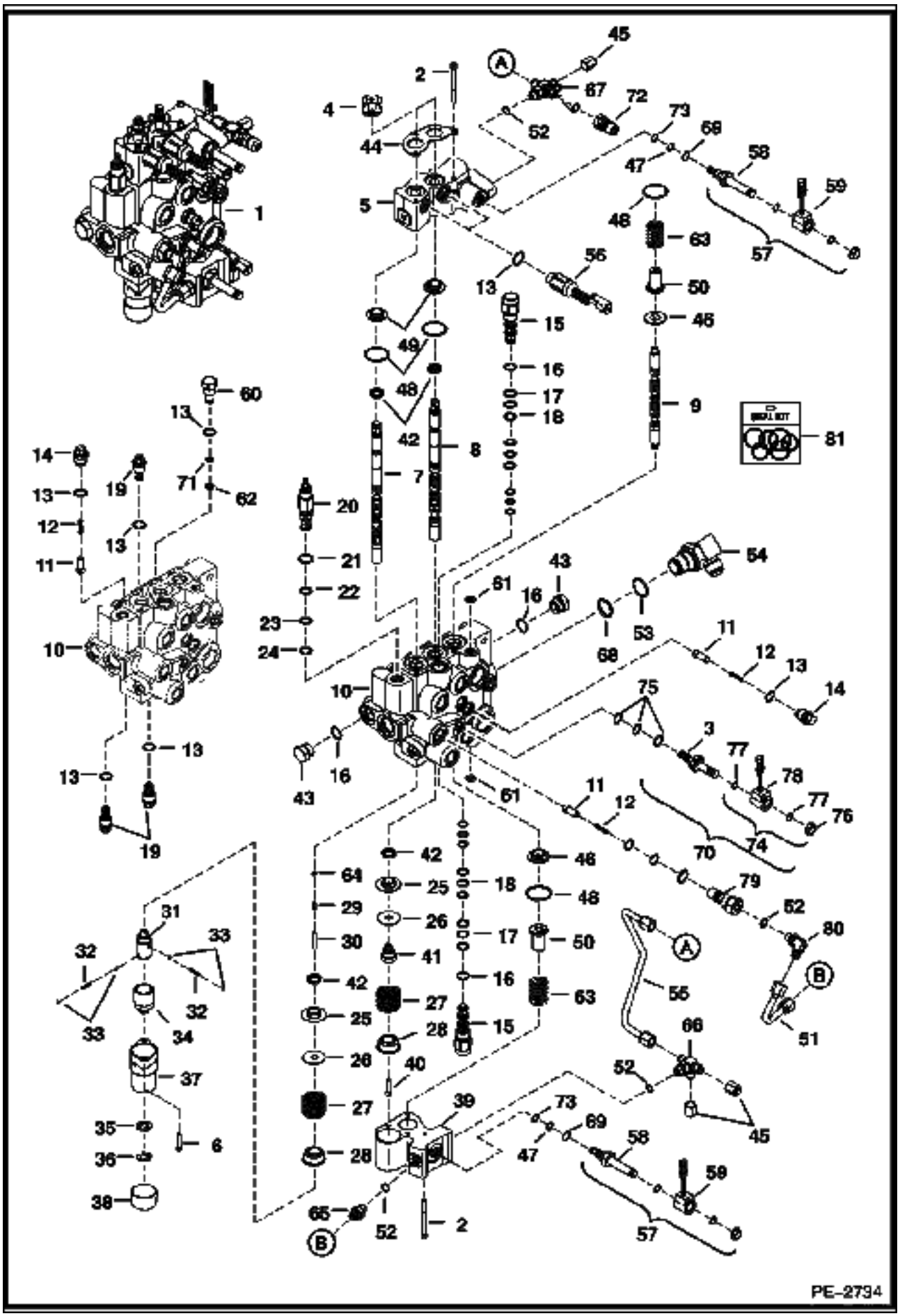
PE-2794

Ref No	Part Number	Description	Remarks	Serial Number	Qty
55	7110914	TUBELINE			1
56	6677383	SOLENOID	spool lock - 5" (127 mm) wire		2
57	6686868	SOLENOID	W/Ref. 47, 58, 59, 69 & 73		2
58	6688397	STEM	W/Ref. 73		2
59	6678891	COIL	W/ Nut - 10 Volt		2
60	6816549	PLUG	W/Ref. 13, 62 & 71		1
61	55K000204B	O-RING			2
62	80K000013B	WASHER	back-up		4
63	7121399	SPRING	Was 6810950 [A]		2
64	54K020002B	O-RING			1
65	6688845	VALVE	check - W/screen & Ref. 52		1
66	7102019	FITTING	W/Ref. 52		1
67	7102066	CROSS	W/Ref. 52		1
68	58K000022B	O-RING			1
69	58K000012B	O-RING			2
70	80K000016B	WASHER	back-up		x
70		SOLENOID	Ref. 3 & 75-78		1
71	58K000013B	O-RING			1
72	6684125	COUPLER			1
73	79K000007B	O-RING			2
74	6675559	COIL	Assy. - Ref. 76-78		1
75	6669732	SEAL KIT			1
76	6668820	NUT			1
77	54K020028B	O-RING			4
78	6671025	COIL	8 Volt		2
79	6815014	CHECK VALVE			1
80	17KB00606B	ELBOW			1
81	6816252	SEAL KIT	Spool - Ref. 2, 4, 29, 42, 48 & 64		x
81	6661328	SEAL KIT	main relief - Ref. 21-24		x
81	6809425	SEAL KIT	Ref. 13 & 16-18		x
81	6816253	SEAL KIT	Complete - Ref. 2, 4, 6, 13, 16-18, 21-24, 42, 44, 48, 61 & 62		x

HYDRAULIC CONTROL VALVE
(ACS) (Selectable Joystick Controls)

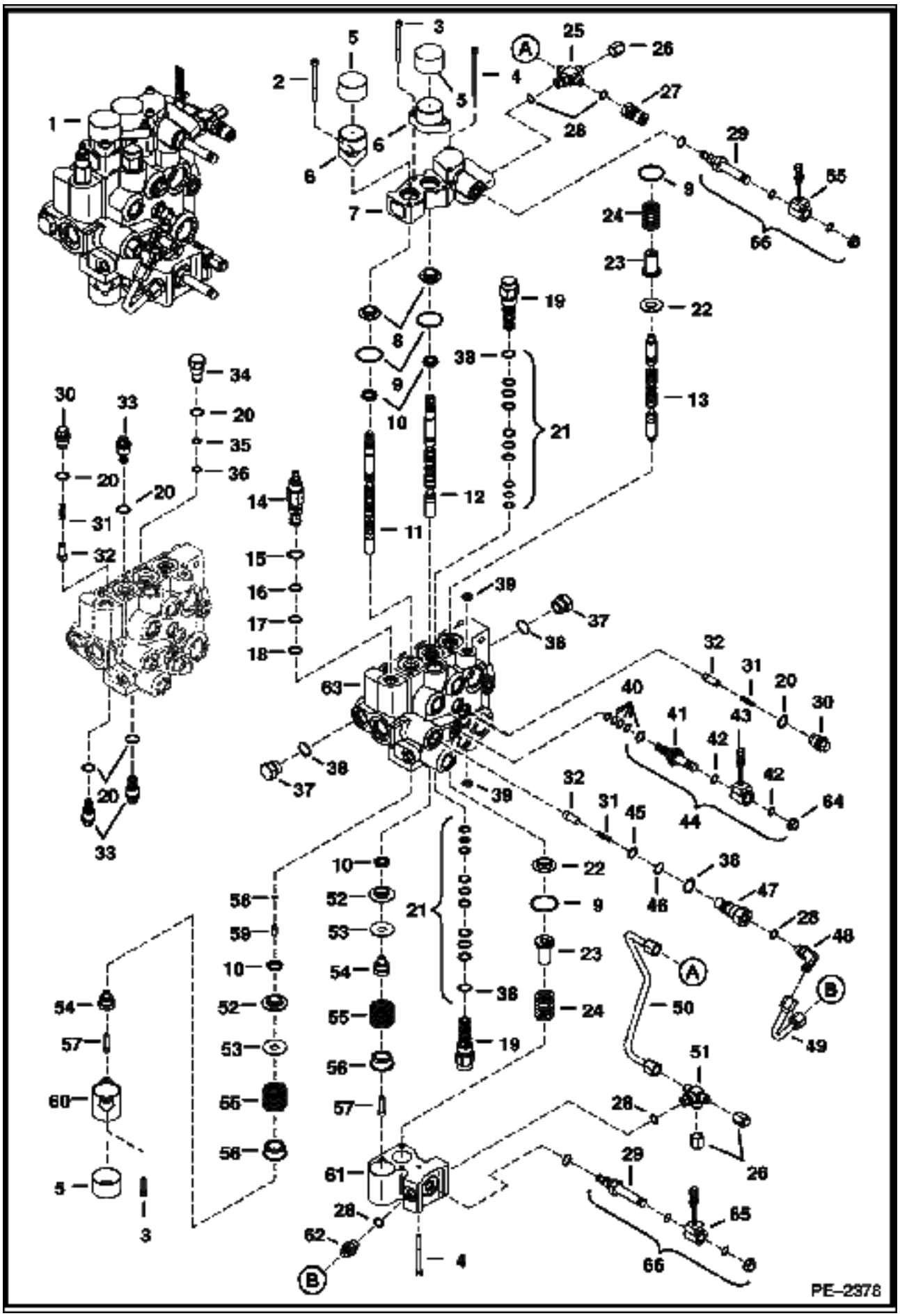

HYDRAULIC CONTROL VALVE (Cont'd)
(ACS) (Selectable Joystick Controls)

Ref No	Part Number	Description	Remarks	Serial Number	Qty
1	7101354	VALVE			1
2	69G000436B	BOLT			2
3	29G000416B	SCREW			4
4	29G000444B	BOLT			5
5	6662848	CAP			3
6	7101345	BONNET			2
7	6817004	BODY			1
8	6805102	BUSHING			2
9	58K000127B	O-RING			4
10	6683274	SEAL			4
11	7108241	SPOOL	lift		1
12	7108242	SPOOL	tilt		1
13	7112383	AUX SPOOL	aux		1
14	6686360	VALVE	W/Ref. 15-18		1
15	58K000017B	O-RING			x
16	6665569	WASHER	back-up		x
17	25K020016B	O-RING			x
18	6665570	RING	guide		x
19	6668765	VALVE	W/Ref. 38		2
20	79K000008B	O-RING			x
21	6669734	SEAL KIT			1
22	6804920	BUSHING			2
23	6814694	RETAINER			2
24	7121399	SPRING	Was 6810950 [A]		2
25	7102066	CROSS	W/Ref. 28		1
26	36K000005B	CAP			2
27	6684125	COUPLER	male		1
28	79K000006B	O-RING			x
29	6688397	STEM			2
30	6817707	PLUG	check valve - W/Ref. 20		3
31	6592117	SPRING			4
32	7106712	SEAT			4
33	6684645	VALVE	W/Ref. 20		3
34	6816549	PLUG	W/Ref. 20, 35 & 36		1
35	58K000013B	O-RING			x
36	73K000013B	O-RING			x
37	24K000007B	PLUG	W/Ref. 38		2
38	79K000010B	O-RING			x
39	55K000204B	O-RING			x
40	6669732	SEAL KIT			1
41	6667687	STEM			1
42	54K020028B	O-RING			x
43	6671025	COIL			1
44	6672471	VALVE	W/Ref. 40-43 & 64		1
45	58K000016B	O-RING			x
46	73K000016B	RING	back-up		x
47	6815014	CHECK VALVE	W/Ref. 38, 45 & 46		1
48	6682549	ELBOW	W/Ref. 28		1
49	7109822	TUBE			1
50	7110914	TUBELINE			1
51	7102018	TEE	W/Ref. 28		1
52	6595663	BUSHING			2
53	6587523	WASHER			2
54	6592109	ADAPTER			2

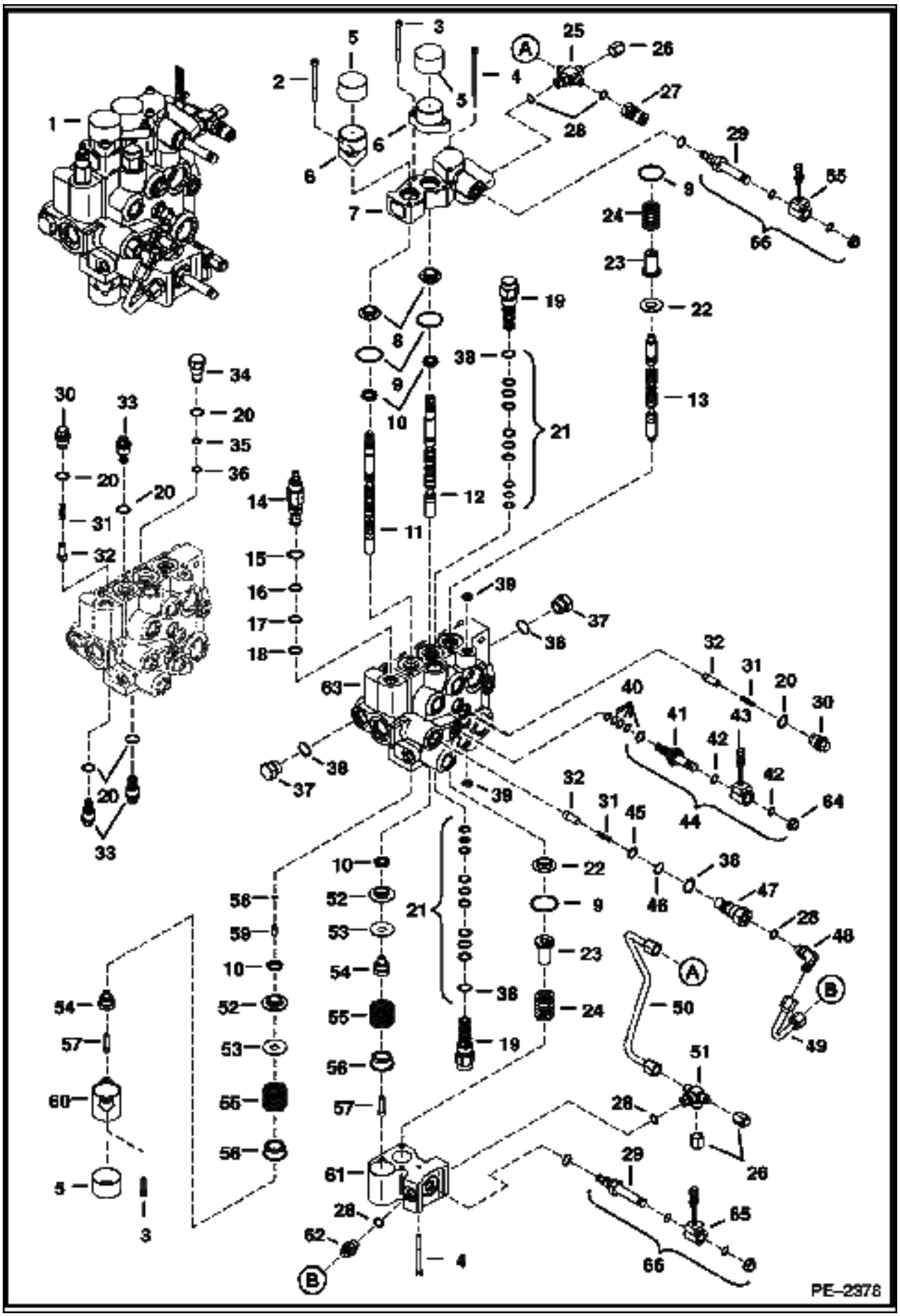
PE-2378

HYDRAULIC CONTROL VALVE (Cont'd)
(ACS) (Selectable Joystick Controls)

Ref No	Part Number	Description	Remarks	Serial Number	Qty
55	6587580	SPRING			2
56	6592100	COLLAR			2
57	7102652	SCREW			2
58	54K020002B	O-RING			x
59	6801167	PLUG			1
60	6803092	BONNET			1
61	6814279	BLOCK			1
62	15KB00606B	ADAPTER	W/Ref. 28		1
63		BODY	NSS		1
64	6668820	NUT			1
65	6678891	COIL			2
66	6678893	SOLENOID	W/Ref 29 & 65		2

MANUAL LIFT RELEASE VALVE

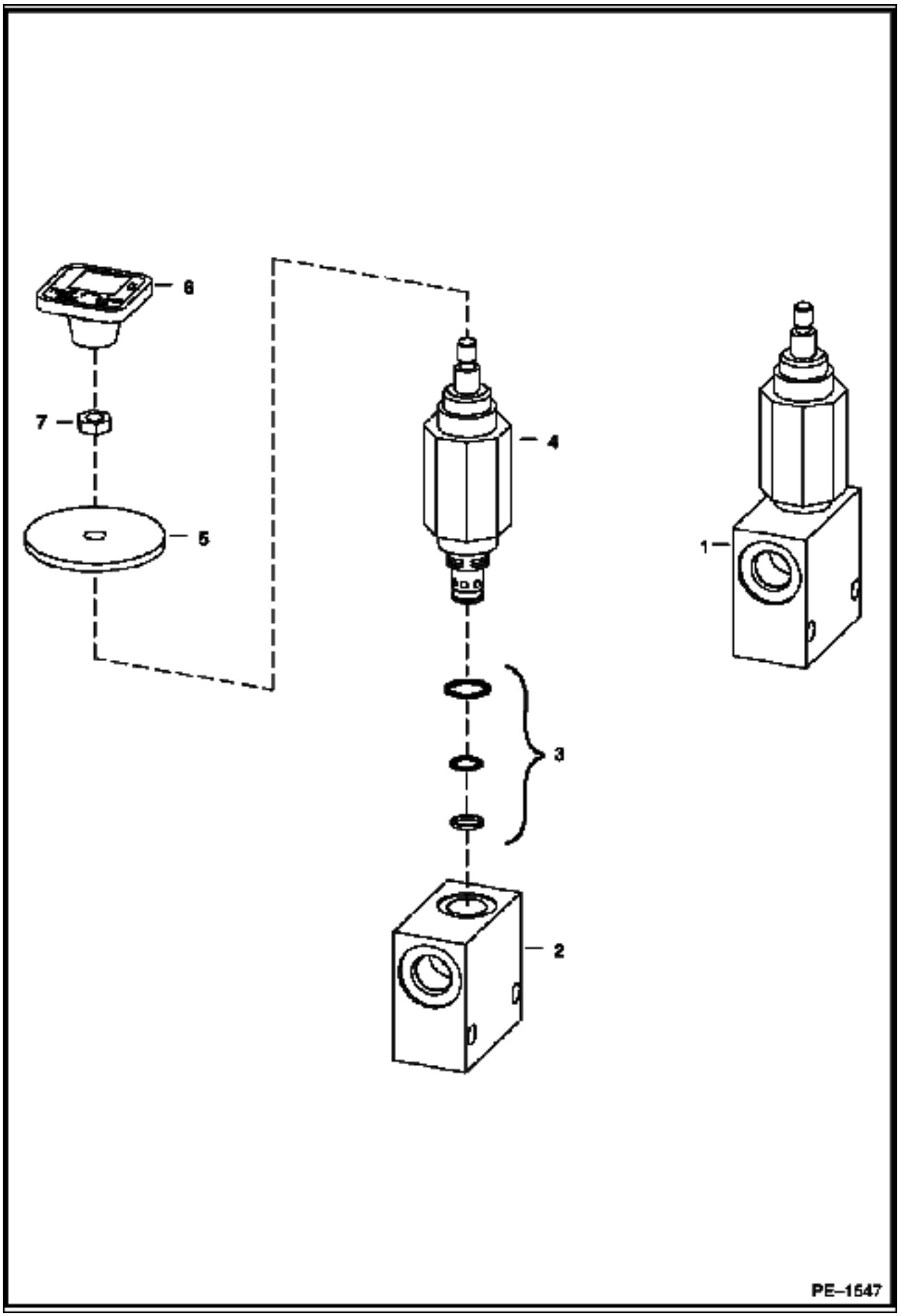

MANUAL LIFT RELEASE VALVE (Cont'd)

Ref No	Part Number	Description	Remarks	Serial Number	Qty
1	6667844	VALVE ASSY	Ref. 2 - 4		1
2		BLOCK	NSS		1
3	6669087	SEAL KIT			1
4	6669085	VALVE			1
5	6707101	SEAL	neoprene		1
6	6737524	KNOB	red square		1
7	7D000004B	NUT			1

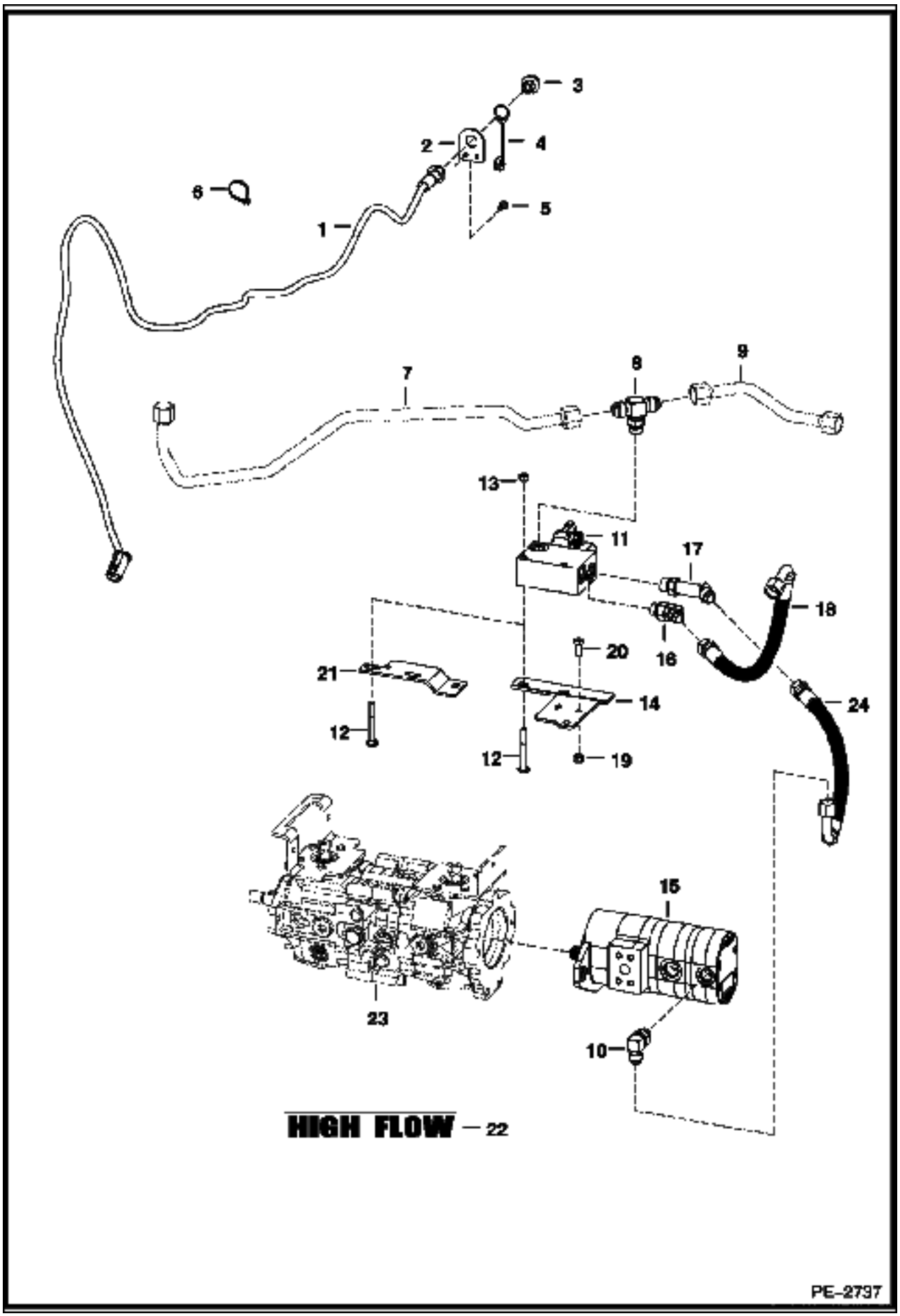
3
2
4
6
5
1
7
8
9
13
11
17
18
16
20
21
14
24
12
12
19
15
23
10
HIGH FLOW
22
PE-2797

HIGH FLOW HYDRAULICS (Cont'd)
(Manual & ACS Controls)

Ref No	Part Number	Description	Remarks	Serial Number	Qty
1	6718426	HARNESS			1
1	6667533	COVER			1
1	6674799	ADAPTER	heat shrink		1
2	6718750	MOUNT			1
3	6674802	CONNECTOR	7-pin		1
3	6669549	SOCKET	small		4
3	6677136	SOCKET	large - 12 ga.		3
4	6675026	CAP			1
5	84G003112B	BOLT			2
6	6624289	STA STRAP			7
7	6736685	TUBE			1
8	19KB01210B	TEE			1
8	79K000010B	O-RING			1
9	7113360	TUBE			1
10	17KB01010B	ELBOW			1
10	79K000010B	O-RING			1
11	6683819	VALVE	See Illustration HIGH FLOW HYDRAULICS/ B22497		1
12	37C000648B	BOLT			2
13	61D000006B	NUT			2
14	7110927	BRACKET	For models T180 & T190		1
15		GEAR PUMP	triple		1
16	18KB01010B	ELBOW			1
16	79K000010B	O-RING			1
17	6718080	ELBOW			1
17	79K000010B	O-RING			1
18	7115595	HOSE			1
19	95D000006B	NUT	For models T180 & T190		2
20	17C000614B	BOLT	For models T180 & T190		1
21	6736810	BRACKET	For Models S160K, S175K, S185K & S205K		1
22	7120693	DECAL	high flow		1
23		PUMP	See Illustration HIGH FLOW HYDRAULICS/ MS1459		1
24	6736647	HOSE			1

HIGH FLOW HYDRAULICS
(Selectable Joystick Controls)

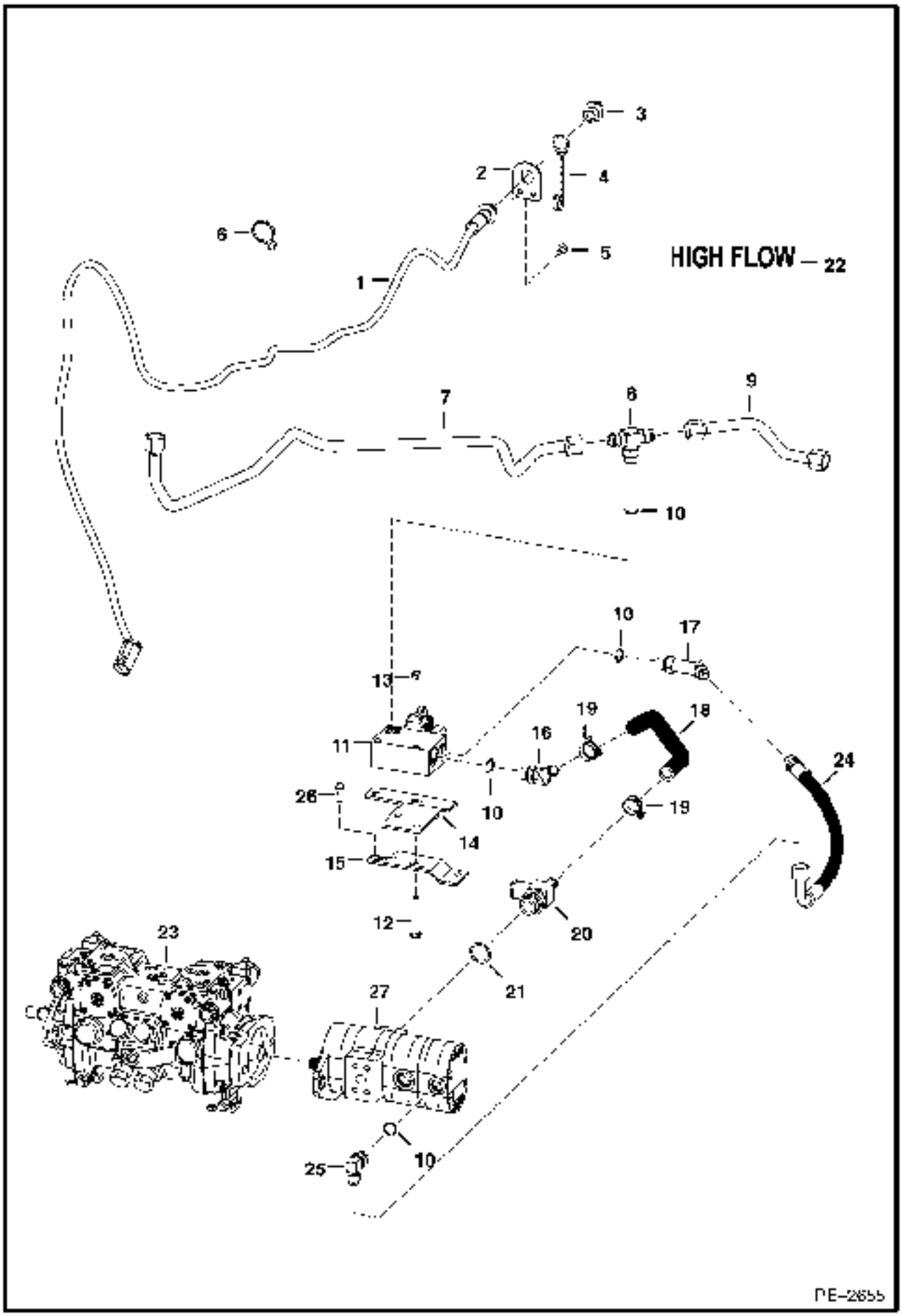

HIGH FLOW HYDRAULICS (Cont'd)
(Selectable Joystick Controls)

Ref No	Part Number	Description	Remarks	Serial Number	Qty
1	6718426	HARNESS			1
1	6667533	COVER			1
1	6674799	ADAPTER	heat shrink		1
2	6718750	MOUNT			1
3	6674802	CONNECTOR	7-pin		1
3	6669549	SOCKET	small		4
3	6677136	SOCKET	large - 12 ga.		3
4	6675026	CAP			1
5	84G003112B	BOLT			2
6	6624289	STA STRAP			7
7	6736685	TUBE			1
8	19KB01210B	TEE	W/Ref. 10		1
9	7113360	TUBE			1
10	79K000010B	O-RING			x
11	6683819	VALVE			1
12	37C000648B	BOLT			2
13	61D000006B	NUT			2
14	6736206	BRACKET	For models T180 & T190		1
15	6736810	BRACKET	For models S150, S160, S175 & S185		1
16	6717885	ELBOW	W/Ref. 10		1
17	6718080	ELBOW	W/Ref. 10		1
18	7107842	HOSE			1
19	5HM00027B	CLAMP	constant tension		2
20	7108400	TEE	W/Ref. 21 - For models S160, S175, S185, T180, & T190		1
21	79K000020B	O-RING			2
22	7120693	DECAL	high flow		1
23		PUMP	See Illustration HYDROSTATIC PUMP/ B25010 R902095064 - W/O double gear pump - For models S160, S175, S185, T180 & T190		1
24	6736647	HOSE			1
25	17KB01010B	ELBOW	W/Ref. 10		1
26	84G003720B	BOLT			1
27	6686389	PUMP	- 163D-1460 - double gear		1

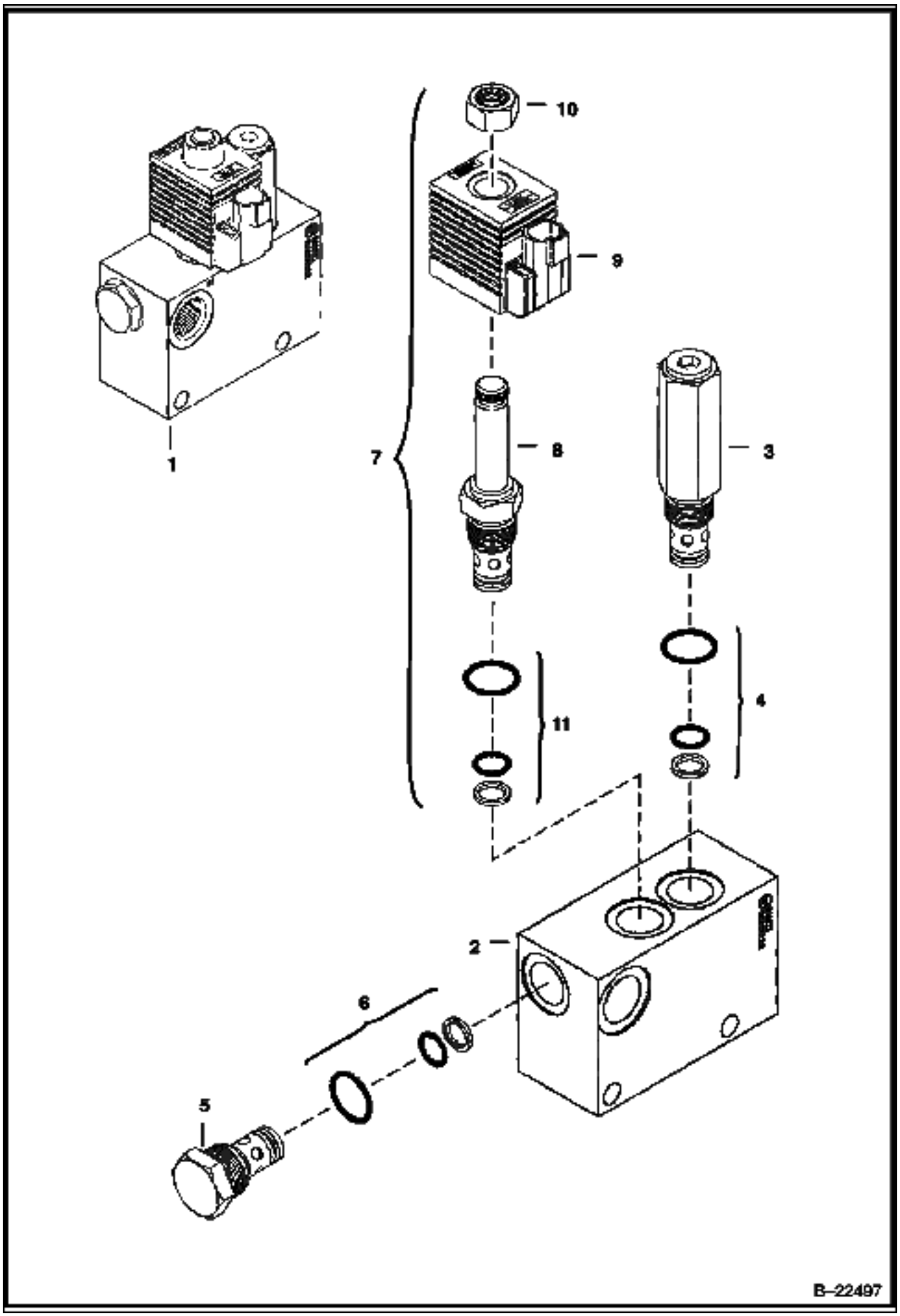
10
9
1
7
8
3
11
4
2
6
5
B–22497

Ref No	Part Number	Description	Remarks	Serial Number	Qty
1	6683819	VALVE			1
2		BLOCK	NSS		1
3	6685185	RELIEF VALVE	W/Ref. 4		1
4	6685184	SEAL KIT			1
5	6685186	CHECK VALVE	W/Ref. 6		2
6	6672515	SEAL KIT			1
7	6685183	SOLENOID	W/Ref. 8 - 11		1
8		STEM	NSS		1
9	6684058	COIL	W/Connector		2
10	6681492	NUT			1
11	6685184	SEAL KIT			1

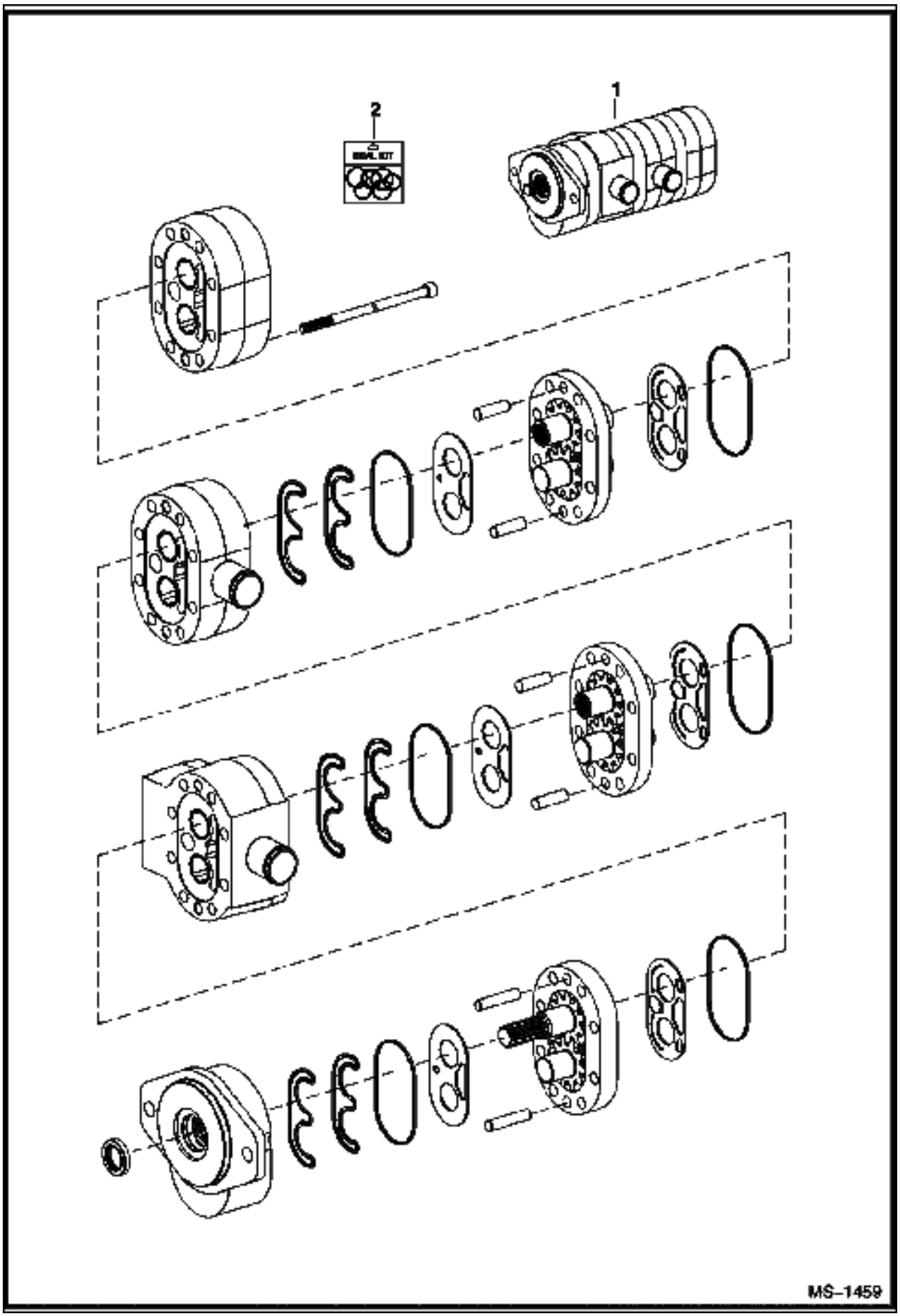
1
2
SEAL KIT
MS-1459

Triple Gear Pump

Ref No	Part Number	Description	Remarks	Serial Number	Qty
1	6687865	GEAR PUMP	model 163D72007		1
2	6688322	SEAL KIT			1

HYDROSTATIC CIRCUITRY
(Manual Hand Controls)

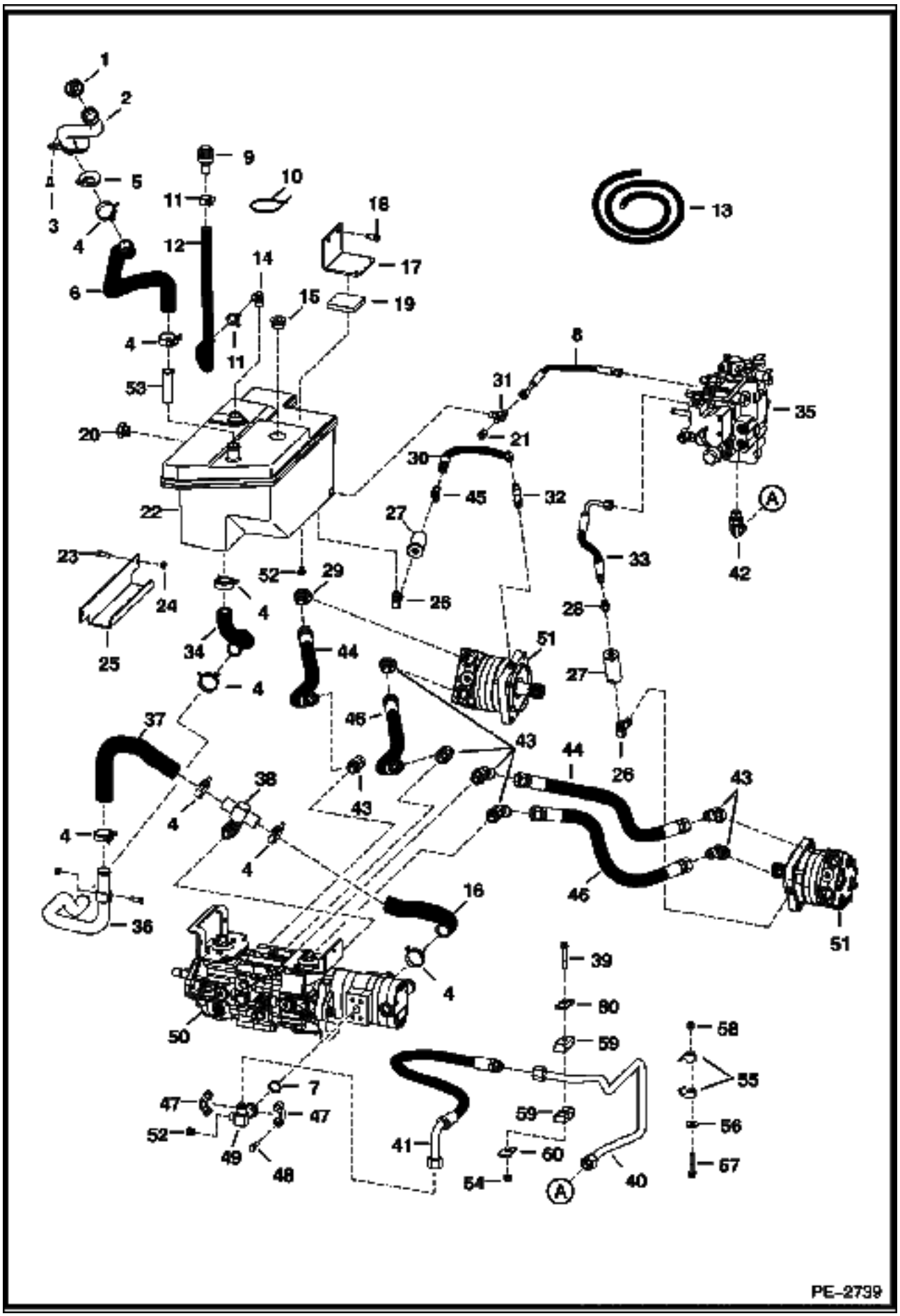

HYDROSTATIC CIRCUITRY (Cont'd)
(Manual Hand Controls)

Ref No	Part Number	Description	Remarks	Serial Number	Qty
1	6717827	CAP			1
2	6717830	TUBE			1
3	84G003710B	BOLT			2
4	5HM00042B	CLAMP			6
5	6718772	GASKET			1
6	6718020	HOSE			1
7	55K000214B	O-RING			1
8	7108406	HOSE			1
9	6684923	BREATHER	breather		1
10	6610510	TIE			2
11	5HM00024B	CLAMP			2
12		HOSE	NAP - 21.5" (546,1 mm) long - Order Ref. 13		1
13	6578172	HOSE	bulk - Sold Per Foot		x
14	6727637	ELBOW	barbed		1
15	47K000010B	PLUG			1
15	79K000016B	O-RING			1
16	7109343	HOSE			1
17	6726254	BRACKET			1
18	84G003716B	BOLT			2
19	6726255	PAD	bumper		1
20	6665915	GAUGE			1
20	79K000012B	O-RING			1
20	6734563	WASHER KIT			1
20	6734561	WASHER			1
20	25K030118B	O-RING			1
21	36K000005B	CAP			1
22	6728673	TANK			1
23	17C000616B	BOLT			2
24	61D000006B	NUT			2
25	6726162	BRACKET			1
26	6715190	ELBOW			2
26	79K000006B	O-RING			x
27	6661022	FILTER			2
28	15KB00606B	ADAPTER			1
28	79K000006B	O-RING			x
29	6734623	ELBOW			1
29	79K000012B	O-RING			x
30	7106205	HOSE			1
31	17KB00606B	ELBOW			1
31	79K000006B	O-RING			x
32	6812815	FITTING			1
33	6542521	HOSE			1
34	6733652	HOSE			1
35		VALVE			1
36	6735922	TUBE			1
37	7109344	HOSE			1
38	7107785	TEE			1
38	79K000016B	O-RING			x
39	17C000644B	BOLT			1
40	7109922	TUBE			1
41	6733197	HOSE			1
42	7101797	ELBOW			1
42	79K000012B	O-RING			x
43	6737453	ELBOW			7

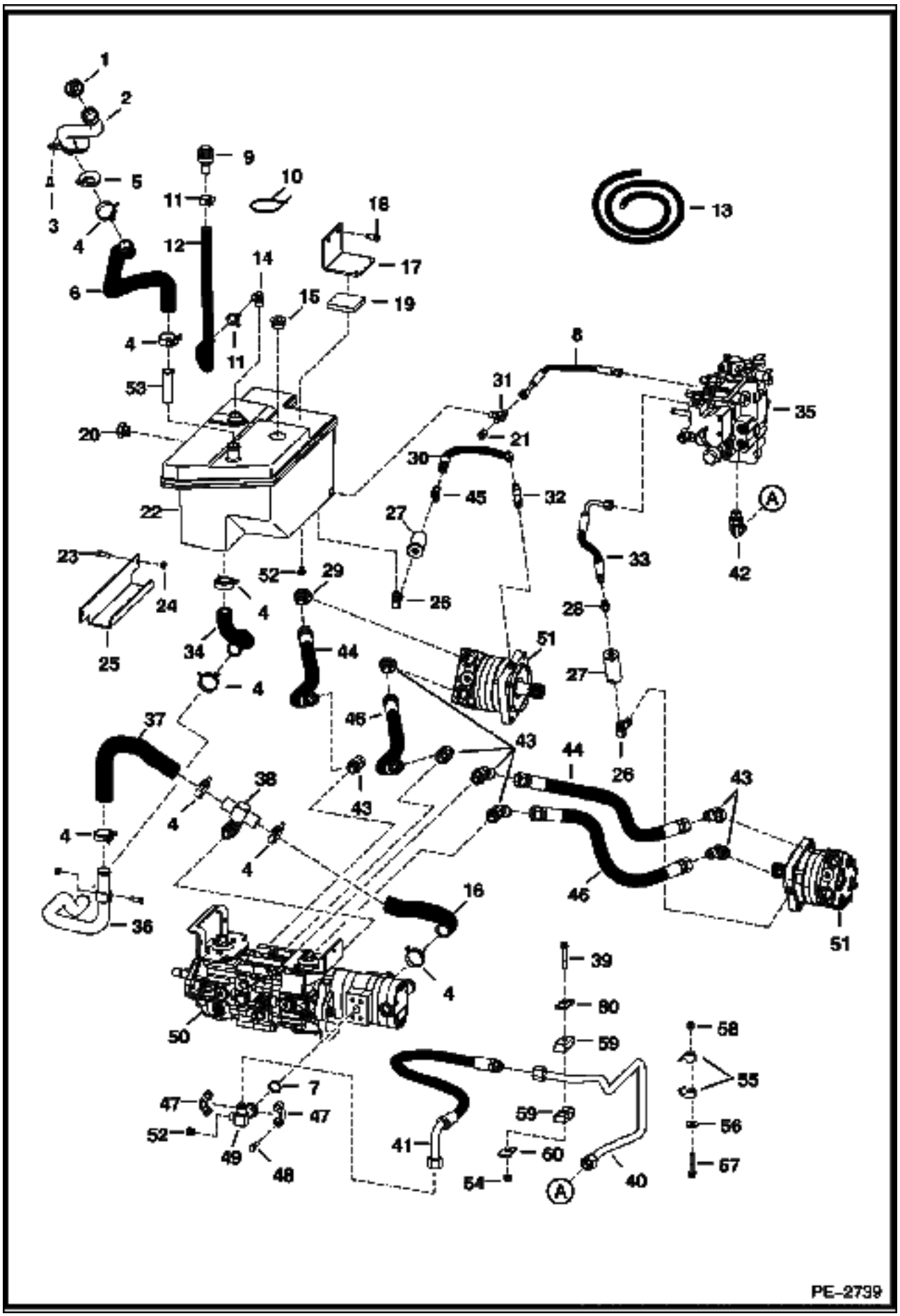
PE-2739

HYDROSTATIC CIRCUITRY (Cont'd)
(Manual Hand Controls)

Ref No	Part Number	Description	Remarks	Serial Number	Qty
43	79K000012B	O-RING			9
44	6688938	HOSE	mega seal		2
45	21KB00606B	TEE			1
45	79K000006B	O-RING			x
46	6688937	HOSE	mega seal		2
47	19J000012B	CLAMP			2
48	17C000620B	BOLT			4
49	7106040	ELBOW	split flange		1
50		PUMP			1
51		MOTOR			1
52	24K000005B	PLUG			1
52	79K000006B	O-RING			x
52	17KB00606B	ELBOW	rear aux.		1
52	79K000006B	O-RING			x
52	21KB00606B	TEE	high flow hydraulics		1
52	79K000006B	O-RING			x
53	6732215	FILTER			1
54	59D000006B	NUT			1
55	7100462	CLAMP			2
56	619021B	WASHER			1
57	84G003732B	BOLT			1
58	83D000006B	NUT			1
59	6592506	CLAMP			2
60	6592507	PLATE			2

HYDROSTATIC CIRCUITRY
(Selectable Joystick Controls)

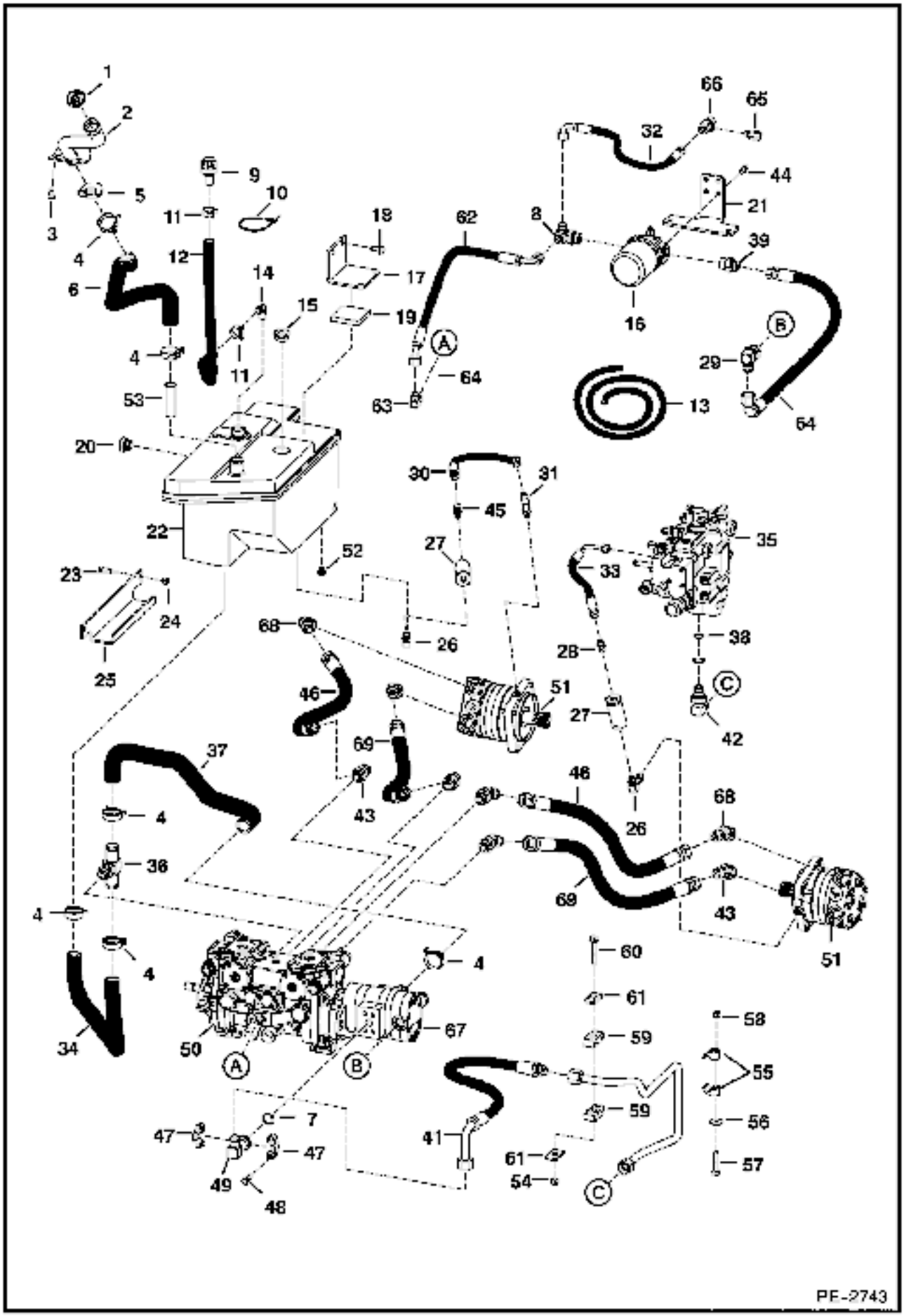

HYDROSTATIC CIRCUITRY (Cont'd)
(Selectable Joystick Controls)

Ref No	Part Number	Description	Remarks	Serial Number	Qty
1	6717827	CAP			1
2	6717830	TUBE			1
3	84G003710B	BOLT			2
4	5HM00042B	CLAMP			6
5	6718772	GASKET			1
6	6718020	HOSE			1
7	55K000214B	O-RING			1
8	7108846	TEE			1
8	79K000012B	O-RING			x
9	6684923	BREATHER	breather		1
10	6610510	TIE			1
11	5HM00024B	CLAMP			2
12		HOSE	NAP - 21.5" (546,1 mm) long - Order Ref. 13		1
13	6578172	HOSE	bulk - Sold Per Foot		x
14	6727637	ELBOW	barbed		1
15	47K000010B	PLUG			1
15	79K000016B	O-RING			1
16	6686922	FILTER ASMBLY 12			1
16	6686926	ELEMENT FILTER			1
16	6687834	SENSOR			1
17	6726254	BRACKET			1
18	84G003716B	BOLT			2
19	6726255	PAD	bumper		1
20	6665915	GAUGE			1
20	79K000012B	O-RING			x
20	6734563	WASHER KIT			1
20	6734561	WASHER			1
20	25K030118B	O-RING			1
21	7108398	BRACKET, FILTER			1
22	6728673	TANK			1
23	17C000616B	BOLT			2
24	61D000006B	NUT			2
25	6726162	BRACKET			1
26	6715190	ELBOW			2
26	79K000006B	O-RING			x
27	6661022	FILTER			2
28	15KB00606B	ADAPTER			1
28	79K000006B	O-RING			x
29	17KB001212B	ELBOW			1
29	79K000012B	O-RING			x
30	7106205	HOSE			1
31	6812815	FITTING			1
31	79K000006B	O-RING			x
32	7108845	HOSE			1
33	6542521	HOSE			1
34	7103861	HOSE			1
35		VALVE			1
36	7103648	TEE			1
36	79K000012B	O-RING			x
37	7107562	HOSE			1
38	58K000022B	O-RING			1
39	15KB01012B	ADAPTER			1
39	79K000012B	O-RING			x
40	6736773	TUBE			1

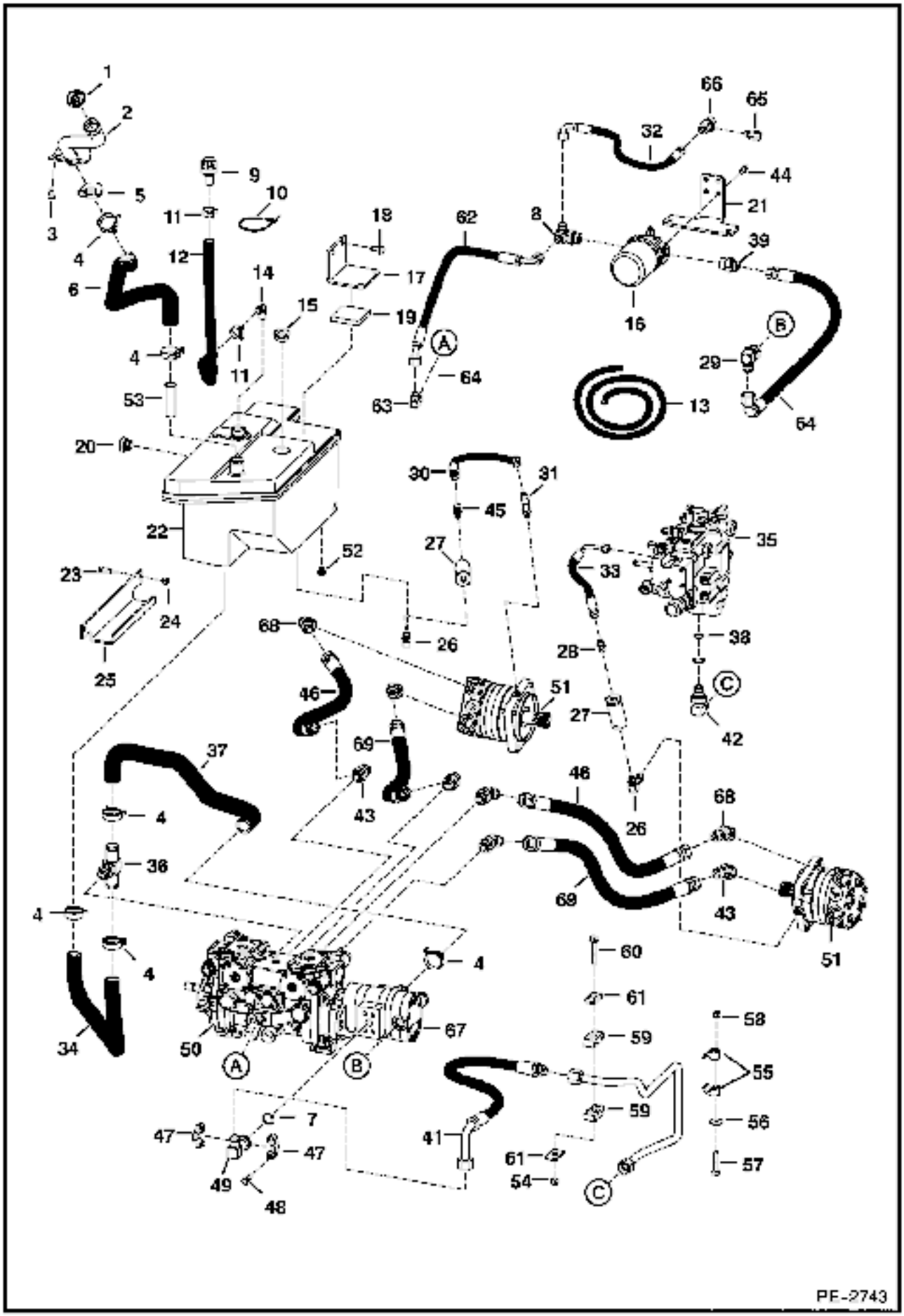
PF-2743

HYDROSTATIC CIRCUITRY (Cont'd)
(Selectable Joystick Controls)

Ref No	Part Number	Description	Remarks	Serial Number	Qty
41	6733197	HOSE			1
42	7101371	ELBOW	W/Ref. 38		1
42	79K000012B	O-RING			x
43	6737453	ELBOW			6
43	79K000012B	O-RING			x
44	17C000612B	BOLT			4
45	21KB00606B	TEE			1
45	79K000006B	O-RING			x
46	6688938	HOSE	mega seal		2
47	19J000012B	CLAMP			2
48	17C000620B	BOLT			4
49	7106040	ELBOW	split flange		1
50		PUMP			1
51		MOTOR			1
52	24K000005B	PLUG			1
52	79K000006B	O-RING			x
52	17KB00606B	ELBOW	rear aux.		1
52	79K000006B	O-RING			x
52	21KB00606B	TEE	high flow hydraulics		1
52	79K000006B	O-RING			x
53	6732215	FILTER			1
54	59D000006B	NUT			1
55	7100462	CLAMP			2
56	619021B	WASHER			2
57	84G003732B	BOLT			1
58	83D000006B	NUT			1
59	6592506	CLAMP			2
60	84G003720B	BOLT			1
61	6592507	PLATE			1
62	7108844	HOSE			1
63	17KB00808B	ELBOW			2
63	79K000008B	O-RING			x
64	7108843	HOSE			1
65	6718948	SNUBBER			1
66	6718660	TEE			1
67		PUMP	gear		1
68	6734623	ELBOW			2
68	79K000012B	O-RING			x
69	6688937	HOSE	mega seal		2

HYDROSTATIC CIRCUITRY

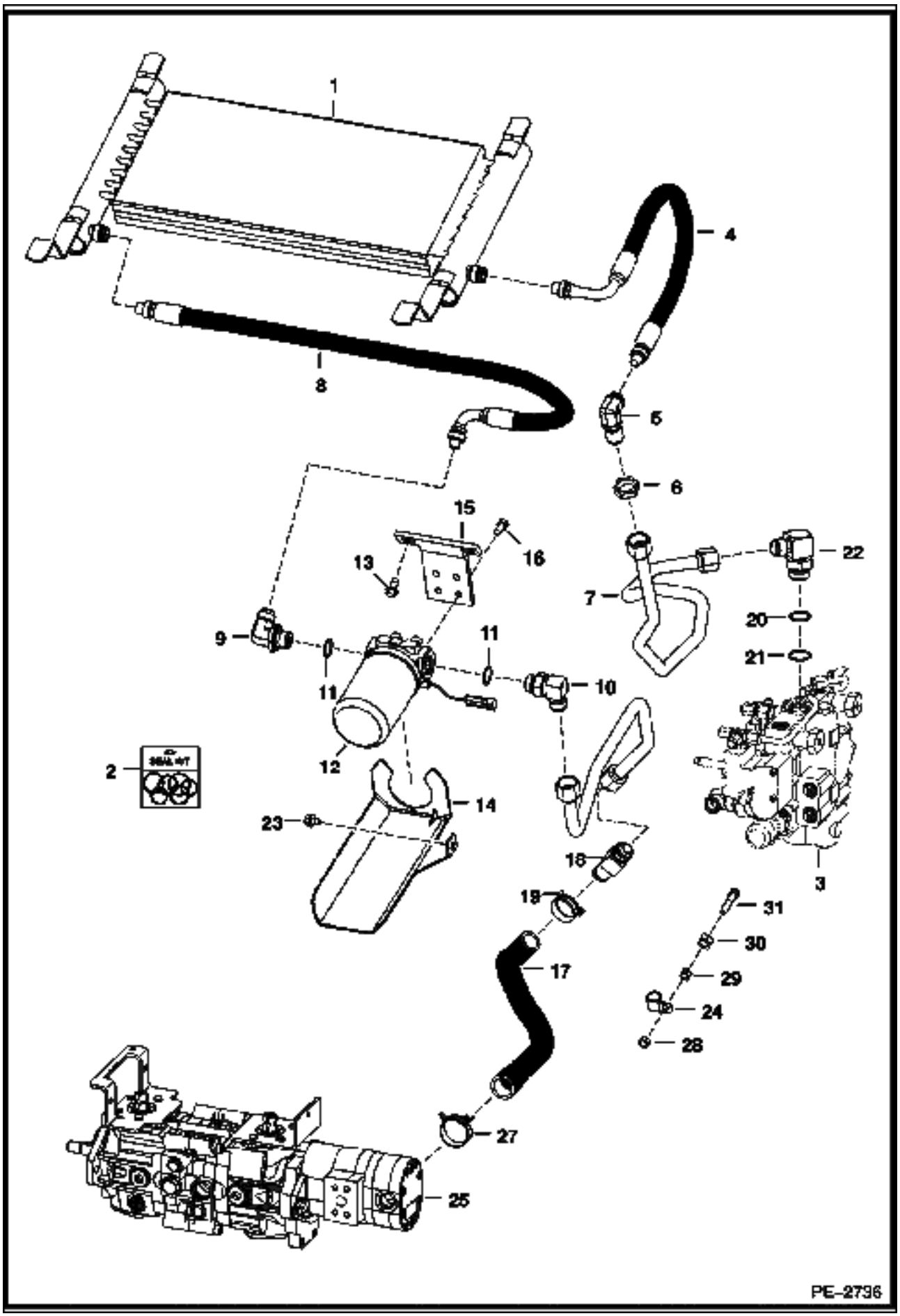

Ref No	Part Number	Description	Remarks	Serial Number	Qty
1	7109582	OIL COOLER			1
2	6674798	REPAIR KIT	For Ref. 1, 5 or 9 - includes internal retaining ring (1), O-ring (1) & back-up ring (1)		2
3		VALVE			1
4	6673828	HOSE			1
5	6670831	ELBOW			1
6	86F000008B	NUT			1
7	7109923	TUBE			1
8	6681944	HOSE			1
9	6681945	ELBOW			1
10	17KB01212B	ELBOW	W/Ref. 11		1
11	79K000012B	O-RING			x
12		FILTER ASSY			1
12	6661248	ELEMENT			1
13	84G003712B	BOLT			2
14	7110695	MOUNT			1
15	6729082	MOUNT			1
16	17C000612B	BOLT			4
17	7106024	HOSE			1
18	7106004	TEE			1
19	5HM00035B	CLAMP			1
20	79K000016B	O-RING			x
21	58K000022B	O-RING			1
22	7101371	ELBOW	W/Ref. 20 & 21		1
23	84G003708B	BOLT			1
24	30H000065B	CLIP			1
25		PUMP			1
26	7106056	TUBE			1
27	5HM00042B	TEE			1
28	95D000006B	NUT			1
29	61D000006B	NUT			1
30	61D000008B	NUT	used as a spacer		1
31	17C000628B	BOLT			1

HYDROSTATIC CIRCUITRY
(Cooling Fan)

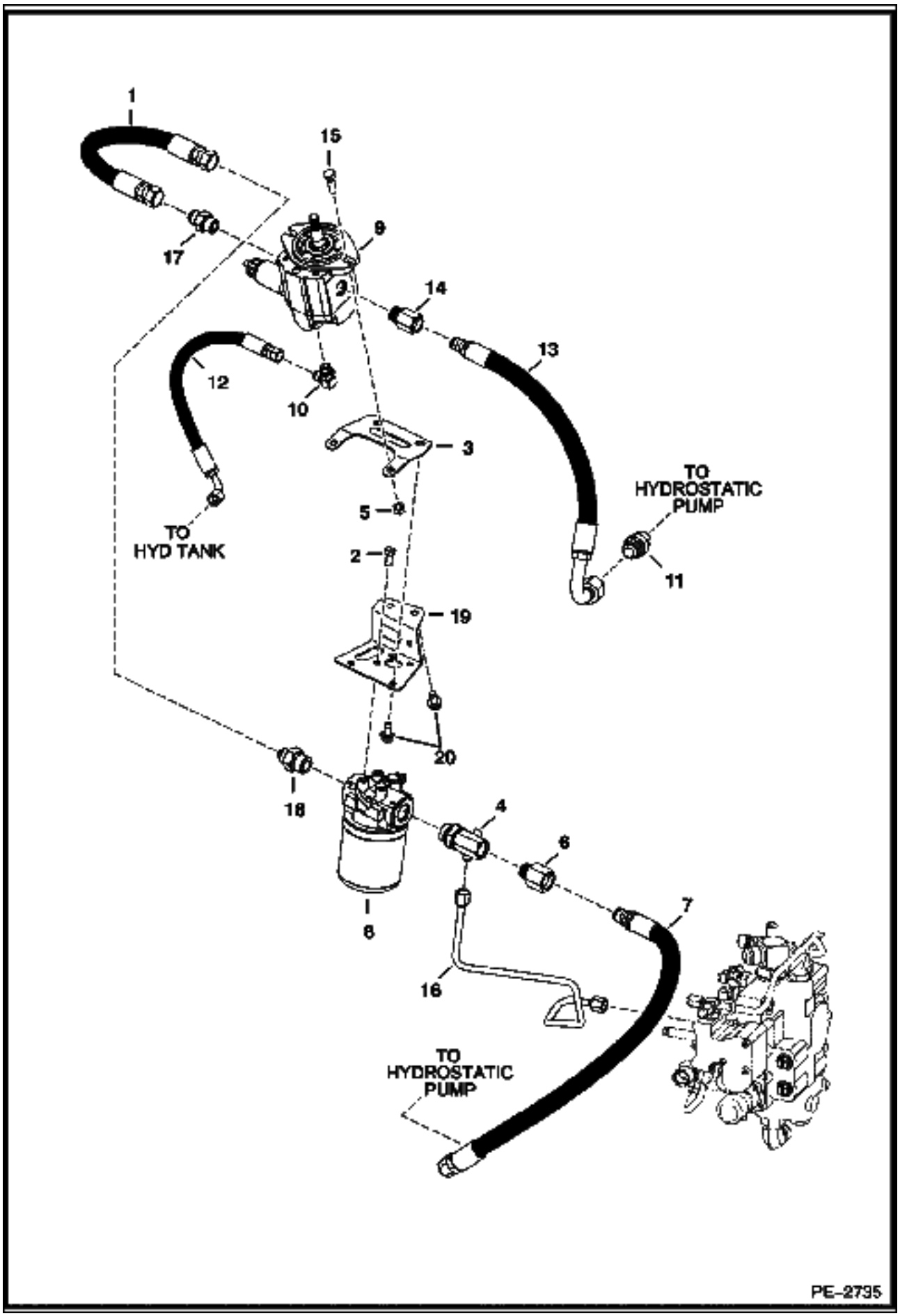

HYDROSTATIC CIRCUITRY (Cont'd)
(Cooling Fan)

Ref No	Part Number	Description	Remarks	Serial Number	Qty
1	7110809	HOSE			1
2	17C000612B	BOLT			4
3	7110243	BRACKET			1
4	7108685	TEE			1
4	79K000012B	O-RING			1
5	95D000006B	NUT			2
6	78HA01210B	ADAPTER			1
6	79K000010B	O-RING			x
7	7114250	HOSE			1
8	6687266	FILTER ASSY			1
8	6686926	ELEMENT FILTER			1
8	6660260	SWITCH			1
9	6687142	MOTOR	See Illustration MOTOR/ PE2811 See Illustration COOLING SYSTEM/ PE2677 W/proportional valve		1
9	6689058	MOTOR	W/O proportional valve		1
9	6689059	VALVE ASSY	proportional		1
9	6689060	COIL ASSY	W/nut & O-ring		1
9	6683206	SEAL KIT	for proportional valve		1
10	17KB00606B	ELBOW			1
10	79K000006B	O-RING			1
11	15KB01212B	ADAPTER			1
11	79K000012B	O-RING			1
12	7107179	HOSE			1
13	7114251	HOSE			1
14	78HA01010B	ADAPTER			1
14	79K000010B	O-RING			1
15	17C000620B	BOLT			2
16	7108980	TUBE			1
17	15KB01010B	ADAPTER			1
17	79K000010B	O-RING			1
18	15KB01012B	ADAPTER			1
18	79K000012B	O-RING			1
19	7110244	TUBE			1
20	84G003712B	BOLT			4
21	15KB612	ADAPTER	See Illustration HYDROSTATIC CIRCUITRY/ PE2739		1
21	15KB606	ADAPTER	See Illustration HYDROSTATIC CIRCUITRY/ PE2743 W/ Selectable Joystick Control		1

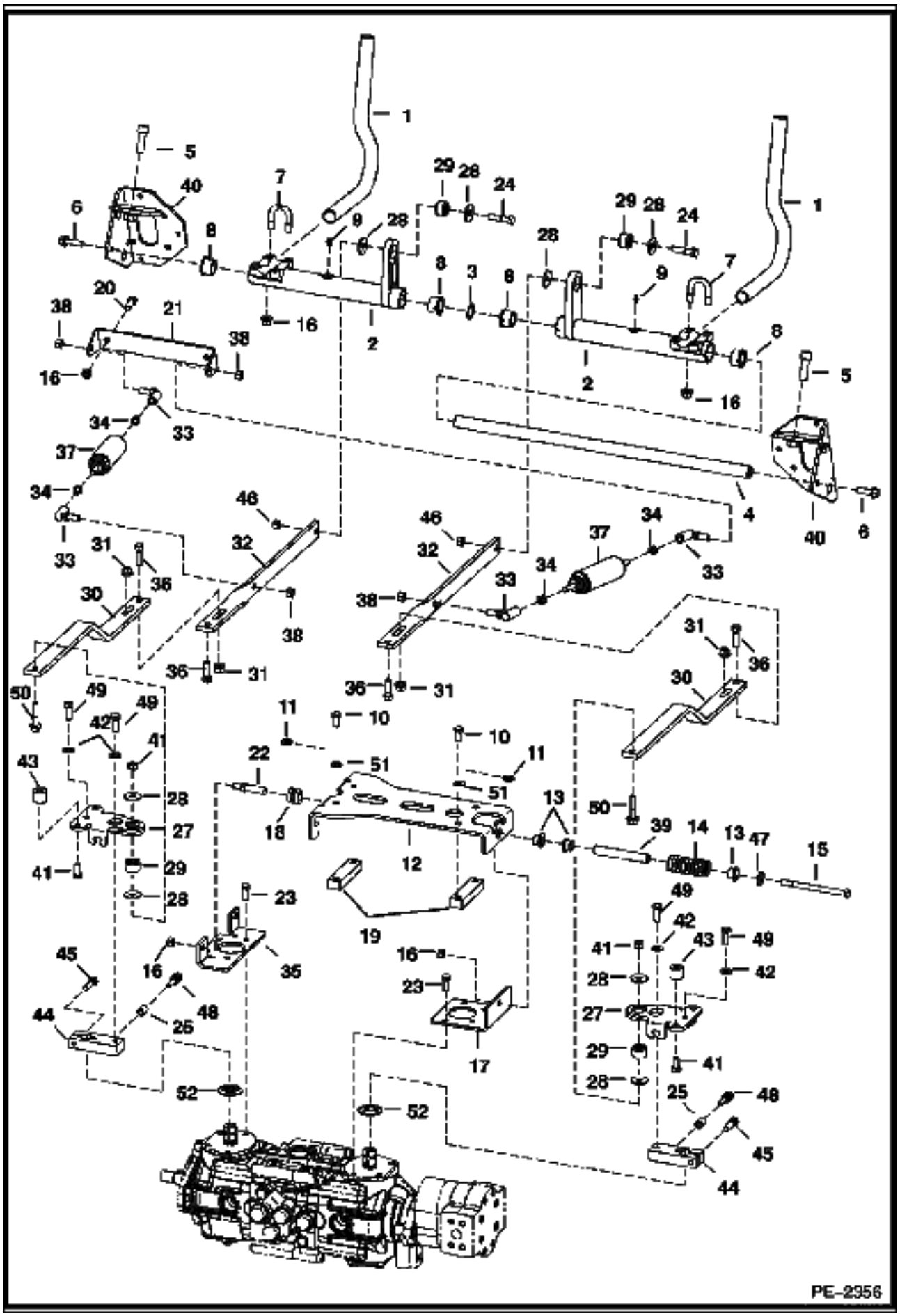
PE-2356

Ref No	Part Number	Description	Remarks	Serial Number	Qty
1	6702543	LEVER			2
2		BELLCRANK	NAP - W/notch for bushing tab - Use W/Ref. 9 (6518200 Grease Zerk) - Order 7110571 Bellcrank & Ref. 9 (10H000035B Grease Zerk) - Was 7101047 [A]		2
2	7110571	BELLCRANK	Use W/Ref. 9 (10H000035B Grease Zerk)		2
3	6599741	WASHER	wave		1
4	6716545	ROD			1
5	73G000824B	BOLT			2
6	45C000620B	BOLT			2
7	6732997	U-BOLT			4
8	6703879	BUSHING	W/tab		4
8	6673710	BEARING	needle - AHC		2
9	10H000035B	GREASE ZERK	threaded		2
9	6518200	GREASE ZERK	press fit		2
10	7105192	BOLT			4
11	6557831	WASHER	.15" thick		4
12	6734298	MOUNT			1
13	6715163	BUSHING			3
14	6701535	SPRING			1
15	17C000680B	BOLT			1
16	91D000006B	NUT			18
17	6734742	BRACKET			1
18	6706098	GUIDE			2
19	6702716	BLOCK			2
20	17C000612B	BOLT			2
21	7100795	MOUNT			1
22	6577058	PIN			2
23	1CM00820B	BOLT			8
24	17C000628B	BOLT			4
25	7105223	SPACER			2
26	63D000006B	NUT			2
27	7110365	PINTLE ARM			2
28	6737388	WASHER			8
29	6685060	BUSHING			4
30	6735253	LINK			2
31	83D000006B	NUT			4
32	7107986	LINK			2
33	6599744	BALL JOINT			4
34	8D000006B	NUT			4
35	6685345	BRACKET			1
36	17C000620B	BOLT			4
37	6649551	SHOCK			2
38	62D000006B	NUT			2
39	6715164	SLEEVE			1
40	6733022	BRACKET	R.H.		1
40	6733024	BRACKET	L.H.		1
41	98D000006B	NUT	AHC		4
42	7100699	WASHER	AHC - .24" thick		4
43	6673789	BEARING	ROLLER - AHC		4
44	7103708	BRACKET	centering		2
45	73G624	BOLT	Was 7105194		2
46	53D000006B	NUT			2
47	6563914	WASHER			1
48	7103711	BOLT			2
49	7105193	BOLT	black		4
50	49C000628B	BOLT			2

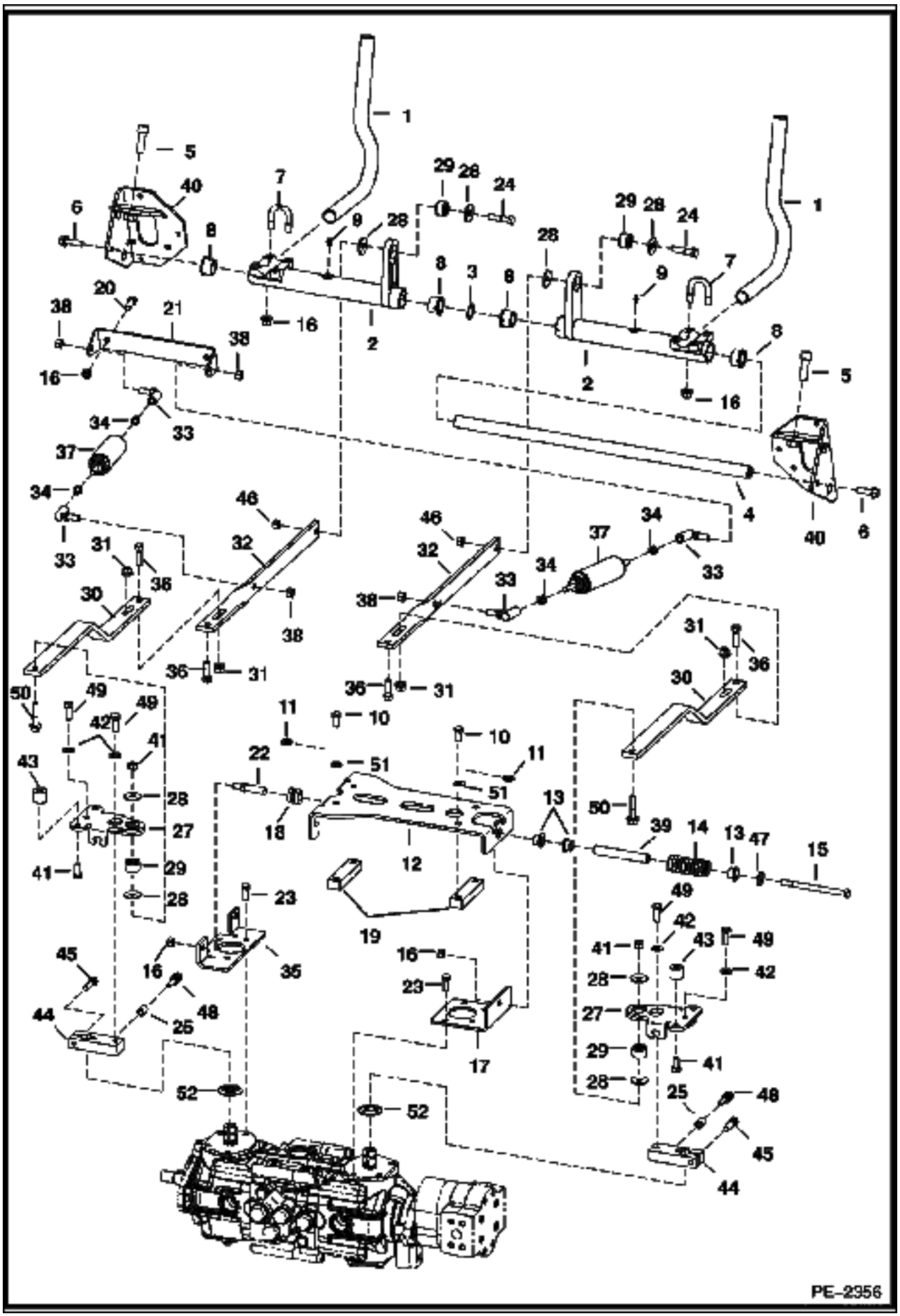
PE-2356

Ref No	Part Number	Description	Remarks	Serial Number	Qty
51	7103271	WASHER	.065" thick		8
52	6687913	SEAL	dust		2

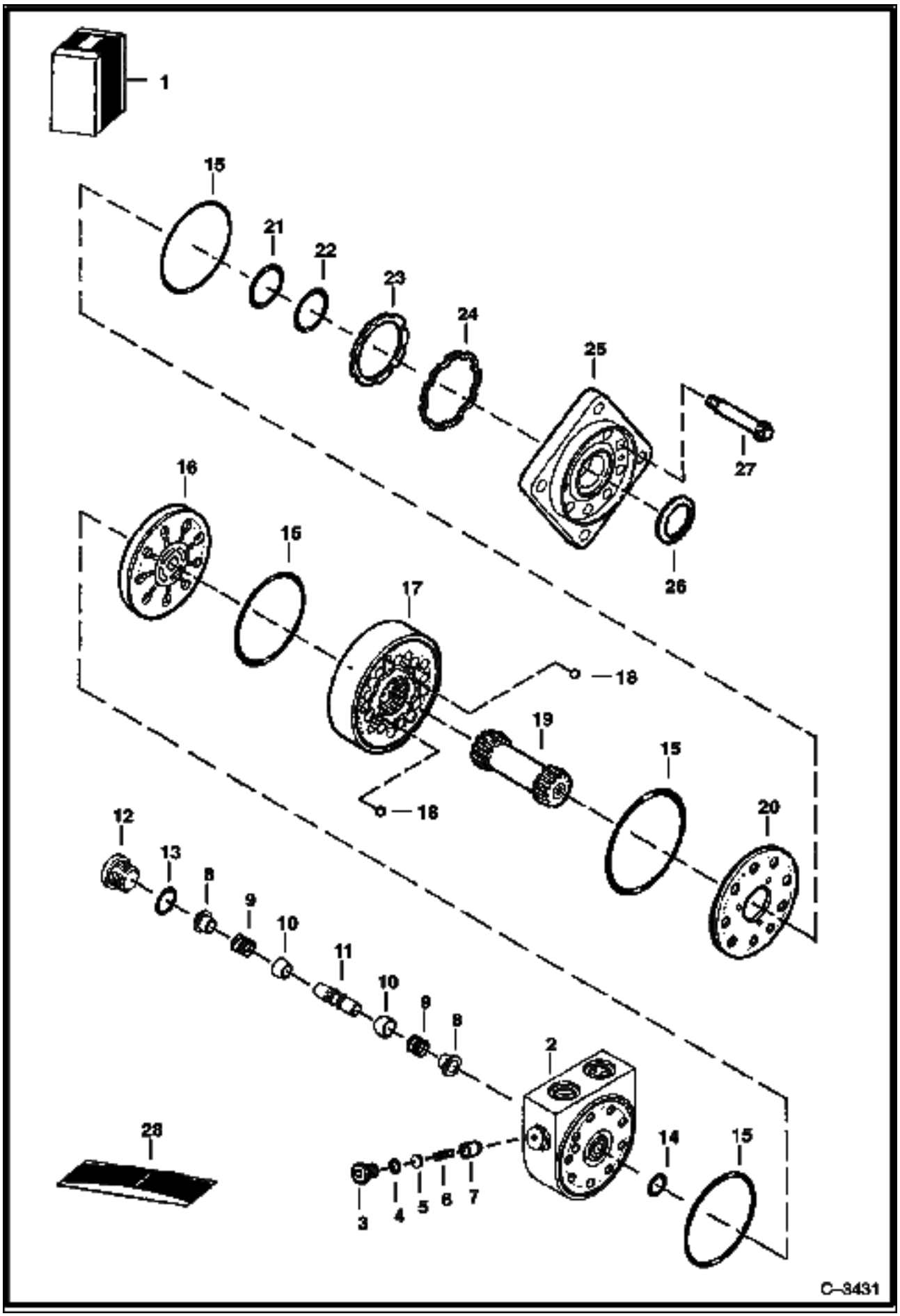
1
15
21
22
23
24
25
27
16
15
26
17
18
19
15
20
18
12
13
8
9
10
11
10
9
8
2
28
14
15
3
4
5
6
7
C-3431

Ref No	Part Number	Description	Remarks	Serial Number	Qty
1	6682034	MOTOR	Ref. 2-27		1
2	6685063	HOUSING	W/Ref. 3-7		1
3	6668079	PLUG	W/Ref. 4		1
4	79K000005B	O-RING			1
5	6668080	SHIM			x
6	6688521	SPRING			1
7	6685064	POPPET			1
8	6685065	SHUTTLE			2
9	6513533	SPRING			2
10	6513532	POPPET			2
11	6685066	PISTON	shuttle - W/ flat - fast acting		1
12	6668089	PLUG	W/Ref. 13		1
13	79K000006B	O-RING			1
14	6669452	O-RING			1
15	6678000	SEAL			4
16	6678001	PLATE	valve		1
17	6685067	GEROLER			1
18	6651542	BALL			2
19	6682862	SHAFT, DRIVE			1
20	6678003	PLATE	balance - upper		1
20	6678004	PLATE	balance - lower		1
21	6678006	BACK-UP RING	backup		1
22	6682860	O-RING			1
23	6682897	SEAL			1
24	6685069	RING,BACK-UP	backup		1
25	6685068	FLANGE	mounting		1
26	6664815	SEAL			1
27	6682863	BOLT			9
28	6685070	KIT, SEAL COMPLETE	W/Ref. 4, 13-15, 21-23 & 26		1

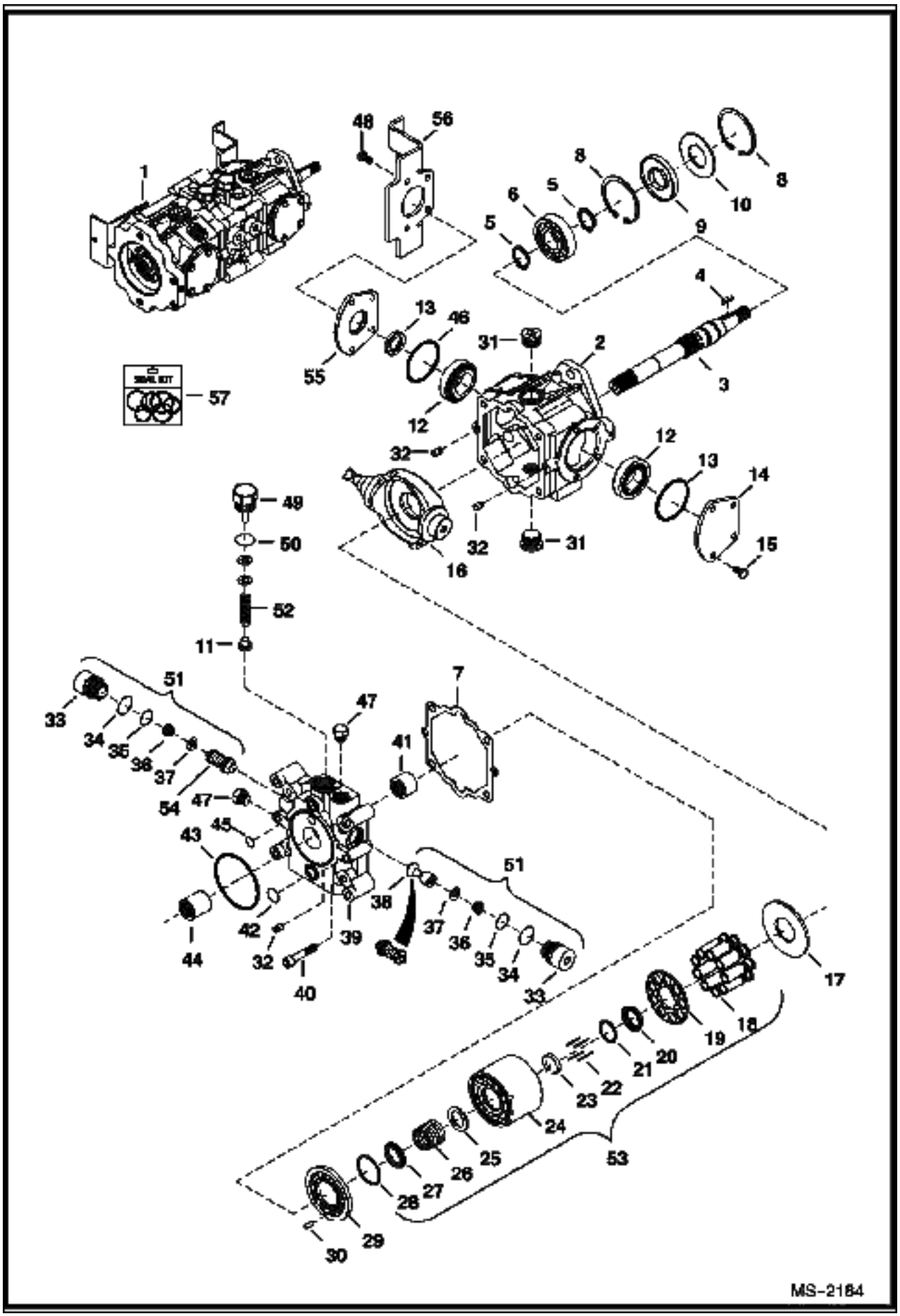
1
48
56
8
6
5
10
9
4
13
46
55
31
2
3
57
12
32
14
15
16
49
50
52
11
51
33
34
35
36
37
54
47
7
41
45
43
38
42
39
40
44
17
18
19
20
21
22
23
24
25
26
27
28
29
30
53
MS-2164

HYDROSTATIC PUMP (Cont'd)
Manual Hand Controls

Ref No	Part Number	Description	Remarks	Serial Number	Qty
1	6687863	PUMP	Model 4445203		1
2	6669402	HOUSING			1
3	6682260	SHAFT	W/square key		1
4	6682261	KEY			1
5	658128B	SNAP RING			2
6	654299B	BEARING			1
7	6650634	GASKET			1
8	669863B	SNAP RING			2
9	6687191	SEAL			1
10	6669409	WASHER			1
11	6650652	POPPET	Charge relief		1
12	6669411	BEARING			2
13	6660814	O-RING			2
14	6657068	COVER			2
15	6650668	BOLT			4
16	6685344	SWASH PLATE	W/threaded shaft hole		1
17	6650627	PLATE			1
18		PISTON ASSY	NAP - Order Ref. 53		1
19		RETAINER	NAP - Order Ref. 53		1
20		RETAINER	NAP - guide - Order Ref. 53		1
21	6666338	WASHER			1
22	6650629	PIN			4
23	6650630	RETAINER			1
24		BLOCK	NAP - Order Ref. 53		1
25		WASHER	NAP - Order Ref. 53		1
26		SPRING	NAP - Order Ref. 53		1
27		WASHER	NAP - Order Ref. 53		1
28		WASHER	NAP - Order Ref. 53		1
29	6687774	PLATE			1
30	6650636	PIN			1
31	47K000008B	PLUG			2
31	6645083	O-RING			2
32	6675342	PIN			4
33		PLUG	NAP - Order Ref. 51		2
34	6657028	O-RING			2
35	79K000008B	O-RING			2
36		SPRING	NAP - Order Ref. 51		2
37		RETAINER	NAP - Order Ref. 51		2
38		CHECK VALVE	NAP - poppet - Order Ref. 51		1
39	6669406	END PLATE			1
40	6650637	BOLT			4
41	6650635	BEARING			1
42	6650647	O-RING			1
43	6673884	O-RING			1
44	6650675	COUPLER			1
45	6650646	O-RING			1
46	6678226	SEAL			1
47	6645086	PLUG			2
47	6661481	O-RING			1
48	6671518	BOLT			4
49	6650648	PLUG	Charge relief - W/Ref. 50		1
50	79K000010B	O-RING			1
51	6689601	VALVE			1
52	6684038	SPRING			1

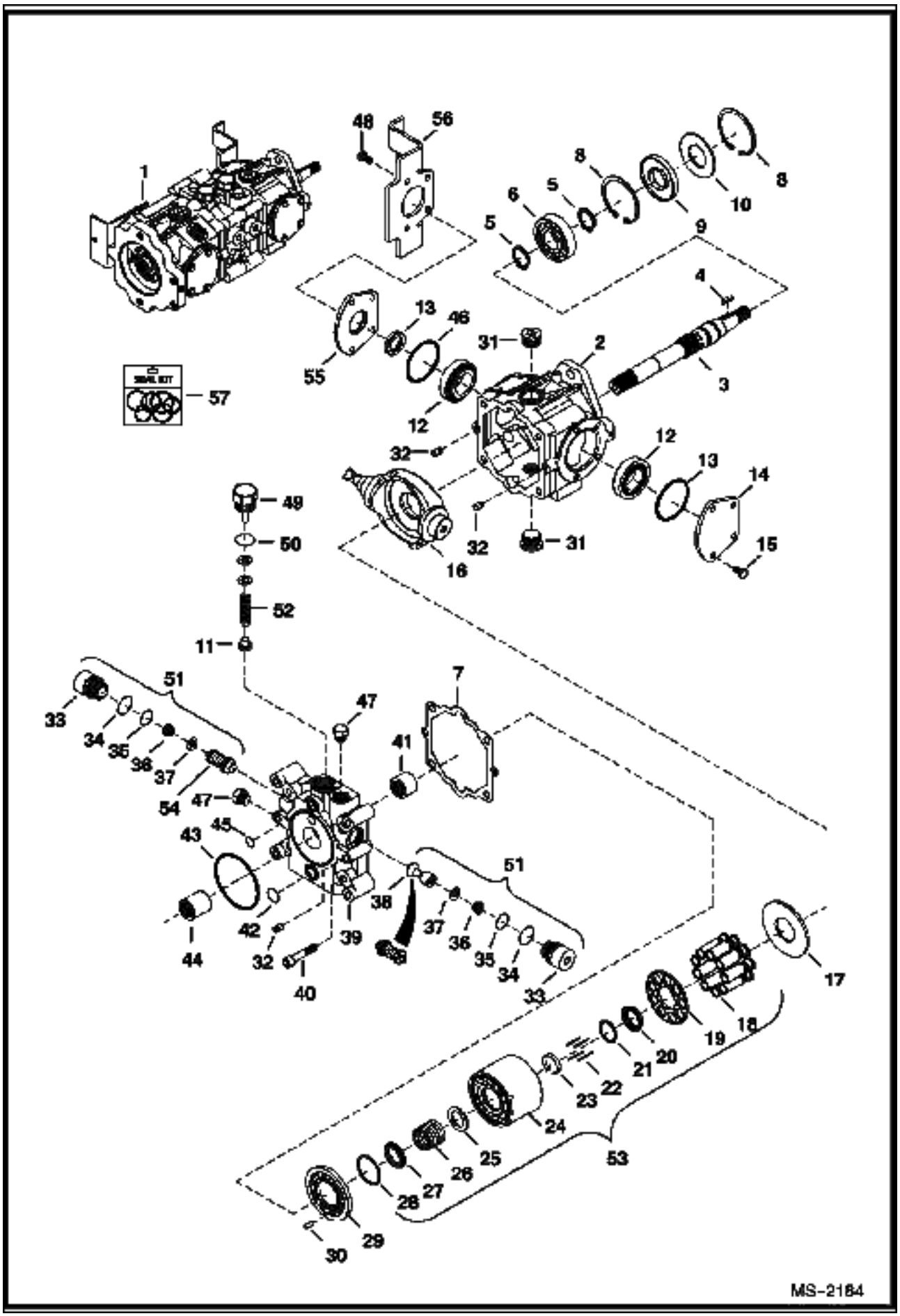
1
48
56
8
6
5
10
9
4
13
46
55
31
2
3
57
12
32
14
49
50
52
11
51
33
34
35
36
37
54
47
45
43
44
42
39
38
40
41
7
17
18
19
20
21
22
23
24
25
26
27
28
29
30
53
MS-2164

Ref No	Part Number	Description	Remarks	Serial Number	Qty
53	6671512	BLOCK ASSY			1
54		RELIEF VALVE	NAP - 5000 PSI (345 bar)- Order Ref. 51		1
55	6657067	COVER	W/Ref. 46		1
56	6685345	BRACKET			1
57	6671516	SEAL KIT	Ref. 7, 9, 13, 34, 35, 42, 43, 45, 46 & 50 - Also includes Ref. 2, 3, 12, 31 & 41 on next page		1

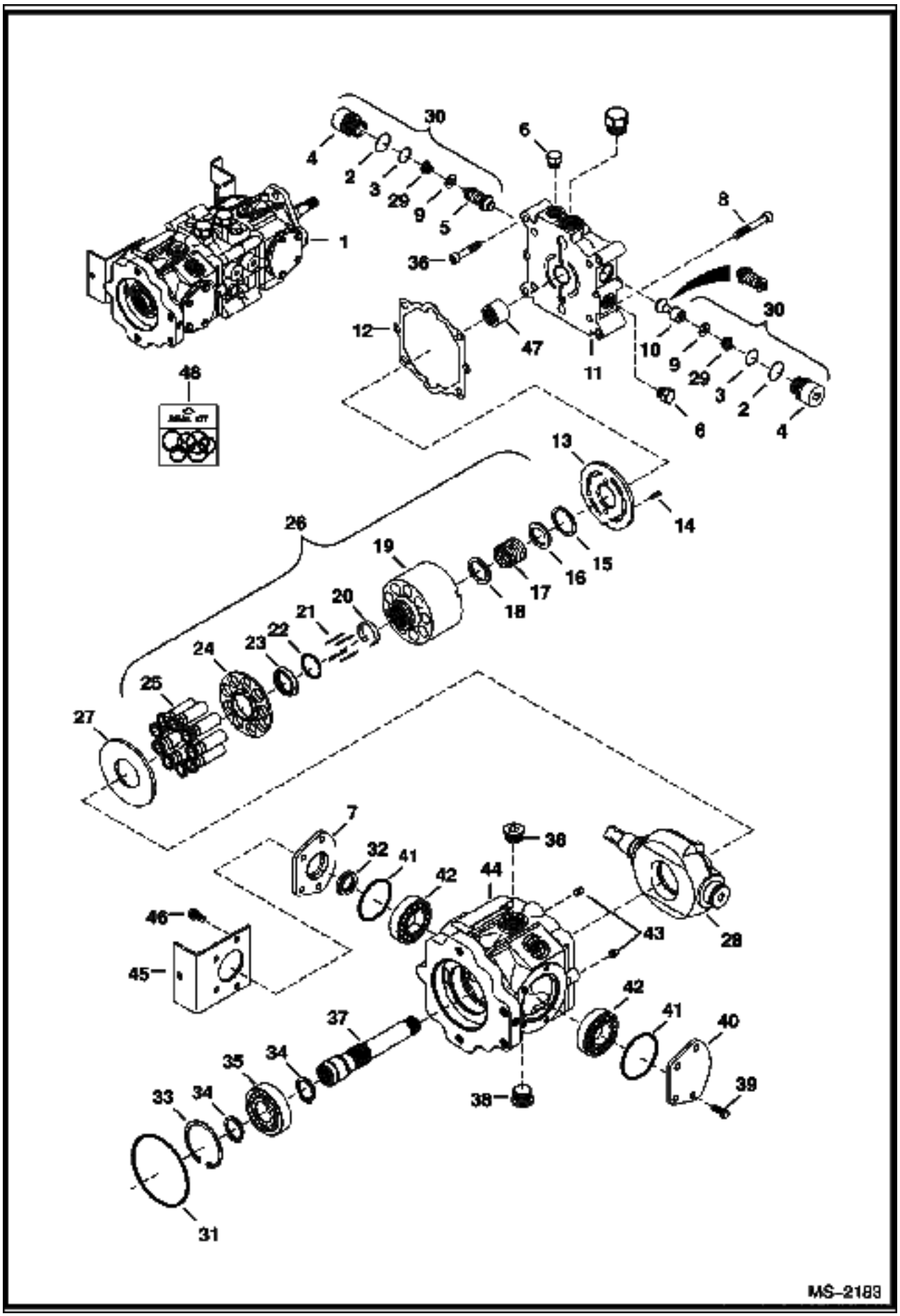
1
2
3
4
5
6
7
8
9
10
11
12
13
14
15
16
17
18
19
20
21
22
23
24
25
26
27
28
29
30
31
32
33
34
35
36
37
38
39
40
41
42
43
44
45
46
47
MS-2183

HYDROSTATIC PUMP (Cont'd)
Manual Hand Controls

Ref No	Part Number	Description	Remarks	Serial Number	Qty
1	6687863	PUMP	Model 4445203		1
2	6657028	O-RING			2
3	79K000008B	O-RING			2
4		PLUG	NAP - Order Ref. 30		2
5		RELIEF VALVE	NAP - 5000 PSI (345 bar)- Order Ref. 30		2
6	6645086	PLUG			4
7	6657067	COVER	W/Ref. 32		1
8	6650637	BOLT			2
9		RETAINER	NAP - Order Ref. 30		4
10		CHECK VALVE	NAP - poppet - Order Ref. 30		1
11	6669405	END CAP			1
12	6650634	GASKET			1
13	6687773	PLATE			1
14	6650636	PIN			2
15		RETAINER	NAP - Order Ref. 26		1
16		WASHER	NAP - Order Ref. 26		1
17		SPRING	NAP - Order Ref. 26		1
18		WASHER	NAP - Order Ref. 26		1
19		BLOCK	NAP - Order Ref. 26		1
20	6650630	RETAINER			1
21	6650629	PIN			4
22	6666338	WASHER			1
23		RETAINER	NAP - Order Ref. 26		1
24		RETAINER	NAP - Order Ref. 26		1
25		PISTON ASSY	NAP - Order Ref. 26		1
26	6671512	BLOCK ASSY			1
27	6650627	PLATE			1
28	6685344	SWASH PLATE	W/threaded shaft hole		1
29		SPRING	NAP - Order Ref. 30		2
30	6689601	VALVE			2
31	6671520	O-RING			1
32	6678226	SEAL			1
33	669863B	SNAP RING			1
34	658128B	SNAP RING			2
35	654299B	BEARING			1
36	6652018	BOLT			4
37	6682264	SHAFT			1
38	47K000008B	PLUG			1
38	79K000012B	GEAR PUMP			2
39	6650668	BOLT			4
40	6657068	COVER			1
41	6660814	O-RING			2
42	6669411	BEARING			2
43	6675342	PIN			2
44	6689602	HOUSING			1
45	6685346	BRACKET			1
46	6650668	BOLT			4
47	6650635	BEARING			1
48	6671516	SEAL KIT	Ref. 2, 3, 12, 31 & 41 - Also includes Ref. 7, 9, 13, 34, 35, 42, 43, 45, 46 & 50 on previous page		1

HYDROSTATIC PUMP
(Selectable Joystick Controls)

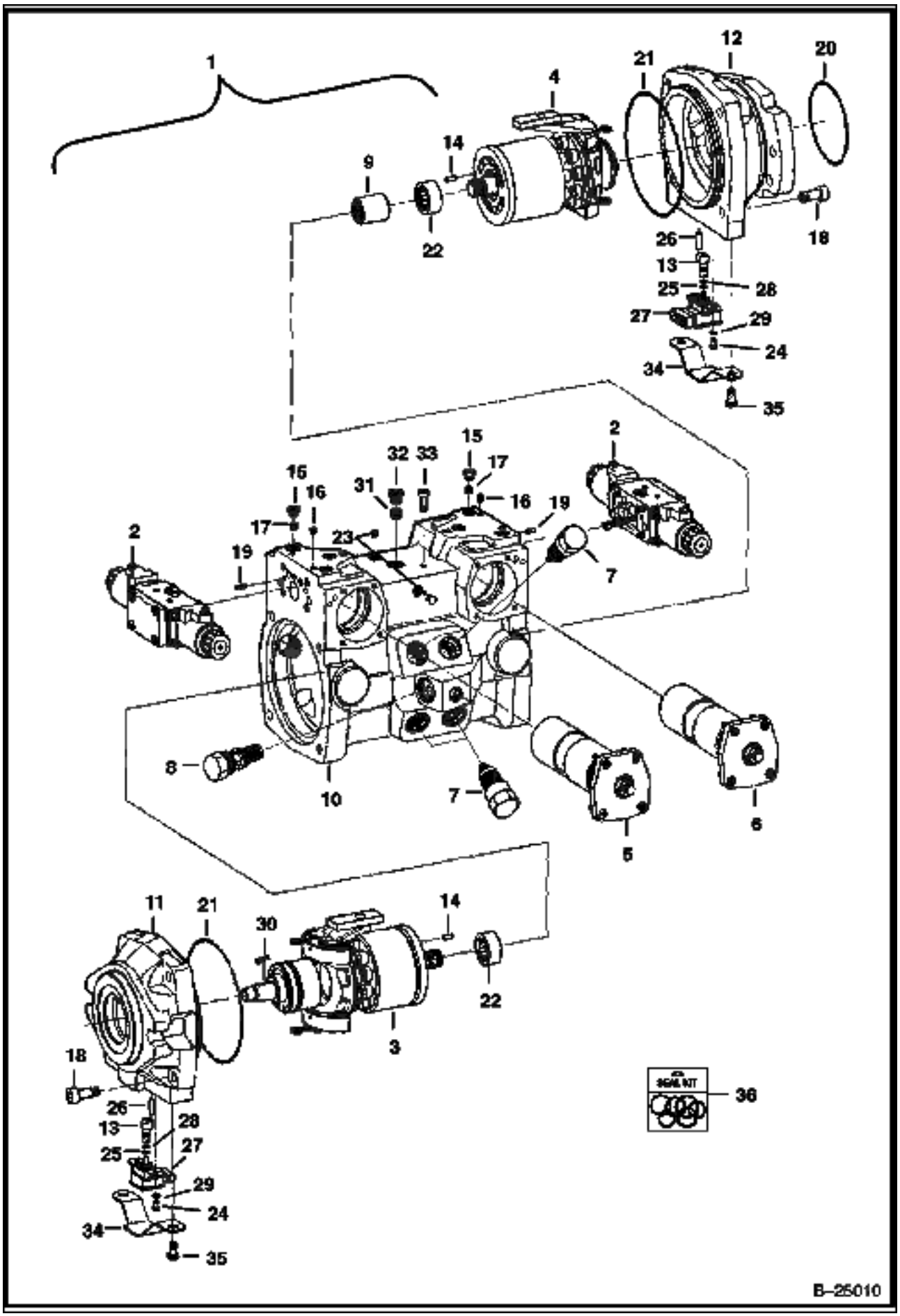

HYDROSTATIC PUMP (Cont'd)
(Selectable Joystick Controls)

Ref No	Part Number	Description	Remarks	Serial Number	Qty
1	6686267	PUMP			1
2	6687970	MODULATOR	See Illustration HYDROSTATIC PUMP/ B25016		2
3	6687957	GROUP	See Illustration HYDROSTATIC PUMP/ B25011 L.H. rotation		1
4	6687958	GROUP	See Illustration HYDROSTATIC PUMP/ B25012 R.H. rotation		1
5	6687960	CONTROL	See Illustration HYDROSTATIC PUMP/ B25013		1
6	6687961	CONTROL	See Illustration HYDROSTATIC PUMP/ B25013A		1
7	6687924	VALVE	See Illustration HYDROSTATIC PUMP/ B25014		4
8	6687938	VALVE	See Illustration HYDROSTATIC PUMP/ B25015		1
9	6687941	COUPLER			1
10	6687964	HOUSING			1
11	6687973	FLANGE			1
12	6687974	FLANGE			1
13	6687965	SHAFT			2
14	6688011	PIN			2
15	6688016	SCREW			11
16	6688039	PIN			3
17	6688020	ORIFICE			4
18	6688008	SCREW			8
19	6686934	PIN			2
20	6688019	SEAL			1
21	6688009	SEAL			2
22	6688040	BEARING			2
23	6687932	PIN			2
24	6687994	SCREW			4
25	6687990	RING			2
26	6688014	PIN			2
27	6687984	SENSOR			2
28	6688007	SEAL			2
29	6687998	SHIM			4
30	6687991	KEY			1
31	6687988	FILTER			1
32	6688015	SCREW			1
33	6687992	SCREW			1
34	6687993	COVER			2
35	6688003	SCREW			4
36	6689021	SEAL KIT	complete		1

HYDROSTATIC PUMP
(Rotary Group - L.H.)
(Selectable Joystick Controls)

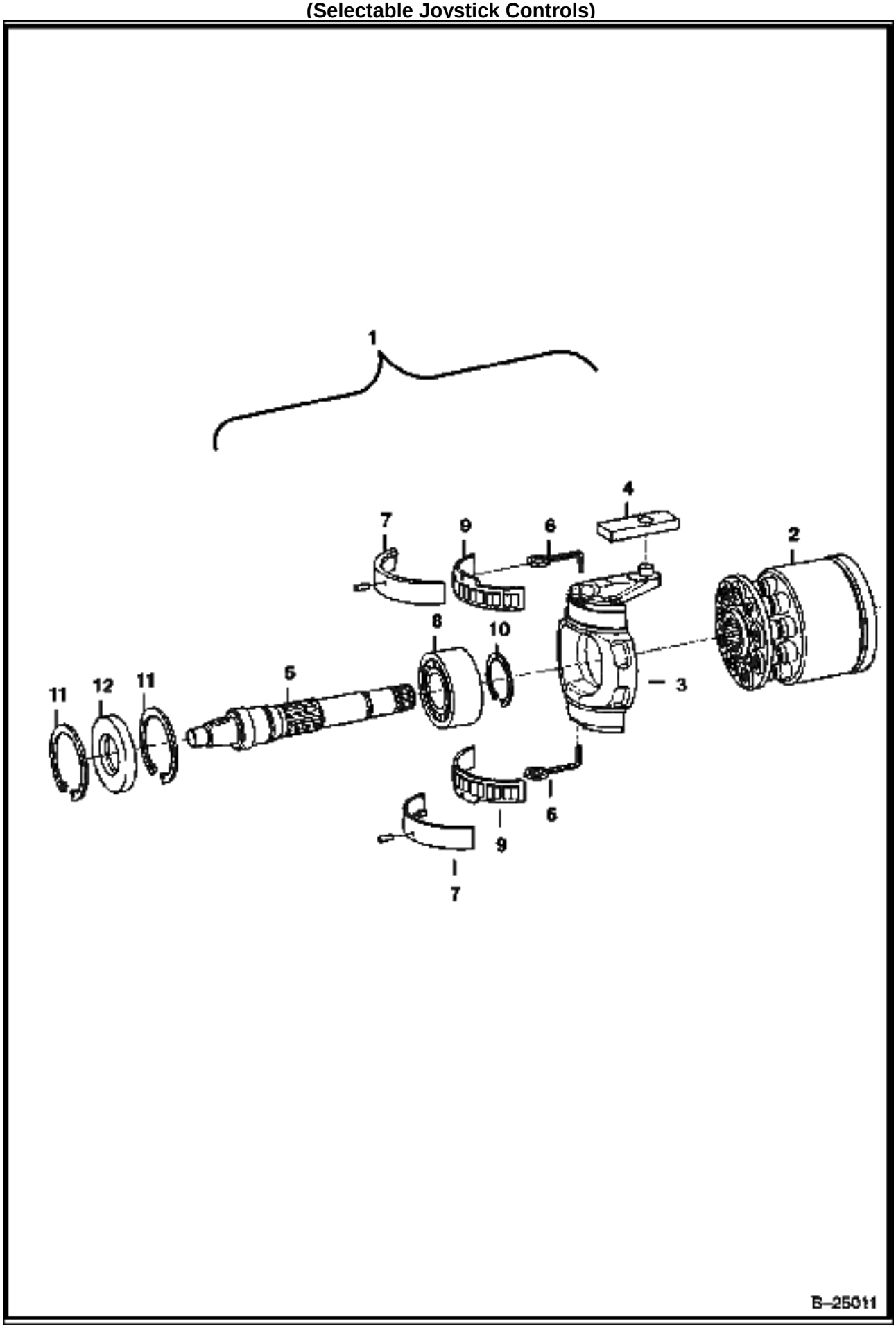

HYDROSTATIC PUMP (Cont'd)
(Rotary Group - L.H.)
(Selectable Jovstick Controls)

Ref No	Part Number	Description	Remarks	Serial Number	Qty
1	6687957	GROUP	L.H. rotation		1
2	6687977	GROUP			1
2	6687979	GROUP			1
2	6687976	PLATE			1
3	6687951	BRACKET			1
4	6687940	RING			1
5	6687959	SHAFT			1
6	6687930	WIRE			2
7	6687956	BEARING			1
8	6688018	BEARING			1
9	6687987	BEARING			1
10	6687999	RING			1
11	6688042	RING			2
12	6688038	RING			1

HYDROSTATIC PUMP
(Rotary Group - R.H.)
(Selectable Joystick Controls)

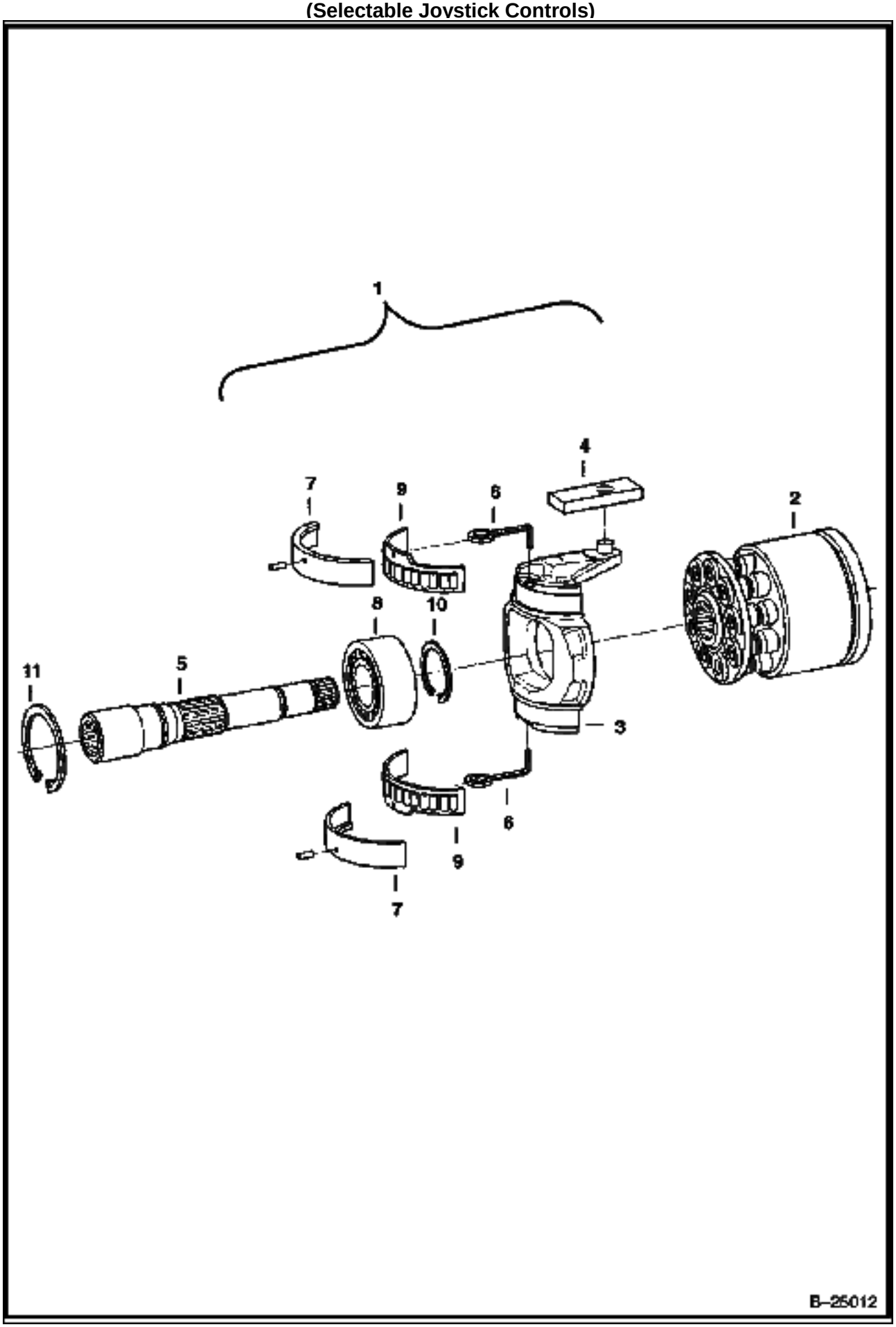

HYDROSTATIC PUMP (Cont'd)
(Rotary Group - R.H.)
(Selectable Jovstick Controls)

Ref No	Part Number	Description	Remarks	Serial Number	Qty
1	6687958	GROUP	R.H. rotation		1
2	6687978	GROUP			1
2	6687979	GROUP			1
2	6687975	PLATE			1
3	6687951	BRACKET			1
4	6687940	RING			1
5	6687943	SHAFT			1
6	6687930	WIRE			2
7	6687956	BEARING			1
8	6688018	BEARING			1
9	6687987	BEARING			1
10	6687999	RING			1
11	6688042	RING			2

HYDROSTATIC PUMP
(Control)
(Selectable Joystick Controls)

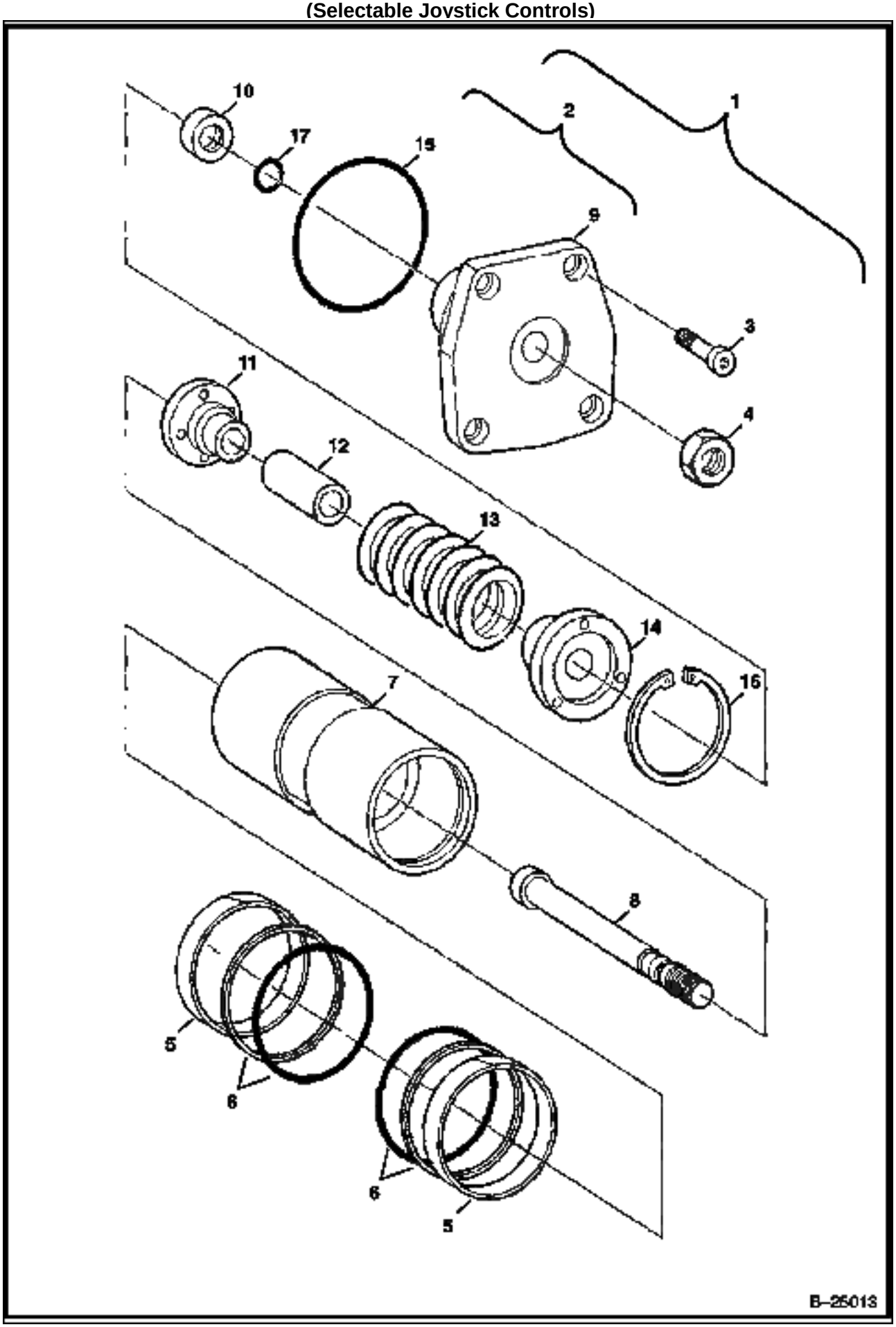

HYDROSTATIC PUMP (Cont'd)
(Control)
(Selectable Jovstick Controls)

Ref No	Part Number	Description	Remarks	Serial Number	Qty
1	6687960	CONTROL			1
2	6687962	PISTON			1
3	6687995	SCREW			4
4	6674907	NUT			1
5	6687985	RING			2
6	6687986	KIT			2
7	6687953	PISTON			1
8	6688031	ROD			1
9	6688024	COVER			1
10	6688037	RING	6,70 mm		1
10	6688036	RING	6,75 mm		1
10	6688035	RING	6,80 mm		1
10	6688025	RING	6,85 mm		1
10	6688026	RING	6,90 mm		1
10	6688027	RING	6,95 mm		1
10	6688028	RING	7,00 mm		1
10	6688029	RING	7,05 mm		1
10	6688030	RING	7,10 mm		1
11	6687926	COLLAR			1
12	6688033	SPACER	54,60 cm		1
12	6687942	SPACER	54,65 cm		1
12	6688032	SPACER	54,70 cm		1
12	6687948	SPACER	54,75 cm		1
12	6687949	SPACER	54,80 cm		1
13	6687928	SPRING			1
14	6687927	COLLAR			1
15	6688005	SEAL			1
16	6688002	RING			1
17	6688006	SEAL			1

HYDROSTATIC PUMP
(Control)
(Selectable Joystick Controls)

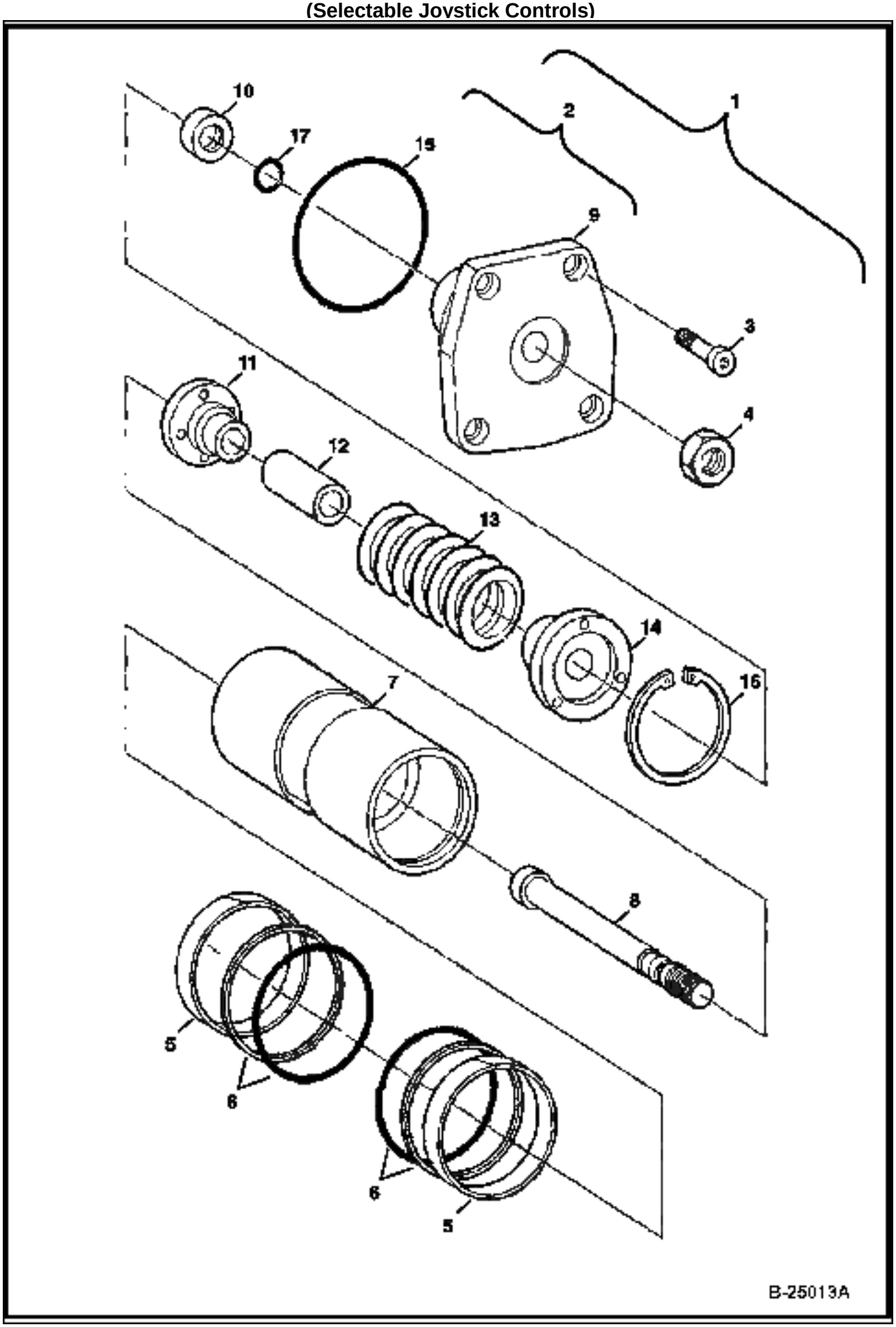

HYDROSTATIC PUMP (Cont'd)
(Control)
(Selectable Jovstick Controls)

Ref No	Part Number	Description	Remarks	Serial Number	Qty
1	6687961	CONTROL			1
2	6687963	PISTON			1
3	6687995	SCREW			4
4	6674907	NUT			1
5	6687985	RING			2
6	6687986	KIT			2
7	6687953	PISTON			1
8	6688031	ROD			1
9	6688024	COVER			1
10	6688037	RING	6,70 mm		1
10	6688036	RING	6,75 mm		1
10	6688035	RING	6,80 mm		1
10	6688025	RING	6,85 mm		1
10	6688026	RING	6,90 mm		1
10	6688027	RING	6,95 mm		1
10	6688028	RING	7,00 mm		1
10	6688029	RING	7,05 mm		1
10	6688030	RING	7,10 mm		1
11	6687926	COLLAR			1
12	6688033	SPACER	54,60 cm		1
12	6687942	SPACER	54,65 cm		1
12	6688032	SPACER	54,70 cm		1
12	6687948	SPACER	54,75 cm		1
12	6687949	SPACER	54,80 cm		1
13	6687928	SPRING			1
14	6687927	COLLAR			1
15	6688005	SEAL			1
16	6688002	RING			1
17	6688006	SEAL			1

HYDROSTATIC PUMP
(Pressure Relief Valve)
(Selectable Joystick Controls)

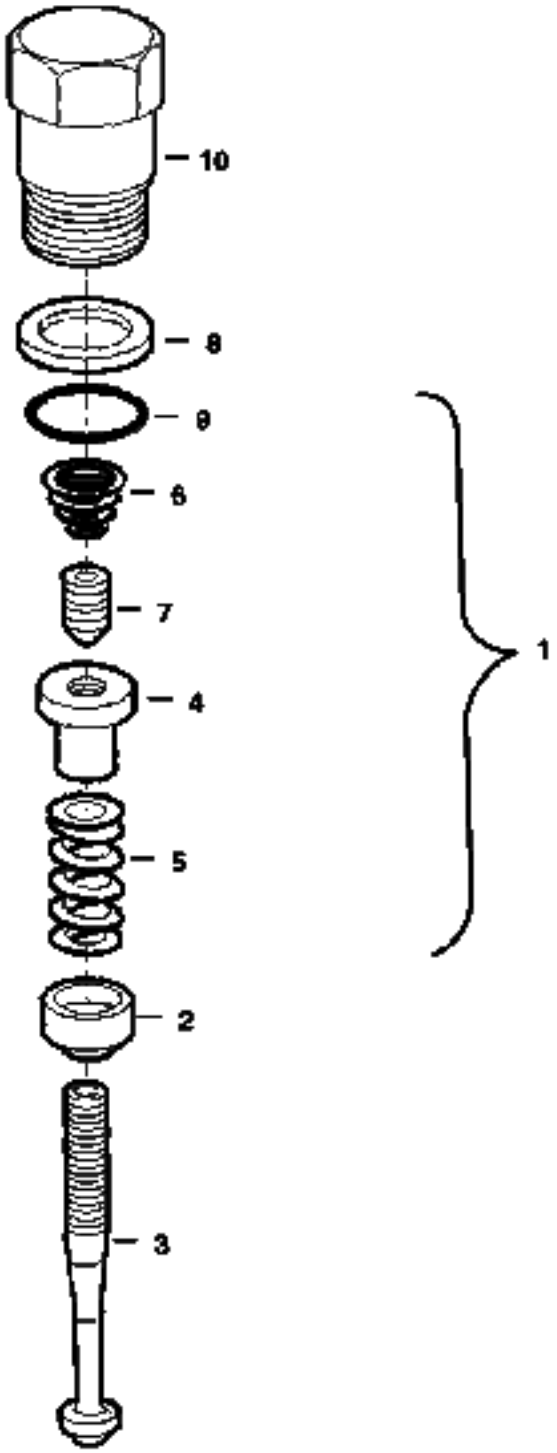

HYDROSTATIC PUMP (Cont'd)
(Pressure Relief Valve)
(Selectable Jovstick Controls)

Ref No	Part Number	Description	Remarks	Serial Number	Qty
1	6687924	VALVE			1
2	6687921	COLLAR			1
3	6687920	SPINDLE			1
4	6687922	NUT			1
5	6688043	SPRING			1
6	6688021	SPRING			1
7	6687923	PIN			1
8	6688041	RING			1
9	6688000	SEAL			1
10	6688034	SCREW			1

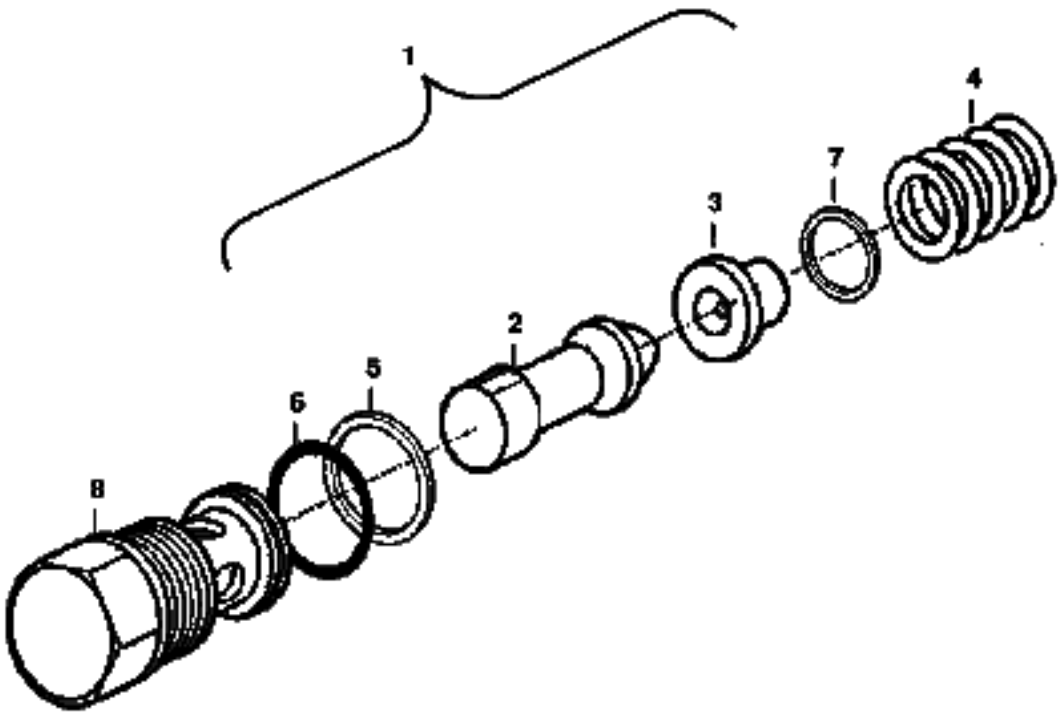
1
4
7
3
2
5
6
8
B–25015

HYDROSTATIC PUMP (Cont'd)
(Pressure Relief Valve)
(Selectable Jovstick Controls)

Ref No	Part Number	Description	Remarks	Serial Number	Qty
1	6687938	VALVE			1
2	6688022	PISTON			1
3	6687919	COLLAR			1
4	6688023	SPRING			1
5	6687983	RING			1
6	6688013	SEAL			1
7	6688017	SHIM			1
8	6687939	SCREW			1

HYDROSTATIC PUMP
(Control Module)
(Selectable Joystick Controls)

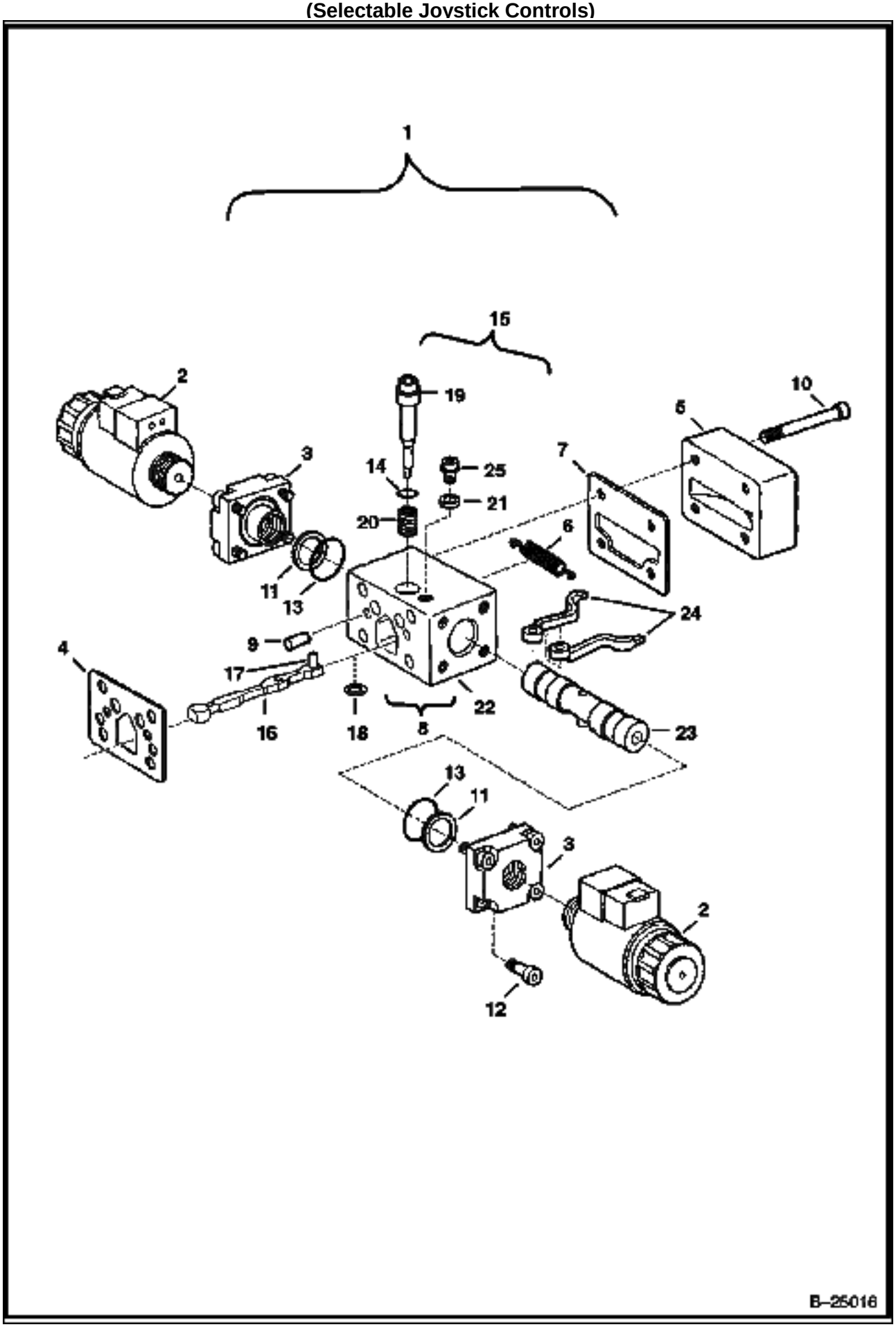

HYDROSTATIC PUMP (Cont'd)
(Control Module)
(Selectable Jovstick Controls)

Ref No	Part Number	Description	Remarks	Serial Number	Qty
1	6687970	MODULATOR			2
2	6687989	SOLENOID			2
3	6687931	BUSHING			2
4	6687954	GASKET			1
5	6687969	COVER			1
6	6687967	SPRING			1
7	6687950	GASKET			1
8	6687972	MODULE	Ref. 15-18		1
9	6688010	PIN			2
10	6687996	SCREW			4
11	6687982	SPRING			2
12	6687997	SCREW			8
13	6688001	SEAL			2
14	6688004	SEAL			1
15	6687971	ROLLER	Ref. 14 & 19-25		1
16	6687929	LEVER			1
17	6688012	ROLLER			1
18	6687944	SHIM	0,60 mm		1
18	6687933	SHIM	0,80 mm		1
18	6687934	SHIM	1,00 mm		1
18	6687935	SHIM	1,20 mm		1
18	6687936	SHIM	1,40 mm		1
18	6687937	SHIM	1,60 mm		1
19	6687947	PIN			1
20	6687946	SPRING			1
21	6687945	PLATE			1
22	6687955	HOUSING			1
23	6687966	PISTON			1
24	6687968	LEVER			2
25	6687981	SCREW			1

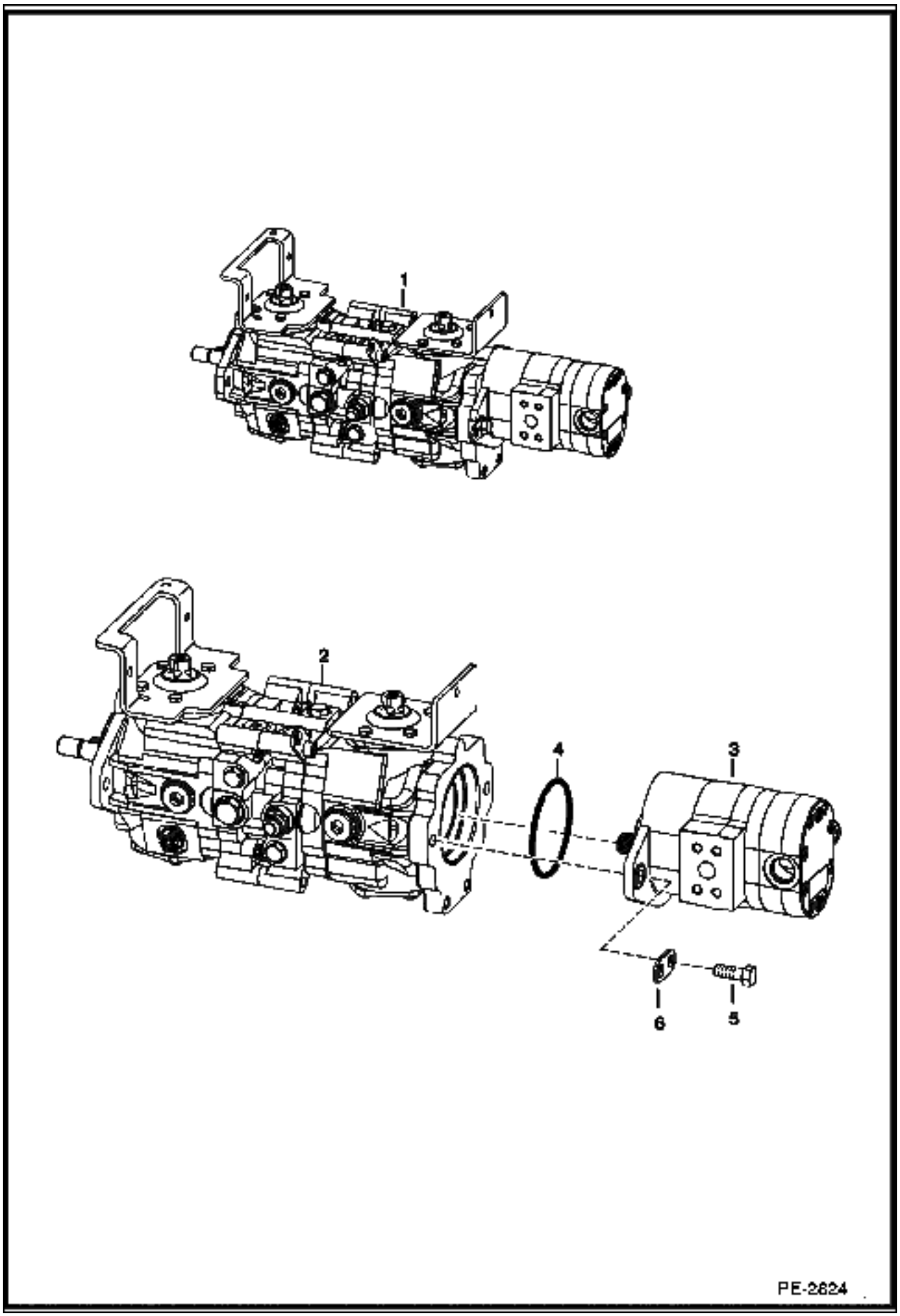
1
2
3
4
5
6
PE-2624

HYDROSTATIC PUMP/GEAR PUMP (Cont'd)
Identification

Ref No	Part Number	Description	Remarks	Serial Number	Qty
1		PUMP ASSY	NAP		1
2		HYDROSTATIC PUMP	See Illustration HYDROSTATIC PUMP/ MS2184 manual hand controls		1
2		HYDROSTATIC PUMP	See Illustration HYDROSTATIC PUMP/ B25010 selectable joystick controls		1
3		GEAR PUMP	See Illustration GEAR PUMP/ MS2185 manual hand controls or selectable joystick controls		1
3		GEAR PUMP	See Illustration HIGH FLOW HYDRAULICS/ MS1459 high flow - manual hand or selectvie joystick controls		1
4	6671520	O-RING	manual hand controls		1
4	6688019	O-RING	selectable joystick controls		1
5	43C820	BOLT			2
6	6631643	PLATE			2

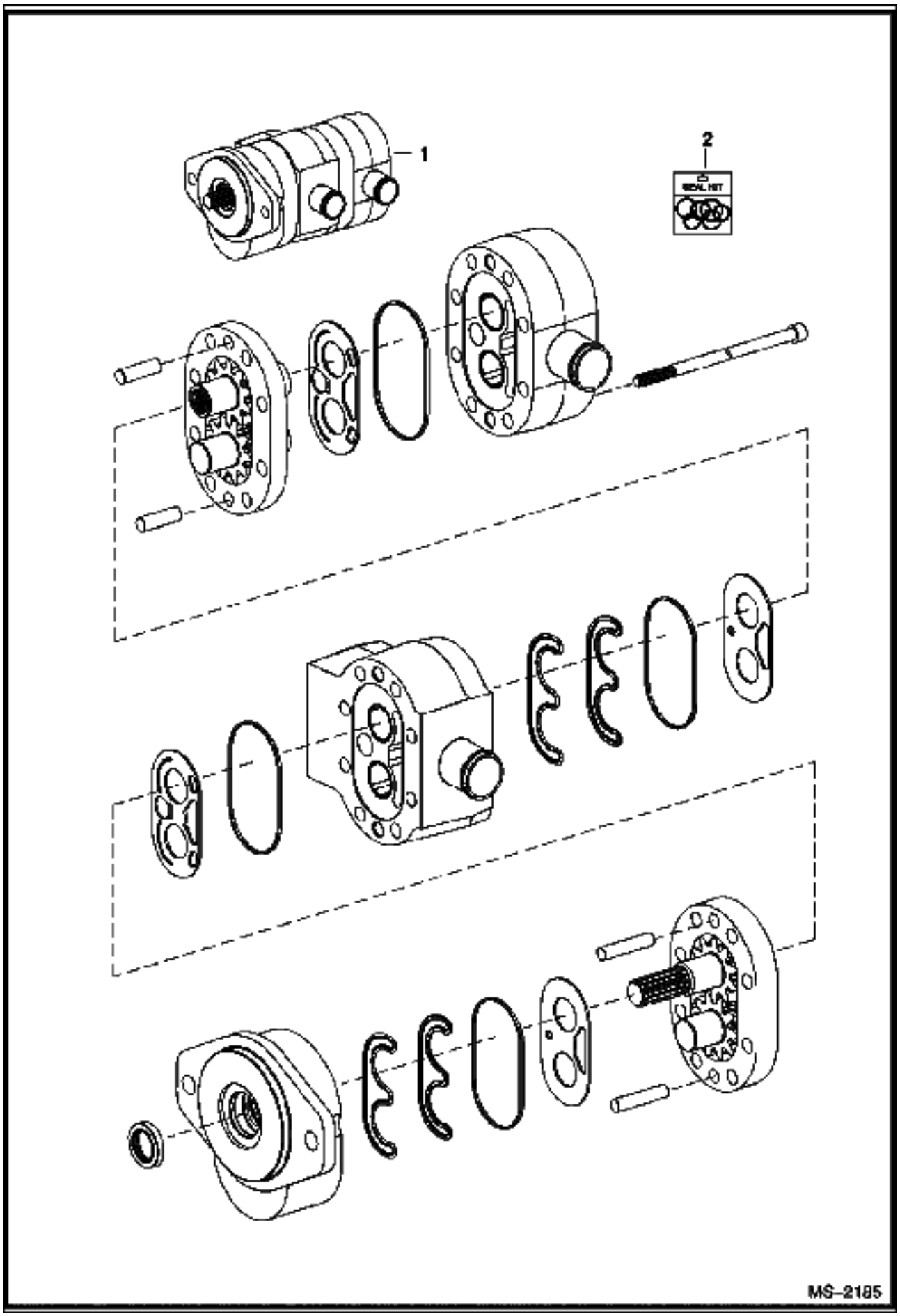
1
2
SEAL KIT
MS-2185

Ref No	Part Number	Description	Remarks	Serial Number	Qty
1	6687864	GEAR PUMP	Model 163D-71019 - for 6687863 (4445203) pump		1
2	6687866	SEAL KIT			1

GEAR PUMP
Selectable Joystick Controls

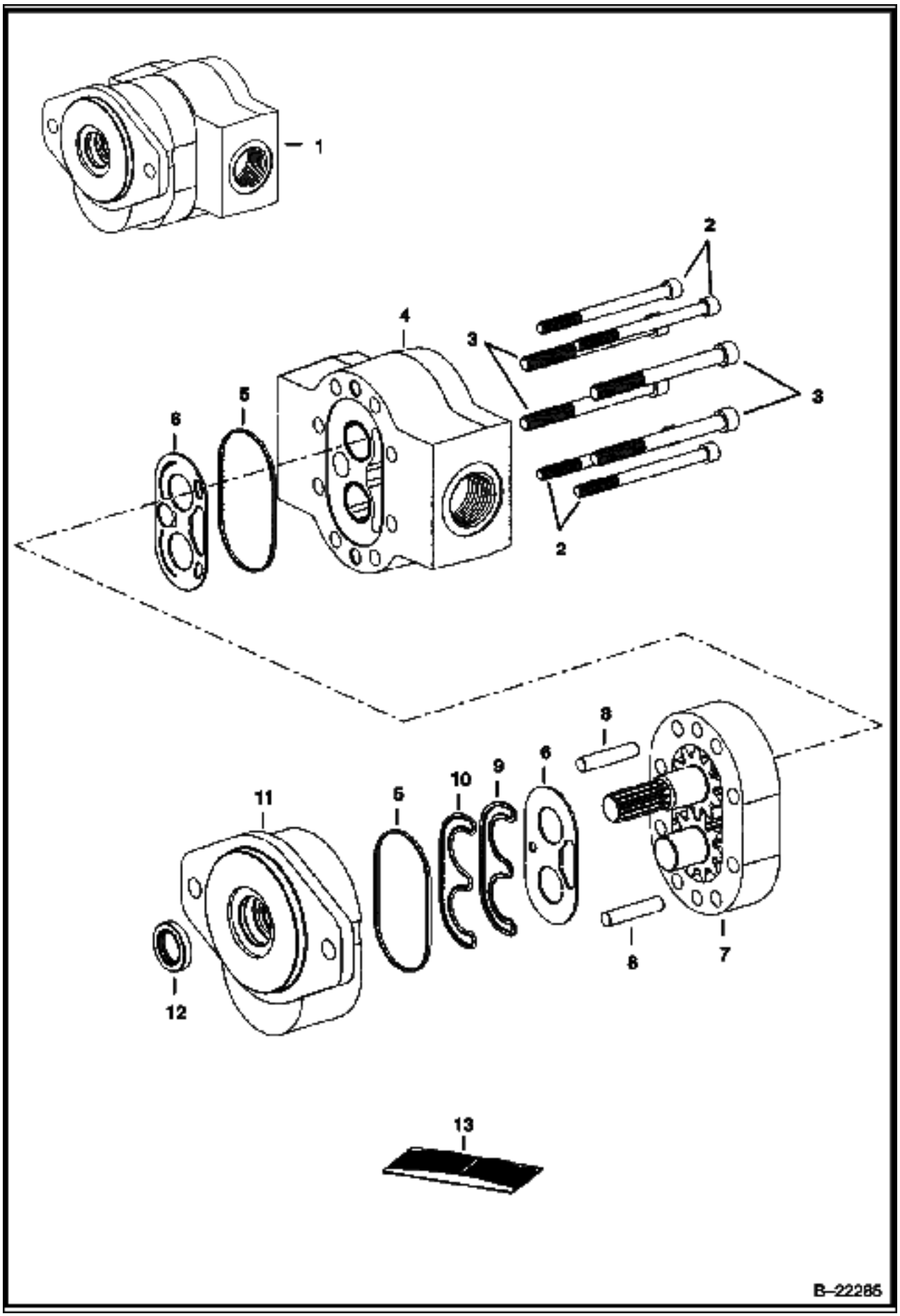

GEAR PUMP (Cont'd)
Selectable Joystick Controls

Ref No	Part Number	Description	Remarks	Serial Number	Qty
1	6686388	PUMP	gear - model 163D1459 - for 6686267 (R902085419) hydrostatic pump		1
2		BOLT	NSS		4
3		BOLT	NSS		4
4		BODY	NSS		1
5		SEAL	NSS		2
6		WEAR PLATE	NSS		2
7		SECTION	NSS		1
8		PIN	NSS		2
9		SEAL	NSS - load		1
10		SEAL	NSS - pre-load		1
11		COVER	NSS		1
12		SEAL	NSS - shaft		1
13	6687866	SEAL KIT	Ref. 5, 6, 9, 10 & 12		1

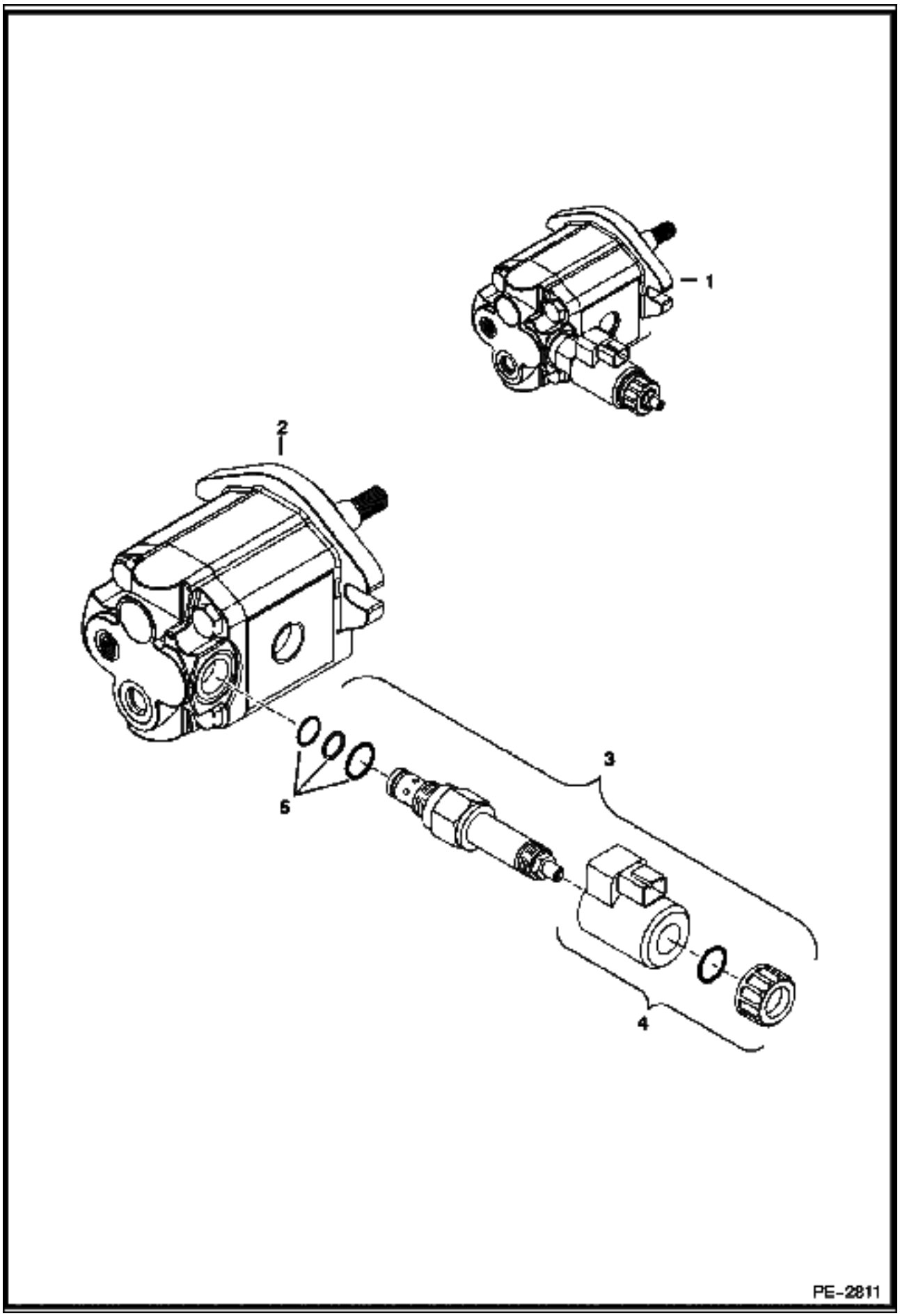
1
2
3
4
5
PE-2811

MOTOR (Cont'd)
Cooling Fan

Ref No	Part Number	Description	Remarks	Serial Number	Qty
1	6687142	MOTOR			1
2	6689058	MOTOR	W/O proportional valve		1
3	6689059	VALVE ASSY			1
4	6689060	COIL ASSY			1
5	6683206	SEAL KIT			1

HYDROSTATIC OIL FILTER
(In-Line)

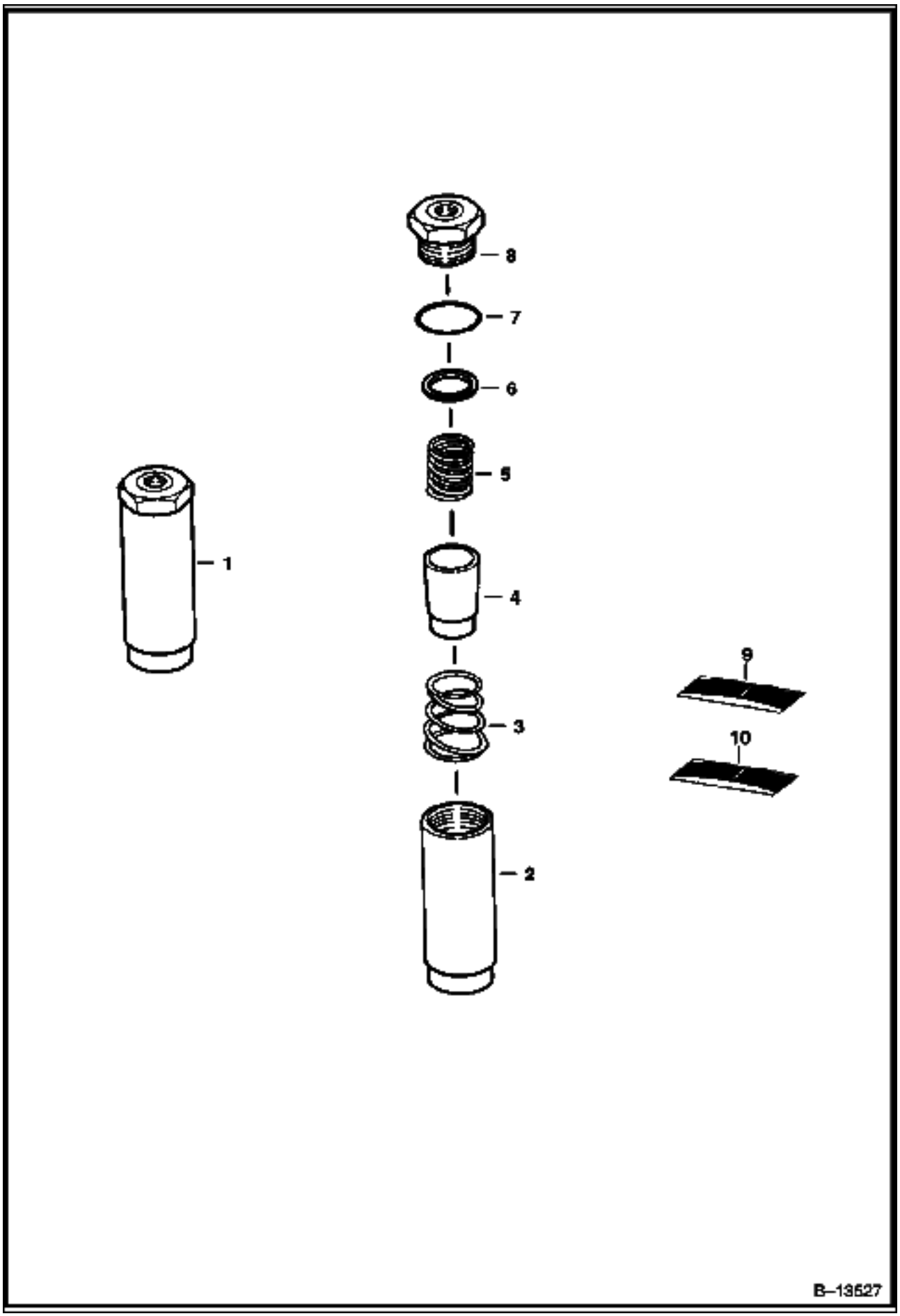

HYDROSTATIC OIL FILTER (Cont'd)
(In-Line)

Ref No	Part Number	Description	Remarks	Serial Number	Qty
1	6661022	FILTER	Ref. 2 - 8		1
2		HOUSING	NSS		1
3		SPRING	NSS		1
4		ELEMENT	NSS		1
5		SPRING	NSS		1
6		GASKET	NSS		1
7		O-RING	NSS		1
8		PLUG	NSS		1
9	6661807	KIT	element - Ref. 4, 6 & 7		1
10	6661808	KIT	spring - Ref. 3 & 5		1

HYDROSTATIC OIL FILTER

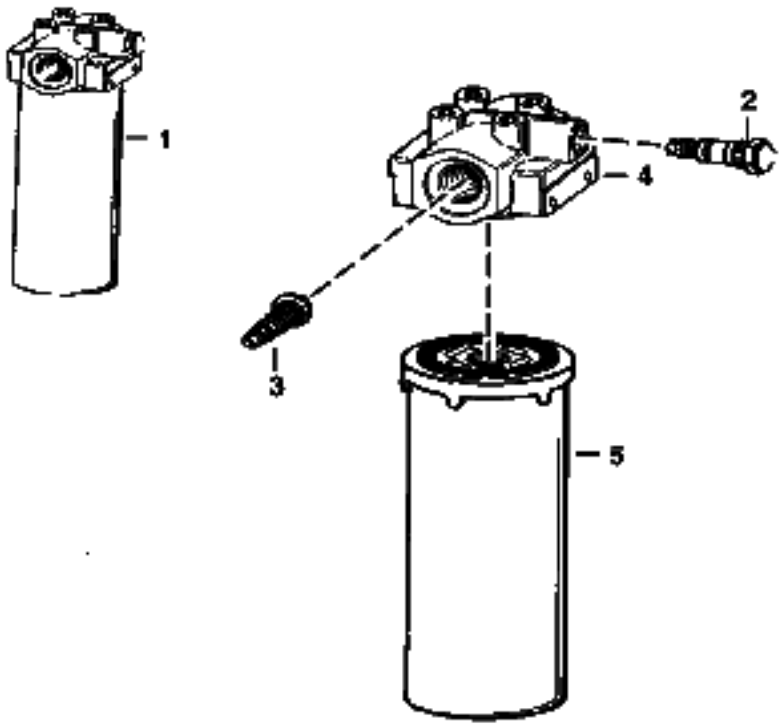

HYDROSTATIC OIL FILTER (Cont'd)

Ref No	Part Number	Description	Remarks	Serial Number	Qty
1	6676969	FILTER	Manual Hand Controls		1
1	6688385	HYD FILTER ASSY	Selectable Joystick Controls		1
2	6660260	SWITCH	pressure - normally closed		1
2	6599365	KIT	nut, washer & O-rings for 6660260 switch		1
3		VALVE	NAP - by-pass (50 PSI) - For Manual Hand Controls - Order Ref. 1 (6676969 Filter)		1
3		VALVE	NAP - by-pass (50 PSI) - For Selectable Joystick Controls - Order Ref. 1 (6688385 Filter)		1
4		HEAD	NSS - For Manual Hand Controls - Order Ref. 1 (6676969 Filter)		1
4		HEAD	NSS - For Selectable Joystick Controls - Order Ref. 1 (6688385 Filter)		1
5	6661248	ELEMENT			1

HYDROSTATIC OIL FILTER
(Selectable Joystick Controls)

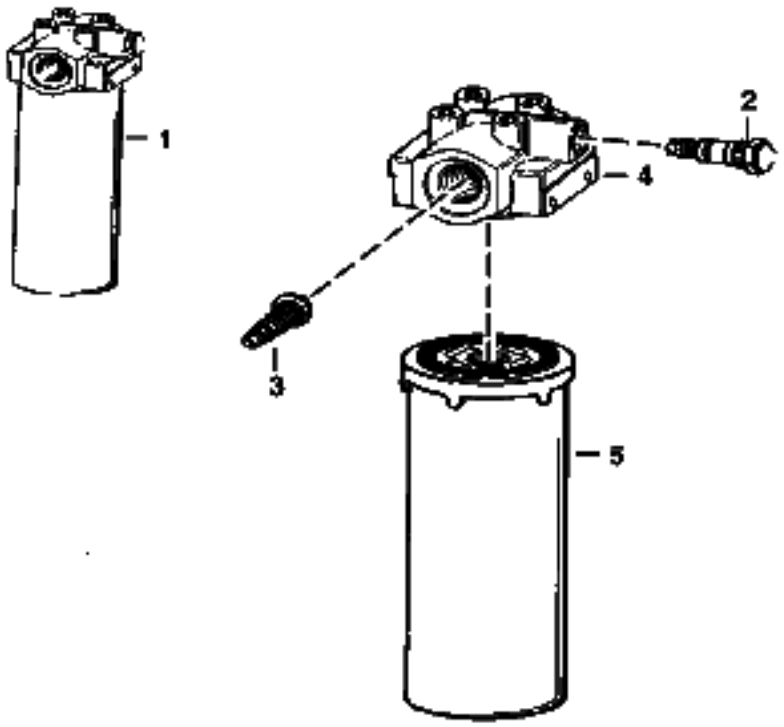

B-16487A

HYDROSTATIC OIL FILTER (Cont'd)
(Selectable Joystick Controls)

Ref No	Part Number	Description	Remarks	Serial Number	Qty
1	6686922	FILTER ASMBLY 12	W/Ref. 2 - 5		1
2	6687834	SENSOR	pressure - normally open		1
3		VALVE	NAP - by-pass		1
4		HEAD	NSS - Order Ref. 1		1
5	6686926	ELEMENT FILTER			1

CAB ELECTRICAL CIRCUITRY

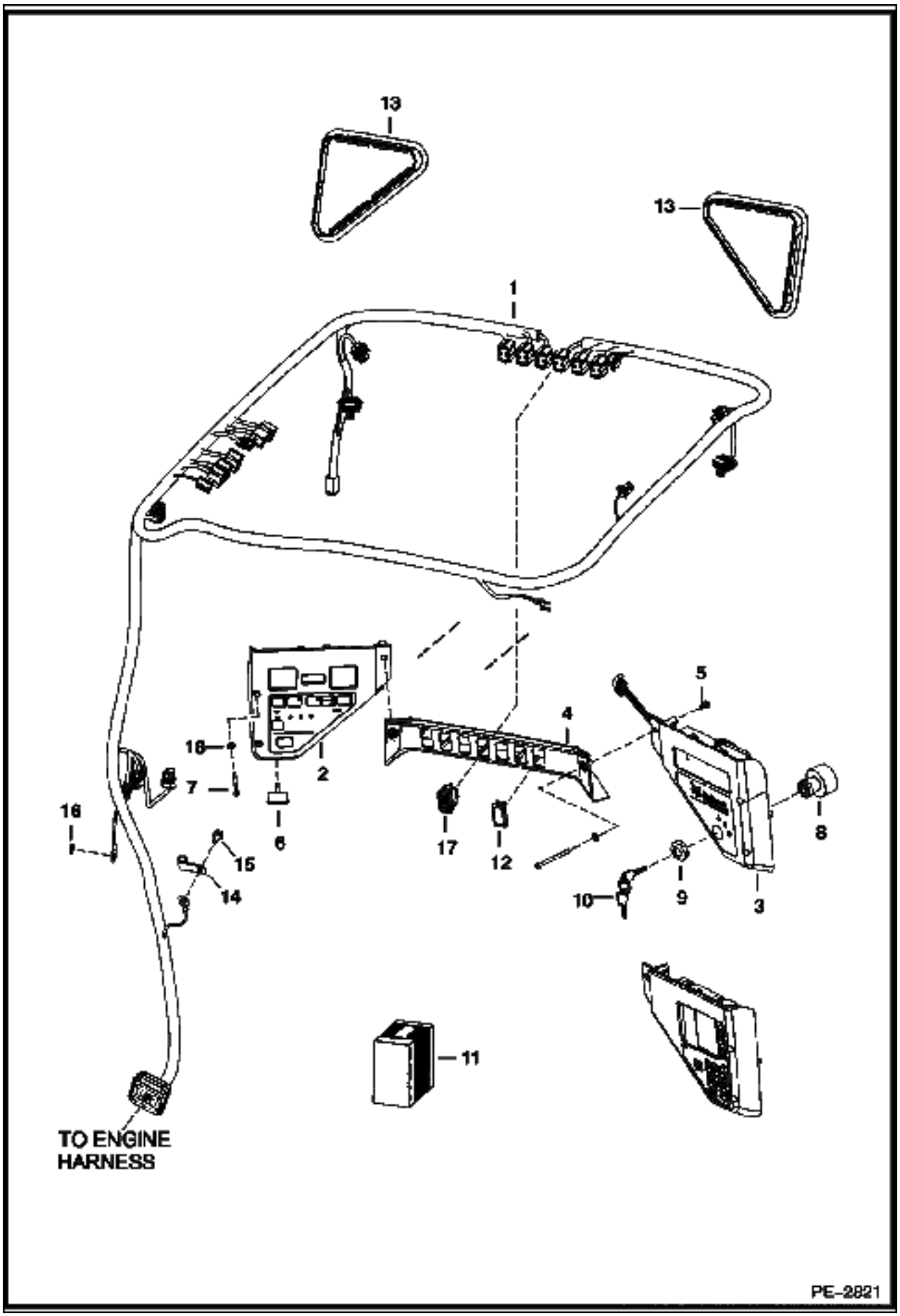

Ref No	Part Number	Description	Remarks	Serial Number	Qty
1	7116261	HARNESS	standard		1
1	7116260	HARNESS	deluxe - required to operate beacon, 4-way flashers, power bob-tach & strobe lights		1
2	6688405	PANEL	L.H. - W/Ref. 6		1
2	6675982	PLUG	backlighting service hole		1
2	6679855	BULB			2
3	6688404	PANEL	R.H. - keyed - W/Ref. 8 & 9		1
3	6688403	PANEL	R.H. - deluxe - keyless		1
3		INSTRUCTIONS	NAP - for deluxe panel - See Service Manual		1
4	6679845	CROSSMEMBER			1
5	6675033	INSERT	threaded		6
6	6679856	ALARM	W/nut		1
7	7105983	BOLT			4
8	6679842	SWITCH	ignition - W/Ref. 9		1
9	6674202	NUT			2
10	6709527	KEY	ignition		1
11		KIT	NAP - keyless ign. - Order 6672348 Panel - See Service Manual		1
12	6665314	PLUG	cover		x
13	6674403	COVER			2
14	6675171	CLAMP			1
15	84G003712B	BOLT			1
16	6E000005B	WASHER			1
17	6676536	SWITCH	park brake		1
18	25E000010B	WASHER			2

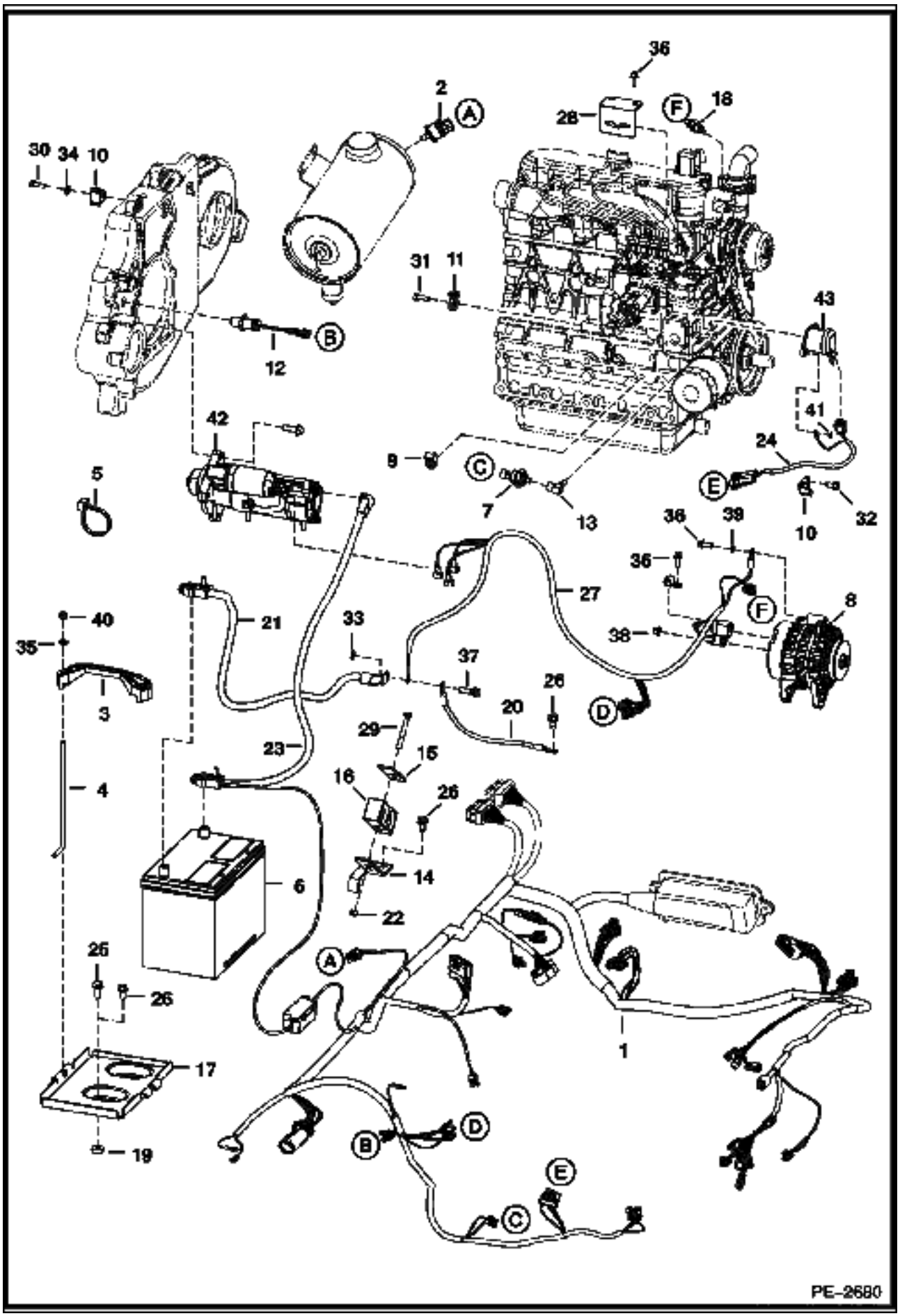
PE-2680

Ref No	Part Number	Description	Remarks	Serial Number	Qty
1	7116258	HARNESS	loader		1
2	6665371	SWITCH			1
3	6569203	CLAMP			1
4	6576280	BOLT			2
5	6624289	STA STRAP			21
6	6674687	BATTERY			1
6		BATTERY CAP			2
7	6674315	SENSOR	eng. oil press.		1
8		ALTERNATOR			1
9	6678667	MOUNT			2
10	6678818	MOUNT			1
11	6679034	MOUNT			2
12	6684037	SENSOR	rpm		1
13	6707040	ELBOW			1
14	6715131	BRACKET			1
15	6715132	RETAINER			1
16	6715197	CLAMP			1
17	6718260	BATTERY PAN			1
18	6718414	SENDER	eng. temp.		1
19	616783	WASHER			2
20	6565170	CABLE	neg.		1
21	6729008	CABLE	ground		1
22	95D000005B	NUT			1
23	6731256	CABLE	pos.		1
24	6736515	HARNESS	fuel solenoid		1
25	84G003716B	BOLT			2
26	84G003712B	BOLT			4
27	7104379	HARNESS	starter/alt.		1
27	6688073	CONNECTOR			1
28	7116956	BRACKET			1
29	17C000540B	BOLT			2
30	1CM00825B	BOLT			1
31	1CM00870B	BOLT			2
32	84G003112B	BOLT			1
33	6E000006B	WASHER			1
34	25E000014B	WASHER			1
35	25E000015B	WASHER			2
36	29CM00820B	BOLT			2
37	35C000620B	BOLT			3
38	43DM00008B	NUT			1
39	6E000005B	WASHER			1
40	59D000005B	NUT			2
41	6E000004B	WASHER			1
42		STARTER			1
43	6684826	SOLENOID	fuel shut off		1

ENGINE ELECTRICAL CIRCUITRY

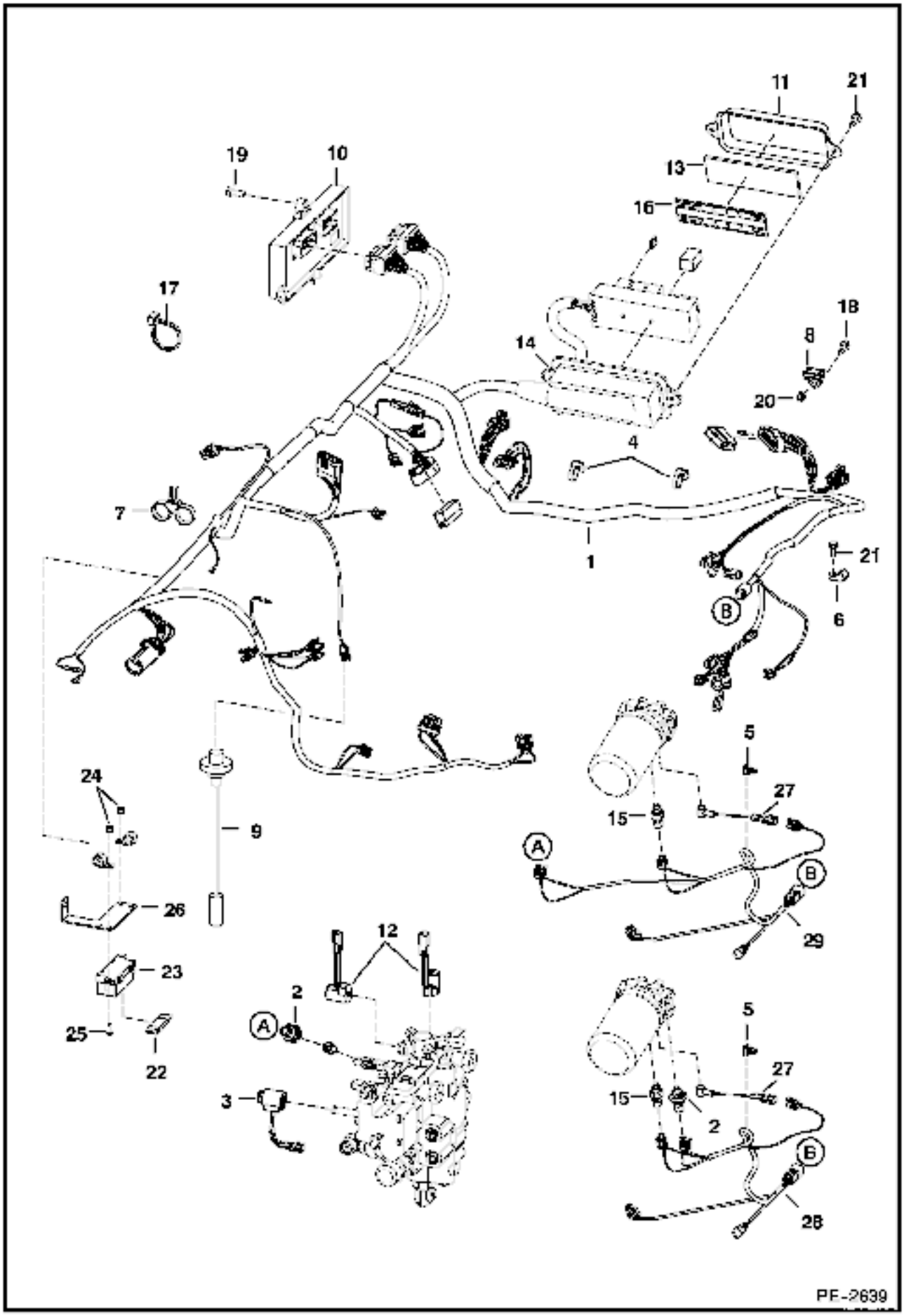

Ref No	Part Number	Description	Remarks	Serial Number	Qty
1	7116258	HARNESS	loader		1
2	6674316	SENSOR	hyd. chg. press. - 3-pin molded connector		1
3	6675559	COIL	assy		1
4	6675734	ALTERNATOR			2
5	6678666	TREE MOUNT	tree		2
6	6678667	MOUNT			2
7	6678668	TIE			1
8	6678818	MOUNT			1
9	6680436	SENSOR	fuel - W/gasket		1
9	6717579	GASKET			1
10	6688439	CONTROLLER	Bobcat		1
11	6716621	COVER			1
12	6717706	COIL	assy		1
13	7117407	DECAL	fuse/relay - 2" x 7" (50,8 mm x 177,8 mm)		1
14	6718659	HOUSING	fuse - boot		1
15	6727869	SENDER	hyd. temp.		1
16	6731275	INSULATION			1
17	6624289	STA STRAP			21
18	17C000412B	BOLT			1
19	43C000616B	BOLT			3
20	83D000004B	NUT			1
21	84G003112B	BOLT			4
22	6675155	FUSE	100 amp		1
23	6675154	HOLDER	high amp fuse		1
24	59D000005B	NUT			2
25	25G000410B	BOLT			2
26	6728621	BRACKET			1
27	6728626	HARNESS			1
28	7112802	HARNESS	hyd. - Manual Hand Controls		1
29	7112800	SJC HARNESS	hyd. - Selectable Joystick Controls		1

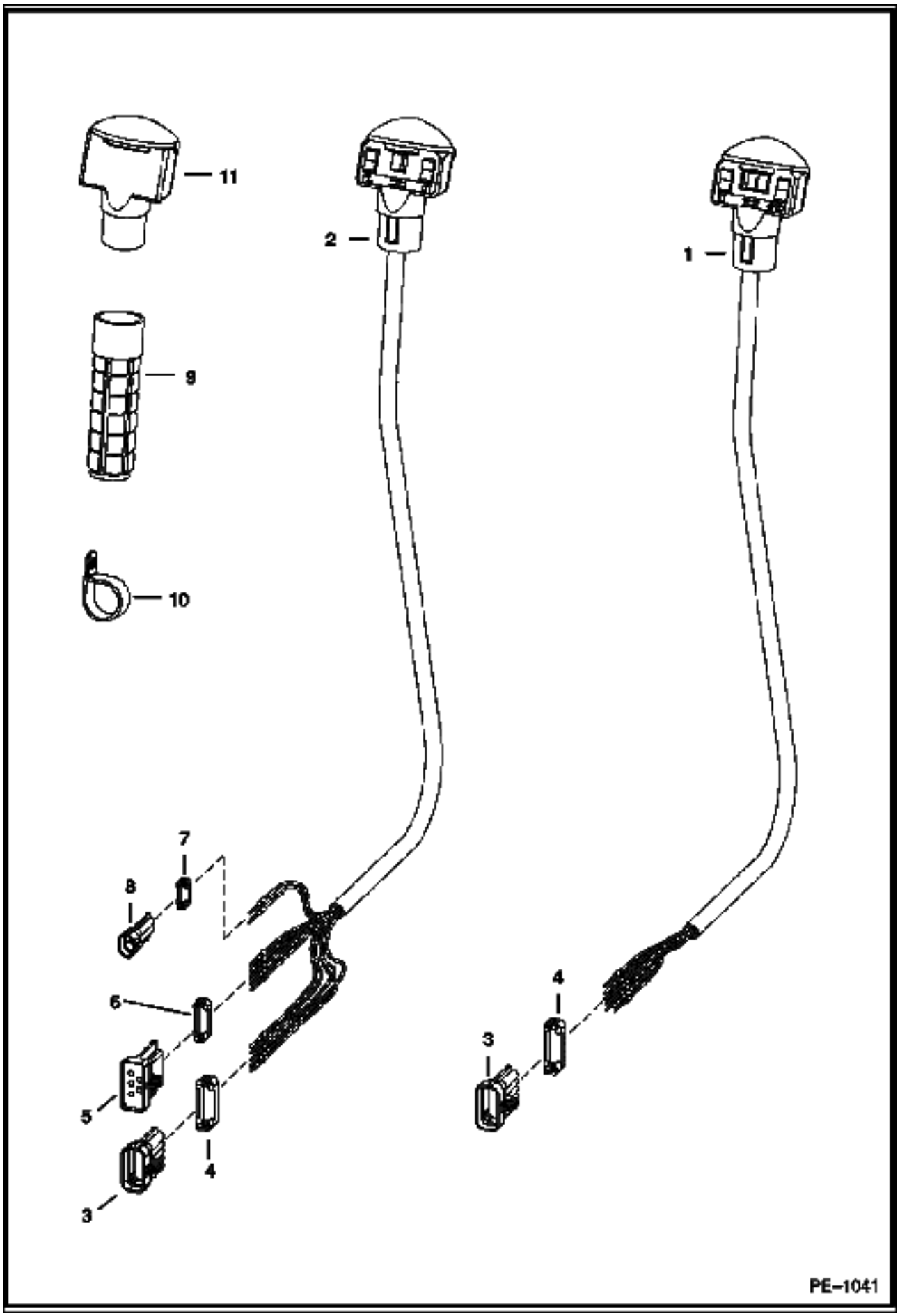
11
2
1
9
10
7
8
6
5
4
3
4
3
PE–1041

CONTROLS ELECTRICAL (Cont'd)
(Manual Hand Controls)

Ref No	Part Number	Description	Remarks	Serial Number	Qty
1	6680418	HANDLE ASSY.	R.H. - Also Order Ref. 3 & 4		1
1	6640690	PIN			9
1	6641176	SEAL			9
2	6680419	HANDLE ASSY.	L.H. - Also Order Ref. 3-8 [A]		1
2	6640690	PIN			10
2	6641176	SEAL			10
2	6680447	DECAL			1
3	6640692	CONNECTOR	10-pin		1
4	6640694	LOCK	10-pin		1
5	6667144	CONNECTOR	5 - way		1
6	6667145	LOCK	5 - way		1
7	6641180	LOCK	2 - pin		1
8	6641179	CONNECTOR	2 - pin		2
9	6702621	GRIP			2
10	6674000	CLAMP			2
11	6680415	HANDLE	L.H. - blank		2

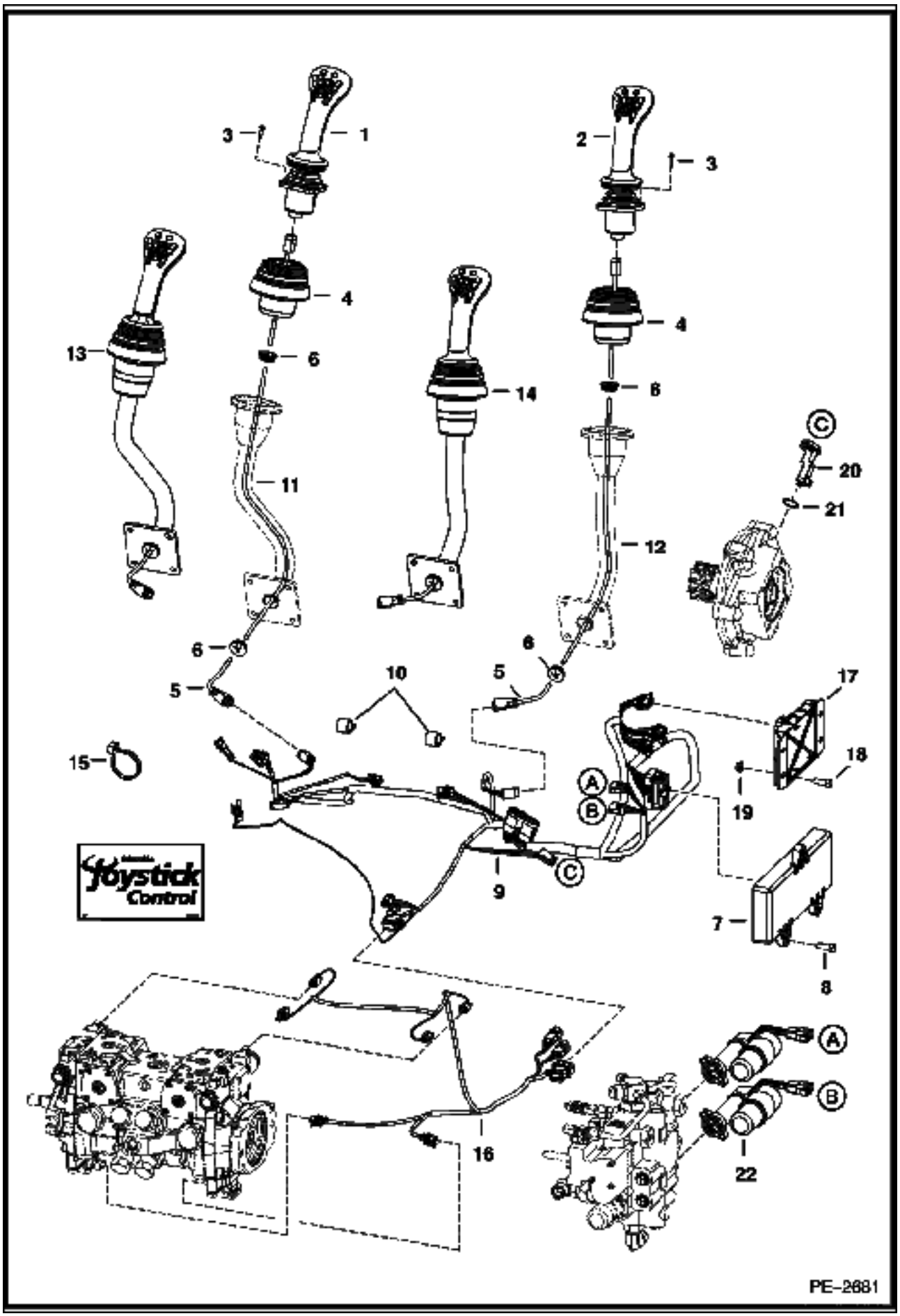
1
2
3
4
5
6
7
8
9
10
11
12
13
14
15
16
17
18
19
20
21
22
A
B
C
Joystick Control
PE-2681

CONTROLS ELECTRICAL (Cont'd)
(Selectable Joystick Controls)

Ref No	Part Number	Description	Remarks	Serial Number	Qty
1		JOYSTICK LH	NSS - Order Ref. 13 - Was 6687883 [A]		1
2		JOYSTICK RH	NSS - Order Ref. 14 - Was 6687882 [A]		1
3		BOLT	NSS - L. H. - Order Ref. 13 - R.H. - Order Ref. 14 - Was 6678659 [A]		8
4		BOOT	NSS - L. H. - Order Ref. 13 - R.H. - Order Ref. 14 - Was 6678903 [A]		2
5		HARNESS	NSS - L. H. - Order Ref. 13 - R.H. - Order Ref. 14 - Was 6729397 [A]		2
6		GROMMET	NSS - L. H. - Order Ref. 13 - R.H. - Order Ref. 14 - Was 6684294 [A]		4
7	6680410	CONTROLLER			1
8	43C000616B	BOLT			3
9	7110406	SJC HARNESS			1
10	30H000046B	CLAMP			2
11		HANDLE	NSS - L.H. - Order Ref. 13 - Was 6729792 [A]		1
12		HANDLE	NSS - R.H. - Order Ref. 14 - Was 6729791 [A]		1
13	7111993	JOYSTICK ASMBLY LH	L.H. - Ref. 1, 3-6 & 11		1
14	7111992	JOYSTICK ASMBLY RH	R.H. - Ref. 2-6 & 12		1
15	6624289	STA STRAP			21
16	7114735	HARNESS	A22 pump		1
17	6679485	CONTROLLER JC			1
18	17C000616B	BOLT			2
19	97D000006B	NUT			2
20	6677181	SENSOR			2
21	25K020100B	O-RING			2
22	7101672	ACTUATOR			2
23	6683812	SWITCH	H/ISO		1

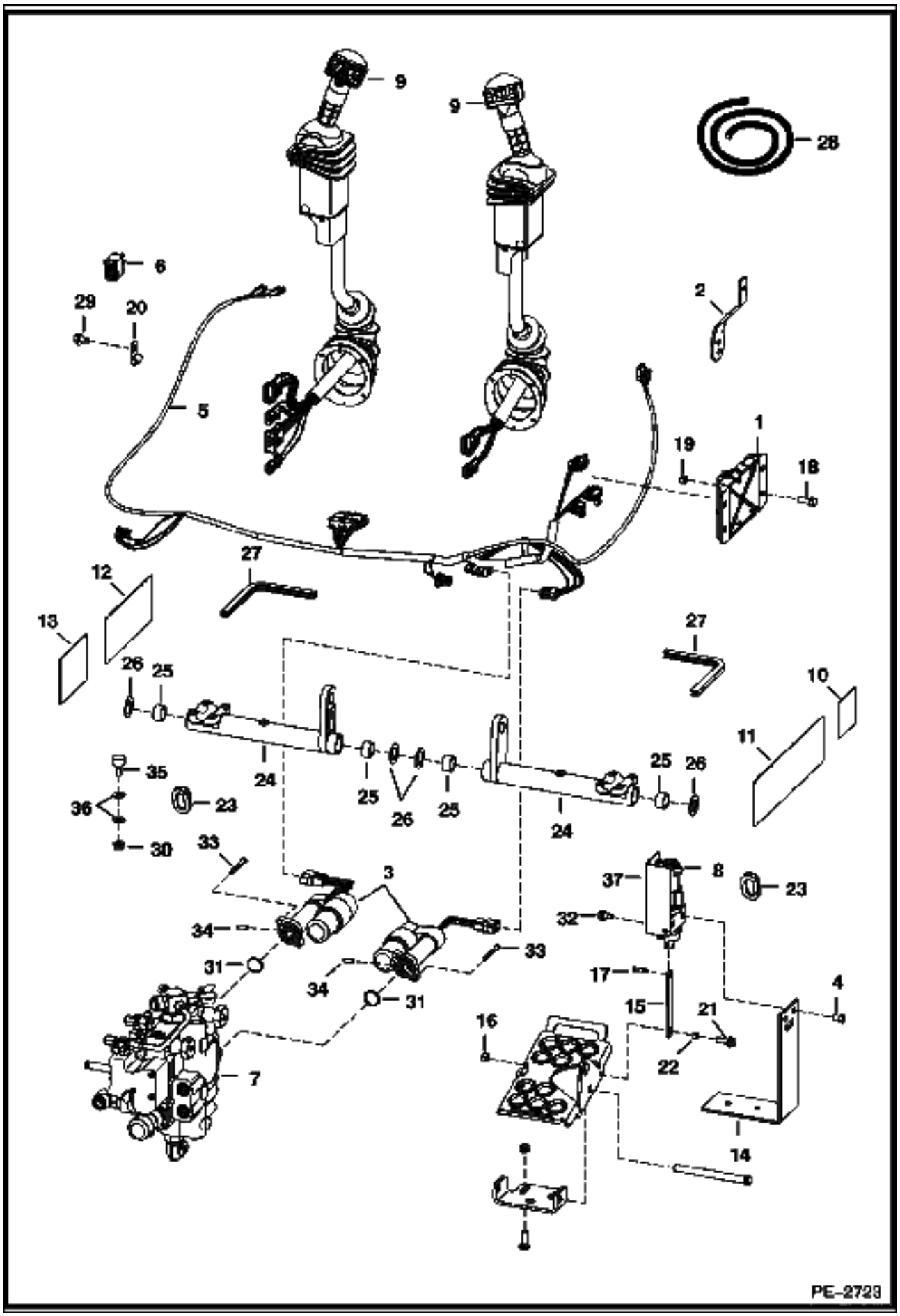
9
9
28
6
29
20
2
5
1
19
18
27
12
13
27
26
25
10
11
24
25
26
25
26
25
24
35
36
23
30
33
3
37
8
23
34
32
31
33
34
31
17
15
21
4
16
22
7
14
PE-2723

Ref No	Part Number	Description	Remarks	Serial Number	Qty
1	6680410	CONTROLLER	metal		1
2	6717393	LEVER	throttle		1
3	7101672	ACTUATOR	W/Ref. 31		2
4	17C000608B	BOLT			4
5	6733292	HARNESS			1
6	6676537	SWITCH			1
7		VALVE			1
8	6684912	SENSOR	See Illustration CONTROLS ELECTRICAL/ PE1553 FOOT PEDAL - R.H.		1
8	6676029	SOLENOID			1
8	6684911	SENSOR	See Illustration CONTROLS ELECTRICAL/ PE1553 FOOT PEDAL - L.H.		1
8	6676029	SOLENOID			1
9	6684915	LEVER	See Illustration CONTROLS ELECTRICAL/ PE1365 TILT - R.H.		1
9	6684916	LEVER	See Illustration CONTROLS ELECTRICAL/ PE1365 LIFT - L.H.		1
10	6718706	DECAL			1
11	6728539	DECAL			1
11	6734646	DECAL	joystick controls		1
12	6727926	DECAL			1
13	6727941	DECAL			1
14	6726573	BRACKET			2
15	6726681	LINK			2
16	95D000005B	NUT			2
17	6727496	PIN			2
18	17C000616B	BOLT			2
19	95D000006B	NUT			6
20	30H000062B	CLAMP			2
21	17C000514B	BOLT			2
22	6729467	SPACER			2
23	6714726	GROMMET			2
24	6716977	BELLCRANK			2
25	6673710	BEARING			4
26	6716916	WASHER	plastic		4
27		MOULDING	NAP - 10.5" (266,7 mm) long - Order Ref. 28		1
28	6654139	MOULDING	bulk - Sold Per Foot		x
29	84G003710B	BOLT			2
30	98D000006B	NUT			2
31	6686220	O-RING			2
32	43C000408B	BOLT			4
33	69G000436B	BOLT			4
34	7108236	PIN			2
35	6673789	BEARING			4
36	25E000017B	WASHER			8
37	6680478	SHIELD	R.H.		1
37	6680479	SHIELD	L.H.		1

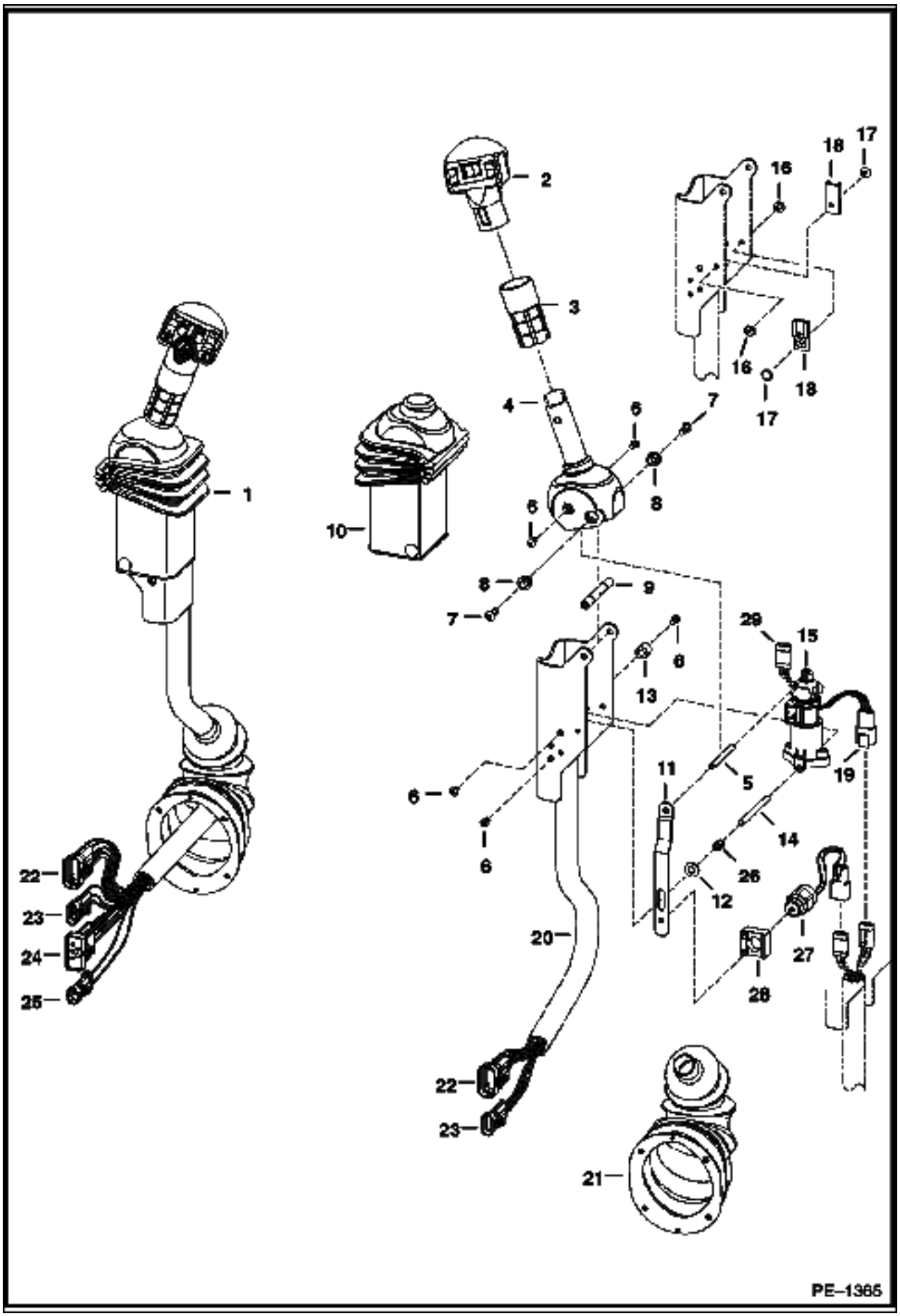
1
2
3
4
5
6
7
8
9
10
11
12
13
14
15
16
17
18
19
20
21
22
23
24
25
26
27
28
29
PE–1365

CONTROLS ELECTRICAL (Cont'd)
(AHC) (ACS) (Handle Assembly)

Ref No	Part Number	Description	Remarks	Serial Number	Qty
1	6684915	LEVER	tilt - R.H.		1
1	6684916	LEVER	lift - L.H.		1
2	6680462	HANDLE	tilt - R.H		1
2	6680417	HANDLE	lift - L.H.		1
3		GRIP	NAP - Order 6702621 Grip & cut to 2.8" long		2
4	6729594	HANDLE	R.H.		1
4	6729595	HANDLE	L.H.		1
5	6680469	SPACER	threaded		1
6	6727065	BOLT			6
7	25GT00410B	BOLT			8
8	6702990	BUSHING			4
9	6713043	SPACER			4
10	6680471	COVER			2
11	6680477	STRAP	stop		1
12	25E000013B	WASHER			1
13	6719835	SLEEVE			4
14	6719834	SPACER	threaded		2
15	6684910	SENSOR			2
15	6670706	CONNECTOR			1
15	6670715	PIN			3
15	6670710	LOCK			1
16	6665322	RIVET	female		2
17	6665321	RIVET	male		2
18	6665000	CLIP			2
19	6670707	CONNECTOR			1
19	6670715	PIN			3
19	6670711	LOCK			1
20	6680481	CHANNEL	R.H.		1
20	6680480	CHANNEL	L.H.		1
21	6532127	BOOT			2
22	6640692	CONNECTOR	10-pin		1
22	6640690	PIN			8
22	6640694	LOCK			1
22	6641176	SEAL			8
22	6646582	PLUG	cavity		1
23	6640699	CONNECTOR	3-pin		2
23	6640690	PIN			3
23	6641176	SEAL			3
23	6640700	LOCK			3
24	6667144	CONNECTOR	5-pin		2
24	6640690	PIN			3
24	6641176	SEAL			3
24	6646582	PLUG	cavity		1
24	6641180	LOCK			1
25	6641179	CONNECTOR	2-pin		1
25	6640690	PIN			2
25	6641176	SEAL			2
25	6641180	LOCK			1
26	6680470	SPRING			1
27	6676029	SOLENOID			1
28	6680468	MOUNT			1
29	6676870	CONNECTOR	3-pin		1
29	6670711	LOCK			1
29	6670715	PIN			1

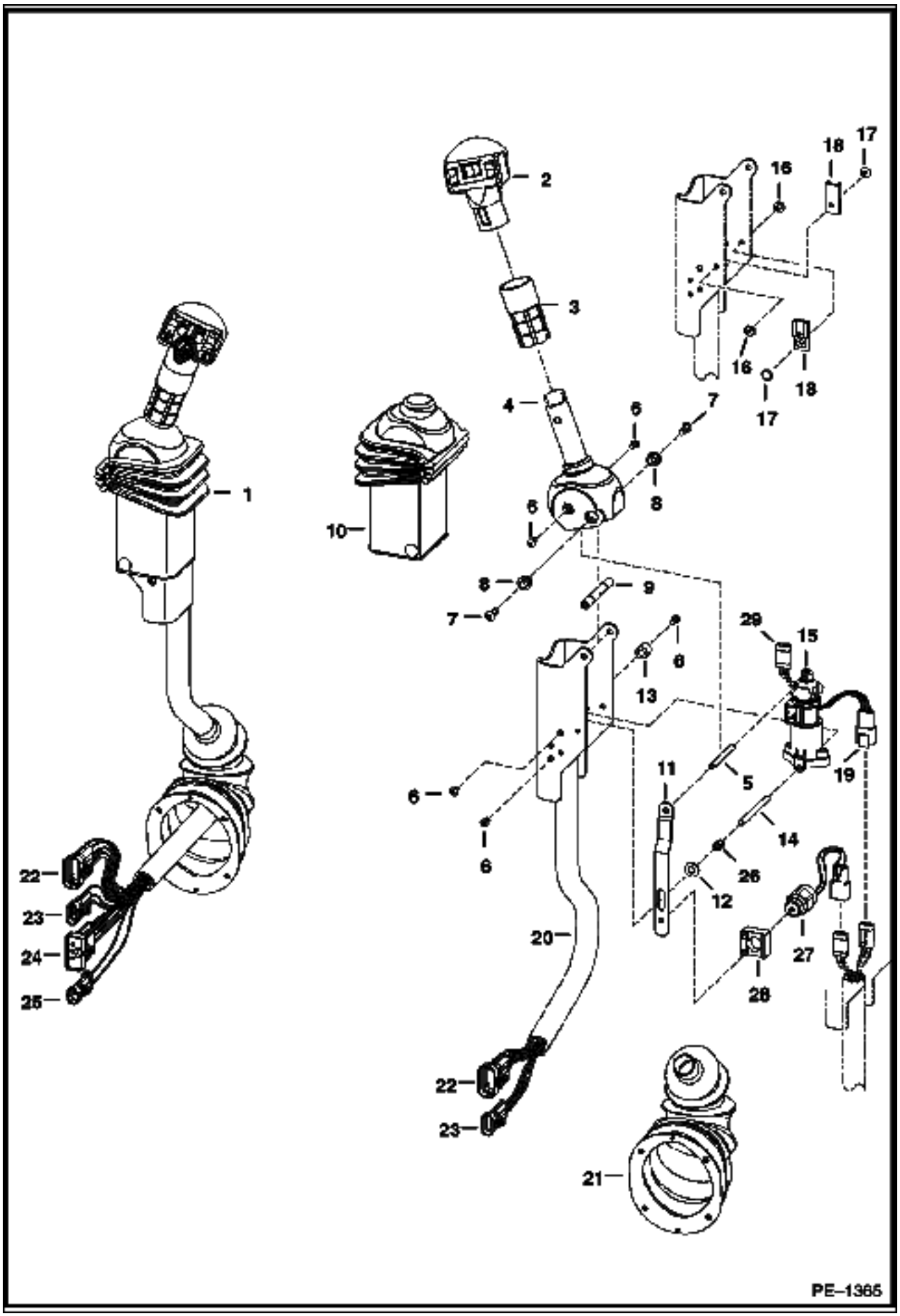
1
2
3
4
5
6
7
8
9
10
11
12
13
14
15
16
17
18
19
20
21
22
23
24
25
26
27
28
29
PE–1365

Ref No	Part Number	Description	Remarks	Serial Number	Qty
29	6676640	SEAL			5

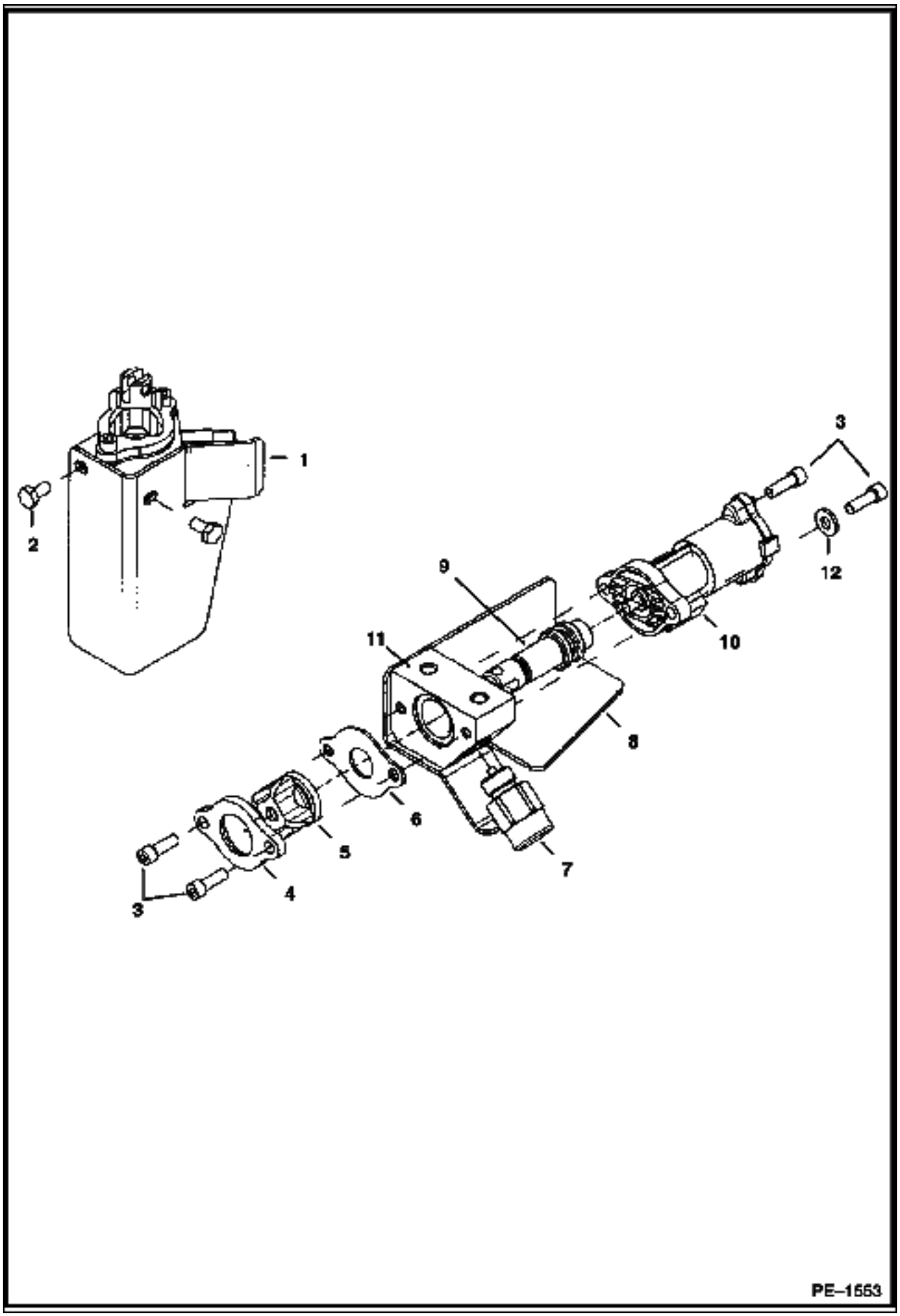
1
2
3
4
5
6
7
8
9
10
11
12
PE–1553

CONTROLS ELECTRICAL (Cont'd)
(ACS) (Foot Pedal Assemblies)

Ref No	Part Number	Description	Remarks	Serial Number	Qty
1	6684912	SENSOR	foot pedal - R.H.		1
1	6684911	SENSOR	foot pedal - L.H.		1
2	43C000408B	BOLT			2
3	98G000412B	BOLT			4
4		RETAINER	NAP - boot		1
5	6587763	BOOT			1
6		STOP PLATE	NAP		1
7	6676029	SOLENOID			1
8	6680478	SHIELD	R.H.		1
8	6680479	SHIELD	L.H.		1
9		SPOOL	NSS		1
10		SENSOR	NSS		1
11		BLOCK	NSS		1
12	25E000013B	WASHER			2

ALTERNATOR

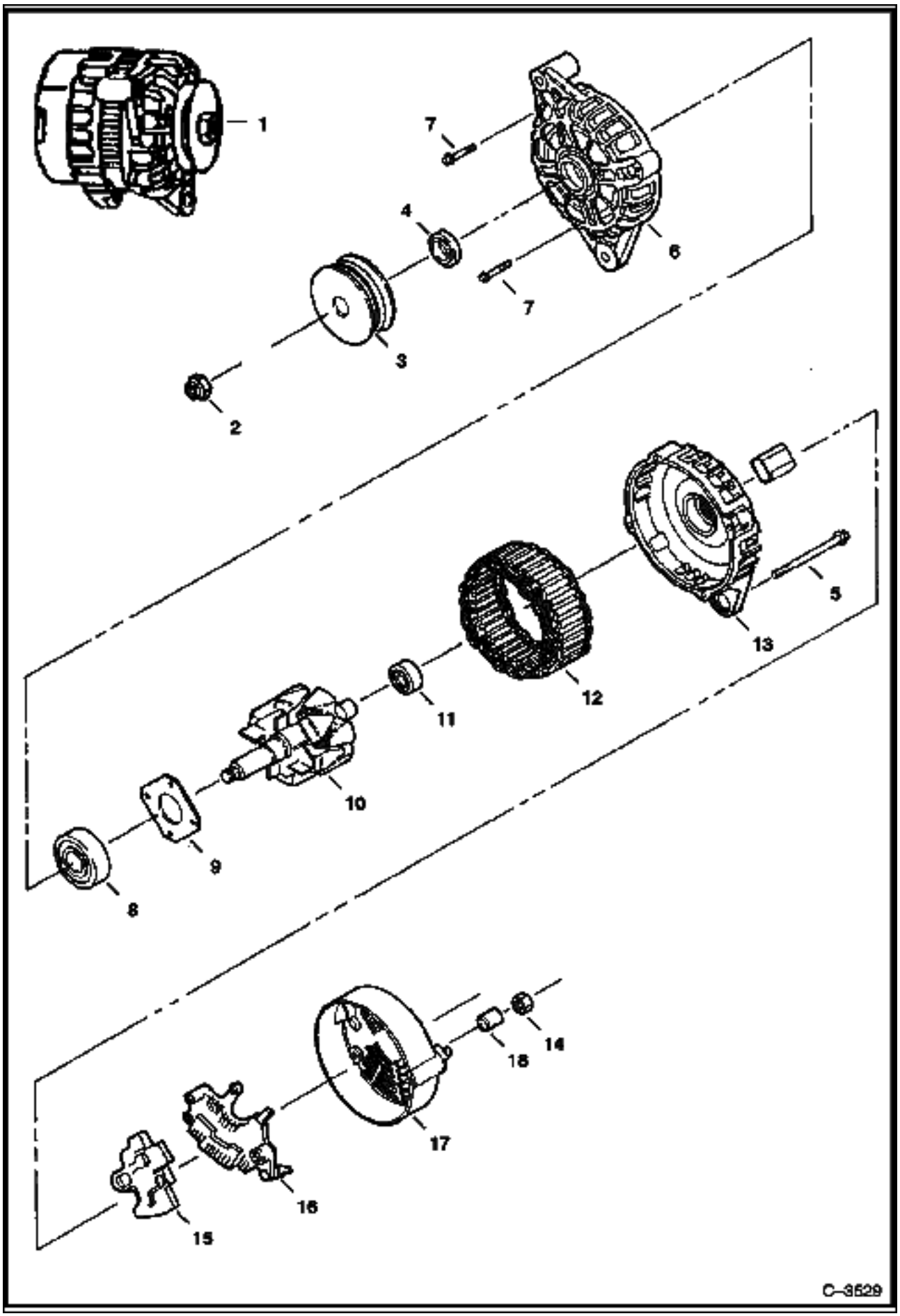

Ref No	Part Number	Description	Remarks	Serial Number	Qty
1	6678205	ALTERNATOR	90 amp		1
2	6677497	NUT			1
3	6677496	PULLEY			1
4	6677495	SPACER	front		1
5	6677494	BOLT			4
6	6677491	BRACKET	rear		1
7	6677817	BOLT			4
8	6677818	BEARING			1
9	6677819	RETAINER			1
10	6677492	ROTOR			1
11	6677820	BEARING			1
12	6677493	STATOR			1
13	6677490	BRACKET			1
14	6677486	NUT			1
15	6677489	REGULATOR ASSY	Order Ref. 1 - Was NSS [D]		1
16	6677488	RECTIFIER			1
17	6677487	COVER			1
18	6677485	SPACER	rear		1

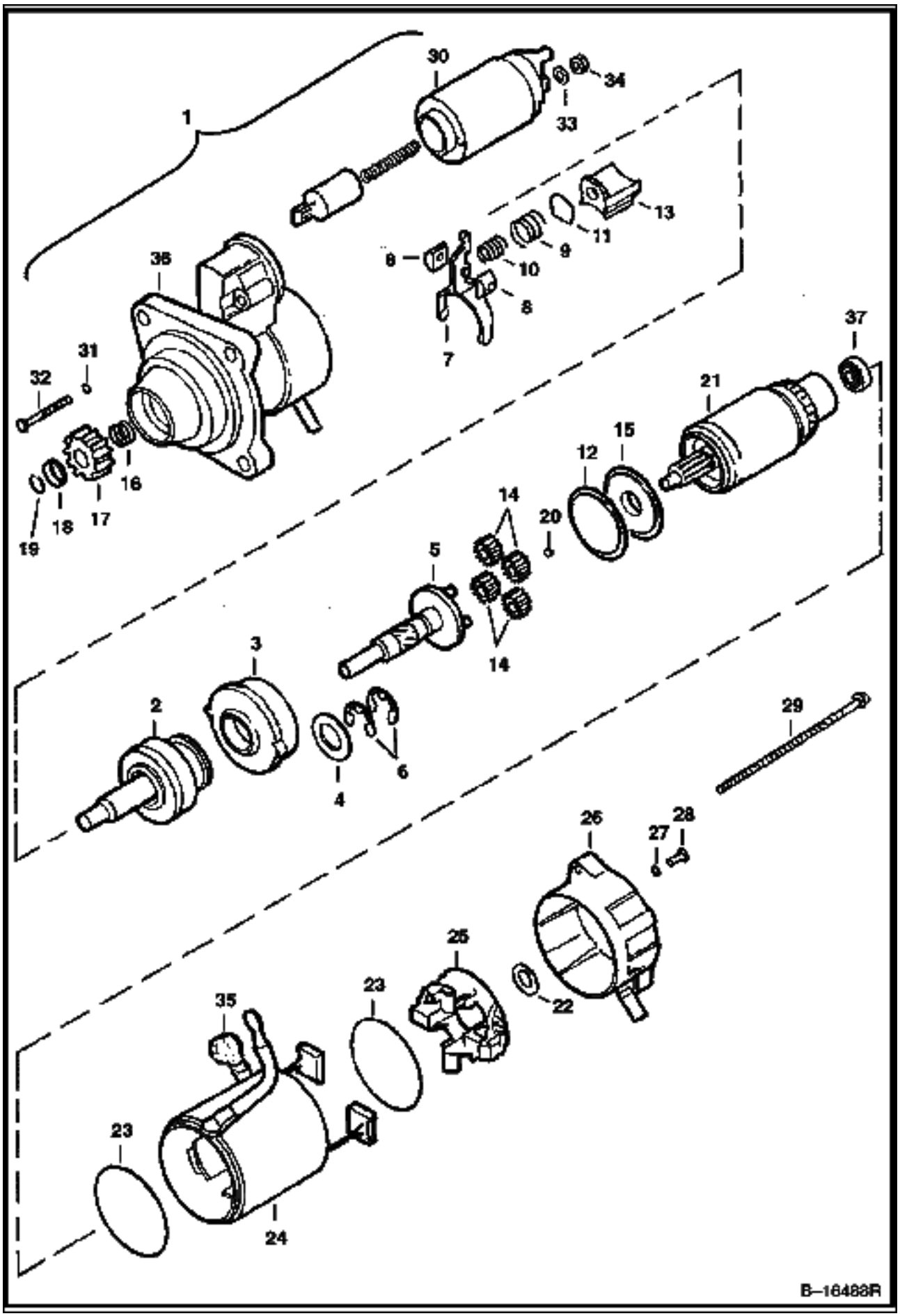
1
30
34
33
13
11
9
10
8
6
7
35
31
32
37
21
15
12
16
17
18
19
20
14
5
14
3
2
4
6
29
26
27
28
25
22
23
35
23
24
B–16483R

STARTER (Cont'd)
(Valeo)

Ref No	Part Number	Description	Remarks	Serial Number	Qty
1	6685190	STARTER			1
2	6680375	SHAFT	O.R.C. assy.		1
3	6680367	GEAR			1
4	6680378	WASHER			1
5	6680365	SHAFT			1
6	6680368	STOP RING			2
7		LEVER	NSS - Order Ref. 36		1
8		HOLDER	NSS - Order Ref. 36		2
9		SPRING	NSS - Order Ref. 36		1
10		SPRING	NSS - Order Ref. 36		1
11		PLATE	NSS - Order Ref. 36		1
12	6680369	SEAL			1
13	6680371	LEVER			1
14	6680366	GEAR			4
15	6680372	BRACKET			1
16	6680361	SPRING			1
17	6680390	GEAR			1
18	6680360	STOP			1
19	6680359	STOP RING			1
20	6680362	BALL			1
21	6680374	ARMATURE	W/Ref. 37		1
22	6680363	WASHER			1
23	6680380	SEAL			2
24	6680373	YOKE			1
25	6680377	HOLDER			1
26	6680389	BRACKET			1
27	6680358	RING	rubber		2
28	6680384	BOLT			2
29	6680356	BOLT			2
30	6680376	SWITCH			1
31	6680379	SEAL			2
32	6680383	BOLT			2
33	6EM00080B	WASHER			1
34	4DM00008B	NUT			1
35	6680355	BOOT			1
36	6680388	BRACKET	W/Ref. 7-11		1
37	6687631	BEARING			1

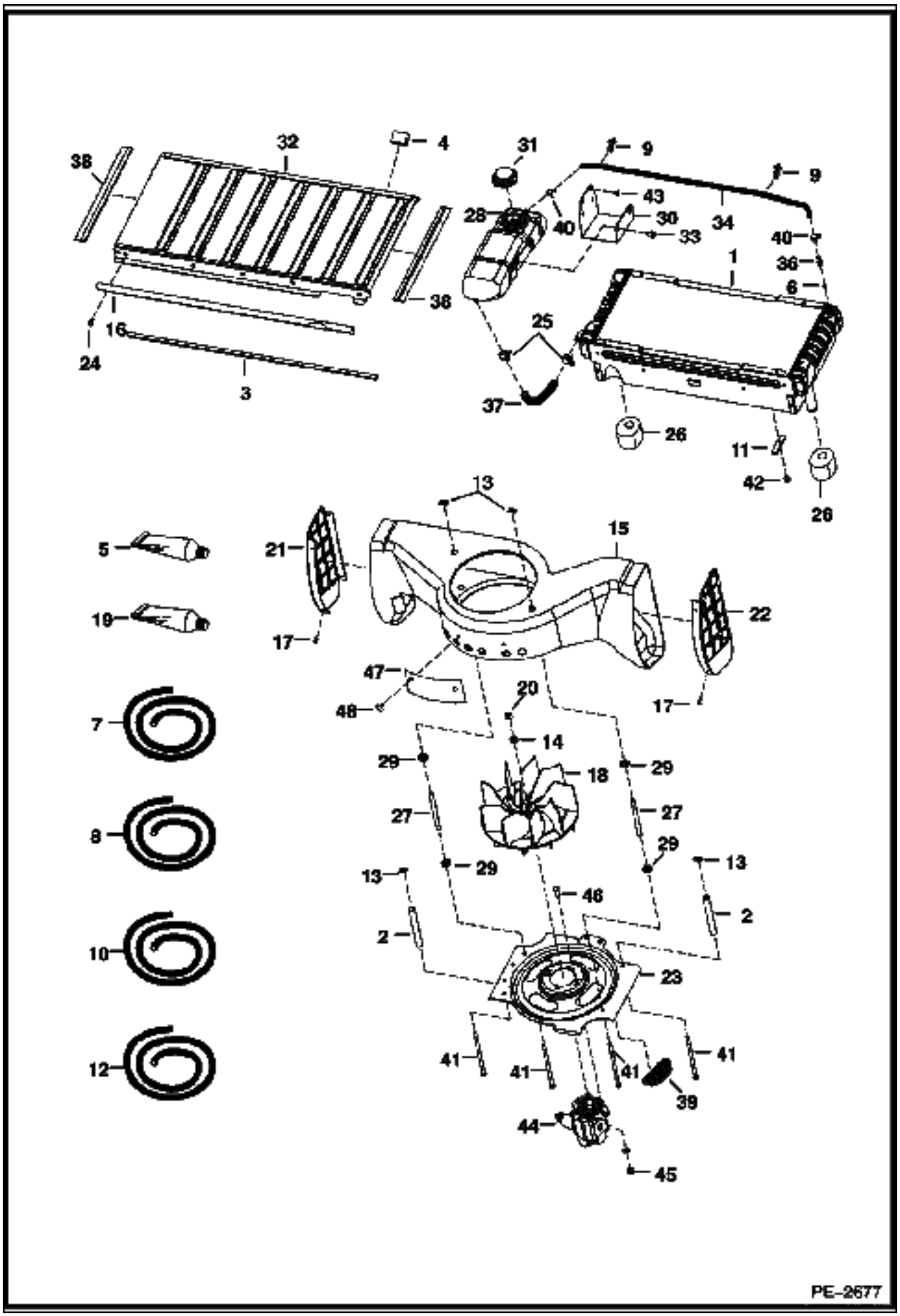
PE-2677

Ref No	Part Number	Description	Remarks	Serial Number	Qty
1	6686077	RADIATOR	Was 6734100 [A]		1
2	6577382	SPACER			2
3		FOAM STRIP	NAP - 34.5"(876,3mm) long - Order Ref. 8		2
4	6579613	STOP			2
5	6633583	HOSE	Oil Cooler Grill		x
6	79K000002B	O-RING			1
7	6578172	HOSE	bulk - sold by the foot		1
8	6511855	SEAL	bulk - sold by the foot		x
9	6675734	STRAP	button head		2
10	6646705	SEAL	bulk - sold by the foot		x
11	6679991	SEAL	washer		1
12	6577822	HOSE	bulk - sold by the foot		x
13	6684033	NUT			4
14	6701097	WASHER			1
15	7104117	HOUSING			1
16	6703471	BRACKET			1
17	6706517	SCREW	plastic louvers		8
18	6715142	FAN			1
19	6650407	ADHESIVE	1 oz. tube		x
20	96D000008B	NUT			1
21	6716571	LOUVER	L.H. - plastic		1
22	6716573	LOUVER	R.H. - plastic		1
23	7107175	INLET			1
24	84G003112B	BOLT			3
25	5HM00024B	CLAMP			2
26	6726433	SPACER			2
27	6732318	SPACER			2
28	6732375	TANK	expansion		1
29	6732457	WASHER	step		4
30	6732870	MOUNT			1
31	6733429	CAP			1
31	6733996	DECAL	14 psi		1
32	6733804	GRILL			1
33	6733886	BOLT			2
34		HOSE	NAP - 36"(914,4 mm) long - Order Ref. 12		1
35	6687142	MOTOR	See Illustration MOTOR/ PE2811 See Illustration HYDROSTATIC CIRCUITRY/ PE2735 W/proportional valve		1
35	6689058	MOTOR	W/O proportional valve		1
35	6689059	VALVE ASSY	proportional		1
35	6689060	COIL ASSY	W/nut & O-ring		1
35	6683206	SEAL KIT	for proportional valve		1
36	6734236	ADAPTER	W/Ref. 6		1
37		HOSE	NAP - 8.25"(209,6 mm) long - Order Ref. 7		1
38		MOULDING	NAP - 16.8"(426,7 mm) long - Order Ref. 10		2
39	6684474	INSERT FAN INLET			4
40	5HM00014B	CLAMP			2
41	17C006116B	BOLT			4
42	35C000516B	BOLT			2
43		BOLT			2
44		MOTOR			2
45		NUT			2
46		BOLT			2
47	6715819	INSULATOR			1
48	6674895	RETAINER			2

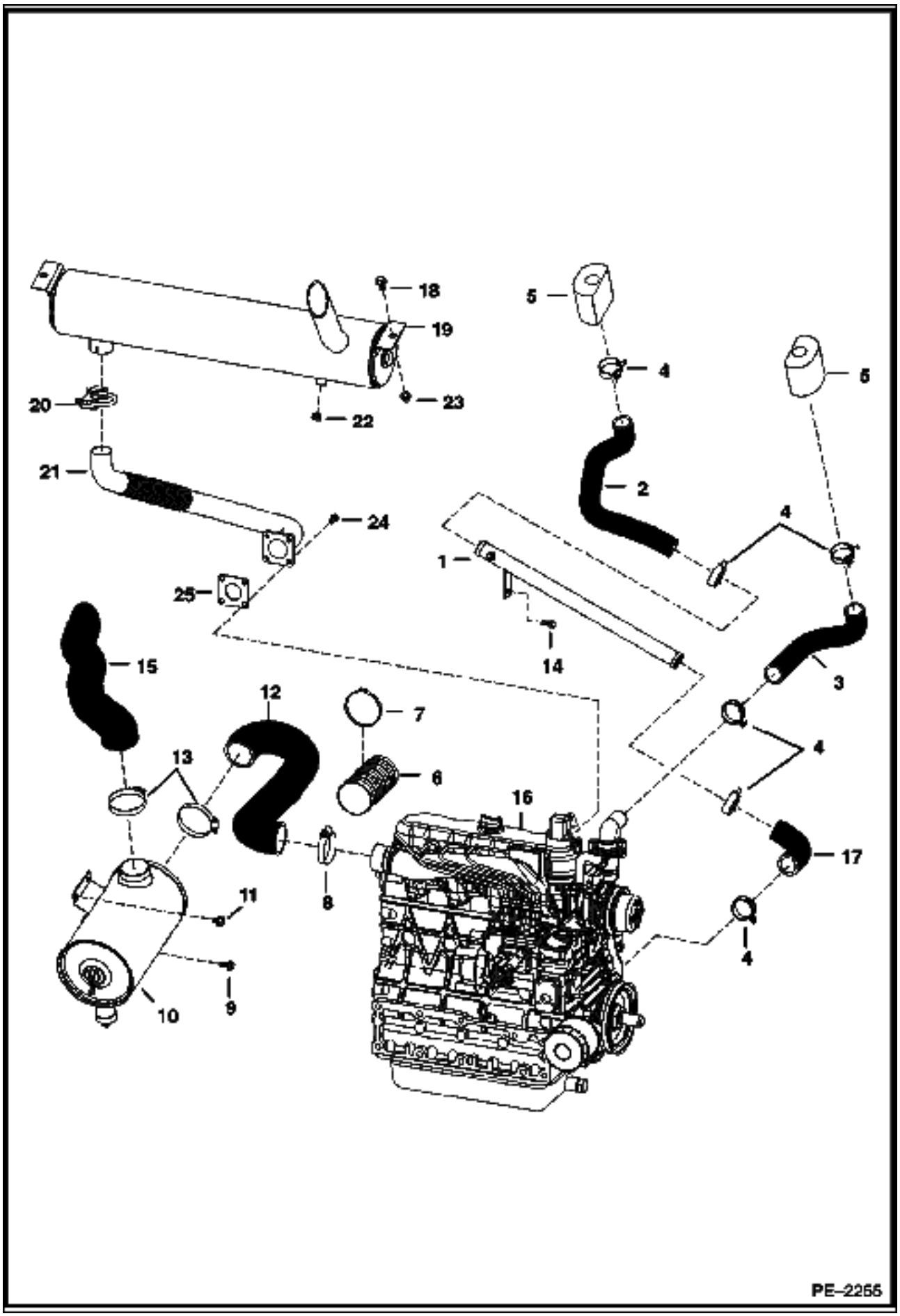
18
19
23
22
20
21
24
25
15
12
13
7
6
11
8
10
9
16
5
4
2
1
14
3
17
PE–2255

Ref No	Part Number	Description	Remarks	Serial Number	Qty
1	6730999	TUBE ASSY			1
1	40K000006B	PLUG			1
2	6717592	HOSE			1
3	6717591	HOSE			1
4	5HM00042B	CLAMP			6
5	6726433	SPACER			2
6	6706393	SHIELD	5"(127 mm) long		1
6	6706394	SHIELD	8"(203,2 mm) long		1
7	6664004	CLAMP			1
7	6664004	CLAMP	Use W/Ref. 6 (6706394 Shield)		2
8	42H000032B	CLAMP			1
9	84G003712B	BOLT			1
10		AIR CLEANER	See Illustration AIR CLEANER/ MS2186		1
11	84G003708B	BOLT			2
12		HOSE	NAP - W/Ref. 6 (6706393 Shield) & 7 - Was 6714889 [A]		1
12	7100573	HOSE	W/Ref. 6 (6706394 Shield) & (2) of Ref. 7		1
13	42HL00300B	CLAMP			2
14	17C000612B	BOLT			1
15	7102656	HOSE			1
16	6683202	ENGINE	See Illustration ENGINE & GASKET KITS/ B22694		1
17	7100024	HOSE			1
18	35C000616B	BOLT			2
19	7100840	MUFFLER			1
20	7101708	CLAMP			1
21	6701151	PIPE			1
22	6661062	PLUG	brass 3/8" (9,5 mm)		1
23	61D000006B	NUT			2
24	6701123	SCREW			4
25	6727752	GASKET			1

ENGINE & ATTACHING PARTS
(Belt Drive System)

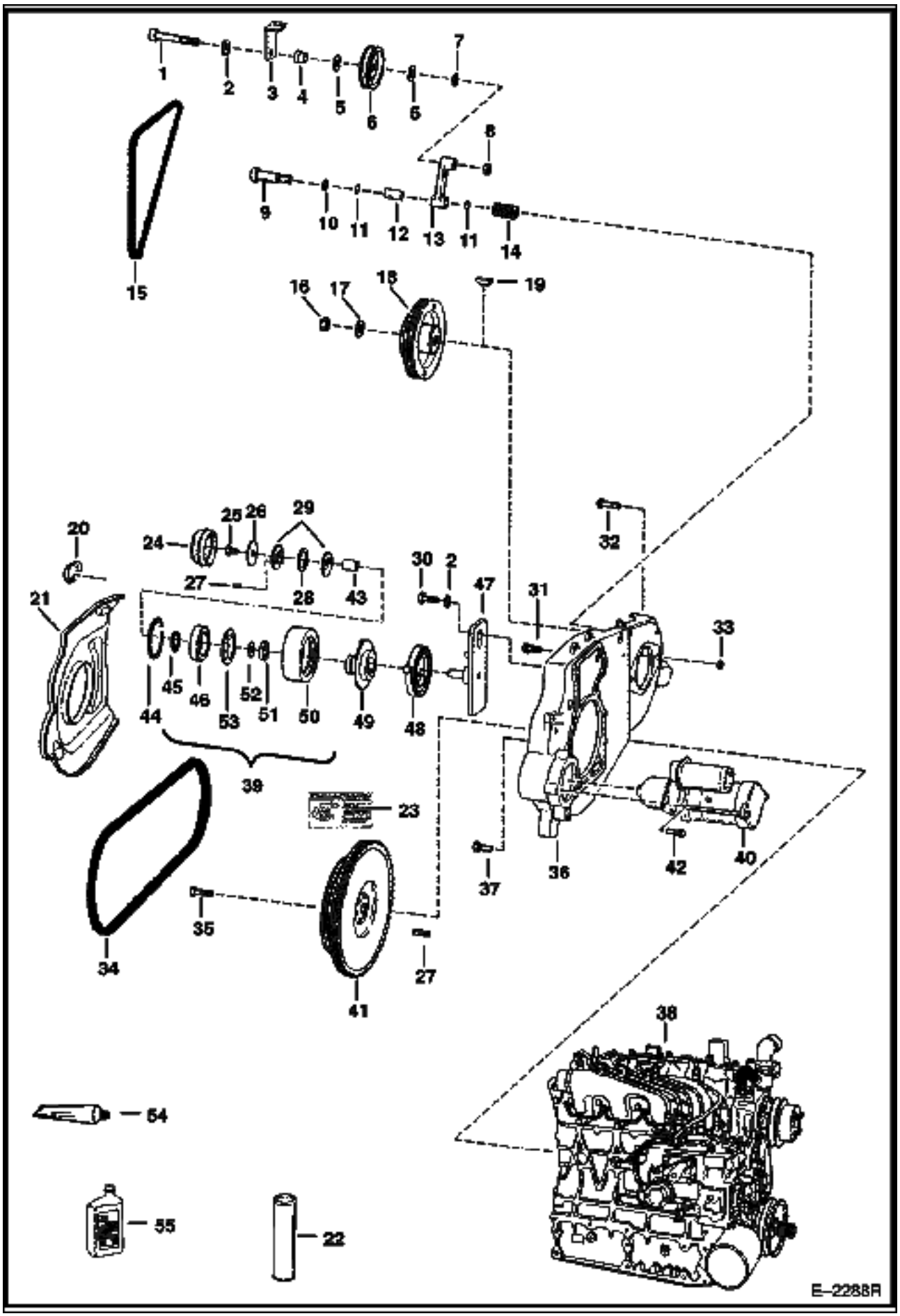

ENGINE & ATTACHING PARTS (Cont'd)
(Belt Drive System)

Ref No	Part Number	Description	Remarks	Serial Number	Qty
1	73G000656B	BOLT			1
2	6704484	WASHER	thrust		3
3	6702474	RETAINER	fan drive idler belt		1
4	6704443	BUSHING	spacer		1
5	6660995	GREASE RING	grease		2
6	6662997	PULLEY	fan drive idler		1
7	6704444	WASHER			1
8	61D000006B	NUT			1
9	38C000820B	BOLT	shoulder		1
10	6655781	BEARING			1
11	6704820	O-RING			2
12	6670682	BEARING	nylon		1
13	6725212	ARM	W/Ref. 12		1
14	6700115	SPRING			1
15		BELT	Fan Drive		1
16	92D000012B	NUT			1
17	6576033	WASHER			1
18	7113635	PULLEY	to hyd. pump - 3 groove - 7.95" (202 mm) dia.		1
19	6J000807B	KEY			1
20	6703022	CLIP			3
21	7109712	SHIELD			1
22	6599719	GREASE	Use W/Ref. 39		x
23	6709030	DECAL	belt tension spring loaded idler		1
24	6708770	CAP	dust		1
25	17C000610B	BOLT			1
26	6705232	WASHER			1
27	6713370	PIN			2
28	6710585	WASHER	wave spring		1
29	6705231	WASHER			2
30	17C000620B	BOLT			1
31	6719828	BOLT			2
32	17C000828B	BOLT	hyd. pump mount		2
33	85D000008B	NUT			2
34	6736775	BELT	pump drive		1
35	6598275	BOLT			6
36	6726613	MOUNT			1
37	6719825	BOLT			7
38		ENGINE	See Illustration ENGINE & GASKET KITS/ B22694		1
39	6735884	IDLER ASSY.	spring loaded - Ref. 24 - 29 & 43 - 53 - Also Order Ref. 23		1
40		STARTER	See Illustration STARTER/ B16488R		1
41	6736807	FLYWHEEL ASSY	W/Ring Gear		1
41	6510470	RING GEAR			1
42	35C000620B	BOLT			3
43	6682442	SLEEVE	bronze sleeve		1
44	6658847	RING			1
45	6658536	RING			1
46	6668114	BEARING	ball		1
47	6735883	BRACKET			1
48	6705491	SPRING	torsion		1
49	6711699	HUB ASSY.			1
50	6704391	PULLEY	idler		1
51	6685735	SEAL			1
52	6703168	BEARING	thrust		1
53	6664209	SEAL			1

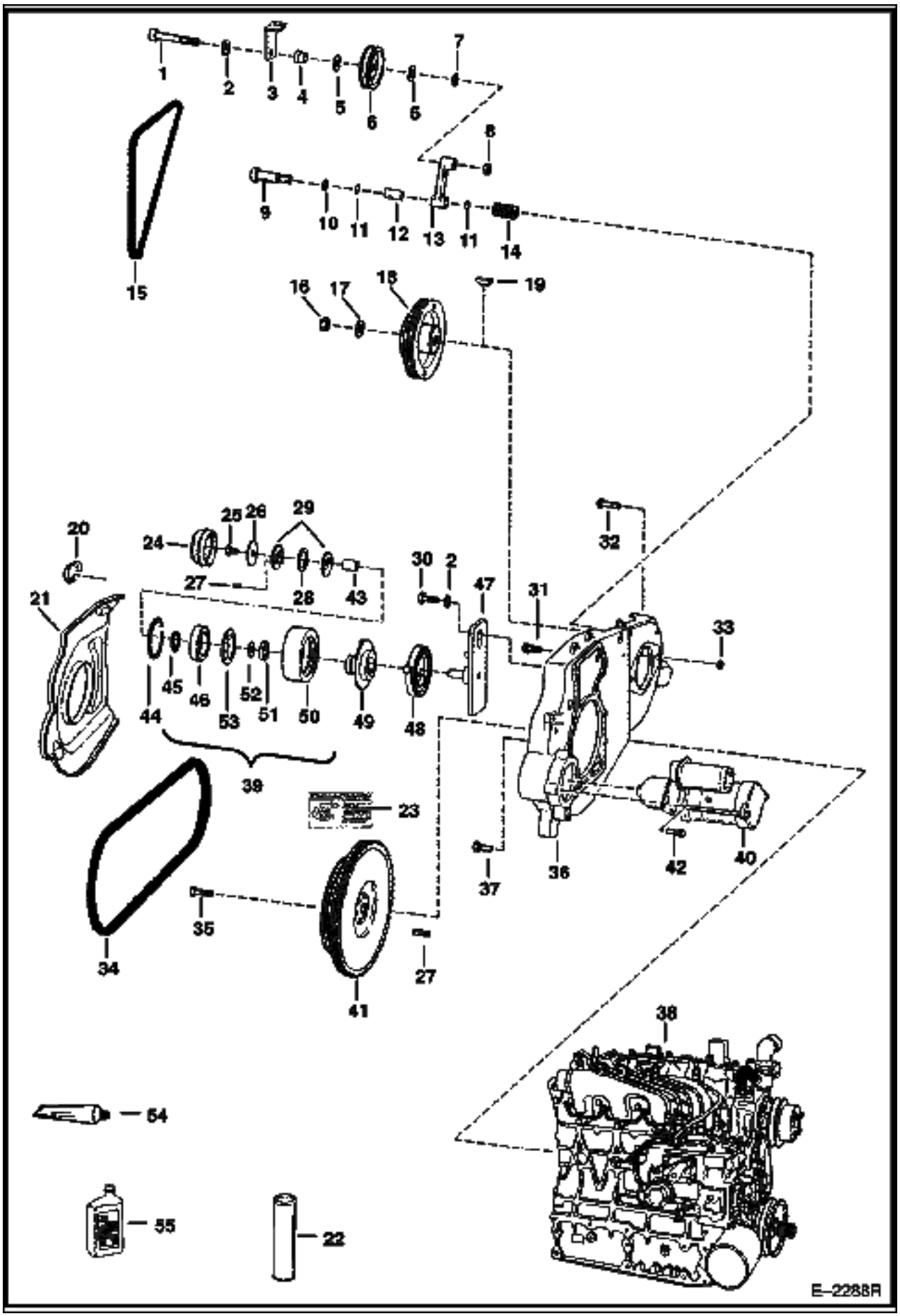
1
2
3
4
5
6
5
7
8
9
10
11
12
13
11
14
15
16
17
18
19
20
21
24
25
26
29
27
28
43
30
2
47
31
32
33
44
45
46
53
52
51
50
49
48
39
23
34
35
27
41
36
37
42
40
38
54
55
22
E-2288R

Ref No	Part Number	Description	Remarks	Serial Number	Qty
54	6633583	SEALANT			x
55	6661405	OIL			x

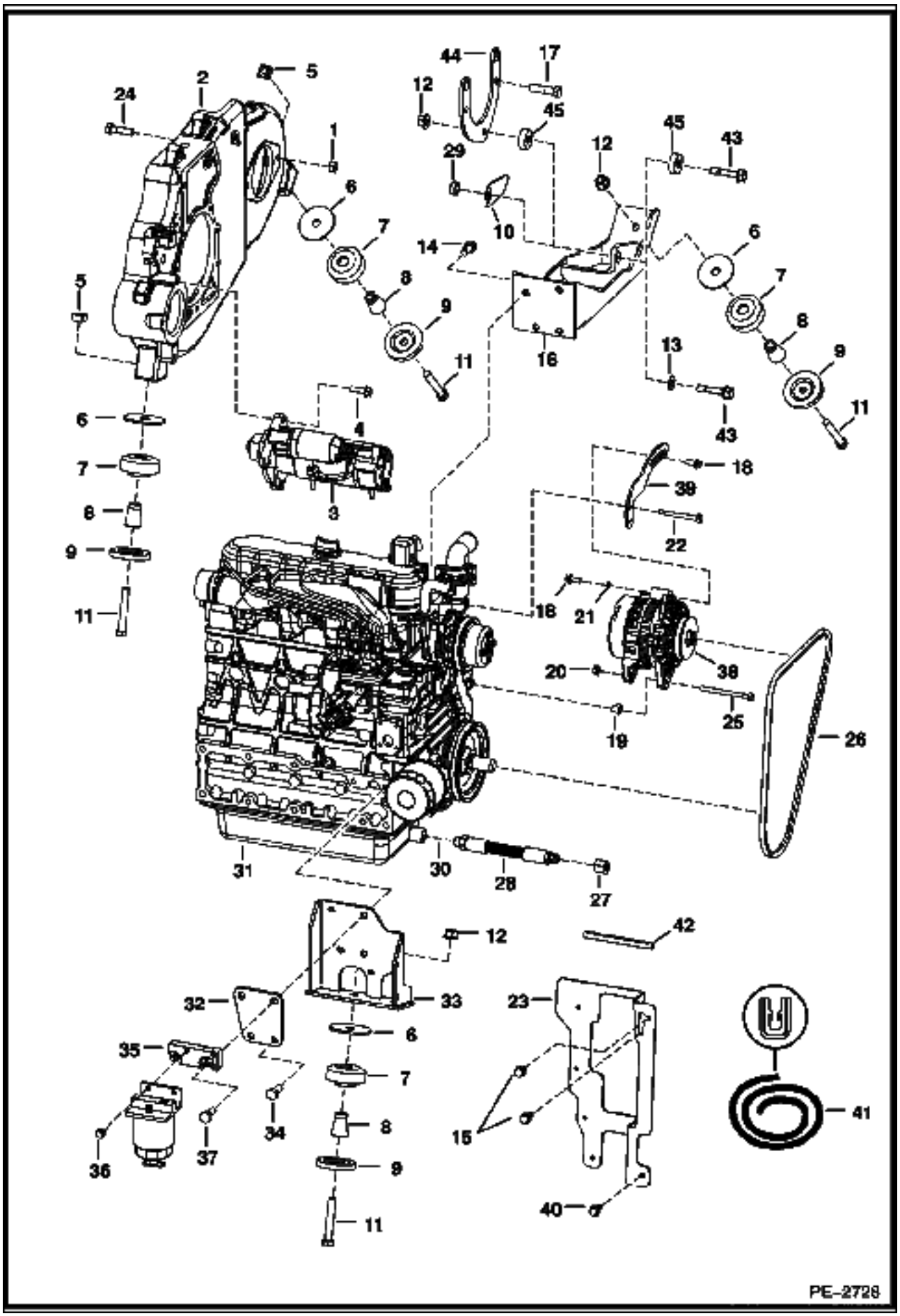
PE-2728

Ref No	Part Number	Description	Remarks	Serial Number	Qty
1	85D000008B	NUT			2
2		MOUNT			1
3		STARTER			1
4	35C000620B	BOLT			3
5	6652918	NUT			2
6	6705106	WASHER			4
7	6661785	MOUNT			4
8	6706043	SPACER			4
9	6661787	WASHER			4
10	7114739	SPACER			1
11	43C000852B	BOLT			4
12	83D000008B	NUT			2
13	25E000021B	WASHER	use 2 max.		x
14	6719827	BOLT			4
15	84G003712B	BOLT			2
16	7104568	MOUNT	engine & hyd. pump - for horizontal hardware mounting of hydrostatic pump		1
17	53CM01240B	SCREW	hyd. pump mount - Selectable Joystick Controls		2
18	29CM00820B	BOLT			1
19	6817566	BUSHING			1
20	53DM00008B	NUT			2
21	6E000005B	WASHER			1
22	1CM00890B	BOLT			1
23	6731060	SHIELD	bolts to upright		1
24	17C000828B	BOLT	hyd. pump mount		2
25	1CM08100B	BOLT			2
26	7100572	BELT	alternator		1
27	36K000006B	CAP			1
28	6563445	HOSE			1
29	7113010	ADAPTER			1
30	79K000008B	O-RING	flat boss face		x
31		ENGINE			1
32	6700535	SPACER			1
33	6703981	MOUNT	W/Ref. 32		1
34	6719828	BOLT			2
35	6736817	MOUNT	fuel filter		1
36	6719826	BOLT			1
37	6719829	BOLT			1
38		ALTERNATOR	90 AMP.		1
39	6730867	BRACKET			1
40	84G003716B	BOLT			2
41	6654139	MOULDING	bulk - Sold Per Foot		x
42		MOULDING	NAP - 5.5" (139,7 mm) long - Order Ref. 41		1
43	6675221	BOLT	hyd. pump mount		1
44	7107849	MOUNT	pump - Selectable Joystick Controls		1
45	7104608	BUSHING	spacer - Selectable Joystick Controls		2

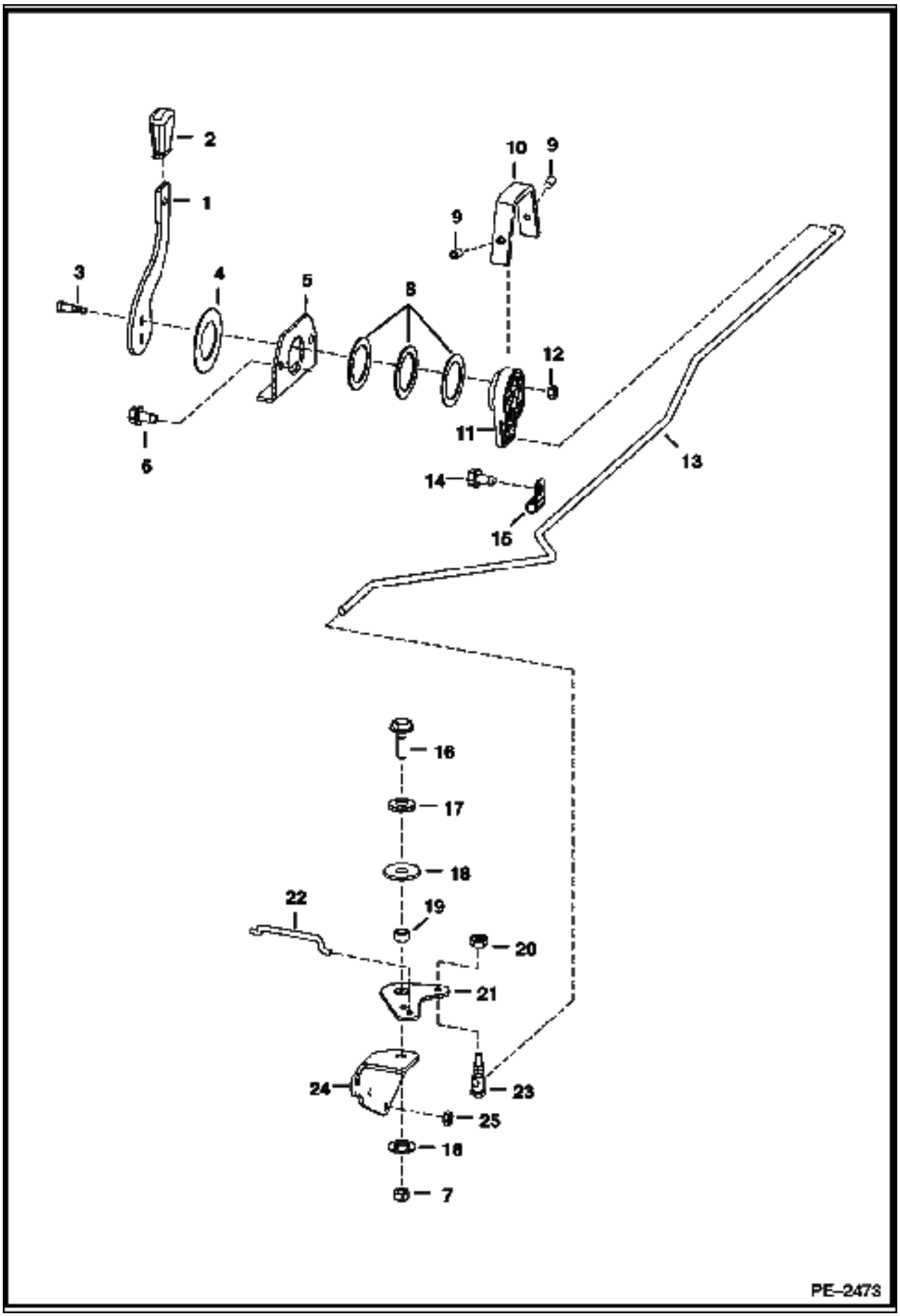
2
1
10
9
9
3
4
5
8
12
11
6
13
14
15
16
17
18
22
19
20
21
24
23
25
18
7
PE–2473

ENGINE SPEED CONTROL (Cont'd)
Manual Hand Controls

Ref No	Part Number	Description	Remarks	Serial Number	Qty
1	6705452	LEVER			1
2	6564452	GRIP			1
3	38C000610B	BOLT	shoulder		2
4	6567962	WASHER			1
5	6576262	MOUNT			1
6	84G003724B	BOLT			2
7	95D000006B	NUT			1
8	6630945	WASHER			3
9	6706572	SET SCREW			2
10	6734520	COVER			1
11	6709022	LEVER			1
12	85D000005B	NUT			2
13	7114667	ROD	throttle		1
14	84G003712B	BOLT			1
15	31H000038B	CLAMP			1
16	84G003716B	BOLT			1
16	17C000716B	BOLT			1
17	25E000018B	WASHER			1
18	6700170	WASHER	plastic		2
19	6564343	SPACER			1
20	59D000004B	NUT			1
21	6578268	BELLCRANK			1
22	6736195	ROD			2
23	6557291	BALL JOINT			1
24	7109314	MOUNT			1
25	4DM00006B	NUT			3

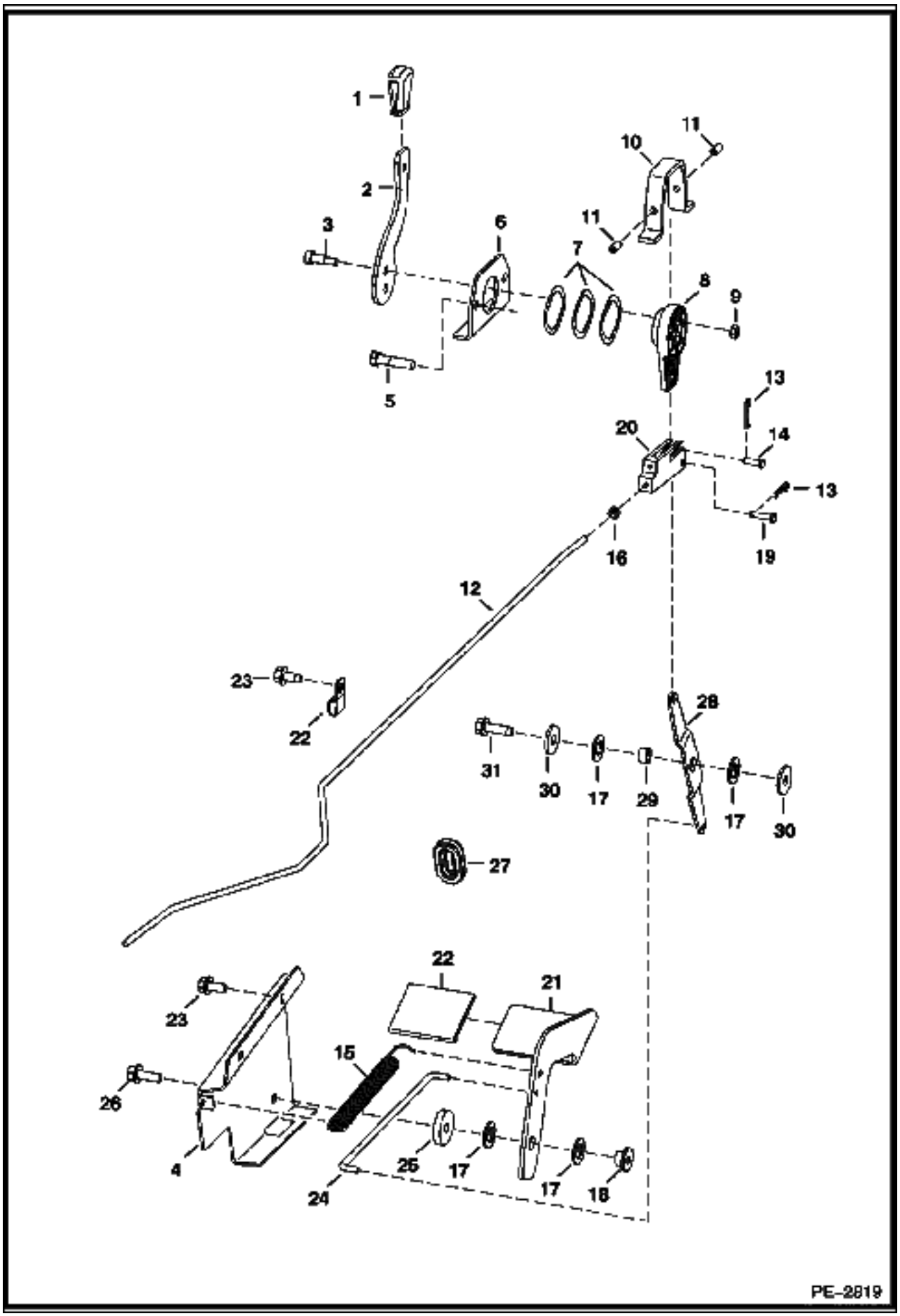
1
2
3
6
7
10
11
11
8
9
9
5
13
20
14
13
16
19
12
23
22
28
31
30
17
29
17
30
27
22
21
23
15
26
4
25
17
17
18
24
PE-2819

ENGINE SPEED CONTROL (Cont'd)
Selectable Joystick Controls

Ref No	Part Number	Description	Remarks	Serial Number	Qty
1	6564452	GRIP			1
2	6730270	LEVER			1
3	38C000610B	BOLT	shoulder		2
4	6732323	BRACKET			1
5	84G003724B	BOLT			2
6	6576262	MOUNT			1
7	6630945	WASHER			3
8	6734416	LEVER			1
9	85D000005B	NUT			2
10	6734520	COVER			1
11	6706572	SET SCREW			2
12	7116280	ROD			1
13	6513495	COTTER PIN			2
14	2F004051B	PIN			1
15	6700743	SPRING			1
16	62D000004B	NUT			2
17	6700170	WASHER	plastic		4
18	6559479	NUT	retaining		1
19	1304227B	PIN			1
20	6734503	CLEVIS			1
21	6731898	PEDAL			1
22	6554100	TREAD	safety		1
23	84G003712B	BOLT			3
24	6731900	ROD			1
25	6732322	SPACER			1
26	45C000616B	BOLT			1
27	6577961	GROMMET			1
28	6734417	LEVER			1
29	6564343	SPACER			1
30	619021B	WASHER			2
31	84G003720B	BOLT			1
32	31H38	CLAMP			1

ENGINE & GASKET KITS
(Kubota - V2203MDI - Tier II)

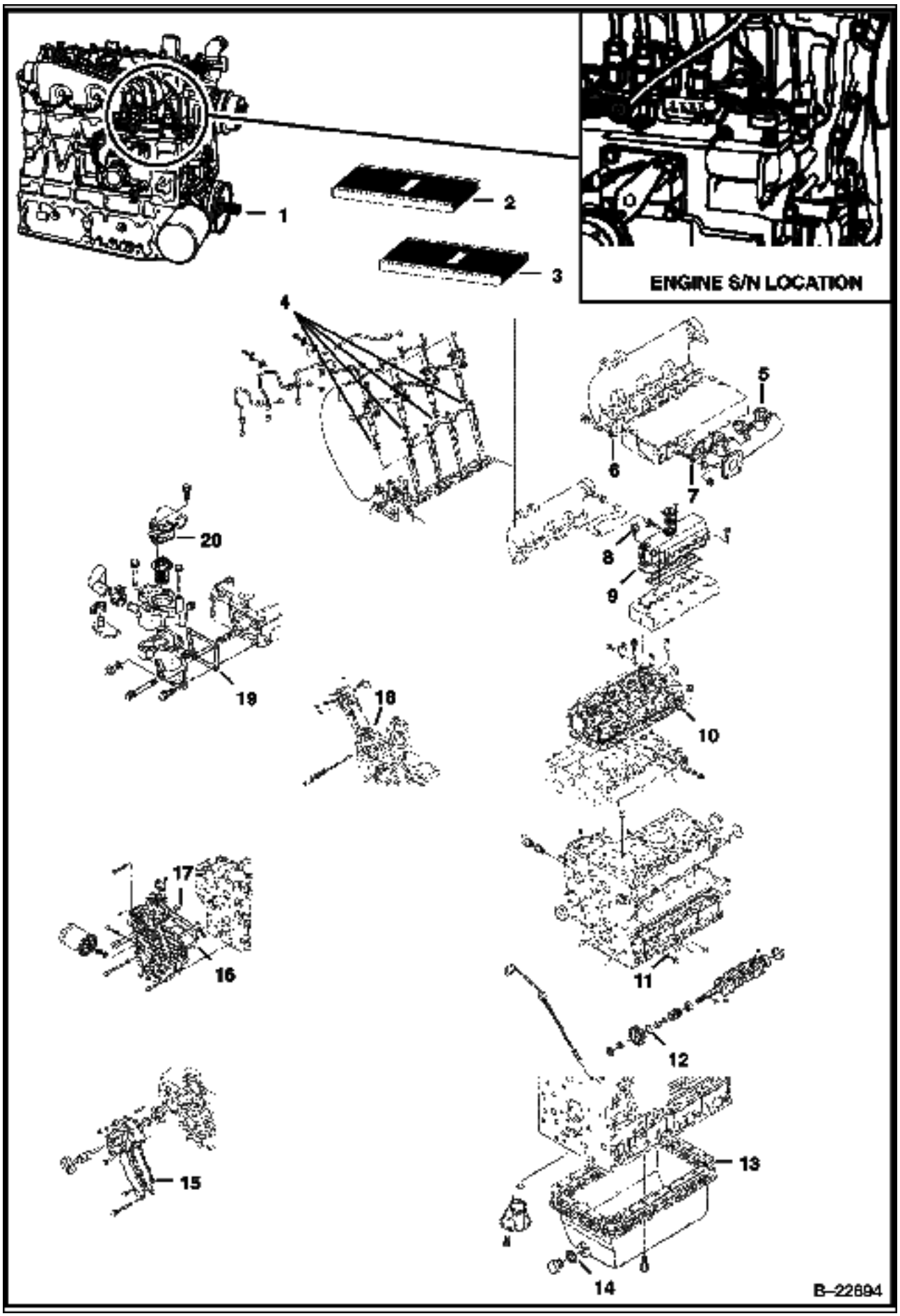

ENGINE & GASKET KITS (Cont'd)
(Kubota - V2203MDI - Tier II)

Ref No	Part Number	Description	Remarks	Serial Number	Qty
1	6683202	ENGINE	Does not include starter, alternator, flywheel, & flywheel housing	5252 11001 & Abv	1
1	6683202	ENGINE	Does not include starter, alternator, flywheel, & flywheel housing	5253 11001 & Abv	1
2	6689012	GASKET KIT	Upper		1
3	6689018	GASKET KIT	Lower		1
4	6670769	O-RING	See Illustration INJECTOR NOZZLES/ B22689		4
5	6666781	GASKET	See Illustration MANIFOLDS/ B22693		1
6	6684877	GASKET	See Illustration MANIFOLDS/ B22693		1
7	6684879	GASKET	See Illustration MANIFOLDS/ B22693		4
8	6684782	O-RING	See Illustration ROCKER ARM COVER/ B22674		1
9	6684780	GASKET	See Illustration ROCKER ARM COVER/ B22674		1
10		GASKET	See Illustration CYLINDER HEAD/ B22678 CYLINDER HEAD		x
11	3974095B	GASKET	See Illustration CRANKCASE/ B22676		7
12	3974577B	O-RING	See Illustration PISTON & CRANKSHAFT/ B22684		1
13	6684753	GASKET	See Illustration OIL PAN/ B22677 OIL PAN		1
14	6631046	SEAL	See Illustration OIL PAN/ B22677		1
15	6684870	GASKET	See Illustration WATER PUMP/ B22691		1
16	6684770	GASKET	See Illustration GEARCASE/ B22675 GEARCASE		1
17	6685468	O-RING	See Illustration GEARCASE/ B22675		1
18	6684824	GASKET	See Illustration SPEED CONTROL PLATE/ B22688 SPEED CONTROL PLATE		1
19	6666802	GASKET	See Illustration WATER FLANGE & THERMOSTAT/ B22690R WATER FLANGE		1
20	6684863	GASKET	See Illustration WATER FLANGE & THERMOSTAT/ B22690R THERMOSTAT COVER		1

GEARCASE
(Kubota - V2203MDI - Tier II)

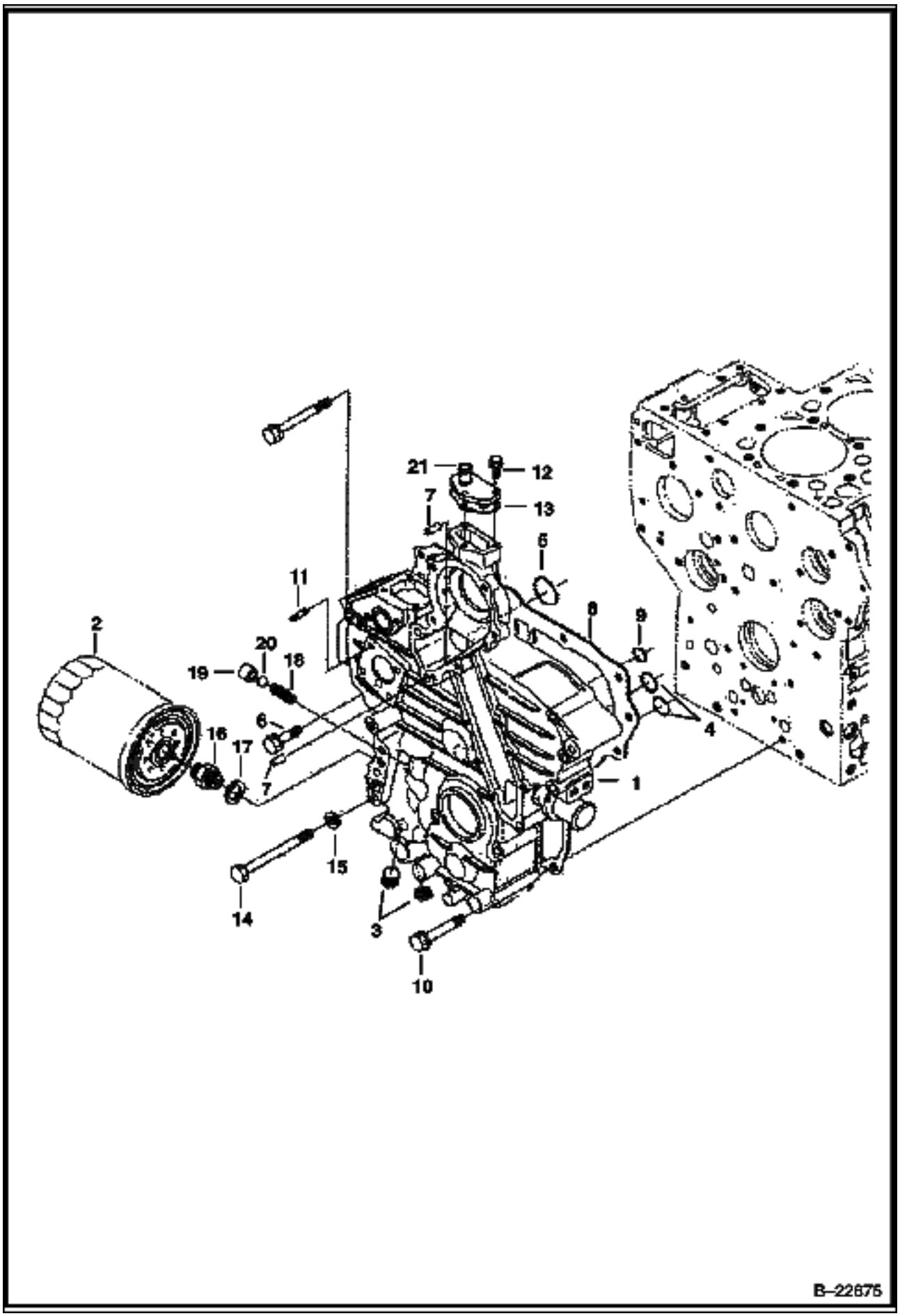

GEARCASE (Cont'd)
(Kubota - V2203MDI - Tier II)

Ref No	Part Number	Description	Remarks	Serial Number	Qty
1	6685523	HOUSING	assy. - W/Ref. 3 - 6 & 9		1
2	6675517	FILTER			1
3	6672360	PLUG	pin		2
4	6685467	O-RING			2
5	6685468	O-RING			1
6	1CM00835B	BOLT			1
7	3974395B	PIN	straight		2
8	6684770	GASKET	gearcase		1
9	6685466	O-RING			1
10	1CM00870B	BOLT			7
11	6652764	STUD			4
12	4CM00620B	BOLT			3
13	6684774	GASKET	water return flange		1
14	6684772	BOLT			2
15	6667422	WASHER			9
16	6653809	ADAPTER			1
17	6685501	WASHER			1
18	6652652	SPRING			1
19	3974893B	SEAT	valve		1
20	10J000013B	BALL			1
21	3974894B	FLANGE	water return		1

CRANKCASE
(Kubota - V2203MDI - Tier II)

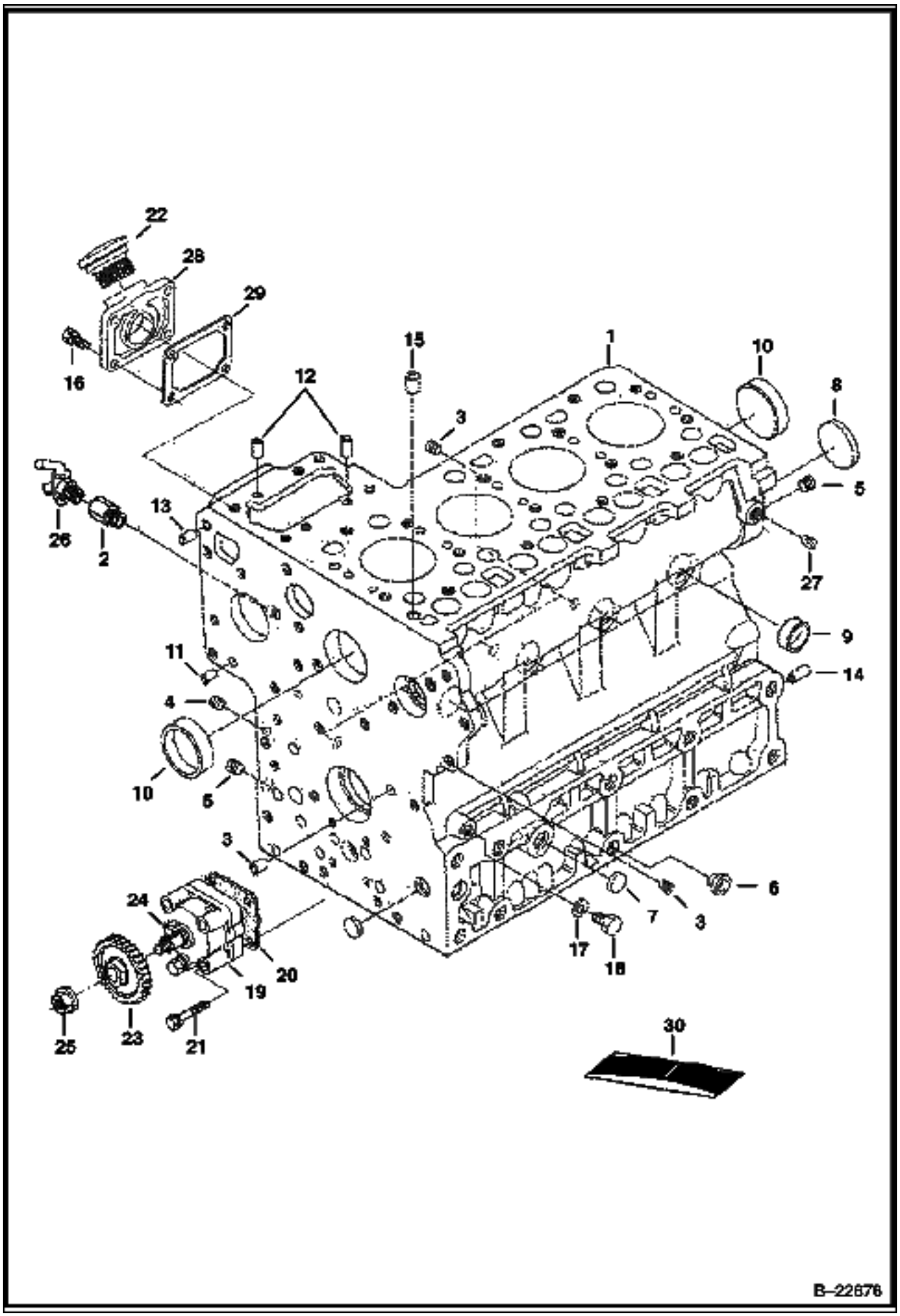

CRANKCASE (Cont'd)
(Kubota - V2203MDI - Tier II)

Ref No	Part Number	Description	Remarks	Serial Number	Qty
1	6685522	CRANKCASE	assy. - W/Ref. 2 - 15		1
2	3974871B	ADAPTER			1
3	6652574	PLUG			6
4	6685477	PLUG			12
5	6652575	PLUG			2
6	6598187	PLUG			2
7	6667418	PLUG	expansion		3
8	6657663	PLUG	expansion		1
9	3974389B	GASKET	sealing		6
10	6680639	PLUG	sealing		2
11	3974393B	PIN	straight		2
12	3974394B	PIN	straight		3
13	3974395B	PIN	straight		2
14	3974868B	PIN	straight		1
15	3974037B	PIN	pipe		1
16	6652580	BOLT			4
17	3974095B	GASKET			1
18	6655884	PLUG			1
19	3975426B	OIL PUMP			1
20	6666782	GASKET			1
21	6655195	BOLT			4
22	6685472	CAP	oil fill		1
23	3975441B	GEAR			1
24	15JM00410B	KEY			1
25	6653888	NUT			1
26	6672190	DRAINCOCK			1
27	16F000002B	PLUG			1
28	6685478	FLANGE	oil fill		1
29	6684752	GASKET			1
30		GASKET KIT	See Illustration ENGINE & GASKET KITS/ B22694 LOWER - DOES NOT INCLUDE REAR OIL SEAL		1

ROCKER ARM COVER
(Kubota - V2203MDI - Tier II)

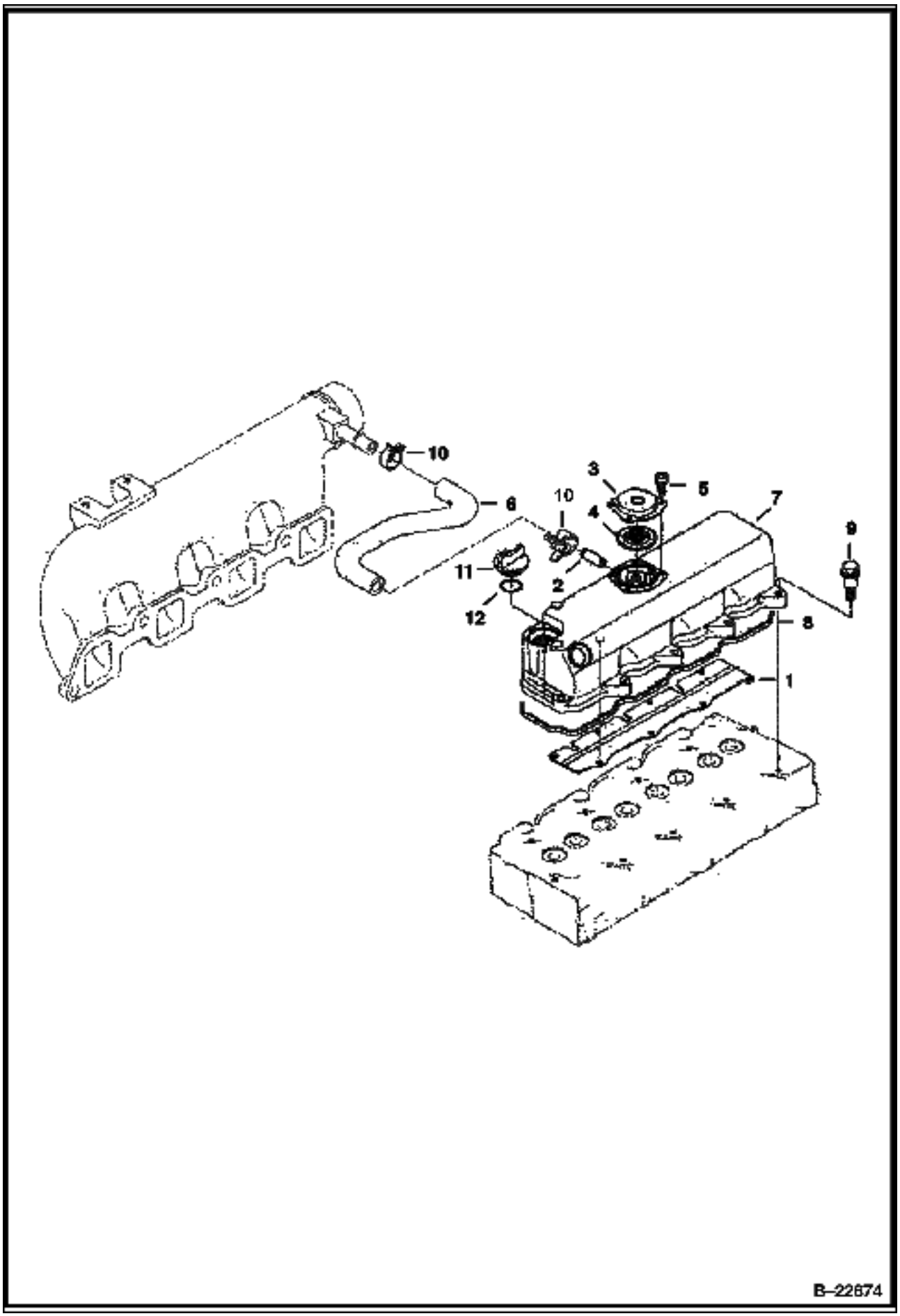

ROCKER ARM COVER (Cont'd)
(Kubota - V2203MDI - Tier II)

Ref No	Part Number	Description	Remarks	Serial Number	Qty
1	6684779	SHIELD	breather		1
2	6655880	PIPE			1
3	6685086	COVER			1
4	6685087	VALVE			1
5	3974928B	SCREW	W/Washer		4
6	6685524	PIPE	breather		1
7	6685085	COVER	valve		1
8	6684780	GASKET			1
9	6684781	BOLT			10
10	3974679B	BAND	pipe		2
11	6652653	PLUG	oil filler		1
12	6684782	O-RING			1

VALVE ROCKER ARM
(Kubota - V2203MDI - Tier II)

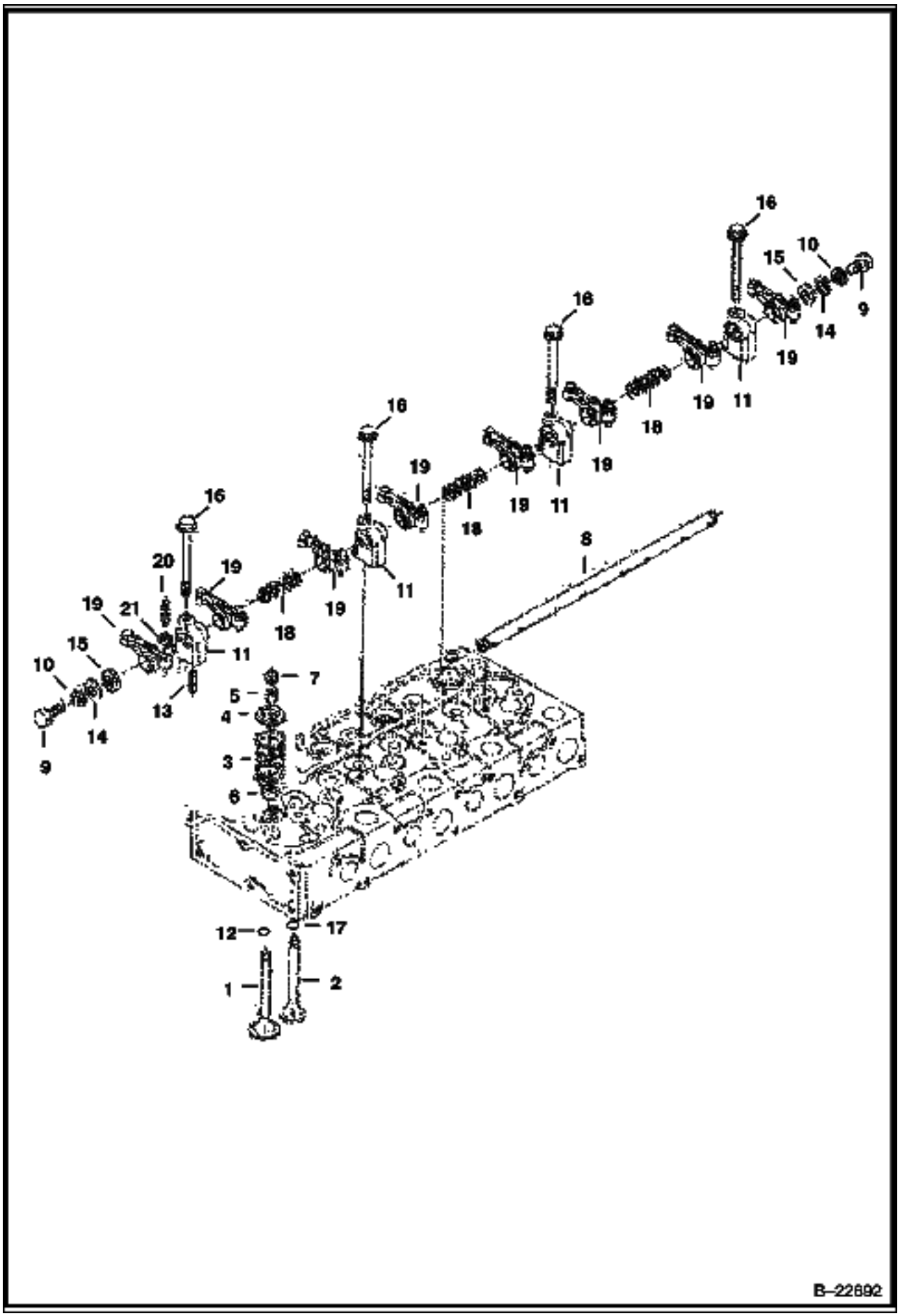

VALVE ROCKER ARM (Cont'd)
(Kubota - V2203MDI - Tier II)

Ref No	Part Number	Description	Remarks	Serial Number	Qty
1	6684872	VALVE	inlet		4
2	6684873	VALVE	exhaust		4
3	3974514B	SPRING	valve		8
4	3974515B	RETAINER	valve spring		8
5	6684874	COLLAR	valve spring - complete set		1
6	6653830	SEAL	valve stem		8
7	3974518B	CAP	valve		8
8	6684875	SHAFT	rocker arm		1
9	5CM00812B	BOLT			2
10	6667422	WASHER	external		2
11	3974521B	BRACKET	rocker arm		4
12	6655155	SEAT	valve inlet		4
13	6667461	PIN	spring		4
14	6667451	WASHER	spring		4
15	3974524B	WASHER			2
16	6680685	BOLT			1
17	6655156	SEAT	valve exhaust		4
18	6653833	SPRING	rocker arm		3
19	6655870	ROCKER ARM	rocker - W/Ref. 20 & 21		8
20	3974920B	SCREW	adjusting		8
21	2DM00008B	NUT			8

CYLINDER HEAD
(Kubota - V2203MDI - Tier II)

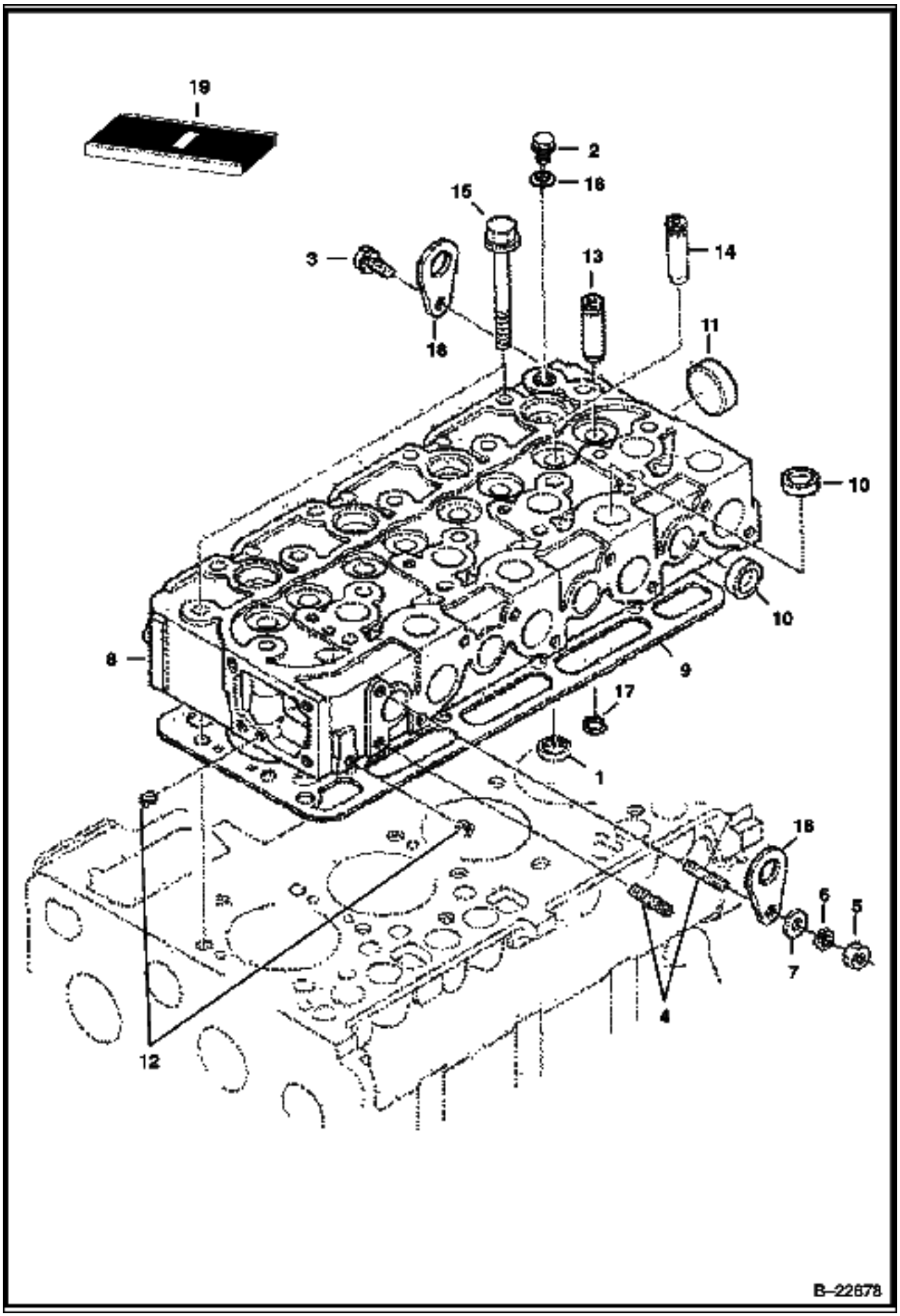

CYLINDER HEAD (Cont'd)
(Kubota - V2203MDI - Tier II)

Ref No	Part Number	Description	Remarks	Serial Number	Qty
1	6684762	SEAT	inlet valve		4
2	6655160	PLUG			1
3	6667421	BOLT			1
4	6598156	STUD			2
5	6652792	NUT			2
6	6667422	WASHER	spring		2
7	2EM00008B	WASHER	plain		2
8	6685503	CYLINDER	cylinder - W/Ref. 10 - 14		1
9	6685078	GASKET	cylinder head - 15		1
9	6685077	GASKET	cylinder head - 20		1
9	6685079	GASKET	cylinder head - 25		1
9	6685080	GASKET	cylinder head - 30		1
9	6685081	GASKET	cylinder head - 35		1
10	3974432B	CAP	sealing		12
11	3974433B	CAP	sealing		1
12	6598116	PLUG			2
13	6655154	GUIDE	intake valve		4
14	6684756	GUIDE	exhaust valve		4
15	6655158	BOLT			18
16	6655161	WASHER			1
17	6684763	SEAT	exhaust valve		4
18	3974882B	BRACKET			1
19		GASKET KIT	See Illustration ENGINE & GASKET KITS/ B22694 UPPER		1

OIL PAN
(Kubota - V2203MDI - Tier II)

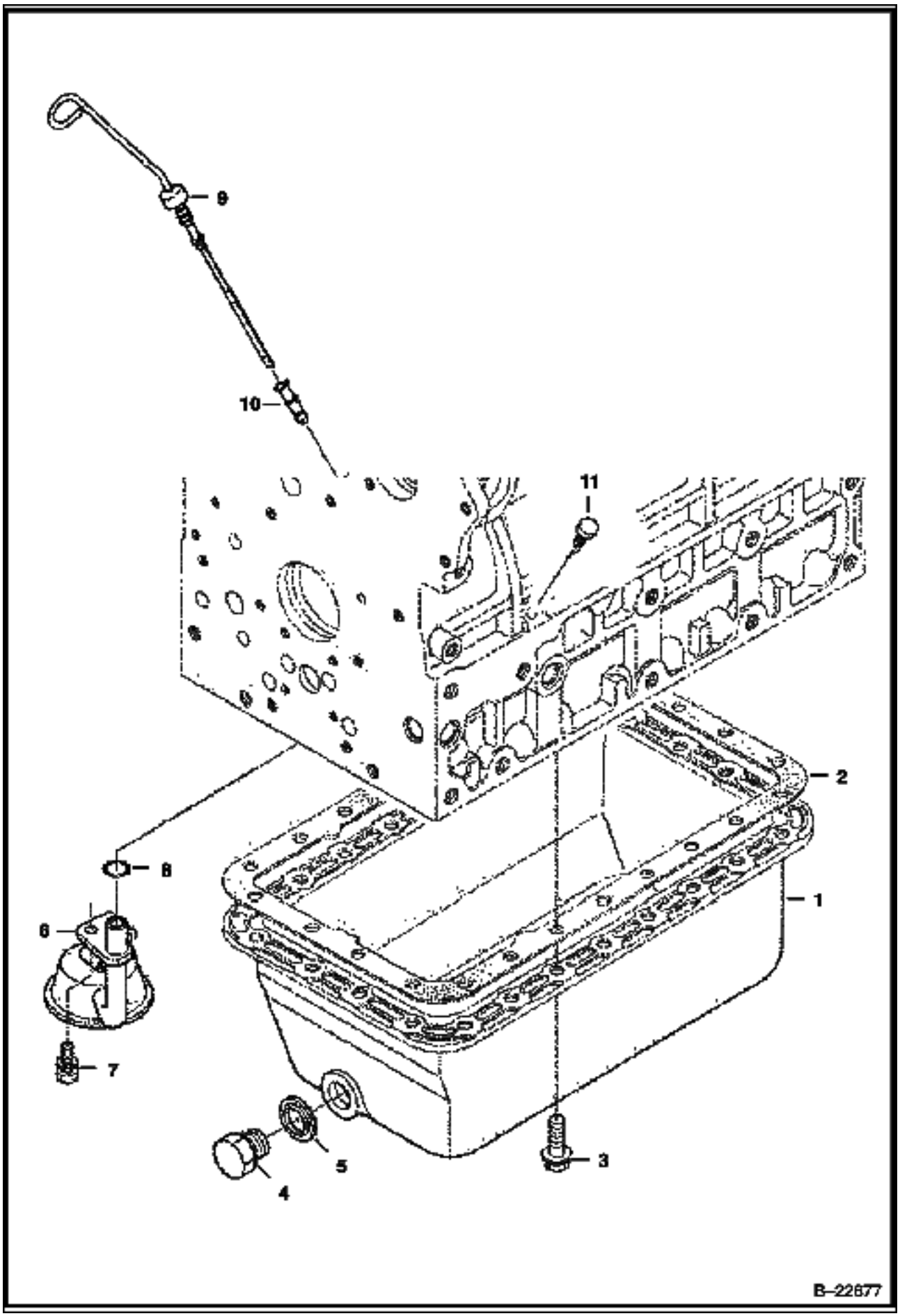

OIL PAN (Cont'd)
(Kubota - V2203MDI - Tier II)

Ref No	Part Number	Description	Remarks	Serial Number	Qty
1	6685518	OIL PAN			1
2	6684753	GASKET	oil pan		1
3	6653798	BOLT			24
4	6680567	GASKET	drain		1
5	6631046	SEAL			1
6	6682500	FILTER			1
7	6667420	BOLT			1
8	6684754	O-RING			1
9	6685499	DIPSTICK	oil		1
10	6677203	GUIDE			1
11	6684785	PLUG			1

PISTON & CRANKSHAFT
(Kubota - V2203MDI - Tier II)

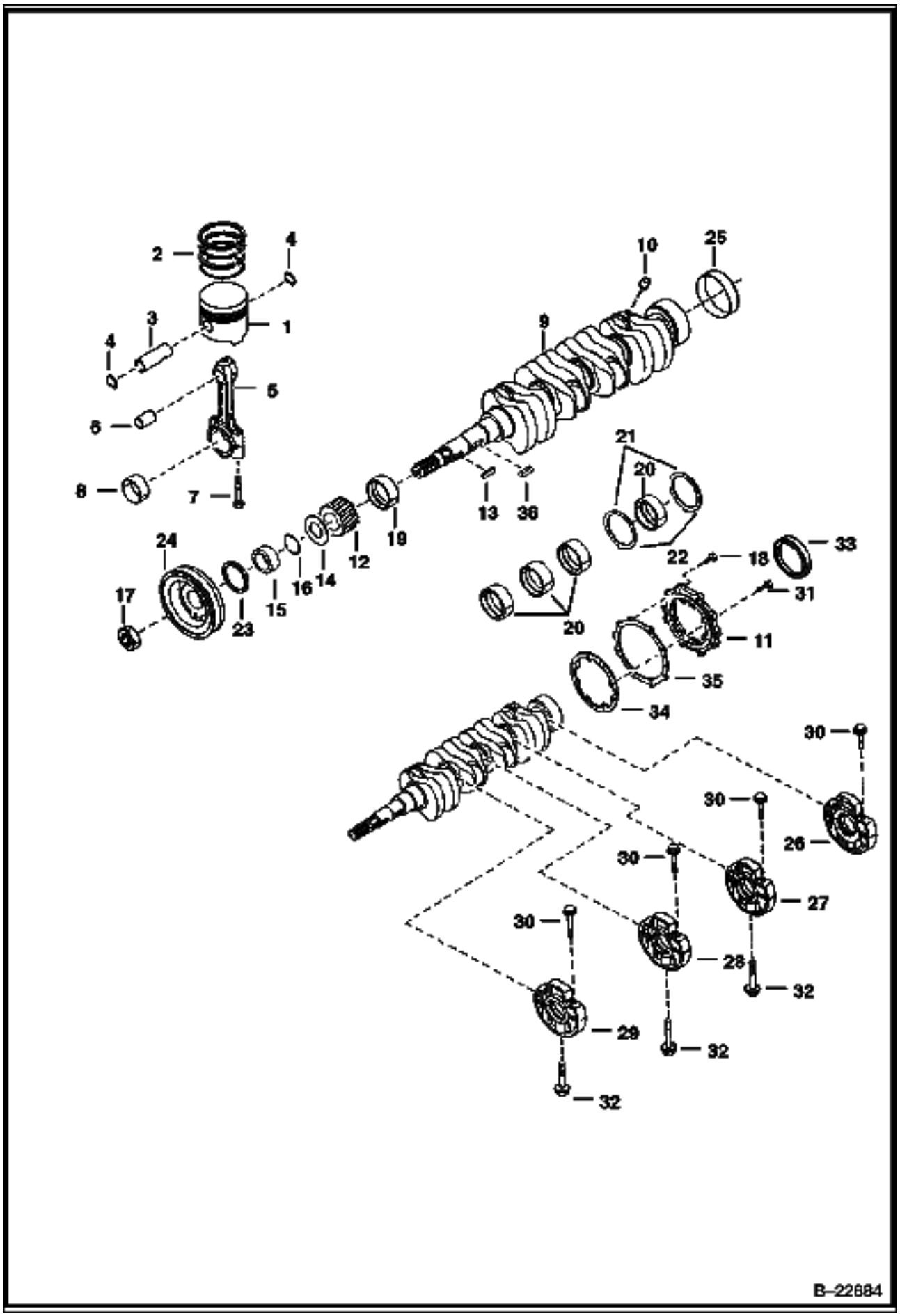

PISTON & CRANKSHAFT (Cont'd)
(Kubota - V2203MDI - Tier II)

Ref No	Part Number	Description	Remarks	Serial Number	Qty
1		PISTON	NAP - Std. (00) (1G796-21120) - Was 6685506 [A]		4
1	6685509	PISTON	+.25 (00) (1G796-21910)		4
1		PISTON	NAP - Std. (05) (1G796-21110) - Was 6685505 [A]		4
1	6685508	PISTON	+.25 (05) (1G796-21900)		4
1	6685507	PISTON	Std. (10) (1G796-21130)		4
1	6685510	PISTON	+.25 (10) (1G796-21920)		4
2	6685095	RING	piston - Std.		4
2	6685096	RING	piston - +.25		4
3	6655179	PIN			4
4	6655180	CIR-CLIP			8
5	6655181	ROD	connecting - W/Ref. 6, 7 & 8		4
6	6655243	BUSHING			4
7	6655498	BOLT			8
8	6655183	PIN	rod - Std.		4
8	6655236	PIN	rod (0,2 mm-.0079)		4
8	6655237	PIN	rod (0,4 mm-.0157)		4
9	6688546	CRANKSHAFT	W/Ref. 10 & 25 - Ref. 10 must be installed before using		1
10	6652633	BALL	Must be installed before using Ref. 9 crankshaft - See S/L dated 3 Jan 85		4
11	6685515	COVER			1
12	6685481	GEAR			1
13	3974546B	KEY			2
14	6653861	SLINGER	oil		1
15	3975337B	COLLAR			1
16	3974577B	O-RING			1
17	3974671B	NUT			1
18	4CM00825B	BOLT			8
19	6685486	BEARING	main - Std.		1
19	6685490	BEARING	main (0,2 mm-.0079)		1
19	6685491	BEARING	main (0,4 mm-.0157)		1
20	6685487	BEARING	main - Std.		4
20	6685492	BEARING	main (0,2 mm-.0079)		4
20	6685493	BEARING	main (0,4 mm-.0157)		4
21	6685488	WASHER	thrust - Std.		2
21	6685494	WASHER	thrust (0,2 mm-.0079)		2
21	6685495	WASHER	thrust (0,4 mm-.0157)		2
22	6685489	WASHER	thrust - Std.		2
22	6685496	WASHER	thrust (0,2 mm-.0079)		2
22	6685497	WASHER	thrust (0,4 mm-.0157)		2
23	6631664	SEAL	oil		1
24	6685521	PULLEY			1
25	6653859	SLEEVE			1
26	6685480	CASE	main bearing - W/Ref. 30		1
27	6685485	CASE	main bearing - W/Ref. 30		1
28	6685484	CASE	main bearing - W/Ref. 30		1
29	6685483	CASE	main bearing - W/Ref. 30		1
30	6685482	BOLT			8
31	4CM00828B	BOLT			8
32	6653821	BOLT			3
33	6684789	SEAL	oil		1
34	6684788	GASKET			1
35	6666814	GASKET			1
36	6685469	KEY			1

FUEL CAMSHAFT
(Kubota - V2203MDI - Tier II)

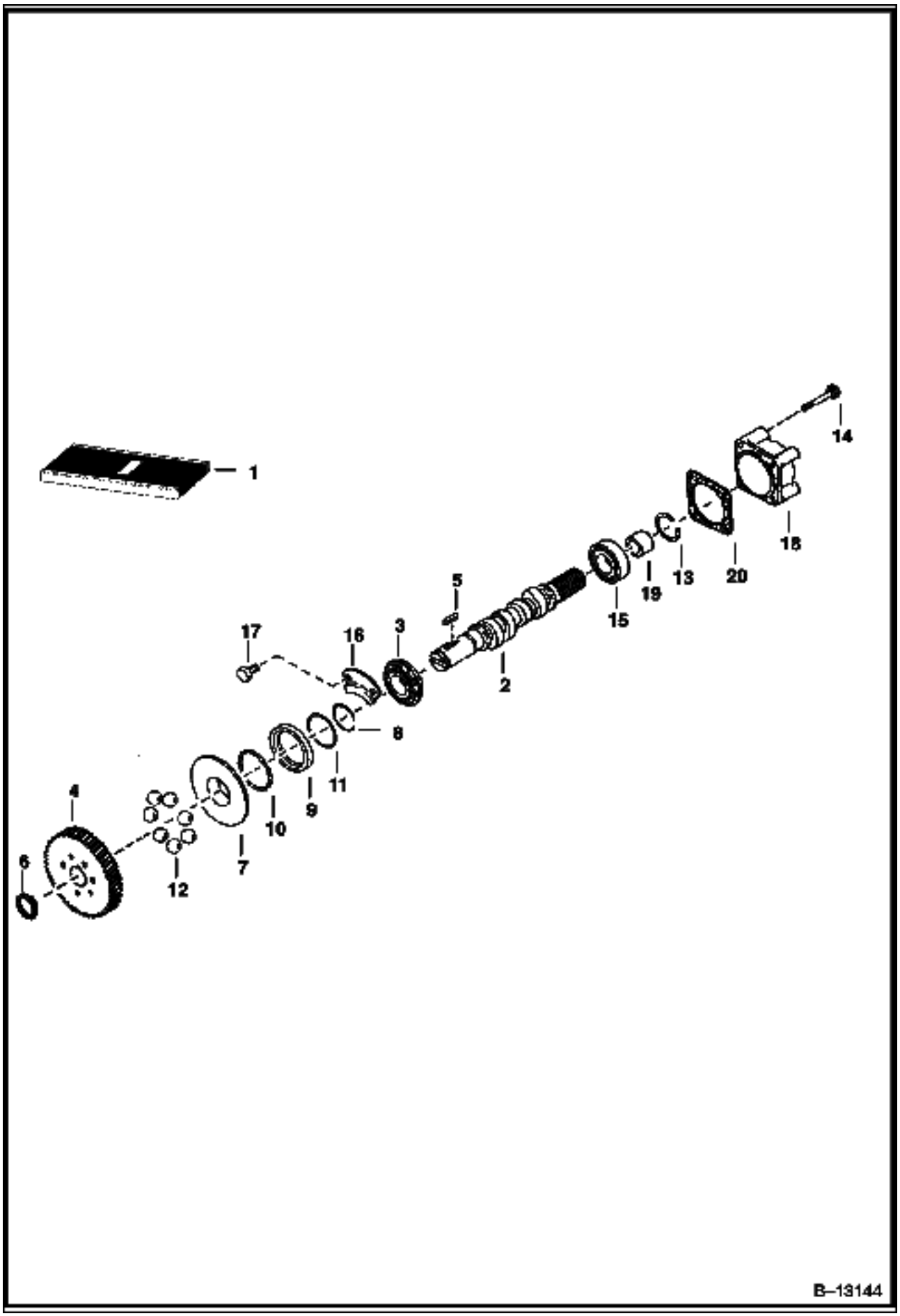

FUEL CAMSHAFT (Cont'd)
(Kubota - V2203MDI - Tier II)

Ref No	Part Number	Description	Remarks	Serial Number	Qty
1	6685504	CAMSHAFT	assy. - Ref. 2-14		1
2		CAMSHAFT	NAP - fuel		1
3	851242B	BEARING			1
4	6655212	GEAR	injection pump		1
5	6598099	KEY			1
6	5JM00024B	CIRCLIP	external		1
7	6655213	SLEEVE	governor		1
8	3974618B	CIRCLIP	sleeve		1
9	6655214	CASE	governor ball		1
10	10J000005B	BALL			39
11	3974620B	CIRCLIP	ball case		1
12	6655215	BALL			7
13	6598158	CIRCLIP	governor ball		1
14	6651934	BOLT			7
15	6685479	BEARING			1
16	6685517	STOPPER			1
17	6667420	BOLT			2
18	3974996B	COVER	fuel camshaft		1
19	6685516	COLLAR			1
20	6684813	GASKET			1

CAMSHAFT
(Kubota - V2203MDI - Tier II)

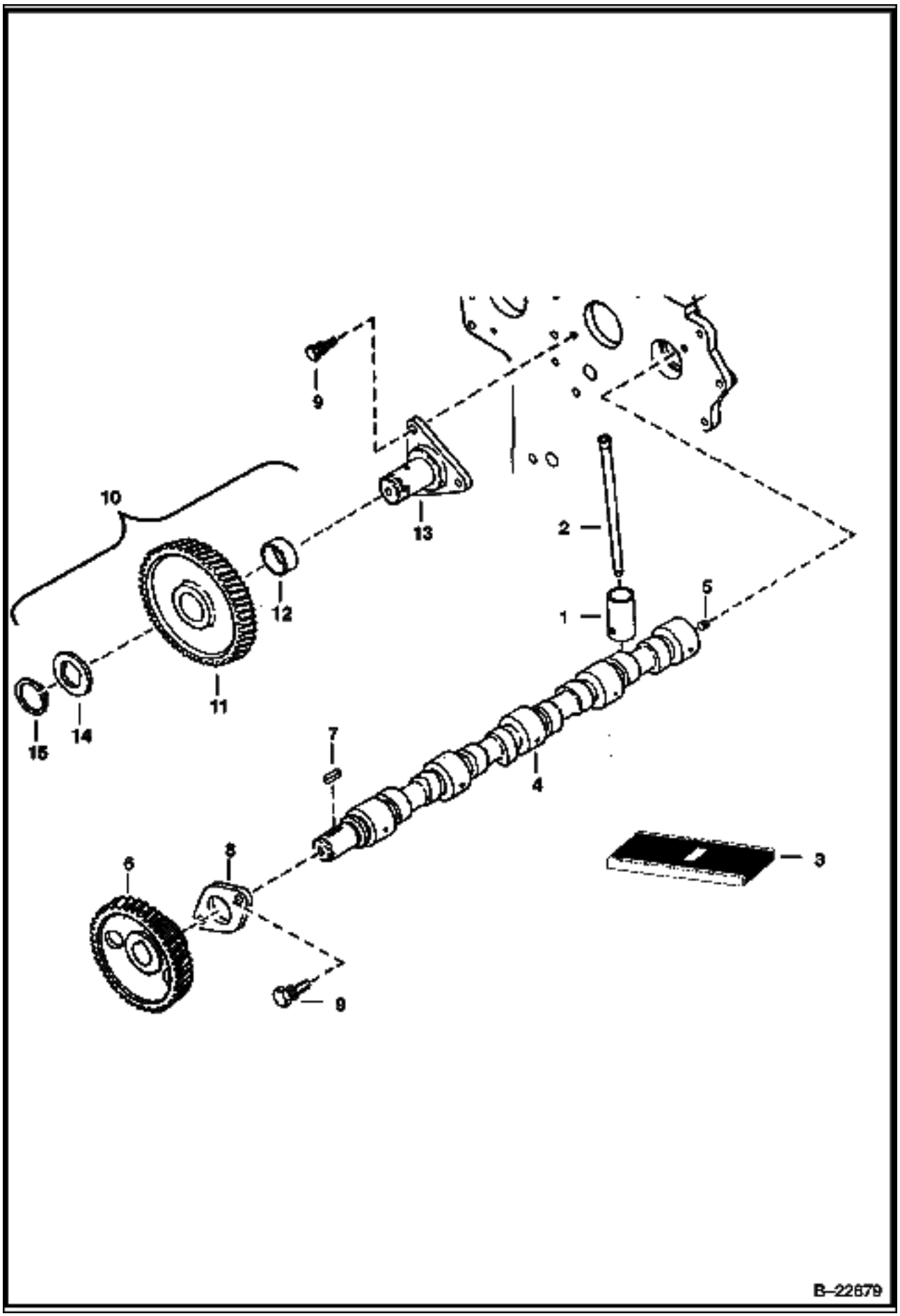

Ref No	Part Number	Description	Remarks	Serial Number	Qty
1	6667428	TAPPET			8
2	6655176	PUSHROD			8
3	6684791	CAMSHAFT	assy. - Ref. 4-8		1
4	6655384	CAMSHAFT			1
5	6652633	BALL	seat		1
6	6684792	GEAR	camshaft		1
7	3974546B	KEY			1
8	3974547B	STOPPER	camshaft		1
9	4CM00818B	BOLT			5
10	6684793	GEAR	idle - W/Ref. 11 & 12		1
11		GEAR	NSS - idle - Order Ref. 10		2
12	6684794	BUSHING	idle gear		1
13	6685519	SHAFT	idle gear		1
14	6684795	COLLAR			1
15	6667433	CIRCLIP	external		1

WATER PUMP
(Kubota - V2203MDI - Tier II)

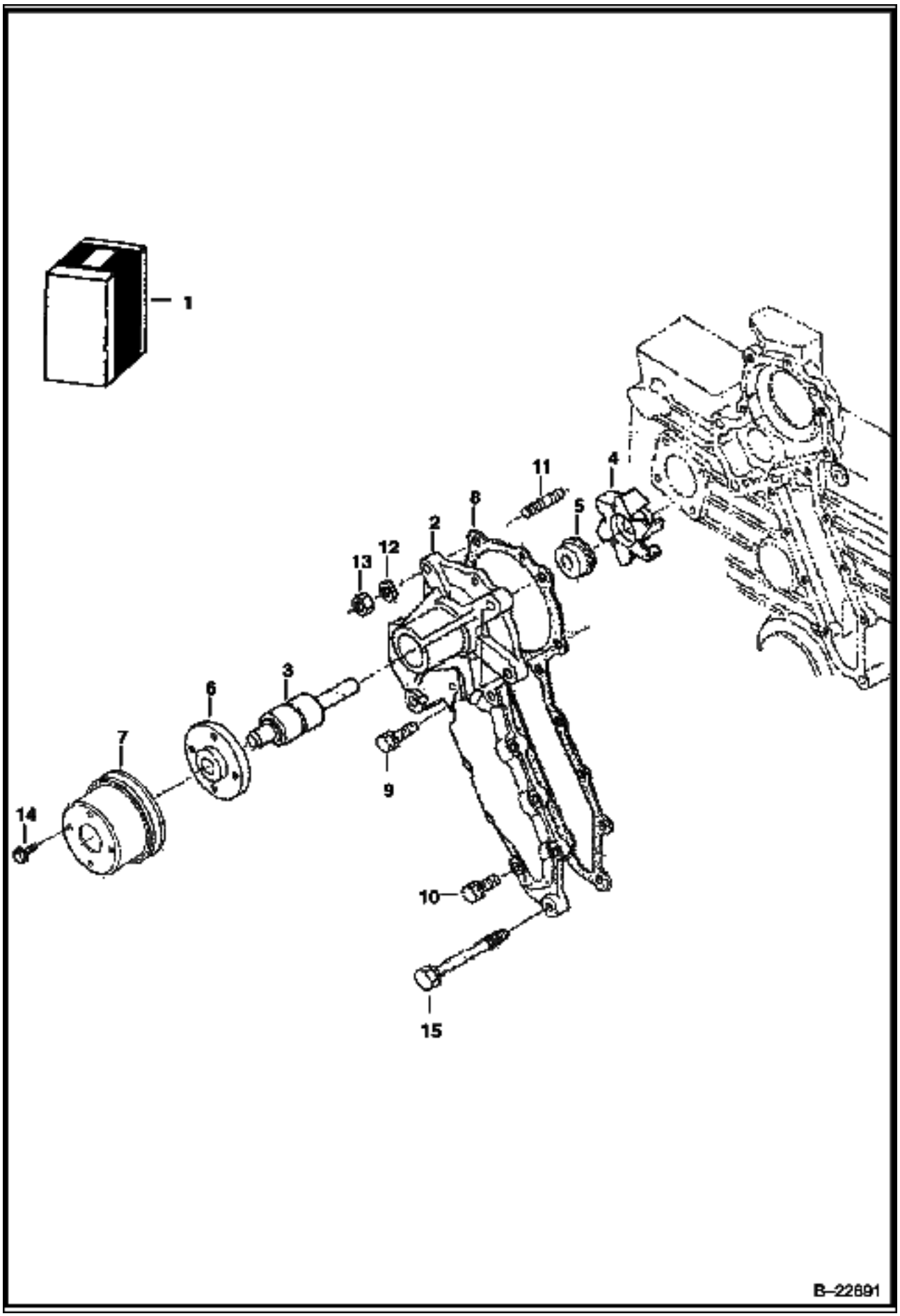

WATER PUMP (Cont'd)
(Kubota - V2203MDI - Tier II)

Ref No	Part Number	Description	Remarks	Serial Number	Qty
1	6685105	PUMP	Ref. 2-6		1
2	6685106	HOUSING			1
3	6685474	BEARING			1
4	6684867	FAN			1
5	6684868	SEAL			1
6	6684869	FLANGE			1
7	6674169	PULLEY	fan		1
8	6684870	GASKET			1
9	4CM00828B	BOLT			2
10	6652580	BOLT			6
11	6653946	STUD			2
12	6667422	WASHER	spring		2
13	6652792	NUT			2
14	6652762	BOLT			4
15	6653808	BOLT			4

WATER FLANGE & THERMOSTAT
(Kubota - V2203MDI - Tier II)

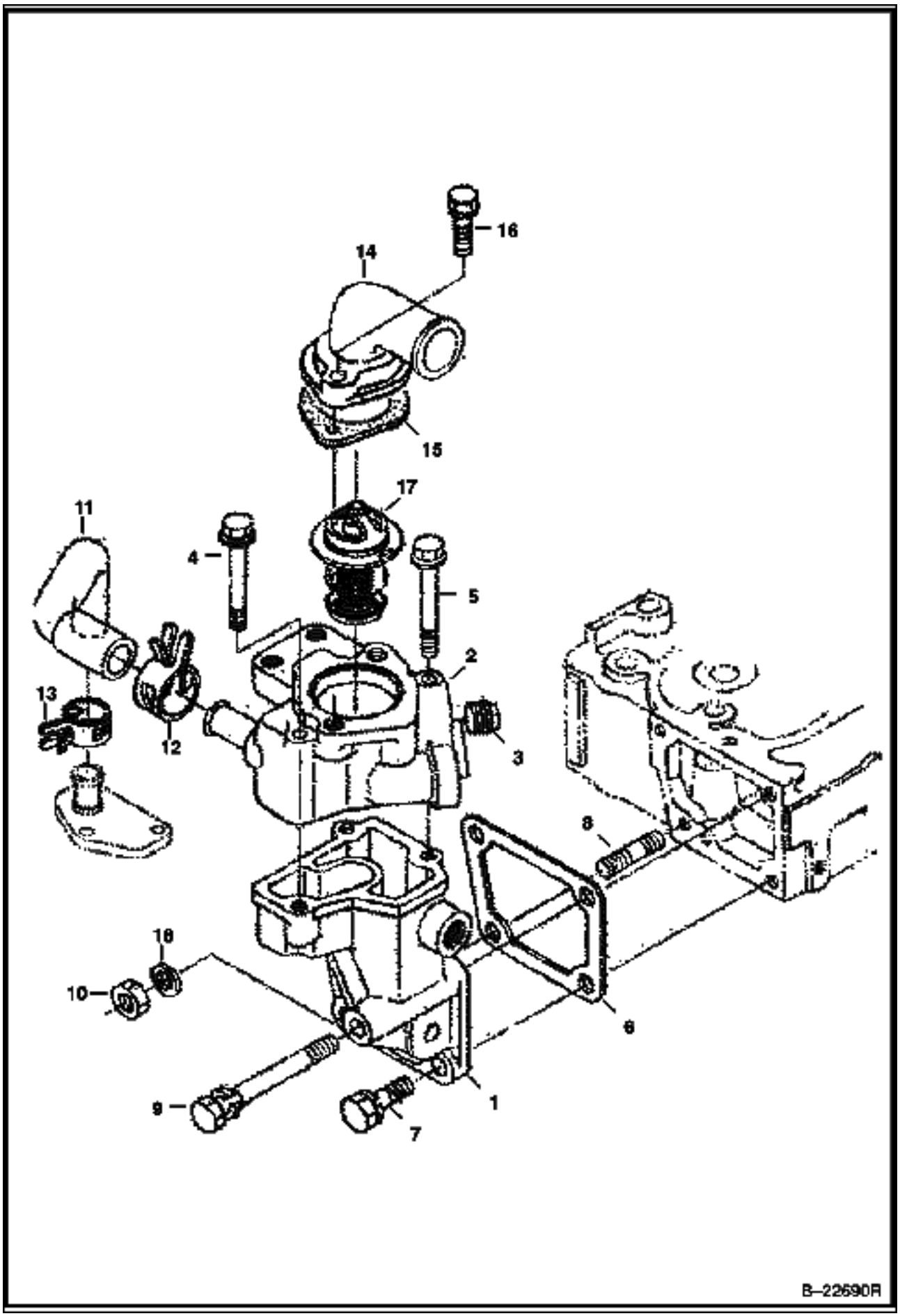

WATER FLANGE & THERMOSTAT (Cont'd)
(Kubota - V2203MDI - Tier II)

Ref No	Part Number	Description	Remarks	Serial Number	Qty
1	6684855	FLANGE			1
2	6684856	FLANGE			1
3	6684857	PLUG			2
4	6683159	BOLT			2
5	6685104	BOLT			1
6	6666802	GASKET			1
7	6657415	BOLT			2
8	6652670	STUD			1
9	1CM00875B	BOLT			1
10	6652792	NUT			1
11	6684862	PIPE			1
12	6675618	CLAMP			1
13	6684889	CLAMP			1
14	6651489	COVER			1
15	6684863	GASKET			1
16	1CM00835B	BOLT			2
17	6685520	THERMOSTAT			1
18	6667422	WASHER	spring		1

MANIFOLDS
(Kubota - V2203MDI - Tier II)

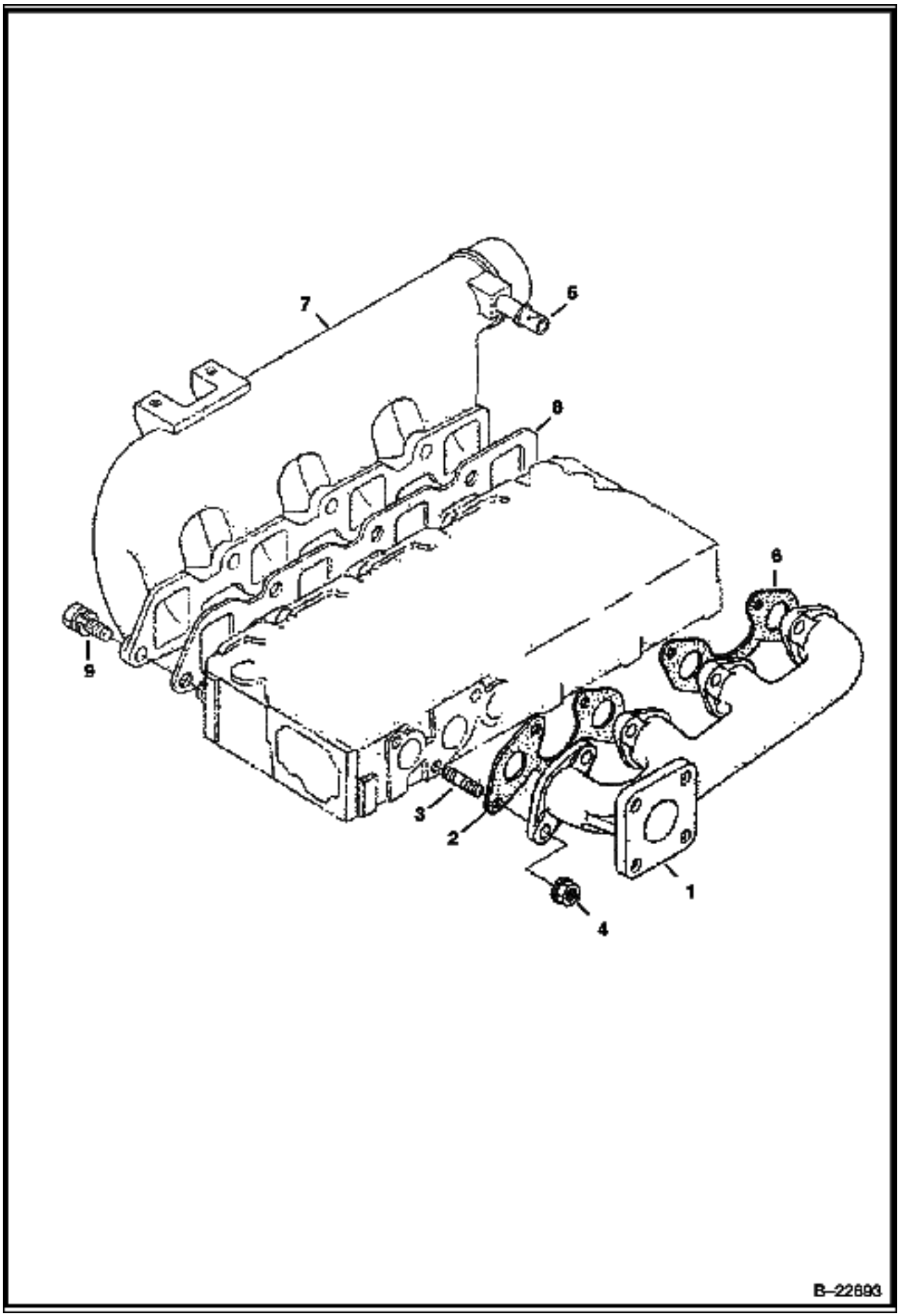

MANIFOLDS (Cont'd)
(Kubota - V2203MDI - Tier II)

Ref No	Part Number	Description	Remarks	Serial Number	Qty
1	6685475	MANIFOLD	exhaust		1
2	6684879	GASKET			1
3	6652670	STUD			8
4	6682532	NUT			8
5	6655880	PIPE			1
6	6666781	GASKET			1
7	6685525	MANIFOLD	intake - W/Ref. 5		1
8	6684877	GASKET			1
9	4CM00822B	BOLT			7

ENGINE STOP LEVER
(Kubota - V2203MDI - Tier II)

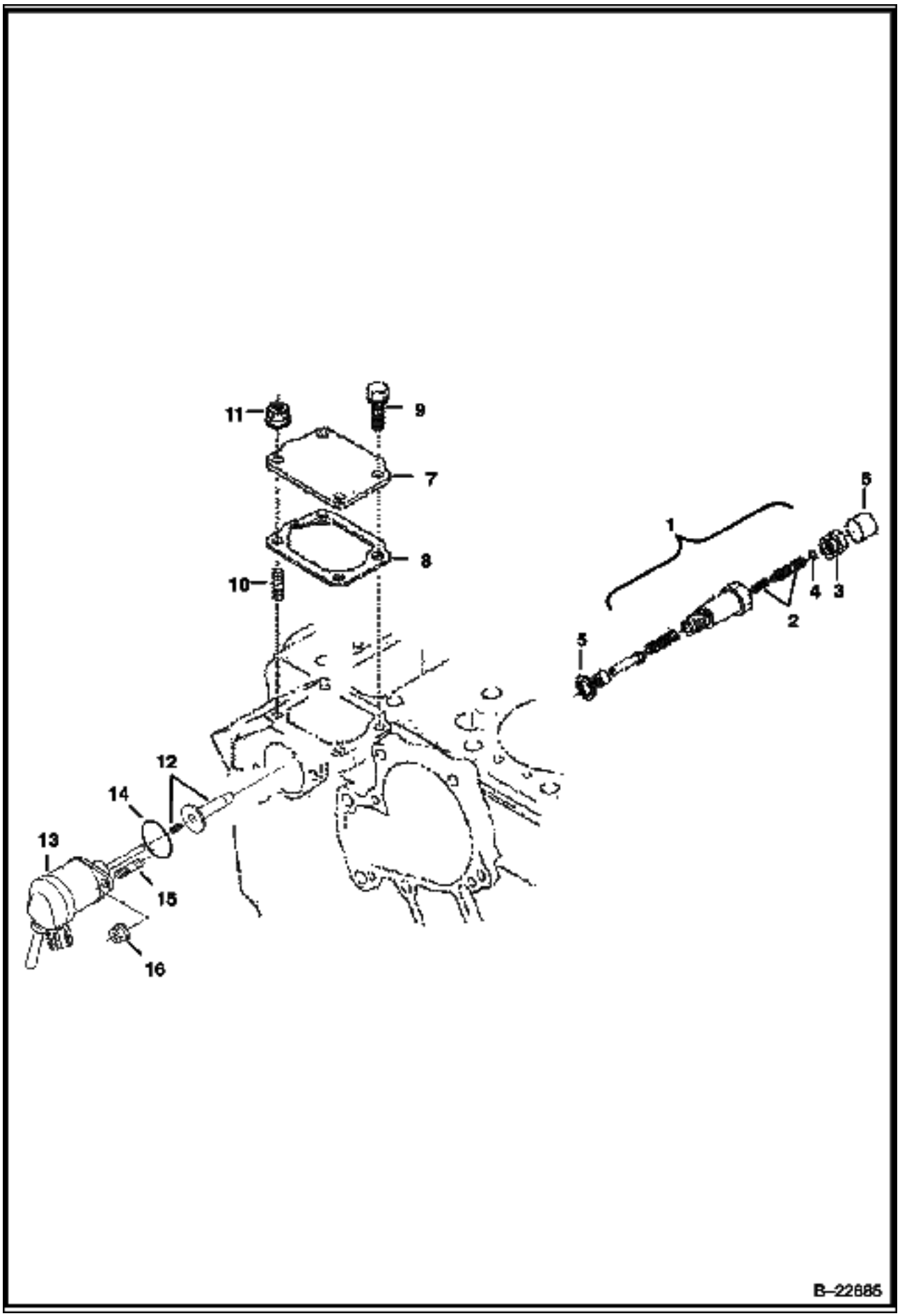

ENGINE STOP LEVER (Cont'd)
(Kubota - V2203MDI - Tier II)

Ref No	Part Number	Description	Remarks	Serial Number	Qty
1	6686334	CAMSHAFT	assy., idle - Ref. 2-6 - Was NAP [D]		1
2	6685513	BOLT	adjusting		1
3	6684817	NUT	adjusting		1
4	6684891	SEAL			1
5	6684818	SEAL			2
6	6684819	CAP			1
7	6685500	COVER			1
8	6684841	GASKET			1
9	4CM00616B	BOLT			2
10	6683087	STUD			2
11	6670533	NUT			2
12	6684825	GUIDE	solenoid		1
13	6684826	SOLENOID			1
14	6685465	O-RING			1
15	6652764	STUD			2
16	6684827	NUT			2

GOVERNOR
(Kubota - V2203MDI - Tier II)

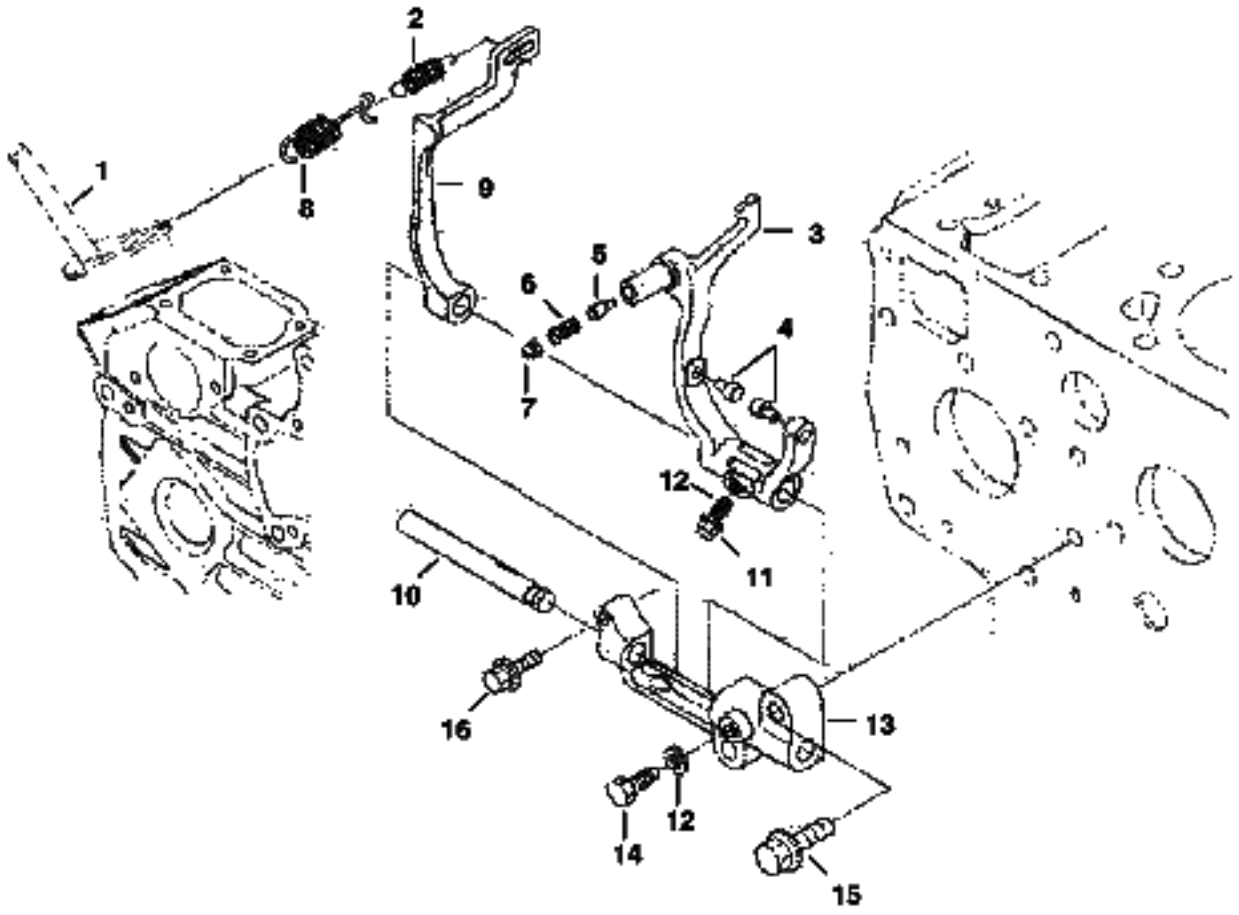

GOVERNOR (Cont'd)
(Kubota - V2203MDI - Tier II)

Ref No	Part Number	Description	Remarks	Serial Number	Qty
1	6684838	LEVER	governor		1
2	6685514	SPRING			1
3	6689100	LEVER	fork - W/Ref. 4-7		1
4		PIN	NSS		2
5		PIN	NSS		1
6		SPRING	NSS		1
7		SCREW	NSS		1
8	6685502	SPRING	governor		1
9	6684832	LEVER			1
10	6684833	SHAFT			1
11	6680830	BOLT			1
12	6667419	WASHER			2
13	6653916	HOLDER			1
14	3974192B	BOLT			1
15	6680706	BOLT			2
16	6685464	BOLT			1

SPEED CONTROL PLATE
(Kubota - V2203MDI - Tier II)

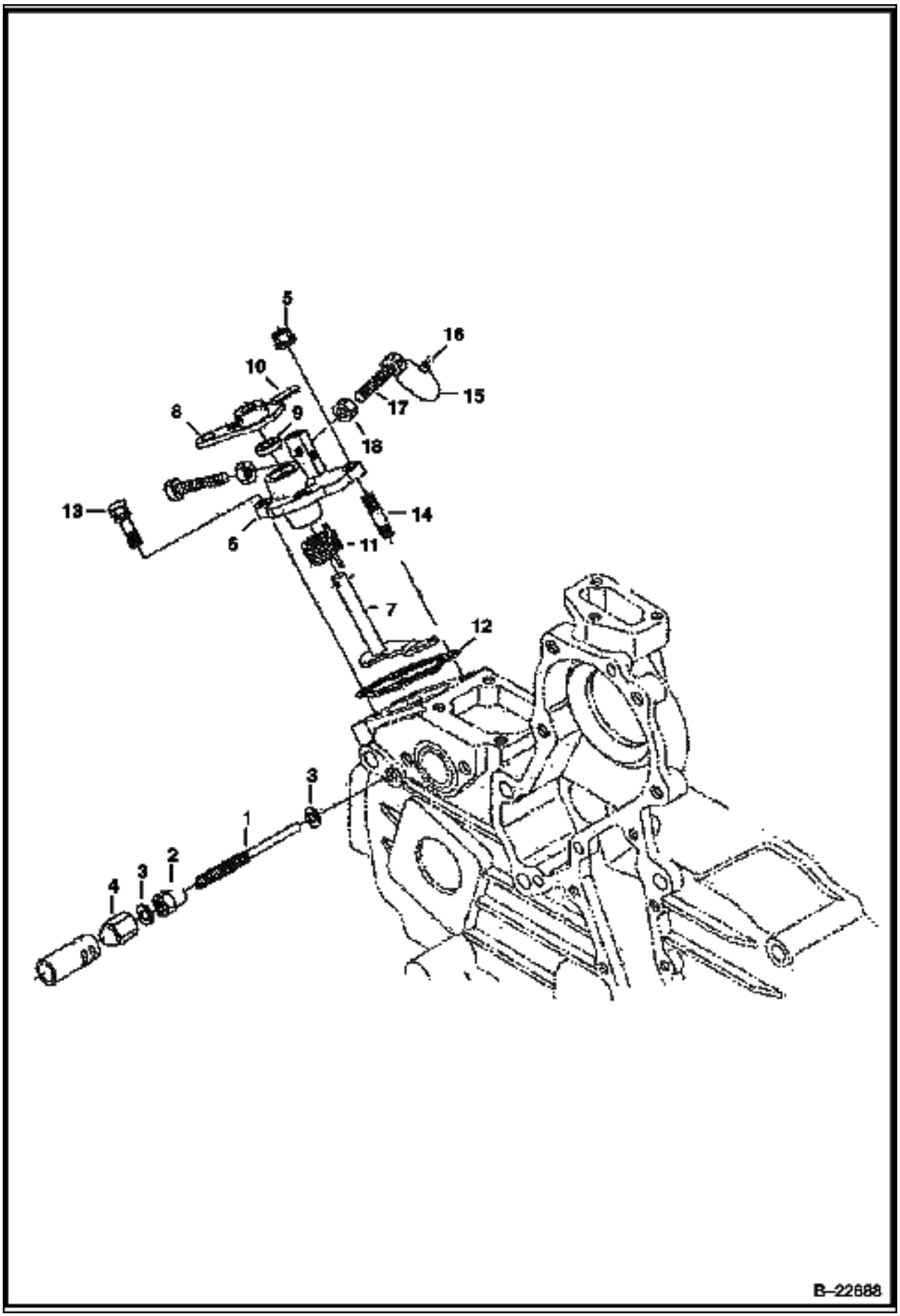

SPEED CONTROL PLATE (Cont'd)
(Kubota - V2203MDI - Tier II)

Ref No	Part Number	Description	Remarks	Serial Number	Qty
1	6684836	BOLT	adjusting - W/Ref. 2		1
2	3974971B	NUT			1
3	3974972B	GASKET			2
4	6655223	NUT	cap		1
5	6670533	NUT			2
6	6685526	PLATE	control assy. - Ref. 7-11, 17 &18		1
7	6684838	LEVER			1
8	6684839	LEVER			1
9	6685476	SEAL			1
10	6598098	PIN	spring		1
11	6684823	SPRING			1
12	6684824	GASKET			1
13	4CM00020B	BOLT			2
14	6652764	STUD			2
15		WIRE	NAP		1
16		LEAD	NAP - sealing		1
17		STOPPER	NAP		2
18		NUT	NAP		2

FUEL & INJECTION PUMP
(Kubota - V2203MDI - Tier II)

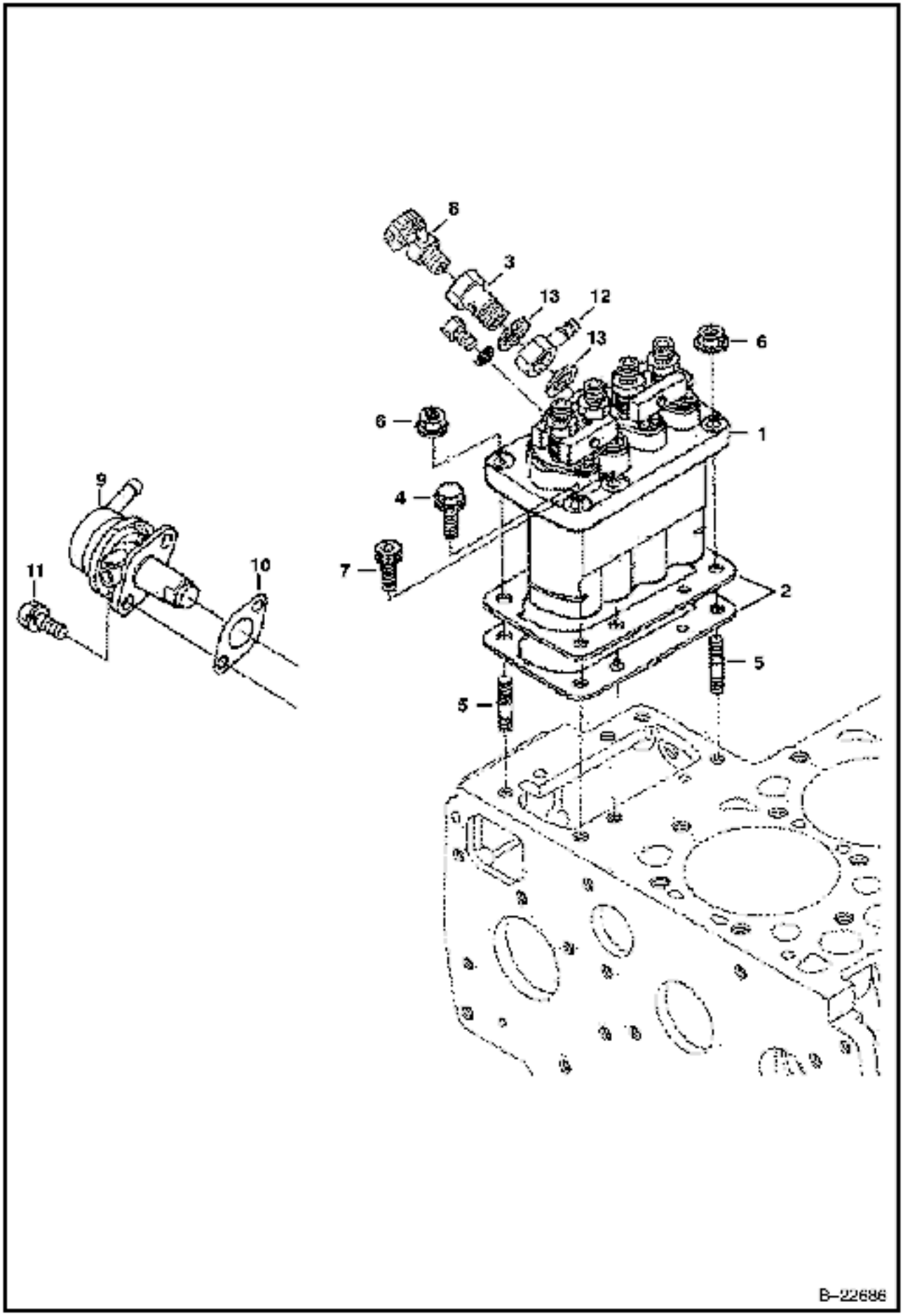

FUEL & INJECTION PUMP (Cont'd)
(Kubota - V2203MDI - Tier II)

Ref No	Part Number	Description	Remarks	Serial Number	Qty
1	6685511	PUMP			1
2	3974626B	SHIM	0.20 mm		2
2	6682515	SHIM	0.25 mm		1
2	6655210	SHIM	0.30 mm		1
2	6684829	SHIM	0.35 mm		1
3	6685473	BOLT			1
4	6680801	BOLT			4
5	6652670	STUD			2
6	6680663	NUT			2
7	6684830	BOLT			1
8	6598102	VALVE	jet start		1
9	6655216	FUEL PUMP			1
10	3974502B	GASKET	fuel pump		1
11	4CM00616B	BOLT			2
12	6513707	JOINT	eye		1
13	6599118	GASKET			2

INJECTOR NOZZLES
(Kubota - V2203MDI - Tier II)

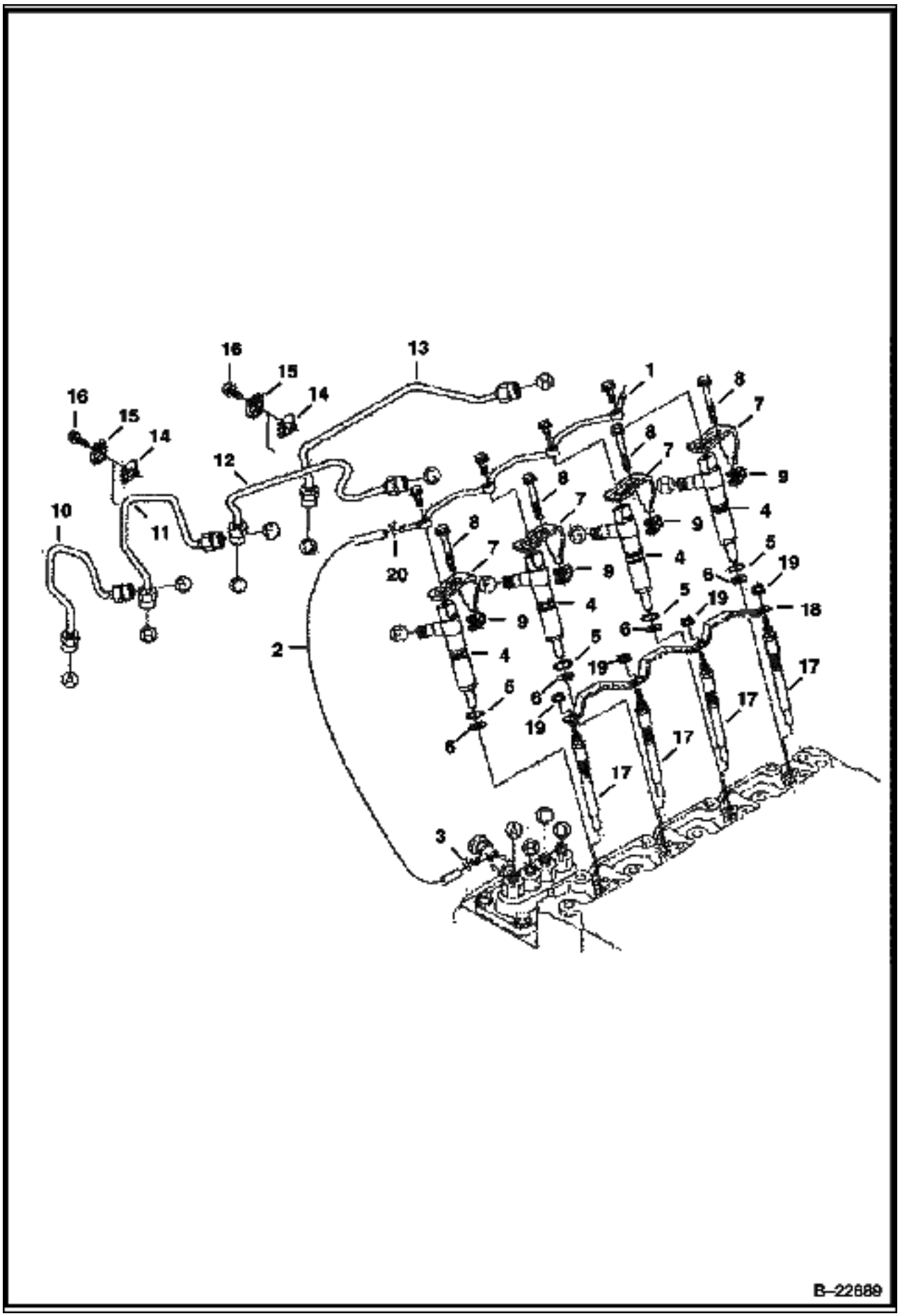

INJECTOR NOZZLES (Cont'd)
(Kubota - V2203MDI - Tier II)

Ref No	Part Number	Description	Remarks	Serial Number	Qty
1	6684842	PIPE	fuel over flow		1
2	6598146	PIPE	fuel over flow (2) - W/Ref. 3 & 20		1
3	6599136	CLIP	pipe		1
4	6685512	HOLDER KIT	NOZZLE-W/REF. 5		4
5	6670769	O-RING			4
6	6680779	GASKET			4
7	6684845	CLAMP			4
8	6684844	BOLT			4
9	6685498	GASKET			4
10	6685102	PIPE	injection (1)		1
11	6685103	PIPE	injection (2)		1
12	6684848	PIPE	injection (3)		1
13	6684849	PIPE	injection (4)		1
14	6652688	CLAMP	pipe (1)		3
15	6652689	CLAMP	pipe (2)		3
16	3974260B	BOLT	with washer		3
17	6684850	GLOW PLUG			4
18	6684851	CORD	glow plug		1
19	6670472	NUT			4
20	6654718	CLAMP	pipe		1

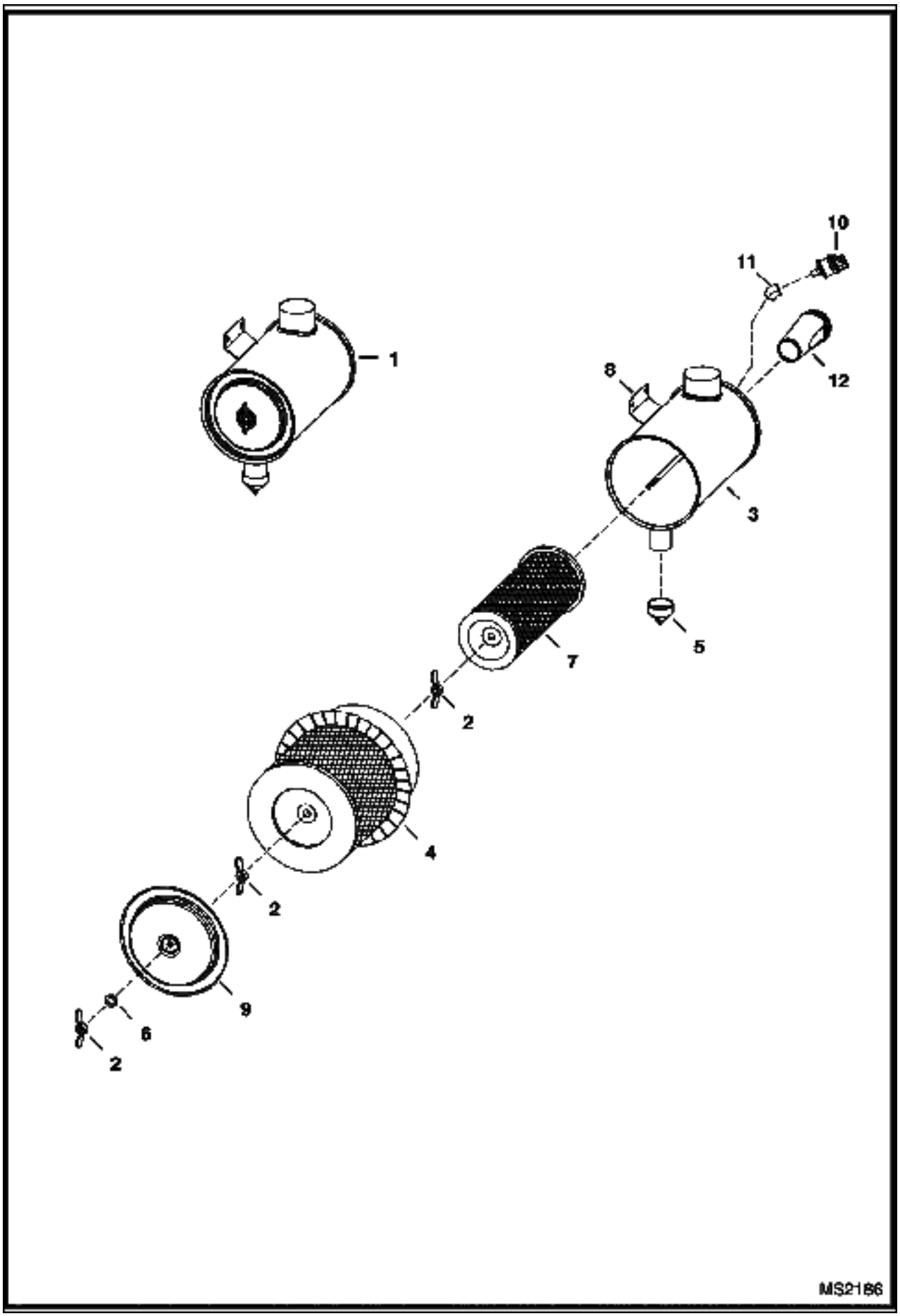
10
11
12
1
8
3
5
7
2
4
2
9
6
2
MS2186

AIR CLEANER (Cont'd)

Ref No	Part Number	Description	Remarks	Serial Number	Qty
1	6700711	AIR CLEANER	W/ 1.5" Evacuator Valve		1
2	6661243	WING NUT			3
3		TANK	NAP		1
4	6598492	ELEMENT	outer		1
5	6655938	VALVE	evacuator - 1.5" (38,1 mm) I.D.		1
6	6661244	WASHER			1
7	6598362	ELEMENT	inner		1
8	866028B	CLAMP			1
9	6661242	COVER			1
10	6665371	SWITCH			1
11	6725502	ELBOW			1
12	7114604	CHOKE	intake - European		1

ACCESS COVER
(Cleanout - Lower Front of Chaincase)

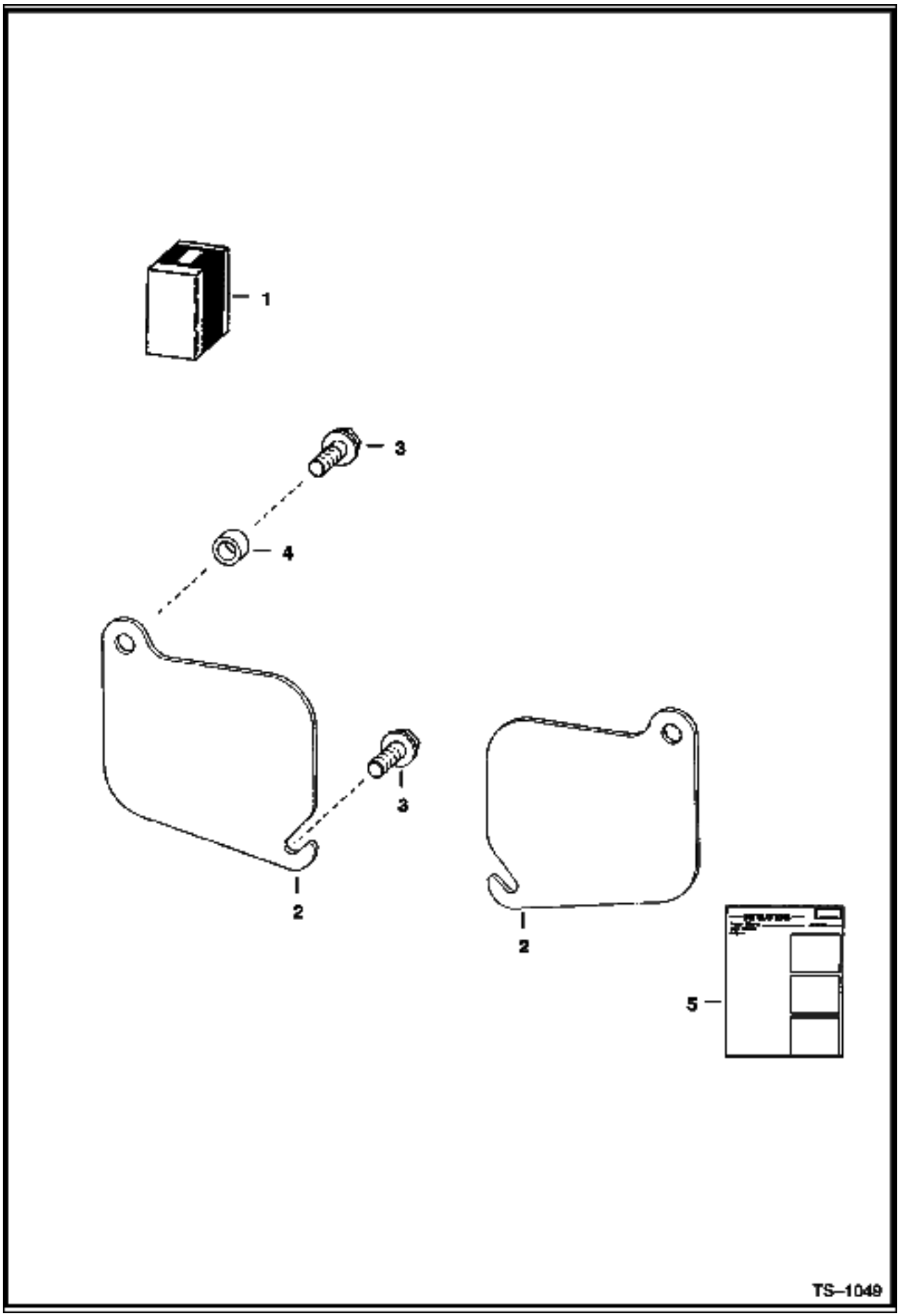

ACCESS COVER (Cont'd)
(Cleanout - Lower Front of Chaincase)

Ref No	Part Number	Description	Remarks	Serial Number	Qty
1	6577880	KIT	Ref. 2-5		1
2		COVER	NAP - Use W/Ref. 4 - Was 6577812 [A]		2
2	6737088	COVER			2
3	84G003720B	BOLT			4
4	6562619	BUSHING	Not in Kit		2
5	6570931	INSTRUCTIONS			1

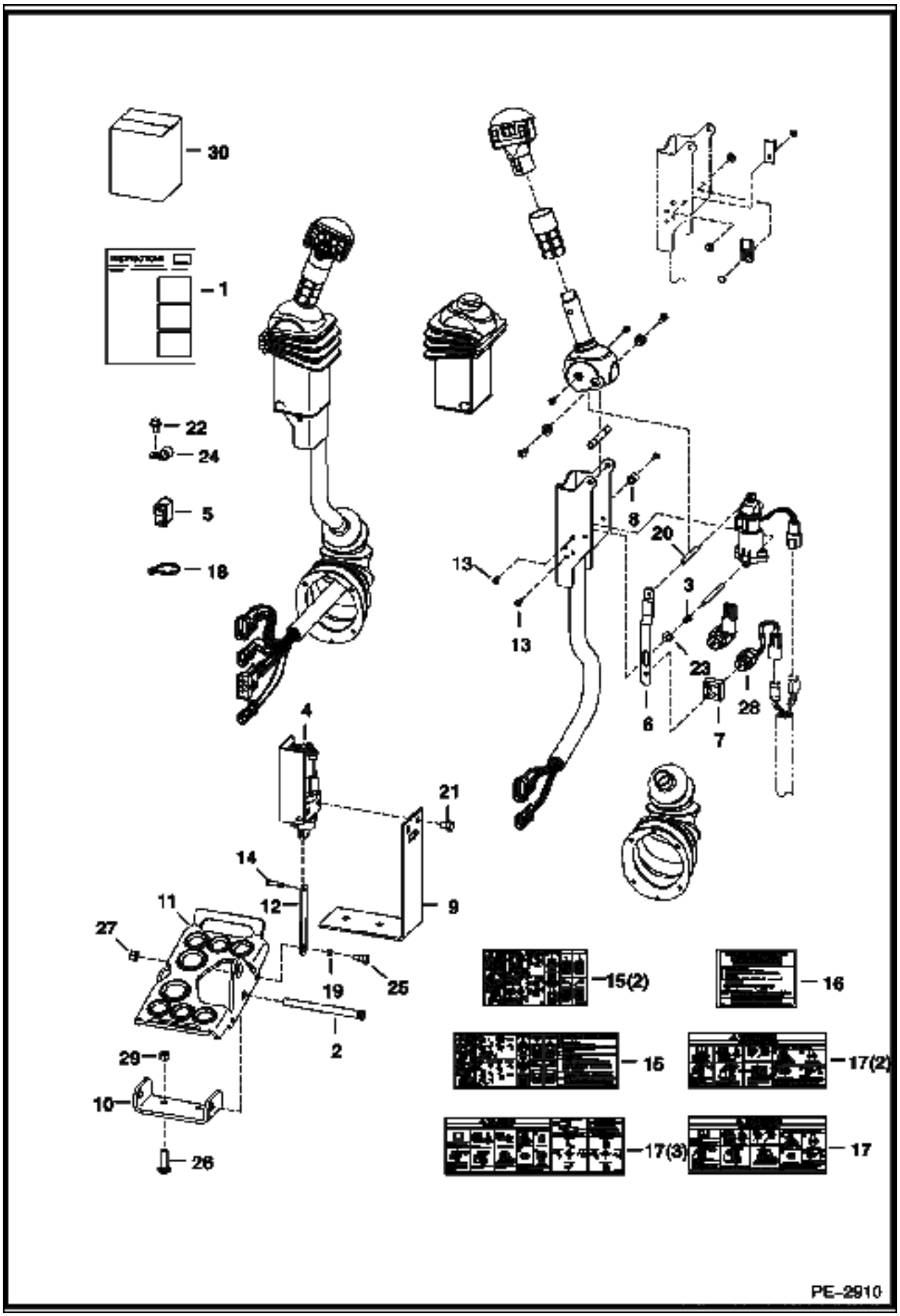
30
1
22
24
5
18
4
21
14
12
11
27
9
25
19
2
29
6
10
26
8
20
13
13
3
23
6
7
28
15(2)
16
15
17(2)
17(3)
17
PE-2910

Ref No	Part Number	Description	Remarks	Serial Number	Qty
1	6731151	KIT	foot control - SEE NOTE - Ref. 2 - 14 & 17 - 29 - If loader is not equipped W/ heater, air conditioning, selectable joystick controls, beacon, power bobtach, non-power port plug-in strobe lights and/or non-power port plug-in 4 way flashers, also order 7116260 deluxe harness		1
2	6564657	PIN			2
3	6680470	SPRING			2
4	6684912	SENSOR	foot pedal - R.H.		1
4	6676029	SOLENOID			1
4	6684911	SENSOR	foot pedal - L.H.		1
4	6676029	SOLENOID			1
5	6676537	SWITCH			2
6	6680477	STRAP			2
7	6680468	MOUNT	solenoid		2
8	6719834	SPACER	threaded		2
9	6726573	BRACKET			2
10	7115220	MOUNT			2
11	7115219	PEDAL			2
12	6726681	LINK			2
13	6727065	BOLT			12
14	6727496	PIN			2
15	6727926	DECAL	operations - models S150, S160, S175, S185, 773G, 863G, 873G, 883 & 963G		1
15	6728045	DECAL	operations - models T190 & T200		1
16	6727941	DECAL	ACS operations		1
17	6728539	DECAL	warning - models S150, S160, S175, S185, 773G, 863G, 873G, 883 & 963G		1
17	6728540	DECAL	warning - models T190 & T200		1
17	6734646	DECAL	Warning - Selectable Joystick Controls		1
18	6624289	STA STRAP			2
19	6729467	SPACER			2
20	6680469	SPACER	threaded		2
21	17C000608B	BOLT			4
22	84G003710B	BOLT			2
23	25E000013B	WASHER			2
24	30H000062B	CLAMP			2
25	17C000514B	BOLT			2
26	37C000620B	BOLT			4
27	95D000005B	NUT			2
28	6676029	SOLENOID			2
29	57D000006B	NUT			4
30	6901492	INSTRUCTIONS			1

AXLE SEAL KIT

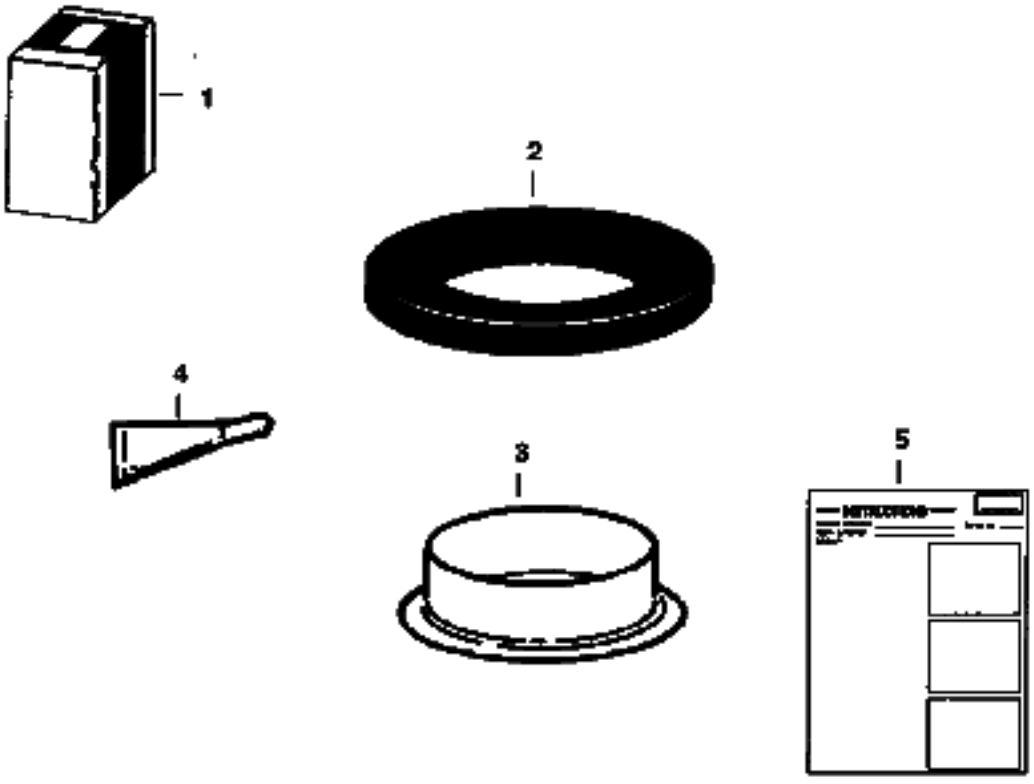

Ref No	Part Number	Description	Remarks	Serial Number	Qty
1	6722907	KIT	Ref. 2 - 5		1
2	6658228	SEAL			1
3	6662306	RING			1
4	6598485	SEALANT			1
5	6722908	INSTRUCTIONS			1

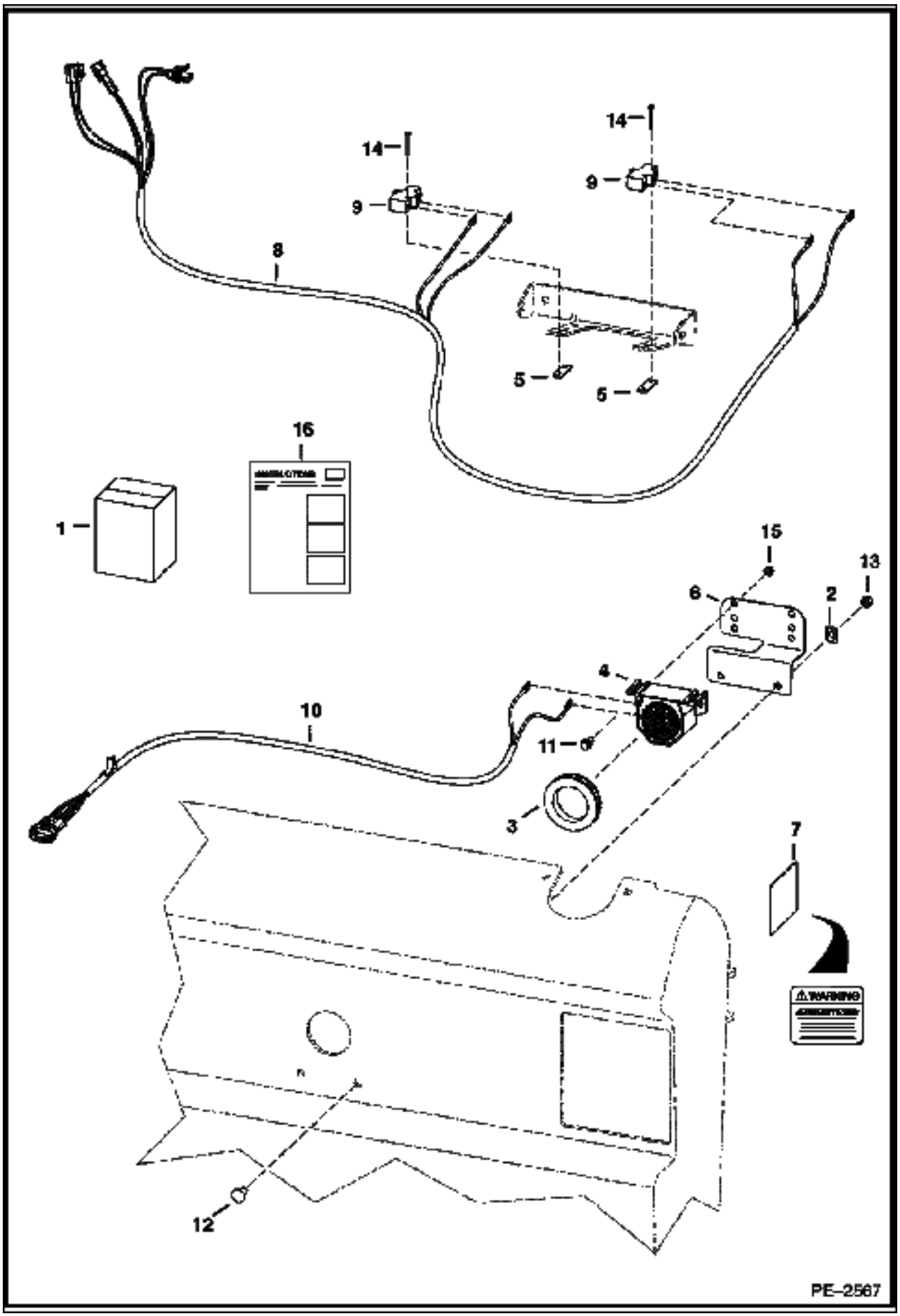
14
14
9
9
8
5
5
16
1
15
13
6
2
4
10
11
3
7
12
PE-2567

BACK-UP ALARM KIT (Cont'd)
Manual Hand Controls

Ref No	Part Number	Description	Remarks	Serial Number	Qty
1	7107829	BACK UP ALARM KIT			1
2	774220	NUT			2
3	6577545	GROMMET			1
4	6599931	ALARM			1
5	6702593	SPACER			2
6	6733970	MOUNT			1
7	6737189	DECAL			1
8	7107544	HARNESS			1
9	6646781	SWITCH			2
10	6715659	HARNESS			1
11	35C000410B	BOLT			2
12	37C000512B	BOLT			2
13	61D000005B	NUT			2
14	84G001320B	BOLT			4
15	97D000004B	NUT			2
16	6903293	INSTRUCTIONS			1

BACK-UP ALARM KIT
(W/Selectable Joystick Controls)

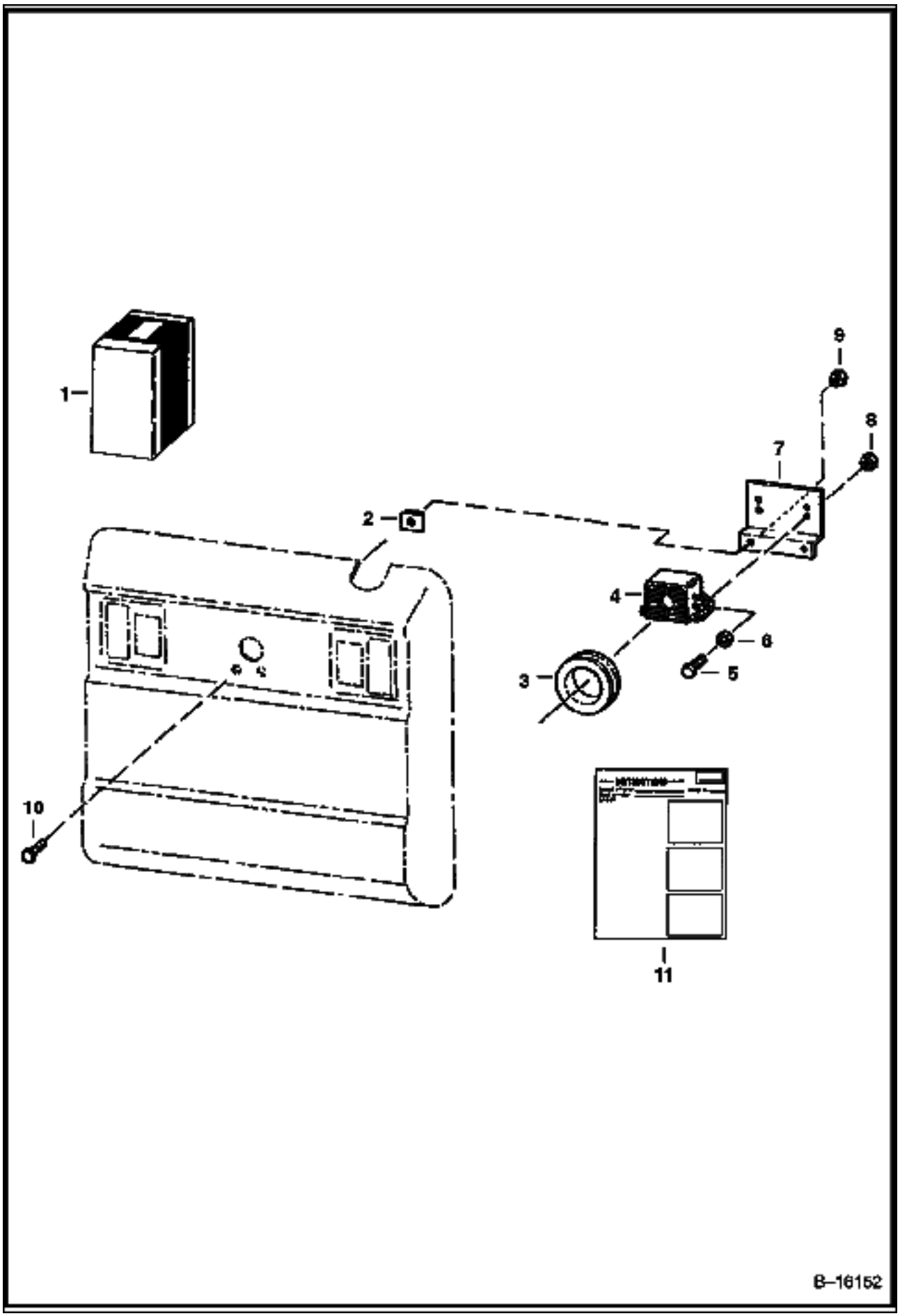

BACK-UP ALARM KIT (Cont'd)
(W/Selectable Joystick Controls)

Ref No	Part Number	Description	Remarks	Serial Number	Qty
1	6732235	KIT	Ref. 2-11		1
2	774220	NUT	spring		2
3	6577545	GROMMET			1
4	6599931	ALARM			1
5	17C000410B	BOLT			2
6	25E000013B	WASHER			2
7	6733970	MOUNT			1
8	83D000004B	NUT			2
9	61D000005B	NUT			2
10	37C000512B	BOLT			2
11	6901690	INSTRUCTIONS			1

BEACON

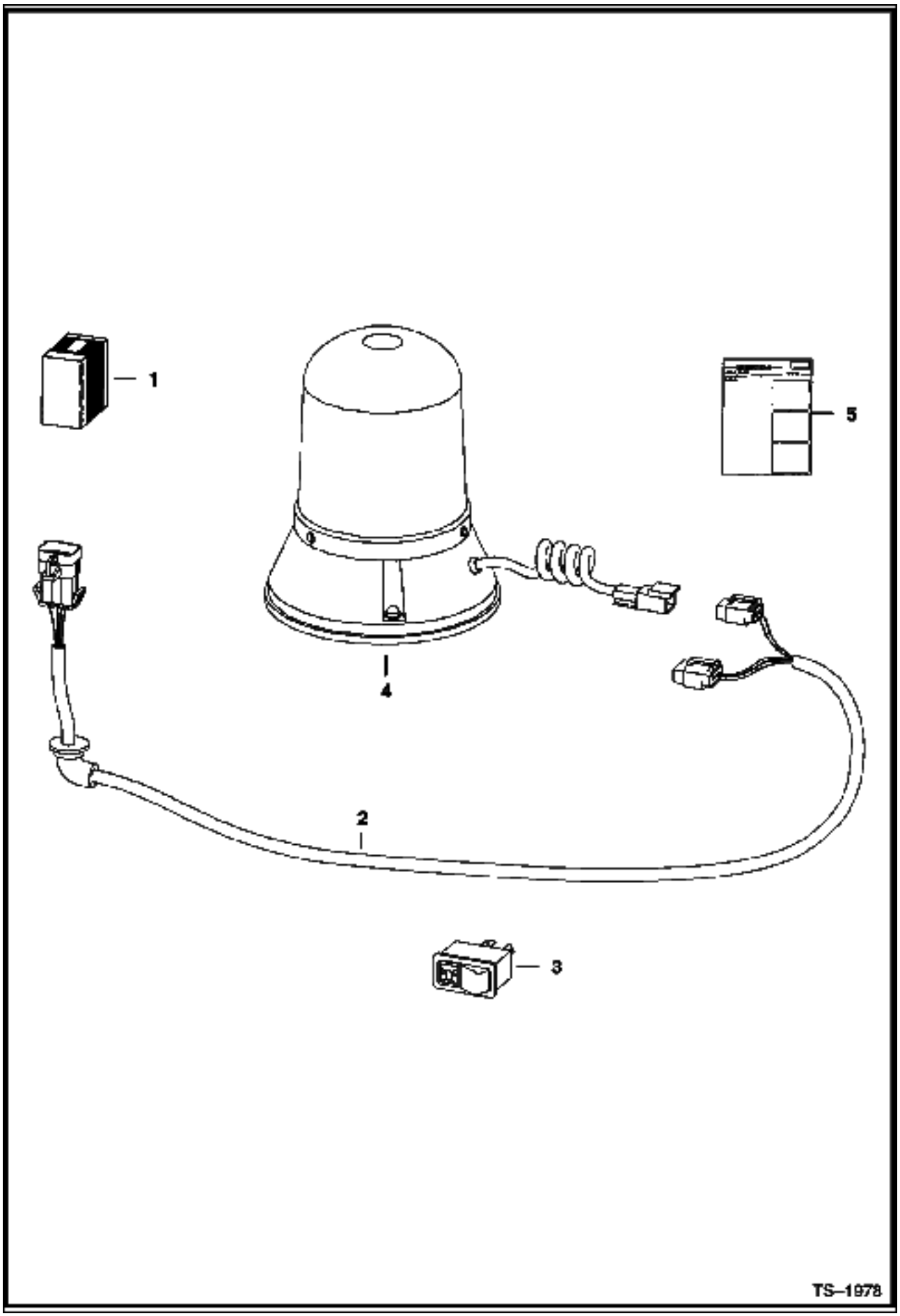

Ref No	Part Number	Description	Remarks	Serial Number	Qty
1	6719854	KIT	rotating beacon - If loader is not equipped W/heater, air conditioning, selectable joystick controls, advanced control system, power bob-tach, non-power port plug-in strobe lights and/or non-power port plug-in 4-way flashers, also order 7116260 deluxe harness		1
2	6718872	HARNESS			1
3	6668816	SWITCH	vertical		1
4	6675523	BEACON			1
4	6666571	BULB			1
5	6900991	INSTRUCTIONS			1

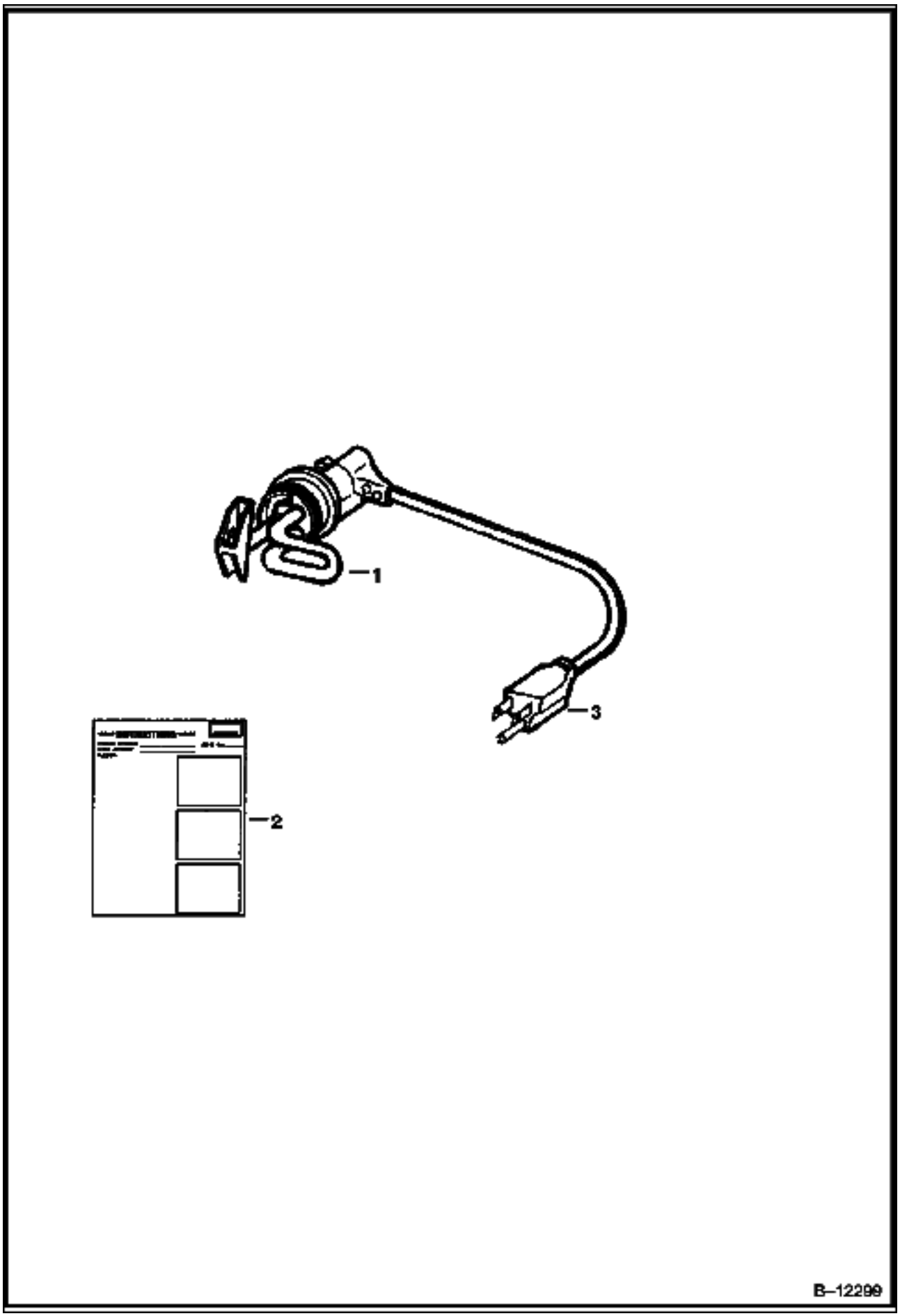
1
2
3
B–12299

BLOCK HEATER (Cont'd)
(Engine)

Ref No	Part Number	Description	Remarks	Serial Number	Qty
1	6720736	PLUG	W/Ref. 2		1
2	6720038	INSTRUCTIONS			1
3	6668881	CORD			1

BOB-TACH LEVERS
(For Use W/Industrial Grapple Fork)

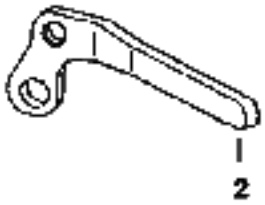



TS–1019

BOB-TACH LEVERS (Cont'd)
(For Use W/Industrial Grapple Fork)

Ref No	Part Number	Description	Remarks	Serial Number	Qty
1	6578139	LEVER	R.H.		1
2	6578140	LEVER	L.H.		1

BUCKET POSITIONING VALVE KIT

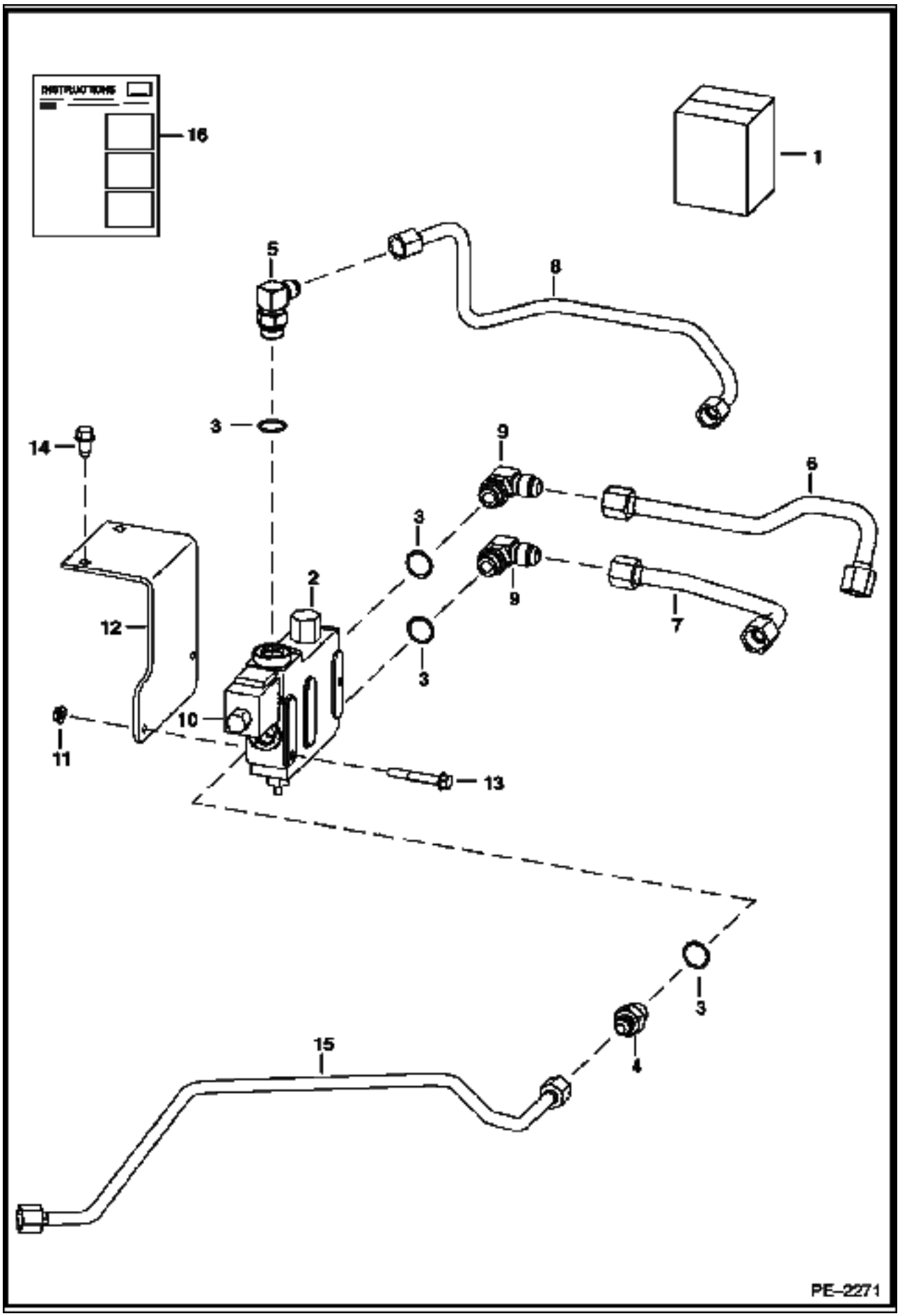

BUCKET POSITIONING VALVE KIT (Cont'd)

Ref No	Part Number	Description	Remarks	Serial Number	Qty
1	7102869	KIT	Ref. 2 - 15		1
2	6666341	VALVE	BUCKET POS.		1
3	79K000010B	O-RING			x
4	15KB00810B	CONNECTOR	W/Ref. 3		1
5	17KB00810B	ELBOW	W/Ref. 3		1
6	6733196	TUBE			1
7	7112912	TUBE			1
8	6734192	TUBE			1
9	17KB01010B	ELBOW	W/Ref. 3		2
10	6672863	SOLENOID			1
10		CARTRIDGE	W/nut		1
10		COIL			1
10	6671527	NUT			1
10	6670634	SEAL KIT			1
11	57D000005B	NUT			2
12	6727646	BRACKET			1
13	35C000536B	BOLT			2
14	84G003712B	BOLT			2
15	7101647	TUBE			1
16	6902833	INSTRUCTIONS			1

BUCKET POSITIONING VALVE

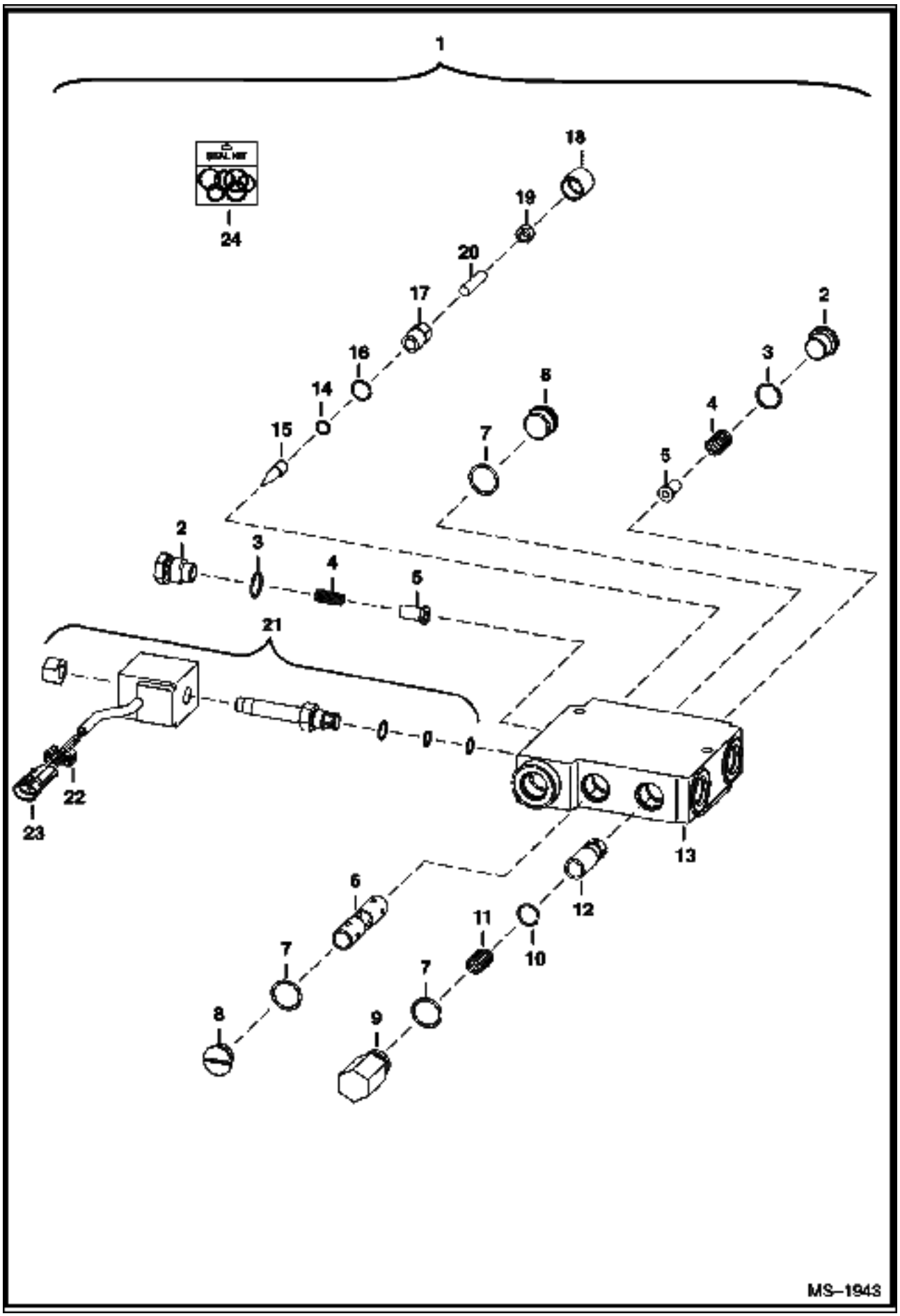

BUCKET POSITIONING VALVE (Cont'd)

Ref No	Part Number	Description	Remarks	Serial Number	Qty
1	6666341	VALVE	Ref. 2-20 - white		1
1	6673959	VALVE	Ref. 2-23 - white		1
2	6647784	PLUG	W/Ref. 3		2
3	79K000008B	O-RING			2
4	6647785	SPRING			2
5	6647783	LOAD CHECK			2
6		SPOOL	NSS		1
7	58K000116B	O-RING	backup		3
8	6647780	PLUG	W/Ref. 7		2
9	6667176	PLUG	W/Ref. 7		1
10	6667680	SNAP RING			1
11	6648294	SPRING			1
12		SPOOL	NSS		1
13		BODY	NSS		1
14	6667677	O-RING			1
15	6647777	PIN			1
16	79K000006B	O-RING			1
17	6647778	CAP			1
18	6667676	COVER			1
19	6631561	NUT			1
20	6648293	SCREW			1
21	6672863	SOLENOID			1
21	6671527	NUT			1
21	6670634	SEAL KIT			1
21	6674331	COIL	W/ Ref. 22, 23		1
21	6676545	CARTRIDGE			1
22	6641180	LOCK	2-pin		1
23	6641179	CONNECTOR	2-pin		1
24	6647786	SEAL KIT	Ref. 3, 7, 14, 16 & 18		1

CAB DOOR

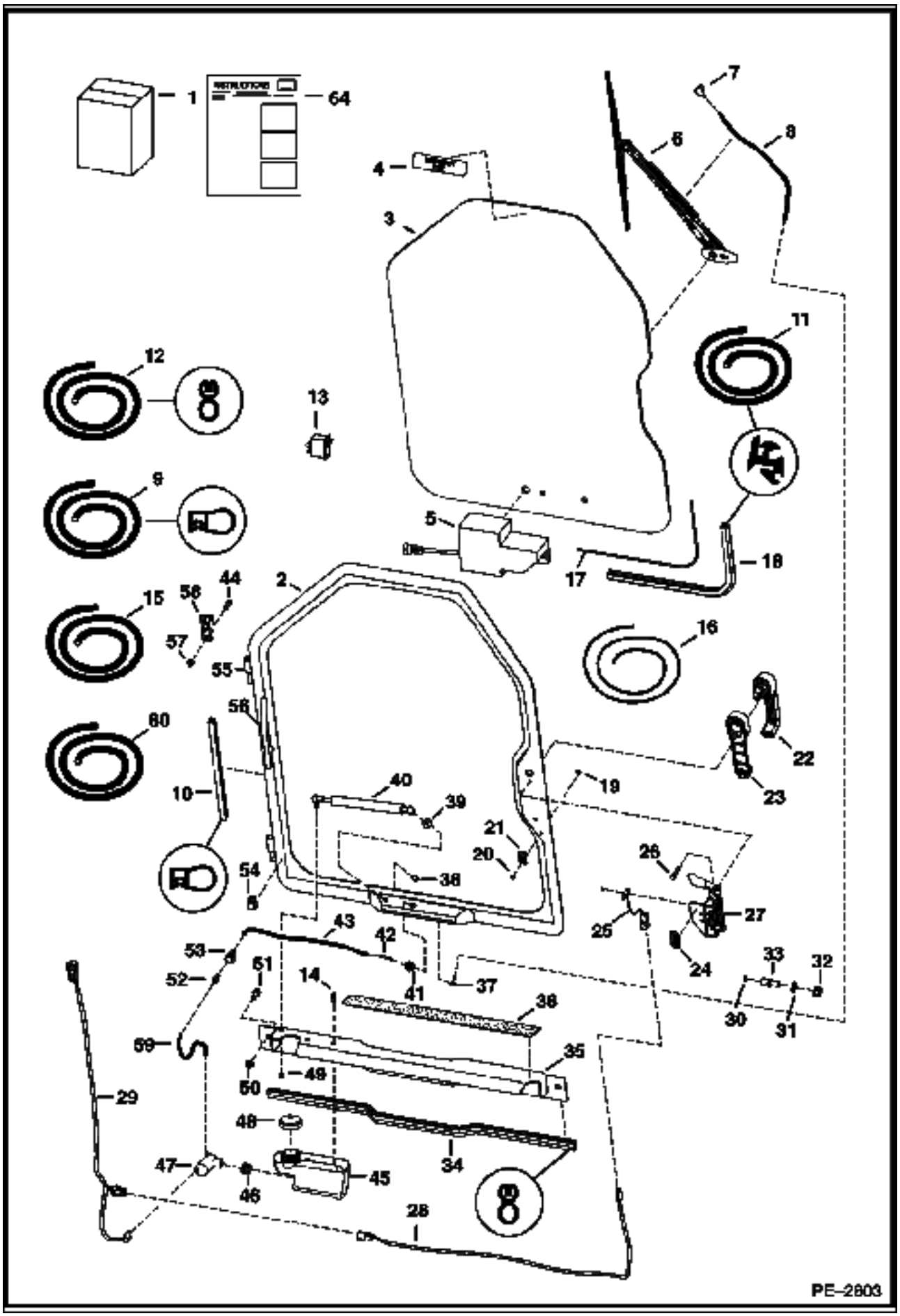
1
64
4
3
7
6
8
11
12
13
9
5
17
18
15
56
44
57
2
16
55
56
60
10
40
39
19
22
23
21
20
38
54
26
27
25
24
43
42
53
52
51
14
41
37
33
32
30
31
38
59
35
50
49
29
48
34
47
46
45
28
PE-2803

Ref No	Part Number	Description	Remarks	Serial Number	Qty
1	6730822	KIT	door - Ref. 2-61 & Ref. 1-21 on ILL. MS1355		1
2	7109665	DOOR	W/Ref. 55 & 56		1
3		WINDOW	See Illustration CAB DOOR/ MS1355 - .25" thick glass		1
4	6707852	DECAL	exit		1
5		MOTOR	See Illustration CAB DOOR/ MS1355 - wiper		1
6		ARM ASSY	See Illustration CAB DOOR/ MS1355 - wiper		1
7		NOZZLE	See Illustration CAB DOOR/ MS1355 - wiper arm mounted		1
8		HOSE	See Illustration CAB DOOR/ MS1355		1
9	6675558	SEAL	bulk - sold per foot		x
10		SEAL	NAP - 127.3" (3233mm) - Order Ref. 9		1
11	6665568	EXTRUSION	bulk - sold per foot		x
12	6513152	SEAL	bulk - sold per foot		x
13	6665707	SWITCH	front wiper		1
14	35C000408B	BOLT			2
15	6676003	HOSE	bulk - sold per foot - .109" I.D. - black		x
16	6554149	CORD	bulk - sold per foot		x
17		CORD	NAP - window - 113" (2878mm) - Order Ref. 16		1
18		SEAL	NAP - window - 113" (2878mm) - Order Ref. 11		1
19	6665321	RIVET	male - plastic		1
20	6665322	RIVET	female - plastic		1
21	6665000	CLIP			1
22	7109662	HANDLE			1
22	6709527	KEY	ignition/rear door		1
23	7109663	SPACER			1
24	7110316	DECAL	door switch		1
25	6728459	DOOR SENSOR			1
25	6677193	RIVET	plastic		2
26	1CM00640B	BOLT			2
27	7109661	DOOR LATCH			1
28	7104465	DOOR SWITCH HARNESS			1
29	7117322	HARNESS	wiper		1
30	6677192	MAGNET			1
31	18EM01224B	WASHER			1
32	51DM12	NUT	12 mm thread		1
33	7109664	BOLT	striker - 12 mm thread		1
34		SEAL	NAP - threshold - 36" (914mm) - Order Ref. 12		1
35	6730816	SHIELD			1
36	6542731	SAFETY TREAD			1
37	6676500	ELBOW			1
38	46D000005B	NUT	acorn		1
39	25E000016B	WASHER			1
40	6682586	GAS SPRING			1
40	6678548	SOCKET	ball		2
40	6649244	STUD			2
40	6649245	RETAINER	spring		2
41	6676499	GROMMET	wiper		1
42	6676917	ELBOW			1
43		HOSE	NAP - 18.25" (464mm) - Order Ref. 15		1
44	17C000512B	BOLT			4
45	6736875	TANK	washer		1
46	6666766	GROMMET			1
47	6664554	PUMP	washer bottle		1
48	6674993	CAP	vented		1
49	61D000005B	NUT			1

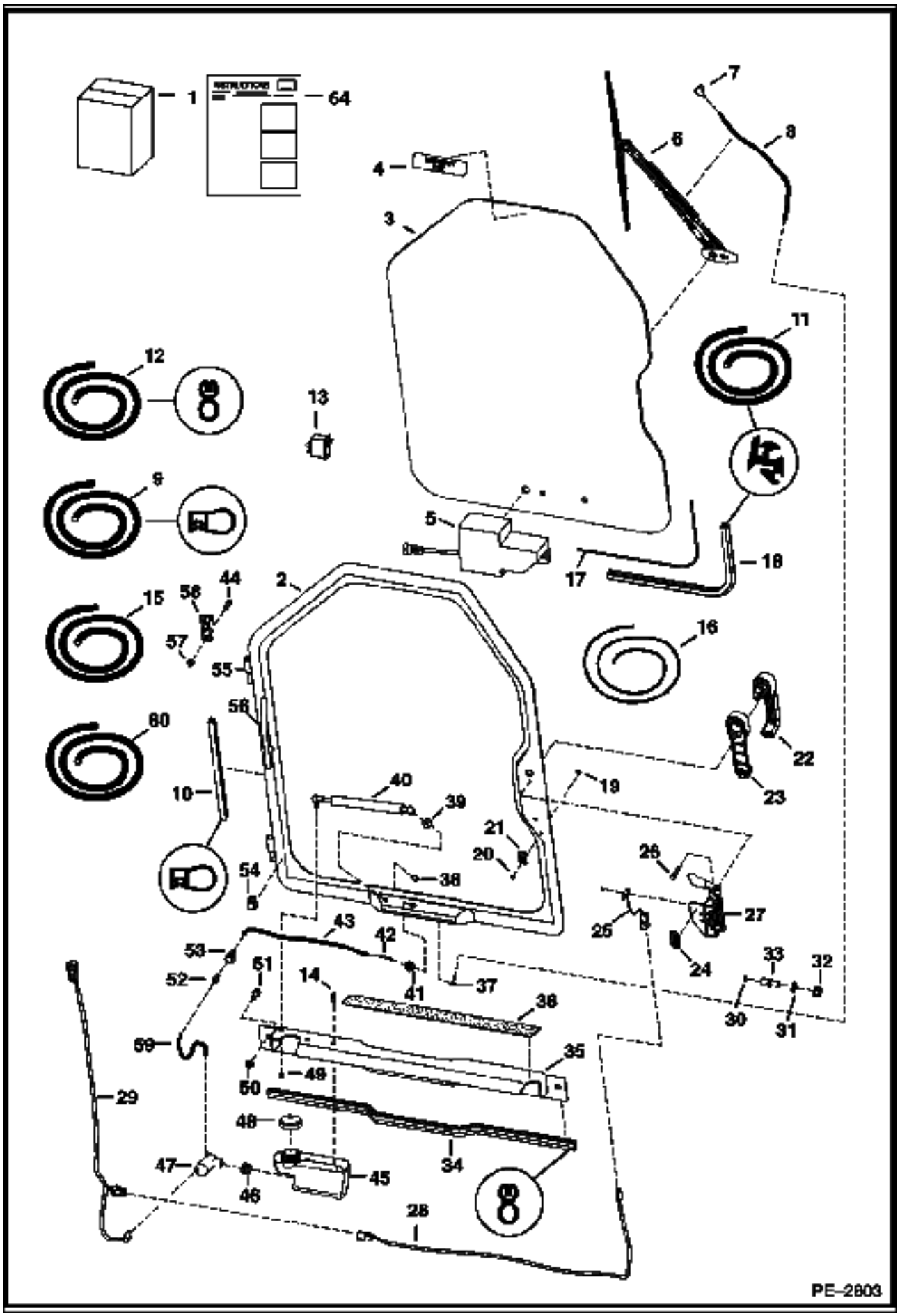
PE-2803

Ref No	Part Number	Description	Remarks	Serial Number	Qty
50	61D000006B	NUT			2
51	17C000612B	BOLT			2
52	6675299	COUPLER	insert		1
53	6675298	COUPLER	body		1
54	6675378	CLIP			3
55	6718376	HINGE	door		2
56	6718521	HANDLE	grab		1
57	59D000005B	NUT			4
58	6717593	HINGE	base		2
59		HOSE	NAP - 4.25" (108mm) long - Order Ref. 60		1
60	6708310	HOSE	bulk - sold per foot - .149 I.D. - clear		x
61	6900854	INSTRUCTIONS INSTL	INSTRUCTIONS INSTL		1

CAB DOOR
(Window & Wiper)

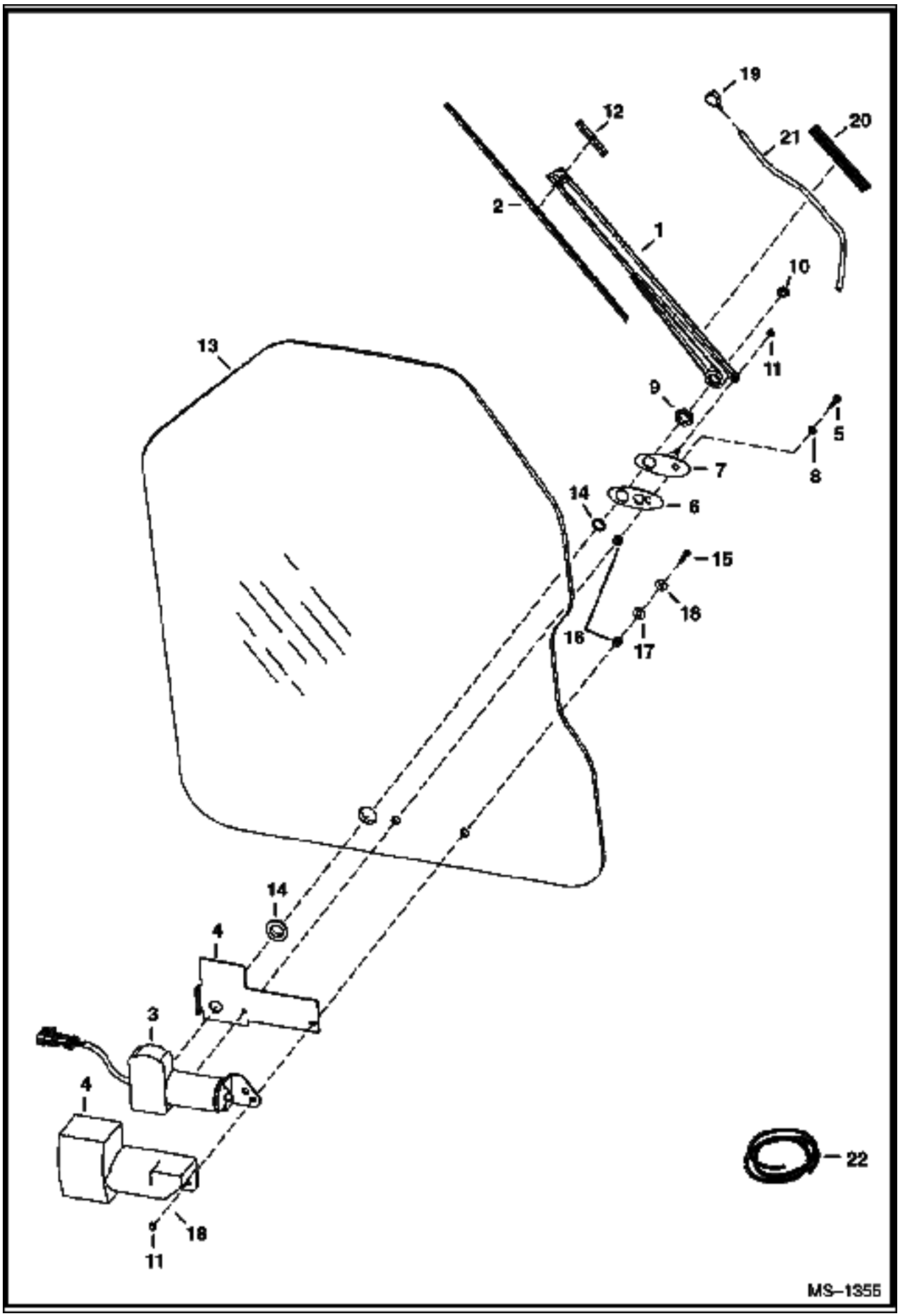

CAB DOOR (Cont'd)
(Window & Wiper)

Ref No	Part Number	Description	Remarks	Serial Number	Qty
1	6677833	ARM ASSY	W/Ref. 19 - 21		1
2	6677834	BLADE			1
3	6679476	MOTOR	W/threaded shaft end & built in fuse		1
4	6677836	COVER			1
5	6677837	BOLT			1
6	6677839	GASKET			1
7	6677840	SWIVEL			1
8	6677841	WASHER	tooth lock		1
9	6677842	NUT			1
10	6677843	NUT			1
11	6677844	NUT			2
12	6677845	ADAPTER	arm		1
13	6729776	WINDOW	.25" thick glass		1
14	6677847	GROMMET	rubber		1
15	6678198	BOLT			1
16	6664085	BUSHING	nylon		2
17	6801059	WASHER	neoprene		1
18	6678739	WASHER	steel		2
19	6678920	NOZZLE			1
20	6678921	GUIDE	hose		1
21		HOSE	NAP - 18"(457,2 mm) long - Order Ref. 22		x
22	6676003	HOSE	bulk - Sold Per Foot - .109" I.D. - black		x

CAB DOOR
(Special Applications)

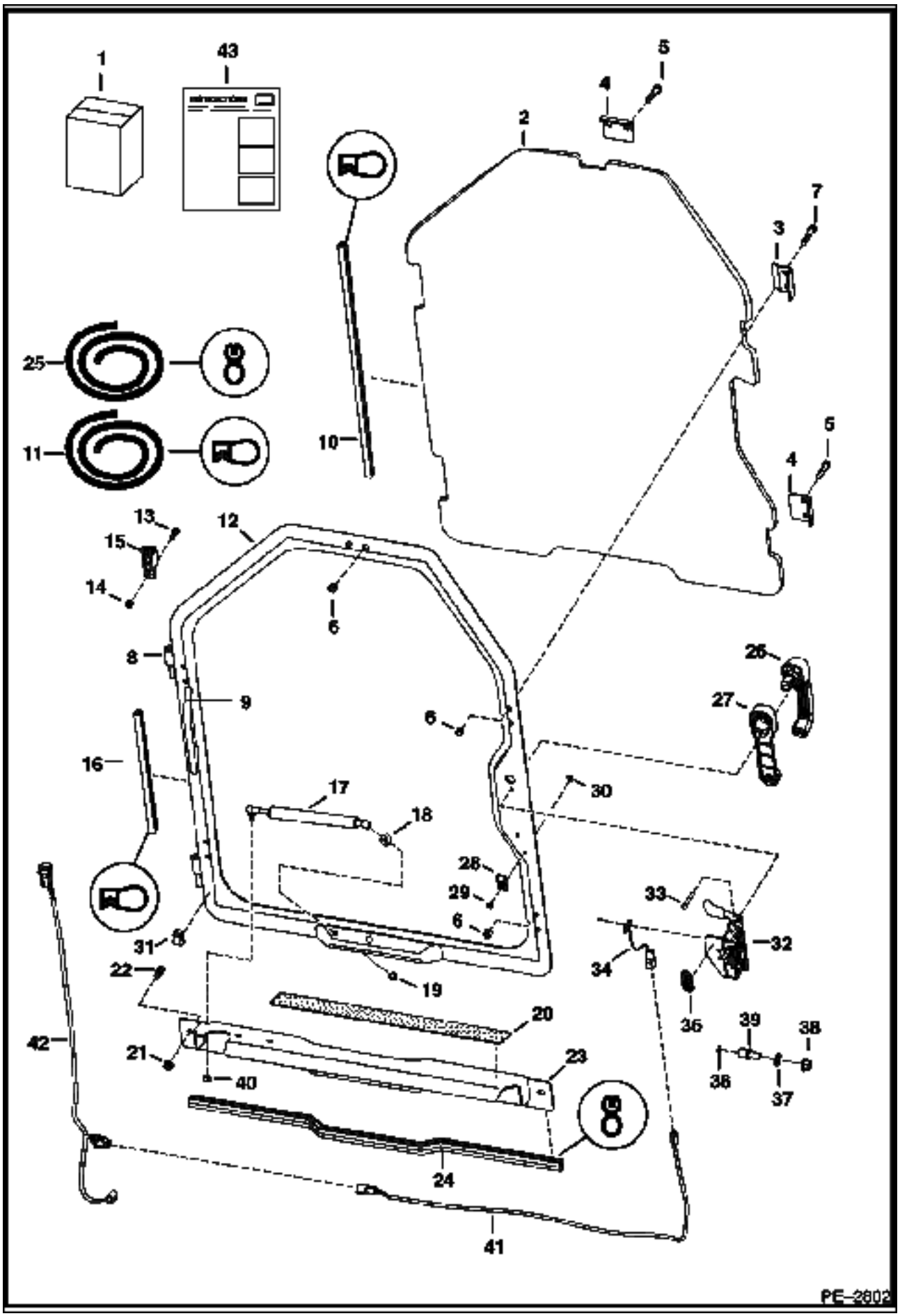

CAB DOOR (Cont'd)
(Special Applications)

Ref No	Part Number	Description	Remarks	Serial Number	Qty
1	6730823	KIT	door - Ref. 2-43		1
2	6732351	WINDOW	.5" thick polycarbonate		1
3	6725938	CLAMP			2
4	6725937	CLAMP			3
5	17C000628B	BOLT			6
6	95D000006B	NUT			10
7	17C000624B	BOLT			4
8	6718376	HINGE	door		2
9	6718521	HANDLE	grab		1
10		SEAL	NAP - 115" (2921 mm) long - Order Ref. 11		1
11	6675558	SEAL	bulk - sold per foot		x
12	7110430	SPECIAL APPS DOOR	W/Ref. 8 & 9		1
13	59D000005B	NUT			4
14	17C000512B	BOLT			4
15	6717593	HINGE	base		2
16		SEAL	NAP - 127.3" (3233,4 mm) long - Order Ref. 11		1
17	6682586	GAS SPRING			1
17	6678548	SOCKET	ball		2
17	6649244	STUD	ball		2
17	6649245	RETAINER	spring		2
18	25E000016B	WASHER			1
19	46D000005B	NUT	acorn		1
20	6542731	SAFETY TREAD			1
21	55D000006B	NUT			2
22	17C000612B	BOLT			2
23	6730816	SHIELD			1
24		SEAL	NAP - 36" (914,4 mm) long - Order Ref 25		1
25	6513152	SEAL	bulk - sold per foot		x
26	7109662	HANDLE			1
26	6709527	KEY	ign. & rear door		1
27	7109663	SPACER			1
28	6665000	CLIP			1
29	6665321	RIVET	male - plastic		1
30	6665322	RIVET	female - plastic		1
31	6675378	CLIP			3
32	7109661	DOOR LATCH			1
33	1CM00640B	BOLT			2
34	6728459	DOOR SENSOR			1
34	6677193	RIVET	plastic		2
35	7110316	DECAL			1
36	6677192	MAGNET			1
37	18EM01224B	WASHER			1
38	51DM00012B	NUT	12 mm thread		1
39	7109664	BOLT	striker - 12 mm thread		1
40	61D000005B	NUT			1
41	7104465	DOOR SWITCH HARNESS	door sensor		1
42	7117322	HARNESS	wiper		1
43	6901013	INSTRUCTIONS			1

CAB DOOR
(Lexan Window)

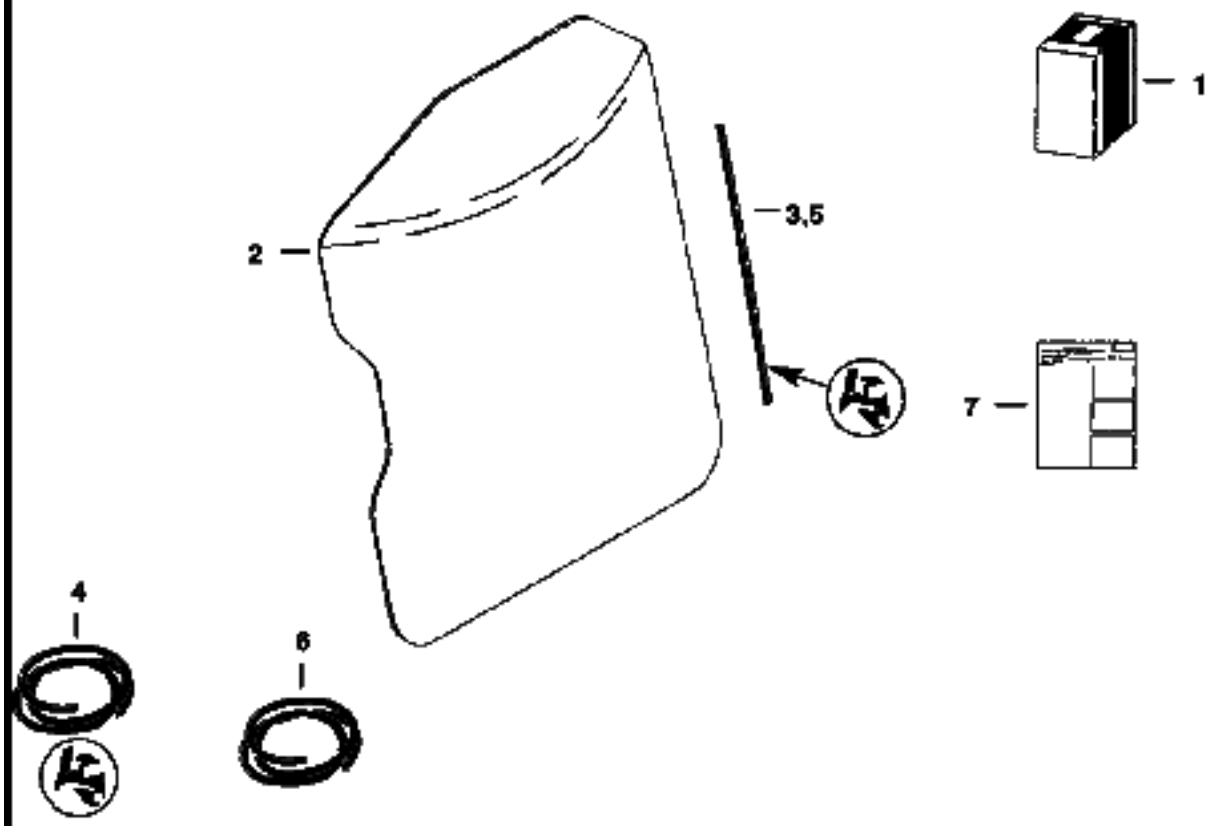

NOTE: This Lexan window is NOT approved as a Special Applications Kit. This window does not provide additional protection from materials entering cab openings.

PE–1558

CAB DOOR (Cont'd)
(Lexan Window)

Ref No	Part Number	Description	Remarks	Serial Number	Qty
1	6726427	KIT	Ref. 2 - 7		1
2	6732350	WINDOW	lexan - .236" thick		1
3		SEAL	NAP - 113.3"(2877,8 mm) long - Order Ref. 4		1
4	6665568	EXTRUSION	bulk - Sold Per Foot		x
5		CORD	NAP - 113.3"(2877,8 mm) long - Order Ref. 6		1
6	6554149	CORD	bulk - Sold Per Foot		x
7	6901036	INSTRUCTIONS			1

CAB ENCLOSURE
(Envelope)

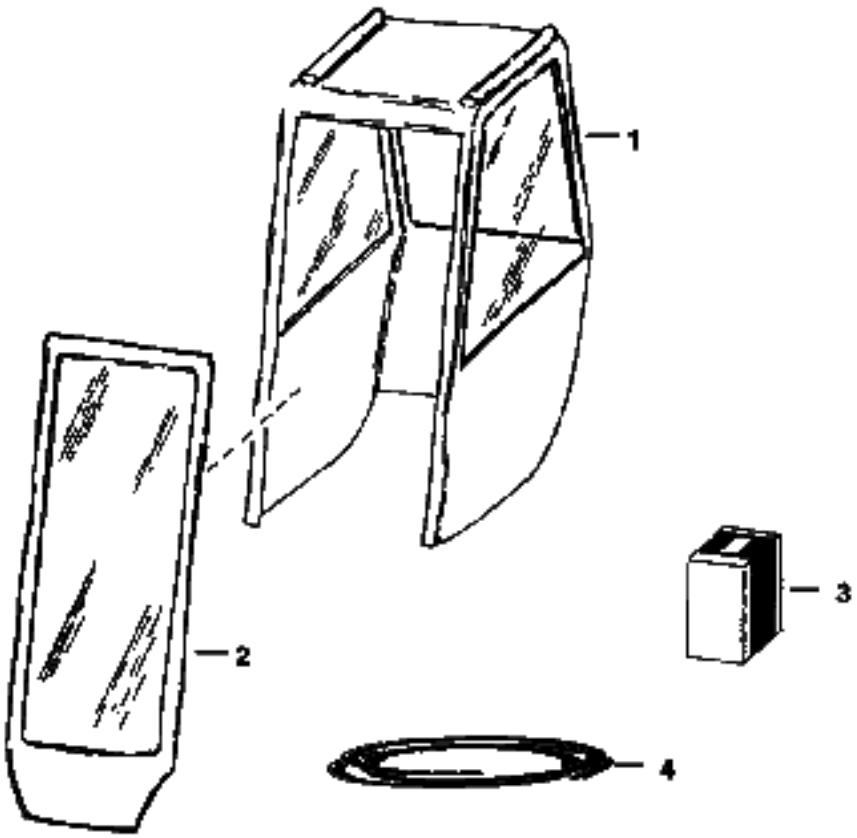

CAB ENCLOSURE (Cont'd)
(Envelope)

Ref No	Part Number	Description	Remarks	Serial Number	Qty
1	6675544	CANVAS CAB	fits over cab - W/Ref. 2		1
2	6675590	DOOR	vinyl		1
3	6675591	HINGE KIT			1
4	6722597	VELCRO	27 feet (8,2 m)		1



B–17100

Ref No	Part Number	Description	Remarks	Serial Number	Qty
1		KIT	See Illustration CAB WINDOWS/ MS1340 See Illustration CAB DOOR/ PE1566 cab enclosure - SALES Kit #6731938		1
1		KIT	See Illustration CAB DOOR/ PE1061 See Illustration CAB WINDOWS/ MS1340 special cab enclosure - SALES Kit #6731937		1

CAB WINDOWS
(Top, Rear & Side)

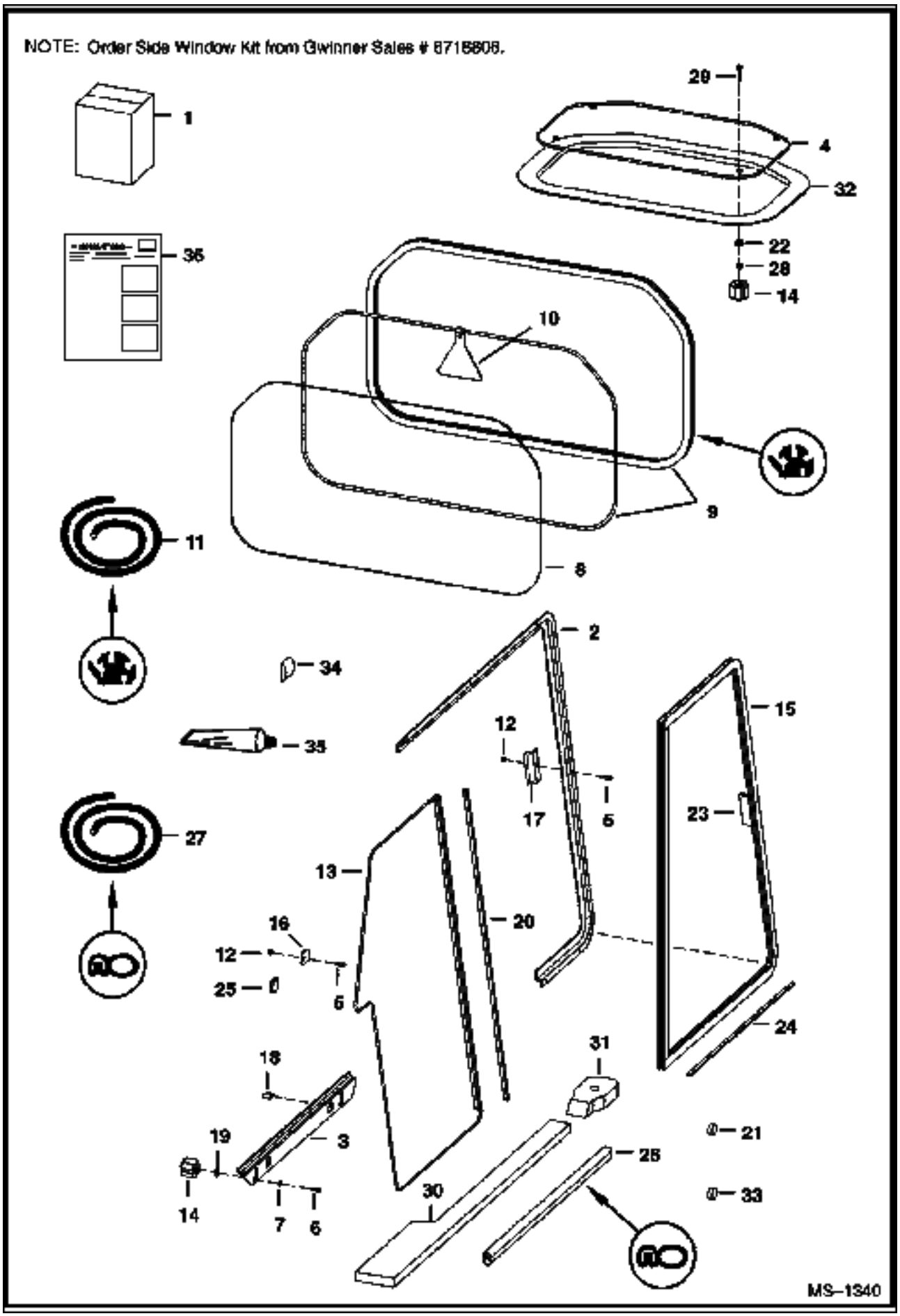

CAB WINDOWS (Cont'd)
(Top, Rear & Side)

Ref No	Part Number	Description	Remarks	Serial Number	Qty
1	6718805	KIT	Top & Rear Window - Ref. 4, 8-10, 14 & 36		1
1		KIT	SALES - Side Window - SEE NOTE		1
2	6717870	FRAME	L.H. side		1
2	6717872	FRAME	R.H. side		1
3	6717871	FRAME	L.H. bottom		1
3	6717873	FRAME	R.H. bottom		1
4	7105035	WINDOW	assy. - top - lexan - W/Ref. 22, 28, 29 & 32		1
5	10C000410B	BOLT	carriage		18
6	10C000416B	BOLT	carriage		4
7	25E000014B	WASHER			4
8	6717874	WINDOW	rear		1
8	6719413	WINDOW	rear - lexan		1
9		EXTRUSION	NAP - 75.75"(1924 mm) long - Order Ref. 11		x
9		CORD	NAP - 75.75"(1924 mm) long - Order Ref. 11		x
10	6731478	EXIT TAG			1
11	6675387	EXTRUSION	bulk - Sold Per Foot		x
11	6554149	CORD	bulk - Sold Per Foot		x
12	59D000004B	NUT			18
13	6674520	WINDOW	L.H. rear - W/Ref. 20		1
13	6674522	WINDOW	R.H. rear - W/Ref. 20		1
14	6681614	KNOB			8
15	6674519	WINDOW	L.H. front - W/Ref. 23		1
15	6674521	WINDOW	R.H. front - W/Ref. 23		1
16	6719063	STOP			2
17	6719037	STRIKER			2
18	6719065	COVER TAB	tab		4
19	6675212	RETAINER	bolt		4
20	6675833	SEAL	rear window dual wiper W/tape		2
21	6657719	PLUG	for .75" dia. hole		2
22	6675545	GROMMET			4
23	6678283	HANDLE	side window - W/tape & instructions		2
24	6676927	FELT STRIP	20.38" (517,7 mm) long		2
25	6677198	TAB	tab		2
26		SEAL	NAP - 24"(609,6 mm) long - Order Ref. 27		1
27	6555351	SEAL	bulk - Sold Per Foot		x
28	6664085	BUSHING	nylon		4
29	91G000420B	BOLT			4
30	6729010	SEAL	L.H. - cab to main frame - foam		1
30	6729009	SEAL	R.H. - cab to main frame - foam		1
31	6729011	SEAL	cab mount		2
32		SEAL	NAP - Order Ref. 4		1
33	6677973	PLUG	for .22" dia. hole		2
34	7103075	SEAL	side screen		2
35		ADHESIVE	NAP - 1 oz. - for top window seal Ref. 1		1
36	6900852	INSTRUCTIONS INSTL	top & rear window		1
36	6900853	INSTRUCTIONS	Side Windows		1

CAB WINDOWS
(Rear Window Removal Kit)

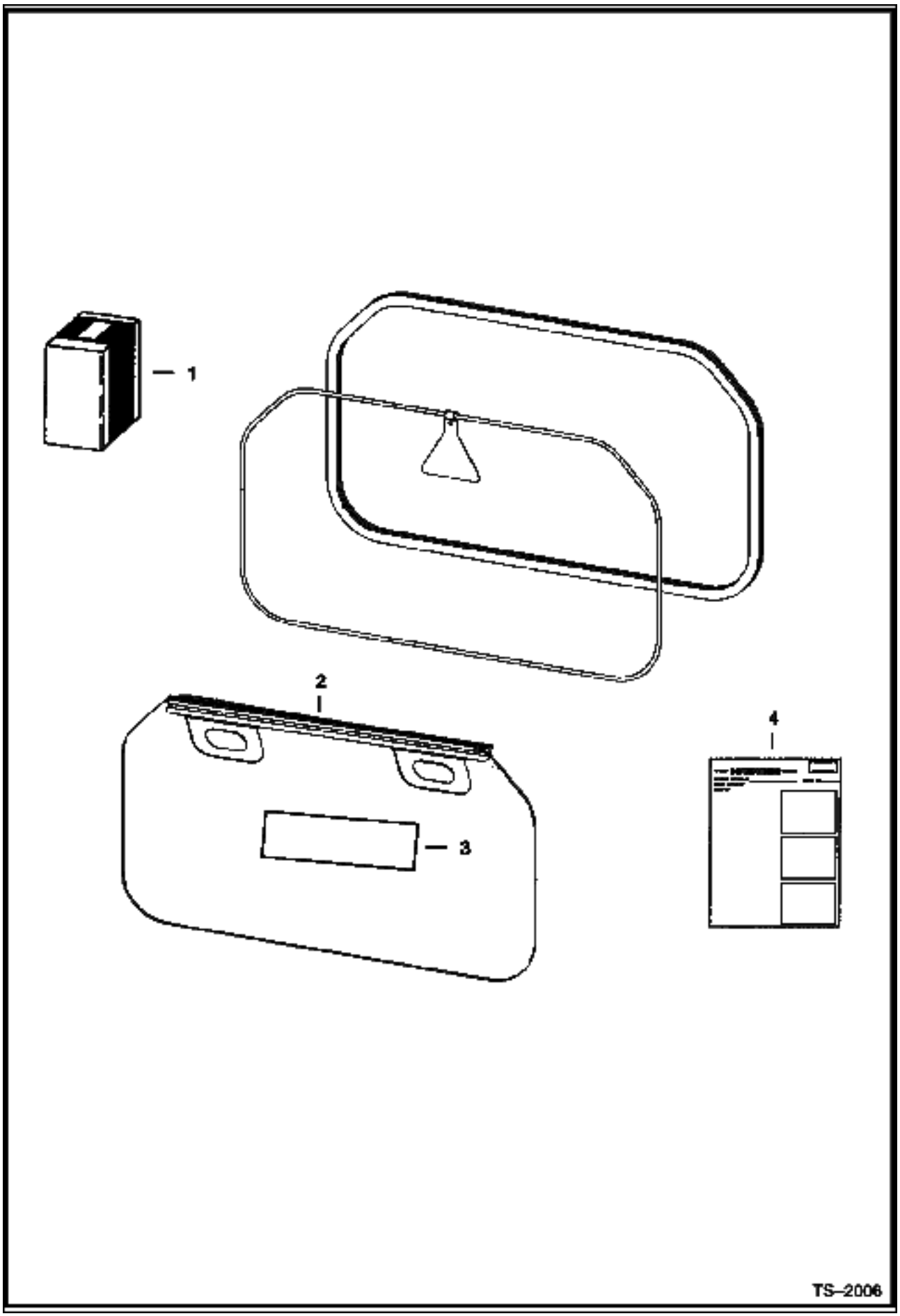

CAB WINDOWS (Cont'd)
(Rear Window Removal Kit)

Ref No	Part Number	Description	Remarks	Serial Number	Qty
1	6725946	KIT	Ref. 2 - 4		1
2	6725421	HANDLE			1
3	6726303	DECAL			1
4	6901029	INSTRUCTIONS			1

COUNTERWEIGHT KIT
(Front Axle)

NOTE: Order Counterweight Kit from Gwinner Sales # 6704284.

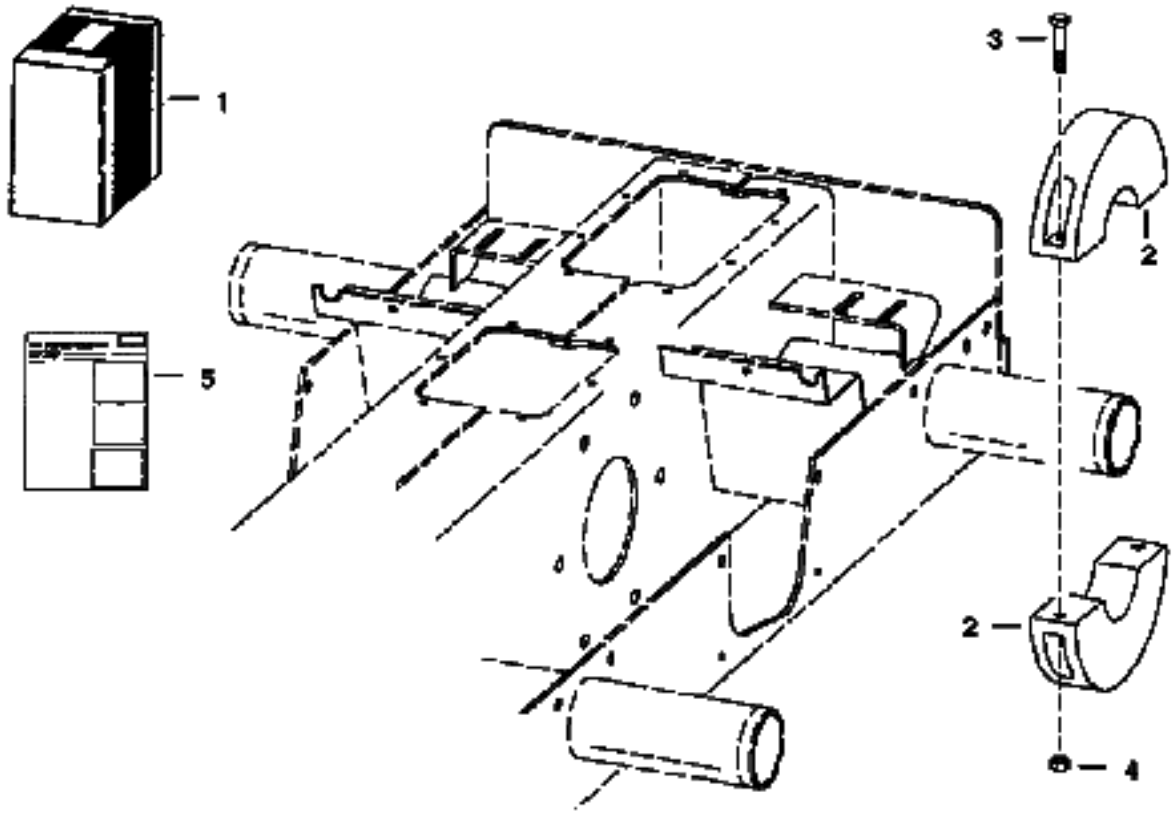

COUNTERWEIGHT KIT (Cont'd)
(Front Axle)

Ref No	Part Number	Description	Remarks	Serial Number	Qty
1		KIT	SALES - counterweight - SEE NOTE		1
2	6714361	WEIGHT	38.7 lbs (17,6 mm) - 4.5"(114,3 mm) wide		4
3	17C000640B	BOLT			8
4	61D000006B	NUT			8
5	6900366	INSTRUCTIONS			1

COUNTERWEIGHT KIT
(1850 lb.)

NOTE: Order Counterweight Kit from Gwinner Sales # 6714932.

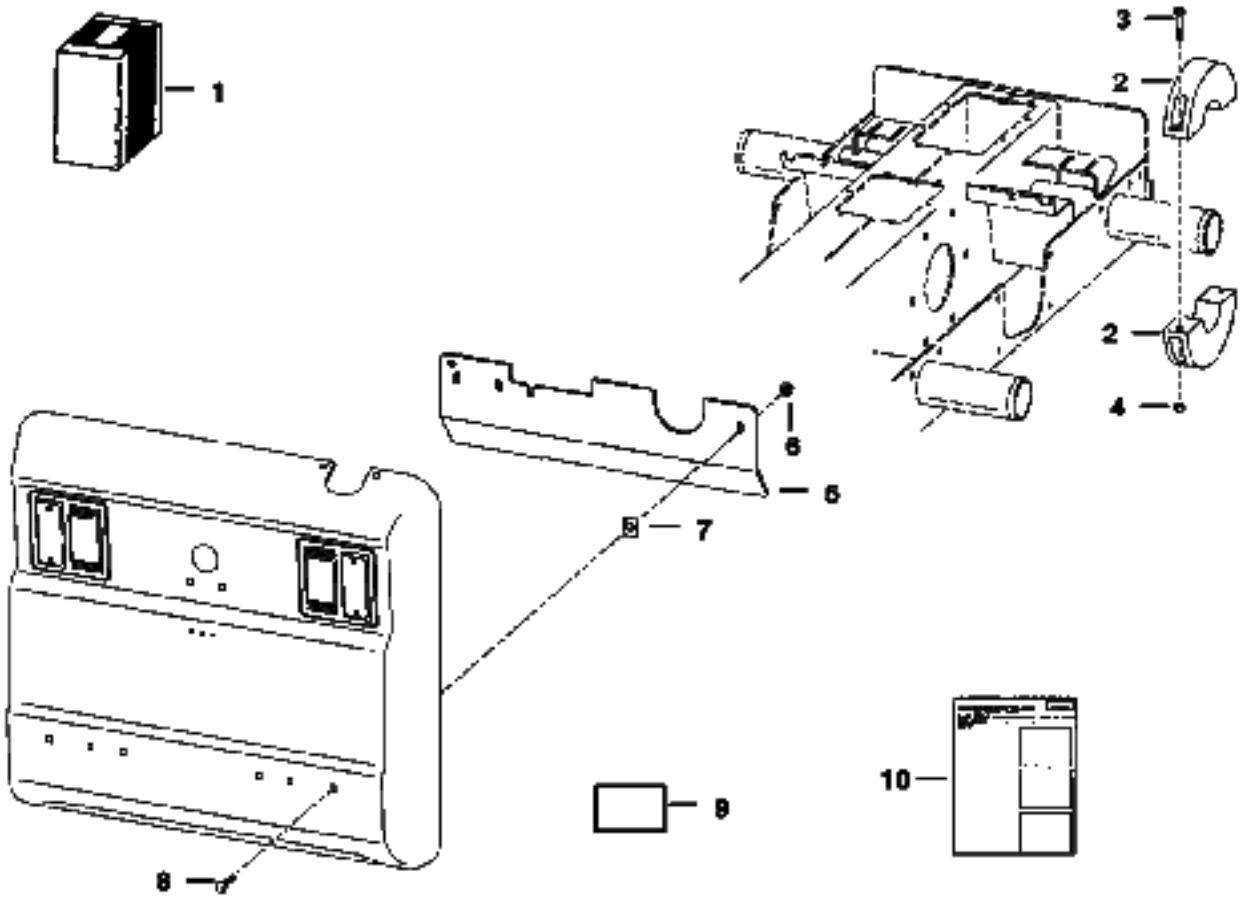

COUNTERWEIGHT KIT (Cont'd)
(1850 lb.)

Ref No	Part Number	Description	Remarks	Serial Number	Qty
1		KIT	SALES - counterweight		1
2	6714361	WEIGHT	front axle - 38.7 lbs (17,6 kg) - 4.5"(114,3 mm) wide		4
3	17C000640B	BOLT			4
4	61D000006B	NUT			4
5	6725256	COUNTERWEIGHT			3
6	57D000006B	NUT			3
7	1612281B	NUT	spring		3
8	37C000632B	BOLT			3
9	6725092	DECAL	1850 lb. - Not in Kit		1
10	6900410	INSTRUCTIONS			1

COUNTERWEIGHT KIT
300 lb. (136 kg.)

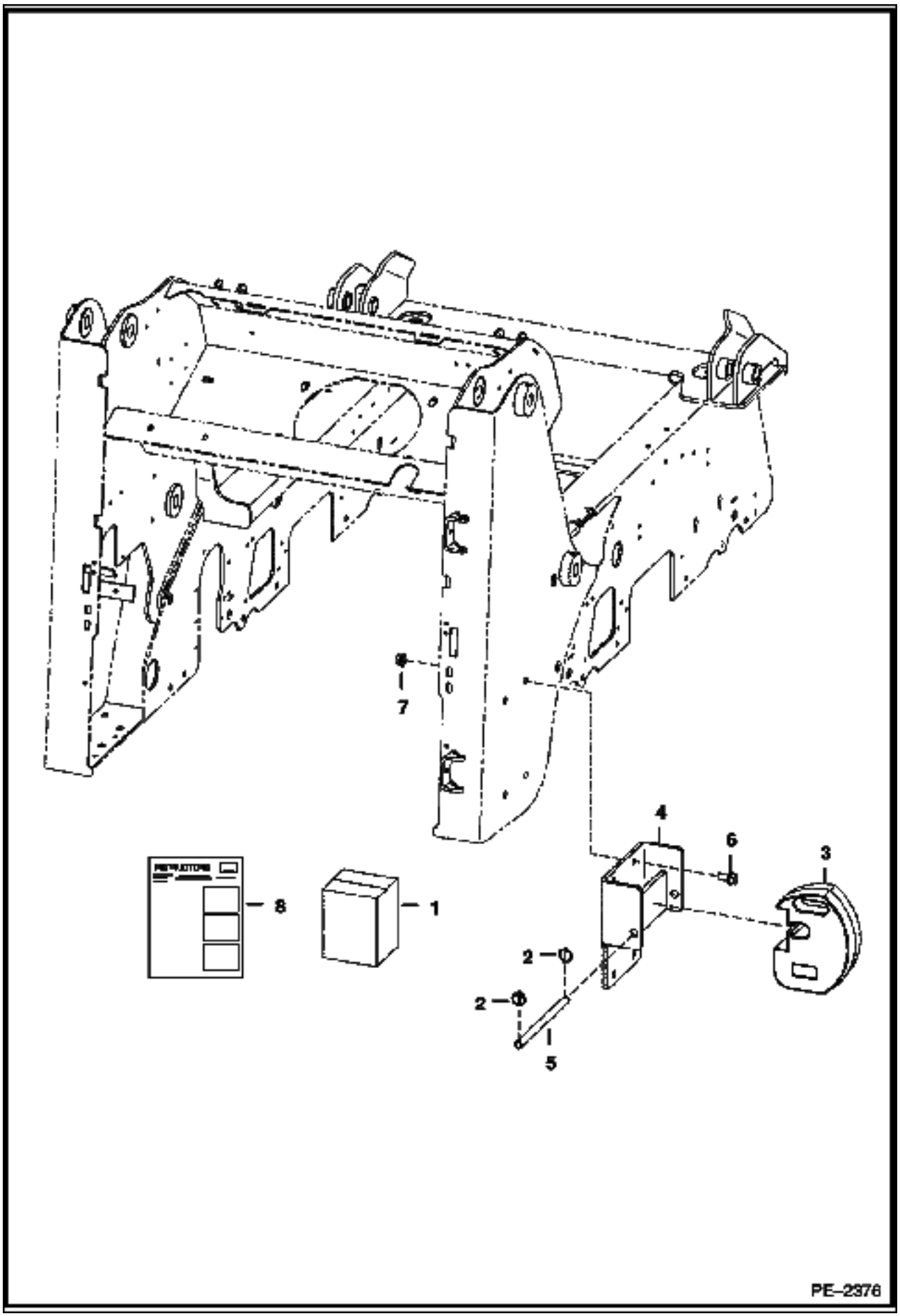

COUNTERWEIGHT KIT (Cont'd)
300 lb. (136 kg.)

Ref No	Part Number	Description	Remarks	Serial Number	Qty
1	7105763	300 LB CTW KIT			1
2	6649706	PIN			4
3	6811483	COUNTERWEIGHT	49 lb.		6
4	7105817	MOUNT ASSY			2
5	7105826	ROD			2
6	35C001020B	BOLT			8
7	57D000010B	NUT			8
8	6903282	INSTRUCTIONS			1

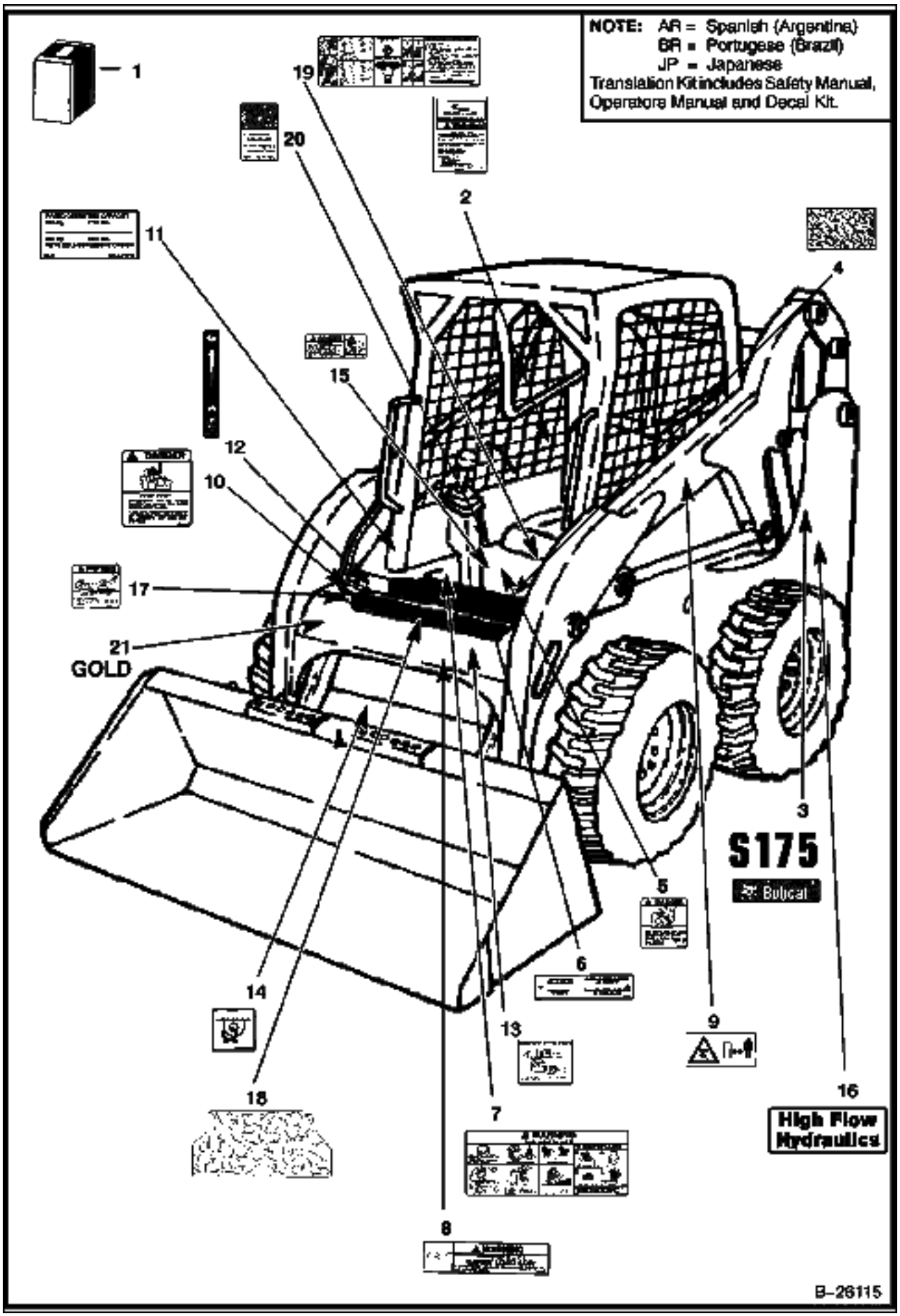
NOTE: AR = Spanish (Argentina)
BR = Portugese (Brazil)
JP = Japanese
Translation Kit includes Safety Manual, Operators Manual and Decal Kit.
1
2
3
4
5
6
7
8
9
10
11
12
13
14
15
16
17
18
19
20
21
GOLD
S175
Bobcat
High Flow Hydraulics
B-26115

Ref No	Part Number	Description	Remarks	Serial Number	Qty
1		KIT	decal		1
1	7120283AR	KIT, DECAL	decal - SEE NOTE		1
1	7120283BR	KIT, DECAL	decal - SEE NOTE		1
1	7120283JP	KIT, DECAL	decal - SEE NOTE		1
1	7120282AR	KIT, TRANSLATION	translation - SEE NOTE		1
1	7120282BR	KIT, TRANSLATION	translation - SEE NOTE		1
2	6737783	KIT	handbook - W/Wire Rope - Not in Decal Kit		1
2	6558309	WIRE ROPE	33" (838,2 mm) long - bulk - Sold Per Foot - Also Order (2) of 6558310		x
2	6558310	SLEEVE	wire rope		2
2	17C000512B	BOLT			1
2	61D000005B	NUT			1
2	84G003112B	BOLT			1
3	7120589	DECAL	model		1
4	6554100	TREAD	6" x 6" (152,4 mm x 152,4 mm)		4
5	6702301	DECAL	danger		1
6	6561383	DECAL	Bob-tach		1
7	6728539	DECAL	warning		1
8	6579528	DECAL	carry load low		1
9	6713507	DECAL	stay clear - European - not in kit		2
10	6702302	DECAL	danger		1
11	6725092	DECAL	load 1750 -1850 W/counterweights		1
11	6718200	DECAL	load 1750 - not in kit		1
12	6735140	DECAL	throttle		1
13	6731757	DECAL	front aux. coupler - not in kit		1
14	6727595	DECAL	tie down		1
15	6717343	DECAL	danger		2
16	7120693	DECAL	high flow - not in kit		1
17	6710358	DECAL	warning		1
18	7108222	SAFETY TREAD	22" x 9.5" (558,8 mm x 241,3 mm)		1
19	6727926	DECAL	operations		1
19	6717639	DECAL	seat & seat bar operations - AHC - not in kit		1
19	6727941	DECAL	seat & seat bar operations - ACS - not in kit		1
20	6711840	DECAL	lift lock		1
21	6735862	DECAL	gold package		1

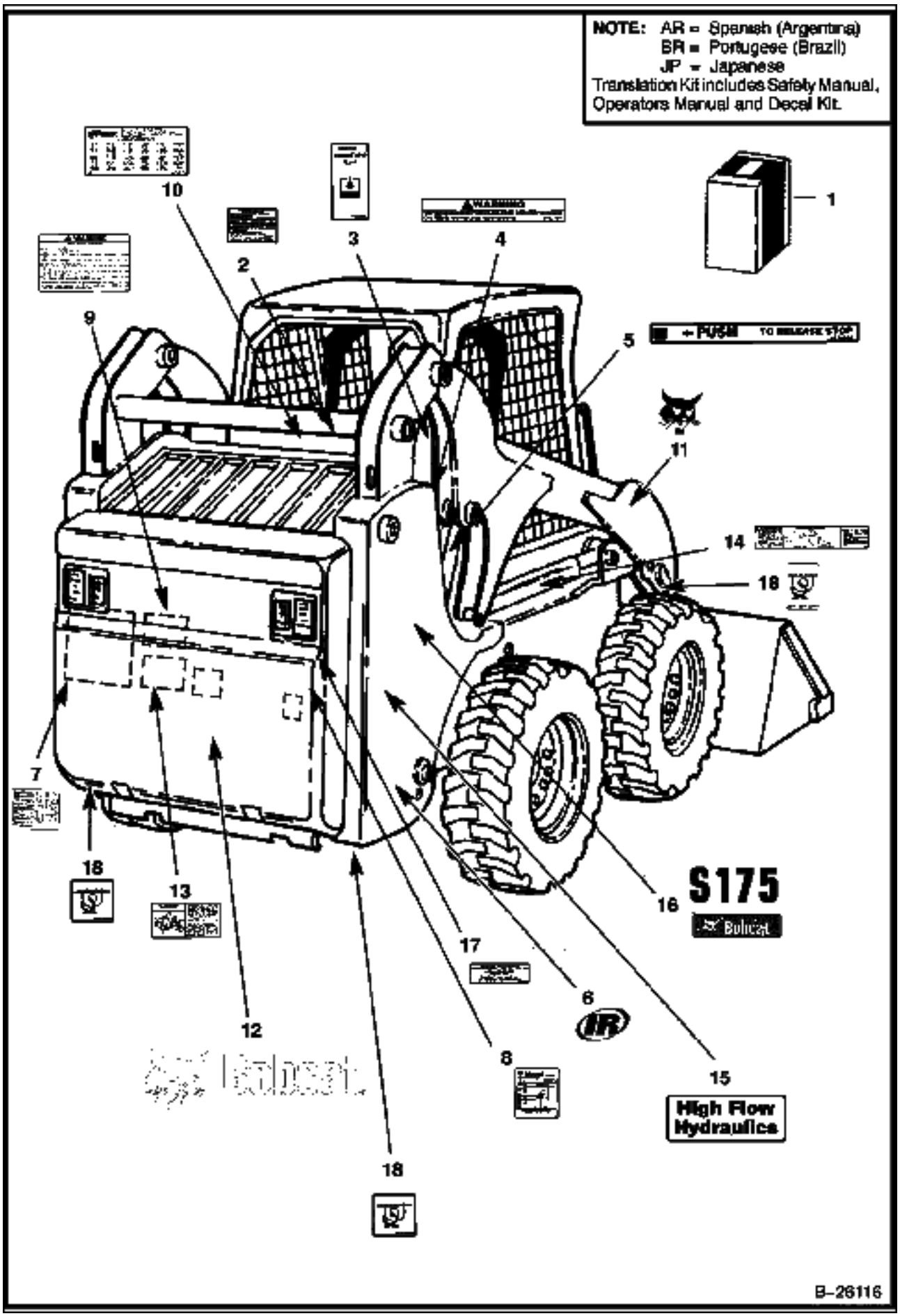
NOTE: AR = Spanish (Argentina)
BR = Portugese (Brazil)
JP = Japanese
Translation Kit includes Safety Manual, Operators Manual and Decal Kit.
1
2
3
4
5
6
7
8
9
10
11
12
13
14
15
16
17
18
S175
Bobcat
High Flow Hydraulics
B-26116

Ref No	Part Number	Description	Remarks	Serial Number	Qty
1		KIT	decal		1
1	7120283AR	KIT, DECAL	decal - SEE NOTE		1
1	7120283BR	KIT, DECAL	decal - SEE NOTE		1
1	7120283JP	KIT, DECAL	decal - SEE NOTE		1
1	7120282AR	KIT, TRANSLATION	translation - SEE NOTE		1
1	7120282BR	KIT, TRANSLATION	translation - SEE NOTE		1
2	6560573	DECAL	spark arrestor		1
3	6565990	DECAL	hydraulic fluid		1
4	6577754	DECAL	warning		2
5	6578368	DECAL	push		1
6	6735864	DECAL	IR - black		2
7	6734534	DECAL	service/warning/service parts		1
8	6565200	DECAL	eng. filter		1
9	6579511	DECAL	warning - not in kit		1
10	6557224	DECAL	patent		1
11	7116870	DECAL	Bobcat head		1
12	6735901	DECAL	Bobcat W/Head - white		1
13	6709030	DECAL	belt tension - spring loaded idler		1
14	6719018	DECAL	boom stop		1
15	7120693	DECAL	hi-flow - not in kit		1
16	7120589	DECAL	model S175		1
17	6708929	DECAL	propylene glycol antifreeze		1
18	6727595	DECAL	tie down		4

DUAL BATTERY KIT
(W/O Starter)

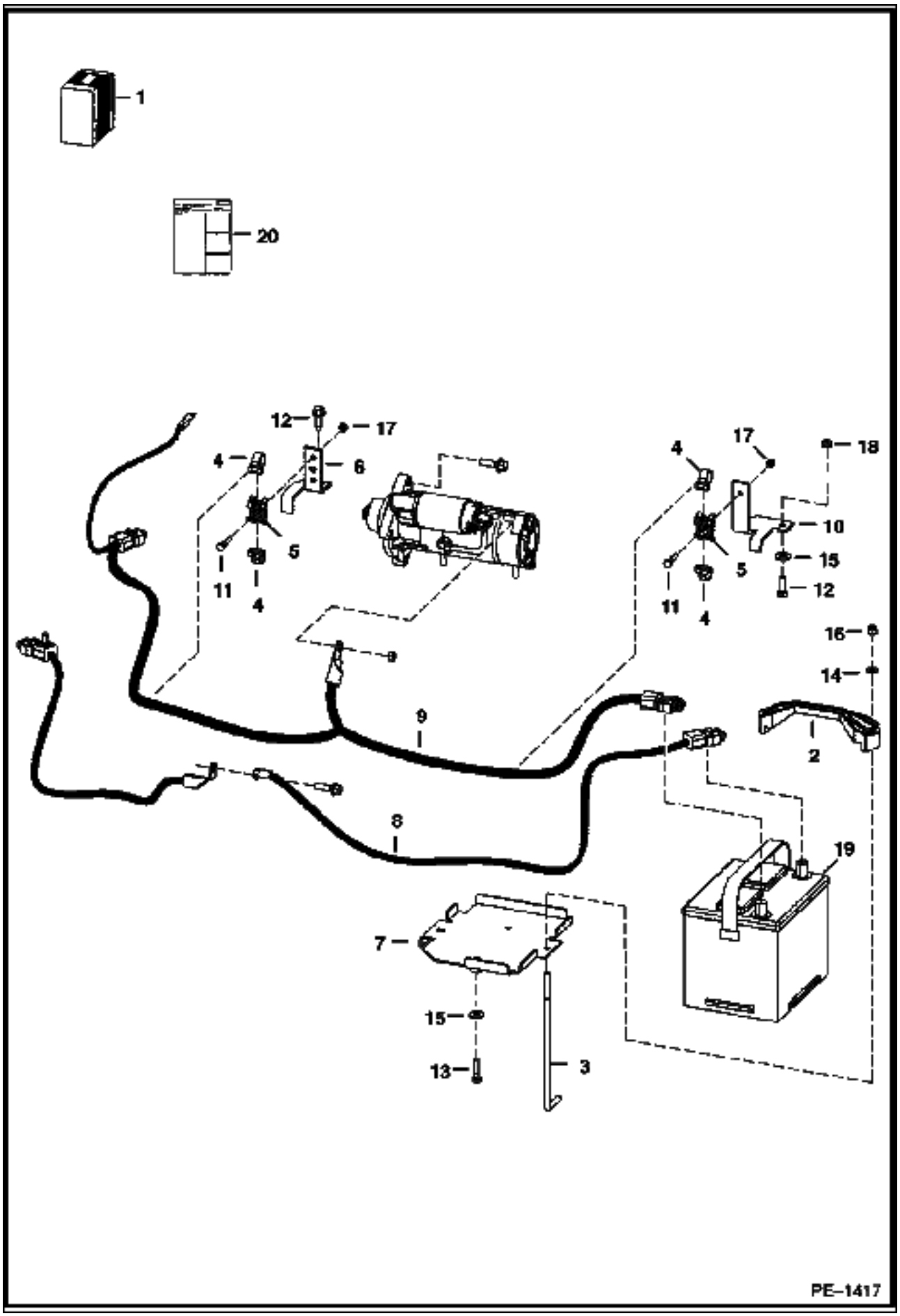

DUAL BATTERY KIT (Cont'd)
(W/O Starter)

Ref No	Part Number	Description	Remarks	Serial Number	Qty
1	6731694	KIT	dual battery - Ref. 2-18 & 20		1
2	6569203	CLAMP			1
3	6576280	BOLT			2
4	6678669	STRAP			4
5	6678974	MOUNT			2
6	6715131	BRACKET			1
7	6731617	PAN	battery		1
8	6731665	CABLE	negative		1
9	6731666	CABLE	positive		1
10	6731746	BRACKET			1
11	17C000420B	BOLT			2
12	17C000516B	BOLT			3
13	17C000520B	BOLT			2
14	25E000015B	WASHER			2
15	25E000016B	WASHER			3
16	59D000005B	NUT			2
17	61D000004B	NUT			2
18	97D000005B	NUT			1
19	6670251	BATTERY	Not in Kit		1
20	6901602	INSTRUCTIONS			1

ELECTRICAL CONNECTOR KIT
(7-Pin)

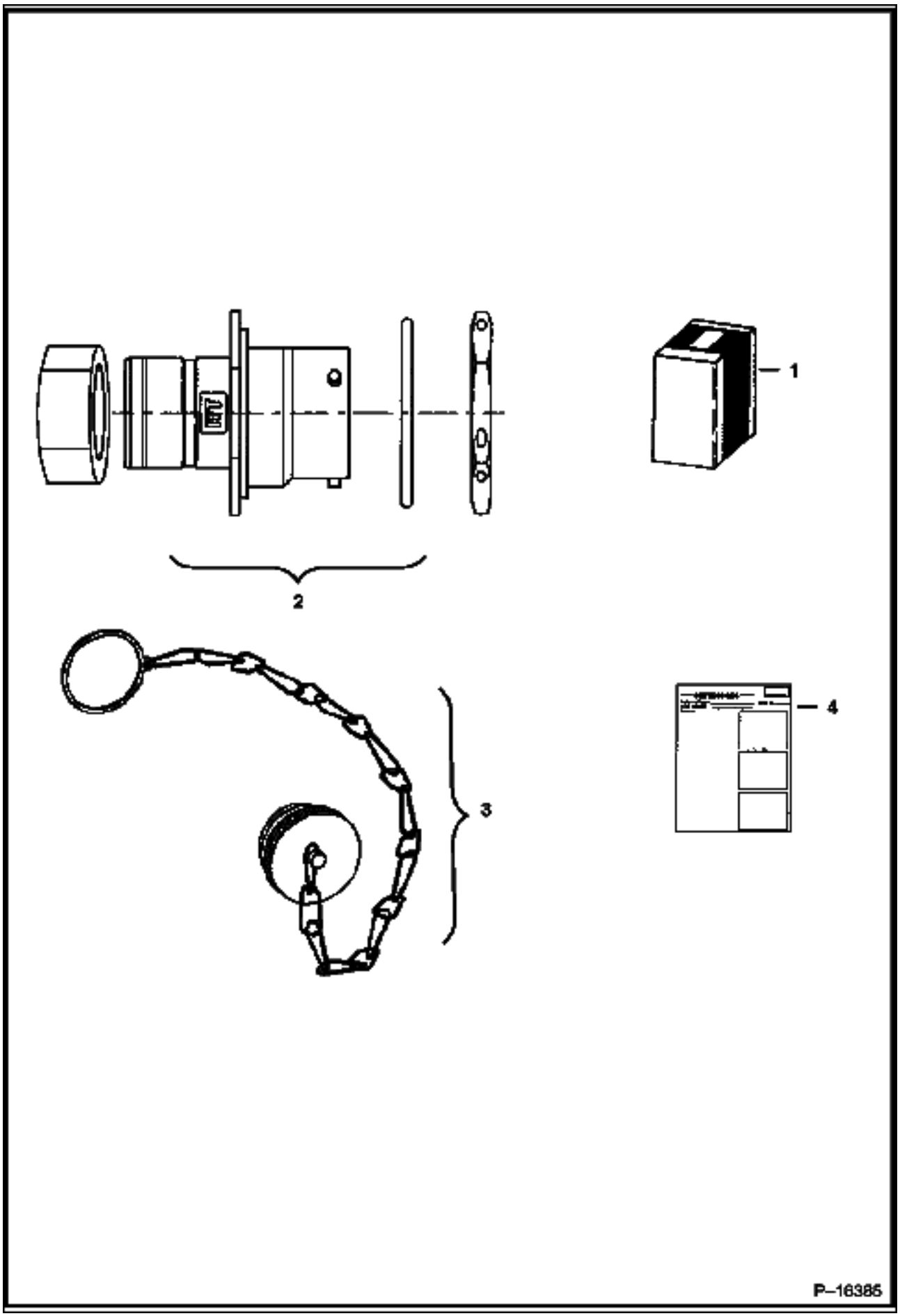

ELECTRICAL CONNECTOR KIT (Cont'd)
(7-Pin)

Ref No	Part Number	Description	Remarks	Serial Number	Qty
1	6727176	KIT			1
2	6674802	CONNECTOR	7-pin		1
2	6669549	SOCKET	small		4
2	6677136	SOCKET	12 ga		3
3	6675026	CAP			1
4	6901076	INSTRUCTIONS			1

ELECTRICAL CONTROLS KIT
(14 Pin Attachments)

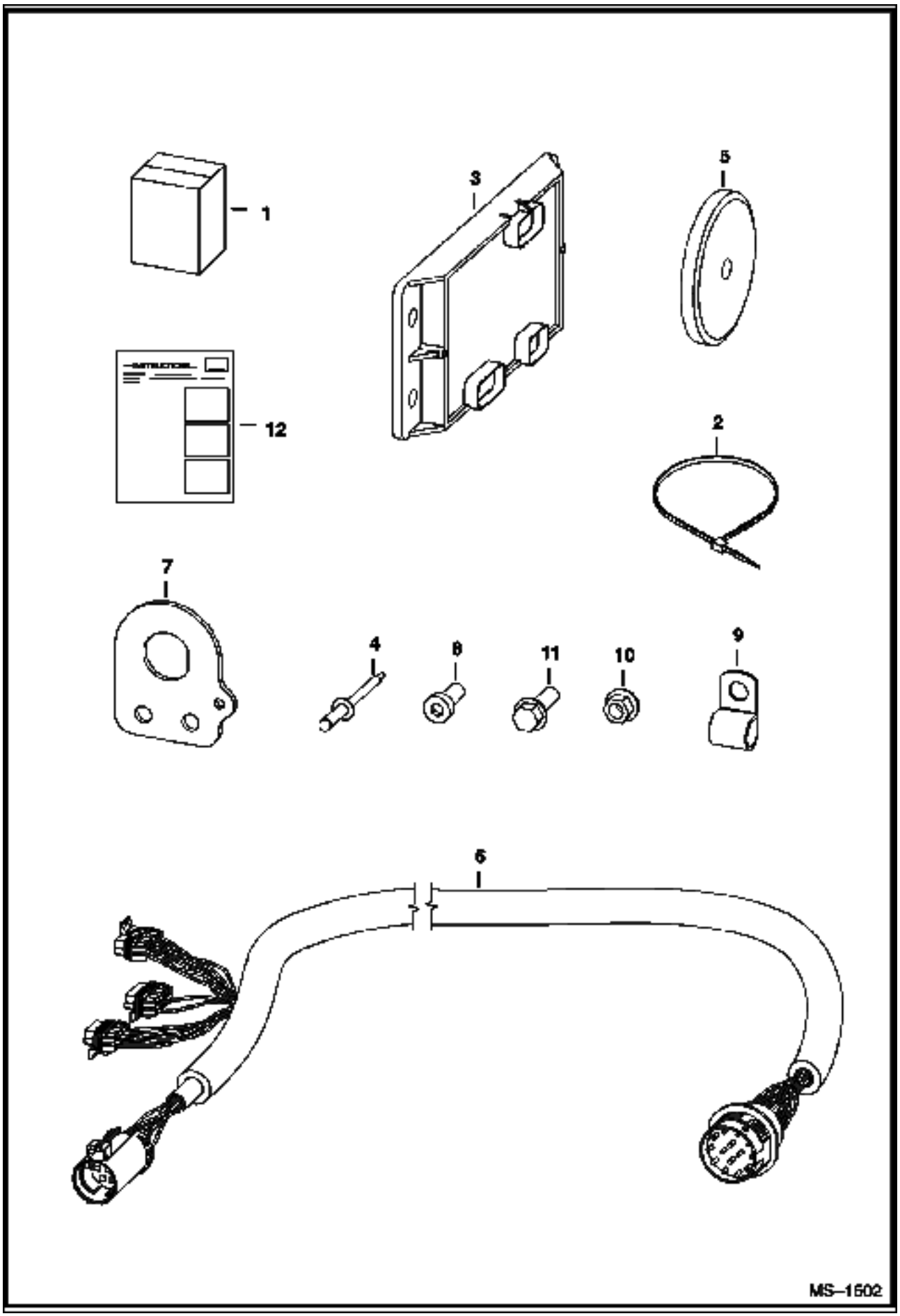

ELECTRICAL CONTROLS KIT (Cont'd)
(14 Pin Attachments)

Ref No	Part Number	Description	Remarks	Serial Number	Qty
1	6733136	KIT			1
2	6624289	STA STRAP			4
3	6678675	CONTROLLER			1
4	6704892	RIVET			1
5	6719448	MAGNET			2
6	6732730	HARNESS			1
7	6733144	MOUNT			1
8	25G000612B	BOLT			2
9	30H000050B	CLAMP			6
10	83D000006B	NUT			2
11	84G003112B	BOLT			8
12	6901872	INSTRUCTIONS			1

ELECTRICAL CONTROLS KIT
(7 Pin Attachments)

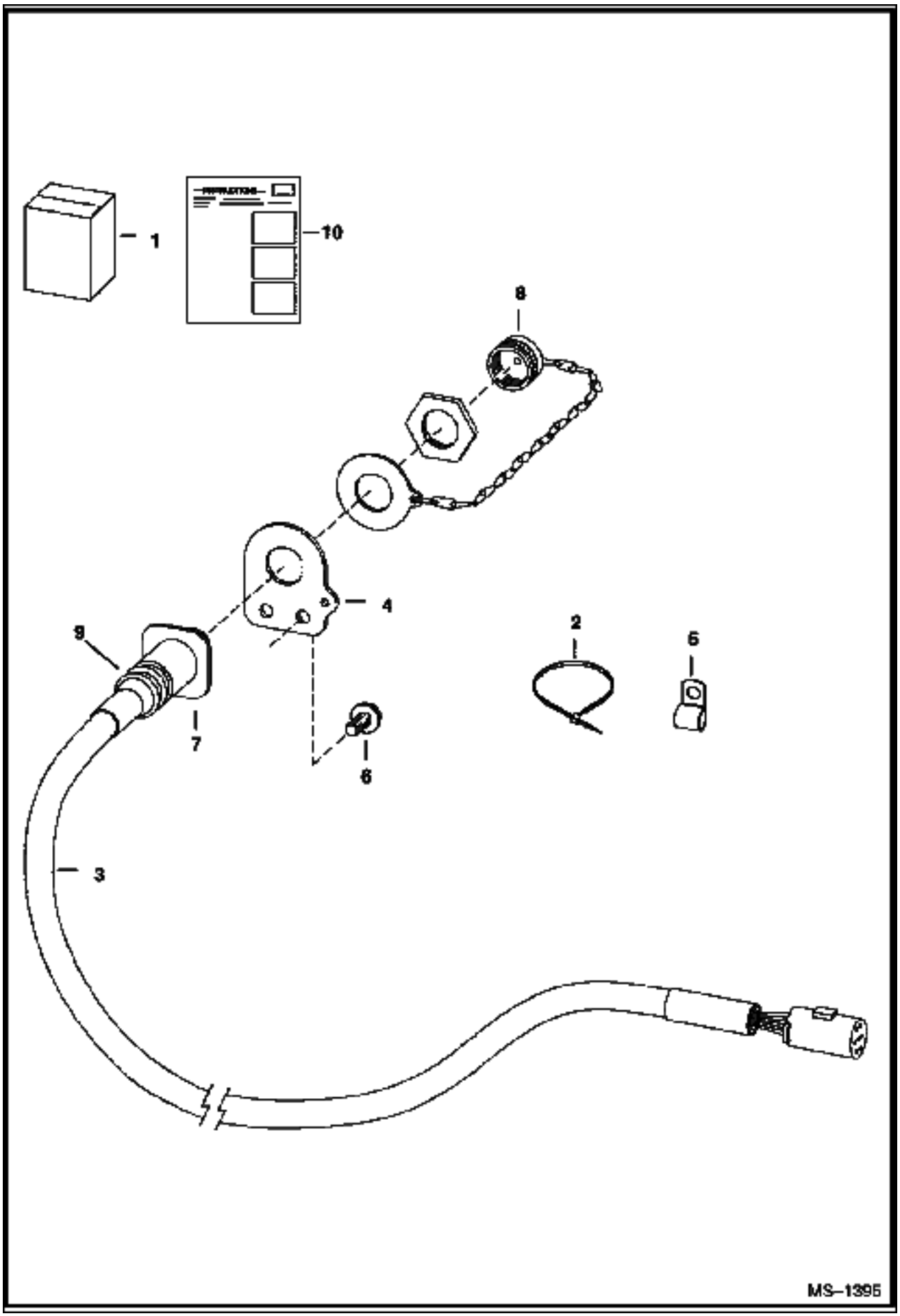

ELECTRICAL CONTROLS KIT (Cont'd)
(7 Pin Attachments)

Ref No	Part Number	Description	Remarks	Serial Number	Qty
1	6733142	KIT	Ref. 3-11		1
2	6624289	STA STRAP			4
3	6718426	HARNESS	W/Ref. 4 & 9		1
4	6718750	MOUNT			1
5	30H000027B	CLIP			6
6	84G003112B	BOLT			8
7	6674802	CONNECTOR	7-pin		1
7	6669549	SOCKET	small		4
7	6677136	SOCKET	large - 12 ga.		3
8	6675026	CAP			1
9	6674799	ADAPTER	heat shrink		1
10	30H000035B	CLAMP			1
11	6901871	INSTRUCTIONS			1

ELECTRICAL CONTROLS KIT
(To Run G-Series Attachments & Old Attachments) (W/O Toggle Switch)

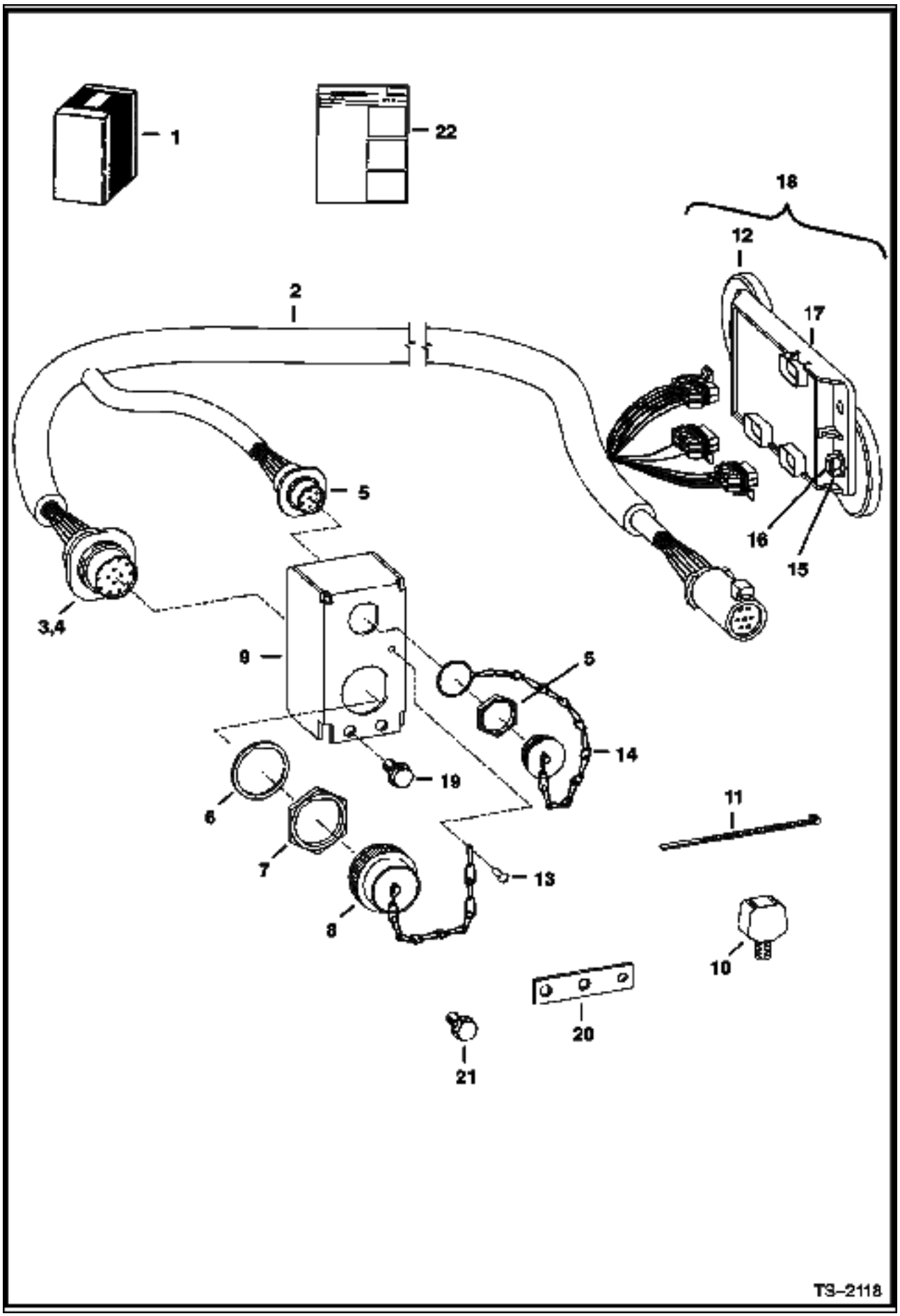

ELECTRICAL CONTROLS KIT (Cont'd)
(To Run G-Series Attachments & Old Attachments) (W/O Toggle Switch)

Ref No	Part Number	Description	Remarks	Serial Number	Qty
1	6727739	KIT			1
2	6729380	HARNESS	W/Ref. 3 - 8 & 14		1
3	6667569	CONNECTOR	Also Order (14) of Ref. 4		1
4	6664040	PIN	male		x
5	6674802	CONNECTOR	See Illustration ELECTRICAL CONNECTOR KIT/ P16385 7-PIN		1
5	6669549	SOCKET	small		4
5	6677136	SOCKET	large - 12 ga.		3
6	6664037	WASHER			2
7	6664036	NUT			2
8	6664035	CAP			1
9	6726945	MOUNT			1
10	6675281	MOUNT	models S175, S185 & 773G		1
11	6624289	STA STRAP			8
12	6719448	MAGNET	100 lb. force		4
13	6704892	RIVET			1
14	6675026	CAP			2
15	83D000006B	NUT			2
16	25G000612B	BOLT			2
17	6678675	CONTROLLER			1
18		CONTROLLER	NAP - assy - Ref. 12 & 15 - 17 - Order Ref. 17 & (2) ea. of Ref. 12, 15 & 16		1
19	84G003112B	BOLT			2
20	6730291	BRACKET	models 873G - 883		1
21	35C000512B	BOLT			2
22	6901116	INSTRUCTIONS			1

ENGINE MOUNT KIT
(For Rough Application)

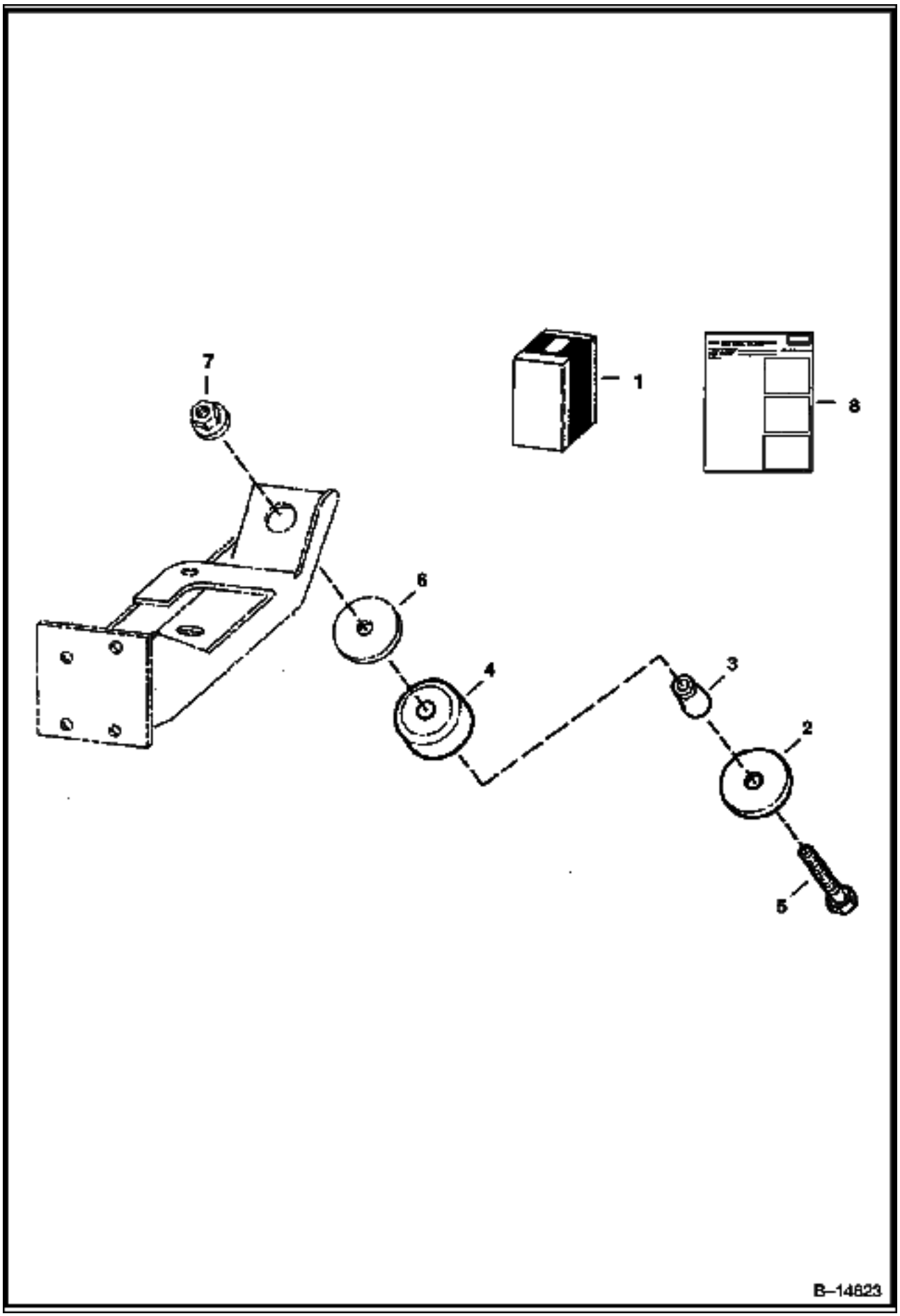

ENGINE MOUNT KIT (Cont'd)
(For Rough Application)

Ref No	Part Number	Description	Remarks	Serial Number	Qty
1	6711632	MOUNTING KIT	Ref. 2 - 8		1
2	6661787	WASHER			4
3	6715287	SPACER			4
4	6668104	MOUNT			4
5	43C000852B	BOLT			4
6	6705106	WASHER			4
7	6652918	NUT			4
8	6724482	INSTRUCTION			1

EXPORT ACCESSORIES
(Caliper Brake Kit)

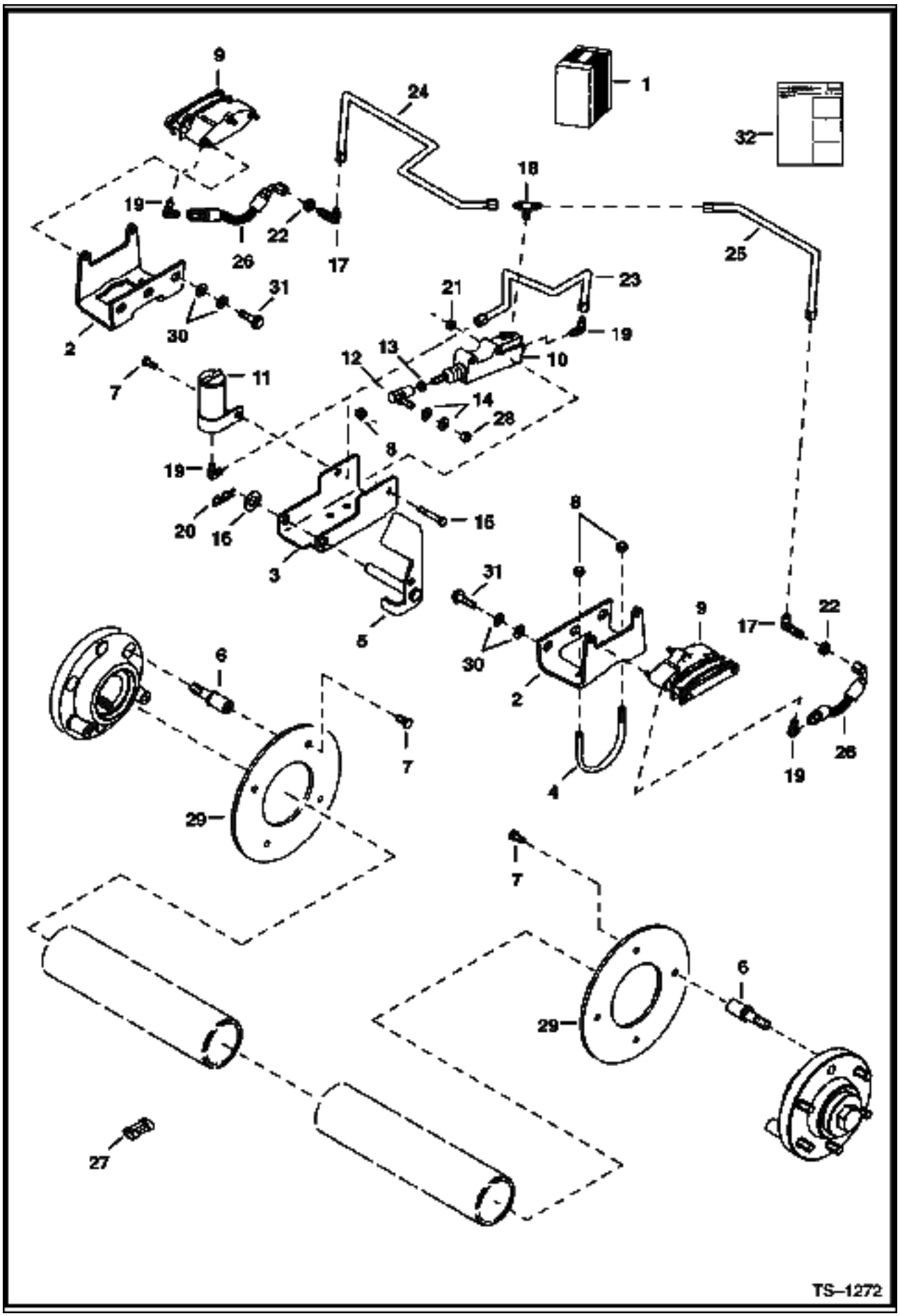

EXPORT ACCESSORIES (Cont'd)
(Caliper Brake Kit)

Ref No	Part Number	Description	Remarks	Serial Number	Qty
1	6719150	KIT	Ref. 2 - 32		1
2	6718728	MOUNT ASSY.	caliper		2
3	6709236	MOUNT	pedal		1
4	6709237	CLAMP			2
5	6709239	PEDAL ASSY.	brake		1
6	6709229	BOLT	wheel		8
7	17C000612B	BOLT			9
8	91D000006B	NUT			5
9	6666932	BRAKE	See Illustration EXPORT ACCESSORIES/ B14851		2
10	6666933	CYLINDER	See Illustration EXPORT ACCESSORIES/ B14851		1
11	6661117	TANK			1
12	6599744	BALL JOINT			1
13	8D000006B	NUT			1
14	25E000017B	WASHER			2
15	17C000532B	BOLT			2
16	25E000025B	WASHER			1
17	45K000003B	FITTING			2
18	98F000003B	TEE			1
19	83F000003B	ELBOW			4
20	1318565B	PIN			1
21	91D000005B	NUT			2
22	86F000003B	NUT			2
23	6709400	TUBE			1
24	6718205	TUBE			1
25	6718206	TUBE			1
26	6709547	HOSE			2
27	6667139	CAP			1
28	62D000006B	NUT			1
29	6709234	DISC	brake		2
30	25E000011B	WASHER			8
31	31C000824B	BOLT			4
32	6900934	INSTRUCTIONS			1

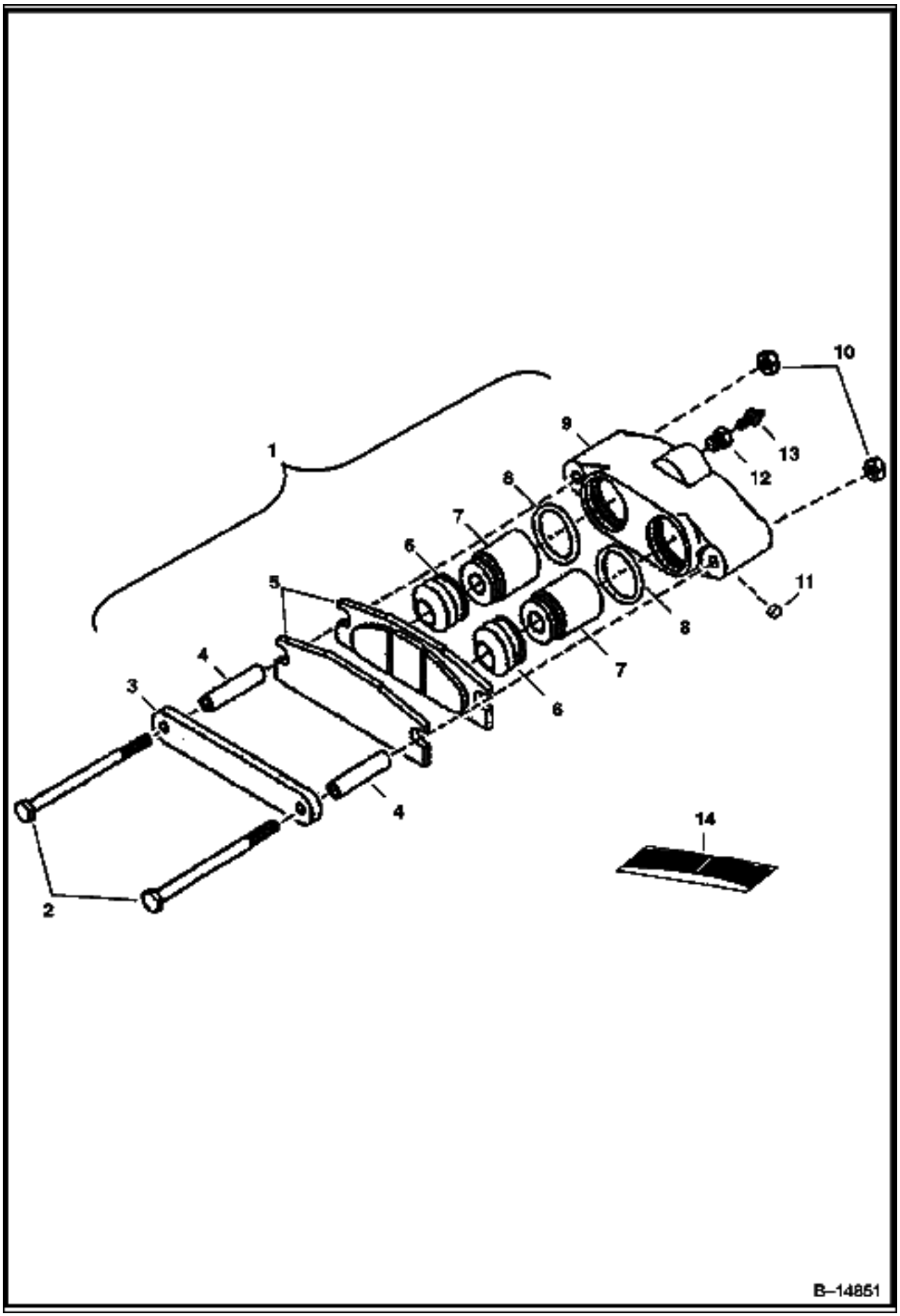
1
2
3
4
4
5
6
6
7
7
8
8
9
10
11
12
13
14
B–14851

EXPORT ACCESSORIES (Cont'd)
(Caliper Brake)

Ref No	Part Number	Description	Remarks	Serial Number	Qty
1	6666932	BRAKE	W/Ref. 2 - 13		1
2	6669154	BOLT			2
3	6669155	PLATE			1
4	6669156	SPACER			2
5	6669184	STATOR ASSY.			1
6		BOOT	NSS - Order Ref. 14		2
7	6669159	PISTON			2
8		O-RING	NSS - Order Ref. 14		2
9		HOUSING	NSS - Order Ref. 1		1
10	6669162	NUT			2
11	6669163	PLUG			1
12	6669164	ADAPTER			1
13	6669165	SCREW	bleeder		1
14	6669185	SEAL KIT	W/Ref. 6 & 8		1

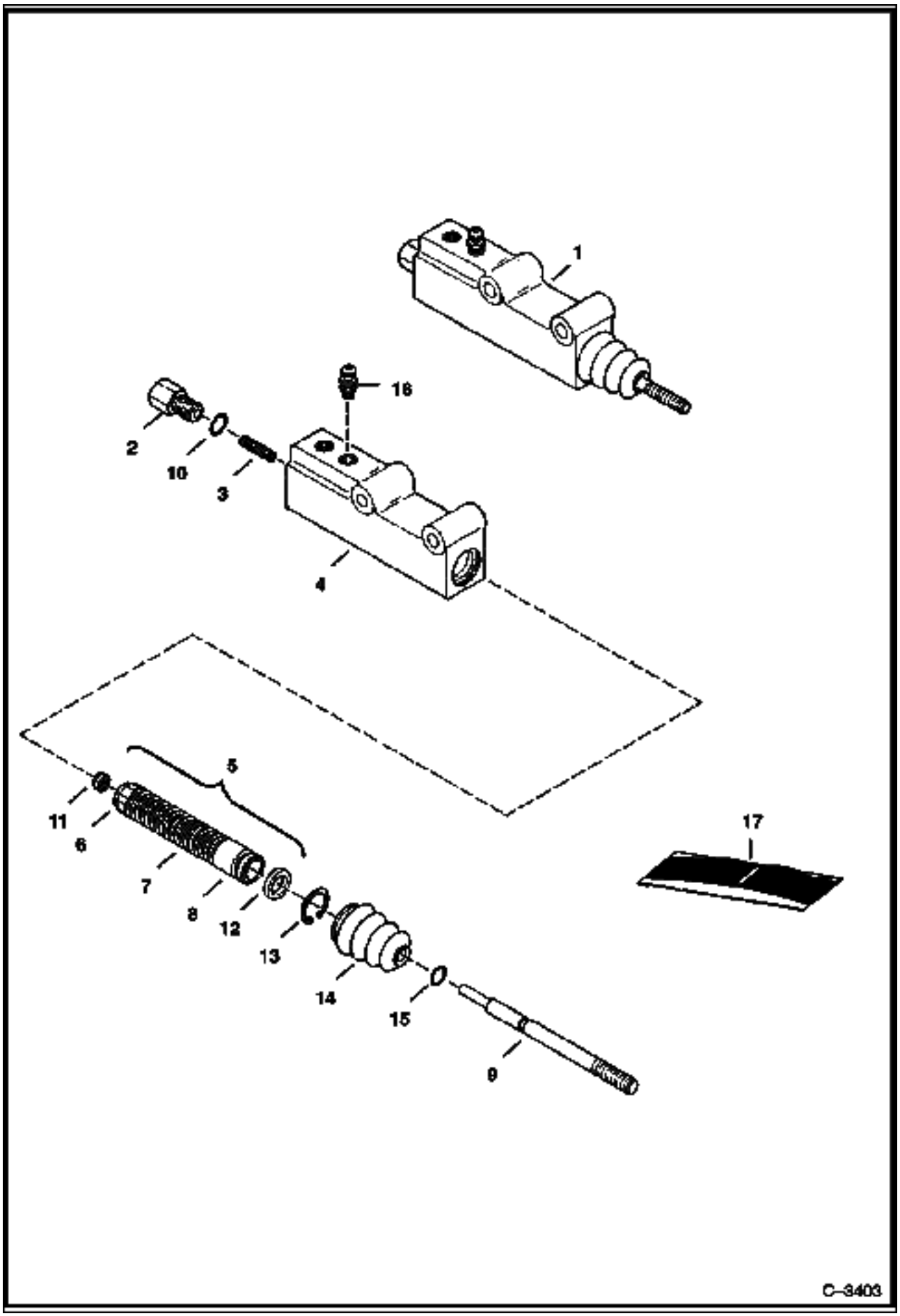
1
16
2
10
3
4
5
11
6
7
8
12
13
14
15
9
17
C-3403

EXPORT ACCESSORIES (Cont'd)
(Caliper Brakes - Master Cylinder)

Ref No	Part Number	Description	Remarks	Serial Number	Qty
1	6666933	CYLINDER	master brake - Ref. 2 - 16		1
2		ADAPTER	NSS		1
3		SPRING	NSS		1
4		BODY	NSS		1
5		SPRING ASSY.	NSS - Ref. 6 - 8 & 11		1
6		RETAINER	NSS		1
7		SPRING	NSS		1
8		PISTON	NSS		1
9		PUSH ROD	NSS		1
10		O-RING	NSS		1
11		SEAT	NSS		1
12		CUP	NSS		1
13		SNAP RING	NSS		1
14		BOOT	NSS		1
15		O-RING	NSS		1
16	6668097	SCREW	bleeder		1
17	6661608	SEAL KIT	Ref. 10 - 15		1

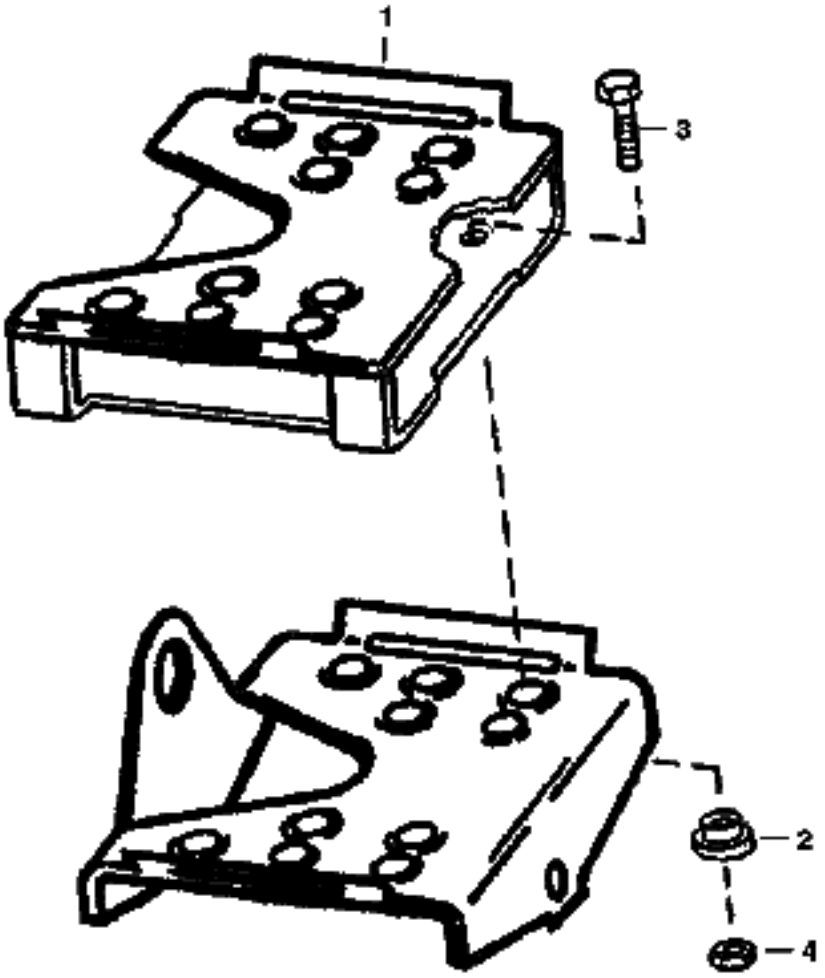
1
3
5
2
4
B–14856

EXPORT ACCESSORIES (Cont'd)
(Pedal Extenders)

Ref No	Part Number	Description	Remarks	Serial Number	Qty
1	6713115	PEDAL	extender		2
2	6713116	BUSHING			8
3	17C000516B	BOLT			8
4	85D000005B	NUT			8

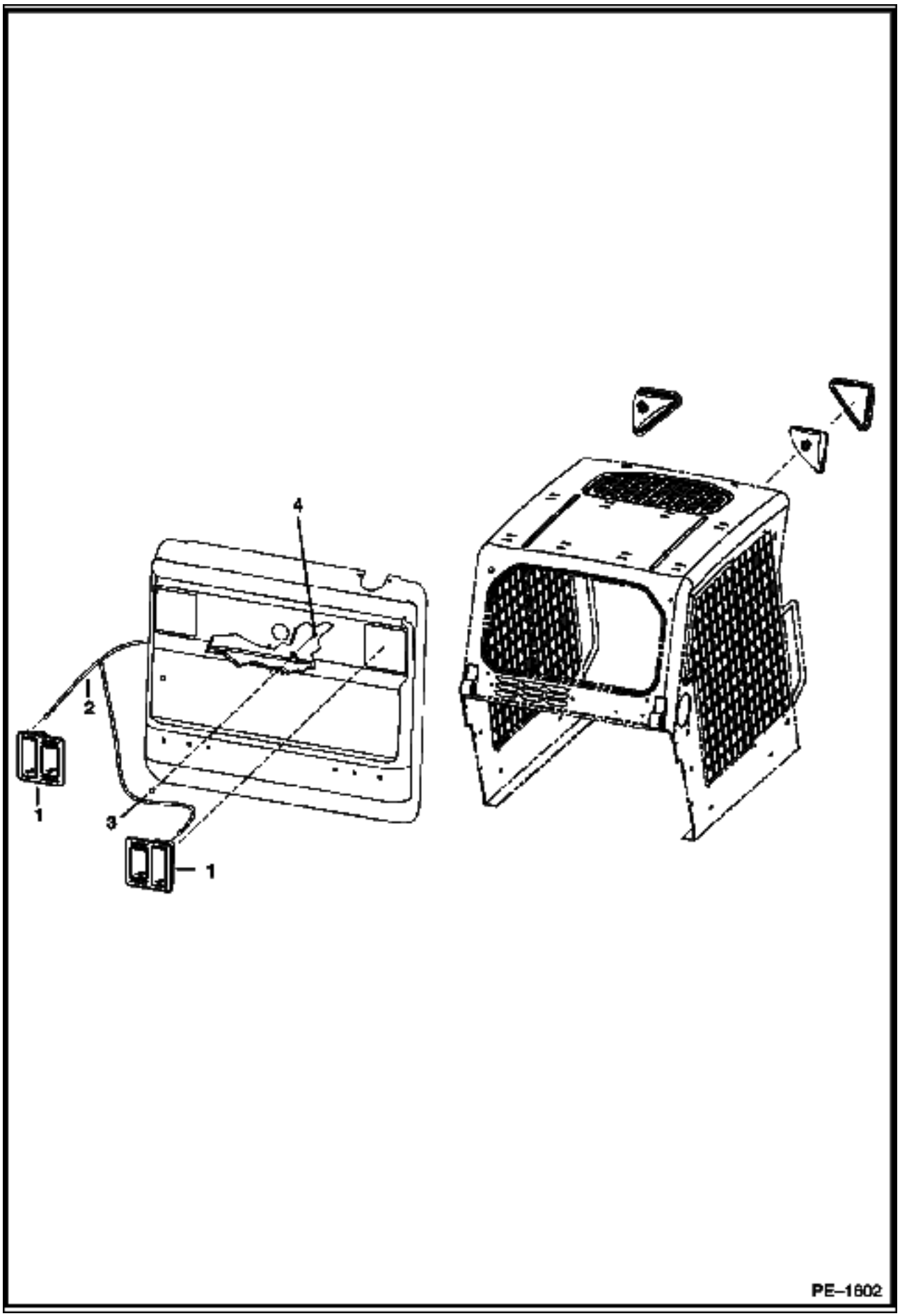
4
2
1
3
1
PE–1602

EXPORT ACCESSORIES (Cont'd)
(Rear Door Lights)

Ref No	Part Number	Description	Remarks	Serial Number	Qty
1		LIGHT	NAP - rear - Order 7101384 Light - Was 6707789 [A]		2
1	6666568	BULB	21W		2
1	6667887	BULB	21/5W		2
1	6668007	SCREW			2
1	6668010	LENS			2
1	6671027	LIGHT			2
1	7101384	LIGHT	rear		2
1	6686097	BULB	turn		1
1	6686096	LENS	amber - turn		1
1	6686098	BULB	stop		1
1	6686099	LENS	red - stop		1
1	6686100	SCREW			2
2	6718198	HARNESS	deluxe		1
3	37C000512B	BOLT			1
4	4DM00005B	NUT			4

EXPORT ACCESSORIES
(Road Kit)

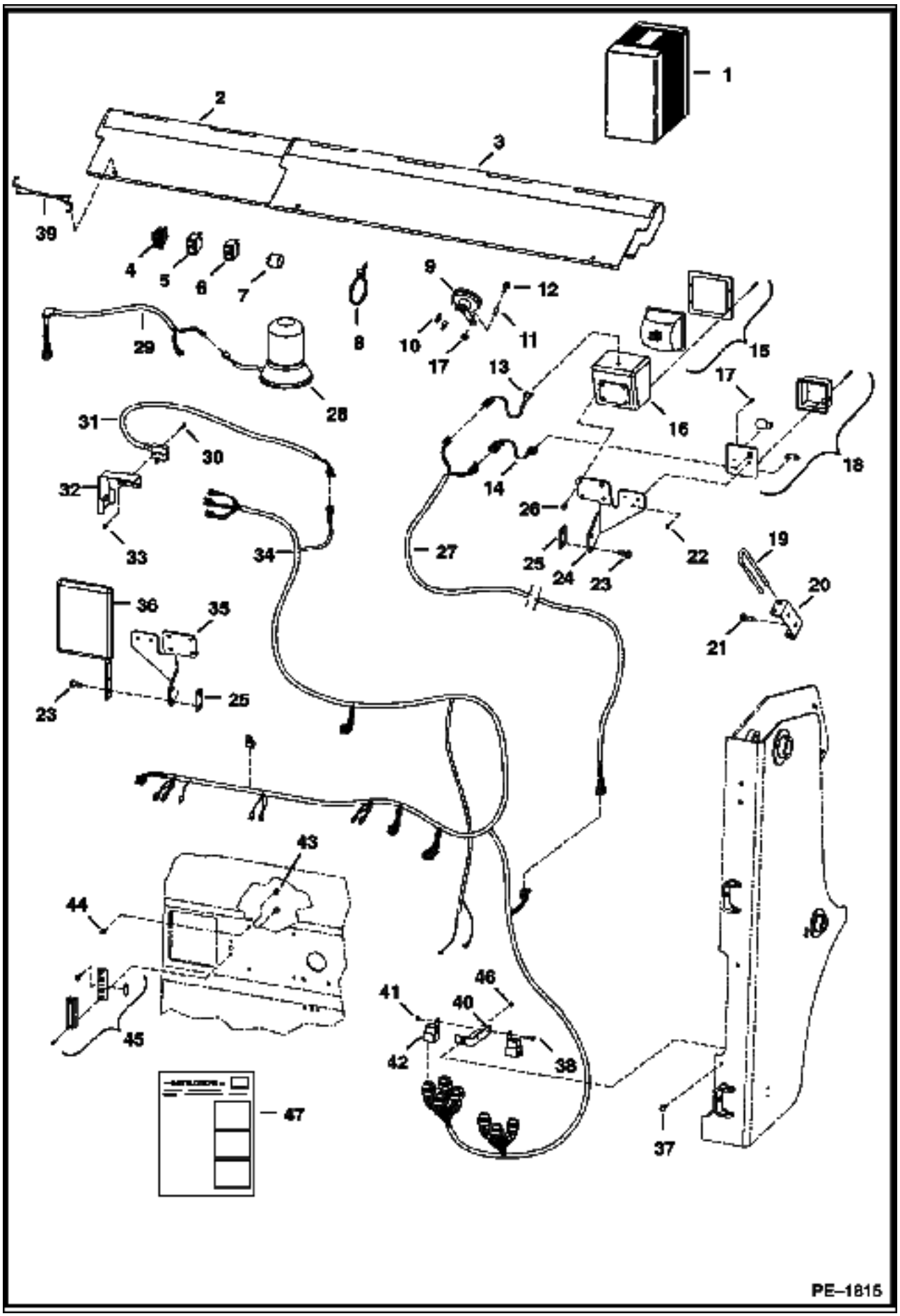

EXPORT ACCESSORIES (Cont'd)
(Road Kit)

Ref No	Part Number	Description	Remarks	Serial Number	Qty
1		KIT	SALES - Order 6731237 - For Europe Only		1
2	6713841	SHIELD	bucket		1
3	6714820	SHIELD	bucket		1
3	6713840	DECAL			1
4	6676872	TURN SIGNAL			1
5	6668815	SWITCH	hazard		1
6	6668816	SWITCH	beacon		1
7	6557904	FLASHER			1
8	6624289	STA STRAP			26
9	6671106	HORN			1
10	6675064	TERMINAL			2
11	6732206	SPACER			1
12	35C000536B	BOLT			1
13	6713994	HARNESS	adapter - headlight		2
14	6713993	HARNESS	adapter - light		2
15	6665728	LIGHT	front		2
16	6707804	HOUSING			2
17	85G000808B	BOLT			4
18	6665727	LIGHT	front turn		2
19	6731222	PIN	Bob-tach		1
20	6731973	HOLDER	pin		1
21	84G003712B	BOLT			2
22	12D000008B	NUT			4
23	84G003716B	BOLT			4
24	6713151	MOUNT	light - R.H.		1
25	6735825	SPACER			2
26	17C000508B	BOLT			8
27	6731239	HARNESS	boom light		2
28	6675523	BEACON	light		1
29	6718872	HARNESS	cab exterior		1
30	85G000616B	SCREW			2
31	6661150	SWITCH			1
32	6713736	BRACKETS			1
33	12D000006B	NUT			2
34	6726430	HARNESS	engine/tail - Italian		1
35	6713150	MOUNT	light - L.H.		1
36	6665860	KIT	side mirror		1
37	17C000512B	BOLT			1
38	17C000410B	BOLT			2
39	6731819	STRAP	rubber		3
40	6702650	MOUNT	fuse		1
41	85D000004B	NUT			2
42	6670312	SOLENOID	magnetic		4
43	83D000004B	NUT			4
44	35C000410B	BOLT			4
45	6665729	LIGHT	license plate		1
46	55D000005B	NUT			2
47	6901663	INSTRUCTIONS			1

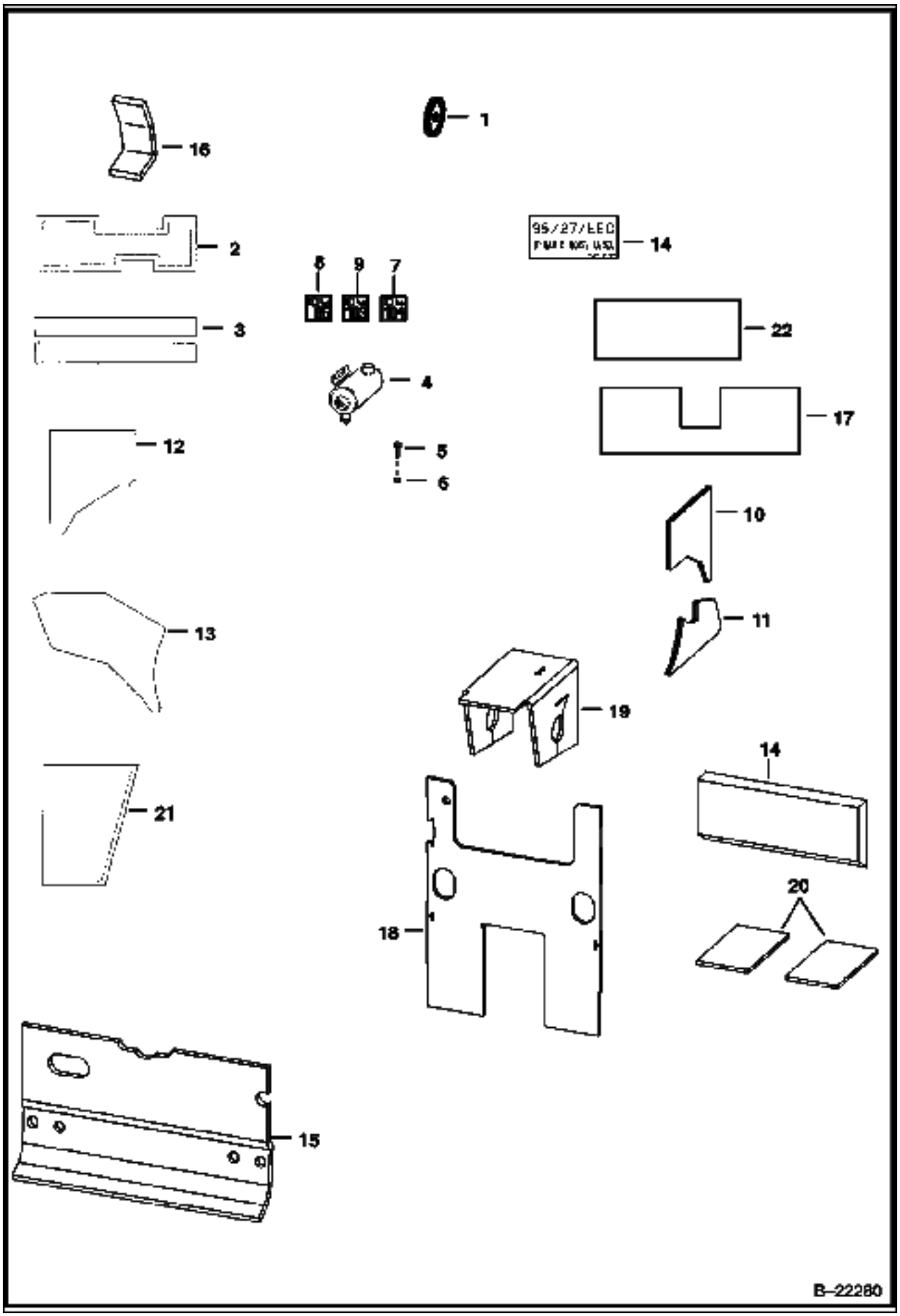
16
1
2
95/27/EEC
14
8
9
7
3
22
4
17
12
5
6
10
13
11
19
21
14
18
20
15
B–22280

EUROPEAN ACCESSORIES (Cont'd)
(Sound Option)

Ref No	Part Number	Description	Remarks	Serial Number	Qty
1	6712970	PULLEY	4.75"(120,7 mm) O.D.		1
1	6712971	PULLEY	5.00"(127 mm) O.D.		1
1	6703483	PULLEY	5.25"(133,4 mm) O.D.		1
2	6719327	INSULATION	fender - L.H.		1
3	6719328	INSULATION	fender - R.H.		1
4	6735285	AIR CLEANER			1
5	84G003716B	BOLT			2
6	6562619	BUSHING			4
7	6812569	DECAL	noise level - 101 decibel		1
8	6579385	DECAL	sound level warning - 85 decibel		1
9	6579404	DECAL	sound level warning-103 decibel		1
10	6719332	INSULATION	blower housing		1
11	6704769	INSULATION	blower housing		1
12	6719333	INSULATION	blower housing		1
13	6719334	INSULATION	blower housing		1
14	6715428	DECAL	dynamic level		1
15	6715106	INSULATION	cab seal		1
16	6703331	INSULATION	air inlet		1
17	6732724	INSULATION	crossmember		1
18	6719372	INSULATION	steering panel		1
19	6719331	INSULATION	transmission top		2
20	6719330	INSULATION	pedal		1
21	6703968	INSULATION	transmission side		1
22	6725361	INSULATION	crossmember		1

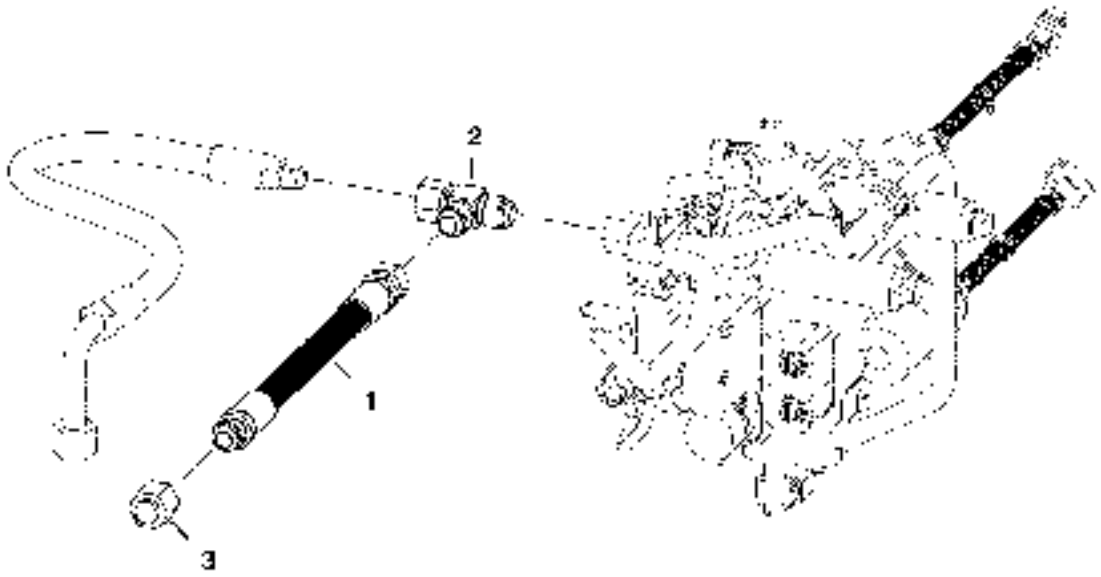

PF-2847

Sound Option - Hydraulic Muffler for Selectable Joystick Controls

Ref No	Part Number	Description	Remarks	Serial Number	Qty
1	7112651	HOSE	hydraulic muffler		1
2	13K000008B	TEE			1
3	36K000008B	CAP			1

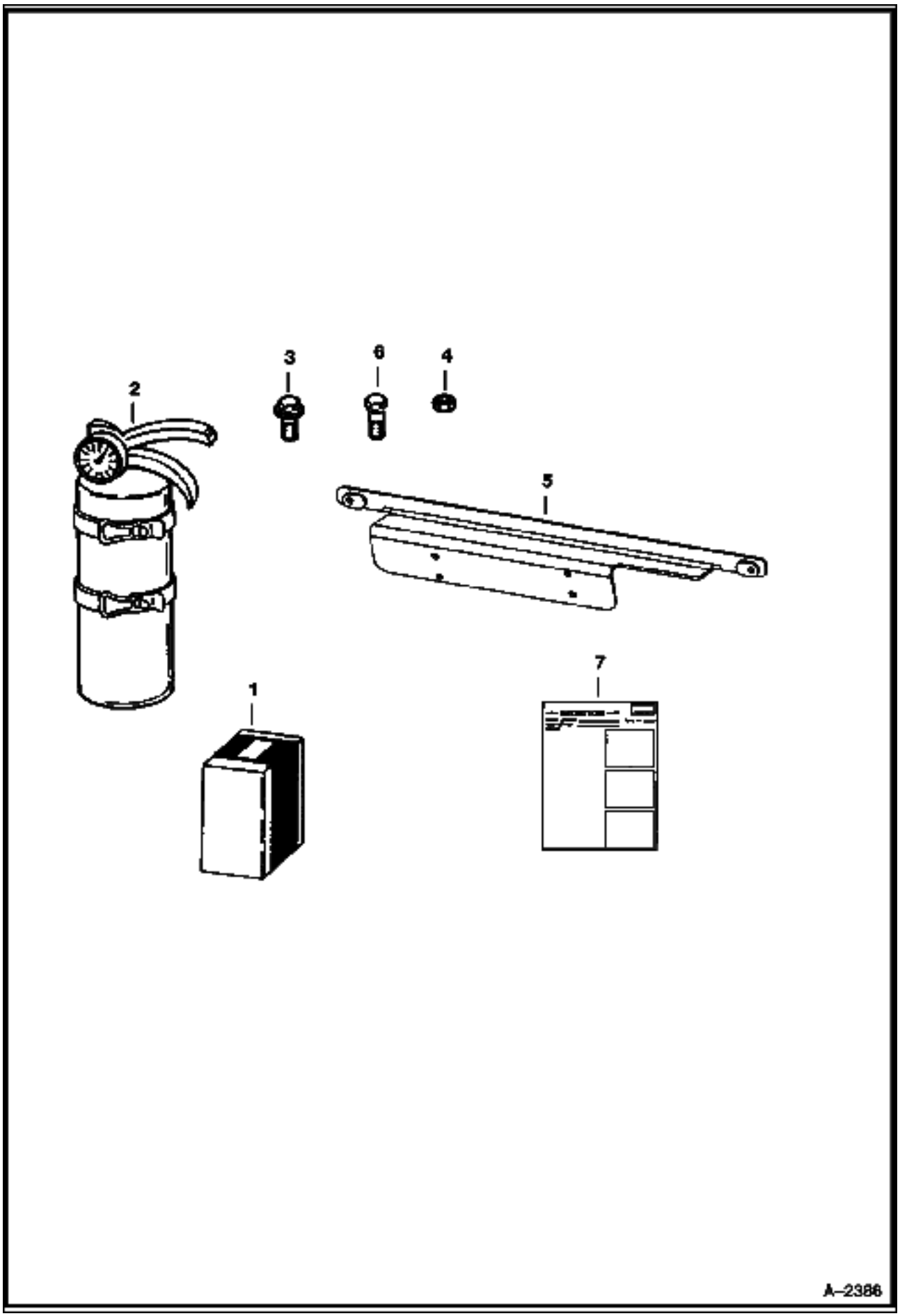
3
6
4
2
5
1
7
A–2386

Ref No	Part Number	Description	Remarks	Serial Number	Qty
1	6725898	KIT	fire extinguisher - Ref. 2 - 7		1
2	6675581	EXTINGUISHER			1
3	45G001006B	BOLT			4
4	12D000010B	NUT			4
5	6725906	BRACKET			1
6	31C000410B	BOLT			2
7	6901025	INSTRUCTIONS			1

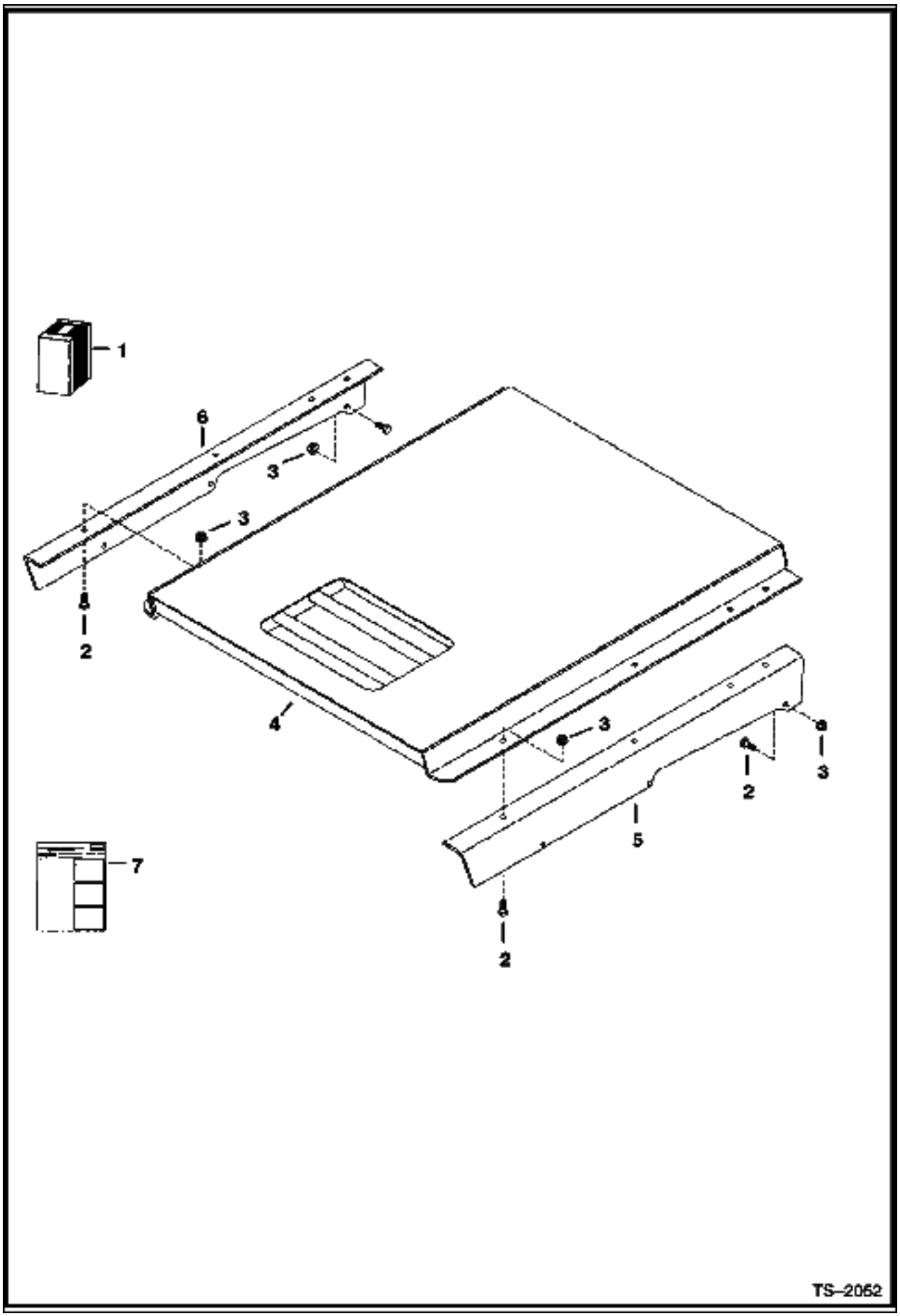
1
6
3
3
2
4
3
2
3
5
7
2
TS–2052

Ref No	Part Number	Description	Remarks	Serial Number	Qty
1	6718924	KIT	Ref. 2 - 7		1
2	17C000616B	BOLT			14
3	83D000006B	NUT			14
4	6702402	SHIELD			1
5	6718833	BRACKET	L.H.		1
6	6718834	BRACKET	R.H.		1
7	6720592	INSTRUCTIONS			1

FLASHER LIGHTS
(4-Way) (Turn Indicators)

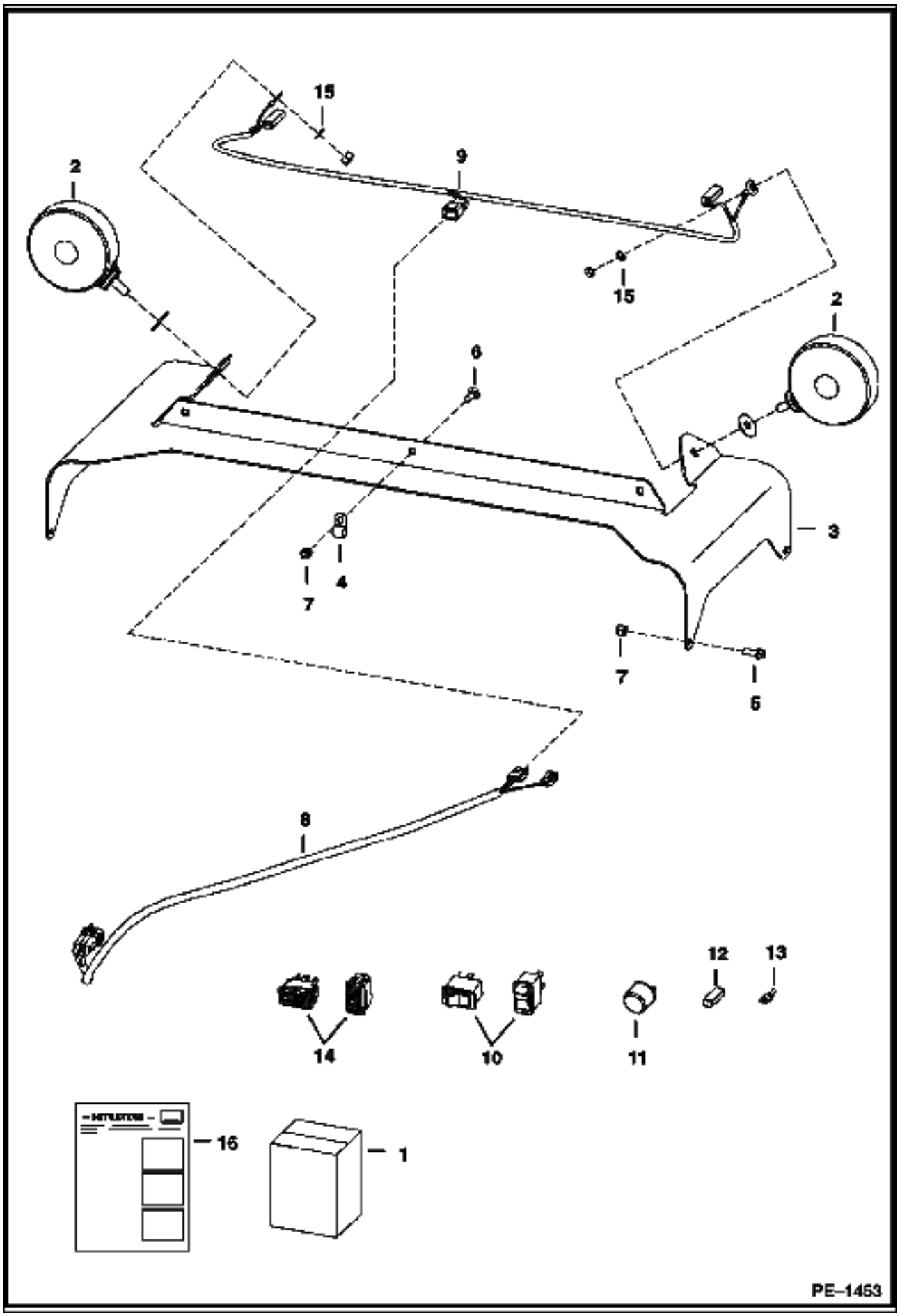

FLASHER LIGHTS (Cont'd)
(4-Way) (Turn Indicators)

Ref No	Part Number	Description	Remarks	Serial Number	Qty
1	6718411	KIT	flasher lights - Ref. 2, 3 & 5-16 - If loader is not equipped W/ heater, air conditioning, selectable joystick controls, advanced control system, power bob-tach, non-power port plug-in strobe lights and/or rotating beacon, also order 7116260 deluxe harness		1
2	6517516	LIGHT			2
3	6718326	MOUNT			1
4	30H000021B	CLAMP	Not in Kit		3
5	35C000412B	BOLT			4
6	37C000412B	BOLT			3
7	59D000004B	NUT			7
8	6718872	HARNESS	ext. cab		1
9	6718873	HARNESS	4-way flasher		1
10	6665316	SWITCH	horizontal		1
10	6668815	SWITCH	vertical		1
11	6557904	FLASHER			1
12	614142B	SLEEVE			2
13	6515131	TERMINAL			2
14	6675835	TURN SIGNAL	horizontal		1
14	6676872	TURN SIGNAL	vertical		1
15	6E000005B	WASHER	lock		2
16	6900848	INSTRUCTIONS			1

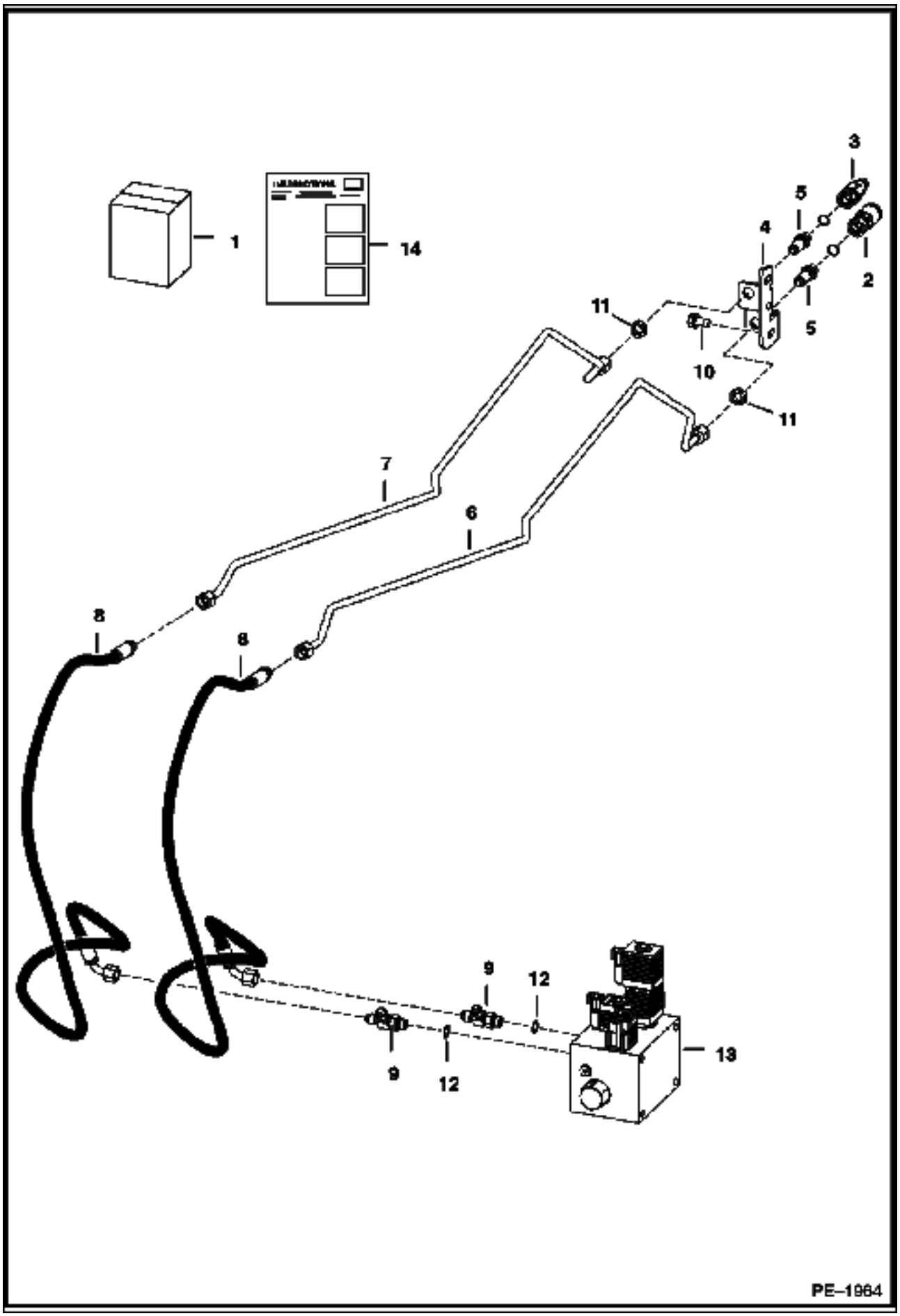
1
14
3
5
4
2
5
11
10
11
7
6
8
8
9
12
9
12
13
PE–1964

FRONT AUXILIARY (Cont'd)
(R.H. Kit)

Ref No	Part Number	Description	Remarks	Serial Number	Qty
1	6731524	KIT	requires rear auxiliaries		1
2	6667803	COUPLER	female		1
3	6667804	COUPLER	male		1
3	6669657	SEAL KIT			1
4	6711674	MOUNT			1
5	6716089	CONNECTOR	W/ O-rings		2
6	6718244	TUBE			1
7	6718245	TUBE			1
8	6718454	HOSE			2
9		VALVE	See Illustration REAR AUXILIARY VALVE/ B21972R select - Not in Kit - Was 6669203 [D]		1
10	21KB00606B	TEE	W/Ref. 13		2
11	84G003712B	BOLT			2
12	86F000005B	NUT	NUT		3
13	79K000006B	O-RING			x
14	6901515	INSTRUCTIONS			1

GAS SPRING KIT

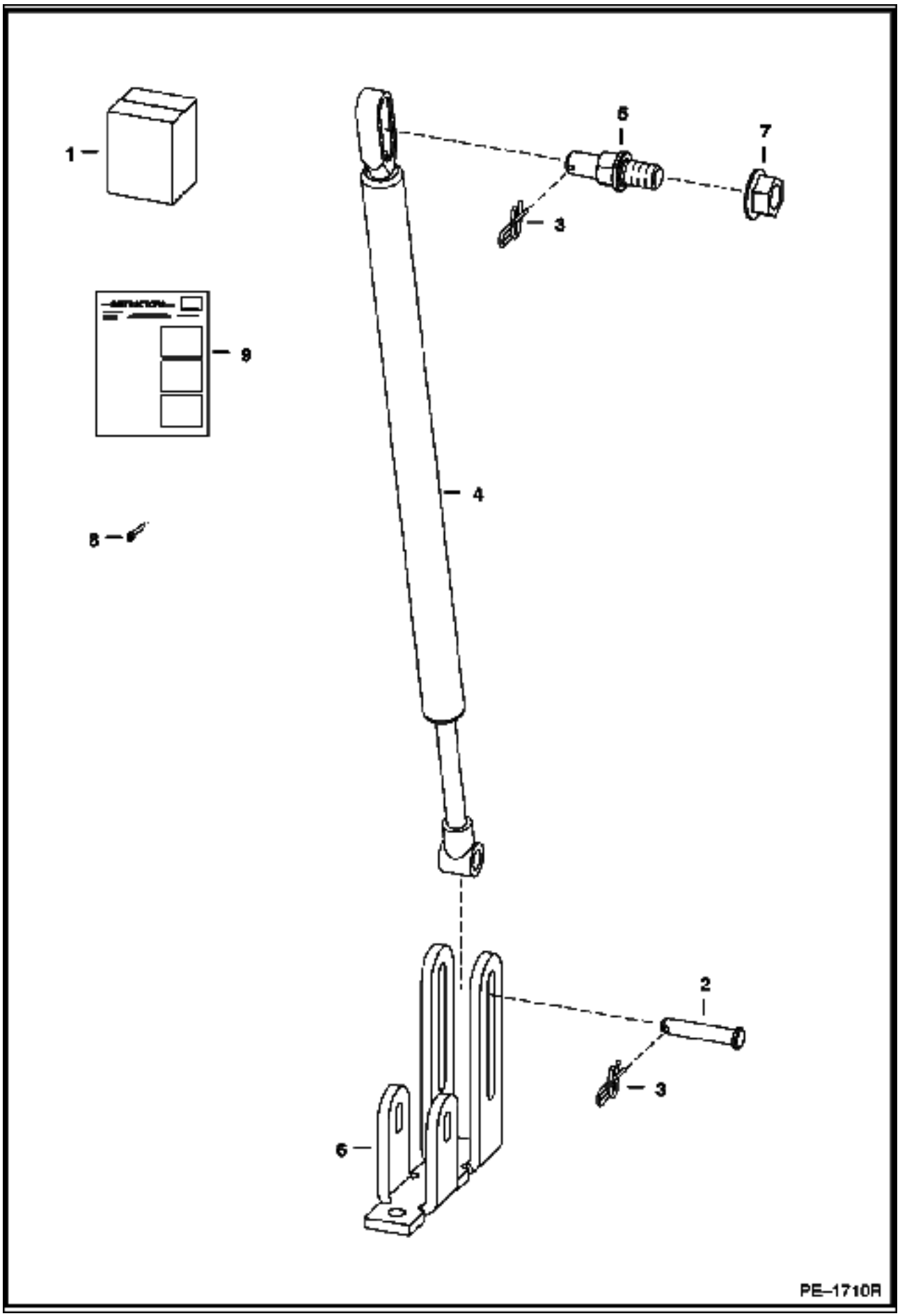

GAS SPRING KIT (Cont'd)

Ref No	Part Number	Description	Remarks	Serial Number	Qty
1	6732928	KIT			1
2	6567743	PIN			1
3	6631418	PIN			2
4	6678292	GAS SPRING			1
5	6719064	MOUNT			1
6	6729141	MOUNT			1
7	97D000008B	NUT			1
8	21G000804B	BOLT			1
9	6901816	INSTRUCTIONS			1

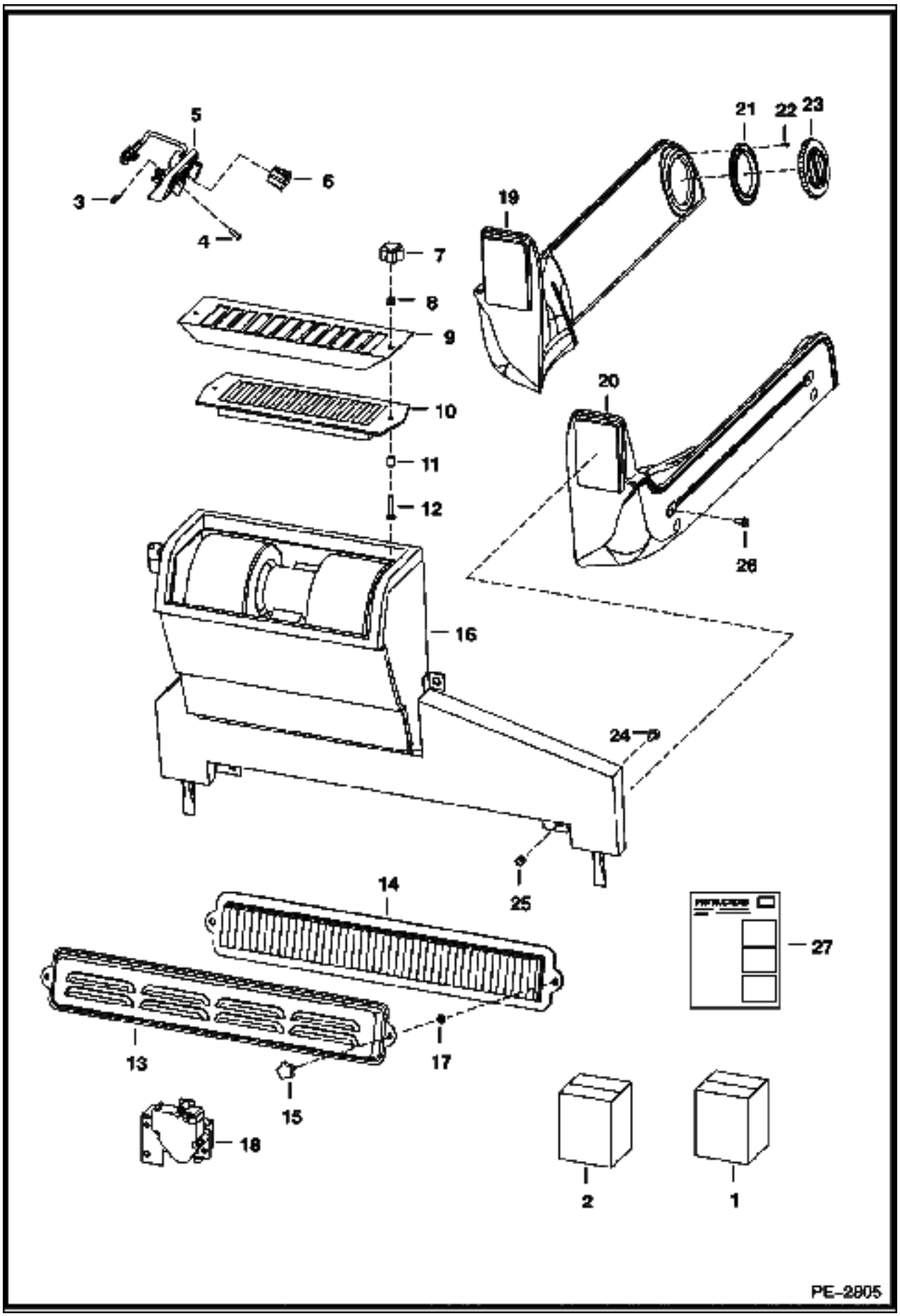
5
6
3
4
7
8
9
10
11
12
16
21
22
23
19
20
26
24
25
14
13
17
15
18
27
2
1
PE-2805

Ref No	Part Number	Description	Remarks	Serial Number	Qty
1	7116899	KIT HEATER CAB	If loader is not equipped W/ beacon, air conditioning, selectable joystick controls, advanced control system, power bob-tach, non-power port plug-in strobe lights and/or non-power port plug-in 4 way flashers, also order 7116260 deluxe harness		1
2	6725513	PACKAGE	Decal		1
3	6669091	CLIP	retainer		3
4	6669224	BOLT			3
5	6674228	PANEL	control		1
5	6640699	CONNECTOR			1
5	6718579	DECAL			1
5	6718887	PANEL			1
5	6675176	SWITCH	blower		1
5	6675177	KNOB			1
5	6675846	POTENTIOMETER			1
6	6675181	PLUG	switch hole - AC		1
7	6681614	KNOB			2
8	83D000004B	NUT			2
9	6718175	SCREEN	filter		1
10	6678207	FILTER	recirculation		1
11	6718837	SPACER			2
12	37C000424B	BOLT			2
13	6727847	COVER			1
14	6677983	FILTER			1
15	6726386	KNOB			2
16	6688543	HEATER	See Illustration HEATER/ PE1143		1
17	6676516	NUT	Push		2
18	7101928	VALVE			1
18	6641174	CONNECTOR	male		1
18	6689635	BRACKET	actuator mounting		1
18	6675172	BRACKET	valve mounting		1
18	6689636	ACTUATOR			1
18	6689637	VALVE			1
19	6735246	DUCT	L.H.		1
20	6735245	DUCT	R.H.		1
21	6675179	FLANGE	round		4
22	57G000608B	SCREW			16
23	6674231	VENT	round		4
24	37C000512B	BOLT			4
25	59D000005B	NUT			4
26	35C000410B	BOLT			4
27	6904255	INSTRUCTIONS			1

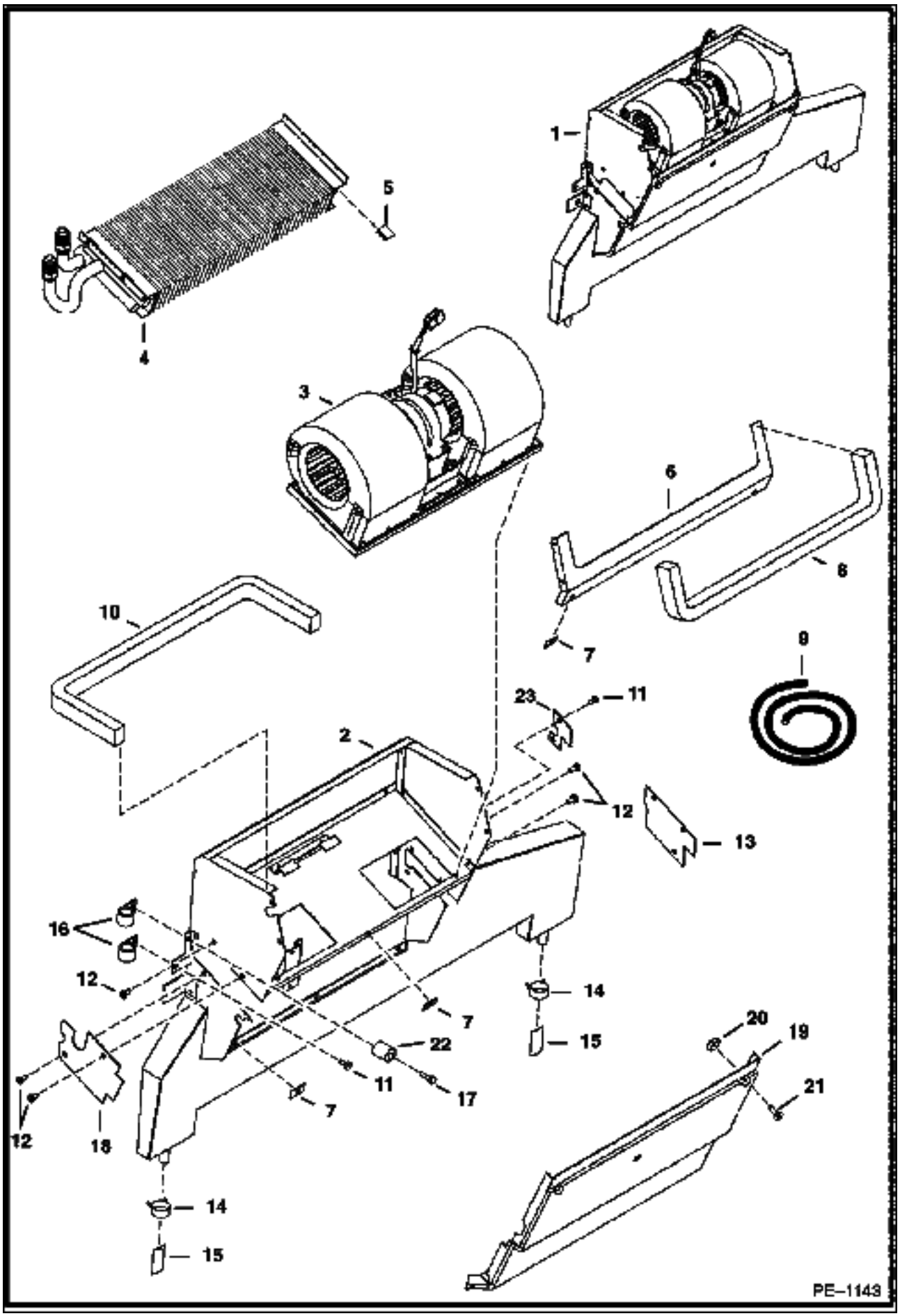
1
2
3
4
5
6
7
8
9
10
11
12
13
14
15
16
17
18
19
20
21
22
23
PE–1143

HEATER (Cont'd)
Heater Assembly

Ref No	Part Number	Description	Remarks	Serial Number	Qty
1	6688543	HEATER	Ref. 2-23		1
2	6677108	HOUSING			1
3	6675497	BLOWER	See Illustration HEATER/ B16401 assy		1
4		COIL	See Illustration HEATER/ PE1228 NAP		1
5	6676539	CLIP			3
6	6678152	SEAL			1
7	6677115	RECEPTACLE			6
8		SEAL	NAP - 22.6"(575mm) long - Order Ref. 9		1
9	6677111	SEAL	bulk - Sold Per Foot		x
10		SEAL	NAP - 25"(635mm) long - Order Ref. 9		1
11	6677119	SCREW	sheetmetal		7
12	6677118	SCREW	w/washer		4
13	6677120	COVER			1
14	6675510	CLAMP	drain hose		2
15	6675511	DRAIN VALVE			2
16	6675512	CLAMP	hose		2
17	6676653	SCREW			1
18	6677504	COVER			1
19	6678151	COVER			1
20	6677116	RETAINER			6
21	6677117	SCREW	captive		6
22	6676606	SPACER			1
23	6677105	COVER			1

HEATER
(Blower Assembly)

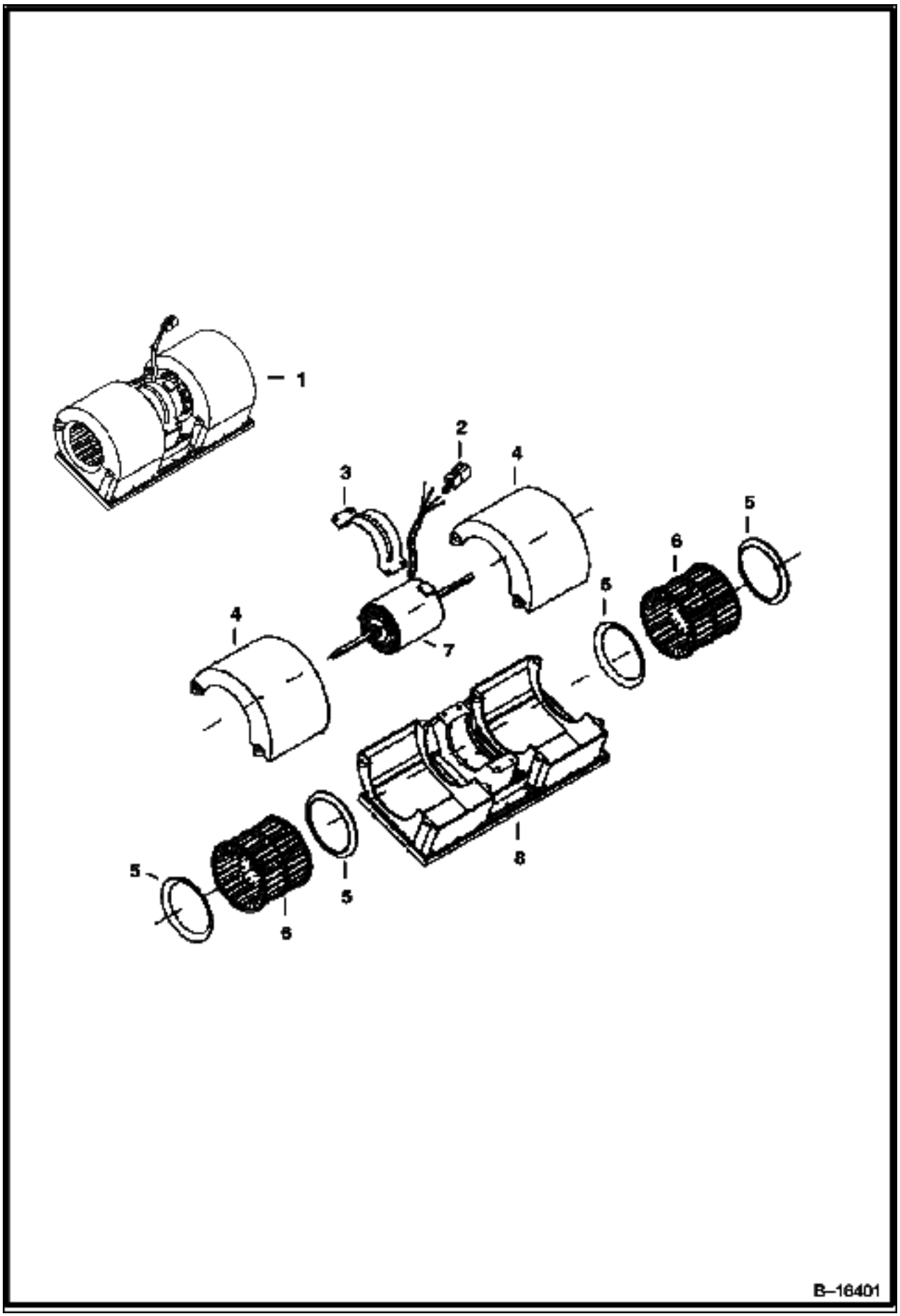

HEATER (Cont'd)
(Blower Assembly)

Ref No	Part Number	Description	Remarks	Serial Number	Qty
1	6675497	BLOWER	Ref. 2-8		1
2	6662246	CONNECTOR	6-pin		1
2	6662252	LOCK	6-pin		1
2	6662257	PIN			4
2	6665370	PLUG			2
3	6675506	MOUNT			1
4	6675507	COVER			2
5	6675504	RING			4
6	6675505	BLOWER WHEEL			2
6	6676618	CLIP			2
7	6675509	MOTOR	W/Ref. 2		1
8	6675503	HOUSING			1

HEATER
(Heater Blower Seal Kit)

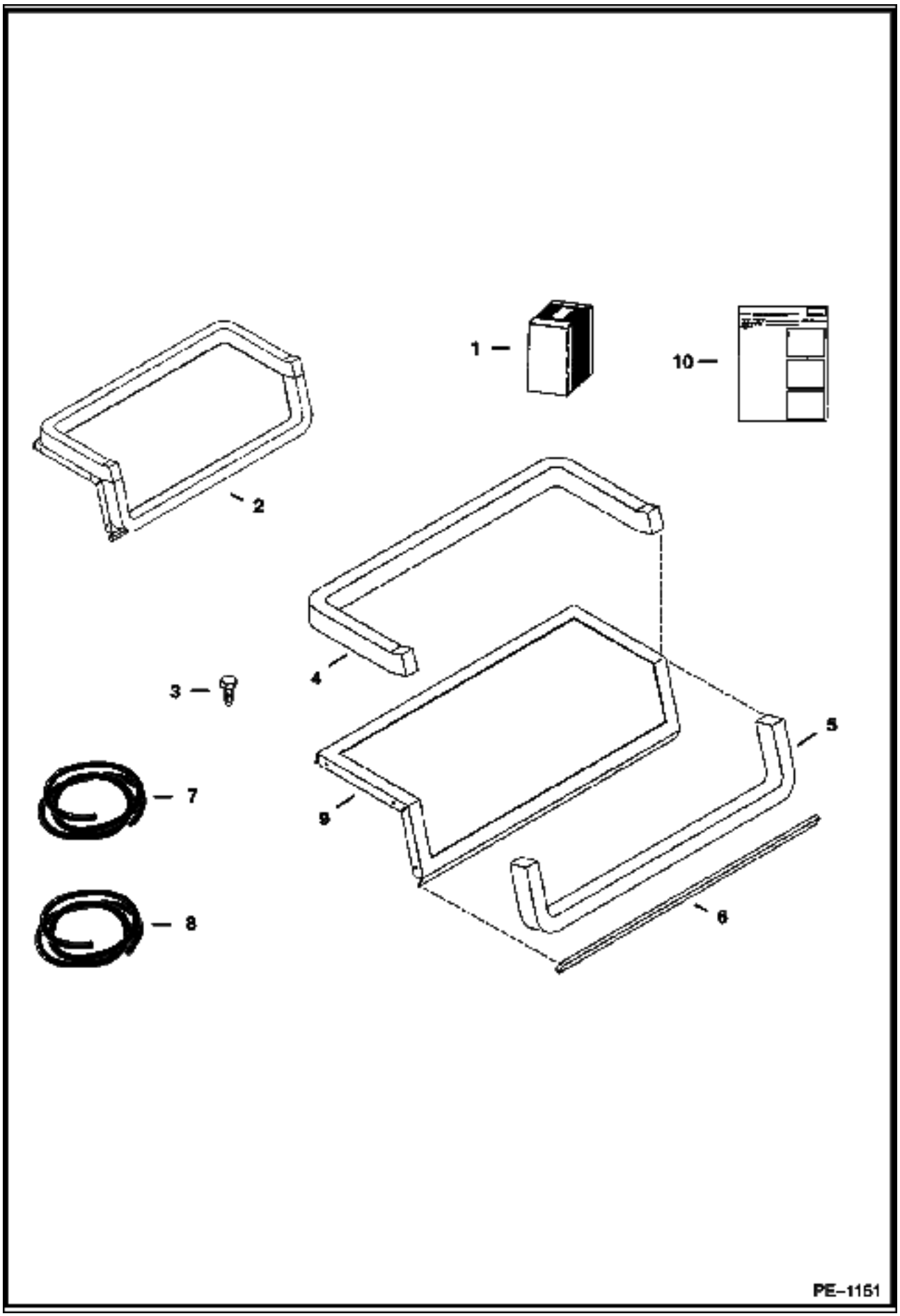

HEATER (Cont'd)
(Heater Blower Seal Kit)

Ref No	Part Number	Description	Remarks	Serial Number	Qty
1	6728567	KIT	blower seal - W/Ref. 2, 3 & 10		1
2		FLANGE SEAL	NSS - assy - Ref. 4, 5, 6 & 9 - Order Ref. 1		1
3	6726621	SCREW			7
4		SEAL	NAP - 27"(686mm) long - Order Ref. 8		1
5		SEAL	NAP - 21"(534mm) long - Order Ref. 8		1
6		SEAL	NAP - 15"(384mm) long - Order Ref. 7		1
7	6675611	SEAL	bulk - Sold Per Foot		x
8	6677111	SEAL	bulk - Sold Per Foot		x
9		FLANGE	NSS - Order Ref. 1		1
10	6901213	INSTRUCTIONS			1

HEATER
(Heater Coil Kit)

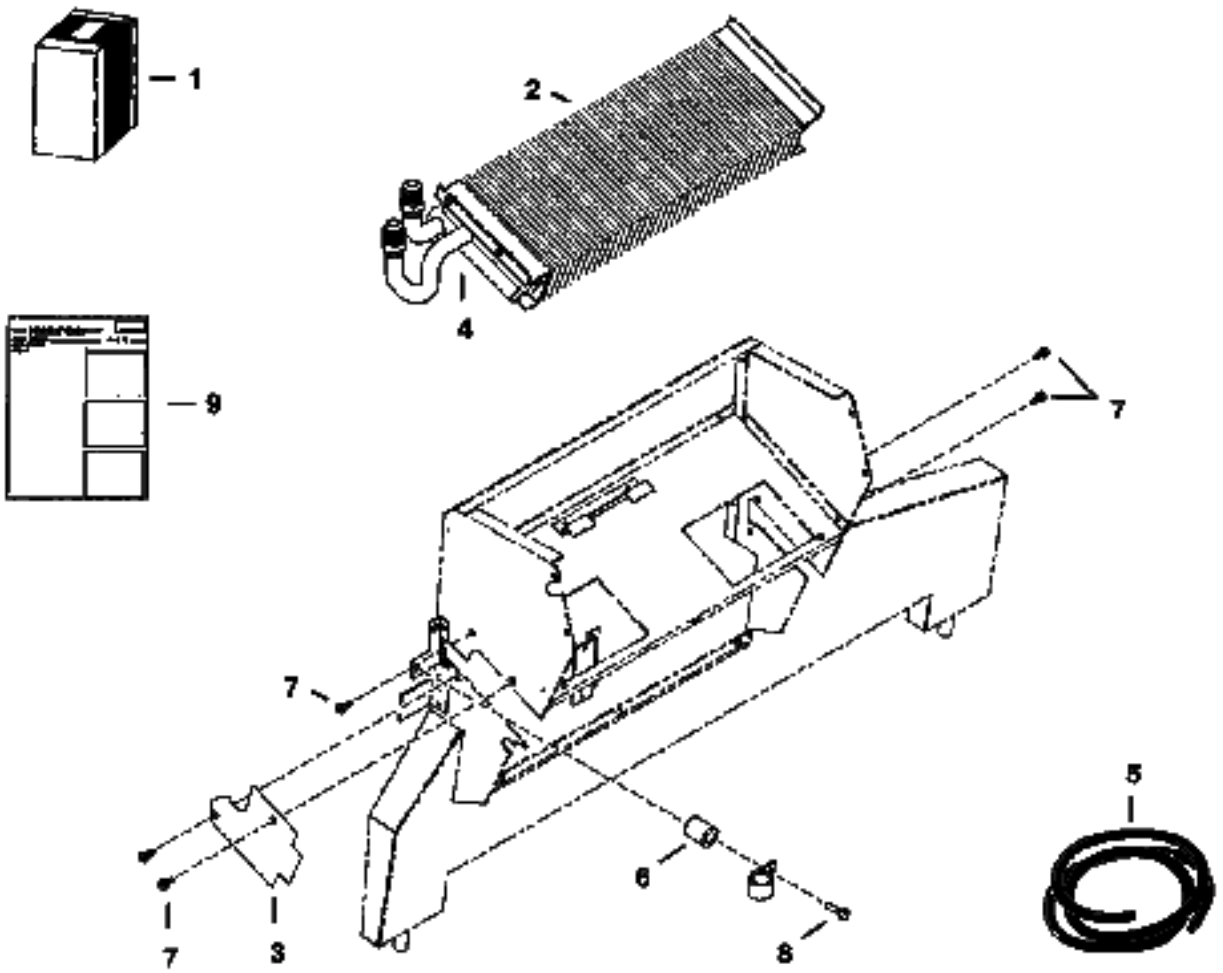

HEATER (Cont'd)
(Heater Coil Kit)

Ref No	Part Number	Description	Remarks	Serial Number	Qty
1	6727786	KIT	heater coil - W/Ref. 2-9 - W/threaded hose connectors		1
2		HEATER COIL	NSS - Order Ref. 1		1
3	6677504	COVER	.279"(7,1mm) thickness		1
4		INSULATION	NAP - 6"(152.4mm) long - Order Ref. 5		1
5	6676538	INSULATION	bulk - Sold Per Foot		x
6	6676606	SPACER			1
7	6726621	SCREW			2
8	6676653	SCREW			1
9	6901120	INSTRUCTIONS			1

HEATER
(Heater Plumbing Kit)

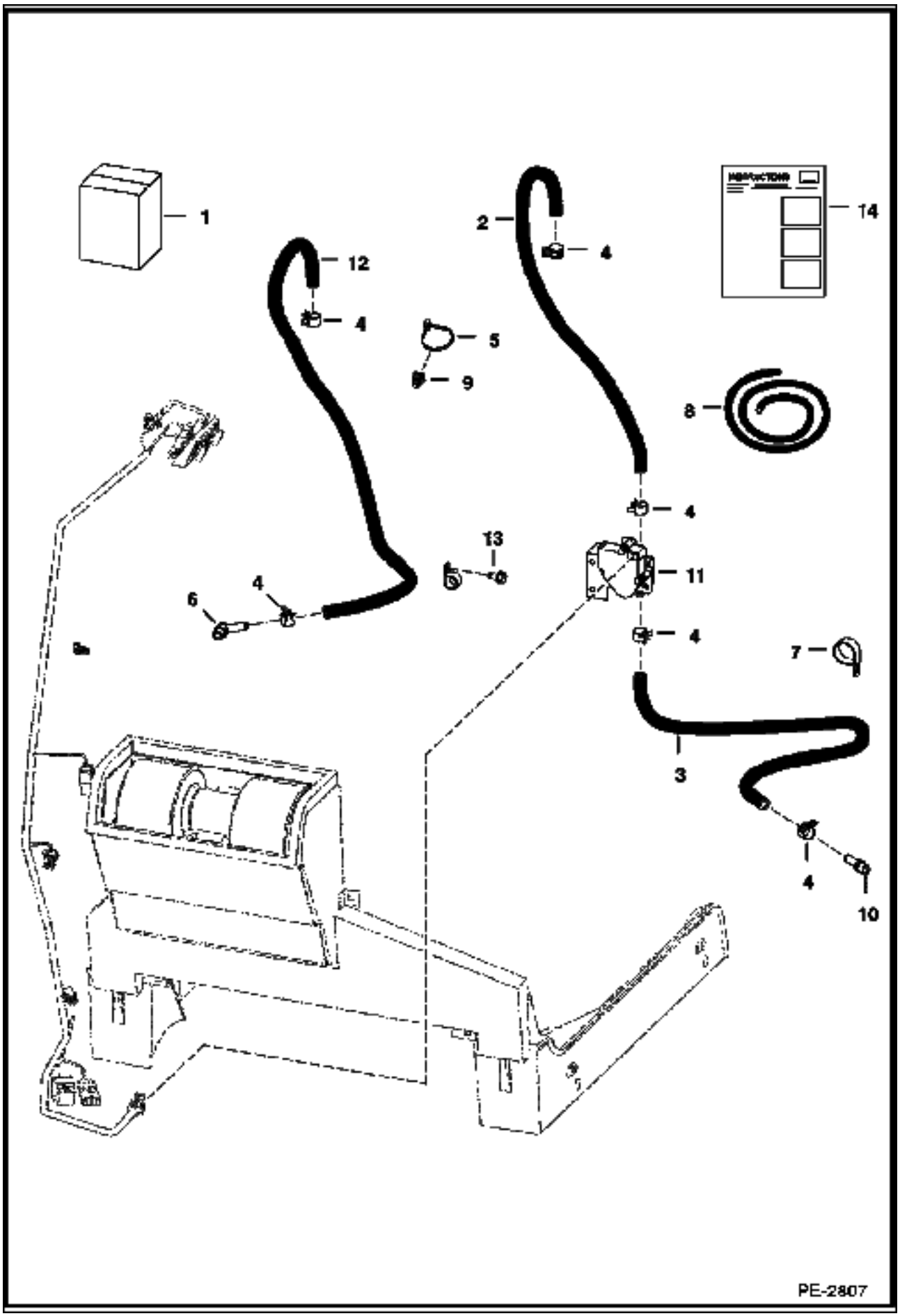

HEATER (Cont'd)
(Heater Plumbing Kit)

Ref No	Part Number	Description	Remarks	Serial Number	Qty
1	7116900	KIT	REF. 2 - 10 - for heater kit W/barbed hose connectors		1
2		HOSE	NAP - 29" (737 mm) long - Order Ref. 8 - Was 6730996 [A]		1
3		HOSE	NAP - 68" (1727 mm) long - Order Ref. 8 - Was 7106328 [A]		1
4	5HM00020B	CLAMP	hose		8
5	6624289	STA STRAP			8
6	7113208	HOSE			1
7	7113209	HOSE			1
8	6565977	HOSE	bulk - Sold Per Foot		x
9	6678666	TREE MOUNT	tree		2
10	6731084	ADAPTER			2
11		VALVE	NOT IN KIT		1
12	6732023	HOSE			2
13	6904255	INSTRUCTIONS	Not in Kit - part of heater kit		1

HORN KIT
(Manual Hand Controls)

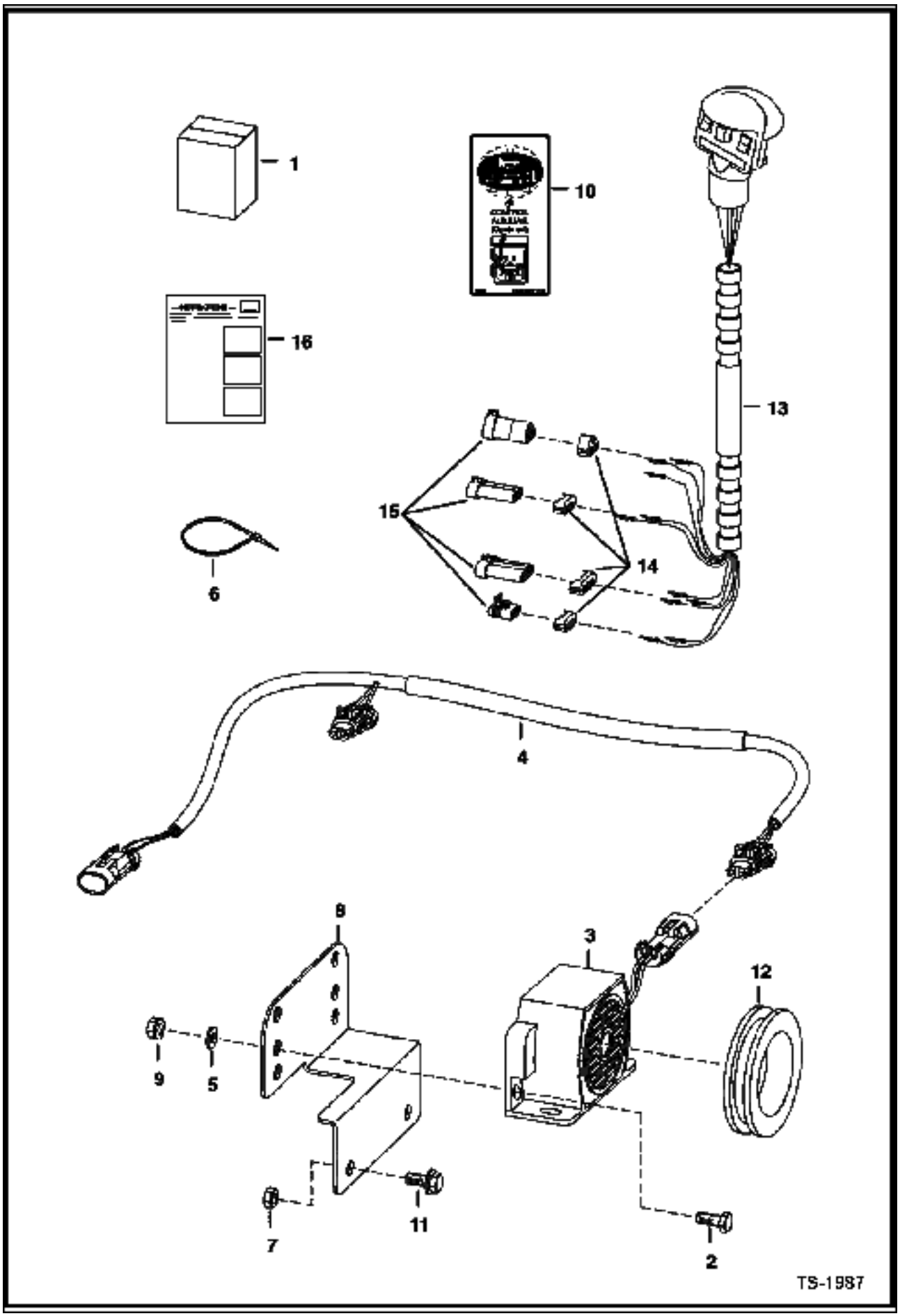

HORN KIT (Cont'd)
(Manual Hand Controls)

Ref No	Part Number	Description	Remarks	Serial Number	Qty
1	6727995	HORN KIT	Ref. 2-12 & 16 - Requires multi-switch handle		1
2	17C000410B	BOLT			2
3	6675099	ALARM			1
4	6727498	HARNESS	56.5"(1435 mm) long		1
5	25E000013B	WASHER			1
6	6610510	TIE			1
7	83D000005B	NUT			2
8	6733970	MOUNT			1
9	83D000004B	NUT			2
10	6703727	DECAL			1
11	35C000512B	BOLT			2
12	6577545	GROMMET			1
13	6680414	HANDLE ASSY.	Not in Kit		1
13	6640690	PIN	Not in Kit		5
13	6641176	SEAL	Not in Kit		5
14	6641180	LOCK	2 - pin - Not in Kit		2
14	6640700	LOCK	3 - pin - Not in Kit		2
15	6641179	CONNECTOR	2 - pin - Not in Kit		2
15	6640699	CONNECTOR	3 - pin - Not in Kit		2
16	6901146	INSTRUCTIONS			1

HORN KIT
(Selectable Joystick Controls)

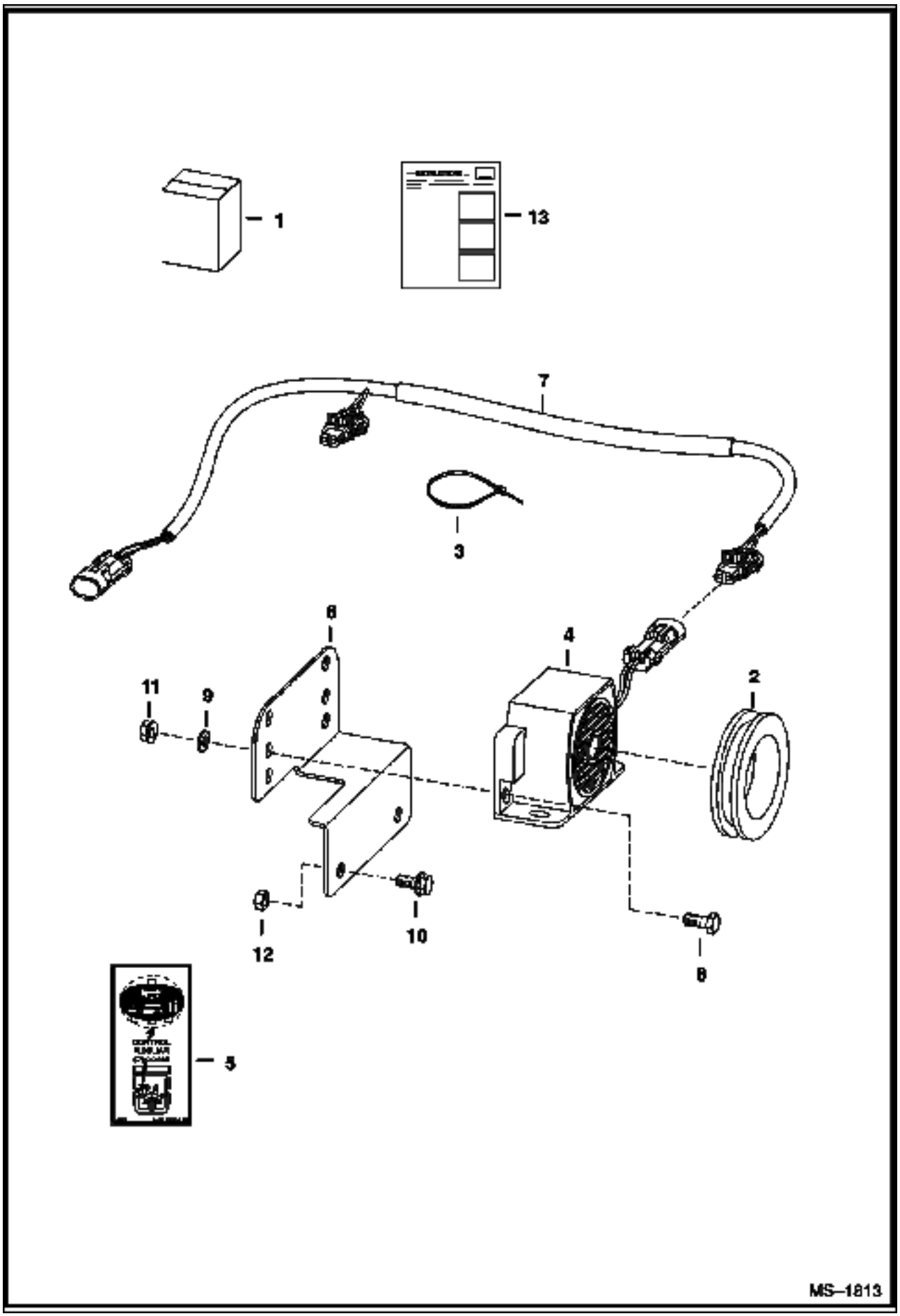

HORN KIT (Cont'd)
(Selectable Joystick Controls)

Ref No	Part Number	Description	Remarks	Serial Number	Qty
1	6732234	KIT	horn - Ref. 2-13		1
2	6577545	GROMMET			1
3	6610510	TIE			3
4	6675099	ALARM	horn		1
5	6703727	DECAL	horn/aux.		1
6	6733970	MOUNT			1
7	6726662	HARNESS			1
8	17C000410B	BOLT			2
9	25E000013B	WASHER			2
10	35C000512B	BOLT			2
11	83D000004B	NUT			2
12	83D000005B	NUT			2
13	6901691	INSTRUCTIONS			1

LIFT KIT
(Single Point)

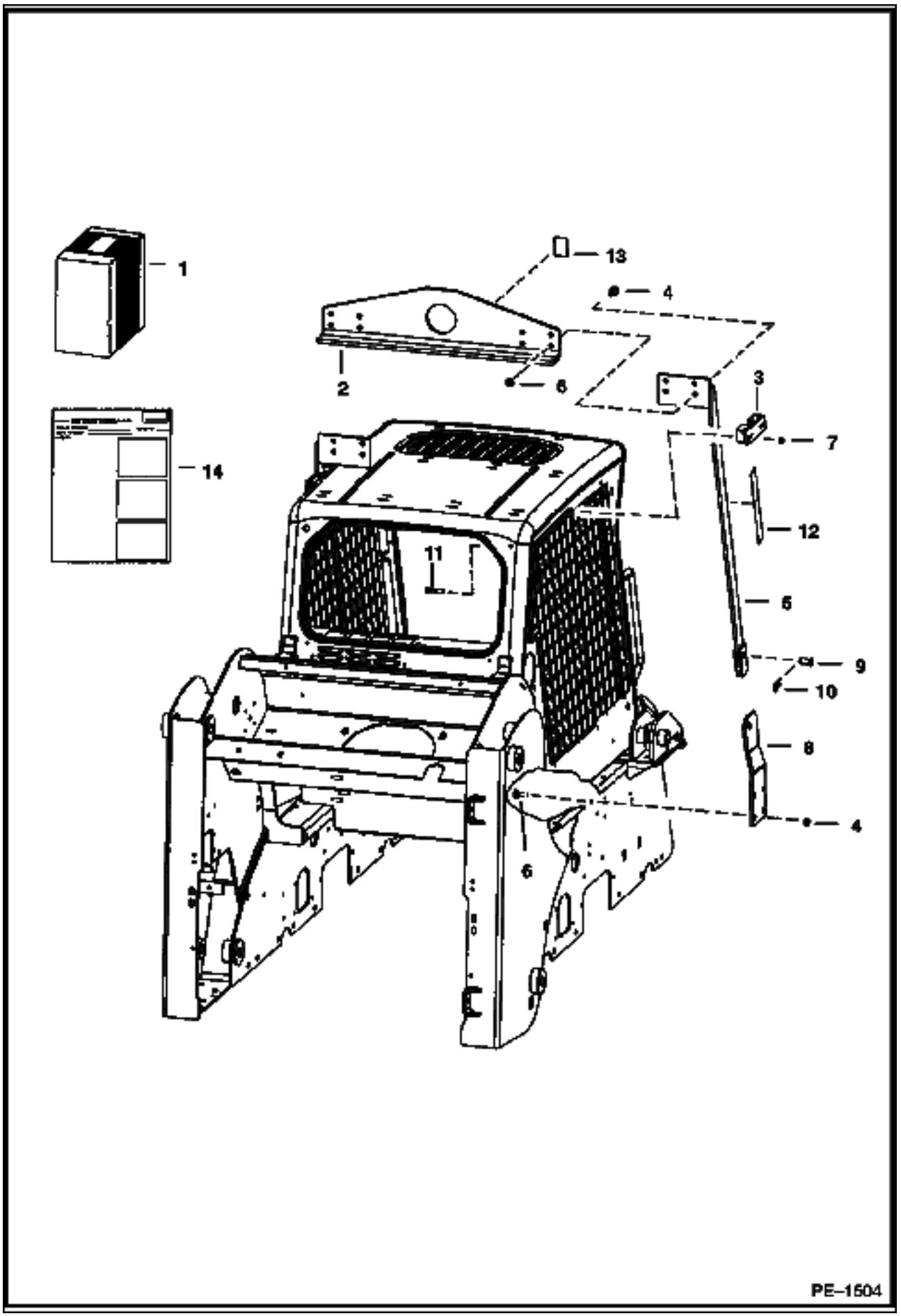

LIFT KIT (Cont'd)
(Single Point)

Ref No	Part Number	Description	Remarks	Serial Number	Qty
1	6719264	KIT	Ref. 2 - 14		1
2	6567827	ANGLE			1
3	6719184	MOUNT	L.H.		1
3	6719185	MOUNT	R.H.		1
4	31C000824B	BOLT			16
5	6704146	BRACKET	R.H.		1
5	6704147	BRACKET	L.H.		1
6	57D000008B	NUT			16
7	57D000006B	NUT			8
8	6731658	BRACKET	R.H.		1
8	6731657	BRACKET	L.H.		1
9	6567838	PIN			2
10	1320075	COTTER PIN			2
11	17C000632B	BOLT			8
12	6704786	DECAL	warning		2
13	6533898	DECAL	hook		1
14	6900888	INSTRUCTIONS			1

LIFT KIT
(Four Point - .75" Thick Lift Eye)

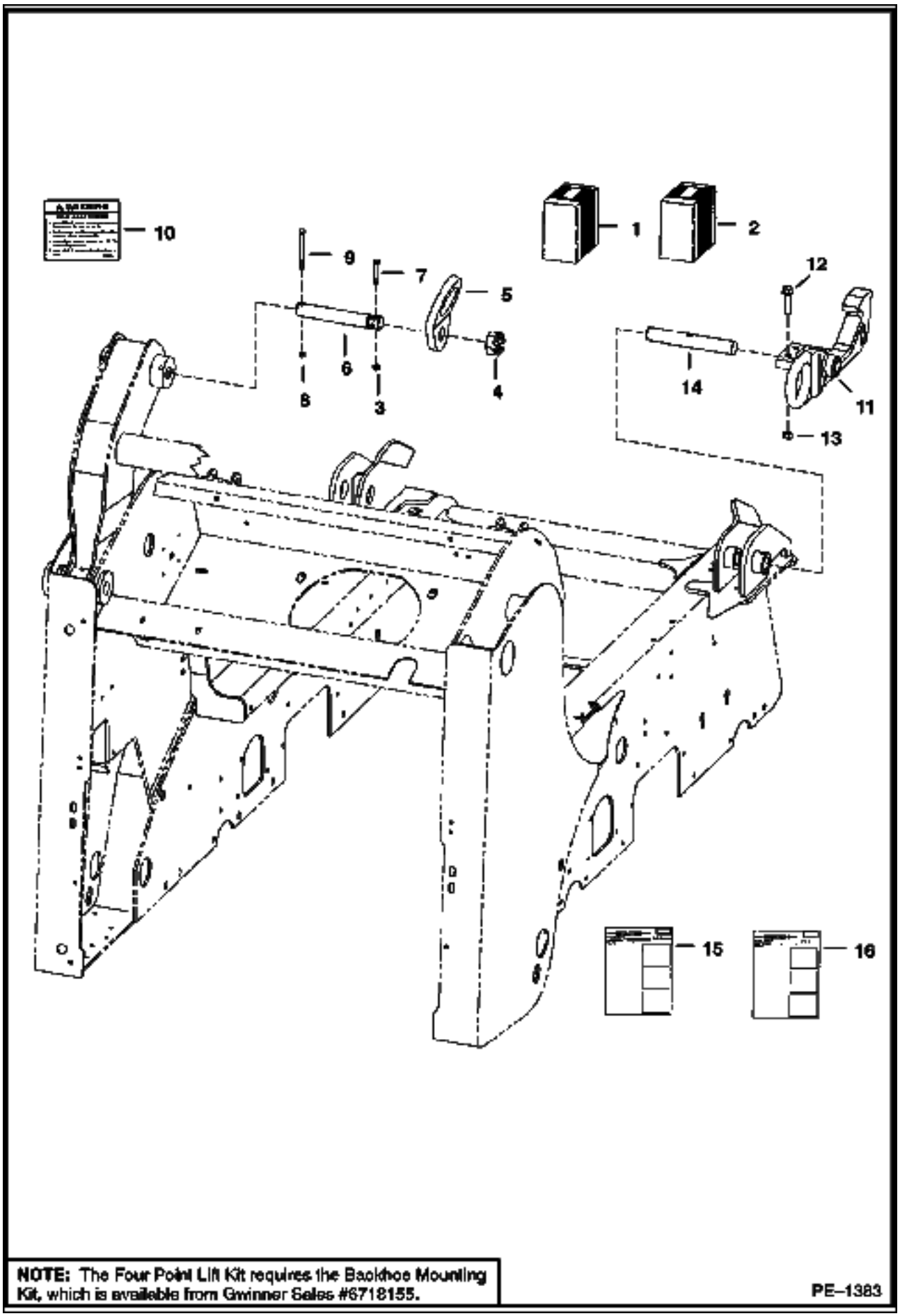

LIFT KIT (Cont'd)
(Four Point - .75" Thick Lift Eye)

Ref No	Part Number	Description	Remarks	Serial Number	Qty
1	6727993	KIT	lift - Ref. 3-10 & 16 - SEE NOTE		1
2		KIT	SALES - backhoe mounting - Ref. 11-15 - SEE NOTE		1
3	87D000005B	NUT			2
4	4D000020B	NUT			2
5	6706825	LIFT EYE	rear		2
6	6706807	PIN			2
7	17C000540B	BOLT			2
8	85D000006B	NUT	Not in Kit		2
9	17C000640B	BOLT	Not in Kit		2
10	6726423	DECAL			2
11	6718122	MOUNT	L.H.		1
11	6717293	MOUNT	R.H.		1
12	31C000836B	BOLT			4
13	63D000008B	NUT			4
14	6717707	PIN			1
15	6900827	INSTRUCTIONS	For Ref. 2		1
16	6901203	INSTRUCTIONS	For Ref. 1		1

LIFT KIT
(Four Point - .75" Thick Lift Eye)

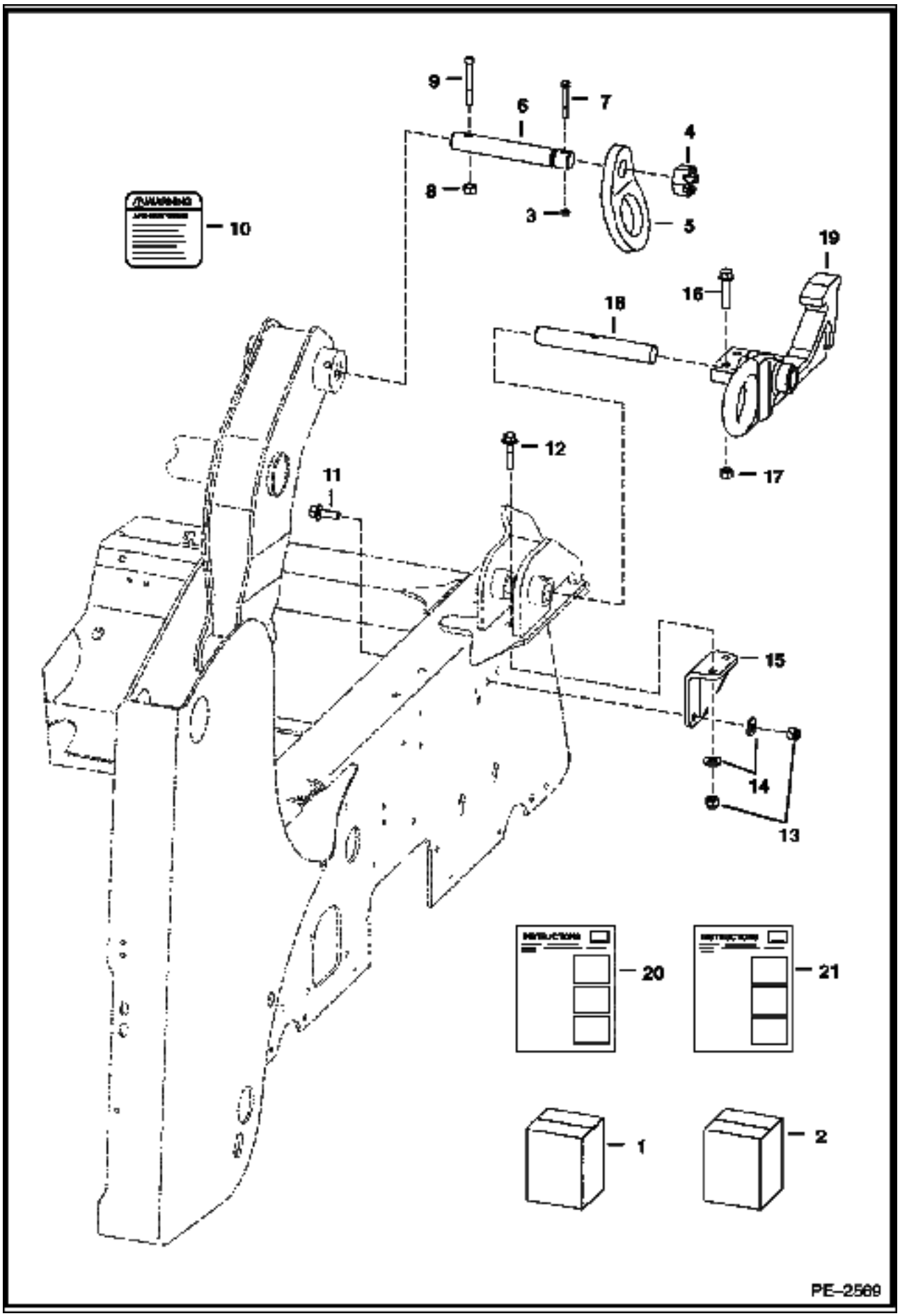

LIFT KIT (Cont'd)
(Four Point - .75" Thick Lift Eye)

Ref No	Part Number	Description	Remarks	Serial Number	Qty
1	7108393	KIT,LIFT KIT	lift - Ref. 3-10 & 16 - SEE NOTE		1
2		KIT	SALES - backhoe mounting - Ref. 16-19		1
3	87D000005B	NUT			2
4	4D000020B	NUT			2
5	6706825	LIFT EYE	rear		2
6	6706807	PIN			2
7	17C000540B	BOLT			2
8	85D000006B	NUT	Not in Kit		2
9	17C000656B	BOLT	Not in Kit		2
10	6726423	DECAL			2
11	31C000824B	BOLT	L.H.		4
12	31C000832B	BOLT			4
13	59D000008B	NUT			8
14	27E000008B	WASHER			8
15	7107353	KIT			2
16	31C000836B	BOLT			4
17	63D000008B	NUT			4
18	6717707	PIN			2
19	6718122	MOUNT	L.H.		1
19	6717293	MOUNT	R.H.		1
20	6900827	INSTRUCTIONS			1
21	6903359	INSTRUCTIONS	For Ref. 2		1

LIFT KIT
(Four Point - .75" Thick Lift Eye)

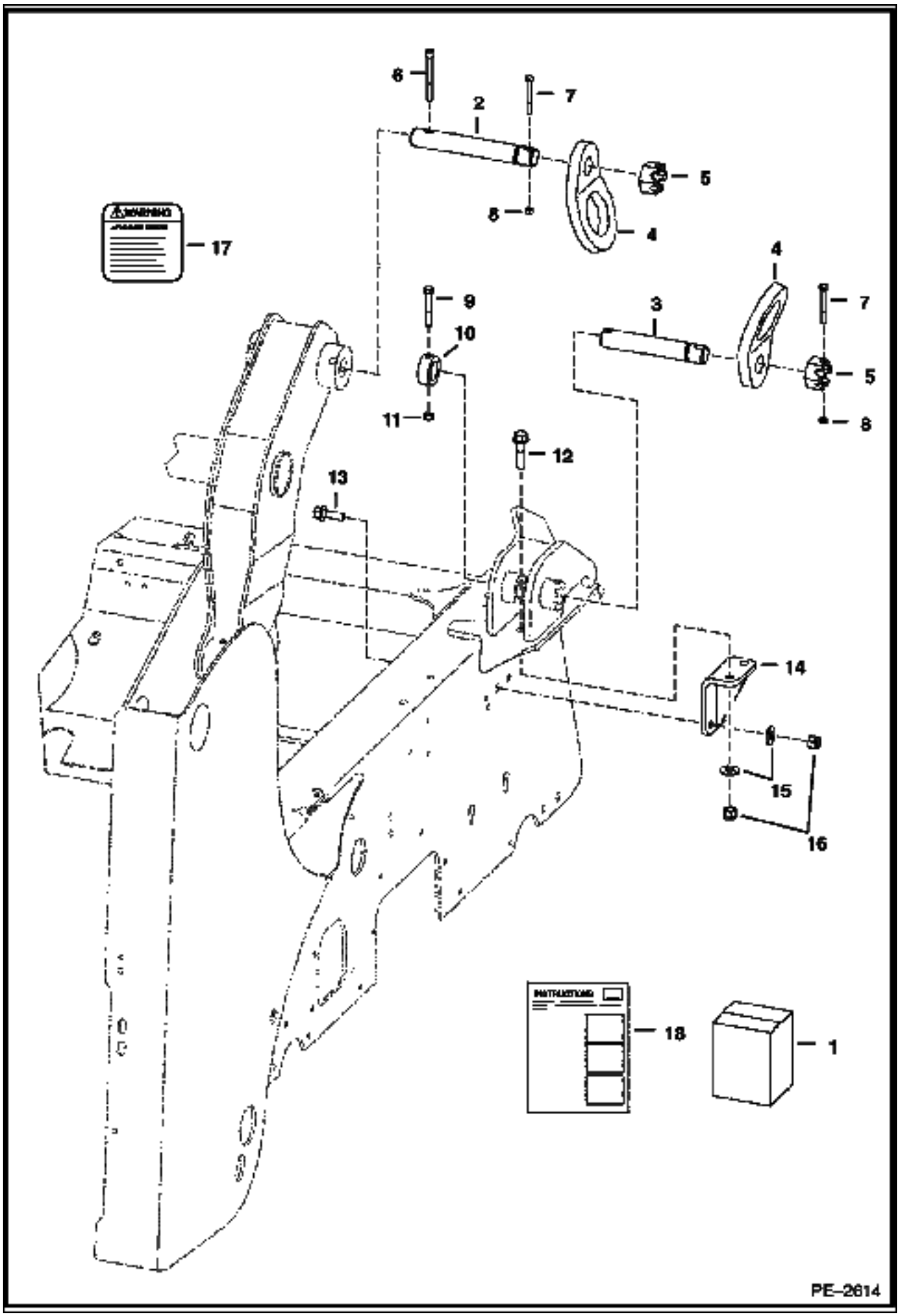

LIFT KIT (Cont'd)
(Four Point - .75" Thick Lift Eye)

Ref No	Part Number	Description	Remarks	Serial Number	Qty
1	7112346	KIT, 4 PT LIFT	Ref. 2-5 & 7-18		1
2	6706807	PIN			2
3	7100444	PIN			2
4	6706825	LIFT EYE			4
5	4D000020B	NUT			4
6	17C000656B	BOLT	Not in Kit		2
7	17C000540B	BOLT			4
8	87D000005B	NUT			4
9	17C000640B	BOLT			2
10	7100445	SPACER			2
11	85D000006B	NUT			2
12	31C000832B	BOLT			4
13	31C000824B	BOLT			4
14	7107353	GUSSET			2
15	27E000008B	WASHER			8
16	59D000008B	NUT			8
17	6726423	DECAL			2
18	6904113	INSTRUCTIONS			1

LIGHT KIT

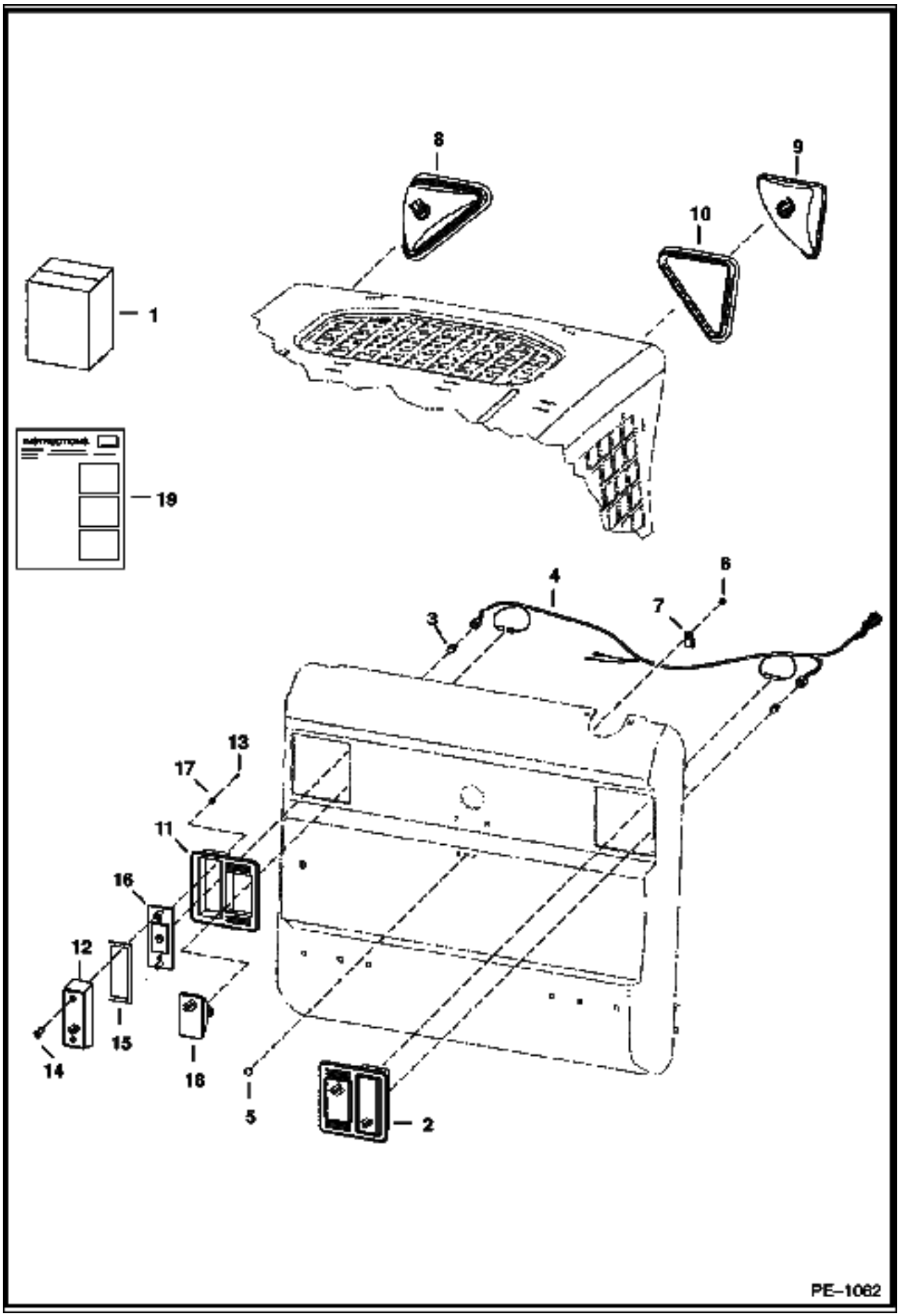

LIGHT KIT (Cont'd)

Ref No	Part Number	Description	Remarks	Serial Number	Qty
1		KIT	NAP - Order components		1
2	6670284	LIGHT ASSY	rear		2
3	6649481	BULB			2
4	7109403	HARNESS	standard		1
5	37C000512B	BOLT			1
6	85D000005B	NUT			1
7	30H000042B	CLAMP			1
8		LIGHT ASSY	NAP - R.H. - Ref. 9 & 10		1
8		LIGHT ASSY	NAP - L.H. - Ref. 9 & 10		1
9	6674401	HOUSING	R.H.		1
9	6675336	BULB	55 watt		1
9	6674400	HOUSING	L.H.		1
9	6675336	BULB	55 watt		1
10	6674402	MOUNT			1
11	6672279	MOUNT	rubber		2
12	6672276	LENS	red		2
13	6672274	SCREW			4
14	6672273	SCREW			2
15	6672275	GASKET			2
16	6672277	BRACKET			2
17	6672272	WASHER			4
18	6661353	LIGHT ASSY	white work - W/bulb		2
18	898731B	BULB			2
19		INSTRUCTIONS			1

MUFFLER/PURIFIER KIT

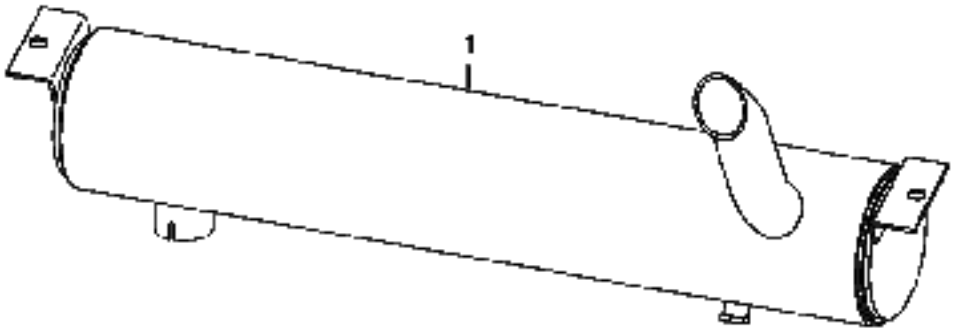

PE-2721

MUFFLER/PURIFIER KIT (Cont'd)

Ref No	Part Number	Description	Remarks	Serial Number	Qty
1	7103790	MUFFLER			1

POWER BOB-TACH KIT

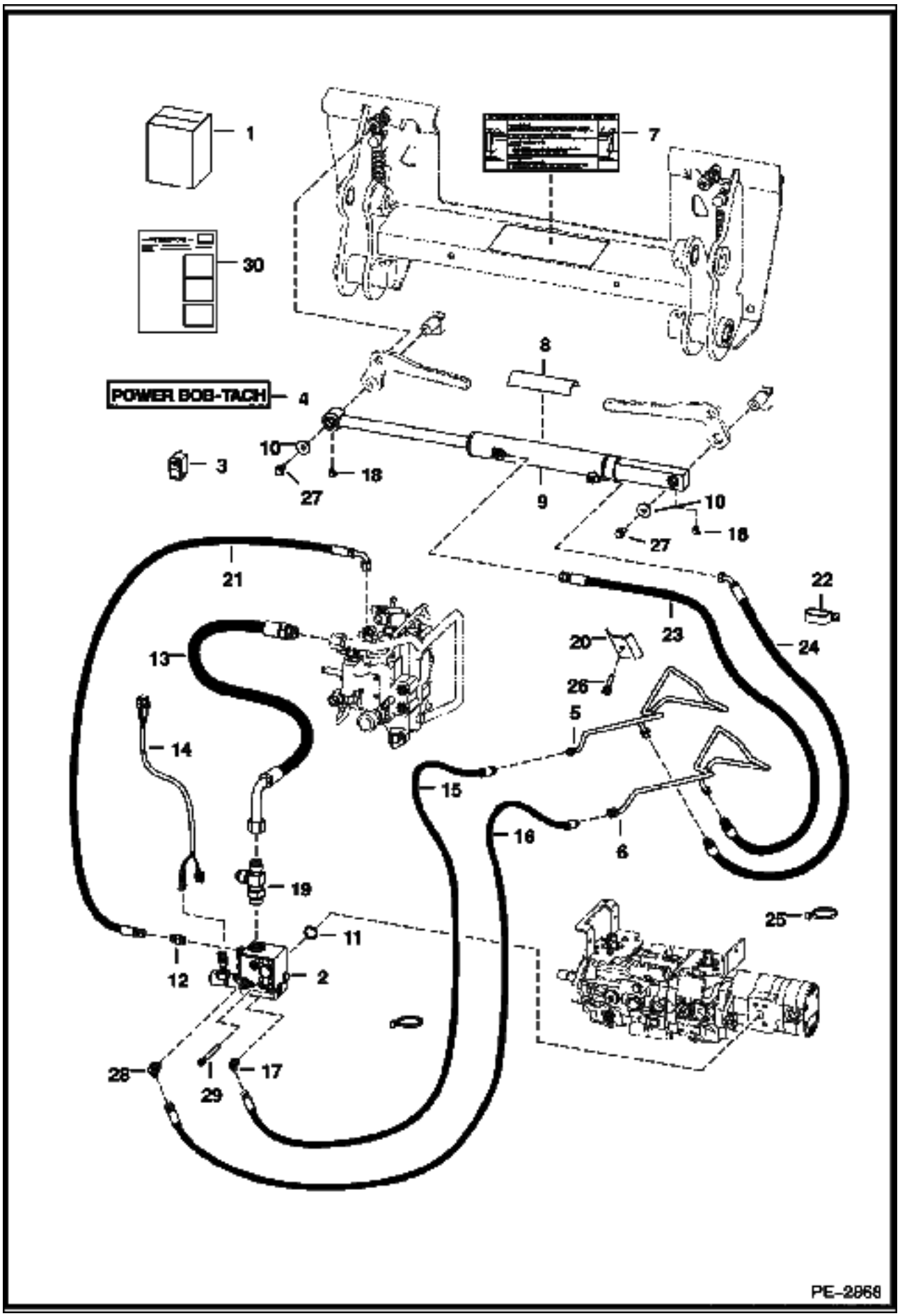

Ref No	Part Number	Description	Remarks	Serial Number	Qty
1	7120898	KIT	Power Bob-Tach - If loader is not equipped W/ heater, air conditioning, selectable joystick controls, advanced control sysetem, rotating beacon, non power port plug-in strobe lights and/or non power port plug-in 4-way flashers, also order 7116260 deluxe harness		1
2		VALVE	See Illustration POWER BOB-TACH/ MS1835R		1
3	6676732	SWITCH	vertical		1
4	6719888	DECAL			1
5	6725552	TUBE			1
6	6725553	TUBE			1
7	6725907	DECAL			1
8	6555341	SAFETY TREAD			1
9		CYLINDER	See Illustration POWER BOB-TACH/ PE1064		1
10	619021B	WASHER			2
11	55K000214B	O-RING			1
12	15KB00404B	ADAPTER			1
13	7115185	HOSE			1
14	7112290	HARNESS			1
15	6718358	HOSE			1
16	6719451	HOSE			1
17	18KB00404B	ELBOW			1
18	12H000025B	GREASE ZERK	90 degree		2
19	21KB01212B	FITTING			1
20	6719884	BRACKET			1
21	7110367	HOSE	45" (1143 mm) long - For loaders equipped W/Selectable Joystick Controls		1
22	31H000049B	CLAMP			1
23	6729202	HOSE			1
24	6729203	HOSE			1
25	6624289	STA STRAP			3
26	84G003724B	BOLT			1
27	35C000616B	BOLT			2
28	18KB00606B	ELBOW			1
29	73G000656B	BOLT			4
30	6902421	INSTRUCTIONS			1

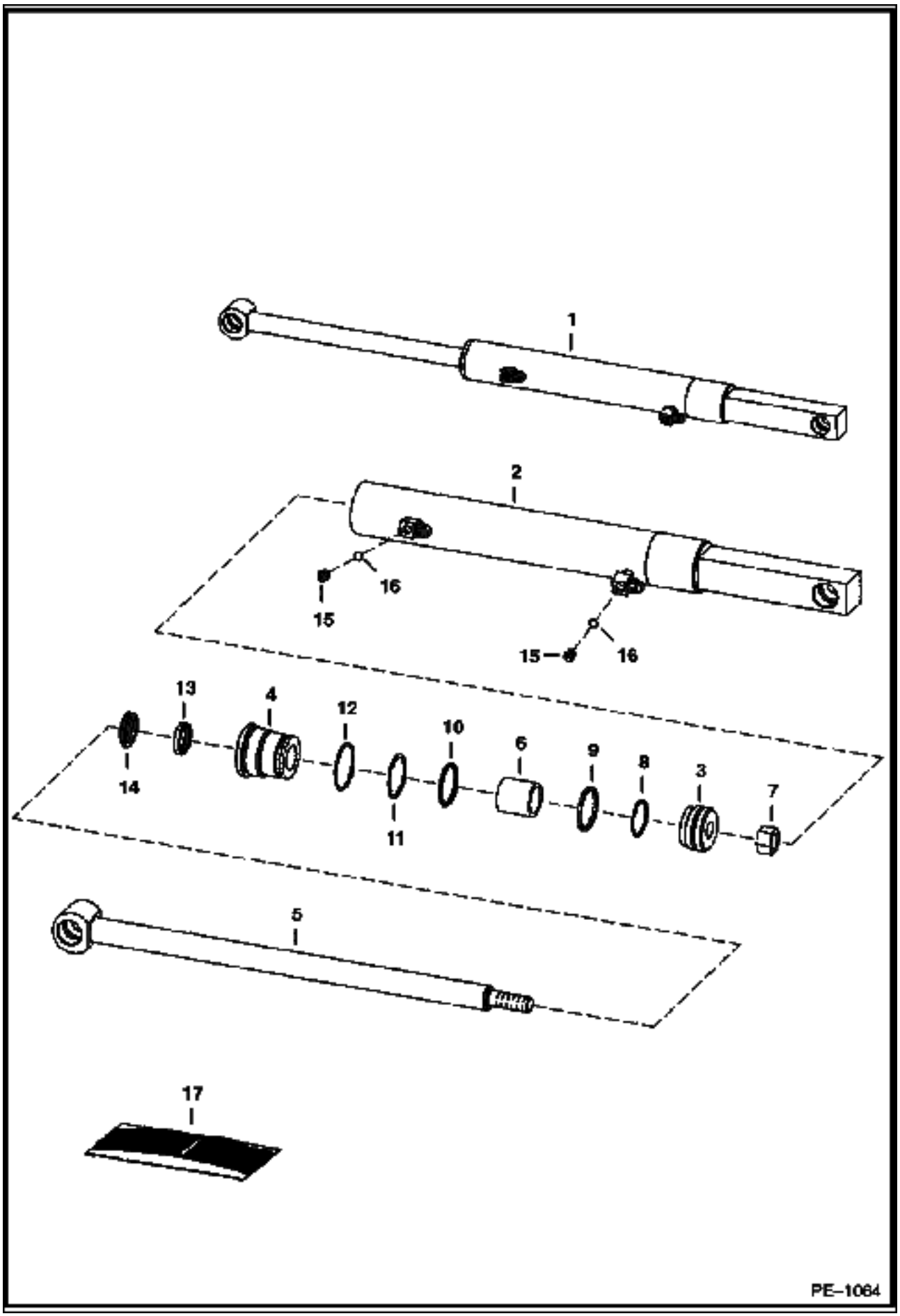
1
2
16
15
15
16
13
4
12
10
6
9
8
3
7
14
11
5
17
PE–1064

POWER BOB-TACH (Cont'd)
(Cylinder)

Ref No	Part Number	Description	Remarks	Serial Number	Qty
1	6807503	CYLINDER	Ref. 2 - 16		1
2	6810349	CASE	1.75"(45 mm) I.D.		1
3	6586543	PISTON			1
4	6586542	HEAD			1
5	6810612	ROD	1" (25.4mm) O.D. - 18.6"(422,4mm) long		1
6	6810356	SPACER			1
7	92D000010B	NUT			1
8	54K030110B	O-RING			1
9	6532453	RING			1
10	54K040116B	O-RING			1
11	73K000222B	WASHER	back-up		1
12	58K000132B	O-RING			1
13	6667323	SEAL	rod		1
14	6666542	SEAL	wiper		1
15	6812170	PLUG	W/Ref. 16		2
16	75K000003B	O-RING			2
17	6803473	SEAL KIT	Ref. 7 - 14		1

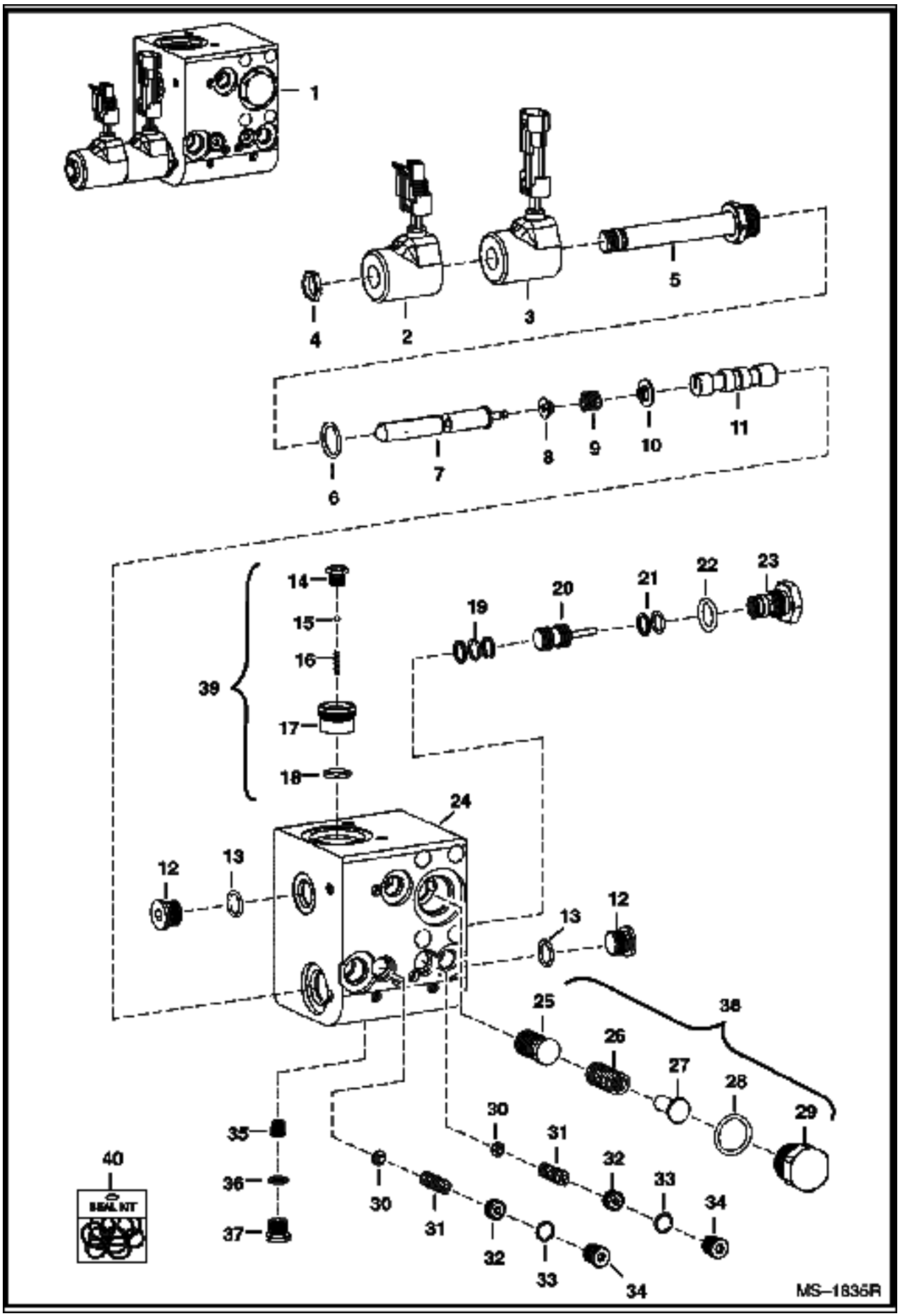
1
2
3
4
5
6
7
8
9
10
11
12
13
14
15
16
17
18
19
20
21
22
23
24
25
26
27
28
29
30
31
32
33
34
35
36
37
38
39
40
SEALANT
MS-1835R

POWER BOB-TACH (Cont'd)
(Valve Assembly)

Ref No	Part Number	Description	Remarks	Serial Number	Qty
1	6686949	VALVE			1
2	6684743	SOLENOID	W/male connector		1
3	6684744	SOLENOID	W/female connector		1
4	6684742	NUT			1
5		STEM	NSS		x
6	79K000008B	O-RING			x
7		STEM	NSS		x
8		RETAINER	NSS		x
9		SPRING	NSS		x
10		WASHER	NSS		x
11	6685540	PISTON			x
12	6685545	PLUG	W/Ref. 13		x
13		O-RING	NSS		x
14		PLUG	NSS		x
15		BALL	NSS		x
16		SPRING	NSS		x
17		VALVE	NSS		x
18	6685542	O-RING			x
19		RINGS	NSS		x
20	6684745	PISTON			1
21		RINGS	NSS		x
22	79K000007B	O-RING			x
23	6684746	CHECK VALVE	W/Ref. 22		1
24		BLOCK	NSS		x
25		STEM	NSS		x
26		SPRING	NSS		x
27		POPPET	NSS		x
28	79K000010B	O-RING			x
29		PLUG	NSS		x
30		POPPET	NSS		x
31		SPRING	NSS		x
32		PLUG	NSS		x
33		O-RING	NSS		x
34		PLUG	NSS		x
35	6685541	POPPET			x
36		O-RING	NSS		x
37	6685546	PLUG			x
38	6685544	COMPENSATOR	assy. - Ref. 25-29		1
39	6685543	CHECK VALVE	assy. - Ref. 14-18		1
40	6684747	SEAL KIT	complete		1

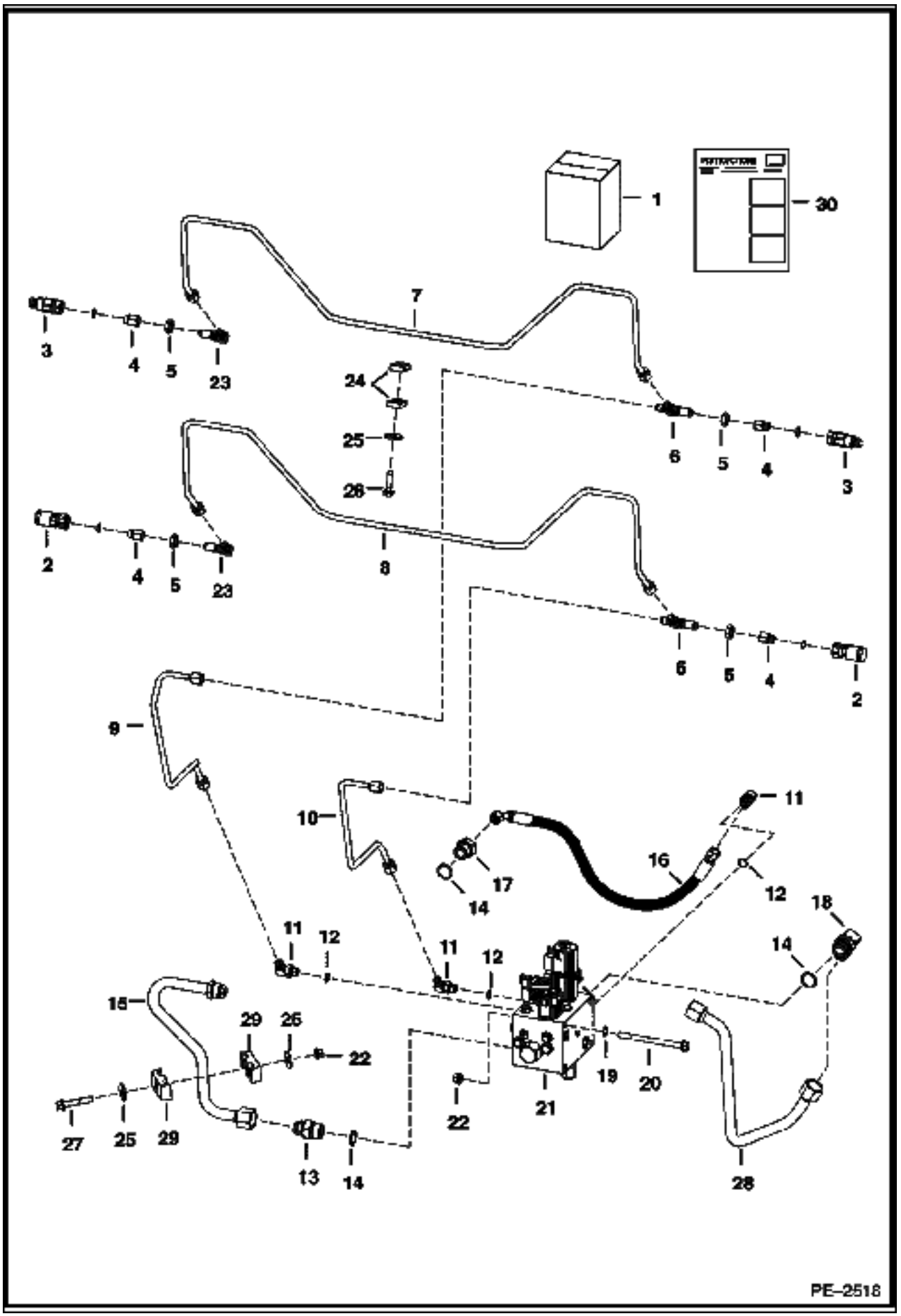
1
30
7
3
4
5
23
24
25
26
6
5
4
3
2
4
5
23
8
6
5
4
2
9
10
11
16
17
14
12
18
11
12
11
12
14
15
29
25
22
27
25
29
13
14
22
21
19
20
28
PE-2518

Ref No	Part Number	Description	Remarks	Serial Number	Qty
1	7109924	KIT-REAR AUX	Ref. 2-30 - Also includes 7101973 Harness		1
1	7101973	HARNESS	jumper		1
2	6667803	COUPLER	female		2
3	6667804	COUPLER	male		2
3	6669657	SEAL KIT			x
4	6706633	ADAPTER			4
5	86F000005B	NUT			4
6	91K000005B	TEE			2
7	6726273	TUBE			1
8	6726272	TUBE			1
9	6735828	TUBE			1
10	6735829	TUBE			1
11	17KB00606B	ELBOW	W/Ref. 12		3
12	79K000006B	O-RING			x
13	15KB01212B	ADAPTER	W/Ref. 14		1
14	79K000012B	O-RING			x
15	7109927	TUBE			1
16	6802324	HOSE			1
17	15KB00612B	ADAPTER	W/Ref. 14		1
18	17KB01212B	ELBOW	W/Ref. 14		1
19	6592506	CLAMP			2
20	17C000680B	BOLT			2
21		VALVE	See Illustration REAR AUXILIARY VALVE/ B21972R		1
22	83D000006B	NUT			3
23	88F000005B	ELBOW			3
24	6726277	CLAMP			2
25	619021B	WASHER			3
26	84G003724B	BOLT			1
27	35C000636B	BOLT			1
28	6733192	TUBE			1
29	6903828	INSTRUCTIONS			1

REAR AUXILIARY VALVE

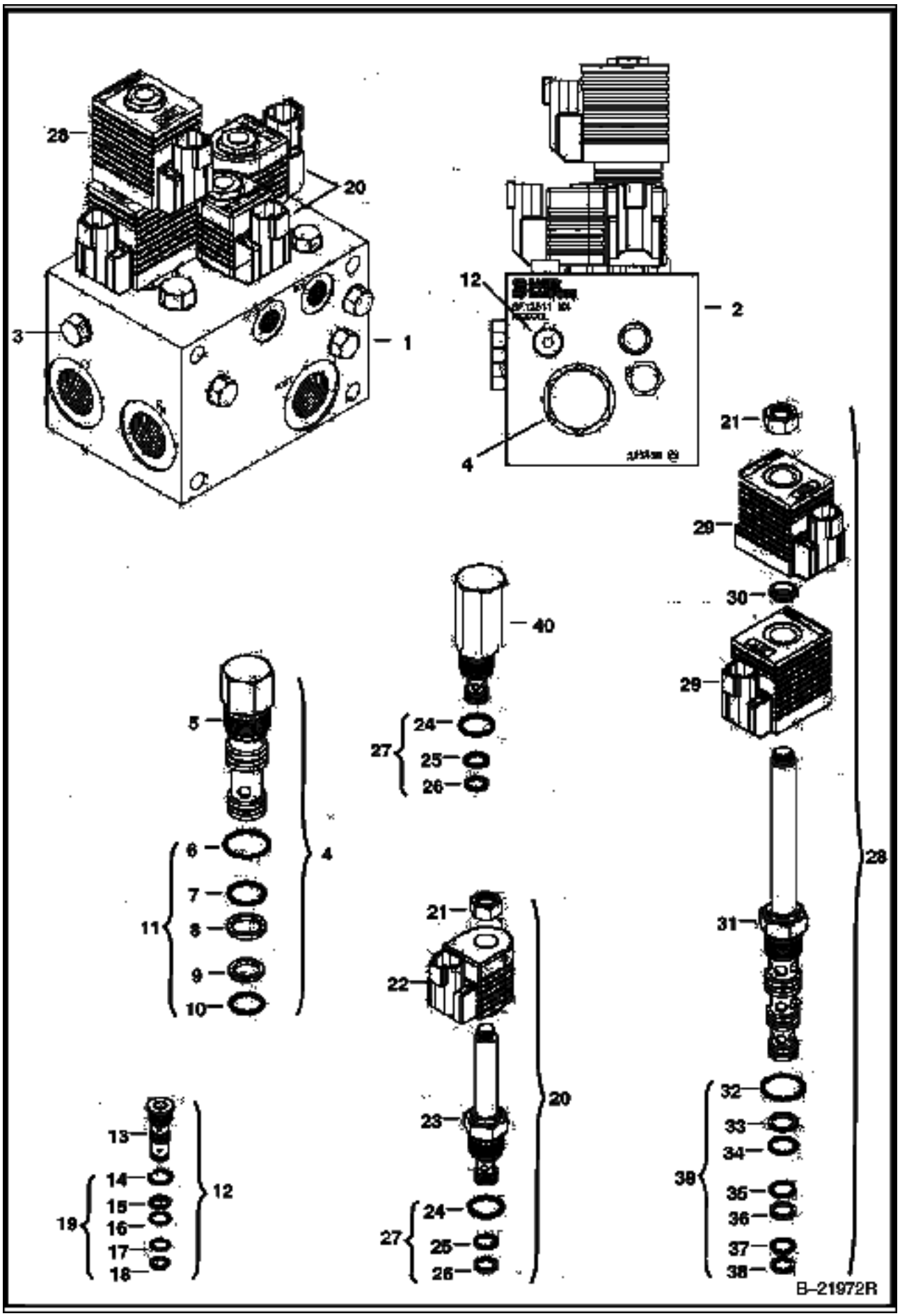

Ref No	Part Number	Description	Remarks	Serial Number	Qty
1	6685624	CONTROL VALVE	CP12646		1
2		BLOCK	NSS		1
3		PLUG			x
4	6684044	VALVE	assy. - Ref. 5-10 - differential sensing		1
5		VALVE	NSS - Order Ref. 4		1
6	6684046	O-RING			1
7	6684048	O-RING			1
8	6684047	BACK-UP RING			1
9	6684050	BACK-UP RING			1
10	6684049	O-RING			1
11	6684045	SEAL KIT	Ref. 6-10		1
12	6684061	VALVE	shuttle - Ref. 13-18		1
13		VALVE	NSS - Order Ref. 12		1
14	6684063	O-RING			1
15	6684064	BACK-UP RING			1
16	6684065	O-RING			1
17	6684066	O-RING			1
18	6684067	BACK-UP RING			1
19	6684062	SEAL KIT	Ref. 14-18		1
20	6685061	VALVE	solenoid - Ref. 21-26		2
21	6684060	NUT			2
22	6684073	COIL	12 volt		2
23		VALVE	NSS - Order Ref. 20		2
24	6684070	O-RING			2
25	6684071	O-RING			2
26	6684072	BACK-UP RING			2
27	6684069	SEAL KIT	Ref. 24-26		2
28	6688933	VALVE ASSY	solenoid - Ref. 21, 29 & 30		1
29	6688934	COIL			2
30	6684059	SPACER			1
31		VALVE	NSS - Order Ref. 28		1
32	6681489	O-RING			1
33	6684053	BACK-UP RING			1
34	6684054	O-RING			1
35	6684056	O-RING			1
36	6684055	BACK-UP RING			1
37	6681487	O-RING			1
38	6684057	BACK-UP RING			1
39	6684052	SEAL KIT	Ref. 32-38		1
40	6685328	RELIEF VALVE	W/Ref. 24-26		1

REAR DOOR LOCK

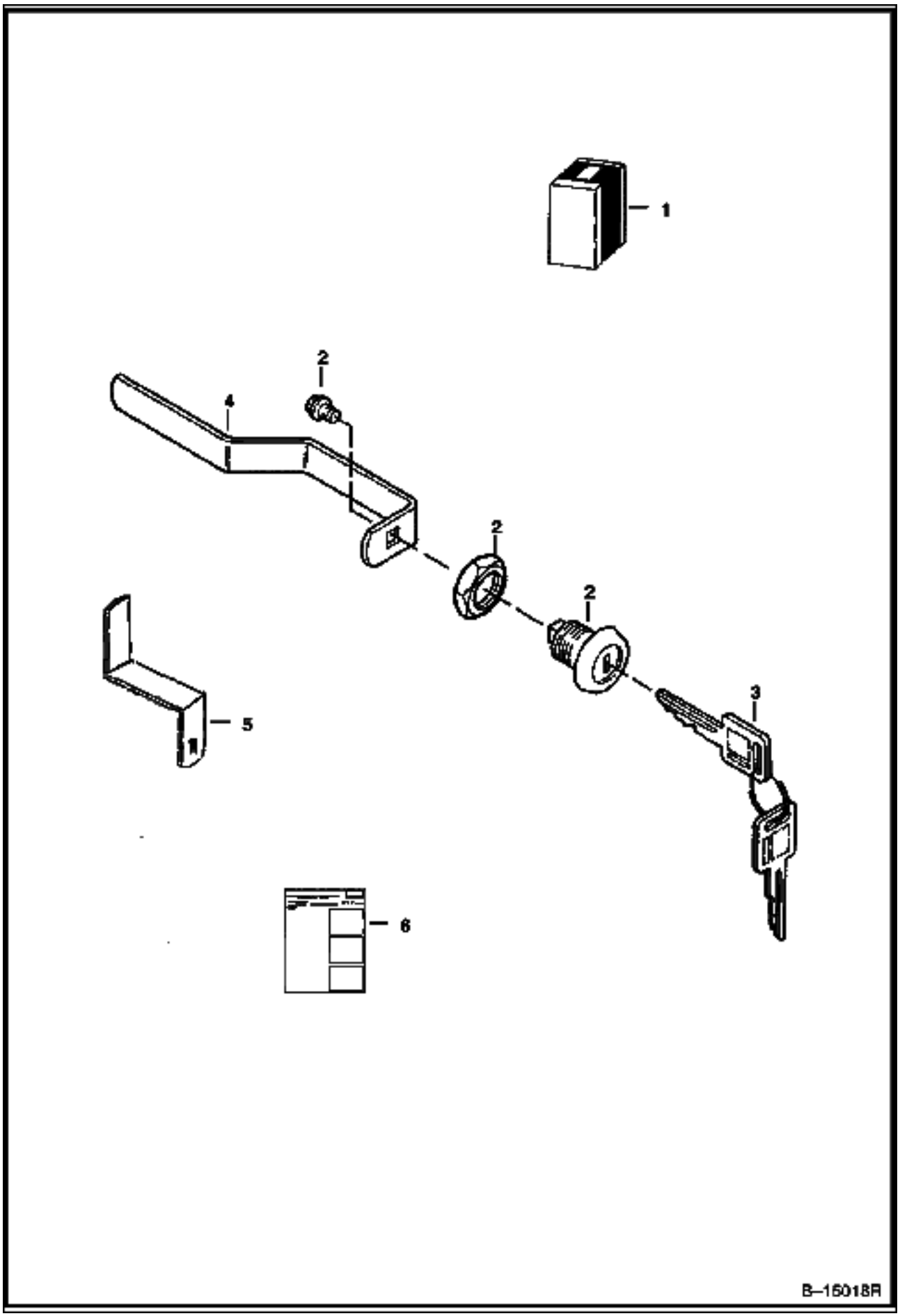

Ref No	Part Number	Description	Remarks	Serial Number	Qty
1	6732001	KIT	lock - Ref. 2 - 6		1
2	6670726	LOCK			1
3	6709527	KEY	ignition		1
4	6714037	LATCH	Use W/6711524 Rear Door		1
5	6729688	LATCH	Use W/6729991 Rear Door		1
6	6901656	INSTRUCTIONS			1

REAR WIPER

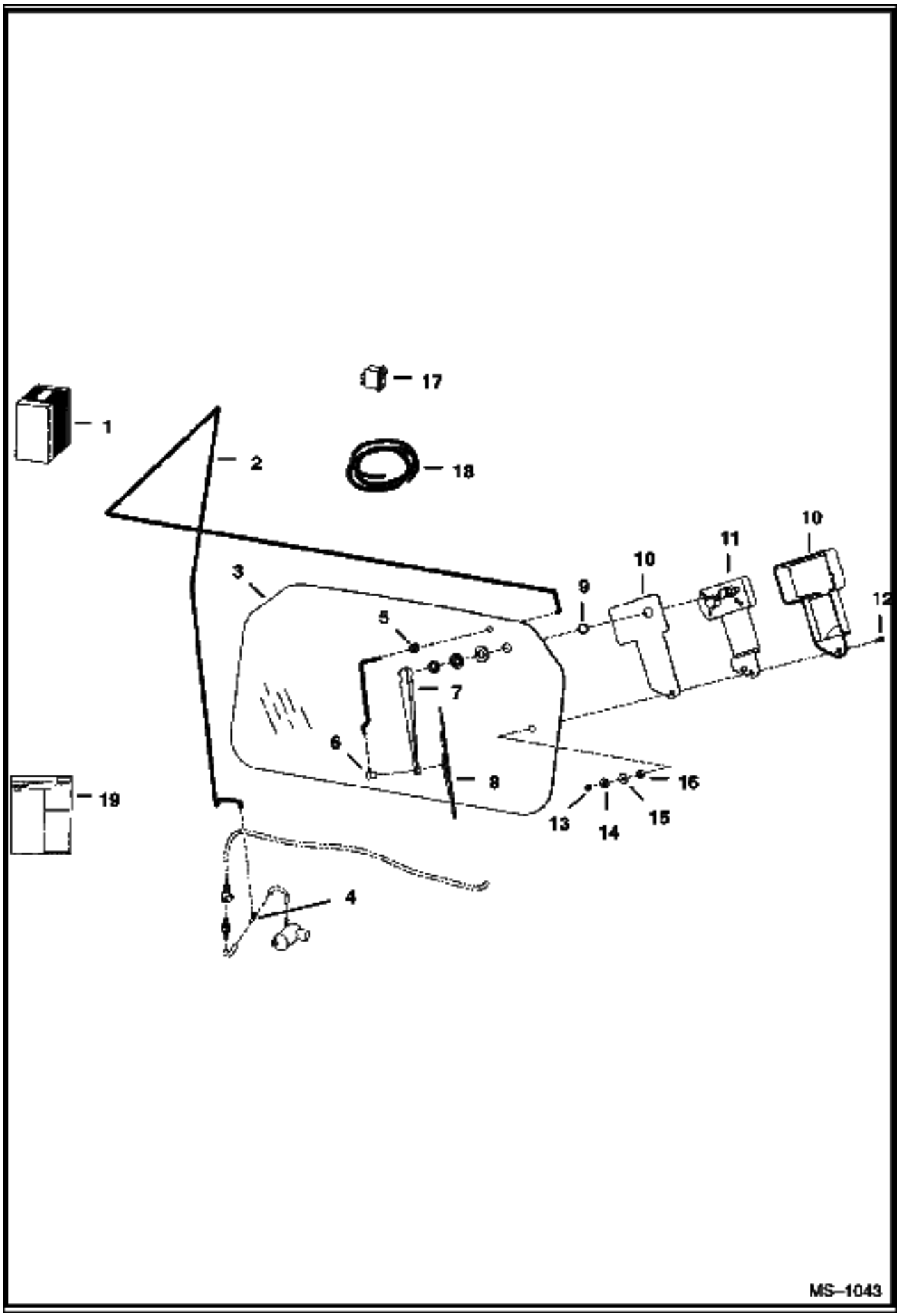

Ref No	Part Number	Description	Remarks	Serial Number	Qty
1	6726655	KIT	rear wiper		1
2		HOSE	NAP - 96"(2438,4 mm) long - Order Ref. 18		1
3	6719317	WINDOW			1
4	6676000	TEE			1
5	6557493	GROMMET			1
6	6676028	NOZZLE			1
7	6676001	ARM			1
8	6676002	BLADE			1
9	6667201	SPACER	nylon		1
10	6664097	COVER	wiper		1
11	6665602	MOTOR			1
12	6664566	BOLT			1
13	6664103	NUT			1
14	6664065	WASHER	nylon		1
15	6801059	WASHER	neoprene		1
16	6664085	BUSHING	nylon		1
17	6675999	SWITCH			1
18	6676003	HOSE	bulk - Sold Per Foot		x
19	6901061	INSTRUCTIONS			1

SEAL ENCLOSURE KIT

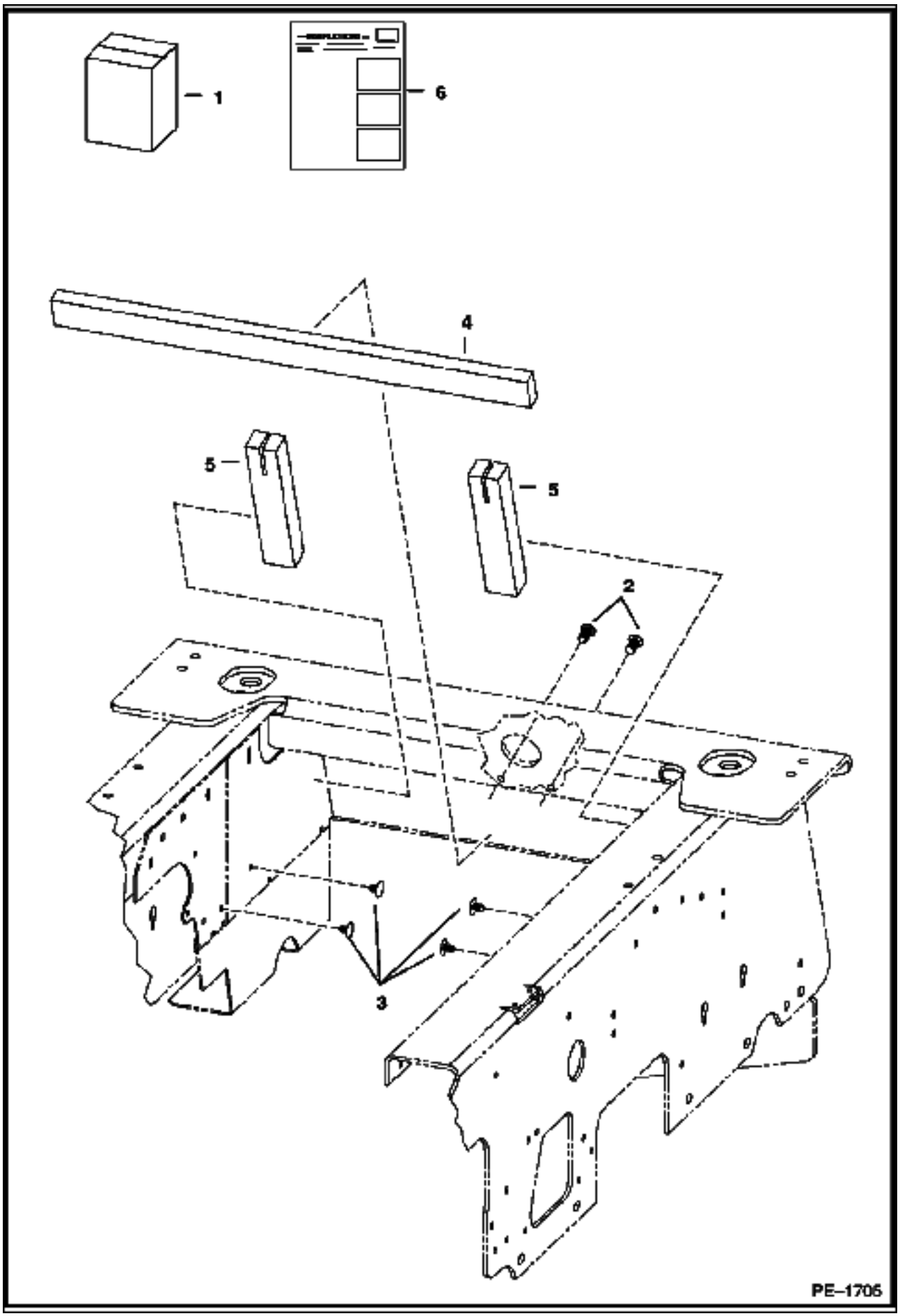

SEAL ENCLOSURE KIT (Cont'd)

Ref No	Part Number	Description	Remarks	Serial Number	Qty
1	6732718	KIT	enclosure		1
2	6669308	RETAINER			2
3	6674895	RETAINER			4
4	6731108	SEAL	retainer		1
5	6732619	SEAL	panel		2
6	6901774	INSTRUCTIONS			1

SEAT BELT
(Three Point Retractable)

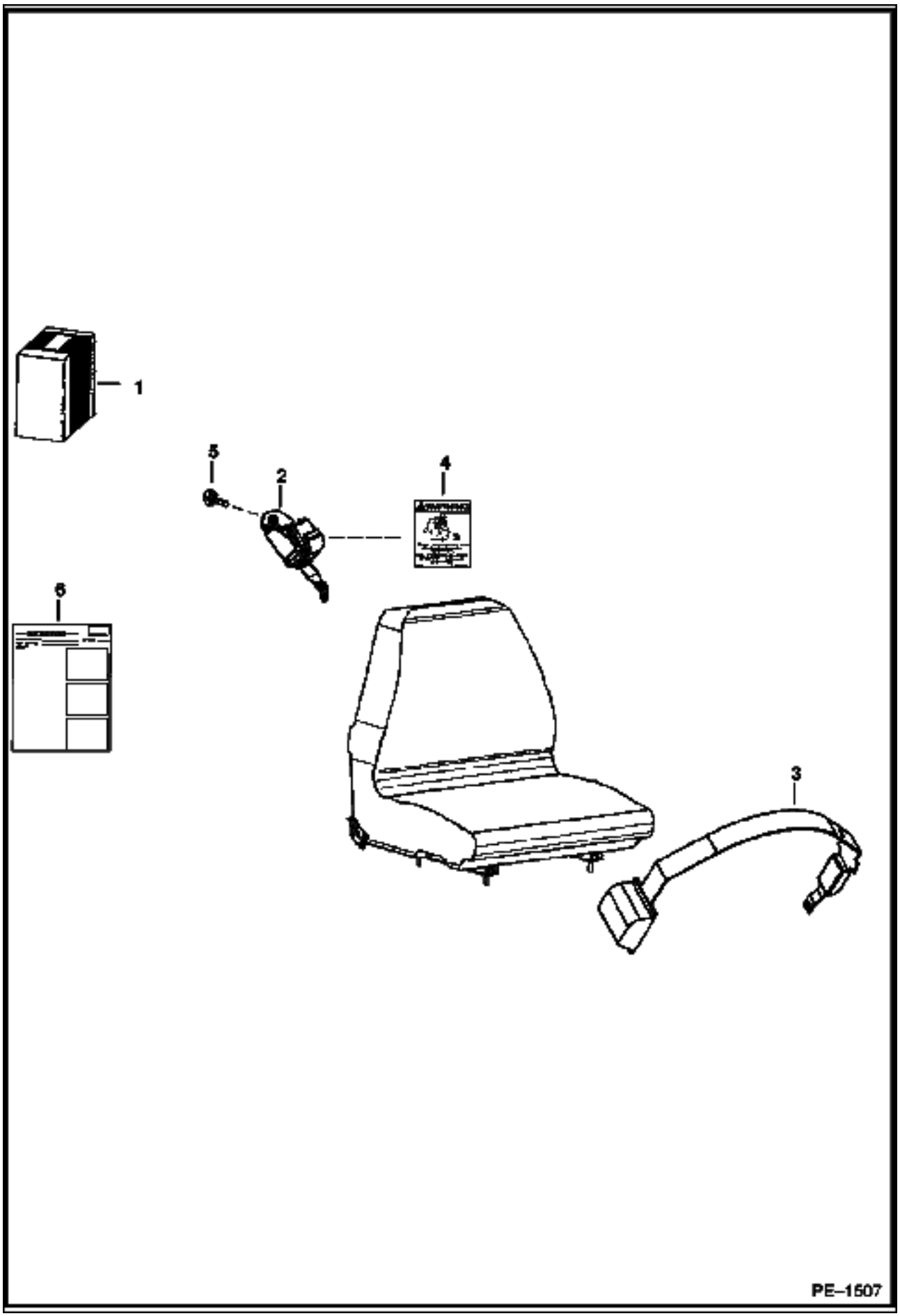

SEAT BELT (Cont'd)
(Three Point Retractable)

Ref No	Part Number	Description	Remarks	Serial Number	Qty
1	6732219	KIT	three point retractable seat belt - Use with Sears brand Suspension Seats with a L.H. recliner lever		1
2	6674407	SHOULDER BELT			1
3	6679308	SEAT BELT			1
4	6725370	DECAL			1
5	35C000612B	BOLT			1
6	6901010	INSTRUCTIONS			1

SEAT BELT
(3" Wide Retractable)

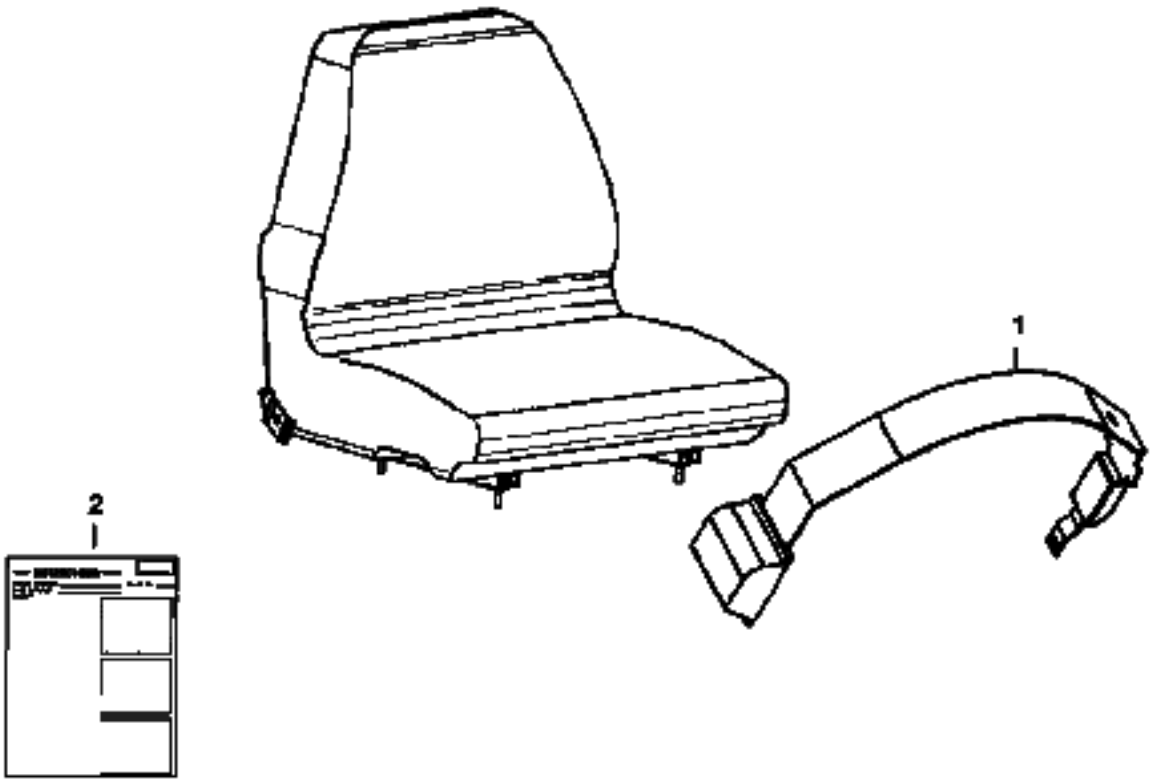

SEAT BELT (Cont'd)
(3" Wide Retractable)

Ref No	Part Number	Description	Remarks	Serial Number	Qty
1	6675562	SEAT BELT	3" wide retractable seat belt - Use with Sears brand Suspension Seats with a L.H. recliner lever		1
2	6901011	INSTRUCTIONS			1

SEAT BELT
(3" Wide)

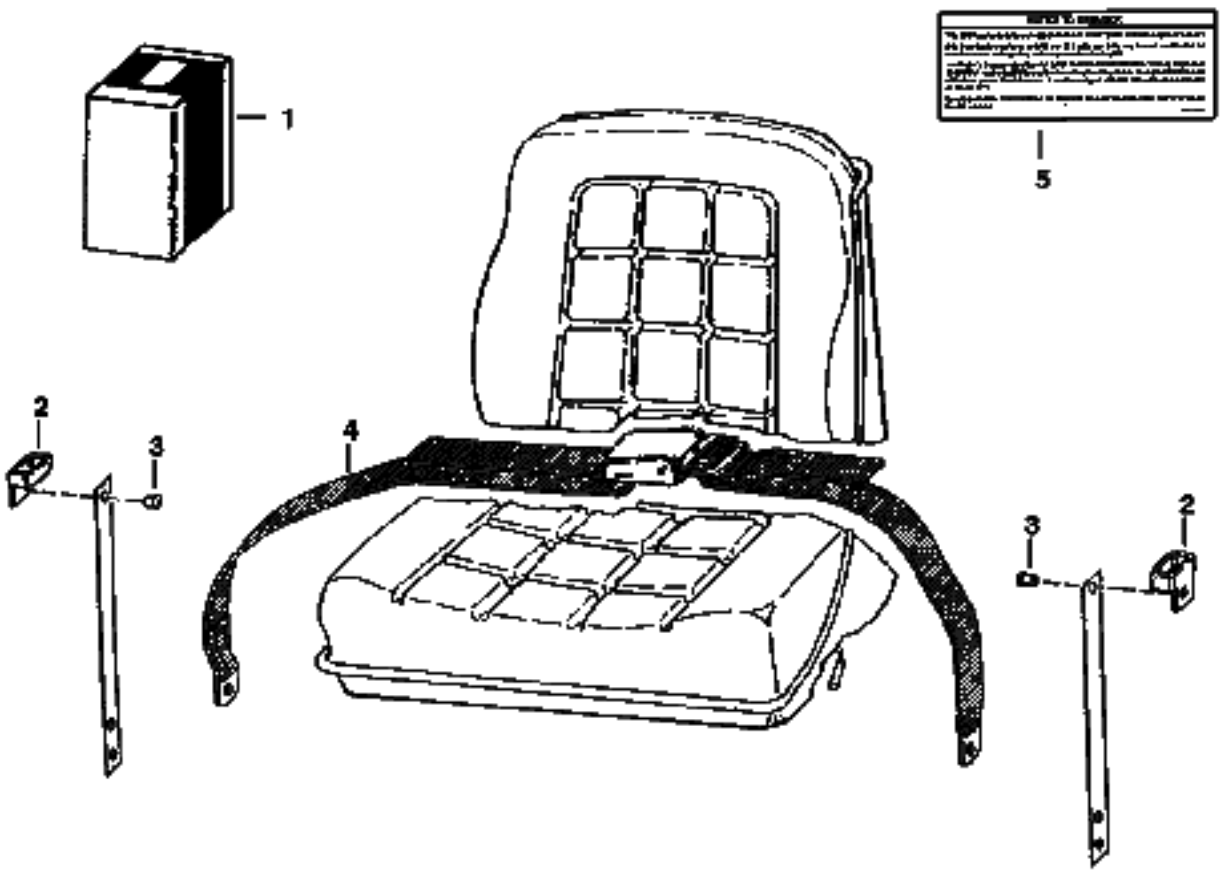

NOTE: Complies with British Columbia Industrial Health and Safety Regulations 26.16 (7) (a).

B–13601

SEAT BELT (Cont'd)
(3" Wide)

Ref No	Part Number	Description	Remarks	Serial Number	Qty
1	6703640	KIT	W/Ref. 2-5		1
2	6703703	GUIDE			2
3	6512797	RIVET			4
4	6659999	BELT			1
5	6703641	DECAL			1

SOUND KIT

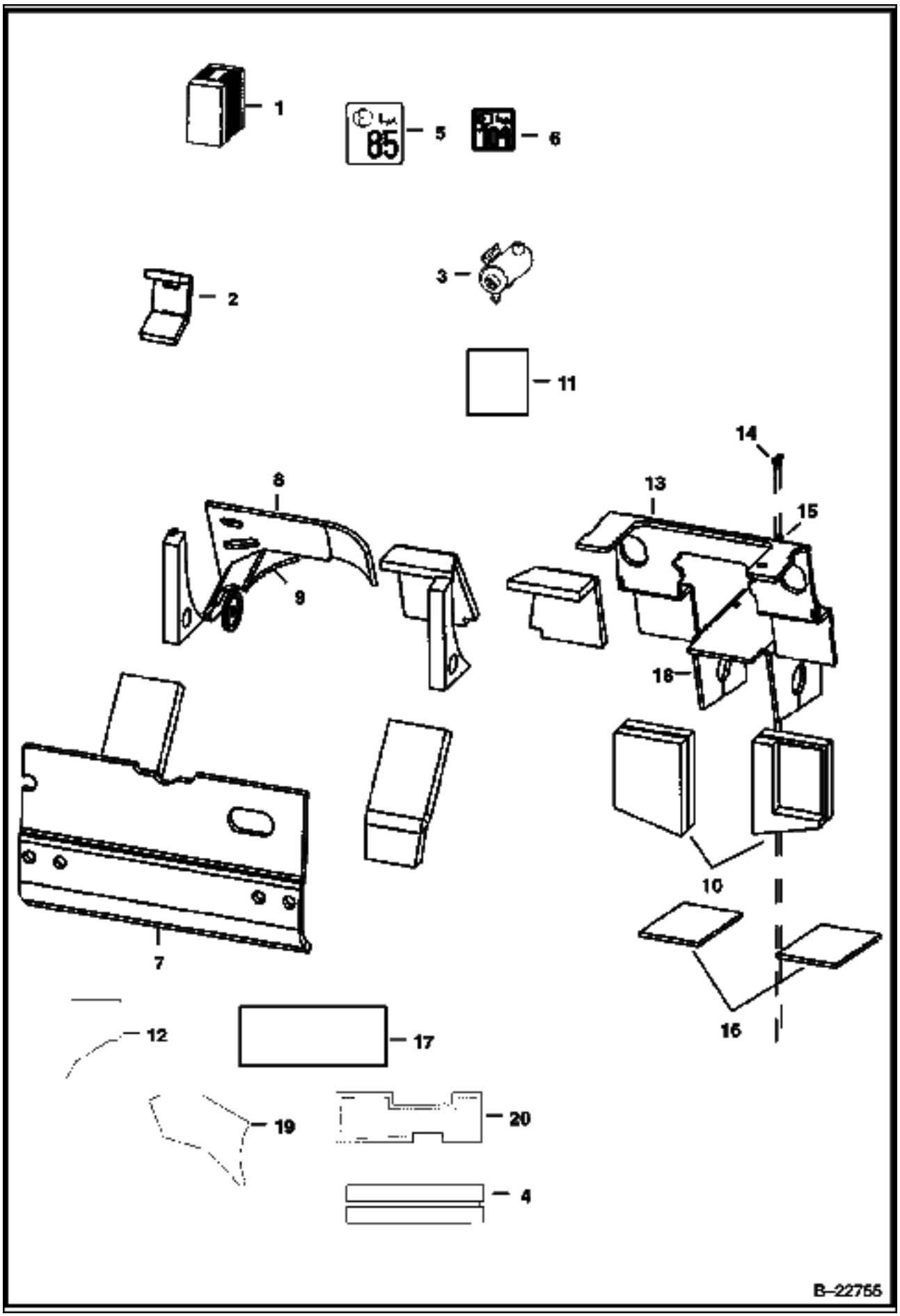

Ref No	Part Number	Description	Remarks	Serial Number	Qty
1	7100110	KIT			1
2	6703331	INSULATION	air inlet		1
3		AIR CLEANER			1
4	6719328	INSULATION	fender - R.H.		1
5	6579385	DECAL	noise level		1
6	6731994	DECAL	noise level		1
7	6715106	INSULATION	rear door		1
8	6719332	INSULATION	blower housing		1
9	6704769	INSULATION	blower housing		1
10	6703968	INSULATION	transmission		2
11	6732724	INSULATION	cross member		1
12	6719333	INSULATION	blower housing		1
13	6719372	INSULATION	steering panel		1
14	84G003716B	BOLT			2
15	6562619	BUSHING			2
16	6719330	INSULATION	pedal		2
17	6725361	INSULATION	cross member		1
18	6719331	INSULATION	transmission top		1
19	6719334	INSULATION	blower housing		1
20	6719327	INSULATION	fender - L.H.		1

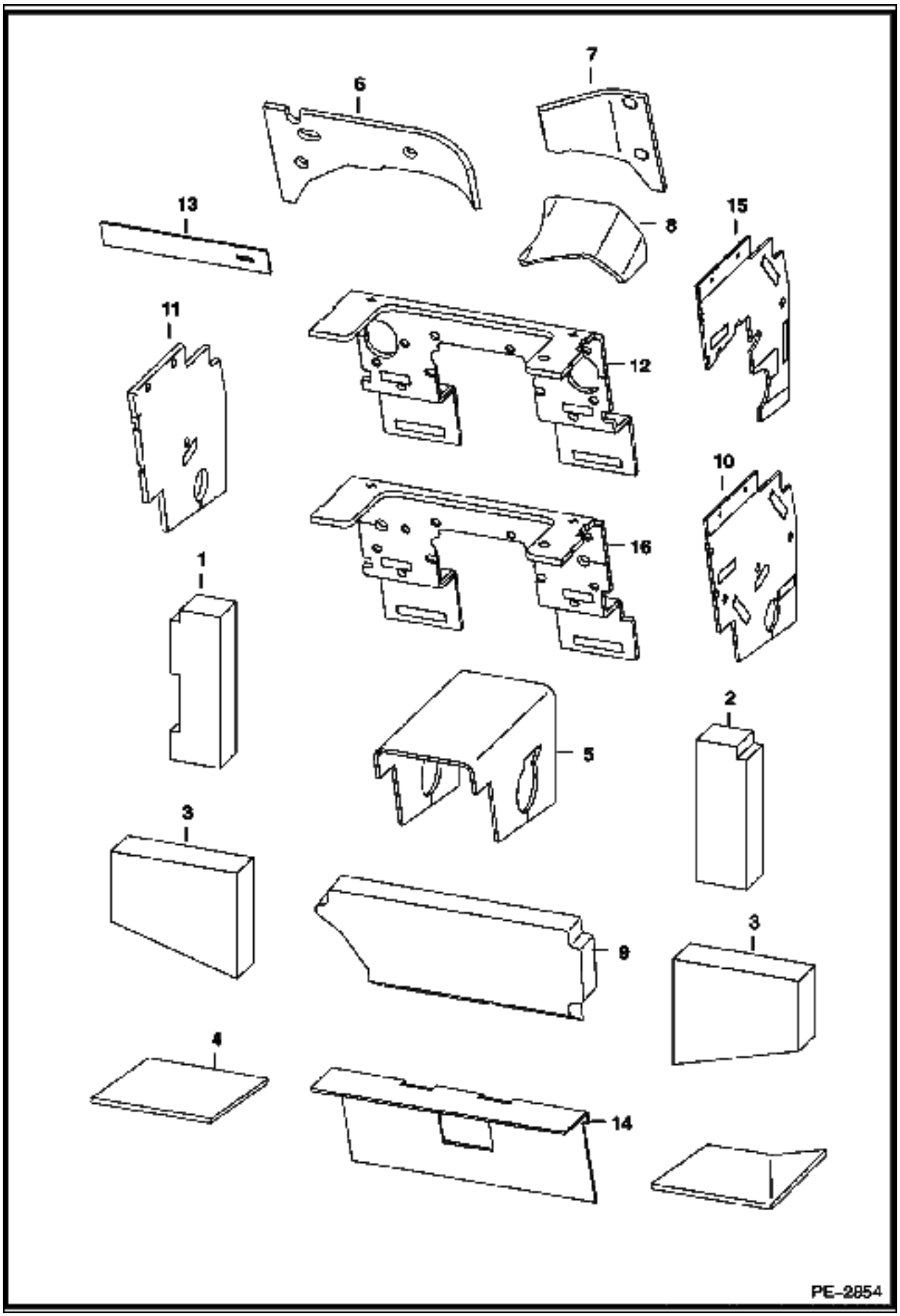
7
6
13
8
15
11
12
10
16
1
5
2
3
3
9
4
14
PE-2854

Ref No	Part Number	Description	Remarks	Serial Number	Qty
1	6719327	INSULATION			1
2	6719328	INSULATION			1
3	6703968	INSULATION	side transmission		2
4	6719330	INSULATION			1
5	7101527	INSULATION	transmission		1
6	6719332	INSULATION			1
7	6719333	INSULATION			1
8	6719334	INSULATION			1
9	6727299	INSULATION			1
10	7101530	INSULATION	left panel		1
11	7101531	INSULATION	right panel		1
12	7101529	INSULATION	Steering column		1
13	6719389	INSULATION			1
14	7101543	INSULATION	crossmember		1
15	7109125	INSULATION	right panel -SJC		1
16	7101528	INSULATION	right panel -SJC		1

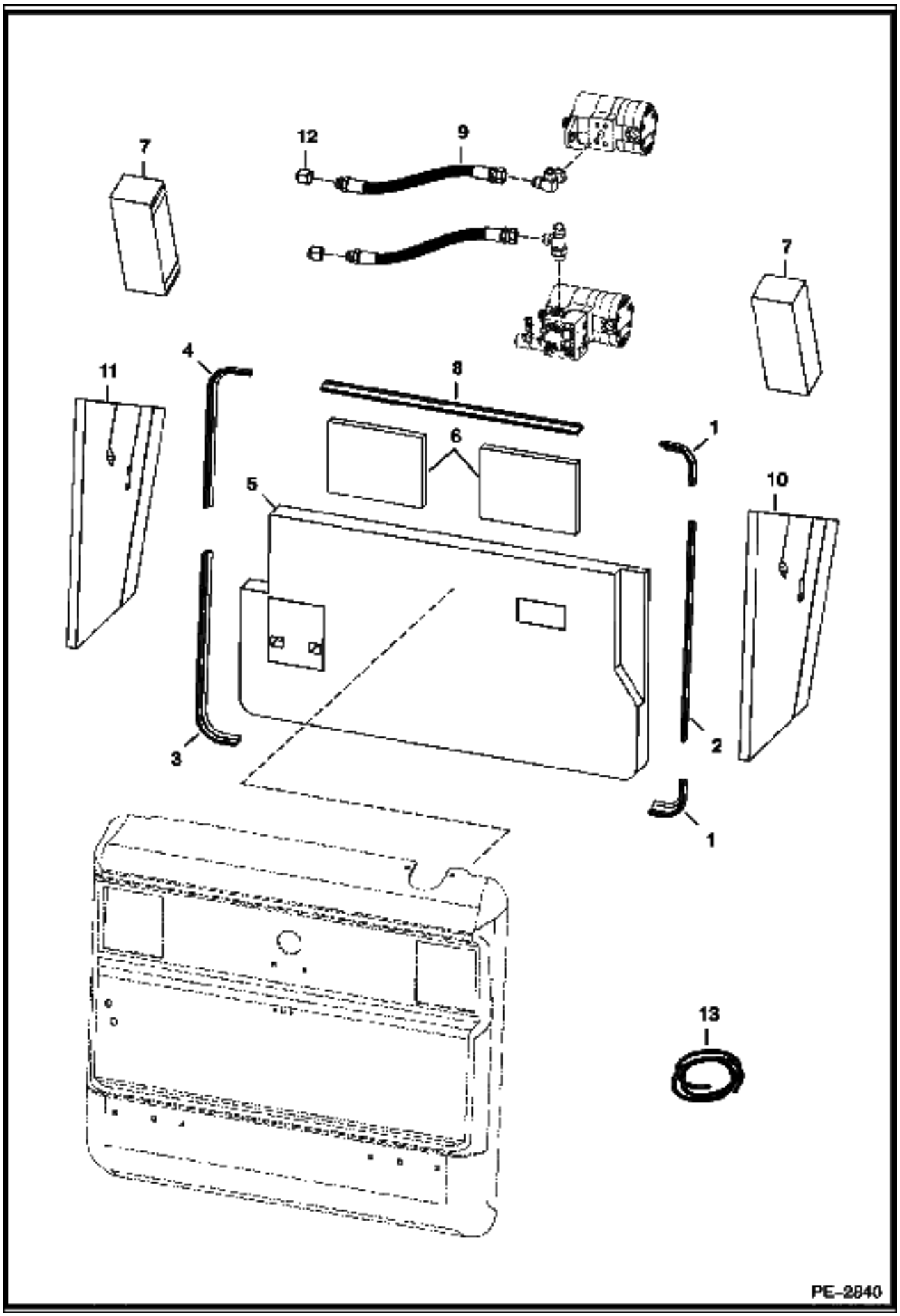
7
12
9
7
11
4
8
1
6
10
5
2
3
1
13
PE-2840

SOUND OPTION (Cont'd)
(Bystander)

Ref No	Part Number	Description	Remarks	Serial Number	Qty
1		SEAL	NAP - 6.50" (165,1 mm) long - Order Ref. 13		2
2		SEAL	NAP - 21.25" (546,1 mm) long - Order Ref. 13		1
3		SEAL	NAP - 22.10" (561,3 mm) long - Order Ref. 13		1
4		SEAL	NAP - 17.60" (447,04 mm) long - Order Ref. 13		1
5	7109317	INSULATOR	tailgate		1
6	7109318	INSULATOR	upper tailgate		2
7	7110410	INSULATION	upright		2
8		SEAL	NAP - 27.25" (692,15 mm) long - Order Ref. 13		1
9	7112651	HOSE			1
10	7116699	INSULATION	upright		1
11	7116700	INSULATION	upright		1
12	36K8	FITTING			1
13	7108716	SEAL	bulk - sold per foot		x

SOUND REDUCTION HARDHAT

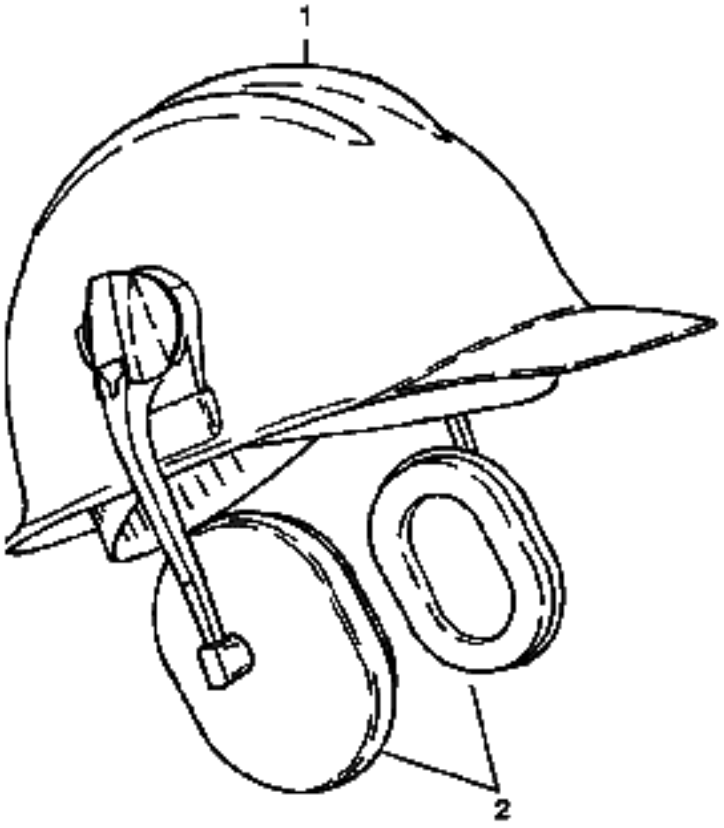

Ref No	Part Number	Description	Remarks	Serial Number	Qty
1	6559552	HARDHAT			1
2	6559775	EARMUFFS			1

STROBE LIGHT

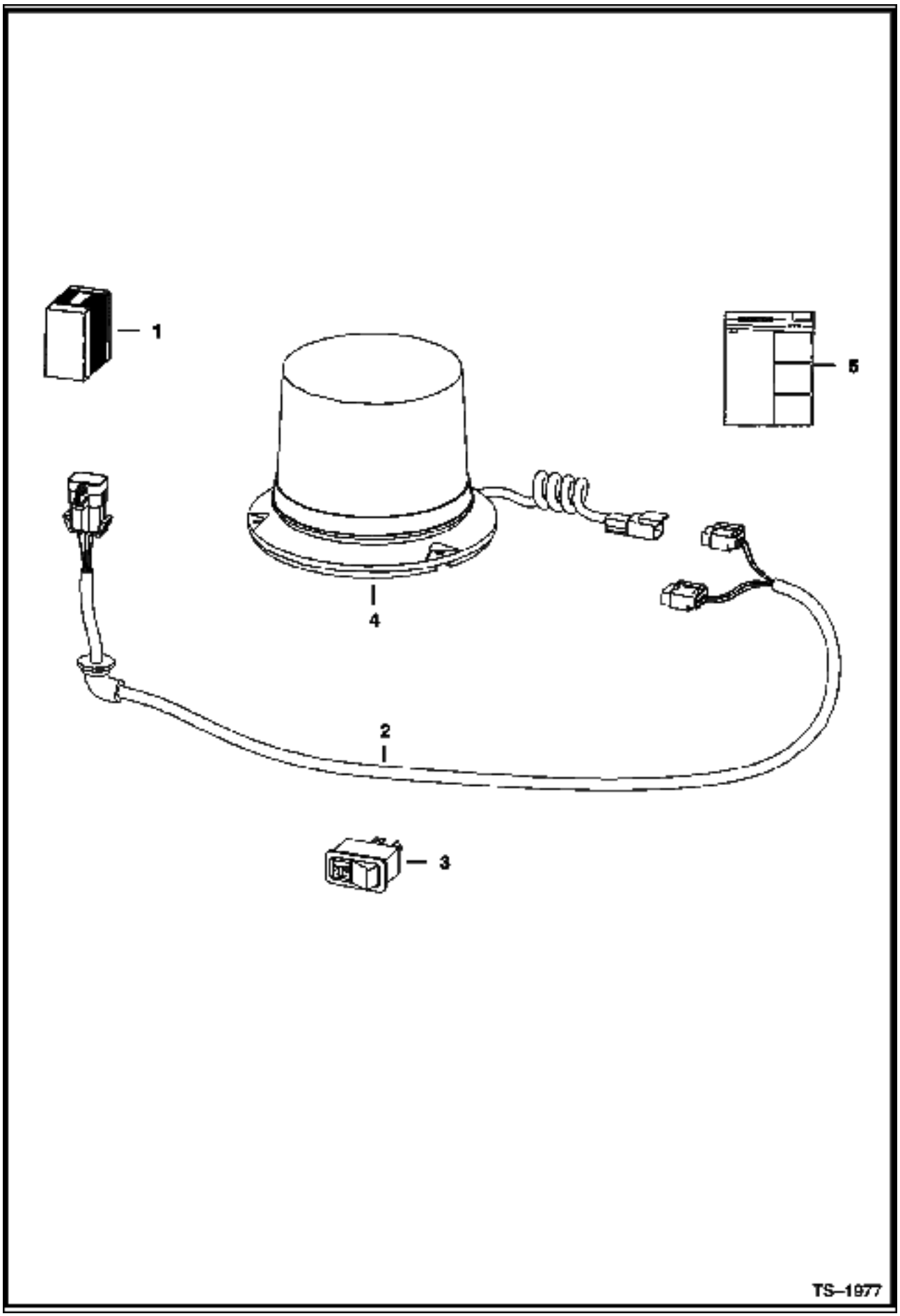

Ref No	Part Number	Description	Remarks	Serial Number	Qty
1	6719857	KIT	strobe light - If loader is not equipped W/ heater, air conditioning, selectable joystick controls, advanced control system, power bob-tach, rotating beacon and/or non-power port plug-in 4 way flashers, also order 7116260 deluxe harness		1
2	6718872	HARNESS			1
3	6668816	SWITCH	vertical		1
4	6675522	STROBE			1
4	6675858	FLASH TUBES			1
5	6900992	INSTRUCTIONS			1

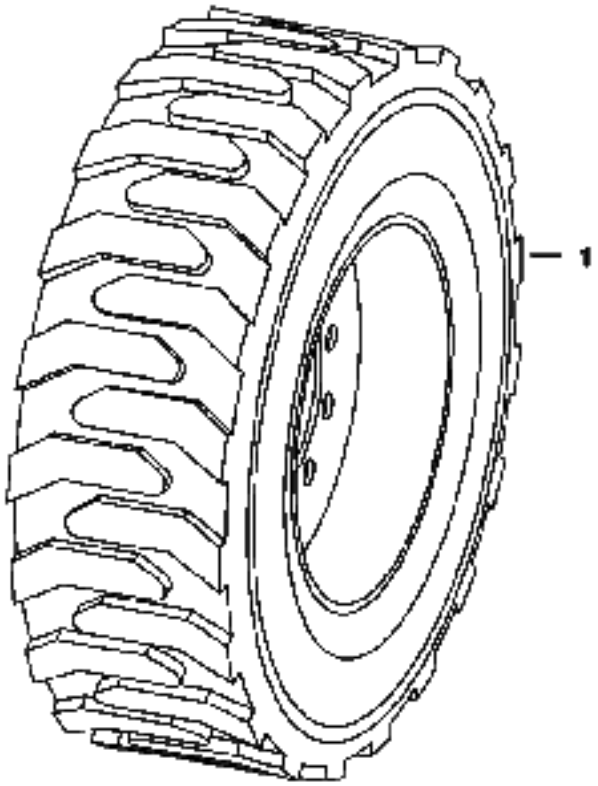

MS-2192

Ref No	Part Number	Description	Remarks	Serial Number	Qty
1	6903766	31X6X10 SOLID FLEX TIRE AND WHEEL (LEFT)			2
2	6903767	31X6X10 SOLID FLEX TIRE AND WHEEL (RIGHT)			2

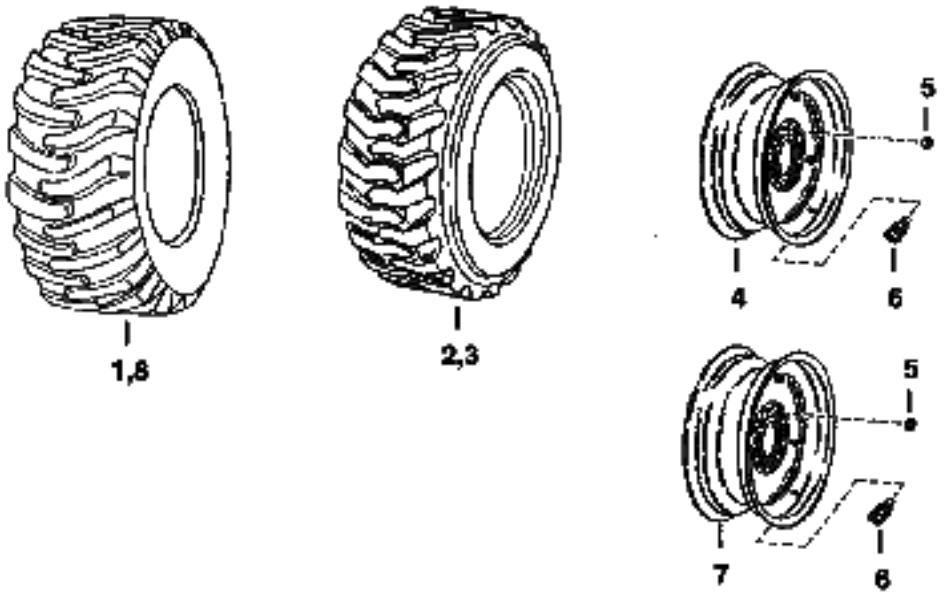
1,8
2,3
5
4
6
5
7
6
B–17101R

Ref No	Part Number	Description	Remarks	Serial Number	Qty
1	6550826	TIRE	10.00-16.5, 6 Ply Rating - General		4
2	6730106	TIRE	10.00 - 16.5 - 10 ply - Bobcat - severe duty		4
3	6729896	TIRE	Bobcat Brand - 10.00 - 16.5, 8ply - standard duty		4
3	6729900	TIRE	Bobcat Brand - 10.00 - 16.5, 10 ply - heavy duty		4
4	6730771	RIM	See BTI197 Used W/Ref. 1, 2 & 3		4
4	6730772	RIM	Used W/Ref. 8		4
5	6564669	NUT	wheel		32
6	1614765B	STEM	tubeless tire		4
7	6730775	RIM	inverted - Use W/Ref. 3 - For 60" width		4
8	7105756	TIRE	31.5 - 13 x 16.5 - 10 ply Bobcat Brand - Super Float [A]		4

BULK ITEMS
(SEE NOTE)

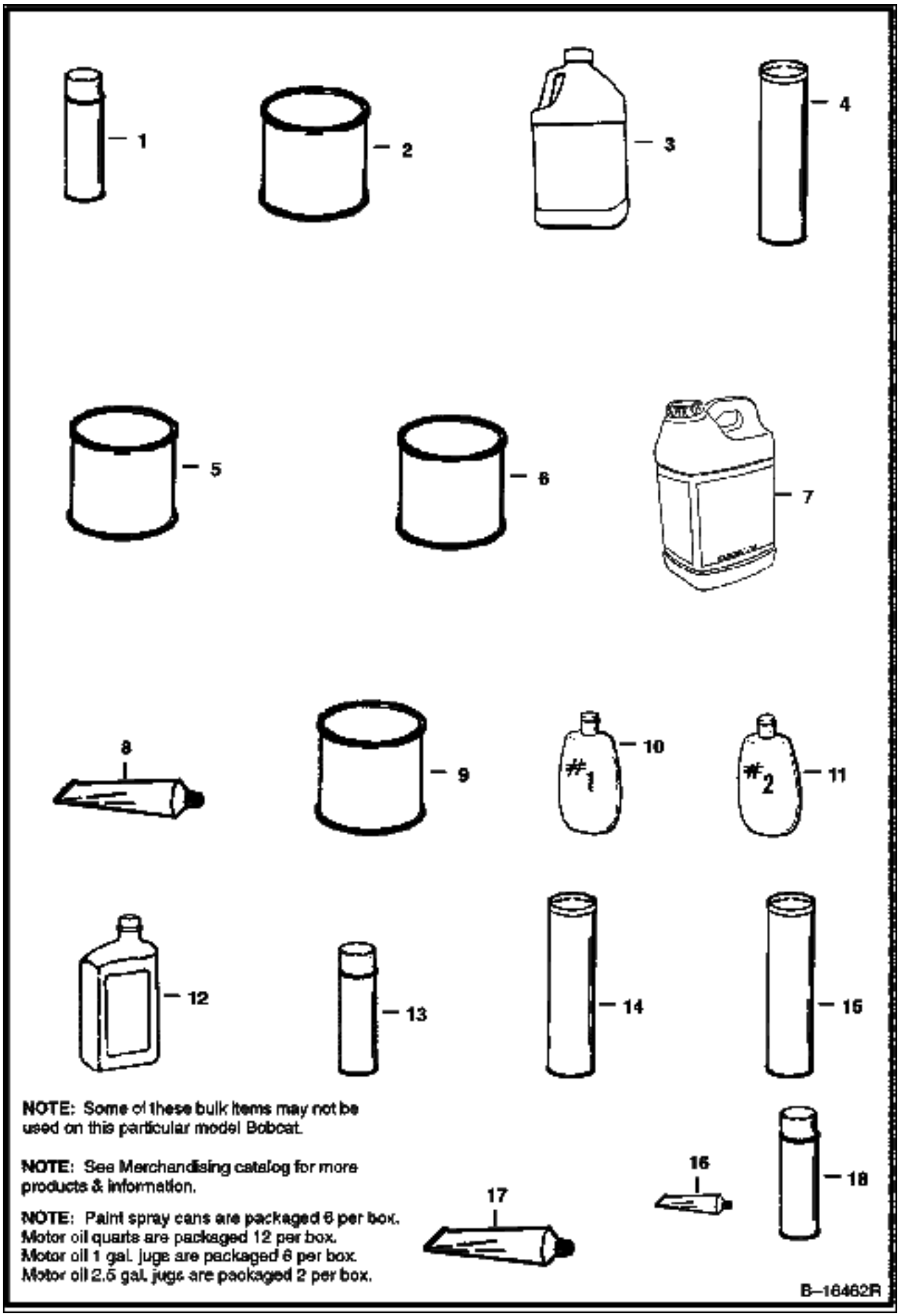

NOTE: Some of these bulk items may not be used on this particular model Bobcat.

NOTE: See Merchandising catalog for more products & information.

NOTE: Paint spray cans are packaged 6 per box.
Motor oil quarts are packaged 12 per box.
Motor oil 1 gal. jugs are packaged 6 per box.
Motor oil 2.5 gal. jugs are packaged 2 per box.

BULK ITEMS (Cont'd)
(SEE NOTE)

Ref No	Part Number	Description	Remarks	Serial Number	Qty
1	6902228	PAINT	orange - Spray Can - SEE NOTE		x
1	6902229	PAINT	charcoal - Spray Can-SEE NOTE		x
1	6902230	PAINT	white - Spray Can - SEE NOTE		x
2	6902233	PAINT	orange - Qt.		x
2	6902234	PAINT	charcoal - Qt.		x
2	6902235	PAINT	white		x
3	6724094	ANTI-FREEEZE	Gal. - Premixed PG		x
3	6724354	ANTI-FREEZE	Gal. - PG concentrate		x
4	6633583	SEALANT	chaincase covers, oil cooler grill		x
5		REDUCER	NAP - Gal.		x
6		PRIMER	NAP - Gal.		X
6	6902232	PRIMER	spray can (16 oz)		x
7	6903117	HYD FLUID 2.5 GAL. 2			x
7	6903118	HYD. FLUID 5GAL			x
7	6903119	HYD. FLUID 55GAL			x
8	6599360	SEALANT	electrical - 3 oz. tube		x
9	6903121	GEAR LUBE 12			x
10	6630188	POLISH	window - #1 (8 oz.)		x
10		POLISH	NAP - window-1 (64 oz.) -Order 6630188 Polish		x
11	6630189	POLISH	window - #2 (8 oz.) - scratch remover		x
11		POLISH	NAP - window-2 (64 oz.) - scratch remover - Order 6630189 Polish		x
12	6903109	OIL 30W QT. 12			x
12	6903110	OIL 30W GAL. 6			x
12	6903111	OIL 30W 2.5 GAL 2			x
12	6903107	OIL 10W30 QT. 12			x
12	6903108	OIL 10W30 GAL. 6			x
12	6903113	OIL 15W40 2.5 GAL. 2			x
12	6903105	OIL 15W40 QT. 12			x
12	6903106	OIL 15W40 GAL. 6			x
12	6903113	OIL 15W40 2.5 GAL. 2			x
13	6675380	ADHESIVE	insulation - spray can		x
14	6903122	GREASE 10			x
15	6599719	GREASE	14.5 oz. cartridge - For fan idler bearing & spring loaded drive idler		x
16	6650407	ADHESIVE	1 oz. tube		x
17	6650388	SEALANT	flange		x
18	6736644	PAINT	orange - .5 oz. spray can		x
18	6736641	PAINT	charcoal - .5 oz. spray can		x
18	6736642	PAINT	white - .5 oz. spray can		x
18	6736645	PAINT	red - .5 oz. spray can		x

Part No.	Description	Was	Code	Page
10C000410B	BOLT			246
10C000416B	BOLT			246
10C000616B	BOLT			20
10H000025B	GREASE ZERK			32
10H000035B	GREASE ZERK			34, 96
10J000005B	BALL			190
10J000013B	BALL			176
11H000015B	GREASE ZERK			32, 62
12D000006B	NUT			282
12D000008B	NUT			282
12D000010B	NUT			288
12H000015B	GREASE ZERK			32
12H000025B	GREASE ZERK			326
1304227B	PIN			172
1306637B	PIN			64
1313995B	STUD			32
1318565B	PIN			272
1320075	COTTER PIN			314
13K000008B	TEE			286
14J005032B	PIN			34
1522534B	PISTON SEAL			62
15JM00410B	KEY			178
15KB00404B	ADAPTER			326
15KB00606B	ADAPTER			58, 72, 84, 88
15KB00612B	ADAPTER			332
15KB00810B	CONNECTOR			54, 228
15KB01010B	ADAPTER			48, 52, 94
15KB01012B	ADAPTER			88, 94
15KB01212B	ADAPTER			94, 332
15KB01216B	ADAPTER			58
15KB606	ADAPTER			94
15KB612	ADAPTER			94
1612281B	NUT			252
1614765B	STEM			360
16F000002B	PLUG			178
17C000410B	BOLT			220, 282, 310, 312
17C000412B	BOLT			45, 46, 142
17C000420B	BOLT			260
17C000432B	BOLT			56
17C000508B	BOLT			282
17C000512B	BOLT			232, 238, 256, 282
17C000514B	BOLT			148, 214
17C000516B	BOLT			260, 278
17C000520B	BOLT			260
17C000532B	BOLT			272
17C000540B	BOLT			140, 316, 318, 320
17C000608B	BOLT			148, 214
17C000610B	BOLT			36, 164
17C000612B	BOLT			16, 64, 90, 92, 94, 96, 162, 234, 238, 272
17C000614B	BOLT			76
17C000616B	BOLT			64, 84, 88, 146, 148, 290
17C000620B	BOLT			64, 86, 90, 94, 96, 164
17C000624B	BOLT			64, 238
17C000628B	BOLT			48, 52, 92, 96, 238

Code for disposition of old part number

A -- Use up
B -- Use on other application (See PNI)
C -- File PDR Report with Bobcat Parts Sales
D -- Part Number Error

Part No.	Description	Was	Code	Page
17C000632B	BOLT			48, 52, 314
17C000640B	BOLT			20, 32, 250, 252, 316, 320
17C000644B	BOLT			84
17C000648B	BOLT			32
17C000656B	BOLT			32, 318, 320
17C000660B	BOLT			32, 34
17C000680B	BOLT			96, 332
17C000716B	BOLT			16, 170
17C000820B	BOLT			30
17C000828B	BOLT			164, 168
17C000844B	BOLT			48, 52
17C001016B	BOLT			32
17C001056B	BOLT			14
17C001072B	BOLT			32
17C006116B	BOLT			160
17KB001212B	ELBOW			88
17KB00606B	ELBOW			55, 56, 68, 84, 86, 90, 94, 332
17KB00808B	ELBOW			90
17KB00810B	ELBOW			54, 228
17KB01010B	ELBOW			53, 54, 76, 78, 228
17KB01212B	ELBOW			92, 332
18C001636B	BOLT			42
18EM01224B	WASHER			232, 238
18KB00404B	ELBOW			326
18KB00606B	ELBOW			326
18KB01010B	ELBOW			76
19J000012B	CLAMP			86, 90
19KB01210B	TEE			76, 78
1CM00640B	BOLT			232, 238
1CM00820B	BOLT			96
1CM00825B	BOLT			140
1CM00835B	BOLT			176, 196
1CM00870B	BOLT			140, 176
1CM00875B	BOLT			196
1CM00890B	BOLT			168
1CM08100B	BOLT			168
21G000804B	BOLT			296
21KB00606B	TEE			86, 90, 294
21KB01212B	FITTING			326
225855B	SEAL			48, 52, 60
24K000005B	PLUG			86, 90
24K000007B	PLUG			66, 70
25E000010B	WASHER			138
25E000011B	WASHER			272
25E000013B	WASHER			46, 150, 154, 214, 220, 310, 312
25E000014B	WASHER			140, 246
25E000015B	WASHER			140, 260
25E000016B	WASHER			232, 238, 260
25E000017B	WASHER			148, 272
25E000018B	WASHER			170
25E000021B	WASHER			168
25E000025B	WASHER			272
25G000410B	BOLT			142
25G000612B	BOLT			264, 268

Code for disposition of old part number

A -- Use up
B -- Use on other application (See PNI)
C -- File PDR Report with Bobcat Parts Sales
D -- Part Number Error

Part No.	Description	Was	Code	Page
25GT00410B	BOLT			150
25K020016B	O-RING			66, 70
25K020100B	O-RING			146
25K030118B	O-RING			84, 88
25K030202B	O-RING			62
25K030508B	O-RING			40
27E000006B	WASHER			48, 52
27E000008B	WASHER			318, 320
27E000010B	WASHER			32
29CM00820B	BOLT			140, 168
29G000416B	SCREW			66, 70
29G000444B	BOLT			66, 70
2DM00008B	NUT			182
2EM00008B	WASHER			184
2F004051B	PIN			172
30G000416B	BOLT			66
30H000021B	CLAMP			292
30H000022B	CLIP			36
30H000027B	CLIP			266
30H000035B	CLAMP			266
30H000042B	CLAMP			322
30H000046B	CLAMP			146
30H000050B	CLAMP			264
30H000062B	CLAMP			148, 214
30H000065B	CLIP			92
31C000410B	BOLT			288
31C000820B	BOLT			12, 48, 52
31C000824B	BOLT			272, 314, 318, 320
31C000828B	BOLT			12
31C000832B	BOLT			318, 320
31C000836B	BOLT			316, 318
31C001272B	BOLT			32
31H000027B	CLAMP			36
31H000038B	CLAMP			170
31H000049B	CLAMP			326
31H38	CLAMP			172
35C000408B	BOLT			232
35C000410B	BOLT			218, 282, 298
35C000412B	BOLT			20, 44, 292
35C000512B	BOLT			28, 268, 310, 312
35C000516B	BOLT			160
35C000536B	BOLT			54, 228, 282
35C000612B	BOLT			64, 342
35C000616B	BOLT	35C000624B	B	56, 162, 326
35C000616B	BOLT			56, 162, 326
35C000620B	BOLT			140, 164, 168
35C000636B	BOLT			332
35C001020B	BOLT			254
35C001032B	BOLT			40
36K000005B	CAP			66, 70, 84
36K000006B	CAP			168
36K000007B	CAP			48
36K000008B	CAP			286
36K8	FITTING			352

Code for disposition of old part number

A -- Use up
B -- Use on other application (See PNI)
C -- File PDR Report with Bobcat Parts Sales
D -- Part Number Error

Part No.	Description	Was	Code	Page
37C000412B	BOLT			292
37C000424B	BOLT			298
37C000512B	BOLT			218, 220, 280, 298, 322
37C000620B	BOLT			28, 64, 214
37C000632B	BOLT			252
37C000648B	BOLT			76, 78
37C000888B	BOLT			12
38C000610B	BOLT			170, 172
38C000820B	BOLT			164
38C000824B	BOLT			30
38C000840B	BOLT			29, 30
3974037B	PIN			178
3974095B	GASKET			174, 178
3974192B	BOLT			202
3974260B	BOLT			208
3974389B	GASKET			178
3974393B	PIN			178
3974394B	PIN			178
3974395B	PIN			176, 178
3974432B	CAP			184
3974433B	CAP			184
3974502B	GASKET			206
3974514B	SPRING			182
3974515B	RETAINER			182
3974518B	CAP			182
3974521B	BRACKET			182
3974524B	WASHER			182
3974546B	KEY			188, 192
3974547B	STOPPER			192
3974577B	O-RING			174, 188
3974618B	CIRCLIP			190
3974620B	CIRCLIP			190
3974626B	SHIM			206
3974671B	NUT			188
3974679B	BAND			180
3974868B	PIN			178
3974871B	ADAPTER			178
3974882B	BRACKET			184
3974893B	SEAT			176
3974894B	FLANGE			176
3974920B	SCREW			182
3974928B	SCREW			180
3974971B	NUT			204
3974972B	GASKET			204
3974996B	COVER			190
3975337B	COLLAR			188
3975426B	OIL PUMP			178
3975441B	GEAR			178
40K000006B	PLUG			162
42H000010B	CLAMP			36
42H000032B	CLAMP			36, 162
42HL00300B	CLAMP			162
42HS00004B	CLAMP			36
43C000408B	BOLT			148, 154

Code for disposition of old part number

A -- Use up
B -- Use on other application (See PNI)
C -- File PDR Report with Bobcat Parts Sales
D -- Part Number Error

Part No.	Description	Was	Code	Page
43C000616B	BOLT			142, 146
43C000852B	BOLT			168, 270
43C820	BOLT			124
43DM00008B	NUT			140
45C000616B	BOLT			172
45C000620B	BOLT			96
45G001006B	BOLT			288
45K000003B	FITTING			272
46D000005B	NUT			232, 238
47C000820B	BOLT			46
47K000008B	PLUG			102, 106
47K000010B	PLUG			84, 88
49C000628B	BOLT			96
4CM00020B	BOLT			204
4CM00616B	BOLT			200, 206
4CM00620B	BOLT			176
4CM00818B	BOLT			192
4CM00822B	BOLT			198
4CM00825B	BOLT			188
4CM00828B	BOLT			188, 194
4D000020B	NUT			316, 318, 320
4DM00005B	NUT			280
4DM00006B	NUT			170
4DM00008B	NUT			158
4F006106B	PIN			20
51DM00012B	NUT			238
51DM12	NUT			232
5289686B	PLUG			18
53CM01240B	SCREW			168
53D000006B	NUT			14, 20, 64, 96
53D000010B	NUT			14
53DM00008B	NUT			168
54K020002B	O-RING			68, 72
54K020028B	O-RING			68, 70
54K030110B	O-RING			328
54K030210B	O-RING			60
54K040116B	O-RING			328
54K040208B	O-RING			62
54K040224B	O-RING			60
54K060212B	O-RING			60
55D000005B	NUT			282
55D000006B	NUT			238
55K000204B	O-RING			68, 70
55K000214B	O-RING			84, 88, 326
57D000005B	NUT			52, 228
57D000006B	NUT			28, 64, 214, 252, 314
57D000008B	NUT			314
57D000010B	NUT			254
57G000608B	SCREW			298
58K000011B	O-RING			66
58K000012B	O-RING			68
58K000013B	O-RING			68, 70
58K000014B	O-RING			66
58K000016B	O-RING			70

Code for disposition of old part number

A -- Use up

B -- Use on other application (See PNI)

C -- File PDR Report with Bobcat Parts Sales

D -- Part Number Error

Part No.	Description	Was	Code	Page
58K000017B	O-RING			66, 70
58K000022B	O-RING			68, 88, 92
58K000116B	O-RING			230
58K000127B	O-RING			66, 70
58K000132B	O-RING			328
59D000004B	NUT			170, 246, 292
59D000005B	NUT			14, 140, 142, 234, 238, 260, 298
59D000006B	NUT			30, 48, 52, 86, 90
59D000008B	NUT			14, 48, 52, 58, 318, 320
5CM00812B	BOLT			182
5HM00013B	CLAMP			38
5HM00014B	CLAMP			36, 160
5HM00020B	CLAMP			308
5HM00024B	CLAMP			36, 84, 88, 160
5HM00027B	CLAMP			78
5HM00035B	CLAMP			92
5HM00042B	CLAMP			84, 88, 92, 162
5HM00058B	CLAMP			36
5JM00024B	CIRCLIP			190
614142B	SLEEVE			292
616783	WASHER			140
619021B	WASHER			14, 22, 34, 48, 52, 64, 86, 90, 172, 326, 332
61D000004B	NUT			260
61D000005B	NUT			30, 218, 220, 232, 238, 256
61D000006B	NUT			12, 76, 78, 84, 88, 92, 162, 164, 233, 234, 250, 252
61D000008B	NUT			92
62D000004B	NUT			172
62D000006B	NUT			96, 272
63D000006B	NUT			96
63D000008B	NUT			316, 318
6510171	LINK			40
6510470	RING GEAR			164
6511855	SEAL			160
6512026	BUSHING			64
6512797	RIVET			346
6513152	SEAL			232, 238
6513495	COTTER PIN			64, 172
6513532	POPPET			100
6513533	SPRING			100
6513707	JOINT			206
6515131	TERMINAL			292
6515817	WASHER			14
6516229	PISTON SEAL			60
6517516	LIGHT			292
6518200	GREASE ZERK			96
6519178	BUMPER			20
6519925	BEARING			42
6531270	SLEEVE			66
6532127	BOOT			26, 150
6532347	SPACER			32
6532453	RING			328
6533898	DECAL			314
6542521	HOSE			84, 88
6542731	SAFETY TREAD			232, 238

Code for disposition of old part number

A -- Use up

B -- Use on other application (See PNI)

C -- File PDR Report with Bobcat Parts Sales

D -- Part Number Error

Part No.	Description	Was	Code	Page
654299B	BEARING			102, 106
6544654	BUSHING			64
6550826	TIRE			359, 360
6552871	WASHER			42
6553411	BUSHING			36, 40, 46
6553709	WASHER			14, 48, 52, 58
6554100	TREAD			172, 256
6554149	CORD			18, 232, 240, 246
6555341	SAFETY TREAD			326
6555351	SEAL			246
6557224	DECAL			258
6557291	BALL JOINT			170
6557493	GROMMET			338
6557831	WASHER			96
6557904	FLASHER			282, 292
6558309	WIRE ROPE			256
6558310	SLEEVE			256
6559479	NUT			172
6559552	HARDHAT			353, 354
6559775	EARMUFFS			354
6560573	DECAL			258
6560633	DAMPENER			14
6561383	DECAL			256
6562018	SPRING			34
6562602	BUSHING			14
6562619	BUSHING			212, 284, 348
6563445	HOSE			168
6563606	WASHER			42
6563914	WASHER			64, 96
6564343	SPACER			170, 172
6564452	GRIP			30, 170, 171, 172
6564657	PIN			63, 64, 214
6564669	NUT			42, 360
6565170	CABLE			140
6565200	DECAL			258
6565977	HOSE			308
6565990	DECAL			258
6567743	PIN			14, 296
6567827	ANGLE			314
6567838	PIN			314
6567962	WASHER			170
6569203	CLAMP			140, 260
6569219	SCREEN			36
6570931	INSTRUCTIONS			212
6571851	SNAP RING			44
6576033	WASHER			164
6576262	MOUNT			170, 172
6576280	BOLT			140, 260
6576302	BAR			64
6577058	PIN			96
6577204	SPROCKET			39, 40, 42
6577382	SPACER			160
6577545	GROMMET			218, 220, 310, 312
6577754	DECAL			258

Code for disposition of old part number

A -- Use up
B -- Use on other application (See PNI)
C -- File PDR Report with Bobcat Parts Sales
D -- Part Number Error

Part No.	Description	Was	Code	Page
6577821	HOSE			36
6577822	HOSE			36, 160
6577880	KIT			211, 212
6577954	PIN			32
6577961	GROMMET			26, 28, 64, 172
6578139	LEVER			225, 226
6578140	LEVER			226
6578169	HOSE			36
6578172	HOSE			36, 84, 88, 160
6578268	BELLCRANK			170
6578278	PAD			36
6578368	DECAL			258
6578689	HUB			42
6579127	CHAIN			40
6579385	DECAL			284, 348
6579404	DECAL			284
6579511	DECAL			258
6579528	DECAL			256
6579613	STOP			14, 160
658128B	SNAP RING			102, 106
6586542	HEAD			328
6586543	PISTON			328
6586918	SCREW			66
6587458	KEY			36
6587523	WASHER			66, 70
6587575	ADAPTER			66
6587580	SPRING			66, 71, 72
6587763	BOOT			66, 154
6589226	BONNET			66
6592098	WASHER			66
6592100	COLLAR			66, 72
6592105	BALL			66
6592107	SPRING			66
6592109	ADAPTER			66, 70
6592117	SPRING			66, 70
6592506	CLAMP			48, 52, 58, 86, 90, 332
6592507	PLATE			86, 90
6595663	BUSHING			66, 70
6596807	PLUG			66
6598098	PIN			204
6598099	KEY			190
6598102	VALVE			206
6598116	PLUG			184
6598146	PIPE			208
6598156	STUD			184
6598158	CIRCLIP			190
6598187	PLUG			178
6598275	BOLT			164
6598362	ELEMENT			2, 210
6598485	SEALANT			216
6598492	ELEMENT			2, 210
6599118	GASKET			206
6599136	CLIP			208
6599360	SEALANT			362

Code for disposition of old part number

A -- Use up
B -- Use on other application (See PNI)
C -- File PDR Report with Bobcat Parts Sales
D -- Part Number Error

Part No.	Description	Was	Code	Page
6599365	KIT			134
6599645	PLUG			40
6599719	GREASE			164, 362
6599741	WASHER			96
6599744	BALL JOINT			96, 272
6599931	ALARM			218, 220
6610510	TIE			18, 84, 88, 310, 312
6624289	STA STRAP			48, 52, 58, 76, 78, 140, 142, 146, 214, 264, 266, 268, 282, 308, 326
6630188	POLISH			362
6630189	POLISH			362
6630207	RIVET			26
6630945	WASHER			170, 172
6631046	SEAL			174, 186
6631418	PIN			14, 20, 296
6631561	NUT			230
6631643	PLATE			124
6631664	SEAL			188
6632218	BEARING			44
6632541	RACE			44
6633583	SEALANT			160, 165, 166, 362
6634609	RACE			42
6640690	PIN			144, 150, 310
6640692	CONNECTOR			144, 150
6640694	LOCK			144, 150
6640699	CONNECTOR			150, 298, 310
6640700	LOCK			150, 310
6641174	CONNECTOR			298
6641176	SEAL			144, 150, 310
6641179	CONNECTOR			144, 150, 230, 310
6641180	LOCK			144, 150, 230, 310
6643249	CONDUIT			48, 54
6645083	O-RING			102
6645086	PLUG			102, 106
6646582	PLUG			150
6646705	SEAL			160
6646781	SWITCH			218
6647777	PIN			230
6647778	CAP			230
6647780	PLUG			230
6647783	LOAD CHECK			230
6647784	PLUG			230
6647785	SPRING			230
6647786	SEAL KIT			230
6648293	SCREW			230
6648294	SPRING			230
6648348	PLUG			26, 28
6648944	BREATHER			7, 8
6649244	STUD			232, 238
6649245	RETAINER			232, 238
6649481	BULB			322
6649551	SHOCK			96
6649706	PIN			254
6649949	PLUG			18
6650388	SEALANT			362

Code for disposition of old part number

A -- Use up

B -- Use on other application (See PNI)

C -- File PDR Report with Bobcat Parts Sales

D -- Part Number Error

Part No.	Description	Was	Code	Page
6650407	ADHESIVE			160, 362
6650627	PLATE			102, 106
6650629	PIN			102, 106
6650630	RETAINER			102, 106
6650634	GASKET			102, 106
6650635	BEARING			102, 106
6650636	PIN			102, 106
6650637	BOLT			102, 106
6650646	O-RING			102
6650647	O-RING			102
6650648	PLUG			102
6650652	POPPET			102
6650668	BOLT			102, 106
6650675	COUPLER			102
6651489	COVER			196
6651542	BALL			100
6651709	SEAL			34
6651934	BOLT			190
6652018	BOLT			106
6652574	PLUG			178
6652575	PLUG			178
6652580	BOLT			178, 194
6652633	BALL			188, 192
6652652	SPRING			176
6652653	PLUG			180
6652670	STUD			196, 198, 206
6652688	CLAMP			208
6652689	CLAMP			208
6652762	BOLT			194
6652764	STUD			176, 200, 204
6652792	NUT			184, 194, 196
6652918	NUT			168, 270
6653798	BOLT			186
6653808	BOLT			194
6653809	ADAPTER			176
6653821	BOLT			188
6653830	SEAL			182
6653833	SPRING			182
6653859	SLEEVE			188
6653861	SLINGER			188
6653888	NUT			178
6653916	HOLDER			202
6653946	STUD			194
6654139	MOULDING			148, 168
6654374	KEY			36
6654718	CLAMP			208
6655154	GUIDE			184
6655155	SEAT			182
6655156	SEAT			182
6655158	BOLT			184
6655160	PLUG			184
6655161	WASHER			184
6655176	PUSHROD			192
6655179	PIN			188

Code for disposition of old part number

A -- Use up
B -- Use on other application (See PNI)
C -- File PDR Report with Bobcat Parts Sales
D -- Part Number Error

Part No.	Description	Was	Code	Page
6655180	CIR-CLIP			188
6655181	ROD			188
6655183	PIN			188
6655195	BOLT			178
6655210	SHIM			206
6655212	GEAR			190
6655213	SLEEVE			190
6655214	CASE			190
6655215	BALL			190
6655216	FUEL PUMP			36, 206
6655223	NUT			204
6655236	PIN			188
6655237	PIN			188
6655243	BUSHING			188
6655384	CAMSHAFT			192
6655498	BOLT			188
6655781	BEARING			164
6655870	ROCKER ARM			182
6655880	PIPE			180, 198
6655884	PLUG			178
6655938	VALVE			210
6657028	O-RING			102, 106
6657067	COVER			104, 106
6657068	COVER			102, 106
6657415	BOLT			196
6657663	PLUG			178
6657719	PLUG			18, 40, 246
6657734	PUMP			36
6658180	BREATHER			36
6658228	SEAL			42, 216
6658536	RING			164
6658672	SNAP RING			46
6658847	RING			164
6659999	BELT			346
6660260	SWITCH			94, 134
6660644	CAP			66
6660814	O-RING			102, 106
6660995	GREASE RING			164
6661022	FILTER			10, 84, 88, 131, 132
6661062	PLUG			162
6661114	CAP			36
6661117	TANK			272
6661150	SWITCH			282
6661213	RING			36
6661242	COVER			210
6661243	WING NUT			210
6661244	WASHER			210
6661248	ELEMENT			2, 8, 92, 134
6661328	SEAL KIT			68
6661353	LIGHT ASSY			322
6661405	OIL			166
6661481	O-RING			102
6661608	SEAL KIT			276
6661696	CAP			36

Code for disposition of old part number

A -- Use up

B -- Use on other application (See PNI)

C -- File PDR Report with Bobcat Parts Sales

D -- Part Number Error

Part No.	Description	Was	Code	Page
6661785	MOUNT			168
6661787	WASHER			168, 270
6661807	KIT			132
6661808	KIT			132
6662246	CONNECTOR			302
6662252	LOCK			302
6662257	PIN			302
6662306	RING			42, 216
6662848	CAP			70
6662997	PULLEY			164
6664004	CLAMP			162
6664035	CAP			268
6664036	NUT			268
6664037	WASHER			268
6664040	PIN			268
6664065	WASHER			338
6664085	BUSHING			18, 236, 246, 338
6664097	COVER			338
6664103	NUT			338
6664209	SEAL			164
6664221	RETAINER			18
6664223	OUTLET			18
6664224	CAP			18
6664554	PUMP			232
6664566	BOLT			338
6664815	SEAL			40, 100
6665000	CLIP			150, 232, 238
6665086	SEAL			62
6665314	PLUG			18, 138
6665316	SWITCH			292
6665321	RIVET			150, 232, 238
6665322	RIVET			150, 232, 238
6665367	BULB			18
6665370	PLUG			302
6665371	SWITCH			140, 210
6665568	EXTRUSION			232, 240
6665569	WASHER			66, 70
6665570	RING			66, 70
6665602	MOTOR			338
6665701	BUSHING			64
6665707	SWITCH			232
6665727	LIGHT			282
6665728	LIGHT			282
6665729	LIGHT			282
6665839	BOLT			64
6665860	KIT			282
6665915	GAUGE			84, 88
6666338	WASHER			102, 106
6666341	VALVE			54, 228, 229, 230
6666542	SEAL			328
6666543	SEAL			60
6666568	BULB			280
6666571	BULB			222
6666766	GROMMET			232

Code for disposition of old part number

A -- Use up
B -- Use on other application (See PNI)
C -- File PDR Report with Bobcat Parts Sales
D -- Part Number Error

Part No.	Description	Was	Code	Page
6666781	GASKET			174, 198
6666782	GASKET			178
6666802	GASKET			174, 196
6666814	GASKET			188
6666932	BRAKE			272, 273, 274
6666933	CYLINDER			272, 275, 276
6667139	CAP			272
6667144	CONNECTOR			144, 150
6667145	LOCK			144
6667176	PLUG			230
6667201	SPACER			338
6667323	SEAL			328
6667325	SEAL			60
6667326	SEAL			62
6667352	FILTER FUEL			2, 6, 36
6667353	FILTER ASSY			36
6667418	PLUG			178
6667419	WASHER			202
6667420	BOLT			186, 190
6667421	BOLT			184
6667422	WASHER			176, 182, 184, 194, 196
6667428	TAPPET			191, 192
6667433	CIRCLIP			192
6667451	WASHER			182
6667461	PIN			182
6667533	COVER			76, 78
6667569	CONNECTOR			268
6667676	COVER			230
6667677	O-RING			230
6667680	SNAP RING			230
6667687	STEM			66, 70
6667803	COUPLER			294, 332
6667804	COUPLER			294, 332
6667844	VALVE ASSY			56, 73, 74
6667887	BULB			280
6668007	SCREW			280
6668010	LENS			280
6668079	PLUG			100
6668080	SHIM			100
6668089	PLUG			100
6668097	SCREW			276
6668104	MOUNT			270
6668114	BEARING			164
6668742	SWITCH			18
6668765	VALVE			66, 70
6668815	SWITCH			282, 292
6668816	SWITCH			222, 282, 356
6668820	NUT			68, 72
6668881	CORD			224
6669085	VALVE			74
6669087	SEAL KIT			74
6669091	CLIP			18, 298
6669135	SEAT			16, 19, 20
6669154	BOLT			274

Code for disposition of old part number

A -- Use up
B -- Use on other application (See PNI)
C -- File PDR Report with Bobcat Parts Sales
D -- Part Number Error

Part No.	Description	Was	Code	Page
6669155	PLATE			274
6669156	SPACER			274
6669159	PISTON			274
6669162	NUT			274
6669163	PLUG			274
6669164	ADAPTER			274
6669165	SCREW			274
6669184	STATOR ASSY.			274
6669185	SEAL KIT			274
6669224	BOLT			18, 298
6669308	RETAINER			340
6669402	HOUSING			102
6669405	END CAP			106
6669406	END PLATE			102
6669409	WASHER			102
6669411	BEARING			102, 106
6669452	O-RING			100
6669549	SOCKET			76, 78, 262, 266, 268
6669657	SEAL KIT			294, 332
6669732	SEAL KIT			68, 70
6669734	SEAL KIT			70
6670251	BATTERY			260
6670284	LIGHT ASSY			322
6670287	COVER			30
6670312	SOLENOID			282
6670472	NUT			208
6670533	NUT			200, 204
6670634	SEAL KIT			228, 230
6670682	BEARING			164
6670706	CONNECTOR			150
6670707	CONNECTOR			150
6670710	LOCK			150
6670711	LOCK			150
6670715	PIN			150
6670726	LOCK			336
6670769	O-RING			174, 208
6670831	ELBOW			92
6671025	COIL			68, 70
6671027	LIGHT			280
6671106	HORN			282
6671512	BLOCK ASSY			103, 104, 106
6671516	SEAL KIT			104, 106
6671518	BOLT			102
6671520	O-RING			106, 124
6671527	NUT			228, 230
6672190	DRAINCOCK			178
6672272	WASHER			322
6672273	SCREW			322
6672274	SCREW			322
6672275	GASKET			322
6672276	LENS			322
6672277	BRACKET			322
6672279	MOUNT			322
6672360	PLUG			176

Code for disposition of old part number

A -- Use up
B -- Use on other application (See PNI)
C -- File PDR Report with Bobcat Parts Sales
D -- Part Number Error

Part No.	Description	Was	Code	Page
6672471	VALVE			70
6672515	SEAL KIT			80
6672863	SOLENOID			228, 230
6673710	BEARING			96, 148
6673789	BEARING			96, 148
6673828	HOSE			92
6673884	O-RING			102
6673959	VALVE			230
6674000	CLAMP			144
6674169	PULLEY			194
6674202	NUT			138
6674228	PANEL			298
6674231	VENT			298
6674315	SENSOR			140
6674316	SENSOR			142
6674331	COIL			230
6674400	HOUSING			322
6674401	HOUSING			322
6674402	MOUNT			322
6674403	COVER			16, 138
6674407	SHOULDER BELT			342
6674519	WINDOW			246
6674520	WINDOW			246
6674521	WINDOW			246
6674522	WINDOW			246
6674687	BATTERY			2, 140
6674798	REPAIR KIT			92
6674799	ADAPTER			76, 78, 266
6674802	CONNECTOR			76, 78, 262, 266, 268
6674894	NUT			20
6674895	RETAINER			18, 160, 340
6674907	NUT			114, 116
6674993	CAP			232
6675026	CAP			76, 78, 262, 266, 268
6675033	INSERT			14, 16, 138
6675064	TERMINAL			282
6675074	SEAT BELT			16
6675099	ALARM			310, 312
6675136	GAS SPRING			14
6675140	SNAP RING			14
6675154	HOLDER			142
6675155	FUSE			142
6675170	SEAT BELT			22
6675171	CLAMP			138
6675172	BRACKET			298
6675176	SWITCH			298
6675177	KNOB			298
6675179	FLANGE			298
6675181	PLUG			298
6675212	RETAINER			246
6675221	BOLT			168
6675257	CLEVIS			14
6675273	WASHER			30
6675281	MOUNT			268

Code for disposition of old part number

A -- Use up
B -- Use on other application (See PNI)
C -- File PDR Report with Bobcat Parts Sales
D -- Part Number Error

Part No.	Description	Was	Code	Page
6675298	COUPLER			234
6675299	COUPLER			234
6675308	KIT			24
6675309	KIT			24
6675310	KIT			24
6675311	KIT			24
6675312	KIT			24
6675313	KIT			24
6675314	KIT			24
6675315	KIT			24
6675316	KIT			24
6675317	SCISSORS			22
6675318	KIT			24
6675319	SEAT			22
6675320	SEAT			22
6675321	SEAT			22
6675322	SEAT			22
6675323	KNOB			22
6675332	LINK			40
6675336	BULB			322
6675342	PIN			102, 106
6675378	CLIP			234, 238
6675380	ADHESIVE			362
6675387	EXTRUSION			17, 18, 246
6675497	BLOWER			300, 301, 302
6675503	HOUSING			302
6675504	RING			302
6675505	BLOWER WHEEL			302
6675506	MOUNT			302
6675507	COVER			302
6675509	MOTOR			302
6675510	CLAMP			300
6675511	DRAIN VALVE			300
6675512	CLAMP			300
6675517	FILTER			1, 2, 3, 4, 6, 176
6675522	STROBE			356
6675523	BEACON			222, 282
6675524	CLIP			16
6675544	CANVAS CAB			241, 242
6675545	GROMMET			18, 246
6675558	SEAL			232, 238
6675559	COIL			68, 142
6675562	SEAT BELT			343, 344
6675581	EXTINGUISHER			288
6675590	DOOR			242
6675591	HINGE KIT			242
6675595	SEAT			22
6675596	SEAT			22
6675611	SEAL			304
6675618	CLAMP			196
6675734	STRAP			142, 160
6675833	SEAL			246
6675835	TURN SIGNAL			292
6675837	BELT			6

Code for disposition of old part number
A -- Use up
B -- Use on other application (See PNI)
C -- File PDR Report with Bobcat Parts Sales
D -- Part Number Error

Part No.	Description	Was	Code	Page
6675846	POTENTIOMETER			298
6675858	FLASH TUBES			356
6675982	PLUG			138
6675999	SWITCH			338
6676000	TEE			338
6676001	ARM			338
6676002	BLADE			338
6676003	HOSE			232, 236, 338
6676028	NOZZLE			338
6676029	SOLENOID			148, 150, 154, 214
6676034	KIT			24
6676338	GAS SPRING			24
6676499	GROMMET			232
6676500	ELBOW			232
6676516	NUT			298
6676536	SWITCH			138
6676537	SWITCH			148, 214
6676538	INSULATION			306
6676539	CLIP			300
6676545	CARTRIDGE			230
6676606	SPACER			300, 306
6676618	CLIP			302
6676640	SEAL			151, 152
6676653	SCREW			300, 306
6676732	SWITCH			326
6676870	CONNECTOR			150
6676872	TURN SIGNAL			282, 292
6676917	ELBOW			232
6676927	FELT STRIP			246
6676969	FILTER			133, 134
6677105	COVER			300
6677108	HOUSING			300
6677111	SEAL			300, 304
6677115	RECEPTACLE			300
6677116	RETAINER			300
6677117	SCREW			300
6677118	SCREW			300
6677119	SCREW			300
6677120	COVER			300
6677136	SOCKET			76, 78, 262, 266, 268
6677181	SENSOR			40, 146
6677192	MAGNET			232, 238
6677193	RIVET			232, 238
6677198	TAB			246
6677203	GUIDE			186
6677383	SOLENOID			68
6677485	SPACER			156
6677486	NUT			156
6677487	COVER			156
6677488	RECTIFIER			156
6677489	REGULATOR ASSY	NSS	D	156
6677490	BRACKET			156
6677491	BRACKET			156
6677492	ROTOR			156

Code for disposition of old part number

A -- Use up

B -- Use on other application (See PNI)

C -- File PDR Report with Bobcat Parts Sales

D -- Part Number Error

Part No.	Description	Was	Code	Page
6677493	STATOR			156
6677494	BOLT			156
6677495	SPACER			156
6677496	PULLEY			156
6677497	NUT			156
6677504	COVER			300, 306
6677817	BOLT			156
6677818	BEARING			156
6677819	RETAINER			156
6677820	BEARING			156
6677833	ARM ASSY			235, 236
6677834	BLADE			236
6677836	COVER			236
6677837	BOLT			236
6677839	GASKET			236
6677840	SWIVEL			236
6677841	WASHER			236
6677842	NUT			236
6677843	NUT			236
6677844	NUT			236
6677845	ADAPTER			236
6677847	GROMMET			236
6677973	PLUG			246
6677983	FILTER			298
6678000	SEAL			100
6678001	PLATE			100
6678003	PLATE			100
6678004	PLATE			100
6678006	BACK-UP RING			100
6678076	BLOCK			57, 58
6678151	COVER			300
6678152	SEAL			300
6678198	BOLT			236
6678205	ALTERNATOR			155, 156
6678207	FILTER			298
6678226	SEAL			102, 106
6678283	HANDLE			246
6678292	GAS SPRING			296
6678548	SOCKET			232, 238
6678666	TREE MOUNT			142, 308
6678667	MOUNT			140, 142
6678668	TIE			142
6678669	STRAP			260
6678675	CONTROLLER			264, 268
6678739	WASHER			236
6678818	MOUNT			140, 142
6678891	COIL			68, 72
6678893	SOLENOID			72
6678920	NOZZLE			236
6678921	GUIDE			236
6678931	PISTON			62
6678974	MOUNT			260
6679034	MOUNT			140
6679247	BOLT			41, 42

Code for disposition of old part number

A -- Use up
B -- Use on other application (See PNI)
C -- File PDR Report with Bobcat Parts Sales
D -- Part Number Error

Part No.	Description	Was	Code	Page
6679308	SEAT BELT			342
6679476	MOTOR			236
6679485	CONTROLLER JC			146
6679837	COUPLER			58
6679838	COUPLER			58
6679839	COUPLER			58
6679840	SEAL			58
6679841	SEAL			58
6679842	SWITCH			138
6679845	CROSSMEMBER			138
6679855	BULB			138
6679856	ALARM			138
6679990	CLIP			14
6679991	SEAL			160
6679994	SEAL			14
6680018	KIT			58
6680020	SEAL KIT			58
6680326	LIGHT			18
6680355	BOOT			158
6680356	BOLT			158
6680358	RING			158
6680359	STOP RING			158
6680360	STOP			158
6680361	SPRING			158
6680362	BALL			158
6680363	WASHER			158
6680365	SHAFT			158
6680366	GEAR			158
6680367	GEAR			158
6680368	STOP RING			158
6680369	SEAL			158
6680371	LEVER			158
6680372	BRACKET			158
6680373	YOKE			158
6680374	ARMATURE			158
6680375	SHAFT			158
6680376	SWITCH			158
6680377	HOLDER			158
6680378	WASHER			158
6680379	SEAL			158
6680380	SEAL			158
6680383	BOLT			158
6680384	BOLT			158
6680388	BRACKET			158
6680389	BRACKET			158
6680390	GEAR			158
6680410	CONTROLLER			146, 147, 148
6680414	HANDLE ASSY.			310
6680415	HANDLE			144
6680417	HANDLE			150
6680418	HANDLE ASSY.			143, 144
6680419	HANDLE ASSY.		A	144
6680429	SENSOR			20
6680436	SENSOR			36, 142

Code for disposition of old part number

A -- Use up
B -- Use on other application (See PNI)
C -- File PDR Report with Bobcat Parts Sales
D -- Part Number Error

Part No.	Description	Was	Code	Page
6680441	BUSHING			20
6680443	BUSHING			20
6680447	DECAL			144
6680462	HANDLE			150
6680468	MOUNT			150, 214
6680469	SPACER			150, 214
6680470	SPRING			150, 214
6680471	COVER			150
6680477	STRAP			150, 214
6680478	SHIELD			148, 154
6680479	SHIELD			148, 154
6680480	CHANNEL			150
6680481	CHANNEL			150
6680567	GASKET			186
6680639	PLUG			178
6680663	NUT			206
6680685	BOLT			182
6680706	BOLT			202
6680779	GASKET			208
6680801	BOLT			206
6680830	BOLT			202
6680970	BREATHER			46
6681469	PLUG			26, 28
6681487	O-RING			334
6681489	O-RING			334
6681492	NUT			80
6681512	SOLENOID			46
6681614	KNOB			18, 246, 298
6681944	HOSE			92
6681945	ELBOW			92
6682034	MOTOR			99, 100
6682260	SHAFT			102
6682261	KEY			102
6682264	SHAFT			106
6682442	SLEEVE			164
6682500	FILTER			186
6682515	SHIM			206
6682532	NUT			198
6682549	ELBOW			70
6682586	GAS SPRING			232, 238
6682860	O-RING			100
6682862	SHAFT, DRIVE			100
6682863	BOLT			100
6682897	SEAL			100
6683087	STUD			200
6683159	BOLT			196
6683202	ENGINE			162, 173, 174
6683206	SEAL KIT			94, 130, 160
6683274	SEAL			66, 70
6683812	SWITCH			146
6683819	VALVE			76, 78, 79, 80
6684033	NUT			48, 52, 160
6684037	SENSOR			140
6684038	SPRING			102

Code for disposition of old part number

A -- Use up
B -- Use on other application (See PNI)
C -- File PDR Report with Bobcat Parts Sales
D -- Part Number Error

Part No.	Description	Was	Code	Page
6684044	VALVE			334
6684045	SEAL KIT			334
6684046	O-RING			334
6684047	BACK-UP RING			334
6684048	O-RING			334
6684049	O-RING			334
6684050	BACK-UP RING			334
6684052	SEAL KIT			334
6684053	BACK-UP RING			334
6684054	O-RING			334
6684055	BACK-UP RING			334
6684056	O-RING			334
6684057	BACK-UP RING			334
6684058	COIL			80
6684059	SPACER			334
6684060	NUT			334
6684061	VALVE			334
6684062	SEAL KIT			334
6684063	O-RING			334
6684064	BACK-UP RING			334
6684065	O-RING			334
6684066	O-RING			334
6684067	BACK-UP RING			334
6684069	SEAL KIT			334
6684070	O-RING			334
6684071	O-RING			334
6684072	BACK-UP RING			334
6684073	COIL			334
6684125	COUPLER			68, 70
6684474	INSERT FAN INLET			160
6684645	VALVE			66, 70
6684742	NUT			330
6684743	SOLENOID			330
6684744	SOLENOID			330
6684745	PISTON			330
6684746	CHECK VALVE			330
6684747	SEAL KIT			330
6684752	GASKET			178
6684753	GASKET			174, 186
6684754	O-RING			186
6684756	GUIDE			184
6684762	SEAT			183, 184
6684763	SEAT			184
6684770	GASKET			174, 176
6684772	BOLT			176
6684774	GASKET			176
6684779	SHIELD			179, 180
6684780	GASKET			174, 180
6684781	BOLT			180
6684782	O-RING			174, 180
6684785	PLUG			186
6684788	GASKET			188
6684789	SEAL			188
6684791	CAMSHAFT			192

Code for disposition of old part number

A -- Use up
B -- Use on other application (See PNI)
C -- File PDR Report with Bobcat Parts Sales
D -- Part Number Error

Part No.	Description	Was	Code	Page
6684792	GEAR			192
6684793	GEAR			192
6684794	BUSHING			192
6684795	COLLAR			192
6684813	GASKET			190
6684817	NUT			200
6684818	SEAL			200
6684819	CAP			200
6684823	SPRING			204
6684824	GASKET			174, 204
6684825	GUIDE			200
6684826	SOLENOID			140, 200
6684827	NUT			200
6684829	SHIM			206
6684830	BOLT			206
6684832	LEVER			202
6684833	SHAFT			202
6684836	BOLT			203, 204
6684838	LEVER			201, 202, 204
6684839	LEVER			204
6684841	GASKET			200
6684842	PIPE			207, 208
6684844	BOLT			208
6684845	CLAMP			208
6684848	PIPE			208
6684849	PIPE			208
6684850	GLOW PLUG			208
6684851	CORD			208
6684855	FLANGE			195, 196
6684856	FLANGE			196
6684857	PLUG			196
6684862	PIPE			196
6684863	GASKET			174, 196
6684867	FAN			194
6684868	SEAL			194
6684869	FLANGE			194
6684870	GASKET			174, 194
6684872	VALVE			181, 182
6684873	VALVE			182
6684874	COLLAR			182
6684875	SHAFT			182
6684877	GASKET			174, 198
6684879	GASKET			174, 198
6684889	CLAMP			196
6684891	SEAL			200
6684910	SENSOR			150
6684911	SENSOR			148, 154, 214
6684912	SENSOR			148, 153, 154, 214
6684915	LEVER			148, 149, 150
6684916	LEVER			148, 150
6684923	BREATHER			84, 88
6684932	KNOB			32
6685060	BUSHING			64, 96
6685061	VALVE			334

Code for disposition of old part number

A -- Use up
B -- Use on other application (See PNI)
C -- File PDR Report with Bobcat Parts Sales
D -- Part Number Error

Part No.	Description	Was	Code	Page
6685063	HOUSING			100
6685064	POPPET			100
6685065	SHUTTLE			100
6685066	PISTON			100
6685067	GEROLER			100
6685068	FLANGE			100
6685069	RING,BACK-UP			100
6685070	KIT, SEAL COMPLETE			100
6685077	GASKET			184
6685078	GASKET			184
6685079	GASKET			184
6685080	GASKET			184
6685081	GASKET			184
6685085	COVER			180
6685086	COVER			180
6685087	VALVE			180
6685095	RING			188
6685096	RING			188
6685102	PIPE			208
6685103	PIPE			208
6685104	BOLT			196
6685105	PUMP			193, 194
6685106	HOUSING			194
6685183	SOLENOID			80
6685184	SEAL KIT			80
6685185	RELIEF VALVE			80
6685186	CHECK VALVE			80
6685190	STARTER			157, 158
6685328	RELIEF VALVE			334
6685344	SWASH PLATE			102, 106
6685345	BRACKET			96, 104
6685346	BRACKET			106
6685372	SEAL			46
6685464	BOLT			202
6685465	O-RING			200
6685466	O-RING			176
6685467	O-RING			176
6685468	O-RING			174, 176
6685469	KEY			188
6685472	CAP			178
6685473	BOLT			206
6685474	BEARING			194
6685475	MANIFOLD			197, 198
6685476	SEAL			204
6685477	PLUG			178
6685478	FLANGE			178
6685479	BEARING			190
6685480	CASE			188
6685481	GEAR			188
6685482	BOLT			188
6685483	CASE			188
6685484	CASE			188
6685485	CASE			188
6685486	BEARING			188

Code for disposition of old part number

A -- Use up

B -- Use on other application (See PNI)

C -- File PDR Report with Bobcat Parts Sales

D -- Part Number Error

Part No.	Description	Was	Code	Page
6685487	BEARING			188
6685488	WASHER			188
6685489	WASHER			188
6685490	BEARING			188
6685491	BEARING			188
6685492	BEARING			188
6685493	BEARING			188
6685494	WASHER			188
6685495	WASHER			188
6685496	WASHER			188
6685497	WASHER			188
6685498	GASKET			208
6685499	DIPSTICK			186
6685500	COVER			200
6685501	WASHER			176
6685502	SPRING			202
6685503	CYLINDER			184
6685504	CAMSHAFT			189, 190
6685507	PISTON			188
6685508	PISTON			188
6685509	PISTON			188
6685510	PISTON			188
6685511	PUMP			205, 206
6685512	HOLDER KIT			208
6685513	BOLT			200
6685514	SPRING			202
6685515	COVER			188
6685516	COLLAR			190
6685517	STOPPER			190
6685518	OIL PAN			185, 186
6685519	SHAFT			192
6685520	THERMOSTAT			196
6685521	PULLEY			188
6685522	CRANKCASE			177, 178
6685523	HOUSING			175, 176
6685524	PIPE			180
6685525	MANIFOLD			198
6685526	PLATE			204
6685540	PISTON			330
6685541	POPPET			330
6685542	O-RING			330
6685543	CHECK VALVE			330
6685544	COMPENSATOR			330
6685545	PLUG			330
6685546	PLUG			330
6685624	CONTROL VALVE			333, 334
6685735	SEAL			164
6686077	RADIATOR	6734100	A	159, 160
6686096	LENS			280
6686097	BULB			280
6686098	BULB			280
6686099	LENS			280
6686100	SCREW			280
6686220	O-RING			148

Code for disposition of old part number

A -- Use up
B -- Use on other application (See PNI)
C -- File PDR Report with Bobcat Parts Sales
D -- Part Number Error

Part No.	Description	Was	Code	Page
6686267	PUMP			107, 108
6686334	CAMSHAFT	NAP	D	199, 200
6686360	VALVE			66, 70
6686388	PUMP			127, 128
6686389	PUMP			78
6686868	SOLENOID			68
6686922	FILTER ASMBLY 12			88, 135, 136
6686926	ELEMENT FILTER			88, 94, 136
6686934	PIN			108
6686949	VALVE			329, 330
6687142	MOTOR			94, 129, 130, 160
6687191	SEAL			102
6687266	FILTER ASSY			94
6687631	BEARING			158
6687773	PLATE			106
6687774	PLATE			102
6687834	SENSOR			88, 136
6687863	PUMP			101, 102, 105, 106
6687864	GEAR PUMP			125, 126
6687865	GEAR PUMP			81, 82
6687866	SEAL KIT			126, 128
6687913	SEAL			98
6687919	COLLAR			120
6687920	SPINDLE			118
6687921	COLLAR			118
6687922	NUT			118
6687923	PIN			118
6687924	VALVE			108, 117, 118
6687926	COLLAR			114, 116
6687927	COLLAR			114, 116
6687928	SPRING			114, 116
6687929	LEVER			122
6687930	WIRE			110, 112
6687931	BUSHING			122
6687932	PIN			108
6687933	SHIM			122
6687934	SHIM			122
6687935	SHIM			122
6687936	SHIM			122
6687937	SHIM			122
6687938	VALVE			108, 119, 120
6687939	SCREW			120
6687940	RING			110, 112
6687941	COUPLER			108
6687942	SPACER			114, 116
6687943	SHAFT			112
6687944	SHIM			122
6687945	PLATE			122
6687946	SPRING			122
6687947	PIN			122
6687948	SPACER			114, 116
6687949	SPACER			114, 116
6687950	GASKET			122
6687951	BRACKET			110, 112

Code for disposition of old part number

A -- Use up
B -- Use on other application (See PNI)
C -- File PDR Report with Bobcat Parts Sales
D -- Part Number Error

Part No.	Description	Was	Code	Page
6687953	PISTON			114, 116
6687954	GASKET			122
6687955	HOUSING			122
6687956	BEARING			110, 112
6687957	GROUP			108, 109, 110
6687958	GROUP			108, 111, 112
6687959	SHAFT			110
6687960	CONTROL			108, 113, 114
6687961	CONTROL			108, 115, 116
6687962	PISTON			114
6687963	PISTON			116
6687964	HOUSING			108
6687965	SHAFT			108
6687966	PISTON			122
6687967	SPRING			122
6687968	LEVER			122
6687969	COVER			122
6687970	MODULATOR			108, 121, 122
6687971	ROLLER			122
6687972	MODULE			122
6687973	FLANGE			108
6687974	FLANGE			108
6687975	PLATE			112
6687976	PLATE			110
6687977	GROUP			110
6687978	GROUP			112
6687979	GROUP			110, 112
6687981	SCREW			122
6687982	SPRING			122
6687983	RING			120
6687984	SENSOR			108
6687985	RING			114, 116
6687986	KIT			114, 116
6687987	BEARING			110, 112
6687988	FILTER			108
6687989	SOLENOID			122
6687990	RING			108
6687991	KEY			108
6687992	SCREW			108
6687993	COVER			108
6687994	SCREW			108
6687995	SCREW			114, 116
6687996	SCREW			122
6687997	SCREW			122
6687998	SHIM			108
6687999	RING			110, 112
6688000	SEAL			118
6688001	SEAL			122
6688002	RING			114, 116
6688003	SCREW			108
6688004	SEAL			122
6688005	SEAL			114, 116
6688006	SEAL			114, 116
6688007	SEAL			108

Code for disposition of old part number

A -- Use up

B -- Use on other application (See PNI)

C -- File PDR Report with Bobcat Parts Sales

D -- Part Number Error

Part No.	Description	Was	Code	Page
6688008	SCREW			108
6688009	SEAL			108
6688010	PIN			122
6688011	PIN			108
6688012	ROLLER			122
6688013	SEAL			120
6688014	PIN			108
6688015	SCREW			108
6688016	SCREW			108
6688017	SHIM			120
6688018	BEARING			110, 112
6688019	SEAL			108, 124
6688020	ORIFICE			108
6688021	SPRING			118
6688022	PISTON			120
6688023	SPRING			120
6688024	COVER			114, 116
6688025	RING			114, 116
6688026	RING			114, 116
6688027	RING			114, 116
6688028	RING			114, 116
6688029	RING			114, 116
6688030	RING			114, 116
6688031	ROD			114, 116
6688032	SPACER			114, 116
6688033	SPACER			114, 116
6688034	SCREW			118
6688035	RING			114, 116
6688036	RING			114, 116
6688037	RING			114, 116
6688038	RING			110
6688039	PIN			108
6688040	BEARING			108
6688041	RING			118
6688042	RING			110, 112
6688043	SPRING			118
6688073	CONNECTOR			140
6688322	SEAL KIT			82
6688385	HYD FILTER ASSY			134
6688397	STEM			68, 70
6688403	PANEL			18, 138
6688404	PANEL			138
6688405	PANEL			138
6688439	CONTROLLER			142
6688521	SPRING			100
6688543	HEATER			298, 299, 300
6688546	CRANKSHAFT			188
6688845	VALVE			68
6688924	MAGNET	6680634	D	44
6688933	VALVE ASSY			334
6688934	COIL			334
6688937	HOSE			86, 90
6688938	HOSE			86, 90
6689012	UPPER GASKET KIT TIER II ENGINE			174

Code for disposition of old part number

A -- Use up

B -- Use on other application (See PNI)

C -- File PDR Report with Bobcat Parts Sales

D -- Part Number Error

Part No.	Description	Was	Code	Page
6689018	LOWER GASKET KIT TIER II ENGINE			174
6689021	SEAL KIT			108
6689058	MOTOR			94, 130, 160
6689059	VALVE ASSY			94, 130, 160
6689060	COIL ASSY			94, 130, 160
6689100	LEVER			202
6689601	VALVE			102, 106
6689602	HOUSING			106
6689635	BRACKET			298
6689636	ACTUATOR			298
6689637	VALVE			298
669863B	SNAP RING			102, 106
6700115	SPRING			164
6700170	WASHER			170, 172
6700182	COVER			40
6700535	SPACER			168
6700711	AIR CLEANER			209, 210
6700743	SPRING			172
6701097	WASHER			160
6701123	SCREW			162
6701151	PIPE			162
6701174	WASHER			14
6701449	FILLER TUBE			36
6701535	SPRING			20, 96
6701893	CLAMP			48, 52
6702301	DECAL			256
6702302	DECAL			256
6702402	SHIELD			290
6702474	RETAINER			164
6702543	LEVER			95, 96
6702593	SPACER			218
6702621	GRIP			144
6702650	MOUNT			282
6702716	BLOCK			96
6702903	LEVER			34
6702904	LEVER			34
6702958	BUSHING			34
6702971	BOLT			14
6702990	BUSHING			150
6703022	CLIP			164
6703168	BEARING			164
6703331	INSULATION			284, 348
6703471	BRACKET			160
6703483	PULLEY			284
6703640	KIT			345, 346
6703641	DECAL			346
6703703	GUIDE			346
6703727	DECAL			310, 312
6703879	BUSHING			96
6703915	CHAIN			40
6703968	INSULATION			284, 348, 350
6703981	MOUNT			168
6704146	BRACKET			314
6704147	BRACKET			314

Code for disposition of old part number

A -- Use up
B -- Use on other application (See PNI)
C -- File PDR Report with Bobcat Parts Sales
D -- Part Number Error

Part No.	Description	Was	Code	Page
6704248	PIVOT			34
6704391	PULLEY			164
6704443	BUSHING			164
6704444	WASHER			164
6704484	WASHER			164
6704769	INSULATION			284, 348
6704786	DECAL			314
6704820	O-RING			164
6704878	GASKET			40
6704892	RIVET			264, 268
6705070	TEE			48, 52
6705106	WASHER			168, 270
6705231	WASHER			164
6705232	WASHER			164
6705452	LEVER			169, 170
6705491	SPRING			164
6705847	SEAL			44
6706043	SPACER			168
6706098	GUIDE			96
6706104	RETAINING NUT			64
6706105	YOKE			64
6706349	MOUNT			14
6706393	SHIELD			162
6706394	SHIELD			162
6706427	AXLE			42
6706485	HOOK			40
6706517	SCREW			36, 160
6706572	SET SCREW			170, 172
6706633	ADAPTER			332
6706718	MOUNT			46
6706737	GASKET			46
6706807	PIN			316, 318, 320
6706808	COVER			12
6706825	LIFT EYE			316, 318, 320
6707040	ELBOW			140
6707101	SEAL			56, 74
6707180	PIN			32
6707804	HOUSING			282
6707852	DECAL			232
6708009	LINK			64
6708016	GASKET			46
6708018	SPRING			46
6708043	BUSHING			64
6708189	TUBE			14
6708267	BOLT			46
6708310	HOSE			234
6708770	CAP			164
6708929	DECAL			258
6708987	HINGE			12
6709022	LEVER			170
6709030	DECAL			164, 258
6709170	STUD			42
6709229	BOLT			272
6709234	DISC			272

Code for disposition of old part number

A -- Use up
B -- Use on other application (See PNI)
C -- File PDR Report with Bobcat Parts Sales
D -- Part Number Error

Part No.	Description	Was	Code	Page
6709236	MOUNT			272
6709237	CLAMP			272
6709239	PEDAL ASSY.			272
6709400	TUBE			272
6709527	KEY			138, 232, 238, 336
6709547	HOSE			272
6710358	DECAL			256
6710585	WASHER			164
6710659	BUSHING			20
6711632	MOUNTING KIT			269, 270
6711674	MOUNT			294
6711699	HUB ASSY.			164
6711840	DECAL			256
6712365	STEP			28
6712970	PULLEY			283, 284
6712971	PULLEY			284
6713040	SPRING			34
6713043	SPACER			150
6713115	PEDAL			277, 278
6713116	BUSHING			278
6713150	MOUNT			282
6713151	MOUNT			282
6713370	PIN			164
6713507	DECAL			256
6713589	CLEVIS			20
6713736	BRACKETS			282
6713840	DECAL			282
6713841	SHIELD			282
6713887	BOLT			20
6713993	HARNESS			282
6713994	HARNESS			282
6714037	LATCH			336
6714126	DOOR STOP			30
6714278	GUIDE			46
6714361	WEIGHT			250, 252
6714726	GROMMET			148
6714820	SHIELD			282
6715106	INSULATION			284, 348
6715131	BRACKET			140, 260
6715132	RETAINER			140
6715142	FAN			160
6715163	BUSHING			96
6715164	SLEEVE			96
6715183	ELBOW			36
6715190	ELBOW			84, 88
6715197	CLAMP			140
6715287	SPACER			270
6715428	DECAL			284
6715659	HARNESS			218
6715819	INSULATOR			160
6715860	SEAT BAR			20
6715863	BRACKET			20
6715864	BUSHING			20
6715865	BUSHING			20

Code for disposition of old part number

A -- Use up
B -- Use on other application (See PNI)
C -- File PDR Report with Bobcat Parts Sales
D -- Part Number Error

Part No.	Description	Was	Code	Page
6715866	BUSHING			20
6716061	TEE			48, 52
6716089	CONNECTOR			294
6716228	BRAKE			46
6716545	ROD			96
6716571	LOUVER			160
6716573	LOUVER			160
6716621	COVER			26, 28, 142
6716843	WASHER			42
6716916	WASHER			148
6716977	BELLCRANK			148
6717025	BUSHING			32
6717026	BUSHING			32
6717039	BUSHING			32
6717041	BUSHING			32
6717151	MOUNT			56
6717246	BUSHING			32
6717259	BUSHING			34
6717260	BUSHING			34
6717277	BUSHING			12
6717278	BUSHING			12
6717293	MOUNT			316, 318
6717343	DECAL			256
6717356	BUSHING			12
6717358	BUSHING			12
6717393	LEVER			148
6717401	PLUG			36
6717402	BUSHING			36
6717517	INSULATION			18
6717518	INSULATION			18
6717519	INSULATION			18
6717520	INSULATION			18
6717560	PIN			31, 32
6717562	BUSHING			32
6717579	GASKET			36, 142
6717591	HOSE			162
6717592	HOSE			162
6717593	HINGE			234, 238
6717639	DECAL			256
6717704	HOSE			36
6717706	COIL			142
6717707	PIN			316, 318
6717820	BAR			64
6717827	CAP			83, 84, 87, 88
6717830	TUBE			84, 88
6717870	FRAME			246
6717871	FRAME			246
6717872	FRAME			246
6717873	FRAME			246
6717874	WINDOW			18, 246
6717885	ELBOW			78
6717890	COVER			26, 28
6717933	CLAMP			48, 52
6717951	CLAMP			58

Code for disposition of old part number

A -- Use up
B -- Use on other application (See PNI)
C -- File PDR Report with Bobcat Parts Sales
D -- Part Number Error

Part No.	Description	Was	Code	Page
6718020	HOSE			84, 88
6718030	TUBE			48, 52
6718080	ELBOW			76, 78
6718101	COVER			16
6718122	MOUNT			316, 318
6718175	SCREEN			298
6718198	HARNESS			280
6718200	DECAL			256
6718205	TUBE			272
6718206	TUBE			272
6718238	BRACKET			48, 52
6718244	TUBE			294
6718245	TUBE			294
6718260	BATTERY PAN			140
6718312	STOP			32
6718326	MOUNT			292
6718358	HOSE			326
6718376	HINGE			234, 238
6718411	KIT			291, 292
6718414	SENDER			140
6718426	HARNESS			75, 76, 77, 78, 266
6718454	HOSE			294
6718489	INSULATION			16
6718521	HANDLE			234, 238
6718579	DECAL			298
6718580	PANEL			18
6718659	HOUSING			142
6718660	TEE			90
6718706	DECAL			148
6718728	MOUNT ASSY.			272
6718750	MOUNT			76, 78, 266
6718772	GASKET			84, 88
6718789	PIN			32
6718796	PLUG			30
6718805	KIT			245, 246
6718833	BRACKET			290
6718834	BRACKET			290
6718837	SPACER			298
6718872	HARNESS			222, 282, 292, 356
6718873	HARNESS			292
6718887	PANEL			298
6718924	KIT			289, 290
6718942	NUT			32
6718948	SNUBBER			90
6719018	DECAL			258
6719037	STRIKER			246
6719056	BLOCK			46
6719057	BLOCK			46
6719063	STOP			246
6719064	MOUNT			14, 296
6719065	COVER TAB			246
6719150	KIT			271, 272
6719184	MOUNT			314
6719185	MOUNT			314

Code for disposition of old part number

A -- Use up
B -- Use on other application (See PNI)
C -- File PDR Report with Bobcat Parts Sales
D -- Part Number Error

Part No.	Description	Was	Code	Page
6719201	COVER			12
6719264	KIT			313, 314
6719317	WINDOW			338
6719327	INSULATION			284, 348, 349, 350
6719328	INSULATION			284, 348, 350
6719330	INSULATION			284, 348, 350
6719331	INSULATION			284, 348
6719332	INSULATION			284, 348, 350
6719333	INSULATION			284, 348, 350
6719334	INSULATION			284, 348, 350
6719372	INSULATION			284, 348
6719389	INSULATION			350
6719413	WINDOW			246
6719439	HOSE			48, 52
6719448	MAGNET			264, 268
6719451	HOSE			326
6719504	INSULATION			16
6719525	BAR			30
6719672	OPERATOR CAB			13, 14, 15, 16
6719766	STOP			30
6719825	BOLT			164
6719826	BOLT			168
6719827	BOLT			168
6719828	BOLT			164, 168
6719829	BOLT			168
6719834	SPACER			150, 214
6719835	SLEEVE			150
6719854	KIT			221, 222
6719857	KIT			355, 356
6719884	BRACKET			326
6719888	DECAL			326
6720038	INSTRUCTIONS			224
6720592	INSTRUCTIONS			290
6720736	PLUG			223, 224
6722597	VELCRO			242
6722907	KIT			42, 215, 216
6722908	INSTRUCTIONS			216
6724094	ANTI-FREEEZE			362
6724354	ANTI-FREEZE			362
6724482	INSTRUCTION			270
6725092	DECAL			252, 256
6725182	TEE			56
6725212	ARM			164
6725256	COUNTERWEIGHT			252
6725301	COVER			16
6725302	GASKET			26, 28
6725303	FRAME			16
6725337	TUBE			48, 52
6725361	INSULATION			284, 348
6725370	DECAL			342
6725373	SPRING PLATE			16
6725421	HANDLE			248
6725502	ELBOW			210
6725513	PACKAGE			298

Code for disposition of old part number

A -- Use up

B -- Use on other application (See PNI)

C -- File PDR Report with Bobcat Parts Sales

D -- Part Number Error

Part No.	Description	Was	Code	Page
6725552	TUBE			326
6725553	TUBE			326
6725898	KIT			287, 288
6725906	BRACKET			288
6725907	DECAL			326
6725937	CLAMP			238
6725938	CLAMP			238
6725946	KIT			247, 248
6726062	SHIELD			12
6726069	COVER			12
6726162	BRACKET			84, 88
6726254	BRACKET			84, 88
6726255	PAD			84, 88
6726272	TUBE			332
6726273	TUBE			332
6726277	CLAMP			48, 52, 332
6726303	DECAL			248
6726386	KNOB			298
6726423	DECAL			316, 318, 320
6726427	KIT			239, 240
6726430	HARNESS			282
6726433	SPACER			160, 162
6726573	BRACKET			148, 214
6726613	MOUNT			164
6726621	SCREW			304, 306
6726655	KIT			337, 338
6726662	HARNESS			312
6726681	LINK			148, 214
6726898	BELT			6
6726945	MOUNT			268
6727065	BOLT			150, 214
6727176	KIT			261, 262
6727299	INSULATION			18, 350
6727496	PIN			148, 214
6727498	HARNESS			310
6727595	DECAL			256, 258
6727637	ELBOW			84, 88
6727638	TEE			48, 52
6727646	BRACKET			54, 228
6727657	HOSE			58
6727705	HOSE			48, 52
6727708	CLAMP			48, 52
6727739	KIT			267, 268
6727752	GASKET			162
6727786	KIT			305, 306
6727847	COVER			298
6727863	ROD LINK			32
6727869	SENDER			142
6727926	DECAL			148, 214, 256
6727941	DECAL			148, 214, 256
6727993	KIT			315, 316
6727995	HORN KIT			309, 310
6728045	DECAL			214
6728459	DOOR SENSOR			232, 238

Code for disposition of old part number

A -- Use up
B -- Use on other application (See PNI)
C -- File PDR Report with Bobcat Parts Sales
D -- Part Number Error

Part No.	Description	Was	Code	Page
6728473	BOLT			34
6728539	DECAL			148, 214, 256
6728540	DECAL			214
6728567	KIT			303, 304
6728621	BRACKET			142
6728626	HARNESS			142
6728673	TANK			84, 88
6729008	CABLE			140
6729009	SEAL			246
6729010	SEAL			246
6729011	SEAL			246
6729012	INSULATION			14
6729013	INSULATION			14
6729082	MOUNT			92
6729141	MOUNT			296
6729202	HOSE			326
6729203	HOSE			326
6729380	HARNESS			268
6729467	SPACER			148, 214
6729594	HANDLE			150
6729595	HANDLE			150
6729688	LATCH			336
6729776	WINDOW			236
6729791	HANDLE			28
6729792	HANDLE			28
6729853	HOSE			36
6729854	HOSE			36
6729896	TIRE			360
6729900	TIRE			360
6729939	LATCH PLATE			30
6729991	REAR DOOR			12, 30
6730013	COVER			44
6730078	COVER			40
6730106	TIRE			360
6730142	TEE			48, 52
6730270	LEVER			172
6730290	BOLT			32
6730291	BRACKET			268
6730771	RIM			360
6730772	RIM			360
6730775	RIM			360
6730816	SHIELD			232, 238
6730822	KIT			231, 232
6730823	KIT			237, 238
6730867	BRACKET			168
6730997	BUSHING			34
6730999	TUBE ASSY			161, 162
6731059	INLET			38
6731060	SHIELD			168
6731084	ADAPTER			308
6731108	SEAL			340
6731119	PIVOT ASSY			34
6731121	PLUG			40
6731151	KIT			213, 214

Code for disposition of old part number

A -- Use up

B -- Use on other application (See PNI)

C -- File PDR Report with Bobcat Parts Sales

D -- Part Number Error

Part No.	Description	Was	Code	Page
6731160	WASHER			32
6731217	CHAIN			40
6731218	CHAIN			40
6731222	PIN			282
6731229	TUBE			58
6731230	TUBE			58
6731231	TUBE			58
6731239	HARNESS			282
6731256	CABLE			140
6731275	INSULATION			142
6731478	EXIT TAG			18, 246
6731524	KIT			293, 294
6731578	BUSHING			12
6731617	PAN			260
6731657	BRACKET			314
6731658	BRACKET			314
6731665	CABLE			260
6731666	CABLE			260
6731694	KIT			259, 260
6731746	BRACKET			260
6731757	DECAL			58, 256
6731819	STRAP			282
6731898	PEDAL			172
6731900	ROD			172
6731973	HOLDER			282
6731979	BUSHING			34
6731994	DECAL			348
6732001	KIT			335, 336
6732023	CONNECTOR			308
6732206	SPACER			282
6732215	FILTER			86, 90
6732219	KIT			341, 342
6732225	SPACER			12
6732234	KIT			311, 312
6732235	KIT			219, 220
6732264	FRAME LINK			32
6732265	BUSHING			32
6732318	SPACER			160
6732322	SPACER			172
6732323	BRACKET			172
6732350	WINDOW			240
6732351	WINDOW			238
6732375	TANK			160
6732443	CUP			34
6732457	WASHER			160
6732537	BOB-TACH			33, 34
6732619	SEAL			340
6732715	LATCH			30
6732718	KIT			339, 340
6732724	INSULATION			284, 348
6732730	HARNESS			264
6732870	MOUNT			160
6732928	KIT			295, 296
6732997	U-BOLT			96

Code for disposition of old part number

A -- Use up

B -- Use on other application (See PNI)

C -- File PDR Report with Bobcat Parts Sales

D -- Part Number Error

Part No.	Description	Was	Code	Page
6733022	BRACKET			96
6733024	BRACKET			96
6733107	PLUG ASSY			14
6733121	SEAL(31"STRIP)			14
6733136	KIT			263, 264
6733142	KIT			265, 266
6733144	MOUNT			264
6733190	TEE			48, 52
6733191	ELBOW			48, 52
6733192	TUBE			332
6733196	TUBE			52, 228
6733197	HOSE			84, 89, 90
6733292	HARNESS			148
6733429	CAP			160
6733575	HINGE			30
6733616	BUMPER			30
6733617	MOUNT ASSY.			43, 44
6733619	HOUSING			44
6733621	SHAFT			44, 46
6733652	HOSE			84
6733667	LATCH			30
6733804	GRILL			160
6733886	BOLT			160
6733956	COVER			46
6733970	MOUNT			218, 220, 310, 312
6733996	DECAL			160
6734192	TUBE			52, 228
6734206	TUBE			56
6734236	ADAPTER			160
6734298	MOUNT			96
6734416	LEVER			172
6734417	LEVER			172
6734503	CLEVIS			172
6734520	COVER			170, 172
6734534	DECAL			258
6734561	WASHER			84, 88
6734563	WASHER KIT			84, 88
6734623	ELBOW			84, 90
6734646	DECAL			148, 214
6734660	BUSHING			32
6734662	PIN			32
6734742	BRACKET			96
6735140	DECAL			256
6735245	DUCT			298
6735246	DUCT			298
6735253	LINK			96
6735285	AIR CLEANER			284
6735316	COVER			46
6735669	SHIELD			48, 52
6735825	SPACER			282
6735828	TUBE			332
6735829	TUBE			332
6735862	DECAL			256
6735864	DECAL			258

Code for disposition of old part number

A -- Use up
B -- Use on other application (See PNI)
C -- File PDR Report with Bobcat Parts Sales
D -- Part Number Error

Part No.	Description	Was	Code	Page
6735883	BRACKET			164
6735884	IDLER ASSY.			164
6735901	DECAL			258
6735922	TUBE			84
6736195	ROD			170
6736206	BRACKET			78
6736515	HARNESS			140
6736641	PAINT			362
6736642	PAINT			362
6736644	PAINT			362
6736645	PAINT			362
6736647	HOSE			76, 78
6736685	TUBE			76, 78
6736773	TUBE			88
6736775	BELT			164
6736807	FLYWHEEL ASSY			164
6736810	BRACKET			76, 78
6736817	MOUNT			168
6736875	TANK			232
6737088	COVER			212
6737189	DECAL			218
6737191	WEDGE			34
6737368	BRACKET			36
6737388	WASHER			64, 96
6737453	ELBOW			84, 90
6737524	KNOB			56, 74
6737704	INSULATION			18
6737783	KIT			2, 256
6801059	WASHER			236, 338
6801167	PLUG			72
6802324	HOSE			332
6803092	BONNET			72
6803473	SEAL KIT			328
6804790	DECAL			16
6804920	BUSHING			66, 70
6805102	BUSHING			66, 70
6805453	BUSHING			60
6806124	HEAD			62
6806315	PISTON			60
6806330	SEAL KIT			60
6806332	HEAD			60
6807503	CYLINDER			327, 328
6808798	ELBOW			38
6809425	SEAL KIT			68
6809511	DECAL			48, 52, 56
6809593	SPACER			62
6809726	ROLLER			30
6809727	CHANNEL			30
6809734	BUSHING			30
6809845	BOLT			30
6809903	ROD			60
6810132	SPRING			30
6810141	SPRING			30
6810349	CASE			328

Code for disposition of old part number

A -- Use up
B -- Use on other application (See PNI)
C -- File PDR Report with Bobcat Parts Sales
D -- Part Number Error

Part No.	Description	Was	Code	Page
6810356	SPACER			328
6810539	NUT			62
6810612	ROD			328
6811483	COUNTERWEIGHT			254
6812170	PLUG			60, 62, 328
6812569	DECAL			284
6812815	FITTING			84, 88
6813153	PLATE			66
6814279	BLOCK			66, 72
6814694	RETAINER			66, 70
6815014	CHECK VALVE			68, 70
6815152	SPOOL			66
6816252	SEAL KIT			68
6816253	SEAL KIT			68
6816537	SEAL KIT			62
6816549	PLUG			68, 70
6817003	BODY			66
6817004	BODY			70
6817566	BUSHING			168
6817707	PLUG			66, 70
6818039	VALVE			65, 66
6900366	INSTRUCTIONS			250
6900410	INSTRUCTIONS			252
6900827	INSTRUCTIONS			316, 318
6900848	INSTRUCTIONS			292
6900852	INSTRUCTIONS INSTL			246
6900853	INSTRUCTIONS			246
6900854	INSTRUCTIONS INSTL			234
6900861	INSTRUCTIONS			24
6900888	INSTRUCTIONS			314
6900934	INSTRUCTIONS			272
6900991	INSTRUCTIONS			222
6900992	INSTRUCTIONS			356
6901010	INSTRUCTIONS			342
6901011	INSTRUCTIONS			344
6901013	INSTRUCTIONS			238
6901025	INSTRUCTIONS			288
6901029	INSTRUCTIONS			248
6901036	INSTRUCTIONS			240
6901061	INSTRUCTIONS			338
6901076	INSTRUCTIONS			262
6901116	INSTRUCTIONS			268
6901120	INSTRUCTIONS			306
6901146	INSTRUCTIONS			310
6901203	INSTRUCTIONS			316
6901213	INSTRUCTIONS			304
6901492	INSTRUCTIONS			214
6901515	INSTRUCTIONS			294
6901602	INSTRUCTIONS			260
6901656	INSTRUCTIONS			336
6901663	INSTRUCTIONS			282
6901690	INSTRUCTIONS			220
6901691	INSTRUCTIONS			312

Code for disposition of old part number

A -- Use up

B -- Use on other application (See PNI)

C -- File PDR Report with Bobcat Parts Sales

D -- Part Number Error

Part No.	Description	Was	Code	Page
6901774	INSTRUCTIONS			340
6901816	INSTRUCTIONS			296
6901871	INSTRUCTIONS			266
6901872	INSTRUCTIONS			264
6902228	PAINT			361, 362
6902229	PAINT			362
6902230	PAINT			362
6902232	PRIMER			362
6902233	PAINT			362
6902234	PAINT			362
6902235	PAINT			362
6902421	INSTRUCTIONS			326
6902833	INSTRUCTIONS			228
6903105	OIL 15W40 QT. 12			2, 4, 6, 362
6903106	OIL 15W40 GAL. 6			2, 4, 6, 362
6903107	OIL 10W30 QT. 12			2, 4, 6, 362
6903108	OIL 10W30 GAL. 6			2, 4, 6, 362
6903109	OIL 30W QT. 12			2, 4, 6, 362
6903110	OIL 30W GAL. 6			2, 4, 6, 362
6903111	OIL 30W 2.5 GAL 2			2, 4, 6, 362
6903112	OIL 10W30 2.5 GAL 2			2, 4, 6
6903113	OIL 15W40 2.5 GAL. 2			2, 4, 6, 362
6903117	HYD FLUID 2.5 GAL. 2			2, 9, 10, 362
6903118	HYD. FLUID 5GAL			2, 10, 362
6903119	HYD. FLUID 55GAL			2, 10, 362
6903121	GEAR LUBE 12			6, 362
6903122	GREASE 10			5, 6, 362
6903282	INSTRUCTIONS			254
6903293	INSTRUCTIONS			218
6903359	INSTRUCTIONS			318
6903766	31X6X10 SOLID FLEX TIRE AND WHEEL (LEFT)			357, 358
6903767	31X6X10 SOLID FLEX TIRE AND WHEEL (RIGHT)			358
6903828	INSTRUCTIONS			332
6904113	INSTRUCTIONS			320
6904130	O/M S175 "K"			2
6904132	S/M S175/S185 "K"			2
6904255	INSTRUCTIONS			298, 308
6904271	P/M S175K			2
69G000436B	BOLT			70, 148
6E000004B	WASHER			140
6E000005B	WASHER			138, 140, 168, 292
6E000006B	WASHER			140
6EM00080B	WASHER			158
6J000807B	KEY			164
6J001664B	WOODRUFF KEY			42
7100024	HOSE			162
7100110	KIT			347, 348
7100444	PIN			320

Code for disposition of old part number

A -- Use up
B -- Use on other application (See PNI)
C -- File PDR Report with Bobcat Parts Sales
D -- Part Number Error

Part No.	Description	Was	Code	Page
7100445	SPACER			320
7100462	CLAMP			86, 90
7100506	GAS SPRING			14
7100508	GAS SPRING			14
7100572	BELT			168
7100573	HOSE			162
7100699	WASHER			96
7100795	MOUNT			96
7100840	MUFFLER			162
7101291	ELBOW			36
7101345	BONNET			70
7101354	VALVE			69, 70
7101371	ELBOW			66, 90, 92
7101384	LIGHT			280
7101527	INSULATION			350
7101528	INSULATION			350
7101529	INSULATION			350
7101530	INSULATION			350
7101531	INSULATION			350
7101543	INSULATION			350
7101557	GASKET			38
7101646	TUBE			48
7101647	TUBE			52, 228
7101648	TEE			48, 52
7101672	ACTUATOR			146, 148
7101708	CLAMP			162
7101797	ELBOW			84
7101928	VALVE			298
7101973	HARNESS			332
7102018	TEE			70
7102019	FITTING			68
7102066	CROSS			68, 70
7102652	SCREW			72
7102656	HOSE			162
7102869	KIT			227, 228
7103075	SEAL			246
7103271	WASHER			97, 98
7103648	TEE			88
7103708	BRACKET			96
7103711	BOLT			96
7103783	MAIN FRAME			11, 12
7103790	MUFFLER			323, 324
7103861	HOSE			88
7104117	HOUSING			160
7104379	HARNESS			140
7104465	DOOR SWITCH HARNESS			232, 238
7104568	MOUNT			168
7104608	BUSHING			168
7105035	WINDOW			18, 246
7105192	BOLT			96
7105193	BOLT			96
7105223	SPACER			96
7105756	TIRE		A	360
7105763	300 LB CTW KIT			253, 254

Code for disposition of old part number

A -- Use up
B -- Use on other application (See PNI)
C -- File PDR Report with Bobcat Parts Sales
D -- Part Number Error

Part No.	Description	Was	Code	Page
7105817	MOUNT ASSY			254
7105826	ROD			254
7105983	BOLT			138
7106004	TEE			92
7106024	HOSE			92
7106040	ELBOW			86, 90
7106056	TUBE			92
7106205	HOSE			84, 88
7106531	CHAINCASE			40
7106687	SHIELD			26, 28
7106712	SEAT			66, 70
7107175	INLET			160
7107179	HOSE			94
7107353	GUSSET			318, 320
7107544	HARNESS			218
7107562	HOSE			88
7107785	TEE			84
7107829	BACK UP ALARM KIT			217, 218
7107842	HOSE			78
7107849	MOUNT			168
7107896	ROD			62
7107986	LINK			96
7108222	SAFETY TREAD			256
7108236	PIN			148
7108241	LIFT SPOOL			70
7108242	TILT SPOOL			70
7108393	KIT,LIFT KIT			317, 318
7108398	BRACKET, FILTER			88
7108400	TEE			78
7108406	HOSE			84
7108408	LEVER			64
7108685	TEE			94
7108716	SEAL			352
7108781	SPOOL			66
7108843	HOSE			90
7108844	HOSE			90
7108845	HOSE			88
7108846	TEE			88
7108980	TUBE			94
7109125	INSULATION			350
7109314	MOUNT			170
7109317	INSULATOR			352
7109318	INSULATOR			352
7109343	HOSE			84
7109344	HOSE			84
7109403	HARNESS			322
7109582	OIL COOLER			91, 92
7109661	DOOR LATCH			232, 238
7109662	HANDLE			232, 238
7109663	SPACER			232, 238
7109664	BOLT			232, 238
7109665	DOOR			232
7109712	SHIELD			164
7109822	TUBE			70

Code for disposition of old part number

A -- Use up

B -- Use on other application (See PNI)

C -- File PDR Report with Bobcat Parts Sales

D -- Part Number Error

Part No.	Description	Was	Code	Page
7109922	TUBE			84
7109923	TUBE			92
7109924	KIT-REAR AUX			331, 332
7109927	TUBE			332
7109934	MOUNT			49, 50, 54
7110243	BRACKET			94
7110244	BRACKET			94
7110262	TUBE			48, 52
7110264	TUBE			58
7110287	GASKET			44
7110316	DECAL			232, 238
7110365	PINTLE ARM			96
7110367	HOSE			326
7110406	HARNESS			146
7110410	INSULATION			352
7110430	SPECIAL APPS DOOR			238
7110571	BELLCRANK			96
7110695	MOUNT			92
7110809	HOSE			93, 94
7110914	TUBELINE			67, 68, 70
7110927	BRACKET			76
7111992	JOYSTICK ASMBLY RH			146
7111993	JOYSTICK ASMBLY LH			146
7112290	HARNESS			326
7112346	KIT, 4 PT LIFT			319, 320
7112383	AUX SPOOL			66, 70
7112651	HOSE			285, 286, 352
7112782	TANK FUEL			35, 36
7112800	SJC HARNESS			142
7112802	HARNESS			142
7112910	ELBOW			48, 52
7112911	TUBE			48, 52
7112912	TUBE			52, 228
7113010	SPACER			168
7113208	HOSE			308
7113209	HOSE			308
7113340	CAP			36
7113360	TUBE			76, 78
7113635	PULLEY			164
7114050	HOSE			48, 52
7114053	TEE			50, 54
7114121	HOSE			58
7114236	HOSE			50, 54
7114250	HOSE			94
7114251	HOSE			94
7114294	ADAPTER			58
7114604	CHOKE			210
7114667	ROD			170
7114710	TUBE			48, 52
7114711	TUBE			48, 52
7114735	HARNESS			146
7114739	SPACER			168

Code for disposition of old part number

A -- Use up
B -- Use on other application (See PNI)
C -- File PDR Report with Bobcat Parts Sales
D -- Part Number Error

Part No.	Description	Was	Code	Page
7114758	LIFT ARM			32
7115185	HOSE			326
7115219	PEDAL			64, 214
7115220	MOUNT			64, 214
7115412	TUBE			58
7115413	TUBE			58
7115595	HOSE			76
7116258	HARNESS			139, 140, 141, 142
7116260	HARNESS			18, 138
7116261	HARNESS			18, 137, 138
7116280	ROD			172
7116564	HOSE			48, 52
7116565	HOSE			48, 52
7116699	INSULATION			352
7116700	INSULATION			352
7116870	DECAL			258
7116899	KIT HEATER CAB			297, 298
7116900	KIT			307, 308
7116956	BRACKET			140
7116995	TUBELINE			66
7117123	PANEL			26, 28
7117174	CYLINDER			59, 60
7117175	CASE			60
7117232	PANEL			25, 26, 27, 28
7117322	HARNESS			232, 238
7117380	TUBE			56
7117407	DECAL			142
7117667	CYLINDER			61, 62
7117668	CASE			62
7120282AR	KIT, TRANSLATION			256, 258
7120282BR	KIT, TRANSLATION			256, 258
7120283AR	KIT, DECAL			256, 258
7120283BR	KIT, DECAL			256, 258
7120283JP	KIT, DECAL			256, 258
7120498	BUSHING			32
7120589	DECAL			256, 258
7120693	DECAL			76, 78, 256, 258
7120898	KIT, PWR BOBTACH			325, 326
7121223	CAP			36
7121399	SPRING	6810950	A	68, 70
72F000001B	DRAIN COCK			36
73G000656B	BOLT			163, 164, 326
73G000824B	BOLT			40, 96
73G624	BOLT	7105194		96
73K000013B	O-RING			70
73K000016B	RING			70
73K000222B	WASHER			328
73K000228B	RING			62
743332B	GREASE ZERK			34
75K000003B	O-RING			60, 328
774220	NUT			218, 220
78HA01010B	ADAPTER			94
78HA01210B	ADAPTER			94
799119B	SNAP RING			66

Code for disposition of old part number

A -- Use up
B -- Use on other application (See PNI)
C -- File PDR Report with Bobcat Parts Sales
D -- Part Number Error

Part No.	Description	Was	Code	Page
79K000002B	O-RING			160
79K000005B	O-RING			36, 100
79K000006B	O-RING			56, 58, 66, 70, 84, 86, 88, 90, 94, 100, 230, 294, 332
79K000007B	O-RING			68, 330
79K000008B	O-RING			66, 70, 90, 102, 106, 168, 230, 330
79K000010B	O-RING			48, 52, 54, 66, 70, 76, 78, 94, 102, 228, 330
79K000012B	O-RING			84, 85, 86, 88, 90, 92, 94, 106, 332
79K000016B	O-RING			66, 84, 88, 92
79K000020B	O-RING			78
7D000004B	NUT			56, 74
80K000013B	WASHER			68
80K000014B	RING			66
80K000016B	WASHER			68
80K000332B	WASHER			60
82K000230B	SEAL			62
83D000004B	NUT			20, 56, 142, 220, 282, 298, 310, 312
83D000005B	NUT			310, 312
83D000006B	NUT			56, 64, 86, 90, 96, 264, 268, 290, 332
83D000008B	NUT			12, 168
83F000003B	ELBOW			272
84G001320B	BOLT			218
84G003112B	BOLT			14, 26, 28, 36, 76, 78, 140, 142, 160, 256, 264, 266, 268
84G003116B	BOLT			38
84G003708B	BOLT			92, 162
84G003710B	BOLT			84, 88, 148, 214
84G003712B	BOLT			12, 26, 28, 36, 37, 38, 40, 48, 52, 92, 94, 138, 140, 162, 168, 170, 172, 228, 282, 294
84G003716B	BOLT			38, 46, 84, 88, 140, 168, 170, 282, 284, 348
84G003720B	BOLT			46, 78, 90, 172, 212
84G003724B	BOLT			170, 172, 326, 332
84G003728B	BOLT			48, 52
84G003732B	BOLT			86, 90
84G003740B	BOLT			58
851242B	BEARING			190
85D000004B	NUT			282
85D000005B	NUT			36, 170, 172, 278, 322
85D000006B	NUT			16, 30, 32, 34, 316, 318, 320
85D000007B	NUT			16
85D000008B	NUT			14, 164, 167, 168
85G000616B	SCREW			282
85G000808B	BOLT			282
866028B	CLAMP			210
86F000003B	NUT			272
86F000005B	NUT			294, 332
86F000008B	NUT			92
872229	WASHER			48, 52, 58
87D000005B	NUT			316, 318, 320
88F000005B	ELBOW			332
898731B	BULB			322
89D000005B	NUT			28
8D000006B	NUT			96, 272
91D000005B	NUT			272
91D000006B	NUT			96, 272

Code for disposition of old part number

A -- Use up
B -- Use on other application (See PNI)
C -- File PDR Report with Bobcat Parts Sales
D -- Part Number Error

Part No.	Description	Was	Code	Page
91G000420B	BOLT			18, 246
91K000005B	TEE			332
92D000010B	NUT			328
92D000012B	NUT			164
92D000016B	NUT			60
95D000005B	NUT			140, 148, 214
95D000006B	NUT			64, 76, 92, 94, 148, 170, 238
95D000008B	NUT			14
95K000003B	O-RING			62
96D000008B	NUT			160
97D000004B	NUT			218
97D000005B	NUT			260
97D000006B	NUT			146
97D000008B	NUT			296
98D000006B	NUT			96, 148
98F000003B	TEE			272
98G000412B	BOLT			154

Code for disposition of old part number

A -- Use up

B -- Use on other application (See PNI)

C -- File PDR Report with Bobcat Parts Sales

D -- Part Number Error