RUTHZIL TRATOR COMERCIAL DE PEÇAS LTDA 11 97083-6812 ROLANDO CITRANGULO

Bobcat®

Parts Manual
S185 Skid-Steer Loader

S/N 530311001 & Above
S/N 530411001 & Above

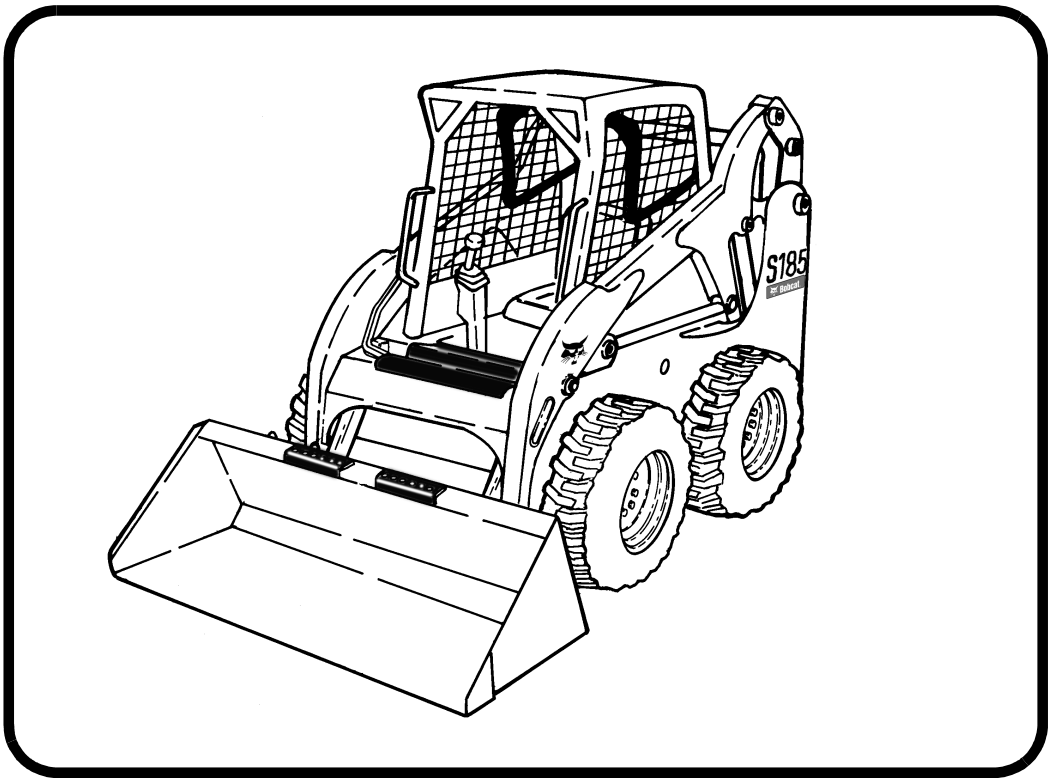

EQUIPPED WITH BOBCAT INTERLOCK CONTROL SYSTEM (BICS)

Ingersoll Rand
Compact Vehicle Technologies

6904272 (11-05) Revised (1-06)

Printed in U.S.A.

© Bobcat Company 2006

GENERAL INFORMATION

Before ordering parts, ALWAYS provide dealer with your product model number and complete serial number information. Before ordering parts, verify correct part numbers and/or serial numbers with your dealer. When using the machine serial number, use the complete number.

Some Serial Number breaks are not available at time of printing.
These are listed as & Bel or & Abv or - (thru)

The number shown in the quantity column in this manual is the number of parts needed for the illustration on the page. For some parts an "x" will be shown in the quantity column. This "x" indicates that the quantity to be used is "As Needed".

When references L.H. (Left Hand) and R.H. (Right Hand) are used in this manual, it is done from the operator's seat in the forward operating position.

When "See Illustration...." appears in the remarks column, refer to the contents page for the illustration title to find page number location.

Some of the illustrations and information found in this parts manual were supplied to Bobcat by machine component companies.

For additional information on the Bobcat website visit www.bobcat.com

ABBREVIATIONS

SALES	=	Order from Gwinner Sales Department	W/	=	With
NSS	=	Not Serviced Seperately	W/O	=	Without
NAP	=	Not Available as Parts	I.D.	=	Inside Diameter
BTI	=	Bobcat Technical Information Bulletin	O.D.	=	Outside Diameter
P/M	=	Parts Manual	"	=	Inches
O/M	=	Operation & Maintenance Manual	'	=	Feet
S/M	=	Service Manual	mm	=	Millimeters
S/L	=	Service Letter			

DISPOSITION CODE DEFINITIONS

(Found in Remarks Column)

[A]	=	Use Up
[B]	=	Use Up on Other Application
[C]	=	File PDR Report with Bobcat Parts Sales
[D]	=	Part Number Error

NOTE D'INFORMATION

Pour toute référence au numéro de série de l'engin, toujours donner le numéro complet.

Le chiffré apparaissant dans la colonne des quantités de ce manuel représentent le nombre de pièces nécessaires pour l'illustration reprise sur la page. Dans certains cas, on lira un "x" dans la colonne des quantités. Cet "x" indique que la quantité nécessaire est "selon besoin".

Pour toute référence vers la GAUCHE ou la DROITE dans ce manuel, considérer que la personne se trouve assise dans le siège de l'opérateur, en position de fonctionnement en marche avant.

Certaines illustrations et informations reprises dans ce manuel de pièces de rechange ont été fournies à Bobcat/Ingersoll–Rand par des fabricants de composants.

ABREVIATIONS & SYMBOLES

SALES	= Commander au Service Ventes à Bruxelles
NSS	= Pas vendu séparément
NAP	= Non disponible comme pièce de rechange
*****	= Chapitre, page ou numéro de pièce modifié ou supplémentaire
BTI	= Bobcat Technical Information Bulletin : voir à la fin de la microfiché du modèle concerné ou la microfiche générale reprenant l' ensemble des "BTI".
was 6535403	= était avant 6535403
adj. (adjustment)	= réglage
Assembly	= ensemble
available W/Ref.	= disponible avec réf.
bulk/sold per foot	= en vrac/vendu par pied
does not include	= ne comprend pas
included with	= compris dans
I.D.	= D.I. (diamètre intérieur)
O.D.	= D.E. (diamètre extérieur)
not in kit	= pas en kit
W/ – WO/	= inclus/ – non inclus/
Qty	= quantité requise
see page/ref.	= voir page/réf.
used with ref/	= utilisé avec réf.
0,05 inch thickness	= 0,05 pouce d'épaisseur (un pouce = 25.4 mm)
weld on	= à souder

ALLGEMEINE INFORMATIONEN

Bei Angabe der Maschinen-Seriennummer stets die komplette Nummer angeben.

Bei der in der Mengenspalte (Anzahl) in diesem Handbuch angegebenen Zahl handelt es sich um die Anzahl von Teilen, die für die Abbildung auf der betreffenden Seite benötigt werden. Bei manchen Teilen in der Mengenspalte ist ein “x” angegeben. Dieses “x” weist darauf hin, dass sich die Anzahl der verwendeten Teile auf den “Bedarf” bezieht.

Bei Verwendung der Seitenangaben links und rechts in diesem Handbuch gelten diese für die Blickrichtung vom Fahrersitz aus, und zwar in Vorwärts-Betriebsrichtung.

Einige der in diesem Ersatzteilhandbuch aufgeführten Abbildungen und Informationen wurden der Bobcat/Ingersoll-Rand von den Herstellern von Maschinenbauteilen zur Verfügung gestellt.

ABKÜRZUNGEN UND SYMBOLE

SALES	= Bestellung bei der Verkaufsabteilung in Brüssel
NSS	= Nicht einzeln erhältlich
NAP	= Nicht als Ersatzteil erhältlich
*****	= Geänderte oder hinzugefügte Abschnitte, Seiten oder Teilenummern
BTI	= Bobcat Technical Information Bulletin : Siehe am Ende der Mikrokarte des jeweiligen Modells oder der allgemeinen Mikrokarte der BTI.
was 6535403	= War 6535403
adj.	= Einstellung
Assembly	= Baugruppe
available W/Ref.	= erhältlich mit der Referenz
bulk/sold per foot	= Mengenabnahme / Verkauf pro Fuss
does not include	= beinhaltet nicht
included with	= enthalten in
I.D.	= Innendurchmesser
O.D.	= Aussendurchmesser
not in kit	= nicht in Bausatz
W/ - WO/	= mit/ - ohne/
Qty	= Anzahl
see page/ref.	= Siehe Seite / Referenz
used with ref.	= verwendet mit Referenz
0.05 inch thickness	= Dicke : 0.05 Zoll (ein Zoll = 25.4 mm)
weld on	= anschweissen

INFORMAZIONI GENERALI

Quando si usa il numero di serie della macchina usare il numero completo.

Il numero mostrato nella colonna della quantità di questo manuale corrisponde al numero di componenti necessari per l'illustrazione della pagina. Per alcuni componenti appare "X" nella colonna delle quantità. Questa "X" indica che la quantità da usare è "come necessario".

See in questo manuale si fa riferimento alla parte destra o sinistra, si intende dal sedile dell'operatore nella posizione in avanti di funzionamento.

Alcune delle illustrazioni e informazioni trovate in questo manuale di componenti sono state fornite alla Bobcat/Ingersoll–Rand da società di componenti di macchine.

SIMBOLI E ABBREVIAZIONI

SALES	= Ordinare al servizio vendite di Bruxelles
NSS	= Non vendute separatamente
NAP	= Non disponibile come componente
*****	= Sezioni, pagine o numeri di componente cambiati o aggiunti
BTI	= (Bobcat Technical information) Ved. al termine del microfiche del modello relativo oppure microfiche generale
was 6535403	= era 6535403
adj. (adjustment)	= regol. (regolazione)
Assembly	= Complessivo
available W/Ref.	= disponibile con rif.
bulk/sold per foot	= alla rinfusa/venduto al piede
does not include	= non comprende
Included with	= compreso con
I.D.	= d. i.
O.D.	= d. e.
not in kit	= non fa parte del kit
W/ – WO/	= con – senza
Qty	= Qtà
see page/ref	= ved. pagina/rif.
used with ref.	= usato con il rif.
0,05 inch thickness	= spessore 0,05 pollici (un pollice = 25,4 mm)
weld on	= a saldare

INFORMACION GENERAL

Al utilizar el número de serie de la máquina, debe emplearse el número completo.

El número que figura en la columna de “Unidades” en este manual es el número de piezas que se necesitan para la ilustración que consta en la página. En algunas piezas aparece una “x” en la columna de “Unidades”. Esta “x” indica que las unidades a utilizar son “según sea necesario”.

Cuando se empleen las referencias izq. y dcha., éstas se entienden mirando desde el asiento del conductor, en posición de marcha adelante.

Algunas de las ilustraciones y la información que figuran en este manual de piezas han sido facilitadas a Bobcat/Ingersoll–Rand por empresas de componentes de máquinas.

ABREVIATURAS Y SIMBOLOS

VENTAS	= Pedido al Departamento de Ventas de Bruselas
NSS	= No se vende por separado
NAP	= No disponible como pieza de repuesto
*****	= Secciones, páginas o referencias modificadas o añadidas
BTI	= (Bobcat Tecnical Information) Ver al final de la microficha del modelo afectado o en la microficha general “Boletín de Información Técnica Bobcat”.
was 6535403	= era anteriormente el 6535403
adj. (adjustment)	= ajuste
assembly	= conjunto
available W/Ref.	= disponible con la ref.
bulk/sold per foot	= a granel/vendido por pies
does not include	= no incluye
included with	= incluido en
I.D.	= diámetro interior
O.D.	= diámetro exterior
not in kit	= no en el kit
W/ – WO/	= con/ – sin
Qty	= Unidades
see page /ref.	= ver página/ref.
used with ref.	= empleado con la ref.
0,05 inch thickness	= 0,05 pulgadas de espesor (1 pulgada = 25,4 mm)
weld on	= debe ser soldado

ALGEMENE INFORMATIE

Als u het serienummer van de machine gebruikt, geef dan het gehele serienummer.

Het cijfer dat voorkomt in de kolom “Aantal”, in deze handleiding, is het aantal onderdelen dat nodig is van de illustratie op de pagina. Voor sommige onderdelen staat er een “x” in de kolom “Aantal”. Deze “x” betekent dat er een aantal “zoals nodig” vereist is.

Wanneer er in deze handleiding naar “links” en naar “rechts” gerefereerd wordt, moet dit verstaan worden voor een bestuurder die in de bestuurdersstoel zit in de voorwaartse bedrijfsstand.

Sommige van de illustraties en informatie in deze onderdelen–handleiding werden door firma’s van machine–componenten geleverd aan Bobcat/Ingersoll–Rand.

AFKORTINGEN EN SYMBOLEN

SALES	= Bestellen bij de Verkoopafdeling te Brussel
NSS	= Niet afzonderlijk te verkrijgen
NAP	= Niet beschikbaar als onderdeel
*****	= Gewijzigde of toegevoegde paragrafen, pagina’s of onderdeelnummers
BTI	= Bobcat Technical Information Bulletin : Zie einde van de microfiche van het desbetreffende model of einde van de algemene microfiche die het geheel van alle “BTI” herneemt.
was 6535403	= was vroeger 6535403
adj. (adjustment)	= afstelling
Assembly	= geheel
available W/Ref.	= beschikbaar met ref.
bulk/sold per foot	= bulk/aan de meter verkocht
does not include	= bevat niet
includes with	= is bevat in
I.D.	= ϕ inw. (inwendige diameter)
O.D.	= ϕ uitw. (uitwendige diameter)
not in kit	= niet in de kit
W/ – WO/	= met/ – zonder/
Qty	= vereiste aantal
see page/ref.	= zie pagina/ref.
used with ref/	= gebruikt met ref.
0,05 inch thickness	= 0.05 inch dik (een inch = 25.4 mm)
weld on	= te lassen

Use only Bobcat belts and hoses to maintain maximum service life.

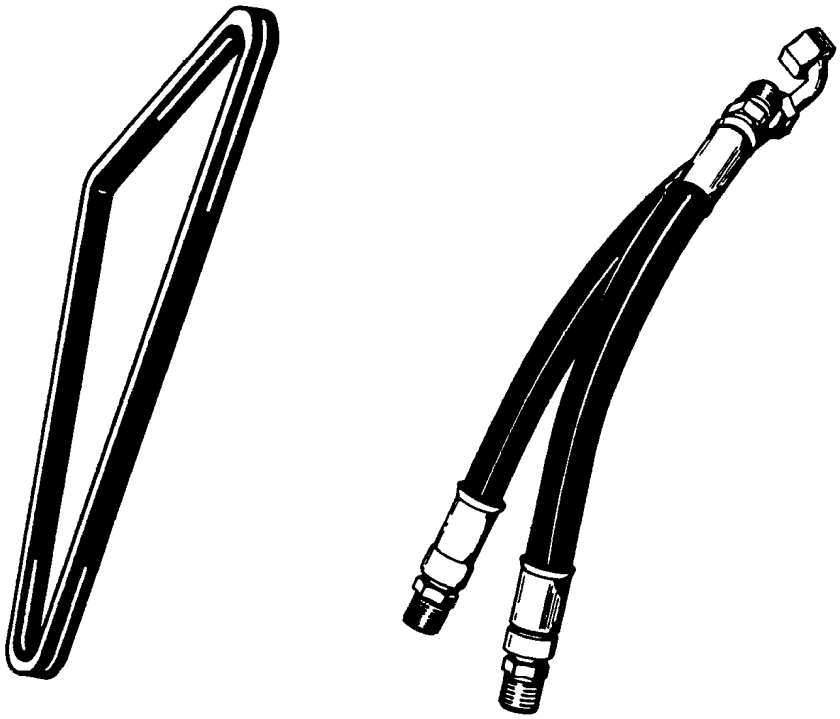

Available from Bobcat Parts.

Bobcat®

CONTENTS

MAINTENANCE ITEMS 1-10
MAINTENANCE ITEMS 1
SCHEDULED MAINTENANCE ITEMS 3-10

MAIN FRAME 11-38
MAIN FRAME 11
OPERATOR CAB 13-18
SEAT & SEAT BAR 19
SEAT 21-24
PANELS 25-28
REAR DOOR 29
LIFT ARMS & BOBTACH 31
BOB-TACH 33
FUEL SYSTEM 35-38

DRIVE TRAIN 39-46
DRIVE TRAIN 39
AXLE 41
MOTOR CARRIER 43
DISC BRAKE 45

HYDRAULIC SYSTEM 47-74
HYDRAULIC CIRCUITRY 47-54
MANUAL LIFT RELEASE SYSTEM 55
AUXILIARY HYDRAULICS 57
TILT CYLINDER 59
LIFT CYLINDER 61
CONTROL PEDALS 63
HYDRAULIC CONTROL VALVE 65-72
MANUAL LIFT RELEASE VALVE 73

HIGH FLOW HYDRAULICS 75-82
HIGH FLOW HYDRAULICS 75-82

HYDROSTATIC SYSTEM 83-134
HYDROSTATIC PUMP 101-122
HYDROSTATIC PUMP/GEAR PUMP 123
GEAR PUMP 125
MOTOR 127
HYDROSTATIC OIL FILTER 129-134
HYDROSTATIC CIRCUITRY 83-94
HAND CONTROLS 95-98
HYDROSTATIC MOTOR 99

ELECTRICAL SYSTEM 135-156
CAB ELECTRICAL CIRCUITRY 135
ENGINE ELECTRICAL CIRCUITRY 137-140
CONTROLS ELECTRICAL 141-152
ALTERNATOR 153
STARTER 155

POWER UNIT 157-216
COOLING SYSTEM 157
ENGINE & ATTACHING PARTS 159-166
ENGINE SPEED CONTROL 167-170
ENGINE & GASKET KITS 171
GEARCASE 173
OIL COOLER 175
CRANKCASE 177

CONTENTS (Cont'd)

POWER UNIT

ROCKER ARM COVER 179
VALVE ROCKER ARM 181
CYLINDER HEAD 183
OIL PAN 185
PISTON & CRANKSHAFT 187
FUEL CAMSHAFT 189
CAMSHAFT 191
WATER PUMP 193
WATER FLANGE & THERMOSTAT 195
MANIFOLDS 197
TURBO CHARGER 199
OIL PIPE 201
ENGINE STOP LEVER 203
GOVERNOR 205
SPEED CONTROL PLATE 207
BOOST COMPENSATOR 209
FUEL & INJECTION PUMP 211
INJECTOR NOZZLES 213
AIR CLEANER 215

ACCESSORIES & OPTIONS 217-380

ACCESS COVER 217
ACS CONVERSION KIT 219
AXLE SEAL KIT 221
BACK-UP ALARM KIT 223-226
BEACON 227
BLOCK HEATER 229
BOB-TACH LEVERS 231
BUCKET POSITIONING VALVE KIT 233
BUCKET POSITIONING VALVE 235
CAB DOOR 237-246
CAB ENCLOSURE 247-250
CAB WINDOWS 251-256
COUNTERWEIGHT KIT 257-262
DECALS 263-266
DUAL BATTERY KIT 267
ELECTRICAL CONNECTOR KIT 269
ELECTRICAL CONTROLS KIT 271-276
ENGINE MOUNT KIT 277
EXPORT ACCESSORIES 279-290
EUROPEAN ACCESSORIES 291-294
FIRE EXTINGUISHER 295
F.O.P.S. KIT 297
FLASHER LIGHTS 299
FRONT AUXILIARY 301
GAS SPRING KIT 303
HEATER & A/C 305-326
HEATER 307-316
HORN KIT 327-330
LIFT KIT 331-338
LIGHT KIT 339
MUFFLER/PURIFIER KIT 341

CONTENTS (Cont'd)

ACCESSORIES & OPTIONS
POWER BOB-TACH KIT 343
POWER BOB-TACH 345-348
REAR AUXILIARY 349
REAR AUXILIARY VALVE 351
REAR DOOR LOCK 353
REAR WIPER 355
SEAL ENCLOSURE KIT 357
SEAT BELT 359-364
SOUND KIT 365
SOUND OPTION 367-370
SOUND REDUCTION HARDHAT 371
STROBE LIGHT 373
TIRES & RIMS 375-378
BULK ITEMS 379
NUMERICAL INDEX 382-429

MAINTENANCE ITEMS

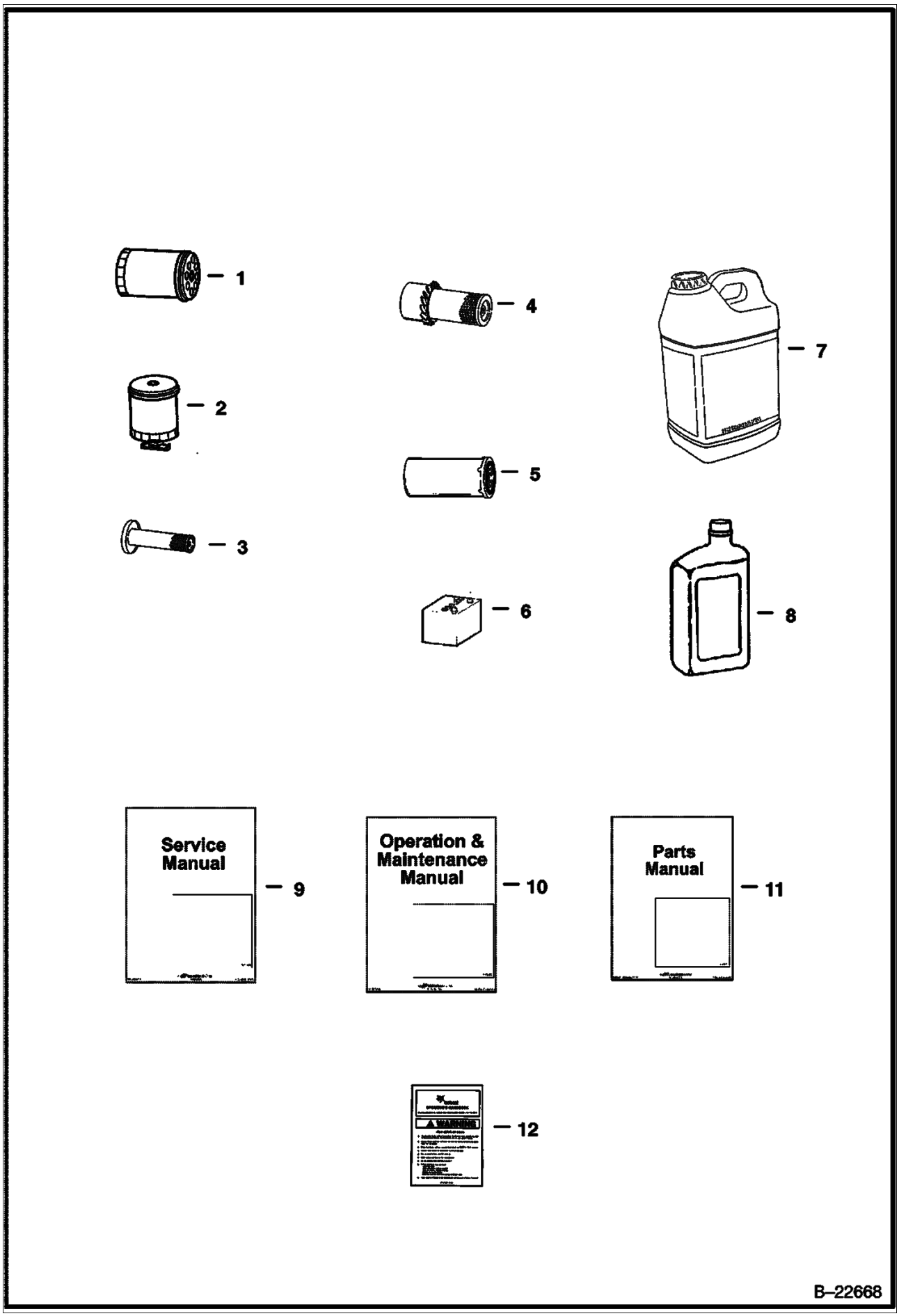

MAINTENANCE ITEMS (Cont'd)

Ref No	Part Number	Description	Remarks	Serial Number	Qty
1	6675517	FILTER	See Illustration GEARCASE/ B22736		x
2	6667352	FILTER FUEL	See Illustration GEARCASE/ B22736 FUEL		x
3	6598362	ELEMENT	See Illustration AIR CLEANER/ B16478 INNER AIR CLEANER		x
4	6598492	ELEMENT	See Illustration AIR CLEANER/ B16478 OUTER AIR CLEANER		x
5	6661248	ELEMENT	See Illustration HYDROSTATIC OIL FILTER/ B16487 HYDROSTATIC # 3 MEDIA		x
6	6674687	BATTERY			x
7	6903117	HYD FLUID 2.5 GAL. 2	See Illustration BULK ITEMS/ B16462R		x
7	6903118	HYD. FLUID 5GAL	See Illustration BULK ITEMS/ B16462R		x
7	6903119	HYD. FLUID 55GAL	See Illustration BULK ITEMS/ B16462R		x
8	6903107	OIL 10W30 QT. 12	See Illustration BULK ITEMS/ B16462R		x
8	6903108	OIL 10W30 GAL. 6	See Illustration BULK ITEMS/ B16462R		x
8	6903112	OIL 10W30 2.5 GAL 2	See Illustration BULK ITEMS/ B16462R		x
8	6903105	OIL 15W40 QT. 12	See Illustration BULK ITEMS/ B16462R		x
8	6903106	OIL 15W40 GAL. 6	See Illustration BULK ITEMS/ B16462R		x
8	6903113	OIL 15W40 2.5 GAL. 2	See Illustration BULK ITEMS/ B16462R		x
8	6903109	OIL 30W QT. 12	See Illustration BULK ITEMS/ B16462R 30W - 1 Qt.		x
8	6903110	OIL 30W GAL. 6	See Illustration BULK ITEMS/ B16462R		x
8	6903111	OIL 30W 2.5 GAL 2	See Illustration BULK ITEMS/ B16462R		x
9	6904132	S/M S175/S185 "K"	Service		1
10	6904134	O/M S185 "K"	Operation & Maintenance		1
11	6904272	P/M S185K	Parts		1
12	6737783	KIT	See Illustration DECALS/ B26117 Operator		1



B–22774

SCHEDULED MAINTENANCE ITEMS (Cont'd)
(50 HOUR)

Ref No	Part Number	Description	Remarks	Serial Number	Qty
1	6675517	FILTER	See Illustration GEARCASE/ B22736		x
2	6903107	OIL 10W30 QT. 12	See Illustration BULK ITEMS/ B16462R		x
2	6903108	OIL 10W30 GAL. 6	See Illustration BULK ITEMS/ B16462R		x
2	6903112	OIL 10W30 2.5 GAL 2	See Illustration BULK ITEMS/ B16462R		x
2	6903105	OIL 15W40 QT. 12	See Illustration BULK ITEMS/ B16462R		x
2	6903106	OIL 15W40 GAL. 6	See Illustration BULK ITEMS/ B16462R		x
2	6903113	OIL 15W40 2.5 GAL. 2	See Illustration BULK ITEMS/ B16462R		x
2	6903109	OIL 30W QT. 12	See Illustration BULK ITEMS/ B16462R 30W - 1 Qt.		x
2	6903110	OIL 30W GAL. 6	See Illustration BULK ITEMS/ B16462R		x
2	6903111	OIL 30W 2.5 GAL 2	See Illustration BULK ITEMS/ B16462R		x

SCHEDULED MAINTENANCE ITEMS
(250 HOUR)

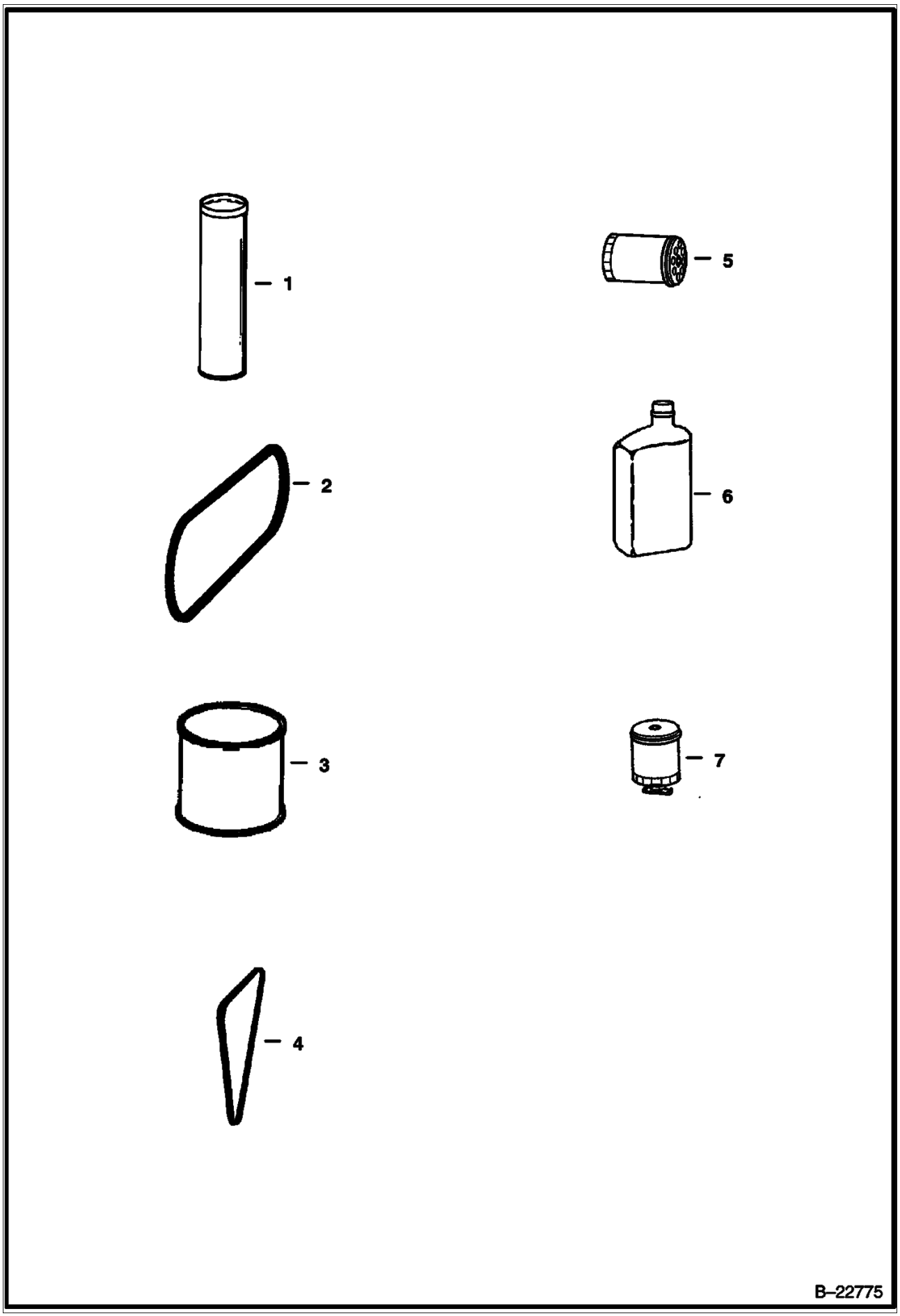

SCHEDULED MAINTENANCE ITEMS (Cont'd)
(250 HOUR)

Ref No	Part Number	Description	Remarks	Serial Number	Qty
1	6903122	GREASE 10			x
2	6726898	BELT	See Illustration ENGINE & ATTACHING PARTS/ E2288R ENG./HYDRO. DRIVE		x
3	6903121	GEAR LUBE 12			x
4	6675837	BELT	ALTERNATOR		x
5	6675517	FILTER	See Illustration GEARCASE/ B22736		x
6	6903107	OIL 10W30 QT. 12	See Illustration BULK ITEMS/ B16462R		x
6	6903108	OIL 10W30 GAL. 6	See Illustration BULK ITEMS/ B16462R		x
6	6903112	OIL 10W30 2.5 GAL 2	See Illustration BULK ITEMS/ B16462R		x
6	6903105	OIL 15W40 QT. 12	See Illustration BULK ITEMS/ B16462R		x
6	6903106	OIL 15W40 GAL. 6	See Illustration BULK ITEMS/ B16462R		x
6	6903113	OIL 15W40 2.5 GAL. 2	See Illustration BULK ITEMS/ B16462R		x
6	6903109	OIL 30W QT. 12	See Illustration BULK ITEMS/ B16462R 30W - 1 Qt.		x
6	6903110	OIL 30W GAL. 6	See Illustration BULK ITEMS/ B16462R		x
6	6903111	OIL 30W 2.5 GAL 2	See Illustration BULK ITEMS/ B16462R		x
7	6667352	FILTER FUEL	See Illustration BULK ITEMS/ B16462R FUEL		x



B–22776

SCHEDULED MAINTENANCE ITEMS (Cont'd)
(500 HOUR)

Ref No	Part Number	Description	Remarks	Serial Number	Qty
1	6648944	BREATHER	HYD. RESERVOIR BREATHER		x
2	6661248	ELEMENT	See Illustration HYDROSTATIC OIL FILTER/ B16487 HYD./HYDRO.		x

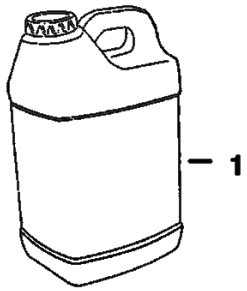

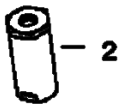

B–22777

SCHEDULED MAINTENANCE ITEMS (Cont'd)
(1000 HOUR)

Ref No	Part Number	Description	Remarks	Serial Number	Qty
1	6903117	HYD FLUID 2.5 GAL. 2	See Illustration BULK ITEMS/ B16462R		x
1	6903118	HYD. FLUID 5GAL	See Illustration BULK ITEMS/ B16462R		x
1	6903119	HYD. FLUID 55GAL	See Illustration BULK ITEMS/ B16462R		x
2	6661022	FILTER	See Illustration HYDROSTATIC OIL FILTER/ B13527 CASE DRAIN		x

MAIN FRAME

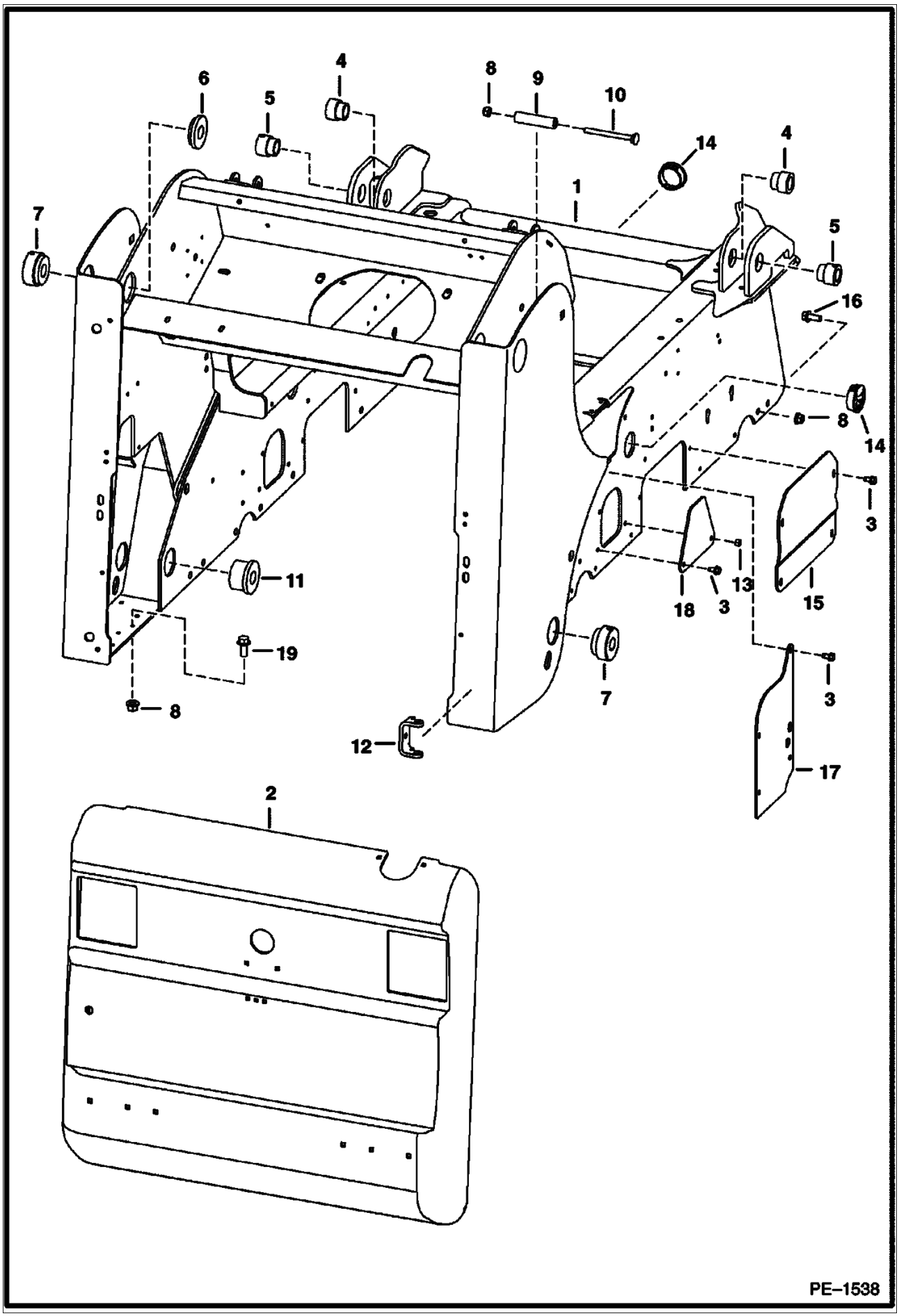

MAIN FRAME (Cont'd)

Ref No	Part Number	Description	Remarks	Serial Number	Qty
1	7103783	MAIN FRAME			1
2	6729991	REAR DOOR	See Illustration REAR DOOR/ PE2252		1
3	84G003712B	BOLT			23
4	6717278	BUSHING	weld on		2
5	6717277	BUSHING	weld on		2
6	6717356	BUSHING	weld on		2
7	6731578	BUSHING	weld on		4
8	83D000008B	NUT			28
9	6732225	SPACER	tube		2
10	37C000888B	BOLT			2
11	6717358	BUSHING	weld on		2
12	6708987	HINGE	hinge - weld on		2
13	61D000006B	NUT			1
14	6706808	COVER			3
15	6719201	COVER			2
16	31C000820B	BOLT			16
17	6726062	SHIELD			2
18	6726069	COVER			2
19	31C000828B	BOLT			10

OPERATOR CAB

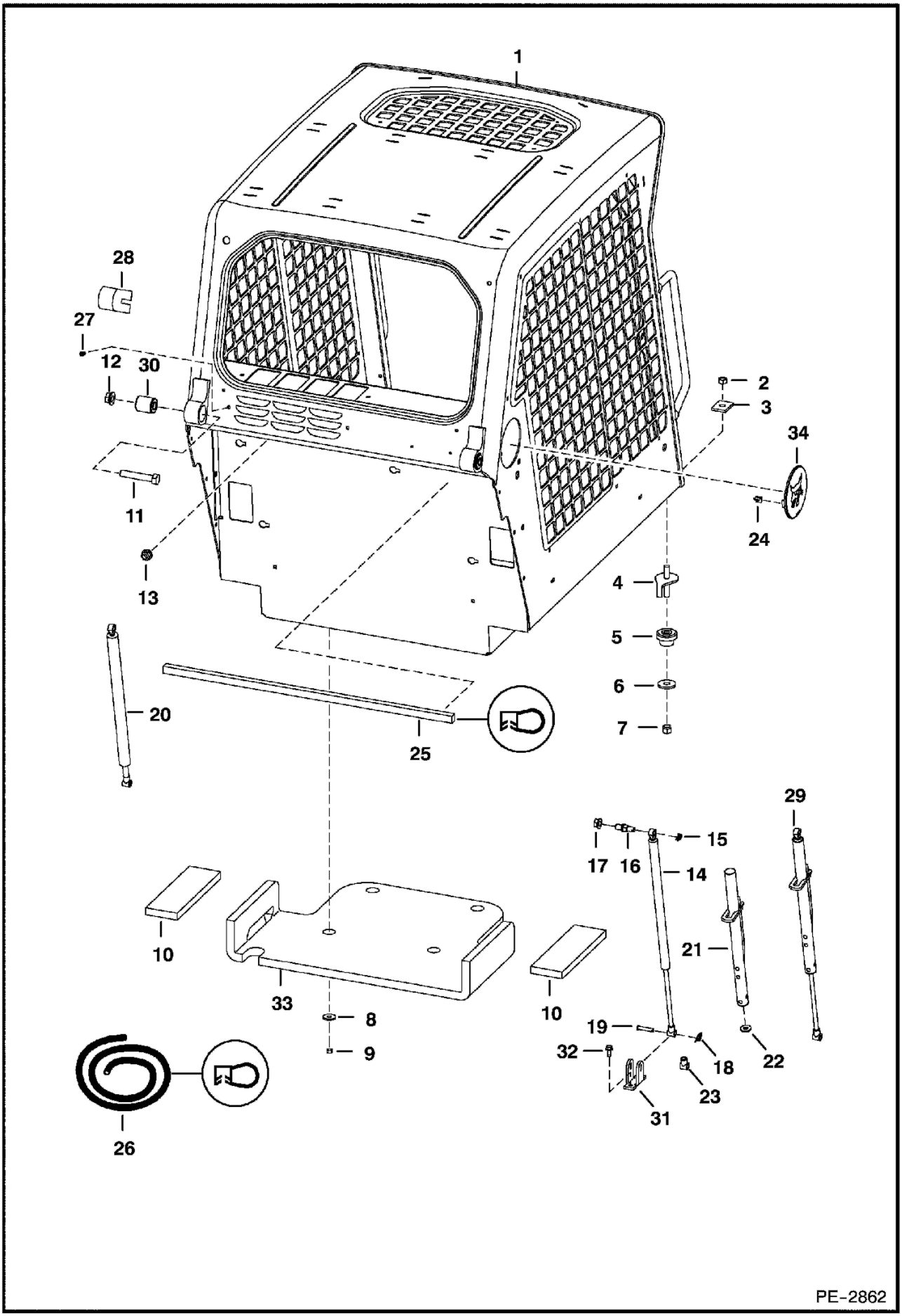

Ref No	Part Number	Description	Remarks	Serial Number	Qty
1	6719672	OPERATOR CAB	Does not include cab decals		1
2	59D000008B	NUT			2
3	6553709	WASHER	rectangular		2
4	6702971	BOLT			2
5	6560633	DAMPENER			2
6	6515817	WASHER			2
7	85D000008B	NUT			2
8	619021B	WASHER			4
9	59D000005B	NUT			4
10	6729012	INSULATION	seat pan		2
11	17C001056B	BOLT			2
12	53D000010B	NUT			2
13	53D000006B	NUT			4
14	7100506	GAS SPRING	R.H.		1
15	6675140	SNAP RING			2
16	6719064	MOUNT			2
17	95D000008B	NUT			2
18	6631418	PIN	ring		2
19	6567743	PIN			2
20	7100508	GAS SPRING	L.H.		1
20	6675136	GAS SPRING	L.H. - heavy duty		1
21	6708189	TUBE	stop - R.H.		1
22	6701174	WASHER			1
23	6675257	CLEVIS			1
24	6679990	CLIP			2
25	6733121	SEAL(31"STRIP)	31"(787,4 mm) long of Ref. 26		1
26	6679994	SEAL	bulk - sold per foot		x
27	6675033	INSERT	filter cover		2
28	6579613	STOP			2
29		GAS SPRING	NSS - R.H. - W/latch - Order Ref. 14 & 21-23		1
30	6562602	BUSHING			2
31	6706349	MOUNT	gas spring		2
32	84G003112B	BOLT			4
33	6729013	INSULATION	seat pan		1
34	6733107	PLUG ASSY	W/ Bobcat head - W/Ref. 24		2

OPERATOR CAB

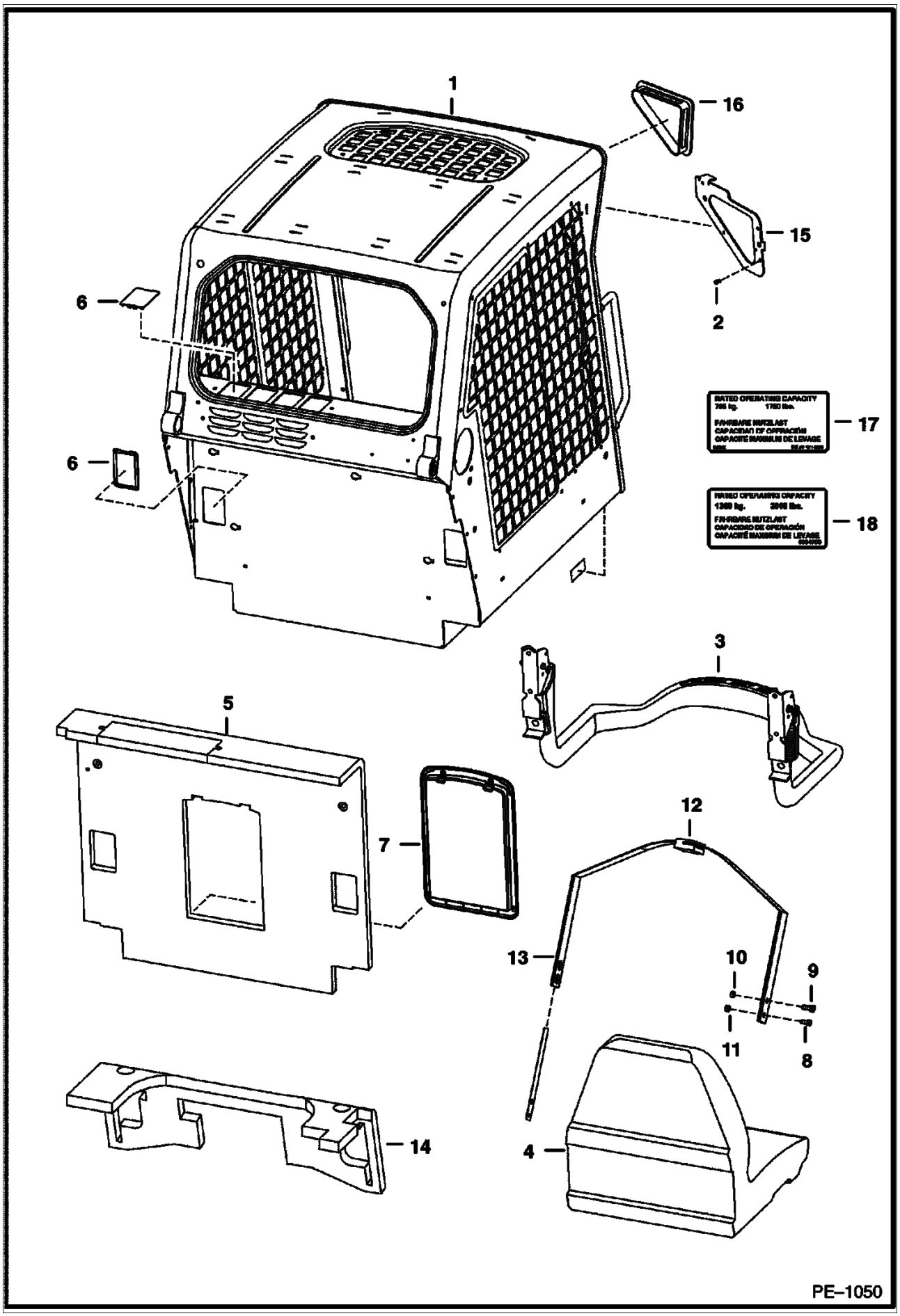

Ref No	Part Number	Description	Remarks	Serial Number	Qty
1	6719672	OPERATOR CAB	Does not include cab decals		1
2	6675033	INSERT			6
3		SEAT BAR	See Illustration SEAT & SEAT BAR/ PE1051		1
4	6669135	SEAT			1
5	6719504	INSULATION	W/Ref. 7		1
6	6718101	COVER			6
7		CONTAINER	NAP - manuals		1
7	6675524	CLIP			2
7	6725301	COVER			1
7	6725303	FRAME			1
8	17C000612B	BOLT			2
9	17C000716B	BOLT			4
10	85D000007B	NUT			4
11	85D000006B	NUT			2
12	6675074	SEAT BELT	Also Order (2) of Ref. 13		1
13	6725373	SPRING PLATE			2
14	6718489	INSULATION	steering panel		1
15		PLATE	NSS - R.H. - weld on		1
15		PLATE	NSS - L.H. - weld on		1
16	6674403	COVER	no lights		2
17	6674403	COVER			1
18	6804790	DECAL	capacity		1

OPERATOR CAB
(Deluxe)

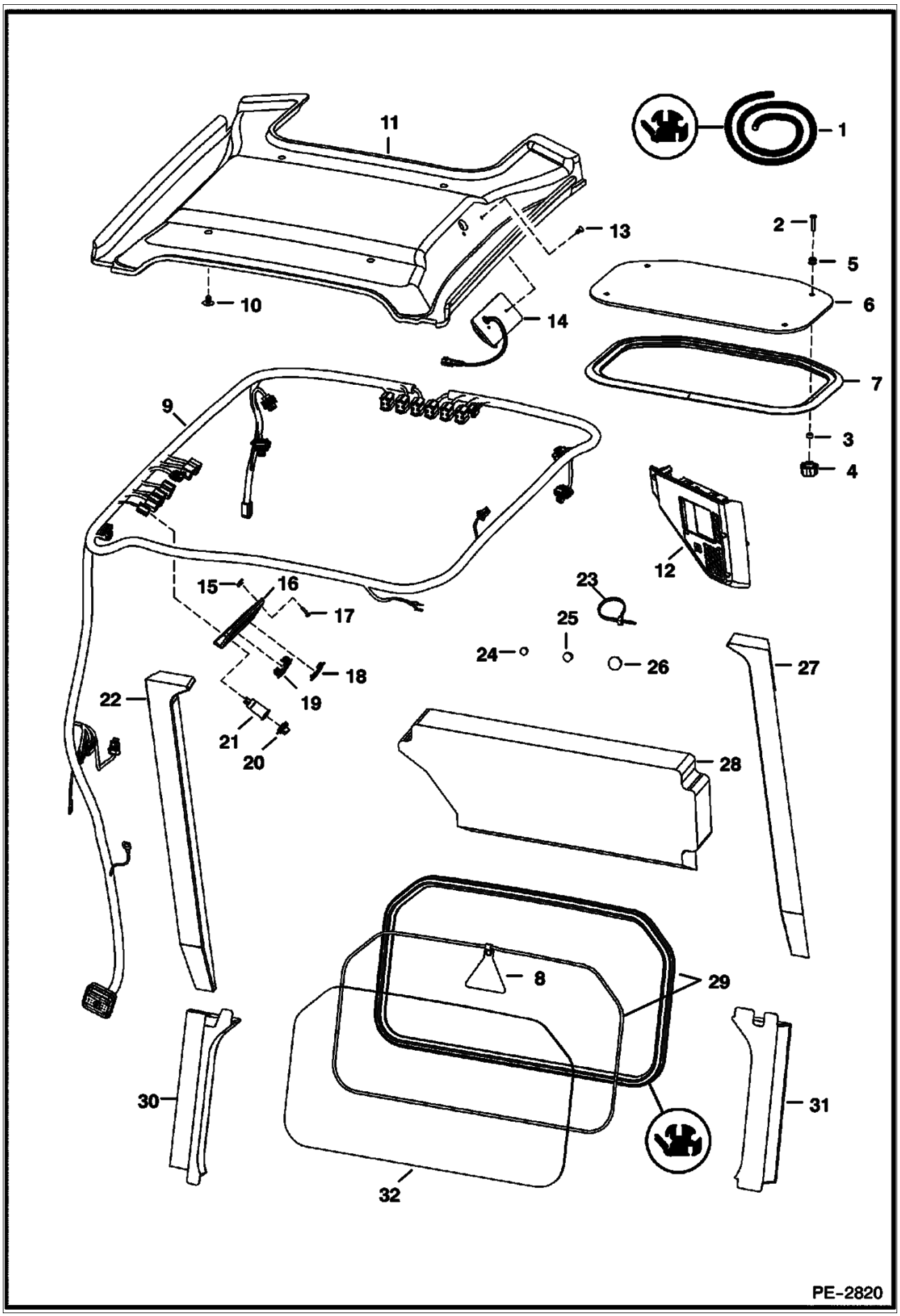

OPERATOR CAB (Cont'd)
(Deluxe)

Ref No	Part Number	Description	Remarks	Serial Number	Qty
1	6675387	EXTRUSION	bulk - Sold Per Foot		x
1	6554149	CORD	bulk - Sold Per Foot		x
2	91G000420B	BOLT			4
3	6664085	BUSHING	nylon		4
4	6681614	KNOB	11/16" deep thread		4
5	6675545	GROMMET			4
6	7105035	WINDOW	assy. - W/ Ref. 2, 3, 5 & 7		1
7		SEAL	NAP - Order Ref. 6		1
8	6731478	EXIT TAG			1
9	7116260	HARNESS	deluxe - required to operate beacon, 4-way flashers, power bob-tach & strobe lights		1
9	7116261	HARNESS	standard		1
10	6674895	RETAINER	snap in		4
11	6737704	INSULATION	headliner		1
12	6688403	PANEL	R.H. - deluxe - keyless - export		1
13	6664221	RETAINER	snap in		2
14	6680326	LIGHT	dome		1
14	6665367	BULB			1
15	6669091	CLIP			4
16	6718580	PANEL			1
17	6669224	BOLT			4
18	6665314	PLUG	switch		5
19	6668742	SWITCH	travel control - export		1
20	6664224	CAP			1
21	6664223	OUTLET			1
22	6717519	INSULATION			1
23	6610510	TIE			6
24	5289686B	PLUG	black - .375" hole		1
25	6649949	PLUG	.5" hole		2
26	6657719	PLUG	.75" hole		1
27	6717520	INSULATION			1
28	6727299	INSULATION	cab back		1
29		EXTRUSION	NAP - 75.75" (1924mm) long - Order Ref. 1		x
29		CORD	NAP - 75.75" (1924mm) long - Order Ref. 1		x
30	6717517	INSULATION			1
31	6717518	INSULATION			1
32	6717874	WINDOW	rear		1

SEAT & SEAT BAR

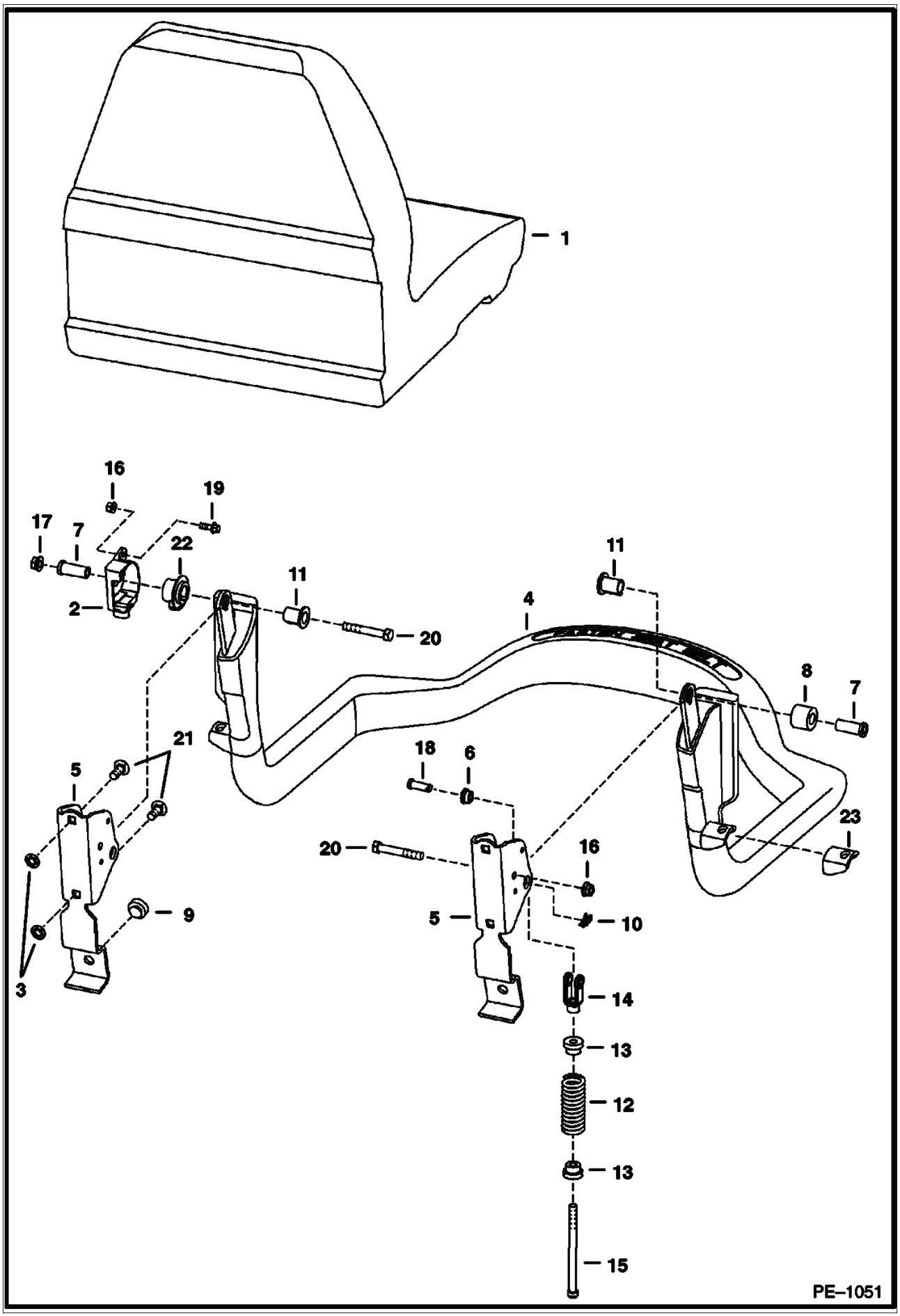

SEAT & SEAT BAR (Cont'd)

Ref No	Part Number	Description	Remarks	Serial Number	Qty
1	6669135	SEAT			1
2	6680429	SENSOR			1
3	6674894	NUT			4
4	6715860	SEAT BAR			1
5	6715863	BRACKET			1
6	6715864	BUSHING			2
7	6715865	BUSHING			2
8	6715866	BUSHING			1
9	6519178	BUMPER			2
10	6631418	PIN	ring		2
11	6680441	BUSHING	keyed		2
12	6701535	SPRING			2
13	6710659	BUSHING			2
14	6713589	CLEVIS			2
15	6713887	BOLT			2
16	83D000004B	NUT			1
17	53D000006B	NUT			2
18	4F006106B	PIN			2
19	35C000412B	BOLT			1
20	17C000640B	BOLT			2
21	10C000616B	BOLT			4
22	6680443	BUSHING			1
23		MOUNT	NAP - Order Ref. 4		1

SEAT
(Suspension - Sears)

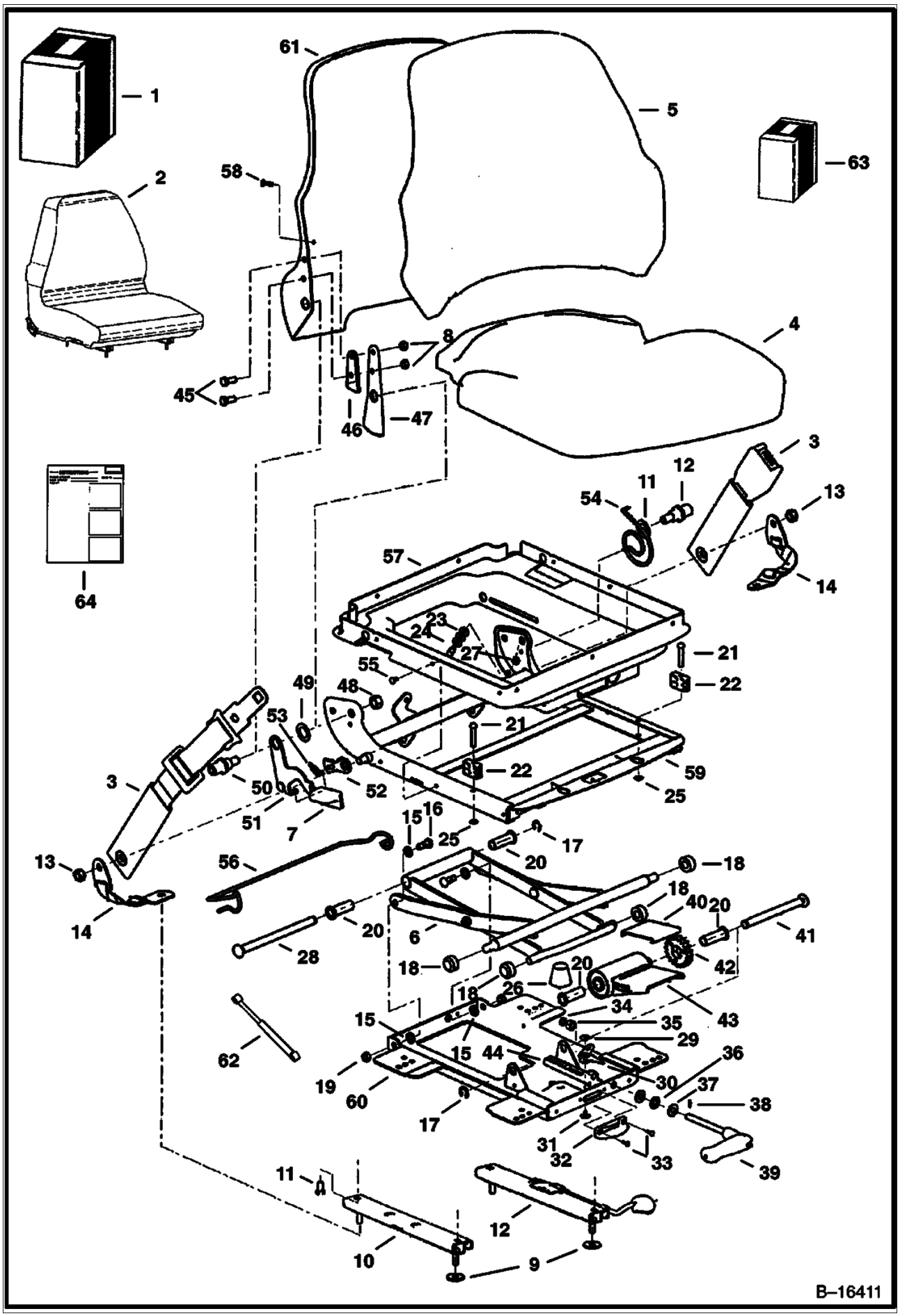

SEAT (Cont'd)
(Suspension - Sears)

Ref No	Part Number	Description	Remarks	Serial Number	Qty
1		KIT	NAP - vinyl seat - Order Ref. 2, 3 & 64		1
1		KIT	NAP - fabric seat - Order Ref. 2, 3 & 64		1
2	6675595	SEAT	vinyl - W/L.H. recliner lever -		1
2	6675596	SEAT	fabric - W/L.H. recliner lever		1
3	6675170	SEAT BELT	lap		1
4	6675320	SEAT	seat - fabric		1
4	6675322	SEAT	seat - vinyl		1
5	6675319	SEAT	backrest - fabric - W/Ref. 58		1
5	6675321	SEAT	backrest - vinyl - W/Ref. 58		1
6	6675317	SCISSORS			1
7	6675323	KNOB	recliner		1
8		NUT	NSS		6
9	619021B	WASHER			4
10		SLIDE	NSS - slave		1
11		BOLT	NSS		4
12		SLIDE	NSS - locking		1
13		NUT	NSS		2
14		BELT	NSS - tether		2
15		WASHER	NSS - cross pivot		4
16		BOLT	NSS - pivot		2
17		RING	NSS - retaining		2
18		ROLLER	NSS		4
19		NUT	NSS		2
20		BUSHING	NSS - wt adjustment		4
21		RIVET	NSS		2
22		BLOCK	NSS - up stop		2
23		WASHER	NSS		3
24		STOP	NSS - armrest		1
25		PUSHNUT	NSS		2
26		BUMPER	NSS		1
27		NUT	NSS		1
28		SHAFT	NSS - bearing		1
29		RIVET	NSS - female snap		1
30		INDICATOR	NSS - weight		1
31		RIVET	NSS - male snap		1
32		DIAL	NSS - weight indicator		1
33		POP RIVET	NSS		2
34		SPACER	NSS		1
35		NUT	NSS		1
36		BEARING	NSS - thrust		1
37		RACE	NSS - thrust		2
38		SHEAR PIN	NSS		1
39		HANDLE	NSS - weight adjustment		1
40		PLATE	NSS - wear		1
41		SHAFT	NSS - torsion		1
42		DRIVE GEAR	NSS		1
43		BUSHING	NSS - torsion		1
44		RACK	NSS - wt adjustment		1
45		BOLT	NSS		2
46		SPACER	NSS - recliner		1
47		BRACKET	NSS - back tilt		1
48		NUT	NSS		2
49		WASHER	NSS - plastic		2
50		BOSS	NSS - back pan pivot		2

SEAT (Cont'd)
(Suspension - Sears)

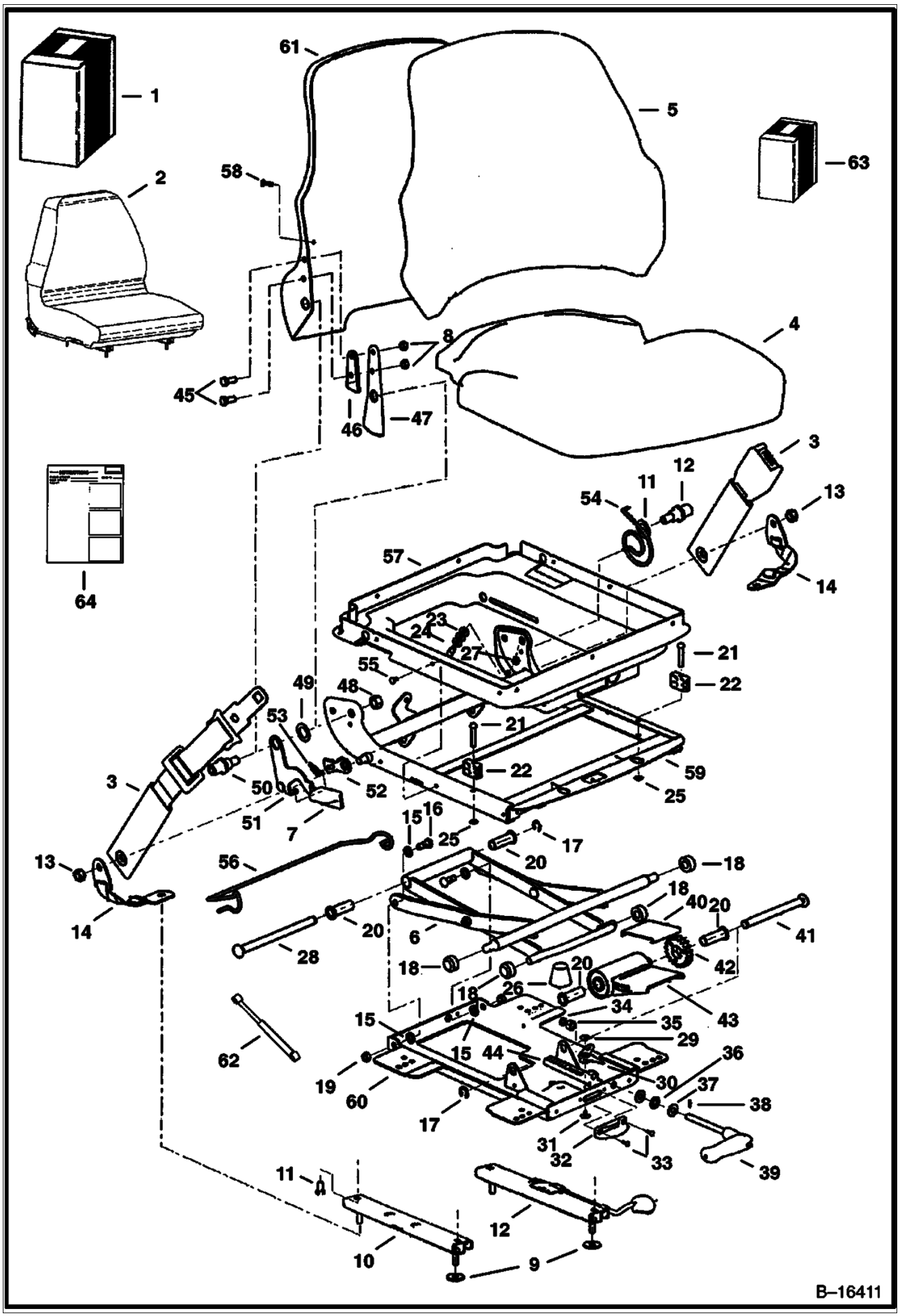

SEAT (Cont'd)
(Suspension - Sears)

Ref No	Part Number	Description	Remarks	Serial Number	Qty
51		HANDLE	NSS - recliner (RH)		1
52		LATCH	NSS - recliner		1
53		SPRING	NSS - extension		1
54		SPRING	NSS - tilt latch		1
55		CLIP	NSS		6
56		WIRE	NSS - boot support		1
57		SUSPENSION	NSS - boot		1
58		SCREW	NSS		2
59		HOUSING	NSS - upper		1
60		HOUSING	NSS - lower		1
61		BACK PAN	NSS		1
62	6676338	GAS SPRING			1
63	6675309	KIT	slides - W/Ref. 8 - 12		1
63	6675310	KIT	tether belt - W/Ref. 9, 13 & 14		1
63	6675311	KIT	suspension rollers & bearings - W/Ref. 15 - 20		1
63	6675312	KIT	suspension bumpers & stops - W/Ref. 21 - 27		1
63	6675313	KIT	rear tube - W/Ref. 17, 20 & 28		1
63	6675314	KIT	weight adj. indicator - W/Ref. 29 - 33		1
63	6675315	KIT	weight adj. handle - W/Ref. 34 - 39		1
63	6675316	KIT	weight adj. - W/Ref. 17, 20 & 40 - 44		1
63	6675318	KIT	R.H. recliner - W/Ref. 7, 8 & 45 - 54		1
63	6676034	KIT	L.H. recliner - W/Ref. 7, 8 & 45 - 54		1
63	6675308	KIT	susp. boot - W/Ref. 55 - 57		1
64	6900861	INSTRUCTIONS			1

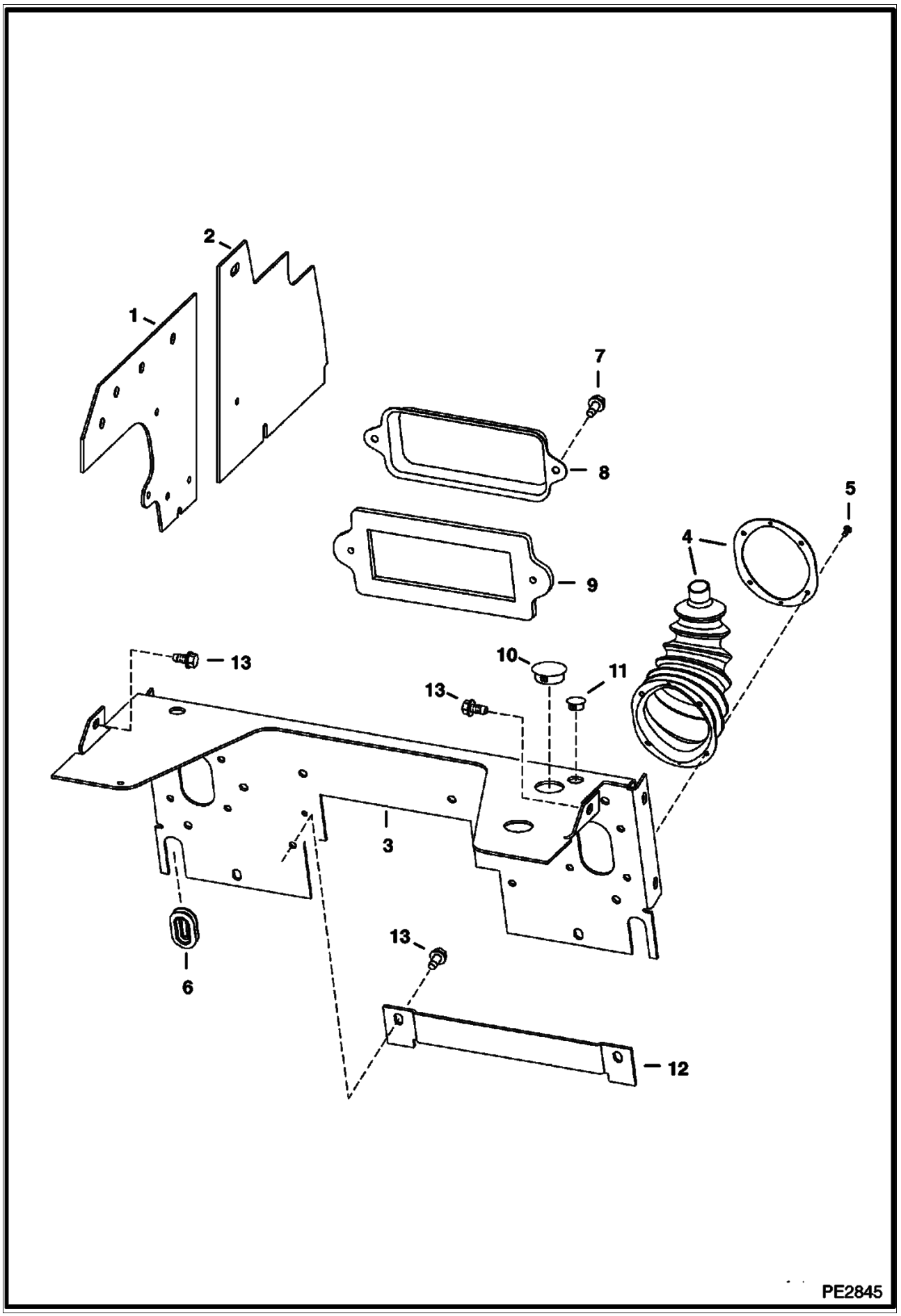
1
2
3
4
5
6
7
8
9
10
11
12
13
13
13
PE2845

PANELS (Cont'd)
(Manual Hand Controls)

Ref No	Part Number	Description	Remarks	Serial Number	Qty
1	7117232	PANEL	side rear		2
2	7117123	PANEL	side front		2
3	7106687	SHIELD			1
4	6532127	BOOT	W/ mounting ring		2
4		RING	NSS - mounting ring		2
5	6630207	RIVET			12
6	6577961	GROMMET			2
7	84G003112B	BOLT			2
8	6716621	COVER	fuse/relay		1
9	6725302	GASKET			1
10	6681469	PLUG			1
11	6648348	PLUG			2
12	6717890	COVER			1
13	84G003712B	BOLT			26

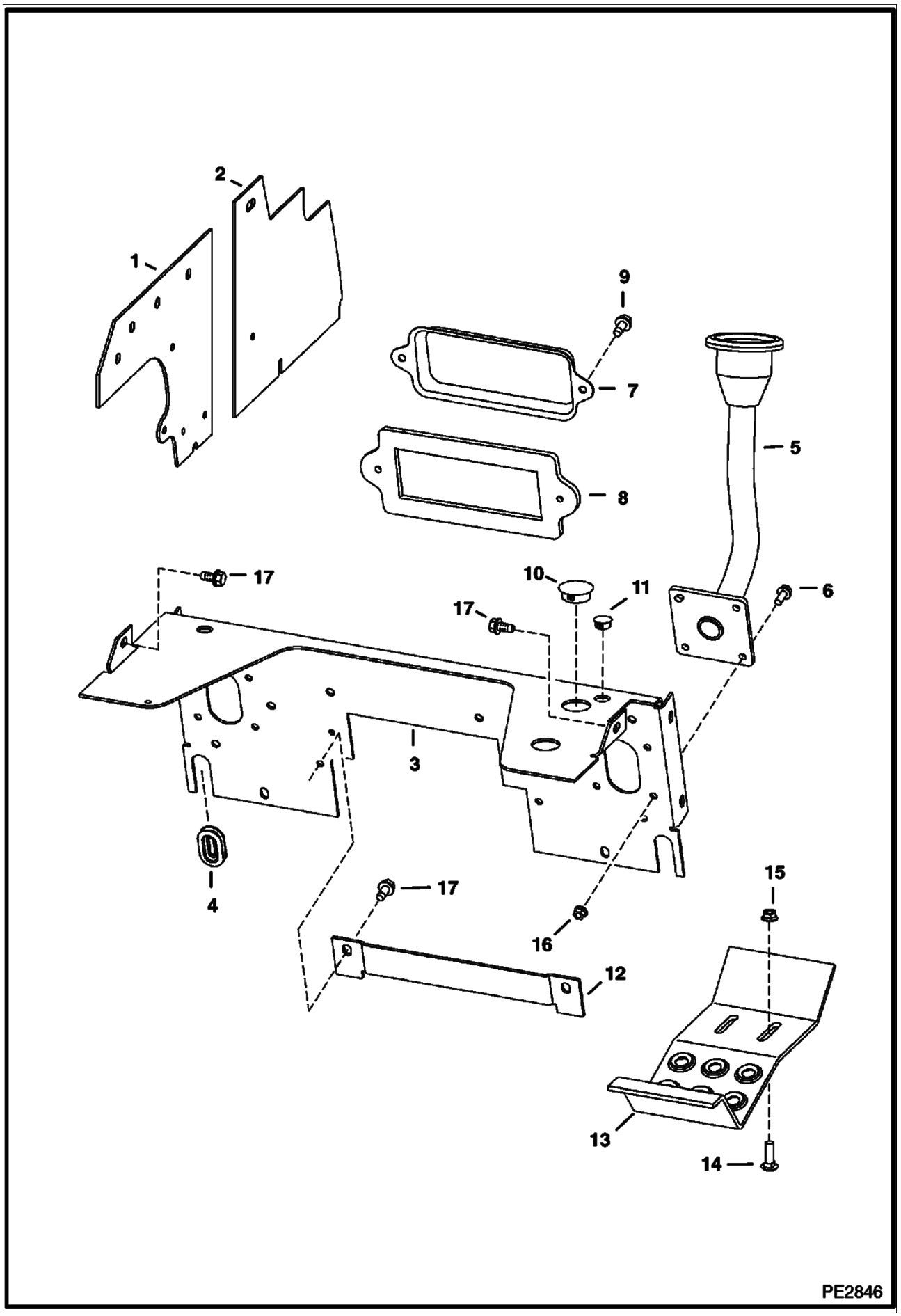
1
2
9
7
8
5
17
10
11
17
6
3
4
17
16
15
12
13
14
PE2846

PANELS (Cont'd)
(Selectable Joystick Controls)

Ref No	Part Number	Description	Remarks	Serial Number	Qty
1	7117232	PANEL	side rear		2
2	7117123	PANEL	side front		2
3	7106687	SHIELD			1
4	6577961	GROMMET			2
5		HANDLE	See Illustration CONTROLS ELECTRICAL/ PE2681 - NAP - joystick - R.H. - Order 7111992 joystick assembly - Was 6729791 [A]		1
5		HANDLE	See Illustration CONTROLS ELECTRICAL/ PE2681 - NAP - joystick - L.H. - Order 7111993 joystick assembly - Was 6729792 [A]		1
6	35C000512B	BOLT			8
7	6716621	COVER	fuse/relay		1
8	6725302	GASKET			1
9	84G003112B	BOLT			2
10	6681469	PLUG			1
11	6648348	PLUG			2
12	6717890	COVER			1
13	6712365	PLATE			2
14	37C000620B	BOLT			4
15	57D000006B	NUT			4
16	89D000005B	NUT			8
17	84G003712B	BOLT			26

REAR DOOR

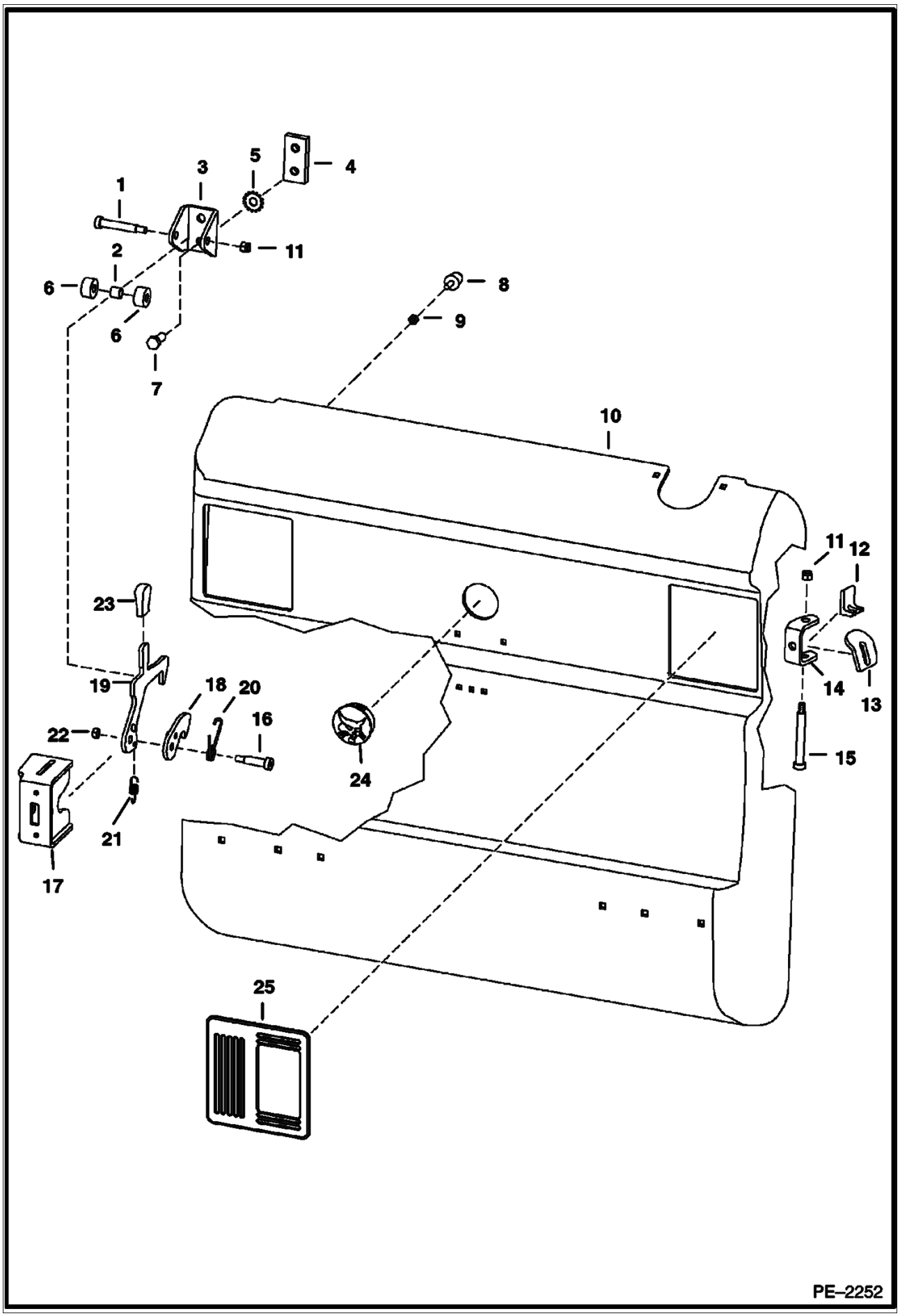
1
3
5
4
2
11
6
8
9
6
7
10
11
12
23
19
18
20
16
14
13
22
15
24
21
17
25
PE–2252

REAR DOOR (Cont'd)

Ref No	Part Number	Description	Remarks	Serial Number	Qty
1	38C000840B	BOLT	carriage		1
2	6809734	BUSHING			1
3	6809727	CHANNEL			1
4	6719525	BAR	threaded striker		1
5	6675273	WASHER	lock		2
6	6809726	ROLLER			2
7	17C000820B	BOLT			2
8	6733616	BUMPER	tapered		2
9	61D000005B	NUT			2
10	6729991	REAR DOOR			1
11	59D000006B	NUT			3
12	6719766	STOP			1
13	6714126	DOOR STOP			1
14	6733575	HINGE	weld on		2
15	6809845	BOLT			2
16	38C000824B	BOLT			1
17	6729939	LATCH PLATE	weld on		1
18	6733667	LATCH			1
19	6732715	LATCH			1
20	6810132	SPRING			1
21	6810141	SPRING			1
22	85D000006B	NUT			1
23	6564452	GRIP			1
24	6718796	PLUG			1
25	6670287	COVER			2

LIFT ARMS & BOBTACH

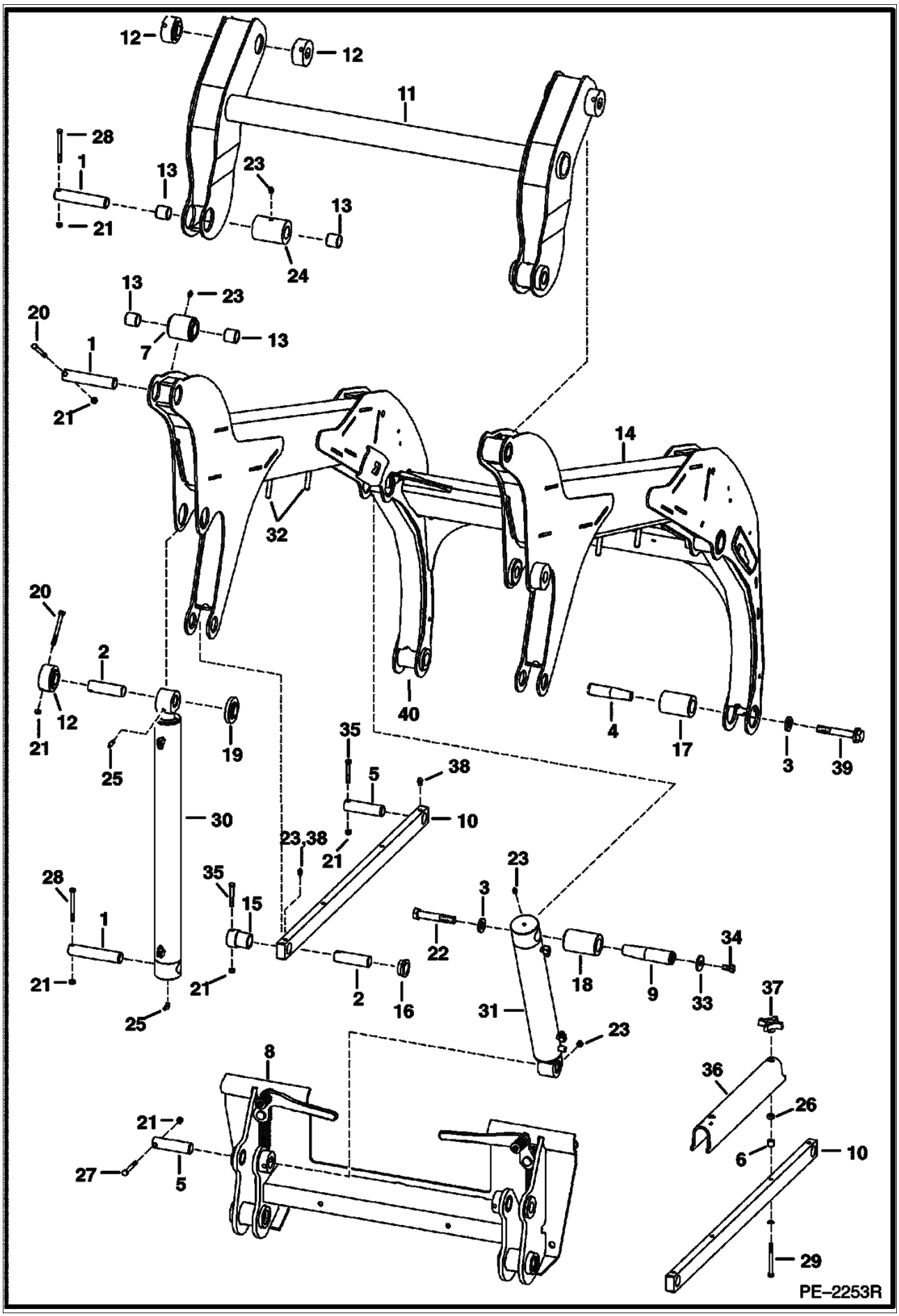

Ref No	Part Number	Description	Remarks	Serial Number	Qty
1	6717560	PIN	1.25" x 6.20" (31,8 mm x 157,5 mm)		6
2	6718789	PIN	1.25" x 4.40" (31,8 mm x 111,8 mm)		4
3	27E000010B	WASHER			4
4	7101078	PIN	tapered - 1.5 in. x 4.05 in. (38,1 mm x 102,9 mm)		2
5	6577954	PIN			4
6	6532347	SPACER			2
7	6717039	BUSHING	weld on		2
8		BOB-TACH	See Illustration BOB-TACH/ PE1540		2
9	6734662	PIN	tapered - 1.5" x 5.7" - (38,1 mm x 144,8 mm)		2
10	6727863	ROD LINK			2
11	6732264	FRAME LINK			1
12	6717246	BUSHING	weld on		6
13	6717562	BUSHING	wear		8
14	7114758	LIFT ARM			1
15	6717026	BUSHING	weld on		2
16	6717025	BUSHING	weld on		2
17	7120498	ARM	weld on - service only - w/tapered hole for 1.5" (38,1 mm) dia. pin		2
18	6734660	BUSHING	weld on		2
19	6717041	BUSHING	weld on		2
20	17C000656B	BOLT			4
21	85D000006B	NUT			14
22	31C001272B	BOLT			2
23	10H000025B	GREASE ZERK			4
24	6732265	BUSHING	weld on		2
25	11H000015B	GREASE ZERK			4
26	6718942	NUT			2
27	17C000648B	BOLT			2
28	17C000660B	BOLT			4
29	6730290	BOLT	stainless steel		2
30		CYLINDER	LIFT		2
31		CYLINDER	See Illustration TILT CYLINDER/ PE2870 TILT		2
32	1313995B	STUD	weld on		4
33	6731160	WASHER			2
34	17C001016B	BOLT			2
35	17C000640B	BOLT			4
36	6718312	STOP	lift arm		1
37	6684932	KNOB			2
38	12H000015B	GREASE ZERK			4
39	17C001072B	BOLT			2
40		ARM	NSS - lower - weld on		2

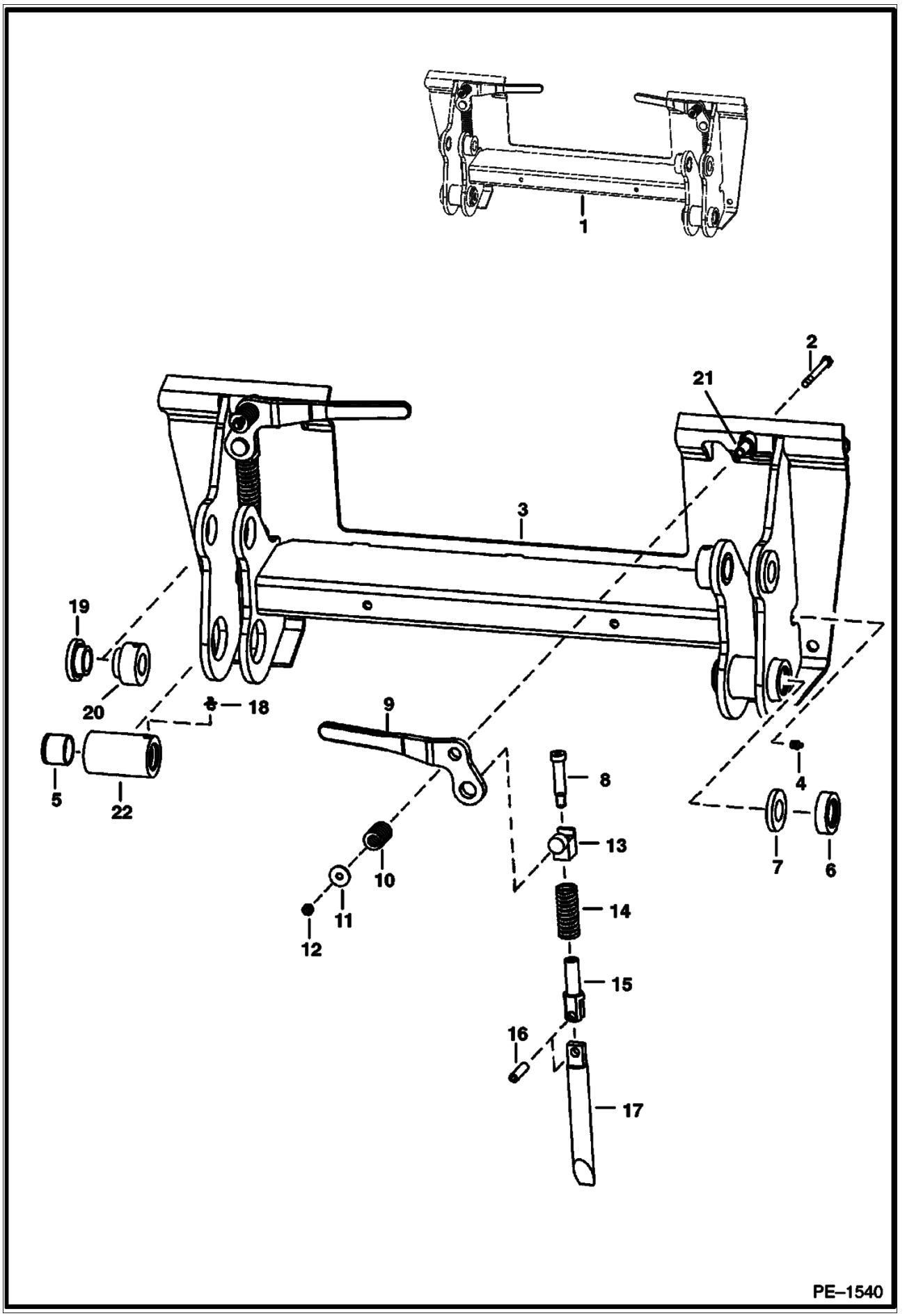
1
2
21
3
19
20
18
9
8
4
5
22
13
7
6
10
14
11
12
15
16
17
PE–1540

Ref No	Part Number	Description	Remarks	Serial Number	Qty
1	6732537	BOB-TACH	See Illustration DECALS/ B26117 ALSO ORDER 6561383 DECAL		1
1		KIT	POWER BOB-TACH		1
2	17C000660B	BOLT			2
3		FRAME	NAP		1
4	10H000035B	GREASE ZERK			2
5	6730997	BUSHING	Press Fit		2
6	6732443	CUP	seal		2
7	6651709	SEAL			2
8	6728473	BOLT	shoulder		2
9	6702904	LEVER	R.H.		1
9	6702903	LEVER	L.H.		1
10	6713040	SPRING			2
11	619021B	WASHER			2
12	85D000006B	NUT			2
13	6731119	PIVOT ASSY			2
14	6562018	SPRING			2
15	6704248	PIVOT	wedge		2
16	14J005032B	PIN			2
17	6737191	WEDGE			2
18	743332B	GREASE ZERK			2
19	6717259	BUSHING	weld on		2
20	6717260	BUSHING	weld on		2
21	6702958	BUSHING	weld on		2
22	6731979	BUSHING	weld on - Also Order Ref. 5 & 18		2

FUEL SYSTEM

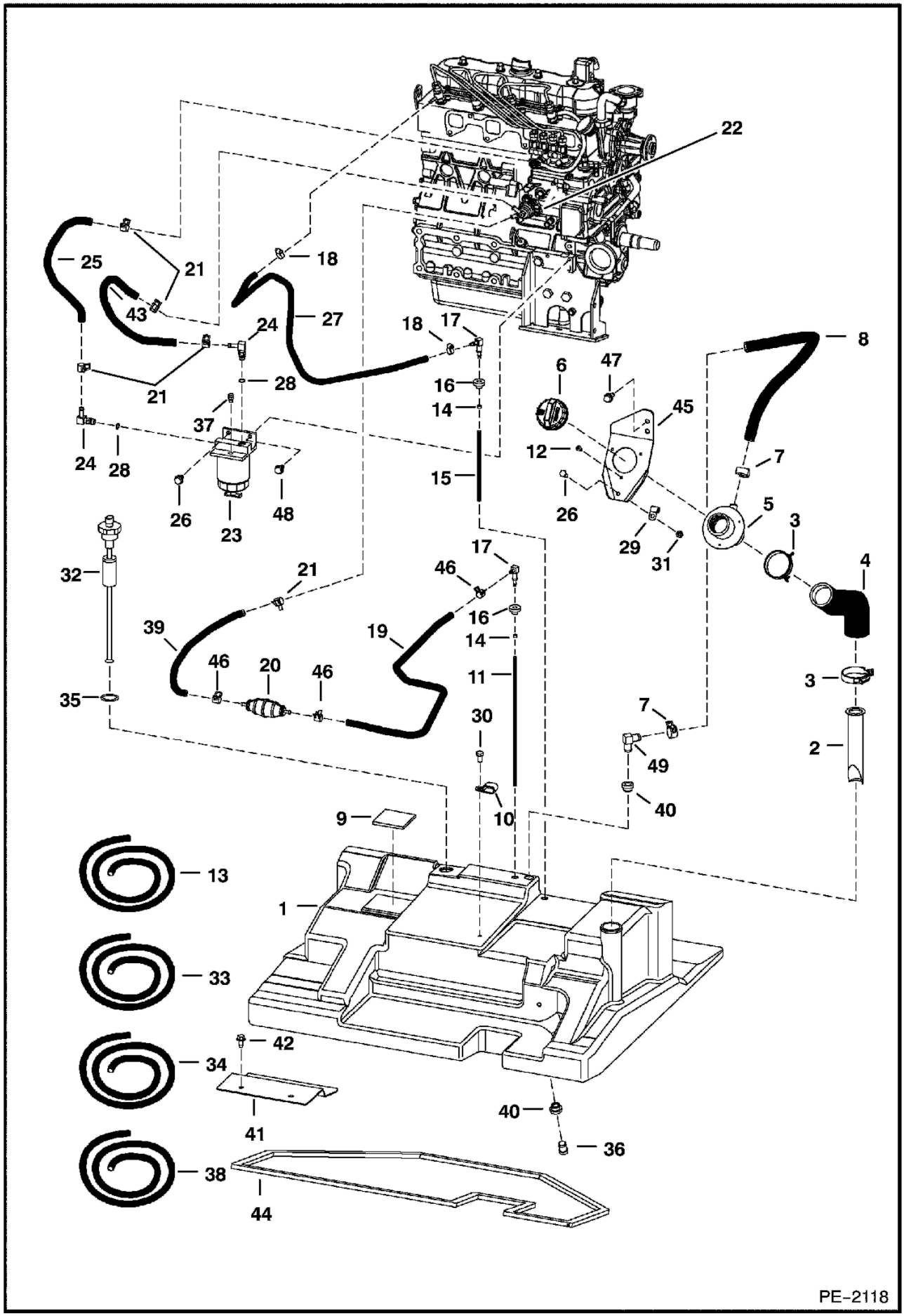
22
25
21
43
18
27
24
28
21
18
17
16
14
15
6
47
45
12
26
29
31
8
7
5
3
4
3
2
37
24
28
26
23
48
32
35
21
39
46
20
46
19
17
46
16
14
11
30
10
7
49
40
9
13
1
33
42
34
41
40
36
38
44
PE-2118

Ref No	Part Number	Description	Remarks	Serial Number	Qty
1	7112782	TANK FUEL			1
2	6569219	SCREEN			1
3	42H000032B	CLAMP	worm gear		2
3	5HM00058B	CLAMP	constant tension		2
4	6717704	HOSE			1
5	6701449	FILLER TUBE			1
6	6661114	CAP	green		1
6		CAP	NAP - locking - W/Key - Code GC020		1
6	6654374	KEY	Code GC020		1
6	6661696	CAP	locking - W/Key - Code PK510		1
6	6587458	KEY	Code PK510		1
6	7113340	CAP	non-locking - European		1
6	7121223	CAP	locking - European		1
6		KEY	European		1
7	42H000010B	CLAMP	worm gear		2
7	5HM00024B	CLAMP	constant tension		2
8		HOSE	NAP - 24 in. (609,6 mm) long - Order Ref. 13		1
9	6578278	PAD	self adhesive one side		2
10	31H000027B	CLAMP			1
11	6729854	HOSE	12.5"(317,5 mm) long		1
12	6706517	SCREW			3
13	6578172	HOSE	bulk - Sold Per Foot		x
14	6661213	RING			2
15	6729853	HOSE	10.25"(260,4 mm) long		1
16	6553411	BUSHING			2
17	7101291	ELBOW			2
18	42HS00004B	CLAMP			2
19		HOSE	NAP - 37 in. (939,8 mm) long - Order Ref. 33		1
20	6657734	PUMP	hand primer		1
21	5HM00014B	CLAMP			5
22	6655216	FUEL PUMP	See Illustration FUEL & INJECTION PUMP/ B22686		1
23	6667353	FILTER ASSY			1
23	6667352	FILTER FUEL			1
23	72F000001B	DRAIN COCK			1
24	6715183	ELBOW	W/Ref. 28		2
25		HOSE	See Illustration FUEL & INJECTION PUMP/ B22686 NAP - 13'' (330,2 MM) LONG - ORDER REF. 34 - CONNECTS TO REF. 12		2
26	84G003112B	BOLT			3
27		HOSE	See Illustration FUEL & INJECTION PUMP/ B22686 NAP - 62" (1574,8 mm) long- Order Ref. 38 - connects to Ref. 12		1
28	79K000005B	O-RING			x
29	30H000022B	CLIP			1
30	17C000610B	BOLT			1
31	85D000005B	NUT			1
32	6680436	SENSOR	fuel - W/Ref. 35		1
33	6577821	HOSE	bulk - Sold Per Foot		x
34	6577822	HOSE	bulk - Sold Per Foot		x
35	6717579	GASKET			1
36	6717401	PLUG	fuel drain		1
37	6658180	BREATHER	breather		1
38	6578169	HOSE	bulk - Sold Per Foot		x
39		HOSE	See Illustration FUEL & INJECTION PUMP/ B22686 NAP - 23" (584,2 mm) long - Order Ref. 33		x
40	6717402	BUSHING			2
41	6737368	BRACKET			1

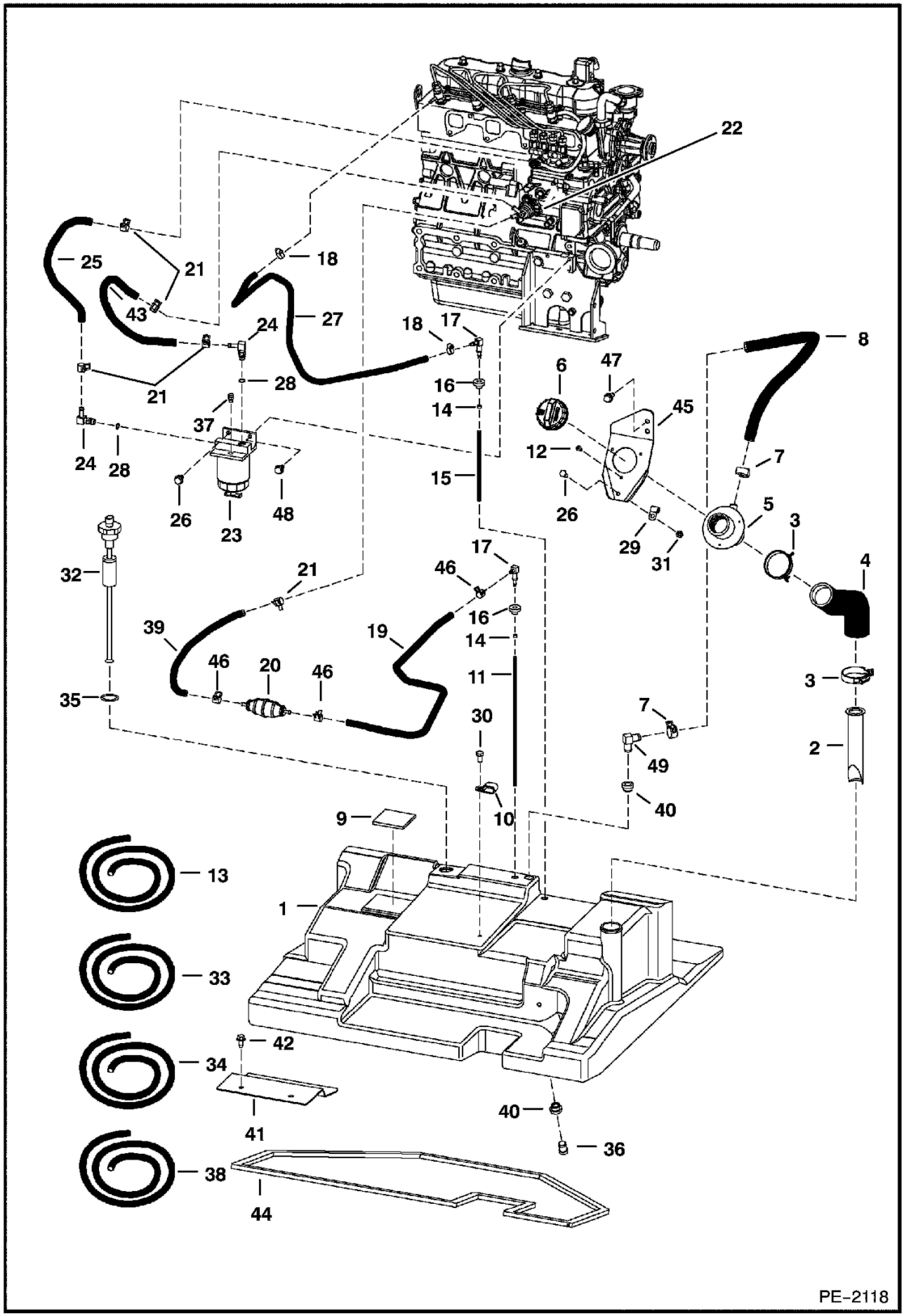
22
25
21
43
18
27
24
18
17
8
6
47
28
16
21
14
45
37
12
7
24
28
15
26
48
23
26
29
31
5
3
4
17
32
21
46
16
39
19
14
46
20
46
11
3
35
30
7
49
2
40
10
9
13
1
33
42
34
40
41
36
38
44
PE-2118

Ref No	Part Number	Description	Remarks	Serial Number	Qty
42	84G003712B	BOLT			2
43		HOSE	NAP - 50" (1270,0 mm) long - Order Ref. 13		1
44	7101557	GASKET	.375" x .75" x 99.81" long		1
45	6731059	INLET	fuel fill		1
46	5HM00013B	CLAMP			3
47	84G003716B	BOLT			2
48	84G003116B	BOLT			1
49	6808798	ELBOW			1

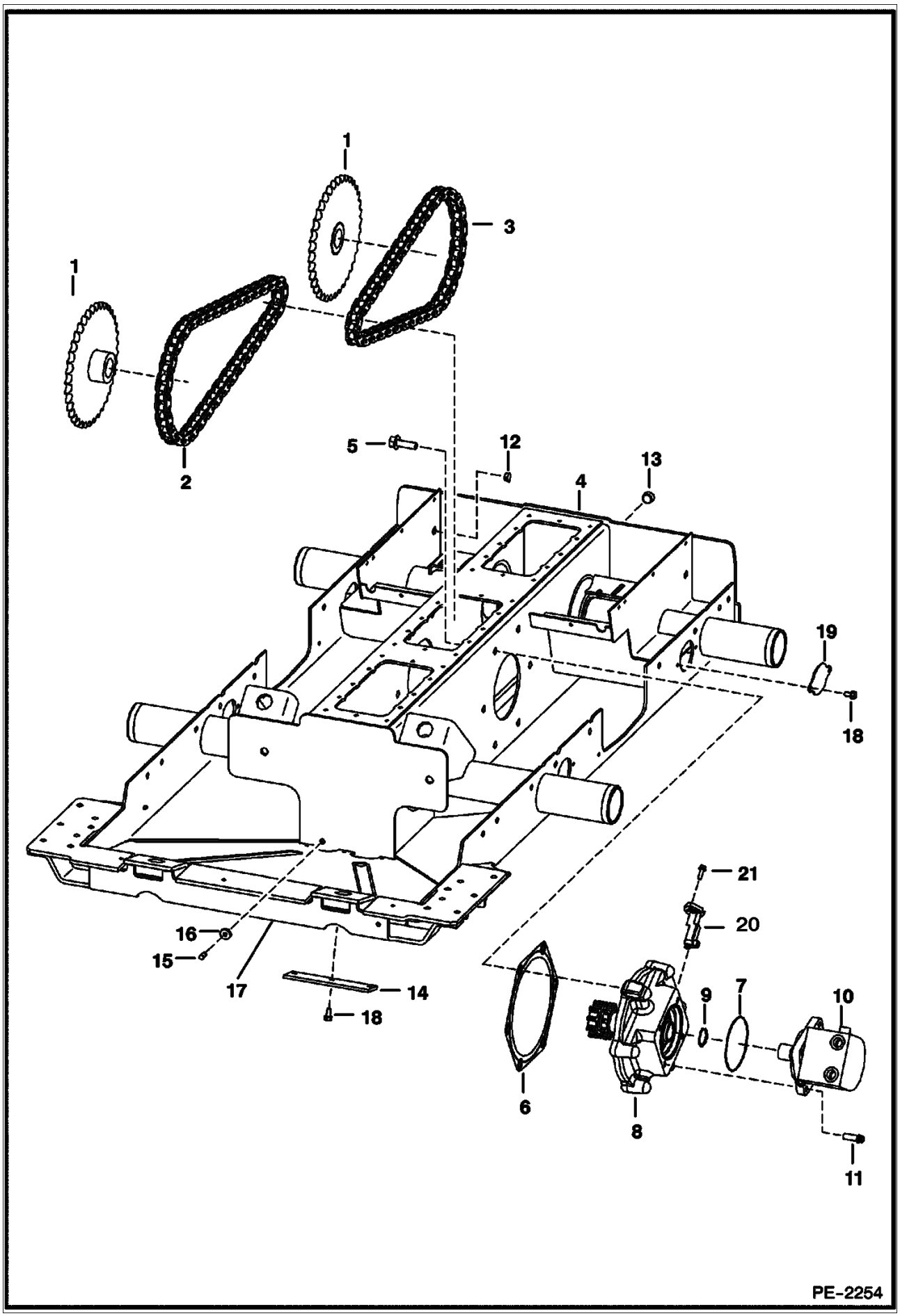
1
1
3
1
2
5
12
13
4
19
18
16
15
17
14
18
21
20
9
7
10
6
8
11
PE-2254

Ref No	Part Number	Description	Remarks	Serial Number	Qty
1	6577204	SPROCKET			4
2	6703915	CHAIN	68 pitches - hour glass shape link		2
2	6731217	CHAIN	68 pitches - oval shape link		2
3	6579127	CHAIN	62 pitches - hour glass shape link		2
3	6731218	CHAIN	62 pitches - oval shape link		2
3	6510171	LINK	conn. - hour glass shape		x
3	6675332	LINK	conn. - oval shape		x
4		CHAINCASE	See Illustration DISC BRAKE/ PE2278 NAP - Order 7122291 chaincase & 7121922 cover - Was 7106531 [A]		1
4	7122291	CHAINCASE			1
5	35C001032B	BOLT			12
6	6704878	GASKET	install W/rib toward chaincase		2
7	25K030508B	O-RING			2
8		MOUNT ASSY	drive motor		2
9	6664815	SEAL	Supplied W/Motor		2
10		MOTOR	W/REF. 9		2
11	73G000824B	BOLT			8
12	6657719	PLUG			2
13	6731121	PLUG	chaincase fill		1
14	6700182	COVER			1
15	6599645	PLUG	chaincase drain		1
16	6553411	BUSHING			2
17	6706485	HOOK	tie down - weld on		2
18	84G003712B	BOLT			11
19	6730078	COVER			2
20	6677181	SENSOR	speed - Selectable Joystick Controls		2
21		SCREW	Selectable Joystick Controls		4

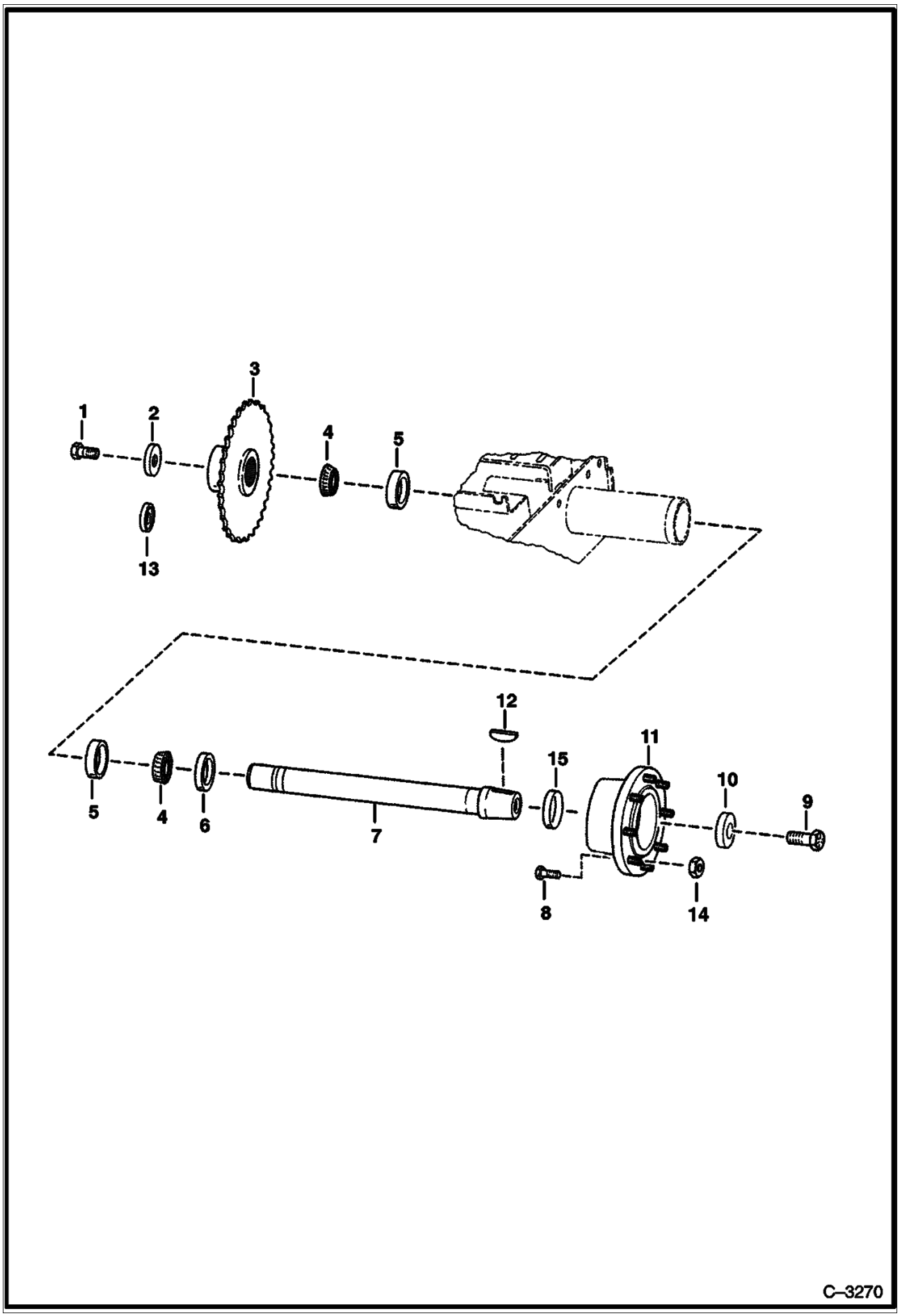
1
2
3
4
5
13
5
4
6
7
12
15
11
10
9
8
14
C–3270

Ref No	Part Number	Description	Remarks	Serial Number	Qty
1	6679247	BOLT			1
2	6552871	WASHER			1
3	6577204	SPROCKET			1
4	6519925	BEARING			2
5	6634609	RACE			2
6	6658228	SEAL			1
7	6706427	AXLE			1
8	6709170	STUD	wheel		8
9	18C001636B	BOLT	2.25"(57,2 mm) long		1
10	6716843	WASHER	recessed		1
11	6578689	HUB	W/Ref. 8		1
12	6J001664B	WOODRUFF KEY			1
13	6563606	WASHER	recessed - Used to take up .005 or .010 end play on axle		1
14	6564669	NUT	wheel		8
15	6662306	RING	wear - service part only		1
15	6722907	KIT	See Illustration AXLE SEAL KIT/ B4041 AXLE SEAL & WEAR SLEEVE		4

MOTOR CARRIER
(Drive Motor Mount Assy.)

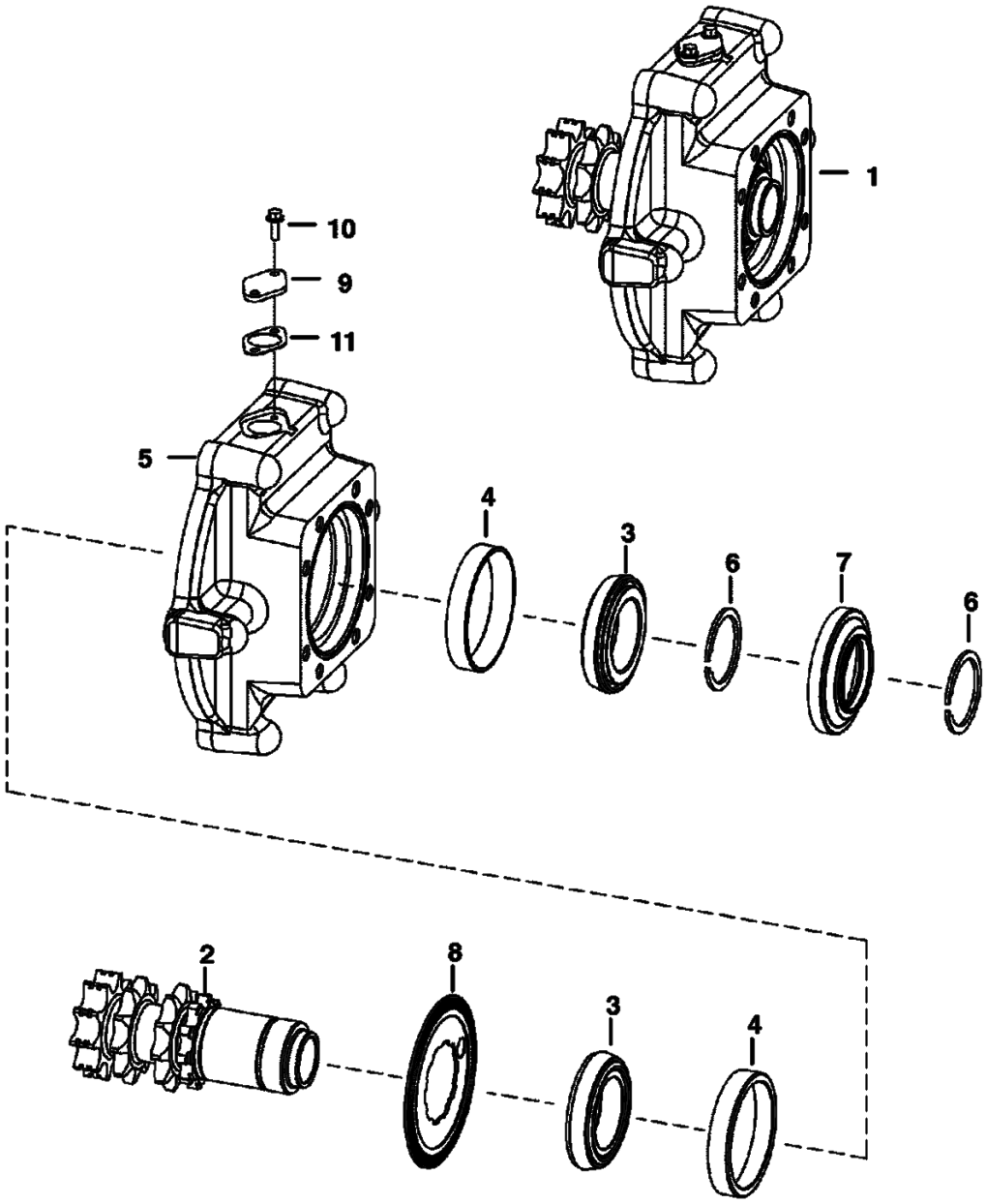

MOTOR CARRIER (Cont'd)
(Drive Motor Mount Assy.)

Ref No	Part Number	Description	Remarks	Serial Number	Qty
1	6733617	MOUNT ASSY.	drive motor - Ref. 2-11		1
2	6733621	SHAFT	W/ snap ring groove		1
3	6632218	BEARING			2
4	6632541	RACE			1
5	6733619	HOUSING			1
6	6571851	SNAP RING			1
7	6705847	SEAL			1
8	6688924	MAGNET	speed sensor - Was 6680634 [D]		1
9	6730013	COVER			1
10	35C000412B	BOLT			2
11	7110287	GASKET			1

DISC BRAKE
(Flat Top Chaincase)

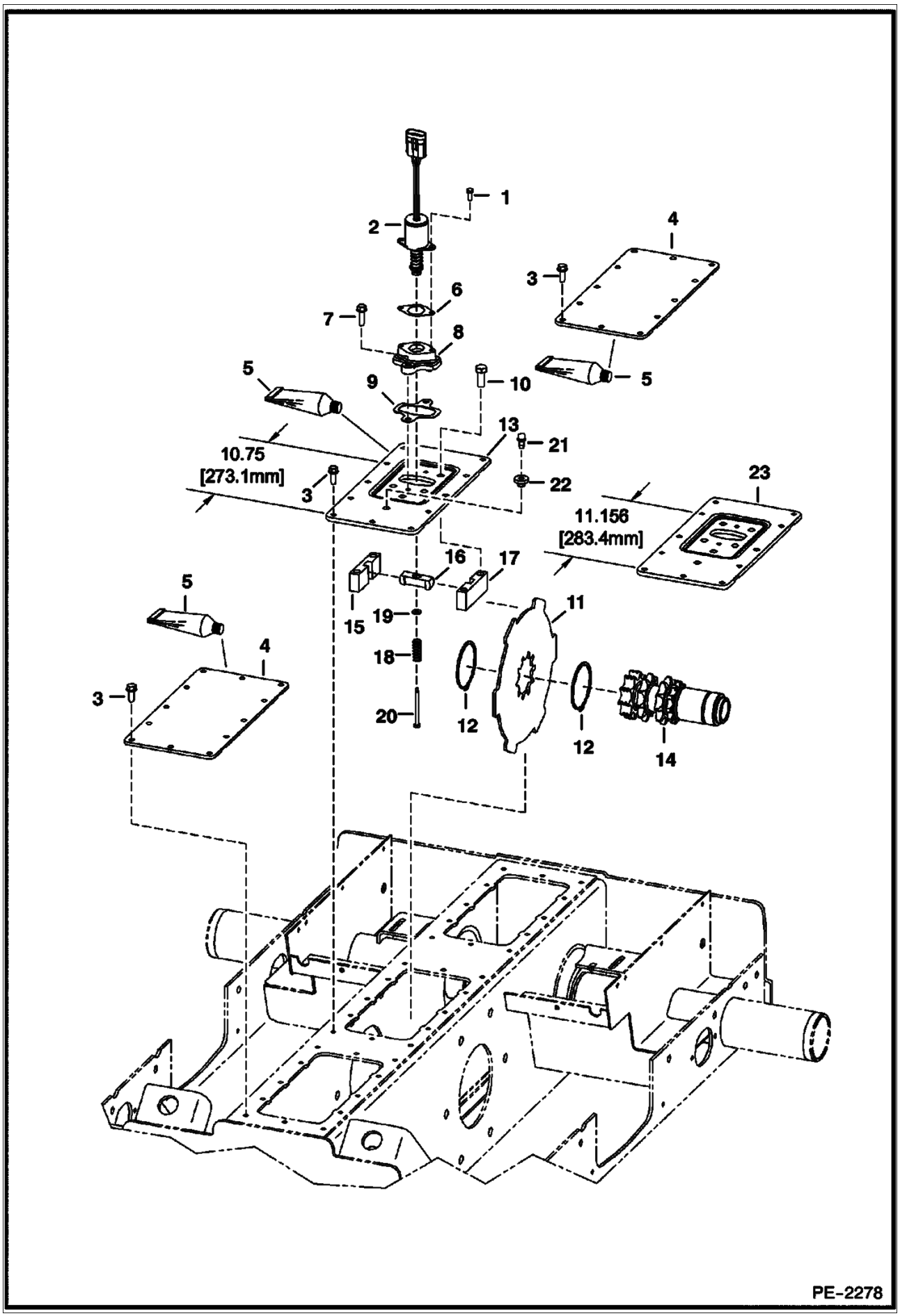

DISC BRAKE (Cont'd)
(Flat Top Chaincase)

Ref No	Part Number	Description	Remarks	Serial Number	Qty
1	17C000412B	BOLT			2
2	6681512	SOLENOID			1
3	84G003716B	BOLT			36
4	6733956	COVER			2
5	6685372	SEAL	liquid gasket - 20 oz. tube		x
6	6706737	GASKET			1
7	84G003720B	BOLT			2
8	6706718	MOUNT			1
9	6708016	GASKET			1
10	47C000820B	BOLT			4
11	6716228	BRAKE	disc		2
12	6658672	SNAP RING			4
13	6735316	COVER			1
14	6733621	SHAFT	DOUBLE SNAP RING GROOVE		2
15	6719056	BLOCK	guide - L.H.		1
16	6714278	GUIDE			1
17	6719057	BLOCK	guide - R.H.		1
18	6708018	SPRING			1
19	25E000013B	WASHER			1
20	6708267	BOLT			1
21	6680970	BREATHER			1
22	6553411	BUSHING			1
23	7121922	COVER			1

HYDRAULIC CIRCUITRY
(W/O Bucket Positioning Valve)

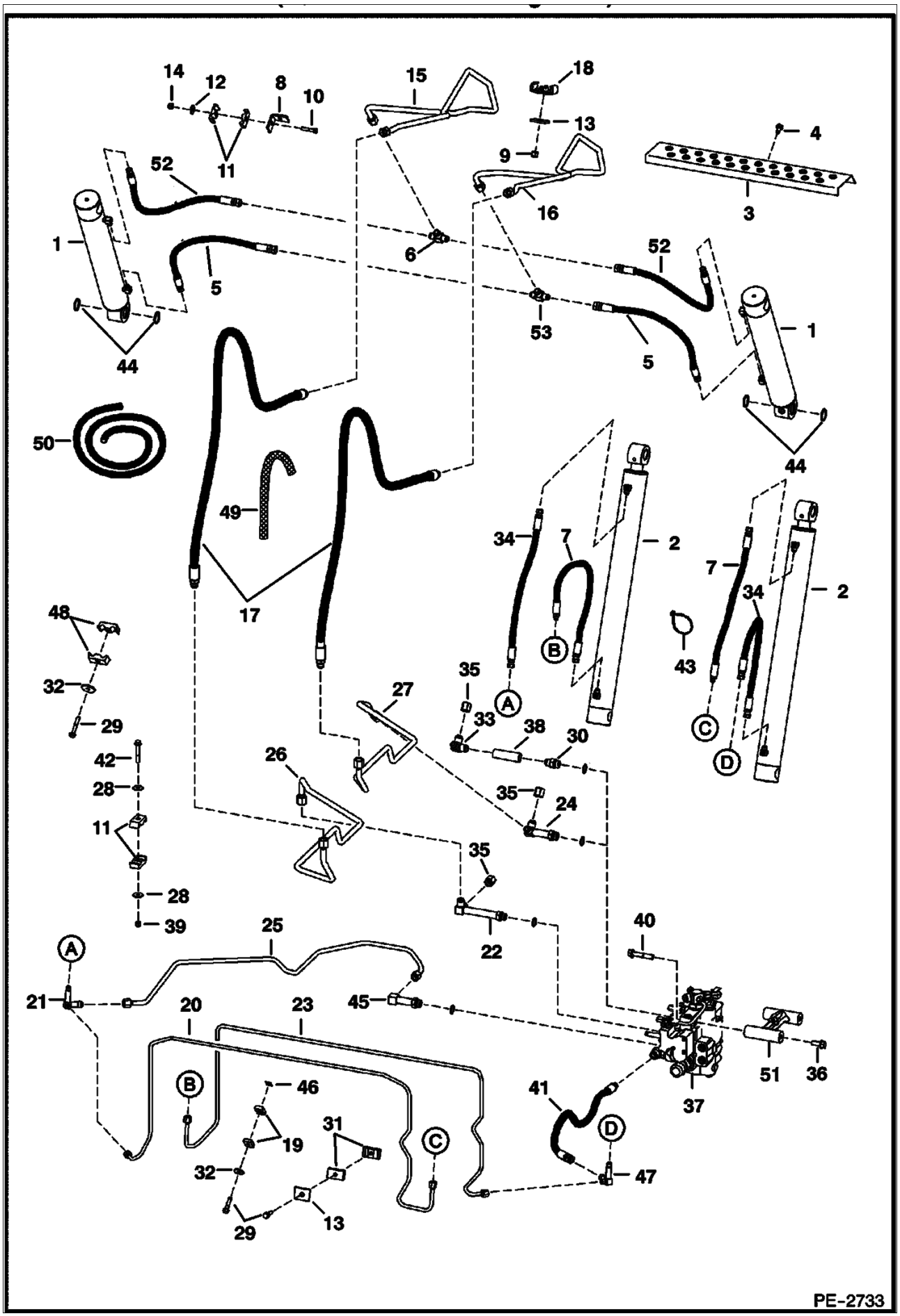

HYDRAULIC CIRCUITRY (Cont'd)
(W/O Bucket Positioning Valve)

Ref No	Part Number	Description	Remarks	Serial Number	Qty
1		CYLINDER	See Illustration TILT CYLINDER/ PE2870 TILT		2
2		CYLINDER	See Illustration LIFT CYLINDER/ PE2748 LIFT		2
3	6735669	SHIELD	boom stop		1
4	84G003712B	BOLT			4
5	7114050	HOSE	.5625" thread female ends		2
6	6716061	TEE			1
7	7116564	HOSE			2
8	6718238	BRACKET			1
9	59D000008B	NUT			2
10	17C000628B	BOLT			1
11	6701893	CLAMP			2
12	27E000006B	WASHER			1
13	6553709	WASHER			2
14	59D000006B	NUT			1
15	6718030	TUBE			1
16	6725337	TUBE			1
17	6719439	HOSE			2
18	6717933	CLAMP			2
19	6726277	CLAMP			4
20	7114710	TUBE			1
21	7101648	TEE			1
22	6730142	TEE			1
22	79K000010B	O-RING			1
23	7114711	TUBE			1
24	6733190	TEE			1
24	79K000010B	O-RING			1
25	7101646	TUBE			1
26	7112911	TUBE			1
27	7110262	TUBE			1
28	872229	WASHER			2
29	84G003728B	BOLT			3
30	15KB01010B	ADAPTER			1
31	6727708	CLAMP			2
32	619021B	WASHER			4
33	6705070	TEE			1
34	7116565	HOSE			2
35	36K000007B	CAP			1
36	31C000820B	BOLT			2
37		VALVE	See Illustration HYDRAULIC CONTROL VALVE/ PE2734		1
38	7112910	ELBOW			1
39	59D000006B	NUT			1
40	17C000844B	BOLT			2
41	6727705	HOSE			1
41	6809511	DECAL	danger		2
42	17C000632B	BOLT			1
43	6624289	STA STRAP			2
44	225855B	SEAL			4
45	6733191	ELBOW			1
45	79K000010B	O-RING			1
46	6684033	NUT			1
47	6727638	TEE			1
48	6592506	CLAMP			2
49		CONDUIT	NAP - 30"(762 mm) long - Order Ref. 50		2
50	6643249	CONDUIT	bulk - Sold Per Print		x

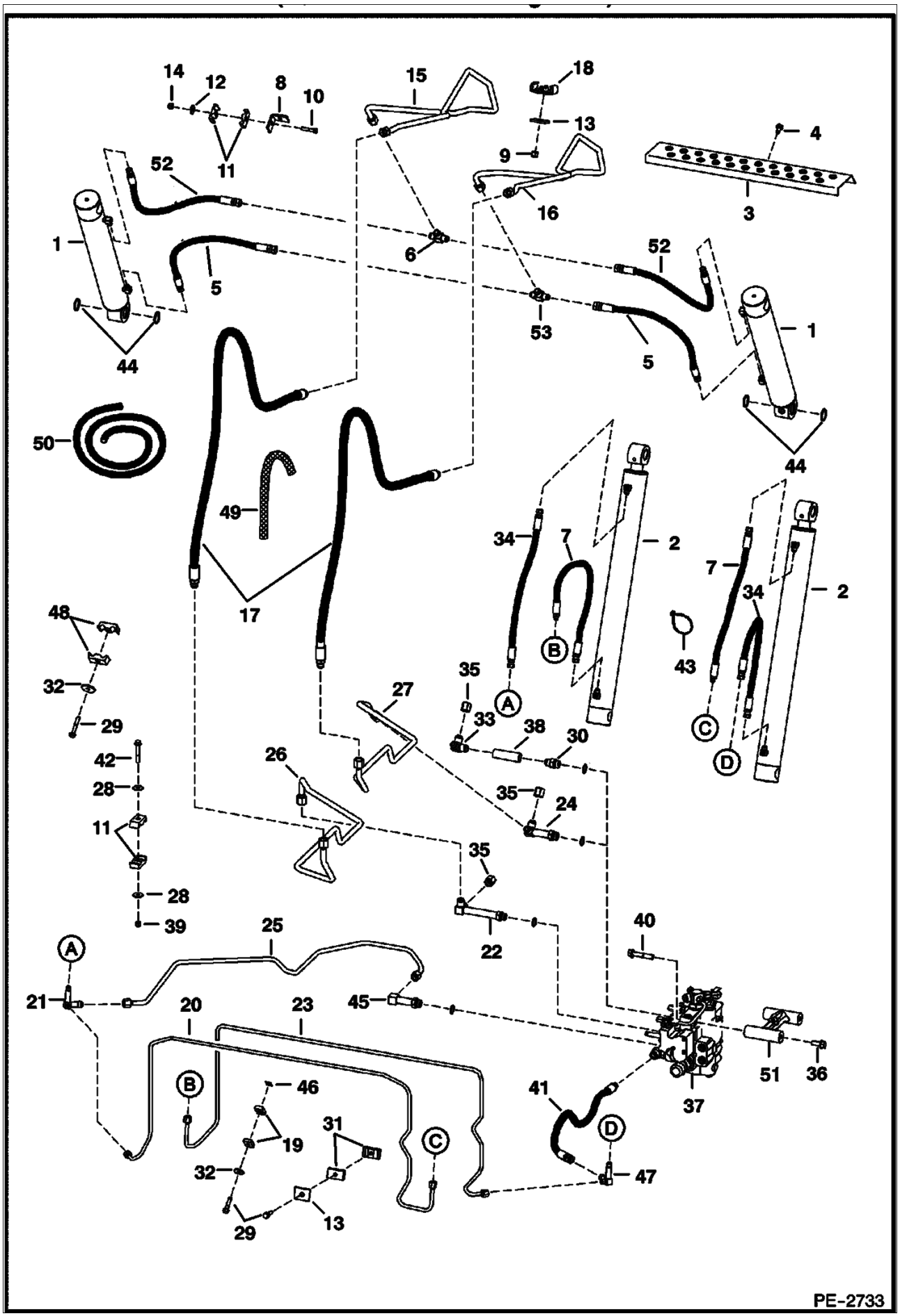
14
12
8
10
15
18
13
9
4
3
16
11
52
1
6
5
53
44
50
49
17
34
7
2
43
48
32
29
27
35
33
38
30
42
28
26
24
11
39
22
25
40
21
20
23
45
51
36
37
41
46
19
31
47
PE-2733

HYDRAULIC CIRCUITRY (Cont'd)
(W/O Bucket Positioning Valve)

Ref No	Part Number	Description	Remarks	Serial Number	Qty
51	7109934	MOUNT			1
52	7114236	HOSE	.75" thread female ends		2
53	7114053	TEE			1

HYDRAULIC CIRCUITRY
(W/Bucket Positioning Valve)

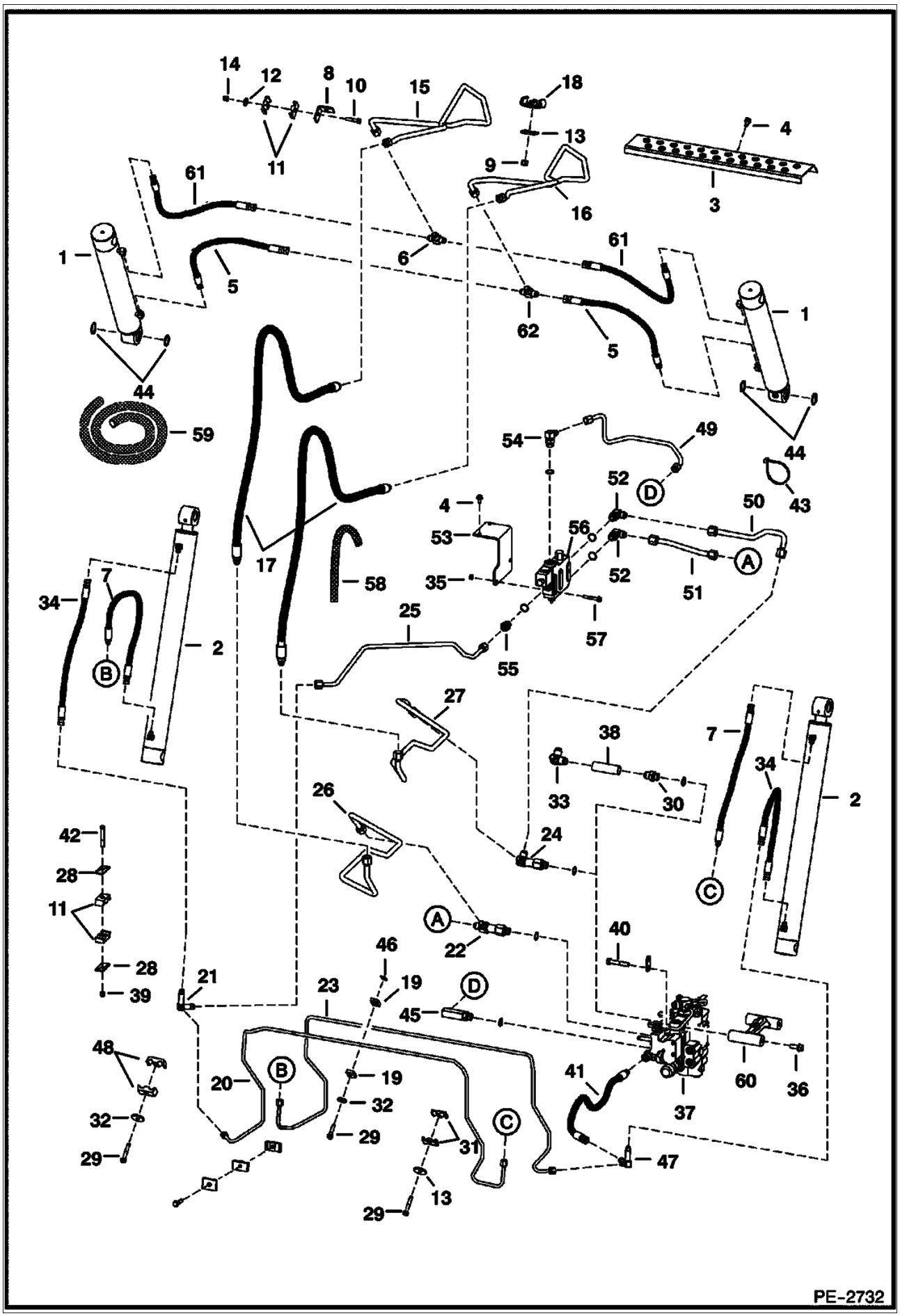

HYDRAULIC CIRCUITRY (Cont'd)
(W/Bucket Positioning Valve)

Ref No	Part Number	Description	Remarks	Serial Number	Qty
1		CYLINDER	See Illustration TILT CYLINDER/ PE2870 TILT		2
2		CYLINDER	See Illustration LIFT CYLINDER/ PE2748 LIFT		2
3	6735669	SHIELD	boom stop		1
4	84G003712B	BOLT			6
5	7114050	HOSE	.5625" thread female ends		2
6	6716061	TEE			1
7	7116564	HOSE			2
8	6718238	BRACKET			1
9	59D000008B	NUT			2
10	17C000628B	BOLT			1
11	6701893	CLAMP			2
12	27E000006B	WASHER			1
13	6553709	WASHER			2
14	59D000006B	NUT			1
15	6718030	TUBE			1
16	6725337	TUBE			1
17	6719439	HOSE	W/Ref. 58		2
18	6717933	CLAMP			2
19	6726277	CLAMP			4
20	7114710	TUBE			1
21	7101648	TEE			1
22	6730142	TEE			1
22	79K000010B	O-RING			1
23	7114711	TUBE			1
24	6733190	TEE			1
25	7101647	TUBE			1
26	7112911	TUBE			1
27	7110262	TUBE			1
28	872229	WASHER			2
29	84G003728B	BOLT			1
30	15KB01010B	ADAPTER			1
31	6727708	CLAMP			2
32	619021B	WASHER			4
33	6705070	TEE			1
34	7116565	HOSE			2
35	57D000005B	NUT			2
36	31C000820B	BOLT			2
37		VALVE	See Illustration HYDRAULIC CONTROL VALVE/ PE2734		1
38	7112910	ELBOW			1
39	59D000006B	NUT			1
40	17C000844B	BOLT			2
41	6727705	HOSE			1
41	6809511	DECAL	danger		2
42	17C000632B	BOLT			1
43	6624289	STA STRAP			2
44	225855B	SEAL			4
45	6733191	ELBOW			2
45	79K000010B	O-RING			2
46	6684033	NUT			2
47	6727638	TEE			1
48	6592506	CLAMP			2
49	6734192	TUBE			1
50	6733196	TUBE			1
51	7112912	TUBE			1

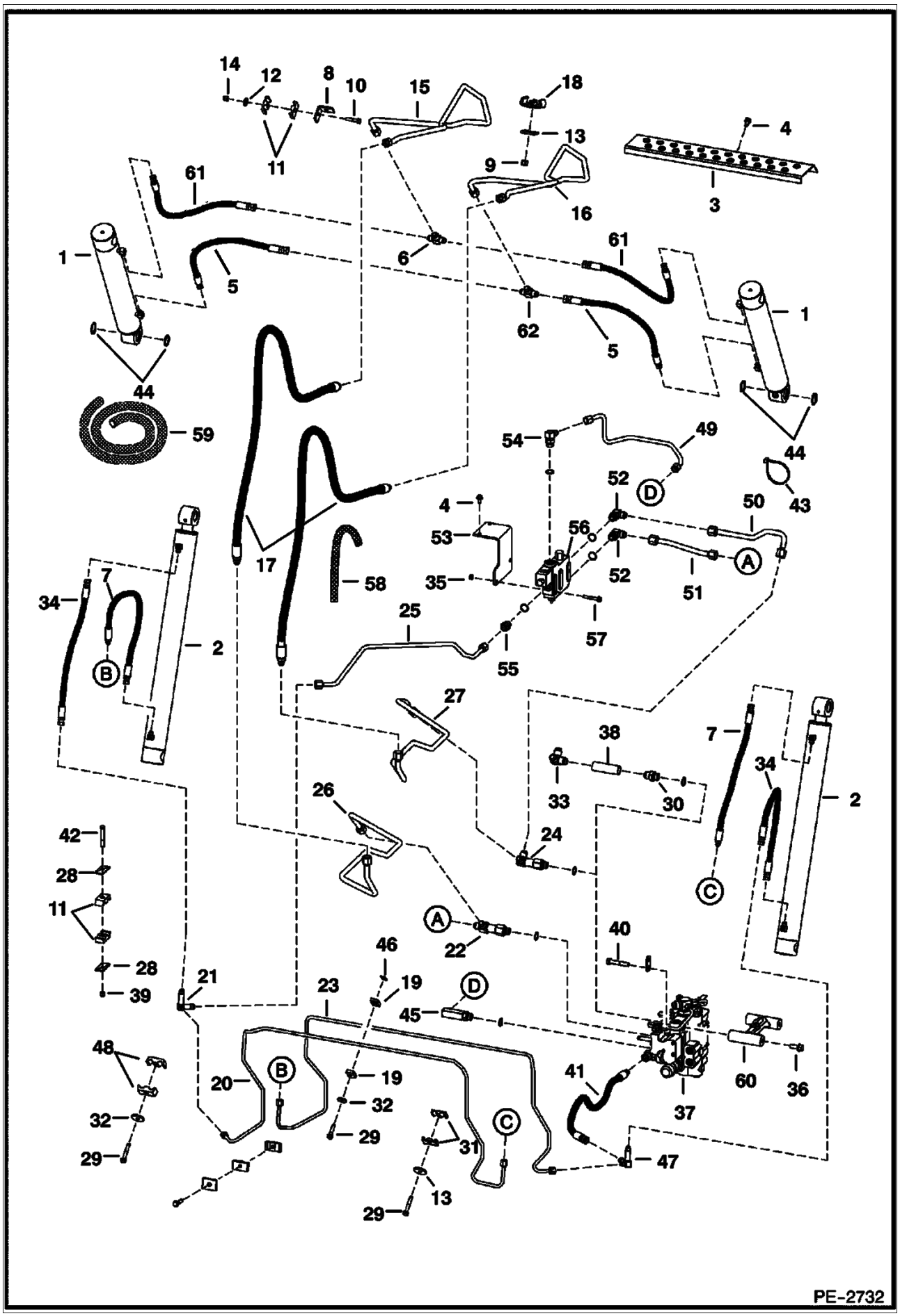
14
12
8
10
15
18
13
9
16
4
3
11
61
1
5
6
62
61
1
44
59
54
49
44
43
52
D
50
4
53
56
52
A
35
51
58
17
34
7
2
B
25
57
55
27
38
7
34
2
33
30
26
24
42
28
11
28
39
21
C
A
22
40
46
19
23
D
45
48
20
B
19
32
29
41
60
36
37
32
29
31
C
47
13
29
PE-2732

HYDRAULIC CIRCUITRY (Cont'd)
(W/Bucket Positioning Valve)

Ref No	Part Number	Description	Remarks	Serial Number	Qty
52	17KB01010B	ELBOW			2
52	79K000010B	O-RING			2
53	6727646	BRACKET			1
54	17KB00810B	ELBOW			1
54	79K000010B	O-RING			1
55	15KB00810B	CONNECTOR			1
55	79K000010B	O-RING			1
56	6666341	VALVE	See Illustration BUCKET POSITIONING VALVE/ MS1943 BUCKET POS.		1
57	35C000536B	BOLT			2
58		CONDUIT	NAP - 30"(762 mm) long - Order Ref. 59		2
59	6643249	CONDUIT	bulk - Sold Per Print		x
60	7109934	MOUNT			1
61	7114236	HOSE	.75" thread female ends		2
62	7114053	TEE			1

MANUAL LIFT RELEASE SYSTEM

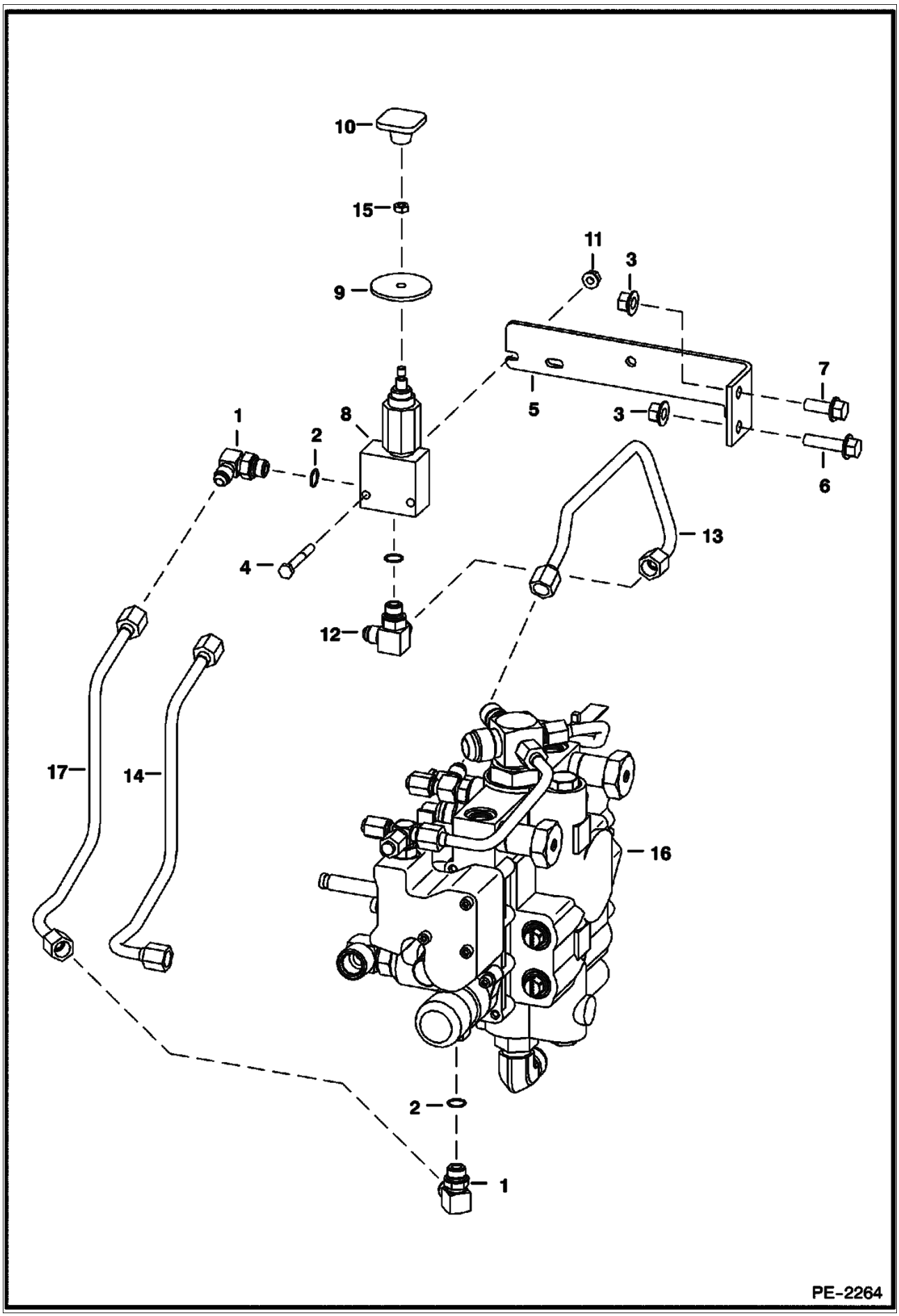

Ref No	Part Number	Description	Remarks	Serial Number	Qty
1	17KB00606B	ELBOW	W/Ref. 2		2
2	79K000006B	O-RING			x
3	83D000006B	NUT			2
4	17C000432B	BOLT			2
5	6717151	MOUNT			1
6	35C000616B	BOLT	Was 35C000624B [B]		1
7	35C000616B	BOLT			1
8	6667844	VALVE ASSY	See Illustration MANUAL LIFT RELEASE VALVE/ PE1547 MANUAL LIFT RELEASE		1
9	6707101	SEAL	neoprene		1
10	6737524	KNOB	red square		1
11	83D000004B	NUT			2
12	6725182	TEE	W/Ref. 2		2
13	7117380	TUBE			1
14		TUBE	NAP - Wdecals - Order Ref. 17 and adjust Ref. 1 to fit - Was 6734206 [D]		1
14	6809511	DECAL	danger		2
15	7D000004B	NUT			1
16		VALVE	NSS - CONTROL		1
17	6734206	TUBE	W/decals		1

AUXILIARY HYDRAULICS
(W/Pressure Relief Coupler Block)

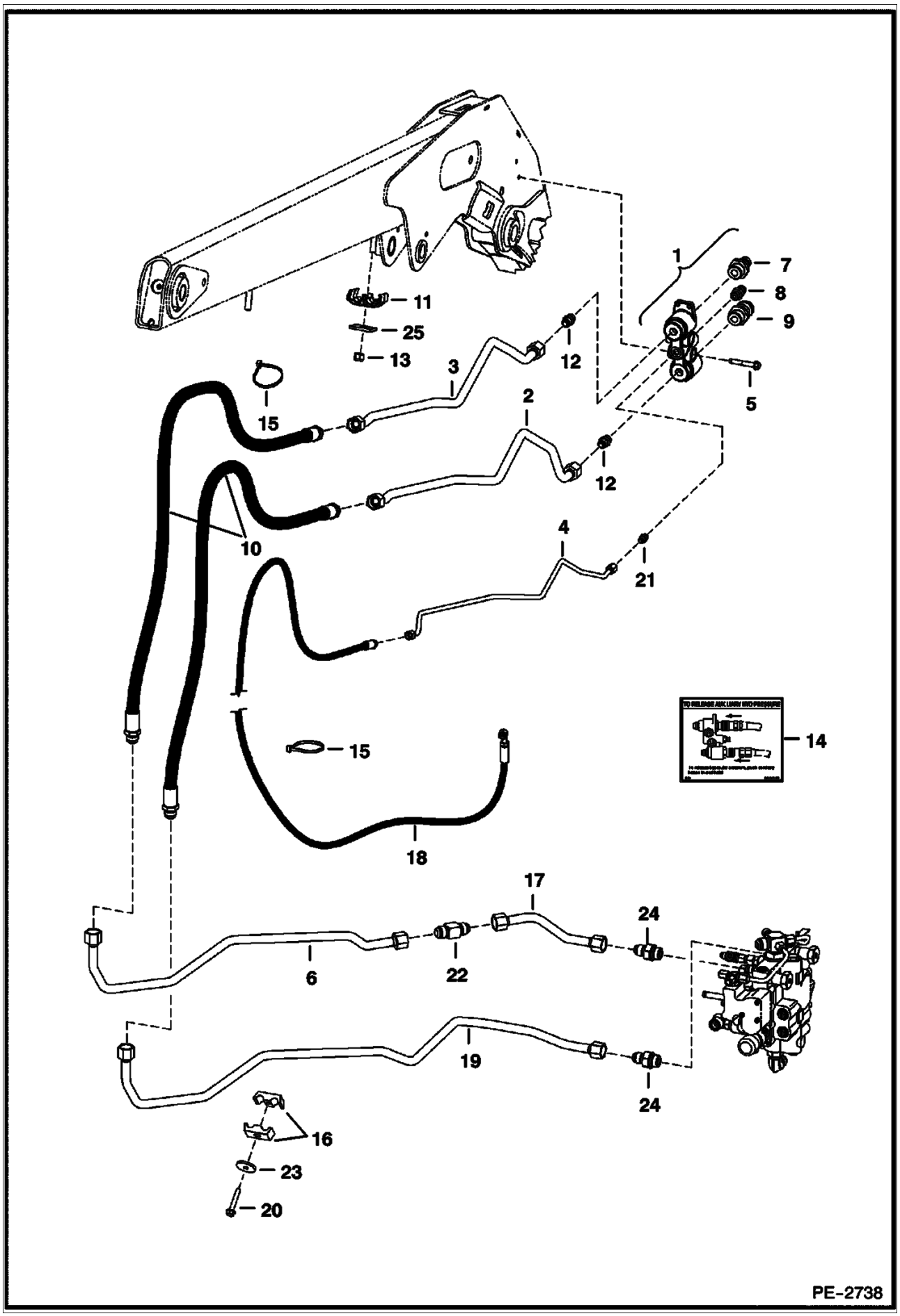

AUXILIARY HYDRAULICS (Cont'd)
(W/Pressure Relief Coupler Block)

Ref No	Part Number	Description	Remarks	Serial Number	Qty
1	6678076	BLOCK	coupler - Ref. 6 - 9 & (2) of Ref. 12		1
2	6731230	TUBE			1
3	6731229	TUBE			1
4	6731231	TUBE			1
5	84G003740B	BOLT			2
6	7115413	TUBE			1
7	6679837	COUPLER	coupler - male - FF		1
7	6679841	SEAL	blue		1
7	6680020	SEAL KIT	O-rings & back-up rings		1
8	6679838	COUPLER	coupler - male		1
8	6679840	SEAL	blue		1
9	6679839	COUPLER	coupler - female - FF		1
9	6680018	KIT	coupler - female - Use W/hydraulic breaker		1
9	6680020	SEAL KIT	O-rings & back-up rings		1
10	6727657	HOSE	W/cover		2
11	6717951	CLAMP			2
12	15KB00606B	ADAPTER			2
12	79K000006B	O-RING			1
13	59D000008B	NUT			2
14	6731757	DECAL			1
15	6624289	STA STRAP			2
16	6592506	CLAMP			2
17	7115412	TUBE			1
18	7114121	HOSE			1
19	7110264	TUBE			1
20	84G003740B	BOLT			1
21	15KB00606B	ADAPTER			1
21	79K000006B	O-RING			1
22	7114294	ADAPTER			1
23	872229	WASHER			1
24	15KB01216B	ADAPTER			2
24	79K000006B	O-RING			1
25	6553709	WASHER			2

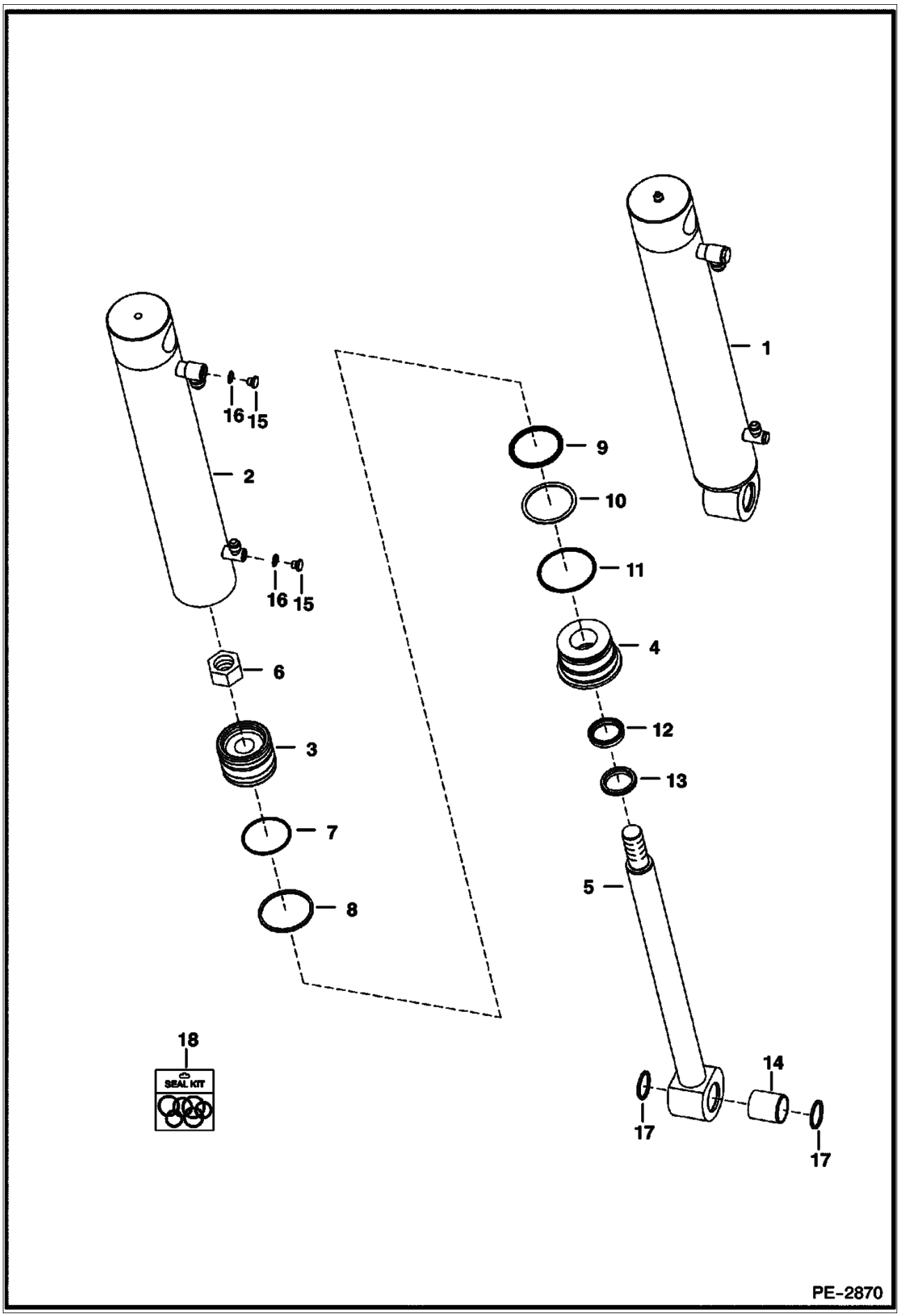
1
2
16
15
16
15
6
3
7
8
18
SEAL KIT
9
10
11
4
12
13
5
14
17
17
PE-2870

Ref No	Part Number	Description	Remarks	Serial Number	Qty
1	7117174	CYLINDER	tilt - Ref. 2-16 - .75" thread		2
2	7117175	CASE	2.75" (69,9 mm) I.D. - W/ base end fitting		1
3	6806315	PISTON			1
4	6806332	HEAD			1
5	6809903	ROD	1.375" (34,9 mm) - W/Ref. 14		1
6	92D000016B	NUT			1
7	54K030210B	O-RING			1
8	6516229	PISTON SEAL			1
9	54K060212B	O-RING			1
10	80K000332B	WASHER	back-up		1
11	54K040224B	O-RING			1
12	6667325	SEAL	rod		1
13	6666543	SEAL	wiper		1
14	6805453	BUSHING	wear		1
15	6812170	PLUG	W/Ref. 16		2
16	75K000003B	O-RING			2
17	225855B	SEAL			2
18	6806330	SEAL KIT	Ref. 6 - 13		1

LIFT CYLINDER

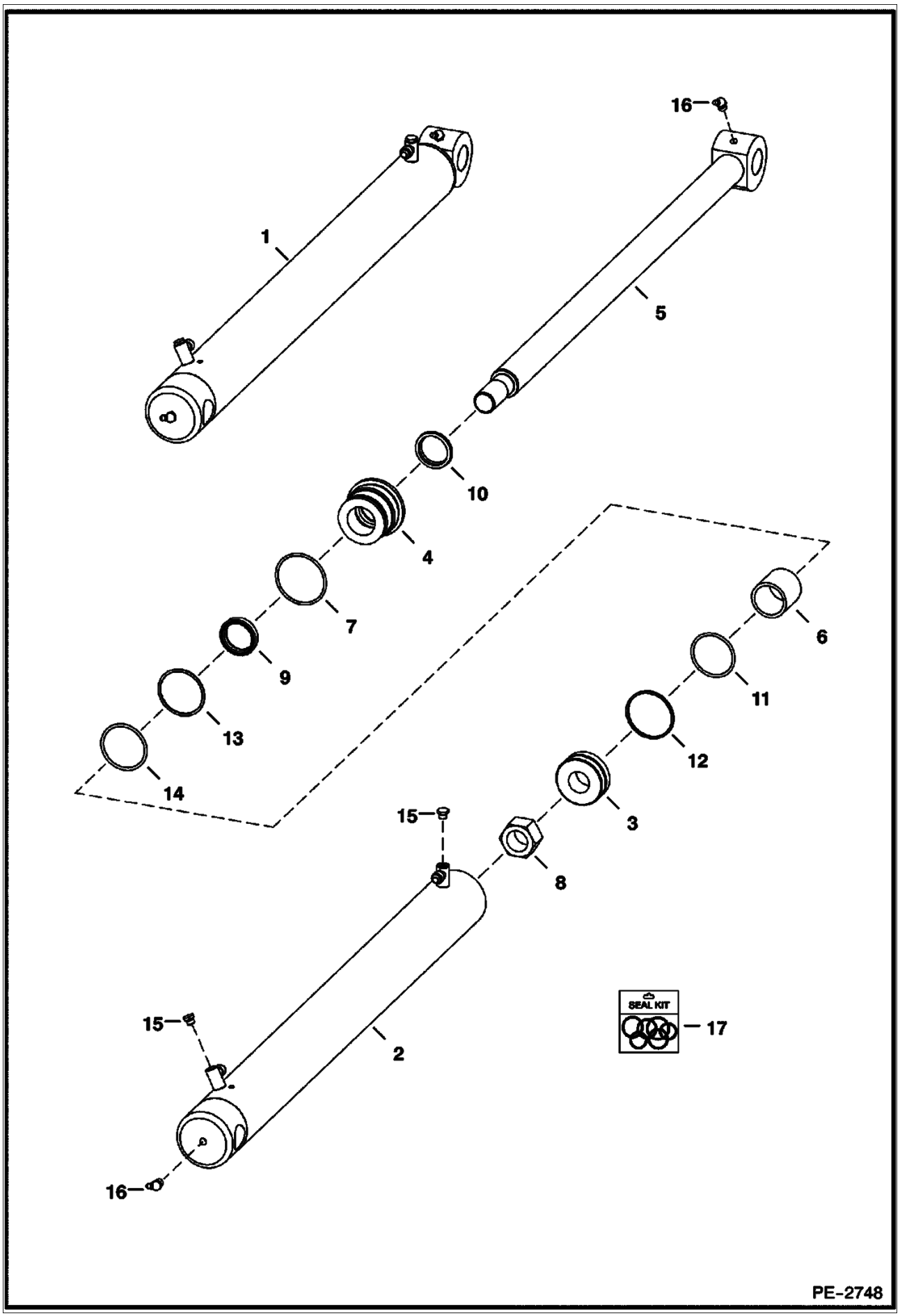

Ref No	Part Number	Description	Remarks	Serial Number	Qty
1	7117667	CYLINDER	Ref. 2 - 16		2
2	7117668	CASE			1
3	6678931	PISTON	W/Ref. 9 & 10 - Also has Non-Replaceable wear sleeves		1
4	6806124	HEAD			1
5	7107896	ROD	32.29" (820,2mm) long		1
6	6809593	SPACER			1
7	82K000230B	SEAL			1
8	6810539	NUT			1
9	1522534B	PISTON SEAL			1
10	25K030202B	O-RING			1
11	54K040208B	O-RING			1
12	73K000228B	RING	back-up		1
13	6667326	SEAL	rod		1
14	6665086	SEAL	wiper		1
15	6812170	PLUG			2
15	95K000003B	O-RING			2
16	11H000015B	GREASE ZERK			2
17	6816537	SEAL KIT	Ref. 7 - 14		1

CONTROL PEDALS

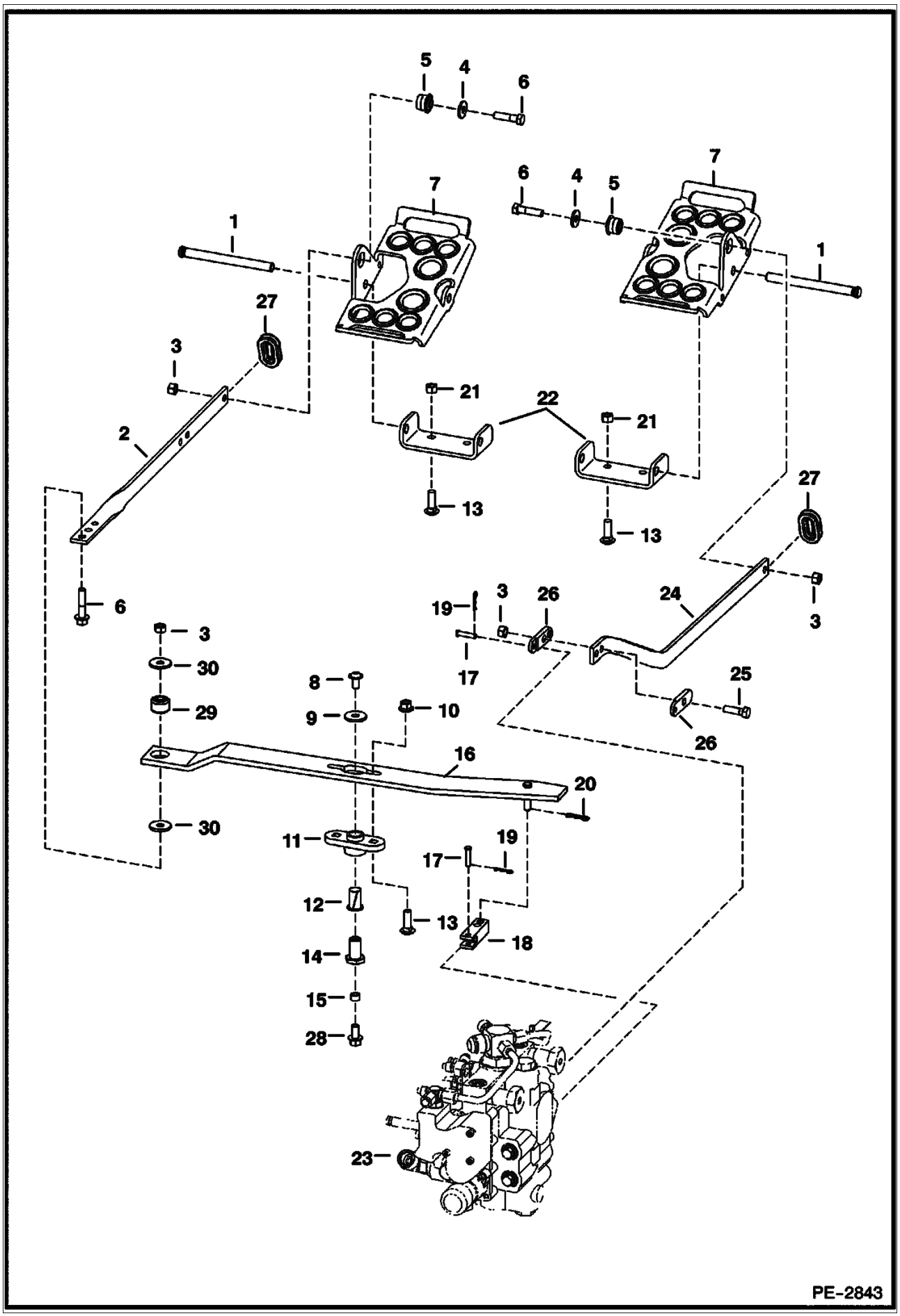

Ref No	Part Number	Description	Remarks	Serial Number	Qty
1	6564657	PIN			2
2	6576302	BAR			1
3	95D000006B	NUT			4
4	6563914	WASHER			2
5	6665701	BUSHING			2
6	17C000624B	BOLT			3
7	7115219	PEDAL			2
8	6665839	BOLT	round head allen socket - .75" long		1
8	17C000616B	BOLT	hex head - 1.0" long		1
9	619021B	WASHER			1
10	83D000006B	NUT	flanged head - prevailing torque		2
10	53D000006B	NUT	flanged head - pre-applied loctite		2
11	6708043	BUSHING	flange		1
12	6512026	BUSHING			1
13	37C000620B	BOLT			6
14	6706104	RETAINING NUT			1
15	6544654	BUSHING	spacer		1
16	7108408	LEVER			1
17		PIN	NAP - Was 6564654 [A]		2
18	6706105	YOKE			1
19	6513495	COTTER PIN			2
20	1306637B	PIN			1
21	57D000006B	NUT			4
22	7115220	MOUNT			2
23		VALVE	See Illustration HYDRAULIC CONTROL VALVE/ PE2734		1
24	6717820	BAR			1
25	17C000620B	BOLT			1
26	6708009	LINK	2.69"(68,3 mm) long		2
27	6577961	GROMMET			2
28	35C000612B	BOLT	flanged hex head		1
28	17C000612B	BOLT	hex head		1
29	6685060	BUSHING	torsion - 1.060"(26,924 mm) O.D.		1
30	6737388	WASHER			2

HYDRAULIC CONTROL VALVE
Manual Hand Controls

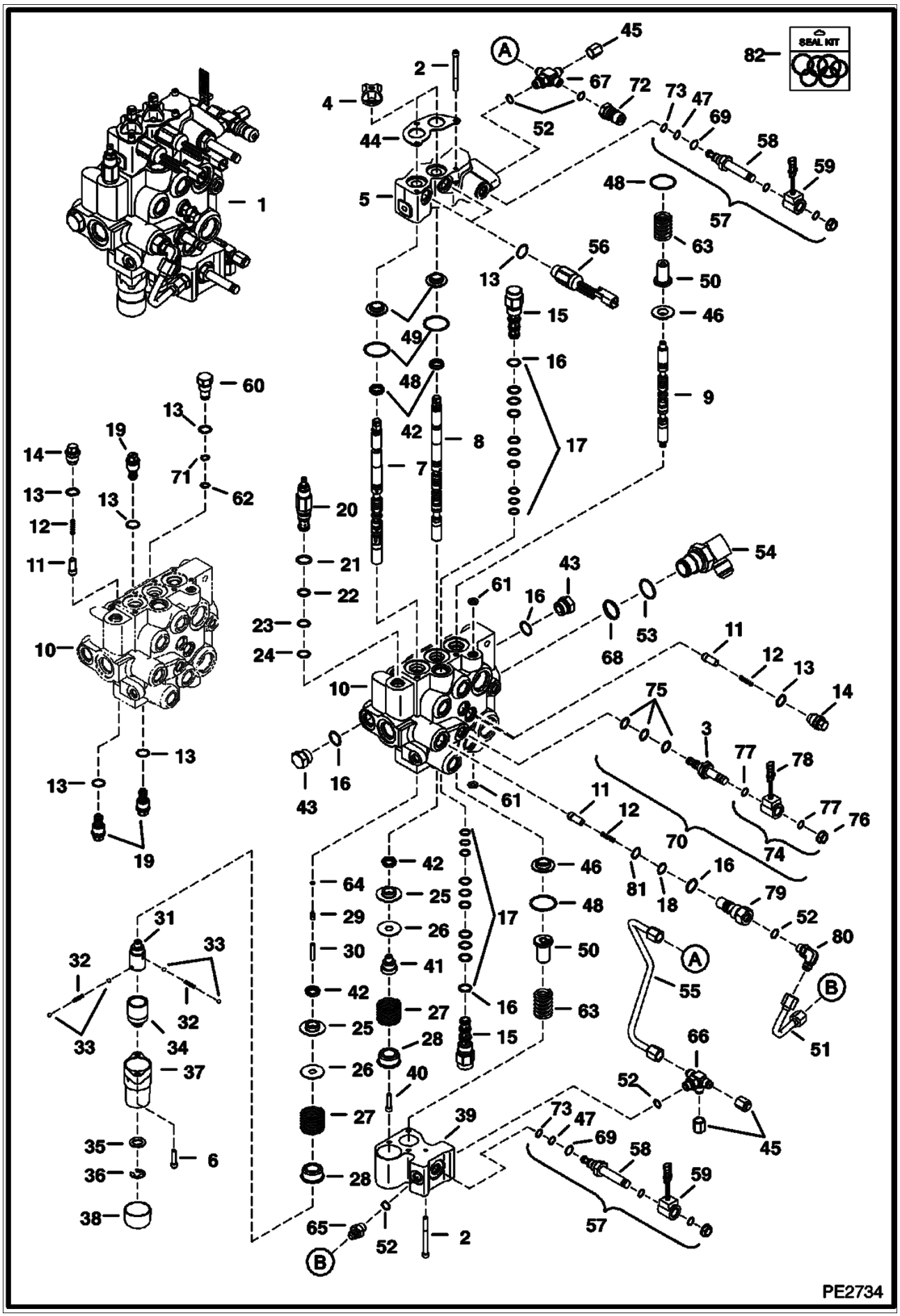

HYDRAULIC CONTROL VALVE (Cont'd)
Manual Hand Controls

Ref No	Part Number	Description	Remarks	Serial Number	Qty
1	6818039	VALVE	W/Fittings		1
2	29G000444B	BOLT			7
3	6667687	STEM			1
4	6587763	BOOT			2
5	6817003	BODY			1
6	29G000416B	SCREW			2
7	7108781	SPOOL	lift		1
8	6815152	SPOOL	tilt		1
9	7112383	AUX SPOOL	auxiliary		1
10		BODY	NSS		1
11	7106712	SEAT	load check		4
12	6592117	SPRING			4
13	79K000008B	O-RING			3
14	6817707	PLUG	load check - W/Ref. 13		3
15	6668765	VALVE	anti-cavity check -W/Ref. 16-18		2
16	79K000010B	O-RING			5
17	6669734	SEAL KIT			2
18	73K000016B	RING			1
19	6684645	VALVE	port relief - W/Ref. 13		3
20	6686360	VALVE	main relief - W/Ref. 21-24 - pressure to be set in field		1
21	58K000017B	O-RING			1
22	6665569	WASHER	back-up		1
23	25K020016B	O-RING			1
24	6665570	RING	glide		1
25	6595663	BUSHING			2
26	6587523	WASHER			2
27	6587580	SPRING			2
28	6592100	COLLAR			2
29	6596807	PLUG	plastic - .460" long		1
30	6586918	SCREW			1
31	6587575	ADAPTER			1
32	6592107	SPRING			2
33	6592105	BALL			4
34	6531270	SLEEVE			1
35	6592098	WASHER			1
36	799119B	SNAP RING			1
37	6589226	BONNET	.625" flange		1
38	6660644	CAP			1
39	6814279	BLOCK			1
40	30G000416B	BOLT			1
41	6592109	ADAPTER			1
42	6683274	SEAL			4
43	24K000007B	PLUG	W/Ref. 16		2
44	6813153	PLATE			1
45	36K000005B	CAP			1
46	6804920	BUSHING			2
47	6685603	SEAL KIT	solenoid valve		2
48	58K000127B	O-RING			4
49	6805102	BUSHING			2
50	6814694	RETAINER	spring		2
51	7116995	TUBELINE			1
52	79K000006B	O-RING			x
53	79K000016B	O-RING			x
54	7101371	ELBOW	W/Ref. 53 & 68		1

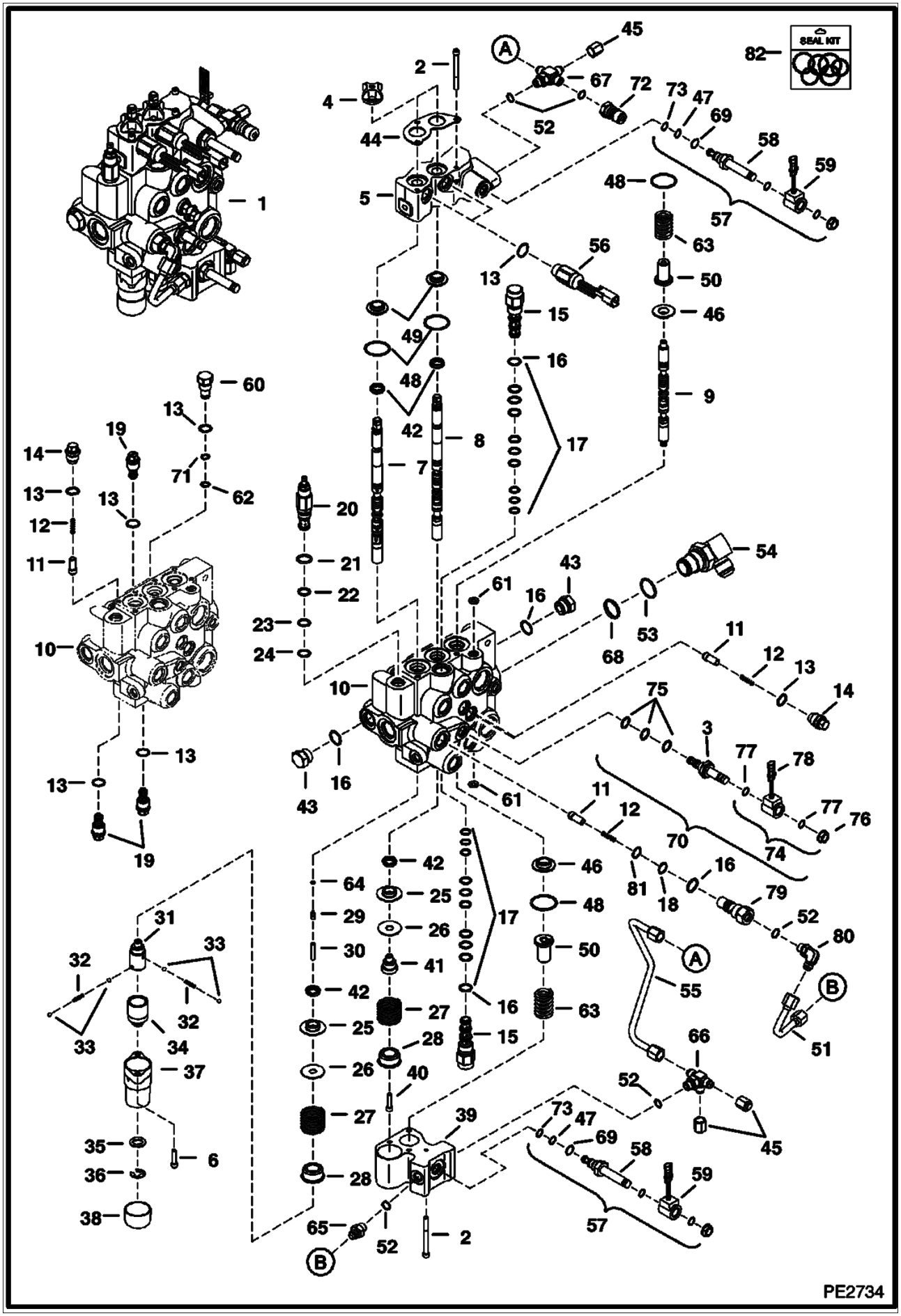
SEAL KIT
PE2734

Ref No	Part Number	Description	Remarks	Serial Number	Qty
55	7110914	TUBELINE			1
56	6677383	SOLENOID	spool lock - 5" (127 mm) wire		2
57	6686868	SOLENOID	W/Ref. 47, 58, 59, 69 & 73		2
58	6688397	STEM	W/Ref. 47, 69, & 73		2
59	6678891	COIL	W/ Nut - 10 Volt		2
60	6816549	PLUG	W/Ref. 13, 62 & 71		1
61	55K000204B	O-RING			2
62	80K000013B	WASHER	back-up		4
63	7121399	SPRING			2
64	54K020002B	O-RING			1
65	6688845	VALVE	check - W/screen & Ref. 52		1
66	7102019	FITTING	W/Ref. 52		1
67	7102066	CROSS	W/Ref. 52		1
68	58K000022B	O-RING			1
69	17KB00606B	ELBOW			2
70		SOLENOID	Ref. 3 & 75-78		1
71	58K000013B	O-RING			1
72	6684125	COUPLER			1
73	58K000016B	O-RING			2
74	6675559	COIL	Assy. - Ref. 76-78		1
75	6669732	SEAL KIT			1
76	6668820	NUT			1
77	54K020028B	O-RING			4
78	6671025	COIL	8 Volt		2
79	6815014	CHECK VALVE			1
80	7123964	SEAL KIT, COMPLETE	Includes seal kits 7123963, 7123965, 6632279, 6685603 (2), 6669732, & 6669734 (2)		x
80	7123963	SEAL KIT	3 spool - Ref. 4, 29, 42, 48, 61 & 62		x
80	6685603	SEAL KIT	solenoid valve - Ref. 47		x
80	6632279	SEAL KIT	main relief - Ref. 21-24		x
80	7123965	SEAL KIT	external fitting - Ref. 13, 16, 18, 52, 53, 62, 68, 71, 73, & 77		x
80	6669732	SEAL KIT	solenoid valve - Ref. 75		x
80	6669734	SEAL KIT	pilot valve - Ref. 17		x

HYDRAULIC CONTROL VALVE
(D-Series)

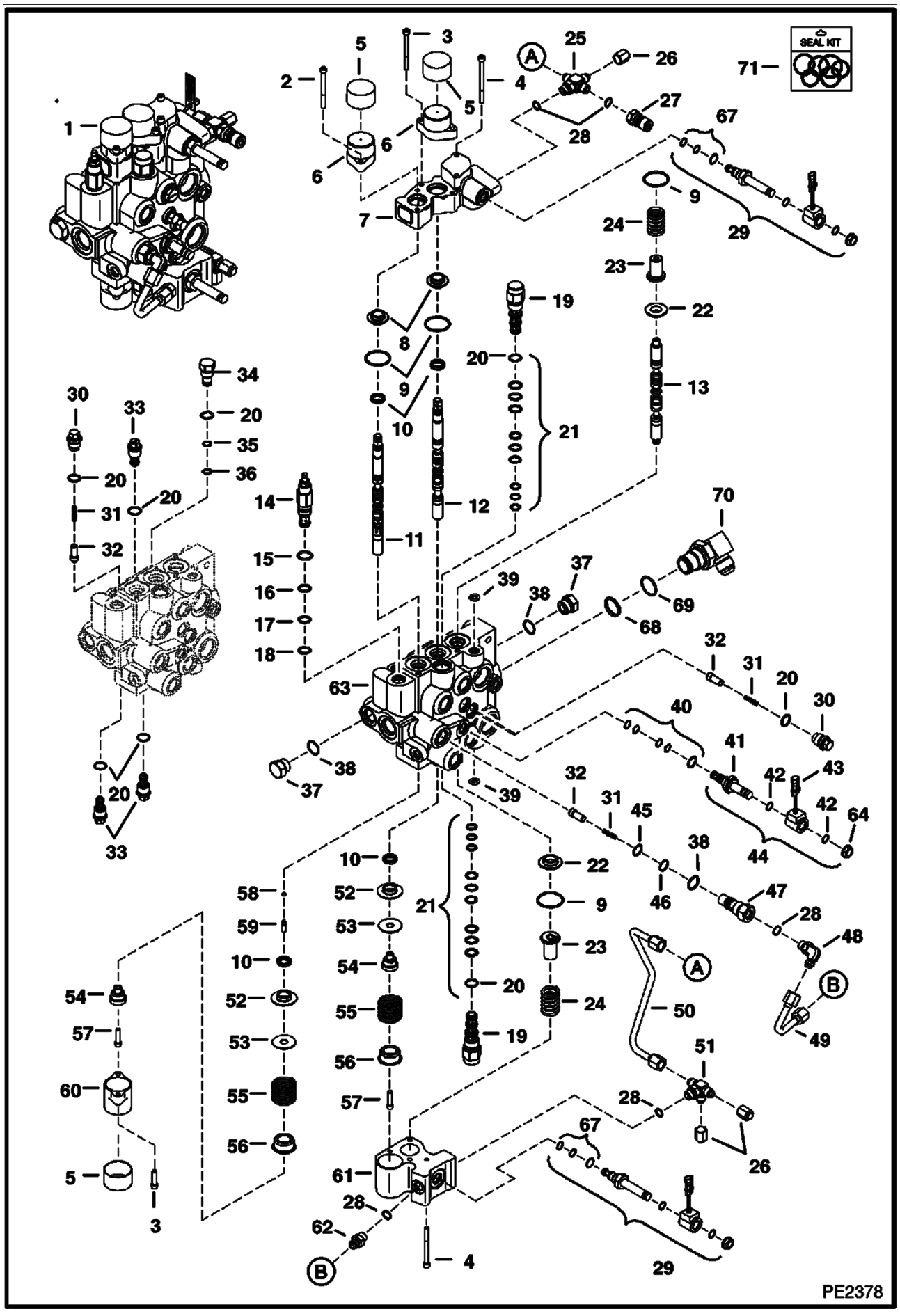

HYDRAULIC CONTROL VALVE (Cont'd)
(D-Series)

Ref No	Part Number	Description	Remarks	Serial Number	Qty
1	7101354	VALVE	W/ fittings		1
2	69G000436B	BOLT			2
3	29G000416B	SCREW			4
4	29G000444B	BOLT			5
5	6662848	CAP			3
6	7101345	BONNET			2
7	6817004	BODY			1
8	6805102	BUSHING			2
9	58K000127B	O-RING			4
10	6683274	SEAL			4
11	7108241	SPOOL	lift		1
12	7108242	SPOOL	tilt		1
13	7112383	AUX SPOOL			1
14	6686360	VALVE	W/Ref. 15-18		1
15	58K000017B	O-RING			x
16	6665569	WASHER	back-up		x
17	25K020016B	O-RING			x
18	6665570	RING	guide		x
19	6668765	VALVE	W/Ref. 38		2
20	79K000008B	O-RING			x
21	6669734	SEAL KIT			1
22	6804920	BUSHING			2
23	6814694	RETAINER			2
24	7121399	SPRING			2
25	7102066	CROSS	W/Ref. 28		1
26	36K000005B	CAP			2
27	6684125	COUPLER	male		1
28	79K000006B	O-RING			x
29	6688397	STEM			2
30	6817707	PLUG	check valve - W/Ref. 20		3
31	6592117	SPRING			4
32	7106712	SEAT			4
33	6684646	VALVE	W/Ref. 20		3
34	6816549	PLUG	W/Ref. 20, 35 & 36		1
35	58K000013B	O-RING			x
36	73K000013B	O-RING			x
37	24K000007B	PLUG	W/Ref. 38		2
38	79K000010B	O-RING			x
39	55K000204B	O-RING			x
40	6669732	SEAL KIT			1
41	6667687	STEM			1
42	54K020028B	O-RING			x
43	6671025	COIL			1
44	6672471	VALVE	W/Ref. 40-43 & 64		1
45	58K000016B	O-RING			x
46	73K000016B	RING	back-up		x
47	6815014	CHECK VALVE	W/Ref. 38, 45 & 46		1
48	6682549	ELBOW	W/Ref. 28		1
49	6815032	TUBELINE			1
50	7110914	TUBELINE			1
51	7102018	TEE	W/Ref. 28		1
52	6595663	BUSHING			2
53	6587523	WASHER			2
54	6592109	ADAPTER			2

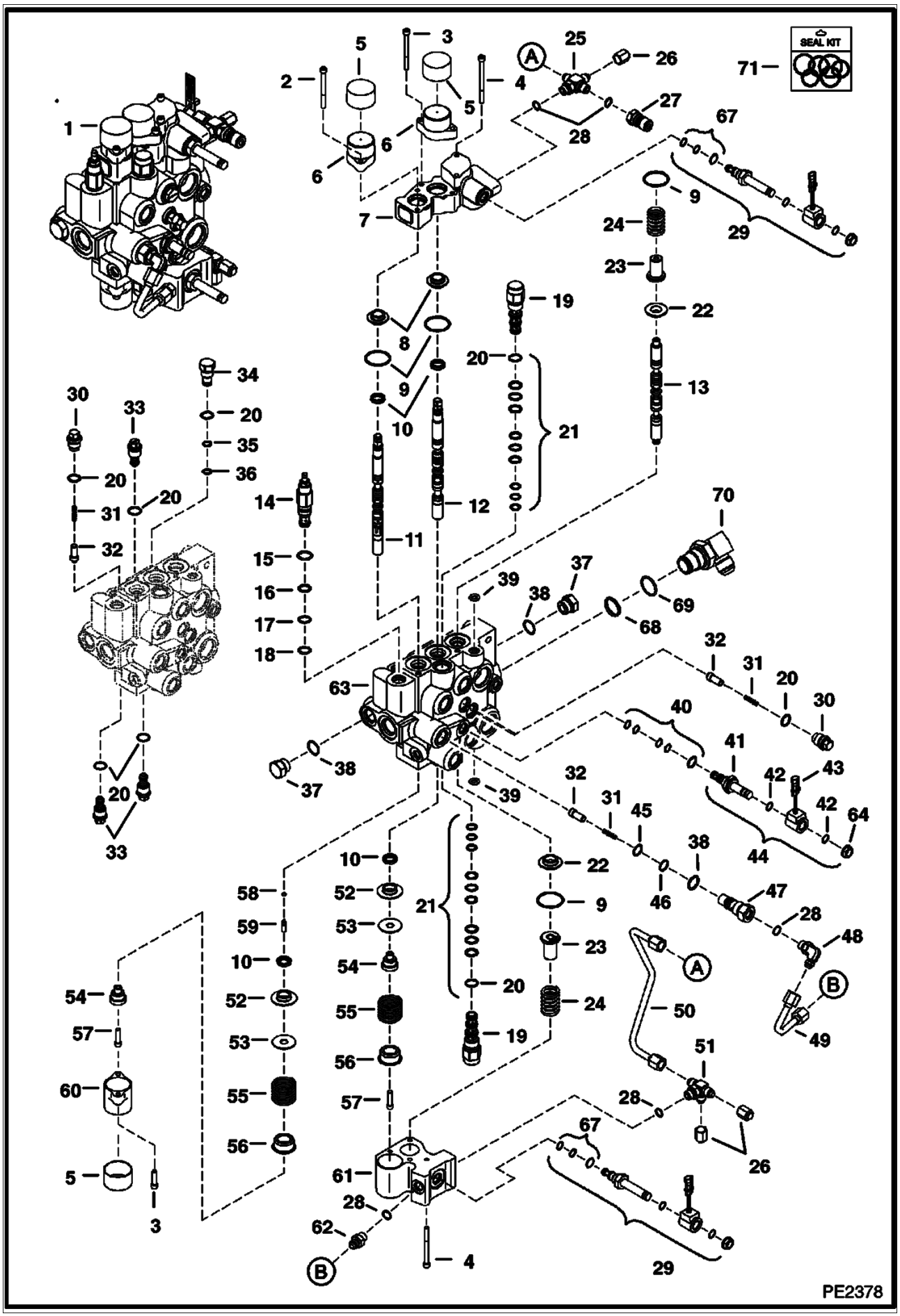
SEAL KIT
PE2378

HYDRAULIC CONTROL VALVE (Cont'd)
(D-Series)

Ref No	Part Number	Description	Remarks	Serial Number	Qty
55	6587580	SPRING			2
56	6592100	COLLAR			2
57	7102652	SCREW			2
58	54K020002B	O-RING			x
59	6801167	PLUG	plastic - .685" long		1
60	6803092	BONNET			1
61	6814279	BLOCK			1
62	6688845	VALVE	W/Ref. 28		1
63		BODY	NSS		1
64	6668820	NUT			1
65	6678891	COIL			2
66	6678893	SOLENOID	W/Ref 29 & 65		2
67	6685603	SEAL KIT	solenoid valve		1
68	58K22	O RING 10			1
69	79K16	O RING 10			1
70	7101371	ELBOW	W/Ref. 68 & 69		1
71	7123964	SEAL KIT, COMPLETE	Includes 7123963, 7123965, 6632279, 6685603 (2), 6669732, & 6669734 (2)		x
71	7123963	SEAL KIT	3 spool - Ref. 9, 10, 39, 58, & 59		x
71	7123965	SEAL KIT	external fitting - Ref. 20, 28, 35, 36, 38, 42, 45, 46, 68, & 69		x
71	6685603	SEAL KIT	solenoid valve -Ref. 67		x
71	6632279	SEAL KIT	main relief - Ref. 15-18		x
71	6669732	SEAL KIT	solenoid valve - Ref. 21		x
71	6669734	SEAL KIT	pilot valve - Ref. 40		x

MANUAL LIFT RELEASE VALVE

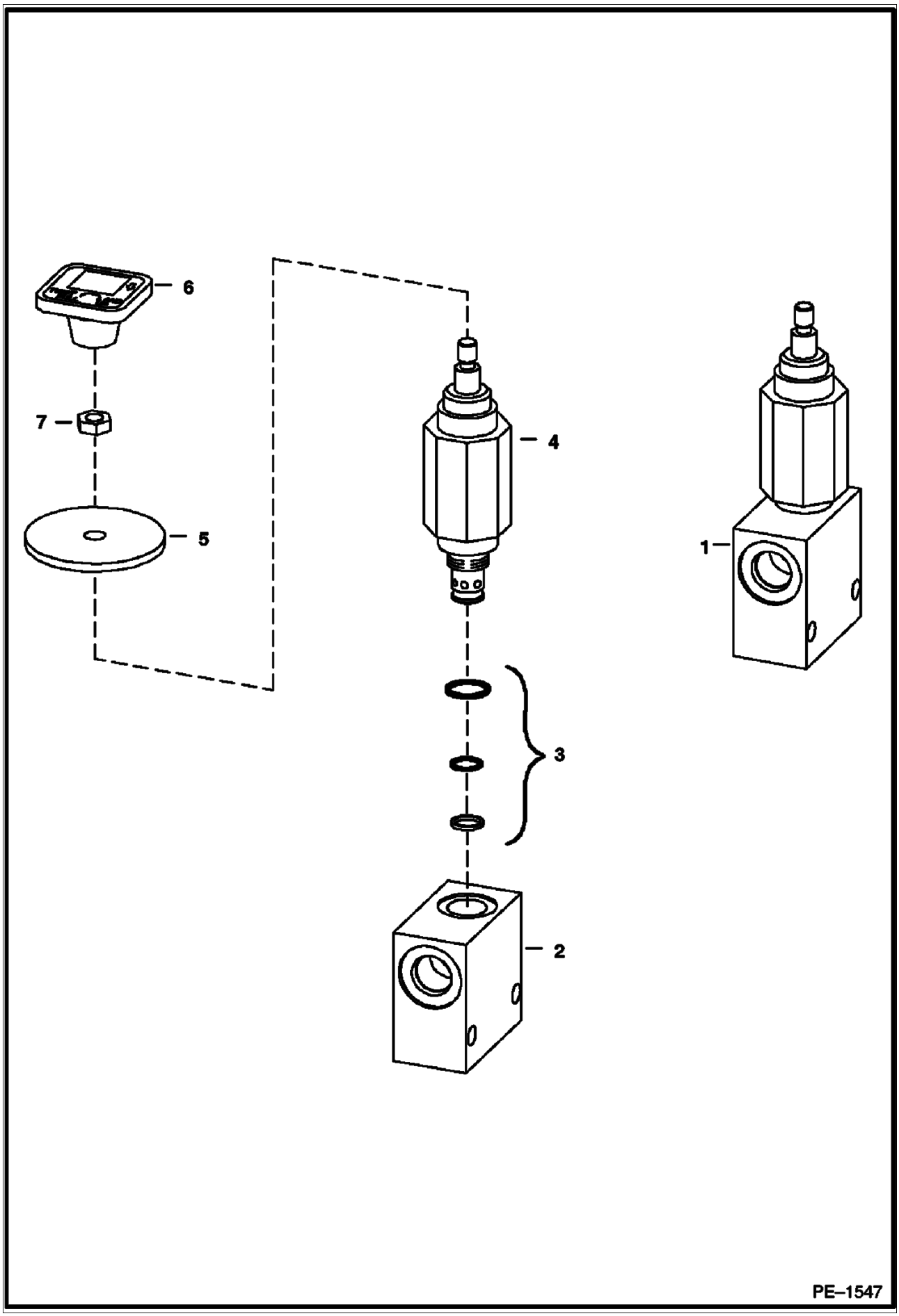

MANUAL LIFT RELEASE VALVE (Cont'd)

Ref No	Part Number	Description	Remarks	Serial Number	Qty
1	6667844	VALVE ASSY	Ref. 2 - 4		1
2		BLOCK	NSS		1
3	6669087	SEAL KIT			1
4	6669085	VALVE			1
5	6707101	SEAL	neoprene		1
6	6737524	KNOB	red square		1
7	7D000004B	NUT			1

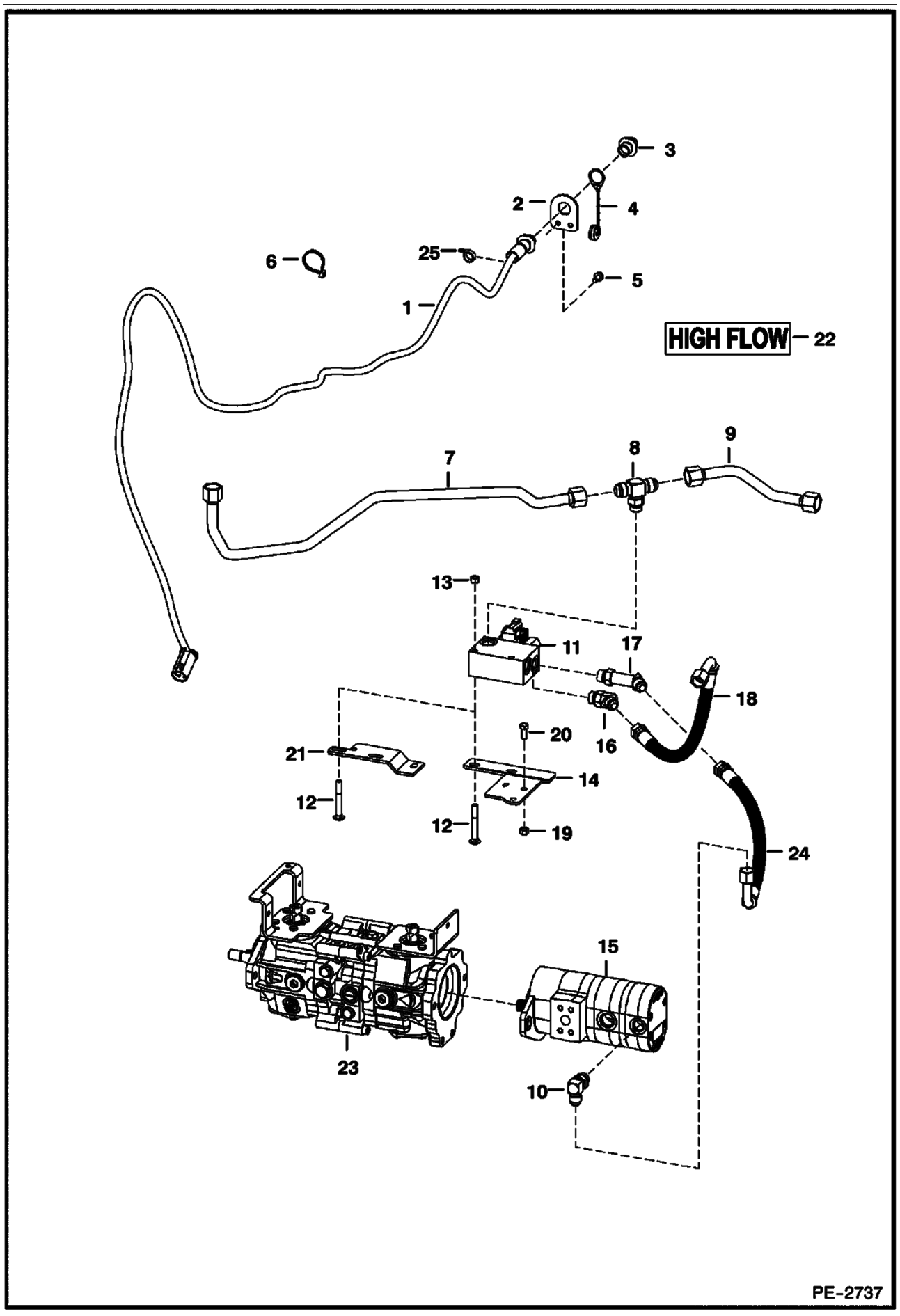
3
2
4
6
25
5
1
HIGH FLOW
22
7
8
9
13
11
17
18
16
20
21
14
12
12
19
24
15
23
10
PE-2737

HIGH FLOW HYDRAULICS (Cont'd)
(Manual & ACS Controls)

Ref No	Part Number	Description	Remarks	Serial Number	Qty
1	6718426	HARNESS	W/Ref 2		1
1	6667533	COVER			1
1	6674799	ADAPTER	heat shrink		1
2	6718750	MOUNT			1
3	6674802	CONNECTOR	7-pin		1
3	6669549	SOCKET	small		4
3	6677136	SOCKET	large - 12 ga.		3
4	6675026	CAP			1
5	84G003112B	BOLT			2
6	6624289	STA STRAP			7
7	6736685	TUBE			1
8	19KB01210B	TEE			1
8	79K000010B	O-RING			1
9	7113360	TUBE			1
10	17KB01010B	ELBOW			1
10	79K000010B	O-RING			1
11	6683819	VALVE	See Illustration HIGH FLOW HYDRAULICS/ B22497		1
12	37C000648B	BOLT			2
13	61D000006B	NUT			2
14	7110927	BRACKET	For models T180 & T190		1
15		GEAR PUMP	See Illustration HIGH FLOW HYDRAULICS/ MS1459 triple		1
16	18KB01010B	ELBOW			1
16	79K000010B	O-RING			1
17	6718080	ELBOW			1
17	79K000010B	O-RING			1
18	7115595	HOSE			1
19	95D000006B	NUT	For models T180 & T190		2
20	17C000614B	BOLT	For models T180 & T190		1
21	6736810	BRACKET	For Models S160K, S175K, S185K & S205K		1
22	7120693	DECAL	high flow		1
23		PUMP	See Illustration HYDROSTATIC PUMP/ MS2184		1
24	6736647	HOSE			1
25	30H000035B	CLAMP			1

HIGH FLOW HYDRAULICS
(Selectable Joystick Controls)

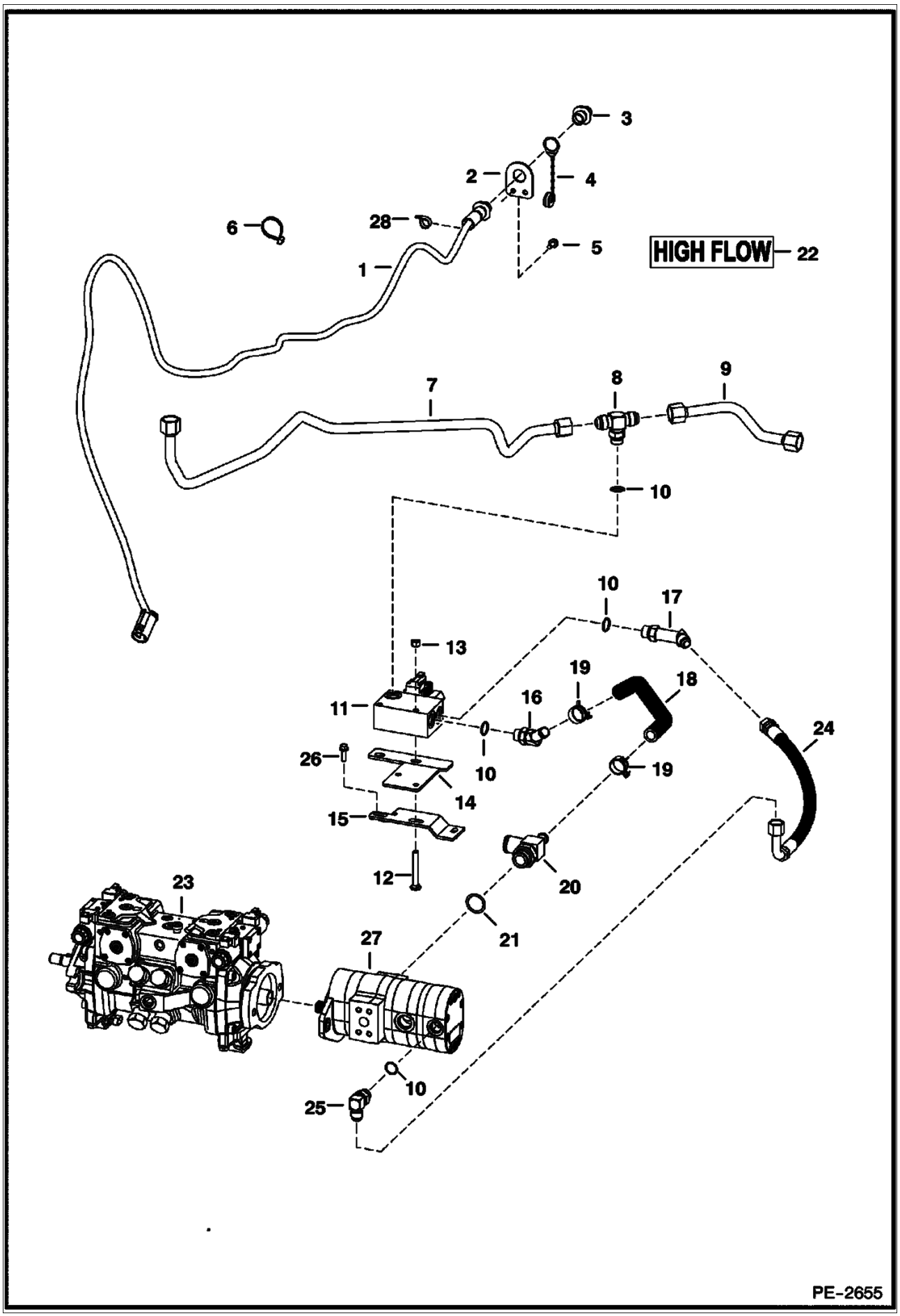

HIGH FLOW HYDRAULICS (Cont'd)
(Selectable Joystick Controls)

Ref No	Part Number	Description	Remarks	Serial Number	Qty
1	6718426	HARNESS	W/Ref. 2		1
1	6667533	COVER			1
1	6674799	ADAPTER	heat shrink		1
2	6718750	MOUNT			1
3	6674802	CONNECTOR	7-pin		1
3	6669549	SOCKET	small		4
3	6677136	SOCKET	large - 12 ga.		3
4	6675026	CAP			1
5	84G003112B	BOLT			2
6	6624289	STA STRAP			7
7	6736685	TUBE			1
8	19KB01210B	TEE	W/Ref. 10		1
9	7113360	TUBE			1
10	79K000010B	O-RING			x
11	6683819	VALVE			1
12	37C000648B	BOLT			2
13	61D000006B	NUT			2
14	6736206	BRACKET	For models T180 & T190		1
15	6736810	BRACKET	For models S150, S160, S175 & S185		1
16	6717885	ELBOW	W/Ref. 10		1
17	6718080	ELBOW	W/Ref. 10		1
18	7107842	HOSE			1
19	5HM00027B	CLAMP	constant tension		2
20	7108400	TEE	W/Ref. 21 - For models S160, S175, S185, T180, & T190		1
21	79K000020B	O-RING			2
22	7120693	DECAL	high flow		1
23		PUMP	See Illustration HYDROSTATIC PUMP/ B25010 R902095064 - W/O double gear pump - For models S160, S175, S185, T180 & T190		1
24	6736647	HOSE			1
25	17KB01010B	ELBOW	W/Ref. 10		1
26	84G003720B	BOLT			1
27	6687865	GEAR PUMP	See Illustration HIGH FLOW HYDRAULICS/ MS1459		1
28	30H000035B	CLAMP			1

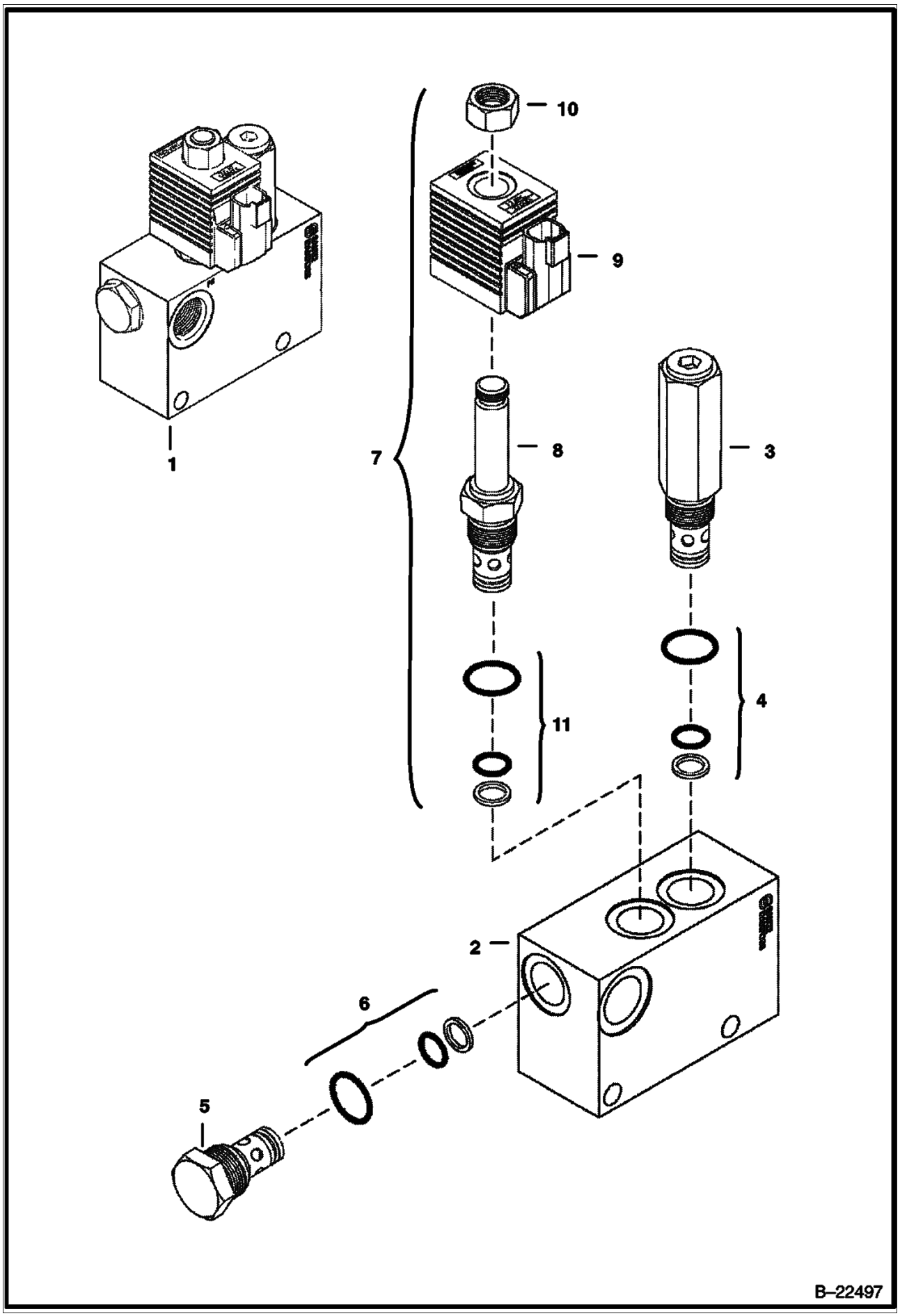
10
9
1
7
8
3
11
4
2
6
5
B–22497

Ref No	Part Number	Description	Remarks	Serial Number	Qty
1	6683819	VALVE			1
2		BLOCK	NSS		1
3	6685185	RELIEF VALVE	W/Ref. 4		1
4	6685184	SEAL KIT			1
5	6685186	CHECK VALVE	W/Ref. 6		2
6	6672515	SEAL KIT			1
7	6685183	SOLENOID	W/Ref. 8 - 11		1
8		STEM	NSS		1
9	6684058	COIL	W/Connector		2
10	6681492	NUT			1
11	6685184	SEAL KIT			1

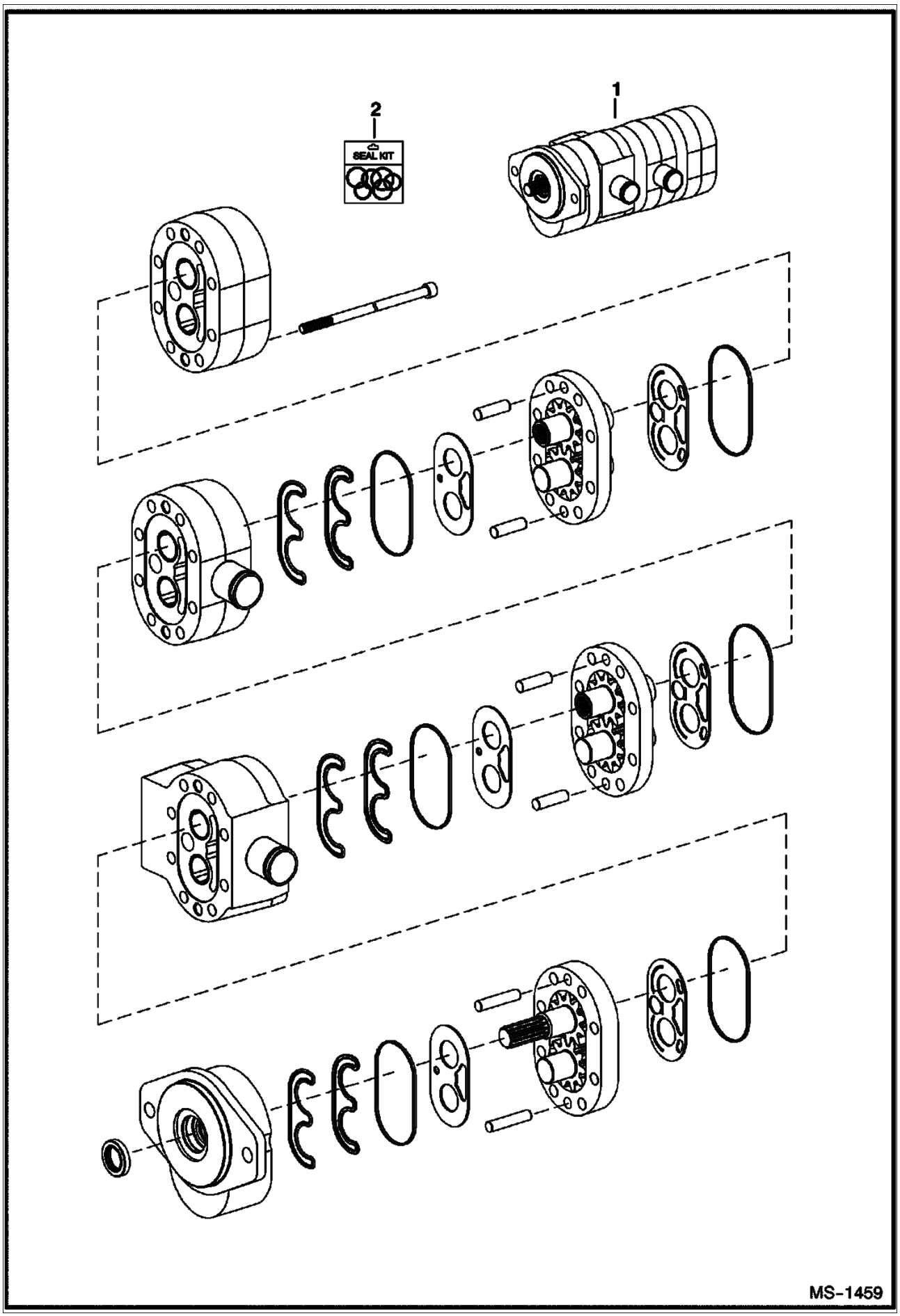
1
2
SEAL KIT
MS-1459

HIGH FLOW HYDRAULICS (Cont'd)
Triple Gear Pump

Ref No	Part Number	Description	Remarks	Serial Number	Qty
1	6687865	GEAR PUMP	model 163D72007		1
2	6688322	SEAL KIT			1

HYDROSTATIC CIRCUITRY
(Manual Hand Controls)

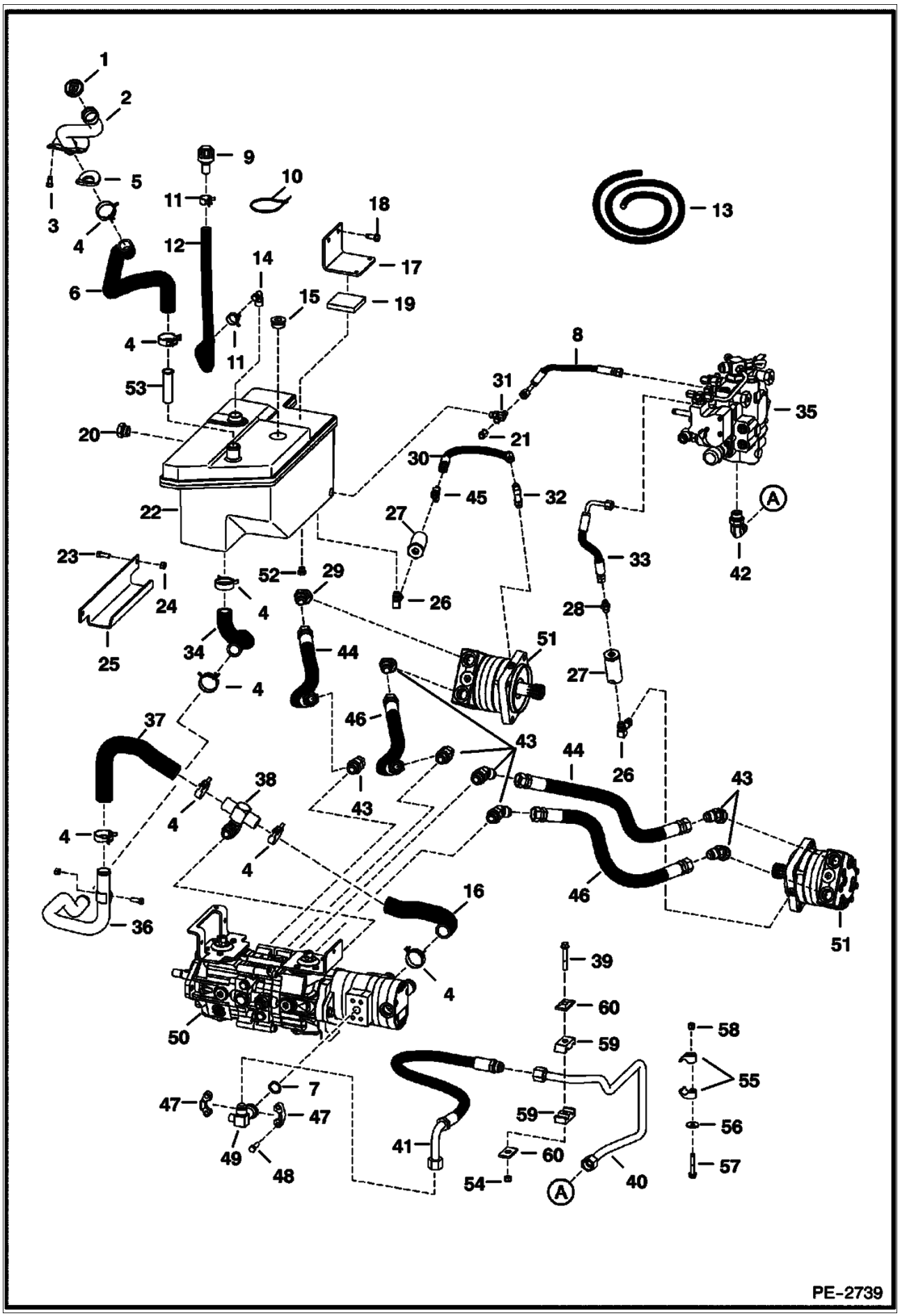

HYDROSTATIC CIRCUITRY (Cont'd)
(Manual Hand Controls)

Ref No	Part Number	Description	Remarks	Serial Number	Qty
1	6717827	CAP			1
2	6717830	TUBE			1
3	84G003710B	BOLT			2
4	5HM00042B	CLAMP			6
5	6718772	GASKET			1
6	6718020	HOSE			1
7	55K000214B	O-RING			1
8	7108406	HOSE			1
9	6684923	BREATHER	breather		1
10	6610510	TIE			2
11	5HM00024B	CLAMP			2
12		HOSE	NAP - 21.5" (546,1 mm) long - Order Ref. 13		1
13	6578172	HOSE	bulk - Sold Per Foot		x
14	6727637	ELBOW	barbed		1
15	47K000010B	PLUG			1
15	79K000016B	O-RING			1
16	7109343	HOSE			1
17	6726254	BRACKET			1
18	84G003716B	BOLT			2
19	6726255	PAD	bumper		1
20	6665915	GAUGE			1
20	79K000012B	O-RING			1
20	6734563	WASHER KIT			1
20	6734561	WASHER			1
20	25K030118B	O-RING			1
21	36K000005B	CAP			1
22	6728673	TANK			1
23	17C000616B	BOLT			2
24	61D000006B	NUT			2
25	6726162	BRACKET			1
26	6715190	ELBOW			2
26	79K000006B	O-RING			x
27	6661022	FILTER			2
28	15KB00606B	ADAPTER			1
28	79K000006B	O-RING			x
29	6734623	ELBOW			1
29	79K000012B	O-RING			x
30	7106205	HOSE			1
31	17KB00606B	ELBOW			1
31	79K000006B	O-RING			x
32	6812815	FITTING			1
33	6542521	HOSE			1
34	6733652	HOSE			1
35		VALVE			1
36	6735922	TUBE			1
37	7109344	HOSE			1
38	7107785	TEE			1
38	79K000016B	O-RING			x
39	17C000644B	BOLT			1
40	7109922	TUBE			1
41	6733197	HOSE			1
42	7101797	ELBOW			1
42	79K000012B	O-RING			x
43	6737453	ELBOW			7

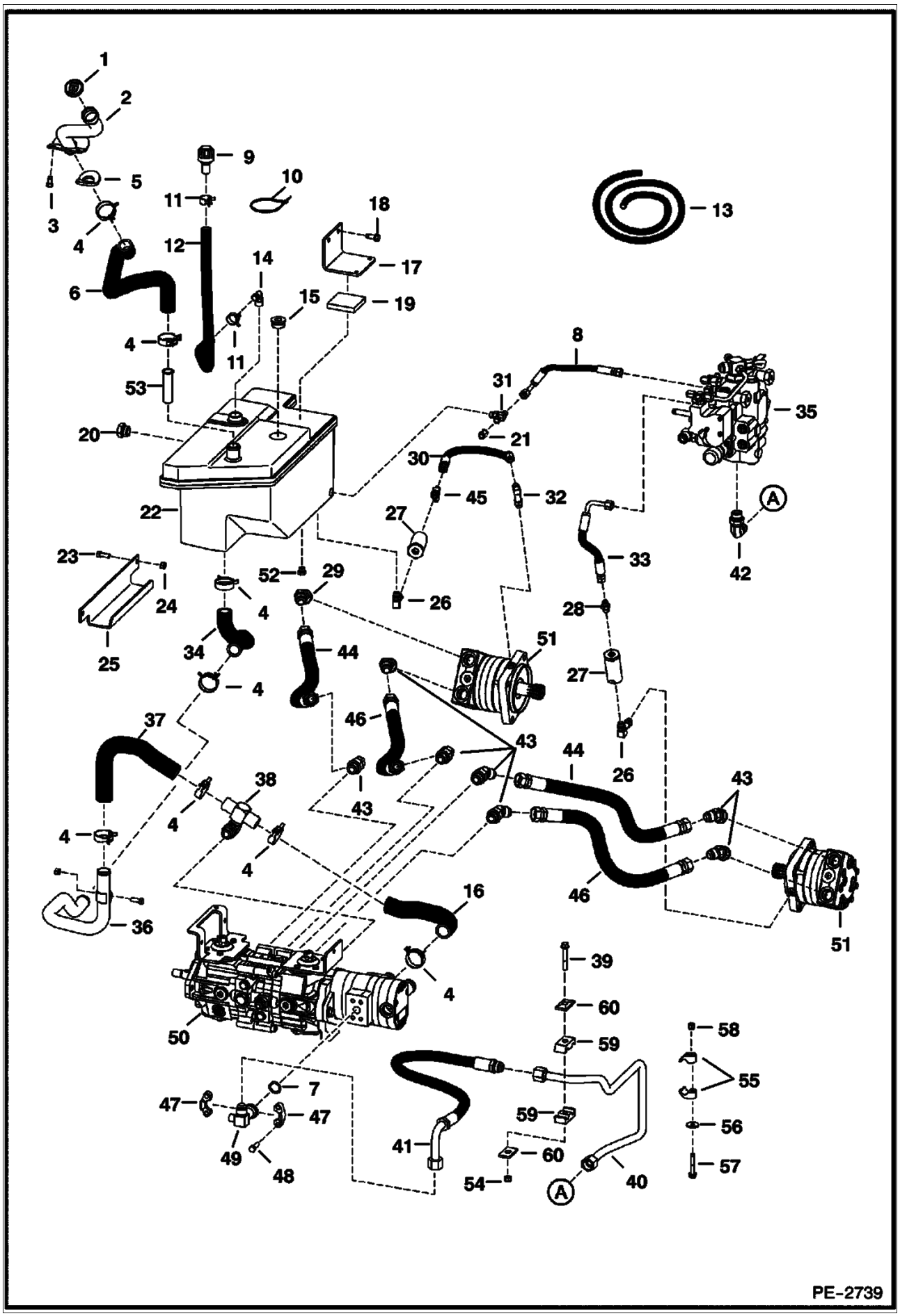
1
2
3
4
5
6
9
10
11
12
13
14
15
17
18
19
20
22
23
24
25
26
27
28
29
30
31
32
33
34
35
36
37
38
39
40
41
42
43
44
45
46
47
48
49
50
51
52
53
54
55
56
57
58
59
60
A
PE-2739

HYDROSTATIC CIRCUITRY (Cont'd)
(Manual Hand Controls)

Ref No	Part Number	Description	Remarks	Serial Number	Qty
43	79K000012B	O-RING			9
44	6688938	HOSE	mega seal		2
45	21KB00606B	TEE			1
45	79K000006B	O-RING			x
46	6688937	HOSE	mega seal		2
47	19J000012B	CLAMP			2
48	17C000620B	BOLT			4
49	7113262	ELBOW	split flange		1
50		PUMP			1
51		MOTOR			1
52	24K000005B	PLUG			1
52	79K000006B	O-RING			x
52	17KB00606B	ELBOW	rear aux.		1
52	79K000006B	O-RING			x
52	21KB00606B	TEE	high flow hydraulics		1
52	79K000006B	O-RING			x
53	6732215	FILTER			1
54	59D000006B	NUT			1
55	7100462	CLAMP			2
56	619021B	WASHER			1
57	84G003732B	BOLT			1
58	83D000006B	NUT			1
59	6592506	CLAMP			2
60	6592507	PLATE			2

HYDROSTATIC CIRCUITRY
(Selectable Joystick Controls)

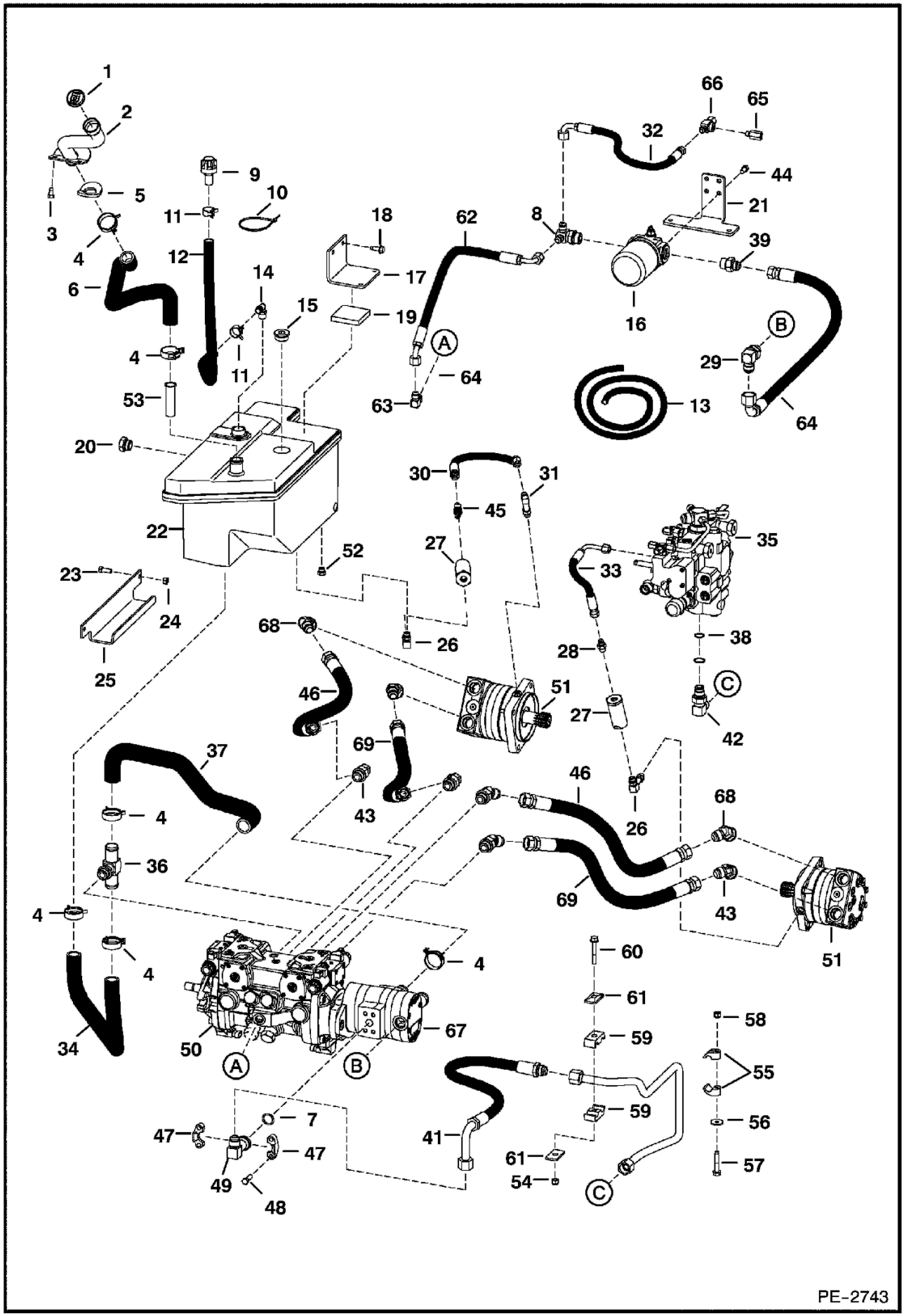

PE-2743

HYDROSTATIC CIRCUITRY (Cont'd)
(Selectable Joystick Controls)

Ref No	Part Number	Description	Remarks	Serial Number	Qty
1	6717827	CAP			1
2	6717830	TUBE			1
3	84G003710B	BOLT			2
4	5HM00042B	CLAMP			6
5	6718772	GASKET			1
6	6718020	HOSE			1
7	55K000214B	O-RING			1
8	7108846	TEE			1
8	79K000012B	O-RING			x
9	6684923	BREATHER	breather		1
10	6610510	TIE			1
11	5HM00024B	CLAMP			2
12		HOSE	NAP - 21.5" (546,1 mm) long - Order Ref. 13		1
13	6578172	HOSE	bulk - Sold Per Foot		x
14	6727637	ELBOW	barbed		1
15	47K000010B	PLUG			1
15	79K000016B	O-RING			1
16	6686922	FILTER ASMBLY 12			1
16	6686926	ELEMENT FILTER			1
16	6687834	SENSOR			1
17	6726254	BRACKET			1
18	84G003716B	BOLT			2
19	6726255	PAD	bumper		1
20	6665915	GAUGE			1
20	79K000012B	O-RING			x
20	6734563	WASHER KIT			1
20	6734561	WASHER			1
20	25K030118B	O-RING			1
21	7108398	BRACKET, FILTER			1
22	6728673	TANK			1
23	17C000616B	BOLT			2
24	61D000006B	NUT			2
25	6726162	BRACKET			1
26	6715190	ELBOW			2
26	79K000006B	O-RING			x
27	6661022	FILTER			2
28	15KB00606B	ADAPTER			1
28	79K000006B	O-RING			x
29	17KB001212B	ELBOW			1
29	79K000012B	O-RING			x
30	7106205	HOSE			1
31	6812815	FITTING			1
31	79K000006B	O-RING			x
32	7108845	HOSE			1
33	6542521	HOSE			1
34	7103861	HOSE			1
35		VALVE			1
36	7103648	TEE			1
36	79K000012B	O-RING			x
37	7107562	HOSE			1
38	58K000022B	O-RING			1
39	15KB01012B	ADAPTER			1
39	79K000012B	O-RING			x
40	6736773	TUBE			1

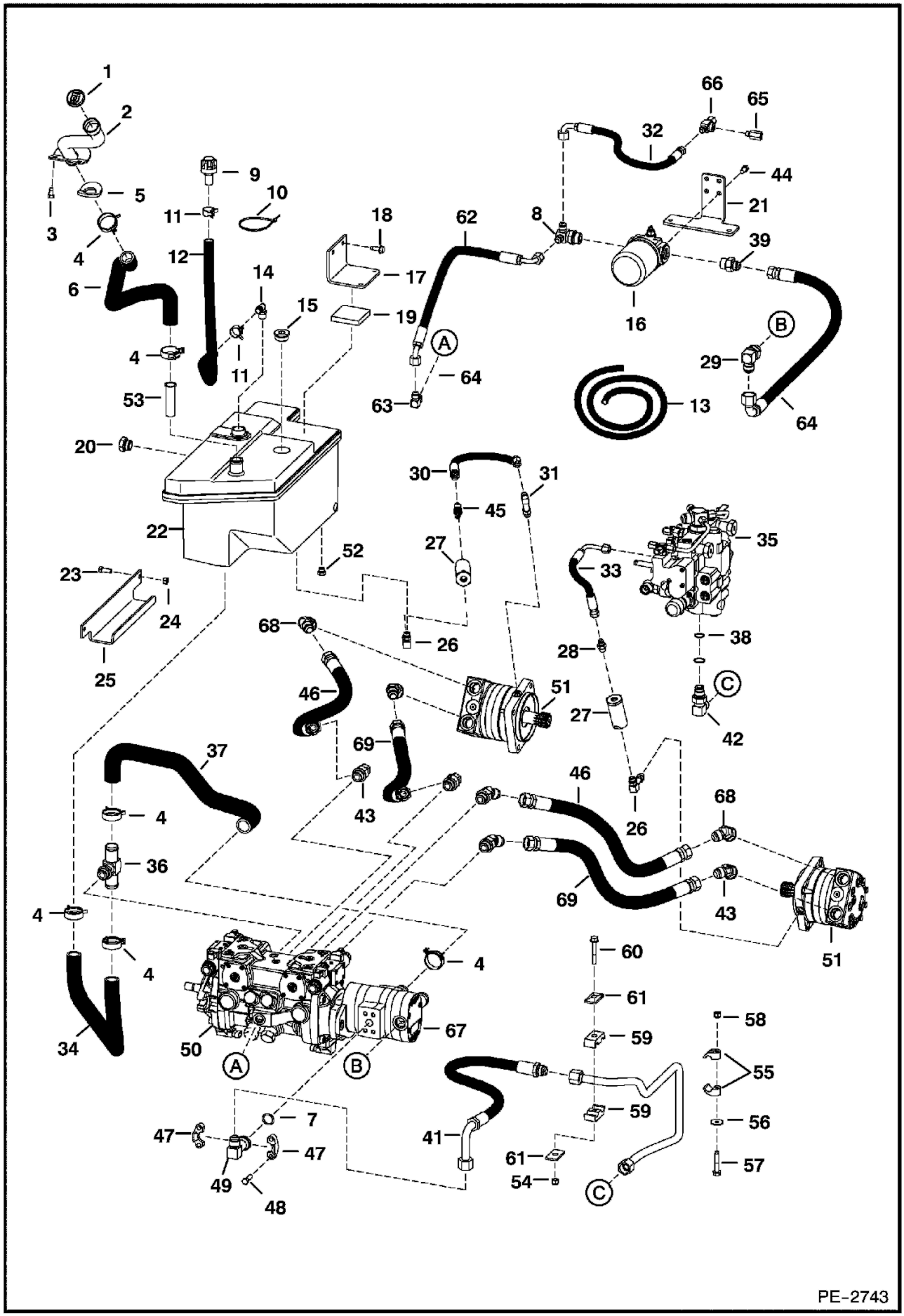
PE-2743

HYDROSTATIC CIRCUITRY (Cont'd)
(Selectable Joystick Controls)

Ref No	Part Number	Description	Remarks	Serial Number	Qty
41	6733197	HOSE			1
42	7101371	ELBOW	W/Ref. 38		1
42	79K000012B	O-RING			x
43	6737453	ELBOW			6
43	79K000012B	O-RING			x
44	17C000612B	BOLT			4
45	21KB00606B	TEE			1
45	79K000006B	O-RING			x
46	6688938	HOSE	mega seal		2
47	19J000012B	CLAMP			2
48	17C000620B	BOLT			4
49	7113262	ELBOW	split flange [A]		1
50		PUMP			1
51		MOTOR			1
52	24K000005B	PLUG			1
52	79K000006B	O-RING			x
52	17KB00606B	ELBOW	rear aux.		1
52	79K000006B	O-RING			x
52	21KB00606B	TEE	high flow hydraulics		1
52	79K000006B	O-RING			x
53	6732215	FILTER			1
54	59D000006B	NUT			1
55	7100462	CLAMP			2
56	619021B	WASHER			2
57	84G003732B	BOLT			1
58	83D000006B	NUT			1
59	6592506	CLAMP			2
60	84G003720B	BOLT			1
61	6592507	PLATE			1
62	7108844	HOSE			1
63	17KB00808B	ELBOW			2
63	79K000008B	O-RING			x
64	7108843	HOSE			1
65	6718948	SNUBBER			1
66	6718660	TEE			1
67		PUMP	gear		1
68	6734623	ELBOW			2
68	79K000012B	O-RING			x
69	6688937	HOSE	mega seal		2

HYDROSTATIC CIRCUITRY

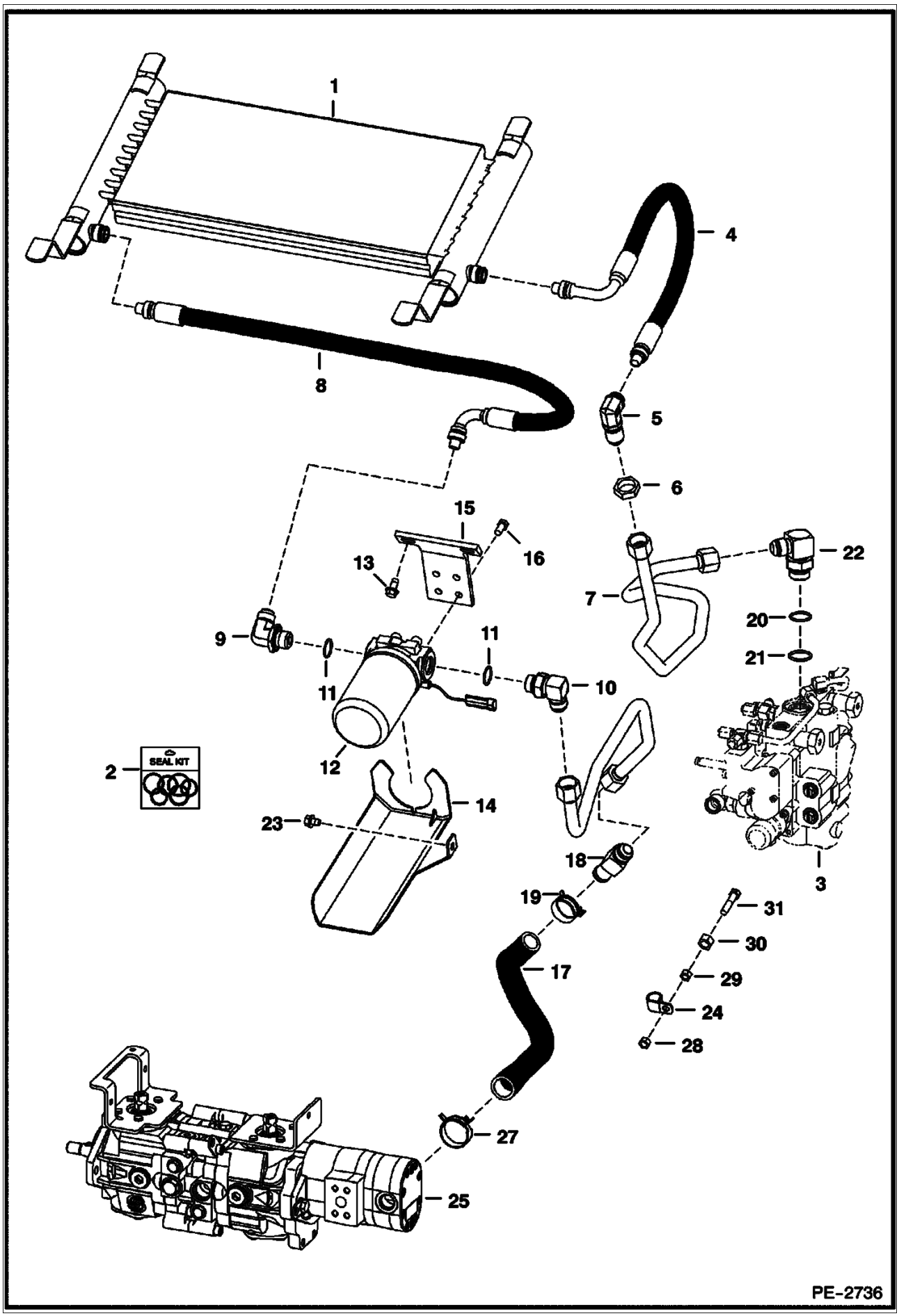

Ref No	Part Number	Description	Remarks	Serial Number	Qty
1	7109582	OIL COOLER			1
2	6674798	REPAIR KIT	For Ref. 1, 5 or 9 - includes internal retaining ring (1), O-ring (1) & back-up ring (1)		2
3		VALVE			1
4	6673828	HOSE			1
5	6670831	ELBOW			1
6	86F000008B	NUT			1
7	7109923	TUBE			1
8	6681944	HOSE			1
9	6681945	ELBOW			1
10	17KB01212B	ELBOW	W/Ref. 11		1
11	79K000012B	O-RING			x
12		FILTER ASSY			1
12	6661248	ELEMENT			1
13	84G003712B	BOLT			2
14	7110695	MOUNT			1
15	6729082	MOUNT			1
16	17C000612B	BOLT			4
17	7106024	HOSE			1
18	7106004	TEE			1
19	5HM00035B	CLAMP			1
20	79K000016B	O-RING			x
21	58K000022B	O-RING			1
22	7101371	ELBOW	W/Ref. 20 & 21		1
23	84G003708B	BOLT			1
24	30H000065B	CLIP			1
25		PUMP			1
26	7106056	TUBE			1
27	5HM00042B	TEE			1
28	95D000006B	NUT			1
29	61D000006B	NUT			1
30	61D000008B	NUT	used as a spacer		1
31	17C000628B	BOLT			1

HYDROSTATIC CIRCUITRY
(Cooling Fan)

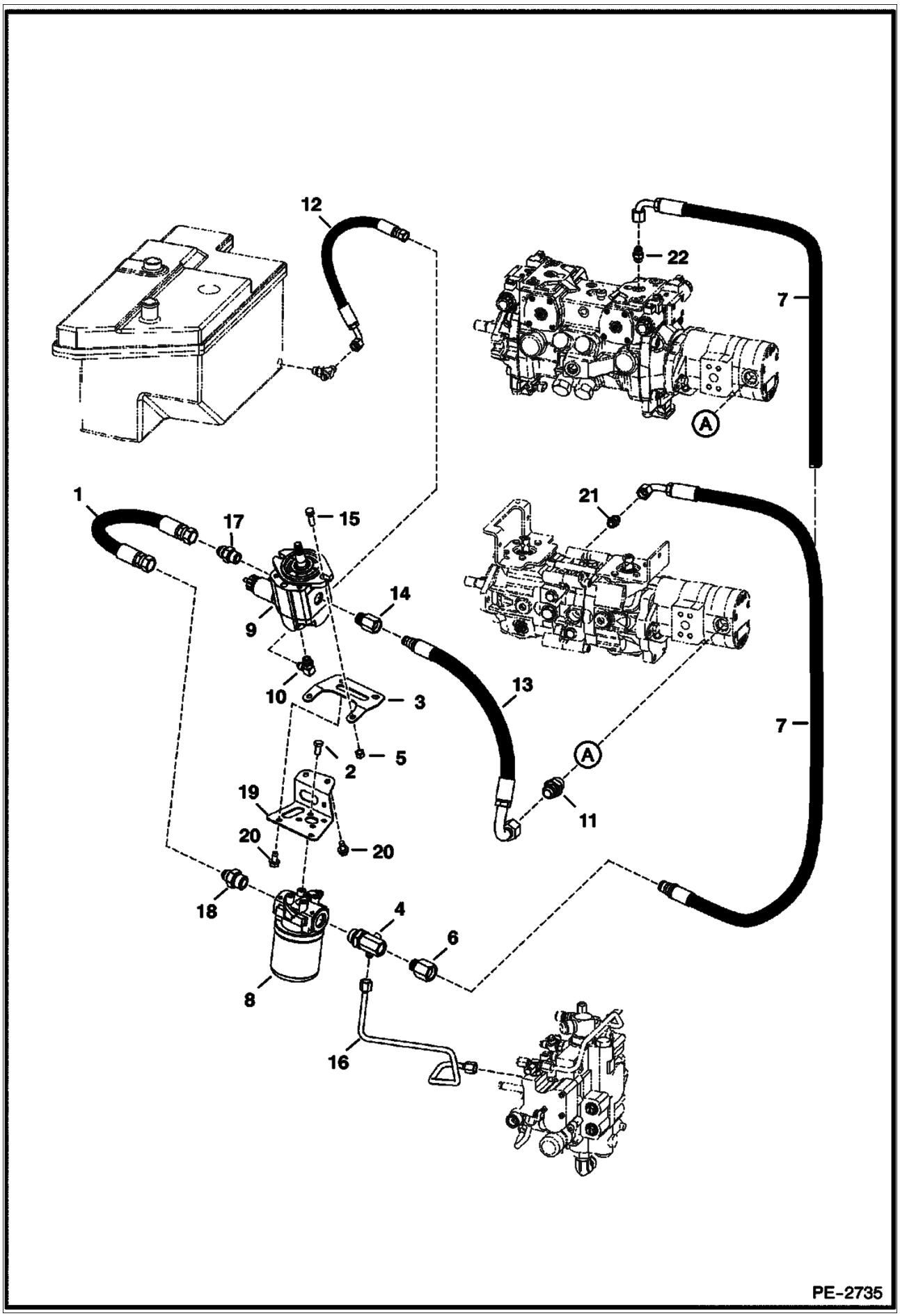

HYDROSTATIC CIRCUITRY (Cont'd)
(Cooling Fan)

Ref No	Part Number	Description	Remarks	Serial Number	Qty
1	7110809	HOSE			1
2	17C000612B	BOLT			4
3	7110243	BRACKET			1
4	7108685	TEE			1
4	79K000012B	O-RING			1
5	95D000006B	NUT			2
6	78HA01210B	ADAPTER			1
6	79K000010B	O-RING			x
7	7114250	HOSE			1
8	6687266	FILTER ASSY			1
8	6686926	ELEMENT FILTER			1
8	6660260	SWITCH			1
9	6687142	MOTOR	See Illustration MOTOR/ PE2811 See Illustration COOLING SYSTEM/ PE2677 W/proportional valve		1
9	6689058	MOTOR	W/O proportional valve		1
9	6689059	VALVE ASSY	proportional		1
9	6689060	COIL ASSY	W/nut & O-ring		1
9	6683206	SEAL KIT	for proportional valve		1
10	17KB00606B	ELBOW			1
10	79K000006B	O-RING			1
11	15KB01212B	ADAPTER			1
11	79K000012B	O-RING			1
12	7107179	HOSE			1
13	7114251	HOSE			1
14	78HA01010B	ADAPTER			1
14	79K000010B	O-RING			1
15	17C000620B	BOLT			2
16	7108980	TUBE			1
17	15KB01010B	ADAPTER			1
17	79K000010B	O-RING			1
18	15KB01012B	ADAPTER			1
18	79K000012B	O-RING			1
19	7110244	TUBE			1
20	84G003712B	BOLT			4
21	15KB612	ADAPTER	Manual Hand Controls		1
22	15KB606	ADAPTER	See Illustration HYDROSTATIC CIRCUITRY/ PE2743 Selectable Joystick Control		1

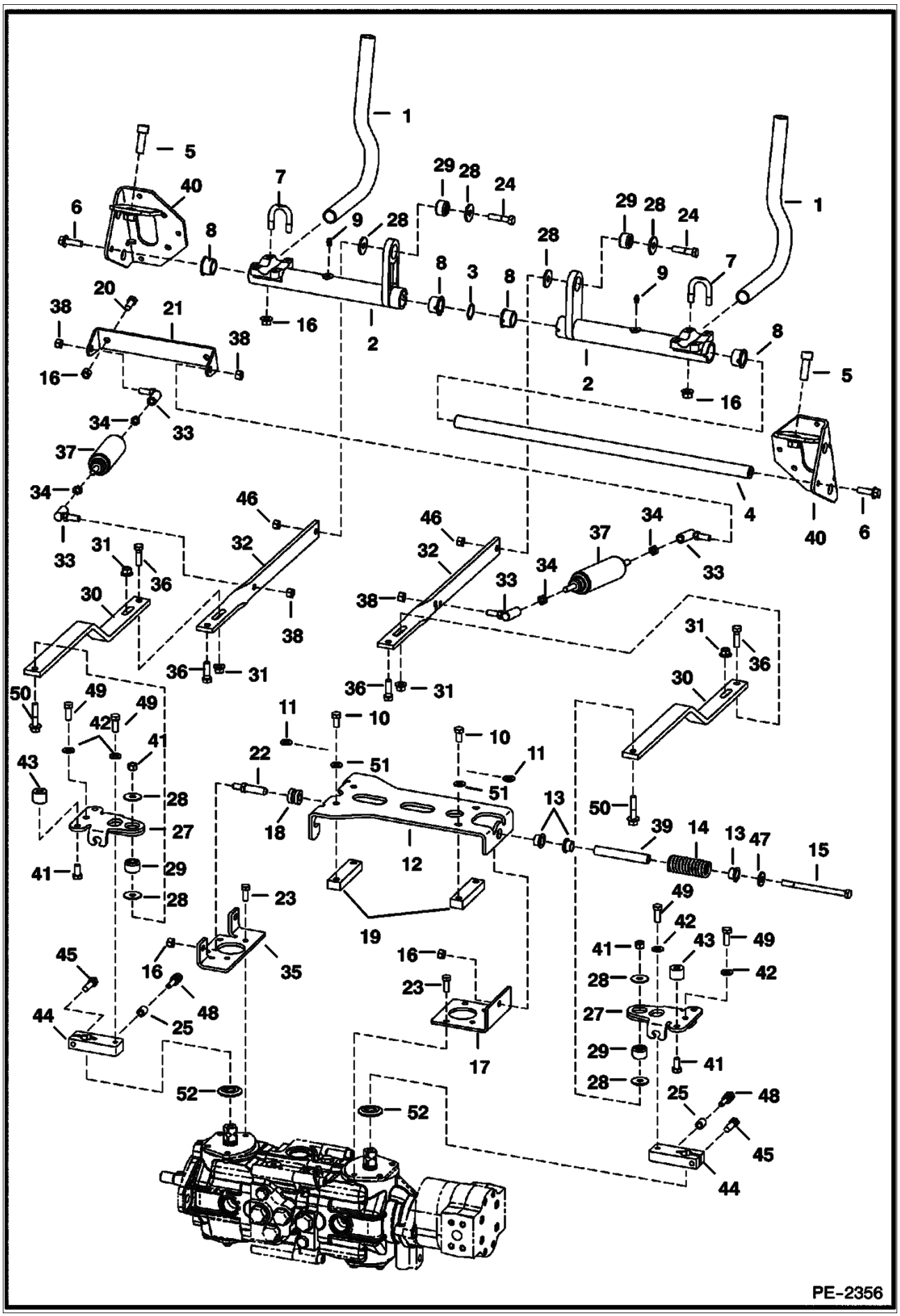
PE-2356

Ref No	Part Number	Description	Remarks	Serial Number	Qty
1	6702543	LEVER			2
2		BELLCRANK	NAP - W/notch for bushing tab - Use W/Ref. 9 (6518200 Grease Zerk) - Order 7110571 Bellcrank & Ref. 9 (10H000035B Grease Zerk) - Was 7101047 [A]		2
2	7110571	BELLCRANK	Use W/Ref. 9 (10H000035B Grease Zerk)		2
3	6599741	WASHER	wave		1
4	6716545	ROD			1
5	73G000824B	BOLT			2
6	45C000620B	BOLT			2
7	6732997	U-BOLT			4
8	6703879	BUSHING	W/tab		4
8	6673710	BEARING	needle - AHC		2
9	10H000035B	GREASE ZERK	threaded		2
9	6518200	GREASE ZERK	press fit		2
10	7105192	BOLT			4
11	6557831	WASHER	.15" thick		4
12	6734298	MOUNT			1
13	6715163	BUSHING			3
14	6701535	SPRING			1
15	17C000680B	BOLT			1
16	91D000006B	NUT			18
17	6734742	BRACKET			1
18	6706098	GUIDE			2
19	6702716	BLOCK			2
20	17C000612B	BOLT			2
21	7100795	MOUNT			1
22	6577058	PIN			2
23	1CM00820B	BOLT			8
24	17C000628B	BOLT			4
25	7105223	SPACER			2
26	63D000006B	NUT			2
27	7110365	PINTLE ARM			2
28	6737388	WASHER			8
29	6685060	BUSHING			4
30	6735253	LINK			2
31	83D000006B	NUT			4
32	7107986	LINK			2
33	6599744	BALL JOINT			4
34	8D000006B	NUT			4
35	6685345	BRACKET			1
36	17C000620B	BOLT			4
37	6649551	SHOCK			2
38	62D000006B	NUT			2
39	6715164	SLEEVE			1
40	6733022	BRACKET	R.H.		1
40	6733024	BRACKET	L.H.		1
41	98D000006B	NUT	AHC		4
42	7100699	WASHER	AHC - .24" thick		4
43	6673789	BEARING	ROLLER - AHC		4
44	7103708	BRACKET	centering		2
45	73G624	BOLT			2
46	53D000006B	NUT			2
47	6563914	WASHER			1
48	7103711	BOLT			2
49	7105193	BOLT	black		4
50	49C000628B	BOLT			2

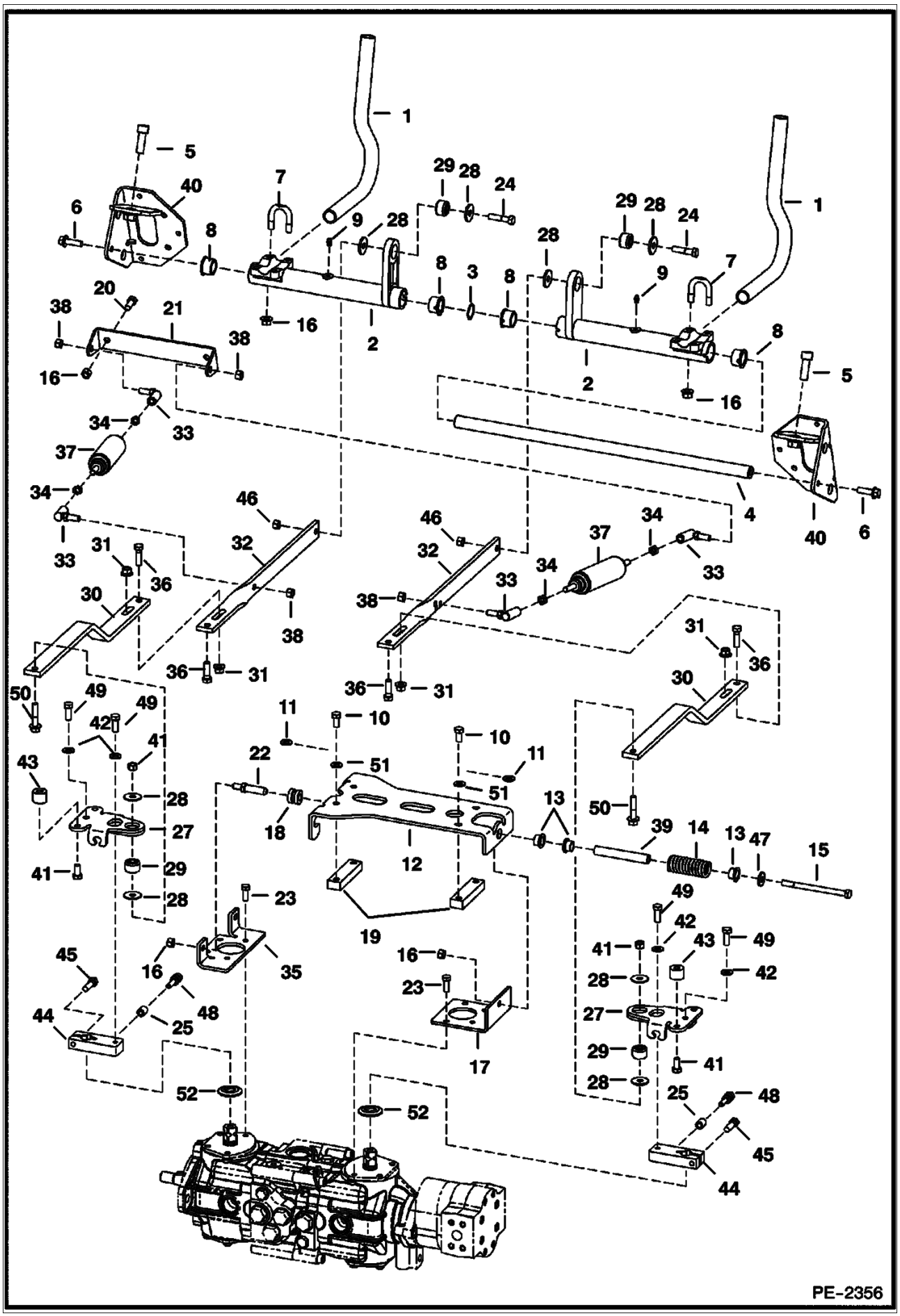
PE-2356

Ref No	Part Number	Description	Remarks	Serial Number	Qty
51	7103271	WASHER	.065" thick		8
52	6687913	SEAL	dust		2

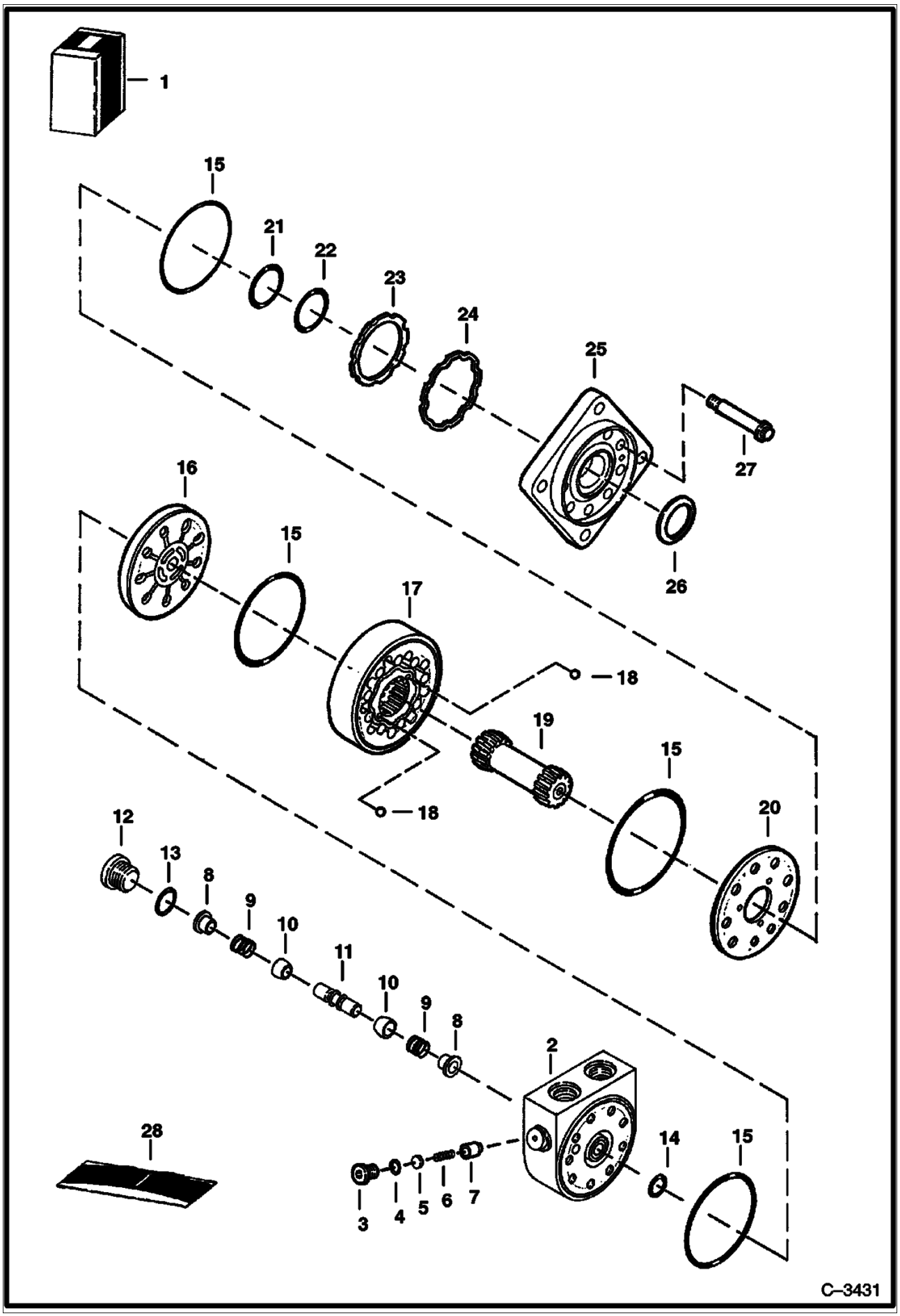
1
15
21
22
23
24
25
27
16
15
26
17
18
19
15
18
20
12
13
8
9
10
11
10
9
8
2
28
14
15
3
4
5
6
7
C–3431

Ref No	Part Number	Description	Remarks	Serial Number	Qty
1	6682034	MOTOR	Ref. 2-27		1
2	6685063	HOUSING	W/Ref. 3-7		1
3	6668079	PLUG	W/Ref. 4		1
4	79K000005B	O-RING			1
5	6668080	SHIM			x
6	6688521	SPRING			1
7	6685064	POPPET			1
8	6685065	SHUTTLE			2
9	6513533	SPRING			2
10	6513532	POPPET			2
11	6685066	PISTON	shuttle - W/ flat - fast acting		1
12	6668089	PLUG	W/Ref. 13		1
13	79K000006B	O-RING			1
14	6669452	O-RING			1
15	6678000	SEAL			4
16	6678001	PLATE	valve		1
17	6685067	GEROLER			1
18	6651542	BALL			2
19	6682862	SHAFT, DRIVE			1
20	6678003	PLATE	balance - upper		1
20	6678004	PLATE	balance - lower		1
21	6678006	BACK-UP RING	backup		1
22	6682860	O-RING			1
23	6682897	SEAL			1
24	6685069	RING,BACK-UP	backup		1
25	6685068	FLANGE	mounting		1
26	6664815	SEAL			1
27	6682863	BOLT			9
28	6685070	KIT, SEAL COMPLETE	W/Ref. 4, 13-15, 21-23 & 26		1

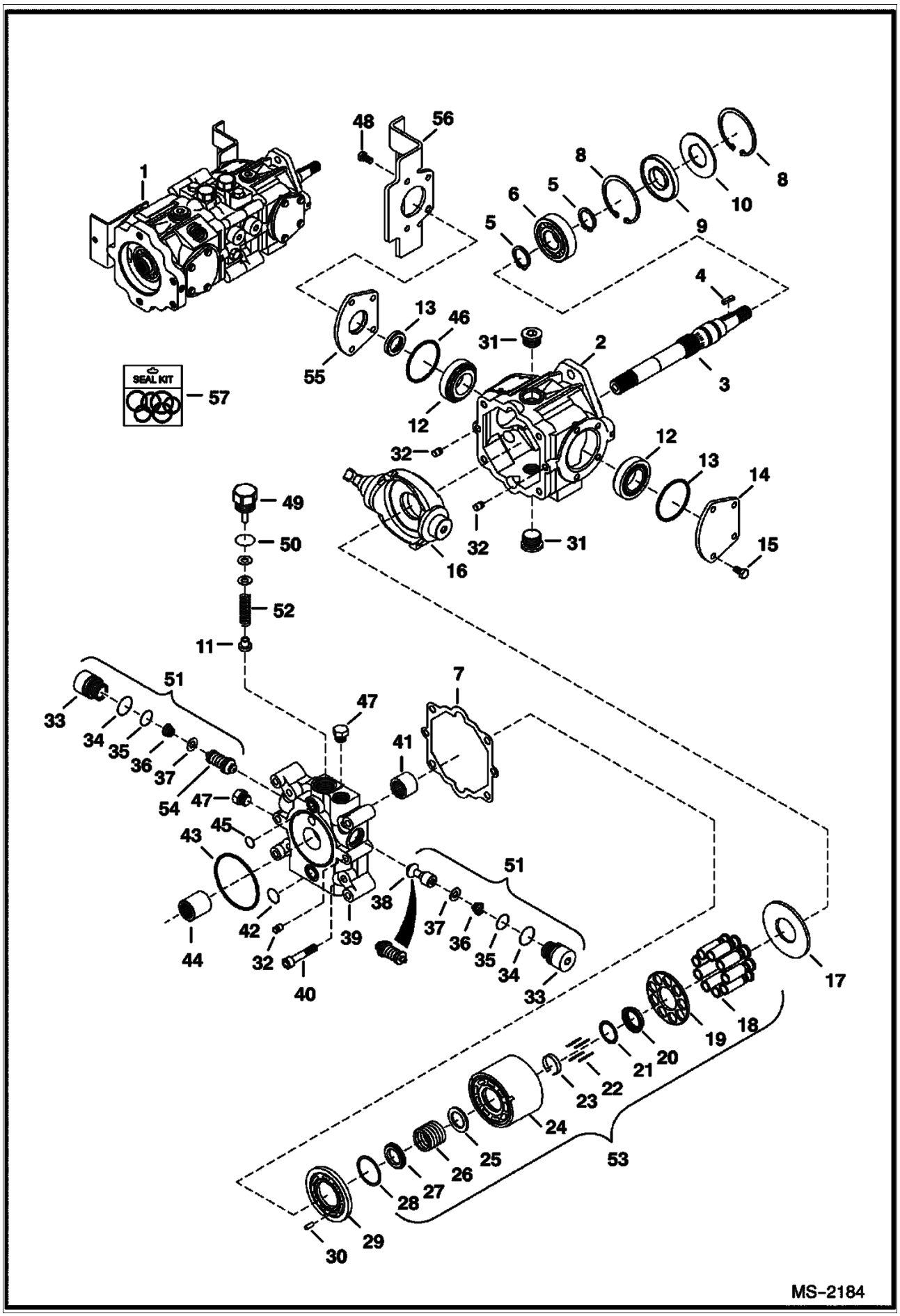
SEAL KIT
MS-2184

HYDROSTATIC PUMP (Cont'd)
Manual Hand Controls

Ref No	Part Number	Description	Remarks	Serial Number	Qty
1	6687863	PUMP	Model 4445203		1
2	6669402	HOUSING			1
3	6682260	SHAFT	W/square key		1
4	6682261	KEY			1
5	658128B	SNAP RING			2
6	654299B	BEARING			1
7	6650634	GASKET			1
8	669863B	SNAP RING			2
9	6687191	SEAL			1
10	6669409	WASHER			1
11	6650652	POPPET	Charge relief		1
12	6669411	BEARING			2
13	6660814	O-RING			2
14	6657068	COVER			2
15	6650668	BOLT			4
16	6685344	SWASH PLATE	W/threaded shaft hole		1
17	6650627	PLATE			1
18		PISTON ASSY	NAP - Order Ref. 53		1
19		RETAINER	NAP - Order Ref. 53		1
20		RETAINER	NAP - guide - Order Ref. 53		1
21	6666338	WASHER			1
22	6650629	PIN			4
23	6650630	RETAINER			1
24		BLOCK	NAP - Order Ref. 53		1
25		WASHER	NAP - Order Ref. 53		1
26		SPRING	NAP - Order Ref. 53		1
27		WASHER	NAP - Order Ref. 53		1
28		WASHER	NAP - Order Ref. 53		1
29	6687774	PLATE			1
30	6650636	PIN			1
31	47K000008B	PLUG			2
31	6645083	O-RING			2
32	6675342	PIN			4
33		PLUG	NAP - Order Ref. 51		2
34	6657028	O-RING			2
35	79K000008B	O-RING			2
36		SPRING	NAP - Order Ref. 51		2
37		RETAINER	NAP - Order Ref. 51		2
38		CHECK VALVE	NAP - poppet - Order Ref. 51		1
39	6669406	END PLATE			1
40	6650637	BOLT			4
41	6650635	BEARING			1
42	6650647	O-RING			1
43	6673884	O-RING			1
44	6650675	COUPLER			1
45	6650646	O-RING			1
46	6678226	SEAL			1
47	6645086	PLUG			2
47	6661481	O-RING			1
48	6671518	BOLT			4
49	6650648	PLUG	Charge relief - W/Ref. 50		1
50	79K000010B	O-RING			1
51	6689601	VALVE			1
52	6684038	SPRING			1

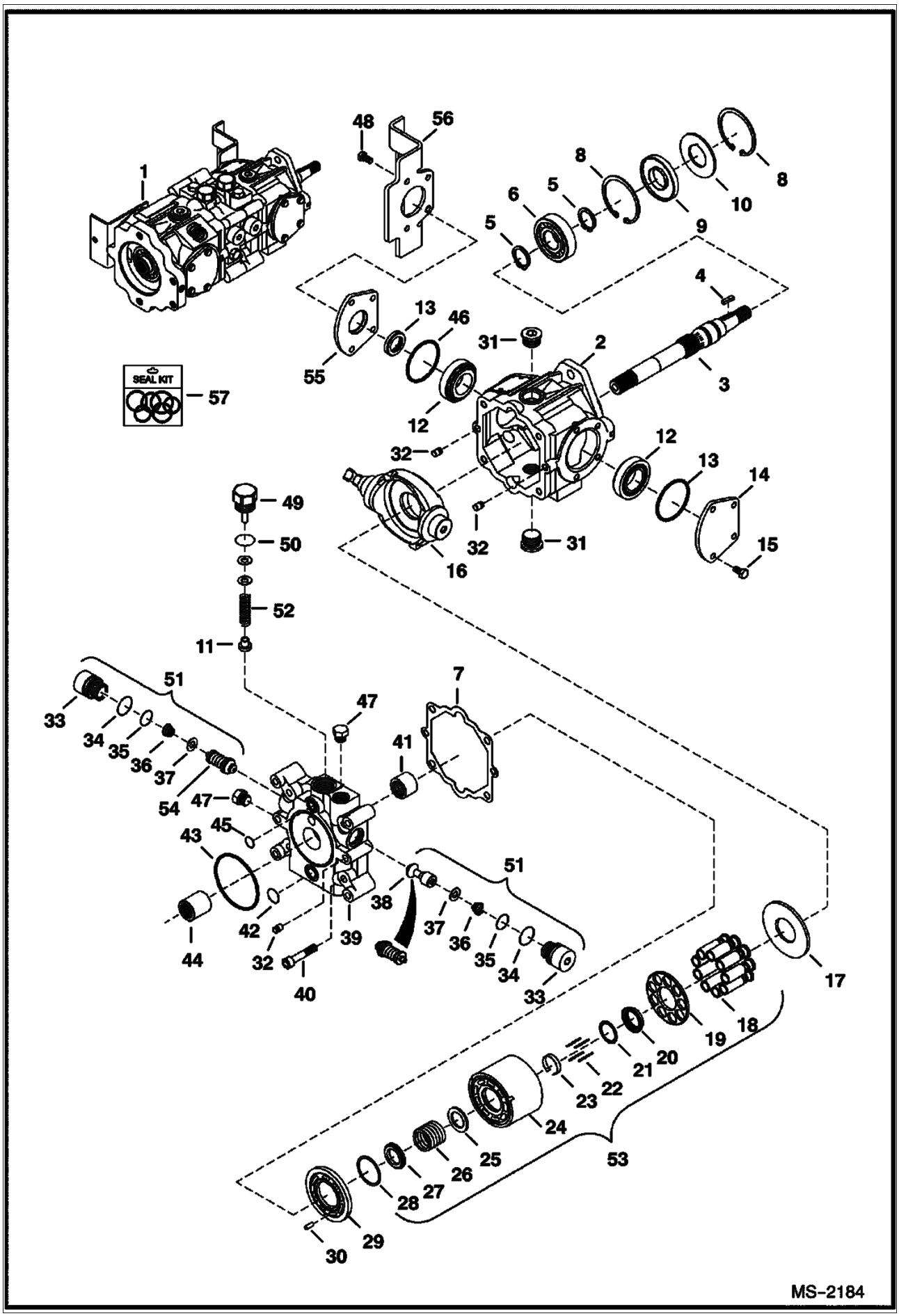
SEAL KIT
MS-2184

Ref No	Part Number	Description	Remarks	Serial Number	Qty
53	6671512	BLOCK ASSY			1
54		RELIEF VALVE	NAP - 5000 PSI (345 bar)- Order Ref. 51		1
55	6657067	COVER	W/Ref. 46		1
56	6685345	BRACKET			1
57	6671516	SEAL KIT	Ref. 7, 9, 13, 34, 35, 42, 43, 45, 46 & 50 - Also includes Ref. 2, 3, 12, 31 & 41 on next page		1

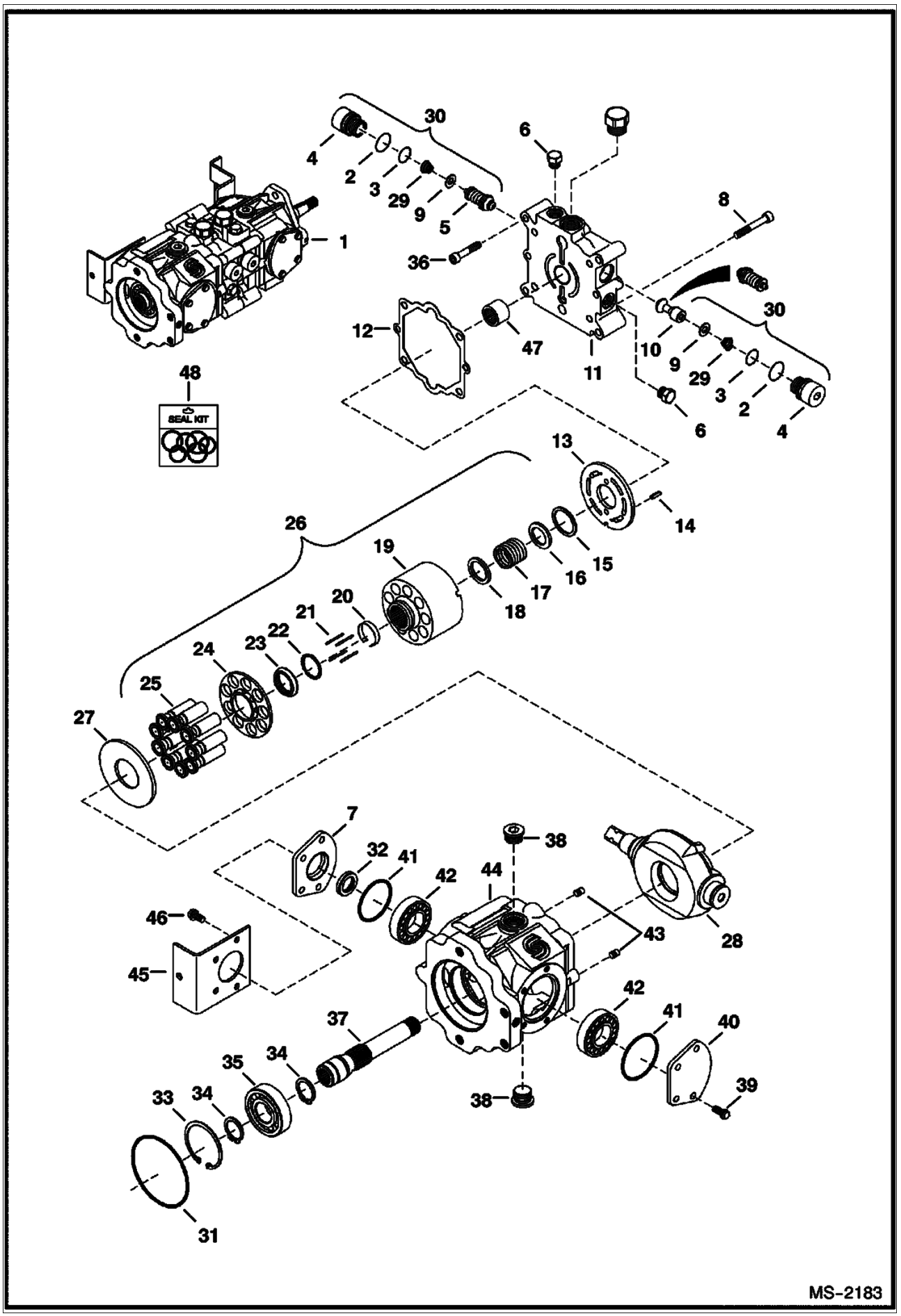
30
4
2
3
29
9
5
6
8
1
36
12
47
11
10
9
29
3
2
4
30
6
48
SEAL KIT
13
14
26
19
15
16
17
18
20
21
22
23
24
25
27
7
32
41
42
38
44
46
45
43
28
42
41
40
39
37
35
34
33
34
38
31
MS-2183

HYDROSTATIC PUMP (Cont'd)
Manual Hand Controls

Ref No	Part Number	Description	Remarks	Serial Number	Qty
1	6687863	PUMP	Model 4445203		1
2	6657028	O-RING			2
3	79K000008B	O-RING			2
4		PLUG	NAP - Order Ref. 30		2
5		RELIEF VALVE	NAP - 5000 PSI (345 bar)- Order Ref. 30		2
6	6645086	PLUG			4
7	6657067	COVER	W/Ref. 32		1
8	6650637	BOLT			2
9		RETAINER	NAP - Order Ref. 30		4
10		CHECK VALVE	NAP - poppet - Order Ref. 30		1
11	6669405	END CAP			1
12	6650634	GASKET			1
13	6687773	PLATE			1
14	6650636	PIN			2
15		RETAINER	NAP - Order Ref. 26		1
16		WASHER	NAP - Order Ref. 26		1
17		SPRING	NAP - Order Ref. 26		1
18		WASHER	NAP - Order Ref. 26		1
19		BLOCK	NAP - Order Ref. 26		1
20	6650630	RETAINER			1
21	6650629	PIN			4
22	6666338	WASHER			1
23		RETAINER	NAP - Order Ref. 26		1
24		RETAINER	NAP - Order Ref. 26		1
25		PISTON ASSY	NAP - Order Ref. 26		1
26	6671512	BLOCK ASSY			1
27	6650627	PLATE			1
28	6685344	SWASH PLATE	W/threaded shaft hole		1
29		SPRING	NAP - Order Ref. 30		2
30	6689601	VALVE			2
31	6671520	O-RING			1
32	6678226	SEAL			1
33	669863B	SNAP RING			1
34	658128B	SNAP RING			2
35	654299B	BEARING			1
36	6652018	BOLT			4
37	6682264	SHAFT			1
38	47K000008B	PLUG			1
38	79K000012B	GEAR PUMP			2
39	6650668	BOLT			4
40	6657068	COVER			1
41	6660814	O-RING			2
42	6669411	BEARING			2
43	6675342	PIN			2
44	6689602	HOUSING			1
45	6685346	BRACKET			1
46	6650668	BOLT			4
47	6650635	BEARING			1
48	6671516	SEAL KIT	Ref. 2, 3, 12, 31 & 41 - Also includes Ref. 7, 9, 13, 34, 35, 42, 43, 45, 46 & 50 on previous page		1

HYDROSTATIC PUMP
(Selectable Joystick Controls)

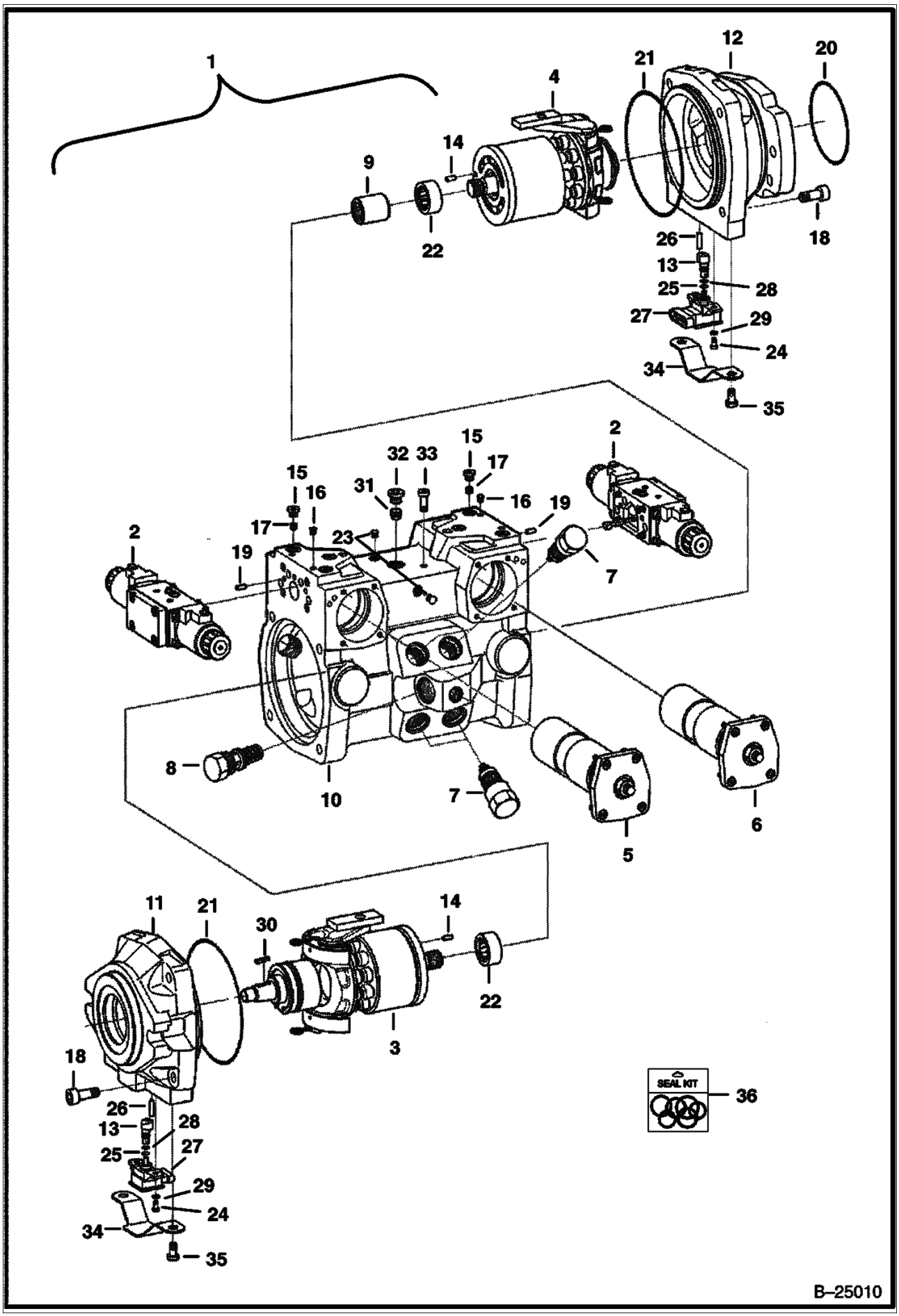

HYDROSTATIC PUMP (Cont'd)
(Selectable Joystick Controls)

Ref No	Part Number	Description	Remarks	Serial Number	Qty
1	6686267	PUMP			1
2	6687970	MODULATOR	See Illustration HYDROSTATIC PUMP/ B25016		2
3	6687957	GROUP	See Illustration HYDROSTATIC PUMP/ B25011 L.H. rotation		1
4	6687958	GROUP	See Illustration HYDROSTATIC PUMP/ B25012 R.H. rotation		1
5	6687960	CONTROL	See Illustration HYDROSTATIC PUMP/ B25013		1
6	6687961	CONTROL	See Illustration HYDROSTATIC PUMP/ B25013A		1
7	6687924	VALVE	See Illustration HYDROSTATIC PUMP/ B25014		4
8	6687938	VALVE	See Illustration HYDROSTATIC PUMP/ B25015		1
9	6687941	COUPLER			1
10	6687964	HOUSING			1
11	6687973	FLANGE			1
12	6687974	FLANGE			1
13	6687965	SHAFT			2
14	6688011	PIN			2
15	6688016	SCREW			11
16	6688039	PIN			3
17	6688020	ORIFICE			4
18	6688008	SCREW			8
19	6686934	PIN			2
20	6688019	SEAL			1
21	6688009	SEAL			2
22	6688040	BEARING			2
23	6687932	PIN			2
24	6687994	SCREW			4
25	6687990	RING			2
26	6688014	PIN			2
27	6687984	SENSOR			2
28	6688007	SEAL			2
29	6687998	SHIM			4
30	6687991	KEY			1
31	6687988	FILTER			1
32	6688015	SCREW			1
33	6687992	SCREW			1
34	6687993	COVER			2
35	6688003	SCREW			4
36	6689021	SEAL KIT	complete		1

HYDROSTATIC PUMP
(Rotary Group - L.H.)
(Selectable Joystick Controls)

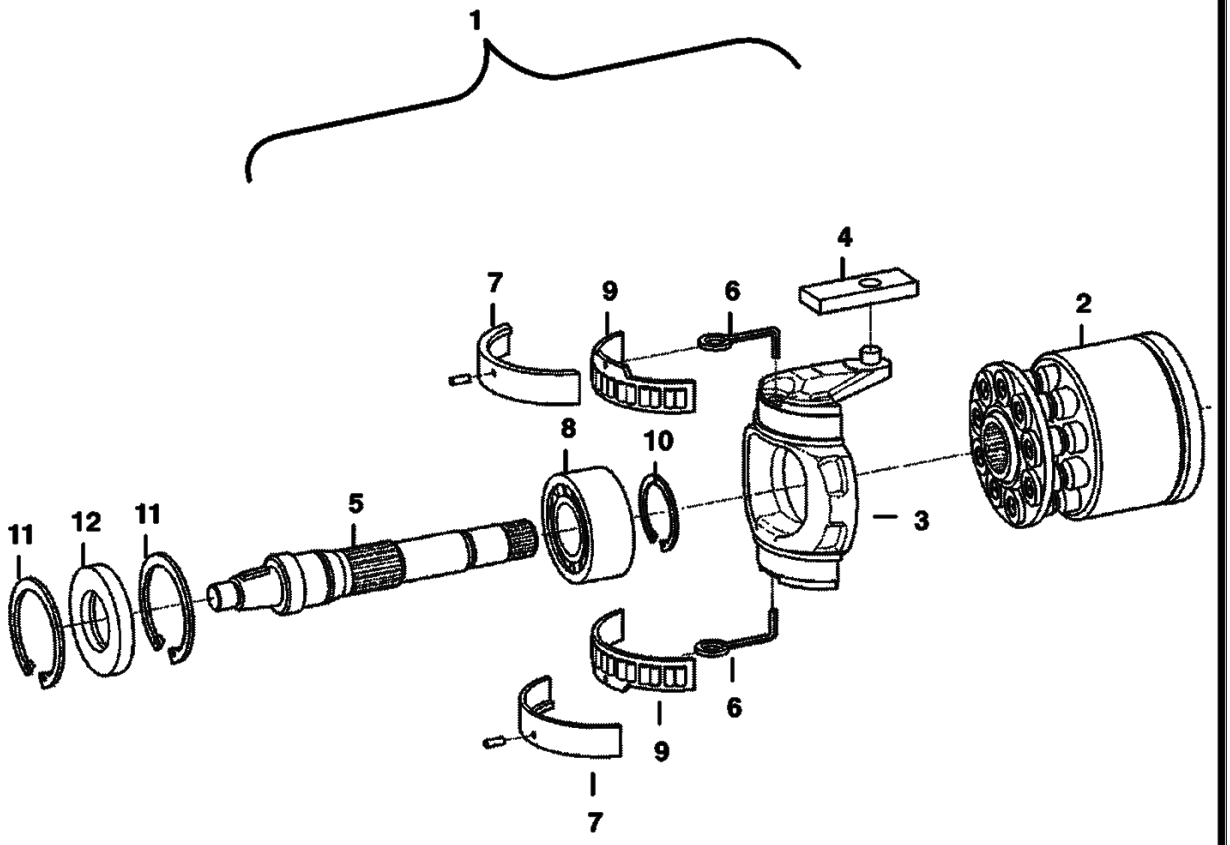

HYDROSTATIC PUMP (Cont'd)
(Rotary Group - L.H.)
(Selectable Jovstick Controls)

Ref No	Part Number	Description	Remarks	Serial Number	Qty
1	6687957	GROUP	L.H. rotation		1
2	6687977	GROUP			1
2	6687979	GROUP			1
2	6687976	PLATE			1
3	6687951	BRACKET			1
4	6687940	RING			1
5	6687959	SHAFT			1
6	6687930	WIRE			2
7	6687956	BEARING			1
8	6688018	BEARING			1
9	6687987	BEARING			1
10	6687999	RING			1
11	6688042	RING			2
12	6688038	RING			1

HYDROSTATIC PUMP
(Rotary Group - R.H.)
(Selectable Joystick Controls)

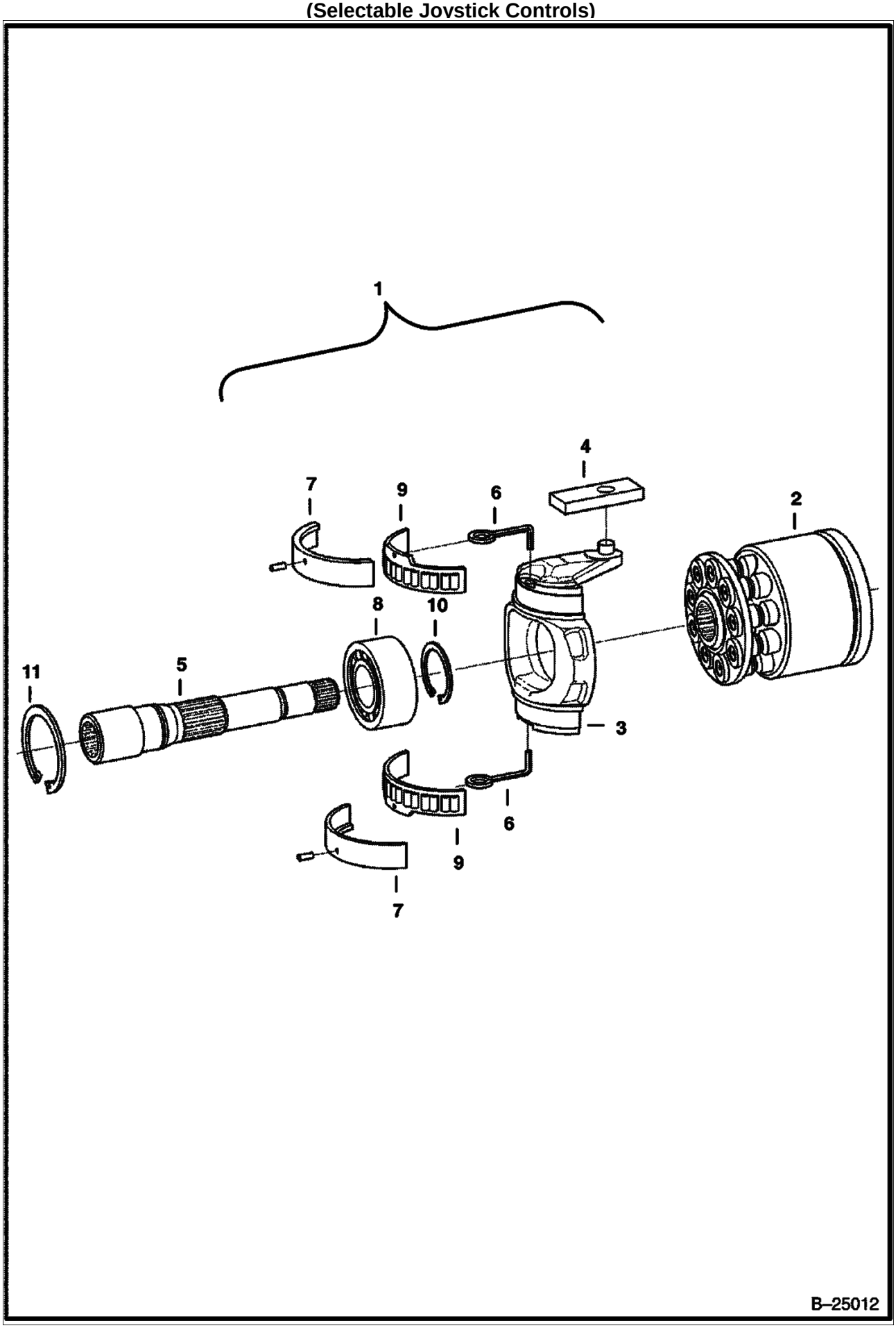

HYDROSTATIC PUMP (Cont'd)
(Rotary Group - R.H.)
(Selectable Jovstick Controls)

Ref No	Part Number	Description	Remarks	Serial Number	Qty
1	6687958	GROUP	R.H. rotation		1
2	6687978	GROUP			1
2	6687979	GROUP			1
2	6687975	PLATE			1
3	6687951	BRACKET			1
4	6687940	RING			1
5	6687943	SHAFT			1
6	6687930	WIRE			2
7	6687956	BEARING			1
8	6688018	BEARING			1
9	6687987	BEARING			1
10	6687999	RING			1
11	6688042	RING			2

HYDROSTATIC PUMP
(Control)
(Selectable Joystick Controls)

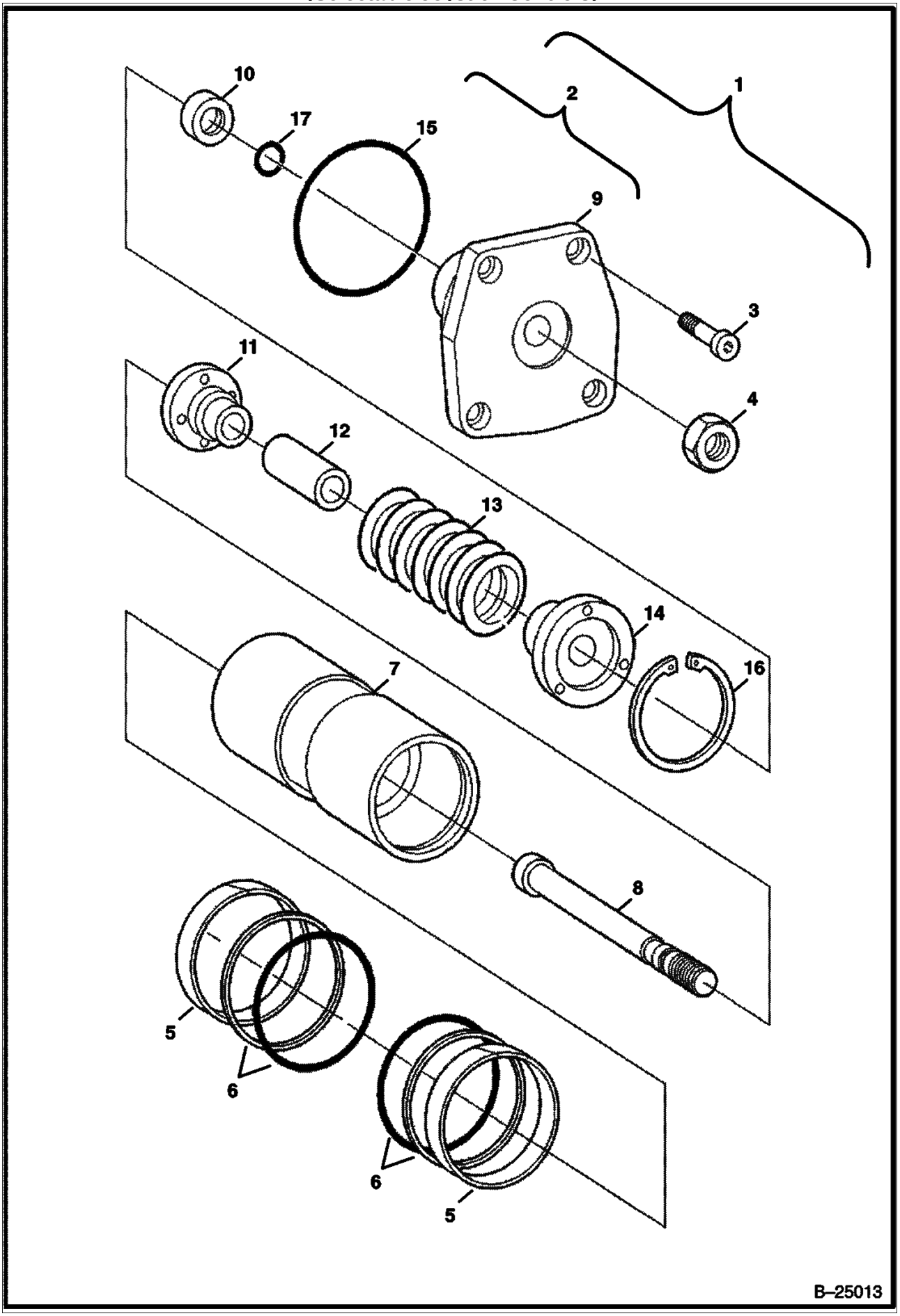

HYDROSTATIC PUMP (Cont'd)
(Control)
(Selectable Jovstick Controls)

Ref No	Part Number	Description	Remarks	Serial Number	Qty
1	6687960	CONTROL			1
2	6687962	PISTON			1
3	6687995	SCREW			4
4	6674907	NUT			1
5	6687985	RING			2
6	6687986	KIT			2
7	6687953	PISTON			1
8	6688031	ROD			1
9	6688024	COVER			1
10	6688037	RING	6,70 mm		1
10	6688036	RING	6,75 mm		1
10	6688035	RING	6,80 mm		1
10	6688025	RING	6,85 mm		1
10	6688026	RING	6,90 mm		1
10	6688027	RING	6,95 mm		1
10	6688028	RING	7,00 mm		1
10	6688029	RING	7,05 mm		1
10	6688030	RING	7,10 mm		1
11	6687926	COLLAR			1
12	6688033	SPACER	54,60 cm		1
12	6687942	SPACER	54,65 cm		1
12	6688032	SPACER	54,70 cm		1
12	6687948	SPACER	54,75 cm		1
12	6687949	SPACER	54,80 cm		1
13	6687928	SPRING			1
14	6687927	COLLAR			1
15	6688005	SEAL			1
16	6688002	RING			1
17	6688006	SEAL			1

HYDROSTATIC PUMP
(Control)
(Selectable Joystick Controls)

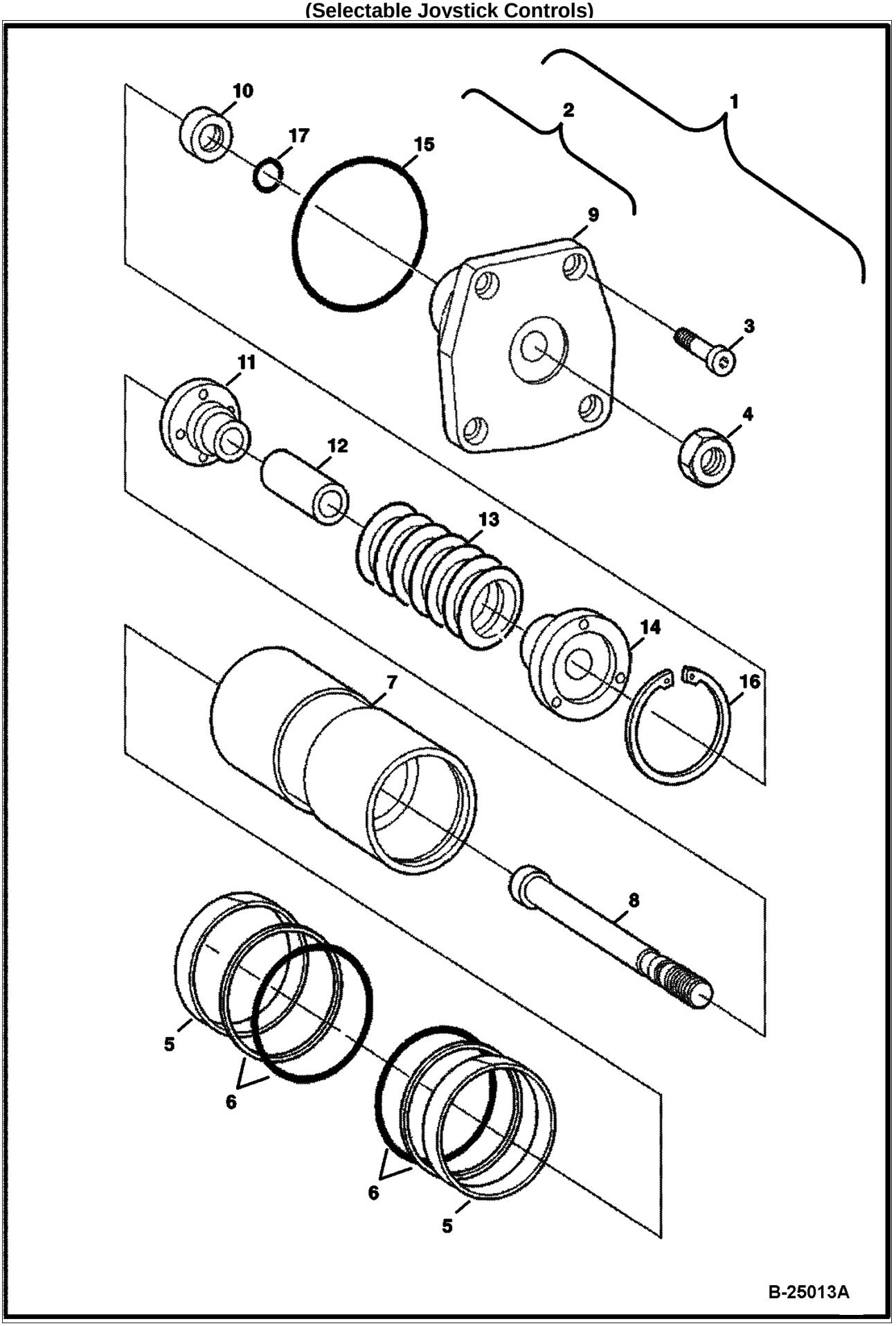

HYDROSTATIC PUMP (Cont'd)
(Control)
(Selectable Jovstick Controls)

Ref No	Part Number	Description	Remarks	Serial Number	Qty
1	6687961	CONTROL			1
2	6687963	PISTON			1
3	6687995	SCREW			4
4	6674907	NUT			1
5	6687985	RING			2
6	6687986	KIT			2
7	6687953	PISTON			1
8	6688031	ROD			1
9	6688024	COVER			1
10	6688037	RING	6,70 mm		1
10	6688036	RING	6,75 mm		1
10	6688035	RING	6,80 mm		1
10	6688025	RING	6,85 mm		1
10	6688026	RING	6,90 mm		1
10	6688027	RING	6,95 mm		1
10	6688028	RING	7,00 mm		1
10	6688029	RING	7,05 mm		1
10	6688030	RING	7,10 mm		1
11	6687926	COLLAR			1
12	6688033	SPACER	54,60 cm		1
12	6687942	SPACER	54,65 cm		1
12	6688032	SPACER	54,70 cm		1
12	6687948	SPACER	54,75 cm		1
12	6687949	SPACER	54,80 cm		1
13	6687928	SPRING			1
14	6687927	COLLAR			1
15	6688005	SEAL			1
16	6688002	RING			1
17	6688006	SEAL			1

HYDROSTATIC PUMP
(Pressure Relief Valve)
(Selectable Joystick Controls)

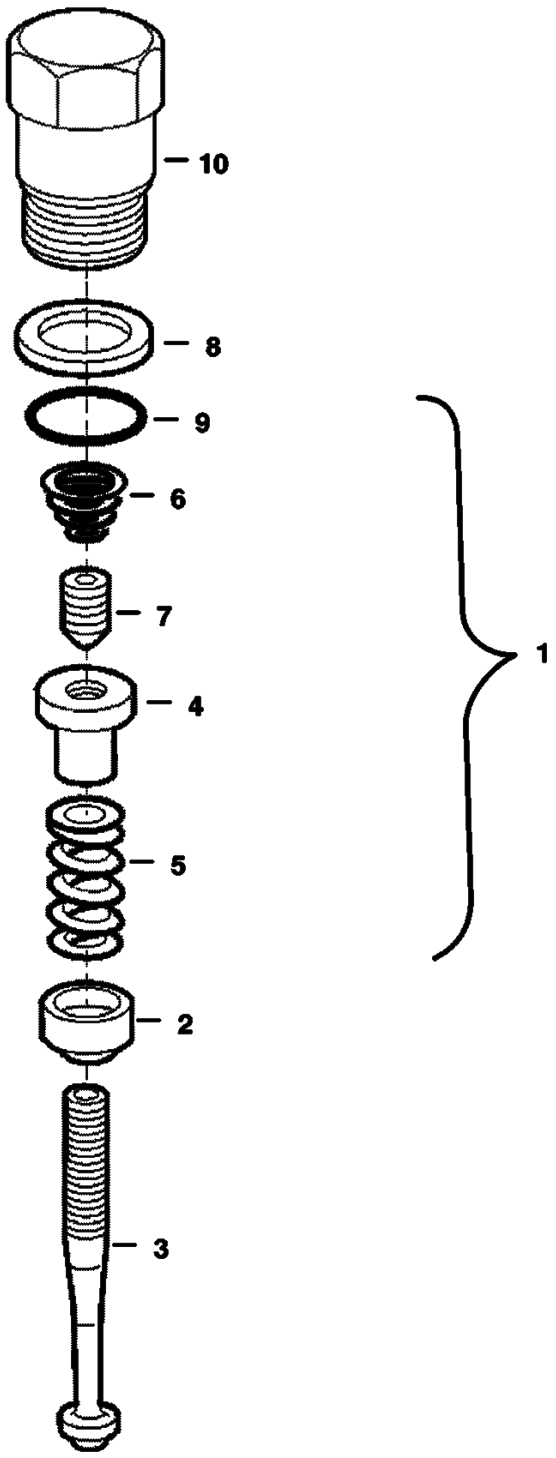

HYDROSTATIC PUMP (Cont'd)
(Pressure Relief Valve)
(Selectable Jovstick Controls)

Ref No	Part Number	Description	Remarks	Serial Number	Qty
1	6687924	VALVE			1
2	6687921	COLLAR			1
3	6687920	SPINDLE			1
4	6687922	NUT			1
5	6688043	SPRING			1
6	6688021	SPRING			1
7	6687923	PIN			1
8	6688041	RING			1
9	6688000	SEAL			1
10	6688034	SCREW			1

HYDROSTATIC PUMP
(Pressure Relief Valve)
(Selectable Joystick Controls)

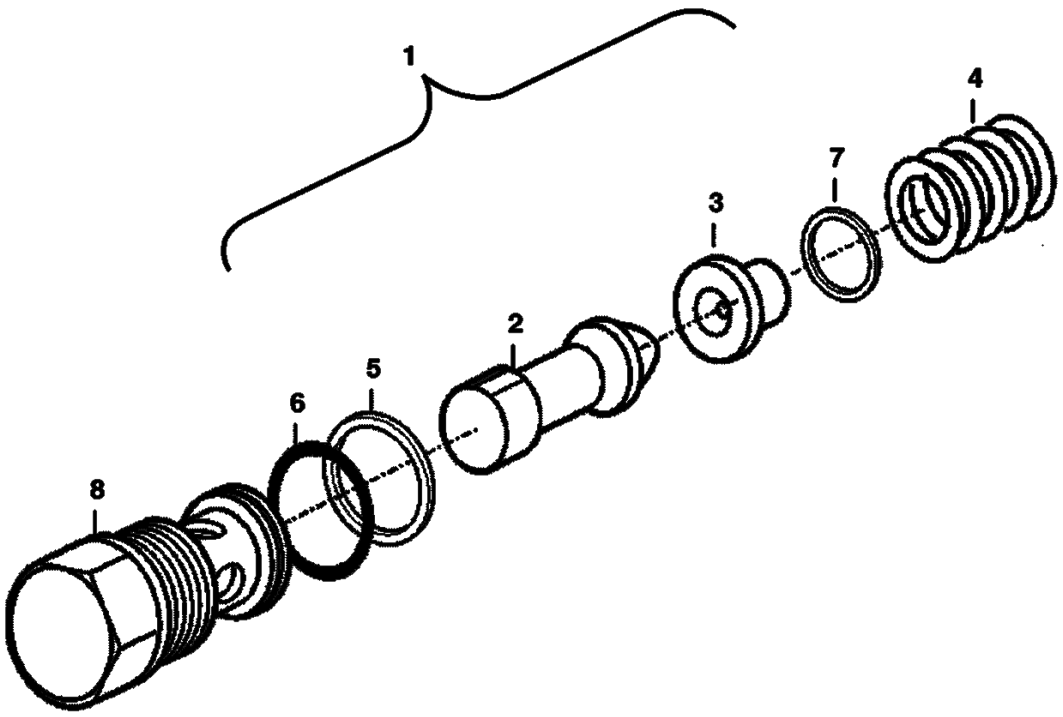

B–25015

HYDROSTATIC PUMP (Cont'd)
(Pressure Relief Valve)
(Selectable Jovstick Controls)

Ref No	Part Number	Description	Remarks	Serial Number	Qty
1	6687938	VALVE			1
2	6688022	PISTON			1
3	6687919	COLLAR			1
4	6688023	SPRING			1
5	6687983	RING			1
6	6688013	SEAL			1
7	6688017	SHIM			1
8	6687939	SCREW			1

HYDROSTATIC PUMP
(Control Module)
(Selectable Joystick Controls)

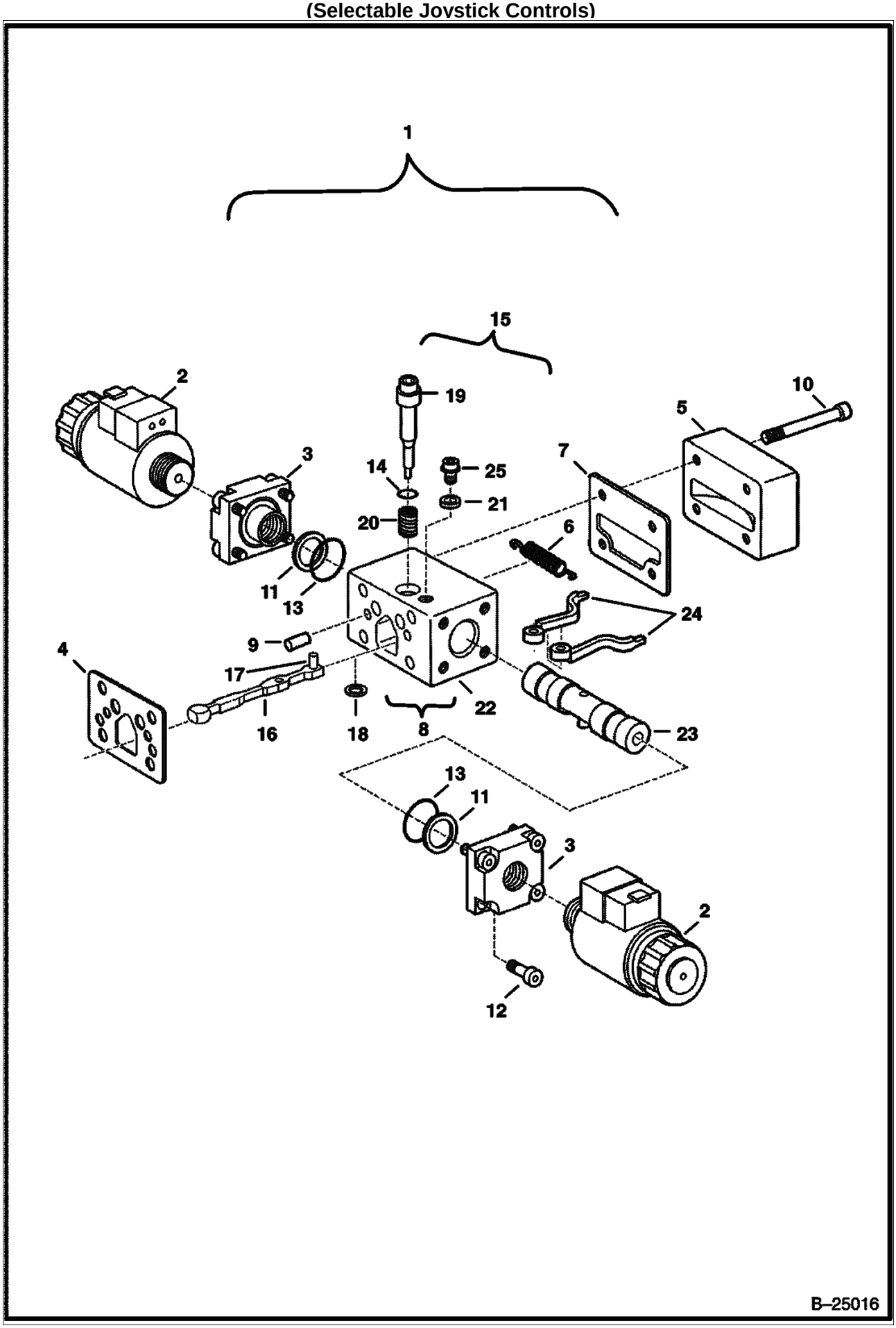

HYDROSTATIC PUMP (Cont'd)
(Control Module)
(Selectable Jovstick Controls)

Ref No	Part Number	Description	Remarks	Serial Number	Qty
1	6687970	MODULATOR			2
2	6687989	SOLENOID			2
3	6687931	BUSHING			2
4	6687954	GASKET			1
5	6687969	COVER			1
6	6687967	SPRING			1
7	6687950	GASKET			1
8	6687972	MODULE	Ref. 15-18		1
9	6688010	PIN			2
10	6687996	SCREW			4
11	6687982	SPRING			2
12	6687997	SCREW			8
13	6688001	SEAL			2
14	6688004	SEAL			1
15	6687971	ROLLER	Ref. 14 & 19-25		1
16	6687929	LEVER			1
17	6688012	ROLLER			1
18	6687944	SHIM	0,60 mm		1
18	6687933	SHIM	0,80 mm		1
18	6687934	SHIM	1,00 mm		1
18	6687935	SHIM	1,20 mm		1
18	6687936	SHIM	1,40 mm		1
18	6687937	SHIM	1,60 mm		1
19	6687947	PIN			1
20	6687946	SPRING			1
21	6687945	PLATE			1
22	6687955	HOUSING			1
23	6687966	PISTON			1
24	6687968	LEVER			2
25	6687981	SCREW			1

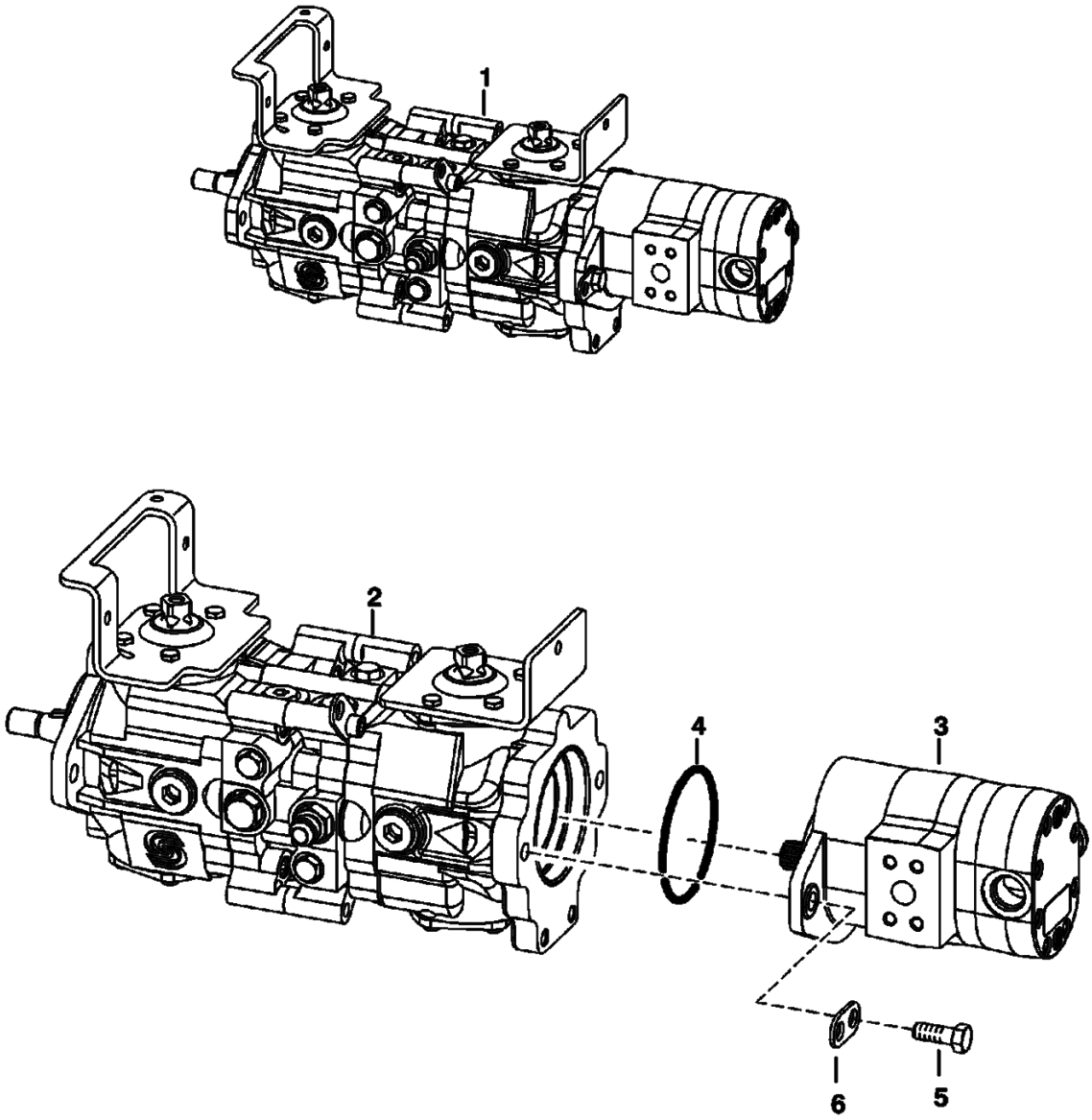
1
2
4
3
6
5
PE-2824

HYDROSTATIC PUMP/GEAR PUMP (Cont'd)
Identification

Ref No	Part Number	Description	Remarks	Serial Number	Qty
1		PUMP ASSY	NAP		1
2		HYDROSTATIC PUMP	See Illustration HYDROSTATIC PUMP/ MS2184 manual hand controls		1
2		HYDROSTATIC PUMP	See Illustration HYDROSTATIC PUMP/ B25010 selectable joystick controls		1
3		GEAR PUMP	See Illustration GEAR PUMP/ MS2185 manual hand controls or selectable joystick controls		1
3		GEAR PUMP	See Illustration HIGH FLOW HYDRAULICS/ MS1459 high flow - manual hand or selectvie joystick controls		1
4	6671520	O-RING	manual hand controls		1
4	6688019	O-RING	selectable joystick controls		1
5	43C820	BOLT			2
6	6631643	PLATE			2

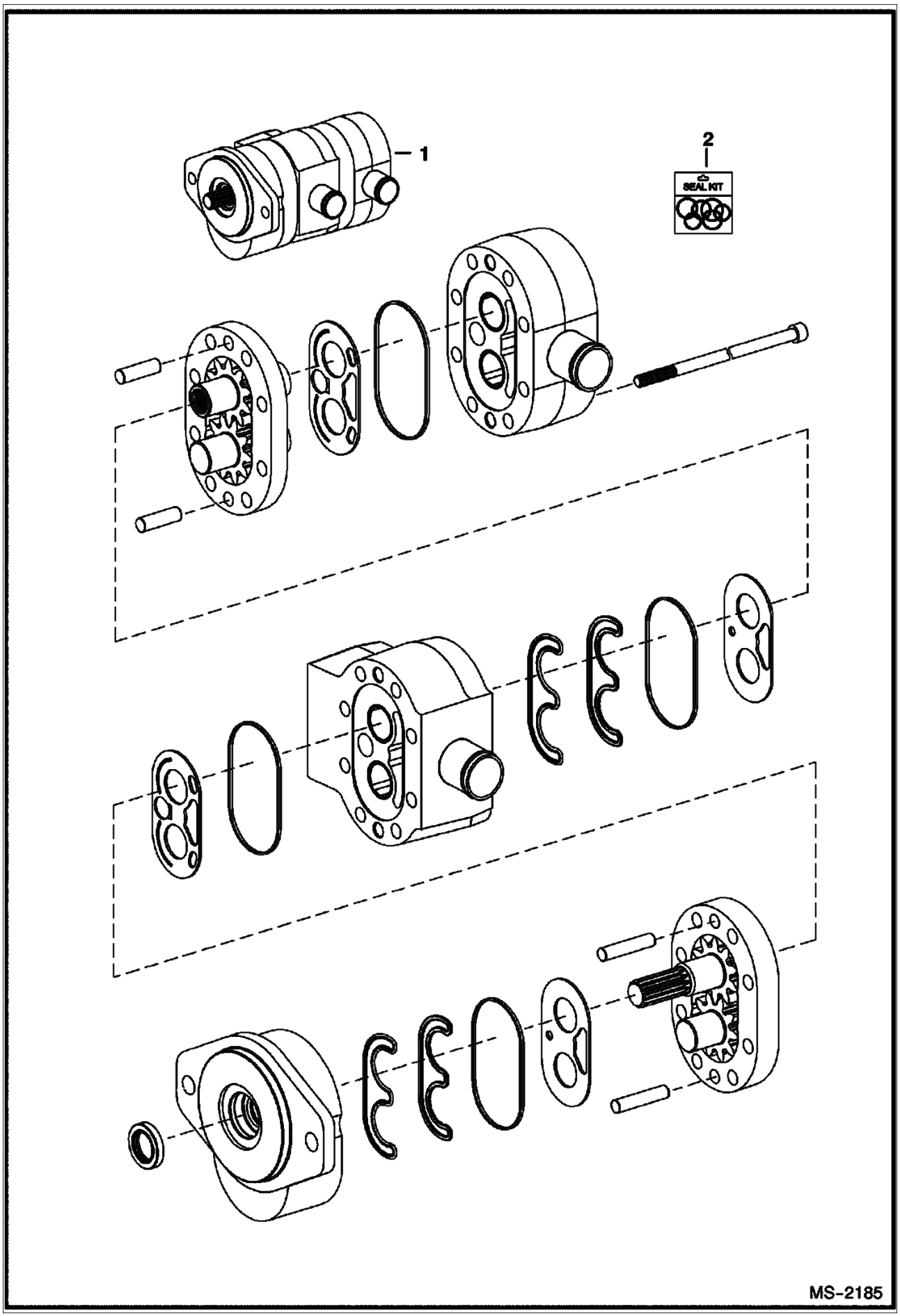
1
2
SEAL KIT
MS-2185

Ref No	Part Number	Description	Remarks	Serial Number	Qty
1	6687864	GEAR PUMP	Model 163D-71019 - for 6687863 (4445203) pump		1
2	6687866	SEAL KIT			1

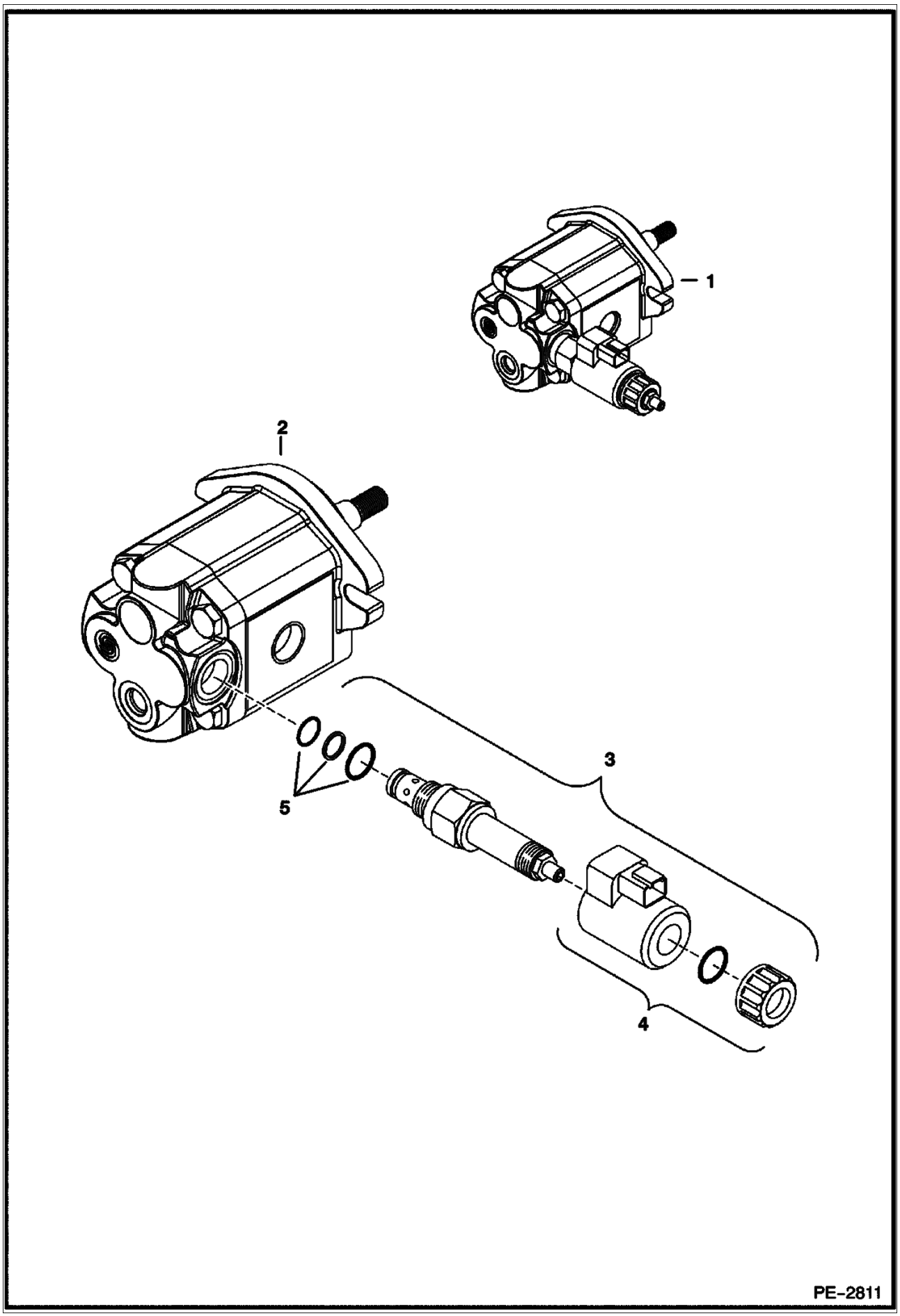
1
2
3
4
5
PE-2811

MOTOR (Cont'd)
Cooling Fan

Ref No	Part Number	Description	Remarks	Serial Number	Qty
1	6687142	MOTOR			1
2	6689058	MOTOR	W/O proportional valve		1
3	6689059	VALVE ASSY			1
4	6689060	COIL ASSY			1
5	6683206	SEAL KIT			1

HYDROSTATIC OIL FILTER
(In-Line)

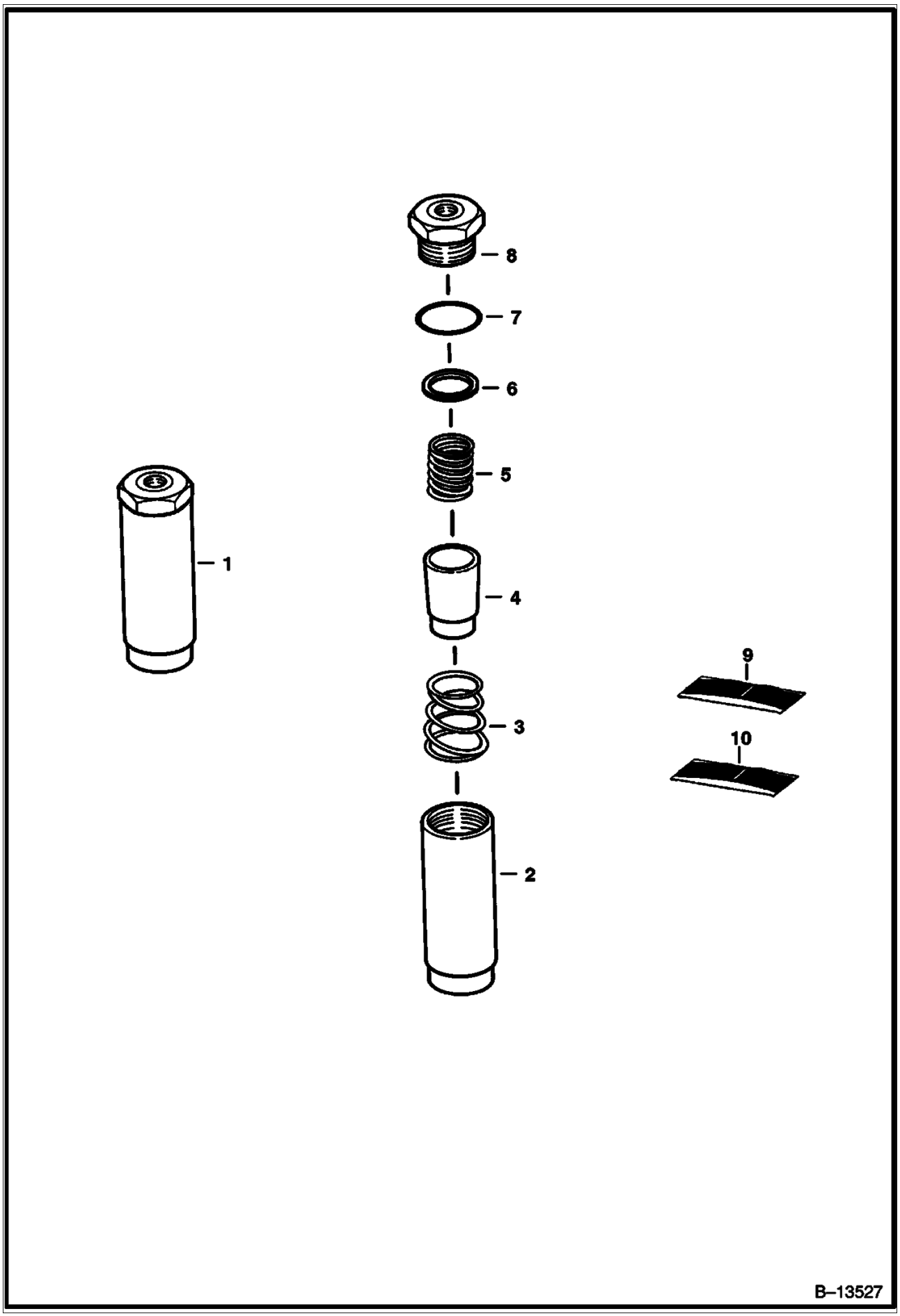

HYDROSTATIC OIL FILTER (Cont'd)
(In-Line)

Ref No	Part Number	Description	Remarks	Serial Number	Qty
1	6661022	FILTER	Ref. 2 - 8		1
2		HOUSING	NSS		1
3		SPRING	NSS		1
4		ELEMENT	NSS		1
5		SPRING	NSS		1
6		GASKET	NSS		1
7		O-RING	NSS		1
8		PLUG	NSS		1
9	6661807	KIT	element - Ref. 4, 6 & 7		1
10	6661808	KIT	spring - Ref. 3 & 5		1

HYDROSTATIC OIL FILTER

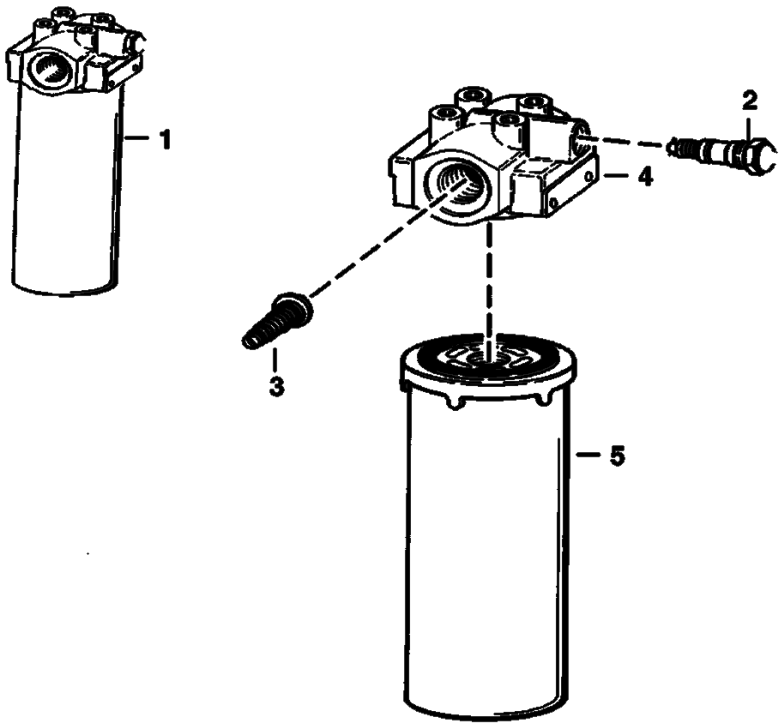

B–16487

HYDROSTATIC OIL FILTER (Cont'd)

Ref No	Part Number	Description	Remarks	Serial Number	Qty
1	6676969	FILTER	Manual Hand Controls		1
1	6688385	HYD FILTER ASSY	Selectable Joystick Controls		1
2	6660260	SWITCH	pressure - normally closed		1
2	6599365	KIT	nut, washer & O-rings for 6660260 switch		1
3		VALVE	NAP - by-pass (50 PSI) - For Manual Hand Controls - Order Ref. 1 (6676969 Filter)		1
3		VALVE	NAP - by-pass (50 PSI) - For Selectable Joystick Controls - Order Ref. 1 (6688385 Filter)		1
4		HEAD	NSS - For Manual Hand Controls - Order Ref. 1 (6676969 Filter)		1
4		HEAD	NSS - For Selectable Joystick Controls - Order Ref. 1 (6688385 Filter)		1
5	6661248	ELEMENT			1

HYDROSTATIC OIL FILTER
(Selectable Joystick Controls)

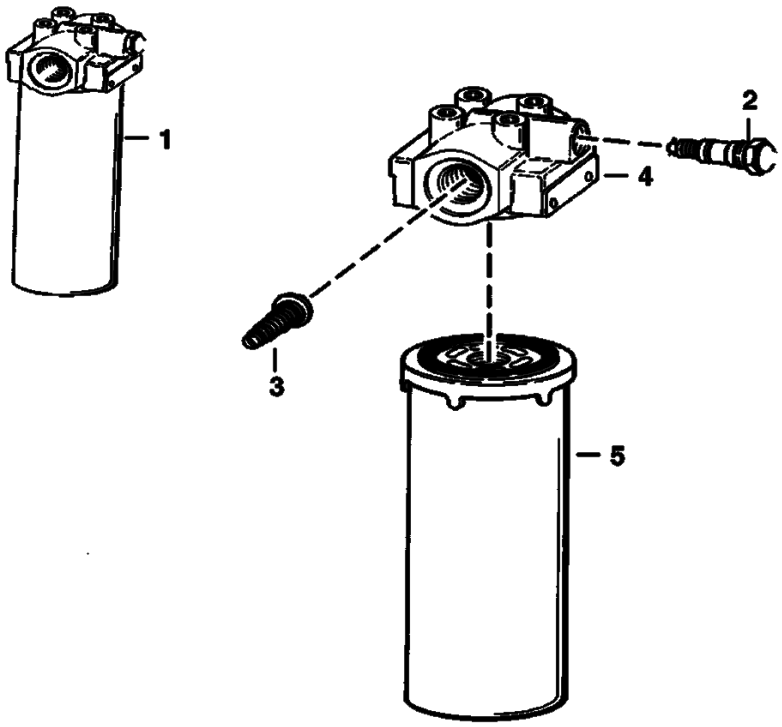

B-16487A

HYDROSTATIC OIL FILTER (Cont'd)
(Selectable Joystick Controls)

Ref No	Part Number	Description	Remarks	Serial Number	Qty
1	6686922	FILTER ASMBLY 12	W/Ref. 2 - 5		1
2	6687834	SENSOR	pressure - normally open		1
3		VALVE	NAP - by-pass		1
4		HEAD	NSS - Order Ref. 1		1
5	6686926	ELEMENT FILTER			1

CAB ELECTRICAL CIRCUITRY

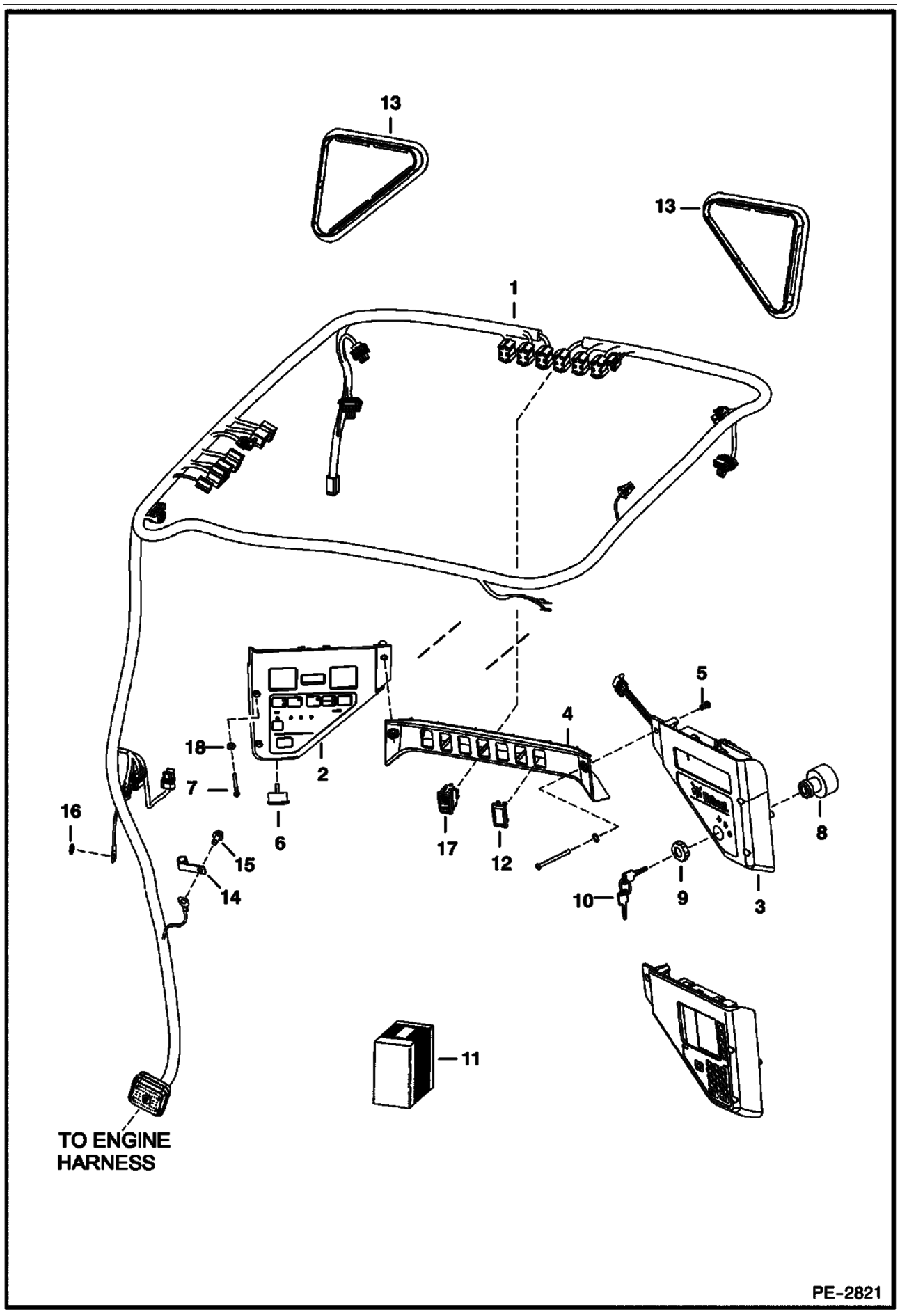

Ref No	Part Number	Description	Remarks	Serial Number	Qty
1	7116261	HARNESS	standard		1
1	7116260	HARNESS	deluxe - required to operate beacon, 4-way flashers, power bob-tach & strobe lights		1
2	6688405	PANEL	L.H. - W/Ref. 6		1
2	6675982	PLUG	backlighting service hole		1
2	6679855	BULB			2
3	6688404	PANEL	R.H. - keyed - W/Ref. 8 & 9		1
3	6688403	PANEL	R.H. - deluxe - keyless		1
3		INSTRUCTIONS	NAP - for deluxe panel - See Service Manual		1
4	6679845	CROSSMEMBER			1
5	6675033	INSERT	threaded		6
6	6679856	ALARM	W/nut		1
7	7105983	BOLT			4
8	6679842	SWITCH	ignition - W/Ref. 9		1
9	6674202	NUT			2
10	6709527	KEY	ignition		1
11		KIT	NAP - keyless ign. - Order 6672348 Panel - See Service Manual		1
12	6665314	PLUG	cover		x
13	6674403	COVER			2
14	6675171	CLAMP			1
15	84G003712B	BOLT			1
16	6E000005B	WASHER			1
17	6676536	SWITCH	park brake		1
18	25E000010B	WASHER			2

ENGINE ELECTRICAL CIRCUITRY

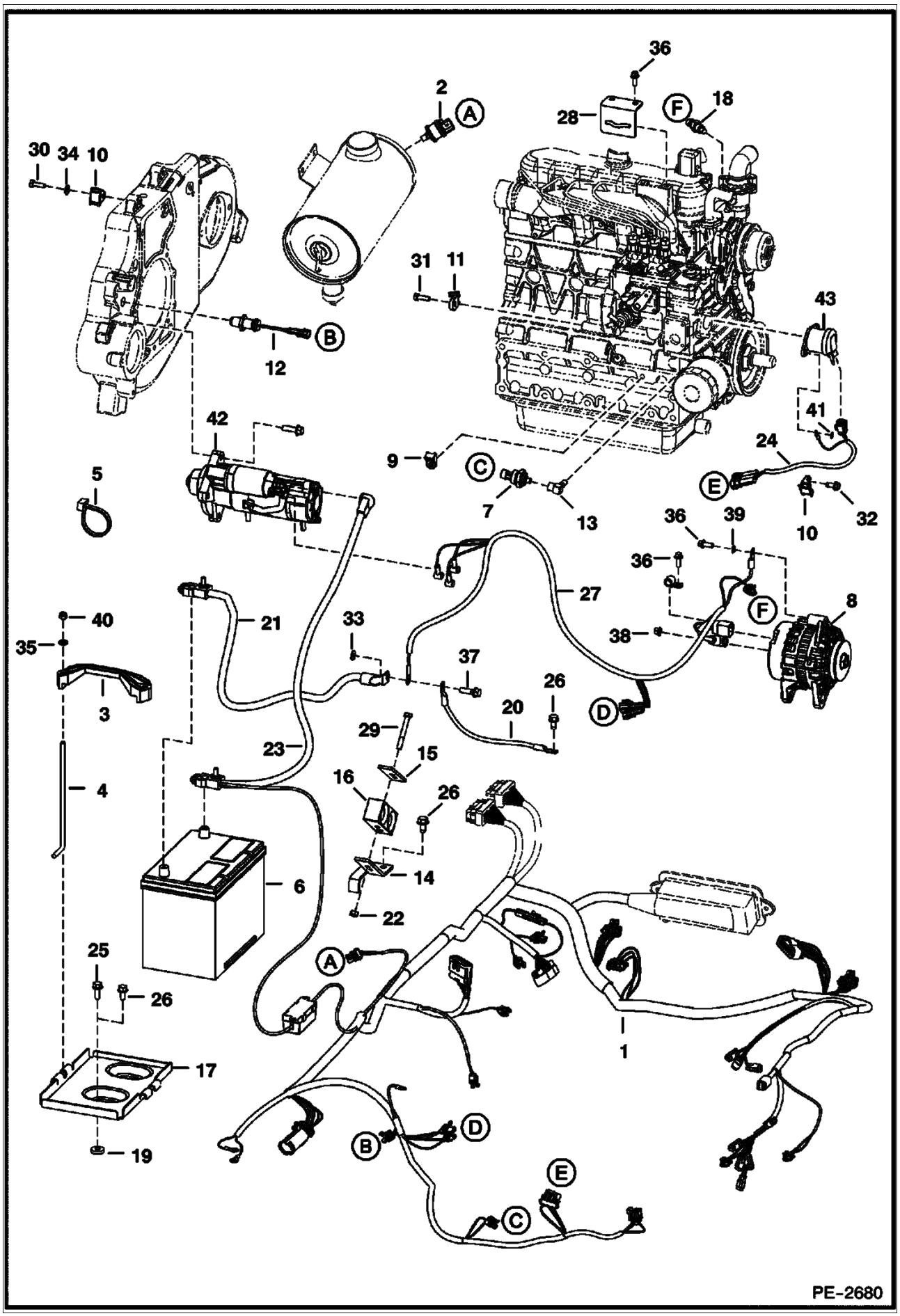

Ref No	Part Number	Description	Remarks	Serial Number	Qty
1	7116258	HARNESS	loader		1
2	6665371	SWITCH			1
3	6569203	CLAMP			1
4	6576280	BOLT			2
5	6624289	STA STRAP			21
6	6674687	BATTERY			1
6		BATTERY CAP			2
7	6674315	SENSOR	eng. oil press.		1
8		ALTERNATOR			1
9	6678667	MOUNT			2
10	6678818	MOUNT			1
11	6679034	MOUNT			2
12	6684037	SENSOR	rpm		1
13	6707040	ELBOW			1
14	6715131	BRACKET			1
15	6715132	RETAINER			1
16	6715197	CLAMP			1
17	6718260	BATTERY PAN			1
18	6718414	SENDER	eng. temp.		1
19	616783	WASHER			2
20	6565170	CABLE	neg.		1
21	6729008	CABLE	ground		1
22	95D000005B	NUT			1
23	6731256	CABLE	pos.		1
24	6736515	HARNESS	fuel solenoid		1
25	84G003716B	BOLT			2
26	84G003712B	BOLT			4
27	7104379	HARNESS	starter/alt.		1
27	6688073	CONNECTOR			1
28	7104215	BRACKET			1
29	17C000540B	BOLT			2
30	1CM00825B	BOLT			1
31	1CM00870B	BOLT			2
32	84G003112B	BOLT			1
33	6E000006B	WASHER			1
34	25E000014B	WASHER			1
35	25E000015B	WASHER			2
36	29CM00820B	BOLT			2
37	35C000620B	BOLT			3
38	43DM00008B	NUT			1
39	6E000005B	WASHER			1
40	59D000005B	NUT			2
41	6E000004B	WASHER			1
42		STARTER			1
43	6684826	SOLENOID	fuel shut off		1

ENGINE ELECTRICAL CIRCUITRY

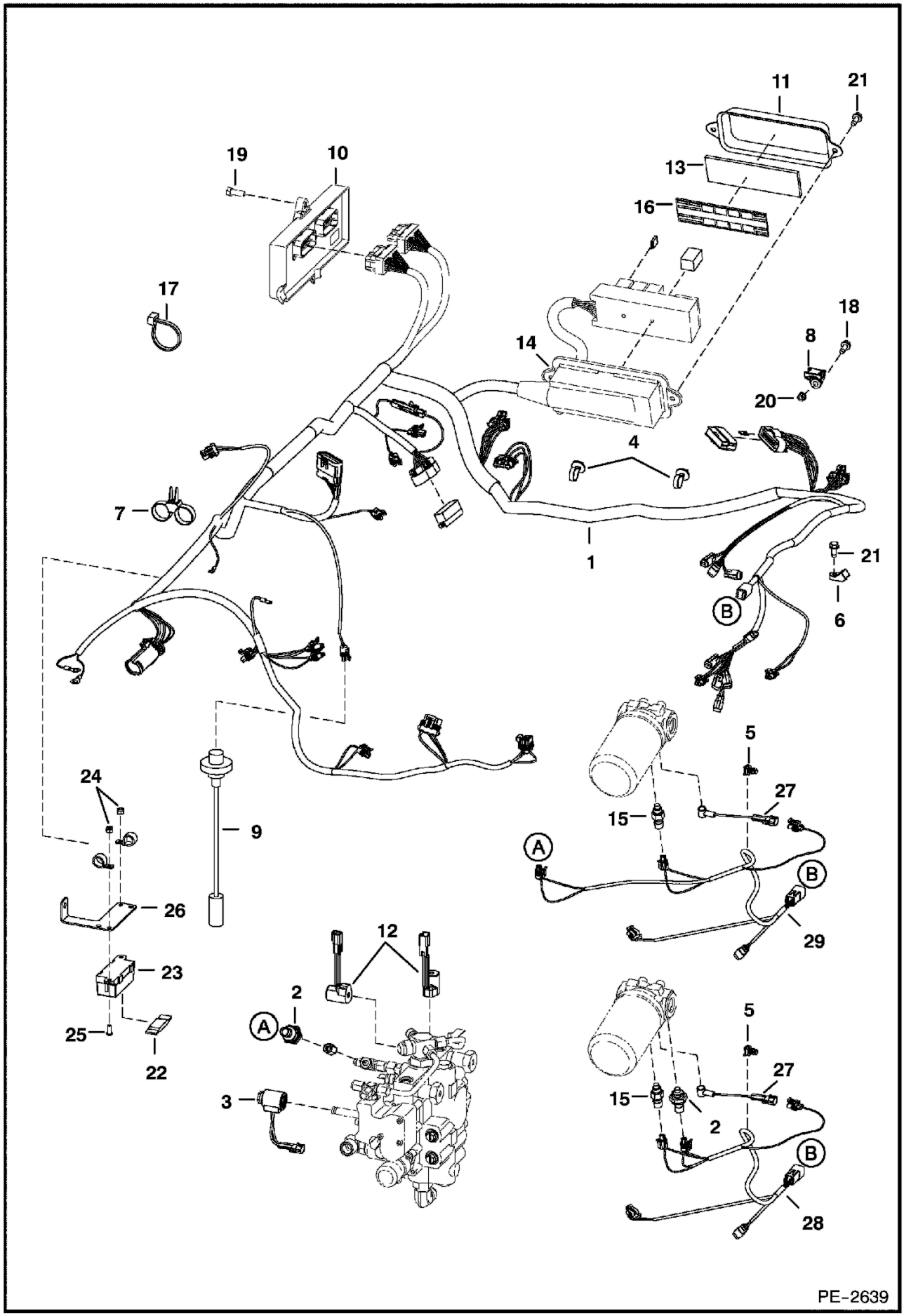

Ref No	Part Number	Description	Remarks	Serial Number	Qty
1	7116258	HARNESS	loader		1
2	6674316	SENSOR	hyd. chg. press. - 3-pin molded connector		1
3	6675559	COIL	assy		1
4	6675734	ALTERNATOR			2
5	6678666	TREE MOUNT	tree		2
6	6678667	MOUNT			2
7	6678668	TIE			1
8	6678818	MOUNT			1
9	6680436	SENSOR	fuel - W/gasket		1
9	6717579	GASKET			1
10	6688439	CONTROLLER	Bobcat		1
11	6716621	COVER			1
12	6717706	COIL	assy		1
13	7117407	DECAL	fuse/relay - 2" x 7" (50,8 mm x 177,8 mm)		1
14	6718659	HOUSING	fuse - boot		1
15	6727869	SENDER	hyd. temp.		1
16	6731275	INSULATION			1
17	6624289	STA STRAP			21
18	17C000412B	BOLT			1
19	43C000616B	BOLT			3
20	83D000004B	NUT			1
21	84G003112B	BOLT			4
22	6675155	FUSE	100 amp		1
23	6675154	HOLDER	high amp fuse		1
24	59D000005B	NUT			2
25	25G000410B	BOLT			2
26	6728621	BRACKET			1
27	6728626	HARNESS			1
28	7112802	HARNESS	hyd. - Manual Hand Controls		1
29	7112800	SJC HARNESS	hyd. - Selectable Joystick Controls		1

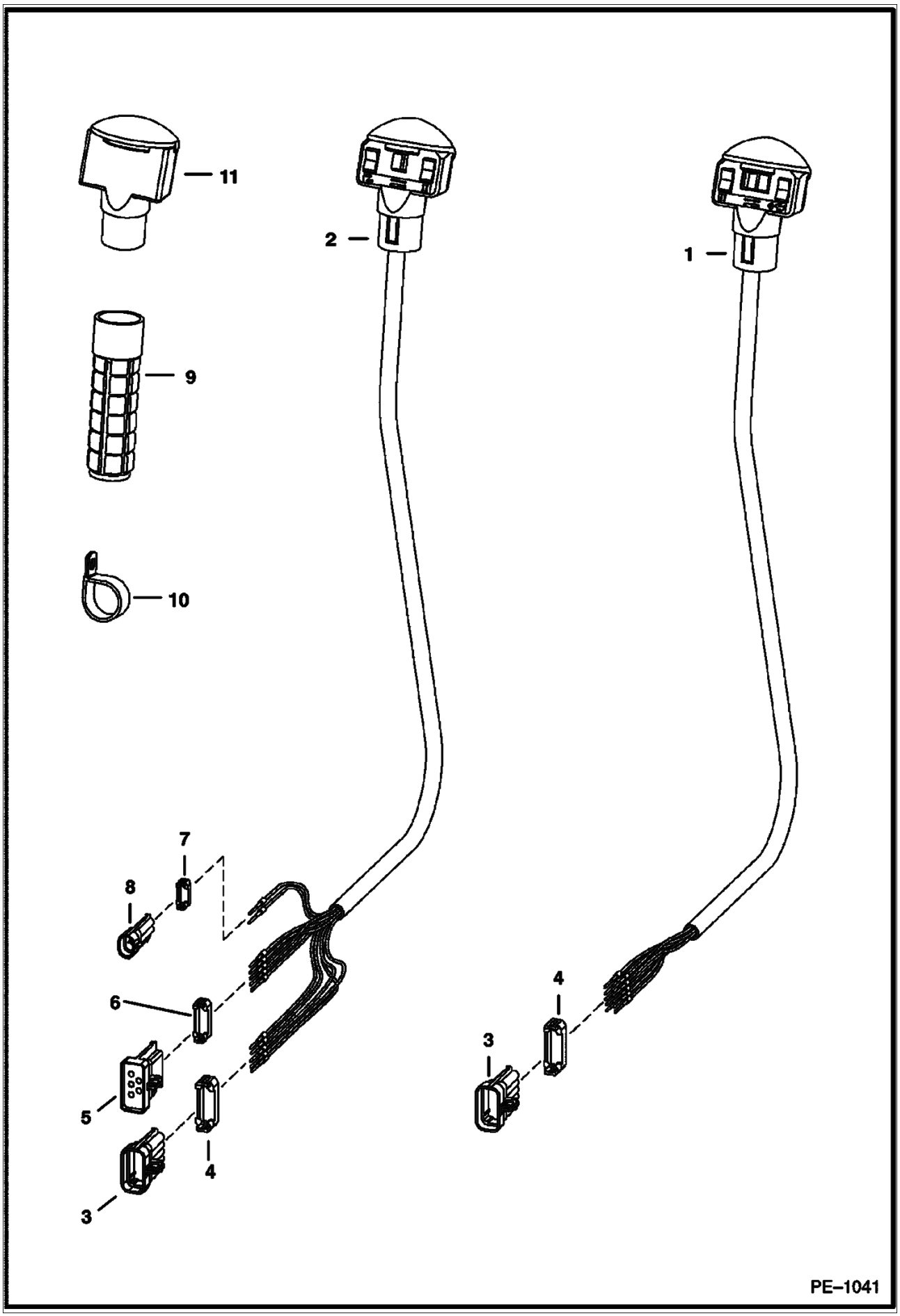
11
2
1
9
10
7
8
6
5
4
3
4
3
PE–1041

CONTROLS ELECTRICAL (Cont'd)
(Manual Hand Controls)

Ref No	Part Number	Description	Remarks	Serial Number	Qty
1	6680418	HANDLE ASSY.	R.H. - Also Order Ref. 3 & 4		1
1	6640690	PIN			9
1	6641176	SEAL			9
2	6680419	HANDLE ASSY.	L.H. - Also Order Ref. 3-8 [A]		1
2	6640690	PIN			10
2	6641176	SEAL			10
2	6680447	DECAL			1
3	6640692	CONNECTOR	10-pin		1
4	6640694	LOCK	10-pin		1
5	6667144	CONNECTOR	5 - way		1
6	6667145	LOCK	5 - way		1
7	6641180	LOCK	2 - pin		1
8	6641179	CONNECTOR	2 - pin		2
9	6702621	GRIP			2
10	6674000	CLAMP			2
11	6680415	HANDLE	L.H. - blank		2

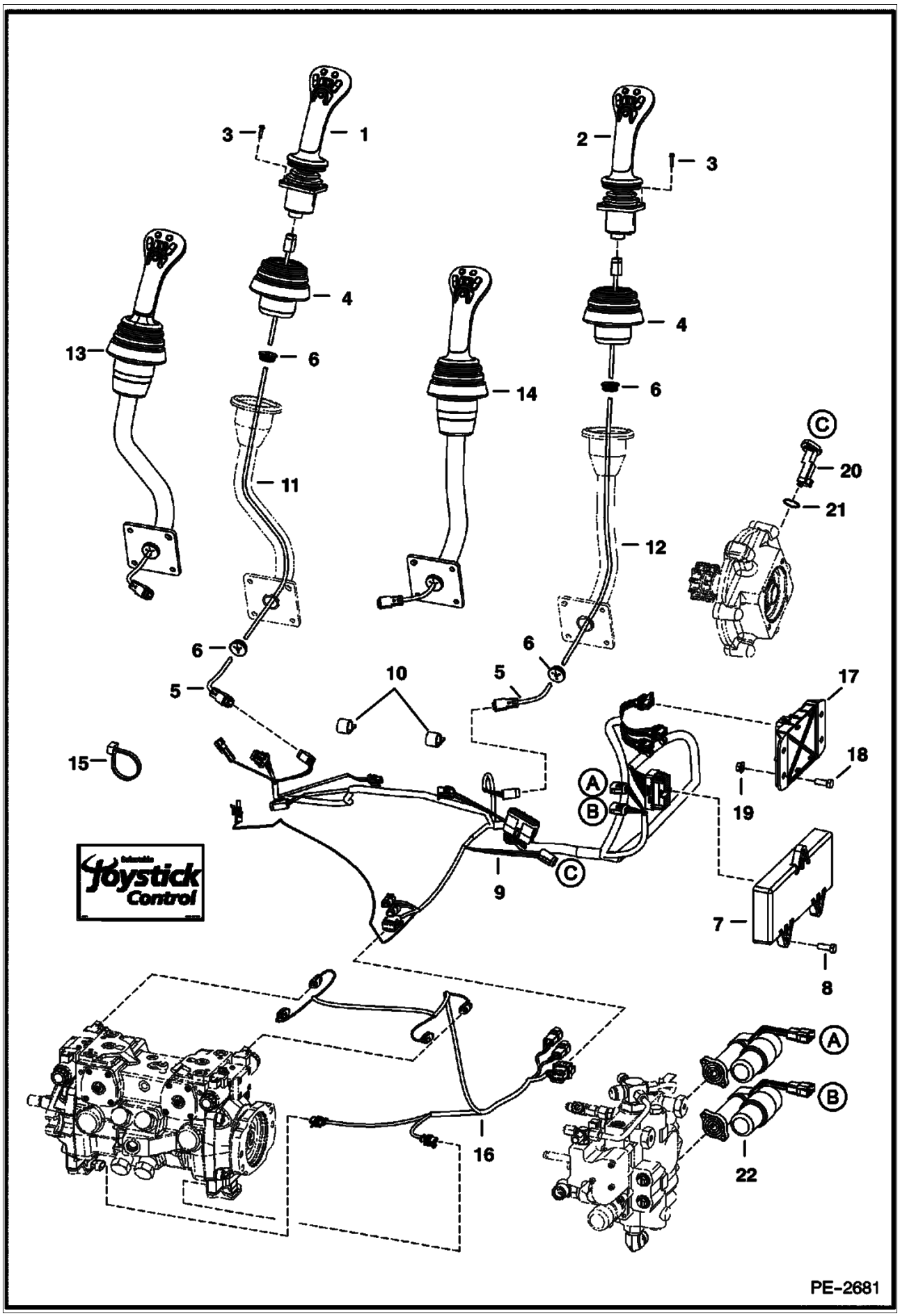
3
1
2
3
4
4
13
6
6
14
11
12
C
20
21
6
6
5
5
10
17
15
18
19
A
B
C
9
7
8
16
A
B
22
PE-2681

CONTROLS ELECTRICAL (Cont'd)
(Selectable Joystick Controls)

Ref No	Part Number	Description	Remarks	Serial Number	Qty
1		JOYSTICK LH	NSS - Order Ref. 13 - Was 6687883 [A]		1
2		JOYSTICK RH	NSS - Order Ref. 14 - Was 6687882 [A]		1
3		BOLT	NSS - L. H. - Order Ref. 13 - R.H. - Order Ref. 14 - Was 6678659 [A]		8
4		BOOT	NSS - L. H. - Order Ref. 13 - R.H. - Order Ref. 14 - Was 6678903 [A]		2
5		HARNESS	NSS - L. H. - Order Ref. 13 - R.H. - Order Ref. 14 - Was 6729397 [A]		2
6		GROMMET	NSS - L. H. - Order Ref. 13 - R.H. - Order Ref. 14 - Was 6684294 [A]		4
7	6680410	CONTROLLER			1
8	43C000616B	BOLT			3
9	7110406	SJC HARNESS			1
10	30H000046B	CLAMP			2
11		HANDLE	NSS - L.H. - Order Ref. 13 - Was 6729792 [A]		1
12		HANDLE	NSS - R.H. - Order Ref. 14 - Was 6729791 [A]		1
13	7111993	JOYSTICK ASMBLY LH	L.H. - Ref. 1, 3-6 & 11		1
14	7111992	JOYSTICK ASMBLY RH	R.H. - Ref. 2-6 & 12		1
15	6624289	STA STRAP			21
16	7114735	HARNESS	A22 pump		1
17	6679485	CONTROLLER JC			1
18	17C000616B	BOLT			2
19	97D000006B	NUT			2
20	6677181	SENSOR			2
21	25K020100B	O-RING			2
22	7101672	ACTUATOR			2
23	6683812	SWITCH	H/ISO		1

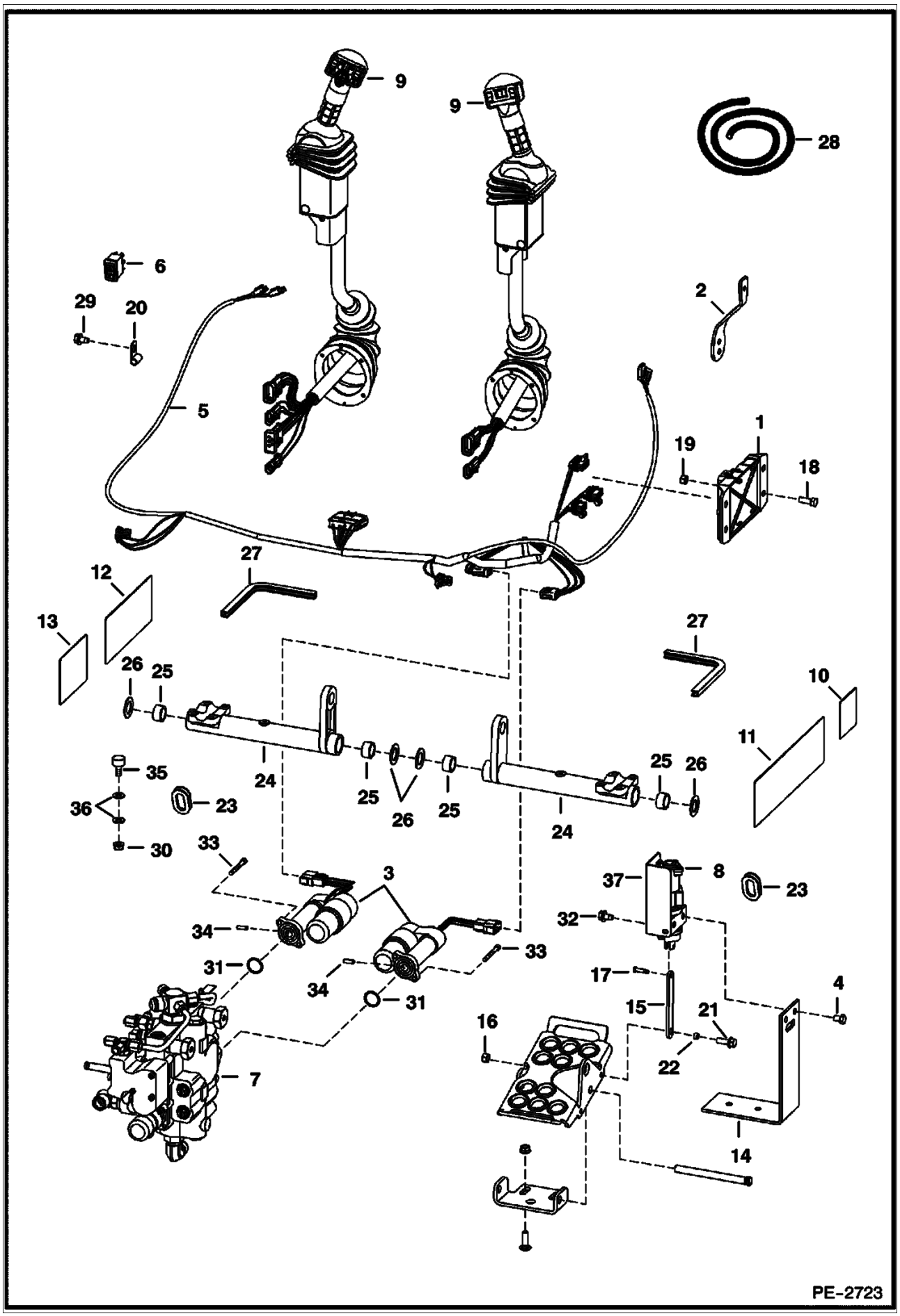
9
9
28
6
29
20
2
5
1
19
18
27
12
13
27
26
25
10
11
24
25
26
25
26
25
24
35
36
23
30
33
3
37
8
23
34
32
31
33
34
31
17
15
21
4
16
22
7
14
PE-2723

CONTROLS ELECTRICAL (Cont'd)
(AHC) (ACS)

Ref No	Part Number	Description	Remarks	Serial Number	Qty
1	6680410	CONTROLLER	metal		1
2	6717393	LEVER	throttle		1
3	7101672	ACTUATOR	W/Ref. 31		2
4	17C000608B	BOLT			4
5	6733292	HARNESS			1
6	6676537	SWITCH			1
7		VALVE			1
8	6684912	SENSOR	See Illustration CONTROLS ELECTRICAL/ PE1553 FOOT PEDAL - R.H.		1
8	6676029	SOLENOID			1
8	6684911	SENSOR	See Illustration CONTROLS ELECTRICAL/ PE1553 FOOT PEDAL - L.H.		1
8	6676029	SOLENOID			1
9	6684915	LEVER	See Illustration CONTROLS ELECTRICAL/ PE1365 TILT - R.H.		1
9	6684916	LEVER	See Illustration CONTROLS ELECTRICAL/ PE1365 LIFT - L.H.		1
10	6718706	DECAL			1
11	6728539	DECAL			1
11	6734646	DECAL	joystick controls		1
12	6727926	DECAL			1
13	6727941	DECAL			1
14	6726573	BRACKET			2
15	6726681	LINK			2
16	95D000005B	NUT			2
17	6727496	PIN			2
18	17C000616B	BOLT			2
19	95D000006B	NUT			6
20	30H000062B	CLAMP			2
21	17C000514B	BOLT			2
22	6729467	SPACER			2
23	6714726	GROMMET			2
24	6716977	BELLCRANK			2
25	6673710	BEARING			4
26	6716916	WASHER	plastic		4
27		MOULDING	NAP - 10.5" (266,7 mm) long - Order Ref. 28		1
28	6654139	MOULDING	bulk - Sold Per Foot		x
29	84G003710B	BOLT			2
30	98D000006B	NUT			2
31	6686220	O-RING			2
32	43C000408B	BOLT			4
33	69G000436B	BOLT			4
34	7108236	PIN			2
35	6673789	BEARING			4
36	25E000017B	WASHER			8
37	6680478	SHIELD	R.H.		1
37	6680479	SHIELD	L.H.		1

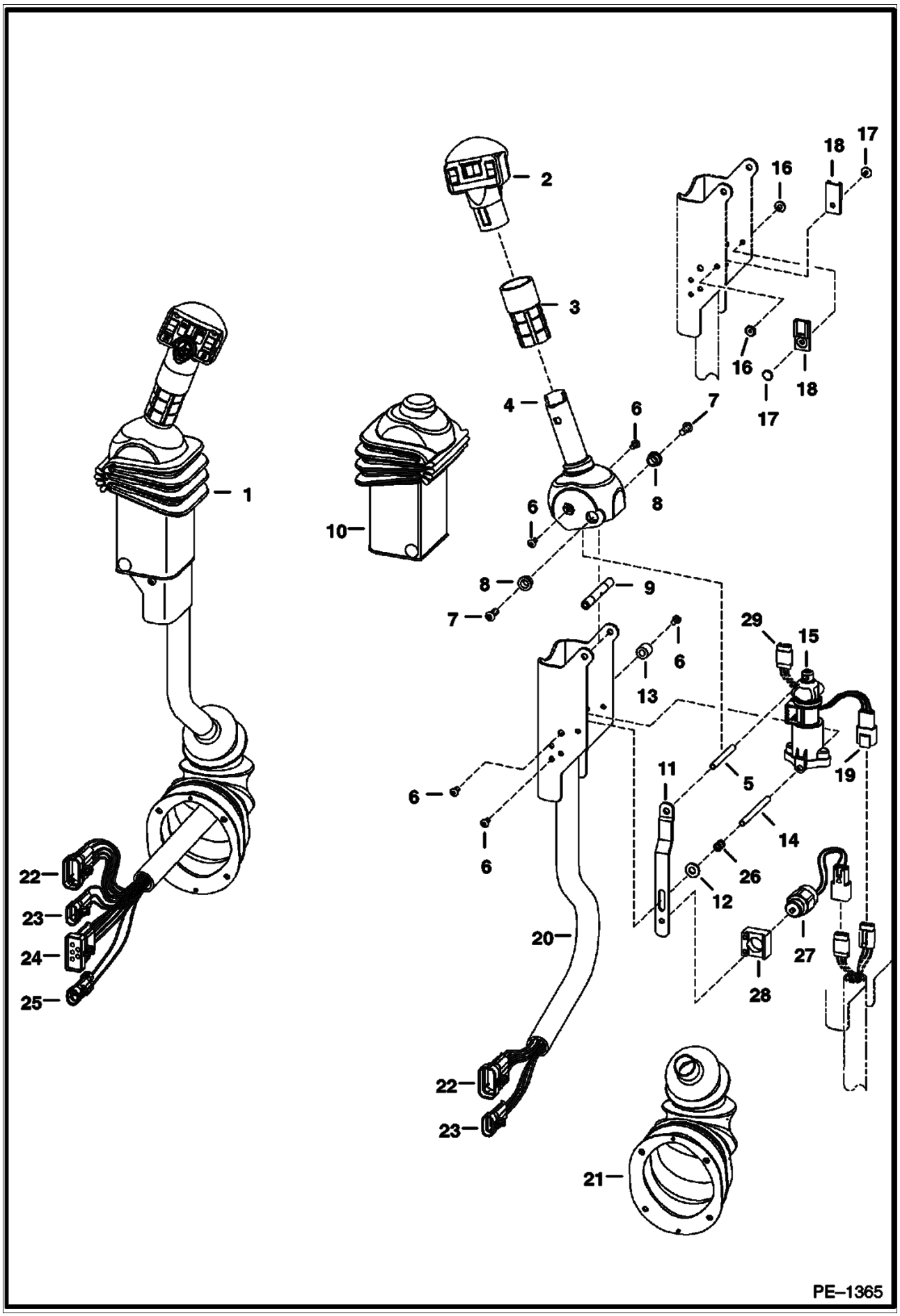
1
2
3
4
5
6
7
8
9
10
11
12
13
14
15
16
17
18
19
20
21
22
23
24
25
26
27
28
29
PE–1365

Ref No	Part Number	Description	Remarks	Serial Number	Qty
1	6684915	LEVER	tilt - R.H.		1
1	6684916	LEVER	lift - L.H.		1
2	6680462	HANDLE	tilt - R.H		1
2	6680417	HANDLE	lift - L.H.		1
3		GRIP	NAP - Order 6702621 Grip & cut to 2.8" long		2
4	6729594	HANDLE	R.H.		1
4	6729595	HANDLE	L.H.		1
5	6680469	SPACER	threaded		1
6	6727065	BOLT			6
7	25GT00410B	BOLT			8
8	6702990	BUSHING			4
9	6713043	SPACER			4
10	6680471	COVER			2
11	6680477	STRAP	stop		1
12	25E000013B	WASHER			1
13	6719835	SLEEVE			4
14	6719834	SPACER	threaded		2
15	6684910	SENSOR			2
15	6670706	CONNECTOR			1
15	6670715	PIN			3
15	6670710	LOCK			1
16	6665322	RIVET	female		2
17	6665321	RIVET	male		2
18	6665000	CLIP			2
19	6670707	CONNECTOR			1
19	6670715	PIN			3
19	6670711	LOCK			1
20	6680481	CHANNEL	R.H.		1
20	6680480	CHANNEL	L.H.		1
21	6532127	BOOT			2
22	6640692	CONNECTOR	10-pin		1
22	6640690	PIN			8
22	6640694	LOCK			1
22	6641176	SEAL			8
22	6646582	PLUG	cavity		1
23	6640699	CONNECTOR	3-pin		2
23	6640690	PIN			3
23	6641176	SEAL			3
23	6640700	LOCK			3
24	6667144	CONNECTOR	5-pin		2
24	6640690	PIN			3
24	6641176	SEAL			3
24	6646582	PLUG	cavity		1
24	6641180	LOCK			1
25	6641179	CONNECTOR	2-pin		1
25	6640690	PIN			2
25	6641176	SEAL			2
25	6641180	LOCK			1
26	6680470	SPRING			1
27	6676029	SOLENOID			1
28	6680468	MOUNT			1
29	6676870	CONNECTOR	3-pin		1
29	6670711	LOCK			1
29	6670715	PIN			1

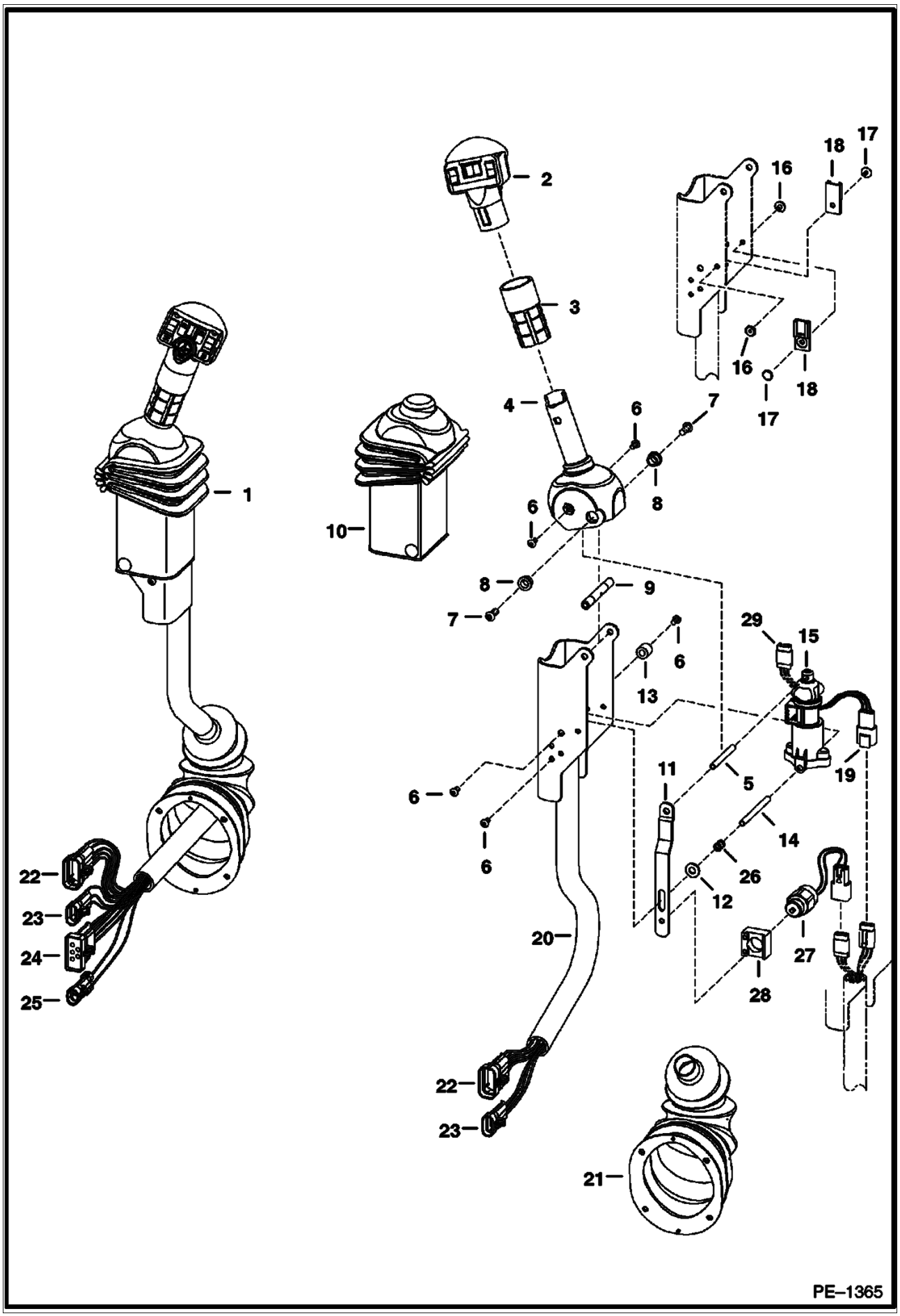
1
2
3
4
6
7
8
9
10
11
12
13
14
15
16
17
18
19
20
21
22
23
24
25
26
27
28
29
PE–1365

Ref No	Part Number	Description	Remarks	Serial Number	Qty
29	6676640	SEAL			5

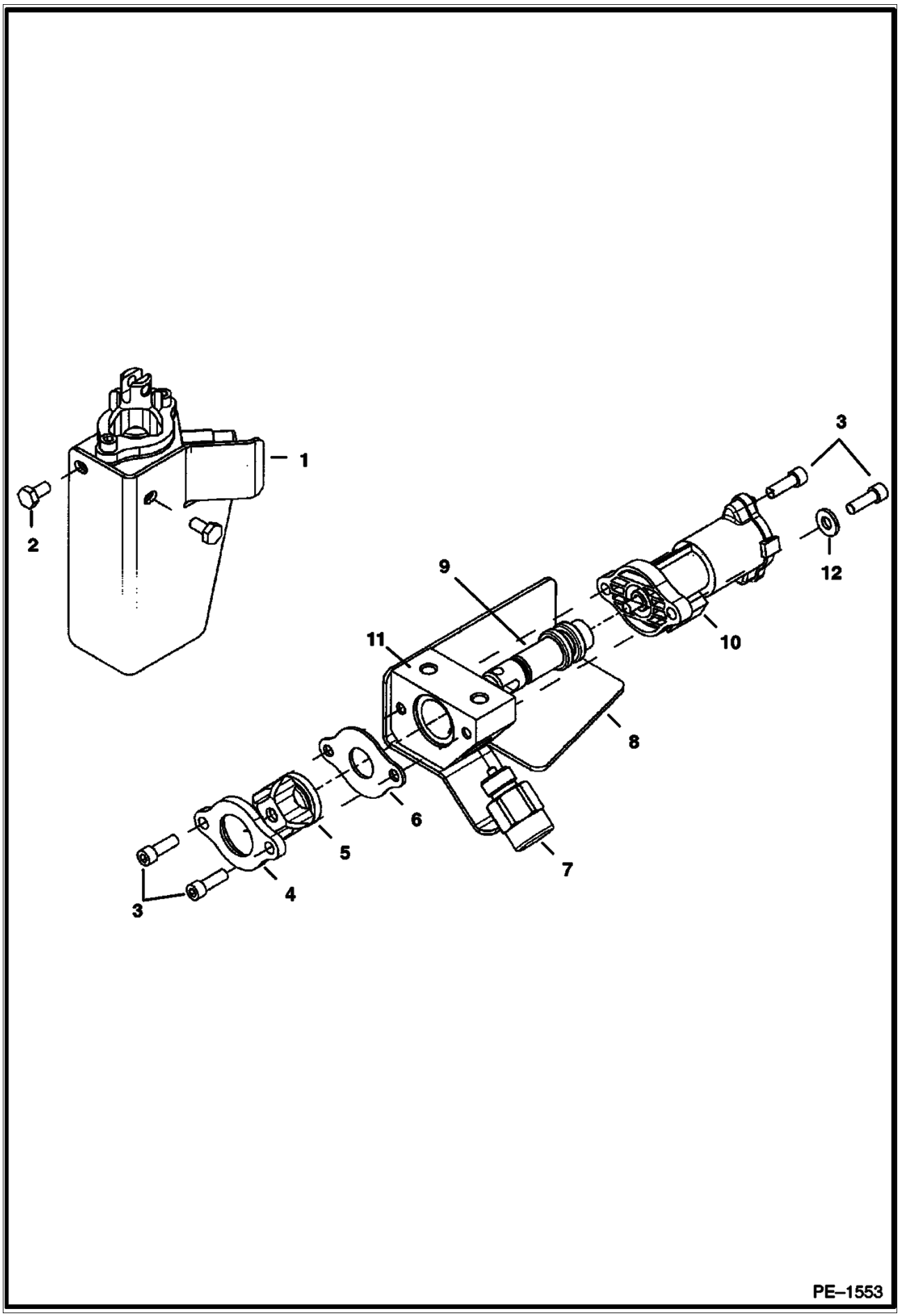
1
2
3
4
5
6
7
8
9
10
11
12
3
PE–1553

CONTROLS ELECTRICAL (Cont'd)
(ACS) (Foot Pedal Assemblies)

Ref No	Part Number	Description	Remarks	Serial Number	Qty
1	6684912	SENSOR	foot pedal - R.H.		1
1	6684911	SENSOR	foot pedal - L.H.		1
2	43C000408B	BOLT			2
3	98G000412B	BOLT			4
4		RETAINER	NAP - boot		1
5	6587763	BOOT			1
6		STOP PLATE	NAP		1
7	6676029	SOLENOID			1
8	6680478	SHIELD	R.H.		1
8	6680479	SHIELD	L.H.		1
9		SPOOL	NSS		1
10		SENSOR	NSS		1
11		BLOCK	NSS		1
12	25E000013B	WASHER			2

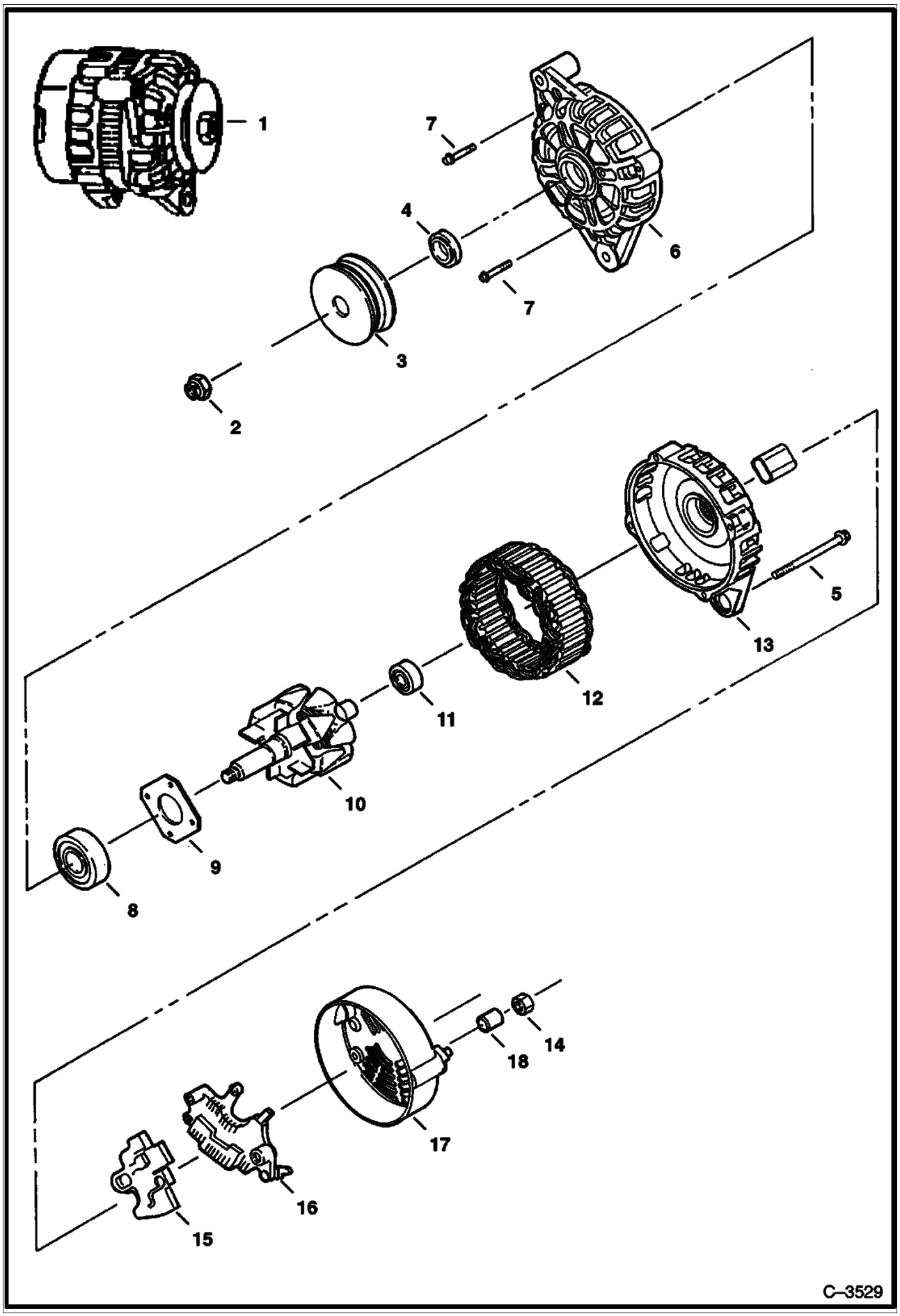
1
7
4
6
7
3
2
5
13
12
11
10
9
8
14
18
17
16
15
C–3529

Ref No	Part Number	Description	Remarks	Serial Number	Qty
1	6678205	ALTERNATOR	90 amp		1
2	6677497	NUT			1
3	6677496	PULLEY			1
4	6677495	SPACER	front		1
5	6677494	BOLT			4
6	6677491	BRACKET	rear		1
7	6677817	BOLT			4
8	6677818	BEARING			1
9	6677819	RETAINER			1
10	6677492	ROTOR			1
11	6677820	BEARING			1
12	6677493	STATOR			1
13	6677490	BRACKET			1
14	6677486	NUT			1
15	6677489	REGULATOR ASSY	Order Ref. 1		1
16	6677488	RECTIFIER			1
17	6677487	COVER			1
18	6677485	SPACER	rear		1

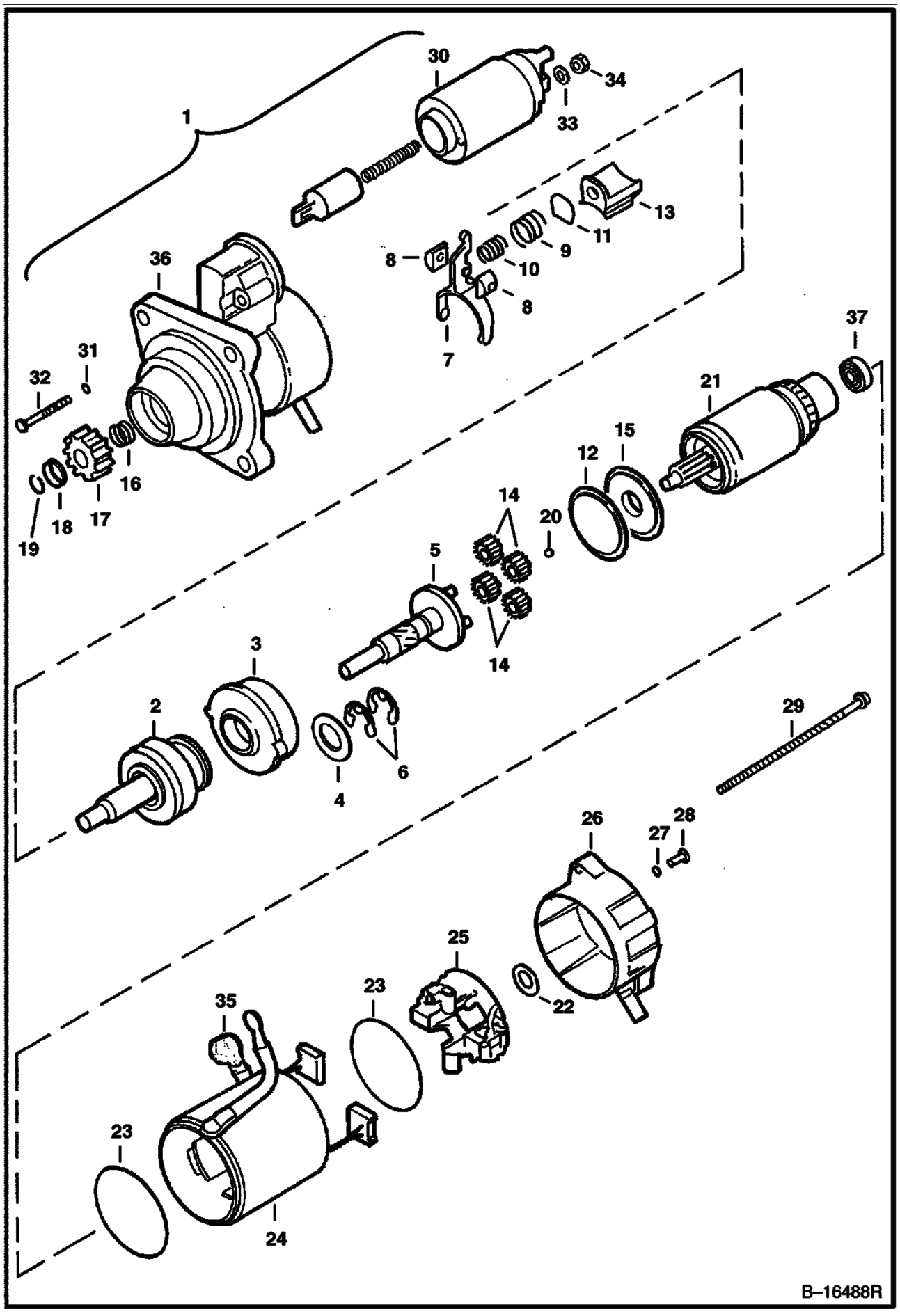
1
30
34
33
13
11
9
10
8
8
7
36
37
31
32
21
15
12
16
17
18
19
14
20
5
14
3
2
29
6
4
26
27
28
25
22
35
23
23
24
B–16488R

STARTER (Cont'd)
(Valeo)

Ref No	Part Number	Description	Remarks	Serial Number	Qty
1	6685190	STARTER			1
2	6680375	SHAFT	O.R.C. assy.		1
3	6680367	GEAR			1
4	6680378	WASHER			1
5	6680365	SHAFT			1
6	6680368	STOP RING			2
7		LEVER	NSS - Order Ref. 36		1
8		HOLDER	NSS - Order Ref. 36		2
9		SPRING	NSS - Order Ref. 36		1
10		SPRING	NSS - Order Ref. 36		1
11		PLATE	NSS - Order Ref. 36		1
12	6680369	SEAL			1
13	6680371	LEVER			1
14	6680366	GEAR			4
15	6680372	BRACKET			1
16	6680361	SPRING			1
17	6680390	GEAR			1
18	6680360	STOP			1
19	6680359	STOP RING			1
20	6680362	BALL			1
21	6680374	ARMATURE	W/Ref. 37		1
22	6680363	WASHER			1
23	6680380	SEAL			2
24	6680373	YOKE			1
25	6680377	HOLDER			1
26	6680389	BRACKET			1
27	6680358	RING	rubber		2
28	6680384	BOLT			2
29	6680356	BOLT			2
30	6680376	SWITCH			1
31	6680379	SEAL			2
32	6680383	BOLT			2
33	6EM00080B	WASHER			1
34	4DM00008B	NUT			1
35	6680355	BOOT			1
36	6680388	BRACKET	W/Ref. 7-11		1
37	6687631	BEARING			1

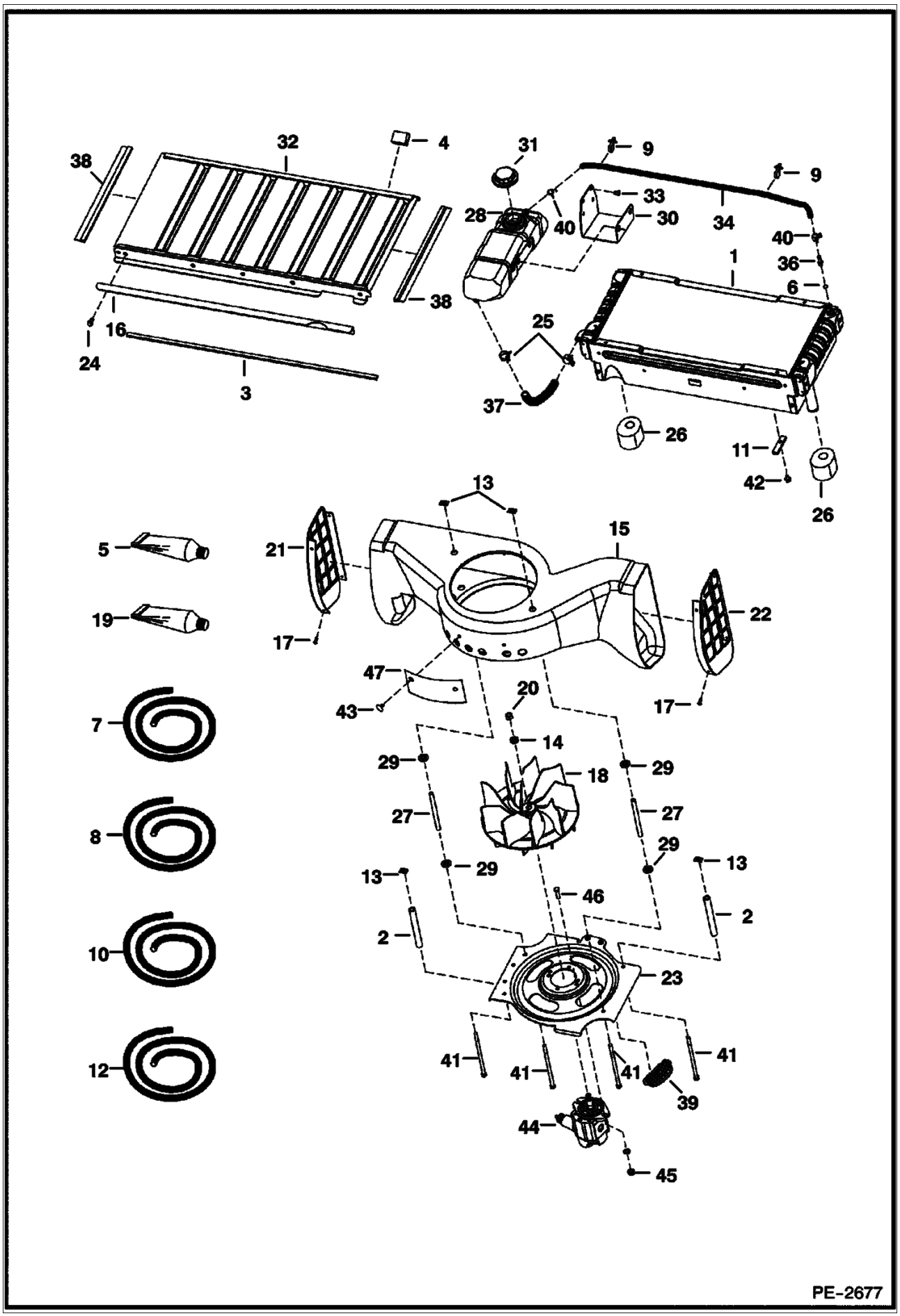
38
32
4
31
9
9
33
28
40
30
34
40
1
36
6
38
25
16
24
3
37
26
11
42
26
13
5
21
15
19
17
22
47
43
20
17
7
14
29
18
29
27
27
8
29
29
13
13
46
2
2
10
23
41
41
41
41
39
12
44
45
PE-2677

Ref No	Part Number	Description	Remarks	Serial Number	Qty
1	6686077	RADIATOR			1
2	6577382	SPACER			2
3		FOAM STRIP	NAP - 34.5"(876,3mm) long - Order Ref. 8		2
4	6579613	STOP			2
5	6633583	HOSE	Oil Cooler Grill		x
6	79K000002B	O-RING			1
7	6578172	HOSE	bulk - sold by the foot		1
8	6511855	SEAL	bulk - sold by the foot		x
9	6675734	STRAP	button head		2
10	6646705	SEAL	bulk - sold by the foot		x
11	6679991	SEAL	washer		1
12	6577822	HOSE	bulk - sold by the foot		x
13	6684033	NUT			4
14	6701097	WASHER			1
15	7104117	HOUSING			1
16	6703471	BRACKET			1
17	6706517	SCREW	plastic louvers		8
18	6715142	FAN			1
19	6650407	ADHESIVE	1 oz. tube		x
20	96D000008B	NUT			1
21	6716571	LOUVER	L.H. - plastic		1
22	6716573	LOUVER	R.H. - plastic		1
23	7107175	INLET			1
24	84G003112B	BOLT			3
25	5HM00024B	CLAMP			2
26	6726433	SPACER			2
27	6732318	SPACER			2
28	6732375	TANK	expansion		1
29	6732457	WASHER	step		4
30	6732870	MOUNT			1
31	6733429	CAP			1
31	6733996	DECAL	14 psi		1
32	6733804	GRILL			1
33	6733886	BOLT			2
34		HOSE	NAP - 36"(914,4 mm) long - Order Ref. 12		1
35	6687142	MOTOR	See Illustration MOTOR/ PE2811 See Illustration HYDROSTATIC CIRCUITRY/ PE2735 W/proportional valve		1
35	6689058	MOTOR	W/O proportional valve		1
35	6689059	VALVE ASSY	proportional		1
35	6689060	COIL ASSY	W/nut & O-ring		1
35	6683206	SEAL KIT	for proportional valve		1
36	6734236	ADAPTER	W/Ref. 6		1
37		HOSE	NAP - 8.25"(209,6 mm) long - Order Ref. 7		1
38		MOULDING	NAP - 16.8"(426,7 mm) long - Order Ref. 10		2
39	6684474	INSERT FAN INLET			4
40	5HM00014B	CLAMP			2
41	17C006116B	BOLT			4
42	35C000516B	BOLT			2
43	6674895	RETAINER			2
44	6687142	MOTOR	See Illustration HYDROSTATIC CIRCUITRY/ PE2735 See Illustration MOTOR/ PE2811		2
45	95D6	NUT			2
46	17C620	BOLT			2
47	6715819	INSULATOR			1

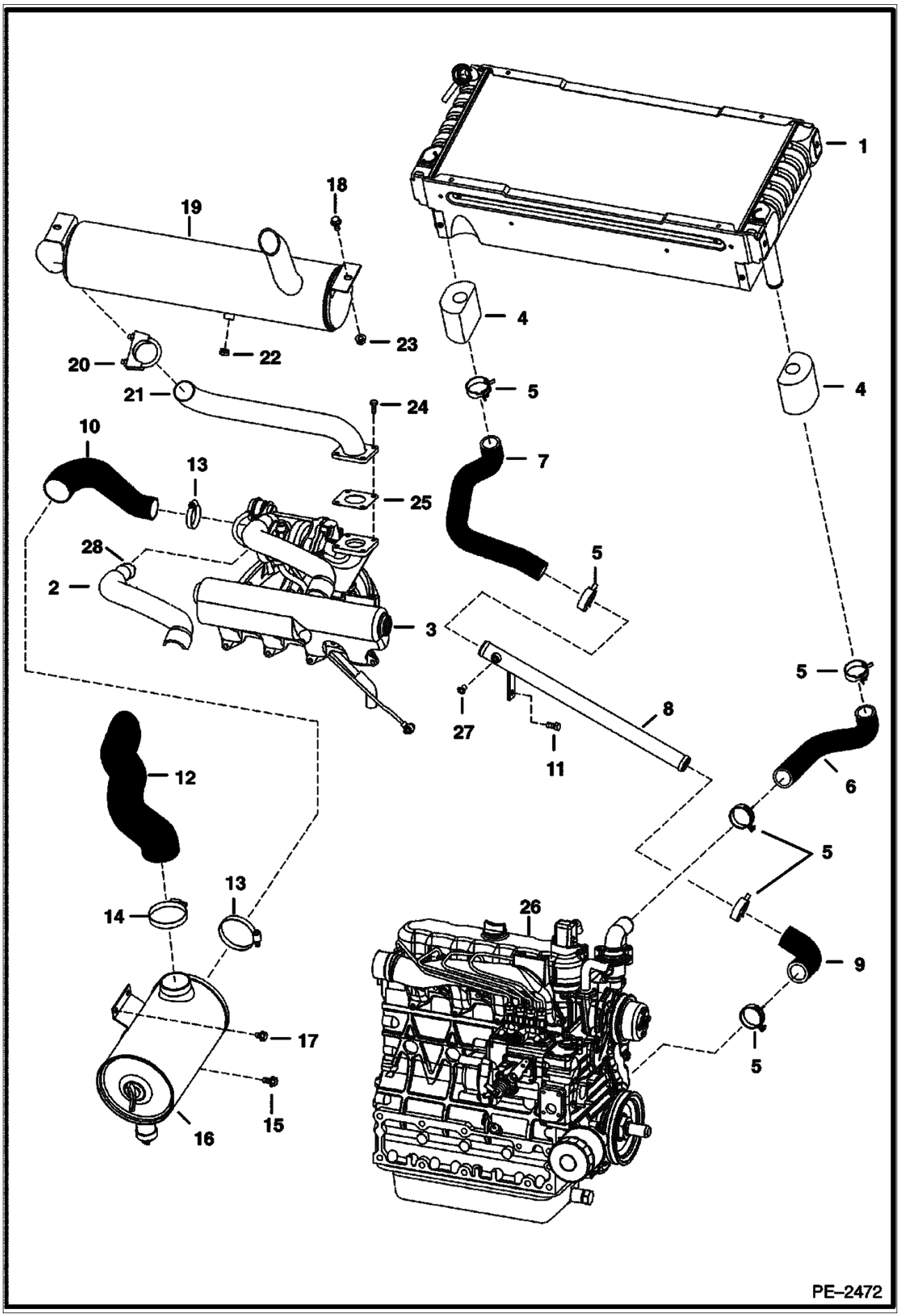
1
18
19
4
23
22
20
5
21
24
4
10
7
13
25
28
5
2
3
5
27
8
11
12
6
5
13
14
26
9
17
5
16
15
PE–2472

Ref No	Part Number	Description	Remarks	Serial Number	Qty
1	6686077	RADIATOR			1
2	6706393	SHIELD			1
3		TURBO	See Illustration TURBO CHARGER/ B22742		1
4	6726433	SPACER			2
5	5HM00042B	CLAMP			6
6	6717591	HOSE			1
7	6717592	HOSE			1
8	6730999	TUBE ASSY			1
8	40K000006B	PLUG			1
9	7100024	HOSE			1
10	6737355	HOSE			1
11	17C000612B	BOLT			1
12	7102656	HOSE			1
13	42HL00300B	CLAMP			2
14	42HL00325B	CLAMP			1
15	84G003712B	BOLT			1
16		AIR CLEANER	See Illustration AIR CLEANER/ B16478		1
17	84G003708B	BOLT			2
18	35C000616B	BOLT			2
19	6683915	MUFFLER			1
20	7101708	CLAMP			1
21	7107449	TUBE			1
22	6661062	PLUG	brass 3/8" (9,5 mm)		1
23	61D000006B	NUT			2
24	6701123	SCREW			4
25	6727753	GASKET			1
26	6683203	ENGINE	See Illustration ENGINE & GASKET KITS/ B22750		1
27	40K000006B	PLUG			1
28	7104076	TIE			1

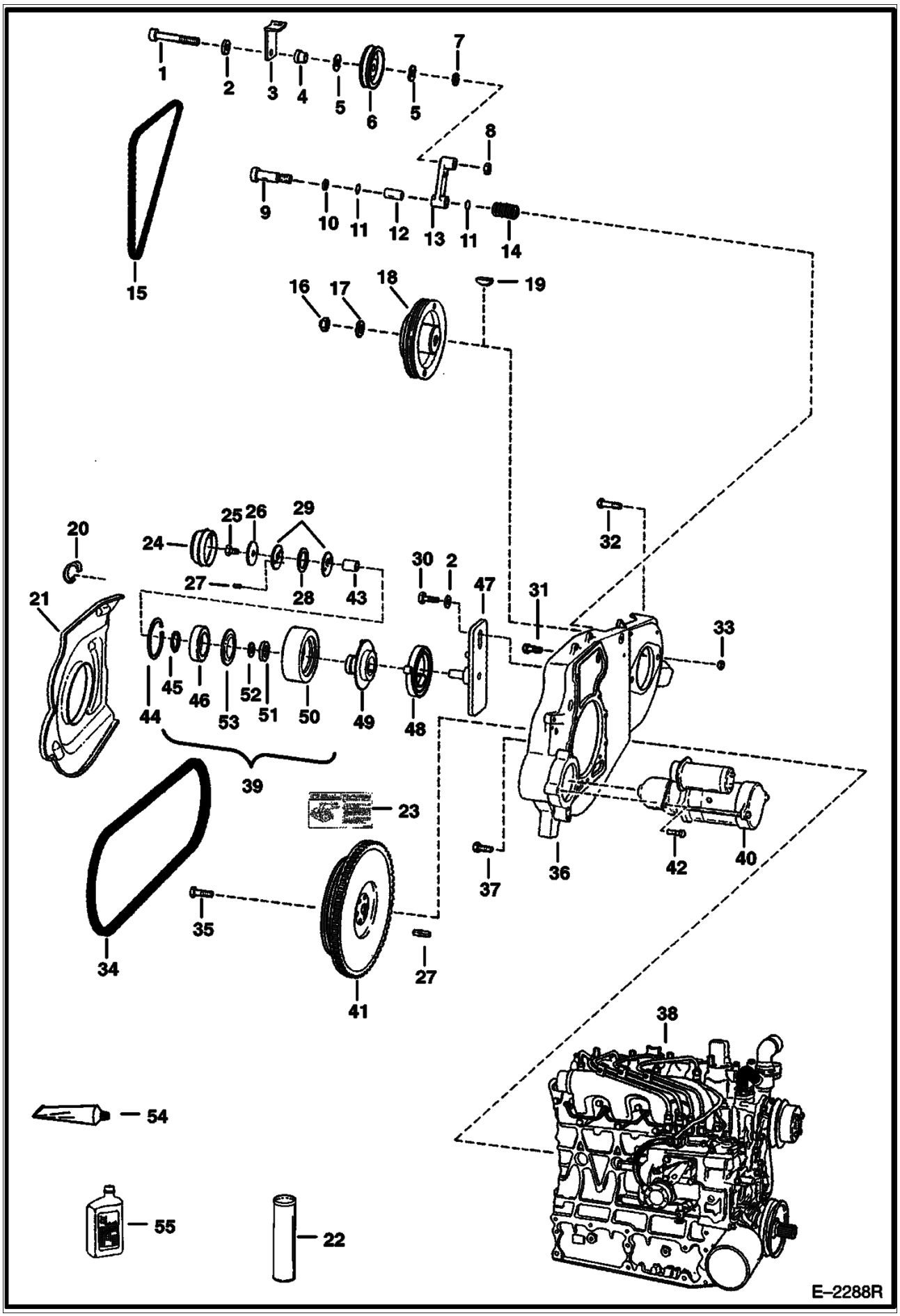
1
2
3
4
5
6
5
7
8
9
10
11
12
13
11
14
15
16
17
18
19
20
21
24
25
26
29
27
28
43
30
2
47
31
32
33
44
45
46
53
52
51
50
49
48
39
23
34
35
27
41
36
37
42
40
38
54
55
22
E–2288R

ENGINE & ATTACHING PARTS (Cont'd)
(Belt Drive System)

Ref No	Part Number	Description	Remarks	Serial Number	Qty
1	73G000656B	BOLT			1
2	6704484	WASHER	thrust		3
3	6702474	RETAINER	fan drive idler belt		1
4	6704443	BUSHING	spacer		1
5	6660995	GREASE RING	grease		2
6	6662997	PULLEY	fan drive idler		1
7	6704444	WASHER			1
8	61D000006B	NUT			1
9	38C000820B	BOLT	shoulder		1
10	6655781	BEARING			1
11	6704820	O-RING			2
12	6670682	BEARING	nylon		1
13	6725212	ARM	W/Ref. 12		1
14	6700115	SPRING			1
15		BELT	FAN DRIVE		1
16	92D000012B	NUT			1
17	6576033	WASHER			1
18	7113635	PULLEY	to hyd. pump - 3 groove - 7.95" (202 mm) dia.		1
19	6J000807B	KEY			1
20	6703022	CLIP			3
21	7109712	SHIELD			1
22	6599719	GREASE	Use W/Ref. 39		x
23	6709030	DECAL	belt tension spring loaded idler		1
24	6708770	CAP	dust		1
25	17C000610B	BOLT			1
26	6705232	WASHER			1
27	6713370	PIN			2
28	6710585	WASHER	wave spring		1
29	6705231	WASHER			2
30	17C000620B	BOLT			1
31	6719828	BOLT			2
32	17C000828B	BOLT	hyd. pump mount		2
33	85D000008B	NUT			2
34	6736775	BELT	pump drive		1
35	6598275	BOLT			6
36	6726613	MOUNT			1
37	6719825	BOLT			7
38		ENGINE	See Illustration ENGINE & GASKET KITS/ B22750		1
39	6735884	IDLER ASSY.	spring loaded - Ref. 24 - 29 & 43 - 53 - Also Order Ref. 23		1
40		STARTER	See Illustration STARTER/ B16488R		1
41	6736807	FLYWHEEL ASSY	W/Ring Gear		1
41	6510470	RING GEAR			1
42	35C000620B	BOLT			3
43	6682442	SLEEVE	bronze sleeve		1
44	6658847	RING			1
45	6658536	RING			1
46	6668114	BEARING	ball		1
47	6735883	BRACKET			1
48	6705491	SPRING	torsion		1
49	6711699	HUB ASSY.			1
50	6704391	PULLEY	idler		1
51	6685735	SEAL			1
52	6703168	BEARING	thrust		1
53	6664209	SEAL			1

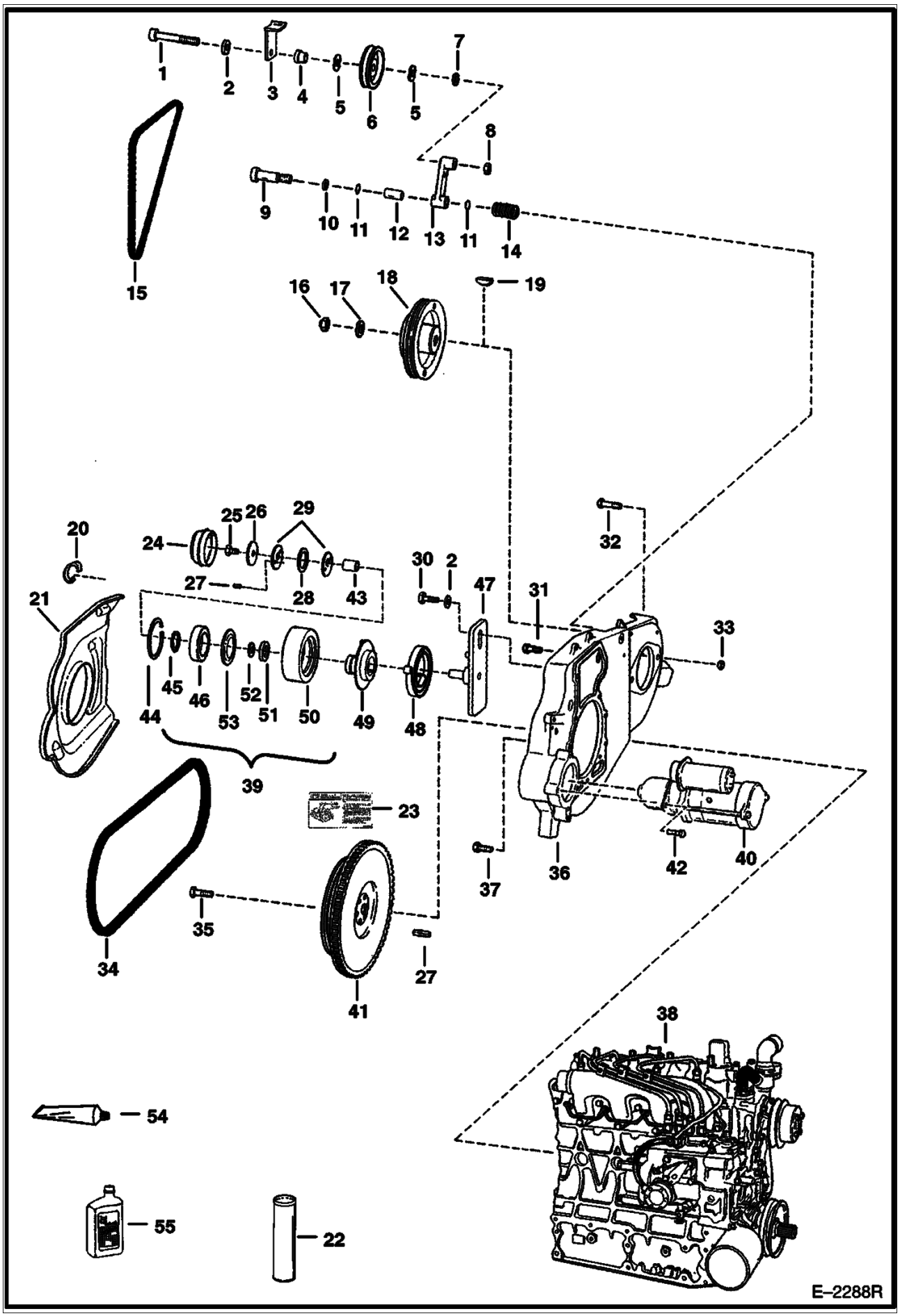
1
2
3
4
5
6
5
7
8
9
10
11
12
13
11
14
15
16
17
18
19
20
21
24
25
26
29
27
28
43
30
2
47
31
32
33
44
45
46
53
52
51
50
49
48
39
23
34
35
27
41
36
37
42
40
38
54
55
22
E–2288R

Ref No	Part Number	Description	Remarks	Serial Number	Qty
54	6633583	SEALANT			x
55	6661405	OIL			x

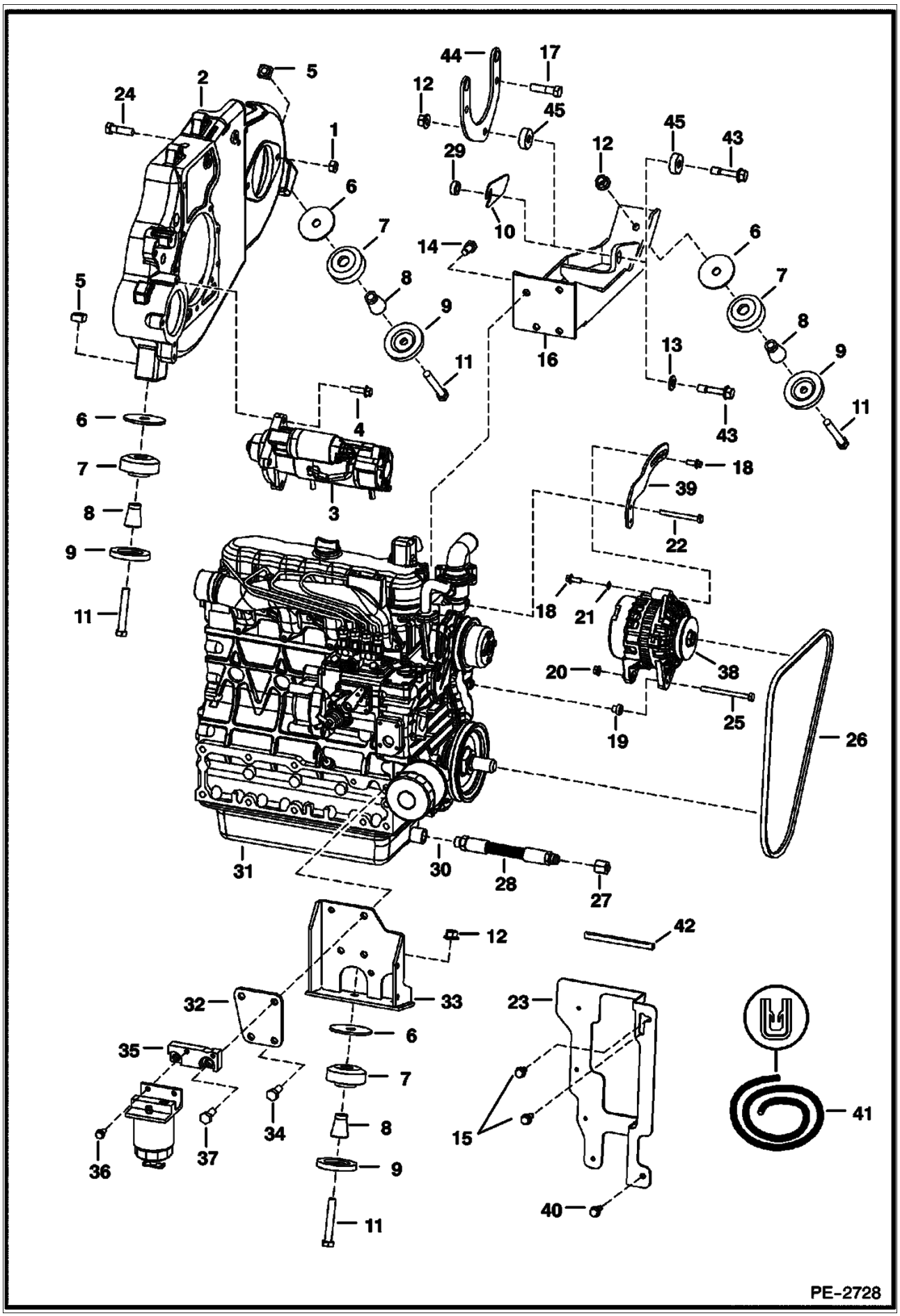
PE-2728

Ref No	Part Number	Description	Remarks	Serial Number	Qty
1	85D000008B	NUT			2
2		MOUNT			1
3		STARTER			1
4	35C000620B	BOLT			3
5	6652918	NUT			2
6	6705106	WASHER			4
7	6661785	MOUNT			4
8	6706043	SPACER			4
9	6661787	WASHER			4
10	7114739	SPACER			1
11	43C000852B	BOLT			4
12	83D000008B	NUT			2
13	25E000021B	WASHER	use 2 max.		x
14	6719827	BOLT			4
15	84G003712B	BOLT			2
16	7104568	MOUNT	engine & hyd. pump - for horizontal hardware mounting of hydrostatic pump		1
17	53CM01240B	SCREW	hyd. pump mount - Selectable Joystick Controls		2
18	29CM00820B	BOLT			1
19	6817566	BUSHING			1
20	53DM00008B	NUT			2
21	6E000005B	WASHER			1
22	1CM00890B	BOLT			1
23	6731060	SHIELD	bolts to upright		1
24	17C000828B	BOLT	hyd. pump mount		2
25	1CM08100B	BOLT			2
26	7100572	BELT	alternator		1
27	36K000006B	CAP			1
28	6563445	HOSE			1
29	7113010	ADAPTER			1
30	79K000008B	O-RING	flat boss face		x
31		ENGINE			1
32	6700535	SPACER			1
33	6703981	MOUNT	W/Ref. 32		1
34	6719828	BOLT			2
35	6736817	MOUNT	fuel filter		1
36	6719826	BOLT			1
37	6719829	BOLT			1
38		ALTERNATOR	90 AMP.		1
39	6730867	BRACKET			1
40	84G003716B	BOLT			2
41	6654139	MOULDING	bulk - Sold Per Foot		x
42		MOULDING	NAP - 5.5" (139,7 mm) long - Order Ref. 41		1
43	6675221	BOLT	hyd. pump mount		1
44	7107849	MOUNT	pump - Selectable Joystick Controls		1
45	7104608	BUSHING	spacer - Selectable Joystick Controls		2

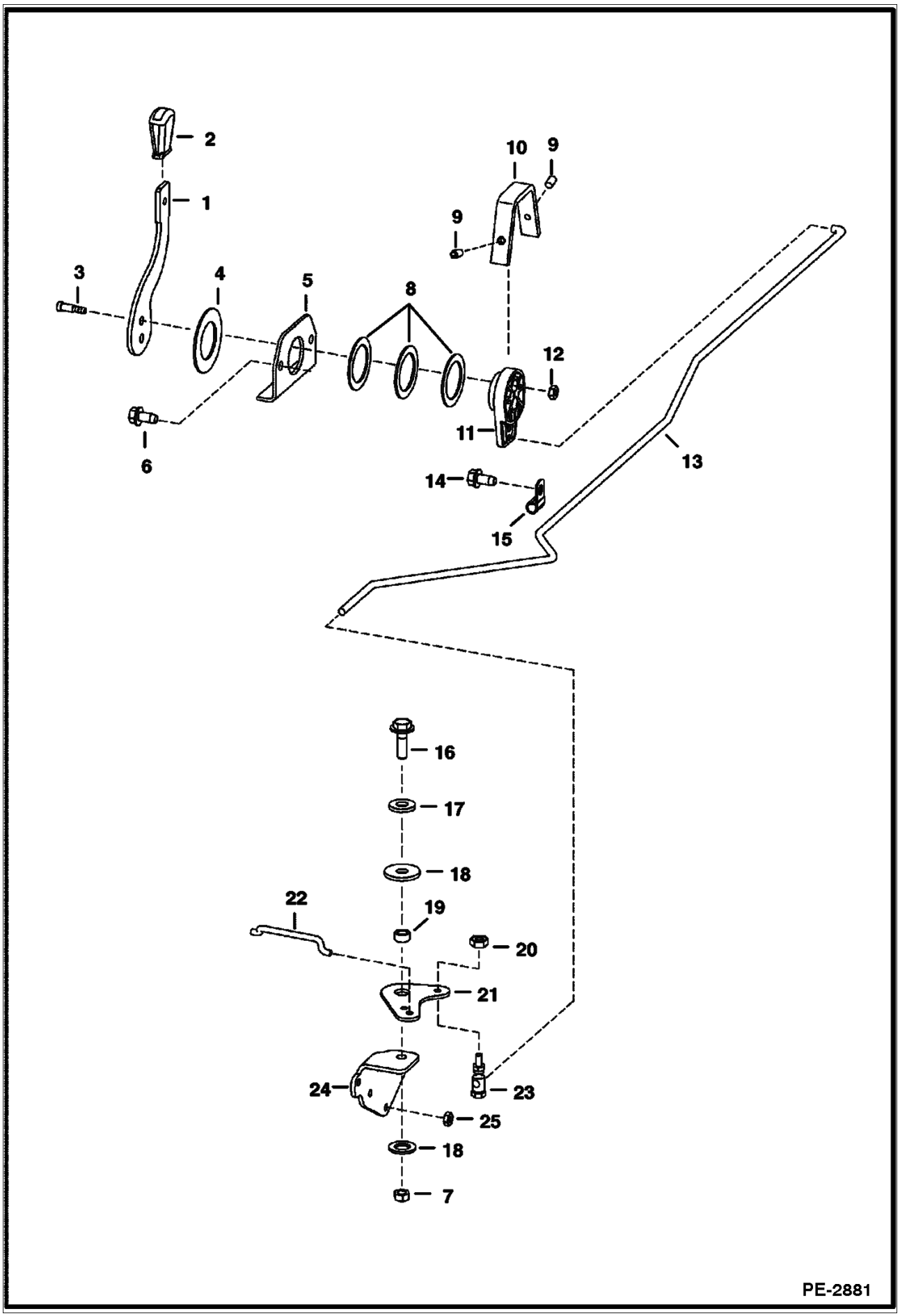
2
1
10
9
9
3
4
5
8
12
6
11
13
14
15
16
17
18
22
19
20
21
24
23
25
18
7
PE-2881

Ref No	Part Number	Description	Remarks	Serial Number	Qty
1	6705452	LEVER			1
2	6564452	GRIP			1
3	38C000610B	BOLT	shoulder		2
4	6567962	WASHER			1
5	6576262	MOUNT			1
6	84G003724B	BOLT			2
7	95D000006B	NUT			1
8	6630945	WASHER			3
9	6706572	SET SCREW			2
10	6734520	COVER			1
11	6734416	LEVER			1
12	85D000005B	NUT			2
13	7114667	ROD	throttle		1
14	84G003712B	BOLT			1
15	31H000038B	CLAMP			1
16	84G003716B	BOLT			1
16	17C000716B	BOLT			1
17	25E000018B	WASHER			1
18	6700170	WASHER	plastic		2
19	6564343	SPACER			1
20	59D000004B	NUT			1
21	6578268	BELLCRANK			1
22	6736195	ROD			2
23	6557291	BALL JOINT			1
24	7109314	MOUNT			1
25	4DM00006B	NUT			3

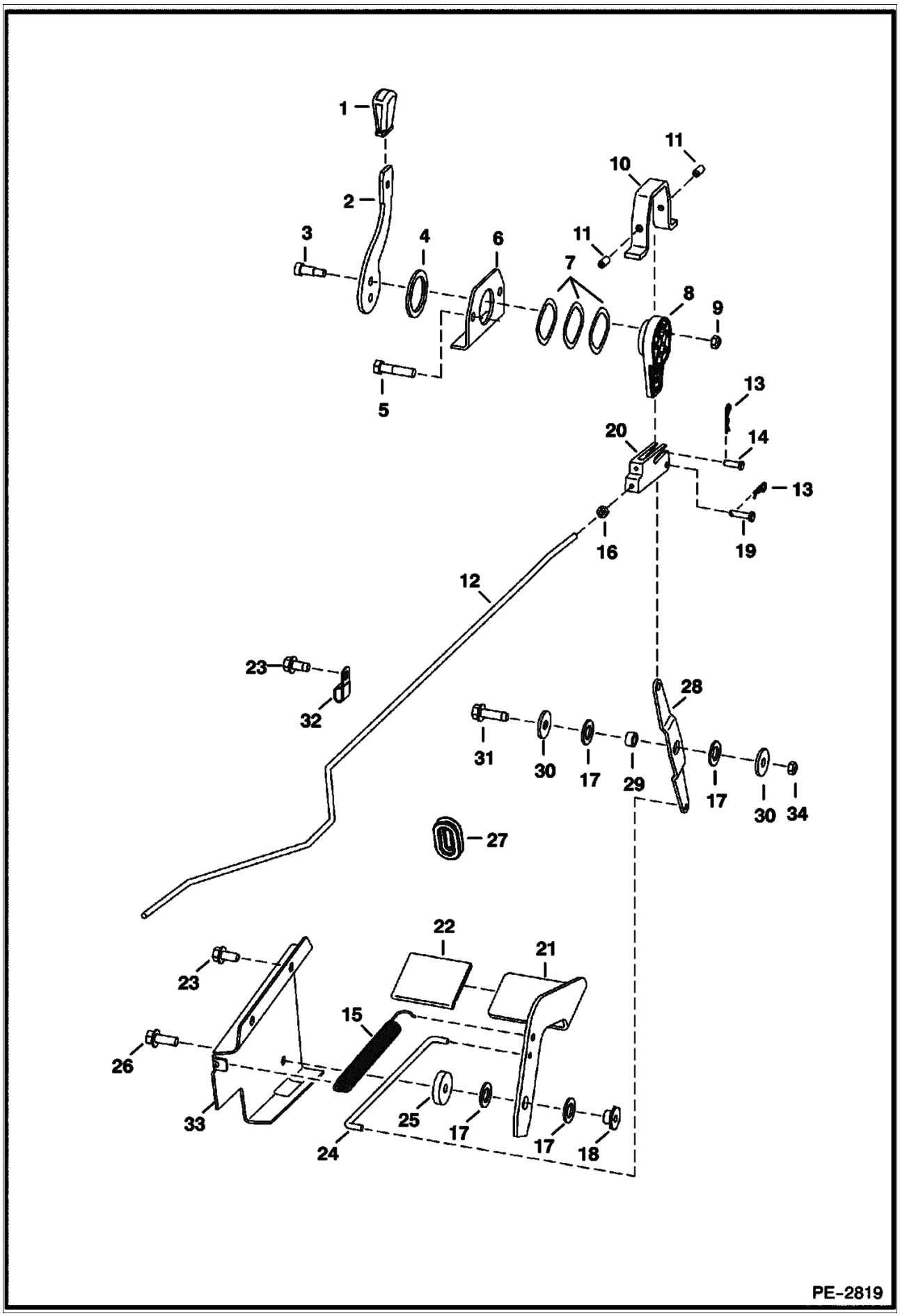
1
2
3
4
5
6
7
8
9
10
11
11
12
13
13
14
16
17
17
17
18
19
20
21
22
23
23
24
25
26
27
28
29
30
30
31
32
33
34
15
PE-2819

ENGINE SPEED CONTROL (Cont'd)
Selectable Joystick Controls

Ref No	Part Number	Description	Remarks	Serial Number	Qty
1	6564452	GRIP			1
2	6730270	LEVER			1
3	38C000610B	BOLT	shoulder		2
4	6567962	WASHER			1
5	84G003724B	BOLT			2
6	6576262	MOUNT			1
7	6630945	WASHER			3
8	6734416	LEVER			1
9	85D000005B	NUT			2
10	6734520	COVER			1
11	6706572	SET SCREW			2
12	7116280	ROD			1
13	6513495	COTTER PIN			2
14	2F004051B	PIN			1
15	6700743	SPRING			1
16	62D000004B	NUT			2
17	6700170	WASHER	plastic		4
18	6559479	NUT	retaining		1
19	1304227B	PIN			1
20	6734503	CLEVIS			1
21	6731898	PEDAL			1
22	6554100	TREAD	safety		1
23	84G003712B	BOLT			3
24	6731900	ROD			1
25	6732322	SPACER			1
26	45C000616B	BOLT			1
27	6577961	GROMMET			1
28	6734417	LEVER			1
29	6564343	SPACER			1
30	619021B	WASHER			2
31	84G003720B	BOLT			1
32	31H38	CLAMP			1
33	6732323	BRACKET			1
34	85D6	LOCK NUT			1

ENGINE & GASKET KITS
(Kubota - V2003TMDI - Tier II)

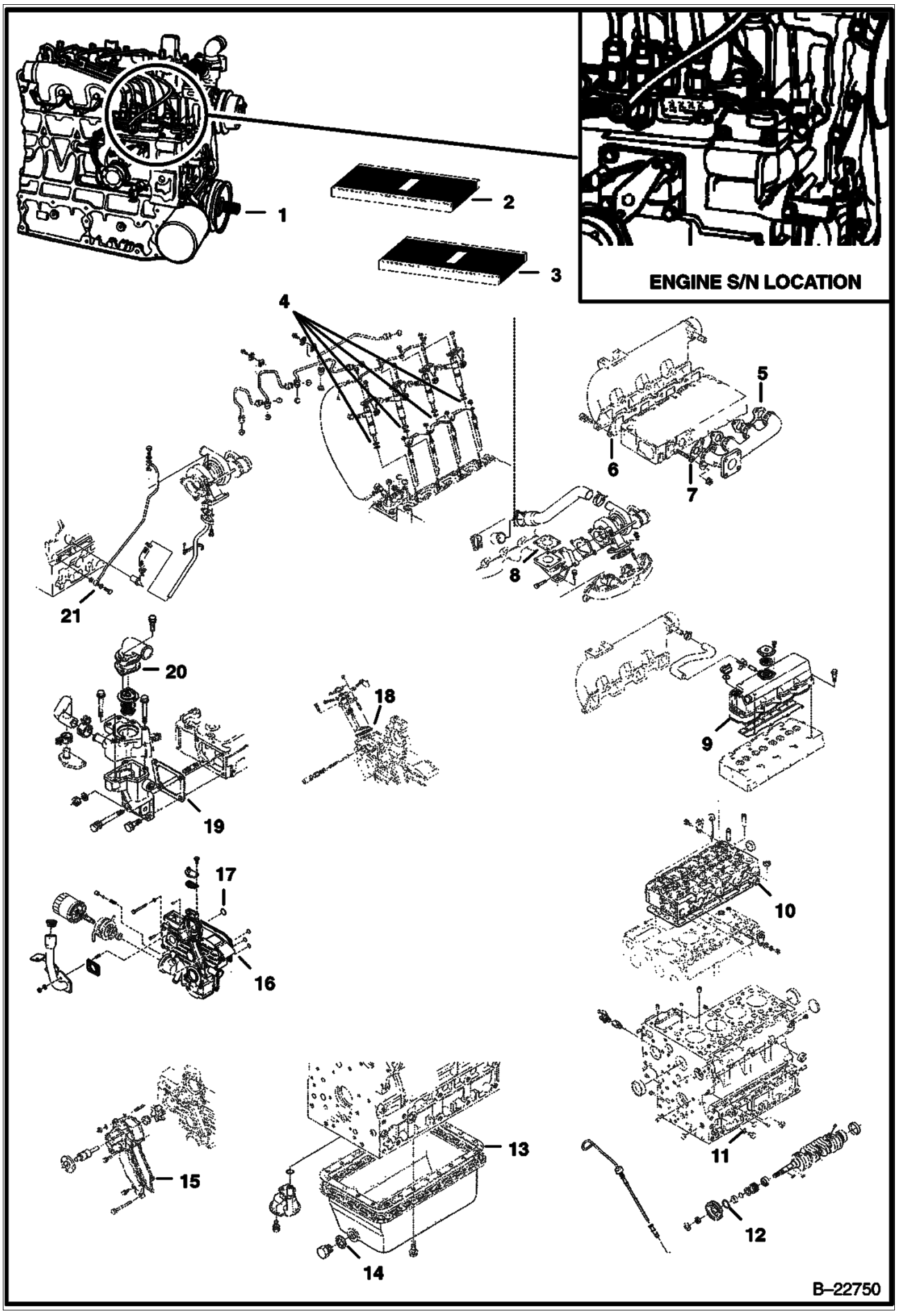

ENGINE & GASKET KITS (Cont'd)
(Kubota - V2003TMDI - Tier II)

Ref No	Part Number	Description	Remarks	Serial Number	Qty
1	6683203	ENGINE	Does not include starter, alternator, flywheel, & flywheel housing		1
2	6689014	GASKET KIT	Upper		1
3	6689018	GASKET KIT	Lower		1
4	6670769	O-RING	See Illustration INJECTOR NOZZLES/ B22738		4
5	6684879	GASKET	See Illustration MANIFOLDS/ B22741		1
6	6684877	GASKET	See Illustration MANIFOLDS/ B22741		1
7	6684880	GASKET	See Illustration MANIFOLDS/ B22741		4
8	6675636	GASKET	See Illustration TURBO CHARGER/ B22742		1
9	6684780	GASKET	See Illustration ROCKER ARM COVER/ B22699		1
10		GASKET	See Illustration CYLINDER HEAD/ B22735 CYLINDER HEAD		x
11	6667418	PLUG	See Illustration CRANKCASE/ B22733		1
12	3974577B	O-RING	See Illustration PISTON & CRANKSHAFT/ B22684A		1
13	6684753	GASKET	See Illustration OIL PAN/ B22734 OIL PAN		1
14	6631046	SEAL	See Illustration OIL PAN/ B22734		1
15	6684870	GASKET	See Illustration WATER PUMP/ B22740		1
16	6684770	GASKET	See Illustration GEARCASE/ B22736 GEARCASE		1
17	6685468	O-RING	See Illustration GEARCASE/ B22736		1
18	6684824	GASKET	See Illustration SPEED CONTROL PLATE/ B22688 SPEED CONTROL PLATE		1
19	6666802	GASKET	See Illustration WATER FLANGE & THERMOSTAT/ B22690R WATER FLANGE		1
20	6684863	GASKET	See Illustration WATER FLANGE & THERMOSTAT/ B22690R THERMOSTAT COVER		1
21	3974095B	GASKET	See Illustration OIL PIPE/ B22747		2

GEARCASE
(Kubota - V2003TMDI - Tier II)

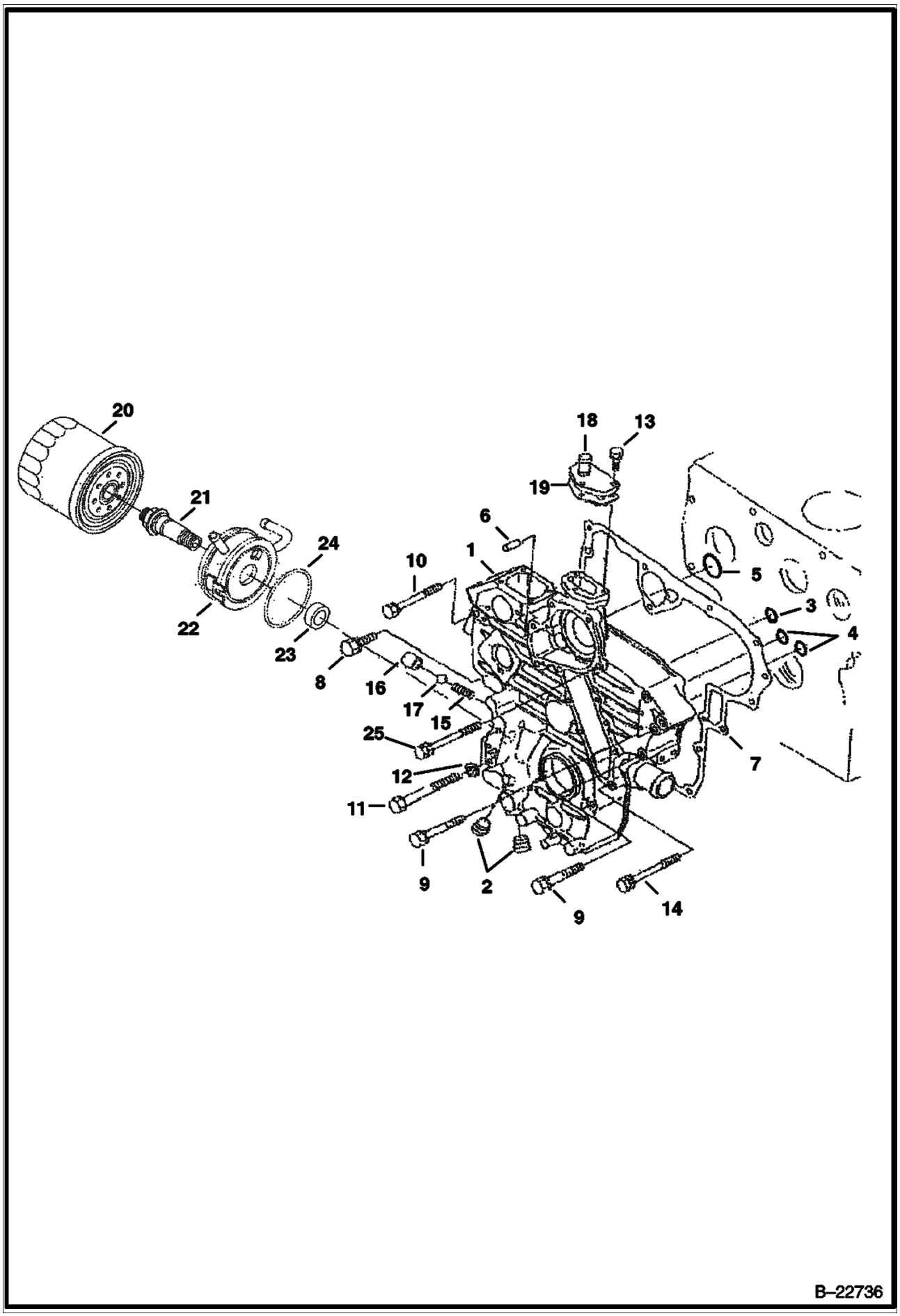

GEARCASE (Cont'd)
(Kubota - V2003TMDI - Tier II)

Ref No	Part Number	Description	Remarks	Serial Number	Qty
1		HOUSING	NAP - Was 6685523 [A]		1
2	6672360	PLUG			2
3	6685466	O-RING			1
4	6685467	O-RING			2
5	6685468	O-RING			1
6	3974395B	PIN			2
7	6684770	GASKET			1
8	1CM00835B	BOLT			1
9	1CM00870B	BOLT			7
10	6653807	BOLT			1
11	6684772	BOLT			2
12	6667422	WASHER			2
13	4CM00620B	BOLT			3
14	6653808	BOLT			4
15	6652652	SPRING			1
16	3974893B	SEAT	valve		1
17	10J000013B	BALL			1
18	3974894B	FLANGE	water return		1
19	6684774	GASKET			1
20	6675517	FILTER			1
21	6675681	ADAPTER			1
22	6685641	OIL COOLER	See Illustration OIL COOLER/ B22748		1
23	6685637	COLLAR			1
24	6657422	O-RING			1
25	6653808	BOLT			4

OIL COOLER
(Kubota - V2003TMDI - Tier II)

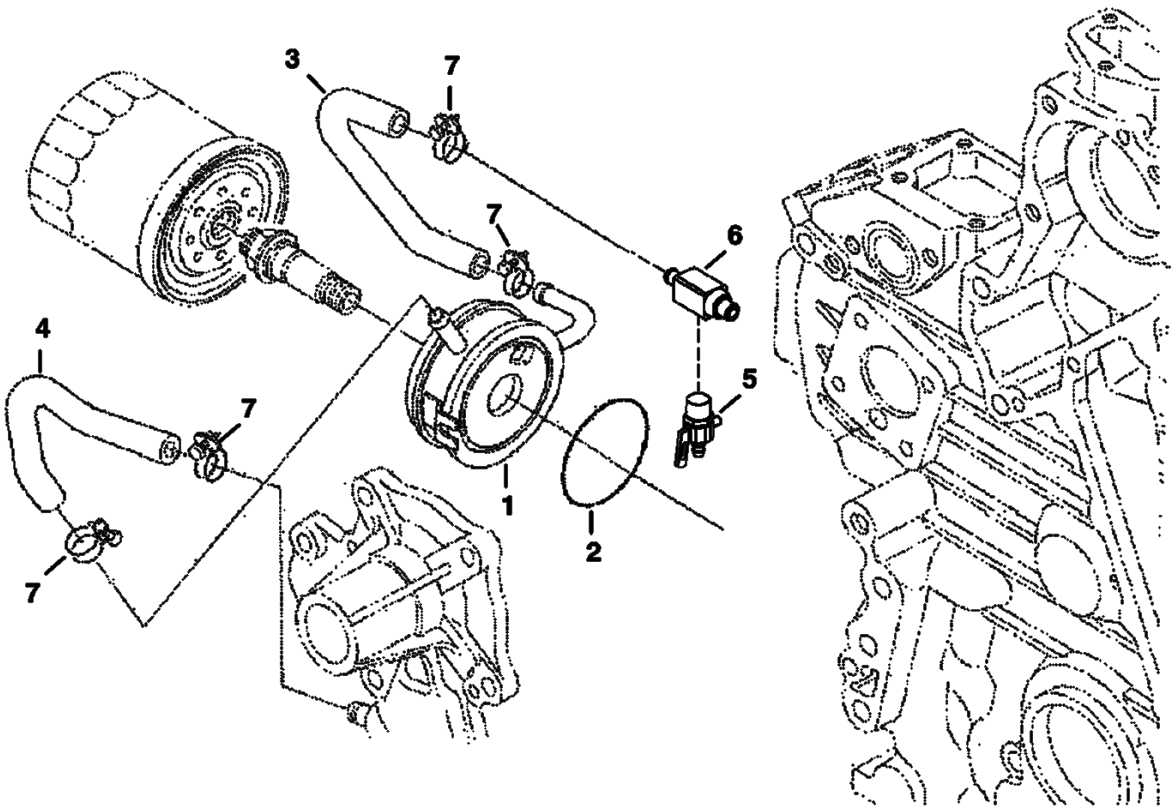

OIL COOLER (Cont'd)
(Kubota - V2003TMDI - Tier II)

Ref No	Part Number	Description	Remarks	Serial Number	Qty
1	6685641	OIL COOLER	W/Ref. 2		1
2	6657422	O-RING			1
3	6685642	HOSE			1
4	6685643	HOSE			1
5	6672190	DRAINCOCK			1
6	6678946	ADAPTER			1
7	6652748	CLAMP			4

CRANKCASE
(Kubota - V2003TMDI - Tier II)

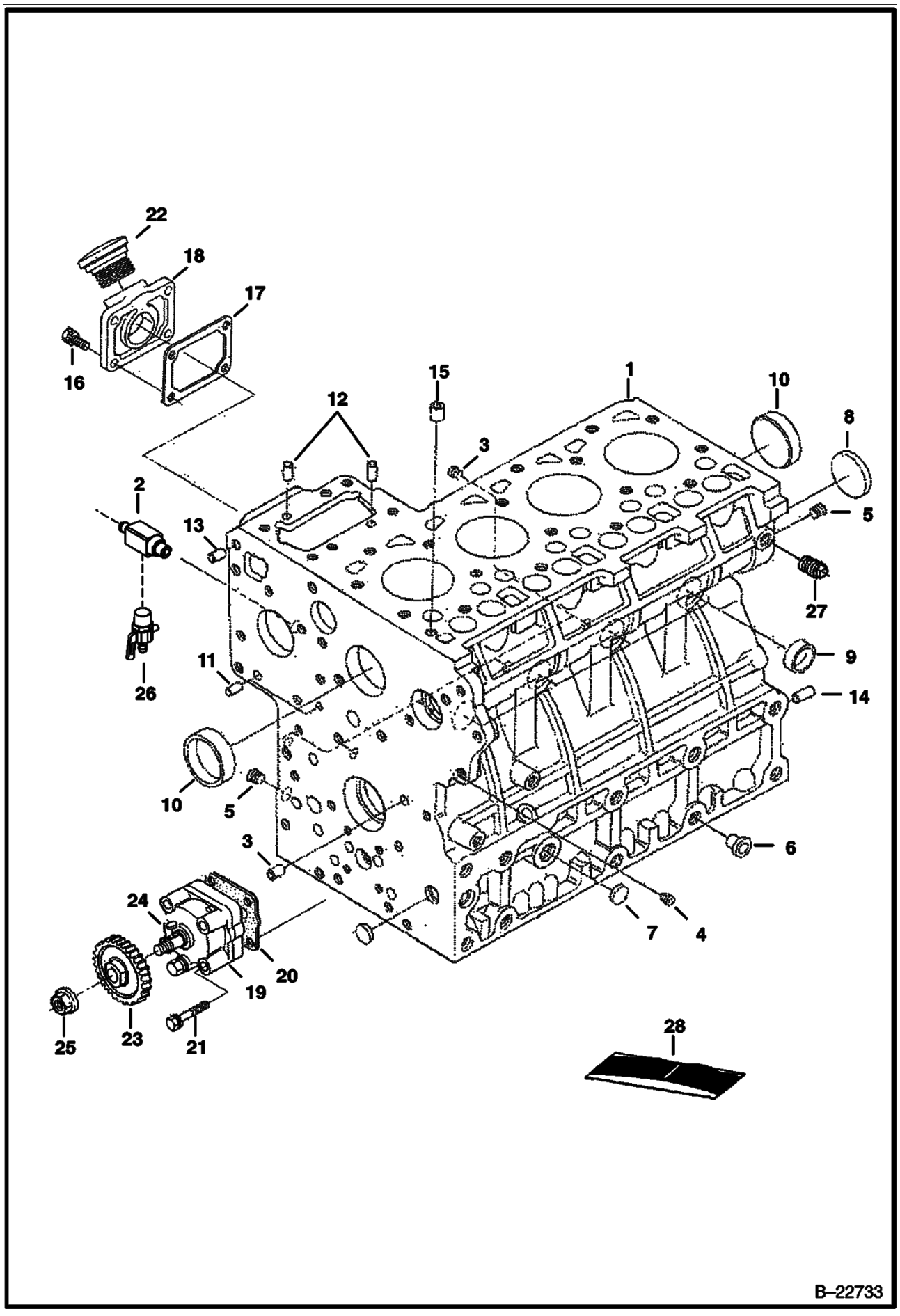

CRANKCASE (Cont'd)
(Kubota - V2003TMDI - Tier II)

Ref No	Part Number	Description	Remarks	Serial Number	Qty
1	6685579	CRANKCASE	assy. - W/Ref. 2 - 15		1
2	6678946	ADAPTER			1
3	6652574	PLUG			5
4	6685477	PLUG			1
5	6652575	PLUG			2
6	6598187	PLUG			2
7	6667418	PLUG	expansion		3
8	6657663	PLUG	expansion		1
9	3974389B	GASKET	sealing		6
10	6680639	PLUG	sealing		2
11	3974393B	PIN	straight		2
12	3974394B	PIN	straight		3
13	3974395B	PIN	straight		2
14	3974868B	PIN	straight		1
15	3974037B	PIN	pipe		1
16	6652580	BOLT			4
17	6684752	GASKET			1
18	6685478	FLANGE	oil fill		1
19	6682498	PUMP			1
20	6666782	GASKET			1
21	6655195	BOLT			4
22	6685472	CAP	oil fill		1
23	3975441B	GEAR			1
24	15JM00410B	KEY			1
25	6653888	NUT			1
26	6672190	DRAINCOCK			1
27	16F000002B	PLUG			1
28		GASKET KIT	See Illustration PISTON & CRANKSHAFT/ B22684A LOWER - DOES NOT INCLUDE REAR OIL SEAL		1

ROCKER ARM COVER
(Kubota - V2003TMDI - Tier II)

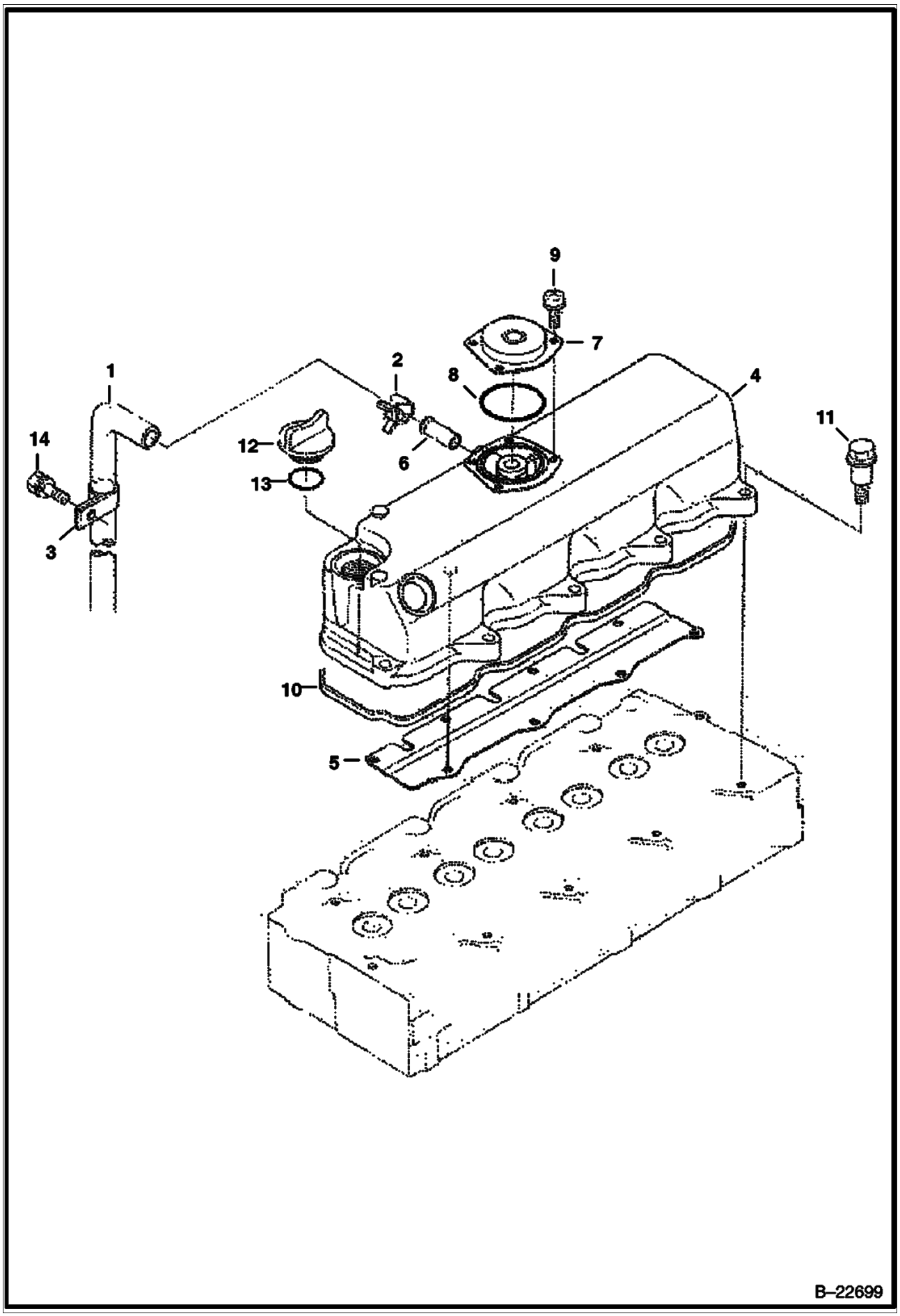

ROCKER ARM COVER (Cont'd)
(Kubota - V2003TMDI - Tier II)

Ref No	Part Number	Description	Remarks	Serial Number	Qty
1	6685580	TUBE	breather		1
2	6684776	CLAMP			1
3	6684777	CLAMP			1
4	6684778	COVER			1
5	6684779	SHIELD	breather		1
6	6655880	PIPE			1
7	6680692	COVER			1
8	6685581	O-RING			1
9	3974928B	SCREW	W/Washer		4
10	6684780	GASKET			1
11	6684781	BOLT			10
12	6652653	PLUG	oil filler		1
13	6684782	O-RING			1
14	4CM00822B	BOLT			1

VALVE ROCKER ARM
(Kubota - V2003TMDI - Tier II)

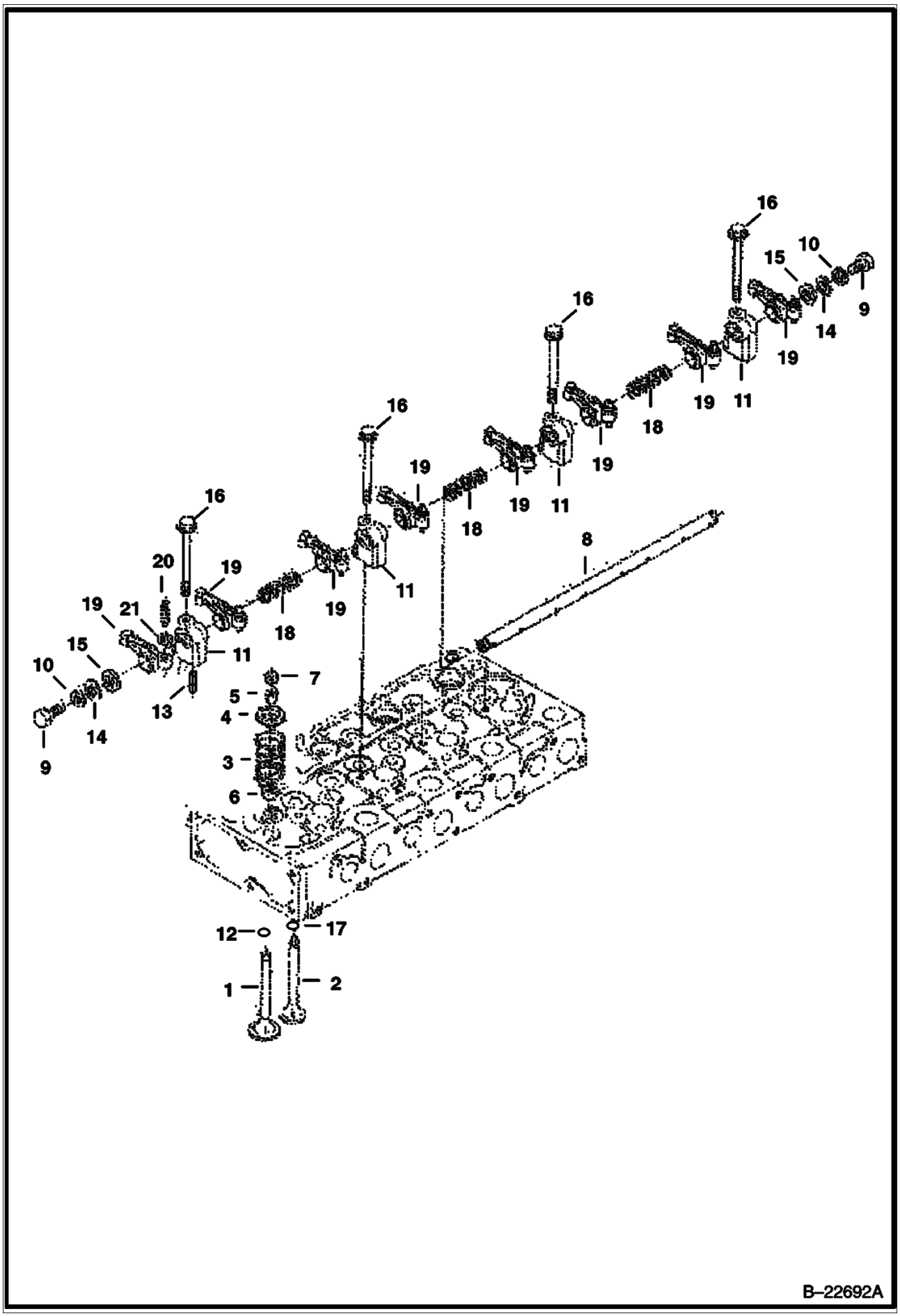

VALVE ROCKER ARM (Cont'd)
(Kubota - V2003TMDI - Tier II)

Ref No	Part Number	Description	Remarks	Serial Number	Qty
1	6684872	VALVE	inlet		4
2	6684873	VALVE	exhaust		4
3	3974514B	SPRING	valve		8
4	3974515B	RETAINER	valve spring		8
5	6684874	COLLAR	valve spring - complete set		1
6	6653830	SEAL	valve stem		8
7	3974518B	CAP	valve		8
8	6684875	SHAFT	rocker arm		1
9	5CM00812B	BOLT			2
10	6667422	WASHER	external		2
11	3974521B	BRACKET	rocker arm		4
12	6655155	SEAT	valve inlet		4
13	6667461	PIN	spring		4
14	6667451	WASHER	spring		4
15	3974524B	WASHER			2
16	6680685	BOLT			1
17	6655156	SEAT	valve exhaust		4
18	6653833	SPRING	rocker arm		3
19	6655870	ROCKER ARM	rocker - W/Ref. 20 & 21		8
20	3974920B	SCREW	adjusting		8
21	2DM00008B	NUT			8

CYLINDER HEAD
(Kubota - V2003TMDI - Tier II)

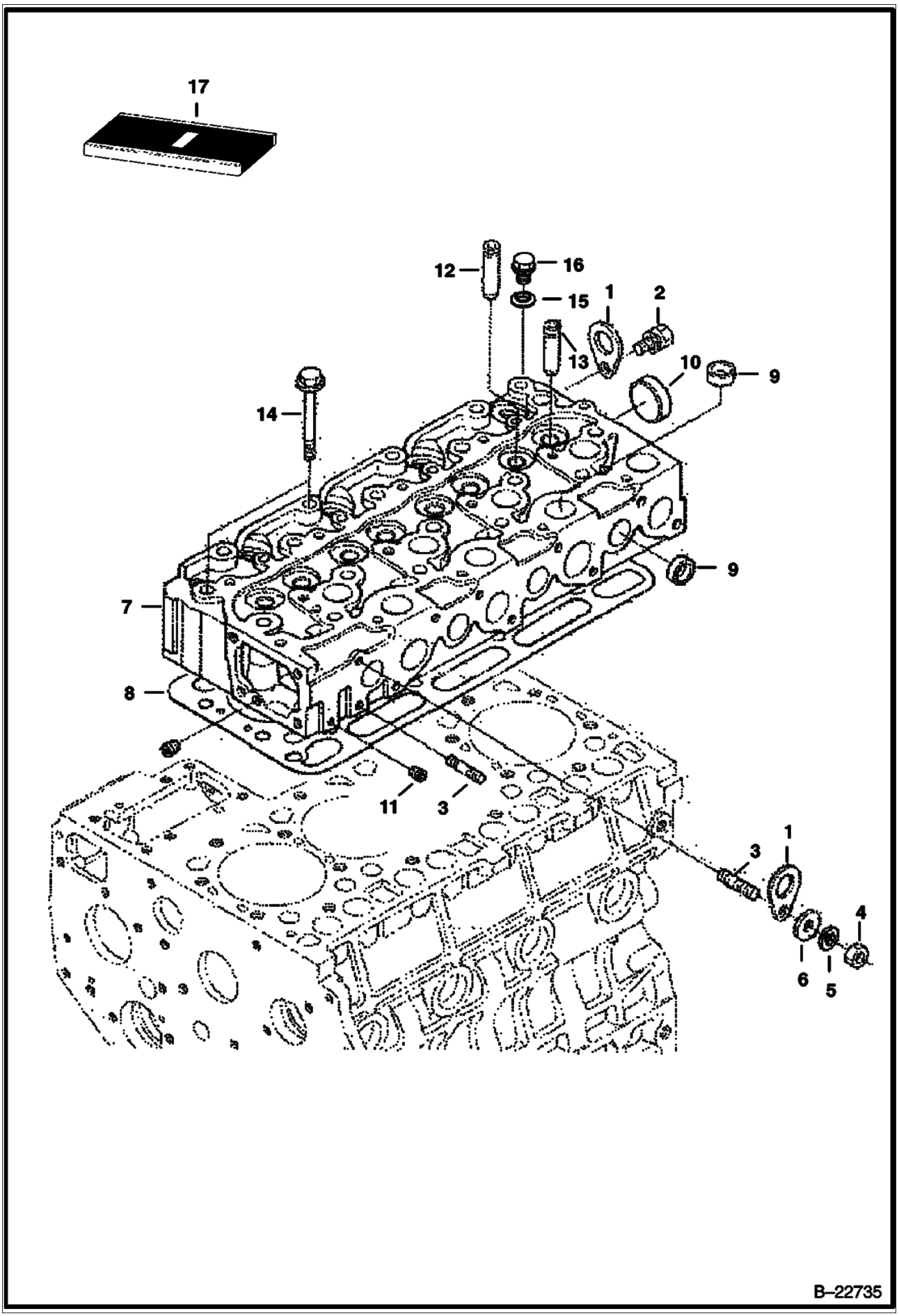

CYLINDER HEAD (Cont'd)
(Kubota - V2003TMDI - Tier II)

Ref No	Part Number	Description	Remarks	Serial Number	Qty
1	3974882B	BRACKET			2
2	6667421	BOLT			1
3	6598156	STUD			2
4	6652792	NUT			2
5	6667422	WASHER	spring		2
6	2EM00008B	WASHER	plain		2
7	6684755	CYLINDER HEAD	cylinder - W/Ref. 10 - 14		1
8	6684758	GASKET	cylinder head - 1.20 mm		1
8	6684757	GASKET	cylinder head - 1.15 mm		1
8	6684759	GASKET	cylinder head - 1.25 mm		1
8	6684760	GASKET	cylinder head - 1.30 mm		1
8	6684761	GASKET	cylinder head - 1.35 mm		1
9	3974432B	CAP	sealing		12
10	3974433B	CAP	sealing		1
11	6598116	PLUG			2
12	6655154	GUIDE	intake valve		4
13	6684756	GUIDE	exhaust valve		4
14	6655158	BOLT			18
15	6655161	WASHER			1
16	6655160	PLUG			1
17		GASKET KIT	See Illustration ENGINE & GASKET KITS/ B22750 UPPER		1

OIL PAN
(Kubota - V2003TMDI - Tier II)

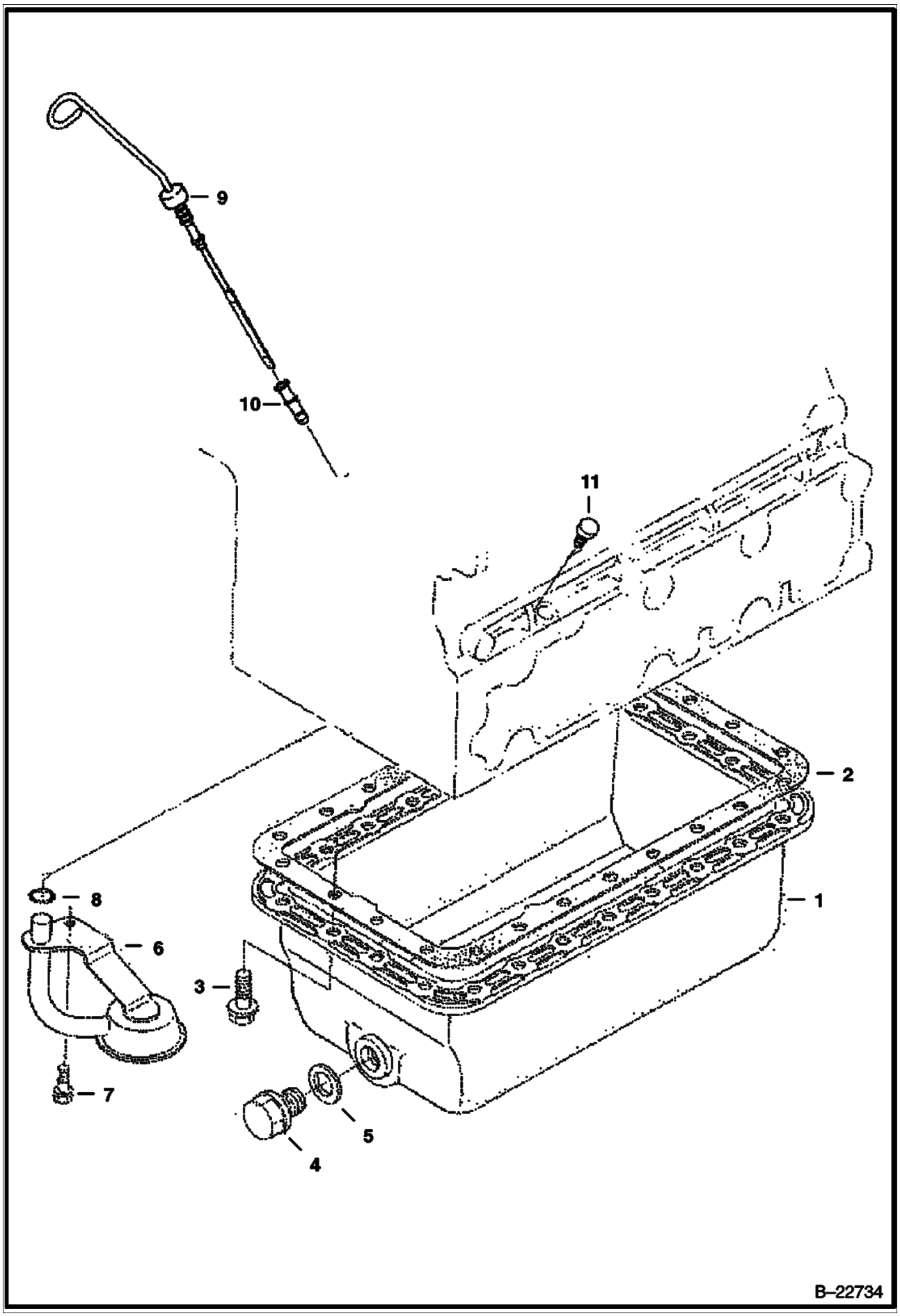

OIL PAN (Cont'd)
(Kubota - V2003TMDI - Tier II)

Ref No	Part Number	Description	Remarks	Serial Number	Qty
1	6685518	OIL PAN			1
2	6684753	GASKET	oil pan		1
3	6653798	BOLT			24
4	6680567	GASKET	drain		1
5	6631046	SEAL			1
6	6682500	FILTER			1
7	6667420	BOLT			1
8	6684754	O-RING			1
9	6685499	DIPSTICK	oil		1
10	6677203	GUIDE			1
11	6969804	PLUG,OIL GAUGE	Was 6684785 [A]		1

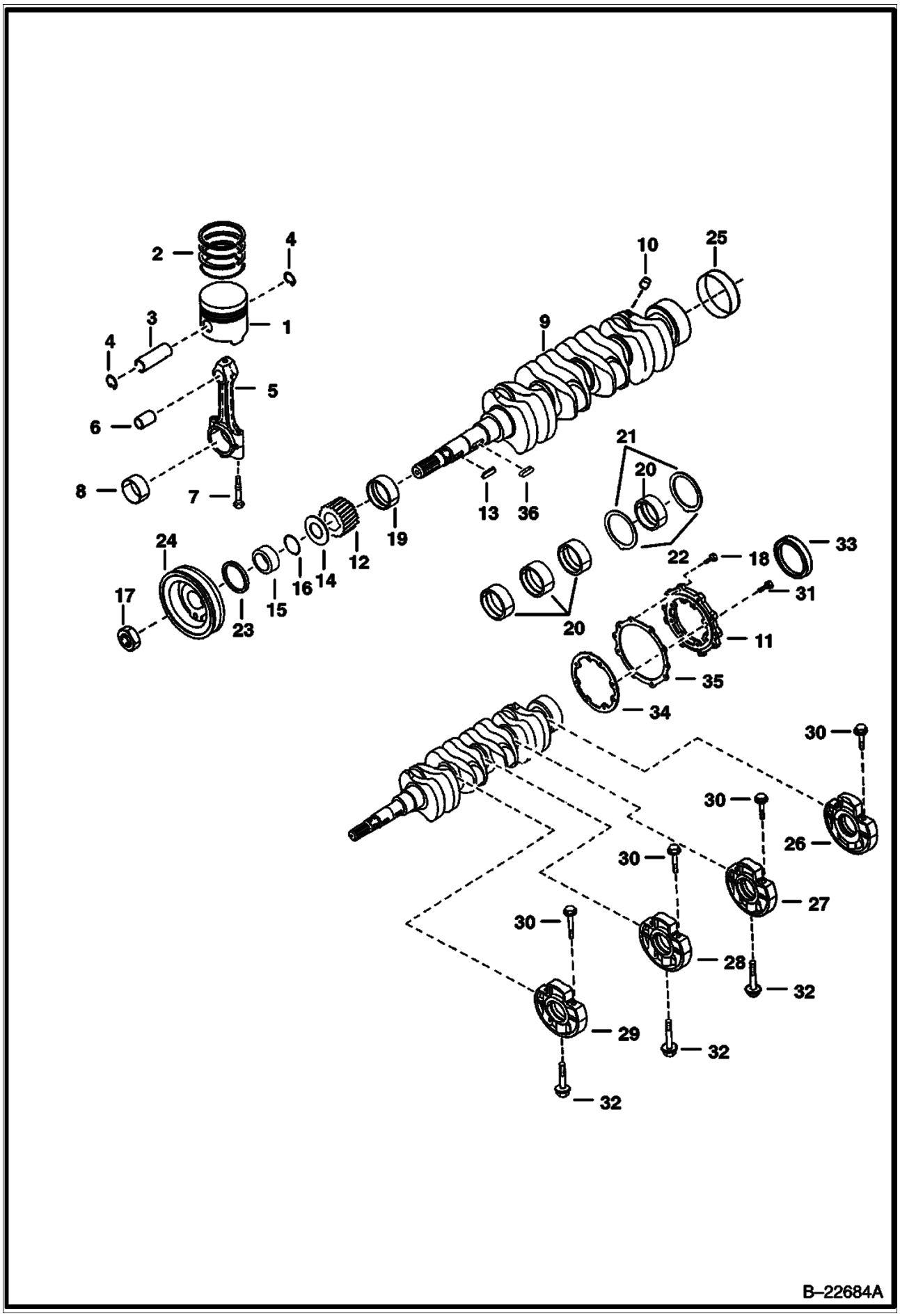
2
4
3
1
4
5
6
8
7
10
25
9
21
20
13
36
19
12
14
16
15
24
17
23
22
18
33
31
20
11
35
34
30
26
27
28
29
32
B–22684A

PISTON & CRANKSHAFT (Cont'd)
(Kubota - V2003TMDI - Tier II)

Ref No	Part Number	Description	Remarks	Serial Number	Qty
1		PISTON	NAP - Std. (00) (1G770-21120) - Was 6684799 [A]		4
1	6684800	PISTON	+.25 (00) (1G770-21910)		4
1	6684797	PISTON	Std. (05) (1G770-21110)		4
1	6684798	PISTON	+.25 (05) (1G770-21900)		4
1	6684801	PISTON	Std. (10) (1G770-21130)		4
2	6684803	RING	piston - Std.		4
2	6684804	RING	piston - +.25		4
3	6655179	PIN			4
4	6655180	CIR-CLIP			8
5	6655181	ROD	connecting - W/Ref. 6, 7 & 8		4
6	6655243	BUSHING			4
7	6655498	BOLT			8
8	6655183	PIN	rod - Std.		4
8	6655236	PIN	rod (0,2 mm-.0079)		4
8	6655237	PIN	rod (0,4 mm-.0157)		4
9	6688546	CRANKSHAFT	W/Ref. 10 & 25 - Ref. 10 must be installed before using		1
10	6652633	BALL	Must be installed before using Ref. 9 crankshaft - See S/L dated 3 Jan 85		4
11	6685515	COVER			1
12	6685481	GEAR			1
13	3974546B	KEY			2
14	6653861	SLINGER	oil		1
15	3975337B	COLLAR			1
16	3974577B	O-RING			1
17	3974671B	NUT			1
18	4CM00825B	BOLT			8
19	6685486	BEARING	main - Std.		1
19	6685490	BEARING	main (0,2 mm-.0079)		1
19	6685491	BEARING	main (0,4 mm-.0157)		1
20	6685487	BEARING	main - Std.		4
20	6685492	BEARING	main (0,2 mm-.0079)		4
20	6685493	BEARING	main (0,4 mm-.0157)		4
21	6685488	WASHER	thrust - Std.		2
21	6685494	WASHER	thrust (0,2 mm-.0079)		2
21	6685495	WASHER	thrust (0,4 mm-.0157)		2
22	6685489	WASHER	thrust - Std.		2
22	6685496	WASHER	thrust (0,2 mm-.0079)		2
22	6685497	WASHER	thrust (0,4 mm-.0157)		2
23	6631664	SEAL	oil		1
24	6685521	PULLEY			1
25	6653859	SLEEVE			1
26	6685480	CASE	main bearing - W/Ref. 30		1
27	6685586	BEARING	main bearing - W/Ref. 30		1
28	6685585	BEARING	main bearing - W/Ref. 30		1
29	6685584	BEARING	main bearing - W/Ref. 30		1
30	6685482	BOLT			8
31	4CM00828B	BOLT			8
32	6653821	BOLT			3
33	6684789	SEAL	oil		1
34	6684788	GASKET			1
35	6666814	GASKET			1
36	6685469	KEY			1

FUEL CAMSHAFT
(Kubota - V2003TMDI - Tier II)

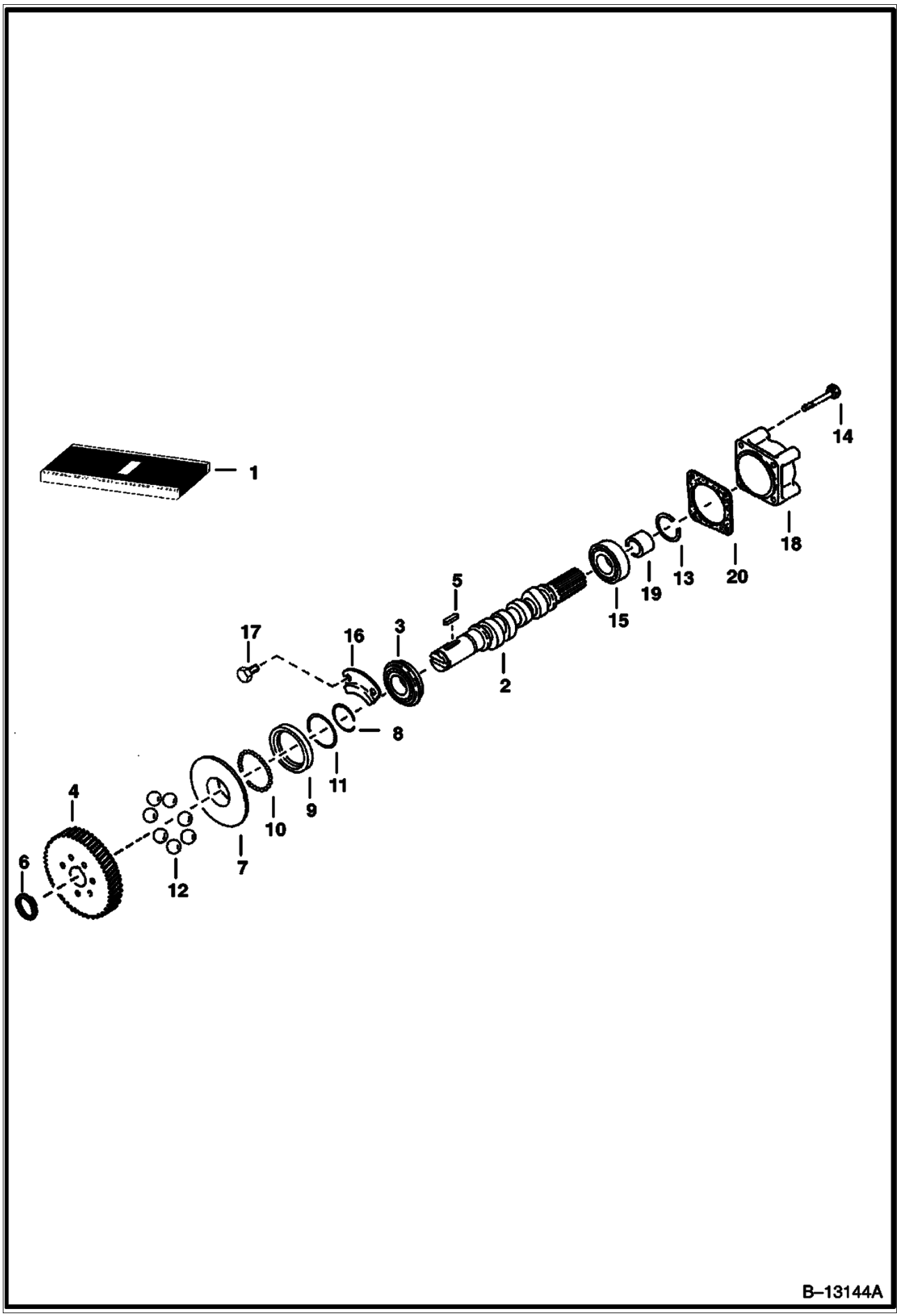

FUEL CAMSHAFT (Cont'd)
(Kubota - V2003TMDI - Tier II)

Ref No	Part Number	Description	Remarks	Serial Number	Qty
1	6684810	CAMSHAFT	assy. - Ref. 2-14		1
2		CAMSHAFT	NAP - fuel		1
3	851242B	BEARING			1
4	6684811	GEAR	injection pump		1
5	6598099	KEY			1
6	5JM00024B	CIRCLIP	external		1
7	6655213	SLEEVE	governor		1
8	3974618B	CIRCLIP	sleeve		1
9	6655214	CASE	governor ball		1
10	10J000005B	BALL			39
11	3974620B	CIRCLIP	ball case		1
12	6655215	BALL			7
13	6598158	CIRCLIP	governor ball		1
14	6651934	BOLT			7
15	6685479	BEARING			1
16	6685517	STOPPER			1
17	6667420	BOLT			2
18	3974996B	COVER	fuel camshaft		1
19	6685516	COLLAR			1
20	6684813	GASKET			1

CAMSHAFT
(Kubota - V2003TMDI - Tier II)

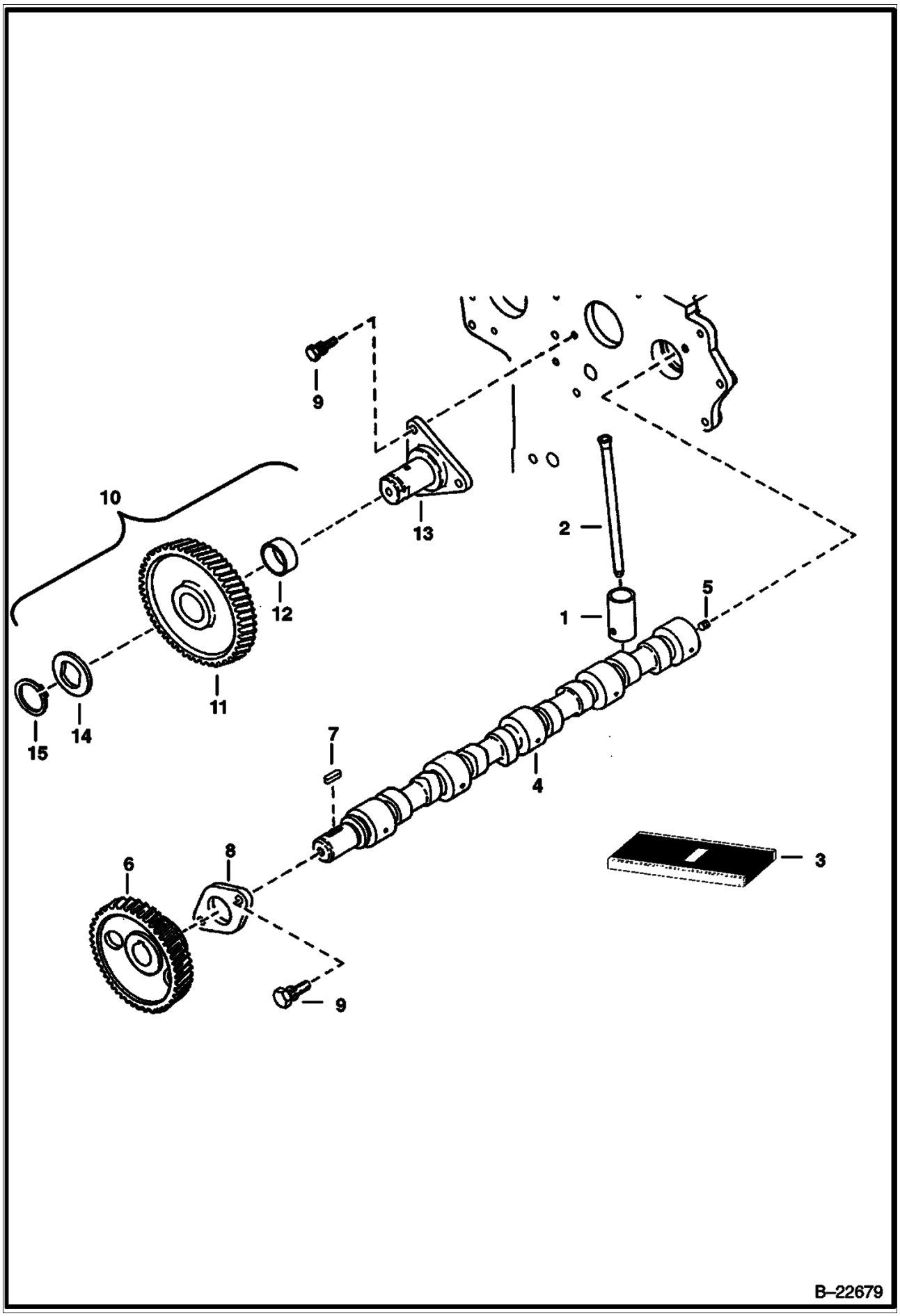

CAMSHAFT (Cont'd)
(Kubota - V2003TMDI - Tier II)

Ref No	Part Number	Description	Remarks	Serial Number	Qty
1	6667428	TAPPET			8
2	6655176	PUSHROD			8
3	6684791	CAMSHAFT	assy. - Ref. 4-8		1
4		CAMSHAFT	NAP - Was 6655384 [A]		1
5	6652633	BALL	seat		1
6	6684792	GEAR	camshaft		1
7	3974546B	KEY			1
8	3974547B	STOPPER	camshaft		1
9	4CM00818B	BOLT			5
10	6684793	GEAR	idle - W/Ref. 11 & 12		1
11		GEAR	NSS - idle - Order Ref. 10		2
12	6684794	BUSHING	idle gear		1
13	6685519	SHAFT	idle gear		1
14	6684795	COLLAR			1
15	6667433	CIRCLIP	external		1

WATER PUMP
(Kubota - V2003TMDI - Tier II)

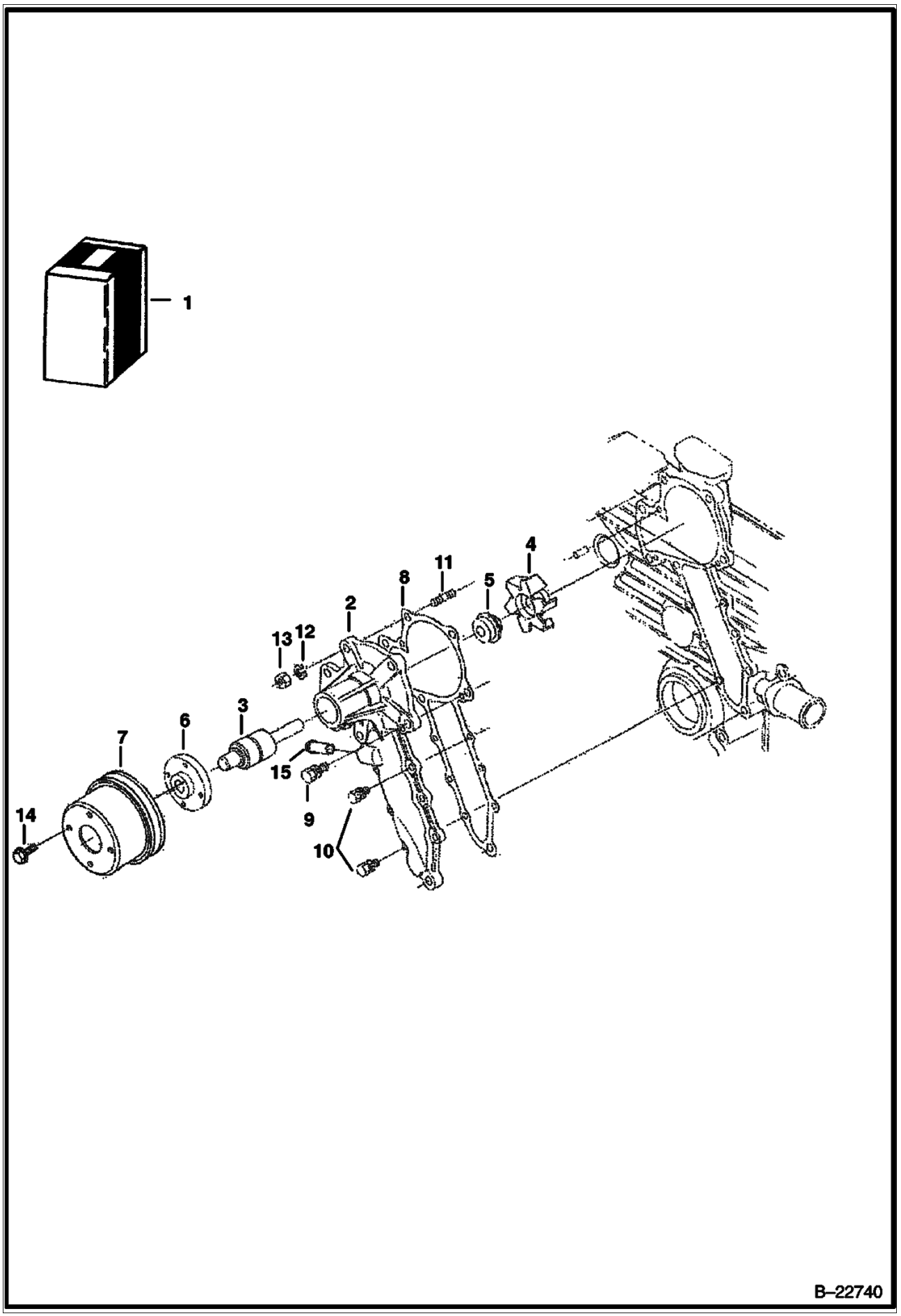

WATER PUMP (Cont'd)
(Kubota - V2003TMDI - Tier II)

Ref No	Part Number	Description	Remarks	Serial Number	Qty
1	6684865	PUMP	Ref. 2-6		1
2	6684866	PUMP			1
3	3974991B	BEARING			1
4	6684867	FAN			1
5	6684868	SEAL			1
6	6684869	FLANGE			1
7	6598155	PULLEY	fan		1
8	6684870	GASKET			1
9	4CM00828B	BOLT			2
10	6652580	BOLT			6
11	6653946	STUD			2
12	6667422	WASHER	spring		2
13	6652792	NUT			2
14	6652762	BOLT			4
15	6670785	PIPE			1

WATER FLANGE & THERMOSTAT
(Kubota - V2003TMDI - Tier II)

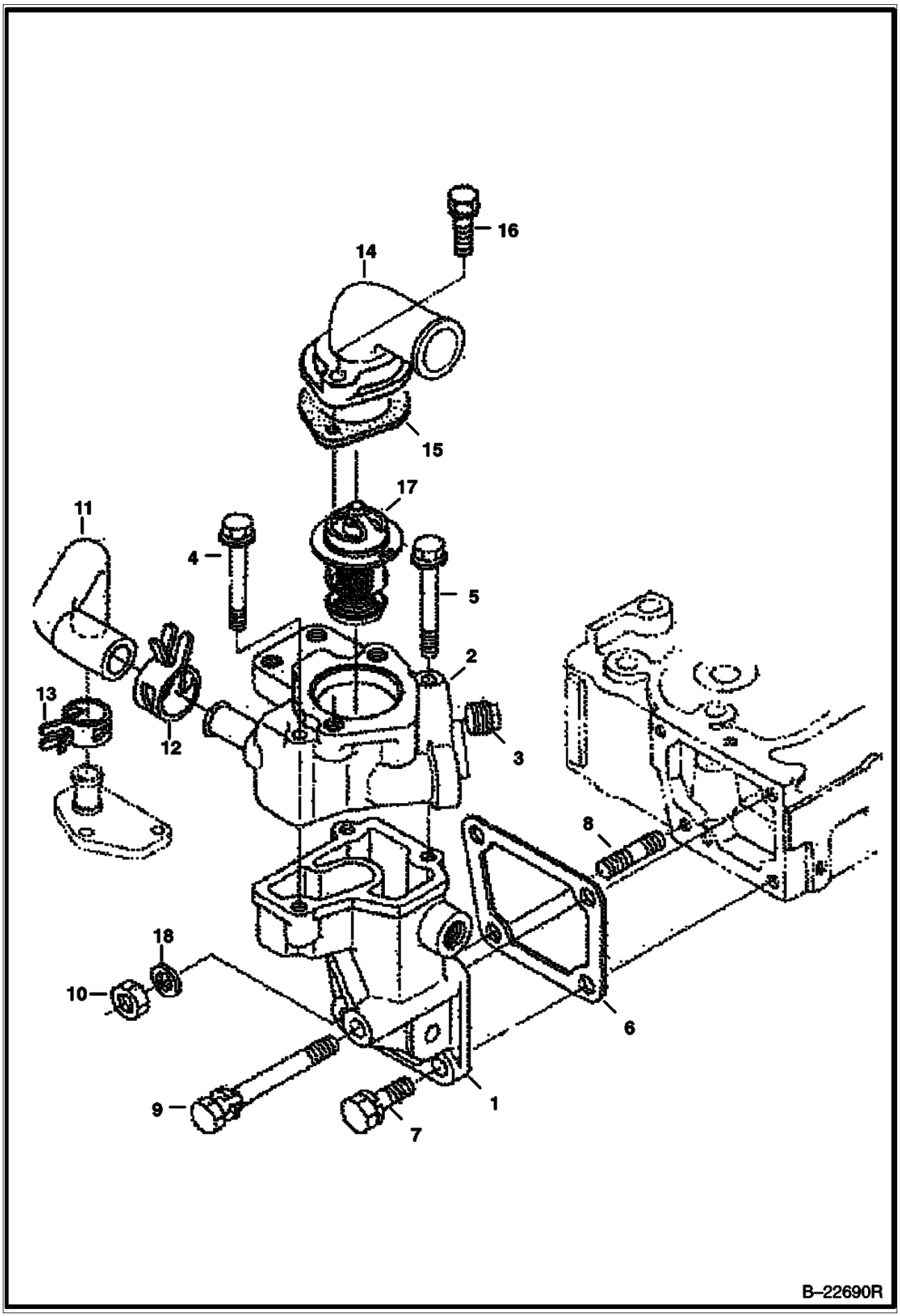

WATER FLANGE & THERMOSTAT (Cont'd)
(Kubota - V2003TMDI - Tier II)

Ref No	Part Number	Description	Remarks	Serial Number	Qty
1	6684855	FLANGE			1
2	6684856	FLANGE			1
3	6684857	PLUG			2
4	6683159	BOLT			2
5	6685104	BOLT			1
6	6666802	GASKET			1
7	6657415	BOLT			2
8	6652670	STUD			1
9	1CM00875B	BOLT			1
10	6652792	NUT			1
11	6684862	PIPE			1
12	6675618	CLAMP			1
13	6684889	CLAMP			1
14	6651489	COVER			1
15	6684863	GASKET			1
16	1CM00835B	BOLT			2
17	6685520	THERMOSTAT			1
18	6667422	WASHER	spring		1

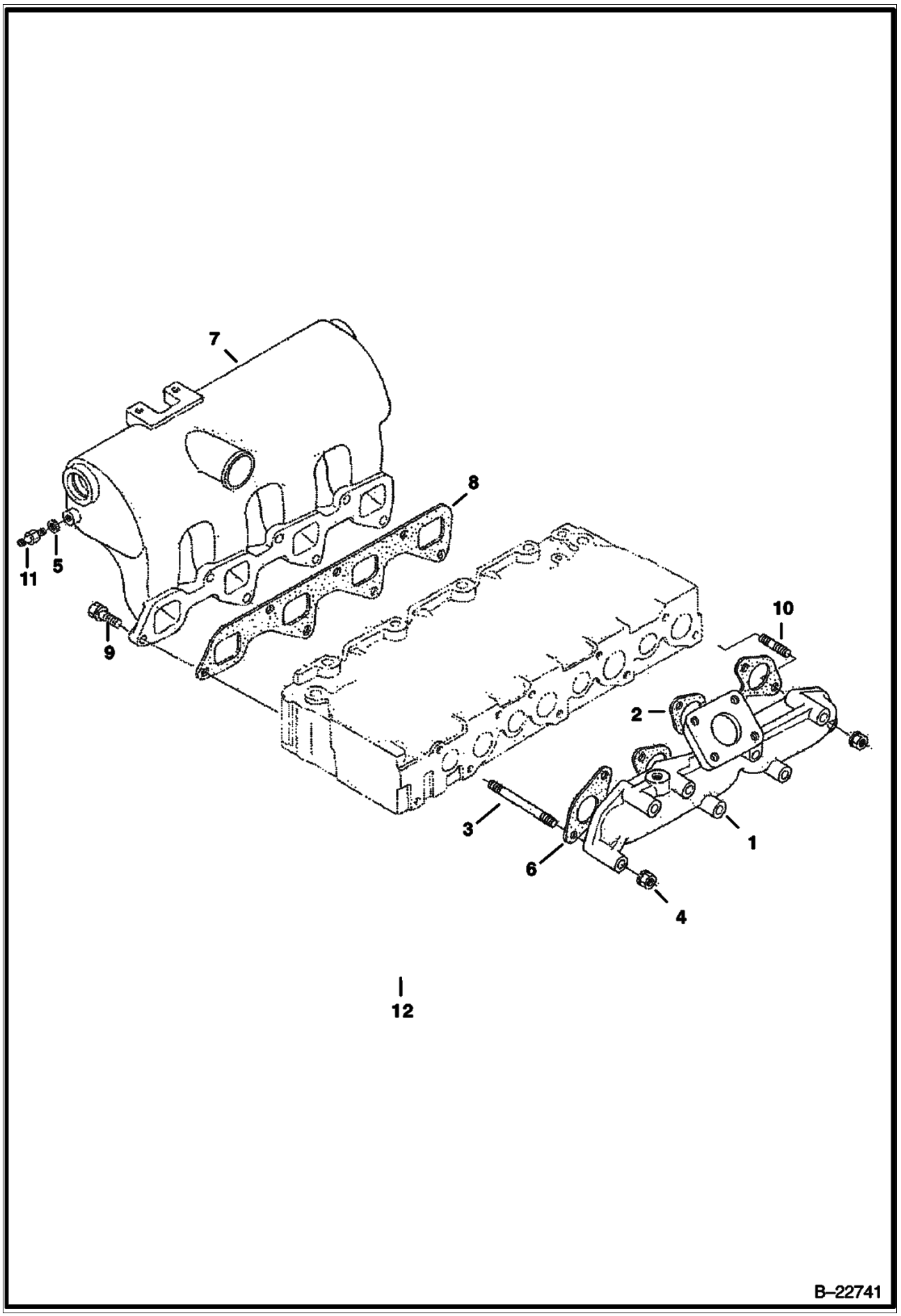
7
8
11
5
9
10
2
3
1
6
4
12
B–22741

MANIFOLDS (Cont'd)
(Kubota - V2003TMDI - Tier II)

Ref No	Part Number	Description	Remarks	Serial Number	Qty
1	6685592	MANIFOLD	exhaust		1
2	6688382	GASKET			1
3	6655893	STUD			7
4	6682532	NUT			8
5	3974972B	GASKET			1
6	6685644	SCREW	air bleed		1
7	6685640	MANIFOLD	intake		1
8	6684877	GASKET			1
9	4CM00822B	BOLT			7
10	3974916B	STUD			1

TURBO CHARGER
(Kubota - V2003TMDI - Tier II)

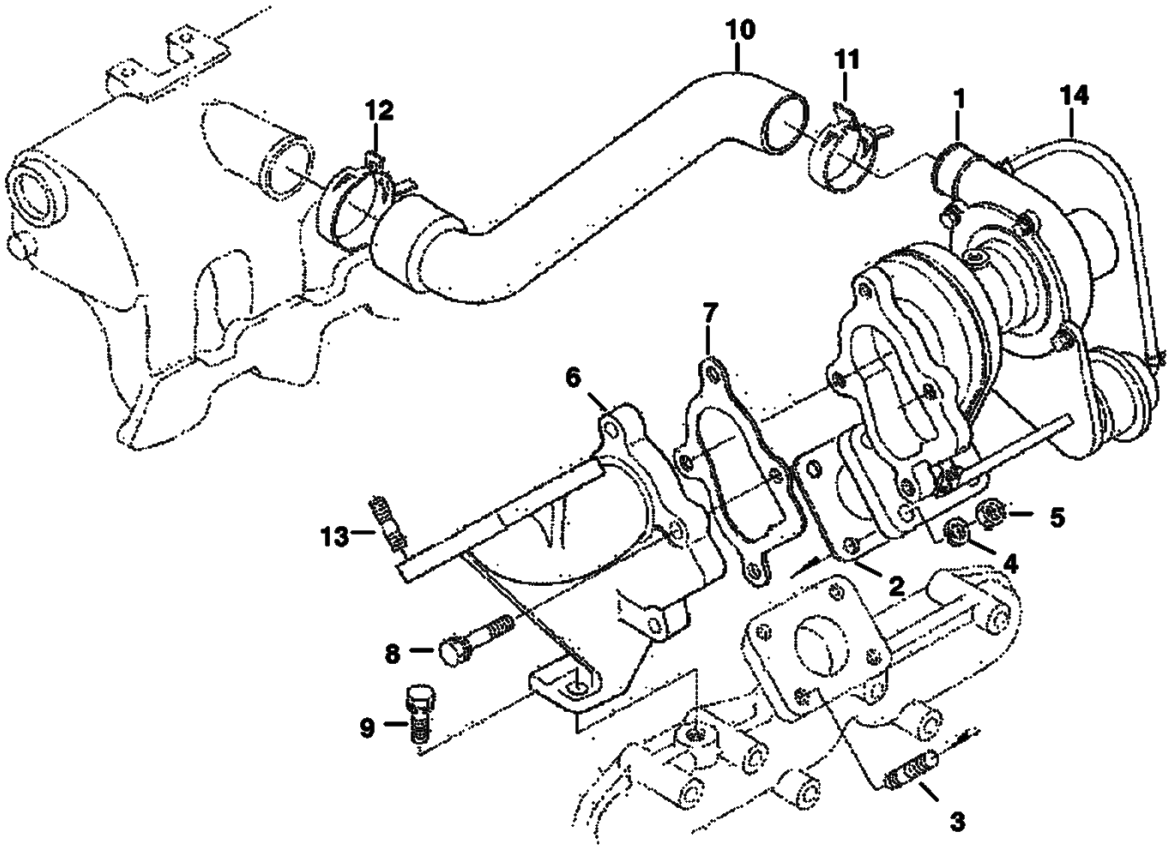

TURBO CHARGER (Cont'd)
(Kubota - V2003TMDI - Tier II)

Ref No	Part Number	Description	Remarks	Serial Number	Qty
1	6685593	TURBO	W/Ref. 14		1
2	6675636	GASKET			1
3	6680564	STUD			4
4	6652792	NUT			4
5	6667422	WASHER			4
6	6685595	FLANGE			1
7	6675637	GASKET			1
8	6657416	BOLT			4
9	6640728	BOLT			1
10	6685596	HOSE			1
11	6675635	BAND			1
12	6680550	BAND			1
13	6652764	STUD			4
14	6685594	HOSE	W/clamps		1

OIL PIPE
(Turbo Charger) (Kubota - V2003TMDI - Tier II)

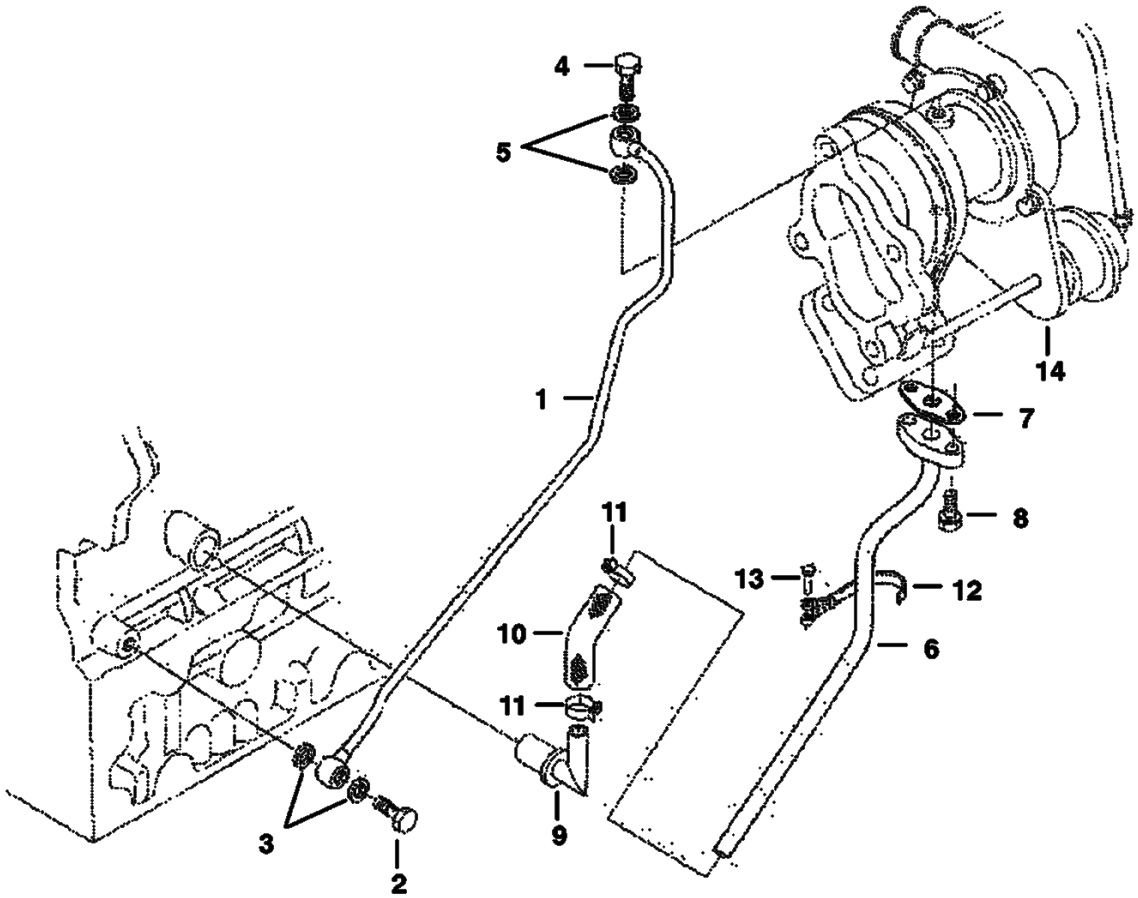

OIL PIPE (Cont'd)
(Turbo Charger) (Kubota - V2003TMDI - Tier II)

Ref No	Part Number	Description	Remarks	Serial Number	Qty
1	6685597	PIPE			1
2	6675622	BOLT, EYE JOINT	eye		1
3	3974095B	GASKET			2
4	6685598	BOLT	eye		1
5	6675623	GASKET			2
6	6685599	PIPE			1
7	6675626	GASKET			1
8	4CM00620B	BOLT			2
9	6684884	PIPE			1
10	6685600	TUBE			1
11	6675618	CLAMP			2
12	6685601	CLAMP			1
13	6675683	PIN, BAND			1
14	6685593	TURBO	See Illustration TURBO CHARGER/ B22742		1

ENGINE STOP LEVER
(Kubota - V2003TMDI - Tier II)

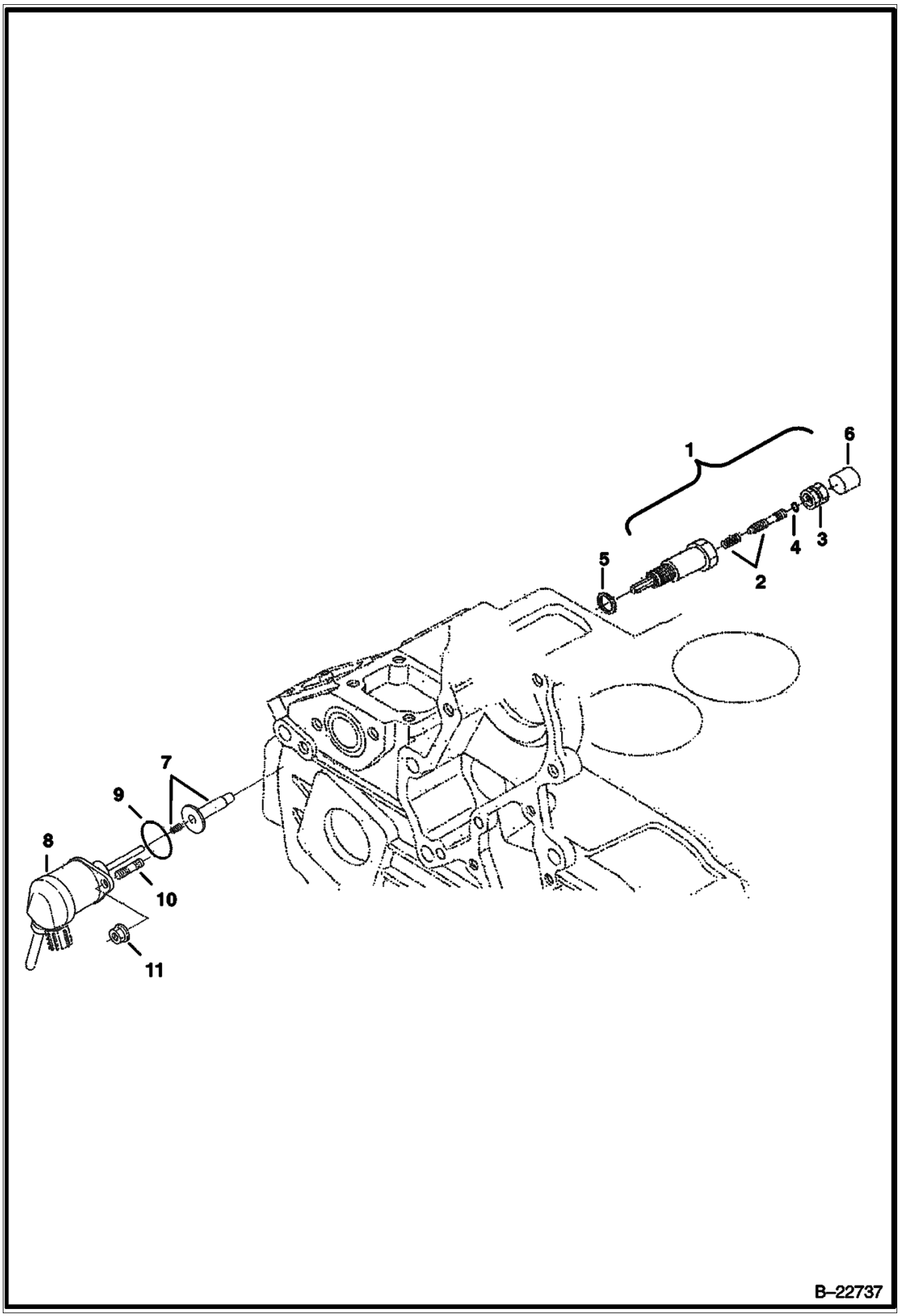

ENGINE STOP LEVER (Cont'd)
(Kubota - V2003TMDI - Tier II)

Ref No	Part Number	Description	Remarks	Serial Number	Qty
1	6684815	IDLING ASSY	assy., idle - Ref. 2-6		1
2	6684816	BOLT	adjusting		1
3	6684817	NUT	adjusting		1
4	6684891	SEAL			1
5	6684818	SEAL			2
6	6684819	CAP			1
7	6684825	GUIDE	solenoid		1
8	6684826	SOLENOID			1
9	6685465	O-RING			1
10	6652764	STUD			2
11	6684827	NUT			2

GOVERNOR
(Kubota - V2003TMDI - Tier II)

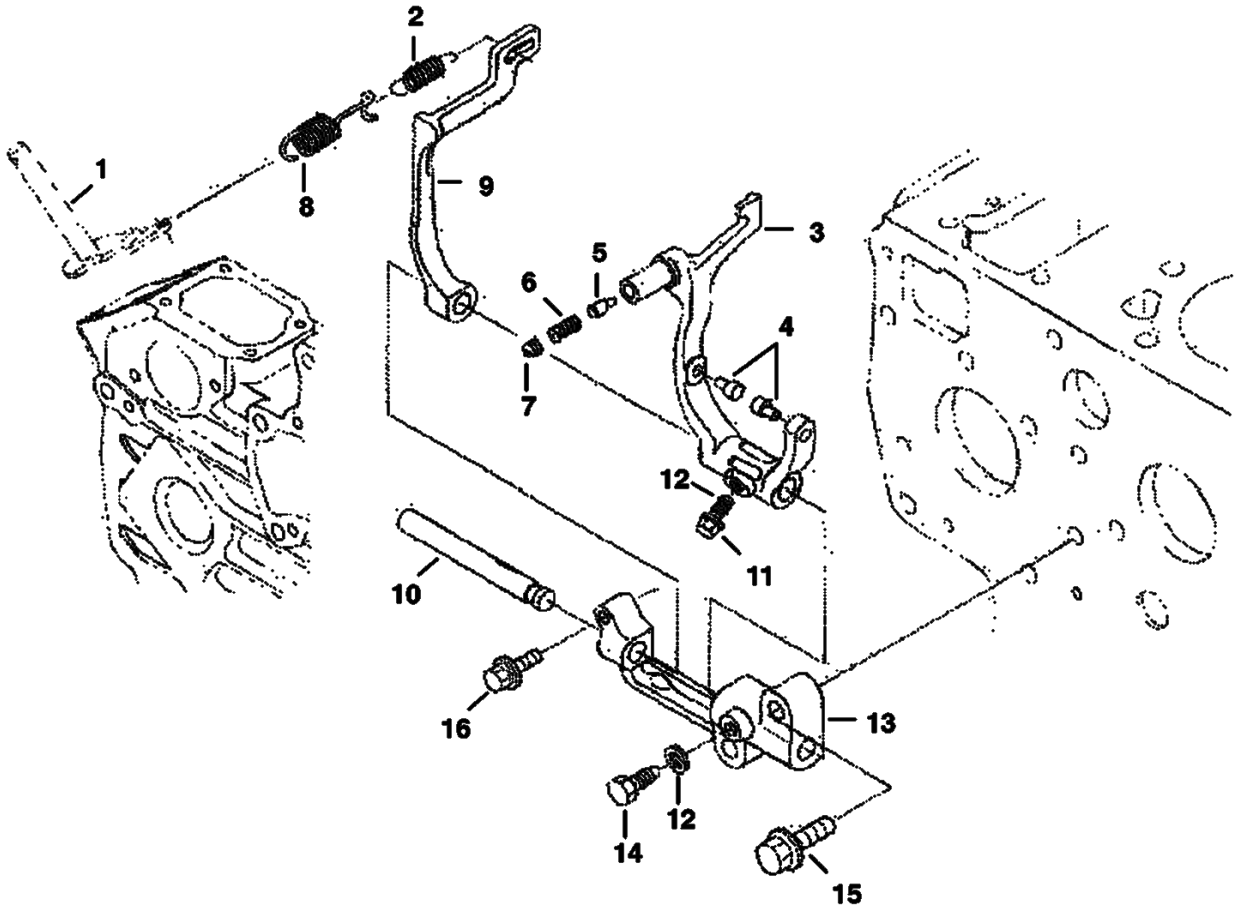

B–22687

GOVERNOR (Cont'd)
(Kubota - V2003TMDI - Tier II)

Ref No	Part Number	Description	Remarks	Serial Number	Qty
1	6684838	LEVER	governor		1
2	6685514	SPRING			1
3	6689100	LEVER	fork - W/Ref. 4-7		1
4		PIN	NSS		2
5		PIN	NSS		1
6		SPRING	NSS		1
7		SCREW	NSS		1
8	6685636	SPRING	governor		1
9	6684832	LEVER			1
10	6684833	SHAFT			1
11	6680830	BOLT			1
12	6667419	WASHER			2
13	6653916	HOLDER			1
14	3974192B	BOLT			1
15	6680706	BOLT			2
16	6685464	BOLT			1

SPEED CONTROL PLATE
(Kubota - V2003TMDI - Tier II)

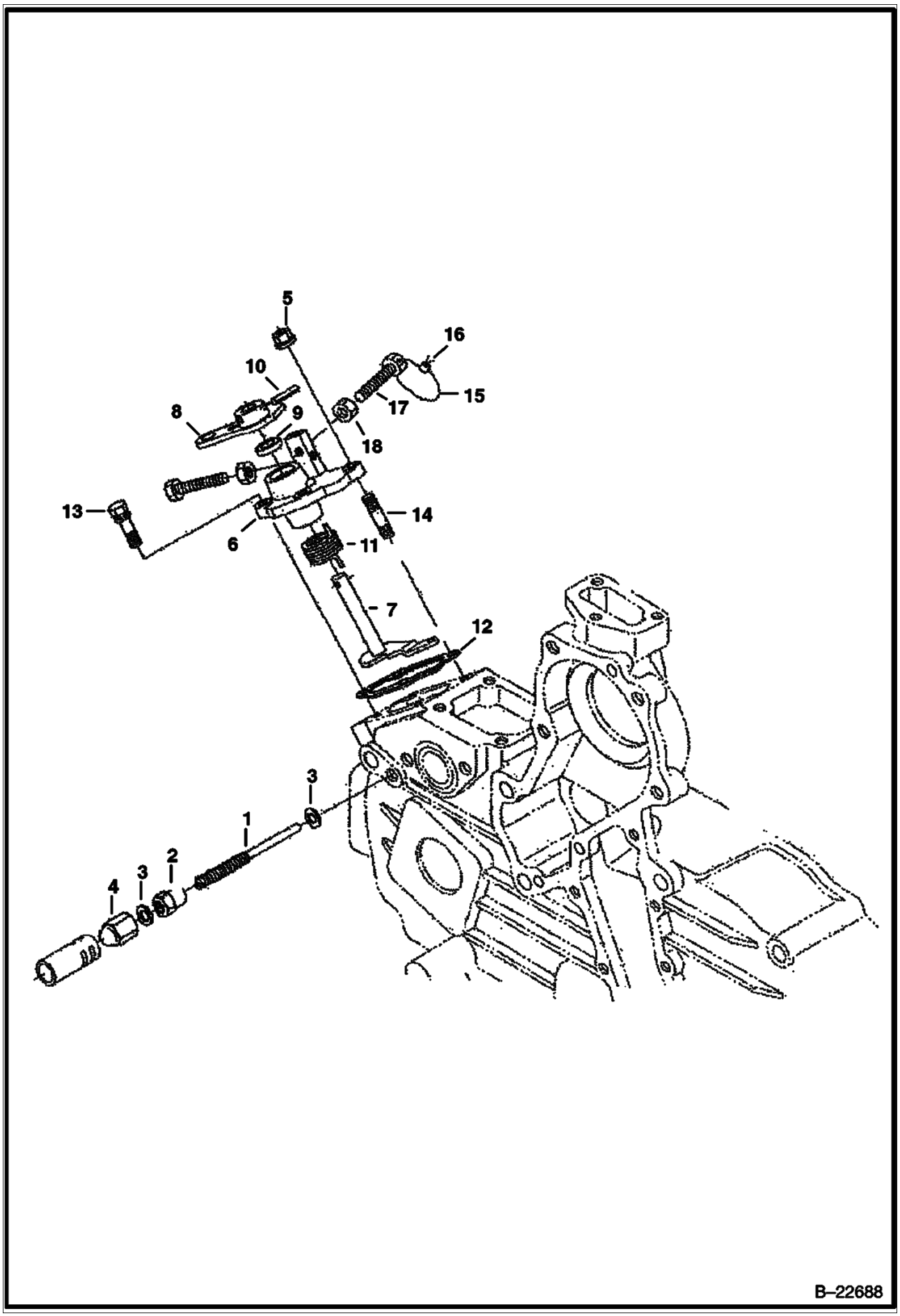

SPEED CONTROL PLATE (Cont'd)
(Kubota - V2003TMDI - Tier II)

Ref No	Part Number	Description	Remarks	Serial Number	Qty
1	6684836	BOLT	adjusting - W/Ref. 2		1
2	3974971B	NUT			1
3	3974972B	GASKET			2
4	6655223	NUT	cap		1
5	6670533	NUT			2
6	6685526	PLATE	control assy. - Ref. 7-11, 17 &18		1
7	6684838	LEVER			1
8	6684839	LEVER			1
9	6685476	SEAL			1
10	6598098	PIN	spring		1
11	6684823	SPRING			1
12	6684824	GASKET			1
13	4CM00020B	BOLT			2
14	6652764	STUD			2
15		WIRE	NAP		1
16		LEAD	NAP - sealing		1
17		STOPPER	NAP		2
18		NUT	NAP		2

BOOST COMPENSATOR
(Kubota - V2003TMDI - Tier II)

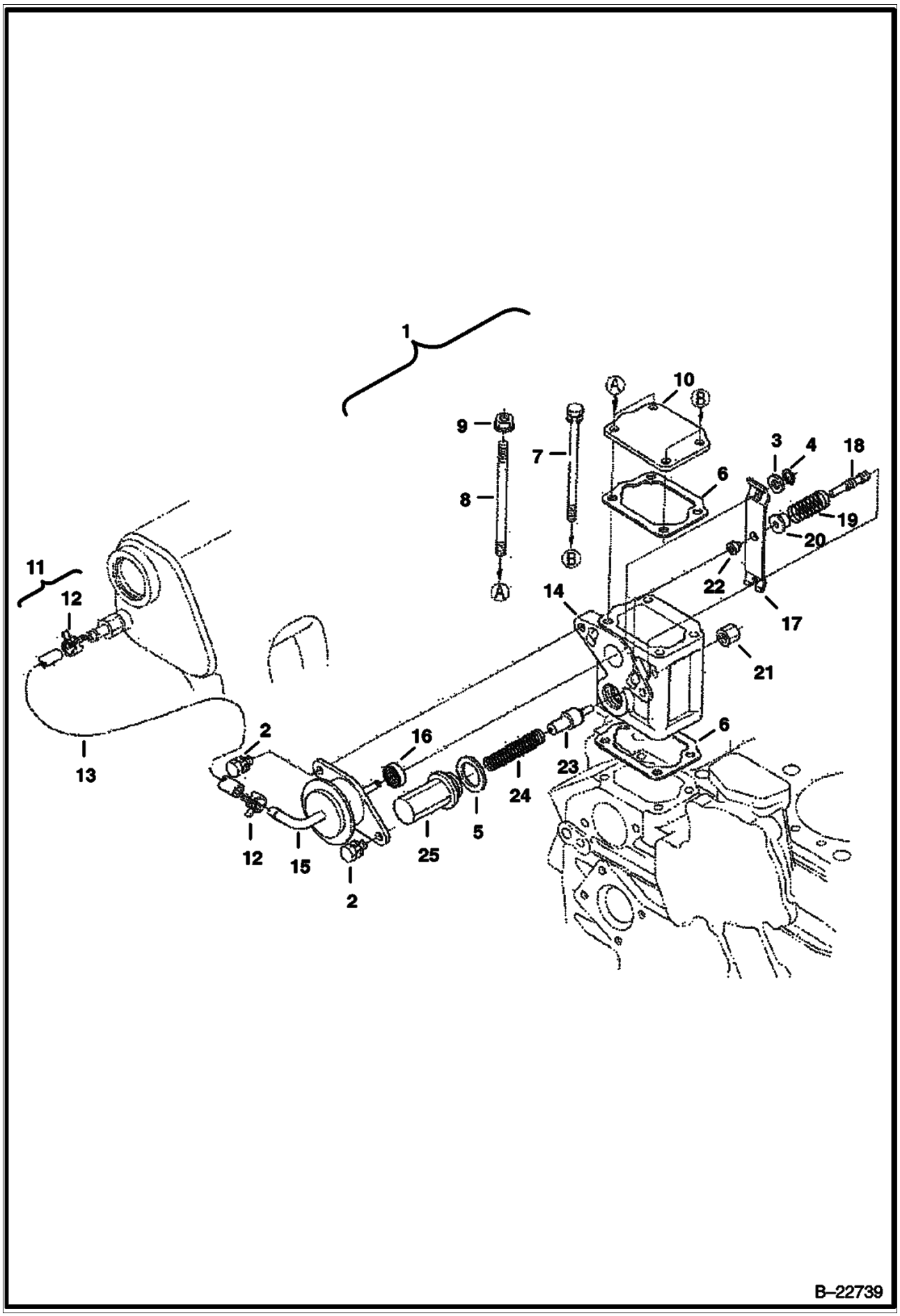

BOOST COMPENSATOR (Cont'd)
(Kubota - V2003TMDI - Tier II)

Ref No	Part Number	Description	Remarks	Serial Number	Qty
1		COMPENSATOR	NAP - Ref. 2 - 5 & 14 - 25 - Was 6685638 [A]		1
2	6652682	BOLT			2
3	6685633	WASHER			1
4	6680821	SNAP RING			1
5	6685634	GASKET			1
6	6684824	GASKET			2
7	6657414	BOLT			2
8	6685639	STUD			2
9	6670533	NUT			2
10	6685500	COVER			1
11	6685645	PIPE ASSY			1
12	6680628	CLAMP			2
13	6685635	TUBE			1
14		HOUSING	NSS		1
15		ELBOW	NSS		1
16		SPACER	NSS		1
17		BRACKET	NSS		1
18		PISTON	NSS		1
19		SPRING	NSS		1
20		BUSHING	NSS		1
21		NUT	NSS		1
22		BUSHING	NSS		1
23		PISTON	NSS		1
24		SPRING	NSS		1
25		VALVE	NSS		1

FUEL & INJECTION PUMP
(Kubota - V2003TMDI - Tier II)

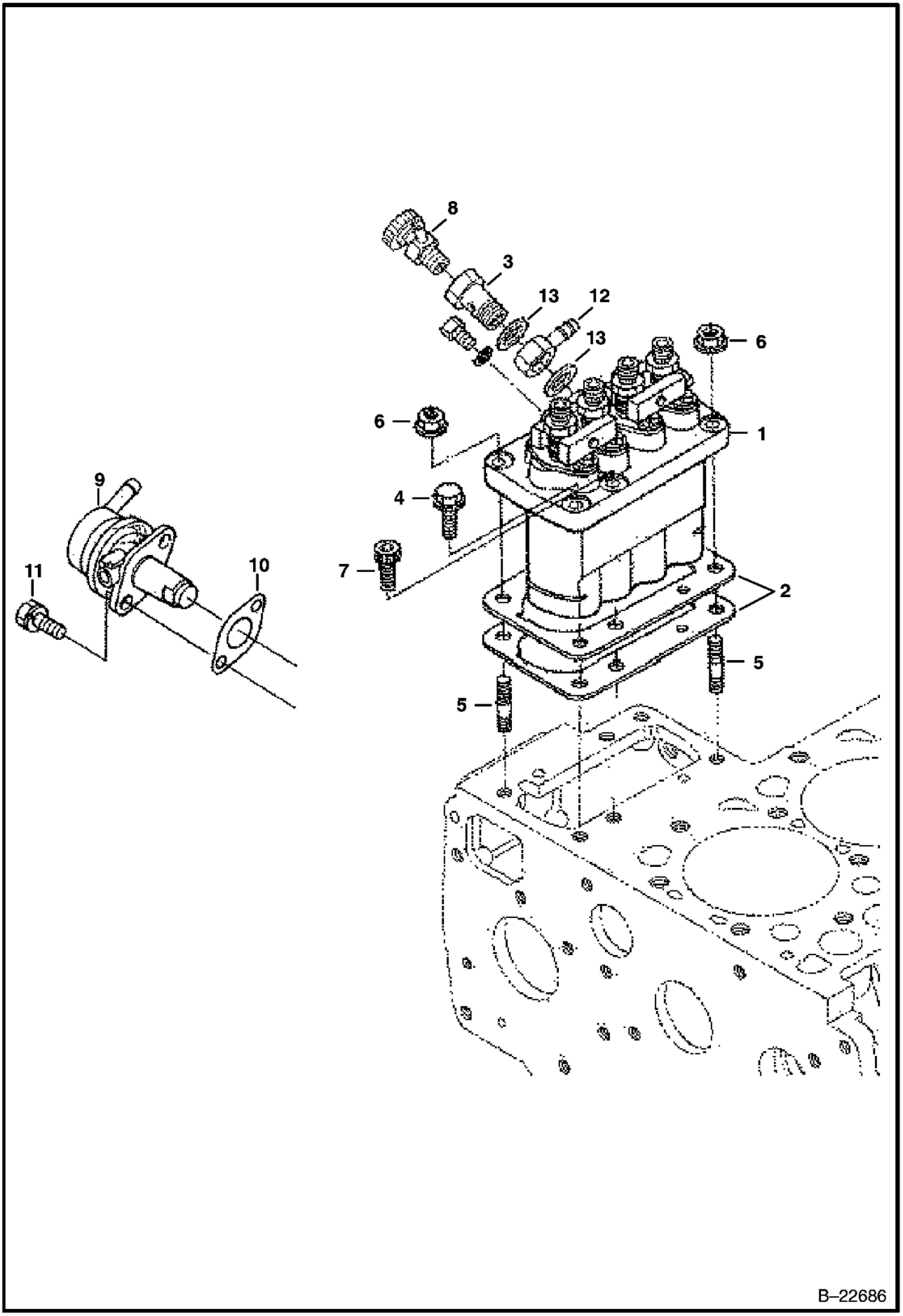

FUEL & INJECTION PUMP (Cont'd)
(Kubota - V2003TMDI - Tier II)

Ref No	Part Number	Description	Remarks	Serial Number	Qty
1	6684828	PUMP			1
2	3974626B	SHIM	0.20 mm		2
2	6682515	SHIM	0.25 mm		1
2	6655210	SHIM	0.30 mm		1
2	6684829	SHIM	0.35 mm		1
3	6685473	BOLT			1
4	6680801	BOLT			4
5	6652670	STUD			2
6	6680663	NUT			2
7	6684830	BOLT			1
8	6598102	VALVE	jet start		1
9	6655216	FUEL PUMP			1
10	3974502B	GASKET	fuel pump		1
11	4CM00616B	BOLT			2
12	6513707	JOINT	eye		1
13	6599118	GASKET			2

INJECTOR NOZZLES
(Kubota - V2003TMDI - Tier II)

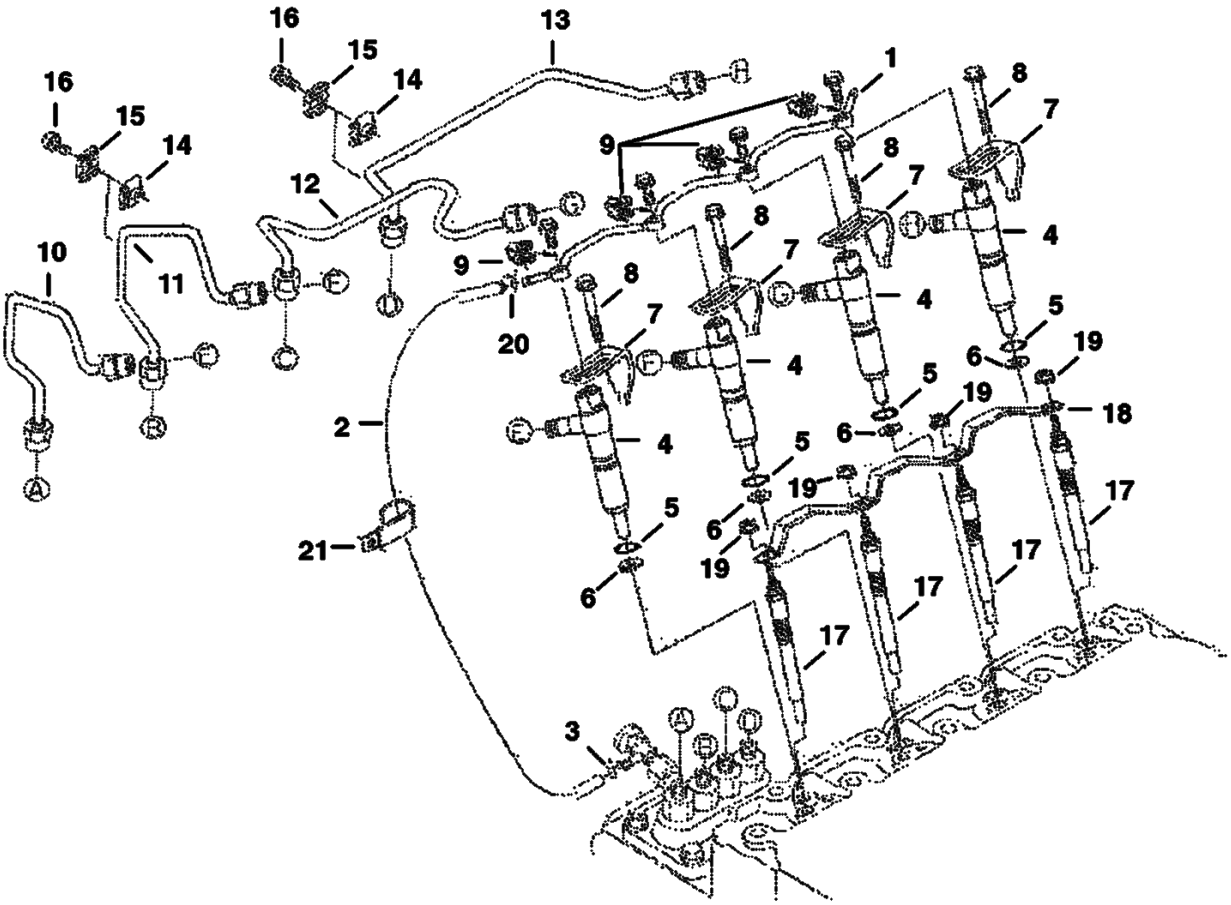

INJECTOR NOZZLES (Cont'd)
(Kubota - V2003TMDI - Tier II)

Ref No	Part Number	Description	Remarks	Serial Number	Qty
1	6684842	PIPE	fuel over flow		1
2	6598146	PIPE	fuel over flow (2) - W/Ref. 3 & 20		1
3	6599136	CLIP	pipe		1
4	6684843	INJECTOR	NOZZLE-W/REF. 5		4
5	6670769	O-RING			4
6	6680779	GASKET			4
7	6684845	CLAMP			4
8	6684844	BOLT			4
9	6685498	GASKET			4
10	6684846	PIPE	injection (1)		1
11	6684847	PIPE	injection (2)		1
12	6684848	PIPE	injection (3)		1
13	6684849	PIPE	injection (4)		1
14	6652688	CLAMP	pipe (1)		3
15	6652689	CLAMP	pipe (2)		3
16	3974260B	BOLT	with washer		3
17	6684850	GLOW PLUG			4
18	6684851	CORD	glow plug		1
19	6670472	NUT			4
20	6654718	CLAMP	pipe		1
21	6667457	CLAMP			1

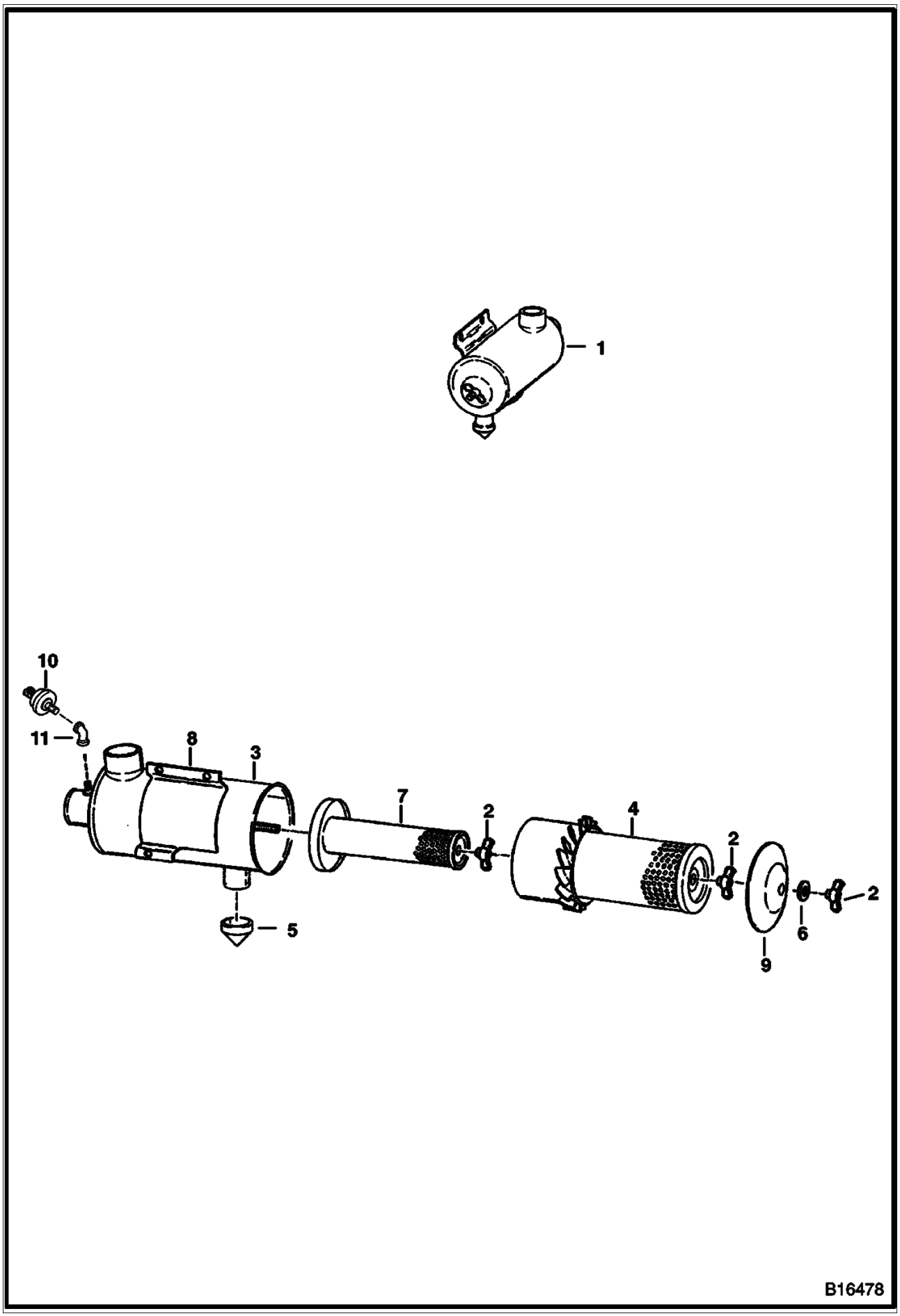
1
10
11
8
3
7
2
4
2
2
5
6
9
B16478

Ref No	Part Number	Description	Remarks	Serial Number	Qty
1	6700711	AIR CLEANER	W/ 1.5" Evacuator Valve		1
1	6735285	AIR CLEANER	European		1
2	6661243	WING NUT			3
3		TANK	NAP		1
4	6598492	ELEMENT	outer		1
5	6655938	VALVE	evacuator - 1.5" (38,1 mm) I.D.		1
6	6661244	WASHER			1
7	6598362	ELEMENT	inner		1
8	866028B	CLAMP			1
9	6661242	COVER			1
10	6665371	SWITCH			1
11	6725502	ELBOW			1

ACCESS COVER
(Cleanout - Lower Front of Chaincase)

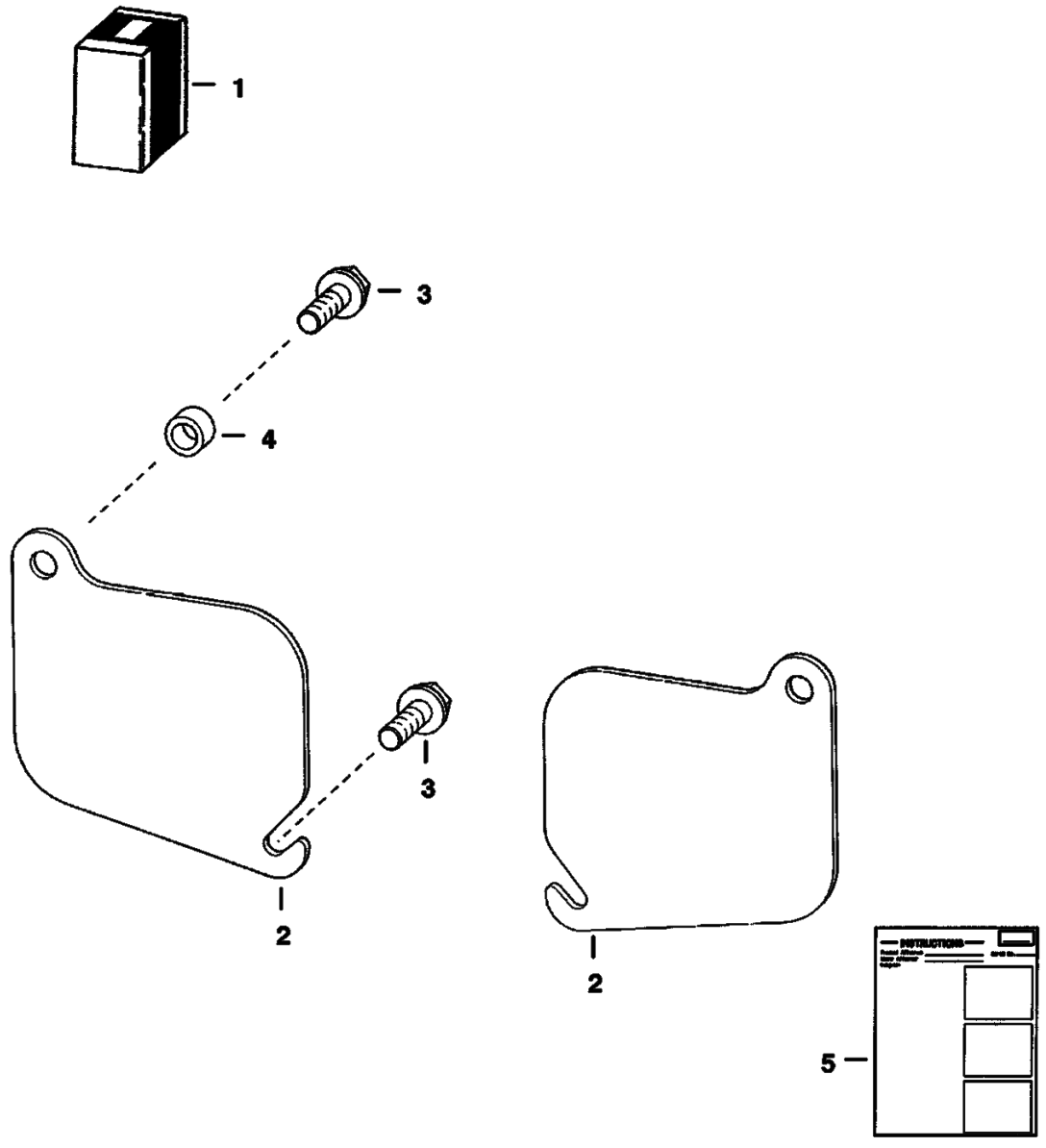

ACCESS COVER (Cont'd)
(Cleanout - Lower Front of Chaincase)

Ref No	Part Number	Description	Remarks	Serial Number	Qty
1	6577880	KIT	Ref. 2-5		1
2		COVER	NAP - Use W/Ref. 4		2
2	6737088	COVER			2
3	84G003720B	BOLT			4
4	6562619	BUSHING	Not in Kit		2
5	6570931	INSTRUCTIONS			1

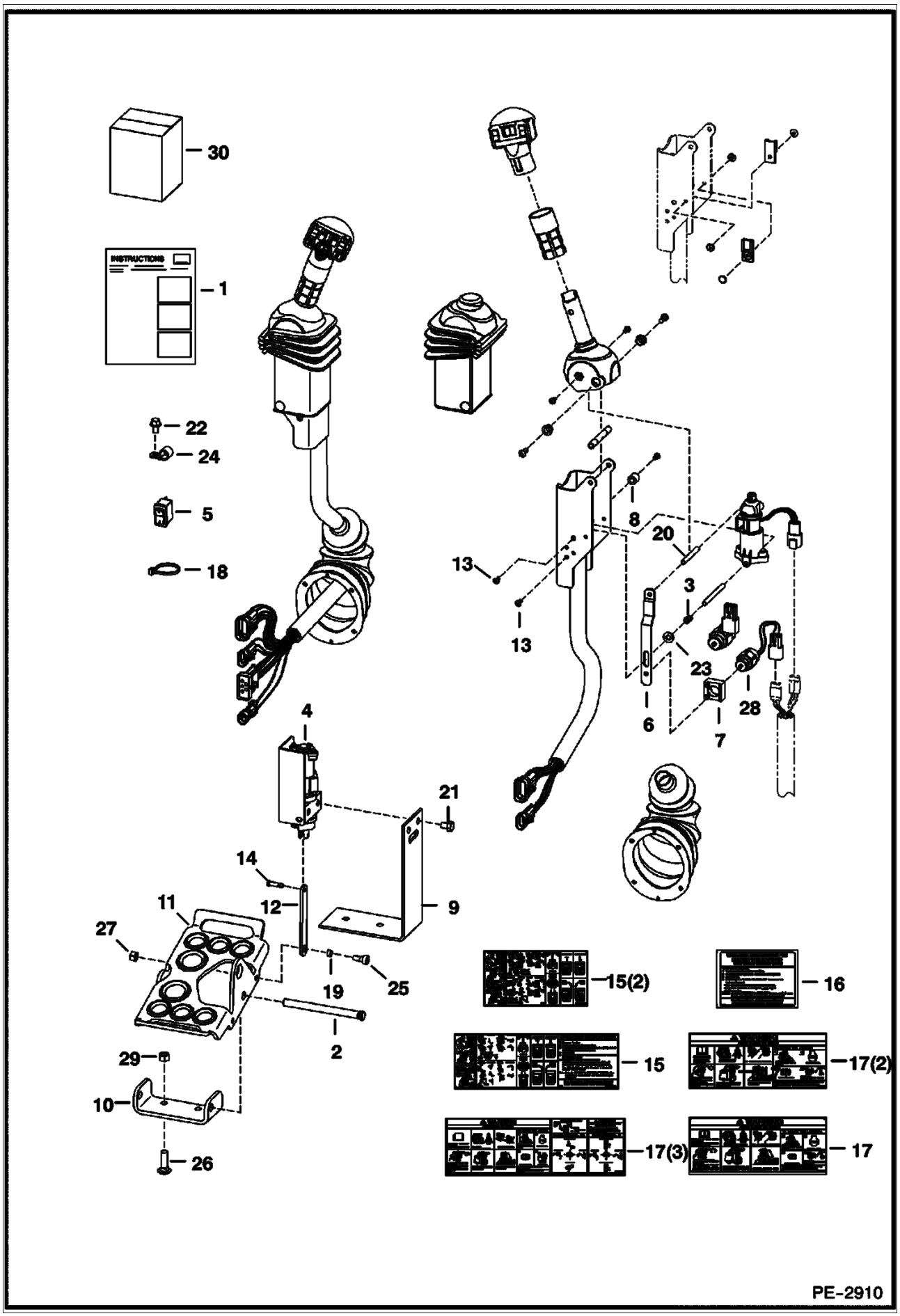
30
INSTRUCTIONS
1
22
24
5
18
4
21
14
12
9
11
27
25
19
2
29
10
26
13
13
8
20
3
23
6
7
28
15(2)
16
15
17(2)
17(3)
17
PE-2910

Ref No	Part Number	Description	Remarks	Serial Number	Qty
1	6731151	KIT	foot control - SEE NOTE - Ref. 2 - 14 & 17 - 29 - If loader is not equipped W/ heater, air conditioning, selectable joystick controls, beacon, power bobtach, non-power port plug-in strobe lights and/or non-power port plug-in 4 way flashers, also order 7116260 deluxe harness		1
2	6564657	PIN			2
3	6680470	SPRING			2
4	6684912	SENSOR	foot pedal - R.H.		1
4	6676029	SOLENOID			1
4	6684911	SENSOR	foot pedal - L.H.		1
4	6676029	SOLENOID			1
5	6676537	SWITCH			2
6	6680477	STRAP			2
7	6680468	MOUNT	solenoid		2
8	6719834	SPACER	threaded		2
9	6726573	BRACKET			2
10	7115220	MOUNT			2
11	7115219	PEDAL			2
12	6726681	LINK			2
13	6727065	BOLT			12
14	6727496	PIN			2
15	6727926	DECAL	operations - models S150, S160, S175, S185, 773G, 863G, 873G, 883 & 963G		1
15	6728045	DECAL	operations - models T190 & T200		1
16	6727941	DECAL	ACS operations		1
17	6728539	DECAL	warning - models S150, S160, S175, S185, 773G, 863G, 873G, 883 & 963G		1
17	6728540	DECAL	warning - models T190 & T200		1
17	6734646	DECAL	Warning - Selectable Joystick Controls		1
18	6624289	STA STRAP			2
19	6729467	SPACER			2
20	6680469	SPACER	threaded		2
21	17C000608B	BOLT			4
22	84G003710B	BOLT			2
23	25E000013B	WASHER			2
24	30H000062B	CLAMP			2
25	17C000514B	BOLT			2
26	37C000620B	BOLT			4
27	95D000005B	NUT			2
28	6676029	SOLENOID			2
29	57D000006B	NUT			4
30	6901492	INSTRUCTIONS			1

AXLE SEAL KIT

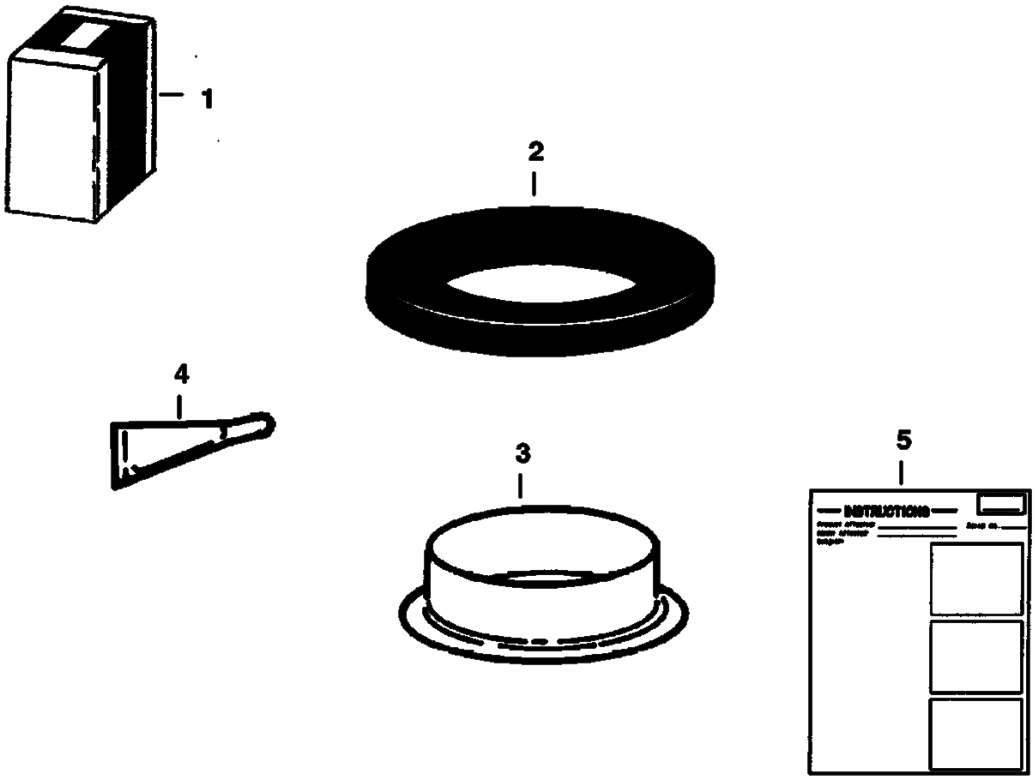

Ref No	Part Number	Description	Remarks	Serial Number	Qty
1	6722907	KIT	Ref. 2 - 5		1
2	6658228	SEAL			1
3	6662306	RING			1
4	6598485	SEALANT			1
5	6722908	INSTRUCTIONS			1

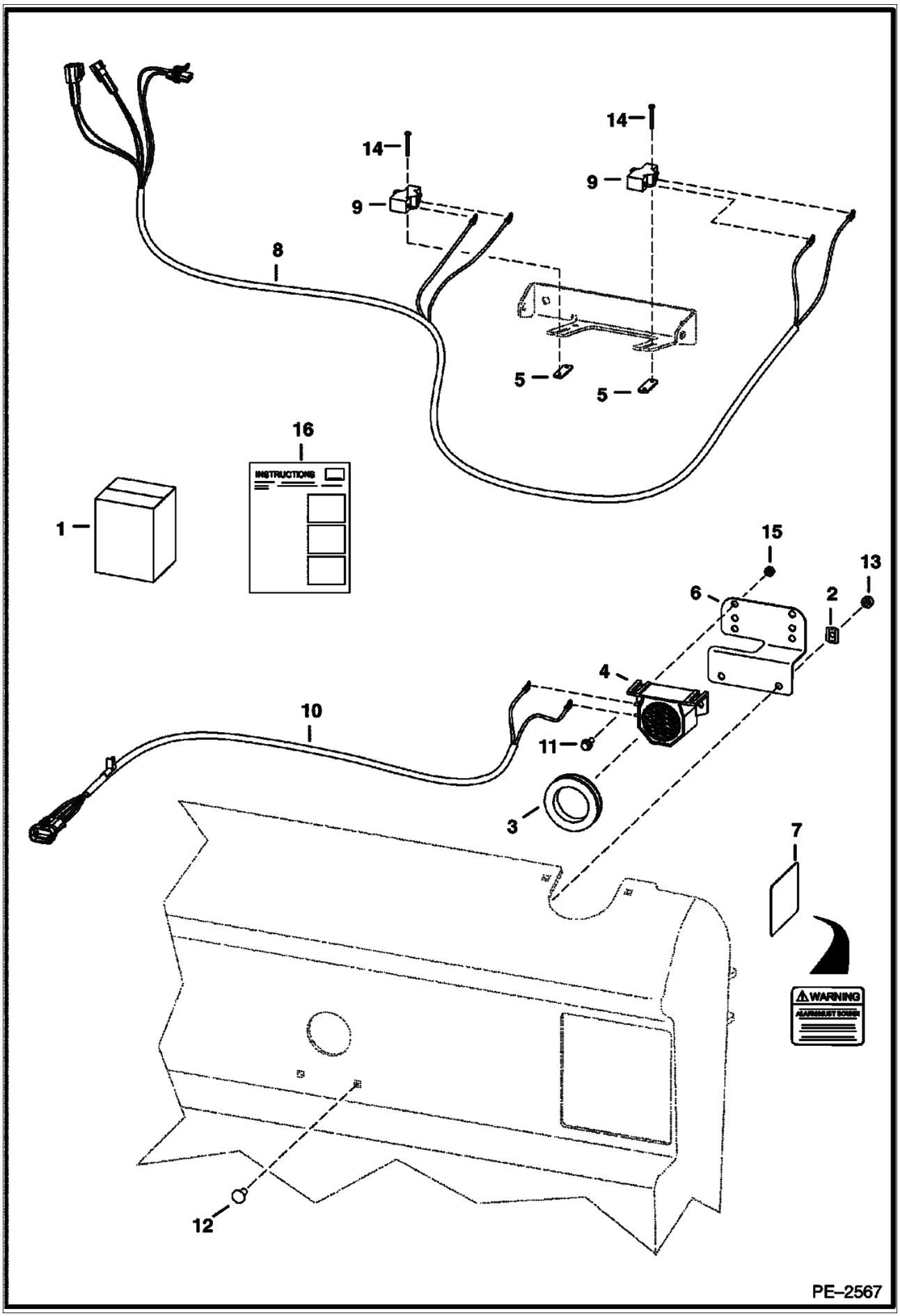
14
14
9
9
8
5
5
16
INSTRUCTIONS
1
15
13
6
2
4
10
11
3
7
WARNING
12
PE–2567

BACK-UP ALARM KIT (Cont'd)
Manual Hand Controls

Ref No	Part Number	Description	Remarks	Serial Number	Qty
1	7107829	BACK UP ALARM KIT			1
2	774220	NUT			2
3	6577545	GROMMET			1
4	6599931	ALARM			1
5	6702593	SPACER			2
6	6733970	MOUNT			1
7	6737189	DECAL			1
8	7107544	HARNESS			1
9	6646781	SWITCH			2
10	6715659	HARNESS			1
11	35C000410B	BOLT			2
12	10C000512B	BOLT			2
13	57D000005B	NUT			2
14	84G001320B	BOLT			4
15	97D000004B	NUT			2
16	6903293	INSTRUCTIONS			1

BACK-UP ALARM KIT
(W/Selectable Joystick Controls)

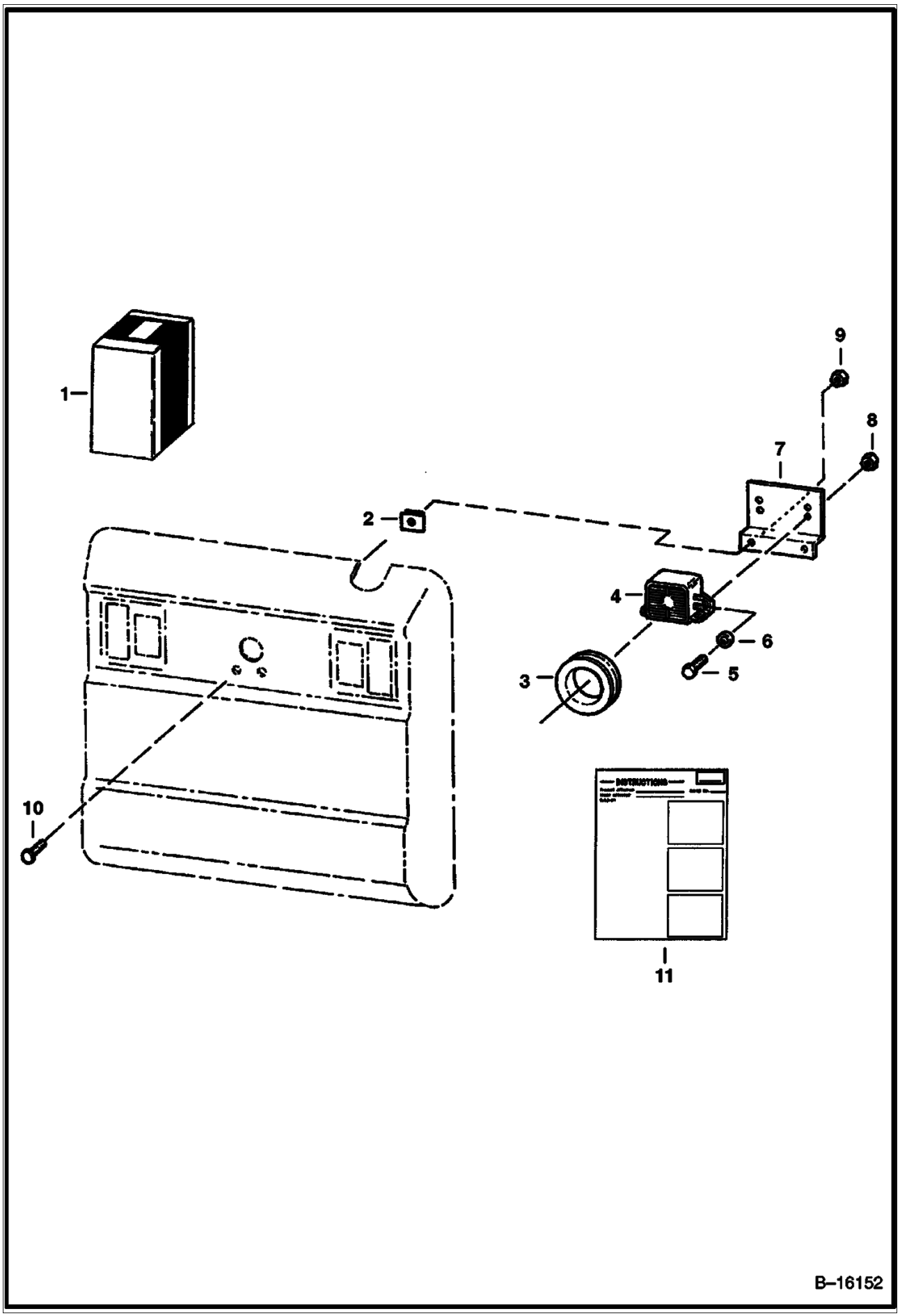

BACK-UP ALARM KIT (Cont'd)
(W/Selectable Joystick Controls)

Ref No	Part Number	Description	Remarks	Serial Number	Qty
1	6732235	KIT	Ref. 2-11		1
2	774220	NUT	spring		2
3	6577545	GROMMET			1
4	6599931	ALARM			1
5	17C000410B	BOLT			2
6	25E000013B	WASHER			2
7	6733970	MOUNT			1
8	83D000004B	NUT			2
9	61D000005B	NUT			2
10	10C000512B	BOLT			2
11	6901690	INSTRUCTIONS			1

BEACON

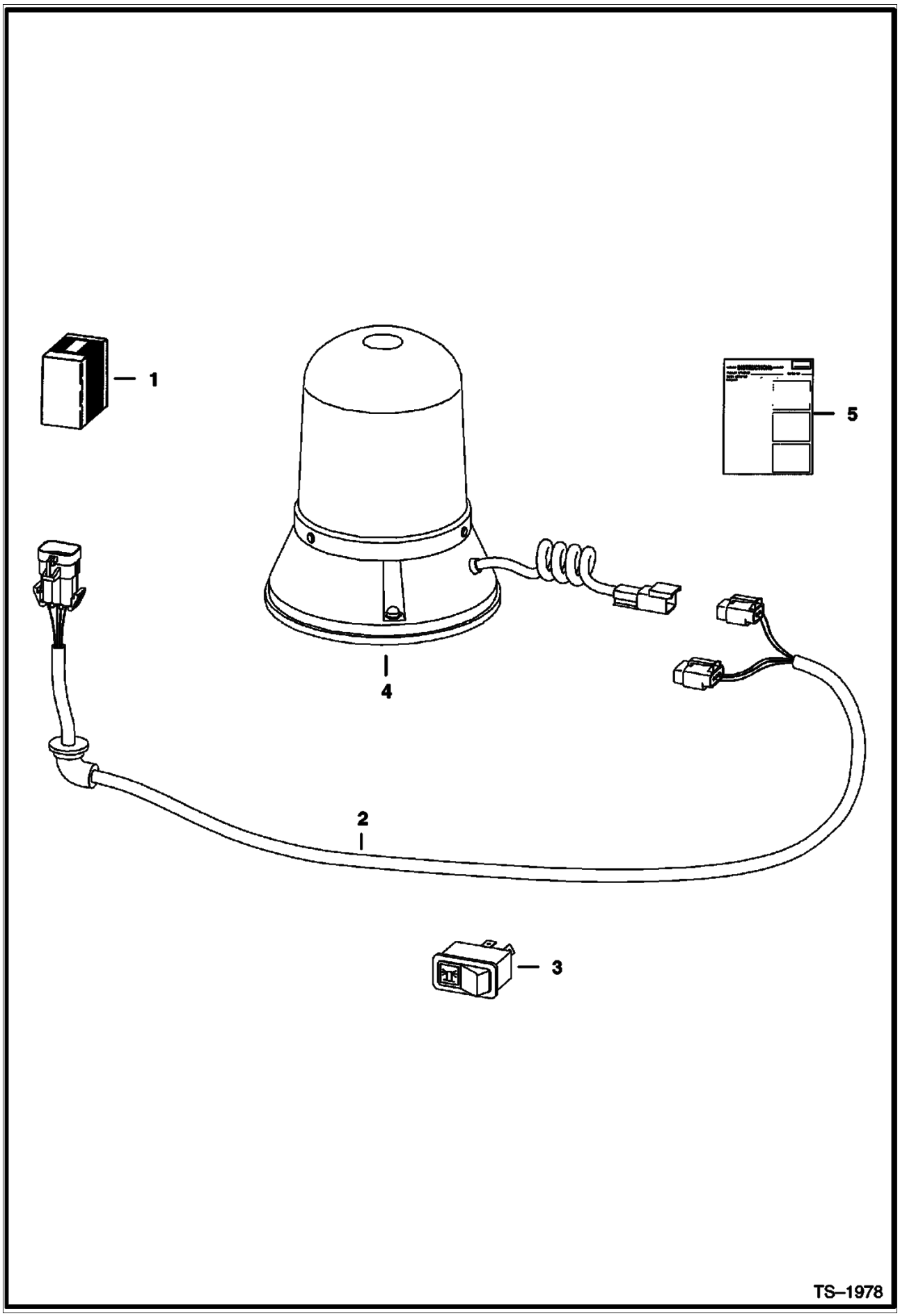

Ref No	Part Number	Description	Remarks	Serial Number	Qty
1	6719854	KIT	rotating beacon - If loader is not equipped W/heater, air conditioning, selectable joystick controls, advanced control system, power bob-tach, non-power port plug-in strobe lights and/or non-power port plug-in 4-way flashers, also order 7116260 deluxe harness		1
2	6718872	HARNESS			1
3	6668816	SWITCH	vertical		1
4	6675523	BEACON			1
4	6666571	BULB			1
5	6900991	INSTRUCTIONS			1

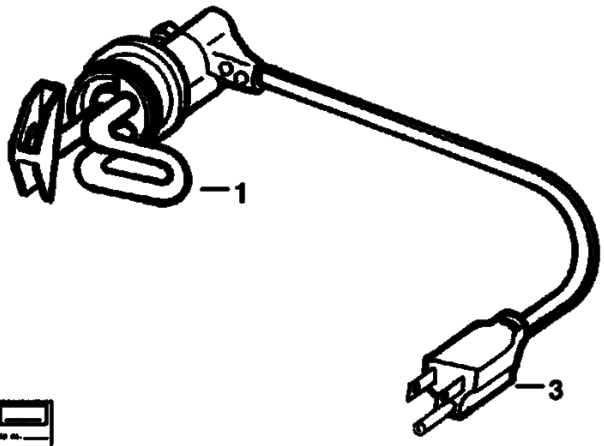

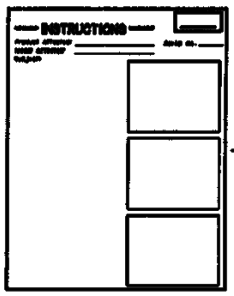

B–12299

BLOCK HEATER (Cont'd)
(Engine)

Ref No	Part Number	Description	Remarks	Serial Number	Qty
1	6720736	PLUG	W/Ref. 2		1
2	6720038	INSTRUCTIONS			1
3	6668881	CORD			1

BOB-TACH LEVERS
(For Use W/Industrial Grapple Fork)

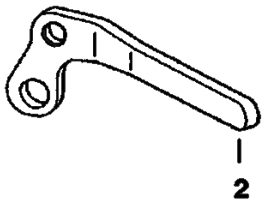

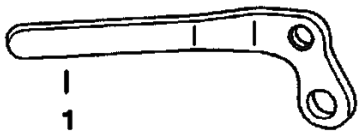

TS–1019

BOB-TACH LEVERS (Cont'd)
(For Use W/Industrial Grapple Fork)

Ref No	Part Number	Description	Remarks	Serial Number	Qty
1	6578139	LEVER	R.H.		1
2	6578140	LEVER	L.H.		1

BUCKET POSITIONING VALVE KIT

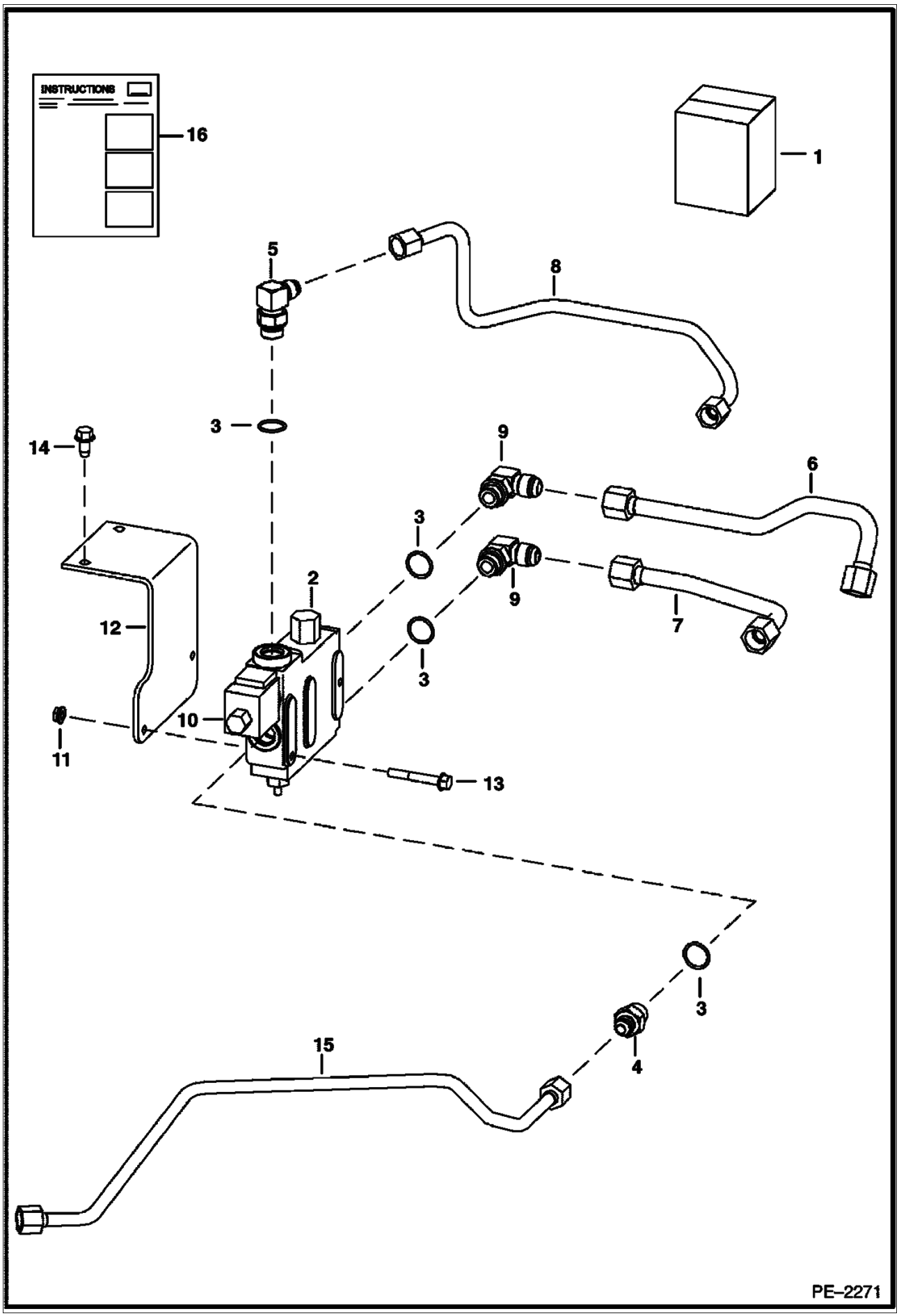

BUCKET POSITIONING VALVE KIT (Cont'd)

Ref No	Part Number	Description	Remarks	Serial Number	Qty
1	7102869	KIT	Ref. 2 - 15		1
2	6666341	VALVE	BUCKET POS.		1
3	79K000010B	O-RING			x
4	15KB00810B	CONNECTOR	W/Ref. 3		1
5	17KB00810B	ELBOW	W/Ref. 3		1
6	6733196	TUBE			1
7	7112912	TUBE			1
8	6734192	TUBE			1
9	17KB01010B	ELBOW	W/Ref. 3		2
10	6672863	SOLENOID			1
10		CARTRIDGE	W/nut		1
10		COIL			1
10	6671527	NUT			1
10	6670634	SEAL KIT			1
11	57D000005B	NUT			2
12	6727646	BRACKET			1
13	35C000536B	BOLT			2
14	84G003712B	BOLT			2
15	7101647	TUBE			1
16	6902833	INSTRUCTIONS			1

BUCKET POSITIONING VALVE

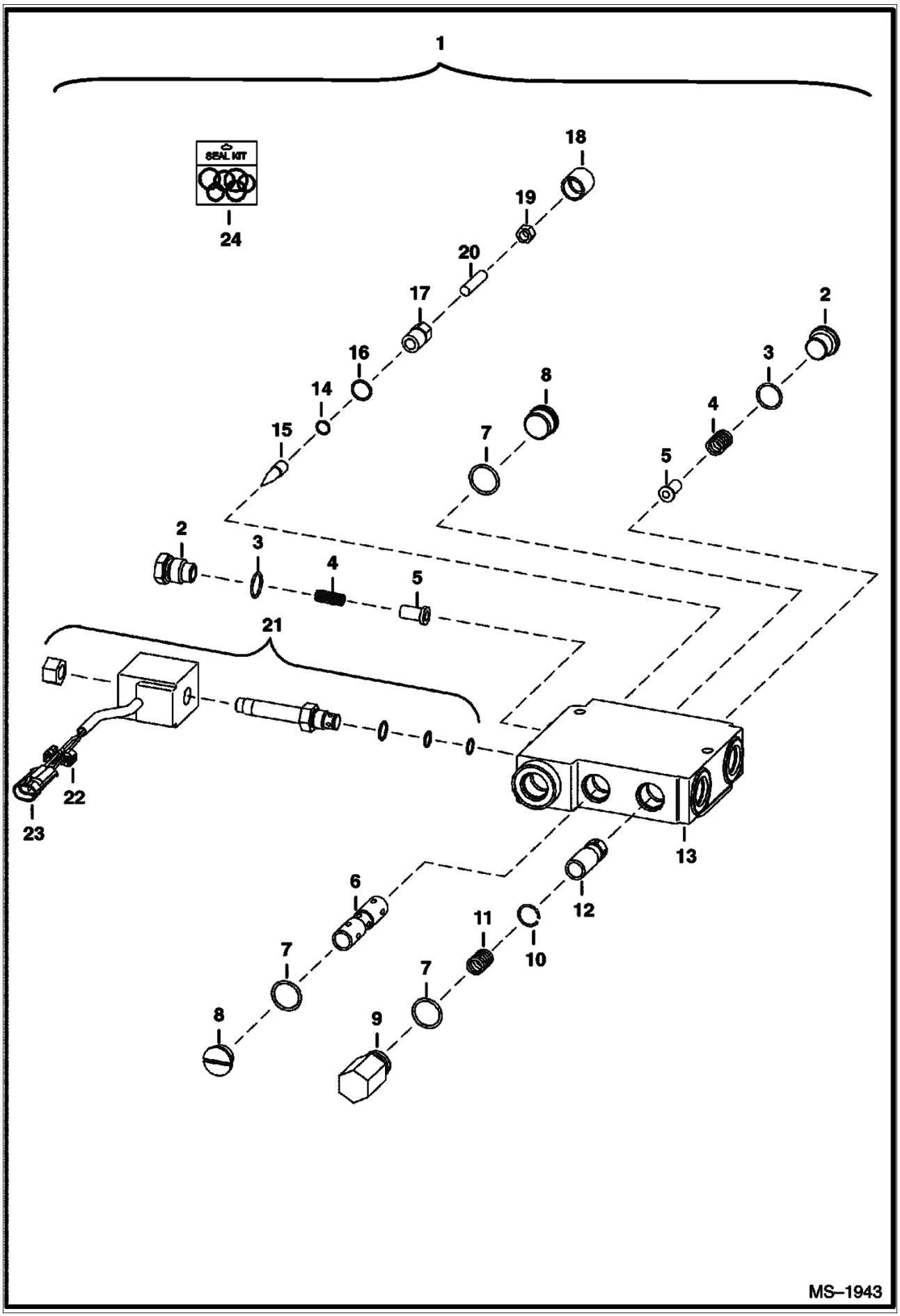

Ref No	Part Number	Description	Remarks	Serial Number	Qty
1	6666341	VALVE	Ref. 2-20 - white		1
1	6673959	VALVE	Ref. 2-23 - white		1
2	6647784	PLUG	W/Ref. 3		2
3	79K000008B	O-RING			2
4	6647785	SPRING			2
5	6647783	LOAD CHECK			2
6		SPOOL	NSS		1
7	58K000116B	O-RING	backup		3
8	6647780	PLUG	W/Ref. 7		2
9	6667176	PLUG	W/Ref. 7		1
10	6667680	SNAP RING			1
11	6648294	SPRING			1
12		SPOOL	NSS		1
13		BODY	NSS		1
14	6667677	O-RING			1
15	6647777	PIN			1
16	79K000006B	O-RING			1
17	6647778	CAP			1
18	6667676	COVER			1
19	6631561	NUT			1
20	6648293	SCREW			1
21	6672863	SOLENOID			1
21	6671527	NUT			1
21	6670634	SEAL KIT			1
21	6674331	COIL	W/ Ref. 22, 23		1
21	6676545	CARTRIDGE			1
22	6641180	LOCK	2-pin		1
23	6641179	CONNECTOR	2-pin		1
24	6647786	SEAL KIT	Ref. 3, 7, 14, 16 & 18		1

CAB DOOR

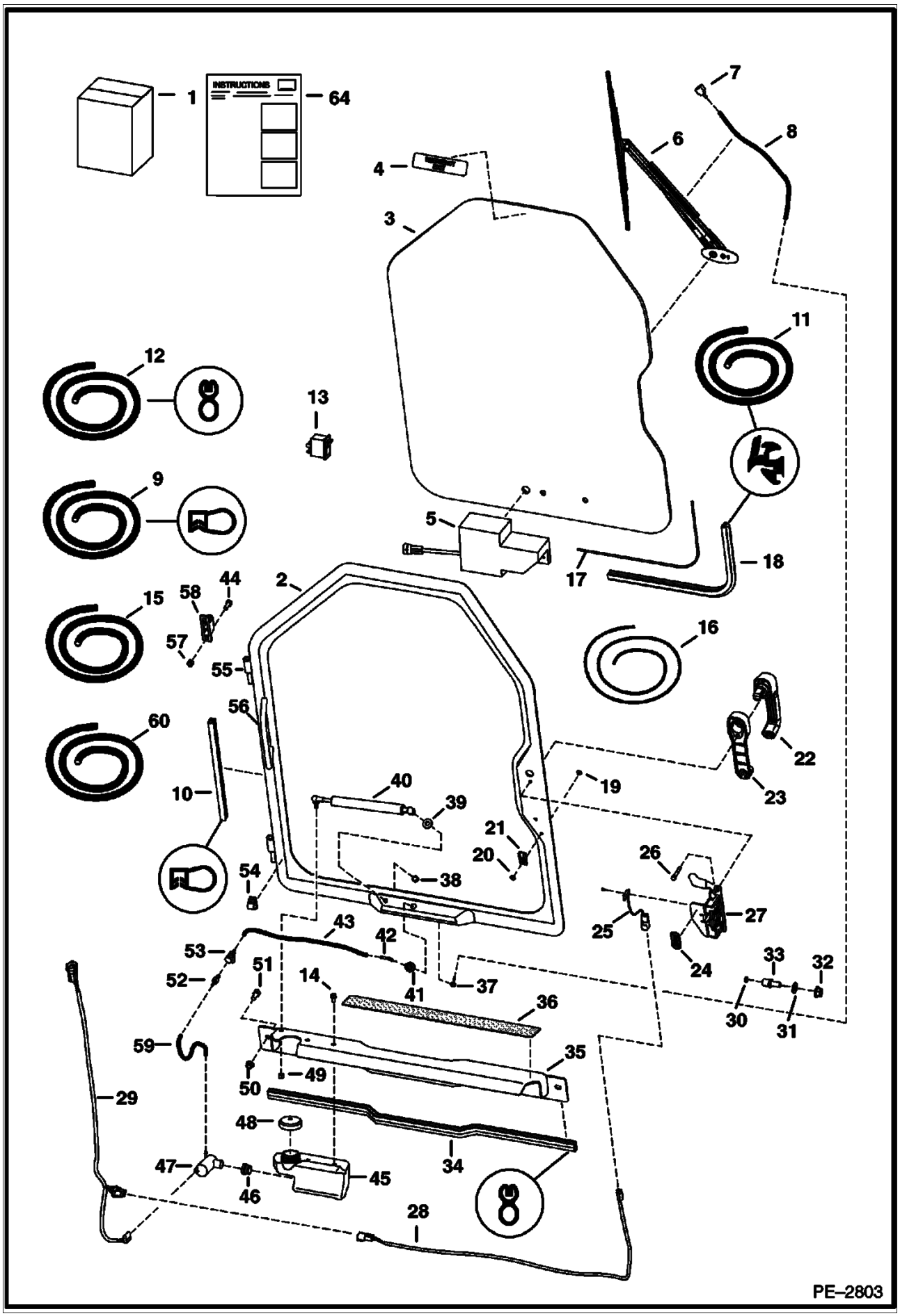
INSTRUCTIONS
1
64
7
8
6
4
3
11
12
13
9
5
18
17
2
15
58
44
57
55
16
56
60
22
10
40
39
19
23
21
20
26
54
38
27
25
43
42
24
53
51
33
32
52
14
41
37
36
30
31
59
35
50
49
29
48
34
47
45
46
28
PE–2803

Ref No	Part Number	Description	Remarks	Serial Number	Qty
1	6730822	KIT	door - Ref. 2-61 & Ref. 1-21 on ILL. MS1355		1
2	7109665	DOOR	W/Ref. 55 & 56		1
3		WINDOW	See Illustration CAB DOOR/ MS1355 - .25" thick glass		1
4	6707852	DECAL	exit		1
5		MOTOR	See Illustration CAB DOOR/ MS1355 - wiper		1
6		ARM ASSY	See Illustration CAB DOOR/ MS1355 - wiper		1
7		NOZZLE	See Illustration CAB DOOR/ MS1355 - wiper arm mounted		1
8		HOSE	See Illustration CAB DOOR/ MS1355		1
9	6675558	SEAL	bulk - sold per foot		x
10		SEAL	NAP - 127.3" (3233mm) - Order Ref. 9		1
11	6665568	EXTRUSION	bulk - sold per foot		x
12	6513152	SEAL	bulk - sold per foot		x
13	6665707	SWITCH	front wiper		1
14	35C000408B	BOLT			2
15	6676003	HOSE	bulk - sold per foot - .109" I.D. - black		x
16	6554149	CORD	bulk - sold per foot		x
17		CORD	NAP - window - 113" (2878mm) - Order Ref. 16		1
18		SEAL	NAP - window - 113" (2878mm) - Order Ref. 11		1
19	6665321	RIVET	male - plastic		1
20	6665322	RIVET	female - plastic		1
21	6665000	CLIP			1
22	7109662	HANDLE			1
22	6709527	KEY	ignition/rear door		1
23	7109663	SPACER			1
24	7110316	DECAL	door switch		1
25	6728459	DOOR SENSOR			1
25	6677193	RIVET	plastic		2
26	1CM00640B	BOLT			2
27	7109661	DOOR LATCH			1
28	7104465	DOOR SWITCH HARNESS			1
29	7117322	HARNESS	wiper		1
30	6677192	MAGNET			1
31	18EM01224B	WASHER			1
32	51DM12	NUT	12 mm thread		1
33	7109664	BOLT	striker - 12 mm thread		1
34		SEAL	NAP - threshold - 36" (914mm) - Order Ref. 12		1
35	6730816	SHIELD			1
36	6542731	SAFETY TREAD			1
37	6676500	ELBOW			1
38	46D000005B	NUT	acorn		1
39	25E000016B	WASHER			1
40	6682586	GAS SPRING			1
40	6678548	SOCKET	ball		2
40	6649244	STUD			2
40	6649245	RETAINER	spring		2
41	6676499	GROMMET	wiper		1
42	6676917	ELBOW			1
43		HOSE	NAP - 18.25" (464mm) - Order Ref. 15		1
44	17C000512B	BOLT			4
45	6736875	TANK	washer		1
46	6666766	GROMMET			1
47	6664554	PUMP	washer bottle		1
48	6674993	CAP	vented		1
49	61D000005B	NUT			1

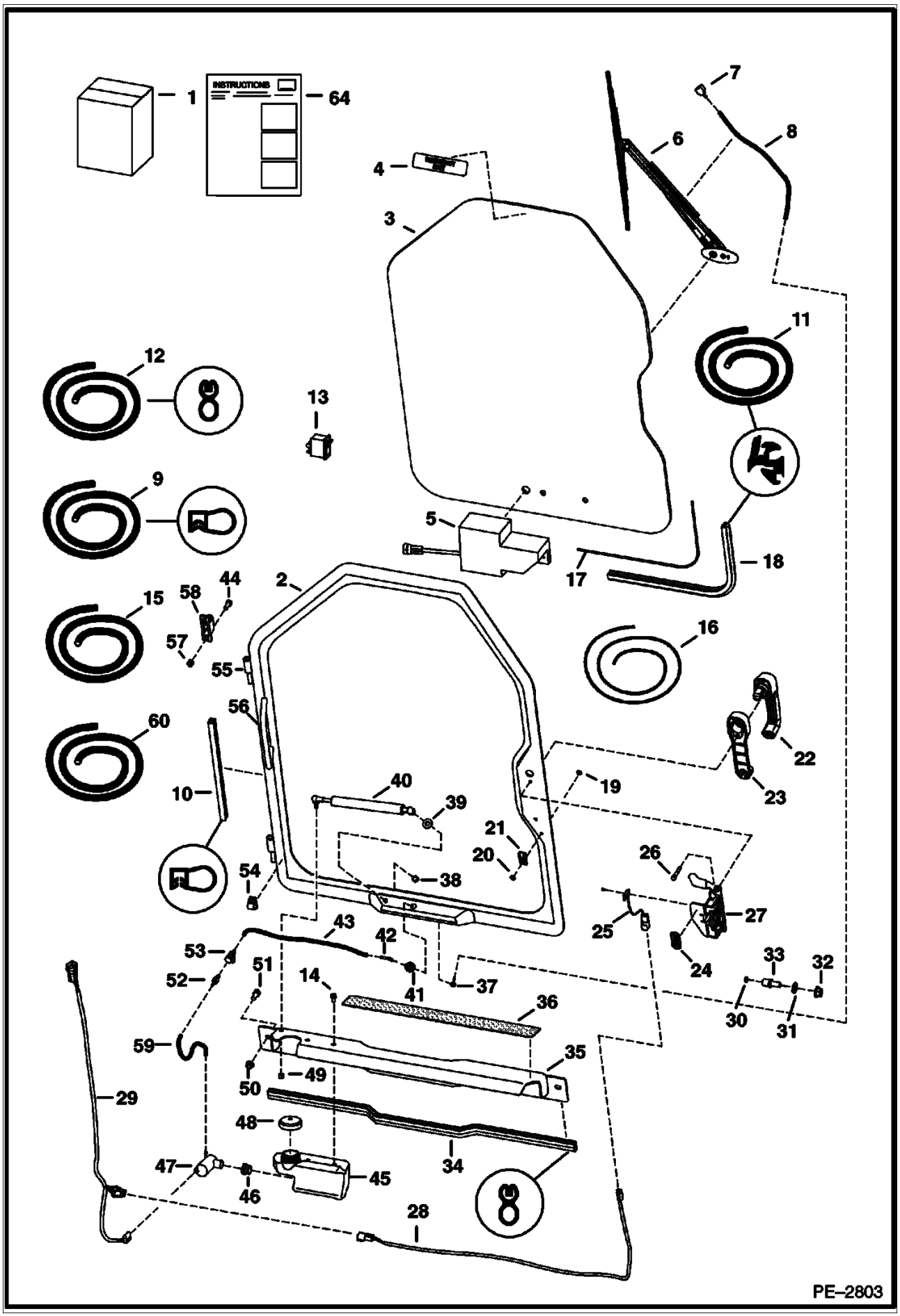
INSTRUCTIONS
1
64
7
6
8
4
3
11
12
13
9
5
18
17
2
44
58
15
57
55
16
56
60
22
10
40
39
19
23
21
20
26
54
38
27
25
43
42
24
33
32
53
51
52
14
41
37
36
30
31
59
35
50
49
29
48
34
47
45
46
28
PE–2803

Ref No	Part Number	Description	Remarks	Serial Number	Qty
50	61D000006B	NUT			2
51	17C000612B	BOLT			2
52	6675299	COUPLER	insert		1
53	6675298	COUPLER	body		1
54	6675378	CLIP			3
55	6718376	HINGE	door		2
56	6718521	HANDLE	grab		1
57	59D000005B	NUT			4
58	6717593	HINGE	base		2
59		HOSE	NAP - 4.25" (108mm) long - Order Ref. 60		1
60	6708310	HOSE	bulk - sold per foot - .149 I.D. - clear		x
61	6900854	INSTRUCTIONS INSTL	INSTRUCTIONS INSTL		1

CAB DOOR
(Window & Wiper)

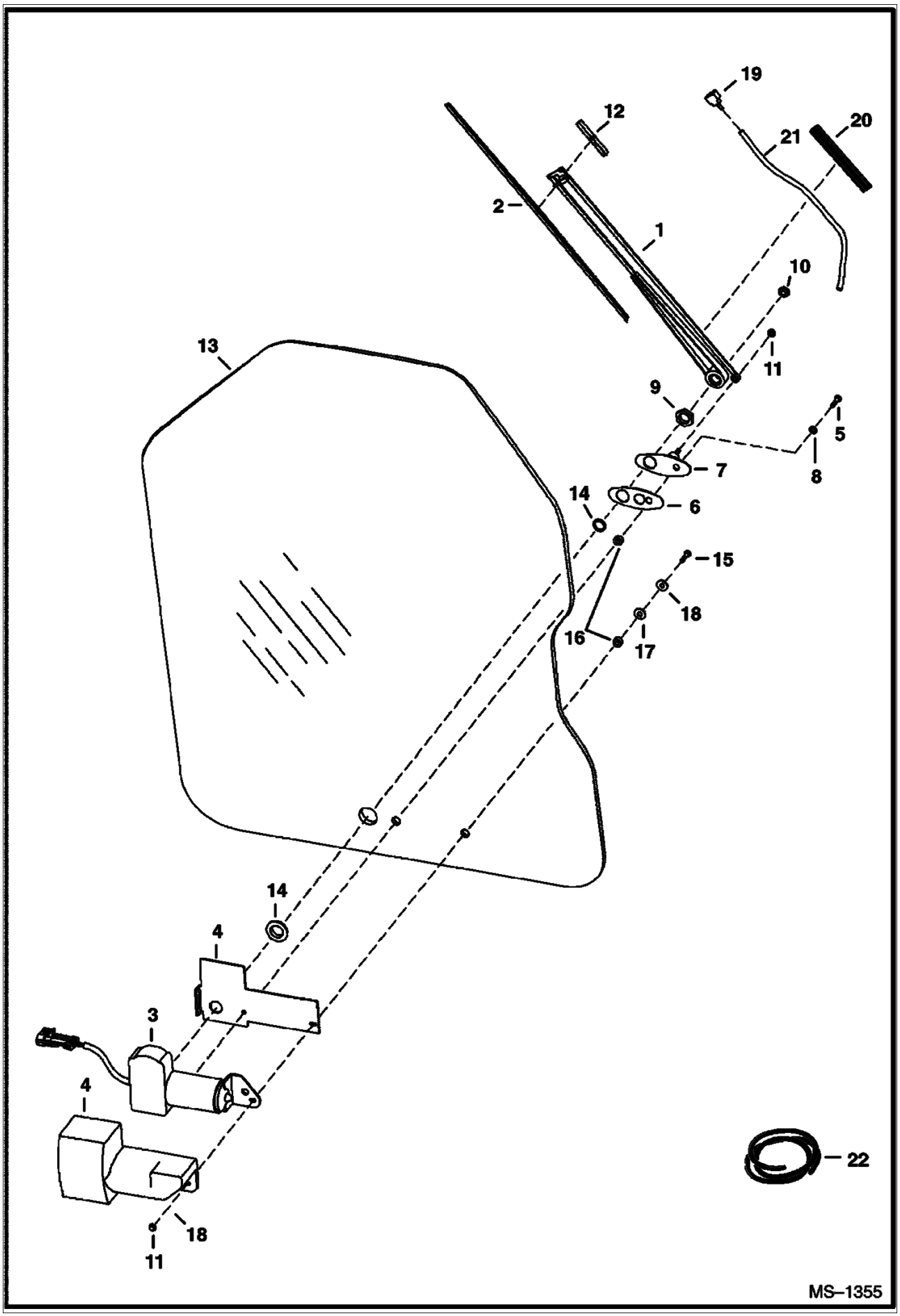

CAB DOOR (Cont'd)
(Window & Wiper)

Ref No	Part Number	Description	Remarks	Serial Number	Qty
1	6677833	ARM ASSY	W/Ref. 19 - 21		1
2	6677834	BLADE			1
3	6679476	MOTOR	W/threaded shaft end & built in fuse		1
4	6677836	COVER			1
5	6677837	BOLT			1
6	6677839	GASKET			1
7	6677840	SWIVEL			1
8	6677841	WASHER	tooth lock		1
9	6677842	NUT			1
10	6677843	NUT			1
11	6677844	NUT			2
12	6677845	ADAPTER	arm		1
13	6729776	WINDOW	.25" thick glass		1
14	6677847	GROMMET	rubber		1
15	6678198	BOLT			1
16	6664085	BUSHING	nylon		2
17	6801059	WASHER	neoprene		1
18	6678739	WASHER	steel		2
19	6678920	NOZZLE			1
20	6678921	GUIDE	hose		1
21		HOSE	NAP - 18"(457,2 mm) long - Order Ref. 22		x
22	6676003	HOSE	bulk - Sold Per Foot - .109" I.D. - black		x

CAB DOOR
(Special Applications)

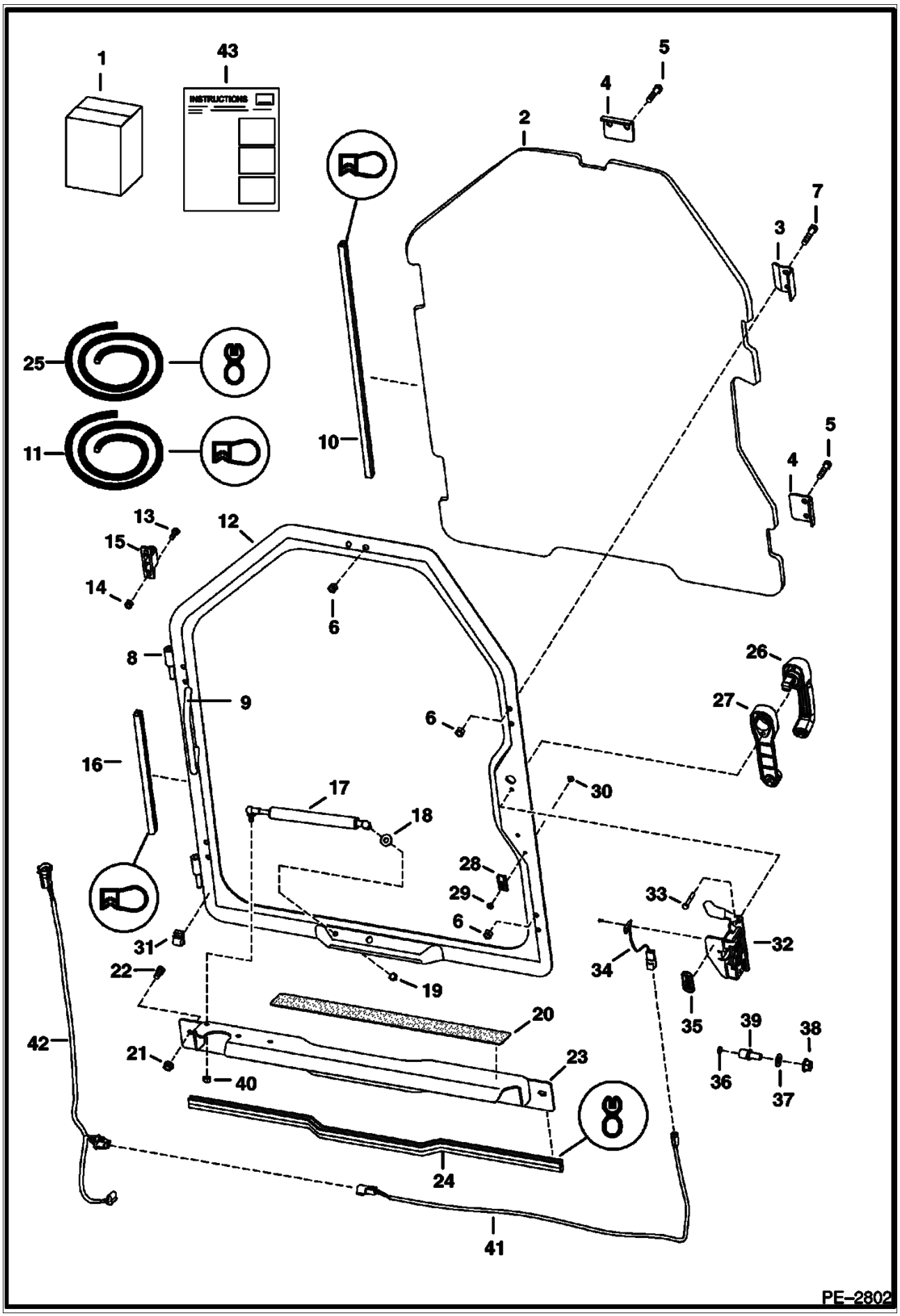

CAB DOOR (Cont'd)
(Special Applications)

Ref No	Part Number	Description	Remarks	Serial Number	Qty
1	6730823	KIT	door - Ref. 2-43		1
2	6732351	WINDOW	.5" thick polycarbonate		1
3	6725938	CLAMP			2
4	6725937	CLAMP			3
5	17C000628B	BOLT			6
6	95D000006B	NUT			10
7	17C000624B	BOLT			4
8	6718376	HINGE	door		2
9	6718521	HANDLE	grab		1
10		SEAL	NAP - 115" (2921 mm) long - Order Ref. 11		1
11	6675558	SEAL	bulk - sold per foot		x
12	7110430	SPECIAL APPS DOOR	W/Ref. 8 & 9		1
13	59D000005B	NUT			4
14	17C000512B	BOLT			4
15	6717593	HINGE	base		2
16		SEAL	NAP - 127.3" (3233,4 mm) long - Order Ref. 11		1
17	6682586	GAS SPRING			1
17	6678548	SOCKET	ball		2
17	6649244	STUD	ball		2
17	6649245	RETAINER	spring		2
18	25E000016B	WASHER			1
19	46D000005B	NUT	acorn		1
20	6542731	SAFETY TREAD			1
21	55D000006B	NUT			2
22	17C000612B	BOLT			2
23	6730816	SHIELD			1
24		SEAL	NAP - 36" (914,4 mm) long - Order Ref 25		1
25	6513152	SEAL	bulk - sold per foot		x
26	7109662	HANDLE			1
26	6709527	KEY	ign. & rear door		1
27	7109663	SPACER			1
28	6665000	CLIP			1
29	6665321	RIVET	male - plastic		1
30	6665322	RIVET	female - plastic		1
31	6675378	CLIP			3
32	7109661	DOOR LATCH			1
33	1CM00640B	BOLT			2
34	6728459	DOOR SENSOR			1
34	6677193	RIVET	plastic		2
35	7110316	DECAL			1
36	6677192	MAGNET			1
37	18EM01224B	WASHER			1
38	51DM00012B	NUT	12 mm thread		1
39	7109664	BOLT	striker - 12 mm thread		1
40	61D000005B	NUT			1
41	7104465	DOOR SWITCH HARNESS	door sensor		1
42	7117322	HARNESS	wiper		1
43	6901013	INSTRUCTIONS			1

CAB DOOR
(Lexan Window)

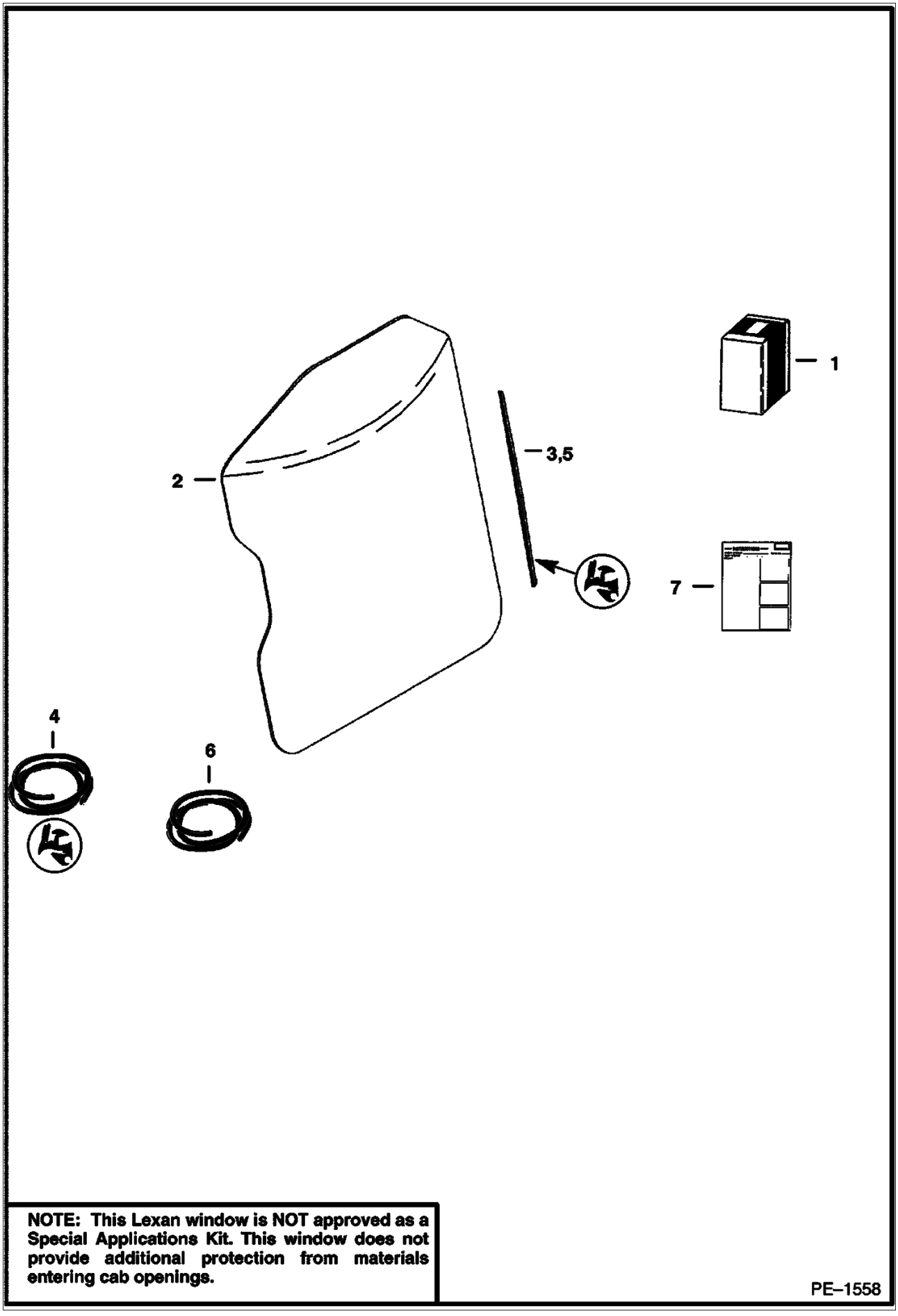

NOTE: This Lexan window is NOT approved as a Special Applications Kit. This window does not provide additional protection from materials entering cab openings.

PE–1558

CAB DOOR (Cont'd)
(Lexan Window)

Ref No	Part Number	Description	Remarks	Serial Number	Qty
1	6726427	KIT	Ref. 2 - 7		1
2	6732350	WINDOW	lexan - .236" thick		1
3		SEAL	NAP - 113.3"(2877,8 mm) long - Order Ref. 4		1
4	6665568	EXTRUSION	bulk - Sold Per Foot		x
5		CORD	NAP - 113.3"(2877,8 mm) long - Order Ref. 6		1
6	6554149	CORD	bulk - Sold Per Foot		x
7	6901036	INSTRUCTIONS			1

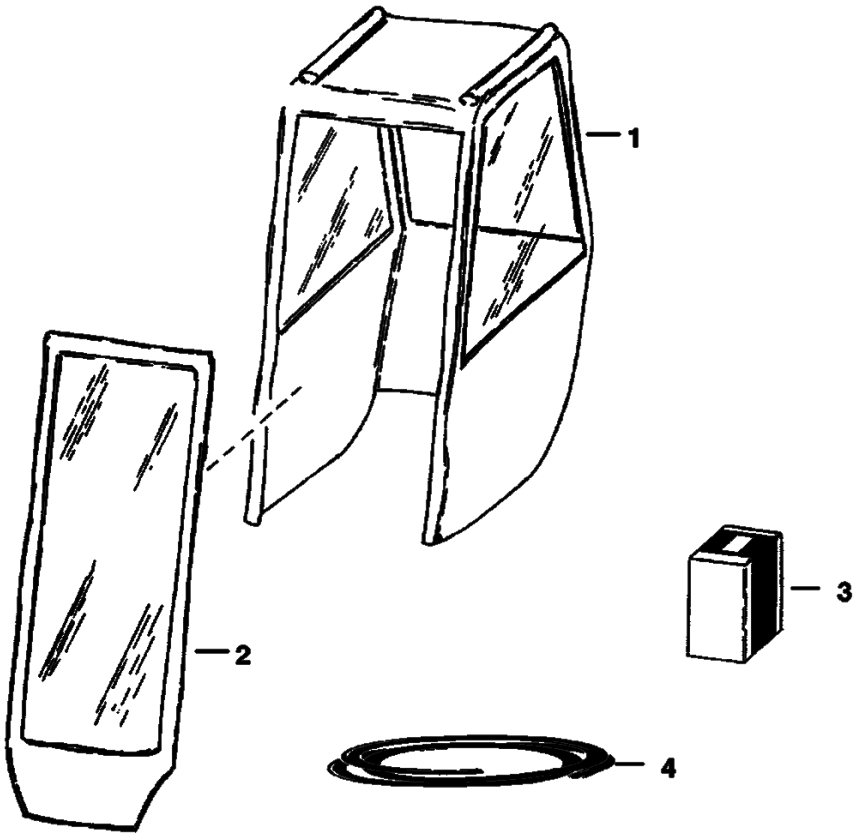
1
2
3
4
B–1413

CAB ENCLOSURE (Cont'd)
(Envelope)

Ref No	Part Number	Description	Remarks	Serial Number	Qty
1	6675544	CANVAS CAB	fits over cab - W/Ref. 2		1
2	6675590	DOOR	vinyl		1
3	6675591	HINGE KIT			1
4	6722597	VELCRO	27 feet (8,2 m)		1

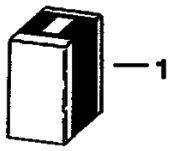

B–17100

Ref No	Part Number	Description	Remarks	Serial Number	Qty
1		KIT	See Illustration CAB WINDOWS/ MS1340 See Illustration CAB DOOR/ PE1566 cab enclosure - SALES Kit #6731938		1
1		KIT	See Illustration CAB DOOR/ PE1061 See Illustration CAB WINDOWS/ MS1340 special cab enclosure - SALES Kit #6731937		1

CAB WINDOWS
(Top, Rear & Side)

NOTE: Order Side Window Kit from Gwinner Sales # 6718806.

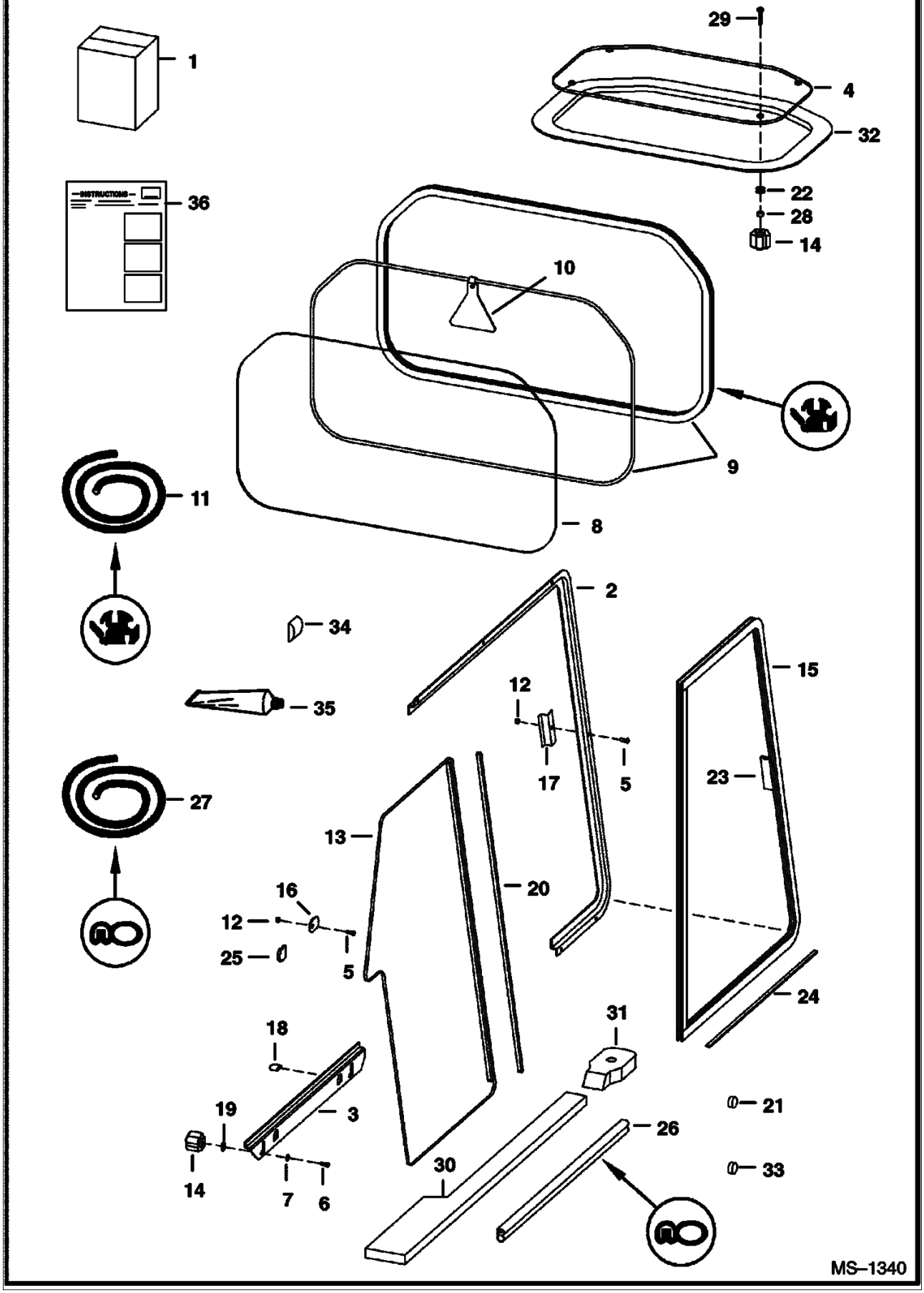

CAB WINDOWS (Cont'd)
(Top, Rear & Side)

Ref No	Part Number	Description	Remarks	Serial Number	Qty
1	6718805	KIT	Top & Rear Window - Ref. 4, 8-10, 14 & 36		1
1		KIT	SALES - Side Window - SEE NOTE		1
2	6717870	FRAME	L.H. side		1
2	6717872	FRAME	R.H. side		1
3	6717871	FRAME	L.H. bottom		1
3	6717873	FRAME	R.H. bottom		1
4	7105035	WINDOW	assy. - top - lexan - W/Ref. 22, 28, 29 & 32		1
5	10C000410B	BOLT	carriage		18
6	10C000416B	BOLT	carriage		4
7	25E000014B	WASHER			4
8	6717874	WINDOW	rear		1
8	6719413	WINDOW	rear - lexan		1
9		EXTRUSION	NAP - 75.75"(1924 mm) long - Order Ref. 11		x
9		CORD	NAP - 75.75"(1924 mm) long - Order Ref. 11		x
10	6731478	EXIT TAG			1
11	6675387	EXTRUSION	bulk - Sold Per Foot		x
11	6554149	CORD	bulk - Sold Per Foot		x
12	59D000004B	NUT			18
13	6674520	WINDOW	L.H. rear - W/Ref. 20		1
13	6674522	WINDOW	R.H. rear - W/Ref. 20		1
14	6681614	KNOB			8
15	6674519	WINDOW	L.H. front - W/Ref. 23		1
15	6674521	WINDOW	R.H. front - W/Ref. 23		1
16	6719063	STOP			2
17	6719037	STRIKER			2
18	6719065	COVER TAB	tab		4
19	6675212	RETAINER	bolt		4
20	6675833	SEAL	rear window dual wiper W/tape		2
21	6657719	PLUG	for .75" dia. hole		2
22	6675545	GROMMET			4
23	6678283	HANDLE	side window - W/tape & instructions		2
24	6676927	FELT STRIP	20.38" (517,7 mm) long		2
25	6677198	TAB	tab		2
26		SEAL	NAP - 24"(609,6 mm) long - Order Ref. 27		1
27	6555351	SEAL	bulk - Sold Per Foot		x
28	6664085	BUSHING	nylon		4
29	91G000420B	BOLT			4
30	6729010	SEAL	L.H. - cab to main frame - foam		1
30	6729009	SEAL	R.H. - cab to main frame - foam		1
31	6729011	SEAL	cab mount		2
32		SEAL	NAP - Order Ref. 4		1
33	6677973	PLUG	for .22" dia. hole		2
34	7103075	SEAL	side screen		2
35		ADHESIVE	NAP - 1 oz. - for top window seal Ref. 1		1
36	6900852	INSTRUCTIONS INSTL	top & rear window		1
36	6900853	INSTRUCTIONS	Side Windows		1

CAB WINDOWS
(Window Rib Kit)

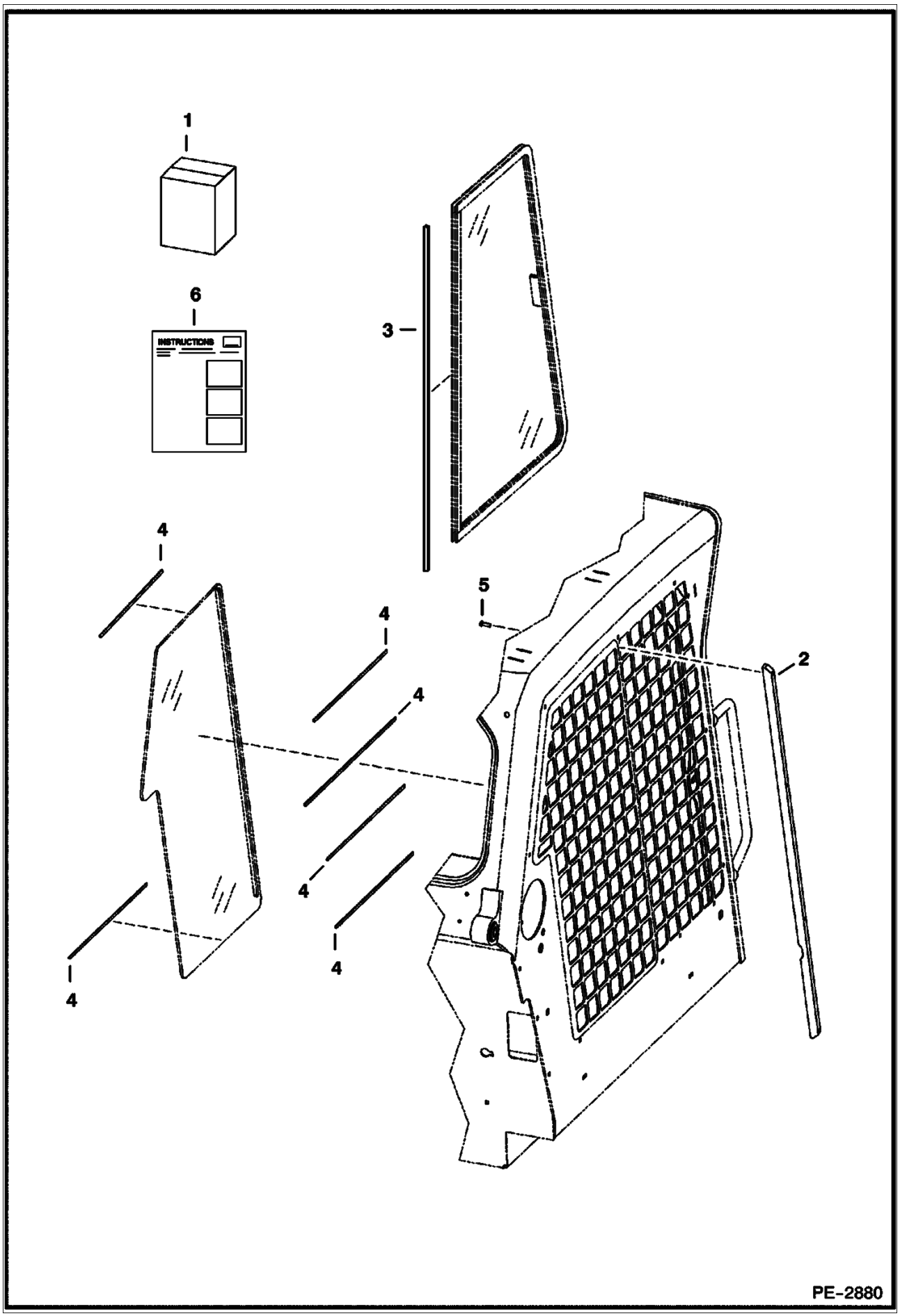

CAB WINDOWS (Cont'd)
(Window Rib Kit)

Ref No	Part Number	Description	Remarks	Serial Number	Qty
1	7122462	KIT, WINDOW RIB	Inc. Ref. 2-6		1
2	7121556	BRACE, CAB			2
3	7122487	SEAL, WIPER			2
4	7122488	SEAL, BULB	180.0" long - cut to fit		1
5	25GT00412B	SCREW			8
6	6904744	INSTRUCTION, INSTALL			1

CAB WINDOWS
(Rear Window Removal Kit)

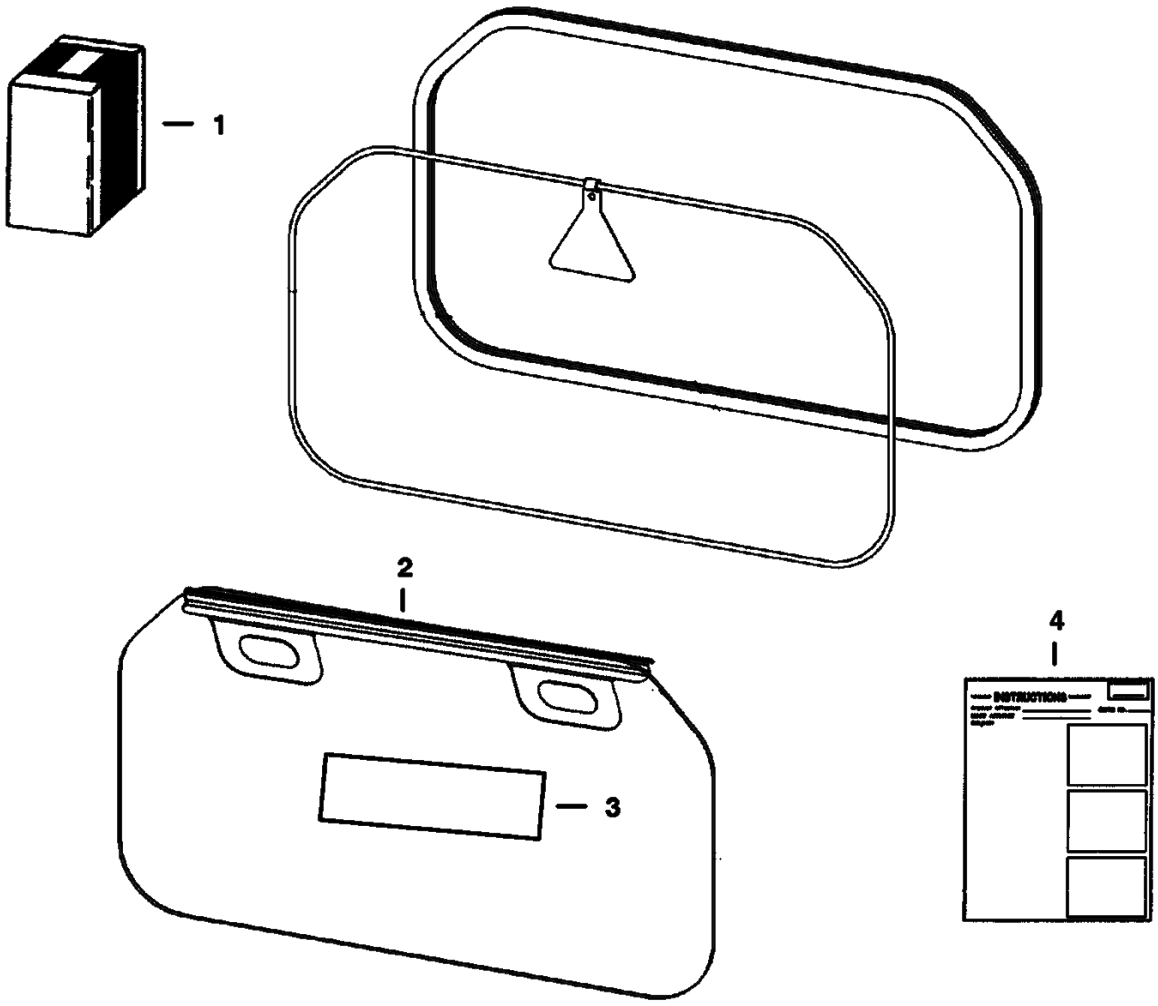

TS–2006

CAB WINDOWS (Cont'd)
(Rear Window Removal Kit)

Ref No	Part Number	Description	Remarks	Serial Number	Qty
1	6725946	KIT	Ref. 2 - 4		1
2	6725421	HANDLE			1
3	6726303	DECAL			1
4	6901029	INSTRUCTIONS			1

COUNTERWEIGHT KIT
(Front Axle)

NOTE: Order Counterweight Kit from Gwinner Sales # 6704284.

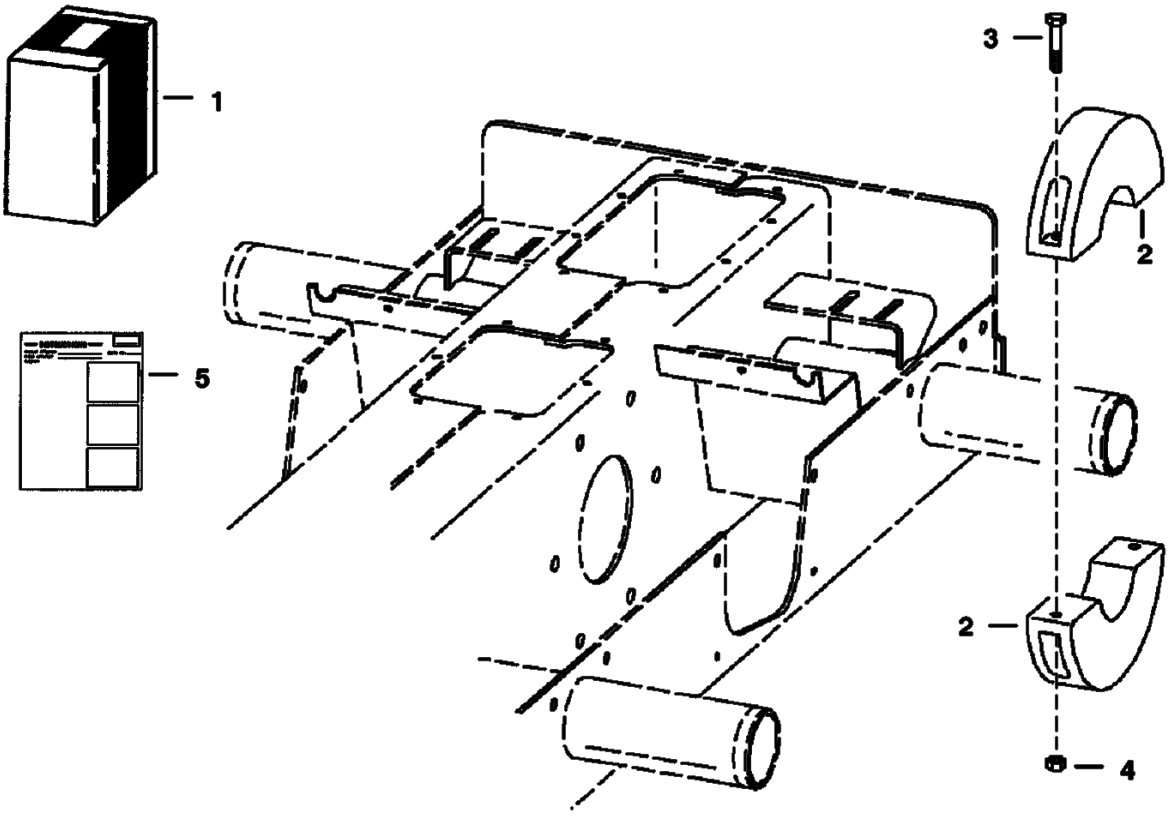

TS–1020

COUNTERWEIGHT KIT (Cont'd)
(Front Axle)

Ref No	Part Number	Description	Remarks	Serial Number	Qty
1		KIT	SALES - counterweight - SEE NOTE		1
2	6714361	WEIGHT	38.7 lbs (17,6 mm) - 4.5"(114,3 mm) wide		4
3	17C000640B	BOLT			8
4	61D000006B	NUT			8
5	6900366	INSTRUCTIONS			1

COUNTERWEIGHT KIT
(1850 lb.)

NOTE: Order Counterweight Kit from Gwinner Sales # 6714932.

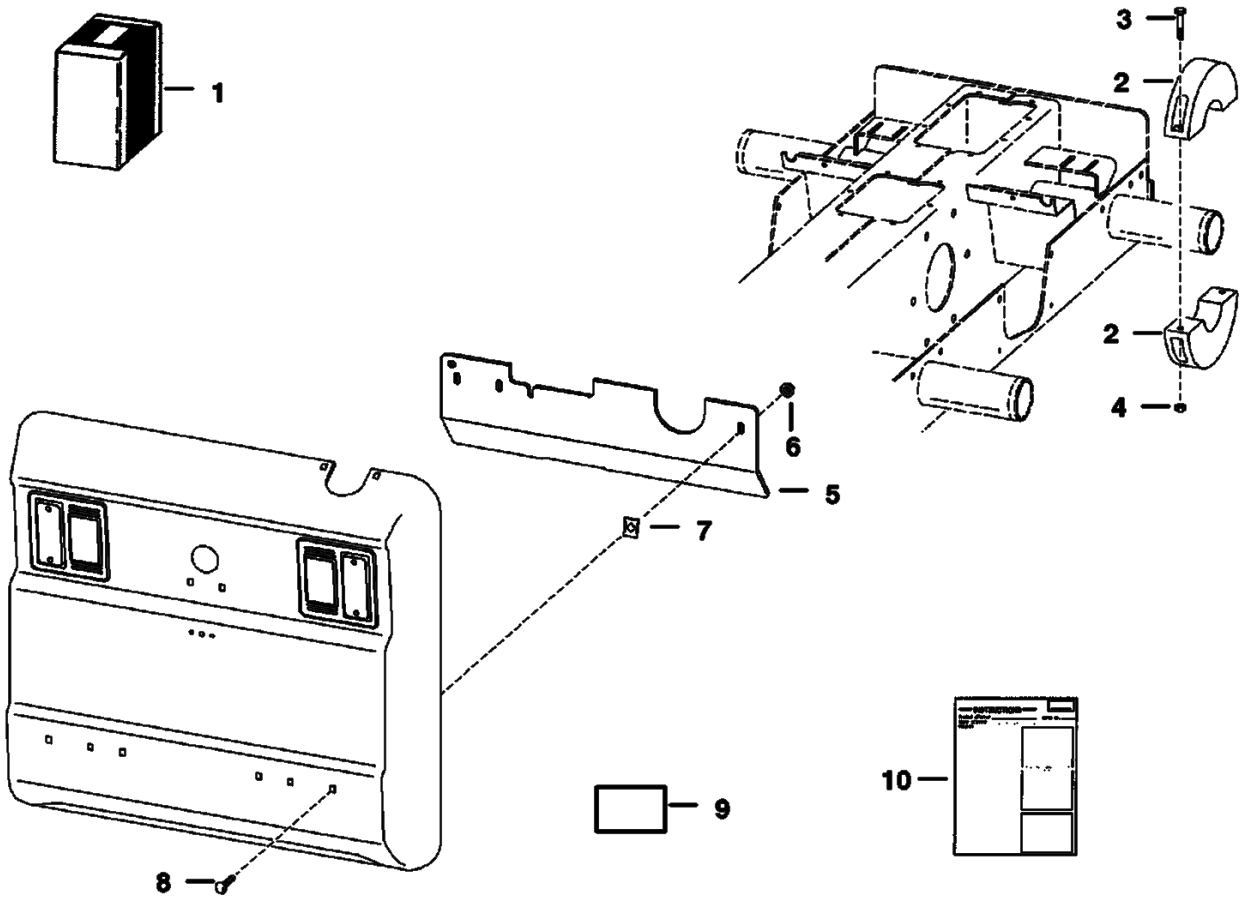

B–17013

COUNTERWEIGHT KIT (Cont'd)
(1850 lb.)

Ref No	Part Number	Description	Remarks	Serial Number	Qty
1		KIT	SALES - counterweight		1
2	6714361	WEIGHT	front axle - 38.7 lbs (17,6 kg) - 4.5"(114,3 mm) wide		4
3	17C000640B	BOLT			4
4	61D000006B	NUT			4
5	6725256	COUNTERWEIGHT			3
6	57D000006B	NUT			3
7	1612281B	NUT	spring		3
8	37C000632B	BOLT			3
9	6725092	DECAL	1850 lb. - Not in Kit		1
10	6900410	INSTRUCTIONS			1

COUNTERWEIGHT KIT
300 lb. (136 kg.)

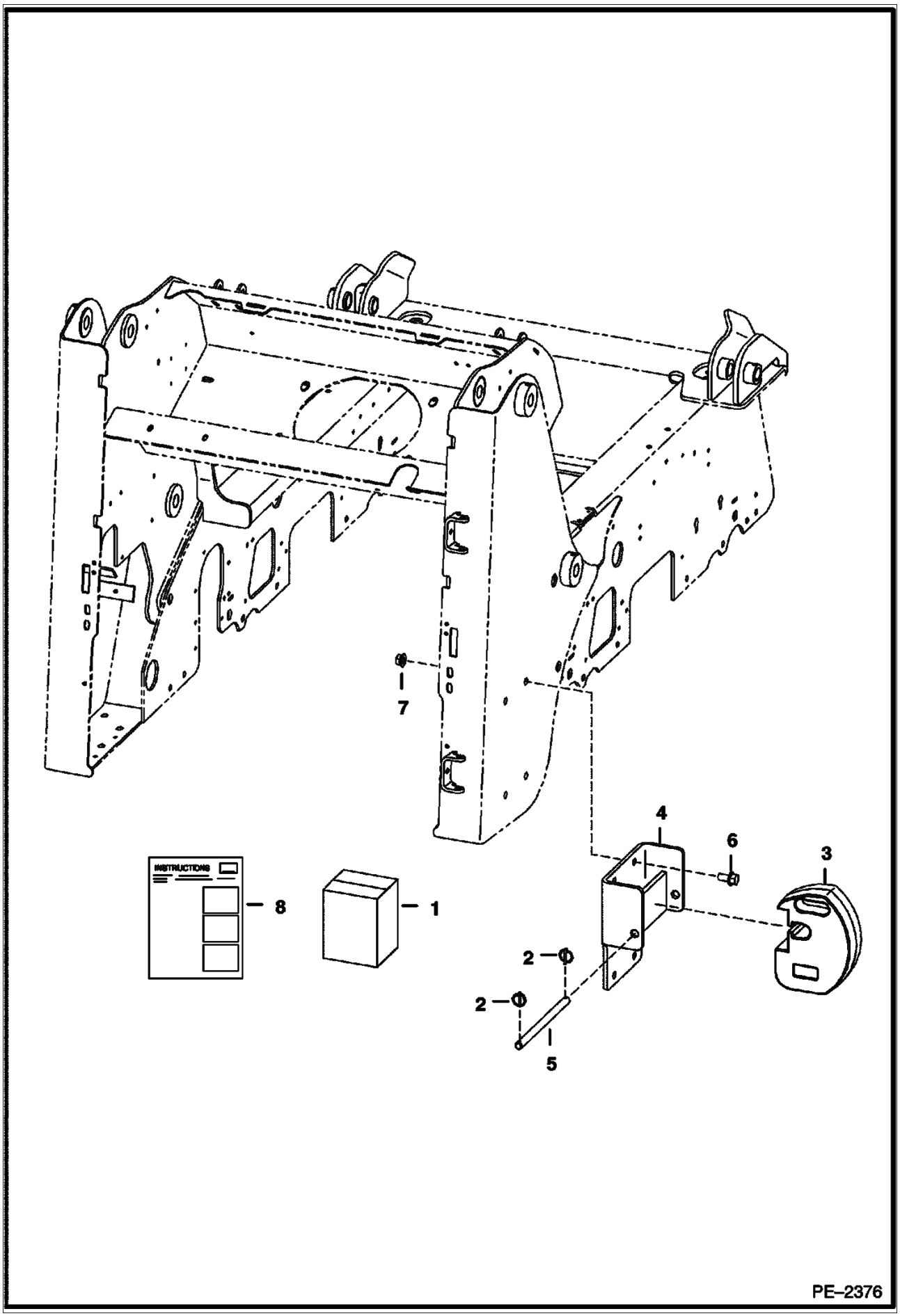

COUNTERWEIGHT KIT (Cont'd)
300 lb. (136 kg.)

Ref No	Part Number	Description	Remarks	Serial Number	Qty
1	7105763	300 LB CTW KIT			1
2	6649706	PIN			4
3	6811483	COUNTERWEIGHT	49 lb.		6
4	7105817	MOUNT ASSY			2
5	7105826	ROD			2
6	35C001020B	BOLT			8
7	57D000010B	NUT			8
8	6903282	INSTRUCTIONS			1

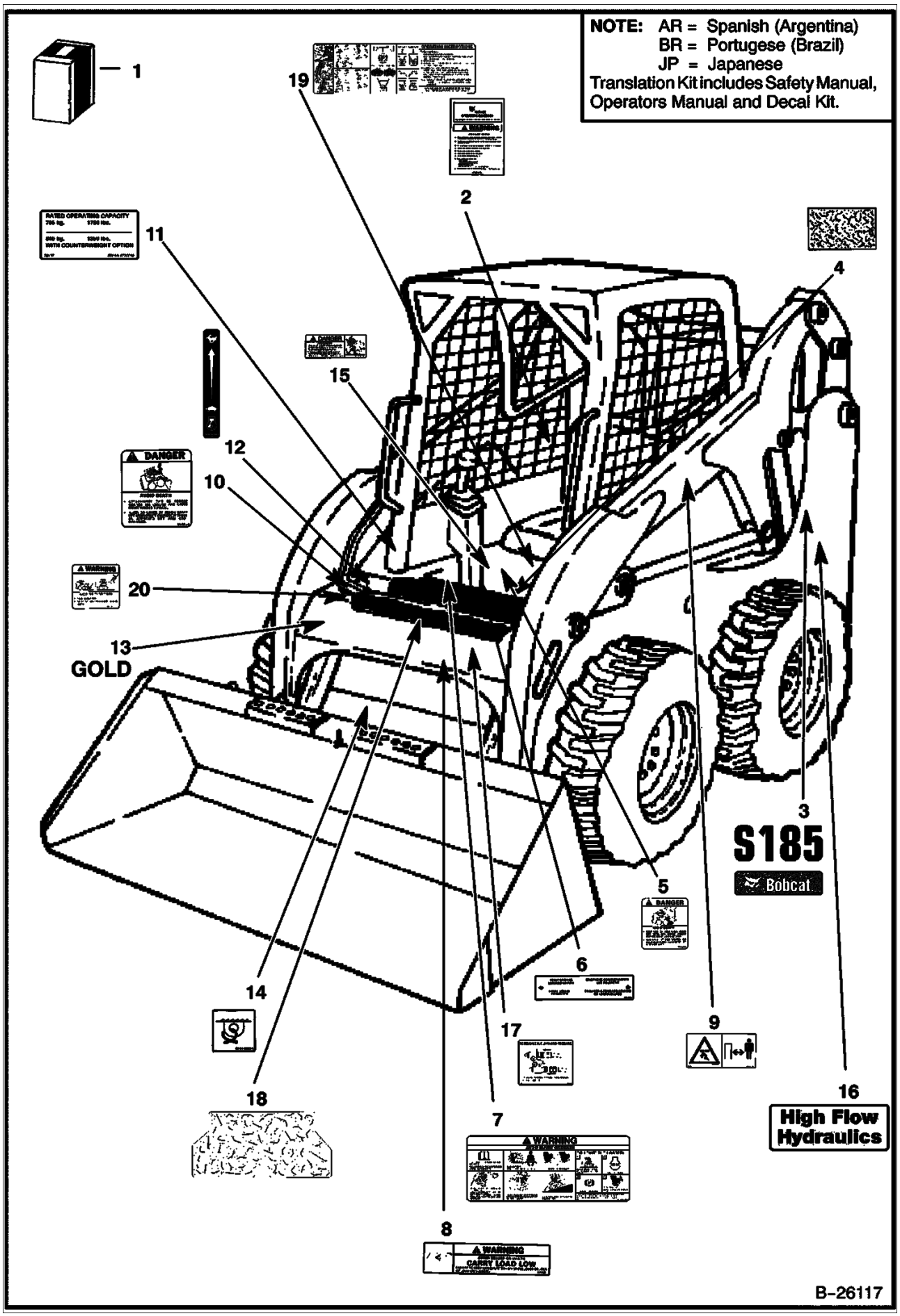
NOTE: AR = Spanish (Argentina)
BR = Portugese (Brazil)
JP = Japanese
Translation Kit includes Safety Manual, Operators Manual and Decal Kit.
1
19
2
11
4
15
12
10
DANGER
20
13
GOLD
3
S185
Bobcat
5
6
14
17
9
18
7
16
High Flow Hydraulics
8
B-26117

Ref No	Part Number	Description	Remarks	Serial Number	Qty
1		KIT	decal		1
1	7120264AR	KIT, DECAL	decal - SEE NOTE		1
1	7120264BR	KIT, DECAL	decal - SEE NOTE		1
1	7120264JP	KIT, DECAL	decal - SEE NOTE		1
1	7120300AR	KIT, TRANSLATION	translation - SEE NOTE		1
1	7120300BR	KIT, TRANSLATION	translation - SEE NOTE		1
2	6737783	KIT	handbook - W/Wire Rope - Not in Decal Kit		1
2	6558309	WIRE ROPE	33" (838,2 mm) long - bulk - Sold Per Foot - Also Order (2) of 6558310		x
2	6558310	SLEEVE	wire rope		2
2	17C000512B	BOLT			1
2	61D000005B	NUT			1
2	84G003112B	BOLT			1
3	7120588	DECAL	model		1
4	6554100	TREAD	6" x 6" (152,4 mm x 152,4 mm)		4
5	6702301	DECAL	danger		1
6	6561383	DECAL	Bob-tach		1
7	6728539	DECAL	warning		1
8	6579528	DECAL	carry load low		1
9	6713507	DECAL	stay clear - European - not in kit		2
10	6702302	DECAL	danger		1
11	6725374	DECAL	load 1850-1950 W/counterweights		1
12	6735140	DECAL	throttle		1
13	6735862	DECAL	gold package		1
14	6727595	DECAL	tie down		1
15	6717343	DECAL	danger		2
16	7120693	DECAL	high flow - not in kit		1
17	6731757	DECAL	front aux. coupler - not in kit		1
18	7108222	SAFETY TREAD	22" x 9.5" (558,8 mm x 241,3 mm)		1
19	6727926	DECAL	operations		1
19	6717639	DECAL	seat & seat bar operating - AHC - not in kit		1
19	6727941	DECAL	seat & seat bar operating - ACS - not in kit		1
20	6710358	DECAL	warning		1

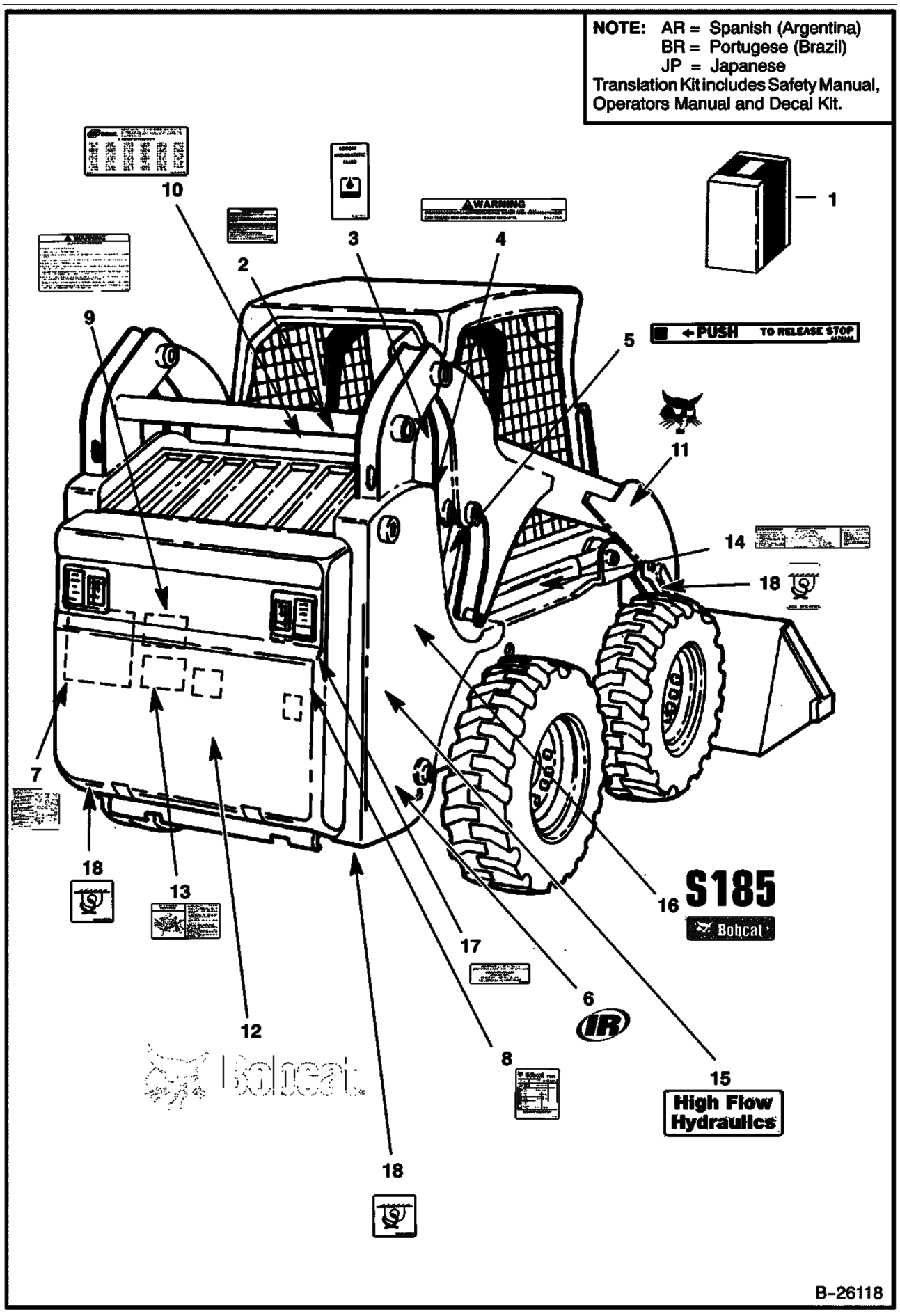
NOTE: AR = Spanish (Argentina)
BR = Portugese (Brazil)
JP = Japanese
Translation Kit includes Safety Manual, Operators Manual and Decal Kit.
WARNING
PUSH TO RELEASE STOP
S185
Bobcat
High Flow Hydraulics
B-26118

Ref No	Part Number	Description	Remarks	Serial Number	Qty
1		KIT	decal		1
1	7120264AR	KIT, DECAL	decal - SEE NOTE		1
1	7120264BR	KIT, DECAL	decal - SEE NOTE		1
1	7120264JP	KIT, DECAL	decal - SEE NOTE		1
1	7120300AR	KIT, TRANSLATION	translation - SEE NOTE		1
1	7120300BR	KIT, TRANSLATION	translation - SEE NOTE		1
2	6560573	DECAL	spark arrestor		1
3	6565990	DECAL	hydraulic fluid		1
4	6577754	DECAL	warning		2
5	6578368	DECAL	push		1
6	6735864	DECAL	IR - black		2
7	6734534	DECAL	service/warning/service parts		1
8	6565200	DECAL	eng. filter		1
9	6579511	DECAL	warning - not in kit		1
10	6557224	DECAL	patent		1
11	7116870	DECAL	Bobcat head		1
12	6735901	DECAL	Bobcat W/Head - white		1
13	6709030	DECAL	belt tension - spring loaded idler		1
14	6719018	DECAL	boom stop		1
15	7120693	DECAL	hi-flow - not in kit		1
16	7120588	DECAL	model		1
17	6708929	DECAL	propylene glycol antifreeze		1
18	6727595	DECAL	tie down		4

DUAL BATTERY KIT
(W/O Starter)

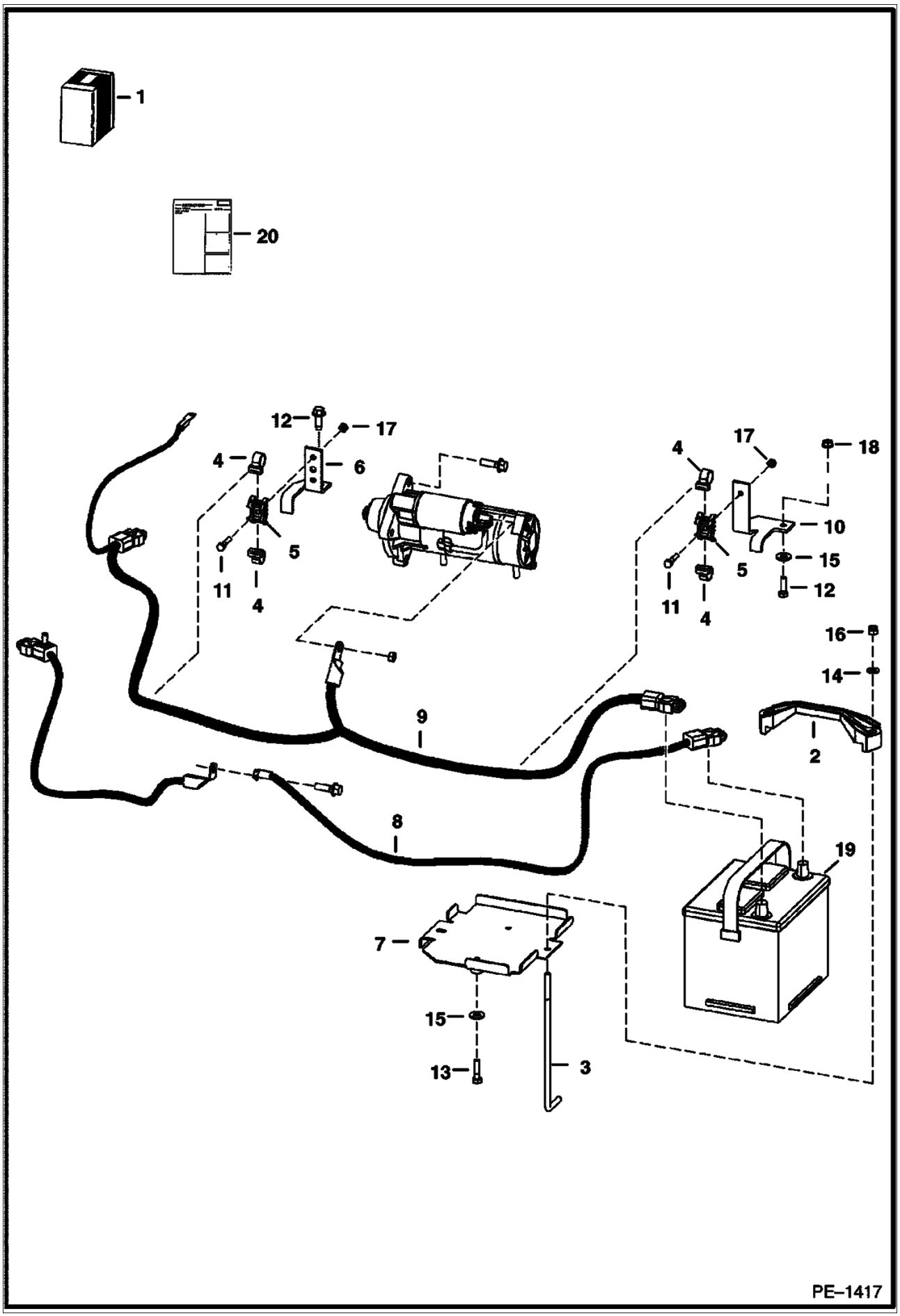

DUAL BATTERY KIT (Cont'd)
(W/O Starter)

Ref No	Part Number	Description	Remarks	Serial Number	Qty
1	6731694	KIT	dual battery - Ref. 2-18 & 20		1
2	6569203	CLAMP			1
3	6576280	BOLT			2
4	6678669	STRAP			4
5	6678974	MOUNT			2
6	6715131	BRACKET			1
7	6731617	PAN	battery		1
8	6731665	CABLE	negative		1
9	6731666	CABLE	positive		1
10	6731746	BRACKET			1
11	17C000420B	BOLT			2
12	17C000516B	BOLT			3
13	17C000520B	BOLT			2
14	25E000015B	WASHER			2
15	25E000016B	WASHER			3
16	59D000005B	NUT			2
17	61D000004B	NUT			2
18	97D000005B	NUT			1
19	6670251	BATTERY	Not in Kit		1
20	6901602	INSTRUCTIONS			1

ELECTRICAL CONNECTOR KIT
(7-Pin)

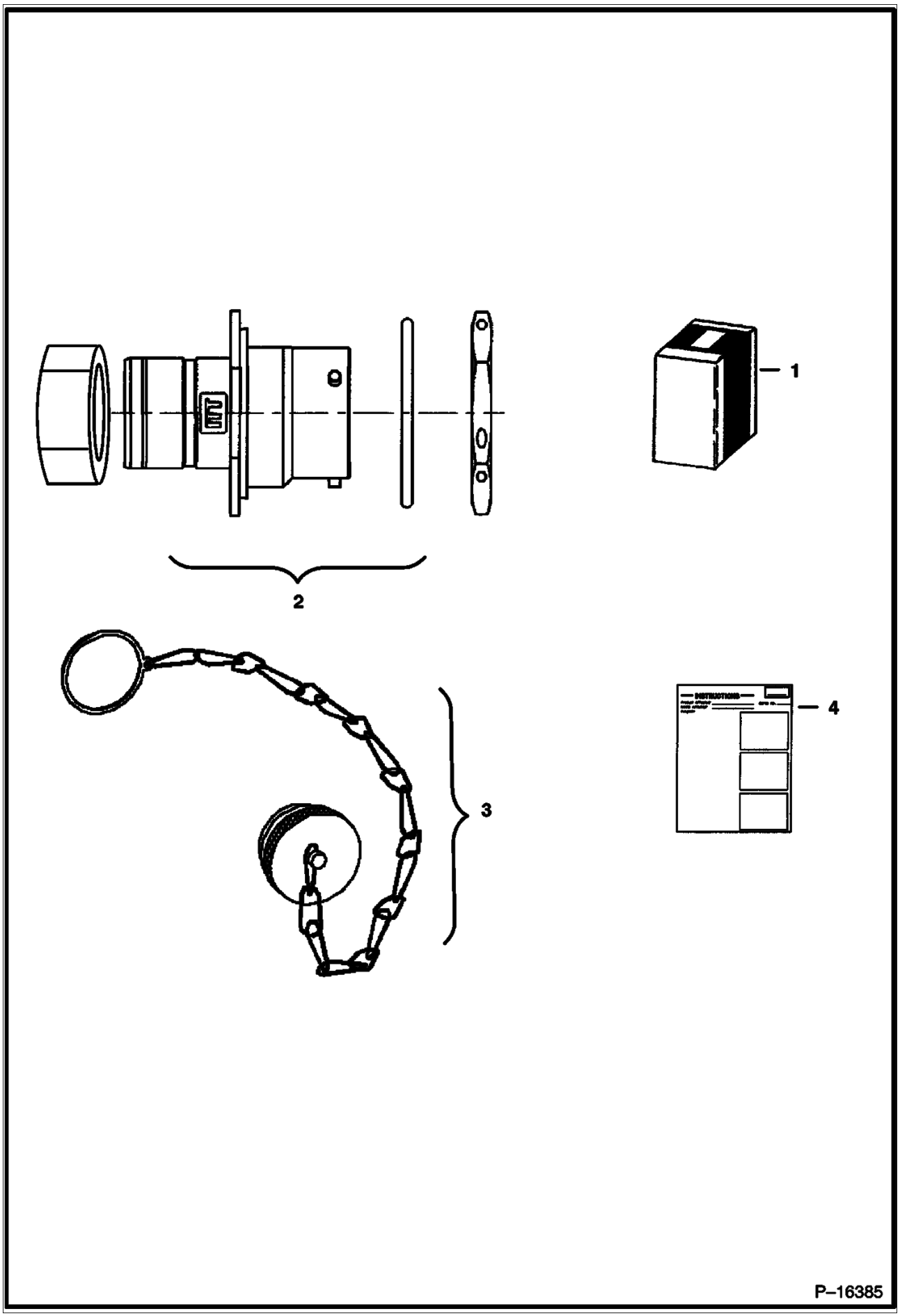

ELECTRICAL CONNECTOR KIT (Cont'd)
(7-Pin)

Ref No	Part Number	Description	Remarks	Serial Number	Qty
1	6727176	KIT			1
2	6674802	CONNECTOR	7-pin		1
2	6669549	SOCKET	small		4
2	6677136	SOCKET	12 ga		3
3	6675026	CAP			1
4	6901076	INSTRUCTIONS			1

ELECTRICAL CONTROLS KIT
(14 Pin Attachments)

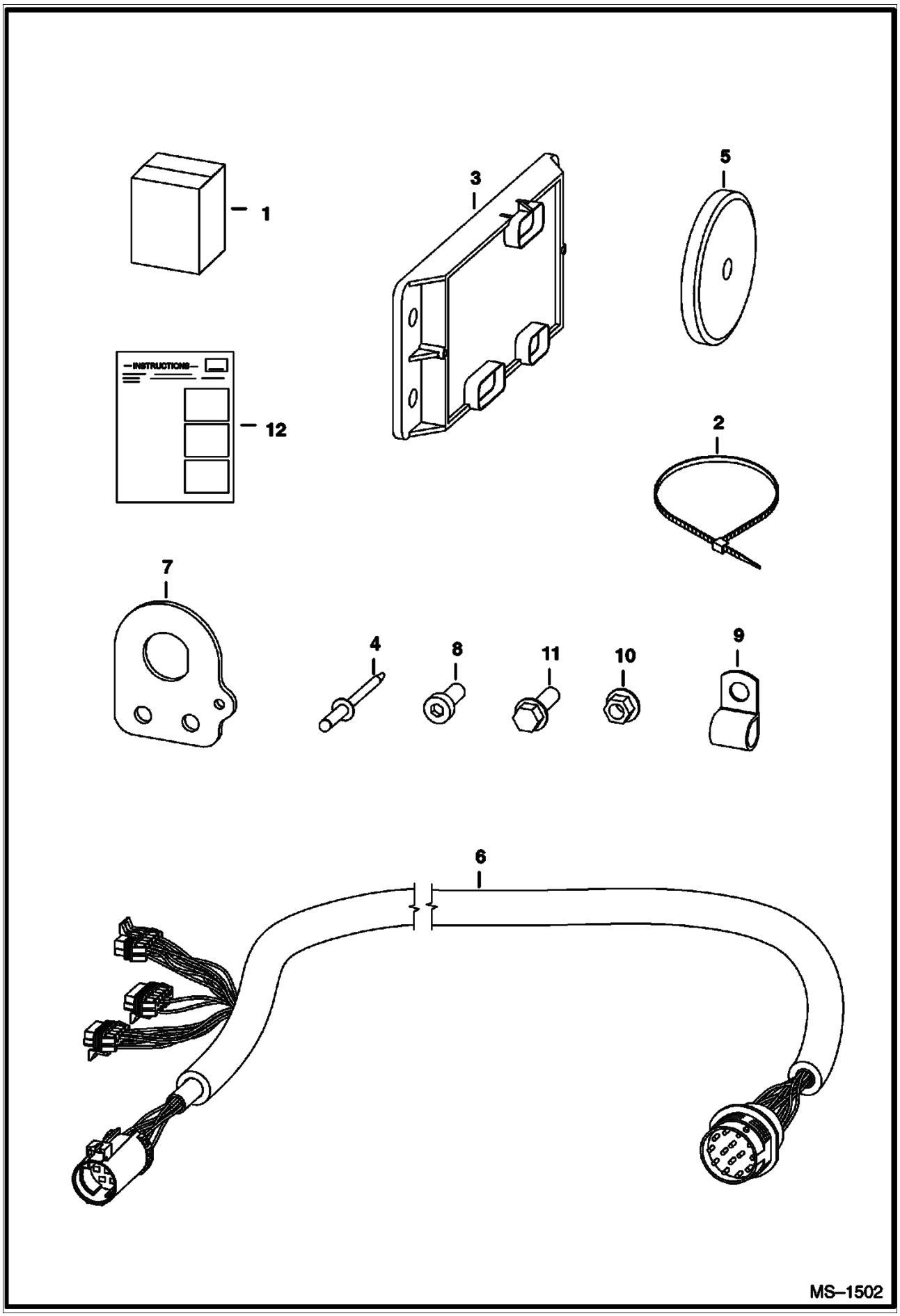

ELECTRICAL CONTROLS KIT (Cont'd)
(14 Pin Attachments)

Ref No	Part Number	Description	Remarks	Serial Number	Qty
1	6733136	KIT			1
2	6624289	STA STRAP			4
3	6678675	CONTROLLER			1
4	6704892	RIVET			1
5	6719448	MAGNET			2
6	6732730	HARNESS			1
7	6733144	MOUNT			1
8	25G000612B	BOLT			2
9	30H000050B	CLAMP			6
10	83D000006B	NUT			2
11	84G003112B	BOLT			8
12	6901872	INSTRUCTIONS			1

ELECTRICAL CONTROLS KIT
(7 Pin Attachments)

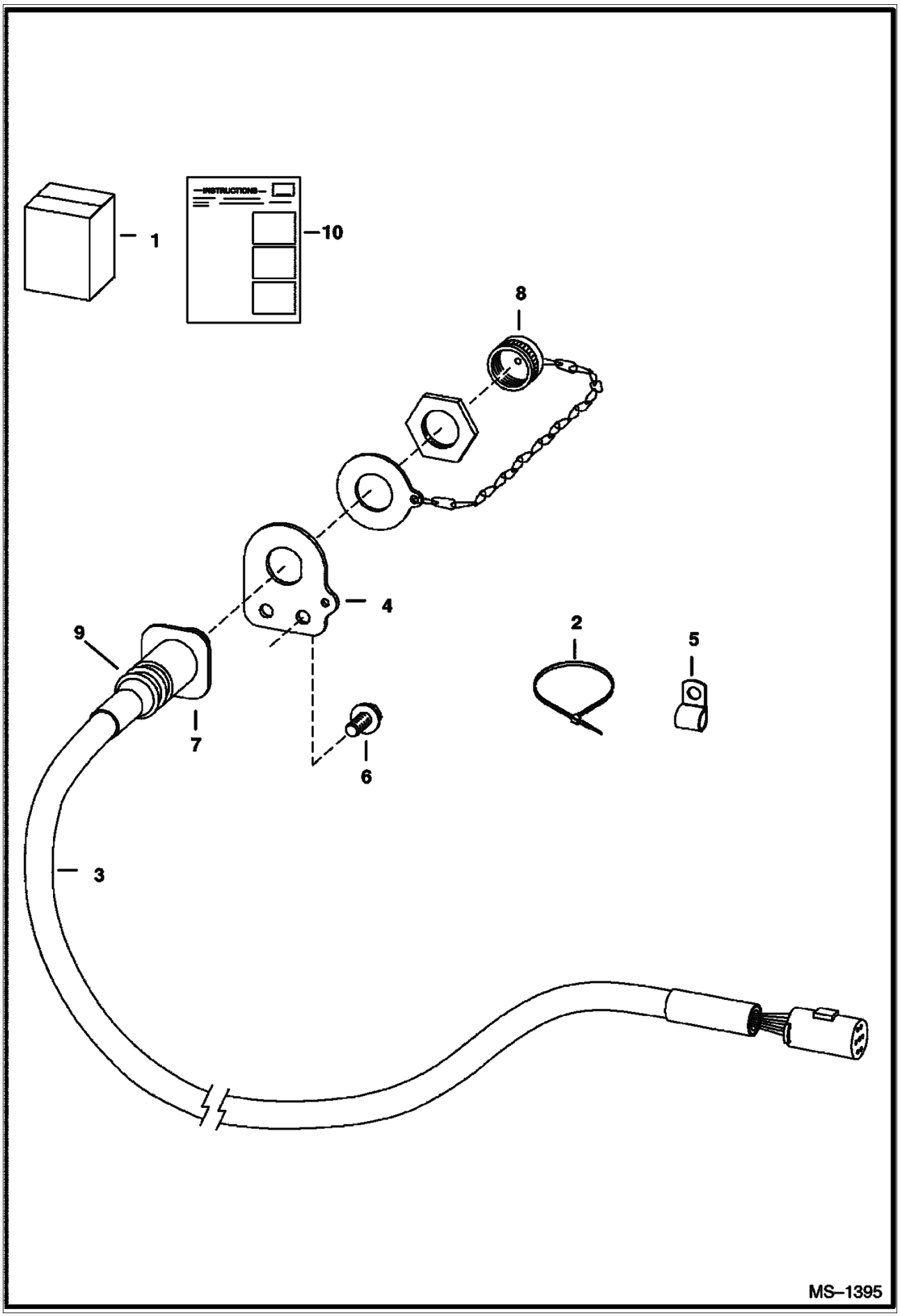

ELECTRICAL CONTROLS KIT (Cont'd)
(7 Pin Attachments)

Ref No	Part Number	Description	Remarks	Serial Number	Qty
1	6733142	KIT	Ref. 2-12		1
2	6624289	STA STRAP			7
3	6718426	HARNESS	W/Ref. 4 & 7		1
4	6718750	MOUNT			1
5	30H000027B	CLIP			6
6	84G003112B	BOLT			8
7	6674802	CONNECTOR	7-pin		1
7	6669549	SOCKET	small		4
7	6677136	SOCKET	large - 12 ga.		3
8	6675026	CAP			1
9	6674799	ADAPTER	heat shrink		1
10	6901871	INSTRUCTIONS			1
11	30H000035B	CLAMP			1
12	6675281	MOUNT			1

ELECTRICAL CONTROLS KIT
(To Run G-Series Attachments & Old Attachments) (W/O Toggle Switch)

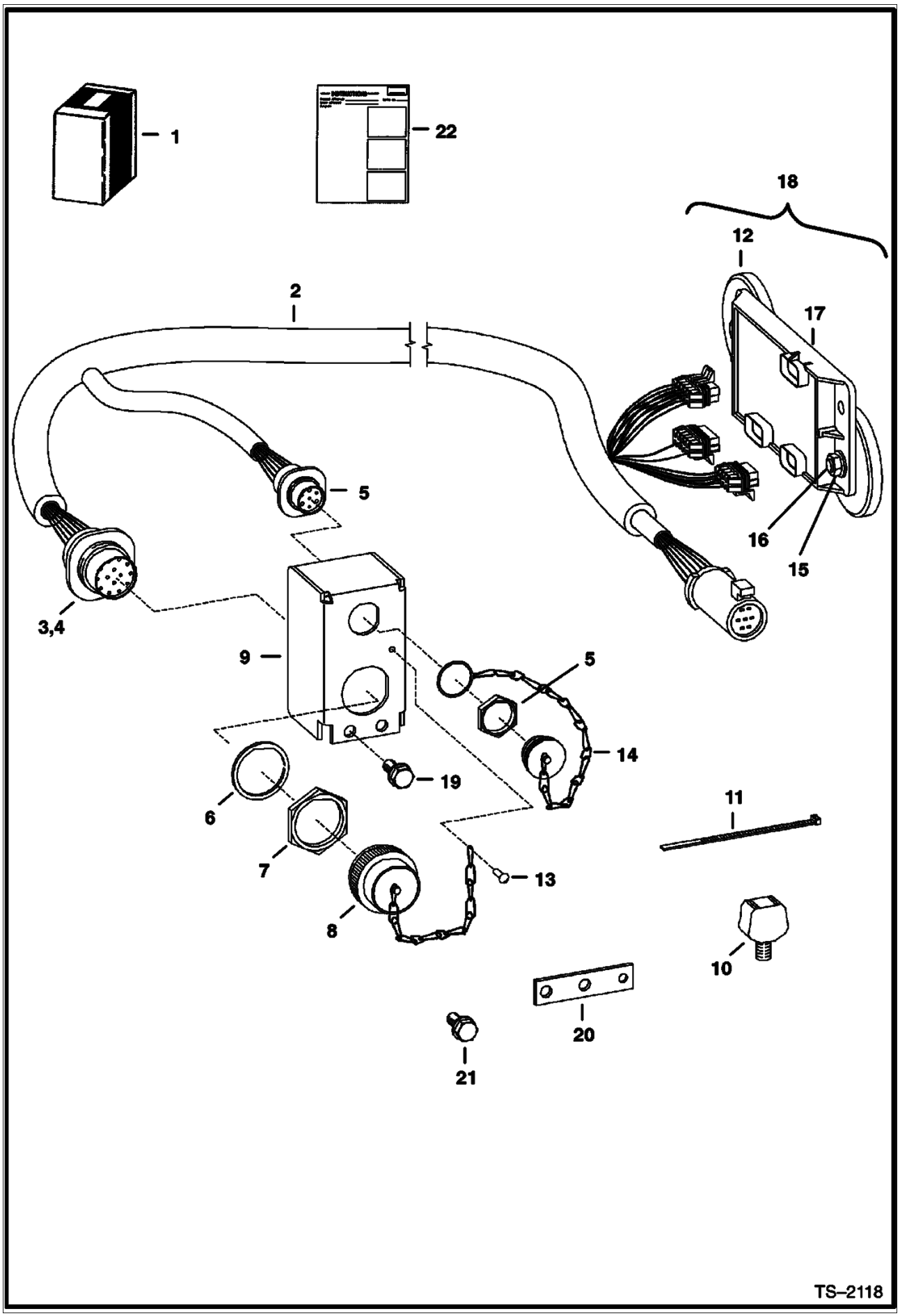

ELECTRICAL CONTROLS KIT (Cont'd)
(To Run G-Series Attachments & Old Attachments) (W/O Toggle Switch)

Ref No	Part Number	Description	Remarks	Serial Number	Qty
1	6727739	KIT			1
2	6729380	HARNESS	W/Ref. 3 - 8 & 14		1
3	6667569	CONNECTOR	Also Order (14) of Ref. 4		1
4	6664040	PIN	male		x
5	6674802	CONNECTOR	See Illustration ELECTRICAL CONNECTOR KIT/ P16385 7-PIN		1
5	6669549	SOCKET	small		4
5	6677136	SOCKET	large - 12 ga.		3
6	6664037	WASHER			2
7	6664036	NUT			2
8	6664035	CAP			1
9	6726945	MOUNT			1
10	6675281	MOUNT	models S175, S185 & 773G		1
11	6624289	STA STRAP			8
12	6719448	MAGNET	100 lb. force		4
13	6704892	RIVET			1
14	6675026	CAP			2
15	83D000006B	NUT			2
16	25G000612B	BOLT			2
17	6678675	CONTROLLER			1
18		CONTROLLER	NAP - assy - Ref. 12 & 15 - 17 - Order Ref. 17 & (2) ea. of Ref. 12, 15 & 16		1
19	84G003112B	BOLT			2
20	6730291	BRACKET	models 873G - 883		1
21	35C000512B	BOLT			2
22	6901116	INSTRUCTIONS			1

ENGINE MOUNT KIT
(For Rough Application)

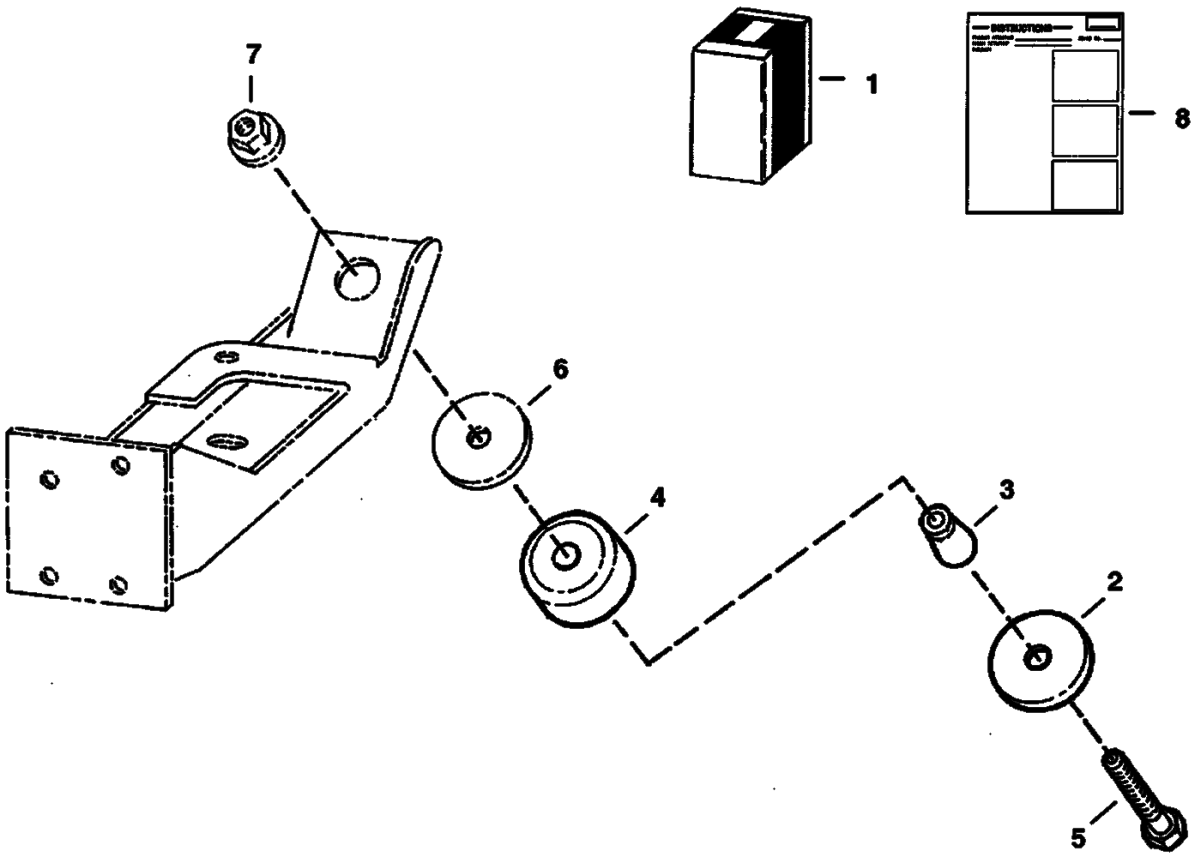

B–14623

ENGINE MOUNT KIT (Cont'd)
(For Rough Application)

Ref No	Part Number	Description	Remarks	Serial Number	Qty
1	6711632	MOUNTING KIT	Ref. 2 - 8		1
2	6661787	WASHER			4
3	6715287	SPACER			4
4	6668104	MOUNT			4
5	43C000852B	BOLT			4
6	6705106	WASHER			4
7	6652918	NUT			4
8	6724482	INSTRUCTION			1

EXPORT ACCESSORIES
(Caliper Brake Kit)

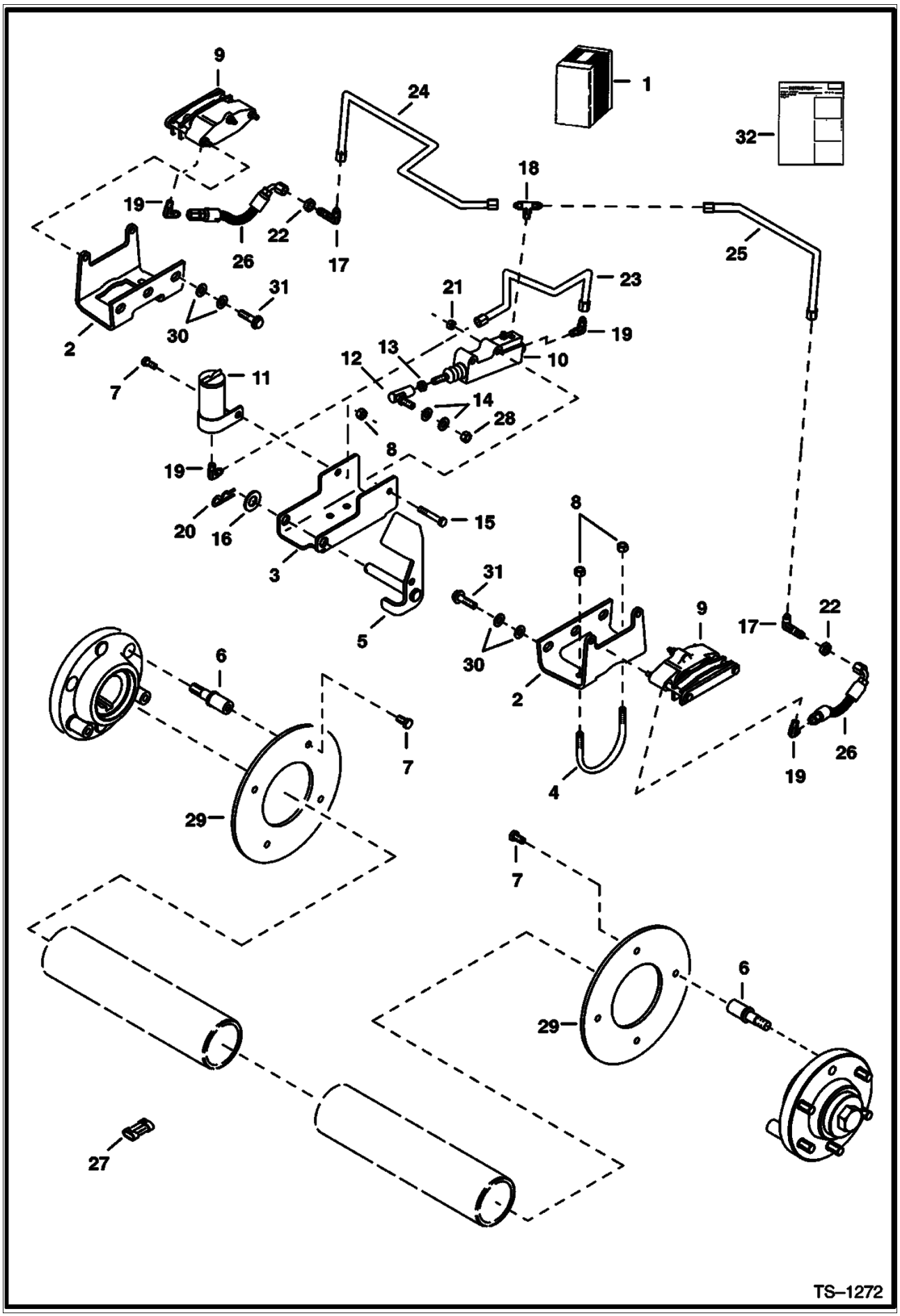

EXPORT ACCESSORIES (Cont'd)
(Caliper Brake Kit)

Ref No	Part Number	Description	Remarks	Serial Number	Qty
1	6719150	KIT	Ref. 2 - 32		1
2	6718728	MOUNT ASSY.	caliper		2
3	6709236	MOUNT	pedal		1
4	6709237	CLAMP			2
5	6709239	PEDAL ASSY.	brake		1
6	6709229	BOLT	wheel		8
7	17C000612B	BOLT			9
8	91D000006B	NUT			5
9	6666932	BRAKE	See Illustration EXPORT ACCESSORIES/ B14851		2
10	6666933	CYLINDER	See Illustration EXPORT ACCESSORIES/ B14851		1
11	6661117	TANK			1
12	6599744	BALL JOINT			1
13	8D000006B	NUT			1
14	25E000017B	WASHER			2
15	17C000532B	BOLT			2
16	25E000025B	WASHER			1
17	45K000003B	FITTING			2
18	98F000003B	TEE			1
19	83F000003B	ELBOW			4
20	1318565B	PIN			1
21	91D000005B	NUT			2
22	86F000003B	NUT			2
23	6709400	TUBE			1
24	6718205	TUBE			1
25	6718206	TUBE			1
26	6709547	HOSE			2
27	6667139	CAP			1
28	62D000006B	NUT			1
29	6709234	DISC	brake		2
30	25E000011B	WASHER			8
31	31C000824B	BOLT			4
32	6900934	INSTRUCTIONS			1

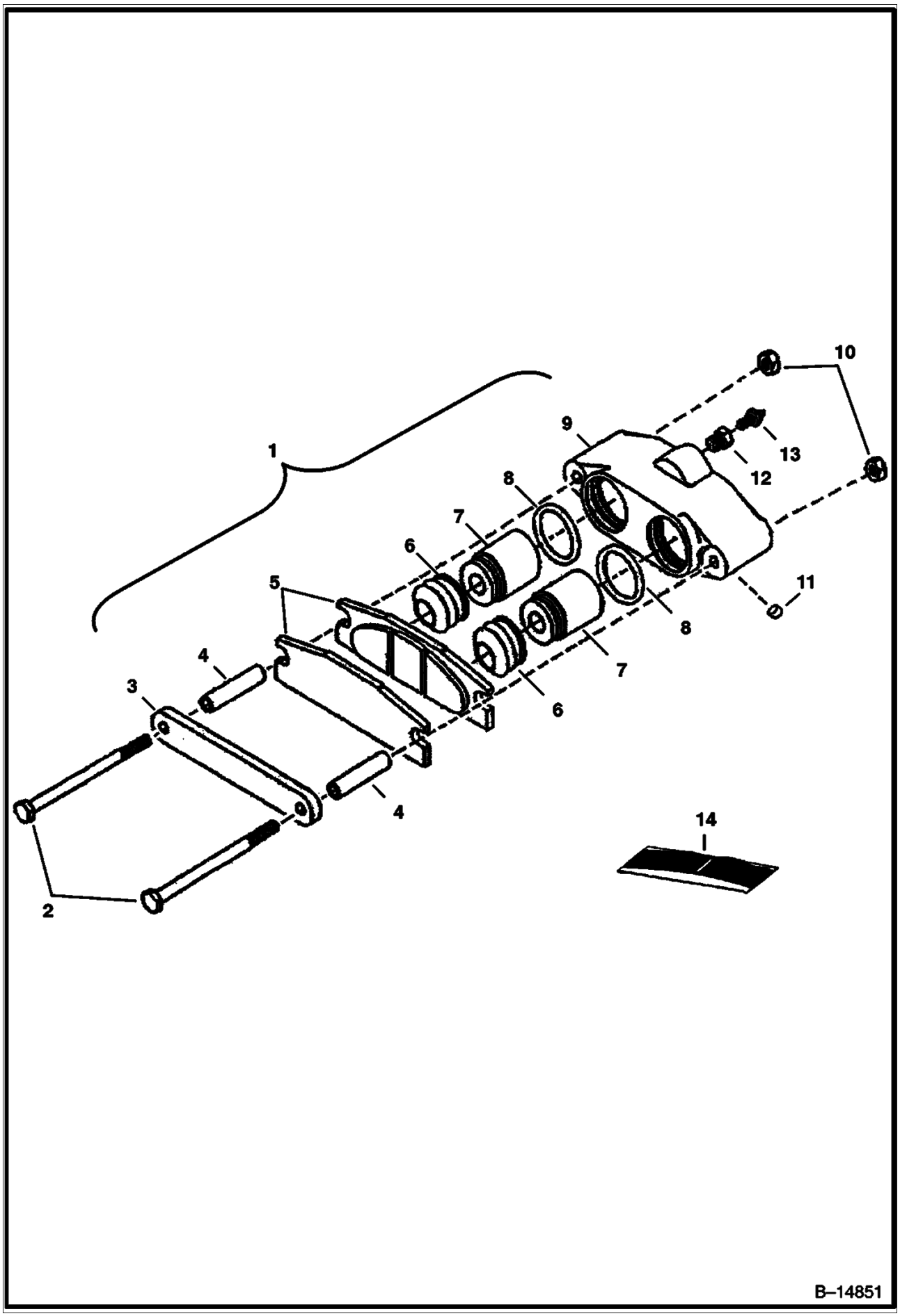
1
2
3
4
4
5
6
6
7
7
8
8
9
10
11
12
13
14
B–14851

EXPORT ACCESSORIES (Cont'd)
(Caliper Brake)

Ref No	Part Number	Description	Remarks	Serial Number	Qty
1	6666932	BRAKE	W/Ref. 2 - 13		1
2	6669154	BOLT			2
3	6669155	PLATE			1
4	6669156	SPACER			2
5	6669184	STATOR ASSY.			1
6		BOOT	NSS - Order Ref. 14		2
7	6669159	PISTON			2
8		O-RING	NSS - Order Ref. 14		2
9		HOUSING	NSS - Order Ref. 1		1
10	6669162	NUT			2
11	6669163	PLUG			1
12	6669164	ADAPTER			1
13	6669165	SCREW	bleeder		1
14	6669185	SEAL KIT	W/Ref. 6 & 8		1

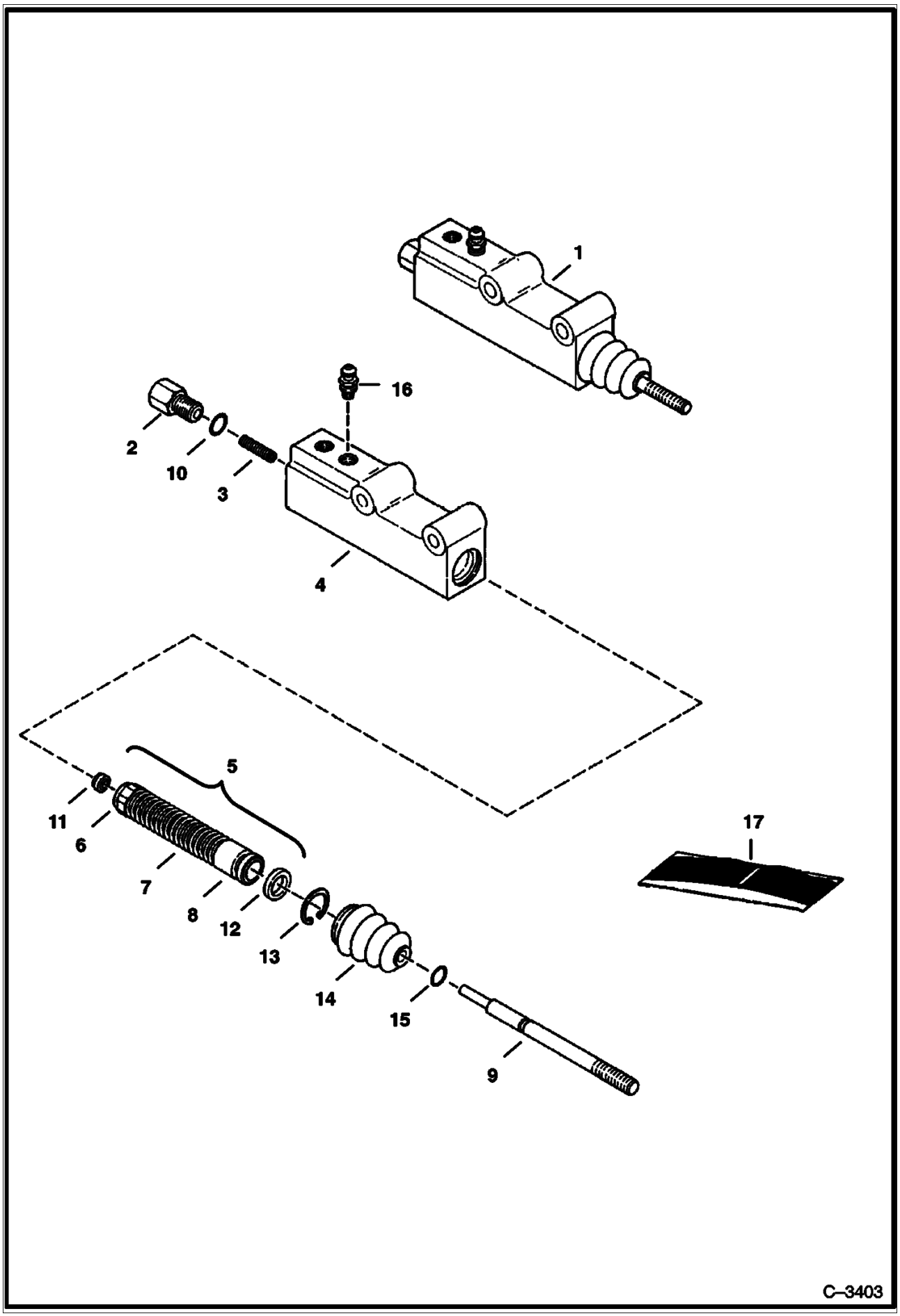
1
16
2
10
3
4
5
11
6
7
8
12
13
14
15
9
17
C–3403

EXPORT ACCESSORIES (Cont'd)
(Caliper Brakes - Master Cylinder)

Ref No	Part Number	Description	Remarks	Serial Number	Qty
1	6666933	CYLINDER	master brake - Ref. 2 - 16		1
2		ADAPTER	NSS		1
3		SPRING	NSS		1
4		BODY	NSS		1
5		SPRING ASSY.	NSS - Ref. 6 - 8 & 11		1
6		RETAINER	NSS		1
7		SPRING	NSS		1
8		PISTON	NSS		1
9		PUSH ROD	NSS		1
10		O-RING	NSS		1
11		SEAT	NSS		1
12		CUP	NSS		1
13		SNAP RING	NSS		1
14		BOOT	NSS		1
15		O-RING	NSS		1
16	6668097	SCREW	bleeder		1
17	6661608	SEAL KIT	Ref. 10 - 15		1

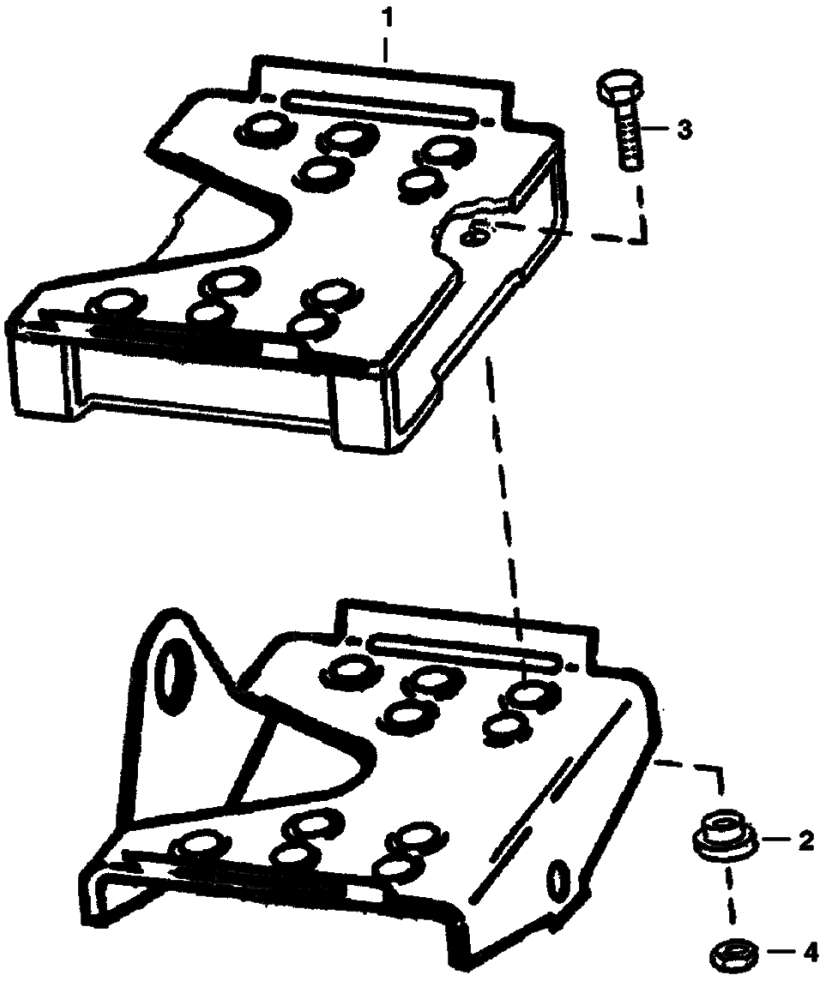
1
3
5
2
4
B–14856

EXPORT ACCESSORIES (Cont'd)
(Pedal Extenders)

Ref No	Part Number	Description	Remarks	Serial Number	Qty
1	6713115	PEDAL	extender		2
2	6713116	BUSHING			8
3	17C000516B	BOLT			8
4	85D000005B	NUT			8

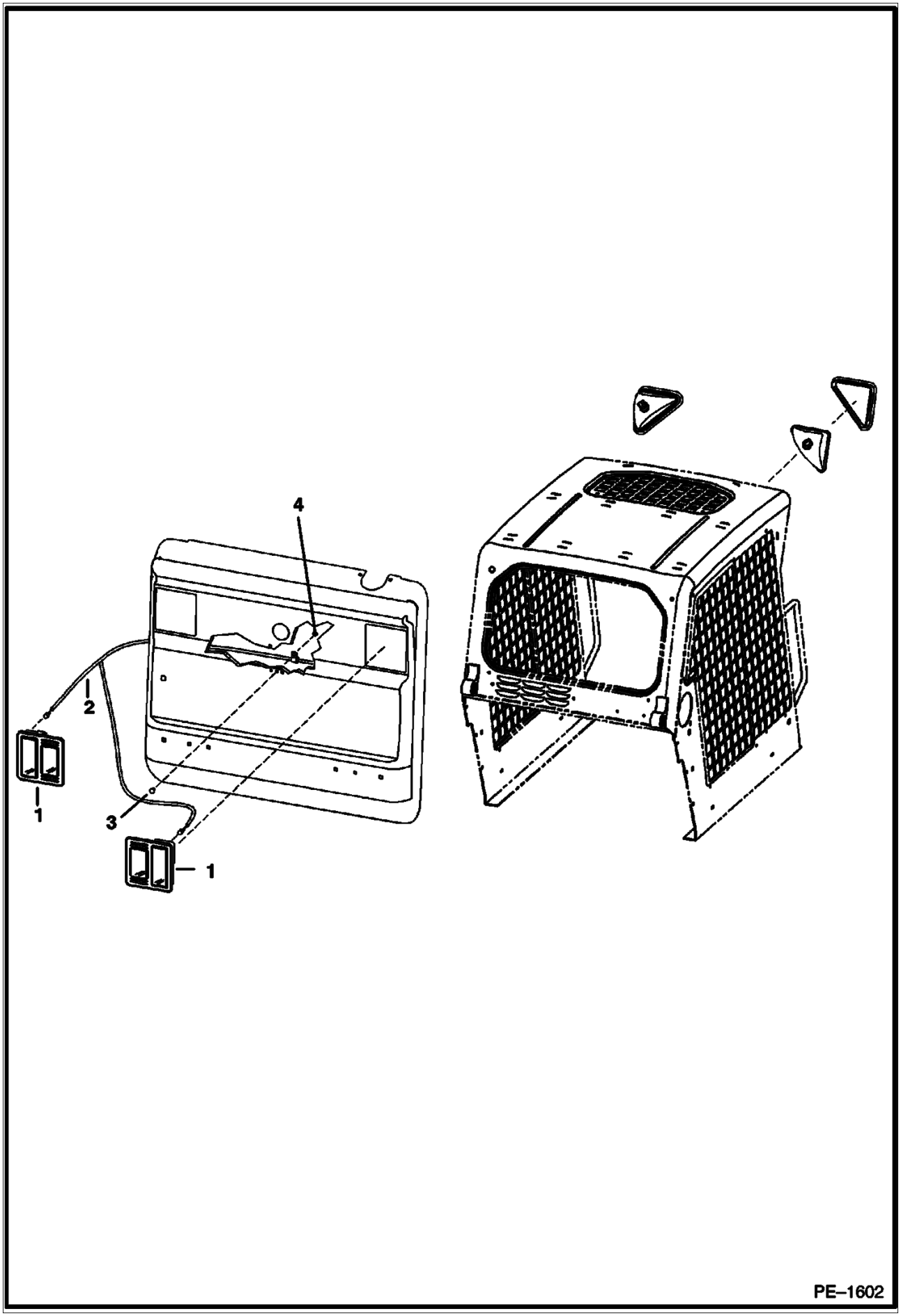
4
2
1
3
1
PE–1602

EXPORT ACCESSORIES (Cont'd)
(Rear Door Lights)

Ref No	Part Number	Description	Remarks	Serial Number	Qty
1		LIGHT	NAP - rear - Order 7101384 Light		2
1	6666568	BULB	21W		2
1	6667887	BULB	21/5W		2
1	6668007	SCREW			2
1	6668010	LENS			2
1	6671027	LIGHT			2
1	7101384	LIGHT	rear		2
1	6686097	BULB	turn		1
1	6686096	LENS	amber - turn		1
1	6686098	BULB	stop		1
1	6686099	LENS	red - stop		1
1	6686100	SCREW			2
2	6718198	HARNESS	deluxe		1
3	37C000512B	BOLT			1
4	4DM00005B	NUT			4

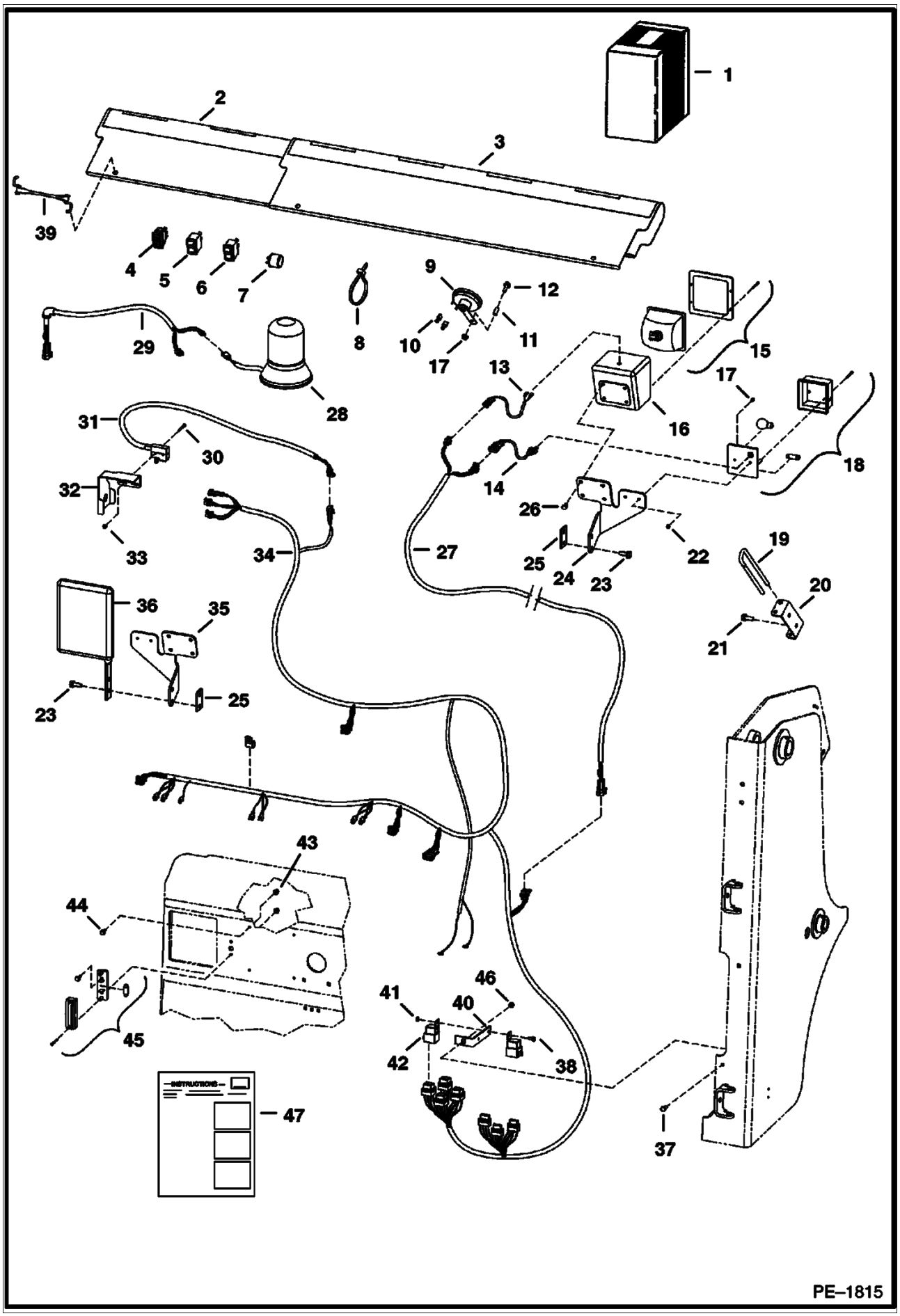
1
2
3
39
4
5
6
7
8
9
10
11
12
17
29
28
13
15
16
17
18
31
30
32
33
34
14
26
27
25
24
23
22
19
20
21
36
35
25
23
43
44
45
41
40
46
42
38
37
47
INSTRUCTIONS
PE–1815

EXPORT ACCESSORIES (Cont'd)
(Road Kit)

Ref No	Part Number	Description	Remarks	Serial Number	Qty
1		KIT	SALES - Order 6731237 - For Europe Only		1
2	6713841	SHIELD	bucket		1
3	6714820	SHIELD	bucket		1
3	6713840	DECAL			1
4	6676872	TURN SIGNAL			1
5	6668815	SWITCH	hazard		1
6	6668816	SWITCH	beacon		1
7	6557904	FLASHER			1
8	6624289	STA STRAP			26
9	6671106	HORN			1
10	6675064	TERMINAL			2
11	6732206	SPACER			1
12	35C000536B	BOLT			1
13	6713994	HARNESS	adapter - headlight		2
14	6713993	HARNESS	adapter - light		2
15	6665728	LIGHT	front		2
16	6707804	HOUSING			2
17	85G000808B	BOLT			4
18	6665727	LIGHT	front turn		2
19	6731222	PIN	Bob-tach		1
20	6731973	HOLDER	pin		1
21	84G003712B	BOLT			2
22	12D000008B	NUT			4
23	84G003716B	BOLT			4
24	6713151	MOUNT	light - R.H.		1
25	6735825	SPACER			2
26	17C000508B	BOLT			8
27	6731239	HARNESS	boom light		2
28	6675523	BEACON	light		1
29	6718872	HARNESS	cab exterior		1
30	85G000616B	SCREW			2
31	6661150	SWITCH			1
32	6713736	BRACKETS			1
33	12D000006B	NUT			2
34	6726430	HARNESS	engine/tail - Italian		1
35	6713150	MOUNT	light - L.H.		1
36	6665860	KIT	side mirror		1
37	17C000512B	BOLT			1
38	17C000410B	BOLT			2
39	6731819	STRAP	rubber		3
40	6702650	MOUNT	fuse		1
41	85D000004B	NUT			2
42	6670312	SOLENOID	magnetic		4
43	83D000004B	NUT			4
44	35C000410B	BOLT			4
45	6665729	LIGHT	license plate		1
46	55D000005B	NUT			2
47	6901663	INSTRUCTIONS			1

EUROPEAN ACCESSORIES
(Sound Option)

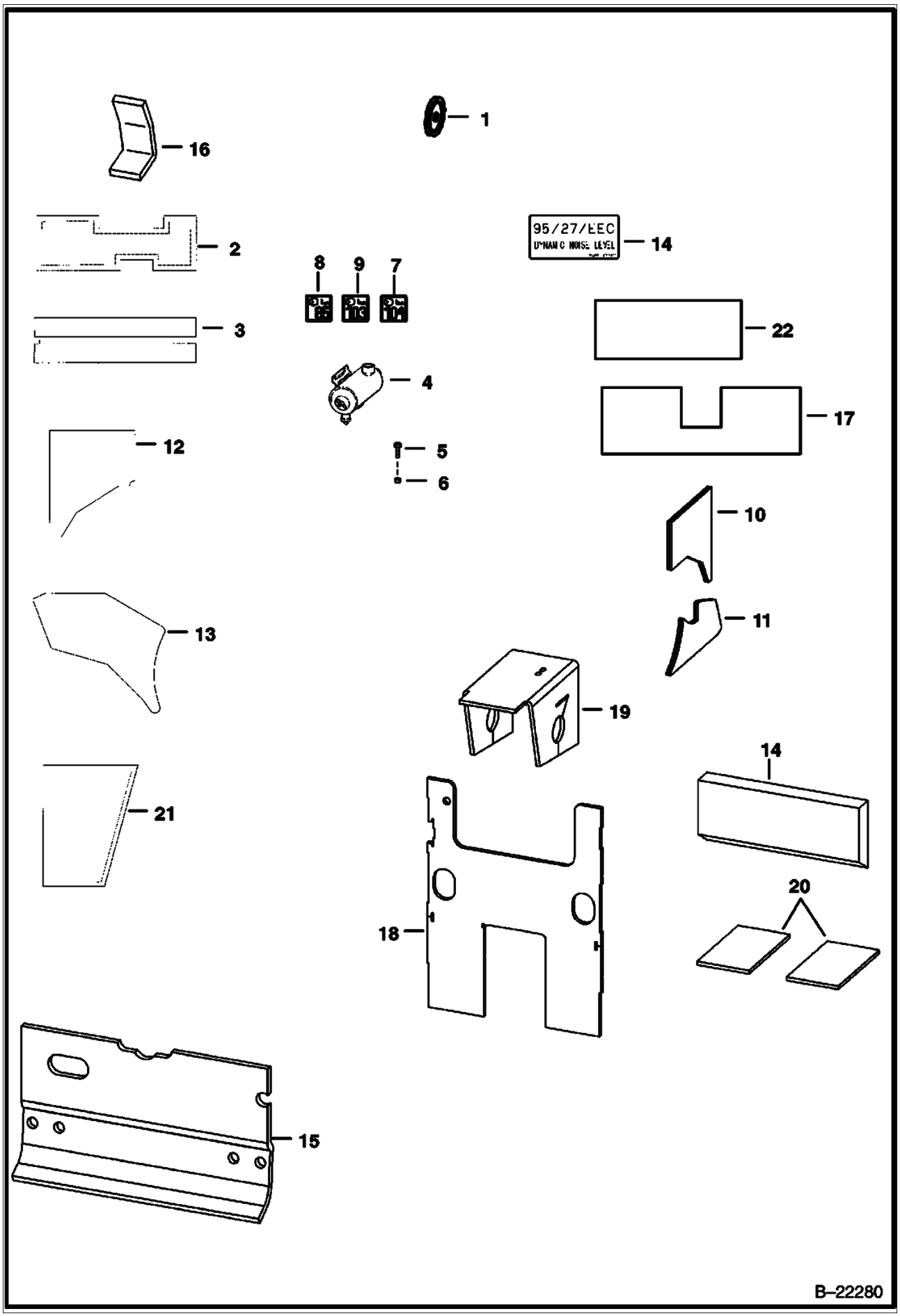

EUROPEAN ACCESSORIES (Cont'd)
(Sound Option)

Ref No	Part Number	Description	Remarks	Serial Number	Qty
1	6712970	PULLEY	4.75"(120,7 mm) O.D.		1
1	6712971	PULLEY	5.00"(127 mm) O.D.		1
1	6703483	PULLEY	5.25"(133,4 mm) O.D.		1
2	6719327	INSULATION	fender - L.H.		1
3	6719328	INSULATION	fender - R.H.		1
4	6735285	AIR CLEANER			1
5	84G003716B	BOLT			2
6	6562619	BUSHING			4
7	6812569	DECAL	noise level - 101 decibel		1
8	6579385	DECAL	sound level warning - 85 decibel		1
9	6579404	DECAL	sound level warning-103 decibel		1
10	6719332	INSULATION	blower housing		1
11	6704769	INSULATION	blower housing		1
12	6719333	INSULATION	blower housing		1
13	6719334	INSULATION	blower housing		1
14	6715428	DECAL	dynamic level		1
15	6715106	INSULATION	cab seal		1
16	6703331	INSULATION	air inlet		1
17	6732724	INSULATION	crossmember		1
18	6719372	INSULATION	steering panel		1
19	6719331	INSULATION	transmission top		2
20	6719330	INSULATION	pedal		1
21	6703968	INSULATION	transmission side		1
22	6725361	INSULATION	crossmember		1

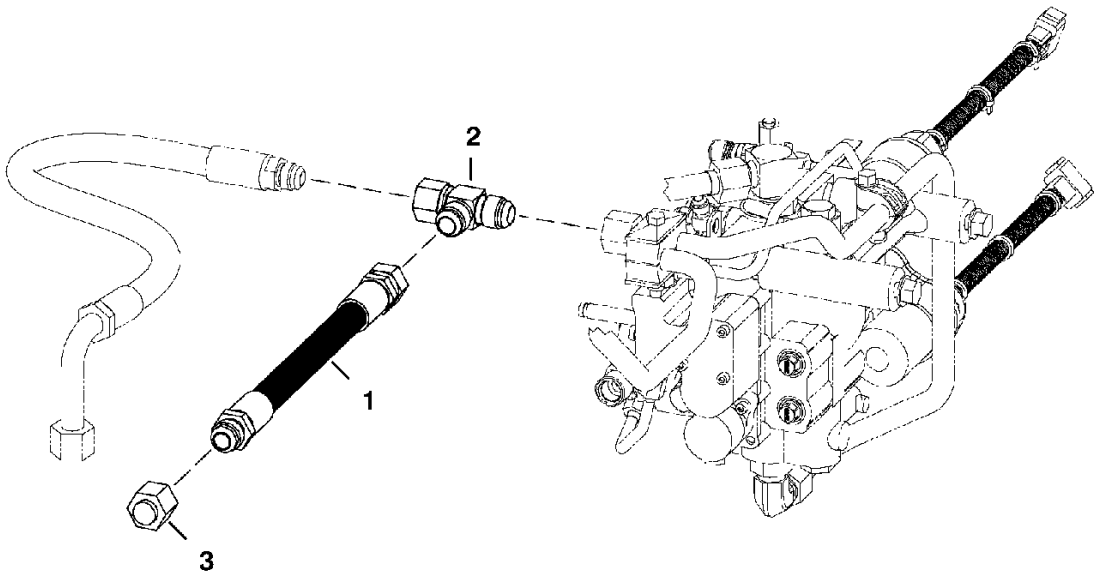

PE-2847

Sound Option - Hydraulic Muffler for Selectable Joystick Controls

Ref No	Part Number	Description	Remarks	Serial Number	Qty
1	7112651	HOSE	hydraulic muffler		1
2	13K000008B	TEE			1
3	36K000008B	CAP			1

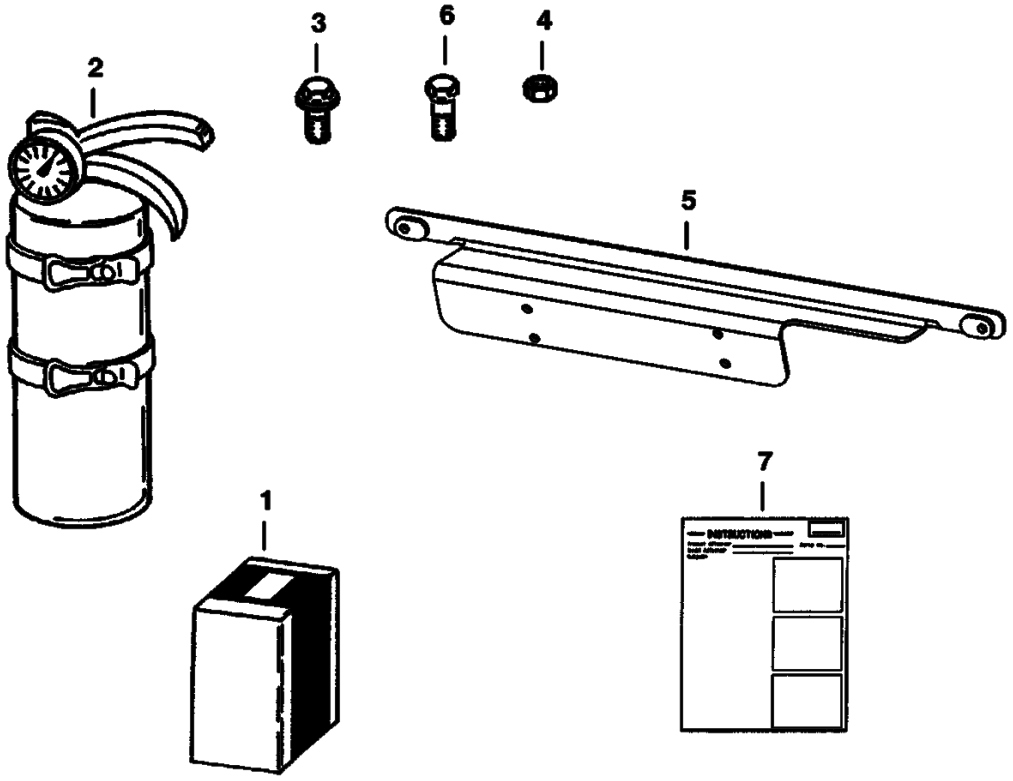

A–2386

Ref No	Part Number	Description	Remarks	Serial Number	Qty
1	6725898	KIT	fire extinguisher - Ref. 2 - 7		1
2	6675581	EXTINGUISHER			1
3	45G001006B	BOLT			4
4	12D000010B	NUT			4
5	6725906	BRACKET			1
6	31C000410B	BOLT			2
7	6901025	INSTRUCTIONS			1

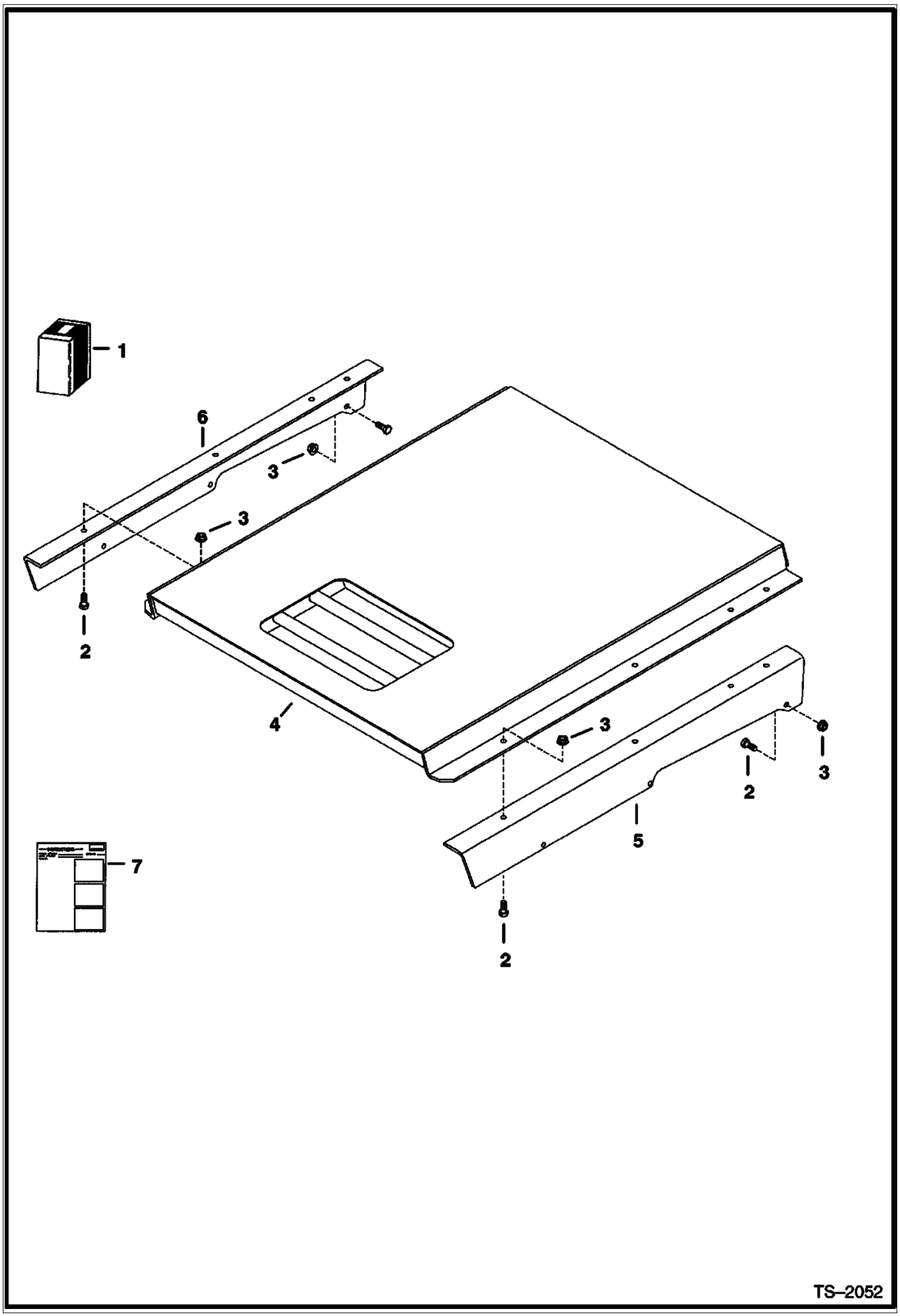
1
6
3
3
2
4
3
2
3
5
7
2
TS–2052

Ref No	Part Number	Description	Remarks	Serial Number	Qty
1	6718924	KIT	Ref. 2 - 7		1
2	17C000616B	BOLT			14
3	83D000006B	NUT			14
4	6702402	SHIELD			1
5	6718833	BRACKET	L.H.		1
6	6718834	BRACKET	R.H.		1
7	6720592	INSTRUCTIONS			1

FLASHER LIGHTS
(4-Way) (Turn Indicators)

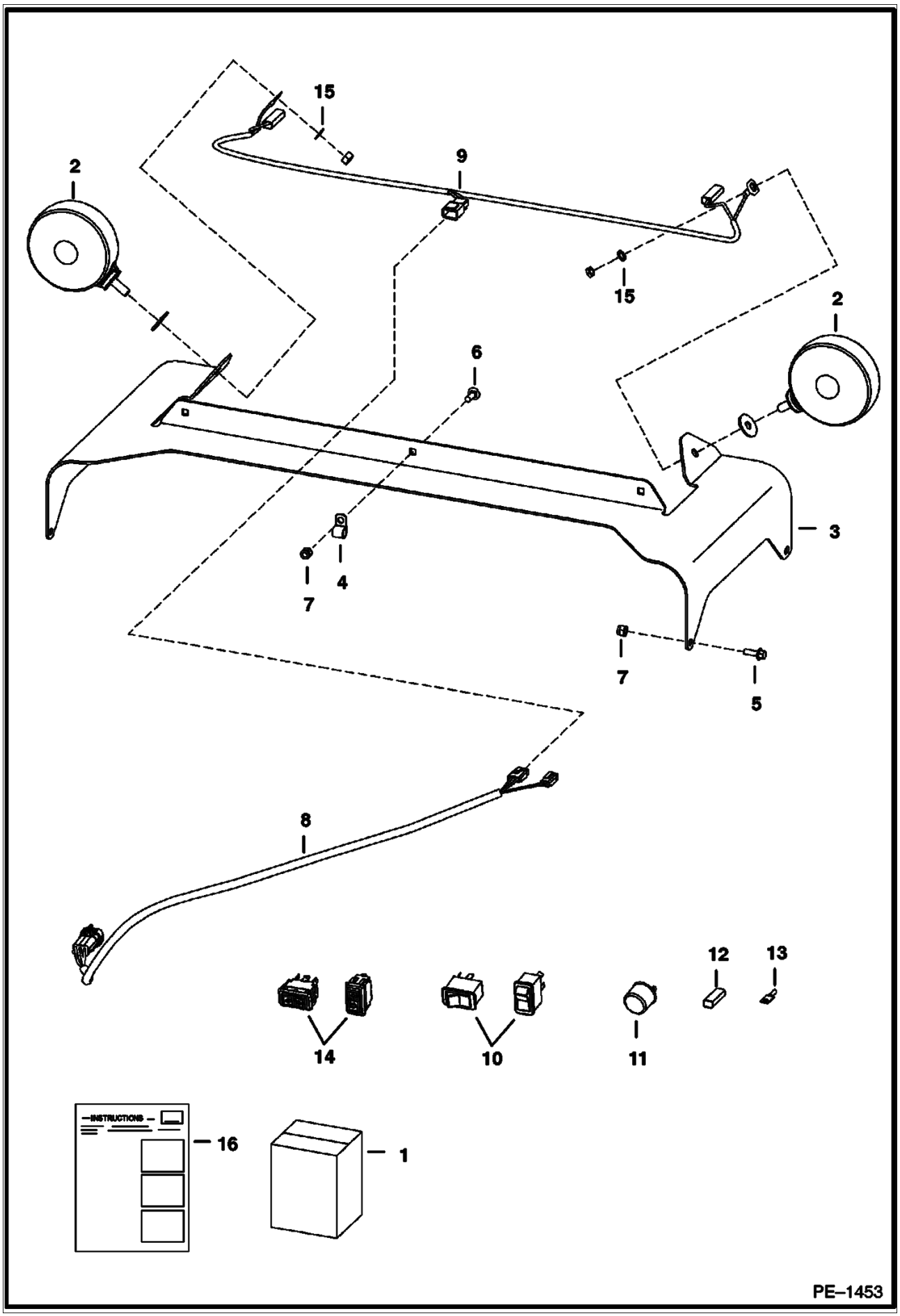

FLASHER LIGHTS (Cont'd)
(4-Way) (Turn Indicators)

Ref No	Part Number	Description	Remarks	Serial Number	Qty
1	6718411	KIT	flasher lights - Ref. 2, 3 & 5-16 - If loader is not equipped W/ heater, air conditioning, selectable joystick controls, advanced control system, power bob-tach, non-power port plug-in strobe lights and/or rotating beacon, also order 7116260 deluxe harness		1
2	6517516	LIGHT			2
3	6718326	MOUNT			1
4	30H000021B	CLAMP	Not in Kit		3
5	35C000412B	BOLT			4
6	37C000412B	BOLT			3
7	59D000004B	NUT			7
8	6718872	HARNESS	ext. cab		1
9	6718873	HARNESS	4-way flasher		1
10	6665316	SWITCH	horizontal		1
10	6668815	SWITCH	vertical		1
11	6557904	FLASHER			1
12	614142B	SLEEVE			2
13	6515131	TERMINAL			2
14	6675835	TURN SIGNAL	horizontal		1
14	6676872	TURN SIGNAL	vertical		1
15	6E000005B	WASHER	lock		2
16	6900848	INSTRUCTIONS			1

FRONT AUXILIARY
(R.H. Kit)

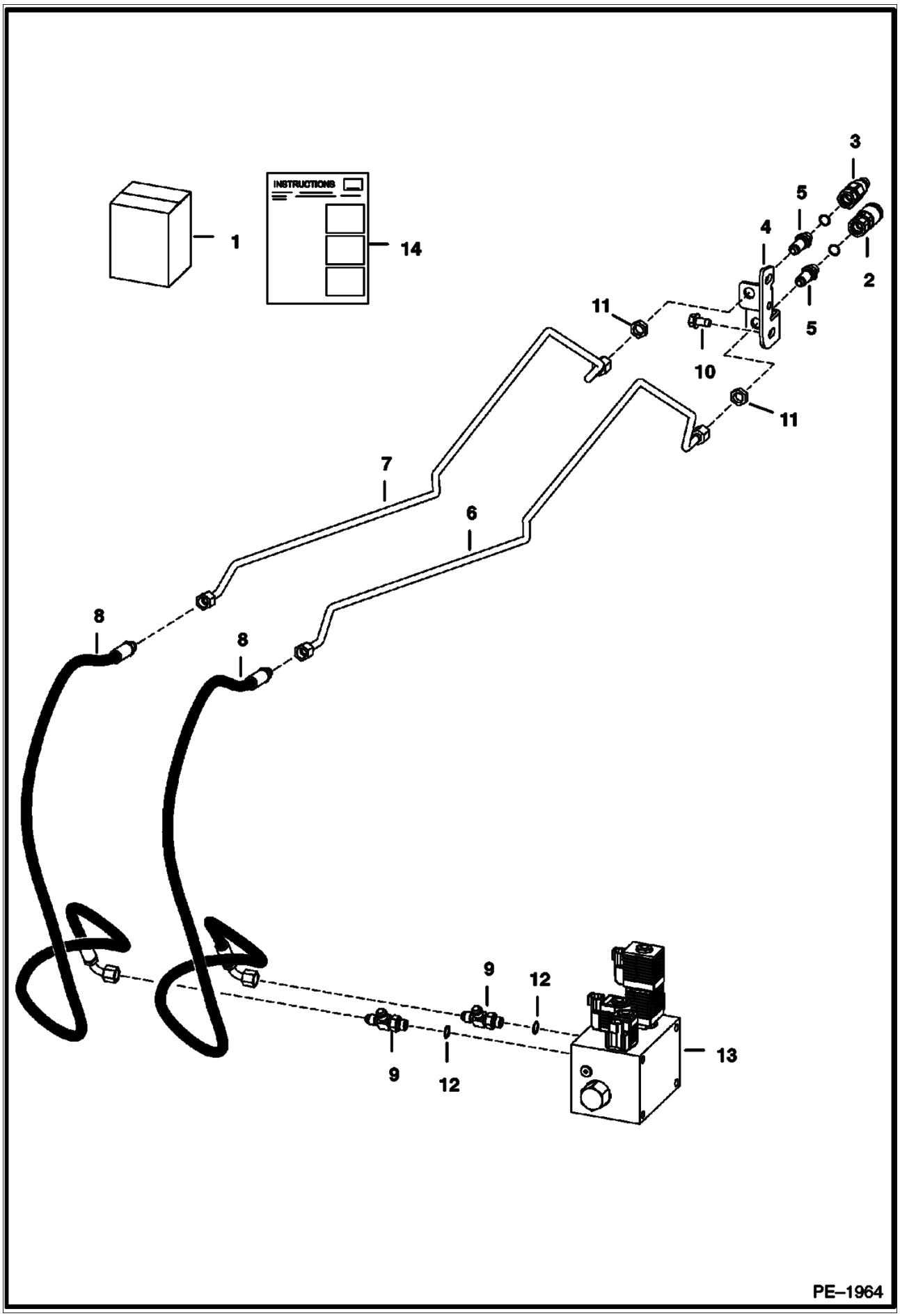

FRONT AUXILIARY (Cont'd)
(R.H. Kit)

Ref No	Part Number	Description	Remarks	Serial Number	Qty
1	6731524	KIT	requires rear auxiliaries		1
2	6667803	COUPLER	female		1
3	6667804	COUPLER	male		1
3	6669657	SEAL KIT			1
4	6711674	MOUNT			1
5	6716089	CONNECTOR	W/ O-rings		2
6	6718244	TUBE			1
7	6718245	TUBE			1
8	6718454	HOSE			2
9		VALVE	See Illustration REAR AUXILIARY VALVE/ B21972R select - Not in Kit		1
10	21KB00606B	TEE	W/Ref. 13		2
11	84G003712B	BOLT			2
12	86F000005B	NUT	NUT		3
13	79K000006B	O-RING			x
14	6901515	INSTRUCTIONS			1

GAS SPRING KIT

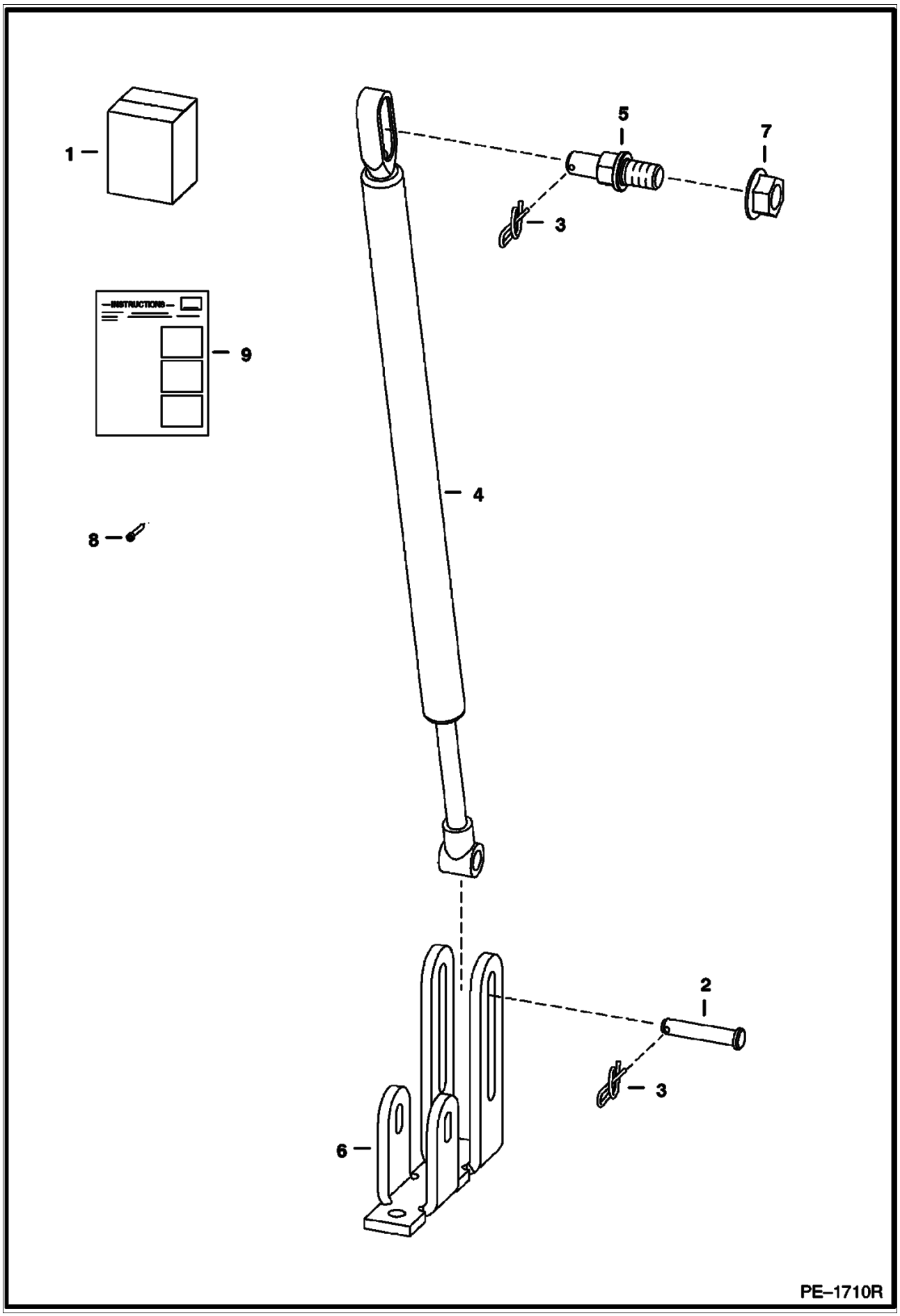

GAS SPRING KIT (Cont'd)

Ref No	Part Number	Description	Remarks	Serial Number	Qty
1	6732928	KIT			1
2	6567743	PIN			1
3	6631418	PIN			2
4	6678292	GAS SPRING			1
5	6719064	MOUNT			1
6	6729141	MOUNT			1
7	97D000008B	NUT			1
8	21G000804B	BOLT			1
9	6901816	INSTRUCTIONS			1

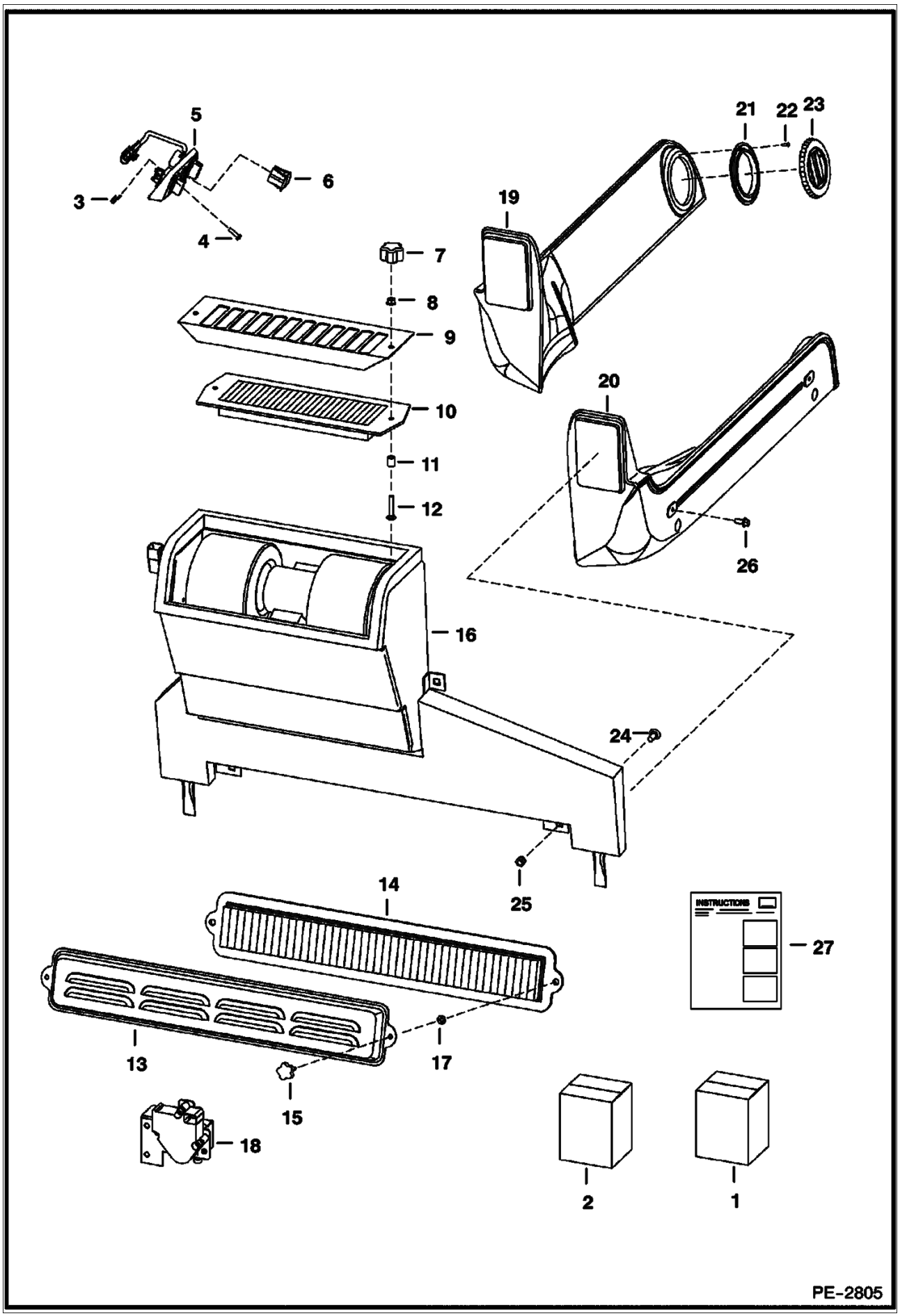
5
6
3
4
7
8
9
10
11
12
16
21
22
23
19
20
26
24
25
14
13
17
15
18
INSTRUCTIONS
27
2
1
PE-2805

Ref No	Part Number	Description	Remarks	Serial Number	Qty
1	7116899	KIT HEATER CAB	If loader is not equipped W/ beacon, air conditioning, selectable joystick controls, advanced control system, power bob-tach, non-power port plug-in strobe lights and/or non-power port plug-in 4 way flashers, also order 7116260 deluxe harness		1
2	6725513	PACKAGE	Decal		1
3	6669091	CLIP	retainer		3
4	6669224	BOLT			3
5	6674228	PANEL	control		1
5	6640699	CONNECTOR			1
5	6718579	DECAL			1
5	6718887	PANEL			1
5	6675176	SWITCH	blower		1
5	6675177	KNOB			1
5	6675846	POTENTIOMETER			1
6	6675181	PLUG	switch hole - AC		1
7	6681614	KNOB			2
8	59D4	NUT 5			2
9	6718175	SCREEN	filter		1
10	6678207	FILTER	recirculation		1
11	6718837	SPACER			2
12	37C000424B	BOLT			2
13	6727847	COVER			1
14	6677983	FILTER			1
15	6726386	KNOB			2
16	6688543	HEATER	See Illustration HEATER/ PE1143		1
17	6676516	NUT	Push		2
18	6689696	VALVE			1
18	6641174	CONNECTOR	male		1
18	6689635	BRACKET	actuator mounting		1
18	6675172	BRACKET	valve mounting		1
18	6675173	ACTUATOR			1
18	6689637	VALVE			1
19	6735246	DUCT	L.H.		1
20	6735245	DUCT	R.H.		1
21	6675179	FLANGE	round		4
22	57G000608B	SCREW			16
23	6674231	VENT	round		4
24	37C000512B	BOLT			4
25	59D000005B	NUT			4
26	35C000410B	BOLT			4
27	6904255	INSTRUCTIONS			1

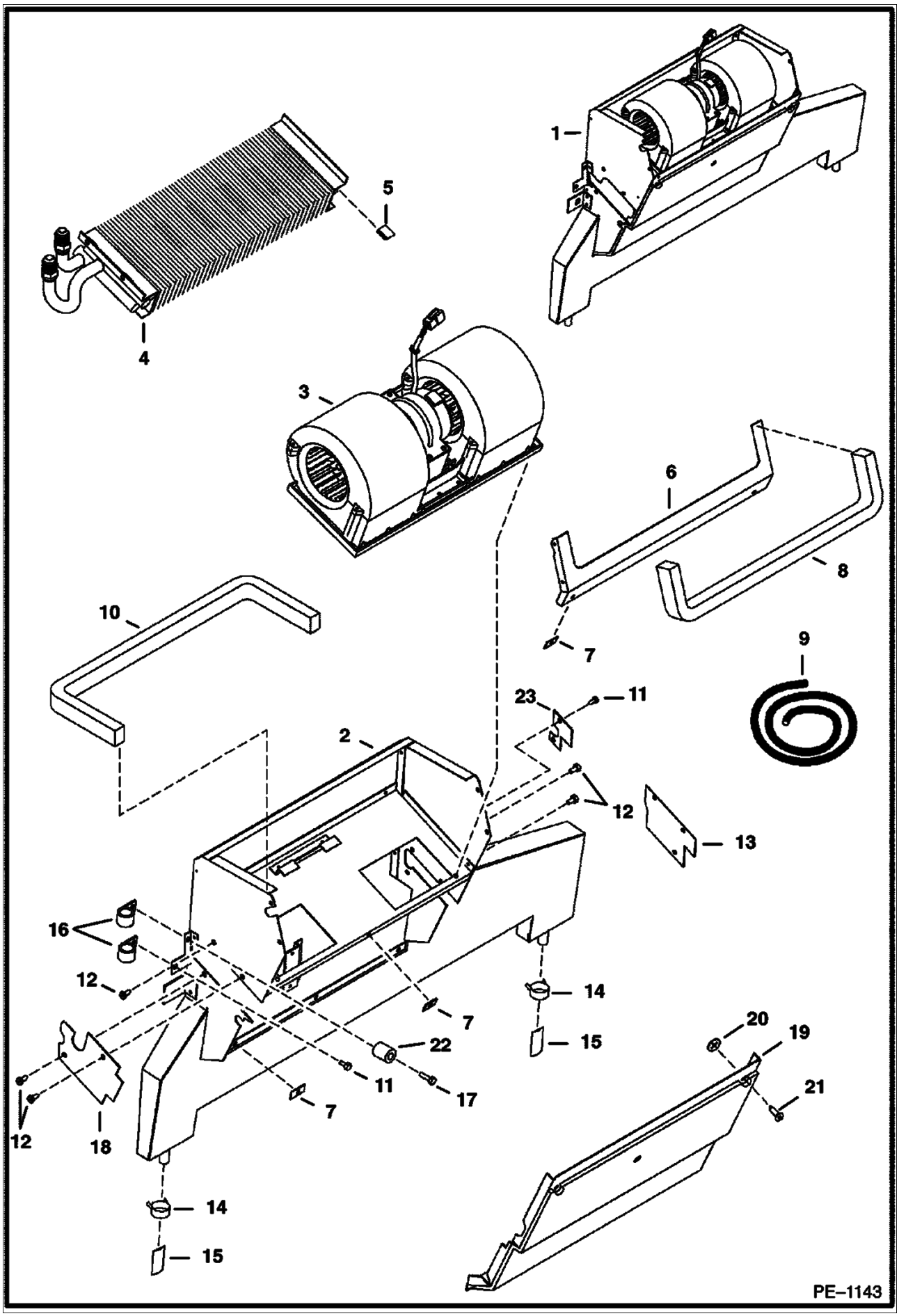
1
2
3
4
5
6
7
8
9
10
11
12
13
14
15
16
17
18
19
20
21
22
23
PE–1143

Ref No	Part Number	Description	Remarks	Serial Number	Qty
1	6688543	HEATER	Ref. 2-23		1
2	6677108	HOUSING			1
3	6689762	BLOWER	See Illustration HEATER & A/C/ B26156 assy		1
4		COIL	See Illustration HEATER & A/C/ PE1228 NAP		1
5	6676539	CLIP			3
6	6678152	SEAL			1
7	6677115	RECEPTACLE			6
8		SEAL	NAP - 22.6"(575mm) long - Order Ref. 9		1
9	6677111	SEAL	bulk - Sold Per Foot		x
10		SEAL	NAP - 25"(635mm) long - Order Ref. 9		1
11	6677119	SCREW	sheetmetal		7
12	6677118	SCREW	w/washer		4
13	6677120	COVER			1
14	6675510	CLAMP	drain hose		2
15	6675511	DRAIN VALVE			2
16	6675512	CLAMP	hose		2
17	6676653	SCREW			1
18	6677504	COVER			1
19	6678151	COVER			1
20	6677116	RETAINER			6
21	6677117	SCREW	captive		6
22	6676606	SPACER			1
23	6677105	COVER			1

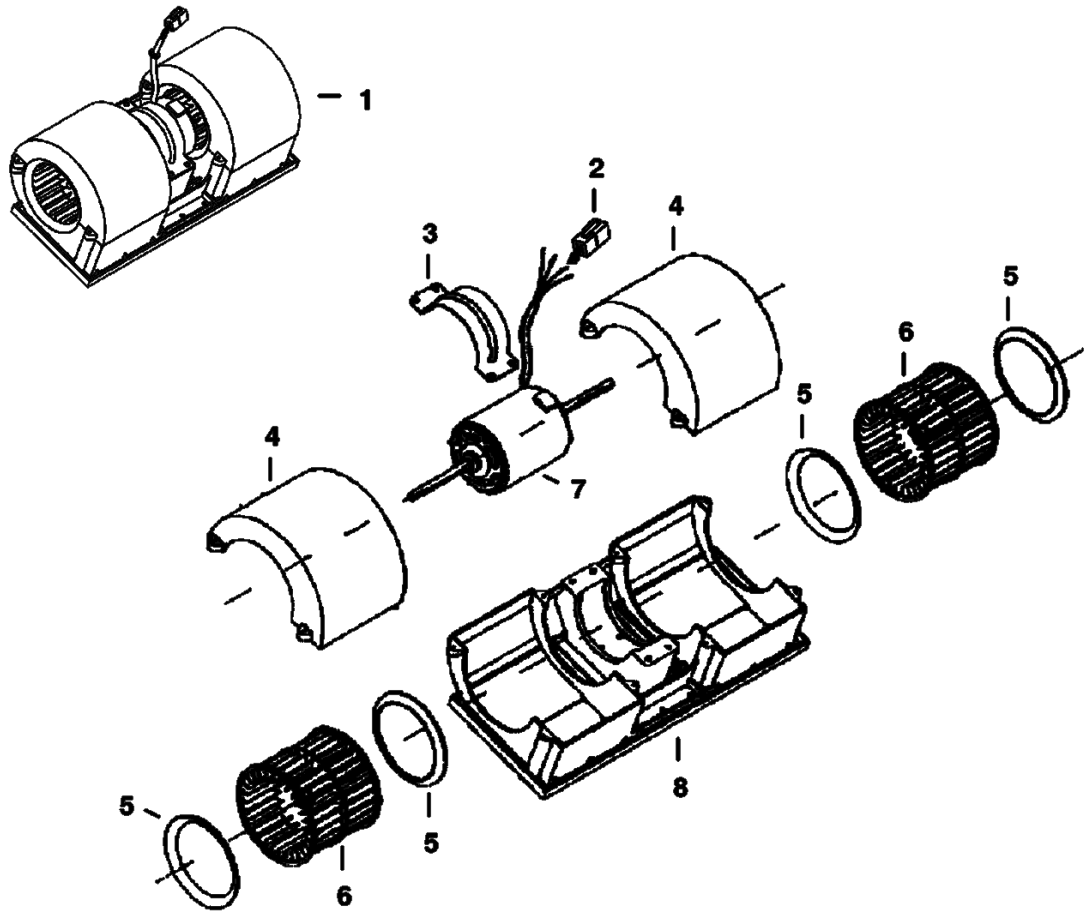
1
2
3
4
5
6
7
8
B-26156

HEATER & A/C (Cont'd)
(Blower Assembly)

Ref No	Part Number	Description	Remarks	Serial Number	Qty
1	6689762	BLOWER	Ref. 2-8		1
2	6665017	CONNECTOR	4-pin		1
2	6665018	LOCK	4-pin		1
2	6648312	TERMINAL			4
2	6648320	SEAL			4
2	6650107	SEAL			4
3	6675506	MOUNT			1
4	6675507	COVER			2
5	6675504	RING			4
6	6675505	BLOWER WHEEL			2
6	6676618	CLIP			2
7	6689766	MOTOR	W/ Ref. 2		1
8	6675503	HOUSING			1
9	6689765	PAD	bottom		1
10	6689764	PAD	top		1

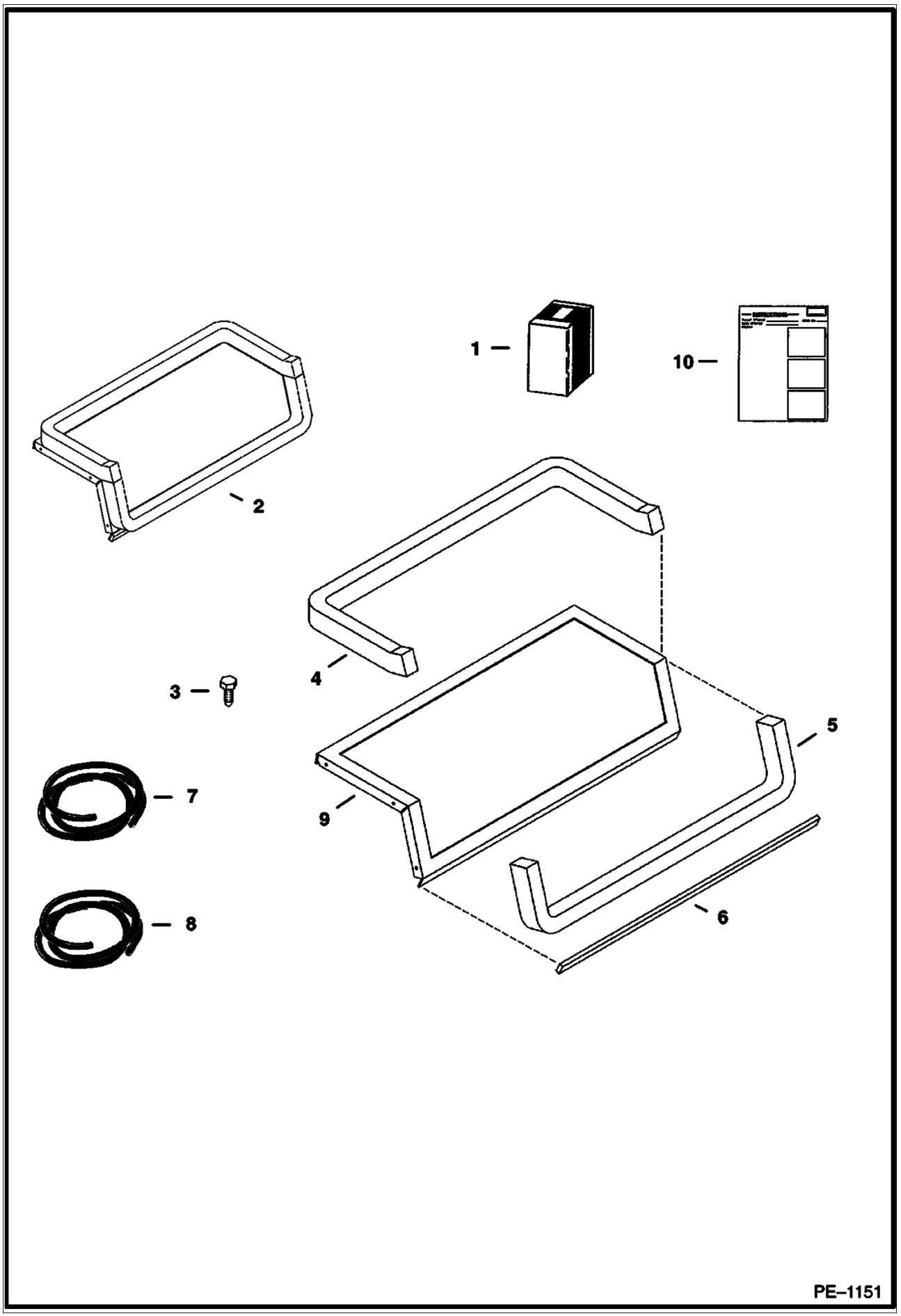
1
10
2
4
3
5
7
9
8
6
PE–1151

Ref No	Part Number	Description	Remarks	Serial Number	Qty
1	6728567	KIT	blower seal - W/Ref. 2, 3 & 10		1
2		FLANGE SEAL	NSS - assy - Ref. 4, 5, 6 & 9 - Order Ref. 1		1
3	6726621	SCREW			7
4		SEAL	NAP - 27"(686mm) long - Order Ref. 8		1
5		SEAL	NAP - 21"(534mm) long - Order Ref. 8		1
6		SEAL	NAP - 15"(384mm) long - Order Ref. 7		1
7	6675611	SEAL	bulk - Sold Per Foot		x
8	6677111	SEAL	bulk - Sold Per Foot		x
9		FLANGE	NSS - Order Ref. 1		1
10	6901213	INSTRUCTIONS			1

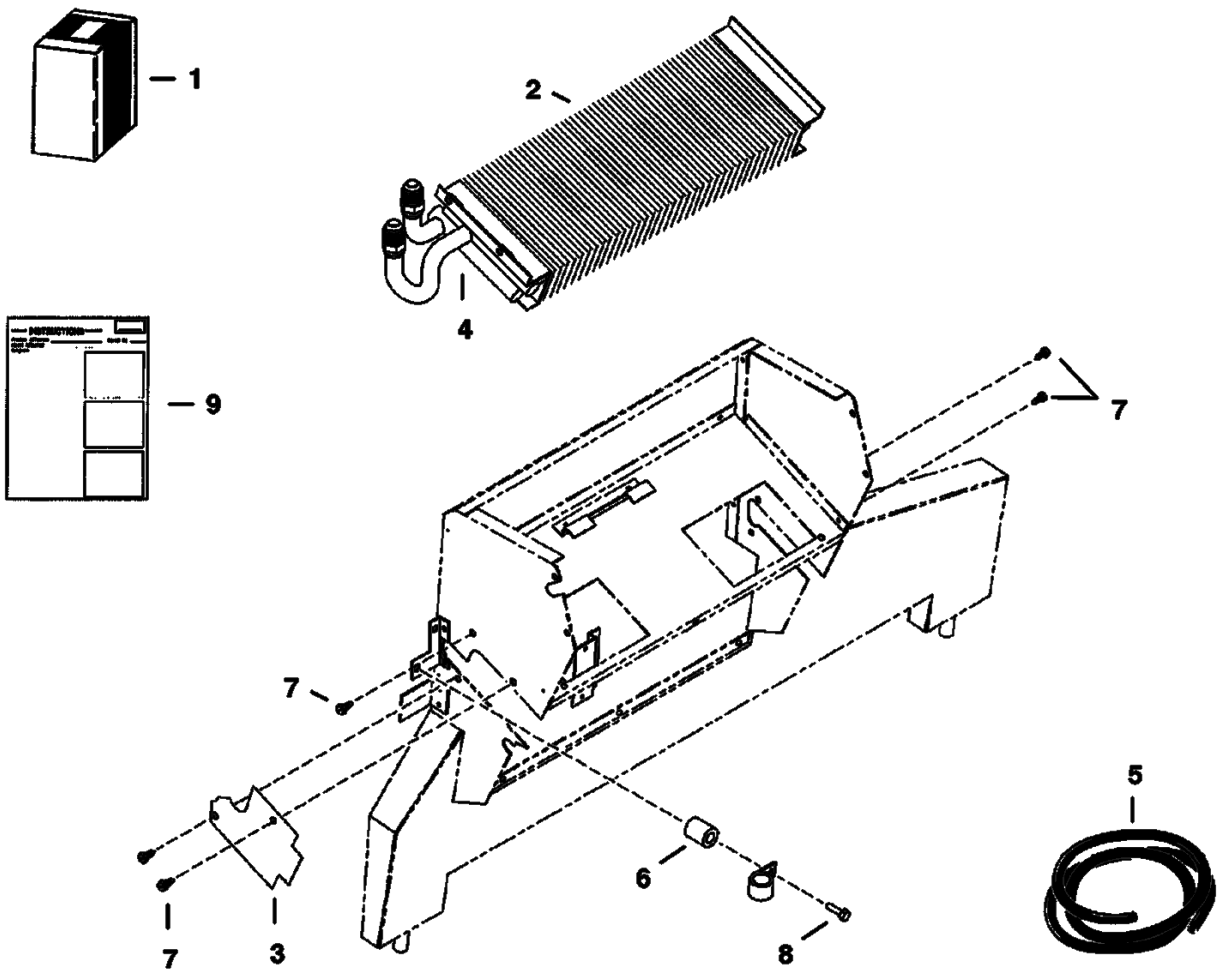
1
2
4
9
7
7
5
6
7
3
8
PE–1228

HEATER & A/C (Cont'd)
(Heater Coil Kit)

Ref No	Part Number	Description	Remarks	Serial Number	Qty
1	6689770	KIT	heater coil - barbed hose connectors - Ref. 2-9		1
2		HEATER COIL	NSS - barbed hose connectors - Order Ref. 1		1
3	6677504	COVER	.279"(7,1mm) thickness		1
4		INSULATION	NAP - 6"(152.4mm) long - Order Ref. 5		1
5	6676538	INSULATION	bulk - Sold Per Foot		x
6	6676606	SPACER			1
7	6726621	SCREW			2
8	6676653	SCREW			1
9	6901120	INSTRUCTIONS			1

HEATER
(Heater Plumbing Kit)

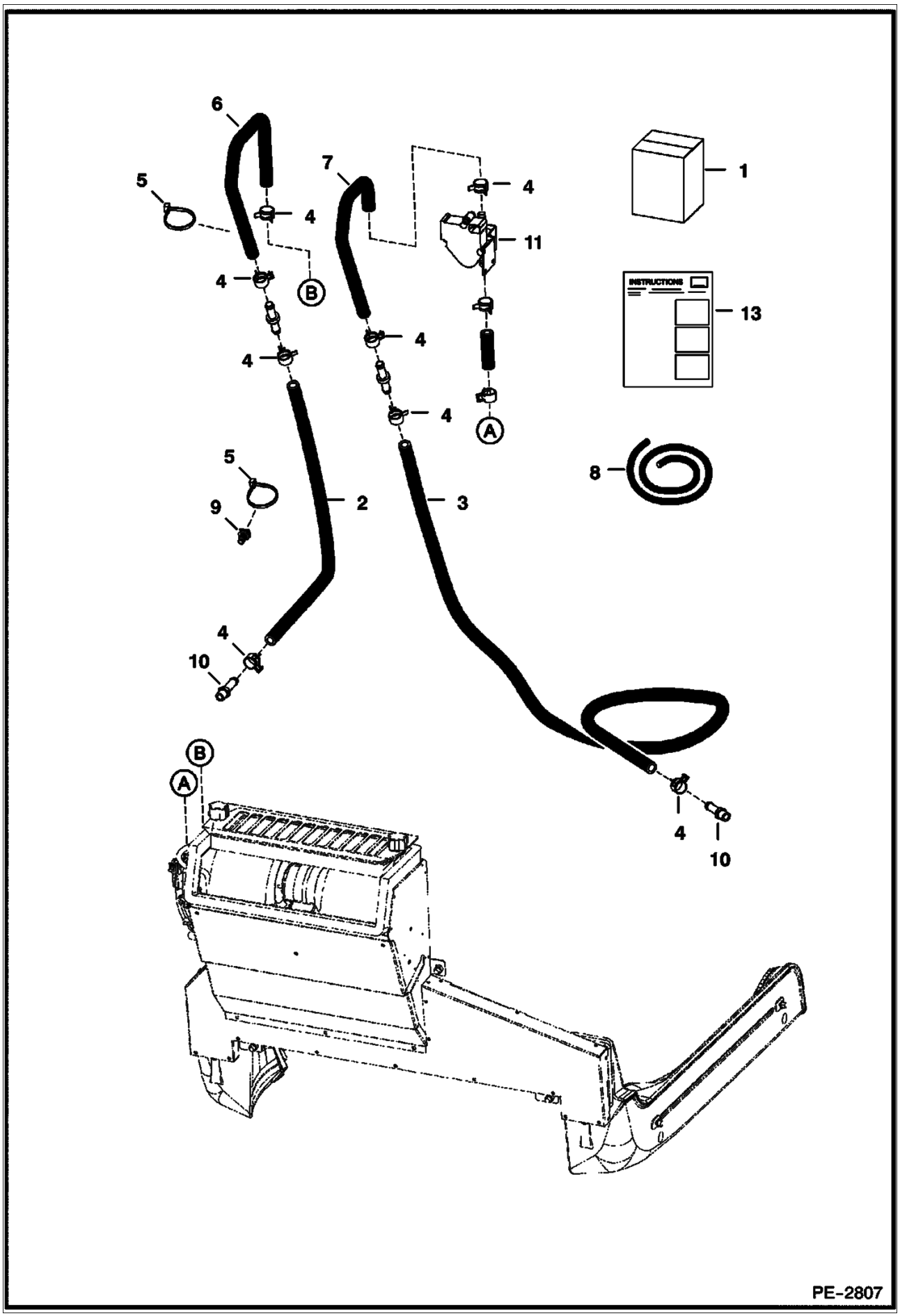

HEATER (Cont'd)
(Heater Plumbing Kit)

Ref No	Part Number	Description	Remarks	Serial Number	Qty
1	7116900	KIT	See Illustration HEATER/ PE2807 REF. 2 - 10 - for heater kit W/barbed hose connectors		1
2		HOSE	NAP - 29" (737 mm) long - Order Ref. 8		1
3		HOSE	NAP - 68" (1727 mm) long - Order Ref. 8		1
4	5HM00020B	CLAMP	hose		8
5	6624289	STA STRAP			8
6	7113208	HOSE			1
7	7113209	HOSE			1
8	6565977	HOSE	bulk - Sold Per Foot		x
9	6678666	TREE MOUNT	tree		2
10	6731084	ADAPTER			2
11		VALVE	See Illustration HEATER & A/C/ PE2805 not in kit		1
12	6732023	HOSE			2
13	6904255	INSTRUCTIONS	not in Kit - part of heater kit		1

HEATER & A/C
(Heater & A/C Option)

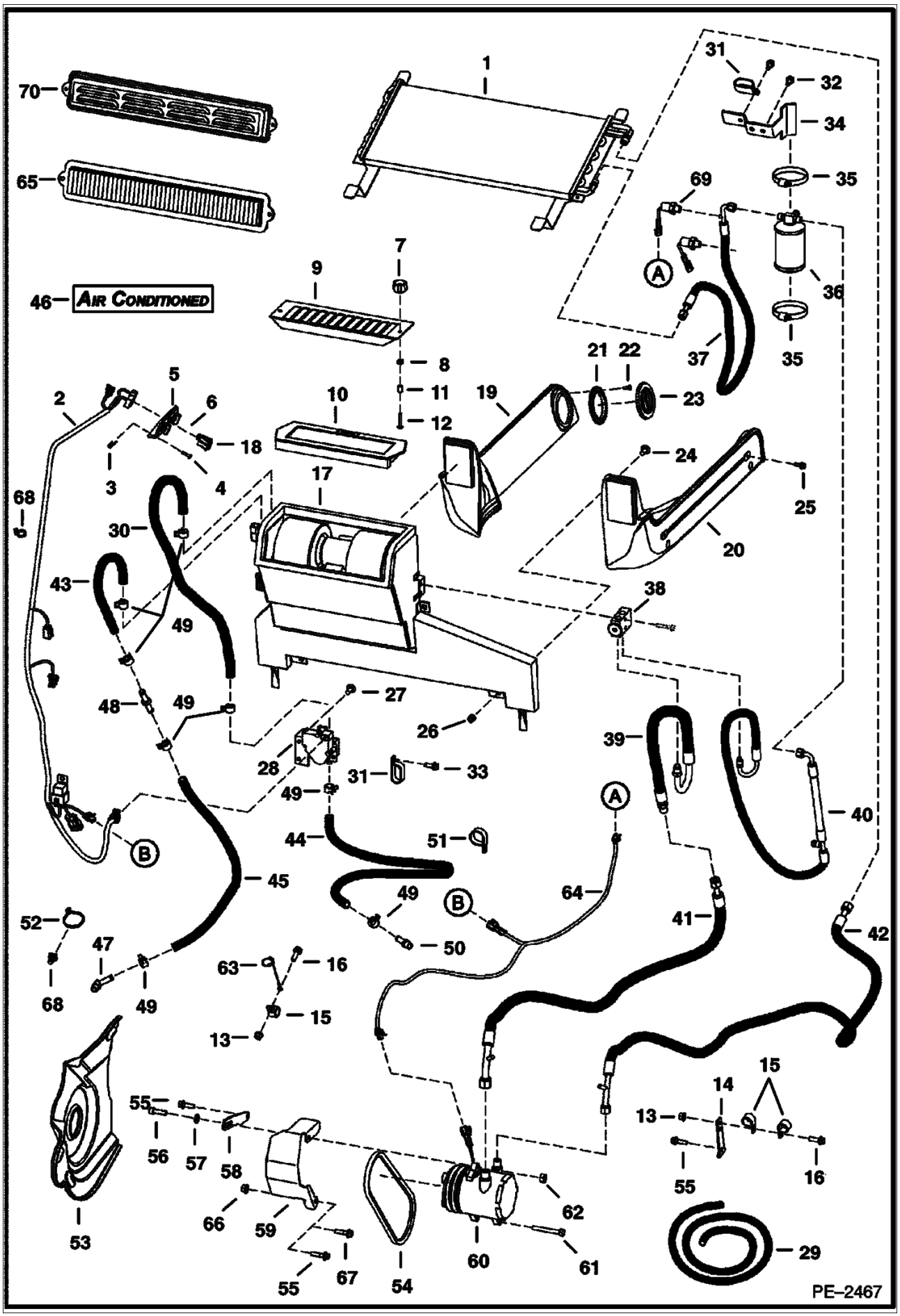

Ref No	Part Number	Description	Remarks	Serial Number	Qty
1	6733001	CONDENSER	A/C		1
2	6725933	HARNESS	hvac		1
3	6669091	CLIP	retainer		3
4	6669224	BOLT			3
5	6674228	PANEL	control		1
5	6640699	CONNECTOR			1
5	6718579	DECAL			1
5	6718887	PANEL	A/C		1
5	6675176	SWITCH	blower		1
5	6675177	KNOB			1
5	6675846	POTENTIOMETER			1
6	6675181	PLUG	switch hole		1
7	6681614	KNOB			2
8	83D000004B	NUT			2
9	6718175	SCREEN	filter		1
10	6678207	FILTER	recirculation		1
11	6718837	SPACER			2
12	37C000424B	BOLT			2
13	83D000005B	NUT			1
14	6728011	BRACKET			1
15	30H000050B	CLAMP			2
16	35C000516B	BOLT			2
17	6688542	HVAC ASSY	See Illustration HEATER & A/C/ PE1142		1
18	6719176	SWITCH			1
19	6735246	DUCT	L.H.		1
20	6735245	DUCT	R.H.		1
21	6675179	FLANGE			4
22	57G000608B	SCREW			16
23	6674231	VENT	round		4
24	37C000512B	BOLT			4
25	35C000410B	BOLT			4
26	59D000005B	NUT			4
27	84G003110B	BOLT			2
28	6689696	VALVE			1
28	6641174	CONNECTOR	male		1
28	6689635	BRACKET	actuator mounting		1
28	6675172	BRACKET	valve mounting		1
28	6689636	ACTUATOR			1
28	6689637	VALVE			1
29	6565977	HOSE	bulk - sold per foot		x
30		HOSE	NAP - 16 in (406,4 mm) long - Order Ref. 29		1
31	31H000046B	CLAMP			2
32	84G003710B	BOLT			3
33	84G003716B	BOLT			1
34	6726620	BRACKET			1
35	44H000048B	CLAMP			2
36	6674235	RECEIVER DRIER			1
37	6727414	HOSE	W/Ref. 69		1
38	6675534	BLOCK VALVE			1
39	6726623	HOSE			1
40	6675075	HOSE			1
40	6677122	CAP			1
41	6726656	HOSE			1
41	6685199	CAP			1

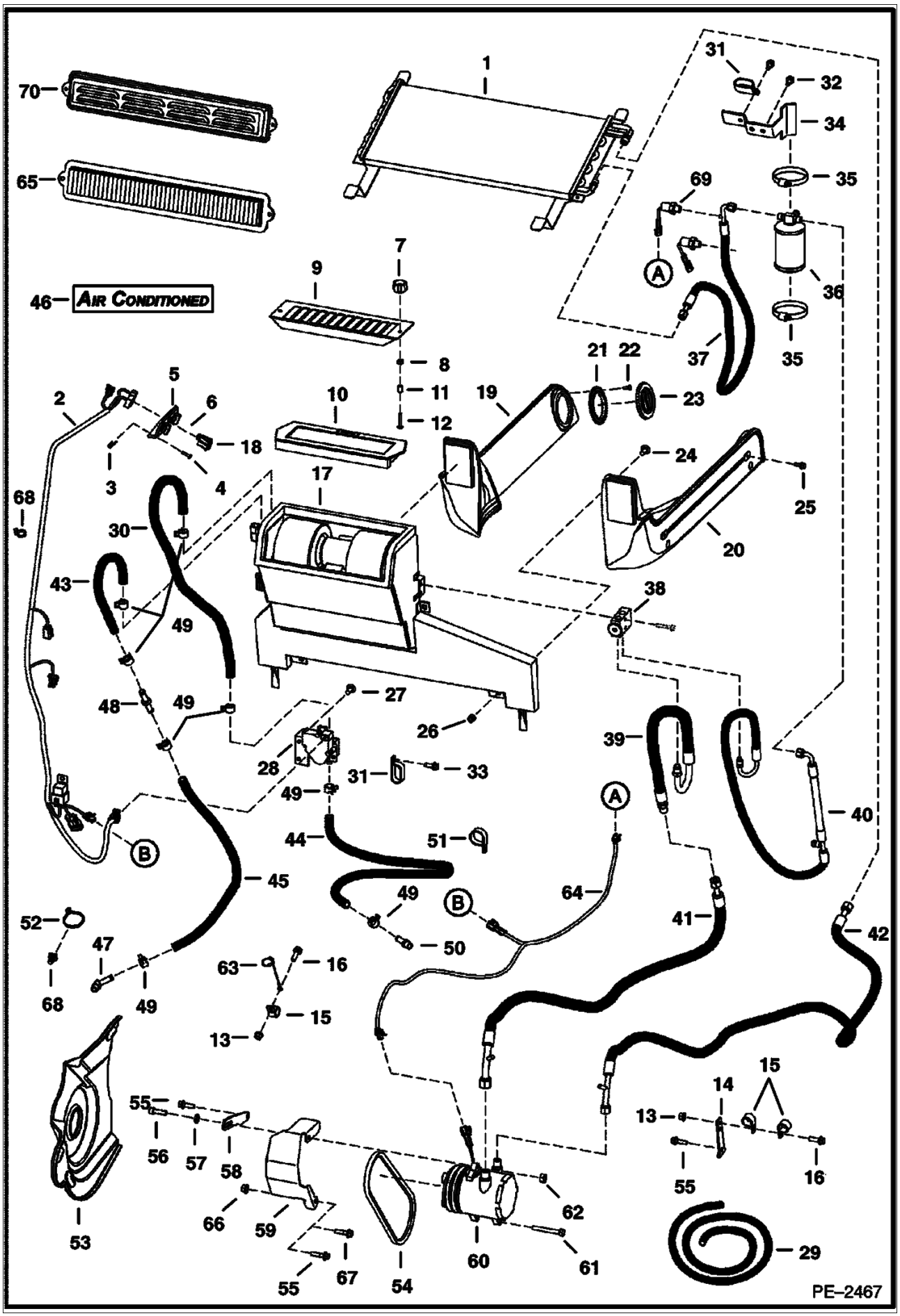
AIR CONDITIONED
PE–2467

Ref No	Part Number	Description	Remarks	Serial Number	Qty
42	6726661	HOSE			1
42	6685198	CAP			1
43		HOSE	NAP - 32 in (812,8 mm) long - Order Ref. 29		1
44		HOSE	NAP - 46 in (1168,4 mm) long - Order. Ref. 29		1
45		HOSE	NAP - 31 in (787,4 mm) long - Order Ref. 29		1
46	6729077	HOSE			2
47	6731085	HOSE			1
48	6732023	CONNECTOR			1
49	5HM00020B	CLAMP			8
50	6731084	ADAPTER			1
51	30H000060B	CLAMP			1
52	6624289	STA STRAP			8
53	7109712	SHIELD			1
54	6726988	BELT	compressor		1
55	35C000620B	BOLT			2
56	2GM01035B	BOLT			1
57	6557831	WASHER			1
58	6726648	BRACKET	swing		1
59	6731495	SHIELD	belt		1
60	6733655	COMPRESSOR	W/Ref. 68		1
60	6679145	CLUTCH			1
60	6648307	CONNECTOR	2-pin		1
60	6648308	CONNECTOR			1
61	5CM01080B	SCREW			1
62	53DM00010B	NUT			1
63	6808831	WIRE ROPE	14"(355,6 mm) long		1
64	6726888	HARNESS	ACS		1
65	6677983	FILTER			1
66	97D000006B	NUT			1
67	35C000624B	BOLT			1
68	6678666	TREE MOUNT	tree		2
69	6675779	PRESS. SWITCH	pressure		1
70	6727848	COVER			1

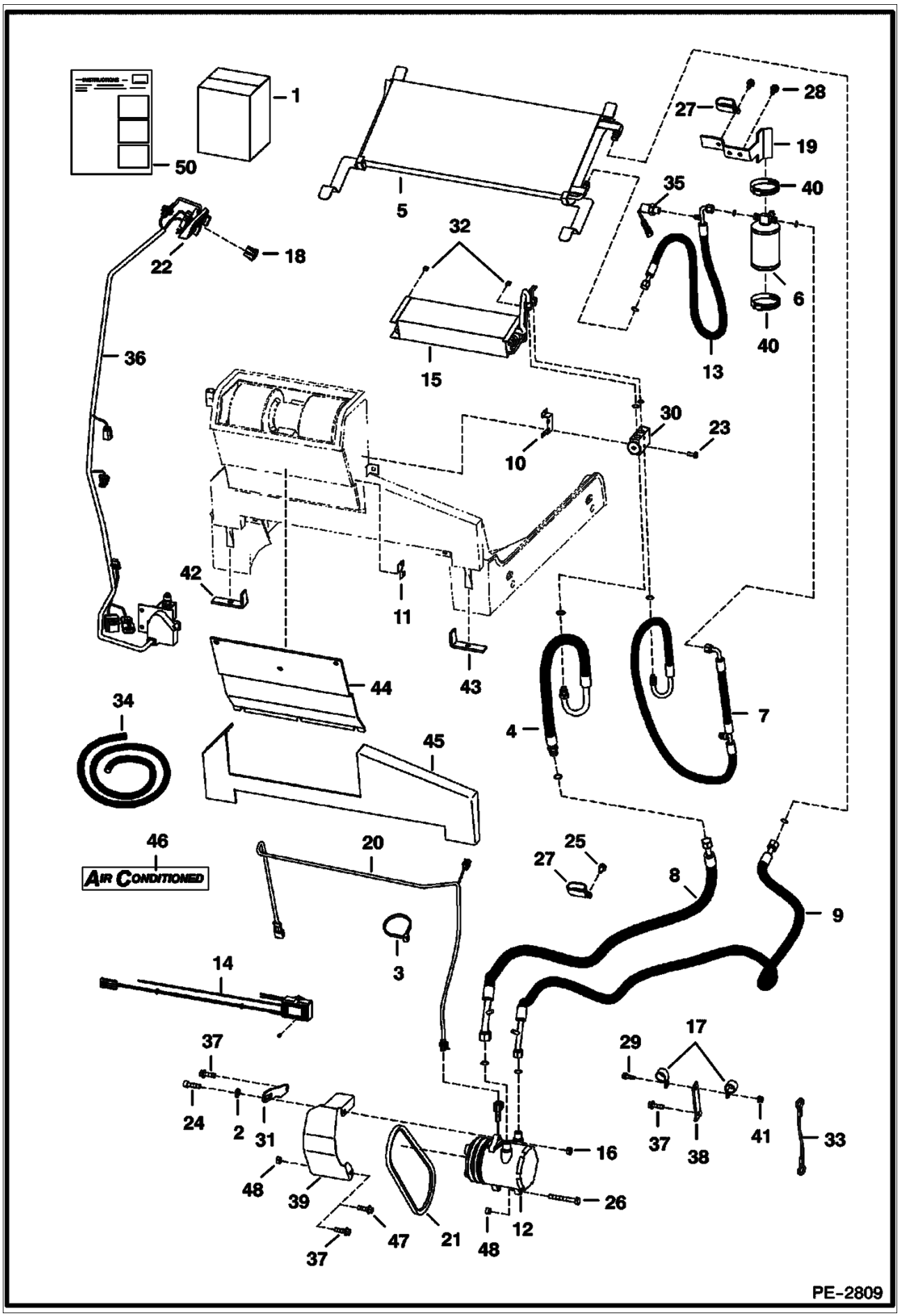
1
50
5
27
28
19
40
35
32
22
18
6
40
36
15
13
30
23
10
42
11
43
44
34
4
7
45
46
AIR CONDITIONED
20
25
27
8
9
3
14
17
29
37
24
2
31
48
39
47
37
21
48
12
16
26
37
38
41
33
PE-2809

Ref No	Part Number	Description	Remarks	Serial Number	Qty
1	7116903	AC KIT	A/C - Ref. 2-49 - If loader is not equipped W/ heater, rotating beacon, selectable joystick controls, advanced control systems, power bob-tach, non-power port plug-in strobe lights and/or non-power port plug-in 4-way flashers, also order 7116260 deluxe harness		1
2	6557831	WASHER			1
3	6624289	STA STRAP			5
4	6726623	HOSE			1
4	6675825	O-RING			x
5	6733001	CONDENSER	A/C		1
6	6674235	RECEIVER DRIER			1
6	6676062	VALVE	relief		1
7	6675075	HOSE			1
7	6677122	CAP			1
7	6675824	O-RING			x
8	6726656	HOSE			1
8	6685199	CAP			1
9	6726661	HOSE			1
9	6685198	CAP			1
9	6675538	O-RING			x
10	6676984	MOUNT	valve		1
11	6677105	COVER	plate		1
12	6733655	COMPRESSOR	W/Ref. 46		1
12	6679145	CLUTCH			1
12	6648307	CONNECTOR	2-pin		1
12	6648308	CONNECTOR			1
13	6727414	HOSE	W/Ref. 35		1
14	6683004	THERMOSTAT			1
15	6683003	COIL	evaporator		1
16	53DM00010B	NUT			1
17	30H000050B	CLAMP			3
18	6719176	SWITCH			1
19	6726620	BRACKET	receiver drier		1
20	6726888	HARNESS			1
21	6726988	BELT	compressor		1
22	6726621	SCREW			2
23	1CM00635B	SCREW			2
24	2GM01035B	BOLT			1
25	84G003716B	BOLT			1
26	5CM01080B	SCREW			1
27	31H000046B	CLAMP			1
28	84G003710B	BOLT			3
29	35C000516B	BOLT			2
30	6675534	BLOCK VALVE	expansion valve		1
30	6675538	O-RING	#8		x
31	6726648	BRACKET	swing		1
32	6676539	CLIP			2
33	6808831	WIRE ROPE			1
34	6676538	INSULATION	bulk - Sold Per Foot		x
35	6675779	PRESS. SWITCH	pressure		1
36	6725933	HARNESS	Not in Kit		1
37	35C000620B	BOLT			2
38	6728011	BRACKET			1
39	6731495	SHIELD	belt		1
40	44H000048B	CLAMP			2

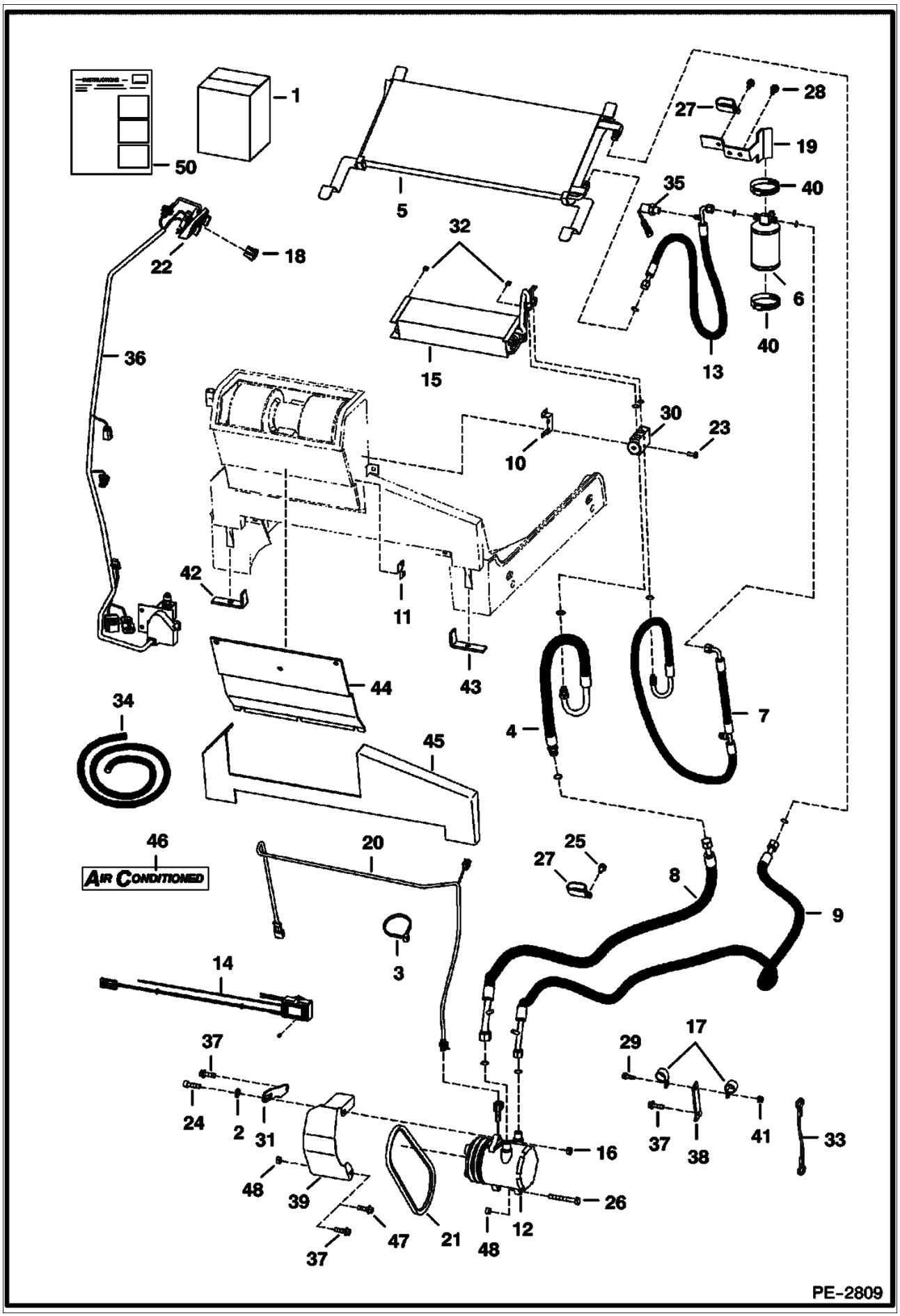
1
50
5
28
27
19
40
35
32
22
18
6
40
36
15
13
30
23
10
42
11
44
43
34
4
7
45
46
AIR CONDITIONED
20
25
27
8
9
3
14
17
29
37
24
2
31
48
39
16
26
37
47
21
48
12
37
38
41
33
PE-2809

Ref No	Part Number	Description	Remarks	Serial Number	Qty
41	83D000005B	NUT			2
42	6675608	INSULATION			1
43	6675609	INSULATION			1
44	6689179	INSULATION			1
45	6689180	INSULATION			1
46	6729077	DECAL	air conditioned		2
47	35C000624B	BOLT			1
48	97D000006B	NUT			1
49	6904257	INSTRUCTIONS			1

HEATER & A/C
(HVAC Assembly)

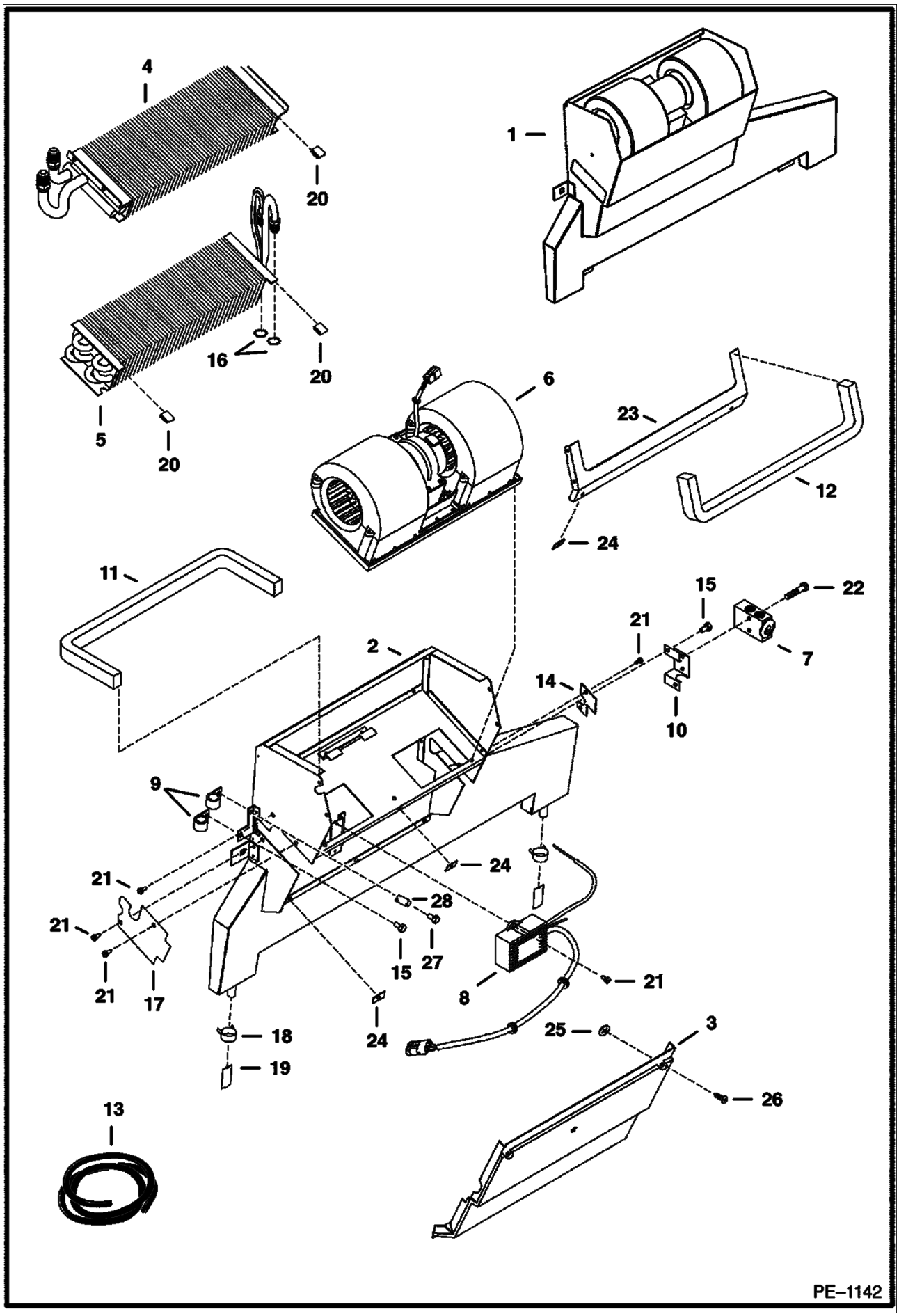

Ref No	Part Number	Description	Remarks	Serial Number	Qty
1	6688542	HVAC HEATER	Ref. 2-28		1
2	6677108	HOUSING			1
3		COVER	NAP - Order 6678151 Cover & Ref. 23 (6678152 Seal)		1
3	6678151	COVER			1
4		COIL	See Illustration HEATER & A/C/ PE1228 NSS - HEATER - ORDER 6689770 HEATER COIL KIT		1
5	6683003	COIL	evaporator		1
6	6689762	BLOWER	See Illustration HEATER & A/C/ B26156 assy		1
7	6675534	BLOCK VALVE			1
8	6683004	THERMOSTAT			1
9	6675512	CLAMP	hose		2
10	6676984	MOUNT	valve		1
11		SEAL	NAP - 25"(635mm) long - Order Ref. 13		1
12		SEAL	NAP - 22.6"(575mm) long - Order Ref. 13		1
13	6677111	SEAL	bulk - Sold Per Foot		x
14	6677105	COVER			1
15	6677118	SCREW	w/washer		3
16	6675538	O-RING			2
17	6677504	COVER			1
18	6675510	CLAMP	drain hose		2
19	6675511	DRAIN VALVE			2
20	6676539	CLIP			2
21	6677119	SCREW	sheetmetal		7
22	1CM00635B	SCREW			2
23		FLANGE	NAP - Order 6678152 Seal & Ref. 3 (6678151 Cover)		1
23	6678152	SEAL			1
24	6677115	RECEPTACLE			6
25	6677116	RETAINER			6
26	6677117	SCREW	captive		6
27	6676653	SCREW			1
28	6676606	SPACER			1

HORN KIT
(Manual Hand Controls)

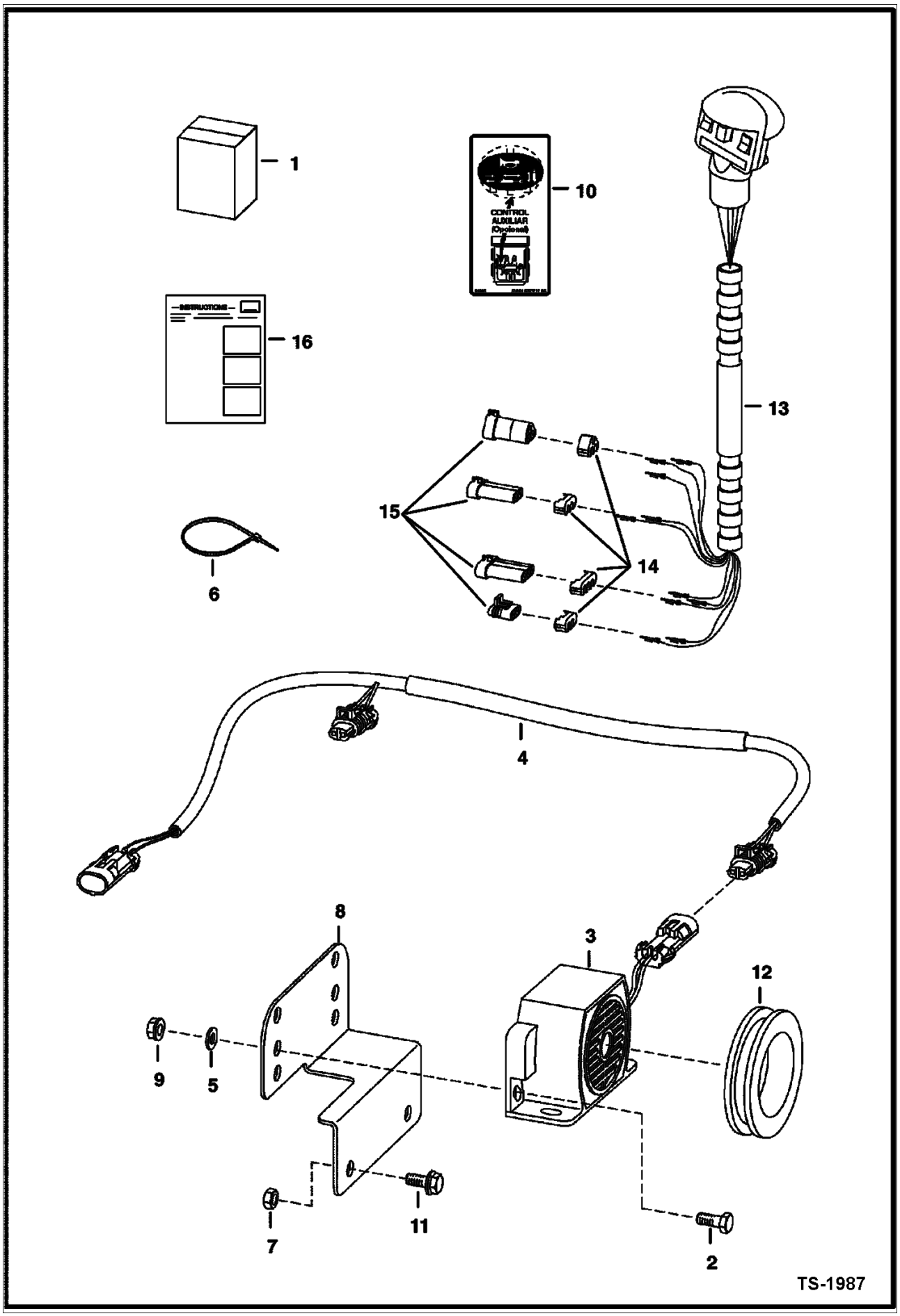

HORN KIT (Cont'd)
(Manual Hand Controls)

Ref No	Part Number	Description	Remarks	Serial Number	Qty
1	6727995	HORN KIT	Ref. 2-12 & 16 - Requires multi-switch handle		1
2	17C000410B	BOLT			2
3	6675099	ALARM			1
4	6727498	HARNESS	56.5"(1435 mm) long		1
5	25E000013B	WASHER			1
6	6610510	TIE			1
7	83D000005B	NUT			2
8	6733970	MOUNT			1
9	83D000004B	NUT			2
10	6703727	DECAL			1
11	35C000512B	BOLT			2
12	6577545	GROMMET			1
13	6680414	HANDLE ASSY.	Not in Kit		1
13	6640690	PIN	Not in Kit		5
13	6641176	SEAL	Not in Kit		5
14	6641180	LOCK	2 - pin - Not in Kit		2
14	6640700	LOCK	3 - pin - Not in Kit		2
15	6641179	CONNECTOR	2 - pin - Not in Kit		2
15	6640699	CONNECTOR	3 - pin - Not in Kit		2
16	6901146	INSTRUCTIONS			1

HORN KIT
(Selectable Joystick Controls)

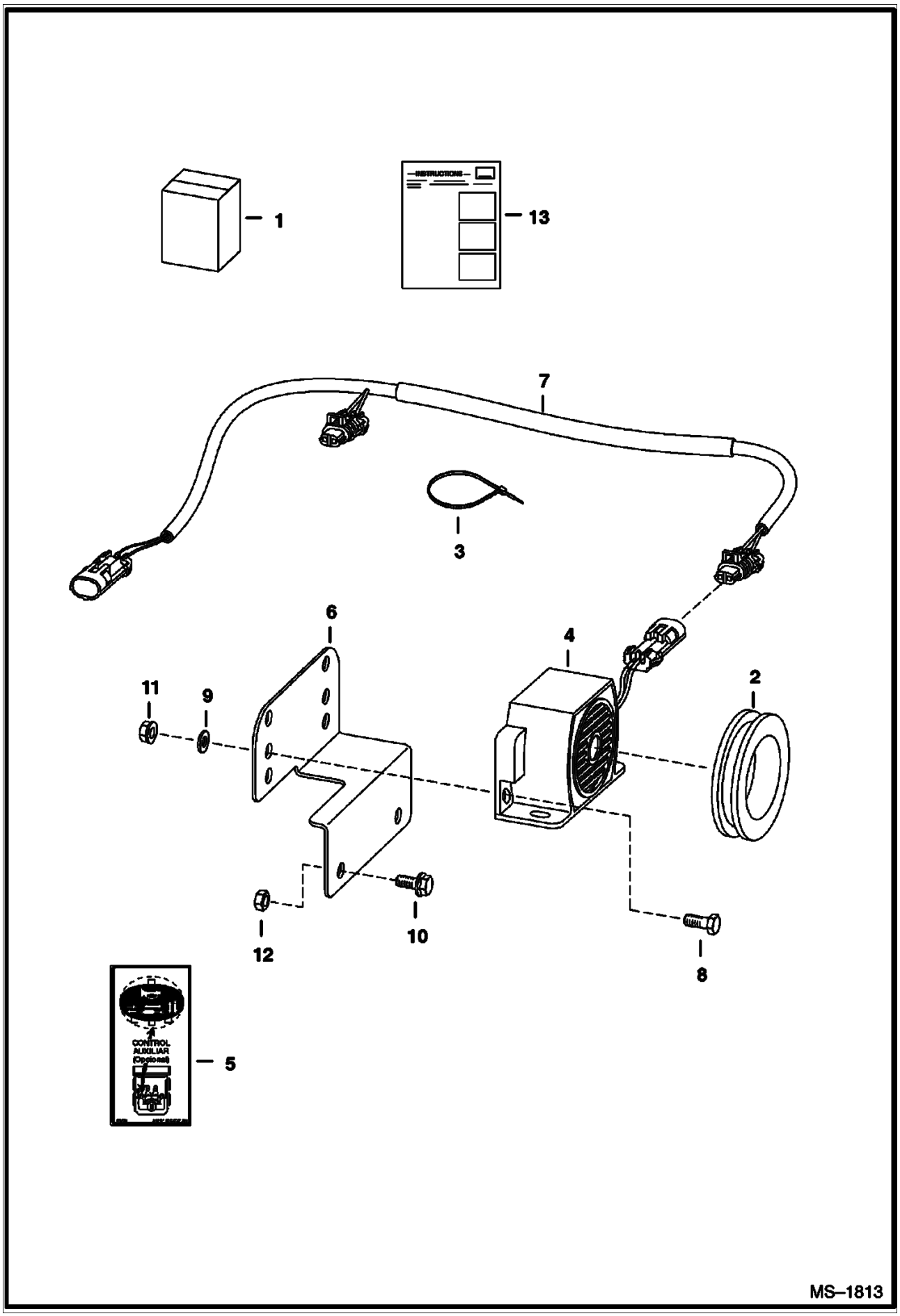

HORN KIT (Cont'd)
(Selectable Joystick Controls)

Ref No	Part Number	Description	Remarks	Serial Number	Qty
1	6732234	KIT	horn - Ref. 2-13		1
2	6577545	GROMMET			1
3	6610510	TIE			3
4	6675099	ALARM	horn		1
5	6703727	DECAL	horn/aux.		1
6	6733970	MOUNT	alarm		1
7	6726662	HARNESS			1
8	17C000410B	BOLT			2
9	25E000013B	WASHER			2
10	35C000512B	BOLT			2
11	83D000004B	NUT			2
12	83D000005B	NUT			2
13	6901691	INSTRUCTIONS			1

LIFT KIT
(Single Point)

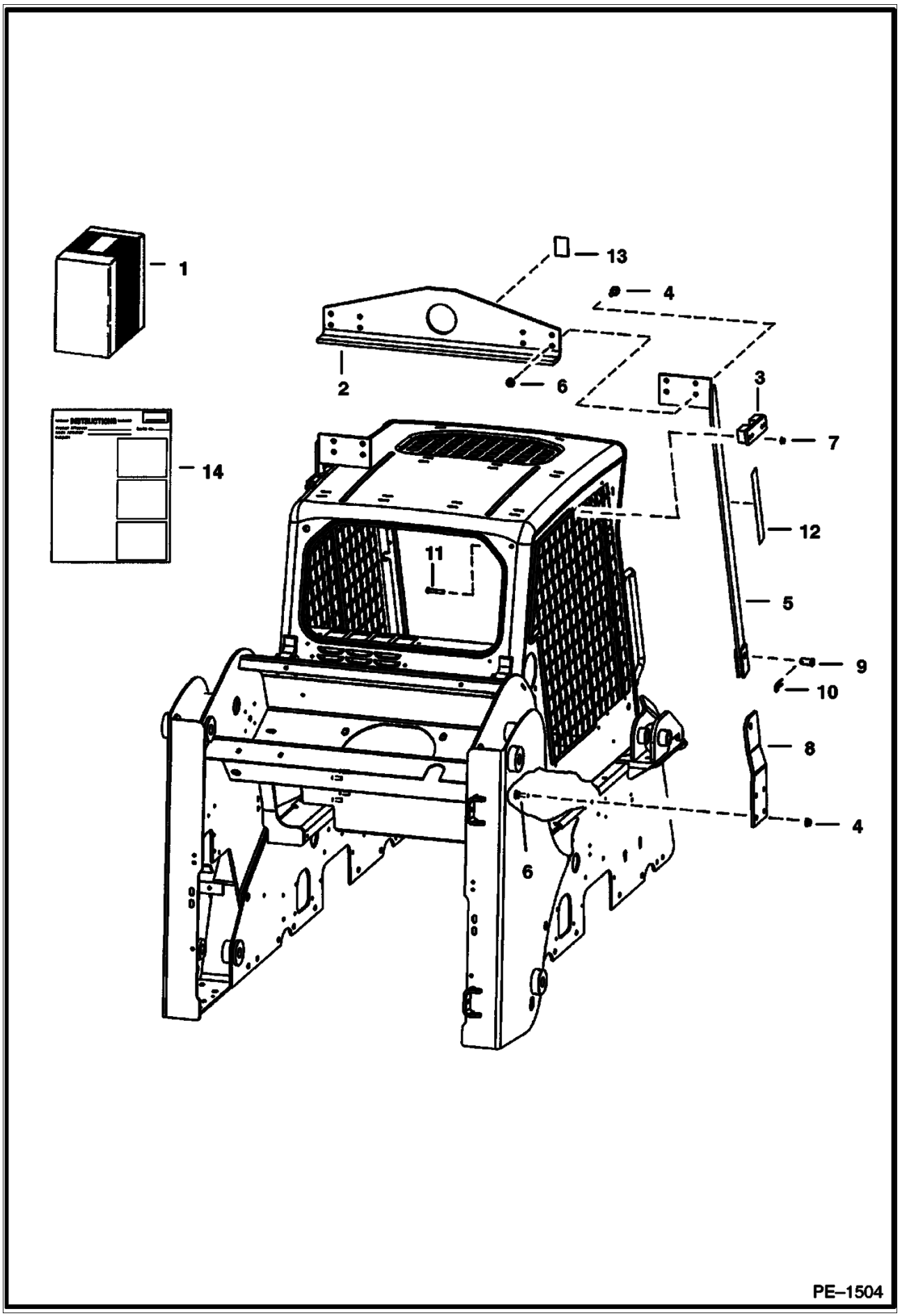

LIFT KIT (Cont'd)
(Single Point)

Ref No	Part Number	Description	Remarks	Serial Number	Qty
1	6719264	KIT	Ref. 2 - 14		1
2	6567827	ANGLE			1
3	6719184	MOUNT	L.H.		1
3	6719185	MOUNT	R.H.		1
4	31C000824B	BOLT			16
5	6704146	BRACKET	R.H.		1
5	6704147	BRACKET	L.H.		1
6	57D000008B	NUT			16
7	57D000006B	NUT			8
8	6731658	BRACKET	R.H.		1
8	6731657	BRACKET	L.H.		1
9	6567838	PIN			2
10	1320075	COTTER PIN			2
11	17C000632B	BOLT			8
12	6704786	DECAL	warning		2
13	6533898	DECAL	hook		1
14	6900888	INSTRUCTIONS			1

LIFT KIT
(Four Point - .75" Thick Lift Eye)

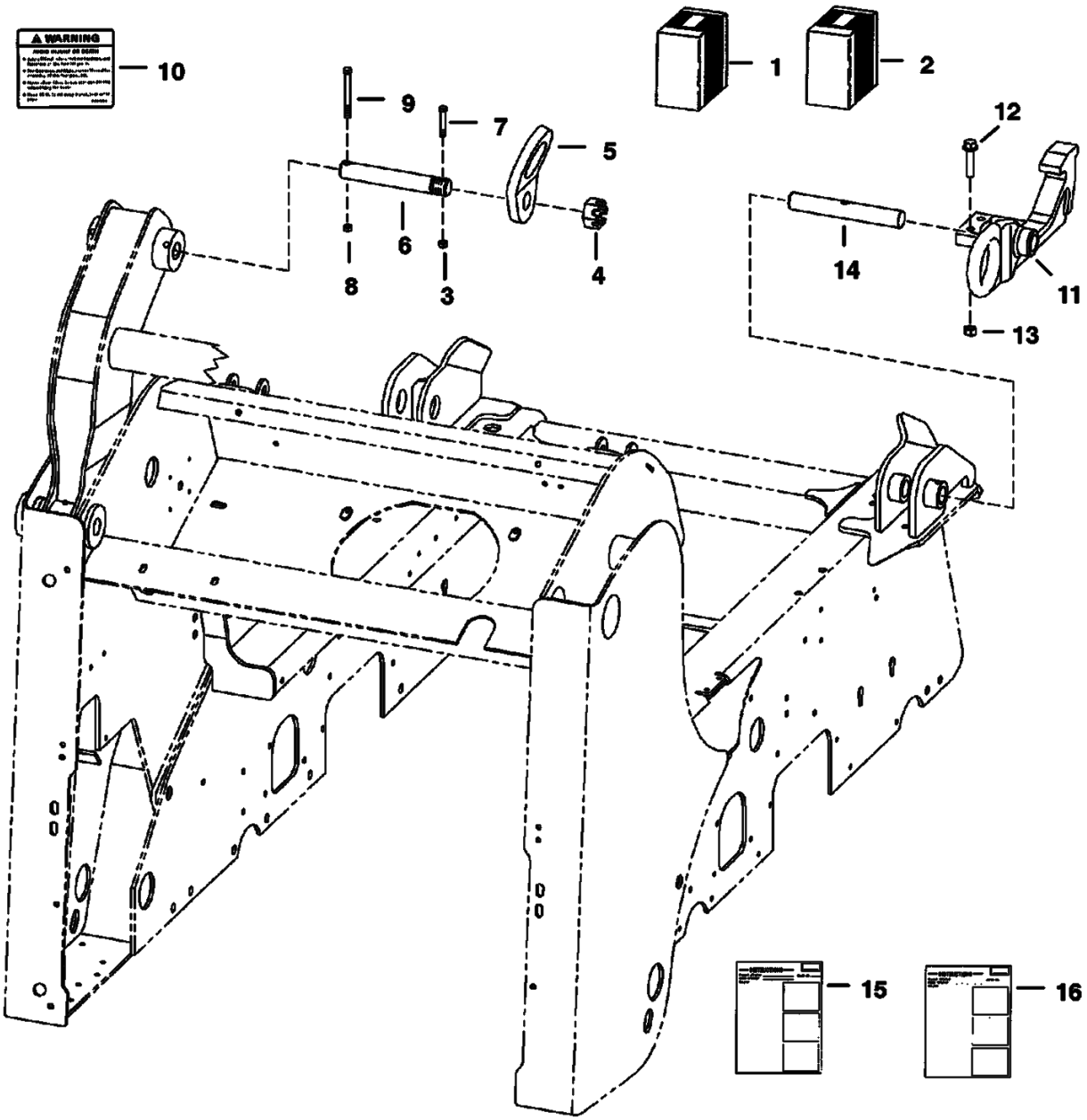

NOTE: The Four Point Lift Kit requires the Backhoe Mounting Kit, which is available from Gwinner Sales #6718155.

PE–1383

LIFT KIT (Cont'd)
(Four Point - .75" Thick Lift Eye)

Ref No	Part Number	Description	Remarks	Serial Number	Qty
1	6727993	KIT	lift - Ref. 3-10 & 16 - SEE NOTE		1
2		KIT	SALES - backhoe mounting - Ref. 11-15 - SEE NOTE		1
3	87D000005B	NUT			2
4	4D000020B	NUT			2
5	6706825	LIFT EYE	rear		2
6	6706807	PIN			2
7	17C000540B	BOLT			2
8	85D000006B	NUT	Not in Kit		2
9	17C000640B	BOLT	Not in Kit		2
10	6726423	DECAL			2
11	6718122	MOUNT	L.H.		1
11	6717293	MOUNT	R.H.		1
12	31C000836B	BOLT			4
13	63D000008B	NUT			4
14	6717707	PIN			1
15	6900827	INSTRUCTIONS	For Ref. 2		1
16	6901203	INSTRUCTIONS	For Ref. 1		1

LIFT KIT
(Four Point - .75" Thick Lift Eye)

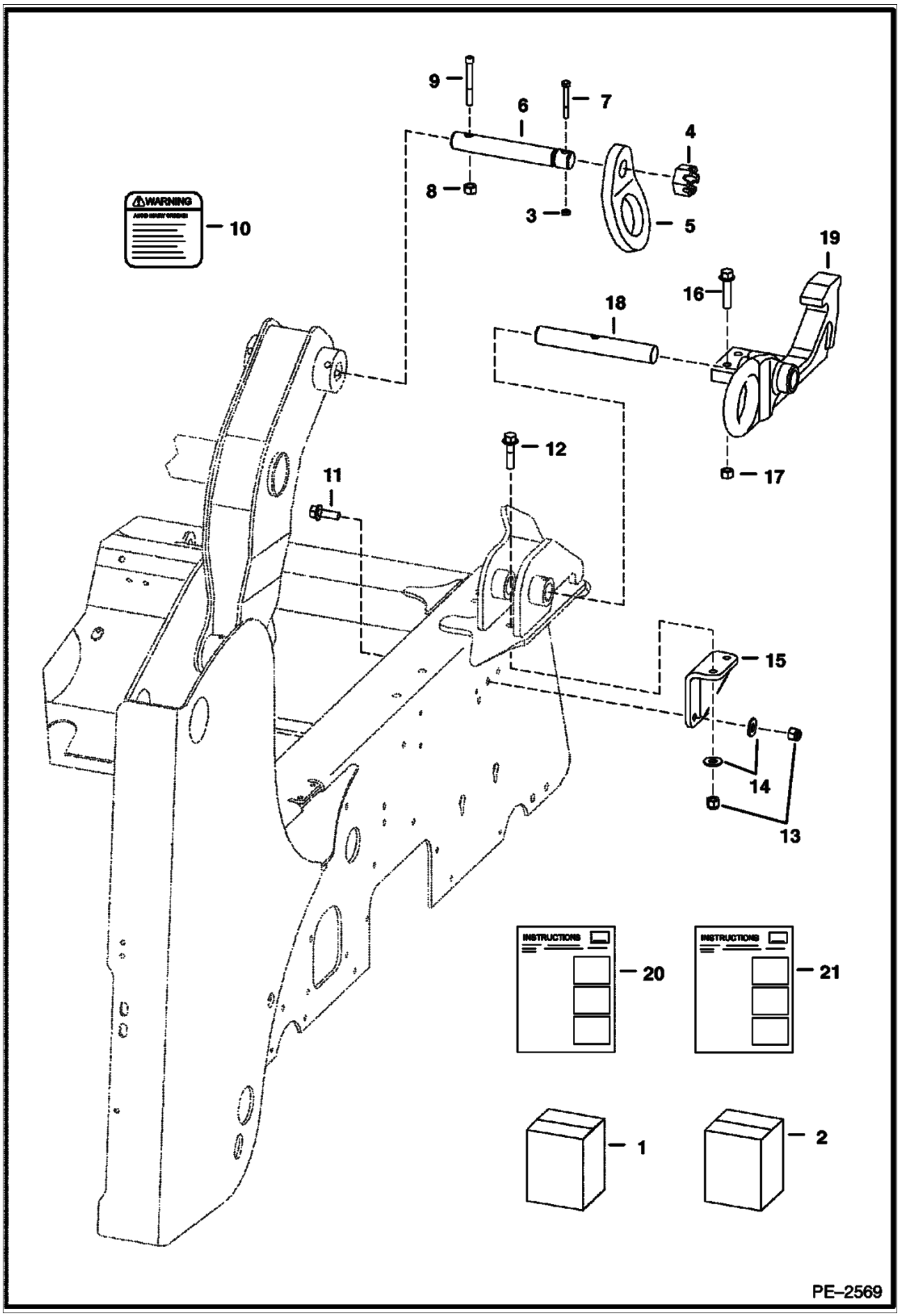

LIFT KIT (Cont'd)
(Four Point - .75" Thick Lift Eye)

Ref No	Part Number	Description	Remarks	Serial Number	Qty
1	7108393	KIT,LIFT KIT	lift - Ref. 3-10 & 16 - SEE NOTE		1
2		KIT	SALES - backhoe mounting - Ref. 16-19		1
3	87D000005B	NUT			2
4	4D000020B	NUT			2
5	6706825	LIFT EYE	rear		2
6	6706807	PIN			2
7	17C000540B	BOLT			2
8	85D000006B	NUT	Not in Kit		2
9	17C000656B	BOLT	Not in Kit		2
10	6726423	DECAL			2
11	31C000824B	BOLT	L.H.		4
12	31C000832B	BOLT			4
13	59D000008B	NUT			8
14	27E000008B	WASHER			8
15	7107353	KIT			2
16	31C000836B	BOLT			4
17	63D000008B	NUT			4
18	6717707	PIN			2
19	6718122	MOUNT	L.H.		1
19	6717293	MOUNT	R.H.		1
20	6900827	INSTRUCTIONS			1
21	6903359	INSTRUCTIONS	For Ref. 2		1

LIFT KIT
(Four Point - .75" Thick Lift Eye)

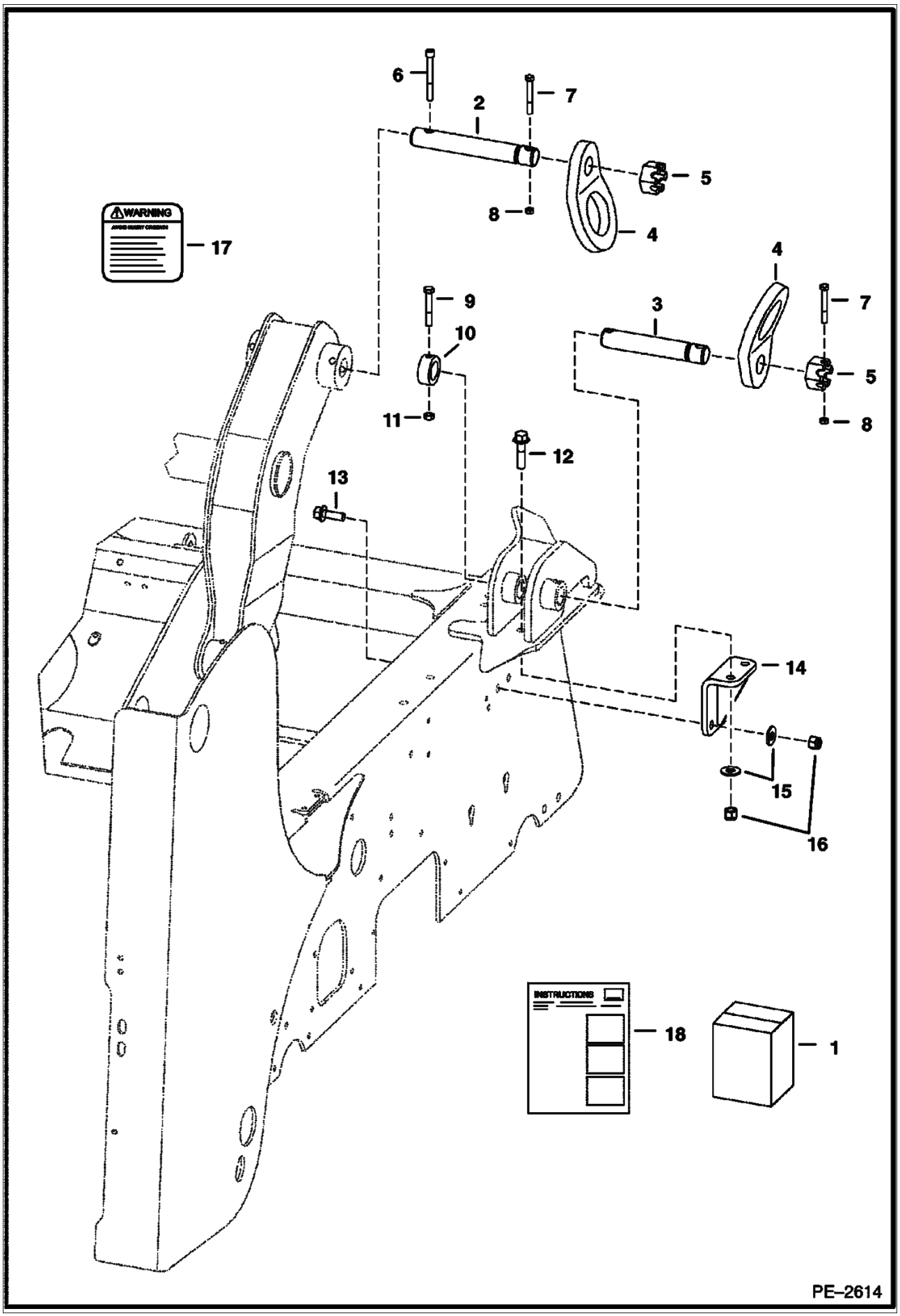

LIFT KIT (Cont'd)
(Four Point - .75" Thick Lift Eye)

Ref No	Part Number	Description	Remarks	Serial Number	Qty
1	7112346	KIT, 4 PT LIFT	Ref. 2-5 & 7-18		1
2	6706807	PIN			2
3	7100444	PIN			2
4	6706825	LIFT EYE			4
5	4D000020B	NUT			4
6	17C000656B	BOLT	Not in Kit		2
7	17C000540B	BOLT			4
8	87D000005B	NUT			4
9	17C000640B	BOLT			2
10	7100445	SPACER			2
11	85D000006B	NUT			2
12	31C000832B	BOLT			4
13	31C000824B	BOLT			4
14	7107353	GUSSET			2
15	27E000008B	WASHER			8
16	59D000008B	NUT			8
17	6726423	DECAL			2
18	6904113	INSTRUCTIONS			1

LIGHT KIT

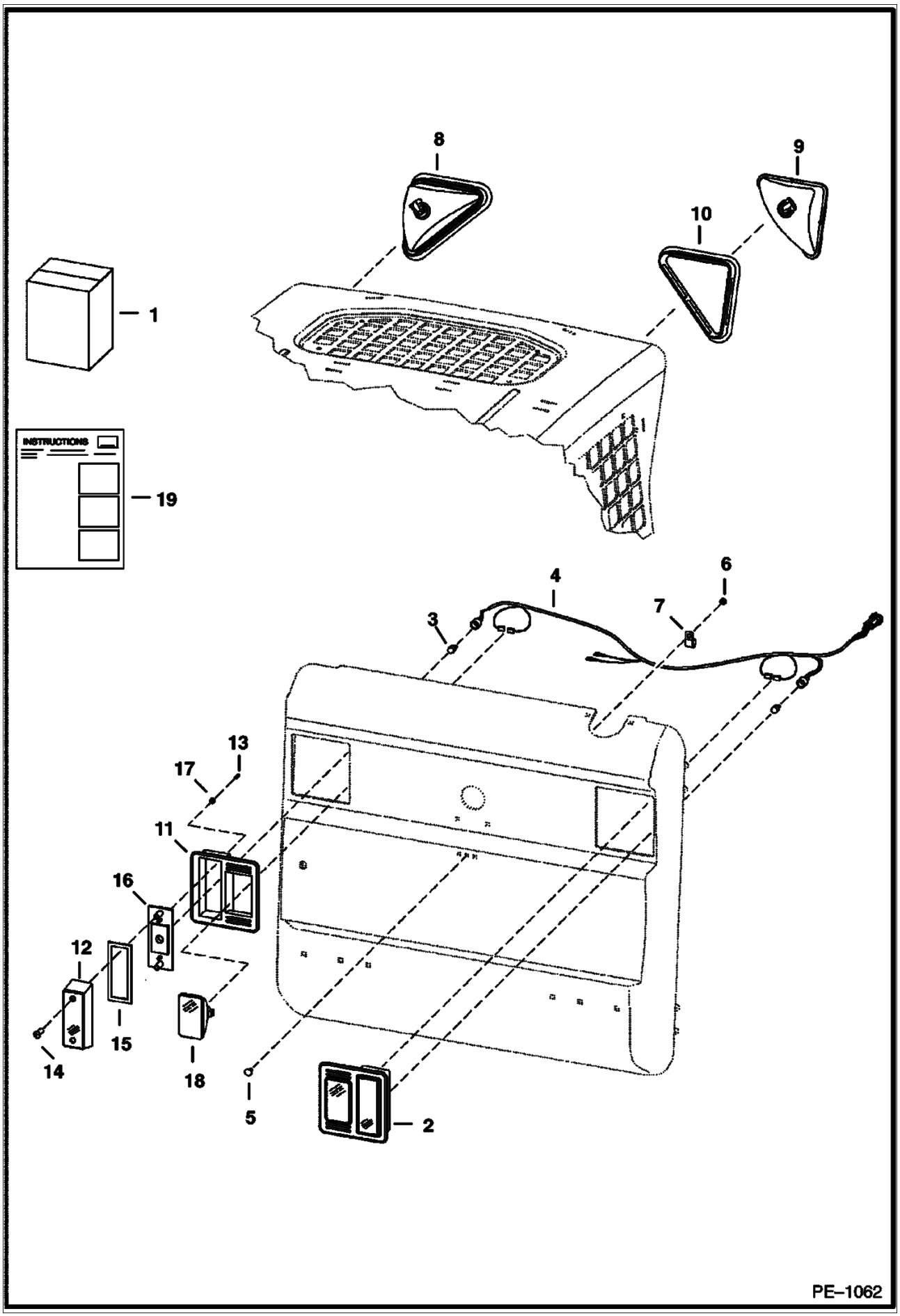

LIGHT KIT (Cont'd)

Ref No	Part Number	Description	Remarks	Serial Number	Qty
1		KIT	NAP - Order components		1
2	6670284	LIGHT ASSY	rear		2
3	6649481	BULB			2
4	7109403	HARNESS	standard		1
5	37C000512B	BOLT			1
6	85D000005B	NUT			1
7	30H000042B	CLAMP			1
8		LIGHT ASSY	NAP - R.H. - Ref. 9 & 10		1
8		LIGHT ASSY	NAP - L.H. - Ref. 9 & 10		1
9	6674401	HOUSING	R.H.		1
9	6675336	BULB	55 watt		1
9	6674400	HOUSING	L.H.		1
9	6675336	BULB	55 watt		1
10	6674402	MOUNT			1
11	6672279	MOUNT	rubber		2
12	6672276	LENS	red		2
13	6672274	SCREW			4
14	6672273	SCREW			2
15	6672275	GASKET			2
16	6672277	BRACKET			2
17	6672272	WASHER			4
18	6661353	LIGHT ASSY	white work - W/bulb		2
18	898731B	BULB			2
19		INSTRUCTIONS			1

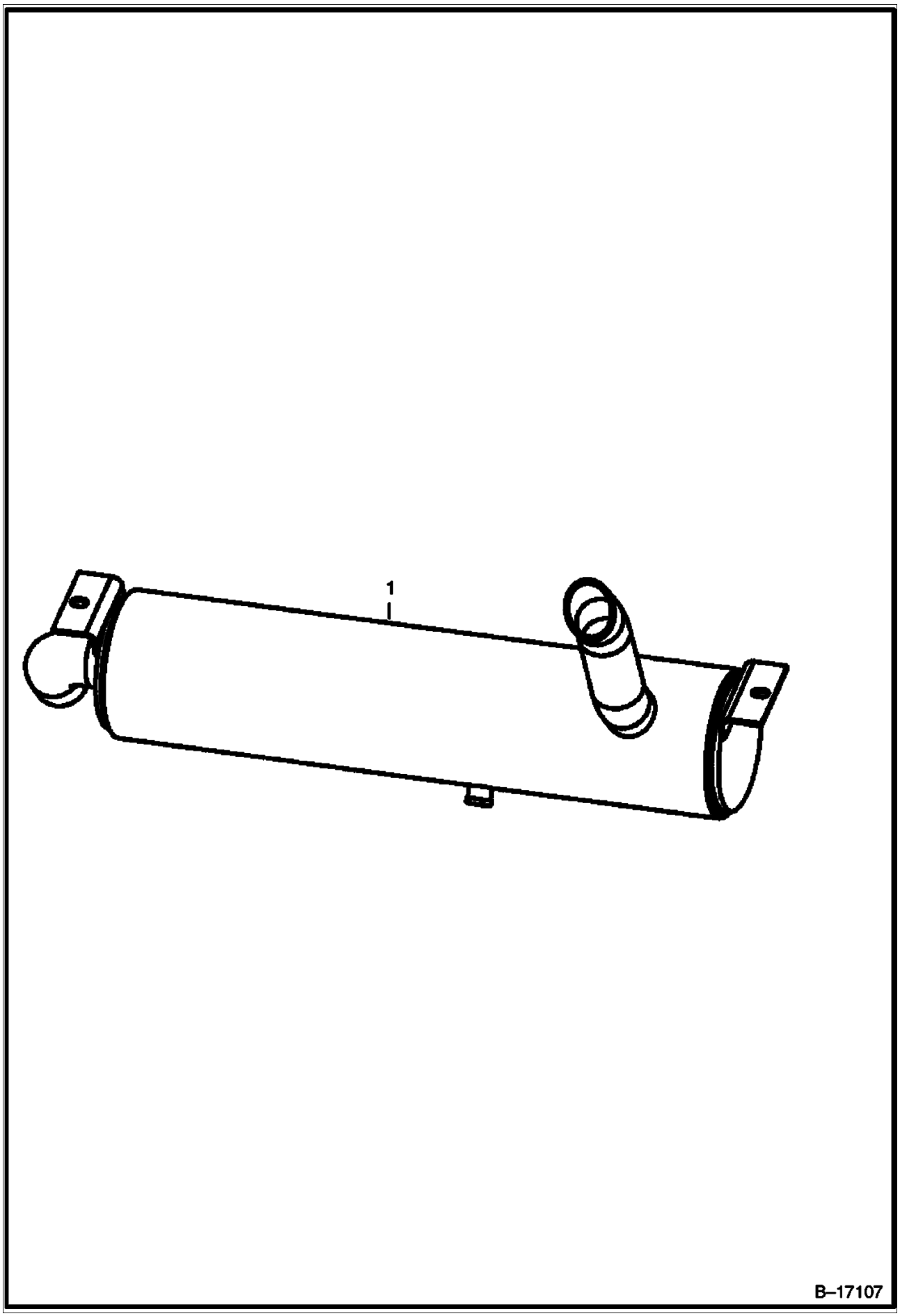
1
B–17107

MUFFLER/PURIFIER KIT (Cont'd)

Ref No	Part Number	Description	Remarks	Serial Number	Qty
1	7103791	MUFFLER			1

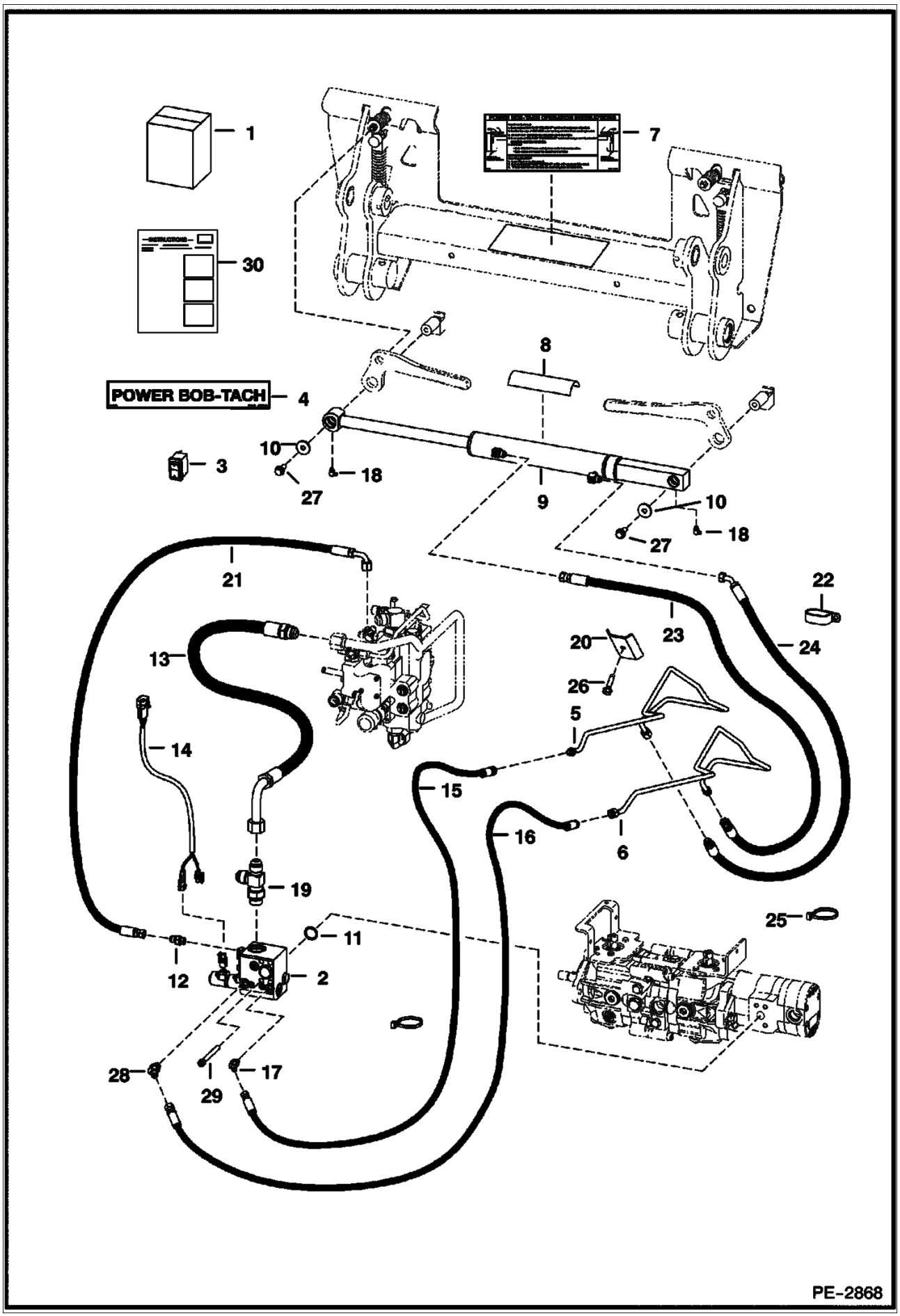
1
7
30
8
POWER BOB-TACH
4
10
3
18
27
9
10
18
27
21
22
23
24
13
20
26
5
14
15
16
6
19
25
11
12
2
28
29
17
PE-2868

Ref No	Part Number	Description	Remarks	Serial Number	Qty
1	7120898	KIT	Power Bob-Tach - If loader is not equipped W/ heater, air conditioning, selectable joystick controls, advanced control sysetem, rotating beacon, non power port plug-in strobe lights and/or non power port plug-in 4-way flashers, also order 7116260 deluxe harness		1
2		VALVE	See Illustration POWER BOB-TACH/ MS1835R		1
3	6676732	SWITCH	vertical		1
4	6719888	DECAL			1
5	6725552	TUBE			1
6	6725553	TUBE			1
7	6725907	DECAL			1
8	6555341	SAFETY TREAD			1
9		CYLINDER	See Illustration POWER BOB-TACH/ PE1064		1
10	619021B	WASHER			2
11	55K000214B	O-RING			1
12	15KB00404B	ADAPTER			1
13	7115185	HOSE			1
14	7112290	HARNESS			1
15	6718358	HOSE			1
16	6719451	HOSE			1
17	18KB00404B	ELBOW			1
18	12H000025B	GREASE ZERK	90 degree		2
19	21KB01212B	FITTING			1
20	6719884	BRACKET			1
21	7110367	HOSE	45" (1143 mm) long - For loaders equipped W/Selectable Joystick Controls		1
22	31H000049B	CLAMP			1
23	6729202	HOSE			1
24	6729203	HOSE			1
25	6624289	STA STRAP			3
26	84G003724B	BOLT			1
27	35C000616B	BOLT			2
28	18KB00606B	ELBOW			1
29	73G000656B	BOLT			4
30	6902421	INSTRUCTIONS			1

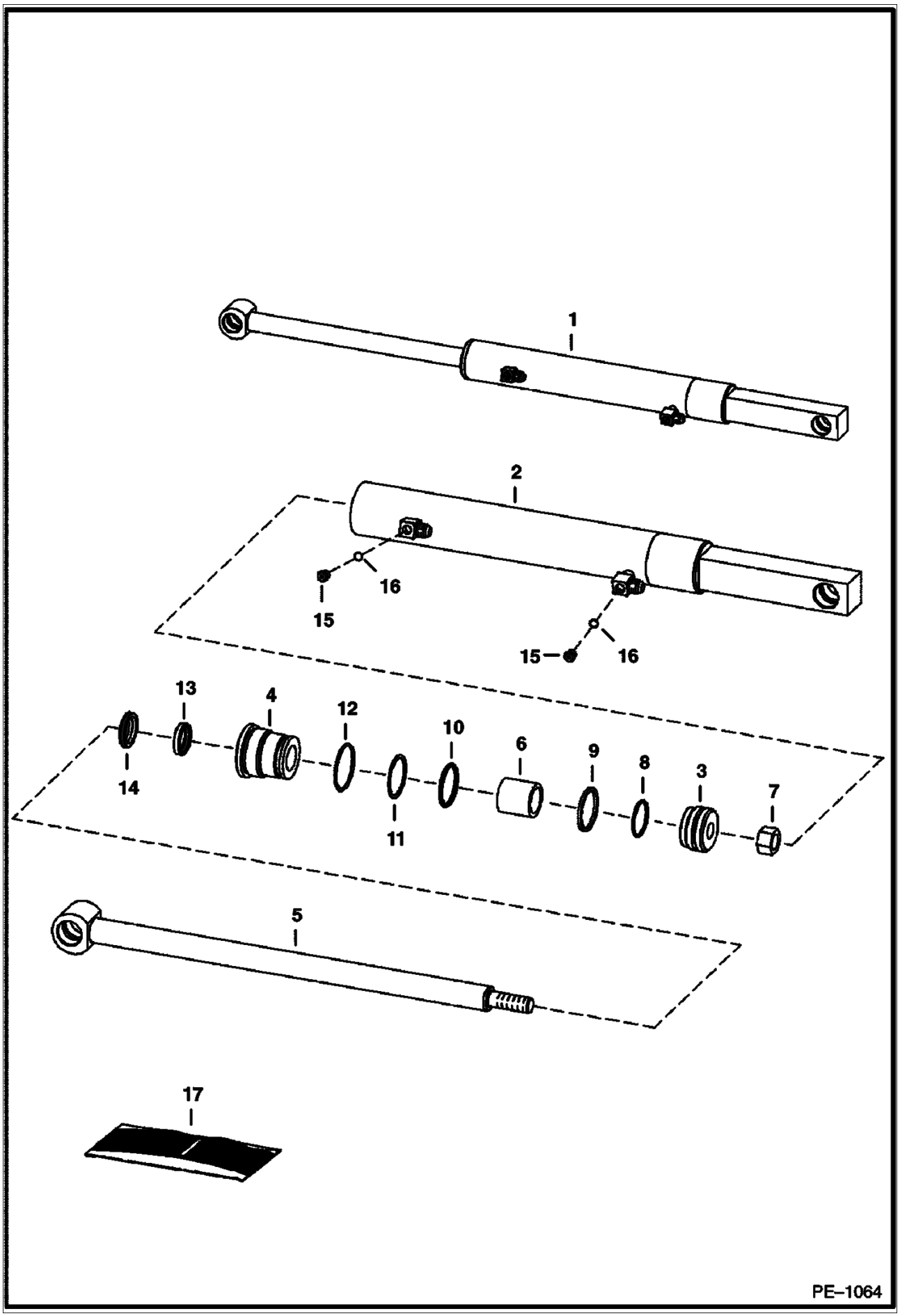
1
2
16
15
15
16
13
4
12
10
6
9
8
3
7
14
11
5
17
PE–1064

POWER BOB-TACH (Cont'd)
(Cylinder)

Ref No	Part Number	Description	Remarks	Serial Number	Qty
1	6807503	CYLINDER	Ref. 2 - 16		1
2	6810349	CASE	1.75"(45 mm) I.D.		1
3	6586543	PISTON			1
4	6586542	HEAD			1
5	6810612	ROD	1" (25.4mm) O.D. - 18.6"(422,4mm) long		1
6	6810356	SPACER			1
7	92D000010B	NUT			1
8	54K030110B	O-RING			1
9	6532453	RING			1
10	54K040116B	O-RING			1
11	73K000222B	WASHER	back-up		1
12	58K000132B	O-RING			1
13	6667323	SEAL	rod		1
14	6666542	SEAL	wiper		1
15	6812170	PLUG	W/Ref. 16		2
16	75K000003B	O-RING			2
17	6803473	SEAL KIT	Ref. 7 - 14		1

POWER BOB-TACH
(Valve Assembly)

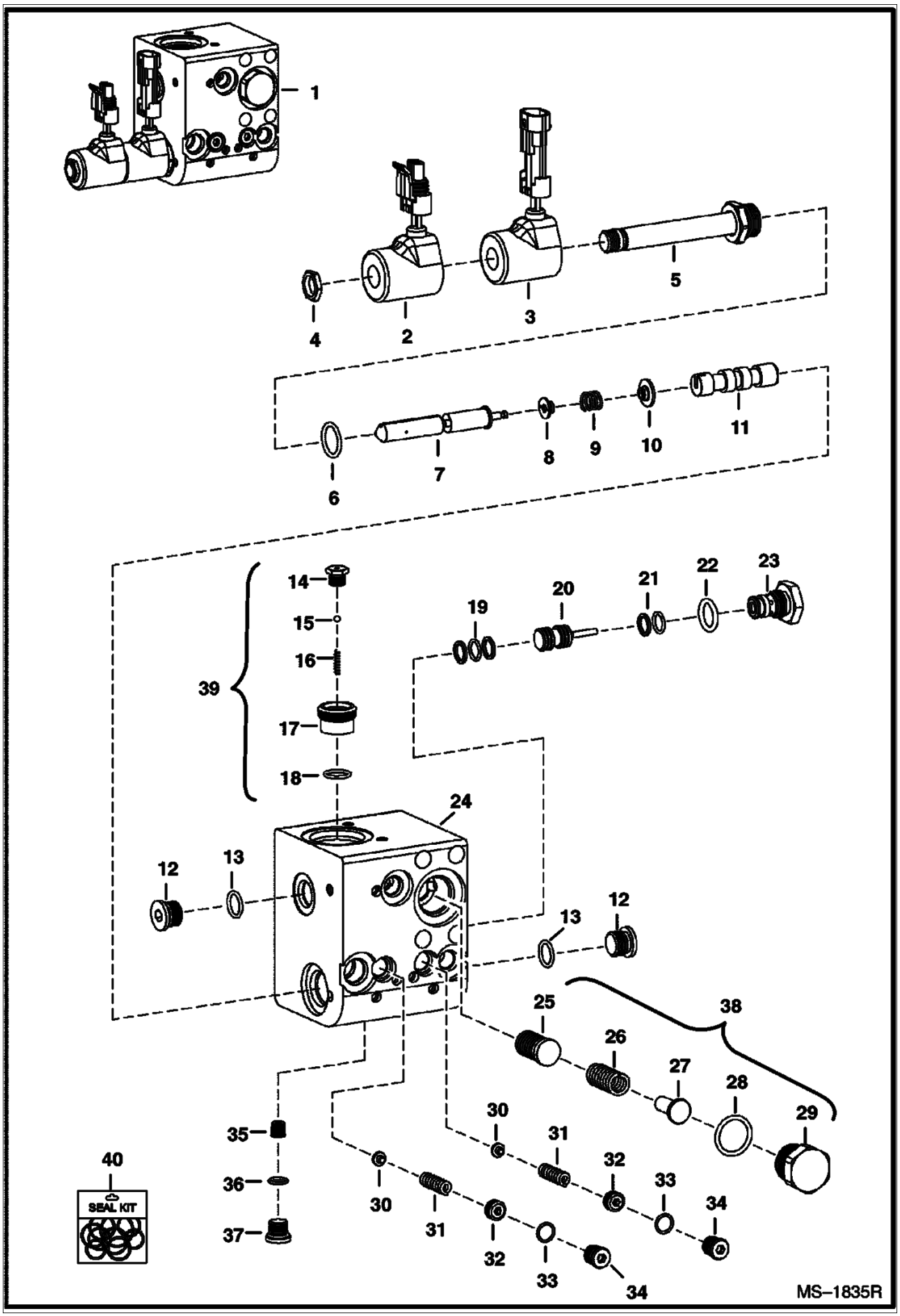

POWER BOB-TACH (Cont'd)
(Valve Assembly)

Ref No	Part Number	Description	Remarks	Serial Number	Qty
1	6686949	VALVE			1
2	6684743	SOLENOID	W/male connector		1
3	6684744	SOLENOID	W/female connector		1
4	6684742	NUT			1
5		STEM	NSS		x
6	79K000008B	O-RING			x
7		STEM	NSS		x
8		RETAINER	NSS		x
9		SPRING	NSS		x
10		WASHER	NSS		x
11	6685540	PISTON			x
12	6685545	PLUG	W/Ref. 13		x
13		O-RING	NSS		x
14		PLUG	NSS		x
15		BALL	NSS		x
16		SPRING	NSS		x
17		VALVE	NSS		x
18	6685542	O-RING			x
19		RINGS	NSS		x
20	6684745	PISTON			1
21		RINGS	NSS		x
22	79K000007B	O-RING			x
23	6684746	CHECK VALVE	W/Ref. 22		1
24		BLOCK	NSS		x
25		STEM	NSS		x
26		SPRING	NSS		x
27		POPPET	NSS		x
28	79K000010B	O-RING			x
29		PLUG	NSS		x
30		POPPET	NSS		x
31		SPRING	NSS		x
32		PLUG	NSS		x
33		O-RING	NSS		x
34		PLUG	NSS		x
35	6685541	POPPET			x
36		O-RING	NSS		x
37	6685546	PLUG			x
38	6685544	COMPENSATOR	assy. - Ref. 25-29		1
39	6685543	CHECK VALVE	assy. - Ref. 14-18		1
40	6684747	SEAL KIT	complete		1

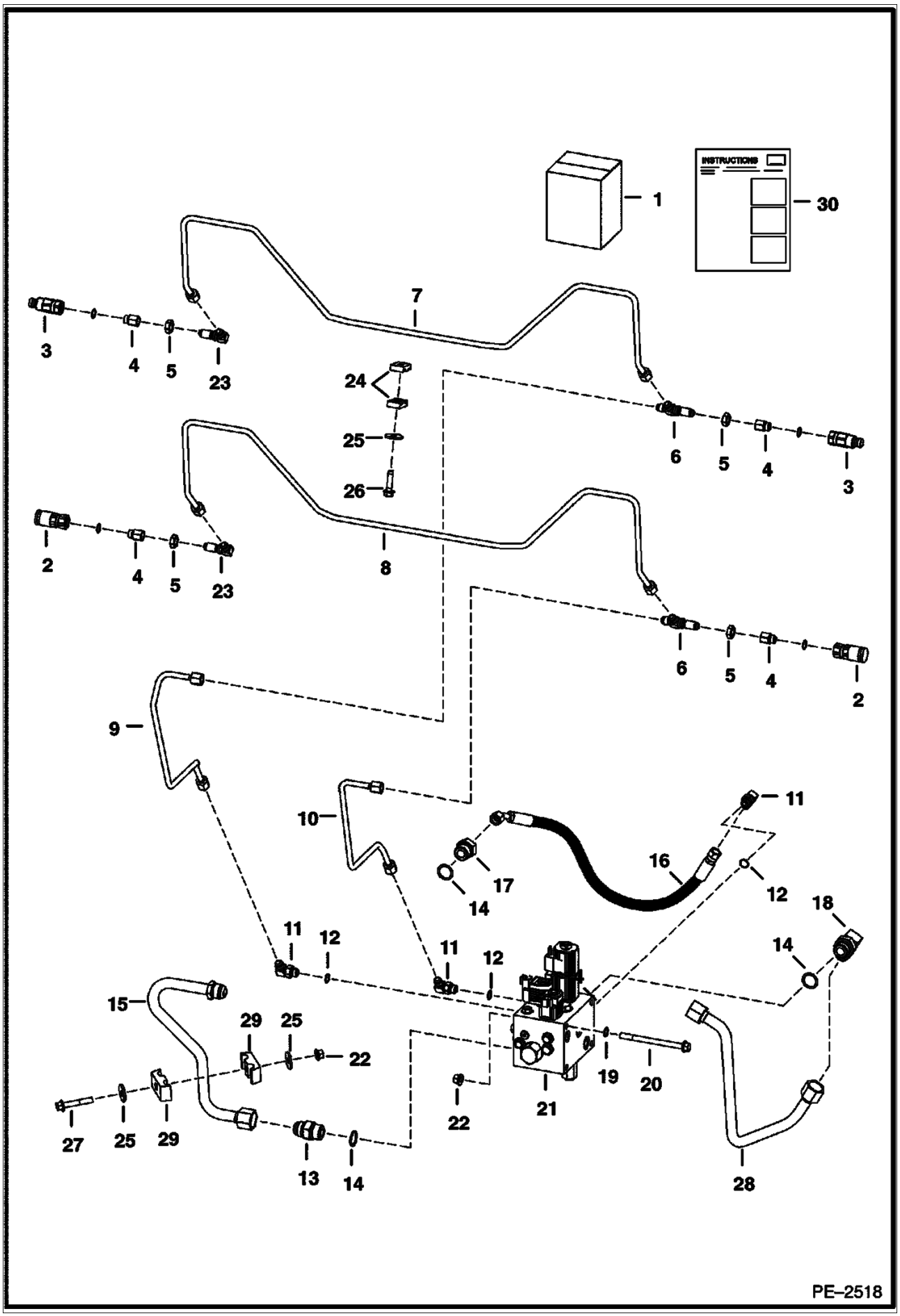
INSTRUCTIONS
1
30
7
3
4
5
23
24
25
26
6
5
4
3
8
2
4
5
23
6
5
4
2
9
10
11
16
17
14
12
18
11
12
11
12
14
15
29
25
22
27
25
29
13
14
22
21
19
20
28
PE–2518

Ref No	Part Number	Description	Remarks	Serial Number	Qty
1	7109924	KIT-REAR AUX	Ref. 2-30 - Also includes 7101973 Harness		1
1	7101973	HARNESS	jumper		1
2	6667803	COUPLER	female		2
3	6667804	COUPLER	male		2
3	6669657	SEAL KIT			x
4	6706633	ADAPTER			4
5	86F000005B	NUT			4
6	91K000005B	TEE			2
7	6726273	TUBE			1
8	6726272	TUBE			1
9	6735828	TUBE			1
10	6735829	TUBE			1
11	17KB00606B	ELBOW	W/Ref. 12		3
12	79K000006B	O-RING			x
13	15KB01212B	ADAPTER	W/Ref. 14		1
14	79K000012B	O-RING			x
15	7109927	TUBE			1
16	6802324	HOSE			1
17	15KB00612B	ADAPTER	W/Ref. 14		1
18	17KB01212B	ELBOW	W/Ref. 14		1
19	6592506	CLAMP			2
20	17C000680B	BOLT			2
21		VALVE	See Illustration REAR AUXILIARY VALVE/ B21972R		1
22	83D000006B	NUT			3
23	88F000005B	ELBOW			3
24	6726277	CLAMP			2
25	619021B	WASHER			3
26	84G003724B	BOLT			1
27	35C000636B	BOLT			1
28	6733192	TUBE			1
29	6903828	INSTRUCTIONS			1

REAR AUXILIARY VALVE

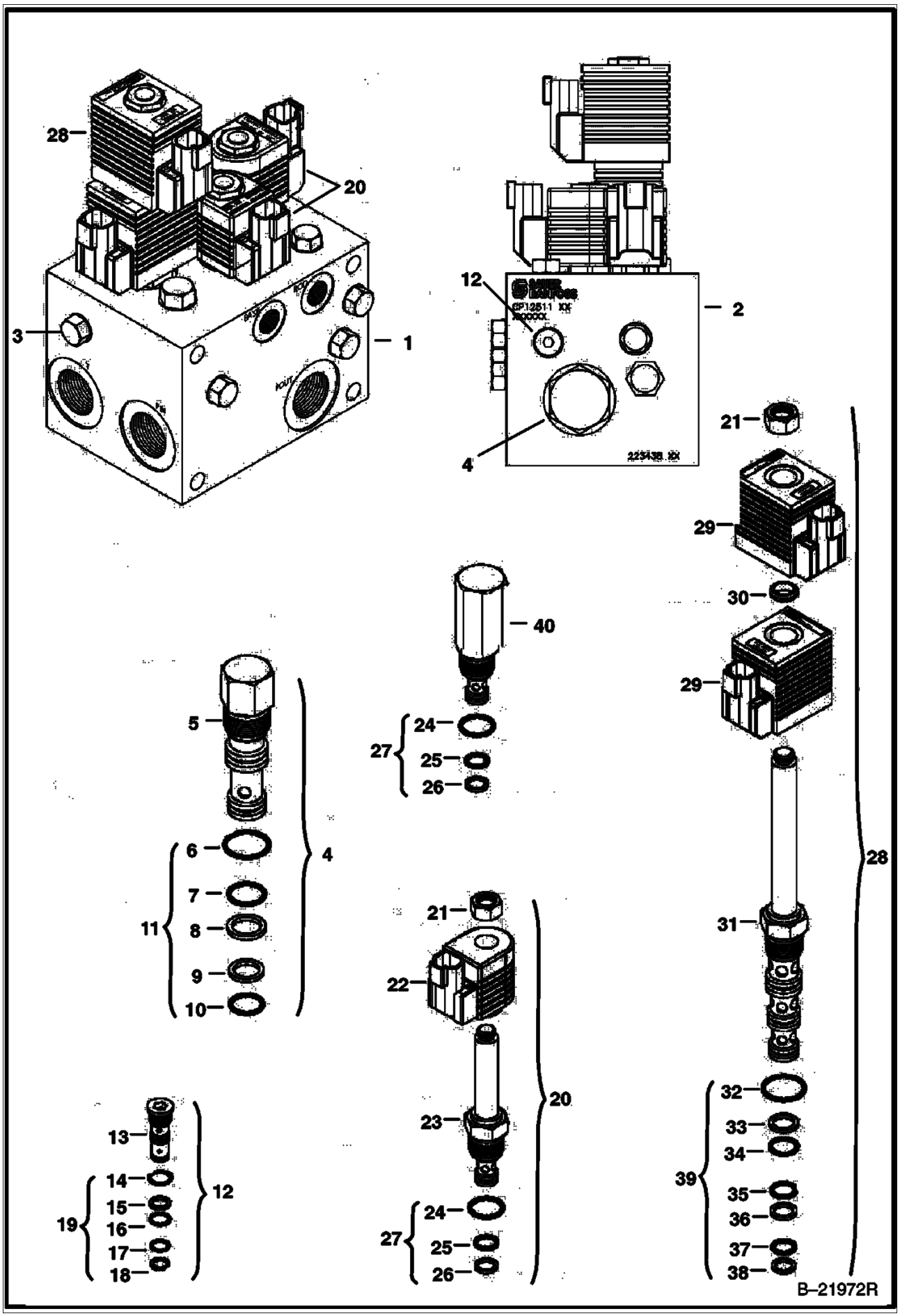

Ref No	Part Number	Description	Remarks	Serial Number	Qty
1	6685624	CONTROL VALVE	CP12646		1
2		BLOCK	NSS		1
3		PLUG			x
4	6684044	VALVE	assy. - Ref. 5-10 - differential sensing		1
5		VALVE	NSS - Order Ref. 4		1
6	6684046	O-RING			1
7	6684048	O-RING			1
8	6684047	BACK-UP RING			1
9	6684050	BACK-UP RING			1
10	6684049	O-RING			1
11	6684045	SEAL KIT	Ref. 6-10		1
12	6684061	VALVE	shuttle - Ref. 13-18		1
13		VALVE	NSS - Order Ref. 12		1
14	6684063	O-RING			1
15	6684064	BACK-UP RING			1
16	6684065	O-RING			1
17	6684066	O-RING			1
18	6684067	BACK-UP RING			1
19	6684062	SEAL KIT	Ref. 14-18		1
20	6685061	VALVE	solenoid - Ref. 21-26		2
21	6684060	NUT			2
22	6684073	COIL	12 volt		2
23		VALVE	NSS - Order Ref. 20		2
24	6684070	O-RING			2
25	6684071	O-RING			2
26	6684072	BACK-UP RING			2
27	6684069	SEAL KIT	Ref. 24-26		2
28	6688933	VALVE ASSY	solenoid - Ref. 21, 29 & 30		1
29	6688934	COIL			2
30	6684059	SPACER			1
31		VALVE	NSS - Order Ref. 28		1
32	6681489	O-RING			1
33	6684053	BACK-UP RING			1
34	6684054	O-RING			1
35	6684056	O-RING			1
36	6684055	BACK-UP RING			1
37	6681487	O-RING			1
38	6684057	BACK-UP RING			1
39	6684052	SEAL KIT	Ref. 32-38		1
40	6685328	RELIEF VALVE	W/Ref. 24-26		1

REAR DOOR LOCK

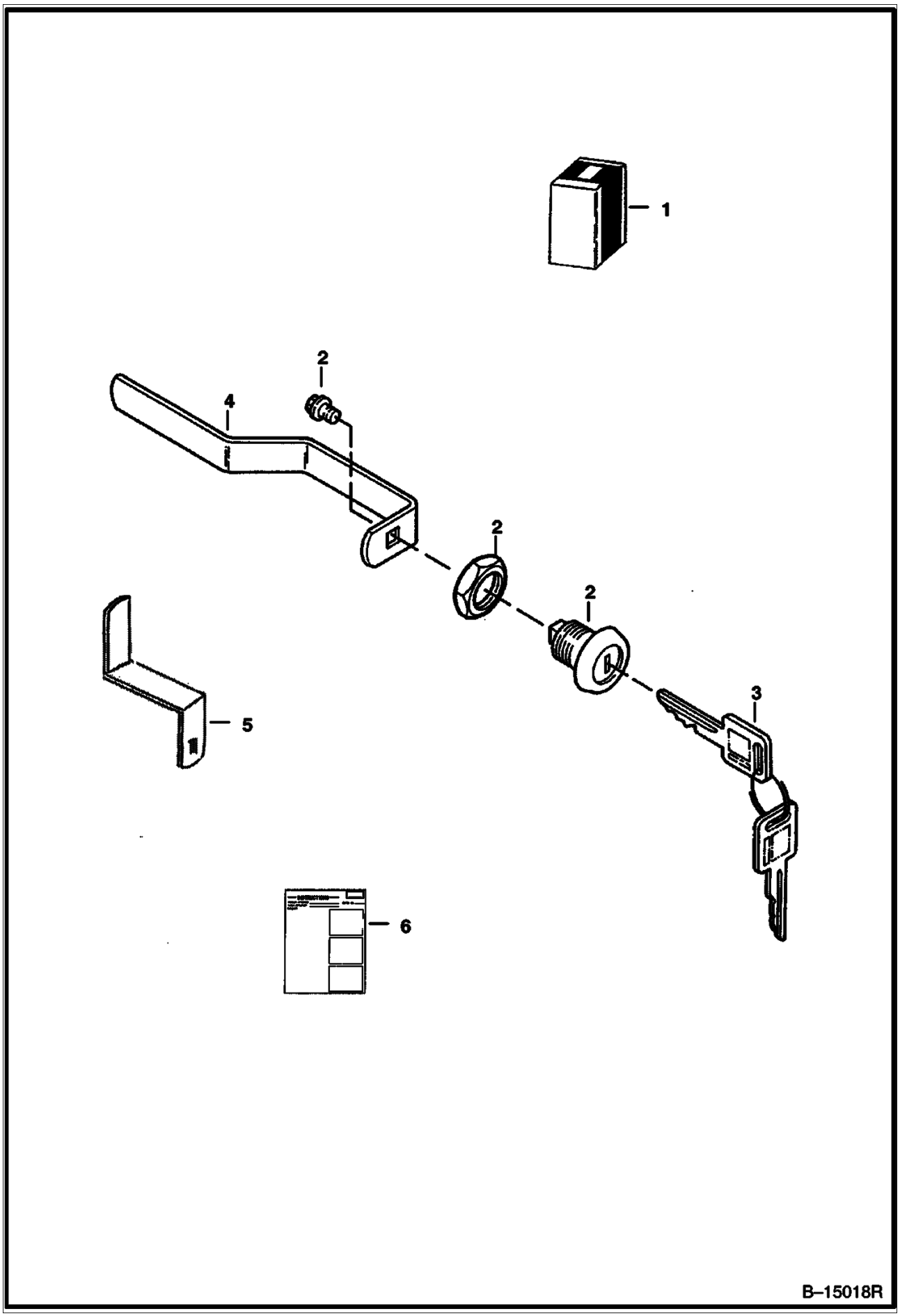

Ref No	Part Number	Description	Remarks	Serial Number	Qty
1	6732001	KIT	lock - Ref. 2 - 6		1
2	6670726	LOCK			1
3	6709527	KEY	ignition		1
4	6714037	LATCH	Use W/6711524 Rear Door		1
5	6729688	LATCH	Use W/6729991 Rear Door		1
6	6901656	INSTRUCTIONS			1

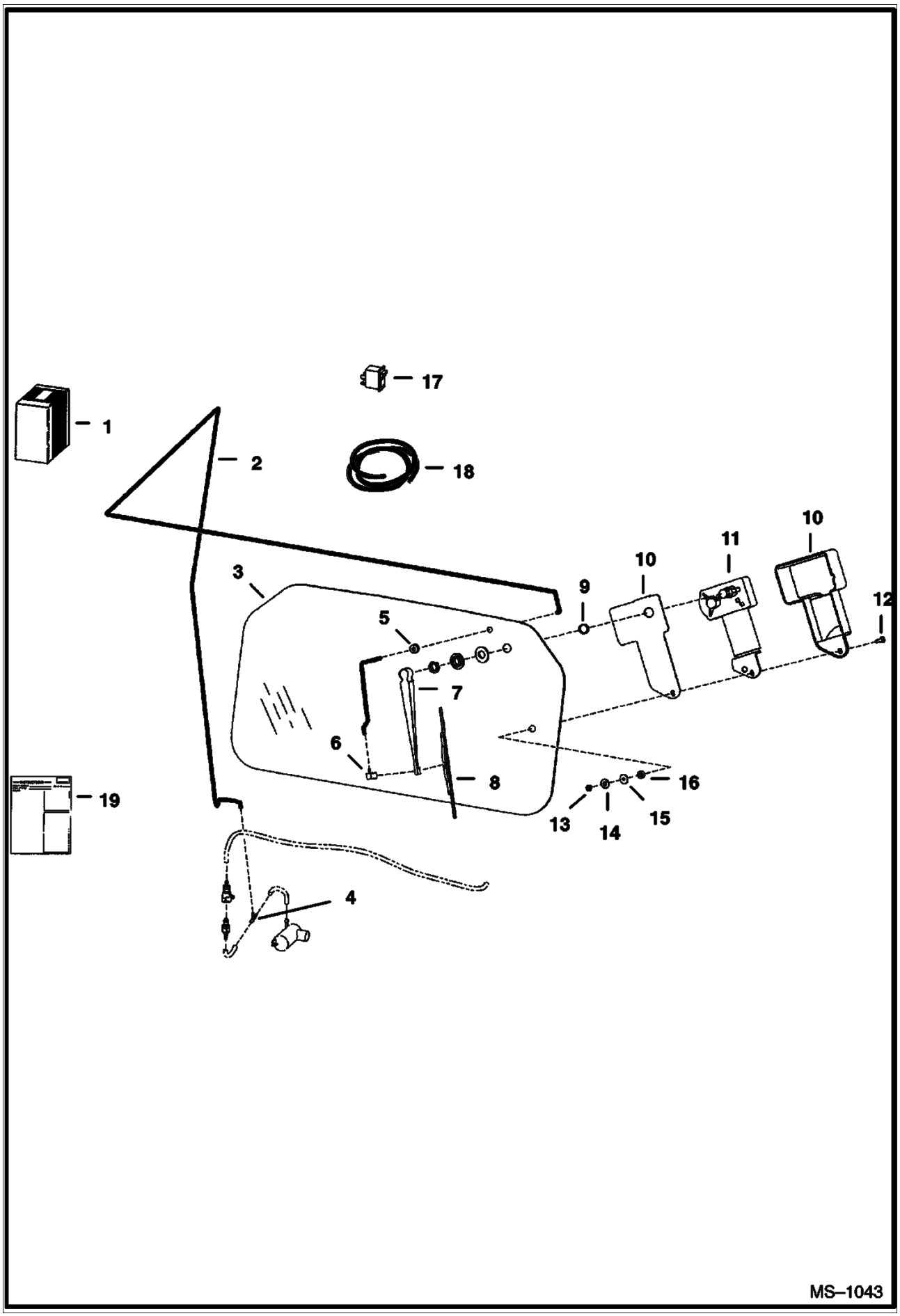
17
1
2
18
10
11
10
3
9
12
5
7
6
8
16
13
14
15
19
4
MS–1043

Ref No	Part Number	Description	Remarks	Serial Number	Qty
1	6726655	KIT	rear wiper		1
2		HOSE	NAP - 96"(2438,4 mm) long - Order Ref. 18		1
3	6719317	WINDOW			1
4	6676000	TEE			1
5	6557493	GROMMET			1
6	6676028	NOZZLE			1
7	6676001	ARM			1
8	6676002	BLADE			1
9	6667201	SPACER	nylon		1
10	6664097	COVER	wiper		1
11	6665602	MOTOR			1
12	6664566	BOLT			1
13	6664103	NUT			1
14	6664065	WASHER	nylon		1
15	6801059	WASHER	neoprene		1
16	6664085	BUSHING	nylon		1
17	6675999	SWITCH			1
18	6676003	HOSE	bulk - Sold Per Foot		x
19	6901061	INSTRUCTIONS			1

SEAL ENCLOSURE KIT

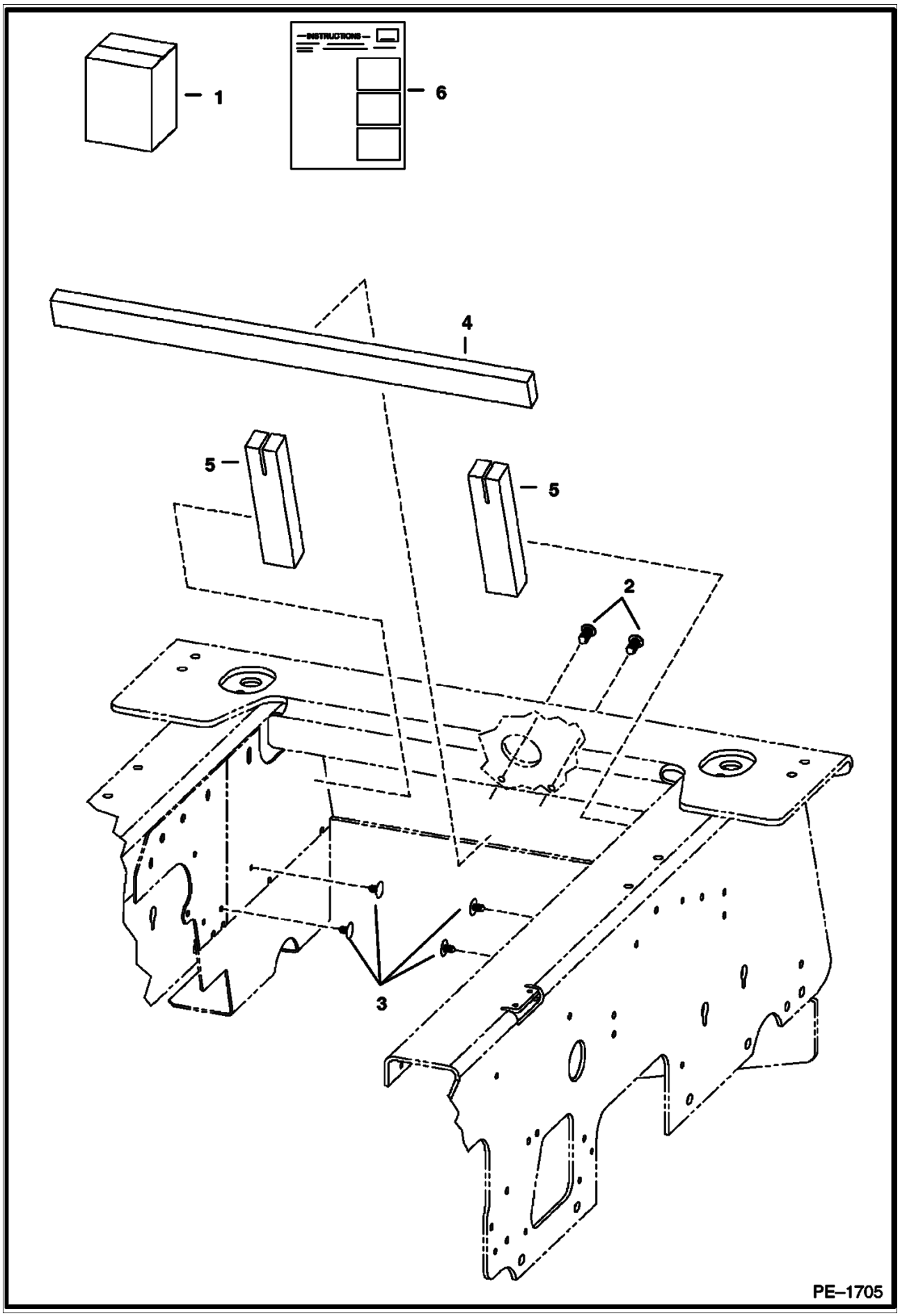

SEAL ENCLOSURE KIT (Cont'd)

Ref No	Part Number	Description	Remarks	Serial Number	Qty
1	6732718	KIT	enclosure		1
2	6669308	RETAINER			2
3	6674895	RETAINER			4
4	6731108	SEAL	retainer		1
5	6732619	SEAL	panel		2
6	6901774	INSTRUCTIONS			1

SEAT BELT
(Three Point Retractable)

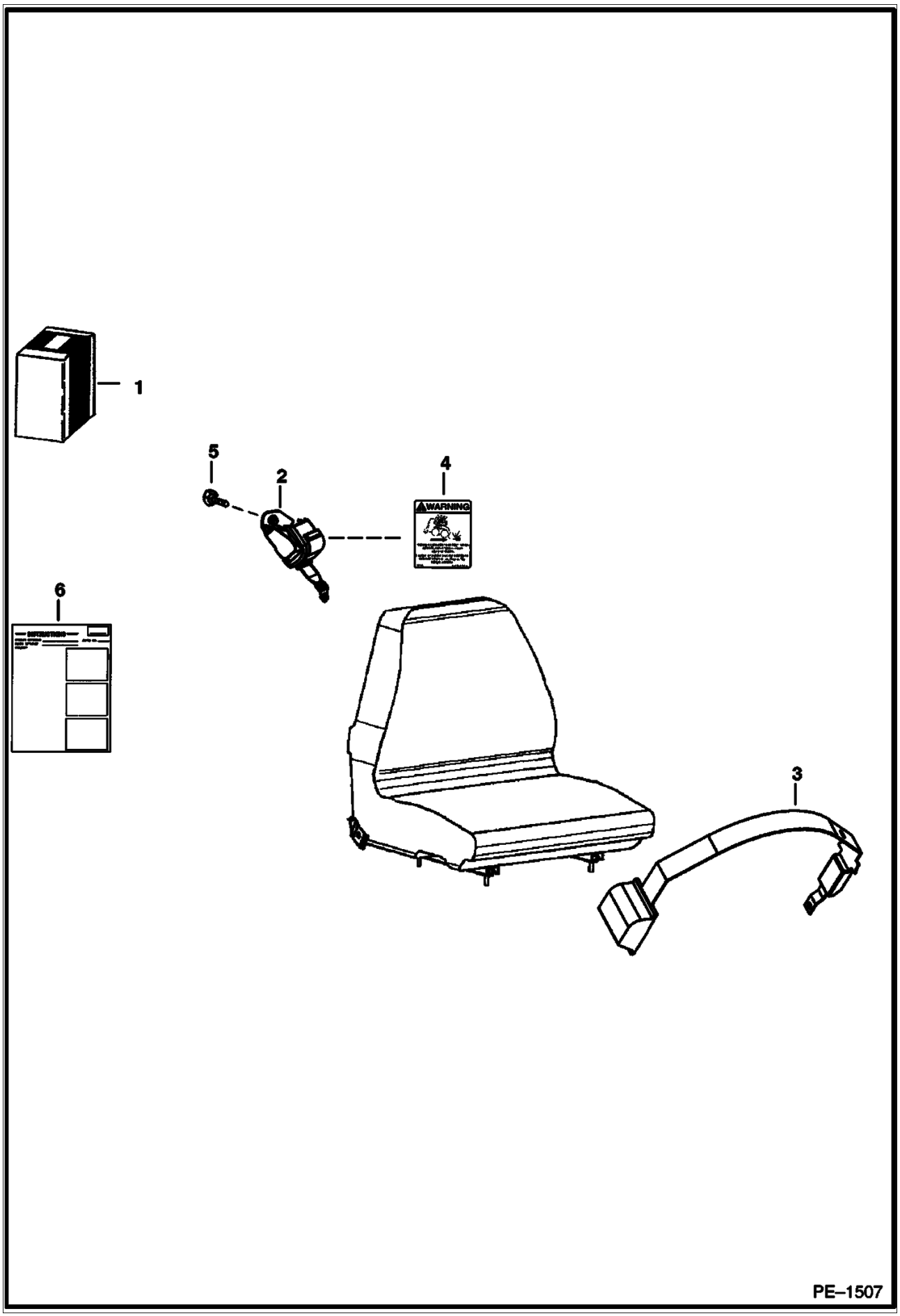

SEAT BELT (Cont'd)
(Three Point Retractable)

Ref No	Part Number	Description	Remarks	Serial Number	Qty
1	6732219	KIT	three point retractable seat belt - Use with Sears brand Suspension Seats with a L.H. recliner lever		1
2	6674407	SHOULDER BELT			1
3	6679308	SEAT BELT			1
4	6725370	DECAL			1
5	35C000612B	BOLT			1
6	6901010	INSTRUCTIONS			1

SEAT BELT
(3" Wide Retractable)

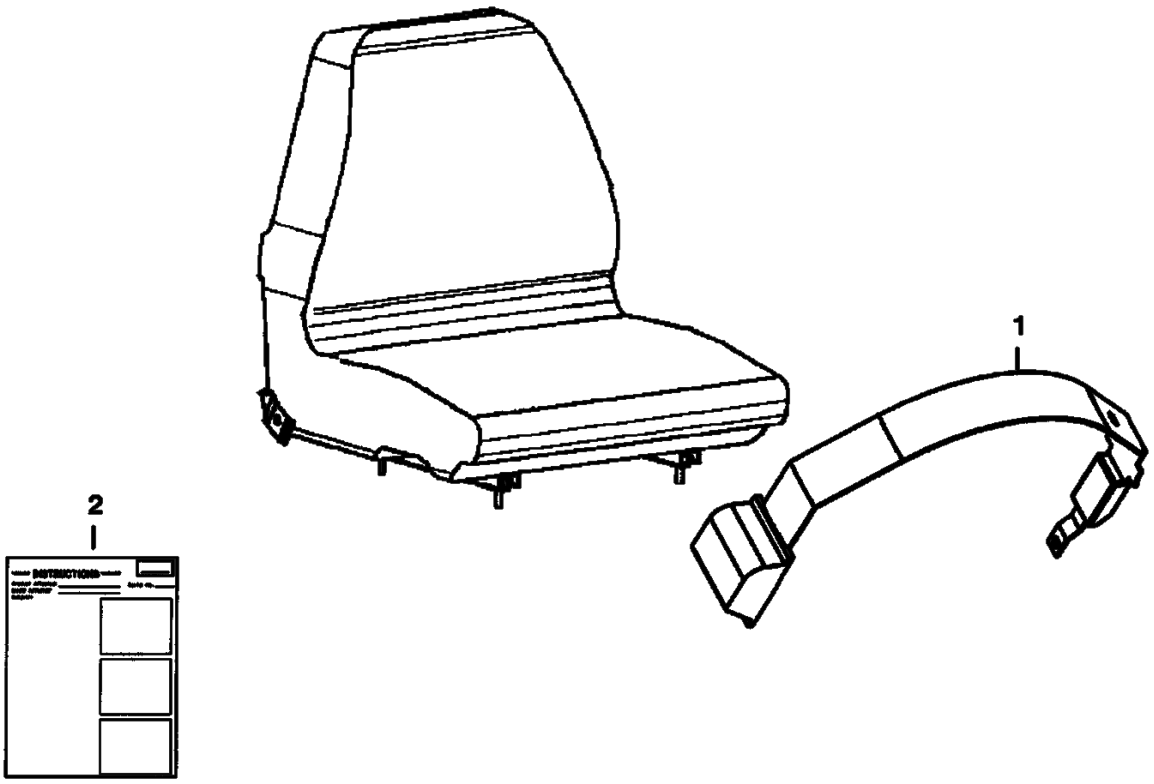

PE–1508

SEAT BELT (Cont'd)
(3" Wide Retractable)

Ref No	Part Number	Description	Remarks	Serial Number	Qty
1	6675562	SEAT BELT	3" wide retractable seat belt - Use with Sears brand Suspension Seats with a L.H. recliner lever		1
2	6901011	INSTRUCTIONS			1

SEAT BELT
(3" Wide)

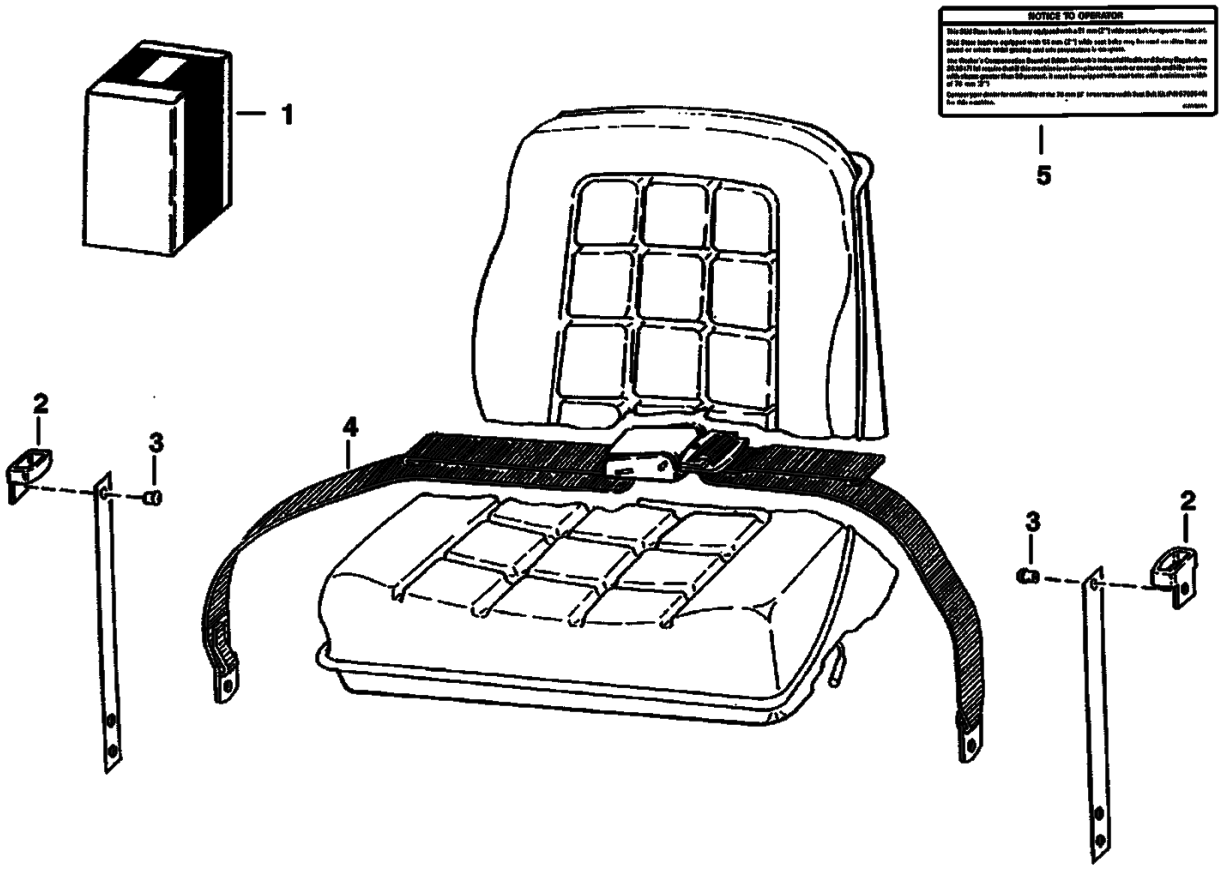

NOTE: Complies with British Columbia Industrial Health and Safety Regulations 26.16 (7) (a).

B–13601

SEAT BELT (Cont'd)
(3" Wide)

Ref No	Part Number	Description	Remarks	Serial Number	Qty
1	6703640	KIT	W/Ref. 2-5		1
2	6703703	GUIDE			2
3	6512797	RIVET			4
4	6659999	BELT			1
5	6703641	DECAL			1

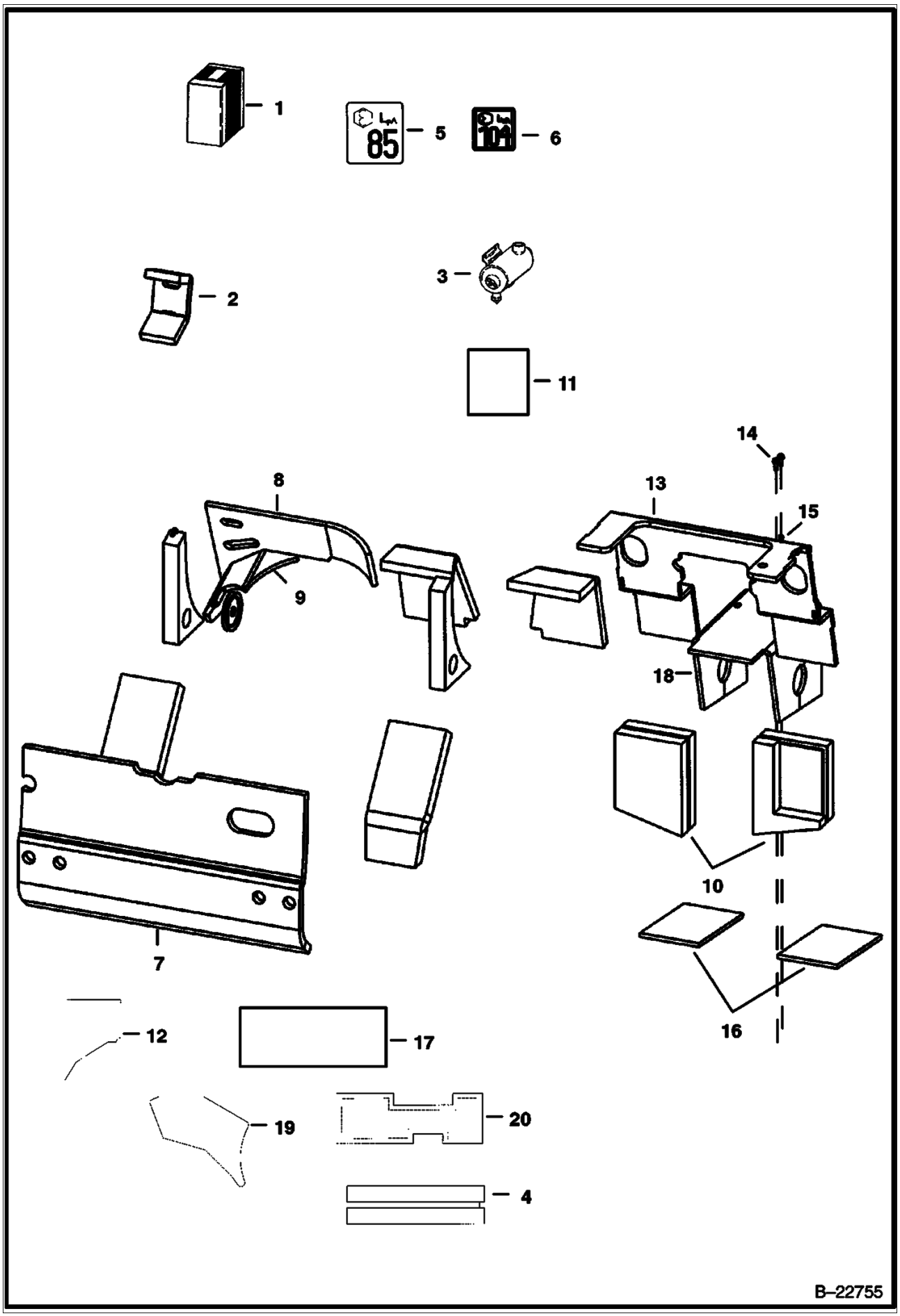
1
85
5
104
6
2
3
11
14
8
13
15
9
18
10
7
12
17
19
20
4
B–22755

Ref No	Part Number	Description	Remarks	Serial Number	Qty
1	7100110	KIT			1
2	6703331	INSULATION	air inlet		1
3	6735285	AIR CLEANER			1
4	6719328	INSULATION	fender - R.H.		1
5	6579385	DECAL	noise level		1
6	6731994	DECAL	noise level		1
7	6715106	INSULATION	rear door		1
8	6719332	INSULATION	blower housing		1
9	6704769	INSULATION	blower housing		1
10	6703968	INSULATION	transmission		2
11	6732724	INSULATION	cross member		1
12	6719333	INSULATION	blower housing		1
13	6719372	INSULATION	steering panel		1
14	84G003716B	BOLT			2
15	6562619	BUSHING			2
16	6719330	INSULATION	pedal		2
17	6725361	INSULATION	cross member		1
18	6719331	INSULATION	transmission top		1
19	6719334	INSULATION	blower housing		1
20	6719327	INSULATION	fender - L.H.		1

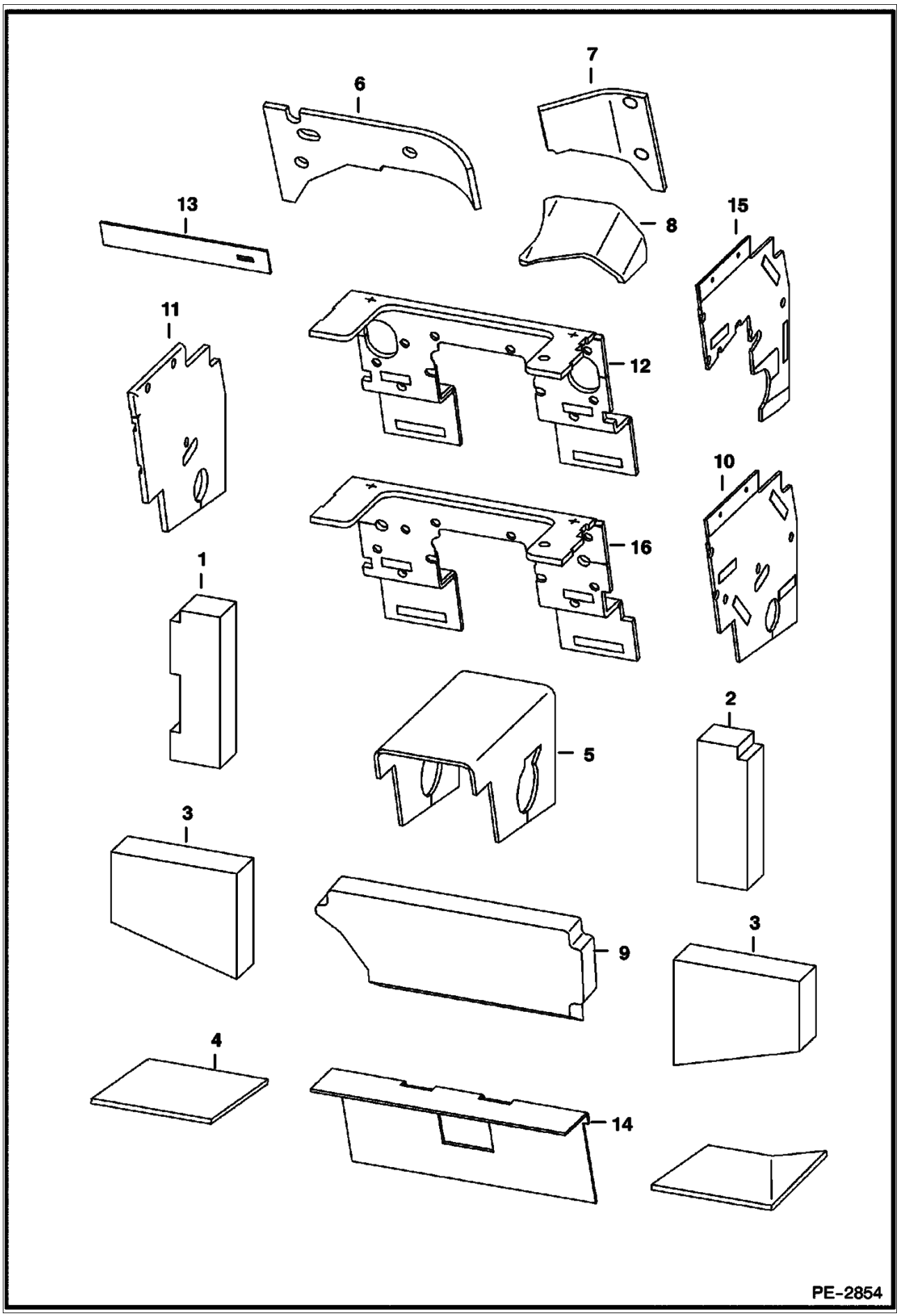
7
6
13
8
15
11
12
10
16
1
5
2
3
9
3
4
14
PE-2854

Ref No	Part Number	Description	Remarks	Serial Number	Qty
1	6719327	INSULATION			1
2	6719328	INSULATION			1
3	6703968	INSULATION	side transmission		2
4	6719330	INSULATION			1
5	7101527	INSULATION	transmission		1
6	6719332	INSULATION			1
7	6719333	INSULATION			1
8	6719334	INSULATION			1
9	6727299	INSULATION			1
10	7101530	INSULATION	left panel		1
11	7101531	INSULATION	right panel		1
12	7101529	INSULATION	Steering column		1
13	6719389	INSULATION			1
14	7101543	INSULATION	crossmember		1
15	7109125	INSULATION	right panel -SJC		1
16	7101528	INSULATION	right panel -SJC		1

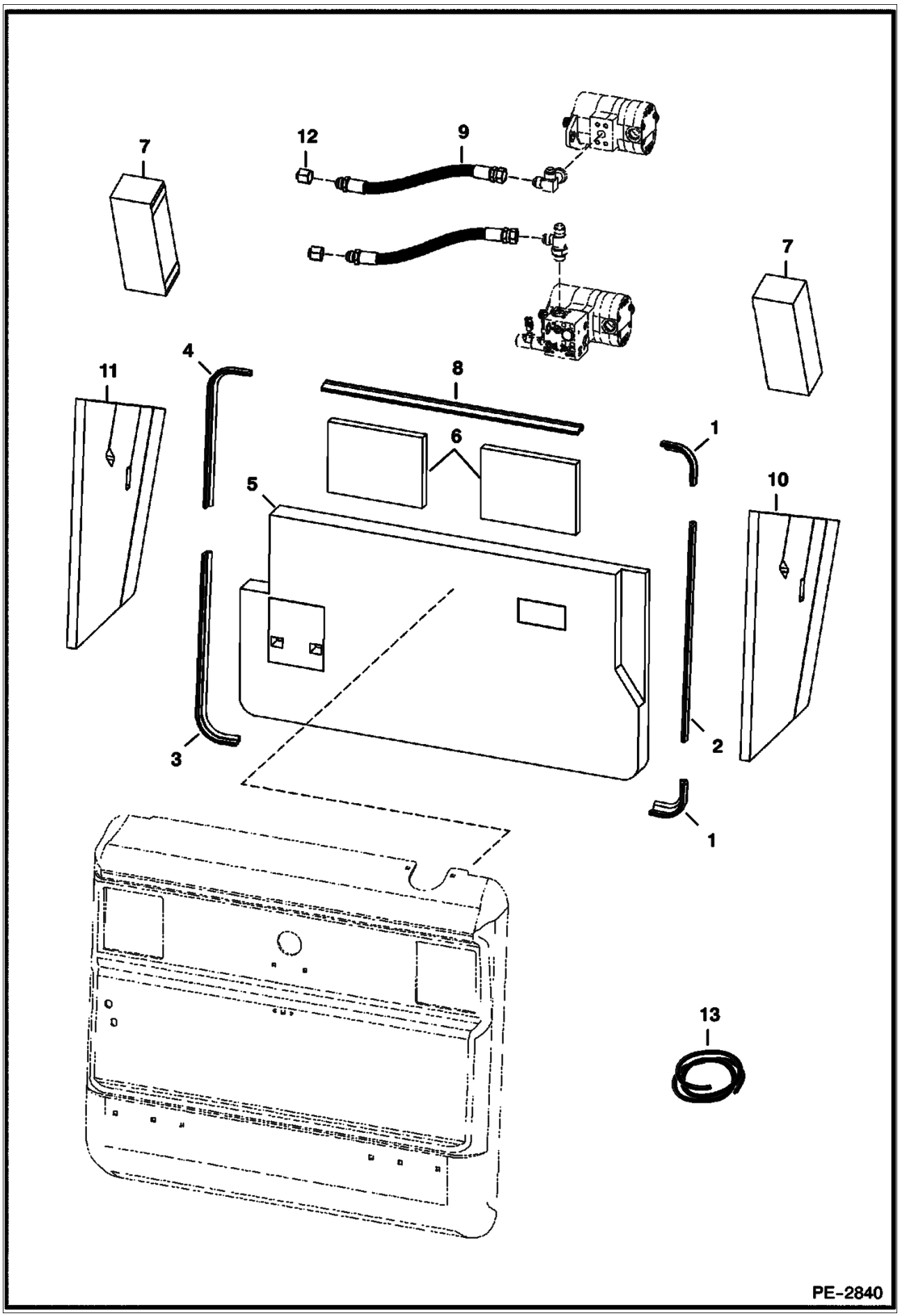
7
12
9
7
11
4
8
1
6
10
5
2
3
1
13
PE-2840

SOUND OPTION (Cont'd)
(Bystander)

Ref No	Part Number	Description	Remarks	Serial Number	Qty
1		SEAL	NAP - 6.50" (165,1 mm) long - Order Ref. 13		2
2		SEAL	NAP - 21.25" (546,1 mm) long - Order Ref. 13		1
3		SEAL	NAP - 22.10" (561,3 mm) long - Order Ref. 13		1
4		SEAL	NAP - 17.60" (447,04 mm) long - Order Ref. 13		1
5	7109317	INSULATOR	tailgate		1
6	7109318	INSULATOR	upper tailgate		2
7	7110410	INSULATION	upright		2
8		SEAL	NAP - 27.25" (692,15 mm) long - Order Ref. 13		1
9	7112651	HOSE			1
10	7116699	INSULATION	upright		1
11	7116700	INSULATION	upright		1
12	36K8	FITTING			1
13	7108716	SEAL	bulk - sold per foot		x

SOUND REDUCTION HARDHAT

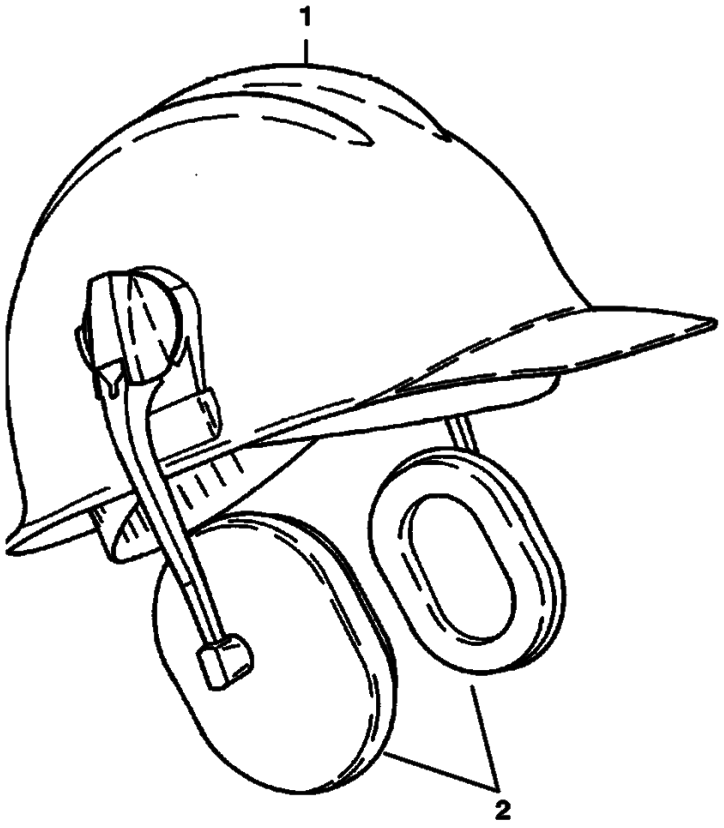

B–3111

Ref No	Part Number	Description	Remarks	Serial Number	Qty
1	6559552	HARDHAT			1
2	6559775	EARMUFFS			1

STROBE LIGHT

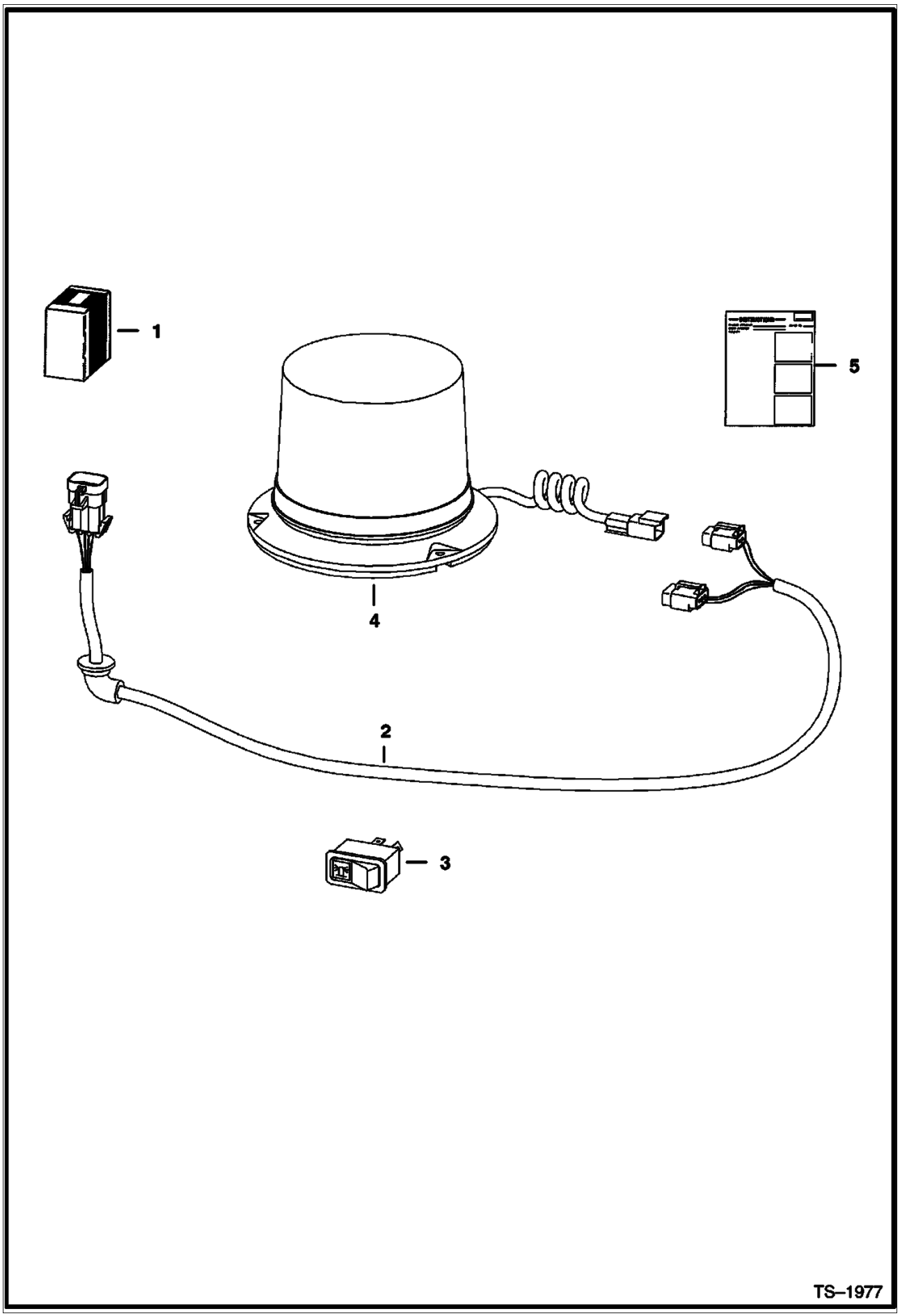

Ref No	Part Number	Description	Remarks	Serial Number	Qty
1	6719857	KIT	strobe light - If loader is not equipped W/ heater, air conditioning, selectable joystick controls, advanced control system, power bob-tach, rotating beacon and/or non-power port plug-in 4 way flashers, also order 7116260 deluxe harness		1
2	6718872	HARNESS			1
3	6668816	SWITCH	vertical		1
4	6675522	STROBE			1
4	6675858	FLASH TUBES			1
5	6900992	INSTRUCTIONS			1

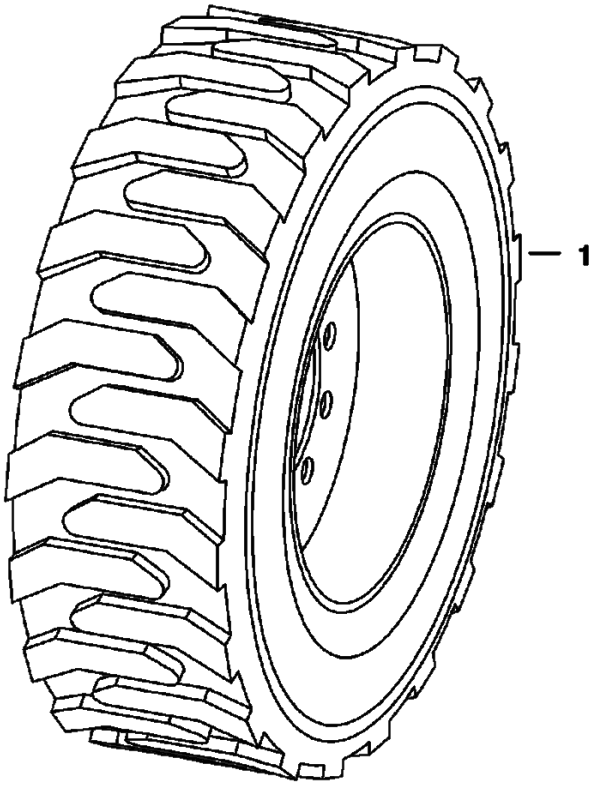

MS-2192

Ref No	Part Number	Description	Remarks	Serial Number	Qty
1	6903766	31X6X10 SOLID FLEX TIRE AND WHEEL (LEFT)			2
2	6903767	31X6X10 SOLID FLEX TIRE AND WHEEL (RIGHT)			2

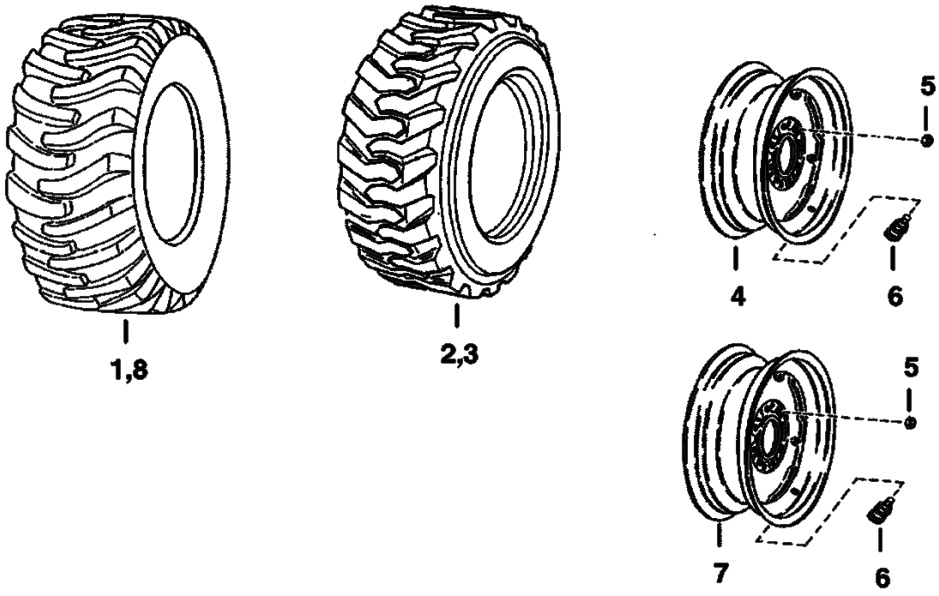

B–17101R

Ref No	Part Number	Description	Remarks	Serial Number	Qty
1	6550826	TIRE	10.00-16.5, 6 Ply Rating - General		4
2	6730106	TIRE	10.00 - 16.5 - 10 ply - Bobcat - severe duty		4
3	6729896	TIRE	Bobcat Brand - 10.00 - 16.5, 8ply - standard duty		4
3	6729900	TIRE	Bobcat Brand - 10.00 - 16.5, 10 ply - heavy duty		4
4	6730771	RIM	See BTI197 Used W/Ref. 1, 2 & 3		4
4	6730772	RIM	Used W/Ref. 8		4
5	6564669	NUT	wheel		32
6	1614765B	STEM	tubeless tire		4
7	6730775	RIM	inverted - Use W/Ref. 3 - For 60" width		4
8	7105756	TIRE	31.5 - 13 x 16.5 - 10 ply Bobcat Brand - Super Float		4

BULK ITEMS
(SEE NOTE)

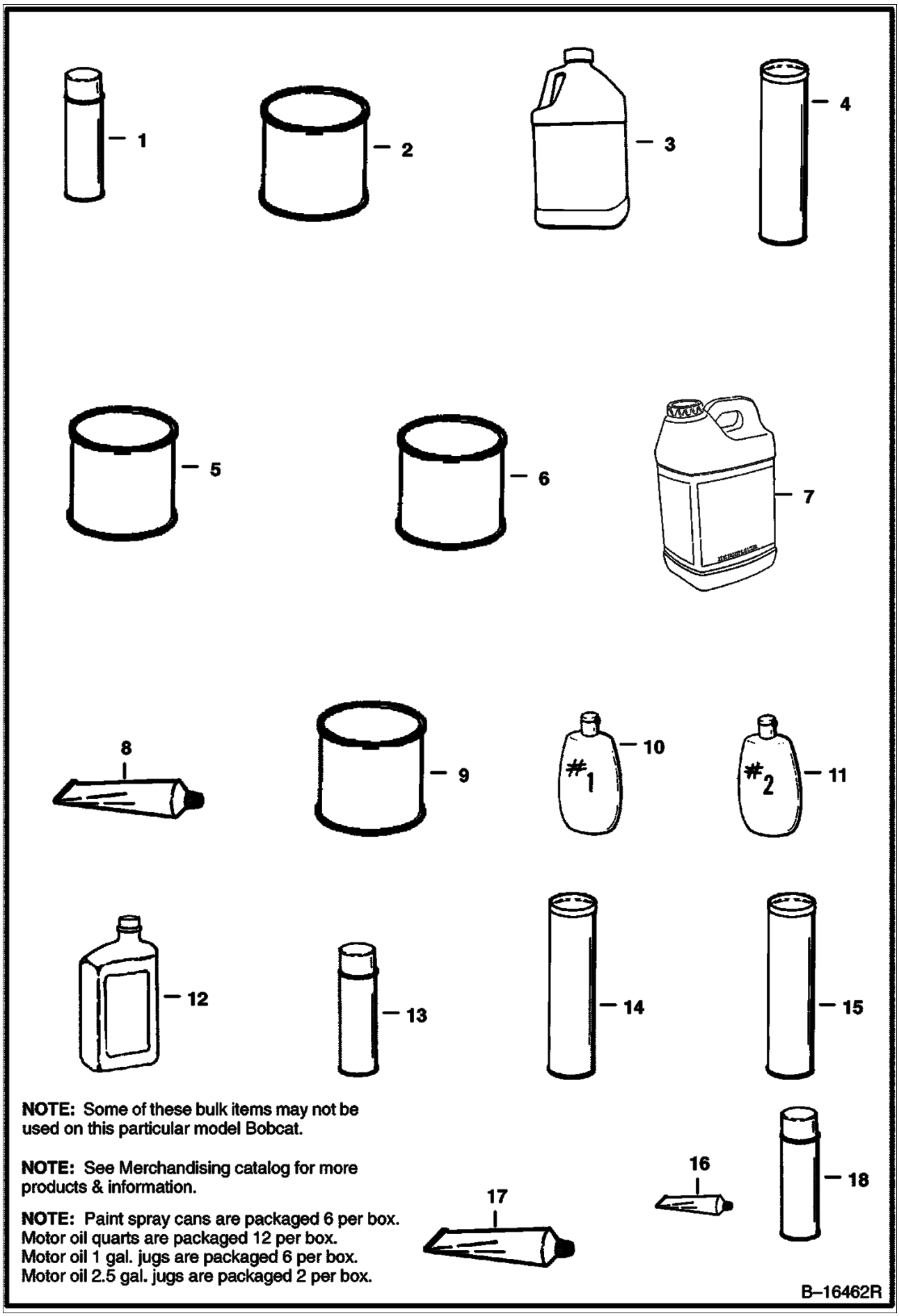

NOTE: Some of these bulk items may not be used on this particular model Bobcat.

NOTE: See Merchandising catalog for more products & information.

NOTE: Paint spray cans are packaged 6 per box.
Motor oil quarts are packaged 12 per box.
Motor oil 1 gal. jugs are packaged 6 per box.
Motor oil 2.5 gal. jugs are packaged 2 per box.

BULK ITEMS (Cont'd)
(SEE NOTE)

Ref No	Part Number	Description	Remarks	Serial Number	Qty
1	6902228	PAINT	orange - Spray Can - SEE NOTE		x
1	6902229	PAINT	charcoal - Spray Can-SEE NOTE		x
1	6902230	PAINT	white - Spray Can - SEE NOTE		x
2	6902233	PAINT	orange - Qt.		x
2	6902234	PAINT	charcoal - Qt.		x
2	6902235	PAINT	white - Qt.		x
3	6724094	ANTI-FREEEZE	Gal. - Premixed PG		x
3	6724354	ANTI-FREEZE	Gal. - PG concentrate		x
4	6633583	SEALANT	chaincase covers, oil cooler grill		x
5		REDUCER	NAP - Gal.		x
6		PRIMER	NAP - Gal.		X
6	6902232	PRIMER	spray can (16 oz)		x
7	6903117	HYD FLUID 2.5 GAL. 2			x
7	6903118	HYD. FLUID 5GAL			x
7	6903119	HYD. FLUID 55GAL			x
8	6599360	SEALANT	electrical - 3 oz. tube		x
9	6903121	GEAR LUBE 12			x
10	6630188	POLISH	window - #1 (8 oz.)		x
10		POLISH	NAP - window-1 (64 oz.) -Order 6630188 Polish		x
11	6630189	POLISH	window - #2 (8 oz.) - scratch remover		x
11		POLISH	NAP - window-2 (64 oz.) - scratch remover - Order 6630189 Polish		x
12	6903109	OIL 30W QT. 12	30W - 1 Qt. - SEE NOTE		x
12	6903110	OIL 30W GAL. 6			x
12	6903111	OIL 30W 2.5 GAL 2			x
12	6903107	OIL 10W30 QT. 12			x
12	6903108	OIL 10W30 GAL. 6			x
12	6903113	OIL 15W40 2.5 GAL. 2			x
12	6903105	OIL 15W40 QT. 12			x
12	6903106	OIL 15W40 GAL. 6			x
12	6903113	OIL 15W40 2.5 GAL. 2			x
13	6675380	ADHESIVE	insulation - spray can		x
14	6903122	GREASE 10			x
15	6599719	GREASE	14.5 oz. cartridge - For fan idler bearing & spring loaded drive idler		x
16	6650407	ADHESIVE	1 oz. tube		x
17	6650388	SEALANT	flange		x
18	6736644	PAINT	orange - .5 oz. spray can		x
18	6736641	PAINT	charcoal - .5 oz. spray can		x
18	6736642	PAINT	white - .5 oz. spray can		x
18	6736645	PAINT	red - .5 oz. spray can		x

Part No.	Description	Was	Code	Page
10C000410B	BOLT			252
10C000416B	BOLT			252
10C000512B	BOLT			224, 226
10C000616B	BOLT			20
10H000025B	GREASE ZERK			32
10H000035B	GREASE ZERK			34, 96
10J000005B	BALL			190
10J000013B	BALL			174
11H000015B	GREASE ZERK			32, 62
12D000006B	NUT			290
12D000008B	NUT			290
12D000010B	NUT			296
12H000015B	GREASE ZERK			32
12H000025B	GREASE ZERK			344
1304227B	PIN			170
1306637B	PIN			64
1313995B	STUD			32
1318565B	PIN			280
1320075	COTTER PIN			332
13K000008B	TEE			294
14J005032B	PIN			34
1522534B	PISTON SEAL			62
15JM00410B	KEY			178
15KB00404B	ADAPTER			344
15KB00606B	ADAPTER			58, 84, 88
15KB00612B	ADAPTER			350
15KB00810B	CONNECTOR			54, 234
15KB01010B	ADAPTER			48, 52, 94
15KB01012B	ADAPTER			88, 94
15KB01212B	ADAPTER			94, 350
15KB01216B	ADAPTER			58
15KB606	ADAPTER			94
15KB612	ADAPTER			94
1612281B	NUT			260
1614765B	STEM			378
16F000002B	PLUG			178
17C000410B	BOLT			226, 290, 328, 330
17C000412B	BOLT			45, 46, 140
17C000420B	BOLT			268
17C000432B	BOLT			56
17C000508B	BOLT			290
17C000512B	BOLT			238, 244, 264, 290
17C000514B	BOLT			146, 220
17C000516B	BOLT			268, 286
17C000520B	BOLT			268
17C000532B	BOLT			280
17C000540B	BOLT			138, 334, 336, 338
17C000608B	BOLT			146, 220
17C000610B	BOLT			36, 162
17C000612B	BOLT			16, 64, 90, 92, 94, 96, 160, 240, 244, 280
17C000614B	BOLT			76
17C000616B	BOLT			64, 84, 88, 144, 146, 298
17C000620B	BOLT			64, 86, 90, 94, 96, 162
17C000624B	BOLT			64, 244

Code for disposition of old part number

A -- Use up
B -- Use on other application (See PNI)
C -- File PDR Report with Bobcat Parts Sales
D -- Part Number Error

Part No.	Description	Was	Code	Page
17C000628B	BOLT			48, 52, 92, 96, 244
17C000632B	BOLT			48, 52, 332
17C000640B	BOLT			20, 32, 258, 260, 334, 338
17C000644B	BOLT			84
17C000648B	BOLT			32
17C000656B	BOLT			32, 336, 338
17C000660B	BOLT			32, 34
17C000680B	BOLT			96, 350
17C000716B	BOLT			16, 168
17C000820B	BOLT			30
17C000828B	BOLT			162, 166
17C000844B	BOLT			48, 52
17C001016B	BOLT			32
17C001056B	BOLT			14
17C001072B	BOLT			32
17C006116B	BOLT			158
17C620	BOLT			158
17KB001212B	ELBOW			88
17KB00606B	ELBOW			55, 56, 68, 84, 86, 90, 94, 350
17KB00808B	ELBOW			90
17KB00810B	ELBOW			54, 234
17KB01010B	ELBOW			53, 54, 76, 78, 234
17KB01212B	ELBOW			92, 350
18C001636B	BOLT			42
18EM01224B	WASHER			238, 244
18KB00404B	ELBOW			344
18KB00606B	ELBOW			344
18KB01010B	ELBOW			76
19J000012B	CLAMP			86, 90
19KB01210B	TEE			76, 78
1CM00635B	SCREW			322, 326
1CM00640B	BOLT			238, 244
1CM00820B	BOLT			96
1CM00825B	BOLT			138
1CM00835B	BOLT			174, 196
1CM00870B	BOLT			138, 174
1CM00875B	BOLT			196
1CM00890B	BOLT			166
1CM08100B	BOLT			166
21G000804B	BOLT			304
21KB00606B	TEE			86, 90, 302
21KB01212B	FITTING			344
225855B	SEAL			48, 52, 60
24K000005B	PLUG			86, 90
24K000007B	PLUG			66, 70
25E000010B	WASHER			136
25E000011B	WASHER			280
25E000013B	WASHER			46, 148, 152, 220, 226, 328, 330
25E000014B	WASHER			138, 252
25E000015B	WASHER			138, 268
25E000016B	WASHER			238, 244, 268
25E000017B	WASHER			146, 280
25E000018B	WASHER			168
25E000021B	WASHER			166

Code for disposition of old part number

A -- Use up
B -- Use on other application (See PNI)
C -- File PDR Report with Bobcat Parts Sales
D -- Part Number Error

Part No.	Description	Was	Code	Page
25E000025B	WASHER			280
25G000410B	BOLT			140
25G000612B	BOLT			272, 276
25GT00410B	BOLT			148
25GT00412B	SCREW			254
25K020016B	O-RING			66, 70
25K020100B	O-RING			144
25K030118B	O-RING			84, 88
25K030202B	O-RING			62
25K030508B	O-RING			40
27E000006B	WASHER			48, 52
27E000008B	WASHER			336, 338
27E000010B	WASHER			32
29CM00820B	BOLT			138, 166
29G000416B	SCREW			66, 70
29G000444B	BOLT			66, 70
2DM00008B	NUT			182
2EM00008B	WASHER			184
2F004051B	PIN			170
2GM01035B	BOLT			320, 322
30G000416B	BOLT			66
30H000021B	CLAMP			300
30H000022B	CLIP			36
30H000027B	CLIP			274
30H000035B	CLAMP			76, 78, 274
30H000042B	CLAMP			340
30H000046B	CLAMP			144
30H000050B	CLAMP			272, 318, 322
30H000060B	CLAMP			320
30H000062B	CLAMP			146, 220
30H000065B	CLIP			92
31C000410B	BOLT			296
31C000820B	BOLT			12, 48, 52
31C000824B	BOLT			280, 332, 336, 338
31C000828B	BOLT			12
31C000832B	BOLT			336, 338
31C000836B	BOLT			334, 336
31C001272B	BOLT			32
31H000027B	CLAMP			36
31H000038B	CLAMP			168
31H000046B	CLAMP			318, 322
31H000049B	CLAMP			344
31H38	CLAMP			170
35C000408B	BOLT			238
35C000410B	BOLT			224, 290, 306, 318
35C000412B	BOLT			20, 44, 300
35C000512B	BOLT			28, 276, 328, 330
35C000516B	BOLT			158, 318, 322
35C000536B	BOLT			54, 234, 290
35C000612B	BOLT			64, 360
35C000616B	BOLT	35C000624B	B	56, 160, 344
35C000616B	BOLT			56, 160, 344
35C000620B	BOLT			138, 162, 166, 320, 322
35C000624B	BOLT			320, 324

Code for disposition of old part number

A -- Use up
B -- Use on other application (See PNI)
C -- File PDR Report with Bobcat Parts Sales
D -- Part Number Error

Part No.	Description	Was	Code	Page
35C000636B	BOLT			350
35C001020B	BOLT			262
35C001032B	BOLT			40
36K000005B	CAP			66, 70, 84
36K000006B	CAP			166
36K000007B	CAP			48
36K000008B	CAP			294
36K8	FITTING			370
37C000412B	BOLT			300
37C000424B	BOLT			306, 318
37C000512B	BOLT			288, 306, 318, 340
37C000620B	BOLT			28, 64, 220
37C000632B	BOLT			260
37C000648B	BOLT			76, 78
37C000888B	BOLT			12
38C000610B	BOLT			168, 170
38C000820B	BOLT			162
38C000824B	BOLT			30
38C000840B	BOLT			29, 30
3974037B	PIN			178
3974095B	GASKET			172, 202
3974192B	BOLT			206
3974260B	BOLT			214
3974389B	GASKET			178
3974393B	PIN			178
3974394B	PIN			178
3974395B	PIN			174, 178
3974432B	CAP			184
3974433B	CAP			184
3974502B	GASKET			212
3974514B	SPRING			182
3974515B	RETAINER			182
3974518B	CAP			182
3974521B	BRACKET			182
3974524B	WASHER			182
3974546B	KEY			188, 192
3974547B	STOPPER			192
3974577B	O-RING			172, 188
3974618B	CIRCLIP			190
3974620B	CIRCLIP			190
3974626B	SHIM			212
3974671B	NUT			188
3974868B	PIN			178
3974882B	BRACKET			183, 184
3974893B	SEAT			174
3974894B	FLANGE			174
3974916B	STUD			198
3974920B	SCREW			182
3974928B	SCREW			180
3974971B	NUT			208
3974972B	GASKET			198, 208
3974991B	BEARING			194
3974996B	COVER			190
3975337B	COLLAR			188

Code for disposition of old part number

A -- Use up

B -- Use on other application (See PNI)

C -- File PDR Report with Bobcat Parts Sales

D -- Part Number Error

Part No.	Description	Was	Code	Page
3975441B	GEAR			178
40K000006B	PLUG			160
42H000010B	CLAMP			36
42H000032B	CLAMP			36
42HL00300B	CLAMP			160
42HL00325B	CLAMP			160
42HS00004B	CLAMP			36
43C000408B	BOLT			146, 152
43C000616B	BOLT			140, 144
43C000852B	BOLT			166, 278
43C820	BOLT			124
43DM00008B	NUT			138
44H000048B	CLAMP			318, 322
45C000616B	BOLT			170
45C000620B	BOLT			96
45G001006B	BOLT			296
45K000003B	FITTING			280
46D000005B	NUT			238, 244
47C000820B	BOLT			46
47K000008B	PLUG			102, 106
47K000010B	PLUG			84, 88
49C000628B	BOLT			96
4CM00020B	BOLT			208
4CM00616B	BOLT			212
4CM00620B	BOLT			174, 202
4CM00818B	BOLT			192
4CM00822B	BOLT			180, 198
4CM00825B	BOLT			188
4CM00828B	BOLT			188, 194
4D000020B	NUT			334, 336, 338
4DM00005B	NUT			288
4DM00006B	NUT			168
4DM00008B	NUT			156
4F006106B	PIN			20
51DM00012B	NUT			244
51DM12	NUT			238
5289686B	PLUG			18
53CM01240B	SCREW			166
53D000006B	NUT			14, 20, 64, 96
53D000010B	NUT			14
53DM00008B	NUT			166
53DM00010B	NUT			320, 322
54K020002B	O-RING			68, 72
54K020028B	O-RING			68, 70
54K030110B	O-RING			346
54K030210B	O-RING			60
54K040116B	O-RING			346
54K040208B	O-RING			62
54K040224B	O-RING			60
54K060212B	O-RING			60
55D000005B	NUT			290
55D000006B	NUT			244
55K000204B	O-RING			68, 70
55K000214B	O-RING			84, 88, 344

Code for disposition of old part number

A -- Use up
B -- Use on other application (See PNI)
C -- File PDR Report with Bobcat Parts Sales
D -- Part Number Error

Part No.	Description	Was	Code	Page
57D000005B	NUT			52, 224, 234
57D000006B	NUT			28, 64, 220, 260, 332
57D000008B	NUT			332
57D000010B	NUT			262
57G000608B	SCREW			306, 318
58K000013B	O-RING			68, 70
58K000016B	O-RING			68, 70
58K000017B	O-RING			66, 70
58K000022B	O-RING			68, 88, 92
58K000116B	O-RING			236
58K000127B	O-RING			66, 70
58K000132B	O-RING			346
58K22	O RING 10			72
59D000004B	NUT			168, 252, 300
59D000005B	NUT			14, 138, 140, 240, 244, 268, 306, 318
59D000006B	NUT			30, 48, 52, 86, 90
59D000008B	NUT			14, 48, 52, 58, 336, 338
59D4	NUT 5			306
5CM00812B	BOLT			182
5CM01080B	SCREW			320, 322
5HM00013B	CLAMP			38
5HM00014B	CLAMP			36, 158
5HM00020B	CLAMP			316, 320
5HM00024B	CLAMP			36, 84, 88, 158
5HM00027B	CLAMP			78
5HM00035B	CLAMP			92
5HM00042B	CLAMP			84, 88, 92, 160
5HM00058B	CLAMP			36
5JM00024B	CIRCLIP			190
614142B	SLEEVE			300
616783	WASHER			138
619021B	WASHER			14, 22, 34, 48, 52, 64, 86, 90, 170, 344, 350
61D000004B	NUT			268
61D000005B	NUT			30, 226, 238, 244, 264
61D000006B	NUT			12, 76, 78, 84, 88, 92, 160, 162, 239, 240, 258, 260
61D000008B	NUT			92
62D000004B	NUT			170
62D000006B	NUT			96, 280
63D000006B	NUT			96
63D000008B	NUT			334, 336
6510171	LINK			40
6510470	RING GEAR			162
6511855	SEAL			158
6512026	BUSHING			64
6512797	RIVET			364
6513152	SEAL			238, 244
6513495	COTTER PIN			64, 170
6513532	POPPET			100
6513533	SPRING			100
6513707	JOINT			212
6515131	TERMINAL			300
6515817	WASHER			14
6516229	PISTON SEAL			60
6517516	LIGHT			300

Code for disposition of old part number

A -- Use up

B -- Use on other application (See PNI)

C -- File PDR Report with Bobcat Parts Sales

D -- Part Number Error

Part No.	Description	Was	Code	Page
6518200	GREASE ZERK			96
6519178	BUMPER			20
6519925	BEARING			42
6531270	SLEEVE			66
6532127	BOOT			26, 148
6532347	SPACER			32
6532453	RING			346
6533898	DECAL			332
6542521	HOSE			84, 88
6542731	SAFETY TREAD			238, 244
654299B	BEARING			102, 106
6544654	BUSHING			64
6550826	TIRE			377, 378
6552871	WASHER			42
6553411	BUSHING			36, 40, 46
6553709	WASHER			14, 48, 52, 58
6554100	TREAD			170, 264
6554149	CORD			18, 238, 246, 252
6555341	SAFETY TREAD			344
6555351	SEAL			252
6557224	DECAL			266
6557291	BALL JOINT			168
6557493	GROMMET			356
6557831	WASHER			96, 320, 322
6557904	FLASHER			290, 300
6558309	WIRE ROPE			264
6558310	SLEEVE			264
6559479	NUT			170
6559552	HARDHAT			371, 372
6559775	EARMUFFS			372
6560573	DECAL			266
6560633	DAMPENER			14
6561383	DECAL			264
6562018	SPRING			34
6562602	BUSHING			14
6562619	BUSHING			218, 292, 366
6563445	HOSE			166
6563606	WASHER			42
6563914	WASHER			64, 96
6564343	SPACER			168, 170
6564452	GRIP			30, 168, 169, 170
6564657	PIN			63, 64, 220
6564669	NUT			42, 378
6565170	CABLE			138
6565200	DECAL			266
6565977	HOSE			316, 318
6565990	DECAL			266
6567743	PIN			14, 304
6567827	ANGLE			332
6567838	PIN			332
6567962	WASHER			168, 170
6569203	CLAMP			138, 268
6569219	SCREEN			36
6570931	INSTRUCTIONS			218

Code for disposition of old part number

A -- Use up
B -- Use on other application (See PNI)
C -- File PDR Report with Bobcat Parts Sales
D -- Part Number Error

Part No.	Description	Was	Code	Page
6571851	SNAP RING			44
6576033	WASHER			162
6576262	MOUNT			168, 170
6576280	BOLT			138, 268
6576302	BAR			64
6577058	PIN			96
6577204	SPROCKET			39, 40, 42
6577382	SPACER			158
6577545	GROMMET			224, 226, 328, 330
6577754	DECAL			266
6577821	HOSE			36
6577822	HOSE			36, 158
6577880	KIT			217, 218
6577954	PIN			32
6577961	GROMMET			26, 28, 64, 170
6578139	LEVER			231, 232
6578140	LEVER			232
6578169	HOSE			36
6578172	HOSE			36, 84, 88, 158
6578268	BELLCRANK			168
6578278	PAD			36
6578368	DECAL			266
6578689	HUB			42
6579127	CHAIN			40
6579385	DECAL			292, 366
6579404	DECAL			292
6579511	DECAL			266
6579528	DECAL			264
6579613	STOP			14, 158
658128B	SNAP RING			102, 106
6586542	HEAD			346
6586543	PISTON			346
6586918	SCREW			66
6587458	KEY			36
6587523	WASHER			66, 70
6587575	ADAPTER			66
6587580	SPRING			66, 71, 72
6587763	BOOT			66, 152
6589226	BONNET			66
6592098	WASHER			66
6592100	COLLAR			66, 72
6592105	BALL			66
6592107	SPRING			66
6592109	ADAPTER			66, 70
6592117	SPRING			66, 70
6592506	CLAMP			48, 52, 58, 86, 90, 350
6592507	PLATE			86, 90
6595663	BUSHING			66, 70
6596807	PLUG			66
6598098	PIN			208
6598099	KEY			190
6598102	VALVE			212
6598116	PLUG			184
6598146	PIPE			214

Code for disposition of old part number

A -- Use up

B -- Use on other application (See PNI)

C -- File PDR Report with Bobcat Parts Sales

D -- Part Number Error

Part No.	Description	Was	Code	Page
6598155	PULLEY			194
6598156	STUD			184
6598158	CIRCLIP			190
6598187	PLUG			178
6598275	BOLT			162
6598362	ELEMENT			2, 216
6598485	SEALANT			222
6598492	ELEMENT			2, 216
6599118	GASKET			212
6599136	CLIP			214
6599360	SEALANT			380
6599365	KIT			132
6599645	PLUG			40
6599719	GREASE			162, 380
6599741	WASHER			96
6599744	BALL JOINT			96, 280
6599931	ALARM			224, 226
6610510	TIE			18, 84, 88, 328, 330
6624289	STA STRAP			48, 52, 58, 76, 78, 138, 140, 144, 220, 272, 274, 276, 290, 316, 320, 322, 344
6630188	POLISH			380
6630189	POLISH			380
6630207	RIVET			26
6630945	WASHER			168, 170
6631046	SEAL			172, 186
6631418	PIN			14, 20, 304
6631561	NUT			236
6631643	PLATE			124
6631664	SEAL			188
6632218	BEARING			44
6632279	SEAL KIT			68, 72
6632541	RACE			44
6633583	SEALANT			158, 163, 164, 380
6634609	RACE			42
6640690	PIN			142, 148, 328
6640692	CONNECTOR			142, 148
6640694	LOCK			142, 148
6640699	CONNECTOR			148, 306, 318, 328
6640700	LOCK			148, 328
6640728	BOLT			200
6641174	CONNECTOR			306, 318
6641176	SEAL			142, 148, 328
6641179	CONNECTOR			142, 148, 236, 328
6641180	LOCK			142, 148, 236, 328
6643249	CONDUIT			48, 54
6645083	O-RING			102
6645086	PLUG			102, 106
6646582	PLUG			148
6646705	SEAL			158
6646781	SWITCH			224
6647777	PIN			236
6647778	CAP			236
6647780	PLUG			236
6647783	LOAD CHECK			236
6647784	PLUG			236

Code for disposition of old part number

A -- Use up

B -- Use on other application (See PNI)

C -- File PDR Report with Bobcat Parts Sales

D -- Part Number Error

Part No.	Description	Was	Code	Page
6647785	SPRING			236
6647786	SEAL KIT			236
6648293	SCREW			236
6648294	SPRING			236
6648307	CONNECTOR			320, 322
6648308	CONNECTOR			320, 322
6648312	TERMINAL			310
6648320	SEAL			310
6648348	PLUG			26, 28
6648944	BREATHER			7, 8
6649244	STUD			238, 244
6649245	RETAINER			238, 244
6649481	BULB			340
6649551	SHOCK			96
6649706	PIN			262
6649949	PLUG			18
6650107	SEAL			310
6650388	SEALANT			380
6650407	ADHESIVE			158, 380
6650627	PLATE			102, 106
6650629	PIN			102, 106
6650630	RETAINER			102, 106
6650634	GASKET			102, 106
6650635	BEARING			102, 106
6650636	PIN			102, 106
6650637	BOLT			102, 106
6650646	O-RING			102
6650647	O-RING			102
6650648	PLUG			102
6650652	POPPET			102
6650668	BOLT			102, 106
6650675	COUPLER			102
6651489	COVER			196
6651542	BALL			100
6651709	SEAL			34
6651934	BOLT			190
6652018	BOLT			106
6652574	PLUG			178
6652575	PLUG			178
6652580	BOLT			178, 194
6652633	BALL			188, 192
6652652	SPRING			174
6652653	PLUG			180
6652670	STUD			196, 212
6652682	BOLT			210
6652688	CLAMP			214
6652689	CLAMP			214
6652748	CLAMP			176
6652762	BOLT			194
6652764	STUD			200, 204, 208
6652792	NUT			184, 194, 196, 200
6652918	NUT			166, 278
6653798	BOLT			186
6653807	BOLT			174

Code for disposition of old part number

A -- Use up
B -- Use on other application (See PNI)
C -- File PDR Report with Bobcat Parts Sales
D -- Part Number Error

Part No.	Description	Was	Code	Page
6653808	BOLT			174
6653821	BOLT			188
6653830	SEAL			182
6653833	SPRING			182
6653859	SLEEVE			188
6653861	SLINGER			188
6653888	NUT			178
6653916	HOLDER			206
6653946	STUD			194
6654139	MOULDING			146, 166
6654374	KEY			36
6654718	CLAMP			214
6655154	GUIDE			184
6655155	SEAT			182
6655156	SEAT			182
6655158	BOLT			184
6655160	PLUG			184
6655161	WASHER			184
6655176	PUSHROD			192
6655179	PIN			188
6655180	CIR-CLIP			188
6655181	ROD			188
6655183	PIN			188
6655195	BOLT			178
6655210	SHIM			212
6655213	SLEEVE			190
6655214	CASE			190
6655215	BALL			190
6655216	FUEL PUMP			36, 212
6655223	NUT			208
6655236	PIN			188
6655237	PIN			188
6655243	BUSHING			188
6655498	BOLT			188
6655781	BEARING			162
6655870	ROCKER ARM			182
6655880	PIPE			180
6655893	STUD			198
6655938	VALVE			216
6657028	O-RING			102, 106
6657067	COVER			104, 106
6657068	COVER			102, 106
6657414	BOLT			210
6657415	BOLT			196
6657416	BOLT			200
6657422	O-RING			174, 176
6657663	PLUG			178
6657719	PLUG			18, 40, 252
6657734	PUMP			36
6658180	BREATHER			36
6658228	SEAL			42, 222
6658536	RING			162
6658672	SNAP RING			46
6658847	RING			162

Code for disposition of old part number

A -- Use up

B -- Use on other application (See PNI)

C -- File PDR Report with Bobcat Parts Sales

D -- Part Number Error

Part No.	Description	Was	Code	Page
6659999	BELT			364
6660260	SWITCH			94, 132
6660644	CAP			66
6660814	O-RING			102, 106
6660995	GREASE RING			162
6661022	FILTER			10, 84, 88, 129, 130
6661062	PLUG			160
6661114	CAP			36
6661117	TANK			280
6661150	SWITCH			290
6661213	RING			36
6661242	COVER			216
6661243	WING NUT			216
6661244	WASHER			216
6661248	ELEMENT			2, 8, 92, 132
6661353	LIGHT ASSY			340
6661405	OIL			164
6661481	O-RING			102
6661608	SEAL KIT			284
6661696	CAP			36
6661785	MOUNT			166
6661787	WASHER			166, 278
6661807	KIT			130
6661808	KIT			130
6662306	RING			42, 222
6662848	CAP			70
6662997	PULLEY			162
6664035	CAP			276
6664036	NUT			276
6664037	WASHER			276
6664040	PIN			276
6664065	WASHER			356
6664085	BUSHING			18, 242, 252, 356
6664097	COVER			356
6664103	NUT			356
6664209	SEAL			162
6664221	RETAINER			18
6664223	OUTLET			18
6664224	CAP			18
6664554	PUMP			238
6664566	BOLT			356
6664815	SEAL			40, 100
6665000	CLIP			148, 238, 244
6665017	CONNECTOR			310
6665018	LOCK			310
6665086	SEAL			62
6665314	PLUG			18, 136
6665316	SWITCH			300
6665321	RIVET			148, 238, 244
6665322	RIVET			148, 238, 244
6665367	BULB			18
6665371	SWITCH			138, 216
6665568	EXTRUSION			238, 246
6665569	WASHER			66, 70

Code for disposition of old part number

A -- Use up
B -- Use on other application (See PNI)
C -- File PDR Report with Bobcat Parts Sales
D -- Part Number Error

Part No.	Description	Was	Code	Page
6665570	RING			66, 70
6665602	MOTOR			356
6665701	BUSHING			64
6665707	SWITCH			238
6665727	LIGHT			290
6665728	LIGHT			290
6665729	LIGHT			290
6665839	BOLT			64
6665860	KIT			290
6665915	GAUGE			84, 88
6666338	WASHER			102, 106
6666341	VALVE			54, 234, 235, 236
6666542	SEAL			346
6666543	SEAL			60
6666568	BULB			288
6666571	BULB			228
6666766	GROMMET			238
6666782	GASKET			178
6666802	GASKET			172, 196
6666814	GASKET			188
6666932	BRAKE			280, 281, 282
6666933	CYLINDER			280, 283, 284
6667139	CAP			280
6667144	CONNECTOR			142, 148
6667145	LOCK			142
6667176	PLUG			236
6667201	SPACER			356
6667323	SEAL			346
6667325	SEAL			60
6667326	SEAL			62
6667352	FILTER FUEL			2, 6, 36
6667353	FILTER ASSY			36
6667418	PLUG			172, 178
6667419	WASHER			206
6667420	BOLT			186, 190
6667421	BOLT			184
6667422	WASHER			174, 182, 184, 194, 196, 200
6667428	TAPPET			191, 192
6667433	CIRCLIP			192
6667451	WASHER			182
6667457	CLAMP			214
6667461	PIN			182
6667533	COVER			76, 78
6667569	CONNECTOR			276
6667676	COVER			236
6667677	O-RING			236
6667680	SNAP RING			236
6667687	STEM			66, 70
6667803	COUPLER			302, 350
6667804	COUPLER			302, 350
6667844	VALVE ASSY			56, 73, 74
6667887	BULB			288
6668007	SCREW			288
6668010	LENS			288

Code for disposition of old part number

A -- Use up
B -- Use on other application (See PNI)
C -- File PDR Report with Bobcat Parts Sales
D -- Part Number Error

Part No.	Description	Was	Code	Page
6668079	PLUG			100
6668080	SHIM			100
6668089	PLUG			100
6668097	SCREW			284
6668104	MOUNT			278
6668114	BEARING			162
6668742	SWITCH			18
6668765	VALVE			66, 70
6668815	SWITCH			290, 300
6668816	SWITCH			228, 290, 374
6668820	NUT			68, 72
6668881	CORD			230
6669085	VALVE			74
6669087	SEAL KIT			74
6669091	CLIP			18, 306, 318
6669135	SEAT			16, 19, 20
6669154	BOLT			282
6669155	PLATE			282
6669156	SPACER			282
6669159	PISTON			282
6669162	NUT			282
6669163	PLUG			282
6669164	ADAPTER			282
6669165	SCREW			282
6669184	STATOR ASSY.			282
6669185	SEAL KIT			282
6669224	BOLT			18, 306, 318
6669308	RETAINER			358
6669402	HOUSING			102
6669405	END CAP			106
6669406	END PLATE			102
6669409	WASHER			102
6669411	BEARING			102, 106
6669452	O-RING			100
6669549	SOCKET			76, 78, 270, 274, 276
6669657	SEAL KIT			302, 350
6669732	SEAL KIT			68, 70, 72
6669734	SEAL KIT			66, 68, 70, 72
6670251	BATTERY			268
6670284	LIGHT ASSY			340
6670287	COVER			30
6670312	SOLENOID			290
6670472	NUT			214
6670533	NUT			208, 210
6670634	SEAL KIT			234, 236
6670682	BEARING			162
6670706	CONNECTOR			148
6670707	CONNECTOR			148
6670710	LOCK			148
6670711	LOCK			148
6670715	PIN			148
6670726	LOCK			354
6670769	O-RING			172, 214
6670785	PIPE			194

Code for disposition of old part number

A -- Use up
B -- Use on other application (See PNI)
C -- File PDR Report with Bobcat Parts Sales
D -- Part Number Error

Part No.	Description	Was	Code	Page
6670831	ELBOW			92
6671025	COIL			68, 70
6671027	LIGHT			288
6671106	HORN			290
6671512	BLOCK ASSY			103, 104, 106
6671516	SEAL KIT			104, 106
6671518	BOLT			102
6671520	O-RING			106, 124
6671527	NUT			234, 236
6672190	DRAINCOCK			176, 178
6672272	WASHER			340
6672273	SCREW			340
6672274	SCREW			340
6672275	GASKET			340
6672276	LENS			340
6672277	BRACKET			340
6672279	MOUNT			340
6672360	PLUG			174
6672471	VALVE			70
6672515	SEAL KIT			80
6672863	SOLENOID			234, 236
6673710	BEARING			96, 146
6673789	BEARING			96, 146
6673828	HOSE			92
6673884	O-RING			102
6673959	VALVE			236
6674000	CLAMP			142
6674202	NUT			136
6674228	PANEL			306, 318
6674231	VENT			306, 318
6674235	RECEIVER DRIER			318, 322
6674315	SENSOR			138
6674316	SENSOR			140
6674331	COIL			236
6674400	HOUSING			340
6674401	HOUSING			340
6674402	MOUNT			340
6674403	COVER			16, 136
6674407	SHOULDER BELT			360
6674519	WINDOW			252
6674520	WINDOW			252
6674521	WINDOW			252
6674522	WINDOW			252
6674687	BATTERY			2, 138
6674798	REPAIR KIT			92
6674799	ADAPTER			76, 78, 274
6674802	CONNECTOR			76, 78, 270, 274, 276
6674894	NUT			20
6674895	RETAINER			18, 158, 358
6674907	NUT			114, 116
6674993	CAP			238
6675026	CAP			76, 78, 270, 274, 276
6675033	INSERT			14, 16, 136
6675064	TERMINAL			290

Code for disposition of old part number
A -- Use up
B -- Use on other application (See PNI)
C -- File PDR Report with Bobcat Parts Sales
D -- Part Number Error

Part No.	Description	Was	Code	Page
6675074	SEAT BELT			16
6675075	HOSE			318, 322
6675099	ALARM			328, 330
6675136	GAS SPRING			14
6675140	SNAP RING			14
6675154	HOLDER			140
6675155	FUSE			140
6675170	SEAT BELT			22
6675171	CLAMP			136
6675172	BRACKET			306, 318
6675173	ACTUATOR			306
6675176	SWITCH			306, 318
6675177	KNOB			306, 318
6675179	FLANGE			306, 318
6675181	PLUG			306, 318
6675212	RETAINER			252
6675221	BOLT			166
6675257	CLEVIS			14
6675273	WASHER			30
6675281	MOUNT			274, 276
6675298	COUPLER			240
6675299	COUPLER			240
6675308	KIT			24
6675309	KIT			24
6675310	KIT			24
6675311	KIT			24
6675312	KIT			24
6675313	KIT			24
6675314	KIT			24
6675315	KIT			24
6675316	KIT			24
6675317	SCISSORS			22
6675318	KIT			24
6675319	SEAT			22
6675320	SEAT			22
6675321	SEAT			22
6675322	SEAT			22
6675323	KNOB			22
6675332	LINK			40
6675336	BULB			340
6675342	PIN			102, 106
6675378	CLIP			240, 244
6675380	ADHESIVE			380
6675387	EXTRUSION			17, 18, 252
6675503	HOUSING			310
6675504	RING			310
6675505	BLOWER WHEEL			310
6675506	MOUNT			310
6675507	COVER			310
6675510	CLAMP			308, 326
6675511	DRAIN VALVE			308, 326
6675512	CLAMP			308, 326
6675517	FILTER			1, 2, 3, 4, 6, 174
6675522	STROBE			374

Code for disposition of old part number

A -- Use up
B -- Use on other application (See PNI)
C -- File PDR Report with Bobcat Parts Sales
D -- Part Number Error

Part No.	Description	Was	Code	Page
6675523	BEACON			228, 290
6675524	CLIP			16
6675534	BLOCK VALVE			318, 322, 326
6675538	O-RING			322, 326
6675544	CANVAS CAB			247, 248
6675545	GROMMET			18, 252
6675558	SEAL			238, 244
6675559	COIL			68, 140
6675562	SEAT BELT			361, 362
6675581	EXTINGUISHER			296
6675590	DOOR			248
6675591	HINGE KIT			248
6675595	SEAT			22
6675596	SEAT			22
6675608	INSULATION			324
6675609	INSULATION			324
6675611	SEAL			312
6675618	CLAMP			196, 202
6675622	BOLT, EYE JOINT			202
6675623	GASKET			202
6675626	GASKET			202
6675635	BAND			200
6675636	GASKET			172, 200
6675637	GASKET			200
6675681	ADAPTER			174
6675683	PIN, BAND			202
6675734	STRAP			140, 158
6675779	PRESS. SWITCH			320, 322
6675824	O-RING			322
6675825	O-RING			322
6675833	SEAL			252
6675835	TURN SIGNAL			300
6675837	BELT			6
6675846	POTENTIOMETER			306, 318
6675858	FLASH TUBES			374
6675982	PLUG			136
6675999	SWITCH			356
6676000	TEE			356
6676001	ARM			356
6676002	BLADE			356
6676003	HOSE			238, 242, 356
6676028	NOZZLE			356
6676029	SOLENOID			146, 148, 152, 220
6676034	KIT			24
6676062	VALVE			322
6676338	GAS SPRING			24
6676499	GROMMET			238
6676500	ELBOW			238
6676516	NUT			306
6676536	SWITCH			136
6676537	SWITCH			146, 220
6676538	INSULATION			314, 322
6676539	CLIP			308, 322, 326
6676545	CARTRIDGE			236

Code for disposition of old part number

A -- Use up

B -- Use on other application (See PNI)

C -- File PDR Report with Bobcat Parts Sales

D -- Part Number Error

Part No.	Description	Was	Code	Page
6676606	SPACER			308, 314, 326
6676618	CLIP			310
6676640	SEAL			149, 150
6676653	SCREW			308, 314, 326
6676732	SWITCH			344
6676870	CONNECTOR			148
6676872	TURN SIGNAL			290, 300
6676917	ELBOW			238
6676927	FELT STRIP			252
6676969	FILTER			131, 132
6676984	MOUNT			322, 326
6677105	COVER			308, 322, 326
6677108	HOUSING			308, 326
6677111	SEAL			308, 312, 326
6677115	RECEPTACLE			308, 326
6677116	RETAINER			308, 326
6677117	SCREW			308, 326
6677118	SCREW			308, 326
6677119	SCREW			308, 326
6677120	COVER			308
6677122	CAP			318, 322
6677136	SOCKET			76, 78, 270, 274, 276
6677181	SENSOR			40, 144
6677192	MAGNET			238, 244
6677193	RIVET			238, 244
6677198	TAB			252
6677203	GUIDE			186
6677383	SOLENOID			68
6677485	SPACER			154
6677486	NUT			154
6677487	COVER			154
6677488	RECTIFIER			154
6677489	REGULATOR ASSY			154
6677490	BRACKET			154
6677491	BRACKET			154
6677492	ROTOR			154
6677493	STATOR			154
6677494	BOLT			154
6677495	SPACER			154
6677496	PULLEY			154
6677497	NUT			154
6677504	COVER			308, 314, 326
6677817	BOLT			154
6677818	BEARING			154
6677819	RETAINER			154
6677820	BEARING			154
6677833	ARM ASSY			241, 242
6677834	BLADE			242
6677836	COVER			242
6677837	BOLT			242
6677839	GASKET			242
6677840	SWIVEL			242
6677841	WASHER			242
6677842	NUT			242

Code for disposition of old part number

A -- Use up
B -- Use on other application (See PNI)
C -- File PDR Report with Bobcat Parts Sales
D -- Part Number Error

Part No.	Description	Was	Code	Page
6677843	NUT			242
6677844	NUT			242
6677845	ADAPTER			242
6677847	GROMMET			242
6677973	PLUG			252
6677983	FILTER			306, 320
6678000	SEAL			100
6678001	PLATE			100
6678003	PLATE			100
6678004	PLATE			100
6678006	BACK-UP RING			100
6678076	BLOCK			57, 58
6678151	COVER			308, 326
6678152	SEAL			308, 326
6678198	BOLT			242
6678205	ALTERNATOR			153, 154
6678207	FILTER			306, 318
6678226	SEAL			102, 106
6678283	HANDLE			252
6678292	GAS SPRING			304
6678548	SOCKET			238, 244
6678666	TREE MOUNT			140, 316, 320
6678667	MOUNT			138, 140
6678668	TIE			140
6678669	STRAP			268
6678675	CONTROLLER			272, 276
6678739	WASHER			242
6678818	MOUNT			138, 140
6678891	COIL			68, 72
6678893	SOLENOID			72
6678920	NOZZLE			242
6678921	GUIDE			242
6678931	PISTON			62
6678946	ADAPTER			176, 178
6678974	MOUNT			268
6679034	MOUNT			138
6679145	CLUTCH			320, 322
6679247	BOLT			41, 42
6679308	SEAT BELT			360
6679476	MOTOR			242
6679485	CONTROLLER JC			144
6679837	COUPLER			58
6679838	COUPLER			58
6679839	COUPLER			58
6679840	SEAL			58
6679841	SEAL			58
6679842	SWITCH			136
6679845	CROSSMEMBER			136
6679855	BULB			136
6679856	ALARM			136
6679990	CLIP			14
6679991	SEAL			158
6679994	SEAL			14
6680018	KIT			58

Code for disposition of old part number

A -- Use up
B -- Use on other application (See PNI)
C -- File PDR Report with Bobcat Parts Sales
D -- Part Number Error

Part No.	Description	Was	Code	Page
6680020	SEAL KIT			58
6680326	LIGHT			18
6680355	BOOT			156
6680356	BOLT			156
6680358	RING			156
6680359	STOP RING			156
6680360	STOP			156
6680361	SPRING			156
6680362	BALL			156
6680363	WASHER			156
6680365	SHAFT			156
6680366	GEAR			156
6680367	GEAR			156
6680368	STOP RING			156
6680369	SEAL			156
6680371	LEVER			156
6680372	BRACKET			156
6680373	YOKE			156
6680374	ARMATURE			156
6680375	SHAFT			156
6680376	SWITCH			156
6680377	HOLDER			156
6680378	WASHER			156
6680379	SEAL			156
6680380	SEAL			156
6680383	BOLT			156
6680384	BOLT			156
6680388	BRACKET			156
6680389	BRACKET			156
6680390	GEAR			156
6680410	CONTROLLER			144, 145, 146
6680414	HANDLE ASSY.			328
6680415	HANDLE			142
6680417	HANDLE			148
6680418	HANDLE ASSY.			141, 142
6680419	HANDLE ASSY.		A	142
6680429	SENSOR			20
6680436	SENSOR			36, 140
6680441	BUSHING			20
6680443	BUSHING			20
6680447	DECAL			142
6680462	HANDLE			148
6680468	MOUNT			148, 220
6680469	SPACER			148, 220
6680470	SPRING			148, 220
6680471	COVER			148
6680477	STRAP			148, 220
6680478	SHIELD			146, 152
6680479	SHIELD			146, 152
6680480	CHANNEL			148
6680481	CHANNEL			148
6680550	BAND			200
6680564	STUD			200
6680567	GASKET			186

Code for disposition of old part number

A -- Use up
B -- Use on other application (See PNI)
C -- File PDR Report with Bobcat Parts Sales
D -- Part Number Error

Part No.	Description	Was	Code	Page
6680628	CLAMP			210
6680639	PLUG			178
6680663	NUT			212
6680685	BOLT			182
6680692	COVER			180
6680706	BOLT			206
6680779	GASKET			214
6680801	BOLT			212
6680821	SNAP RING			210
6680830	BOLT			206
6680970	BREATHER			46
6681469	PLUG			26, 28
6681487	O-RING			352
6681489	O-RING			352
6681492	NUT			80
6681512	SOLENOID			46
6681614	KNOB			18, 252, 306, 318
6681944	HOSE			92
6681945	ELBOW			92
6682034	MOTOR			99, 100
6682260	SHAFT			102
6682261	KEY			102
6682264	SHAFT			106
6682442	SLEEVE			162
6682498	PUMP			178
6682500	FILTER			186
6682515	SHIM			212
6682532	NUT			198
6682549	ELBOW			70
6682586	GAS SPRING			238, 244
6682860	O-RING			100
6682862	SHAFT, DRIVE			100
6682863	BOLT			100
6682897	SEAL			100
6683003	COIL			322, 326
6683004	THERMOSTAT			322, 326
6683159	BOLT			196
6683203	ENGINE			160, 171, 172
6683206	SEAL KIT			94, 128, 158
6683274	SEAL			66, 70
6683812	SWITCH			144
6683819	VALVE			76, 78, 79, 80
6683915	MUFFLER			160
6684033	NUT			48, 52, 158
6684037	SENSOR			138
6684038	SPRING			102
6684044	VALVE			352
6684045	SEAL KIT			352
6684046	O-RING			352
6684047	BACK-UP RING			352
6684048	O-RING			352
6684049	O-RING			352
6684050	BACK-UP RING			352
6684052	SEAL KIT			352

Code for disposition of old part number

A -- Use up
B -- Use on other application (See PNI)
C -- File PDR Report with Bobcat Parts Sales
D -- Part Number Error

Part No.	Description	Was	Code	Page
6684053	BACK-UP RING			352
6684054	O-RING			352
6684055	BACK-UP RING			352
6684056	O-RING			352
6684057	BACK-UP RING			352
6684058	COIL			80
6684059	SPACER			352
6684060	NUT			352
6684061	VALVE			352
6684062	SEAL KIT			352
6684063	O-RING			352
6684064	BACK-UP RING			352
6684065	O-RING			352
6684066	O-RING			352
6684067	BACK-UP RING			352
6684069	SEAL KIT			352
6684070	O-RING			352
6684071	O-RING			352
6684072	BACK-UP RING			352
6684073	COIL			352
6684125	COUPLER			68, 70
6684474	INSERT FAN INLET			158
6684645	VALVE			66
6684646	VALVE			70
6684742	NUT			348
6684743	SOLENOID			348
6684744	SOLENOID			348
6684745	PISTON			348
6684746	CHECK VALVE			348
6684747	SEAL KIT			348
6684752	GASKET			178
6684753	GASKET			172, 186
6684754	O-RING			186
6684755	CYLINDER HEAD			184
6684756	GUIDE			184
6684757	GASKET			184
6684758	GASKET			184
6684759	GASKET			184
6684760	GASKET			184
6684761	GASKET			184
6684770	GASKET			172, 174
6684772	BOLT			174
6684774	GASKET			174
6684776	CLAMP			180
6684777	CLAMP			180
6684778	COVER			180
6684779	SHIELD			180
6684780	GASKET			172, 180
6684781	BOLT			180
6684782	O-RING			180
6684788	GASKET			188
6684789	SEAL			188
6684791	CAMSHAFT			192
6684792	GEAR			192

Code for disposition of old part number

A -- Use up
B -- Use on other application (See PNI)
C -- File PDR Report with Bobcat Parts Sales
D -- Part Number Error

Part No.	Description	Was	Code	Page
6684793	GEAR			192
6684794	BUSHING			192
6684795	COLLAR			192
6684797	PISTON			188
6684798	PISTON			188
6684800	PISTON			188
6684801	PISTON			188
6684803	RING			188
6684804	RING			188
6684810	CAMSHAFT			189, 190
6684811	GEAR			190
6684813	GASKET			190
6684815	IDLING ASSY			203, 204
6684816	BOLT			204
6684817	NUT			204
6684818	SEAL			204
6684819	CAP			204
6684823	SPRING			208
6684824	GASKET			172, 208, 210
6684825	GUIDE			204
6684826	SOLENOID			138, 204
6684827	NUT			204
6684828	PUMP			211, 212
6684829	SHIM			212
6684830	BOLT			212
6684832	LEVER			206
6684833	SHAFT			206
6684836	BOLT			207, 208
6684838	LEVER			205, 206, 208
6684839	LEVER			208
6684842	PIPE			213, 214
6684843	INJECTOR			214
6684844	BOLT			214
6684845	CLAMP			214
6684846	PIPE			214
6684847	PIPE			214
6684848	PIPE			214
6684849	PIPE			214
6684850	GLOW PLUG			214
6684851	CORD			214
6684855	FLANGE			195, 196
6684856	FLANGE			196
6684857	PLUG			196
6684862	PIPE			196
6684863	GASKET			172, 196
6684865	PUMP			193, 194
6684866	PUMP			194
6684867	FAN			194
6684868	SEAL			194
6684869	FLANGE			194
6684870	GASKET			172, 194
6684872	VALVE			181, 182
6684873	VALVE			182
6684874	COLLAR			182

Code for disposition of old part number

A -- Use up
B -- Use on other application (See PNI)
C -- File PDR Report with Bobcat Parts Sales
D -- Part Number Error

Part No.	Description	Was	Code	Page
6684875	SHAFT			182
6684877	GASKET			172, 198
6684879	GASKET			172
6684880	GASKET			172
6684884	PIPE			202
6684889	CLAMP			196
6684891	SEAL			204
6684910	SENSOR			148
6684911	SENSOR			146, 152, 220
6684912	SENSOR			146, 151, 152, 220
6684915	LEVER			146, 147, 148
6684916	LEVER			146, 148
6684923	BREATHER			84, 88
6684932	KNOB			32
6685060	BUSHING			64, 96
6685061	VALVE			352
6685063	HOUSING			100
6685064	POPPET			100
6685065	SHUTTLE			100
6685066	PISTON			100
6685067	GEROLER			100
6685068	FLANGE			100
6685069	RING,BACK-UP			100
6685070	KIT, SEAL COMPLETE			100
6685104	BOLT			196
6685183	SOLENOID			80
6685184	SEAL KIT			80
6685185	RELIEF VALVE			80
6685186	CHECK VALVE			80
6685190	STARTER			155, 156
6685198	CAP			320, 322
6685199	CAP			318, 322
6685328	RELIEF VALVE			352
6685344	SWASH PLATE			102, 106
6685345	BRACKET			96, 104
6685346	BRACKET			106
6685372	SEAL			46
6685464	BOLT			206
6685465	O-RING			204
6685466	O-RING			174
6685467	O-RING			174
6685468	O-RING			172, 174
6685469	KEY			188
6685472	CAP			178
6685473	BOLT			212
6685476	SEAL			208
6685477	PLUG			178
6685478	FLANGE			178
6685479	BEARING			190
6685480	CASE			188
6685481	GEAR			188
6685482	BOLT			188
6685486	BEARING			188
6685487	BEARING			188

Code for disposition of old part number

A -- Use up

B -- Use on other application (See PNI)

C -- File PDR Report with Bobcat Parts Sales

D -- Part Number Error

Part No.	Description	Was	Code	Page
6685488	WASHER			188
6685489	WASHER			188
6685490	BEARING			188
6685491	BEARING			188
6685492	BEARING			188
6685493	BEARING			188
6685494	WASHER			188
6685495	WASHER			188
6685496	WASHER			188
6685497	WASHER			188
6685498	GASKET			214
6685499	DIPSTICK			186
6685500	COVER			210
6685514	SPRING			206
6685515	COVER			188
6685516	COLLAR			190
6685517	STOPPER			190
6685518	OIL PAN			185, 186
6685519	SHAFT			192
6685520	THERMOSTAT			196
6685521	PULLEY			188
6685526	PLATE			208
6685540	PISTON			348
6685541	POPPET			348
6685542	O-RING			348
6685543	CHECK VALVE			348
6685544	COMPENSATOR			348
6685545	PLUG			348
6685546	PLUG			348
6685579	CRANKCASE			177, 178
6685580	TUBE			179, 180
6685581	O-RING			180
6685584	BEARING			188
6685585	BEARING			188
6685586	BEARING			188
6685592	MANIFOLD			197, 198
6685593	TURBO			199, 200, 202
6685594	HOSE			200
6685595	FLANGE			200
6685596	HOSE			200
6685597	PIPE			201, 202
6685598	BOLT			202
6685599	PIPE			202
6685600	TUBE			202
6685601	CLAMP			202
6685603	SEAL KIT			66, 68, 72
6685624	CONTROL VALVE			351, 352
6685633	WASHER			210
6685634	GASKET			210
6685635	TUBE			210
6685636	SPRING			206
6685637	COLLAR			174
6685639	STUD			210
6685640	MANIFOLD			198

Code for disposition of old part number

A -- Use up

B -- Use on other application (See PNI)

C -- File PDR Report with Bobcat Parts Sales

D -- Part Number Error

Part No.	Description	Was	Code	Page
6685641	OIL COOLER			174, 175, 176
6685642	HOSE			176
6685643	HOSE			176
6685644	SCREW			198
6685645	PIPE ASSY			210
6685735	SEAL			162
6686077	RADIATOR			157, 158, 159, 160
6686096	LENS			288
6686097	BULB			288
6686098	BULB			288
6686099	LENS			288
6686100	SCREW			288
6686220	O-RING			146
6686267	PUMP			107, 108
6686360	VALVE			66, 70
6686868	SOLENOID			68
6686922	FILTER ASMBLY 12			88, 133, 134
6686926	ELEMENT FILTER			88, 94, 134
6686934	PIN			108
6686949	VALVE			347, 348
6687142	MOTOR			94, 127, 128, 158
6687191	SEAL			102
6687266	FILTER ASSY			94
6687631	BEARING			156
6687773	PLATE			106
6687774	PLATE			102
6687834	SENSOR			88, 134
6687863	PUMP			101, 102, 105, 106
6687864	GEAR PUMP			125, 126
6687865	GEAR PUMP			78, 81, 82
6687866	SEAL KIT			126
6687913	SEAL			98
6687919	COLLAR			120
6687920	SPINDLE			118
6687921	COLLAR			118
6687922	NUT			118
6687923	PIN			118
6687924	VALVE			108, 117, 118
6687926	COLLAR			114, 116
6687927	COLLAR			114, 116
6687928	SPRING			114, 116
6687929	LEVER			122
6687930	WIRE			110, 112
6687931	BUSHING			122
6687932	PIN			108
6687933	SHIM			122
6687934	SHIM			122
6687935	SHIM			122
6687936	SHIM			122
6687937	SHIM			122
6687938	VALVE			108, 119, 120
6687939	SCREW			120
6687940	RING			110, 112
6687941	COUPLER			108

Code for disposition of old part number

A -- Use up
B -- Use on other application (See PNI)
C -- File PDR Report with Bobcat Parts Sales
D -- Part Number Error

Part No.	Description	Was	Code	Page
6687942	SPACER			114, 116
6687943	SHAFT			112
6687944	SHIM			122
6687945	PLATE			122
6687946	SPRING			122
6687947	PIN			122
6687948	SPACER			114, 116
6687949	SPACER			114, 116
6687950	GASKET			122
6687951	BRACKET			110, 112
6687953	PISTON			114, 116
6687954	GASKET			122
6687955	HOUSING			122
6687956	BEARING			110, 112
6687957	GROUP			108, 109, 110
6687958	GROUP			108, 111, 112
6687959	SHAFT			110
6687960	CONTROL			108, 113, 114
6687961	CONTROL			108, 115, 116
6687962	PISTON			114
6687963	PISTON			116
6687964	HOUSING			108
6687965	SHAFT			108
6687966	PISTON			122
6687967	SPRING			122
6687968	LEVER			122
6687969	COVER			122
6687970	MODULATOR			108, 121, 122
6687971	ROLLER			122
6687972	MODULE			122
6687973	FLANGE			108
6687974	FLANGE			108
6687975	PLATE			112
6687976	PLATE			110
6687977	GROUP			110
6687978	GROUP			112
6687979	GROUP			110, 112
6687981	SCREW			122
6687982	SPRING			122
6687983	RING			120
6687984	SENSOR			108
6687985	RING			114, 116
6687986	KIT			114, 116
6687987	BEARING			110, 112
6687988	FILTER			108
6687989	SOLENOID			122
6687990	RING			108
6687991	KEY			108
6687992	SCREW			108
6687993	COVER			108
6687994	SCREW			108
6687995	SCREW			114, 116
6687996	SCREW			122
6687997	SCREW			122

Code for disposition of old part number

A -- Use up

B -- Use on other application (See PNI)

C -- File PDR Report with Bobcat Parts Sales

D -- Part Number Error

Part No.	Description	Was	Code	Page
6687998	SHIM			108
6687999	RING			110, 112
6688000	SEAL			118
6688001	SEAL			122
6688002	RING			114, 116
6688003	SCREW			108
6688004	SEAL			122
6688005	SEAL			114, 116
6688006	SEAL			114, 116
6688007	SEAL			108
6688008	SCREW			108
6688009	SEAL			108
6688010	PIN			122
6688011	PIN			108
6688012	ROLLER			122
6688013	SEAL			120
6688014	PIN			108
6688015	SCREW			108
6688016	SCREW			108
6688017	SHIM			120
6688018	BEARING			110, 112
6688019	SEAL			108, 124
6688020	ORIFICE			108
6688021	SPRING			118
6688022	PISTON			120
6688023	SPRING			120
6688024	COVER			114, 116
6688025	RING			114, 116
6688026	RING			114, 116
6688027	RING			114, 116
6688028	RING			114, 116
6688029	RING			114, 116
6688030	RING			114, 116
6688031	ROD			114, 116
6688032	SPACER			114, 116
6688033	SPACER			114, 116
6688034	SCREW			118
6688035	RING			114, 116
6688036	RING			114, 116
6688037	RING			114, 116
6688038	RING			110
6688039	PIN			108
6688040	BEARING			108
6688041	RING			118
6688042	RING			110, 112
6688043	SPRING			118
6688073	CONNECTOR			138
6688322	SEAL KIT			82
6688382	GASKET			198
6688385	HYD FILTER ASSY			132
6688397	STEM			68, 70
6688403	PANEL			18, 136
6688404	PANEL			136
6688405	PANEL			136

Code for disposition of old part number

A -- Use up

B -- Use on other application (See PNI)

C -- File PDR Report with Bobcat Parts Sales

D -- Part Number Error

Part No.	Description	Was	Code	Page
6688439	CONTROLLER			140
6688521	SPRING			100
6688542	HVAC HEATER			318, 325, 326
6688543	HEATER			306, 307, 308
6688546	CRANKSHAFT			188
6688845	VALVE			68, 72
6688924	MAGNET	6680634	D	44
6688933	VALVE ASSY			352
6688934	COIL			352
6688937	HOSE			86, 90
6688938	HOSE			86, 90
6689014	UPPER GASKET KIT TIER II ENGINE			172
6689018	LOWER GASKET KIT TIER II ENGINE			172
6689021	SEAL KIT			108
6689058	MOTOR			94, 128, 158
6689059	VALVE ASSY			94, 128, 158
6689060	COIL ASSY			94, 128, 158
6689100	LEVER			206
6689179	INSULATION			324
6689180	INSULATION			324
6689601	VALVE			102, 106
6689602	HOUSING			106
6689635	BRACKET			306, 318
6689636	ACTUATOR			318
6689637	VALVE			306, 318
6689696	VALVE			306, 318
6689762	BLOWER			308, 309, 310, 326
6689764	PAD			310
6689765	PAD			310
6689766	MOTOR			310
6689770	KIT			313, 314
669863B	SNAP RING			102, 106
6700115	SPRING			162
6700170	WASHER			168, 170
6700182	COVER			40
6700535	SPACER			166
6700711	AIR CLEANER			215, 216
6700743	SPRING			170
6701097	WASHER			158
6701123	SCREW			160
6701174	WASHER			14
6701449	FILLER TUBE			36
6701535	SPRING			20, 96
6701893	CLAMP			48, 52
6702301	DECAL			264
6702302	DECAL			264
6702402	SHIELD			298
6702474	RETAINER			162
6702543	LEVER			95, 96
6702593	SPACER			224
6702621	GRIP			142
6702650	MOUNT			290
6702716	BLOCK			96

Code for disposition of old part number

A -- Use up

B -- Use on other application (See PNI)

C -- File PDR Report with Bobcat Parts Sales

D -- Part Number Error

Part No.	Description	Was	Code	Page
6702903	LEVER			34
6702904	LEVER			34
6702958	BUSHING			34
6702971	BOLT			14
6702990	BUSHING			148
6703022	CLIP			162
6703168	BEARING			162
6703331	INSULATION			292, 366
6703471	BRACKET			158
6703483	PULLEY			292
6703640	KIT			363, 364
6703641	DECAL			364
6703703	GUIDE			364
6703727	DECAL			328, 330
6703879	BUSHING			96
6703915	CHAIN			40
6703968	INSULATION			292, 366, 368
6703981	MOUNT			166
6704146	BRACKET			332
6704147	BRACKET			332
6704248	PIVOT			34
6704391	PULLEY			162
6704443	BUSHING			162
6704444	WASHER			162
6704484	WASHER			162
6704769	INSULATION			292, 366
6704786	DECAL			332
6704820	O-RING			162
6704878	GASKET			40
6704892	RIVET			272, 276
6705070	TEE			48, 52
6705106	WASHER			166, 278
6705231	WASHER			162
6705232	WASHER			162
6705452	LEVER			167, 168
6705491	SPRING			162
6705847	SEAL			44
6706043	SPACER			166
6706098	GUIDE			96
6706104	RETAINING NUT			64
6706105	YOKE			64
6706349	MOUNT			14
6706393	SHIELD			160
6706427	AXLE			42
6706485	HOOK			40
6706517	SCREW			36, 158
6706572	SET SCREW			168, 170
6706633	ADAPTER			350
6706718	MOUNT			46
6706737	GASKET			46
6706807	PIN			334, 336, 338
6706808	COVER			12
6706825	LIFT EYE			334, 336, 338
6707040	ELBOW			138

Code for disposition of old part number

A -- Use up
B -- Use on other application (See PNI)
C -- File PDR Report with Bobcat Parts Sales
D -- Part Number Error

Part No.	Description	Was	Code	Page
6707101	SEAL			56, 74
6707804	HOUSING			290
6707852	DECAL			238
6708009	LINK			64
6708016	GASKET			46
6708018	SPRING			46
6708043	BUSHING			64
6708189	TUBE			14
6708267	BOLT			46
6708310	HOSE			240
6708770	CAP			162
6708929	DECAL			266
6708987	HINGE			12
6709030	DECAL			162, 266
6709170	STUD			42
6709229	BOLT			280
6709234	DISC			280
6709236	MOUNT			280
6709237	CLAMP			280
6709239	PEDAL ASSY.			280
6709400	TUBE			280
6709527	KEY			136, 238, 244, 354
6709547	HOSE			280
6710358	DECAL			264
6710585	WASHER			162
6710659	BUSHING			20
6711632	MOUNTING KIT			277, 278
6711674	MOUNT			302
6711699	HUB ASSY.			162
6712365	STEP			28
6712970	PULLEY			291, 292
6712971	PULLEY			292
6713040	SPRING			34
6713043	SPACER			148
6713115	PEDAL			285, 286
6713116	BUSHING			286
6713150	MOUNT			290
6713151	MOUNT			290
6713370	PIN			162
6713507	DECAL			264
6713589	CLEVIS			20
6713736	BRACKETS			290
6713840	DECAL			290
6713841	SHIELD			290
6713887	BOLT			20
6713993	HARNESS			290
6713994	HARNESS			290
6714037	LATCH			354
6714126	DOOR STOP			30
6714278	GUIDE			46
6714361	WEIGHT			258, 260
6714726	GROMMET			146
6714820	SHIELD			290
6715106	INSULATION			292, 366

Code for disposition of old part number

A -- Use up

B -- Use on other application (See PNI)

C -- File PDR Report with Bobcat Parts Sales

D -- Part Number Error

Part No.	Description	Was	Code	Page
6715131	BRACKET			138, 268
6715132	RETAINER			138
6715142	FAN			158
6715163	BUSHING			96
6715164	SLEEVE			96
6715183	ELBOW			36
6715190	ELBOW			84, 88
6715197	CLAMP			138
6715287	SPACER			278
6715428	DECAL			292
6715659	HARNESS			224
6715819	INSULATOR			158
6715860	SEAT BAR			20
6715863	BRACKET			20
6715864	BUSHING			20
6715865	BUSHING			20
6715866	BUSHING			20
6716061	TEE			48, 52
6716089	CONNECTOR			302
6716228	BRAKE			46
6716545	ROD			96
6716571	LOUVER			158
6716573	LOUVER			158
6716621	COVER			26, 28, 140
6716843	WASHER			42
6716916	WASHER			146
6716977	BELLCRANK			146
6717025	BUSHING			32
6717026	BUSHING			32
6717039	BUSHING			32
6717041	BUSHING			32
6717151	MOUNT			56
6717246	BUSHING			32
6717259	BUSHING			34
6717260	BUSHING			34
6717277	BUSHING			12
6717278	BUSHING			12
6717293	MOUNT			334, 336
6717343	DECAL			264
6717356	BUSHING			12
6717358	BUSHING			12
6717393	LEVER			146
6717401	PLUG			36
6717402	BUSHING			36
6717517	INSULATION			18
6717518	INSULATION			18
6717519	INSULATION			18
6717520	INSULATION			18
6717560	PIN			31, 32
6717562	BUSHING			32
6717579	GASKET			36, 140
6717591	HOSE			160
6717592	HOSE			160
6717593	HINGE			240, 244

Code for disposition of old part number

A -- Use up
B -- Use on other application (See PNI)
C -- File PDR Report with Bobcat Parts Sales
D -- Part Number Error

Part No.	Description	Was	Code	Page
6717639	DECAL			264
6717704	HOSE			36
6717706	COIL			140
6717707	PIN			334, 336
6717820	BAR			64
6717827	CAP			83, 84, 87, 88
6717830	TUBE			84, 88
6717870	FRAME			252
6717871	FRAME			252
6717872	FRAME			252
6717873	FRAME			252
6717874	WINDOW			18, 252
6717885	ELBOW			78
6717890	COVER			26, 28
6717933	CLAMP			48, 52
6717951	CLAMP			58
6718020	HOSE			84, 88
6718030	TUBE			48, 52
6718080	ELBOW			76, 78
6718101	COVER			16
6718122	MOUNT			334, 336
6718175	SCREEN			306, 318
6718198	HARNESS			288
6718205	TUBE			280
6718206	TUBE			280
6718238	BRACKET			48, 52
6718244	TUBE			302
6718245	TUBE			302
6718260	BATTERY PAN			138
6718312	STOP			32
6718326	MOUNT			300
6718358	HOSE			344
6718376	HINGE			240, 244
6718411	KIT			299, 300
6718414	SENDER			138
6718426	HARNESS			75, 76, 77, 78, 274
6718454	HOSE			302
6718489	INSULATION			16
6718521	HANDLE			240, 244
6718579	DECAL			306, 318
6718580	PANEL			18
6718659	HOUSING			140
6718660	TEE			90
6718706	DECAL			146
6718728	MOUNT ASSY.			280
6718750	MOUNT			76, 78, 274
6718772	GASKET			84, 88
6718789	PIN			32
6718796	PLUG			30
6718805	KIT			251, 252
6718833	BRACKET			298
6718834	BRACKET			298
6718837	SPACER			306, 318
6718872	HARNESS			228, 290, 300, 374

Code for disposition of old part number
A -- Use up
B -- Use on other application (See PNI)
C -- File PDR Report with Bobcat Parts Sales
D -- Part Number Error

Part No.	Description	Was	Code	Page
6718873	HARNESS			300
6718887	PANEL			306, 318
6718924	KIT			297, 298
6718942	NUT			32
6718948	SNUBBER			90
6719018	DECAL			266
6719037	STRIKER			252
6719056	BLOCK			46
6719057	BLOCK			46
6719063	STOP			252
6719064	MOUNT			14, 304
6719065	COVER TAB			252
6719150	KIT			279, 280
6719176	SWITCH			318, 322
6719184	MOUNT			332
6719185	MOUNT			332
6719201	COVER			12
6719264	KIT			331, 332
6719317	WINDOW			356
6719327	INSULATION			292, 366, 367, 368
6719328	INSULATION			292, 366, 368
6719330	INSULATION			292, 366, 368
6719331	INSULATION			292, 366
6719332	INSULATION			292, 366, 368
6719333	INSULATION			292, 366, 368
6719334	INSULATION			292, 366, 368
6719372	INSULATION			292, 366
6719389	INSULATION			368
6719413	WINDOW			252
6719439	HOSE			48, 52
6719448	MAGNET			272, 276
6719451	HOSE			344
6719504	INSULATION			16
6719525	BAR			30
6719672	OPERATOR CAB			13, 14, 15, 16
6719766	STOP			30
6719825	BOLT			162
6719826	BOLT			166
6719827	BOLT			166
6719828	BOLT			162, 166
6719829	BOLT			166
6719834	SPACER			148, 220
6719835	SLEEVE			148
6719854	KIT			227, 228
6719857	KIT			373, 374
6719884	BRACKET			344
6719888	DECAL			344
6720038	INSTRUCTIONS			230
6720592	INSTRUCTIONS			298
6720736	PLUG			229, 230
6722597	VELCRO			248
6722907	KIT			42, 221, 222
6722908	INSTRUCTIONS			222
6724094	ANTI-FREEEZE			380

Code for disposition of old part number

A -- Use up
B -- Use on other application (See PNI)
C -- File PDR Report with Bobcat Parts Sales
D -- Part Number Error

Part No.	Description	Was	Code	Page
6724354	ANTI-FREEZE			380
6724482	INSTRUCTION			278
6725092	DECAL			260
6725182	TEE			56
6725212	ARM			162
6725256	COUNTERWEIGHT			260
6725301	COVER			16
6725302	GASKET			26, 28
6725303	FRAME			16
6725337	TUBE			48, 52
6725361	INSULATION			292, 366
6725370	DECAL			360
6725373	SPRING PLATE			16
6725374	DECAL			264
6725421	HANDLE			256
6725502	ELBOW			216
6725513	PACKAGE			306
6725552	TUBE			344
6725553	TUBE			344
6725898	KIT			295, 296
6725906	BRACKET			296
6725907	DECAL			344
6725933	HARNESS			318, 322
6725937	CLAMP			244
6725938	CLAMP			244
6725946	KIT			255, 256
6726062	SHIELD			12
6726069	COVER			12
6726162	BRACKET			84, 88
6726254	BRACKET			84, 88
6726255	PAD			84, 88
6726272	TUBE			350
6726273	TUBE			350
6726277	CLAMP			48, 52, 350
6726303	DECAL			256
6726386	KNOB			306
6726423	DECAL			334, 336, 338
6726427	KIT			245, 246
6726430	HARNESS			290
6726433	SPACER			158, 160
6726573	BRACKET			146, 220
6726613	MOUNT			162
6726620	BRACKET			318, 322
6726621	SCREW			312, 314, 322
6726623	HOSE			318, 322
6726648	BRACKET			320, 322
6726655	KIT			355, 356
6726656	HOSE			318, 322
6726661	HOSE			319, 320, 322
6726662	HARNESS			330
6726681	LINK			146, 220
6726888	HARNESS			320, 322
6726898	BELT			6
6726945	MOUNT			276

Code for disposition of old part number

A -- Use up
B -- Use on other application (See PNI)
C -- File PDR Report with Bobcat Parts Sales
D -- Part Number Error

Part No.	Description	Was	Code	Page
6726988	BELT			320, 322
6727065	BOLT			148, 220
6727176	KIT			269, 270
6727299	INSULATION			18, 368
6727414	HOSE			318, 322
6727496	PIN			146, 220
6727498	HARNESS			328
6727595	DECAL			264, 266
6727637	ELBOW			84, 88
6727638	TEE			48, 52
6727646	BRACKET			54, 234
6727657	HOSE			58
6727705	HOSE			48, 52
6727708	CLAMP			48, 52
6727739	KIT			275, 276
6727753	GASKET			160
6727847	COVER			306
6727848	COVER			320
6727863	ROD LINK			32
6727869	SENDER			140
6727926	DECAL			146, 220, 264
6727941	DECAL			146, 220, 264
6727993	KIT			333, 334
6727995	HORN KIT			327, 328
6728011	BRACKET			318, 322
6728045	DECAL			220
6728459	DOOR SENSOR			238, 244
6728473	BOLT			34
6728539	DECAL			146, 220, 264
6728540	DECAL			220
6728567	KIT			311, 312
6728621	BRACKET			140
6728626	HARNESS			140
6728673	TANK			84, 88
6729008	CABLE			138
6729009	SEAL			252
6729010	SEAL			252
6729011	SEAL			252
6729012	INSULATION			14
6729013	INSULATION			14
6729077	DECAL			320, 324
6729082	MOUNT			92
6729141	MOUNT			304
6729202	HOSE			344
6729203	HOSE			344
6729380	HARNESS			276
6729467	SPACER			146, 220
6729594	HANDLE			148
6729595	HANDLE			148
6729688	LATCH			354
6729776	WINDOW			242
6729853	HOSE			36
6729854	HOSE			36
6729896	TIRE			378

Code for disposition of old part number

A -- Use up
B -- Use on other application (See PNI)
C -- File PDR Report with Bobcat Parts Sales
D -- Part Number Error

Part No.	Description	Was	Code	Page
6729900	TIRE			378
6729939	LATCH PLATE			30
6729991	REAR DOOR			12, 30
6730013	COVER			44
6730078	COVER			40
6730106	TIRE			378
6730142	TEE			48, 52
6730270	LEVER			170
6730290	BOLT			32
6730291	BRACKET			276
6730771	RIM			378
6730772	RIM			378
6730775	RIM			378
6730816	SHIELD			238, 244
6730822	KIT			237, 238
6730823	KIT			243, 244
6730867	BRACKET			166
6730997	BUSHING			34
6730999	TUBE ASSY			160
6731059	INLET			38
6731060	SHIELD			166
6731084	ADAPTER			316, 320
6731085	ELBOW			320
6731108	SEAL			358
6731119	PIVOT ASSY			34
6731121	PLUG			40
6731151	KIT			219, 220
6731160	WASHER			32
6731217	CHAIN			40
6731218	CHAIN			40
6731222	PIN			290
6731229	TUBE			58
6731230	TUBE			58
6731231	TUBE			58
6731239	HARNESS			290
6731256	CABLE			138
6731275	INSULATION			140
6731478	EXIT TAG			18, 252
6731495	SHIELD			320, 322
6731524	KIT			301, 302
6731578	BUSHING			12
6731617	PAN			268
6731657	BRACKET			332
6731658	BRACKET			332
6731665	CABLE			268
6731666	CABLE			268
6731694	KIT			267, 268
6731746	BRACKET			268
6731757	DECAL			58, 264
6731819	STRAP			290
6731898	PEDAL			170
6731900	ROD			170
6731973	HOLDER			290
6731979	BUSHING			34

Code for disposition of old part number

A -- Use up
B -- Use on other application (See PNI)
C -- File PDR Report with Bobcat Parts Sales
D -- Part Number Error

Part No.	Description	Was	Code	Page
6731994	DECAL			366
6732001	KIT			353, 354
6732023	CONNECTOR			316, 320
6732206	SPACER			290
6732215	FILTER			86, 90
6732219	KIT			359, 360
6732225	SPACER			12
6732234	KIT			329, 330
6732235	KIT			225, 226
6732264	FRAME LINK			32
6732265	BUSHING			32
6732318	SPACER			158
6732322	SPACER			170
6732323	BRACKET			170
6732350	WINDOW			246
6732351	WINDOW			244
6732375	TANK			158
6732443	CUP			34
6732457	WASHER			158
6732537	BOB-TACH			33, 34
6732619	SEAL			358
6732715	LATCH			30
6732718	KIT			357, 358
6732724	INSULATION			292, 366
6732730	HARNESS			272
6732870	MOUNT			158
6732928	KIT			303, 304
6732997	U-BOLT			96
6733001	CONDENSER			317, 318, 322
6733022	BRACKET			96
6733024	BRACKET			96
6733107	PLUG ASSY			14
6733121	SEAL(31"STRIP)			14
6733136	KIT			271, 272
6733142	KIT			273, 274
6733144	MOUNT			272
6733190	TEE			48, 52
6733191	ELBOW			48, 52
6733192	TUBE			350
6733196	TUBE			52, 234
6733197	HOSE			84, 89, 90
6733292	HARNESS			146
6733429	CAP			158
6733575	HINGE			30
6733616	BUMPER			30
6733617	MOUNT ASSY.			43, 44
6733619	HOUSING			44
6733621	SHAFT			44, 46
6733652	HOSE			84
6733655	COMPRESSOR			320, 322
6733667	LATCH			30
6733804	GRILL			158
6733886	BOLT			158
6733956	COVER			46

Code for disposition of old part number
A -- Use up
B -- Use on other application (See PNI)
C -- File PDR Report with Bobcat Parts Sales
D -- Part Number Error

Part No.	Description	Was	Code	Page
6733970	MOUNT			224, 226, 328, 330
6733996	DECAL			158
6734192	TUBE			52, 234
6734206	TUBE			56
6734236	ADAPTER			158
6734298	MOUNT			96
6734416	LEVER			168, 170
6734417	LEVER			170
6734503	CLEVIS			170
6734520	COVER			168, 170
6734534	DECAL			266
6734561	WASHER			84, 88
6734563	WASHER KIT			84, 88
6734623	ELBOW			84, 90
6734646	DECAL			146, 220
6734660	BUSHING			32
6734662	PIN			32
6734742	BRACKET			96
6735140	DECAL			264
6735245	DUCT			306, 318
6735246	DUCT			306, 318
6735253	LINK			96
6735285	AIR CLEANER			216, 292, 366
6735316	COVER			46
6735669	SHIELD			48, 52
6735825	SPACER			290
6735828	TUBE			350
6735829	TUBE			350
6735862	DECAL			264
6735864	DECAL			266
6735883	BRACKET			162
6735884	IDLER ASSY.			162
6735901	DECAL			266
6735922	TUBE			84
6736195	ROD			168
6736206	BRACKET			78
6736515	HARNESS			138
6736641	PAINT			380
6736642	PAINT			380
6736644	PAINT			380
6736645	PAINT			380
6736647	HOSE			76, 78
6736685	TUBE			76, 78
6736773	TUBE			88
6736775	BELT			162
6736807	FLYWHEEL ASSY			162
6736810	BRACKET			76, 78
6736817	MOUNT			166
6736875	TANK			238
6737088	COVER			218
6737189	DECAL			224
6737191	WEDGE			34
6737355	HOSE			160
6737368	BRACKET			36

Code for disposition of old part number

A -- Use up
B -- Use on other application (See PNI)
C -- File PDR Report with Bobcat Parts Sales
D -- Part Number Error

Part No.	Description	Was	Code	Page
6737388	WASHER			64, 96
6737453	ELBOW			84, 90
6737524	KNOB			56, 74
6737704	INSULATION			18
6737783	KIT			2, 264
6801059	WASHER			242, 356
6801167	PLUG			72
6802324	HOSE			350
6803092	BONNET			72
6803473	SEAL KIT			346
6804790	DECAL			16
6804920	BUSHING			66, 70
6805102	BUSHING			66, 70
6805453	BUSHING			60
6806124	HEAD			62
6806315	PISTON			60
6806330	SEAL KIT			60
6806332	HEAD			60
6807503	CYLINDER			345, 346
6808798	ELBOW			38
6808831	WIRE ROPE			320, 322
6809511	DECAL			48, 52, 56
6809593	SPACER			62
6809726	ROLLER			30
6809727	CHANNEL			30
6809734	BUSHING			30
6809845	BOLT			30
6809903	ROD			60
6810132	SPRING			30
6810141	SPRING			30
6810349	CASE			346
6810356	SPACER			346
6810539	NUT			62
6810612	ROD			346
6811483	COUNTERWEIGHT			262
6812170	PLUG			60, 62, 346
6812569	DECAL			292
6812815	FITTING			84, 88
6813153	PLATE			66
6814279	BLOCK			66, 72
6814694	RETAINER			66, 70
6815014	CHECK VALVE			68, 70
6815032	TUBELINE			70
6815152	SPOOL			66
6816537	SEAL KIT			62
6816549	PLUG			68, 70
6817003	BODY			66
6817004	BODY			70
6817566	BUSHING			166
6817707	PLUG			66, 70
6818039	VALVE			65, 66
6900366	INSTRUCTIONS			258
6900410	INSTRUCTIONS			260
6900827	INSTRUCTIONS			334, 336

Code for disposition of old part number

A -- Use up
B -- Use on other application (See PNI)
C -- File PDR Report with Bobcat Parts Sales
D -- Part Number Error

Part No.	Description	Was	Code	Page
6900848	INSTRUCTIONS			300
6900852	INSTRUCTIONS INSTL			252
6900853	INSTRUCTIONS			252
6900854	INSTRUCTIONS INSTL			240
6900861	INSTRUCTIONS			24
6900888	INSTRUCTIONS			332
6900934	INSTRUCTIONS			280
6900991	INSTRUCTIONS			228
6900992	INSTRUCTIONS			374
6901010	INSTRUCTIONS			360
6901011	INSTRUCTIONS			362
6901013	INSTRUCTIONS			244
6901025	INSTRUCTIONS			296
6901029	INSTRUCTIONS			256
6901036	INSTRUCTIONS			246
6901061	INSTRUCTIONS			356
6901076	INSTRUCTIONS			270
6901116	INSTRUCTIONS			276
6901120	INSTRUCTIONS			314
6901146	INSTRUCTIONS			328
6901203	INSTRUCTIONS			334
6901213	INSTRUCTIONS			312
6901492	INSTRUCTIONS			220
6901515	INSTRUCTIONS			302
6901602	INSTRUCTIONS			268
6901656	INSTRUCTIONS			354
6901663	INSTRUCTIONS			290
6901690	INSTRUCTIONS			226
6901691	INSTRUCTIONS			330
6901774	INSTRUCTIONS			358
6901816	INSTRUCTIONS			304
6901871	INSTRUCTIONS			274
6901872	INSTRUCTIONS			272
6902228	PAINT			379, 380
6902229	PAINT			380
6902230	PAINT			380
6902232	PRIMER			380
6902233	PAINT			380
6902234	PAINT			380
6902235	PAINT			380
6902421	INSTRUCTIONS			344
6902833	INSTRUCTIONS			234
6903105	OIL 15W40 QT. 12			2, 4, 6, 380
6903106	OIL 15W40 GAL. 6			2, 4, 6, 380
6903107	OIL 10W30 QT. 12			2, 4, 6, 380
6903108	OIL 10W30 GAL. 6			2, 4, 6, 380
6903109	OIL 30W QT. 12			2, 4, 6, 380
6903110	OIL 30W GAL. 6			2, 4, 6, 380
6903111	OIL 30W 2.5 GAL 2			2, 4, 6, 380
6903112	OIL 10W30 2.5 GAL 2			2, 4, 6
6903113	OIL 15W40 2.5 GAL. 2			2, 4, 6, 380

Code for disposition of old part number

A -- Use up
B -- Use on other application (See PNI)
C -- File PDR Report with Bobcat Parts Sales
D -- Part Number Error

Part No.	Description	Was	Code	Page
6903117	HYD FLUID 2.5 GAL. 2			2, 9, 10, 380
6903118	HYD. FLUID 5GAL			2, 10, 380
6903119	HYD. FLUID 55GAL			2, 10, 380
6903121	GEAR LUBE 12			6, 380
6903122	GREASE 10			5, 6, 380
6903282	INSTRUCTIONS			262
6903293	INSTRUCTIONS			224
6903359	INSTRUCTIONS			336
6903766	31X6X10 SOLID FLEX TIRE AND WHEEL (LEFT)			375, 376
6903767	31X6X10 SOLID FLEX TIRE AND WHEEL (RIGHT)			376
6903828	INSTRUCTIONS			350
6904113	INSTRUCTIONS			338
6904132	S/M S175/S185 "K"			2
6904134	O/M S185 "K"			2
6904255	INSTRUCTIONS			306, 316
6904257	INSTRUCTIONS			324
6904272	P/M S185K			2
6904744	INSTRUCTION, INSTALL			254
6969804	PLUG,OIL GAUGE	6684785	A	186
69G000436B	BOLT			70, 146
6E000004B	WASHER			138
6E000005B	WASHER			136, 138, 166, 300
6E000006B	WASHER			138
6EM00080B	WASHER			156
6J000807B	KEY			162
6J001664B	WOODRUFF KEY			42
7100024	HOSE			160
7100110	KIT			365, 366
7100444	PIN			338
7100445	SPACER			338
7100462	CLAMP			86, 90
7100506	GAS SPRING			14
7100508	GAS SPRING			14
7100572	BELT			166
7100699	WASHER			96
7100795	MOUNT			96
7101078	PIN			32
7101291	ELBOW			36
7101345	BONNET			70
7101354	VALVE			69, 70
7101371	ELBOW			66, 72, 90, 92
7101384	LIGHT			288
7101527	INSULATION			368
7101528	INSULATION			368
7101529	INSULATION			368
7101530	INSULATION			368
7101531	INSULATION			368
7101543	INSULATION			368
7101557	GASKET			38

Code for disposition of old part number

A -- Use up

B -- Use on other application (See PNI)

C -- File PDR Report with Bobcat Parts Sales

D -- Part Number Error

Part No.	Description	Was	Code	Page
7101646	TUBE			48
7101647	TUBE			52, 234
7101648	TEE			48, 52
7101672	ACTUATOR			144, 146
7101708	CLAMP			160
7101797	ELBOW			84
7101973	HARNESS			350
7102018	TEE			70
7102019	FITTING			68
7102066	CROSS			68, 70
7102652	SCREW			72
7102656	HOSE			160
7102869	KIT			233, 234
7103075	SEAL			252
7103271	WASHER			97, 98
7103648	TEE			88
7103708	BRACKET			96
7103711	BOLT			96
7103783	MAIN FRAME			11, 12
7103791	MUFFLER			341, 342
7103861	HOSE			88
7104076	TIE			160
7104117	HOUSING			158
7104215	BRACKET			138
7104379	HARNESS			138
7104465	DOOR SWITCH HARNESS			238, 244
7104568	MOUNT			166
7104608	BUSHING			166
7105035	WINDOW			18, 252
7105192	BOLT			96
7105193	BOLT			96
7105223	SPACER			96
7105756	TIRE			378
7105763	300 LB CTW KIT			261, 262
7105817	MOUNT ASSY			262
7105826	ROD			262
7105983	BOLT			136
7106004	TEE			92
7106024	HOSE			92
7106056	TUBE			92
7106205	HOSE			84, 88
7106687	SHIELD			26, 28
7106712	SEAT			66, 70
7107175	INLET			158
7107179	HOSE			94
7107353	GUSSET			336, 338
7107449	TUBE			160
7107544	HARNESS			224
7107562	HOSE			88
7107785	TEE			84
7107829	BACK UP ALARM KIT			223, 224
7107842	HOSE			78
7107849	MOUNT			166

Code for disposition of old part number

A -- Use up
B -- Use on other application (See PNI)
C -- File PDR Report with Bobcat Parts Sales
D -- Part Number Error

Part No.	Description	Was	Code	Page
7107896	ROD			62
7107986	LINK			96
7108222	SAFETY TREAD			264
7108236	PIN			146
7108241	LIFT SPOOL			70
7108242	TILT SPOOL			70
7108393	KIT,LIFT KIT			335, 336
7108398	BRACKET, FILTER			88
7108400	TEE			78
7108406	HOSE			84
7108408	LEVER			64
7108685	TEE			94
7108716	SEAL			370
7108781	SPOOL			66
7108843	HOSE			90
7108844	HOSE			90
7108845	HOSE			88
7108846	TEE			88
7108980	TUBE			94
7109125	INSULATION			368
7109314	MOUNT			168
7109317	INSULATOR			370
7109318	INSULATOR			370
7109343	HOSE			84
7109344	HOSE			84
7109403	HARNESS			340
7109582	OIL COOLER			91, 92
7109661	DOOR LATCH			238, 244
7109662	HANDLE			238, 244
7109663	SPACER			238, 244
7109664	BOLT			238, 244
7109665	DOOR			238
7109712	SHIELD			162, 320
7109922	TUBE			84
7109923	TUBE			92
7109924	KIT-REAR AUX			349, 350
7109927	TUBE			350
7109934	MOUNT			49, 50, 54
7110243	BRACKET			94
7110244	BRACKET			94
7110262	TUBE			48, 52
7110264	TUBE			58
7110287	GASKET			44
7110316	DECAL			238, 244
7110365	PINTLE ARM			96
7110367	HOSE			344
7110406	HARNESS			144
7110410	INSULATION			370
7110430	SPECIAL APPS DOOR			244
7110571	BELLCRANK			96
7110695	MOUNT			92
7110809	HOSE			93, 94
7110914	TUBELINE			67, 68, 70
7110927	BRACKET			76

Code for disposition of old part number
A -- Use up
B -- Use on other application (See PNI)
C -- File PDR Report with Bobcat Parts Sales
D -- Part Number Error

Part No.	Description	Was	Code	Page
7111992	JOYSTICK ASMBLY RH			144
7111993	JOYSTICK ASMBLY LH			144
7112290	HARNESS			344
7112346	KIT, 4 PT LIFT			337, 338
7112383	AUX SPOOL			66, 70
7112651	HOSE			293, 294, 370
7112782	TANK FUEL			35, 36
7112800	SJC HARNESS			140
7112802	HARNESS			140
7112910	ELBOW			48, 52
7112911	TUBE			48, 52
7112912	TUBE			52, 234
7113010	SPACER			166
7113208	HOSE			316
7113209	HOSE			316
7113262	ELBOW		A	86, 90
7113262	ELBOW			86, 90
7113340	CAP			36
7113360	TUBE			76, 78
7113635	PULLEY			162
7114050	HOSE			48, 52
7114053	TEE			50, 54
7114121	HOSE			58
7114236	HOSE			50, 54
7114250	HOSE			94
7114251	HOSE			94
7114294	ADAPTER			58
7114667	ROD			168
7114710	TUBE			48, 52
7114711	TUBE			48, 52
7114735	HARNESS			144
7114739	SPACER			166
7114758	LIFT ARM			32
7115185	HOSE			344
7115219	PEDAL			64, 220
7115220	MOUNT			64, 220
7115412	TUBE			58
7115413	TUBE			58
7115595	HOSE			76
7116258	HARNESS			137, 138, 139, 140
7116260	HARNESS			18, 136
7116261	HARNESS			18, 135, 136
7116280	ROD			170
7116564	HOSE			48, 52
7116565	HOSE			48, 52
7116699	INSULATION			370
7116700	INSULATION			370
7116870	DECAL			266
7116899	KIT HEATER CAB			305, 306
7116900	KIT			315, 316
7116903	AC KIT			321, 322
7116995	TUBELINE			66
7117123	PANEL			26, 28

Code for disposition of old part number

A -- Use up

B -- Use on other application (See PNI)

C -- File PDR Report with Bobcat Parts Sales

D -- Part Number Error

Part No.	Description	Was	Code	Page
7117174	CYLINDER			59, 60
7117175	CASE			60
7117232	PANEL			25, 26, 27, 28
7117322	HARNESS			238, 244
7117380	TUBE			56
7117407	DECAL			140
7117667	CYLINDER			61, 62
7117668	CASE			62
7120264AR	KIT, DECAL			264, 266
7120264BR	KIT, DECAL			264, 266
7120264JP	KIT, DECAL			264, 266
7120300AR	KIT, TRANSLATION			264, 266
7120300BR	KIT, TRANSLATION			264, 266
7120498	BUSHING			32
7120588	DECAL			264, 266
7120693	DECAL			76, 78, 264, 266
7120898	KIT, PWR BOBTACH			343, 344
7121223	CAP			36
7121399	SPRING			68, 70
7121556	BRACE, CAB			254
7121922	COVER			46
7122291	CHAINCASE			40
7122462	KIT, WINDOW RIB			253, 254
7122487	SEAL, WIPER			254
7122488	SEAL, BULB			254
7123963	SEAL KIT			68, 72
7123964	SEAL KIT, COMPLETE			68, 72
7123965	SEAL KIT			68, 72
72F000001B	DRAIN COCK			36
73G000656B	BOLT			161, 162, 344
73G000824B	BOLT			40, 96
73G624	BOLT			96
73K000013B	O-RING			70
73K000016B	RING			66, 70
73K000222B	WASHER			346
73K000228B	RING			62
743332B	GREASE ZERK			34
75K000003B	O-RING			60, 346
774220	NUT			224, 226
78HA01010B	ADAPTER			94
78HA01210B	ADAPTER			94
799119B	SNAP RING			66
79K000002B	O-RING			158
79K000005B	O-RING			36, 100
79K000006B	O-RING			56, 58, 66, 70, 84, 86, 88, 90, 94, 100, 236, 302, 350
79K000007B	O-RING			348
79K000008B	O-RING			66, 70, 90, 102, 106, 166, 236, 348
79K000010B	O-RING			48, 52, 54, 66, 70, 76, 78, 94, 102, 234, 348
79K000012B	O-RING			84, 85, 86, 88, 90, 92, 94, 106, 350
79K000016B	O-RING			66, 84, 88, 92
79K000020B	O-RING			78
79K16	O RING 10			72
7D000004B	NUT			56, 74

Code for disposition of old part number

A -- Use up

B -- Use on other application (See PNI)

C -- File PDR Report with Bobcat Parts Sales

D -- Part Number Error

Part No.	Description	Was	Code	Page
80K000013B	WASHER			68
80K000332B	WASHER			60
82K000230B	SEAL			62
83D000004B	NUT			20, 56, 140, 226, 290, 318, 328, 330
83D000005B	NUT			318, 322, 323, 324, 328, 330
83D000006B	NUT			56, 64, 86, 90, 96, 272, 276, 298, 350
83D000008B	NUT			12, 166
83F000003B	ELBOW			280
84G001320B	BOLT			224
84G003110B	BOLT			318
84G003112B	BOLT			14, 26, 28, 36, 76, 78, 138, 140, 158, 264, 272, 274, 276
84G003116B	BOLT			38
84G003708B	BOLT			92, 160
84G003710B	BOLT			84, 88, 146, 220, 318, 322
84G003712B	BOLT			12, 26, 28, 36, 37, 38, 40, 48, 52, 92, 94, 136, 138, 160, 166, 168, 170, 234, 290, 302
84G003716B	BOLT			38, 46, 84, 88, 138, 166, 168, 290, 292, 318, 322, 366
84G003720B	BOLT			46, 78, 90, 170, 218
84G003724B	BOLT			168, 170, 344, 350
84G003728B	BOLT			48, 52
84G003732B	BOLT			86, 90
84G003740B	BOLT			58
851242B	BEARING			190
85D000004B	NUT			290
85D000005B	NUT			36, 168, 170, 286, 340
85D000006B	NUT			16, 30, 32, 34, 334, 336, 338
85D000007B	NUT			16
85D000008B	NUT			14, 162, 165, 166
85D6	LOCK NUT			170
85G000616B	SCREW			290
85G000808B	BOLT			290
866028B	CLAMP			216
86F000003B	NUT			280
86F000005B	NUT			302, 350
86F000008B	NUT			92
872229	WASHER			48, 52, 58
87D000005B	NUT			334, 336, 338
88F000005B	ELBOW			350
898731B	BULB			340
89D000005B	NUT			28
8D000006B	NUT			96, 280
91D000005B	NUT			280
91D000006B	NUT			96, 280
91G000420B	BOLT			18, 252
91K000005B	TEE			350
92D000010B	NUT			346
92D000012B	NUT			162
92D000016B	NUT			60
95D000005B	NUT			138, 146, 220
95D000006B	NUT			64, 76, 92, 94, 146, 168, 244
95D000008B	NUT			14
95D6	NUT			158
95K000003B	O-RING			62

Code for disposition of old part number

A -- Use up
B -- Use on other application (See PNI)
C -- File PDR Report with Bobcat Parts Sales
D -- Part Number Error

Part No.	Description	Was	Code	Page
96D000008B	NUT			158
97D000004B	NUT			224
97D000005B	NUT			268
97D000006B	NUT			144, 320, 324
97D000008B	NUT			304
98D000006B	NUT			96, 146
98F000003B	TEE			280
98G000412B	BOLT			152

Code for disposition of old part number

A -- Use up
B -- Use on other application (See PNI)
C -- File PDR Report with Bobcat Parts Sales
D -- Part Number Error