RUTHZIL TRATOR COMERCIAL DE PEÇAS LTDA 11 97083-6812 ROLANDO

Bobcat®

Parts Manual
S220 Skid-Steer Loader

S/N 530711001 & Above
S/N 530811001 & Above

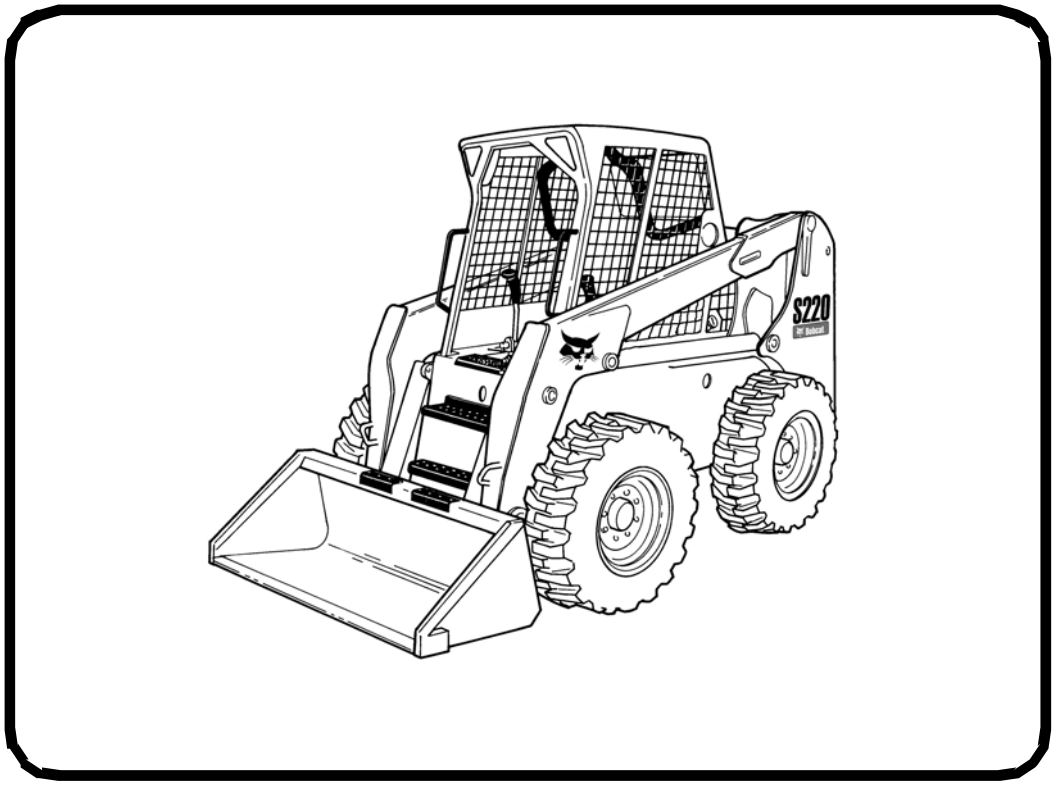

EQUIPPED WITH
BOBCAT INTERLOCK
CONTROL SYSTEM (BICS)

6904243 (6-06) Revised (5-09)

Printed in U.S.A.

© Bobcat Company 2009

Page 1 - OSS# 2071408 - All rights reserved by Bobcat Company - 12/04/2009 - 07:23:36 - Produced by Ken Cook Co. with mediaioff

GENERAL INFORMATION

Before ordering parts, ALWAYS provide dealer with your product model number and complete serial number information. Before ordering parts, verify correct part numbers and/or serial numbers with your dealer. When using the machine serial number, use the complete number.

Some serial number breaks are not available at time of printing.
These are listed as & Bel or & Abv or - (thru)

The number shown in the quantity column in this manual is the number of parts needed for the illustration on the page. For some parts an "x" will be shown in the quantity column. This "x" indicates that the quantity to be used is "As Needed".

When references LH (Left Hand) and RH (Right Hand) are used in this manual, it is done from the operator's seat in the forward operating position.

When "See Illustration…." appears in the remarks column, refer to the contents page for the illustration title to find page number location.

Some of the illustrations and information found in this parts manual were supplied to Bobcat by machine component companies.

For additional information on the Bobcat website visit www.bobcat.com

ABBREVIATIONS

SALES	= Order from Gwinner Sales Department	P/M	= Parts Manual
NSS	= Not Serviced Separately	S/L	= Service Letter
NAP	= Not Available as Parts	W/	= With
BTI	= Bobcat Technical Information Bulletin	W/ O	= Without
O/M	= Operation & Maintenance Manual	ID	= Inside Diameter
S/M	= Service Manual	OD	= Outside Diameter
AHC	= Advanced Hand Controls	"	= Inches
ACS	= Advanced Control System	'	= Feet
SJC	= Selectable Joystick Controls	mm	= Millimeters

TRANSLATION KITS & DECAL KITS

AR = Argentina (Spanish) BR = Brazil (Portugese) JP = Japanese
(Translation Kit includes Safety Manual, Operators Manual & Decal Kit)

DISPOSITION

(Found in the Remarks Column)

[A]	=	Use Up
[B]	=	Use Up on Other Applications
[C]	=	File PDR Report with Bobcat Parts Sales
[D]	=	Part Number Error

Page 2 - OSS# 2071408 - All rights reserved by Bobcat Company - 12/04/2009 - 07:23:36 - Produced by Ken Cook Co. with mediaioff

NOTE D'INFORMATION

Pour toute référence au numéro de série de l'engin, toujours donner le numéro complet.

Le chiffré apparaissant dans la colonne des quantités de ce manuel représentent le nombre de pièces nécessaires pour l'illustration reprise sur la page. Dans certains cas, on lira un "x" dans la colonne des quantités. Cet "x" indique que la quantité nécessaire est "selon besoin".

Pour toute référence vers la GAUCHE ou la DROITE dans ce manuel, considérer que la personne se trouve assise dans le siège de l'opérateur, en position de fonctionnement en marche avant.

Certaines illustrations et informations reprises dans ce manuel de pièces de rechange ont été fournies à Bobcat/Ingersoll–Rand par des fabricants de composants.

ABREVIATIONS & SYMBOLES

SALES	= Commander au Service Ventes à Bruxelles
NSS	= Pas vendu séparément
NAP	= Non disponible comme pièce de rechange
*****	= Chapitre, page ou numéro de pièce modifié ou supplémentaire
BTI	= Bobcat Technical Information Bulletin : voir à la fin de la microfiché du modèle concerné ou la microfiche générale reprenant l' ensemble des "BTI".
was 6535403	= était avant 6535403
adj. (adjustment)	= réglage
Assembly	= ensemble
available W/Ref.	= disponible avec réf.
bulk/sold per foot	= en vrac/vendu par pied
does not include	= ne comprend pas
included with	= compris dans
I.D.	= D.I. (diamètre intérieur)
O.D.	= D.E. (diamètre extérieur)
not in kit	= pas en kit
W/ – WO/	= inclus/ – non inclus/
Qty	= quantité requise
see page/ref.	= voir page/réf.
used with ref/	= utilisé avec réf.
0,05 inch thickness	= 0,05 pouce d'épaisseur (un pouce = 25.4 mm)
weld on	= à souder

Page 3 - OSS# 2071408 - All rights reserved by Bobcat Company - 12/04/2009 - 07:23:36 - Produced by Ken Cook Co. with mediaioff

ALLGEMEINE INFORMATIONEN

Bei Angabe der Maschinen-Seriennummer stets die komplette Nummer angeben.

Bei der in der Mengenspalte (Anzahl) in diesem Handbuch angegebenen Zahl handelt es sich um die Anzahl von Teilen, die für die Abbildung auf der betreffenden Seite benötigt werden. Bei manchen Teilen in der Mengenspalte ist ein “x” angegeben. Dieses “x” weist darauf hin, dass sich die Anzahl der verwendeten Teile auf den “Bedarf” bezieht.

Bei Verwendung der Seitenangaben links und rechts in diesem Handbuch gelten diese für die Blickrichtung vom Fahrersitz aus, und zwar in Vorwärts-Betriebsrichtung.

Einige der in diesem Ersatzteilhandbuch aufgeführten Abbildungen und Informationen wurden der Bobcat/Ingersoll-Rand von den Herstellern von Maschinenbauteilen zur Verfügung gestellt.

ABKÜRZUNGEN UND SYMBOLE

SALES	= Bestellung bei der Verkaufsabteilung in Brüssel
NSS	= Nicht einzeln erhältlich
NAP	= Nicht als Ersatzteil erhältlich
*****	= Geänderte oder hinzugefügte Abschnitte, Seiten oder Teilenummern
BTI	= Bobcat Technical Information Bulletin : Siehe am Ende der Mikrokarte des jeweiligen Modells oder der allgemeinen Mikrokarte der BTI.
was 6535403	= War 6535403
adj.	= Einstellung
Assembly	= Baugruppe
available W/Ref.	= erhältlich mit der Referenz
bulk/sold per foot	= Mengenabnahme / Verkauf pro Fuss
does not include	= beinhaltet nicht
included with	= enthalten in
I.D.	= Innendurchmesser
O.D.	= Aussendurchmesser
not in kit	= nicht in Bausatz
W/ - WO/	= mit/ - ohne/
Qty	= Anzahl
see page/ref.	= Siehe Seite / Referenz
used with ref.	= verwendet mit Referenz
0.05 inch thickness	= Dicke : 0.05 Zoll (ein Zoll = 25.4 mm)
weld on	= anschweissen

Page 4 - OSS# 2071408 - All rights reserved by Bobcat Company - 12/04/2009 - 07:23:36 - Produced by Ken Cook Co. with mediaIoff

INFORMAZIONI GENERALI

Quando si usa il numero di serie della macchina usare il numero completo.

Il numero mostrato nella colonna della quantità di questo manuale corrisponde al numero di componenti necessari per l'illustrazione della pagina. Per alcuni componenti appare "X" nella colonna delle quantità. Questa "X" indica che la quantità da usare è "come necessario".

See in questo manuale si fa riferimento alla parte destra o sinistra, si intende dal sedile dell'operatore nella posizione in avanti di funzionamento.

Alcune delle illustrazioni e informazioni trovate in questo manuale di componenti sono state fornite alla Bobcat/Ingersoll–Rand da società di componenti di macchine.

SIMBOLI E ABBREVIAZIONI

SALES	= Ordinare al servizio vendite di Bruxelles
NSS	= Non vendute separatamente
NAP	= Non disponibile come componente
*****	= Sezioni, pagine o numeri di componente cambiati o aggiunti
BTI	= (Bobcat Technical information) Ved. al termine del microfiche del modello relativo oppure microfiche generale
was 6535403	= era 6535403
adj. (adjustment)	= regol. (regolazione)
Assembly	= Complessivo
available W/Ref.	= disponibile con rif.
bulk/sold per foot	= alla rinfusa/venduto al piede
does not include	= non comprende
Included with	= compreso con
I.D.	= d. i.
O.D.	= d. e.
not in kit	= non fa parte del kit
W/ – WO/	= con – senza
Qty	= Qtà
see page/ref	= ved. pagina/rif.
used with ref.	= usato con il rif.
0,05 inch thickness	= spessore 0,05 pollici (un pollice = 25,4 mm)
weld on	= a saldare

Page 5 - OSS# 2071408 - All rights reserved by Bobcat Company - 12/04/2009 - 07:23:36 - Produced by Ken Cook Co. with mediaioff

INFORMACION GENERAL

Al utilizar el número de serie de la máquina, debe emplearse el número completo.

El número que figura en la columna de “Unidades” en este manual es el número de piezas que se necesitan para la ilustración que consta en la página. En algunas piezas aparece una “x” en la columna de “Unidades”. Esta “x” indica que las unidades a utilizar son “según sea necesario”.

Cuando se empleen las referencias izq. y dcha., éstas se entienden mirando desde el asiento del conductor, en posición de marcha adelante.

Algunas de las ilustraciones y la información que figuran en este manual de piezas han sido facilitadas a Bobcat/Ingersoll–Rand por empresas de componentes de máquinas.

ABREVIATURAS Y SIMBOLOS

VENTAS	= Pedido al Departamento de Ventas de Bruselas
NSS	= No se vende por separado
NAP	= No disponible como pieza de repuesto
*****	= Secciones, páginas o referencias modificadas o añadidas
BTI	= (Bobcat Tecnical Information) Ver al final de la microficha del modelo afectado o en la microficha general “Boletín de Información Técnica Bobcat”.
was 6535403	= era anteriormente el 6535403
adj. (adjustment)	= ajuste
assembly	= conjunto
available W/Ref.	= disponible con la ref.
bulk/sold per foot	= a granel/vendido por pies
does not include	= no incluye
included with	= incluido en
I.D.	= diámetro interior
O.D.	= diámetro exterior
not in kit	= no en el kit
W/ – WO/	= con/ – sin
Qty	= Unidades
see page /ref.	= ver página/ref.
used with ref.	= empleado con la ref.
0,05 inch thickness	= 0,05 pulgadas de espesor (1 pulgada = 25,4 mm)
weld on	= debe ser soldado

Page 6 - OSS# 2071408 - All rights reserved by Bobcat Company - 12/04/2009 - 07:23:36 - Produced by Ken Cook Co. with mediaioff

ALGEMENE INFORMATIE

Als u het serienummer van de machine gebruikt, geef dan het gehele serienummer.

Het cijfer dat voorkomt in de kolom “Aantal”, in deze handleiding, is het aantal onderdelen dat nodig is van de illustratie op de pagina. Voor sommige onderdelen staat er een “x” in de kolom “Aantal”. Deze “x” betekent dat er een aantal “zoals nodig” vereist is.

Wanneer er in deze handleiding naar “links” en naar “rechts” gerefereerd wordt, moet dit verstaan worden voor een bestuurder die in de bestuurdersstoel zit in de voorwaartse bedrijfsstand.

Sommige van de illustraties en informatie in deze onderdelen-handleiding werden door firma’s van machine-componenten geleverd aan Bobcat/Ingersoll-Rand.

AFKORTINGEN EN SYMBOLEN

SALES	= Bestellen bij de Verkoopafdeling te Brussel
NSS	= Niet afzonderlijk te verkrijgen
NAP	= Niet beschikbaar als onderdeel
*****	= Gewijzigde of toegevoegde paragrafen, pagina’s of onderdeelnummers
BTI	= Bobcat Technical Information Bulletin : Zie einde van de microfiche van het desbetreffende model of einde van de algemene microfiche die het geheel van alle “BTI” herneemt.
was 6535403	= was vroeger 6535403
adj. (adjustment)	= afstelling
Assembly	= geheel
available W/Ref.	= beschikbaar met ref.
bulk/sold per foot	= bulk/aan de meter verkocht
does not include	= bevat niet
includes with	= is bevat in
I.D.	= ϕ inw. (inwendige diameter)
O.D.	= ϕ uitw. (uitwendige diameter)
not in kit	= niet in de kit
W/ - WO/	= met/ - zonder/
Qty	= vereiste aantal
see page/ref.	= zie pagina/ref.
used with ref/	= gebruikt met ref.
0,05 inch thickness	= 0.05 inch dik (een inch = 25.4 mm)
weld on	= te lassen

Page 7 - OSS# 2071408 - All rights reserved by Bobcat Company - 12/04/2009 - 07:23:36 - Produced by Ken Cook Co. with mediaioff

Use only Bobcat belts and hoses to maintain maximum service life.

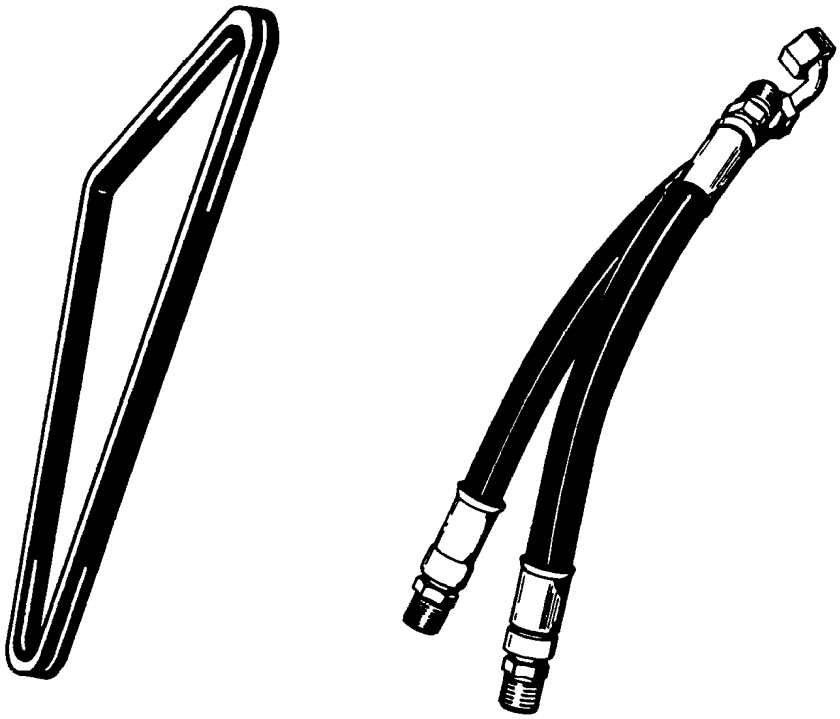

Available from Bobcat Parts.

Bobcat®

Page 8 - OSS# 2071408 - All rights reserved by Bobcat Company - 12/04/2009 - 07:23:36 - Produced by Ken Cook Co. with mediaioff

CONTENTS

MAINTENANCE ITEMS 1-12
MAINTENANCE ITEMS 1-4
SCHEDULED MAINTENANCE ITEMS 5-12

MAIN FRAME 13-40
MAIN FRAME 13-16
OPERATOR CAB 17-22
SEAT & SEAT BAR 23
SEAT 25
REAR DOOR 27
LIFT ARMS & BOBTACH 29
BOB-TACH 31
PANELS 33-36
FUEL SYSTEM 37-40

DRIVE TRAIN 41-58
DRIVE TRAIN 41
MOTOR CARRIER 43-50
TRANSMISSION COVERS 51-56
AXLE 57

HYDRAULIC SYSTEM 59-92
HYDRAULIC CIRCUITRY 59-66
AUXILIARY HYDRAULICS 67
LIFT & TILT CONTROL CIRCUITRY 69
TILT CYLINDER 71
LIFT CYLINDER 73
MANUAL LIFT RELEASE VALVE 75
CONTROL PEDALS 77
HYDRAULIC CONTROL VALVE 79-90
BUCKET POSITIONING VALVE 91

HIGH FLOW HYDRAULICS 93-96
HIGH FLOW HYDRAULICS 93-96

HYDROSTATIC SYSTEM 97-170
HAND CONTROLS 121-124
HYDROSTATIC MOTOR 125
HYDROSTATIC MOTOR & BRAKE 127-130
HYDROSTATIC PUMP/GEAR PUMP 131
HYDROSTATIC PUMP 133-156
GEAR PUMP 157
COOLING FAN MOTOR 159-164
2-SPEED VALVE 165
HYDROSTATIC OIL FILTER 167-170
HYDROSTATIC CIRCUITRY 97-120

ELECTRICAL SYSTEM 171-208
CAB ELECTRICAL CIRCUITRY 171-174
ENGINE ELECTRICAL 175-180
CONTROLS ELECTRICAL 181-204
CONNECTOR HARNESS ASSEMBLY 183
ALTERNATOR 205
STARTER 207

POWER UNIT 209-266
COOLING SYSTEM 209-216
ENGINE & ATTACHING PARTS 217-222
ENGINE MOUNTS 223

Page 9 - OSS# 2071408 - All rights reserved by Bobcat Company - 12/04/2009 - 07:23:36 - Produced by Ken Cook Co. with mediaioff

CONTENTS (Cont'd)

POWER UNIT

ENGINE SPEED CONTROL 225-228
ENGINE 229
MANIFOLDS 231
TURBOCHARGER 233
CYLINDER HEAD & COVER 235
CYLINDER HEAD 237
OIL PAN 239
PISTON & CRANKSHAFT 241-244
CAMSHAFT 245
FRONT COVER 247
WATER PUMP & THERMOSTAT 249
WATER PUMP 251
FUEL INJECTION SYSTEM 253-256
FUEL INJECTION PUMP 257
GOVERNOR 259-264
AIR CLEANER 265

ACCESSORIES & OPTIONS 267-452

ACCESS COVER 267
ACS CONVERSION KIT 269
BACK-UP ALARM KIT 271-274
BEACON 275
BLOCK HEATER 277
BUCKET POSITIONING KIT 279
CAB DOOR 281-290
CAB ENCLOSURE 291-296
CAB WINDOWS 297-302
COOLING UPGRADE KIT 303
COUNTERWEIGHT KIT 305-308
DECALS 309-312
DEBRIS SHIELD KIT 313
ELECTRICAL CONNECTOR KIT 315
ELECTRICAL CONTROLS KIT 317-320
EUROPEAN ACCESSORIES 321
EUROPEAN ACCESSORIES 323-326
FIRE EXTINGUISHER 327
FLASHER LIGHTS 329
F.O.P.S. KIT 331
FRONT AUXILIARY 333
GAS SPRING KIT 335
HEATER & A/C 337-374
HEATER 341
HEATER & AC 355
HORN KIT 375-378
HOSE GUIDE KIT 379
LIFT KIT 381-386
LIGHT KIT 387
MAINTENANCE PLATFORM KIT 389
PEDAL EXTENDERS 391
PURIFIER 393
POWER BOB-TACH 395-408
RADIATOR SCREEN KIT 409

Page 10 - OSS# 2071408 - All rights reserved by Bobcat Company - 12/04/2009 - 07:23:36 - Produced by Ken Cook Co. with media1off

CONTENTS (Cont'd)

ACCESSORIES & OPTIONS

REAR AUXILIARY HYDRAULIC KIT 411
REAR AUXILIARY VALVE 413
REAR DOOR LOCK 415
REAR WIPER 417
REMOTE CONTROL KIT 419
SEAT 421-424
SEAT BELT 425-430
SOUND/NOISE REDUCTION OPTION 431-440
SOUND REDUCTION KIT 433-438
STROBE LIGHT 441
TIRES & RIMS 443-446
WHITE DECAL KIT 447
BULK ITEMS 449-452

NUMERICAL INDEX 454-508

Page 11 - OSS# 2071408 - All rights reserved by Bobcat Company - 12/04/2009 - 07:23:36 - Produced by Ken Cook Co. with media1off

MAINTENANCE ITEMS

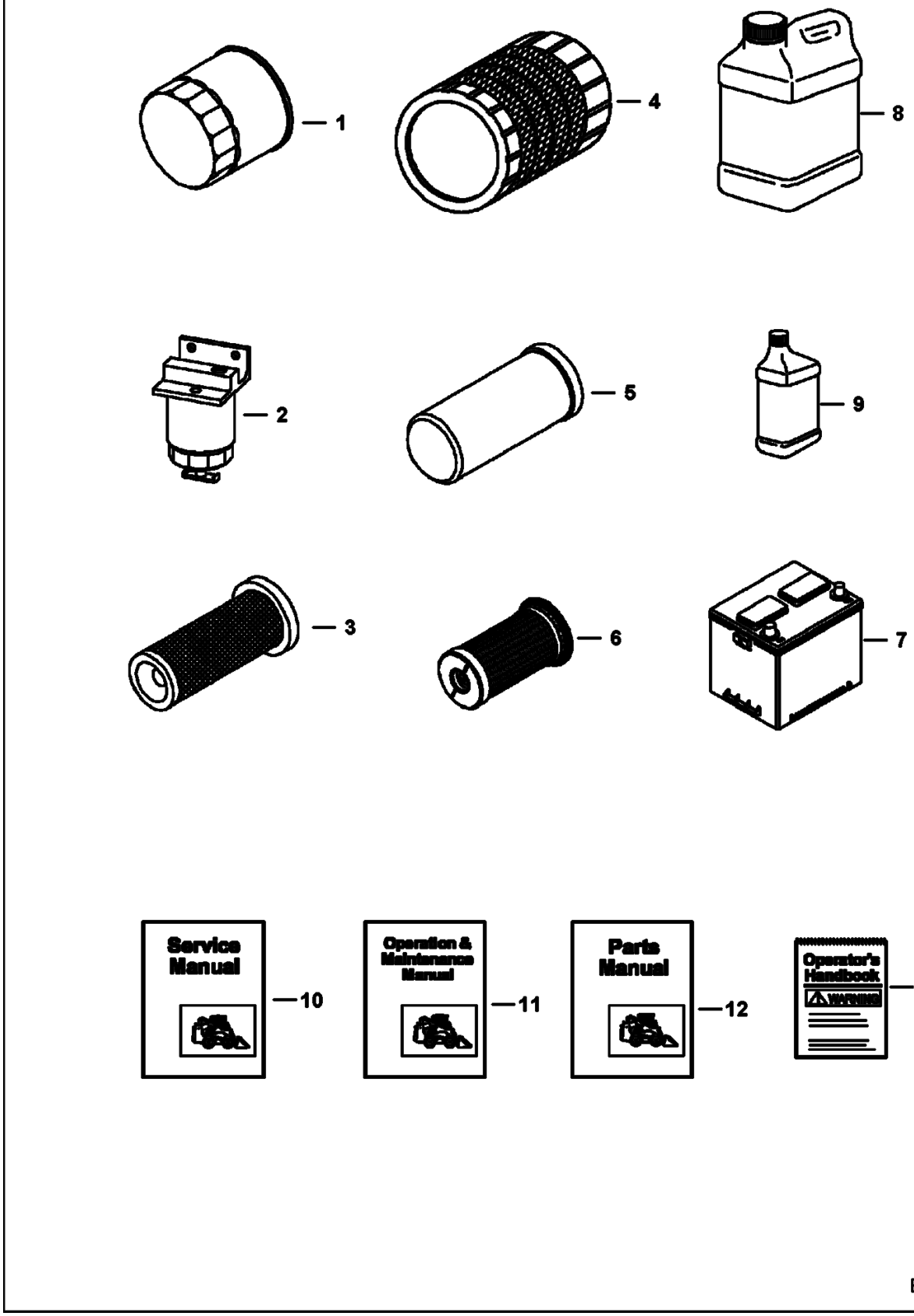

Page 12 - OSS# 2071408 - All rights reserved by Bobcat Company - 12/04/2009 - 07:23:36 - Produced by Ken Cook Co. with media1off

Ref No	Part Number	Description	Remarks	Serial Number	Qty
1	6678233	FILTER, OIL ENG	See Illustration OIL PAN/ B22921 - engine oil (6 pack)		x
2	6667352	FILTER, FUEL W/SEPERATOR 12	See Illustration FUEL SYSTEM/ PE3064		x
3	6681475	CARTRIDGE	See Illustration AIR CLEANER/ MS1516 - Inner Air Cleaner		x
4	6681474	CARTRIDGE	See Illustration AIR CLEANER/ MS1516 - Outer Air Cleaner		x
5	6661248	FILTER, OIL HYD 12	See Illustration HYDROSTATIC OIL FILTER/ C2818 Hydrostatic #3 Media - Standard Flow - 6" (152, 4mm) long		x
5	6668819	FILTER	See Illustration HYDROSTATIC OIL FILTER/ C2818 Hydrostatic # 3 Media - High Flow - 9.5" (241,3 mm) long		x
5	6686926	FILTER, OIL HYD	hydrostatic #3 media - charge - for aluminum cooling motor - 4.5" (113,5 mm) long		x
5	6661807	FILTER, OIL HYD	See Illustration HYDROSTATIC OIL FILTER/ B13527 - in-line		x
6	6692337	FILTER, HYD CARTRIDGE	See Illustration COOLING FAN MOTOR/ MS2514 - for cast iron cooling motor		x
7	6665427	BATTERY, DRY 950 AMP	See Illustration ENGINE ELECTRICAL/ PE2826		x
8	6903117	FLUID, OIL HYD 2.5 GAL 2	See Illustration BULK ITEMS/ B16415		x
8	6903118	FLUID, OIL HYD 5 GAL	See Illustration BULK ITEMS/ B16415		x
8	6903119	FLUID, OIL HYD 55 GAL	See Illustration BULK ITEMS/ B16415		x
9	6903107	OIL, 10W30 QT. 12	See Illustration BULK ITEMS/ B16415		x
9	6903105	OIL, 15W40 QT. 12	See Illustration BULK ITEMS/ B16415		x
9	6903109	OIL 30W QT. 12	See Illustration BULK ITEMS/ B16415		x
9	6903106	OIL, 15W40 GAL. 6	See Illustration BULK ITEMS/ B16415		x
9	6903108	OIL, 10W30 GAL. 6	See Illustration BULK ITEMS/ B16415		x
9	6903110	OIL, 30W GAL. 6	See Illustration BULK ITEMS/ B16415		x
9	6903112	OIL, 10W30 2.5 GAL 2	See Illustration BULK ITEMS/ B16415		x
9	6903113	OIL, 15W40 2.5 GAL. 2	See Illustration BULK ITEMS/ B16415 Was 6674204 [A]		x
9	6903111	OIL 30W 2.5 GAL 2	See Illustration BULK ITEMS/ B16415		x
10	6904154	MANUAL SERVICE S220 LOADER	service		1
11	6904152	MANUAL OPERATION S220 LOADER	operation & maintenance		1
12	6904243	MANUAL PARTS S220 LOADER	printed		1
12	6904243-CD	MANUAL PARTS S220 LOADER CD			1
13	6902600	MANUAL	See Illustration DECALS/ B26130 operation &		1

Page 13 - OSS# 2071408 - All rights reserved by Bobcat Company - 12/04/2009 - 07:23:36 - Produced by Ken Cook Co. with media1off

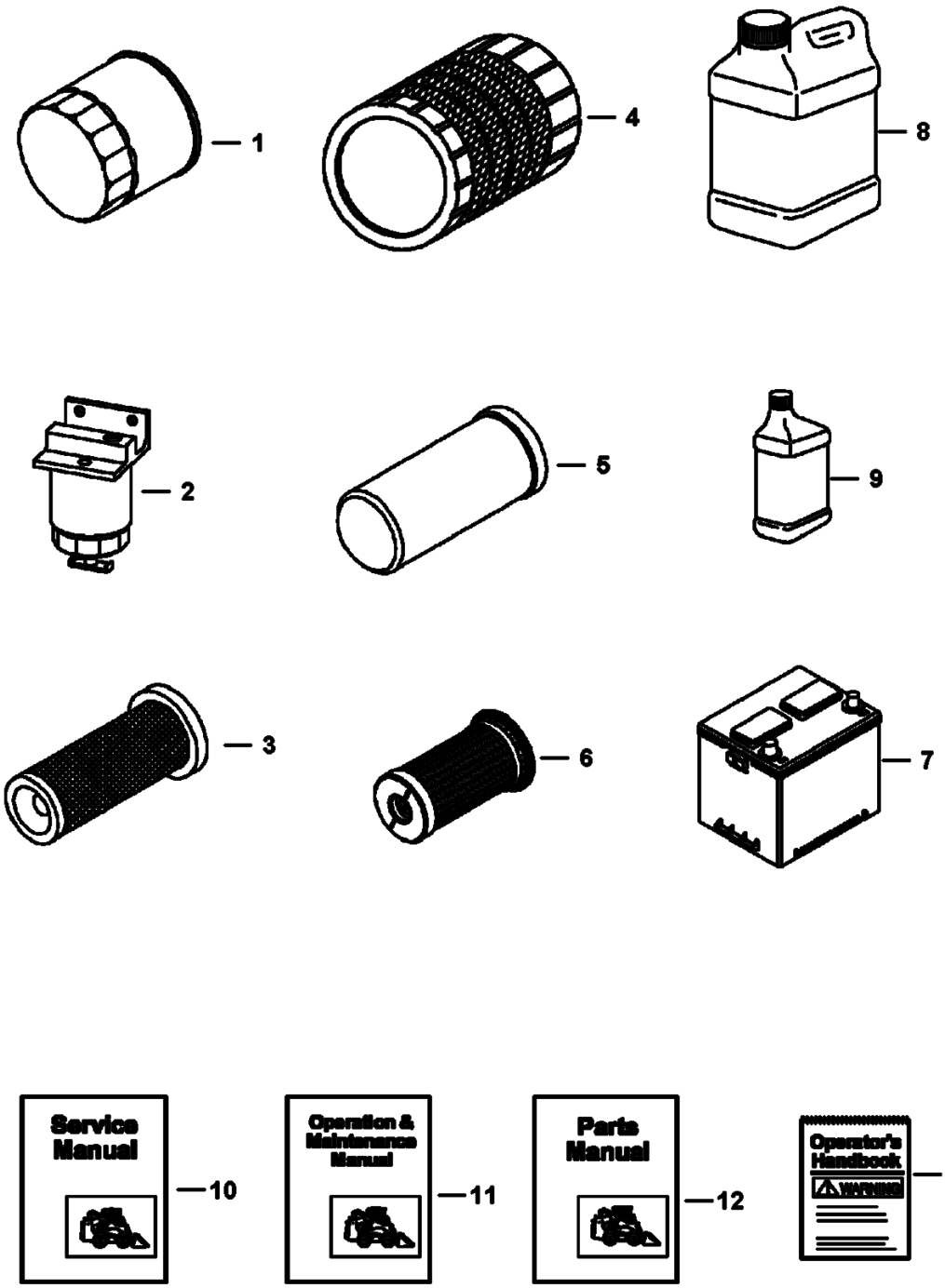

Page 14 - OSS# 2071408 - All rights reserved by Bobcat Company - 12/04/2009 - 07:23:36 - Produced by Ken Cook Co. with media1off

Ref No	Part Number	Description	Remarks	Serial Number	Qty
			maintenance - W/wire rope - Was 6737783 [D]		

Page 15 - OSS# 2071408 - All rights reserved by Bobcat Company - 12/04/2009 - 07:23:36 - Produced by Ken Cook Co. with media1off

SCHEDULED MAINTENANCE ITEMS
(50 Hour)

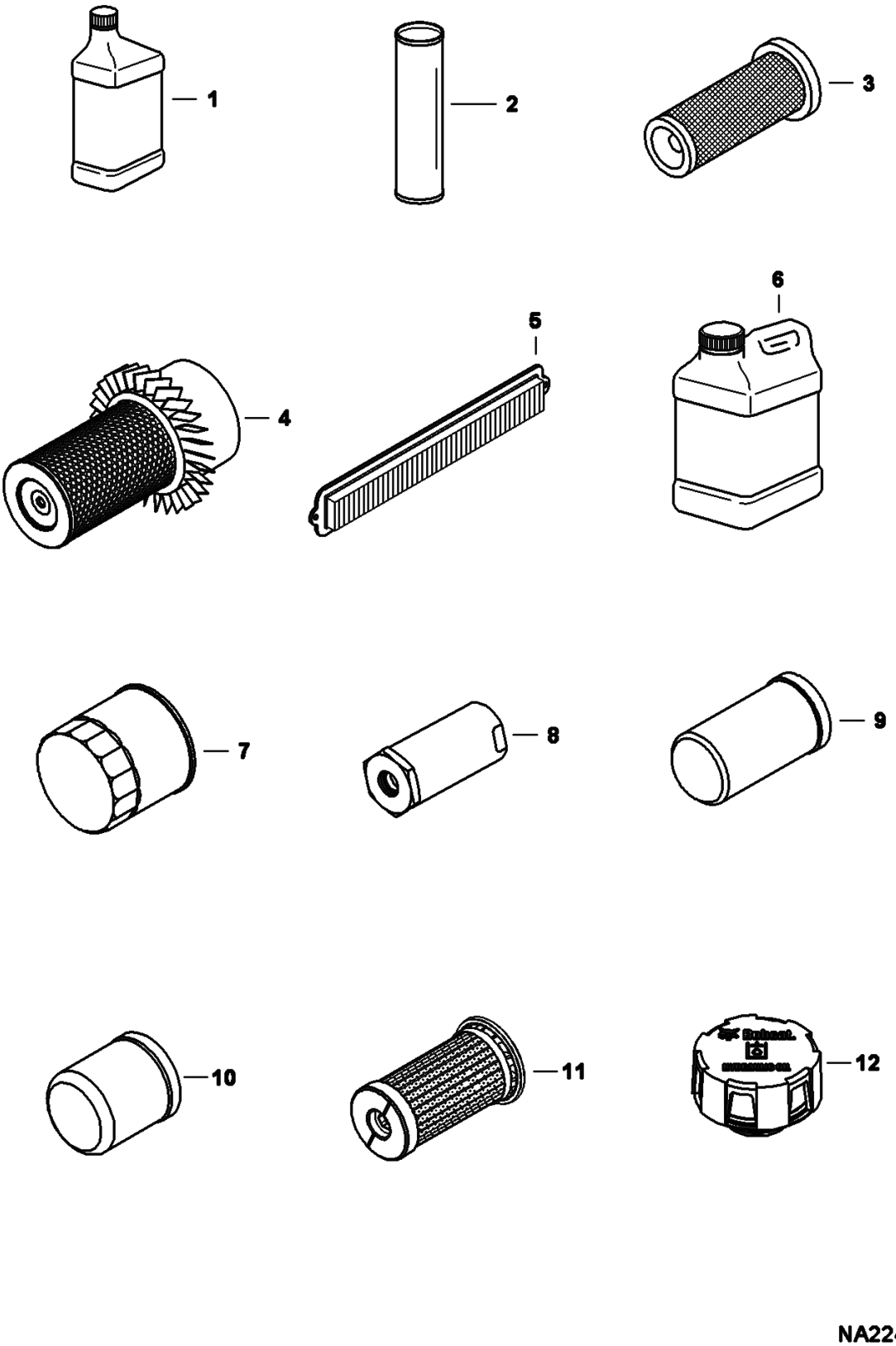

Page 16 - OSS# 2071408 - All rights reserved by Bobcat Company - 12/04/2009 - 07:23:36 - Produced by Ken Cook Co. with media1off

SCHEDULED MAINTENANCE ITEMS (Cont'd)
(50 Hour)

Ref No	Part Number	Description	Remarks	Serial Number	Qty
1	6903107	OIL, 10W30 QT. 12	See Illustration BULK ITEMS/ B16415		x
1	6903105	OIL, 15W40 QT. 12	See Illustration BULK ITEMS/ B16415		x
1	6903109	OIL 30W QT. 12	See Illustration BULK ITEMS/ B16415		x
1	6903106	OIL, 15W40 GAL. 6	See Illustration BULK ITEMS/ B16415		x
1	6903108	OIL, 10W30 GAL. 6	See Illustration BULK ITEMS/ B16415		x
1	6903110	OIL, 30W GAL. 6	See Illustration BULK ITEMS/ B16415		x
1	6903112	OIL, 10W30 2.5 GAL 2	See Illustration BULK ITEMS/ B16415		x
1	6903113	OIL, 15W40 2.5 GAL. 2	See Illustration BULK ITEMS/ B16415 Was 6674204 [A]		x
1	6903111	OIL 30W 2.5 GAL 2	See Illustration BULK ITEMS/ B16415		x
2	6903122	GREASE, MULTI PURPOSE #2 - 10	See Illustration BULK ITEMS/ B16415		x
3	6681475	CARTRIDGE	See Illustration AIR CLEANER/ MS1516 - Inner Air Cleaner		x
4	6681474	CARTRIDGE	See Illustration AIR CLEANER/ MS1516 - Outer Air Cleaner		x
5	6677983	FILTER, AIR HEATER CAB	See Illustration HEATER & A/C/ PE3078 - HVAC		x
6	6903117	FLUID, OIL HYD 2.5 GAL 2	See Illustration BULK ITEMS/ B16415		x
6	6903118	FLUID, OIL HYD 5 GAL	See Illustration BULK ITEMS/ B16415		x
6	6903119	FLUID, OIL HYD 55 GAL	See Illustration BULK ITEMS/ B16415		x
7	6678233	FILTER, OIL ENG	See Illustration OIL PAN/ B22921 - Engine Oil (6 Pack)		x
8	6661022	FILTER	See Illustration HYDROSTATIC OIL FILTER/ B13527		1
9	6661248	FILTER, OIL HYD 12	See Illustration HYDROSTATIC OIL FILTER/ C2818 - std		1
9	6668819	FILTER	See Illustration HYDROSTATIC OIL FILTER/ C2818 - high flow		1
10	6686926	FILTER, OIL HYD	See Illustration HYDROSTATIC OIL FILTER/ C2818 - charge		1
11	6692337	FILTER, HYD CARTRIDGE	See Illustration COOLING FAN MOTOR/ MS2514		1
12	6727475	CAP	See Illustration HYDROSTATIC CIRCUITRY/ PE2961		1

Page 17 - OSS# 2071408 - All rights reserved by Bobcat Company - 12/04/2009 - 07:23:36 - Produced by Ken Cook Co. with media1off

SCHEDULED MAINTENANCE ITEMS
(250 Hour)

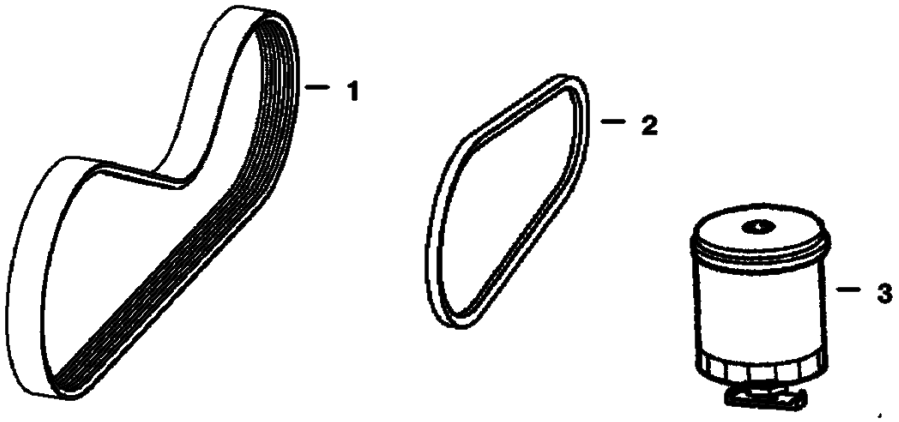

B–25008

Page 18 - OSS# 2071408 - All rights reserved by Bobcat Company - 12/04/2009 - 07:23:36 - Produced by Ken Cook Co. with media1off

SCHEDULED MAINTENANCE ITEMS (Cont'd)
(250 Hour)

Ref No	Part Number	Description	Remarks	Serial Number	Qty
1	6682855	10SEGMENT	See Illustration ENGINE & ATTACHING PARTS/ PE3058 - drive belt		x
2	6730819	BELT	See Illustration HEATER & A/C/ PE2810 - air conditioner		x
3	6667352	FILTER, FUEL W/SEPERATOR 12	See Illustration FUEL SYSTEM/ PE3064		x

Page 19 - OSS# 2071408 - All rights reserved by Bobcat Company - 12/04/2009 - 07:23:36 - Produced by Ken Cook Co. with media1off

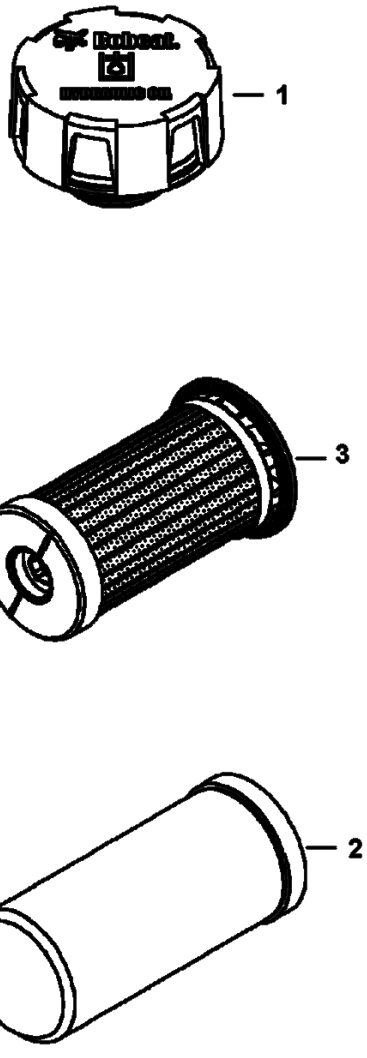

Page 20 - OSS# 2071408 - All rights reserved by Bobcat Company - 12/04/2009 - 07:23:36 - Produced by Ken Cook Co. with media1off

SCHEDULED MAINTENANCE ITEMS (Cont'd)
(500 Hour)

Ref No	Part Number	Description	Remarks	Serial Number	Qty
1	6727475	CAP	hyd. reservoir breather		x
2	6661248	FILTER, OIL HYD 12	Standard Flow for aluminum colling motor - 6" (152,4mm) long		x
2	6668819	FILTER	high flow - 9.5" (241,3 mm) long		x
2	6686926	FILTER, OIL HYD	See Illustration HYDROSTATIC CIRCUITRY/ PE2996 See Illustration HYDROSTATIC OIL FILTER/ C2818 charge - for aluminum cooling motor - 4.5" (113,5 mm) long		x
3	6692337	FILTER, HYD CARTRIDGE	See Illustration COOLING FAN MOTOR/ MS2514 - for cast iron cooling motor		x

Page 21 - OSS# 2071408 - All rights reserved by Bobcat Company - 12/04/2009 - 07:23:36 - Produced by Ken Cook Co. with media1off

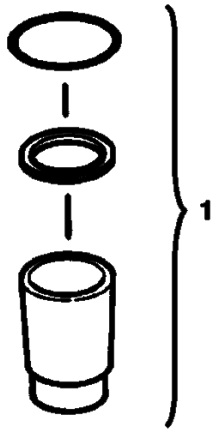

B–25009

Page 22 - OSS# 2071408 - All rights reserved by Bobcat Company - 12/04/2009 - 07:23:36 - Produced by Ken Cook Co. with media1off

SCHEDULED MAINTENANCE ITEMS (Cont'd)
(1000 Hour)

Ref No	Part Number	Description	Remarks	Serial Number	Qty
1	6661807	FILTER, OIL HYD	See Illustration HYDROSTATIC OIL FILTER/ B13527 - in-line		x

Page 23 - OSS# 2071408 - All rights reserved by Bobcat Company - 12/04/2009 - 07:23:36 - Produced by Ken Cook Co. with media1off

MAIN FRAME

(S/N 530740068 & Below)

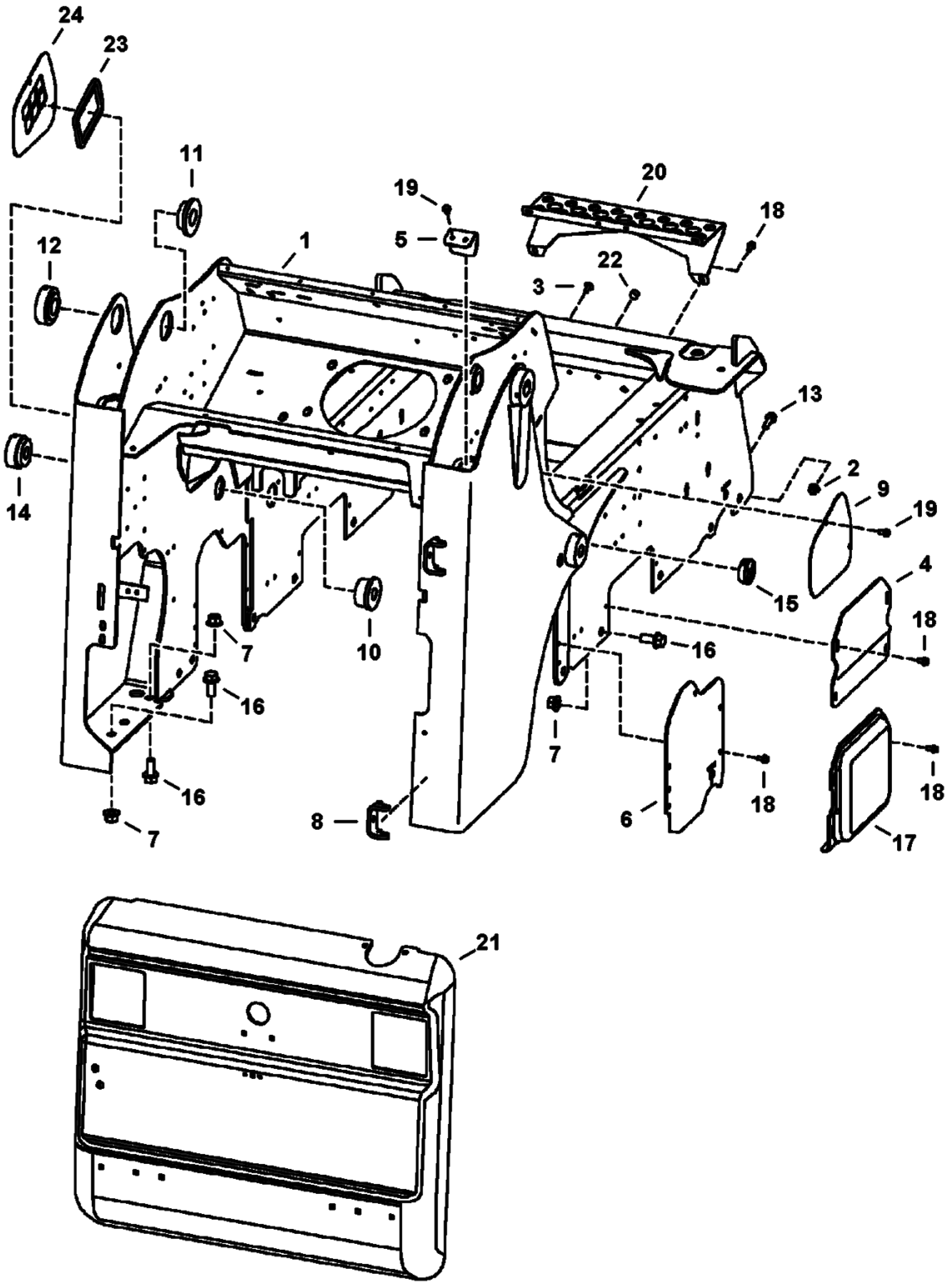

Page 24 - OSS# 2071408 - All rights reserved by Bobcat Company - 12/04/2009 - 07:23:36 - Produced by Ken Cook Co. with media1off

MAIN FRAME (Cont'd)

(S/N 530740068 & Below)

Ref No	Part Number	Description	Remarks	Serial Number	Qty
1		MAIN FRAME	See Illustration HYDROSTATIC CIRCUITRY/ PE3280 - NAP - Order 7147407 - Also Order 7142858, 7142859 tubelines, 7142876 bulkhead mount, & (3) of 84G3712 screw - if cooling has not been upgraded, Also order cooling upgrade kit (7126319) - Was 7101454 [A]	5308 11453 & Bel	1
1		MAIN FRAME	See Illustration HYDROSTATIC CIRCUITRY/ PE3280 - NAP - Order 7147407 - Also Order 7142858, 7142859 tubelines, 7142876 bulkhead mount, & (3) of 84G3712 screw - if cooling has not been upgraded, Also order cooling upgrade kit (7126319) - Was 7101454 [A]	5307 13065 & Bel	1
1		MAIN FRAME	See Illustration HYDROSTATIC CIRCUITRY/ PE3280 - NAP - Order 7147407 - Also Order 7142858, 7142859 tubelines, 7142876 bulkhead mount, & (3) of 84G3712 screw - Was 7124886 [A]	5307 13066 & Abv	1
1		MAIN FRAME	See Illustration HYDROSTATIC CIRCUITRY/ PE3280 - NAP - Order 7147407 - Also Order 7142858, 7142859 tubelines, 7142876 bulkhead mount, & (3) of 84G3712 screw - Was 7124886 [A]	5308 11454 & Abv	1
1	7114934	STOP	See BTI379 weld on - 1" thick - Was 6733784 [A]		2
2	83D8	NUT 5			4
3	6679966	PLUG			8
4	6719201	COVER			2
5	6736121	HOSE COVER			2
6		COVER	NAP - Order 7124839 and remove and discard Ref. 16 bolt that interferes with cover - Was 7107573 [A]	5307 14262 & Bel	2
6	7124839	COVER		5307 14263 & Abv	2
7	53D12	NUT			18
8	6708987	HINGE			2
9	6733740	COVER		5308 11453 & Bel	2
9	6733740	COVER		5307 13065 & Bel	2
9	6733740	COVER		5307 13066 & Abv	1
9	6733740	COVER		5308 11454 & Abv	1
10	6730785	BUSHING	inside upright weld-on		2
11	6729401	BUSHING	inside upright weld-on		2
12	6729402	BUSHING	outside upright weld-on		2
13	31C824	BOLT 10			4
14	6730784	BUSHING	outside upright weld-on		2
15	6718796	PLUG	Bobcat head		1
16	31C1228	BOLT			24
17	6719168	COVER	2 speed		2
18	84G3712	BOLT			24
19	84G3708	SCREW			4
20	6732577	STEP, MFR			1
21	6729991	REAR DOOR	See Illustration REAR DOOR/ PE3062		1
22	6669308	RETAINER			2
23	7126496	SEAL		5307 13066 & Abv	1
23	7126496	SEAL		5308 11454 & Abv	1
24	6733740	COVER	W/O vent holes - See Ref. 9	5307 13065 & Bel	1
24	6733740	COVER	W/O vent holes - See Ref. 9	5308 11453 & Bel	1
24	7124567	COVER	W/vent holes	5307 13066 & Abv	1
24	7124567	COVER	W/vent holes	5308 11454 & Abv	1

Page 25 - OSS# 2071408 - All rights reserved by Bobcat Company - 12/04/2009 - 07:23:36 - Produced by Ken Cook Co. with media1off

MAIN FRAME

(S/N 530740069 & Above)

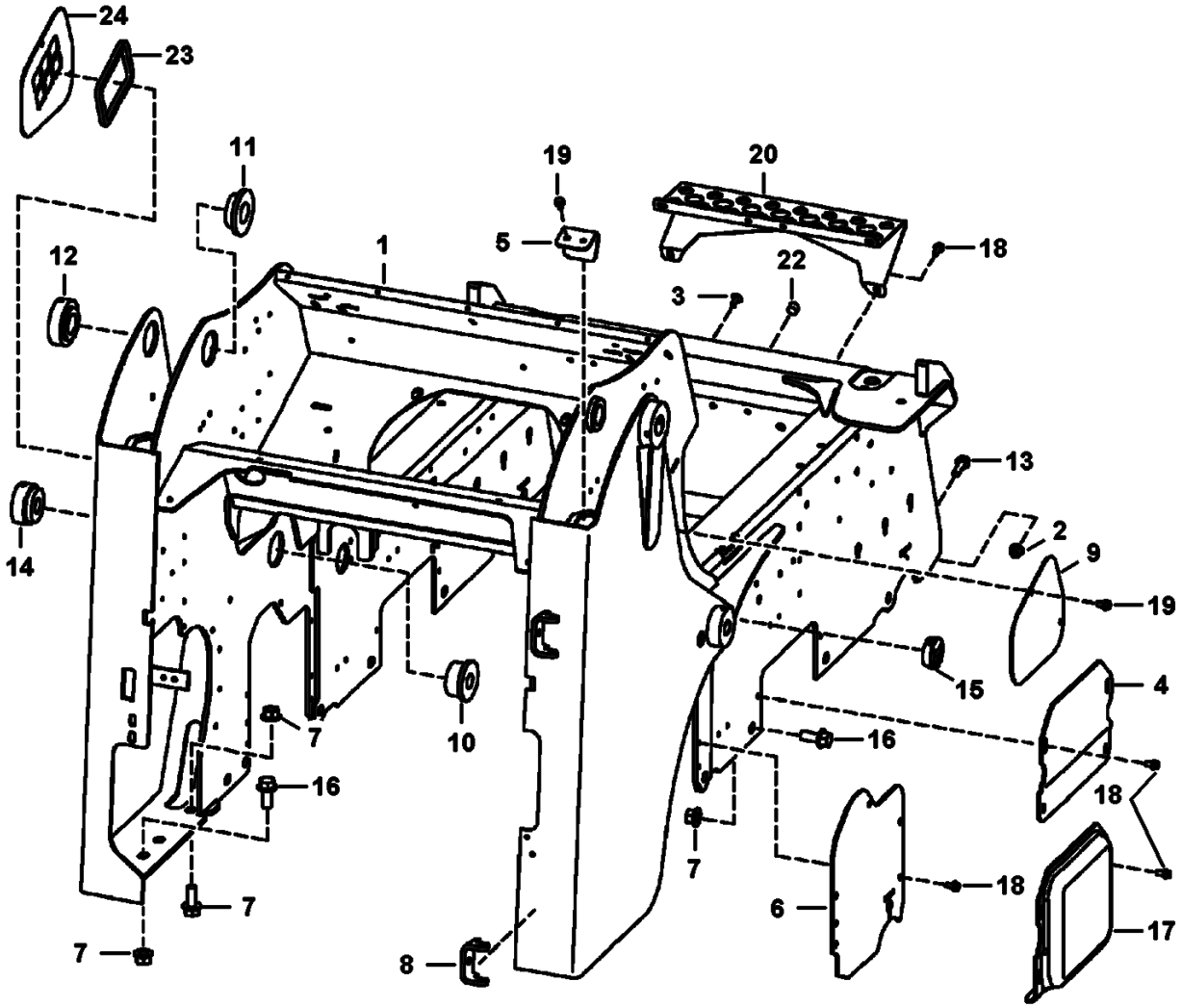

Page 26 - OSS# 2071408 - All rights reserved by Bobcat Company - 12/04/2009 - 07:23:36 - Produced by Ken Cook Co. with media1off

MAIN FRAME (Cont'd)

(S/N 530740069 & Above)

Ref No	Part Number	Description	Remarks	Serial Number	Qty
1	7147407	FRAME, MAIN ASSY			1
1	7114934	STOP	See BTI379 weld on - 1" thick - Was 6733784 [A]		2
2	83D8	NUT 5			4
3	6679966	PLUG			8
4	6719201	COVER			2
5	6736121	HOSE COVER			2
6	7124839	COVER			2
7	53D12	NUT			18
8	6708987	HINGE			2
9	6733740	COVER			1
10	6730785	BUSHING	inside upright weld-on		2
11	6729401	BUSHING	inside upright weld-on		2
12	6729402	BUSHING	outside upright weld-on		2
13	31C824	BOLT 10			4
14	6730784	BUSHING	outside upright weld-on		2
15	6718796	PLUG	Bobcat head		1
16	31C1228	BOLT			24
17	6719168	COVER	2 speed		2
18	84G3712	BOLT			24
19	84G3708	SCREW			4
20	6732577	STEP, MFR			1
21	6729991	REAR DOOR			1
22	6669308	RETAINER			2
23	7126496	SEAL			1
24	7124567	COVER	W/vent holes		1

Page 27 - OSS# 2071408 - All rights reserved by Bobcat Company - 12/04/2009 - 07:23:36 - Produced by Ken Cook Co. with media1off

OPERATOR CAB

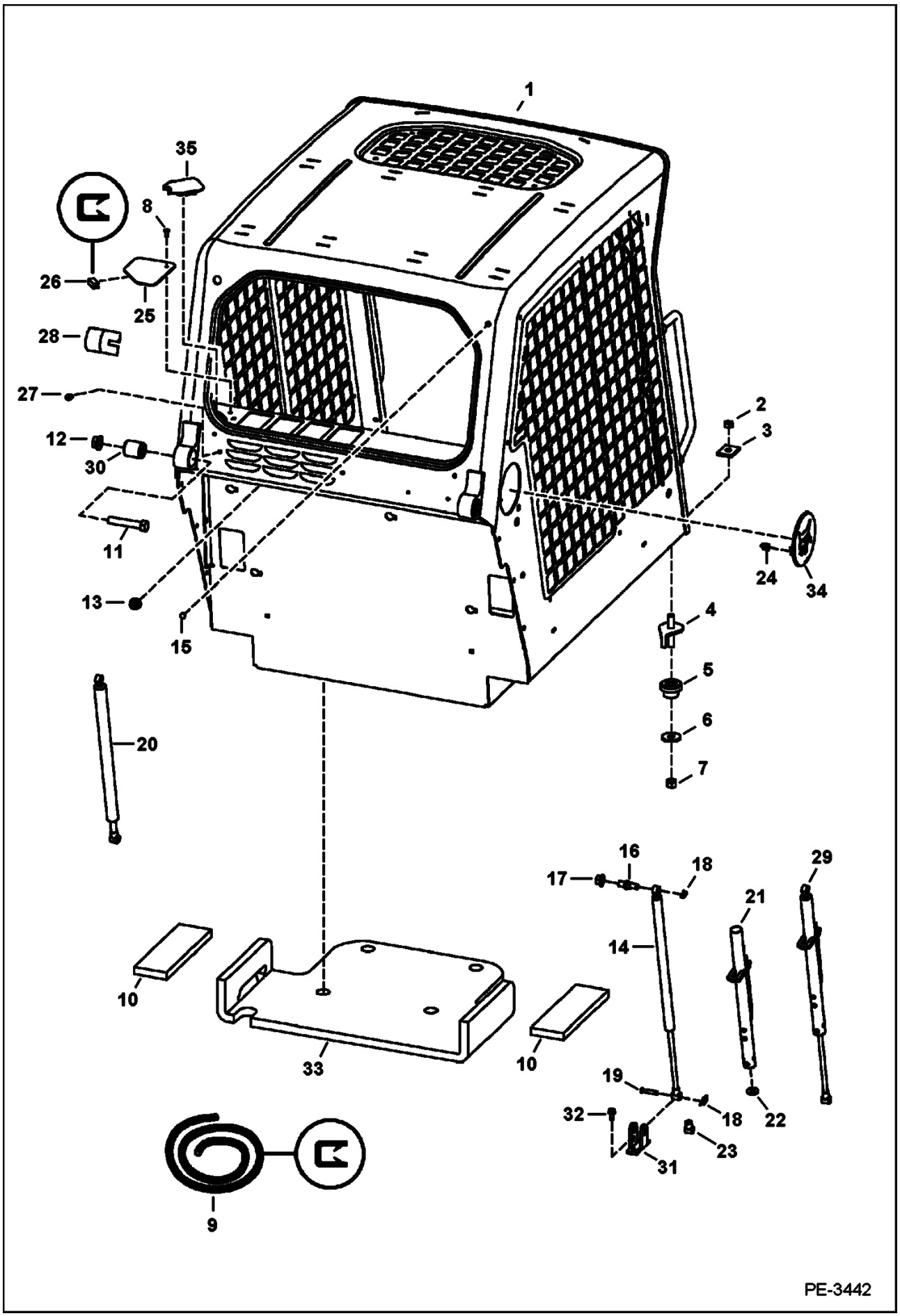

Page 28 - OSS# 2071408 - All rights reserved by Bobcat Company - 12/04/2009 - 07:23:36 - Produced by Ken Cook Co. with media1off

Ref No	Part Number	Description	Remarks	Serial Number	Qty
1		OPERATOR CAB	Does not include cab decals - Order 6719672 cab & Ref. 35		1
2	59D8	NUT 5			2
3	6553709	WASHER	rectangular		2
4	6702971	BOLT			2
5	6560633	DAMPENER			2
6	6515817	WASHER			2
7	85D8	NUT, 5			2
8	6630207	RIVET			1
9	6654139	MOULDING	bulk - sold per foot		x
10	6729012	INSULATION	seat pan		2
11	17C1056	BOLT			2
12	53D10	NUT			2
13	53D6	NUT			4
14	7157892	GAS SPRING	RH - Was 7100506 [A]		1
15	5289686	PLUG			1
16	6719064	MOUNT			2
17	97D8	NUT			2
18	6631418	PIN	ring		4
19	6567743	PIN			2
20	7157891	GAS SPRING	LH - Was 7100508 [A]		1
20	6675136	GAS SPRING	LH - heavy duty		1
21	6708189	TUBE	stop - RH		1
22	6701174	WASHER			1
23	6675257	CLEVIS			1
24	6679990	CLIP			2
25		COVER	NAP - Order Ref. 35 - Was 7122338 [A]		1
26		MOULDING	NAP - 1" (25,4 mm) long - Order Ref. 9		1
27	6675033	INSERT	filter cover		2
28	6579613	STOP			2
29		GAS SPRING	NSS - R.H. - W/latch - Order Ref. 14 & 21-23		1
30	6562602	BUSHING			2
31	6706349	MOUNT	gas spring		2
32	84G3112	BOLT 5			4
33	6729013	INSULATION	seat pan		1
34	6733107	PLUG ASSY	W/Bobcat head & Ref. 24		2
35	7129949	COVER	snap		1

Page 29 - OSS# 2071408 - All rights reserved by Bobcat Company - 12/04/2009 - 07:23:36 - Produced by Ken Cook Co. with media1off

OPERATOR CAB

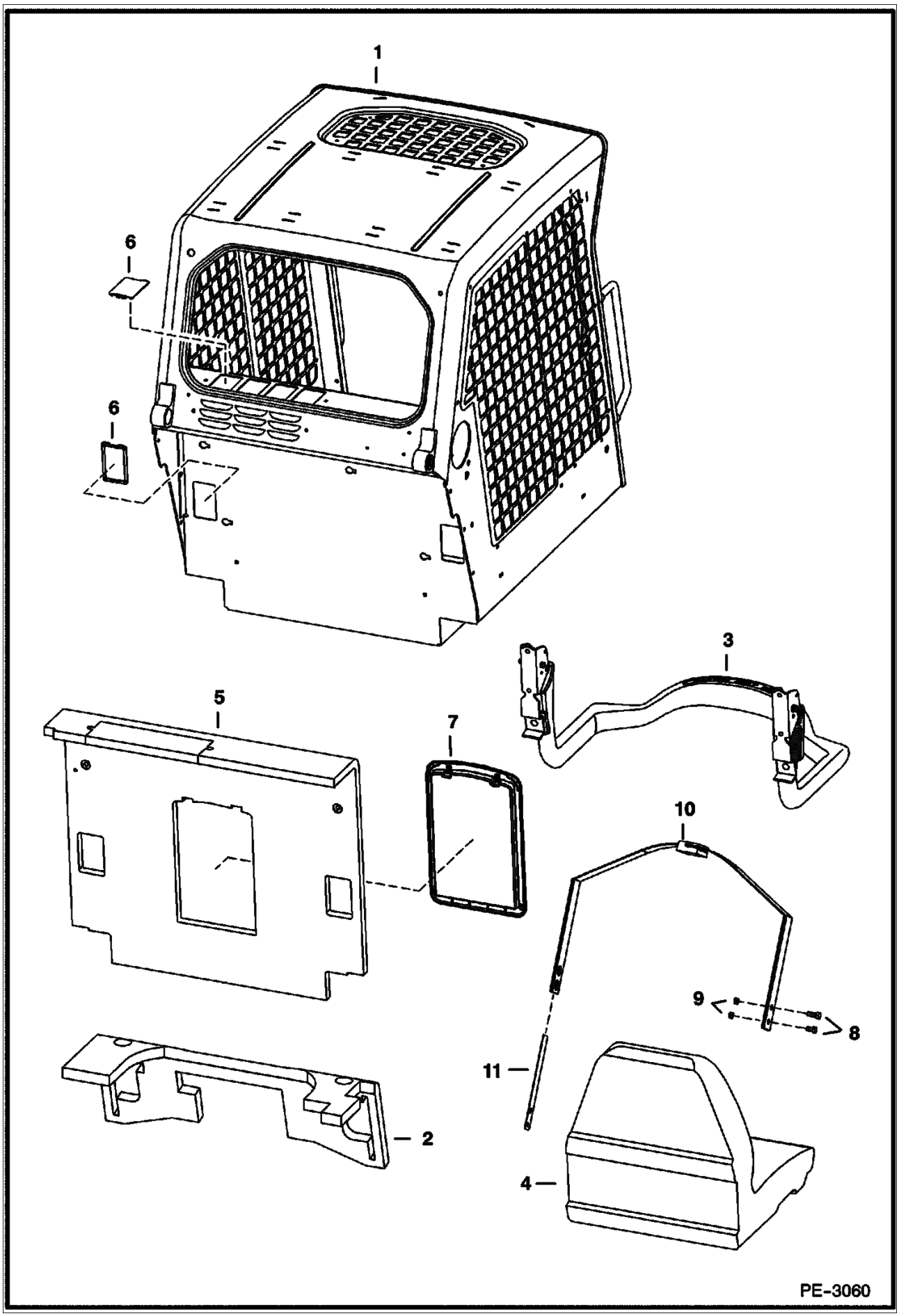

Page 30 - OSS# 2071408 - All rights reserved by Bobcat Company - 12/04/2009 - 07:23:36 - Produced by Ken Cook Co. with media1off

Ref No	Part Number	Description	Remarks	Serial Number	Qty
1		OPERATOR CAB	Does not include cab decals		1
2	6716800	INSULATION			1
3		SEAT BAR	See Illustration SEAT & SEAT BAR/ PE2950		1
4		SEAT	See Illustration SEAT/ B26226		1
5	6719504	INSULATION			1
6	6718101	COVER			6
7		CONTAINER	NAP - manuals - Order 6725301 cover & 6725303 frame		1
7	6675524	CLIP			2
7	6725301	OP MANUAL COVER			1
7	6725303	OP MANUAL PAN			1
8	17C716	BOLT			4
9	85D7	NUT			4
10	6675074	SEAT BELT			1
11	6725373	SPRING PLATE			2

Page 31 - OSS# 2071408 - All rights reserved by Bobcat Company - 12/04/2009 - 07:23:36 - Produced by Ken Cook Co. with media1off

OPERATOR CAB
(Deluxe)

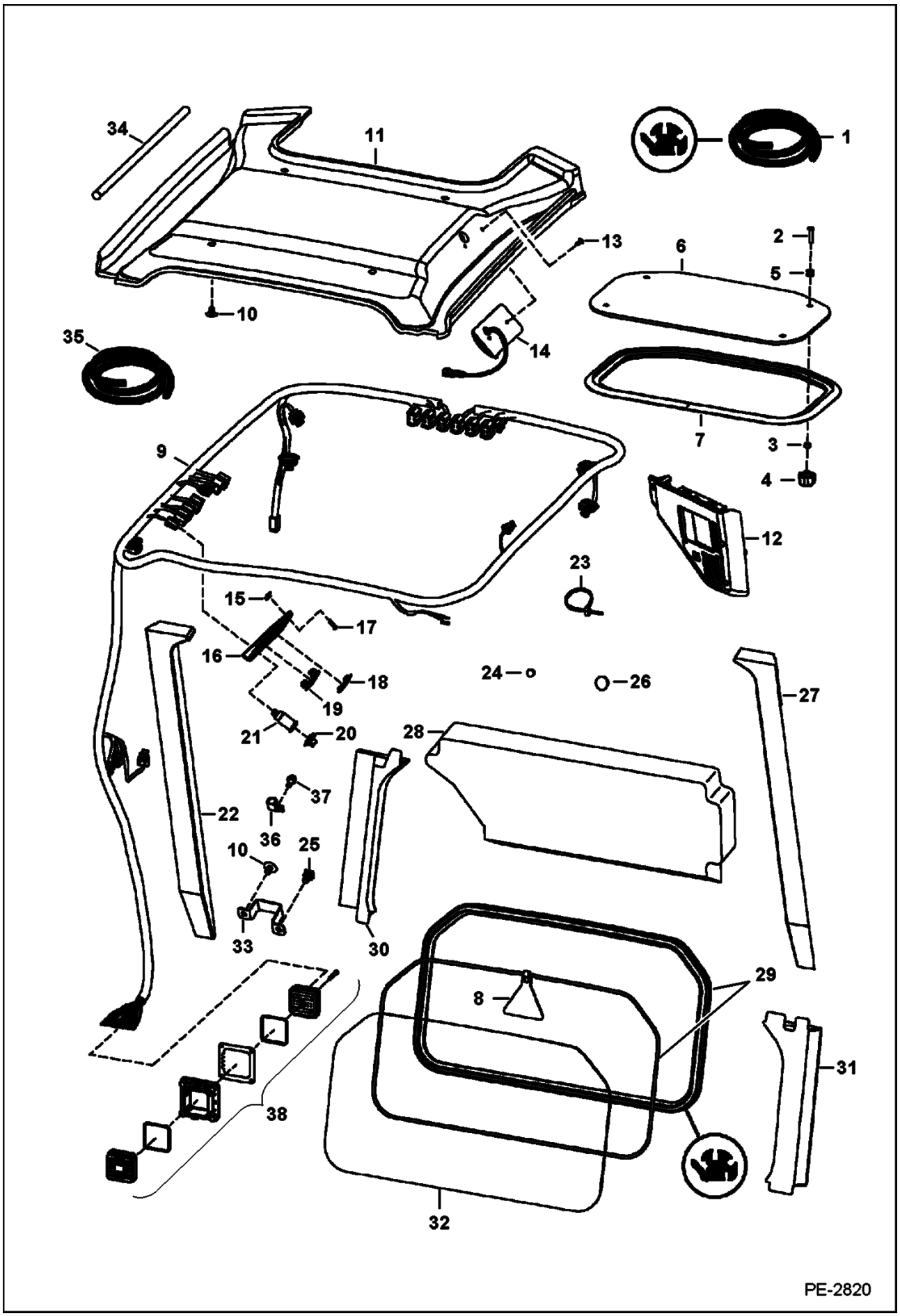

Page 32 - OSS# 2071408 - All rights reserved by Bobcat Company - 12/04/2009 - 07:23:36 - Produced by Ken Cook Co. with mediaioff

Ref No	Part Number	Description	Remarks	Serial Number	Qty
1	6675387	EXTRUSION	bulk - sold per foot		x
1	6554149	CORD	bulk - sold per foot		x
2	91G420	SCREW			4
3	6664085	BUSHING	nylon		4
4	6681614	KNOB	11/16" deep thread		4
5	6675545	GROMMET			4
6	7105034	WINDOW TOP	Was 7105035 [A]		1
7	7165265	SEAL, WINDOW			1
8	6731478	EXIT TAG			1
9		HARNESS, CAB	See Illustration CAB ELECTRICAL CIRCUITRY/ PE2806		1
10	6674895	RETAINER	snap in	& Bel	4
10	6674895	RETAINER	snap in	& Abv	5
11		INSULATION	headliner - Use W/Ref. 30 (6717517 insulation) & Ref. 31 (6717518 insulation) - Order 7148195 insulation, Ref. 30 (7148197 insulation) & Ref. 31 (7148198 insulation) - Was 6737704 [A]		1
11	7148195	INSULATION HEADLINER	headliner - Use W/Ref. 30 (7148197 insulation) & Ref. 31 (7148198 insulation)		1
12	6688403	PANEL	deluxe - RH - keyless		1
13	6664221	RETAINER	snap in		2
14	6680326	LIGHT	dome		1
14	6665367	BULB			1
15	6669091	CLIP			4
16	6718580	PANEL			1
17	6669224	BOLT			4
18	6665314	PLUG	switch		5
19	6668742	SWITCH	travel control - export		1
20	6664224	CAP			1
21	6664223	OUTLET			1
22	7148199	INSULATION	Was 6717519 [A]		1
23	6624289	TIE STRAP			1
24	5289686	PLUG	black - .375" hole		1
25	6678666	TREE MOUNT	push in - Use W/tie strap		1
26	6657719	PLUG	for .75" (19,1 mm) dia hole		1
27	7148200	INSULATION	Was 6717520 [A]		1
28	6727299	INSULATION	cab back		1
29		EXTRUSION	NAP - 75.75" (1924mm) long - Order Ref. 1		x
29		CORD	NAP - 75.75" (1924mm) long - Order Ref. 1 - Also Order Ref. 8 (6731478 exit tag)		x
30	6717517	INSULATION	Use W/Ref. 11 (NAP/ 6737704 insulation)		1
30	7148197	INSULATION	Use W/Ref. 11 (7148195 insulation)		1
31	6717518	INSULATION	Use W/Ref. 11 (NAP/ 6737704 insulation)		1
31	7148198	INSULATION	Use W/Ref. 11 (7148195 insulation)		1
32	6717874	WINDOW	rear		1
33	7138645	BRACKET		& Abv	1
34		FOAM	NAP - 7" (177.8 mm) long - Order Ref. 35 - W/O Heat or HVAC		2
34		FOAM	NAP - 12" (304.8 mm) long - Order Ref. 35 - W/ Heat or HVAC		2
35	6511855	SEAL	self adhesive - bulk - sold per foot		x
36	30H75	CLAMP			1
37	84G3712	BOLT			1
38		CONNECTOR ASSEMBLY	See Illustration CONNECTOR HARNESS ASSEMBLY/ PE3684 - NSS		1

Page 33 - OSS# 2071408 - All rights reserved by Bobcat Company - 12/04/2009 - 07:23:36 - Produced by Ken Cook Co. with media1off

SEAT & SEAT BAR

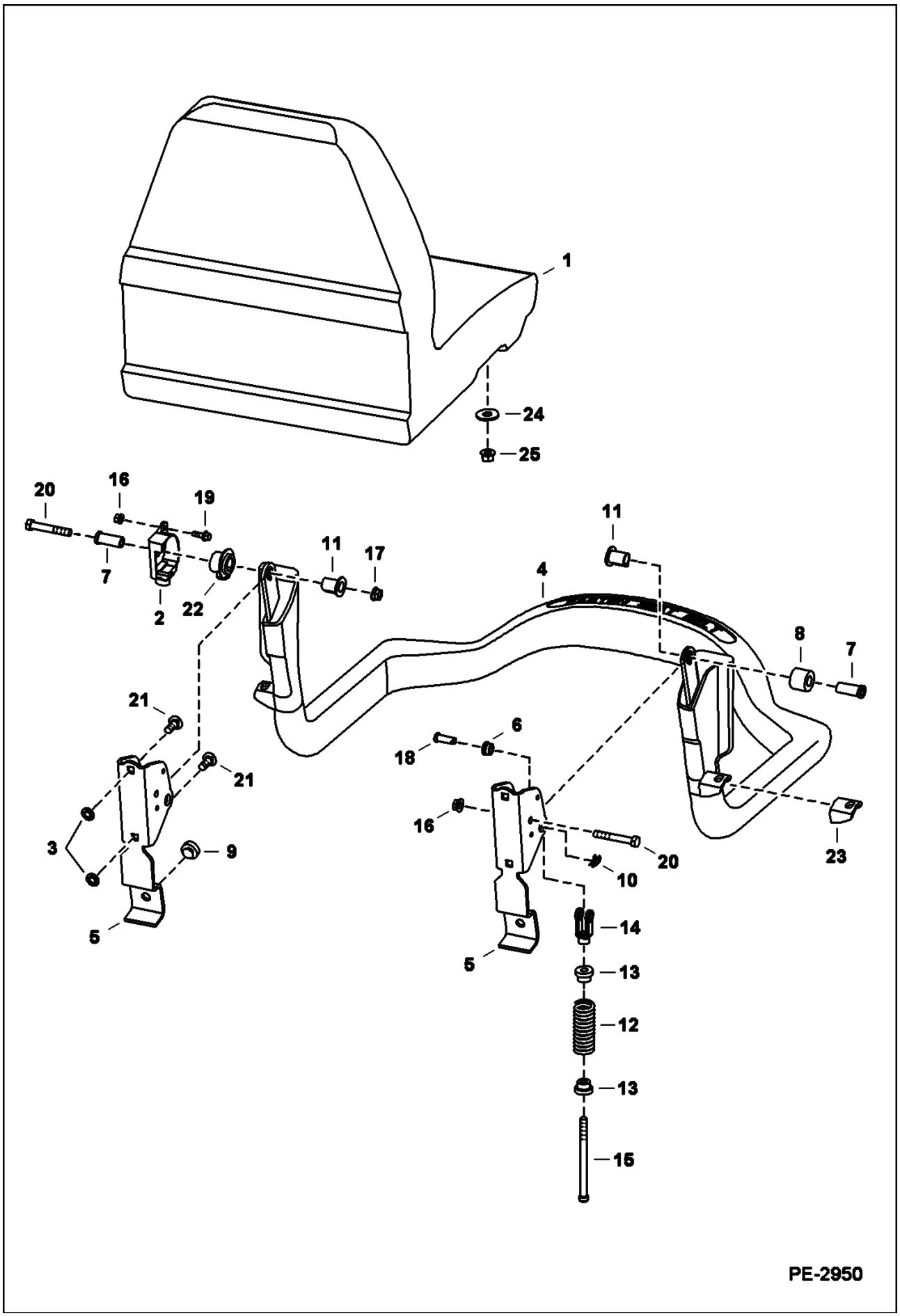

Page 34 - OSS# 2071408 - All rights reserved by Bobcat Company - 12/04/2009 - 07:23:36 - Produced by Ken Cook Co. with media1off

Ref No	Part Number	Description	Remarks	Serial Number	Qty
1		SEAT	See Illustration SEAT/ B25136 See Illustration SEAT/ B26226		1
2	6691714	SENSOR, SEATBAR BICS	Was 6680429 [A]		1
3	6674894	NUT			4
4	6715860	SEAT BAR			1
5	6715863	BRACKET			1
6	6715864	BUSHING			2
7	6715865	BUSHING			2
8	6715866	BUSHING			1
9	6519178	BUMPER			2
10	6631418	PIN	ring		2
11	6680441	BUSHING	keyed		2
12	6701535	SPRING			2
13	6710659	BUSHING			2
14	6713589	CLEVIS			2
15	6713887	BOLT			2
16	83D4	NUT 10			1
17	97D6	NUT 10			2
18	4F6106	PIN			2
19	35C412	BOLT			1
20	17C640	BOLT 5			2
21	10C616	BOLT 10			4
22	6680443	BUSHING, MAGNET			1
23		MOUNT	NAP - Order Ref. 4		2
24	619021	WASHER, 5			6
25	59D5	NUT 5			4

Page 35 - OSS# 2071408 - All rights reserved by Bobcat Company - 12/04/2009 - 07:23:36 - Produced by Ken Cook Co. with media1off

SEAT
(Michigan)

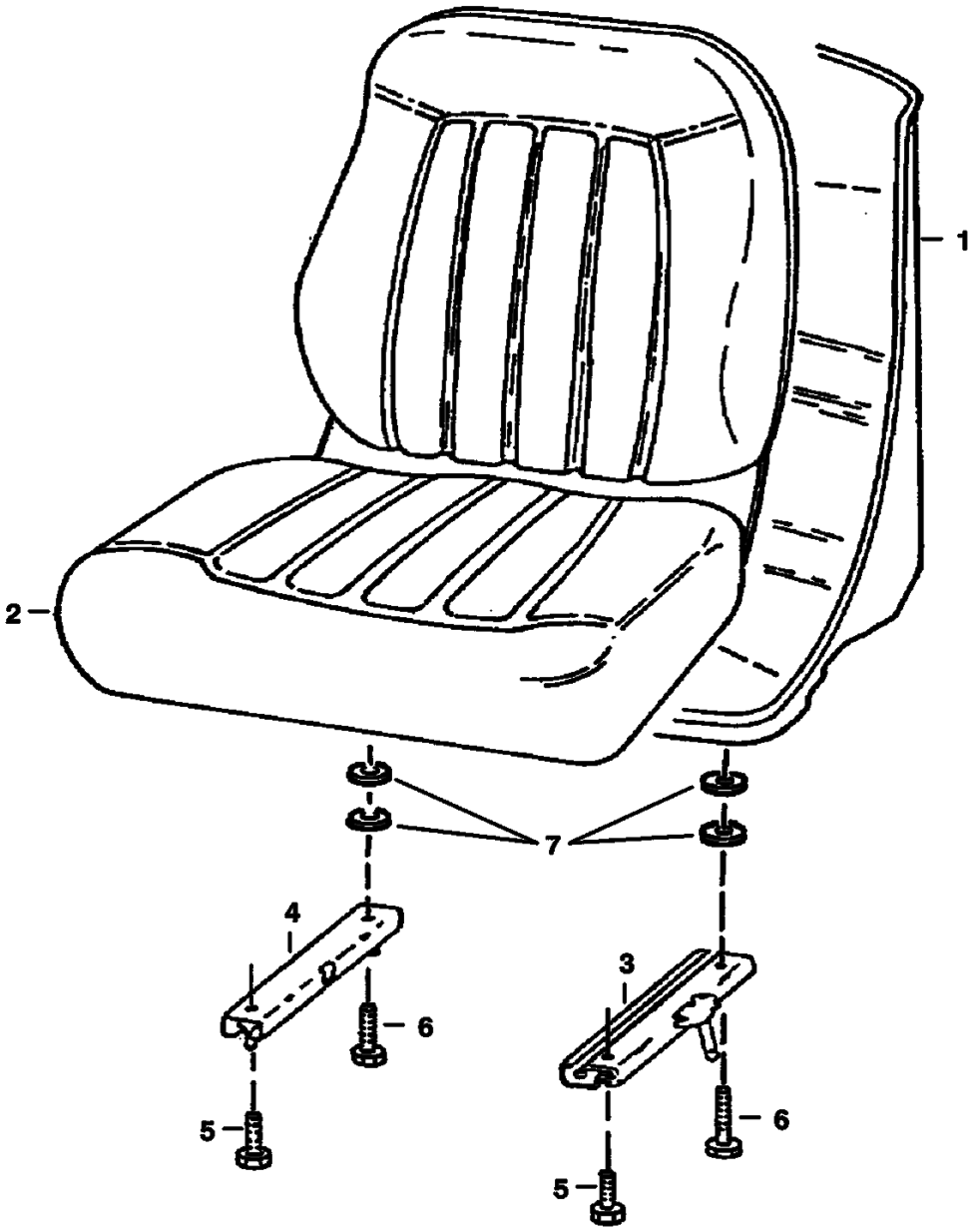

Page 36 - OSS# 2071408 - All rights reserved by Bobcat Company - 12/04/2009 - 07:23:36 - Produced by Ken Cook Co. with media1off

Ref No	Part Number	Description	Remarks	Serial Number	Qty
1	6669135	SEAT	W/Ref. 2-7		1
2	6670160	CUSHION	W/ edging, clip & (2) grommets		1
2		EDGING	NSS		1
2		CLIP	NSS		1
3	6674013	TRACK	LH - W/ 8" (203,2 mm) latch		1
4	6669089	TRACK	RH - W/O latch		1
5	25G512	SCREW			2
6	25G520	SCREW			2
7	6672715	SPACER			4

Page 37 - OSS# 2071408 - All rights reserved by Bobcat Company - 12/04/2009 - 07:23:36 - Produced by Ken Cook Co. with media1off

REAR DOOR

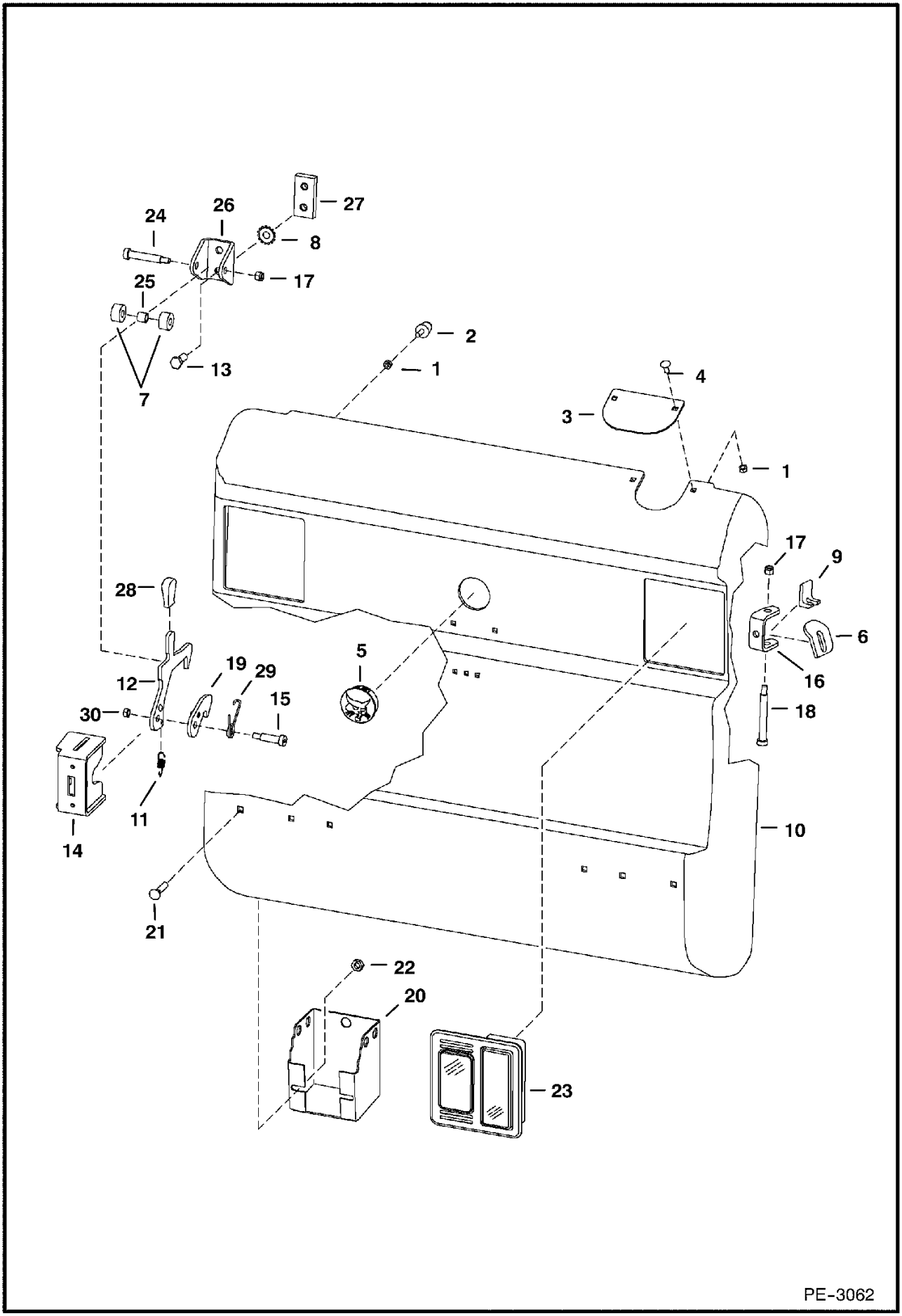

Page 38 - OSS# 2071408 - All rights reserved by Bobcat Company - 12/04/2009 - 07:23:36 - Produced by Ken Cook Co. with mediaioff

Ref No	Part Number	Description	Remarks	Serial Number	Qty
1	61D5	NUT			4
2	6733616	BUMPER			2
3	6714509	COVER	exhaust		1
4	37C512	BOLT			2
5	6718796	PLUG	back-up alarm		1
6	6714126	DOOR STOP			1
7	6809726	ROLLER			2
8	6675273	WASHER	lock		2
9	6719766	STOP			1
10	6729991	REAR DOOR			1
11	6810141	SPRING			1
12	6732715	LATCH			1
13	17C820	BOLT			2
14	6729939	LATCH PLATE	weld-on		1
15	38C824	SCREW			1
16	6733575	HINGE, REAR DOOR	weld-on		2
17	59D6	NUT			3
18	6809845	BOLT			2
19	6733667	LATCH, REAR DOOR			1
20	6715318	TOOL HOLDER	standard for Europe		1
21	37C612	BOLT			2
22	55D6	NUT			2
23		LIGHT ASSY	See Illustration LIGHT KIT/ PE3084		2
24	38C840	BOLT	carriage		1
25	6809734	BUSHING	striker		1
26	6809727	CHANNEL			1
27	6719525	BAR	threaded striker		1
28	6564452	GRIP			1
29	6810132	SPRING			1
30	85D6	LOCK NUT			1

Page 39 - OSS# 2071408 - All rights reserved by Bobcat Company - 12/04/2009 - 07:23:36 - Produced by Ken Cook Co. with media1off

LIFT ARMS & BOBTACH

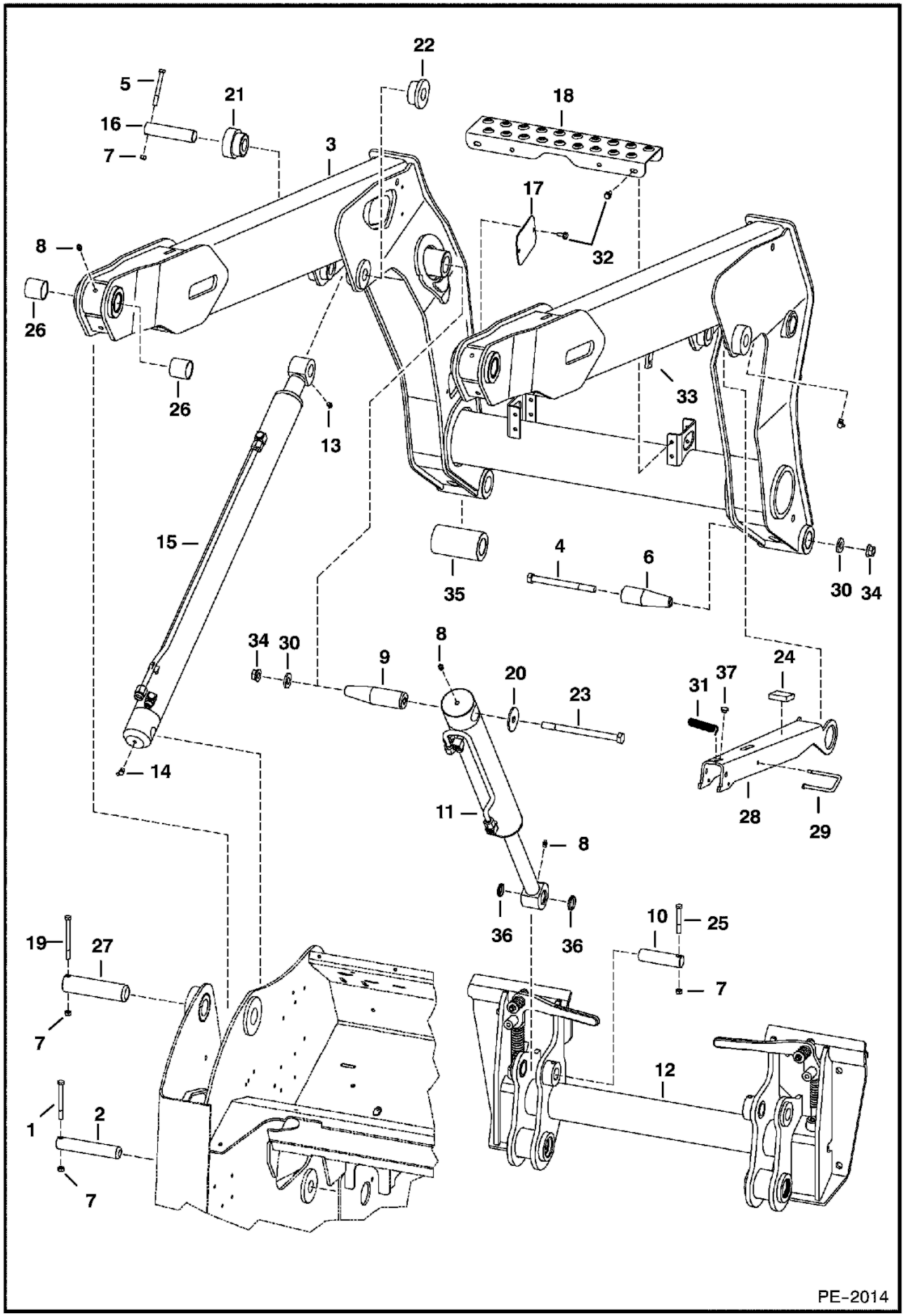

Page 40 - OSS# 2071408 - All rights reserved by Bobcat Company - 12/04/2009 - 07:23:36 - Produced by Ken Cook Co. with media1off

Ref No	Part Number	Description	Remarks	Serial Number	Qty
1	17C664	BOLT			2
2	6730887	PIN	base end - lift cylinder		2
3	6733707	LIFT ARM	See BTI379		1
4	17C10112	BOLT			2
5	17C656	BOLT			2
6	6729358	PIN, PIVOT TAPERED	lift arm to bob-tach		2
7	85D6	LOCK NUT			8
8	10H25	FITTING, GREASE 5			6
9	6728971	PIN, PIVOT TAPERED	base end - tilt cylinder		2
10	6577954	PIN	rod end - tilt cylinder - 1.25" x 4.65" (31,7 mm x 118 mm)		2
11		CYLINDER	See Illustration TILT CYLINDER/ PE1520 - tilt		2
12		BOB-TACH	See Illustration BOB-TACH/ PE3063		1
13	12H15	GREASE ZERK			2
14	11H15	GREASE FITTING			2
15		CYLINDER	See Illustration LIFT CYLINDER/ PE2016 - lift		2
16	6702935	PIN, PIVOT	rod end - lift cylinder		2
17	6731179	COVER			1
18	6729888	STEP			1
19	17C672	BOLT			2
20	6731160	WASHER			2
21	6729005	BUSHING	weld-on		2
22	6735946	BUSHING	weld-on		2
23	17C10136	BOLT			2
24	6704436	PAD	rubber - self adhesive		1
25	17C648	BOLT 5			2
26	6730995	BUSHING, WEAR			2
27	6728819	PIN	boom to upright		2
28	6736732	LIFT ARM STOP	assy		1
29	6714810	PIN	retainer		1
30	27E10	WASHER			4
31	6700743	SPRING			1
32	84G3112	BOLT 5			6
33	6705091	TAB	weld-on		1
34	53D10	NUT	Was 57D10 [B]		4
35	6728999	BUSHING, WELD-ON	weld on		2
36	225855	SEAL, OIL	grease		4
37	6519178	BUMPER			1

Page 41 - OSS# 2071408 - All rights reserved by Bobcat Company - 12/04/2009 - 07:23:36 - Produced by Ken Cook Co. with media1off

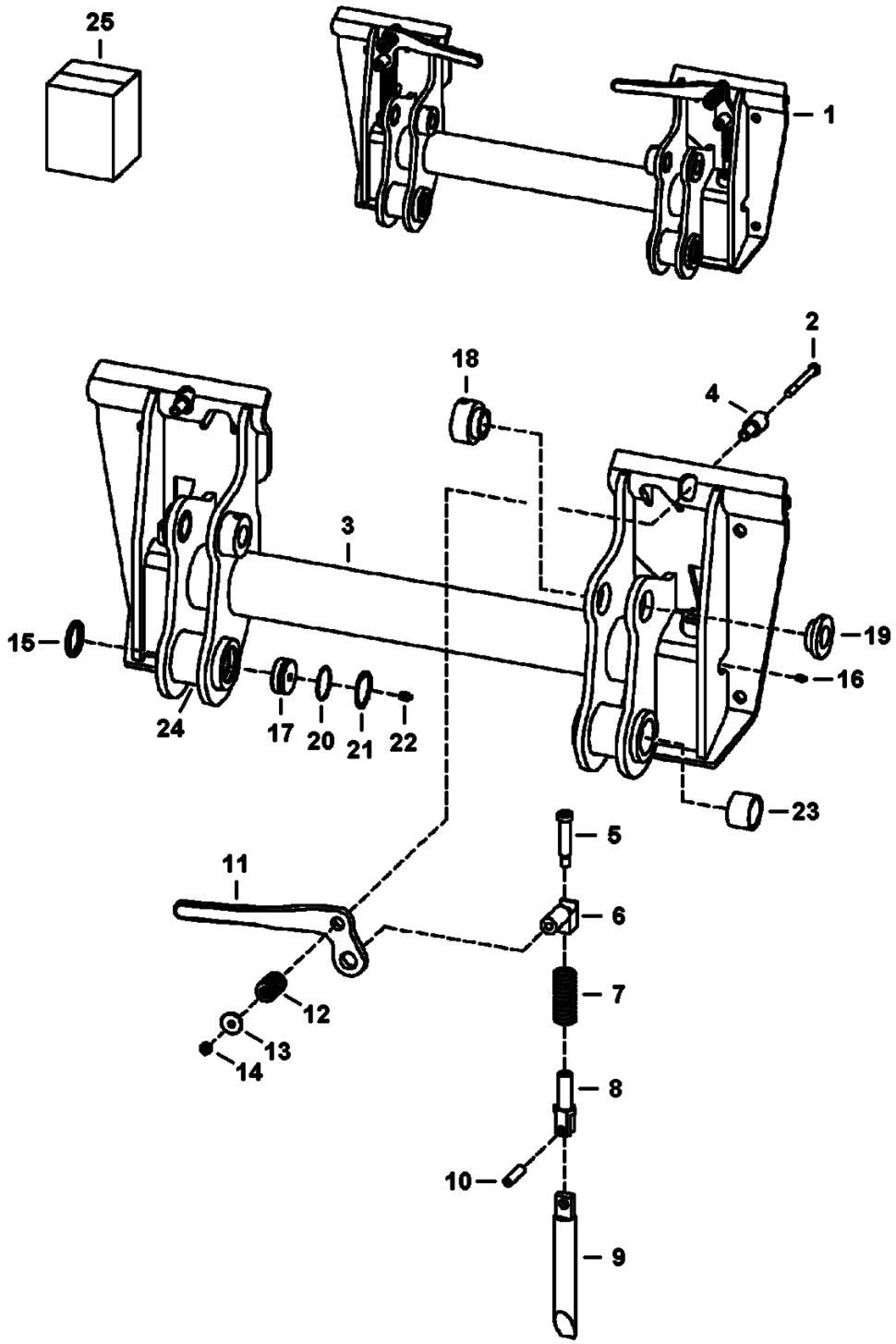

Page 42 - OSS# 2071408 - All rights reserved by Bobcat Company - 12/04/2009 - 07:23:36 - Produced by Ken Cook Co. with media1off

Ref No	Part Number	Description	Remarks	Serial Number	Qty
1	6729029	BOB-TACH	See Illustration DECALS/ B26130 - Ref. 2-22 - Also Order 6561383 decal		1
2	17C660	BOLT			2
3		FRAME	NAP		1
4	6702958	BUSHING, WELD-ON			2
5	6728473	BOLT	shoulder		2
6	6704240	PIVOT ASSY.	.75" (19,05 mm) long pin - not in kit		2
6	6731119	PIVOT ASSY	1.95" (49,53 mm) long pin - in kit		2
7	6578253	SPRING, COMPRESSION	Was 6562018 [A]		2
8	6704248	PIVOT	wedge		2
9	6737191	WEDGE			2
10	14J5032	PIN, STRAIGHT			2
11	6702904	LEVER	RH		1
11	6702903	LEVER	LH		1
12	6713040	SPRING			2
13	619021	WASHER, 5			2
14	85D6	LOCK NUT			2
15	6678960	SEAL			2
16	10H35	GREASE ZERK			2
17	6729491	PLUG			2
18	6717260	BUSHING	weld-on		2
19	6717259	BUSHING	weld-on		2
20	25K30126	O RING 10	Was 54K30126		2
21	7105856	SNAP RING			2
22	10H25	FITTING, GREASE 5			2
23		BUSHING	NAP - wear - w/ grease groove - Order 7139943 - Was 6718329 [A]		2
23	7139943	BUSHING	wear - w/o grease groove		2
24	6729353	BUSHING PIVOT	weld on		2
25	6724775	LEVER KIT	RH - Bob-Tach - Ref. 2 & 5-14		1
25	6724776	LEVER KIT	LH - Bob-Tach - Ref. 2 & 5-14		1

Page 43 - OSS# 2071408 - All rights reserved by Bobcat Company - 12/04/2009 - 07:23:36 - Produced by Ken Cook Co. with media1off

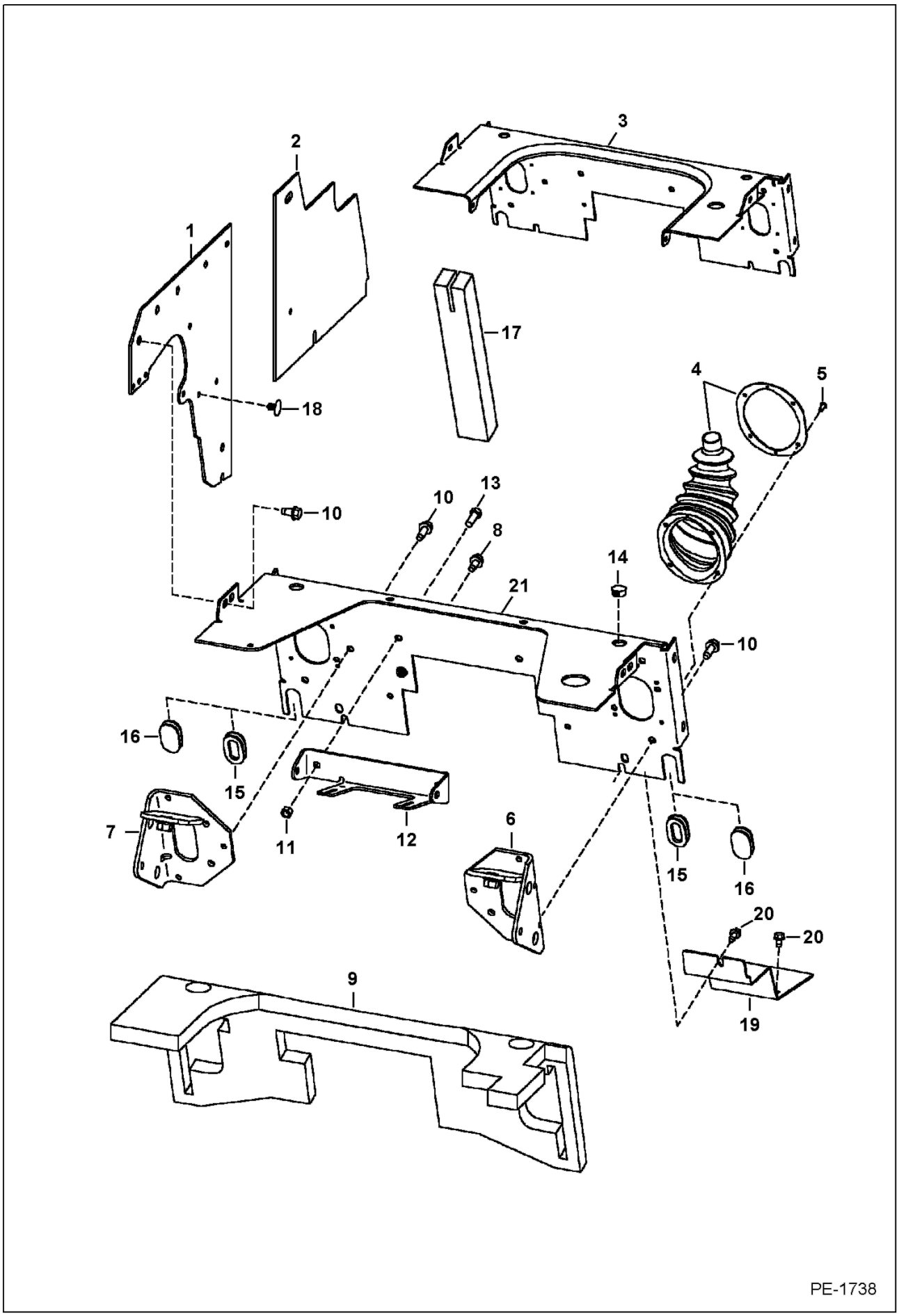

Page 44 - OSS# 2071408 - All rights reserved by Bobcat Company - 12/04/2009 - 07:23:36 - Produced by Ken Cook Co. with mediaioff

Ref No	Part Number	Description	Remarks	Serial Number	Qty
1	6734521	PANEL			2
2	7117124	PANEL			2
3	7106707	SHIELD		5307 14202 & Bel	1
3	7106707	SHIELD		5308 11539 & Bel	1
4	6532127	BOOT	W/mounting ring		2
4		RING	NSS - mounting ring		2
5	6630207	RIVET			8
6		BRACKET	See Illustration HAND CONTROLS/ PE2962 - RH - steering - Was 6733022 [A]		1
7		BRACKET	See Illustration HAND CONTROLS/ PE2962 - LH - steering - Was 6733024 [A]		1
8	84G3716	SCREW 5			2
9	6716800	INSULATION	Use W/Ref. 3	5307 14202 & Bel	1
9	6716800	INSULATION	Use W/Ref. 3	5308 11539 & Bel	1
9	7139184	INSULATION	Use W/Ref. 21	5307 14203 & Abv	1
9	7139184	INSULATION	Use W/Ref. 21	5308 11540 & Abv	1
10	84G3710	SCREW			30
11	95D6	NUT			2
12	7147580	MOUNT	damper - W/mount for back-up alarm switch - Was 7100795 [A]		1
13	17C612	BOLT 5			1
14	6648348	PLUG	for .812" (20,6 mm) dia hole		2
15	6577961	GROMMET	for standard control		1
16	6714726	GROMMET	plug - for AHC/ACS control		1
17	6732618	SEAL			2
18	6674895	RETAINER			4
19	6737095	STEP	RH rest		1
19	6737120	STEP	LH rest		1
20	84G3710	SCREW			4
21	7139183	SHIELD		5307 14203 & Abv	1
21	7139183	SHIELD		5308 11540 & Abv	1

Page 45 - OSS# 2071408 - All rights reserved by Bobcat Company - 12/04/2009 - 07:23:36 - Produced by Ken Cook Co. with media1off

PANELS
(Selectable Joystick Controls)

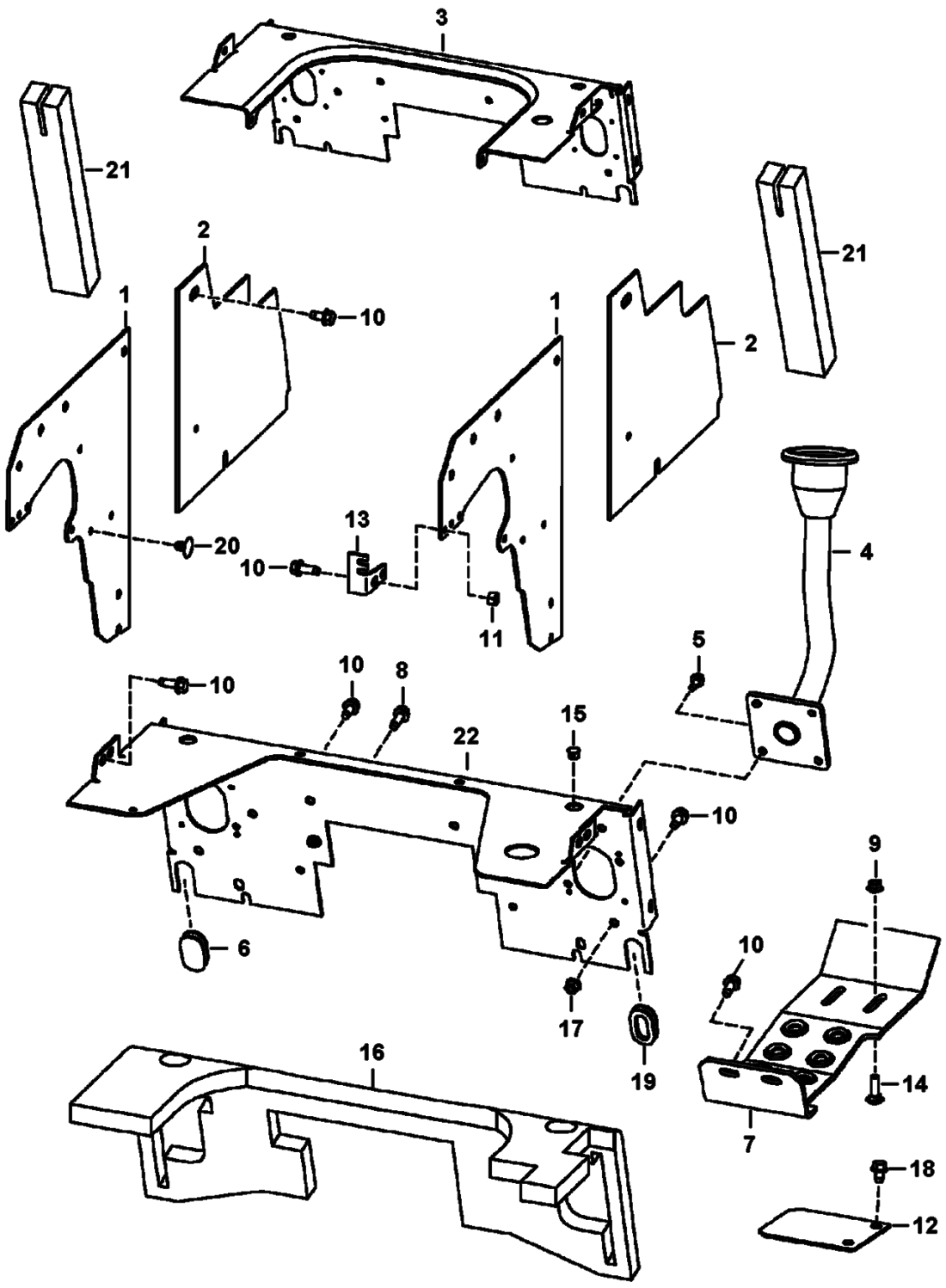

Page 46 - OSS# 2071408 - All rights reserved by Bobcat Company - 12/04/2009 - 07:23:36 - Produced by Ken Cook Co. with mediaioff

PANELS (Cont'd)
(Selectable Joystick Controls)

Ref No	Part Number	Description	Remarks	Serial Number	Qty
1	6734521	PANEL			2
2	7117124	PANEL			2
3	7106707	SHIELD		5307 14202 & Bel	1
3	7106707	SHIELD		5308 11539 & Bel	1
4		HANDLE	See Illustration CONTROLS ELECTRICAL/ PE2024 - NAP - joystick - RH - Order 7111992 joystick assembly - Was 6729791 [A]		1
4		HANDLE	See Illustration CONTROLS ELECTRICAL/ PE2024 - NAP - joystick - LH - Order 7111993 joystick assembly - Was 6729792 [A]		1
5	35C512	BOLT			4
6	6714726	GROMMET			1
7	6729237	STEP			2
8	84G3716	SCREW 5			2
9	57D6	NUT 5			4
10	84G3712	BOLT			28
11	95D6	NUT			2
12	6729774	COVER	cylinder access		2
13	6732450	BRACKET	cable		1
14	37C620	BOLT			4
15	6648348	PLUG	for .812" (20,6 mm) dia hole		2
16	6716800	INSULATION	Use W/Ref. 3	5307 14202 & Bel	1
16	6716800	INSULATION	Use W/Ref. 3	5308 11539 & Bel	1
16	7139184	INSULATION	Use W/Ref. 22	5307 14203 & Abv	1
16	7139184	INSULATION	Use W/Ref. 22	5308 11540 & Abv	1
17	89D5	NUT			4
18	84G3710	SCREW			4
19	6577961	GROMMET			1
20	6674895	RETAINER			4
21	6732618	SEAL			2
22	7139183	SHIELD		5307 14203 & Abv	1
22	7139183	SHIELD		5308 11540 & Abv	1

Page 47 - OSS# 2071408 - All rights reserved by Bobcat Company - 12/04/2009 - 07:23:36 - Produced by Ken Cook Co. with media1off

FUEL SYSTEM

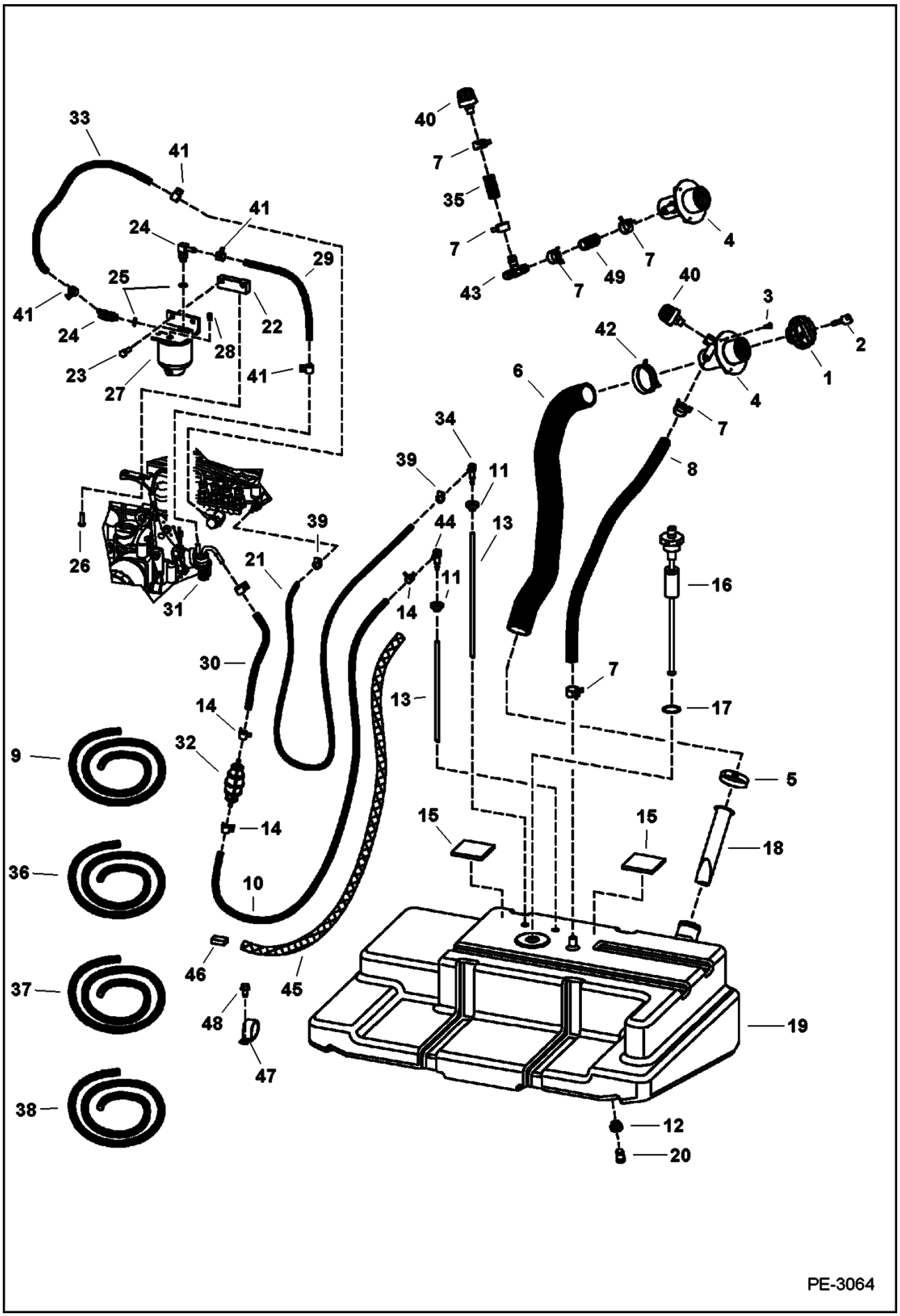

Page 48 - OSS# 2071408 - All rights reserved by Bobcat Company - 12/04/2009 - 07:23:36 - Produced by Ken Cook Co. with media1off

Ref No	Part Number	Description	Remarks	Serial Number	Qty
1	6661114	CAP	green fuel fill		1
1	6661696	CAP	locking - W/Ref. 2 - Code PK510		1
1	7113340	CAP	non-locking - European		1
1	7121223	CAP	locking - European		1
2	6587458	KEY	Code PK510		1
2		KEY	NSS - European		1
3	7106279	BOLT			3
4	6701449	FILLER TUBE		5307 14995 & Bel	1
4	6701449	FILLER TUBE		5308 11001 & Abv	1
4	7102303	FILLER TUBE	domestic only	5307 14996 & Abv	1
5	42HL250	CLAMP			1
6	7110942	HOSE			1
7	5HM24	CLAMP		5307 14996 & Abv	2
7	5HM24	CLAMP		5307 14995 & Bel	6
7	5HM24	CLAMP		5308 11001 & Abv	6
8		HOSE	NAP - 33.5" (850mm) long - domestic only - Order Ref. 36	5307 & Bel	1
8		HOSE	NAP- 37.25" (946mm) long - Order Ref. 36	5307 & Abv	1
8		HOSE	NAP- 37.25" (946mm) long - Order Ref. 36	5308 11001 & Abv	1
9	6578169	HOSE	.187" (4,75 mm) ID - bulk - sold per foot		x
10		HOSE	NAP - 29.5" (749mm) long - Order Ref. 38	& Bel	1
10		HOSE	NAP - 45.5" (1156mm) long - Order Ref. 38	& Abv	1
11	6735696	BUSHING	.37'' (9,4mm) ID - brown - high temp		2
11	6553411	BUSHING	.375" (9,53 mm) ID		2
12	6717402	BUSHING	.54" (13,7mm) ID		1
13	6729854	TUBE	12.5" (317,5 mm) long		2
14	5HM13	CLAMP			3
15	6578278	PAD	self adhesive one side		2
16	6680438	SENSOR, FUEL	W/Ref. 17		1
17	6717579	GASKET			1
18	6569219	SCREEN			1
19	6735614	TANK			1
20	6717401	PLUG	.75" shoulder		1
20	6599645	PLUG, STEEL	.50" (12,25 mm) shoulder		1
21		HOSE	NAP - 50" (1270mm) long - Order Ref. 9	& Bel	1
21		HOSE	NAP - 67" (1702mm) long - Order Ref. 9	& Abv	1
22	6731152	MOUNT			1
23	43C516	BOLT			2
24	6715183	ELBOW	W/Ref. 25		2
25	79K5	O RING 10			x
26	45C516	SCREW	Was 53C516 [A]		2
27	6667353	FILTER ASSY	W/Ref. 18		1
27	6667352	FILTER, FUEL W/SEPERATOR 12			1
27	72F1	FITTING			1
28	6658180	PLUG	bleed		1
29		HOSE	NAP - 13" (330mm) Long - Order Ref. 37		1
30		HOSE	NAP - 9.25" (235mm) Long - Order Ref. 38	& Bel	1
30		HOSE	NAP - 13.13" (333mm) long - Order Ref. 38	& Abv	1
31		FUEL PUMP			1
32	6657734	PUMP	hand primer - 4.88" long (123.9 mm)		1
33		HOSE	NAP - 16" (406mm) Long - Order Ref. 37		1

Page 49 - OSS# 2071408 - All rights reserved by Bobcat Company - 12/04/2009 - 07:23:36 - Produced by Ken Cook Co. with media1off

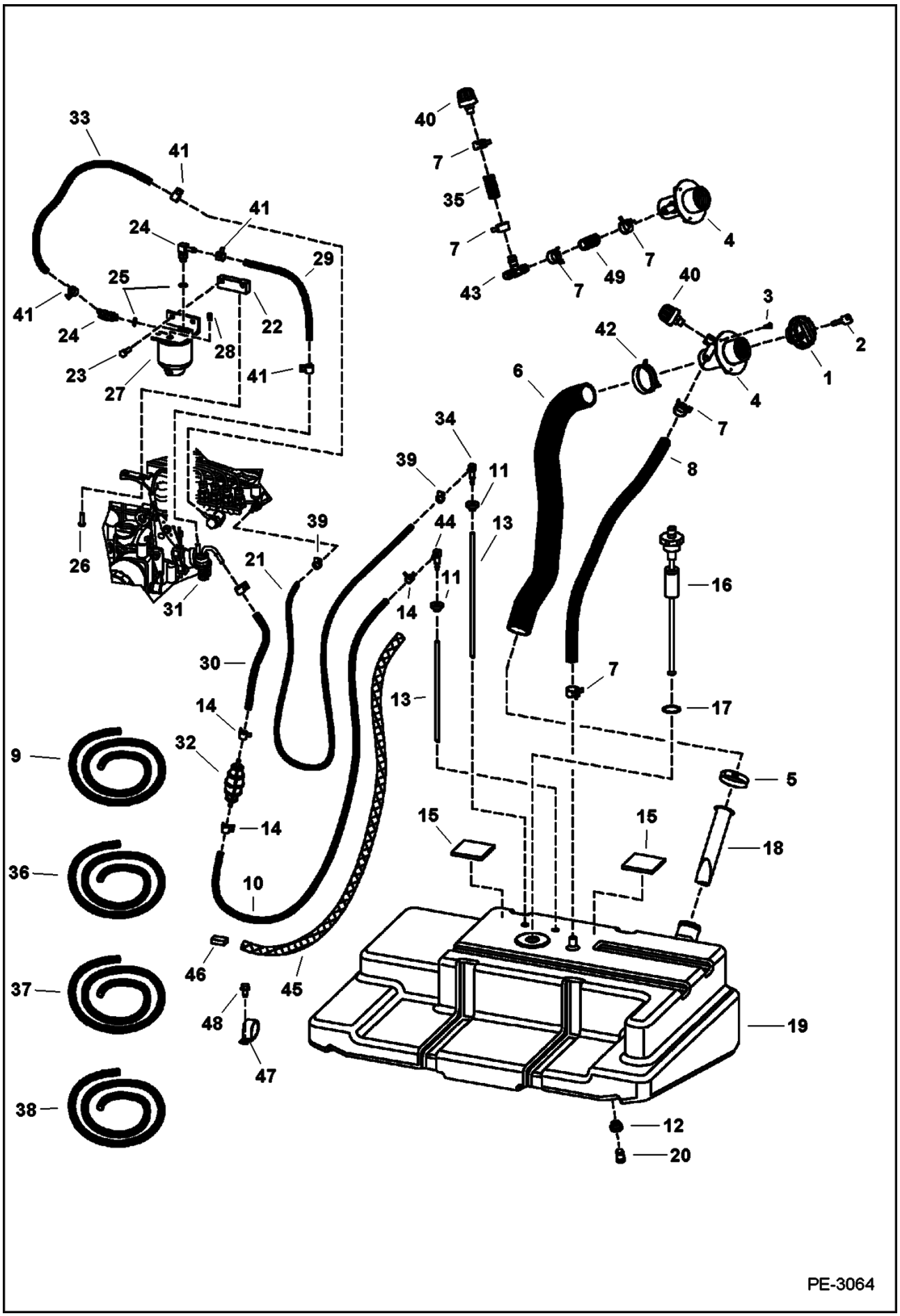

Page 50 - OSS# 2071408 - All rights reserved by Bobcat Company - 12/04/2009 - 07:23:36 - Produced by Ken Cook Co. with media1off

Ref No	Part Number	Description	Remarks	Serial Number	Qty
34	7101291	ELBOW			1
35		HOSE	NAP - 2.5" (63mm) Long - Order Ref. 36	5307 & Bel	2
35		HOSE	NAP - 2.5" (63mm) Long - Order Ref. 36	5308 11001 & Abv	2
35		HOSE	NAP - 2.5" (63mm) long - Order Ref. 36	5308 & Abv	1
35		HOSE	NAP - 2.5" (63mm) long - Order Ref. 36	5307 14995 & Bel	1
36	6578172	HOSE	bulk - sold per foot		x
37	6577822	HOSE	.375 ID - bulk - Sold Per Foot		x
38	6577821	HOSE	.25" (6,35 mm) ID - bulk - sold per foot		x
39	42HS4	CLAMP			2
40	6684923	BREATHER			1
41	5HM14	CLAMP			5
42	5HM58	CLAMP			1
43	7102705	TEE		5307 14995 & Bel	1
43	7102705	TEE		5308 11001 & Abv	1
44	6598908	ELBOW			1
45	7124301	GUARD	hose		1
46	7124326	RETAINER	hose		1
47	30H75	CLAMP			1
48	84G3712	BOLT			1
49		HOSE	NAP - 7" (178mm) long - Order Ref. 36	5308 11001 & Abv	1
49		HOSE	NAP - 7" (178mm) long - Order Ref. 36	5307 14995 & Bel	1

Page 51 - OSS# 2071408 - All rights reserved by Bobcat Company - 12/04/2009 - 07:23:36 - Produced by Ken Cook Co. with media1off

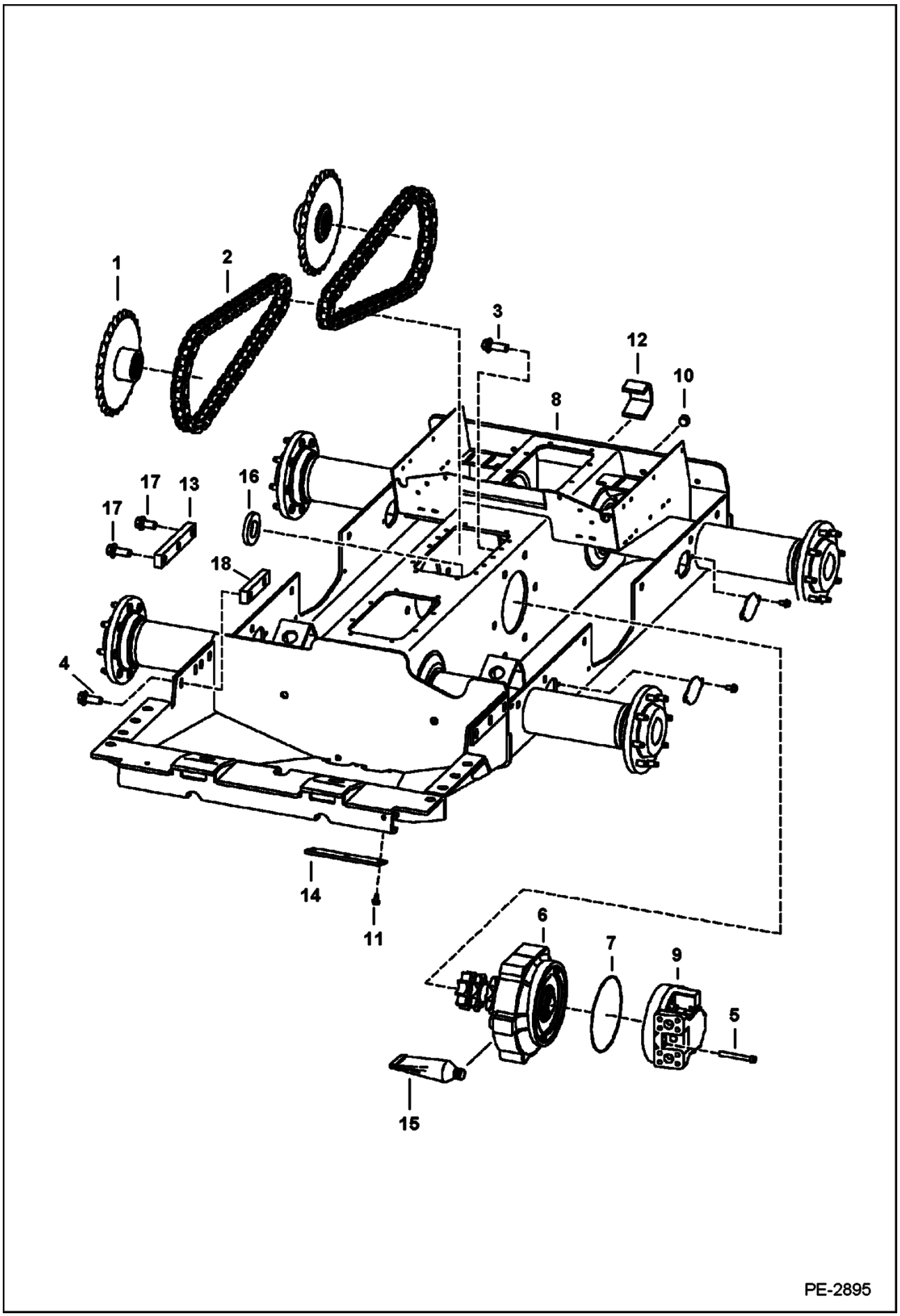

Page 52 - OSS# 2071408 - All rights reserved by Bobcat Company - 12/04/2009 - 07:23:36 - Produced by Ken Cook Co. with media1off

Ref No	Part Number	Description	Remarks	Serial Number	Qty
1	7134153	SPROCKET	See Illustration AXLE/ PE1544 - Was 7106737 [A]		4
2	7106862	CHAIN, DRIVE	endless - 48 pitches		4
2	6690988	CHAIN, DRIVE	service		x
2	6691078	LINK	connecting		x
3	6678971	BOLT			12
4	31C1228	BOLT			6
5	6717806	BOLT			20
6		MOTOR CARRIER	See Illustration MOTOR CARRIER/ PE1395 See Illustration MOTOR CARRIER/ PE1543 - drive motor		2
7	25K30812	O-RING, 10			2
8	7112333	CHAINCASE	frame only		1
9		MOTOR	See Illustration HYDROSTATIC MOTOR/ MS2199 See Illustration HYDROSTATIC MOTOR & BRAKE/ MS2218		2
10	6731121	PLUG	chaincase fill		1
11	84G3712	BOLT			3
12	6706485	HOOK	tie-down - weld on		1
13	6706857	BLOCK	3 hole threaded		2
14	6700182	COVER, DRAIN	drain		1
15	6685372	SEALANT, GASKET LIQUID	tube - 20 oz		x
16	6680055	MAGNET	selectable joystick controls		2
17	31C1224	BOLT			2
18	7124840	BAR	2 hole threaded		2

Page 53 - OSS# 2071408 - All rights reserved by Bobcat Company - 12/04/2009 - 07:23:36 - Produced by Ken Cook Co. with media1off

MOTOR CARRIER
(Drive Motor Mount Assy) (Manual Controls, AHC, & ACS)
(S/N 530714318 & Below) (S/N 530811605 & Below)

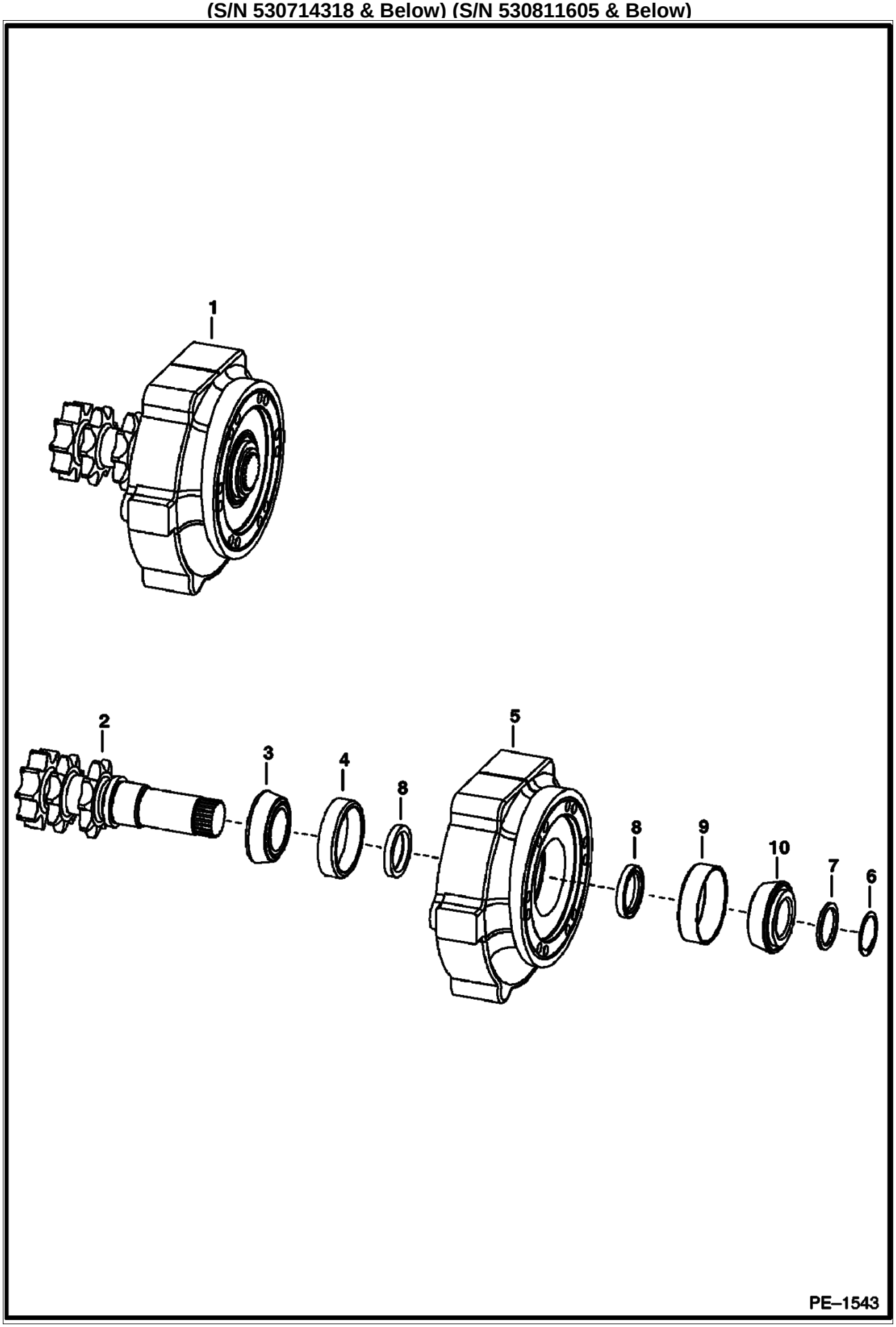

Page 54 - OSS# 2071408 - All rights reserved by Bobcat Company - 12/04/2009 - 07:23:36 - Produced by Ken Cook Co. with media1off

MOTOR CARRIER (Cont'd)
(Drive Motor Mount Assy) (Manual Controls, AHC, & ACS)
(S/N 530714318 & Below) (S/N 530811605 & Below)

Ref No	Part Number	Description	Remarks	Serial Number	Qty
1		CARRIER, MOTOR	NAP - drive motor - Ref. 2-10 - Order 7126215 motor - also order 6690163 retaining rings (2) and 7126213 brake disc - Carriers can be replaced individually - Was 7107272 [A]		1
2		SHAFT	See Illustration MOTOR CARRIER/ PE3329 See Illustration TRANSMISSION COVERS/ PE3330 - NAP - Order 7147579 shaft, 7126213 brake disk, 6690163 retaining ring (2), 6693415 snap ring & 6693525 bearing - Was 7106738 [A]		1
3	6664845	CONE, BEARING			1
4	6650120	RACE			1
5	6717242	HOUSING			1
6	6664848	SNAP RING	.062" (1,57mm) thick		1
7	6706817	SPACER	.152" (3,86mm) thickness		1
7	6807992	SHIM	.005"(1,27mm) - used to take up to .012"(3,048mm) end play		x
8	6665755	SEAL, OIL			2
9	7100240	RACE			1
10	6693525	BEARING	Was 7100239 [B]		1

Page 55 - OSS# 2071408 - All rights reserved by Bobcat Company - 12/04/2009 - 07:23:36 - Produced by Ken Cook Co. with media1off

MOTOR CARRIER
(Drive Motor Mount Assy) (Manual Controls, AHC, & ACS)
(S/N 530714319 & Above) (S/N 530811606 & Above)

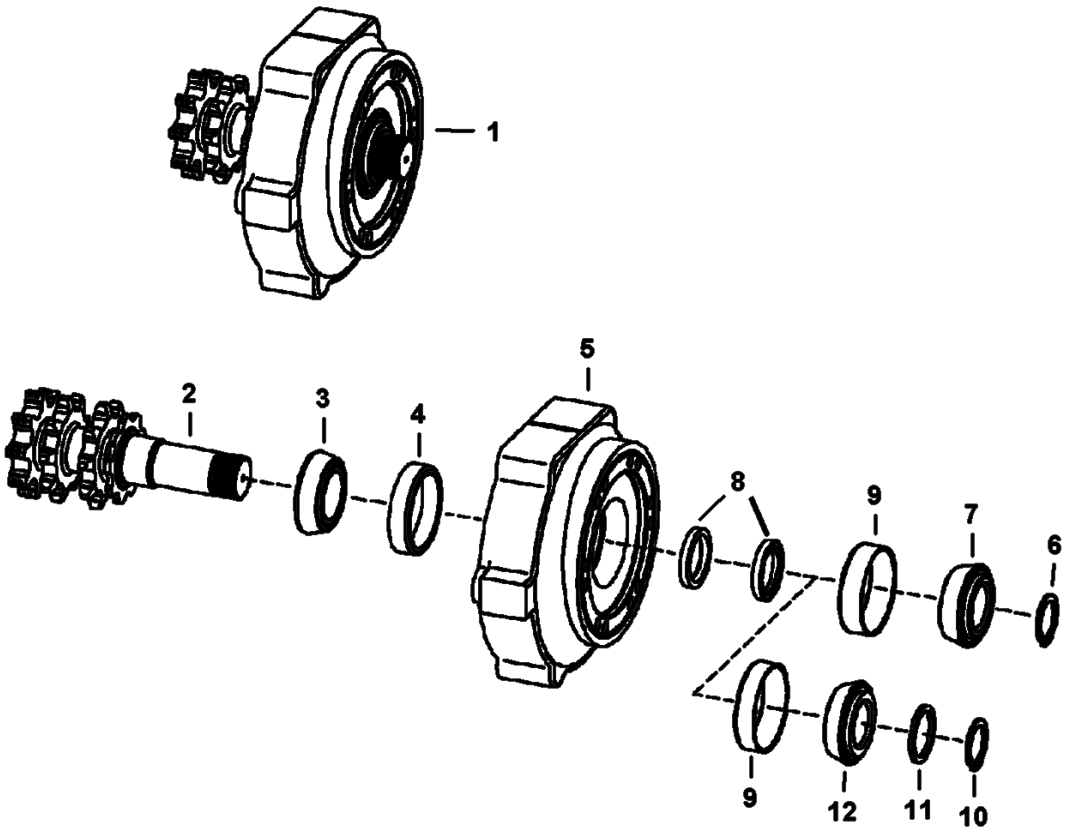

Page 56 - OSS# 2071408 - All rights reserved by Bobcat Company - 12/04/2009 - 07:23:36 - Produced by Ken Cook Co. with media1off

MOTOR CARRIER (Cont'd)
(Drive Motor Mount Assy) (Manual Controls, AHC, & ACS)
(S/N 530714319 & Above) (S/N 530811606 & Above)

Ref No	Part Number	Description	Remarks	Serial Number	Qty
1	7126215	CARRIER, MOTOR	drive motor - Ref. 2-8		1
2	7147579	SHAFT TRANS	W/grooves - Used W/ 6693525 bearing, 6693415 snap ring & 6690163 snap ring (2)		1
3	6664845	CONE, BEARING			1
4	6650120	RACE			1
5	6717242	HOUSING			1
6	6693415	RING			1
7	6693525	BEARING			1
8	6665755	SEAL, OIL			2
9	7100240	RACE			1
10		SNAP RING	NAP - replace Ref. 10, 11 & 12 W/Ref. 6 & 7		1
11		SPACER	NAP - replace Ref. 10, 11 & 12 W/Ref. 6 & 7		1
12		BEARING	NAP - replace Ref. 10, 11 & 12 W/Ref. 6 & 7		1

Page 57 - OSS# 2071408 - All rights reserved by Bobcat Company - 12/04/2009 - 07:23:36 - Produced by Ken Cook Co. with media1off

MOTOR CARRIER
(Drive Motor Mount Assy.) (SJC)
(S/N 530714318 & Below) (S/N 530811605 & Below)

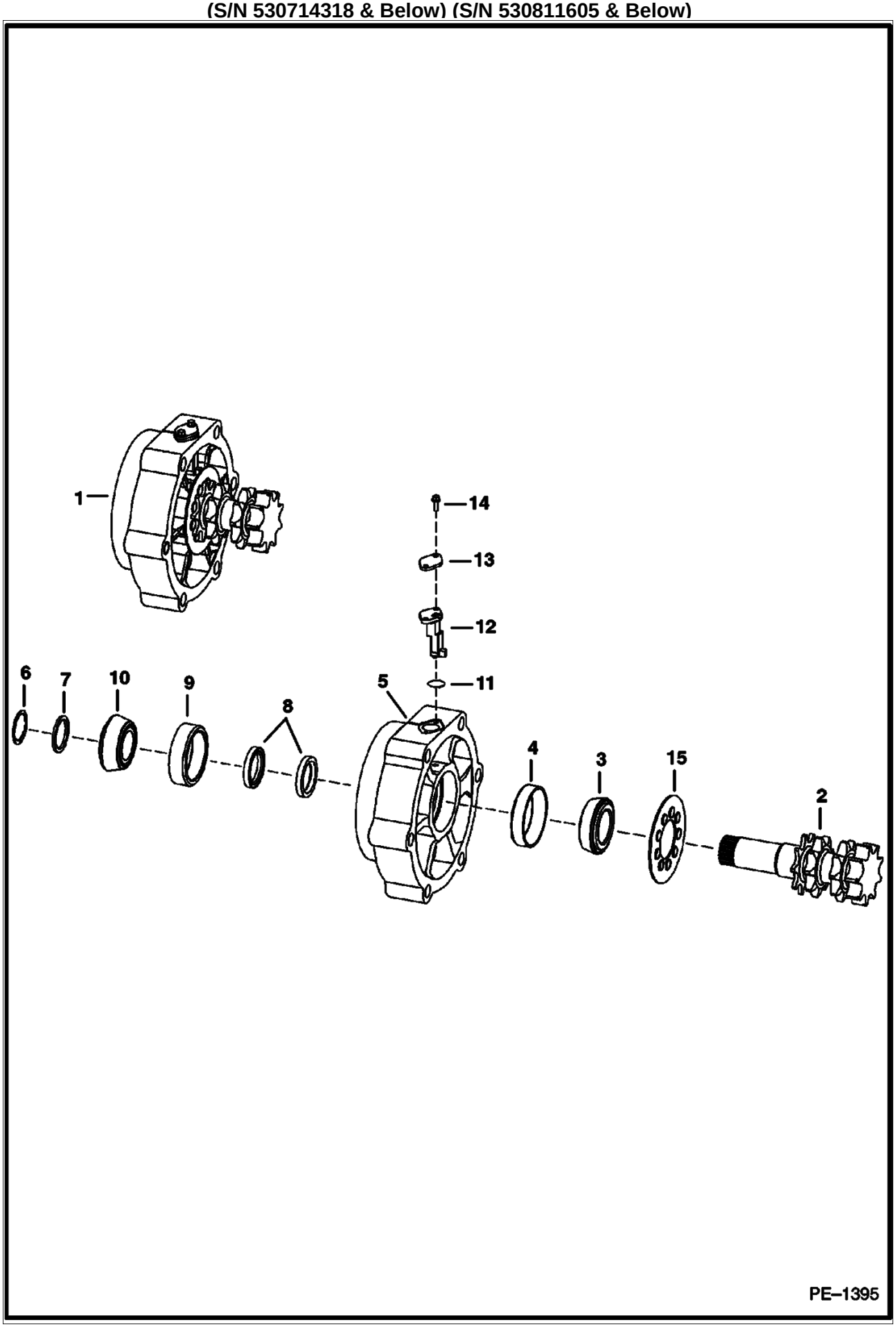

Page 58 - OSS# 2071408 - All rights reserved by Bobcat Company - 12/04/2009 - 07:23:36 - Produced by Ken Cook Co. with media1off

MOTOR CARRIER (Cont'd)
(Drive Motor Mount Assy.) (SJC)
(S/N 530714318 & Below) (S/N 530811605 & Below)

Ref No	Part Number	Description	Remarks	Serial Number	Qty
1		CARRIER, MOTOR	NAP - drive motor - Ref. 2-15 - Order 7136291 motor - also Order 6690163 retaing ring (2) and 7126213 brake disc - the Carriers can be replaced individually - Was 7107274 [A]		1
2		SHAFT	See Illustration TRANSMISSION COVERS/ PE3330 See Illustration MOTOR CARRIER/ PE3328 - NAP - Order 7147579 shaft, 7126213 brake disk, 6690163 retaining ring (2), 6693415 snap ring & 6693525 bearing - Was 7106739 [A]		1
3	6664845	CONE, BEARING			1
4	6650120	RACE			1
5	6729663	HOUSING			1
6	6664848	SNAP RING	.062" (1,57 mm) thick		1
7	6706817	SPACER	.152" (3,86 mm) thick		1
7	6807992	SHIM	.005"(1,27mm) - used to take up to .012"(3,048mm) end play		x
8	6665755	SEAL, OIL			2
9	7100240	RACE			1
10	6693525	BEARING	Was 7100239 [B]		1
11	25K20100	O RING 10			1
12	6677181	SENSOR, SPEED WHEEL	wheel speed		1
13	6730013	COVER			1
14	35C412	BOLT			2
15	6690561	MAGNET	speed sensor - Was 6688924 [A]		1

Page 59 - OSS# 2071408 - All rights reserved by Bobcat Company - 12/04/2009 - 07:23:36 - Produced by Ken Cook Co. with media1off

MOTOR CARRIER
(Drive Motor Mount Assy) (SJC)
(S/N 530714319 & Above) (S/N 530811606 & Above)

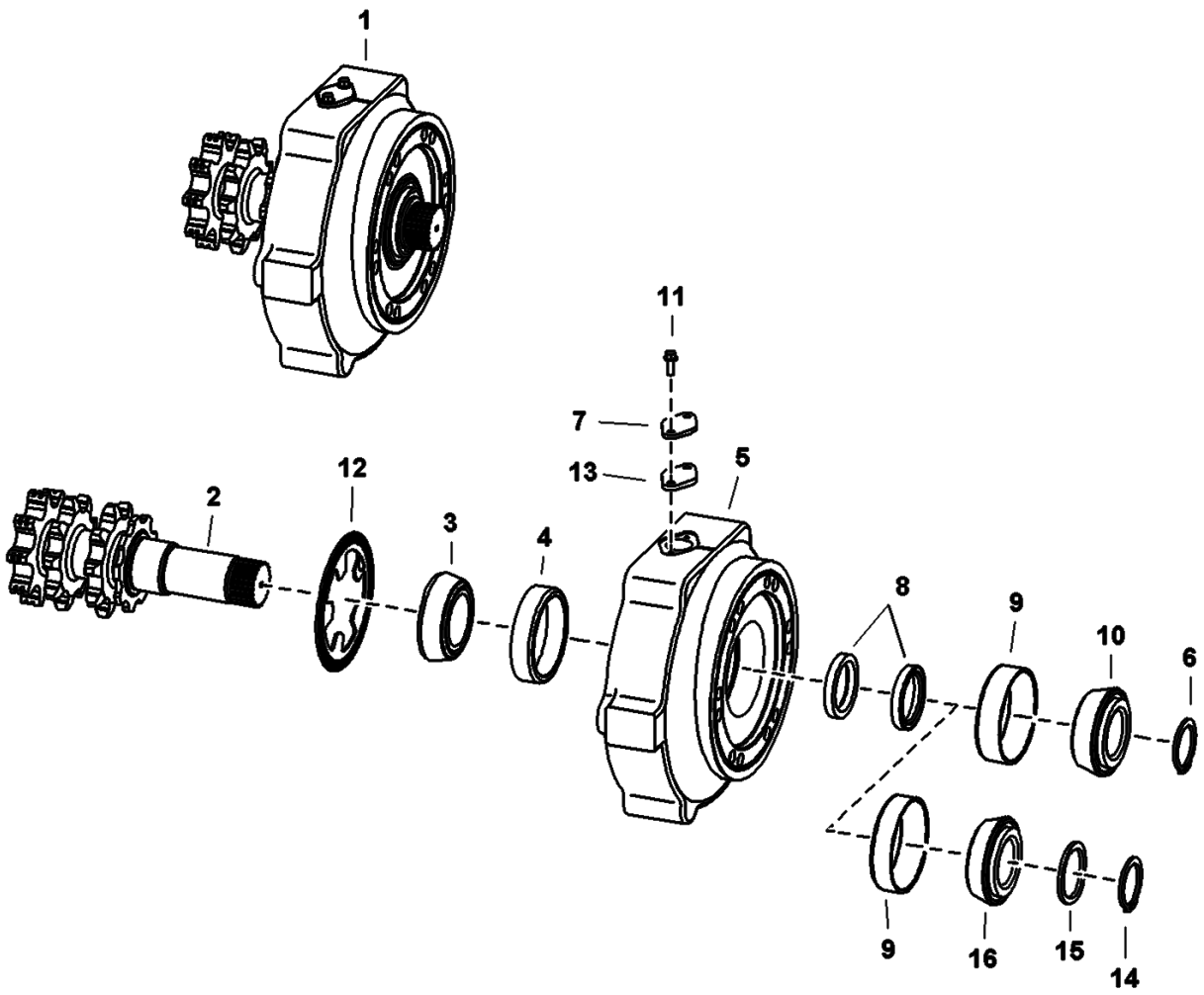

PE-3328

Page 60 - OSS# 2071408 - All rights reserved by Bobcat Company - 12/04/2009 - 07:23:36 - Produced by Ken Cook Co. with media1off

MOTOR CARRIER (Cont'd)
(Drive Motor Mount Assy) (SJC)
(S/N 530714319 & Above) (S/N 530811606 & Above)

Ref No	Part Number	Description	Remarks	Serial Number	Qty
1	7136291	CARRIER, MOTOR	drive motor - Ref. 2-13		1
2	7147579	SHAFT TRANS	W/grooves - Used W/ 6693525 bearing, 6693415 snap ring & 6690163 snap ring (2)		1
3	6664845	CONE, BEARING			1
4	6650120	RACE			1
5	6729663	HOUSING			1
6	6693415	RING			1
7	6730013	COVER			1
8	6665755	SEAL, OIL			2
9	7100240	RACE			1
10	6693525	BEARING			1
11	35C412	BOLT			2
12	6690561	MAGNET	speed sensor		1
13	7110287	GASKET			1
14		SNAP RING	NAP - replace Ref. 13, 14 & 15 W/Ref. 6 & 10		1
15		SPACER	NAP - replace Ref. 13, 14 & 15 W/Ref. 6 & 10		1
16		BEARING	NAP - replace Ref. 13, 14 & 15 W/Ref. 6 & 10		1

Page 61 - OSS# 2071408 - All rights reserved by Bobcat Company - 12/04/2009 - 07:23:36 - Produced by Ken Cook Co. with media1off

TRANSMISSION COVERS
(W/Disc Brake)
(S/N 530714318 & Below, 530811605 & Below)

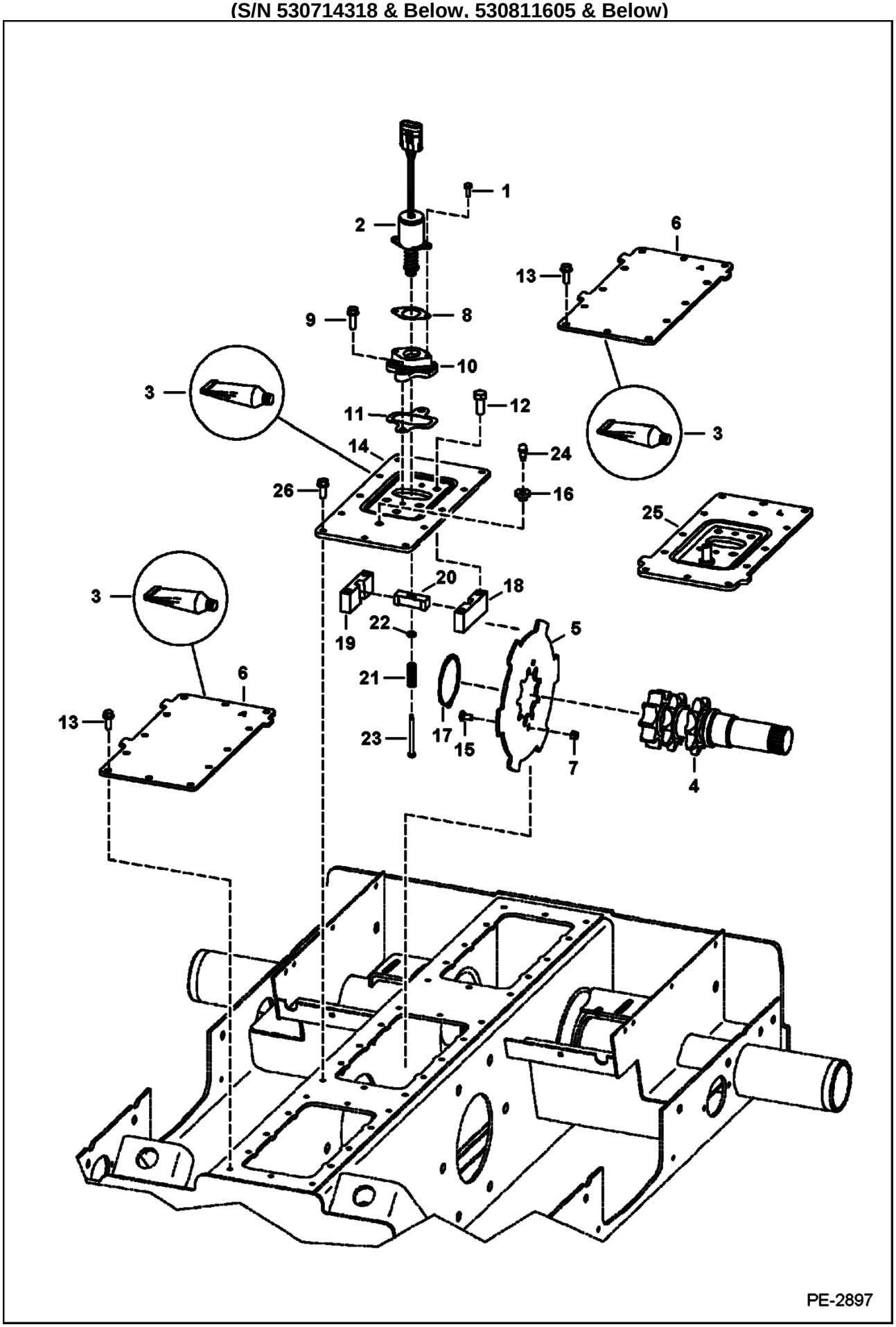

Page 62 - OSS# 2071408 - All rights reserved by Bobcat Company - 12/04/2009 - 07:23:36 - Produced by Ken Cook Co. with media1off

TRANSMISSION COVERS (Cont'd)
(W/Disc Brake)
(S/N 530714318 & Below, 530811605 & Below)

Ref No	Part Number	Description	Remarks	Serial Number	Qty
1	17C412	BOLT 5			2
2	6681512	SOLENOID			1
3	6685372	SEALANT, GASKET LIQUID	tube - 20 oz		x
4	7106738	SHAFT	See Illustration MOTOR CARRIER/ PE1543 - standard hand controls		2
5	7106744	BRAKE DISC			2
5	6710195	PLATE	W/disc brake		1
6	7129987	COVER	Was 6733956 [A]		2
7	59D5	NUT 5			4
8	6706737	GASKET			1
9	84G3720	BOLT			2
10	6706718	MOUNT			1
11	6708016	GASKET			1
12	47C820	BOLT			4
13	84G3716	SCREW 5			36
14		COVER	NAP - single speed - L stamped - Order Ref. 25, 17C612 bolt & 6557831 washer - Was 7130296 [A]		1
15	37C512	BOLT			4
16	6553411	BUSHING			1
17	6662298	RING, RETAINER			1
18	6719057	BLOCK	guide - RH		1
19	6719056	BLOCK	guide - LH		1
20	6714278	GUIDE	for brake disc		1
21	6708018	SPRING			1
22	25E13	WASHER 5			2
23	6708267	BOLT			2
24	6680970	BREATHER			1
25	7156264	COVER	L stamped		1

Page 63 - OSS# 2071408 - All rights reserved by Bobcat Company - 12/04/2009 - 07:23:36 - Produced by Ken Cook Co. with media1off

TRANSMISSION COVERS
(W/Disc Brake)
(S/N 530714319 & Above) (S/N 530811606 & Above)

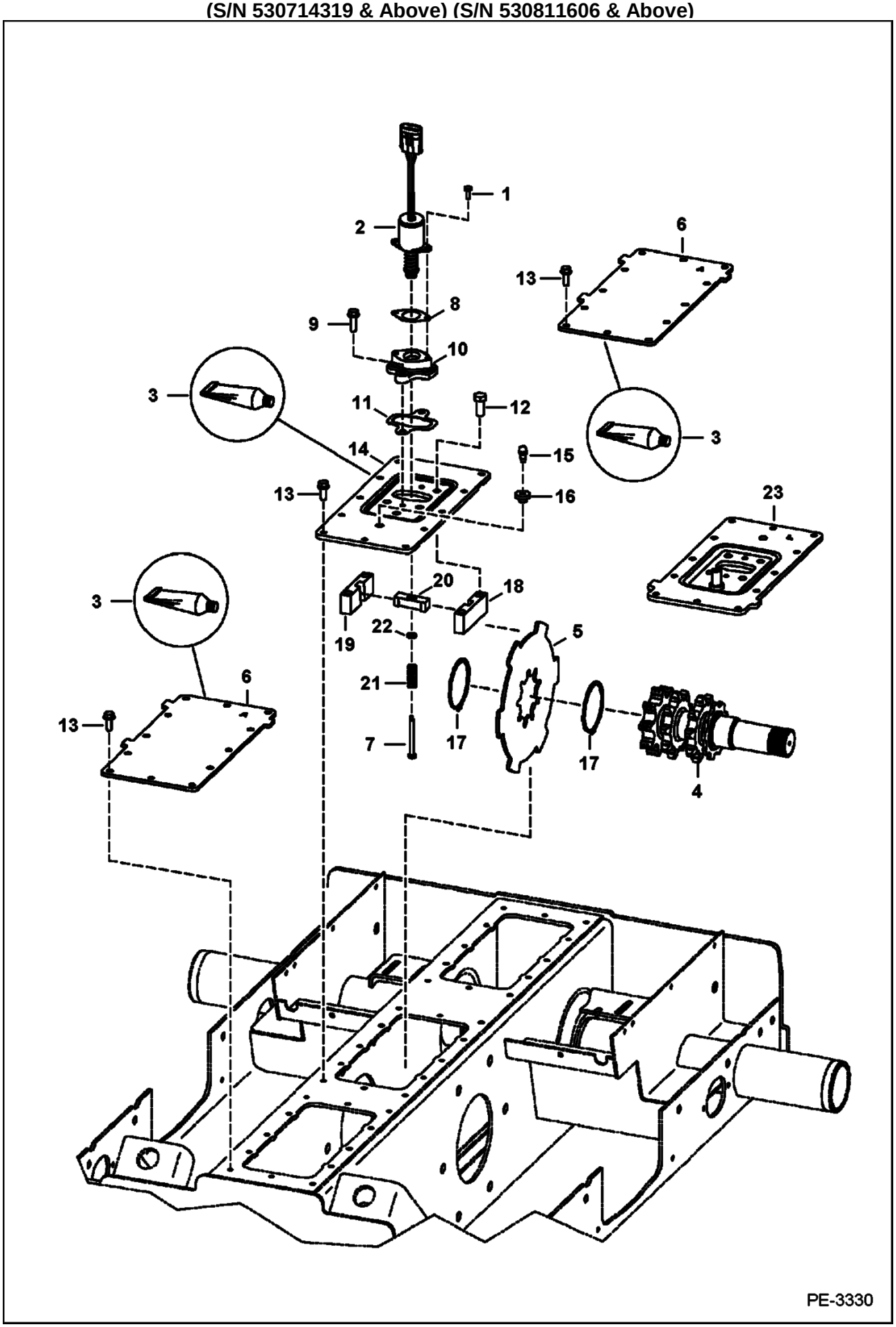

Page 64 - OSS# 2071408 - All rights reserved by Bobcat Company - 12/04/2009 - 07:23:36 - Produced by Ken Cook Co. with media1off

TRANSMISSION COVERS (Cont'd)
(W/Disc Brake)
(S/N 530714319 & Above) (S/N 530811606 & Above)

Ref No	Part Number	Description	Remarks	Serial Number	Qty
1	17C412	BOLT 5			2
2	6681512	SOLENOID			1
3	6685372	SEALANT, GASKET LIQUID	tube - 20 oz		x
4		SHAFT	See Illustration MOTOR CARRIER/ PE3329 - manual hand controls		2
5	7126213	DISC			2
6	7129987	COVER	Was 6733956 [A]		2
7	6708267	BOLT			2
8	6706737	GASKET			1
9	84G3720	BOLT			2
10	6706718	MOUNT			1
11	6708016	GASKET			1
12	47C820	BOLT			4
13	84G3716	SCREW 5			36
14		COVER	NAP - single speed - L stamped - Order Ref. 23, 17C612 bolt & 6557831 washer - Was 7130296		1
15	6680970	BREATHER			1
16	6553411	BUSHING			1
17	6690163	RING			2
18	6719057	BLOCK	guide - RH		1
19	6719056	BLOCK	guide - LH		1
20	6714278	GUIDE	for brake disc		1
21	6708018	SPRING			1
22	25E13	WASHER 5			2
23	7156264	COVER	L stamped		1

Page 65 - OSS# 2071408 - All rights reserved by Bobcat Company - 12/04/2009 - 07:23:36 - Produced by Ken Cook Co. with media1off

TRANSMISSION COVERS
(W/O Disc Brake)

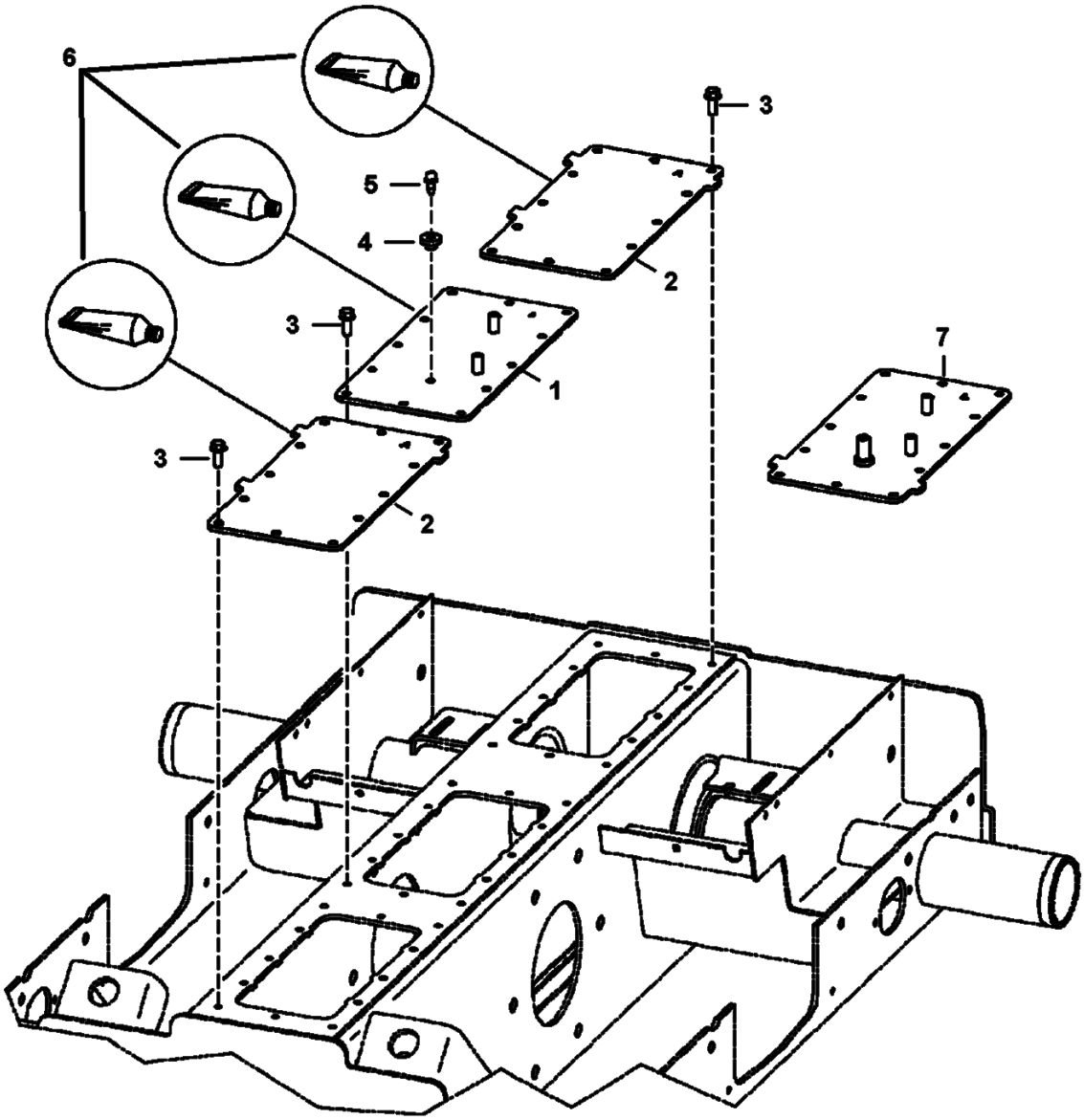

Page 66 - OSS# 2071408 - All rights reserved by Bobcat Company - 12/04/2009 - 07:23:36 - Produced by Ken Cook Co. with media1off

TRANSMISSION COVERS (Cont'd)
(W/O Disc Brake)

Ref No	Part Number	Description	Remarks	Serial Number	Qty
1		COVER	L stamped - Order Ref. 7, 17C612 bolt & 6557831 washer - Was 7130365 [A]		1
2	7129987	COVER	Was 6733956 [A]		2
3	84G3716	SCREW 5			36
4	6553411	BUSHING			1
5	6680970	BREATHER			1
6	6685372	SEALANT, GASKET LIQUID	tube - 20 oz		x
7	7156267	COVER	L stamped		1

Page 67 - OSS# 2071408 - All rights reserved by Bobcat Company - 12/04/2009 - 07:23:36 - Produced by Ken Cook Co. with media1off

AXLE

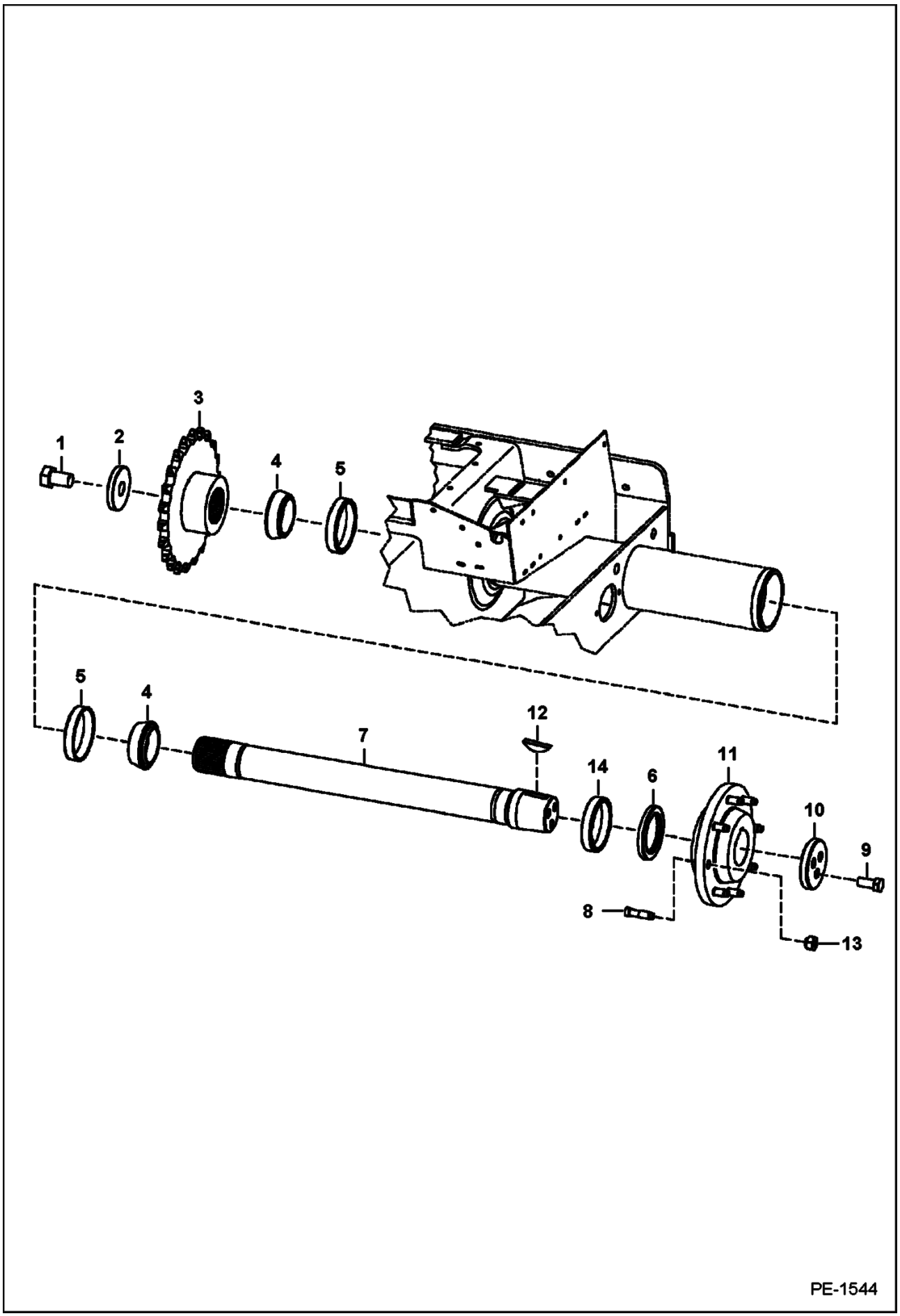

Page 68 - OSS# 2071408 - All rights reserved by Bobcat Company - 12/04/2009 - 07:23:36 - Produced by Ken Cook Co. with mediaioff

Ref No	Part Number	Description	Remarks	Serial Number	Qty
1	2C1626	BOLT			1
2	7107271	WASHER			1
3	7134153	SPROCKET	Was 7106737 [A]		1
4	1321608	BEARING, CONE			2
5	1321607	CUP, BEARING			2
6	6671138	SEAL, OIL	use W/Ref. 7		1
6	6658229	SEAL, OIL	use W/Ref. 14		x
7	6709757	SHAFT, AXLE			1
8	6709170	STUD	wheel		8
9	17C1024	BOLT			3
10	6565947	WASHER	recessed		1
11	6578857	HUB, WHEEL	W/Ref. 8		1
12	6J1664	KEY			1
13	6564669	NUT	wheel		8
14	6558693	WEAR RING	wear - service part only		x

Page 69 - OSS# 2071408 - All rights reserved by Bobcat Company - 12/04/2009 - 07:23:36 - Produced by Ken Cook Co. with media1off

HYDRAULIC CIRCUITRY
(W/O Bucket Positioning Valve) (W/O Cooling Upgrade)
(S/N 530713065 & Below, 530811454 & Below

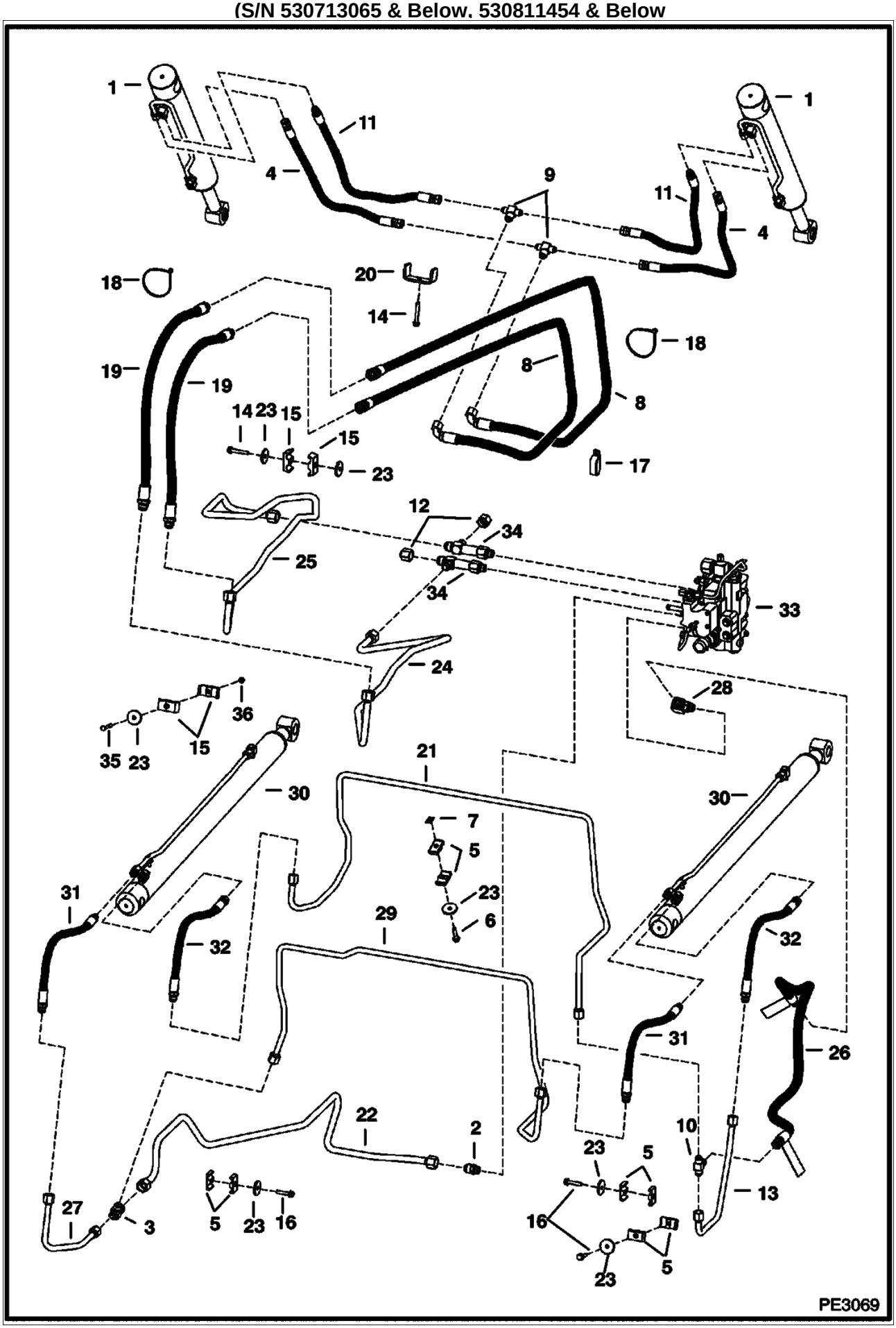

Page 70 - OSS# 2071408 - All rights reserved by Bobcat Company - 12/04/2009 - 07:23:36 - Produced by Ken Cook Co. with media1off

HYDRAULIC CIRCUITRY (Cont'd)
(W/O Bucket Positioning Valve) (W/O Cooling Upgrade)
(S/N 530713065 & Below, 530811454 & Below

Ref No	Part Number	Description	Remarks	Serial Number	Qty
1		CYLINDER	See Illustration TILT CYLINDER/ PE1520 - tilt		1
2	15KB1210	ADAPTER			1
2	79K10	O RING 10			x
3	6729686	TEE			1
4	7102090	HOSE			2
5	6701893	CLAMP			10
6	84G3728	BOLT			2
7	6684033	NUT			2
8	6736353	HOSE			2
9	6716061	TEE			2
10	6729694	TEE			1
11	7102089	HOSE			2
12	36K8	CAP			2
13	6730858	TUBELINE			1
14	84G3740	BOLT			3
15	6592506	CLAMP			4
16	84G3732	BOLT			3
17	31H49	CLAMP			1
18	6624289	TIE STRAP			2
19	6736352	HOSE			2
20	6735796	CLAMP			2
21	7114821	TUBELINE	lift	& Bel	1
21	7114821	TUBELINE	lift	& Abv	1
22	7114812	TUBELINE	lift		1
23	872229	WASHER			8
24	7114828	TUBELINE	tilt		1
24	7126515	TUBELINE		530712141 & Abv	1
24	7126515	TUBELINE		530811080 & Abv	1
25	7114829	TUBELINE	tilt		1
25	7126516	TUBELINE		530712141 & Abv	1
25	7126516	TUBELINE		530811080 & Abv	1
26	6729604	HOSE	available only as an assembly W/two danger decals installed		1
26	6809511	DECAL	danger		2
26	79K10	O RING 10			x
27	7114820	TUBELINE	lift		1
28	7109623	ELBOW	Was 6817335 [A]		1
28	79K10	O RING 10			x
29	7114813	TUBELINE	lift		1
30		CYLINDER	See Illustration LIFT CYLINDER/ PE2016 - lift		2
31	7100626	HOSE			2
32	7100627	HOSE			2
33		VALVE	See Illustration HYDRAULIC CONTROL VALVE/ PE2379 See Illustration HYDRAULIC CONTROL VALVE/ PE2378		1
34	6730914	TEE			1
34	79K10	O RING 10			x
35	1CM540	BOLT			1
36	59D5	NUT 5			1

Page 71 - OSS# 2071408 - All rights reserved by Bobcat Company - 12/04/2009 - 07:23:36 - Produced by Ken Cook Co. with media1off

HYDRAULIC CIRCUITRY
(W/O Bucket Positioning Valve) (W/Cooling Upgrade)
(S/N 530713066 & Above, 530811455 & Above)

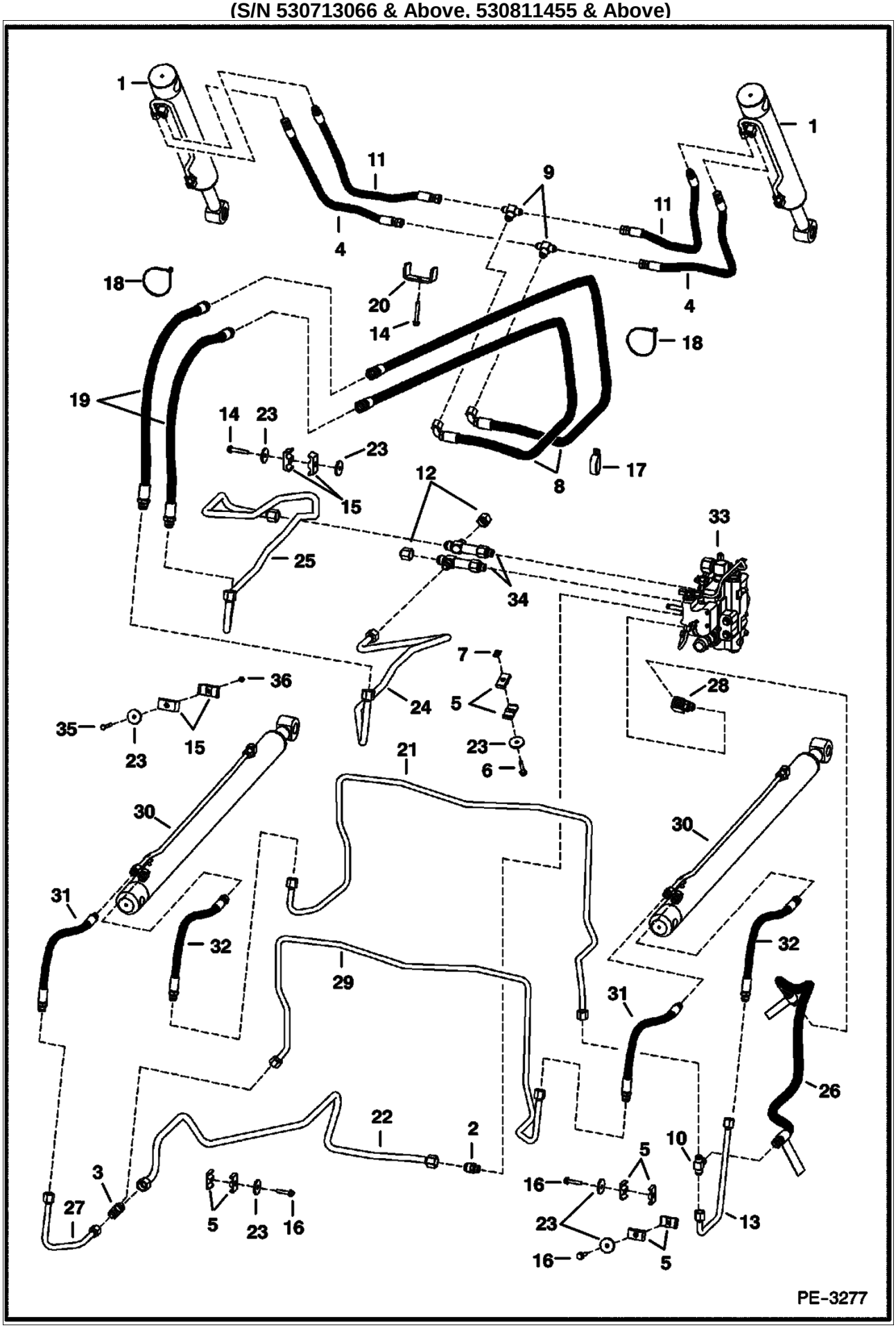

Page 72 - OSS# 2071408 - All rights reserved by Bobcat Company - 12/04/2009 - 07:23:36 - Produced by Ken Cook Co. with media1off

HYDRAULIC CIRCUITRY (Cont'd)
(W/O Bucket Positioning Valve) (W/Cooling Upgrade)
(S/N 530713066 & Above, 530811455 & Above)

Ref No	Part Number	Description	Remarks	Serial Number	Qty
1		CYLINDER	See Illustration TILT CYLINDER/ PE1520 - tilt		1
2	15KB1210	ADAPTER			1
2	79K10	O RING 10			x
3	6729686	TEE			1
4	7102090	HOSE			2
5	6701893	CLAMP			10
6	84G3728	BOLT			2
7	6684033	NUT			2
8	6736353	HOSE			2
9	6716061	TEE			2
10	6729694	TEE			1
11	7102089	HOSE			2
12	36K8	CAP			2
13	7126937	TUBELINE			1
14	84G3740	BOLT			3
15	6592506	CLAMP			4
16	84G3732	BOLT			3
17	31H49	CLAMP			1
18	6624289	TIE STRAP			2
19	6736352	HOSE			2
20	6735796	CLAMP			2
21	7126874	TUBELINE	lift		1
22	7114812	TUBELINE	lift		1
23	872229	WASHER			8
24	7126515	TUBELINE	tilt		1
25	7126516	TUBELINE	tilt		1
26	6729604	HOSE	available only as an assembly W/two danger decals installed		1
26	6809511	DECAL	danger		2
26	79K10	O RING 10			x
27	7114820	TUBELINE	lift		1
28	7109623	ELBOW	Was 6817335 [A]		1
28	79K10	O RING 10			x
29	7126873	TUBELINE	lift		1
30		CYLINDER	See Illustration LIFT CYLINDER/ PE2016 - lift		2
31	7100626	HOSE			2
32	7100627	HOSE			2
33		VALVE	See Illustration HYDRAULIC CONTROL VALVE/ PE2379 See Illustration HYDRAULIC CONTROL VALVE/ PE2378		1
34	6730914	TEE			1
34	79K10	O RING 10			x
35	1CM540	BOLT			1
36	59D5	NUT 5			1

Page 73 - OSS# 2071408 - All rights reserved by Bobcat Company - 12/04/2009 - 07:23:36 - Produced by Ken Cook Co. with media1off

HYDRAULIC CIRCUITRY
(W/Bucket Positioning Valve) (W/O Cooling Upgrade)
(S/N 530713065 & Below, 530811454 & Below

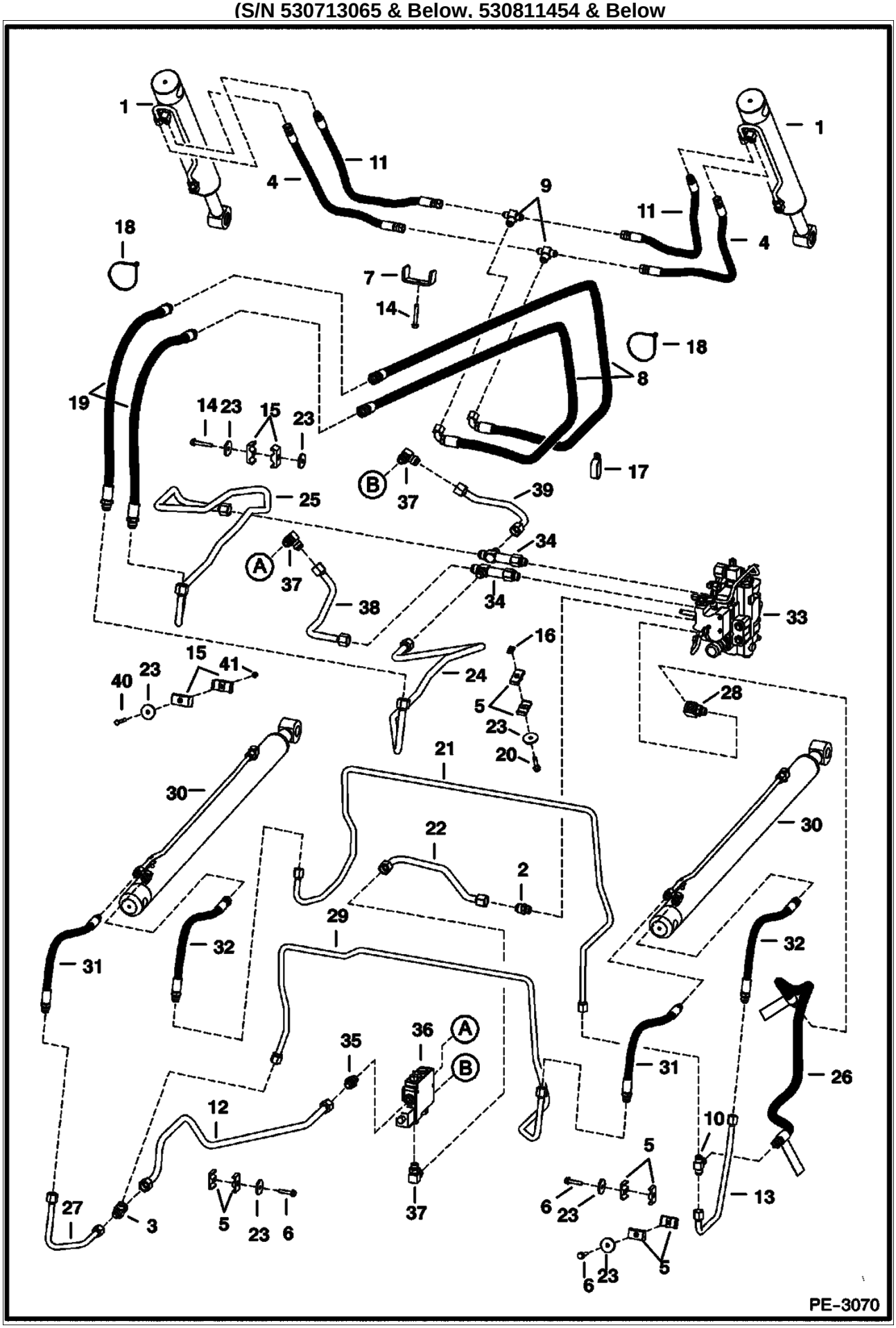

Page 74 - OSS# 2071408 - All rights reserved by Bobcat Company - 12/04/2009 - 07:23:36 - Produced by Ken Cook Co. with media1off

HYDRAULIC CIRCUITRY (Cont'd)
(W/Bucket Positioning Valve) (W/O Cooling Upgrade)
(S/N 530713065 & Below, 530811454 & Below

Ref No	Part Number	Description	Remarks	Serial Number	Qty
1		CYLINDER	See Illustration TILT CYLINDER/ PE1520 - tilt		1
2	15KB1210	ADAPTER			1
2	79K10	O RING 10			x
3	6729686	TEE			1
4	7102090	HOSE			2
5	6701893	CLAMP			10
6	84G3732	BOLT			3
7	6735796	CLAMP			1
8	6736353	HOSE			2
9	6716061	TEE			2
10	6729694	TEE			1
11	7102089	HOSE			2
12	7114823	TUBELINE			1
13	6730858	TUBELINE			1
14	84G3740	BOLT			2
15	6592506	CLAMP			6
16	6684033	NUT			2
17	31H49	CLAMP			1
18	6624289	TIE STRAP			2
19	6736352	HOSE			2
20	84G3728	BOLT			2
21	7114821	TUBELINE	lift		1
22	6732992	TUBELINE	lift		1
23	872229	WASHER			8
24	7114828	TUBELINE	tilt		1
24	7126515	TUBELINE		530712141 & Abv	1
24	7126515	TUBELINE		530811080 & Abv	1
25	7114829	TUBELINE	tilt		1
26	6729604	HOSE	available only as an assembly W/two danger decals installed		1
26	6809511	DECAL	danger		2
26	79K10	O RING 10			x
27	7114820	TUBELINE	lift		1
28	7109623	ELBOW	Was 6817335 [A]		1
28	79K10	O RING 10			x
29	7114813	TUBELINE	lift		1
30		CYLINDER	See Illustration LIFT CYLINDER/ PE2016 - lift		2
31	7100626	HOSE			2
32	7100627	HOSE			2
33		VALVE	See Illustration HYDRAULIC CONTROL VALVE/ PE2379 See Illustration HYDRAULIC CONTROL VALVE/ PE2378 - control		1
34	6730914	TEE			2
34	79K10	O RING 10			x
35	15KB1210	ADAPTER			1
35	79K10	O RING 10			x
36		VALVE	See Illustration BUCKET POSITIONING KIT/ PE2364 See Illustration BUCKET POSITIONING VALVE/ MS1943 - BPV		1
37	17KB1210	ELBOW			3
37	79K10	O RING 10			x
38	6732991	TUBELINE			1
39	7108458	TUBELINE			1
40	1CM540	BOLT			1
41	59D5	NUT 5			1

Page 75 - OSS# 2071408 - All rights reserved by Bobcat Company - 12/04/2009 - 07:23:36 - Produced by Ken Cook Co. with media1off

HYDRAULIC CIRCUITRY
(W/Bucket Positioning Valve) (W/Cooling Upgrade)
(S/N 530713066 & Above, 530811455 & Above)

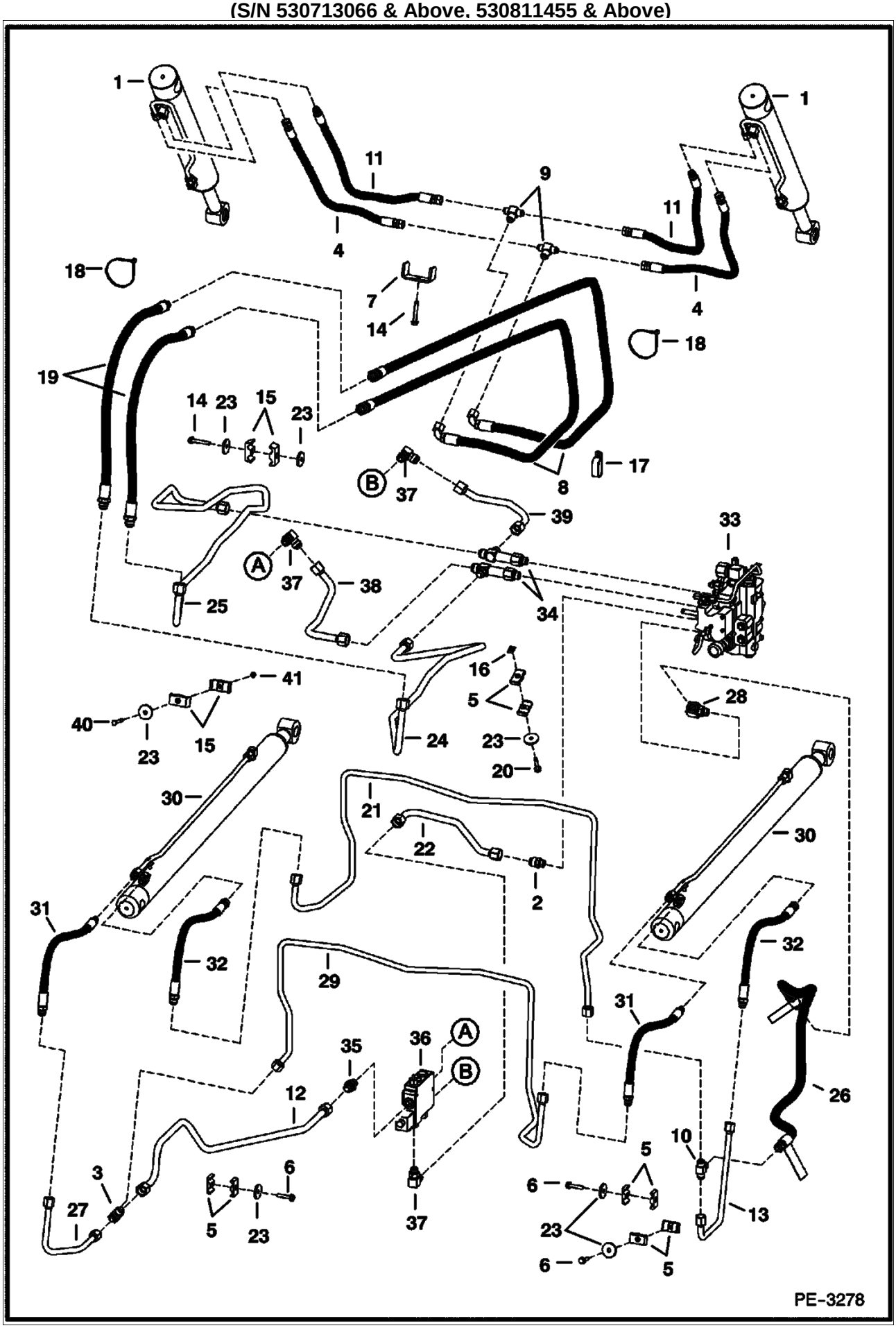

Page 76 - OSS# 2071408 - All rights reserved by Bobcat Company - 12/04/2009 - 07:23:36 - Produced by Ken Cook Co. with media1off

HYDRAULIC CIRCUITRY (Cont'd)
(W/Bucket Positioning Valve) (W/Cooling Upgrade)
(S/N 530713066 & Above, 530811455 & Above)

Ref No	Part Number	Description	Remarks	Serial Number	Qty
1		CYLINDER	See Illustration TILT CYLINDER/ PE1520 - tilt		1
2	15KB1210	ADAPTER			1
2	79K10	O RING 10			x
3	6729686	TEE			1
4	7102090	HOSE			2
5	6701893	CLAMP			10
6	84G3732	BOLT			3
7	6735796	CLAMP			1
8	6736353	HOSE			2
9	6716061	TEE			2
10	6729694	TEE			1
11	7102089	HOSE			2
12	7114823	TUBELINE			1
13	7126937	TUBELINE			1
14	84G3740	BOLT			2
15	6592506	CLAMP			6
16	6684033	NUT			2
17	31H49	CLAMP			1
18	6624289	TIE STRAP			2
19	6736352	HOSE			2
20	84G3728	BOLT			2
21	7126874	TUBELINE	lift		1
22	6732992	TUBELINE	lift		1
23	872229	WASHER			8
24	7126515	TUBELINE	tilt		1
25	7126516	TUBELINE	tilt		1
26	6729604	HOSE	available only as an assembly W/two danger decals installed		1
26	6809511	DECAL	danger		2
26	79K10	O RING 10			x
27	7114820	TUBELINE	lift		1
28	7109623	ELBOW	Was 6817335 [A]		1
28	79K10	O RING 10			x
29	7126873	TUBELINE	lift		1
30		CYLINDER	See Illustration LIFT CYLINDER/ PE2016 - lift		2
31	7100626	HOSE			2
32	7100627	HOSE			2
33		VALVE	See Illustration HYDRAULIC CONTROL VALVE/ PE2379 See Illustration HYDRAULIC CONTROL VALVE/ PE2378 - control		1
34	6730914	TEE			2
34	79K10	O RING 10			x
35	15KB1210	ADAPTER			1
35	79K10	O RING 10			x
36		VALVE	See Illustration BUCKET POSITIONING KIT/ PE2364 See Illustration BUCKET POSITIONING VALVE/ MS1943 - BPV		1
37	17KB1210	ELBOW			3
37	79K10	O RING 10			x
38	6732991	TUBELINE			1
39	7108458	TUBELINE			1
40	1CM540	BOLT			1
41	59D5	NUT 5			1

Page 77 - OSS# 2071408 - All rights reserved by Bobcat Company - 12/04/2009 - 07:23:36 - Produced by Ken Cook Co. with media1off

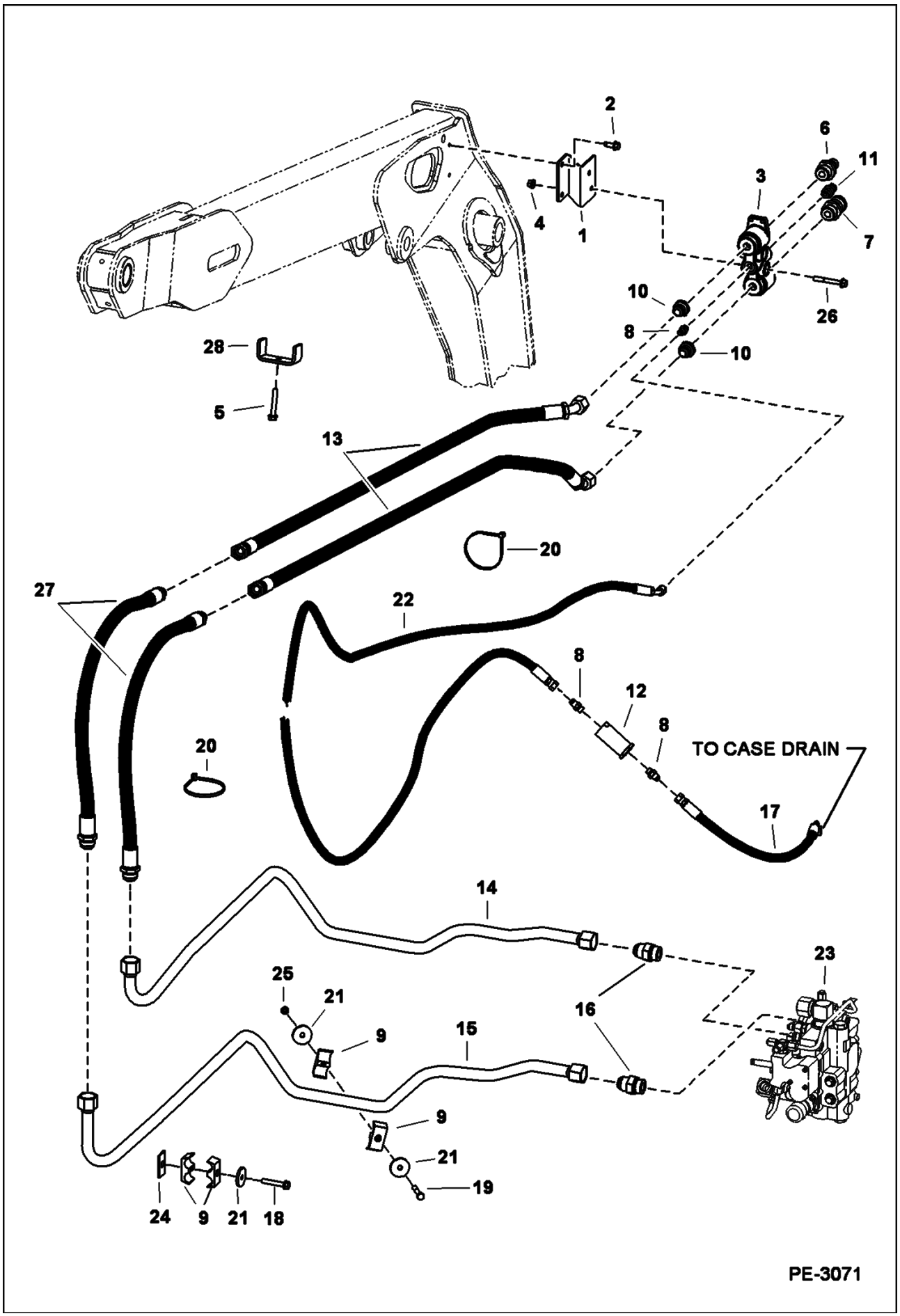

Page 78 - OSS# 2071408 - All rights reserved by Bobcat Company - 12/04/2009 - 07:23:36 - Produced by Ken Cook Co. with media1off

Ref No	Part Number	Description	Remarks	Serial Number	Qty
1	7102414	BRACKET			1
2	84G3716	SCREW 5			2
3	6678076	BLOCK	W/Ref. 6, 7, 11 & (2) of Ref. 10		1
4	83D6	NUT 5			2
5	84G3740	BOLT			1
6	6679837	COUPLER	male		1
6	6679841	SEAL	blue - front		1
6	6680020	SEAL KIT	(3) O-rings & (3) back-up washers		1
7		KIT	coupler - female - FF - Order 6680018 coupler kit - Was 6679839 [A]		1
7	6680020	SEAL KIT	(3) O-rings & (3) back-up washers		1
8	15KB606	ADAPTER			3
8	79K6	O RING 10			x
9	6729320	CLAMP			4
10	6679836	ADAPTER	W/spring		2
10	79K12	O RING 10			x
11	6679838	COUPLER	male - casedrain - W/ spring, valve, seal & O-ring		1
11	6679840	SEAL	blue - front		1
12	6661022	FILTER			1
13	6736351	HOSE			2
14	7114816	TUBELINE			1
15	7114827	TUBELINE			1
16	15KB1616	ADAPTER			2
16	79K16	O RING 10			x
17	7106215	HOSE			1
18	84G3748	BOLT			1
19	17C640	BOLT 5			1
20	6624289	TIE STRAP			2
21	872229	WASHER			3
22	7101377	HOSE			1
23		VALVE	See Illustration HYDRAULIC CONTROL VALVE/ PE2379 See Illustration HYDRAULIC CONTROL VALVE/ PE2378 - control		1
24	7113465	SPACER			1
25	59D6	NUT			1
26	31C644	BOLT			2
27	6736350	HOSE			1
28	6735796	CLAMP			1

Page 79 - OSS# 2071408 - All rights reserved by Bobcat Company - 12/04/2009 - 07:23:36 - Produced by Ken Cook Co. with media1off

LIFT & TILT CONTROL CIRCUITRY

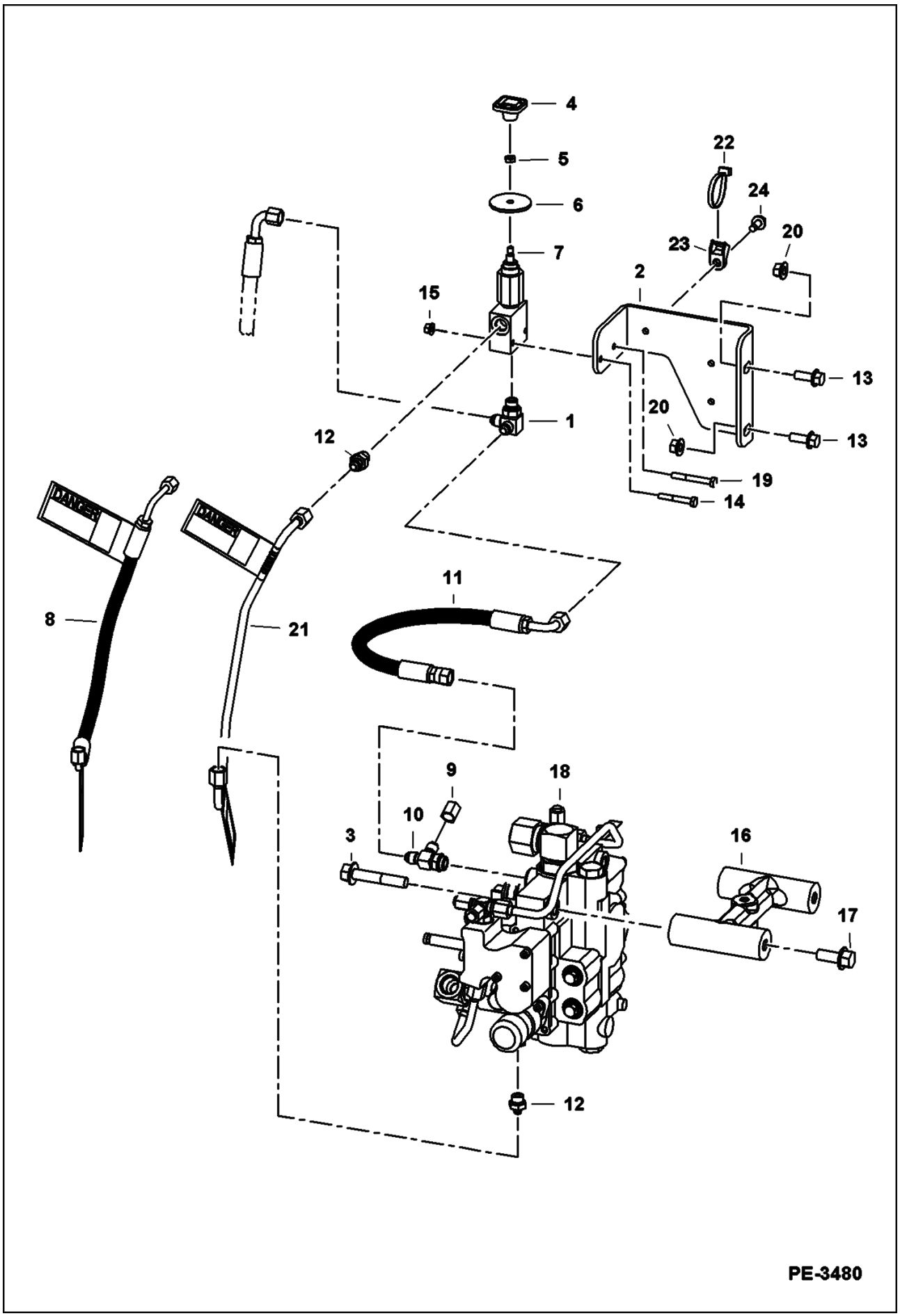

Page 80 - OSS# 2071408 - All rights reserved by Bobcat Company - 12/04/2009 - 07:23:36 - Produced by Ken Cook Co. with media1off

Ref No	Part Number	Description	Remarks	Serial Number	Qty
1	79K6	O RING 10			x
1	6725182	TEE			1
2	6718881	BRACKET			1
3	17C844	BOLT			2
4	6737524	KNOB			1
5	7D4	NUT			1
6	6707101	SEAL	neoprene		1
7	6667844	VALVE, LIFT MANUAL	manual lift		1
8		HOSE	NAP - W/decals - Order 7148987 tube - Was 7103172 [A]		1
8	6809511	DECAL	danger		2
9	36K5	CAP			1
10	21KB606	TEE			1
10	79K6	O RING 10			x
11	7110284	HOSE			1
12	15KB406	ADAPTER	use W/Ref. 8		1
12	79K6	O RING 10			x
12	15KB606	ADAPTER	use W/Ref. 21		2
12	79K6	O RING 10			x
13	35C616	BOLT 5			3
14	17C428	BOLT			2
15	83D4	NUT 10			2
16	7109934	MOUNT, VALVE			1
17	35C820	BOLT			2
18		VALVE	See Illustration HYDRAULIC CONTROL VALVE/ PE2378 See Illustration HYDRAULIC CONTROL VALVE/ PE2379 - control		1
19	35C616	BOLT 5	Was 17C624		1
20	83D6	NUT 5			2
21	7148997	TUBELINE, HYD	available only as an assembly W/two danger decals installed		1
21	6809511	DECAL			2
22	6624289	TIE STRAP			1
23	6678667	MOUNT			1
24	84G3112	BOLT 5			1

Page 81 - OSS# 2071408 - All rights reserved by Bobcat Company - 12/04/2009 - 07:23:36 - Produced by Ken Cook Co. with media1off

TILT CYLINDER

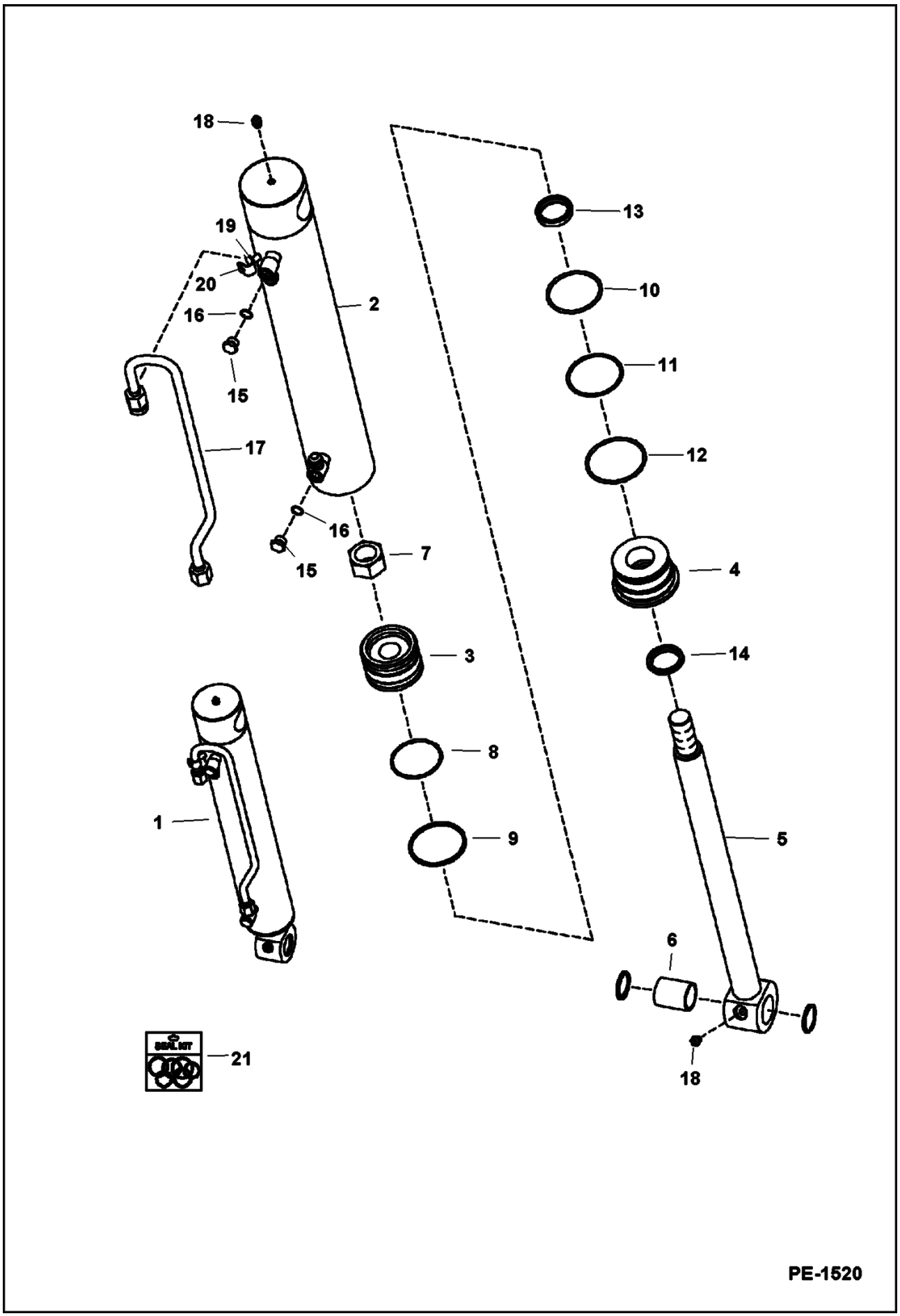

Page 82 - OSS# 2071408 - All rights reserved by Bobcat Company - 12/04/2009 - 07:23:36 - Produced by Ken Cook Co. with media1off

Ref No	Part Number	Description	Remarks	Serial Number	Qty
1	6810233	CYLINDER	tilt - Ref. 2-20		1
2	6810234	TUBE, CASE CYL TILT	3" (76,2 mm) ID		1
3	6810237	PISTON			1
4	6538367	HEAD, CYL TILT			1
5	6810235	SHAFT, ROD CYL TILT	W/Ref. 6 - 1.5" (38 mm) OD		1
6	6805453	BUSHING			1
7	6810539	NUT			1
8	25K30218	O RING 10	Was 54K30218 [B]		1
9	947088	RING			1
10	25K40224	O RING 10	Was 54K40224 [B]		1
11	73K232	RING	back-up - Was 80K232 [A]		1
12	58K234	O RING 10	Was 54K40300 [B]		1
13	6667326	SEAL			1
14	6690707	SEAL	wiper - Was 6665086 [A]		1
15	6812171	PLUG	W/Ref. 16 - allen socket head		2
16	75K6	O-RING			x
17	6810213	TUBELINE			1
18	10H25	FITTING, GREASE 5			2
19		STUD	NAP - Was 6690909 [A]		1
20	6690911	CLAMP			1
21	7135547	KIT, SEAL	Ref. 7-14 - Was 6816325 [A]		1

Page 83 - OSS# 2071408 - All rights reserved by Bobcat Company - 12/04/2009 - 07:23:36 - Produced by Ken Cook Co. with media1off

LIFT CYLINDER

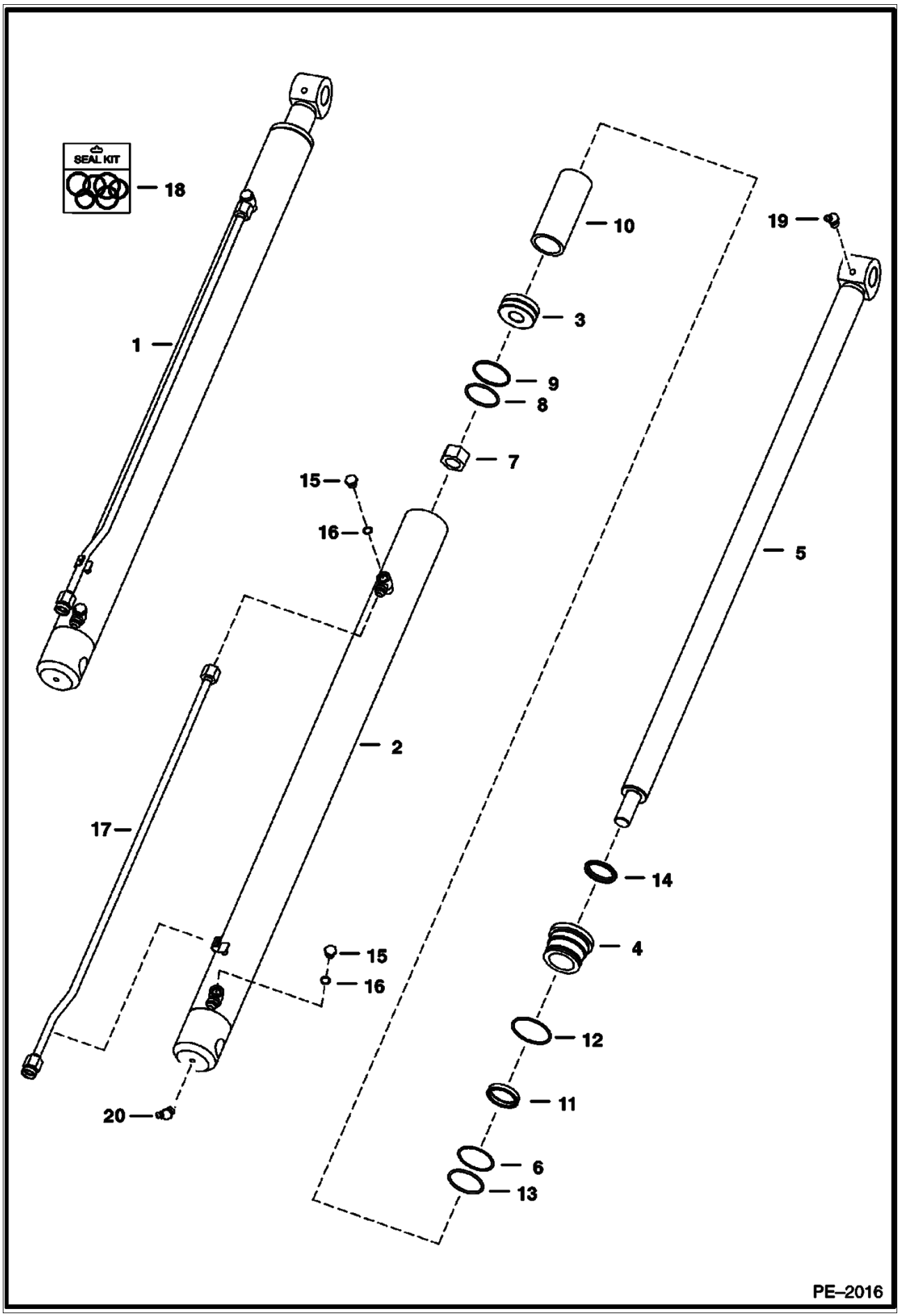

Page 84 - OSS# 2071408 - All rights reserved by Bobcat Company - 12/04/2009 - 07:23:36 - Produced by Ken Cook Co. with media1off

Ref No	Part Number	Description	Remarks	Serial Number	Qty
1	6815757	CYLINDER	lift - Ref. 2-16		1
2	6815759	CASE			1
3	6667291	PISTON	W/Ref. 8 & 9		1
4	6597009	HEAD			1
5	6597015	ROD	W/Ref. 6		1
6	25K40208	O RING 10	Was 54K40208 [B]		1
7	92D16	NUT			1
8	1522534	SEAL			1
9	25K30202	O RING 10			1
10	6592776	SPACER			1
11	73K228	BACK-UP RING	back-up		1
12	82K230	SEAL			1
13	6667327	SEAL	rod		1
14	6686999	SEAL	Wiper		1
15	6812171	PLUG	W/Ref. 16		2
16	75K6	O-RING			x
17	6800974	TUBELINE			1
18	7137865	SEAL KIT	Ref. 6-9 & 11-14 - Was 6803312 [A]		1
19	12H15	GREASE ZERK	90 degrees		1
20	11H15	GREASE FITTING	45 degrees		1

Page 85 - OSS# 2071408 - All rights reserved by Bobcat Company - 12/04/2009 - 07:23:36 - Produced by Ken Cook Co. with media1off

MANUAL LIFT RELEASE VALVE

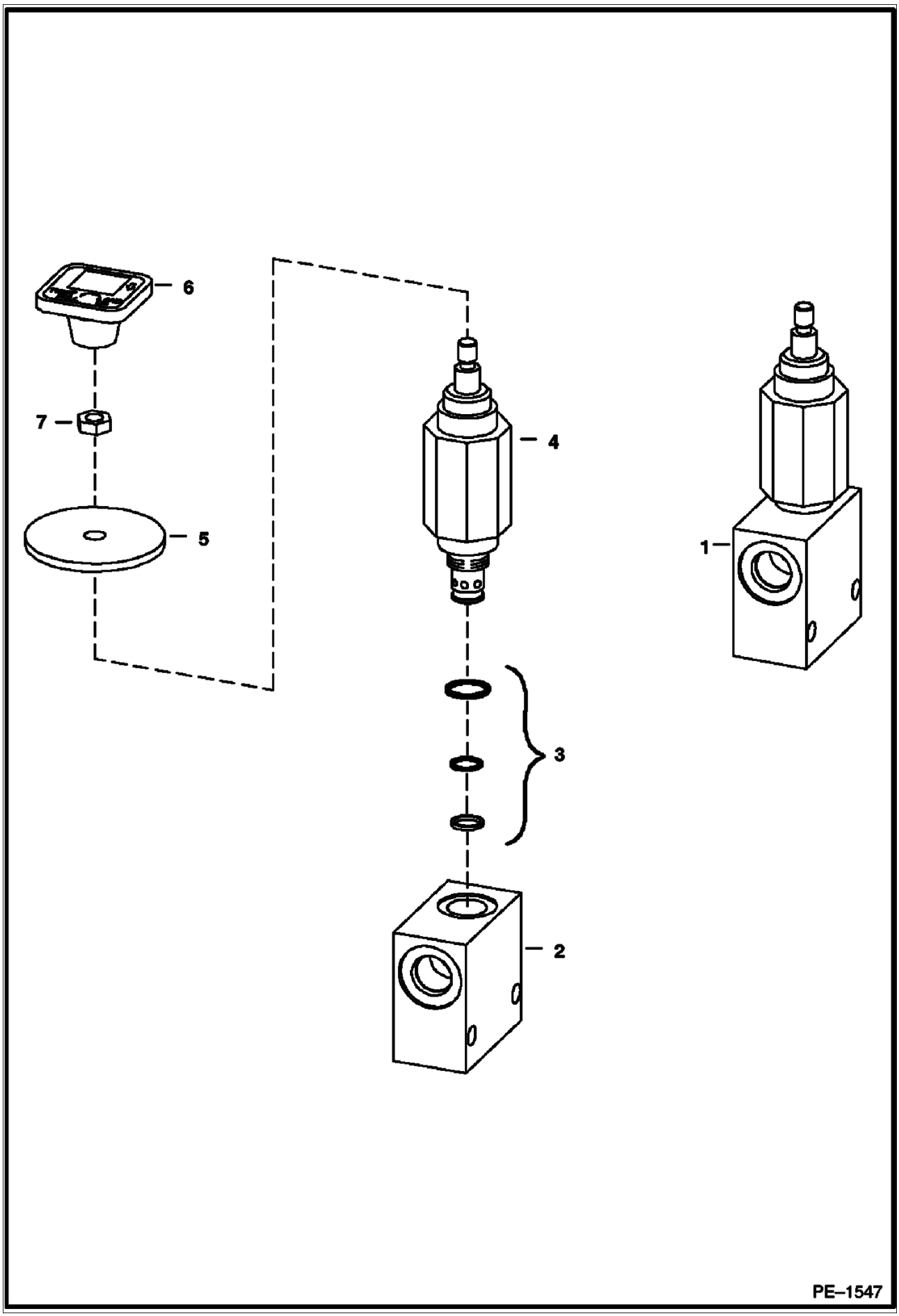

Page 86 - OSS# 2071408 - All rights reserved by Bobcat Company - 12/04/2009 - 07:23:36 - Produced by Ken Cook Co. with media1off

Ref No	Part Number	Description	Remarks	Serial Number	Qty
1	6667844	VALVE, LIFT MANUAL	Ref. 2-4		1
2		BLOCK	NSS - Order Ref. 1		1
3	6669087	SEAL KIT			1
4		VALVE	NSS - Order Ref. 1		1
5	6707101	SEAL	neoprene		1
6	6737524	KNOB	red square		1
7	7D4	NUT			1

Page 87 - OSS# 2071408 - All rights reserved by Bobcat Company - 12/04/2009 - 07:23:36 - Produced by Ken Cook Co. with media1off

CONTROL PEDALS

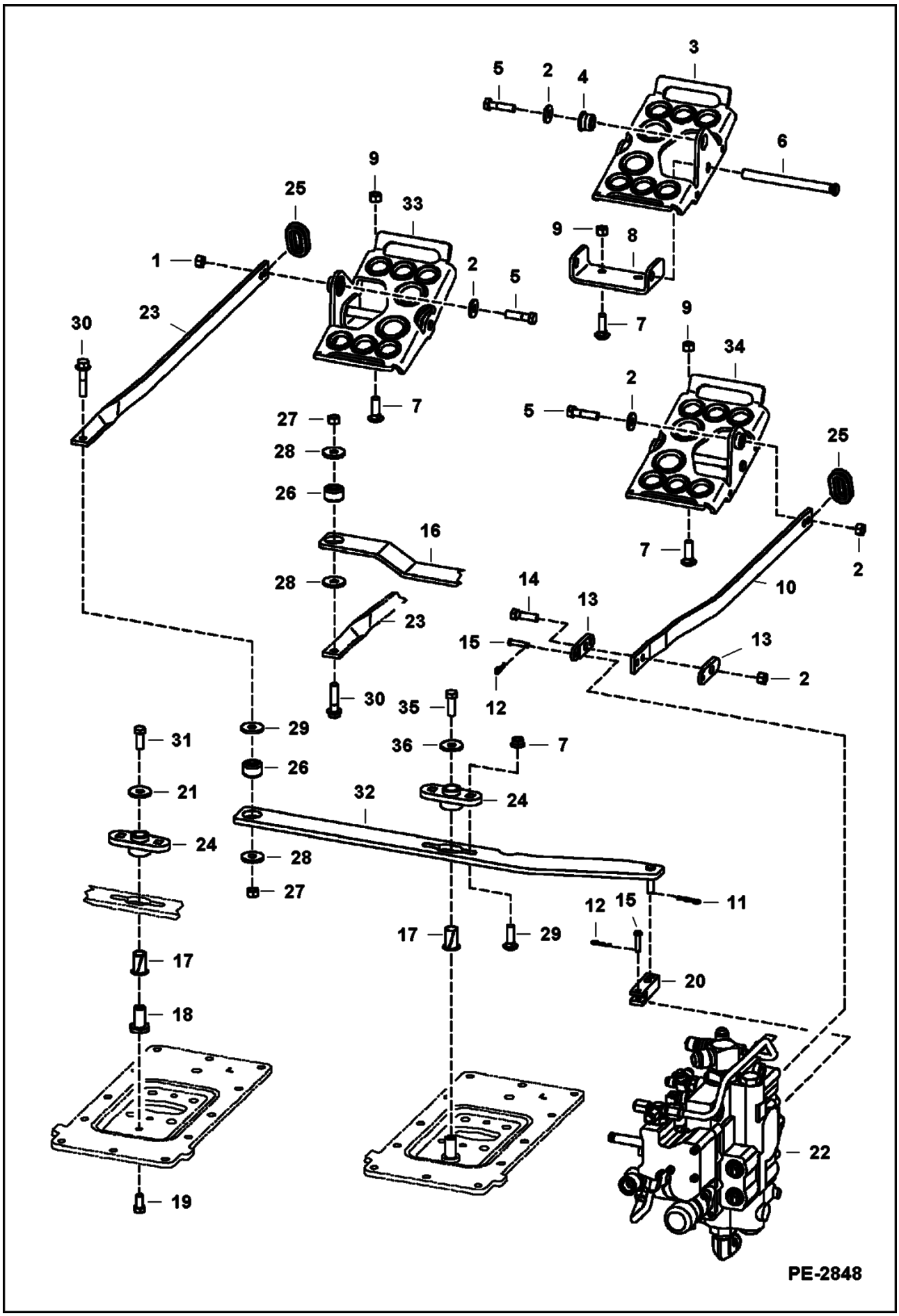

Page 88 - OSS# 2071408 - All rights reserved by Bobcat Company - 12/04/2009 - 07:23:36 - Produced by Ken Cook Co. with media1off

Ref No	Part Number	Description	Remarks	Serial Number	Qty
1	95D6	NUT			5
2	6563914	WASHER			2
3	7115219	PEDAL		& Bel	2
4	6665701	BUSHING, PRESS FIT		& Bel	2
5	17C624	BOLT 5			2
6		PIN	NAP - Was 6564657 [A]		2
7	37C620	BOLT			6
8	7115220	MOUNT		& Bel	2
9	57D6	NUT 5			4
10	6731251	BAR			1
11	1306637	CLIP			2
12	6513495	COTTER PIN			2
13	6708009	LINK			2
14	17C620	BOLT			1
15	6564654	PIN			2
16		LEVER	NAP - bent - Order Ref. 32 - Was 6718285 [A]		1
17	6512026	BUSHING			1
18	6706104	RETAINING NUT			1
19	43C612	BOLT	Was 17C612 [B]		1
20	6706105	YOKE			1
21	619021	WASHER, 5	1.25" (31,8 mm) OD		1
22		VALVE	See Illustration HYDRAULIC CONTROL VALVE/ PE2379 See Illustration HYDRAULIC CONTROL VALVE/ PE2378		1
23	6731252	BAR			1
24	6708043	BUSHING			1
25	6577961	GROMMET			2
26	6685060	BUSHING, TORSION			1
27	63D6	NUT			1
28	6737388	WASHER			2
29	53D6	NUT			2
30	49C628	BOLT			1
31	17C616	BOLT 5			1
32	7122324	LEVER	flat		1
33	7123941	PEDAL ASSEMBLY	LH - W/Ref. 3, 4, 6 & 8	& Abv	1
34	7123942	PEDAL ASSEMBLY	RH - W/Ref. 3, 4, 6 & 8	& Abv	1
35	17C612	BOLT 5			1
36	6557831	WASHER	.875" (22,23 mm) OD		1

Page 89 - OSS# 2071408 - All rights reserved by Bobcat Company - 12/04/2009 - 07:23:36 - Produced by Ken Cook Co. with media1off

HYDRAULIC CONTROL VALVE
(Manual Controls)

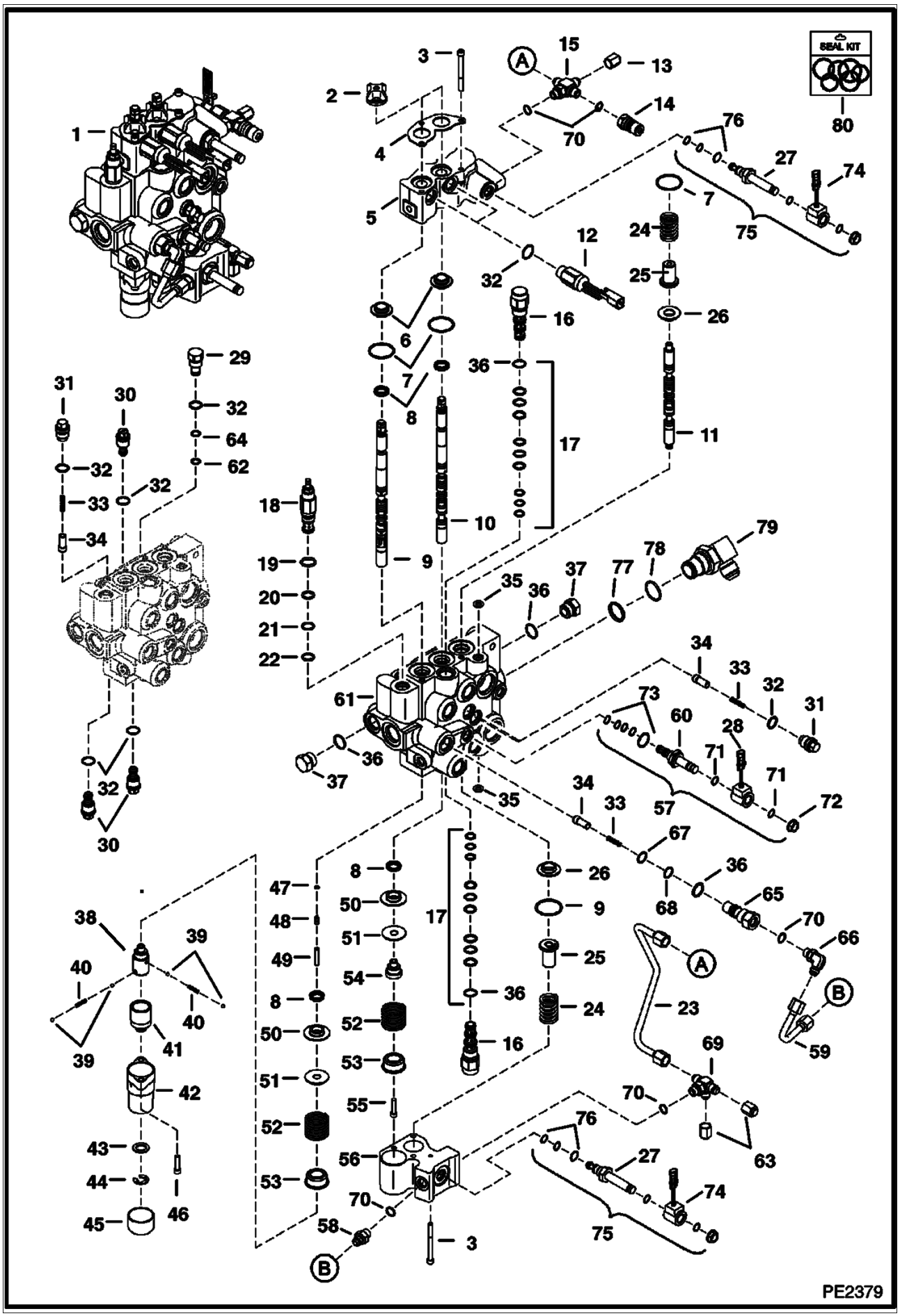

Page 90 - OSS# 2071408 - All rights reserved by Bobcat Company - 12/04/2009 - 07:23:36 - Produced by Ken Cook Co. with media1off

HYDRAULIC CONTROL VALVE (Cont'd)
(Manual Controls)

Ref No	Part Number	Description	Remarks	Serial Number	Qty
1		VALVE, CONTROL	See Illustration HYDRAULIC CONTROL VALVE/ PE2979 See BTI363 - NAP - Was 6813080 [A]		1
2	6587763	BOOT			2
3	29G444	BOLT			7
4	6813153	PLATE	retainer		1
5	6817003	BODY			1
6	6805102	BUSHING			2
7	1K127	O-RING 10	Was 93K127 [A]		x
8	6683274	SEAL, SPOOL			4
9	7108781	SPOOL	lift		1
10	6815152	SPOOL			1
11	7112383	AUX SPOOL			1
12	6677383	SOLENOID, LOCK SPOOL	W/Ref. 32		2
13	36K5	CAP			1
14	6684125	COUPLER	male		1
15	7102066	CROSS	W/Ref. 70		1
16	6689739	VALVE	pilot operated - W/Ref. 17		2
17	6690431	SEAL KIT	W/Ref. 36		2
18	6686360	VALVE	main relief - W/Ref. 19-22 - pressure to be set in field		1
19	58K17	O RING 10			x
20	6665569	WASHER	back-up		x
21	25K20016	O RING 10			x
22	6665570	RING	guide		x
23	7110914	TUBELINE			1
24	7121399	SPRING			2
25	6814694	RETAINER			2
26	7138376	BUSHING	Was 6804920 [B]		2
27	6688743	STEM, VALVE CONTROL	Was 6688397 [A]		2
28	6671025	COIL			1
29	6816549	PLUG ASSY PORT RLF	W/Ref. 32, 62 & 64		1
30	6684646	VALVE	anti-cav - W/Ref. 32		3
31	7134520	PLUG	check valve - W/Ref. 32 - Was 6817707 [A]		3
32	79K8	O RING 10			x
33	6592117	SPRING			4
34	7106712	SEAT			4
35	55K204	O RING 10			x
36	79K10	O RING 10			x
37	24K7	PLUG	W/Ref. 36		2
38	6587575	ADAPTER			1
39	6592105	BALL			4
40	6592107	SPRING			2
41	6531270	SLEEVE			1
42	6589226	BONNET			1
43	6592098	WASHER			1
44	799119	RING			1
45	6660644	CAP			1
46	29G416	BOLT			2
47	58K4	O-RING	Was 54K020002B [B]		1
48	6596807	PLUG	plastic - .460" long		1
49	6586918	SCREW			1
50	6595663	BUSHING			2
51	6587523	WASHER			2
52	6587580	SPRING			2
53	6592100	COLLAR			2

Page 91 - OSS# 2071408 - All rights reserved by Bobcat Company - 12/04/2009 - 07:23:36 - Produced by Ken Cook Co. with media1off

HYDRAULIC CONTROL VALVE (Cont'd)
(Manual Controls)

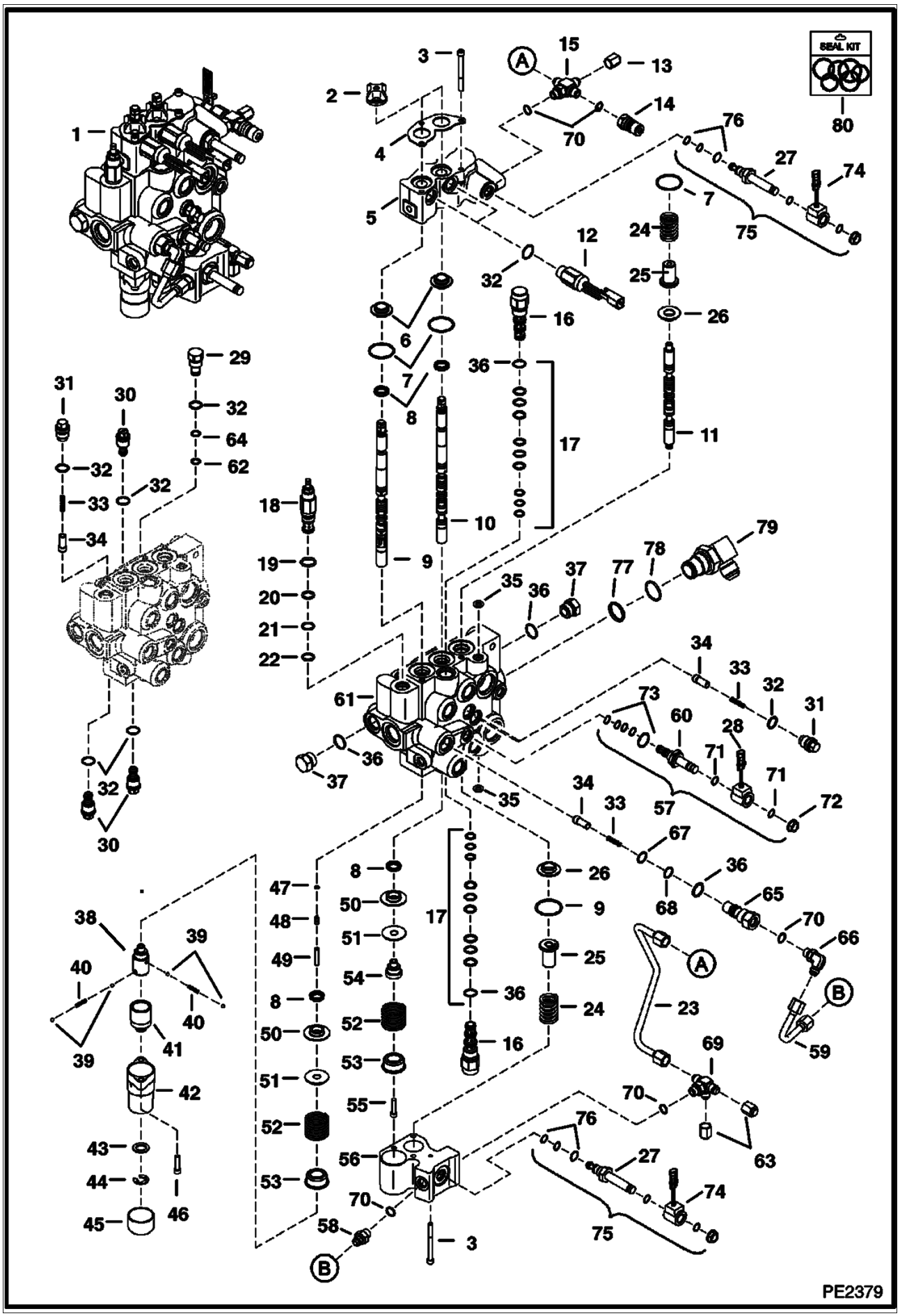

Page 92 - OSS# 2071408 - All rights reserved by Bobcat Company - 12/04/2009 - 07:23:36 - Produced by Ken Cook Co. with media1off

Ref No	Part Number	Description	Remarks	Serial Number	Qty
54	6592109	ADAPTER			1
55	7102652	SCREW			1
56	6814279	BLOCK			1
57	6672471	VALVE	solenoid - W/Ref. 28, 60 & 70-73		1
58	6688845	VALVE	check - W/Ref. 70		1
59	7116995	TUBELINE			1
60	6667687	STEM			1
61		VALVE BODY	NSS		1
62	73K13	RING			x
63	36K5	CAP			2
64	58K13	O-RING			x
65	7134522	PLUG	W/Ref. 36, 67 & 68 - Was 6815014		1
66	17KB606	ELBOW	W/Ref. 70		1
67	58K16	O RING 10			x
68	73K16	RING	back-up		x
69	7102019	CROSS	W/Ref. 70		1
70	79K6	O RING 10			x
71	54K20028	O RING 10			x
72	6668820	NUT			1
73	6669732	KIT, SEAL			1
74	6678891	COIL	10 volt - W/nut		2
74	6691022	NUT	Was 6690705 [A]		2
75	6690991	VALVE, SOLENOID	W/Ref. 27 & 74 - Was 6688499 [A]		2
76	6685603	SEAL KIT	solenoid valve		2
77	58K22	O RING 10			1
78	79K16	O RING 10			1
79	6813964	ELBOW	W/Ref. 77 & 78		1
80	7123964	KIT, SEAL COMPLETE	includes 7123963, 7123965, 6632279, 6669732 & (2) each of 6685603 & 6690431		x
80	7123963	SEAL KIT	3 spool - Ref. 2, 7, 8, 35, 47, & 48		x
80	7123965	SEAL KIT	external fitting - Ref. 32, 36, 62, 64, 67, 68, 70, 71, 77, & 78		x
80	6685603	SEAL KIT	solenoid valve - Ref. 76		2
80	6632279	KIT, SEAL	main relief - Ref. 19-22		x
80	6669732	KIT, SEAL	solenoid valve - Ref. 73		x
80	6690431	SEAL KIT	pilot valve - Ref. 17		x

Page 93 - OSS# 2071408 - All rights reserved by Bobcat Company - 12/04/2009 - 07:23:36 - Produced by Ken Cook Co. with media1off

HYDRAULIC CONTROL VALVE
(Spool Lock) (Service Valve)

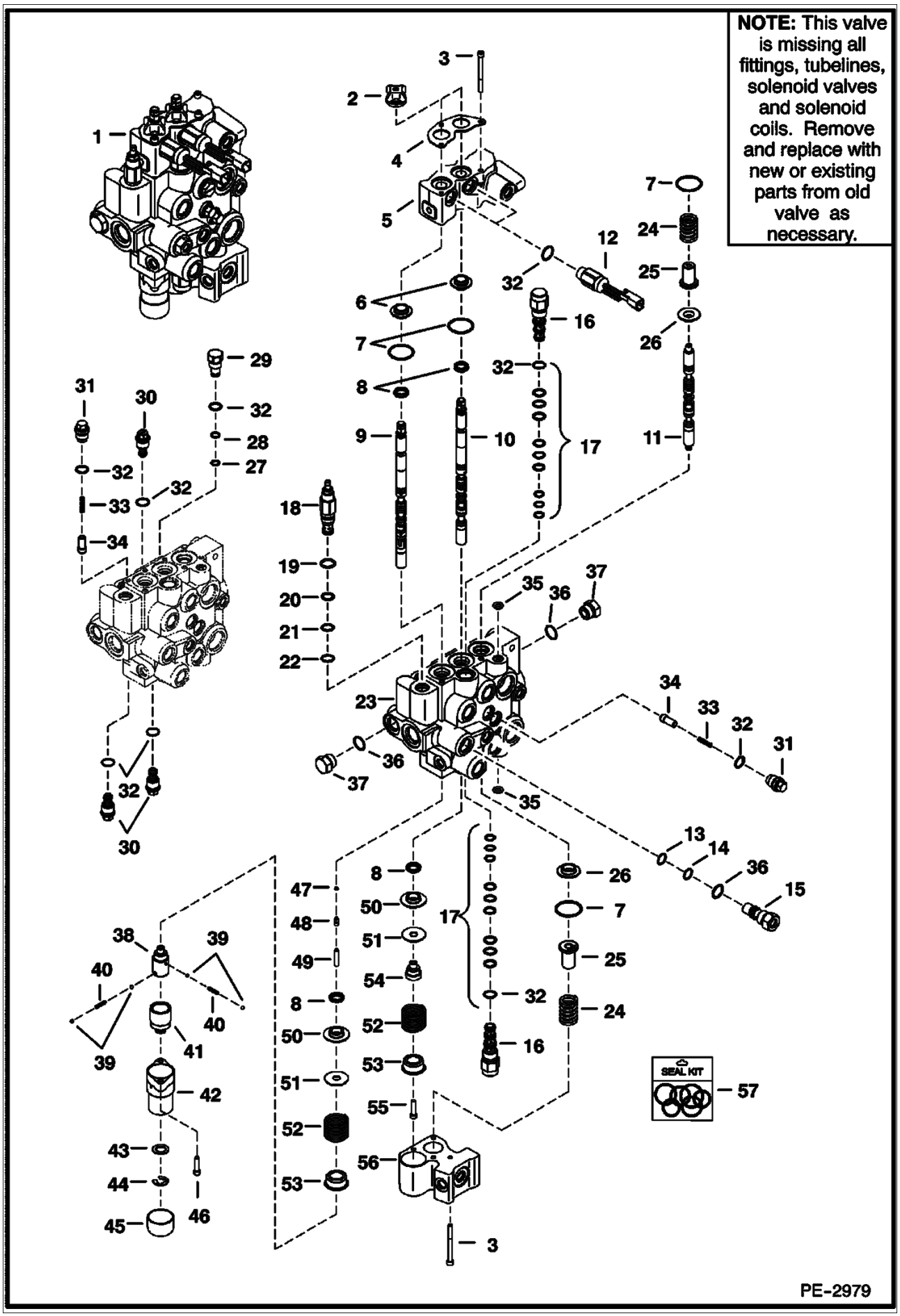

Page 94 - OSS# 2071408 - All rights reserved by Bobcat Company - 12/04/2009 - 07:23:36 - Produced by Ken Cook Co. with mediaioff

HYDRAULIC CONTROL VALVE (Cont'd)
(Spool Lock) (Service Valve)

Ref No	Part Number	Description	Remarks	Serial Number	Qty
1	7124362	VALVE, CONTROL SERVICE			1
2	6587763	BOOT			2
3	29G444	BOLT			7
4	6813153	PLATE	retainer		1
5	6817003	BODY			1
6	6805102	BUSHING			2
7	1K127	O-RING 10	Was 93K127 [A]		x
8	6683274	SEAL, SPOOL			4
9	7108781	SPOOL	lift		1
10	6815152	SPOOL			1
11	7112383	AUX SPOOL			1
12	6676029	SOLENOID	W/Ref. 32 - Was 6677383 [B]		2
13	73K16	RING	back-up		x
14	58K16	O RING 10			x
15	6685157	VALVE	W/Ref. 33, 34 & 36		1
16	6689739	VALVE	pilot operated - W/Ref. 21		2
17	6690431	SEAL KIT	W/Ref. 32 - Was 6669734 [A]		2
18	6686360	VALVE	main relief - W/Ref. 19-22 - pressure to be set in field		1
19	58K17	O RING 10			x
20	6665569	WASHER	back-up		x
21	25K20016	O RING 10			x
22	6665570	RING	guide		x
23		VALVE BODY	NSS		1
24	7121399	SPRING			2
25	6814694	RETAINER			2
26	7138376	BUSHING	Was 6804920 [B]		2
27	73K13	RING			x
28	58K13	O-RING			x
29	6816549	PLUG ASSY PORT RLF	W/Ref. 27, 28 & 32		1
30	6684645	VALVE, ANTI CAV	anti-cav - 3500 psi - W/Ref. 32		3
31	7134520	PLUG	check valve - W/Ref. 32 - Was 6817707 [A]		3
32	79K8	O RING 10			x
33	6592117	SPRING			3
34	7106712	SEAT			3
35	55K204	O RING 10			x
36	79K10	O RING 10			x
37	24K7	PLUG	W/Ref. 36		2
38	6587575	ADAPTER			1
39	6592105	BALL			4
40	6592107	SPRING			2
41	6531270	SLEEVE			1
42	6589226	BONNET			1
43	6592098	WASHER			1
44	799119	RING			1
45	6660644	CAP			1
46	29G416	BOLT			2
47	58K4	O-RING			1
48	6596807	PLUG	plastic - .460" long		1
49	6586918	SCREW			1
50	6595663	BUSHING			2
51	6587523	WASHER			2
52	6587580	SPRING			2
53	6592100	COLLAR			2

Page 95 - OSS# 2071408 - All rights reserved by Bobcat Company - 12/04/2009 - 07:23:36 - Produced by Ken Cook Co. with media1off

HYDRAULIC CONTROL VALVE (Cont'd)
(Spool Lock) (Service Valve)

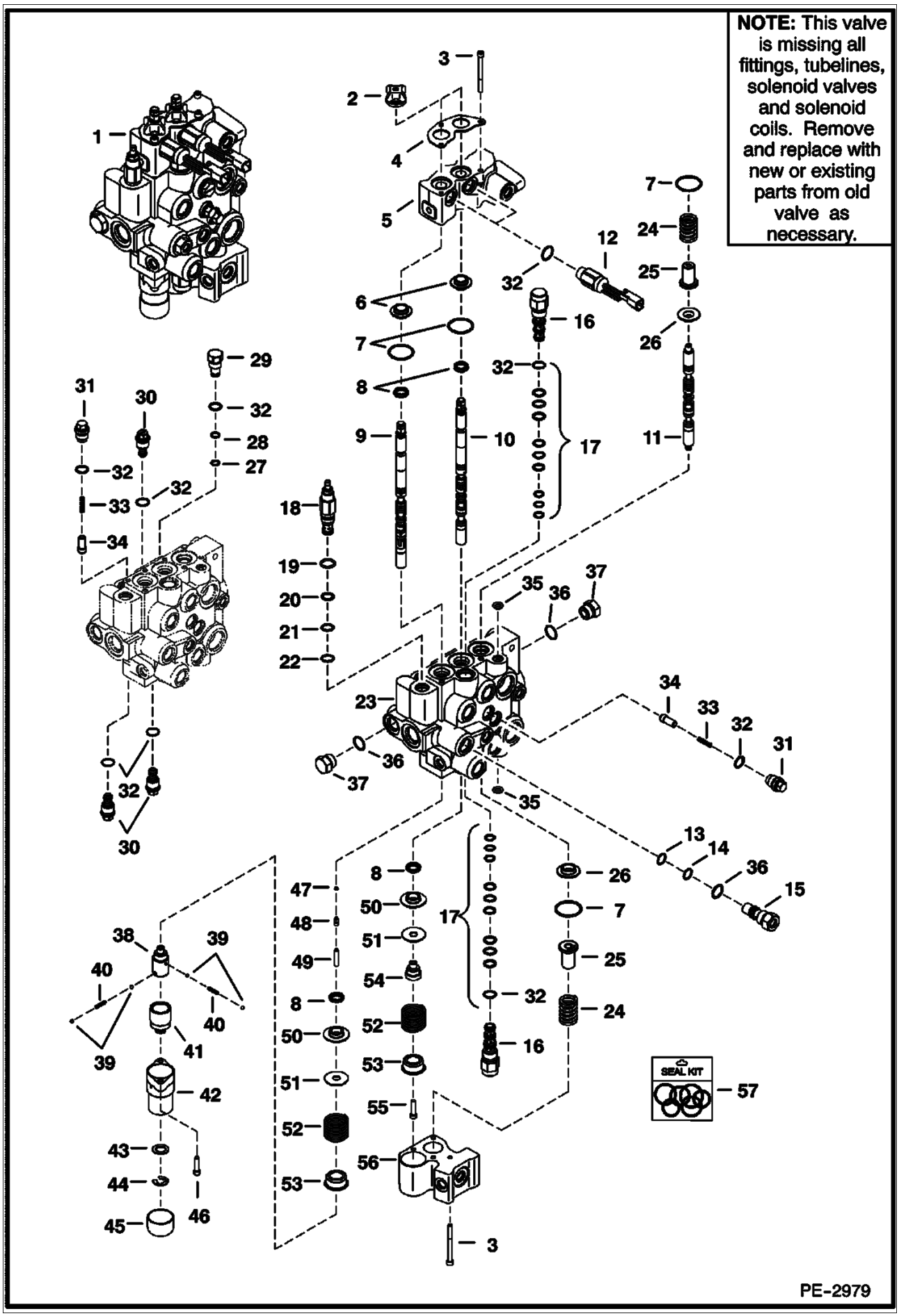

Page 96 - OSS# 2071408 - All rights reserved by Bobcat Company - 12/04/2009 - 07:23:36 - Produced by Ken Cook Co. with mediaioff

HYDRAULIC CONTROL VALVE (Cont'd)
(Spool Lock) (Service Valve)

Ref No	Part Number	Description	Remarks	Serial Number	Qty
54	6592109	ADAPTER			1
55	7102652	SCREW			1
56	6814279	BLOCK			1
57	7123964	KIT, SEAL COMPLETE	includes 7123963, 7123965, 6632279, 6669732 & (2) each of 6685603 & 6690431		x
57	7123963	SEAL KIT	3 spool - Ref. 2, 7, 8, 35, 47, & 48		x
57	7123965	SEAL KIT	external fitting		x
57	6685603	SEAL KIT	solenoid valve		x
57	6632279	KIT, SEAL	main relief - Ref. 19-22		x
57	6669732	KIT, SEAL	solenoid valve		x
57	6690431	SEAL KIT	pilot valve - Ref. 21 - Was 6669734 [A]		x

Page 97 - OSS# 2071408 - All rights reserved by Bobcat Company - 12/04/2009 - 07:23:36 - Produced by Ken Cook Co. with media1off

HYDRAULIC CONTROL VALVE
(AHC/ACS/SJC)

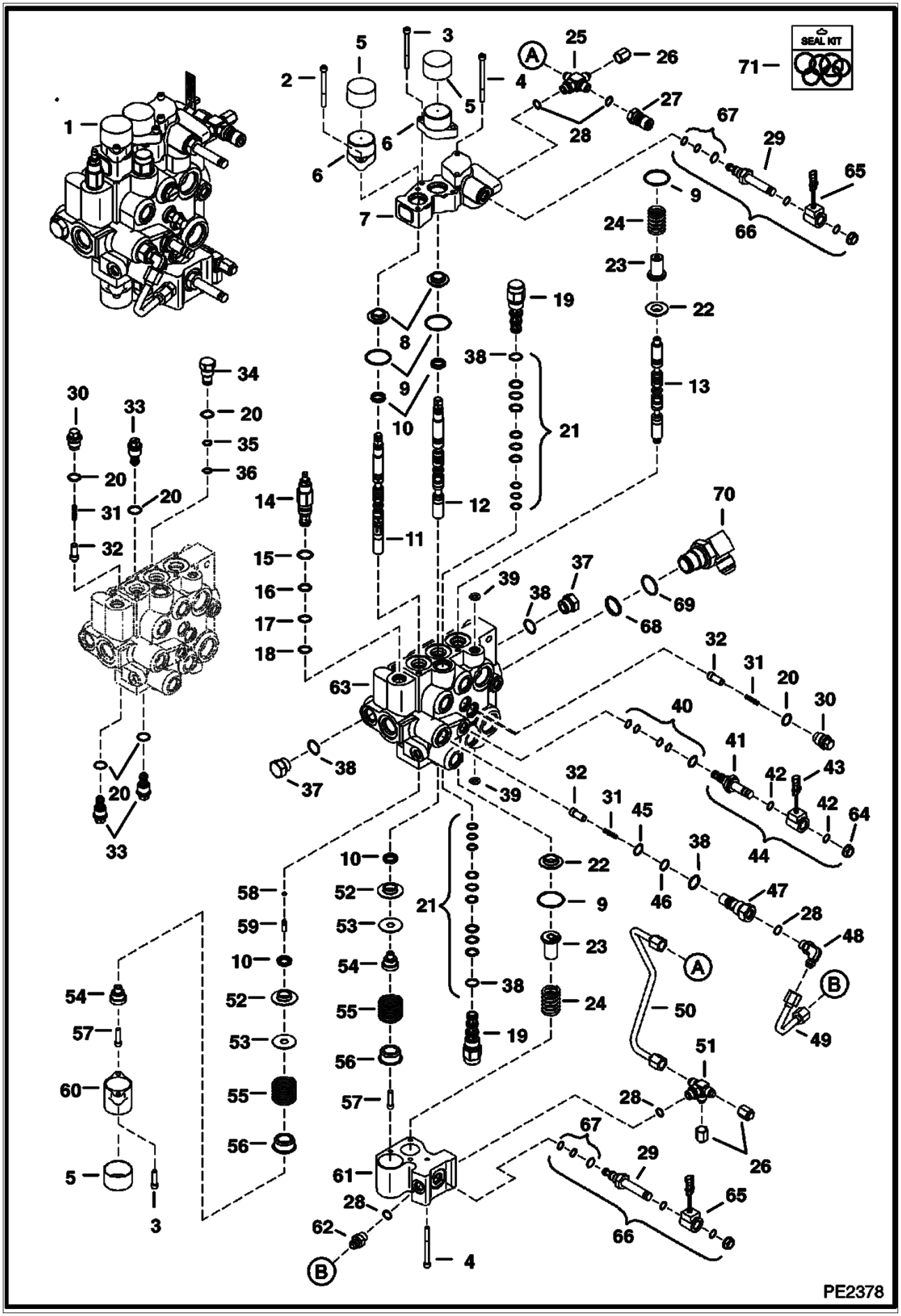

Page 98 - OSS# 2071408 - All rights reserved by Bobcat Company - 12/04/2009 - 07:23:36 - Produced by Ken Cook Co. with media1off

HYDRAULIC CONTROL VALVE (Cont'd)
(AHC/ACS/SJC)

Ref No	Part Number	Description	Remarks	Serial Number	Qty
1	6814600	VALVE, CONTROL	ACS/AHC/SJC)		1
2	69G436	BOLT			2
3	29G416	BOLT			4
4	29G444	BOLT			5
5	6662848	CAP			3
6	7101345	BONNET, DETENT HYD VALVE			2
7	6817004	BODY			1
8	6805102	BUSHING			2
9	1K127	O-RING 10	Was 93K127 [A]		4
10	6683274	SEAL, SPOOL			4
11	7108241	LIFT SPOOL	lift		1
12	7108242	TILT SPOOL	tilt		1
13	7112383	AUX SPOOL			1
14	6686360	VALVE	main relief - W/Ref. 15-18 - pressure to be set in field		1
15	58K17	O RING 10			x
16	6665569	WASHER	back-up		x
17	25K20016	O RING 10			x
18	6665570	RING	guide		x
19	6689739	VALVE	pilot operated - W/Ref. 21		2
20	79K8	O RING 10			x
21	6690431	SEAL KIT	W/Ref. 38		2
22	7138376	BUSHING	Was 6804920 [B]		2
23	6814694	RETAINER			2
24	7121399	SPRING			2
25	7102066	CROSS	W/Ref. 28		1
26	36K5	CAP			2
27	6684125	COUPLER	male		1
28	79K6	O RING 10			x
29	6688743	STEM, VALVE CONTROL	Was 6688397 [A]		2
30	7134520	PLUG	check valve - W/Ref. 20 - Was 6817707 [A]		3
31	6592117	SPRING			4
32	7106712	SEAT			4
33	6684646	VALVE	anti-cav - W/Ref. 20		3
34	6816549	PLUG ASSY PORT RLF	W/Ref. 20, 35 & 36		1
35	58K13	O-RING			x
36	73K13	RING			x
37	24K7	PLUG	W/Ref. 38		2
38	79K10	O RING 10			x
39	55K204	O RING 10			x
40	6669732	KIT, SEAL			1
41	6667687	STEM			1
42	54K20028	O RING 10			x
43	6671025	COIL			1
44	6672471	VALVE	solenoid - W/Ref. 40-43 & 64		1
45	58K16	O RING 10			x
46	73K16	RING	back-up		x
47	7134522	PLUG	W/Ref. 38, 45 & 46 - Was 6815014 [A]		1
48	17KB606	ELBOW	W/Ref. 28		1
49	7116995	TUBELINE			1
50	7110914	TUBELINE			1
51	7102018	TEE	W/Ref. 28		1
52	6595663	BUSHING			2

Page 99 - OSS# 2071408 - All rights reserved by Bobcat Company - 12/04/2009 - 07:23:36 - Produced by Ken Cook Co. with media1off

HYDRAULIC CONTROL VALVE (Cont'd)
(AHC/ACS/SJC)

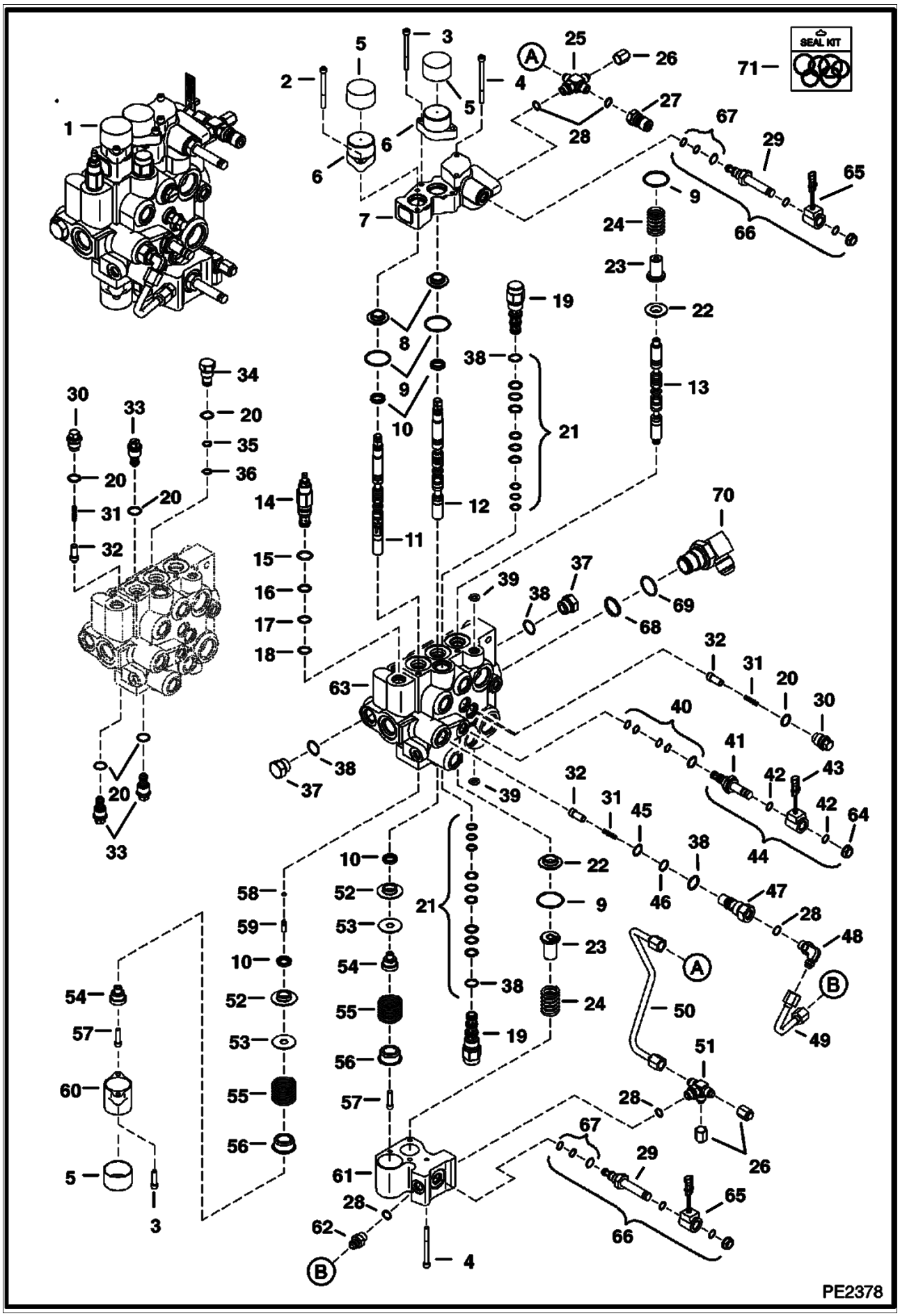

Page 100 - OSS# 2071408 - All rights reserved by Bobcat Company - 12/04/2009 - 07:23:36 - Produced by Ken Cook Co. with mediaIoff

HYDRAULIC CONTROL VALVE (Cont'd)
(AHC/ACS/SJC)

Ref No	Part Number	Description	Remarks	Serial Number	Qty
53	6587523	WASHER			2
54	6592109	ADAPTER			2
55	6587580	SPRING			2
56	6592100	COLLAR			2
57	7102652	SCREW			2
58	58K4	O-RING	Was 54K020002B [B]		1
59	6801167	PLUG	plastic - .685" long		1
60	6803092	BONNET			1
61	6814279	BLOCK			1
62	6688845	VALVE	check - W/Ref. 28		1
63		BODY	NSS		1
64	6668820	NUT			1
65	6678891	COIL	10 volt - W/nut		2
65	6691022	NUT	Was 6690705 [A]		2
66	6690991	VALVE, SOLENOID	W/Ref. 29 & 65 - Was 6688499 [A]		2
67	6685603	SEAL KIT	solenoid valve		1
68	58K22	O RING 10			1
69	79K16	O RING 10			1
70	6813964	ELBOW	W/Ref. 68 & 69		1
71	7123964	KIT, SEAL COMPLETE	includes 7123963, 7123965, 6632279, 6669732 & (2) each of 6685603 & 6690431		x
71	7123963	SEAL KIT	3 spool - Ref. 9, 10, 39, 58, & 59		x
71	7123965	SEAL KIT	external fitting - Ref. 20, 28, 35, 36, 38, 42, 45, 46, 68, & 69		x
71	6685603	SEAL KIT	solenoid valve -Ref. 67		x
71	6632279	KIT, SEAL	main relief - Ref. 15-18		x
71	6669732	KIT, SEAL	solenoid valve - Ref. 40		x
71	6690431	SEAL KIT	pilot valve - Ref. 21		x

Page 101 - OSS# 2071408 - All rights reserved by Bobcat Company - 12/04/2009 - 07:23:36 - Produced by Ken Cook Co. with mediaioff

BUCKET POSITIONING VALVE

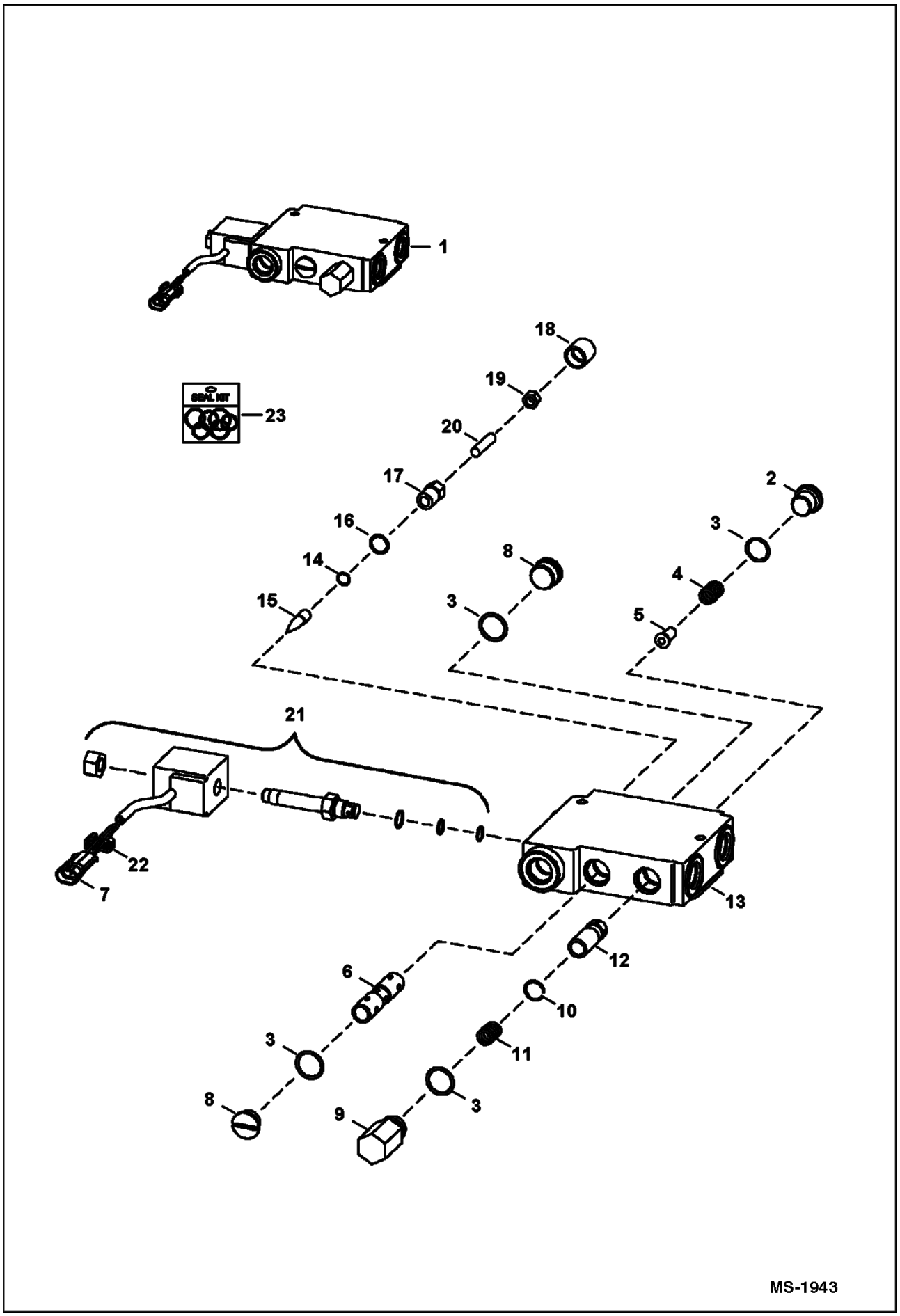

Page 102 - OSS# 2071408 - All rights reserved by Bobcat Company - 12/04/2009 - 07:23:36 - Produced by Ken Cook Co. with mediaioff

Ref No	Part Number	Description	Remarks	Serial Number	Qty
1	6673959	VALVE, BPV	Ref. 2-24 - white		1
2	6647784	PLUG	W/Ref. 3		1
3	79K10	O RING 10	Was 79K8 [B,D]		4
4	6647785	SPRING			1
5	6647783	LOAD CHECK			1
6		SPOOL	NSS		1
7	6641179	CONNECTOR	2-pin		1
8	6676543	PLUG	W/Ref. 3		2
9	6667176	PLUG	W/Ref. 3		1
10	6667680	SNAP RING			1
11	6648294	SPRING			1
12		SPOOL	NSS		1
13		BODY	NSS		1
14	6667677	O-RING			1
15	6647777	PIN			1
16	79K6	O RING 10	Was 6634874 [B,D]		1
17	6647778	CAP			1
18	6667676	COVER			1
19	8D4	NUT	Was 6631561 [A]		1
20	6648293	SCREW			1
21	6672863	VALVE, SOLENOID			1
21	6671527	NUT			1
21	6670634	SEAL KIT			1
21	6675781	COIL	W/Ref. 7 & 22 - Was 6674331 [A]		1
21	6675780	CARTRIDGE	Was 6676545 [A]		1
22	6641180	LOCK	Use W/ 2-pin connector		1
23	6647786	SEAL KIT	Ref. 3, 14, 16, & 18		1

Page 103 - OSS# 2071408 - All rights reserved by Bobcat Company - 12/04/2009 - 07:23:36 - Produced by Ken Cook Co. with mediaioff

HIGH FLOW HYDRAULICS
(Circuitry)

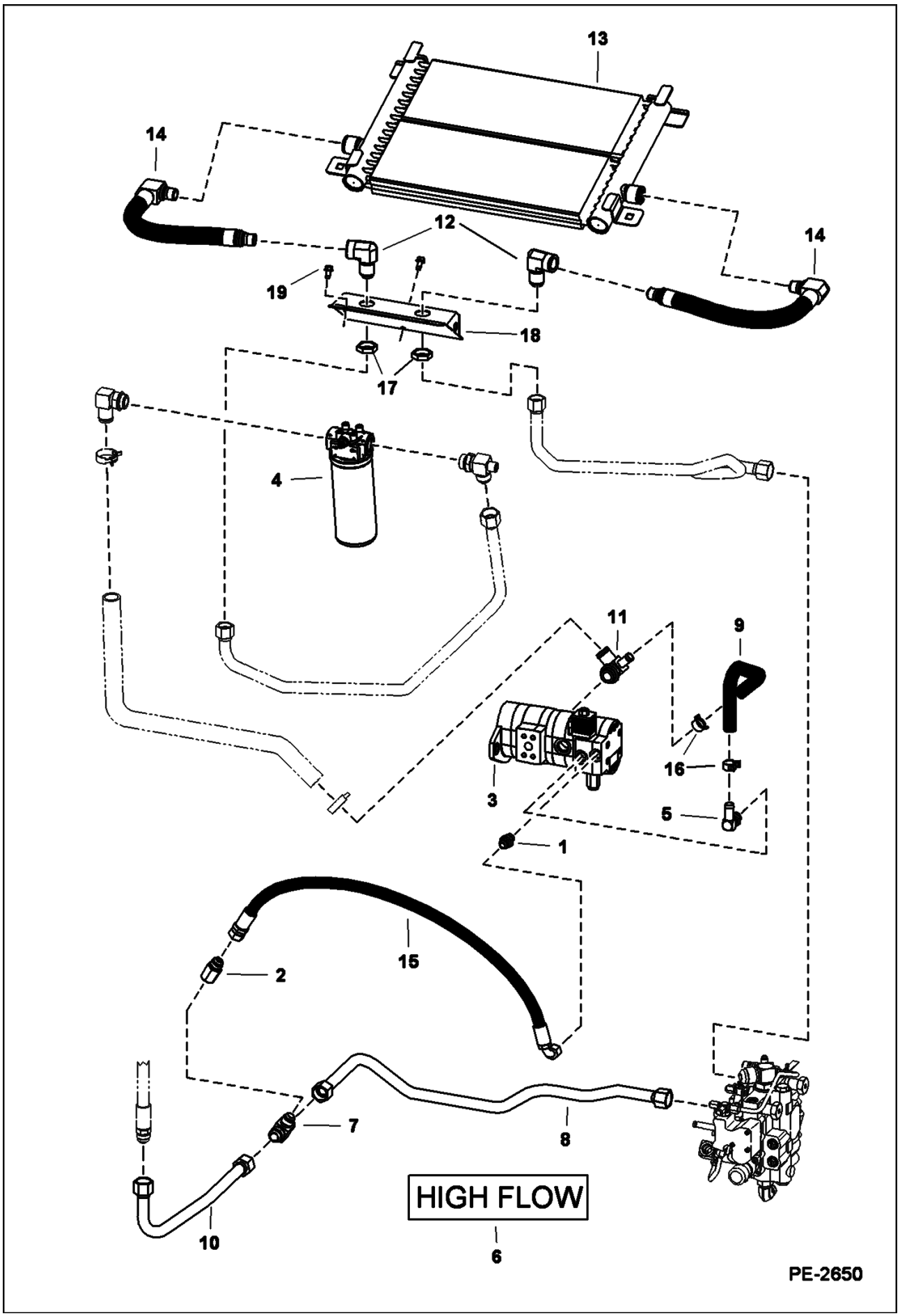

Page 104 - OSS# 2071408 - All rights reserved by Bobcat Company - 12/04/2009 - 07:23:36 - Produced by Ken Cook Co. with mediaioff

Ref No	Part Number	Description	Remarks	Serial Number	Qty
1	15KB1008	ADAPTER			1
2	7113552	CHECK VALVE			1
2	79K8	O RING 10			x
3		HYDRO PUMP			1
4	6685847	FILTER ASSY			1
5	6717885	ELBOW			1
5	79K10	O RING 10			x
6	7120602	DECAL	high flow		1
7	6730143	TEE			1
8	7114818	TUBELINE		5307 13065 & Bel	1
8	7114818	TUBELINE		5308 11453 & Bel	1
8	7134507	TUBELINE		5307 13066 & Abv	1
8	7134507	TUBELINE		& Bel	1
8	7134507	TUBELINE		5308 11454 & Abv	1
9	7109888	HOSE			1
10	7114824	TUBELINE		5307 13065 & Bel	1
10	7114824	TUBELINE		5308 11453 & Bel	1
10	7134515	TUBELINE		5307 13066 & Abv	1
10	7134515	TUBELINE		5308 11454 & Abv	1
11	7109885	TEE			1
11	79K16	O RING 10			x
12	7103749	ELBOW	W/STC-16 fitting		2
12	6690950	O-RING			2
12	6688523	SEAL KIT STC-16			x
13	7103750	EXCHANGER, OIL COOLER	See BTI391 W/STC-16 fitting		1
13	6688523	SEAL KIT STC-16			x
14	7103751	HOSE	W/STC-16 fitting		2
14	6688523	SEAL KIT STC-16			x
15	7109144	HOSE			1
16	5HM29	HOSECLAMP	Was 5HM00027B [A]		2
17	86F10	NUT			2
18	7142876	MOUNT			1
19	84G3712	BOLT			3

Page 105 - OSS# 2071408 - All rights reserved by Bobcat Company - 12/04/2009 - 07:23:36 - Produced by Ken Cook Co. with mediaioff

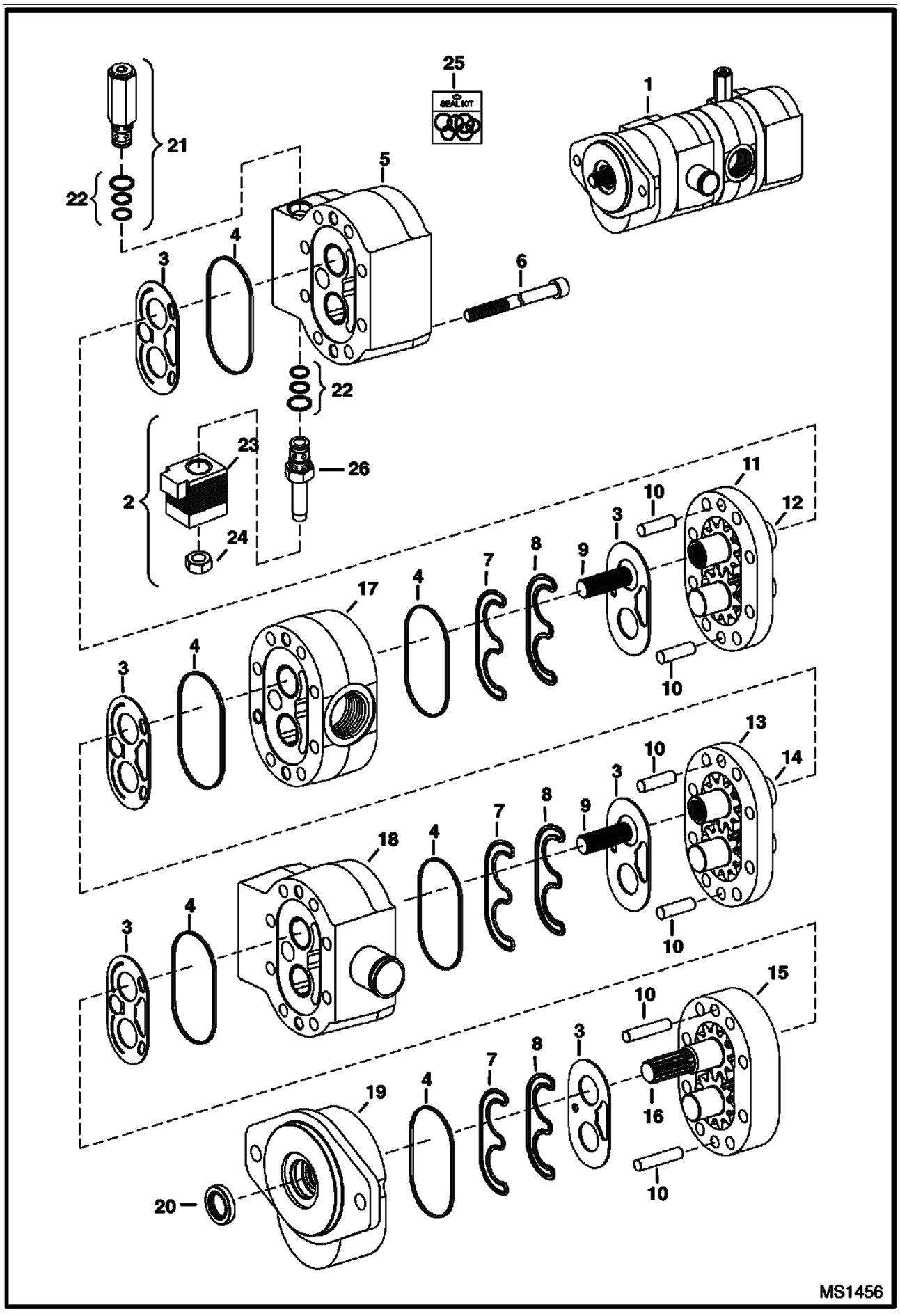

Page 106 - OSS# 2071408 - All rights reserved by Bobcat Company - 12/04/2009 - 07:23:36 - Produced by Ken Cook Co. with mediaioff

Ref No	Part Number	Description	Remarks	Serial Number	Qty
1	6688713	PUMP, GEAR TRIPLE	model 163D72022		1
2	6685027	VALVE	W/Ref. 22, 23, 24 & 26		1
3		WEAR PLATE	NSS		6
4		SEAL, SECTION	NSS		6
5		HOUSING, REAR	NSS		1
6		BOLT	NSS		8
7		SEAL, PRE-LOAD	NSS		6
8		SEAL, LOAD	NSS		6
9		CONNECTOR, SPLINE	NSS		2
10		PIN	NSS		6
11		HOUSING, GEAR	NSS - #3		1
12		GEAR SET	NSS - #3		1
13		HOUSING, GEAR	NSS - #2		1
14		GEAR SET	NSS - #2		1
15		HOUSING, GEAR	NSS - #1		1
16		GEAR SET	NSS - drive		1
17		HOUSING, CENTER	NSS		1
18		HOUSING, CENTER	NSS		1
19		HOUSING, FRONT	NSS		1
20		SEAL, SHAFT	NSS		1
21	6685026	VALVE			1
22	6683206	SEAL KIT			2
23	6681491	COIL	Was 6684590 [A]		1
24	6681492	NUT			1
25	6688321	SEAL KIT			1
26		STEM	NSS - Order Ref. 2		1

Page 107 - OSS# 2071408 - All rights reserved by Bobcat Company - 12/04/2009 - 07:23:36 - Produced by Ken Cook Co. with mediaioff

HYDROSTATIC CIRCUITRY
(W/Tank) (Manual Controls, AHC, ACS)

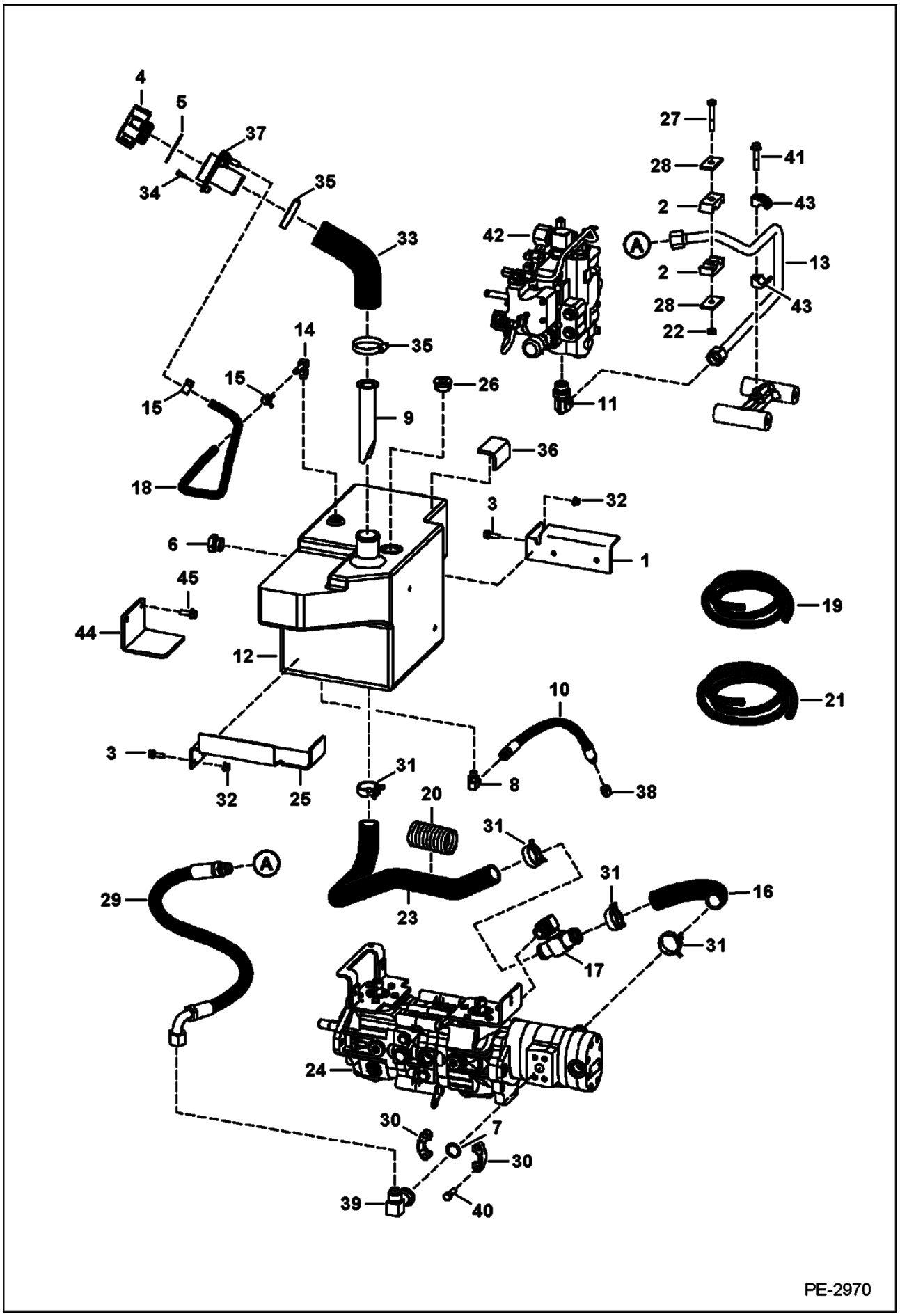

Page 108 - OSS# 2071408 - All rights reserved by Bobcat Company - 12/04/2009 - 07:23:36 - Produced by Ken Cook Co. with mediaioff

Ref No	Part Number	Description	Remarks	Serial Number	Qty
1	6718851	BRACKET			1
2	6592506	CLAMP			2
3	35C516	BOLT 10			4
4	6727475	CAP	breather & fill - Also Order Ref. 6		1
5	6700631	GASKET			2
6	6665915	GAUGE	sight		1
6	79K12	O RING 10			x
6	6734563	WASHER KIT			1
6	6734561	WASHER			1
6	25K30118	O RING 10			1
7	55K214	O-RING			1
8	17KB606	ELBOW			1
8	79K6	O RING 10			x
9	6569219	SCREEN			1
10	7106212	HOSE			1
11	7101797	ELBOW			1
11	79K12	O RING 10			x
12	6731209	TANK	hydraulic		1
13	7115066	TUBELINE			1
13	7126157	TUBELINE		530712141 & Abv	1
13	7126157	TUBELINE		530811080 & Abv	1
14	6727313	ELBOW			1
14	79K6	O RING 10			x
15	5HM15	CLAMP			2
16	7109343	HOSE			1
17	7107785	TEE			1
17	79K12	O RING 10			x
18		HOSE	NAP - 23" (584 mm long) - Order Ref. 19		1
19	6586251	HOSE	bulk - sold per foot		x
20		SHIELD	NAP - 5" (127 mm) long - Order Ref.21		1
21	6705749	SHIELD	bulk - sold per foot		x
22	59D6	NUT			1
23	7108441	HOSE			1
24		PUMP	See Illustration HYDROSTATIC PUMP/GEAR PUMP/ PE2824 - hydrostatic		1
25	6718850	BRACKET			1
26	47K10	PLUG	tank flushing hole		1
26	79K16	O RING 10			x
27	17C644	BOLT			1
28	6592507	PLATE			2
29	7115185	HOSE			1
30	19J12	CLAMP			2
31	5HM42	HOSECLAMP			4
32	83D5	NUT 5			4
33	6731638	HOSE			1
34	7106279	BOLT			3
35	42HL250	CLAMP			2
36	6578278	PAD			1
37	6727354	INLET			1
38	36K5	CAP			1
39	7106040	ELBOW	split flange		1
40	17C620	BOLT			4
41	35C632	BOLT			1
42		VALVE	See Illustration HYDRAULIC CONTROL VALVE/ PE2379 - control		1
43	7100462	CLAMP			2

Page 109 - OSS# 2071408 - All rights reserved by Bobcat Company - 12/04/2009 - 07:23:36 - Produced by Ken Cook Co. with mediaioff

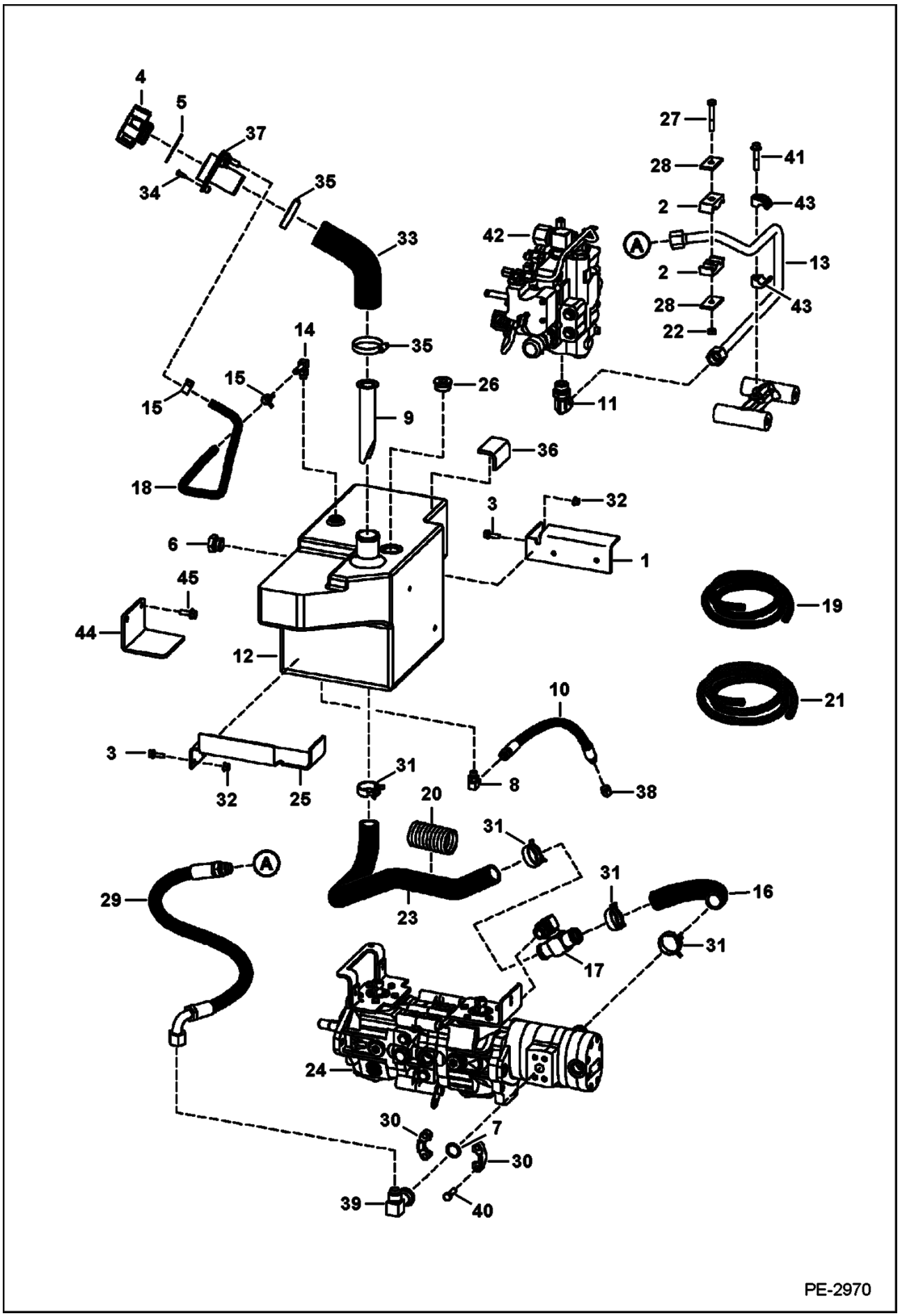

Page 110 - OSS# 2071408 - All rights reserved by Bobcat Company - 12/04/2009 - 07:23:36 - Produced by Ken Cook Co. with mediaioff

Ref No	Part Number	Description	Remarks	Serial Number	Qty
44	7135068	BRACKET			1
45	84G3716	SCREW 5			2

Page 111 - OSS# 2071408 - All rights reserved by Bobcat Company - 12/04/2009 - 07:23:36 - Produced by Ken Cook Co. with mediaioff

HYDROSTATIC CIRCUITRY
(W/Tank) (Selectable Joystick Controls)

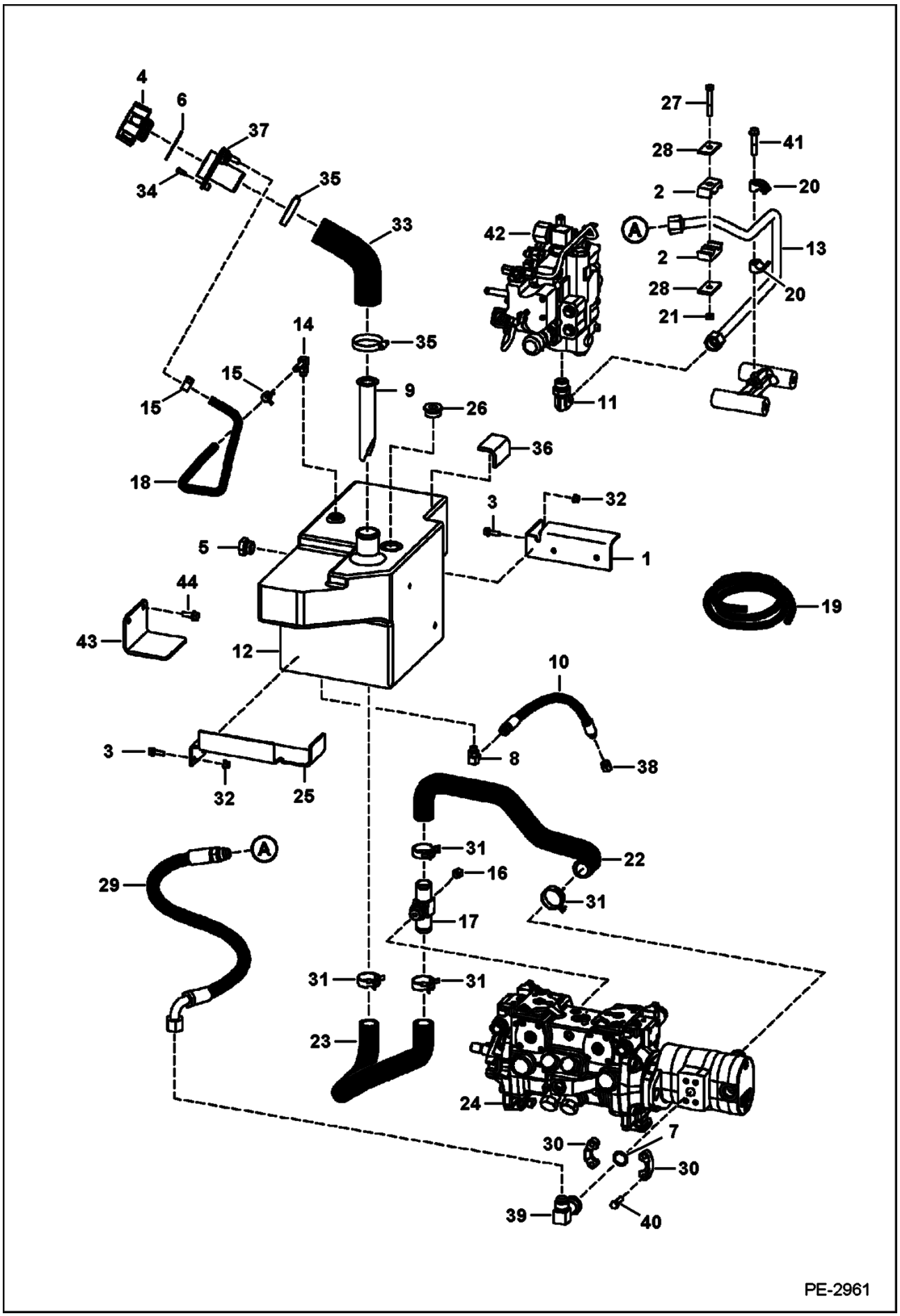

Page 112 - OSS# 2071408 - All rights reserved by Bobcat Company - 12/04/2009 - 07:23:36 - Produced by Ken Cook Co. with mediaioff

HYDROSTATIC CIRCUITRY (Cont'd)
(W/Tank) (Selectable Joystick Controls)

Ref No	Part Number	Description	Remarks	Serial Number	Qty
1	6718851	BRACKET			1
2	6592506	CLAMP			2
3	35C516	BOLT 10			4
4	6727475	CAP	breather & fill - also Order Ref. 6		1
5	6665915	GAUGE	sight		1
5	79K12	O RING 10			x
5	6734563	WASHER KIT			1
5	25K30118	O RING 10			1
5	6734561	WASHER			1
6	6700631	GASKET			2
7	55K214	O-RING			1
8	17KB606	ELBOW			1
8	79K6	O RING 10			x
9	6569219	SCREEN			1
10	7106212	HOSE			1
11	7101797	ELBOW			1
11	79K12	O RING 10			x
12	6731209	TANK	hydraulic		1
13	7115066	TUBELINE			1
13	7126157	TUBELINE		530712141 & Abv	1
13	7126157	TUBELINE		530811080 & Abv	1
14	6727313	ELBOW			1
14	79K6	O RING 10			x
15	5HM15	CLAMP			2
16	24K5	PLUG			1
17	7108633	TEE			1
17	79K12	O RING 10			x
18		HOSE	NAP - 23" (584mm long) - Order Ref. 19		1
19	6586251	HOSE	bulk - sold per foot		x
20	7100462	CLAMP			2
21	59D6	NUT			1
22	7107562	HOSE			1
23	7107561	HOSE			1
24		PUMP	See Illustration HYDROSTATIC PUMP/GEAR PUMP/ PE2824 - hydrostatic		1
25	6718850	BRACKET			1
26	47K10	PLUG	tank flushing hole		1
26	79K16	O RING 10			x
27	17C644	BOLT			1
28	6592507	PLATE			2
29	7115185	HOSE			1
30	19J12	CLAMP			2
31	5HM42	HOSECLAMP			2
32	83D5	NUT 5			4
33	6731638	HOSE			1
34	7106279	BOLT			3
35	42HL250	CLAMP			2
36	6578278	PAD			1
37	6727354	INLET			1
38	36K5	CAP			1
39	7106040	ELBOW	split flange		1
40	17C620	BOLT			4
41	35C632	BOLT			1
42		VALVE	See Illustration HYDRAULIC CONTROL VALVE/ PE2378 - control		1
43	7135068	BRACKET			1

Page 113 - OSS# 2071408 - All rights reserved by Bobcat Company - 12/04/2009 - 07:23:36 - Produced by Ken Cook Co. with mediaioff

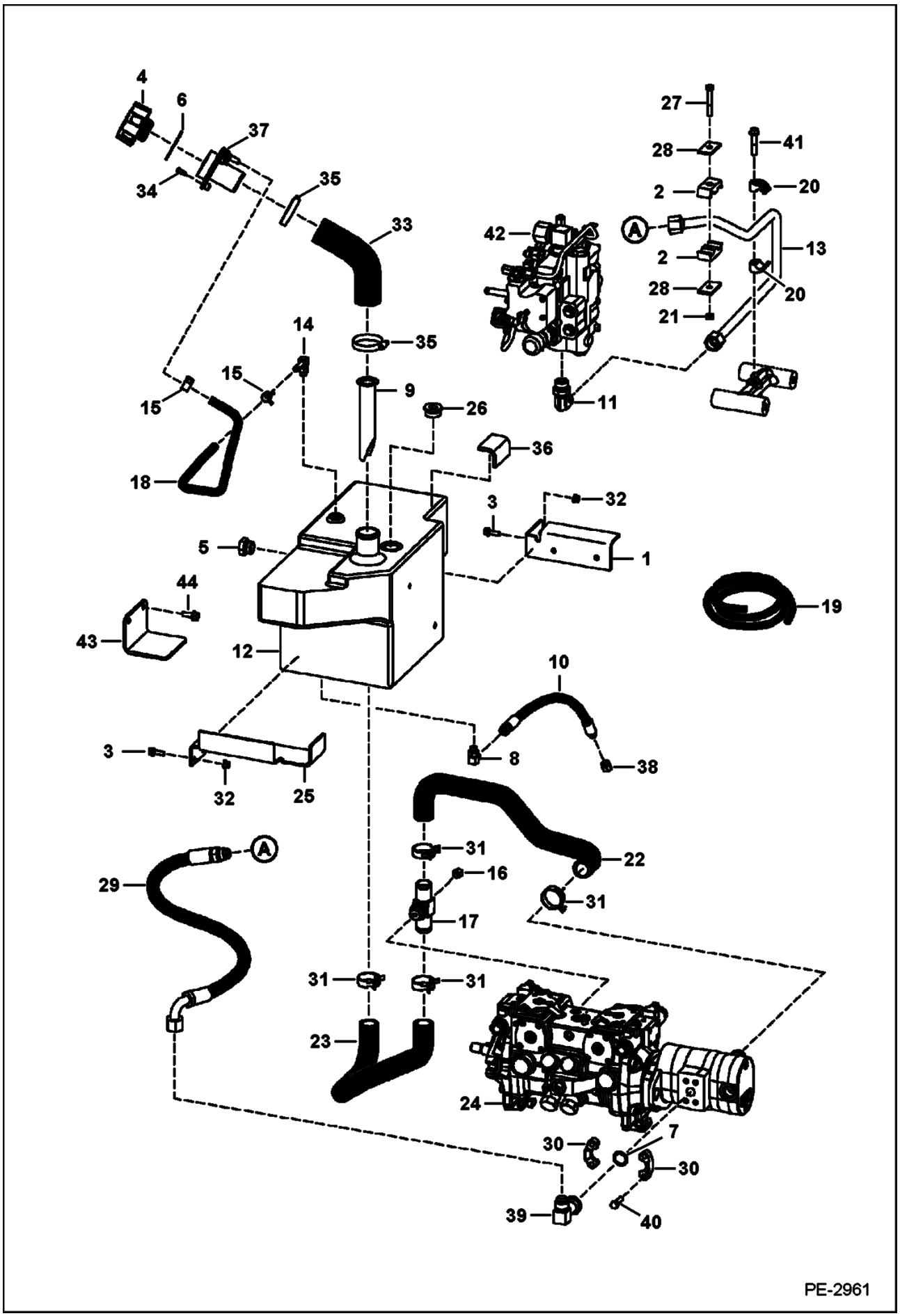

Page 114 - OSS# 2071408 - All rights reserved by Bobcat Company - 12/04/2009 - 07:23:36 - Produced by Ken Cook Co. with mediaioff

Ref No	Part Number	Description	Remarks	Serial Number	Qty
44	84G3716	SCREW 5			2

Page 115 - OSS# 2071408 - All rights reserved by Bobcat Company - 12/04/2009 - 07:23:36 - Produced by Ken Cook Co. with mediaioff

HYDROSTATIC CIRCUITRY
(W/Cooler) (W/O Cooling Upgrade)
(S/N 530713065 & Below, 530811454 & Below)

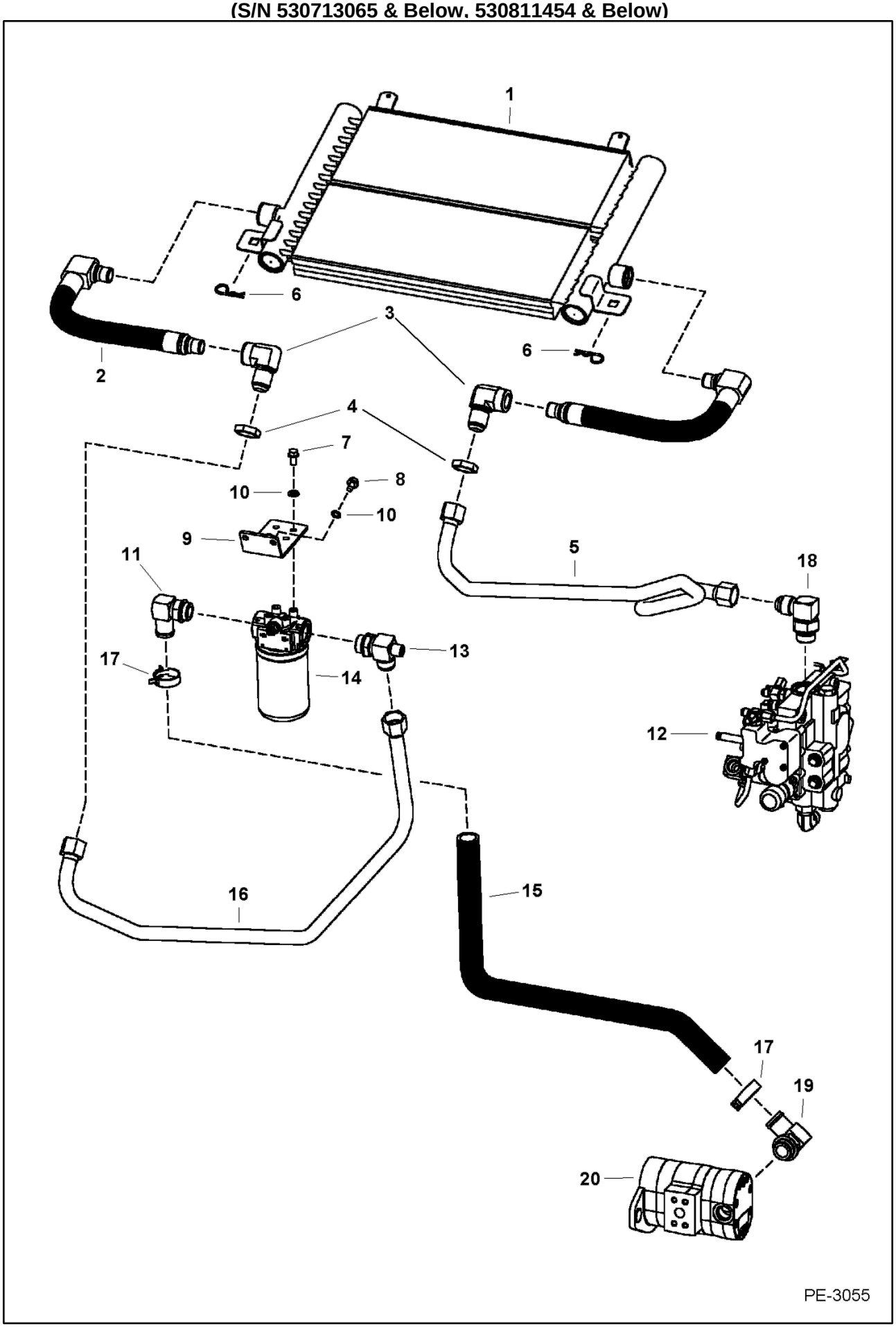

Page 116 - OSS# 2071408 - All rights reserved by Bobcat Company - 12/04/2009 - 07:23:36 - Produced by Ken Cook Co. with mediaioff

HYDROSTATIC CIRCUITRY (Cont'd)
(W/Cooler) (W/O Cooling Upgrade)
(S/N 530713065 & Below, 530811454 & Below)

Ref No	Part Number	Description	Remarks	Serial Number	Qty
1	6678156	COOLER	See BTI391 for manual controls - W/STC-12 fitting		1
1	6681501	SEAL KIT	STC-12		x
1	7103750	EXCHANGER, OIL COOLER	See BTI391 for SJC or high flow opt. - W/STC-16 fitting		1
1	6688523	SEAL KIT STC-16			x
2	6684457	HOSE, HYD ASSY STC	for manual controls, ACS & AHC - W/STC-12 fitting		2
2	6681501	SEAL KIT	STC-12		x
2	7103751	HOSE	for SJC & high flow opt. - W/STC-16 fitting		2
2	6688523	SEAL KIT STC-16			x
3	6678970	ELBOW	for manual controls, ACS & AHC - W/STC-12 fitting		2
3	6690950	O-RING			1
3	7103749	ELBOW	for SJC & high flow opt. - W/STC-16 fitting		2
3	6690950	O-RING			2
3	6681501	SEAL KIT	STC-12		x
3	6688523	SEAL KIT STC-16			x
4	86F10	NUT			2
5	7115091	TUBELINE			1
6	1318565	COTTER PIN			2
7	35C612	BOLT			4
8	84G3710	SCREW			2
9	7103903	MOUNT	filter		1
10	6E6	WASHER			2
11	6697791	ELBOW	Was 6729306 [B]		1
12		VALVE	See Illustration HYDRAULIC CONTROL VALVE/ PE2379 See Illustration HYDRAULIC CONTROL VALVE/ PE2378 - control		1
13	6731527	TEE			1
13	79K16	O RING 10			x
14	6678155	FILTER ASSY			1
14	6661248	FILTER, OIL HYD 12	6" (152,4mm) long		1
15	7114886	HOSE			1
16	7113355	TUBELINE			1
17	5HM42	HOSECLAMP			2
18	6813964	ELBOW			1
18	79K16	O RING 10			x
18	58K22	O RING 10			x
19	7112788	ELBOW			1
20		PUMP	See Illustration GEAR PUMP/ MS1454		1

Page 117 - OSS# 2071408 - All rights reserved by Bobcat Company - 12/04/2009 - 07:23:36 - Produced by Ken Cook Co. with mediaioff

HYDROSTATIC CIRCUITRY
(W/Cooler) (W/Cooling Upgrade)
(S/N 530713066 & Above, 530811455 & Above)

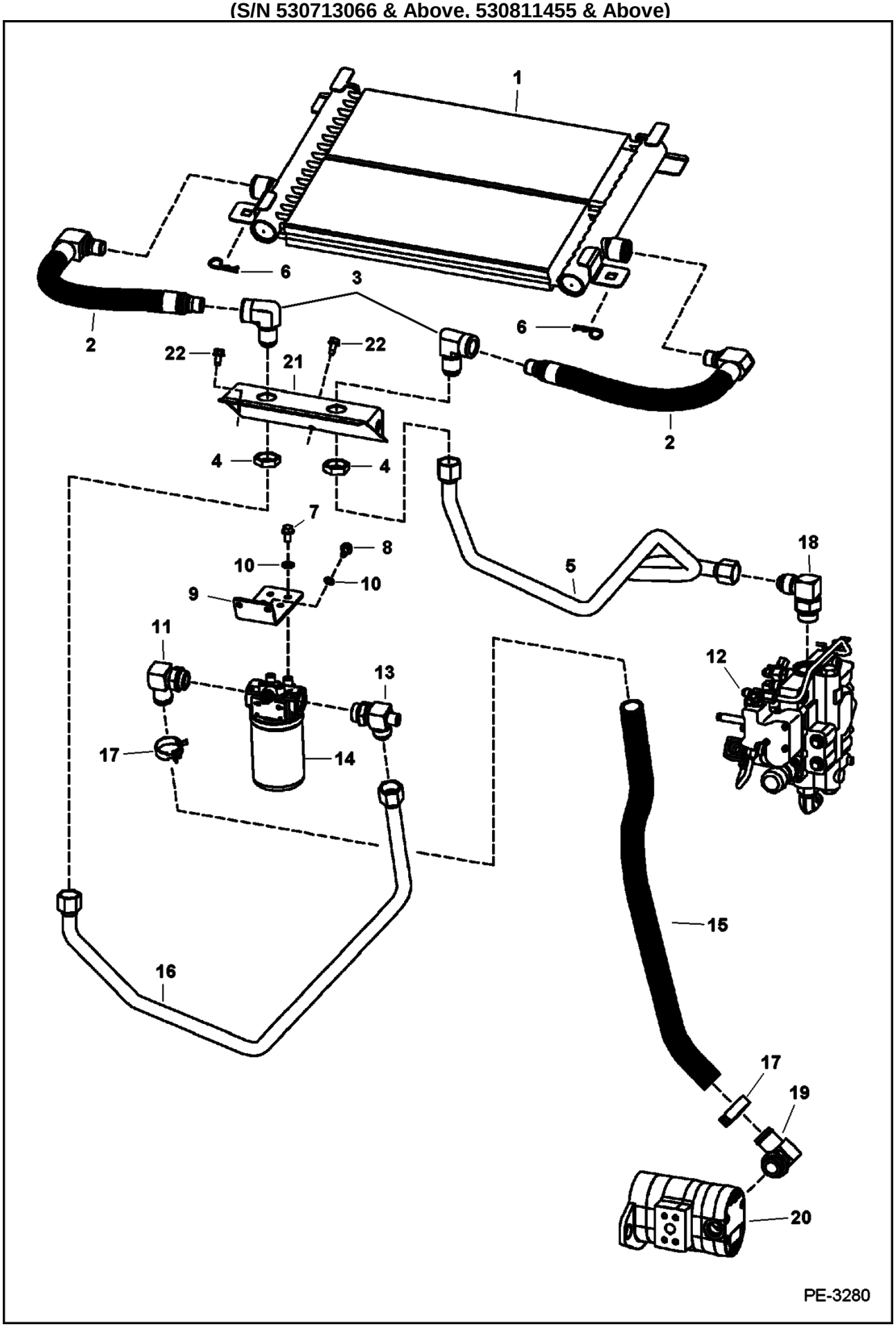

Page 118 - OSS# 2071408 - All rights reserved by Bobcat Company - 12/04/2009 - 07:23:36 - Produced by Ken Cook Co. with mediaIoff

HYDROSTATIC CIRCUITRY (Cont'd)
(W/Cooler) (W/Cooling Upgrade)
(S/N 530713066 & Above, 530811455 & Above)

Ref No	Part Number	Description	Remarks	Serial Number	Qty
1	6678156	COOLER	W/STC-12 fitting		1
1	6681501	SEAL KIT	STC-12		x
1	7103750	EXCHANGER, OIL COOLER	See BTI391 for high flow opt. - W/STC-16 fitting		1
1	6688523	SEAL KIT STC-16			x
2	6684457	HOSE, HYD ASSY STC	W/STC-12 fitting		2
2	6681501	SEAL KIT	STC-12		x
2	7103751	HOSE	for high flow opt. - W/STC-16 fitting		2
2	6688523	SEAL KIT STC-16			x
3	6678970	ELBOW	for manual controls, AHC, ACS - W/STC-12 fitting		2
3	6690950	O-RING			2
3	7103749	ELBOW	high flow opt. - W/STC-16 fitting		2
3	6690949	O-RING			20
3	6681501	SEAL KIT	STC-12		x
3	6688523	SEAL KIT STC-16			x
4	86F10	NUT			2
5	7125181	TUBELINE		5307 40068 & Bel	1
5	7142858	TUBELINE		5307 40069 & Abv	1
6	1318565	COTTER PIN			2
7	35C612	BOLT			4
8	84G3710	SCREW			2
9	7103903	MOUNT	filter		1
10	6E6	WASHER			2
11	6697791	ELBOW	Was 6729306 [B]		1
12		VALVE	See Illustration HYDRAULIC CONTROL VALVE/ PE2379 See Illustration HYDRAULIC CONTROL VALVE/ PE2378 - control		1
13	6731527	TEE			1
13	79K16	O RING 10			x
14	6678155	FILTER ASSY			1
14	6661248	FILTER, OIL HYD 12	6" (152,4mm) long		1
15	7126554	HOSE			1
16	7125182	TUBELINE		5307 40068 & Bel	1
16	7142859	TUBELINE		5307 40069 & Abv	1
17	5HM42	HOSECLAMP			2
18	6813964	ELBOW			1
18	79K16	O RING 10			x
18	58K22	O RING 10			x
19	7112788	ELBOW			1
20		PUMP	See Illustration GEAR PUMP/ MS1454		1
21	7142876	MOUNT		5307 40069 & Abv	1
22	84G3712	BOLT			3

Page 119 - OSS# 2071408 - All rights reserved by Bobcat Company - 12/04/2009 - 07:23:36 - Produced by Ken Cook Co. with mediaioff

HYDROSTATIC CIRCUITRY
(W/Cooling Fan Motor) (W/O Cooling Upgrade)
(S/N 530713065 & Below, 530811454 & Below)

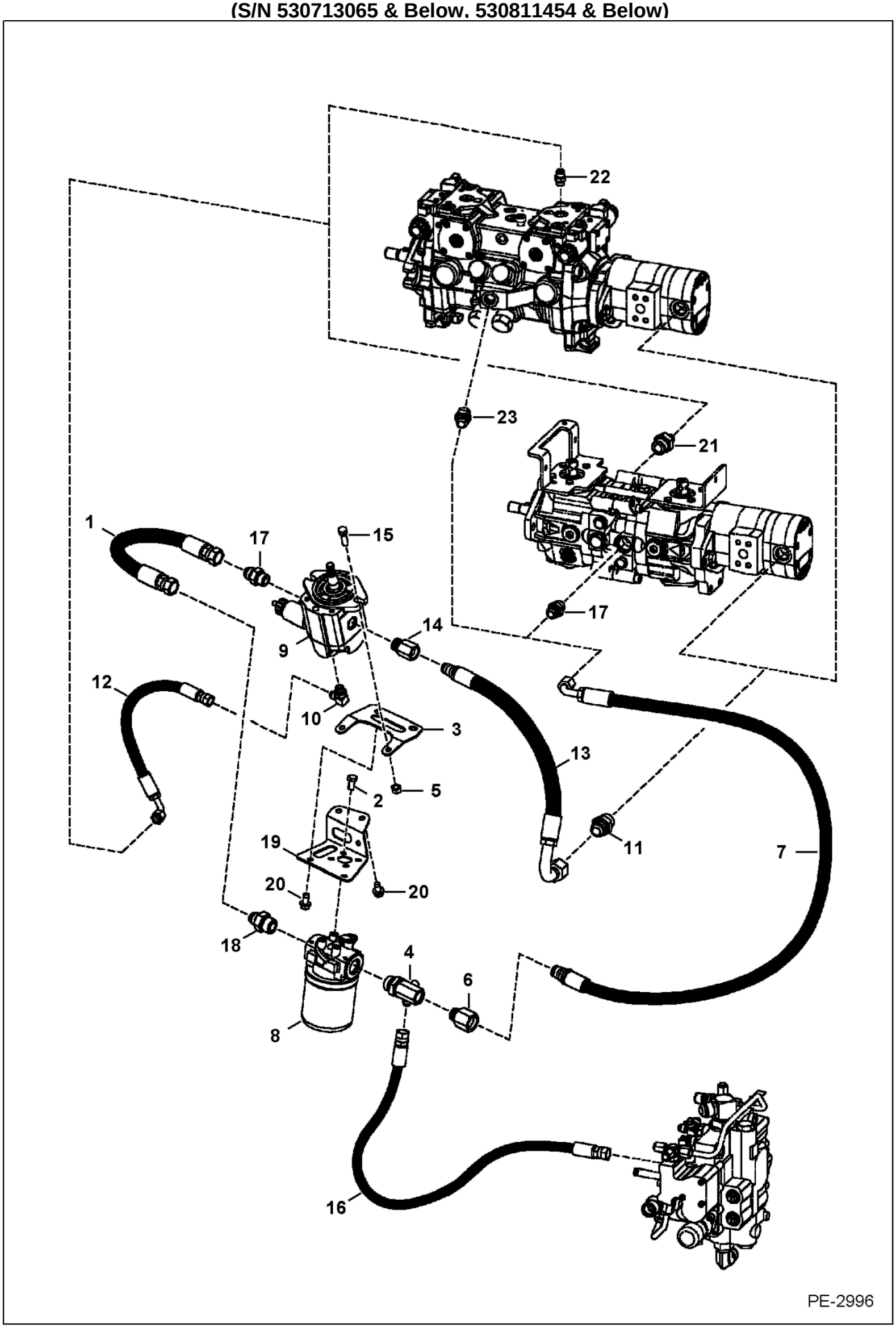

Page 120 - OSS# 2071408 - All rights reserved by Bobcat Company - 12/04/2009 - 07:23:36 - Produced by Ken Cook Co. with mediaioff

HYDROSTATIC CIRCUITRY (Cont'd)
(W/Cooling Fan Motor) (W/O Cooling Upgrade)
(S/N 530713065 & Below, 530811454 & Below)

Ref No	Part Number	Description	Remarks	Serial Number	Qty
1	7110809	HOSE			1
2	17C612	BOLT 5			4
3	7110243	BRACKET			1
4	7108685	TEE			1
4	79K12	O RING 10			1
5	95D6	NUT			2
6	15HB1210	ADAPTER, COUPLER	quick lock - Also Order Ref. 7 (6689768 hose) - Was 78HA1210 [A]		1
6	79K10	O RING 10			x
7		HOSE	NAP - Order 6689768 hose & Ref. 6 - Was 7107174 [A]		1
7	6689768	HOSE	Also order Ref. 6		1
8		FILTER ASSY	See Illustration HYDROSTATIC OIL FILTER/ C2818 - charge		1
9		MOTOR, HYD COOLING FAN	See Illustration COOLING FAN MOTOR/ PE2811 See BTI384 - NAP - aluminum - W/proportional valve - Was 6687142 [A]		1
10	17KB606	ELBOW			1
10	79K6	O RING 10			1
11	15KB1012	ADAPTER	use W/Ref. 13 (NAP/ 7107153 hose)		1
11	79K12	O RING 10			1
11	15KB1212	ADAPTER	Use W/Ref. 13 (7143272 hose)		1
12	7107179	HOSE			1
13		HOSE	NAP - .875" female thread - Order 6689767 hose, Ref. 11 (15KB1212 adapter), & Ref. 14 - Was 7107153 [A]		1
13	7143272	HOSE	1.0625" female thread - Also order Ref. 14 - Was 6689767 [A]		1
14	15HB1010	ADAPTER, COUPLER	quick lock - Also Order Ref. 13 (7143272 hose) - Was 78HA1010 [A]		1
14	79K10	O RING 10			1
15	17C620	BOLT			2
16	6815887	HOSE			1
17	15KB1010	FITTING			2
17	79K10	O RING 10			2
18	15KB1012	ADAPTER			1
18	79K12	O RING 10			1
19	7110244	BRACKET			1
20	84G3712	BOLT			4
21	15KB612	ADAPTER	manual controls, AHS & ACS		1
21	79K12	O RING 10			1
22	15KB606	ADAPTER	selectable joystick controls		1
22	79K6	O RING 10			1
23	15KB1008	ADAPTER	selectable joystick controls		1
23	79K8	O RING 10			1

Page 121 - OSS# 2071408 - All rights reserved by Bobcat Company - 12/04/2009 - 07:23:36 - Produced by Ken Cook Co. with mediaioff

HYDROSTATIC CIRCUITRY
(W/Cooling Fan Motor) (W/Cooling Upgrade)
(S/N 530713066 - 39999, 530811455 - 39999)

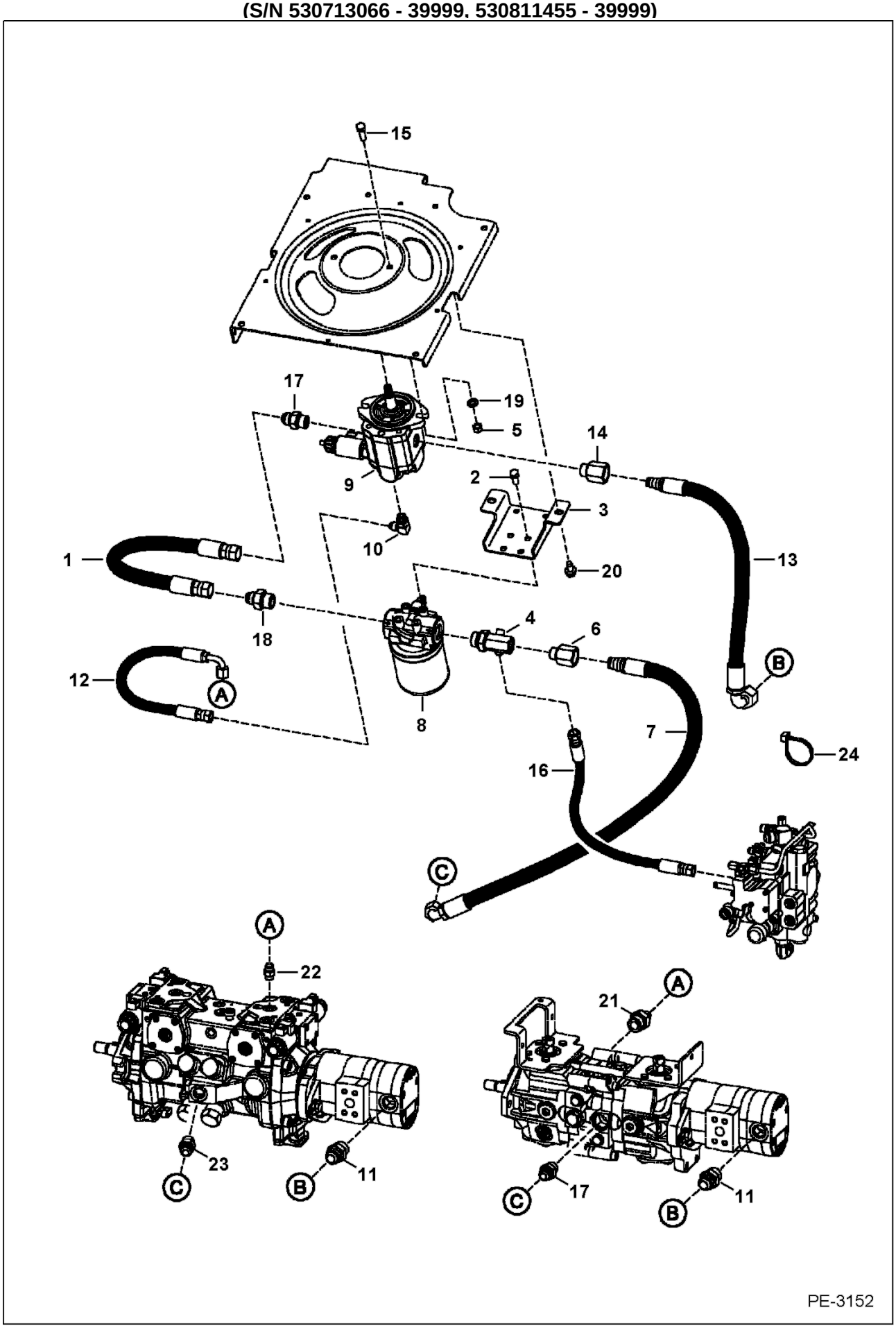

Page 122 - OSS# 2071408 - All rights reserved by Bobcat Company - 12/04/2009 - 07:23:36 - Produced by Ken Cook Co. with mediaioff

HYDROSTATIC CIRCUITRY (Cont'd)
(W/Cooling Fan Motor) (W/Cooling Upgrade)
(S/N 530713066 - 39999, 530811455 - 39999)

Ref No	Part Number	Description	Remarks	Serial Number	Qty
1	7124832	HOSE			1
2	17C612	BOLT 5			4
3	7126458	BRACKET			1
4	7108685	TEE			1
4	79K12	O RING 10			1
5	95D6	NUT			2
6	15HB1210	ADAPTER, COUPLER	quick lock - Also Order Ref. 7 - Was 78HA1210 [A]		1
6	79K10	O RING 10			x
7	7124827	HOSE	Also Order Ref. 6		1
8		FILTER ASSY	See Illustration HYDROSTATIC OIL FILTER/ C2818 - charge		1
9		MOTOR, HYD COOLING FAN	See Illustration COOLING FAN MOTOR/ PE2811 See BTI384 - NAP - aluminum - W/proportional valve - Was 6687142 [A]		1
10	17KB606	ELBOW			1
10	79K6	O RING 10			1
11	15KB1212	ADAPTER			1
12	6578804	HOSE			1
13	7137691	HOSE	Also order Ref. 14 - Was 7124797 [A]		1
14	15HB1010	ADAPTER, COUPLER	quick lock - Also Order Ref. 13 - Was 78HA1010 [A]		1
14	79K10	O RING 10			1
15	17C620	BOLT			2
16	7125723	HOSE			1
17	15KB1010	FITTING			2
17	79K10	O RING 10			2
18	15KB1012	ADAPTER			1
18	79K12	O RING 10			1
19	6557831	WASHER			2
20	84G3712	BOLT			2
21	15KB612	ADAPTER	manual controls, AHC & ACS		1
21	79K12	O RING 10			1
22	15KB606	ADAPTER	selectable joystick controls		1
22	79K6	O RING 10			1
23	15KB1008	ADAPTER	selectable joystick controls		1
23	79K8	O RING 10			1
24	6624289	TIE STRAP			1

Page 123 - OSS# 2071408 - All rights reserved by Bobcat Company - 12/04/2009 - 07:23:36 - Produced by Ken Cook Co. with mediaioff

HYDROSTATIC CIRCUITRY
(W/Cooling Fan Motor)
(S/N 530740001 & Above, 530840001 & Above)

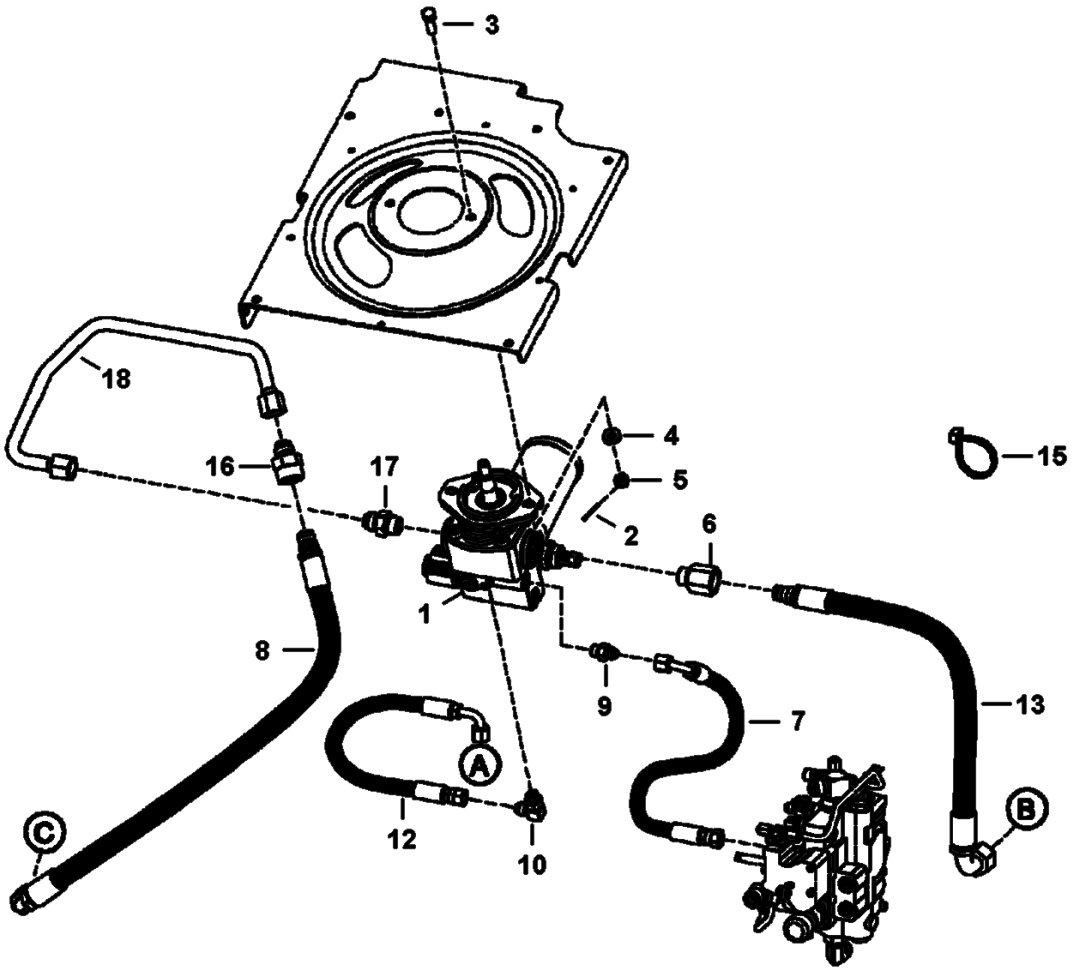

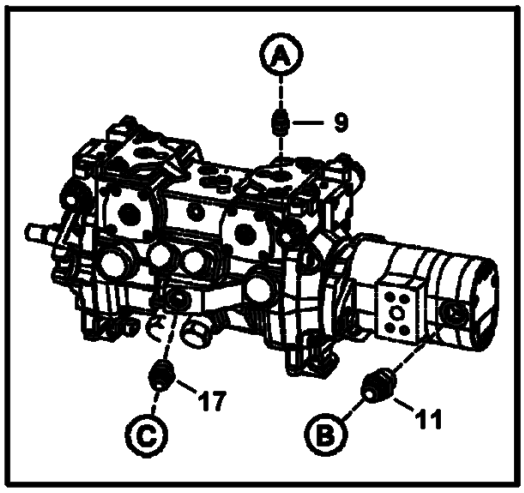

SJC

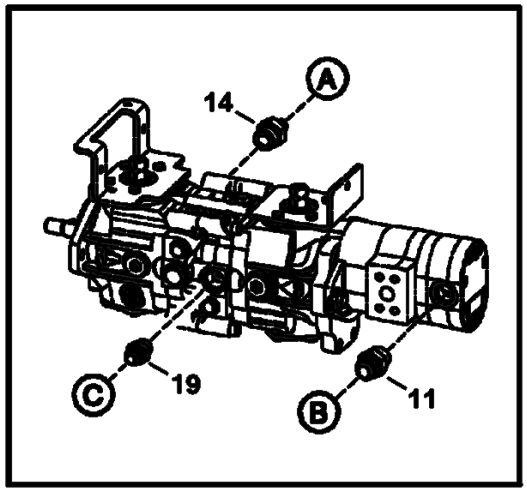

MANUAL, AHC & ACS

PE-3538

Page 124 - OSS# 2071408 - All rights reserved by Bobcat Company - 12/04/2009 - 07:23:36 - Produced by Ken Cook Co. with mediaioff

HYDROSTATIC CIRCUITRY (Cont'd)
(W/Cooling Fan Motor)
(S/N 530740001 & Above, 530840001 & Above)

Ref No	Part Number	Description	Remarks	Serial Number	Qty
1	7164320	MOTOR, HYD COOLING FAN	See Illustration COOLING FAN MOTOR/ MS2514 - cast iron - Also Order (2) of Ref. 2 - Was 7132033 [A]		1
2	1F316	PIN			2
3	7147826	BOLT, CROSS DRILLED			2
4	6557831	WASHER			2
5	3D6	NUT			2
6	15HB1010	ADAPTER, COUPLER	quick lock - Also Order Ref. 13 - Was 78HA1010 [A]		1
6	79K10	O RING 10			1
7	7147678	HOSE, HYD			1
8	7124827	HOSE	Also Order Ref. 16		1
9	15KB606	ADAPTER			2
9	79K6	O RING 10			2
10	17KB606	ELBOW			1
10	79K6	O RING 10			1
11	15KB1212	ADAPTER			1
11	79K12	O RING 10			1
12	6578804	HOSE			1
13	7137691	HOSE	Also Order Ref. 6 - Was 7124797 [A]		1
14	15KB612	ADAPTER			1
14	79K12	O RING 10			1
15	6624289	TIE STRAP			1
16	7154342	ADAPTER, UNION	Also Order Ref. 8		2
16	79K10	O RING 10			2
17	15KB1008	ADAPTER	SJC		1
17	79K8	O RING 10			1
18	7149908	TUBELINE			1
19	15KB1010	FITTING			1
19	79K10	O RING 10			1

Page 125 - OSS# 2071408 - All rights reserved by Bobcat Company - 12/04/2009 - 07:23:36 - Produced by Ken Cook Co. with mediaioff

HYDROSTATIC CIRCUITRY
(W/Motors) (Manual Controls, AHC & ACS)

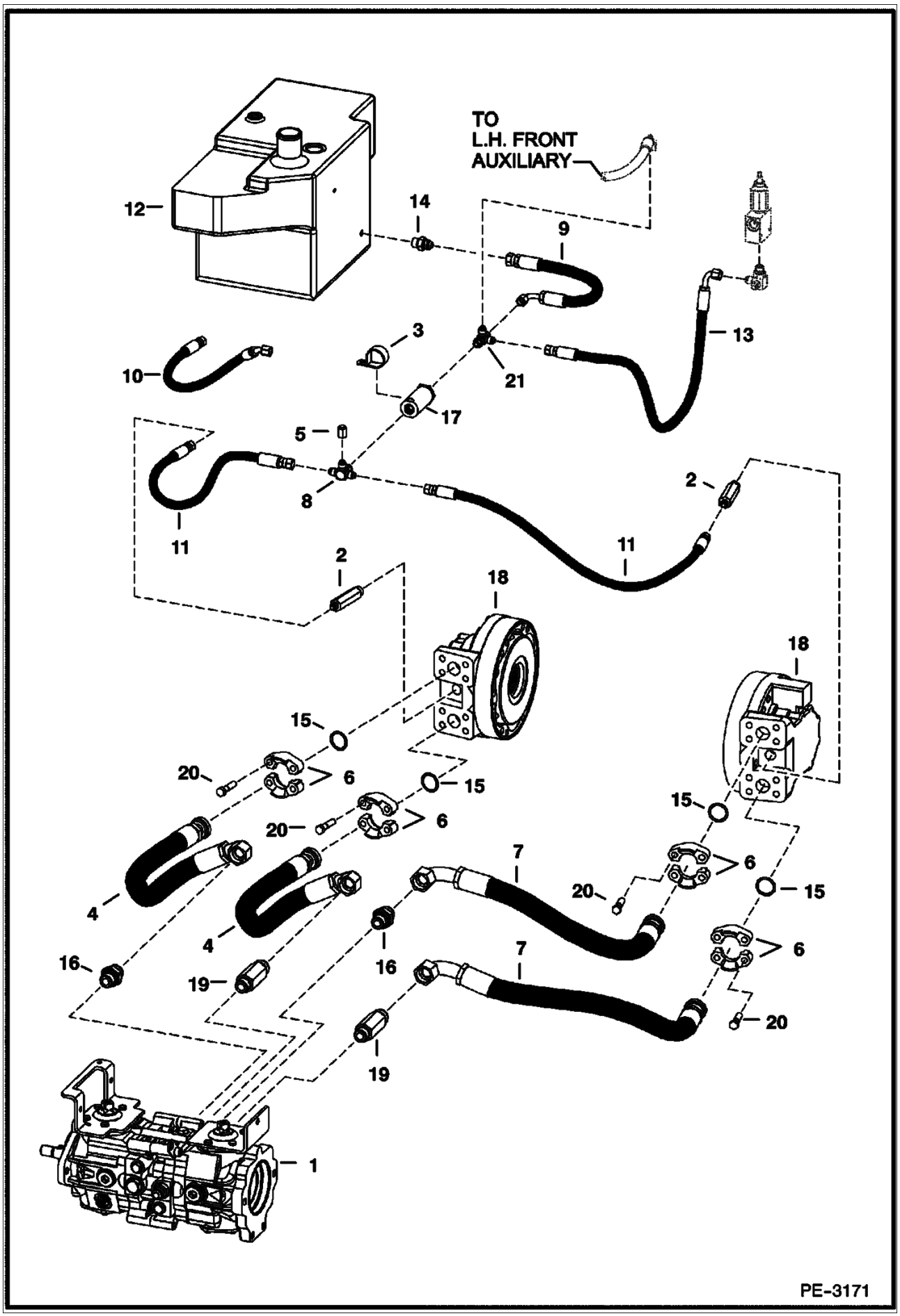

Page 126 - OSS# 2071408 - All rights reserved by Bobcat Company - 12/04/2009 - 07:23:36 - Produced by Ken Cook Co. with mediaioff

HYDROSTATIC CIRCUITRY (Cont'd)
(W/Motors) (Manual Controls, AHC & ACS)

Ref No	Part Number	Description	Remarks	Serial Number	Qty
1		PUMP	See Illustration HYDROSTATIC PUMP/GEAR PUMP/ PE2824		1
2	6717306	ADAPTER			2
2	79K6	O RING 10			x
3	30H79	CLAMP			1
4	6673954	HOSE	mega seal		2
5	36K5	CAP			1
6	20J16	FLANGE			8
7	6679141	HOSE	mega seal		2
8	6725497	CROSS			1
8	79K6	O RING 10			x
9	6733219	HOSE			1
10	6732484	HOSE	1 straight end & (1) 45 degree end - can use Ref. 11	& Bel	1
11	7126010	HOSE	2 straight ends - Was 6732485 [A]	& Abv	2
11	7126010	HOSE	2 straight ends - Was 6732485 [A]	& Bel	1
12	6731209	TANK	hydraulic		1
13	6732483	HOSE			1
14	15KB808	CONNECTOR			1
14	79K8	O RING 10			x
15	55K219	O'RING			4
16	15KB1612	CONNECTOR			2
16	79K12	O RING 10			x
17	6661022	FILTER	in-line - 90 micron		1
18		MOTOR	See Illustration HYDROSTATIC MOTOR/ MS2199 drive		2
19	6716243	ADAPTER			2
19	79K12	O RING 10			x
20	17C728	BOLT			16
21	6718031	TEE			1
21	79K6	O RING 10			x

Page 127 - OSS# 2071408 - All rights reserved by Bobcat Company - 12/04/2009 - 07:23:36 - Produced by Ken Cook Co. with mediaioff

HYDROSTATIC CIRCUITRY
(W/Motors) (SJC)

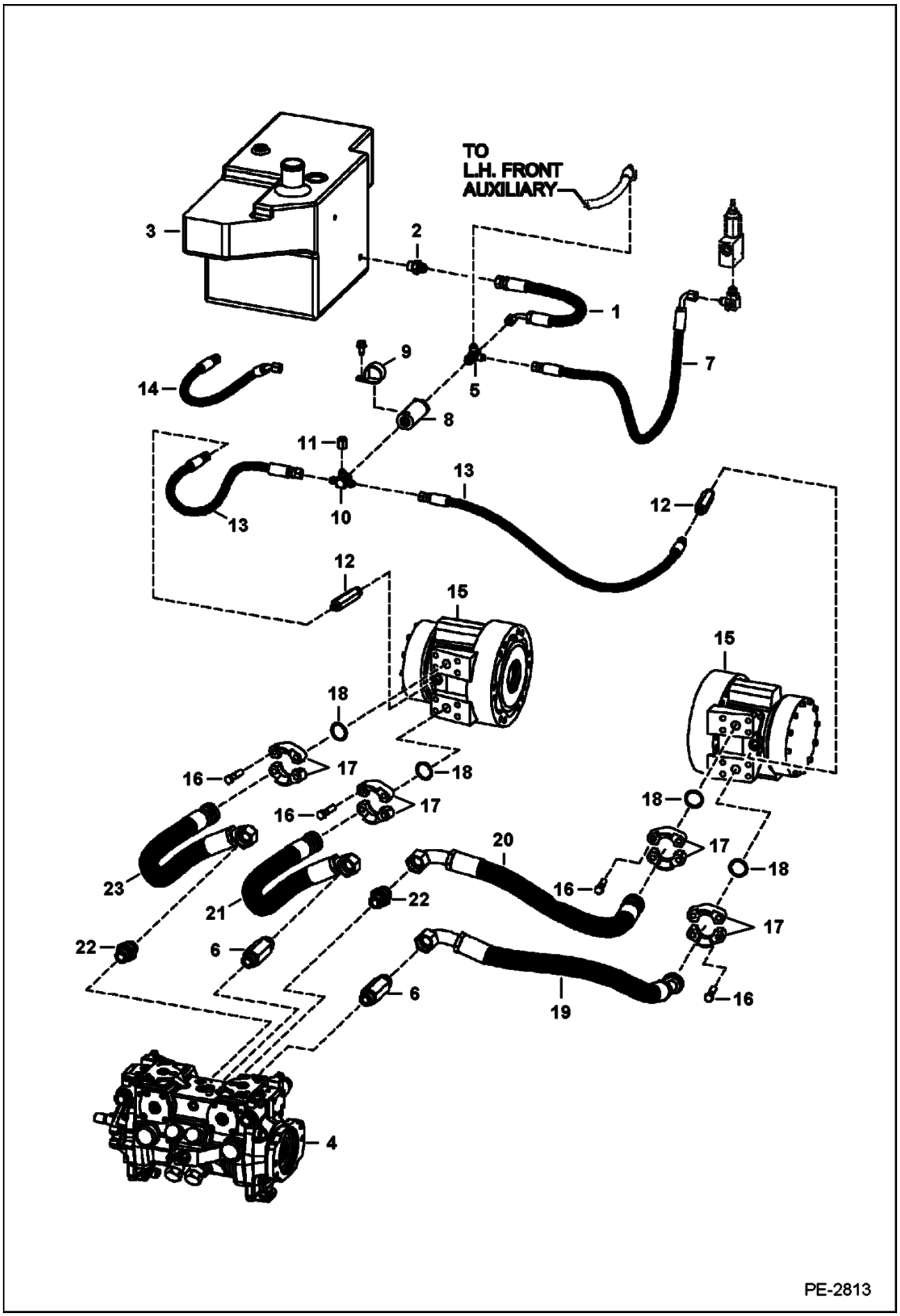

Page 128 - OSS# 2071408 - All rights reserved by Bobcat Company - 12/04/2009 - 07:23:36 - Produced by Ken Cook Co. with mediaioff

HYDROSTATIC CIRCUITRY (Cont'd)
(W/Motors) (SJC)

Ref No	Part Number	Description	Remarks	Serial Number	Qty
1	6733219	HOSE			1
2	15KB808	CONNECTOR			1
2	79K8	O RING 10			x
3	6731209	TANK	hydraulic		1
4		PUMP	See Illustration HYDROSTATIC PUMP/GEAR PUMP/ PE2824 - hydrostatic		1
5	6718031	TEE			1
5	79K6	O RING 10			x
6	6716243	ADAPTER			2
6	79K12	O RING 10			x
7	6732483	HOSE			1
8	6661022	FILTER	in-line		1
9	30H79	CLAMP			1
10	6725497	CROSS			1
10	79K6	O RING 10			x
11	36K5	CAP			1
12	6717306	ADAPTER			2
12	79K8	O RING 10			x
13	7126010	HOSE	2 straight ends - Was 6732485 [A]	& Bel	1
13	7126010	HOSE	2 straight ends - Was 6732485 [A]	& Abv	2
14		HOSE	1 straight end & (1) 45 degree end - can use Ref. 13	& Bel	1
15		MOTOR	See Illustration HYDROSTATIC MOTOR & BRAKE/ MS2218 - drive		2
16	17C728	BOLT			16
17	20J16	FLANGE			8
18	55K219	O'RING			4
19	7107557	HOSE			1
20	7107558	HOSE			1
21	7107559	HOSE			1
22	15KB1612	CONNECTOR			2
22	79K12	O RING 10			x
23	7107560	HOSE			1

Page 129 - OSS# 2071408 - All rights reserved by Bobcat Company - 12/04/2009 - 07:23:36 - Produced by Ken Cook Co. with mediaioff

HYDROSTATIC CIRCUITRY
(2-Speed Option)

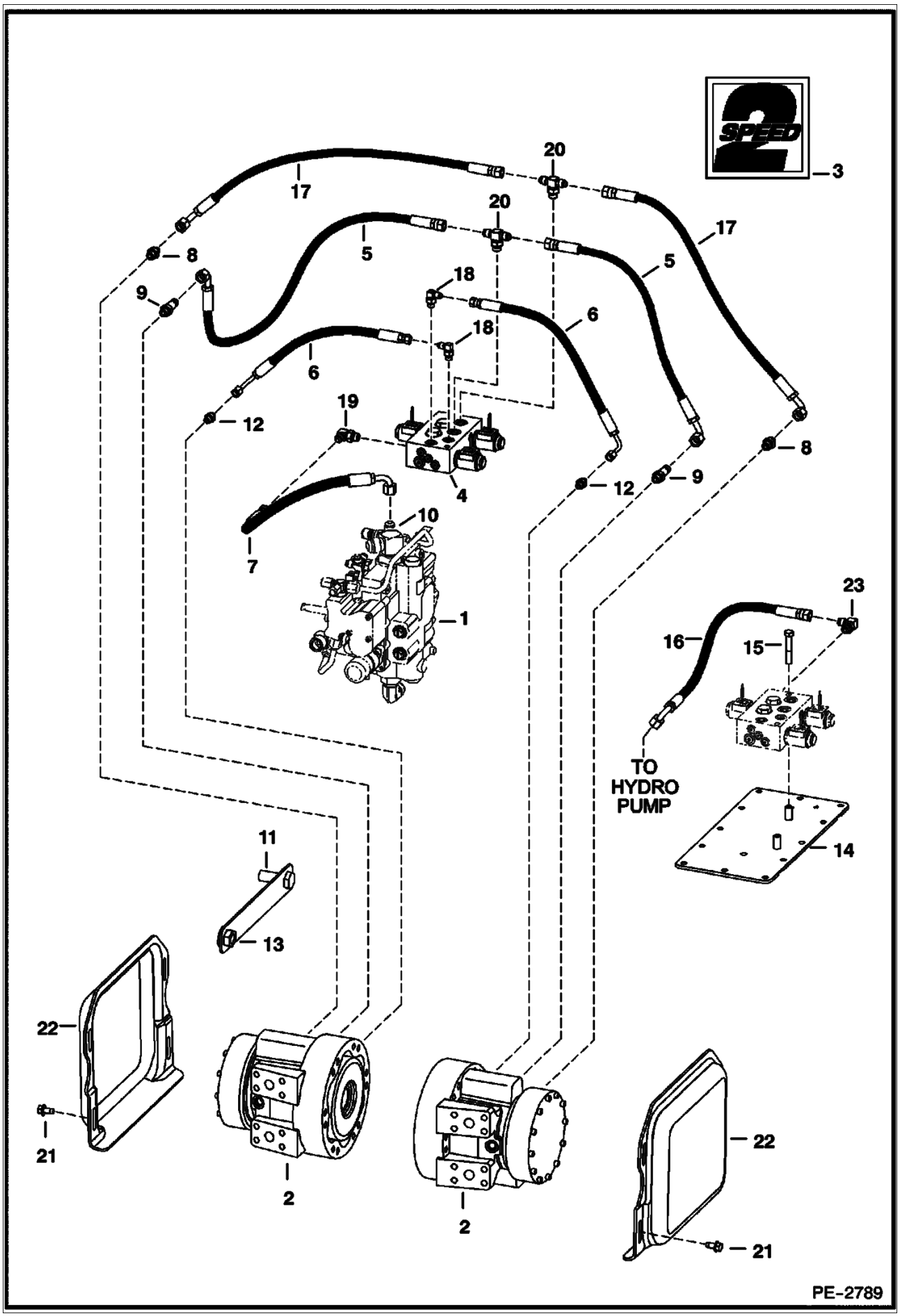

Page 130 - OSS# 2071408 - All rights reserved by Bobcat Company - 12/04/2009 - 07:23:36 - Produced by Ken Cook Co. with mediaioff

HYDROSTATIC CIRCUITRY (Cont'd)
(2-Speed Option)

Ref No	Part Number	Description	Remarks	Serial Number	Qty
1		VALVE	See Illustration HYDRAULIC CONTROL VALVE/ PE2379		1
2		MOTOR	See Illustration HYDROSTATIC MOTOR & BRAKE/ MS2218		2
3	6729078	DECAL	2-speed		2
4	6679102	VALVE	See Illustration 2-SPEED VALVE/ MS1385 - 2-speed		1
5	6725899	HOSE	2-speed port		2
6	6725900	HOSE	make-up		2
7	6806058	HOSE			1
8	15KB606	ADAPTER			2
8	99K6	O'RING			x
9	7122214	ADAPTER			2
9	99K6	O'RING			x
10	7102066	CROSS			1
10	97K6	O'RING			x
11	31C1228	BOLT			1
12	15KB404	CONNECTOR			2
12	99K4	O'RING			x
13	83D12	NUT			1
14		COVER	See Illustration TRANSMISSION COVERS/ PE3089 - chaincase - Was 7130365 [A]		1
15	17C636	BOLT			2
16	6628613	HOSE			1
17	6716391	HOSE	brake		2
18	17KB404	ELBOW			2
18	99K4	O'RING			x
19	6812815	FITTING			1
19	99K6	O'RING			x
20	19KB606	TEE			2
20	99K6	O'RING			x
21	84G3712	BOLT			8
22	6719168	COVER			2
23	17KB606	ELBOW			1

Page 131 - OSS# 2071408 - All rights reserved by Bobcat Company - 12/04/2009 - 07:23:36 - Produced by Ken Cook Co. with mediaioff

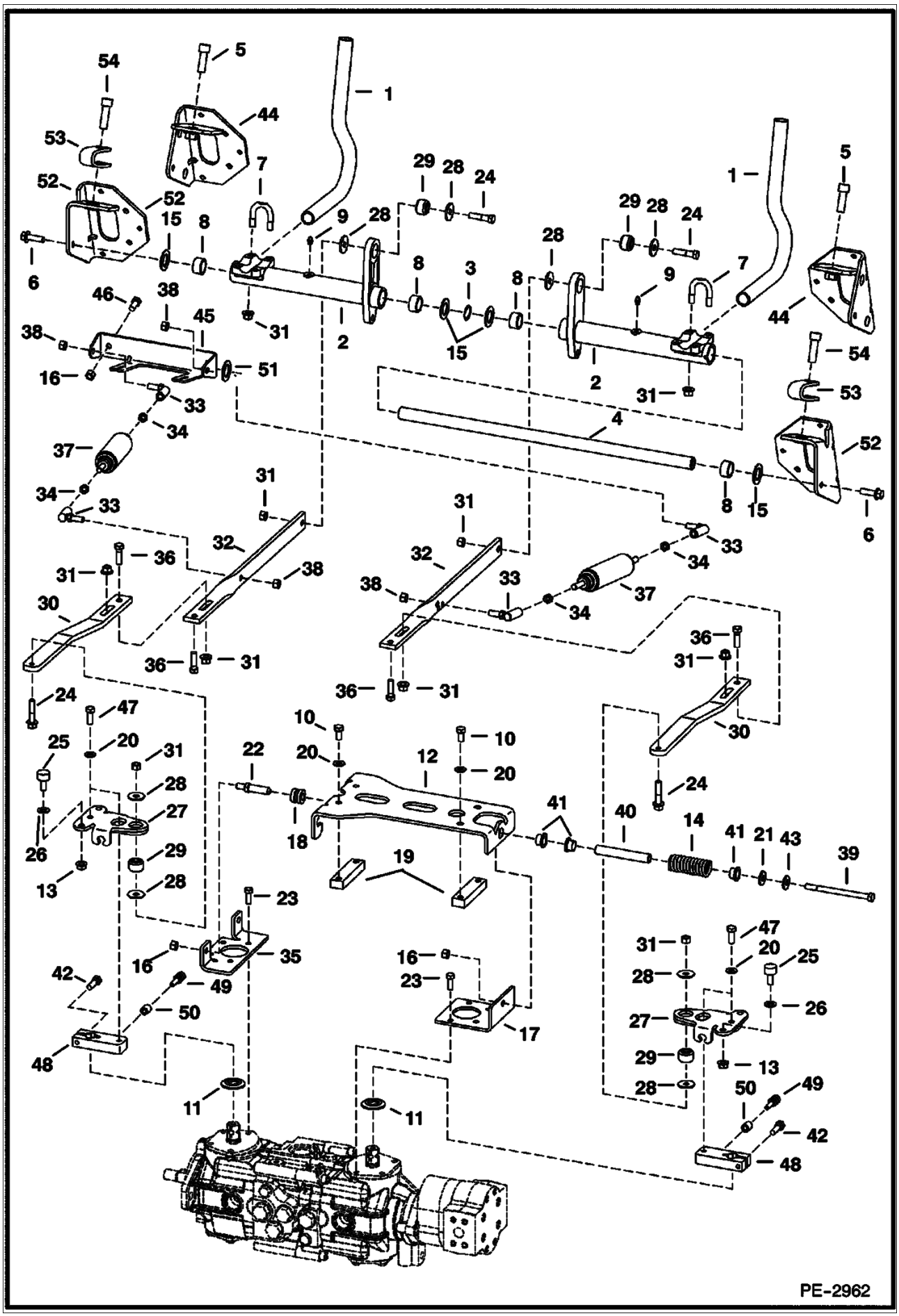

Page 132 - OSS# 2071408 - All rights reserved by Bobcat Company - 12/04/2009 - 07:23:36 - Produced by Ken Cook Co. with mediaioff

Ref No	Part Number	Description	Remarks	Serial Number	Qty
1	6702543	LEVER, STEERING			2
2		BELLCRANK	NAP - Use W/Ref. 8 (6673710 bearing) - Order 7110571 bellcrank & (2) of Ref. 8 (6703879 bushing) - Was 7110572 [A]		2
2	7110571	BELLCRANK, STEERING	W/notch for Ref. 8 (6703879 bushing)		2
3	6599741	WASHER	wave - Use W/Ref. 15		1
3	7154546	WASHER, WAVE			1
4	6716545	ROD			1
5	93G824	BOLT	Was 73G824 [A]		2
6	45C620	BOLT			2
7	6732997	U-BOLT			4
8	6673710	BEARING, NEEDLE	Use W/Ref. 2 (NAP/ 7110572 bellcrank)		4
8	6703879	BUSHING, PLASTIC	W/tab - Use W/Ref. 2 (7110571 bellcrank)		4
9	10H35	GREASE ZERK	threaded		2
10	7105192	BOLT			4
11	6687913	SEAL			2
12	6734298	MOUNT			1
13	98D6	NUT			4
14	6701535	SPRING			1
15	6716916	WASHER			4
16	95D6	NUT			5
17	7109904	BRACKET			1
18	6706098	GUIDE			2
19	6702716	BLOCK			2
20	7103217	WASHER			8
21	6563914	WASHER			1
22	6577058	PIN			2
23	1CM820	BOLT			8
24	49C628	BOLT			4
25	6673789	BEARING			4
26	7100699	WASHER			4
27	7110365	ARM, PINTLE			2
28	6737388	WASHER			8
29	6685060	BUSHING, TORSION	torsion - 1.055" (26,797 mm) OD		4
30	6737746	LINK	16.35" (415,3 mm) long	5307 14202 & Bel	2
30	6737746	LINK	16.35" (415,3 mm) long	5308 11539 & Bel	2
30	7125363	LINK	19" (482,6 mm) long	5307 14203 & Abv	2
30	7125363	LINK	19" (482,6 mm) long	5308 11540 & Abv	2
31	83D6	NUT 5			16
32	7100266	LINK	25.72" (653,3 mm) long	5307 14202 & Bel	2
32	7100266	LINK	25.72" (653,3 mm) long	5308 11539 & Bel	2
32	7139420	LINK	23.07" (586 mm) long	5307 14203 & Abv	2
32	7139420	LINK	23.07" (586 mm) long	5308 11540 & Abv	2
33	6599744	BALL JOINT			4
34	62D6	NUT 5			4
35	7109905	BRACKET			1
36	17C620	BOLT			4
37	6649551	SHOCK			2
38	96D6	NUT			4
39	17C680	BOLT			1
40	6715164	SLEEVE, SPRING			1
41	6715163	BUSHING,			3

Page 133 - OSS# 2071408 - All rights reserved by Bobcat Company - 12/04/2009 - 07:23:36 - Produced by Ken Cook Co. with mediaioff

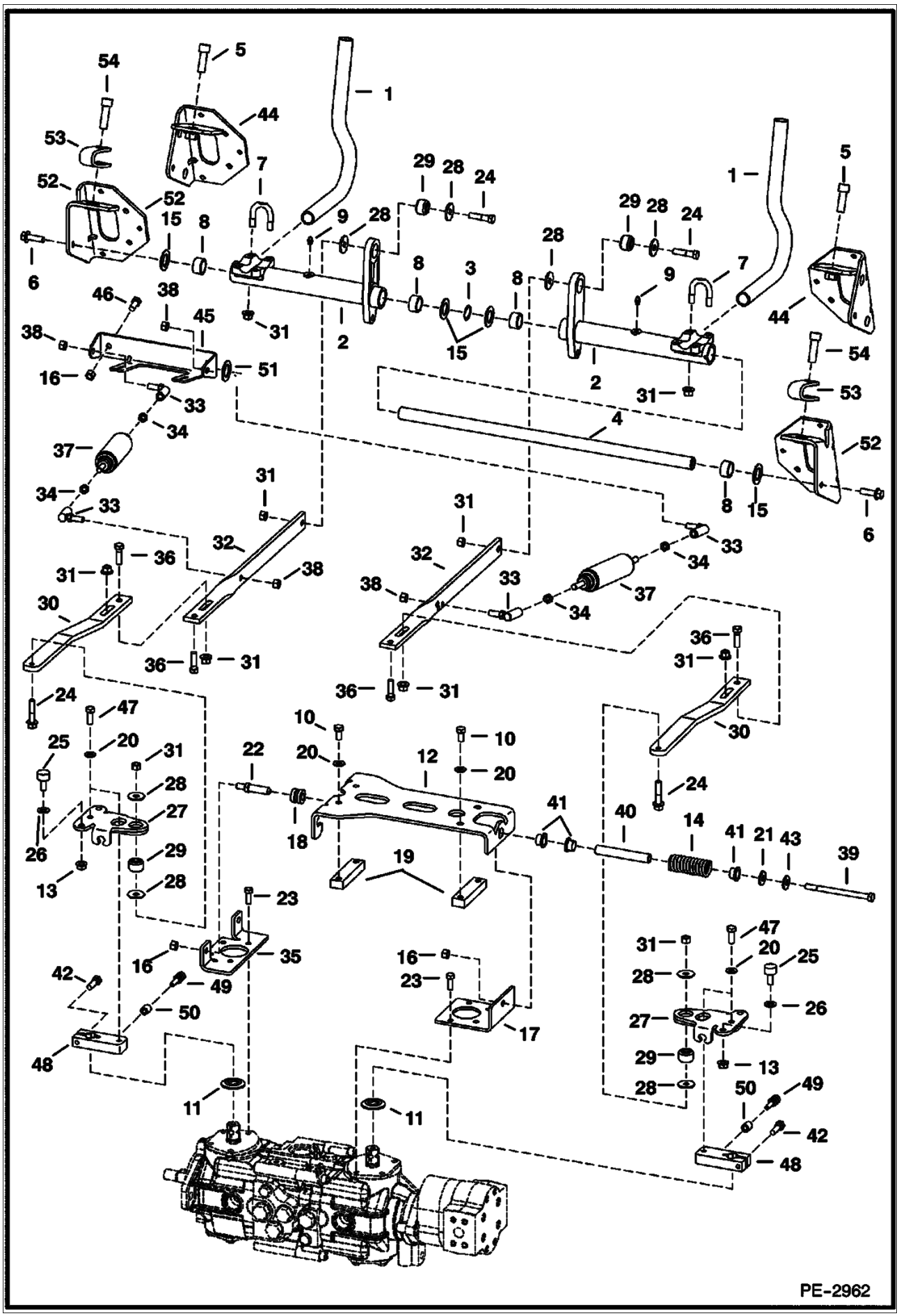

Page 134 - OSS# 2071408 - All rights reserved by Bobcat Company - 12/04/2009 - 07:23:36 - Produced by Ken Cook Co. with mediaioff

Ref No	Part Number	Description	Remarks	Serial Number	Qty
		PRESS FIT			
42	73G624	BOLT			2
43	25E24	WASHER	for AHC & ACS - Was 25E22 [B]		1
44		BRACKET	NAP - R.H. - Order Ref. 52-54 - Was 6733022 [A]		1
44		BRACKET	NAP - L.H. - Order Ref 52-54 - Was 6733024 [A]		1
45	7147580	MOUNT	damper - W/mount for back-up alarm switch - Was 7100795 [A]		1
46	17C612	BOLT 5			2
47	47C620	BOLT	Was 7105193 [A]		4
48	7103708	BRACKET	pintle arm		2
49	7103711	BOLT			2
50	7105223	SPACER			2
51		SPACER	NAP - Order 8D6 jam nut - Was 7110945 [A]		1
52	7128600	BRACKET	RH		1
52	7128601	BRACKET	LH		1
53	7121779	PAD			2
54	73G828	BOLT			2

Page 135 - OSS# 2071408 - All rights reserved by Bobcat Company - 12/04/2009 - 07:23:36 - Produced by Ken Cook Co. with mediaioff

HYDROSTATIC MOTOR

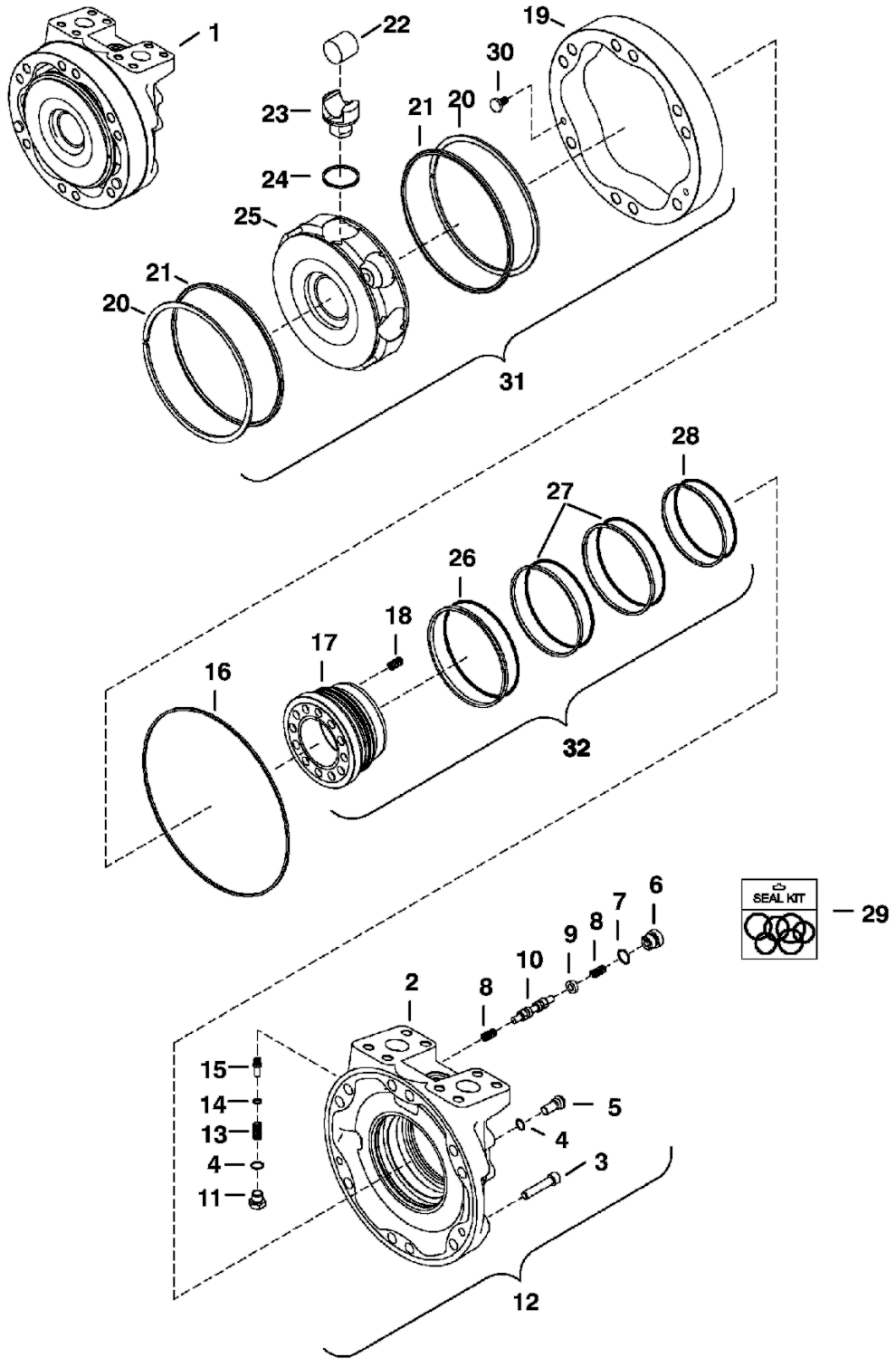

MS-2199

Page 136 - OSS# 2071408 - All rights reserved by Bobcat Company - 12/04/2009 - 07:23:36 - Produced by Ken Cook Co. with mediaioff

Ref No	Part Number	Description	Remarks	Serial Number	Qty
1	6687825	MOTOR, DRIVE HYD	Model R921810312		1
2	6674341	HOUSING	Was 6690026 [A]		1
3	6690039	SCREW			2
4	6676038	O-RING	Was 6689132 [A]		2
5	6674340	PIN	Was 6690030 [A]		1
6	6691227	PLUG	Was 6688866 [A]		1
7	6689133	O-RING			1
8	6674841	SPRING	Was 6690042 [A]		2
9	6675867	WASHER	Was 6690043 [A]		1
10	6675866	SPOOL	Was 6690041 [A]		1
11	6674345	PLUG	Was 6690047 [A]		1
12		REAR HOUSING ASSY.	NSS- Order individual parts or Ref. 1		1
13	6674344	SPRING	Was 6690046 [A]		1
14	6674343	SHIM	Was 6690044 [A]		1
15	6675868	POPPET	Was 6690045 [A]		1
16	6675864	QUAD RING	Was 6690033 [A]		1
17	6674184	RING	Was 6690027 [A]		1
18	6674037	SPRING	Was 6690031 [A]		9
19	6690025	CAM			1
20	6674035	SNAP RING	Was 6690023 [A]		2
21	6674036	RING	Was 6690024 [A]		2
22	6690022	ROLLER			8
23	6689126	PISTON			8
24	6690048	RING			8
25	6690021	BLOCK			1
26	6674040	SEAL	W/ O-ring - 87,15 mm I.D. - Was 6690028 [A]		1
27	6675228	SEAL	Was 6690049 [A]		2
28	6674038	SEAL	Was 6690029 [A]		1
29	6676021	KIT, SEAL	Was 6690004 [A]		1
30	6688449	LOCATING PIN			2
31	6690158	ROTOR GROUP	W/Ref. 19-25		1
32		RING AND SEALS KIT	NSS- Order individual parts or Ref. 1		1

Page 137 - OSS# 2071408 - All rights reserved by Bobcat Company - 12/04/2009 - 07:23:36 - Produced by Ken Cook Co. with mediaioff

HYDROSTATIC MOTOR & BRAKE
(2-Speed and/or SJC)

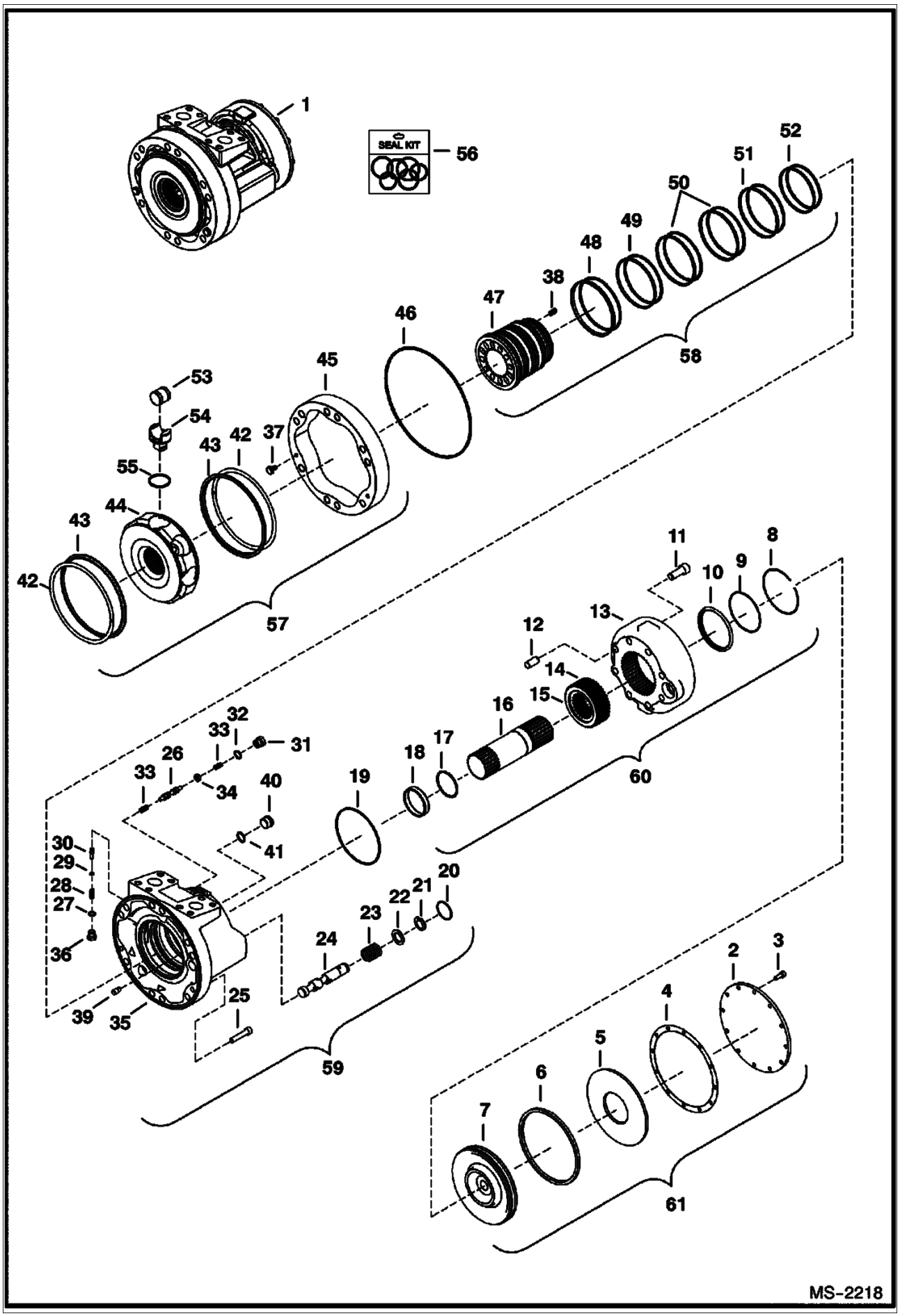

Page 138 - OSS# 2071408 - All rights reserved by Bobcat Company - 12/04/2009 - 07:23:36 - Produced by Ken Cook Co. with mediaIoff

HYDROSTATIC MOTOR & BRAKE (Cont'd)
(2-Speed and/or SJC)

Ref No	Part Number	Description	Remarks	Serial Number	Qty
1	6687826	MOTOR, DRIVE HYD 2-SPD	Model R921810406 - Ref. 2-55		1
2	6675890	COVER	Was 6690086 [A]		1
3	6690095	SCREW			12
4	6675892	GASKET	Was 6690091 [A]		1
5	6675897	WASHER	disk - Was 6690098 [A]		1
6	6675893	O-RING	Was 6690092 [A]		1
7	6675889	PISTON	Was 6690085 [A]		1
8	6690094	CLAMP			1
9	6690097	O-RING			1
10	6689088	QUAD RING	Was 6690093 [A]		1
11	6690096	SCREW			5
12	6687193	DOWEL	Was 6690099 [A]		3
13	6690082	HOUSING			1
14	6674193	BRAKE DISC	inner - Was 6690088 [A]		14
15	6690087	PLATE	outer		16
16	6690084	SHAFT			1
17	6690081	CLAMP			1
18	6675898	BUSHING	Was 6690100 [A]		1
19	6675863	QUAD RING	Was 6690078 [A]		1
20	6690077	O-RING			1
21	6675885	SNAP RING	Was 6690076 [A]		1
22	6690105	WASHER			1
23	6675883	KIT, WASHER	Was 6690075 [A]		1
24		SPOOL	NAP - Order Ref. 59 - Was 6690074 [A]		1
25	6690039	SCREW			2
26	6675866	SPOOL	Was 6690041 [A]		1
27	6676038	O-RING	Was 6689132 [A]		1
28	6674344	SPRING	Was 6690046 [A]		1
29	6674343	SHIM	Was 6690044 [A]		1
30	6675868	POPPET	Was 6690045 [A]		1
31	6691227	PLUG	Was 6688866 [A]		1
32	6689133	O-RING			2
33	6674841	SPRING	Was 6690042 [A]		2
34	6675867	WASHER	Was 6690043 [A]		1
35		HOUSING	NSS - Order Ref. 59 - Was 6690066 [A]		1
36	6674345	PLUG	Was 6690047 [A]		1
37	6688449	LOCATING PIN			2
38	6674037	SPRING	Was 6690031 [A]		15
39	6690068	PIN			1
40	6689129	PLUG			1
41	6690080	O-RING			1
42	6674035	SNAP RING	Was 6690023 [A]		2
43	6674036	RING	Was 6690024 [A]		2
44		BLOCK	NAP - Was 6690065 [A]		1
45	6690025	CAM			1
46	6675864	QUAD RING	Was 6690033 [A]		1
47	6690067	RING			1
48	6675877	SEAL	Was 6690069 [A]		1
49	6675878	SEAL	Was 6690070 [A]		1
50	6675879	SEAL	Was 6690071 [A]		2
51	6675880	SEAL	Was 6690072 [A]		1
52	6675881	SEAL	Was 6690073 [A]		1
53	6690022	ROLLER	Roller		8
54	6689126	PISTON			8

Page 139 - OSS# 2071408 - All rights reserved by Bobcat Company - 12/04/2009 - 07:23:36 - Produced by Ken Cook Co. with mediaioff

HYDROSTATIC MOTOR & BRAKE (Cont'd)
(2-Speed and/or SJC)

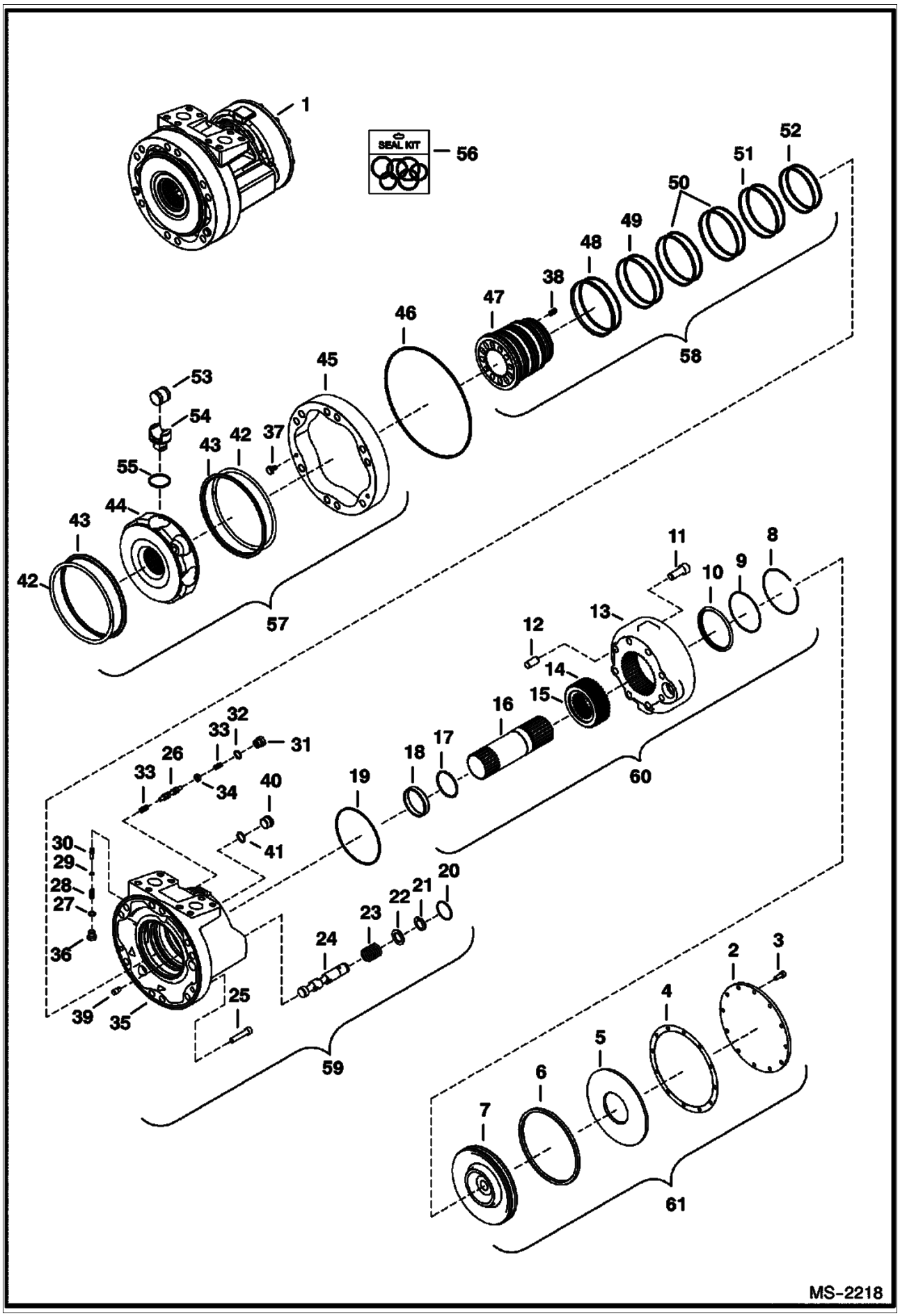

Page 140 - OSS# 2071408 - All rights reserved by Bobcat Company - 12/04/2009 - 07:23:36 - Produced by Ken Cook Co. with mediaioff

Ref No	Part Number	Description	Remarks	Serial Number	Qty
55	6690048	RING			8
56	6690005	SEAL KIT			1
57	6687826	MOTOR, DRIVE HYD 2-SPD	W/Ref. 42-45 & 53-55 - Was 6690157 [A]		1
58		RING AND SEALS KIT	NSS- Order individual parts or Ref. 1		1
59		REAR HOUSING ASSY.	NSS- Order individual parts or Ref. 1		1
60		BRAKE HOUSING ASSY.	NSS- Order individual parts or Ref. 1		1
61		BRAKE PISTON ASSY.	NSS- Order individual parts or Ref. 1		1

Page 141 - OSS# 2071408 - All rights reserved by Bobcat Company - 12/04/2009 - 07:23:36 - Produced by Ken Cook Co. with mediaioff

HYDROSTATIC PUMP/GEAR PUMP
(Identification)

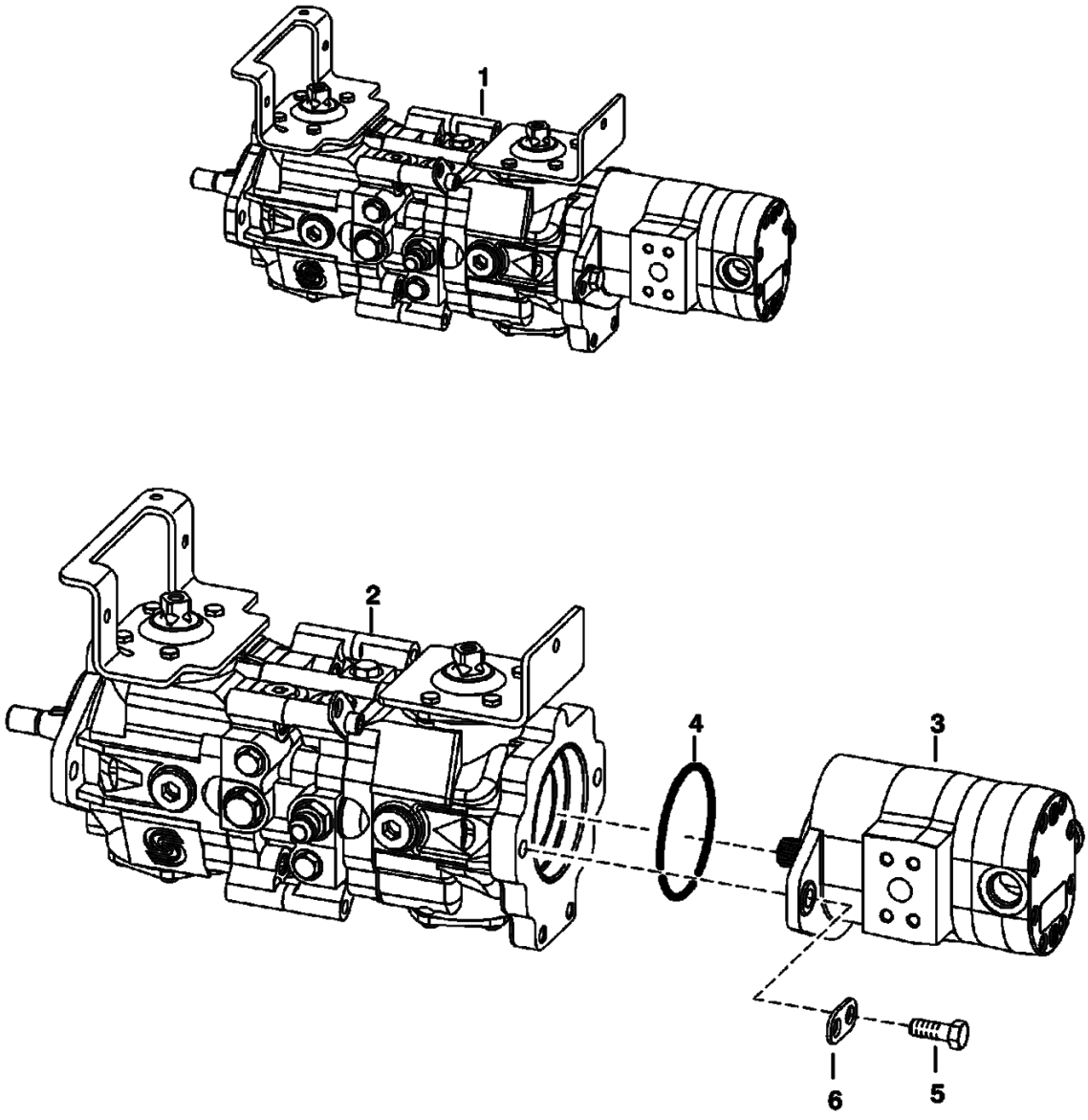

Page 142 - OSS# 2071408 - All rights reserved by Bobcat Company - 12/04/2009 - 07:23:36 - Produced by Ken Cook Co. with mediaioff

Ref No	Part Number	Description	Remarks	Serial Number	Qty
1		PUMP ASSY	NAP		1
2		HYDROSTATIC PUMP	See Illustration HYDROSTATIC PUMP/ MS2184 See Illustration HYDROSTATIC PUMP/ MS2183 - manual controls		1
2		HYDROSTATIC PUMP	See Illustration HYDROSTATIC PUMP/ B25010 - AHC, ACS & SJC		1
3		GEAR PUMP	See Illustration GEAR PUMP/ MS1454 - standard flow		1
3		GEAR PUMP	- high flow		1
4	6671520	O-RING	manual controls		1
4	6682949	O-RING	AHC, ACS & SJC - Was 6688019 [A]		1
5	45C824	BOLT	manual controls - Was 31C824 [B,D]		2
5	59CM1240	BOLT	AHC, ACS & SJC - Was 53CM1240 [A]		2
6	6662126	BRACKET	Was 6631643 [A]		2

Page 143 - OSS# 2071408 - All rights reserved by Bobcat Company - 12/04/2009 - 07:23:36 - Produced by Ken Cook Co. with mediaioff

HYDROSTATIC PUMP
(Manual Controls, AHC & ACS) (Left Half)

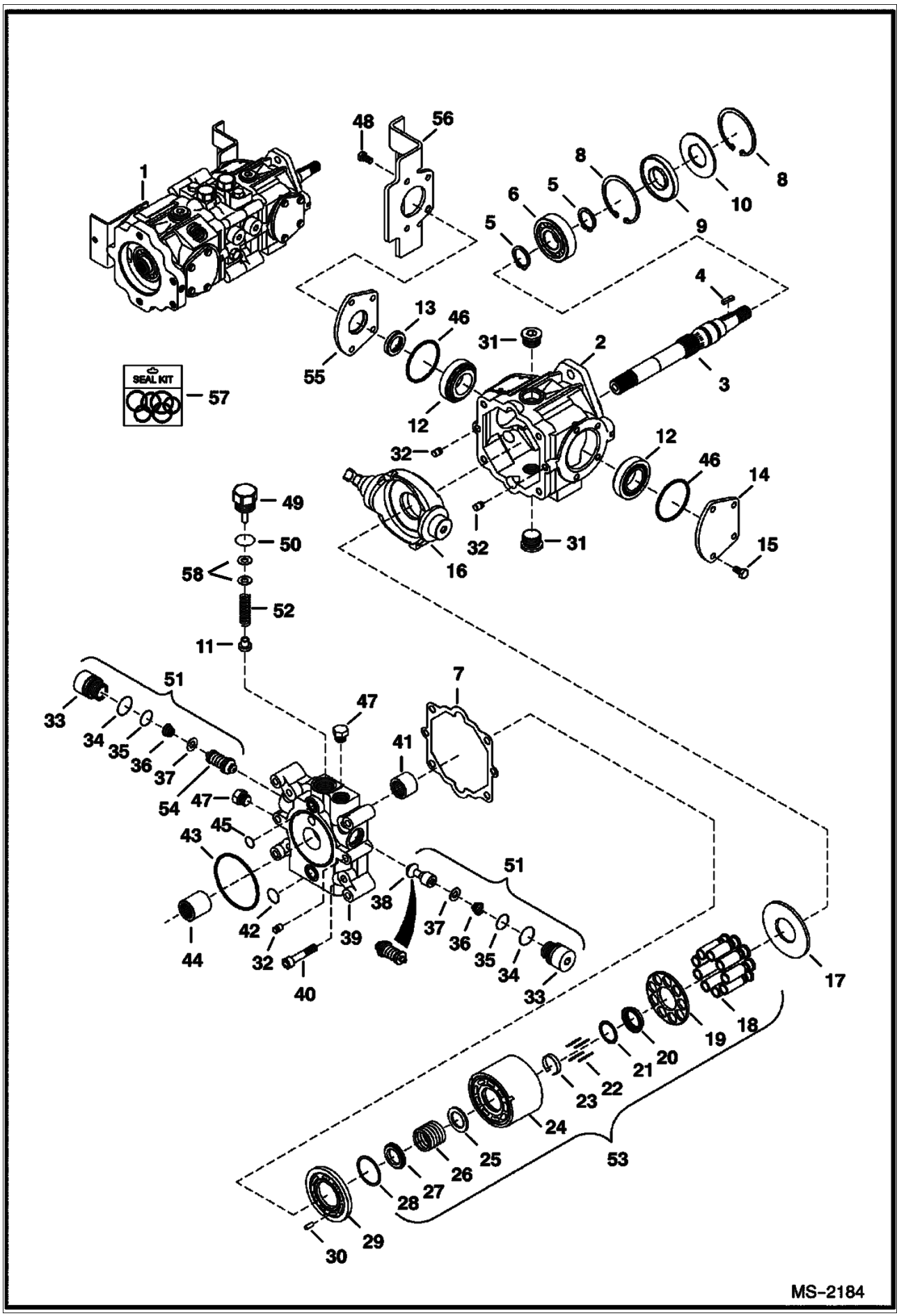

Page 144 - OSS# 2071408 - All rights reserved by Bobcat Company - 12/04/2009 - 07:23:36 - Produced by Ken Cook Co. with mediaioff

HYDROSTATIC PUMP (Cont'd)
(Manual Controls, AHC & ACS) (Left Half)

Ref No	Part Number	Description	Remarks	Serial Number	Qty
1	6687832	PUMP, HYD TANDEM	Model 4445208		1
2	6669402	HOUSING			1
3	6682260	SHAFT	W/square key		1
4	6682261	KEY	Was 6683169 [A]		1
5	658128	RING, SNAP			2
6	654299	BEARING			1
7	6650634	GASKET			1
8	669863	RING, SNAP			2
9	6687191	SEAL, OIL			1
10	6669409	WASHER			1
11	6650652	POPPET	charge relief		1
12	6669411	BEARING			2
13	6678226	SEAL, OIL	Was 6660814 [D]		2
14	6657068	COVER			2
15	6650668	BOLT			4
16	6685344	SWASHPLATE	W/threaded shaft hole		1
17	6650627	PLATE			1
18	6683168	PISTON ASSEMBLY			9
19		RETAINER	NAP - Order Ref. 53 - Was 6657072 [A]		1
20		RETAINER	NAP - Order Ref. 53 - Was 6657073 [A]		1
21	6666338	WASHER			1
22	6650629	PIN			4
23	6650630	RETAINER			1
24	6683167	CYLINDER BLOCK			1
25		WASHER	NAP - Order Ref. 53		1
26		SPRING	NAP - Order Ref. 53		1
27		WASHER	NAP - Order Ref. 53		1
28		RETAINER	NAP - Order Ref. 53 - Was 6666881 [A]		1
29	6676147	PLATE, VALVE			1
30	6650636	PIN			1
31	47K8	PLUG			2
31	79K12	O RING 10			2
32	6675342	PIN			4
33		PLUG	NAP - Order Ref. 51		2
34	6657028	O-RING			2
35	79K8	O RING 10			2
36		SPRING	NAP - Order Ref. 51		2
37		RETAINER	NAP - Order Ref. 51		2
38		CHECK VALVE	NAP - poppet - Order Ref. 51		1
39	6669406	END PLATE			1
40	6650637	BOLT			4
41	6650635	BEARING			1
42	6650647	O-RING			1
43	6673884	O-RING			1
44	6650675	COUPLER			1
45	6650646	O-RING			1
46	6660814	O-RING			2
47	6645086	PLUG			2
47	6661481	O-RING			1
48	6671518	BOLT			4
49	6650648	PLUG	charge relief - W/Ref. 50		1
50	79K10	O RING 10			1
51	6670685	RELIEF VALVE	Ref. 33-37 & 54 - Was 6689601 [A]		1
52	6673882	SPRING	Was 6684038 [A]		1

Page 145 - OS&H 2071408 - All rights reserved by Bobcat Company - 12/04/2009 - 07:23:36 - Produced by Ken Cook Co. with mediaioff

HYDROSTATIC PUMP (Cont'd)
(Manual Controls, AHC & ACS) (Left Half)

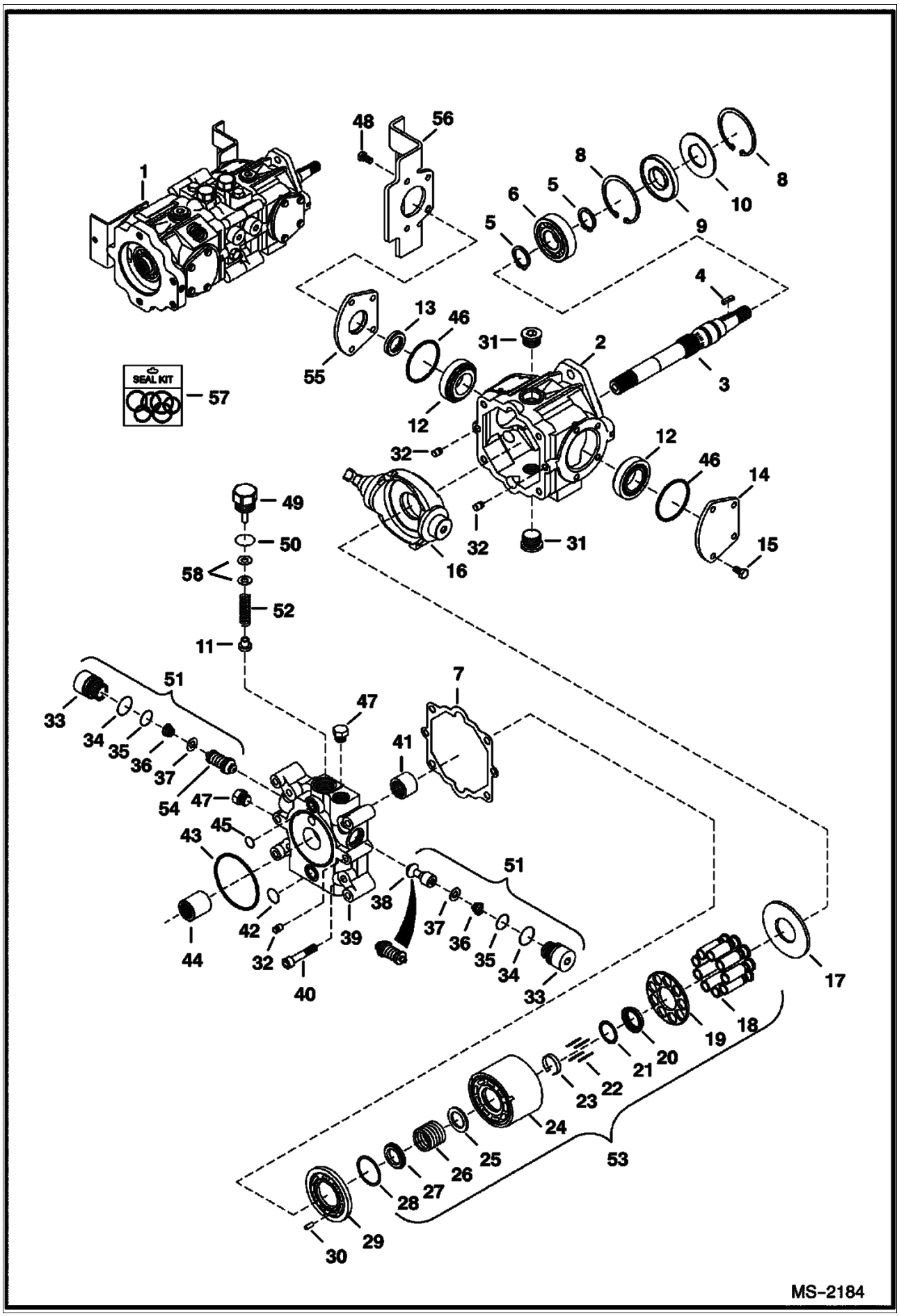

Page 146 - OSS# 2071408 - All rights reserved by Bobcat Company - 12/04/2009 - 07:23:36 - Produced by Ken Cook Co. with mediaioff

Ref No	Part Number	Description	Remarks	Serial Number	Qty
53	6675341	GROUP, ROTARY			1
54		RELIEF VALVE	NAP - 5000 PSI (345 bar)- Order Ref. 51		1
55	6657067	COVER	W/Ref. 46		1
56	7109905	BRACKET			1
57	6671516	KIT, SEAL	Ref. 7, 9, 13, 34, 35, 42, 43, 45, 46 & 50 - Also includes Ref. 2, 3, 12, 31 & 41 on next page		1
58	6669410	KIT, SHIM	for Ref. 49 - (2) each of .010, .020 and .050 thick		1

Page 147 - OSS# 2071408 - All rights reserved by Bobcat Company - 12/04/2009 - 07:23:36 - Produced by Ken Cook Co. with mediaioff

HYDROSTATIC PUMP
(Manual Controls, AHC & ACS) (Right Half)

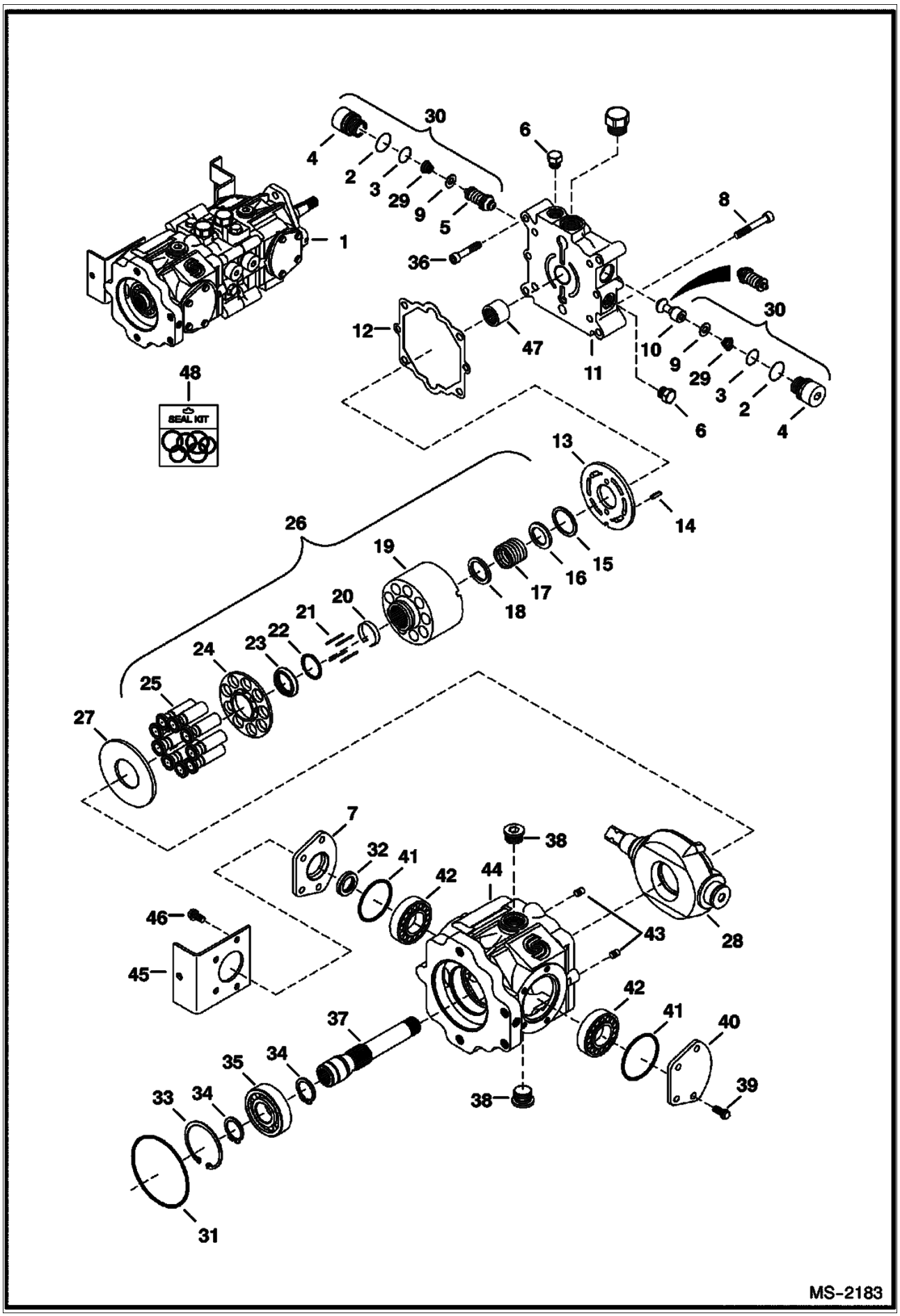

Page 148 - OSS# 2071408 - All rights reserved by Bobcat Company - 12/04/2009 - 07:23:36 - Produced by Ken Cook Co. with mediaioff

HYDROSTATIC PUMP (Cont'd)
(Manual Controls, AHC & ACS) (Right Half)

Ref No	Part Number	Description	Remarks	Serial Number	Qty
1	6687832	PUMP, HYD TANDEM	Model 4445208		1
2	6657028	O-RING			2
3	79K8	O RING 10			2
4		PLUG	NAP - Order Ref. 30		2
5		RELIEF VALVE	NAP - 5000 PSI (345 bar)- Order Ref. 30		2
6	6645086	PLUG			4
7	6657067	COVER	W/Ref. 32 - Was 6675338 [A]		1
8	6650637	BOLT			2
9		RETAINER	NAP - Order Ref. 30		4
10		CHECK VALVE	NAP - poppet - Order Ref. 30		1
11	6669405	END CAP			1
12	6650634	GASKET			1
13	6676148	PLATE, VALVE			1
14	6650636	PIN			2
15		RETAINER	NAP - Order Ref. 26		1
16		WASHER	NAP - Order Ref. 26		1
17		SPRING	NAP - Order Ref. 26		1
18		WASHER	NAP - Order Ref. 26		1
19	6683167	CYLINDER BLOCK			1
20	6650630	RETAINER			1
21	6650629	PIN			4
22	6666338	WASHER			1
23		RETAINER	NAP - Order Ref. 26 - Was 6657073 [A]		1
24		RETAINER	NAP - Order Ref. 26 - Was 6657072 [A]		1
25	6683168	PISTON ASSEMBLY			9
26	6671512	GROUP, ROTARY	W/Ref. 15-25		1
27	6650627	PLATE			1
28	6685344	SWASHPLATE	W/threaded shaft hole		1
29		SPRING	NAP - Order Ref. 30		2
30	6670685	RELIEF VALVE	Ref. 2-5, 9, 10 & 29 - Was 6689601		2
31	6671520	O-RING			1
32	6678226	SEAL, OIL			1
33	669863	RING, SNAP			1
34	658128	RING, SNAP			2
35	654299	BEARING			1
36	6652018	BOLT			4
37	6682264	SHAFT			1
38	47K8	PLUG			1
38	79K12	O RING 10			2
39	6650668	BOLT			4
40	6657068	COVER			1
41	6660814	O-RING			2
42	6669411	BEARING			2
43	6675342	PIN			2
44	6682262	HOUSING	Was 6689602 [A]		1
45	7109904	BRACKET			1
46	6671518	BOLT			4
47	6650635	BEARING			1
48	6671516	KIT, SEAL	Ref. 2, 3, 12, 31 & 41 - Also includes Ref. 7, 9, 13, 34, 35, 42, 43, 45, 46 & 50 on previous page		1

Page 149 - OSS# 2071408 - All rights reserved by Bobcat Company - 12/04/2009 - 07:23:36 - Produced by Ken Cook Co. with mediaioff

HYDROSTATIC PUMP
(Selectable Joystick Controls)

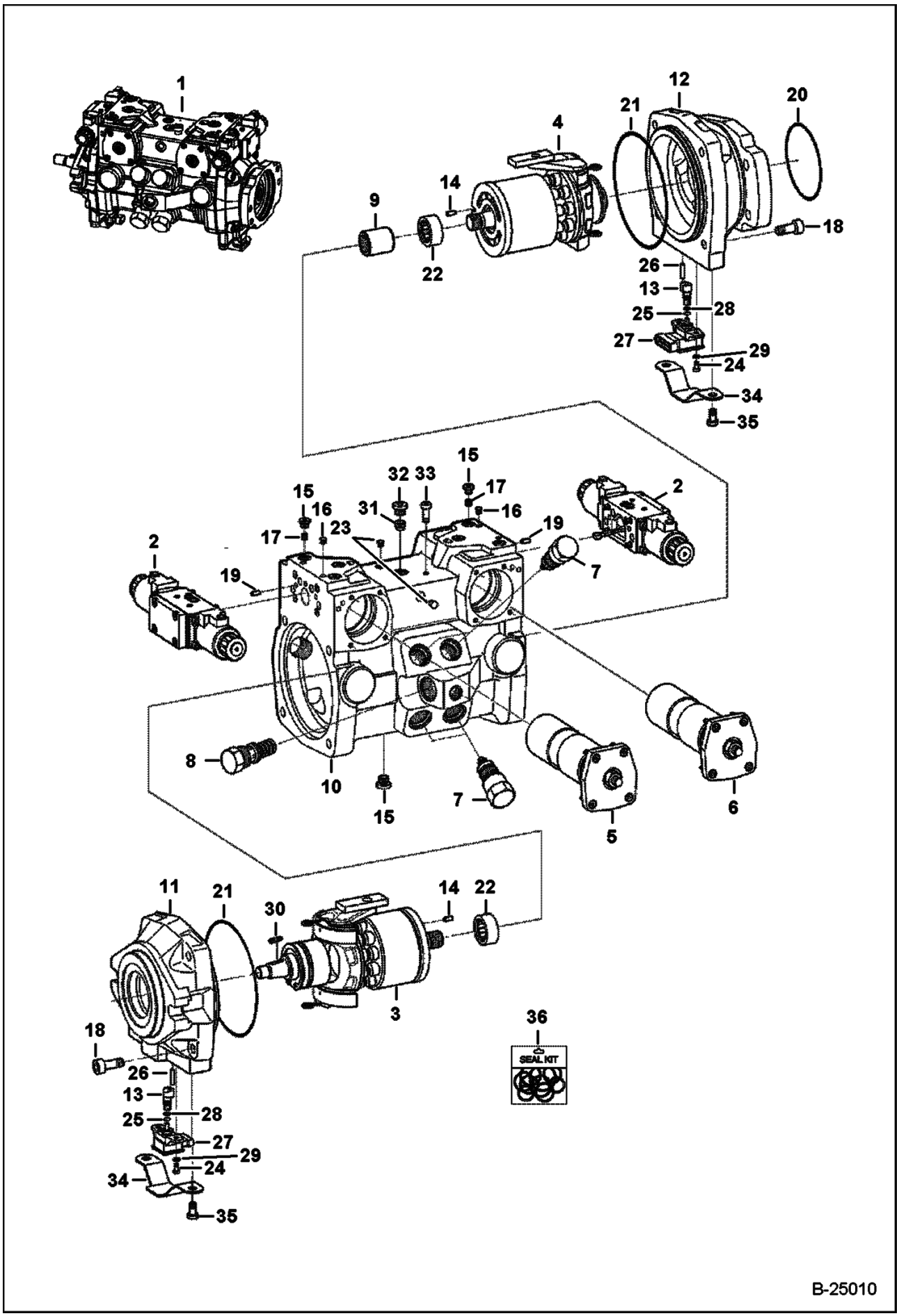

Page 150 - OSS# 2071408 - All rights reserved by Bobcat Company - 12/04/2009 - 07:23:36 - Produced by Ken Cook Co. with mediaioff

HYDROSTATIC PUMP (Cont'd)
(Selectable Joystick Controls)

Ref No	Part Number	Description	Remarks	Serial Number	Qty
1		PUMP, HYD TANDEM	NAP - Model R902095064 - Order 7170197 pump & ??????? harness - Was 6686267 [A]	5308 11133-11529	1
1		PUMP, HYD TANDEM	NAP - Model R902095064 - Order 7170197 pump & ??????? harness - Was 6686267 [A]	5307 12577-13897	1
1		PUMP, HYD TANDEM	NAP - model R902095064 - Order 7170197 pump and 7169309 harness - Was 6686267 [A]	5307 13898 & Abv	1
1		PUMP, HYD TANDEM	NAP - model R902095064 - Order 7170197 pump and 7169309 harness - Was 6686267 [A]	5308 11530 & Abv	1
1	7170197	PUMP, HYD TANDEM	Model R902136745		1
2	6687970	MODULATOR	See Illustration HYDROSTATIC PUMP/ B25016 Model R902095064		2
2	7008109	MODULE, CONTROL	See Illustration HYDROSTATIC PUMP/ B25016 Model R902136745		2
3	6687957	GROUP, ROTATING	See Illustration HYDROSTATIC PUMP/ B25011 LH rotation - Model R902095064		1
3	7008807	GROUP, ROTATING	See Illustration HYDROSTATIC PUMP/ B25011 Model R902136745		1
4	6687958	GROUP	See Illustration HYDROSTATIC PUMP/ B25012 RH rotation - Model R902095064		1
4	7008106	GROUP ROTATING RH	See Illustration HYDROSTATIC PUMP/ B25012 Model R902136745		1
5	6687960	CONTROL	See Illustration HYDROSTATIC PUMP/ B25013 Model R902095064		1
5	7008107	CONTROL	See Illustration HYDROSTATIC PUMP/ B25013 Model R902136745		1
6	6687961	CONTROL	See Illustration HYDROSTATIC PUMP/ B25013A Model R902095064		1
6	7008108	CONTROL	See Illustration HYDROSTATIC PUMP/ B25013A Model R902136745		1
7	6692332	VALVE,RELIEF	See Illustration HYDROSTATIC PUMP/ B25014 - preset at 350 bar - Was 6687924 - Model R902095064 [A]		4
7	7008124	VALVE, RELIEF	See Illustration HYDROSTATIC PUMP/ B25014 Model R902136745		4
8	6687938	VALVE	See Illustration HYDROSTATIC PUMP/ B25015		1
9	6687941	COUPLER			1
10	6687964	HOUSING	Model R902095064		1
10	7008110	HOUSING	Model R902136745		1
11	6687973	FLANGE	Model R902095064		1
11	7008111	FLANGE, LH	Model R902136745		1
12	6687974	FLANGE	Model R902095064		1
12	7008112	FLANGE, RH	Model R902136745		1
13	6687965	SHAFT	Model R902095064		2
13	7008113	SHAFT	Model R902136745		2
14	6688011	PIN			2
15	6682875	PLUG	Was 6688016 [A]		11
16	6682879	PIN	Was 6688039 [A]		3
17		ORIFICE	See BTI393 Was 6967419 [B]	49293001 & Bel	4
18	6688008	SCREW			8
19	6682919	PIN	Was 6686934 [A]		2
20	6682949	O-RING	Was 6688019 [A]		1
21	6688009	SEAL			2
22	6688040	BEARING			2
23	6687932	PIN			2
24	6687994	SCREW	Model R902095064		4
24	7008114	SCREW	Model R902136745		4

Page 151 - OSS# 2071408 - All rights reserved by Bobcat Company - 12/04/2009 - 07:23:36 - Produced by Ken Cook Co. with mediaioff

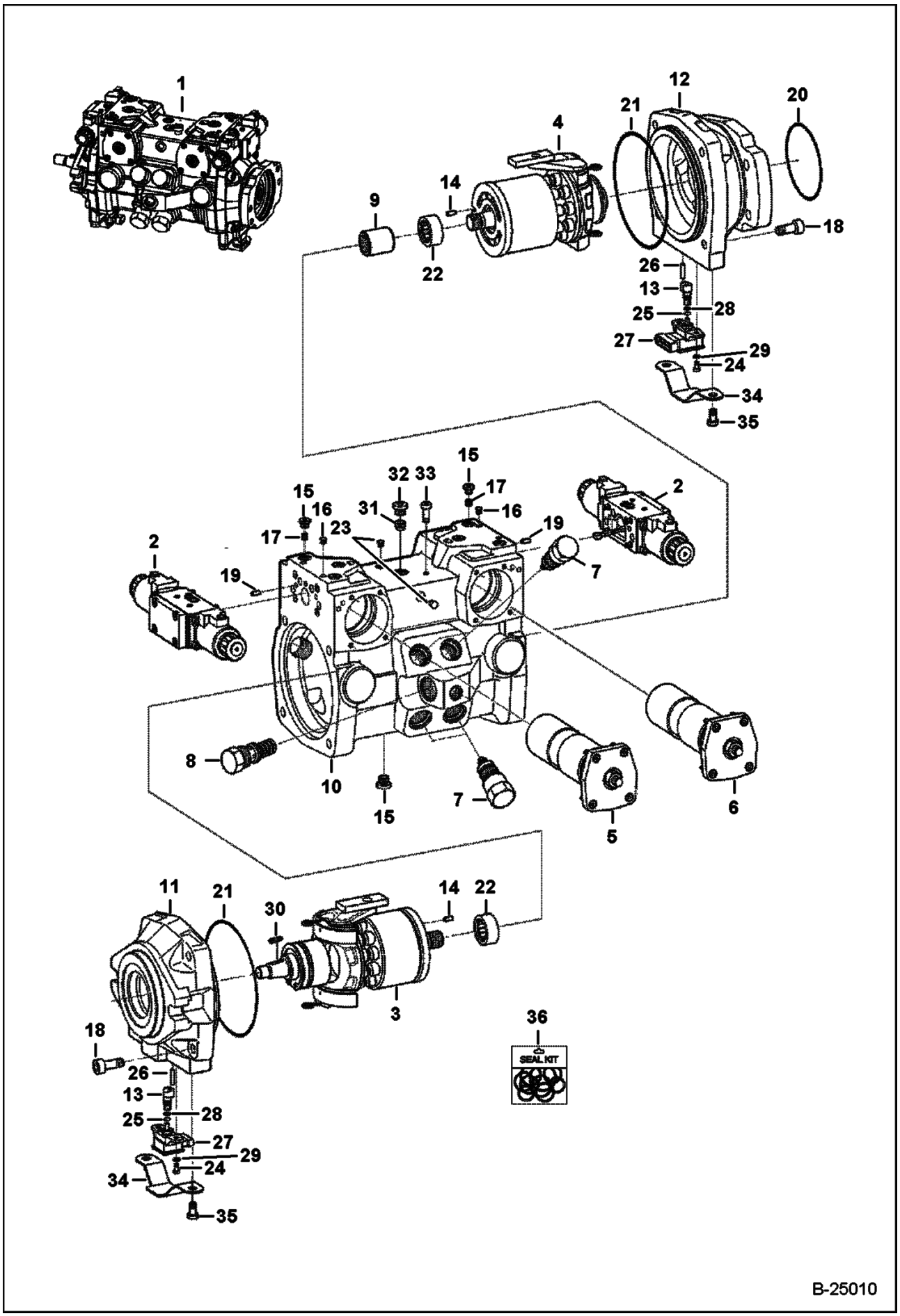

Page 152 - OSS# 2071408 - All rights reserved by Bobcat Company - 12/04/2009 - 07:23:36 - Produced by Ken Cook Co. with mediaioff

HYDROSTATIC PUMP (Cont'd)
(Selectable Joystick Controls)

Ref No	Part Number	Description	Remarks	Serial Number	Qty
25	6687990	RING			2
26	6688014	PIN			2
27	6687984	SENSOR, PUMP HYD POSITION	Model R902095064 - use W/ 7139761 harness		2
27	7008115	SENSOR	Model R902136745 - use W/ 7169309 harness		2
28	6688007	SEAL			2
29	6687998	SHIM			4
30	6J807	WOODRUFF KEY	Was 6687991 [A]		1
31	6687988	FILTER			1
32	6682877	PLUG	Was 6688015 [A]		1
33	6687992	SCREW			1
34	7131322	COVER	Was 6687993 [C]		2
35	6688003	SCREW			4
36	6689021	SEAL KIT	complete		1

Page 153 - OSS# 2071408 - All rights reserved by Bobcat Company - 12/04/2009 - 07:23:36 - Produced by Ken Cook Co. with mediaioff

HYDROSTATIC PUMP
(Rotary Group - LH)
(SJC)

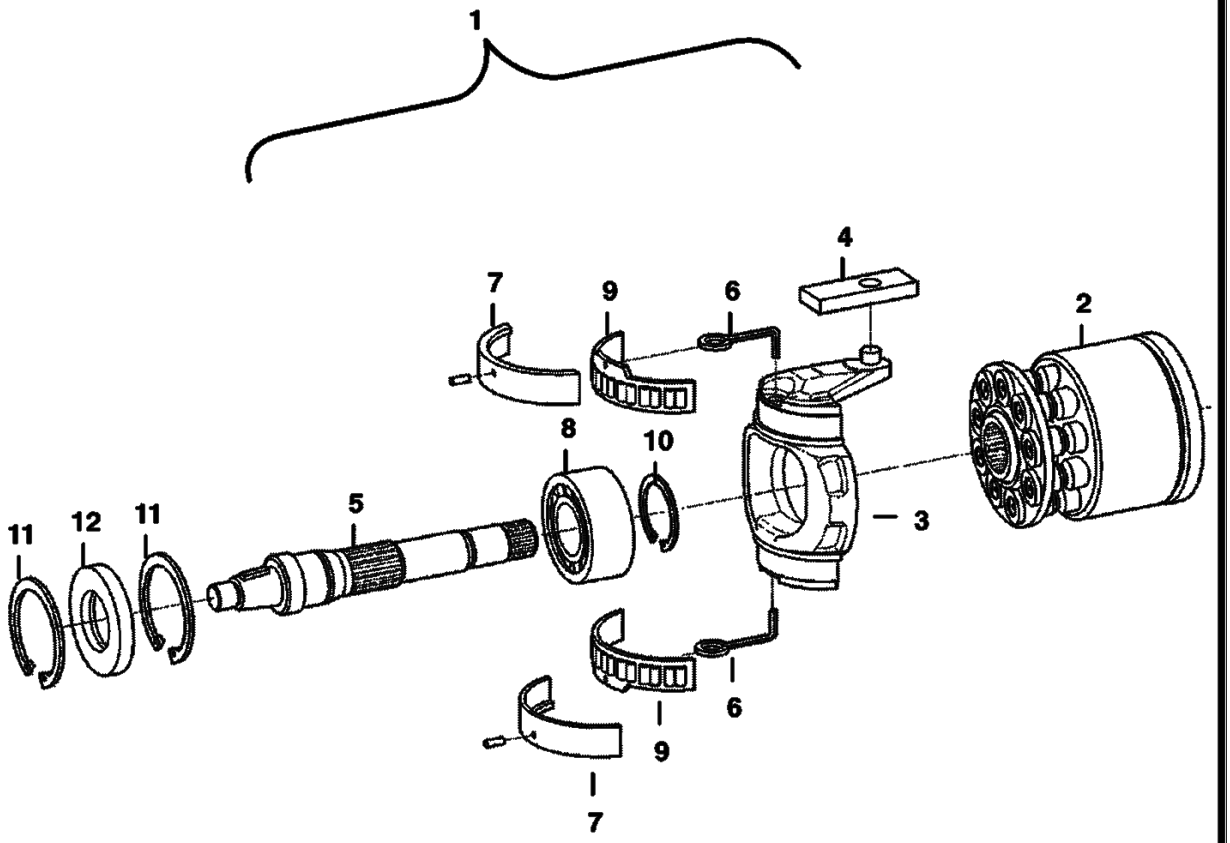

Page 154 - OSS# 2071408 - All rights reserved by Bobcat Company - 12/04/2009 - 07:23:36 - Produced by Ken Cook Co. with mediaioff

HYDROSTATIC PUMP (Cont'd)
(Rotary Group - LH)
(SJC)

Ref No	Part Number	Description	Remarks	Serial Number	Qty
1	6687957	GROUP, ROTATING	LH rotation - model R902095064		1
1	7008807	GROUP, ROTATING	LH rotation - model R902136745		1
2	6687977	GROUP, ROTARY	model R902095064		1
2	6687979	GROUP, ROTARY			1
2	6687976	PLATE			1
2	6693869	ROTARY GRP	model R902136745		1
3	6687951	SWASHPLATE	model R902095064		1
3	7008117	SWASHPLATE	model R902136745		1
4	6687940	PLATE			1
5	6687959	SHAFT			1
6	6687930	WIRE			2
7	6687956	BEARING			1
8	6688018	BEARING			1
9	6687987	BEARING	model R902095064		1
9	7008118	BEARING	model R902136745		1
10	6687999	RING, SNAP			1
11	6671741	SNAP RING	Was 6688042 [A]		2
12	6671742	SEAL	model R902095064		1
12	6693876	SEAL, SHAFT	model R902136745		1

Page 155 - OSS# 2071408 - All rights reserved by Bobcat Company - 12/04/2009 - 07:23:36 - Produced by Ken Cook Co. with mediaioff

HYDROSTATIC PUMP
(Rotary Group - RH)
(Selectable Joystick Controls)

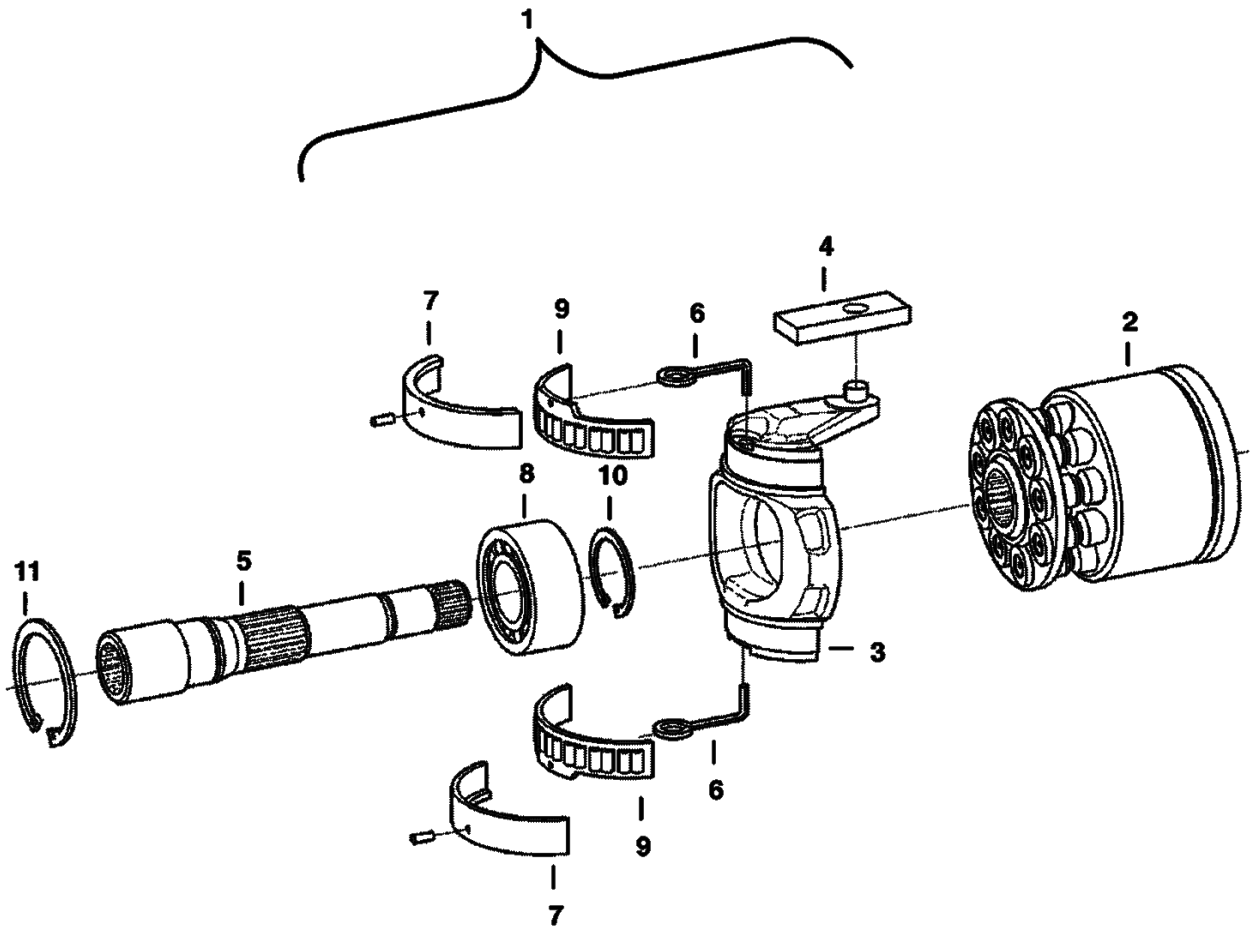

Page 156 - OSS# 2071408 - All rights reserved by Bobcat Company - 12/04/2009 - 07:23:36 - Produced by Ken Cook Co. with mediaioff

HYDROSTATIC PUMP (Cont'd)
(Rotary Group - RH)
(Selectable Jovstick Controls)

Ref No	Part Number	Description	Remarks	Serial Number	Qty
1	6687958	GROUP	RH rotation - model R902095064		1
1	7008106	GROUP ROTATING RH	RH rotation - model R902136745		1
2	6687978	GROUP	model R902095064		1
2	6687979	GROUP, ROTARY			1
2	6687975	PLATE			1
2	6693869	ROTARY GRP	model R902136745		1
3	6687951	SWASHPLATE	model R902095064		1
3	7008117	SWASHPLATE	model R902136745		1
4	6687940	PLATE			1
5	6687943	SHAFT			1
6	6687930	WIRE			2
7	6687956	BEARING			1
8	6688018	BEARING			1
9	6687987	BEARING	model R902095064		1
9	7008118	BEARING	model R902136745		1
10	6687999	RING, SNAP			1
11	6671741	SNAP RING	Was 6688042 [A]		2

Page 157 - OSS# 2071408 - All rights reserved by Bobcat Company - 12/04/2009 - 07:23:36 - Produced by Ken Cook Co. with mediaioff

HYDROSTATIC PUMP
(Control)
(Selectable Jovstick Controls)

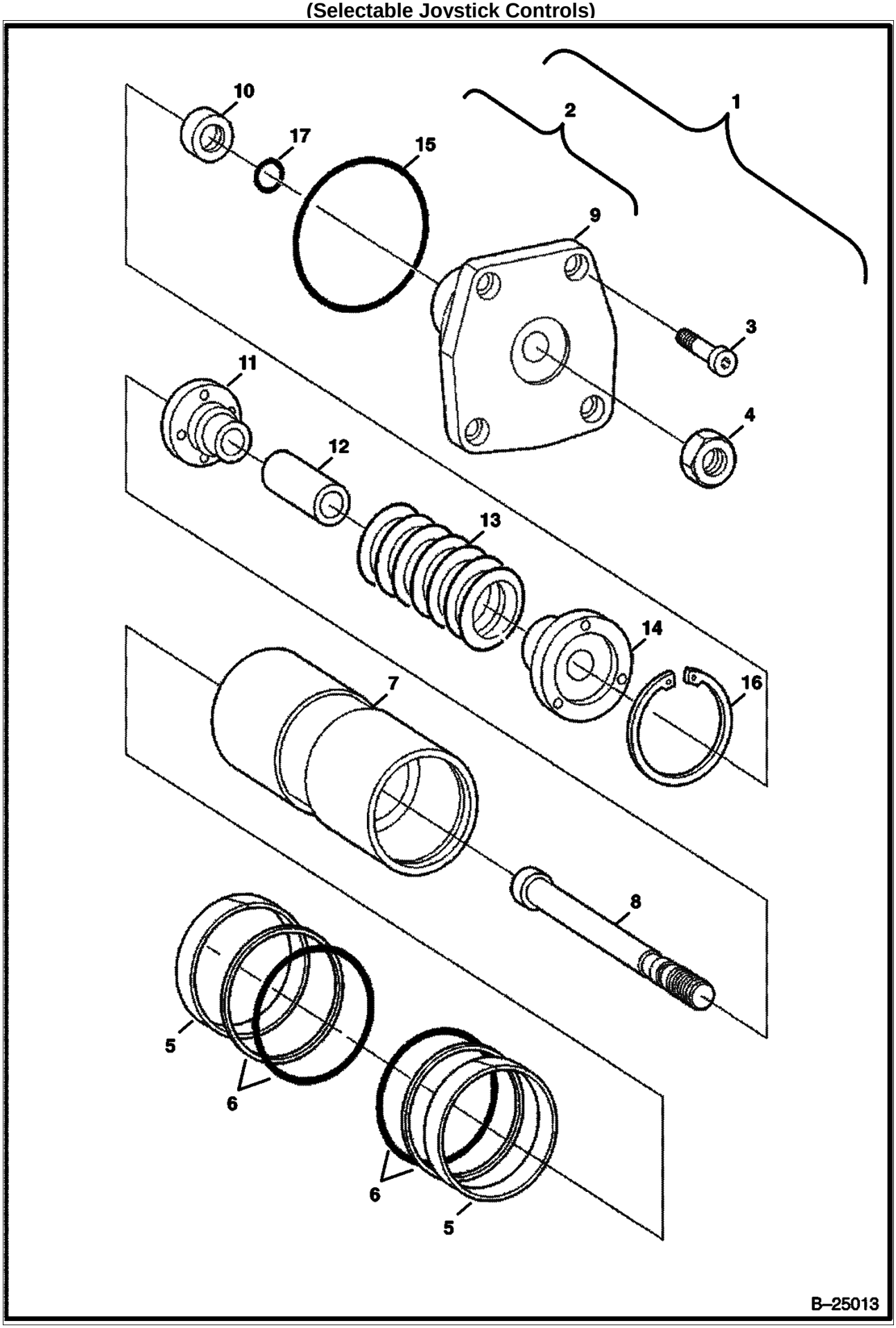

Page 158 - OSS# 2071408 - All rights reserved by Bobcat Company - 12/04/2009 - 07:23:36 - Produced by Ken Cook Co. with mediaioff

HYDROSTATIC PUMP (Cont'd)
(Control)
(Selectable Jovstick Controls)

Ref No	Part Number	Description	Remarks	Serial Number	Qty
1	6687960	CONTROL	model R902095064		1
1	7008107	CONTROL	model R902136745		1
2	6687962	PISTON			1
3	6682968	SCREW	Was 6687995 [A]		4
4	6674907	NUT			1
5	6687985	RING	model R902095064		2
5	7008119	RING	model R902136745		2
6	6687986	KIT			2
7		PISTON	NAP - Order 6687961 - Was 6687953 [A]		1
8	6688031	ROD			1
9	6671760	COVER	Was 6688024 [A]		1
10	6688037	RING	6,70 mm		1
10	6682902	RING	6,75 mm - Was 6688036 [A]		1
10	6682901	RING	6,80 mm - Was 6688035 [A]		1
10	6688025	RING	6,85 mm		1
10	6688026	RING	6,90 mm		1
10	6688027	RING	6,95 mm		1
10	6688028	RING	7,00 mm		1
10	6671803	RING	7,05 mm - Was 6688029 [A]		1
10	6688030	RING	7,10 mm		1
11	6687926	COLLAR			1
12	6688033	SPACER	54,60 cm		1
12	6687942	SPACER	54,65 cm		1
12	6688032	SPACER	54,70 cm		1
12	6687948	SPACER	54,75 cm		1
12	6687949	SPACER	54,80 cm		1
13	6687928	SPRING			1
14	6674215	COLLAR	Was 6687927 [A]		1
15	6688005	SEAL			1
16	6688002	RING			1
17	6682913	O-RING	Was 6688006 [A]		1

Page 159 - OSS# 2071408 - All rights reserved by Bobcat Company - 12/04/2009 - 07:23:36 - Produced by Ken Cook Co. with mediaioff

HYDROSTATIC PUMP
(Control)
(Selectable Jovstick Controls)

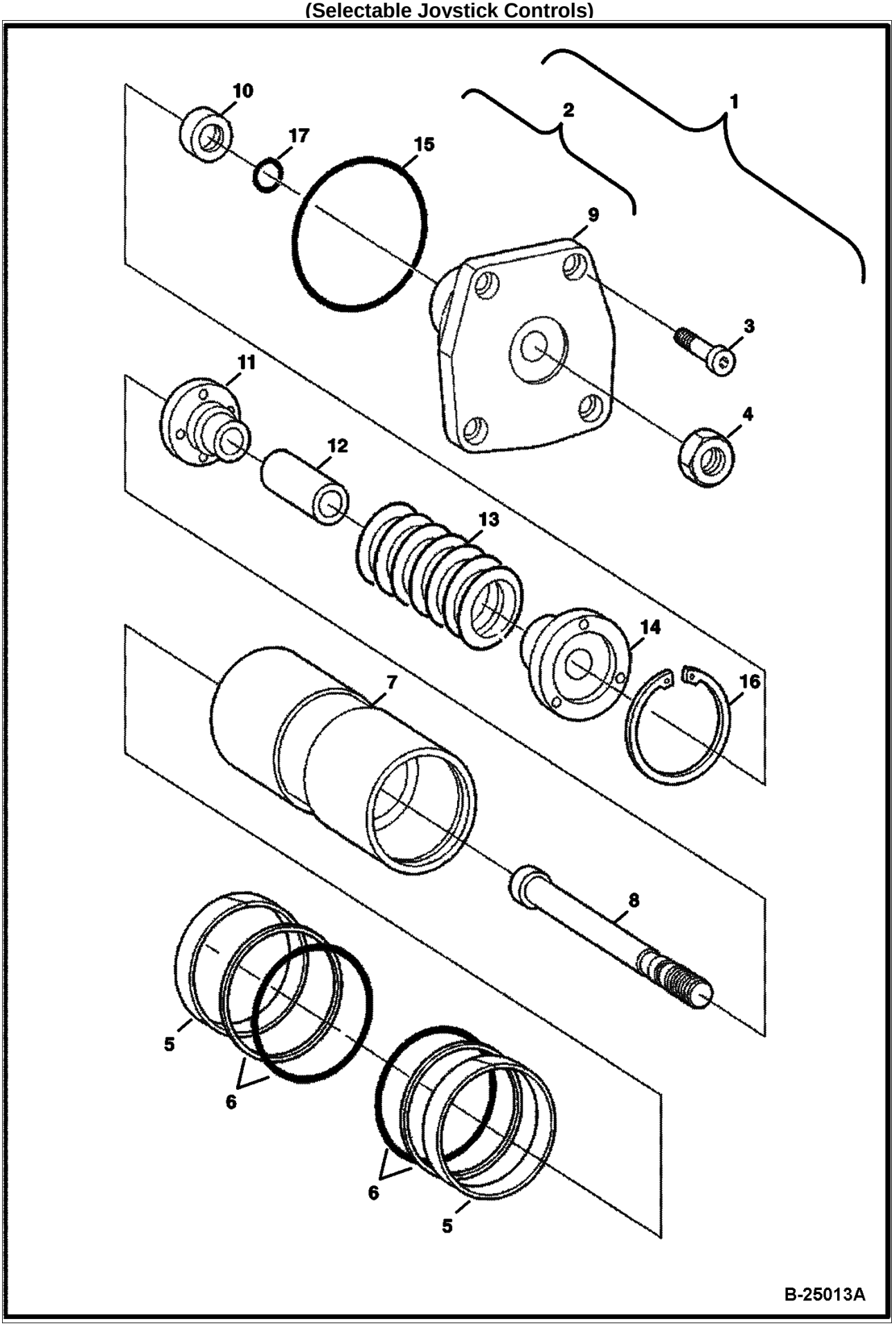

Page 160 - OSS# 2071408 - All rights reserved by Bobcat Company - 12/04/2009 - 07:23:36 - Produced by Ken Cook Co. with mediaioff

HYDROSTATIC PUMP (Cont'd)
(Control)
(Selectable Jovstick Controls)

Ref No	Part Number	Description	Remarks	Serial Number	Qty
1	6687961	CONTROL	model R902095064		1
1	7008108	CONTROL	model R902136745		1
2	6687963	PISTON			1
3	6682968	SCREW	Was 6687995 [A]		4
4	6674907	NUT			1
5	6687985	RING	model R902095064		2
5	7008119	RING	model R902136745		2
6	6687986	KIT			2
7	6687953	PISTON	model R902095064		1
7		PISTON	NAP - Order 7008108 - model R902136745 - Was 6687952 [A]		1
8	6688031	ROD			1
9	6671760	COVER	Was 6688024 [A]		1
10	6688037	RING	6,70 mm		1
10	6682902	RING	6,75 mm - Was 6688036 [A]		1
10	6682901	RING	6,80 mm - Was 6688035 [A]		1
10	6688025	RING	6,85 mm		1
10	6688026	RING	6,90 mm		1
10	6688027	RING	6,95 mm		1
10	6688028	RING	7,00 mm		1
10	6671803	RING	7,05 mm - Was 6688029 [A]		1
10	6688030	RING	7,10 mm		1
11	6687926	COLLAR			1
12	6688033	SPACER	54,60 cm		1
12	6687942	SPACER	54,65 cm		1
12	6688032	SPACER	54,70 cm		1
12	6687948	SPACER	54,75 cm		1
12	6687949	SPACER	54,80 cm		1
13	6687928	SPRING			1
14	6674215	COLLAR	Was 6687927 [A]		1
15	6688005	SEAL			1
16	6688002	RING			1
17	6682913	O-RING	Was 6688006 [A]		1

Page 161 - OSS# 2071408 - All rights reserved by Bobcat Company - 12/04/2009 - 07:23:36 - Produced by Ken Cook Co. with mediaioff

HYDROSTATIC PUMP
(High Pressure Relief Valve)
(Selectable Joystick Controls)

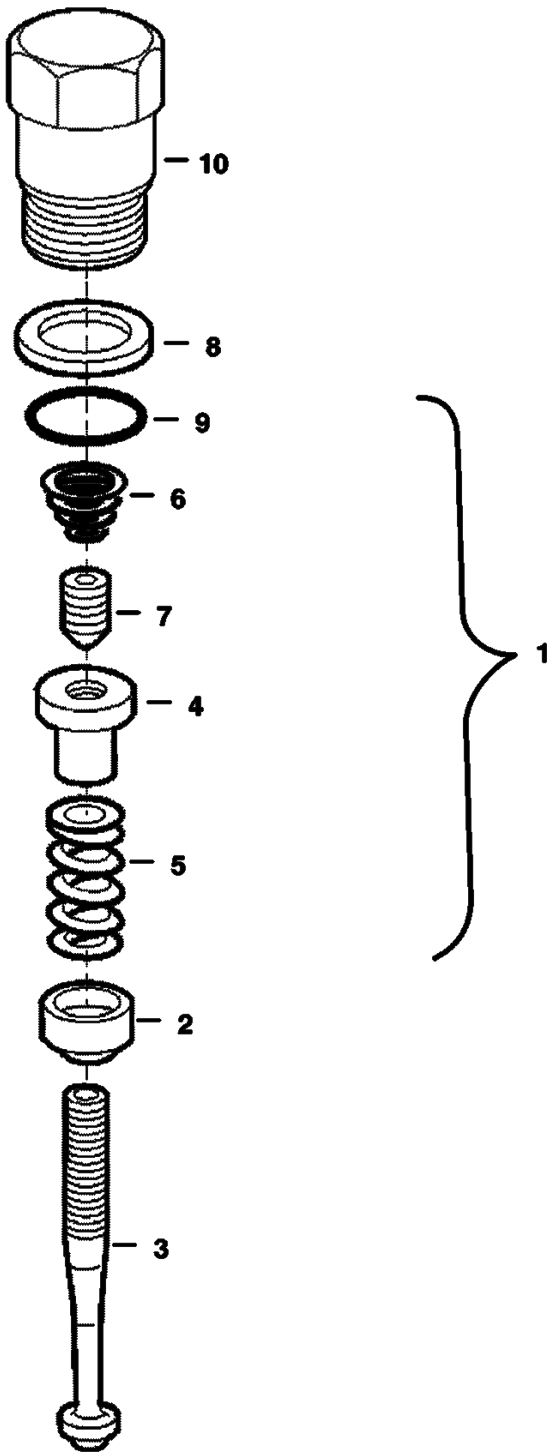

Page 162 - OSS# 2071408 - All rights reserved by Bobcat Company - 12/04/2009 - 07:23:36 - Produced by Ken Cook Co. with mediaioff

HYDROSTATIC PUMP (Cont'd)
(High Pressure Relief Valve)
(Selectable Jovstick Controls)

Ref No	Part Number	Description	Remarks	Serial Number	Qty
1	6692332	VALVE,RELIEF	preset at 350 bar - Was 6687924 - model R902095064 [A]		1
1	7008124	VALVE, RELIEF	model R902136745		1
2	6687921	COLLAR			1
3	6967523	SPINDLE	Was 6687920 [A]		1
4		NUT	NAP - Was 6687922 [A]		1
5	6967525	SPRING	Was 6688043 [A]		1
6	6967526	SPRING	Was 6688021 [A]		1
7	6967527	PIN	Was 6687923 [A]		1
8	6682930	O-RING	Was 6688041 [A]		1
9	6682929	O-RING	Was 6688000 [A]		1
10	6688034	SCREW			1

Page 163 - OSS# 2071408 - All rights reserved by Bobcat Company - 12/04/2009 - 07:23:36 - Produced by Ken Cook Co. with mediaioff

HYDROSTATIC PUMP
(Charge Pressure Relief Valve)
(Selectable Joystick Controls)

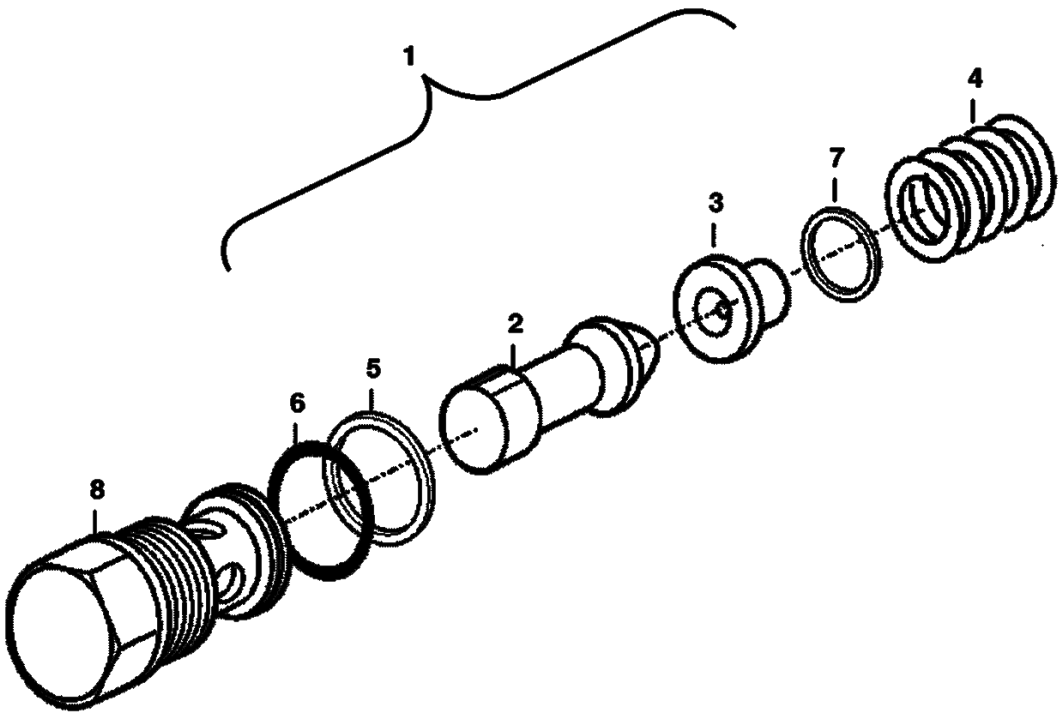

B–25015

Page 164 - OSS# 2071408 - All rights reserved by Bobcat Company - 12/04/2009 - 07:23:36 - Produced by Ken Cook Co. with mediaioff

HYDROSTATIC PUMP (Cont'd)
(Charge Pressure Relief Valve)
(Selectable Jovstick Controls)

Ref No	Part Number	Description	Remarks	Serial Number	Qty
1	6687938	VALVE			1
2	6967534	PISTON	Was 6688022 [A]		1
3	6967535	COLLAR	Was 6687919 [A]		1
4	6967536	SPRING	Was 6688023 [A]		1
5		RING	NAP - Was 6687983 [A]		1
6	6682936	O-RING	Was 6688013 [A]		1
7	6688017	SHIM	0,3 mm		1
7	7008766	SHIM	0.5 mm		1
7	7008767	SHIM	1.0 mm		1
8	6687939	SCREW			1

Page 165 - OSS# 2071408 - All rights reserved by Bobcat Company - 12/04/2009 - 07:23:36 - Produced by Ken Cook Co. with mediaioff

HYDROSTATIC PUMP
(Control Module)
(Selectable Joystick Controls)

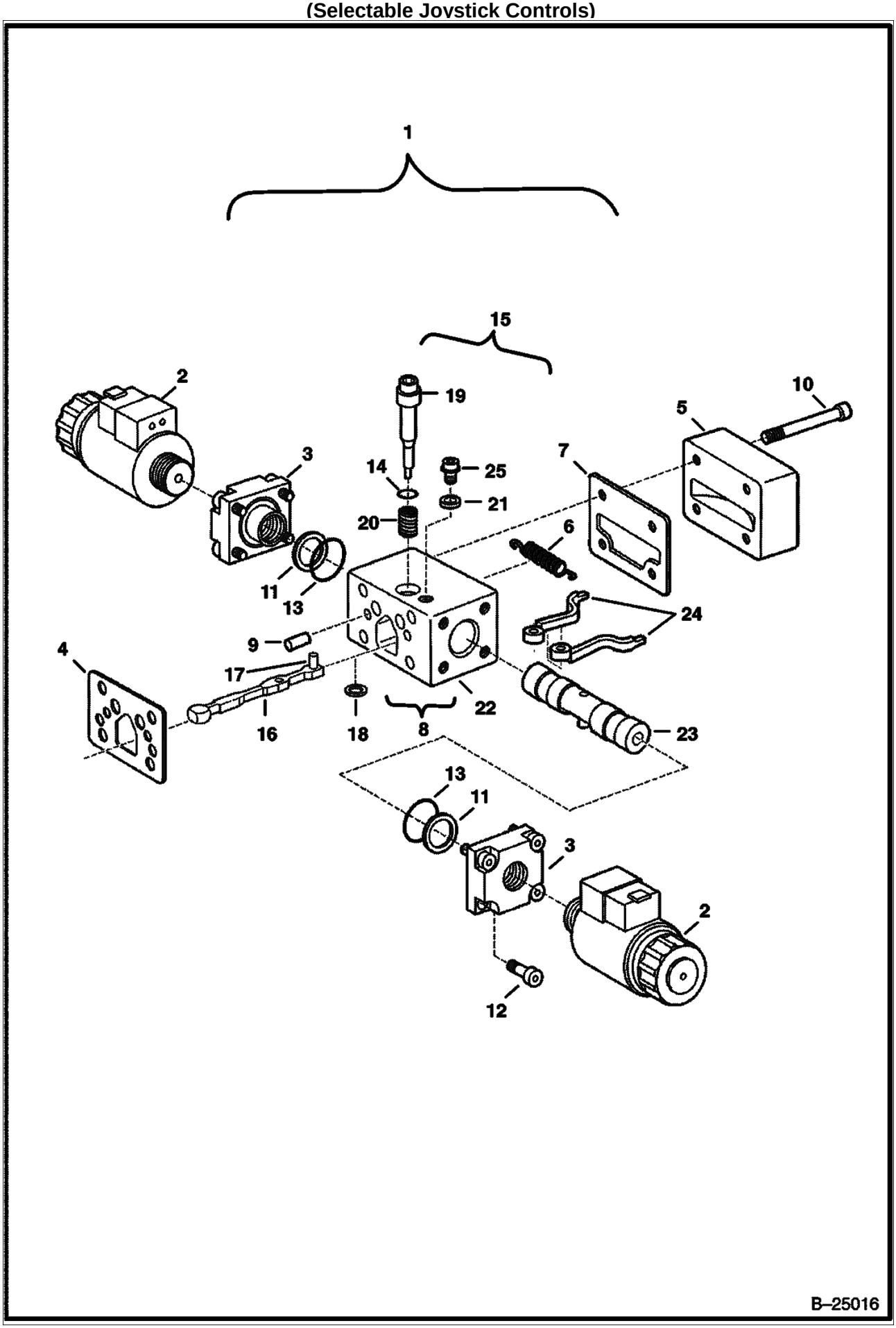

Page 166 - OSS# 2071408 - All rights reserved by Bobcat Company - 12/04/2009 - 07:23:36 - Produced by Ken Cook Co. with mediaioff

HYDROSTATIC PUMP (Cont'd)
(Control Module)
(Selectable Jovstick Controls)

Ref No	Part Number	Description	Remarks	Serial Number	Qty
1	6687970	MODULATOR	Ref. 2-25 - models R902095064		2
1	7008109	MODULE, CONTROL	Ref. 2-25 - model R902136745		2
2	6687989	SOLENOID	model R902095064		2
2	6697960	SOLENOID	model R902136745		2
3	6687931	BUSHING			2
4	6687954	GASKET	model R902095064		1
4	7008806	GASKET	model R902136745 - Was 7008121 [A]		1
5	6687969	COVER	model R902095064		1
5	7008122	COVER	model R902136745		1
6	6687967	SPRING			1
7	6687950	GASKET	model R902095064		1
7	7008123	GASKET	model R902136745		1
8		MODULE	NAP - Order components - Ref. 15-18 - model R902095064 - Was 6687972		1
8		MODULE	NAP - model R902136745 - Ref. 15-18 - Order components - Was 7008120 [A]		1
9	6688010	PIN			2
10	6687996	SCREW			4
11	6687982	SPRING			2
12	6687997	SCREW			8
13	6688001	SEAL			2
14	6688004	SEAL			1
15		ROLLER	NAP - Ref. 14 & 19-25 - Order components - Was 6687971 [A]		1
16	6687929	LEVER			1
17	6688012	ROLLER			1
18	6687944	SHIM	0,60 mm		1
18	6687933	SHIM	0,80 mm		1
18	6687934	SHIM	1,00 mm		1
18	6687935	SHIM	1,20 mm		1
18	6687936	SHIM	1,40 mm		1
18	6687937	SHIM	1,60 mm		1
19	6687947	PIN	model R902095064		1
19		PIN	NAP - Order 7008109 - model R902136745 - Was 7008805 [A]		1
20	6687946	SPRING			1
21	6687945	PLATE			1
22	6687955	HOUSING	model R902095064		1
22		HOUSING	model R902136745 NAP - Order assembly - model - R902136745 - Was 7008803 [A]		1
23	6687966	PISTON			1
24	6687968	LEVER			2
25	6687981	SCREW			1

Page 167 - OSS# 2071408 - All rights reserved by Bobcat Company - 12/04/2009 - 07:23:36 - Produced by Ken Cook Co. with mediaioff

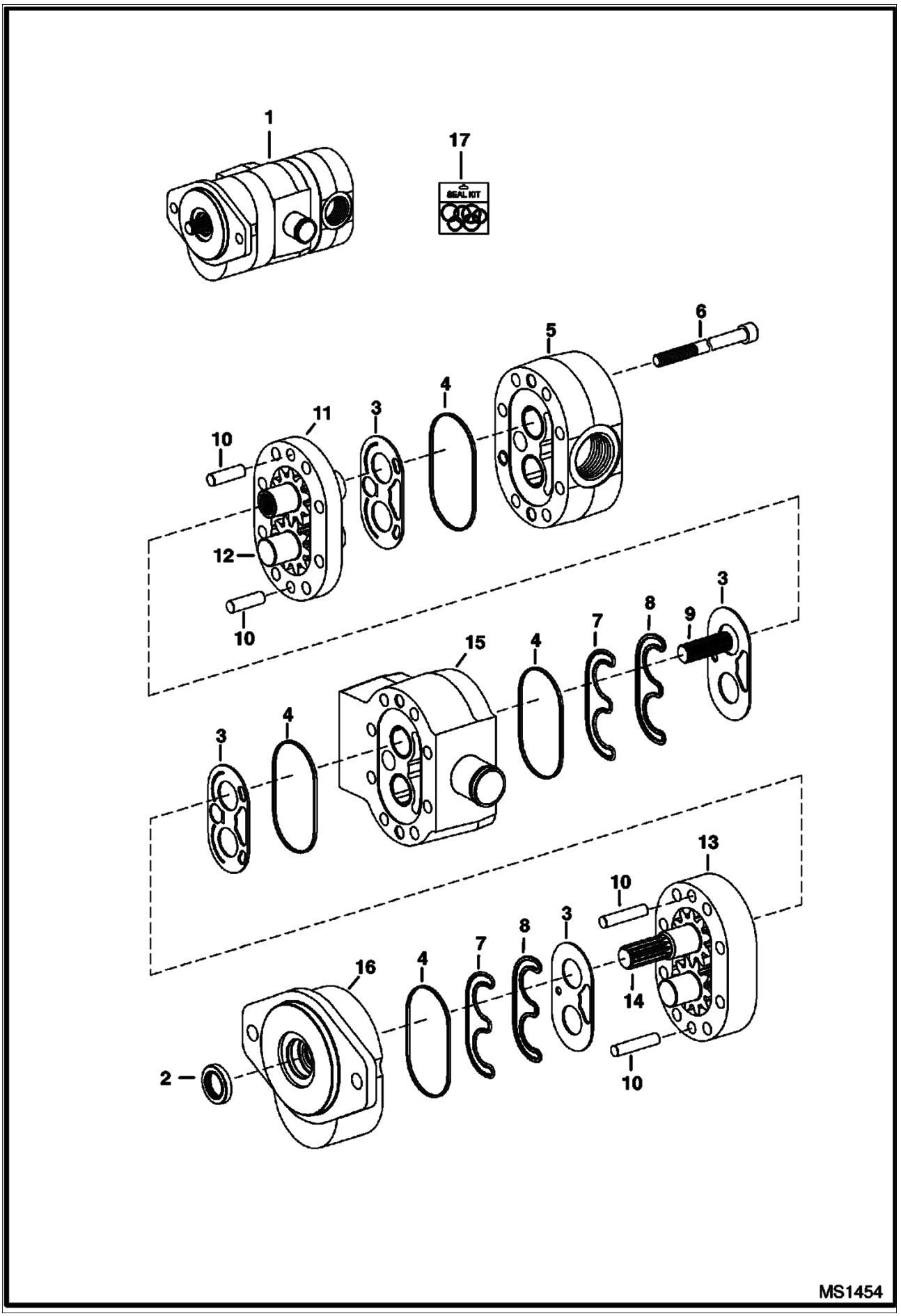

Page 168 - OSS# 2071408 - All rights reserved by Bobcat Company - 12/04/2009 - 07:23:36 - Produced by Ken Cook Co. with mediaioff

Ref No	Part Number	Description	Remarks	Serial Number	Qty
1	6686885	PUMP, GEAR DOUBLE	model 163D71021		1
2		SEAL, SHAFT	NSS		1
3		WEAR PLATE	NSS		6
4		SEAL, SECTION	NSS		6
5		HOUSING, REAR	NSS		1
6		BOLT	NSS		8
7		SEAL, PRE-LOAD	NSS		6
8		SEAL, LOAD	NSS		6
9		CONNECTOR, SPLINE	NSS		2
10		PIN	NSS		6
11		HOUSING, GEAR	NSS - #2		1
12		GEAR SET	NSS - #2		1
13		HOUSING, GEAR	NSS - #1		1
14		GEAR SET	NSS - drive		1
15		HOUSING, CENTER	NSS		1
16		HOUSING, FRONT	NSS		1
17	6687866	KIT, SEAL			1

Page 169 - OSS# 2071408 - All rights reserved by Bobcat Company - 12/04/2009 - 07:23:36 - Produced by Ken Cook Co. with mediaioff

COOLING FAN MOTOR
(Aluminum)
(S/N 530739999 & Below, 530839999 & Below)

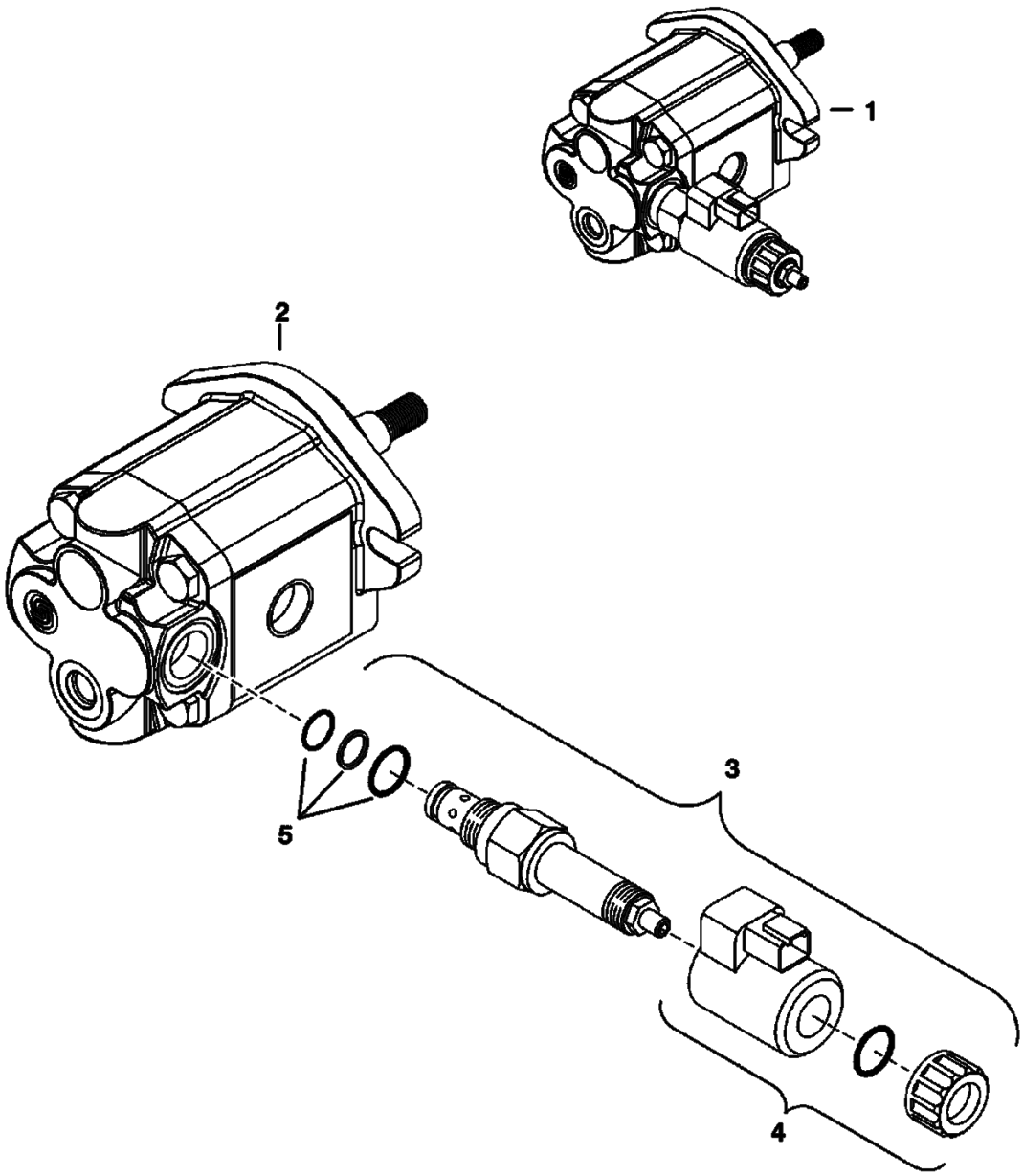

Page 170 - OSS# 2071408 - All rights reserved by Bobcat Company - 12/04/2009 - 07:23:36 - Produced by Ken Cook Co. with mediaioff

COOLING FAN MOTOR (Cont'd)
(Aluminum)
(S/N 530739999 & Below. 530839999 & Below)

Ref No	Part Number	Description	Remarks	Serial Number	Qty
1		MOTOR, HYD COOLING FAN	See BTI384 - NAP - aluminum - W/proportional valve - Was 6687142 [A]		1
1	7010427	KIT, SEAL	includes shaft seal, spacer, snap ring and dust cover		1
2		MOTOR, HYD COOLING FAN	NAP - W/O proportional valve - Order Ref. 1 - Was 6689058 [A]		1
3		VALVE, RELIEF	See BTI384		1
4		COIL ASSY	See BTI384 - round		1
5	6683206	SEAL KIT			1

Page 171 - OSS# 2071408 - All rights reserved by Bobcat Company - 12/04/2009 - 07:23:36 - Produced by Ken Cook Co. with mediaioff

COOLING FAN MOTOR
(Cast Iron)
(S/N 530739999 & Below, 530839999 & Below)

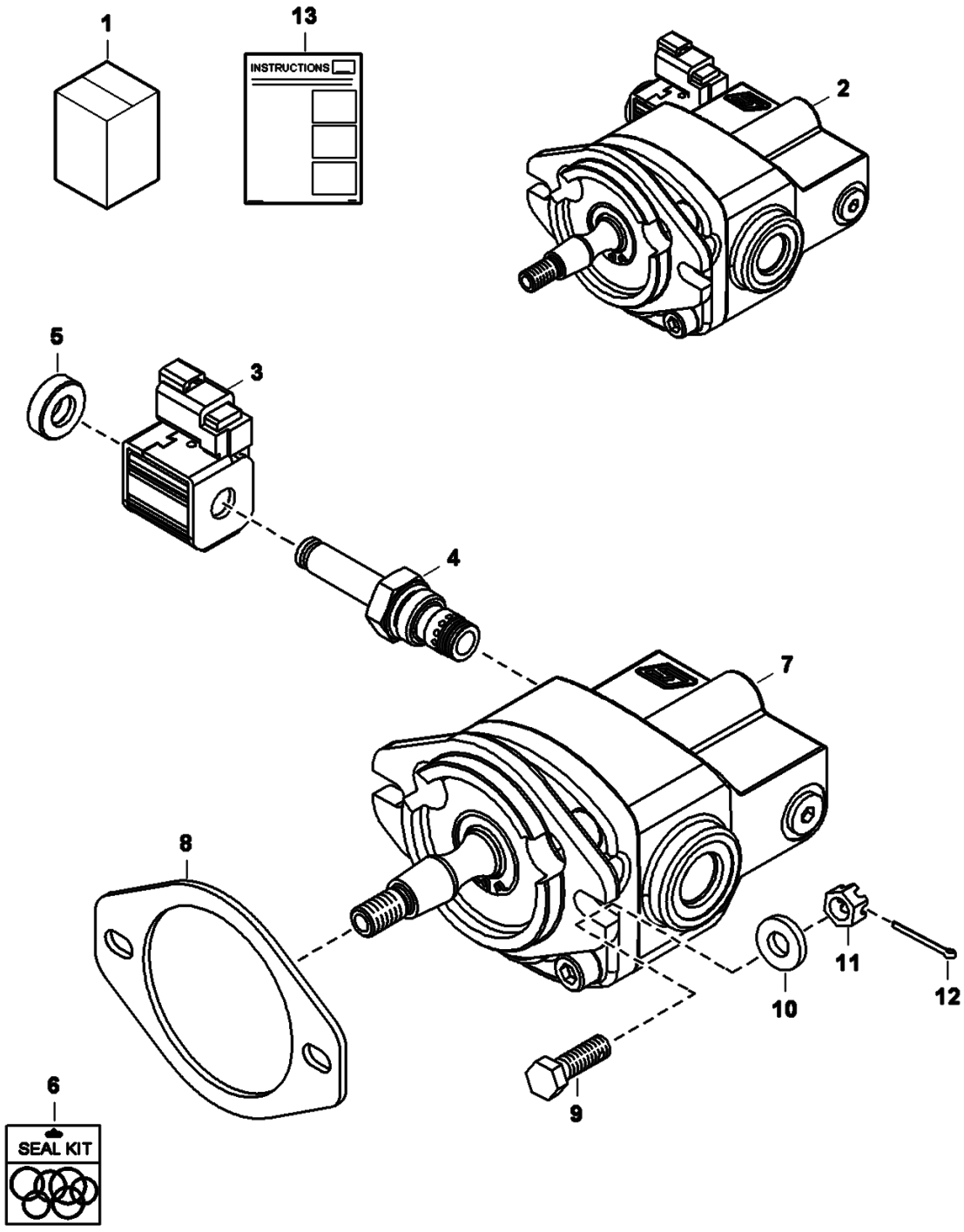

Page 172 - OSS# 2071408 - All rights reserved by Bobcat Company - 12/04/2009 - 07:23:36 - Produced by Ken Cook Co. with mediaioff

COOLING FAN MOTOR (Cont'd)
(Cast Iron)
(S/N 530739999 & Below, 530839999 & Below)

Ref No	Part Number	Description	Remarks	Serial Number	Qty
1		KIT, MOTOR FAN	See BTI384		1
2		MOTOR, HYD COOLING FAN	See BTI384 - cast iron - Ref. 2-8		1
3		COIL	See BTI384 - W/metal cover		1
4		VALVE	See BTI384 - stem - W/Ref. 5		1
5		NUT	W/pre-applied thread locker		1
6		KIT, SEAL	NSS - Order Ref. 1		1
7		MOTOR, HYD COOLING FAN	NSS - Order Ref. 1		1
8	6698062	GASKET, MOTOR			1
9	7147826	BOLT, CROSS DRILLED			2
10	25E17	WASHER 5	.05" thick		2
10	6557831	WASHER	.15" thick		2
11	3D6	NUT			2
12	1F316	PIN			2
13	6986799	INSTRUCTIONS			1

Page 173 - OSS# 2071408 - All rights reserved by Bobcat Company - 12/04/2009 - 07:23:36 - Produced by Ken Cook Co. with mediaioff

COOLING FAN MOTOR
(Cast Iron)
(S/N 530740001 & Above, 530840001 & Above)

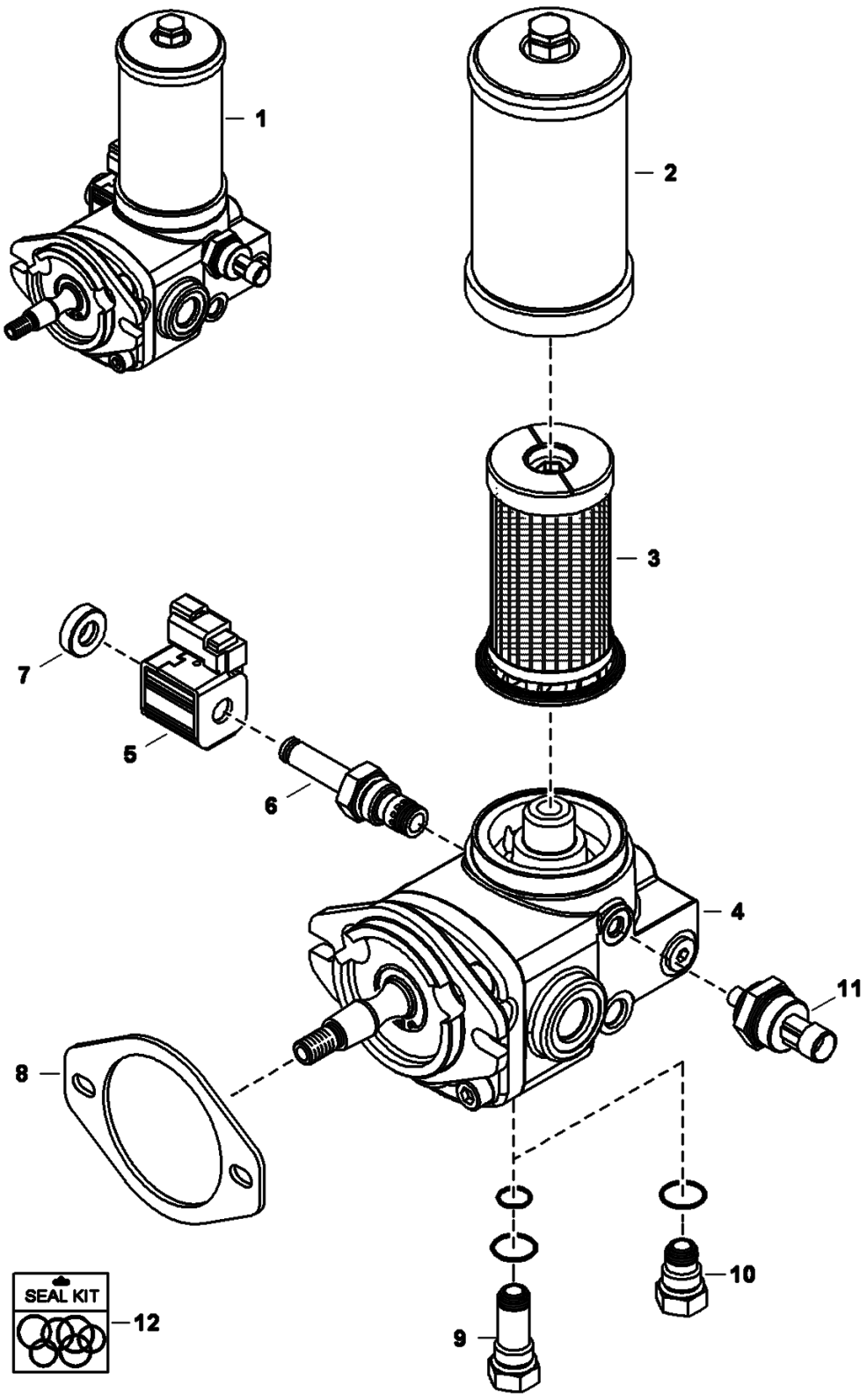

Page 174 - OSS# 2071408 - All rights reserved by Bobcat Company - 12/04/2009 - 07:23:36 - Produced by Ken Cook Co. with mediaioff

COOLING FAN MOTOR (Cont'd)
(Cast Iron)
(S/N 530740001 & Above, 530840001 & Above)

Ref No	Part Number	Description	Remarks	Serial Number	Qty
1	7164320	MOTOR, HYD COOLING FAN	See Illustration COOLING FAN MOTOR/ MS2514 - cast iron - Ref. 2-10 - Also Order (2) of 1F316 cotter pin - Was 7132033 [A]		1
2	6698066	HOUSING, FILTER CARTRIDGE			1
3	6692337	FILTER, HYD CARTRIDGE			1
4		MOTOR	NSS - Order Ref. 1		1
5	6698065	COIL, CPP012H			1
6	6698064	VALVE, AP04G2YR10.8CV	W/Ref. 7		1
6	6698591	KIT, SEAL			1
7	6698352	NUT, COIL SOLENOID			1
8	6698062	GASKET, MOTOR			1
9	7000973	PLUG, MOTOR			1
10	7000974	PLUG, MOTOR			1
11	6674316	SWITCH, PRESS OIL HYD	3-pin molded connector		1
12		KIT, SEAL	NSS - Order Ref. 1		1

Page 175 - OSS# 2071408 - All rights reserved by Bobcat Company - 12/04/2009 - 07:23:36 - Produced by Ken Cook Co. with mediaioff

2-SPEED VALVE

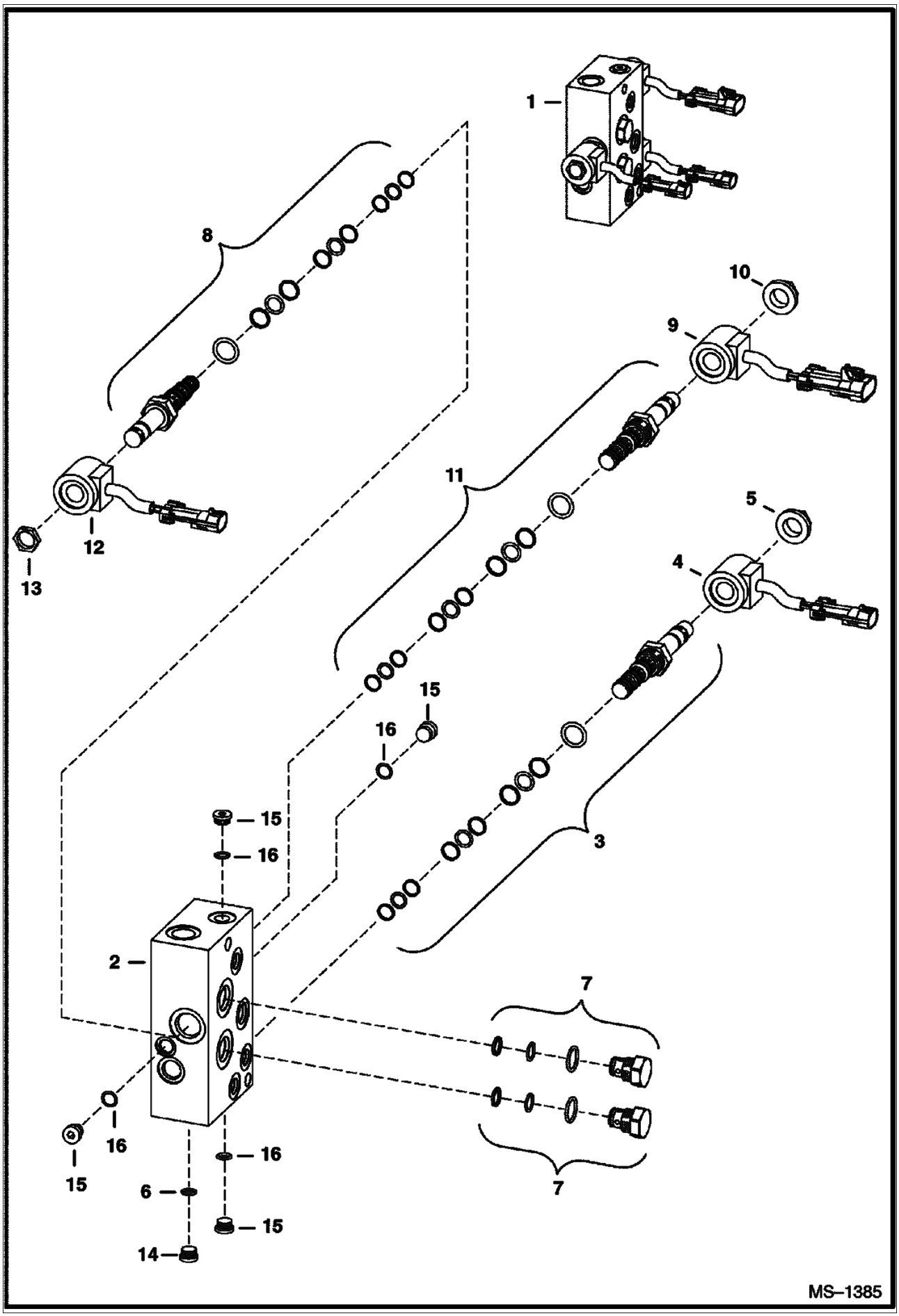

Page 176 - OSS# 2071408 - All rights reserved by Bobcat Company - 12/04/2009 - 07:23:36 - Produced by Ken Cook Co. with mediaioff

Ref No	Part Number	Description	Remarks	Serial Number	Qty
1	6679102	VALVE	assy.		1
2		BLOCK	NSS - Order Ref. 1		1
3	6677982	CARTRIDGE	make up valve - W/Ref. 5		1
3	6672756	SEAL KIT			x
4	6676243	COIL			1
5	6668820	NUT			1
6	75K4	ORING			x
7	6675265	CHECK VALVE			2
7	6669087	SEAL KIT			x
8	6676239	CARTRIDGE	2 Speed - W/Ref. 10		1
8	6673188	SEAL KIT			x
9	6676242	COIL			1
10	6677980	NUT			1
11	6680120	CARTRIDGE	Brake valve - PWM - W/Ref. 13		1
11	6676205	SEAL KIT			x
12	6676244	COIL			1
13	6676247	NUT			1
14	6672762	PLUG	W/Ref. 6		1
15	6677177	PLUG	W/Ref. 16		5
16		O-RING			x

Page 177 - OSS# 2071408 - All rights reserved by Bobcat Company - 12/04/2009 - 07:23:36 - Produced by Ken Cook Co. with mediaioff

HYDROSTATIC OIL FILTER
(In-Line)

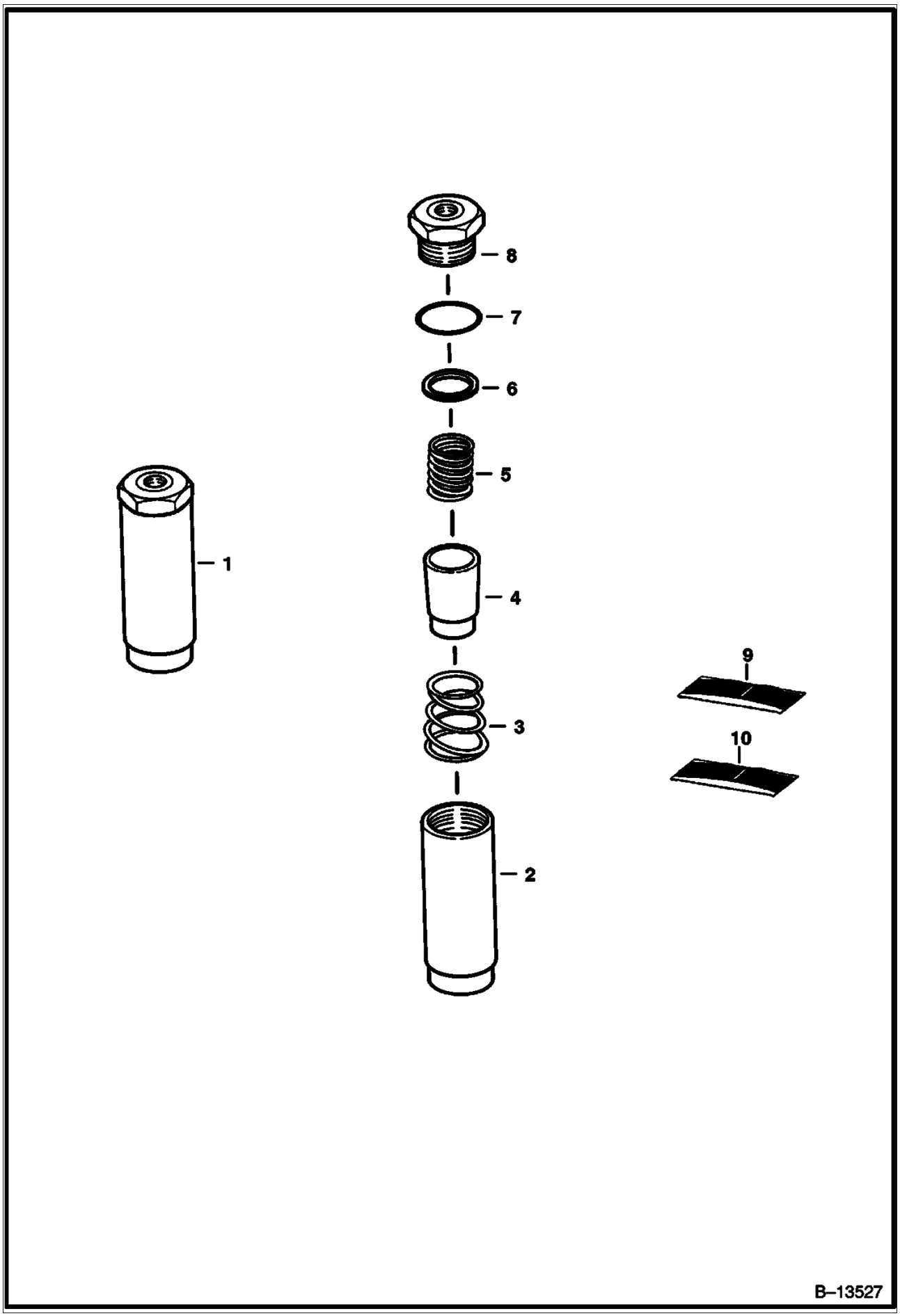

Page 178 - OSS# 2071408 - All rights reserved by Bobcat Company - 12/04/2009 - 07:23:36 - Produced by Ken Cook Co. with mediaioff

HYDROSTATIC OIL FILTER (Cont'd)
(In-Line)

Ref No	Part Number	Description	Remarks	Serial Number	Qty
1	6661022	FILTER	Ref. 2-8		1
2		HOUSING	NSS		1
3		SPRING	NSS		1
4		ELEMENT	NSS		1
5		SPRING	NSS		1
6		GASKET	NSS		1
7		O-RING	NSS		1
8		PLUG	NSS		1
9	6661807	FILTER, OIL HYD	element - Ref. 4, 6 & 7		1
10	6661808	KIT	spring - Ref. 3 & 5		1

Page 179 - OSS# 2071408 - All rights reserved by Bobcat Company - 12/04/2009 - 07:23:36 - Produced by Ken Cook Co. with mediaioff

HYDROSTATIC OIL FILTER

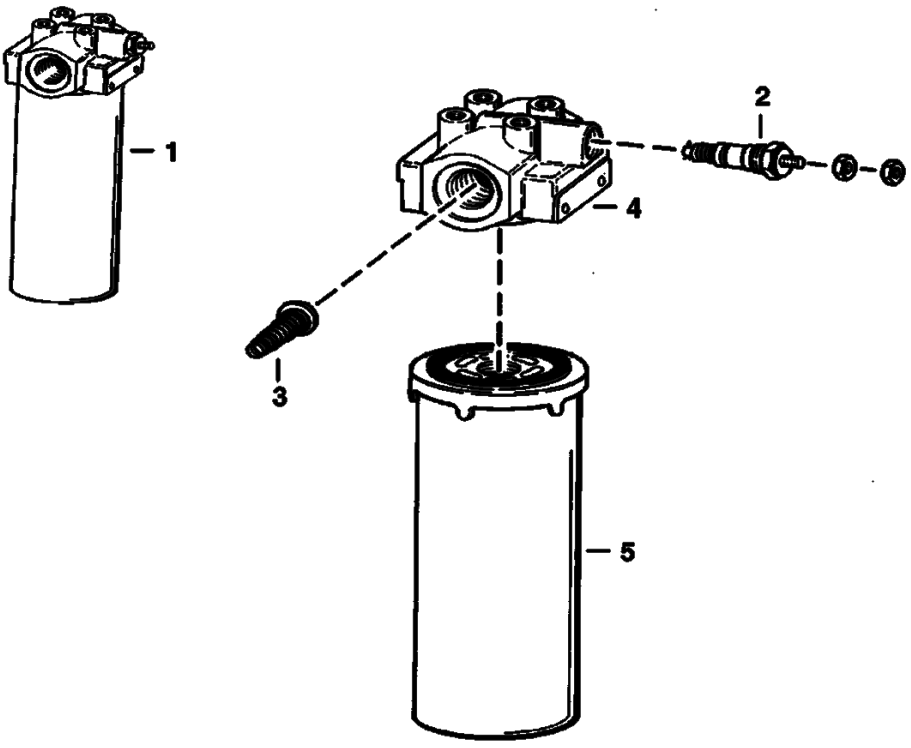

Page 180 - OSS# 2071408 - All rights reserved by Bobcat Company - 12/04/2009 - 07:23:36 - Produced by Ken Cook Co. with mediaioff

Ref No	Part Number	Description	Remarks	Serial Number	Qty
1	6678155	FILTER ASSY	W/Ref. 2-5 - 50 PSI by-pass & switch		1
1	6685847	FILTER ASSY	W/Ref. 2-5 - 50 PSI by-pass & switch - HIGH FLOW		1
1	6687266	FILTER ASSY	W/Ref. 2-5 - 50 PSI by-pass & switch - CHARGE		1
2	6660260	SWITCH	pressure - normally closed		1
2	6599365	KIT	nut, washer & O-rings for switch		1
3		VALVE	NAP - by-pass - 50 PSI - Order Ref. 1		1
4		HEAD	NSS - Order Ref. 1 filter assy.		1
5	6661248	FILTER, OIL HYD 12	6" (152,4mm) long		1
5	6668819	FILTER	9.5" (241,3mm) long - High Flow		1
5	6686926	FILTER, OIL HYD	4.5" (113,5 mm) long - charge		1

Page 181 - OSS# 2071408 - All rights reserved by Bobcat Company - 12/04/2009 - 07:23:36 - Produced by Ken Cook Co. with mediaioff

CAB ELECTRICAL CIRCUITRY

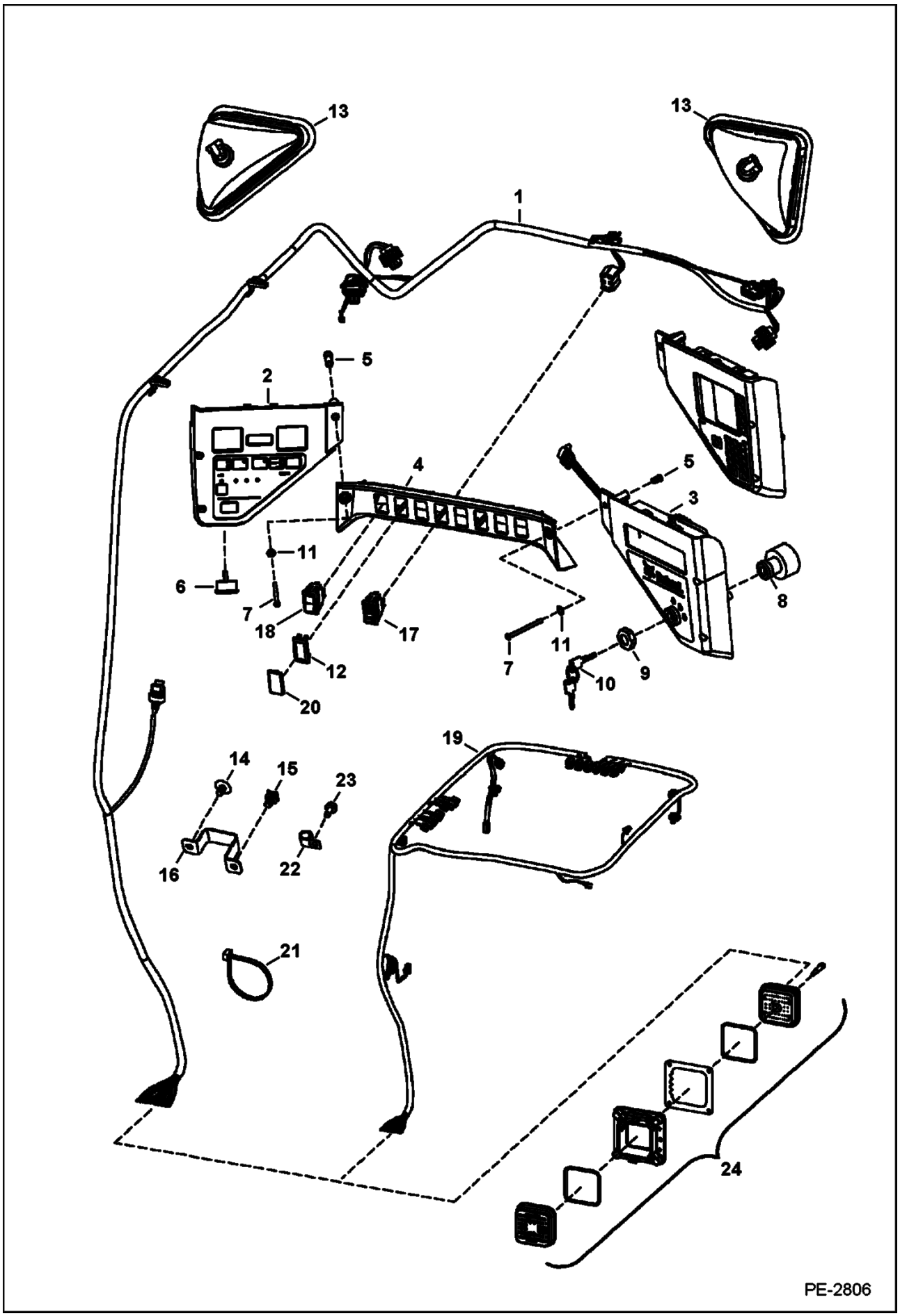

Page 182 - OSS# 2071408 - All rights reserved by Bobcat Company - 12/04/2009 - 07:23:36 - Produced by Ken Cook Co. with mediaioff

Ref No	Part Number	Description	Remarks	Serial Number	Qty
1	7116261	HARNESS	standard - W/Ref. 24	5307 13759 & Bel	1
1	7116261	HARNESS	standard - W/Ref. 24	5308 11510 & Bel	1
1	7143070	HARNESS	standard - W/Ref. 24	5307 13760 & Abv	1
1	7143070	HARNESS	standard - W/Ref. 24	5308 11511 & Abv	1
1	7116260	HARNESS, CAB DLX	deluxe - W/Ref. 24 - required to operate rotating beacon, 4-way flasher, power Bob-Tach, heater, A/C & strobe light	5307 13759 & Bel	1
1	7116260	HARNESS, CAB DLX	deluxe - W/Ref. 24 - required to operate rotating beacon, 4-way flasher, power Bob-Tach, heater, A/C & strobe light	5308 11510 & Bel	1
1	7143071	HARNESS	deluxe - W/Ref. 24 - required to operate rotating beacon, 4-way flasher, power Bob-Tach, heater, A/C & strobe light	5307 13760 & Abv	1
1	7143071	HARNESS	deluxe - W/Ref. 24 - required to operate rotating beacon, 4-way flasher, power Bob-Tach, heater, A/C & strobe light	5308 11511 & Abv	1
2		PANEL	NAP - L.H. - W/Ref. 6 - gauges lit by bulbs - Order 6689754 panel - Was 6688405 [A]		1
2	6689754	PANEL INSTRUMENT LH	LH - W/Ref. 6 - lit guages		1
3	6688404	PANEL, KEY STANDARD	RH - W/Ref. 8 & 9		1
3		PANEL	See Illustration OPERATOR CAB/ PE2820 - R.H. - deluxe - keyless		1
4	6679845	CROSSMEMBER			1
5	6675033	INSERT	threaded		6
6	6679856	ALARM	W/nut		1
7	7105983	BOLT			6
8		SWITCH, IGN	NAP - W/Ref. 9 & 10 - Order 6693245 switch, 6693241 key, 7000329 adapter & 6697965 harness - Was 6679842 [A]		1
8	6693245	SWITCH, IGN	W/Ref. 9 (7009081 nut) - also order Ref. 10 (6693241 key)		1
8	7000329	ADAPTER, SWITCH IGN	for 6693245 switch		1
8	6697965	HARNESS	for 6693245 switch		1
9	6674202	NUT	for NAP 6679842 switch		1
9	7009081	NUT	for 6693245 switch		1
10		KEY	NAP - ignition - includes two keys W/ring - Order 6693241 - Was 6709527 [A]		1
10	6693241	KEY 10	single key W/O ring - use W/NAP 6679842 switch & 6693245 switch		x
11	25E10	WASHER			2
12	6665314	PLUG			x
13		LIGHT ASSY	See Illustration LIGHT KIT/ PE3084 - NAP		1
14	6674895	RETAINER			1
15	6678666	TREE MOUNT	push in - Use W/tie strap		2
16	7138645	BRACKET			1
17	6676536	SWITCH	park brake		1
18	6683812	SWITCH	selectable joystick control		1
19		HARNESS	See Illustration OPERATOR CAB/ PE2820 - deluxe		x
20	6737248	DECAL	warning - joystick controls		1
21	6624289	TIE STRAP			3
22	30H75	CLAMP			1
23	84G3712	BOLT			1
24		CONNECTOR ASSEMBLY	See Illustration CONNECTOR HARNESS ASSEMBLY/ PE3684 - NSS - engine & cab - Order		1

Page 183 - OSS# 2071408 - All rights reserved by Bobcat Company - 12/04/2009 - 07:23:36 - Produced by Ken Cook Co. with mediaioff

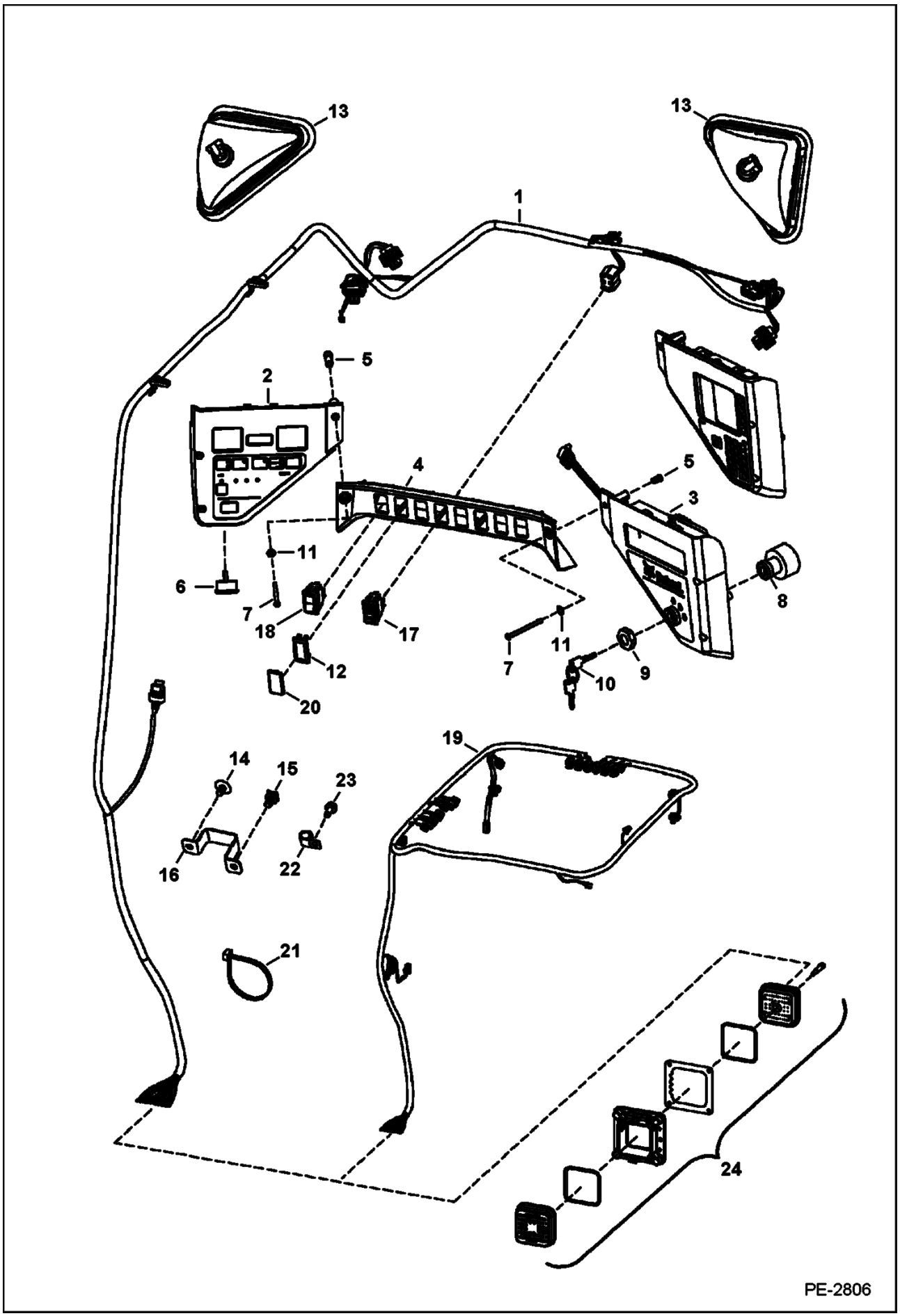

Page 184 - OSS# 2071408 - All rights reserved by Bobcat Company - 12/04/2009 - 07:23:36 - Produced by Ken Cook Co. with mediaioff

Ref No	Part Number	Description	Remarks	Serial Number	Qty
			components		

Page 185 - OSS# 2071408 - All rights reserved by Bobcat Company - 12/04/2009 - 07:23:36 - Produced by Ken Cook Co. with mediaioff

ENGINE ELECTRICAL
(W/Controller)

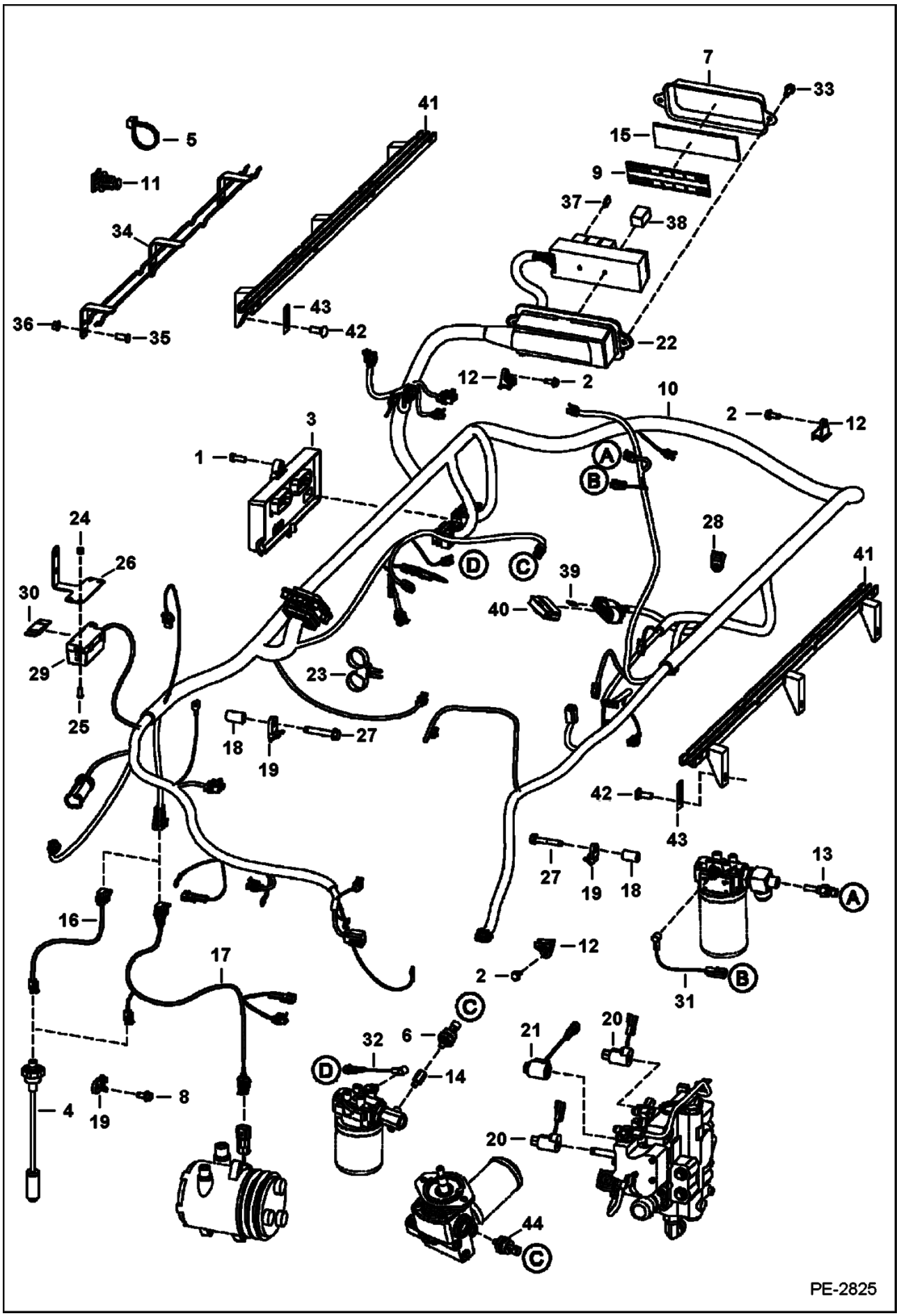

Page 186 - OSS# 2071408 - All rights reserved by Bobcat Company - 12/04/2009 - 07:23:36 - Produced by Ken Cook Co. with mediaioff

ENGINE ELECTRICAL (Cont'd)
(W/Controller)

Ref No	Part Number	Description	Remarks	Serial Number	Qty
1	43C616	BOLT			3
2	84G3112	BOLT 5			3
3	6688439	CONTROLLER, BOBCAT			1
4	6680438	SENSOR, FUEL	W/gasket		1
4	6717579	GASKET			1
5	6624289	TIE STRAP			21
6	6674316	SWITCH, PRESS OIL HYD	3-pin molded connector	5307 13066-39999	1
6	6674316	SWITCH, PRESS OIL HYD	3-pin molded connector	5308 11455-39999	1
7	7176546	COVER, FUSE BOX	fuse box - Was 6716621 [B]		1
7	6736071	KIT	extreme applications - W/decal & insulation		1
8	84G3712	BOLT			1
9	7117407	DECAL	fuse/relay - 2" x 7" (51mm x 178mm)		1
10	7116257	HARNESS, MFR	main frame - W/Ref. 22, 26, 29,30, 37, 38, 39 & 40	5307 12576 & Bel	1
10	7116257	HARNESS, MFR	main frame - W/Ref. 22, 26, 29,30, 37, 38, 39 & 40	5308 11132 & Bel	1
10	7123800	HARNESS LF MFR	main frame - W/Ref. 22, 26, 29,30, 37, 38, 39 & 40	5307 12577 & Abv	1
10	7123800	HARNESS LF MFR	main frame - W/Ref. 22, 26, 29,30, 37, 38, 39 & 40	5308 11133 & Abv	1
11	6678666	TREE MOUNT	push in - Use W/tie strap		10
12	6678818	MOUNT			3
13	6718417	SENDER	hyd temp		1
14	6718948	SNUBBER		5307 13066-39999	1
14	6718948	SNUBBER		5308 11455-39999	1
14	6675278	FILTER			1
15	6731275	INSULATION			1
16	7110159	HARNESS	fuel sender - standard		1
17	7110160	HARNESS	fuel sender - deluxe cab - power bobtach, high flow & A/C		1
18	7101893	SPACER			2
19	6679034	MOUNT			3
20	6678891	COIL	10 volt - W/nut		2
20	6691022	NUT	Was 6690705 [A]		2
21	6675559	COIL	W/diode		1
22	6718659	HOUSING	fuse		1
23	6678668	STRAP, DUAL TIE			2
24	59D4	NUT 5			2
25	25G410	CAPSCREW			2
26	6728621	BRACKET			1
27	84G3736	BOLT			2
28	6678667	MOUNT			2
29	6675154	HOLDER	fuse		1
30	6675155	FUSE	100 amp		1
31	7115893	HARNESS DIFF SWITCH			1
32	6728626	HARNESS		5307 13066-39999	1
32	6728626	HARNESS		5308 11455-39999	1
33	84G3116	SCREW			2
34		BRACKET	NSS - Order Ref. 41 & (3) each of Ref. 42 & 43		2
35	6689032	STUD			6
36	97D6	NUT 10			6
37	6663289	FUSE, 5A	5 amp		x
37	6654806	FUSE, 15A	15 amp		3

Page 187 - OSS# 2071408 - All rights reserved by Bobcat Company - 12/04/2009 - 07:23:36 - Produced by Ken Cook Co. with mediaioff

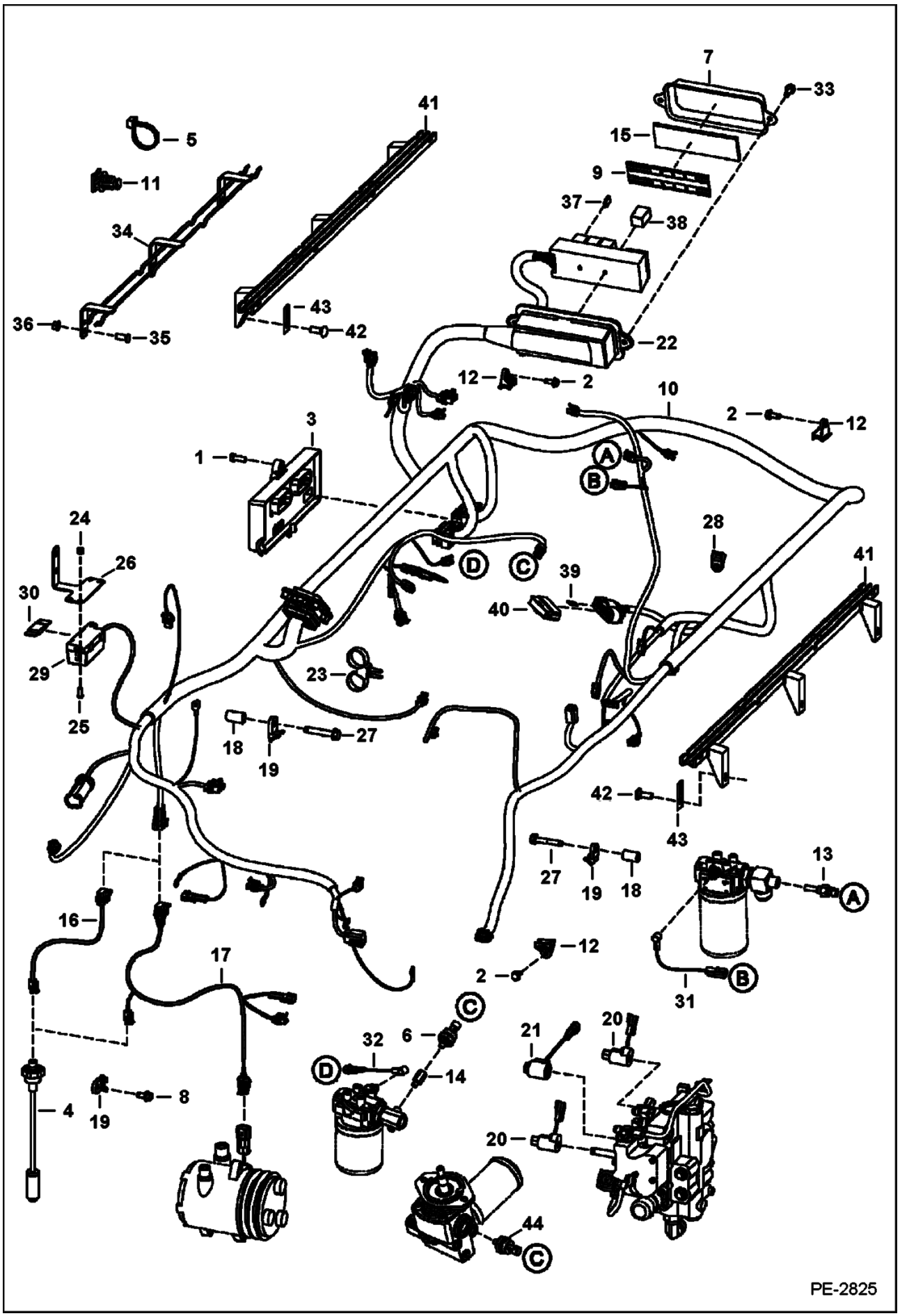

Page 188 - OSS# 2071408 - All rights reserved by Bobcat Company - 12/04/2009 - 07:23:36 - Produced by Ken Cook Co. with mediaioff

Ref No	Part Number	Description	Remarks	Serial Number	Qty
37	6702444	FUSE 25A 5	25 amp		6
37	6718034	FUSE, 30A	30 amp		2
38	6679820	RELAY	switch		8
39	6684415	BUSS BAR			1
40	6684126	COVER			1
41	7131254	BRACKET, MOLDED SKI			2
42	37C620	BOLT			6
43		PLATE, REINFORCEMENT	NAP - Was 6698084 [A]		6
44	6674316	SWITCH, PRESS OIL HYD	3-pin molded connector	5307 40001 & Abv	1
44	6674316	SWITCH, PRESS OIL HYD	3-pin molded connector	5308 40001 & Abv	1

Page 189 - OSS# 2071408 - All rights reserved by Bobcat Company - 12/04/2009 - 07:23:36 - Produced by Ken Cook Co. with mediaioff

ENGINE ELECTRICAL
(Engine)

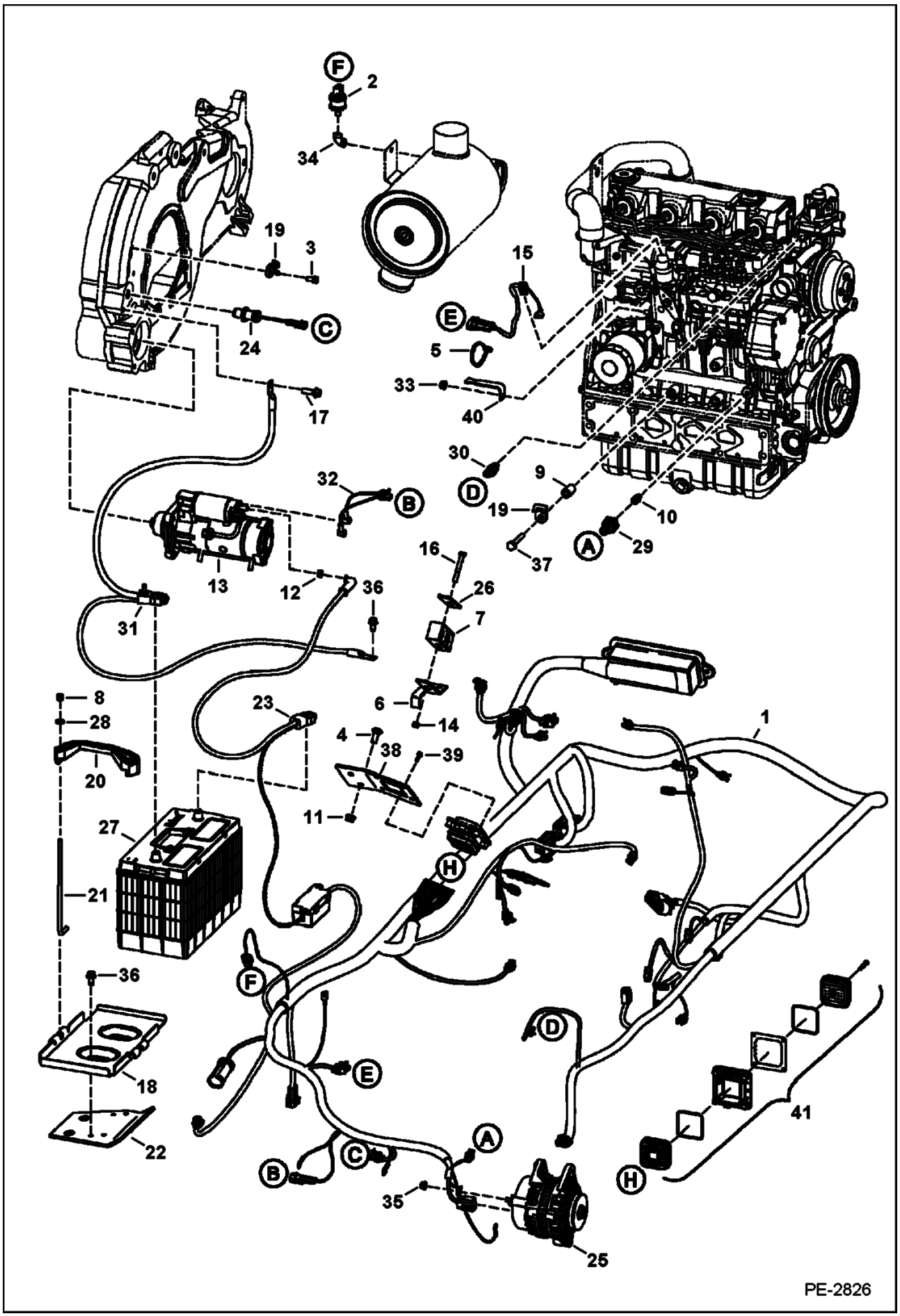

Page 190 - OSS# 2071408 - All rights reserved by Bobcat Company - 12/04/2009 - 07:23:36 - Produced by Ken Cook Co. with mediaIoff

Ref No	Part Number	Description	Remarks	Serial Number	Qty
1	7116257	HARNESS, MFR	main frame	5308 11132 & Bel	1
1	7116257	HARNESS, MFR	main frame	5307 12576 & Bel	1
1	7123800	HARNESS LF MFR	main frame	5307 12577 & Abv	1
1	7123800	HARNESS LF MFR	main frame	5308 11133 & Abv	1
2	6665371	SWITCH	condition indicator		1
3	17C610	BOLT			2
4	37C616	BOLT			2
5	6624289	TIE STRAP			17
6	6715131	BRACKET			1
7	6715197	CLAMP			1
8	59D5	NUT 5			2
9	7101893	SPACER			1
10	7102451	FITTING			1
11	97D6	NUT 10			2
12	4DM10	NUT	starter		1
13		STARTER	See Illustration STARTER/ B16488R		1
14	95D5	NUT			1
15	6736515	HARNESS	fuel shutoff solenoid		1
16	17C540	BOLT			1
17	35C612	BOLT	negative cable ground		1
17	6E6	WASHER		& Bel	1
18	6712536	PAN	battery		1
19	6679034	MOUNT			1
20	6569203	CLAMP	battery		1
21	6576280	BOLT	battery hold down		2
22	7130536	BRACKET, BATTERY	Was 6579989 [A]		1
23	6719141	CABLE POSITIVE			1
24	6684037	SENSOR	rpm		1
25		ALTERNATOR	See Illustration ALTERNATOR/ C3529		1
26	6715132	RETAINER			1
27	6665427	BATTERY, DRY 950 AMP			1
28	25E15	WASHER			2
29	6674315	SENSOR	eng oil pressure		1
30	6718414	SENDER, TEMP ENG			1
31	6727803	CABLE	negative		1
32	6733370	HARNESS			1
33	51DM8	NUT			1
34	24F1	ELBOW	elbow		1
35	43DM8	NUT			1
36	84G3712	BOLT			2
37	2CM1055	SCREW			1
38	7112760	BRACKET			1
39	6688980	BOLT			4
40	7120084	BRACKET			1
41		CONNECTOR ASSEMBLY	See Illustration CONNECTOR HARNESS ASSEMBLY/ PE3684 - NSS - engine & cab - Order components		1

Page 191 - OSS# 2071408 - All rights reserved by Bobcat Company - 12/04/2009 - 07:23:36 - Produced by Ken Cook Co. with mediaioff

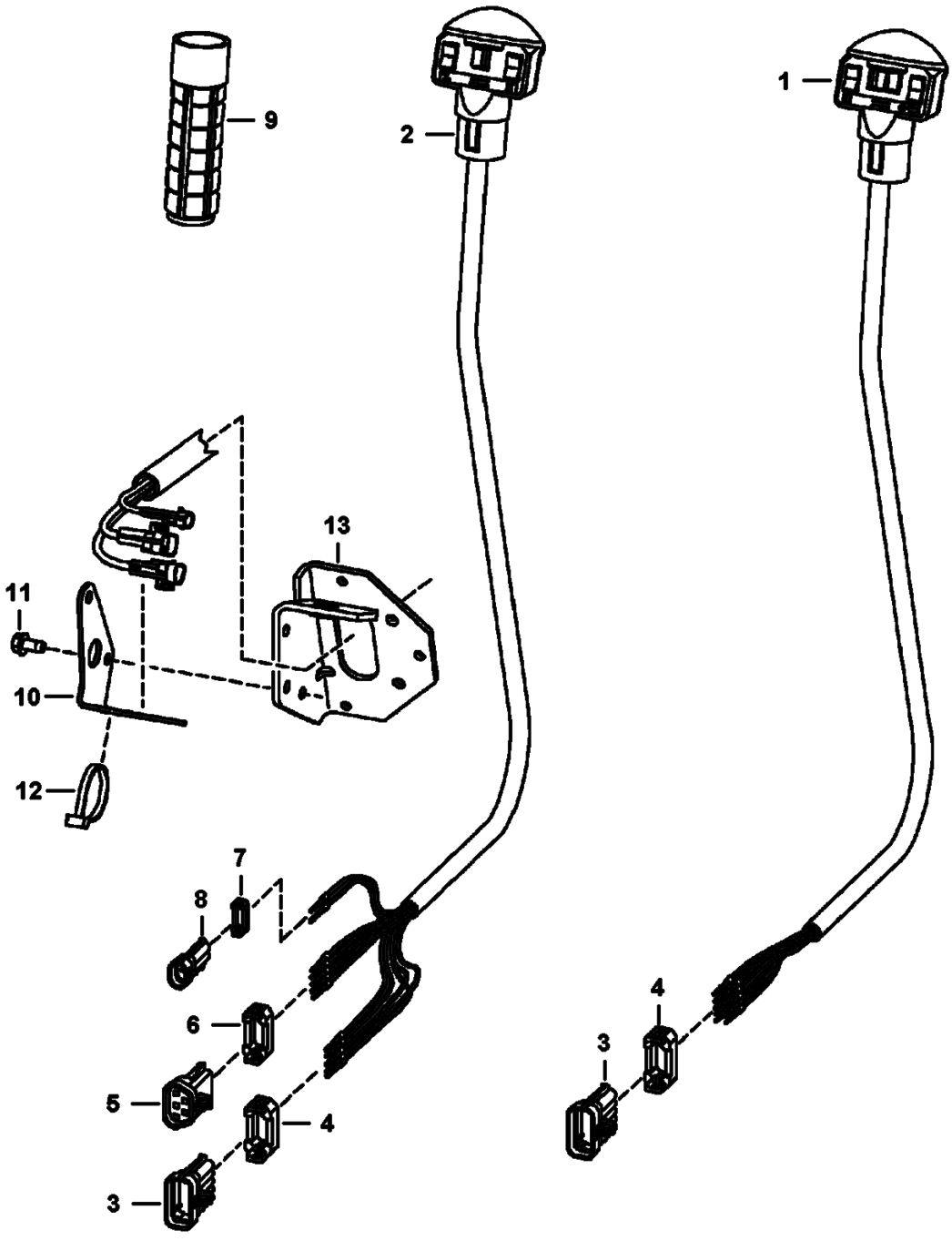

Page 192 - OSS# 2071408 - All rights reserved by Bobcat Company - 12/04/2009 - 07:23:36 - Produced by Ken Cook Co. with mediaioff

Ref No	Part Number	Description	Remarks	Serial Number	Qty
1	6680418	HANDLE ASSY.	RH - Also Order Ref. 3 & 4		1
1	6640690	PIN			9
1	6641176	SEAL			9
2	6680419	HANDLE ASSY.	LH - Also Order Ref. 3-8		1
2	6640690	PIN			10
2	6641176	SEAL			10
2	6680447	DECAL			1
3	6640692	CONNECTOR	10-pin		2
4	6640694	LOCK	Use W/ 10-pin connector		2
5	6667144	CONNECTOR	5-pin		1
6	6667145	LOCK	Use W/ 5-pin connector		1
7	6641180	LOCK	Use W/ 2-pin connector		1
8	6641179	CONNECTOR	2-pin		2
9	6702621	GRIP			2
10	7144550	BRACKET, TIEDOWN			1
11	84G3712	BOLT			2
12	6624289	TIE STRAP			2
13	7128601	BRACKET	See Illustration HAND CONTROLS/ PE2962 - LH		1

Page 193 - OSS# 2071408 - All rights reserved by Bobcat Company - 12/04/2009 - 07:23:36 - Produced by Ken Cook Co. with mediaioff

CONNECTOR HARNESS ASSEMBLY

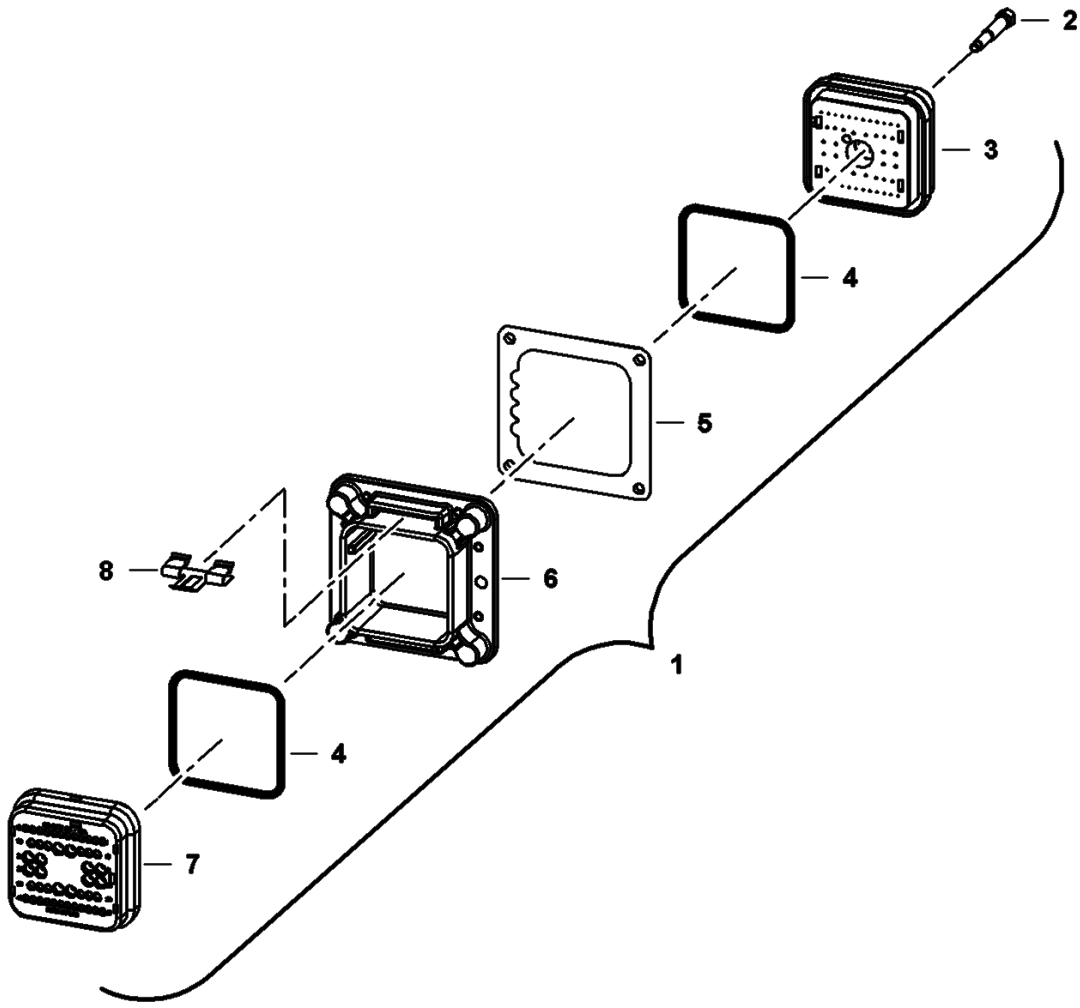

PE-3684

Page 194 - OSS# 2071408 - All rights reserved by Bobcat Company - 12/04/2009 - 07:23:36 - Produced by Ken Cook Co. with mediaioff

Ref No	Part Number	Description	Remarks	Serial Number	Qty
1		CONNECTOR	NSS - Order components		1
2		BOLT	NSS - Order Ref. 3		1
3	6688834	CONNECTOR	cab - W/Ref. 2 & 4		1
4		SEAL	NSS - Order Ref. 7 - Was 6697794 [A]		1
5		SEAL	NSS - Order Ref. 6 - Was 6697793 [A]		1
6	6688836	FLANGE	W/Ref. 5 & 8		1
7	6688833	CONNECTOR	engine - W/Ref. 4		1
8		CLIP	NSS - metal - Order Ref. 6		2

Page 195 - OSS# 2071408 - All rights reserved by Bobcat Company - 12/04/2009 - 07:23:36 - Produced by Ken Cook Co. with mediaioff

CONTROLS ELECTRICAL
(Selectable Joystick Controls)
(S/N 530712576 & Below, 530811132 & Below)

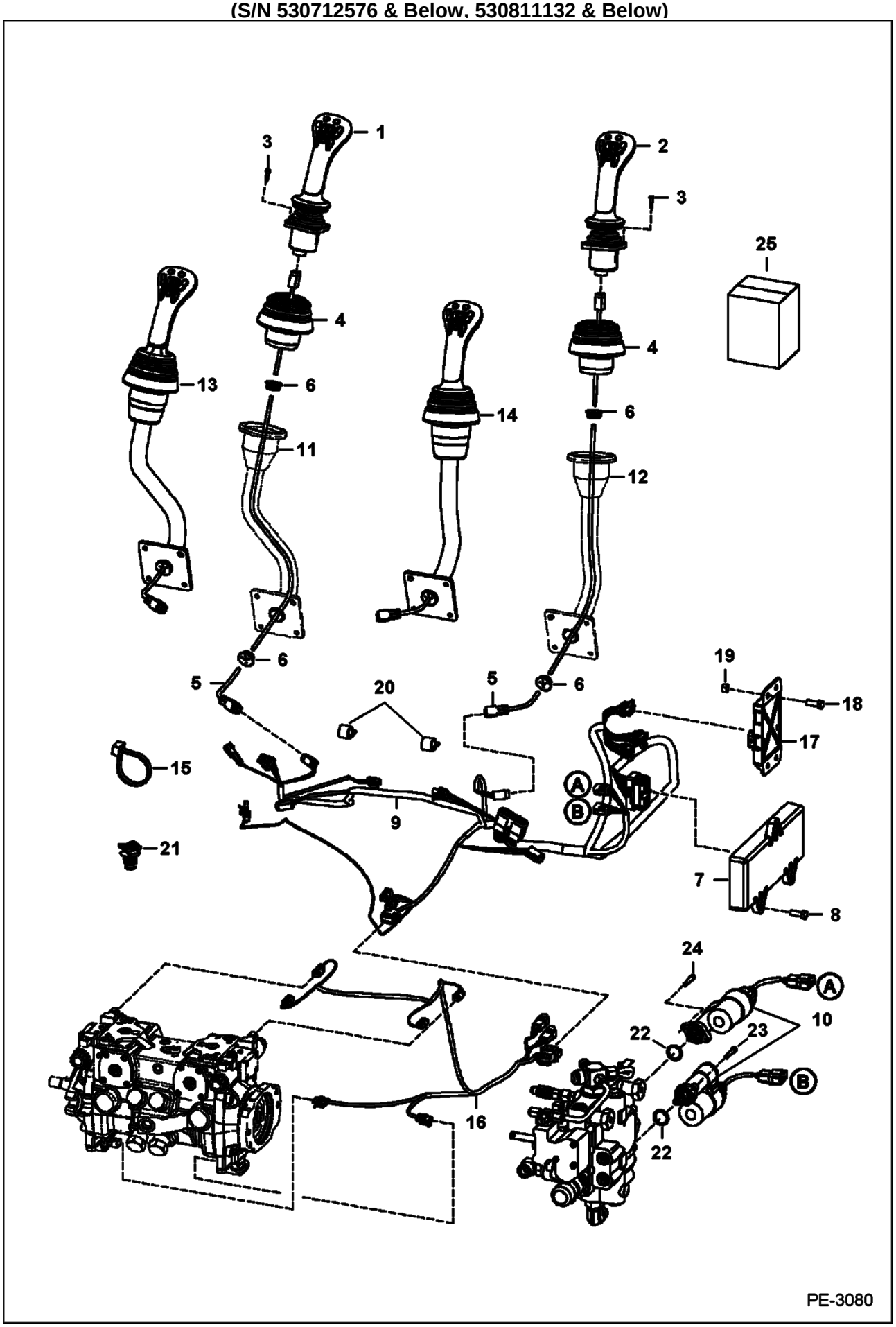

Page 196 - OSS# 2071408 - All rights reserved by Bobcat Company - 12/04/2009 - 07:23:36 - Produced by Ken Cook Co. with mediaioff

CONTROLS ELECTRICAL (Cont'd)
(Selectable Joystick Controls)
(S/N 530712576 & Below, 530811132 & Below)

Ref No	Part Number	Description	Remarks	Serial Number	Qty
1		JOYSTICK LH	NSS - Order Ref. 13 - Was 6687883 [A]		1
2		JOYSTICK RH	NSS - Order Ref. 14 - Was 6687882 [A]		1
3		BOLT	NSS - Order Ref. 22 - Was 6678659 [A]		8
4		BOOT	NSS - Order Ref. 22 - Was 6678903 [A]		2
5		HARNESS	NSS - Order Ref. 22 - Was 6729397 [A]		2
6	6684294	GROMMET			4
7	6679485	CONTROLLER SJC	drive - W/single 50 pin connector		1
8	43C616	BOLT			3
9	7117036	HARNESS, SJC	joystick control		1
10	7101672	ACTUATOR	W/Ref. 22		2
11		HANDLE	NSS - LH - Order Ref. 13 - Was 6729792 [A]		1
12		HANDLE	NSS - RH - Order Ref. 14 - Was 6729791 [A]		1
13		JOYSTICK ASMBLY LH	LH - Ref. 1, 3-6 & 11 - Order Ref. 22 - Was 7111993 [C]		1
14		JOYSTICK ASMBLY RH	RH - Ref. 2-6 & 12 - Order Ref. 22 - Was 7111992 [C]		1
15	6689641	CABLE TIE			4
16	7131601	HARNESS	pump - Was 7114735 [B,D]		1
17	6680410	CONTROLLER	plastic - W/ 3 connector plug		1
18	17C616	BOLT 5			2
19	97D6	NUT 10			2
20	30H42	CLAMP			2
21	6681871	MOUNT			4
22	58K120	O-RING	Use W/Ref. 10 - Was 6686220 [B,D]		2
23	69G436	BOLT			2
24	29G416	BOLT			2
25	7126558	KIT, JOYSTICK	See Illustration CONTROLS ELECTRICAL/ PE3111		1

Page 197 - OSS# 2071408 - All rights reserved by Bobcat Company - 12/04/2009 - 07:23:36 - Produced by Ken Cook Co. with mediaioff

CONTROLS ELECTRICAL
(Selectable Joystick Control Service Kit)
(S/N 530712576 & Below, 530811132 & Below)

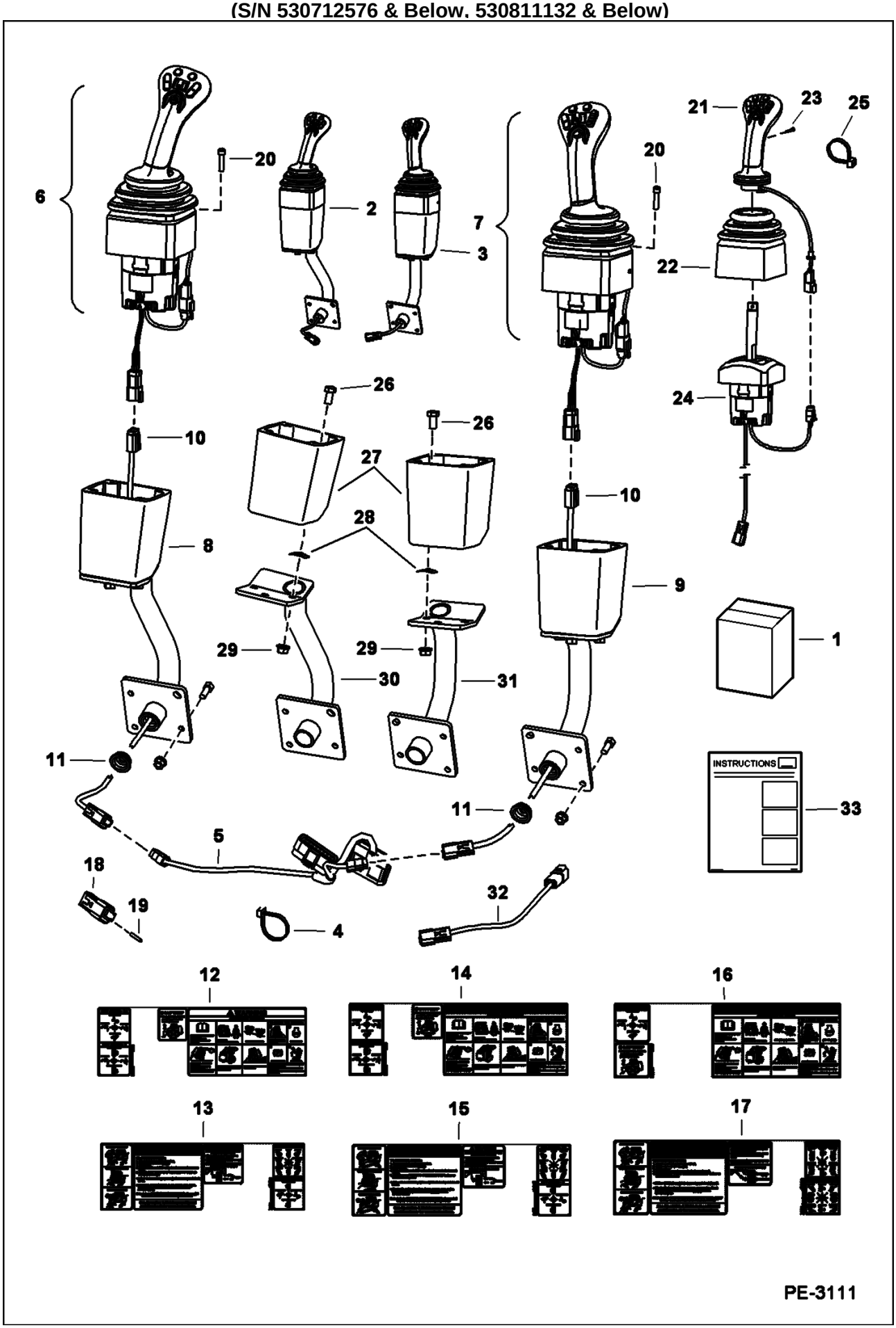

Page 198 - OSS# 2071408 - All rights reserved by Bobcat Company - 12/04/2009 - 07:23:36 - Produced by Ken Cook Co. with mediaioff

CONTROLS ELECTRICAL (Cont'd)
(Selectable Joystick Control Service Kit)
(S/N 530712576 & Below, 530811132 & Below)

Ref No	Part Number	Description	Remarks	Serial Number	Qty
1	7126558	KIT, JOYSTICK	Ref. 4-21, 32 & 33		1
2		JOYSTICK, COMPLETE L.H	NAP - Order Ref. 6, 8, 10 & 11		1
3		JOYSTICK, COMPLETE R.H.	NAP - Order Ref. 7, 9, 10 & 11		1
4	6624289	TIE STRAP			2
5	7122184	HARNESS			1
6		JOYSTICK, LH	NAP - used W/ Ref. 10 (NAP harness) - Order 6697904 joystick, LH & 7152616 harness, adapter - Was 6689920 [A]		1
6	6697904	JOYSTICK, LH	W/Ref. 10 (7112828 harness)		1
7		JOYSTICK, RH	NAP - used W/ Ref. 10 (NAP harness) - Order 6697905 joystick, RH & 7152616 harness, adapter - Was 6689921		1
7	6697905	JOYSTICK, RH	W/Ref. 10 (7112828 harness)		1
8		HANDLE	NAP - LH - Order Ref. 11 & 26-30 [A]		1
9		HANDLE	NAP - RH - Order Ref. 11, 26-29 & 31 [A]		1
10		HARNESS	NAP - 20" (508 mm) long - Use W/ Ref. 6 (NAP joystick) & Ref. 7 (NAP joystick) - Order 7112828 harness & 7162616 jumper harness - Was 7112828 [B]		2
10	7112828	HARNESS	Use W/Ref. 6 (6697904 joystick) & Ref. 7 (6697905 joystick) - 12" (304,8mm) long		2
11	6684294	GROMMET			2
12	7131518	DECAL	for wheel SJC machines		1
13	7131519	DECAL	for wheel SJC machines		1
14	7131520	DECAL	for track SJC machines		1
15	7131521	DECAL	for track SJC machines		1
16	7131522	DECAL	for AWS SJC machines		1
17	7131523	DECAL	for AWS SJC machines		1
18	6677898	CONNECTOR			2
19	6676640	SEAL			12
20	29G416	BOLT			8
21	6689922	HANDLE	LH		1
21	6689923	HANDLE	RH		1
22	6689926	BOOT			2
23	6689927	BOLT			2
24	6689924	BASE, AJ4 SJC RH	RH - Used W/Ref. 7 (6689921 joystick)		1
24	6689925	BASE, AJ4 SJC LH	LH - Used W/Ref. 6 (6689920 joystick)		1
25	6691589	100 TIE	packaged as 100 pieces		x
26	17C612	BOLT 5			6
27	7124929	BASE			2
28	6684033	NUT			6
29	97D6	NUT 10			6
30	7123817	MOUNT LH			1
31	7123816	MOUNT RH			1
32	7152616	HARNESS, ADAPTER	jumper harness - used W/ Ref. 10 (7112828 harness) - 4" (101,6 mm) long		2
33	6904783	INSTRUCTIONS			1

Page 199 - OSS# 2071408 - All rights reserved by Bobcat Company - 12/04/2009 - 07:23:36 - Produced by Ken Cook Co. with mediaioff

CONTROLS ELECTRICAL
(Selectable Joystick Controls)
(S/N 530712577 & Above, 530811133 & Above)

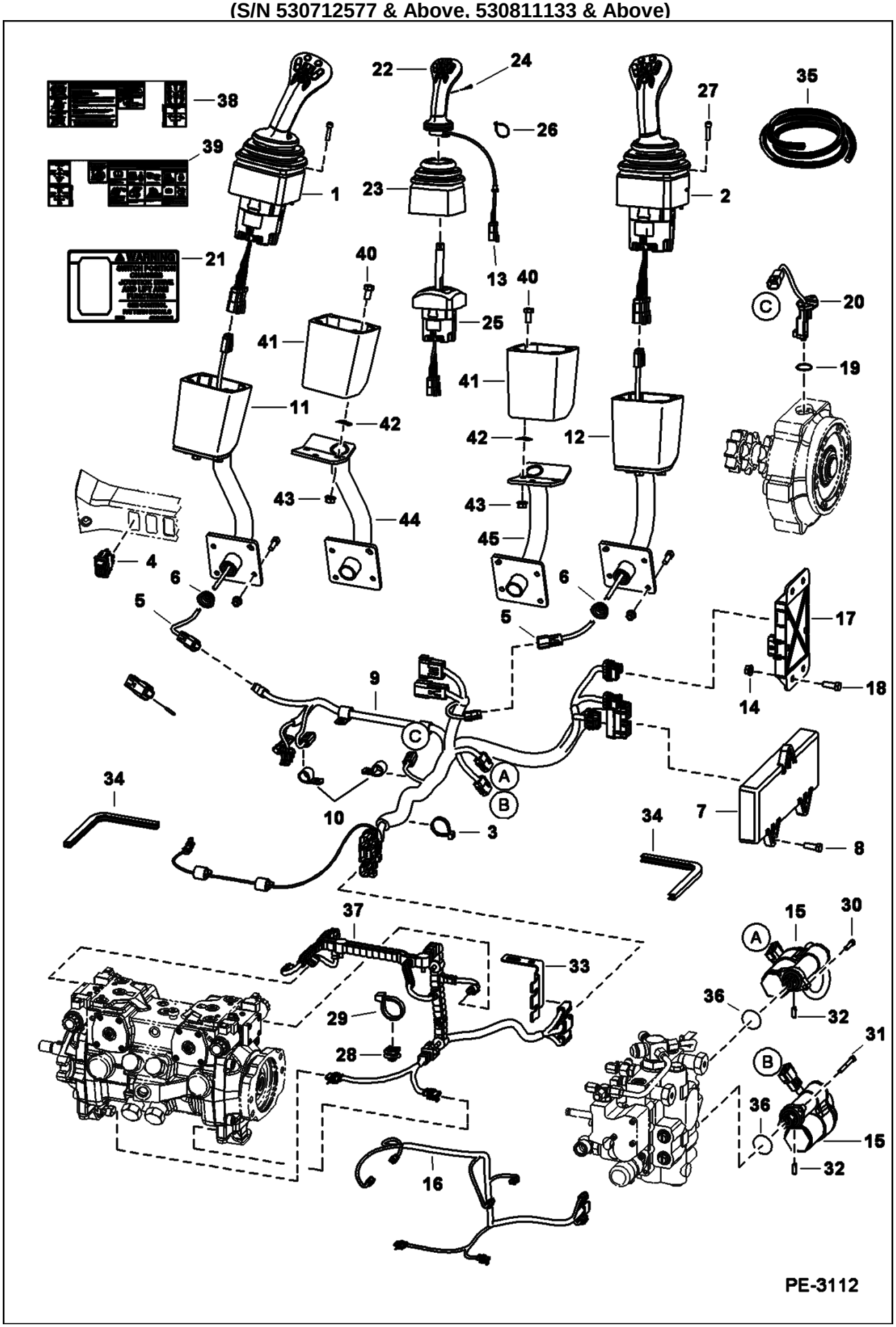

Page 200 - OSS# 2071408 - All rights reserved by Bobcat Company - 12/04/2009 - 07:23:36 - Produced by Ken Cook Co. with mediaioff

CONTROLS ELECTRICAL (Cont'd)
(Selectable Joystick Controls)
(S/N 530712577 & Above, 530811133 & Above)

Ref No	Part Number	Description	Remarks	Serial Number	Qty
1		JOYSTICK, LH	NAP - Order 6697904 joystick, LH & 7152616 harness, adapter - Was 6689920 [A]		1
2		JOYSTICK, RH	NAP - Order 6697905 joystick, RH & 7152616 harness, adapter - Was 6689921 [A]		1
3	6624289	TIE STRAP			8
4	6683812	SWITCH	Was 6689020 [B,D]		1
5	7112828	HARNESS			2
6	6684294	GROMMET			4
7	6679485	CONTROLLER SJC	drive - W/single 50 pin connector - Was 6679487 [B,D]		1
8	43C616	BOLT			3
9	7123801	SJC HARNESS		5307 12577-13897	1
9	7123801	SJC HARNESS		5308 11133-11529	1
9	7136042	HARNESS		5307 13898 & Abv	1
9	7136042	HARNESS		5308 11530 & Abv	1
10	30H46	CLIP			2
11		HANDLE	NAP - LH - Order Ref. 6 & 40-44 [A]		1
12		HANDLE	NAP - RH - Order Ref. 6, 40-43 & 45 [A]		1
13		HARNESS	NSS - Order Ref. 22		2
14	97D6	NUT 10			2
15	7101672	ACTUATOR	W/Ref. 36		2
16	7131601	HARNESS	pump - Was 7114735 [B,D]	5307 12577-13897	1
16	7131601	HARNESS	pump - Was 7114735 [B,D]	5308 11133-11529	1
17	6680410	CONTROLLER	plastic - W/ 3 connector plug		1
18	17C616	BOLT 5			2
19	6677181	SENSOR, SPEED WHEEL	wheel speed		2
20	25K20100	O RING 10			2
21	6737248	DECAL			1
22	6689922	HANDLE	LH		1
22	6689923	HANDLE	RH		1
23	6689926	BOOT			2
24	6689927	BOLT			2
25	6689924	BASE, AJ4 SJC RH	RH		1
25	6689925	BASE, AJ4 SJC LH	LH		1
26	6691589	100 TIE	packaged as 100 pieces		x
27	29G416	BOLT			8
28	6690688	TREE MOUNT			4
29	6690690	TIE			4
30	29G416	BOLT			2
31	69G436	BOLT			2
32	7108236	PIN			2
33	7122359	BRACKET			1
34		MOULDING	NAP - 10.5" (267 mm) long - Order Ref. 35		2
35	6654139	MOULDING	bulk - sold per foot		x
36	58K120	O-RING	Use W/Ref. 15 - Was 6686220 [B,D]		2
37	7139761	HARNESS	pump - use W/hydrostatic pump Model R902095064	5307 13898 & Abv	1
37	7139761	HARNESS	pump - use W/hydrostatic pump Model R902095064	5308 11530 & Abv	1
37		HARNESS	pump - use W/ hydrostatic pump Model R902136745 - 3 pin triangle	5307 12577-13897	1
37		HARNESS	pump - use W/ hydrostatic pump Model R902136745 - 3 pin triangle	5308 11133-11529	1
37	7169309	HARNESS	pump - use W/ hydrostatic pump Model R902136745	5307 13898 & Abv	1
37	7169309	HARNESS	pump - use W/ hydrostatic pump Model R902136745	5308 11530 & Abv	1
37	6664969	CONNECTOR			x

Page 201 - OS6# 2071408 - All rights reserved by Bobcat Company - 12/04/2009 - 07:23:36 - Produced by Ken Cook Co. with mediaioff

CONTROLS ELECTRICAL (Cont'd)
(Selectable Joystick Controls)
(S/N 530712577 & Above, 530811133 & Above)

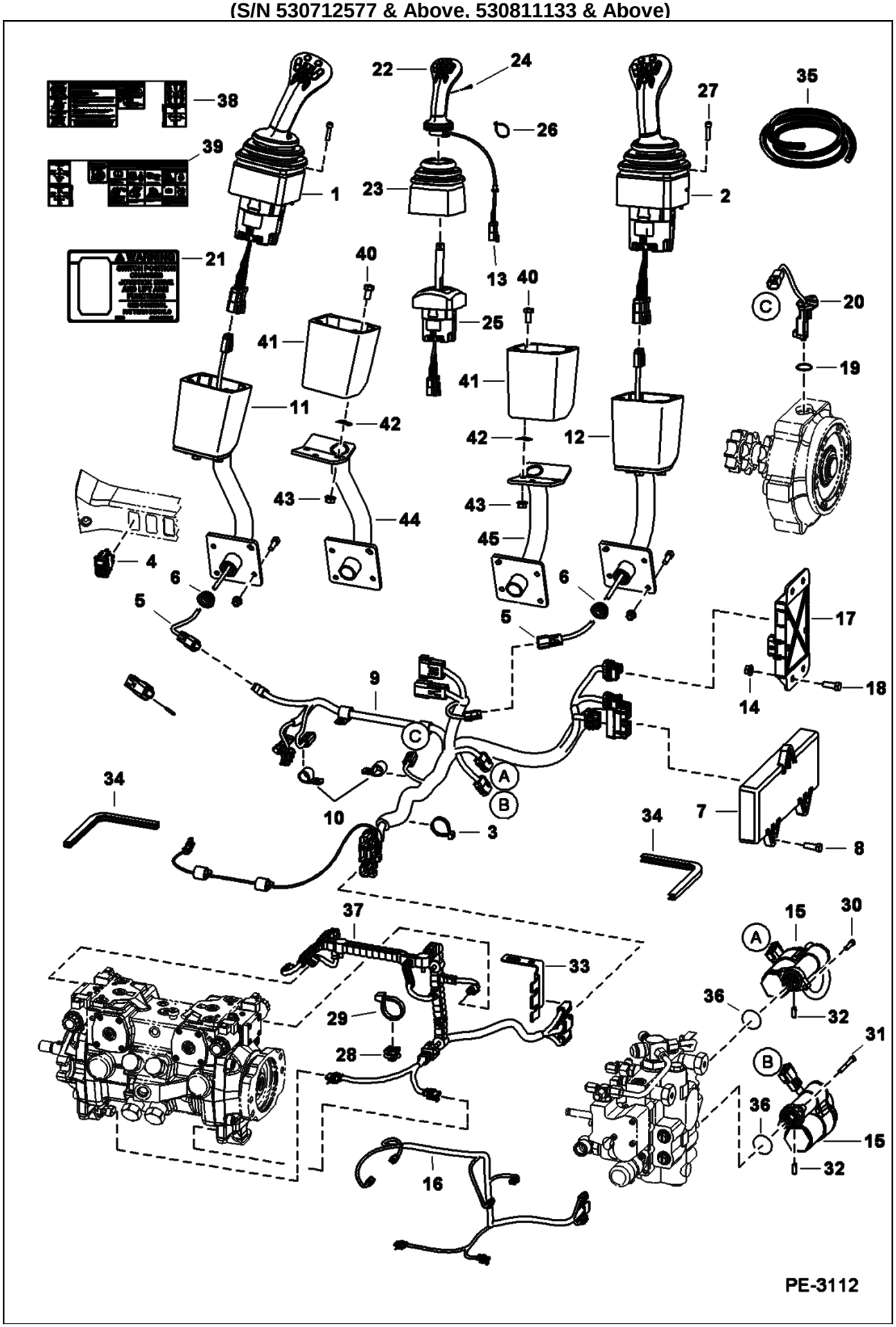

Page 202 - OSS# 2071408 - All rights reserved by Bobcat Company - 12/04/2009 - 07:23:36 - Produced by Ken Cook Co. with mediaioff

CONTROLS ELECTRICAL (Cont'd)
(Selectable Joystick Controls)
(S/N 530712577 & Above, 530811133 & Above)

Ref No	Part Number	Description	Remarks	Serial Number	Qty
37	6664185	CONNECTOR			x
37	6687268	FEMALE CONNECTOR	black - 3 -pin oval- use W/ 7139761 harness		x
37	6664801	CONNECTOR	3 pin triangular - use W/ 7169309 harness		x
37	6691421	FEMALE CONNECTOR	grey - 4 pin rectangular		x
37	6662248	4 PIN PLUG	black - 4 pin plug		x
38	7131518	DECAL			1
39	7131519	DECAL			1
40	17C612	BOLT 5			6
41	7124929	BASE			2
42	6684033	NUT			6
43	97D6	NUT 10			6
44	7123817	MOUNT LH			1
45	7123816	MOUNT RH			1

Page 203 - OSS# 2071408 - All rights reserved by Bobcat Company - 12/04/2009 - 07:23:36 - Produced by Ken Cook Co. with mediaioff

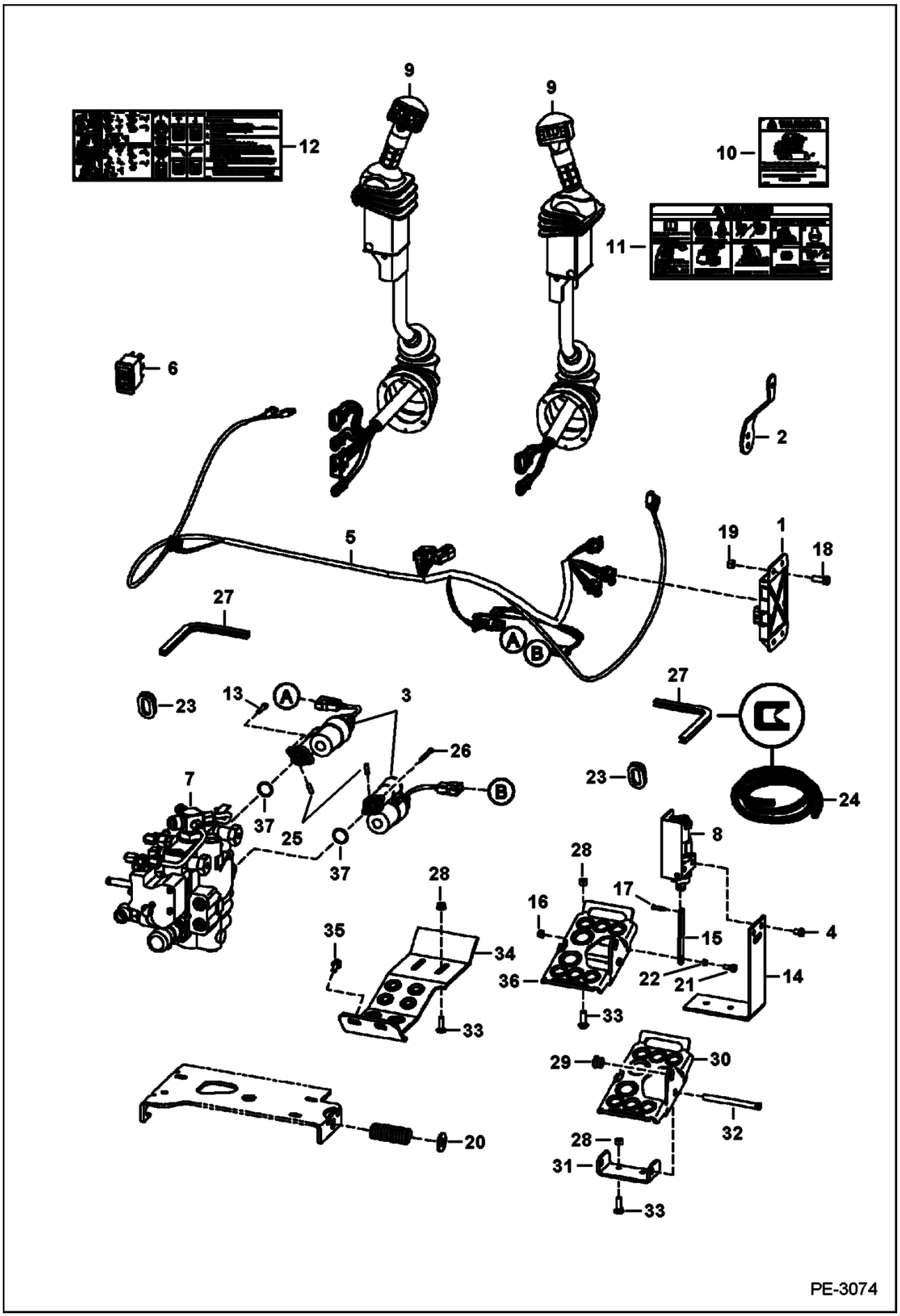

Page 204 - OSS# 2071408 - All rights reserved by Bobcat Company - 12/04/2009 - 07:23:36 - Produced by Ken Cook Co. with mediaioff

CONTROLS ELECTRICAL (Cont'd)
(AHC & ACS)

Ref No	Part Number	Description	Remarks	Serial Number	Qty
1	6680410	CONTROLLER	plastic - W/ 3 connector plug		1
2	6717393	LEVER	throttle		1
3	7101672	ACTUATOR	W/Ref. 37		2
4	17C612	BOLT 5			4
5	6733292	HARNESS, ACS	ACS	5307 12576 & Bel	1
5	6733292	HARNESS, ACS	ACS	5308 11132 & Bel	1
5	7124893	HARNESS	ACS	5307 12577 & Abv	1
5	7124893	HARNESS	ACS	5308 11133 & Abv	1
6	6676537	SWITCH			1
7		VALVE	See Illustration HYDRAULIC CONTROL VALVE/ PE2378 - ACS control		1
8		SENSOR	See Illustration CONTROLS ELECTRICAL/ PE1553 - foot pedal - RH		1
8		SENSOR	See Illustration CONTROLS ELECTRICAL/ PE1553 - foot pedal - LH		1
9	6684915	LEVER, ACS RH	See Illustration CONTROLS ELECTRICAL/ PE1365 - tilt - RH - ACS		1
9	6684916	LEVER, ACS LH	See Illustration CONTROLS ELECTRICAL/ PE1365 - lift - LH - ACS		1
9	6684913	LEVER	See Illustration CONTROLS ELECTRICAL/ PE2992 - tilt - RH - AHC		1
9	6684914	LEVER	See Illustration CONTROLS ELECTRICAL/ PE2992 - lift - LH - AHC		1
10	6718706	DECAL	used on S250 S300 ACS		1
11	6728539	DECAL	used on S250 S300 ACS		1
12	6727926	DECAL	operations AHC		1
13	29G416	BOLT			2
14	7126869	BRACKET	Was 6726573 [A]		2
15	6726681	LINK			2
16	95D5	NUT			2
17	6727496	PIN			2
18	17C616	BOLT 5			2
19	95D6	NUT			2
20	25E24	WASHER	Was 25E22 [B]		1
21	35C514	BOLT			2
22	6729467	SPACER			2
23	6714726	GROMMET			2
24	6654139	MOULDING	bulk - sold per foot		x
25	7108236	PIN			2
26	69G436	BOLT			2
27		MOULDING	NAP - 10.5" (267mm) long - Order Ref. 24		1
28	57D6	NUT 5			4
29	6665701	BUSHING, PRESS FIT	ACS	S/N & Bel.	2
30		PEDAL	ACS - NAP - order Ref. 36 - Was 7115219 [A]	S/N & Bel.	2
31	7115220	MOUNT	ACS	S/N & Bel.	2
32	6564657	PIN	ACS	S/N & Bel.	2
33	37C620	BOLT			8
34	6729237	STEP	AHC		2
35	84G3712	BOLT			2
36	7123942	PEDAL ASSEMBLY	RH - ACS - W/Ref. 29-32	S/N & Abv.	1
36	7123941	PEDAL ASSEMBLY	LH - ACS - W/Ref. 29-32	S/N & Abv.	1
37	58K120	O-RING	Use W/Ref. 3 - Was 6686220 [B,D]		2

Page 205 - OSS# 2071408 - All rights reserved by Bobcat Company - 12/04/2009 - 07:23:36 - Produced by Ken Cook Co. with mediaioff

CONTROLS ELECTRICAL
(ACS) (Handle Assembly)

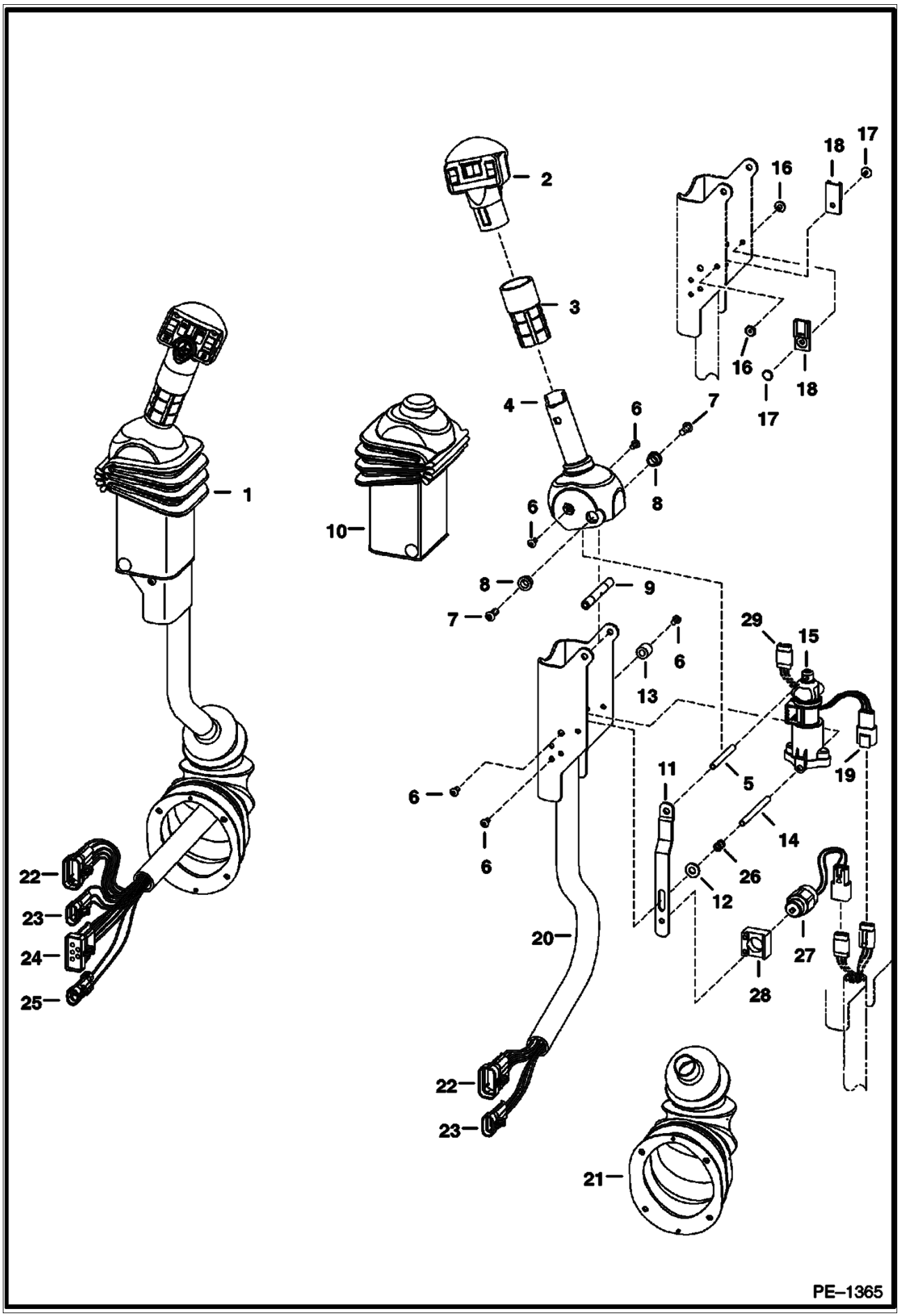

Page 206 - OSS# 2071408 - All rights reserved by Bobcat Company - 12/04/2009 - 07:23:36 - Produced by Ken Cook Co. with mediaioff

Ref No	Part Number	Description	Remarks	Serial Number	Qty
1	6684915	LEVER, ACS RH	tilt - RH		1
1	6684916	LEVER, ACS LH	lift - LH		1
2	6680462	HANDLE, ACS RH	tilt - RH		1
2	6680417	HANDLE	lift - LH		1
3		GRIP	NAP - Order 6702621 grip & cut to 2.8" (71,1mm) long		2
4	6729594	HANDLE	RH		1
4	6729595	HANDLE	LH		1
5	6680469	SPACER	threaded		1
6	6727065	BOLT			6
7	25GT410	SCREW			8
8	6702990	BUSHING			4
9	6713043	SPACER			4
10	6680471	COVER			2
11	6680477	STRAP	stop		1
12	25E13	WASHER 5			1
13	6719835	SLEEVE			4
14	6719834	SPACER	threaded		2
15	6684910	SENSOR, ELEC AHC			2
15	6670706	CONNECTOR			1
15	6670715	PIN			3
15	6670710	LOCK			1
16	6665322	RIVET	female		2
17	6665321	RIVET	male		2
18	6665000	CLIP			2
19	6670707	CONNECTOR			1
19	6670715	PIN			3
19	6670711	LOCK			1
20	6680481	CHANNEL	RH		1
20	6680480	CHANNEL	LH		1
21	6532127	BOOT			2
22	6640692	CONNECTOR	10-pin		1
22	6640690	PIN			8
22	6640694	LOCK	Use W/ 10-pin connector		1
22	6641176	SEAL			8
22	6646582	PLUG	cavity		1
23	6640699	CONNECTOR	3-pin		2
23	6640690	PIN			3
23	6641176	SEAL			3
23	6640700	LOCK			3
24	6667144	CONNECTOR	5-pin		2
24	6640690	PIN			3
24	6641176	SEAL			3
24	6646582	PLUG	cavity		1
24	6641180	LOCK	Use W/ 2-pin connector		1
25	6641179	CONNECTOR	2-pin		1
25	6640690	PIN			2
25	6641176	SEAL			2
25	6641180	LOCK	Use W/ 2-pin connector		1
26	6680470	SPRING			1
27	6676029	SOLENOID			1
28	6680468	MOUNT			1
29	6676870	CONNECTOR	3-pin		1
29	6670711	LOCK			1
29	6670715	PIN			1

Page 207 - OSS# 2071408 - All rights reserved by Bobcat Company - 12/04/2009 - 07:23:36 - Produced by Ken Cook Co. with mediaioff

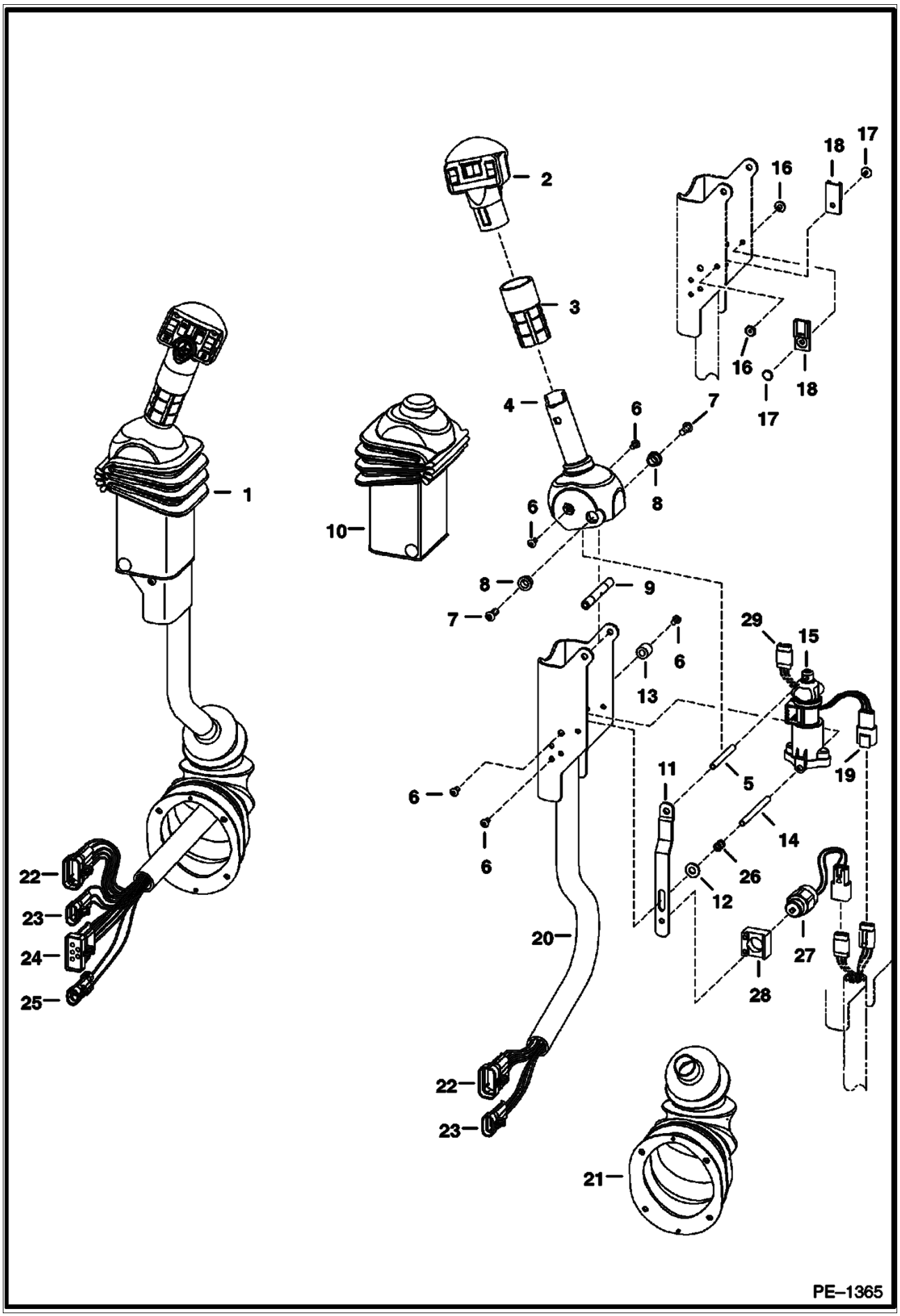

Page 208 - OSS# 2071408 - All rights reserved by Bobcat Company - 12/04/2009 - 07:23:36 - Produced by Ken Cook Co. with mediaioff

Ref No	Part Number	Description	Remarks	Serial Number	Qty
29	6676640	SEAL			5

Page 209 - OSS# 2071408 - All rights reserved by Bobcat Company - 12/04/2009 - 07:23:36 - Produced by Ken Cook Co. with mediaioff

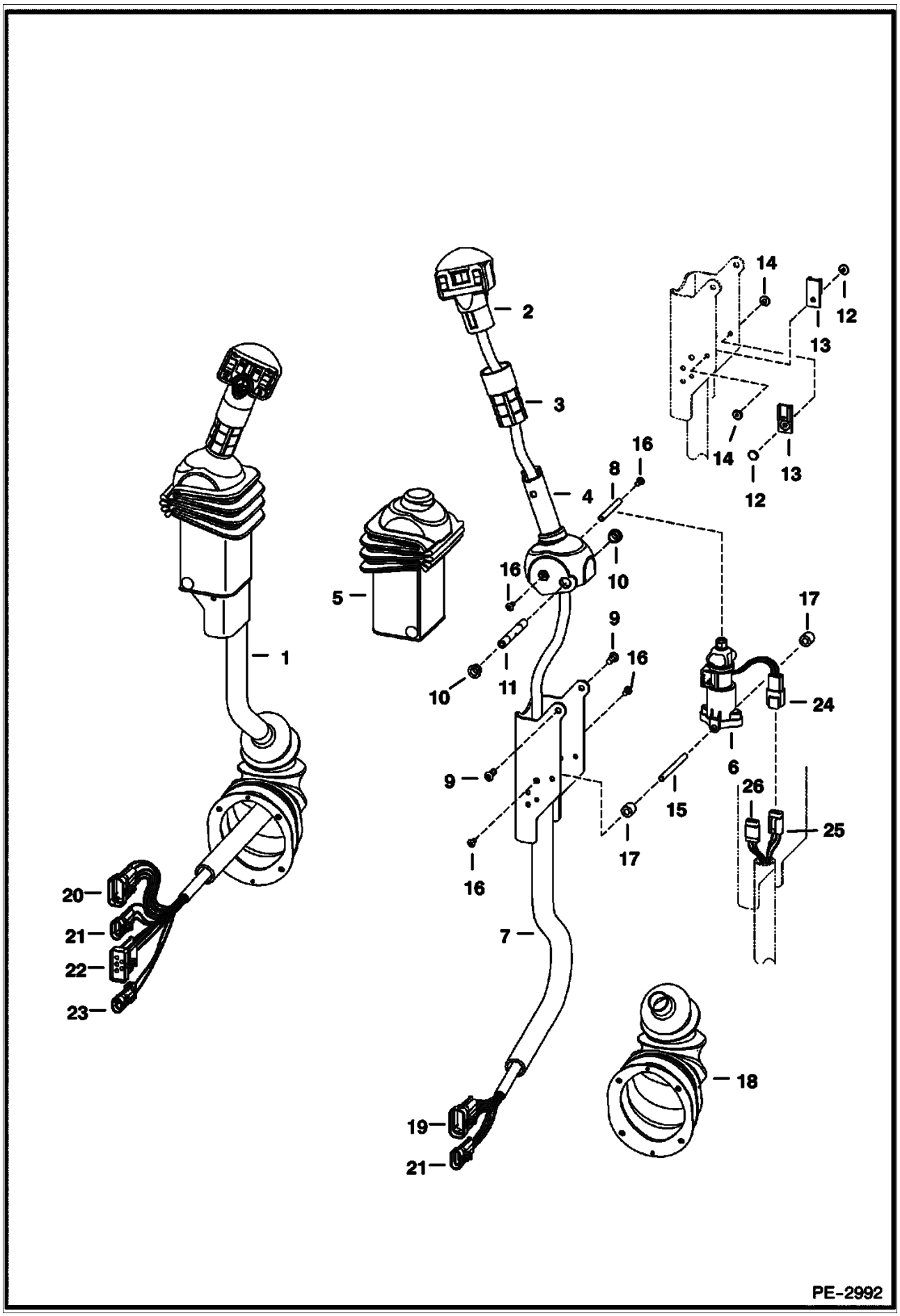

Page 210 - OSS# 2071408 - All rights reserved by Bobcat Company - 12/04/2009 - 07:23:36 - Produced by Ken Cook Co. with mediaioff

Ref No	Part Number	Description	Remarks	Serial Number	Qty
1	6684913	LEVER	tilt - RH		1
1	6684914	LEVER	lift - LH		1
2	6680462	HANDLE, ACS RH	tilt - RH - Was 6677536 [A]		1
2	6680417	HANDLE	lift - LH		1
3	6702621	GRIP			2
4	6729594	HANDLE	RH		1
4	6729595	HANDLE	LH		1
5	6680471	COVER			2
6	6684910	SENSOR, ELEC AHC			2
6	6670706	CONNECTOR	3-pin		1
6	6670714	PIN			3
6	6670710	LOCK			1
7	6680481	CHANNEL	RH		1
7	6680480	CHANNEL	LH		1
8	6680469	SPACER			1
9	25GT410	SCREW			4
10	6702990	BUSHING			4
11	6713043	SPACER			2
12	6665321	RIVET	male		4
13	6665000	CLIP			4
14	6665322	RIVET	female		4
15	6719834	SPACER	threaded		2
16	6727065	BOLT			8
17	6719835	SLEEVE			4
18	6532127	BOOT			2
19	6640692	CONNECTOR	10-pin - RH		1
19	6640690	PIN			8
19	6640694	LOCK	Use W/ 10-pin connector		1
19	6641176	SEAL			8
19	6646582	PLUG	cavity		2
20	6640692	CONNECTOR	10-PIN - LH		1
20	6640690	PIN			6
20	6640694	LOCK	Use W/ 10-pin connector		1
20	6641176	SEAL			6
20	6646582	PLUG	cavity		4
21	6640699	CONNECTOR	3-pin - RH & LH		2
21	6640690	PIN			3
21	6641176	SEAL			3
21	6640700	LOCK			1
22	6667144	CONNECTOR	5-pin - LH		1
22	6640690	PIN			3
22	6641176	SEAL			3
22	6646582	PLUG	cavity		1
22	6667145	LOCK	Use W/ 5-pin connector		1
23	6641179	CONNECTOR	2-pin - LH		1
23	6640690	PIN			2
23	6641176	SEAL			2
23	6641180	LOCK	Use W/ 2-pin connector		1
24	6670707	CONNECTOR	3-pin		1
24	6670715	PIN			3
24	6670711	LOCK			1
25	6676870	CONNECTOR	3 - pin		1
25	6670711	LOCK			1
25	6670715	PIN			3

Page 211 - OSS# 2071408 - All rights reserved by Bobcat Company - 12/04/2009 - 07:23:36 - Produced by Ken Cook Co. with mediaioff

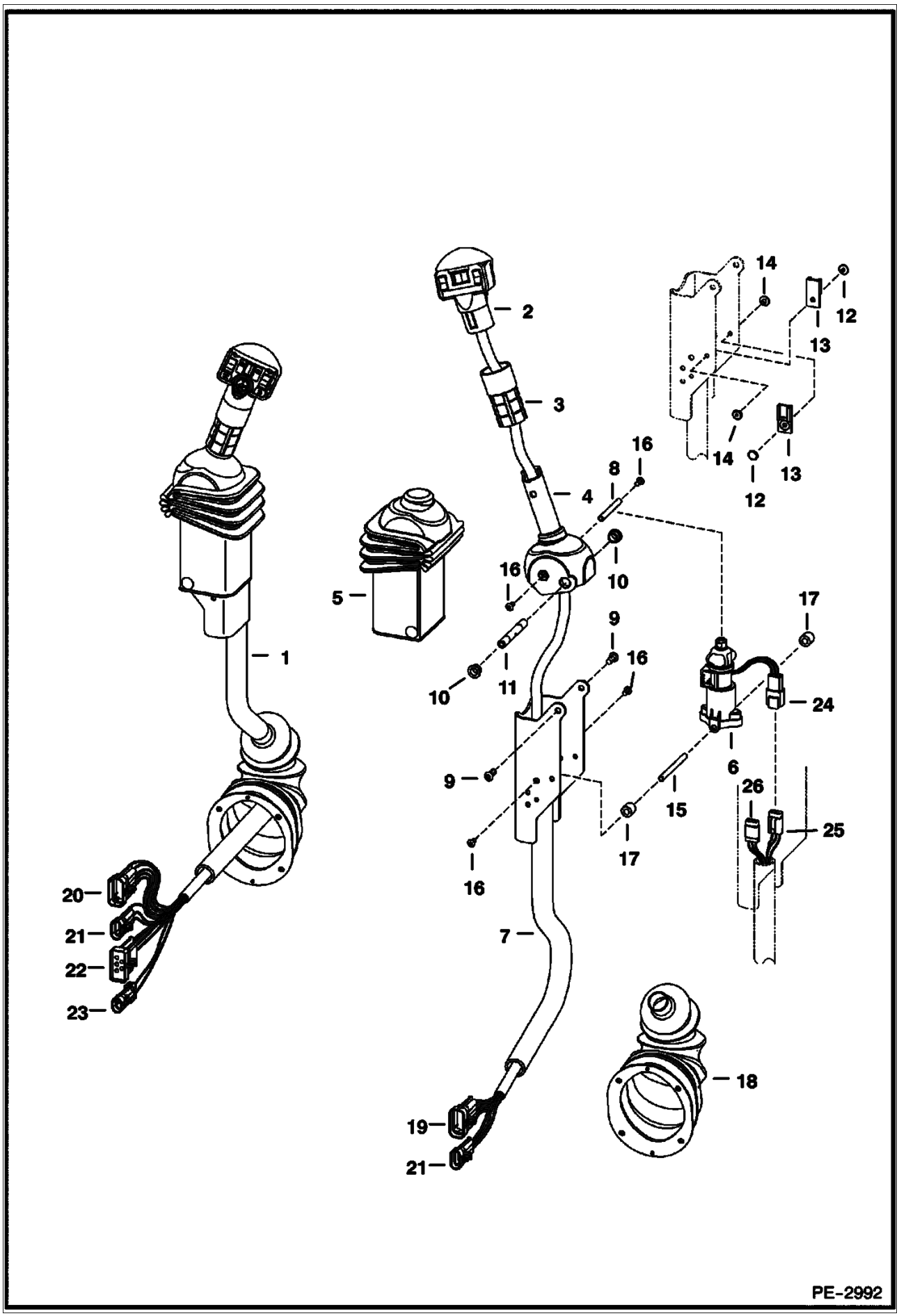

Page 212 - OSS# 2071408 - All rights reserved by Bobcat Company - 12/04/2009 - 07:23:36 - Produced by Ken Cook Co. with mediaioff

Ref No	Part Number	Description	Remarks	Serial Number	Qty
25	6676640	SEAL	plug		1
26	6677364	CONNECTOR	3-pin - RH & LH		1
26	6676640	SEAL	plug		3
26	6670715	PIN			2

Page 213 - OSS# 2071408 - All rights reserved by Bobcat Company - 12/04/2009 - 07:23:36 - Produced by Ken Cook Co. with mediaioff

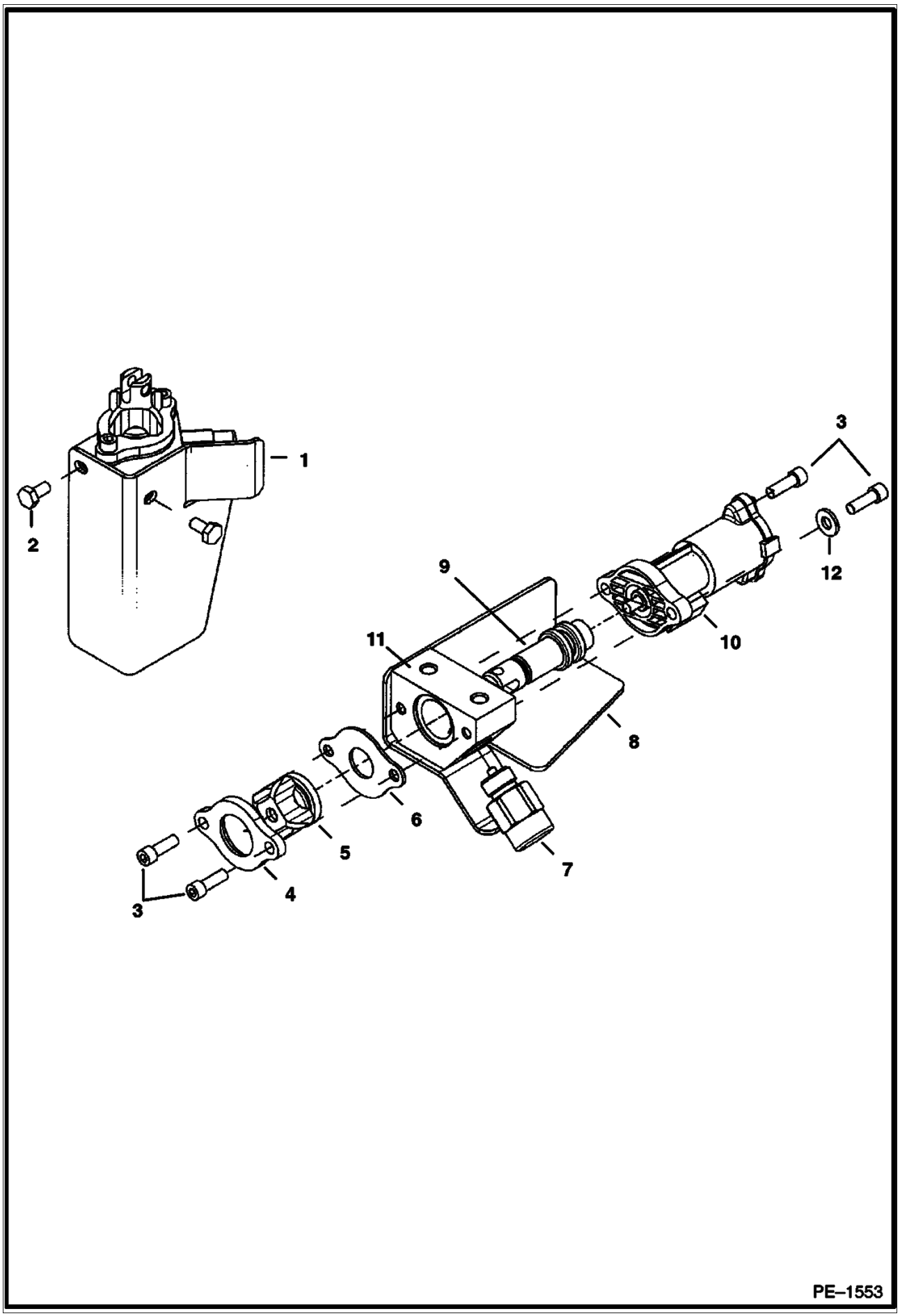

Page 214 - OSS# 2071408 - All rights reserved by Bobcat Company - 12/04/2009 - 07:23:36 - Produced by Ken Cook Co. with mediaioff

Ref No	Part Number	Description	Remarks	Serial Number	Qty
1	6684912	SENSOR, FOOT RH			1
1	6684911	SENSOR, FOOT LH			1
2	43C408	BOLT			2
3	98G412	BOLT			4
4		RETAINER	NAP - boot		1
5	6587763	BOOT			1
6		STOP PLATE	NAP		1
7	6676029	SOLENOID			1
8	6680478	SHIELD	RH		1
8	6680479	SHIELD	LH		1
9		SPOOL	NSS		1
10		SENSOR	NSS		1
11		BLOCK	NSS		1
12	25E13	WASHER 5			2

Page 215 - OSS# 2071408 - All rights reserved by Bobcat Company - 12/04/2009 - 07:23:36 - Produced by Ken Cook Co. with mediaioff

ALTERNATOR
(90 Amp)

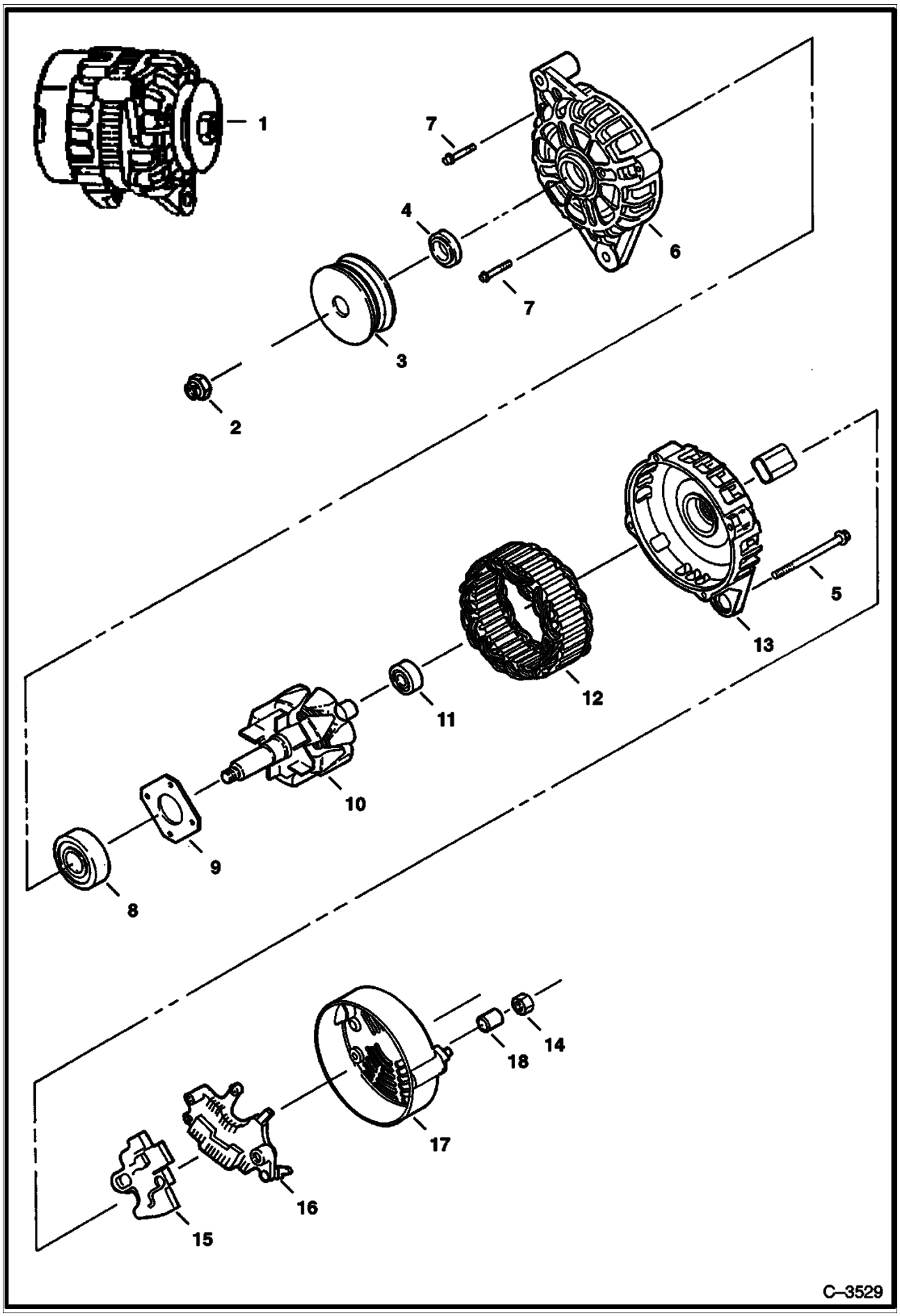

Page 216 - OSS# 2071408 - All rights reserved by Bobcat Company - 12/04/2009 - 07:23:36 - Produced by Ken Cook Co. with mediaIoff

ALTERNATOR (Cont'd)
(90 Amp)

Ref No	Part Number	Description	Remarks	Serial Number	Qty
1	6678205	ALTERNATOR, 90 AMP	90 amp - Ref. 2-18		1
1	6678205REM	ALTERNATOR, 90 AMP	90 amp - Ref. 2-18		1
2	6677497	NUT			1
3	6677496	PULLEY			1
4	6677495	SPACER			1
5	6677494	BOLT			4
6	6677491	BRACKET	front		1
7	6677817	BOLT			4
8	6677818	BEARING			1
9	6677819	RETAINER			1
10	6677492	ROTOR			1
11	6677820	BEARING			1
12	6677493	STATOR			1
13	6677490	BRACKET			1
14	6677486	NUT			1
15		REGULATOR	NSS - Order Ref. 1		1
16	6677488	RECTIFIER			1
17	6677487	COVER			1
18	6677485	SPACER			1

Page 217 - OSS# 2071408 - All rights reserved by Bobcat Company - 12/04/2009 - 07:23:36 - Produced by Ken Cook Co. with mediaioff

STARTER
(Valeo)

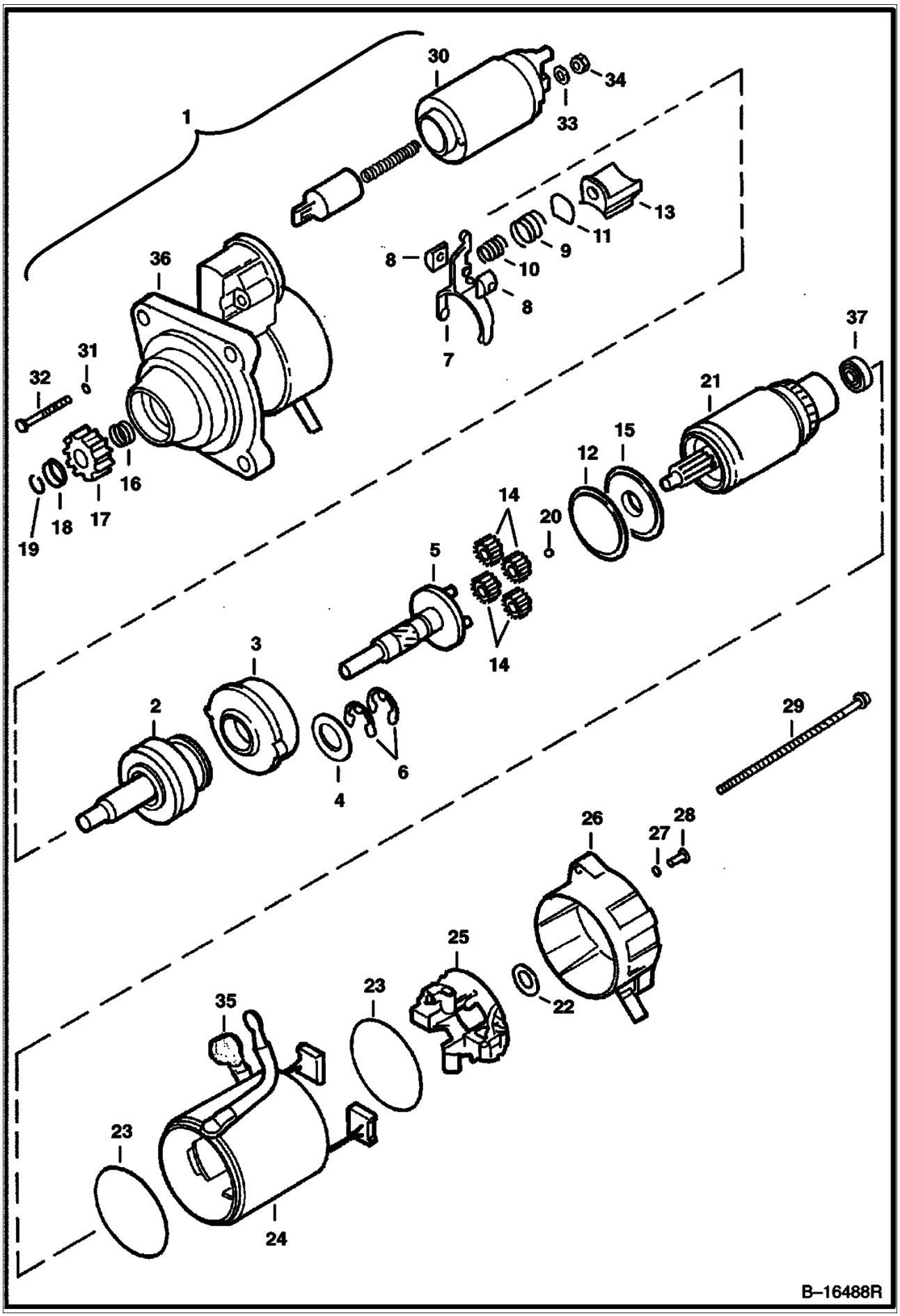

Page 218 - OSS# 2071408 - All rights reserved by Bobcat Company - 12/04/2009 - 07:23:36 - Produced by Ken Cook Co. with mediaioff

STARTER (Cont'd)
(Valeo)

Ref No	Part Number	Description	Remarks	Serial Number	Qty
1	6685190	STARTER			1
1	6685190REM	STARTER			1
2	6680375	SHAFT	ORC assy		1
3	6680367	GEAR			1
4	6680378	WASHER			1
5	6680365	SHAFT			1
6	6680368	STOP RING			2
7	6680364	LEVER			1
8	6680357	HOLDER			2
9	6680381	SPRING			1
10	6680382	SPRING			1
11	6680370	PLATE			1
12	6680369	SEAL			1
13	6680371	LEVER			1
14	6680366	GEAR			4
15	6680372	BRACKET			1
16	6680361	SPRING			1
17	6680390	GEAR			1
18	6680360	STOP			1
19	6680359	STOP RING			1
20	6680362	BALL			1
21	6680374	ARMATURE	W/Ref. 37		1
22	6680363	WASHER			1
23	6680380	SEAL			2
24	6680373	YOKE			1
25	6680377	HOLDER			1
26	6680389	BRACKET			1
27	6680358	RING	rubber		2
28	6680384	BOLT			2
29	6680356	BOLT			2
30	6680376	SWITCH			1
31	6680379	SEAL			2
32	6680383	BOLT			2
33	6EM80	WASHER, SPRING			1
34	4DM8	NUT			1
35	6680355	BOOT			1
36	6680388	BRACKET	includes ball bearing, drain tube, front bracket & oil seal		1
37		BEARING	NAP - Order 6680374 - Was 6687631 [A]		1

Page 219 - OSS# 2071408 - All rights reserved by Bobcat Company - 12/04/2009 - 07:23:36 - Produced by Ken Cook Co. with mediaioff

COOLING SYSTEM
(W/O Cooling Upgrade)
(S/N 530713065 & Below, 530811454 & Below)

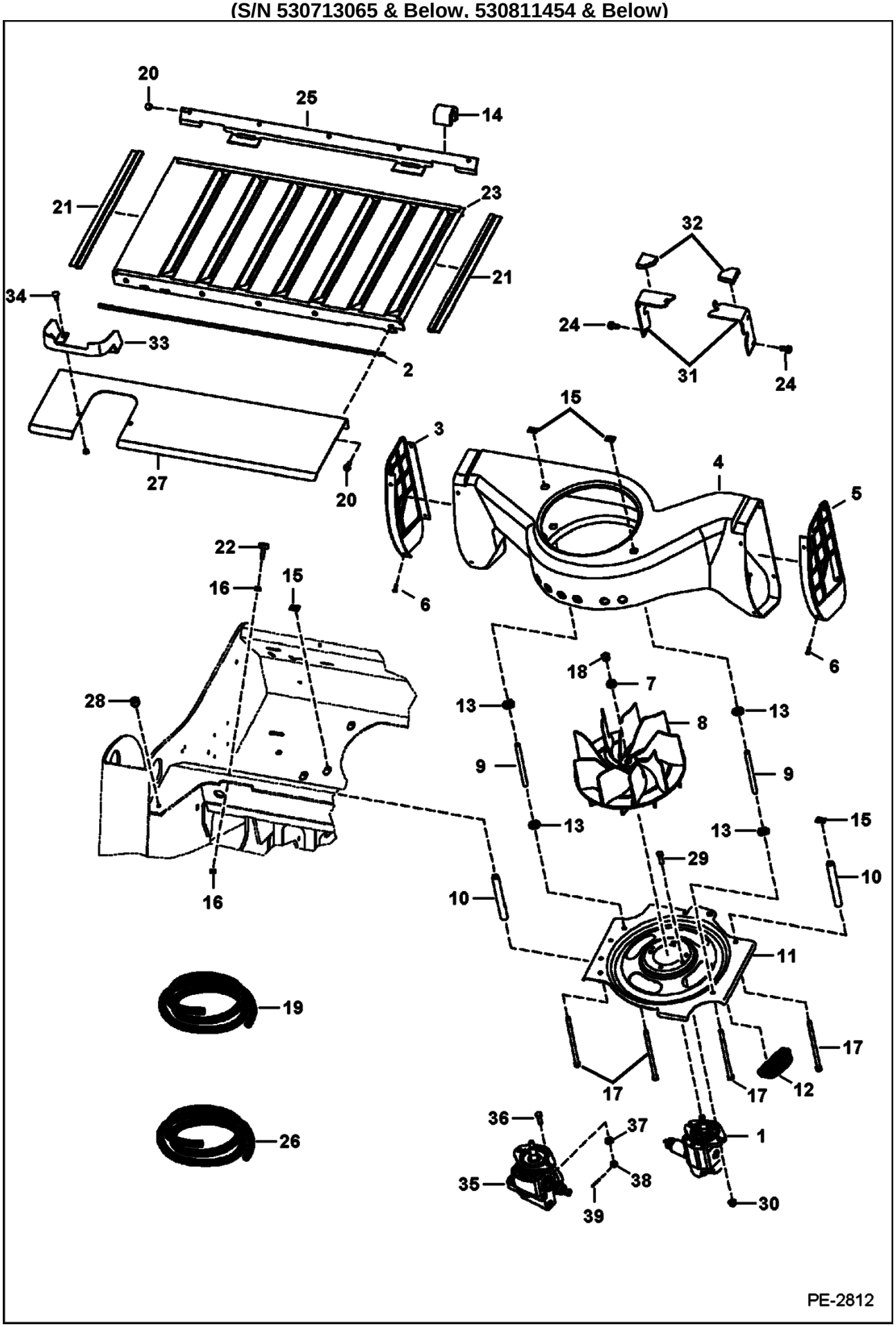

Page 220 - OSS# 2071408 - All rights reserved by Bobcat Company - 12/04/2009 - 07:23:36 - Produced by Ken Cook Co. with mediaioff

COOLING SYSTEM (Cont'd)
(W/O Cooling Upgrade)
(S/N 530713065 & Below, 530811454 & Below)

Ref No	Part Number	Description	Remarks	Serial Number	Qty
1		MOTOR, HYD COOLING FAN	See Illustration COOLING FAN MOTOR/ PE2811 See BTI384 - NAP - aluminum - W/proportional valve - Was 6687142 [A]		1
2		SEAL	34.5" (900 mm) long - Order Ref 26		2
3	6716574	LOUVER, PLASTIC LH	LH - plastic		1
4	6732931	HOUSING			1
5	6716572	LOUVER, PLASTIC RH	RH - plastic		1
6	6706517	SCREW			8
7	6701097	WASHER			1
8	6715142	FAN			1
9	6577382	SPACER			2
10	6732318	SPACER			2
11	7107175	INLET	4 slot		1
12	6684474	INSERT FAN INLET	inlet		4
13	6732457	WASHER	step		4
14	6579613	STOP	cab tilt		2
15	6684033	NUT	spring		4
16	61D5	NUT			6
17	17C6116	BOLT			4
18	96D8	NUT			1
19	7167241	SEAL, BULK	bulk - sold per foot - Was 6646705 [B]		x
20	84G3112	BOLT 5			8
21		SEAL	NAP - 19" (482,61mm) long - Order Ref. 19		2
22	6655399	BUMPER			4
23	6731078	GRILL			1
24	84G3716	SCREW 5			4
25	6731915	BRACKET			1
26	6511855	SEAL	self adhesive - bulk - sold per foot		x
27	6731916	SHIELD			1
28	6714454	BUMPER			2
29	17C620	BOLT	Use W/Ref. 1		2
30	95D6	NUT	Use W/Ref. 1		2
31	6731970	BRACKET			2
32	6733529	SEAL			2
33	6719808	SHIELD	Europe only		1
34	37C512	BOLT			2
35		MOTOR, HYD COOLING FAN	See Illustration COOLING FAN MOTOR/ MS2513 See BTI384 - cast iron		1
36	7147826	BOLT, CROSS DRILLED	Use W/Ref. 35		2
37	25E17	WASHER 5	Use W/Ref. 35		2
38	3D6	NUT	Use W/Ref. 35		2
39	1F316	PIN	Use W/Ref. 35		2

Page 221 - OSS# 2071408 - All rights reserved by Bobcat Company - 12/04/2009 - 07:23:36 - Produced by Ken Cook Co. with mediaioff

COOLING SYSTEM
(W/Cooling Upgrade)
(S/N 530713066 & Above, 530811455 & Above)

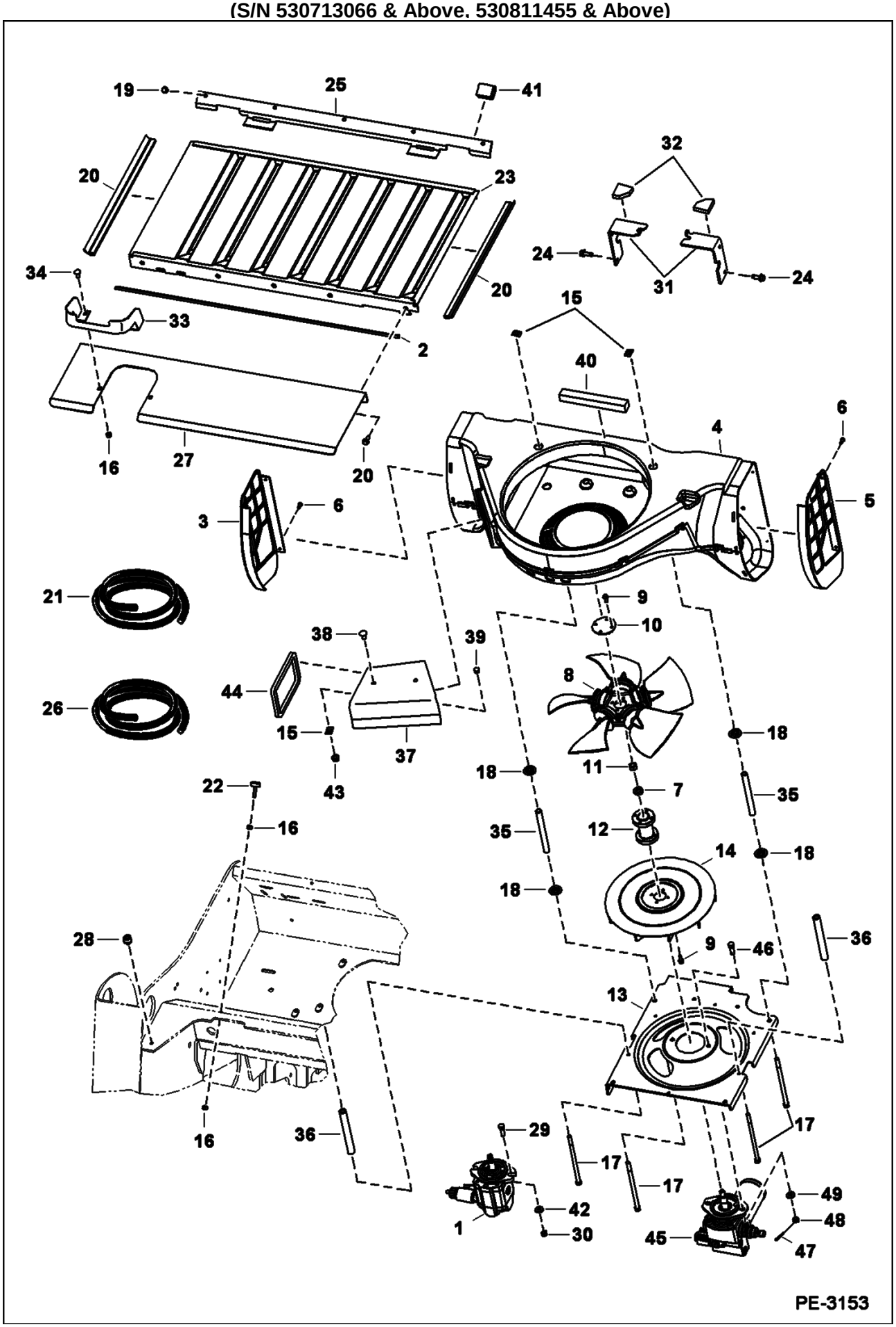

Page 222 - OSS# 2071408 - All rights reserved by Bobcat Company - 12/04/2009 - 07:23:36 - Produced by Ken Cook Co. with mediaioff

COOLING SYSTEM (Cont'd)
(W/Cooling Upgrade)
(S/N 530713066 & Above, 530811455 & Above)

Ref No	Part Number	Description	Remarks	Serial Number	Qty
1		MOTOR, HYD COOLING FAN	See Illustration COOLING FAN MOTOR/ PE2811 See BTI384 - NAP - aluminum - W/proportional valve - Was 6687142 [A]	530713066 - 39999	1
1		MOTOR, HYD COOLING FAN	See Illustration COOLING FAN MOTOR/ PE2811 See BTI384 - NAP - aluminum - W/proportional valve - Was 6687142 [A]	530811455 - 39999	1
2		SEAL	34.5" (900 mm) long - Order Ref 26		2
3	7135132	LOUVER	LH - plastic		1
4	7134338	HOUSING			1
5	7135131	LOUVER	RH - plastic		1
6	6706517	SCREW			4
7	6701097	WASHER			1
8	7128719	FAN, ENG COOLANT			1
9	49C412	BOLT			4
10	7125948	PLATE			1
11	96D8	NUT			1
12	7128728	HUB			1
13	7126457	MOUNT	3 inlet slots		1
14	7123766	FAN			1
15	6684033	NUT	spring		6
16	61D5	NUT			6
17	17C6116	BOLT	Was 7101373 [A]		4
18	7131873	WASHER			4
19	84G3112	BOLT 5			8
20		SEAL	NAP - 19" (482,61mm) long - Order Ref. 21		2
21	7167241	SEAL, BULK	bulk - sold per foot - Was 6646705 [B]		x
22	6655399	BUMPER			4
23	6731078	GRILL			1
24	84G3716	SCREW 5			4
25	6731915	BRACKET			1
26	6511855	SEAL	self adhesive - bulk - sold per foot		x
27	6731916	SHIELD			1
28	6714454	BUMPER			2
29	17C620	BOLT	Use W/Ref. 1	530713066 - 39999	2
29	17C620	BOLT	Use W/Ref. 1	530811455 - 39999	2
30	95D6	NUT	Use W/Ref. 1	530713066 - 39999	2
30	95D6	NUT	Use W/Ref. 1	530811455 - 39999	2
31	6731970	BRACKET			2
32	6733529	SEAL			2
33	6719808	SHIELD	Europe only		1
34	37C512	BOLT			2
35	7131872	SPACER			2
36	6577382	SPACER			2
37		CHUTE	NAP - Order 714037 chute - Was 7124826 [A]		1
37	7140307	CHUTE	does not use Ref. 39		1
38	10C612	BOLT			2
39	6649949	PLUG	Use W/Ref. 37 (NAP/ 7124826 chute)		2
40	7126863	SEAL			1
41	6579613	STOP			2
42	6557831	WASHER	Use W/Ref. 1	530713066 - 39999	2
42	6557831	WASHER	Use W/Ref. 1	530811455 -	2

Page 223 - OSS# 2071408 - All rights reserved by Bobcat Company - 12/04/2009 - 07:23:36 - Produced by Ken Cook Co. with mediaioff

COOLING SYSTEM (Cont'd)
(W/Cooling Upgrade)
(S/N 530713066 & Above, 530811455 & Above)

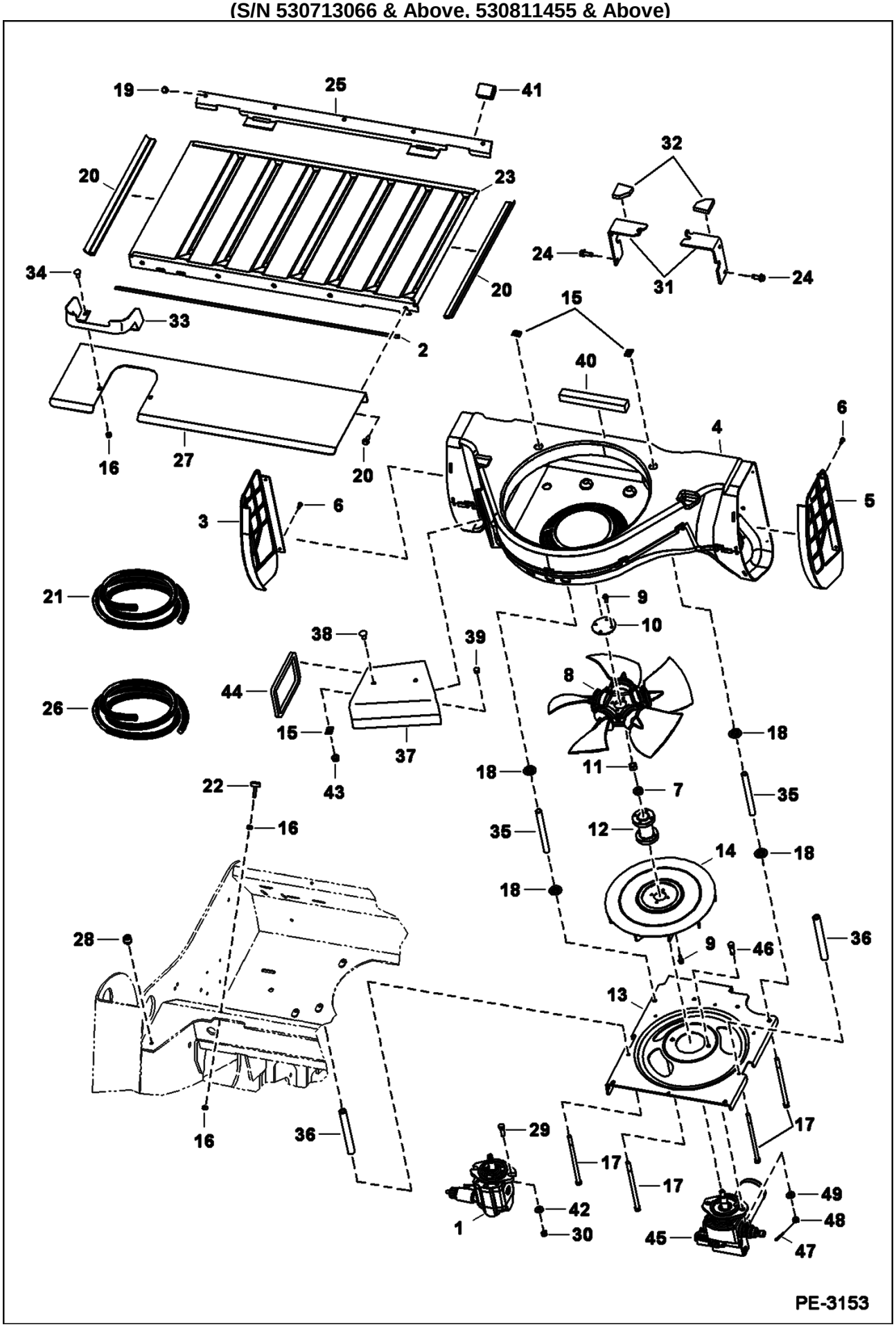

Page 224 - OSS# 2071408 - All rights reserved by Bobcat Company - 12/04/2009 - 07:23:36 - Produced by Ken Cook Co. with mediaioff

COOLING SYSTEM (Cont'd)
(W/Cooling Upgrade)
(S/N 530713066 & Above, 530811455 & Above)

Ref No	Part Number	Description	Remarks	Serial Number	Qty
				39999	
43	57D6	NUT 5			2
44	7126496	SEAL			1
45	7164320	MOTOR, HYD COOLING FAN	- cast iron - Also Order (2) of Ref. 47 - Was 7132033 [A]	530740001 & Abv	1
45	7164320	MOTOR, HYD COOLING FAN	- cast iron - Also Order (2) of Ref. 47 - Was 7132033 [A]	530840001 & Abv	1
46	7147826	BOLT, CROSS DRILLED	Use W/Ref. 45	530840001 & Above	2
46	7147826	BOLT, CROSS DRILLED	Use W/Ref. 45	530740001 & Above	2
47	1F316	PIN	Use W/Ref. 45	530740001 & Above	2
47	1F316	PIN	Use W/Ref. 45	530840001 & Above	2
48	3D6	NUT	slotted - Use W/Ref. 45	530740001 & Above	2
48	3D6	NUT	slotted - Use W/Ref. 45	530840001 & Above	2
49	6557831	WASHER	Use W/Ref. 45	530740001 & Above	2
49	6557831	WASHER	Use W/Ref. 45	530840001 & Above	2

Page 225 - OSS# 2071408 - All rights reserved by Bobcat Company - 12/04/2009 - 07:23:36 - Produced by Ken Cook Co. with mediaioff

COOLING SYSTEM

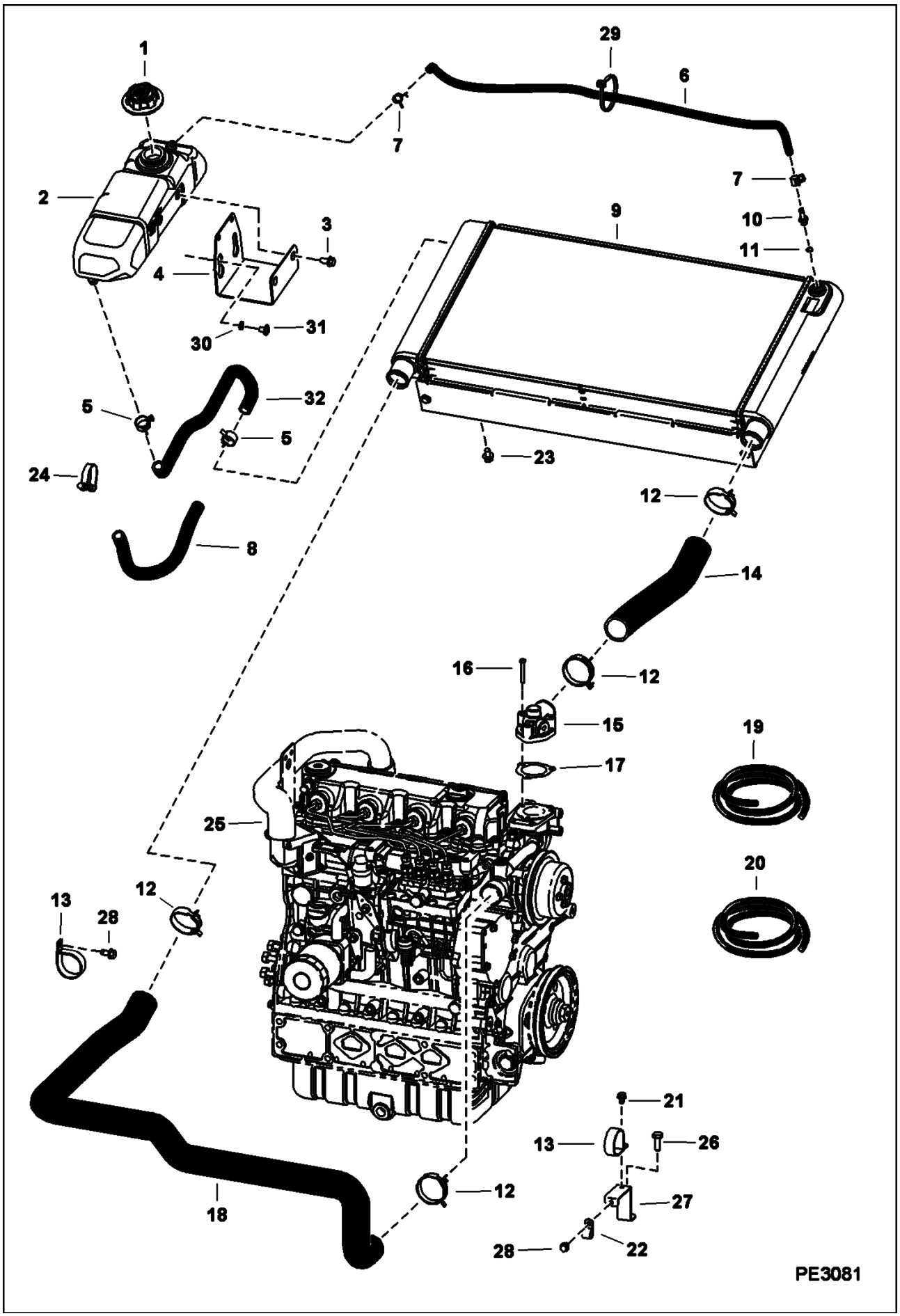

Page 226 - OSS# 2071408 - All rights reserved by Bobcat Company - 12/04/2009 - 07:23:36 - Produced by Ken Cook Co. with mediaioff

Ref No	Part Number	Description	Remarks	Serial Number	Qty
1	6733429	CAP			1
1	6733996	DECAL	14 psi		1
2	6732375	TANK			1
3	6733886	BOLT	use W/ (6732870 mount) W/O mounting slots		2
4		MOUNT	NAP - W/O mounting slots - Order Ref. 4 (7162194 mount) & Ref. 30 (7162111 spacer)(qty2) & also Ref. 31 (7161087 bolt)(qty2) - Was 6732870 [A]		1
4	7162194	MOUNT, TANK COOLANT	See BTI391 W/slotted mounting holes		1
5	5HM23	CLAMP			2
6		HOSE	NAP - Order Ref. 19 - .25" ID - 36" (914mm) long		1
7	5HM14	CLAMP			2
8		HOSE	NAP - Order Ref. 32 & orientate fitting on exchanger toward cab - Was 17.25" (440 mm) of Ref. 20 [B]		1
9	6684367	EXCHANGER, WATER RADIATOR			1
10	6734090	ADAPTER			1
11	79K4	O RING 10			x
12	5HM55	CLAMP			4
13	30H91	CLAMP			2
14	6728749	HOSE			1
15		COVER	See Illustration WATER PUMP & THERMOSTAT/ B22925 - thermostat		1
16		BOLT	See Illustration WATER PUMP & THERMOSTAT/ B22925		3
17		GASKET	See Illustration WATER PUMP & THERMOSTAT/ B22925		1
18	6736566	HOSE			1
19	6577822	HOSE	bulk - sold per foot		x
20	6578172	HOSE	bulk - sold per foot		x
21	84G3712	BOLT			2
22	30H34	CLAMP			1
23	35C516	BOLT 10			4
24	6513471	CLAMP			1
25		ENGINE	See Illustration ENGINE/ B26157		1
26	5CM1020	SCREW			1
27	7112683	BRACKET			1
28	84G3116	SCREW	Was 84G3108 [B]		2
29	6610510	TIE			1
30	7162111	SPACER	use W/7162194 mount		2
31	7161087	BOLT	use W/7162194 mount		2
32	7159166	HOSE, WATER FORMED	See BTI391 fitting on exchanger is orientated toward cab		1

Page 227 - OSS# 2071408 - All rights reserved by Bobcat Company - 12/04/2009 - 07:23:36 - Produced by Ken Cook Co. with mediaioff

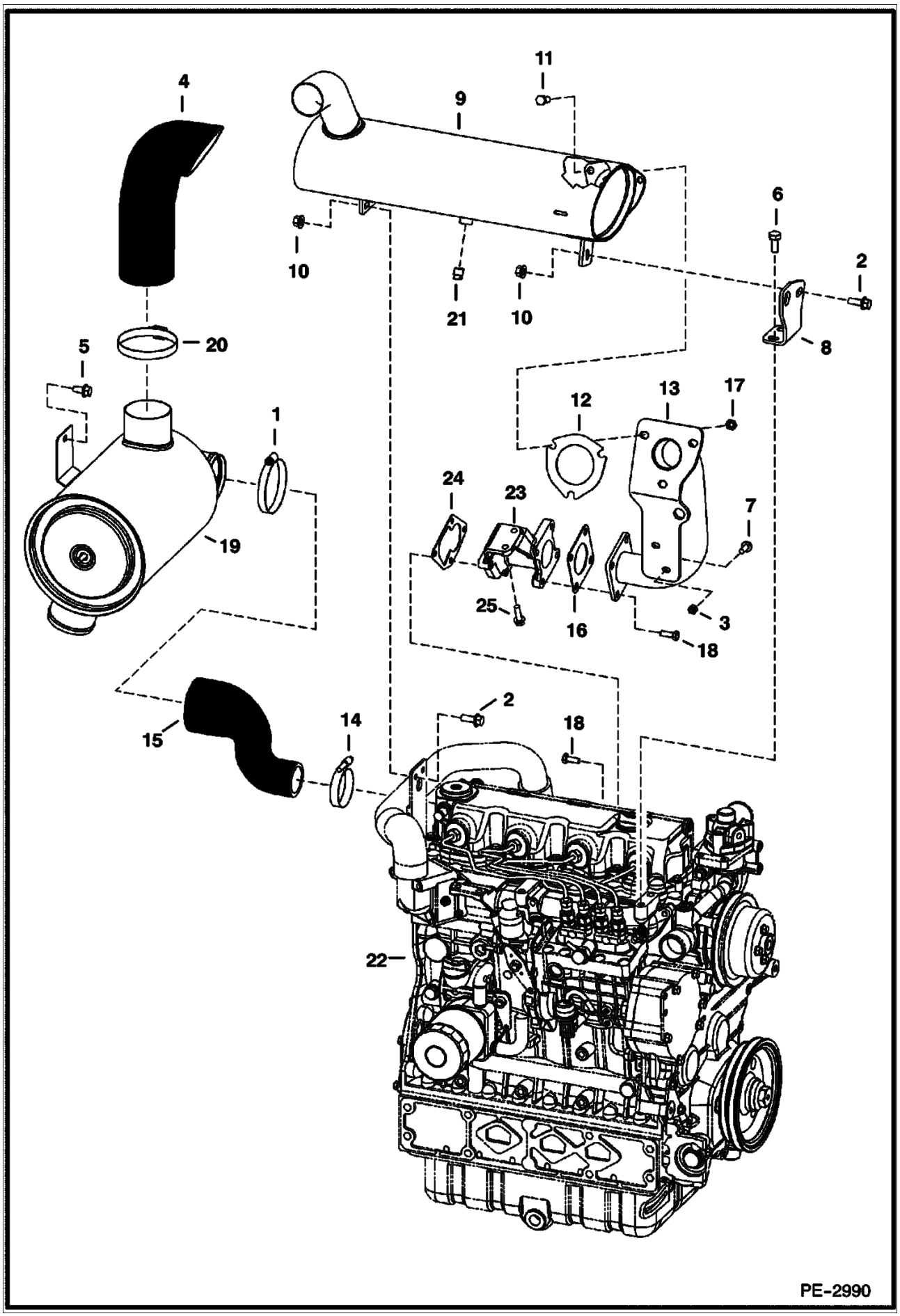

Page 228 - OSS# 2071408 - All rights reserved by Bobcat Company - 12/04/2009 - 07:23:36 - Produced by Ken Cook Co. with mediaioff

Ref No	Part Number	Description	Remarks	Serial Number	Qty
1	42HC375	CLAMP			1
2	45C616	BOLT			2
3	53DM8	NUT			1
4	6730726	HOSE	air intake		1
5	84G3712	BOLT			2
6	6719825	BOLT			2
7	29CM820	SCREW			1
8	7111805	MOUNT	muffler		1
8	6730753	MOUNT	See Illustration PURIFIER/ PE2827 - purifier		1
9	6687887	MUFFLER, EXHAUST	oval - double insulated		1
10	83D6	NUT 5			3
11	17C620	BOLT			3
12	6732032	GASKET	exhaust		1
13	7102368	TUBE	exhaust - square bolt pattern		1
14	42HC250	CLAMP			1
15	6734114	HOSE			1
16	7102747	GASKET	square bolt pattern		1
17	85D6	LOCK NUT			3
18	5CM1020	SCREW			4
19		AIR CLEANER	See Illustration AIR CLEANER/ MS1516		1
20	42H52	CLAMP			1
21	6661062	PLUG	brass - 3/8" straight pipe thread		1
22		ENGINE	See Illustration ENGINE/ B26157		1
23	6687145	FLANGE			1
24	6687147	GASKET			1
25	6680755	BOLT			2

Page 229 - OSS# 2071408 - All rights reserved by Bobcat Company - 12/04/2009 - 07:23:36 - Produced by Ken Cook Co. with mediaioff

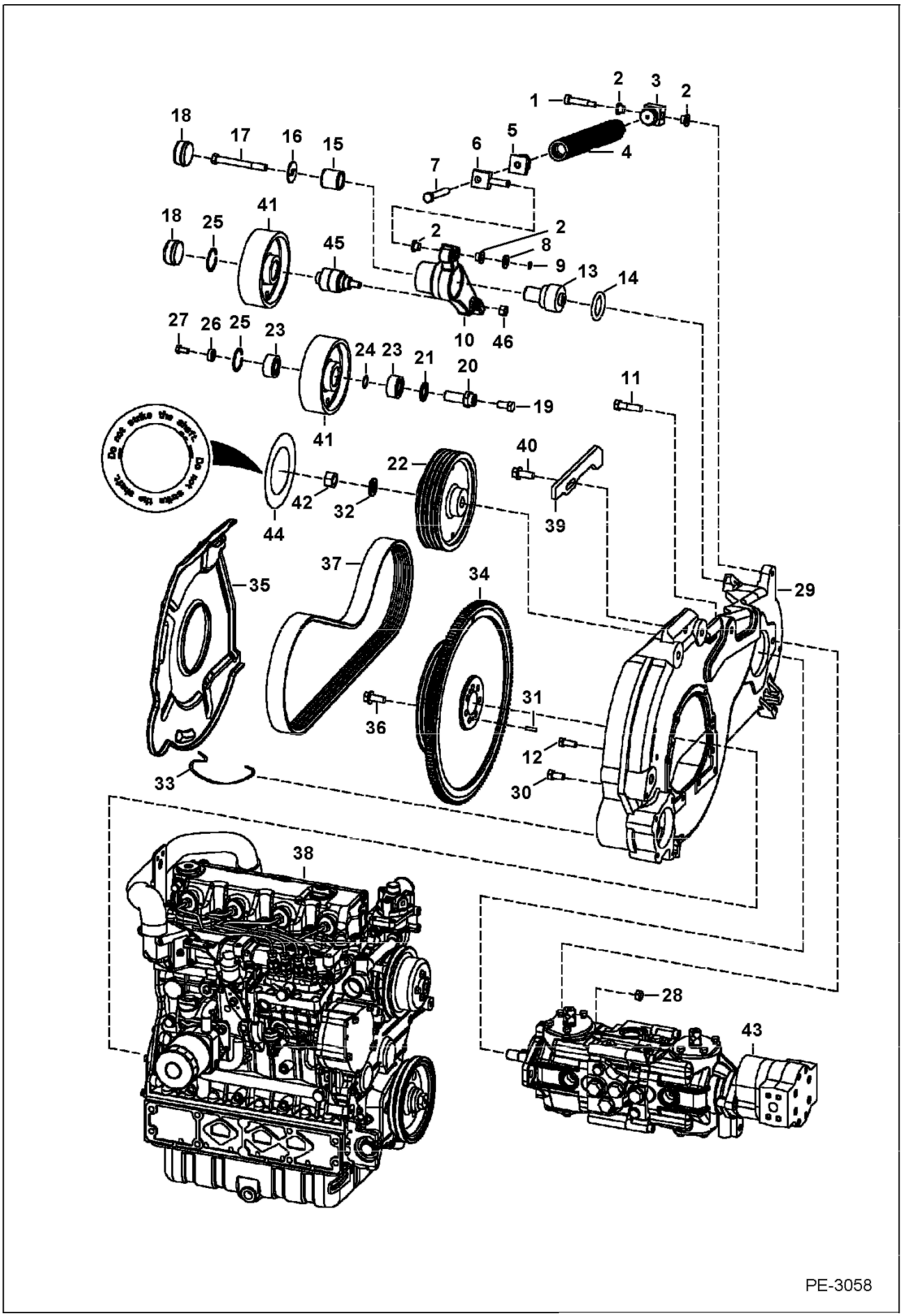

Page 230 - OSS# 2071408 - All rights reserved by Bobcat Company - 12/04/2009 - 07:23:36 - Produced by Ken Cook Co. with mediaioff

Ref No	Part Number	Description	Remarks	Serial Number	Qty
1	38C828	BOLT	shoulder		1
2	1313116	BUSHING			3
3	6568424	ADAPTER			1
4	6569498	SPRING ASSY			1
5	6568425	ADAPTER			1
6	6587182	SWIVEL PIN			1
7	6586710	BOLT			1
8	1EM120	WASHER	Was 25E21 [B]		2
9	6518955	SNAP RING			1
10	6735709	IDLER			1
11	17C832	BOLT	hydrostatic pump mount		2
12	6730894	BOLT			2
13	6707699	PIVOT			1
14	6661377	SEAL			1
15	6587765	BUSHING, PRESS FIT			1
16	6707698	WASHER			1
17	17C872	BOLT			1
18	6660967	CAP	grease		2
19		BOLT	NSS - Order Ref. 45 & 46 - Was 17C816 [B]		1
20		SPINDLE	NSS - Order Ref. 45 & 46 - Was 6707654 [B]		1
21		SEAL	NSS - Order Ref. 45 & 46 - Was 6665307 [B]		1
22	7111581	PULLEY	pump - 8.5" (216 mm) OD		1
23		BEARING	NSS - Order Ref. 45 & 46 - Was 6661229 [B]		2
24		SHIM	NSS - Order Ref. 45 & 46 - Was 6701159 [B]		1
25	6665308	SNAP RING			1
26		WASHER	NSS - Order Ref. 45 & 46 - Was 6707697 [B]		1
27		BOLT 5	NSS - Order Ref. 45 & 46 - Was 17C612 [B]		1
28	85D8	NUT, 5			2
29	6735980	MOUNT	has an extra hole for fan drive idler mounting bolt	& Bel	1
29	7141328	MOUNT ENGINE		& Abv	1
30	6719828	BOLT			10
31	14J3112	PIN			2
32	6576033	WASHER			1
33	6701160	CLIP			3
34	7100859	FLYWHEEL ASSY	W/ ring gear		1
34	6665222	GEAR, RING STARTER			1
35		SHIELD	NAP - Order 7109579 shield, Also Order 7130536 bracket		1
35	7141330	SHIELD DRIVE	has webbed center - Was 7109579 [A]		1
36	6680747	BOLT, FLYWHEEL			6
37	6662855	BELT, DRIVE	pump drive		1
38		ENGINE	See Illustration ENGINE/ B26157		1
39	6729944	STOP	idler		1
40	31C820	BOLT			1
41	6708445	PULLEY	drive idler		1
42	92D12	NUT			1
43		PUMP	See Illustration HYDROSTATIC PUMP/GEAR PUMP/ PE2824		1
44		DECAL	NAP - pulley - do not strike - Was 7122009 [A]		1
45	6691330	BEARING	idler		1
46	95D8	NUT			1

Page 231 - OSS# 2071408 - All rights reserved by Bobcat Company - 12/04/2009 - 07:23:36 - Produced by Ken Cook Co. with mediaioff

ENGINE & ATTACHING PARTS
(Engine Mounts)

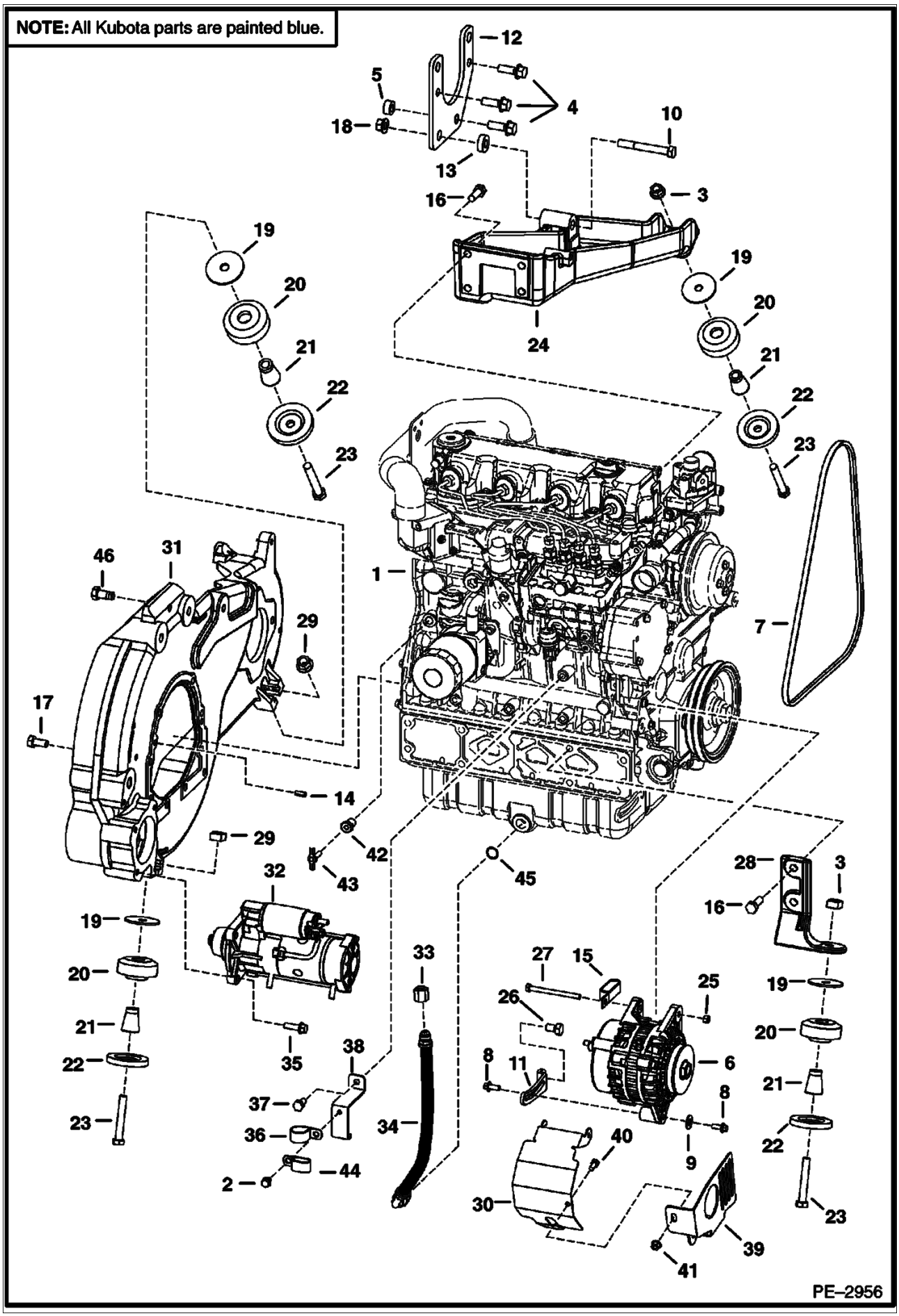

Page 232 - OSS# 2071408 - All rights reserved by Bobcat Company - 12/04/2009 - 07:23:36 - Produced by Ken Cook Co. with mediaioff

ENGINE & ATTACHING PARTS (Cont'd)
(Engine Mounts)

Ref No	Part Number	Description	Remarks	Serial Number	Qty
1		ENGINE	See Illustration ENGINE/ B26157		1
2	84G3116	SCREW	Was 84G3108 [B]		1
3	83D8	NUT 5			2
4	7131273	SCREW	selectable joystick controls - Was 59CM1240 [A]		2
4	31C824	BOLT 10	for standard control		3
5	7105753	SPACER			1
6		ALTERNATOR	See Illustration ALTERNATOR/ C3529		1
7	6686655	BELT	alternator / water pump		1
8	29CM820	SCREW			2
9	6E5	WASHER		& Bel	1
10		BOLT 5	See Illustration ENGINE MOUNTS/ NA2353		1
11	6732193	BRACKET			1
12		SUPPORT	See Illustration ENGINE MOUNTS/ NA2353		1
13	7106750	SPACER	for standard control		1
13	7107572	SPACER	for selectable joystick control		1
14	14J3112	PIN	align Ref. 31 to the engine		2
15	31H38	CLAMP		& Bel	1
15	31H34	CLIP		& Abv	1
16	6719829	BOLT			6
17	6719828	BOLT			10
18	83D10	NUT 5			1
19	6705106	WASHER	3" (76,2mm) O.D.		4
20	6668104	MOUNT, ENG			4
21	7110276	SPACER, TAPERED			4
22	6661787	WASHER			4
23	43C852	BOLT			4
24		MOUNT	See Illustration ENGINE MOUNTS/ NA2353		1
25	53DM8	NUT			1
26	6CM1220	BOLT			1
27	1CM8110	HEX CAP S	Was 1CM8100 [D]		1
28	6735346	MOUNT	cast		2
29	6652918	NUT	square		2
30	6733873	SHIELD	alternator		1
31	6735980	MOUNT	has an extra hole for fan drive idler mounting bolt	& Bel	1
31	7141328	MOUNT ENGINE		& Abv	1
32		STARTER	See Illustration STARTER/ B16488R		1
33	36K6	CAP			1
34	6734573	HOSE, ENG OIL DRAIN	12.5" (318mm) long		1
35	45C620	BOLT			3
36	30H73	CLAMP			1
37	5CM1020	SCREW			1
38	7112683	BRACKET			1
39	6734436	SHIELD	alternator belt		1
40	17C510	BOLT			1
41	83D5	NUT 5			1
42	7101136	BUSHING			1
43	72F1	FITTING			1
44	31H34	CLIP			1
45	79K8	O RING 10			1
46	31C820	BOLT			1

Page 233 - OSS# 2071408 - All rights reserved by Bobcat Company - 12/04/2009 - 07:23:36 - Produced by Ken Cook Co. with mediaioff

Page 234 - OSS# 2071408 - All rights reserved by Bobcat Company - 12/04/2009 - 07:23:36 - Produced by Ken Cook Co. with mediaioff

Ref No	Part Number	Description	Remarks	Serial Number	Qty
1	7109792	MOUNT			1
2	7106240	SUPPORT			1
3	7131273	SCREW			3
4	6719829	BOLT			6
5	7107572	SPACER	SJC		1
6	7105753	SPACER			1
7	83D10	NUT 5			1
8	17C1064	BOLT 5			1
9	7181229	KIT, MOUNT ISOLATED	Ref. 10-19		2
10	45C824	BOLT	Use W/Sauer-Danfoss pump		2
11	7147389	SUPPORT			1
12	43C680	BOLT			1
13	7149357	MOUNT, LOAD ISOLATOR			1
14	6737388	WASHER			2
15	7147350	SPACER, TUBE			1
16	27E6	WASHER 5			1
17	53D6	NUT			1
17	53D6	NUT			1
18	7131273	SCREW	Use W/Rexroth pump		2
19	6987496	INSTRUCTIONS			1

Page 235 - OSS# 2071408 - All rights reserved by Bobcat Company - 12/04/2009 - 07:23:36 - Produced by Ken Cook Co. with mediaioff

ENGINE SPEED CONTROL

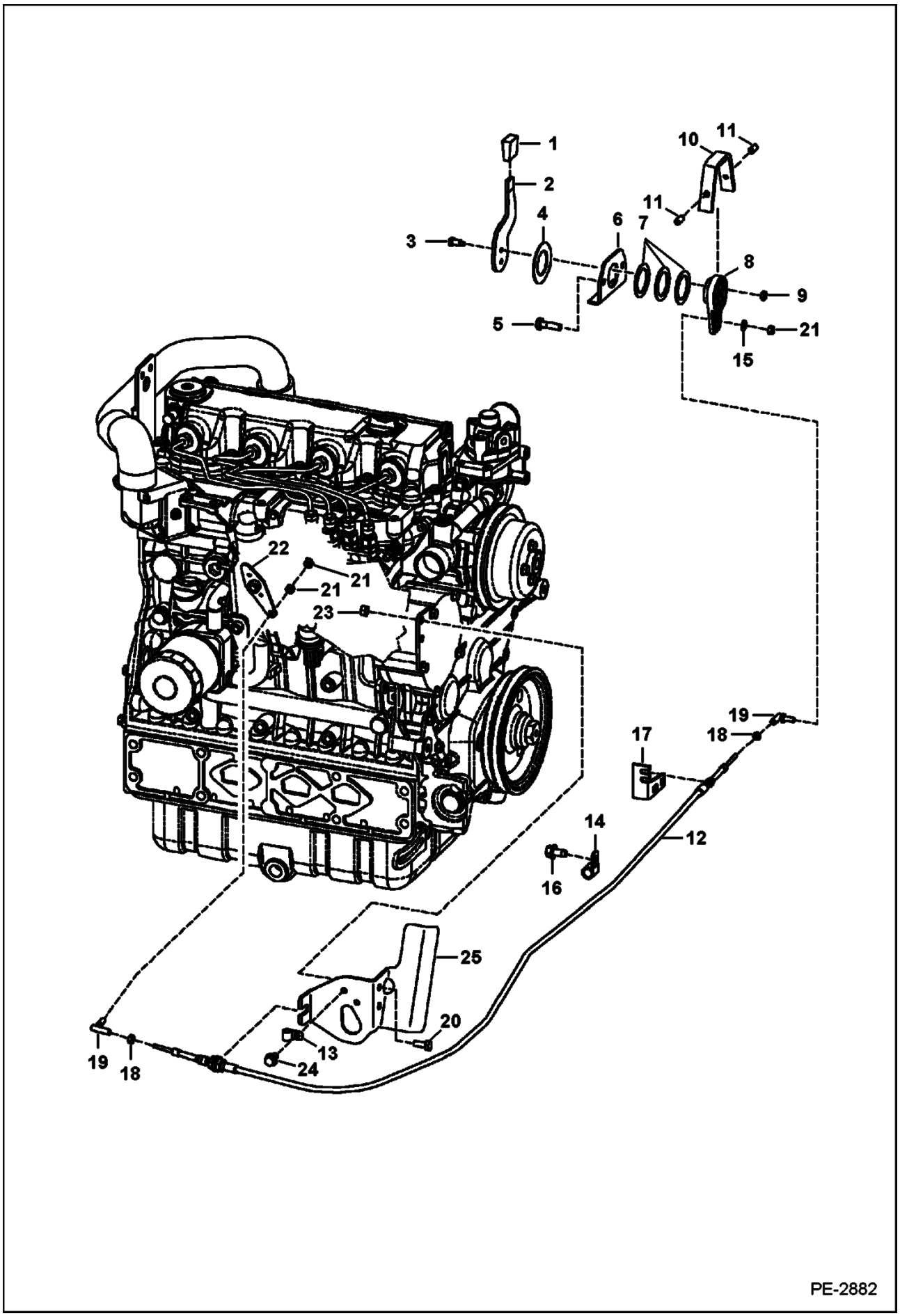

Page 236 - OSS# 2071408 - All rights reserved by Bobcat Company - 12/04/2009 - 07:23:36 - Produced by Ken Cook Co. with mediaioff

Ref No	Part Number	Description	Remarks	Serial Number	Qty
1	6564452	GRIP			1
2	6705452	LEVER			1
3	38C610	BOLT	shoulder		2
4	6567962	WASHER			1
5	84G3728	BOLT	Was 84G3724 [B]		2
6	6576262	MOUNT			1
7	6630945	WASHER			3
8	6734416	LEVER			1
9	85D5	NUT 5			6
10	6576261	COVER	Was 6734520 [A]		1
11	6706572	SET SCREW			2
12	6675668	CABLE, THROTTLE			1
13	30H26	CLIP			1
14	30H31	CLAMP 10			1
15	25E11	WASHER			1
16	84G3712	BOLT			1
17	6732450	BRACKET			1
18	14D10	NUT			2
19	6644965	BALL JOINT			1
20	17C512	BOLT 5			2
21	62D4	NUT			3
22		LEVER	See Illustration GOVERNOR/ B22930 - Ref. 12		1
23	95D5	NUT			2
24	84G3110	SCREW			1
25	6734772	MOUNT			1

Page 237 - OSS# 2071408 - All rights reserved by Bobcat Company - 12/04/2009 - 07:23:36 - Produced by Ken Cook Co. with mediaioff

ENGINE SPEED CONTROL
(Selectable Joystick Controls)

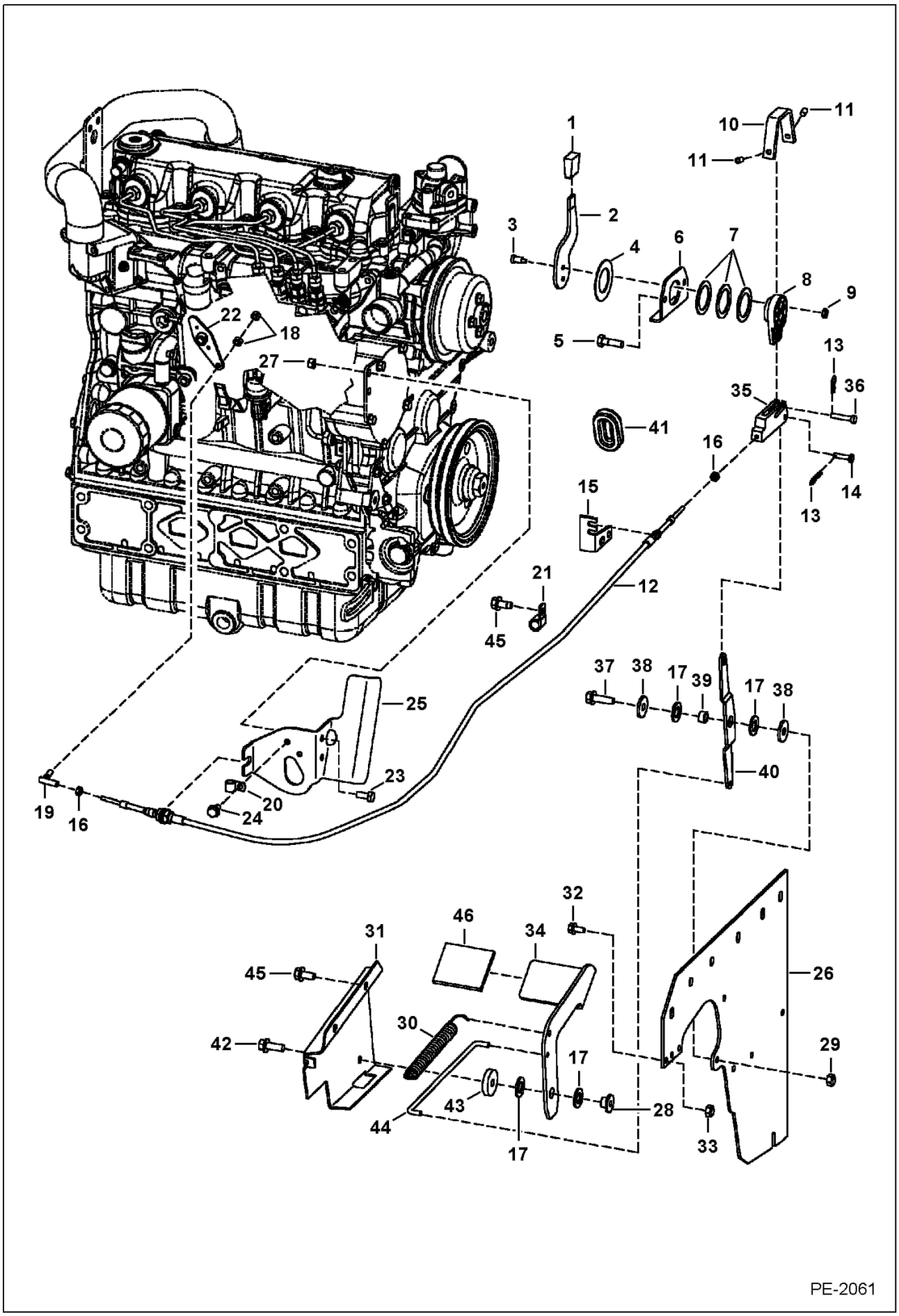

Page 238 - OSS# 2071408 - All rights reserved by Bobcat Company - 12/04/2009 - 07:23:36 - Produced by Ken Cook Co. with mediaIoff

Ref No	Part Number	Description	Remarks	Serial Number	Qty
1	6564452	GRIP			1
2	6730270	LEVER			1
3	38C610	BOLT	shoulder		2
4	6567962	WASHER			1
5	84G3728	BOLT	Was 84G3724 [B]		2
6	6576262	MOUNT			1
7	6630945	WASHER			3
8	6734416	LEVER			1
9	85D5	NUT 5			6
10	6576261	COVER	Was 6734520 [A]		1
11	6706572	SET SCREW			2
12	6675668	CABLE, THROTTLE			1
13	6513495	COTTER PIN			2
14	2F4051	PIN			1
15	6732450	BRACKET			1
16	14D10	NUT			2
17	6700170	WASHER	plastic		4
18	62D4	NUT			2
19	6644965	BALL JOINT			1
20	30H26	CLIP			1
21	30H31	CLAMP 10			1
22		LEVER	See Illustration GOVERNOR/ B22930 - Ref. 12		1
23	17C512	BOLT 5			2
24	84G3110	SCREW			1
25	6734772	MOUNT			1
26		PANEL	See Illustration PANELS/ PE2841		1
27	95D5	NUT			2
28	6559479	NUT	retaining		1
29	85D6	LOCK NUT			1
30	6700743	SPRING			1
31	6732323	BRACKET			1
32	84G3712	BOLT			2
33	95D6	NUT			2
34	6735680	FOOT PEDAL			1
35	6734503	CLEVIS			1
36	1304227	PIN			1
37	84G3720	BOLT			1
38	619021	WASHER, 5			2
39	6564343	SPACER			1
40	6734417	LEVER			1
41	6577961	GROMMET			1
42	45C616	BOLT			1
43	6732322	SPACER			1
44	6731900	ROD			1
45	84G3712	BOLT			2
46	6554100	TREAD	3" x 6" (76,2 mm x 152,4 mm)		1

Page 239 - OSS# 2071408 - All rights reserved by Bobcat Company - 12/04/2009 - 07:23:36 - Produced by Ken Cook Co. with mediaioff

ENGINE
(V3300 DI T Kubota)

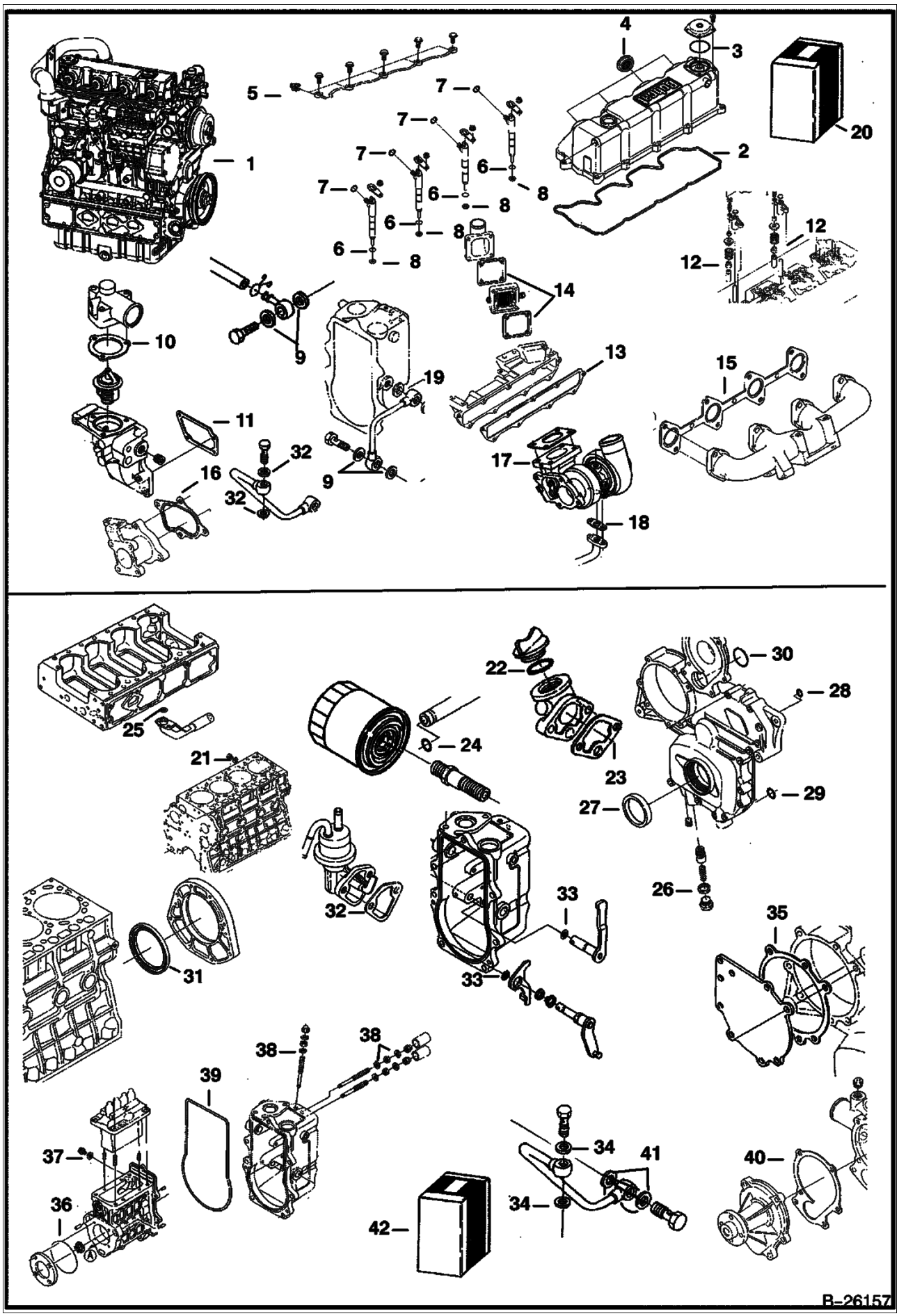

Page 240 - OSS# 2071408 - All rights reserved by Bobcat Company - 12/04/2009 - 07:23:36 - Produced by Ken Cook Co. with mediaioff

Ref No	Part Number	Description	Remarks	Serial Number	Qty
1	6684576	ENGINE, V3300-DI-T-E2CB-BOB2	complete - includes turbocharger, fuel injection pump, intake & exhaust manifolds		1
1	6684576REM	ENGINE, KUBOTA V3300T DI-E2CB-BOB2 TIER 2			1
2	6680690	GASKET	head cover		1
3	6680691	O-RING			1
4	6680695	SEAL	injection pipe		4
5	6685498	GASKET	overflow pipe		5
6	6670769	O-RING			4
7	6680778	O-RING			4
8	6680779	GASKET	nozzle		4
9	3974095	MET-GASK	copper - Was 6680792 [A]		2
10	6685955	GASKET	thermostat cover		1
11	6680849	GASKET	water flange		1
12	6672436	SEAL			16
13	6680884	GASKET			1
14	6680887	GASKET	Was 6685960 [A]		2
15	6680891	GASKET			1
16	6687147	GASKET			1
17	6680893	GASKET			1
18	6680570	GASKET	oil pipe - Was 6685964 [A]		1
19	6685962	GASKET	consists of 2 gaskets attached by a tab		x
20	6689756	KIT, UPPER GASKET	upper gasket- W/Ref 2-19		1
21	6652751	GASKET	Was 6631046 [D]		1
22	6684782	O-RING	oil fill plug - Was 3966602 [A]		1
23	6685923	GASKET	oil filler flange		1
24	6685971	O-RING			1
25	6680661	O-RING			1
26	6670347	GASKET			1
27	6680680	SEAL	oil		1
28	6680681	O-RING			1
29	6680682	O-RING			1
30	6680855	O-RING			1
31	6680705	SEAL			1
32	6670782	GASKET	fuel pump		1
33	6683023	O-RING			3
34	6685962	GASKET	consists of 2 gaskets attached by a tab		x
35	6685948	GASKET			1
36	6680816	O-RING			1
37	3974095	MET-GASK			4
38	3974972	GASKET			6
39	6680829	GASKET	governor housing		1
40	6680853	GASKET	water pump		1
41	6689331	GASKET	aluminum		1
42	6689755	KIT	lower gasket - W/Ref 21-41		1

Page 241 - OSS# 2071408 - All rights reserved by Bobcat Company - 12/04/2009 - 07:23:36 - Produced by Ken Cook Co. with mediaioff

MANIFOLDS
(V3300 DI T Kubota)

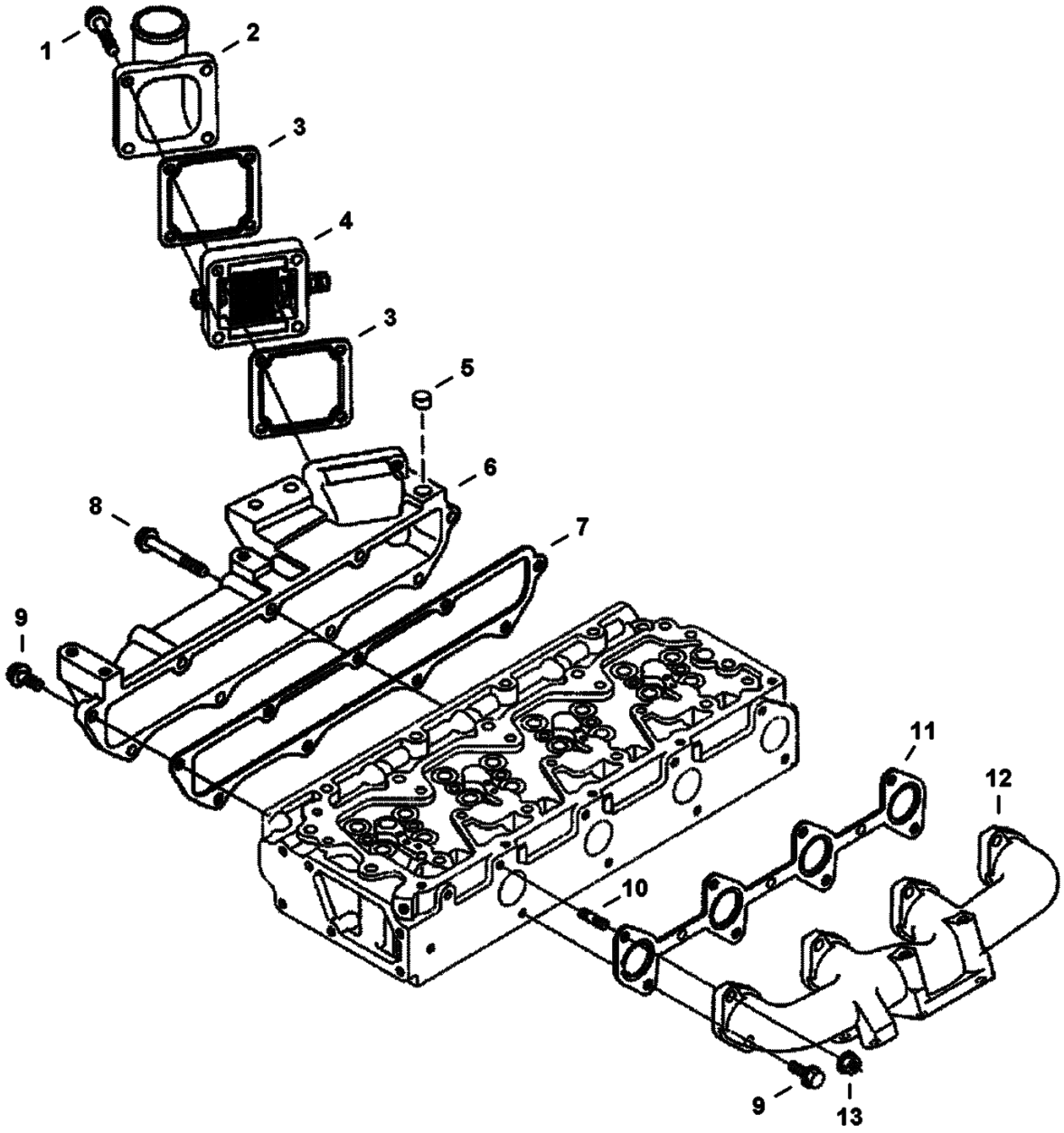

Page 242 - OSS# 2071408 - All rights reserved by Bobcat Company - 12/04/2009 - 07:23:36 - Produced by Ken Cook Co. with mediaIoff

Ref No	Part Number	Description	Remarks	Serial Number	Qty
1	6680851	BOLT			4
2	6680886	FLANGE			1
3	6680887	GASKET	Was 6685960 [A]		2
4	6680888	HEATER			1
5	3974409	PLUG	Was 6685961 [A]		1
6	6680883	MANIFOLD	intake		1
7	6680884	GASKET	manifold		1
8	6680885	BOLT			3
9	6680801	BOLT			10
10	6652670	STUD	Was 3974916B [A]		4
11	6680891	GASKET	manifold		1
12	6680890	MANIFOLD	exhaust		1
13	6680663	NUT			1

Page 243 - OSS# 2071408 - All rights reserved by Bobcat Company - 12/04/2009 - 07:23:36 - Produced by Ken Cook Co. with mediaioff

TURBOCHARGER
(V3300 DI T Kubota) (Tier II)

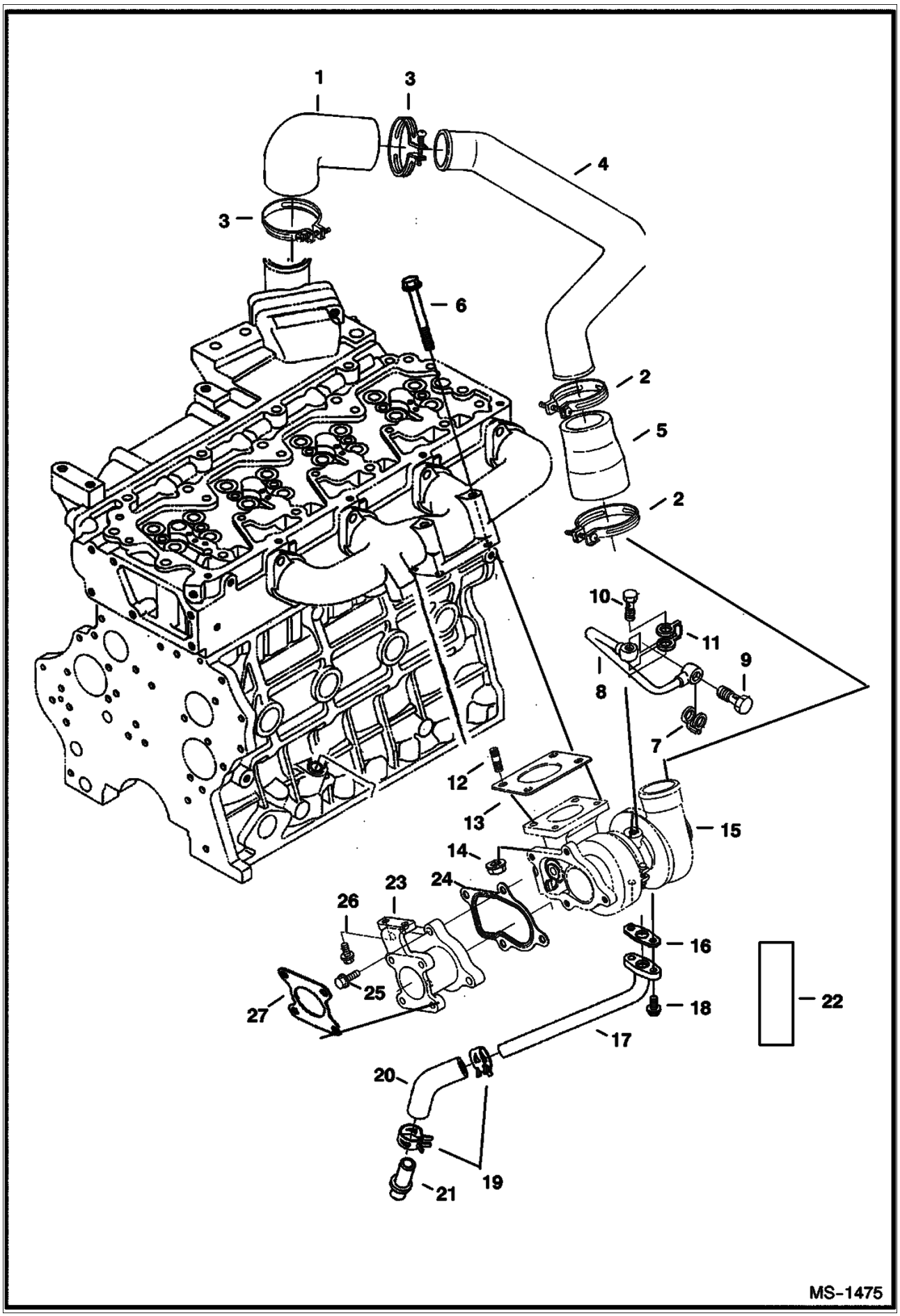

Page 244 - OSS# 2071408 - All rights reserved by Bobcat Company - 12/04/2009 - 07:23:36 - Produced by Ken Cook Co. with mediaioff

TURBOCHARGER (Cont'd)
(V3300 DI T Kubota) (Tier II)

Ref No	Part Number	Description	Remarks	Serial Number	Qty
1	6680896	HOSE			1
2	6653993	CLAMP			2
3	3974143	BAND,PIPE			2
4	6680895	HOSE			1
5	6680894	HOSE			1
6	6680802	BOLT			2
7	3974095	MET-GASK	copper - Was 6680792 [A]		2
7	6689331	GASKET	1 piece aluminum		1
8	6680899	TUBE			1
9	6680791	BOLT	hollow		1
10	6680900	BOLT	hollow		1
11	6685962	GASKET	consists of 2 gaskets attached by a tab		x
12	6680564	STUD			2
13	6680893	GASKET			1
14	6680663	NUT			2
15	6680892	TURBO, CHARGER	W/Ref. 22		1
15	6680892REM	TURBOCHARGER, KUBOTA V3300	W/Ref. 22		1
16	6680570	GASKET	oil return tube		1
17	6685963	PIPE			1
18	29CM612	BOLT			2
19	6680903	CLAMP			2
20	6685965	HOSE			1
21	6680649	TUBE			1
22	6688069	HOSE	turbocharger		1
23	6687145	FLANGE			1
24	6687147	GASKET			1
25	6687146	BOLT			4
26	6680755	BOLT			2
27	7102747	GASKET			1

Page 245 - OSS# 2071408 - All rights reserved by Bobcat Company - 12/04/2009 - 07:23:36 - Produced by Ken Cook Co. with mediaioff

CYLINDER HEAD & COVER
(V3300 DI T Kubota)

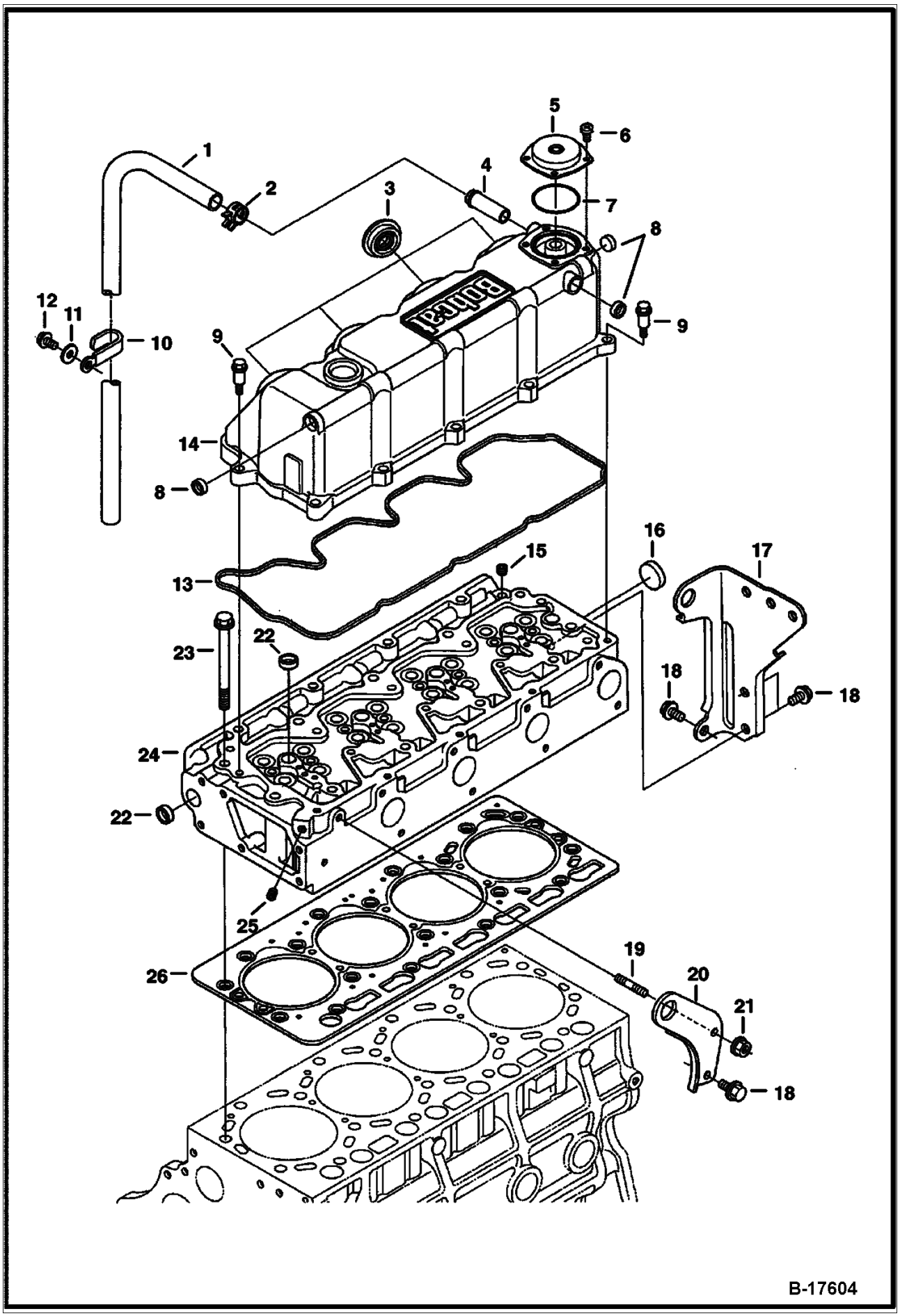

Page 246 - OSS# 2071408 - All rights reserved by Bobcat Company - 12/04/2009 - 07:23:36 - Produced by Ken Cook Co. with mediaIoff

CYLINDER HEAD & COVER (Cont'd)
(V3300 DI T Kubota)

Ref No	Part Number	Description	Remarks	Serial Number	Qty
1	6685930	HOSE			1
2	6680698	CLAMP			1
3	6680695	SEAL	injection tube		4
4	6680689	ADAPTER			1
5	6688655	COVER, BREATHER	breather - Was 6680692 [A]		1
6	6680693	SCREW			4
7	6680691	O-RING			1
8	6680694	PLUG			3
9	6680696	BOLT			10
10	6680699	CLAMP			1
11	6680700	WASHER			1
12	6680658	BOLT			1
13	6680690	GASKET			1
14	6680688	HEAD COVER	W/Ref. 3-8 & 13		1
15	6652574	PLUG	Was 6598169 [A]		1
16	3974433	PLUG	Was 6680666 [A]		1
17	6685926	BRACKET			1
18	6680662	BOLT			4
19	6652670	STUD	Was 3974916B [A]		1
20		BRACKET	NAP - part is not serviced - Was 6598133 [D]		1
21	6680663	NUT			1
22	3974432	PLUG	Was 6680665 [A]		5
23	6680668	BOLT			18
24	6693482	CYLINDER HEAD ASSY	W/Ref. 15, 16, 22 - Ref. 15-21, 25 & 26 on Ill. NA2220 - Was 6685927 [A]		1
25	6680667	PLUG			1
26	6680669	HEAD GASKET	0.80mm - .0315" thick tightened - 2 notch		1
26	6680670	HEAD GASKET	0.90mm - .0354" thick tightened - 1 notch		1
26	6680671	HEAD GASKET	0.95mm - .0374" thick tightened - 0 notch		1

Page 247 - OSS# 2071408 - All rights reserved by Bobcat Company - 12/04/2009 - 07:23:36 - Produced by Ken Cook Co. with mediaioff

CYLINDER HEAD
(V3300 DI T Kubota)

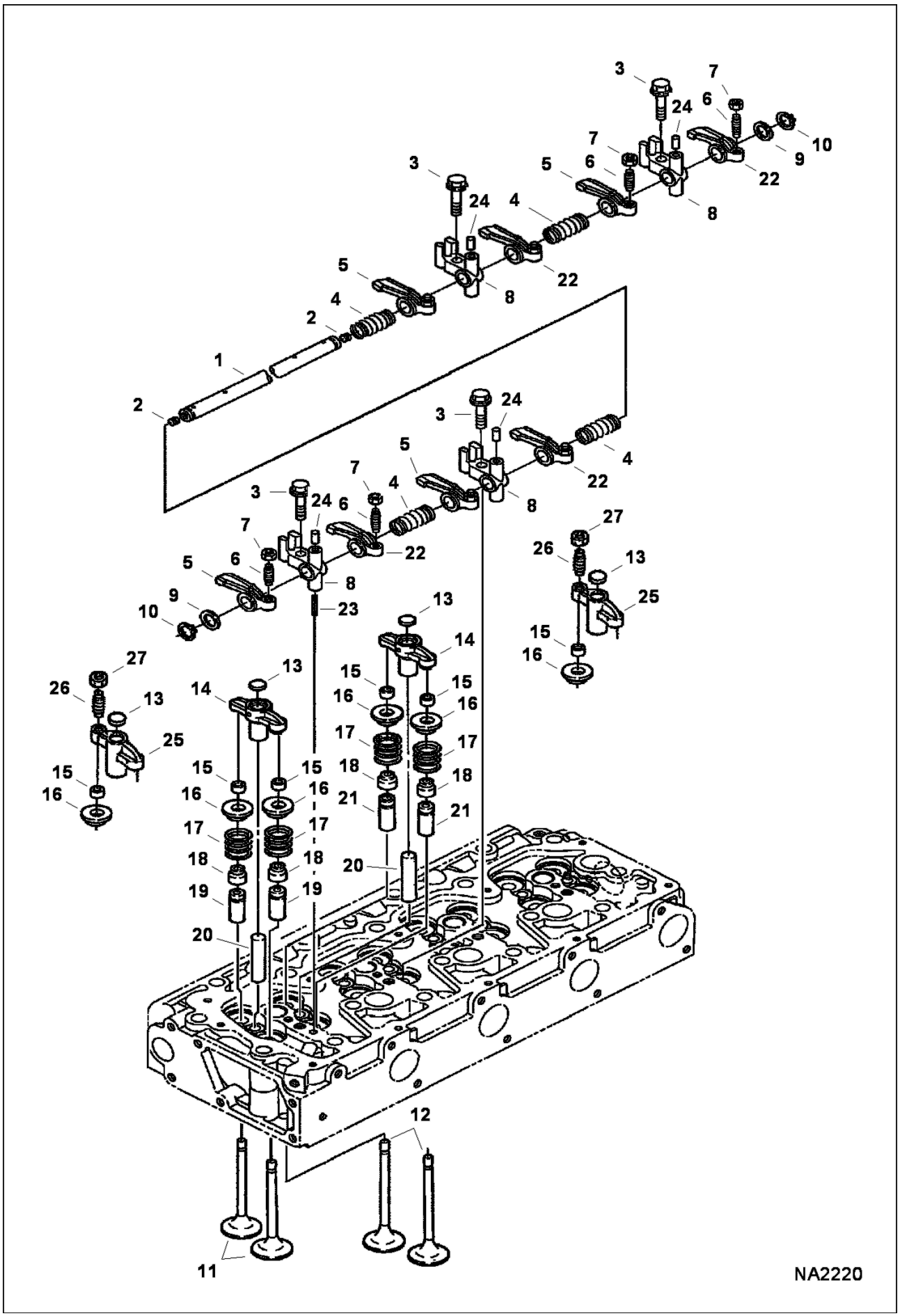

Page 248 - OSS# 2071408 - All rights reserved by Bobcat Company - 12/04/2009 - 07:23:36 - Produced by Ken Cook Co. with mediaIoff

Ref No	Part Number	Description	Remarks	Serial Number	Qty
1	6680878	BOLT			4
2	25GM8010	SCREW	SCREW,SET		2
3	6680868	SHAFT			1
4	6680872	SPRING			3
5	6680873	ROCKER ARM			4
6	3974920	SCREW			8
7	2DM8	NUT	NUT		4
8	6680869	BRACKET			4
9	6680870	WASHER			2
10	6680871	SNAP RING			2
11	6680861	VALVE			8
12	6680862	VALVE			8
13	6680882	PAD			8
14	6698524	ARM, VALVE BRIDGE		E/ 8C0001 & Abv	8
15	7008389	RETAINER, VALVE SPRING	SET		16
16	6685959	RETAINER			16
17	6680863	VALVE SPRING			16
18	6672436	SEAL			16
19	6680859	GUIDE			8
20	6680866	SHAFT			8
21	6685958	GUIDE			8
22	6680875	ROCKER ARM			4
23	6667461	PIN			1
24	6680877	PIN			4
25	6680879	ARM		E/ 8A4650 & Bel	8
26	6680880	SCREW		E/ 8A4650 & Bel	8
27	6680881	NUT		E/ 8A4650 & Bel	8

Page 249 - OSS# 2071408 - All rights reserved by Bobcat Company - 12/04/2009 - 07:23:36 - Produced by Ken Cook Co. with mediaioff

OIL PAN
(V3300 DI T Kubota)

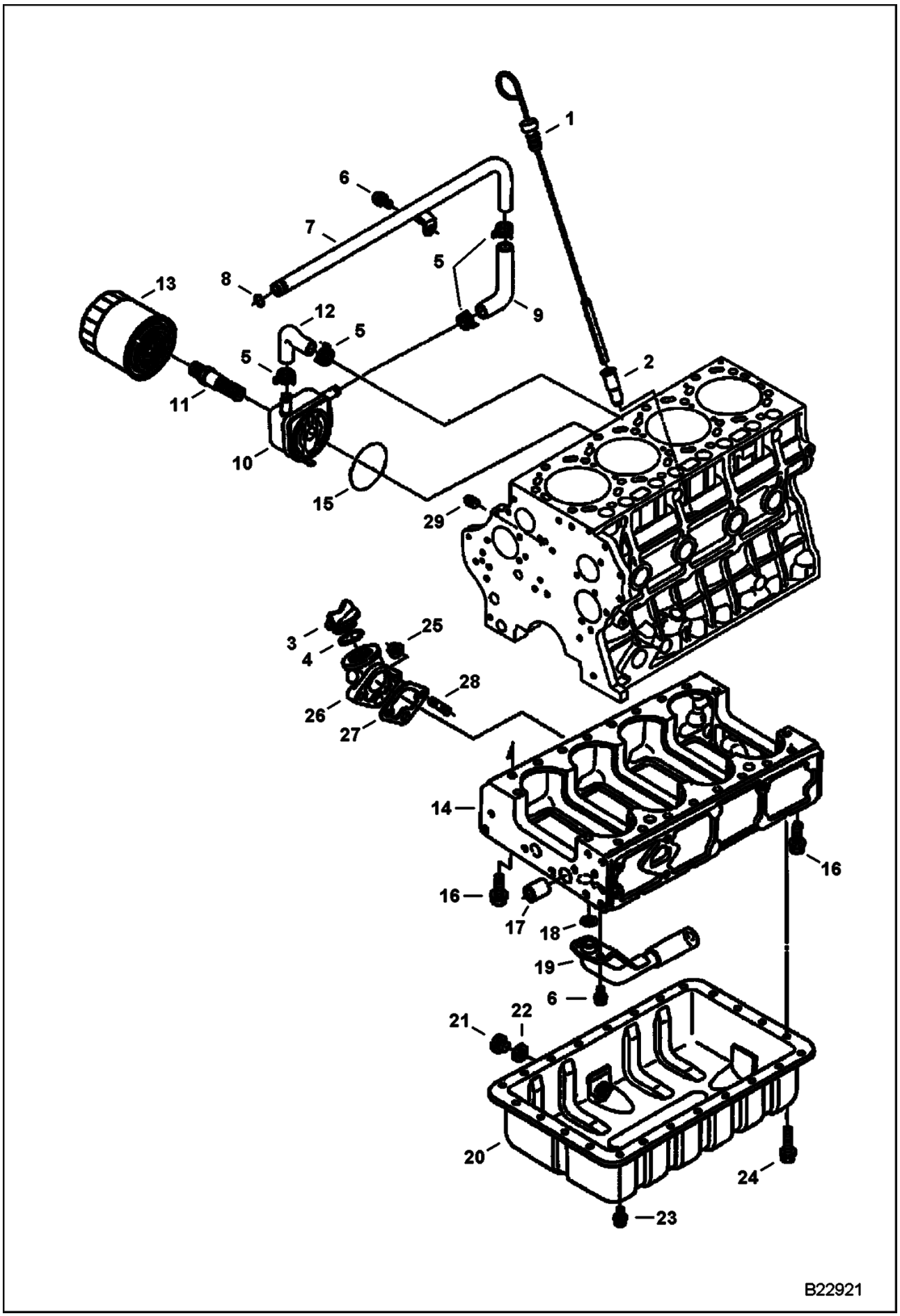

Page 250 - OSS# 2071408 - All rights reserved by Bobcat Company - 12/04/2009 - 07:23:36 - Produced by Ken Cook Co. with mediaioff

OIL PAN (Cont'd)
(V3300 DI T Kubota)

Ref No	Part Number	Description	Remarks	Serial Number	Qty
1	6690692	DIPSTICK	Was 6680703 [A]		1
2	6680702	TUBE	dipstick		1
3	6685924	CAP			1
4	6684782	O-RING	oil fill plug - Was 3966602 [A]		1
5	6675618	CLAMP			4
6	6680662	BOLT			3
7	6685970	HOSE			1
8	6685971	O-RING			1
9	6685972	HOSE			1
10	6680909	OIL COOLER			1
11	6680910	ADAPTER			1
12	6685969	HOSE			1
13	6678233	FILTER, OIL ENG			1
14	6685921	CRANKCASE		E/ 7RZ999 & Bel	1
14	6698527	BLOCK, ENG. LOWER		E/ 7S0001 & Abv	1
15	6686402	SEAL			1
16	6680654	BOLT			16
17	6680655	PIN	gear case		1
18	6680661	O-RING			1
19	6680660	SCREEN, OIL			1
20	6680656	OIL PAN			1
21	6680657	PLUG	oil		1
22	6631046	SEAL	rubber		1
23	6685925	BOLT			20
24	6680659	BOLT			4
25	6680663	NUT			2
26	6685922	FLANGE	oil fill		1
27	6685923	GASKET			1
28	6652670	STUD	Was 3974916B [A]		2
29	16F2	PLUG			1

Page 251 - OSS# 2071408 - All rights reserved by Bobcat Company - 12/04/2009 - 07:23:36 - Produced by Ken Cook Co. with mediaioff

PISTON & CRANKSHAFT
(V3300 DI T Kubota)

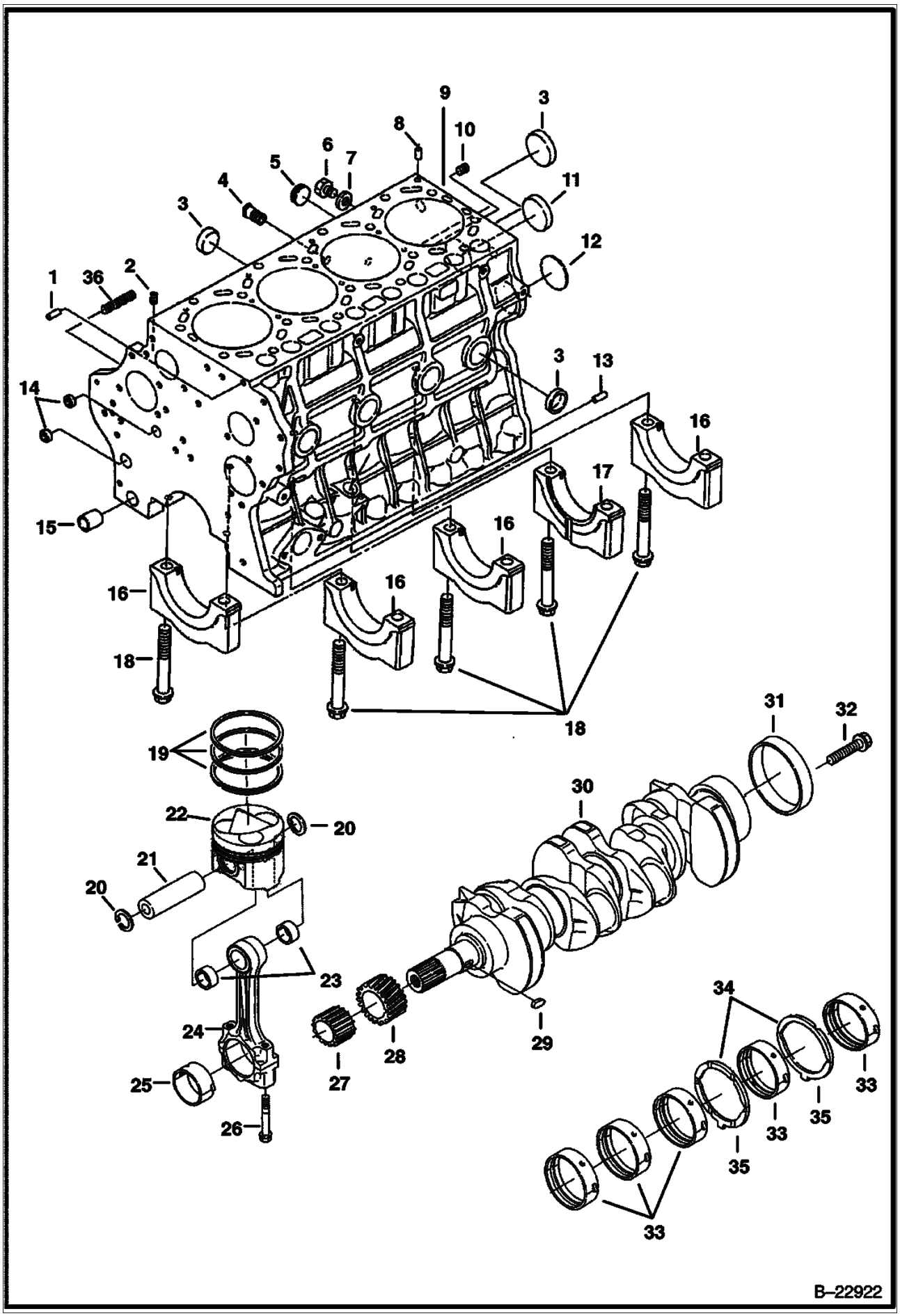

Page 252 - OSS# 2071408 - All rights reserved by Bobcat Company - 12/04/2009 - 07:23:36 - Produced by Ken Cook Co. with mediaioff

PISTON & CRANKSHAFT (Cont'd)
(V3300 DI T Kubota)

Ref No	Part Number	Description	Remarks	Serial Number	Qty
1	21JM814	PIN	dowel		1
2	6652574	PLUG	Was 6598169 [A]	E/ 7M9999 & Bel	1
2	6680667	PLUG		E/ 7N0001 & Abv	1
3	3974389	CAP, SEALING	Was 6680638 [A]		7
4	6680646	ADAPTER	Was 6685920 [A]		1
5	6672354	PLUG			1
6	6652750	PLUG			1
7	6652751	GASKET			1
8	3974037	PIN	Was 6680643 [A]		2
9	6685917	CRANKCASE	W/Ref. 1-3, 5, 8, 10-18 & 36	E/ 6B9999 & Bel	1
9	6921065	COMP. CRANKCASE	W/Ref. 1-3, 5, 8, 10-18 & 36	E/ 6C0003 & Abv	1
10	6680636	PLUG			1
11	3974390	PLUG	Was 6680639 [A]		1
12	6680640	PLUG			1
13	6685918	PIN			2
14	3974056	CAP	Was 6680637 [A]		2
15	6680644	PIN			1
16		CAP	NSS - main bearing - Order Ref. 9		4
17		CAP	NSS - main bearing - Order Ref. 9		1
18	6680645	BOLT			10
19	6680723	PISTON RINGS	standard		4
19	6680724	PISTON RINGS	0.50mm oversized		4
20	6680726	SNAP RING	internal		8
21	6680725	PIN			4
22	6685933	PISTON	std (1G557-2111)		4
22	6685934	PISTON	+.50 mm (1G557-2112 OS50)		4
23	6680728	BUSHING			8
24	6680727	ROD	connecting - W/Ref. 23, 25 & 26- marked blue, yellow or w/o color		4
25	6680730	BEARING	rod - set - blue		4
25	6680731	BEARING	rod - set - yellow or w/o color		4
25	6680732	BEARING	rod - set - 0.20 mm		4
25	6680733	BEARING	rod - set - 0.40 mm		4
26	6680729	BOLT			8
27	6680737	GEAR	oil pump		1
28	6680736	GEAR	crankshaft		1
29	3974226	KEY			1
30	6680734	CRANKSHAFT	W/Ref. 27-29 & 31	E/ 5L2303 & Bel	1
30	6921064	COMP. CRANKSHAFT	W/Ref. 27-29 & 31	E/ 5L2304 & Abv	1
31	6680735	SLEEVE	crankshaft		1
32	6680747	BOLT, FLYWHEEL	flywheel		7
33	6680738	MAIN BEARING	standard - set		5
33	6680739	MAIN BEARING	0.20mm undersized - set		5
33	6680740	MAIN BEARING	0.40mm undersized - set		5
34	6680741	THRUST WASHER	standard		2
34	6680742	THRUST WASHER	0.20mm oversized		2
34	6680743	THRUST WASHER	0.40mm oversized		2
35	6680744	THRUST WASHER	standard		2
35	6680745	THRUST WASHER	0.20mm oversized		2

Page 253 - OSS# 2071408 - All rights reserved by Bobcat Company - 12/04/2009 - 07:23:36 - Produced by Ken Cook Co. with mediaioff

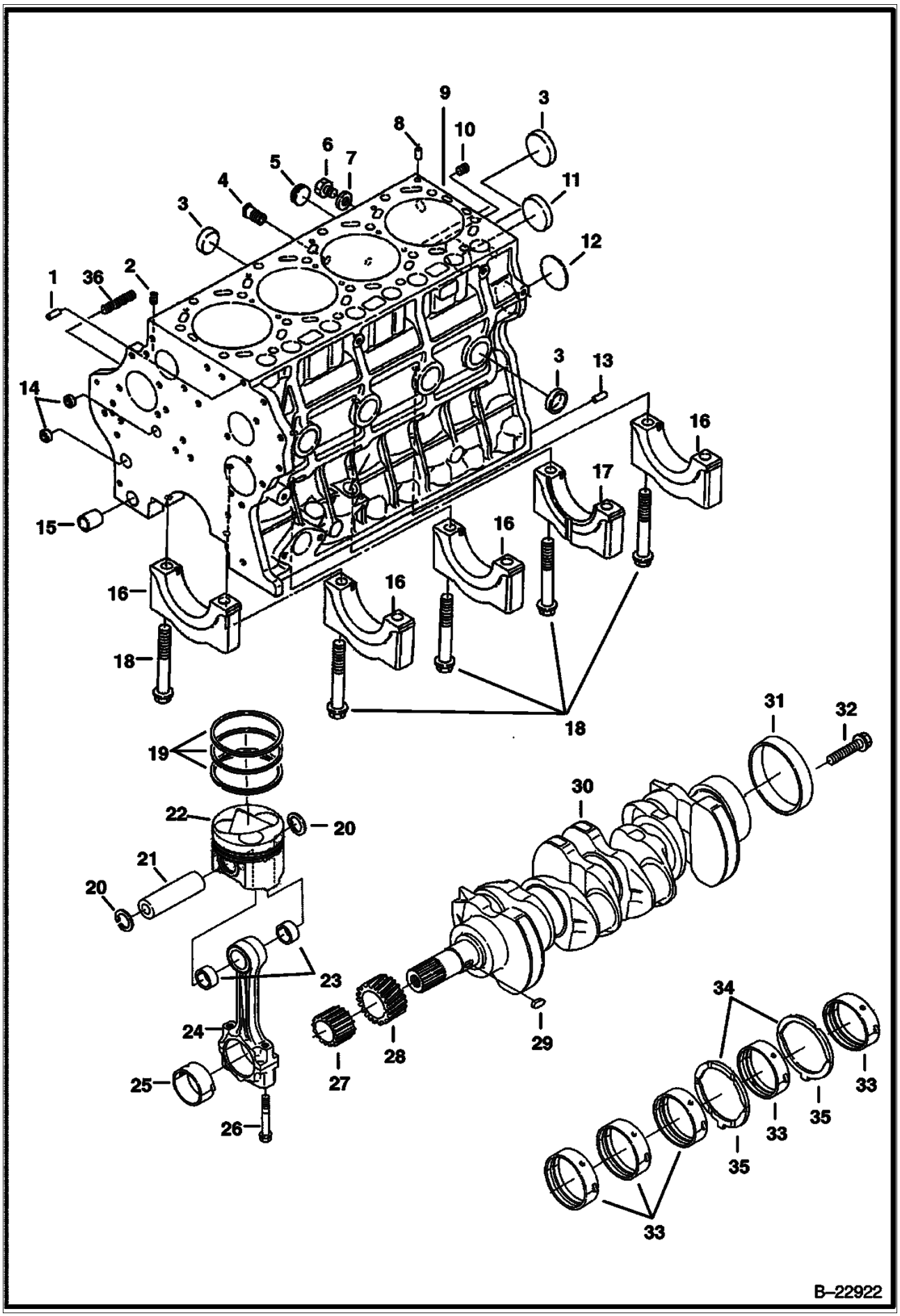

Page 254 - OSS# 2071408 - All rights reserved by Bobcat Company - 12/04/2009 - 07:23:36 - Produced by Ken Cook Co. with mediaioff

Ref No	Part Number	Description	Remarks	Serial Number	Qty
35	6680746	THRUST WASHER	0.40mm oversized		2
36	6685919	STUD			3

Page 255 - OSS# 2071408 - All rights reserved by Bobcat Company - 12/04/2009 - 07:23:36 - Produced by Ken Cook Co. with mediaioff

CAMSHAFT
(V3300 DI T Kubota)

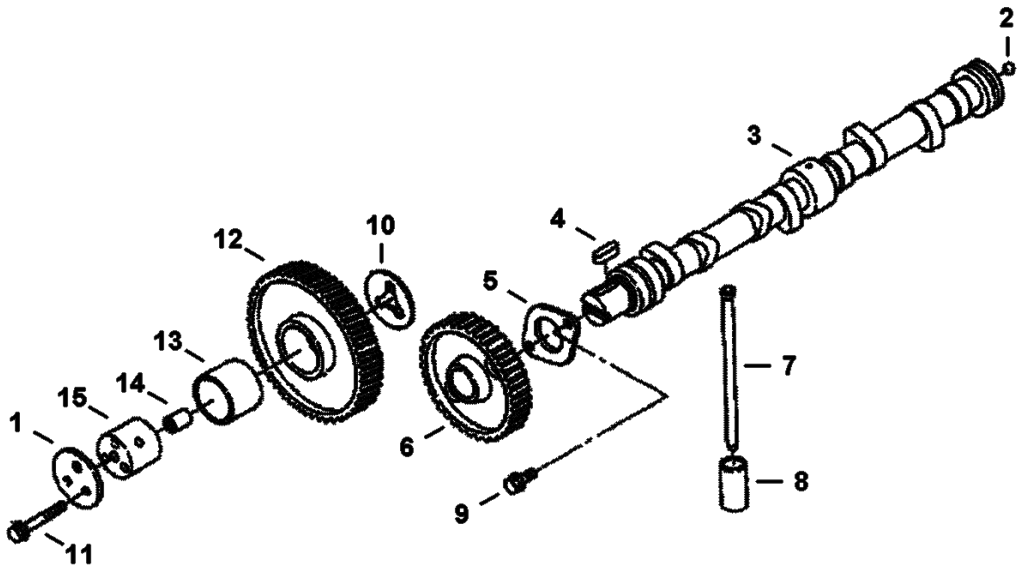

Page 256 - OSS# 2071408 - All rights reserved by Bobcat Company - 12/04/2009 - 07:23:36 - Produced by Ken Cook Co. with mediaioff

Ref No	Part Number	Description	Remarks	Serial Number	Qty
1	6680717	COLLAR			2
2	6680710	BALL			1
3	6680709	CAMSHAFT	W/Ref. 2 & 4-6		1
4	6652679	KEY			1
5	6680712	FLANGE			1
6	6680711	GEAR	cam		1
7	6680708	PUSH ROD			8
8	6667428	TAPPET			8
9	6680662	BOLT			2
10	6680716	COLLAR			1
11	6680685	BOLT			6
12	6685932	GEAR	W/Ref. 13		1
13	6680720	BUSHING			2
14	6680715	PIN			2
15	6680714	SHAFT	idler gear		2

Page 257 - OSS# 2071408 - All rights reserved by Bobcat Company - 12/04/2009 - 07:23:36 - Produced by Ken Cook Co. with mediaioff

FRONT COVER
(V3300 DI T Kubota)

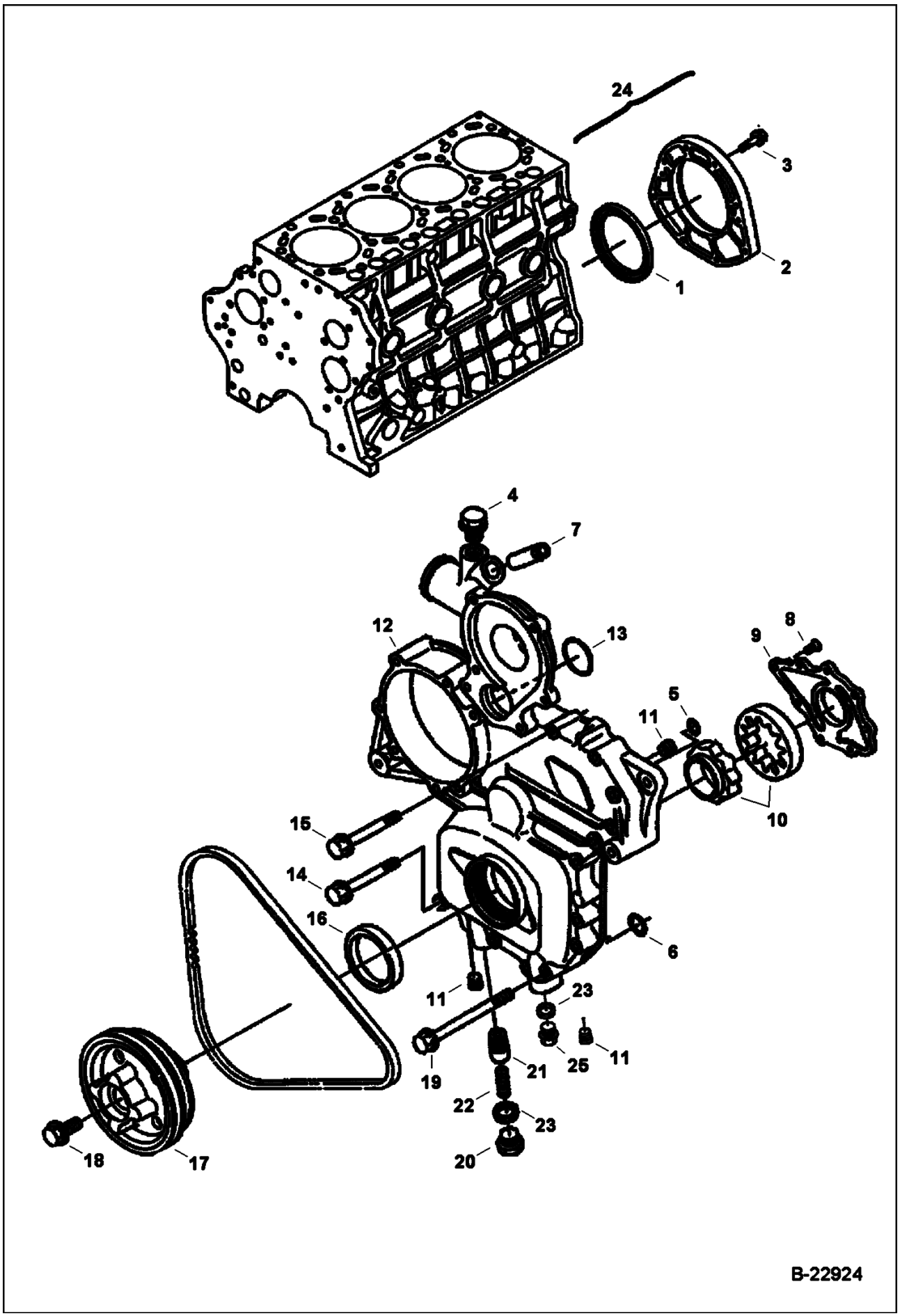

Page 258 - OSS# 2071408 - All rights reserved by Bobcat Company - 12/04/2009 - 07:23:36 - Produced by Ken Cook Co. with mediaioff

FRONT COVER (Cont'd)
(V3300 DI T Kubota)

Ref No	Part Number	Description	Remarks	Serial Number	Qty
1	6680705	SEAL	rear		1
2		COVER	NAP - Order Ref. 24 - Was 6685931 [A]		1
3	6680706	BOLT			8
4	6684857	PLUG	Was 6670504 [A]		1
5	6680681	O-RING			1
6	6680682	O-RING			1
7	6680689	ADAPTER			1
8	6680678	SCREW			8
9	6680677	COVER	oil pump		1
10	6680676	ROTOR	oil pump		1
11	6680679	PLUG		E/ 8G4921 & Bel	3
11	6680679	PLUG		E/ 8J0001 & Abv	2
12	6698604	COVER, FRONT	front - W/Ref. 4, 7-11 & 20-23 - Was 6685928 [A]		1
13	6680855	O-RING			1
14	6693485	BOLT			2
15	6680685	BOLT			13
16	6680680	SEAL			1
17	6680840	PULLEY	fan - Was 6685953 [A]	E/ 5L2303 & Bel	1
17	6921062	PULLEY, FAN DRIVE		E/ 5L2304 & Abv	1
18	6680841	BOLT			1
19	6680686	BOLT			2
20	6680675	PLUG			1
21	6685929	RELIEF VALVE			1
22	6680673	SPRING			1
23	6670347	GASKET		E/ 8G4921 & Bel	1
23	6670347	GASKET		E/ 8J0001 & Abv	2
24	6680704	COVER	Ref. 1 & 2		1
25	6691294	PLUG		E/ 8J0001 & Abv	1

Page 259 - OSS# 2071408 - All rights reserved by Bobcat Company - 12/04/2009 - 07:23:36 - Produced by Ken Cook Co. with mediaioff

WATER PUMP & THERMOSTAT
(V3300 DI T Kubota)

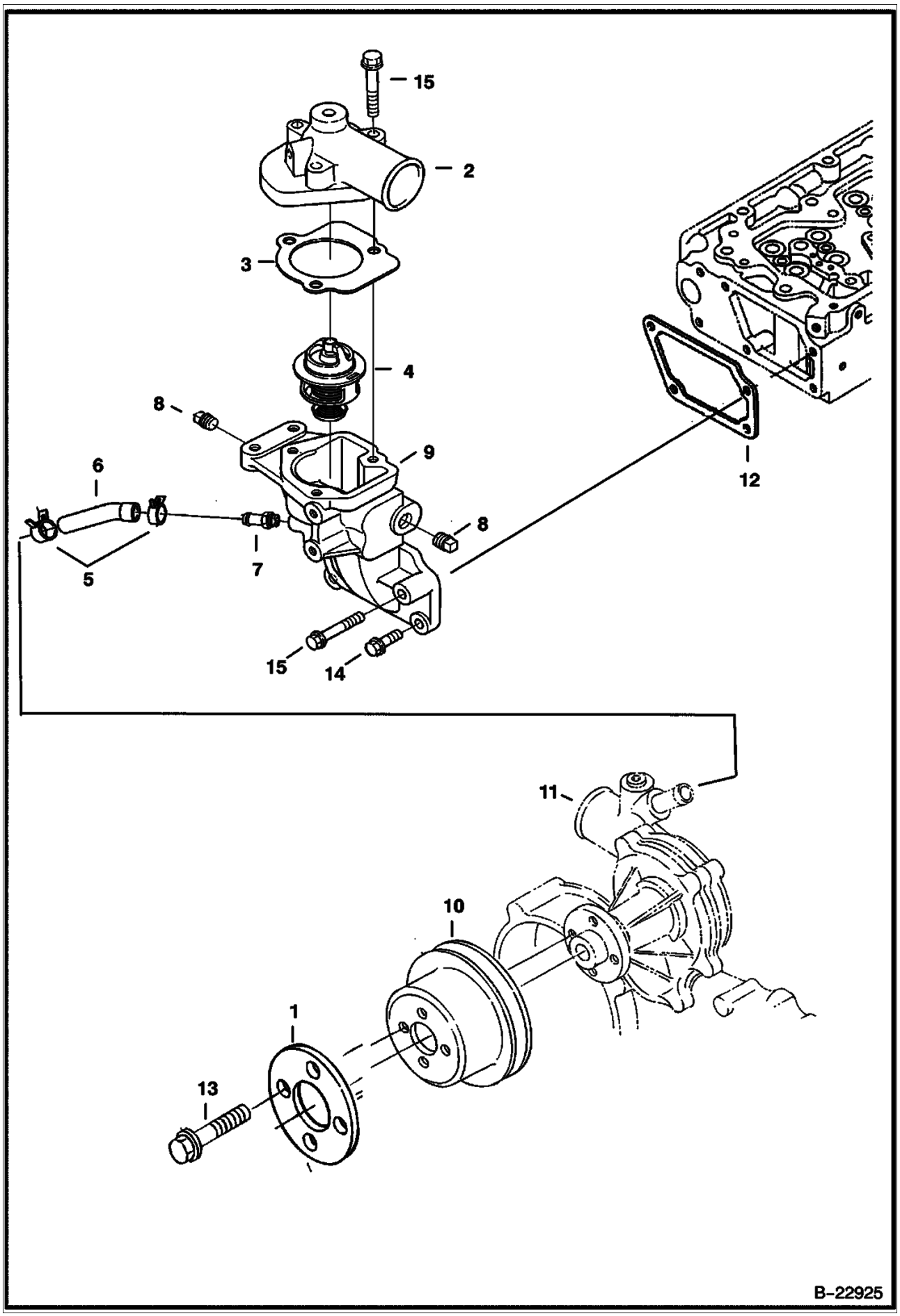

Page 260 - OSS# 2071408 - All rights reserved by Bobcat Company - 12/04/2009 - 07:23:36 - Produced by Ken Cook Co. with mediaioff

WATER PUMP & THERMOSTAT (Cont'd)
(V3300 DI T Kubota)

Ref No	Part Number	Description	Remarks	Serial Number	Qty
1	6680858	WASHER			1
2	6685954	COVER	thermostat		1
3	6685955	GASKET			1
4	6680850	THERMOSTAT			1
5	6675618	CLAMP			2
6	6680842	HOSE			1
7	6680646	ADAPTER	Was 6685920 [A]		1
8	6684857	PLUG	Was 6670504 [A]		2
9	6685956	HOUSING	thermostat - W/Ref. 7 & 8		1
10	6680857	PULLEY	fan		1
11		WATER PUMP	See Illustration WATER PUMP/ B22926		1
12	6680849	GASKET			1
13	6680662	BOLT			4
14	6680755	BOLT			3
15	6680851	BOLT			4

Page 261 - OSS# 2071408 - All rights reserved by Bobcat Company - 12/04/2009 - 07:23:36 - Produced by Ken Cook Co. with mediaioff

WATER PUMP
(V3300 DI T Kubota)

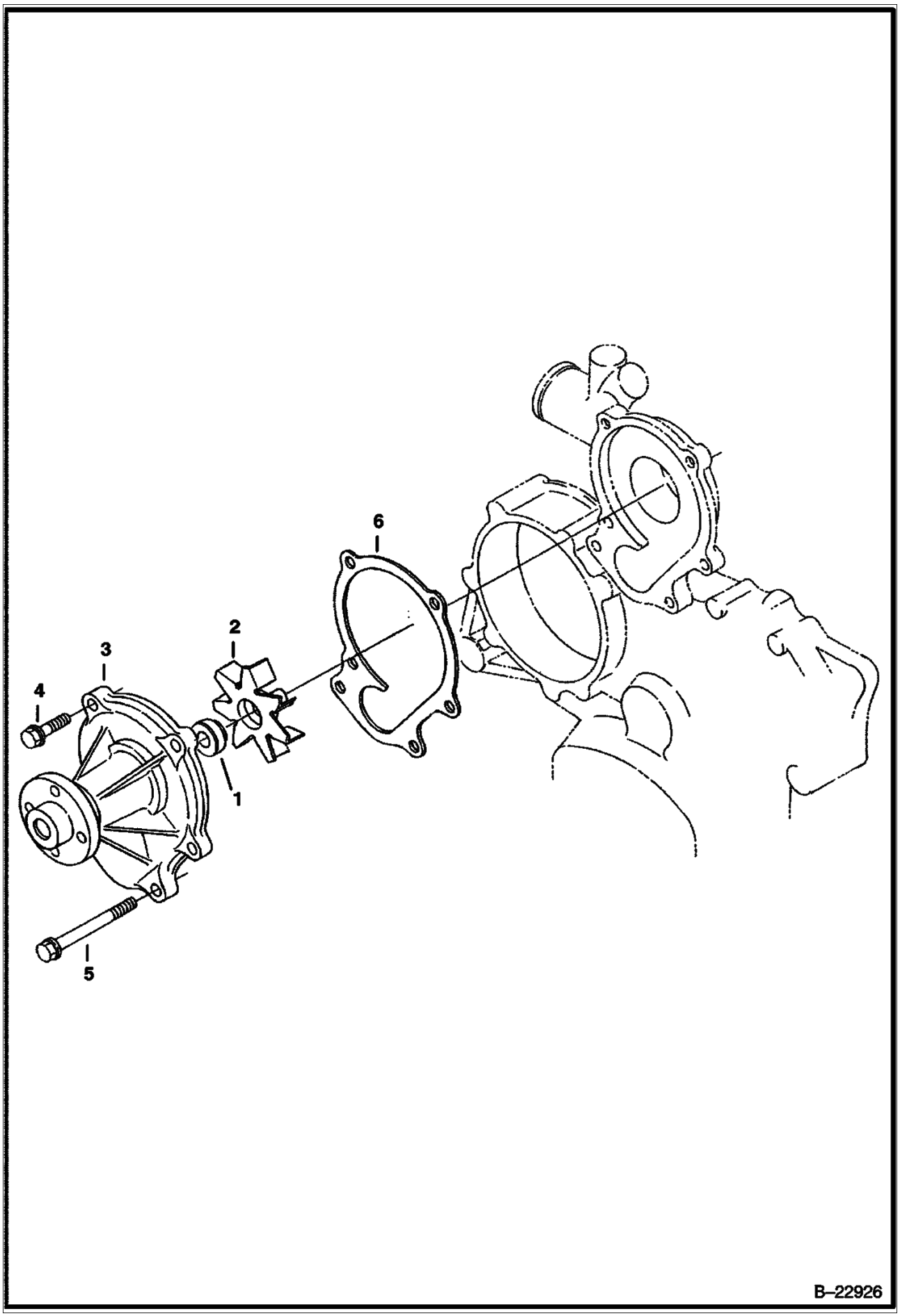

Page 262 - OSS# 2071408 - All rights reserved by Bobcat Company - 12/04/2009 - 07:23:36 - Produced by Ken Cook Co. with mediaioff

WATER PUMP (Cont'd)
(V3300 DI T Kubota)

Ref No	Part Number	Description	Remarks	Serial Number	Qty
1	6680280	SEAL			1
2		IMPELLER	NSS - Order Ref. 3		1
3	6680852	PUMP	water - W/Ref. 1 & 2		1
4	6680706	BOLT			2
5	6680856	BOLT			4
6	6680853	GASKET			1

Page 263 - OSS# 2071408 - All rights reserved by Bobcat Company - 12/04/2009 - 07:23:36 - Produced by Ken Cook Co. with mediaioff

FUEL INJECTION SYSTEM
(V3300 DI T Kubota)

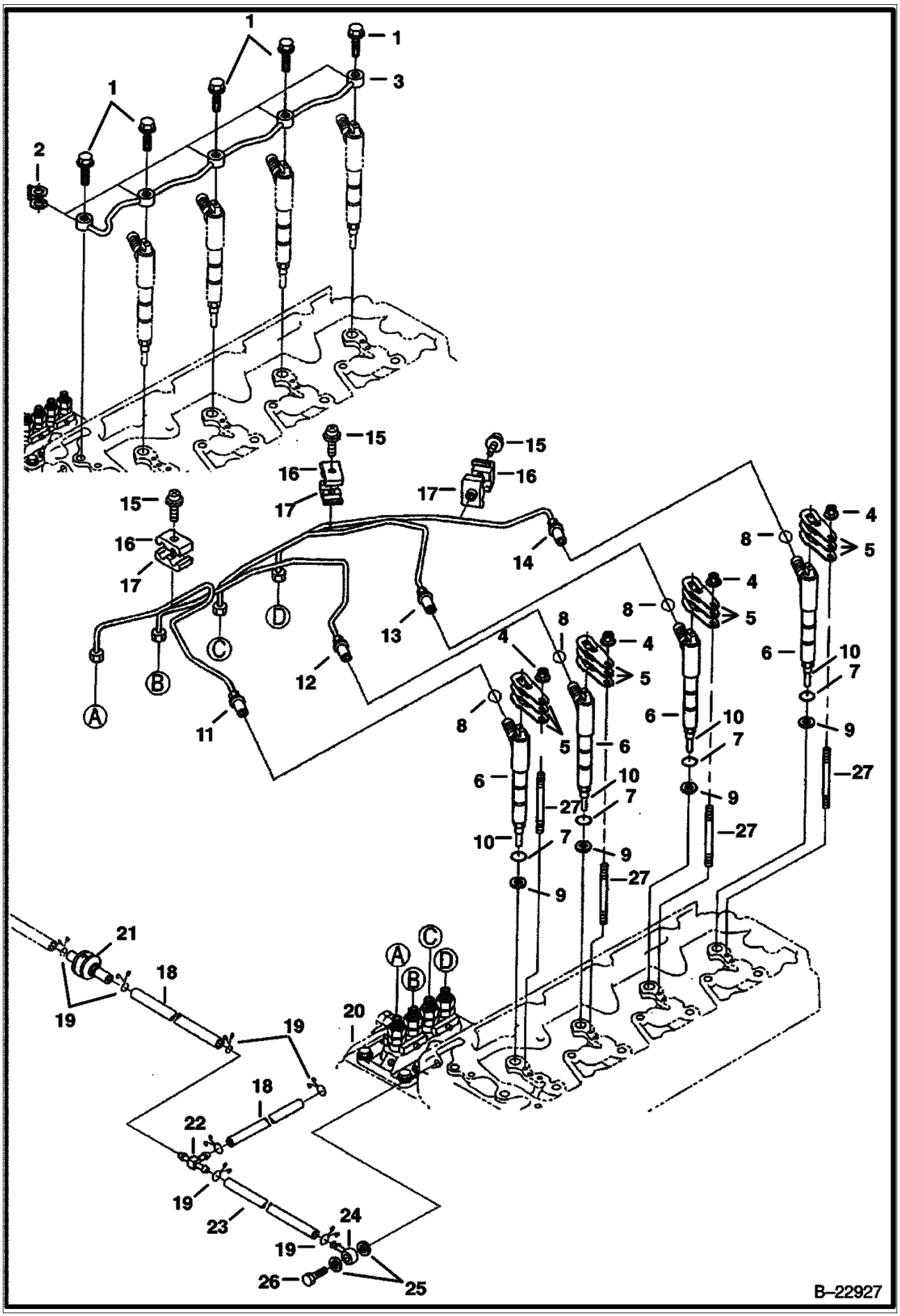

Page 264 - OSS# 2071408 - All rights reserved by Bobcat Company - 12/04/2009 - 07:23:36 - Produced by Ken Cook Co. with mediaIoff

Ref No	Part Number	Description	Remarks	Serial Number	Qty
1	6680788	BOLT			5
2	6685498	GASKET			5
3	6680787	PIPE			1
4	6680663	NUT			4
5	6680780	CLAMP	hold down		12
6	6685854	INJECTOR	W/Ref. 10		4
6	6685854REM	NOZZLE, FUEL INJ. KUBOTA V3300DI			4
7	6670769	O-RING			4
8	6680778	O-RING			4
9	6680779	GASKET			4
10		NOZZLE	NAP - Order Ref. 6 - Was 6680777 [A]		4
11	6685940	TUBE			1
12	6685941	TUBE			1
13	6685942	TUBE			1
14	6685943	TUBE			1
15	3974260	SCREW			3
16	6680786	CLAMP			3
17	6680785	CLAMP			3
18	6685945	HOSE			2
19	6654718	CLAMP	pipe - Was 6680795 [A]		6
20		PUMP	See Illustration FUEL INJECTION PUMP/ B17614 - injection		1
21	6680796	VALVE	check		1
22	6680797	TEE			1
23	6685944	HOSE			1
24	6680790	FITTING			1
25	3974095	MET-GASK	copper - Was 6680792 [A]		2
26	6680791	BOLT	hollow		1
27	6680867	STUD			4

Page 265 - OSS# 2071408 - All rights reserved by Bobcat Company - 12/04/2009 - 07:23:36 - Produced by Ken Cook Co. with mediaioff

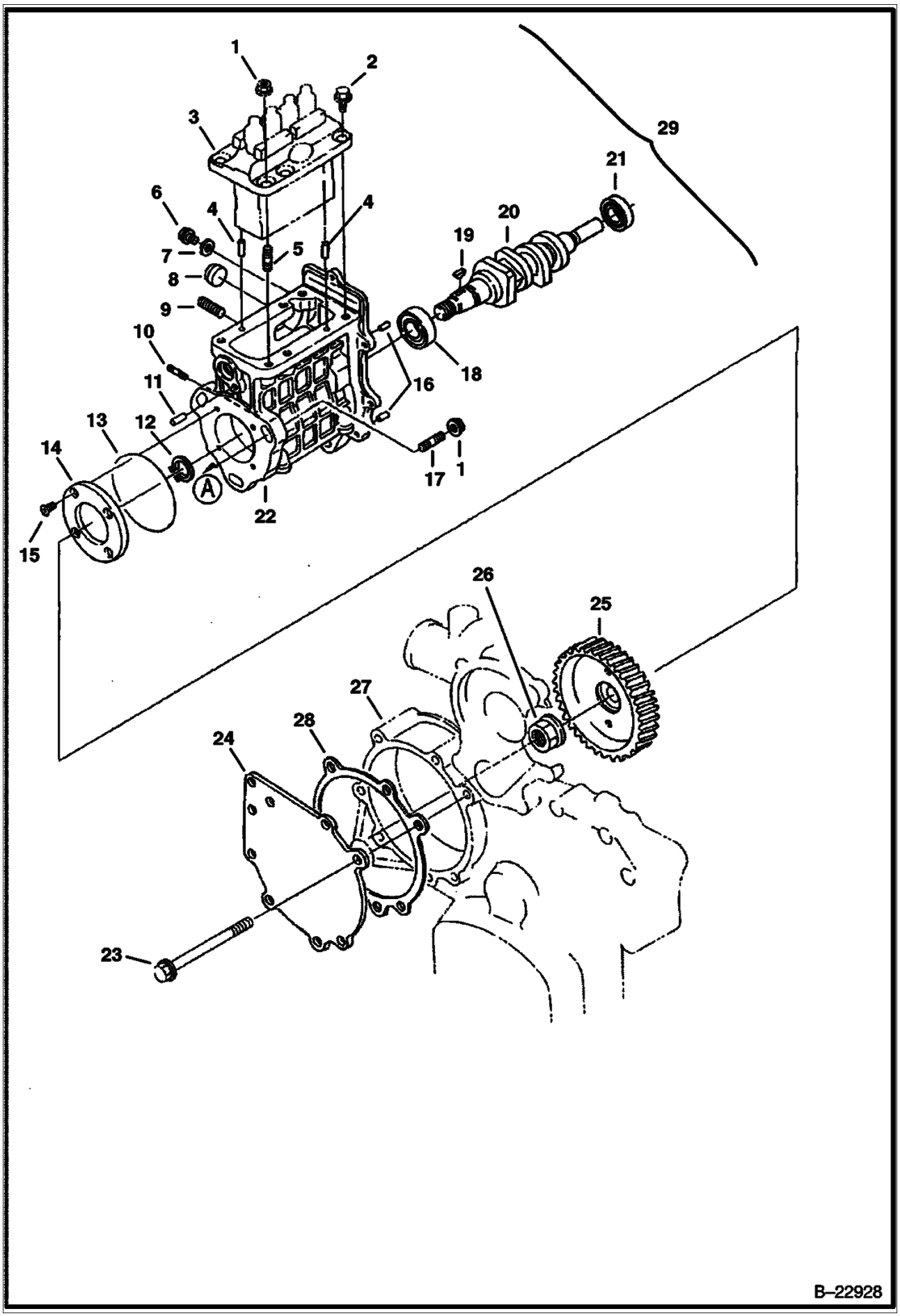

Page 266 - OSS# 2071408 - All rights reserved by Bobcat Company - 12/04/2009 - 07:23:36 - Produced by Ken Cook Co. with mediaioff

Ref No	Part Number	Description	Remarks	Serial Number	Qty
1	6680663	NUT			6
2	6680801	BOLT			5
3		INJECTION PUMP	See Illustration FUEL INJECTION PUMP/ B17614		1
4	3974394	PIN			2
5	6680807	STUD			3
6	6680815	SET SCREW			2
7	3974095	MET-GASK			2
8	6680808	PLUG			1
9	6680815	SET SCREW			2
10	3974503	STUD			2
11	21JM20	PIN			2
12	5JM20	CIRCLIP, EXTERNAL			1
13	6680816	O-RING			1
14	6680814	FLANGE			1
15	6680678	SCREW			4
16	6680809	PIN			2
17	6680799	STUD			3
18	6685950	BEARING			1
19	6680813	KEY	woodruff		1
20	6685949	CAMSHAFT	fuel		1
21	6680812	BEARING			1
22	6680806	HOUSING	W/Ref. 4, 5, 8, 10 & 16		1
23	6680802	BOLT			7
24	6685947	COVER			1
25	6685946	GEAR			1
26	6680818	NUT			1
27		FRONT COVER	See Illustration FRONT COVER/ B22924		1
28	6685948	GASKET			1
29	6685935	INJECTION PUMP	complete w/housing, fuel pump, camshaft, injection pump & governor		1
29	6685935REM	PUMP, FUEL INJ. KUBOTA V3300 W/ GOVERN.	complete w/housing, fuel pump, camshaft, injection pump & governor		1

Page 267 - OSS# 2071408 - All rights reserved by Bobcat Company - 12/04/2009 - 07:23:36 - Produced by Ken Cook Co. with mediaioff

FUEL INJECTION PUMP
(V3300 DI T Kubota)

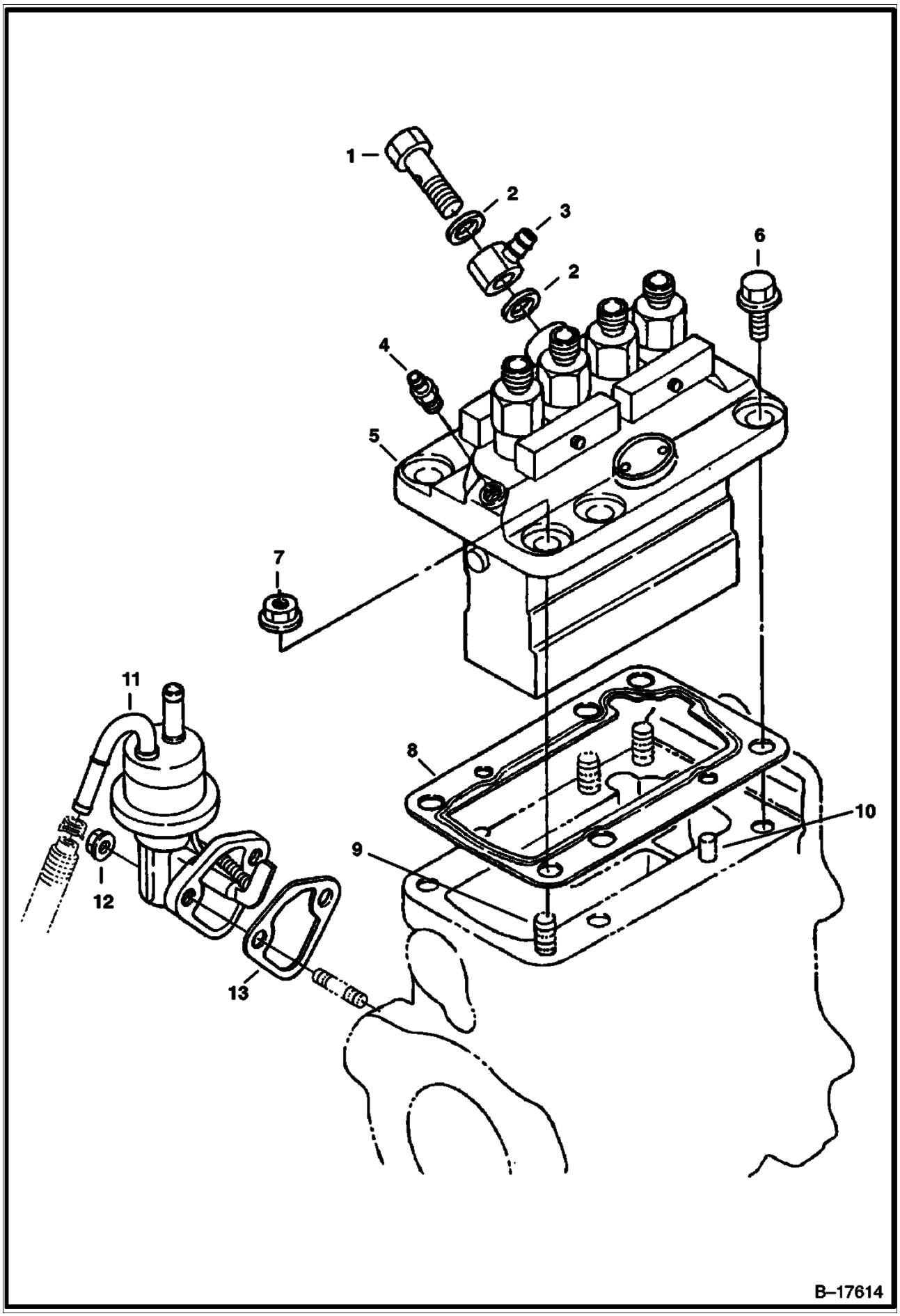

Page 268 - OSS# 2071408 - All rights reserved by Bobcat Company - 12/04/2009 - 07:23:36 - Produced by Ken Cook Co. with mediaioff

FUEL INJECTION PUMP (Cont'd)
(V3300 DI T Kubota)

Ref No	Part Number	Description	Remarks	Serial Number	Qty
1	6680752	BOLT			1
2	3975389	GASKET	Was 6680753 [A]		2
3	6655515	JOINT	eye - Was 3974500B [A]		1
4	6680756	SCREW	air		1
5	6685936	PUMP, FUEL INJ	injection - W/Ref. 1 & 2		1
5	6685936REM	PUMP, FUEL INJ. KUBOTA V3300			1
6	6680755	BOLT			5
7	6680663	NUT			3
8		SHIM	See Illustration FUEL INJECTION SYSTEM/ B22928 - NSS - Order Ref. 29 - or see an authorized Kubota pump shop		1
9	6598156	STUD	Was 6680807 [A]		3
10	3974394	PIN			2
11	6680838	PUMP, FUEL			1
12	6670533	NUT			2
13	6670782	GASKET			1

Page 269 - OSS# 2071408 - All rights reserved by Bobcat Company - 12/04/2009 - 07:23:36 - Produced by Ken Cook Co. with mediaioff

GOVERNOR
(V3300 DI T Kubota)

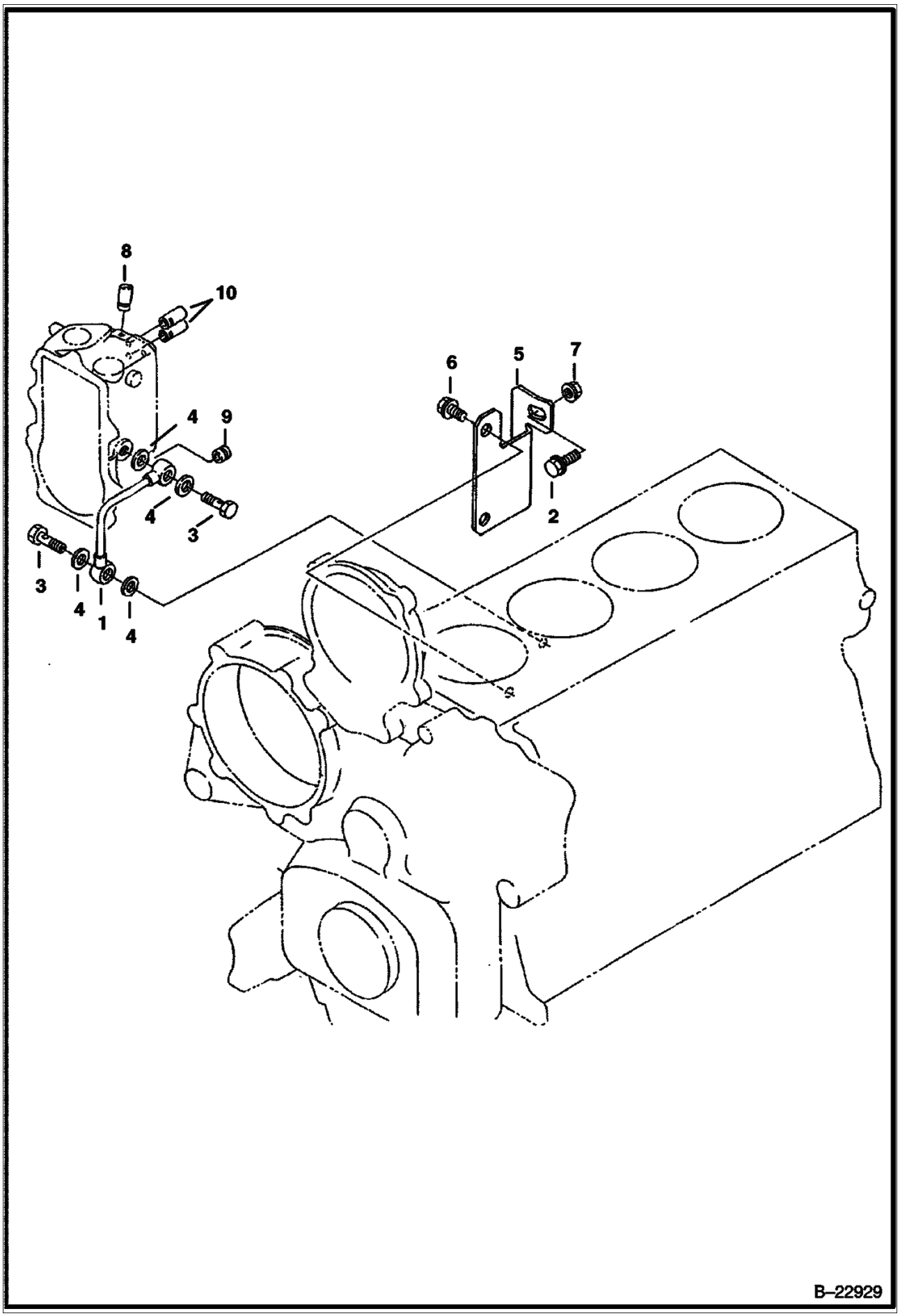

Page 270 - OSS# 2071408 - All rights reserved by Bobcat Company - 12/04/2009 - 07:23:36 - Produced by Ken Cook Co. with mediaioff

Ref No	Part Number	Description	Remarks	Serial Number	Qty
1	6685966	TUBE			1
2	6680654	BOLT			1
3	6680900	BOLT	Was 6680906 [A]		1
4	6685962	GASKET	consists of 2 gaskets attached by a tab		x
5	6685967	BRACKET	injection pump		1
6	6680658	BOLT			2
7	6652656	NUT			1
8	6672384	CAP, SECURITY			1
9	6670427	CAP, SECURITY			1
10	6598112	CAP			2

Page 271 - OSS# 2071408 - All rights reserved by Bobcat Company - 12/04/2009 - 07:23:36 - Produced by Ken Cook Co. with mediaioff

GOVERNOR
(V3300 DI T Kubota)

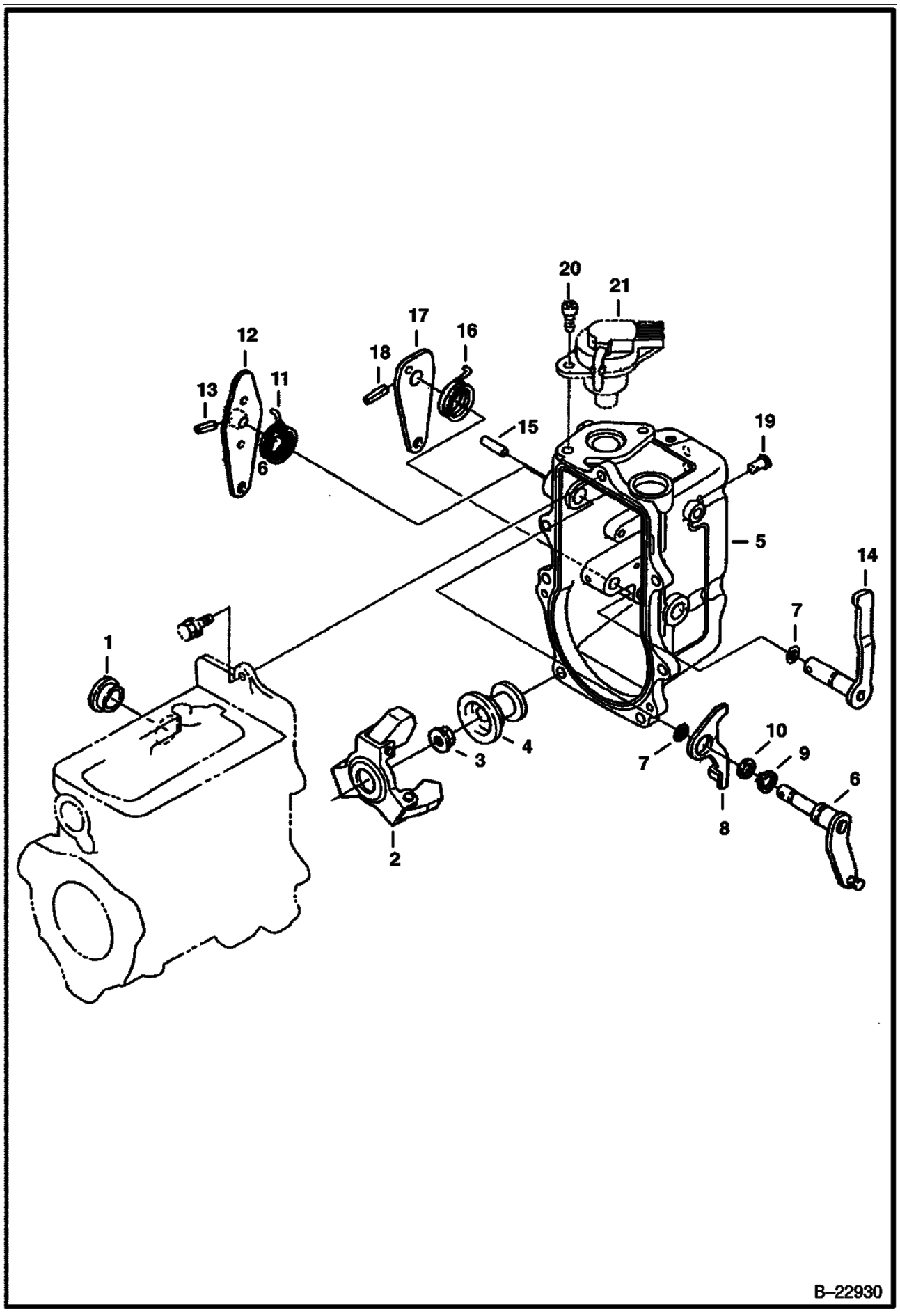

Page 272 - OSS# 2071408 - All rights reserved by Bobcat Company - 12/04/2009 - 07:23:36 - Produced by Ken Cook Co. with mediaioff

Ref No	Part Number	Description	Remarks	Serial Number	Qty
1	6680757	COVER			1
2	6680758	WEIGHT			1
3	6680759	NUT			1
4	6680761	SLEEVE	governor		1
5	6680762	HOUSING	Was 6685937 [A]		1
6	6680763	LEVER			1
7	6683023	O-RING			3
8	6680764	LEVER	stop	E/ 5Y4276 & Bel	1
8	6698601	LEVER, STOP		E/ 6A0001 & Abv	1
9	6680765	SNAP RING			1
10	3974524	WASHER	Was 6680766 [A]		1
11	6693488	SPRING	Was 6685938 [A]		1
12	6685939	LEVER	speed control		1
13	6680769	PIN			1
14	6680770	LEVER	engine stop		1
15	6680775	PIN			1
16	6598702	SPRING			1
17	6680772	LEVER	engine stop		1
18	6680769	PIN	Was 6680773 [A]		1
19	6652592	PIN	Was 6680774 [A]		1
20	6680750	SCREW			2
21		SOLENOID	NAP - fuel shut-off - used w/jumper harness - order 6689034		1
21	6689034	SOLENOID, SHUTOFF FUEL	fuel shutoff - no jumper harness needed		1

Page 273 - OSS# 2071408 - All rights reserved by Bobcat Company - 12/04/2009 - 07:23:36 - Produced by Ken Cook Co. with mediaioff

GOVERNOR
(V3300 DI T Kubota)

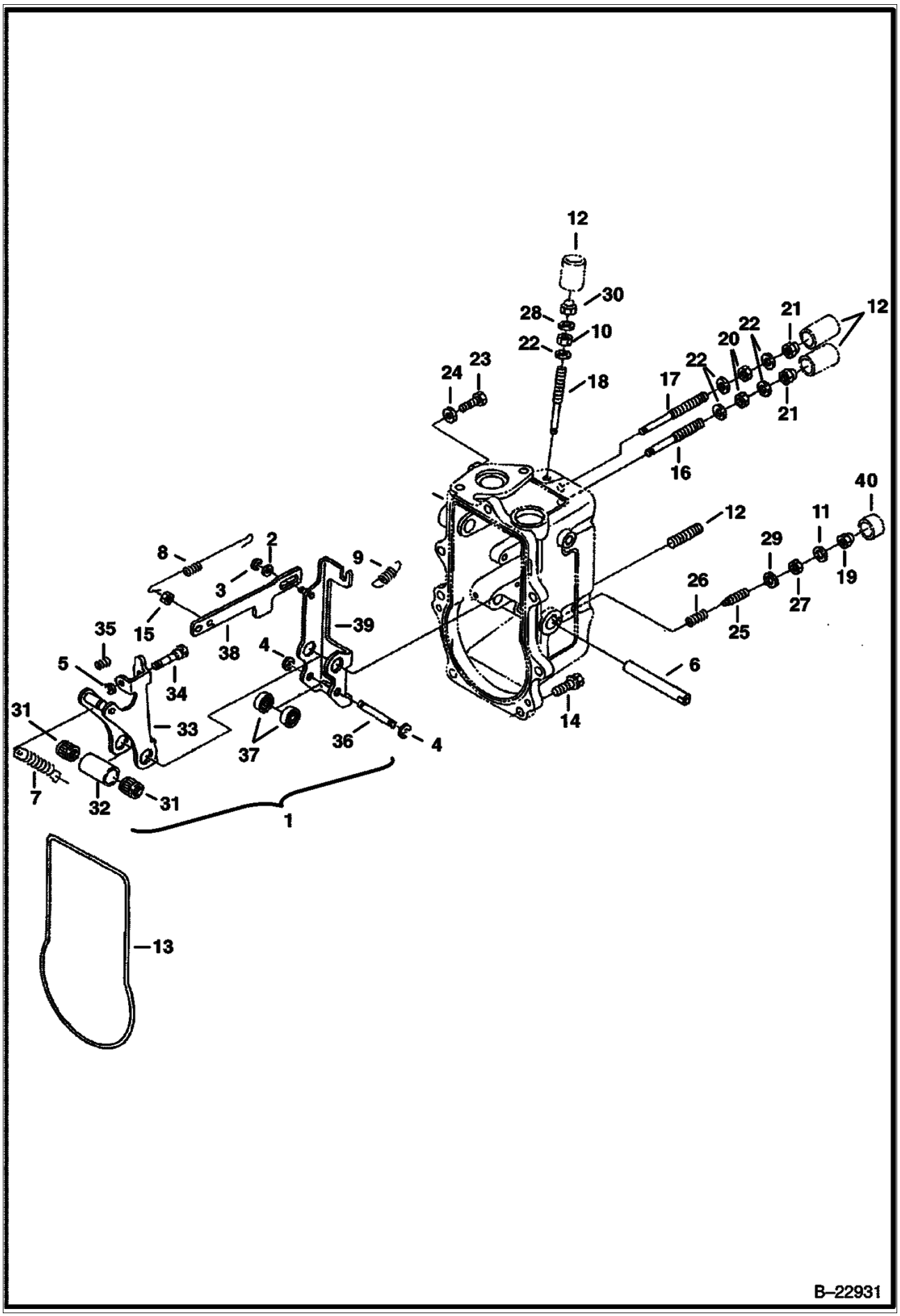

Page 274 - OSS# 2071408 - All rights reserved by Bobcat Company - 12/04/2009 - 07:23:36 - Produced by Ken Cook Co. with mediaioff

Ref No	Part Number	Description	Remarks	Serial Number	Qty
1	6693511	FORK	assy - Ref. 2-5, 15 & 31-39 - Was 6685951 [B,D]		1
2	6680820	WASHER			1
3	6680821	SNAP RING			1
4	6680822	SNAP RING			2
5	6680823	SNAP RING			1
6	6689318	SHAFT, FORK LEVER	Was 6680824 [B,D]		1
7	6680825	SPRING			1
8	6680826	SPRING			1
9	6680827	SPRING			1
10	6680272	NUT			2
11	3974095	MET-GASK	copper - Was 6680792 [A]		1
12	6680828	STUD			2
13	6680829	GASKET			1
14	6680830	BOLT			7
15	6685952	NUT			1
16	6680832	SCREW	adjusting		1
17	6680833	SCREW	adjusting - Was 6686985 [B,D]		1
18	6686985	BOLT, ADJUSTING	adjusting - Was 3974970 [B,D]		1
19	6670426	NUT			1
20	6657459	NUT	Was 6680499 [A]		1
21	6670462	NUT			2
22	3974972	GASKET			1
23	6680834	STOPPER			1
24	1DM6	NUT			1
25	6687760	ADJ BOLT ASSY	adjusting - W/Ref. 27 - Was 6670425 [B,D]		1
26		SPRING	NAP		1
27	6599085	NUT			1
28	3974972	GASKET			5
29	3974095	MET-GASK			1
30	6670462	NUT			1
31		BUSHING	NSS		2
32		TUBE	NSS		1
33		LEVER	NSS		1
34		BOLT	NSS		1
35		SPRING	NSS		1
36		ROD	NSS		1
37		BEARING	NSS		2
38		BRACKET	NSS		1
39		LEVER	NSS		1
40	6670427	CAP, SECURITY			1

Page 275 - OSS# 2071408 - All rights reserved by Bobcat Company - 12/04/2009 - 07:23:36 - Produced by Ken Cook Co. with mediaioff

AIR CLEANER
(V3300 DI T Kubota) (Tier II)

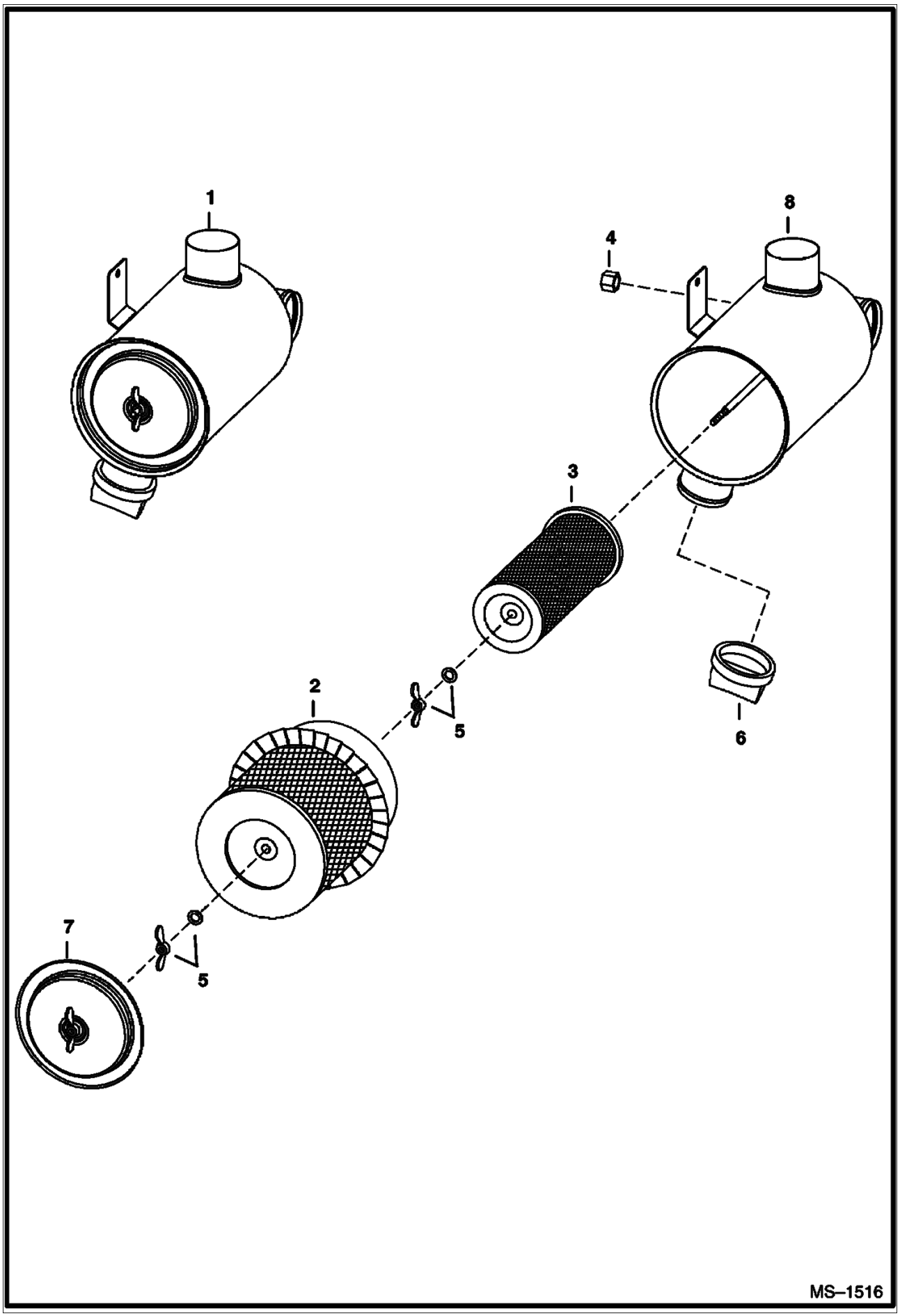

Page 276 - OSS# 2071408 - All rights reserved by Bobcat Company - 12/04/2009 - 07:23:36 - Produced by Ken Cook Co. with mediaioff

AIR CLEANER (Cont'd)
(V3300 DI T Kubota) (Tier II)

Ref No	Part Number	Description	Remarks	Serial Number	Qty
1	6678066	AIR CLEANER	W/Ref. 2-8		1
2	6681474	CARTRIDGE	outer		1
3	6681475	CARTRIDGE	inner		1
4	6681476	CAP			1
5	3291290	NUT	W/ washer		2
6	6652373	VALVE	dust unloader		1
7	6681477	COVER			1
8		TANK	NSS		1

Page 277 - OSS# 2071408 - All rights reserved by Bobcat Company - 12/04/2009 - 07:23:36 - Produced by Ken Cook Co. with mediaioff

ACCESS COVER
(Cleanout - Lower Front of Chaincase)

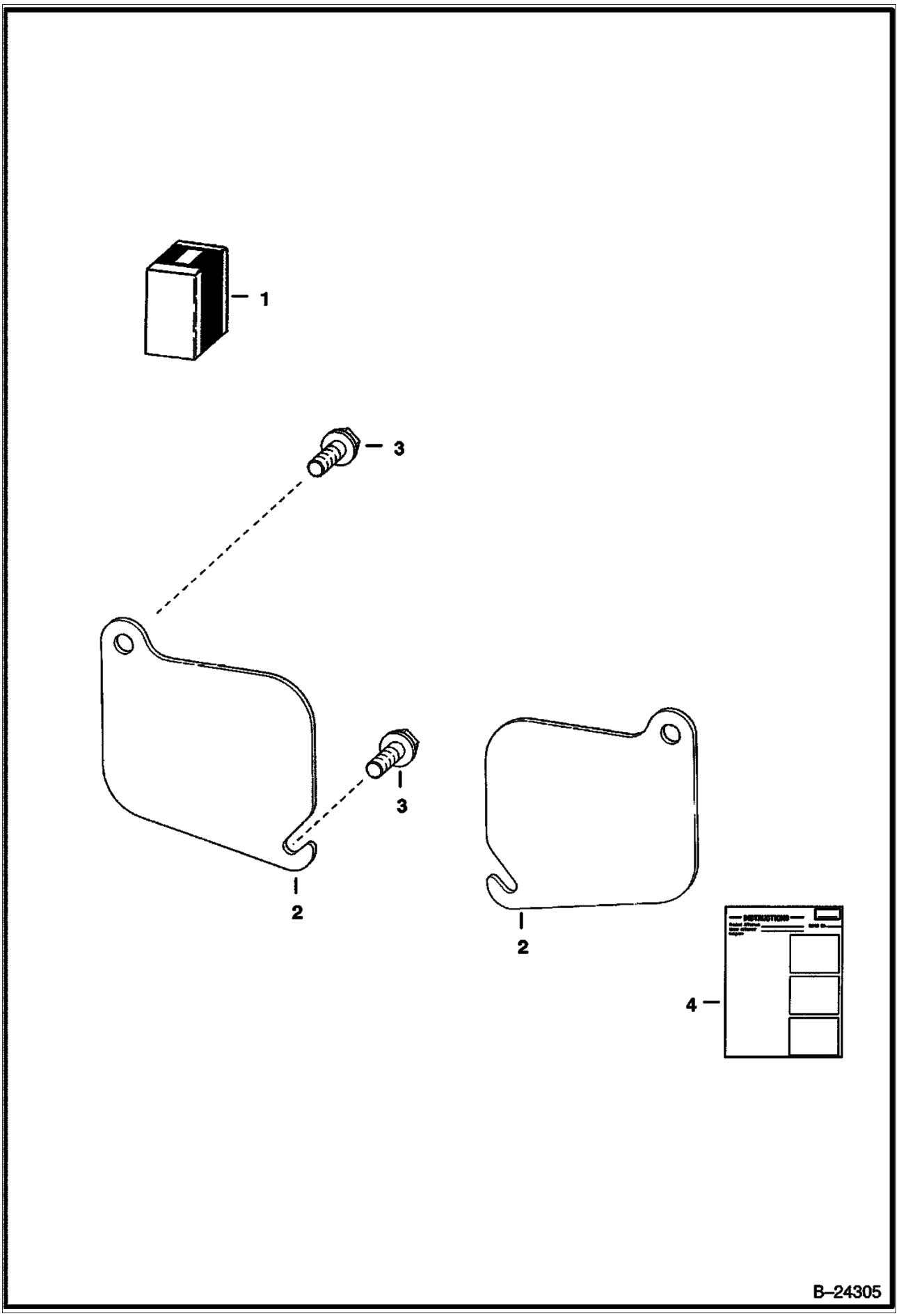

Page 278 - OSS# 2071408 - All rights reserved by Bobcat Company - 12/04/2009 - 07:23:36 - Produced by Ken Cook Co. with mediaioff

ACCESS COVER (Cont'd)
(Cleanout - Lower Front of Chaincase)

Ref No	Part Number	Description	Remarks	Serial Number	Qty
1	6577880	KIT	Ref. 2-4		1
2	6737088	COVER, FRONT ACCESS			2
3	84G3720	BOLT			4
4	6570931	INSTRUCTIONS			1

Page 279 - OSS# 2071408 - All rights reserved by Bobcat Company - 12/04/2009 - 07:23:36 - Produced by Ken Cook Co. with mediaioff

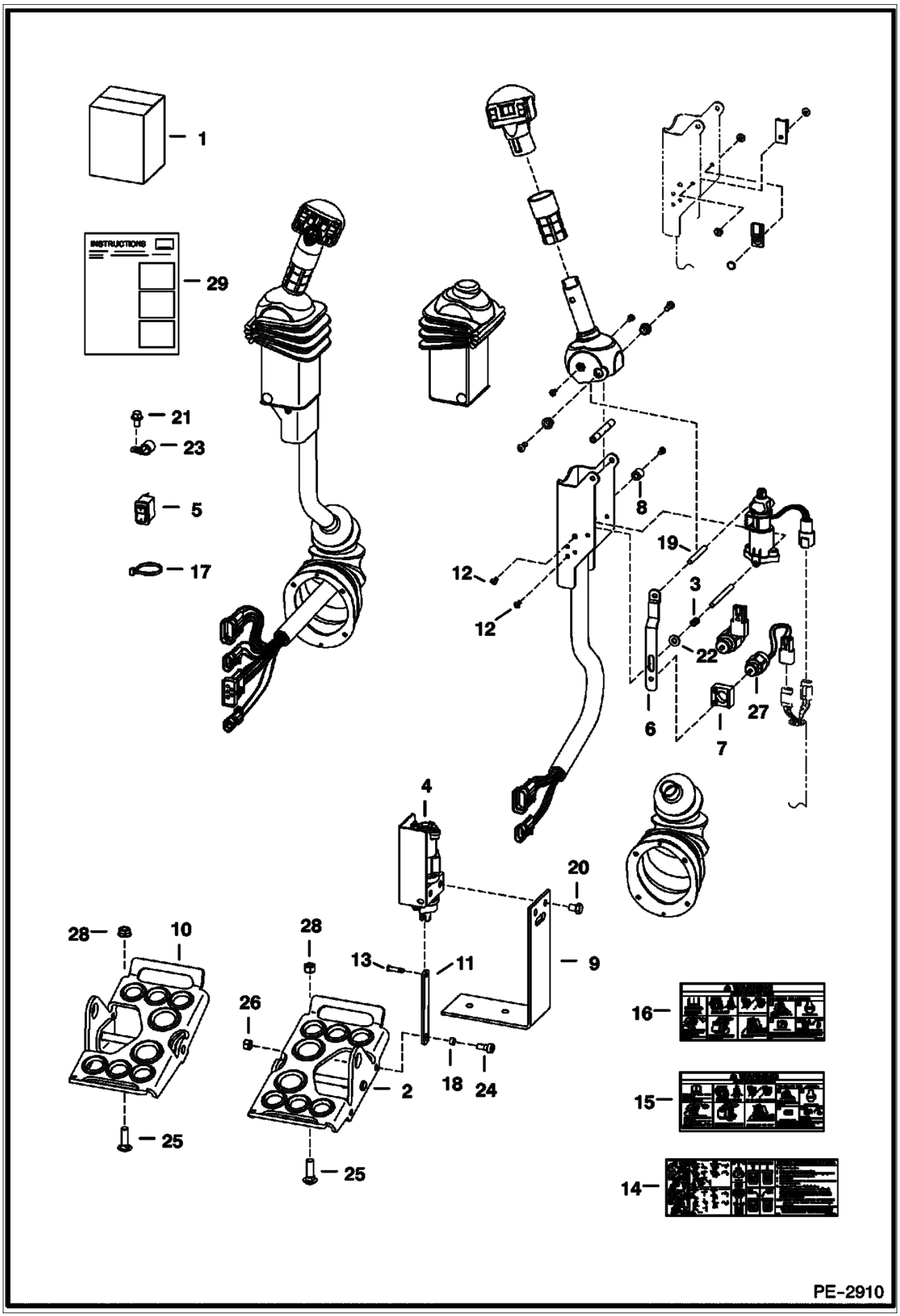

Page 280 - OSS# 2071408 - All rights reserved by Bobcat Company - 12/04/2009 - 07:23:36 - Produced by Ken Cook Co. with mediaioff

Ref No	Part Number	Description	Remarks	Serial Number	Qty
1	6731151	KIT	foot control - Ref. 2-29 - loader must be equipped W/advanced hand control option		1
2	7123942	PEDAL ASSEMBLY			1
3	6680470	SPRING			2
4	6684912	SENSOR, FOOT RH			1
4	6676029	SOLENOID			1
4	6684911	SENSOR, FOOT LH			1
4	6676029	SOLENOID			1
5	6676537	SWITCH			1
6	6680477	STRAP			2
7	6680468	MOUNT	solenoid		2
8	6719834	SPACER			2
9	7126869	BRACKET	Was 6726573 [A]		2
10	7123941	PEDAL ASSEMBLY			1
11	6726681	LINK			2
12	6727065	BOLT			12
13	6727496	PIN			2
14	6727926	DECAL	ACS operations		1
15	6728540	DECAL	warning		1
16	6728539	DECAL	warning		1
17	6624289	TIE STRAP			2
18	6729467	SPACER			2
19	6680469	SPACER	threaded		2
20	17C608	BOLT			4
21	84G3710	SCREW			2
22	25E13	WASHER 5			2
23	30H62	CLIP			2
24	35C514	BOLT			2
25	37C620	BOLT			4
26	95D5	NUT			2
27	6676029	SOLENOID			2
28	61D6	NUT 5			4
29	6901492	INSTRUCTIONS			1

Page 281 - OSS# 2071408 - All rights reserved by Bobcat Company - 12/04/2009 - 07:23:36 - Produced by Ken Cook Co. with mediaioff

BACK-UP ALARM KIT
(Manual Controls, AHC & ACS)

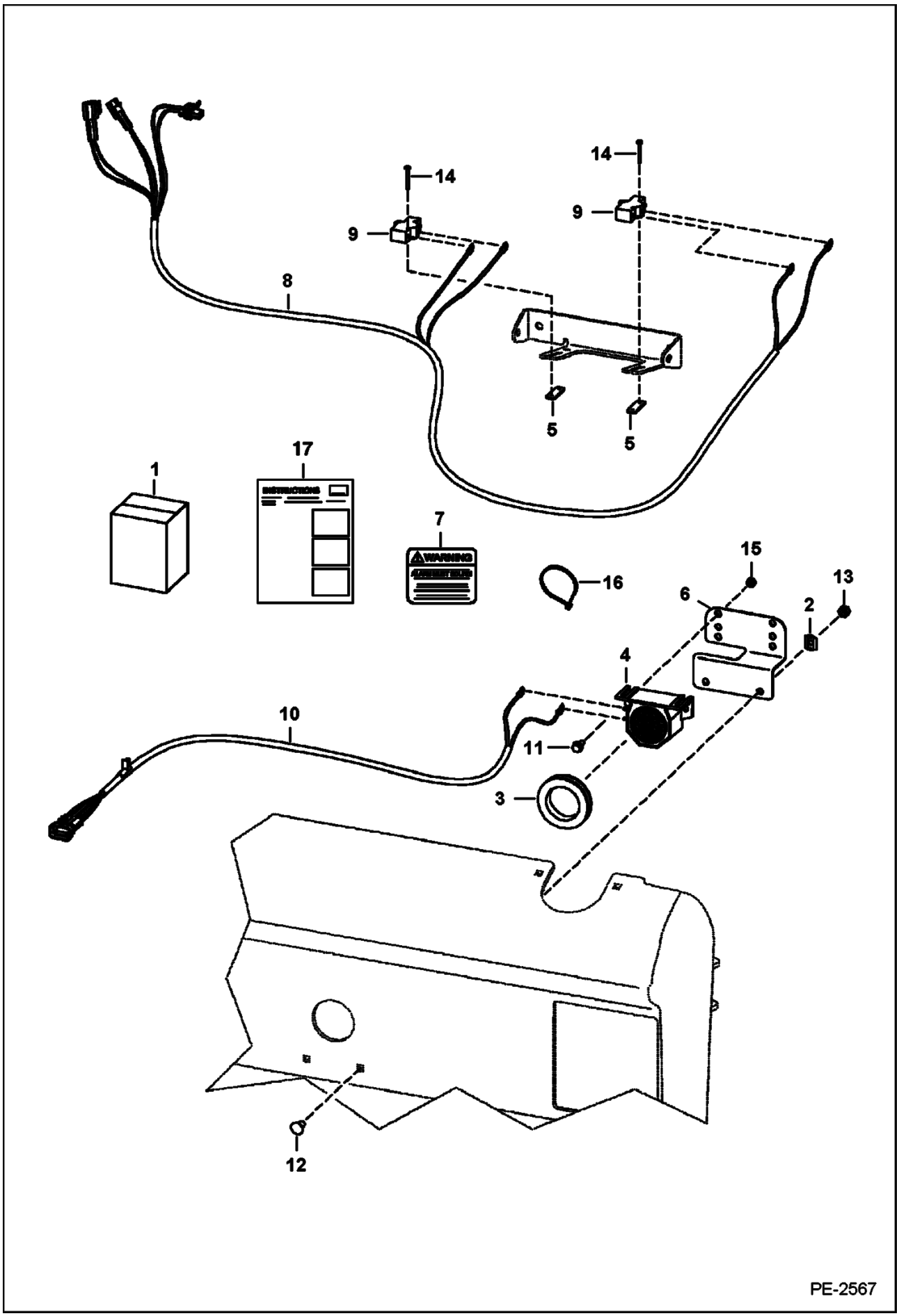

Page 282 - OSS# 2071408 - All rights reserved by Bobcat Company - 12/04/2009 - 07:23:36 - Produced by Ken Cook Co. with mediaioff

BACK-UP ALARM KIT (Cont'd)
(Manual Controls, AHC & ACS)

Ref No	Part Number	Description	Remarks	Serial Number	Qty
1	7107829	KIT, BACK-UP ALARM			1
2	774220	NUT			2
3	6577545	GROMMET			1
4	6599931	ALARM			1
5	6702593	SPACER			2
6	6733970	MOUNT			1
7	6737189	DECAL			1
8	7107544	HARNESS			1
9	6646781	SWITCH			2
10	6715659	HARNESS			1
11	35C410	BOLT 5			2
12	10C512	BOLT			2
13	57D5	NUT			2
14	84G1320	BOLT			4
15	97D4	NUT			2
16	6624289	TIE STRAP			2
17	6903293	INSTRUCTIONS			1

Page 283 - OSS# 2071408 - All rights reserved by Bobcat Company - 12/04/2009 - 07:23:36 - Produced by Ken Cook Co. with mediaioff

BACK-UP ALARM KIT
(Selectable Joystick Controls)

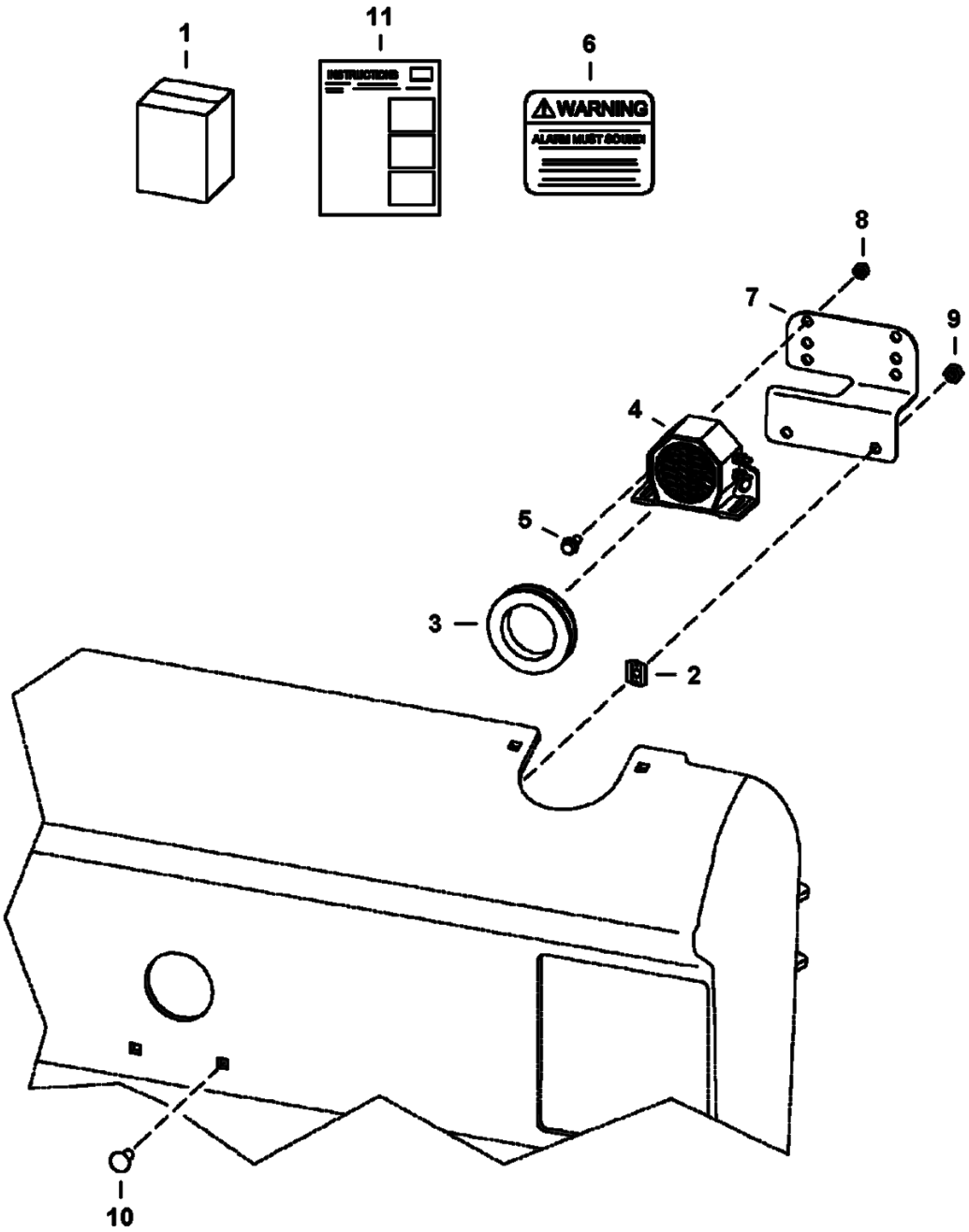

Page 284 - OSS# 2071408 - All rights reserved by Bobcat Company - 12/04/2009 - 07:23:36 - Produced by Ken Cook Co. with mediaioff

BACK-UP ALARM KIT (Cont'd)
(Selectable Joystick Controls)

Ref No	Part Number	Description	Remarks	Serial Number	Qty
1	6732235	KIT	Ref. 2-11		1
2	774220	NUT	spring		2
3	6577545	GROMMET			1
4	6599931	ALARM			1
5	17C410	BOLT 10	not in kit	& Bel.	2
5	25E13	WASHER 5	not in kit	& Bel.	2
5	35C410	BOLT 5		& Abv.	2
6	6737189	DECAL			1
7	6733970	MOUNT			1
8	97D4	NUT	Was 83D4 [B]		2
9	61D5	NUT			2
10	37C516	BOLT	Was 10C512 [B]		2
11	6901690	INSTRUCTIONS			1

Page 285 - OSS# 2071408 - All rights reserved by Bobcat Company - 12/04/2009 - 07:23:36 - Produced by Ken Cook Co. with mediaioff

BEACON

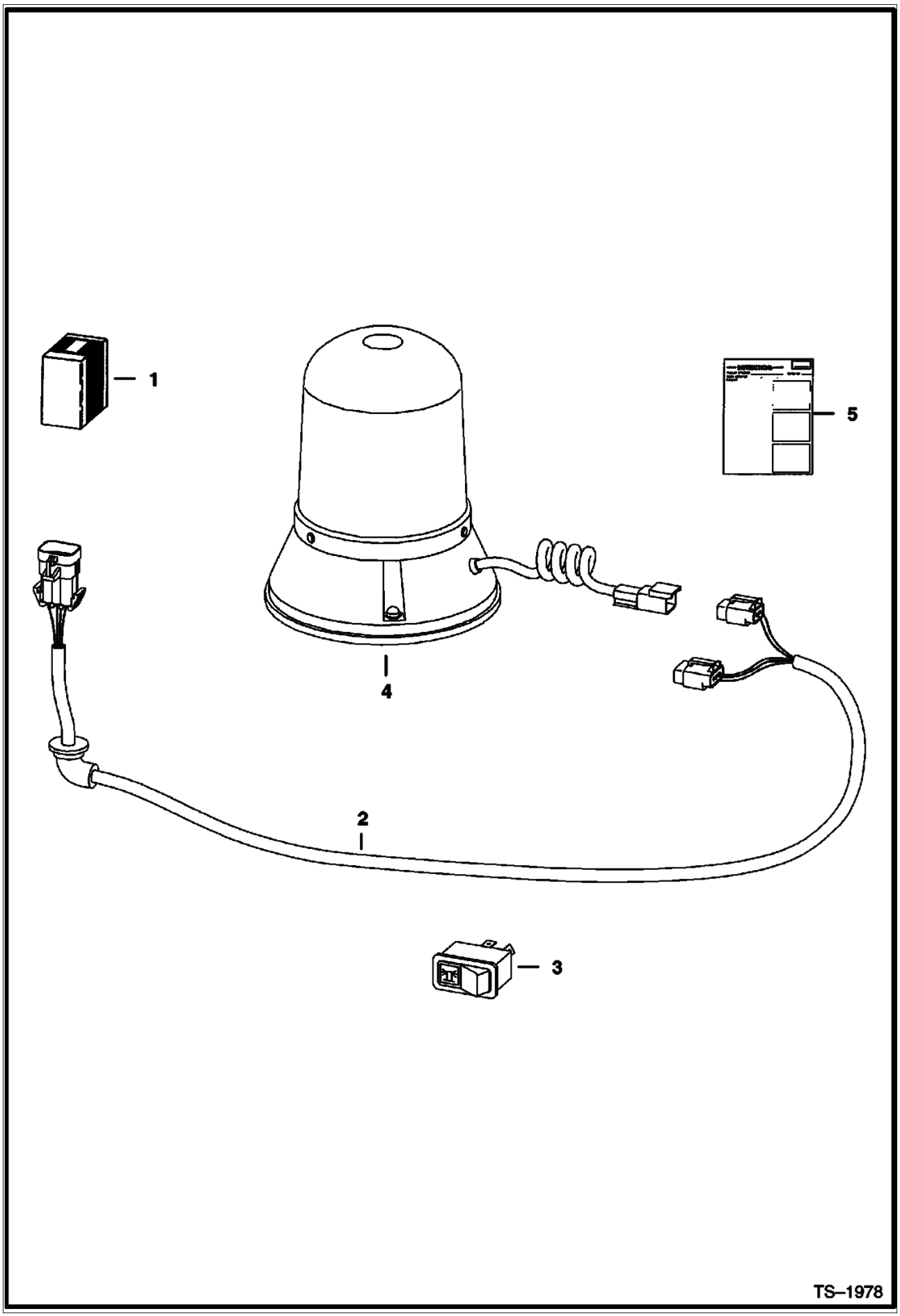

Page 286 - OSS# 2071408 - All rights reserved by Bobcat Company - 12/04/2009 - 07:23:36 - Produced by Ken Cook Co. with mediaioff

Ref No	Part Number	Description	Remarks	Serial Number	Qty
1	6719854	KIT	rotating beacon - if loader is not equipped W/deluxe cab accessories harness, heater, A/C, SJC, ACS, power Bob-Tach, cab enclosure door kit, rear wiper or any of the following cab harness connected 4-way flasher or strobe light, Also Order 7116260 deluxe cab accessories harness	5307 13759 & Bel	1
1	6719854	KIT	rotating beacon - if loader is not equipped W/deluxe cab accessories harness, heater, A/C, SJC, ACS, power Bob-Tach, cab enclosure door kit, rear wiper or any of the following cab harness connected 4-way flasher or strobe light, Also Order 7116260 deluxe cab accessories harness	5308 11510 & Bel	1
1	6719854	KIT	rotating beacon - if loader is not equipped W/deluxe cab accessories harness, heater, A/C, SJC, ACS, power Bob-Tach, cab enclosure door kit, rear wiper or any of the following cab harness connected 4-way flasher or strobe light, Also Order 7143071 deluxe cab accessories harness	5307 13760 & Abv	1
1	6719854	KIT	rotating beacon - if loader is not equipped W/deluxe cab accessories harness, heater, A/C, SJC, ACS, power Bob-Tach, cab enclosure door kit, rear wiper or any of the following cab harness connected 4-way flasher or strobe light, Also Order 7143071 deluxe cab accessories harness	5308 11511 & Abv	1
2	6718872	HARNESS			1
3	6665317	SWITCH	horizontal - not in kit		1
3	6668816	SWITCH	vertical		1
4	6675523	BEACON			1
4	6666571	BULB			1
5	6900991	INSTRUCTIONS			1

Page 287 - OSS# 2071408 - All rights reserved by Bobcat Company - 12/04/2009 - 07:23:36 - Produced by Ken Cook Co. with mediaioff

BLOCK HEATER
(Engine)

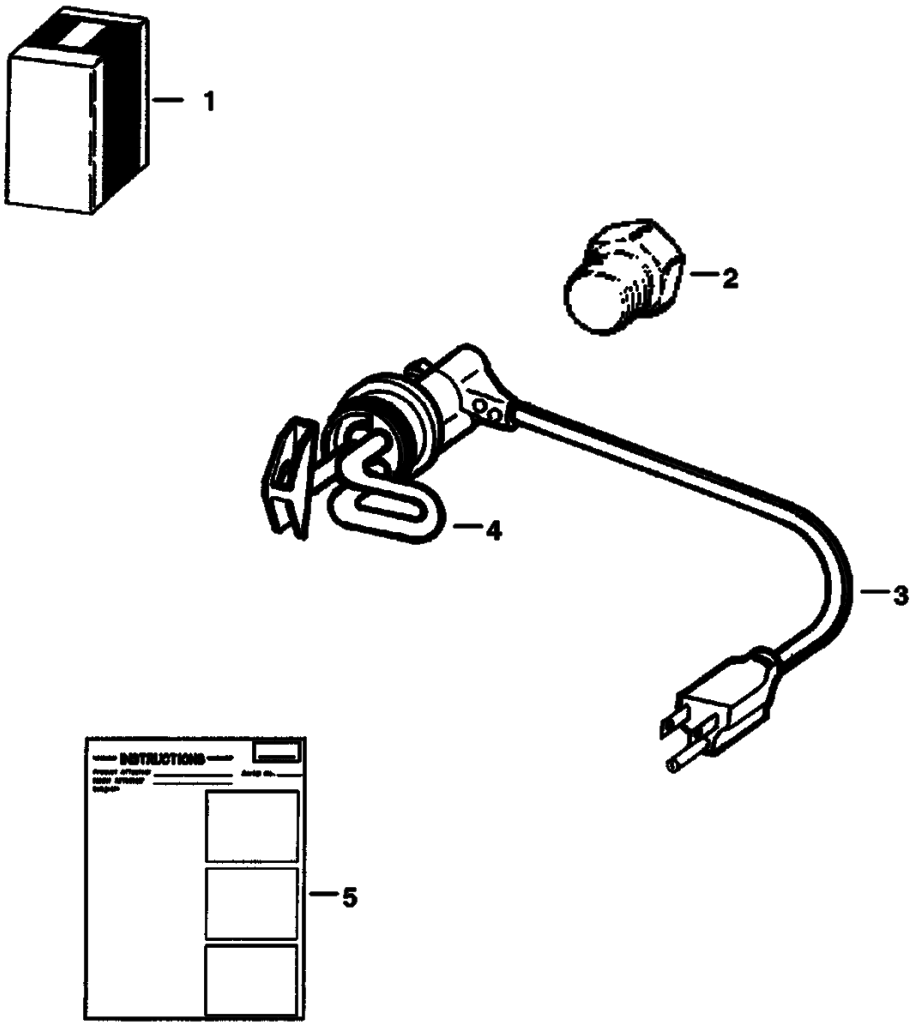

PE–1762

Page 288 - OSS# 2071408 - All rights reserved by Bobcat Company - 12/04/2009 - 07:23:36 - Produced by Ken Cook Co. with mediaioff

BLOCK HEATER (Cont'd)
(Engine)

Ref No	Part Number	Description	Remarks	Serial Number	Qty
1	6720808	KIT, ENGINE BLOCK HEATER	W/Ref. 2, 4 & 5		1
2	19F12	BUSHING			1
3	6685850	CORD	Was 6668881 [B,D]		1
4	6659369	HEATER	W/Ref. 3		1
5	6720038	INSTRUCTIONS			1

Page 289 - OSS# 2071408 - All rights reserved by Bobcat Company - 12/04/2009 - 07:23:36 - Produced by Ken Cook Co. with mediaioff

BUCKET POSITIONING KIT

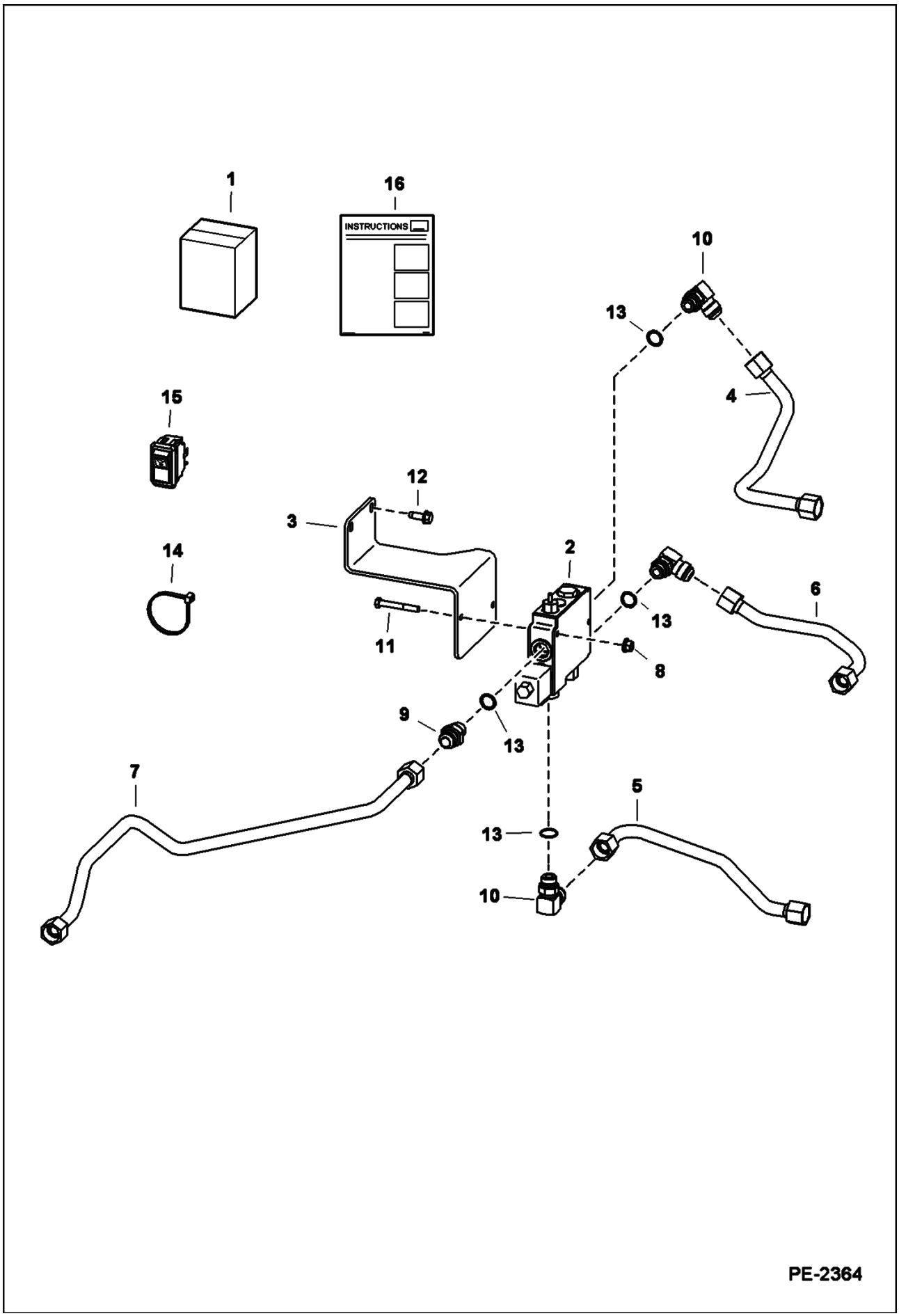

Page 290 - OSS# 2071408 - All rights reserved by Bobcat Company - 12/04/2009 - 07:23:36 - Produced by Ken Cook Co. with mediaioff

Ref No	Part Number	Description	Remarks	Serial Number	Qty
1	7104830	KIT, BPV	Ref. 2-16		1
2	6673959	VALVE, BPV	See Illustration BUCKET POSITIONING VALVE/ MS1943		1
3	6730898	MOUNT	BPV		1
4	6732991	TUBELINE			1
5	6732992	TUBELINE			1
6	7108458	TUBELINE			1
7	7114823	TUBELINE			1
8	17C540	BOLT			2
9	15KB1210	ADAPTER	W/Ref. 13		1
10	17KB1210	ELBOW	W/Ref. 13		3
11	83D5	NUT 5			2
12	84G3716	SCREW 5			2
13	79K10	O RING 10			x
14	6624289	TIE STRAP			2
15	6690947	SWITCH, BPV			1
16	6903132	INSTRUCTIONS			1

Page 291 - OSS# 2071408 - All rights reserved by Bobcat Company - 12/04/2009 - 07:23:36 - Produced by Ken Cook Co. with mediaioff

CAB DOOR

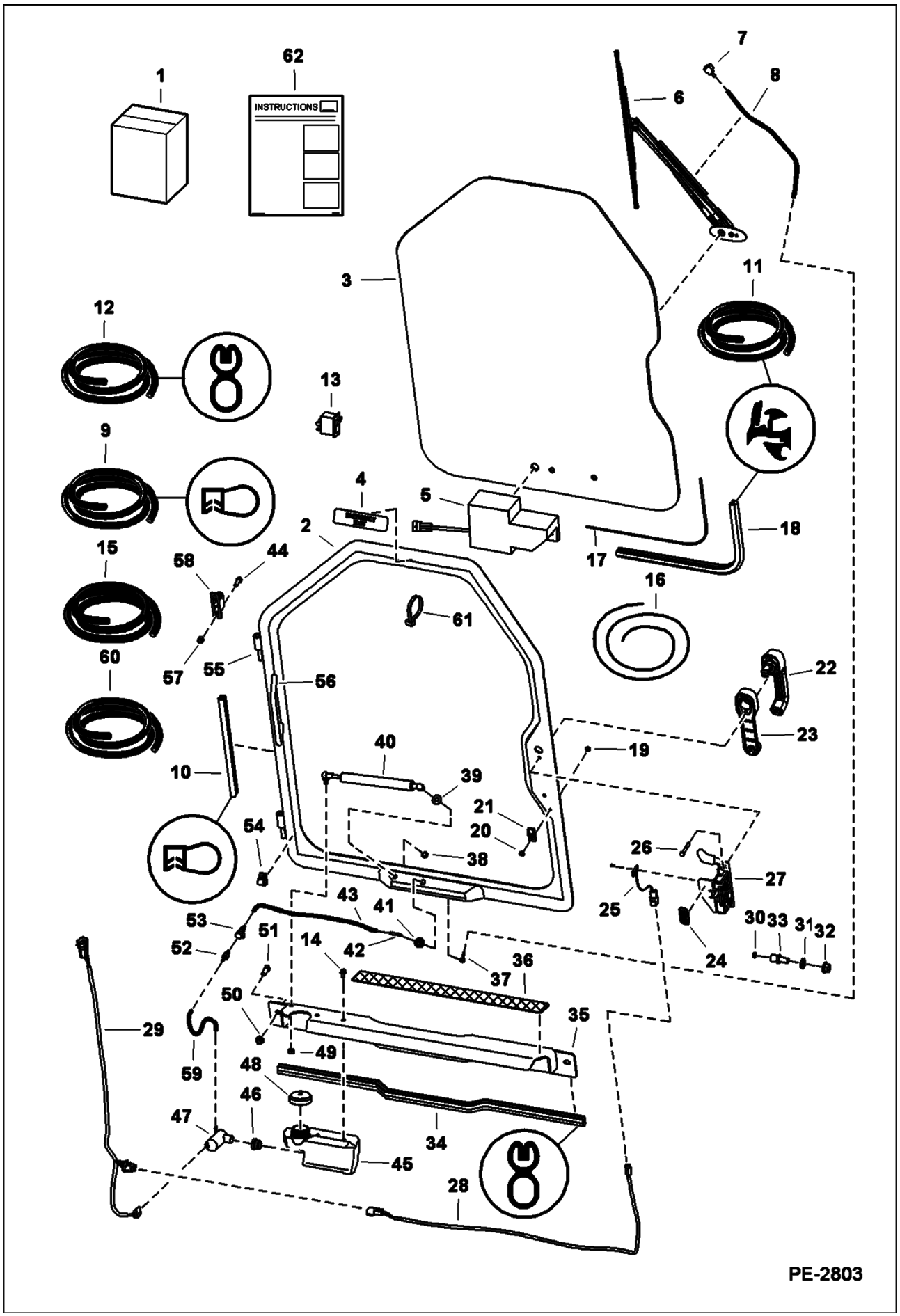

Page 292 - OSS# 2071408 - All rights reserved by Bobcat Company - 12/04/2009 - 07:23:36 - Produced by Ken Cook Co. with mediaioff

Ref No	Part Number	Description	Remarks	Serial Number	Qty
1	6730822	KIT	door - Ref. 2-62 & Ref. 1-21 on ILL. MS1355		1
2	7109665	FRAME, DOOR CAB	W/Ref. 55 & 56 - Also order Ref. 4 (6707852 decal)		1
3		WINDOW	See Illustration CAB DOOR/ MS1355 - .25" thick glass		1
4	6707852	DECAL	exit		1
5		MOTOR	See Illustration CAB DOOR/ MS1355 - wiper		1
6		ARM ASSY	See Illustration CAB DOOR/ MS1355 - wiper		1
7		NOZZLE	See Illustration CAB DOOR/ MS1355 - wiper arm mounted		1
8		HOSE	See Illustration CAB DOOR/ MS1355		1
9	6675558	SEAL	bulk - sold per foot		x
10		SEAL	NAP - 127.3" (3233 mm) - Order Ref. 9		1
11	6665568	EXTRUSION	bulk - sold per foot		x
12	6513152	SEAL	bulk - sold per foot		x
13	6665707	SWITCH	front wiper		1
14	35C408	BOLT			2
15	6676003	HOSE	black - .109" (2,77 mm) ID - bulk - sold per foot		x
16	6554149	CORD	bulk - sold per foot		x
17		CORD	NAP - window - 113" (2878 mm) long - Order Ref. 16 - Also Order Ref. 61 (6610510 tie)		1
18		SEAL	NAP - window - 113" (2878 mm) - Order Ref. 11		1
19	6665321	RIVET	male - plastic		1
20	6665322	RIVET	female - plastic		1
21	6665000	CLIP			1
22	7109662	HANDLE, LATCH DOOR			1
22		KEY	NAP - ignition & rear door - includes two keys W/ring - Order 6693241 - Was 6709527 [A]		1
22	6693241	KEY 10	single key W/O ring		x
23	7109663	SPACER			1
24	7110316	DECAL	door switch		1
25	6728459	DOOR SENSOR			1
25	6677193	RIVET	plastic		2
26	1CM640	SCREW			2
27	7109661	LATCH, DOOR W/SENSOR	W/Ref. 25		1
28	7104465	DOOR SWITCH HARNESS			1
29	7117322	HARNESS, WIPER	wiper		1
30	6677192	MAGNET			1
31	18EM1224	WASHER			1
32	51DM12	NUT	12 mm thread		1
33	7109664	BOLT	striker - 12 mm thread		1
34		SEAL	NAP - threshold - 36" (914 mm) - Order Ref. 12		1
35	6730816	SHIELD			1
36	6542731	SAFETY TREAD			1
37	6676500	ELBOW			1
38	46D5	NUT	acorn		1
39	25E16	WSHR			1
40	7157893	GAS SPRING	Was 6682586 [A]		1
40	6678548	SOCKET	ball		2
40	6649244	STUD			2
40	6649245	RETAINER	spring		2
41	6676499	GROMMET	wiper		1
42	6676917	ELBOW			1

Page 293 - OSS# 2071408 - All rights reserved by Bobcat Company - 12/04/2009 - 07:23:36 - Produced by Ken Cook Co. with mediaioff

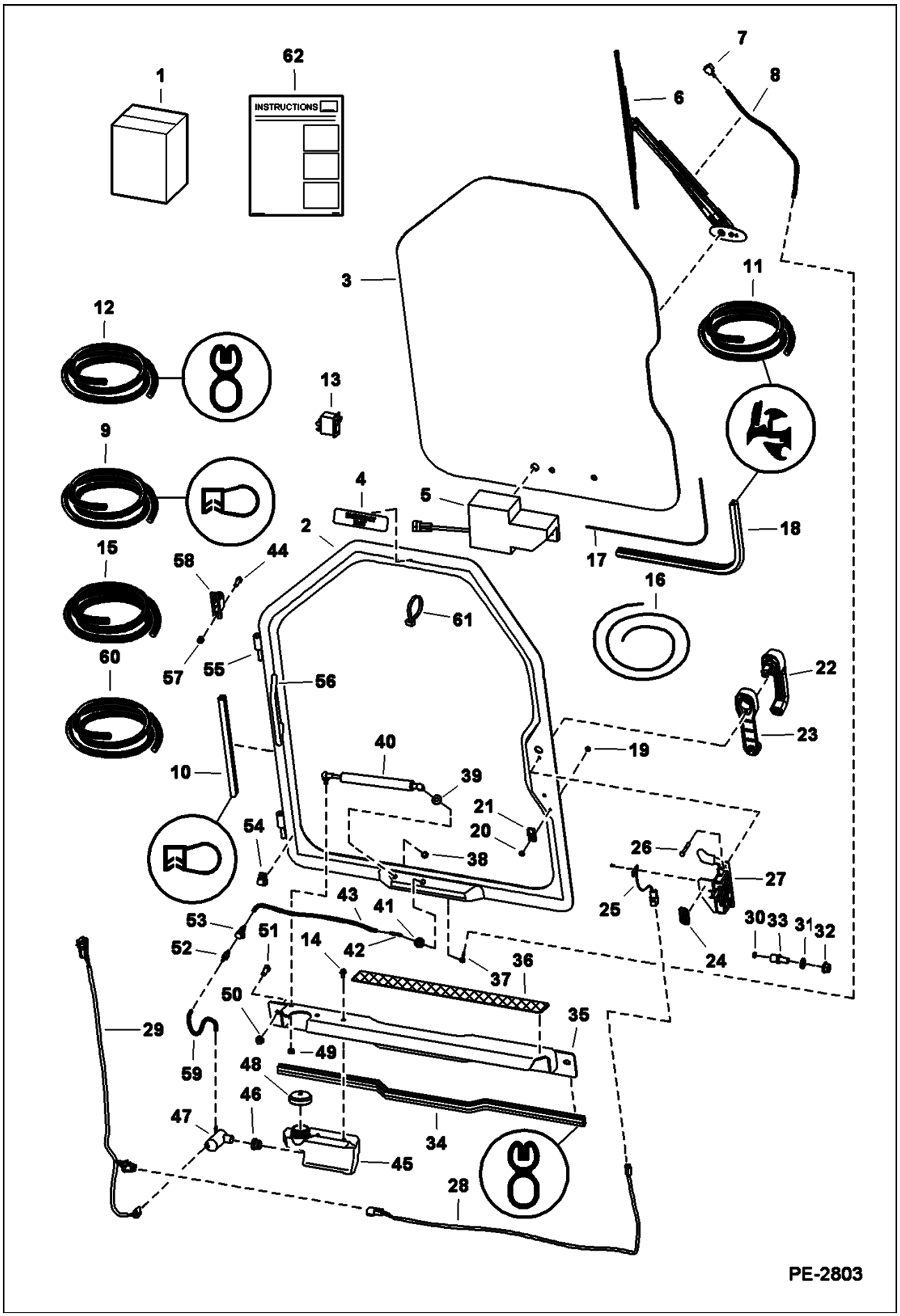

Page 294 - OSS# 2071408 - All rights reserved by Bobcat Company - 12/04/2009 - 07:23:36 - Produced by Ken Cook Co. with mediaioff

Ref No	Part Number	Description	Remarks	Serial Number	Qty
43		HOSE	NAP - 20.25" (514,4 mm) long - Order Ref. 15		1
44	17C512	BOLT 5			4
45	7133211	TANK, WASHER	Was 6736875 [A]		1
46	6666766	GROMMET			1
47	6664554	PUMP, WIPER WASHER			1
48	6674993	CAP	vented		1
49	61D5	NUT			1
50	61D6	NUT 5			2
51	17C612	BOLT 5			2
52	6675299	COUPLER	insert		1
53	6675298	COUPLER, BODY	body		1
54	6675378	CLIP	wire - W/adhesive back		3
55	6718376	HINGE	door		2
56	7138347	HANDLE	grab - Was 6718521 [B]		1
57	59D5	NUT 5			4
58	6717593	HINGE	base		2
59		HOSE	NAP - 4.25" (108 mm) long - Order Ref. 60		1
60	6708310	HOSE	clear - .154" (3,91 mm) ID - bulk - sold per foot		x
61	6610510	TIE	cord removal		1
62	6900854	INSTRUCTIONS			1

Page 295 - OSS# 2071408 - All rights reserved by Bobcat Company - 12/04/2009 - 07:23:36 - Produced by Ken Cook Co. with mediaioff

CAB DOOR
(Window & Wiper)

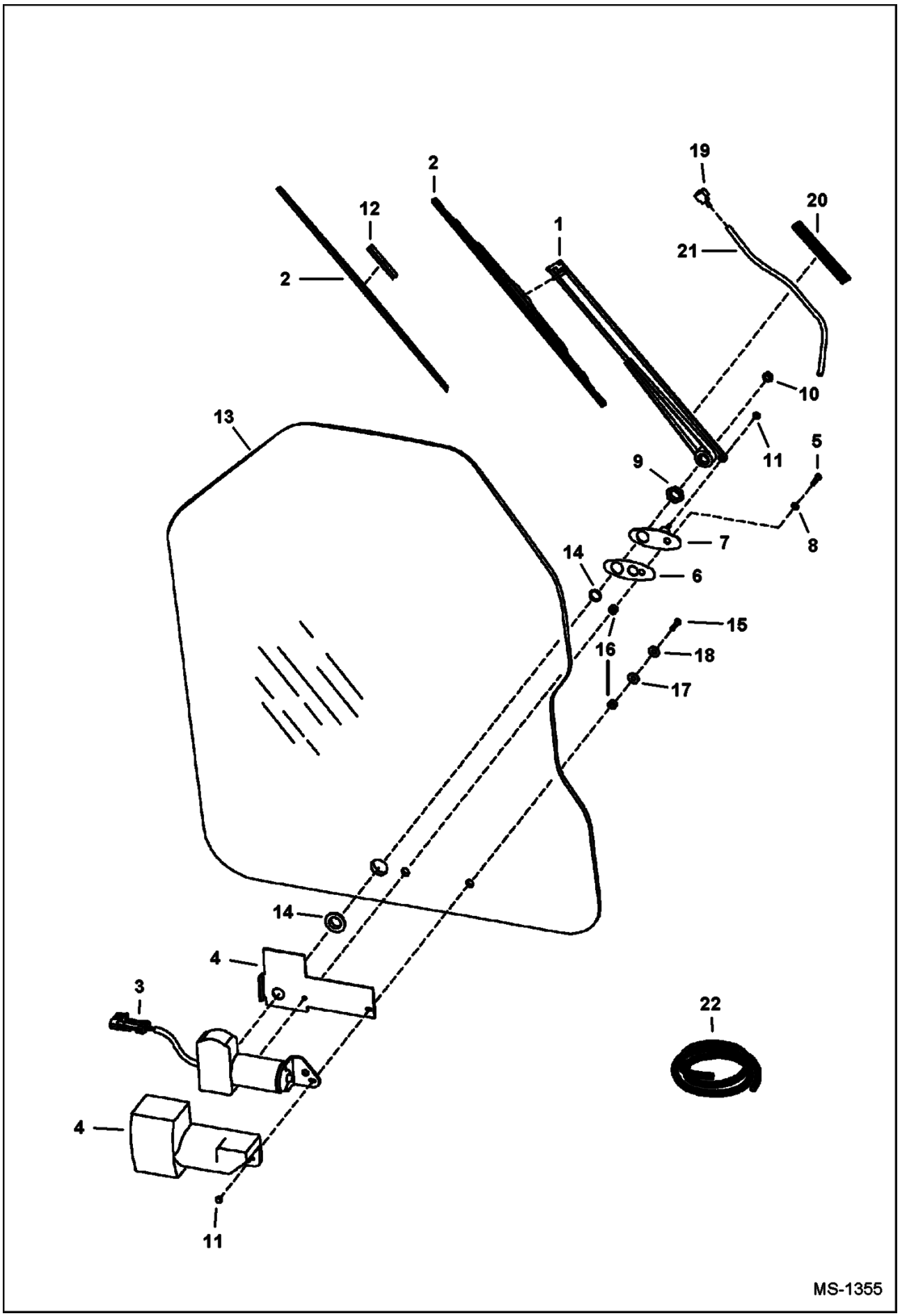

Page 296 - OSS# 2071408 - All rights reserved by Bobcat Company - 12/04/2009 - 07:23:36 - Produced by Ken Cook Co. with mediaioff

Ref No	Part Number	Description	Remarks	Serial Number	Qty
1	6677833	ARM ASSY	W/Ref. 19-21		1
2	7147359	BLADE, WIPER WINDOW	one piece blade		1
2	6677834	BLADE	Also Order Ref. 12		2
3	6679476	MOTOR	W/threaded shaft end & built in fuse		1
3	6640699	CONNECTOR	electrical connector		1
4	6677836	COVER			1
5	6677837	BOLT			1
6	6677839	GASKET			1
7	6677840	SWIVEL, PLATE ASSY			1
8	6677841	WASHER	tooth lock		1
9	6677842	NUT			1
10	6677843	NUT			1
11	6677844	NUT			2
12	6677845	ADAPTER	arm - use W/Ref. 2 (6677834 blade)		1
13	6729776	WINDOW, DOOR CURVED CAB	.25" thick glass W/1.00" dia. wiper motor shaft hole		1
14	6677847	GROMMET	rubber		1
15	6678198	BOLT			1
16	6664085	BUSHING	nylon		2
17	6801059	WASHER	neoprene		1
18	6678739	WASHER	steel		2
19	6678920	NOZZLE	For Ref. 1		1
20	6678921	GUIDE	hose		1
21		HOSE	NAP - 18" (457mm) long - Order Ref. 22		x
22	6676003	HOSE	black - .109" (2,77 mm) ID - bulk - sold per foot		x

Page 297 - OSS# 2071408 - All rights reserved by Bobcat Company - 12/04/2009 - 07:23:36 - Produced by Ken Cook Co. with media1off

CAB DOOR
(Special Applications)

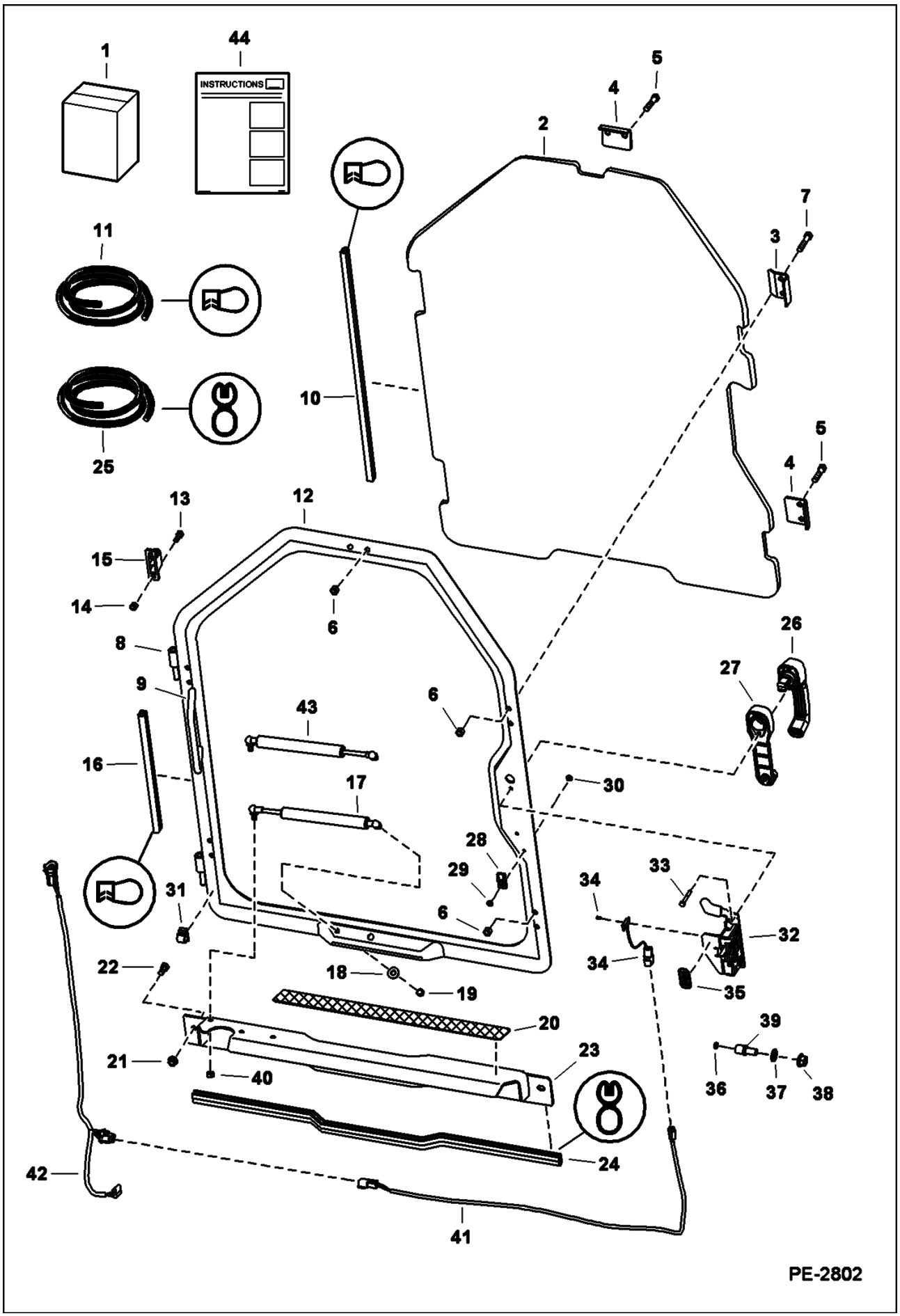

Page 298 - OSS# 2071408 - All rights reserved by Bobcat Company - 12/04/2009 - 07:23:36 - Produced by Ken Cook Co. with mediaioff

Ref No	Part Number	Description	Remarks	Serial Number	Qty
1	7121116	KIT, POWER BOB-TACH	Ref. 2-28 - if loader is not equipped W/deluxe cab accessories harness, heater, A/C, cab enclosure door kit, rear wiper kit or any of the following cab harness connected rotating beacon, 4-way flasher or strobe light, Also Order 7116260 deluxe cab accessories harness - if loader is not equipped W/high flow or A/C, Also Order 7110160 deluxe fuel harness		1
1	6730823	KIT	door - Ref. 2-43 - wiper is not included because it may scratch special applications window		1
2	6732351	WINDOW	.5" thick polycarbonate		1
3	6725938	CLAMP			3
4	6725937	CLAMP			2
5	17C628	BOLT			6
6	95D6	NUT			10
7	17C624	BOLT 5			4
8	6718376	HINGE	door		2
9	7138347	HANDLE	grab - Was 6718521 [B]		1
10		SEAL	NAP - 115" (2921 mm) long - Order Ref. 11		1
11	6675558	SEAL	bulk - sold per foot		x
12	7110430	SPECIAL APPS DOOR	W/Ref. 8 & 9		1
13	59D5	NUT 5			4
14	17C512	BOLT 5			4
15	6717593	HINGE	base		2
16		SEAL	NAP - 127.3" (3233,4 mm) long - Order Ref. 11		1
17		GAS SPRING	NAP - Order Ref. 43 - Was 6682586 [A]		1
17	6678548	SOCKET	ball		2
17	6649244	STUD	ball		2
17	6649245	RETAINER	spring		2
18	25E16	WSHR			1
19	46D5	NUT	acorn		1
20	6542731	SAFETY TREAD			1
21	55D6	NUT			2
22	17C612	BOLT 5			2
23	6730816	SHIELD			1
24		SEAL	NAP - 36" (914,4 mm) long - Order Ref 25		1
25	6513152	SEAL	bulk - sold per foot		x
26	7109662	HANDLE, LATCH DOOR			1
26		KEY	NAP - ignition & rear door - includes two keys W/ring - Order 6693241 - Was 6709527 [A]		1
26	6693241	KEY 10	single key W/O ring		x
27	7109663	SPACER			1
28	6665000	CLIP			1
29	6665321	RIVET	male - plastic		1
30	6665322	RIVET	female - plastic		1
31	6675378	CLIP	wire - W/adhesive back		3
32	7109661	LATCH, DOOR W/SENSOR	W/Ref. 34		1
33	1CM640	SCREW			2
34	6728459	DOOR SENSOR			1
34	6677193	RIVET	plastic		2
35	7110316	DECAL			1
36	6677192	MAGNET			1
37	18EM1224	WASHER			1
38	51DM12	NUT	12 mm thread		1

Page 299 - OSS# 2071408 - All rights reserved by Bobcat Company - 12/04/2009 - 07:23:36 - Produced by Ken Cook Co. with mediaioff

CAB DOOR (Cont'd)
(Special Applications)

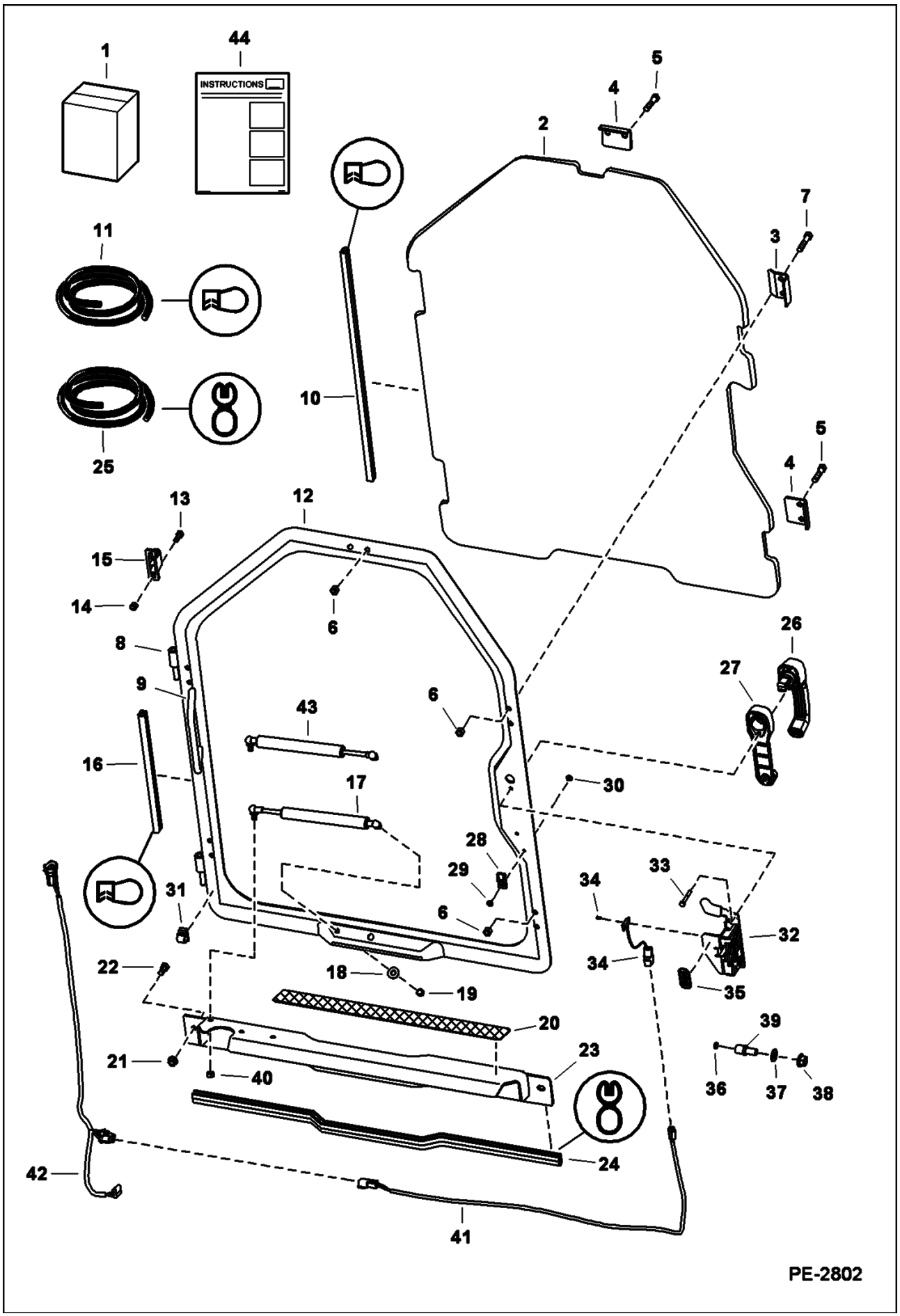

Page 300 - OSS# 2071408 - All rights reserved by Bobcat Company - 12/04/2009 - 07:23:36 - Produced by Ken Cook Co. with mediaioff

Ref No	Part Number	Description	Remarks	Serial Number	Qty
39	7109664	BOLT	striker - 12 mm thread		1
40	61D5	NUT			1
41	7104465	DOOR SWITCH HARNESS	door sensor		1
42	7117322	HARNESS, WIPER	wiper		1
43	7157893	GAS SPRING			1
44	6901013	INSTRUCTIONS			1

Page 301 - OSS# 2071408 - All rights reserved by Bobcat Company - 12/04/2009 - 07:23:36 - Produced by Ken Cook Co. with mediaioff



NOTE:

Ref. 1 - Cab Enclosure Kit

Ref. 2 - Special Applications Kit - To complete the Cab Enclosure Also Order Side Windows Kit, 3rd Gas Spring Kit & Access Cover Kit.

B–17100

Page 302 - OSS# 2071408 - All rights reserved by Bobcat Company - 12/04/2009 - 07:23:36 - Produced by Ken Cook Co. with mediaioff

Ref No	Part Number	Description	Remarks	Serial Number	Qty
1		KIT	SALES #6731938 - includes access cover kit, dual tilt door kit, 3rd gas spring kit & side window kit - if loader is not equipped W/deluxe cab accessories harness, heater, A/C, SJC, ACS, power Bob-Tach, rear wiper or any of the following cab harness connected rotating beacon, 4-way flasher or strobe light, Also Order 7116260 deluxe cab accessories harness - SEE NOTE	5307 11001-13759	1
1		KIT	SALES #6731938 - includes access cover kit, dual tilt door kit, 3rd gas spring kit & side window kit - if loader is not equipped W/deluxe cab accessories harness, heater, A/C, SJC, ACS, power Bob-Tach, rear wiper or any of the following cab harness connected rotating beacon, 4-way flasher or strobe light, Also Order 7116260 deluxe cab accessories harness - SEE NOTE	5308 11001-11510	1
1		KIT	SALES #6731938 - includes access cover kit, dual tilt door kit, 3rd gas spring kit & side window kit - if loader is not equipped W/deluxe cab accessories harness, heater, A/C, SJC, ACS, power Bob-Tach, rear wiper or any of the following cab harness connected rotating beacon, 4-way flasher or strobe light, Also Order 7143071 deluxe cab accessories harness - SEE NOTE	5307 13760 & Abv	1
1		KIT	SALES #6731938 - includes access cover kit, dual tilt door kit, 3rd gas spring kit & side window kit - if loader is not equipped W/deluxe cab accessories harness, heater, A/C, SJC, ACS, power Bob-Tach, rear wiper or any of the following cab harness connected rotating beacon, 4-way flasher or strobe light, Also Order 7143071 deluxe cab accessories harness - SEE NOTE	5308 11511 & Abv	1
2		KIT	SALES #6731937 - special applications kit - includes dual door kit, lexan top window kit & lexan rear window kit - if loader is not equipped W/deluxe cab accessories harness, heater, A/C, SJC, ACS, power Bob-Tach, rear wiper or any of the following cab harness connected rotating beacon, 4-way flasher or strobe light, Also Order 7116260 deluxe cab accessories harness - SEE NOTE	5307 11001-13759	1
2		KIT	SALES #6731937 - special applications kit - includes dual door kit, lexan top window kit & lexan rear window kit - if loader is not equipped W/deluxe cab accessories harness, heater, A/C, SJC, ACS, power Bob-Tach, rear wiper or any of the following cab harness connected rotating beacon, 4-way flasher or strobe light, Also Order 7116260 deluxe cab accessories harness - SEE NOTE	5308 11001-11510	1
2		KIT	SALES #6731937 - special applications kit - includes dual door kit, lexan top window kit & lexan rear window kit - if loader is not equipped W/deluxe cab accessories harness, heater, A/C, SJC, ACS, power Bob-Tach, rear wiper or any of the following cab harness connected rotating beacon, 4-way flasher or strobe light, Also Order 7143071 deluxe cab accessories harness - SEE NOTE	5307 13760 & Abv	1
2		KIT	SALES #6731937 - special applications kit - includes	5308 11511 & Abv	1

Page 303 - OSS# 2071408 - All rights reserved by Bobcat Company - 12/04/2009 - 07:23:36 - Produced by Ken Cook Co. with mediaioff



NOTE:

Ref. 1 - Cab Enclosure Kit

Ref. 2 - Special Applications Kit - To complete the Cab Enclosure Also Order Side Windows Kit, 3rd Gas Spring Kit & Access Cover Kit.

B–17100

Page 304 - OSS# 2071408 - All rights reserved by Bobcat Company - 12/04/2009 - 07:23:36 - Produced by Ken Cook Co. with mediaioff

Ref No	Part Number	Description	Remarks	Serial Number	Qty
			dual door kit, lexan top window kit & lexan rear window kit - if loader is not equipped W/deluxe cab accessories harness, heater, A/C, SJC, ACS, power Bob-Tach, rear wiper or any of the following cab harness connected rotating beacon, 4-way flasher or strobe light, Also Order 7143071 deluxe cab accessories harness - SEE NOTE		

Page 305 - OSS# 2071408 - All rights reserved by Bobcat Company - 12/04/2009 - 07:23:36 - Produced by Ken Cook Co. with mediaioff

CAB ENCLOSURE
(Envelope)

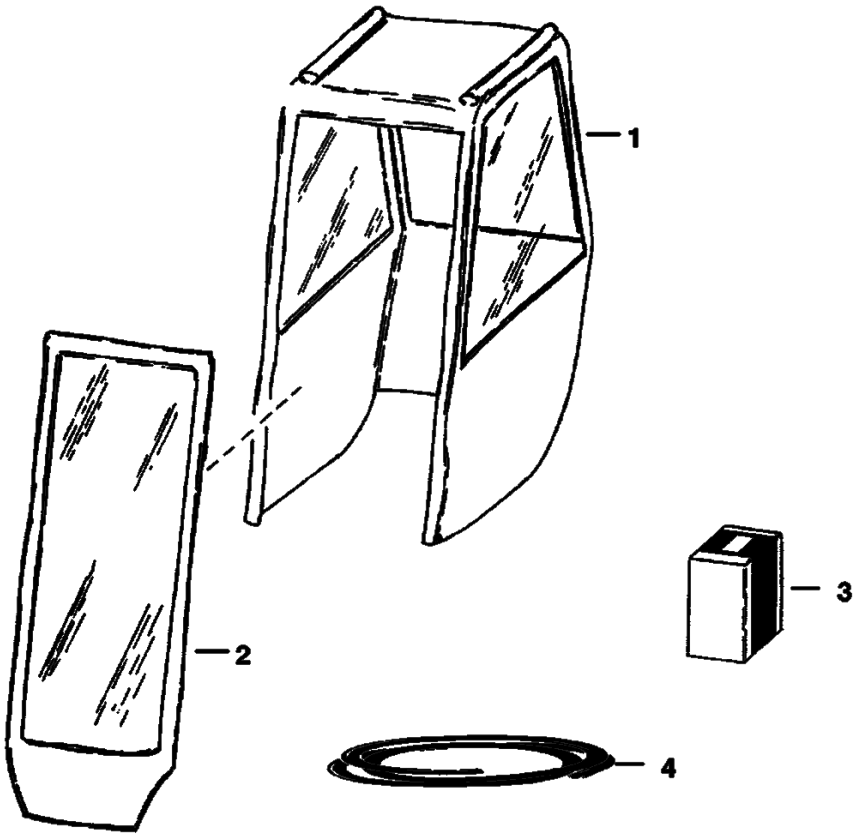

B–1413

Page 306 - OSS# 2071408 - All rights reserved by Bobcat Company - 12/04/2009 - 07:23:36 - Produced by Ken Cook Co. with mediaioff

CAB ENCLOSURE (Cont'd)
(Envelope)

Ref No	Part Number	Description	Remarks	Serial Number	Qty
1	6675544	CANVAS CAB	W/Ref. 2-4 - fits over cab		1
2	6675590	DOOR	vinyl		1
3	6675591	HINGE KIT			1
4	6722597	VELCRO	27 feet (8,2meters) long		1

Page 307 - OSS# 2071408 - All rights reserved by Bobcat Company - 12/04/2009 - 07:23:36 - Produced by Ken Cook Co. with mediaioff

CAB WINDOWS
(Rear Window Removal Kit)

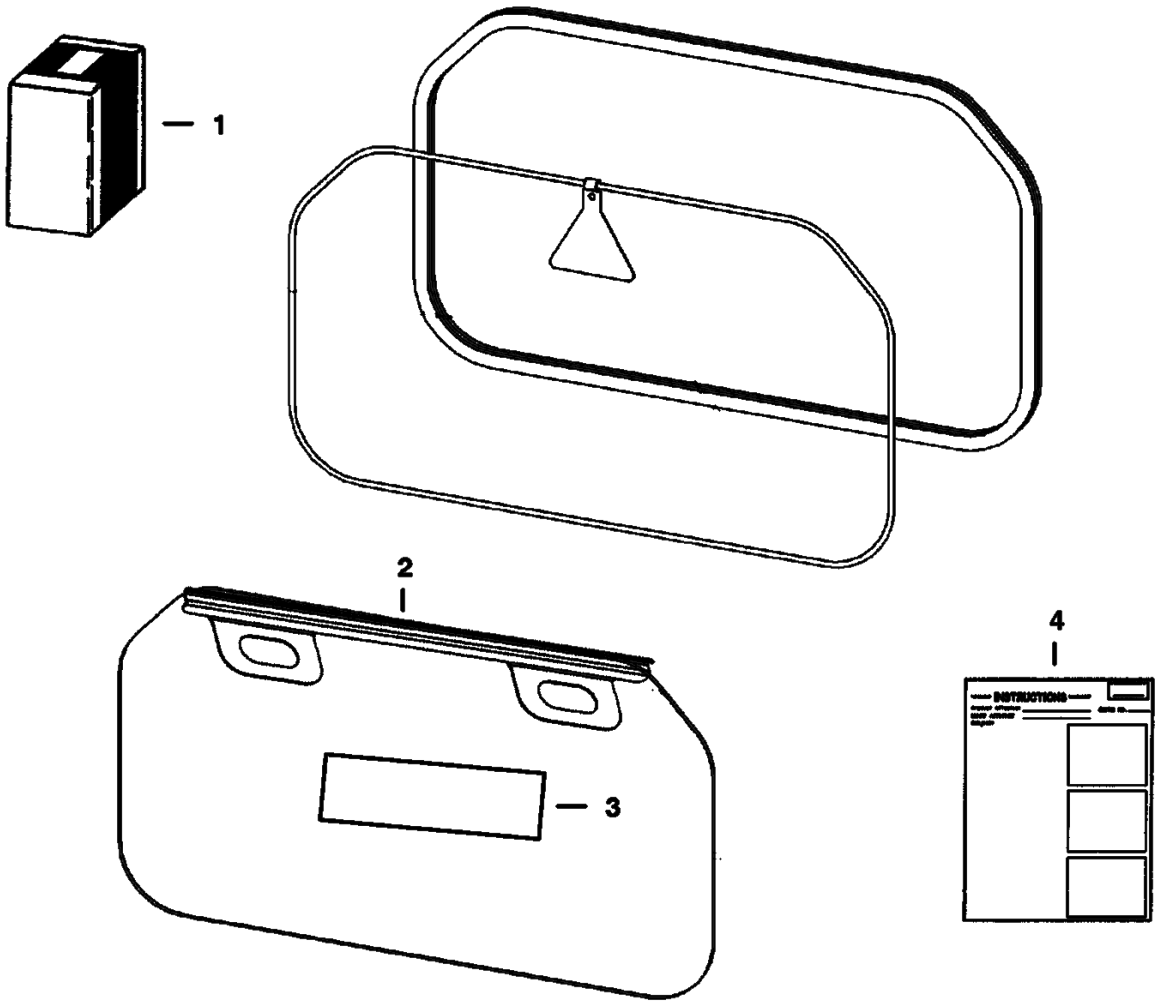

TS–2006

Page 308 - OSS# 2071408 - All rights reserved by Bobcat Company - 12/04/2009 - 07:23:36 - Produced by Ken Cook Co. with mediaioff

Ref No	Part Number	Description	Remarks	Serial Number	Qty
1	6725946	KIT	Ref. 2-4		1
2	6725421	HANDLE			1
3	6726303	DECAL			1
4	6901029	INSTRUCTIONS			1

Page 309 - OSS# 2071408 - All rights reserved by Bobcat Company - 12/04/2009 - 07:23:36 - Produced by Ken Cook Co. with mediaioff

CAB WINDOWS
(Top, Rear & Side)

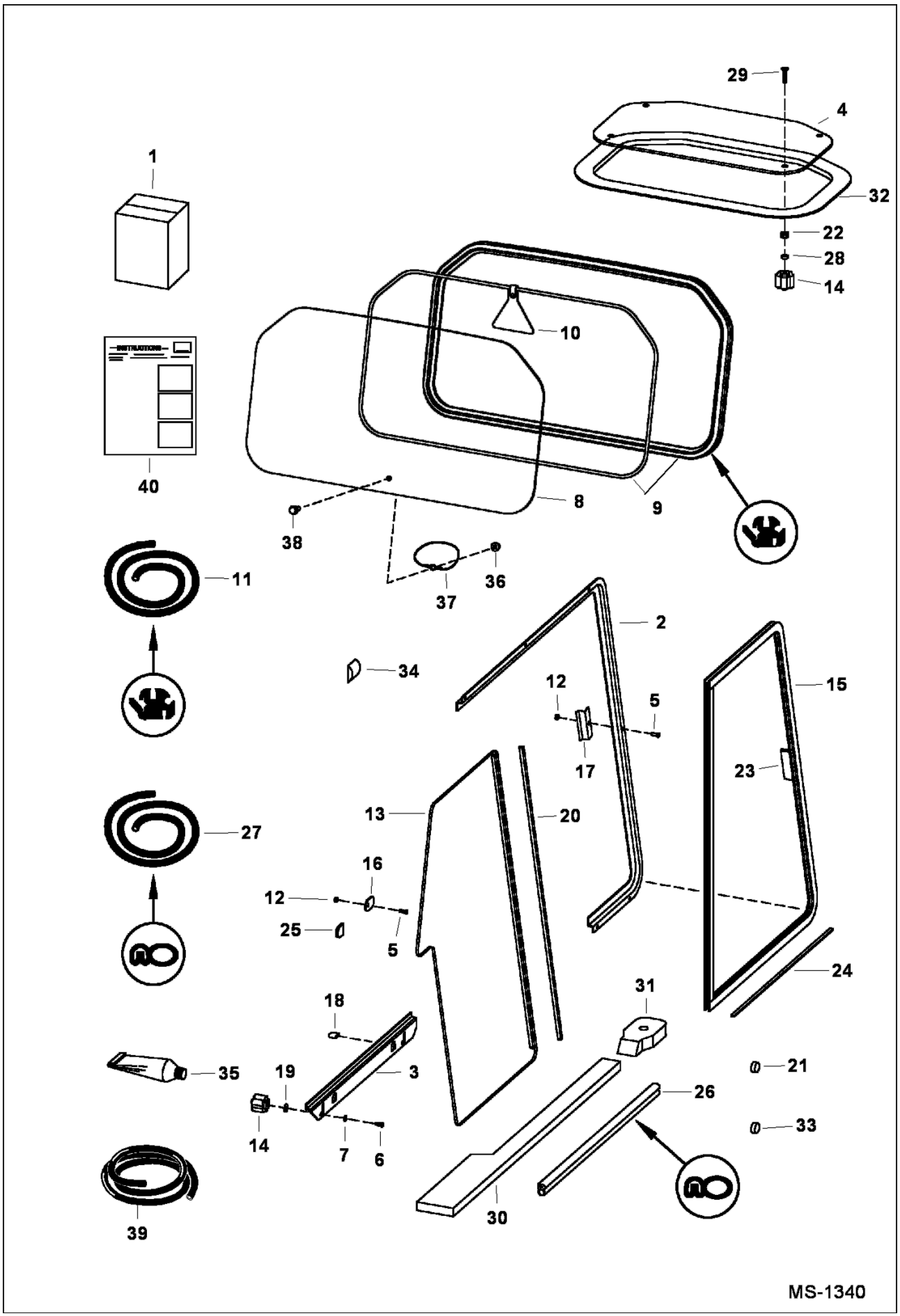

Page 310 - OSS# 2071408 - All rights reserved by Bobcat Company - 12/04/2009 - 07:23:36 - Produced by Ken Cook Co. with mediaioff

CAB WINDOWS (Cont'd)
(Top, Rear & Side)

Ref No	Part Number	Description	Remarks	Serial Number	Qty
1	6718805	KIT	top & rear window - Ref. 4, 8-10, 14 & 39 - Was SALES [A]		1
1		KIT	SALES - side windows - Order SALES #7131580		1
2	6717870	FRAME	LH side		1
2	6717872	FRAME	RH side		1
3	6717871	FRAME	LH bottom		1
3	6717873	FRAME	RH bottom		1
4	7105034	WINDOW TOP	Was 7105035 [A]		1
5	10C410	BOLT	carriage		14
6	10C412	BOLT	carriage		8
7	25E14	WSHR			4
8	6717874	WINDOW	rear - 3/16" thick		1
8	6719413	WINDOW	rear - polycarbonate		1
9		EXTRUSION	NAP - 75.75" (1924mm) long - Order Ref. 11		1
9		CORD	NAP - 75.75" (1924mm) long - Order Ref. 11 - Also Order Ref. 10 (6731478 exit tag)		1
10	6731478	EXIT TAG	Was 6559515 [A]		1
11	6675387	EXTRUSION	bulk - sold per foot		x
11	6554149	CORD	bulk - sold per foot		x
12	59D4	NUT 5			18
13	6691001	WINDOW	rear - LH - W/Ref. 20 - Was 6674520 [A]		1
13	6691003	WINDOW	rear - RH - W/Ref. 20 - Was 6674522 [A]		1
14	6681614	KNOB			8
15	7003481	WINDOW, LEFT ASSY	sliding - W/Ref. 23 - Was 6691000 [A]		1
15	7003482	WINDOW, RIGHT ASSY	sliding - W/Ref. 23 - Was 6691002 [A]		1
16	6719063	STOP	window		2
17	6719037	STRIKER			2
18	6719065	COVER TAB	tab		4
19	6675212	RETAINER	tab bolt		4
20	6675833	SEAL	rear window - dual wiper W/tape		2
21	6657719	PLUG	for .75" (19,1 mm) dia hole		2
22	6675545	GROMMET			4
23	6678283	HANDLE	side window		2
24		FELT STRIP	NAP - 20.38" (517,7 mm) long - Order Ref. 39		2
25	6677198	TAB	cab		2
26		SEAL	NAP - 24" (609mm) long - Order Ref. 27		2
27	6555351	SEAL	bulk - sold per foot		x
28	6664085	BUSHING	nylon		4
29	91G420	SCREW			4
30	6729010	SEAL	foam - LH		1
30	6729009	SEAL	foam - RH		1
31	6729011	SEAL	cab mount		2
32	7165265	SEAL, WINDOW			1
33	6677973	PLUG	for .22" dia hole		2
34	7103075	SEAL	side screen		2
35		ADHESIVE	NAP - 1 oz. - for top window seal Ref. 1		1
36	83D5	NUT 5			1
37	6555331	WIRE ROPE			1
38	35C516	BOLT 10			1
39	6676927	FELT STRIP	bulk- sold per foot		x
40	6900852	INSTRUCTIONS	INSTRUCTIONS top & rear window		1
40	6900853	INSTRUCTIONS	INSTRUCTIONS side windows		1

Page 311 - OSS# 2071408 - All rights reserved by Bobcat Company - 12/04/2009 - 07:23:36 - Produced by Ken Cook Co. with mediaioff

CAB WINDOWS
(Window Rib Kit)

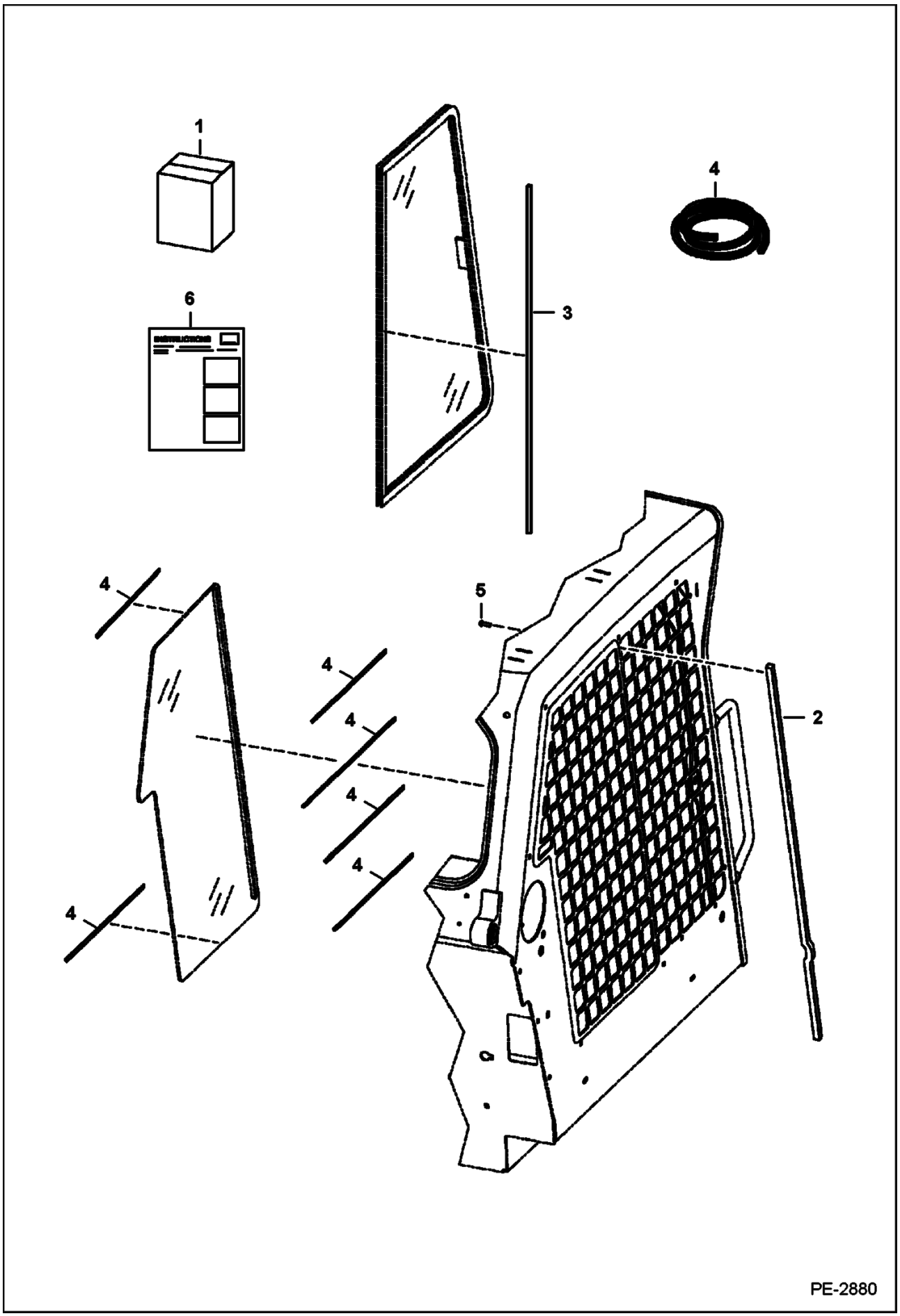

Page 312 - OSS# 2071408 - All rights reserved by Bobcat Company - 12/04/2009 - 07:23:36 - Produced by Ken Cook Co. with mediaioff

Ref No	Part Number	Description	Remarks	Serial Number	Qty
1	7122462	KIT, RIB WINDOW	Ref. 2-6 - can NOT use W/single point lift kits - Ref. 2 & 5 may already be installed		1
2	7153099	BRACE, CAB	Was 7121556 [A]		2
3	7122487	2 SEAL, WIPER			2
4	7122488	SEAL, BULB	180" (4572 mm) long - cut to fit		1
5	7142024	SCREW	Was 25GT410 [B]		8
6	6904744	INSTRUCTIONS			1

Page 313 - OSS# 2071408 - All rights reserved by Bobcat Company - 12/04/2009 - 07:23:36 - Produced by Ken Cook Co. with mediaioff

COOLING UPGRADE KIT
(S/N 530713065 & Below, 530811454 & Below

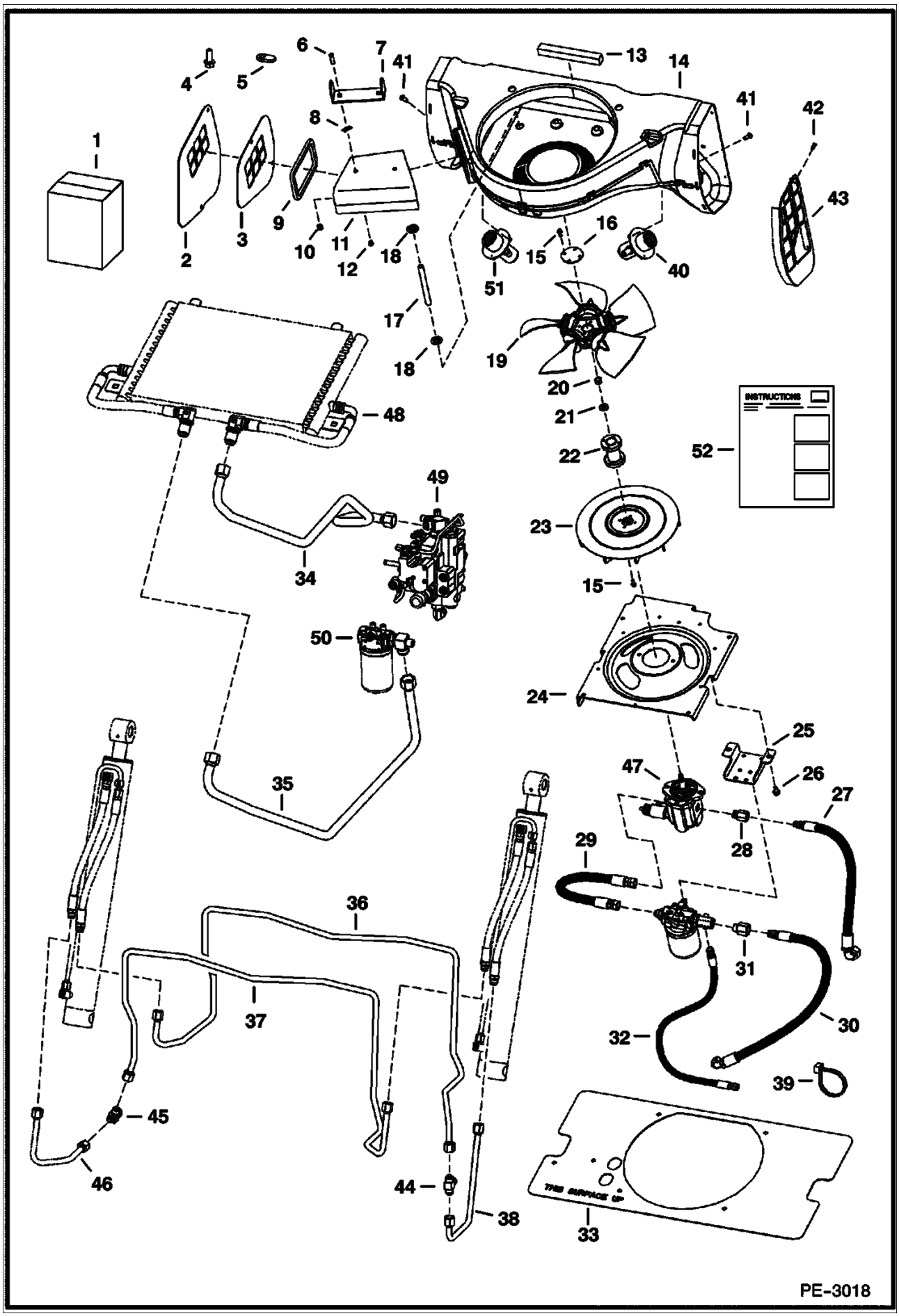

Page 314 - OSS# 2071408 - All rights reserved by Bobcat Company - 12/04/2009 - 07:23:36 - Produced by Ken Cook Co. with mediaioff

COOLING UPGRADE KIT (Cont'd)
(S/N 530713065 & Below, 530811454 & Below

Ref No	Part Number	Description	Remarks	Serial Number	Qty
1	7126319	KIT, UPGRADE COOLING	Ref. 2-38 & 51		1
2	7124566	COVER	for A300, S250, S300, S330 & T300		1
3	7124567	COVER	for S220 & T250		1
4	31C636	BOLT			2
5	634187	NUT,SPTWLD			6
6	10C612	BOLT			2
7	7131534	MOUNT	weld on - part of main frame		1
8	6684033	NUT			4
9	7126496	SEAL			1
10	57D6	NUT 5			2
11		CHUTE	NAP - Order 714037 chute - Was 7124826 [A]		1
11	7140307	CHUTE	does not use Ref. 12		1
12	6649949	PLUG	Use W/Ref. 11 (NAP/ 7124826 chute)		2
13	7126863	SEAL			1
14	7134338	HOUSING			1
15	49C412	BOLT			8
16	7125948	PLATE			1
17	7131872	SPACER			4
18	7131873	WASHER			2
19	7152335	FAN, ENG COOLANT	Was 7128719 [A]		1
20	96D8	NUT			1
21	6701097	WASHER			1
22	7128728	HUB			1
23	7123766	FAN			1
24	7126457	MOUNT			1
25	7126458	BRACKET			1
26	84G3712	BOLT			2
27	7137691	HOSE	Also Order Ref. 28 - Was 7124797 [A]		1
28	15HB1010	ADAPTER, COUPLER	quick lock - Also Order Ref. 27 - Was 78HA1010 [B,D]		1
29	7124832	HOSE			1
30	7124827	HOSE	Also Order Ref. 31		1
31	15HB1210	ADAPTER, COUPLER	quick lock - Also Order Ref. 30 - Was 78HA1210 [A]		1
32	7125723	HOSE			1
33	7127216	TEMPLATE			1
34	7125181	TUBELINE	cooler		1
35	7125182	TUBELINE	filter		1
36	7126874	TUBELINE	lift		1
37	7126873	TUBELINE	lift		1
38	7126937	TUBELINE	lift		1
39	6624289	TIE STRAP			1
40		INLET	Not in kit - use existing part		x
41		SCREW	Not in kit - use existing part		x
42		SCREW	Not in kit - use existing part		x
43		LOUVER	Not in kit - use existing part		x
44		FITTING	Not in kit - use existing part		x
45		FITTING	Not in kit - use existing part		x
46		TUBELINE	Not in kit - use existing part		x
47		HYD MOTOR	Not in kit - use existing part		x
48		COOLER ASSY	Not in kit - use existing part		x
49		VALVE ASSY	Not in kit - use existing part		x
50		FILTER ASSY	Not in kit - use existing part		x
51		INLET	Not in kit - use existing part		x
52	6904896	INSTRUCTIONS			1

Page 315 - OSS# 2071408 - All rights reserved by Bobcat Company - 12/04/2009 - 07:23:36 - Produced by Ken Cook Co. with mediaioff

COUNTERWEIGHT KIT
(2000/2500 lb. Rear Axle)

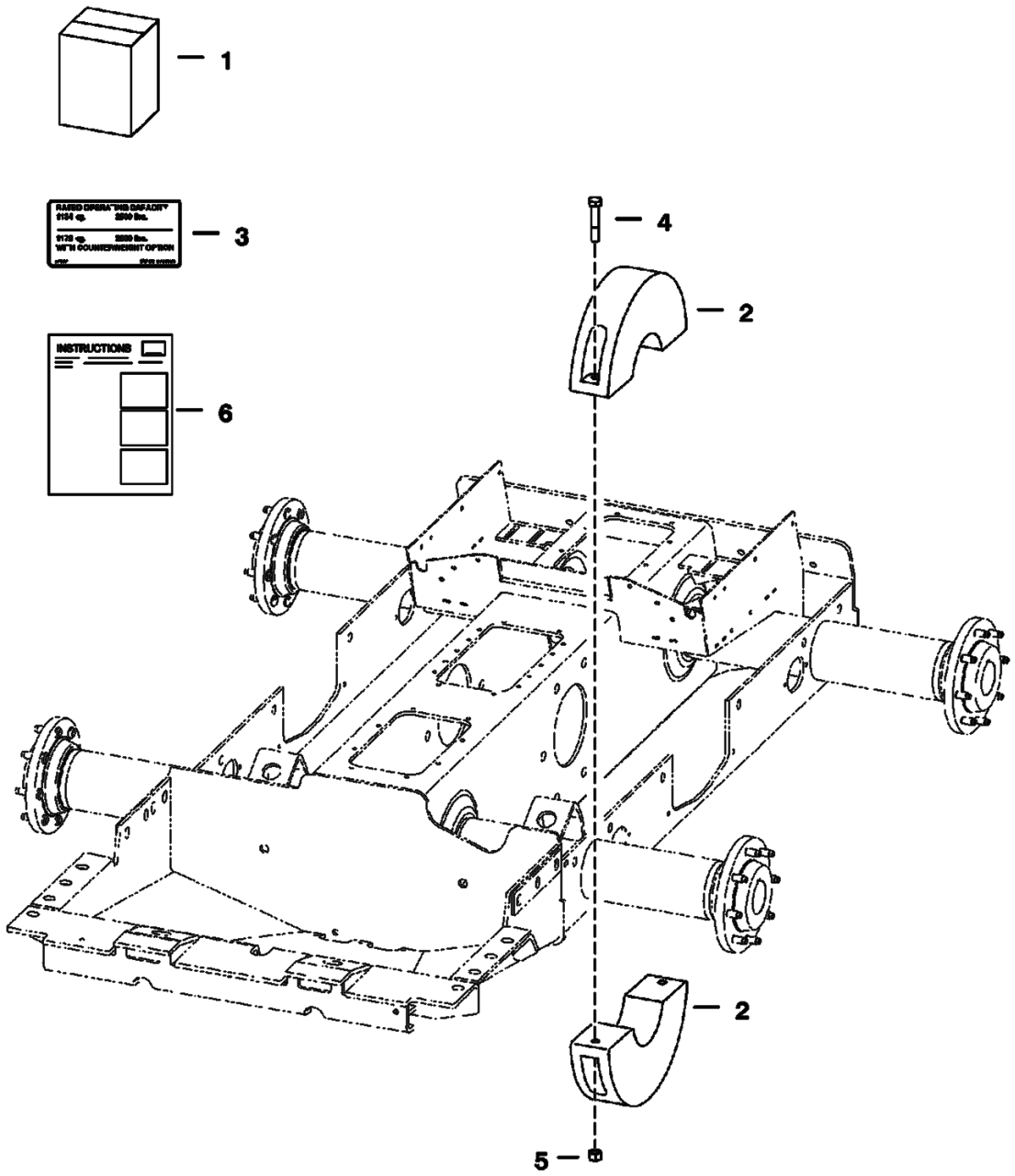

Page 316 - OSS# 2071408 - All rights reserved by Bobcat Company - 12/04/2009 - 07:23:36 - Produced by Ken Cook Co. with mediaioff

COUNTERWEIGHT KIT (Cont'd)
(2000/2500 lb. Rear Axle)

Ref No	Part Number	Description	Remarks	Serial Number	Qty
1	6712911	KIT, COUNTERWEIGHT	counterweight		1
2	6714362	WEIGHT	rear axle - 42.8 lbs (19,4 kg) - 4.5" (114,3mm) wide		4
3	6733924	DECAL	2500 lb / 2600 lb load		1
3	6712912	DECAL	2000 lb load		1
4	17C640	BOLT 5			4
5	61D6	NUT 5			4
6	6900366	INSTRUCTIONS			1

Page 317 - OSS# 2071408 - All rights reserved by Bobcat Company - 12/04/2009 - 07:23:36 - Produced by Ken Cook Co. with mediaioff

COUNTERWEIGHT KIT
(400 lb) (181 kg)

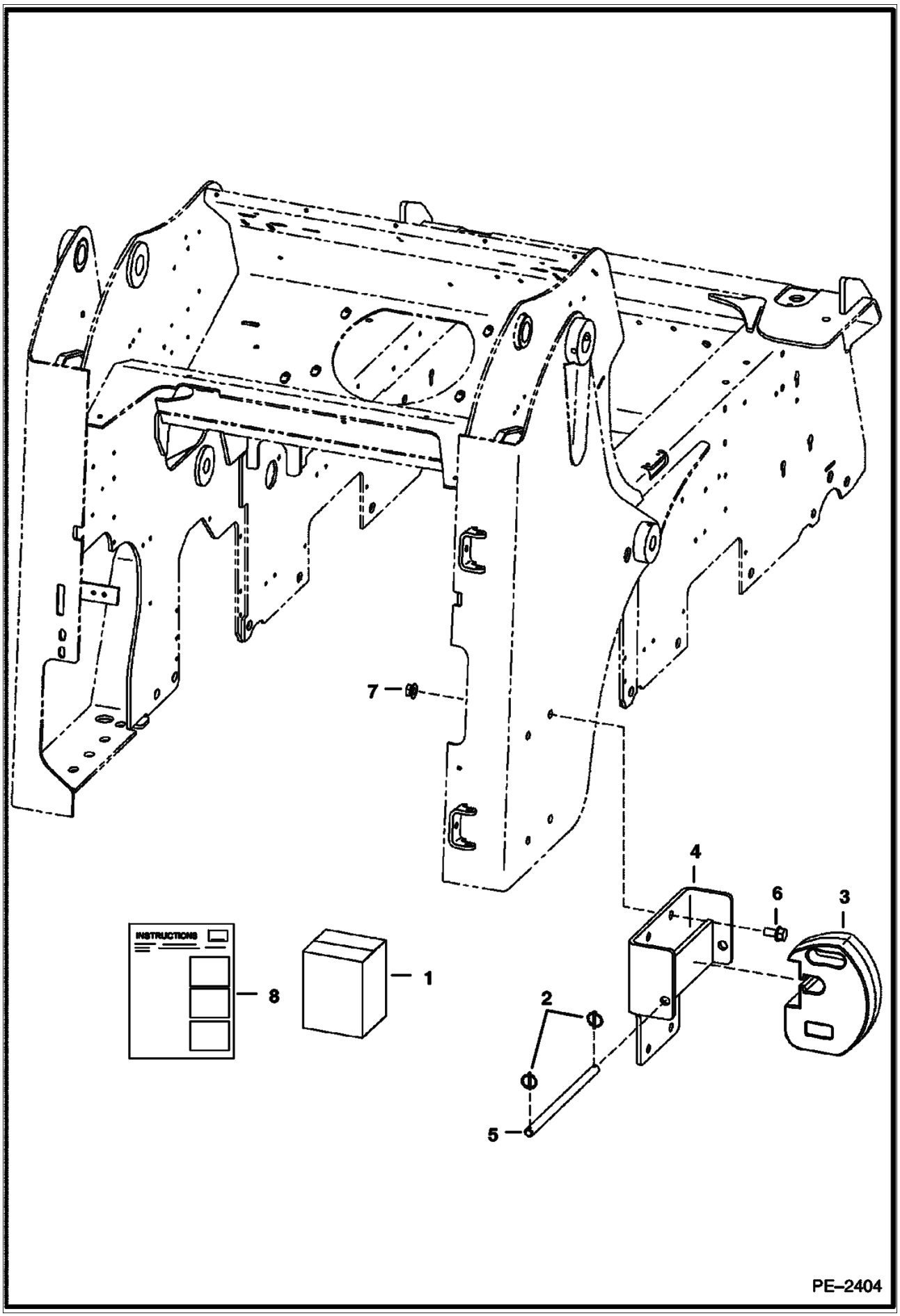

Page 318 - OSS# 2071408 - All rights reserved by Bobcat Company - 12/04/2009 - 07:23:36 - Produced by Ken Cook Co. with mediaioff

COUNTERWEIGHT KIT (Cont'd)
(400 lb) (181 kg)

Ref No	Part Number	Description	Remarks	Serial Number	Qty
1		KIT	NAP - Ref. 2-8 - Was 7105764 [A]		1
2	6649706	PIN			4
3		COUNTERWEIGHT	NAP - 49 lb (20,142 kg) - Was 6811483 [B]		8
4		MOUNT	NAP - Was 7105818 [A]		2
5		ROD	NAP - Was 7105827 [A]		2
6	35C1020	BOLT			8
7	57D10	NUT			8
8		INSTRUCTIONS	NAP - Was 6903283 [A]		1

Page 319 - OSS# 2071408 - All rights reserved by Bobcat Company - 12/04/2009 - 07:23:36 - Produced by Ken Cook Co. with mediaioff

DECALS
(Front)

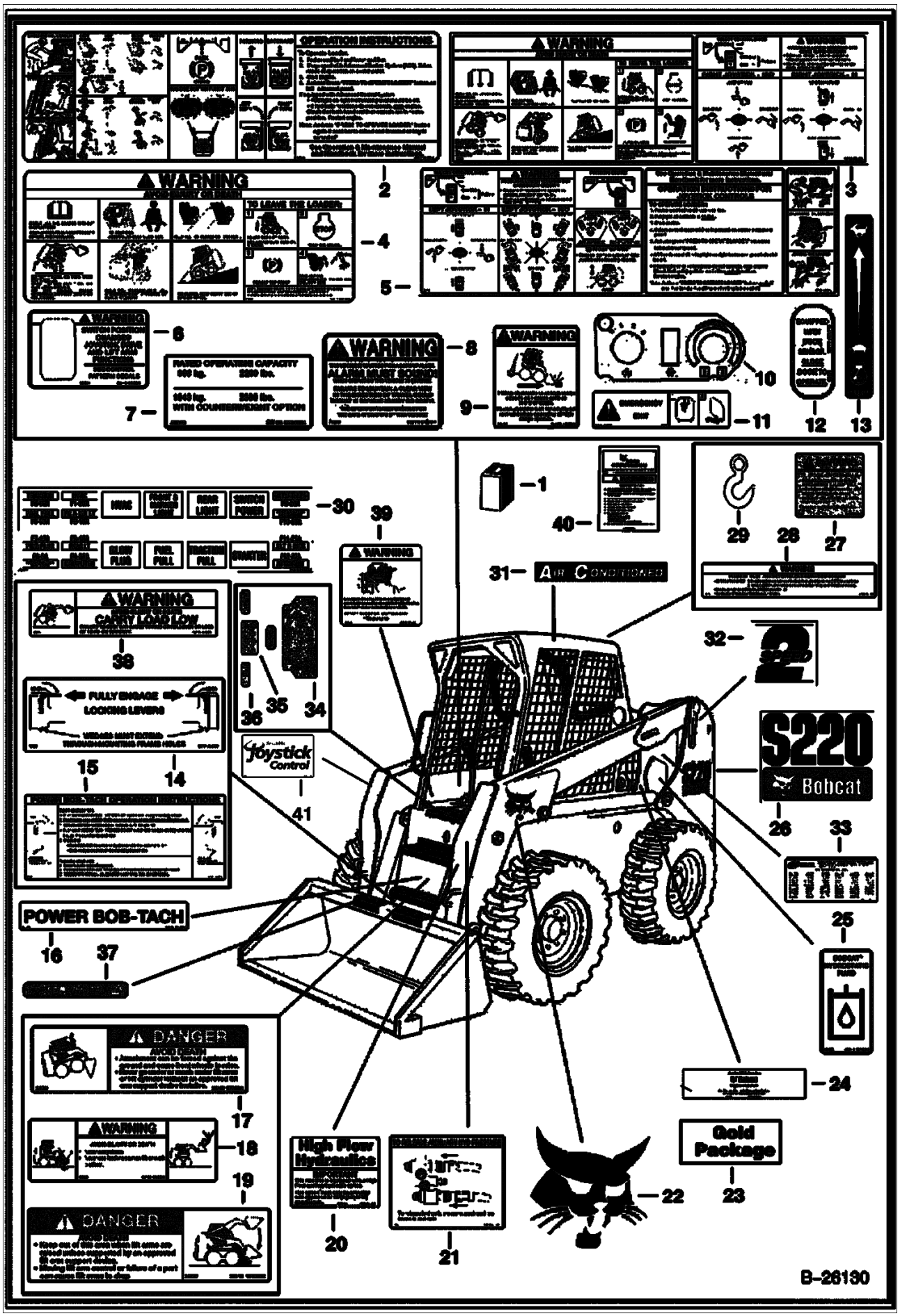

Page 320 - OSS# 2071408 - All rights reserved by Bobcat Company - 12/04/2009 - 07:23:36 - Produced by Ken Cook Co. with mediaIoff

DECALS (Cont'd)
(Front)

Ref No	Part Number	Description	Remarks	Serial Number	Qty
1	6904764	DECAL KIT	Except where noted, includes decals from this ILL. & ILL. B26131		1
1	7120288AR	KIT, TRANSLATION S220 SPANISH	Argentina		1
1	7120288BR	KIT, TRANSLATION S220 PORTUGUESE	Brazil		1
1	7120289AR	KIT, DECAL	Argentina		1
1	7120289BR	KIT, DECAL	Brazil		1
1	7120289JP	KIT, DECAL	Japan		1
2	6727926	DECAL	standard & ACS		1
3	6734646	DECAL	warning - selectable joystick controls		1
4	6728539	DECAL	warning		1
5	6734647	DECAL	operation - selectable joystick controls		1
6	6737248	DECAL	selectable joystick control		1
7	6736824	DECAL	load cap.		1
8	6737189	DECAL	backup alarm		1
9	6725370	DECAL	3-pt seat belt - Not In Kit		1
10	6718579	DECAL	heater control - Not In Kit		1
11	6707852	DECAL	emergency exit		1
12	7110316	DECAL	door sensor		1
13	6735140	DECAL	throttle		1
14	6561383	DECAL	locking lever		1
15	6725907	DECAL	bob-tach operation		1
16	6719888	DECAL	power bob-tach - Not In Kit		1
17	6702301	DECAL	danger		1
18	6732696	DECAL	warning		1
19	6702302	DECAL	danger		1
20	7120602	DECAL	high flow hydraulics - Not In Kit		1
21	6731757	DECAL	to release auxiliary hyd. pressure		1
22	7116870	DECAL	bobcat		2
23	6735862	DECAL	gold package - Not In Kit		1
24	6565200	DECAL	filter		1
25	6565990	DECAL	hydrostatic fluid fill		1
26	7120599	DECAL	S220		2
27	6726423	DECAL	4 pt. lift opt.		2
28	6704786	DECAL	sgl. pt. lift warning		1
29	6533898	DECAL	sgl. pt. lift opt. - Not In Kit		1
30	7117407	DECAL	inside fuse cover		1
31	6729077	DECAL	air conditioned - Not In Kit		2
32	6729078	DECAL	2 speed - Not In Kit		2
33	6557224	DECAL	patent		1
34	7108222	SAFETY TREAD	22.5" (571,5 mm) wide irregular shape		1
35	6553976	SAFETY TREAD	5" x 8" (127mm x 203,2mm)		1
36	6554100	TREAD	3" x 6" (76,2 mm x 152,4 mm)		3
37	6555341	SAFETY TREAD	3" x 12"		1
38	6579528	DECAL	carry load low		1
39	6718706	DECAL	warning		1
40	6902600	MANUAL	operation & maintenance - W/wire rope - not in kit - Was 6718719 [B,D]		1
40	6558309	WIRE ROPE	bulk - sold per foot		3
40	6558310	SLEEVE	wire rope		2

Page 321 - OSS# 2071408 - All rights reserved by Bobcat Company - 12/04/2009 - 07:23:36 - Produced by Ken Cook Co. with mediaioff

DECALS
(Rear)

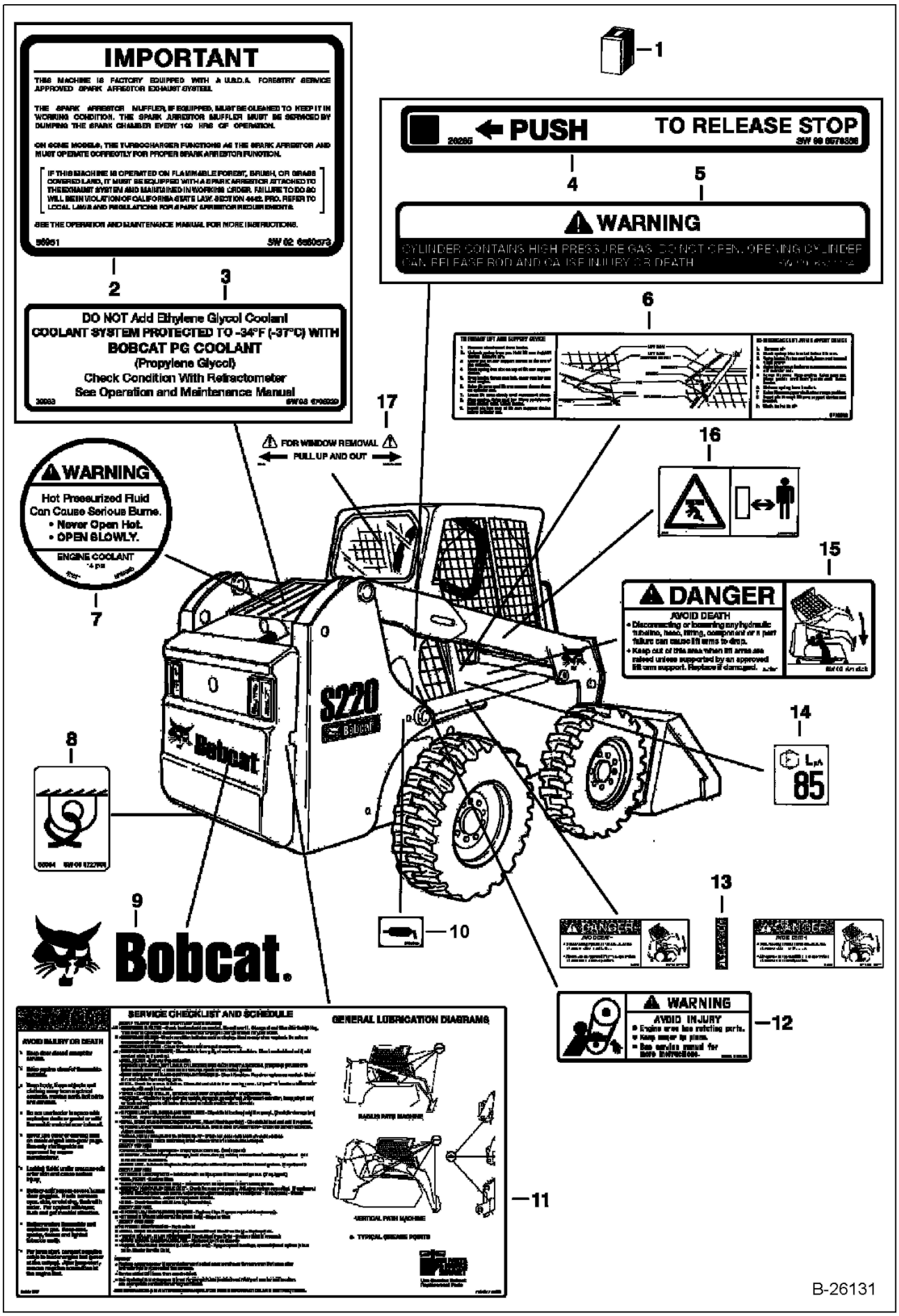

Page 322 - OSS# 2071408 - All rights reserved by Bobcat Company - 12/04/2009 - 07:23:36 - Produced by Ken Cook Co. with mediaoff

DECALS (Cont'd)
(Rear)

Ref No	Part Number	Description	Remarks	Serial Number	Qty
1	6904764	DECAL KIT	Except where noted, includes decals from this ILL. & ILL. B26130		1
2	6560573	DECAL	muffler		1
3	6708929	DECAL	coolant		1
4	6578368	DECAL	push to release stop		1
5	6577754	DECAL	warning		3
6	6706558	DECAL	lift arm support		1
7	6733996	DECAL	warning - engine coolant		1
8	6727595	DECAL	tie down		3
9	6735901	DECAL, BOBCAT	W/Bobcat head - white		1
10	6705340	DECAL	lube - European - not in kit		2
11	6734534	DECAL	service checklist & schedule - Was 7124877 [A]		1
12	6708941	DECAL	warning		2
13	6809511	DECAL	hose & tube danger		2
14	6579385	DECAL	85db noise level - European - Not In Kit		1
15	6717343	DECAL	danger		2
16	6713507	DECAL	stay clear - European - Not in Kit		2
17	6726303	DECAL	removeable rear window		1

Page 323 - OSS# 2071408 - All rights reserved by Bobcat Company - 12/04/2009 - 07:23:36 - Produced by Ken Cook Co. with mediaioff

DEBRIS SHIELD KIT

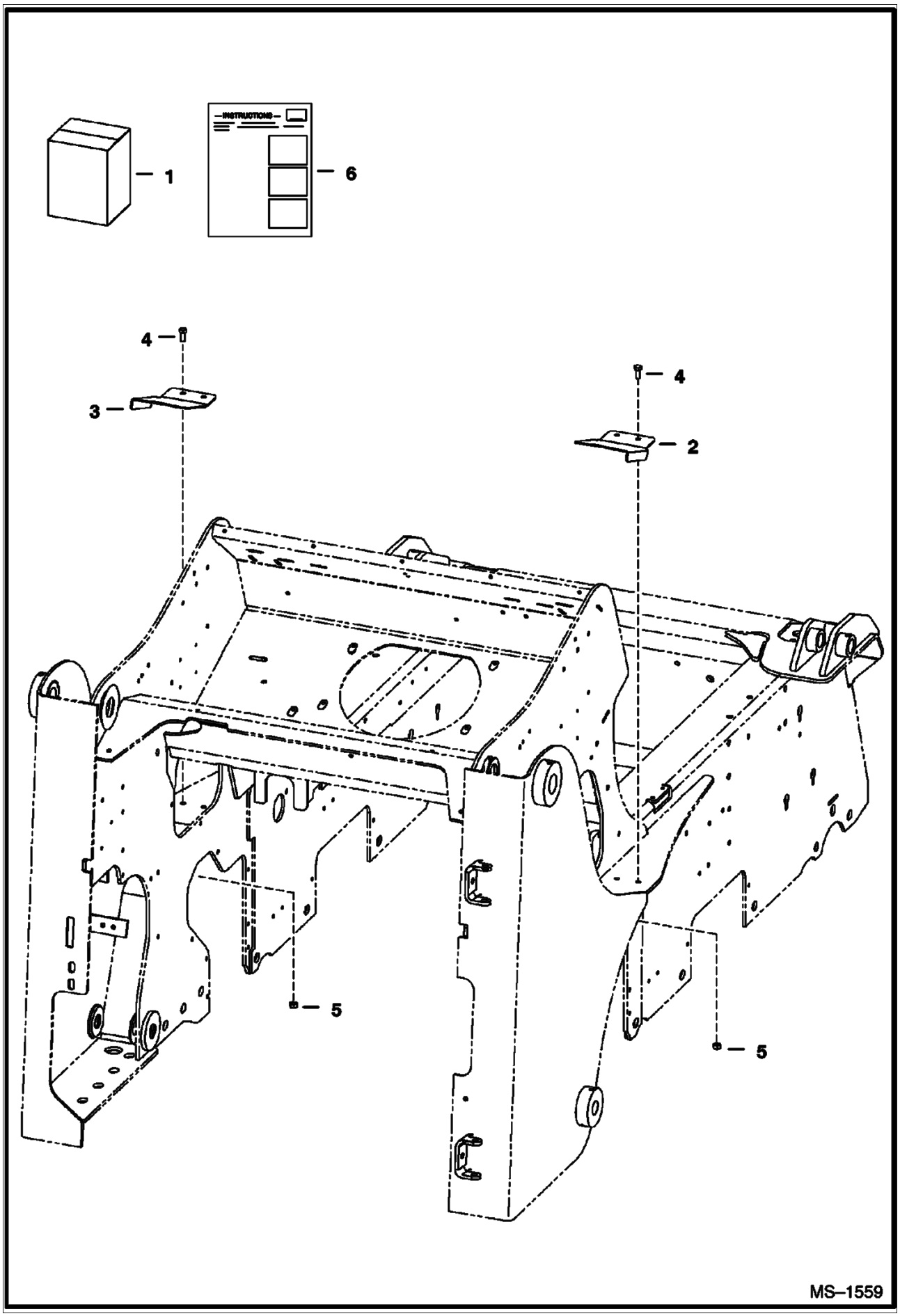

Page 324 - OSS# 2071408 - All rights reserved by Bobcat Company - 12/04/2009 - 07:23:36 - Produced by Ken Cook Co. with mediaioff

Ref No	Part Number	Description	Remarks	Serial Number	Qty
1	6734461	KIT	Ref. 2-6		1
2	6734447	SHIELD	R.H.		1
3	6734446	SHIELD	L.H.		1
4	17C614	BOLT			4
5	61D6	NUT 5			4
6	6902252	INSTRUCTIONS			1

Page 325 - OSS# 2071408 - All rights reserved by Bobcat Company - 12/04/2009 - 07:23:36 - Produced by Ken Cook Co. with mediaioff

ELECTRICAL CONNECTOR KIT
(7-Pin)

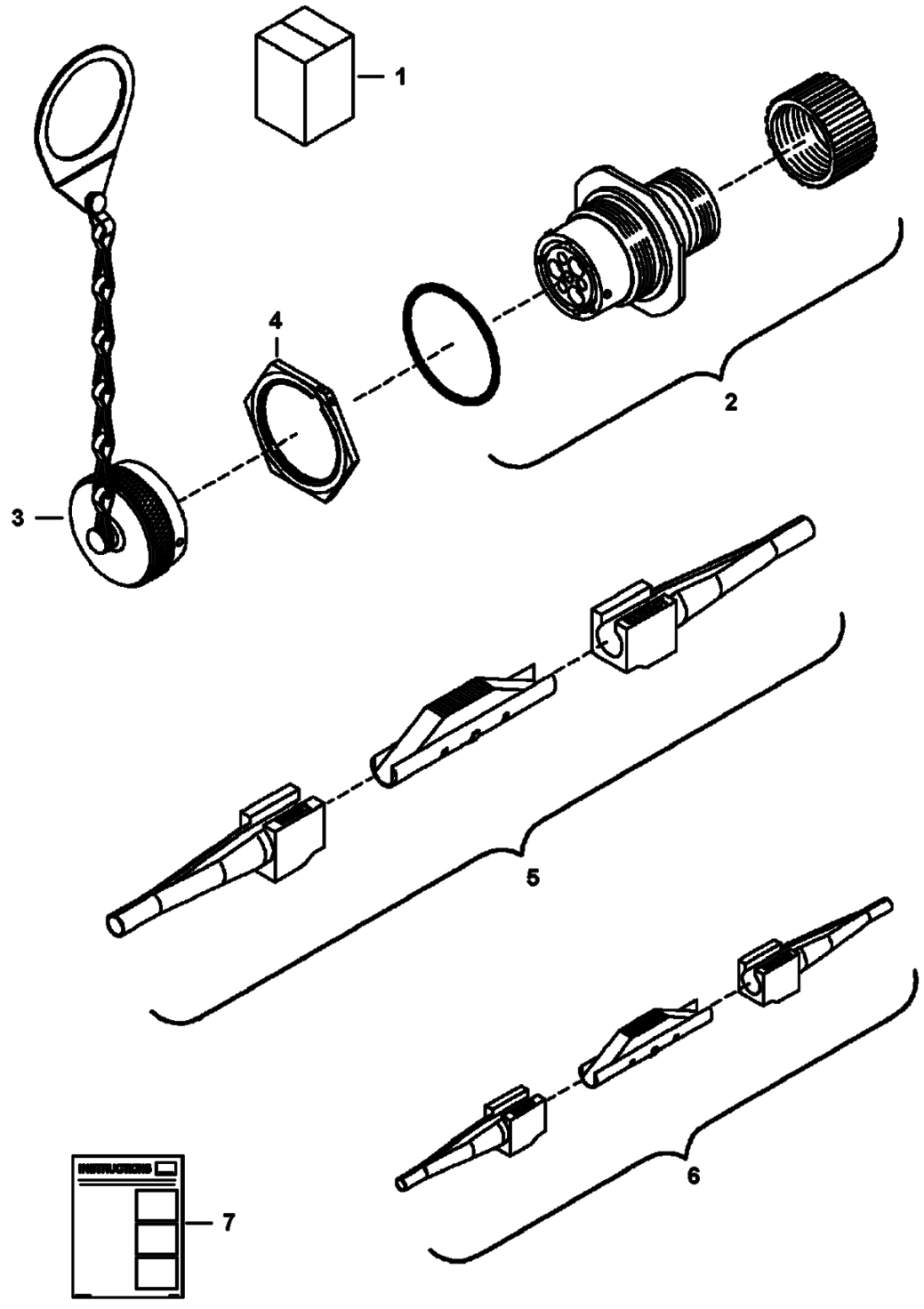

Page 326 - OSS# 2071408 - All rights reserved by Bobcat Company - 12/04/2009 - 07:23:36 - Produced by Ken Cook Co. with mediaioff

ELECTRICAL CONNECTOR KIT (Cont'd)
(7-Pin)

Ref No	Part Number	Description	Remarks	Serial Number	Qty
1	6727176	KIT	Ref. 2-4 & 7		1
2	6674802	CONNECTOR	7-pin does not include sockets		1
2	6669549	SOCKET	small		4
2	6677136	SOCKET	large - 12 ga		3
3	6675026	CAP			1
4	6688338	NUT			1
5	7000461	TOOL, DISCONNECT TERMINAL	yellow/white		1
6	7000460	TOOL, DISCONNECT TERMINAL	blue/white		1
7	6901076	INSTRUCTIONS			1

Page 327 - OSS# 2071408 - All rights reserved by Bobcat Company - 12/04/2009 - 07:23:36 - Produced by Ken Cook Co. with mediaioff

ELECTRICAL CONTROLS KIT
(7 Pin Attachments)

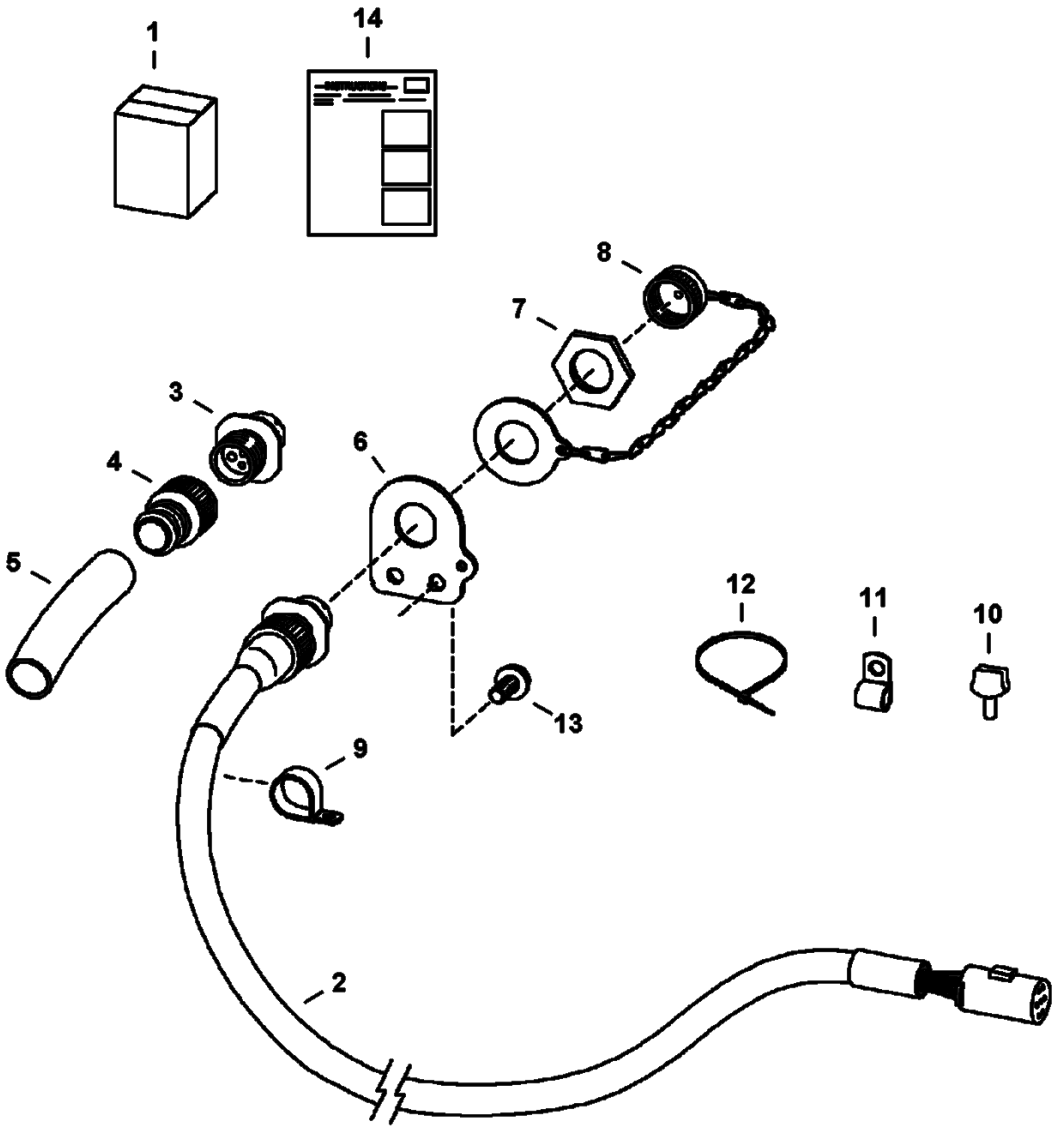

Page 328 - OSS# 2071408 - All rights reserved by Bobcat Company - 12/04/2009 - 07:23:36 - Produced by Ken Cook Co. with mediaioff

ELECTRICAL CONTROLS KIT (Cont'd)
(7 Pin Attachments)

Ref No	Part Number	Description	Remarks	Serial Number	Qty
1	6733142	KIT	Ref. 2-14		1
2	6718426	HARNESS, BOOM	W/Ref. 3-8		1
3	6674802	CONNECTOR	See Illustration ELECTRICAL CONNECTOR KIT/ MS2627 - 7-pin - W/Ref. 7 does not include sockets		1
3	6669549	SOCKET	small		4
3	6677136	SOCKET	large - 12 ga		3
4	6674799	ADAPTER	heat shrink		1
5		HEAT SHRINK	NSS - purchase locally		1
6	6718750	MOUNT			1
7	6688338	NUT	jam		1
8	6675026	CAP			1
9	30H35	CLAMP 10			1
10	6675281	MOUNT			1
11	30H27	CLAMP			6
12	6624289	TIE STRAP			7
13	84G3112	BOLT 5			8
14	6901871	INSTRUCTIONS			1

Page 329 - OSS# 2071408 - All rights reserved by Bobcat Company - 12/04/2009 - 07:23:36 - Produced by Ken Cook Co. with mediaioff

ELECTRICAL CONTROLS KIT
(14 Pin Attachments)

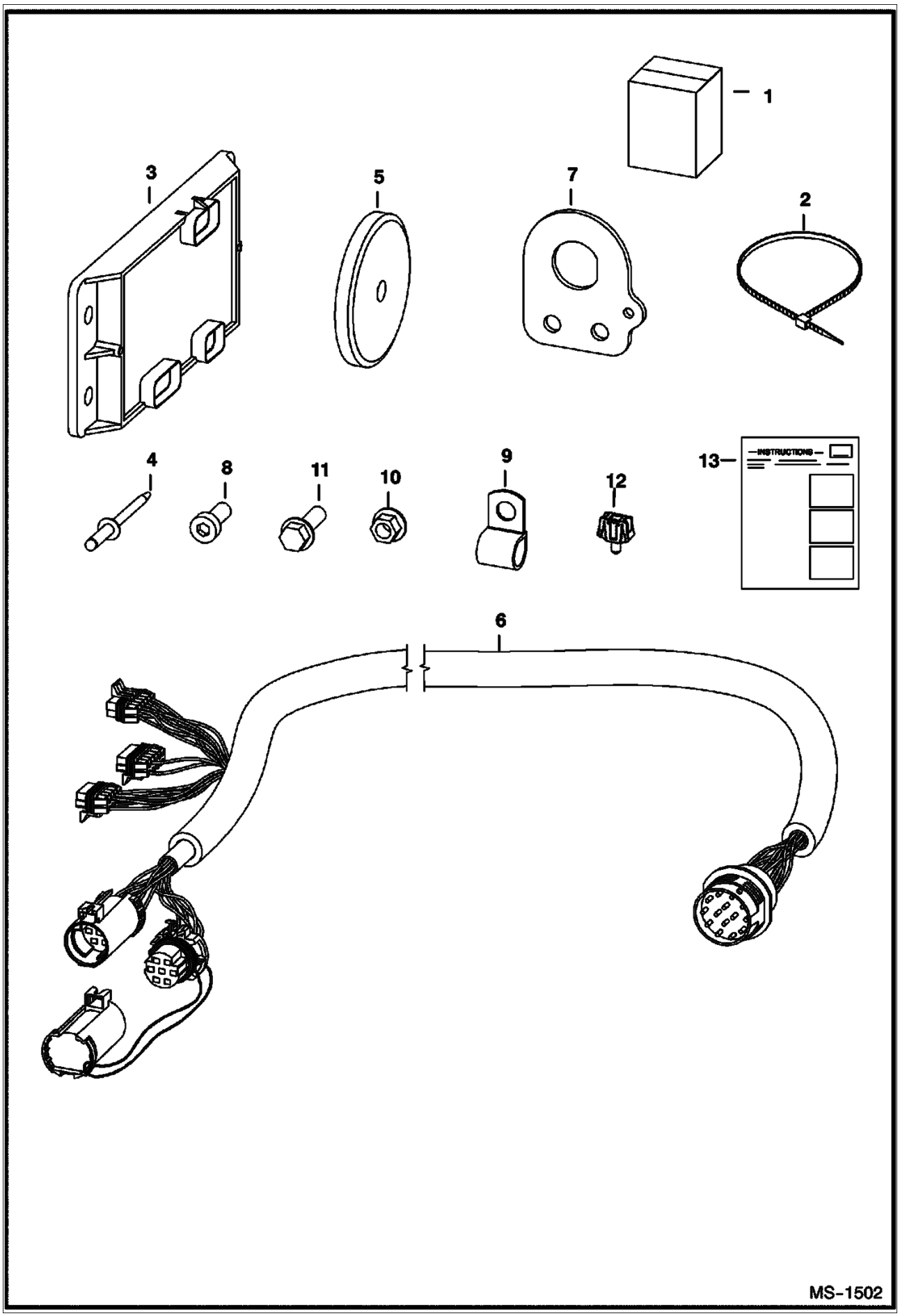

Page 330 - OSS# 2071408 - All rights reserved by Bobcat Company - 12/04/2009 - 07:23:36 - Produced by Ken Cook Co. with mediaioff

ELECTRICAL CONTROLS KIT (Cont'd)
(14 Pin Attachments)

Ref No	Part Number	Description	Remarks	Serial Number	Qty
1	6733136	KIT			1
2	6624289	TIE STRAP			9
3	6678675	CONTROLLER, ACD DELUXE			1
4	6704892	RIVET			1
5	6719448	MAGNET, CONTROL ATTACH	100 lbs (45,5 kg) force		2
6	6732730	HARNESS			1
7	6733144	MOUNT			1
8	25G612	SCREW			2
9	30H50	CLIP			6
10	83D6	NUT 5			2
11	84G3112	BOLT 5			8
12	6675281	MOUNT			1
13	6901872	INSTRUCTIONS			1

Page 331 - OSS# 2071408 - All rights reserved by Bobcat Company - 12/04/2009 - 07:23:36 - Produced by Ken Cook Co. with mediaioff

EUROPEAN ACCESSORIES
(Road Kit)

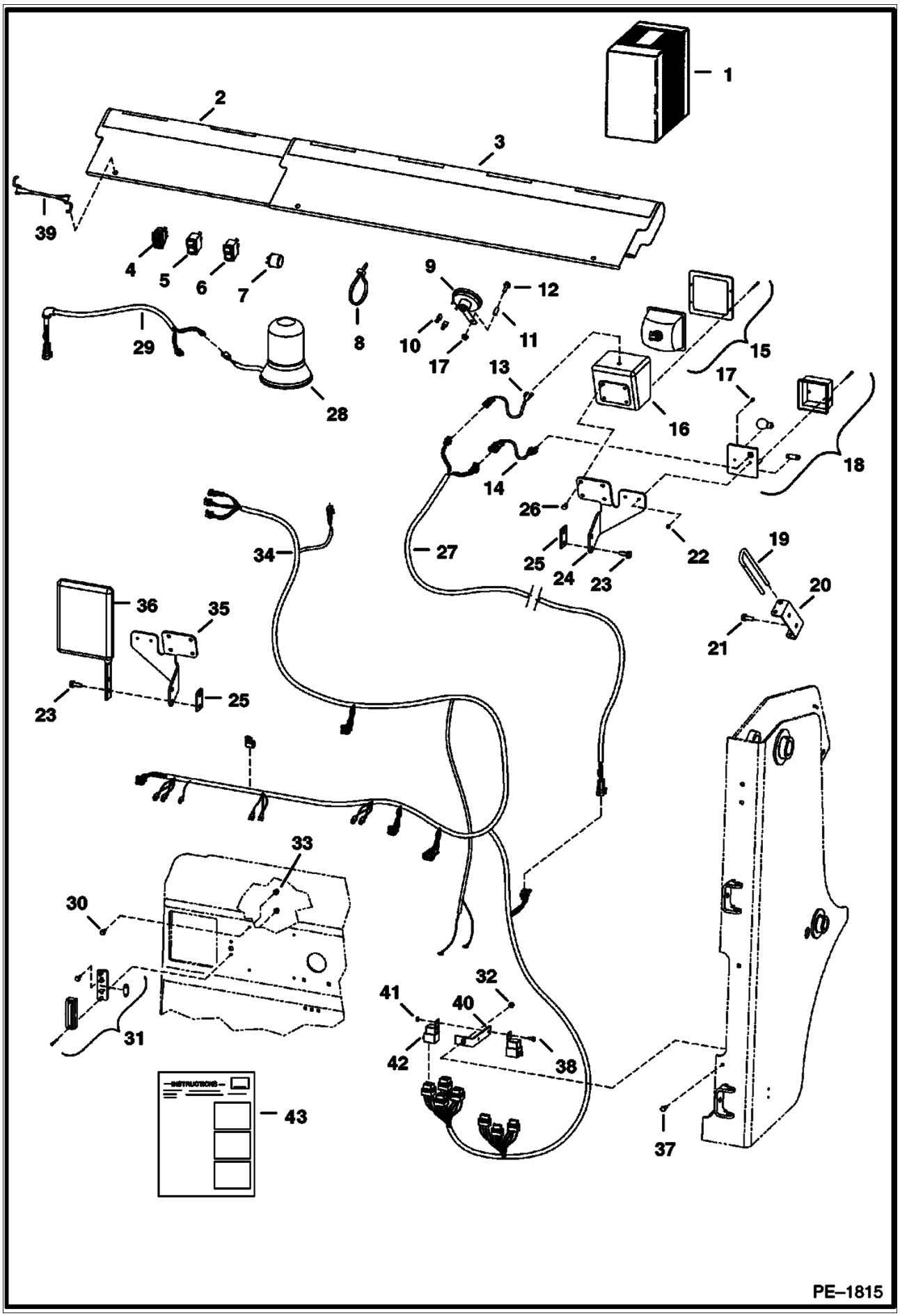

Page 332 - OSS# 2071408 - All rights reserved by Bobcat Company - 12/04/2009 - 07:23:36 - Produced by Ken Cook Co. with mediaioff

EUROPEAN ACCESSORIES (Cont'd)
(Road Kit)

Ref No	Part Number	Description	Remarks	Serial Number	Qty
1		KIT	SALES - for Europe only - Sales #6731237		1
2	6713841	SHIELD	bucket		1
3	6714820	SHIELD	bucket		1
3		DECAL	NAP - stripe		1
4	6676872	TURN SIGNAL			1
5	6668815	SWITCH	hazard		1
6	6668816	SWITCH	beacon		1
7	6557904	FLASHER			1
8	6624289	TIE STRAP			26
9	6671106	HORN			1
10	6675064	TERMINAL			2
11	6732206	SPACER			1
12	35C536	BOLT			1
13	6713994	HARNESS	adapter - headlight		2
14	6713993	HARNESS	adapter - light		2
15	6665728	LIGHT	front		2
15	6666570	BULB	40/45W		2
15	6666564	HOUSING			2
15	6666565	LENS			2
15	6666566	GASKET			2
16	6707804	HOUSING			2
17	85G808	SCREW			4
18	6665727	LIGHT	front turn		2
19	6731222	PIN	Bob-Tach		1
20	6731973	HOLDER	pin		1
21	84G3712	BOLT			2
22	12D8	NUT			4
23	84G3716	SCREW 5			4
24		MOUNT	NAP - light - R.H.		1
25	6735825	SPACER			2
26	17C508	SCREW			8
27	6731239	HARNESS	boom light		2
28	6675523	BEACON	light		1
29	6718872	HARNESS	cab exterior		1
30	35C410	BOLT 5			4
31	6665729	LIGHT			1
32	55D5	NUT			2
33	83D4	NUT 10			4
34	6726430	HARNESS	engine/tail - Italian		1
35		MOUNT	NAP - light - L.H.		1
36	6665860	KIT	side mirror		1
37	17C512	BOLT 5			1
38	17C410	BOLT 10			2
39	6731819	STRAP	rubber		3
40	6702650	MOUNT	fuse		1
41	85D4	NUT 5			2
42	6670312	RELAY	magnetic		4
43	6901663	INSTRUCTIONS			1

Page 333 - OSS# 2071408 - All rights reserved by Bobcat Company - 12/04/2009 - 07:23:36 - Produced by Ken Cook Co. with mediaioff

EUROPEAN ACCESSORIES
(Road Kit) (Selectable Joystick Controls)

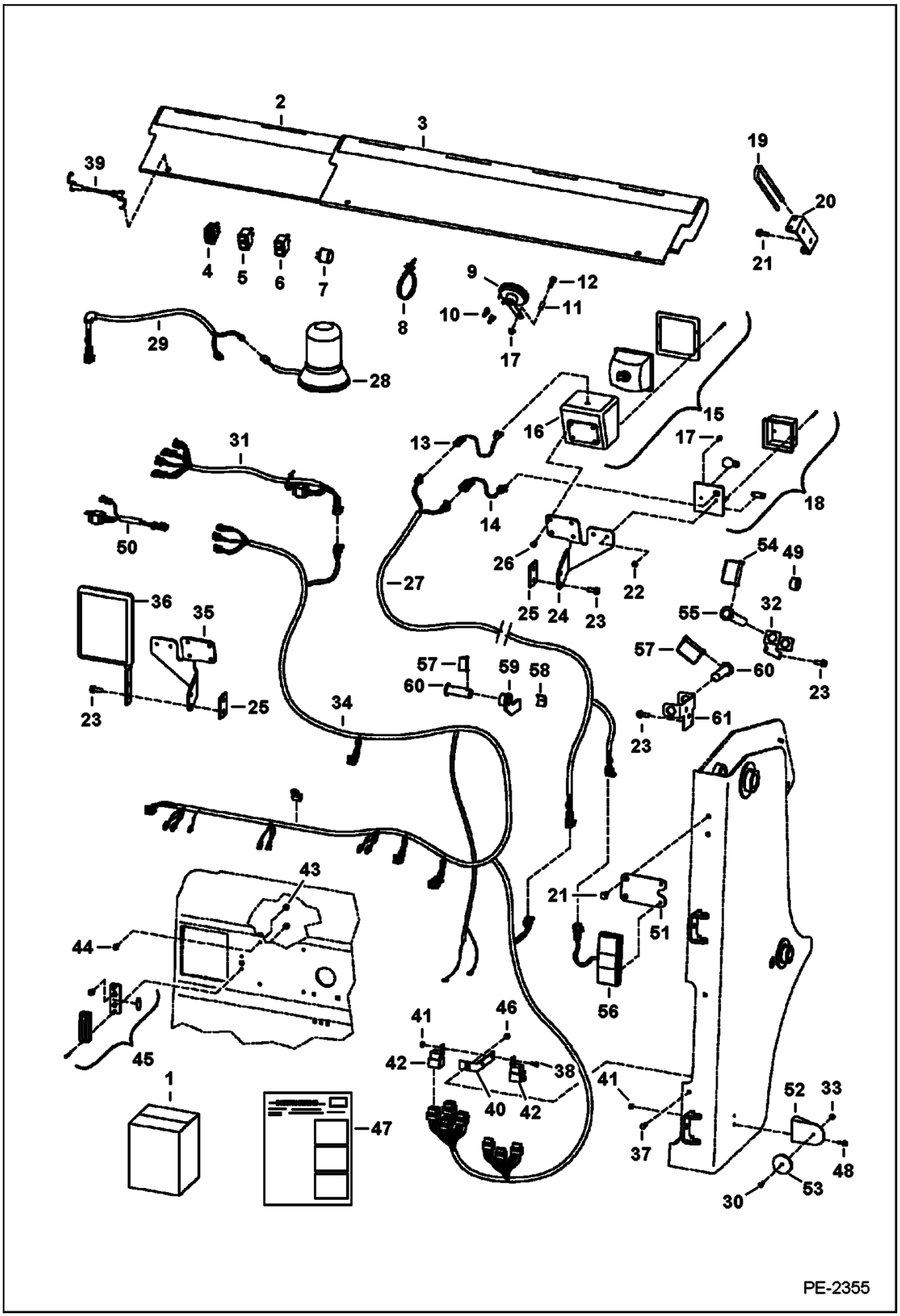

Page 334 - OSS# 2071408 - All rights reserved by Bobcat Company - 12/04/2009 - 07:23:36 - Produced by Ken Cook Co. with mediaioff

Ref No	Part Number	Description	Remarks	Serial Number	Qty
1		KIT	SALES - Order 6732387 from SALES		1
2	6713841	SHIELD	bucket		1
3	6713842	SHIELD	bucket		1
4	6676872	TURN SIGNAL			1
5	6668815	SWITCH	hazard		1
6	6668816	SWITCH	beacon		1
7	6557904	FLASHER			1
8	6624289	TIE STRAP			20
9	6671106	HORN			1
10	6675064	TERMINAL			2
11	6732206	SPACER			1
12	35C536	BOLT			1
13	6713994	HARNESS	adapter - headlight		2
14	6713993	HARNESS	adapter - light		2
15	6665728	LIGHT	front		2
15	6666570	BULB	40/45W		2
15	6666564	HOUSING			2
15	6666565	LENS			2
15	6666566	GASKET			2
16	6707804	HOUSING			2
17	85G808	SCREW			4
18	6665727	LIGHT	front turn		2
19	6731222	PIN	Bob-Tach	& Bel.	1
20	6731973	HOLDER	pin		1
21	84G3712	BOLT			4
22	12D8	NUT			4
23	84G3716	SCREW 5		& Bel.	6
23	84G3716	SCREW 5		& Abv.	8
24		MOUNT	NAP - light - RH - Was 6713151 [A]		1
25	6735825	SPACER			2
26	17C508	SCREW			8
27	6732081	HARNESS	boom light		2
28	6675523	BEACON	light		1
29	6718872	HARNESS	cab exterior		1
30	85G1010	SCREW			2
31	6732045	HARNESS	AWS stop lights		1
32	6733296	BRACKET	pin holder		1
33	14D10	NUT			2
34	6726430	HARNESS	engine/tail - Italian		1
35		MOUNT	NAP - light - LH - Was 6713150 [A]		1
36	6665860	KIT	side mirror		1
37	17C512	BOLT 5			1
38	17C410	BOLT 10			2
39	6731819	STRAP	rubber		3
40	6702650	MOUNT	fuse		1
41	85D4	NUT 5			6
42	6670312	RELAY	magnetic		4
43	83D4	NUT 10			4
44	35C410	BOLT 5			4
45	6665729	LIGHT	license plate		1
46	55D5	NUT			2
47	6901909	INSTRUCTIONS			1
48	35C412	BOLT			4
49	6733270	MOUNT			1

Page 335 - OSS# 2071408 - All rights reserved by Bobcat Company - 12/04/2009 - 07:23:36 - Produced by Ken Cook Co. with mediaioff

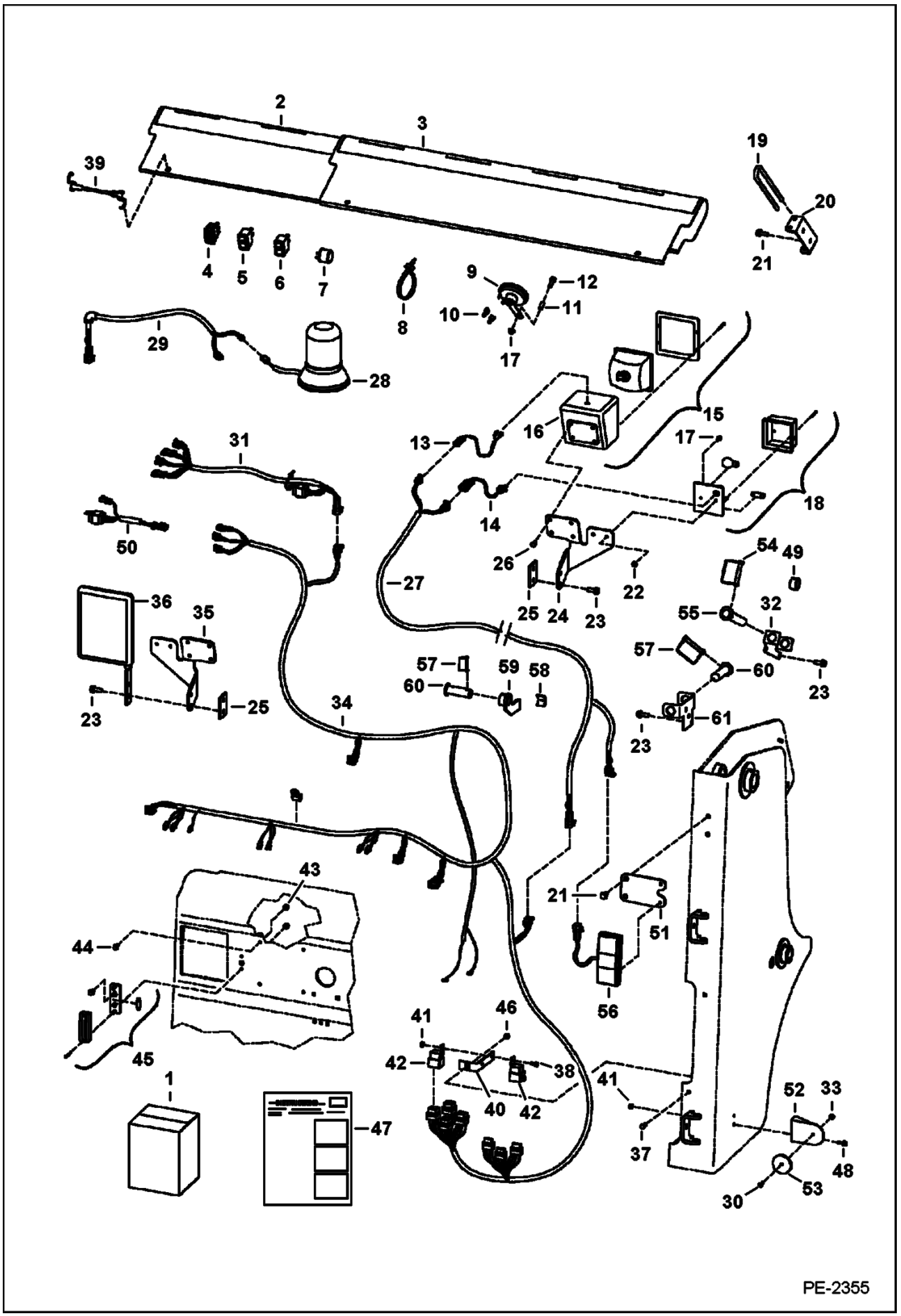

Page 336 - OSS# 2071408 - All rights reserved by Bobcat Company - 12/04/2009 - 07:23:36 - Produced by Ken Cook Co. with mediaioff

Ref No	Part Number	Description	Remarks	Serial Number	Qty
50	6733851	HARNESS	SJC stop lights		1
51	7101104	MOUNT	rear lights		2
52	6670620	MOUNT	reflector		2
53	6670621	LENS	reflector		2
54	6670668	PIN			1
55	6713990	PIN	B/T lock		1
56	7101384	LIGHT	rear		2
56	6686096	LENS	amber - turn		1
56	6686097	BULB	turn		1
56	6686098	BULB	stop		1
56	6686099	LENS	red - stop		1
56	6686100	SCREW			2
57	6656009	PIN		& Abv.	2
58	7117881	STOP		& Abv.	1
59	7117883	MOUNT		& Abv.	1
60	7117885	PIN		& Abv.	2
60	7117885	PIN		& Abv.	2
61	7117886	MOUNT		& Abv.	1

Page 337 - OSS# 2071408 - All rights reserved by Bobcat Company - 12/04/2009 - 07:23:36 - Produced by Ken Cook Co. with mediaioff

FIRE EXTINGUISHER

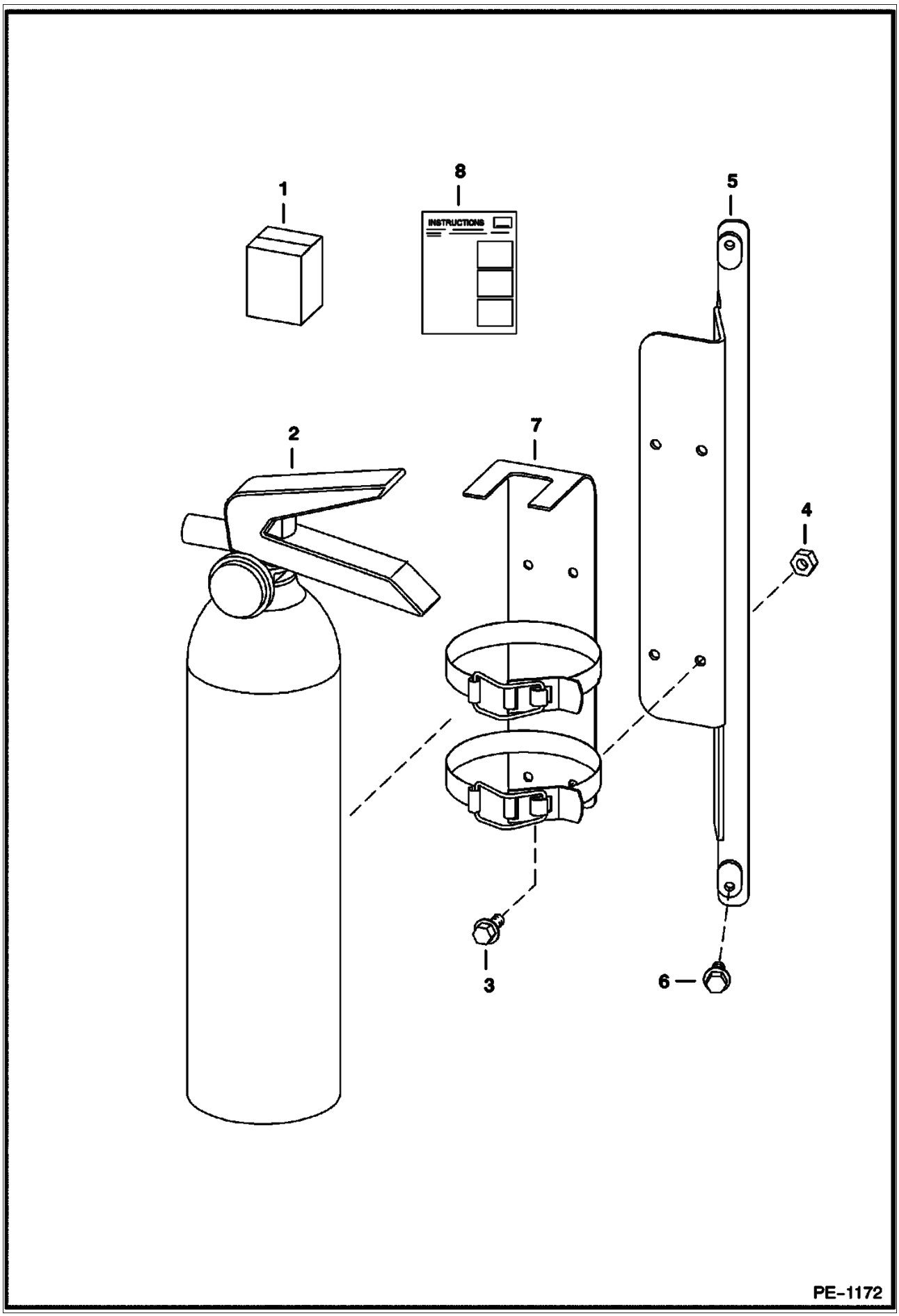

Page 338 - OSS# 2071408 - All rights reserved by Bobcat Company - 12/04/2009 - 07:23:36 - Produced by Ken Cook Co. with mediaioff

Ref No	Part Number	Description	Remarks	Serial Number	Qty
1	6725898	KIT	fire extinguisher - Ref. 2-8		1
2	7168164	EXTINQUISHER,FIRE	Was 6675581 [A]		1
3	45G1006	BOLT			4
4	12D10	NUT			4
5	6725906	BRACKET			1
6	31C410	BOLT			2
7	6691173	BRACKET			1
8	6901025	INSTRUCTIONS			1

Page 339 - OSS# 2071408 - All rights reserved by Bobcat Company - 12/04/2009 - 07:23:36 - Produced by Ken Cook Co. with mediaioff

FLASHER LIGHTS
(4-Way) (Turn Indicators)

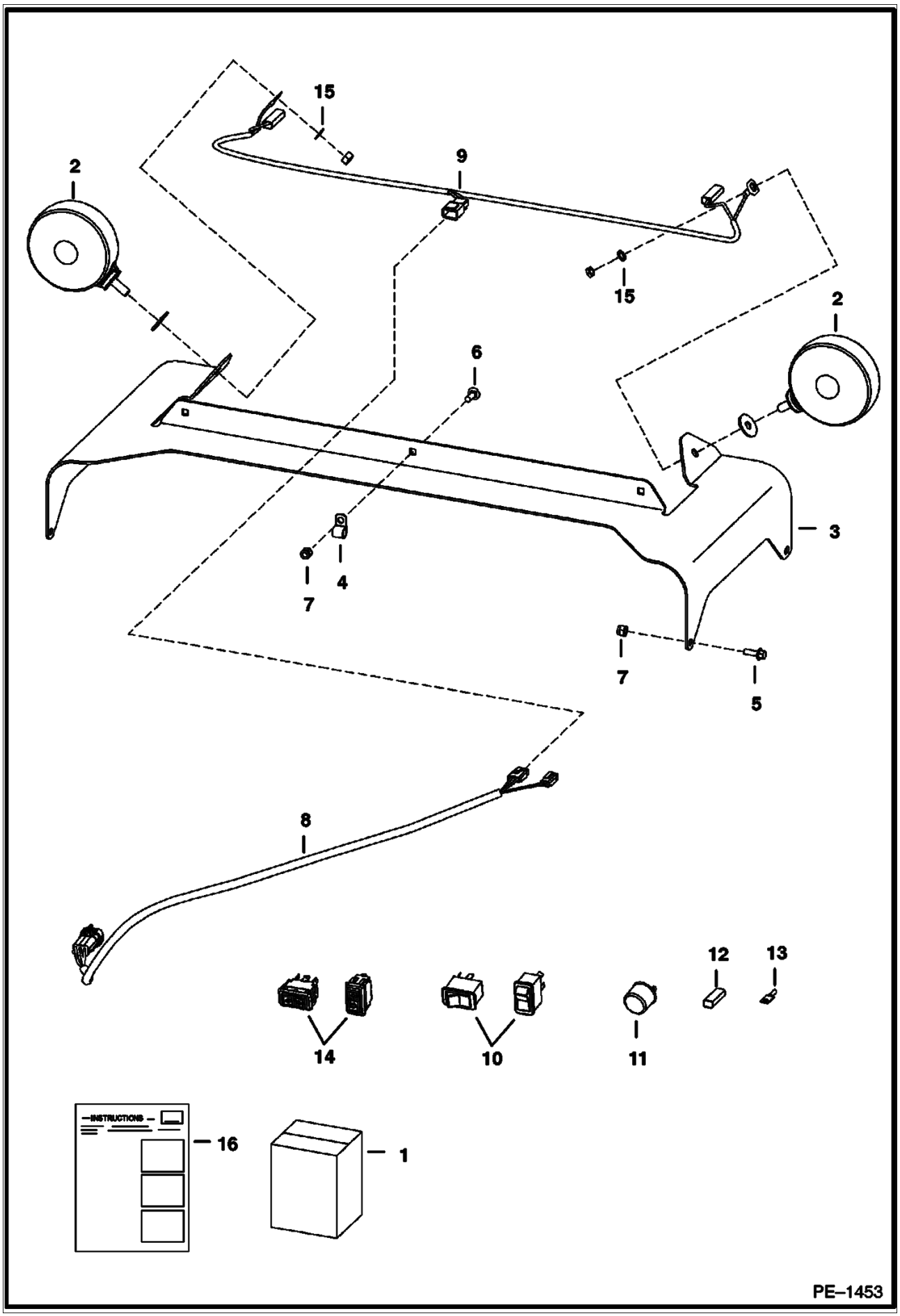

Page 340 - OSS# 2071408 - All rights reserved by Bobcat Company - 12/04/2009 - 07:23:36 - Produced by Ken Cook Co. with mediaioff

FLASHER LIGHTS (Cont'd)
(4-Way) (Turn Indicators)

Ref No	Part Number	Description	Remarks	Serial Number	Qty
1	6718411	KIT	flasher lights - Ref. 2-16 - if loader is not equipped W/deluxe cab accessories harness, heater, A/C, SJC, ACS, power Bob-Tach, cab enclosure door kit, rear wiper or any of the following cab harness connected rotating beacon or strobe light, Also Order 7116260 deluxe cab accessories harness - if equipped W/SJC, Also Order 6726662 harness	5307 13759 & Bel	1
1	6718411	KIT	flasher lights - Ref. 2-16 - if loader is not equipped W/deluxe cab accessories harness, heater, A/C, SJC, ACS, power Bob-Tach, cab enclosure door kit, rear wiper or any of the following cab harness connected rotating beacon or strobe light, Also Order 7116260 deluxe cab accessories harness - if equipped W/SJC, Also Order 6726662 harness	5308 11510 & Bel	1
1	6718411	KIT	flasher lights - Ref. 2-16 - if loader is not equipped W/deluxe cab accessories harness, heater, A/C, SJC, ACS, power Bob-Tach, cab enclosure door kit, rear wiper or any of the following cab harness connected rotating beacon or strobe light, Also Order 7143071 deluxe cab accessories harness - if equipped W/SJC, Also Order 6726662 harness	5308 11511 & Abv	1
1	6718411	KIT	flasher lights - Ref. 2-16 - if loader is not equipped W/deluxe cab accessories harness, heater, A/C, SJC, ACS, power Bob-Tach, cab enclosure door kit, rear wiper or any of the following cab harness connected rotating beacon or strobe light, Also Order 7143071 deluxe cab accessories harness - if equipped W/SJC, Also Order 6726662 harness	5307 13760 & Abv	1
2	6517516	LIGHT			2
3	6718326	MOUNT			1
4	30H21	CLAMP 10			3
5	35C412	BOLT			4
6	37C412	BOLT			3
7	59D4	NUT 5			7
8	6718872	HARNESS	cab exterior		1
9	6718873	HARNESS	4-way flasher		1
10	6665316	SWITCH	horizontal		1
10	6668815	SWITCH	vertical		1
11	6557904	FLASHER			1
12	614142	SLEEVE 10			1
13	6515131	TERMINAL			2
14	6675835	TURN SIGNAL	horizontal		1
14	6676872	TURN SIGNAL	vertical		1
15	6E5	WASHER	lock		2
16	6900848	INSTRUCTIONS			1

Page 341 - OSS# 2071408 - All rights reserved by Bobcat Company - 12/04/2009 - 07:23:36 - Produced by Ken Cook Co. with mediaioff

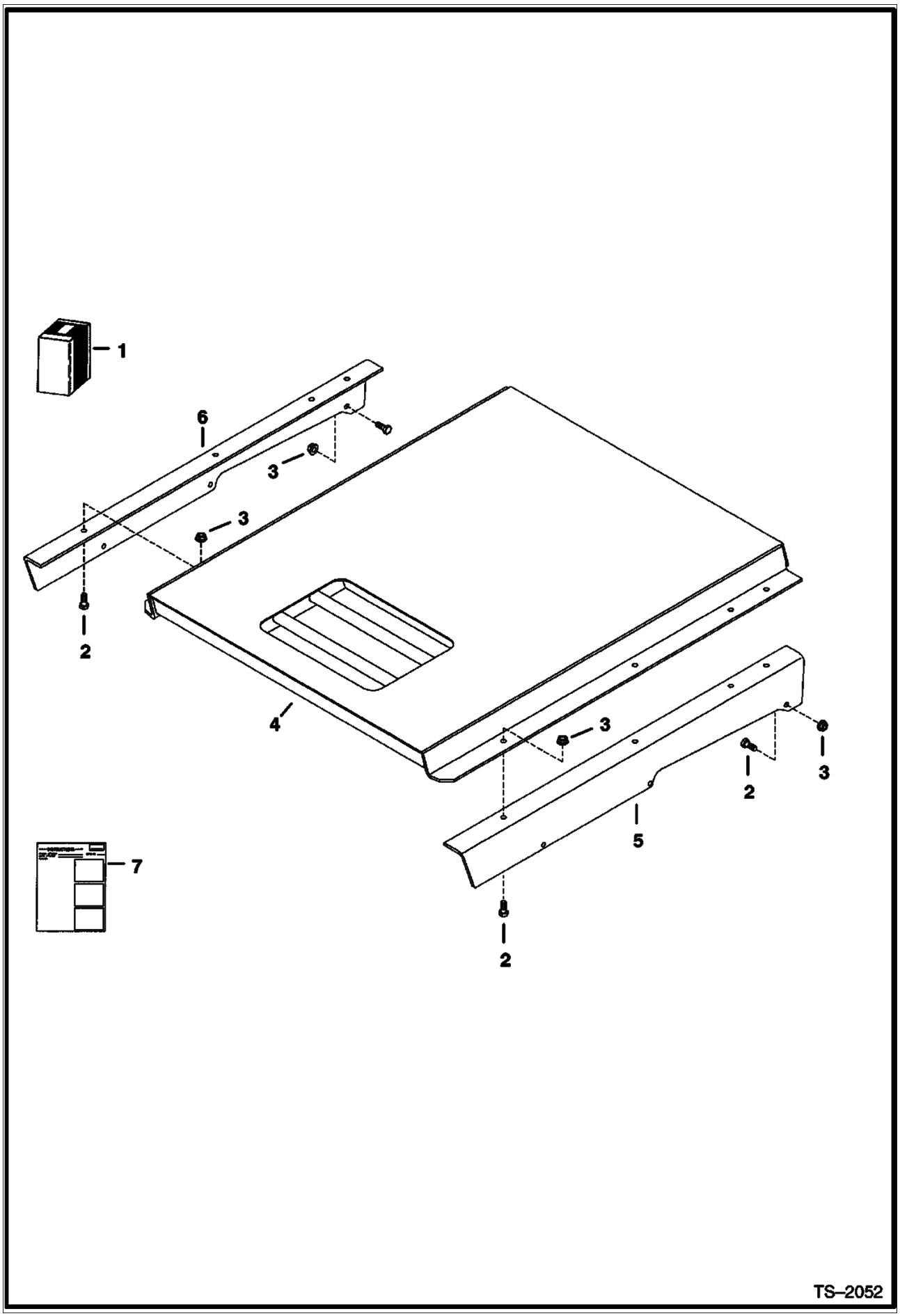

Page 342 - OSS# 2071408 - All rights reserved by Bobcat Company - 12/04/2009 - 07:23:36 - Produced by Ken Cook Co. with mediaioff

Ref No	Part Number	Description	Remarks	Serial Number	Qty
1	6718924	KIT	Ref. 2-7		1
2	17C616	BOLT 5			14
3	83D6	NUT 5			14
4	6702402	SHIELD			1
5	6718833	BRACKET	LH		1
6	6718834	BRACKET	RH		1
7	6720592	INSTRUCTIONS			1

Page 343 - OSS# 2071408 - All rights reserved by Bobcat Company - 12/04/2009 - 07:23:36 - Produced by Ken Cook Co. with mediaioff

FRONT AUXILIARY
(RH Kit)

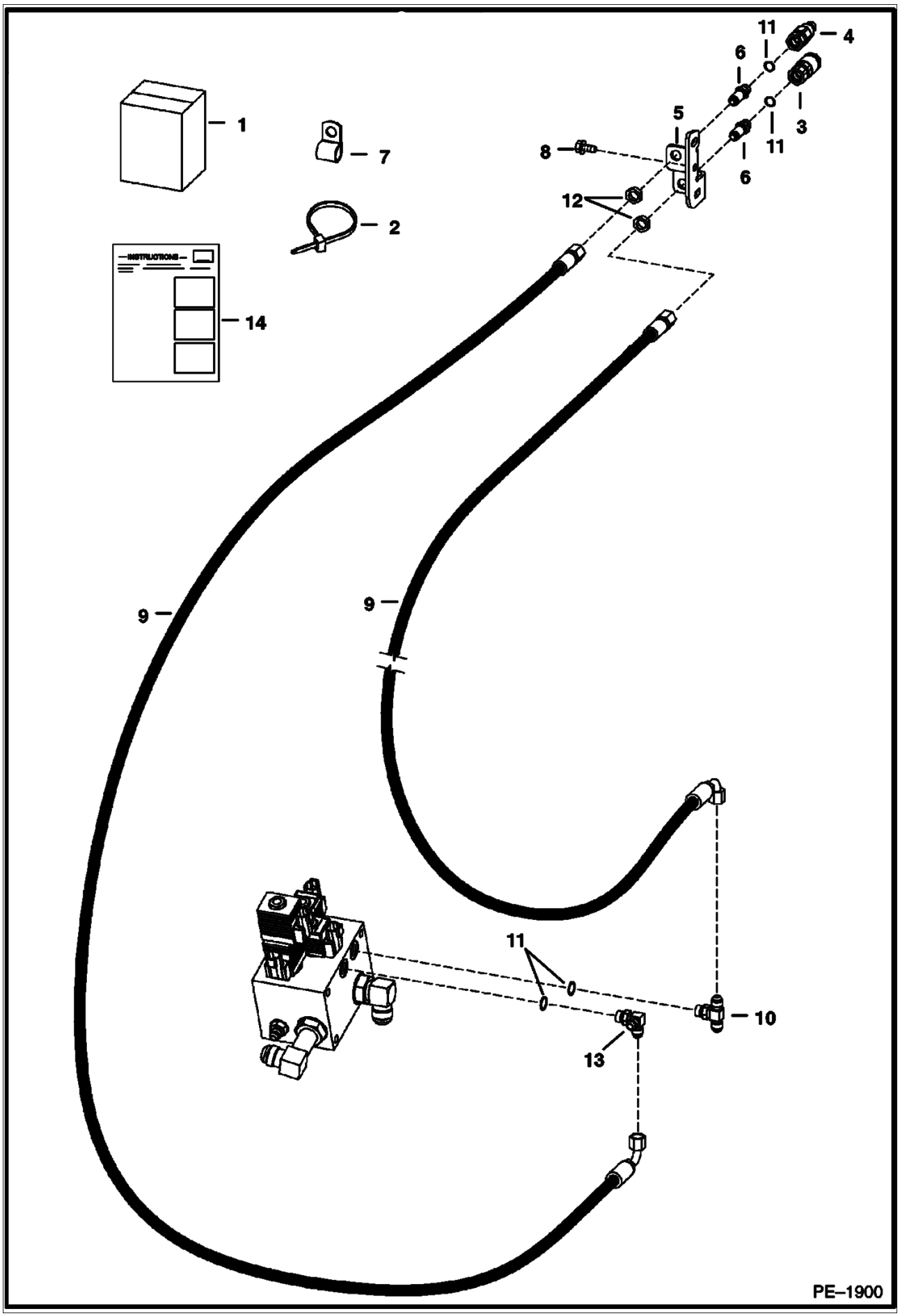

Page 344 - OSS# 2071408 - All rights reserved by Bobcat Company - 12/04/2009 - 07:23:36 - Produced by Ken Cook Co. with mediaioff

FRONT AUXILIARY (Cont'd)
(RH Kit)

Ref No	Part Number	Description	Remarks	Serial Number	Qty
1	6736655	KIT	this front aux kit requires the rear aux kit, or factory installed option in order to operate		1
2	6624289	TIE STRAP			10
3	6667803	COUPLER	female		1
4	6667804	COUPLER	male		1
4	6669657	SEAL KIT			x
5	6711674	MOUNT	quick coupler		1
6	6716089	CONNECTOR	bulkhead		2
7	31H42	CLIP			4
8	84G3716	SCREW 5			6
9	6736664	HOSE			2
10	19KB606	TEE	W/Ref. 11		1
11	79K6	O RING 10			x
12	86F5	NUT			2
13	6725182	TEE	W/Ref. 11		1
14	6901916	INSTRUCTIONS			1

Page 345 - OSS# 2071408 - All rights reserved by Bobcat Company - 12/04/2009 - 07:23:36 - Produced by Ken Cook Co. with mediaioff

GAS SPRING KIT

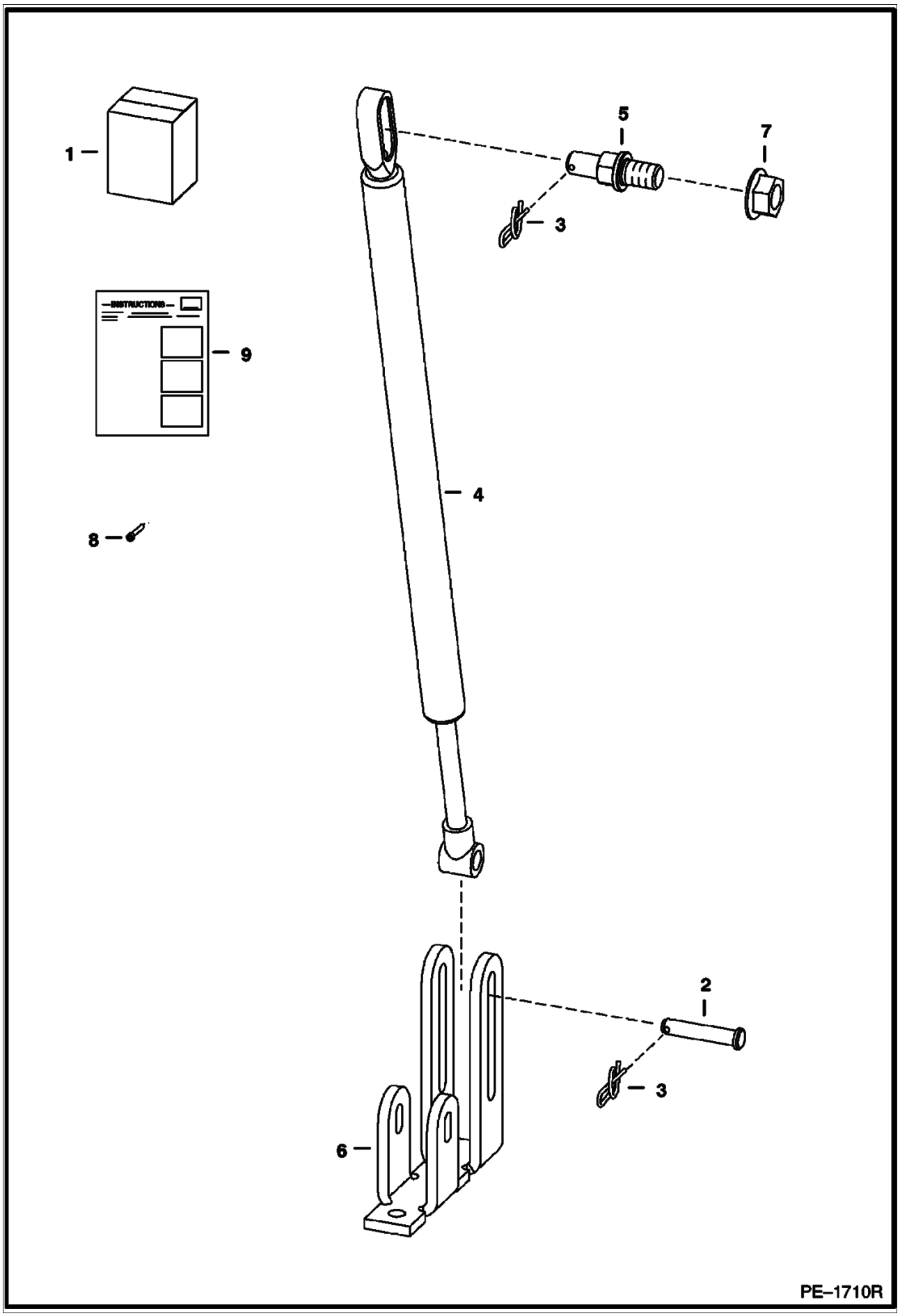

Page 346 - OSS# 2071408 - All rights reserved by Bobcat Company - 12/04/2009 - 07:23:36 - Produced by Ken Cook Co. with mediaioff

Ref No	Part Number	Description	Remarks	Serial Number	Qty
1	6732928	KIT			1
2	6567743	PIN			1
3	6631418	PIN			2
4	7157890	GAS SPRING	Was 6678292 [A]		1
5	6719064	MOUNT			1
6	6729141	MOUNT			1
7	97D8	NUT			1
8	21G804	BOLT			1
9	6901816	INSTRUCTIONS			1

Page 347 - OSS# 2071408 - All rights reserved by Bobcat Company - 12/04/2009 - 07:23:36 - Produced by Ken Cook Co. with mediaioff

HEATER & A/C
(Heater Kit) (Metal Housing)

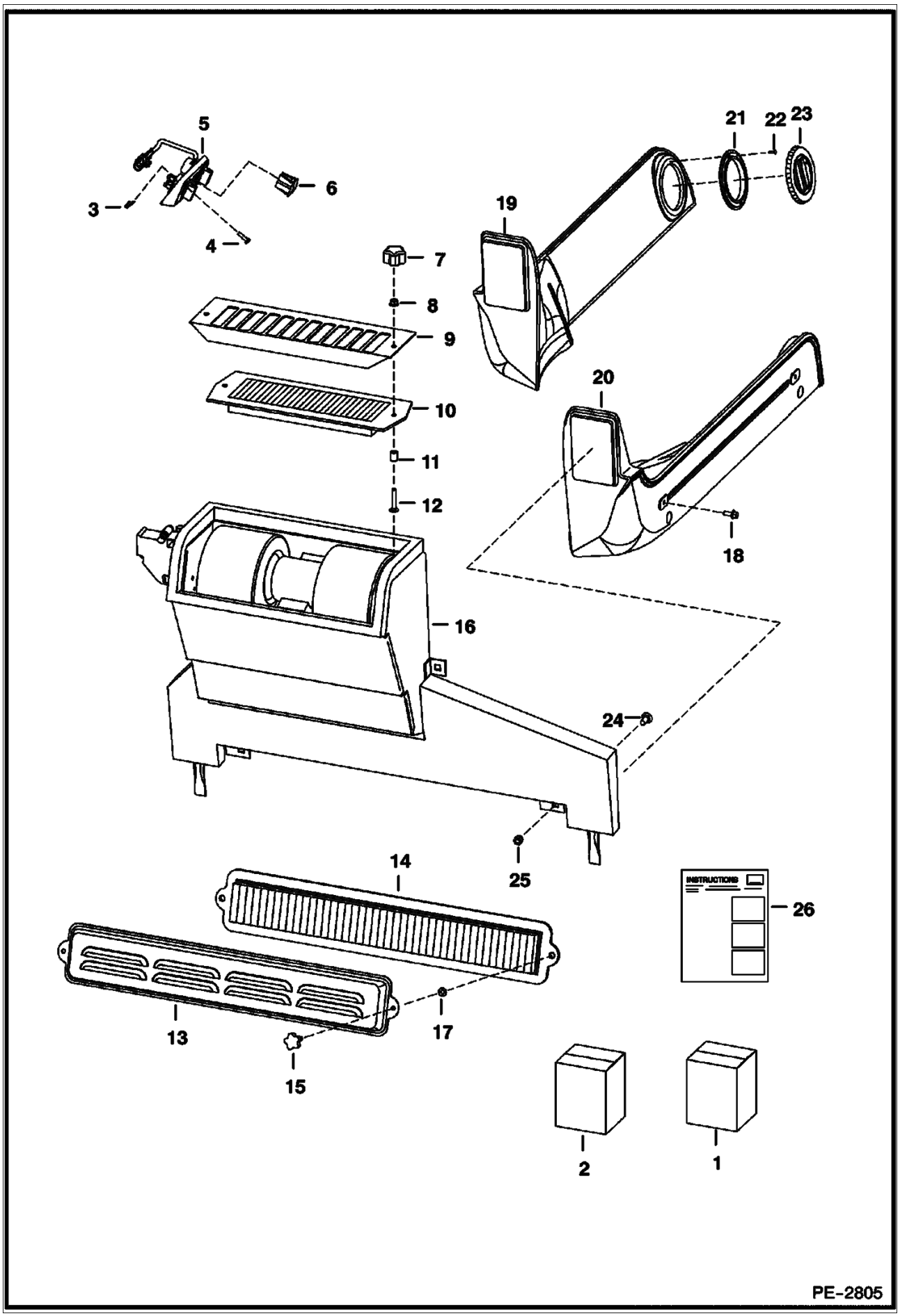

Page 348 - OSS# 2071408 - All rights reserved by Bobcat Company - 12/04/2009 - 07:23:36 - Produced by Ken Cook Co. with mediaioff

Ref No	Part Number	Description	Remarks	Serial Number	Qty
1		KIT, HEATER CAB	- NAP - Order 7166137 kit - if loader is not equipped W/deluxe cab harness, heater, A/C, SJC, ACS, power Bob-Tach, cab enclosure door kit, rear wiper or any of the following cab harness connected rotating beacon, 4-way flasher or strobe light, Also Order 7116260 deluxe cab harness - Was 7116899 [A]	5308 11510 & Bel	1
1		KIT, HEATER CAB	- NAP - Order 7166137 kit - if loader is not equipped W/deluxe cab harness, heater, A/C, SJC, ACS, power Bob-Tach, cab enclosure door kit, rear wiper or any of the following cab harness connected rotating beacon, 4-way flasher or strobe light, Also Order 7116260 deluxe cab harness - Was 7116899 [A]	5307 13759 & Bel	1
1		KIT, HEATER CAB	- NAP - Order 7166137 kit - if loader is not equipped W/deluxe cab harness, heater, A/C, SJC, ACS, power Bob-Tach, cab enclosure door kit, rear wiper or any of the following cab harness connected rotating beacon, 4-way flasher or strobe light, Also Order 7143071 deluxe cab harness - Was 7116899 [A]	5307 13760 & Abv	1
1		KIT, HEATER CAB	- NAP - Order 7166137 kit - if loader is not equipped W/deluxe cab harness, heater, A/C, SJC, ACS, power Bob-Tach, cab enclosure door kit, rear wiper or any of the following cab harness connected rotating beacon, 4-way flasher or strobe light, Also Order 7143071 deluxe cab harness - Was 7116899 [A]	5308 11511 & Abv	1
2	7121572	DECAL PACKAGE	Was 6725513 [A]		1
3	6669091	CLIP	retainer		3
4	6669224	BOLT			3
5	6674228	PANEL	control		1
5	6640699	CONNECTOR			1
5	6718579	DECAL			1
5	6718887	PANEL			1
5	6675176	SWITCH	blower		1
5	6675177	KNOB			2
5	6675846	POTENTIOMETER			1
6	6675181	PLUG	switch hole - AC		1
7	6681614	KNOB			2
8	59D4	NUT 5			2
9	6718175	SCREEN	filter		1
10	6678207	FILTER	recirculation		1
11	6718837	SPACER			2
12	37C424	BOLT			2
13	6727847	COVER	W/Ref. 15 & 17		1
14	6677983	FILTER, AIR HEATER CAB			1
15	6726386	KNOB			2
16	6688543	HEATER	See Illustration HEATER & A/C/ PE3077		1
17	6676516	NUT	push		2
18	35C410	BOLT 5			4
19	6735246	DUCT	LH		1
20	6735245	DUCT	RH		1
21	6675179	FLANGE	round		4
22	57G608	SCREW			16
23	6674231	VENT, HEATER CAB ROUND	round		4
24	37C512	BOLT			4

Page 349 - OSS# 2071408 - All rights reserved by Bobcat Company - 12/04/2009 - 07:23:36 - Produced by Ken Cook Co. with mediaioff

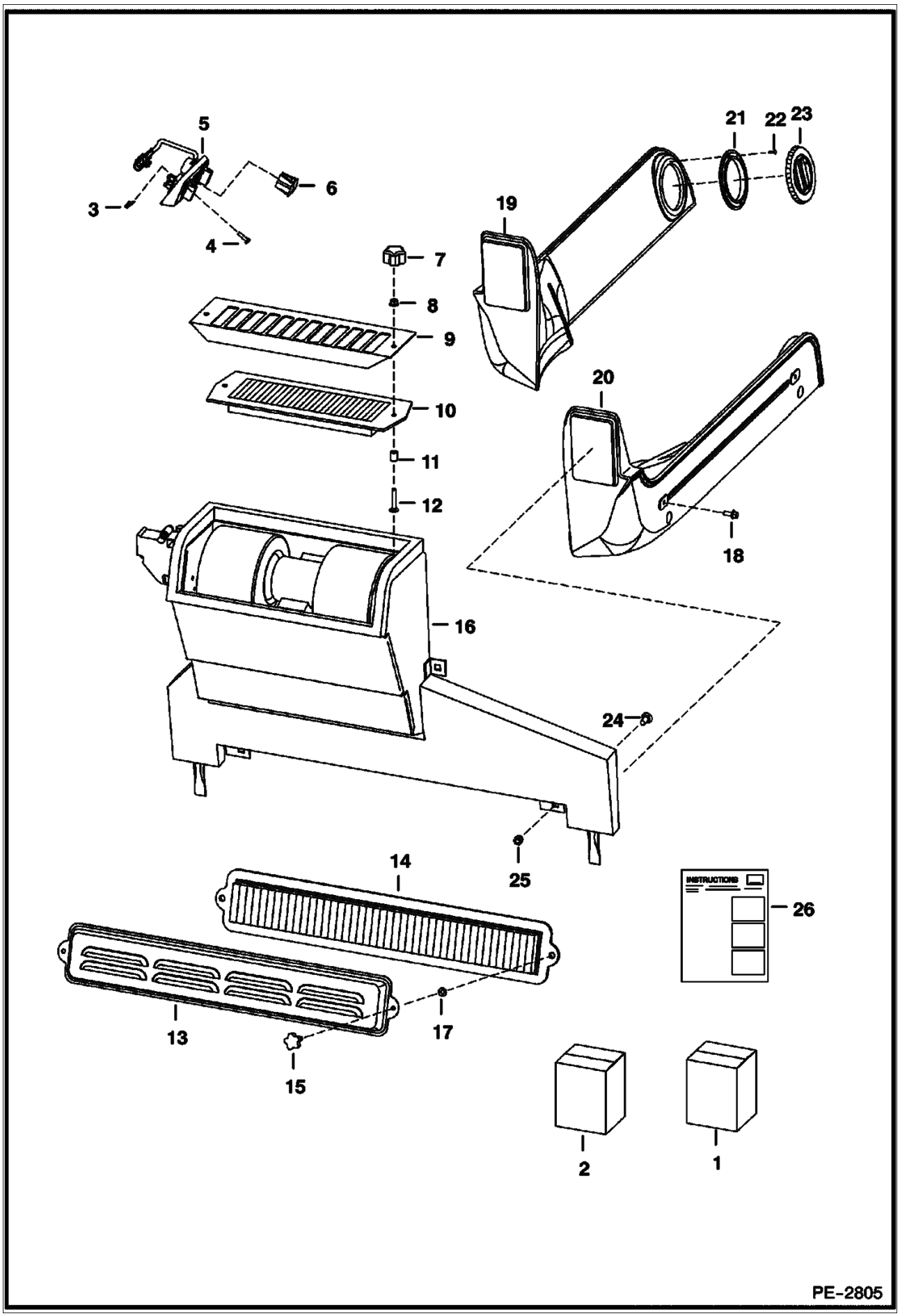

Page 350 - OSS# 2071408 - All rights reserved by Bobcat Company - 12/04/2009 - 07:23:36 - Produced by Ken Cook Co. with mediaioff

Ref No	Part Number	Description	Remarks	Serial Number	Qty
25	59D5	NUT 5			4
26	6904255	INSTRUCTIONS			1

Page 351 - OSS# 2071408 - All rights reserved by Bobcat Company - 12/04/2009 - 07:23:36 - Produced by Ken Cook Co. with mediaioff

HEATER
(Heater Kit) (Plastic Housing)

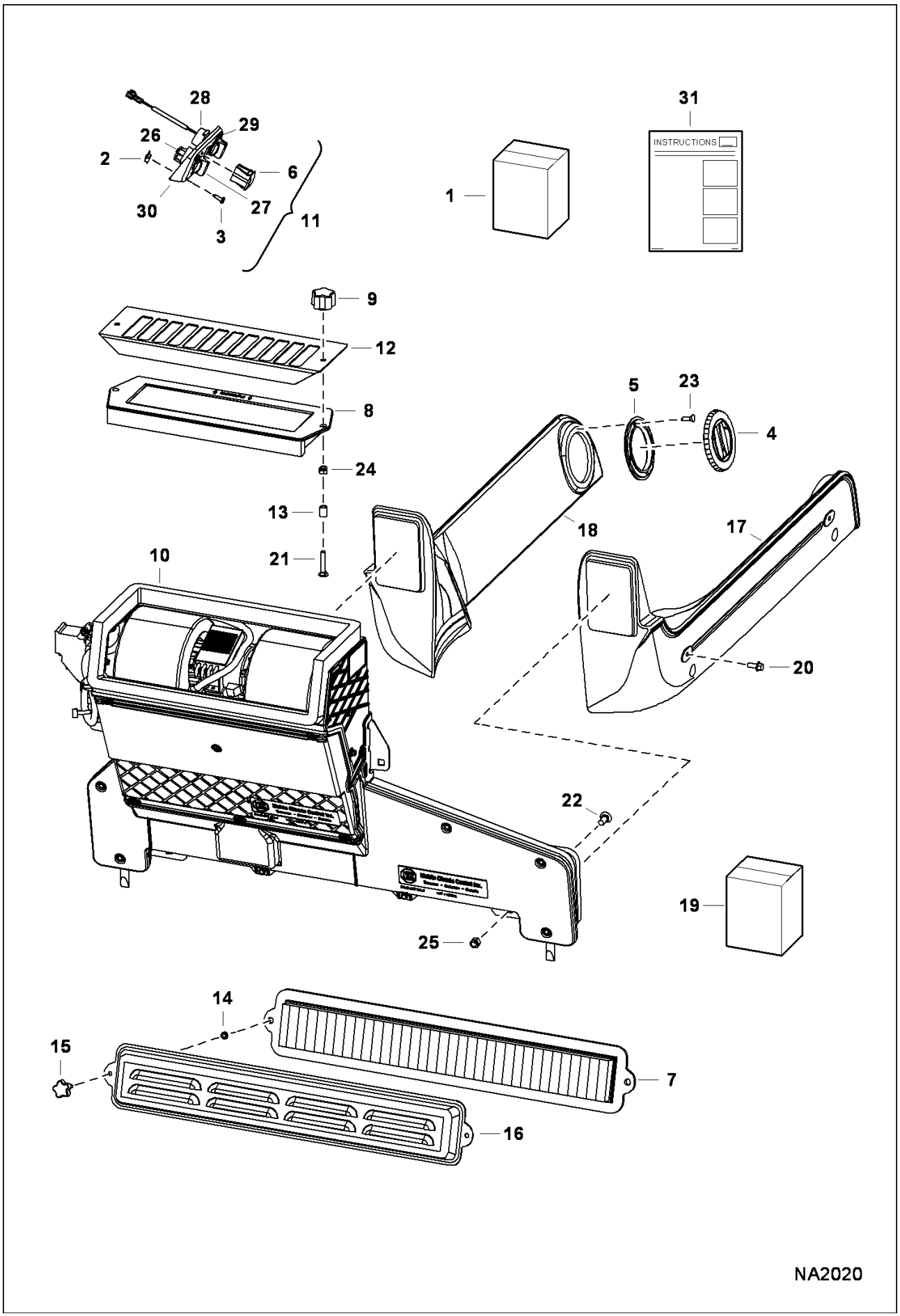

Page 352 - OSS# 2071408 - All rights reserved by Bobcat Company - 12/04/2009 - 07:23:36 - Produced by Ken Cook Co. with mediaioff

Ref No	Part Number	Description	Remarks	Serial Number	Qty
1	7166137	KIT HEATER			1
2	6669091	CLIP			3
3	6669224	BOLT			3
4	6674231	VENT, HEATER CAB ROUND			4
5	6675179	FLANGE			4
6	6675181	PLUG			1
7	6677983	FILTER, AIR HEATER CAB			1
8	6678207	FILTER			1
9	6681614	KNOB			2
10	7175394	HEATER CAB	Was 6691439 [A]		1
11	6697906	PANEL, CONTROL	Ref. 26-30		1
12	6718175	SCREEN			1
13	6718837	SPACER			2
14	6676516	NUT			2
15	6726386	KNOB			2
16	6727847	COVER			1
17	6735245	DUCT	RH		1
18	6735246	DUCT	LH		1
19	7121572	DECAL PACKAGE			1
20	35C410	BOLT 5			4
21	37C424	BOLT			2
22	37C512	BOLT			4
23	57G608	SCREW			16
24	59D4	NUT 5			2
25	59D5	NUT 5			4
26	6675176	SWITCH	blower		1
27	6675177	KNOB			2
28	6693148	RESISTOR	temp control		1
29	6718579	DECAL			1
30	6718887	PANEL			1
31	6987152	INSTRUCTIONS			1

Page 353 - OSS# 2071408 - All rights reserved by Bobcat Company - 12/04/2009 - 07:23:36 - Produced by Ken Cook Co. with mediaioff

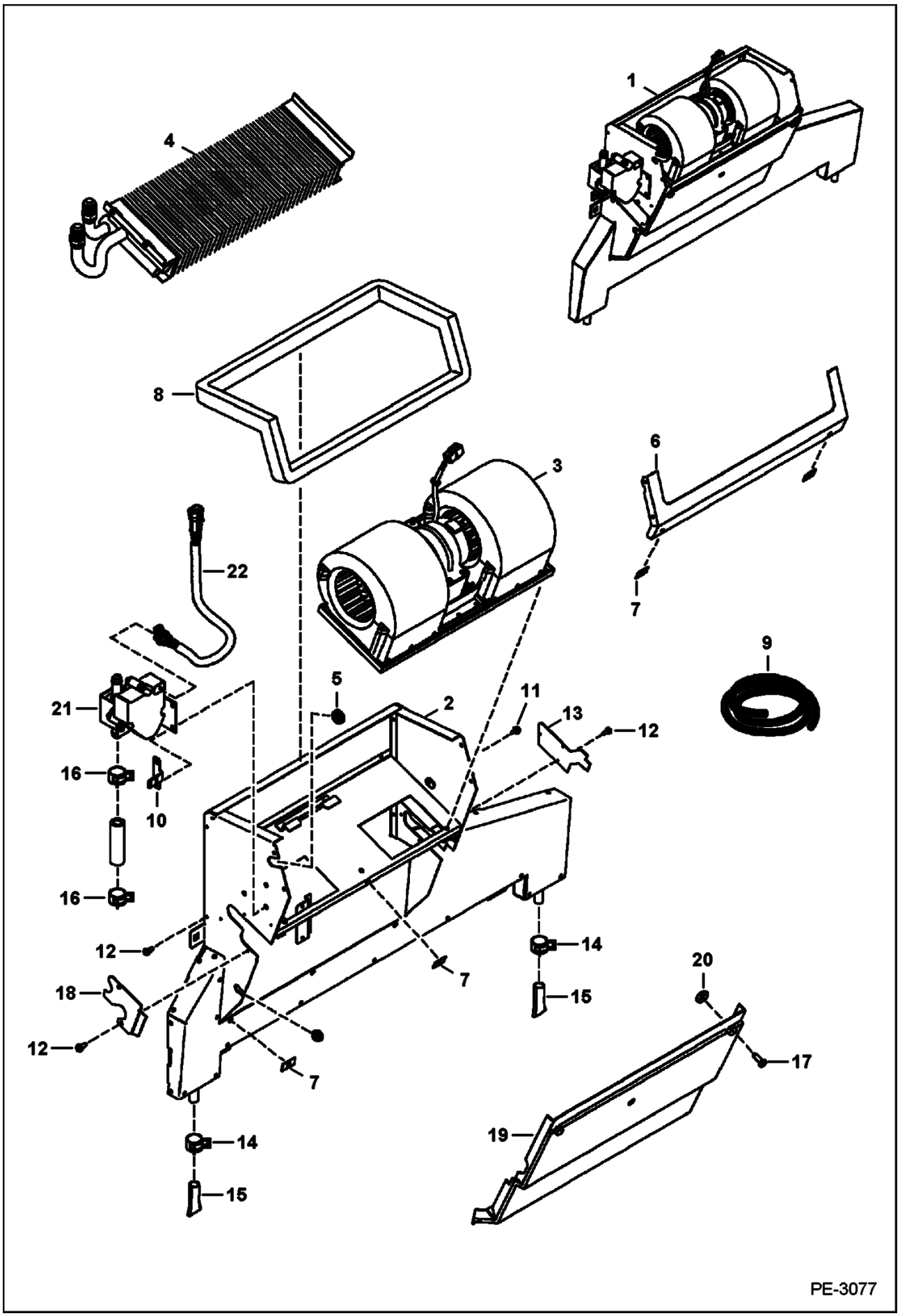

Page 354 - OSS# 2071408 - All rights reserved by Bobcat Company - 12/04/2009 - 07:23:36 - Produced by Ken Cook Co. with mediaioff

Ref No	Part Number	Description	Remarks	Serial Number	Qty
1	6688543	HEATER	Ref. 2-22		1
2	6690478	HOUSING			1
3		BLOWER	See Illustration HEATER & A/C/ B26156 - NAP - assy - Was 6689762 [A]		1
4		COIL	See Illustration HEATER & A/C/ PE1228 - NAP - Order 6689770 Heater Coil kit		1
5	6690482	GROMMET			1
6	6678152	SEAL FLANGE			1
7	6677115	RECEPTACLE			6
8		SEAL	NAP - 48.75"(1238,25mm) long - Order Ref. 9		1
9	6677111	SEAL	bulk - sold per foot		x
10	6690481	BRACKET	harness		1
11	6677119	SCREW	sheetmetal		7
12	6677118	SCREW	W/washer		4
13	6690487	COVER			1
14	6675510	CLAMP	drain hose		2
15	6675511	DRAIN VALVE			2
16	6675512	CLAMP	hose		2
17	6677117	SCREW	captive		1
18	6690479	COVER			1
19	6690476	COVER			1
20	6677116	RETAINER			6
21	6689696	VALVE, HEATER CAB			1
22	6698501	HARNESS, HEATER			1

Page 355 - OSS# 2071408 - All rights reserved by Bobcat Company - 12/04/2009 - 07:23:36 - Produced by Ken Cook Co. with mediaioff

HEATER & A/C
(Heater Assembly) (Plastic Housing) (Two Piece Blower Mount)

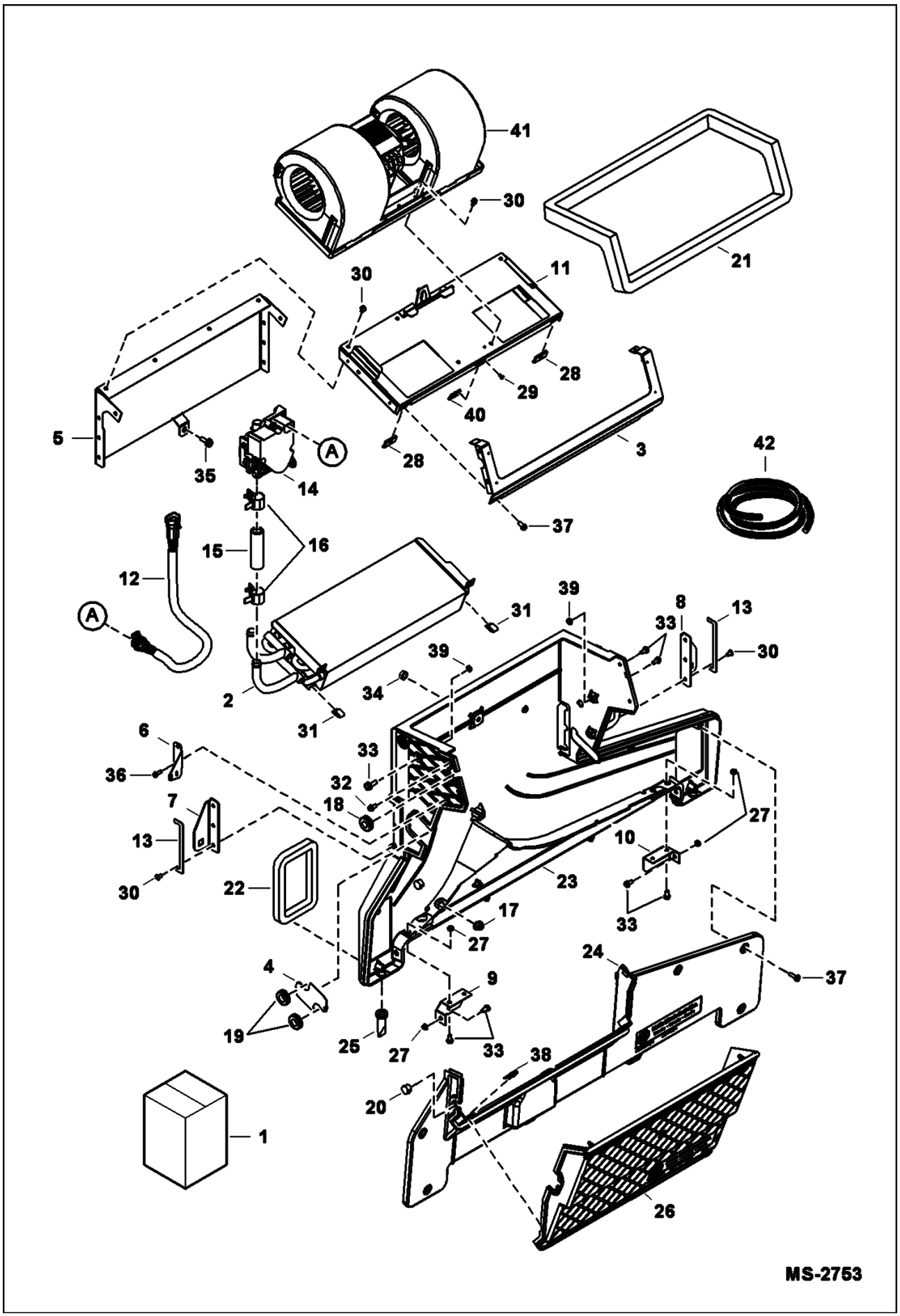

Page 356 - OSS# 2071408 - All rights reserved by Bobcat Company - 12/04/2009 - 07:23:36 - Produced by Ken Cook Co. with mediaioff

Ref No	Part Number	Description	Remarks	Serial Number	Qty
1		HEATER, CAB	See Illustration HEATER & A/C/ NA1534 NAP - Order 7175394 heater assy - Was 6691439 [A]		1
2	7003446	COIL, HEATER			1
3	7003447	FLANGE, SEAL			1
4	7003448	PLATE			1
5	7003449	PAN, COIL			1
6	7003450	BRACKET, HARNESS			1
7	7003451	BRACKET			1
8	7003452	BRACKET			1
9	7003453	BRACKET			1
10	7003454	BRACKET			1
11	7003455	PLATE			1
12	6698501	HARNESS, HEATER			1
13	6676538	INSULATION	bulk - sold per foot		x
14	7003456	VALVE, MOTORIZED ASSY			1
15	7003457	HOSE, HEATER			2
16	7003458	CLAMP, HOSE			2
17	6675513	GROMMET			2
18	6690482	GROMMET			1
19	7003459	GROMMET			2
20	7003511	PLUG			1
21		SEAL	NAP - 48.75" (1,238.25 mm) long - Order Ref. 42		1
22	7003460	SEAL, FOAM			2
23	7003461	HOUSING, BASE			1
24	7003462	HOUSING, COVER DUST			1
25	7003463	VALVE, DRAIN			2
26	7003464	COVER, ASSY			1
27	7003465	NUT			8
28	6677115	RECEPTACLE			2
29	7003466	RIVET, POP			2
30	7003467	RIVET, POP			13
31	6676539	CLIP			2
32	6677580	SCREW			2
33	6693228	BOLT			14
34	7003468	NUT			1
35	7003469	SCREW			3
36	7003470	SCREW			4
37	7003471	SCREW			7
38	7003472	CLIP, RECEPTACLE			3
39	7003473	NUT			3
40	7003474	CLIP, RECEPTACLE			1
41		BLOWER, HEATER & A/C	See Illustration HEATER & A/C/ NA2155		1
42	6677111	SEAL	bulk - sold per foot		x

Page 357 - OSS# 2071408 - All rights reserved by Bobcat Company - 12/04/2009 - 07:23:36 - Produced by Ken Cook Co. with mediaioff

HEATER & A/C
(Heater Assembly) (Plastic Housing) (One Piece Blower Mount)

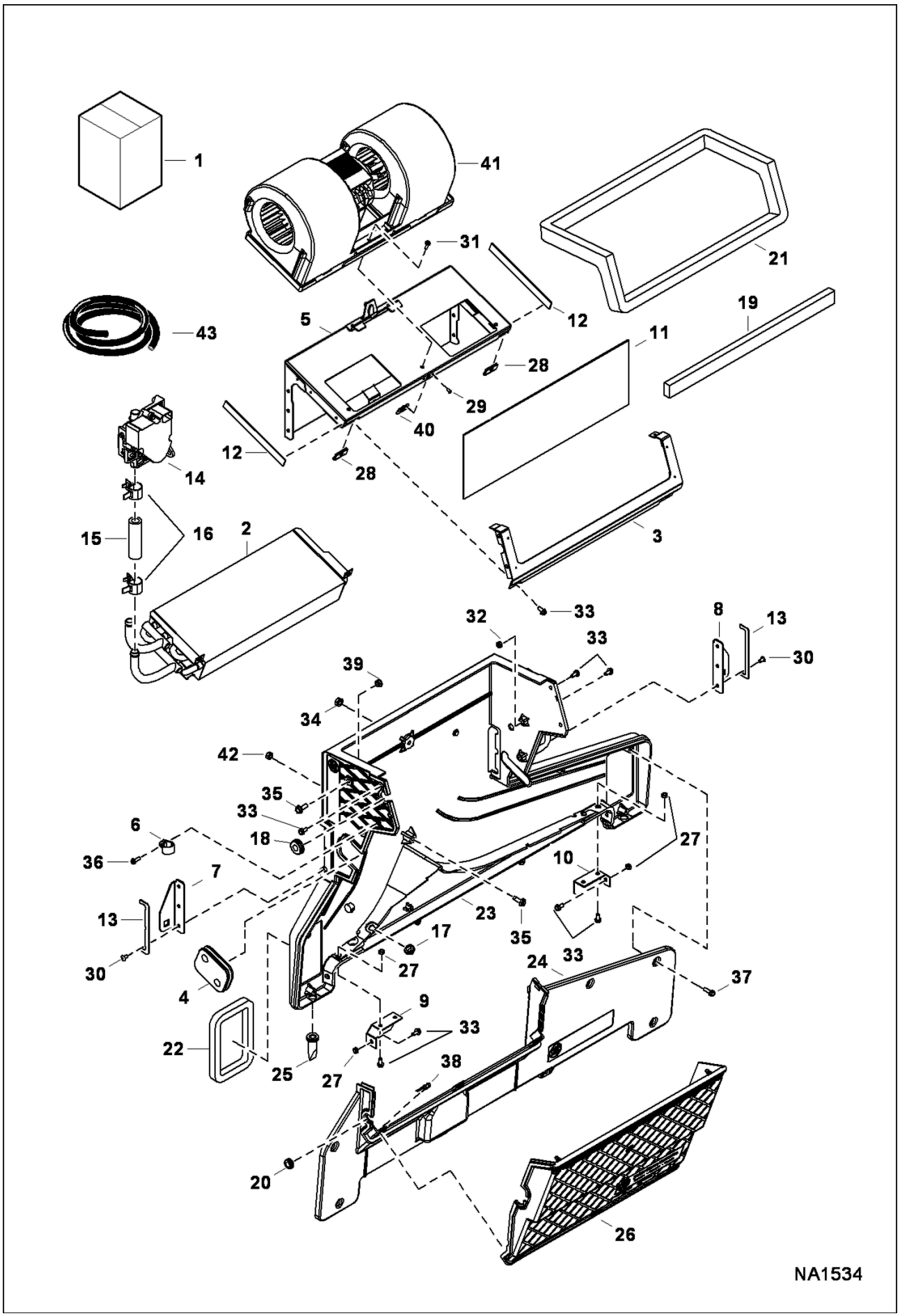

Page 358 - OSS# 2071408 - All rights reserved by Bobcat Company - 12/04/2009 - 07:23:36 - Produced by Ken Cook Co. with mediaIoff

Ref No	Part Number	Description	Remarks	Serial Number	Qty
1	7175394	HEATER CAB			1
2	7003446	COIL, HEATER			1
3	7003447	FLANGE, SEAL			1
4	7175397	GROMMET			1
5	7010269	PAN, COIL			1
6	7010268	CLAMP			1
7	7003451	BRACKET			1
8	7003452	BRACKET			1
9	7003453	BRACKET			1
10	7003454	BRACKET			1
11	7010263	SHIELD, ISOLATOR			1
12	6693236	FOAM			2
13	6676538	INSULATION	bulk - sold per foot		x
14	7003456	VALVE, MOTORIZED ASSY			1
14	6698501	HARNESS, HEATER			1
15	7003457	HOSE, HEATER			2
16	7003458	CLAMP, HOSE			2
17	6675513	GROMMET			2
18	6690482	GROMMET			1
19	7010264	FOAM			1
20	7003511	PLUG			1
21		SEAL	NAP - 48.75" (1,238.25 mm) long - Order Ref. 43		1
22	7003460	SEAL, FOAM			2
23	7003461	HOUSING, BASE			1
24	7003462	HOUSING, COVER DUST			1
25	7003463	VALVE, DRAIN			2
26	7003464	COVER, ASSY			1
27	7003465	NUT			8
28	6677115	RECEPTACLE			2
29	7003466	RIVET, POP			2
30	7010266	RIVET, POP			6
31	7010265	BOLT			5
32	7010267	NUT, LOCK			2
33	6677118	SCREW			14
34	7003468	NUT			1
35	7003469	SCREW			3
36	7003470	SCREW			4
37	7003471	SCREW			7
38	7003472	CLIP, RECEPTACLE			3
39	7003473	NUT			3
40	7003474	CLIP, RECEPTACLE			1
41		BLOWER, HEATER & A/C	See Illustration HEATER & A/C/ NA2155		1
42	6693226	NUT			1
43	6677111	SEAL	bulk - sold per foot		x

Page 359 - OSS# 2071408 - All rights reserved by Bobcat Company - 12/04/2009 - 07:23:36 - Produced by Ken Cook Co. with mediaioff

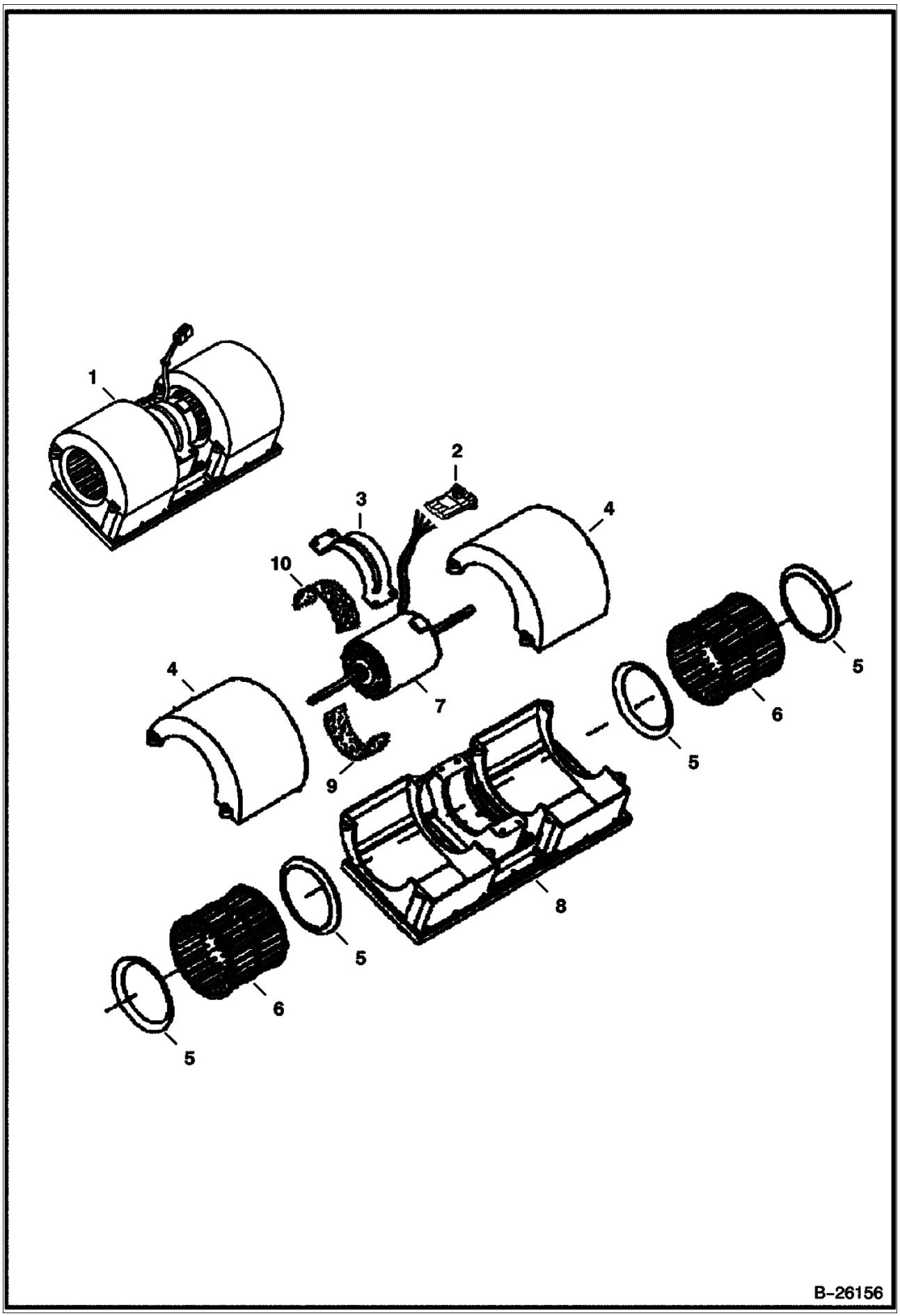

Page 360 - OSS# 2071408 - All rights reserved by Bobcat Company - 12/04/2009 - 07:23:36 - Produced by Ken Cook Co. with mediaioff

Ref No	Part Number	Description	Remarks	Serial Number	Qty
1		BLOWER	See Illustration HEATER & A/C/ NA2155 See Illustration HEATER/ NA2020 - NAP - Ref. 2-10 - Order 7003445 blower & 6697906 panel - Was 6689762 [A]		1
2	6665017	CONNECTOR	4-pin		1
2	6665018	LOCK	4-pin		1
2	6648312	TERMINAL			4
2	6648320	SEAL			4
2	6650107	SEAL			4
3	6675506	MOUNT			1
4	6675507	COVER			2
5	6675504	RING			4
6	6675505	BLOWER WHEEL			2
6	6676618	CLIP			2
7	6689766	MOTOR	W/Ref. 2		1
8	6675503	HOUSING			1
9	6689765	PAD	bottom		1
10	6689764	PAD	top		1

Page 361 - OSS# 2071408 - All rights reserved by Bobcat Company - 12/04/2009 - 07:23:36 - Produced by Ken Cook Co. with mediaioff

HEATER & A/C
(Blower Assembly) (Used on Heaters W/Plastic Housing)

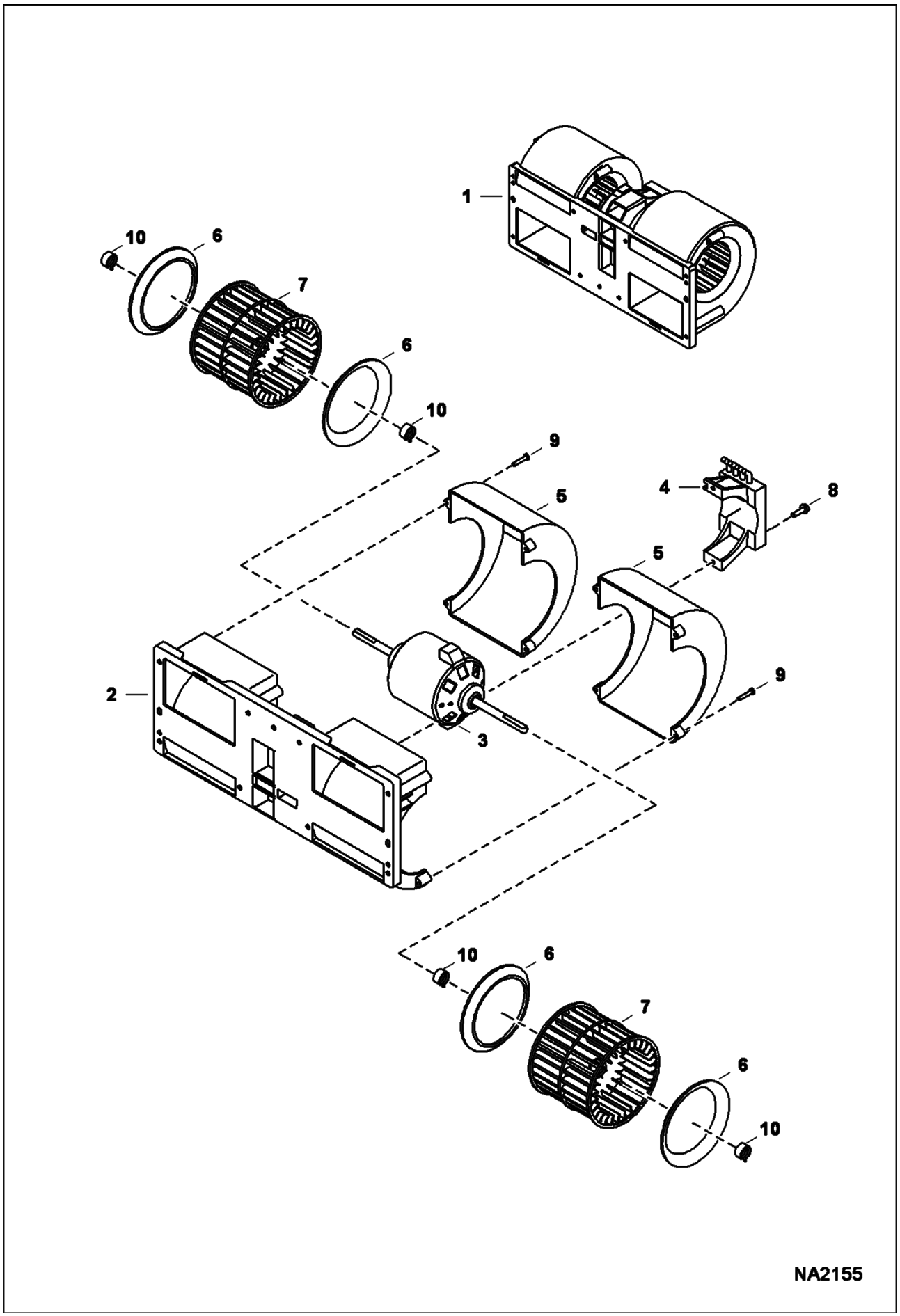

Page 362 - OSS# 2071408 - All rights reserved by Bobcat Company - 12/04/2009 - 07:23:36 - Produced by Ken Cook Co. with mediaioff

Ref No	Part Number	Description	Remarks	Serial Number	Qty
1	7003445	BLOWER, HEATER & A/C			1
2	7010162	HOUSING, BLOWER			1
3	7010163	MOTOR, FAN			1
4	7010164	RESISTOR			1
5	7010165	COVER			2
6	7010166	RING, INNER			4
7	7010167	BLOWER, WHEEL			2
8	7003471	SCREW			2
9	7010168	SCREW			8
10	7010169	CLAMP, HOSE			4

Page 363 - OSS# 2071408 - All rights reserved by Bobcat Company - 12/04/2009 - 07:23:36 - Produced by Ken Cook Co. with mediaioff

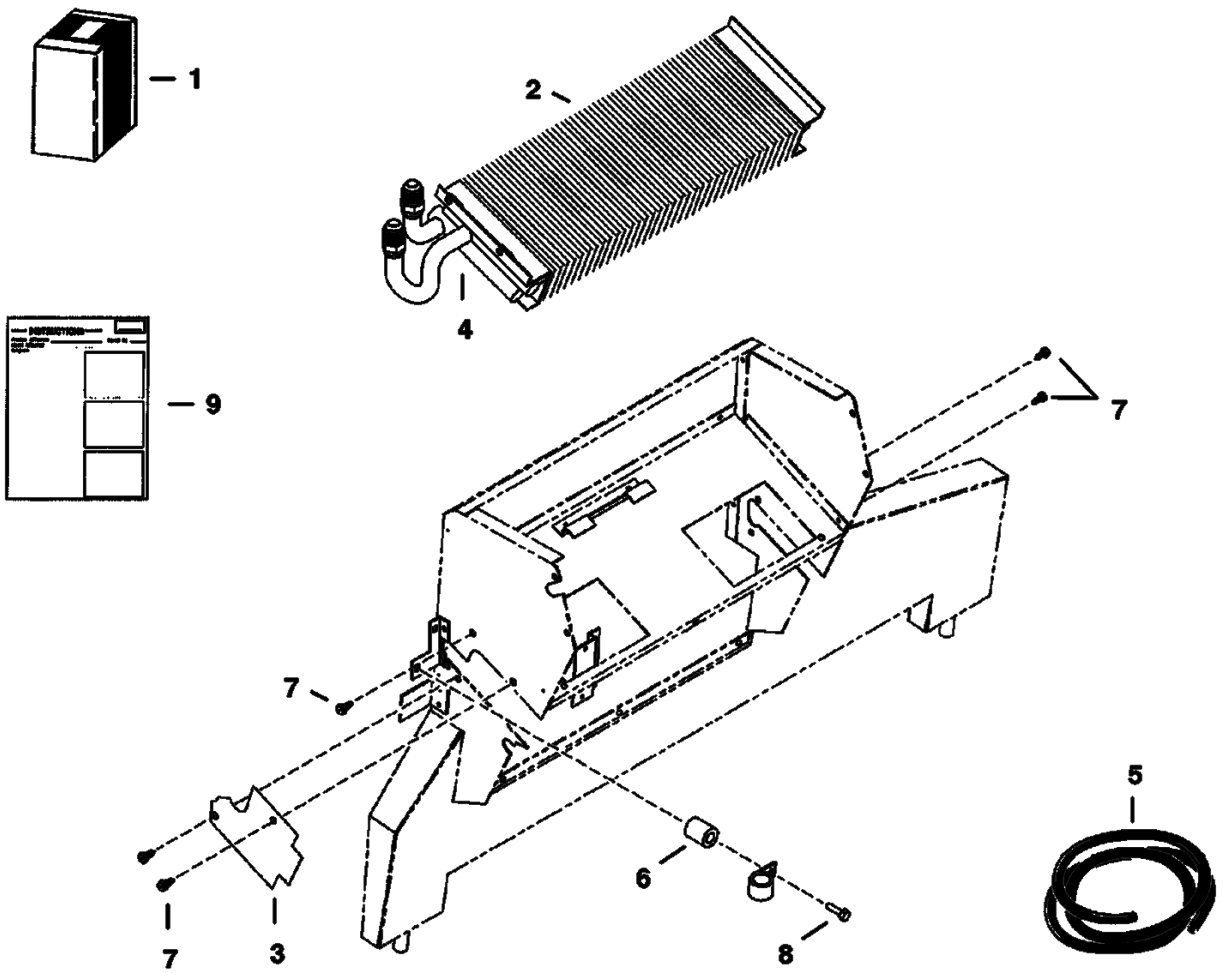

PE–1228

Page 364 - OSS# 2071408 - All rights reserved by Bobcat Company - 12/04/2009 - 07:23:36 - Produced by Ken Cook Co. with mediaioff

Ref No	Part Number	Description	Remarks	Serial Number	Qty
1	7129922	HEATER COIL KIT	heater coil - barbed hose connectors - Ref. 2, 4 & 9 - Was 6689770 [A]		1
2		HEATER COIL	NSS - barbed hose connectors - Order Ref. 1		1
3	6677504	COVER	.279" (7,1 mm) thick		1
4		INSULATION	NAP - 6" (152mm) long - Order Ref. 5		1
5	6676538	INSULATION	bulk - sold per foot		x
6	6676606	SPACER			1
7	6726621	SCREW			2
8	6676653	SCREW			1
9	6901120	INSTRUCTIONS			1

Page 365 - OSS# 2071408 - All rights reserved by Bobcat Company - 12/04/2009 - 07:23:36 - Produced by Ken Cook Co. with mediaioff

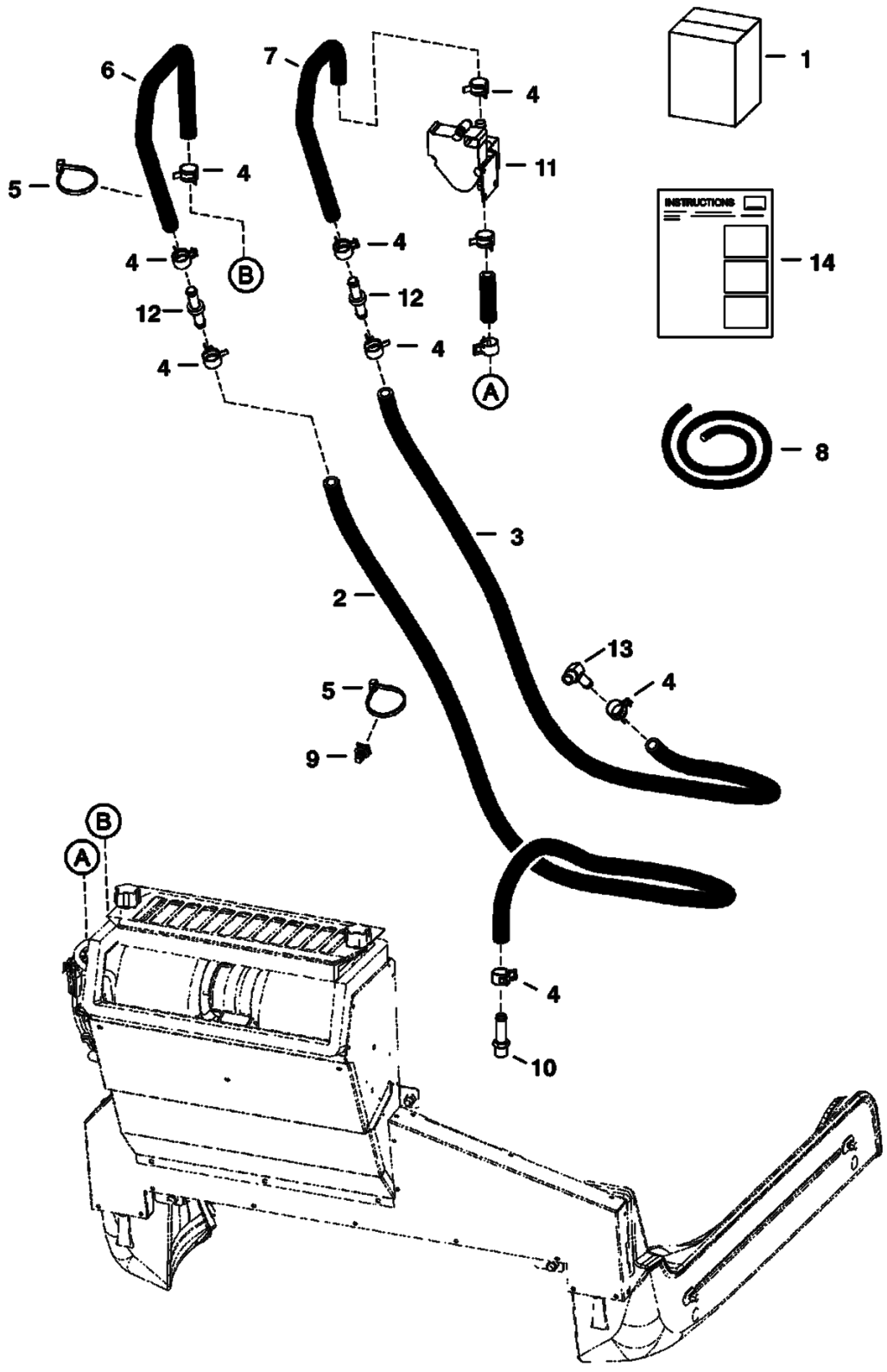

Page 366 - OSS# 2071408 - All rights reserved by Bobcat Company - 12/04/2009 - 07:23:36 - Produced by Ken Cook Co. with mediaioff

Ref No	Part Number	Description	Remarks	Serial Number	Qty
1		KIT	See Illustration HEATER & A/C/ PE3550 See Illustration HEATER & A/C/ PE2805 - NAP - Ref. 2-10, 12 & 13 - Order 7116902 kit [B]		1
2		HOSE	NAP - 72" (1828,8 mm) long - Order Ref. 8 - Was 6733432 [A]		1
3		HOSE	NAP - 84" (2133,6 mm) long - Order Ref.8 - Was 6732817 [A]		1
4	5HM20	CLAMP			8
5	6624289	TIE STRAP			7
6	7113208	HOSE			1
7	7113209	HOSE			1
8	6565977	HOSE	bulk - sold per foot		x
9	6678666	TREE MOUNT	push in - Use W/tie strap		2
10	6731084	ADAPTER			1
11		VALVE	See Illustration HEATER & A/C/ PE2805 - heater - not in kit		1
12	6732023	CONNECTOR			2
13	6731085	ELBOW			1
14	6904255	INSTRUCTIONS	INSTRUCTIONS not in kit - part of heater kit - Was 6903305 [B]		1

Page 367 - OSS# 2071408 - All rights reserved by Bobcat Company - 12/04/2009 - 07:23:36 - Produced by Ken Cook Co. with mediaioff

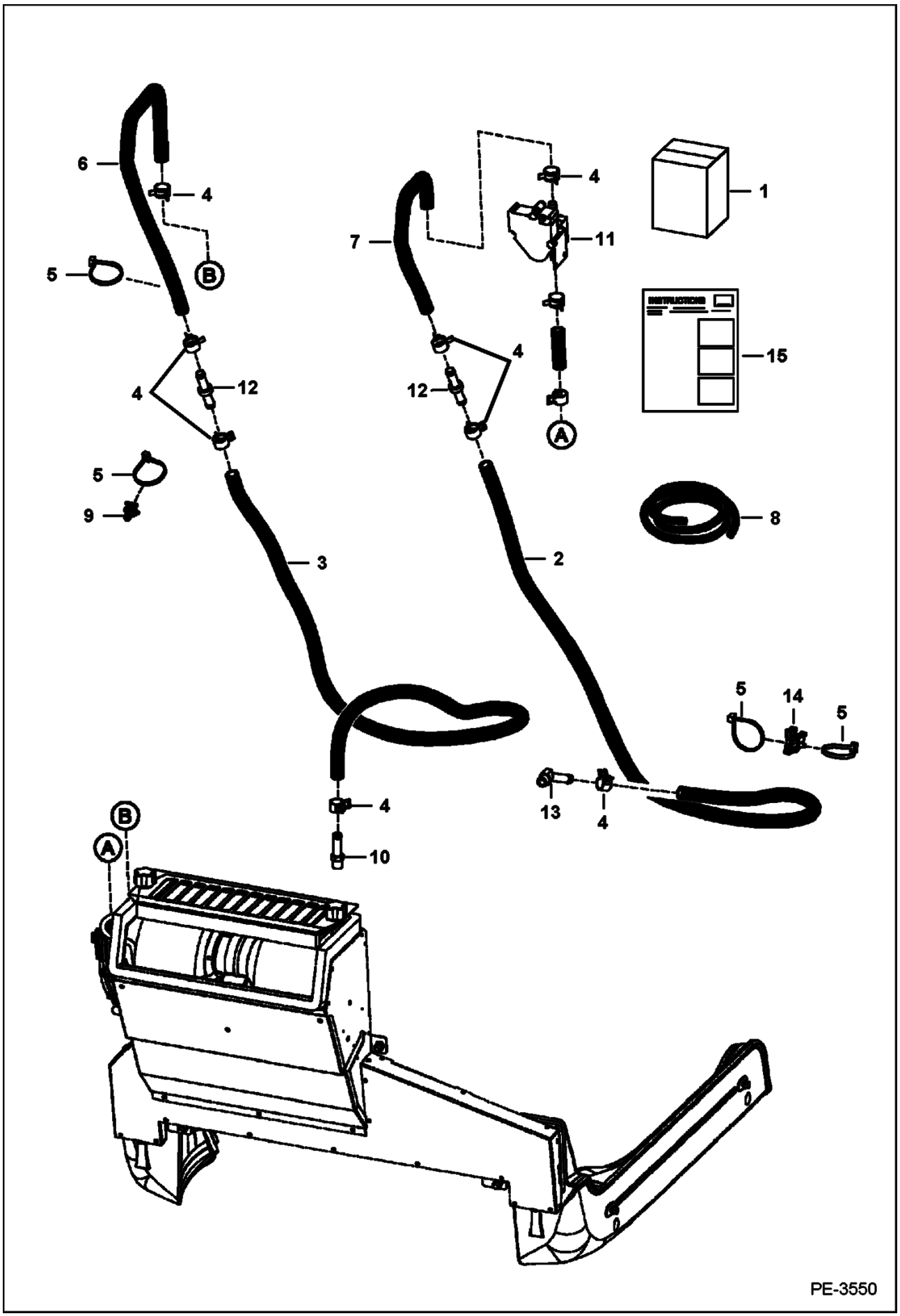

Page 368 - OSS# 2071408 - All rights reserved by Bobcat Company - 12/04/2009 - 07:23:36 - Produced by Ken Cook Co. with mediaioff

Ref No	Part Number	Description	Remarks	Serial Number	Qty
1	7116902	KIT	See Illustration HEATER & A/C/ PE2805 - Ref. 2-10 & 12-14		1
2		HOSE	NAP - 72" (1828,8 mm) long - Order Ref. 8 - Was 6733432 [A]		1
3		HOSE	NAP - 76" (1930,4 mm) long - Order Ref. 8 - Was 6732817 [A]		1
4	5HM20	CLAMP			8
5	6624289	TIE STRAP			9
6	7125557	HOSE, HEATER FORMED			1
7	7113209	HOSE			1
8	6565977	HOSE	bulk - sold per foot		x
9	6678666	TREE MOUNT	push in - Use W/tie strap		2
10	6731084	ADAPTER			2
11		VALVE	See Illustration HEATER & A/C/ PE2805 - not in kit		1
12	6732023	CONNECTOR			2
13	6731085	ELBOW			1
14	6686385	MOUNT, SADDLE SWIVEL			1
15	6904255	INSTRUCTIONS	INSTRUCTIONS - not in kit - part of heater kit		1

Page 369 - OSS# 2071408 - All rights reserved by Bobcat Company - 12/04/2009 - 07:23:36 - Produced by Ken Cook Co. with mediaioff

HEATER & A/C
(A/C Kit) (Used on Heaters W/Metal Housing)

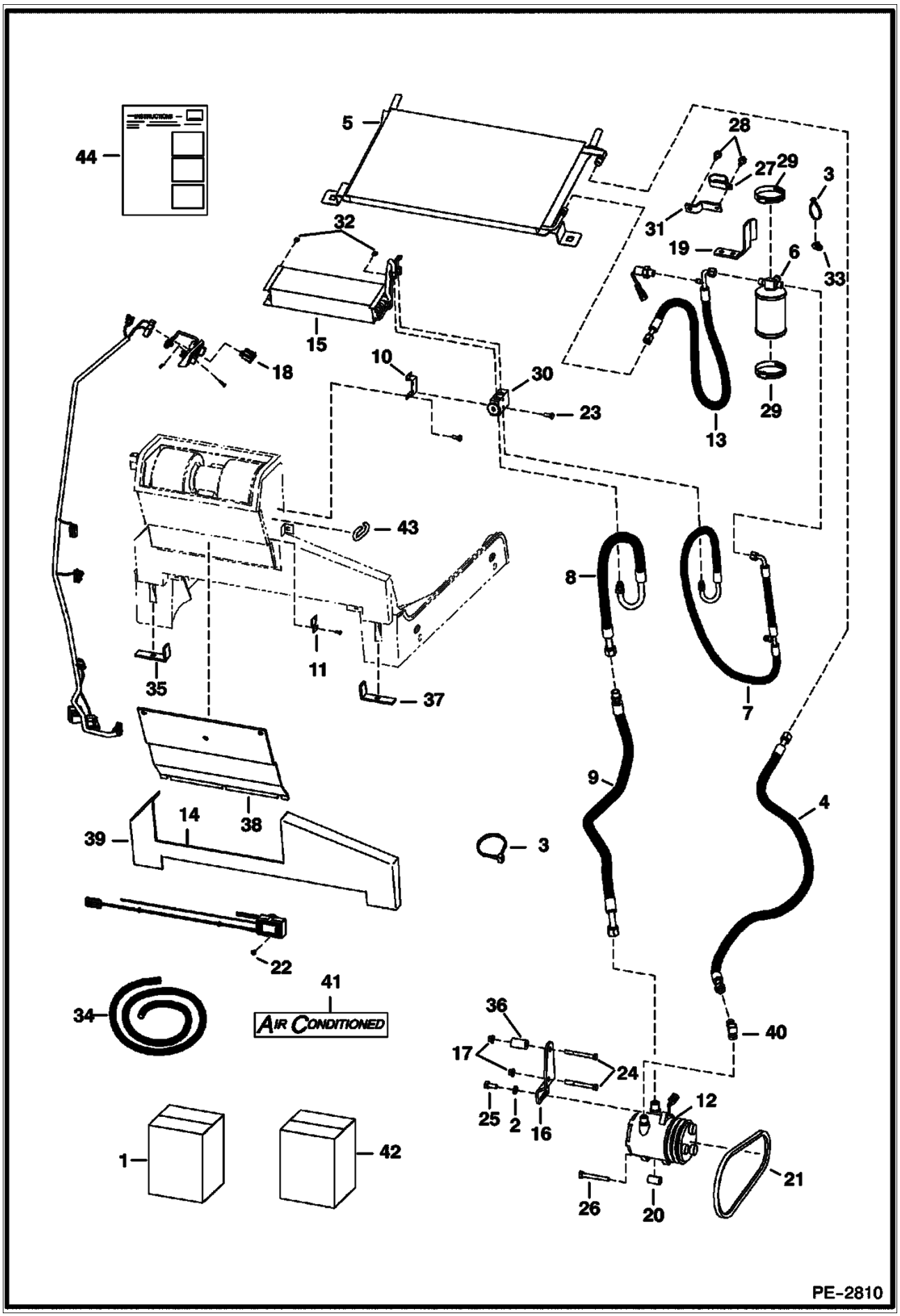

Page 370 - OSS# 2071408 - All rights reserved by Bobcat Company - 12/04/2009 - 07:23:36 - Produced by Ken Cook Co. with mediaioff

Ref No	Part Number	Description	Remarks	Serial Number	Qty
1	7116904	KIT, A/C	Ref. 2-19, 21-41 & 43 - If not equipped with Power Bob-Tach or High Flow, Also Order 7110160 fuel harness	5307 13759 & Bel	1
1	7116904	KIT, A/C	Ref. 2-19, 21-41 & 43 - If not equipped with Power Bob-Tach or High Flow, Also Order 7110160 fuel harness	5308 11510 & Bel	1
1	7116904	KIT, A/C	Ref. 2-19, 21-41 & 43 - If not equipped with Power Bob-Tach or High Flow, Also Order 7110160 fuel harness	5307 13760 & Abv	1
1	7116904	KIT, A/C	Ref. 2-19, 21-41 & 43 - If not equipped with Power Bob-Tach or High Flow, Also Order 7110160 fuel harness	5308 11511 & Abv	1
2	6557831	WASHER			1
3	6624289	TIE STRAP			2
4	6692809	HOSE, A/C ASSY	AC - Was 6684907 [A]		1
4	6675538	O-RING	#8		x
5	6674234	CONDENSER	See BTI391		1
6	6674235	RECEIVER DRIER			1
6	6676062	VALVE	relief		1
7	6698442	HOSE	Was 6675075 [A]		1
7	6677122	CAP			1
7	6675824	O-RING	#6		x
8	6675076	HOSE	AC- W/schrader valve	& Bel	1
8	6726623	HOSE	W/O schrader valve	& Abv	1
8	6675825	O-RING	#10		x
8	6677121	CAP			1
9	6684908	HOSE, A/C ASSY	AC - W/O schrader valve	& Bel	1
9	7121115	HOSE	W/ schrader valve	& Abv	1
9	6675825	O-RING	#10		x
10	6676984	MOUNT	valve		1
11	6690480	COVER	plate - Was 6677105 [B]	& Bel	1
11	6692416	COVER		& Abv	1
12	6733655	COMPRESSOR	W/Ref. 20		1
12	6679145	CLUTCH			1
12	6648307	CONNECTOR	2-pin		1
12	6648308	CONNECTOR			1
13	6675685	HOSE	AC		1
13	6675779	SWITCH, PRESS	W/harness		1
13	6676399	VALVE CORE			1
13	6675824	O-RING	#6		x
14	6683004	THERMOSTAT			1
15	6690477	EVAPORATOR			1
15	6675538	O-RING	#8		x
16	6730265	MOUNT	compressor		1
17	83D6	NUT 5			2
18	6719176	SWITCH	rocker		1
19	6719459	MOUNT	receiver drier		1
20	6732732	BUSHING	not in kit		1
21	6730819	BELT	compressor		1
22	6726621	SCREW			2
23	1CM635	BOLT			2
24	17C656	BOLT			2
25	5CM1025	BOLT			1
26	5CM1080	SCREW			1
27	31H46	CLAMP			1
28	84G3710	SCREW			2

Page 371 - OSS# 2071408 - All rights reserved by Bobcat Company - 12/04/2009 - 07:23:36 - Produced by Ken Cook Co. with mediaioff

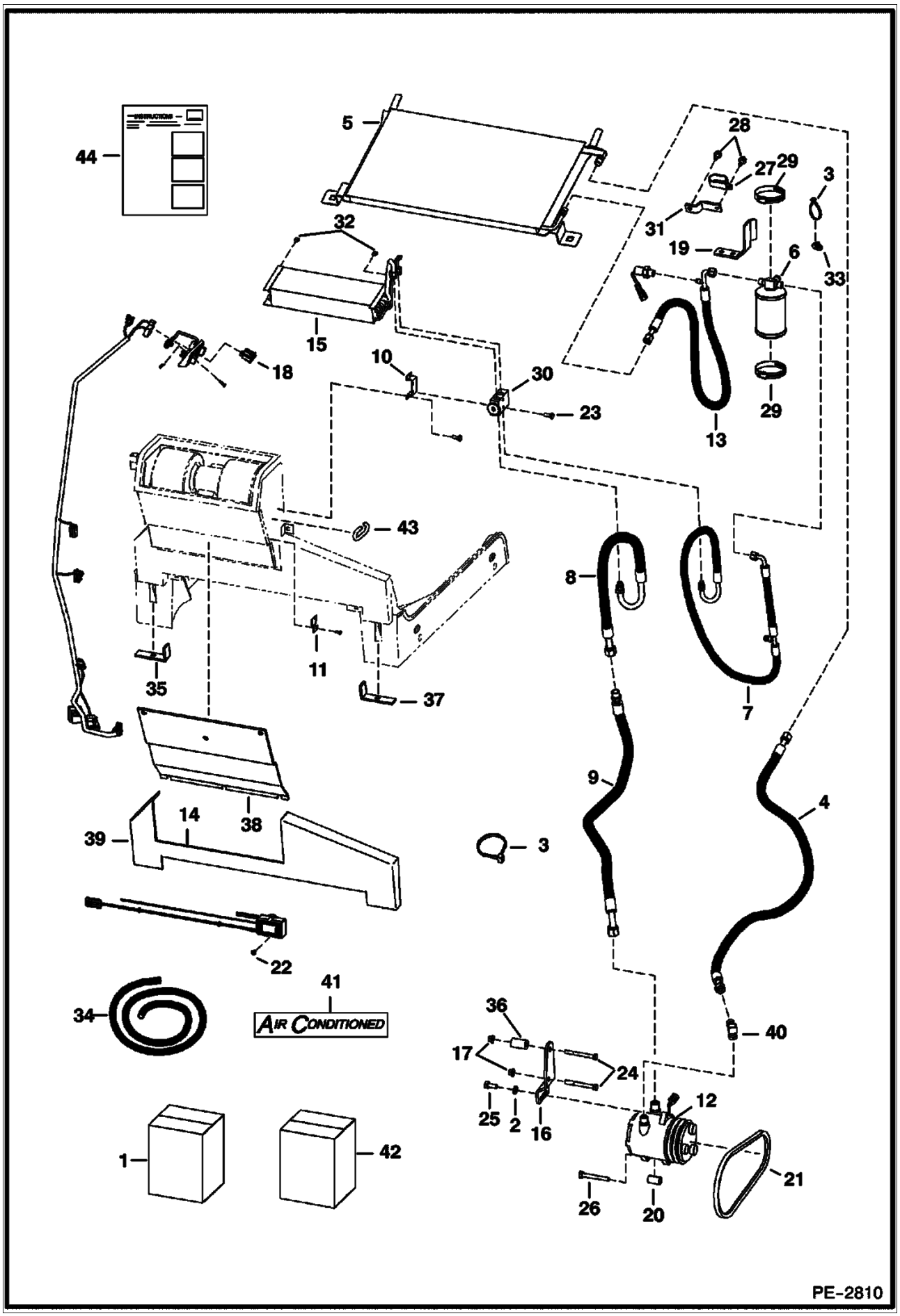

Page 372 - OSS# 2071408 - All rights reserved by Bobcat Company - 12/04/2009 - 07:23:36 - Produced by Ken Cook Co. with mediaioff

Ref No	Part Number	Description	Remarks	Serial Number	Qty
29	44H48	CLAMP			2
30	6675534	BLOCK VALVE			1
31	6727326	MOUNT	clamp		1
32	6676539	CLIP			2
33	6679034	MOUNT			1
34	6676538	INSULATION	bulk - sold per foot		x
35	6675608	INSULATION			1
36	6730266	SPACER			1
37	6675609	INSULATION			1
38	6689179	INSULATION			1
39	6689180	INSULATION			1
40	6731255	ELBOW	W/ O-ring		1
41	6729077	DECAL	air conditioned		2
42	6676063	KIT	fitting caps - not in kit		1
43		INSULATION	NAP - 6" (152,4 mm) long - Order Ref. 34		1
44	6904258	INSTRUCTIONS			1

Page 373 - OSS# 2071408 - All rights reserved by Bobcat Company - 12/04/2009 - 07:23:36 - Produced by Ken Cook Co. with mediaioff

HEATER & A/C
(A/C Kit) (Used on Heaters W/Plastic Housing)

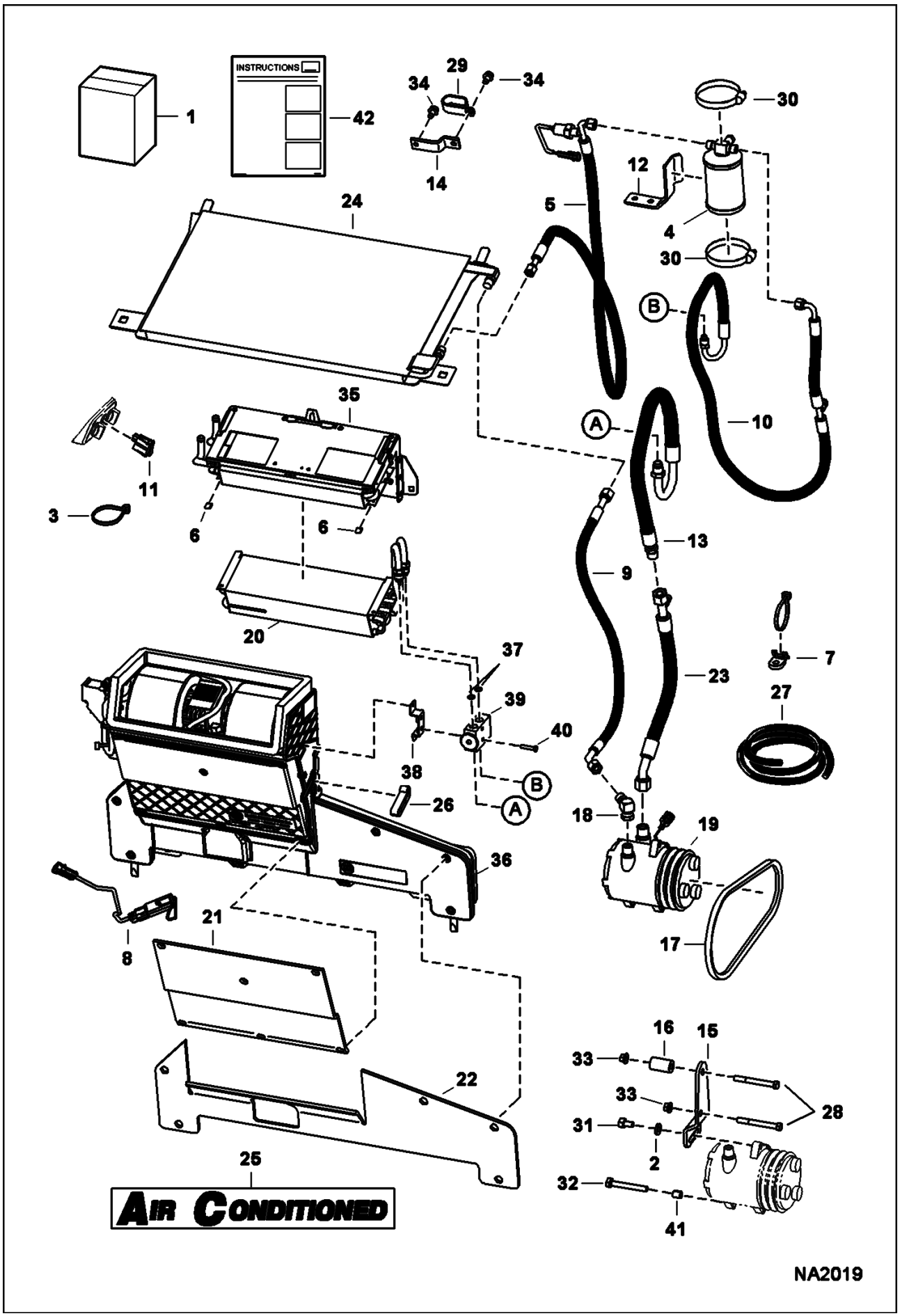

Page 374 - OSS# 2071408 - All rights reserved by Bobcat Company - 12/04/2009 - 07:23:36 - Produced by Ken Cook Co. with mediaIoff

Ref No	Part Number	Description	Remarks	Serial Number	Qty
1	7166139	KIT A/C			1
2	6557831	WASHER			1
3	6624289	TIE STRAP			2
4	6674235	RECEIVER DRIER			1
5	6675685	HOSE			1
5	6675824	O-RING	#6		x
6	6676539	CLIP			2
7	6679034	MOUNT			1
8	7008040	THERMOSTAT	Was 6683004 [A]		1
9	6692809	HOSE, A/C ASSY			1
9	6675538	O-RING	#8		x
10	6698442	HOSE			1
10	6677122	CAP			1
10	6675824	O-RING	#6		x
11	6719176	SWITCH			1
12	6719459	MOUNT			1
13	6726623	HOSE			1
13	6675825	O-RING	#10		x
14	6727326	MOUNT			1
15	6730265	MOUNT			1
16	6730266	SPACER			1
17	6730819	BELT			1
18	6731255	ELBOW			1
19	6733655	COMPRESSOR			1
20	7002707	EVAPORATOR			1
20	6675538	O-RING	#8		x
21	7001670	INSULATION			1
22	7001671	INSULATION			1
23	7121115	HOSE			1
23	6675825	O-RING	#10		x
24	7157561	CONDENSER, A/C			1
25	7166916	DECAL, A/C			2
26		SEAL	NAP - 7.87" (199.9 mm) long - Order Ref. 27		1
27	6677111	SEAL	bulk - sold per foot		1
28	17C656	BOLT			2
29	31H46	CLAMP			1
30	44H48	CLAMP			2
31	5CM1020	SCREW			1
32	5CM1080	SCREW			1
33	83D6	NUT 5			2
34	84G3710	SCREW			2
35		HEATER COIL ASSY	See Illustration HEATER & A/C/ MS2754		1
36		HVAC ASSY	See Illustration HEATER & A/C/ MS2754		1
37	6675538	O-RING			2
38	7001669	BRACKET			1
39	6675534	BLOCK VALVE			1
40	6691534	SCREW			2
41	6732732	BUSHING			1
42	6987150	INSTRUCTIONS			1

Page 375 - OSS# 2071408 - All rights reserved by Bobcat Company - 12/04/2009 - 07:23:36 - Produced by Ken Cook Co. with mediaioff

HEATER & A/C
(HVAC Assembly) (Metal Housing)

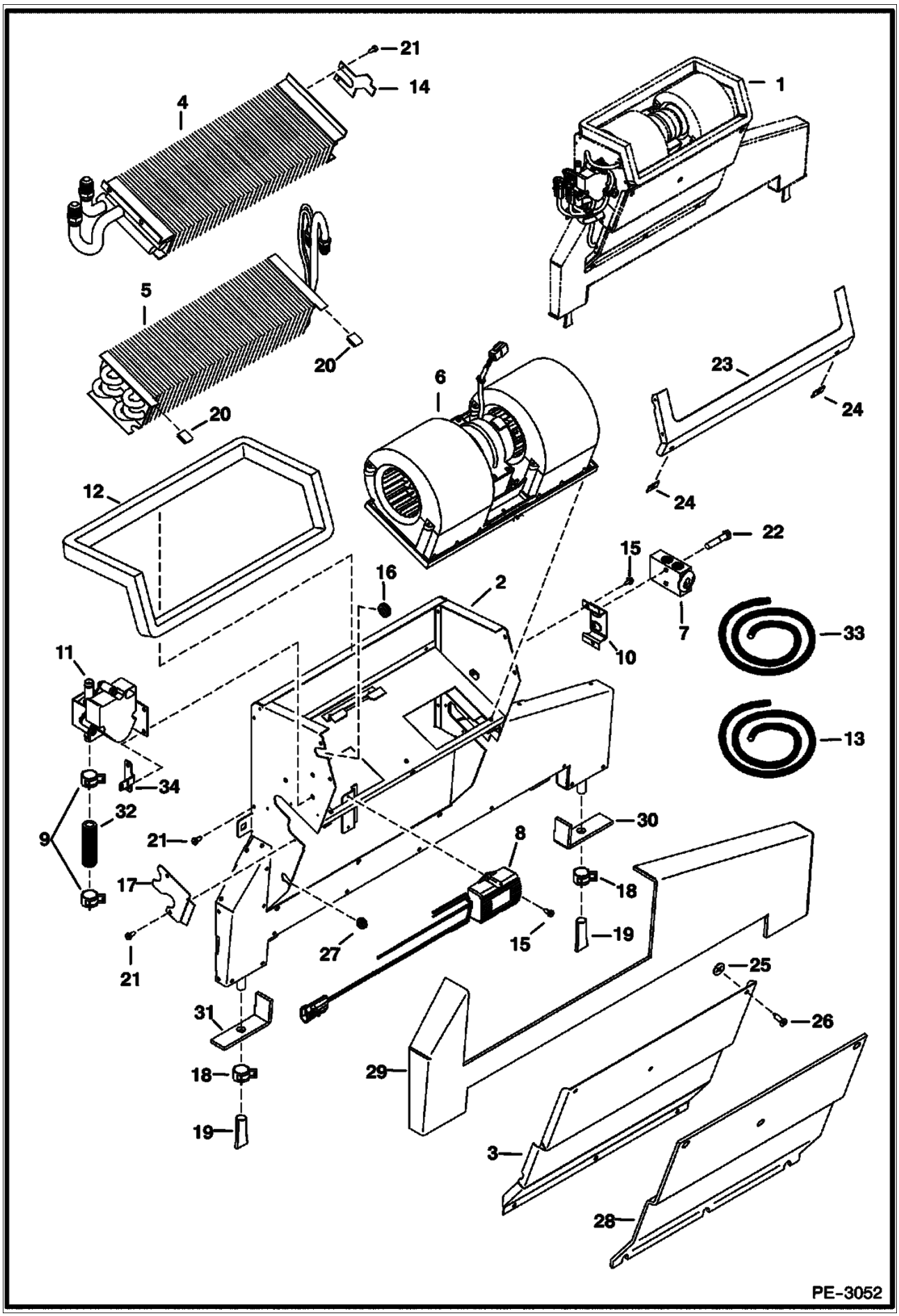

Page 376 - OSS# 2071408 - All rights reserved by Bobcat Company - 12/04/2009 - 07:23:36 - Produced by Ken Cook Co. with mediaioff

Ref No	Part Number	Description	Remarks	Serial Number	Qty
1	6688542	HVAC HEATER	assy - Ref. 2-34		1
2	6690478	HOUSING			1
3		COVER	NAP - Order 6690476, also Order Ref. 23 (6678152)		1
3	6690476	COVER			1
4		COIL	NSS - heater - Order 6689770 heater coil kit		1
5	6690477	EVAPORATOR			1
5	6675538	O-RING	#8		x
6	6689762	BLOWER	assy		1
7	6675534	BLOCK VALVE			1
8	6683004	THERMOSTAT			1
9	6675512	CLAMP	hose		2
10	6676984	MOUNT	valve		1
11	6689696	VALVE, HEATER CAB			1
12		SEAL	NAP - 48.75" (1238,25mm) - Order Ref. 13		1
13	6677111	SEAL	bulk - sold per foot		x
14	6690480	COVER			1
15	6677118	SCREW	W/washer		3
16	6690482	GROMMET			1
17	6690479	COVER			1
18	6675510	CLAMP	drain hose		2
19	6675511	DRAIN VALVE			2
20	6676539	CLIP			2
21	6726621	SCREW	sheet metal		7
22	1CM635	BOLT			2
23		SEAL	NAP - Order 6678152, Also Order Ref. 3 (6690476)		1
23	6678152	SEAL FLANGE			1
24	6677115	RECEPTACLE			6
25	6677116	RETAINER			6
26	6677117	SCREW	captive		6
27	6684947	GROMMET			1
28	6689179	INSULATION			1
29	6689180	INSULATION			1
30	6675609	INSULATION			1
31	6675608	INSULATION			1
32		HOSE	NAP - 1/2" heater hose 2.75" (69,85mm) - Order Ref. 33		1
33	6565977	HOSE	bulk - sold per foot		x
34	6690481	BRACKET	harness		1

Page 377 - OSS# 2071408 - All rights reserved by Bobcat Company - 12/04/2009 - 07:23:36 - Produced by Ken Cook Co. with mediaioff

HEATER & A/C
(HVAC Assembly) (Plastic Housing) (Two Piece Blower Mount)

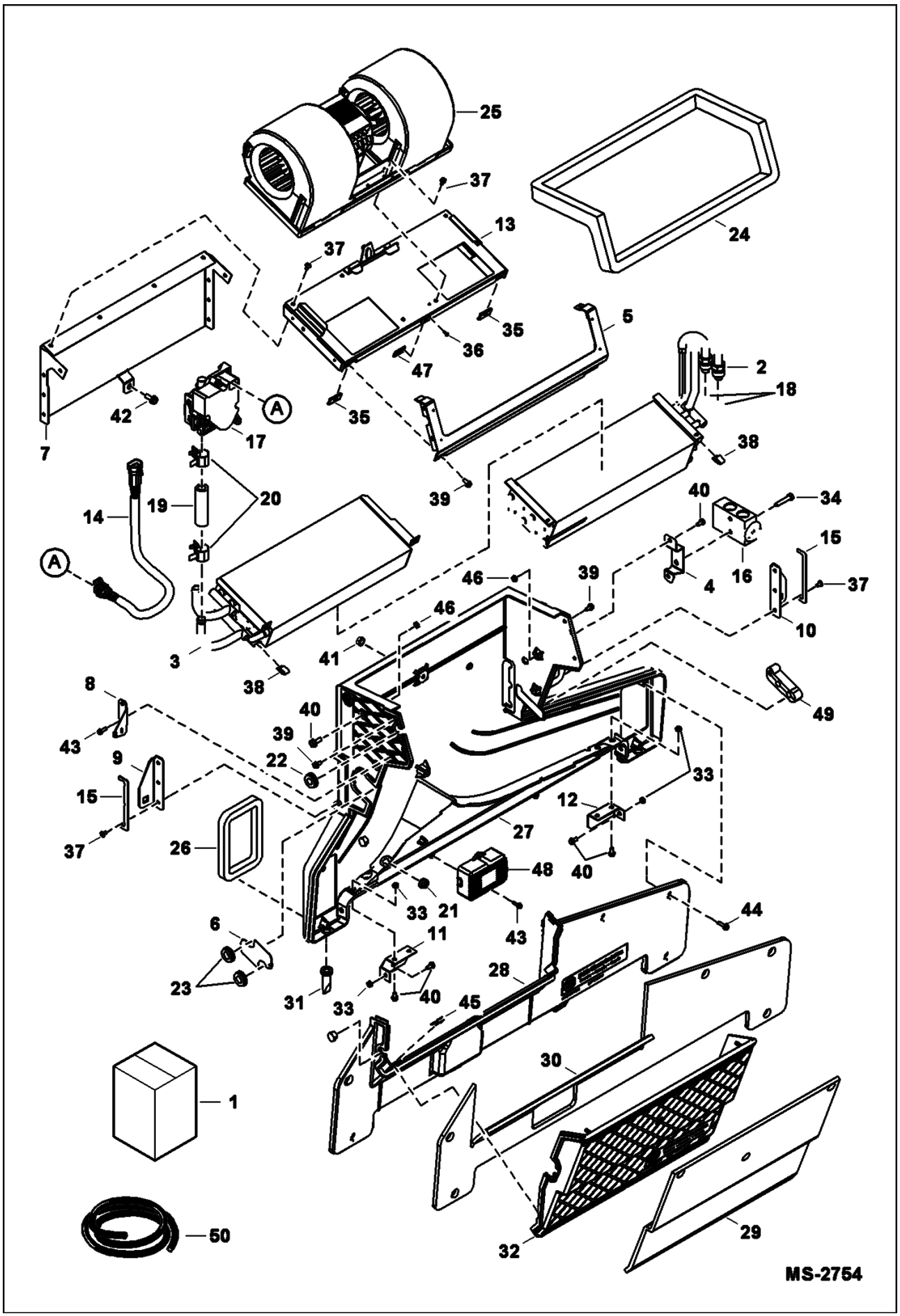

Page 378 - OSS# 2071408 - All rights reserved by Bobcat Company - 12/04/2009 - 07:23:36 - Produced by Ken Cook Co. with mediaioff

Ref No	Part Number	Description	Remarks	Serial Number	Qty
1		HVAC ASSY	See Illustration HEATER & A/C/ NA1535 - NAP - Order 7175395 HVAC assy - Was 6691438 [A]		1
2	7002707	EVAPORATOR			1
3	7003446	COIL, HEATER			1
4	7001669	BRACKET			1
5	7003447	FLANGE, SEAL			1
6	7003448	PLATE			1
7	7003449	PAN, COIL			1
8	7003450	BRACKET, HARNESS			1
9	7003451	BRACKET			1
10	7003452	BRACKET			1
11	7003453	BRACKET			1
12	7003454	BRACKET			1
13	7003455	PLATE			1
14	6698501	HARNESS, HEATER			1
15	6676538	INSULATION	bulk - sold per foot		x
16	6675534	BLOCK VALVE			1
17	7003456	VALVE, MOTORIZED ASSY			1
18	6675538	O-RING			2
19	7003457	HOSE, HEATER	2.75" (69,9 mm) long		1
20	7003458	CLAMP, HOSE			2
21	6675513	GROMMET			2
22	6690482	GROMMET			1
23	7003459	GROMMET			2
24		SEAL	NAP - 48.75" (1,238.25 mm) long - Order Ref. 50		2
25		BLOWER, HEATER & A/C	See Illustration HEATER & A/C/ NA2155		1
26	7003460	SEAL, FOAM			2
27	7003461	HOUSING, BASE			1
28	7003462	HOUSING, COVER DUST			1
29	7001670	INSULATION			1
30	7001671	INSULATION			1
31	7003463	VALVE, DRAIN			2
32	7003464	COVER, ASSY			1
33	7003465	NUT			8
34	6691534	SCREW			2
35	6677115	RECEPTACLE			2
36	7003466	RIVET, POP			2
37	7003467	RIVET, POP			13
38	6676539	CLIP			2
39	6677580	SCREW			2
40	6677118	SCREW			14
41	7003468	NUT			1
42	7003469	SCREW			3
43	7003470	SCREW			4
44	7003471	SCREW			7
45	7003472	CLIP, RECEPTACLE			3
46	7003473	NUT			3
47	7003474	CLIP, RECEPTACLE			1
48	6683004	THERMOSTAT			1

Page 379 - OSS# 2071408 - All rights reserved by Bobcat Company - 12/04/2009 - 07:23:36 - Produced by Ken Cook Co. with mediaioff

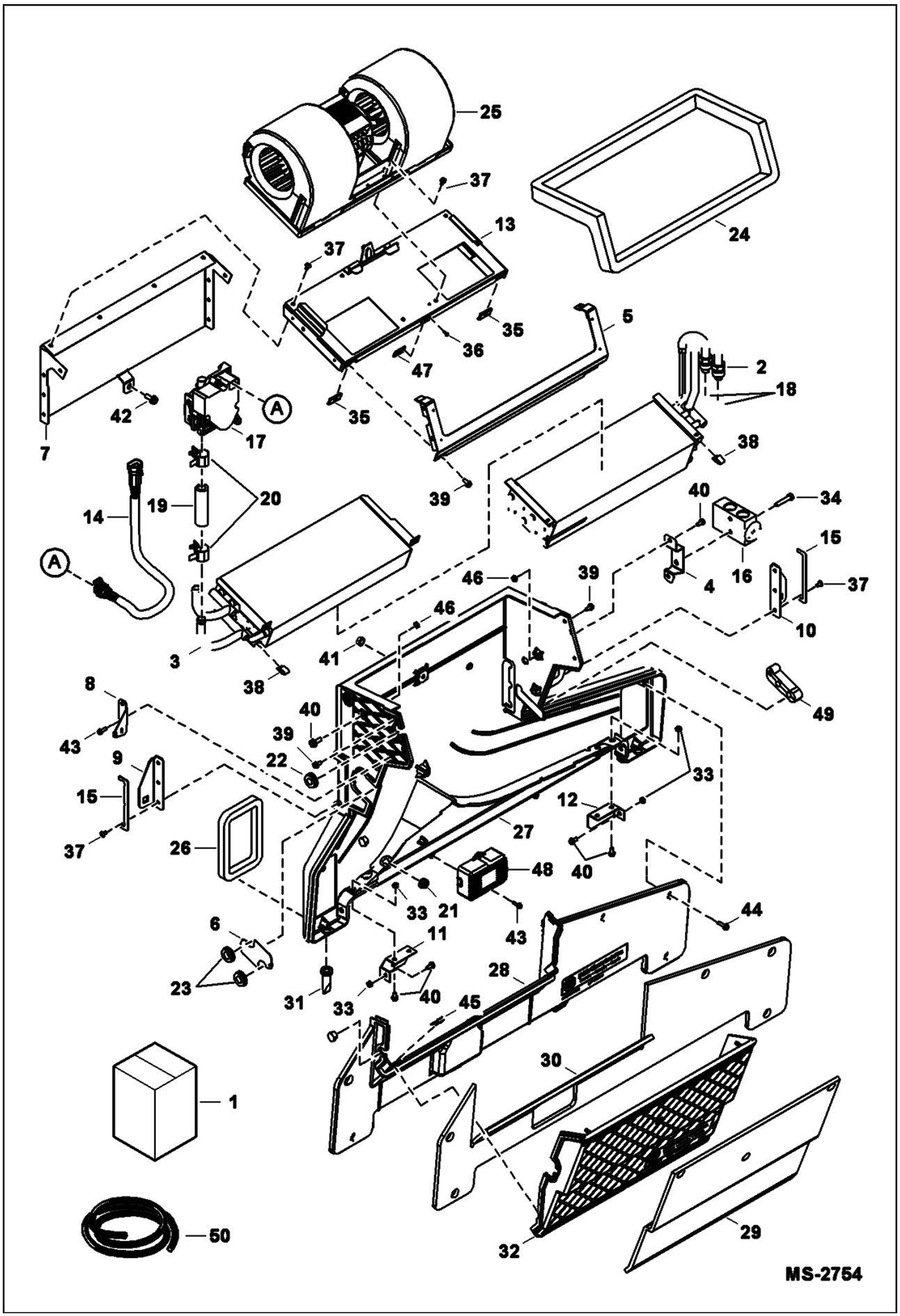

Page 380 - OSS# 2071408 - All rights reserved by Bobcat Company - 12/04/2009 - 07:23:36 - Produced by Ken Cook Co. with mediaioff

Ref No	Part Number	Description	Remarks	Serial Number	Qty
49		SEAL	NAP - 8" (203.2 mm) long - Order Ref. 50		1
50	6677111	SEAL	bulk - sold per foot		x

Page 381 - OSS# 2071408 - All rights reserved by Bobcat Company - 12/04/2009 - 07:23:36 - Produced by Ken Cook Co. with mediaioff

HEATER & A/C
(HVAC Assembly) (Plastic Housing) (One Piece Blower Mount)

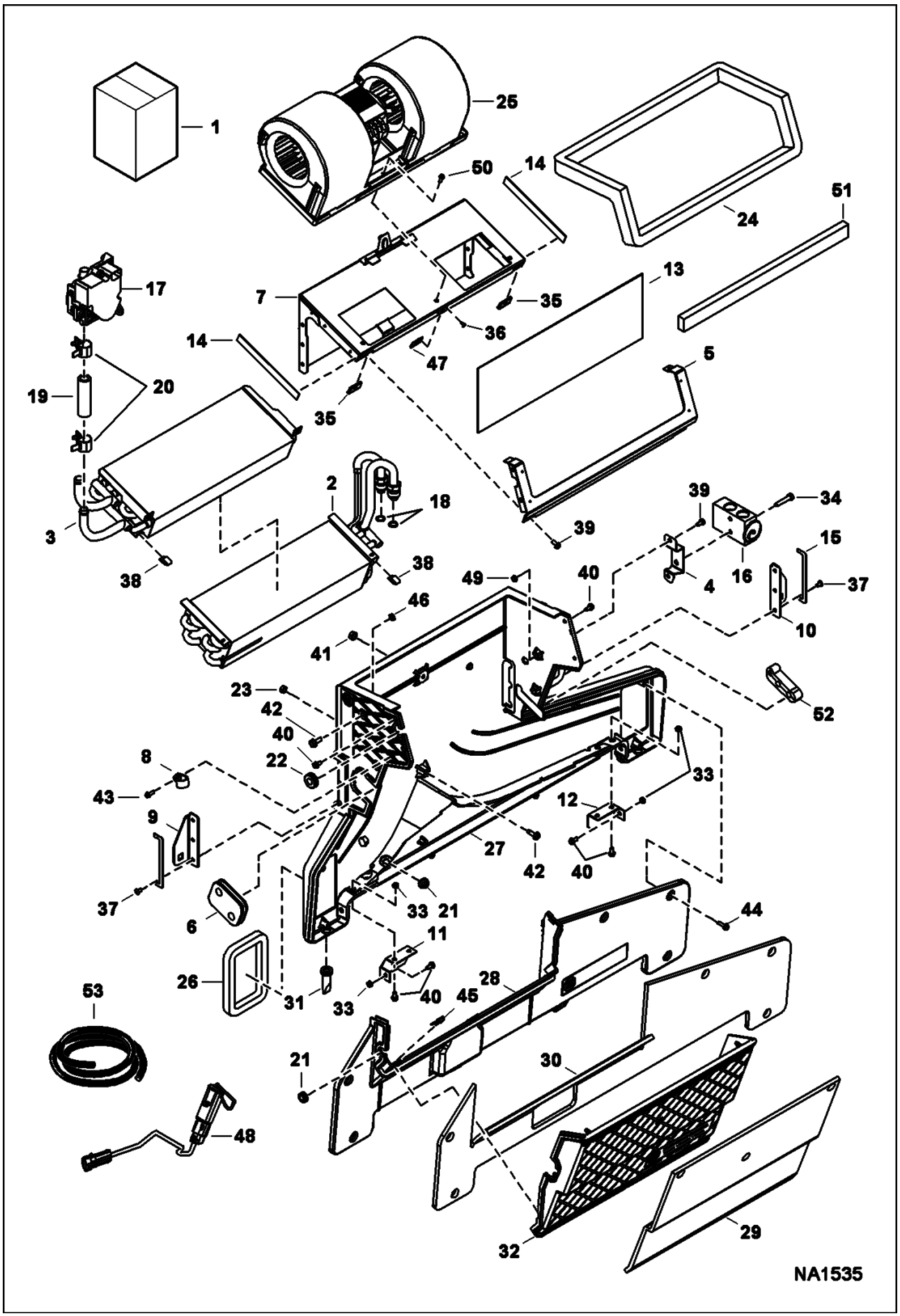

Page 382 - OSS# 2071408 - All rights reserved by Bobcat Company - 12/04/2009 - 07:23:36 - Produced by Ken Cook Co. with mediaioff

Ref No	Part Number	Description	Remarks	Serial Number	Qty
1	7175395	HVAC ASSY			1
2	7002707	EVAPORATOR			1
3	7003446	COIL, HEATER			1
4	7001669	BRACKET			1
5	7003447	FLANGE, SEAL			1
6	7175397	GROMMET			1
7	7010269	PAN, COIL			1
8	7010268	CLAMP			1
9	7003451	BRACKET			1
10	7003452	BRACKET			1
11	7003453	BRACKET			1
12	7003454	BRACKET			1
13	7010263	SHIELD, ISOLATOR			1
14	6693236	FOAM			2
15	6676538	INSULATION	bulk - sold per foot		x
16	6675534	BLOCK VALVE			1
17	7003456	VALVE, MOTORIZED ASSY			1
18	6675538	O-RING			2
19	7003457	HOSE, HEATER	2.75" (69,9 mm) long		1
20	7003458	CLAMP, HOSE			2
21	6675513	GROMMET			2
22	6690482	GROMMET			1
23	6693226	NUT			1
24		SEAL	NAP - 48.75" (1,238.25 mm) long - Order Ref. 53		1
25		BLOWER, HEATER & A/C	See Illustration HEATER & A/C/ NA2155		1
26	7003460	SEAL, FOAM			2
27	7003461	HOUSING, BASE			1
28	7003462	HOUSING, COVER DUST			1
29	7001670	INSULATION			1
30	7001671	INSULATION			1
31	7003463	VALVE, DRAIN			2
32	7003464	COVER, ASSY			1
33	7003465	NUT			8
34	6691534	SCREW			2
35	6677115	RECEPTACLE			2
36	7003466	RIVET, POP			2
37	7010266	RIVET, POP			6
38	6676539	CLIP			2
39	6693228	BOLT			2
40	6693228	BOLT			12
41	7003468	NUT			1
42	7003469	SCREW			3
43	7003470	SCREW			4
44	7003471	SCREW			7
45	7003472	CLIP, RECEPTACLE			3
46	7003473	NUT			3
47	7003474	CLIP, RECEPTACLE			1
48	7008040	THERMOSTAT			1
48	6698501	HARNESS, HEATER			1

Page 383 - OSS# 2071408 - All rights reserved by Bobcat Company - 12/04/2009 - 07:23:36 - Produced by Ken Cook Co. with mediaioff

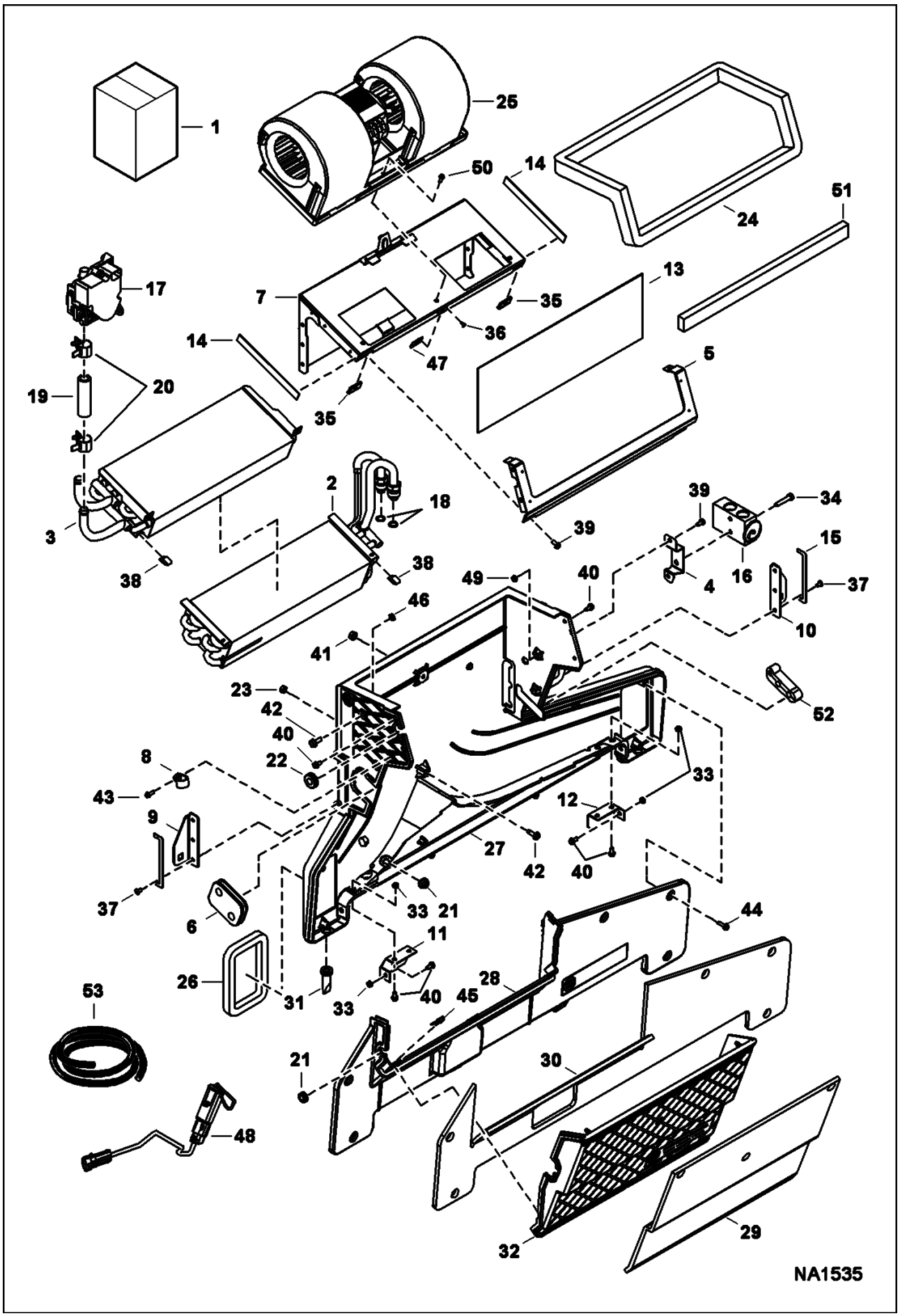

Page 384 - OSS# 2071408 - All rights reserved by Bobcat Company - 12/04/2009 - 07:23:36 - Produced by Ken Cook Co. with mediaioff

Ref No	Part Number	Description	Remarks	Serial Number	Qty
49	7010267	NUT, LOCK			2
50	7010265	BOLT			3
51	7010264	FOAM			1
52		SEAL	NAP - 8" (203.2 mm) long - Order Ref. 53		1
53	6677111	SEAL	bulk - sold per foot		x

Page 385 - OSS# 2071408 - All rights reserved by Bobcat Company - 12/04/2009 - 07:23:36 - Produced by Ken Cook Co. with mediaioff

HORN KIT
(Manual Controls, AHC & ACS)

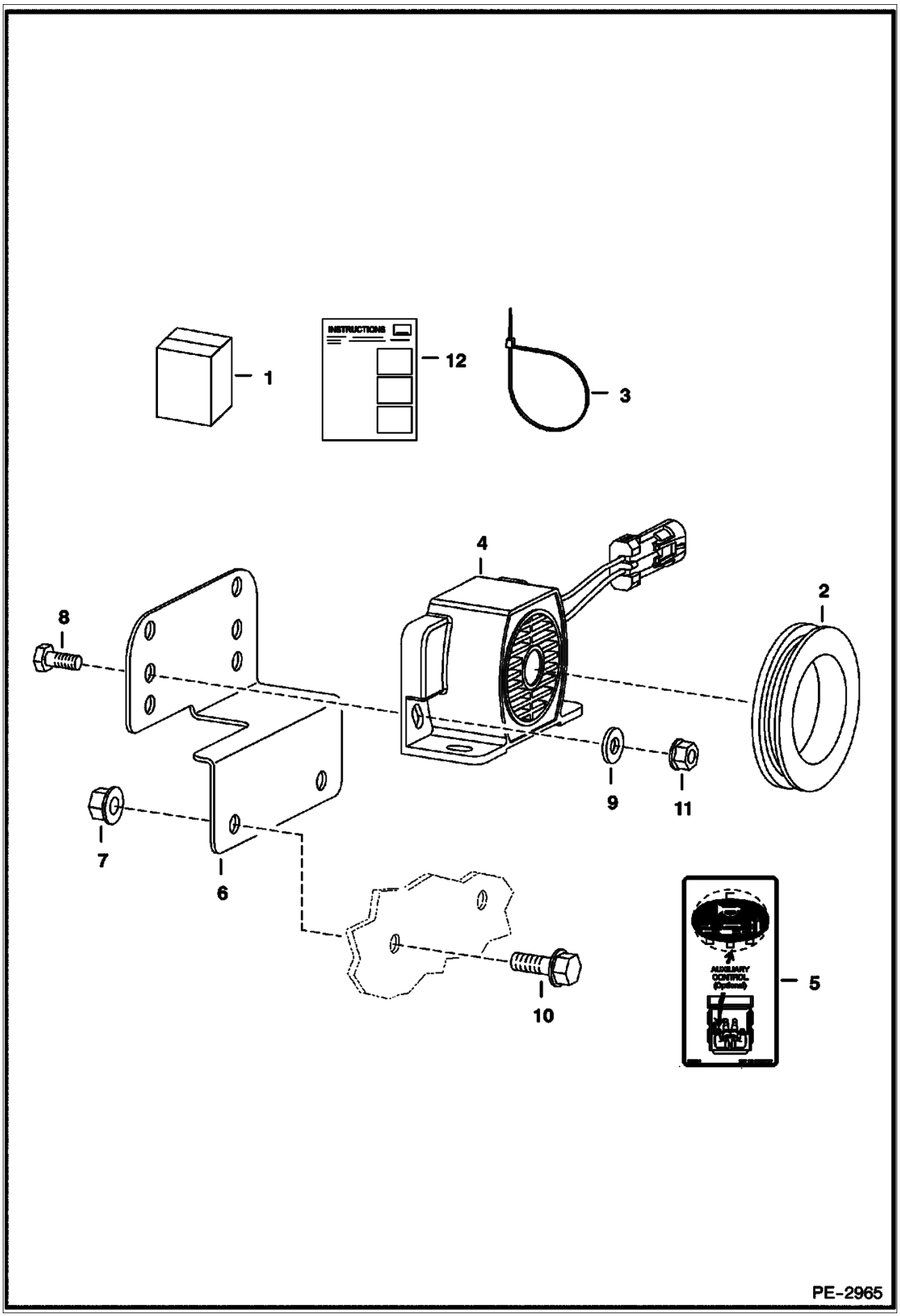

Page 386 - OSS# 2071408 - All rights reserved by Bobcat Company - 12/04/2009 - 07:23:36 - Produced by Ken Cook Co. with mediaioff

HORN KIT (Cont'd)
(Manual Controls, AHC & ACS)

Ref No	Part Number	Description	Remarks	Serial Number	Qty
1	7122028	KIT, HORN	horn - Ref. 2-12		1
2	6577545	GROMMET			1
3	6610510	TIE			3
4	7001044	HORN, ALARM	Was 6675099 [A]		1
5	6703727	DECAL	not in kit		1
6	6733970	MOUNT			1
7	83D5	NUT 5			2
8	17C410	BOLT 10			2
9	25E13	WASHER 5			2
10	35C514	BOLT			1
11	83D4	NUT 10			2
12	6904732	INSTRUCTIONS			1

Page 387 - OSS# 2071408 - All rights reserved by Bobcat Company - 12/04/2009 - 07:23:36 - Produced by Ken Cook Co. with mediaioff

HORN KIT
(Selectable Joystick Controls)

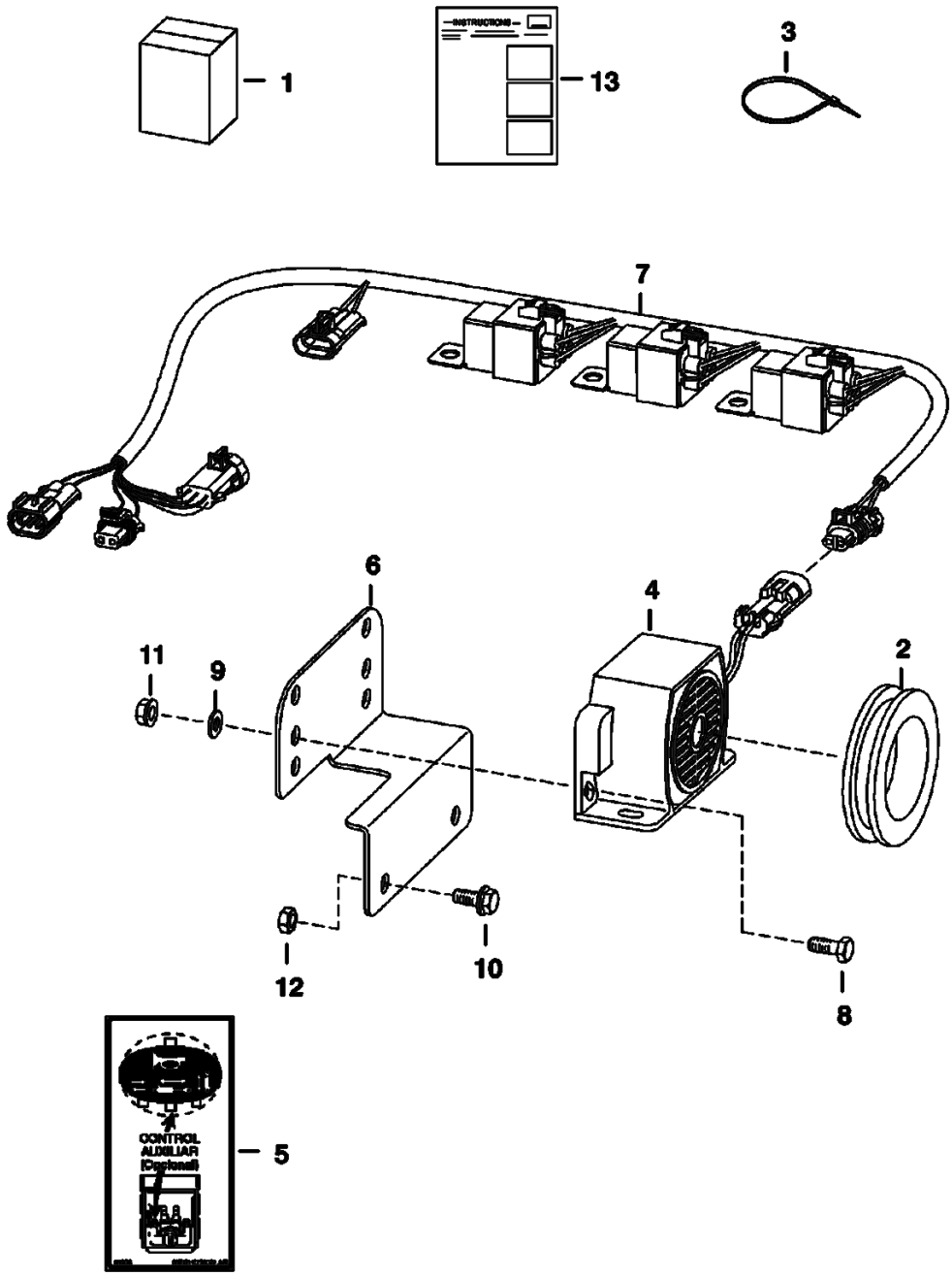

Page 388 - OSS# 2071408 - All rights reserved by Bobcat Company - 12/04/2009 - 07:23:36 - Produced by Ken Cook Co. with mediaioff

HORN KIT (Cont'd)
(Selectable Joystick Controls)

Ref No	Part Number	Description	Remarks	Serial Number	Qty
1	6732234	KIT	horn - Ref. 2-14		1
2	6577545	GROMMET			1
3	6610510	TIE			3
4	7001044	HORN, ALARM	Was 6675099 [A]		1
5	6703727	DECAL	horn/aux		1
6	6733970	MOUNT	alarm		1
7	6726662	HARNESS	Was 7151940 [B,D]		1
8	17C410	BOLT 10			2
9	25E13	WASHER 5			2
10	35C512	BOLT			2
11	83D4	NUT 10			2
12	83D5	NUT 5			2
13	6901691	INSTRUCTIONS			1

Page 389 - OSS# 2071408 - All rights reserved by Bobcat Company - 12/04/2009 - 07:23:36 - Produced by Ken Cook Co. with mediaioff

HOSE GUIDE KIT

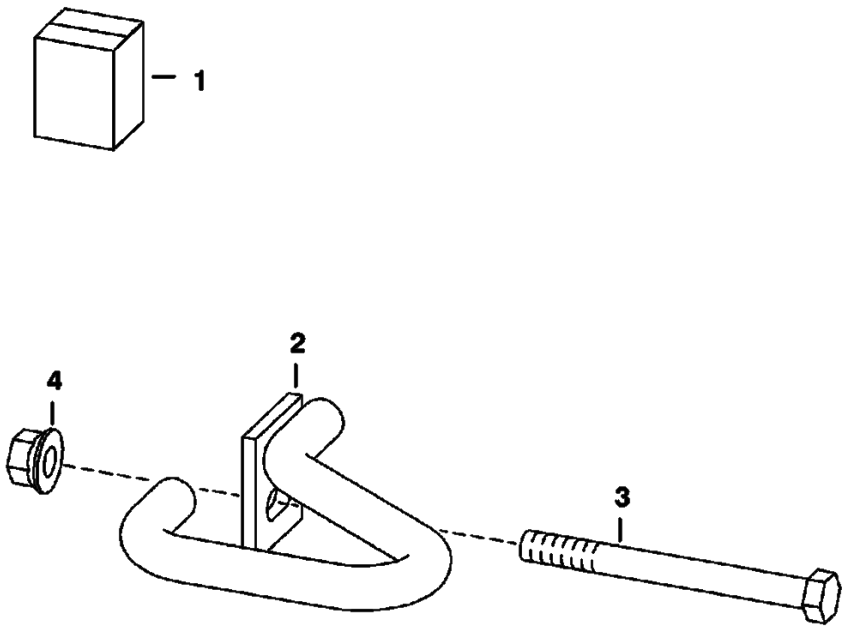

PE-3211

Page 390 - OSS# 2071408 - All rights reserved by Bobcat Company - 12/04/2009 - 07:23:36 - Produced by Ken Cook Co. with mediaioff

Ref No	Part Number	Description	Remarks	Serial Number	Qty
1	6816301	HOSE GUIDE KIT			1
2	6815995	HOSE GUIDE			1
3	1C888	BOLT			1
4	89D8	NUT			1

Page 391 - OSS# 2071408 - All rights reserved by Bobcat Company - 12/04/2009 - 07:23:36 - Produced by Ken Cook Co. with mediaioff

LIFT KIT
(Four Point)

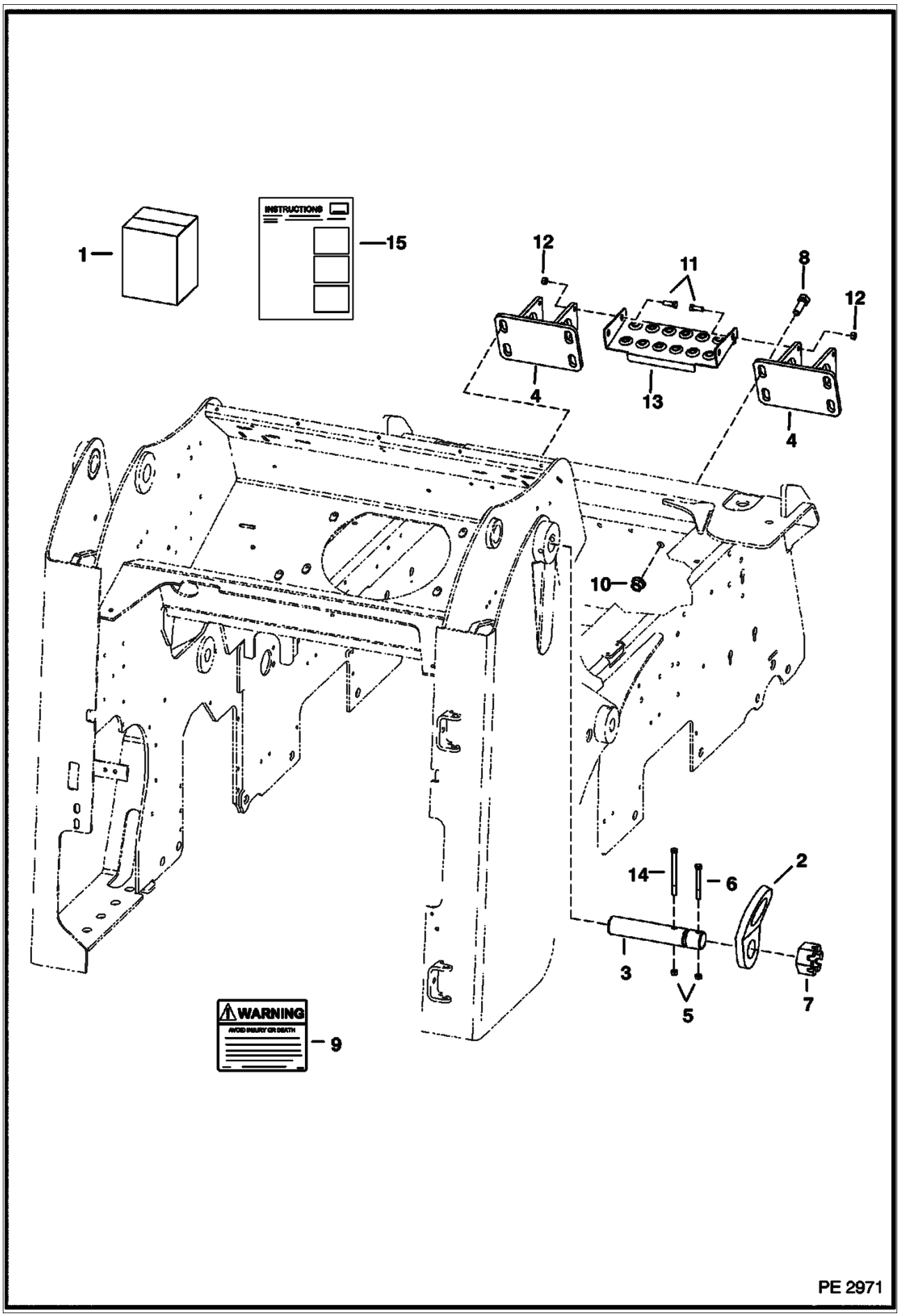

Page 392 - OSS# 2071408 - All rights reserved by Bobcat Company - 12/04/2009 - 07:23:36 - Produced by Ken Cook Co. with mediaioff

LIFT KIT (Cont'd)
(Four Point)

Ref No	Part Number	Description	Remarks	Serial Number	Qty
1	6732678	KIT	lift - Ref. 2-15		1
2	6726908	LIFT EYE			2
3	6732687	PIN			2
4	6734108	BRACKET			2
5	85D6	LOCK NUT			4
6	17C652	SCREW			2
7	4D28	NUT			2
8	17C1028	BOLT			8
9	6726423	DECAL			1
10	83D10	NUT 5			8
11	17C616	BOLT 5			4
12	95D6	NUT			4
13	6813078	STEP			1
14	17C672	BOLT	not in kit		4
15	6901772	INSTRUCTIONS			1

Page 393 - OSS# 2071408 - All rights reserved by Bobcat Company - 12/04/2009 - 07:23:36 - Produced by Ken Cook Co. with mediaioff

LIFT KIT
(Single Point)

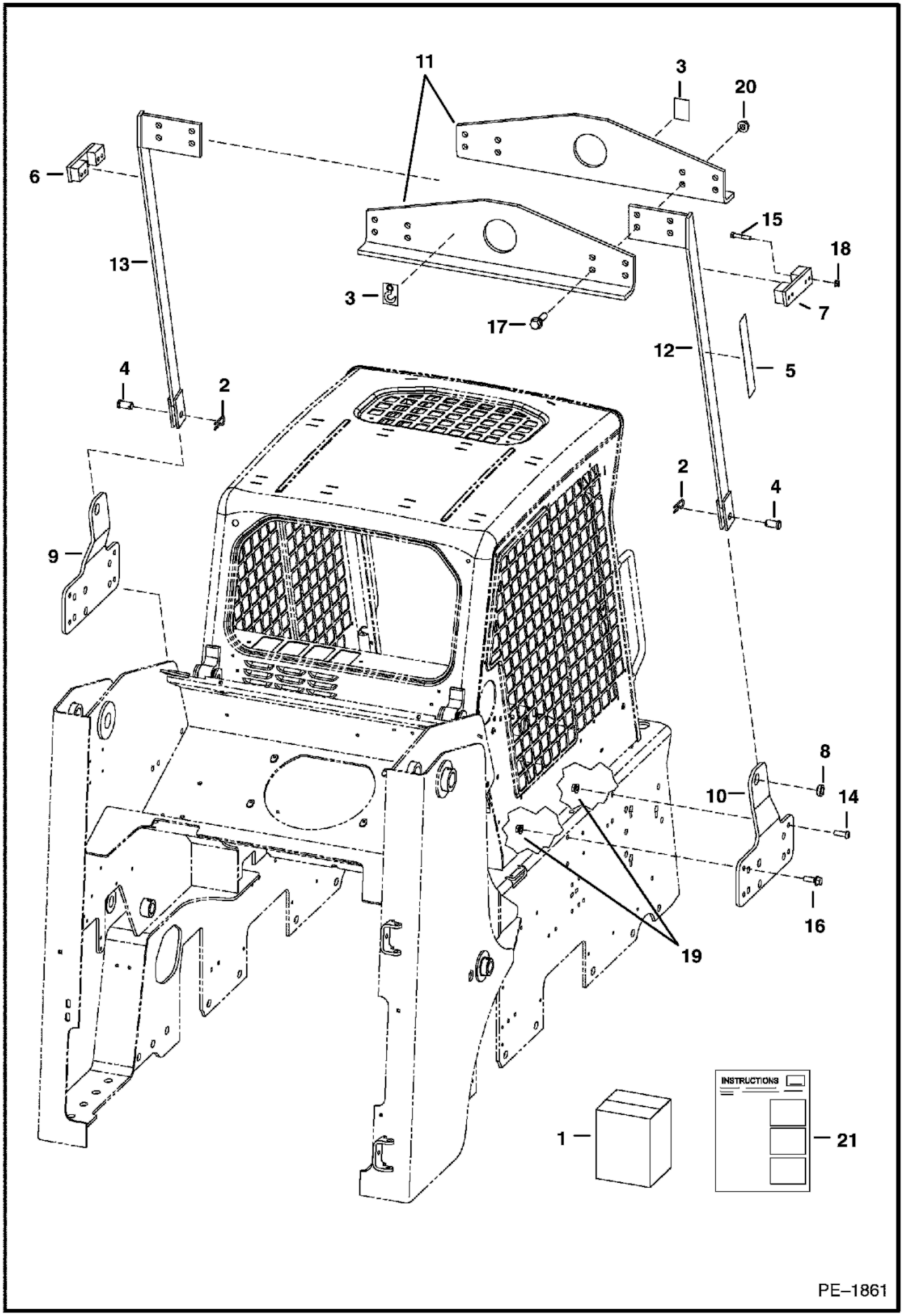

Page 394 - OSS# 2071408 - All rights reserved by Bobcat Company - 12/04/2009 - 07:23:36 - Produced by Ken Cook Co. with mediaioff

LIFT KIT (Cont'd)
(Single Point)

Ref No	Part Number	Description	Remarks	Serial Number	Qty
1		KIT	See Illustration LIFT KIT/ PE3394 - NAP - Ref. 2-21 - Order 7142001 lift kit - Can NOT use W/ 7121556 window rib brace - Was 6735279 [A]		1
2	1320075	COTTER PIN			2
3	6533898	DECAL	hook		2
4	6567838	PIN			2
5	6704786	DECAL	safety		2
6	6719184	MOUNT	LH		1
7	6719185	MOUNT	RH		1
8	6734560	BUSHING			2
9	6734627	MOUNT	LH		1
10	6734628	MOUNT	RH		1
11	6734657	ANGLE			2
12	6734666	ARM	RH		1
13	6734667	ARM	LH		1
14	6735282	SCREW	socket head		2
15	17C632	BOLT 5			8
16	31C824	BOLT 10			6
17	31C1036	SCREW			8
18	57D6	NUT 5			8
19	57D8	NUT 10			8
20	57D10	NUT			8
21	6900888	INSTRUCTIONS			1

Page 395 - OSS# 2071408 - All rights reserved by Bobcat Company - 12/04/2009 - 07:23:36 - Produced by Ken Cook Co. with mediaioff

LIFT KIT
(Single Point)

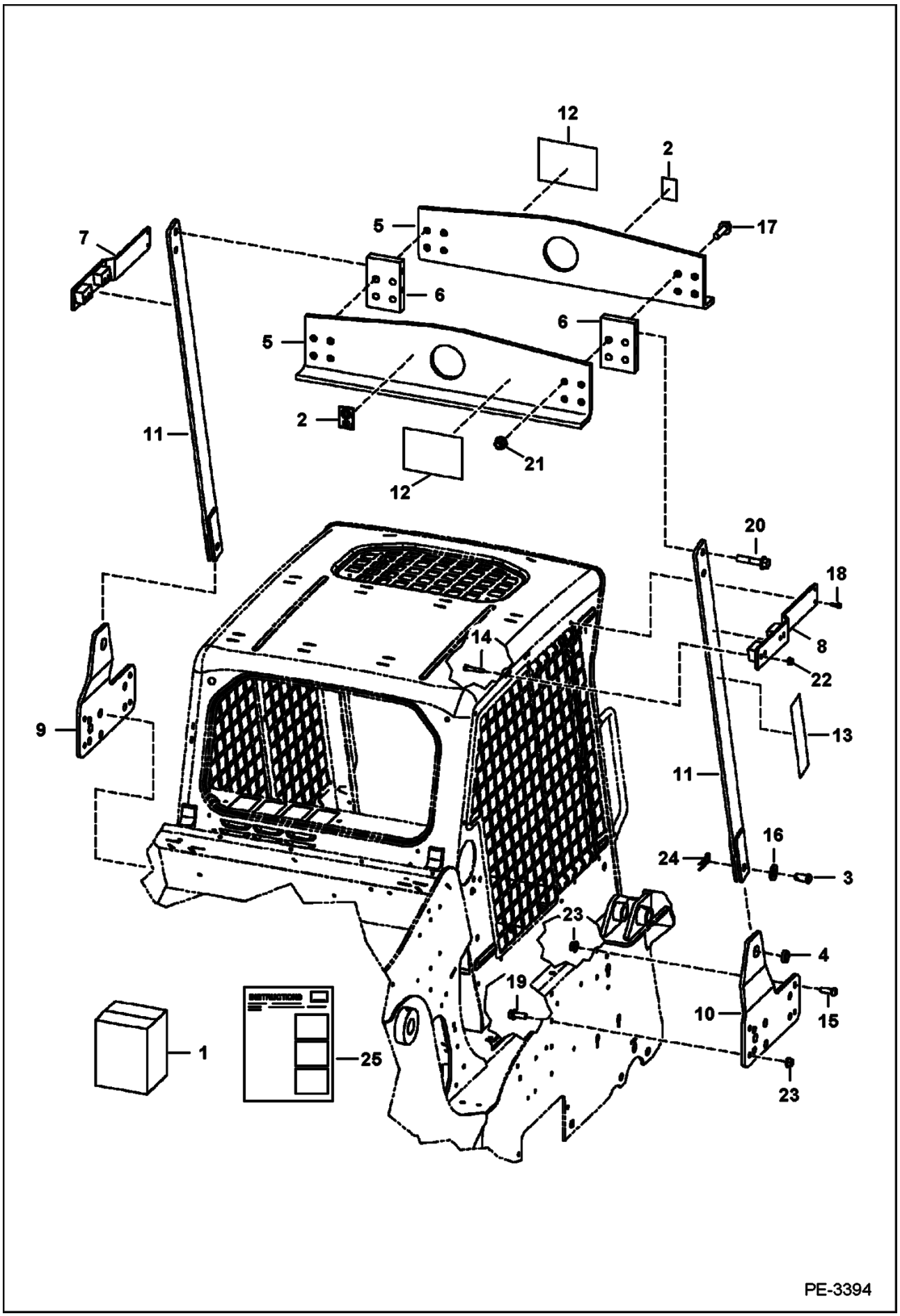

Page 396 - OSS# 2071408 - All rights reserved by Bobcat Company - 12/04/2009 - 07:23:36 - Produced by Ken Cook Co. with mediaioff

LIFT KIT (Cont'd)
(Single Point)

Ref No	Part Number	Description	Remarks	Serial Number	Qty
1	7142001	KIT			1
2	6533898	DECAL			2
3	6567838	PIN			2
4	6734560	BUSHING			2
5	7126679	PLATE			2
6	7126682	BLOCK			2
7	7126685	MOUNT			1
8	7126686	MOUNT			1
9	7126695	MOUNT			1
10	7126696	MOUNT			1
11	7126700	ARM			2
12	7142139	DECAL	service		2
12	7142140	DECAL	service - no text		2
13	7142141	DECAL	warning		2
13	7142142	DECAL	warning - no text		2
14	17C632	BOLT 5			8
15	25G824	BOLT			2
16	27E12	WASHER			2
17	31C1044	BOLT			6
18	31C412	BOLT			2
19	31C824	BOLT 10			6
20	49C1048	BOLT			4
21	53D10	NUT			6
22	53D6	NUT			8
23	53D8	NUT			8
24	1320075	COTTER PIN			2
25	6986593	INSTRUCTIONS			1

Page 397 - OSS# 2071408 - All rights reserved by Bobcat Company - 12/04/2009 - 07:23:36 - Produced by Ken Cook Co. with mediaioff

LIGHT KIT

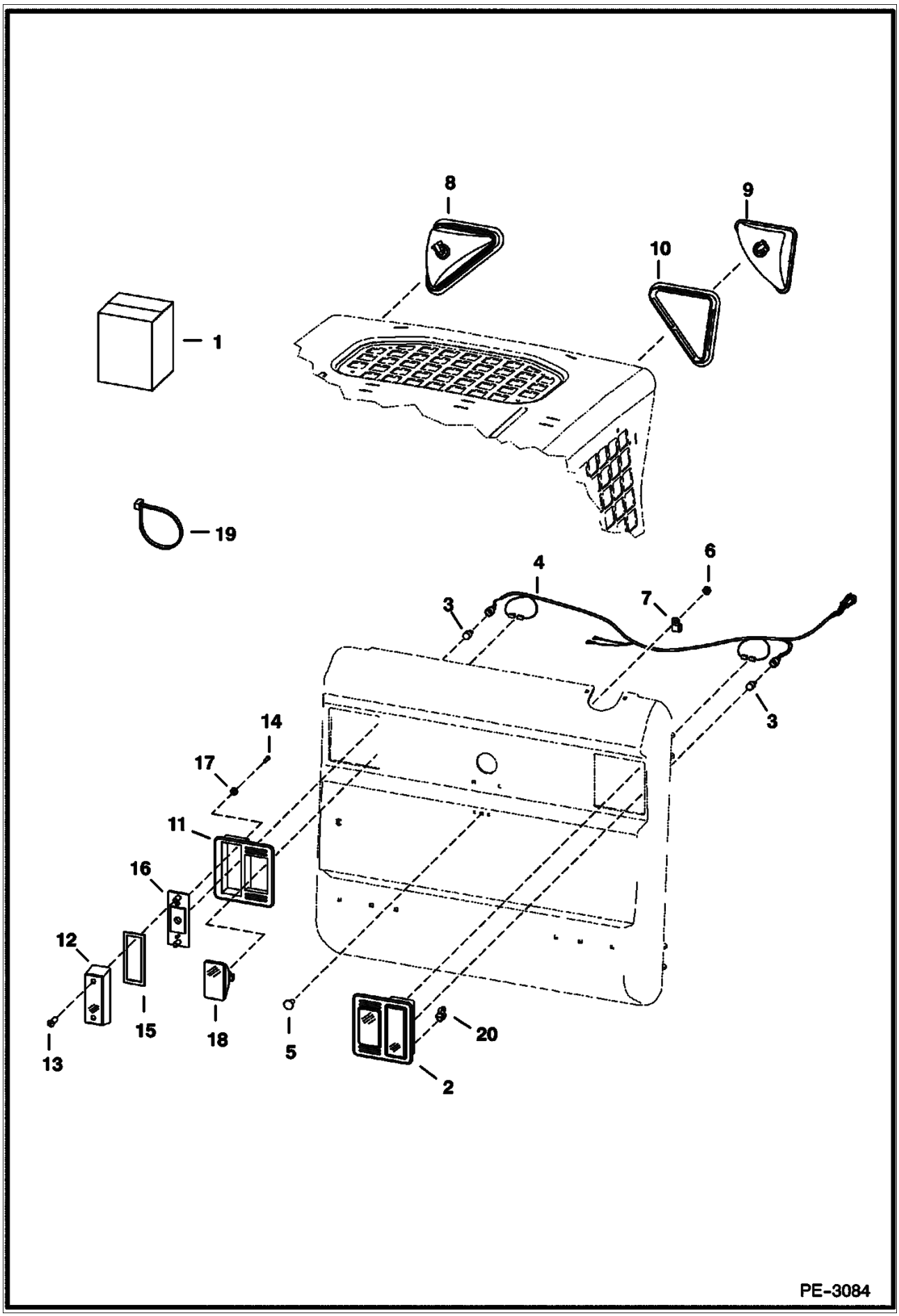

Page 398 - OSS# 2071408 - All rights reserved by Bobcat Company - 12/04/2009 - 07:23:36 - Produced by Ken Cook Co. with mediaioff

Ref No	Part Number	Description	Remarks	Serial Number	Qty
1		KIT	NAP - Order components		1
2	6670284	LIGHT ASSY	rear		2
2	7104670	LIGHT	rear - RH European		1
2	7104671	LIGHT	rear - LH European		1
3	6649481	LIGHT, WEDGE BASE			2
4	7109403	HARNESS			1
4	7109404	HARNESS	european		1
5	37C512	BOLT			4
6	95D5	NUT			4
7	30H42	CLAMP			1
8		LIGHT ASSY	NAP - RH - Ref. 9 & 10		1
8		LIGHT ASSY	NAP - LH - Ref. 9 & 10		1
9	6674401	HOUSING	RH		1
9	6675336	BULB	55 watt		1
9	6674400	HOUSING	LH		1
9	6675336	BULB	55 watt		1
10	6674402	MOUNT, LIGHT			2
11	6672279	MOUNT, LIGHT RUBBER	rubber		2
12	6672276	LENS, LIGHT RED	red		2
13	6672274	SCREW			4
14	6672273	SCREW			2
15	6672275	GASKET			2
16	6672277	BRACKET			2
17	6672272	WASHER			4
18	6661353	LIGHT ASSY	W/bulb - white work		2
18	898731	1156 BULB			2
19	6624289	TIE STRAP			1
20	6688637	MOUNT	mounts European rear light assys		2

Page 399 - OSS# 2071408 - All rights reserved by Bobcat Company - 12/04/2009 - 07:23:36 - Produced by Ken Cook Co. with mediaioff

MAINTENANCE PLATFORM KIT

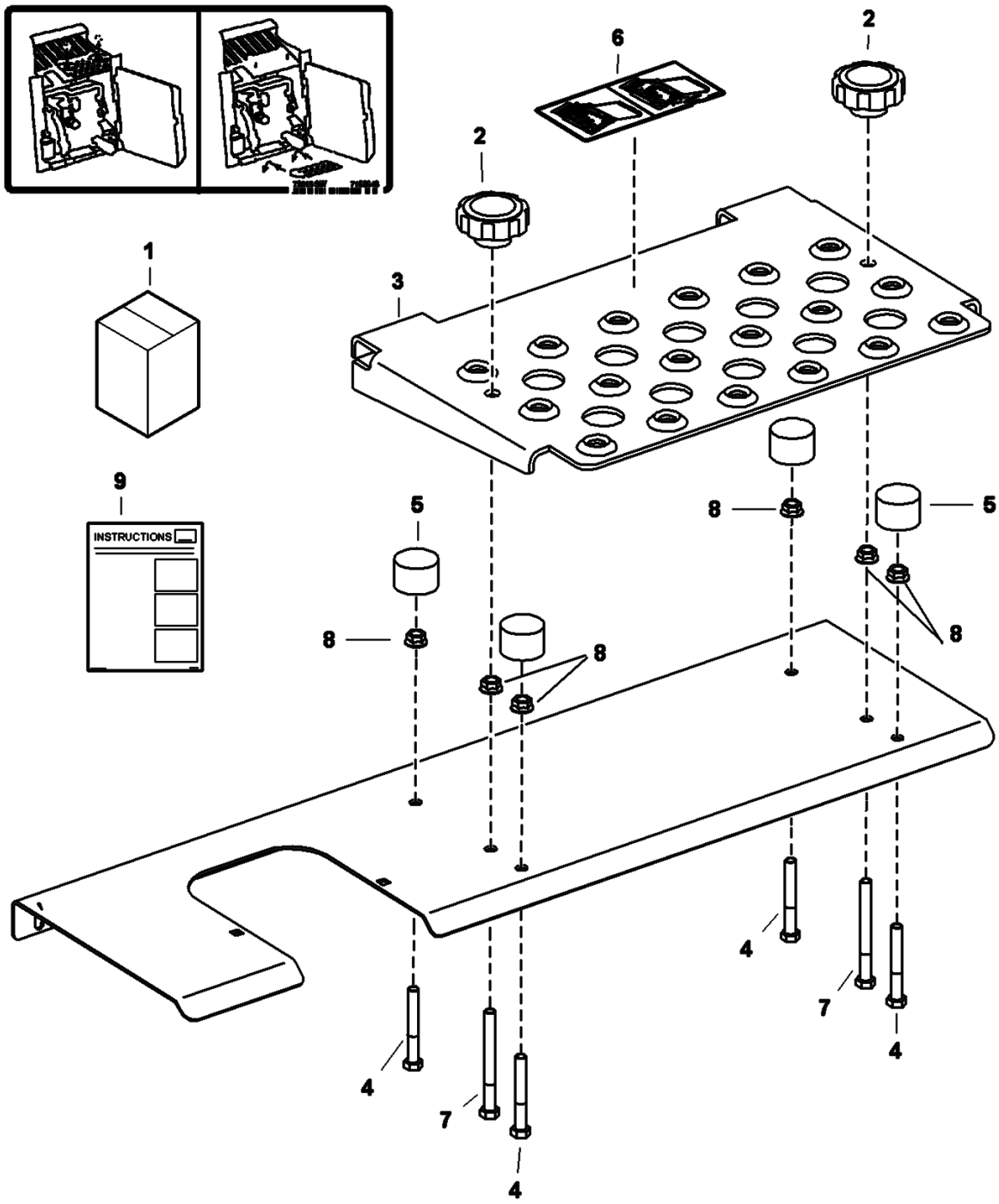

Page 400 - OSS# 2071408 - All rights reserved by Bobcat Company - 12/04/2009 - 07:23:36 - Produced by Ken Cook Co. with mediaioff

Ref No	Part Number	Description	Remarks	Serial Number	Qty
1	7161610	KIT, MAINTENANCE PATFORM			1
2	6684932	KNOB			2
3	7156771	PLATFORM, MAINTENANCE			1
4	7156722	SCREW			4
5	7156809	BUMPER			4
6	7162648	DECAL			1
7	7164618	SCREW			2
8	55D6	NUT			6
9	6987268	INSTRUCTIONS			1

Page 401 - OSS# 2071408 - All rights reserved by Bobcat Company - 12/04/2009 - 07:23:36 - Produced by Ken Cook Co. with mediaioff

PEDAL EXTENDERS

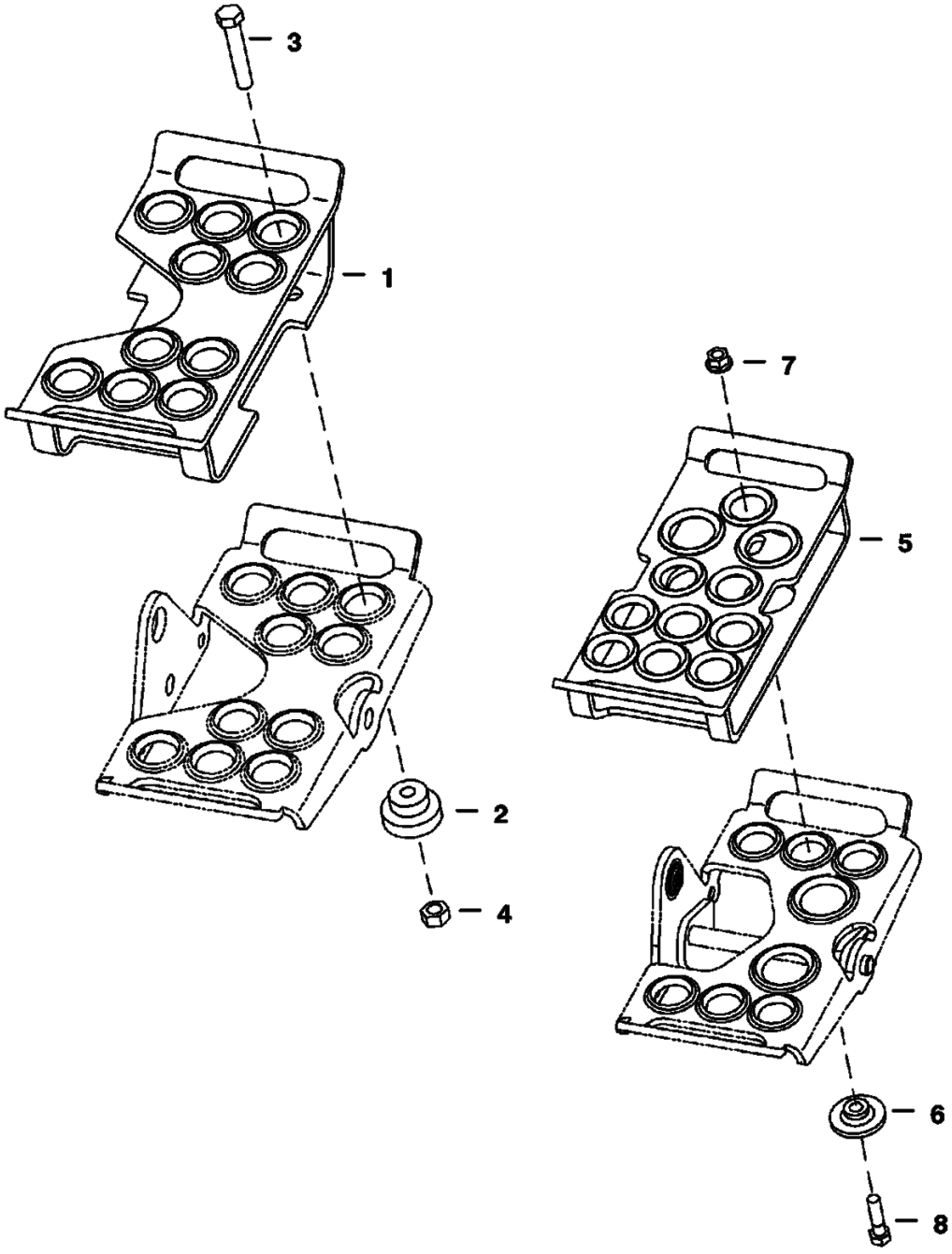

Page 402 - OSS# 2071408 - All rights reserved by Bobcat Company - 12/04/2009 - 07:23:36 - Produced by Ken Cook Co. with mediaioff

Ref No	Part Number	Description	Remarks	Serial Number	Qty
1		PEDAL	NAP - extender - Order Ref. 5 & (3) each of Ref. 6-8 - Was 6713115 [A]		2
2	6713116	BUSHING			8
3	17C516	BOLT			8
4	85D5	NUT 5			8
5	7131233	PEDAL			2
6	7131236	BUSHING			6
7	89D5	NUT			6
8	17C520	BOLT 5			6

Page 403 - OSS# 2071408 - All rights reserved by Bobcat Company - 12/04/2009 - 07:23:36 - Produced by Ken Cook Co. with mediaioff

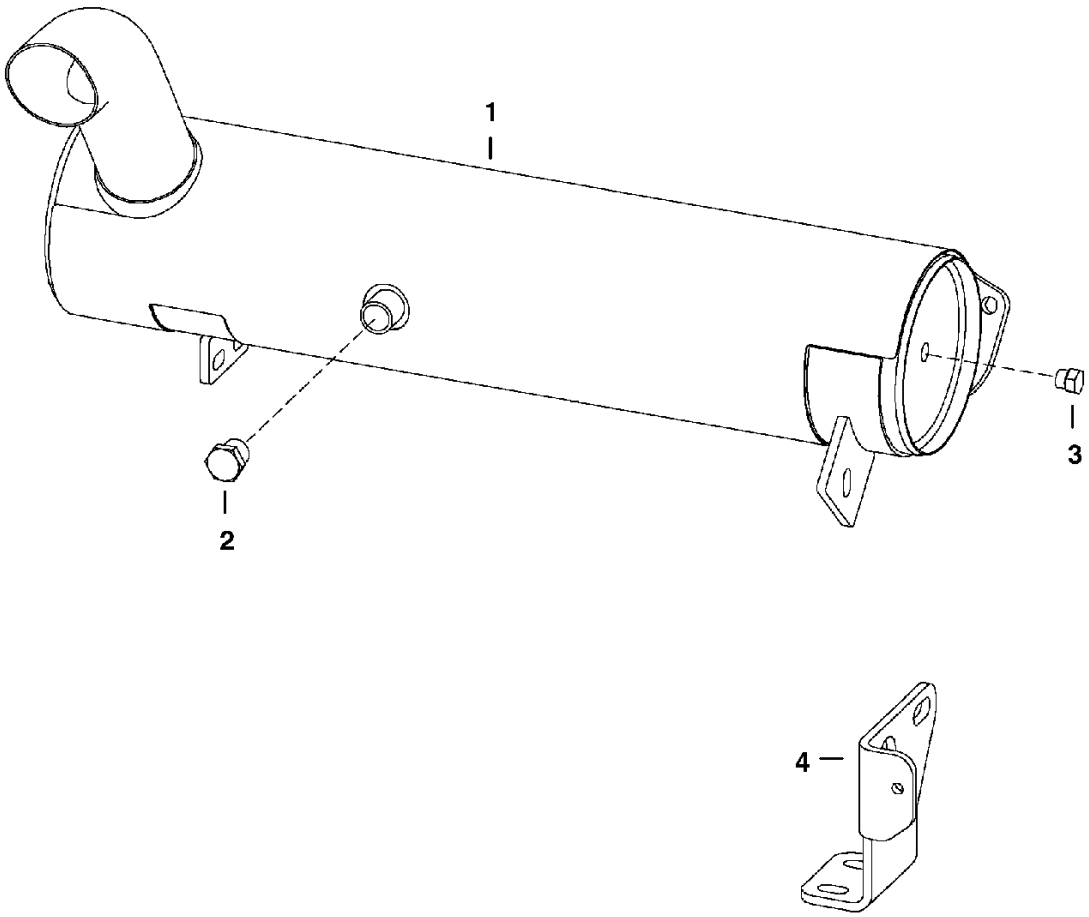

Page 404 - OSS# 2071408 - All rights reserved by Bobcat Company - 12/04/2009 - 07:23:36 - Produced by Ken Cook Co. with mediaioff

Ref No	Part Number	Description	Remarks	Serial Number	Qty
1	6687886	MUFFLER, PURIFIER	purifier - includes Ref. 2 & 3 - round - used W/ shield 6730753 - also Order Ref. 4		1
2	6661062	PLUG	3/8" - brass		1
3	6659543	PLUG	1/8" - brass		1
4	6730753	MOUNT			1

Page 405 - OSS# 2071408 - All rights reserved by Bobcat Company - 12/04/2009 - 07:23:36 - Produced by Ken Cook Co. with mediaioff

POWER BOB-TACH
(Kit) (Rear Mounted Cylinder Ports)

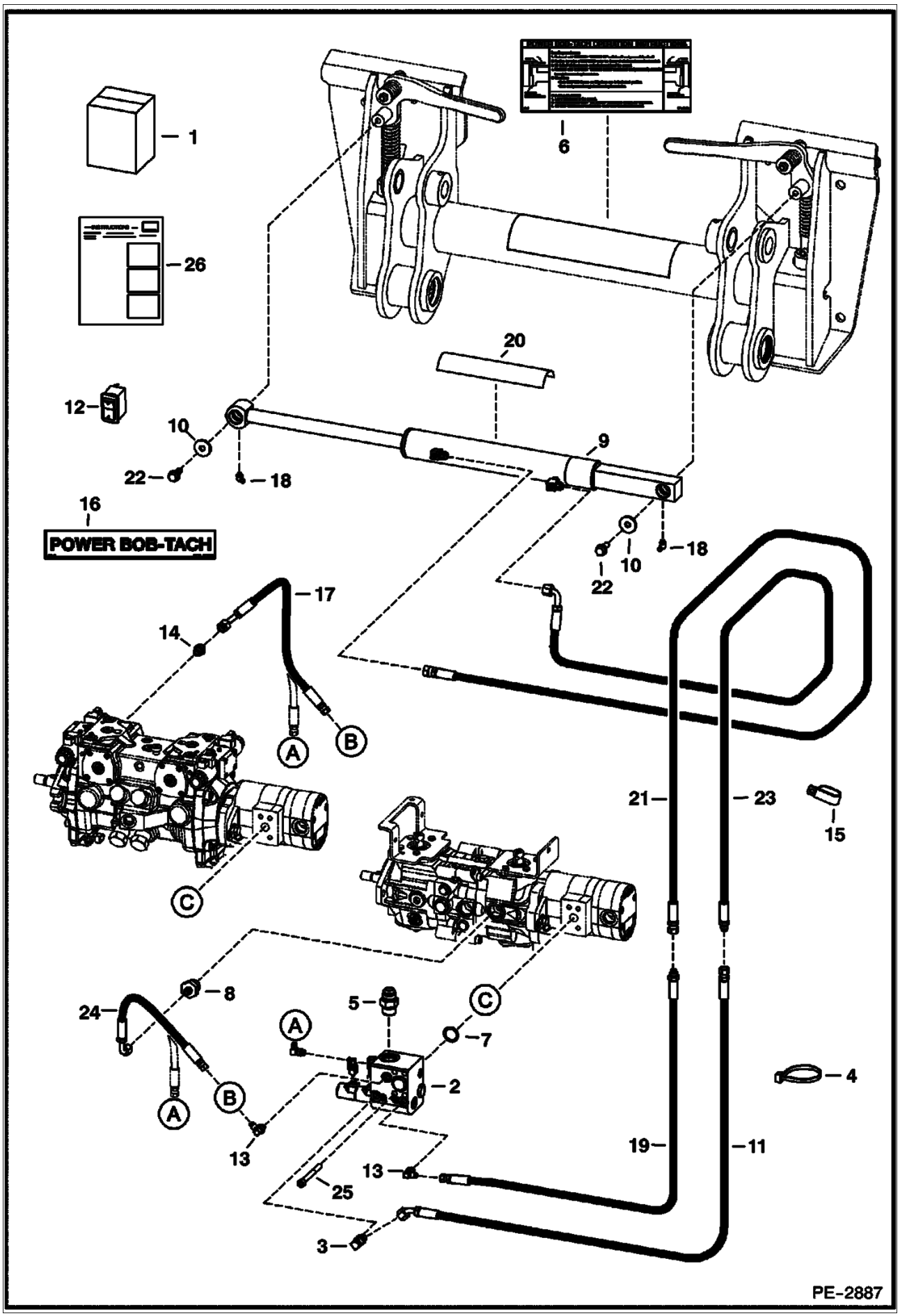

Page 406 - OSS# 2071408 - All rights reserved by Bobcat Company - 12/04/2009 - 07:23:36 - Produced by Ken Cook Co. with mediaioff

Ref No	Part Number	Description	Remarks	Serial Number	Qty
1		KIT, POWER BOB-TACH	See Illustration POWER BOB-TACH/ PE3798 - NAP - Order 7121116 kit - If loader is not equipped W/deluxe cab accessories harness, heater, A/C, cab enclosure dooe kit, rear wiper kit or any of the following cab harness connected rotating beacon, 4-way flasher or strobe light, Also Order 7116260 deluxe cab accessories harness - if loader is not equipped W/high flow or A/C, Also Order 7110160 deluxe fuel harness - Was 7121116 [A]	5307 13759 & Bel	1
1		KIT, POWER BOB-TACH	See Illustration POWER BOB-TACH/ PE3798 - NAP - Order 7121116 kit - If loader is not equipped W/deluxe cab accessories harness, heater, A/C, cab enclosure dooe kit, rear wiper kit or any of the following cab harness connected rotating beacon, 4-way flasher or strobe light, Also Order 7116260 deluxe cab accessories harness - if loader is not equipped W/high flow or A/C, Also Order 7110160 deluxe fuel harness - Was 7121116 [A]	5308 11510 & Bel	1
1		KIT, POWER BOB-TACH	See Illustration POWER BOB-TACH/ PE3798 - NAP - Order 7121116 kit - If loader is not equipped W/deluxe cab accessories harness, heater, A/C, cab enclosure dooe kit, rear wiper kit or any of the following cab harness connected rotating beacon, 4-way flasher or strobe light, Also Order 7143071 deluxe cab accessories harness - if loader is not equipped W/high flow or A/C, Also Order 7110160 deluxe fuel harness - Was 7121116 [A]	5307 13760 & Above	1
1		KIT, POWER BOB-TACH	See Illustration POWER BOB-TACH/ PE3798 - NAP - Order 7121116 kit - If loader is not equipped W/deluxe cab accessories harness, heater, A/C, cab enclosure dooe kit, rear wiper kit or any of the following cab harness connected rotating beacon, 4-way flasher or strobe light, Also Order 7143071 deluxe cab accessories harness - if loader is not equipped W/high flow or A/C, Also Order 7110160 deluxe fuel harness - Was 7121116 [A]	5308 11511 & Above	1
2		VALVE	See Illustration POWER BOB-TACH/ MS1835		1
3	17KB606	ELBOW			1
3	79K6	O RING 10			1
4	6624289	TIE STRAP			2
5	15KB1212	ADAPTER			1
5	79K12	O RING 10			1
6	6725907	DECAL			1
7	55K214	O-RING			1
8	15KB612	ADAPTER	for loaders equipped W/manual controls, AHC or ACS		1
8	79K12	O RING 10			1
9		CYLINDER	See Illustration POWER BOB-TACH/ PE1064		1
10	619021	WASHER, 5			2
11	6735475	HOSE			1
12	6676732	SWITCH	vertical		1
13	17KB404	ELBOW			2
13	79K4	O RING 10			2
14	15KB406	ADAPTER	for loaders equipped W/SJC		1
14	79K6	O RING 10			1
15	31H42	CLIP			1
16	6719888	DECAL			1

Page 407 - OSS# 2071408 - All rights reserved by Bobcat Company - 12/04/2009 - 07:23:36 - Produced by Ken Cook Co. with mediaioff

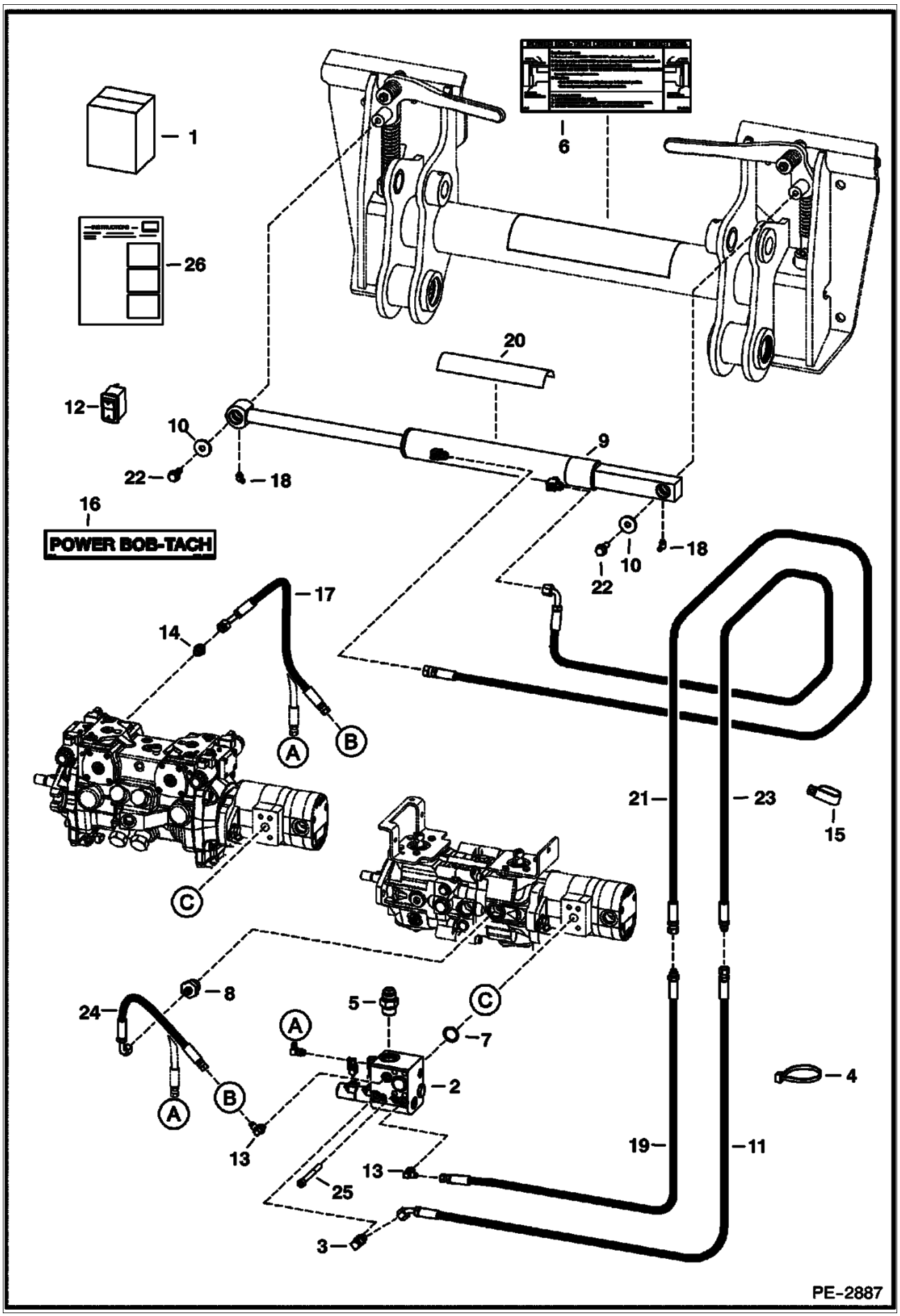

Page 408 - OSS# 2071408 - All rights reserved by Bobcat Company - 12/04/2009 - 07:23:36 - Produced by Ken Cook Co. with mediaioff

Ref No	Part Number	Description	Remarks	Serial Number	Qty
17	7145675	HOSE	for loaders equipped W/SJC - 32" (812,8 mm) long - Was 6701854 [A]		1
18	12H25	FITTING			2
19	6726987	HOSE			1
20	6555341	SAFETY TREAD	safety		1
21	6733630	HOSE			1
22	35C612	BOLT			2
23	6733629	HOSE, HYD ASSY			1
24	6806403	HOSE	16" (406,4 mm) long - manual controls		1
25	73G656	SCREW			4
26	6904718	INSTRUCTIONS	Was 6902361 [B,D]		1

Page 409 - OSS# 2071408 - All rights reserved by Bobcat Company - 12/04/2009 - 07:23:36 - Produced by Ken Cook Co. with mediaioff

POWER BOB-TACH
(Kit) (Bottom Mounted Cylinder Ports)

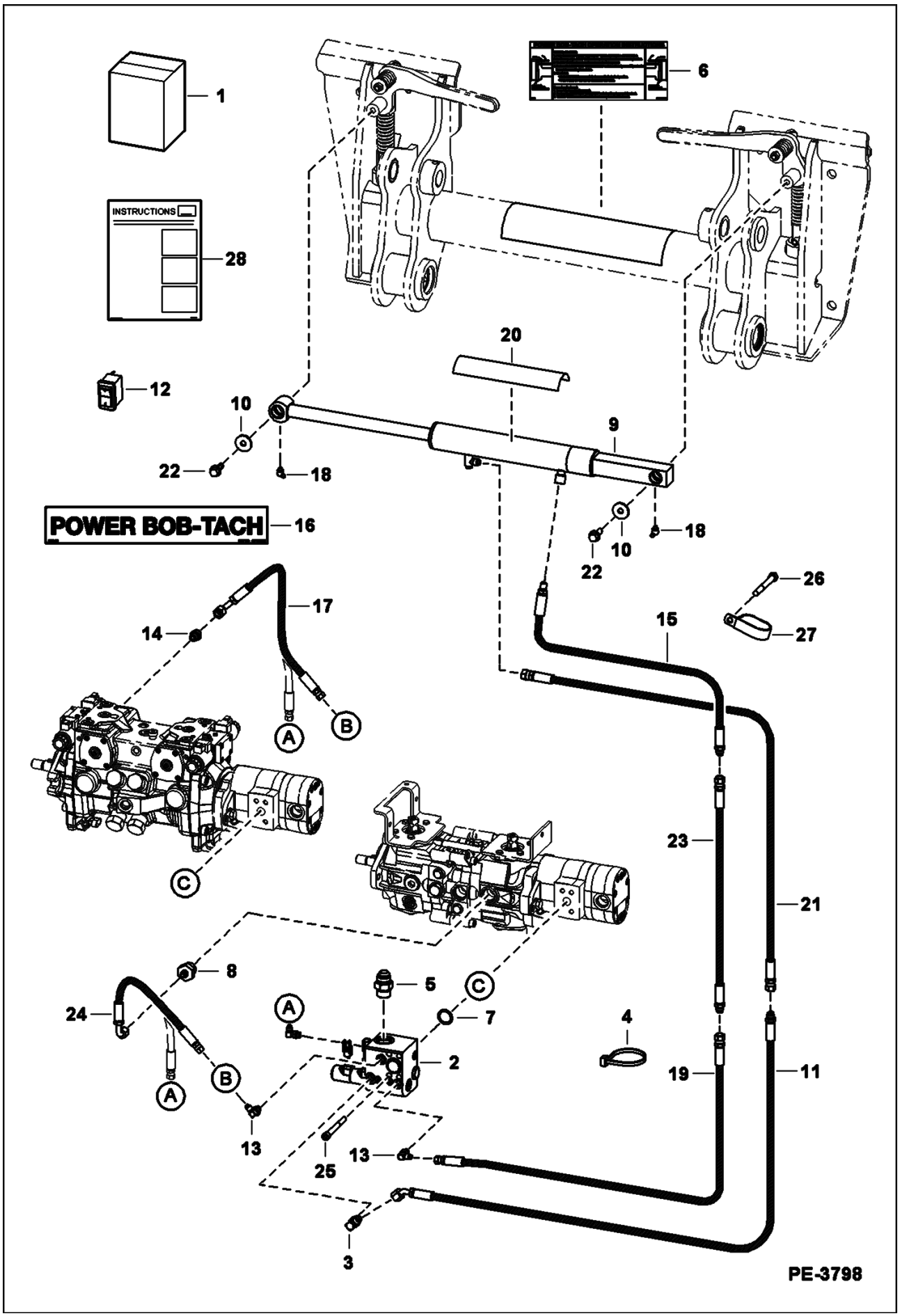

Page 410 - OSS# 2071408 - All rights reserved by Bobcat Company - 12/04/2009 - 07:23:36 - Produced by Ken Cook Co. with mediaioff

POWER BOB-TACH (Cont'd)
(Kit) (Bottom Mounted Cylinder Ports)

Ref No	Part Number	Description	Remarks	Serial Number	Qty
1	7121116	KIT, POWER BOB-TACH	Ref. 2-28 - if loader is not equipped W/high flow hydraulics or A/C, Also Order 7110160 deluxe fuel harness		1
2		VALVE	See Illustration POWER BOB-TACH/ MS1835		1
3	17KB606	ELBOW			1
3	79K6	O RING 10			1
4	6624289	TIE STRAP			2
5	15KB1212	ADAPTER			1
5	79K12	O RING 10			1
6	6725907	DECAL			1
7	55K214	O-RING			1
8	15KB612	ADAPTER	for loaders equipped W/manual controls		1
8	79K12	O RING 10			1
9		CYLINDER	See Illustration POWER BOB-TACH/ PE3799		1
10	619021	WASHER, 5			2
11	6735475	HOSE			1
12	6676732	SWITCH	vertical		1
13	17KB404	ELBOW			2
13	79K4	O RING 10			2
14	15KB406	ADAPTER	for loaders equipped W/SJC		1
14	79K6	O RING 10			1
15	7161047	HOSE, HYD			1
16	6719888	DECAL			1
17	7145675	HOSE	for loaders equipped W/SJC - 32" (812,8 mm) long - Was 6701854 [A]		1
18	12H25	FITTING			2
19	6726987	HOSE			1
20	6555341	SAFETY TREAD	safety		1
21	6733630	HOSE			1
22	35C612	BOLT			2
23	7161095	HOSE, HYD			1
24	6806403	HOSE	16" (406,4 mm) long		1
25	73G656	SCREW			4
26	31H49	CLAMP			1
27	84G3712	BOLT			1
28	6904718	INSTRUCTIONS			1

Page 411 - OSS# 2071408 - All rights reserved by Bobcat Company - 12/04/2009 - 07:23:36 - Produced by Ken Cook Co. with mediaioff

POWER BOB-TACH
(Cylinder) (Rear Mounted Ports)

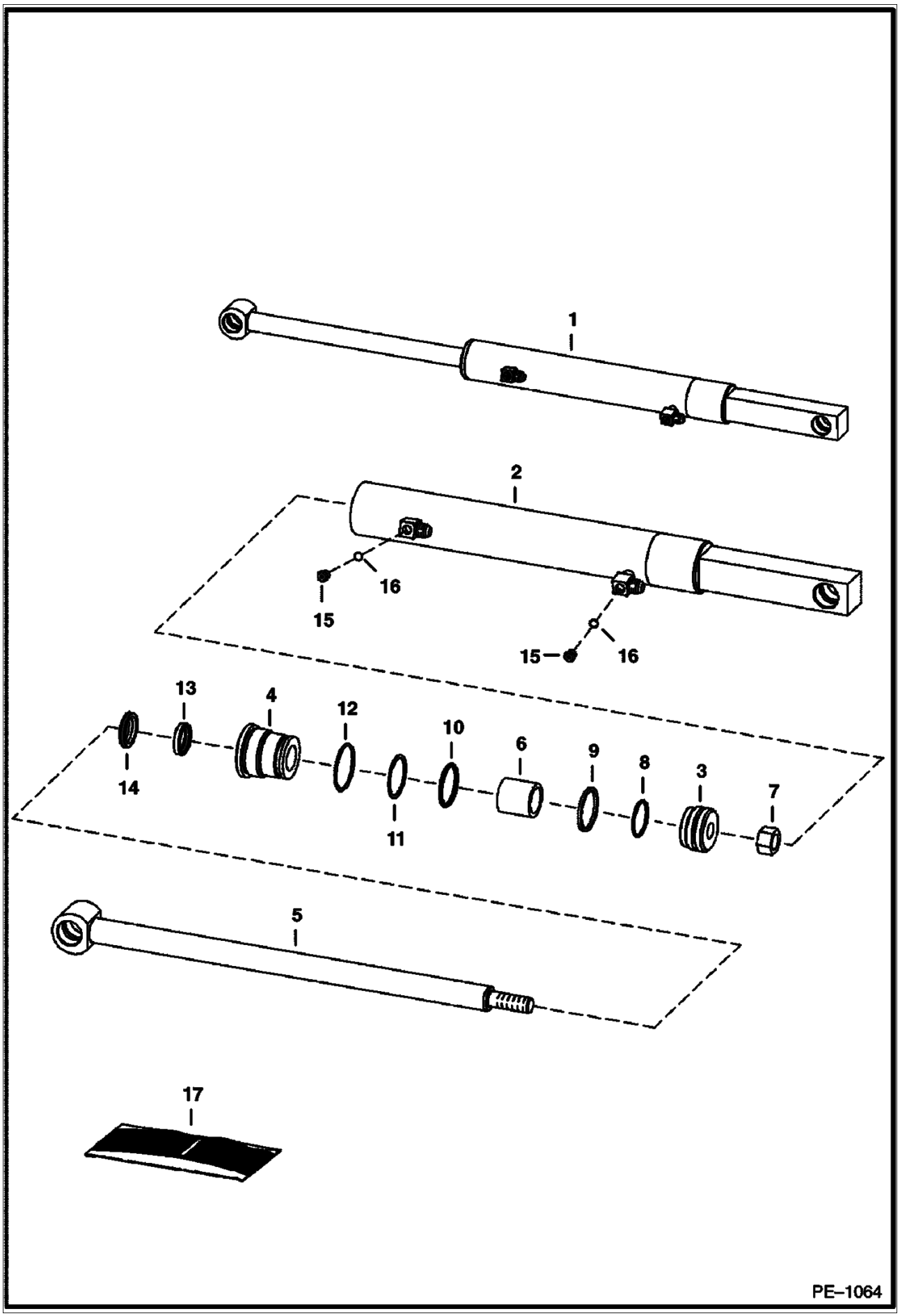

Page 412 - OSS# 2071408 - All rights reserved by Bobcat Company - 12/04/2009 - 07:23:36 - Produced by Ken Cook Co. with mediaioff

POWER BOB-TACH (Cont'd)
(Cylinder) (Rear Mounted Ports)

Ref No	Part Number	Description	Remarks	Serial Number	Qty
1	6810611	CYLINDER, POWER BOB-TACH	Ref. 2-16		1
2	6810349	CASE	1.75" (44,45 mm) ID		1
3	6586543	PISTON			1
4	6586542	HEAD			1
5	6810612	SHAFT, ROD CYL POWER BOB-TACH	1" (25,4 mm) od - 18.6" (472,4 mm) long - w/.25" grease zerk hole		1
6	6810356	SPACER			1
7	92D10	NUT			1
8	25K30110	O RING 10	Was 54K30110 [B]		1
9	6532453	RING			1
10	54K40116	O-RING			1
11	73K222	RING	back-up		1
12	58K132	O'RING			1
13	6667323	SEAL	rod		1
14	6666542	SEAL	wiper		1
15	90KV2	PLUG	W/Ref. 16 - tapered boss face - allen socket head		2
15	6812170	PLUG	W/Ref. 16 - flat boss face - hex head		2
16	95K3	O'RING	tapered boss face		x
16	75K3	O-RING	flat boss face		x
17	7138014	SEAL KIT	Ref. 7-14 - Was 6803473 [A]		1

Page 413 - OSS# 2071408 - All rights reserved by Bobcat Company - 12/04/2009 - 07:23:36 - Produced by Ken Cook Co. with mediaioff

POWER BOB-TACH
(Cylinder) (Bottom Mounted Ports)

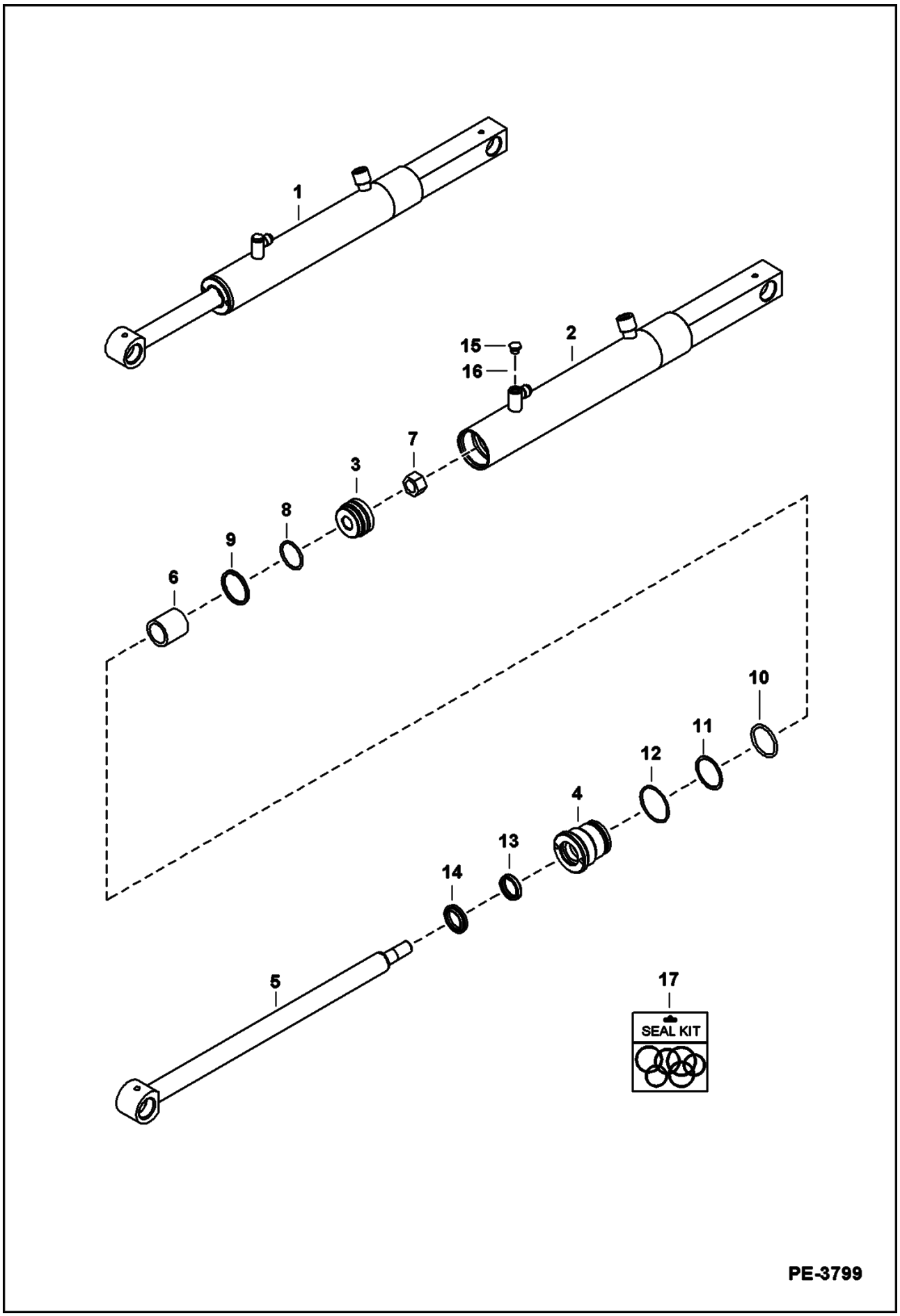

Page 414 - OSS# 2071408 - All rights reserved by Bobcat Company - 12/04/2009 - 07:23:36 - Produced by Ken Cook Co. with mediaioff

POWER BOB-TACH (Cont'd)
(Cylinder) (Bottom Mounted Ports)

Ref No	Part Number	Description	Remarks	Serial Number	Qty
1	7160395	CYLINDER, POWER BOB-TACH	Ref. 2-16		1
2	7160396	CASE	1.75" (44,45 mm) ID		1
3	6586543	PISTON			1
4	6586542	HEAD			1
5	6810612	SHAFT, ROD CYL POWER BOB-TACH	1" (25,4 mm) od - 18.6" (472,4 mm) long - w/.25" grease zerk hole		1
6	6810356	SPACER			1
7	92D10	NUT			1
8	54K30110	O-RING			1
9	6532453	RING			1
10	54K40116	O-RING			1
11	73K222	RING	back-up		1
12	58K132	O'RING			1
13	6667323	SEAL	rod		1
14	6666542	SEAL	wiper		1
15	6812170	PLUG	W/Ref. 16 - flat boss face - hex head		1
16	75K3	O-RING	flat boss face		1
17	7138014	SEAL KIT	Ref. 7-14		1

Page 415 - OSS# 2071408 - All rights reserved by Bobcat Company - 12/04/2009 - 07:23:36 - Produced by Ken Cook Co. with mediaioff

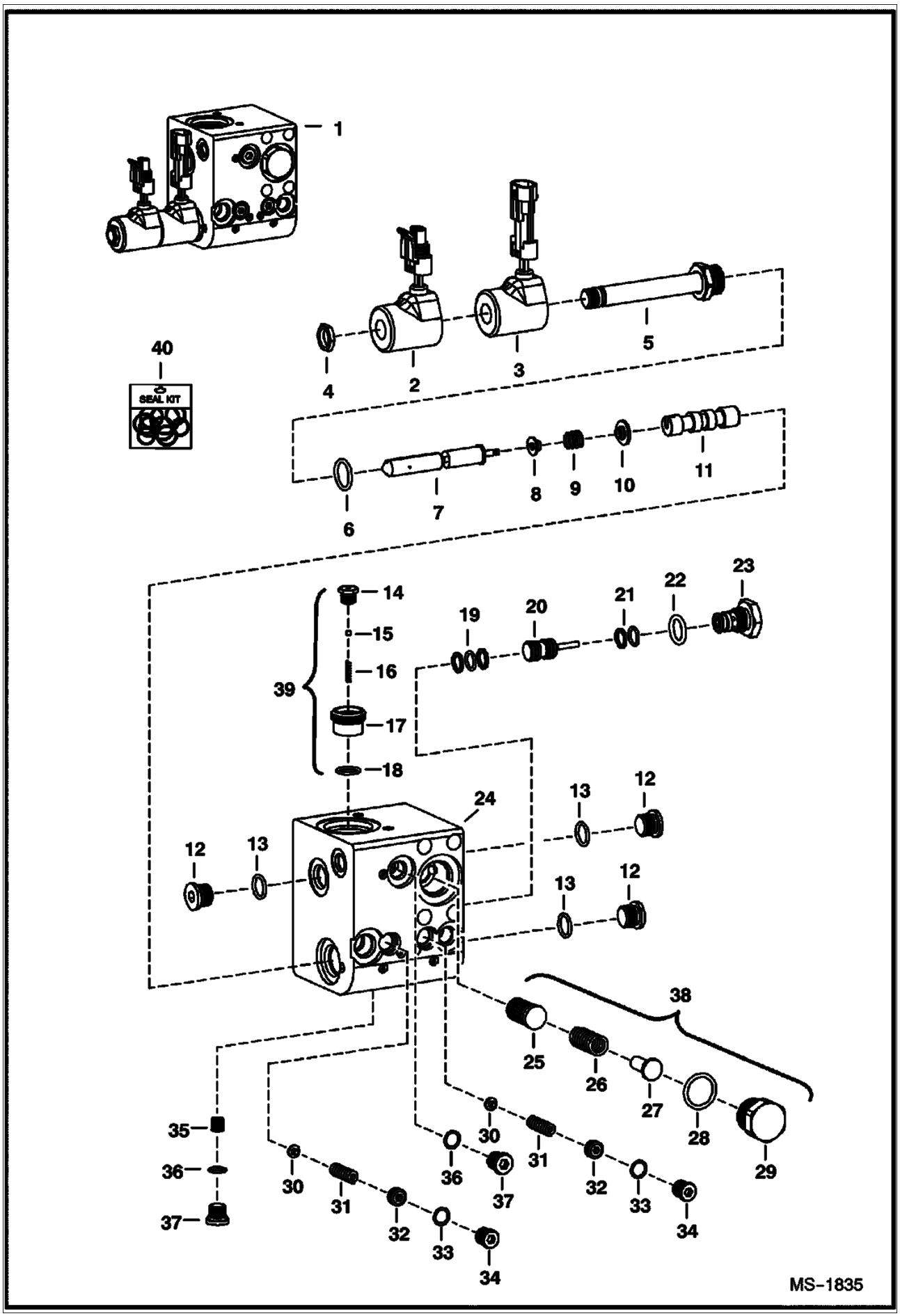

Page 416 - OSS# 2071408 - All rights reserved by Bobcat Company - 12/04/2009 - 07:23:36 - Produced by Ken Cook Co. with mediaioff

POWER BOB-TACH (Cont'd)
(Valve)

Ref No	Part Number	Description	Remarks	Serial Number	Qty
1		VALVE, POWER BOB-TACH	See Illustration POWER BOB-TACH/ MS2724 - NAP - Order 7161786 - Valve has 2 drain ports marked DR. Can use either port that best fits plumbing application.- Was 6686949 [A]		1
2	6684743	SOLENOID	W/ male connector		1
3	6684744	SOLENOID	W/ female connector		1
4	6684742	NUT			1
5		STEM	NSS		x
6	79K8	O RING 10			x
7		STEM	NSS		x
8		RETAINER	NSS		x
9		SPRING	NSS		x
10		WASHER	NSS		x
11		PISTON	NAP - Was 6685540 [A]		x
12	6685545	PLUG	W/Ref. 13		x
13		O-RING	NSS		x
14		PLUG	NSS		x
15		BALL	NSS		x
16		SPRING	NSS		x
17		VALVE	NSS		x
18	6685542	O-RING			x
19		RINGS	NSS		x
20	6684745	PISTON			1
21		RINGS	NSS		x
22	79K7	O RING 10			x
23	6684746	CHECK VALVE	W/Ref. 22		1
24		BLOCK	NSS		x
25		STEM	NSS		x
26		SPRING	NSS		x
27		POPPET	NSS		x
28	79K10	O RING 10			x
29		PLUG	NSS		x
30		POPPET	NSS		x
31		SPRING	NSS		x
32		PLUG	NSS		x
33		O-RING	NSS		x
34		PLUG	NSS		x
35	6685541	POPPET			x
36		O-RING	NSS - Was 6685542 [B,D]		x
37	6685546	PLUG	W/Ref. 36		x
38	6685544	COMPENSATOR	Ref. 25-29		1
39	6685543	CHECK VALVE	Ref. 14-18		1
40	6684747	SEAL KIT	Ref. 6, 21, 22, 28 & 36		1

Page 417 - OSS# 2071408 - All rights reserved by Bobcat Company - 12/04/2009 - 07:23:36 - Produced by Ken Cook Co. with mediaioff

POWER BOB-TACH
(Valve)

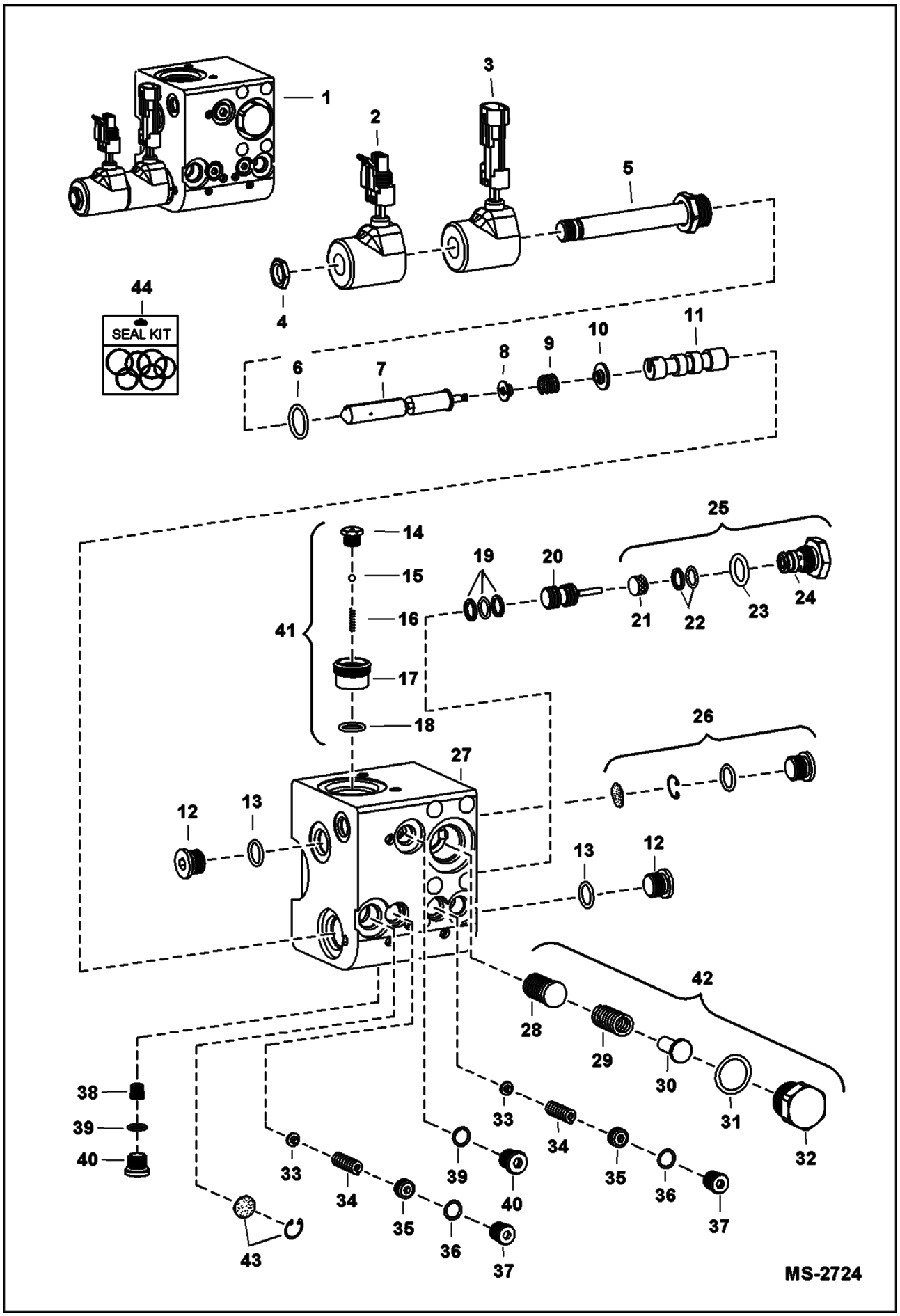

Page 418 - OSS# 2071408 - All rights reserved by Bobcat Company - 12/04/2009 - 07:23:36 - Produced by Ken Cook Co. with mediaioff

POWER BOB-TACH (Cont'd)
(Valve)

Ref No	Part Number	Description	Remarks	Serial Number	Qty
1	7161786	VALVE, POWER BOB-TACH	valve has (2) drain ports marked DR - Use which ever port best fits plumbing application		1
2	6684743	SOLENOID	W/male connector		1
3	6684744	SOLENOID	W/female connector		1
4	6684742	NUT			1
5		STEM	NSS		x
6	79K8	O RING 10			x
7		STEM	NSS		x
8		RETAINER	NSS		x
9		SPRING	NSS		x
10		WASHER	NSS		x
11		PISTON	NAP		x
12	6685545	PLUG	W/Ref. 13		x
13		ORING	NSS		x
14		PLUG	NSS		x
15		BALL	NSS		x
16		SPRING	NSS		x
17		VALVE	NSS		x
18	6685542	O-RING			x
19		RINGS	NSS		x
20	6684745	PISTON	W/Ref. 19		1
21		STEM	NSS		1
22		RINGS	NSS		x
23	79K7	O RING 10			x
24	6684746	CHECK VALVE	W/Ref. 23		1
25	7001678	VALVE, CHECK	W/Ref. 21-24		1
26	7001673	KIT, SCREEN FILTER			1
27		BLOCK	NSS		x
28			NSS		x
29		SPRING	NSS		x
30		POPPET	NSS		x
31	79K10	O RING 10			x
32		PLUG	NSS		1
33		POPPET	NSS		x
34		SPRING	NSS		x
35		PLUG	NSS		x
36	79K4	O RING 10			x
37	24K3	PLUG	W/Ref. 36		x
38	6685541	POPPET			1
39		O-RING	NSS - Was 6685542 [B,D]		x
40	6685546	PLUG			2
41	6685543	CHECK VALVE	W/Ref. 14-18		1
42	6685544	COMPENSATOR	W/Ref. 26-30		1
43	6689983	FILTER KIT			1
44	6684747	SEAL KIT	Ref. 6, 22, 23, 31 & 39 - consists of (5) O-rings & (1) back-up washer		1

Page 419 - OSS# 2071408 - All rights reserved by Bobcat Company - 12/04/2009 - 07:23:36 - Produced by Ken Cook Co. with mediaioff

RADIATOR SCREEN KIT

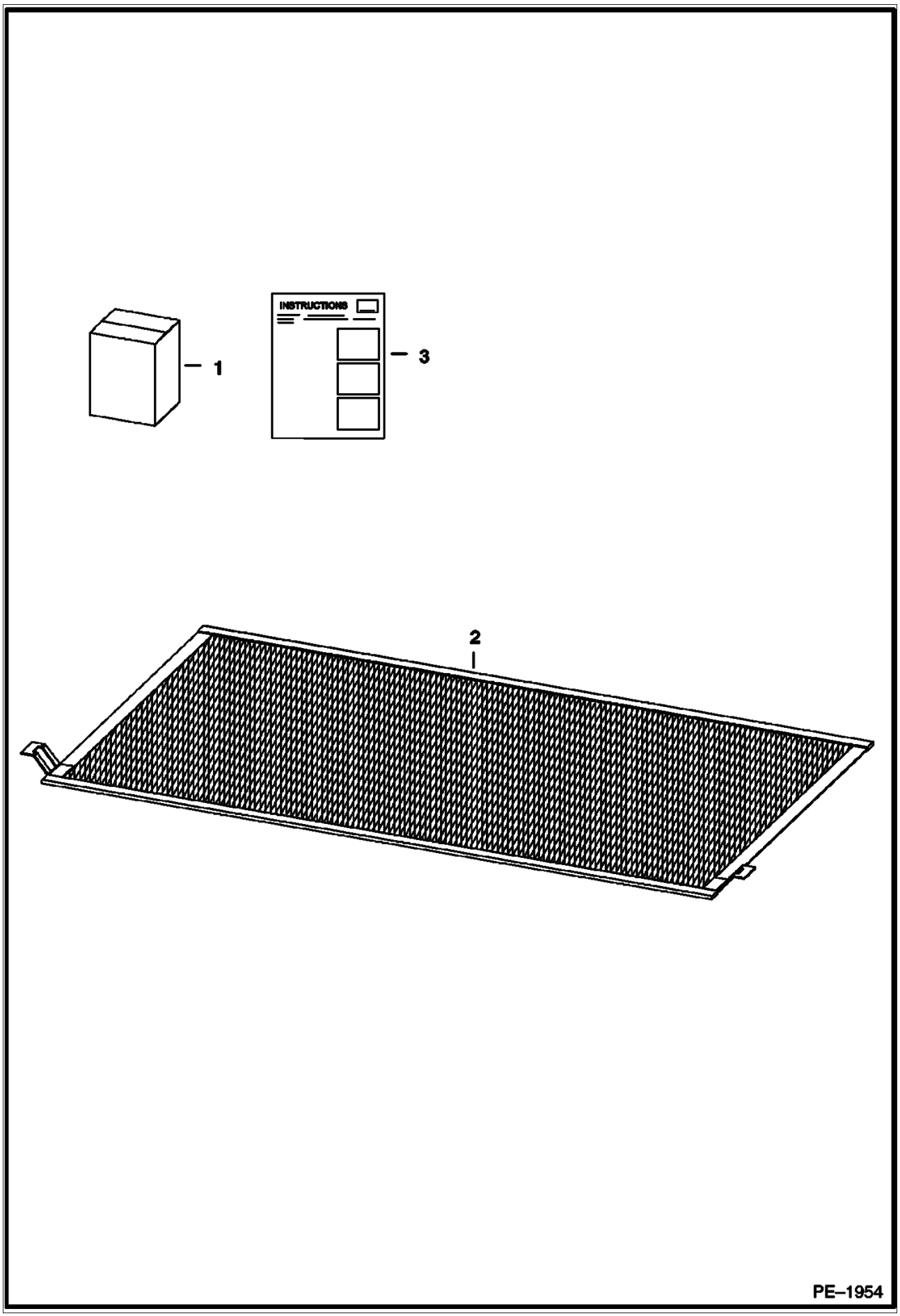

Page 420 - OSS# 2071408 - All rights reserved by Bobcat Company - 12/04/2009 - 07:23:36 - Produced by Ken Cook Co. with mediaioff

Ref No	Part Number	Description	Remarks	Serial Number	Qty
1	6734696	KIT	Ref. 2 & 3		1
2	6734697	SCREEN			1
3	6902288	INSTRUCTIONS			1

Page 421 - OSS# 2071408 - All rights reserved by Bobcat Company - 12/04/2009 - 07:23:36 - Produced by Ken Cook Co. with mediaioff

REAR AUXILIARY HYDRAULIC KIT

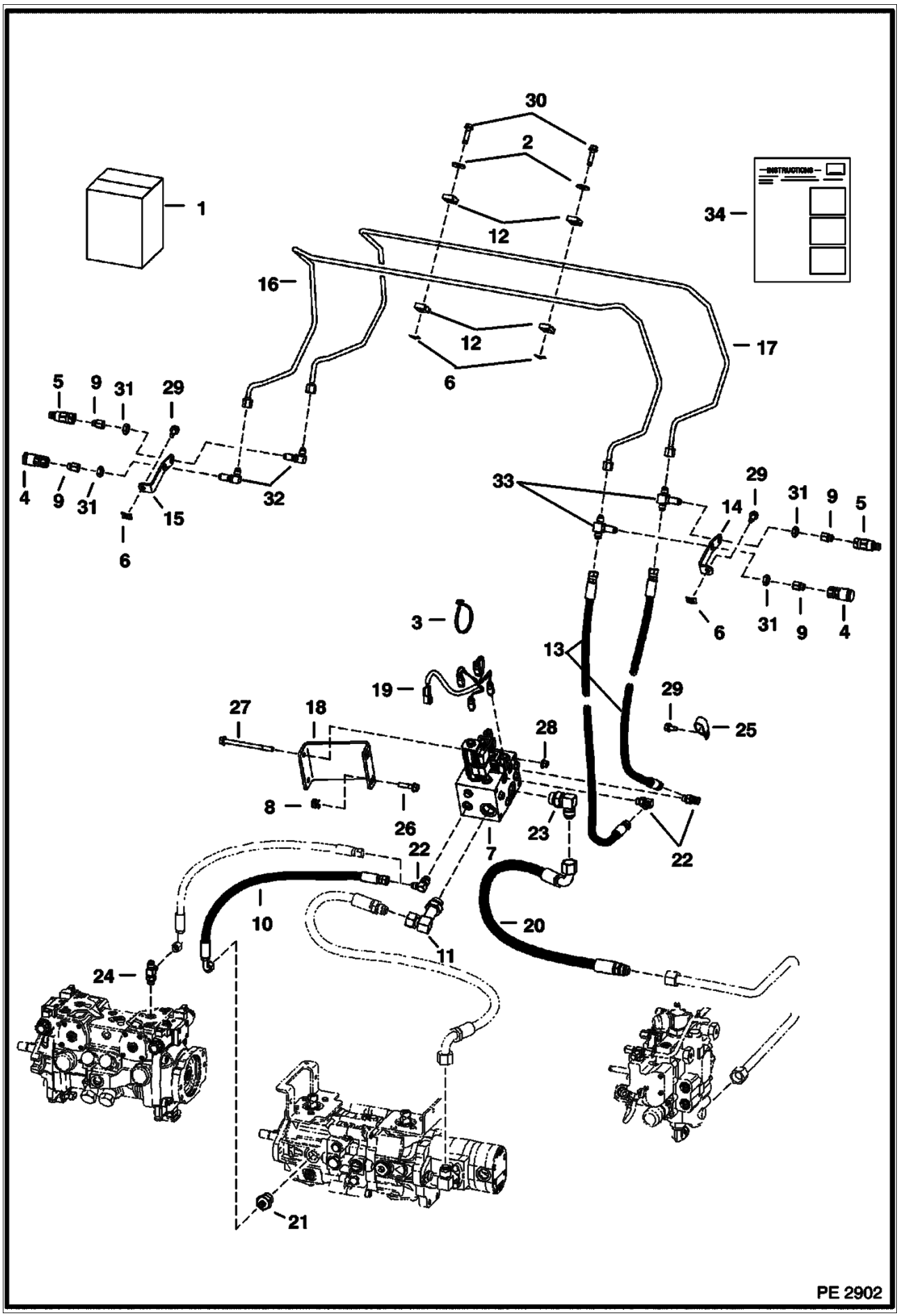

Page 422 - OSS# 2071408 - All rights reserved by Bobcat Company - 12/04/2009 - 07:23:36 - Produced by Ken Cook Co. with mediaioff

Ref No	Part Number	Description	Remarks	Serial Number	Qty
1	7116600	KIT, AUX REAR			1
2	619021	WASHER, 5			2
3	6624289	TIE STRAP			5
4	6667803	COUPLER			2
5	6667804	COUPLER			2
6	6684033	NUT			4
7	6685624	VALVE, AUX REAR			1
8	6685663	RETAINER			2
9	6706633	ADAPTER			4
10	6711166	HOSE			1
11	6691055	ELBOW	Was 7124922 [A]		1
12	6726277	CLAMP			4
13	6735684	HOSE			2
14	6736438	MOUNT			1
15	6736440	MOUNT			1
16	6736442	TUBELINE			1
17	6736443	TUBELINE			1
18	6737201	MOUNT			1
19	7102338	HARNESS	jumper - W/ 6-pin connector & 2-pin connectors (4) - Use W/Ref. 1 (7116600 kit)		1
20	7120956	HOSE			1
21	15KB612	ADAPTER			1
22	17KB606	ELBOW			3
23	17KB1212	ELBOW			1
24	21KB606	TEE	selectable joystick control		1
25	31H38	CLAMP			1
26	35C624	BOLT			2
27	17C680	BOLT			2
28	83D6	NUT 5			2
29	84G3712	BOLT			3
30	84G3724	BOLT			2
31	86F5	NUT			4
32	88F5	ELBOW			2
33	90F5	TEE			2
34	6904734	INSTRUCTIONS	Use W/Ref. 1 (7116600 kit)		1

Page 423 - OSS# 2071408 - All rights reserved by Bobcat Company - 12/04/2009 - 07:23:36 - Produced by Ken Cook Co. with mediaioff

REAR AUXILIARY VALVE

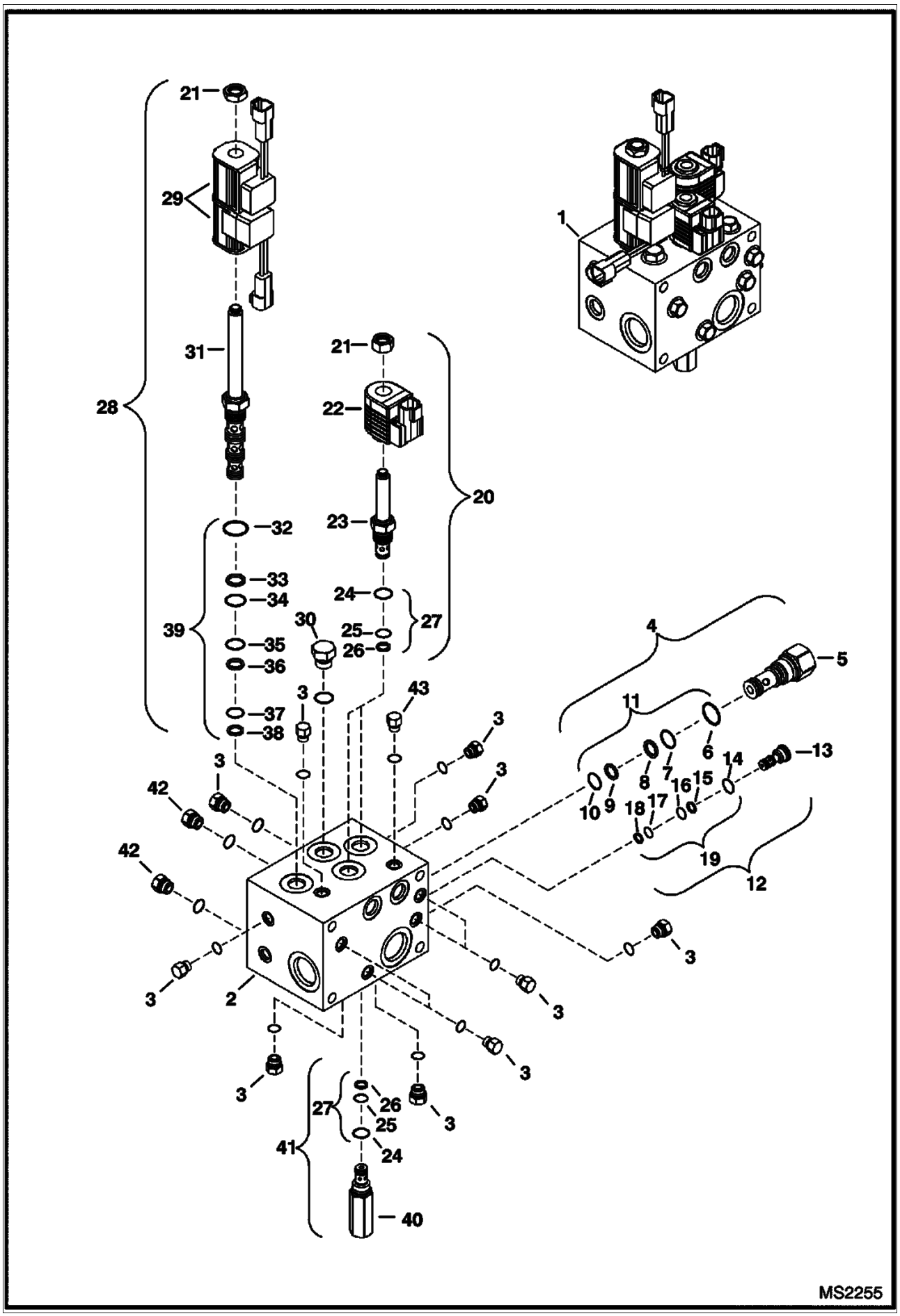

Page 424 - OSS# 2071408 - All rights reserved by Bobcat Company - 12/04/2009 - 07:23:36 - Produced by Ken Cook Co. with mediaioff

REAR AUXILIARY VALVE (Cont'd)

Ref No	Part Number	Description	Remarks	Serial Number	Qty
1	6685624	VALVE, AUX REAR	CP12646		1
2		BLOCK	NSS		1
3		PLUG	NSS - #4 SAE W/ O-ring		11
4	6684044	VALVE	differential sensing - Ref. 5-10		1
5		VALVE	NSS - Order Ref. 4		1
6	6684046	O-RING			1
7	6684048	O-RING			1
8	6684047	BACK-UP RING			1
9	6684050	BACK-UP RING			1
10	6684049	O-RING			1
11	6684045	SEAL KIT	Ref. 6-10		1
12	6684061	VALVE	shuttle - Ref. 13-18		1
13		VALVE	NSS - Order Ref. 12		1
14	6684063	O-RING			1
15	6684064	BACK-UP RING			1
16	6684065	O-RING			1
17	6684066	O-RING			1
18	6684067	BACK-UP RING			1
19	6684062	SEAL KIT	Ref. 14-18		1
20	6685061	VALVE	solenoid - Ref. 21-26		2
21	6684060	NUT			2
22	6684073	COIL	12 volt		2
23		VALVE	NSS - Order Ref. 20		2
24	6684070	O-RING			2
25	6684071	O-RING			2
26	6684072	BACK-UP RING			2
27	6684069	SEAL KIT	Ref. 24-26		2
28	6688933	VALVE ASSY	solenoid W/coils - Ref. 21, 29 & 31-38		1
29	6688934	COIL			2
30		PLUG	NSS - #8 SAE W/ O-ring		1
31		VALVE	NSS - Order Ref. 28		1
32		O-RING	NAP - Order Ref. 39 - Was 6681489 [A]		1
33	6684053	BACK-UP RING			1
34	6684054	O-RING			1
35	6684056	O-RING			1
36	6684055	BACK-UP RING			1
37		O-RING	NAP - Order Ref. 39 - Was 6681487 [A]		1
38	6684057	BACK-UP RING			1
39	6684052	SEAL KIT	Ref. 32-38		1
40		VALVE	NSS - Order Ref. 41		x
41	6685328	RELIEF VALVE	W/Ref. 24-26		1
42		PLUG	NSS - #6 SAE W/ O-ring		4
43		PLUG	NSS - metric		1

Page 425 - OSS# 2071408 - All rights reserved by Bobcat Company - 12/04/2009 - 07:23:36 - Produced by Ken Cook Co. with mediaioff

REAR DOOR LOCK

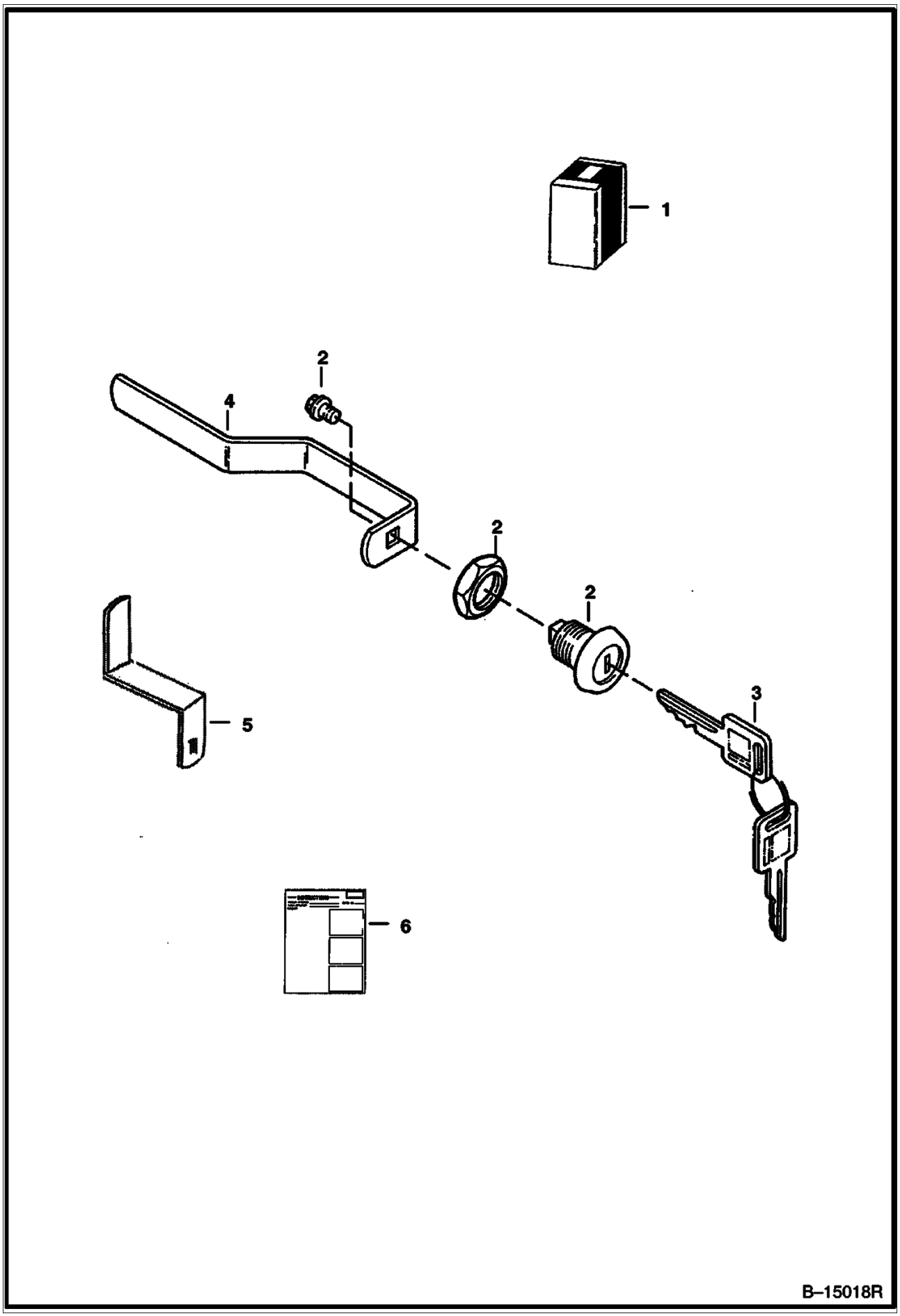

Page 426 - OSS# 2071408 - All rights reserved by Bobcat Company - 12/04/2009 - 07:23:36 - Produced by Ken Cook Co. with mediaioff

Ref No	Part Number	Description	Remarks	Serial Number	Qty
1	6732001	KIT	lock - Ref. 2-6		1
2	6670726	LOCK			1
3		KEY	NAP - ignition & rear door - includes two keys W/ring - Order 6693241 - Was 6709527 [A]		1
3	6693241	KEY 10	single key W/O ring		x
4	6714037	LATCH			1
5	6729688	LATCH			1
6	6901656	INSTRUCTIONS			1

Page 427 - OSS# 2071408 - All rights reserved by Bobcat Company - 12/04/2009 - 07:23:36 - Produced by Ken Cook Co. with mediaioff

REAR WIPER

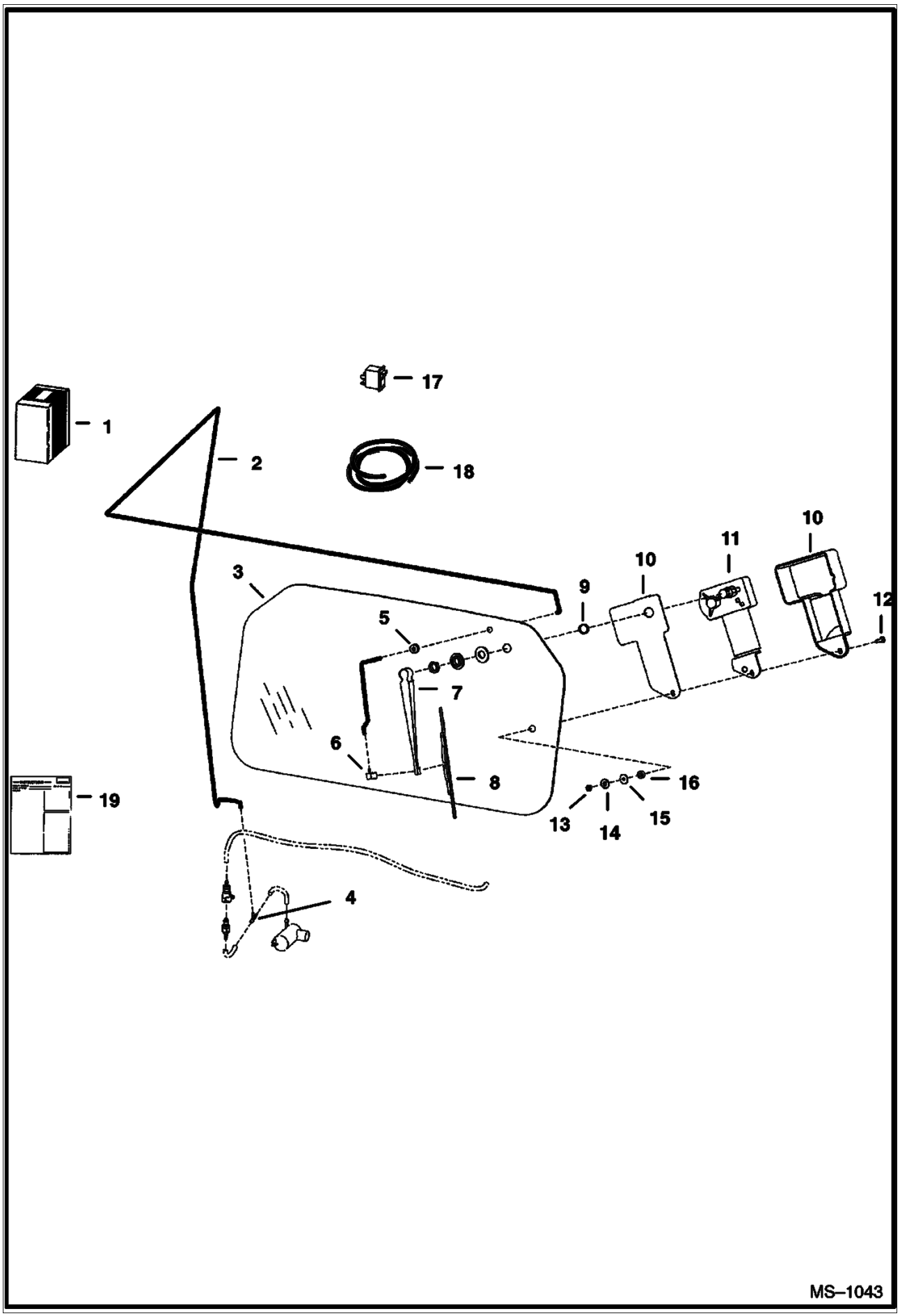

Page 428 - OSS# 2071408 - All rights reserved by Bobcat Company - 12/04/2009 - 07:23:36 - Produced by Ken Cook Co. with mediaioff

Ref No	Part Number	Description	Remarks	Serial Number	Qty
1	6726655	KIT	rear wiper		1
2		HOSE	NAP - 96"(2438,4 mm) long - Order Ref. 18		1
3	6719317	WINDOW			1
4	6676000	TEE			1
5	6557493	GROMMET			1
6	6676028	NOZZLE			1
7	6676001	ARM			1
8	6676002	BLADE			1
9	6667201	SPACER	nylon		1
10	6664097	COVER	wiper		1
11	6665602	MOTOR			1
12	6664566	BOLT			1
13	6664103	NUT			1
14	6664065	WASHER	nylon		1
15	6801059	WASHER	neoprene		1
16	6664085	BUSHING	nylon		1
17	6675999	SWITCH			1
18	6676003	HOSE	black - .109" (2,77 mm) ID - bulk - sold per foot		x
19	6901061	INSTRUCTIONS			1

Page 429 - OSS# 2071408 - All rights reserved by Bobcat Company - 12/04/2009 - 07:23:36 - Produced by Ken Cook Co. with mediaioff

REMOTE CONTROL KIT
(Selectable Joystick Controls)

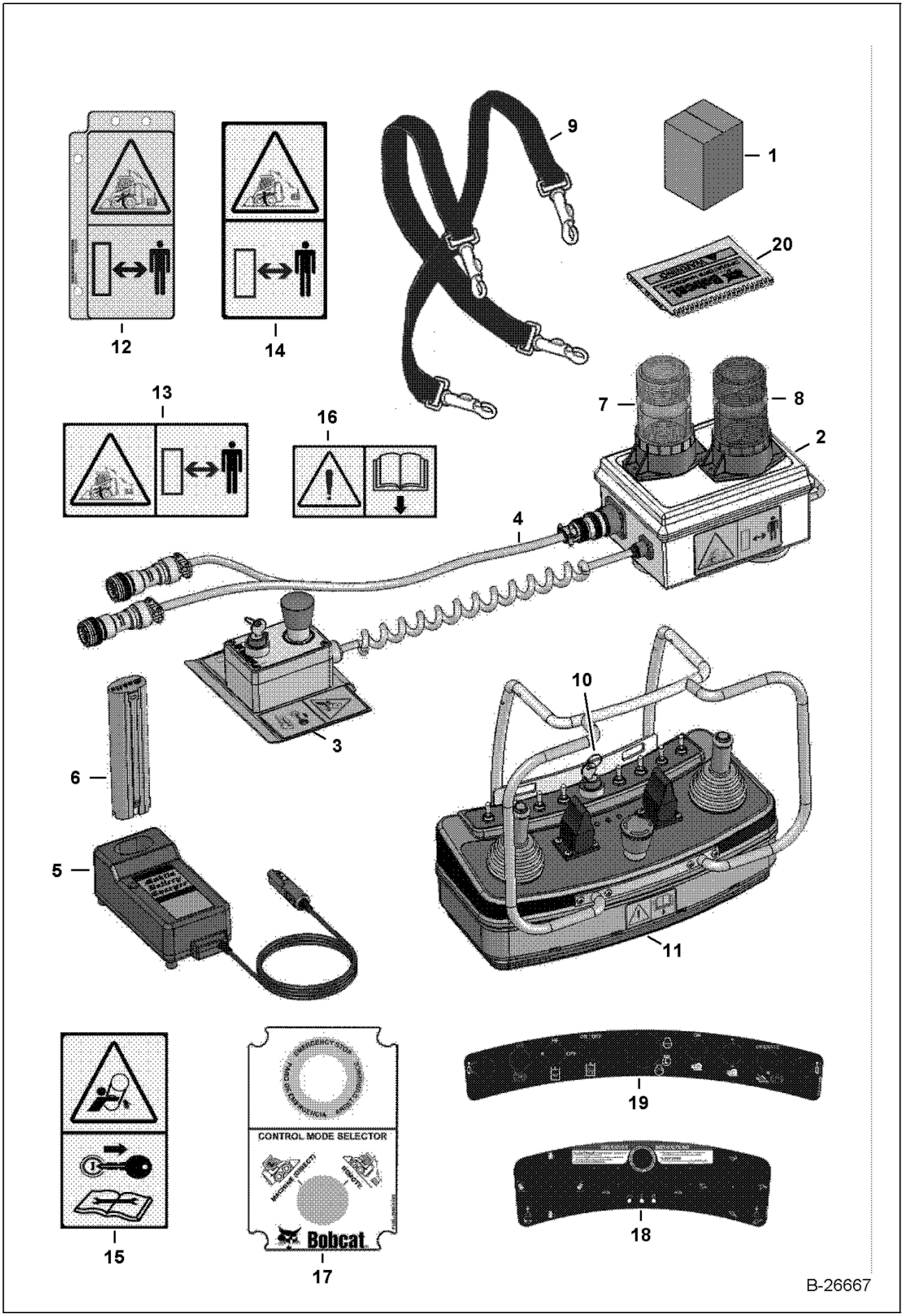

Page 430 - OSS# 2071408 - All rights reserved by Bobcat Company - 12/04/2009 - 07:23:36 - Produced by Ken Cook Co. with mediaioff

REMOTE CONTROL KIT (Cont'd)
(Selectable Joystick Controls)

Ref No	Part Number	Description	Remarks	Serial Number	Qty
1	7141291	REMOTE CONTROL SYSTEM 2.4GHZ	radio remote control		1
2		RECEIVER, 2.4GHZ	See BTI392 Was 6692756 [B]		1
3	6692766	E-STOP BOX	mode selector/E-stop box - W/Ref. 17		1
4	6692764	RECIEVER CABLE			1
5	6692769	CHARGER, MAKITA DC1422, 12-24VDC	W/Ref. 6		1
6	6692770	BATTERY, NICD, 9.6V, 1.3AH, MAKITA 9000			1
7	6693411	LENS	green		1
7	6693409	BULB, STROBE			1
8	6693410	LENS	amber		1
8	6693409	BULB, STROBE			1
9	6692771	SHOULER HARNESS			1
10	6692762	KEYS, SET OF 2	set of (2)		x
11		2.4GHZ TRANSMITTER	See BTI392 transmitter - W/Ref. 18 & 19 - Was 6692761 [B]		1
12	7135569	DECAL	remote ready identification tag		1
13	6692757	DECAL, "REMOTE CONTROL OPERATION", LARGE	operation		1
14	6692768	DECAL, "REMOTE CONTROL OPERATION", SMALL	operation		1
15	6692767	DECAL, "ROTATING PARTS"	rotating parts		1
16	6692763	DECAL WARNING, "READ THE MANUAL"	operating instructions		1
17		DECAL	NAP - Order Ref. 3		1
18		DECAL	NAP - Order Ref. 11		1
19		DECAL	NAP - Order Ref. 11		1
20	6904709	MANUAL	operation, maintenance and parts		1

Page 431 - OSS# 2071408 - All rights reserved by Bobcat Company - 12/04/2009 - 07:23:36 - Produced by Ken Cook Co. with mediaioff

SEAT
(Suspension - Sears)

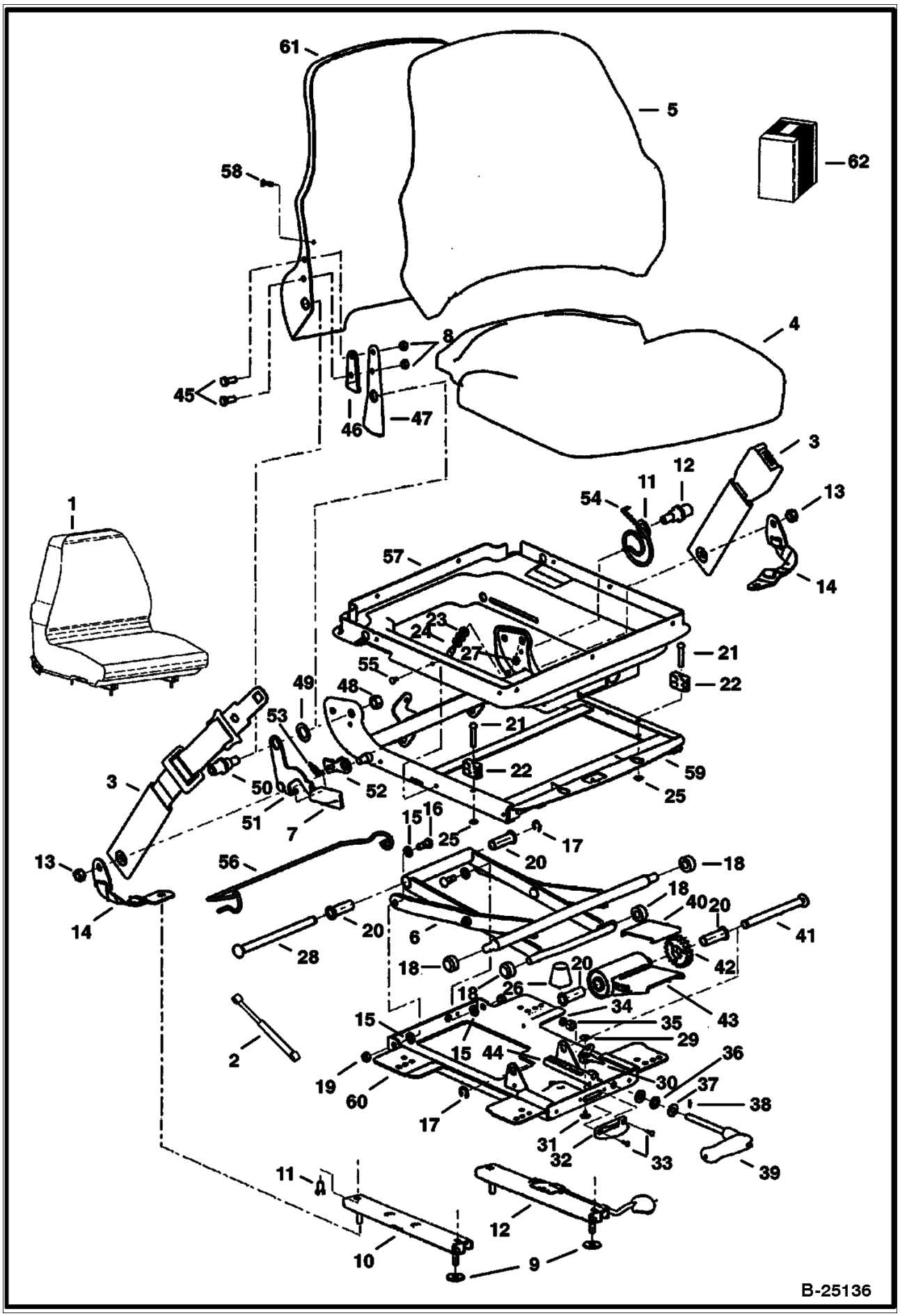

Page 432 - OSS# 2071408 - All rights reserved by Bobcat Company - 12/04/2009 - 07:23:36 - Produced by Ken Cook Co. with mediaioff

SEAT (Cont'd)
(Suspension - Sears)

Ref No	Part Number	Description	Remarks	Serial Number	Qty
1	6675595	SEAT	vinyl - LH recliner lever		1
1	6675596	SEAT	fabric - LH recliner lever		1
2	6676338	GAS SPRING			1
3	6675170	SEAT BELT	lap		1
4	6675320	SEAT			1
4	6675322	SEAT			1
5	6675319	SEAT	backrest - fabric - W/Ref. 58		1
5	6675321	SEAT	backrest - vinyl - W/Ref. 58		1
6	6675317	SCISSORS			1
7	6675323	KNOB	recliner		1
8		NUT	NSS		6
9	619021	WASHER, 5			4
10		SLIDE	NSS - slave		1
11		BOLT	NSS		4
12		SLIDE	NSS - locking		1
13		NUT	NSS		2
14		BELT	NSS - tether		2
15		WASHER	NSS - cross pivot		4
16		BOLT	NSS - pivot		2
17		RING	NSS - retaining		2
18		ROLLER	NSS		4
19		NUT	NSS		2
20		BUSHING	NSS - wt adjustment		4
21		RIVET	NSS		2
22		BLOCK	NSS - up stop		2
23		WASHER	NSS		3
24		STOP	NSS - armrest		1
25		PUSHNUT	NSS		2
26		BUMPER	NSS		1
27		NUT	NSS		1
28		SHAFT	NSS - bearing		1
29		RIVET	NSS - female snap		1
30		INDICATOR	NSS - weight		1
31		RIVET	NSS - male snap		1
32		DIAL	NSS - weight indicator		1
33		POP RIVET	NSS		2
34		SPACER	NSS		1
35		NUT	NSS		1
36		BEARING	NSS - thrust		1
37		RACE	NSS - thrust		2
38		SHEAR PIN	NSS		1
39		HANDLE	NSS - weight adjustment		1
40		PLATE	NSS - wear		1
41		SHAFT	NSS - torsion		1
42		DRIVE GEAR	NSS		1
43		BUSHING	NSS - torsion		1
44		RACK	NSS - wt adjustment		1
45		BOLT	NSS		2
46		SPACER	NSS - recliner		1
47		BRACKET	NSS - back tilt		1
48		NUT	NSS		2
49		WASHER	NSS - plastic		2
50		BOSS	NSS - back pan pivot		2
51		HANDLE	NSS - recliner (RH)		1

Page 433 - OSS# 2071408 - All rights reserved by Bobcat Company - 12/04/2009 - 07:23:36 - Produced by Ken Cook Co. with mediaioff

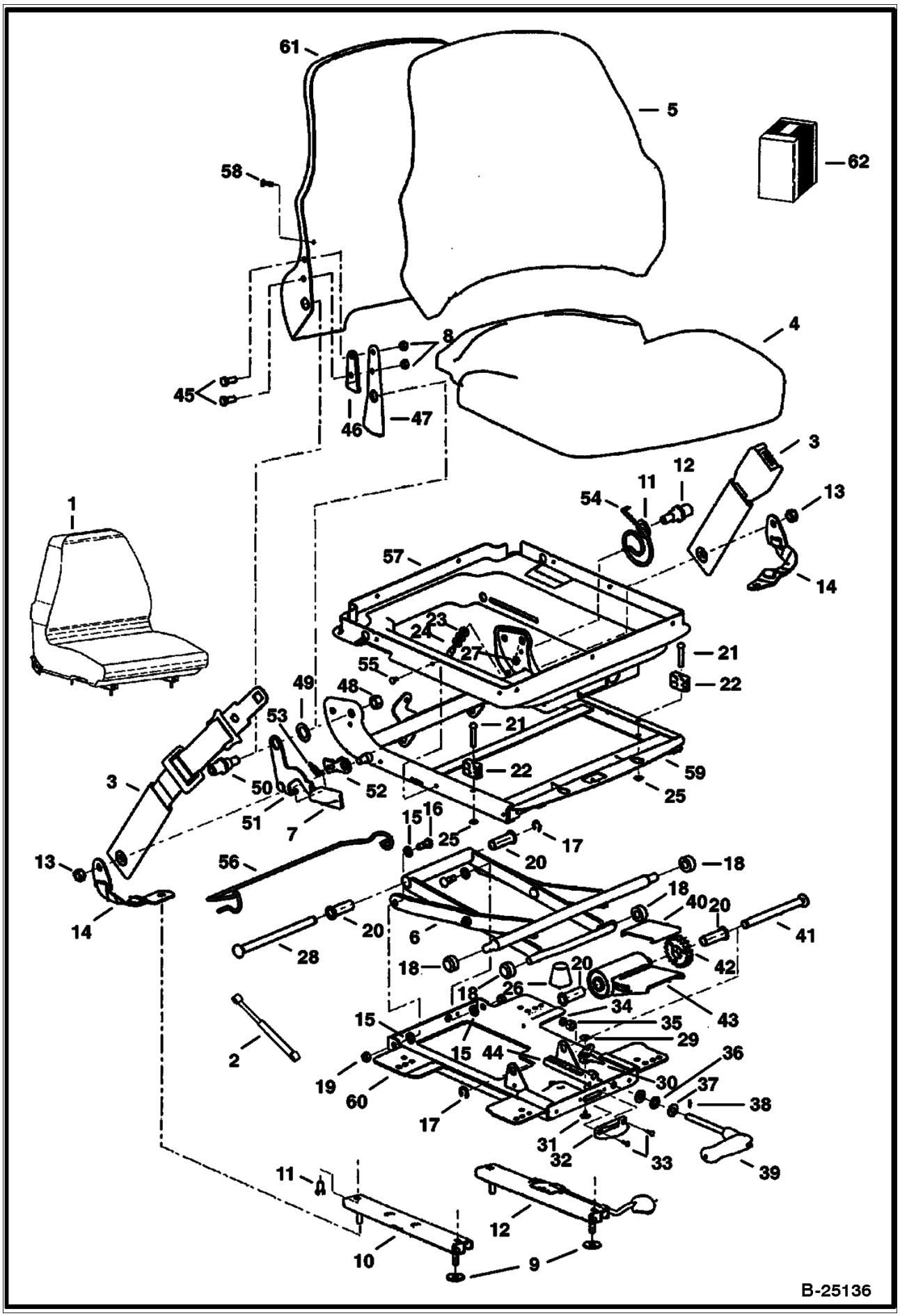

Page 434 - OSS# 2071408 - All rights reserved by Bobcat Company - 12/04/2009 - 07:23:36 - Produced by Ken Cook Co. with mediaioff

Ref No	Part Number	Description	Remarks	Serial Number	Qty
52		LATCH	NSS - recliner		1
53		SPRING	NSS - extension		1
54		SPRING	NSS - tilt latch		1
55		CLIP	NSS		6
56		WIRE	NSS - boot support		1
57		SUSPENSION	NSS - boot		1
58		SCREW	NSS		2
59		HOUSING	NSS - upper		1
60		HOUSING	NSS - lower		1
61		BACK PAN	NSS		1
62	6675309	KIT	slides - Ref. 8-12		1
62	6675310	KIT	tether belt - Ref. 9, 13 & 14		1
62	6675311	KIT	suspension rollers & bearing - Ref. 15-20		1
62	6675312	KIT	suspension bumpers & stops - Ref. 21-27		1
62	6675313	KIT	rear tube - Ref. 17, 20 & 28		1
62	6675314	KIT	weight adjustment indicator - Ref. 29-33		1
62	6675315	KIT	weight adjustment handle - Ref. 34-39		1
62	6675316	KIT	weight adjustment - Ref. 17, 20 & 40-44		1
62	6675318	KIT	RH recliner - Ref. 7, 8 & 45-54		1
62	6676034	KIT	LH recliner - Ref. 7, 8 & 45-54		1
62	6675308	KIT	suspension boot - Ref. 55-57		1

Page 435 - OSS# 2071408 - All rights reserved by Bobcat Company - 12/04/2009 - 07:23:36 - Produced by Ken Cook Co. with mediaioff

SEAT BELT
(Three Point Retractable)

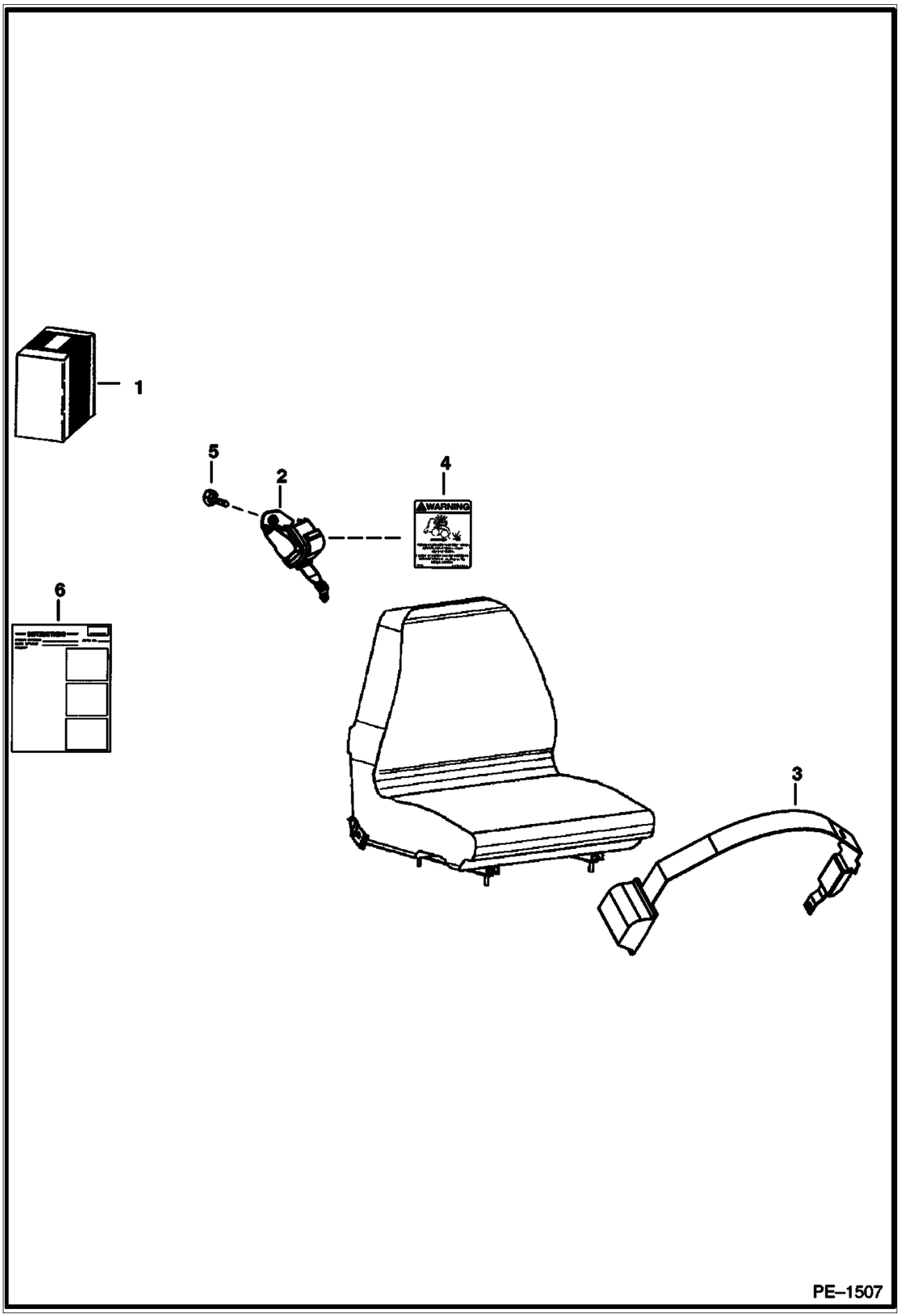

Page 436 - OSS# 2071408 - All rights reserved by Bobcat Company - 12/04/2009 - 07:23:36 - Produced by Ken Cook Co. with mediaioff

SEAT BELT (Cont'd)
(Three Point Retractable)

Ref No	Part Number	Description	Remarks	Serial Number	Qty
1	6732219	KIT	three point retractable seat belt - Use W/Sears brand suspension seats W/LH recliner lever		1
2	6674407	SHOULDER BELT			1
3	6679308	SEAT BELT			1
4	6725370	DECAL			1
5	35C612	BOLT			1
6	6901010	INSTRUCTIONS			1

Page 437 - OSS# 2071408 - All rights reserved by Bobcat Company - 12/04/2009 - 07:23:36 - Produced by Ken Cook Co. with mediaioff

SEAT BELT
(3" Wide Retractable)

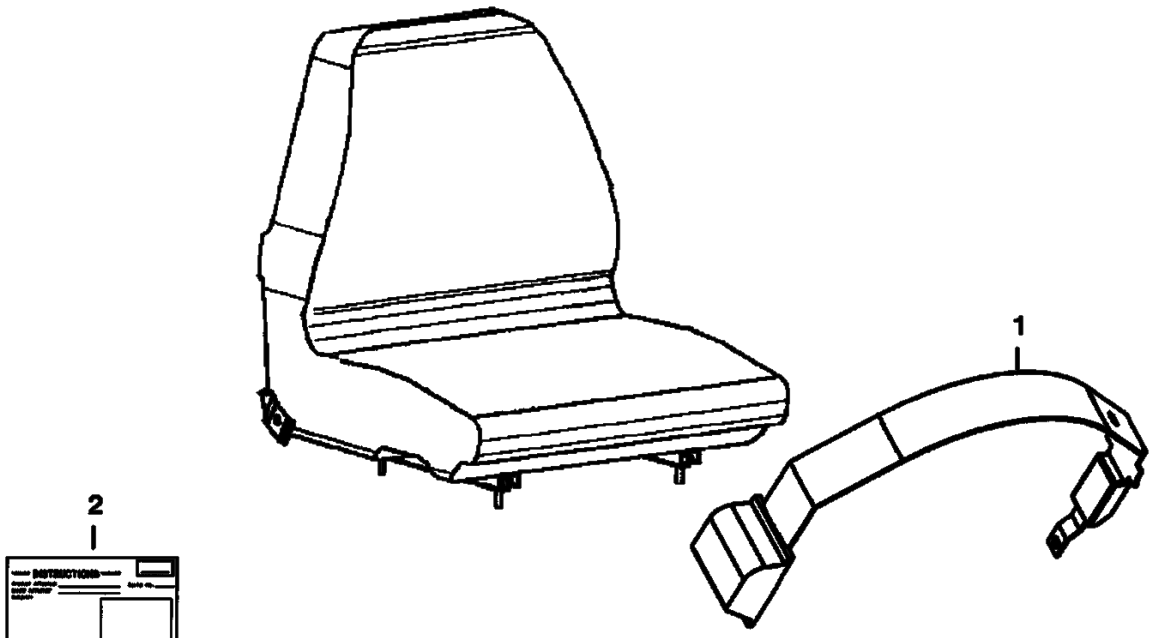

PE–1508

Page 438 - OSS# 2071408 - All rights reserved by Bobcat Company - 12/04/2009 - 07:23:36 - Produced by Ken Cook Co. with mediaioff

SEAT BELT (Cont'd)
(3" Wide Retractable)

Ref No	Part Number	Description	Remarks	Serial Number	Qty
1	6675562	SEAT BELT	3" wide retractable - Use W/Sears brand suspension seats W/LH recliner lever		1
2	6901011	INSTRUCTIONS			1

Page 439 - OSS# 2071408 - All rights reserved by Bobcat Company - 12/04/2009 - 07:23:36 - Produced by Ken Cook Co. with mediaioff

SEAT BELT
(3" Wide)

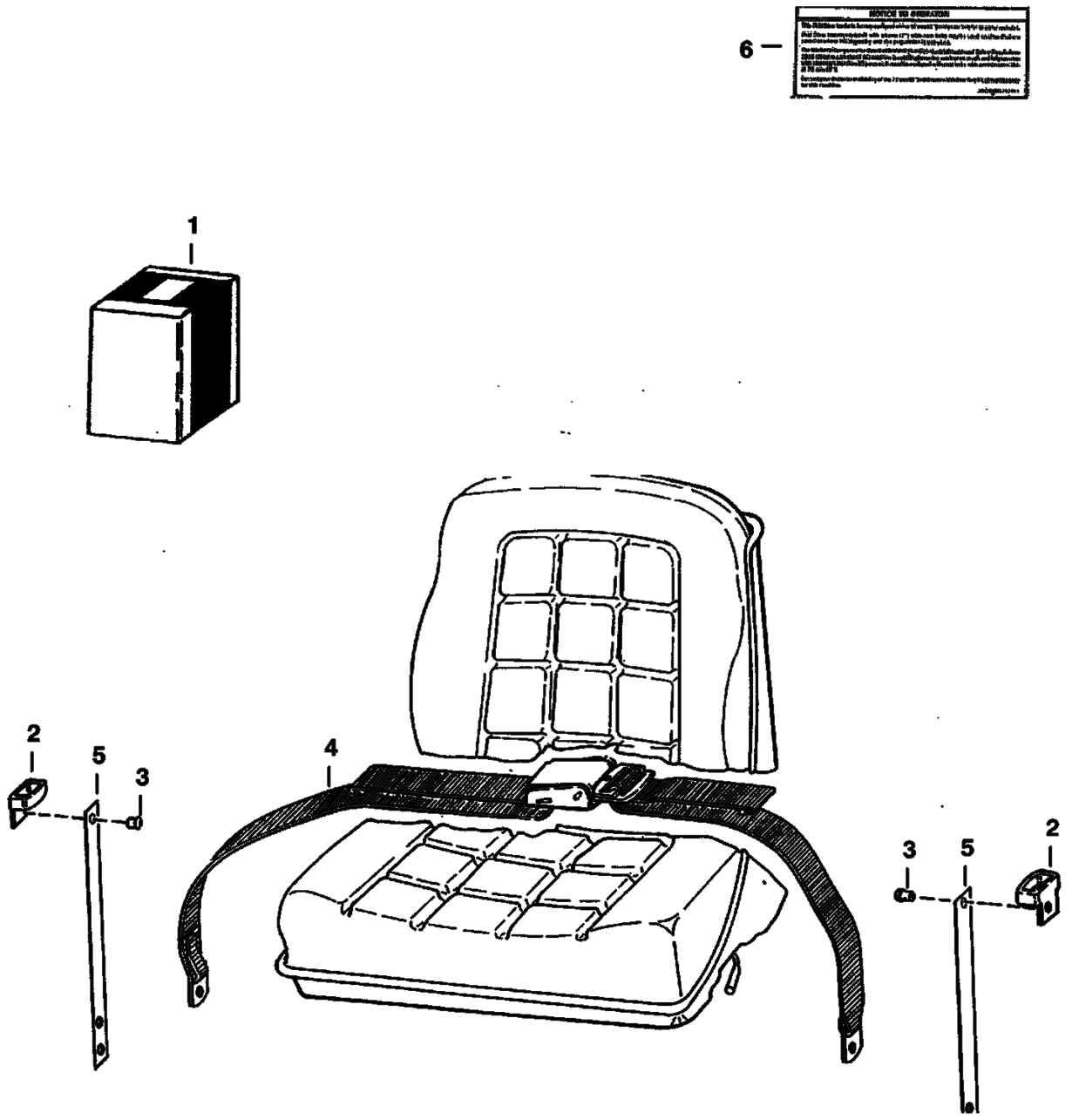

NOTE: Complies with British Columbia Industrial Health & Safety Regulations 26.16 (7) (a).

B-13601

Page 440 - OSS# 2071408 - All rights reserved by Bobcat Company - 12/04/2009 - 07:23:36 - Produced by Ken Cook Co. with mediaioff

SEAT BELT (Cont'd)
(3" Wide)

Ref No	Part Number	Description	Remarks	Serial Number	Qty
1	6703640	KIT	W/Ref. 2-6		1
2	6703703	GUIDE			2
3	6630207	RIVET	Was 6512797 [A]		4
4	6659999	BELT, SEAT			1
5	6711908	SPRING PLATE			2
6	6703641	DECAL			1

Page 441 - OSS# 2071408 - All rights reserved by Bobcat Company - 12/04/2009 - 07:23:36 - Produced by Ken Cook Co. with mediaioff

SOUND/NOISE REDUCTION OPTION
(Manual Controls, ACS & AHC)
(S/N 530714202 & Below, 530811539 & Below)

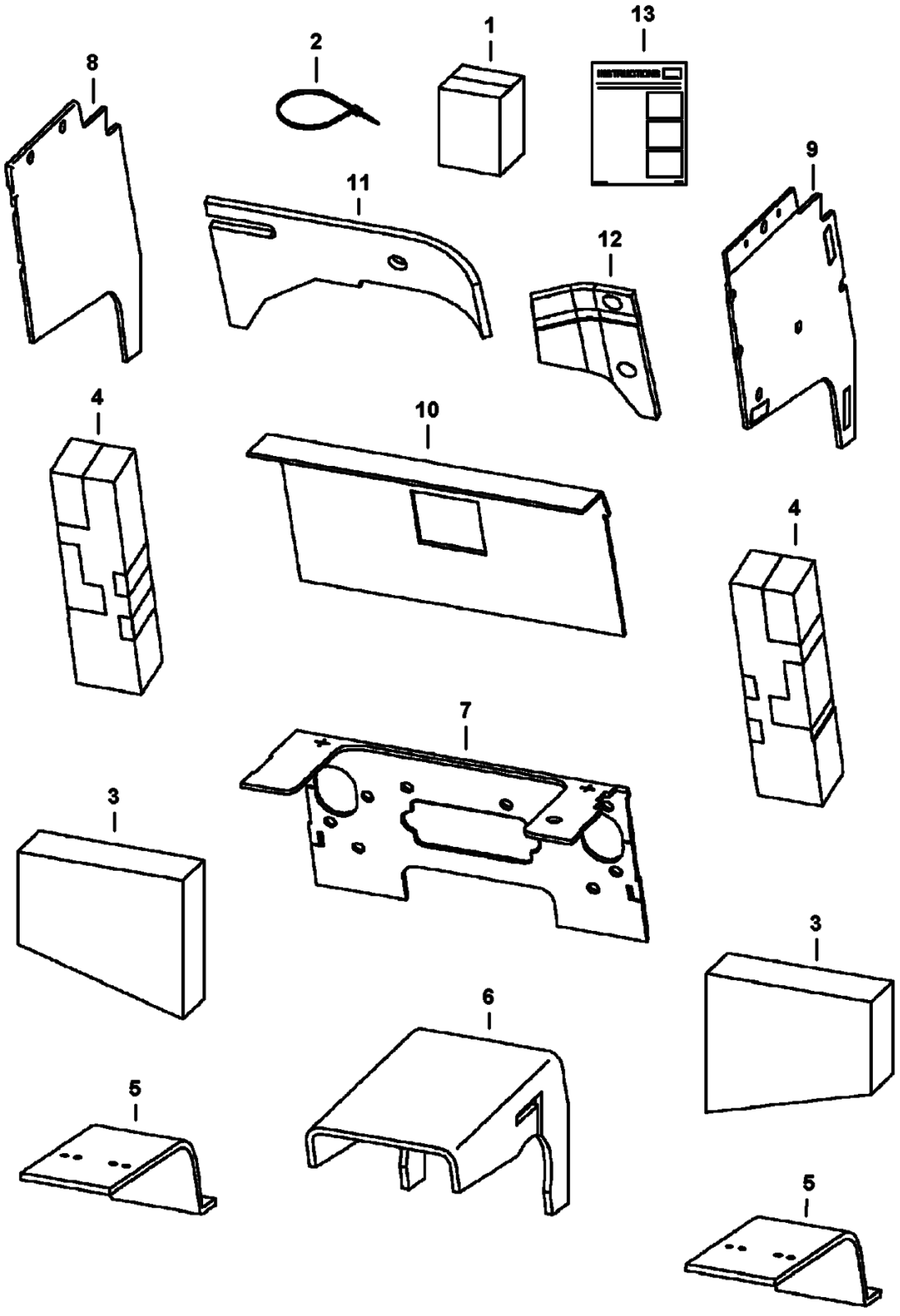

Page 442 - OSS# 2071408 - All rights reserved by Bobcat Company - 12/04/2009 - 07:23:36 - Produced by Ken Cook Co. with mediaioff

SOUND/NOISE REDUCTION OPTION (Cont'd)
(Manual Controls, ACS & AHC)
(S/N 530714202 & Below, 530811539 & Below)

Ref No	Part Number	Description	Remarks	Serial Number	Qty
1	7139040	KIT	Ref. 2-13		1
2	6624289	TIE STRAP			8
3	6703967	INSULATION	fender - Was 7152242 [B,D]		2
4	6703968	INSULATION	transmission		2
5	6732583	INSULATION	pedal shield		2
6	7101533	INSULATION	transmission		1
7	7101535	INSULATION	steering panel		1
8	7101536	INSULATION	panel - LH		1
9	7101537	INSULATION	panel - RH		1
10	7101538	INSULATION	crossmember		1
11	6719332	INSULATION	blower housing - Was 7123854 [D]		1
12	7140616	INSULATION	blower housing - Was 6719333 [A]		1
13	6986528	INSTRUCTIONS			1

Page 443 - OSS# 2071408 - All rights reserved by Bobcat Company - 12/04/2009 - 07:23:36 - Produced by Ken Cook Co. with mediaioff

SOUND REDUCTION KIT
(Manual Controls, AHC & ACS)
(S/N 530714203 & Above, 530811540 & Above)

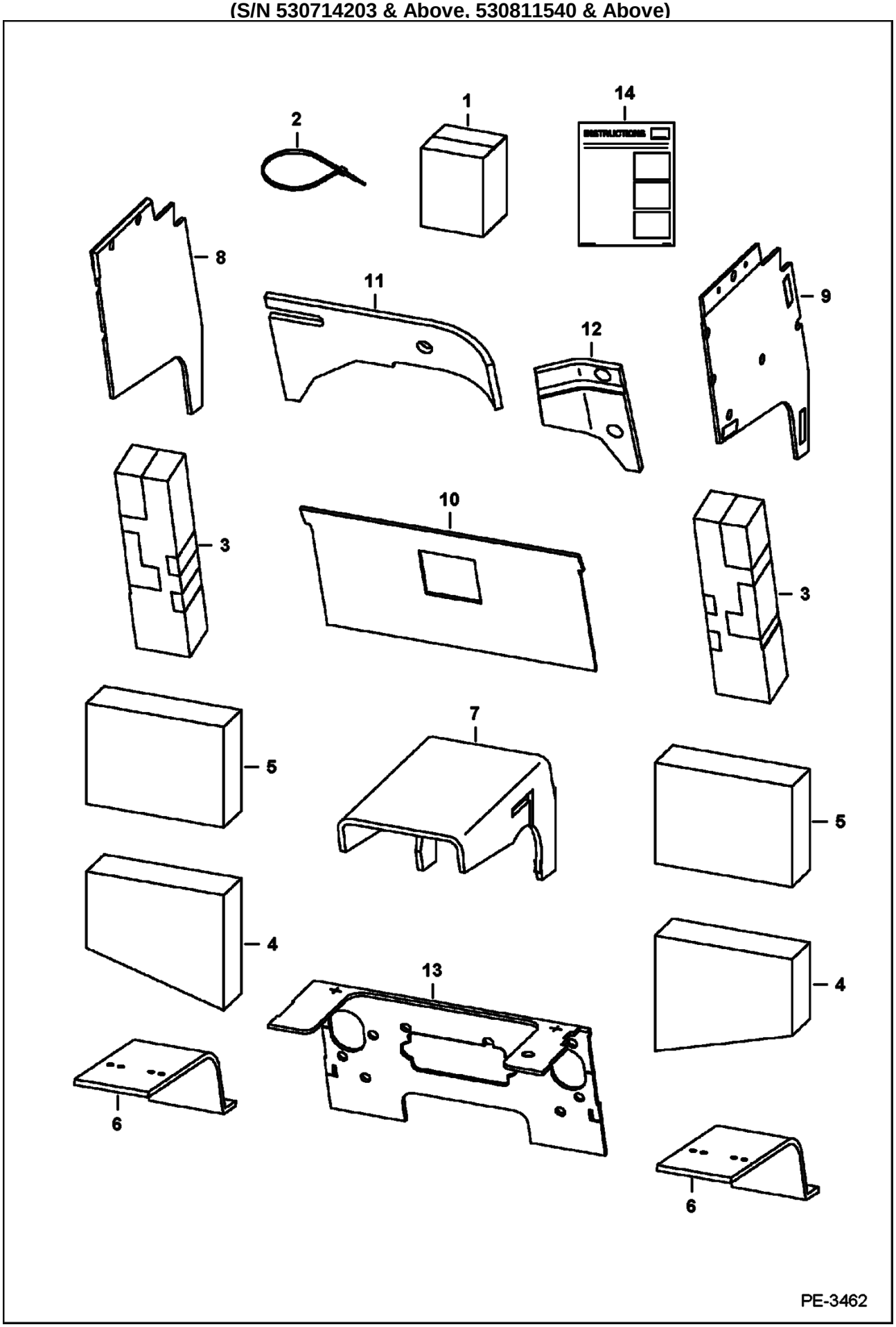

Page 444 - OSS# 2071408 - All rights reserved by Bobcat Company - 12/04/2009 - 07:23:36 - Produced by Ken Cook Co. with mediaioff

SOUND REDUCTION KIT (Cont'd)
(Manual Controls, AHC & ACS)
(S/N 530714203 & Above, 530811540 & Above)

Ref No	Part Number	Description	Remarks	Serial Number	Qty
1	7149799	KIT	Ref. 2-14		1
2	6624289	TIE STRAP			8
3	7152242	INSULATION, STRIP	fender - Was 6703967 [A]		2
4	6703968	INSULATION	transmission		2
5	6730573	INSULATION	transmission - used only in track loaders		2
6	6732583	INSULATION	pedal shield		2
7	7101533	INSULATION	transmission		1
8	7101536	INSULATION	panel - LH		1
9	7101537	INSULATION	panel - RH		1
10	7101538	INSULATION	crossmember		1
11	7123854	INSULATION	blower housing		1
12	7140616	INSULATION	blower housing		1
13	7148454	INSULATION	steering panel		1
14	6986528	INSTRUCTIONS			1

Page 445 - OSS# 2071408 - All rights reserved by Bobcat Company - 12/04/2009 - 07:23:36 - Produced by Ken Cook Co. with mediaioff

SOUND/NOISE REDUCTION OPTION
(SJC)
(S/N 53071402 & Below, 530811539 & Below)

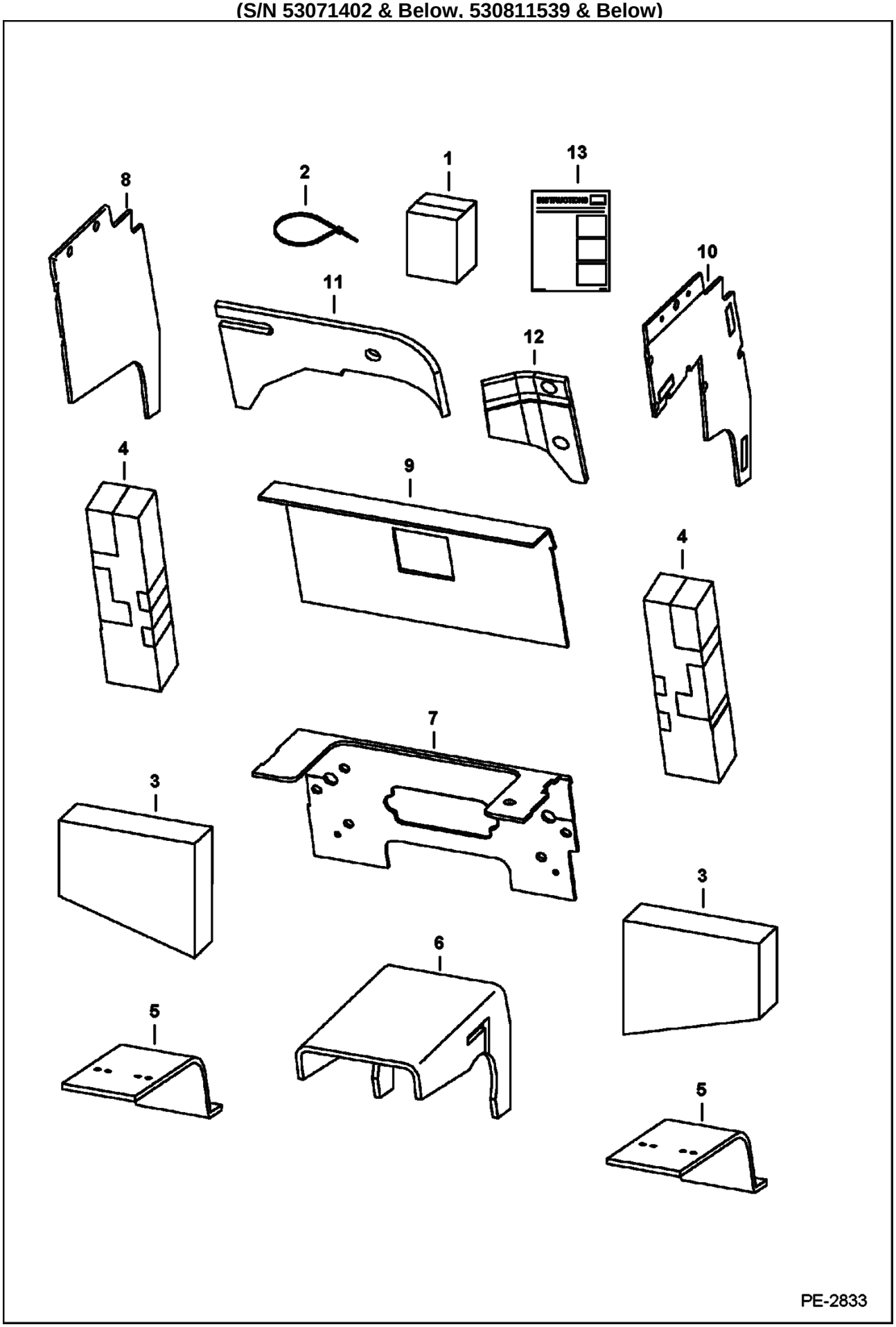

Page 446 - OSS# 2071408 - All rights reserved by Bobcat Company - 12/04/2009 - 07:23:36 - Produced by Ken Cook Co. with mediaioff

SOUND/NOISE REDUCTION OPTION (Cont'd)
(SJC)
(S/N 53071402 & Below, 530811539 & Below)

Ref No	Part Number	Description	Remarks	Serial Number	Qty
1	7139039	KIT	Ref. 2-13		1
2	6624289	TIE STRAP			8
3	7152242	INSULATION, STRIP	fender - Was 6703967 [B]		2
4	6703968	INSULATION	transmission		2
5	6732583	INSULATION	pedal shield		2
6	7101533	INSULATION	transmission		1
7	7101534	INSULATION	steering panel		1
8	7101536	INSULATION	panel - LH		1
9	7101538	INSULATION	crossmember		1
10	7101539	INSULATION	panel shield - RH		1
11	6719332	INSULATION	blower housing - Was 7123854 [D]		1
12	7140616	INSULATION	blower housing - Was 6719333 [A]		1
13	6986527	INSTRUCTIONS			1

Page 447 - OSS# 2071408 - All rights reserved by Bobcat Company - 12/04/2009 - 07:23:36 - Produced by Ken Cook Co. with mediaioff

SOUND REDUCTION KIT
(SJC)
(S/N 530714203 & Above, 530811540 & Above)

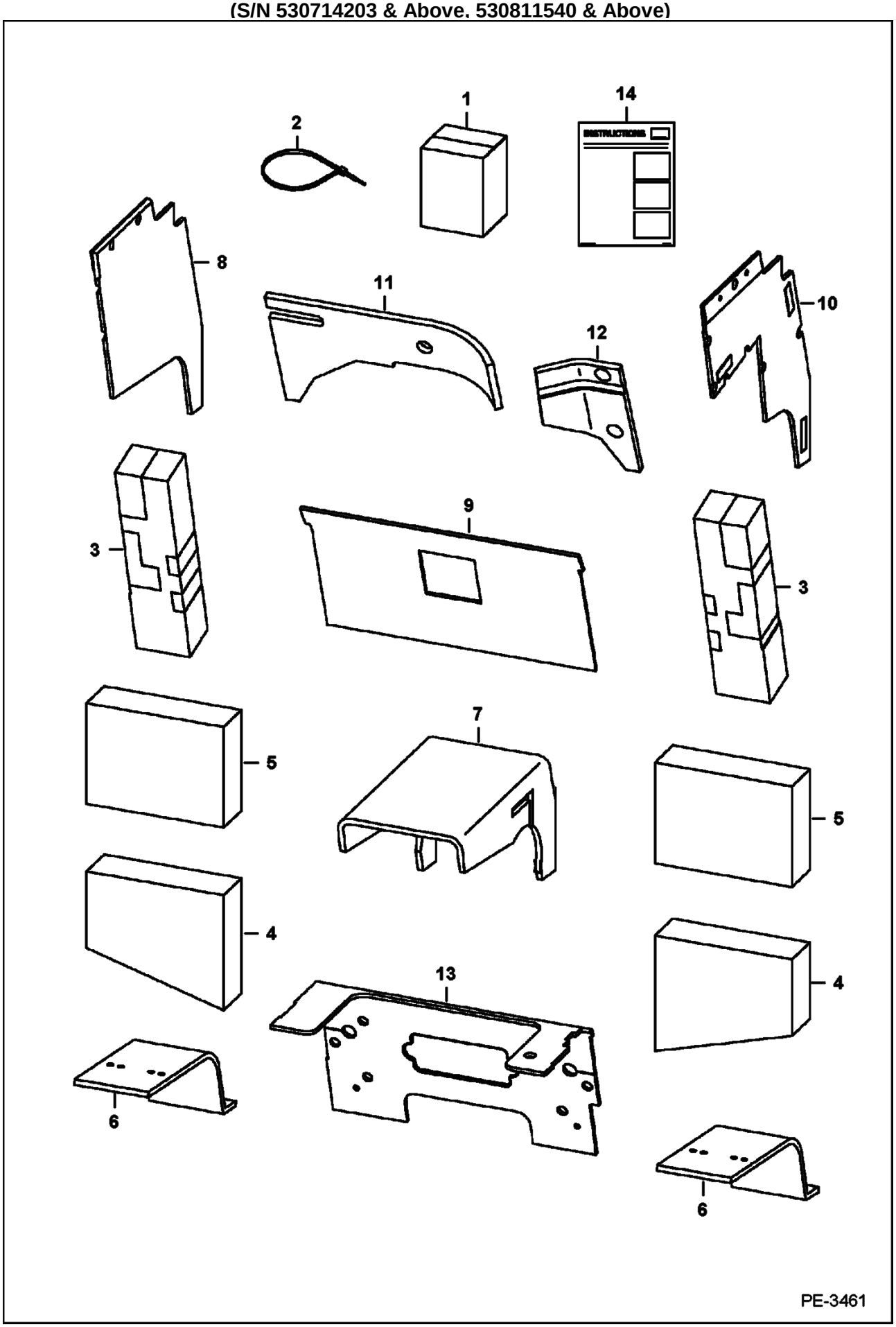

Page 448 - OSS# 2071408 - All rights reserved by Bobcat Company - 12/04/2009 - 07:23:36 - Produced by Ken Cook Co. with mediaioff

SOUND REDUCTION KIT (Cont'd)
(SJC)
(S/N 530714203 & Above, 530811540 & Above)

Ref No	Part Number	Description	Remarks	Serial Number	Qty
1	7149800	KIT	Ref. 2-14		1
2	6624289	TIE STRAP			8
3	7152242	INSULATION, STRIP	fender - Was 6703967 [A]		2
4	6703968	INSULATION	transmission		2
5	6730573	INSULATION	transmission - used only in track loaders		2
6	6732583	INSULATION	panel shield		2
7	7101533	INSULATION	transmission		1
8	7101536	INSULATION	panel - LH		1
9	7101538	INSULATION	crossmember		1
10	7101539	INSULATION	panel shield - RH		1
11	7123854	INSULATION	blower housing		1
12	7140616	INSULATION	blower housing		1
13	7148453	INSULATION	steering panel		1
14	6986527	INSTRUCTIONS			1

Page 449 - OSS# 2071408 - All rights reserved by Bobcat Company - 12/04/2009 - 07:23:36 - Produced by Ken Cook Co. with mediaioff

SOUND/NOISE REDUCTION OPTION
(Bystander)

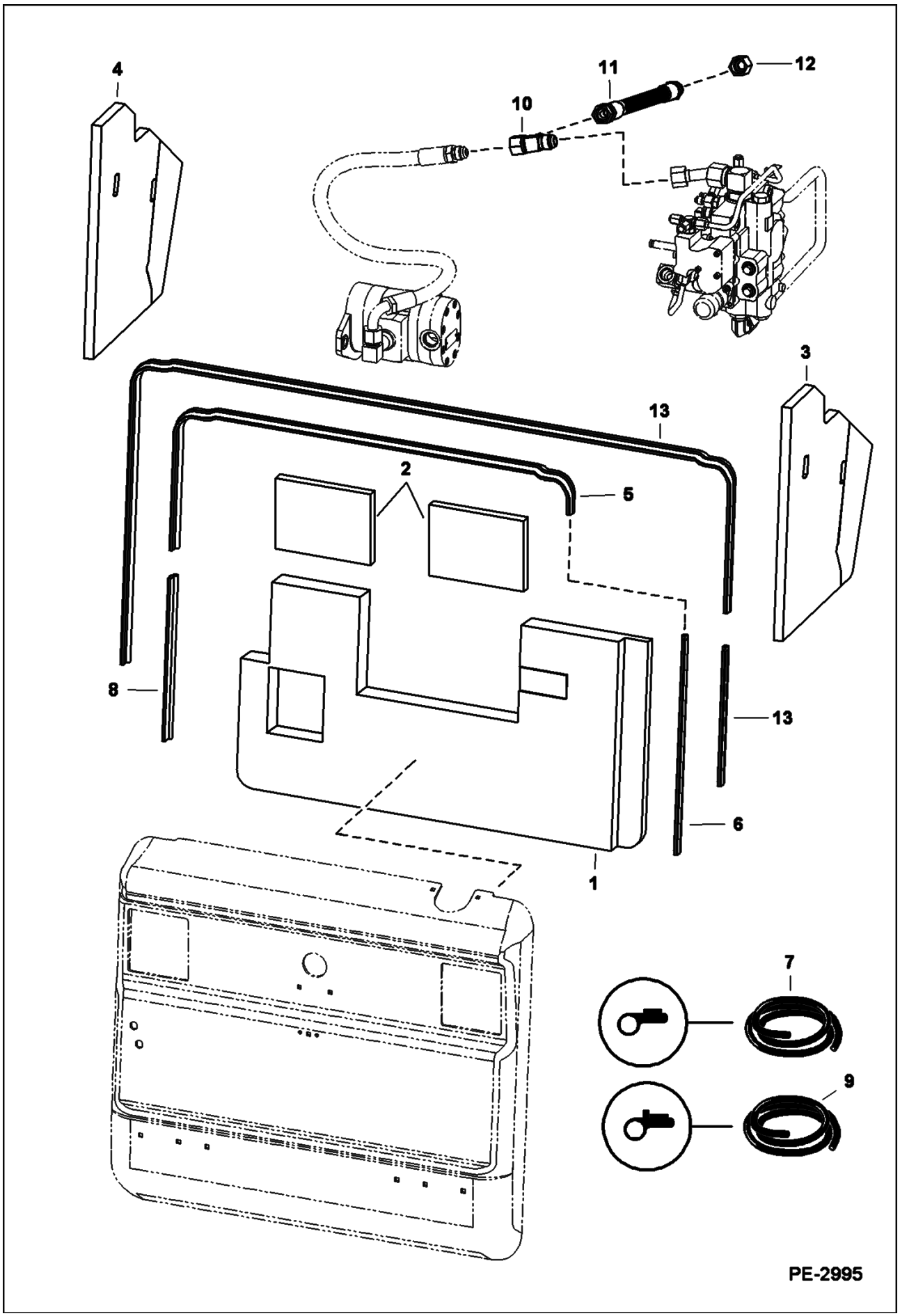

Page 450 - OSS# 2071408 - All rights reserved by Bobcat Company - 12/04/2009 - 07:23:36 - Produced by Ken Cook Co. with mediaioff

SOUND/NOISE REDUCTION OPTION (Cont'd)
(Bystander)

Ref No	Part Number	Description	Remarks	Serial Number	Qty
1	7166676	INSULATOR	tailgate - Was 7109317 [A]		1
2	7109318	INSULATOR	upper tailgate		2
3	7109319	INSULATOR	RH upright		1
4	7109320	INSULATOR	LH upright		1
5		SEAL	NAP - 57.25" (1454,00mm) long - Order Ref. 13		1
6		SEAL	NAP - 16.75" (425,45 mm) long - Order Ref. 13		1
7		SEAL, BULK/FOOT	NAP - bulk - sold per foot - Order Ref. 13 - Was 7108716		x
8		SEAL	NAP - 21.25" (539,75 mm) long - Order Ref. 13		1
9		SEAL - BULK/FT	NAP - bulk - sold per foot - Order Ref. 13 - Was 7108677		x
10	13K8	TEE			1
11	7112349	HOSE	15.8" (401,2 mm) long		1
12	36K8	CAP			1
13	7160444	SEAL	includes 2 seals custom cut to seal complete door		1

Page 451 - OSS# 2071408 - All rights reserved by Bobcat Company - 12/04/2009 - 07:23:36 - Produced by Ken Cook Co. with mediaioff

STROBE LIGHT

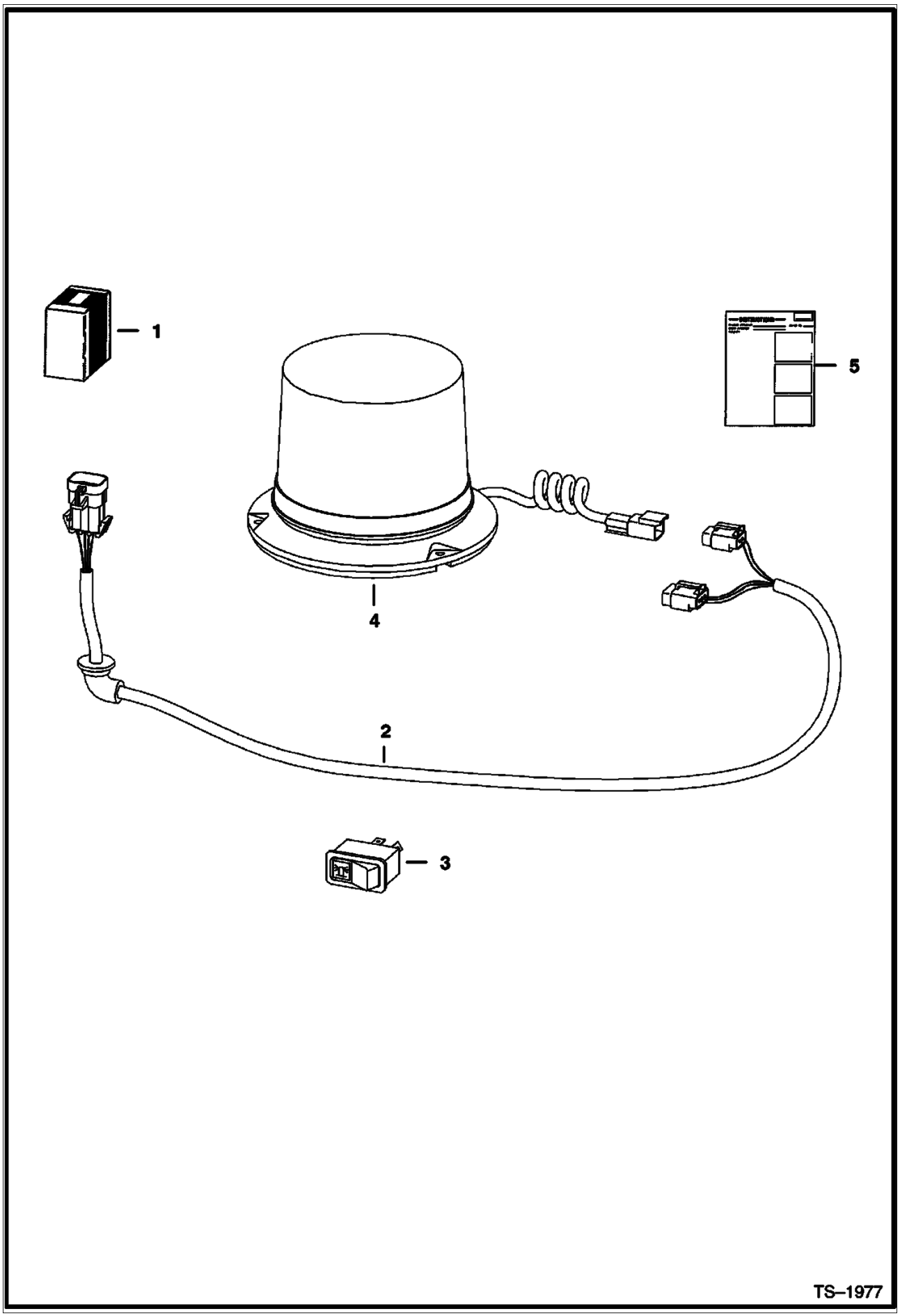

Page 452 - OSS# 2071408 - All rights reserved by Bobcat Company - 12/04/2009 - 07:23:36 - Produced by Ken Cook Co. with mediaioff

Ref No	Part Number	Description	Remarks	Serial Number	Qty
1	6719857	KIT	strobe light - if loader is not equipped W/deluxe cab accessories harness, heater, A/C, SJC, ACS, power Bob-Tach, cab enclosure door kit, rear wiper or any of the following cab harness connected rotating beacon or 4-way flasher, Also Order 7116260 deluxe cab accessories harness	5307 13759 & Bel	1
1	6719857	KIT	strobe light - if loader is not equipped W/deluxe cab accessories harness, heater, A/C, SJC, ACS, power Bob-Tach, cab enclosure door kit, rear wiper or any of the following cab harness connected rotating beacon or 4-way flasher, Also Order 7116260 deluxe cab accessories harness	5308 11510 & Bel	1
1	6719857	KIT	strobe light - if loader is not equipped W/deluxe cab accessories harness, heater, A/C, SJC, ACS, power Bob-Tach, cab enclosure door kit, rear wiper or any of the following cab harness connected rotating beacon or 4-way flasher, Also Order 7143071 deluxe cab accessories harness	5307 13760 & Abv	1
1	6719857	KIT	strobe light - if loader is not equipped W/deluxe cab accessories harness, heater, A/C, SJC, ACS, power Bob-Tach, cab enclosure door kit, rear wiper or any of the following cab harness connected rotating beacon or 4-way flasher, Also Order 7143071 deluxe cab accessories harness	5308 11511 & Abv	1
2	6718872	HARNESS			1
3	6665317	SWITCH	horizontal - not in kit		1
3	6668816	SWITCH	vertical		1
4	6675522	STROBE	4200 series light - Was 6697800 [A]		1
4	6675858	FLASH TUBES	round base bulb		1
4	6697796	FLASHTUBE	3 pin rectangular base bulb		1
4	6697797	AMBER LENS	Was 6665021 [A]		1
5	6900992	INSTRUCTIONS			1

Page 453 - OSS# 2071408 - All rights reserved by Bobcat Company - 12/04/2009 - 07:23:36 - Produced by Ken Cook Co. with mediaioff

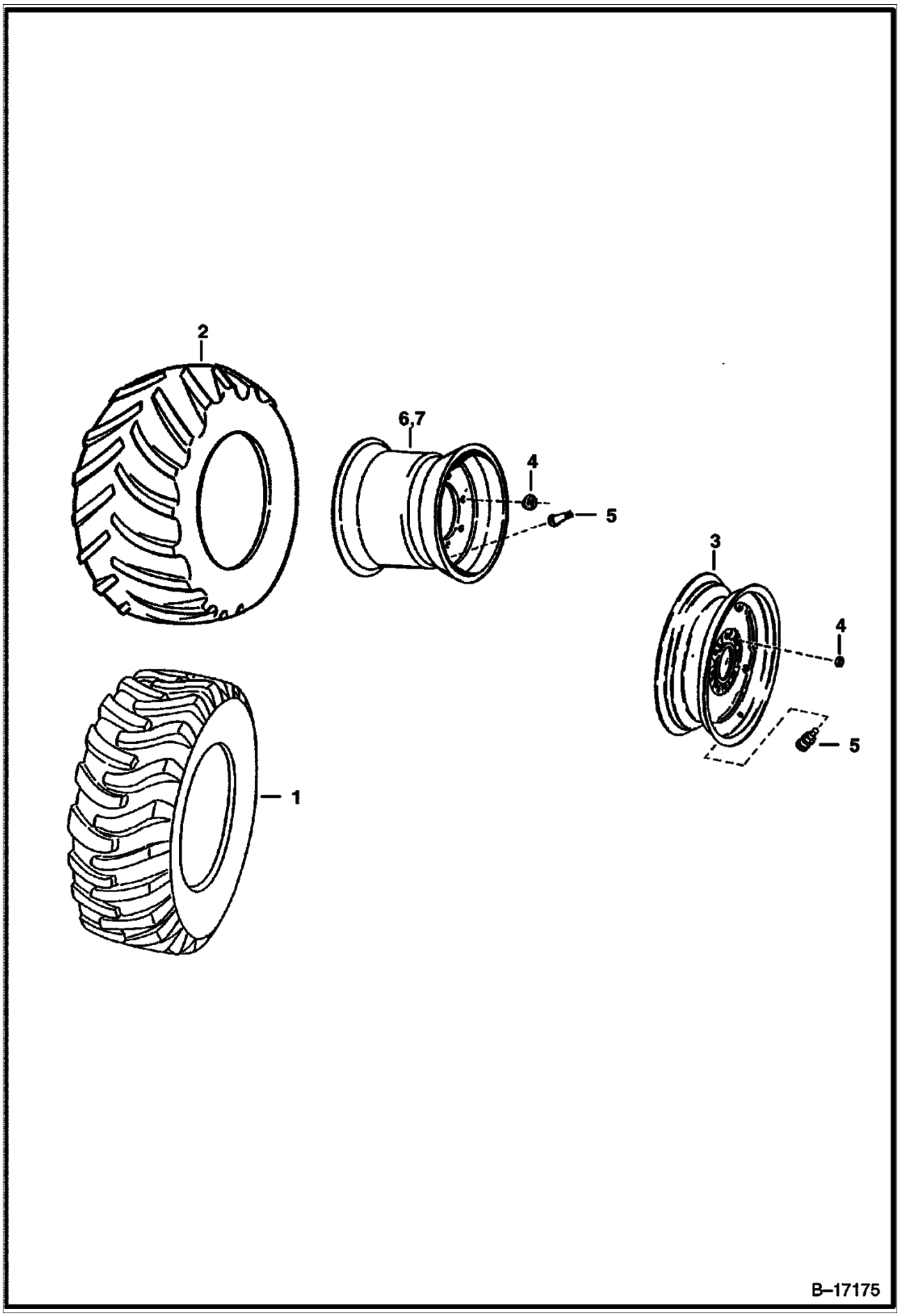

Page 454 - OSS# 2071408 - All rights reserved by Bobcat Company - 12/04/2009 - 07:23:36 - Produced by Ken Cook Co. with mediaioff

Ref No	Part Number	Description	Remarks	Serial Number	Qty
1	6729901	TIRE	12 x 16.5 12 ply rating - Bobcat - heavy duty - Note p/n on tire		4
1	7101736	TIRE, HEAVY DUTY - 12X16.5 - 12 PLY	12 x 16.5 12 ply rating - Bobcat - heavy duty - Note p/n on tire		4
1	6730108	TIRE	12 x 16.5 12 ply rating - Bobcat - severe duty		4
2	6730109	TIRE	33 x 15.5 x 16.5 12 Ply - Hippo - Galaxy		4
3	6730772	RIM	Used W/Ref. 1 - 72" wide		4
4	6564669	NUT	wheel		32
5	1614765	STEM	valve		4
6	6732847	RIM	used W/Ref. 2 - 74" wide		4
7	6733578	RIM	used W/Ref. 1 - offset - 68" wide		4

Page 455 - OSS# 2071408 - All rights reserved by Bobcat Company - 12/04/2009 - 07:23:36 - Produced by Ken Cook Co. with mediaioff

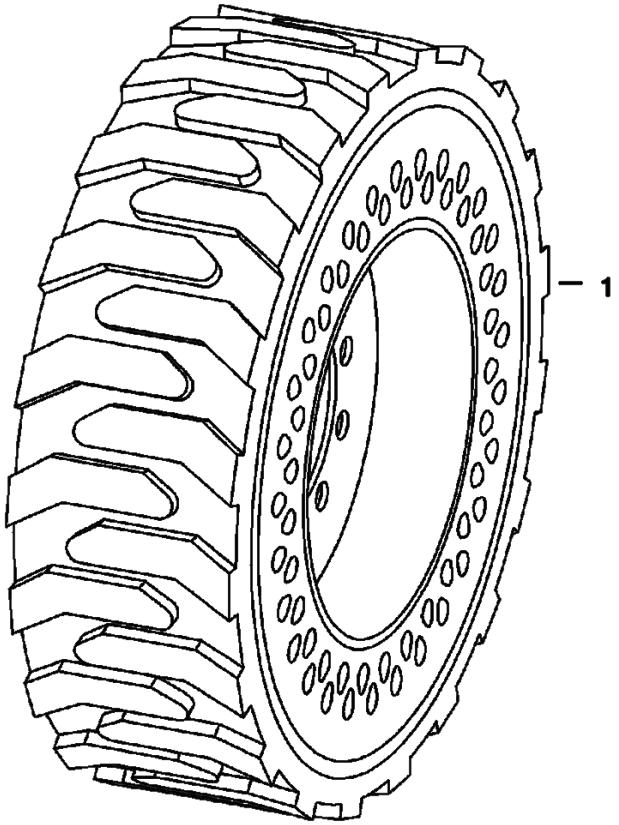

MS-2192

Page 456 - OSS# 2071408 - All rights reserved by Bobcat Company - 12/04/2009 - 07:23:36 - Produced by Ken Cook Co. with mediaioff

Ref No	Part Number	Description	Remarks	Serial Number	Qty
1	6903773	33X6X11 TWIN FLEX TIRE & WHEEL (LEFT)	LH - 12 x 16.5		2
1	6903774	33X6X11 TWIN FLEX TIRE & WHEEL (RIGHT)	RH - 12 x 16.5		2

Page 457 - OSS# 2071408 - All rights reserved by Bobcat Company - 12/04/2009 - 07:23:36 - Produced by Ken Cook Co. with mediaioff

WHITE DECAL KIT

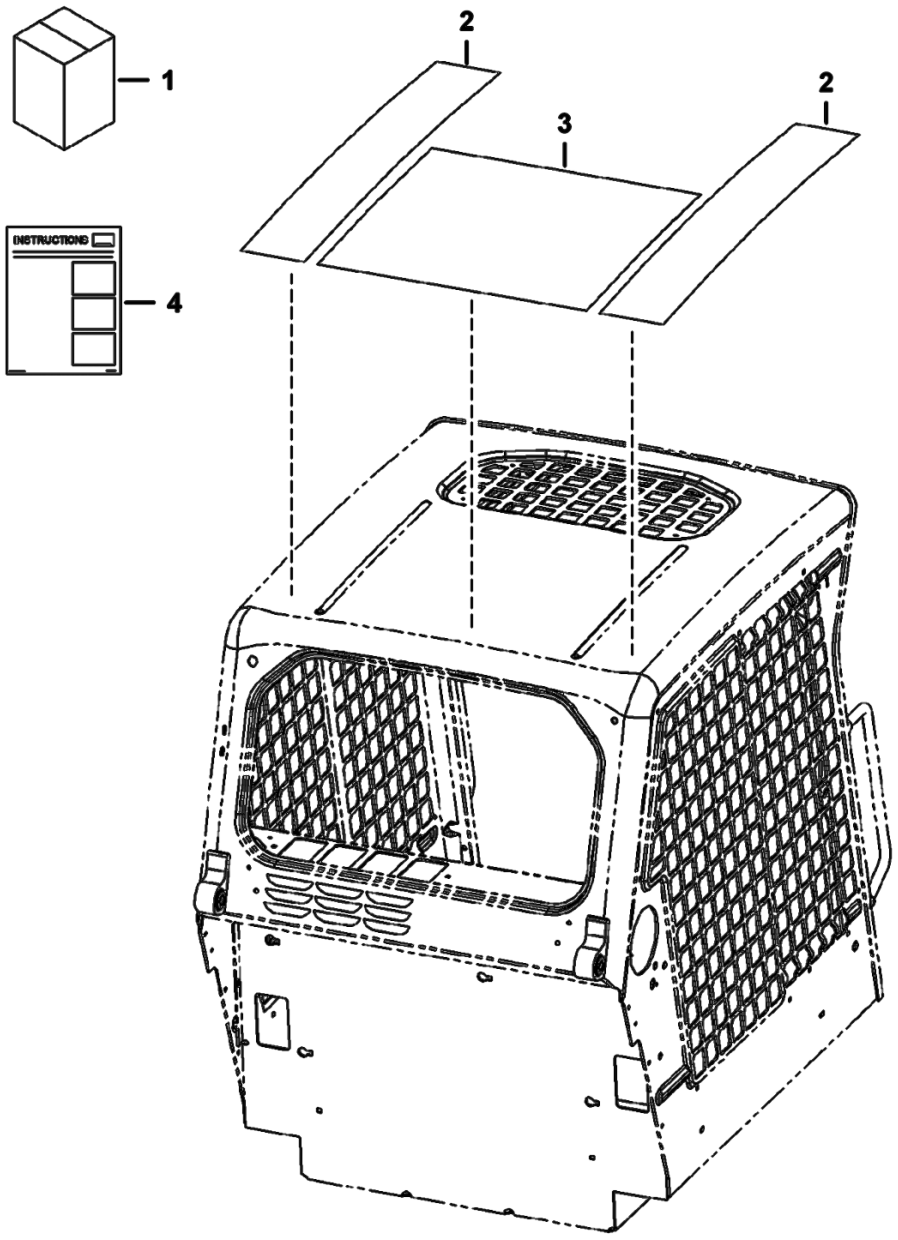

PE-3373

Page 458 - OSS# 2071408 - All rights reserved by Bobcat Company - 12/04/2009 - 07:23:36 - Produced by Ken Cook Co. with mediaioff

Ref No	Part Number	Description	Remarks	Serial Number	Qty
1	7140768	KIT	white decal - Ref. 2-4		1
2	7136678	DECAL	top side		2
3	7136679	DECAL	middle top		1
4	6986573	INSTRUCTIONS			1

Page 459 - OSS# 2071408 - All rights reserved by Bobcat Company - 12/04/2009 - 07:23:36 - Produced by Ken Cook Co. with mediaioff

BULK ITEMS
(See Note)

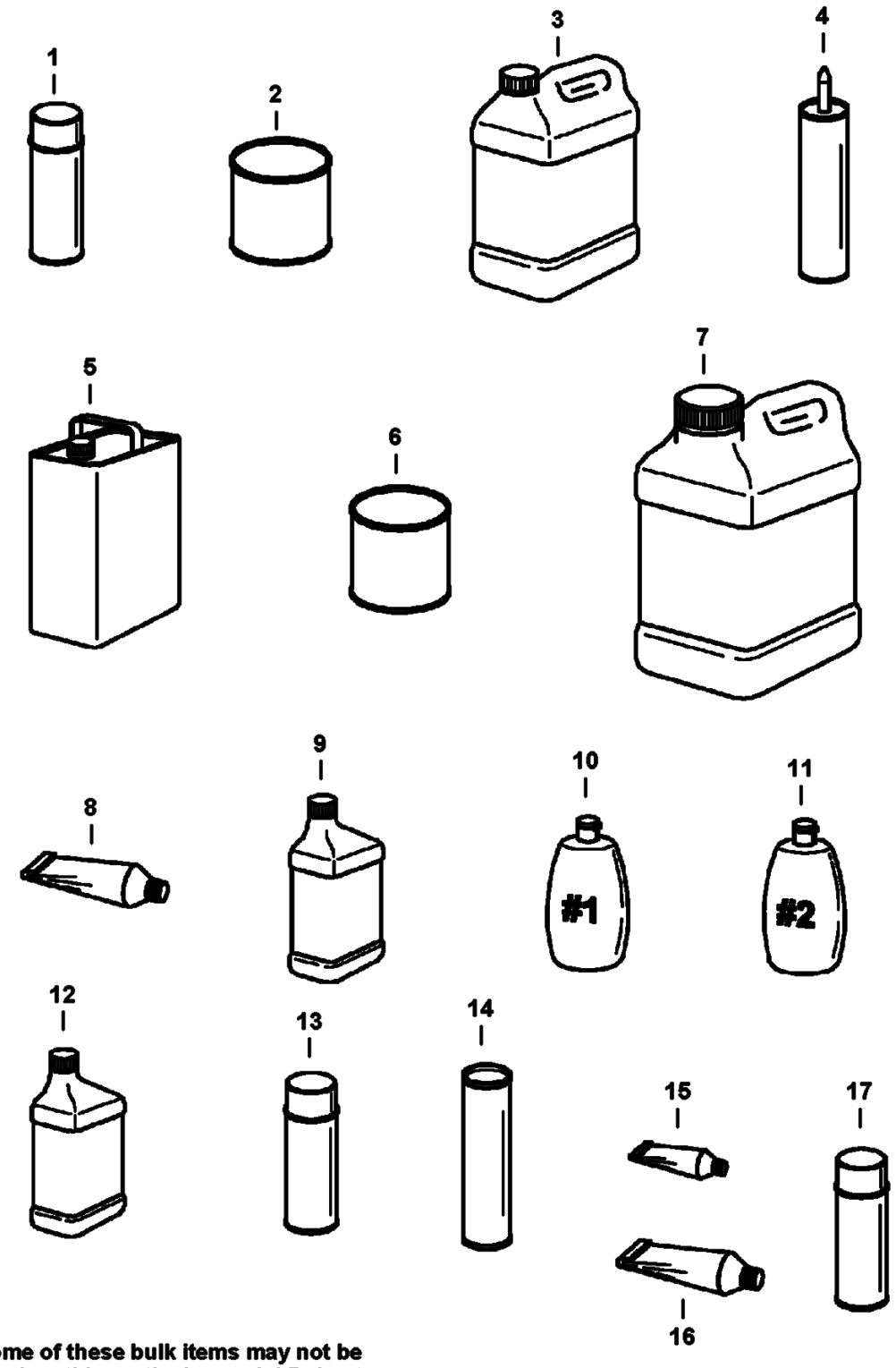

NOTE: Some of these bulk items may not be used on this particular model Bobcat.

NOTE: See Merchandising catalog for more products & information.

NOTE: Paint spray cans are packaged 6 per box.
Motor oil quarts are packaged 12 per box.
Motor oil 1 gal. jugs are packaged 6 per box.
Motor oil 2.5 gal. jugs are packaged 2 per box.

B-16415

Page 460 - OSS# 2071408 - All rights reserved by Bobcat Company - 12/04/2009 - 07:23:36 - Produced by Ken Cook Co. with mediaioff

BULK ITEMS (Cont'd)
(See Note)

Ref No	Part Number	Description	Remarks	Serial Number	Qty
1	6902228	PAINT, ORANGE SPRAY CAN 6			x
1	6902229	PAINT, CHARCOAL SPRAY CAN 6			x
1	6902230	PAINT, WHITE SPRAY CAN 6			x
2	6902233	PAINT, ORANGE QT 6			x
2	6902234	PAINT, CHARCOAL QT 6			x
2	6902235	PAINT, WHITE QT 6			x
3	6983128	ANTI-FREEZE PG 53/47 PREMIX GAL 6	Was 6724094 [A]		x
3	6983129	ANTI-FREEZE PG CONCENTRATE 6	Was 6724354 [A]		x
4	6633583	SEALANT	tube - 300 ml		x
5		REDUCER	NAP		x
6	6902236	PRIMER QT. 6	quart - Was 6653519 [A]		x
7	6903117	FLUID, OIL HYD 2.5 GAL 2	hydraulic / hydrostatic trans. fluid		x
7	6903118	FLUID, OIL HYD 5 GAL	hydraulic / hydrostatic trans. - 5 gallons container		x
7	6903119	FLUID, OIL HYD 55 GAL			x
8	6599360	SEALANT	electrical - tube - 3 oz		x
8	6685372	SEALANT, GASKET LIQUID	tube - 20 oz		x
9	6903121	LUBE, GEAR 12	90 wt. - use in cooling fan drive assy.		x
10	6630188	POLISH	window - #1 - 8 oz		x
11	6630189	POLISH	window - scratch remover - #2 - 8 oz		x
12	6903109	OIL 30W QT. 12			x
12	6903107	OIL, 10W30 QT. 12			x
12	6903105	OIL, 15W40 QT. 12			x
12	6903108	OIL, 10W30 GAL. 6			x
12	6903106	OIL, 15W40 GAL. 6			x
12	6903110	OIL, 30W GAL. 6			x
12	6903113	OIL, 15W40 2.5 GAL. 2	Was 6674204 [A]		x
12	6903112	OIL, 10W30 2.5 GAL 2			x
12	6903111	OIL 30W 2.5 GAL 2			x
13	6675380	ADHESIVE	insulation - spray can		x
14	6903122	GREASE, MULTI PURPOSE #2 - 10			x
14		GREASE	NAP - 14.5 oz. cartridge - For fan idler bearing & spring loaded drive idler - Was 6599719 [A]		x
15	6650407	ADHESIVE	tube - 1 oz		x
16	6650388	SEALANT	flange		x

Page 461 - OSS# 2071408 - All rights reserved by Bobcat Company - 12/04/2009 - 07:23:36 - Produced by Ken Cook Co. with mediaioff

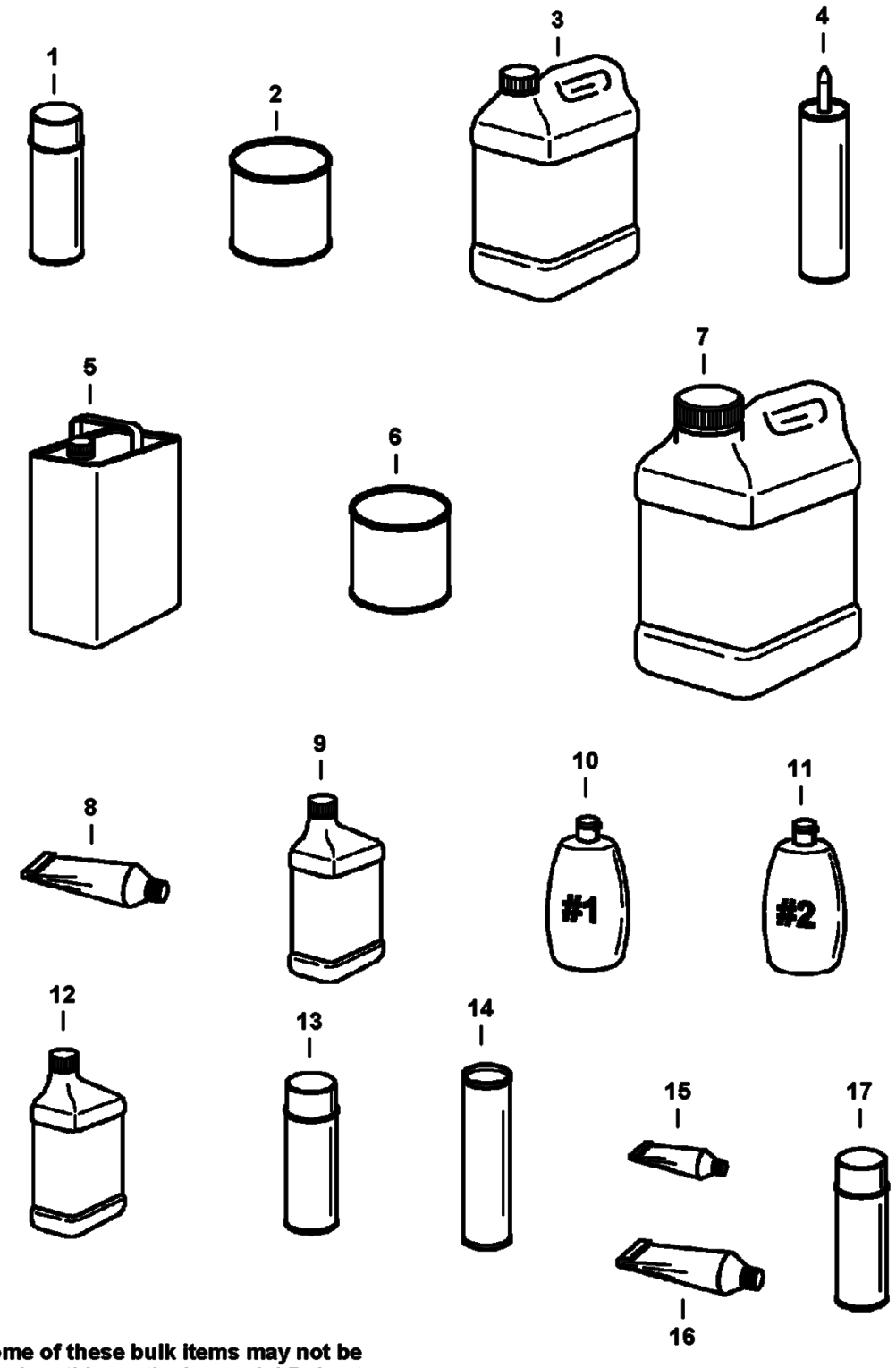

NOTE: Some of these bulk items may not be used on this particular model Bobcat.

NOTE: See Merchandising catalog for more products & information.

NOTE: Paint spray cans are packaged 6 per box.
Motor oil quarts are packaged 12 per box.
Motor oil 1 gal. jugs are packaged 6 per box.
Motor oil 2.5 gal. jugs are packaged 2 per box.

B-16415

Page 462 - OSS# 2071408 - All rights reserved by Bobcat Company - 12/04/2009 - 07:23:36 - Produced by Ken Cook Co. with mediaioff

BULK ITEMS (Cont'd)
(See Note)

Ref No	Part Number	Description	Remarks	Serial Number	Qty
17	6736644	PAINT	orange - spray can - .5 oz		x
17	6736641	PAINT	charcoal - spray can - .5 oz		x
17	6736642	PAINT	white - spray can - .5 oz		x
17	6736645	PAINT	red - spray can - .5 oz		x

Page 463 - OSS# 2071408 - All rights reserved by Bobcat Company - 12/04/2009 - 07:23:36 - Produced by Ken Cook Co. with mediaioff

Page 464 - OSS# 2071408 - All rights reserved by Bobcat Company - 12/04/2009 - 07:23:36 - Produced by Ken Cook Co. with mediaioff

Part No.	Description	Was	Code	Page
10C410	BOLT			300
10C412	BOLT			300
10C512	BOLT			272
10C612	BOLT			212, 304
10C616	BOLT 10			24
10H25	FITTING, GREASE 5			30, 32, 72
10H35	GREASE ZERK			32, 122
11H15	GREASE FITTING			30, 74
12D10	NUT			328
12D8	NUT			322, 324
12H15	GREASE ZERK			30, 74
12H25	FITTING			398, 400
1304227	PIN			228
1306637	CLIP			78
1313116	BUSHING			220
1318565	COTTER PIN			106, 108
1320075	COTTER PIN			384, 386
1321607	CUP, BEARING			58
1321608	BEARING, CONE			58
13K8	TEE			440
14D10	NUT			226, 228, 324
14J3112	PIN			220, 222
14J5032	PIN, STRAIGHT			32
1522534	SEAL			74
15HB1010	ADAPTER, COUPLER	78HA1010	A	110, 112, 114, 304
15HB1010	ADAPTER, COUPLER	78HA1010	B,D	110, 112, 114, 304
15HB1210	ADAPTER, COUPLER	78HA1210	A	110, 112, 304
15KB1008	ADAPTER			93, 94, 110, 112, 114
15KB1010	FITTING			110, 112, 114
15KB1012	ADAPTER			110, 112
15KB1210	ADAPTER			60, 62, 64, 66, 280
15KB1212	ADAPTER			110, 112, 114, 396, 400
15KB1612	CONNECTOR			116, 118
15KB1616	ADAPTER			68
15KB404	CONNECTOR			120
15KB406	ADAPTER			70, 396, 400
15KB606	ADAPTER			68, 70, 110, 112, 114, 120
15KB612	ADAPTER			110, 112, 114, 396, 400, 412
15KB808	CONNECTOR			116, 118
1614765	STEM			444
16F2	PLUG			240
17C10112	BOLT			30
17C10136	BOLT			30
17C1024	BOLT			58
17C1028	BOLT			382
17C1056	BOLT			18
17C1064	BOLT 5			224
17C410	BOLT 10			274, 322, 324, 376, 378
17C412	BOLT 5			51, 52, 53, 54
17C428	BOLT			70
17C508	SCREW			322, 324
17C510	BOLT			222

Code for disposition of old part number
A -- Use up
B -- Use on other application (See PNI)
C -- File PDR Report with Bobcat Parts Sales
D -- Part Number Error

Page 465 - OS$# 2071408 - All rights reserved by Bobcat Company - 12/04/2009 - 07:23:36 - Produced by Ken Cook Co. with mediaioff

Part No.	Description	Was	Code	Page
17C512	BOLT 5			226, 228, 284, 288, 322, 324
17C516	BOLT			392
17C520	BOLT 5			392
17C540	BOLT			180, 280
17C608	BOLT			270
17C610	BOLT			180
17C6116	BOLT	7101373	A	210, 212
17C6116	BOLT			210, 212
17C612	BOLT 5			34, 78, 110, 112, 124, 188, 192, 194, 284, 288
17C614	BOLT			314
17C616	BOLT 5			78, 186, 190, 194, 332, 382
17C620	BOLT			78, 98, 102, 110, 112, 122, 210, 212, 218
17C624	BOLT 5			78, 288
17C628	BOLT			288
17C632	BOLT 5			384, 386
17C636	BOLT			120
17C640	BOLT 5			24, 68, 306
17C644	BOLT			98, 102
17C648	BOLT 5			30
17C652	SCREW			382
17C656	BOLT			30, 360, 364
17C660	BOLT			32
17C664	BOLT			29, 30
17C672	BOLT			30, 382
17C680	BOLT			122, 412
17C716	BOLT			20
17C728	BOLT			116, 118
17C820	BOLT			28
17C832	BOLT			220
17C844	BOLT			70
17C872	BOLT			220
17KB1210	ELBOW			64, 66, 280
17KB1212	ELBOW			412
17KB404	ELBOW			120, 396, 400
17KB606	ELBOW			82, 88, 98, 102, 110, 112, 114, 120, 396, 400, 412
18EM1224	WASHER			282, 288
19F12	BUSHING			278
19J12	CLAMP			98, 102
19KB606	TEE			120, 334
1C888	BOLT			380
1CM540	BOLT			60, 62, 64, 66
1CM635	BOLT			360, 366
1CM640	SCREW			282, 288
1CM8110	HEX CAP S	1CM8100	D	222
1CM820	BOLT			122
1DM6	NUT			264
1EM120	WASHER	25E21	B	220
1F316	PIN			114, 162, 210, 214
1K127	O-RING 10	93K127	A	80, 84, 88
20J16	FLANGE			116, 118
21G804	BOLT			336
21JM20	PIN			256
21JM814	PIN			241, 242
21KB606	TEE			70, 412

Code for disposition of old part number

A -- Use up
B -- Use on other application (See PNI)
C -- File PDR Report with Bobcat Parts Sales
D -- Part Number Error

Page 466 - OSS# 2071408 - All rights reserved by Bobcat Company - 12/04/2009 - 07:23:36 - Produced by Ken Cook Co. with mediaioff

Part No.	Description	Was	Code	Page
225855	SEAL, OIL			30
24F1	ELBOW			180
24K3	PLUG			408
24K5	PLUG			102
24K7	PLUG			80, 84, 88
25E10	WASHER			172
25E11	WASHER			226
25E13	WASHER 5			52, 54, 196, 204, 270, 274, 376, 378
25E14	WSHR			300
25E15	WASHER			180
25E16	WSHR			282, 288
25E17	WASHER 5			162, 210
25E24	WASHER	25E22	B	124, 194
25G410	CAPSCREW			176
25G512	SCREW			26
25G520	SCREW			26
25G612	SCREW			320
25G824	BOLT			386
25GM8010	SCREW			238
25GT410	SCREW			196, 200
25K20016	O RING 10			80, 84, 88
25K20100	O RING 10			48, 190
25K30110	O RING 10	54K30110	B	402
25K30118	O RING 10			98, 102
25K30126	O RING 10	54K30126		32
25K30202	O RING 10			74
25K30218	O RING 10	54K30218	B	72
25K30812	O-RING, 10			42
25K40208	O RING 10	54K40208	B	74
25K40224	O RING 10	54K40224	B	72
27E10	WASHER			30
27E12	WASHER			386
27E6	WASHER 5			224
29CM612	BOLT			234
29CM820	SCREW			218, 222
29G416	BOLT			80, 84, 88, 186, 188, 190, 194
29G444	BOLT			80, 84, 88
2C1626	BOLT			57, 58
2CM1055	SCREW			180
2DM8	NUT			238
2F4051	PIN			228
30H21	CLAMP 10			330
30H26	CLIP			226, 228
30H27	CLAMP			318
30H31	CLAMP 10			226, 228
30H34	CLAMP			216
30H35	CLAMP 10			318
30H42	CLAMP			186, 388
30H46	CLIP			190
30H50	CLIP			320
30H62	CLIP			270
30H73	CLAMP			222
30H75	CLAMP			22, 40, 172
30H79	CLAMP			116, 118

Code for disposition of old part number

A -- Use up
B -- Use on other application (See PNI)
C -- File PDR Report with Bobcat Parts Sales
D -- Part Number Error

Page 467 - OSS# 2071408 - All rights reserved by Bobcat Company - 12/04/2009 - 07:23:36 - Produced by Ken Cook Co. with mediaioff

Part No.	Description	Was	Code	Page
30H91	CLAMP			216
31C1036	SCREW			384
31C1044	BOLT			386
31C1224	BOLT			42
31C1228	BOLT			14, 16, 42, 120
31C410	BOLT			328
31C412	BOLT			386
31C636	BOLT			304
31C644	BOLT			68
31C820	BOLT			220, 222
31C824	BOLT 10			14, 16, 222, 384, 386
31H34	CLIP			222
31H38	CLAMP			222, 412
31H42	CLIP			334, 396
31H46	CLAMP			360, 364
31H49	CLAMP			60, 62, 64, 66, 400
3291290	NUT			266
35C1020	BOLT			308
35C408	BOLT			282
35C410	BOLT 5			272, 274, 322, 324, 338, 342
35C412	BOLT			24, 48, 50, 324, 330
35C512	BOLT			36, 378
35C514	BOLT			194, 270, 376
35C516	BOLT 10			98, 102, 216, 300
35C536	BOLT			322, 324
35C612	BOLT			106, 108, 180, 398, 400, 426
35C616	BOLT 5	17C624		70
35C616	BOLT 5			70
35C624	BOLT			412
35C632	BOLT			98, 102
35C820	BOLT			70
36K5	CAP			70, 80, 82, 88, 98, 102, 116, 118
36K6	CAP			222
36K8	CAP			60, 62, 440
37C412	BOLT			330
37C424	BOLT			338, 342
37C512	BOLT			28, 52, 210, 212, 338, 342, 388
37C516	BOLT	10C512	B	274
37C612	BOLT			28
37C616	BOLT			180
37C620	BOLT			36, 78, 178, 194, 270
38C610	BOLT			226, 228
38C824	SCREW			28
38C828	BOLT			219, 220
38C840	BOLT			28
3974037	PIN	6680643	A	242
3974056	CAP	6680637	A	242
3974095	MET-GASK			230, 234, 254, 256, 264
3974095	MET-GASK	6680792	A	230, 234, 254, 256, 264
3974143	BAND,PIPE			234
3974226	KEY			242
3974260	SCREW			254
3974389	CAP, SEALING	6680638	A	242
3974390	PLUG	6680639	A	242

Code for disposition of old part number
A -- Use up
B -- Use on other application (See PNI)
C -- File PDR Report with Bobcat Parts Sales
D -- Part Number Error

Page 468 - OSS# 2071408 - All rights reserved by Bobcat Company - 12/04/2009 - 07:23:36 - Produced by Ken Cook Co. with mediaioff

Part No.	Description	Was	Code	Page
3974394	PIN			256, 258
3974409	PLUG	6685961	A	232
3974432	PLUG	6680665	A	236
3974433	PLUG	6680666	A	236
3974503	STUD			256
3974524	WASHER	6680766	A	262
3974920	SCREW			238
3974972	GASKET			230, 264
3975389	GASKET	6680753	A	258
3D6	NUT			114, 162, 210, 214
42H52	CLAMP			218
42HC250	CLAMP			218
42HC375	CLAMP			217, 218
42HL250	CLAMP			38, 98, 102
42HS4	CLAMP			40
43C408	BOLT			204
43C516	BOLT			38
43C612	BOLT	17C612	B	78
43C616	BOLT			175, 176, 186, 190
43C680	BOLT			224
43C852	BOLT			222
43DM8	NUT			180
44H48	CLAMP			360, 361, 362, 364
45C516	SCREW	53C516	A	38
45C616	BOLT			218, 228
45C620	BOLT			122, 222
45C824	BOLT	31C824	B,D	132, 224
45C824	BOLT			132, 224
45G1006	BOLT			328
46D5	NUT			282, 288
47C620	BOLT	7105193	A	124
47C820	BOLT			52, 54
47K10	PLUG			98, 102
47K8	PLUG			134, 138
49C1048	BOLT			386
49C412	BOLT			212, 304
49C628	BOLT			78, 122
4D28	NUT			382
4DM10	NUT			180
4DM8	NUT			208
4F6106	PIN			24
51DM12	NUT			282, 288
51DM8	NUT			180
5289686	PLUG			18, 22
53D10	NUT	57D10	B	18, 30, 386
53D10	NUT			18, 30, 386
53D12	NUT			14, 16
53D6	NUT			18, 78, 224, 386
53D8	NUT			386
53DM8	NUT			218, 222
54K20028	O RING 10			82, 88
54K30110	O-RING			404
54K40116	O-RING			402, 404
55D5	NUT			322, 324

Code for disposition of old part number

A -- Use up
B -- Use on other application (See PNI)
C -- File PDR Report with Bobcat Parts Sales
D -- Part Number Error

Page 469 - OS$# 2071408 - All rights reserved by Bobcat Company - 12/04/2009 - 07:23:36 - Produced by Ken Cook Co. with mediaioff

Part No.	Description	Was	Code	Page
55D6	NUT			28, 288, 390
55K204	O RING 10			80, 84, 88
55K214	O-RING			98, 102, 396, 400
55K219	O'RING			116, 118
57D10	NUT			308, 384
57D5	NUT			272
57D6	NUT 5			36, 78, 194, 214, 304, 384
57D8	NUT 10			384
57G608	SCREW			338, 342
58K120	O-RING	6686220	B,D	186, 190, 194
58K13	O-RING			82, 84, 88
58K132	O'RING			402, 404
58K16	O RING 10			82, 84, 88
58K17	O RING 10			80, 84, 88
58K22	O RING 10			82, 90, 106, 108
58K234	O RING 10	54K40300	B	72
58K4	O-RING			80, 84, 90
58K4	O-RING	54K020002B	B	80, 84, 90
59CM1240	BOLT	53CM1240	A	132
59D4	NUT 5			176, 300, 330, 338, 342
59D5	NUT 5			24, 52, 60, 62, 64, 66, 180, 284, 288, 338, 339, 340, 342
59D6	NUT			28, 68, 98, 102
59D8	NUT 5			18
5CM1020	SCREW			216, 218, 222, 364
5CM1025	BOLT			360
5CM1080	SCREW			360, 364
5HM13	CLAMP			38
5HM14	CLAMP			40, 216
5HM15	CLAMP			98, 102
5HM20	CLAMP			356, 358
5HM23	CLAMP			216
5HM24	CLAMP			38
5HM29	HOSECLAMP	5HM00027B	A	94
5HM42	HOSECLAMP			98, 102, 106, 108
5HM55	CLAMP			216
5HM58	CLAMP			40
5JM20	CIRCLIP, EXTERNAL			256
614142	SLEEVE 10			330
619021	WASHER, 5			24, 32, 78, 228, 396, 400, 412, 422
61D5	NUT			27, 28, 210, 212, 274, 284, 290
61D6	NUT 5			270, 284, 306, 314
62D4	NUT			226, 228
62D6	NUT 5			122
634187	NUT,SPTWLD			304
63D6	NUT			78
6511855	SEAL			22, 210, 212
6512026	BUSHING			78
6513152	SEAL			282, 288
6513471	CLAMP			216
6513495	COTTER PIN			78, 228
6515131	TERMINAL			330
6515817	WASHER			18
6517516	LIGHT			330
6518955	SNAP RING			220

Code for disposition of old part number

A -- Use up

B -- Use on other application (See PNI)

C -- File PDR Report with Bobcat Parts Sales

D -- Part Number Error

Page 470 - OSS# 2071408 - All rights reserved by Bobcat Company - 12/04/2009 - 07:23:36 - Produced by Ken Cook Co. with mediaioff

Part No.	Description	Was	Code	Page
6519178	BUMPER			24, 30
6531270	SLEEVE			80, 84
6532127	BOOT			34, 196, 200
6532453	RING			402, 404
6533898	DECAL			310, 384, 386
6538367	HEAD, CYL TILT			72
6542731	SAFETY TREAD			282, 288
654299	BEARING			134, 138
6553411	BUSHING			38, 52, 54, 56
6553709	WASHER			18
6553976	SAFETY TREAD			310
6554100	TREAD			228, 310
6554149	CORD			22, 282, 300
6555331	WIRE ROPE			300
6555341	SAFETY TREAD			310, 398, 400
6555351	SEAL			300
6557224	DECAL			310
6557493	GROMMET			418
6557831	WASHER			78, 112, 114, 162, 212, 213, 214, 360, 364
6557904	FLASHER			322, 324, 330
6558309	WIRE ROPE			310
6558310	SLEEVE			310
6558693	WEAR RING			58
6559479	NUT			228
6560573	DECAL			312
6560633	DAMPENER			18
6561383	DECAL			310
6562602	BUSHING			18
6563914	WASHER			78, 122
6564343	SPACER			228
6564452	GRIP			28, 225, 226, 227, 228
6564654	PIN			78
6564657	PIN			194
6564669	NUT			58, 444
6565200	DECAL			310
6565947	WASHER			58
6565977	HOSE			356, 358, 366
6565990	DECAL			310
6567743	PIN			18, 336
6567838	PIN			384, 386
6567962	WASHER			226, 228
6568424	ADAPTER			220
6568425	ADAPTER			220
6569203	CLAMP			180
6569219	SCREEN			38, 98, 102
6569498	SPRING ASSY			220
6570931	INSTRUCTIONS			268
6576033	WASHER			220
6576261	COVER	6734520	A	226, 228
6576262	MOUNT			226, 228
6576280	BOLT			180
6577058	PIN			122
6577382	SPACER			210, 212
6577545	GROMMET			272, 274, 376, 378

Code for disposition of old part number

A -- Use up

B -- Use on other application (See PNI)

C -- File PDR Report with Bobcat Parts Sales

D -- Part Number Error

Page 471 - OSS# 2071408 - All rights reserved by Bobcat Company - 12/04/2009 - 07:23:36 - Produced by Ken Cook Co. with mediaioff

Part No.	Description	Was	Code	Page
6577754	DECAL			312
6577821	HOSE			40
6577822	HOSE			40, 216
6577880	KIT			267, 268
6577954	PIN			30
6577961	GROMMET			34, 36, 78, 228
6578169	HOSE			38
6578172	HOSE			40, 216
6578253	SPRING, COMPRESSION	6562018	A	32
6578278	PAD			38, 98, 102
6578368	DECAL			312
6578804	HOSE			112, 114
6578857	HUB, WHEEL			58
6579385	DECAL			312
6579528	DECAL			310
6579613	STOP			18, 210, 212
658128	RING, SNAP			134, 138
6586251	HOSE			98, 102
6586542	HEAD			402, 404
6586543	PISTON			402, 404
6586710	BOLT			220
6586918	SCREW			80, 84
6587182	SWIVEL PIN			220
6587458	KEY			38
6587523	WASHER			80, 84, 88, 89, 90
6587575	ADAPTER			80, 84
6587580	SPRING			80, 84, 90
6587763	BOOT			80, 84, 204
6587765	BUSHING, PRESS FIT			220
6589226	BONNET			80, 84
6592098	WASHER			80, 84
6592100	COLLAR			80, 84, 90
6592105	BALL			80, 84
6592107	SPRING			80, 84
6592109	ADAPTER			80, 81, 82, 84, 85, 86, 90
6592117	SPRING			80, 84, 88
6592506	CLAMP			60, 62, 64, 66, 98, 102
6592507	PLATE			98, 102
6592776	SPACER			74
6595663	BUSHING			80, 84, 88
6596807	PLUG			80, 84
6597009	HEAD			74
6597015	ROD			74
6598112	CAP			260
6598156	STUD	6680807	A	258
6598702	SPRING			262
6598908	ELBOW			40
6599085	NUT			264
6599360	SEALANT			450
6599365	KIT			170
6599645	PLUG, STEEL			38
6599741	WASHER			122
6599744	BALL JOINT			122

Code for disposition of old part number
A -- Use up
B -- Use on other application (See PNI)
C -- File PDR Report with Bobcat Parts Sales
D -- Part Number Error

Page 472 - OSS# 2071408 - All rights reserved by Bobcat Company - 12/04/2009 - 07:23:36 - Produced by Ken Cook Co. with mediaioff

Part No.	Description	Was	Code	Page
6599931	ALARM			272, 274
6610510	TIE			216, 284, 376, 378
6624289	TIE STRAP			22, 60, 62, 64, 66, 68, 70, 112, 114, 172, 176, 180, 182, 188, 190, 270, 272, 280, 304, 318, 320, 322, 324, 334, 356, 358, 360, 364, 388, 396, 400, 412, 432, 434, 436, 438
6628613	HOSE			120
6630188	POLISH			450
6630189	POLISH			450
6630207	RIVET	6512797	A	18, 34, 430
6630207	RIVET			18, 34, 430
6630945	WASHER			226, 228
6631046	SEAL			240
6631418	PIN			18, 24, 336
6632279	KIT, SEAL			82, 86, 90
6633583	SEALANT			450
6640690	PIN			182, 196, 200
6640692	CONNECTOR			182, 196, 200
6640694	LOCK			182, 196, 200
6640699	CONNECTOR			196, 200, 286, 338
6640700	LOCK			196, 200
6641176	SEAL			182, 196, 200
6641179	CONNECTOR			92, 182, 196, 200
6641180	LOCK			92, 182, 196, 200
6644965	BALL JOINT			226, 228
6645086	PLUG			134, 138
6646582	PLUG			196, 200
6646781	SWITCH			272
6647777	PIN			92
6647778	CAP			92
6647783	LOAD CHECK			92
6647784	PLUG			92
6647785	SPRING			92
6647786	SEAL KIT			92
6648293	SCREW			92
6648294	SPRING			92
6648307	CONNECTOR			360
6648308	CONNECTOR			360
6648312	TERMINAL			350
6648320	SEAL			350
6648348	PLUG			34, 36
6649244	STUD			282, 288
6649245	RETAINER			282, 288
6649481	LIGHT, WEDGE BASE			388
6649551	SHOCK			122
6649706	PIN			308
6649949	PLUG			212, 304
6650107	SEAL			350
6650120	RACE			44, 46, 48, 50
6650388	SEALANT			450
6650407	ADHESIVE			450
6650627	PLATE			134, 138
6650629	PIN			134, 138
6650630	RETAINER			134, 138

Code for disposition of old part number

A -- Use up
B -- Use on other application (See PNI)
C -- File PDR Report with Bobcat Parts Sales
D -- Part Number Error

Page 473 - OSS# 2071408 - All rights reserved by Bobcat Company - 12/04/2009 - 07:23:36 - Produced by Ken Cook Co. with mediaioff

Part No.	Description	Was	Code	Page
6650634	GASKET			134, 138
6650635	BEARING			134, 138
6650636	PIN			134, 138
6650637	BOLT			134, 138
6650646	O-RING			134
6650647	O-RING			134
6650648	PLUG			134
6650652	POPPET			134
6650668	BOLT			134, 138
6650675	COUPLER			134
6652018	BOLT			138
6652373	VALVE			266
6652574	PLUG	6598169	A	236, 242
6652592	PIN	6680774	A	262
6652656	NUT			260
6652670	STUD	3974916B	A	232, 236, 240
6652679	KEY			246
6652750	PLUG			242
6652751	GASKET	6631046	D	230, 242
6652751	GASKET			230, 242
6652918	NUT			222
6653993	CLAMP			234
6654139	MOULDING			18, 190, 194
6654718	CLAMP	6680795	A	254
6654806	FUSE, 15A			176
6655399	BUMPER			210, 212
6655515	JOINT	3974500B	A	258
6656009	PIN			326
6657028	O-RING			134, 138
6657067	COVER	6675338	A	136, 138
6657067	COVER			136, 138
6657068	COVER			134, 138
6657459	NUT	6680499	A	264
6657719	PLUG			22, 300
6657734	PUMP			38
6658180	PLUG			38
6658229	SEAL, OIL			58
6659369	HEATER			278
6659543	PLUG			394
6659999	BELT, SEAT			430
6660260	SWITCH			170
6660644	CAP			80, 84
6660814	O-RING			134, 138
6660967	CAP			220
6661022	FILTER			6, 68, 116, 118, 167, 168
6661062	PLUG			218, 394
6661114	CAP			37, 38
6661248	FILTER, OIL HYD 12			2, 6, 10, 106, 108, 170
6661353	LIGHT ASSY			388
6661377	SEAL			220
6661481	O-RING			134
6661696	CAP			38
6661787	WASHER			222
6661807	FILTER, OIL HYD			2, 11, 12, 168

Code for disposition of old part number
A -- Use up
B -- Use on other application (See PNI)
C -- File PDR Report with Bobcat Parts Sales
D -- Part Number Error

Page 474 - OSS# 2071408 - All rights reserved by Bobcat Company - 12/04/2009 - 07:23:36 - Produced by Ken Cook Co. with mediaioff

Part No.	Description	Was	Code	Page
6661808	KIT			168
6662126	BRACKET	6631643	A	132
6662248	4 PIN PLUG			192
6662298	RING, RETAINER			52
6662848	CAP			88
6662855	BELT, DRIVE			220
6663289	FUSE, 5A			176
6664065	WASHER			418
6664085	BUSHING			22, 286, 300, 418
6664097	COVER			418
6664103	NUT			418
6664185	CONNECTOR			190, 191, 192
6664221	RETAINER			22
6664223	OUTLET			22
6664224	CAP			22
6664554	PUMP, WIPER WASHER			284
6664566	BOLT			418
6664801	CONNECTOR			192
6664845	CONE, BEARING			44, 46, 48, 50
6664848	SNAP RING			44, 48
6664969	CONNECTOR			190
6665000	CLIP			196, 200, 282, 288
6665017	CONNECTOR			350
6665018	LOCK			350
6665222	GEAR, RING STARTER			220
6665308	SNAP RING			220
6665314	PLUG			22, 172
6665316	SWITCH			330
6665317	SWITCH			276, 442
6665321	RIVET			196, 200, 282, 288
6665322	RIVET			196, 200, 282, 288
6665367	BULB			22
6665371	SWITCH			180
6665427	BATTERY, DRY 950 AMP			2, 180
6665568	EXTRUSION			282
6665569	WASHER			80, 84, 88
6665570	RING			80, 84, 88
6665602	MOTOR			418
6665701	BUSHING, PRESS FIT			78, 194
6665707	SWITCH			282
6665727	LIGHT			322, 324
6665728	LIGHT			322, 324
6665729	LIGHT			322, 324
6665755	SEAL, OIL			44, 46, 48, 50
6665860	KIT			322, 324
6665915	GAUGE			98, 102
6666338	WASHER			134, 138
6666542	SEAL			402, 404
6666564	HOUSING			322, 324
6666565	LENS			322, 324
6666566	GASKET			322, 324

Code for disposition of old part number

A -- Use up
B -- Use on other application (See PNI)
C -- File PDR Report with Bobcat Parts Sales
D -- Part Number Error

Page 475 - OSS# 2071408 - All rights reserved by Bobcat Company - 12/04/2009 - 07:23:36 - Produced by Ken Cook Co. with mediaioff

Part No.	Description	Was	Code	Page
6666570	BULB			322, 324
6666571	BULB			276
6666766	GROMMET			284
6667144	CONNECTOR			182, 196, 200
6667145	LOCK			182, 200
6667176	PLUG			92
6667201	SPACER			418
6667291	PISTON			74
6667323	SEAL			402, 404
6667326	SEAL			72
6667327	SEAL			74
6667352	FILTER, FUEL W/SEPERATOR 12			2, 8, 38
6667353	FILTER ASSY			38
6667428	TAPPET			246
6667461	PIN			238
6667676	COVER			92
6667677	O-RING			92
6667680	SNAP RING			92
6667687	STEM			82, 88
6667803	COUPLER			334, 412
6667804	COUPLER			334, 412
6667844	VALVE, LIFT MANUAL			70, 75, 76
6668104	MOUNT, ENG			222
6668742	SWITCH			22
6668815	SWITCH			322, 324, 330
6668816	SWITCH			276, 322, 324, 442
6668819	FILTER			2, 6, 10, 170
6668820	NUT			82, 90, 166
6669087	SEAL KIT			76, 166
6669089	TRACK			26
6669091	CLIP			22, 338, 342
6669135	SEAT			25, 26
6669224	BOLT			22, 338, 342
6669308	RETAINER			14, 16
6669402	HOUSING			134
6669405	END CAP			138
6669406	END PLATE			134
6669409	WASHER			134
6669410	KIT, SHIM			136
6669411	BEARING			134, 138
6669549	SOCKET			316, 318
6669657	SEAL KIT			334
6669732	KIT, SEAL			82, 86, 88, 90
6670160	CUSHION			26
6670284	LIGHT ASSY			388
6670312	RELAY			322, 324
6670347	GASKET			230, 248
6670426	NUT			264
6670427	CAP, SECURITY			260, 264
6670462	NUT			264
6670533	NUT			258
6670620	MOUNT			326
6670621	LENS			326

Code for disposition of old part number
A -- Use up
B -- Use on other application (See PNI)
C -- File PDR Report with Bobcat Parts Sales
D -- Part Number Error

Page 476 - OSS# 2071408 - All rights reserved by Bobcat Company - 12/04/2009 - 07:23:36 - Produced by Ken Cook Co. with mediaioff

Part No.	Description	Was	Code	Page
6670634	SEAL KIT			92
6670668	PIN			326
6670685	RELIEF VALVE	6689601	A	134, 138
6670685	RELIEF VALVE	6689601		134, 138
6670706	CONNECTOR			196, 200
6670707	CONNECTOR			196, 200
6670710	LOCK			196, 200
6670711	LOCK			196, 200
6670714	PIN			200
6670715	PIN			196, 200, 202
6670726	LOCK			416
6670769	O-RING			230, 254
6670782	GASKET			230, 258
6671025	COIL			80, 88
6671106	HORN			322, 324
6671138	SEAL, OIL			58
6671512	GROUP, ROTARY			138
6671516	KIT, SEAL			136, 138
6671518	BOLT			134, 138
6671520	O-RING			132, 138
6671527	NUT			92
6671741	SNAP RING	6688042	A	144, 146
6671742	SEAL			144
6671760	COVER	6688024	A	148, 150
6671803	RING	6688029	A	148, 150
6672272	WASHER			388
6672273	SCREW			388
6672274	SCREW			388
6672275	GASKET			388
6672276	LENS, LIGHT RED			388
6672277	BRACKET			388
6672279	MOUNT, LIGHT RUBBER			388
6672354	PLUG			242
6672384	CAP, SECURITY			260
6672436	SEAL			230, 238
6672471	VALVE			82, 88
6672715	SPACER			26
6672756	SEAL KIT			166
6672762	PLUG			166
6672863	VALVE, SOLENOID			92
6673188	SEAL KIT			166
6673710	BEARING, NEEDLE			122
6673789	BEARING			122
6673882	SPRING	6684038	A	134
6673884	O-RING			134
6673954	HOSE			116
6673959	VALVE, BPV			91, 92, 280
6674013	TRACK			26
6674035	SNAP RING	6690023	A	126, 128
6674036	RING	6690024	A	126, 128
6674037	SPRING	6690031	A	126, 128
6674038	SEAL	6690029	A	126
6674040	SEAL	6690028	A	126
6674184	RING	6690027	A	126

Code for disposition of old part number

A -- Use up

B -- Use on other application (See PNI)

C -- File PDR Report with Bobcat Parts Sales

D -- Part Number Error

Page 477 - OSS# 2071408 - All rights reserved by Bobcat Company - 12/04/2009 - 07:23:36 - Produced by Ken Cook Co. with mediaioff

Part No.	Description	Was	Code	Page
6674193	BRAKE DISC	6690088	A	128
6674202	NUT			172
6674215	COLLAR	6687927	A	148, 150
6674228	PANEL			338
6674231	VENT, HEATER CAB ROUND			338, 342
6674234	CONDENSER			360
6674235	RECEIVER DRIER			360, 364
6674315	SENSOR			180
6674316	SWITCH, PRESS OIL HYD			164, 176, 178
6674340	PIN	6690030	A	126
6674341	HOUSING	6690026	A	126
6674343	SHIM	6690044	A	126, 128
6674344	SPRING	6690046	A	126, 128
6674345	PLUG	6690047	A	126, 128
6674400	HOUSING			388
6674401	HOUSING			388
6674402	MOUNT, LIGHT			388
6674407	SHOULDER BELT			426
6674799	ADAPTER			318
6674802	CONNECTOR			316, 318
6674841	SPRING	6690042	A	126, 128
6674894	NUT			24
6674895	RETAINER			22, 34, 36, 172
6674907	NUT			148, 150
6674993	CAP			284
6675026	CAP			316, 318
6675033	INSERT			18, 172
6675064	TERMINAL			322, 324
6675074	SEAT BELT			20
6675076	HOSE			360
6675136	GAS SPRING			18
6675154	HOLDER			176
6675155	FUSE			176
6675170	SEAT BELT			422
6675176	SWITCH			338, 342
6675177	KNOB			338, 342
6675179	FLANGE			338, 342
6675181	PLUG			338, 342
6675212	RETAINER			300
6675228	SEAL	6690049	A	126
6675257	CLEVIS			18
6675265	CHECK VALVE			166
6675273	WASHER			28
6675278	FILTER			176
6675281	MOUNT			318, 320
6675298	COUPLER, BODY			284
6675299	COUPLER			284
6675308	KIT			424
6675309	KIT			424
6675310	KIT			424
6675311	KIT			424
6675312	KIT			424
6675313	KIT			424

Code for disposition of old part number
A -- Use up
B -- Use on other application (See PNI)
C -- File PDR Report with Bobcat Parts Sales
D -- Part Number Error

Page 478 - OSS# 2071408 - All rights reserved by Bobcat Company - 12/04/2009 - 07:23:36 - Produced by Ken Cook Co. with mediaioff

Part No.	Description	Was	Code	Page
6675314	KIT			424
6675315	KIT			424
6675316	KIT			424
6675317	SCISSORS			422
6675318	KIT			424
6675319	SEAT			422
6675320	SEAT			422
6675321	SEAT			422
6675322	SEAT			422
6675323	KNOB			422
6675336	BULB			388
6675341	GROUP, ROTARY			135, 136
6675342	PIN			134, 138
6675378	CLIP			284, 288
6675380	ADHESIVE			450
6675387	EXTRUSION			21, 22, 300
6675503	HOUSING			350
6675504	RING			350
6675505	BLOWER WHEEL			350
6675506	MOUNT			350
6675507	COVER			350
6675510	CLAMP			344, 366
6675511	DRAIN VALVE			344, 366
6675512	CLAMP			344, 366
6675513	GROMMET			346, 348, 368, 372
6675522	STROBE	6697800	A	442
6675523	BEACON			276, 322, 324
6675524	CLIP			20
6675534	BLOCK VALVE			362, 364, 366, 368, 372
6675538	O-RING			360, 364, 366, 368, 372
6675544	CANVAS CAB			295, 296
6675545	GROMMET			22, 300
6675558	SEAL			282, 288
6675559	COIL			176
6675562	SEAT BELT			427, 428
6675590	DOOR			296
6675591	HINGE KIT			296
6675595	SEAT			421, 422
6675596	SEAT			422
6675608	INSULATION			362, 366
6675609	INSULATION			362, 366
6675618	CLAMP			240, 250
6675668	CABLE, THROTTLE			226, 228
6675685	HOSE			360, 364
6675779	SWITCH, PRESS			360
6675780	CARTRIDGE	6676545	A	92
6675781	COIL	6674331	A	92
6675824	O-RING			360, 364
6675825	O-RING			360, 364
6675833	SEAL			300
6675835	TURN SIGNAL			330
6675846	POTENTIOMETER			338
6675858	FLASH TUBES			442
6675863	QUAD RING	6690078	A	128

Code for disposition of old part number
A -- Use up
B -- Use on other application (See PNI)
C -- File PDR Report with Bobcat Parts Sales
D -- Part Number Error

Page 479 - OSS# 2071408 - All rights reserved by Bobcat Company - 12/04/2009 - 07:23:36 - Produced by Ken Cook Co. with mediaioff

Part No.	Description	Was	Code	Page
6675864	QUAD RING	6690033	A	126, 128
6675866	SPOOL	6690041	A	126, 128
6675867	WASHER	6690043	A	126, 128
6675868	POPPET	6690045	A	126, 128
6675877	SEAL	6690069	A	128
6675878	SEAL	6690070	A	128
6675879	SEAL	6690071	A	128
6675880	SEAL	6690072	A	128
6675881	SEAL	6690073	A	128
6675883	KIT, WASHER	6690075	A	128
6675885	SNAP RING	6690076	A	128
6675889	PISTON	6690085	A	128
6675890	COVER	6690086	A	128
6675892	GASKET	6690091	A	128
6675893	O-RING	6690092	A	128
6675897	WASHER	6690098	A	128
6675898	BUSHING	6690100	A	128
6675999	SWITCH			418
6676000	TEE			418
6676001	ARM			418
6676002	BLADE			418
6676003	HOSE			282, 286, 418
6676021	KIT, SEAL	6690004	A	126
6676028	NOZZLE			418
6676029	SOLENOID	6677383	B	84, 196, 204, 270
6676029	SOLENOID			84, 196, 204, 270
6676034	KIT			424
6676038	O-RING	6689132	A	126, 128
6676062	VALVE			360
6676063	KIT			362
6676147	PLATE, VALVE			134
6676148	PLATE, VALVE			138
6676205	SEAL KIT			166
6676239	CARTRIDGE			166
6676242	COIL			166
6676243	COIL			166
6676244	COIL			166
6676247	NUT			166
6676338	GAS SPRING			422
6676399	VALVE CORE			360
6676499	GROMMET			282
6676500	ELBOW			282
6676516	NUT			338, 342
6676536	SWITCH			172
6676537	SWITCH			194, 270
6676538	INSULATION			346, 348, 354, 362, 368, 372
6676539	CLIP			346, 362, 364, 366, 368, 372
6676543	PLUG			92
6676606	SPACER			354
6676618	CLIP			350
6676640	SEAL			188, 197, 198, 201, 202
6676653	SCREW			354
6676732	SWITCH			396, 400
6676870	CONNECTOR			196, 200

Code for disposition of old part number
A -- Use up
B -- Use on other application (See PNI)
C -- File PDR Report with Bobcat Parts Sales
D -- Part Number Error

Page 480 - OSS# 2071408 - All rights reserved by Bobcat Company - 12/04/2009 - 07:23:36 - Produced by Ken Cook Co. with mediaioff

Part No.	Description	Was	Code	Page
6676872	TURN SIGNAL			322, 324, 330
6676917	ELBOW			282
6676927	FELT STRIP			300
6676984	MOUNT			360, 366
6677111	SEAL			344, 346, 348, 364, 366, 370, 374
6677115	RECEPTACLE			344, 346, 348, 366, 368, 372
6677116	RETAINER			344, 366
6677117	SCREW			344, 366
6677118	SCREW			344, 348, 366, 368
6677119	SCREW			344
6677121	CAP			360
6677122	CAP			360, 364
6677136	SOCKET			316, 318
6677177	PLUG			166
6677181	SENSOR, SPEED WHEEL			48, 190
6677192	MAGNET			282, 288
6677193	RIVET			282, 288
6677198	TAB			300
6677364	CONNECTOR			202
6677383	SOLENOID, LOCK SPOOL			80
6677485	SPACER			206
6677486	NUT			206
6677487	COVER			206
6677488	RECTIFIER			206
6677490	BRACKET			206
6677491	BRACKET			206
6677492	ROTOR			206
6677493	STATOR			206
6677494	BOLT			206
6677495	SPACER			206
6677496	PULLEY			206
6677497	NUT			206
6677504	COVER			354
6677580	SCREW			346, 368
6677817	BOLT			206
6677818	BEARING			206
6677819	RETAINER			206
6677820	BEARING			206
6677833	ARM ASSY			285, 286
6677834	BLADE			286
6677836	COVER			286
6677837	BOLT			286
6677839	GASKET			286
6677840	SWIVEL, PLATE ASSY			286
6677841	WASHER			286
6677842	NUT			286
6677843	NUT			286
6677844	NUT			286
6677845	ADAPTER			286
6677847	GROMMET			286
6677898	CONNECTOR			188
6677973	PLUG			300

Code for disposition of old part number
A -- Use up
B -- Use on other application (See PNI)
C -- File PDR Report with Bobcat Parts Sales
D -- Part Number Error

Page 481 - OSS# 2071408 - All rights reserved by Bobcat Company - 12/04/2009 - 07:23:36 - Produced by Ken Cook Co. with mediaioff

Part No.	Description	Was	Code	Page
6677980	NUT			166
6677982	CARTRIDGE			166
6677983	FILTER, AIR HEATER CAB			6, 338, 342
6678066	AIR CLEANER			265, 266
6678076	BLOCK			68
6678152	SEAL FLANGE			344, 366
6678155	FILTER ASSY			106, 108, 169, 170
6678156	COOLER			105, 106, 107, 108
6678198	BOLT			286
6678205	ALTERNATOR, 90 AMP			205, 206
6678205REM	ALTERNATOR, 90 AMP			206
6678207	FILTER			338, 342
6678226	SEAL, OIL			134, 138
6678226	SEAL, OIL	6660814	D	134, 138
6678233	FILTER, OIL ENG			1, 2, 6, 240
6678283	HANDLE			300
6678548	SOCKET			282, 288
6678666	TREE MOUNT			22, 172, 176, 356, 358
6678667	MOUNT			70, 176
6678668	STRAP, DUAL TIE			176
6678675	CONTROLLER, ACD DELUXE			320
6678739	WASHER			286
6678818	MOUNT			176
6678891	COIL			82, 90, 176
6678920	NOZZLE			286
6678921	GUIDE			286
6678960	SEAL			32
6678970	ELBOW			106, 108
6678971	BOLT			42
6679034	MOUNT			176, 180, 362, 364
6679102	VALVE			120, 165, 166
6679141	HOSE			116
6679145	CLUTCH			360
6679308	SEAT BELT			426
6679476	MOTOR			286
6679485	CONTROLLER SJC			186, 190
6679485	CONTROLLER SJC	6679487	B,D	186, 190
6679820	RELAY			178
6679836	ADAPTER			68
6679837	COUPLER			68
6679838	COUPLER			68
6679840	SEAL			68
6679841	SEAL			68
6679845	CROSSMEMBER			172
6679856	ALARM			172
6679966	PLUG			14, 16
6679990	CLIP			18
6680020	SEAL KIT			68
6680055	MAGNET			42
6680120	CARTRIDGE			166
6680272	NUT			264

Code for disposition of old part number

A -- Use up
B -- Use on other application (See PNI)
C -- File PDR Report with Bobcat Parts Sales
D -- Part Number Error

Page 482 - OSS# 2071408 - All rights reserved by Bobcat Company - 12/04/2009 - 07:23:36 - Produced by Ken Cook Co. with mediaioff

Part No.	Description	Was	Code	Page
6680280	SEAL			251, 252
6680326	LIGHT			22
6680355	BOOT			208
6680356	BOLT			208
6680357	HOLDER			208
6680358	RING			208
6680359	STOP RING			208
6680360	STOP			208
6680361	SPRING			208
6680362	BALL			208
6680363	WASHER			208
6680364	LEVER			208
6680365	SHAFT			208
6680366	GEAR			208
6680367	GEAR			208
6680368	STOP RING			208
6680369	SEAL			208
6680370	PLATE			208
6680371	LEVER			208
6680372	BRACKET			208
6680373	YOKE			208
6680374	ARMATURE			208
6680375	SHAFT			208
6680376	SWITCH			208
6680377	HOLDER			208
6680378	WASHER			208
6680379	SEAL			208
6680380	SEAL			208
6680381	SPRING			208
6680382	SPRING			208
6680383	BOLT			208
6680384	BOLT			208
6680388	BRACKET			208
6680389	BRACKET			208
6680390	GEAR			208
6680410	CONTROLLER			186, 190, 193, 194
6680417	HANDLE			196, 200
6680418	HANDLE ASSY.			181, 182
6680419	HANDLE ASSY.			182
6680438	SENSOR, FUEL			38, 176
6680441	BUSHING			24
6680443	BUSHING, MAGNET			24
6680447	DECAL			182
6680462	HANDLE, ACS RH			196, 200
6680462	HANDLE, ACS RH	6677536	A	196, 200
6680468	MOUNT			196, 270
6680469	SPACER			196, 200, 270
6680470	SPRING			196, 270
6680471	COVER			196, 200
6680477	STRAP			196, 270
6680478	SHIELD			204
6680479	SHIELD			204
6680480	CHANNEL			196, 200
6680481	CHANNEL			196, 200

Code for disposition of old part number

A -- Use up

B -- Use on other application (See PNI)

C -- File PDR Report with Bobcat Parts Sales

D -- Part Number Error

Page 483 - OSS# 2071408 - All rights reserved by Bobcat Company - 12/04/2009 - 07:23:36 - Produced by Ken Cook Co. with mediaioff

Part No.	Description	Was	Code	Page
6680564	STUD			234
6680570	GASKET	6685964	A	230, 234
6680570	GASKET			230, 234
6680636	PLUG			242
6680640	PLUG			242
6680644	PIN			242
6680645	BOLT			242
6680646	ADAPTER	6685920	A	242, 250
6680649	TUBE			234
6680654	BOLT			240, 260
6680655	PIN			240
6680656	OIL PAN			240
6680657	PLUG			240
6680658	BOLT			236, 260
6680659	BOLT			240
6680660	SCREEN, OIL			240
6680661	O-RING			230, 240
6680662	BOLT			236, 240, 246, 250
6680663	NUT			232, 234, 236, 240, 254, 255, 256, 258
6680667	PLUG			236, 242
6680668	BOLT			236
6680669	HEAD GASKET			236
6680670	HEAD GASKET			236
6680671	HEAD GASKET			236
6680673	SPRING			248
6680675	PLUG			248
6680676	ROTOR			248
6680677	COVER			248
6680678	SCREW			248, 256
6680679	PLUG			248
6680680	SEAL			230, 248
6680681	O-RING			230, 248
6680682	O-RING			230, 248
6680685	BOLT			246, 248
6680686	BOLT			248
6680688	HEAD COVER			236
6680689	ADAPTER			236, 248
6680690	GASKET			230, 236
6680691	O-RING			230, 236
6680693	SCREW			236
6680694	PLUG			236
6680695	SEAL			230, 236
6680696	BOLT			236
6680698	CLAMP			236
6680699	CLAMP			236
6680700	WASHER			236
6680702	TUBE			240
6680704	COVER			248
6680705	SEAL			230, 247, 248
6680706	BOLT			248, 252
6680708	PUSH ROD			246
6680709	CAMSHAFT			246
6680710	BALL			246
6680711	GEAR			246

Code for disposition of old part number
A -- Use up
B -- Use on other application (See PNI)
C -- File PDR Report with Bobcat Parts Sales
D -- Part Number Error

Page 484 - OSS# 2071408 - All rights reserved by Bobcat Company - 12/04/2009 - 07:23:36 - Produced by Ken Cook Co. with mediaioff

Part No.	Description	Was	Code	Page
6680712	FLANGE			246
6680714	SHAFT			246
6680715	PIN			246
6680716	COLLAR			246
6680717	COLLAR			245, 246
6680720	BUSHING			246
6680723	PISTON RINGS			242
6680724	PISTON RINGS			242
6680725	PIN			242
6680726	SNAP RING			242
6680727	ROD			242
6680728	BUSHING			242
6680729	BOLT			242
6680730	BEARING			242
6680731	BEARING			242
6680732	BEARING			242
6680733	BEARING			242
6680734	CRANKSHAFT			242
6680735	SLEEVE			242
6680736	GEAR			242
6680737	GEAR			242
6680738	MAIN BEARING			242
6680739	MAIN BEARING			242
6680740	MAIN BEARING			242
6680741	THRUST WASHER			242
6680742	THRUST WASHER			242
6680743	THRUST WASHER			242
6680744	THRUST WASHER			242
6680745	THRUST WASHER			242
6680746	THRUST WASHER			242, 243, 244
6680747	BOLT, FLYWHEEL			220, 242
6680750	SCREW			262
6680752	BOLT			257, 258
6680755	BOLT			218, 234, 250, 258
6680756	SCREW			258
6680757	COVER			261, 262
6680758	WEIGHT			262
6680759	NUT			262
6680761	SLEEVE			262
6680762	HOUSING	6685937	A	262
6680763	LEVER			262
6680764	LEVER			262
6680765	SNAP RING			262
6680769	PIN	6680773	A	262
6680769	PIN			262
6680770	LEVER			262
6680772	LEVER			262
6680775	PIN			262
6680778	O-RING			230, 254
6680779	GASKET			230, 254
6680780	CLAMP			254
6680785	CLAMP			254
6680786	CLAMP			254
6680787	PIPE			254

Code for disposition of old part number

A -- Use up
B -- Use on other application (See PNI)
C -- File PDR Report with Bobcat Parts Sales
D -- Part Number Error

Page 485 - OSS# 2071408 - All rights reserved by Bobcat Company - 12/04/2009 - 07:23:36 - Produced by Ken Cook Co. with mediaioff

Part No.	Description	Was	Code	Page
6680788	BOLT			253, 254
6680790	FITTING			254
6680791	BOLT			234, 254
6680796	VALVE			254
6680797	TEE			254
6680799	STUD			256
6680801	BOLT			232, 256
6680802	BOLT			234, 256
6680806	HOUSING			256
6680807	STUD			256
6680808	PLUG			256
6680809	PIN			256
6680812	BEARING			256
6680813	KEY			256
6680814	FLANGE			256
6680815	SET SCREW			256
6680816	O-RING			230, 256
6680818	NUT			256
6680820	WASHER			264
6680821	SNAP RING			264
6680822	SNAP RING			264
6680823	SNAP RING			264
6680825	SPRING			264
6680826	SPRING			264
6680827	SPRING			264
6680828	STUD			264
6680829	GASKET			230, 264
6680830	BOLT			264
6680832	SCREW			264
6680833	SCREW	6686985	B,D	264
6680834	STOPPER			264
6680838	PUMP, FUEL			258
6680840	PULLEY	6685953	A	248
6680841	BOLT			248
6680842	HOSE			250
6680849	GASKET			230, 250
6680850	THERMOSTAT			250
6680851	BOLT			231, 232, 250
6680852	PUMP			252
6680853	GASKET			230, 252
6680855	O-RING			230, 248
6680856	BOLT			252
6680857	PULLEY			250
6680858	WASHER			249, 250
6680859	GUIDE			238
6680861	VALVE			238
6680862	VALVE			238
6680863	VALVE SPRING			238
6680866	SHAFT			238
6680867	STUD			254
6680868	SHAFT			238
6680869	BRACKET			238
6680870	WASHER			238
6680871	SNAP RING			238

Code for disposition of old part number
A -- Use up
B -- Use on other application (See PNI)
C -- File PDR Report with Bobcat Parts Sales
D -- Part Number Error

Page 486 - OSS# 2071408 - All rights reserved by Bobcat Company - 12/04/2009 - 07:23:36 - Produced by Ken Cook Co. with mediaioff

Part No.	Description	Was	Code	Page
6680872	SPRING			238
6680873	ROCKER ARM			238
6680875	ROCKER ARM			238
6680877	PIN			238
6680878	BOLT			237, 238
6680879	ARM			238
6680880	SCREW			238
6680881	NUT			238
6680882	PAD			238
6680883	MANIFOLD			232
6680884	GASKET			230, 232
6680885	BOLT			232
6680886	FLANGE			232
6680887	GASKET	6685960	A	230, 232
6680888	HEATER			232
6680890	MANIFOLD			232
6680891	GASKET			230, 232
6680892	TURBO, CHARGER			234
6680892REM	TURBOCHARGER, KUBOTA V3300			234
6680893	GASKET			230, 234
6680894	HOSE			234
6680895	HOSE			234
6680896	HOSE			233, 234
6680899	TUBE			234
6680900	BOLT			234, 260
6680900	BOLT	6680906	A	234, 260
6680903	CLAMP			234
6680909	OIL COOLER			240
6680910	ADAPTER			240
6680970	BREATHER			52, 54, 56
6681474	CARTRIDGE			2, 6, 266
6681475	CARTRIDGE			2, 6, 266
6681476	CAP			266
6681477	COVER			266
6681491	COIL	6684590	A	96
6681492	NUT			96
6681501	SEAL KIT			106, 108
6681512	SOLENOID			52, 54
6681614	KNOB			22, 300, 338, 342
6681871	MOUNT			186
6682260	SHAFT			134
6682261	KEY	6683169	A	134
6682262	HOUSING	6689602	A	138
6682264	SHAFT			138
6682855	10SEGMENT			7, 8
6682875	PLUG	6688016	A	140
6682877	PLUG	6688015	A	142
6682879	PIN	6688039	A	140
6682901	RING	6688035	A	148, 150
6682902	RING	6688036	A	148, 150
6682913	O-RING	6688006	A	148, 150
6682919	PIN	6686934	A	140
6682929	O-RING	6688000	A	152
6682930	O-RING	6688041	A	152

Code for disposition of old part number

A -- Use up

B -- Use on other application (See PNI)

C -- File PDR Report with Bobcat Parts Sales

D -- Part Number Error

Page 487 - OSS# 2071408 - All rights reserved by Bobcat Company - 12/04/2009 - 07:23:36 - Produced by Ken Cook Co. with mediaioff

Part No.	Description	Was	Code	Page
6682936	O-RING	6688013	A	154
6682949	O-RING	6688019	A	132, 140
6682968	SCREW	6687995	A	148, 150
6683004	THERMOSTAT			360, 366, 368
6683023	O-RING			230, 262
6683167	CYLINDER BLOCK			134, 138
6683168	PISTON ASSEMBLY			134, 138
6683206	SEAL KIT			96, 160
6683274	SEAL, SPOOL			80, 84, 88
6683812	SWITCH	6689020	B,D	172, 190
6683812	SWITCH			172, 190
6684033	NUT			60, 62, 64, 66, 188, 192, 210, 212, 304, 412
6684037	SENSOR			180
6684044	VALVE			414
6684045	SEAL KIT			414
6684046	O-RING			414
6684047	BACK-UP RING			414
6684048	O-RING			414
6684049	O-RING			414
6684050	BACK-UP RING			414
6684052	SEAL KIT			414
6684053	BACK-UP RING			414
6684054	O-RING			414
6684055	BACK-UP RING			414
6684056	O-RING			414
6684057	BACK-UP RING			414
6684060	NUT			414
6684061	VALVE			414
6684062	SEAL KIT			414
6684063	O-RING			414
6684064	BACK-UP RING			414
6684065	O-RING			414
6684066	O-RING			414
6684067	BACK-UP RING			414
6684069	SEAL KIT			414
6684070	O-RING			414
6684071	O-RING			414
6684072	BACK-UP RING			414
6684073	COIL			414
6684125	COUPLER			80, 88
6684126	COVER			178
6684294	GROMMET			186, 188, 190
6684367	EXCHANGER, WATER RADIATOR			216
6684415	BUSS BAR			178
6684457	HOSE, HYD ASSY STC			106, 108
6684474	INSERT FAN INLET			210
6684576	ENGINE, V3300-DI-T-E2CB-BOB2			229, 230
6684576REM	ENGINE, KUBOTA V3300T DI-E2CB-BOB2 TIER 2			230
6684645	VALVE, ANTI CAV			84
6684646	VALVE			80, 88

Code for disposition of old part number
A -- Use up
B -- Use on other application (See PNI)
C -- File PDR Report with Bobcat Parts Sales
D -- Part Number Error

Page 488 - OSS# 2071408 - All rights reserved by Bobcat Company - 12/04/2009 - 07:23:36 - Produced by Ken Cook Co. with mediaioff

Part No.	Description	Was	Code	Page
6684742	NUT			406, 408
6684743	SOLENOID			406, 408
6684744	SOLENOID			406, 408
6684745	PISTON			406, 408
6684746	CHECK VALVE			406, 408
6684747	SEAL KIT			406, 408
6684782	O-RING	3966602	A	230, 240
6684857	PLUG	6670504	A	248, 250
6684908	HOSE, A/C ASSY			360
6684910	SENSOR, ELEC AHC			196, 200
6684911	SENSOR, FOOT LH			204, 270
6684912	SENSOR, FOOT RH			203, 204, 270
6684913	LEVER			194, 199, 200
6684914	LEVER			194, 200
6684915	LEVER, ACS RH			194, 195, 196
6684916	LEVER, ACS LH			194, 196
6684923	BREATHER			40
6684932	KNOB			390
6684947	GROMMET			366
6685026	VALVE			96
6685027	VALVE			96
6685060	BUSHING, TORSION			78, 122
6685061	VALVE			414
6685157	VALVE			84
6685190	STARTER			207, 208
6685190REM	STARTER			208
6685328	RELIEF VALVE			414
6685344	SWASHPLATE			134, 138
6685372	SEALANT, GASKET LIQUID			42, 52, 54, 56, 450
6685498	GASKET			230, 254
6685541	POPPET			406, 408
6685542	O-RING			406, 408
6685543	CHECK VALVE			406, 408
6685544	COMPENSATOR			406, 408
6685545	PLUG			406, 408
6685546	PLUG			406, 408
6685603	SEAL KIT			82, 86, 90
6685624	VALVE, AUX REAR			412, 413, 414
6685663	RETAINER			412
6685847	FILTER ASSY			94, 170
6685850	CORD	6668881	B,D	278
6685854	INJECTOR			254
6685854REM	NOZZLE, FUEL INJ. KUBOTA V3300DI			254
6685917	CRANKCASE			242
6685918	PIN			242
6685919	STUD			244
6685921	CRANKCASE			240
6685922	FLANGE			240
6685923	GASKET			230, 240
6685924	CAP			240
6685925	BOLT			240
6685926	BRACKET			236
6685929	RELIEF VALVE			248

Code for disposition of old part number

A -- Use up

B -- Use on other application (See PNI)

C -- File PDR Report with Bobcat Parts Sales

D -- Part Number Error

Page 489 - OSS# 2071408 - All rights reserved by Bobcat Company - 12/04/2009 - 07:23:36 - Produced by Ken Cook Co. with mediaioff

Part No.	Description	Was	Code	Page
6685930	HOSE			235, 236
6685932	GEAR			246
6685933	PISTON			242
6685934	PISTON			242
6685935	INJECTION PUMP			256
6685935REM	PUMP, FUEL INJ. KUBOTA V3300 W/ GOVERN.			256
6685936	PUMP, FUEL INJ			258
6685936REM	PUMP, FUEL INJ. KUBOTA V3300			258
6685939	LEVER			262
6685940	TUBE			254
6685941	TUBE			254
6685942	TUBE			254
6685943	TUBE			254
6685944	HOSE			254
6685945	HOSE			254
6685946	GEAR			256
6685947	COVER			256
6685948	GASKET			230, 256
6685949	CAMSHAFT			256
6685950	BEARING			256
6685952	NUT			264
6685954	COVER			250
6685955	GASKET			230, 250
6685956	HOUSING			250
6685958	GUIDE			238
6685959	RETAINER			238
6685962	GASKET			230, 234, 260
6685963	PIPE			234
6685965	HOSE			234
6685966	TUBE			259, 260
6685967	BRACKET			260
6685969	HOSE			240
6685970	HOSE			240
6685971	O-RING			230, 240
6685972	HOSE			240
6686096	LENS			326
6686097	BULB			326
6686098	BULB			326
6686099	LENS			326
6686100	SCREW			326
6686360	VALVE			80, 84, 88
6686385	MOUNT, SADDLE SWIVEL			358
6686402	SEAL			240
6686655	BELT			222
6686885	PUMP, GEAR DOUBLE			157, 158
6686926	FILTER, OIL HYD			2, 6, 10, 170
6686985	BOLT, ADJUSTING	3974970	B,D	264
6686999	SEAL			74
6687145	FLANGE			218, 234
6687146	BOLT			234

Code for disposition of old part number
A -- Use up
B -- Use on other application (See PNI)
C -- File PDR Report with Bobcat Parts Sales
D -- Part Number Error

Page 490 - OSS# 2071408 - All rights reserved by Bobcat Company - 12/04/2009 - 07:23:36 - Produced by Ken Cook Co. with mediaioff

Part No.	Description	Was	Code	Page
6687147	GASKET			218, 230, 234
6687191	SEAL, OIL			134
6687193	DOWEL	6690099	A	128
6687266	FILTER ASSY			170
6687268	FEMALE CONNECTOR			192
6687760	ADJ BOLT ASSY	6670425	B,D	264
6687825	MOTOR, DRIVE HYD			125, 126
6687826	MOTOR, DRIVE HYD 2-SPD	6690157	A	127, 128, 130
6687826	MOTOR, DRIVE HYD 2-SPD			127, 128, 130
6687832	PUMP, HYD TANDEM			133, 134, 137, 138
6687866	KIT, SEAL			158
6687886	MUFFLER, PURIFIER			393, 394
6687887	MUFFLER, EXHAUST			218
6687913	SEAL			122
6687921	COLLAR			152
6687926	COLLAR			148, 150
6687928	SPRING			148, 150
6687929	LEVER			156
6687930	WIRE			144, 146
6687931	BUSHING			156
6687932	PIN			140
6687933	SHIM			156
6687934	SHIM			156
6687935	SHIM			156
6687936	SHIM			156
6687937	SHIM			156
6687938	VALVE			140, 153, 154
6687939	SCREW			154
6687940	PLATE			144, 146
6687941	COUPLER			140
6687942	SPACER			148, 150
6687943	SHAFT			146
6687944	SHIM			156
6687945	PLATE			156
6687946	SPRING			156
6687947	PIN			156
6687948	SPACER			148, 150
6687949	SPACER			148, 150
6687950	GASKET			156
6687951	SWASHPLATE			144, 146
6687953	PISTON			150
6687954	GASKET			156
6687955	HOUSING			156
6687956	BEARING			144, 146
6687957	GROUP, ROTATING			140, 143, 144
6687958	GROUP			140, 145, 146
6687959	SHAFT			144
6687960	CONTROL			140, 147, 148
6687961	CONTROL			140, 149, 150

Code for disposition of old part number
A -- Use up
B -- Use on other application (See PNI)
C -- File PDR Report with Bobcat Parts Sales
D -- Part Number Error

Page 491 - OSS# 2071408 - All rights reserved by Bobcat Company - 12/04/2009 - 07:23:36 - Produced by Ken Cook Co. with mediaioff

Part No.	Description	Was	Code	Page
6687962	PISTON			148
6687963	PISTON			150
6687964	HOUSING			140
6687965	SHAFT			140
6687966	PISTON			156
6687967	SPRING			156
6687968	LEVER			156
6687969	COVER			156
6687970	MODULATOR			140, 155, 156
6687973	FLANGE			140
6687974	FLANGE			140
6687975	PLATE			146
6687976	PLATE			144
6687977	GROUP, ROTARY			144
6687978	GROUP			146
6687979	GROUP, ROTARY			144, 146
6687981	SCREW			156
6687982	SPRING			156
6687984	SENSOR, PUMP HYD POSITION			142
6687985	RING			148, 150
6687986	KIT			148, 150
6687987	BEARING			144, 146
6687988	FILTER			142
6687989	SOLENOID			156
6687990	RING			140, 141, 142
6687992	SCREW			142
6687994	SCREW			140
6687996	SCREW			156
6687997	SCREW			156
6687998	SHIM			142
6687999	RING, SNAP			144, 146
6688001	SEAL			156
6688002	RING			148, 150
6688003	SCREW			142
6688004	SEAL			156
6688005	SEAL			148, 150
6688007	SEAL			142
6688008	SCREW			140
6688009	SEAL			140
6688010	PIN			156
6688011	PIN			140
6688012	ROLLER			156
6688014	PIN			142
6688017	SHIM			154
6688018	BEARING			144, 146
6688025	RING			148, 150
6688026	RING			148, 150
6688027	RING			148, 150
6688028	RING			148, 150
6688030	RING			148, 150
6688031	ROD			148, 150
6688032	SPACER			148, 150
6688033	SPACER			148, 150
6688034	SCREW			152

Code for disposition of old part number

A -- Use up
B -- Use on other application (See PNI)
C -- File PDR Report with Bobcat Parts Sales
D -- Part Number Error

Page 492 - OSS# 2071408 - All rights reserved by Bobcat Company - 12/04/2009 - 07:23:36 - Produced by Ken Cook Co. with mediaioff

Part No.	Description	Was	Code	Page
6688037	RING			148, 150
6688040	BEARING			140
6688069	HOSE			234
6688321	SEAL KIT			96
6688338	NUT			316, 318
6688403	PANEL			22
6688404	PANEL, KEY STANDARD			172
6688439	CONTROLLER, BOBCAT			176
6688449	LOCATING PIN			126, 128
6688523	SEAL KIT STC-16			94, 106, 108
6688542	HVAC HEATER			365, 366
6688543	HEATER			338, 343, 344
6688637	MOUNT			388
6688655	COVER, BREATHER	6680692	A	236
6688713	PUMP, GEAR TRIPLE			95, 96
6688743	STEM, VALVE CONTROL	6688397	A	80, 88
6688833	CONNECTOR			184
6688834	CONNECTOR			184
6688836	FLANGE			184
6688845	VALVE			82, 90
6688933	VALVE ASSY			414
6688934	COIL			414
6688980	BOLT			180
6689021	SEAL KIT			142
6689032	STUD			176
6689034	SOLENOID, SHUTOFF FUEL			262
6689088	QUAD RING	6690093	A	128
6689126	PISTON			126, 128
6689129	PLUG			128
6689133	O-RING			126, 128
6689179	INSULATION			362, 366
6689180	INSULATION			362, 366
6689318	SHAFT, FORK LEVER	6680824	B,D	264
6689331	GASKET			230, 234
6689641	CABLE TIE			186
6689696	VALVE, HEATER CAB			344, 366
6689739	VALVE			80, 84, 88
6689754	PANEL INSTRUMENT LH			172
6689755	KIT			230
6689756	KIT, UPPER GASKET			230
6689762	BLOWER			366
6689764	PAD			350
6689765	PAD			350
6689766	MOTOR			350
6689768	HOSE			110
6689922	HANDLE			188, 190

Code for disposition of old part number

A -- Use up

B -- Use on other application (See PNI)

C -- File PDR Report with Bobcat Parts Sales

D -- Part Number Error

Page 493 - OSS# 2071408 - All rights reserved by Bobcat Company - 12/04/2009 - 07:23:36 - Produced by Ken Cook Co. with mediaioff

Part No.	Description	Was	Code	Page
6689923	HANDLE			188, 190
6689924	BASE, AJ4 SJC RH			188, 190
6689925	BASE, AJ4 SJC LH			188, 190
6689926	BOOT			188, 190
6689927	BOLT			188, 190
6689983	FILTER KIT			408
6690005	SEAL KIT			130
6690021	BLOCK			126
6690022	ROLLER			126, 128
6690025	CAM			126, 128
6690039	SCREW			126, 128
6690048	RING			126, 129, 130
6690067	RING			128
6690068	PIN			128
6690077	O-RING			128
6690080	O-RING			128
6690081	CLAMP			128
6690082	HOUSING			128
6690084	SHAFT			128
6690087	PLATE			128
6690094	CLAMP			128
6690095	SCREW			128
6690096	SCREW			128
6690097	O-RING			128
6690105	WASHER			128
6690158	ROTOR GROUP			126
6690163	RING			54
6690431	SEAL KIT			80, 82, 84, 86, 88, 90
6690431	SEAL KIT	6669734	A	80, 82, 84, 86, 88, 90
6690476	COVER			344, 366
6690477	EVAPORATOR			360, 366
6690478	HOUSING			344, 366
6690479	COVER			344, 366
6690480	COVER			360, 366
6690480	COVER	6677105	B	360, 366
6690481	BRACKET			344, 366
6690482	GROMMET			344, 346, 348, 366, 368, 372
6690487	COVER			344
6690561	MAGNET			48, 50
6690561	MAGNET	6688924	A	48, 50
6690688	TREE MOUNT			190
6690690	TIE			190
6690692	DIPSTICK	6680703	A	239, 240
6690707	SEAL	6665086	A	72
6690911	CLAMP			72
6690947	SWITCH, BPV			280
6690949	O-RING			108
6690950	O-RING			94, 106, 108
6690988	CHAIN, DRIVE			42
6690991	VALVE, SOLENOID	6688499	A	82, 90
6691001	WINDOW	6674520	A	300
6691003	WINDOW	6674522	A	300
6691022	NUT	6690705	A	82, 90, 176
6691055	ELBOW	7124922	A	412

Code for disposition of old part number
A -- Use up
B -- Use on other application (See PNI)
C -- File PDR Report with Bobcat Parts Sales
D -- Part Number Error

Page 494 - OSS# 2071408 - All rights reserved by Bobcat Company - 12/04/2009 - 07:23:36 - Produced by Ken Cook Co. with mediaioff

Part No.	Description	Was	Code	Page
6691078	LINK			42
6691173	BRACKET			328
6691227	PLUG	6688866	A	126, 128
6691294	PLUG			248
6691330	BEARING			220
6691421	FEMALE CONNECTOR			192
6691534	SCREW			364, 368, 372
6691589	100 TIE			188, 190
6691714	SENSOR, SEATBAR BICS	6680429	A	24
6692332	VALVE,RELIEF	6687924 - model R902095064	A	140, 151, 152
6692332	VALVE,RELIEF	6687924 - Model R902095064	A	140, 151, 152
6692337	FILTER, HYD CARTRIDGE			2, 6, 10, 164
6692416	COVER			360
6692757	DECAL, "REMOTE CONTROL OPERATION", LARGE			420
6692762	KEYS, SET OF 2			420
6692763	DECAL WARNING, "READ THE MANUAL"			420
6692764	RECIEVER CABLE			420
6692766	E-STOP BOX			420
6692767	DECAL, "ROTATING PARTS"			420
6692768	DECAL, "REMOTE CONTROL OPERATION", SMALL			420
6692769	CHARGER, MAKITA DC1422, 12-24VDC			420
6692770	BATTERY, NICD, 9.6V, 1.3AH, MAKITA 9000			420
6692771	SHOULER HARNESS			420
6692809	HOSE, A/C ASSY			360, 364
6692809	HOSE, A/C ASSY	6684907	A	360, 364
6693148	RESISTOR			342
6693226	NUT			348, 372
6693228	BOLT			346, 372
6693236	FOAM			348, 372
6693241	KEY 10			172, 282, 288, 416
6693245	SWITCH, IGN			172
6693409	BULB, STROBE			420
6693410	LENS			420
6693411	LENS			420
6693415	RING			46, 50
6693482	CYLINDER HEAD ASSY	6685927	A	236

Code for disposition of old part number

A -- Use up
B -- Use on other application (See PNI)
C -- File PDR Report with Bobcat Parts Sales
D -- Part Number Error

Page 495 - OSS# 2071408 - All rights reserved by Bobcat Company - 12/04/2009 - 07:23:36 - Produced by Ken Cook Co. with mediaioff

Part No.	Description	Was	Code	Page
6693485	BOLT			248
6693488	SPRING	6685938	A	262
6693511	FORK	6685951	B,D	263, 264
6693525	BEARING	7100239	B	44, 46, 48, 50
6693525	BEARING			44, 46, 48, 50
6693869	ROTARY GRP			144, 146
6693876	SEAL, SHAFT			144
6697791	ELBOW	6729306	B	106, 108
6697796	FLASHTUBE			442
6697797	AMBER LENS	6665021	A	442
6697904	JOYSTICK, LH			188
6697905	JOYSTICK, RH			188
6697906	PANEL, CONTROL			342
6697960	SOLENOID			156
6697965	HARNESS			172
6698062	GASKET, MOTOR			162, 164
6698064	VALVE, AP04G2YR10.8CV			164
6698065	COIL, CPP012H			164
6698066	HOUSING, FILTER CARTRIDGE			164
6698352	NUT, COIL SOLENOID			164
6698442	HOSE			360, 364
6698442	HOSE	6675075	A	360, 364
6698501	HARNESS, HEATER			344, 346, 348, 368, 372
6698524	ARM, VALVE BRIDGE			238
6698527	BLOCK, ENG. LOWER			240
6698591	KIT, SEAL			164
6698601	LEVER, STOP			262
6698604	COVER, FRONT	6685928	A	248
669863	RING, SNAP			134, 138
6700170	WASHER			228
6700182	COVER, DRAIN			42
6700631	GASKET			98, 102
6700743	SPRING			30, 228
6701097	WASHER			210, 212, 304
6701160	CLIP			220
6701174	WASHER			18
6701449	FILLER TUBE			38
6701535	SPRING			24, 122
6701893	CLAMP			60, 62, 64, 66
6702301	DECAL			310
6702302	DECAL			310
6702402	SHIELD			332
6702444	FUSE 25A 5			176, 177, 178
6702543	LEVER, STEERING			121, 122
6702593	SPACER			272
6702621	GRIP			182, 200
6702650	MOUNT			322, 324
6702716	BLOCK			122
6702903	LEVER			32
6702904	LEVER			32

Code for disposition of old part number

A -- Use up

B -- Use on other application (See PNI)

C -- File PDR Report with Bobcat Parts Sales

D -- Part Number Error

Page 496 - OSS# 2071408 - All rights reserved by Bobcat Company - 12/04/2009 - 07:23:36 - Produced by Ken Cook Co. with mediaioff

Part No.	Description	Was	Code	Page
6702935	PIN, PIVOT			30
6702958	BUSHING, WELD-ON			32
6702971	BOLT			18
6702990	BUSHING			196, 200
6703640	KIT			429, 430
6703641	DECAL			430
6703703	GUIDE			430
6703727	DECAL			376, 378
6703879	BUSHING, PLASTIC			122
6703967	INSULATION	7152242	B,D	432
6703968	INSULATION			432, 434, 436, 438
6704240	PIVOT ASSY.			32
6704248	PIVOT			32
6704436	PAD			30
6704786	DECAL			310, 384
6704892	RIVET			320
6705091	TAB			30
6705106	WASHER			222
6705340	DECAL			312
6705452	LEVER			226
6705749	SHIELD			98
6706098	GUIDE			122
6706104	RETAINING NUT			78
6706105	YOKE			78
6706349	MOUNT			18
6706485	HOOK			42
6706517	SCREW			210, 212
6706558	DECAL			312
6706572	SET SCREW			226, 228
6706633	ADAPTER			412
6706718	MOUNT			52, 54
6706737	GASKET			52, 54
6706817	SPACER			44, 48
6706857	BLOCK			42
6707101	SEAL			70, 76
6707698	WASHER			220
6707699	PIVOT			220
6707804	HOUSING			322, 324
6707852	DECAL			282, 310
6708009	LINK			78
6708016	GASKET			52, 54
6708018	SPRING			52, 54
6708043	BUSHING			78
6708189	TUBE			18
6708267	BOLT			52, 54
6708310	HOSE			284
6708445	PULLEY			220
6708929	DECAL			312
6708941	DECAL			312
6708987	HINGE			14, 16
6709170	STUD			58
6709757	SHAFT, AXLE			58
6710195	PLATE			52
6710659	BUSHING			24

Code for disposition of old part number

A -- Use up
B -- Use on other application (See PNI)
C -- File PDR Report with Bobcat Parts Sales
D -- Part Number Error

Page 497 - OSS# 2071408 - All rights reserved by Bobcat Company - 12/04/2009 - 07:23:36 - Produced by Ken Cook Co. with mediaioff

Part No.	Description	Was	Code	Page
6711166	HOSE			412
6711674	MOUNT			334
6711908	SPRING PLATE			430
6712536	PAN			180
6712911	KIT, COUNTERWEIGHT			305, 306
6712912	DECAL			306
6713040	SPRING			32
6713043	SPACER			196, 200
6713116	BUSHING			392
6713507	DECAL			312
6713589	CLEVIS			24
6713841	SHIELD			322, 324
6713842	SHIELD			324
6713887	BOLT			24
6713990	PIN			326
6713993	HARNESS			322, 324
6713994	HARNESS			322, 324
6714037	LATCH			416
6714126	DOOR STOP			28
6714278	GUIDE			52, 54
6714362	WEIGHT			306
6714454	BUMPER			210, 212
6714509	COVER			28
6714726	GROMMET			34, 36, 194
6714810	PIN			30
6714820	SHIELD			322
6715131	BRACKET			180
6715132	RETAINER			180
6715142	FAN			210
6715163	BUSHING, PRESS FIT			122, 123, 124
6715164	SLEEVE, SPRING			122
6715183	ELBOW			38
6715197	CLAMP			180
6715318	TOOL HOLDER			28
6715659	HARNESS			272
6715860	SEAT BAR			24
6715863	BRACKET			24
6715864	BUSHING			24
6715865	BUSHING			24
6715866	BUSHING			24
6716061	TEE			60, 62, 64, 66
6716089	CONNECTOR			334
6716243	ADAPTER			116, 118
6716391	HOSE			120
6716545	ROD			122
6716572	LOUVER, PLASTIC RH			210
6716574	LOUVER, PLASTIC LH			210
6716800	INSULATION			20, 34, 36
6716916	WASHER			122
6717242	HOUSING			44, 46
6717259	BUSHING			32

Code for disposition of old part number
A -- Use up
B -- Use on other application (See PNI)
C -- File PDR Report with Bobcat Parts Sales
D -- Part Number Error

Page 498 - OSS# 2071408 - All rights reserved by Bobcat Company - 12/04/2009 - 07:23:36 - Produced by Ken Cook Co. with mediaioff

Part No.	Description	Was	Code	Page
6717260	BUSHING			32
6717306	ADAPTER			116, 118
6717343	DECAL			312
6717393	LEVER			194
6717401	PLUG			38
6717402	BUSHING			38
6717517	INSULATION			22
6717518	INSULATION			22
6717579	GASKET			38, 176
6717593	HINGE			284, 288
6717806	BOLT			42
6717870	FRAME			300
6717871	FRAME			300
6717872	FRAME			300
6717873	FRAME			300
6717874	WINDOW			22, 300
6717885	ELBOW			94
6718031	TEE			116, 118
6718034	FUSE, 30A			178
6718101	COVER			20
6718175	SCREEN			338, 342
6718326	MOUNT			330
6718376	HINGE			284, 288
6718411	KIT			329, 330
6718414	SENDER, TEMP ENG			180
6718417	SENDER			176
6718426	HARNESS, BOOM			318
6718579	DECAL			310, 338, 342
6718580	PANEL			22
6718659	HOUSING			176
6718706	DECAL			194, 310
6718750	MOUNT			318
6718796	PLUG			14, 16, 28
6718805	KIT	SALES	A	299, 300
6718833	BRACKET			332
6718834	BRACKET			332
6718837	SPACER			338, 342
6718850	BRACKET			98, 102
6718851	BRACKET			97, 98, 101, 102
6718872	HARNESS			276, 322, 324, 330, 442
6718873	HARNESS			330
6718881	BRACKET			70
6718887	PANEL			338, 342
6718924	KIT			331, 332
6718948	SNUBBER			176
6719037	STRIKER			300
6719056	BLOCK			52, 54
6719057	BLOCK			52, 54
6719063	STOP			300
6719064	MOUNT			18, 336
6719065	COVER TAB			300
6719141	CABLE POSITIVE			180
6719168	COVER			14, 16, 120
6719176	SWITCH			360, 364

Code for disposition of old part number
A -- Use up
B -- Use on other application (See PNI)
C -- File PDR Report with Bobcat Parts Sales
D -- Part Number Error

Page 499 - OSS# 2071408 - All rights reserved by Bobcat Company - 12/04/2009 - 07:23:36 - Produced by Ken Cook Co. with mediaioff

Part No.	Description	Was	Code	Page
6719184	MOUNT			384
6719185	MOUNT			384
6719201	COVER			14, 16
6719317	WINDOW			418
6719332	INSULATION	7123854	D	432, 436
6719413	WINDOW			300
6719448	MAGNET, CONTROL ATTACH			320
6719459	MOUNT			360, 364
6719504	INSULATION			20
6719525	BAR			28
6719766	STOP			28
6719808	SHIELD			210, 212
6719825	BOLT			218
6719828	BOLT			220, 222
6719829	BOLT			222, 224
6719834	SPACER			196, 200, 270
6719835	SLEEVE			196, 200
6719854	KIT			275, 276
6719857	KIT			441, 442
6719888	DECAL			310, 396, 400
6720038	INSTRUCTIONS			278
6720592	INSTRUCTIONS			332
6720808	KIT, ENGINE BLOCK HEATER			277, 278
6722597	VELCRO			296
6724775	LEVER KIT			32
6724776	LEVER KIT			32
6725182	TEE			70, 334
6725301	OP MANUAL COVER			20
6725303	OP MANUAL PAN			20
6725370	DECAL			310, 426
6725373	SPRING PLATE			20
6725421	HANDLE			298
6725497	CROSS			116, 118
6725898	KIT			327, 328
6725899	HOSE			120
6725900	HOSE			120
6725906	BRACKET			328
6725907	DECAL			310, 396, 400
6725937	CLAMP			288
6725938	CLAMP			288
6725946	KIT			297, 298
6726277	CLAMP			412
6726303	DECAL			298, 312
6726386	KNOB			338, 342
6726423	DECAL			310, 382
6726430	HARNESS			322, 324
6726621	SCREW			354, 360, 366
6726623	HOSE			360, 364
6726655	KIT			417, 418
6726662	HARNESS	7151940	B,D	378
6726681	LINK			194, 270
6726908	LIFT EYE			382
6726987	HOSE			398, 400

Code for disposition of old part number
A -- Use up
B -- Use on other application (See PNI)
C -- File PDR Report with Bobcat Parts Sales
D -- Part Number Error

Page 500 - OSS# 2071408 - All rights reserved by Bobcat Company - 12/04/2009 - 07:23:36 - Produced by Ken Cook Co. with mediaioff

Part No.	Description	Was	Code	Page
6727065	BOLT			196, 200, 270
6727176	KIT			315, 316
6727299	INSULATION			22
6727313	ELBOW			98, 102
6727326	MOUNT			362, 364
6727354	INLET			98, 102
6727475	CAP			6, 9, 10, 98, 102
6727496	PIN			194, 270
6727595	DECAL			312
6727803	CABLE			180
6727847	COVER			338, 342
6727926	DECAL			194, 270, 310
6728459	DOOR SENSOR			282, 288
6728473	BOLT			32
6728539	DECAL			194, 270, 310
6728540	DECAL			270
6728621	BRACKET			176
6728626	HARNESS			176
6728749	HOSE			216
6728819	PIN			30
6728971	PIN, PIVOT TAPERED			30
6728999	BUSHING, WELD-ON			30
6729005	BUSHING			30
6729009	SEAL			300
6729010	SEAL			300
6729011	SEAL			300
6729012	INSULATION			18
6729013	INSULATION			18
6729029	BOB-TACH			31, 32
6729077	DECAL			310, 362
6729078	DECAL			120, 310
6729141	MOUNT			336
6729237	STEP			36, 194
6729320	CLAMP			68
6729353	BUSHING PIVOT			32
6729358	PIN, PIVOT TAPERED			30
6729401	BUSHING			14, 16
6729402	BUSHING			14, 16
6729467	SPACER			194, 270
6729491	PLUG			32
6729594	HANDLE			196, 200
6729595	HANDLE			196, 200
6729604	HOSE			60, 62, 64, 66
6729663	HOUSING			48, 50
6729686	TEE			60, 62, 64, 66
6729688	LATCH			416
6729694	TEE			60, 62, 64, 66
6729774	COVER			36
6729776	WINDOW, DOOR CURVED CAB			286
6729854	TUBE			38
6729888	STEP			30
6729901	TIRE			443, 444

Code for disposition of old part number
A -- Use up
B -- Use on other application (See PNI)
C -- File PDR Report with Bobcat Parts Sales
D -- Part Number Error

Page 501 - OSS# 2071408 - All rights reserved by Bobcat Company - 12/04/2009 - 07:23:36 - Produced by Ken Cook Co. with mediaioff

Part No.	Description	Was	Code	Page
6729939	LATCH PLATE			28
6729944	STOP			220
6729991	REAR DOOR			14, 16, 28
6730013	COVER			48, 50
6730108	TIRE			444
6730109	TIRE			444
6730143	TEE			94
6730265	MOUNT			360, 364
6730266	SPACER			362, 364
6730270	LEVER			228
6730573	INSULATION			434, 438
6730726	HOSE			218
6730753	MOUNT			218, 394
6730772	RIM			444
6730784	BUSHING			14, 16
6730785	BUSHING			14, 16
6730816	SHIELD			282, 288
6730819	BELT			8, 360, 364
6730822	KIT			281, 282
6730823	KIT			288
6730858	TUBELINE			60, 64
6730887	PIN			30
6730894	BOLT			220
6730898	MOUNT			280
6730914	TEE			60, 62, 64, 66
6730995	BUSHING, WEAR			30
6731078	GRILL			210, 212
6731084	ADAPTER			356, 358
6731085	ELBOW			356, 358
6731119	PIVOT ASSY			32
6731121	PLUG			42
6731151	KIT			269, 270
6731152	MOUNT			38
6731160	WASHER			30
6731179	COVER			30
6731209	TANK			98, 102, 116, 118
6731222	PIN			322, 324
6731239	HARNESS			322
6731251	BAR			78
6731252	BAR			78
6731255	ELBOW			362, 364
6731275	INSULATION			176
6731478	EXIT TAG	6559515	A	22, 300
6731478	EXIT TAG			22, 300
6731527	TEE			106, 108
6731638	HOSE			98, 102
6731757	DECAL			310
6731819	STRAP			322, 324
6731900	ROD			228
6731915	BRACKET			210, 212
6731916	SHIELD			210, 212
6731970	BRACKET			210, 212
6731973	HOLDER			322, 324
6732001	KIT			415, 416

Code for disposition of old part number
A -- Use up
B -- Use on other application (See PNI)
C -- File PDR Report with Bobcat Parts Sales
D -- Part Number Error

Page 502 - OSS# 2071408 - All rights reserved by Bobcat Company - 12/04/2009 - 07:23:36 - Produced by Ken Cook Co. with mediaioff

Part No.	Description	Was	Code	Page
6732023	CONNECTOR			356, 358
6732032	GASKET			218
6732045	HARNESS			324
6732081	HARNESS			324
6732193	BRACKET			222
6732206	SPACER			322, 324
6732219	KIT			425, 426
6732234	KIT			377, 378
6732235	KIT			273, 274
6732318	SPACER			210
6732322	SPACER			228
6732323	BRACKET			228
6732351	WINDOW			288
6732375	TANK			216
6732450	BRACKET			36, 226, 228
6732457	WASHER			210
6732483	HOSE			116, 118
6732484	HOSE			116
6732577	STEP, MFR			14, 16
6732583	INSULATION			432, 434, 436, 438
6732618	SEAL			34, 36
6732678	KIT			381, 382
6732687	PIN			382
6732696	DECAL			310
6732715	LATCH			28
6732730	HARNESS			320
6732732	BUSHING			360, 364
6732847	RIM			444
6732928	KIT			335, 336
6732931	HOUSING			210
6732991	TUBELINE			64, 66, 280
6732992	TUBELINE			64, 66, 280
6732997	U-BOLT			122
6733107	PLUG ASSY			18
6733136	KIT			319, 320
6733142	KIT			317, 318
6733144	MOUNT			320
6733219	HOSE			116, 117, 118
6733270	MOUNT			324
6733292	HARNESS, ACS			194
6733296	BRACKET			324
6733370	HARNESS			180
6733429	CAP			215, 216
6733529	SEAL			210, 212
6733575	HINGE, REAR DOOR			28
6733578	RIM			444
6733616	BUMPER			28
6733629	HOSE, HYD ASSY			398
6733630	HOSE			398, 400
6733655	COMPRESSOR			360, 364
6733667	LATCH, REAR DOOR			28
6733707	LIFT ARM			30
6733740	COVER			14, 16
6733851	HARNESS			325, 326

Code for disposition of old part number
A -- Use up
B -- Use on other application (See PNI)
C -- File PDR Report with Bobcat Parts Sales
D -- Part Number Error

Page 503 - OSS# 2071408 - All rights reserved by Bobcat Company - 12/04/2009 - 07:23:36 - Produced by Ken Cook Co. with mediaioff

Part No.	Description	Was	Code	Page
6733873	SHIELD			222
6733886	BOLT			216
6733924	DECAL			306
6733970	MOUNT			272, 274, 376, 378
6733996	DECAL			216, 312
6734090	ADAPTER			216
6734108	BRACKET			382
6734114	HOSE			218
6734298	MOUNT			122
6734416	LEVER			226, 228
6734417	LEVER			228
6734436	SHIELD			222
6734446	SHIELD			314
6734447	SHIELD			314
6734461	KIT			313, 314
6734503	CLEVIS			228
6734521	PANEL			33, 34, 35, 36
6734534	DECAL	7124877	A	312
6734560	BUSHING			384, 386
6734561	WASHER			98, 102
6734563	WASHER KIT			98, 102
6734573	HOSE, ENG OIL DRAIN			222
6734627	MOUNT			384
6734628	MOUNT			384
6734646	DECAL			310
6734647	DECAL			310
6734657	ANGLE			384
6734666	ARM			384
6734667	ARM			384
6734696	KIT			409, 410
6734697	SCREEN			410
6734772	MOUNT			226, 228
6735140	DECAL			310
6735245	DUCT			338, 342
6735246	DUCT			338, 342
6735282	SCREW			384
6735346	MOUNT			222
6735475	HOSE			396, 400
6735614	TANK			38
6735680	FOOT PEDAL			228
6735684	HOSE			412
6735696	BUSHING			38
6735709	IDLER			220
6735796	CLAMP			60, 62, 64, 66, 68
6735825	SPACER			322, 324
6735862	DECAL			310
6735901	DECAL, BOBCAT			312
6735946	BUSHING			30
6735980	MOUNT			220, 222
6736071	KIT			176
6736121	HOSE COVER			14, 16
6736350	HOSE			68
6736351	HOSE			68
6736352	HOSE			60, 62, 64, 66

Code for disposition of old part number
A -- Use up
B -- Use on other application (See PNI)
C -- File PDR Report with Bobcat Parts Sales
D -- Part Number Error

Page 504 - OSS# 2071408 - All rights reserved by Bobcat Company - 12/04/2009 - 07:23:36 - Produced by Ken Cook Co. with mediaioff

Part No.	Description	Was	Code	Page
6736353	HOSE			60, 62, 64, 66
6736438	MOUNT			412
6736440	MOUNT			412
6736442	TUBELINE			412
6736443	TUBELINE			412
6736515	HARNESS			180
6736566	HOSE			216
6736641	PAINT			452
6736642	PAINT			452
6736644	PAINT			450, 451, 452
6736645	PAINT			452
6736655	KIT			333, 334
6736664	HOSE			334
6736732	LIFT ARM STOP			30
6736824	DECAL			310
6737088	COVER, FRONT ACCESS			268
6737095	STEP			34
6737120	STEP			34
6737189	DECAL			272, 274, 310
6737191	WEDGE			32
6737201	MOUNT			412
6737248	DECAL			172, 190, 310
6737388	WASHER			78, 122, 224
6737524	KNOB			70, 76
6737746	LINK			122
6800974	TUBELINE			74
6801059	WASHER			286, 418
6801167	PLUG			90
6803092	BONNET			90
6805102	BUSHING			80, 84, 88
6805453	BUSHING			72
6806058	HOSE			120
6806403	HOSE			398, 400
6807992	SHIM			44, 48
6809511	DECAL			60, 62, 64, 66, 70, 312
6809726	ROLLER			28
6809727	CHANNEL			28
6809734	BUSHING			28
6809845	BOLT			28
6810132	SPRING			28
6810141	SPRING			28
6810213	TUBELINE			72
6810233	CYLINDER			71, 72
6810234	TUBE, CASE CYL TILT			72
6810235	SHAFT, ROD CYL TILT			72
6810237	PISTON			72
6810349	CASE			402
6810356	SPACER			402, 404
6810539	NUT			72
6810611	CYLINDER, POWER BOB-TACH			401, 402

Code for disposition of old part number
A -- Use up
B -- Use on other application (See PNI)
C -- File PDR Report with Bobcat Parts Sales
D -- Part Number Error

Page 505 - OSS# 2071408 - All rights reserved by Bobcat Company - 12/04/2009 - 07:23:36 - Produced by Ken Cook Co. with mediaioff

Part No.	Description	Was	Code	Page
6810612	SHAFT, ROD CYL POWER BOB-TACH			402, 404
6812170	PLUG			402, 404
6812171	PLUG			72, 74
6812815	FITTING			120
6813078	STEP			382
6813153	PLATE			80, 84
6813964	ELBOW			82, 90, 106, 108
6814279	BLOCK			82, 86, 90
6814600	VALVE, CONTROL			87, 88
6814694	RETAINER			80, 84, 88
6815152	SPOOL			80, 84
6815757	CYLINDER			73, 74
6815759	CASE			74
6815887	HOSE			110
6815995	HOSE GUIDE			380
6816301	HOSE GUIDE KIT			379, 380
6816549	PLUG ASSY PORT RLF			80, 84, 88
6817003	BODY			80, 84
6817004	BODY			88
6900366	INSTRUCTIONS			306
6900848	INSTRUCTIONS			330
6900852	INSTRUCTIONS			300
6900853	INSTRUCTIONS			300
6900854	INSTRUCTIONS			284
6900888	INSTRUCTIONS			384
6900991	INSTRUCTIONS			276
6900992	INSTRUCTIONS			442
6901010	INSTRUCTIONS			426
6901011	INSTRUCTIONS			428
6901013	INSTRUCTIONS			290
6901025	INSTRUCTIONS			328
6901029	INSTRUCTIONS			298
6901061	INSTRUCTIONS			418
6901076	INSTRUCTIONS			316
6901120	INSTRUCTIONS			354
6901492	INSTRUCTIONS			270
6901656	INSTRUCTIONS			416
6901663	INSTRUCTIONS			322
6901690	INSTRUCTIONS			274
6901691	INSTRUCTIONS			378
6901772	INSTRUCTIONS			382
6901816	INSTRUCTIONS			336
6901871	INSTRUCTIONS			318
6901872	INSTRUCTIONS			320
6901909	INSTRUCTIONS			324
6901916	INSTRUCTIONS			334
6902228	PAINT, ORANGE SPRAY CAN 6			449, 450
6902229	PAINT, CHARCOAL SPRAY CAN 6			450
6902230	PAINT, WHITE SPRAY CAN 6			450

Code for disposition of old part number
A -- Use up
B -- Use on other application (See PNI)
C -- File PDR Report with Bobcat Parts Sales
D -- Part Number Error

Page 506 - OSS# 2071408 - All rights reserved by Bobcat Company - 12/04/2009 - 07:23:36 - Produced by Ken Cook Co. with mediaioff

Part No.	Description	Was	Code	Page
6902233	PAINT, ORANGE QT 6			450
6902234	PAINT, CHARCOAL QT 6			450
6902235	PAINT, WHITE QT 6			450
6902236	PRIMER QT. 6	6653519	A	450
6902252	INSTRUCTIONS			314
6902288	INSTRUCTIONS			410
6902600	MANUAL	6718719	B,D	2, 3, 4, 310
6902600	MANUAL	6737783	D	2, 3, 4, 310
6903105	OIL, 15W40 QT. 12			2, 6, 450
6903106	OIL, 15W40 GAL. 6			2, 6, 450
6903107	OIL, 10W30 QT. 12			2, 5, 6, 450
6903108	OIL, 10W30 GAL. 6			2, 6, 450
6903109	OIL 30W QT. 12			2, 6, 450
6903110	OIL, 30W GAL. 6			2, 6, 450
6903111	OIL 30W 2.5 GAL 2			2, 6, 450
6903112	OIL, 10W30 2.5 GAL 2			2, 6, 450
6903113	OIL, 15W40 2.5 GAL. 2	6674204	A	2, 6, 450
6903117	FLUID, OIL HYD 2.5 GAL 2			2, 6, 450
6903118	FLUID, OIL HYD 5 GAL			2, 6, 450
6903119	FLUID, OIL HYD 55 GAL			2, 6, 450
6903121	LUBE, GEAR 12			450
6903122	GREASE, MULTI PURPOSE #2 - 10			6, 450
6903132	INSTRUCTIONS			280
6903293	INSTRUCTIONS			272
6903773	33X6X11 TWIN FLEX TIRE & WHEEL (LEFT)			445, 446
6903774	33X6X11 TWIN FLEX TIRE & WHEEL (RIGHT)			446
6904152	MANUAL OPERATION S220 LOADER			2
6904154	MANUAL SERVICE S220 LOADER			2
6904243	MANUAL PARTS S220 LOADER			2
6904243-CD	MANUAL PARTS S220 LOADER CD			2
6904255	INSTRUCTIONS			340, 356, 358
6904255	INSTRUCTIONS	6903305	B	340, 356, 358
6904258	INSTRUCTIONS			362
6904709	MANUAL			420
6904718	INSTRUCTIONS			398, 400
6904718	INSTRUCTIONS	6902361	B,D	398, 400
6904732	INSTRUCTIONS			376
6904734	INSTRUCTIONS			412

Code for disposition of old part number

A -- Use up

B -- Use on other application (See PNI)

C -- File PDR Report with Bobcat Parts Sales

D -- Part Number Error

Page 507 - OS$# 2071408 - All rights reserved by Bobcat Company - 12/04/2009 - 07:23:36 - Produced by Ken Cook Co. with mediaioff

Part No.	Description	Was	Code	Page
6904744	INSTRUCTIONS			302
6904764	DECAL KIT			309, 310, 311, 312
6904783	INSTRUCTIONS			188
6904896	INSTRUCTIONS			304
6921062	PULLEY, FAN DRIVE			248
6921064	COMP. CRANKSHAFT			242
6921065	COMP. CRANKCASE			242
6967523	SPINDLE	6687920	A	152
6967525	SPRING	6688043	A	152
6967526	SPRING	6688021	A	152
6967527	PIN	6687923	A	152
6967534	PISTON	6688022	A	154
6967535	COLLAR	6687919	A	154
6967536	SPRING	6688023	A	154
6983128	ANTI-FREEZE PG 53/47 PREMIX GAL 6	6724094	A	450
6983129	ANTI-FREEZE PG CONCENTRATE 6	6724354	A	450
6986527	INSTRUCTIONS			436, 438
6986528	INSTRUCTIONS			432, 434
6986573	INSTRUCTIONS			448
6986593	INSTRUCTIONS			386
6986799	INSTRUCTIONS			162
6987150	INSTRUCTIONS			364
6987152	INSTRUCTIONS			342
6987268	INSTRUCTIONS			390
6987496	INSTRUCTIONS			224
69G436	BOLT			88, 186, 190, 194
6CM1220	BOLT			222
6E5	WASHER			222, 330
6E6	WASHER			106, 108, 180
6EM80	WASHER, SPRING			208
6J1664	KEY			58
6J807	WOODRUFF KEY	6687991	A	142
7000329	ADAPTER, SWITCH IGN			172
7000460	TOOL, DISCONNECT TERMINAL			316
7000461	TOOL, DISCONNECT TERMINAL			316
7000973	PLUG, MOTOR			164
7000974	PLUG, MOTOR			164
7001044	HORN, ALARM	6675099	A	376, 378
7001669	BRACKET			364, 368, 372
7001670	INSULATION			364, 368, 372
7001671	INSULATION			364, 368, 372
7001673	KIT, SCREEN FILTER			408
7001678	VALVE, CHECK			408
7002707	EVAPORATOR			364, 368, 372
7003445	BLOWER, HEATER & A/C			351, 352
7003446	COIL, HEATER			346, 348, 368, 372
7003447	FLANGE, SEAL			346, 348, 368, 372

Code for disposition of old part number

A -- Use up
B -- Use on other application (See PNI)
C -- File PDR Report with Bobcat Parts Sales
D -- Part Number Error

Page 508 - OSS# 2071408 - All rights reserved by Bobcat Company - 12/04/2009 - 07:23:36 - Produced by Ken Cook Co. with mediaioff

Part No.	Description	Was	Code	Page
7003448	PLATE			346, 368
7003449	PAN, COIL			346, 368
7003450	BRACKET, HARNESS			346, 368
7003451	BRACKET			346, 348, 368, 372
7003452	BRACKET			346, 348, 368, 372
7003453	BRACKET			346, 348, 368, 372
7003454	BRACKET			346, 348, 368, 372
7003455	PLATE			346, 368
7003456	VALVE, MOTORIZED ASSY			346, 348, 368, 372
7003457	HOSE, HEATER			346, 348, 368, 372
7003458	CLAMP, HOSE			346, 348, 368, 372
7003459	GROMMET			346, 368
7003460	SEAL, FOAM			346, 348, 368, 372
7003461	HOUSING, BASE			346, 348, 368, 372
7003462	HOUSING, COVER DUST			346, 348, 368, 372
7003463	VALVE, DRAIN			346, 348, 368, 372
7003464	COVER, ASSY			346, 348, 368, 372
7003465	NUT			346, 348, 368, 372
7003466	RIVET, POP			346, 348, 368, 372
7003467	RIVET, POP			346, 368
7003468	NUT			346, 348, 368, 372
7003469	SCREW			346, 348, 368, 372
7003470	SCREW			346, 348, 368, 372
7003471	SCREW			346, 348, 352, 368, 372
7003472	CLIP, RECEPTACLE			346, 348, 368, 372
7003473	NUT			346, 348, 368, 372
7003474	CLIP, RECEPTACLE			346, 348, 368, 372
7003481	WINDOW, LEFT ASSY	6691000	A	300
7003482	WINDOW, RIGHT ASSY	6691002	A	300
7003511	PLUG			346, 348
7008040	THERMOSTAT	6683004	A	364, 372
7008040	THERMOSTAT			364, 372
7008106	GROUP ROTATING RH			140, 146
7008107	CONTROL			140, 148
7008108	CONTROL			140, 150
7008109	MODULE, CONTROL			140, 156
7008110	HOUSING			140
7008111	FLANGE, LH			140
7008112	FLANGE, RH			140
7008113	SHAFT			140
7008114	SCREW			140
7008115	SENSOR			142
7008117	SWASHPLATE			144, 146
7008118	BEARING			144, 146
7008119	RING			148, 150
7008122	COVER			156
7008123	GASKET			156
7008124	VALVE, RELIEF			140, 152

Code for disposition of old part number
A -- Use up
B -- Use on other application (See PNI)
C -- File PDR Report with Bobcat Parts Sales
D -- Part Number Error

Page 509 - OSS# 2071408 - All rights reserved by Bobcat Company - 12/04/2009 - 07:23:36 - Produced by Ken Cook Co. with mediaioff

Part No.	Description	Was	Code	Page
7008389	RETAINER, VALVE SPRING			238
7008766	SHIM			154
7008767	SHIM			154
7008806	GASKET	7008121	A	156
7008807	GROUP, ROTATING			140, 144
7009081	NUT			172
7010162	HOUSING, BLOWER			352
7010163	MOTOR, FAN			352
7010164	RESISTOR			352
7010165	COVER			352
7010166	RING, INNER			352
7010167	BLOWER, WHEEL			352
7010168	SCREW			352
7010169	CLAMP, HOSE			352
7010263	SHIELD, ISOLATOR			348, 372
7010264	FOAM			348, 374
7010265	BOLT			348, 374
7010266	RIVET, POP			348, 372
7010267	NUT, LOCK			348, 372, 373, 374
7010268	CLAMP			348, 372
7010269	PAN, COIL			348, 372
7010427	KIT, SEAL			160
7100240	RACE			44, 46, 48, 50
7100266	LINK			122
7100462	CLAMP			98, 102
7100626	HOSE			60, 62, 64, 66
7100627	HOSE			60, 62, 64, 66
7100699	WASHER			122
7100859	FLYWHEEL ASSY			220
7101104	MOUNT			326
7101136	BUSHING			222
7101291	ELBOW			38, 39, 40
7101345	BONNET, DETENT HYD VALVE			88
7101377	HOSE			68
7101384	LIGHT			326
7101533	INSULATION			432, 434, 436, 438
7101534	INSULATION			436
7101535	INSULATION			432
7101536	INSULATION			432, 434, 436, 438
7101537	INSULATION			432, 434
7101538	INSULATION			432, 434, 436, 438
7101539	INSULATION			436, 438
7101672	ACTUATOR			186, 190, 194
7101736	TIRE, HEAVY DUTY - 12X16.5 - 12 PLY			444
7101797	ELBOW			98, 102
7101893	SPACER			176, 180
7102018	TEE			88
7102019	CROSS			82
7102066	CROSS			80, 88, 120
7102089	HOSE			60, 62, 64, 66
7102090	HOSE			60, 62, 64, 66
7102303	FILLER TUBE			38

Code for disposition of old part number
A -- Use up
B -- Use on other application (See PNI)
C -- File PDR Report with Bobcat Parts Sales
D -- Part Number Error

Page 510 - OSS# 2071408 - All rights reserved by Bobcat Company - 12/04/2009 - 07:23:36 - Produced by Ken Cook Co. with mediaioff

Part No.	Description	Was	Code	Page
7102338	HARNESS			412
7102368	TUBE			218
7102414	BRACKET			67, 68
7102451	FITTING			180
7102652	SCREW			82, 86, 90
7102705	TEE			40
7102747	GASKET			218, 234
7103075	SEAL			300
7103217	WASHER			122
7103708	BRACKET			124
7103711	BOLT			124
7103749	ELBOW			94, 106, 108
7103750	EXCHANGER, OIL COOLER			94, 106, 108
7103751	HOSE			94, 106, 108
7103903	MOUNT			106, 108
7104465	DOOR SWITCH HARNESS			282, 290
7104670	LIGHT			388
7104671	LIGHT			388
7104830	KIT, BPV			279, 280
7105034	WINDOW TOP	7105035	A	22, 300
7105192	BOLT			122
7105223	SPACER			124
7105753	SPACER			222, 224
7105856	SNAP RING			32
7105983	BOLT			172
7106040	ELBOW			98, 102
7106212	HOSE			98, 102
7106215	HOSE			68
7106240	SUPPORT			224
7106279	BOLT			38, 98, 102
7106707	SHIELD			34, 36
7106712	SEAT			80, 84, 88
7106738	SHAFT			52
7106744	BRAKE DISC			52
7106750	SPACER			222
7106862	CHAIN, DRIVE			42
7107175	INLET			210
7107179	HOSE			110
7107271	WASHER			58
7107544	HARNESS			272
7107557	HOSE			118
7107558	HOSE			118
7107559	HOSE			118
7107560	HOSE			118
7107561	HOSE			102
7107562	HOSE			102
7107572	SPACER			222, 224
7107785	TEE			98
7107829	KIT, BACK-UP ALARM			271, 272
7108222	SAFETY TREAD			310
7108236	PIN			190, 194
7108241	LIFT SPOOL			88

Code for disposition of old part number
A -- Use up
B -- Use on other application (See PNI)
C -- File PDR Report with Bobcat Parts Sales
D -- Part Number Error

Page 511 - OSS# 2071408 - All rights reserved by Bobcat Company - 12/04/2009 - 07:23:36 - Produced by Ken Cook Co. with mediaioff

Part No.	Description	Was	Code	Page
7108242	TILT SPOOL			88
7108441	HOSE			98
7108458	TUBELINE			64, 66, 280
7108633	TEE			102
7108685	TEE			110, 112
7108781	SPOOL			80, 84
7109144	HOSE			94
7109318	INSULATOR			440
7109319	INSULATOR			440
7109320	INSULATOR			440
7109343	HOSE			98
7109403	HARNESS			388
7109404	HARNESS			388
7109623	ELBOW	6817335	A	60, 62, 64, 66
7109661	LATCH, DOOR W/SENSOR			282, 288
7109662	HANDLE, LATCH DOOR			282, 288
7109663	SPACER			282, 288
7109664	BOLT			282, 288, 289, 290
7109665	FRAME, DOOR CAB			282
7109792	MOUNT			223, 224
7109885	TEE			94
7109888	HOSE			94
7109904	BRACKET			122, 138
7109905	BRACKET			122, 136
7109934	MOUNT, VALVE			70
7110159	HARNESS			176
7110160	HARNESS			176
7110243	BRACKET			110
7110244	BRACKET			110
7110276	SPACER, TAPERED			222
7110284	HOSE			70
7110287	GASKET			50
7110316	DECAL			282, 288, 310
7110365	ARM, PINTLE			122
7110430	SPECIAL APPS DOOR			288
7110571	BELLCRANK, STEERING			122
7110809	HOSE			109, 110
7110914	TUBELINE			80, 88
7110942	HOSE			38
7111581	PULLEY			220
7111805	MOUNT			218
7112333	CHAINCASE			42
7112349	HOSE			440
7112383	AUX SPOOL			80, 84, 88
7112683	BRACKET			216, 222
7112760	BRACKET			180
7112788	ELBOW			106, 108
7112828	HARNESS			188, 190
7113208	HOSE			356
7113209	HOSE			356, 358
7113340	CAP			38

Code for disposition of old part number

A -- Use up

B -- Use on other application (See PNI)

C -- File PDR Report with Bobcat Parts Sales

D -- Part Number Error

Page 512 - OSS# 2071408 - All rights reserved by Bobcat Company - 12/04/2009 - 07:23:36 - Produced by Ken Cook Co. with mediaioff

Part No.	Description	Was	Code	Page
7113355	TUBELINE			106
7113465	SPACER			68
7113552	CHECK VALVE			94
7114812	TUBELINE			60, 62
7114813	TUBELINE			60, 64
7114816	TUBELINE			68
7114818	TUBELINE			94
7114820	TUBELINE			60, 62, 64, 66
7114821	TUBELINE			60, 64
7114823	TUBELINE			64, 66, 280
7114824	TUBELINE			94
7114827	TUBELINE			68
7114828	TUBELINE			60, 64
7114829	TUBELINE			60, 64
7114886	HOSE			106
7114934	STOP	6733784	A	14, 16
7115066	TUBELINE			98, 102
7115091	TUBELINE			106
7115185	HOSE			98, 102
7115219	PEDAL			78
7115220	MOUNT			78, 194
7115893	HARNESS DIFF SWITCH			176
7116257	HARNESS, MFR			176, 179, 180
7116260	HARNESS, CAB DLX			172
7116261	HARNESS			171, 172
7116600	KIT, AUX REAR			411, 412
7116870	DECAL			310
7116902	KIT			357, 358
7116904	KIT, A/C			359, 360
7116995	TUBELINE			82, 88
7117036	HARNESS, SJC			186
7117124	PANEL			34, 36
7117322	HARNESS, WIPER			282, 290
7117407	DECAL			176, 310
7117881	STOP			326
7117883	MOUNT			326
7117885	PIN			326
7117886	MOUNT			326
7120084	BRACKET			180
7120288AR	KIT, TRANSLATION S220 SPANISH			310
7120288BR	KIT, TRANSLATION S220 PORTUGUESE			310
7120289AR	KIT, DECAL			310
7120289BR	KIT, DECAL			310
7120289JP	KIT, DECAL			310
7120599	DECAL			310
7120602	DECAL			94, 310
7120956	HOSE			412
7121115	HOSE			360, 364
7121116	KIT, POWER BOB-TACH			287, 288, 399, 400
7121223	CAP			38
7121399	SPRING			80, 84, 88

Code for disposition of old part number

A -- Use up
B -- Use on other application (See PNI)
C -- File PDR Report with Bobcat Parts Sales
D -- Part Number Error

Page 513 - OSS# 2071408 - All rights reserved by Bobcat Company - 12/04/2009 - 07:23:36 - Produced by Ken Cook Co. with mediaioff

Part No.	Description	Was	Code	Page
7121572	DECAL PACKAGE			338, 342
7121572	DECAL PACKAGE	6725513	A	338, 342
7121779	PAD			124
7122028	KIT, HORN			375, 376
7122184	HARNESS			188
7122214	ADAPTER			120
7122324	LEVER			78
7122359	BRACKET			190
7122462	KIT, RIB WINDOW			301, 302
7122487	2 SEAL, WIPER			302
7122488	SEAL, BULB			302
7123766	FAN			212, 304
7123800	HARNESS LF MFR			176, 180
7123801	SJC HARNESS			190
7123816	MOUNT RH			188, 192
7123817	MOUNT LH			188, 192
7123854	INSULATION			434, 438
7123941	PEDAL ASSEMBLY			78, 194, 270
7123942	PEDAL ASSEMBLY			78, 194, 270
7123963	SEAL KIT			82, 86, 90
7123964	KIT, SEAL COMPLETE			82, 86, 90
7123965	SEAL KIT			82, 86, 90
7124301	GUARD			40
7124326	RETAINER			40
7124362	VALVE, CONTROL SERVICE			83, 84
7124566	COVER			304
7124567	COVER			14, 16, 304
7124827	HOSE			112, 114, 304
7124832	HOSE			111, 112, 304
7124839	COVER			14, 16
7124840	BAR			42
7124893	HARNESS			194
7124929	BASE			188, 192
7125181	TUBELINE			108, 304
7125182	TUBELINE			108, 304
7125363	LINK			122
7125557	HOSE, HEATER FORMED			358
7125723	HOSE			112, 304
7125948	PLATE			212, 304
7126010	HOSE	6732485	A	116, 118
7126157	TUBELINE			98, 102
7126213	DISC			54
7126215	CARRIER, MOTOR			45, 46
7126319	KIT, UPGRADE COOLING			303, 304
7126457	MOUNT			212, 304
7126458	BRACKET			112, 304
7126496	SEAL			14, 16, 214, 304
7126515	TUBELINE			60, 62, 64, 66
7126516	TUBELINE			60, 62, 66
7126554	HOSE			108
7126558	KIT, JOYSTICK			186, 187, 188

Code for disposition of old part number
A -- Use up
B -- Use on other application (See PNI)
C -- File PDR Report with Bobcat Parts Sales
D -- Part Number Error

Page 514 - OSS# 2071408 - All rights reserved by Bobcat Company - 12/04/2009 - 07:23:36 - Produced by Ken Cook Co. with mediaioff

Part No.	Description	Was	Code	Page
7126679	PLATE			386
7126682	BLOCK			386
7126685	MOUNT			386
7126686	MOUNT			386
7126695	MOUNT			386
7126696	MOUNT			386
7126700	ARM			386
7126863	SEAL			212, 304
7126869	BRACKET	6726573	A	194, 270
7126873	TUBELINE			62, 66, 304
7126874	TUBELINE			62, 66, 304
7126937	TUBELINE			62, 66, 304
7127216	TEMPLATE			304
7128600	BRACKET			124
7128601	BRACKET			124, 182
7128719	FAN, ENG COOLANT			212
7128728	HUB			212, 304
7129922	HEATER COIL KIT	6689770	A	353, 354
7129949	COVER			18
7129987	COVER	6733956	A	52, 54, 56
7130536	BRACKET, BATTERY	6579989	A	180
7131233	PEDAL			392
7131236	BUSHING			392
7131254	BRACKET, MOLDED SKI			178
7131273	SCREW	59CM1240	A	222, 224
7131273	SCREW			222, 224
7131322	COVER	6687993	C	142
7131518	DECAL			188, 192
7131519	DECAL			188, 192
7131520	DECAL			188
7131521	DECAL			188
7131522	DECAL			188
7131523	DECAL			188
7131534	MOUNT			304
7131601	HARNESS	7114735	B,D	186, 190
7131872	SPACER			212, 304
7131873	WASHER			212, 304
7133211	TANK, WASHER	6736875	A	284
7134153	SPROCKET	7106737	A	41, 42, 58
7134338	HOUSING			212, 304
7134507	TUBELINE			94
7134515	TUBELINE			94
7134520	PLUG	6817707	A	80, 84, 88
7134522	PLUG	6815014	A	82, 88
7134522	PLUG	6815014		82, 88
7135068	BRACKET			99, 100, 102
7135131	LOUVER			212
7135132	LOUVER			212
7135547	KIT, SEAL	6816325	A	72
7135569	DECAL			420
7136042	HARNESS			190
7136291	CARRIER, MOTOR			49, 50
7136678	DECAL			448

Code for disposition of old part number

A -- Use up

B -- Use on other application (See PNI)

C -- File PDR Report with Bobcat Parts Sales

D -- Part Number Error

Page 515 - OSS# 2071408 - All rights reserved by Bobcat Company - 12/04/2009 - 07:23:36 - Produced by Ken Cook Co. with mediaioff

Part No.	Description	Was	Code	Page
7136679	DECAL			448
7137691	HOSE	7124797	A	112, 114, 304
7137865	SEAL KIT	6803312	A	74
7138014	SEAL KIT			402, 404
7138014	SEAL KIT	6803473	A	402, 404
7138347	HANDLE	6718521	B	284, 288
7138376	BUSHING	6804920	B	80, 84, 88
7138645	BRACKET			22, 172
7139039	KIT			435, 436
7139040	KIT			431, 432
7139183	SHIELD			34, 36
7139184	INSULATION			34, 36
7139420	LINK			122
7139761	HARNESS			190
7139943	BUSHING			32
7140307	CHUTE			212, 304
7140616	INSULATION	6719333	A	432, 434, 436, 438
7140616	INSULATION			432, 434, 436, 438
7140768	KIT			447, 448
7141291	REMOTE CONTROL SYSTEM 2.4GHZ			419, 420
7141328	MOUNT ENGINE			220, 222
7141330	SHIELD DRIVE	7109579	A	220
7142001	KIT			385, 386
7142024	SCREW	25GT410	B	302
7142139	DECAL			386
7142140	DECAL			386
7142141	DECAL			386
7142142	DECAL			386
7142858	TUBELINE			108
7142859	TUBELINE			108
7142876	MOUNT			94, 108
7143070	HARNESS			172
7143071	HARNESS			172
7143272	HOSE	6689767	A	110
7144550	BRACKET, TIEDOWN			182
7145675	HOSE	6701854	A	396, 397, 398, 400
7147350	SPACER, TUBE			224
7147359	BLADE, WIPER WINDOW			286
7147389	SUPPORT			224
7147407	FRAME, MAIN ASSY			15, 16
7147579	SHAFT TRANS			46, 50
7147580	MOUNT	7100795	A	34, 124
7147678	HOSE, HYD			114
7147826	BOLT, CROSS DRILLED			114, 162, 210, 214
7148195	INSULATION HEADLINER			22
7148197	INSULATION			22
7148198	INSULATION			22
7148199	INSULATION	6717519	A	22
7148200	INSULATION	6717520	A	22
7148453	INSULATION			438

Code for disposition of old part number
A -- Use up
B -- Use on other application (See PNI)
C -- File PDR Report with Bobcat Parts Sales
D -- Part Number Error

Page 516 - OSS# 2071408 - All rights reserved by Bobcat Company - 12/04/2009 - 07:23:36 - Produced by Ken Cook Co. with mediaioff

Part No.	Description	Was	Code	Page
7148454	INSULATION			434
7148997	TUBELINE, HYD			70
7149357	MOUNT, LOAD ISOLATOR			224
7149799	KIT			433, 434
7149800	KIT			437, 438
7149908	TUBELINE			114
7152242	INSULATION, STRIP	6703967	B	434, 436, 438
7152242	INSULATION, STRIP	6703967	A	434, 436, 438
7152335	FAN, ENG COOLANT	7128719	A	304
7152616	HARNESS, ADAPTER			188
7153099	BRACE, CAB	7121556	A	302
7154342	ADAPTER, UNION			114
7154546	WASHER, WAVE			122
7156264	COVER			52, 54
7156267	COVER			56
7156722	SCREW			390
7156771	PLATFORM, MAINTENANCE			390
7156809	BUMPER			390
7157561	CONDENSER, A/C			364
7157890	GAS SPRING	6678292	A	336
7157891	GAS SPRING	7100508	A	18
7157892	GAS SPRING	7100506	A	18
7157893	GAS SPRING			282, 290
7157893	GAS SPRING	6682586	A	282, 290
7159166	HOSE, WATER FORMED			216
7160395	CYLINDER, POWER BOB-TACH			403, 404
7160396	CASE			404
7160444	SEAL			440
7161047	HOSE, HYD			400
7161087	BOLT			216
7161095	HOSE, HYD			400
7161610	KIT, MAINTENANCE PATFORM			389, 390
7161786	VALVE, POWER BOB-TACH			407, 408
7162111	SPACER			216
7162194	MOUNT, TANK COOLANT			216
7162648	DECAL			390
7164320	MOTOR, HYD COOLING FAN	7132033	A	113, 114, 163, 164, 214
7164618	SCREW			390
7165265	SEAL, WINDOW			22, 300
7166137	KIT HEATER			341, 342
7166139	KIT A/C			363, 364
7166676	INSULATOR	7109317	A	439, 440
7166916	DECAL, A/C			364
7167241	SEAL, BULK	6646705	B	210, 212
7168164	EXTINQUISHER,FIRE	6675581	A	328

Code for disposition of old part number

A -- Use up
B -- Use on other application (See PNI)
C -- File PDR Report with Bobcat Parts Sales
D -- Part Number Error

Page 517 - OSS# 2071408 - All rights reserved by Bobcat Company - 12/04/2009 - 07:23:36 - Produced by Ken Cook Co. with mediaioff

Part No.	Description	Was	Code	Page
7169309	HARNESS			190
7170197	PUMP, HYD TANDEM			140
7175394	HEATER CAB			342, 347, 348
7175394	HEATER CAB	6691439	A	342, 347, 348
7175395	HVAC ASSY			371, 372
7175397	GROMMET			348, 372
7176546	COVER, FUSE BOX	6716621	B	176
7181229	KIT, MOUNT ISOLATED			224
72F1	FITTING			38, 222
73G624	BOLT			124
73G656	SCREW			398, 400
73G828	BOLT			124
73K13	RING			82, 84, 88
73K16	RING			82, 84, 88
73K222	RING			402, 404
73K228	BACK-UP RING			74
73K232	RING	80K232	A	72
75K3	O-RING			402, 404
75K4	ORING			166
75K6	O-RING			72, 74
774220	NUT			272, 274
799119	RING			80, 84
79K10	O RING 10			60, 62, 64, 66, 80, 84, 88, 92, 94, 110, 112, 114, 134, 280, 406, 408
79K10	O RING 10	79K8	B,D	60, 62, 64, 66, 80, 84, 88, 92, 94, 110, 112, 114, 134, 280, 406, 408
79K12	O RING 10			68, 98, 102, 110, 112, 114, 116, 118, 134, 138, 396, 400
79K16	O RING 10			68, 82, 90, 94, 98, 102, 106, 108
79K4	O RING 10			216, 396, 400, 408
79K5	O RING 10			38
79K6	O RING 10	6634874	B,D	68, 69, 70, 82, 88, 92, 98, 102, 110, 112, 114, 116, 118, 334, 396, 400
79K6	O RING 10			68, 69, 70, 82, 88, 92, 98, 102, 110, 112, 114, 116, 118, 334, 396, 400
79K7	O RING 10			406, 408
79K8	O RING 10			80, 84, 88, 94, 110, 112, 114, 116, 118, 134, 138, 222, 406, 408
7D4	NUT			70, 76
82K230	SEAL			74
83D10	NUT 5			222, 224, 382
83D12	NUT			120
83D4	NUT 10			24, 70, 322, 324, 376, 378
83D5	NUT 5			98, 102, 222, 280, 300, 376, 378
83D6	NUT 5			68, 70, 122, 218, 320, 332, 360, 364, 412
83D8	NUT 5			14, 16, 222
84G1320	BOLT			272
84G3110	SCREW			226, 228
84G3112	BOLT 5			18, 30, 70, 176, 210, 212, 318, 320
84G3116	SCREW			176, 216, 222
84G3116	SCREW	84G3108	B	176, 216, 222
84G3708	SCREW			14, 16
84G3710	SCREW			34, 36, 106, 108, 270, 360, 364

Code for disposition of old part number

A -- Use up

B -- Use on other application (See PNI)

C -- File PDR Report with Bobcat Parts Sales

D -- Part Number Error

Page 518 - OSS# 2071408 - All rights reserved by Bobcat Company - 12/04/2009 - 07:23:36 - Produced by Ken Cook Co. with mediaoff

Part No.	Description	Was	Code	Page
84G3712	BOLT			14, 16, 22, 36, 40, 42, 94, 108, 110, 112, 120, 172, 176, 180, 182, 194, 216, 218, 226, 228, 304, 322, 324, 400, 412
84G3716	SCREW 5			34, 36, 52, 54, 56, 68, 100, 103, 104, 210, 212, 280, 322, 324, 334
84G3720	BOLT			52, 54, 228, 268
84G3724	BOLT			412
84G3728	BOLT	84G3724	B	60, 62, 64, 66, 226, 228
84G3728	BOLT			60, 62, 64, 66, 226, 228
84G3732	BOLT			60, 62, 64, 66
84G3736	BOLT			176
84G3740	BOLT			60, 62, 64, 66, 68
84G3748	BOLT			68
85D4	NUT 5			322, 324
85D5	NUT 5			226, 228, 392
85D6	LOCK NUT			28, 30, 32, 218, 228, 382
85D7	NUT			20
85D8	NUT, 5			18, 220
85G1010	SCREW			324
85G808	SCREW			322, 324
86F10	NUT			94, 106, 108
86F5	NUT			334, 412
872229	WASHER			60, 62, 64, 66, 68
88F5	ELBOW			412
898731	1156 BULB			388
89D5	NUT			36, 392
89D8	NUT			380
8D4	NUT	6631561	A	92
90F5	TEE			412
90KV2	PLUG			402
91G420	SCREW			22, 300
92D10	NUT			402, 404
92D12	NUT			220
92D16	NUT			74
93G824	BOLT	73G824	A	122
947088	RING			72
95D5	NUT			180, 194, 226, 228, 270, 388
95D6	NUT			34, 36, 77, 78, 110, 112, 122, 194, 210, 212, 228, 288, 382
95D8	NUT			220
95K3	O'RING			402
96D6	NUT			122
96D8	NUT			210, 212, 304
97D4	NUT			272, 274
97D4	NUT	83D4	B	272, 274
97D6	NUT 10			24, 176, 180, 186, 188, 190, 192
97D8	NUT			18, 336
97K6	O'RING			120
98D6	NUT			122
98G412	BOLT			204
99K4	O'RING			120
99K6	O'RING			120

Code for disposition of old part number

A -- Use up
B -- Use on other application (See PNI)
C -- File PDR Report with Bobcat Parts Sales
D -- Part Number Error

Page 519 - OSS# 2071408 - All rights reserved by Bobcat Company - 12/04/2009 - 07:23:36 - Produced by Ken Cook Co. with mediaioff