RUTHZIL TRATOR COMERCIAL DE PEÇAS LTDA 11 97083-6812 ROLANDO CITRANGULO

DOOSAN

SOLAR 225LC-V

PARTS LIST
LISTE DE PIECES DETACHEES

N°DE REFERENCE : 021 - 00030HEF
HEMX - 2704

Excavator S225LC-V

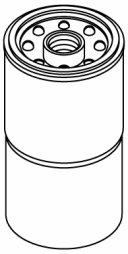

Filter		Interval(hr)
E/g oil filter	65.05510-5028	200
E/g fuel filter	65.12503-5011D	750
Element-inner(air cleaner)	2474-9054A	500
Element-outer(air cleaner)	2474-9053A	500
Suction filter-oil tank	2474-9016A	2000
Filter-oil tank	2474-9404A	500
Filter-fuel tank	2471-9046	
Element-pilot filter	2471-1154	500
Aircon filter	2471-6050A	

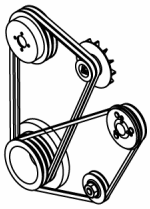

Belt	
Aircon Belt	2106-1019D10
Fan Belt	2106-1019D4

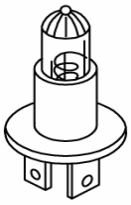

Bulb	
Bulb	515-00012A
Bulb-halogen 24V 75/70W	2515-1022D1
Bulb 24V 70W	2515-1016D4

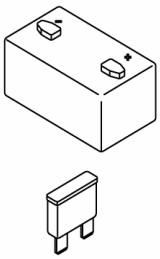

Battery / fuse / relay		
Battery	2506-1104	MF100
Fuse 10A	2527-1016	
Fuse 15A	2527-1017	
Fuse 20A	2527-1018	
Fuse 30A	2527-1025	
Fusible link 27A	2527-1023A	
Relay	2544-9033	
Battery relay	2544-9024	

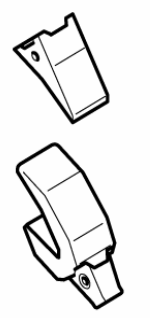

Teeth / adapter / side cutter	
Teeth	2713-1217
Adpater	2713-1218
Side cutter(RH)	2713-1059A
Side cutter(LH)	2713-1060A

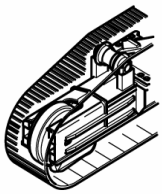

Under carriage		
Idler	2270-1108A	
Upper roller	2270-1005E	
Lower roller	2270-1098A	
Sprocket	108-00017B	
Track link-without shoe	2272-6137	
Track shoe-link+shoe	2272-9032D1	600G
Shoe (only)	2273-6040D1	600G
Shoe (only)	2273-6040D2	700G
Shoe (only)	2273-6040D3	800G
Shoe (only)	2273-6040D4	900G



Seal kit	
Seal kit-boom	440-00355AKT
Seal kit-arm	2440-9236KT
Seal kit-bucket	2440-9339KT
Seal kit-track spring	2274-1008BKT
Seal kit-center joint	2480-6043KT
Main pump	2401-9223KT
Swing motor	2401-9242KT
Travel motor	2401-9287KT

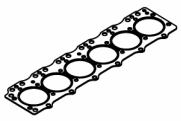

Engine Gasket kit	
Top overhaul gasket kit	65.99605-8018
All overhaul gasket kit	65.99601-8025

FOREWORD

● This parts list is shown the equipment components parts of

「DOOSAN EXCAVATOR S225LC-V」.

1. HOW TO ORDER PARTS.

When ordering parts, please specify the follwing items as shown in the following example.

Ex.				
	1) Model of Machine	:	S225LC-V	(Shown on name plate on the side cover)
	2) Machine Serial No	:	HEMX0-○○○○	(Shown on nameplate on the bed frame)
	3) Engine Serial No	:	DB58TIS	(Shown on Engine cylinder block)
	4) Part No.	:	401-00356A	
	5) Description	:	MAIN PUMP	
	6) Q'ty	:	1	

2. HOW TO USE THIS PARTS LIST.

Key No. : It shows the reference no. on the illustration.

Part No. : It shows the part number of the parts which are included in an illustration.

Description : It shows the name of part. Components of an assembly part are shown with [•] marks and are shown on the line, or lines, below the assembly part.
Also if the components with [•] mark is consists of further components part.
These further components are shown with the marks [••].

Q'ty : It shows the quantity use for one machine. quantity of components show the quantity for one assembly part.

Service code : Abbreviations in this column have their own meaning as show below.

- B : The parts with this abbreviation shows that the part requires some work on it before installing in the machine.
- D : These parts are not serviceable,
  In case of the part with this abbreviation is a component of an assembly and is not available independently. The assembly part containing this part should be ordered.
- K : This means that the part is contained in the service part kit.
- M : This means that the part is available only with its mating parts altogether.
- R : The part with this abbreviation shows that the quantity of the part is changed depending on the machine, such as an adjusting shim etc.
- S : This part is specially provided as a service part, which was not provided in the machine before shipping from the factory.

G : This part need grade control and should be requested as the same grade of counter part.

OP : Optional parts.

EX : Specific design parts.

OS : Over-sized parts.

US : Under-sized parts.
(Part with abbreviation "OS" or "US" is described on the line below the standard sized part.)

: The part with this mark is newly added on that page of the equipment.

Serial no. : Serial No. shows the machine serial number which the parts were applied.
As to the engine Serial No. shows only engine serial number which the parts were applied.
Parts without any applicable serial number are used in every machine.

ICA : ICA shows the interchangeability between the original and the improved parts.
Abbreviations used in this column are as follows;

I : Part No. in the column of "Replaceable part" can be used instead of this part but not vice versa.

P : This must not be used for machine. The part No. in the column "Replaceable part" should be used instead.

T : Parts No. those in the column of "Replaceable part" can be used as an assembly instead of this part.

Y : This part and the part in the column of "Replaceable part" are interchangeable with each other.

Blank : This part has no "Repleaceable part"

Replaceable part : Interchangeable parts nos. and their required quantity are shown in this column.
If interchangeable improved parts are provided for the parts which you may order, the improved parts classified as "I", "P" "T" or "Y" may be supplied.

● When repairing, it is recommended to use our standard part.

● Researching the assembling parts from Part No., see the 「Parts Index」 of this parts list.

Aug. 2002

AVANT-PROPOS

● Cette liste de pieces apparait dans le 「DOOSAN EXCAVATEUR S225LC-V」.

1. COMMENT COMMANDER LES PICES.

Lorsque vous commanderez les pieces, veuillez specifier les articles suivants comme indiques dans l'exemple ci-dessous:

Ex.	1) Modele de machine	:	S225LC-V
	2) Serie de la machine	:	HEMX0-○○○○
	3) Numero de serie du moteur	:	DB58TIS
	4) Numero de la piece	:	401-00356A
	5) Description	:	POMPE
	6) Quantite	:	1

2. COMMENT UTILISER CE RECUEIL DE PIECES DETACHEES.

Numero de la cle : Indique le numero de reference de l'illustration.

Numero de la piece : Indique le numero de piece sur l'illustration.

Description : Nom de la piece. Les pieces composantes des pieces d'assemblage sont indiquees avec une marque [•] en dessous des pieces d'assemblage. Aussi, si les pieces composantes sont marques d'un [•]. Cela indique qu'ily a plusieurs pieces composantes, ces autres pieces composantes sont indiquees par un [••].

Quantite : Quantite, montre la quantite utilisee pour une machine, cependant Q'te des composants de pieces montre la quantite utilisee pour un assemblage de pieces.

Code de Service : L'Abveration est un composant d'un code de service qui a sa propre signification comme indique ci-dessous.

- B : La piece avec cette abreviation indique que la piece exige d'etre travaillee avant d'etre installee dans la machine.
- D : La piece avec cette abreviation est uun composant d'un assemblage et n'est pas diponible toute seule, la d'assemblage contenant cette peece dcvrait ctrc commandee
- K : Cette veut dire que la piece est inclue dans la trousse de pieces de service. "ensemble kit"
- M : Cela signifie que la piece est disponible uniquement avec as peice piece d'accouplement.
- R : La piece avec cette abreviation montre que la quantite de la piece est changee en fonction de la machine.

S : Cette piece est specialement approvisionnee en tant que piece de service, qui n'a pas ete livree dans la machine lors du depart de l'usine.

G : Cette piece a besoin d'on degerde controle et doit etre commande avec un niveau de degre equivalent.

OP : Prieces facultatives

EX : Pieces specifiquement dessinees

OS : Pieces demesurees

US : Pieces uop petites
La piece avec abreviation OS-US est decrite sur la ligne en dessous de la piece standard

: La piece avec cette marque vient d'ent d'etre rajoutee sur la page de l'equipement.

Numero de serie : Numero de serie indique le numero de serie de la machine avcc lesquels les pieces etaient appliquees.
En ce qui conceme le numero de serie du moteur. Celui-ci indique seulement le numero de serie du moteur sur lesquels les pieces etaient appliquess.
Les pieces qui n'ont aucun numero de serie applicable sont utilisees dans toutes les machines.

ICA : Indique l'interchangeabilite entre la piece originale et les piece ameliorees. Les abreviations utilisees dans cette colonne sont les suivantes:

I : Piece numero dans la colonne de piece de piece de remplacement peut etre utilisee au lieu de cette piece mais pas l'inverse.

P : Ceci ne peut etrc utilise pour la machine. Le numero de piece dans colonne pieces remplacable devrait etre utilise a la place.

T : Numcros de pieces, ceux dans la colonne piece de remplacement' peuvent etre utilisees en tant qu'assemblage au lieu de cette piece.

Y : Cette piece et la piece dans la colonne piece de remplacement'sont.

Piece de rechange : Numeros de pieces interchangeables et leurs quantites requises sont indiques sur cette colonne. Si les pieces ameliorees interchangeables sont fournies, les pieces que vous pouvez commander sont classees de la facon suivante "I", "P", "T" ou "Y" peuvent etre fournies.

- Lors de reparation. il est recommande d'utiliser notre piece standard.
- Recherche de pieces d'assemblage a partir des numeros de pieces
  Regarder l'index des pieces qui se trouvent a la fin du livre.

Aug. 2002

CONTENTS
TABLES DES MATIERES

● ENGINE PARTS

Fig.				
	001	CYLINDER BLOCK	BLOC CYLINDRE	2
	002	TIMING GEAR CASE	CARTER DE DISTRIBUTION	6
	003	FLYWHEEL HOUSING	CARTER DE VOLANT MOTEUR	8
	004	CRANK SHAFT	VILEBREQUIN	10
	005	CYLINDER HEAD	CULLASSE	12
	006	VALVE MECHANISM	CALAGE D'INJECTION	16
	007	OIL PUMP	POMPE A HUILE	18
	008	OIL FILTER	FILTRE A HUILE	20
	009	OIL COOLER	REFROIDISSEMENT DE HUILE	22
	010	OIL PAN	CARTER D'HUILE	24
	011	THERMOSTAT	THERMOSTAT	26
	012	WATER PUMP & COOLING FAN	POMPE A EAU VENTILATEUR	28
	013	INTAKE & EXHAUST MANIFOLD	D'ADMISSION ET D'ECHAPPEMENT	30
	014	TURBO CHARGER & OIL PIPE	CHARGEUR DE TURBO	32
	015	FUEL SYSTEM	INJECTEUR ET POMPE-INJECTEUR	34
	016	FUEL FILTER	FILTRE A GAZOLE	38
	017	ALTERNATOR MOUNTING	ALTERNATEUR	40
	018	STARTER	DEMARREUR	42
	019	OVER HAUL GASKET KIT-TOP	PIECES DE RECHANGE	44
	020	OVER HAUL GASKET KIT-ALL	PIECES DE RECHANGE	45-1

● BODY PARTS

Fig.				
	1100	MAIN FRAME	BATI PRINCIPAL	46
	1110	ENGINE MOUNTING	MOTEUR	48
	1120	RADIATOR	RADIATEUR	50
	1130	RESERVE TANK	RESEVOIR	52
	1140	MUFFLER	SILENCIEUX	54
	1150	CAC PIPING	CHARGEE DE REFROIDISSEUR D'CAIR	56
	1160	AIR CLEANER ASS'Y	ENSEMBLE FILTRE A AIR	58
	1165	AIR CLEANER	FILTRE A AIR	60
	1170	PUMP MOUNTING	POMPE	62
	1180	FUEL PIPING	CONDUITES DE GAZOLE	64
	1190	FUEL TANK	RESERVOIR DE GAZOLE	66
	1200	SWING DEVICE ASS'Y	SYSTEME D'ORIENTATION	68
	1210	OIL TANK	RESERVOIR DE HUILE	70
	1220	OIL COOLER PIPING(1)	CONDUITES DE HUILE	72
	1230	OIL COOLER PIPING(2)	CONDUITES DE HUILE	74
	1240	OIL COOLER PIPING(3)	CONDUITES DE HUILE	76
	1250	MAIN PIPING(1)	CONDUITES DE BATI PRINCIPAL	78

1260	MAIN PIPING(2)	CONDUITES DE BATI PRINCIPAL	80
1270	MAIN PIPING(3)	CONDUITES DE BATI PRINCIPAL	82
1280	MAIN PIPING(4)	CONDUITES DE BATI PRINCIPAL	84
1290	MAIN PIPING(5)	CONDUITES DE BATI PRINCIPAL	86
1300	ENGINE CONTROL ASS'Y	COMMANDE REGIME MOTEUR	88
1310	PILOT PIPING(1)	CONDUITES DE PILOTE	90
1320	PILOT PIPING(2)	CONDUITES DE PILOTE	92
1330	PILOT PIPING(3)	CONDUITES DE PILOTE	94
1340	PILOT PIPING(4)	CONDUITES DE PILOTE	96
1350	PILOT PIPING(5)	CONDUITES DE PILOTE	98
1360	PILOT PIPING(6)	CONDUITES DE PILOTE	100
1370	PILOT PIPING(7)	CONDUITES DE PILOTE	102
1380	PILOT PIPING(8)	CONDUITES DE PILOTE	104
1390	CONTROL STAND-L.H	CONSOLE DE COMMANDE	106
1400	CONTROL STAND-R.H	CONSOLE DE COMMANDE	110
1410	SEAT & ELECTRIC BOX	SIEGE ET ELECTRIQUE BOITIES	112
1420	SEAT MOUNTING-EUROPE & U.S.A	SIEGE LE SUPPORT	114
1425	SEAT-EUROPE & U.S.A	SIEGE	116
1430	SEAT MOUNTING-EXCEPT EUROPE & U.S.A	SIEGE LE SUPPORT	118
1435	SEAT-EXCEPT EUROPE & U.S.A	SIEGE	120
1440	DUCT COVER ASS'Y	CONDUITES COUVERCLE	122
1450	HEATER COVER ASS'Y	BOITIES DE CHAUFFAGE	124
1460	CABIN MOUNT ASS'Y	SUPPORT DE CABINE	126
1470	CABIN ASS'Y	CABINE	128
1480	CABIN(1)	CABINE	132
1490	CABIN(2)	CABINE	136
1500	CABIN(3)	CABINE	140
1510	CABIN(4)	CABINE	142
1520	CABIN(5)	CABINE	144
1530	SUPPORT(1)	SUPPORT	148
1540	SUPPORT(2)	SUPPORT	150
1550	COVER(1)	COUVERCLE	152
1560	COVER(2)	COUVERCLE	154
1570	COVER(3)	COUVERCLE	156
1580	COVER(4)	COUVERCLE	158
1590	COVER(5)	COUVERCLE	160
1600	BAFFLE	COUVERCLE	162
1610	ACOUSTIC FOAM	ENSEMBLE DE EPONGE	164
1620	UNDER COVER	TOLES IMFERIEVRES	166
1630	LUBRICATION PIPING	LUBRIFICATION	168
1640	ELECTRIC BOX ASS'Y(1)-BOX	EQUIPMENT ELECTRIQUE	170
1650	ELECTRIC BOX ASS'Y(2)-ELECTRIC PARTS	EQUIPMENT ELECTRIQUE	172
1660	ELECTRIC PARTS(1)-GAUGE & SWITCH PANEL	EQUIPMENT ELECTRIQUE	176
1670	ELECTRIC PARTS(2)-STAND R.H	EQUIPMENT ELECTRIQUE	178
1680	ELECTRIC PARTS(3)-STAND L.H	EQUIPMENT ELECTRIQUE	180

1690	ELECTRIC PARTS(4)-CABIN	EQUIPMENT ELECTRIQUE	182
1700	ELECTRIC PARTS(5)-BATTERY	EQUIPMENT ELECTRIQUE	184
1710	ELECTRIC PARTS(6)-ENGINE	EQUIPMENT ELECTRIQUE	186
1720	ELECTRIC PARTS(7)-RELATED PARTS	EQUIPMENT ELECTRIQUE	188
1730	ELECTRIC WIRING(1)-BATTERY	POSE DE FILES ELECTRIQUES	190
1740	ELECTRIC WIRING(2)-ENGINE	POSE DE FILES ELECTRIQUES	192
1750	ELECTRIC WIRING(3)-RELATED PARTS	POSE DE FILES ELECTRIQUES	194
1760	AIRCONDITIONER(1)	REFRIGERATION	196
1770	AIRCONDITIONER(2)-AIRCON UNIT	REFRIGERATION	200
1780	HEATER PIPING	CONDUITES DE CHAUFFAGE	202

● TRACK PARTS

Fig.				
	2100	TRACK FRAME	TRAIN DE ROULEMENT	204
	2110	TRAVEL DEVICE	SYSTEME D'TRANSLATION	206
	2120	IDLER	BARBOTIN	208
	2130	TRACK SPRING	TENDEUR DE CHENILLE	210
	2140	UPPER ROLLER	GALET SUPERIEUR	212
	2150	LOWER ROLLER	GALET INFERIEUR	214
	2160	CENTER JOINT	JOINT CENTRAL	216
	2170	TRACK SHOE ASS'Y-600G	MAILLON DE CHAINE	218
	2180	TRAVEL PIPING COVER	COUVERCLE DE TRANSLATION	220
	2190	TRAVEL PIPING	CONDUITES DE TRANSLATION	222

● FRONT PARTS

Fig.				
	3100	BOOM-5.9m	FLECHE	224
	3110	ARM-3.0m	BALANCIER	226
	3120	BUCKET ASS'Y-0.95m³	GODET	228
	3130	BOOM PIPING	CONDUITES DE FLECHE	230
	3140	ARM PIPING	CONDUITES DE BALANCIER	232
	3150	FRONT LUBRICATION PIPING	TUYAUTERIE AVANT DE LUBRIFICATION	234

● HYDRAULIC COMPONENTS

Fig.				
	4100	MAIN PUMP	POMPE	236
	4110	REGULATOR	REGULATEUR	240
	4120	GEAR PUMP	POMPE	244
	4130	PTO ASS'Y	ENSEMBLE DE PTO	246
	4140	SWING MOTOR	MOTEUR D'ORIENTATION	248
	4150	SWING REDUCTION GEAR	REDEUTEUR D'ORIENTATION	252
	4160	TRAVEL MOTOR	MOTEUR DE TRANSLATION	256
	4170	TRAVEL REDUCTION GEAR	REDEUTEUR DE TRANSLATION	260
	4180	CONTROL VALVE(1)	DISTRIBUTEUR	262
	4190	CONTROL VALVE(2)	DISTRIBUTEUR	264
	4200	CONTROL VALVE(3)	DISTRIBUTEUR	266
	4210	REMOTE CONTROL VALVE	VANNE DE COMMAND A DISTANCE	270
	4211	REMOTE CONTROL VALVE	VANNE DE COMMAND A DISTANCE	273-1

4215	REMOTE CONTROL VALVE-3 SWITCH	VANNE DE COMMAND A DISTANCE	273-5
4220	PEDAL VALVE	VANNE DE PEDALE	274
4230	SOLENOID VALVE	VANNE DE SOLENOIDE	276
4240	PILOT VALVE	VANNE DE PILOTE	278
4250	BREAKER VALVE	VANNE DE BRISEUR	280
4260	BOOM CYLINDER-L.H	VERIN DE FLECHE	282
4270	BOOM CYLINDER-R.H	VERIN DE FLECHE	286
4280	ARM CYLINDER	VERIN DE BALANCIER	290
4290	BUCKET CYLINDER	VERIN DE GODET	294
4300	BOOM CYLINDER(L.H)-LOCK VALVE	VERIN DE FLECHE	298
4310	BOOM CYLINDER(R.H)-LOCK VALVE	VERIN DE FLECHE	302
4320	ARM CYLINDER-LOCK VALVE	VERIN DE BALANCIER	306
4330	OPTION VALVE	VANNE	309-1
4331	OPTION VALVE	VANNE	309-3
4340	PEDAL VALVE	VANNE DE PEDALE	309-5

● OTHER PARTS

Fig.				
	5100	TOOLS	OUTILLAGE	310
	5110	SPARE PARTS	PIECES DE RECHANGE	314
	5120	CABIN NAME PLATE-EUROPE	PLAQUE D'IDENTIFICATION	316
	5130	NAME PLATE-EUROPE	PLAQUE D'IDENTIFICATION	318
	5140	CABIN NAME PLATE-ENGLISH	PLAQUE D'IDENTIFICATION	319-1
	5150	NAME PLATE-ENGLISH	PLAQUE D'IDENTIFICATION	319-3

● OPTION PARTS

Fig.				
	6100	FUEL FILLER PUMP ASS'Y	POMPE	320
	6110	DOUBLE FUEL FILTER ASS'Y	FILTRE A GAZOLE	322
	6120	NOISE FILTER ASS'Y-EUROPE	SILENCIEUX FILTRE	324
	6130	CABIN LAMP ASS'Y	LAMPE	326
	6140	6-LAMP & BEACON(TELESCOPIC)	LAMPE & FEU DE CIRCULATION	328
	6150	ROTATING BEACON	FEU DE CIRCULATION	330
	6160	TRAVEL/SWING ALARM ASS'Y	SIGNALISATEUR	332
	6170	TRAVEL ALARM ASS'Y	ALARME DE VOYAGE	334
	6180	RETURN FILTER PRESS SWITCH	COMMUTATEUR DE FILTRE DE RETURUN	336
	6190	ALTERNATOR	ALTERNATEUR	338
	6200	OVERLOAD WARNING ASS'Y	AVERTISSEMENT DE SURCHARGE	340
	6210	FLOOR PLATE-TILTING	TOLE DE PLANCHER	342
	6220	SUN VISOR ASS'Y	PARE-SOLEIL	344
	6230	SUN ROOF ASS'Y	COUVERTURE DE TOIT	346
	6240	TRACK-NARROW(2.99m)	TRAIN DE ROULEMENT	348
	6250	TRACK SHOE-700G	ENSEMBLE MAILLON DE CHAINES	350
	6260	TRACK SHOE-800G	ENSEMBLE MAILLON DE CHAINES	352
	6270	TRACK SHOE-900G	ENSEMBLE MAILLON DE CHAINES	354
	6280	SEALED TRACK SHOE-600G	ENSEMBLE MAILLON DE CHAINES	356
	6290	BOOM-5.3m	FLECHE	358

6300	ARM-2.0m	BALANCIER	360
6310	ARM-2.5m	BALANCIER	362
6320	ARM-3.5m	BALANCIER	364
6330	BOOM PIPING-5.3m	CONDUITES DE FLECHE	366
6340	ARM PIPING-2.0m	CONDUITES DE BALANCIER	368
6350	ARM PIPING-2.5m	CONDUITES DE BALANCIER	370
6360	ARM PIPING-3.5m	CONDUITES DE BALANCIER	372
6370	FRONT LUBRICATION PIPING	TUYAUTERIE AVANT DE LUBRIFICATION	374
6380	BUCKET-0.45m³	GODET	376
6390	BUCKET-0.7m³	GODET	378
6400	BUCKET-0.8m³	GODET	380
6410	BUCKET-0.9m³	GODET	382
6420	BUCKET-1.0m³	GODET	384
6430	BUCKET-1.1m³	GODET	386
6440	BUCKET-0.67㎥(36")-SIDE PIN	GODET	388
6450	BUCKET-0.67㎥(36")-VERTICAL PIN	GODET	390
6460	BUCKET-0.80㎥(42")-SIDE PIN	GODET	392
6470	BUCKET-0.80㎥(42")-VERTICAL PIN	GODET	394
6480	BUCKET-0.95㎥(48")-SIDE PIN	GODET	396
6490	BUCKET-0.95㎥(48")-VERTICAL PIN	GODET	398
6500	BUCKET-1.1㎥(54")-SIDE PIN	GODET	400
6510	BUCKET-1.1㎥(54")-VERTICAL PIN	GODET	402
6520	BUCKET-1.17㎥(57")-SIDE PIN	GODET	404
6530	BUCKET-1.17㎥(57")-VERTICAL PIN	GODET	406
6540	BUCKET-1.31㎥(63")-SIDE PIN	GODET	408
6550	BUCKET-1.31㎥(63")-VERTICAL PIN	GODET	410
6560	BREAKER PIPING	CONDUITES DE BRISEUR	412
6570	PILOT PIPING-BREAKER	CONDUITES DE PILOTE	414
6580	BOOM PIPING-BOOM 5.9m(ONE WAY)	CONDUITES DE FLECHE	416
6590	BOOM PIPING-BOOM 5.3m(ONE WAY)	CONDUITES DE FLECHE	418
6600	ARM PIPING-ARM 2.0m(ONE & TWO WAY)	CONDUITES DE BALANCIER	420
6601	ARM PIPING-ARM 2.0m(ONE & TWO WAY)	CONDUITES DE BALANCIER	421-1
6610	ARM PIPING-ARM 2.5m(ONE & TWO WAY)	CONDUITES DE BALANCIER	422
6611	ARM PIPING-ARM 2.5m(ONE & TWO WAY)	CONDUITES DE BALANCIER	423-1
6620	ARM PIPING-ARM 3.0m(ONE & TWO WAY)	CONDUITES DE BALANCIER	424
6621	ARM PIPING-ARM 3.0m(ONE & TWO WAY)	CONDUITES DE BALANCIER	425-1
6630	ARM PIPING-ARM 3.5m(ONE & TWO WAY)	CONDUITES DE BALANCIER	426
6631	ARM PIPING-ARM 3.5m(ONE & TWO WAY)	CONDUITES DE BALANCIER	427-1
6640	NAME PLATE-ONE & TWO WAY	PLAQUE D'IDENTIFICATION	428
6650	LOCK VALVE PIPING-5.9m	CONDUITES DE VERROU VANNE	430
6660	PILOT PIPING-ROTATION & TILTING	CONDUITES DE PILOTE	434
6670	MAIN PIPING-ROTATION & TILTING	CONDUITES DE BATI PRINCIPAL	436
6680	BOOM PIPING-ROTATION & TILTING	CONDUITES DE FLECHE	438
6690	ARM PIPING-ROTATION & TILTING	CONDUITES DE BALANCIER	440
6700	JOYSTICK VALVE ASS'Y-3 SWITCH	VANNE DE COMMAND A DISTANCE	442

6710	CABIN LOW GUARD	GARDE	444
6720	F.O.G.S ASS'Y	GARDE	446
6730	SEALED TRACK SHOE-700G	ENSEMBLE MAILLON DE CHAINES	448
6740	SEALED TRACK SHOE-800G	ENSEMBLE MAILLON DE CHAINES	450
6750	SEALED TRACK SHOE-900G	ENSEMBLE MAILLON DE CHAINES	452
6760	TROPICAL COVER	COUVERCLE	454
6770	FLOOR PLATE-ARTI.BOOM	TOLE DE PLANCHER	456
6780	FLOOR ASS'Y-TILT & ARTI.BOOM	TOLE DE PLANCHER	458
6790	BOOM PIPING-BOOM 5.9m(PE3C)	CONDUITES DE FLECHE	460
6800	MAIN PIPING-PE3C	CONDUITES DE BRISEUR	462
6810	PILOT PIPING-PE3C & PERO	CONDUITES DE PILOTE	464
6820	PILOT PIPING-PE3C	CONDUITES DE PILOTE	468
6830	PILOT PIPING-PERO	CONDUITES DE PILOTE	472
6840	ACOUSTIC FOAM	ENSEMBLE DE EPONGE	474

● WORLDWIDE NETWORK

DATE	DEC. 15, 2006
REV. NO.	EXB06-13

Fig. 001 CYLINDER BLOCK
BLOC CYLINDRE

Serial No. ;

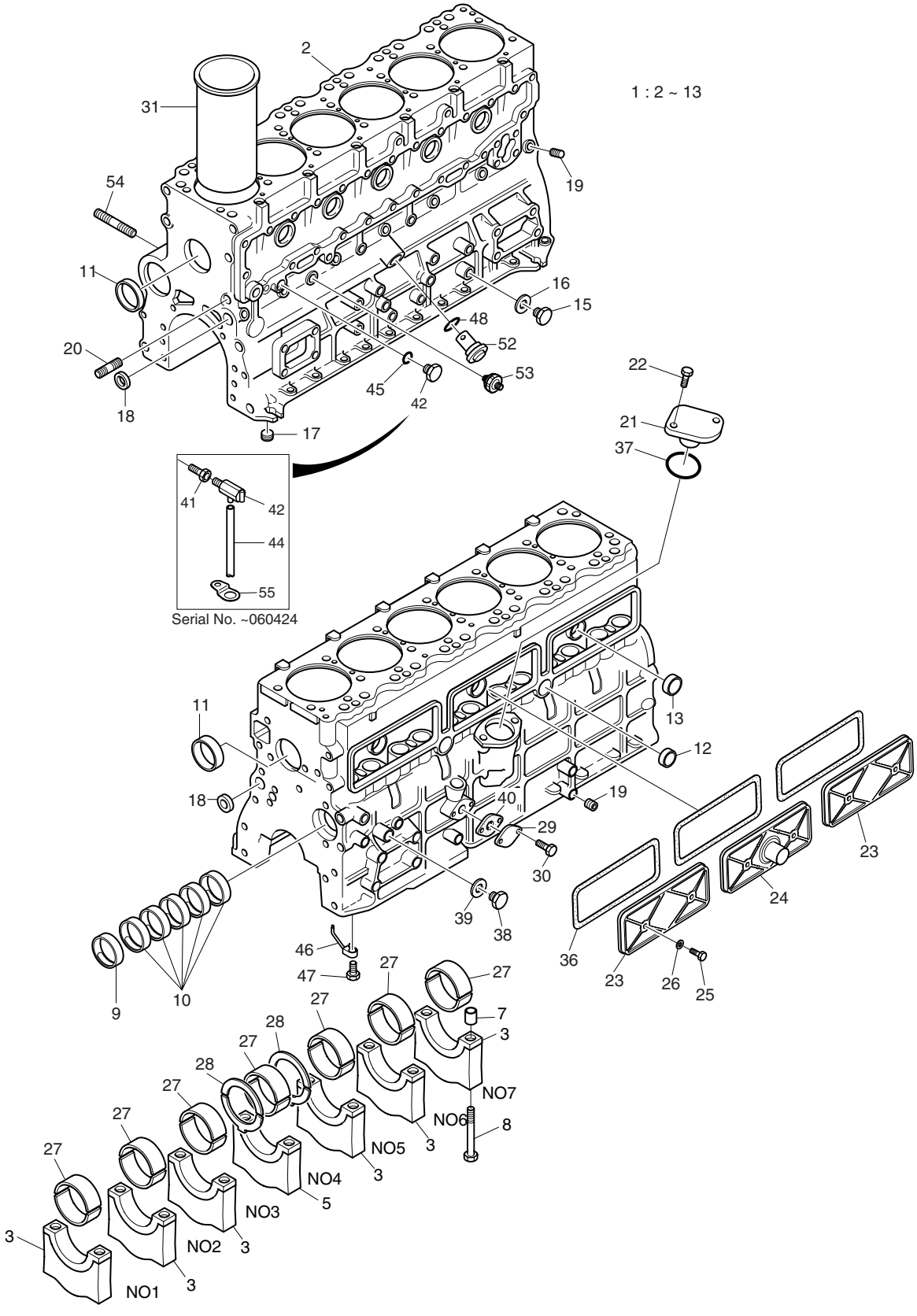

DATE	DEC. 15, 2006
REV. NO.	EXB06-13

Fig. 001 CYLINDER BLOCK BLOC CYLINDRE

Serial No. ;

Key No.	Part No.	Description	Description	Q'ty	S.C	Serial No.	ICA	Replaceable part	
								Part No.	Q'ty
001-1	65.01101-6079	CYLINDER BLOCK ASS'Y	BLOC CYLINDRE	1		~030629	Y	65.01101-6079A	1
	65.01101-6079A	CYLINDER BLOCK ASS'Y	BLOC CYLINDRE	1		~041214	Y	65.01101-6079B	1
	65.01101-6079B	CYLINDER BLOCK ASS'Y	BLOC CYLINDRE	1		~051004	Y	65.01101-6079C	1
	65.01101-6079C	CYLINDER BLOCK ASS'Y	BLOC CYLINDRE	1		~060726	Y	65.01101-6079D	1
	65.01101-6079D	**CYLINDER BLOCK ASS'Y**	BLOC CYLINDRE	1		060727~			
2	65.01101-0030F	. BLOCK;CYLINDER	. BLOC CYLINDRE	1	D	~030629			
	65.01101-0030G	. BLOCK;CYLINDER	. BLOC CYLINDRE	1	D	~051004	Y		
	65.01101-0030H	. BLOCK;CYLINDER	. BLOC CYLINDRE	1	D	~060726			
	65.01101-0030I	**. BLOCK;CYLINDER**	. BLOC CYLINDRE	1	D	060727~			
3	65.01105-1048	. CAP;BEARING(F.M.R)	. PALIER	6	D	~060726			
	65.01105-1048A	**. CAP;BEARING(F.M.R)**	. PALIER	6	D	060727~			
5	65.01105-1047	. CAP;BEARING(NO.4)	. PALIER	1	D	~060726			
	65.01105-1047A	**. CAP;BEARING(NO.4)**	. PALIER	1	D	060727~			
7	65.91710-0001	. RING;STOPPER	. BAGUE D'ETANCHEITE	2					
8	65.90020-0066A	. BOLT;HEX.	. BOULON A 6 PANS	14					
9	65.04410-0007A	. BUSH;CAM SHAFT	. DOUILLE	1	B	~021109	Y	65.04410-0007B	1
	65.04410-0007B	. BUSH;CAM SHAFT	. DOUILLE	1	B	~041214	Y	65.04410-0007C	1
	65.04410-0007C	. BUSH;CAM SHAFT	. DOUILLE	1	B	~060726	Y	65.04410-0007D	1
	65.04410-0007D	**. BUSH;CAM SHAFT**	. DOUILLE	1	B	060727~			
10	65.04410-0006A	. BUSH;CAM SHAFT	. DOUILLE	5	B	~021109	Y	65.04410-0006B	5
	65.04410-0006B	. BUSH;CAM SHAFT	. DOUILLE	5	B	~041214	Y	65.04410-0006C	5
	65.04410-0006C	. BUSH;CAM SHAFT	. DOUILLE	5	B	041215~			
11	65.90302-0009	. PLUG;CORE	. BOUCHON B28D	2					
12	06.15091-0319	. PLUG;CORE	. BOUCHON B28D	2		~030510			
	65.90302-0041	. PLUG;CORE	. BOUCHON B28D	2		030511~			
13	06.15091-0322	. PLUG;CORE	. BOUCHON B28D	3		~030510			
	65.90302-0042	. PLUG;CORE	. BOUCHON B28D	3		030511~			
15	65.90310-0030	SCREW;PLUG M12X1.25	VIS	1					
16	06.56190-0704	RING;SEAL A12X18	BAGUE D'ETANCHEITE	1					
17	65.90320-0019	SCREW;PLUG PT3/8	VIS	1					
18	06.15091-0313	PLUG;CORE	BOUCHON	2					
19	65.90320-0022	SCREW;PLUG PT1/8	VIS DE REGLAGE	10					
20	65.90201-0058	BOLT;STUD M14X12.5X45	BOULON DE GOUJON	1					
21	65.91605-0001E	COVER	COUVERCLE	1					
22	06.01913-3113	BOLT ASS'Y M8X20	BOULON A 6 PANS	2					
23	65.01112-0021A	COVER;PUSH ROD CHAMBER	COUVERCLE	2					
24	65.01112-5018	COVER;PUSH ROD CHAMBER	COUVERCLE	1					
25	65.90020-0049	BOLT;HEX.	BOULON A 6 PANS	6					

DATE	DEC. 15, 2006
REV. NO.	EXB06-13

Fig. 001 CYLINDER BLOCK
BLOC CYLINDRE

Serial No. ;

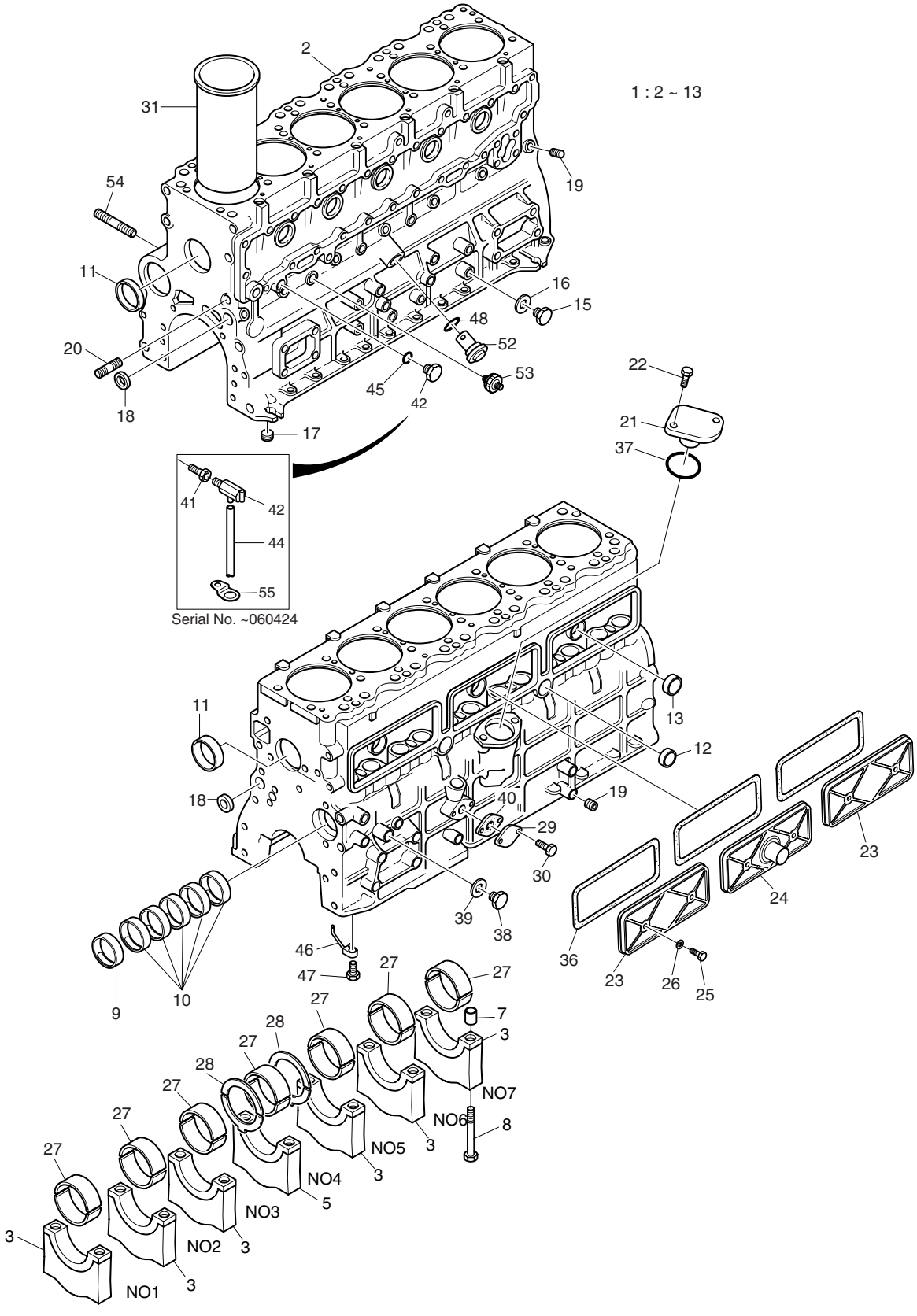

DATE	DEC. 15, 2006
REV. NO.	EXB06-13

Fig. 001 CYLINDER BLOCK BLOC CYLINDRE

Serial No. ;

Key No.	Part No.	Description	Description	Q'ty	S.C	Serial No.	ICA	Replaceable part	
								Part No.	Q'ty
001-26	65.96507-0007	PACKING;JOINT	EMBALLAGE	6					
27	65.01110-6090B	METAL;CRANK STD	COUSSINET	7					
	65.01110-6091B	METAL;CRANK 0.25	COUSSINET	7	US				
	65.01110-6092B	METAL;CRANK 0.50	COUSSINET	7	US				
28	65.01150-6010A	WASHER;THRUST STD	RONDELLE	2		~060808	I	65.01150-6008	2
	65.01150-6008	**WASHER;THRUST STD**	RONDELLE	2		060809~			
	65.01150-6034A	WASHER;THRUST 0.25	RONDELLE DE BUTEE	2	OS				
	65.01150-6035A	WASHER;THRUST 0.50	RONDELLE DE BUTEE	2	OS				
29	65.91615-0011	COVER;BLIND	COUVERCLE	1					
30	06.01913-3113	BOLT ASS'Y	BOULON A 6 PANS	2					
31	65.01201-0067	LINER;CYLINDER (ALTV.)	CHEMISE DE CYLINDRE	6	D				
	65.01201-0068	LINER;CYLINDER(1A)	CHEMISE DE CYLINDRE	6					
	65.01201-0069	LINER;CYLINDER(1B)	CHEMISE DE CYLINDRE	6					
	65.01201-0070	LINER;CYLINDER(2A)	CHEMISE DE CYLINDRE	6					
	65.01201-0071	LINER;CYLINDER(2B)	CHEMISE DE CYLINDRE	6					
36	65.01901-0020	GASKET;CHAMBER COVER	JOINT	3					
37	06.56021-0106	O-RING G50	JOINT TORIQUE	1					
38	65.90310-0135	SCREW;PLUG M14X1.5	BOUCHON A VIS	1					
39	06.56190-0706	RING;SEAL A14X20	BAGUE D'ETANCHEITE	1					
40	65.05903A0013	GASKET	JOINT	1					
41	**65.98130-0040A**	**ADAPTER**	RACCORD ADAPTATEUR	1		~060424			
42	65.06310-6003	PLUG;DRAIN	BOUCHON DE VIDANGE	1		~021110	Y	65.06310-6003A	1
	65.06310-6003A	PLUG;DRAIN	BOUCHON DE VIDANGE	1		~060424			
	65.06310-0122	**PLUG;DRAIN**	BOUCHON DE VIDANGE	1		060425~			
44	**04.50010-0811**	**HOSE;VINYL**	TUYAU FLEXIBLE PVC	1		~060424			
45	06.56190-0713	RING;SEAL A18X24	BAGUE D'ETANCHEITE	2					
46	65.01601-5010A	OIL JET PIPE	REFROIDISSEUR D'HUILE	6					
47	65.05401-5023	RELIEF VALVE ASS'Y	COUVERCLE ETANCHE	6					
48	06.56021-0102	O-RING G30	JOINT TORIQUE	1					
52	65.05401-5002F	RELIEF VALVE ASS'Y	SOULAGEMENT VANNE	1					
53	65.27441-7006	SWITCH;OIL PRESS.	INTERRUPTEUR	1					
54	65.90201-0182	BOLT;STUD	BOULON DE GOUJON	1					
55	**65.97401-0050**	**CLIP;PIPE**	BOULON A 6 PANS	1		~060424			

DATE	DEC. 29, 2005
REV. NO.	EXB05-20

Fig. 002 TIMING GEAR CASE
CARTER DE DISTRIBUTION

Serial No. ;

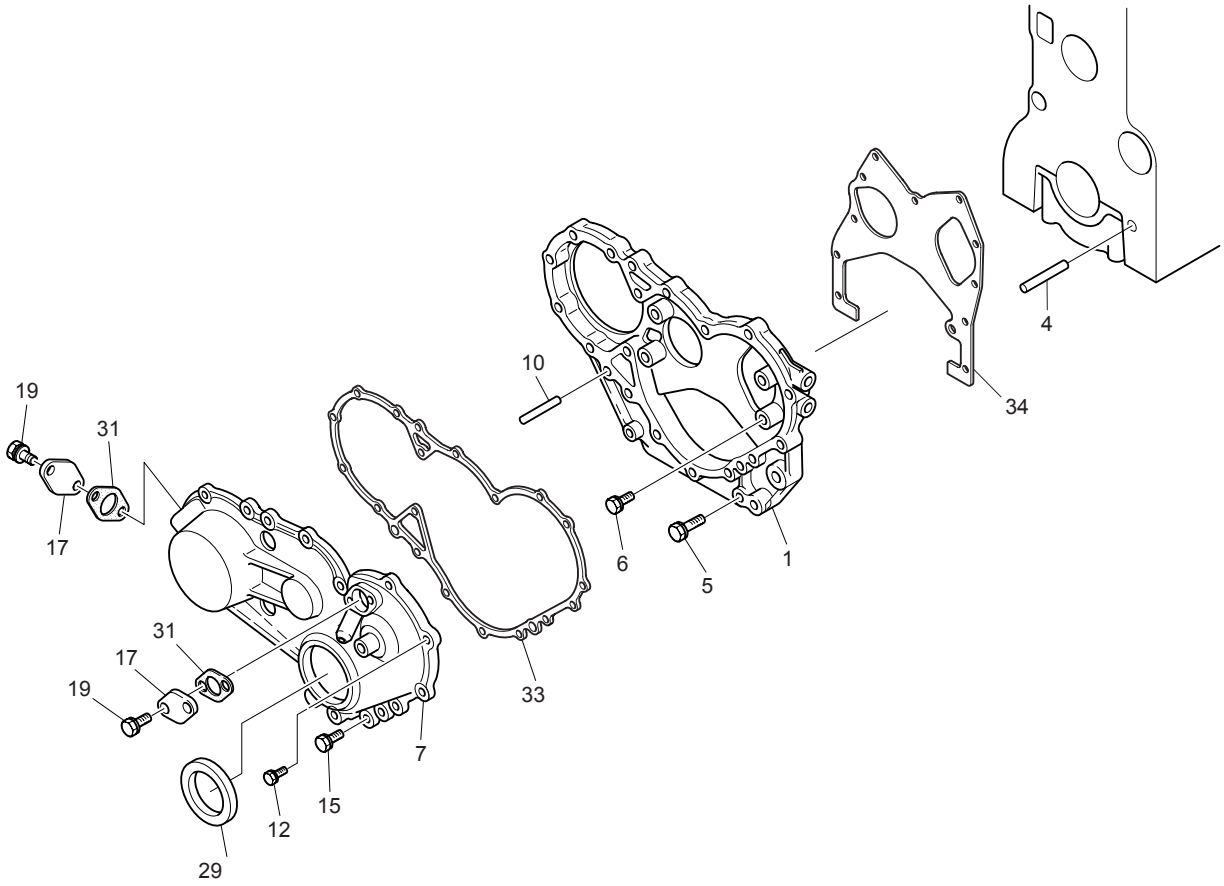

DATE	DEC. 29, 2005
REV. NO.	EXB05-20

Fig. 002 TIMING GEAR CASE
CARTER DE DISTRIBUTION

Serial No ;

Key No.	Part No.	Description	Description	Q'ty	S.C	Serial No.	ICA	Replaceable part	
								Part No.	Q'ty
002-1	65.01304-0003C	CASE;TIMING GEAR	CARTER	1					
4	06.22022-3119	PIN	GOUJON	1					
5	06.01913-3120	BOLT ASS'Y	BOULON A 6 PANS	2					
6	06.01913-3113	BOLT ASS'Y M8X20	BOULON A 6 PANS	4					
7	65.01305-5074	COVER;TIMING GEAR CASE	COUVERCLE	1		~050628	Y	65.01305-5074A	1
	65.01305-5074A	**COVER;TIMING GEAR CASE**	COUVERCLE	1		050629~			
10	06.22022-3111	PIN	GOUJON	1					
12	06.01913-3115	BOLT ASS'Y M8X25	BOULON A 6 PANS	7					
15	06.01913-3122	BOLT ASS'Y M8X55	BOULON A 6 PANS	5					
17	65.01307-0002B	COVER;TIMING CHECK HOLE	COUVERCLE	2					
19	06.01913-2911	BOLT;HEX. M6X16	BOULON A 6 PANS	4					
29	65.01510-0001	SEAL;OIL(FRONT)	JOINT	1					
31	65.01903-0002C	GASKET(T.G.C)	JOINT	2					
33	65.01903B0003	GASKET(T.G.C)	JOINT	1					
34	65.01903B0004	GASKET(T.G.C)	JOINT	1					

DATE	AUG. 12, 2002
1st EDITION	

Fig. 003 FLYWHEEL HOUSING
CARTER DE VOLANT MOTEUR

Serial No. ;

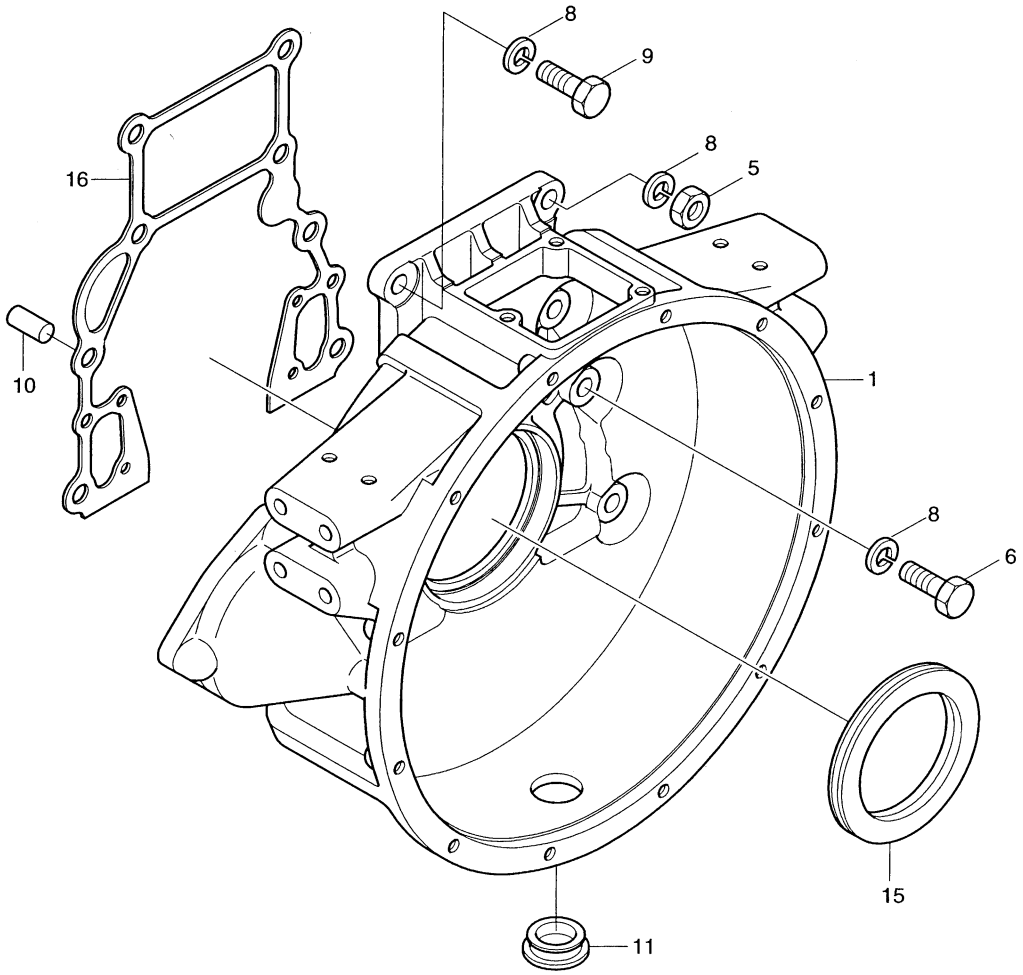

DATE	AUG. 12, 2002
1st EDITION	

Fig. 003 FLYWHEEL HOUSING
CARTER DE VOLANT MOTEUR

Serial No. ;

Key No.	Part No.	Description	Description	Q'ty	S.C	Serial No.	ICA	Replaceable part	
								Part No.	Q'ty
003-1	65.01401-0119	HOUSING;FLYWHEEL	CARTER	1					
5	06.01494-4407	BOLT;HEX. M14X1.5X40	BOULON A 6 PANS	1					
6	06.01494-4409	BOLT;HEX. M14X1.5X50	BOULON A 6 PANS	6					
8	06.16731-2110	WASHER;SPRING	RONDELLE ELASTIQUE	8					
9	06.11063-9217	NUT M14X1.5	ECROU 6 PANS	1					
10	06.22022-3111	PIN	GOUJON	2					
11	65.96401-0007	CAP;RUBBER	CHAPEAU DE	1					
15	65.01510-0101	SEAL;OIL(REAR)	JOINT D'HUILE	1					
16	65.01904-0021	GASKET;FLY WHEEL HOUSING	JOINT DE CULASSE	1					

DATE	JUN. 30, 2006
REV. NO.	EXB06-08

Fig. 004 CRANK SHAFT VILEBREQUIN

Serial No. ;

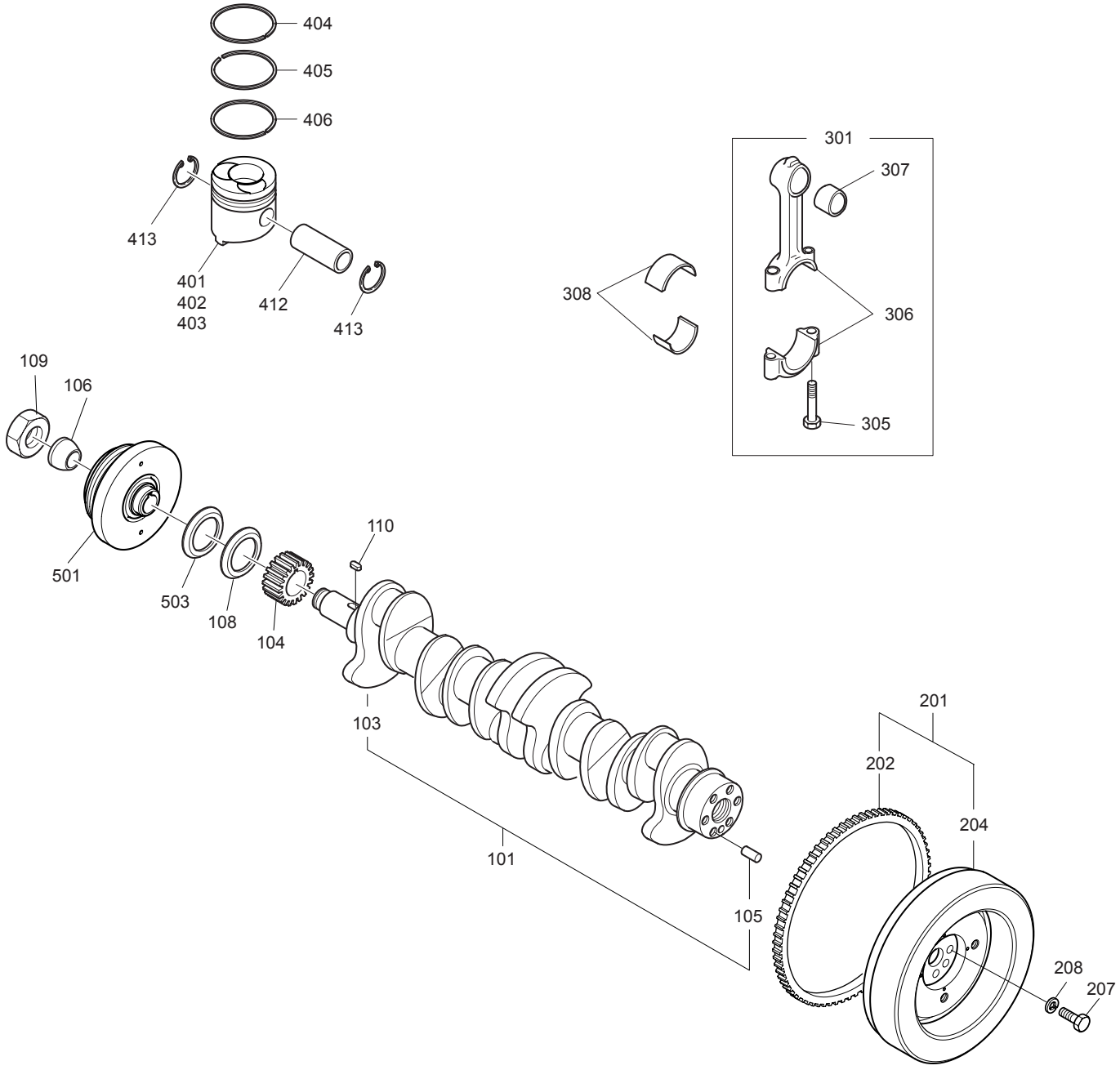

DATE	JUN. 30, 2006
REV. NO.	EXB06-08

Fig. 004 CRANK SHAFT VILEBREQUIN

Serial No. ;

Key No.	Part No.	Description	Description	Q'ty	S.C	Serial No.	ICA	Replaceable part	
								Part No.	Q'ty
004-101	65.02101-6018A	CRANK SHAFT ASS'Y	ENSEMBLE VILEBREQUIN	1					
103	65.02101-0045A	. SHAFT;CRANK	. VILEBREGUIN	1					
105	06.22022-3212	. PIN;PARALLEL	. GOUPILLE	1					
104	65.02115-0009	GEAR;CRANK SHAFT	PIGNON DE VILEBREQUIN	1					
106	65.93020-0015	BUSH;TAPER	COUSSINET	1					
108	65.02120-0002	RING;OIL THROWER	BAGUE	1					
109	65.90501-0006	NUT	ECROU	1					
110	65.91501-0006	KEY;SLIDING	KEY	1					
201	65.02301-5099A	FLYWHEEL ASS'Y	VOLANT	1					
202	65.02310-0006	. GEAR;STARTING RING	. ENGRENAGE	1					
204	65.02301-0245A	. FLY WHEEL	. VOLANT	1					
207	06.01494-4506	BOLT M16X1.5X35	BOULON A 6 PANS	6					
208	06.16731-2111	WASHER;SPRING	RONDELLE	6					
301	65.02401-6021	CONNECTING ROD ASS'Y	BIELLE	6					
305	65.02411-0006A	. BOLT	. BOULON A 6 PANS	2					
306	65.02401-0163D	. ROD;CONNECTING	. TIGE	1	D				
307	65.02405-0006	. BUSH	. AMPOULE	1	B				
308	65.02410-6083	METAL;CON-ROD STD	PALIER	6		~020930	Y	65.02410-6083B	6
	65.02410-6083B	METAL;CON-ROD STD	PALIER	6		020931~			
	65.02410-6124B	METAL;CON-ROD(0.25)	PALIER	6	US	020931~			
	65.02410-6125B	METAL;CON-ROD(0.50)	PALIER	6	US	020931~			
401	65.02501-0410	PISTON(ALTV.)	PIISTON	6	D	~020913	I	65.02501-0416	6
	65.02501-0416	PISTON(ALTV.)	PIISTON	6	D	~050707			
	65.02501-0440	PISTON(ALTV.)	PIISTON	6	D	050708~			
402	65.02501-0416	PISTON;(ALTV.-1)	PIISTON	6	D	050708~			
	65.02501-0443	PISTON;(ALTV.-2)	PIISTON	6	D	050708~			
403	65.02501-0417	PISTON-1;A GRADE	PIISTON	6		050708~			
	65.02501-0444	PISTON-2;A GRADE	PIISTON	6		050708~			
	65.02501-0418	PISTON-1;B GRADE	PIISTON	6		050708~			
	65.02501-0445	PISTON-2;B GRADE	PIISTON	6		050708~			
404	65.02503-0099	RING;TOP	SEGMENT COUP DE FEU	6		~060519	Y	65.02503-0137	6
	65.02503-0137	**RING;TOP**	SEGMENT COUP DE FEU	6		060520~			
405	65.02503-0116	RING;SECOND	SEGMENT DE	6		~060519	Y	65.02503-0138	6
	65.02503-0138	**RING;SECOND**	SEGMENT DE	6		060520~			
406	65.02503-0114	RING;OIL	BAGUE	6					
412	65.02502-0082A	PIN;PISTON	AXE DE PISTON	6					
413	65.90815-0007	RING;RETAINING	BAGUE	12					
501	65.02601-5019	PULLEY;DAMPER	POULIE	1					

DATE	JUN. 30, 2006
REV. NO.	EXB06-08

Fig. 004 CRANK SHAFT VILEBREQUIN

Serial No. ;

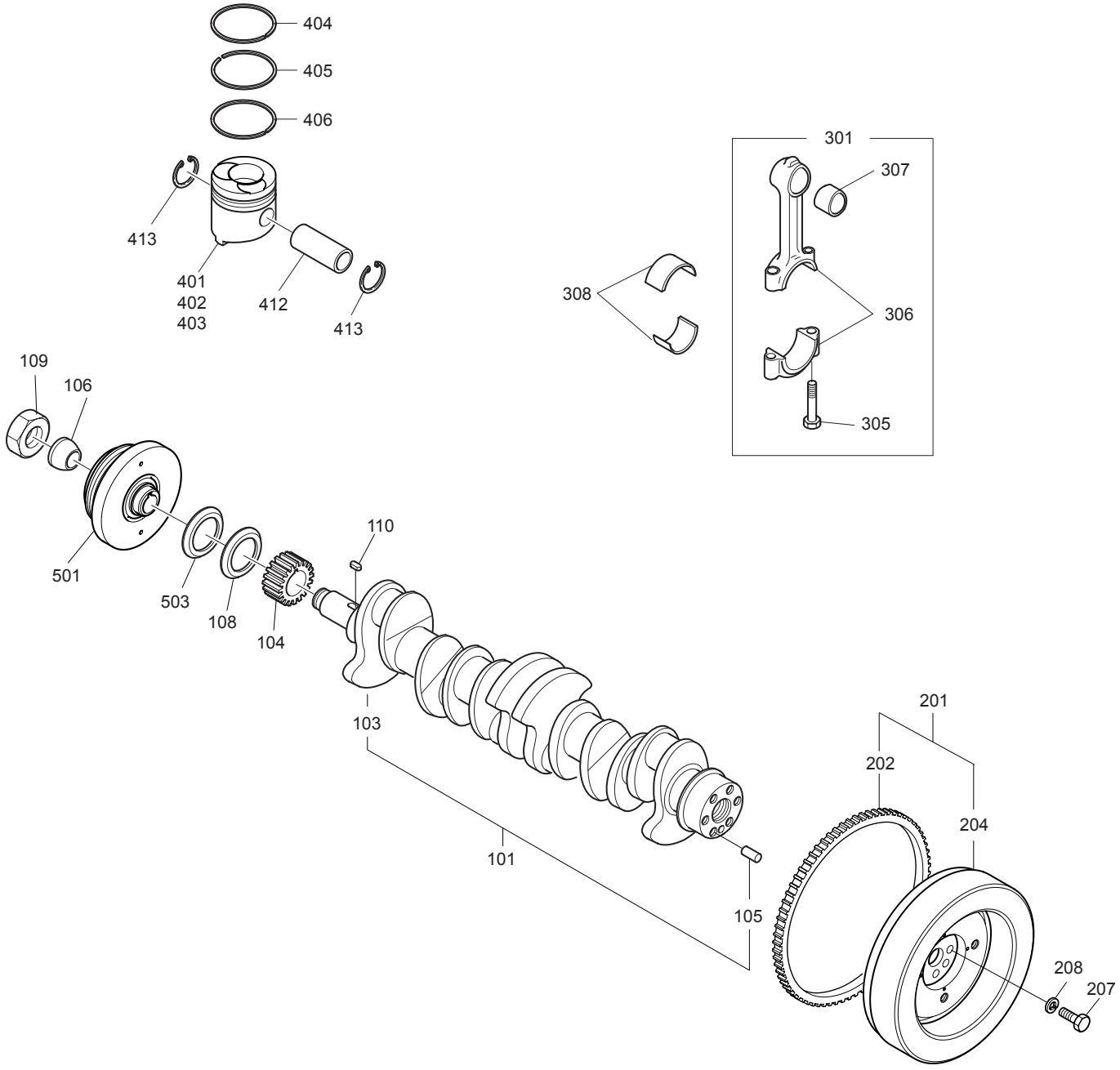

DATE	JUN. 30, 2006
REV. NO.	EXB06-08

Fig. 004 CRANK SHAFT VILEBREQUIN

Serial No. ;

Key No.	Part No.	Description	Description	Q'ty	S.C	Serial No.	ICA	Replaceable part	
								Part No.	Q'ty
004-503	65.02122-0001	COVER;DUST	PARE-POUSSIERES	1					

DATE	DEC. 15, 2006
REV. NO.	EXB06-13

Fig. 005 CYLINDER HEAD
CULLASSE

Serial No. ;

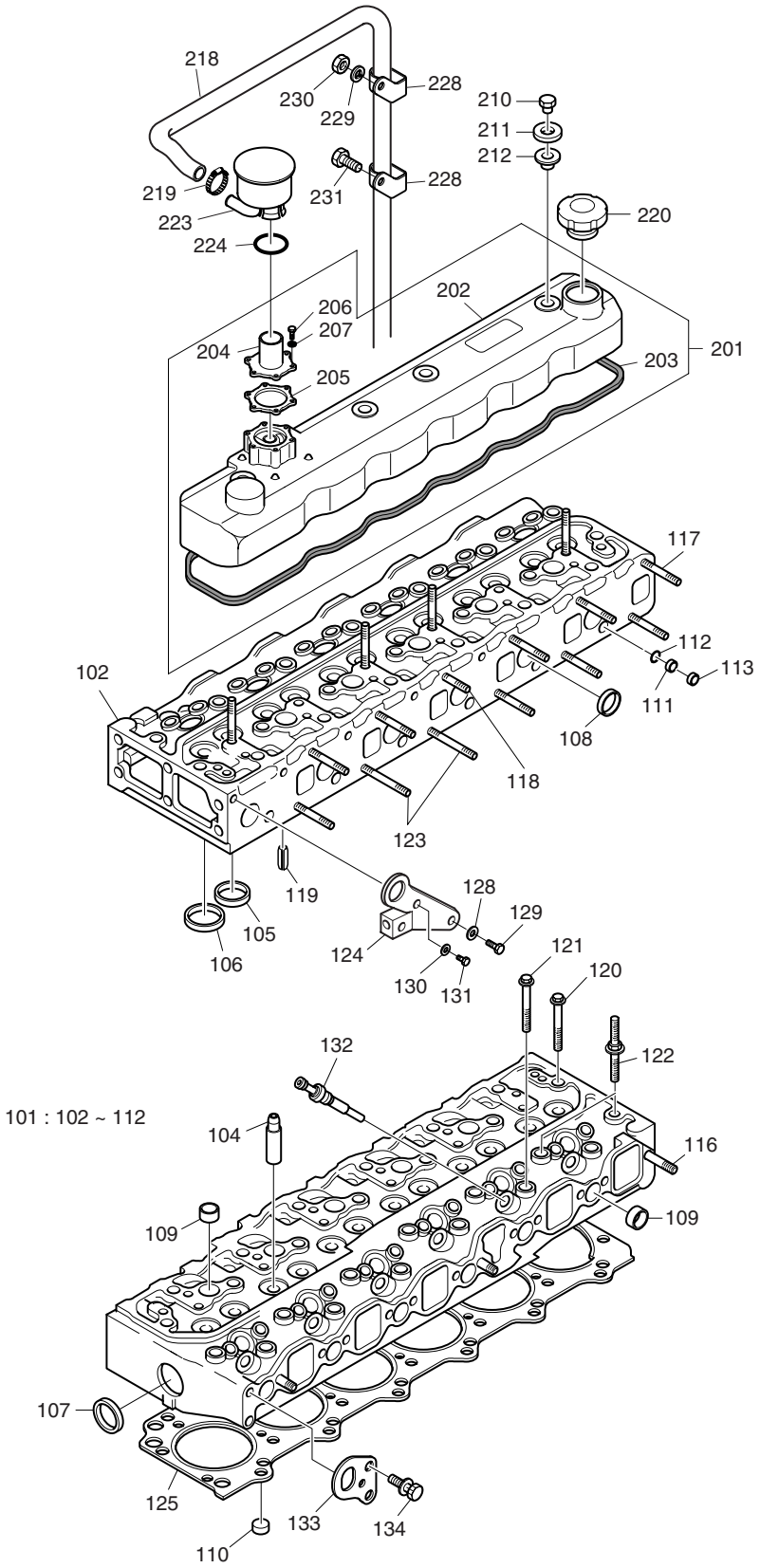

DATE	DEC. 15, 2006
REV. NO.	EXB06-13

Fig. 005 CYLINDER HEAD CULLASSE

Serial No. ;

Key No.	Part No.	Description	Description	Q'ty	S.C	Serial No.	ICA	Replaceable part	
								Part No.	Q'ty
005-101	65.03101-6069	CYLINDER HEAD ASS'Y	ENSEMBLE CULASSE	1		~020919	I	65.03101-6071A	1
	65.03101-6071A	CYLINDER HEAD ASS'Y	ENSEMBLE CULASSE	1		~040924	Y	65.03101-6071B	1
	65.03101-6071B	CYLINDER HEAD ASS'Y	ENSEMBLE CULASSE	1		040925~			
102	65.03101-1038	. HEAD;CYLINDER	. CULASSE	1	D	~020919			
	65.03101-1043C	. HEAD;CYLINDER	. CULASSE	1	D	020920~			
104	65.03201-1013	. GUIDE;VALVE	. GUIDE-SOUPAPE	12	B	~040924	Y	65.03201-1013A	12
	65.03201-1013A	. GUIDE;VALVE	. GUIDE-SOUPAPE	12	B	040925~			
105	65.03203-1020	. SEAT;EXHAUST VALVE	. SIEGE	6	B	~020919	I	65.03203-1054	6
	65.03203-1054	. SEAT;EXHAUST VALVE	. SIEGE	6	B	020920~			
106	65.03203-1019	. SEAT;INLET VALVE	. SIEGE	6	B	~020919	I	65.03203-1053	6
	65.03203-1053	. SEAT;INLET VALVE	. SIEGE	6	B	020920~			
107	65.90302-0015	. PLUG;CORE(NEAR FACE)	. BOUCHON	1					
108	65.90302-0016	. PLUG;CORE(EXHAUST MAIN)	. BOUCHON	3		~020919			
	65.90302-0030	. PLUG;CORE(EXHAUST MAIN)	. BOUCHON	6		020920~			
109	65.90302-0019B	. PLUG;CORE	. COUPELLE	11					
110	06.15090-2313	. PLUG;CORE	. BOUCHON	3		~020919			
	65.90302-0045	. PLUG;CORE	. BOUCHON	3		020920~			
111	06.15090-2305	. PLUG;CORE	. BOUCHON	6		~020919			
	65.90302-0027	. PLUG;CORE	. BOUCHON	6		020920~			
112	65.90302-0011	. PLUG;DRILLED PASS	. BOUCHON	6					
113	65.90302-0017	PLUG;WATER JET CORE	BOUCHON	6					
116	06.06225-0706	BOLT;STUD M8X25	BOULON DE GOUJON	3					
117	06.06125-8717	BOLT;STUD M8X75	BOULON DE GOUJON	9					
118	06.06125-8709	BOLT;STUD M8X35	BOULON DE GOUJON	1					
119	65.91710-0004	RING;STOPPER	BAGUE	2					
120	65.90021-0002	BOLT;CYLINDER HEAD	BOULON DE CULASSE	19		~030910			
	65.90021-0002	BOLT;CYLINDER HEAD	BOULON DE CULASSE	18		030911~			
121	65.90021-0003	BOLT;CYLINDER HEAD	BOULON DE CULASSE	6					
122	65.90021-0004	BOLT;CYLINDER HEAD	BOULON DE CULASSE	1		~030910			
	65.90021-0004	BOLT;CYLINDER HEAD	BOULON DE CULASSE	2		030911~			
123	06.06125-8723	BOLT;STUD M8X110	BOULON DE GOUJON	2					
124	65.19202-5005	HOOK;LIFTING	CROCHET	1					
125	65.03901-0066	GASKET;CYLINDER HEAD	JOINT	1		~030221	Y	65.03901-0066A	1
	65.03901-0066A	GASKET;CYLINDER HEAD	JOINT	1		030222~			
128	06.16731-2110	WASHER;SPRING	RONDELLE ELASTIQUE	1					
129	06.01733-4409	BOLT;HEX M14X1.5X25	BOULON A 6 PANS	1					
130	06.16731-2108	WASHER;SPRING	RONDELLE	1					
131	06.01733-4208	BOLT M10X1.25X22	BOULON A 6 PANS	1					

DATE	DEC. 15, 2006
REV. NO.	EXB06-13

Fig. 005 CYLINDER HEAD CULLASSE

Serial No. ;

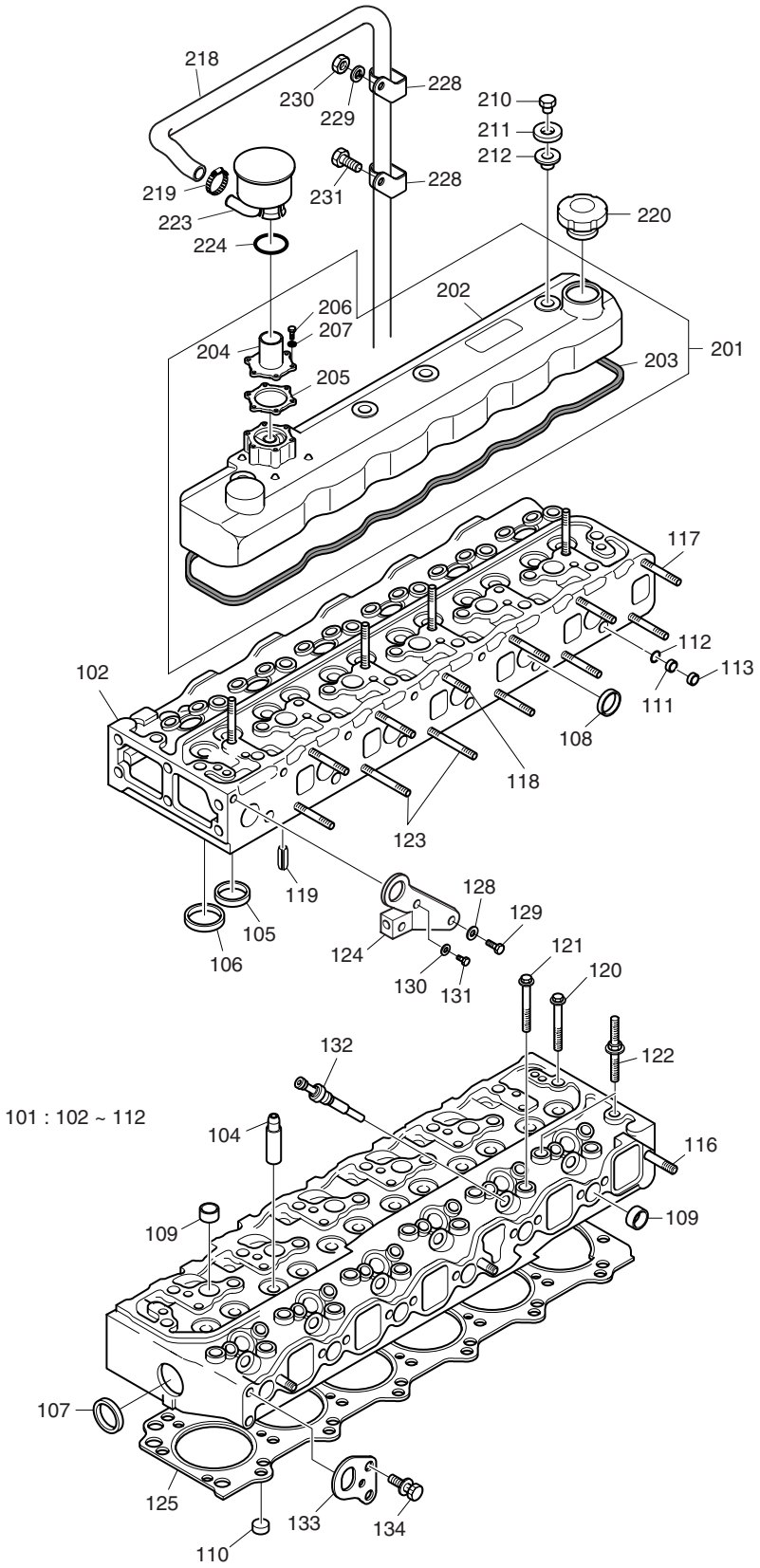

DATE	DEC. 15, 2006
REV. NO.	EXB06-13

Fig. 005 CYLINDER HEAD CULLASSE

Serial No. ;

Key No.	Part No.	Description	Description	Q'ty	S.C	Serial No.	ICA	Replaceable part	
								Part No.	Q'ty
005-132	65.26815-0002	PLUG;DUMMY	PRISE DE LUEUR	6					
133	65.19202-0005	HOOK;LIFTING	CROCHET	1					
134	06.01943-3213	BOLT ASS'Y M10X1.25X20	BOULON A 6 PANS	2					
201	65.03401-6057A	CYLINDER HEAD COVER ASS'Y	COUVRE-CULASSE	1		~030529	I	65.03401-6064	1
	65.03401-6064	CYLINDER HEAD COVER ASS'Y	COUVRE-CULASSE	1		~041214	I	65.03401-6064A	1
	65.03401-6064A	CYLINDER HEAD COVER ASS'Y	COUVRE-CULASSE	1		~060206	Y	65.03401-6097	1
	65.03401-6097	CYLINDER HEAD COVER ASS'Y	COUVRE-CULASSE	1		060207~			
202	65.03401-0061A	. COVER. CYL,HEAD	. COUVERCLE	1		~060206			
	65.03401-6094	**. COVER. CYL,HEAD**	. COUVERCLE	1		060207~			
203	65.03905-0002B	. GASKET;CYLINDER HEAD	. RONDELLE D'ETANCHEITE	1					
205	65.03903-0001	. PACKING;COVER	. EMBALLAGE	1					
204	65.01801-0011	. CASE;BREATHER	. BOITE	1					
206	06.04190-8808	. BOLT M5X16	. BOULON A 6 PANS	6					
207	06.16731-2104	. WASHER;SPRING	. RONDELLE ELASTIQUE	6					
210	65.90501-0028	NUT;CYLINDER HEAD COVER	ECROU	4					
211	65.90701-0202	WASHER;PLATE	RONDELLE	4					
212	65.03905-0023	GASKET;CYL. HEAD COVER	RONDELLE	4					
218	65.96301-0354	HOSE;RUBBER	TUYAU FLEXIBLE	1					
219	**06.67020-0105**	**CLAMP**	ATTACHE DE TUYAU	1					
220	65.01810-5007	CAP;OIL FILLER	VIBREUR	1		~051230	I	65.01810-5011	1
	65.01810-5011	CAP;OIL FILLER	VIBREUR	1		051231~			
223	65.01801-5035	BREATHER PIPE ASS'Y	CLAPET DE RECHANGE	1		~041125	Y	65.01801-5035A	1
	65.01801-5035A	BREATHER PIPE ASS'Y	CLAPET DE RECHANGE	1		041126~			
224	65.96501-0032B	O-RING	JOINT TORIQUE	1					
228	65.97401-0179	CLIP;WATER HOSE	CLIP	2					
229	06.16731-2107	WASHER;SPRING	RONDELLE ELASTIQUE	1					
230	06.11063-8214	NUT;HEX M8	ECROU	1					
231	06.01913-3111	BOLT ASS'Y M8X16	BOULON A 6 PANS	1					

DATE	DEC. 29, 2005
REV. NO.	EXB05-20

Fig. 006 VALVE MECHANISM CALAGE D'INJECTION

Serial No. ;

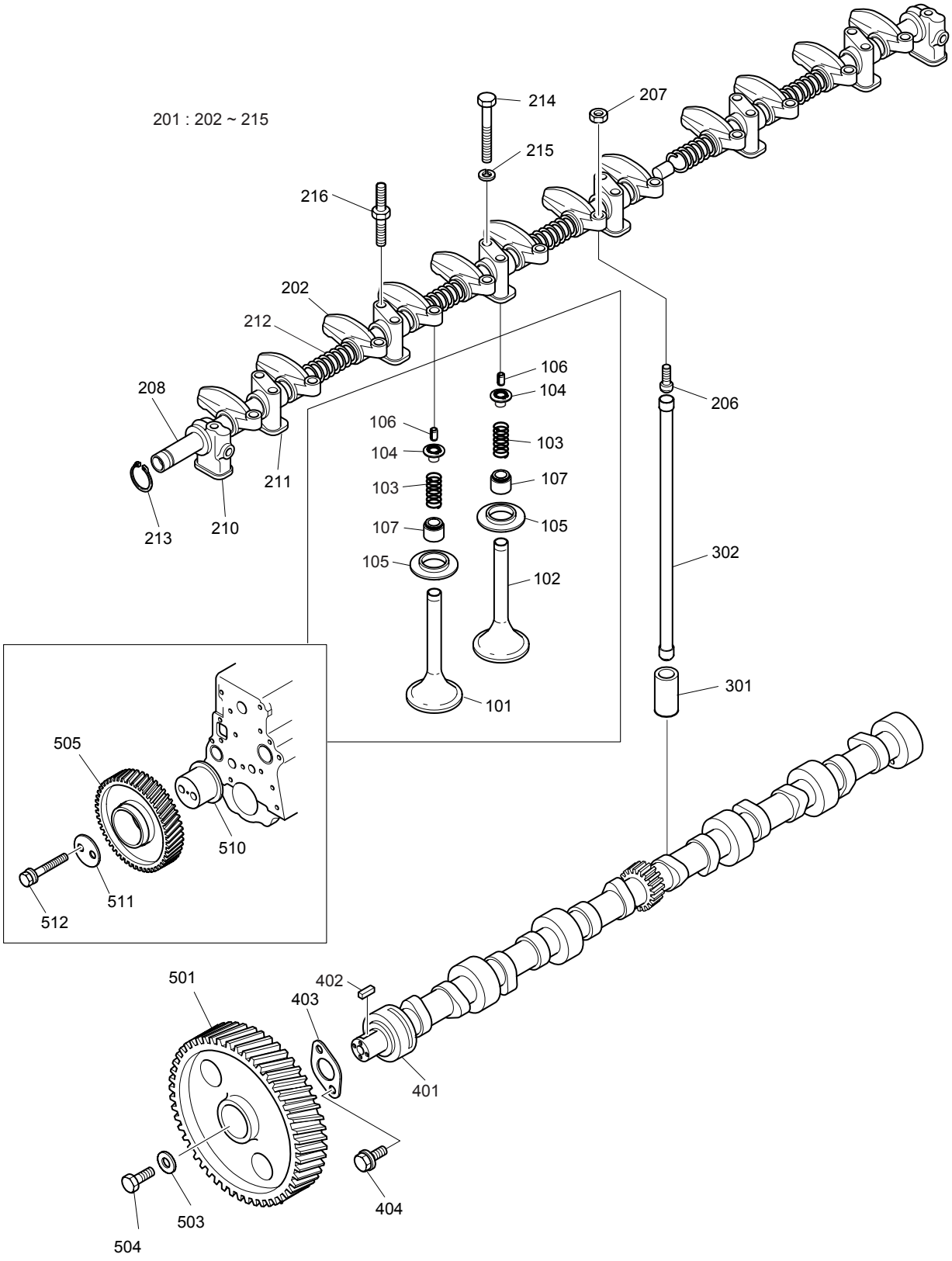

DATE	DEC. 29, 2005
REV. NO.	EXB05-20

Fig. 006 VALVE MECHANISM CALAGE D'INJECTION

Serial No ;

Key No.	Part No.	Description	Description	Q'ty	S.C	Serial No.	ICA	Replaceable part	
								Part No.	Q'ty
006-101	65.04101-0032	VALVE;INLET	VANNE	6					
102	65.04101-0025A	VALVE;EXHAUST	VANNE	6					
103	65.04102-0005	SPRING;VALVE	RESSORT	12					
104	65.04103-0001B	RETAINER;VALVE SPRING	PLAQUE	12					
105	65.04103-0002	PLATE;SPRING	PLAQUE	12					
106	65.04104-0001	SPLIT;COLLAR	GOUPILLE	24					
107	65.04902-0011A	SEAL;VALVE STEM	JOINT DE VANNE	12		~040616	I	65.04902-0015	12
	65.04902-0015	SEAL;VALVE STEM	JOINT DE VANNE	12		040617~			
201	65.04200-6019C	ROCKER ARM & SHAFT ASS'Y	AXE DE BRAS DE	1		~050923	Y	65.04200-6019D	1
	65.04200-6019D	**ROCKER ARM & SHAFT**	AXE DE BRAS DE	1		050924~			
202	65.04201-5002B	. ROCKER ARM ASS'Y	. BALANCIER	12		~050923	Y	65.04201-5002C	12
	65.04201-5002C	**. ROCKER ARM ASS'Y**	. BALANCIER	12		050924~			
206	65.04205-0001	. SCREW;ADJUST	. VIS DE REGLAGE	12					
207	65.90501-0013	. NUT;HEX.	. ECROU 6 PANS	12					
208	65.04203-5008C	. ROCKER ARM SHAFT ASS'Y	. ENSEMBLE AXE DE	1					
210	65.04202-0009	. BRACKET(FRONT)	. SUPPORT	1					
211	65.04202-0003C	. BRACKET(ROCKER ARM)	. SUPPORT	6					
212	65.97601-0048	. SPRING;ROCKER ARM	. RESSORT D'AXE DE	5					
213	06.29010-0116	. RING;SNAP	. CIRCLIP	1					
214	06.01013-9118	. BOLT;HEX. M8X65	. BOULON A 6 PANS	10					
215	06.15010-2311	. WASHER	. RONDELLE	10					
216	65.90201-0081	BOLT;STUD	BOULON DE GOUJON	4					
301	65.04301-0009	TAPPET	POUSSOIR DE TIGE DE	12					
302	65.04302-5006	ROD;PUSH	TIGE DE POUSSOIR	12					
401	65.04401-0018A	SHAFT;CAM	ARBRE A CAMES	1		~040827	Y	65.04401-0018B	1
	65.04401-0018B	SHAFT;CAM	ARBRE A CAMES	1		040828~			
402	06.29151-4608	KEY	KEY	1					
403	65.98112-0009	FLANGE	BRIDE	1		~040422	Y	65.98112-0009A	1
	65.98112-0009A	FLANGE	BRIDE	1		040423~			
404	06.01913-3115	BOLT ASS'Y M8X25	BOULON A 6 PANS	2					
501	65.04501-0004	GEAR;CAM SHAFT	PIGNON D'ARBRE A CAMES	1					
503	65.90701-0059	WASHER;PLAIN	RONDELLE	1					
504	06.01733-4410	BOLT M14X1.5X28	BOULON A 6 PANS	1					
505	65.04505-5012	IDLE GEAR ASS'Y	BARBOTIN	1					
510	65.04506-0011	SHAFT;IDLE GEAR	GOUJON DE PIGNON FOU	1					
511	65.90720-0016	WASHER;THRUST	RONDELLE DE BUTEE	1					
512	06.01943-3222	BOLT ASS'Y M10X1.25X55	BOULON A 6 PANS	2					

DATE	DEC. 29, 2005
REV. NO.	EXB05-20

Fig. 007 OIL PUMP
POMPE A HUILE

Serial No. ;

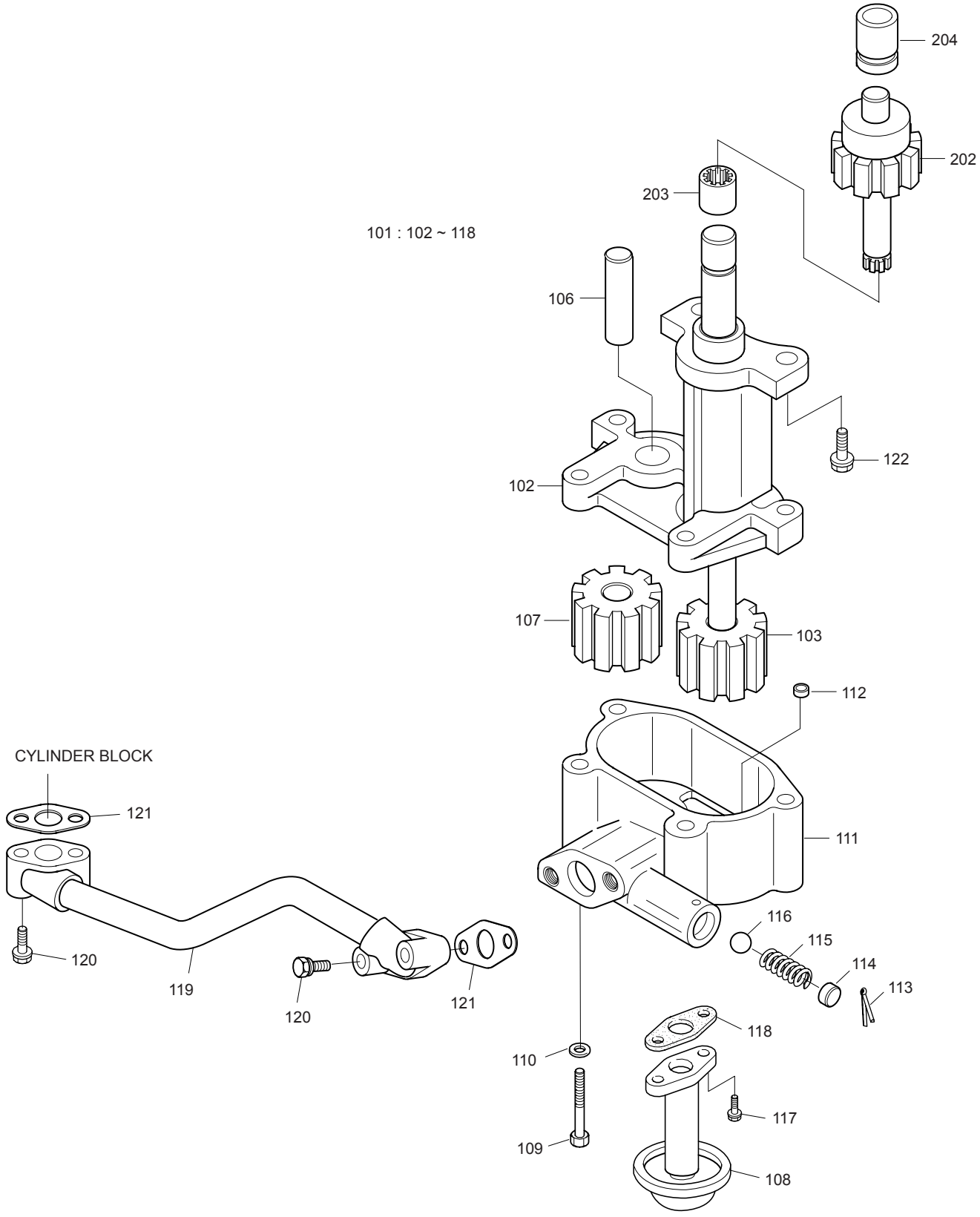

DATE	DEC. 29, 2005
REV. NO.	EXB05-20

Fig. 007 OIL PUMP
POMPE A HUILE

Serial No ;

Key No.	Part No.	Description	Description	Q'ty	S.C	Serial No.	ICA	Replaceable part	
								Part No.	Q'ty
007-101	65.05101-7021	OIL PUMP ASS'Y(NO.102 118)	POMPE D'CHUILE	1					
102	65.05102-0018	. HOUSING;OIL PUMP	. CARTER	1	D				
103	65.05104-6065	. GEAR ASS'Y;OIL PUMP	. PIGNON	1					
106	65.05105-0044	. SHAFT;OIL PUMP	. ARBRE	1					
107	65.05104-0177	. GEAR;OIL PUMP	. ENSEMBLE POMPE A	1					
108	65.05705-6016	. STRAINER ASS'Y	. FILTRE	1					
109	06.01013-9117	. BOLT M8X65	. BOULON A 6 PANS	4					
110	06.16731-2107	. WASHER;SPRING	. RONDELLE ELASTIQUE	4					
111	65.05103-0051	. COVER;OIL PUMP	. COUVERCLE	1	D				
112	65.91710-0012	. RING;STOPPER	. BAGUE	1					
113	06.22070-0913	. PIN;SPLIT 4X30	. GOUJON	1					
114	65.91305-0007	. SEAT;SPRING	. RESSORT	1					
115	65.97601-0090	. SPRING;COMPRESSION	. RESSORT	1					
116	06.31641-0222	. BALL;STEEL 15/32	. BILLE	1					
117	06.01913-3113	. BOLT ASS'Y M8X20	. BOULON A 6 PANS	2					
118	65.96601-0058	. GASKET	. JOINT	1					
119	65.05701-5636	OIL PIPE ASS'Y	CONDUITE	1		~020917	Y	65.05701-5636A	1
	65.05701-5636A	OIL PIPE ASS'Y	CONDUITE	1		020918~			
120	06.01923-3120	BOLT ASS'Y M8X45	BOULON A 6 PANS	4					
121	65.05903A0002	GASKET	JOINT	2					
122	06.01944-3215	BOLT ASS'Y M10X1.25X25	BOULON A 6 PANS	2					
202	65.05201-0065	GEAR;OIL PUMP DRIVE	PIGNON	1					
203	65.05207-0006	COUPLING;SLEEVE	FIXATION DE POMPE	1					
204	65.05202-0001A	BUSH;DRIVE GEAR	DOUILLE	1		~050819	Y	65.05202-0001B	1
	65.05202-0001B	**BUSH;DRIVE GEAR**	DOUILLE	1		050820~			

DATE	DEC. 29, 2005
REV. NO.	EXB05-20

Fig. 008 OIL FILTER
FILTRE A HUILE

Serial No. ;

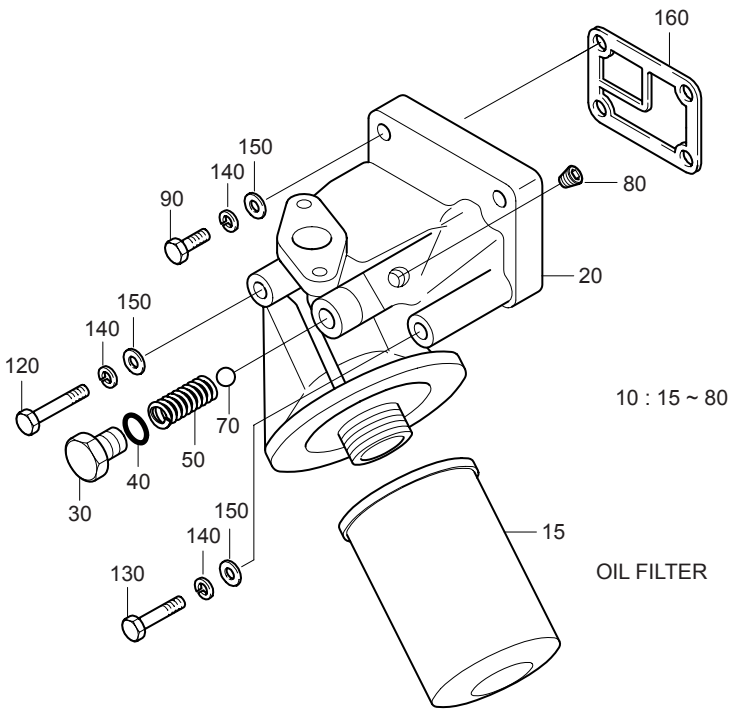

DATE	DEC. 29, 2005
REV. NO.	EXB05-20

Fig. 008 OIL FILTER FILTRE A HUILE

Serial No ;

Key No.	Part No.	Description	Description	Q'ty	S.C	Serial No.	ICA	Replaceable part	
								Part No.	Q'ty
008-10	65.05501-7076	OIL FILTER ASS'Y	FILTRE A GAZOLE	1		~040412	Y	65.05501-7065C	1
	65.05501-7065C	OIL FILTER ASS'Y	FILTRE A GAZOLE	1		~050714	Y	65.05501-7065D	1
	65.05501-7065D	**OIL FILTER ASS'Y**	FILTRE A GAZOLE	1		050715~			
15	65.05510-5028	. ELEMENT;OIL FILTER	. ELEMENT	1		~040412			
	65.05510-5021A	. ELEMENT;OIL FILTER	. ELEMENT	1		~050714	Y	65.05510-5021B	1
	65.05510-5021B	**. ELEMENT;OIL FILTER**	. ELEMENT	1		050715~			
20	65.05503-0033B	. HEAD;OIL FILTER	. CULASSE	1					
30	65.90310-0036A	. PLUG;SCREW	. VIS	1					
40	06.56190-0709	. RING;SEAL	. BAGUE D'ETANCHEITE	1					
50	65.97601-0045	. SPRING;COMPRESS	. RESSORT	1					
70	06.31641-0222	. BALL;STEEL	. BILLE	1					
80	65.90350-0005	. SCREW;PLUG PT 3/8	. VIS	1					
90	06.01493-4206	BOLT M10X1.25X35	BOULON A 6 PANS	2					
120	65.90001-0162	BOLT M10X1.25X105	BOULON A 6 PANS	1					
130	06.01493-4214	BOLT M10X1.25X75	BOULON A 6 PANS	1					
140	06.16731-2108	WASHER;SPRING	RONDELLE	4					
150	06.15010-2312	WASHER;PLAIN	RONDELLE	4					
160	65.05901C0004	GASKET	JOINT	1					

DATE	DEC. 15, 2006
REV. NO.	EXB06-13

Fig. 009 OIL COOLER
REFROIDISSEMENT DE HUILE

Serial No. ;

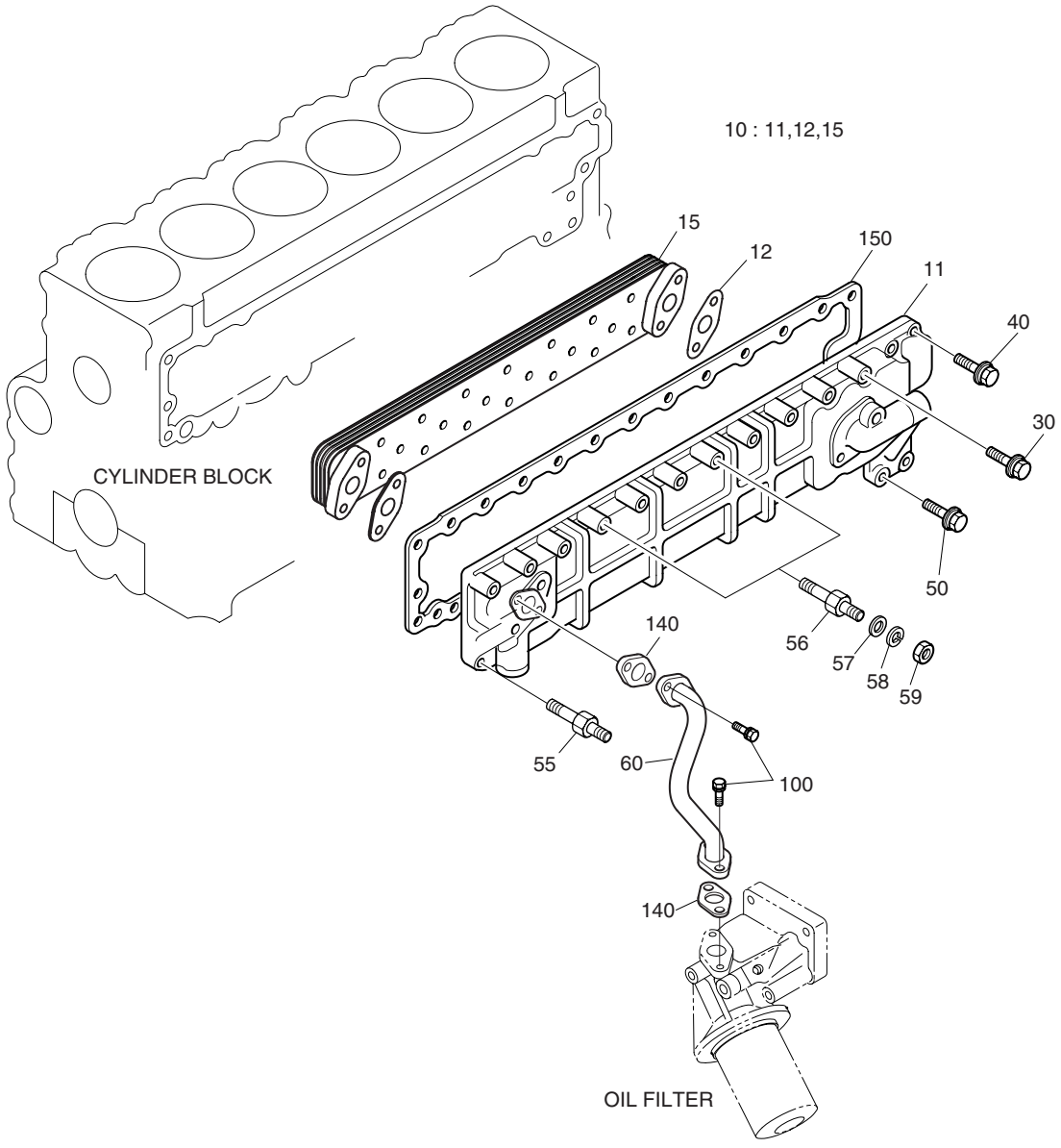

DATE	DEC. 15, 2006
REV. NO.	EXB06-13

Fig. 009 OIL COOLER
REFROIDISSEMENT DE HUILE

Serial No. ;

Key No.	Part No.	Description	Description	Q'ty	S.C	Serial No.	ICA	Replaceable part	
								Part No.	Q'ty
009-10	65.05601-7056B	OIL COOLER ASS'Y	ENSEMBLE	1		~030825	Y	65.05601-7056C	1
	65.05601-7056C	OIL COOLER ASS'Y	ENSEMBLE	1		~050820	Y	65.05601-7056D	1
	65.05601-7056D	OIL COOLER ASS'Y	ENSEMBLE	1		~060605	Y	65.05601-7056E	1
	65.05601-7056E	**OIL COOLER ASS'Y**	ENSEMBLE	1		060606~			
11	65.05604-0013A	. HOUSING;OIL COOLER	. BOITIER	1		~060605	Y	65.05604-0013B	1
	65.05604-0013B	**. HOUSING;OIL COOLER**	. BOITIER	1		060606~			
12	65.05902-0025	. GASKET;ELEMENT	. JOINT	2		050821~			
15	65.05606-5024	. ELEMENT;OIL COOLER	. ELEMENT FILTRANT	1					
30	06.01923-3120	BOLT ASS'Y M8X45	BOULON A 6 PANS	10					
40	06.01923-3115	HEX. BOLT ASS'Y M8X25	BOULON A 6 PANS	15					
50	06.01923-3113	BOLT ASS'Y M8X20	BOULON A 6 PANS	2					
55	65.90201-0066	BOLT;STUD	BOULON DE GOUJON	1					
56	65.90201-0103	BOLT;STUD	BOULON DE GOUJON	2					
57	06.15010-2311	WASHER;PLAIN	RONDELLE PLATE	2					
58	06.16731-2107	WASHER;SPRING	RONDELLE ELASTIQUE	2					
59	06.11063-8214	NUT	ECROU	2					
60	65.05701-5341	OIL PIPE ASS'Y	CONDUITE	1					
100	06.01913-3114	BOLT ASS'Y M8X22	BOULON A 6 PANS	4					
140	65.05903A0001	GASKET	JOINT	2					
150	65.05902A0005	GASKET;OIL COOLER	JOINT	1					

DATE	DEC. 15, 2006
REV. NO.	EXB06-13

Fig. 010 OIL PAN
CARTER D'HUILE

Serial No. ;

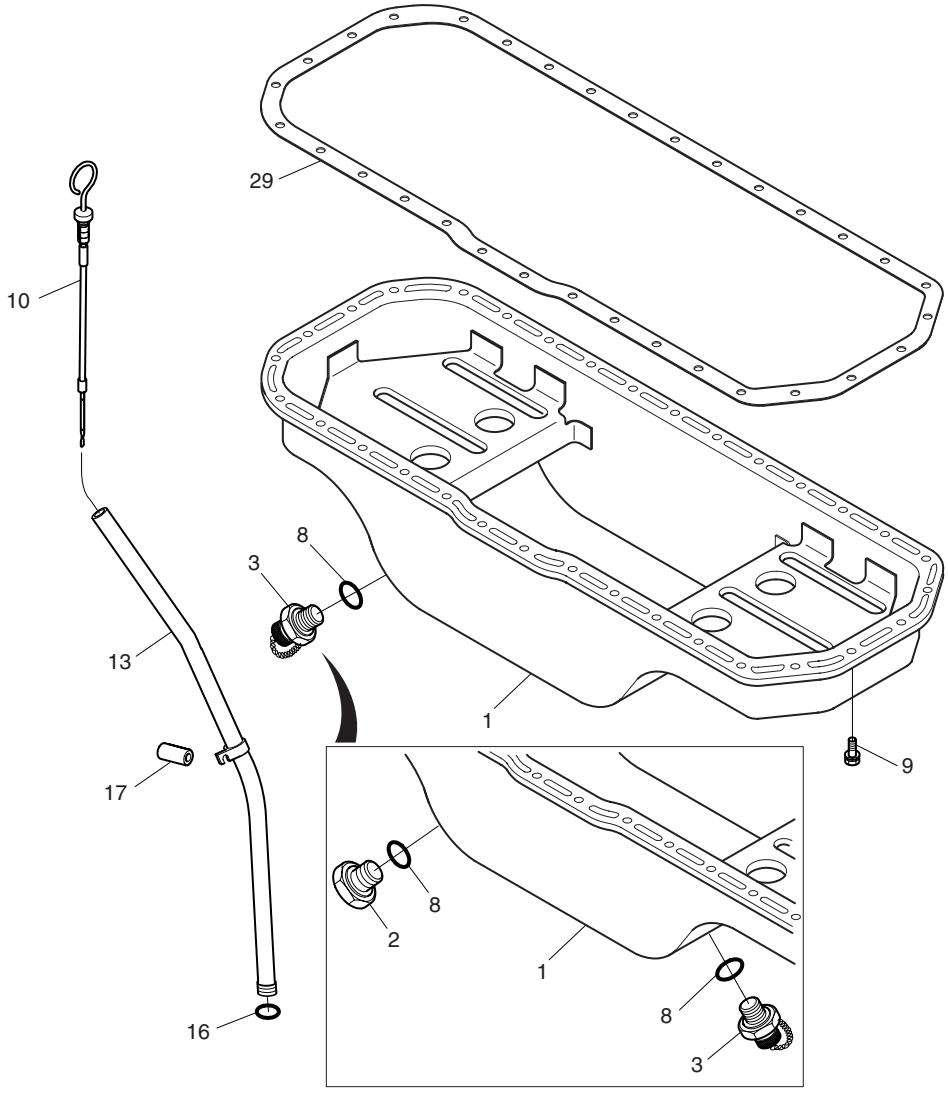

Serial No. ~061010

DATE	DEC. 15, 2006
REV. NO.	EXB06-13

Fig. 010 OIL PAN
CARTER D'HUILE

Serial No. ;

Key No.	Part No.	Description	Description	Q'ty	S.C	Serial No.	ICA	Replaceable part	
								Part No.	Q'ty
010-1	65.05801-5191	PAN;OIL	CARTER D'HUILE	1		~030801	Y	65.05801-5191A	1
	65.05801-5191A	PAN;OIL	CARTER D'HUILE	1		~061010	Y	65.05801-5252	1
	65.05801-5252	**PAN;OIL**	CARTER D'HUILE	1		061011~			
2	**65.90310-0050B**	**SCREW;PLUG M20X1.5**	BOUCHON A VIS	1		~061010			
3	65.98125-5020	JOINT;DRAIN	JOINT	1		~030801	Y	65.98125-5021	1
	65.98125-5021	JOINT;DRAIN	JOINT	1		~061010	Y	65.98125-5021A	1
	65.98125-5021A	**JOINT;DRAIN**	JOINT	1		061011~			
8	06.56190-0715	RING;SEAL A20X26	BAGUE	2		~061010			
	06.56190-0715	**RING;SEAL A20X26**	BAGUE	1		061011~			
9	06.01913-3112	BOLT ASS'Y M8X18	BOULON A 6 PANS	32					
10	65.05805-5188A	GAUGE;OIL LEVEL	JAUGE D'HUILE	1		~051117	Y	65.05805-5188B	1
	65.05805-5188B	GAUGE;OIL LEVEL	JAUGE D'HUILE	1		051118~			
13	65.05806-5102	TUBE;GUIDE	TUBE DE GUIDAGE	1					
16	06.56017-0303	. O-RING	. JOINT TORIQUE	2					
17	65.91701-0086	SPACER	BAGUE D'ECARTEMENT	2					
29	65.05904A0002	GASKET;OIL PAN	JOINT	1					

DATE	DEC. 15, 2006
REV. NO.	EXB06-13

Fig. 011 THERMOSTAT
THERMOSTAT

Serial No. ;

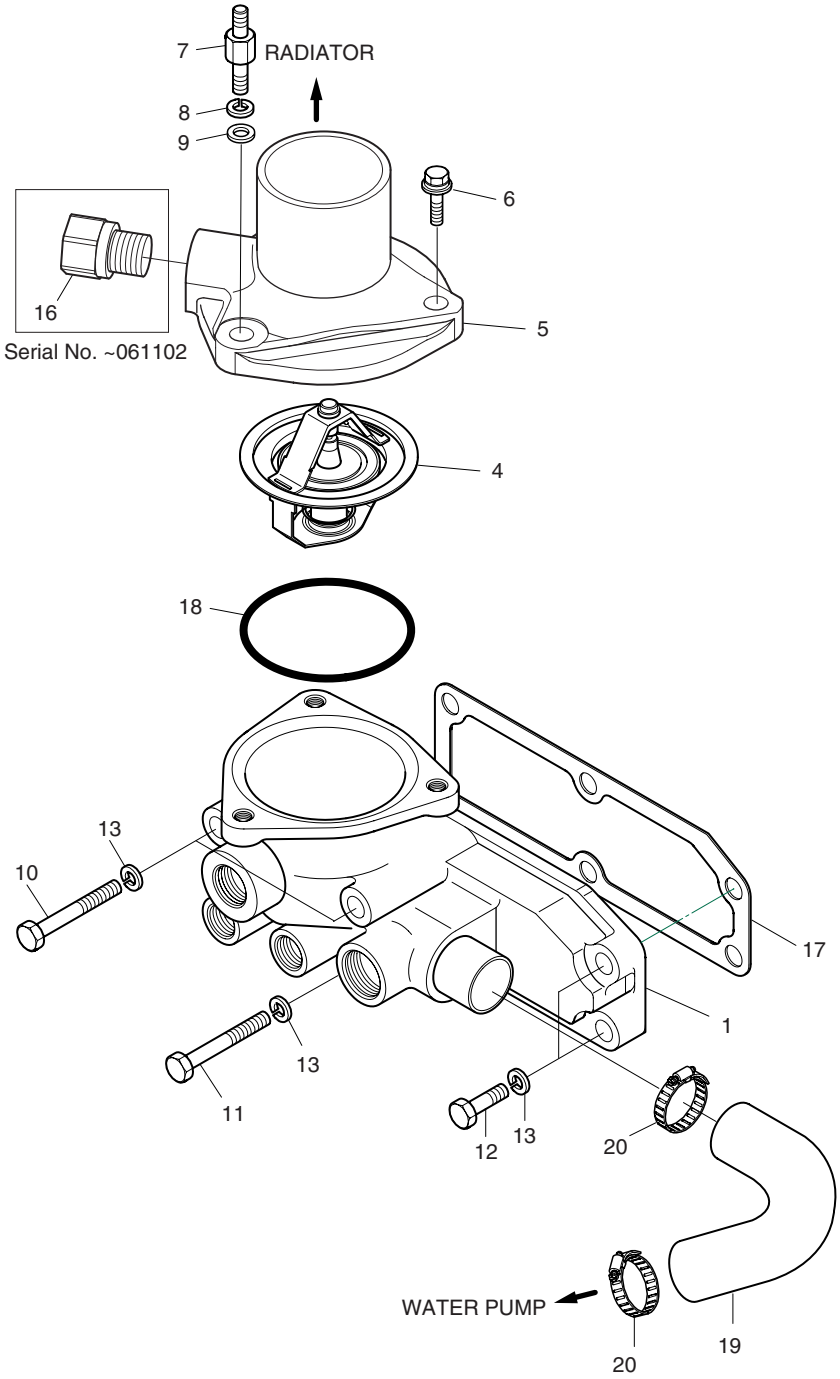

DATE	DEC. 15, 2006
REV. NO.	EXB06-13

Fig. 011 THERMOSTAT
THERMOSTAT

Serial No. ;

Key No.	Part No.	Description	Description	Q'ty	S.C	Serial No.	ICA	Replaceable part	
								Part No.	Q'ty
011-1	65.06404-5003B	HOUSING ASS'Y	ENSEMBLE DE CORPS DE	1		~061102	Y	65.06404-5032	1
	65.06404-5032	**HOUSING ASS'Y**	ENSEMBLE DE CORPS DE	1		061103~			
4	65.06402-5015	ELEMENT;THERMOSTAT	FILTRE	1					
5	65.06405-0012	OUTLET;WATER	SORTIE A EAU	1		~030604	Y	65.06405-0012A	1
	65.06405-0012A	OUTLET;WATER	SORTIE A EAU	1		~061102	Y	65.06405-0039	1
	65.06405-0039	**OUTLET;WATER**	SORTIE A EAU	1		061103~			
6	06.01923-3114	BOLT ASS'Y M8X22	BOULON A 6 PANS	2					
7	65.90201-0037	BOLT;SPACER	BOULON A 6 PANS	1					
8	06.16731-2107	WASHER;SPRING	RONDELLE	1					
9	06.15010-2311	WASHER;PLAIN	RONDELLE	1					
10	06.01493-4217	BOLT M10X1.25X90	BOULON A 6 PANS	2					
11	06.01493-4216	BOLT M10X1.25X85	BOULON A 6 PANS	1					
12	06.01943-3217	BOLT M10X1.25X30	BOULON A 6 PANS	3					
13	06.16044-0211	WASHER;SPRING	BOULON A 6 PANS	6					
16	**65.90320-0019**	**PLUG;SCREW**	VIS	1		~061102			
17	65.06904A0004	GASKET	JOINT	1					
18	65.06904-0003	PACKING	EMBALLAGE	1					
19	65.96301-0045C	HOSE;RUBBER	TUYAU FLEXIBLE	1					
20	06.67020-0106	CLAMP;HOSE	FIXATION DE TUYAU	2					

DATE	JUN. 30, 2004
REV. NO.	EXB04-04

Fig. 012 WATER PUMP & COOLING FAN
POMPE A EAU VENTILATEUR

Serial No. ;

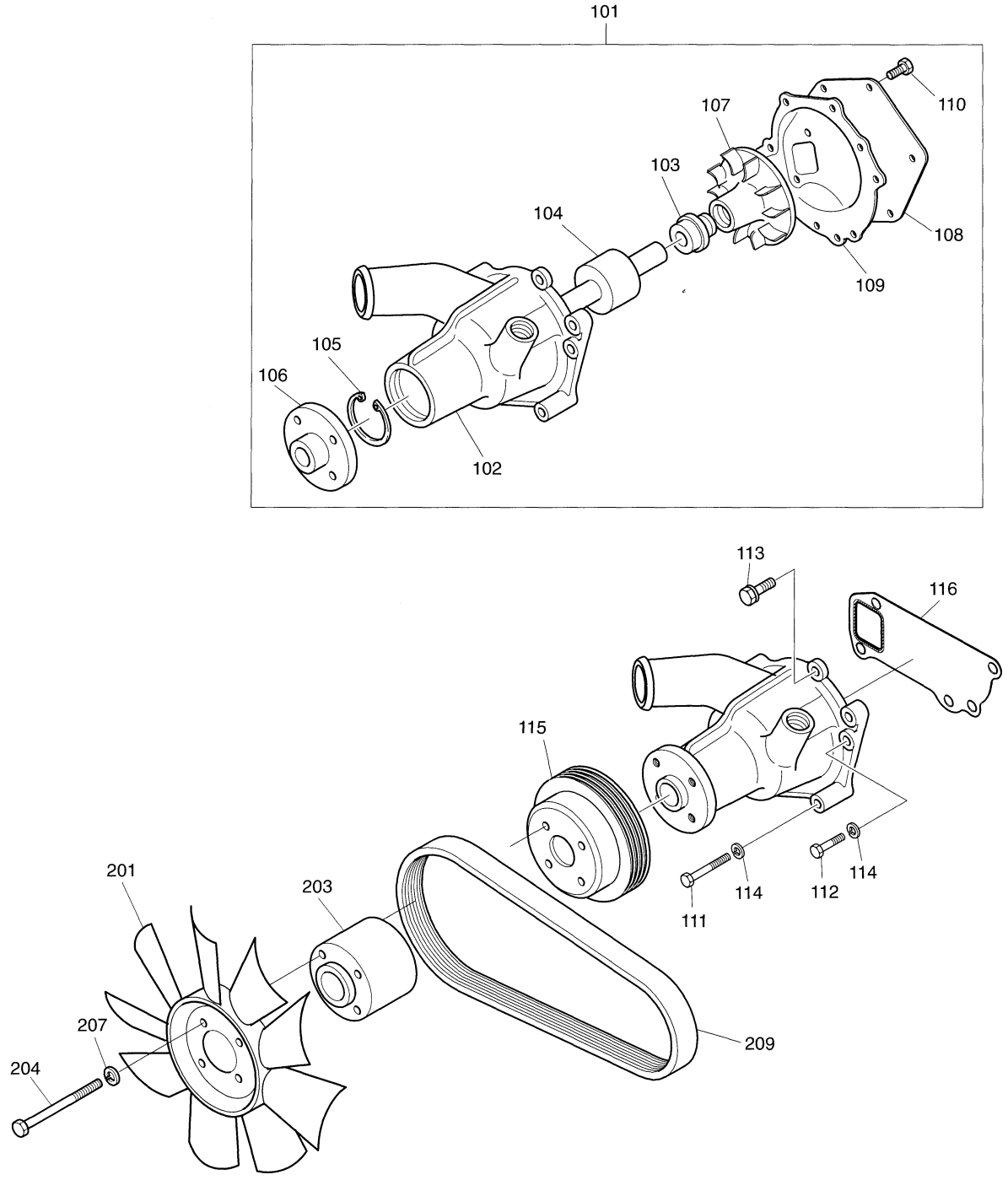

DATE	JUN. 30, 2004
REV. NO.	EXB04-04

Fig. 012 WATER PUMP & COOLING FAN
POMPE A EAU VENTILATEUR

Serial No ;

Key No.	Part No.	Description	Description	Q'ty	S.C	Serial No.	ICA	Replaceable part	
								Part No.	Q'ty
012-101	65.06500-6144	WATER PUMP ASS'Y	POMPE DE EAU	1		~030507	Y	65.06500-6144A	1
	65.06500-6144A	WATER PUMP ASS'Y	POMPE DE EAU	1		030508~			
102	65.06501-0214	. HOUSING	. BOITIER	1	D				
103	65.06520-6007	. SEAL;MECHANICAL	. JOINT	1					
104	65.93410-0027	. BEARING	. PALIER	1					
105	06.29020-0132	. RING;SNAP	. BAGUE ELASTIQUE	1					
106	65.06504-0033	. HUB;V-BELT PULLEY	. MOYEU	1					
107	65.06506-0085	. IMPELLER	. TURBINE	1					
108	65.06512-0016	. COVER	. COUVERCLE	1					
109	65.06901-0035	. GASKET	. JOINT	1		~030507	Y	65.06901-0003A	1
	65.06901-0003A	. GASKET	. JOINT	1		~030513	Y	65.06901-0035A	1
	65.06901-0035A	. GASKET	. JOINT	1		030514~			
110	06.04200-9009	. SCREW;CROSS M8X20	. VIS	3					
111	06.01493-4215	BOLT M10X1.25X80	BOULON A 6 PANS	1					
112	06.01493-4211	BOLT M10X1.25X60	BOULON A 6 PANS	2					
113	06.01943-3218	BOLT ASS'Y M10X1.25X35	BOULON A 6 PANS	1					
114	06.16731-2108	WASHER;SPRING	RONDELLE	3					
115	65.06606-0039	PULLEY;FAN	POLLEY	1					
116	65.06901B0002	GASKET	JOINT	1					
201	65.06601-5051	FAN;COOLING(9 BLADE)	VENTILATEUR	1					
203	65.06611-0108	FLANGE;FAN	VENTILATEUR	1		~030507	Y	65.06611-0108A	1
	65.06611-0108A	FLANGE;FAN	VENTILATEUR	1		030508~			
204	06.01013-9127	BOLT M8X120	BOULON A 6 PANS	4					
207	06.16731-2107	WASHER;SPRING	RONDELLE ELASTIQUE	4					
209	65.96801-0124	BELT;POLY	COURROIE	1		~040205	Y	65.96801-0124A	1
	65.96801-0124A	**BELT;POLY**	COURROIE	1		040206~			

DATE	DEC. 15, 2006
REV. NO.	EXB06-13

Fig. 013 INTAKE & EXHAUST MANIFOLD D'ADMISSION ET D'ECHAPPEMENT

Serial No. ;

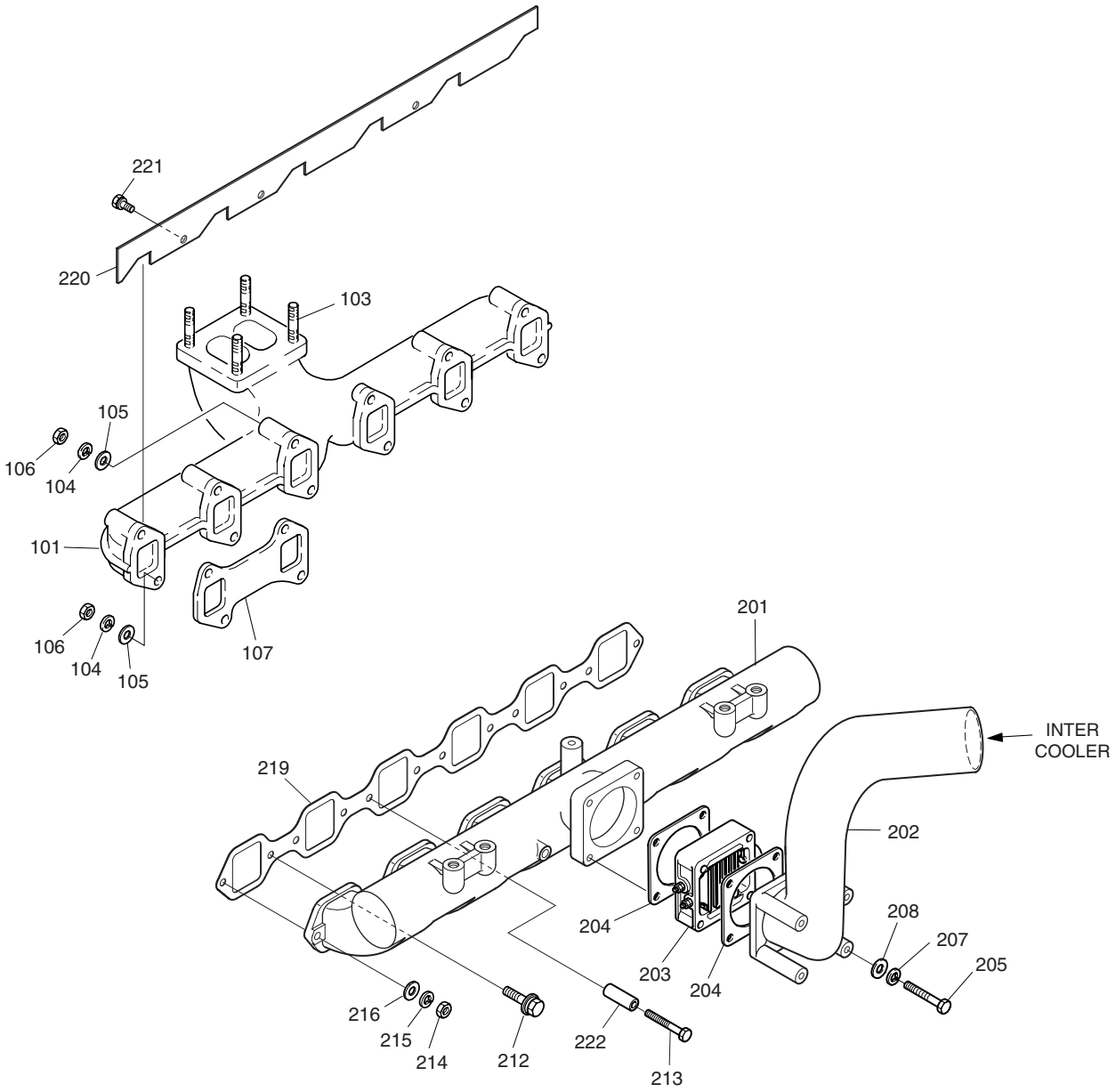

DATE	DEC. 15, 2006
REV. NO.	EXB06-13

Fig. 013 INTAKE & EXHAUST MANIFOLD D'ADMISSION ET D'ECHAPPEMENT

Serial No. ;

Key No.	Part No.	Description	Description	Q'ty	S.C	Serial No.	ICA	Replaceable part	
								Part No.	Q'ty
013-101	65.08101-0199	MANIFOLD;EXHAUST	COLLECTEUR	1		~061011	Y	65.08101-0274	1
	65.08101-0274	**MANIFOLD;EXHAUST**	COLLECTEUR	1		061012~			
103	06.06175-8208	BOLT;STUD M10X1.25X30	BOULON DE GOUJON	4					
104	06.16731-2107	WASHER;SPRING	RONDELLE ELASTIQUE	12					
105	06.15010-2311	WASHER	RONDELLE	12					
106	06.11063-8214	NUT	ECROU 6 PANS	12					
107	65.08901-0028	GASKET;MANIFOLD EXHAUST	JOINT	3					
201	65.08201-5060	MANIFOLD;INTAKE	COLLECTEUR	1					
202	65.08202-0136	STAKE;INTAKE	PIEU	1					
203	65.26803-7028	HEATER;AIR	RECHAUFFEUR D'AIR	1		~040128	Y	65.26803-7028A	1
	65.26803-7028A	HEATER;AIR	RECHAUFFEUR D'AIR	1		~041213	Y	65.26803-7028B	1
	65.26803-7028B	HEATER;AIR	RECHAUFFEUR D'AIR	1		041214~			
204	65.09904-0008	GASKET;AIR PIPE	ELEMENT FILTRE	2					
205	06.01013-9128	BOLT;HEX. M8X130	BOULON A 6PANS	4					
207	06.16731-2107	WASHER;SPRING	RONDELLE ELASTIQUE	4					
208	06.15010-2311	WASHER	RONDELLE	4					
212	06.01923-3115	BOLT ASS'Y	BOULON A 6 PANS	8		~030125			
	06.01923-3115	BOLT ASS'Y	BOULON A 6 PANS	7		030126~			
213	06.01013-9127	BOLT ASS'Y	BOULON A 6 PANS	1		030126~			
214	06.11063-8214	NUT	ECROU 6 PANS	3					
215	06.16731-2107	WASHER;SPRING	RONDELLE ELASTIQUE	3					
216	06.15010-2311	WASHER	RONDELLE	3					
219	65.08902A0004	GASKET;INTAKE MANIFOLD	JOINT	1					
220	65.08120-0026	HEAT;SCREEN	LA CHALEUR D'ECRAN	1					
221	06.01913-3111	BOLT ASS'Y M8X16	BOULON A 6 PANS	3					
222	65.91701-0029	SPACER	BAGUE	1		~030126			

DATE	DEC. 15, 2006
REV. NO.	EXB06-13

Fig. 014 TURBO CHARGER & OIL PIPE
CHARGEUR DE TURBO

Serial No. ;

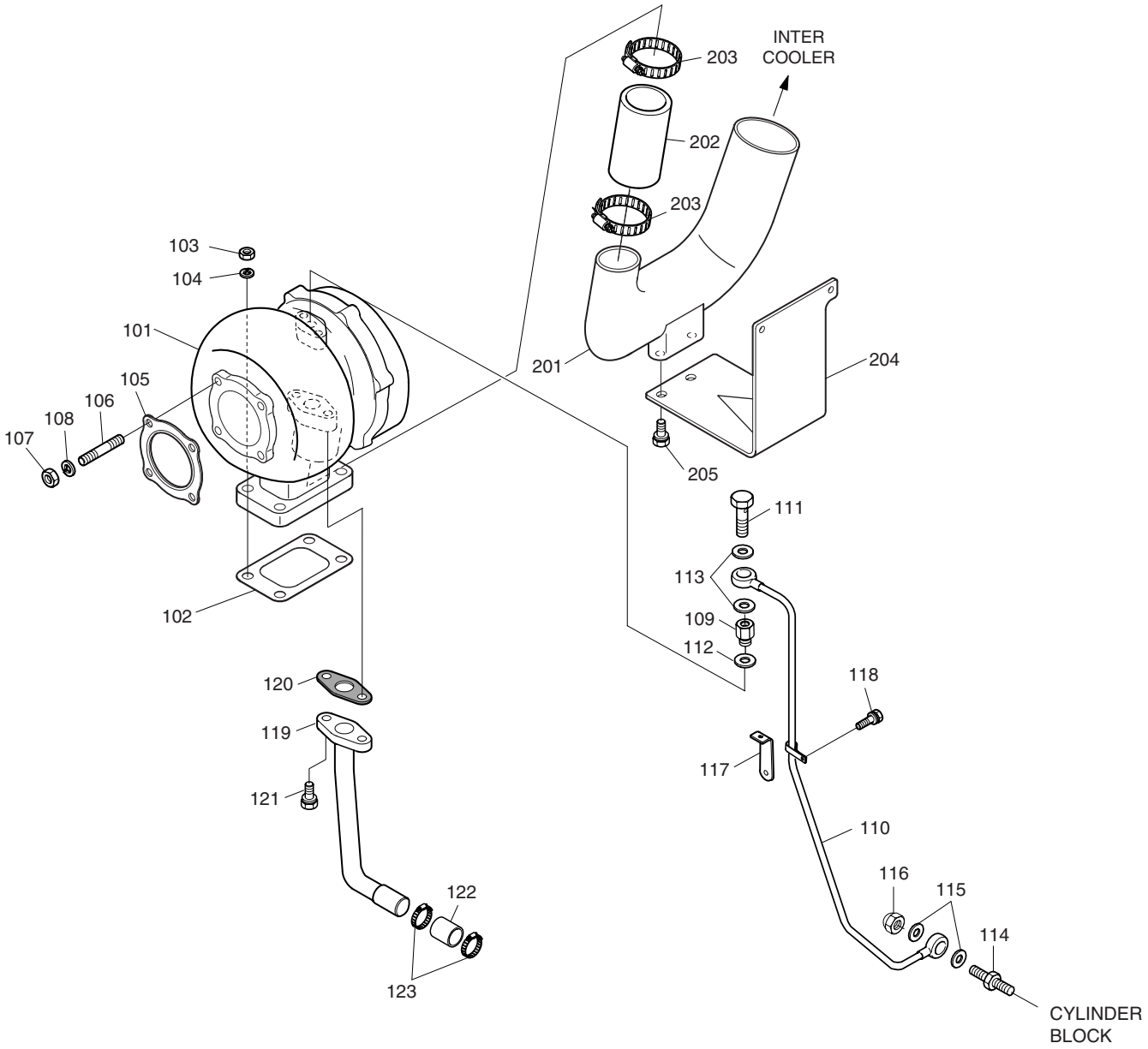

DATE	DEC. 15, 2006
REV. NO.	EXB06-13

Fig. 014 TURBO CHARGER & OIL PIPE
CHARGEUR DE TURBO

Serial No. ;

Key No.	Part No.	Description	Description	Q'ty	S.C	Serial No.	ICA	Replaceable part	
								Part No.	Q'ty
014-101	65.09100-7080	TURBO CHARGER ASS'Y	TURBO CHARGER	1		~020913	Y	65.09100-7080A	1
	65.09100-7080A	TURBO CHARGER ASS'Y	TURBO CHARGER	1		020914~			
102	65.09901-0018A	GASKET	JOINT	1					
103	06.11024-9202	NUT M10X1.25	ECROU	4					
104	06.16731-2108	WASHER;SPRING	RONDELLE	4					
105	65.09901-0020	GASKET	JOINT	1					
106	06.06225-0708	BOLT;STUD M8X30	BOULON DE GOUJON	4		~040916	I	65.90201-0096	4
	65.90201-0096	BOLT;STUD M8X30	BOULON DE GOUJON	4		040917~			
107	06.11063-8214	NUT;HEX. M8	ECROU	4					
108	06.16731-2107	WASHER;SPRING	RONDELLE	4					
109	65.98130-0200	ADAPTER	ADAPTATEUR	1		~020813	Y	65.98130-0200A	1
	65.98130-0200A	ADAPTER	ADAPTATEUR	1		020814~			
110	65.05701-5342	OIL PIPE ASS'Y	CONDUITE	1					
111	06.78144-2403	SCREW;HOLLOW M12X1.5	VIS CREUSE	1					
112	06.56190-0709	RING;SEAL	BAGUE D'ETANCHEITE	1					
113	06.56190-0704	RING;SEAL	BAGUE D'ETANCHEITE	2					
114	65.98155-0011	UNION;HOLLOW	GRAISSEUR	1					
115	06.56180-0714	RING;SEAL	BAGUE D'ETANCHEITE	2					
116	06.12172-9314	NUT;CAP	ECROU	1					
117	65.97480-0135	HOLDER	POSSESSEUR	1					
118	06.01913-3110	BOLT ASS'Y M8X12	BOULON A 6 PANS	1					
119	65.05701-5343	OIL PIPE ASS'Y	CONDUITE	1					
120	65.96601-0045A	GASKET	JOINT	1		~060630	I	65.96601-0067	1
	65.96601-0067	**GASKET**	JOINT	1		060631~			
121	06.01913-3115	BOLT ASS'Y M8X25	BOULON A 6 PANS	2					
122	65.96301-0280A	HOSE;RUBBER	TUYAU FLEXIBLE	1					
123	06.67020-0106	CLAMP;HOSE	FIXATION DE TUYAU	2					
201	65.09411-5054	PIPE;INLET	CONDUITES	1					
202	65.96301-0279	HOSE;RUBBER	TUYAU FLEXIBLE	1					
203	06.67020-0109	CLAMP;HOSE	FIXATION DE TUYAU	2					
204	65.09440-0016	BRACKET	SUPPORT	1					
205	06.01923-3215	BOLT ASS'Y M10X25	BOULON A 6 PANS	2					

DATE	DEC. 15, 2006
REV. NO.	EXB06-13

Fig. 015 FUEL SYSTEM
INJECTEUR ET POMPE-INJECTEUR

Serial No. ;

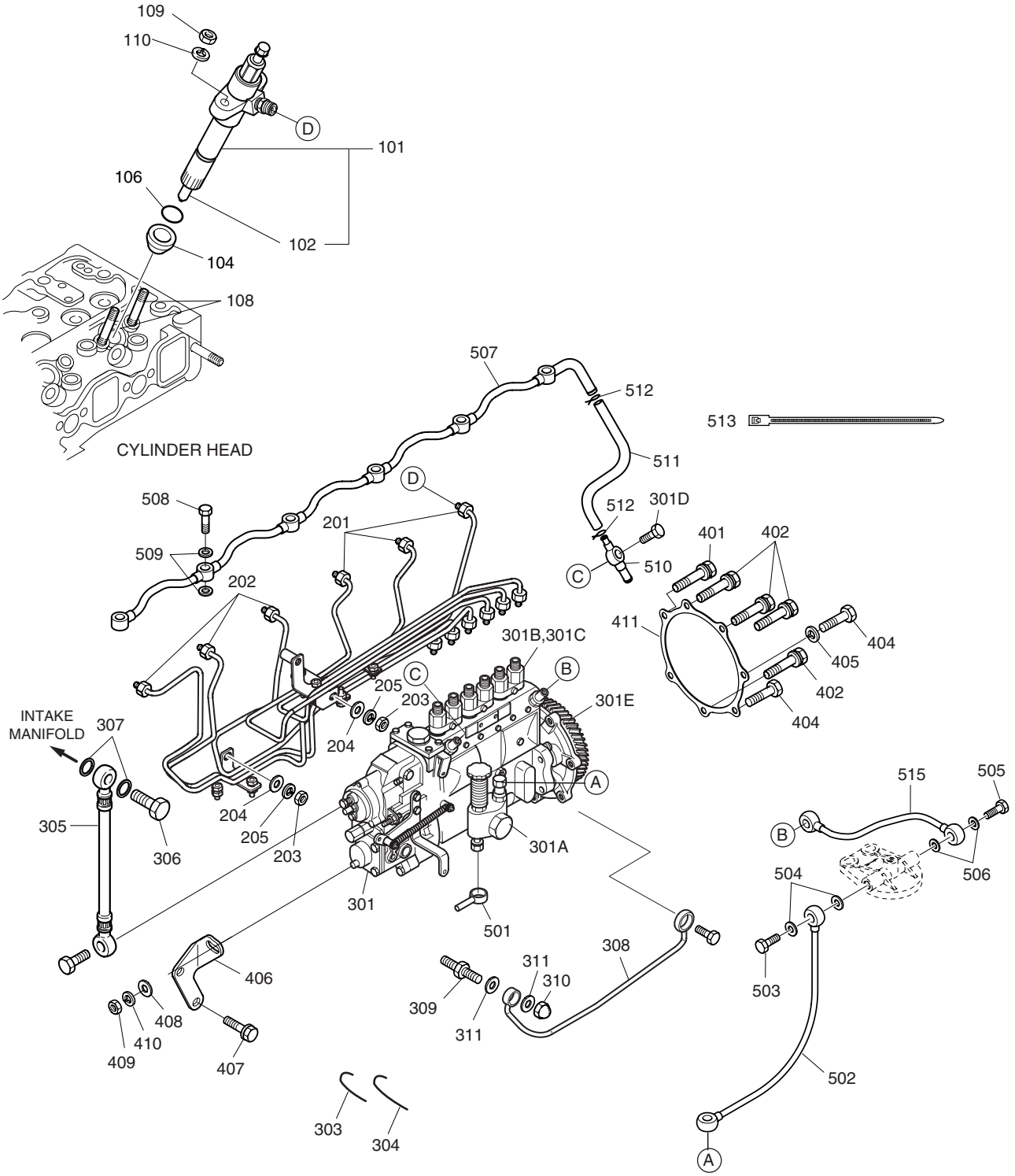

DATE	DEC. 15, 2006
REV. NO.	EXB06-13

Fig. 015 FUEL SYSTEM
INJECTEUR ET POMPE-INJECTEUR

Serial No. ;

Key No.	Part No.	Description	Description	Q'ty	S.C	Serial No.	ICA	Replaceable part	
								Part No.	Q'ty
015-101	65.10101-7090	NOZZLE HOLDER ASS'Y	BEC SUPPORT	6		~020913			
	65.10101-7092	NOZZLE HOLDER ASS'Y	BEC SUPPORT	6		~051121	Y	65.10101-7099	6
	65.10101-7099	NOZZLE HOLDER ASS'Y	BEC SUPPORT	6		~061109	Y	65.10101-7099A	6
	65.10101-7099A	**NOZZLE HOLDER ASS'Y**	BEC SUPPORT	6		061110~			
102	65.10102-6060	. NOZZLE	. BEC	1		~020913			
	65.10102-6064	. NOZZLE	. BEC	1		~051121	Y	65.10102-6069	1
	65.10102-6069	. NOZZLE	. BEC	1		051122~			
104	65.96507-0044A	RING;SEAL	BAGUE D'ETANCHEITE	6		~020913	Y	65.96507-0044B	6
	65.96507-0044B	RING;SEAL	BAGUE D'ETANCHEITE	6		020914~			
106	65.96507-0047	RING;SEAL	BAGUE D'ETANCHEITE	6		~020913			
	65.96507-0050	RING;SEAL	BAGUE D'ETANCHEITE	6		020914~			
108	65.90201-0099	BOLT;STUD	BOULON DE GOUJON	12					
109	06.11063-8214	NUT;HEX. M8	ECROU 6 PANS	12					
110	06.16731-2107	WASHER	RONDELLE ELASTIQUE	12					
201	65.10301-6085	PRESSURE PIPE ASS'Y	PIPE DE PRESSION	1		~020913			
	65.10301-6088	PRESSURE PIPE ASS'Y	PIPE DE PRESSION	1		~060105	I	65.10301-6202	1
	65.10301-6202	PRESSURE PIPE ASS'Y	PIPE DE PRESSION	1		060106~			
202	65.10301-6086	PRESSURE PIPE ASS'Y	CONDUITE	1		~020913			
	65.10301-6089	PRESSURE PIPE ASS'Y	CONDUITE	1		~060105	I	65.10301-6203	1
	65.10301-6203	PRESSURE PIPE ASS'Y	CONDUITE	1		060106~			
203	06.11063-8214	NUT	ECROU	2		060106~			
204	06.15010-2311	WASHER	RONDELLE	2		060106~			
205	**06.16731-2107**	**WASHER;SPRING**	RONDELLE	2		060106~			
301	65.11101-7384	PUMP;INJECTION	POMPE D'CINJECTION	1		~021001	Y	65.11101-7391	1
	65.11101-7391	PUMP;INJECTION	POMPE D'CINJECTION	1		021002~			
301A	105220-6490	. FEED PUMP	. POMPE	1					
301B	131150-2620	. PLUNGER	. POMPE	6					
301C	131110-5520	. VALVE;DELIVERY	. POMPE	1					
301D	131424-1520	. VALVE;OVERFLOW	. POMPE	1					
301E	156639-882C	. COUPLING	. POMPE	1					
303	65.11596-0001	WIRE;SEAL	FIL	3					
304	65.11596-0002	WIRE;SEAL	FIL	1					
305	65.08301-6010A	HOSE;AIR	TUYAU FLEXIBLE	1					
306	65.98150-0053B	SCREW;HOLLOW	VIS CREUSE	1					
307	06.56180-0714	RING;SEAL	BAGUE D'ETANCHEITE	2					
308	65.05701-5200	PIPE;OIL	CONDUITE	1					
309	65.98155-0011	UNION;HOLLOW	GRAISSEUR	1					
310	06.12172-9314	NUT;CAP	CHAPEAU DE ECROU	1					

DATE	DEC. 15, 2006
REV. NO.	EXB06-13

Fig. 015 FUEL SYSTEM
INJECTEUR ET POMPE-INJECTEUR

Serial No. ;

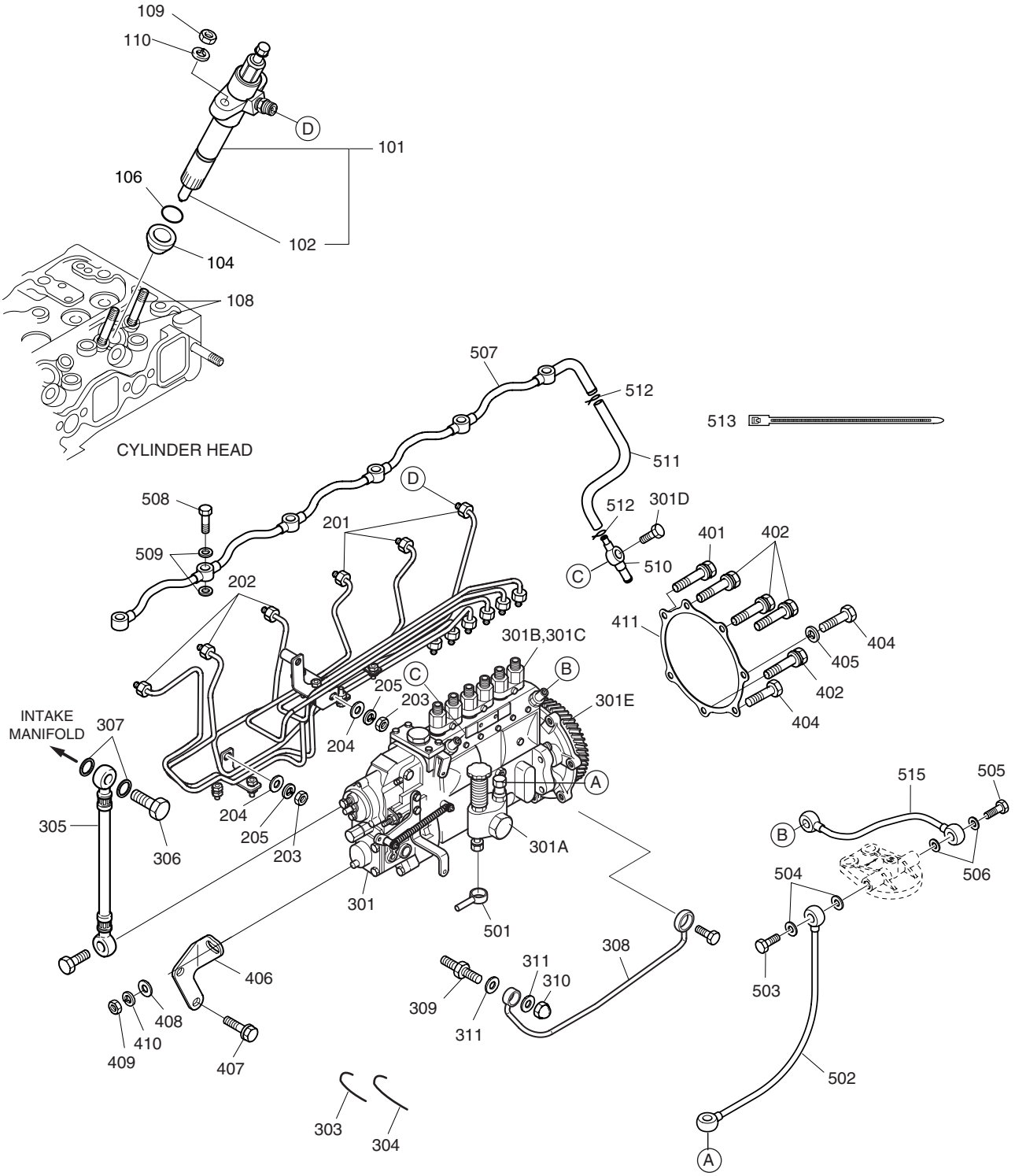

DATE	DEC. 15, 2006
REV. NO.	EXB06-13

Fig. 015 FUEL SYSTEM
INJECTEUR ET POMPE-INJECTEUR

Serial No. ;

Key No.	Part No.	Description	Description	Q'ty	S.C	Serial No.	ICA	Replaceable part	
								Part No.	Q'ty
015-311	06.56180-0714	RING;SEAL	BAGUE D'ETANCHEITE	2					
401	06.01913-3122	BOLT ASS'Y M8X55	BOULON A 6 PANS	1					
402	06.01913-3124	BOLT ASS'Y M8X65	BOULON A 6 PANS	4					
404	06.01283-7128	BOLT;HEX. M8X85	BOULON A 6 PANS	2					
405	06.16731-2107	WASHER;SPRING	RONDELLE	1					
406	65.11401-0002C	BRACKET;REAR	SUPPORT	1					
407	06.01953-3213	BOLT ASS'Y M10X1.25X20	BOULON A 6 PANS	2					
408	06.15010-2312	WASHER;PLAIN	RONDELLE	1					
409	06.11063-9215	NUT M10X1.25	ECROU	1					
410	06.16731-2108	WASHER;SPRING	RONDELLE	1					
411	65.11902A0001	GASKET;INJECTION PUMP	JOINT	1					
501	65.12301-5022	PIPE;FUEL	CANALISATION DE GAZOLE	1					
502	65.96341-0107	HOSE;FUEL	TUYAU A GAZOLE	1		~020913			
	65.96341-0100	HOSE;FUEL	TUYAU A GAZOLE	1		020914~			
503	06.78144-2204	SCREW;HOLLOW	VIS CREUSE	1					
504	65.96507-0043	RING;SEAL	BAGUE D'ETANCHEITE	2					
505	06.78144-2204	SCREW;HOLLOW	VIS CREUSE	1					
506	65.96507-0043	RING;SEAL	BAGUE D'ETANCHEITE	2					
507	65.12301-5824	PIPE;FUEL	CONDUITES	1					
508	65.98150-0015B	SCREW;HOLLOW	VIS CREUSE	6					
509	06.56180-0712	RING;SEAL A8X14	BAGUE D'ETANCHEITE	12					
510	65.12301-5825	PIPE;FUEL(RETURN)	CONDUITES	1					
511	65.96301-0176	HOSE;RUBBER	TUYAU FLEXIBLE	1					
512	65.97401-0089	CLIP	CLIP	2					
513	65.97460-0002	CABLE TIA	CABLE TIA	1					
515	65.96341-0080	HOSE;FUEL	TUYAU FLEXIBLE	1		~020913			
	65.96341-0100	HOSE;FUEL	TUYAU FLEXIBLE	1		020914~			

DATE	JUN. 30, 2005
REV. NO.	EXB05-05

Fig. 016 FUEL FILTER
FILTRE A GAZOLE

Serial No. ;

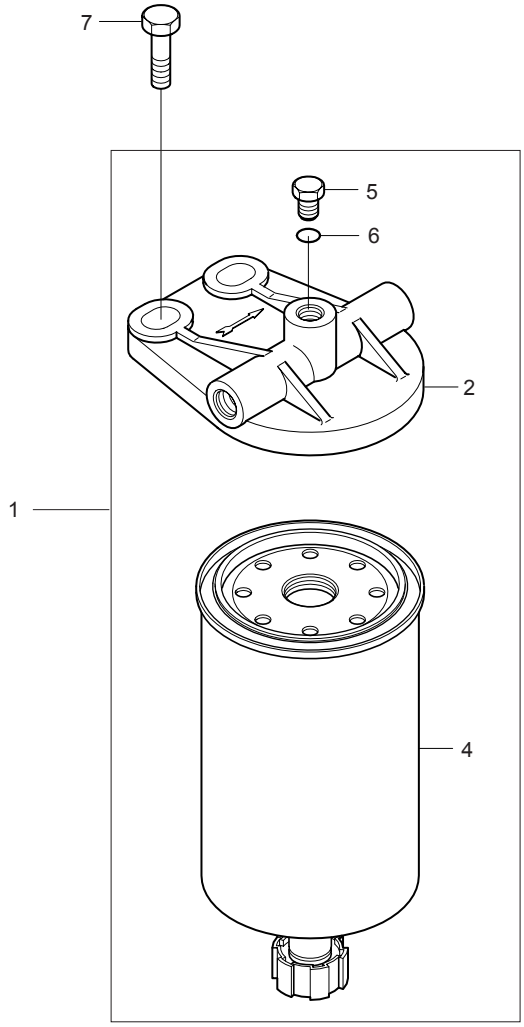

DATE	JUN. 30, 2005
REV. NO.	EXB05-05

Fig. 016 FUEL FILTER FILTRE A GAZOLE

Serial No ;

Key No.	Part No.	Description	Description	Q'ty	S.C	Serial No.	ICA	Replaceable part	
								Part No.	Q'ty
016-1	65.12501-7023	FUEL FILTER ASS'Y	FILTRE A GAZOLE	1		~050522	Y	65.12501-7023A	1
	65.12501-7023A	**FUEL FILTER ASS'Y**	FILTRE A GAZOLE	1		050523~			
2	65.12504-5013A	. HEAD;FUEL FILTER	. COUVERCLE	1		~050522	Y	65.12504-5013B	1
	65.12504-5013B	**. HEAD;FUEL FILTER**	. COUVERCLE	1		050523~			
4	65.12503-5016	. FILTER;FUEL	. ELEMENT FILTRE	1		~050522	Y	65.12503-5016A	1
	65.12503-5016A	**. FILTER;FUEL**	. ELEMENT FILTRE	1		050523~			
5	65.90310-0143	. SCREW;PLUG	. VIS	1					
6	06.56180-0716	. RING;SEAL	. BAGUE D'ETANCHEITE	1					
7	06.01953-3318	BOLT ASS'Y	BOULON A 6 PANS	2					

DATE	JUN. 30, 2006
REV. NO.	EXB06-08

Fig. 017 ALTERNATOR MOUNTING ALTERNATEUR

Serial No. ;

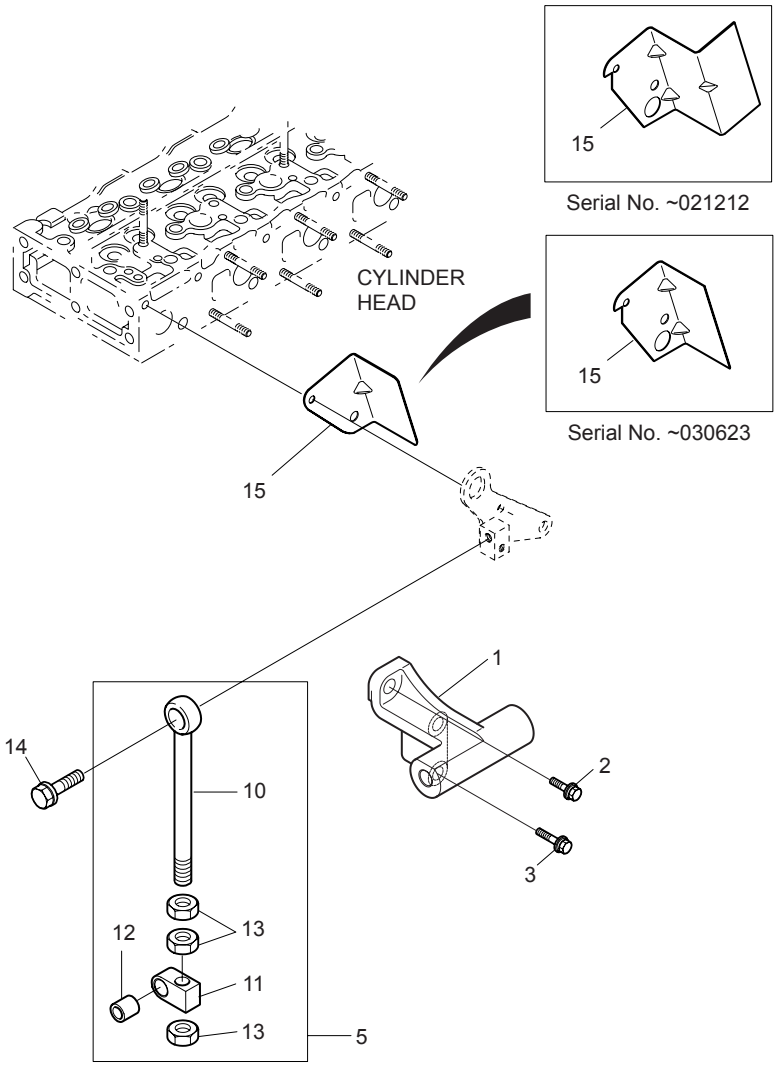

DATE	JUN. 30, 2006
REV. NO.	EXB06-08

Fig. 017 ALTERNATOR MOUNTING ALTERNATEUR

Serial No. ;

Key No.	Part No.	Description	Description	Q'ty	S.C	Serial No.	ICA	Replaceable part	
								Part No.	Q'ty
017-1	65.19102-0013B	BRACKET	SUPPORT	1					
2	06.01944-3215	BOLT ASS'Y M10X1.25X25	BOULON A 6 PANS	1					
3	06.01943-3218	BOLT ASS'Y M10X1.25X35	BOULON A 6 PANS	2					
5	65.19103-6010	EYE BOLT ASS'Y	BOULON A 6PANS	1		~060526	Y	65.19103-6010A	1
	65.19103-6010A	**EYE BOLT ASS'Y**	BOULON A 6PANS	1		060527~			
10	65.90441-0009A	. BOLT;EYE	. BOUCHON A VIS	1	D				
11	65.19107-0001	. PIPECE;GUIDE	. GUIDE	1	D	~060526			
	65.19107-0001A	**. PIPECE;GUIDE**	. GUIDE	1	D	060527~			
12	65.93020-0055	. BUSH	. AMPOULE	1	D				
13	06.11063-9217	. NUT;HEX.	. ECROU 6 PANS	3	D				
14	06.01943-3319	BOLT ASS'Y M12X1.5X40	BOULON 6 A PANS	1					
15	65.08120-0042A	SCREEN;HEAT	CRAN DE LA CHALEUR	1		~021212	Y	65.08120-0025	1
	65.08120-0025	SCREEN;HEAT	CRAN DE LA CHALEUR	1		~030623	Y	65.08120-0027	1
	65.08120-0027	SCREEN;HEAT	CRAN DE LA CHALEUR	1		030624~			

DATE	DEC. 15, 2006
REV. NO.	EXB06-13

Fig. 018 STARTER DEMARREUR

Serial No. ;

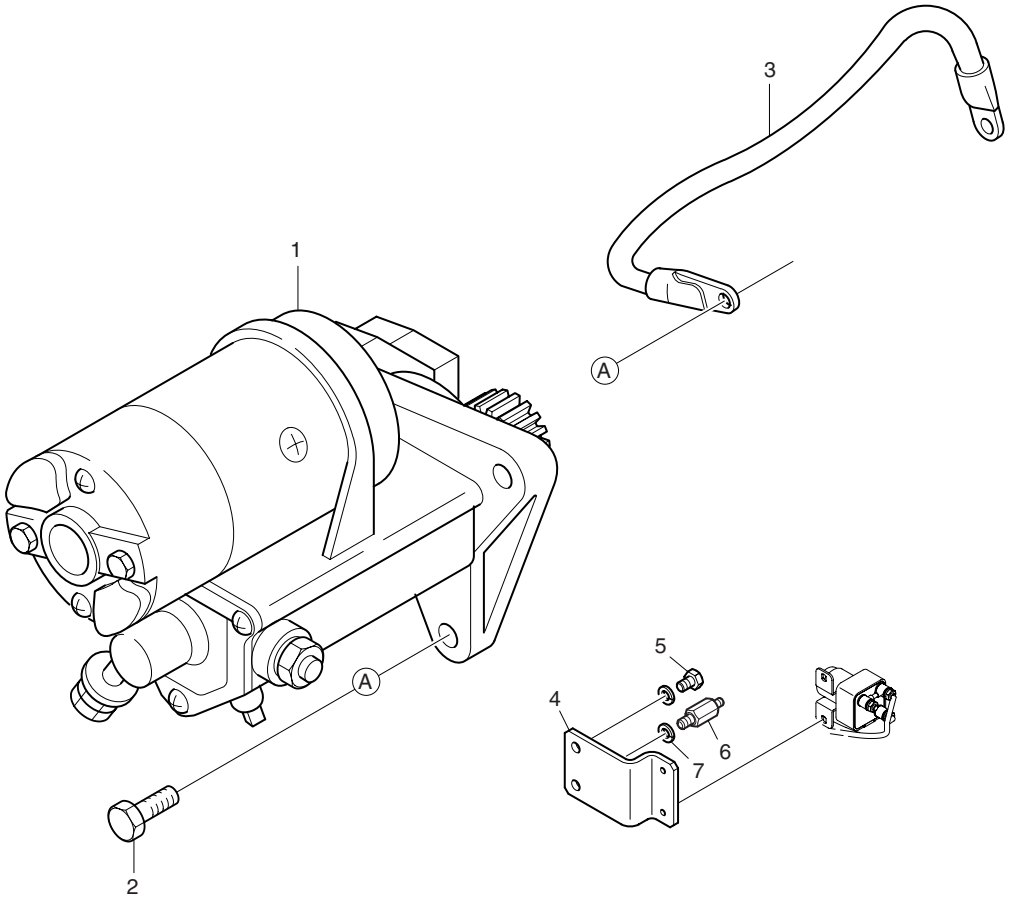

DATE	DEC. 15, 2006
REV. NO.	EXB06-13

Fig. 018 STARTER DEMARREUR

Serial No. ;

Key No.	Part No.	Description	Description	Q'ty	S.C	Serial No.	ICA	Replaceable part	
								Part No.	Q'ty
018-1	65.26201-7044	STARTER	DEMARREUR	1		~061014	Y	65.26201-7076	1
	65.26201-7076	**STARTER**	DEMARREUR	1		061015~			
2	06.01943-3318	BOLT ASS'Y M12X1.5X35	BOULON A 6 PANS	3					
3	65.29101-5001	WIRE;ELECTRIC	FIL	1					
4	**65.97480-0223**	**HOLDER**	POSSESSEUR	1		060927~			
5	**06.01943-3213**	**BOLT**	BOULON A 6 PANS	1		060927~			
6	**65.90201-0168**	**BOLT;STUD**	BOULON A 6 PANS	1		060927~			
7	**06.16731-2108**	**WASHER;SPRING**	RONDELLE ELASTIQUE	1		060927~			

DATE	DEC. 15, 2006
REV. NO.	EXB06-13

Fig. 019 OVER HAUL GASKET KIT-TOP PIECES DE RECHANGE

Serial No. ;

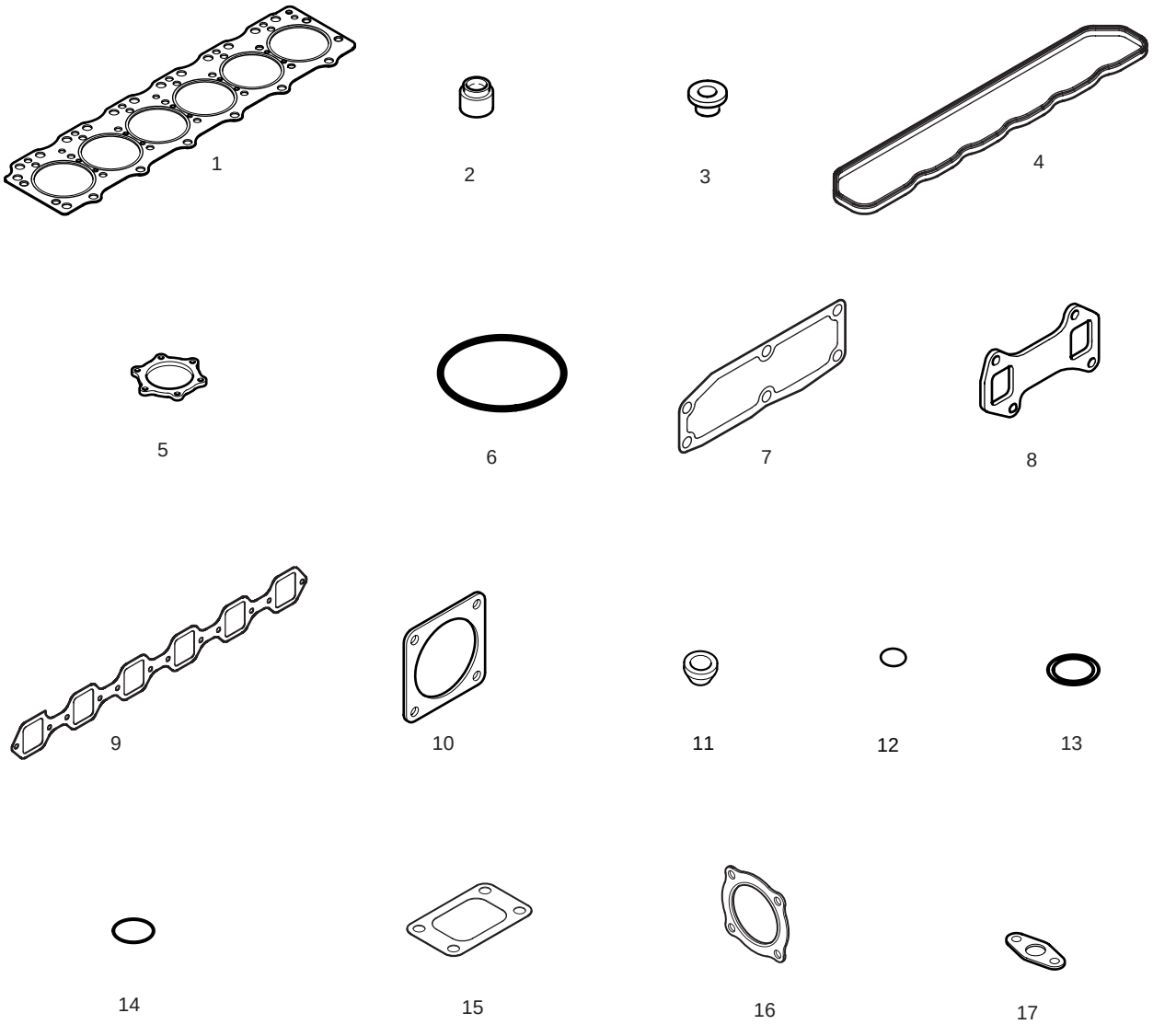

DATE	DEC. 15, 2006
REV. NO.	EXB06-13

Fig. 019 OVER HAUL GASKET KIT-TOP PIECES DE RECHANGE

Serial No. ;

Key No.	Part No.	Description	Description	Q'ty	S.C	Serial No.	ICA	Replaceable part	
								Part No.	Q'ty
019--	65.99605-8020	OVER HAUL GASKET KIT-TOP	JOINT	1					
1	65.03901-0066A	GASKET;CYLINDER HEAD	JOINT	1					
2	65.04902-0011A	SEAL;VALVE STEM	JOINT	12		~040616	I	65.04902-0015	12
	65.04902-0015	**SEAL;VALVE STEM**	JOINT	12		040617~			
3	65.03905-0023A	GASKET;CYLINDER HEAD COVER	JOINT	4					
4	65.03905-0002B	GASKET;CYLINDER HEAD COVER	JOINT	1					
5	65.03903-0001	PACKING;BREATHER PIPE	EMBALLAGE	1					
6	65.06904-0003	GASKET;THERMOSTAT	JOINT	1					
7	65.06904A0004	GASKET;THERMOSTAT HSG	JOINT	1					
8	65.08901-0028	GASKET;EXHAUST MANIFOLD	JOINT	3					
9	65.08902A0004	GASKET;INTAKE MANIFOLD	JOINT	1					
10	65.09904-0008	GASKET;AIR PIPE	JOINT	2					
11	65.96507-0044B	SEAL;RING	BAGUE D'ETANCHEITE	6					
12	65.96507-0050	SEAL;RING	BAGUE D'ETANCHEITE	6					
13	06.56180-0712	SEAL;RING	BAGUE D'ETANCHEITE	12					
14	65.96501-0032B	O-RING;BREATHER	JOINT TORIQUE	1					
15	65.09901-0018A	GASKET;TURBO	JOINT	1					
16	65.09901-0020	GASKET;TURBO	JOINT	1					
17	65.96601-0045A	GASKET;TURBO CHARGER OIL	JOINT	1		~060630	I	65.96601-0067	1
	65.96601-0067	**GASKET;TURBO CHARGER**	JOINT	1		060631~			

DATE	DEC. 15, 2006
REV. NO.	EXB06-13

Fig. 020 OVER HAUL GASKET KIT-ALL PIECES DE RECHANGE

Serial No. ;


1

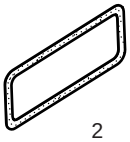
2

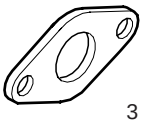
3


4

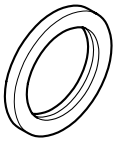
5


6

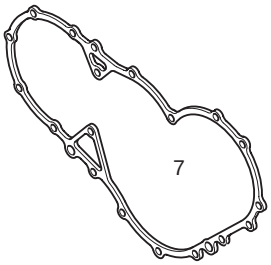
7

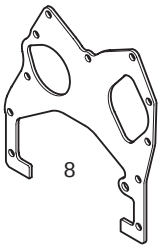
8

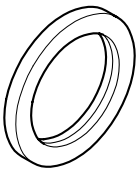
9

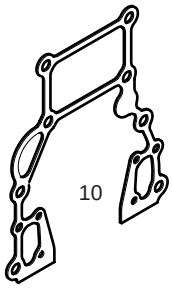
10

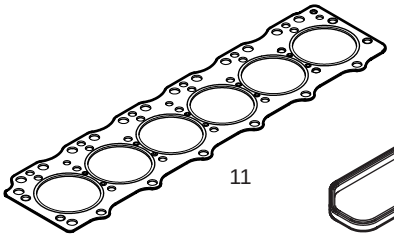
11

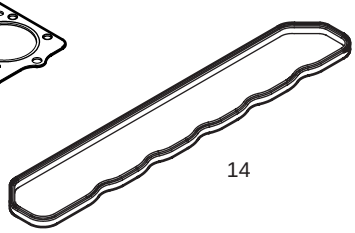
14


12


13


15


16

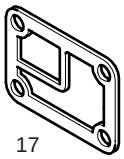
17

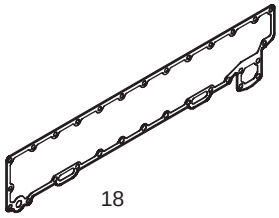
18


19

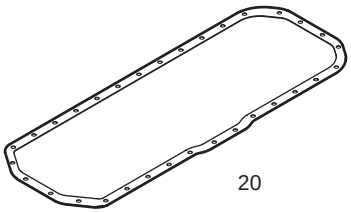
20


21

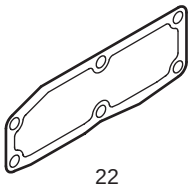
22

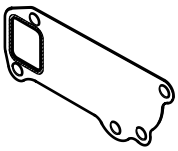
23


24

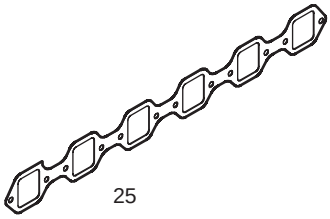
25

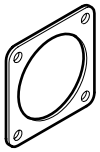
26


27


28

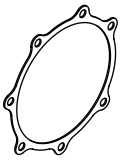
29


30


31


32

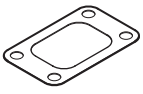
33


34


35

DATE	DEC. 15, 2006
REV. NO.	EXB06-13

Fig. 020 OVER HAUL GASKET KIT-ALL PIECES DE RECHANGE

Serial No. ;

Key No.	Part No.	Description	Description	Q'ty	S.C	Serial No.	ICA	Replaceable part	
								Part No.	Q'ty
020--	65.99601-8027	OVER HAUL GASKET KIT-ALL	JOINT	1					
1	06.56021-0106	O-RING;O/P DRIVE FLANGE	JOINT TORIQUE	1					
2	65.01901-0020	GASKET;PUSH ROD CHAMBER	JOINT	3					
3	65.05903A0013	GASKET;FLANGE	JOINT	1					
4	06.56021-0102	O-RING;RELIEF VALVE	JOINT TORIQUE	1					
5	65.01510-0001	SEAL;OIL(FRONT)	JOINT D'HUILE	1					
6	65.01903-0002C	GASKET	JOINT	2					
7	65.01903B0003	GASKET;TIMING GEAR CASE	JOINT	1					
8	65.01903B0004	GASKET;TIMING GEAR	JOINT	1					
9	65.01510-0101	SEAL;OIL(REAR)	JOINT D'HUILE	1					
10	65.01904-0021	GASKET;FLYWHEEL HOUSING	JOINT	1					
11	65.03901-0066A	GASKET;CYLINDER HEAD	JOINT	1					
12	65.04902-0011A	SEAL;VALVE STEM	JOINT	12		~040616	I	65.04902-0015	12
	65.04902-0015	**SEAL;VALVE STEM**	JOINT	12		040617~			
13	65.03905-0023A	GASKET;CYLINDER HEAD COVER	JOINT	4					
14	65.03905-0002B	GASKET;CYLINDER HEAD COVER	JOINT	1					
15	65.03903-0001	PACKING;BREATHER PIPE	EMBALLAGE	1					
16	65.05903A0002	GASKET;OIL PIPE(O/P=>BLOCK)	JOINT	2					
17	65.05901C0004	GASKET;OIL FILTER	JOINT	1					
18	65.05902A0005	GASKET;OIL COOLER	JOINT	1					
19	65.05903A0001	GASKET;OIL PIPE(O/F=>O/C)	JOINT	2					
20	65.05904A0002	GASKET;OIL PAN	JOINT	1					
21	65.06904-0003	GASKET;THERMOSTAT	JOINT	1					
22	65.06904A0004	GASKET;THERMOSTAT HSG	JOINT	1					
23	65.06901B0002	GASKET;WATER PUMP	JOINT	1					
24	65.08901-0028	GASKET;EXHAUST MANIFOLD	JOINT	3					
25	65.08902A0004	GASKET;INTAKE MANIFOLD	JOINT	1					
26	65.09904-0008	GASKET;AIR PIPE	JOINT	2					
27	65.96507-0044B	SEAL;RING	BAGUE D'ETANCHEITE	6					
28	65.96507-0050	SEAL;RING	BAGUE D'ETANCHEITE	6					
29	65.11902A0001	GASKET;INJECTION PUMP	JOINT	1					
30	06.56180-0712	SEAL;RING	BAGUE D'ETANCHEITE	12					
31	65.96507-0007	PACKING;PUSH ROD CHAMBER	EMBALLAGE	6					
32	65.96501-0032B	O-RING;BREATHER	JOINT TORIQUE	1					
33	65.09901-0018A	GASKET;TURBO	JOINT	1					
34	65.09901-0020	GASKET;TURBO	JOINT	1					
35	65.96601-0045A	GASKET;TURBO CHARGER OIL	JOINT	1		~060630	I	65.96601-0067	1
	65.96601-0067	**GASKET;TURBO CHARGER**	JOINT	1		060631~			

DATE	DEC. 29, 2005
REV. NO.	EXB05-20

Fig. 1100 MAIN FRAME
BATI PRINCIPAL

Serial No. ;

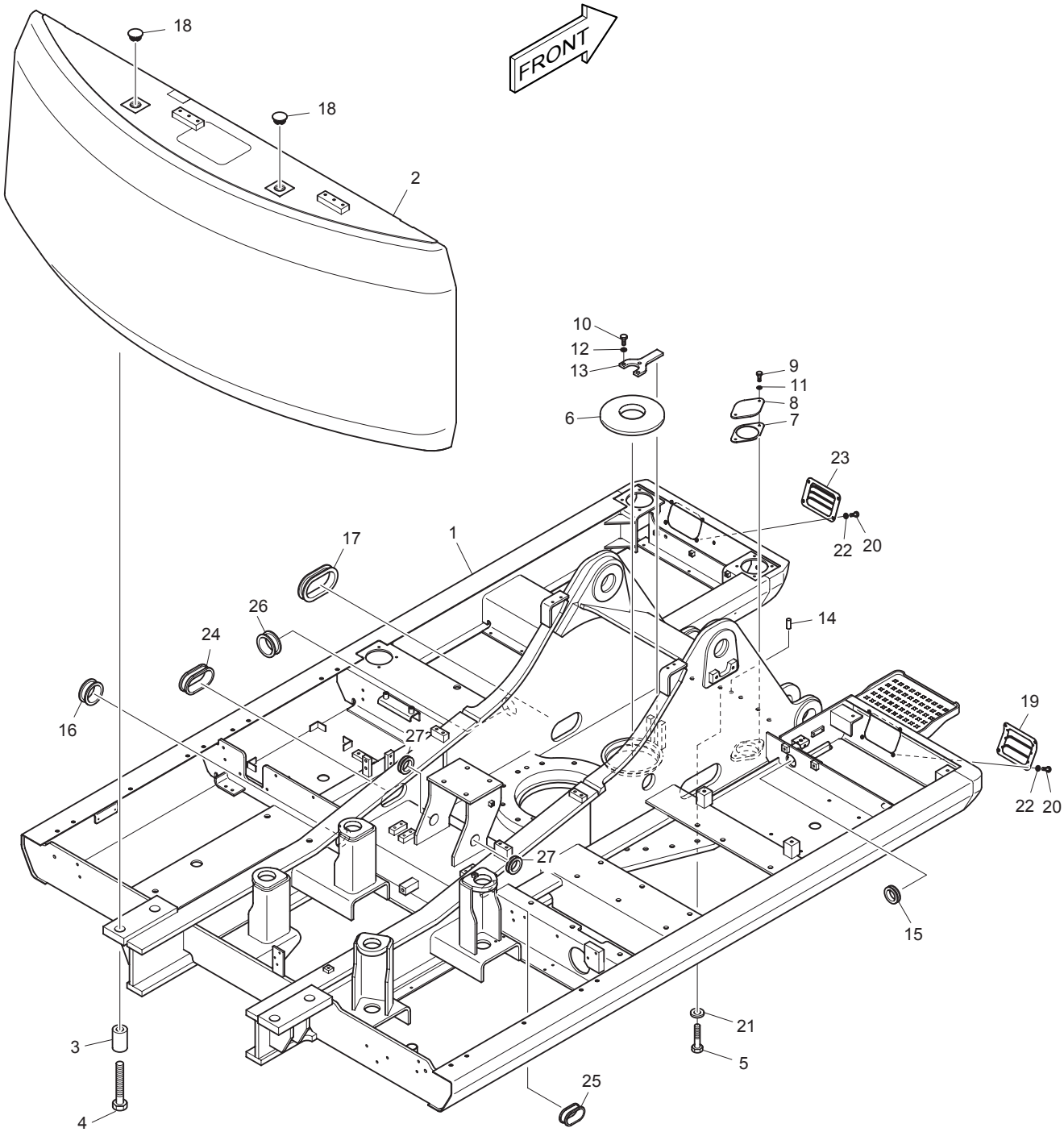

DATE	DEC. 29, 2005
REV. NO.	EXB05-20

Fig. 1100 MAIN FRAME BATI PRINCIPAL

Serial No ;

Key No.	Part No.	Description	Description	Q'ty	S.C	Serial No.	ICA	Replaceable part	
								Part No.	Q'ty
1100--	600-00119	FRAME ASS'Y	ARMATURE	-	D	1001–2037			
	600-00119A	**FRAME ASS'Y**	ARMATURE	-	D	**2038–2169**			
	600-00119B	**FRAME ASS'Y**	ARMATURE	-	D	**2170–**			
1	603-00226C	FRAME;MAIN	ARMATURE PRINCIPALE	1		1001–1031	I	603-00226E	1
	603-00226E	FRAME;MAIN	ARMATURE PRINCIPALE	1		1032–2169	I	603-00226G	1
	603-00226G	**FRAME;MAIN**	ARMATURE PRINCIPALE	1		**2170–**			
2	624-00038B	WEIGHT;COUNTER	MASSE D'EQUILIBRAGE	1		1001–1967	I	624-00038C	1
	624-00038C	WEIGHT;COUNTER	MASSE D'EQUILIBRAGE	1		1968–2037	I	624-00038E	1
	624-00038E	**WEIGHT;COUNTER**	MASSE D'EQUILIBRAGE	1		**2038–**			
3	2114-1817	SPACER	BAGUE	4					
4	2120-2137	BOLT M30X3.0X240	BOULON A 6PANS	4		1001–1267	I	2120-2137A	4
	2120-2137A	BOLT M30X3.0X240	BOULON A 6PANS	4		1268–			
5	S0571261	BOLT M20X2.5X120	BOULON A 6PANS	36		1001–1267	I	S0571266	36
	S0571266	BOLT M20X2.5X120	BOULON A 6PANS	36		1268–			
6	2160-9010	COVER;RUBBER	COUVERCLE	1					
7	2180-1017A	PACKING	RONDELLE ETANCHE	1					
8	2403-1002	COVER	COUVERCLE	1					
9	S0511853	BOLT M10X1.5X20	BOULON A 6PANS	2					
10	S0515053	BOLT M12X1.75X25	BOULON A 6PANS	3					
11	S5102603	WASHER;SPRING M10	RONDELLE ELASTIQUE	2					
12	S5102703	WASHER;SPRING M12	RONDELLE ELASTIQUE	3					
13	2195-2534C	BRACKET	SUPPORT	1					
14	2123-1107D4	PIN;DOWEL (SWING BEARING)	BROCHE	2					
15	2160-1004D34	BUSHING;RUBBER	DOUILLE EN CAOUTCHOUC	1					
16	2160-1004D39	BUSHING;RUBBER	DOUILLE EN CAOUTCHOUC	1					
17	2160-1201D11	BUSHING;RUBBER	DOUILLE EN CAOUTCHOUC	1					
18	2160-9034	CAP M48X5.0	CHAPEAU	2					
19	621-01527A	COVER;LAMP	COUVERCLE	1					
20	S0508853	BOLT M8X1.25X20	BOULON A 6PANS	8					
21	2114-9012A	WASHER;HARD	RONDELLE	36					
22	S5010513	WASHER;PLAIN M8	RONDELLE	8					
23	621-01579A	COVER;LAMP	COUVERCLE	1					
24	2160-1201D26	BUSHING;RUBBER	DOUILLE EN CAOUTCHOUC	1		1001–1221	I	DS7601022	1
	DS7601022	BUSHING;RUBBER	DOUILLE EN CAOUTCHOUC	1		1222–			
25	2160-1201D27	BUSHING;RUBBER	DOUILLE EN CAOUTCHOUC	1					
26	2160-1201D12	BUSHING;RUBBER	DOUILLE EN CAOUTCHOUC	1					
27	2160-1004D55	BUSHING;RUBBER	DOUILLE EN CAOUTCHOUC	2					

DATE	DEC. 29, 2006
REV. NO.	EXB05-20

Fig. 1110 ENGINE MOUNTING MOTEUR

Serial No. ;

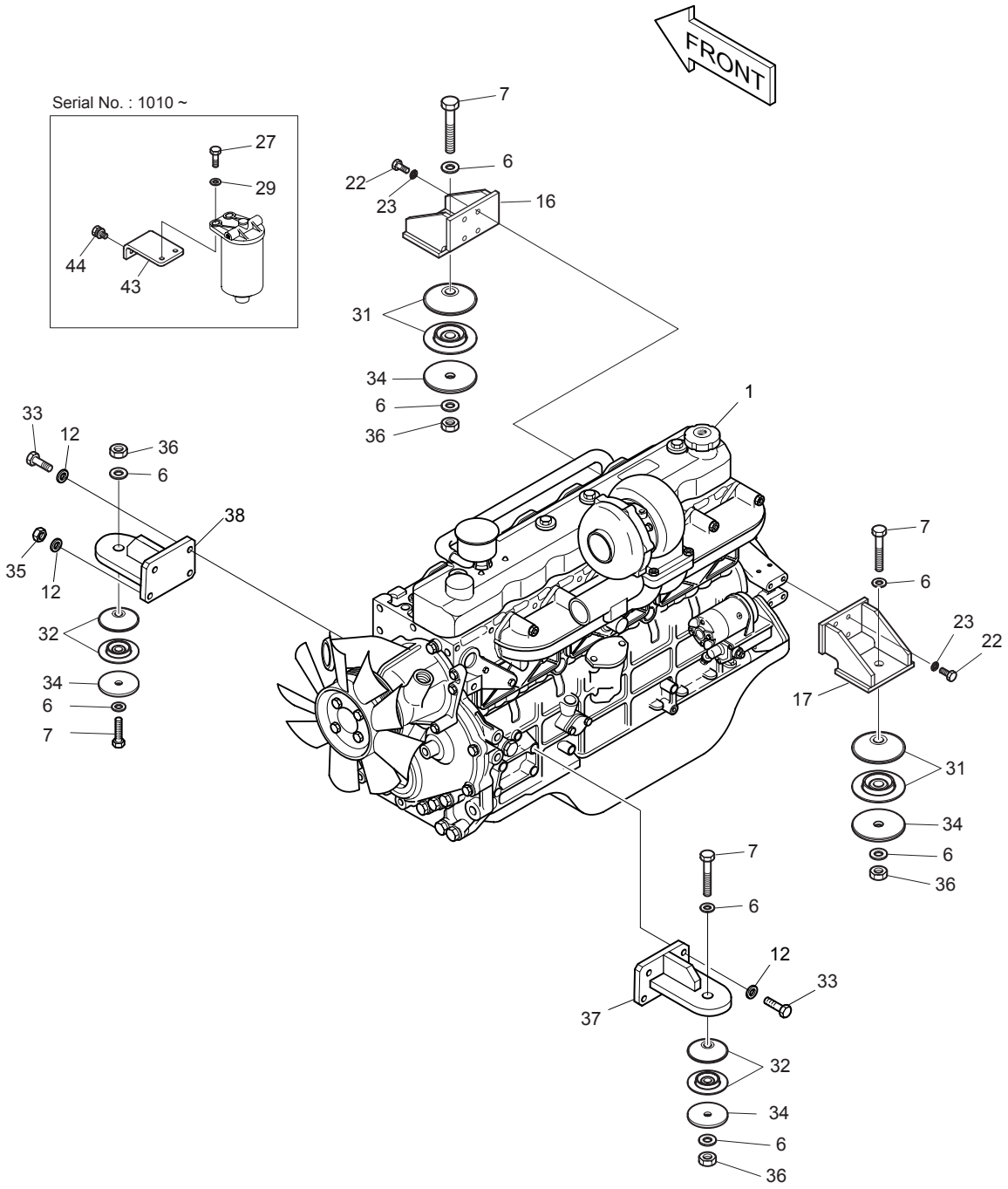

DATE	DEC. 29, 2005
REV. NO.	EXB05-20

Fig. 1110 ENGINE MOUNTING MOTEUR

Serial No ;

Key No.	Part No.	Description	Description	Q'ty	S.C	Serial No.	ICA	Replaceable part	
								Part No.	Q'ty
1110--	201-00111B	ENGINE ASS'Y	MOTEUR	-	D	1001–1986			
	201-00111C	ENGINE ASS'Y	MOTEUR	-	D	1987–			
1	201-00012	ENGINE(DB58TIS)	MOTEUR	1					
6	2114-9012A	WASHER;HARD	RONDELLE	8					
7	S0771466	BOLT M20X1.5X130	BOULON	4					
12	S5102603	WASHER;SPRING M10	RONDELLE ELASTIQUE	8					
16	195-01925	BRACKET;ENGINE MOUNTING	SUPPORT	1					
17	195-01924	BRACKET;ENGINE MOUNTING	SUPPORT	1					
22	S0786253	BOLT M12X1.5X30	BOULON A 6PANS	8					
23	S5102703	WASHER;SPRING M12	RONDELLE ELASTIQUE	8					
27	S0515353	BOLT M12X1.75X35	BOULON A 6PANS	2		1010–			
29	S5010713	WASHER;PALIN	RONDELLE ELASTIQUE	2		1010–			
31	2161-9066	RUBBER;E/G MOUNTING	CAOUTCHOUC	4		1001–2236	I	161-00548	4
	161-00548	**RUBBER;E/G MOUNTING**	CAOUTCHOUC	4		**2237**–			
32	4161-9067	RUBBER;E/G MOUNTING	CAOUTCHOUC	4		1001–2349	I	161-00550	4
	161-00550	**RUBBER;E/G MOUNTING**	CAOUTCHOUC	4		**2350**–			
33	S0712253	BOLT M10X1.25X30	BOULON A 6PANS	7					
34	2114-1929	WASHER;BUMP	RONDELLE PLATE	4					
35	S4032633	NUT M10X1.25	ECROU	1					
36	121-00066	NUT;LOCK M20X1.5	ECROU	4					
37	195-01926	BRACKET;ENGINE MOUNTING	SUPPORT	1					
38	195-01927	BRACKET;ENGINE MOUNTING	SUPPORT	1					
43	195-02465	BRACKET	SUPPORT	1		1010–			
44	2120-2196D9	BOLT;SET	BOULON A 6PANS	2		1010–			

DATE	JUN. 30, 2005
REV. NO.	EXB05-05

Fig. 1120 RADIATOR RADIATEUR

Serial No. ;

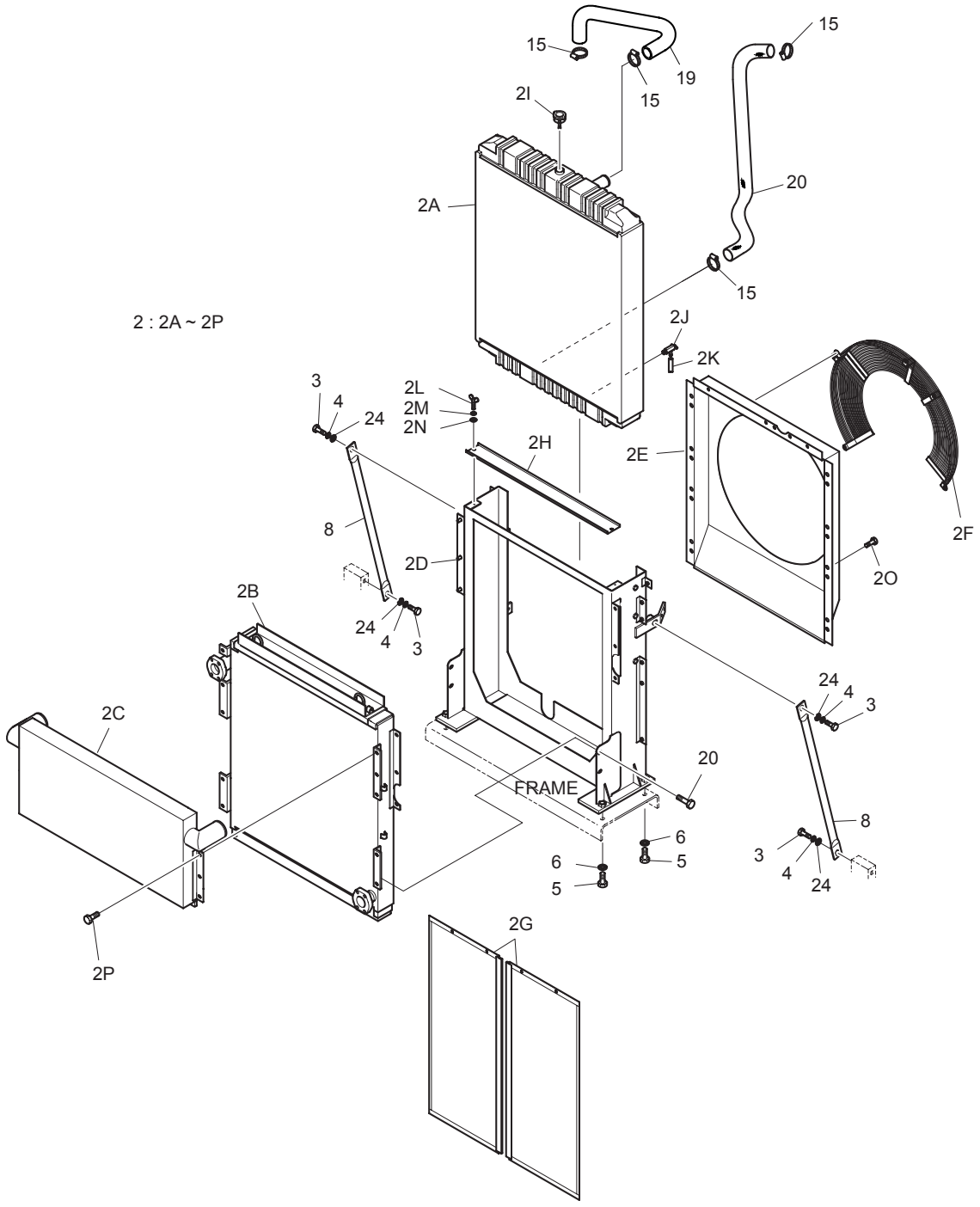

DATE	JUN. 30, 2005
REV. NO.	EXB05-05

Fig. 1120 RADIATOR RADIATEUR

Serial No ;

Key No.	Part No.	Description	Description	Q'ty	S.C	Serial No.	ICA	Replaceable part	
								Part No.	Q'ty
1120--	201-00111B	ENGINE ASS'Y	MOTEUR	-	D	1001–1986			
	201-00111C	**ENGINE ASS'Y**	MOTEUR	-	D	**1987–**			
2	202-00022B	RADIATOR ASS'Y	RADIATEUR	1		1001–1214	I	202-00022C	1
	202-00022C	RADIATOR ASS'Y	RADIATEUR	1		1215–			
2A	13G21000	. RADIATOR	. RADIATEUR	1					
2B	13G22000	. OIL COOLER ASS'Y	. REFROIDISSEUR HUILE	1					
2C	13G23000	. C/H AIR COOLER ASS'Y	. REFROIDISSEUR HUILE	1					
2D	13G24000	. FRAME ASS'Y	. ARMATURE	1					
2E	13G25000	. SHROUD ASS'Y	. ARITER	1					
2F	13G26000	. FAN GUARD ASS'Y	. ABRITER	1					
2G	13G27000	. WIRE NET ASS'Y	. CABLE	2					
2H	13G28000	. PLATE	. PLAQUE	1					
2I	P06A	. CAP ASS'Y	. CHAPEAU	1					
2J	P04	. DRAIN COCK ASS'Y	. ROBINET	1					
2K	P03	. HOSE;DRAIN	. TUYAU FLEXIBLE	1					
2L	P1106	. BOLT;WING	. BOULON A 6PANS	6					
2M	P1306	. WASHER;PLAIN M6	. RONDELLE	6					
2N	P1406	. WASHER;SPRING M6	. RONDELLE ELASTIQUE	6					
2O	P1110A	. BOLT M10X1.25X20	. BOULON A 6PANS	20					
2P	P1110B	. BOLT M10X1.25X25	. BOULON A 6PANS	18					
3	S0521466	BOLT M16X2.0X40	BOULON	4					
4	S5102903	WASHER;SPRING M16	RONDELLE ELASTIQUE	4					
5	S0569866	BOLT M20X2.5X50	BOULON	4					
6	2114-9012A	WASHER;HARDEN	RONDELLE	4					
8	145-00004A	STAY	ENTRETOISE	2					
15	S8470075	CLAMP;HOSE	FIXATION DE TUYAU	4					
19	185-00282A	HOSE;WATER	TUYAU FLEXIBLE	1					
20	185-00325B	HOSE;WATER	TUYAU FLEXIBLE	1					
24	S5010913	WASHER;PLAIN M16	RONDELLE PLATE	4					

DATE	JUN. 30, 2005
REV. NO.	EXB05-05

Fig. 1130 RESERVE TANK RESEVOIR

Serial No. ;

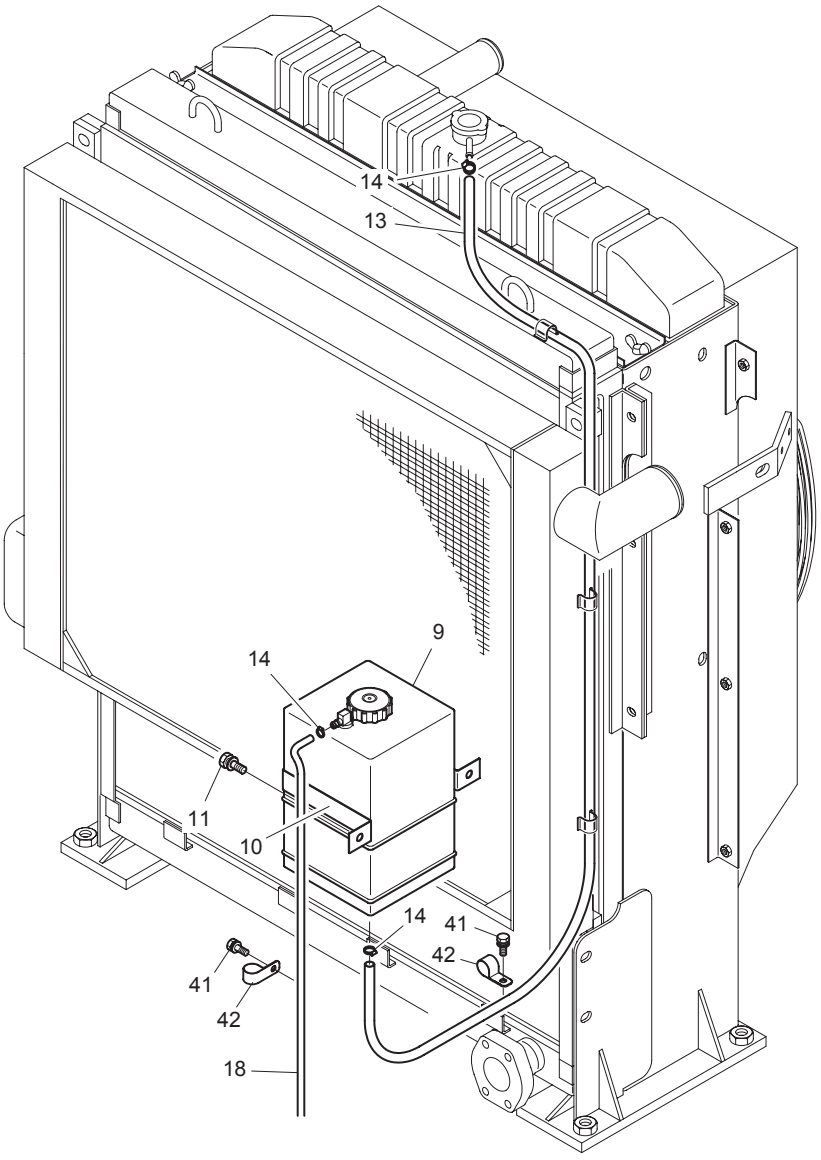

DATE	JUN. 30, 2005
REV. NO.	EXB05-05

Fig. 1130 RESERVE TANK RESEVOIR

Serial No ;

Key No.	Part No.	Description	Description	Q'ty	S.C	Serial No.	ICA	Replaceable part	
								Part No.	Q'ty
1130--	201-00111B	ENGINE ASS'Y	MOTEUR	-	D	1001–1986			
	201-00111C	**ENGINE ASS'Y**	MOTEUR	-	D	**1987–**			
9	2470-9016	TANK;RESERVE	RESERVOIR	1		1001–1914	I	K1003180	1
	K1003180	**TANK;RESERVE**	RESERVOIR	1		**1915–**			
10	2124-1244	CLAMP	ATTACHE DE TUYAU	1					
11	2120-2196D1	BOLT;SET M10X1.5X20	BOULON A 6PANS	2					
13	185-00280	HOSE;WATER	TUYAU FLEXIBLE	1					
14	S8470014	CLAMP;HOSE	FIXATION DE TUYAU	3					
18	185-00320	HOSE;WATER	TUYAU FLEXIBLE	1					
41	120-00276	BOLT M8X1.25X12	BOULON	2					
42	124-00208D2	CLIP	CLIP	2					

DATE	JUN. 30, 2005
REV. NO.	EXB05-05

Fig. 1140 MUFFLER SILENCIEUX

Serial No. ;

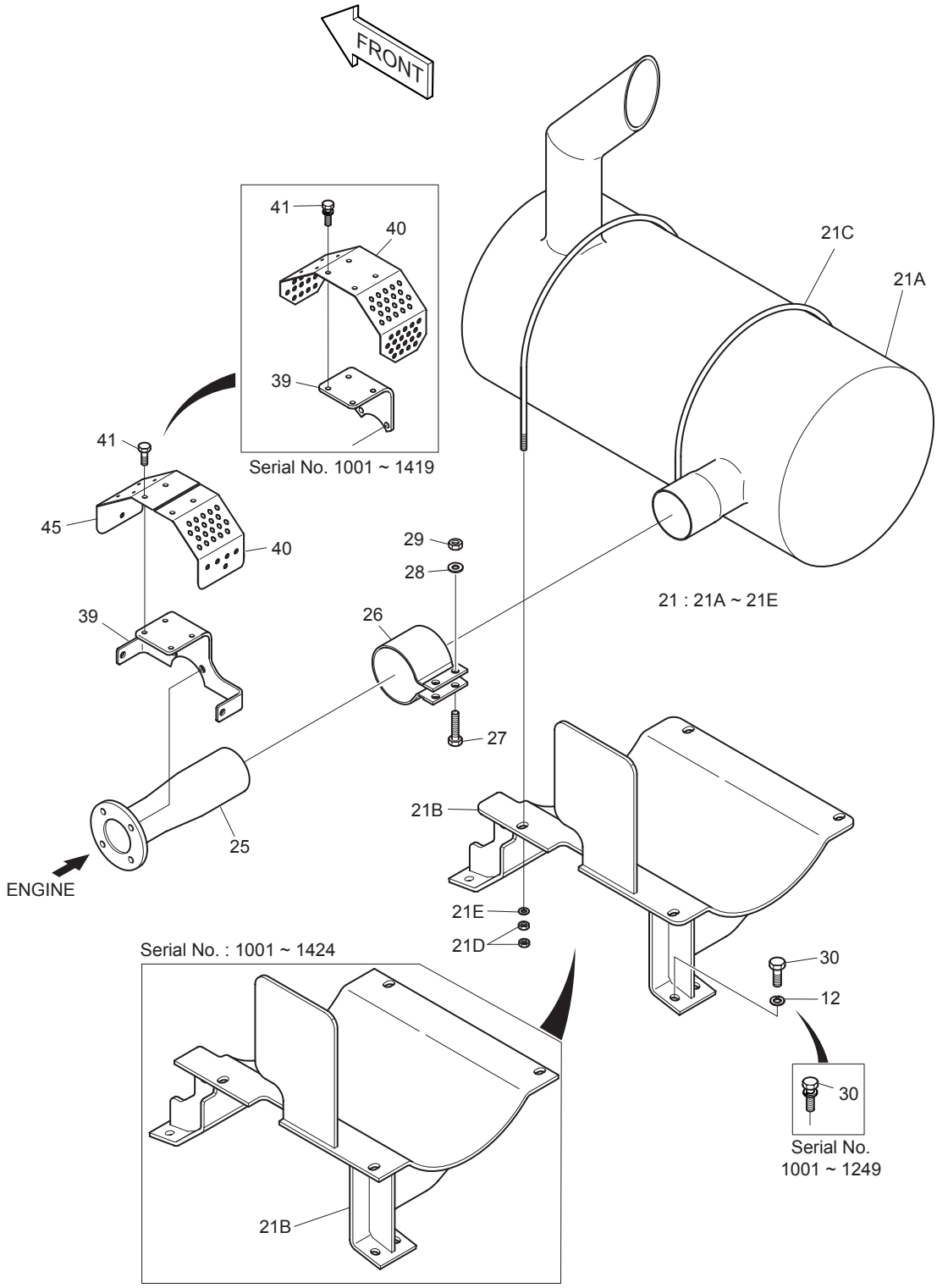

DATE	JUN. 30, 2005
REV. NO.	EXB05-05

Fig. 1140 MUFFLER SILENCIEUX

Serial No ;

Key No.	Part No.	Description	Description	Q'ty	S.C	Serial No.	ICA	Replaceable part	
								Part No.	Q'ty
1140--	201-00111B	ENGINE ASS'Y	MOTEUR	-	D	1001–1986			
	201-00111C	**ENGINE ASS'Y**	MOTEUR	-	D	**1987**–			
12	S5102603	WASHER;SPRING	RONDELLE ELASTIQUE	4		1250–			
21	203-00067B	MUFFLER SUB ASS'Y	SILENCIEUX	1		1001–1115	I	203-00067C	1
	203-00067C	MUFFLER SUB ASS'Y	SILENCIEUX	1		1116–1424	I	203-00067E	1
	203-00067E	MUFFLER SUB ASS'Y	SILENCIEUX	1		1425–			
21A	203-00068A	. MUFFLER	. SILENCIEUX	1					
21B	195-01965B	. BRACKET;MUFFLER	. SUPPORT	1		1001–1424	I	195-01965C	1
	195-01965C	. BRACKET;MUFFLER	. SUPPORT	1		1425–			
21C	2120-2135	. BOLT;U	. BOULON U	2		1001–1115	I	2120-2135A	2
	2120-2135A	. BOLT;U	. BOULON U	2		1116–			
21D	S4012633	. NUT M12X1.75	. ECROU	8					
21E	S5010613	. WASHER;PLAIN M10	. RONDELLE PLATE	4					
25	2182-1573B	PIPE;EXHAUST	TUBULURE	1		1001–1986	I	2182-1573C	1
	2182-1573C	**PIPE;EXHAUST**	TUBULURE	1		**1987**–			
26	2124-1592A	CLAMP	ATTACHE DE TUYAU	1					
27	S0515353	BOLT M12X1.75X35	BOULON A 6PANS	2					
28	S4012733	NUT M12X1.75	ECROU	2					
29	S5010713	WASHER;PLAIN M12	RONDELLE	2					
30	2120-2196D2	BOLT;SET M10X1.5X25	BOULON	4		1001–1249			
	S0512053	BOLT M10X1.5X25	BOULON	4		1250–			
39	195-02188	BRACKET	SUPPORT	1		1001–1419			
	195-02320	BRACKET	SUPPORT	1		1420–			
40	621-02266	COVER	COUVERCLE	1		1001–1419			
	621-02363	COVER	COUVERCLE	1		1420–			
41	120-00276	BOLT;SET M8X1.25X12	BOULON	4		1001–1419			
	120-00276	BOLT;SET M8X1.25X12	BOULON	6		1420–			
45	621-02364	COVER	COUVER	1		1420–			

DATE	AUG. 12, 2002
1st EDITION	

Fig. 1150 CAC PIPING
CHARGEE DE REFROIDISSEUR D'CAIR

Serial No. ;

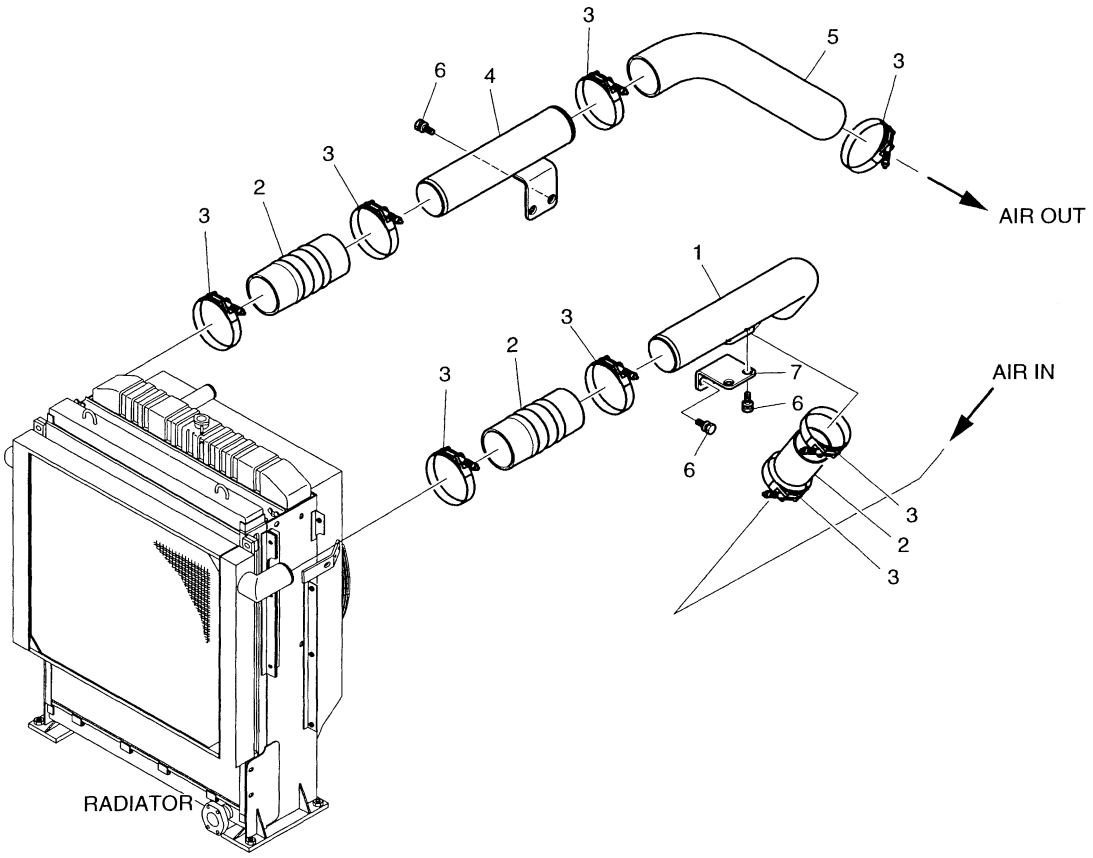

DATE	AUG. 12, 2002
1st EDITION	

Fig. 1150 CAC PIPING
CHARGEE DE REFROIDISSEUR D'CAIR

Serial No. ;

Key No.	Part No.	Description	Description	Q'ty	S.C	Serial No.	ICA	Replaceable part	
								Part No.	Q'ty
1150--	400-00980B	CAC PIPING ASS'Y	CHARGEE DE	-	D				
1	193-00719A	PIPE;CAC	CONDUITES	1					
2	185-00245A	HOSE;CAC	TUYAU FLEXIBLE	3					
3	124-00194	CLAMP	COLLIER	8					
4	140-01223A	PIPE;CAC	CONDUITES	1					
5	185-00326	HOSE;CAC	TUYAU FLEXIBLE	1					
6	2120-2196D5	BOLT;SET M10X1.5X20	BOULON A 6PANS	6					
7	195-02190	BRACKET	SUPPORT	1					

DATE	JUN. 30, 2004
REV. NO.	EXB04-04

Fig. 1160 AIR CLEANER ASS'Y
ENSEMBLE FILTRE A AIR

Serial No. ;

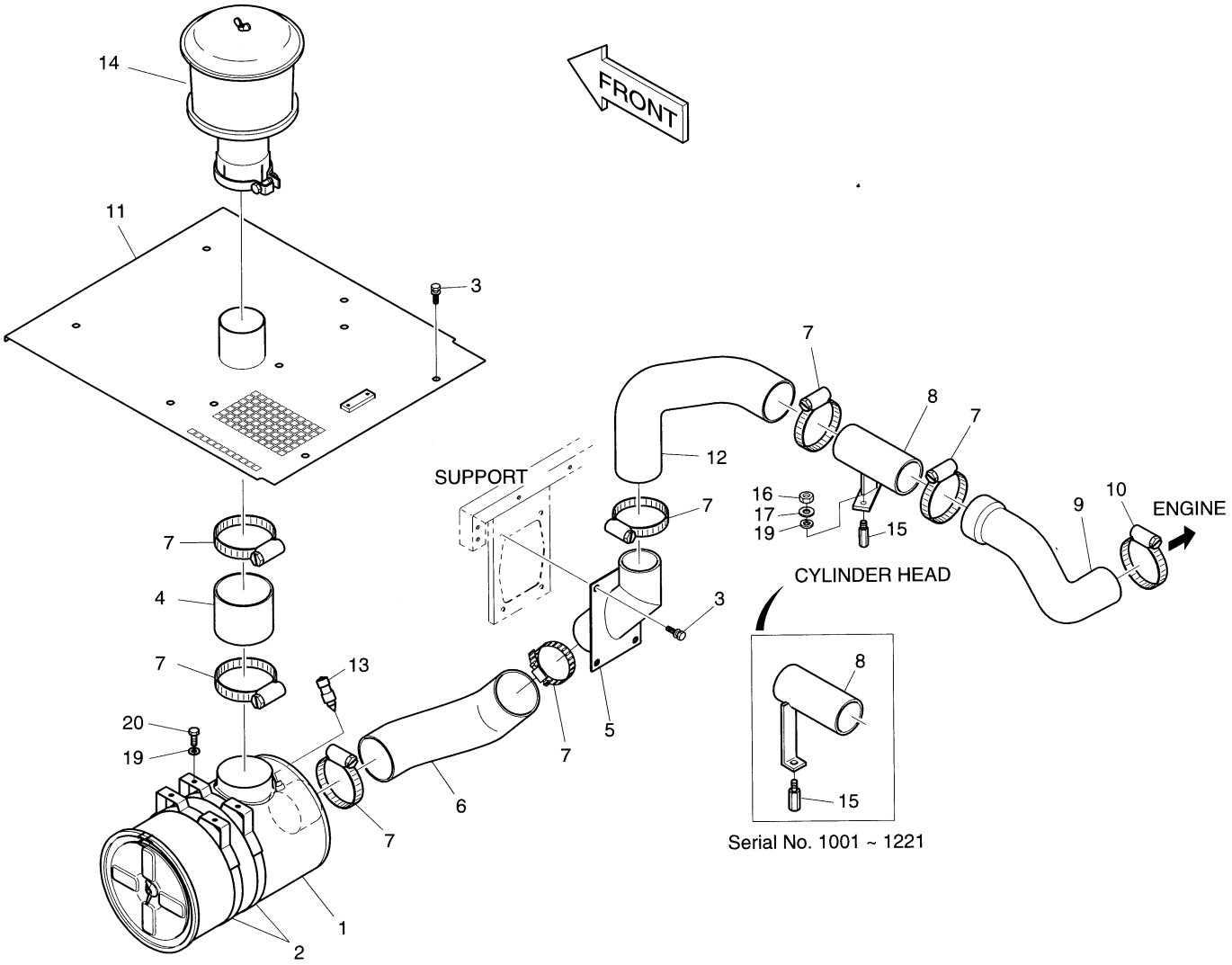

DATE	JUN. 30, 2004
REV. NO.	EXB04-04

Fig. 1160 AIR CLEANER ASS'Y ENSEMBLE FILTRE A AIR

Serial No ;

Key No.	Part No.	Description	Description	Q'ty	S.C	Serial No.	ICA	Replaceable part	
								Part No.	Q'ty
1160--	204-00049B	AIR CLEANER ASS'Y	ENSEMBLE FILTRE A AIR	-	D				
1	2204-9039A	CLEANER;AIR	FILTRE A AIR	1					
2	2124-1593A	BAND;AIR CLEANER	ATTACHE DE TUYAU	2					
3	2120-2196D9	BOLT;SET M12X1.75X25	BOULON	8					
4	2185-1724	HOSE;AIR	TUYAU FLEXIBLE	1					
5	193-00682B	PIPE;AIR	TUYAU	1					
6	185-00284	HOSE;AIR	TUYAU FLEXIBLE	1					
7	S8510118	CLAMP;HOSE	FIXATION DE TUYAU	7					
8	193-00697A	PIPE;AIR	TUYAU	1		1001–1221			
	193-00813	**PIPE;AIR**	TUYAU	1		**1222–**			
9	2185-1671A	HOSE;AIR	TUYAU FLEXIBLE	1					
10	S8510092	CLAMP;HOSE	FIXATION DE TUYAU	1					
11	621-01893B	COVER	COUVERCLE	1		1001–1054	I	621-01893C	1
	621-01893C	COVER	COUVERCLE	1		1055–			
12	185-00307	HOSE;AIR	TUYAU FLEXIBLE	1					
13	170-00004	INDICATOR	INDICATEUR	1					
14	2204-9014A	PRE CLEANER	PRE-FILTRE A AIR	1					
15	2120-2165	BOLT	BOULON A 6PANS	1		1001–1221			
	2120-2165	**BOLT**	BOULON A 6PANS	2		**1222–**			
16	S4012633	NUT M10X1.5	ECROU	1		1001–1221			
	S4012633	**NUT M10X1.5**	ECROU	2		**1222–**			
17	S5102603	WASHER;SPRING M10	RONDELLE ELASTIQUE	1		1001–1221			
	S5102603	**WASHER;SPRING M10**	RONDELLE ELASTIQUE	2		**1222–**			
19	S5010613	WASHER;PLAIN M10	RONDELLE PLATE	5		1001–1221			
	S5010613	**WASHER;PLAIN M10**	RONDELLE PLATE	6		**1222–**			
20	S0512053	BOLT M10X1.5X25	BOULON A 6PANS	4					

DATE	JUL. 30, 2003
REV. NO.	EXB03-13

Fig. 1165 AIR CLEANER FILTRE A AIR

Serial No. ;

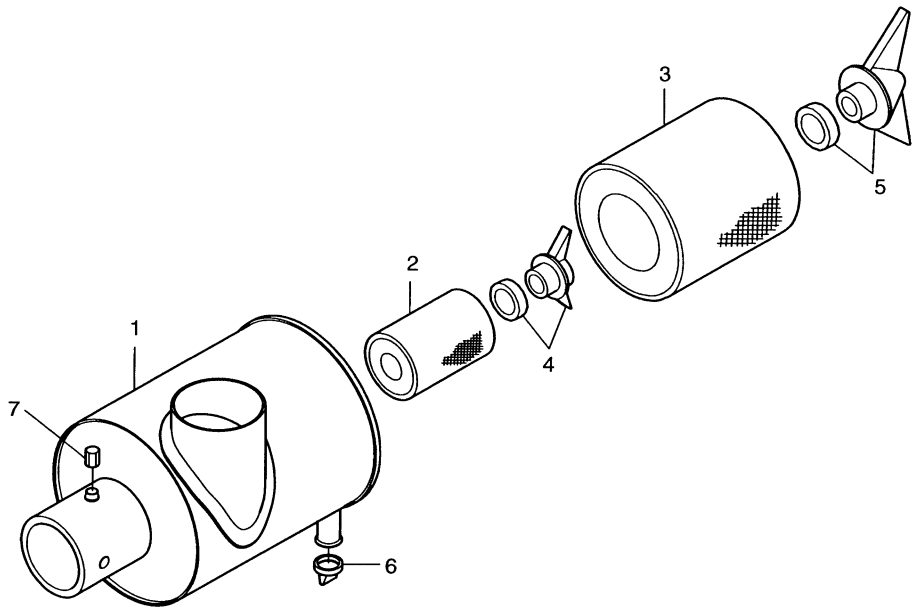

DATE	JUL. 30, 2003
REV. NO.	EXB03-13

Fig. 1165 AIR CLEANER FILTRE A AIR

Serial No ;

Key No.	Part No.	Description	Description	Q'ty	S.C	Serial No.	ICA	Replaceable part	
								Part No.	Q'ty
1165--	2204-9039A	AIR CLEANER	FILTRE A AIR	1					
1	-	BODY	CARTER	1	D				
2	2474-9054A	ELEMENT;INNER	ELEMENT	1					
3	2474-9053A	ELEMENT;OUTER	ELEMENT	1					
4	121-00076	NUT;WING(INNER)	ECROU	1					
5	121-00077	NUT;WING(OUTER)	ECROU	1					
6	2422-6021	VALVE;VACUATOR	VANNE	1					
7	-	ADAPTER	ADAPTEUR	1	D				

DATE	JUN. 30, 2004
REV. NO.	EXB04-04

Fig. 1170 PUMP MOUNTING
POMPE

Serial No. ;

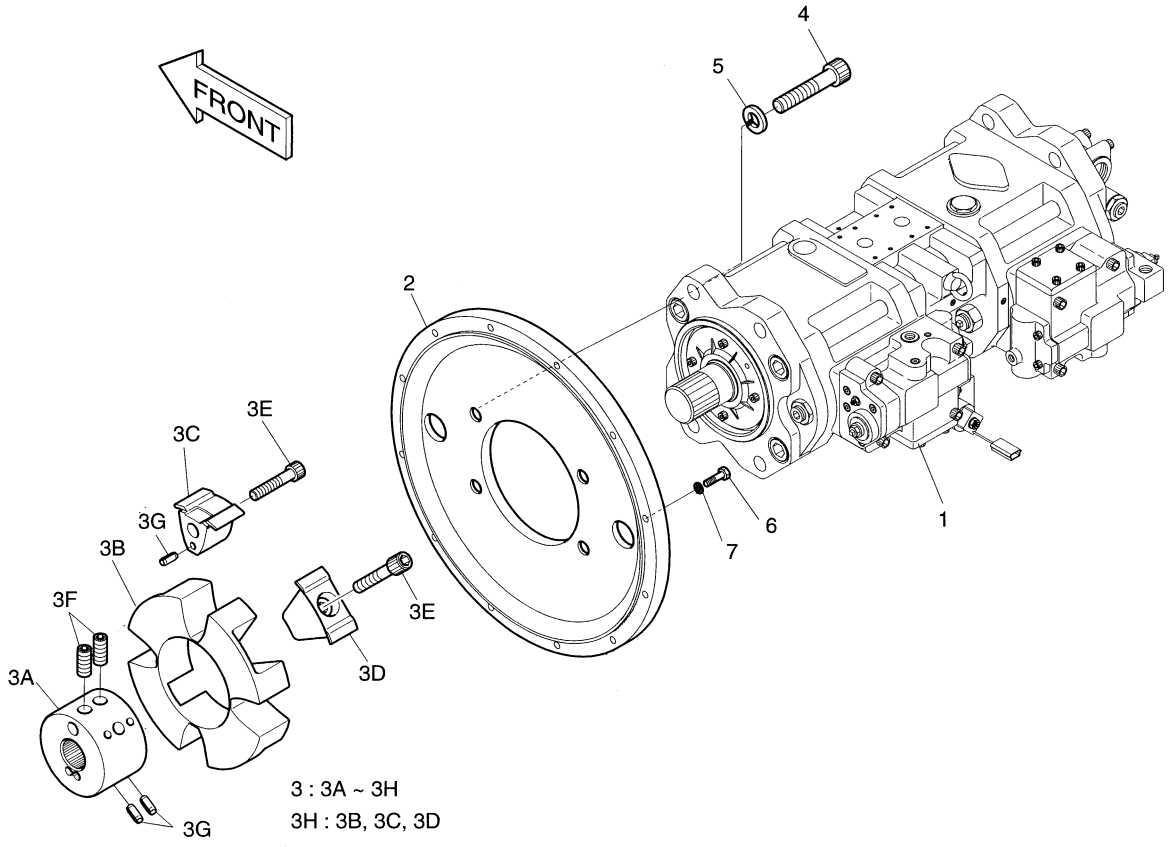

DATE	JUN. 30, 2004
REV. NO.	EXB04-04

Fig. 1170 PUMP MOUNTING POMPE

Serial No ;

Key No.	Part No.	Description	Description	Q'ty	S.C	Serial No.	ICA	Replaceable part	
								Part No.	Q'ty
1170--	401-00280A	PUMP INSTALLATION	POMPE	-	D				
1	401-00356A	PUMP INSTALLATION	POMPE	1					
2	229-00012A	COVER	COUVERCLE	1					
3	2414-9008A	COUPLING	FIXATION DE POMPE	1					
3A	-	. HUB	. MOYEU	1	D				
3B	2474-7009	. ELEMENT	. ELEMENT	1					
3C	-	. INSERT(A)	. INSERTION	4	D				
3D	-	. INSERT(R)	. INSERTION	4	D				
3E	K9000422	. SOCKET BOLT SET(8EA)	. BOULON DE PLOT	1					
3F	-	. BOLT;CLAMPING M16X2.0X28	. BOULON	2	D				
3G	-	. PIN;SPRING D5X10	. GOUPILLE	12	D				
3H	2474-7009K	. ELEMENT KIT	. KIT DE ELEMENT	1					
4	S2227966	BOLT;SOCKET M20X2.5X65	BOULON DE PLOT	4					
5	S5111103	WASHER;SPRING M20	RONDELLE ELASTIQUE M20	4					
6	S0512053	BOLT M10X1.5X25	BOULON A 6PANS	12					
7	S5102603	WASHER;SPRING M10	RONDELLE ELASTIQUE	12					

DATE	DEC. 30, 2004
REV. NO.	EXB04-09

Fig. 1180 FUEL PIPING
CONDUITES DE GAZOLE

Serial No. ;

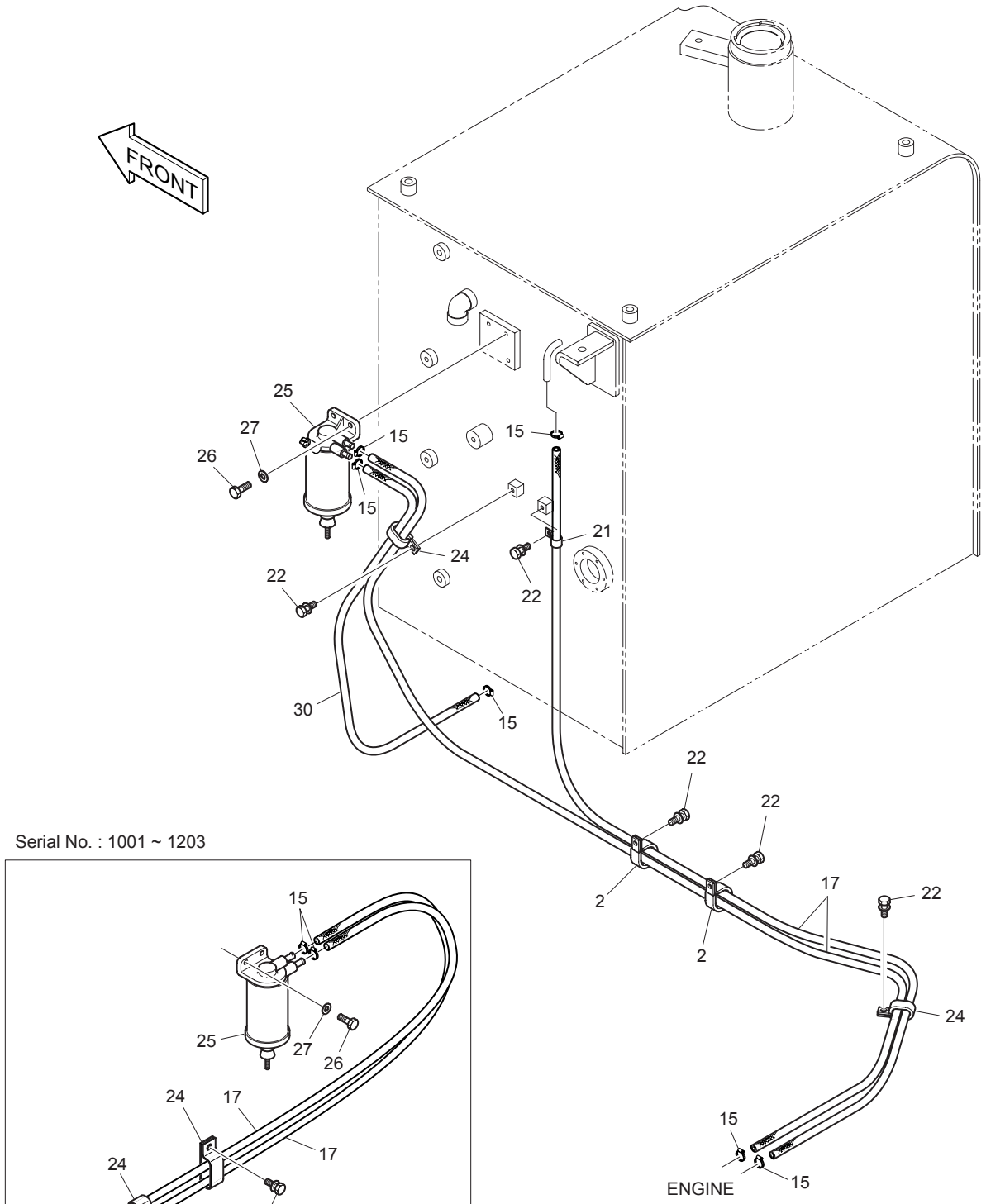

Serial No. : 1001 ~ 1203

DATE	DEC. 30, 2004
REV. NO.	EXB04-09

Fig. 1180 FUEL PIPING
CONDUITES DE GAZOLE

Serial No ;

Key No.	Part No.	Description	Description	Q'ty	S.C	Serial No.	ICA	Replaceable part	
								Part No.	Q'ty
1180--	470-00089A	FUEL TANK ASS'Y	CONDUITES DE GAZOLE	-	D				
2	124-00208D7	CLIP	CLIP	2					
15	S8450012	CLAMP;HOSE	FIXATION DE TUYAU	6					
17	2185-1247D122	HOSE;FUEL	TUYAU FLEXIBLE	3		1001–1203			
	2185-1247D122	HOSE;FUEL	TUYAU FLEXIBLE	2		1204–			
21	124-00208D3	CLIP	CLIP	1					
22	120-00276	BOLT M8X1.25X12	BOULON	6		1001–1203			
	120-00276	BOLT M8X1.25X12	BOULON	5		1204–			
24	124-00209D1	CLIP	CLIP	3		1001–1203			
	124-00209D1	CLIP	CLIP	2		1204–			
25	471-00082	SEPARATOR;WATER	SEPARATEUR	1		1001–1699	I	471-00082A	1
	471-00082A	**SEPARATOR;WATER**	SEPARATEUR	1		**1700**–			
26	S0508853	BOLT M8X1.25X20	BOULON A 6PANS	2					
27	S5010513	WASHER;PLAIN M8	RONDELLE	2					
30	2185-1247D31	HOSE 1200L	TUYAU FLEXIBLE	1		1204–			

DATE	JUN. 30, 2005
REV. NO.	EXB05-05

Fig. 1190 FUEL TANK
RESERVOIR DE GAZOLE

Serial No. ;

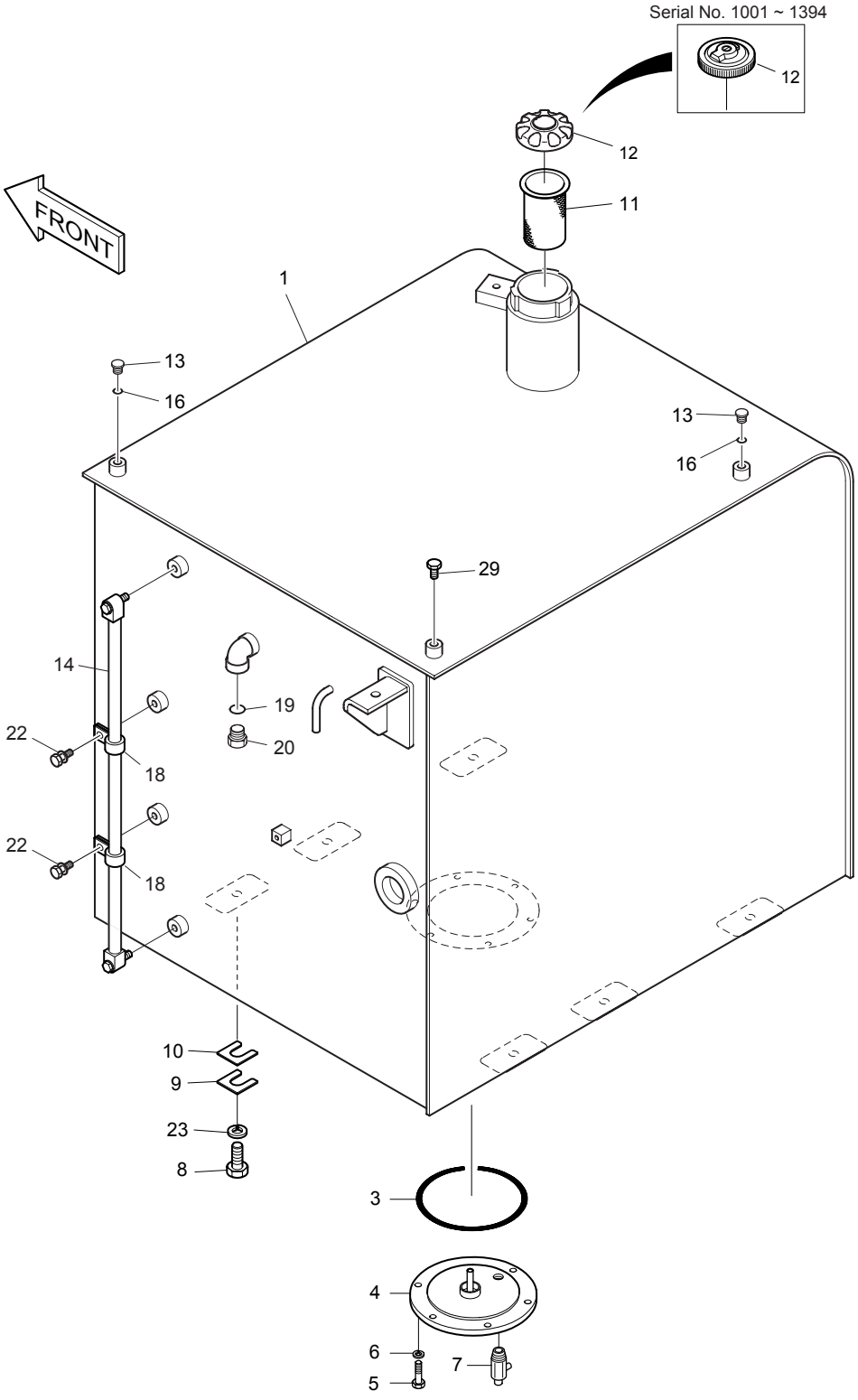

DATE	JUN. 30, 2005
REV. NO.	EXB05-05

Fig. 1190 FUEL TANK
RESERVOIR DE GAZOLE

Serial No ;

Key No.	Part No.	Description	Description	Q'ty	S.C	Serial No.	ICA	Replaceable part	
								Part No.	Q'ty
1190--	470-00089A	FUEL TANK ASS'Y	CONDUITES DE GAZOLE	-	D				
1	470-00088C	TANK;FUEL	RESERVOIR DE GAZOLE	1		1001–1031	I	470-00088E	1
	470-00088E	TANK;FUEL	RESERVOIR DE GAZOLE	1		1032–1203			
	470-00088G	TANK;FUEL	RESERVOIR DE GAZOLE	1		1204–1206	I	470-00088H	1
	470-00088H	TANK;FUEL	RESERVOIR DE GAZOLE	1		1207–			
3	S8011450	O-RING	JONT TORIQUE	1					
4	473-00033	COVER	COUVERCLE	1					
5	S0512053	BOLT M10X1.5X25	BOULON A 6PANS	6					
6	S5102603	WASHER;SPRING	RONDELLE ELASTIQUE	6					
7	186-00017	COCK;DRAIN	ROBINET DE PURGE	1		1001–1206	I	186-00017A	1
	186-00017A	COCK;DRAIN	ROBINET DE PURGE	1		1207–			
8	S0565461	BOLT M16X2.0X60	BOULON A 6PANS	6					
9	2114-1813	SHIM	CALE	3					
10	2114-1814	SHIM	CALE	3					
11	2471-9046	FILTER;FUEL	FILTRE	1		1001–1203	I	471-00105	1
	471-00105	FILTER;FUEL	FILTRE	1		1204–			
12	2188-9008	CAP	BOUCHON	1		1001–1206	I	188-00018	1
	188-00018	CAP	BOUCHON	1		1207–1394	I	188-00014A	1
	188-00014A	CAP	BOUCHON	1		1395–1859			
	K1004166	**CAP**	BOUCHON	1		**1860**–			
13	2181-1950D1	PLUG	BOUCHON	2					
14	119-00014D1	GAUGE;LEVEL	INDICATEUR DE NIVEAU	1					
16	S8000111	O-RING	JONT TORIQUE	2					
18	DS2802021	CLIP	CLIP	2					
19	S8000181	O-RING	JONT TORIQUE	1					
20	2181-1950D7	PLUG	BOUCHON	1					
22	120-00276	BOLT M8X1.25X12	BOULON	2					
23	114-00425	SPACER	ENTRETOISE	6					
29	S0514653	BOLT M12X1.75X16	BOULON	1					

DATE	DEC. 29, 2005
REV. NO.	EXB05-20

Fig. 1200 SWING DEVICE ASS'Y
SYSTEME D'ORIENTATION

Serial No. ;

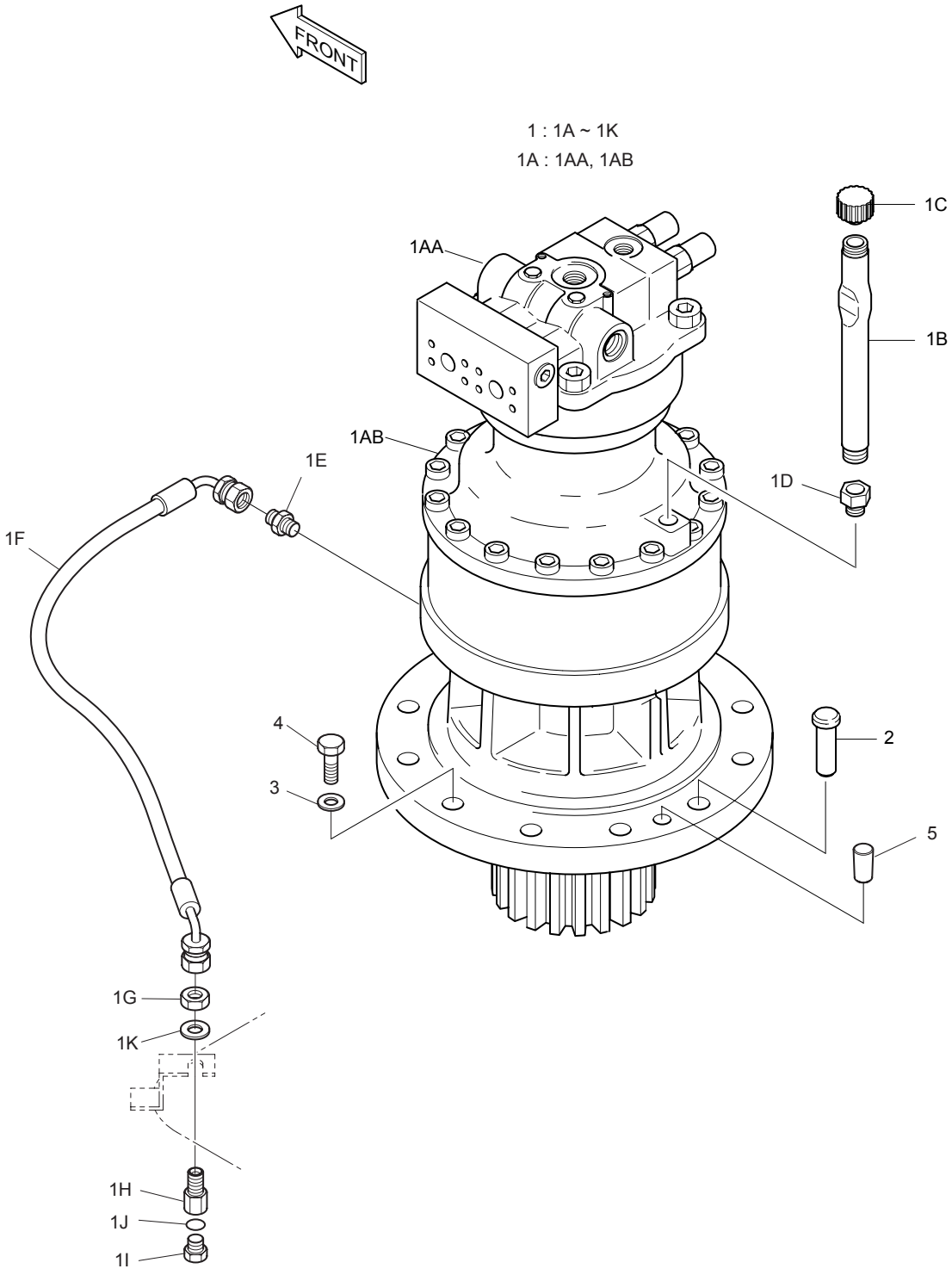

DATE	DEC. 29, 2005
REV. NO.	EXB05-20

Fig. 1200 SWING DEVICE ASS'Y SYSTEME D'ORIENTATION

Serial No ;

Key No.	Part No.	Description	Description	Q'ty	S.C	Serial No.	ICA	Replaceable part	
								Part No.	Q'ty
1200--	401-00289B	SWING DEVICE ASS'Y	SYSTEME D'ORIENTATION	-	D	1001–2173			
	401-00289C	**SWING DEVICE ASS'Y**	SYSTEME D'ORIENTATION	-	D	**2174–**			
1	401-00325B	SWING DEVICE SUB ASS'Y	SYSTEME D'ORIENTATION	1		1001–1257	I	401-00325C	1
	401-00325C	SWING DEVICE SUB ASS'Y	SYSTEME D'ORIENTATION	1		1258–2064	I	401-00325E	1
	401-00325E	**SWING DEVICE SUB ASS'Y**	SYSTEME D'ORIENTATION	1		**2065–2173**	I	401-00325G	1
	401-00325G	**SWING DEVICE SUB ASS'Y**	SYSTEME D'ORIENTATION	1		**2174–**			
1A	401-00290A	. SWING DEVICE SUB ASS'Y	. SYSTEME D'ORIENTATION	1	D	1001–1257			
	401-00290B	. SWING DEVICE SUB ASS'Y	. SYSTEME D'ORIENTATION	1	D	1258–2173	I	401-00290C	1
	401-00290C	**. SWING DEVICE SUB ASS'Y**	. SYSTEME D'ORIENTATION	1	D	**2174–**			
1AA	401-00391	.. MOTOR;SWING	.. SYSTEME	1		1001–2173	I	401-00391A	1
	401-00391A	**.. MOTOR;SWING**	.. SYSTEME	1		**2174–**			
1AB	2404-1063I	.. GEAR;REDUCTION	.. SYSTEME	1		1001–1257	I	2404-1063J	1
	2404-1063J	.. GEAR;REDUCTION	.. SYSTEME	1		1258–2064	I	K1004160A	1
	K1004160A	**.. GEAR;REDUCTION**	.. SYSTEME	1		**2065–**			
1B	2182-1662	. PIPE	. TUYAU	1					
1C	2119-1063A	. CAP	. CHAPEAU	1					
1D	2181-1913D24	. REDUCER	. REDUCTEUR	1					
1E	2181-1110D3	. ADAPTER PF1/2-PF1/2	. ADAPTEUR	1					
1F	DS2059420	. HOSE	. TUYAU FLEXIBLE	1					
1G	121-00010D3	. NUT	. ECROU	1					
1H	181-00698	. REDUCER	. REDUCTEUR	1					
1I	2181-1950D3	. PLUG	. BOUCHON	1					
1J	S8000181	. O-RING	. JONT TORIQUE	1					
1K	S5011113	. WASHER;PLAIN	. RONDELLE	1					
2	2123-4030	PIN;LOCK	GOUPILLE	1					
3	2114-9012A	WASHER;HARD	RONDELLE	11					
4	S0570166	BOLT M20X2.5X65	BOULON	11					
5	160-00027	CAP	CHAPEAU	2					

DATE	DEC. 29, 2005
REV. NO.	EXB05-20

Fig. 1210 OIL TANK
RESERVOIR DE HUILE

Serial No. ;

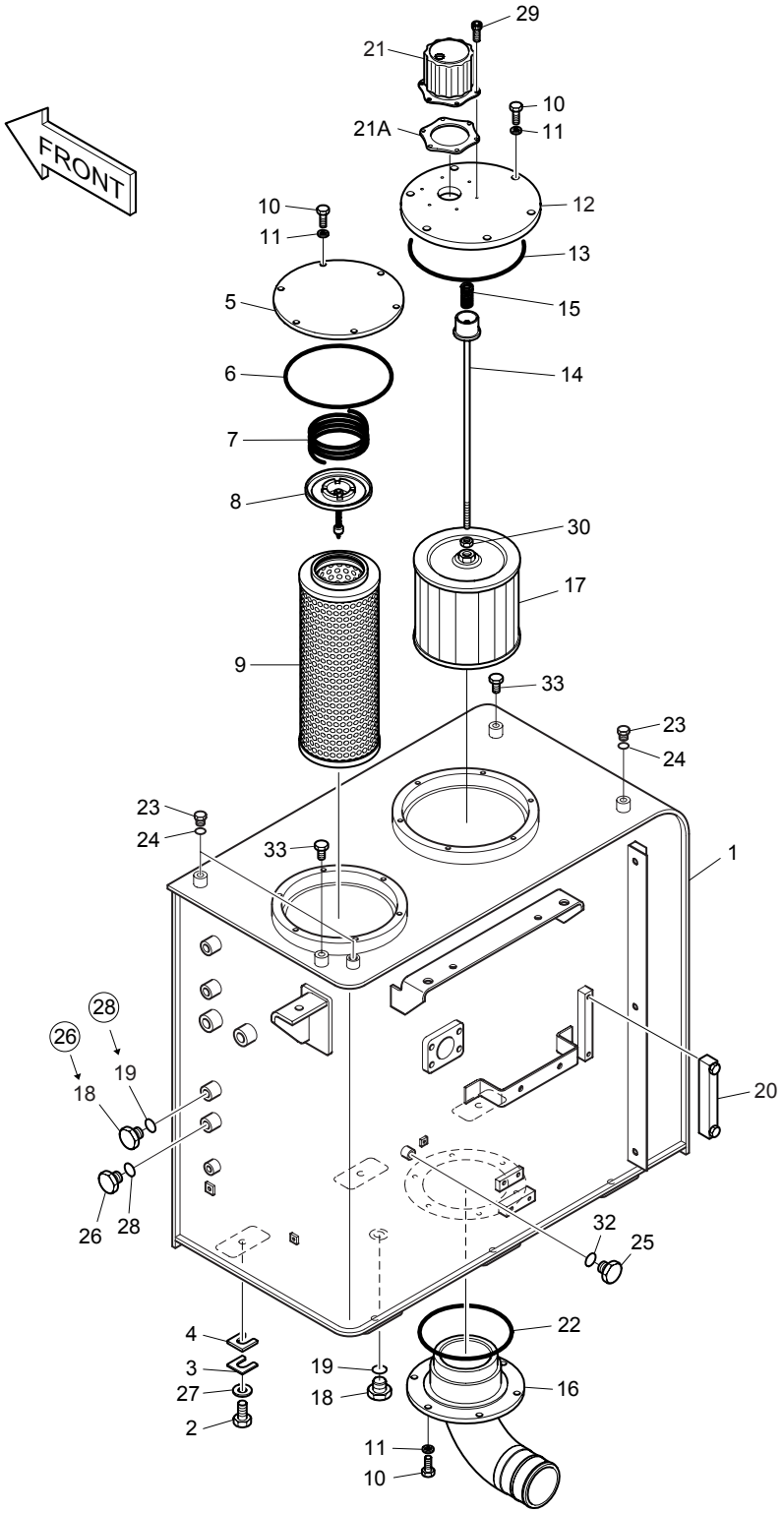

DATE	DEC. 29, 2005
REV. NO.	EXB05-20

Fig. 1210 OIL TANK RESERVOIR DE HUILE

Serial No ;

Key No.	Part No.	Description	Description	Q'ty	S.C	Serial No.	ICA	Replaceable part	
								Part No.	Q'ty
1210--	470-00092A	OIL TANK ASS'Y	RESERVOIR DE HUILE	-	D				
1	470-00091E	TANK;OIL	RESERVOIR DE HUILE	1		1001–1002			
	470-00091G	TANK;OIL	RESERVOIR DE HUILE	1		1003–1003			
	470-00091H	TANK;OIL	RESERVOIR DE HUILE	1		1004–			
2	S0565461	BOLT M16X2.0X60	BOULON A 6PANS	6					
3	2114-1813	SHIM 0.8T	CALE	3					
4	2114-1814	SHIM 1.6T	CALE	3					
5	2473-1080A	COVER	COUVERCLE	1					
6	S8012000	O-RING	JONT TORIQUE	1					
7	2129-1393	SPRING	RESSORT	1					
8	2426-1175	VALVE;BY-PASS	VANNE	1					
9	2474-9404A	ELEMENT;FILTER	ELEMENT FILTRANT	1					
10	S0512053	BOLT M10X1.5X25	BOULON A 6PANS	18					
11	S5102603	WASHER;SPRING M10	RONDELLE ELASTIQUE	18					
12	2473-1088B	COVER	COUVERCLE	1					
13	S8011650	O-RING	JONT TORIQUE	1					
14	136-00002	ROD	TIGE	1					
15	2129-1008	SPRING;COMPRESS	RESSORT	1					
16	140-01344	PIPE	TUYAU	1					
17	2474-9016A	FILTER:SUCTION	ELEMENT FILTRANT	1					
18	2181-1950D7	PLUG	BOUCHON	1		1001–1002			
	2181-1950D7	PLUG	BOUCHON	2		1003–			
19	S8000181	O-RING	JONT TORIQUE	1		1001–1002			
	S8000181	O-RING	JONT TORIQUE	2		1003–			
20	2119-1007	GAUGE;LEVEL	JAUGE D'HUILE	1					
21	422-00027A	BREATHER;AIR	RENIFLARD	1					
21A	180-00200	. PACKING	. JOINT	1					
22	S8011200	O-RING	JONT TORIQUE	1					
23	2181-1950D1	PLUG	BOUCHON	3					
24	S8000111	O-RING	JONT TORIQUE	3					
25	2181-2667	PLUG	BOUCHON	1					
26	2181-1950D2	PLUG	BOUCHON	2		1001–1002			
	2181-1950D2	PLUG	BOUCHON	1		1003–			
27	114-00425	SPACER	ENTRETOISE	6					
28	S8000141	O-RING	JONT TORIQUE	2		1001–1002			
	S8000141	O-RING	JONT TORIQUE	1		1003–			
29	2120-2166D41	BOLT M8X0.8X8	BOULON	6					
30	S4012733	NUT	ECROU	1					

DATE	DEC. 29, 2005
REV. NO.	EXB05-20

Fig. 1210 OIL TANK
RESERVOIR DE HUILE

Serial No. ;

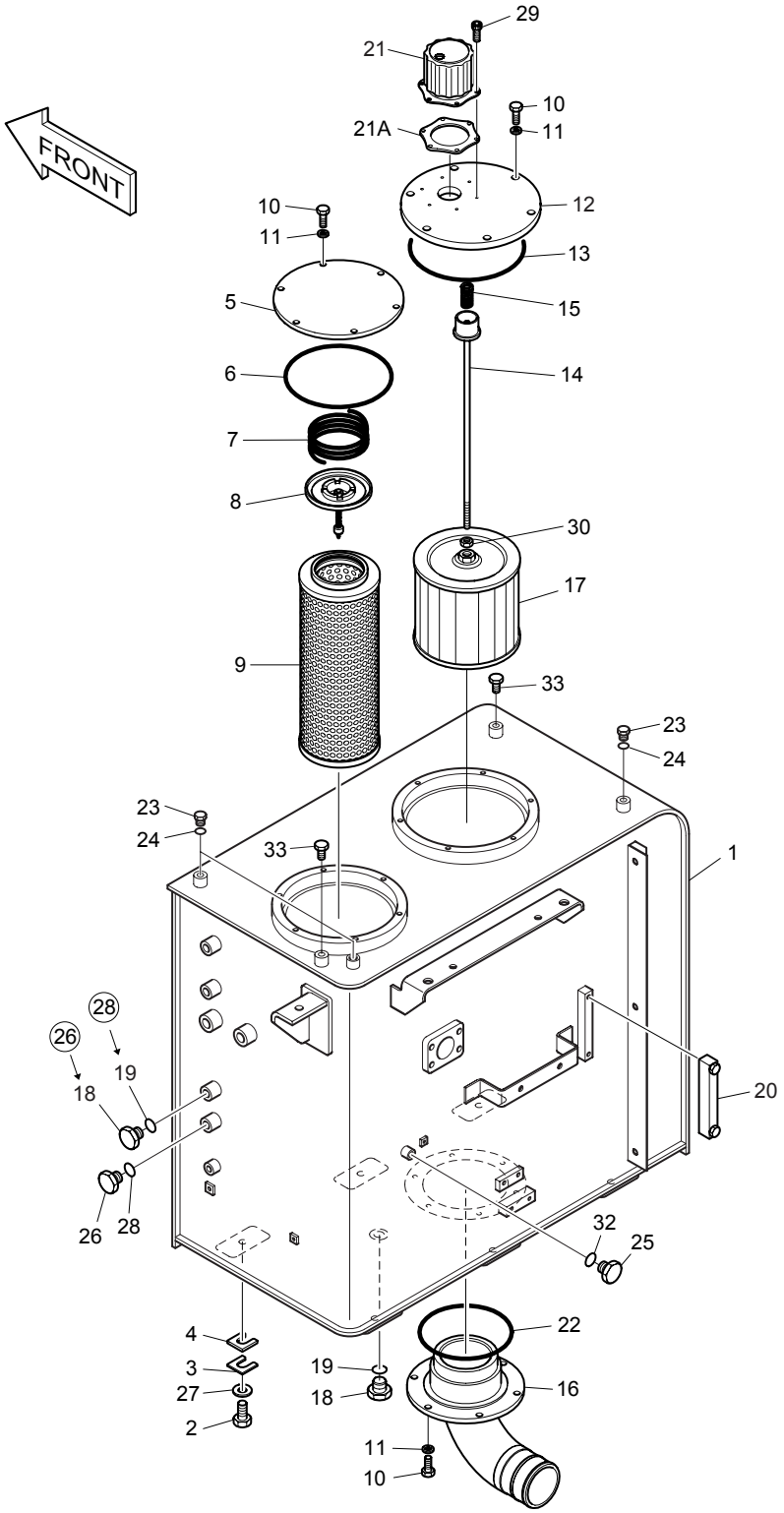

DATE	DEC. 29, 2005
REV. NO.	EXB05-20

Fig. 1210 OIL TANK RESERVOIR DE HUILE

Serial No ;

Key No.	Part No.	Description	Description	Q'ty	S.C	Serial No.	ICA	Replaceable part	
								Part No.	Q'ty
1210-32	S8180221	PLUG	RONDELLE D'ETANCHEITE	1					
33	S0514653	BOLT M12X1.75X16	BOULON	2					

DATE	JUL. 30, 2003
REV. NO.	EXB03-13

Fig. 1220 OIL COOLER PIPING(1)
CONDUITES DE HUILE

Serial No. ;

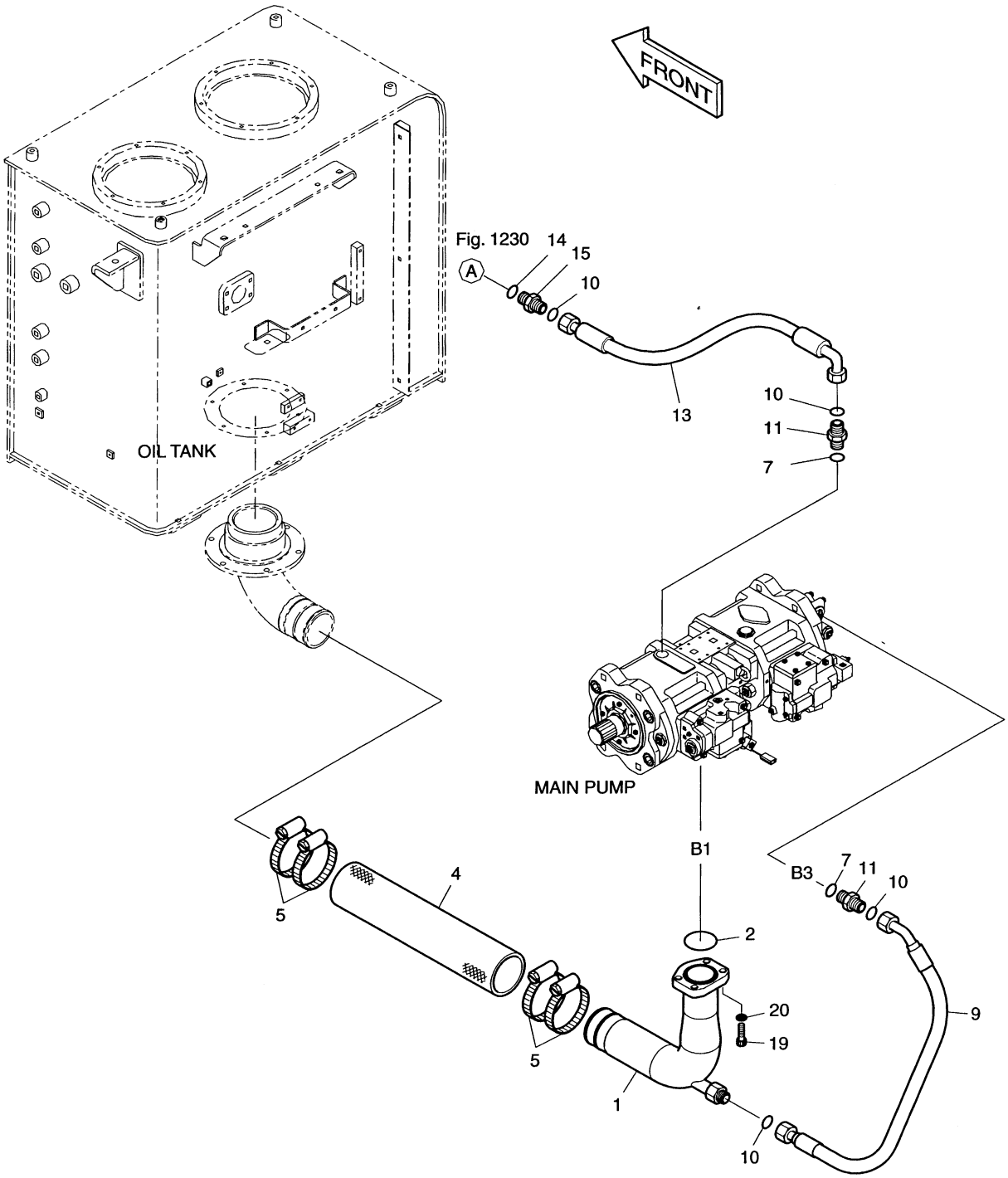

DATE	JUL. 30, 2003
REV. NO.	EXB03-13

Fig. 1220 OIL COOLER PIPING(1) CONDUITES DE HUILE

Serial No ;

Key No.	Part No.	Description	Description	Q'ty	S.C	Serial No.	ICA	Replaceable part	
								Part No.	Q'ty
1220--	400-00855A	OIL COOLER PIPING	CONDUITES DE HUILE	-	D				
1	140-01017	PIPE;SUCTION	TUYAU	1					
2	2180-1026D31	O-RING	JONT TORIQUE	1					
4	2185-1737D1	HOSE	TUYAU FLEXIBLE	1					
5	S8470112	CLAMP	ATTACHE	4					
7	S8000241	O-RING	JONT TORIQUE	2					
9	DS2012136	HOSE	TUYAU FLEXIBLE	1					
10	S8030121	O-RING	JONT TORIQUE	4					
11	2181-4133D5	ADAPTER PFO3/4-PF3/4	ADAPTEUR	2					
13	2184-1197D34	HOSE	TUYAU FLEXIBLE	1					
14	S8000231	O-RING	JONT TORIQUE	1					
15	2181-2627D1	ADAPTER	ADAPTEUR	1					
19	S2215466	BOLT;SOCKET M12X1.75X40	BOULON DE PLOT	4					
20	S5110703	WASHER;SPRING M12	RONDELLE ELASTIQUE	4					

DATE	JUN. 30, 2004
REV. NO.	EXB04-04

Fig. 1230 OIL COOLER PIPING(2)
CONDUITES DE HUILE

Serial No. ;

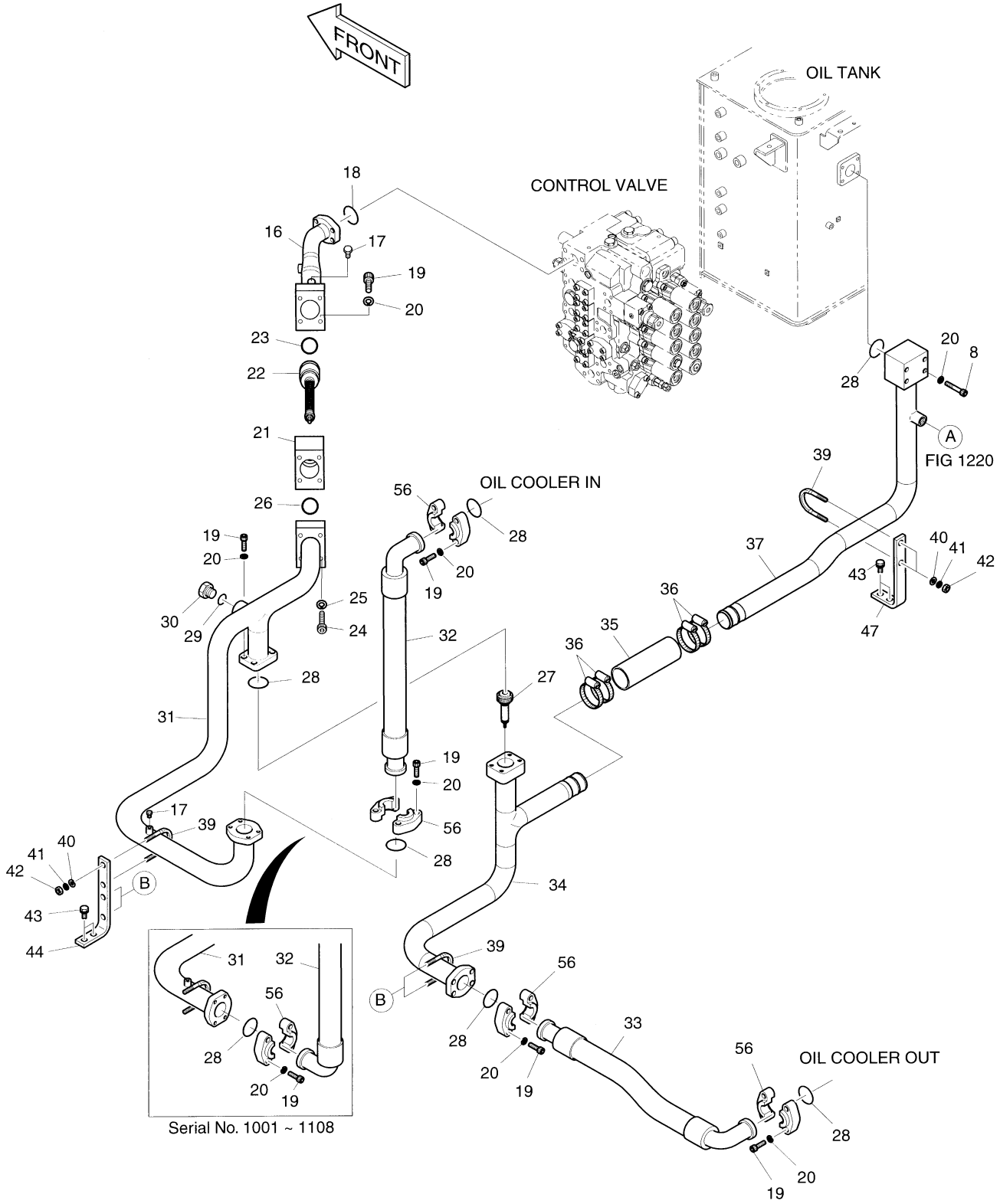

DATE	JUN. 30, 2004
REV. NO.	EXB04-04

Fig. 1230 OIL COOLER PIPING(2) CONDUITES DE HUILE

Serial No ;

Key No.	Part No.	Description	Description	Q'ty	S.C	Serial No.	ICA	Replaceable part	
								Part No.	Q'ty
1230--	400-00855A	OIL COOLER PIPING	CONDUITES DE HUILE	-	D				
8	S0561753	BOLT M12X1.75X100	BOULON A 6PANS	4					
16	140-01018A	PIPE	TUYAU	1					
17	2181-2047A	PLUG M10X1.0	BOUCHON	2					
18	2180-1026D24	O-RING	JONT TORIQUE	1					
19	S2215466	BOLT;SET M12X1.75X40	BOULON A 6PANS	28					
20	S5110703	WASHER;SPRING M12	RONDELLE ELASTIQUE	32					
21	423-00114A	BLOCK	BLOC	1					
22	422-00041	VALVE;BY-PASS	VANNE	1		1001–1212	I	420-00261B	1
	420-00261B	**VALVE;BY-PASS**	VANNE	1		**1213–**			
23	2180-1026D31	O-RING	JONT TORIQUE	1					
24	S2221566	BOLT;SET M16X2.0X45	BOULON	4					
25	S5110903	WASHER;SPRING M16	RONDELLE ELASTIQUE	4					
26	2180-1026D32	O-RING	JONT TORIQUE	1					
27	420-00304	VALVE;BY-PASS	VANNE	1					
28	2180-1026D27	O-RING	JONT TORIQUE	6					
29	S8000291	O-RING	JONT TORIQUE	2					
30	2181-1950D9	PLUG	BOUCHON	1					
31	140-01019B	PIPE	TUYAU	1		1001–1108			
	140-01505	PIPE	TUYAU	1		1109–			
32	DS2045314	HOSE PF2-720L	TUYAU FLEXIBLE	1		1001–1031			
	DS2045321	HOSE PF2-720L	TUYAU FLEXIBLE	1		1032–1108			
	DS2040372	HOSE PF2-615L	TUYAU FLEXIBLE	1		1109–			
33	DS2040346	HOSE PF2-760L	TUYAU FLEXIBLE	1					
34	140-01020B	PIPE	TUYAU	1		1001–1204	I	140-01020C	1
	140-01020C	PIPE	TUYAU	1		1205–			
35	2185-1776D1	HOSE	TUYAU FLEXIBLE	1					
36	S8470085	CLAMP	ATTACHE	4					
37	140-01021A	PIPE	TUYAU	1					
39	120-00258A	BOLT;U M12X1.75	BOULON U	3					
40	2114-1058D30	WASHER	RONDELLE	6					
41	S5102703	WASHER;SPRING M12	RONDELLE ELASTIQUE	6					
42	S4012733	NUT M12X1.75	ECROU	6					
43	2120-2196D8	BOLT;SET M12X1.75X30	BOULON	4					
44	195-01990	PLATE	PLAQUE	1					
47	195-01901A	PLATE	PLAQUE	1					
56	4215-1003D6	FLANGE;SPLIT	FLASQUE	8					

DATE	DEC. 22, 2003
REV. NO.	EXB03-15

Fig. 1240 OIL COOLER PIPING(3) CONDUITES DE HUILE

Serial No. ;

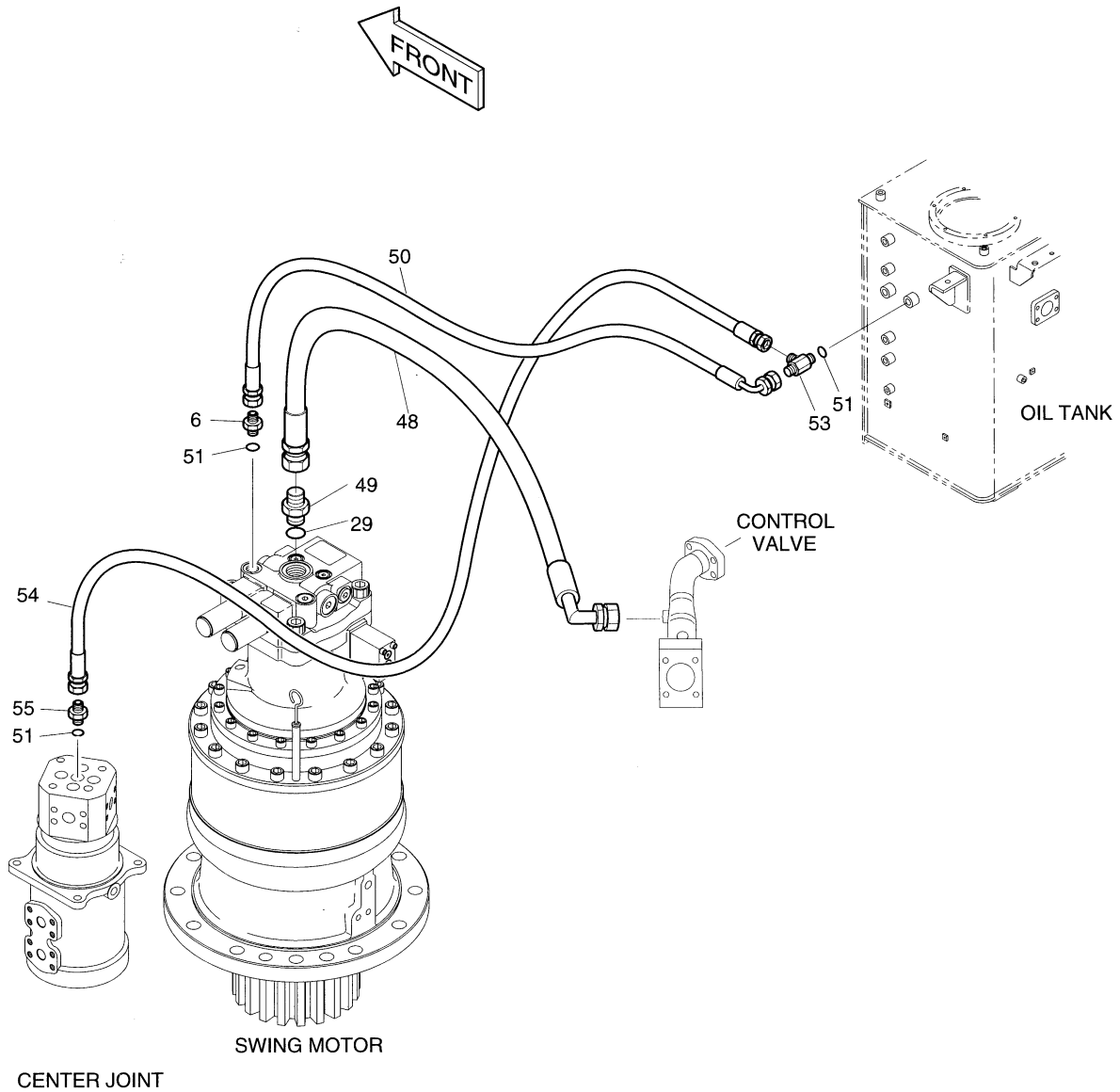

DATE	DEC. 22, 2003
REV. NO.	EXB03-15

Fig. 1240 OIL COOLER PIPING(3) CONDUITES DE HUILE

Serial No ;

Key No.	Part No.	Description	Description	Q'ty	S.C	Serial No.	ICA	Replaceable part	
								Part No.	Q'ty
1240--	400-00855A	OIL COOLER PIPING	CONDUITES DE HUILE	-	D				
6	2181-1126D6	ADAPTER	ADAPTEUR	1					
29	S8000291	O-RING	JONT TORIQUE	1					
48	DS2055756	HOSE PF1-620L	TUYAU FLEXIBLE	1					
49	2181-1126D25	ADAPTER	ADAPTEUR	1					
50	2184-1036D269	HOSE PF1/2-650L	TUYAU FLEXIBLE	1		1001-1002			
	2184-1036D12	HOSE PF1/2-700L	TUYAU FLEXIBLE	1		1003-1009			
	2184-1036D16	HOSE PF1/2-700L	TUYAU FLEXIBLE	1		1010-			
51	S8000181	O-RING	JONT TORIQUE	3					
53	2181-1951D5	TEE 3PF1/2	TE	1					
54	2184-1026D24	HOSE PF1/2-1300L	TUYAU FLEXIBLE	1					
55	2181-1126D83	ADAPTER 2PF1/2	ADAPTEUR	1					

DATE	JUL. 30, 2003
REV. NO.	EXB03-13

Fig. 1250 MAIN PIPING(1)
CONDUITES DE BATI PRINCIPAL

Serial No. ;

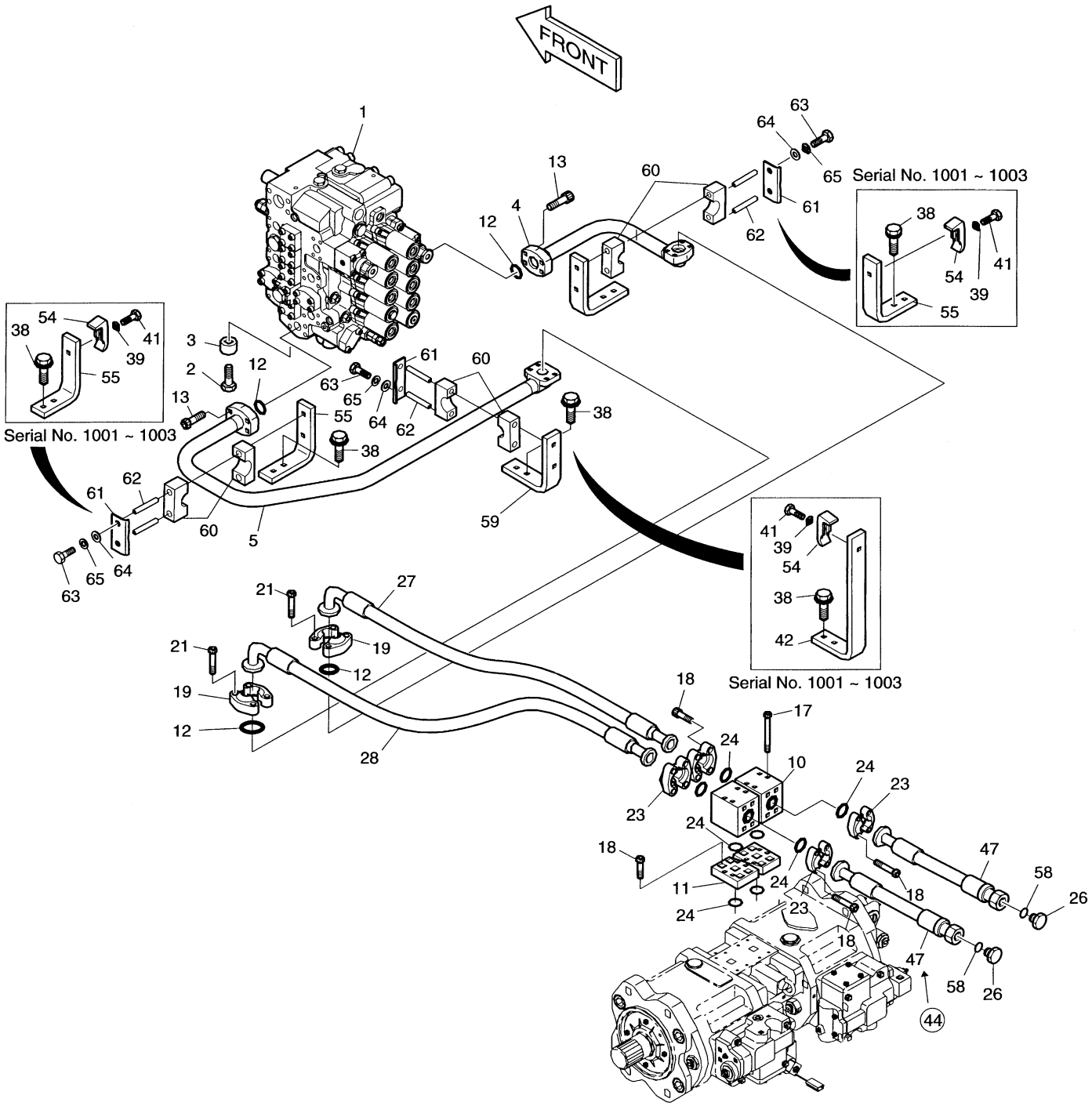

DATE	JUL. 30, 2003
REV. NO.	EXB03-13

Fig. 1250 MAIN PIPING(1) CONDUITES DE BATI PRINCIPAL

Serial No ;

Key No.	Part No.	Description	Description	Q'ty	S.C	Serial No.	ICA	Replaceable part	
								Part No.	Q'ty
1250--	400-00854A	MAIN PIPING	CONDUITES DE BATI	-	D				
1	420-00295	VALVE;CONTROL	VANNE	1					
2	S0565466	BOLT M16X2.0X60	BOULON A 6PANS	4					
3	114-00425	SPACER;HARDEN	ENTRETOISE	4					
4	140-01301	PIPE	TUYAU	1					
5	140-01305	PIPE	TUYAU	1					
10	2423-1556	BLOCK	BLOC	2					
11	2423-1554A	BLOCK	BLOC	2					
12	2180-1026D19	O-RING	JONT TORIQUE	4					
13	S2215466	BOLT;SOCKET M12X1.75X40	BOULON DE PLOT	8					
17	S2213466	BOLT;SOCKET M10X1.5X90	BOULON DE PLOT	8					
18	S2212066	BOLT;SOCKET M10X1.5X25	BOULON DE PLOT	24					
19	2181-9078	FLANGE;SPLIT	BRIDE	4					
21	S2212266	BOLT;SOCKET M10X1.5X30	BOULON DE PLOT	8					
23	2181-9079	FLANGE;SPLIT	FLASQUE EN DEUX	8					
24	2180-1026D2	O-RING	JONT TORIQUE	8					
26	2181-2218D5	PLUG	BOUCHON	2					
27	DS2040350	HOSE PF3/4-875L	TUYAU FLEXIBLE	1					
28	DS2040343	HOSE PF3/4-610L	TUYAU FLEXIBLE	1					
38	2120-2196D11	BOLT;SET M12X1.75X35	BOULON	6					
39	**S5102703**	**WASHER;SPRING M12**	RONDELLE ELASTIQUE	3		**1001-1003**			
41	**S0561053**	**BOLT M12X1.7X65**	BOULON A 6PANS	3		**1001-1003**			
42	**195-01799**	**PLATE**	PLAQUE	1		**1001-1003**			
44	**DS2016022**	**HOSE PF3/4-250L**	TUYAU FLEXIBLE	1		**1001-1002**			
47	DS2016023	HOSE PF3/4-330L	TUYAU FLEXIBLE	1		1001-1002			
	DS2016023	**HOSE PF3/4-330L**	TUYAU FLEXIBLE	2		**1003-**			
54	**2124-1026D3**	**CLAMP;PIPE**	ATTACHE DE TUBE	3		**1001-1003**			
55	195-01903A	BRACKET	SUPPORT	2		1001-1003			
	195-02438	**PLATE**	PLAQUE	2		**1004-**			
58	S8030121	O-RING	JONT TORIQUE	2					
59	**195-02439**	**PLATE**	PLAQUE	1		**1004-**			
60	**124-00285**	**CLAMP;PIPE**	ATTACHE DE TUBE	6		**1004-**			
61	**621-02548**	**PLATE**	PLAQUE	3		**1004-**			
62	**114-00553**	**SPACER**	ENTRETOISE	6		**1004-**			
63	**S0559353**	**BOLT**	BOULON A 6PANS	6		**1004-**			
64	**S5010613**	**WASHER;PLAIN**	RONDELLE	6		**1004-**			
65	**S5102603**	**WASHER;SPRING**	RONDELLE ELASTIQUE	6		**1004-**			

DATE	DEC. 30, 2004
REV. NO.	EXB04-09

Fig. 1260 MAIN PIPING(2)
CONDUITES DE BATI PRINCIPAL

Serial No. ;

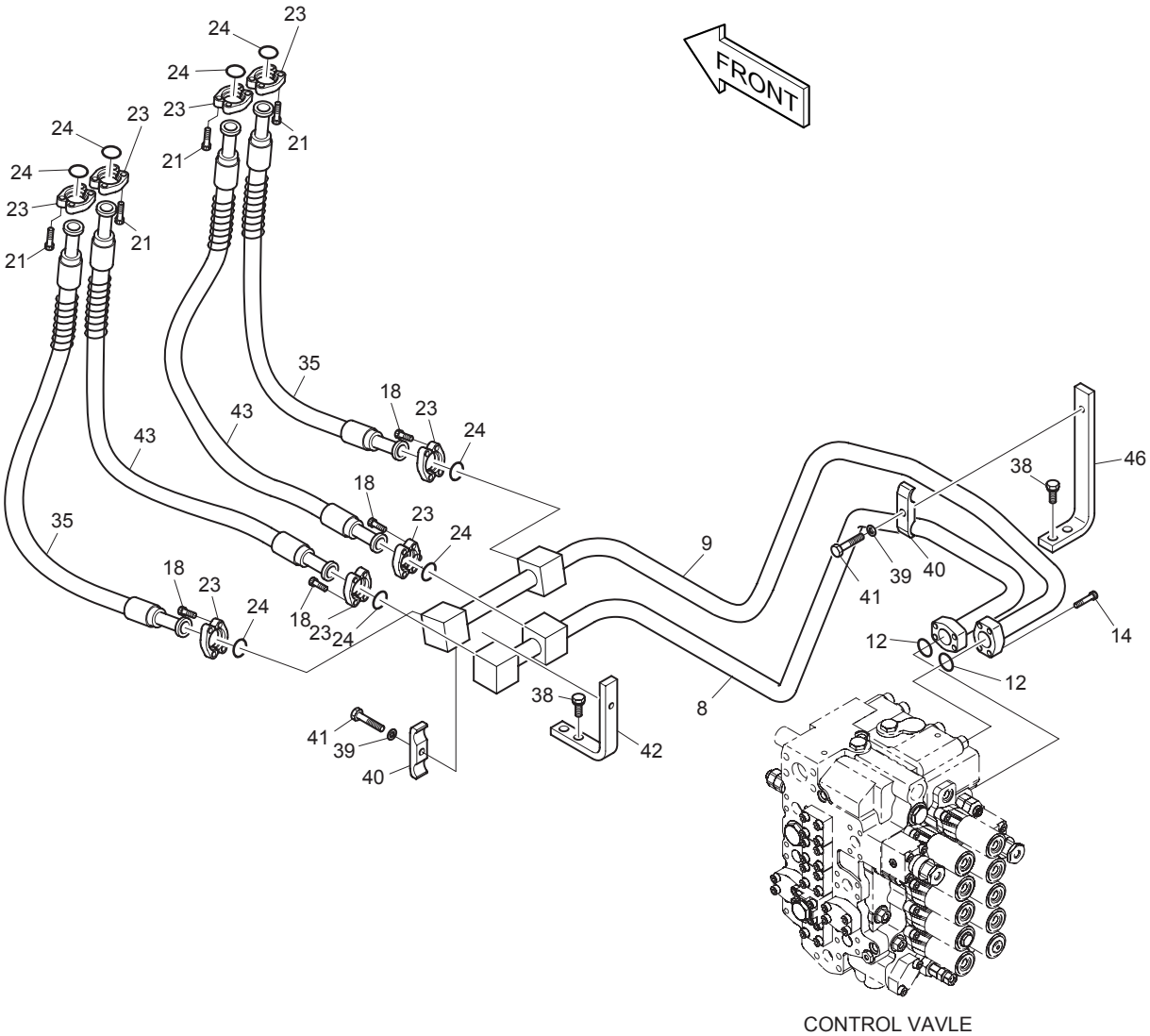

DATE	DEC. 30, 2004
REV. NO.	EXB04-09

Fig. 1260 MAIN PIPING(2) CONDUITES DE BATI PRINCIPAL

Serial No ;

Key No.	Part No.	Description	Description	Q'ty	S.C	Serial No.	ICA	Replaceable part	
								Part No.	Q'ty
1260--	400-00854A	MAIN PIPING	CONDUITES DE BATI	-	D				
8	140-01025A	PIPE	TUYAU	1		1001–1419	I	140-01025B	1
	140-01025B	**PIPE**	TUYAU	1		**1420–**			
9	140-01026A	PIPE	TUYAU	1		1001–1419	I	140-01026B	1
	140-01026B	**PIPE**	TUYAU	1		**1420–**			
12	2180-1026D19	O-RING	JONT TORIQUE	2					
14	S2212466	BOLT;SOCKET M10X1.5X40	BOULON DE PLOT	8					
18	S2212066	BOLT;SOCKET M10X1.5X25	BOULON DE PLOT	16					
21	S2212266	BOLT;SOCKET M10X1.5X30	BOULON DE PLOT	16					
23	2181-9079	FLANGE;SPLIT	FLASQUE EN DEUX	16					
24	2180-1026D2	O-RING	JONT TORIQUE	8					
35	2184-1081D117	HOSE PF3/4-740L	TUYAU FLEXIBLE	2					
38	2120-2196D11	BOLT;SET M12X1.75X35	BOULON	4					
39	S5102703	WASHER;SPRING M12	RONDELLE ELASTIQUE	2					
40	2124-1025D5	CLAMP;PIPE	ATTACHE DE TUBE	2					
41	S0561053	BOLT M12X1.75X65	BOULON A 6PANS	2					
42	195-01799	PLATE	PLAQUE	1					
43	DS2038135	HOSE PF3/4-720L	TUYAU FLEXIBLE	2					
46	195-01802A	BRACKET	SUPPORT	1					

DATE	DEC. 22, 2003
REV. NO.	EXB03-15

Fig. 1270 MAIN PIPING(3)
CONDUITES DE BATI PRINCIPAL

Serial No. ;

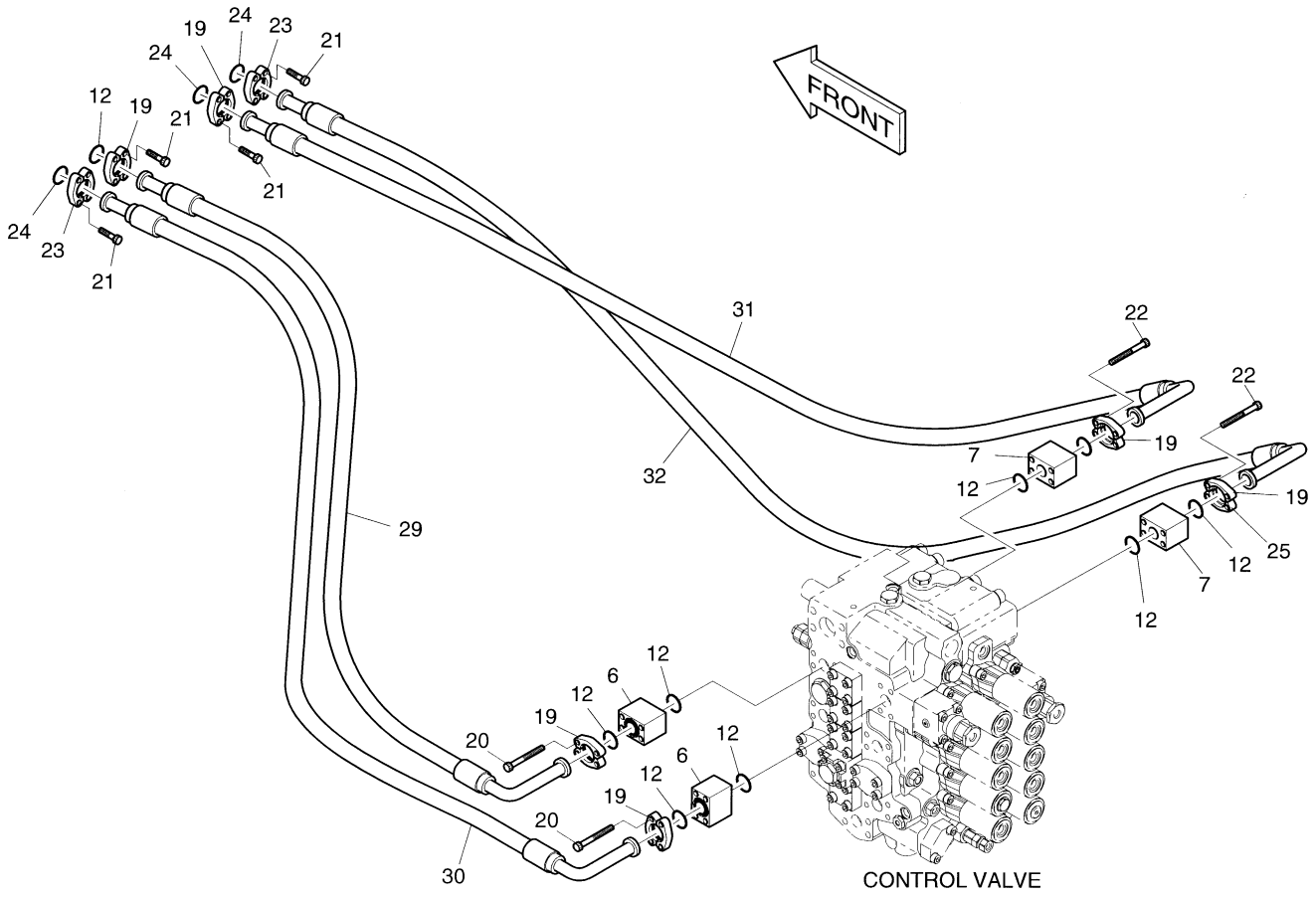

DATE	DEC. 22, 2003
REV. NO.	EXB03-15

Fig. 1270 MAIN PIPING(3) CONDUITES DE BATI PRINCIPAL

Serial No ;

Key No.	Part No.	Description	Description	Q'ty	S.C	Serial No.	ICA	Replaceable part	
								Part No.	Q'ty
1270--	400-00854A	MAIN PIPING	CONDUITES DE BATI	-	D				
6	2423-1407	BLOCK;SPACER	BLOC	2					
7	2181-4127A	BLOCK;SPACER	BLOC	2					
12	2180-1026D19	O-RING	JONT TORIQUE	9					
19	2181-9078	FLANGE;SPLIT	BRIDE	9					
20	S2212866	BOLT;SOCKET M10X1.5X60	BOULON DE PLOT	8					
21	S2212266	BOLT;SOCKET M10X1.5X30	BOULON DE PLOT	16					
22	S2213066	BOLT;SOCKET M10X1.5X70	BOULON DE PLOT	8					
23	2181-9079	FLANGE;SPLIT	FLASQUE EN DEUX	6					
24	2180-1026D2	O-RING	JONT TORIQUE	3					
25	2181-9083	FLANGE;SPLIT	FLASQUE	1					
29	DS2040349	HOSE PF1-1520L	TUYAU FLEXIBLE	1					
30	DS2040347	HOSE PF3/4-1650L	TUYAU FLEXIBLE	1					
31	2184-1250D85	HOSE PF3/4-1600L	TUYAU FLEXIBLE	1					
32	DS2040348	HOSE PF3/4-1450L	TUYAU FLEXIBLE	1					

DATE	DEC. 22, 2003
REV. NO.	EXB03-15

Fig. 1280 MAIN PIPING(4)
CONDUITES DE BATI PRINCIPAL

Serial No. ;

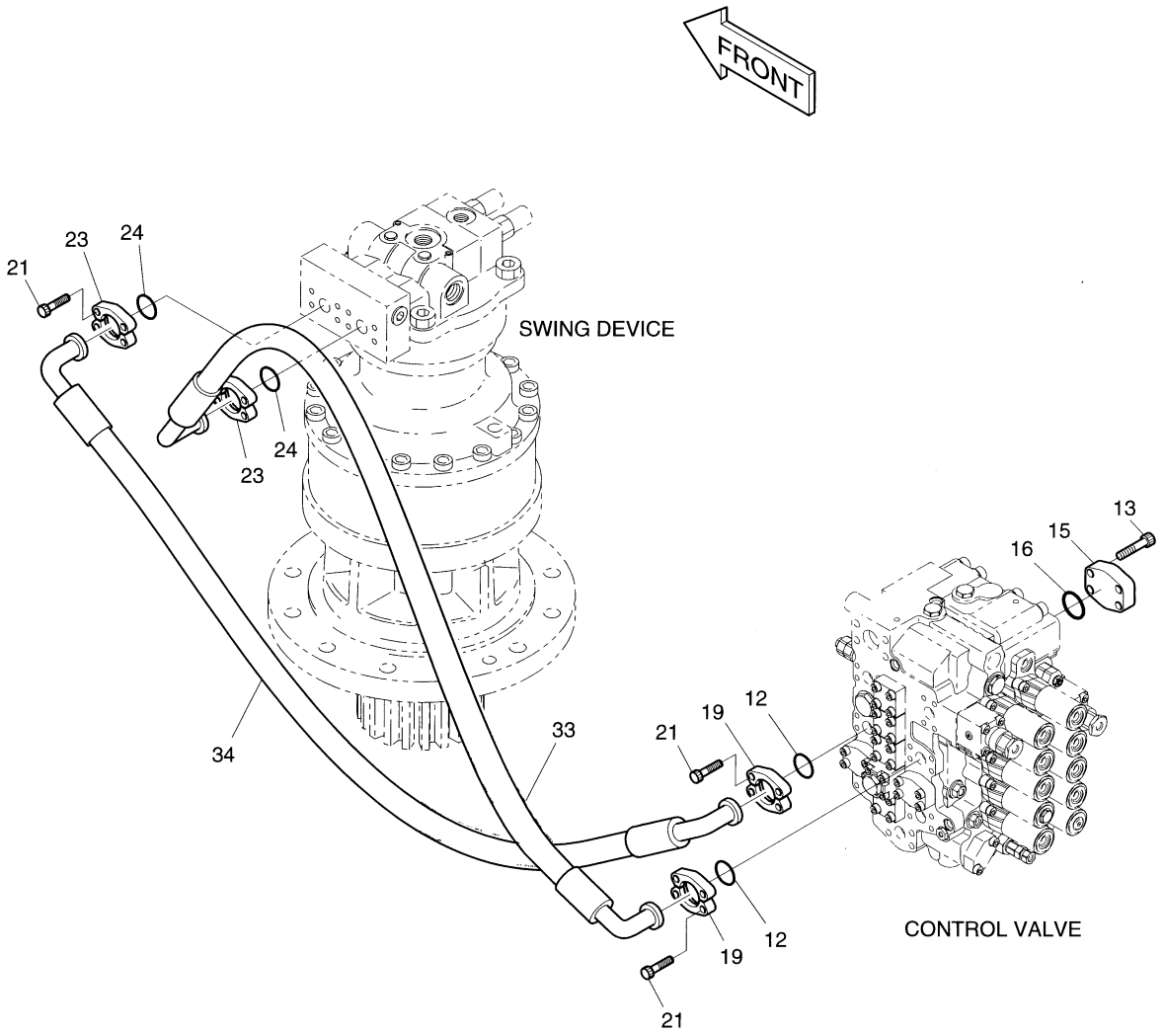

DATE	DEC. 22, 2003
REV. NO.	EXB03-15

Fig. 1280 MAIN PIPING(4) CONDUITES DE BATI PRINCIPAL

Serial No ;

Key No.	Part No.	Description	Description	Q'ty	S.C	Serial No.	ICA	Replaceable part	
								Part No.	Q'ty
1280--	400-00854A	MAIN PIPING	CONDUITES DE BATI	-	D				
12	2180-1026D19	O-RING	JONT TORIQUE	2					
13	S2215466	BOLT;SOCKET M12X1.75X40	BOULON DE PLOT	4					
15	2181-2157D6	FLANGE	BRIDE	1					
16	2180-1026D24	O-RING	JONT TORIQUE	1					
19	2181-9078	FLANGE;SPLIT	BRIDE	4					
21	S2212266	BOLT;SOCKET M10X1.5X30	BOULON DE PLOT	16					
23	2181-9079	FALNGE;SPLIT	FLASQUE EN DEUX	4					
24	2180-1026D2	O-RING	JONT TORIQUE	2					
33	DS2045309	HOSE PF3/4-460L	TUYAU FLEXIBLE	1					
34	DS2045315	HOSE PF3/4-450L	TUYAU FLEXIBLE	1					

DATE	DEC. 22, 2003
REV. NO.	EXB03-15

Fig. 1290 MAIN PIPING(5)
CONDUITES DE BATI PRINCIPAL

Serial No. ;

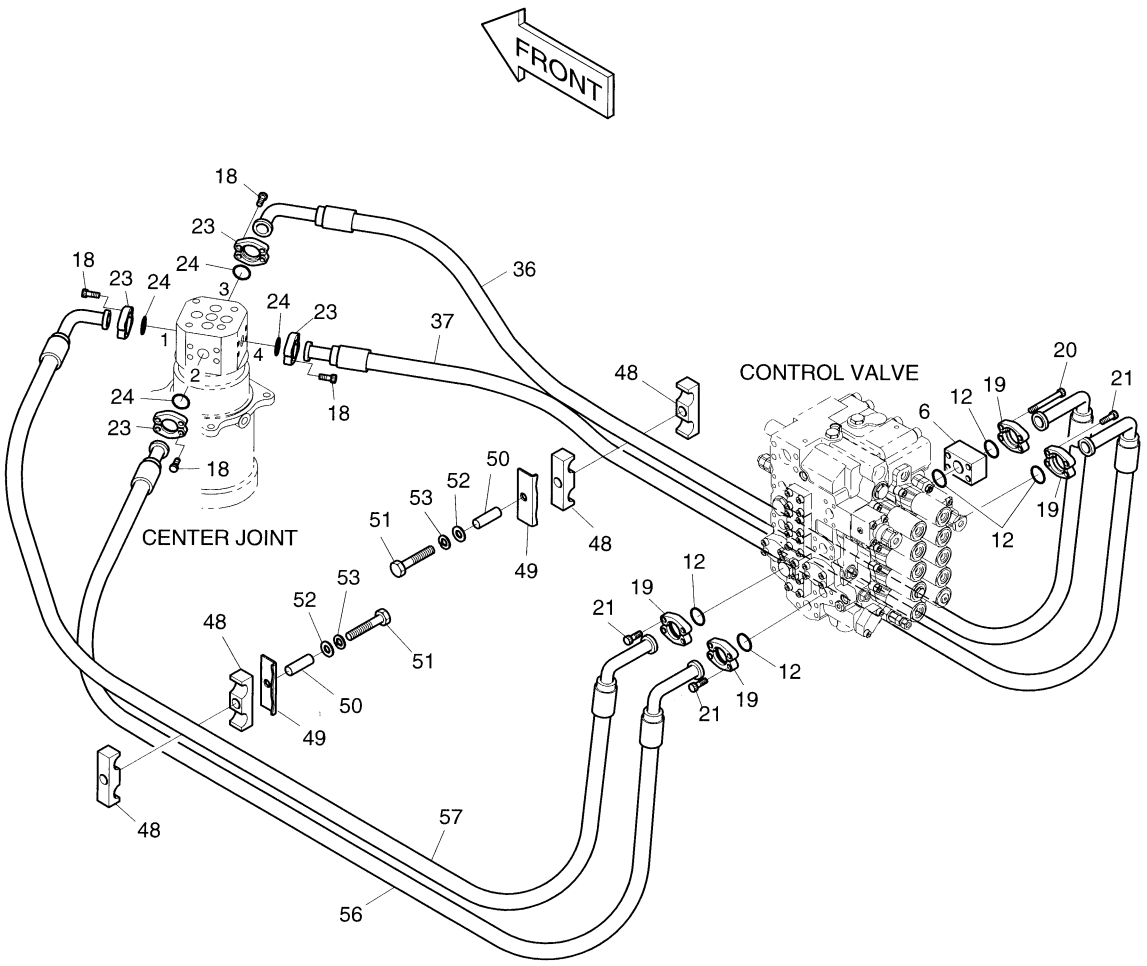

DATE	DEC. 22, 2003
REV. NO.	EXB03-15

Fig. 1290 MAIN PIPING(5) CONDUITES DE BATI PRINCIPAL

Serial No ;

Key No.	Part No.	Description	Description	Q'ty	S.C	Serial No.	ICA	Replaceable part	
								Part No.	Q'ty
1290--	400-00854A	MAIN PIPING	CONDUITES DE BATI	-	D				
6	2423-1407	BLOCK;SPACER	BLOC	1					
12	2180-1026D19	O-RING	JONT TORIQUE	5					
18	S2212066	BOLT;SOCKET M10X1.5X25	BOULON DE PLOT	16					
19	2181-9078	FLANGE;SPLIT	BRIDE	8					
20	S2212866	BOLT;SOCKET M10X1.5X60	BOULON DE PLOT	4					
21	S2212266	BOLT;SOCKET M10X1.5X30	BOULON DE PLOT	12					
23	2181-9079	FLANGE;SPLIT	FLASQUE EN DEUX	8					
24	2180-1026D2	O-RING	JONT TORIQUE	4					
36	DS2045305	HOSE PF3/4-1260L	TUYAU FLEXIBLE	1					
37	DS2040336	HOSE PF3/4-1370L	TUYAU FLEXIBLE	1					
48	124-00192	CLAMP;HOSE	FIXATION DE TUYAU	4					
49	621-01811	PLATE;CLAMP	PLAQUE	2					
50	2114-1737	SPACER	BAGUE D'ECARTEMENT	2					
51	S0566053	BOLT M16X2.0X90	BOULON A 6PANS	2					
52	S5010913	WASHER M16	RONDELLE PLATE	2					
53	S5102903	WASHER;SPRING M16	RONDELLE ELASTIQUE	2					
56	DS2040335	HOSE PF3/4-1270L	TUYAU FLEXIBLE	1					
57	DS2045304	HOSE PF3/4-1190L	TUYAU FLEXIBLE	1					

DATE	AUG. 12, 2002
1st EDITION	

Fig. 1300 ENGINE CONTROL ASS'Y
COMMANDE REGIME MOTEUR

Serial No. ;

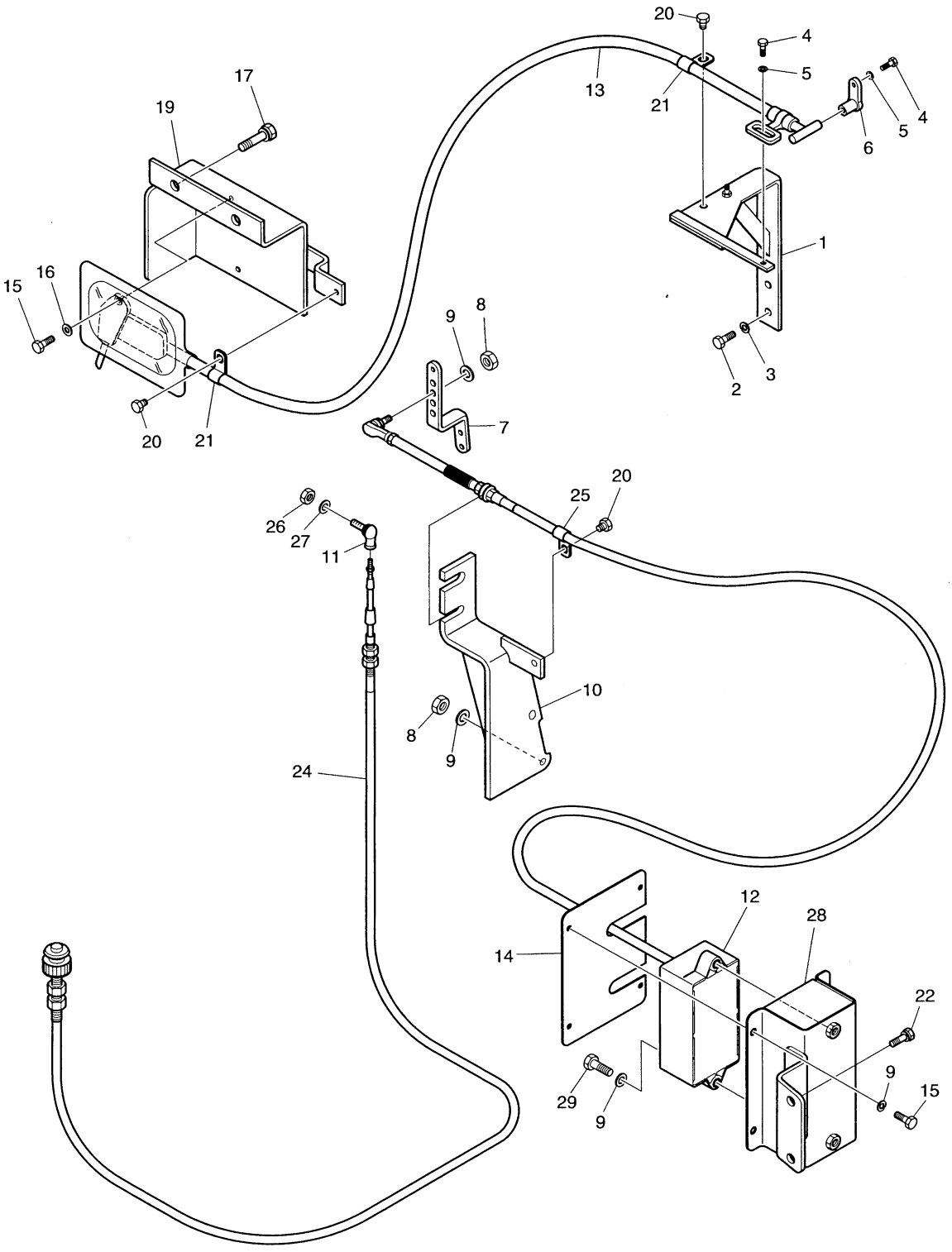

DATE	AUG. 12, 2002
1st EDITION	

Fig. 1300 ENGINE CONTROL ASS'Y COMMANDE REGIME MOTEUR

Serial No. ;

Key No.	Part No.	Description	Description	Q'ty	S.C	Serial No.	ICA	Replaceable part	
								Part No.	Q'ty
1300--	201-00132A	ENGINE CONTROL ASSY	COMMANDE REGIME	-	D				
1	2197-1777A	BRACKET	SUPPORT	1					
2	S0711853	BOLT M10X1.25X20	BOULON A 6PANS	2					
3	S5102603	WASHER;SPRING M10	RONDELLE ELASTIQUE	2					
4	S0504553	BOLT M6X1.0X14	BOULON A 6PANS	3					
5	S5102303	WASHER;SPRING M6	RONDELLE ELASTIQUE M6	3					
6	2150-1122	HOOK;CABLE	CROCHET	1					
7	133-00172	LEVER	LEVIER	1					
8	S4012533	NUT M8X1.25	ECROU	3					
9	S5102503	WASHER;SPRING M8	RONDELLE ELASTIQUE	9					
10	195-02079	BRACKET	SUPPORT	1					
11	2138-9006B	JOINT;BALL M5X0.8	ENSEMBLE DE JOINT	1					
12	523-00006	MOTOR;E/G CONTROL	MOTEUR	1					
13	2523-9016	MOTOR;E/G STOP	MOTEUR	1					
14	159-00227	COVER	COUVERCLE	1					
15	S0508953	BOLT M8X1.25X22	BOULON A 6PANS	6					
16	S5010513	WASHER;PLAIN M8	RONDELLE	2					
17	2120-2196D2	BOLT M10X1.5X25	BOULON A 6PANS	2					
19	195-02148	BRACKET;E/G STOP MOTOR	SUPPORT	1					
20	120-00276	BOLT M8X1.25X12	BOULON A 6PANS	3					
21	2124-1509D10	CLIP	ATTACHE	2					
22	2120-2196D10	BOLT;SET M12X1.75X25	BOULON A 6PANS	2					
24	2139-6055D16	CABLE:CONTROL 3800L	CABLE	1					
25	2124-1509D1	CLIP	ATTACHE	1					
26	S4012233	NUT M5X0.8	ECROU	1					
27	S5102203	WASHER;SPRING M5	RONDELLE ELASTIQUE	1					
28	195-02157	BRACKET	SUPPORT	1					
29	S0509353	BOLT M8X1.25X35	BOULON A 6PANS	2					

DATE	JUN. 30, 2006
REV. NO.	EXB06-08

Fig. 1310 PILOT PIPING(1)
CONDUITES DE PILOTE

Serial No. ;

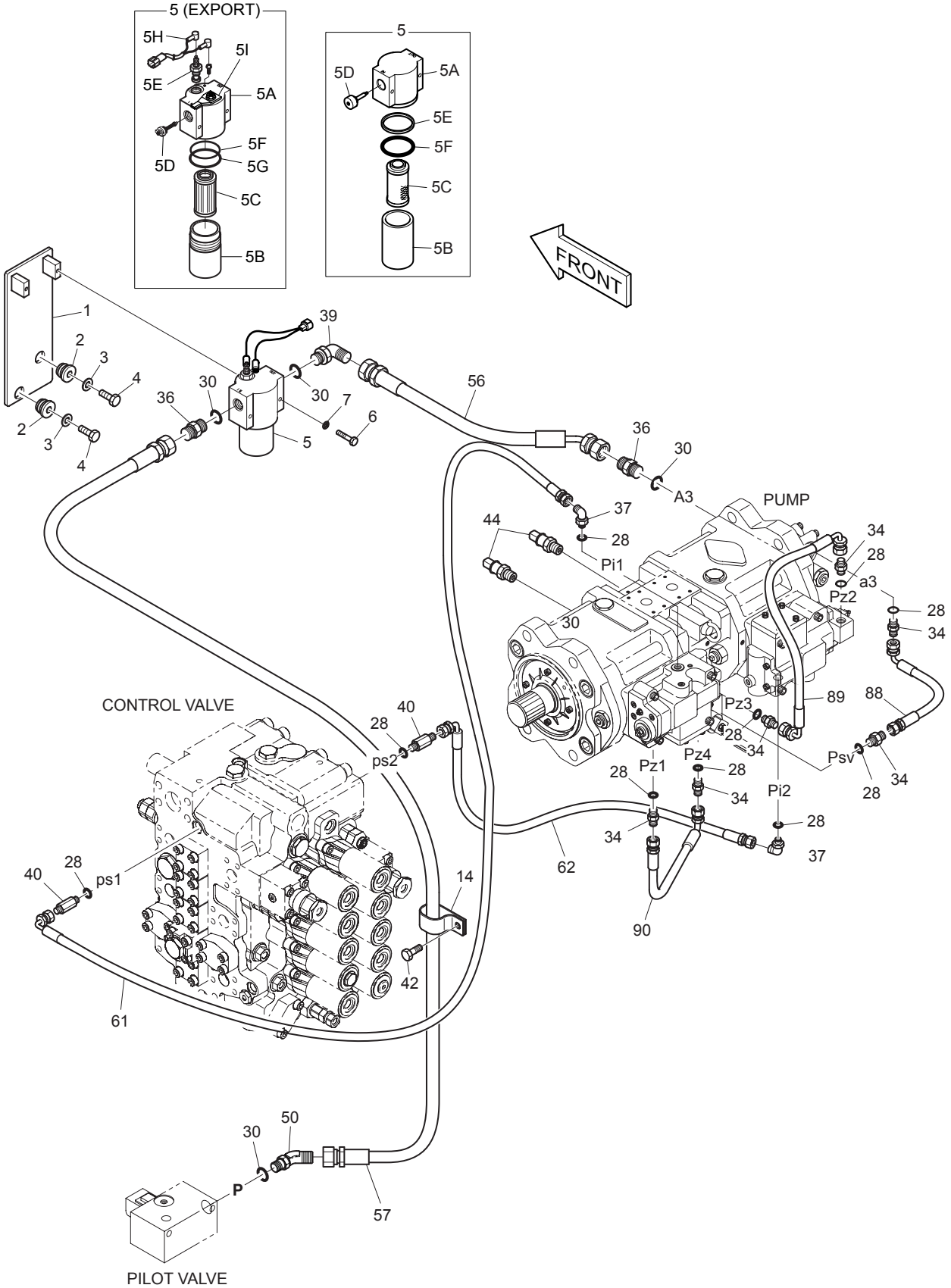

DATE	JUN. 30, 2006
REV. NO.	EXB06-08

Fig. 1310 PILOT PIPING(1) CONDUITES DE PILOTE

Serial No. ;

Key No.	Part No.	Description	Description	Q'ty	S.C	Serial No.	ICA	Replaceable part	
								Part No.	Q'ty
1310--	400-00852A	PILOT PIPING(1)	CONDUITES DE PILOTE	-	D				
1	195-01601	BRACKET	SUPPORT	1					
2	198-00016	RUBBER	CAOUTCHOUC	2					
3	2114-1058D10	WASHER;PLAIN	RONDELLE PLATE	2					
4	S0512253	BOLT M10X1.5X30	BOULON A 6PANS	2					
5	2471-9062	FILTER;PILOT	FILTRE	1					
5A	-	. HEAD	. CARTER	1					
5B	2472-7003	. CASE	. CARTER	1					
5C	2471-1154	. ELEMENT;PILOT FILTER	. ELEMENT FILTRANT	1					
5D	2426-1237	. VALVE;BY-PASS	. VANNE	1					
5E	Y-3738-05	. RING;BACK UP	. JONT TORIQUE	1					
5F	Y-3738-04	. O-RING	. BAGUE	1					
5	471-00075A	FILTER;PILOT(EXPORT)	FILTRE	1					
5A	-	. HEAD	. CARTER	1					
5B	2472-7003	. CASE	. CARTER	1					
5C	2471-1154	. ELEMENT;PILOT FILTER	. ELEMENT FILTRANT	1					
5D	2426-1237	. VALVE;BY-PASS	. VANNE	1					
5E	2471-1155A	. INDICATOR	. INDICATEUR	1					
5F	Y-3738-04	. O-RING	. BAGUE	1					
5G	Y-3738-05	. RING;BACK UP	. JONT TORIQUE	1					
5H	530-00236	. HARNESS;PILOT FILTER	. HARNAIS	1					
5I	2197-1661	. BRACKET	. SUPPORT	1					
6	S0553753	BOLT M6X1.0X55	BOULON A 6PANS	2					
7	S5102303	WASHER;SPRING	RONDELLE ELASTIQUE M6	2					
14	124-00208D9	CLIP	CLIP	2		1001–1128			
	124-00208D9	CLIP	CLIP	1		1129–			
28	S8000111	O-RING	JONT TORIQUE	10					
30	S8000181	O-RING	JONT TORIQUE	4					
34	2181-1126D14	ADAPTER PFO1/4-PF1/4	ADAPTEUR	6					
36	2181-1126D6	ADAPTER PFO1/2-PF1/2	ADAPTEUR	2					
37	2181-1702D4	ELBOW PFO1/4-PF1/4	COUDE	2					
39	2181-1702D2	ELBOW PFO1/2-PF1/2	COUDE	1					
40	2181-1126D34	ADAPTER;LONG	ADAPTEUR	2					
42	120-00276	BOLT M8X1.25X12	BOULON	2		1001–1128			
	120-00276	BOLT M8X1.25X12	BOULON	1		1129–			
44	2547-9045	SENSOR;PRESSURE	CAPTEUR	2					
50	2181-2419D3	ELBOW;45°	COUDE	1					
56	2184-1060D169	HOSE PF1/2-550L	TUYAU FLEXIBLE	1					

DATE	JUN. 30, 2006
REV. NO.	EXB06-08

Fig. 1310 PILOT PIPING(1)
CONDUITES DE PILOTE

Serial No. ;

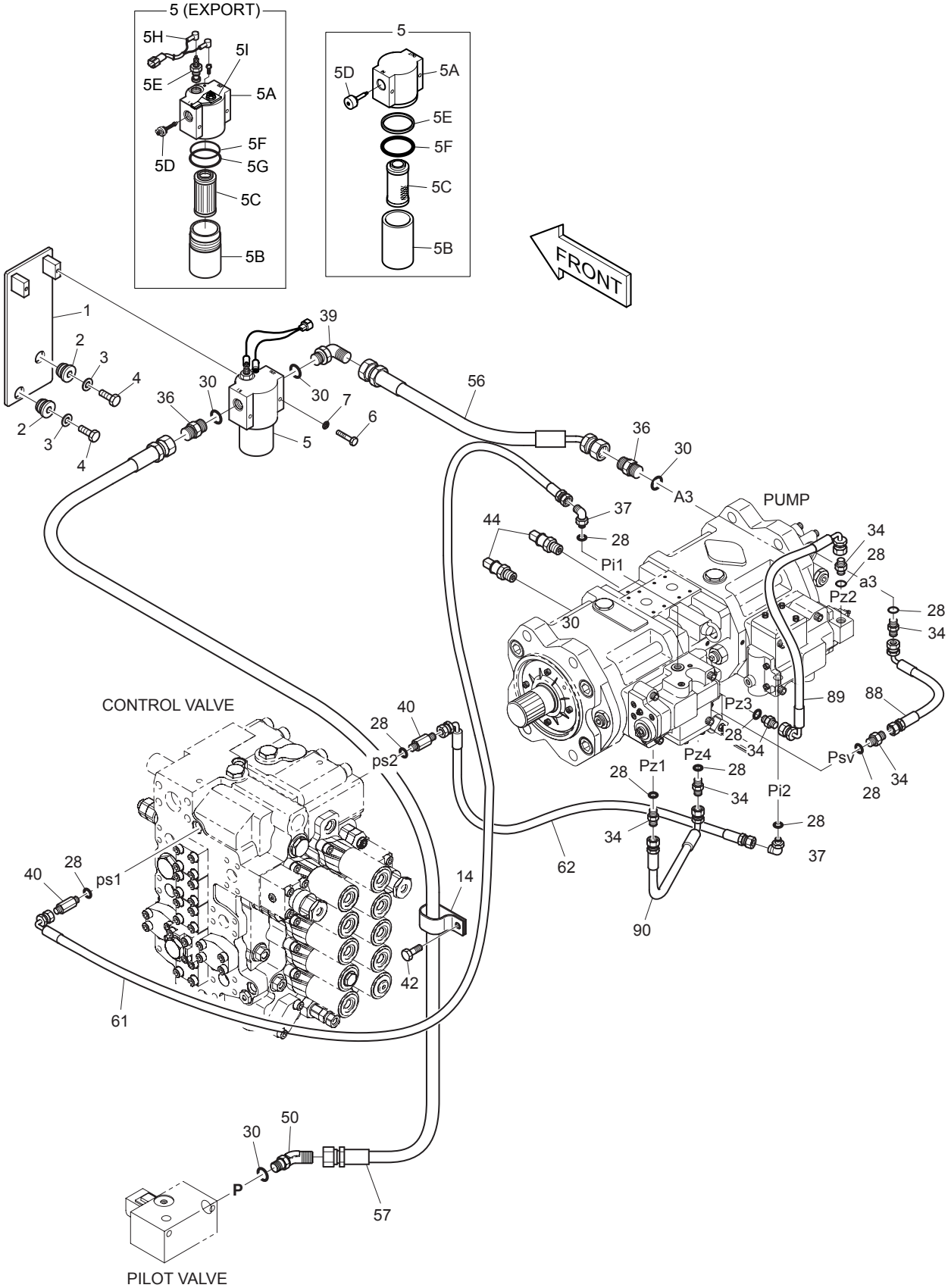

DATE	JUN. 30, 2006
REV. NO.	EXB06-08

Fig. 1310 PILOT PIPING(1) CONDUITES DE PILOTE

Serial No. ;

Key No.	Part No.	Description	Description	Q'ty	S.C	Serial No.	ICA	Replaceable part	
								Part No.	Q'ty
1310-57	DS2053757	HOSE PF1/2-1750L	TUYAU FLEXIBLE	1					
61	2184-1046D177	HOSE PF1/4-2300L	TUYAU FLEXIBLE	1					
62	2184-1046D188	HOSE PF1/4-2400L	TUYAU FLEXIBLE	1					
88	**2184-1046D198**	**HOSE PF1/4-400L**	TUYAU FLEXIBLE	1					
89	2184-1061D245	HOSE PF1/4-430L	TUYAU FLEXIBLE	1					
90	2184-1046D215	HOSE PF1/4-320L	TUYAU FLEXIBLE	1					

DATE	DEC. 29, 2005
REV. NO.	EXB05-20

Fig. 1320 PILOT PIPING(2)
CONDUITES DE PILOTE

Serial No. ;

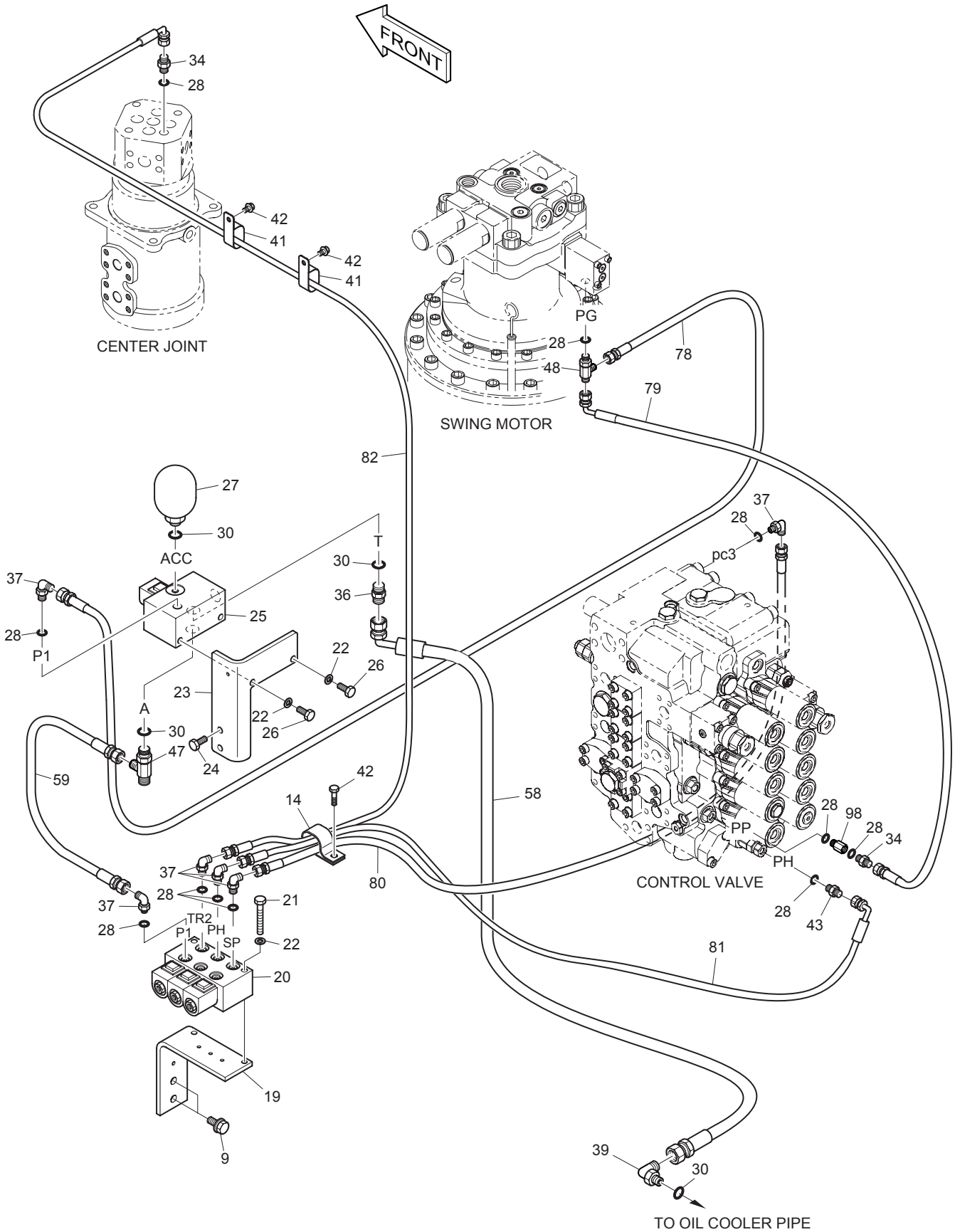

DATE	DEC. 29, 2005
REV. NO.	EXB05-20

Fig. 1320 PILOT PIPING(2) CONDUITES DE PILOTE

Serial No ;

Key No.	Part No.	Description	Description	Q'ty	S.C	Serial No.	ICA	Replaceable part	
								Part No.	Q'ty
1320--	**400-00852B**	**PILOT PIPING(2)**	CONDUITES DE PILOTE	-	D				
9	2120-2196D8	BOLT;SET M12X1.75X30	BOULON	2					
14	124-00208D9	CLIP	CLIP	1					
19	195-01993	BRACKET	SUPPORT	1					
20	426-00163	VALVE;SOLENOID	VANNE	1		1001–1404	I	426-00163A	1
	426-00163A	VALVE;SOLENOID	VANNE	1		1405–			
21	S0558953	BOLT M10X1.5X70	BOULON A 6PANS	2					
22	S5102603	WASHER;SPRING	RONDELLE ELASTIQUE	4					
23	195-01583B	BRACKET	SUPPORT	1					
24	2120-2196D4	BOLT;SET M10X1.5X30	BOULON A 6PANS	2					
25	2426-9039B	VALVE;PILOT	VANNE	1		1001–1404	I	2426-9039C	1
	2426-9039C	VALVE;PILOT	VANNE	1		1405–			
26	S0512053	BOLT M10X1.5X25	BOULON A 6PANS	2					
27	2460-9060	ACCUMULATOR;PILOT	ACCUMULATEUR	1					
28	S8000111	O-RING	JONT TORIQUE	10		1001–2156			
	S8000111	**O-RING**	JONT TORIQUE	11		**2157**–			
30	S8000181	O-RING	JONT TORIQUE	4					
34	2181-1126D14	ADAPTER PFO1/4-PF1/4	ADAPTEUR	2					
36	2181-1126D6	ADAPTER PFO1/2-PF1/2	ADAPTEUR	1					
37	2181-1702D4	ELBOW PFO1/4-PF1/4	COUDE	6					
39	2181-1702D2	ELBOW PFO1/2-PF1/2	COUDE	1					
41	124-00209D1	CLIP	CLIP	2					
42	120-00276	BOLT M8X1.25X12	BOULON	3					
43	2181-1126D75	ADAPTER;LONG	ADAPTEUR	1					
47	2181-1951D19	TEE	TE	1					
48	2181-1951D1	TEE	TE	1					
58	2184-1036D70	HOSE PF1/2-450L	TUYAU FLEXIBLE	1					
59	2184-1045D159	HOSE PF1/4-570L	TUYAU FLEXIBLE	1					
78	2184-1045D157	HOSE PF1/4-1500L	TUYAU FLEXIBLE	1					
79	2184-1046D148	HOSE PF1/4-1450L	TUYAU FLEXIBLE	1		1001–1779			
	2184-1046D108	HOSE PF1/4-1300L	TUYAU FLEXIBLE	1		1780–			
80	2184-1045D77	HOSE PF1/4-1480L	TUYAU FLEXIBLE	1					
81	2184-1046D162	HOSE PF1/4-920L	TUYAU FLEXIBLE	1					
82	2184-1046D169	HOSE PF1/4-1600L	TUYAU FLEXIBLE	1					
98	**471-00118**	**FILTER;REDUCER**	FILTRE	1		**2157**–			

DATE	DEC. 30, 2004
REV. NO.	EXB04-09

Fig. 1330 PILOT PIPING(3)
CONDUITES DE PILOTE

Serial No. ;

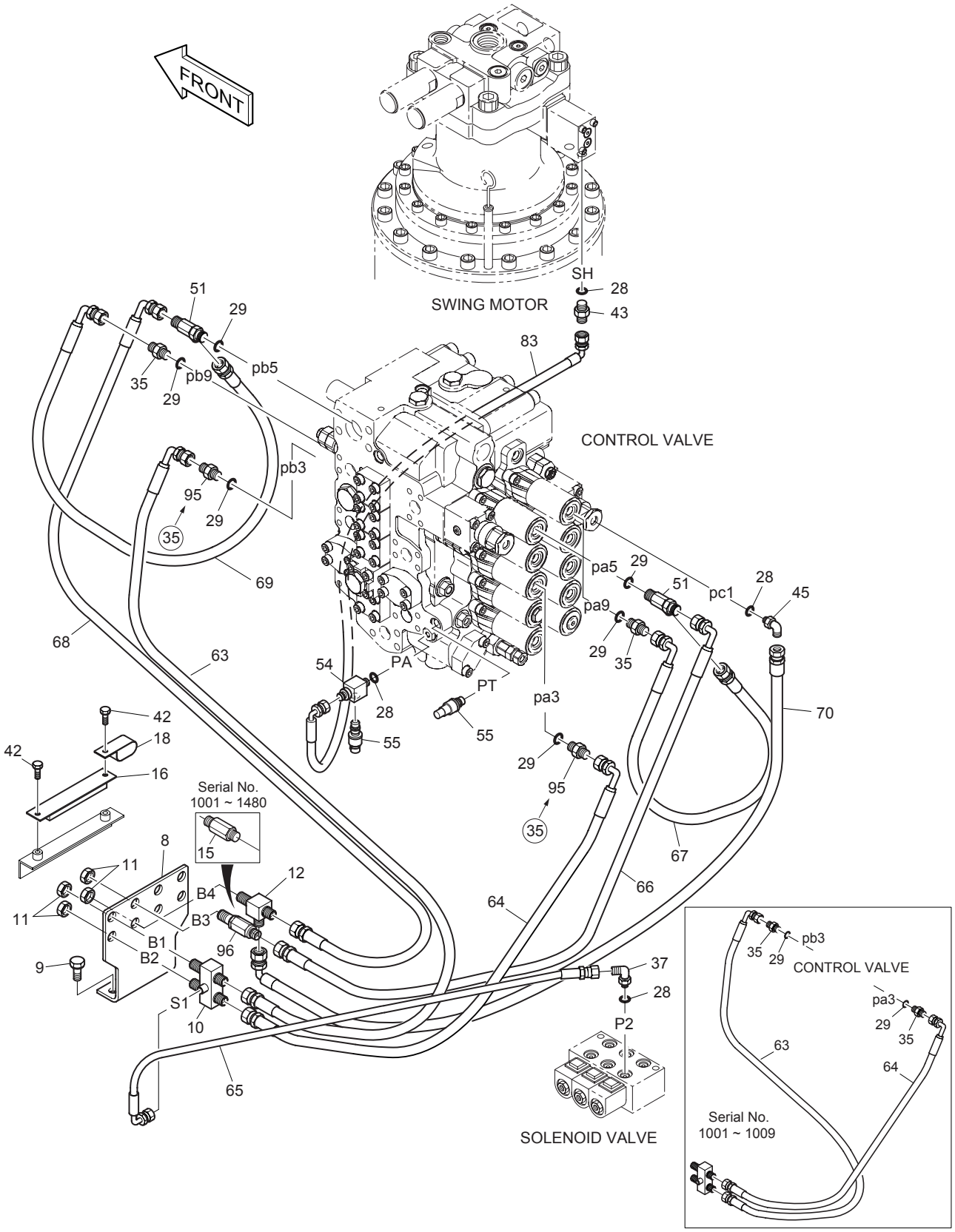

DATE	DEC. 30, 2004
REV. NO.	EXB04-09

Fig. 1330 PILOT PIPING(3) CONDUITES DE PILOTE

Serial No ;

Key No.	Part No.	Description	Description	Q'ty	S.C	Serial No.	ICA	Replaceable part	
								Part No.	Q'ty
1330--	400-00852A	PILOT PIPING(3)	CONDUITES DE PILOTE	-	D				
8	195-01469A	BRACKET	SUPPORT	1					
9	2120-2196D8	BOLT;SET M12X1.75X30	BOULON	2					
10	420-00307	VALVE;SHUTTLE	VANNE	1					
11	121-00010D1	NUT	ECROU	4					
12	181-00086D2	TEE 3PF3/8	TE	1					
15	**181-00078D1**	**ADAPTER**	ADAPTEUR	1		**1001–1480**			
16	124-00267	CLAMP	ATTACHE	1					
18	124-00209D4	CLIP	CLIP	1					
28	S8000111	O-RING	JONT TORIQUE	4					
29	S8000141	O-RING	JONT TORIQUE	6					
35	2181-1126D7	ADAPTER PFO3/8-PF3/8	ADAPTEUR	4		1001–1322			
	2181-1126D7	**ADAPTER PFO3/8-PF3/8**	ADAPTEUR	2		**1323–**			
37	2181-1702D4	ELBOW	COUDE	1					
42	120-00276	BOLT M8X1.25X12	BOULON	2					
43	2181-1126D75	ADAPTER;LONG	ADAPTEUR	1					
45	2181-1702D3	ELBOW	COUDE	1					
51	2181-1951D16	TEE	TE	2					
54	2181-2635	ADAPTER	ADAPTEUR	1					
55	2549-9112	SWITCH;PRESSURE	INTERRUPTEUR	2					
63	DS2055733	HOSE PF3/8-1750L	TUYAU FLEXIBLE	1					
64	2184-1046D123	HOSE PF3/8-1500L	TUYAU FLEXIBLE	1					
65	2184-1046D44	HOSE PF1/4-460L	TUYAU FLEXIBLE	1		1001–1373			
	2184-1046D35	**HOSE PF1/4-680L**	TUYAU FLEXIBLE	1		**1374–**			
66	2184-1046D291	HOSE PF3/8-1550L	TUYAU FLEXIBLE	1					
67	2184-1046D213	HOSE PF3/8-1050L	TUYAU FLEXIBLE	1					
68	DS2055735	HOSE PF3/8-1850L	TUYAU FLEXIBLE	1					
69	2184-1046D247	HOSE PF3/8-1000L	TUYAU FLEXIBLE	1					
70	2184-1046D291	HOSE PF3/8-1550L	TUYAU FLEXIBLE	1					
83	2184-1061D191	HOSE PF1/4-1350L	TUYAU FLEXIBLE	1					
95	**181-00144D5**	**ADAPTER;ORIFICE**	ADAPTEUR	2		**1323–**			
96	**420-00352D1**	**VALVE;SHOCKLESS**	VANNE	1		**1481–**			

DATE	JUN. 30, 2005
REV. NO.	EXB05-05

Fig. 1340 PILOT PIPING(4)
CONDUITES DE PILOTE

Serial No. ;

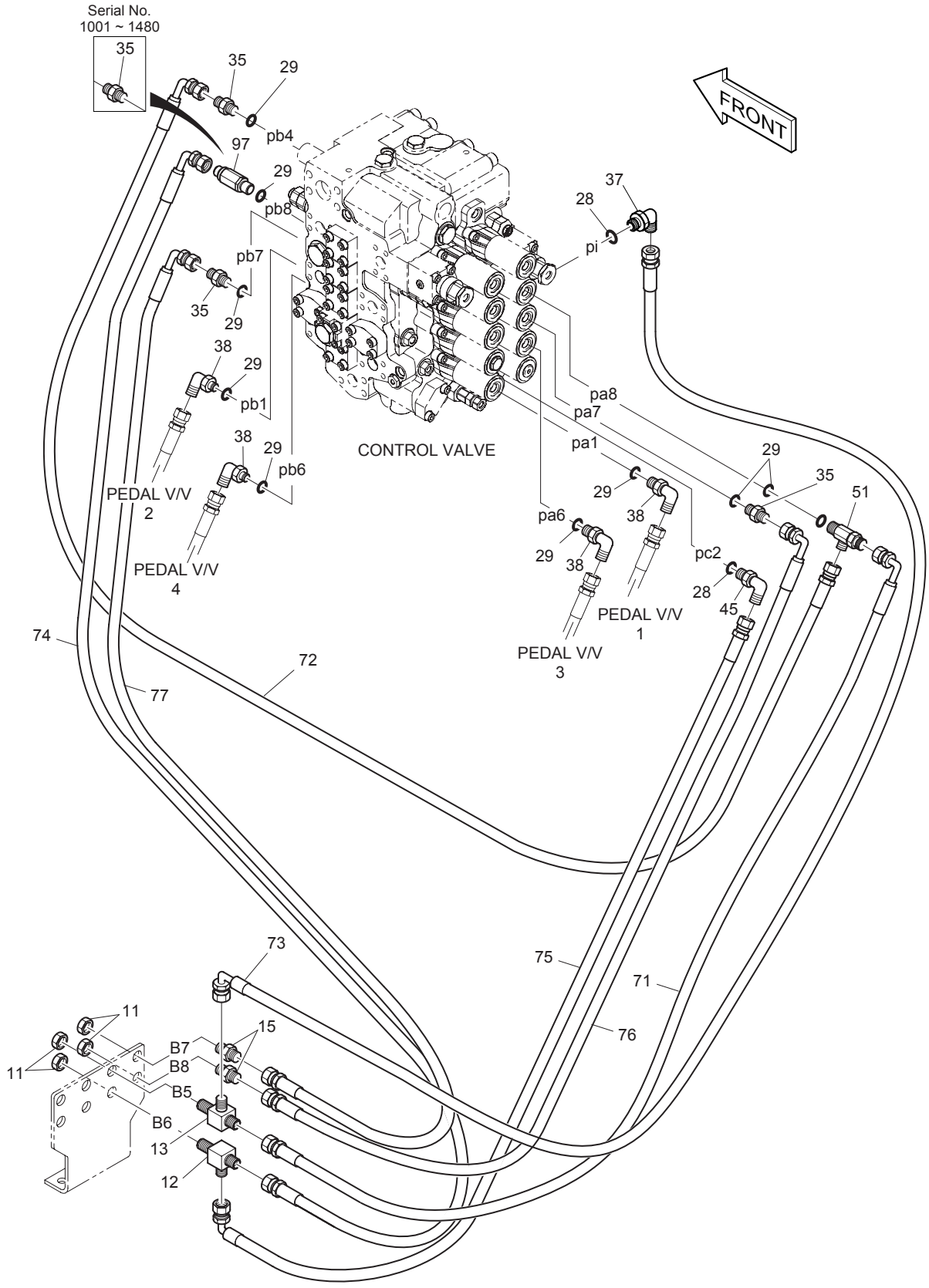

DATE	JUN. 30, 2005
REV. NO.	EXB05-05

Fig. 1340 PILOT PIPING(4) CONDUITES DE PILOTE

Serial No ;

Key No.	Part No.	Description	Description	Q'ty	S.C	Serial No.	ICA	Replaceable part	
								Part No.	Q'ty
1340--	400-00852A	PILOT PIPING(4)	CONDUITES DE PILOTE	-	D				
11	121-00010D1	NUT	ECROU	4					
12	181-00086D2	TEE 3PF3/8	TE	1					
13	181-00086D1	TEE 2PF3/8-PF1/4	TE	1					
15	181-00078D1	ADAPTER	ADAPTEUR	2					
28	S8000111	O-RING	JONT TORIQUE	2					
29	S8000141	O-RING	JONT TORIQUE	9					
35	2181-1126D7	ADAPTER PFO3/8-PF3/8	ADAPTEUR	4		1001–1480			
	2181-1126D7	ADAPTER PFO3/8-PF3/8	ADAPTEUR	3		1481–			
37	2181-1702D4	ELBOW PFO1/4-PF1/4	COUDE	1					
38	2181-1702D10	ELBOW PFO3/8-PF1/4	COUDE	4					
45	2181-1702D3	ELBOW FPO1/4-PF3/8	COUDE	1					
51	2181-1951D16	TEE	TE	1					
71	2184-1046D275	HOSE PF3/8-1650L	TUYAU FLEXIBLE	1					
72	2184-1046D284	HOSE PF3/8-1800L	TUYAU FLEXIBLE	1					
73	2184-1046D149	HOSE PF1/4-1800L	TUYAU FLEXIBLE	1					
74	DS2055733	HOSE PF3/8-1750L	TUYAU FLEXIBLE	1		1001–1779			
	DS2055732	**HOSE PF3/8-1900L**	TUYAU FLEXIBLE	1		**1780–**			
75	2184-1046D275	HOSE PF3/8-1650L	TUYAU FLEXIBLE	1					
76	2184-1046D291	HOSE PF3/8-1550L	TUYAU FLEXIBLE	1					
77	DS2055676	HOSE PF3/8-1600L	TUYAU FLEXIBLE	1					
97	K1003664D1	VALVE;SHOCKLESS	VANNE	1		1481–			

DATE	JUL. 30, 2003
REV. NO.	EXB03-13

Fig. 1350 PILOT PIPING(5)
CONDUITES DE PILOTE

Serial No. ;

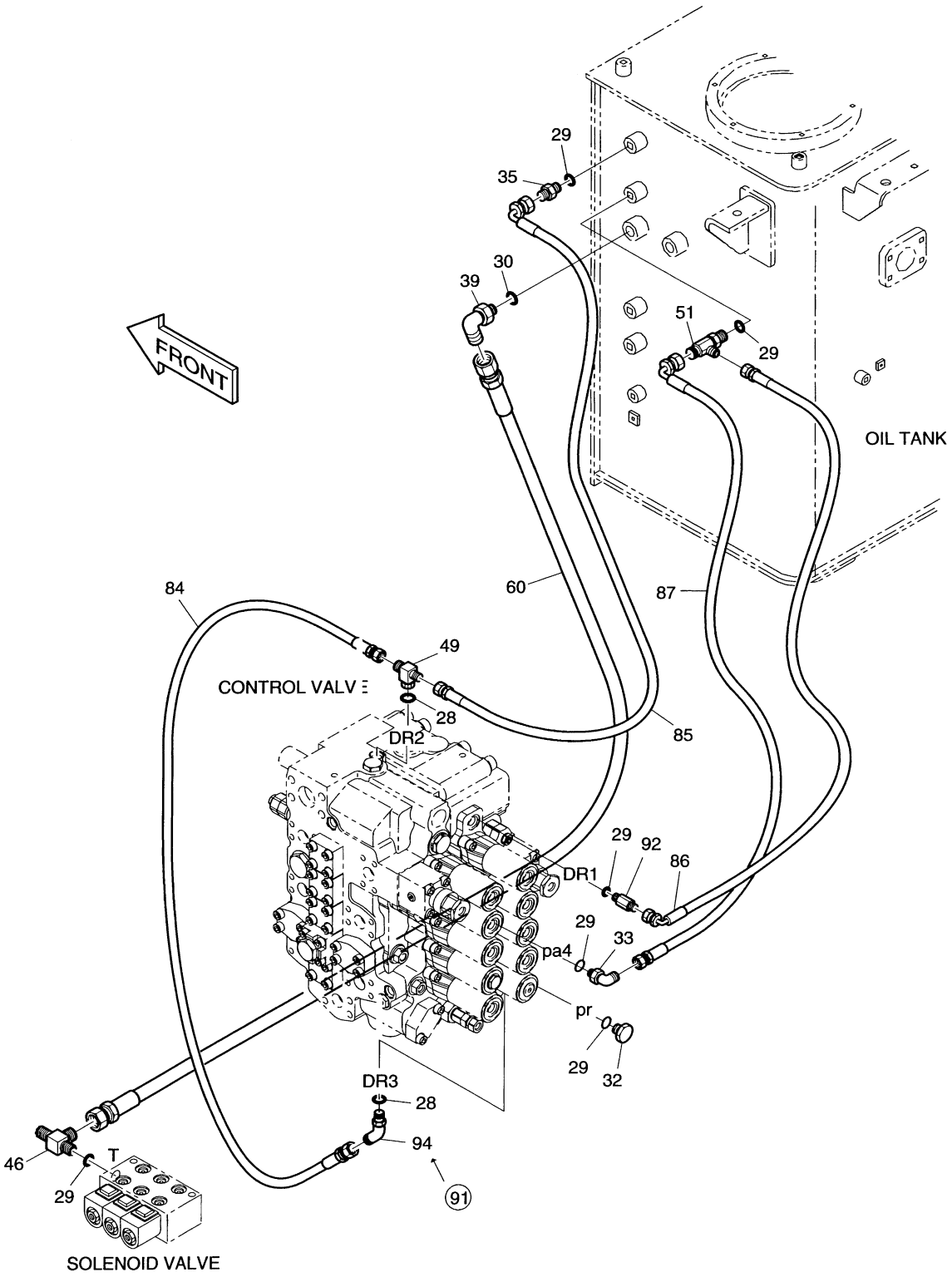

DATE	JUL. 30, 2003
REV. NO.	EXB03-13

Fig. 1350 PILOT PIPING(5) CONDUITES DE PILOTE

Serial No ;

Key No.	Part No.	Description	Description	Q'ty	S.C	Serial No.	ICA	Replaceable part	
								Part No.	Q'ty
1350--	400-00852A	PILOT PIPING(5)	CONDUITES DE PILOTE	-	D				
28	S8000111	O-RING	JONT TORIQUE	2					
29	S8000141	O-RING	JONT TORIQUE	6					
30	S8000181	O-RING	JONT TORIQUE	1					
32	2181-1950D2	PLUG	BOUCHON	1					
33	2181-1702D5	ELBOW PFO3/8-PF3/8	COUDE	1					
35	2181-1126D7	ADAPTER PFO3/8-PF3/8	ADAPTEUR	1					
39	2181-1702D2	ELBOW	COUDE	1					
46	DS2349012	TEE	TE	1					
49	2181-2281D21	TEE	TE	1					
51	2181-1951D16	TEE	TE	1					
60	2184-1026D9	HOSE PF1/2-1700L	TUYAU FLEXIBLE	1		1001-1002			
	2184-1026D435	**HOSE PF1/2-1900L**	TUYAU FLEXIBLE	1		**1003-**			
84	2184-1045D64	HOSE PF1/4-920L	TUYAU FLEXIBLE	1					
85	2184-1046D158	HOSE PF3/8-825L	TUYAU FLEXIBLE	1					
86	DS2059421	HOSE PF3/8-550L	TUYAU FLEXIBLE	1					
87	2184-1045D252	HOSE PF3/8-690L	TUYAU FLEXIBLE	1					
91	**2181-2419D1**	**ELBOW**	COUDE	1		**1001-1002**			
92	2181-1126D27	ADAPTER	ADAPTEUR	1					
94	**2181-2419D1**	**ELBOW**	COUDE	1		**1003-**			

DATE	DEC. 15, 2006
REV. NO.	EXB06-13

Fig. 1360 PILOT PIPING(6)
CONDUITES DE PILOTE

Serial No. ;

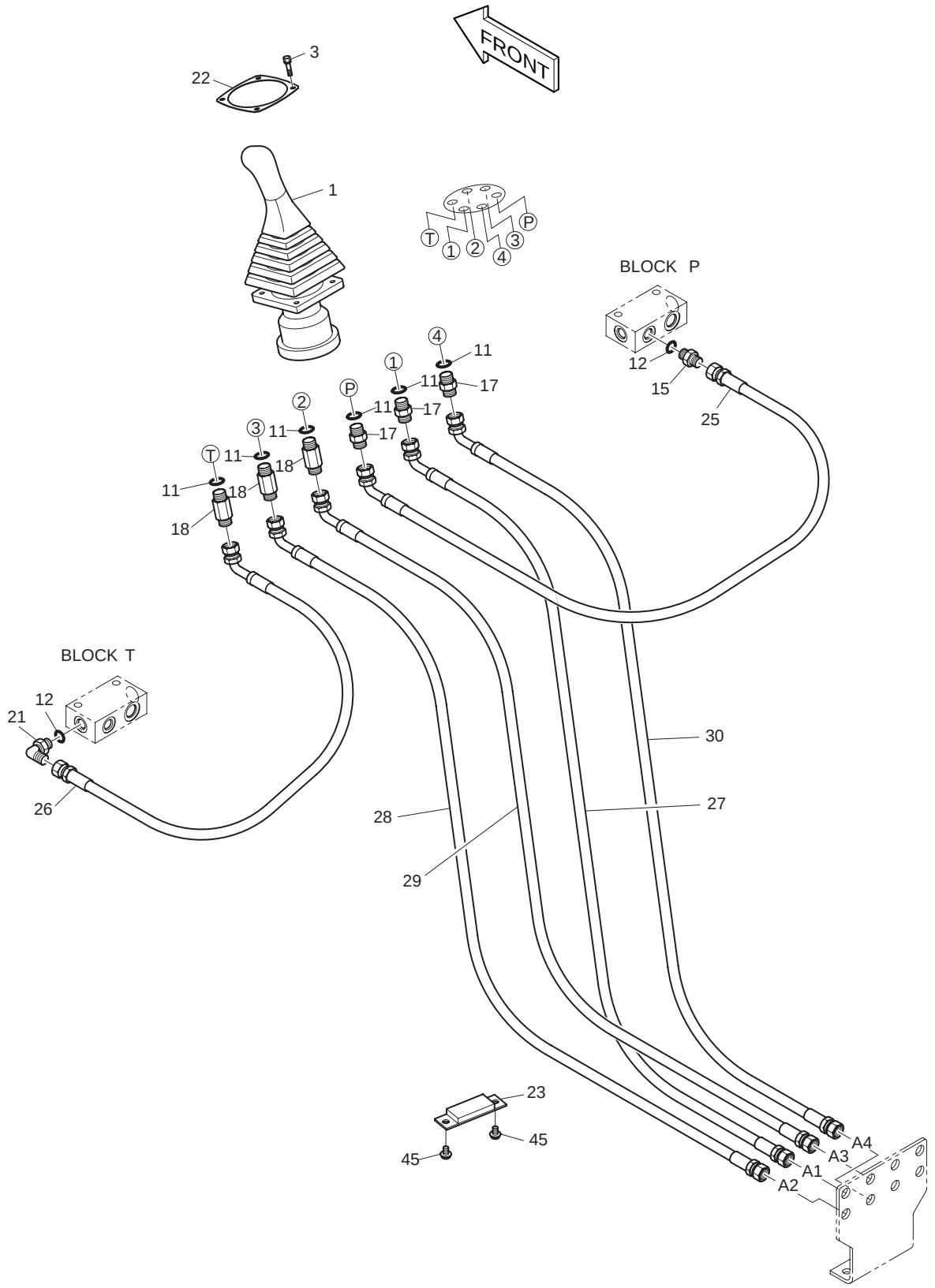

DATE	DEC. 15, 2006
REV. NO.	EXB06-13

Fig. 1360 PILOT PIPING(6) CONDUITES DE PILOTE

Serial No. ;

Key No.	Part No.	Description	Description	Q'ty	S.C	Serial No.	ICA	Replaceable part	
								Part No.	Q'ty
1360--	400-00853A	PILOT PIPING(6)	CONDUITES DE PILOTE	-	D				
1	420-00342A	VALVE;REMOCON(L.H)	VANNE	1		1001–2219	I	420-00342B	1
	420-00342B	**VALVE;REMOCON(L.H)**	VANNE	1		**2220–**			
3	S2205066	BOLT;SOCKET	BOULON DE PLOT	4					
11	S8000111	O-RING	JONT TORIQUE	6					
12	S8000141	O-RING	JONT TORIQUE	2					
15	2181-1126D7	ADAPTER PFO3/8-PF3/8	ADAPTEUR	1					
17	2181-1126D89	ADAPTER PFO1/4-PF3/8	ADAPTEUR	3					
18	2181-1126D120	ADAPTER PFO1/4-PF3/8	ADAPTEUR	3					
21	2181-1702D5	ELBOW PFO3/8-PF3/8	COUDE	1					
22	2621-2752	PLATE	PLAQUE CAOUTCHOUC	1					
23	124-00226A	CLAMP;HOSE	FIXATION DE TUYAU	1					
25	2184-1267D9	HOSE PF3/8-1950L	TUYAU FLEXIBLE	1					
26	2184-1267D10	HOSE PF3/8-2050L	TUYAU FLEXIBLE	1					
27	DS2062020	HOSE PF3/8-2350L	TUYAU FLEXIBLE	1					
28	DS2062020	HOSE PF3/8-2350L	TUYAU FLEXIBLE	1					
29	DS2062020	HOSE PF3/8-2350L	TUYAU FLEXIBLE	1					
30	DS2062020	HOSE PF3/8-2350L	TUYAU FLEXIBLE	1					
45	120-00276	BOLT;SET M8X1.25X12	BOULON	2					

DATE	DEC. 15, 2006
REV. NO.	EXB06-13

Fig. 1370 PILOT PIPING(7)
CONDUITES DE PILOTE

Serial No. ;

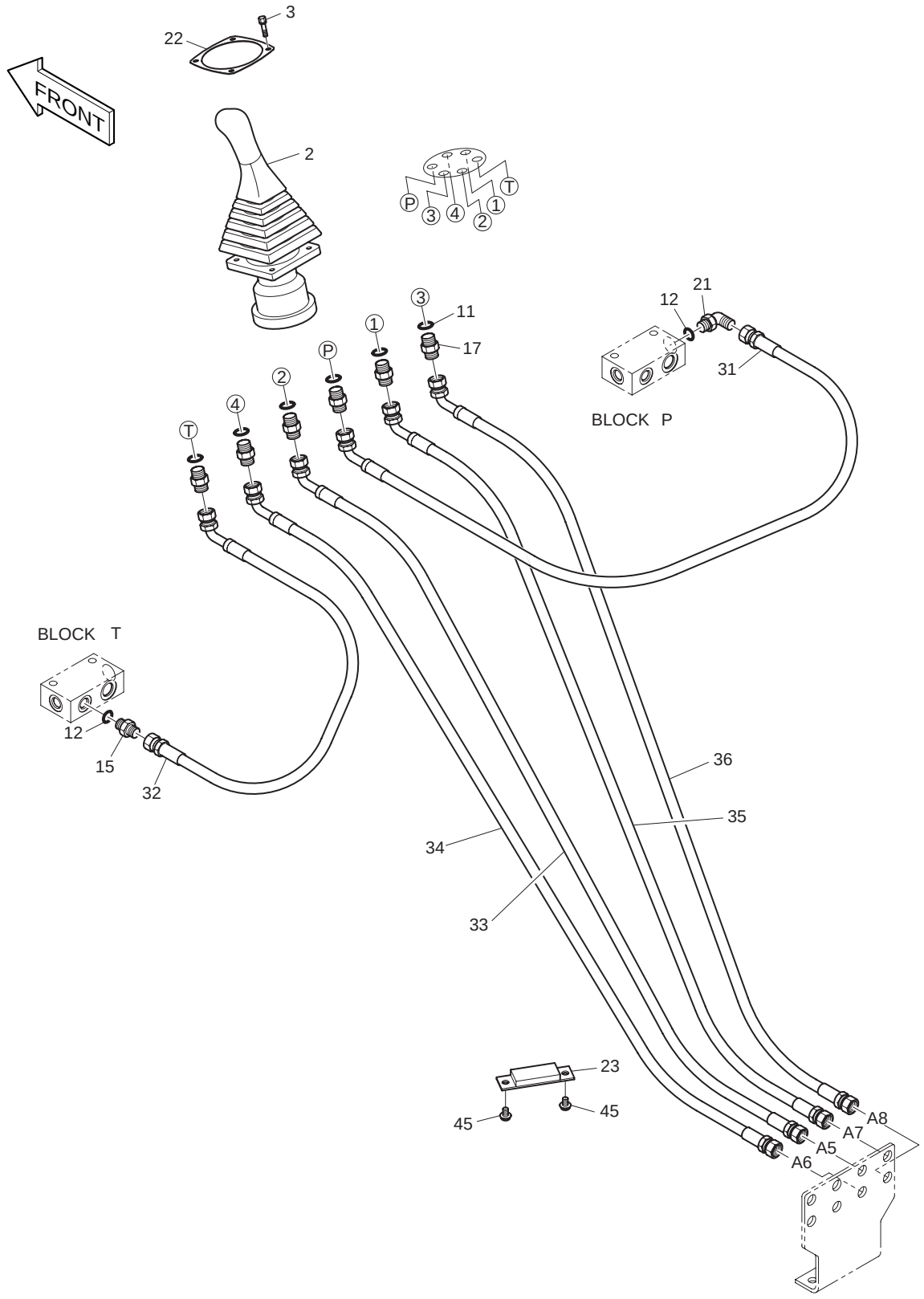

DATE	DEC. 15, 2006
REV. NO.	EXB06-13

Fig. 1370 PILOT PIPING(7) CONDUITES DE PILOTE

Serial No. ;

Key No.	Part No.	Description	Description	Q'ty	S.C	Serial No.	ICA	Replaceable part	
								Part No.	Q'ty
1370--	400-00853A	PILOT PIPING(7)	CONDUITES DE PILOTE	-	D				
2	420-00343A	VALVE;REMOCON(R.H)	VANNE	1		1001–2219	I	420-00343B	1
	420-00343B	**VALVE;REMOCON(R.H)**	VANNE	1		**2220–**			
3	S2205066	BOLT;SOCKET	BOULON DE PLOT	4					
11	S8000111	O-RING	JONT TORIQUE	6					
12	S8000141	O-RING	JONT TORIQUE	2					
15	2181-1126D7	ADAPTER PFO3/8-PF3/8	ADAPTEUR	1					
17	2181-1126D89	ADAPTER PFO1/4-PF3/8	ADAPTEUR	6					
21	2181-1702D5	ELBOW PFO3/8-PF3/8	COUDE	1					
22	2621-2752	PLATE	PLAQUE CAOUTCHOUC	1					
23	124-00226A	CLAMP;HOSE	FIXATION DE TUYAU	1					
31	2184-1060D151	HOSE PF3/8-1950L	TUYAU FLEXIBLE	1					
32	2184-1060D151	HOSE PF3/8-1950L	TUYAU FLEXIBLE	1					
33	2184-1060D147	HOSE PF3/8-2200L	TUYAU FLEXIBLE	1					
34	2184-1060D147	HOSE PF3/8-2200L	TUYAU FLEXIBLE	1					
35	2184-1060D147	HOSE PF3/8-2200L	TUYAU FLEXIBLE	1					
36	2184-1060D147	HOSE PF3/8-2200L	TUYAU FLEXIBLE	1					
45	120-00276	BOLT;SET M8X1.25X12	BOULON	2					

DATE	AUG. 12, 2002
1st EDITION	

Fig. 1380 PILOT PIPING(8) CONDUITES DE PILOTE

Serial No. ;

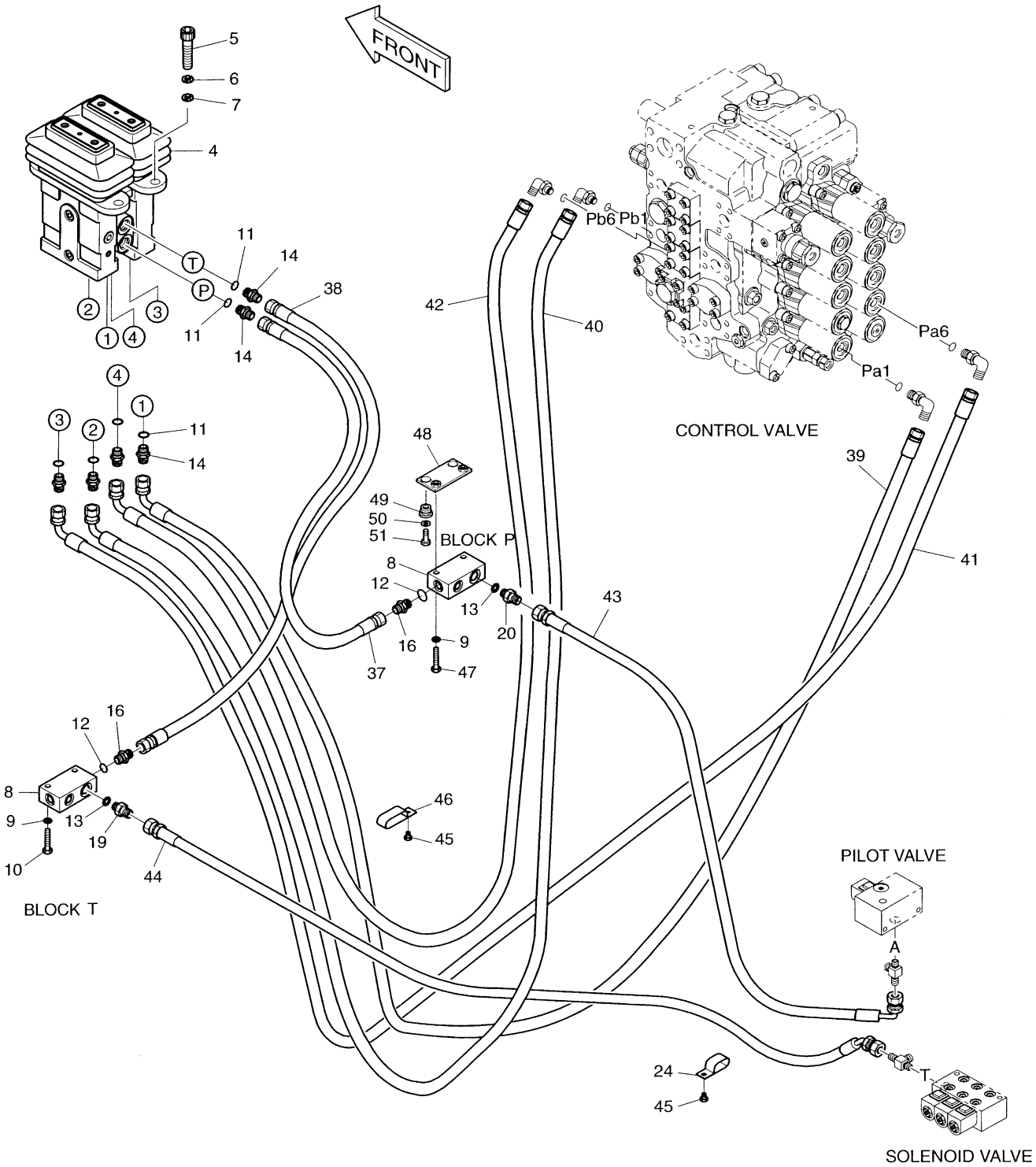

DATE	AUG. 12, 2002
1st EDITION	

Fig. 1380 PILOT PIPING(8) CONDUITES DE PILOTE

Serial No. ;

Key No.	Part No.	Description	Description	Q'ty	S.C	Serial No.	ICA	Replaceable part	
								Part No.	Q'ty
1380--	400-00853A	PILOT PIPING(8)	CONDUITES DE PILOTE	-	D				
4	420-00030	VALVE;PEDAL	VANNE	1					
5	S2212266	BOLT;SOCKET M10X1.5X30	BOULON A 6PANS	4					
6	S5110603	WASHER	RONDELLE ELASTIQUE	4					
7	S5010613	WASHER;PLAIN	RONDELLE PLATE	4					
8	2423-1470	BLOCK	BLOC	2					
9	S5102603	WASHER;SPRING M10	RONDELLE ELASTIQUE	4					
10	S0558653	BOLT M10X1.5X55	BOULON A 6PANS	2					
11	S8000111	O-RING	JONT TORIQUE	6					
12	S8000141	O-RING	JONT TORIQUE	2					
13	S8000181	O-RING	JONT TORIQUE	2					
14	2181-1126D14	ADAPTER PFO1/4-PF1/4	ADAPTEUR	6					
16	2181-1126D36	ADAPTER PFO3/8-PF1/4	ADAPTEUR	2					
19	2181-1126D6	ADAPTER PFO1/2-PF1/2	ADAPTEUR	1					
20	2471-1135	FILTER;ADAPTER	ADAPTEUR	1					
24	124-00209D4	CLIP	ATTACHE	1					
37	2184-1045D42	HOSE PF1/4-420L	TUYAU FLEXIBLE	1					
38	2184-1045D42	HOSE PF1/4-420L	TUYAU FLEXIBLE	1					
39	2184-1046D179	HOSE PF1/4-2900L	TUYAU FLEXIBLE	1					
40	2184-1046D86	HOSE PF1/4-3100L	TUYAU FLEXIBLE	1					
41	2184-1046D78	HOSE PF1/4-3200L	TUYAU FLEXIBLE	1					
42	2184-1046D78	HOSE PF1/4-3200L	TUYAU FLEXIBLE	1					
43	2184-1036D224	HOSE PF1/2-1700L	TUYAU FLEXIBLE	1					
44	DS2054251	HOSE PF1/2-1840L	TUYAU FLEXIBLE	1					
45	120-00276	BOLT;SET M8X1.25X12	BOULON A 6PANS	2					
46	124-00209D3	CLIP	ATTACHE	1					
47	S0558753	BOLT M10X1.5X60	BOULON A 6PANS	2					
48	621-02151	PLATE	PLAQUE	1					
49	198-00016	RUBBER	CAOUTCHOUC	2					
50	2114-1058D10	WASHER	RONDELLE PLATE	2					
51	S0512253	BOLT M10X1.5X30	BOULON A 6PANS	2					

DATE	DEC. 15, 2006
REV. NO.	EXB06-13

Fig. 1390 CONTROL STAND-L.H
CONSOLE DE COMMANDE

Serial No. ;

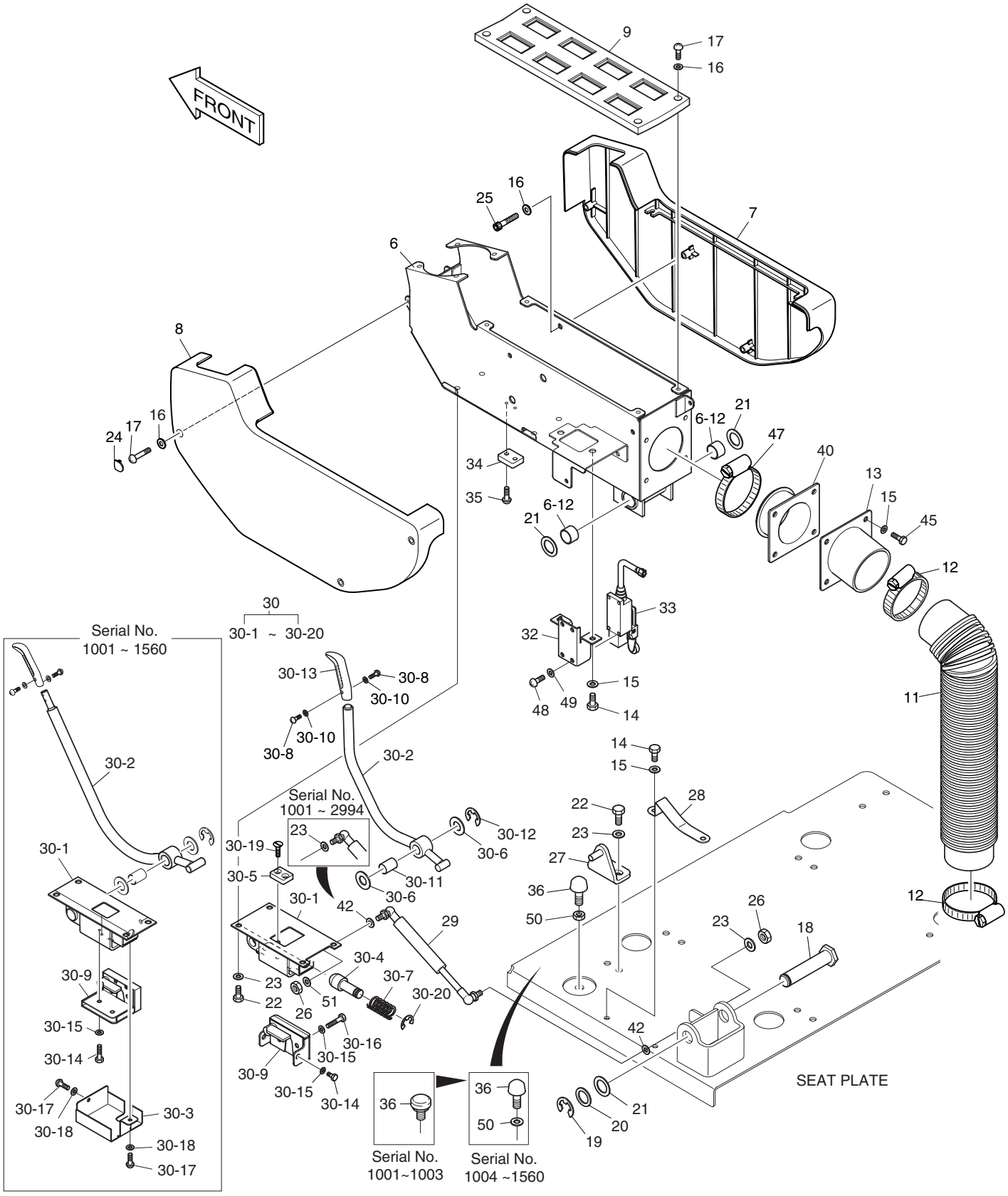

DATE	DEC. 15, 2006
REV. NO.	EXB06-13

Fig. 1390 CONTROL STAND-L.H
CONSOLE DE COMMANDE

Serial No. ;

Key No.	Part No.	Description	Description	Q'ty	S.C	Serial No.	ICA	Replaceable part	
								Part No.	Q'ty
1390--	195-01710E	STAND ASS'Y	CARTER	-	D	1001–1003			
	195-01710G	STAND ASS'Y	CARTER	-	D	1004–1560			
	195-01710H	STAND ASS'Y	CARTER	-	D	1561–1859			
	195-01710K	**STAND ASS'Y**	CARTER	-	D	**1860–**			
6	195-01617B	BRACKET;STAND(L.H)	SUPPORT	1					
6-12	2110-1184D37	. BUSH;DU	. DOUILLE	2					
7	621-01822	CASE;STAND	CARTER	1					
8	621-01823	CASE;STAND	CARTER	1					
9	621-01827	PLATE;SWITCH	PLAQUE	1					
11	2158-1021	PROTECTOR	PROTECTEUR	1					
12	S8450066	CLAMP;HOSE	FIXATION DE TUYAU	2					
13	195-01730A	BRACKET	SUPPORT	1					
14	2120-2166D6	BOLT M6X1.0X16	BOULON A 6 PANS	4					
15	2114-1898D3	WASHER	RONDELLE	8					
16	2114-1898D4	WASHER;PLAIN	RONDELLE PLATE	16					
17	2120-2166D8	SCREW M5X0.8X14	VIS	9					
18	2123-2240	PIN	GOUJON	1					
19	S6541900	RING;RETAINER	BAGUE	1					
20	2114-4129	WASHER	RONDELLE	1					
21	2114-1059D31	SHIM	CALE	3					
22	2120-2166D5	BOLT M8X1.25X20	BOULON A 6 PANS	6					
23	2114-1898D2	WASHER	RONDELLE	8		1001–2994			
	2114-1898D2	**WASHER**	RONDELLE	7		**2995–**			
24	621-01850	COVER;HOLE	COUVERCLE	1					
25	S2202866	BOLT;SOCKET M5X0.8X10	BOULON DE PLOT	3					
26	2121-1311D2	NUT M8X1.25	ECROU	1		1001–2994			
	2121-1311D2	**NUT M8X1.25**	ECROU	2		**2995–**			
27	142-00052	STRIKER	FRAPPER	1					
28	159-00114	PLATE	PLAQUE	1					
29	DS1001045	SPRING;GAS	RESSORT	1					
30	133-00163C	LEVER;SAFETY	LEVIER	1		1001–1560	I	133-00163E	1
	133-00163E	LEVER;SAFETY	LEVIER	1		1561–1859	I	133-00163G	1
	133-00163G	LEVER;SAFETY	LEVIER	1		1860–2994			
	133-00163H	**LEVER;SAFETY**	LEVIER	1		**2995–**			
30-1	159-00223A	. PLATE	. PLAQUE	1		1001–1560			
	159-00223B	. PLATE	. PLAQUE	1		1561–2994			
	159-00223C	**. PLATE**	. PLAQUE	1		**2995–**			
30-2	133-00130A	. LEVER	. LEVIER	1		1001–1560	I	133-00130B	1

DATE	DEC. 15, 2006
REV. NO.	EXB06-13

Fig. 1390 CONTROL STAND-L.H
CONSOLE DE COMMANDE

Serial No. ;

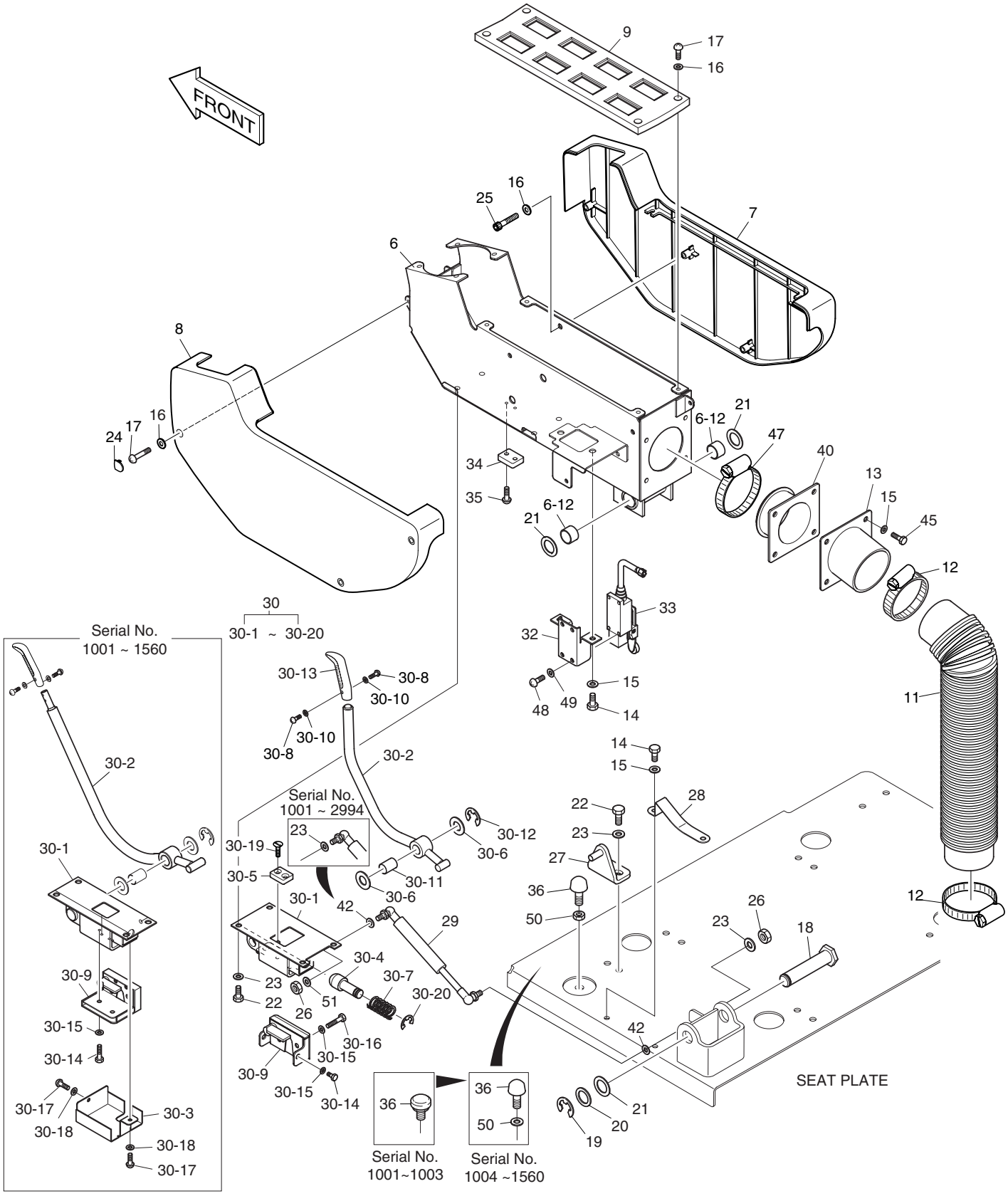

DATE	DEC. 15, 2006
REV. NO.	EXB06-13

Fig. 1390 CONTROL STAND-L.H
CONSOLE DE COMMANDE

Serial No. ;

Key No.	Part No.	Description	Description	Q'ty	S.C	Serial No.	ICA	Replaceable part	
								Part No.	Q'ty
1390-30-2	133-00130B	. LEVER	. LEVIER	1		1561–1859	I	K1008200	1
	K1008200	. LEVER	. LEVIER	1		1860–			
30-3	213-00022	. COVER	. COUVERCLE	1		1001–1560			
30-4	123-00456A	. PIN	. GOUJON	1					
30-5	161-00297	. STOPPER;RUBBER	. TAQUET D'ARRET	1					
30-6	2114-1059D37	. SHIM	. CALE	2					
30-7	2129-1432	. SPRING	. RESSORT	1					
30-8	S3450583	. SCREW M4X0.7X12	. VIS	2					
30-9	125-00021	. CATCH	. LOQUET	1		1001–1560			
	K1003998	. CATCH	. LOQUET	1		1561–			
30-10	S5000113	. WASHER;PLAIN M4	. RONDELLE PLATE	2					
30-11	2110-1184D29	. BUSH;DU	. DOUILLE	1					
30-12	S6541200	. RING;RETAINER	. BAGUE	1					
30-13	2132-1132A	. GRIP	. POIGNEE	1					
30-14	S0503353	. BOLT M5X0.8X20	. BOULON A 6 PANS	2		1001–1560			
	2120-2166D19	. BOLT M6X1.0X12	. BOULON A 6 PANS	2		1561–			
30-15	S5000213	. WASHER	. RONDELLE	3		1001–1560			
	2114-1898D3	. WASHER	. RONDELLE	4		1561–			
30-16	S0503553	. BOLT M5X0.8X25	. BOULON A 6 PANS	1		1001–1560			
	S0505063	. BOLT M6X1.0X25	. BOULON A 6 PANS	2		1561–			
30-17	2120-2166D18	. SCREW M5X0.8X10	. VIS	2		1001–1560			
30-18	2114-1898D4	. WASHER M5	. RONDELLE	2		1001–1560			
30-19	S3452833	. SCREW M5X0.8X12	. VIS	2					
30-20	S6541500	. RING;RETAINER	. BAGUE	1					
32	621-01951	COVER;MICRO SWITCH	COUVERCLE	1					
33	549-00046	SWITCH;MICRO	INTERRUPTEUR	1					
34	161-00524	RUBBER;STOPPER	CAOUTCHOUC	1					
35	S3452853	SCREW M5X0.8X16	VIS	2					
36	2161-2367	STOPPER	TAQUET D'ARRET	1		1001–1003			
	161-00195	STOPPER	TAQUET D'ARRET	1		1004–			
40	160-00030	BOOT	BOOT	1					
42	**2114-2031D4**	**WASHER**	RONDELLE	2		**2995**–			
45	2120-2166D36	BOLT M6X1.0X20	BOULON A 6 PANS	4					
47	S8450053	CLAMP;HOSE	FIXATION DE TUYAU	1					
48	S3450823	SCREW M5X0.8X10	VIS	4					
49	S5000203	WASHER M5	RONDELLE	4					
50	2114-1898D16	WASHER	RONDELLE	1		1004–1560			
	2121-1311D4	NUT	ECROU	1		1561–			

DATE	DEC. 15, 2006
REV. NO.	EXB06-13

Fig. 1390 CONTROL STAND-L.H
CONSOLE DE COMMANDE

Serial No. ;

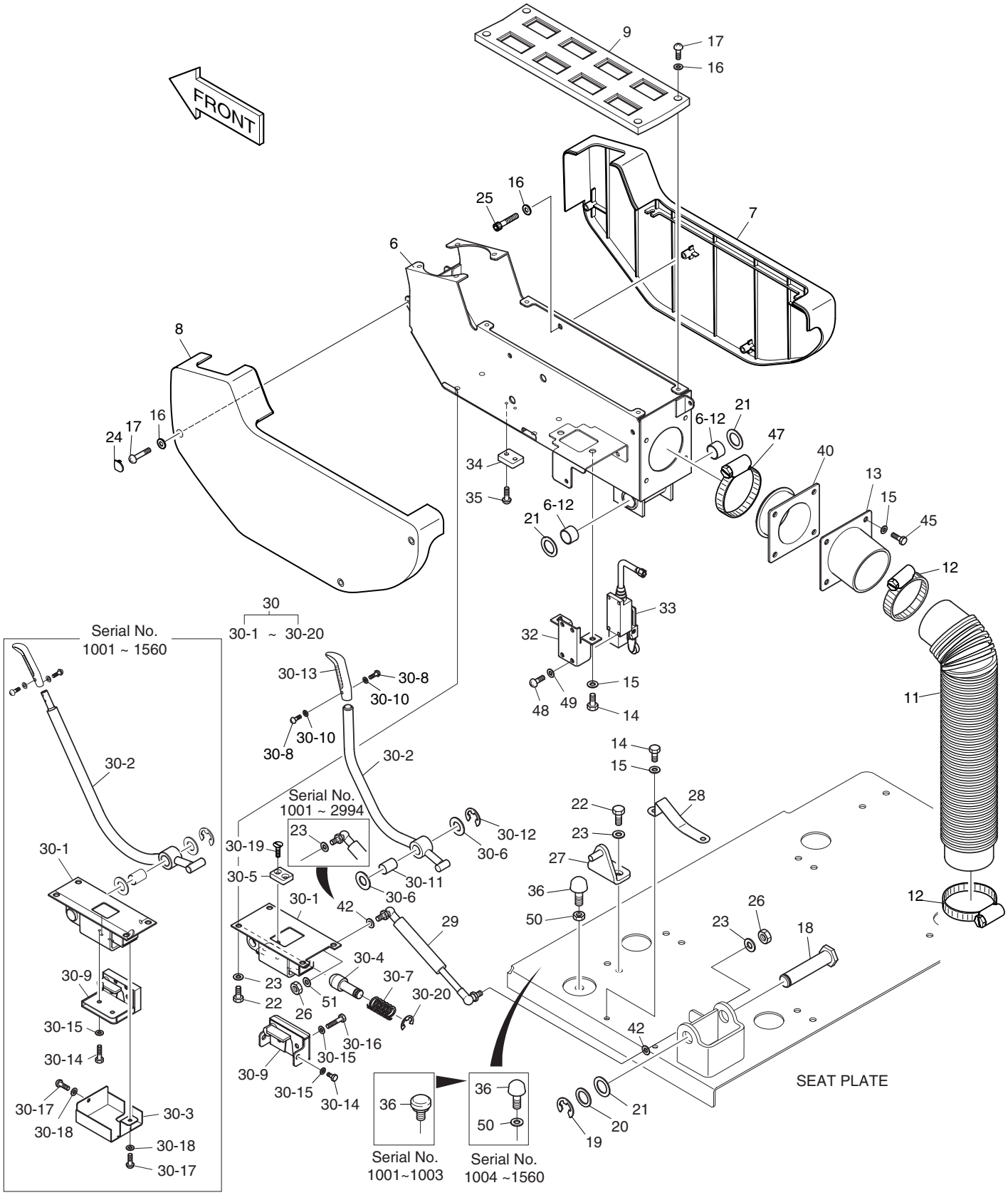

DATE	DEC. 15, 2006
REV. NO.	EXB06-13

Fig. 1390 CONTROL STAND-L.H
CONSOLE DE COMMANDE

Serial No. ;

Key No.	Part No.	Description	Description	Q'ty	S.C	Serial No.	ICA	Replaceable part	
								Part No.	Q'ty
1390-51	**2114-1898D8**	**WASHER**	RONDELLE	1		**2995–**			

DATE	JUN. 30, 2005
REV. NO.	EXB05-05

Fig. 1400 CONTROL STAND-R.H
CONSOLE DE COMMANDE

Serial No. ;

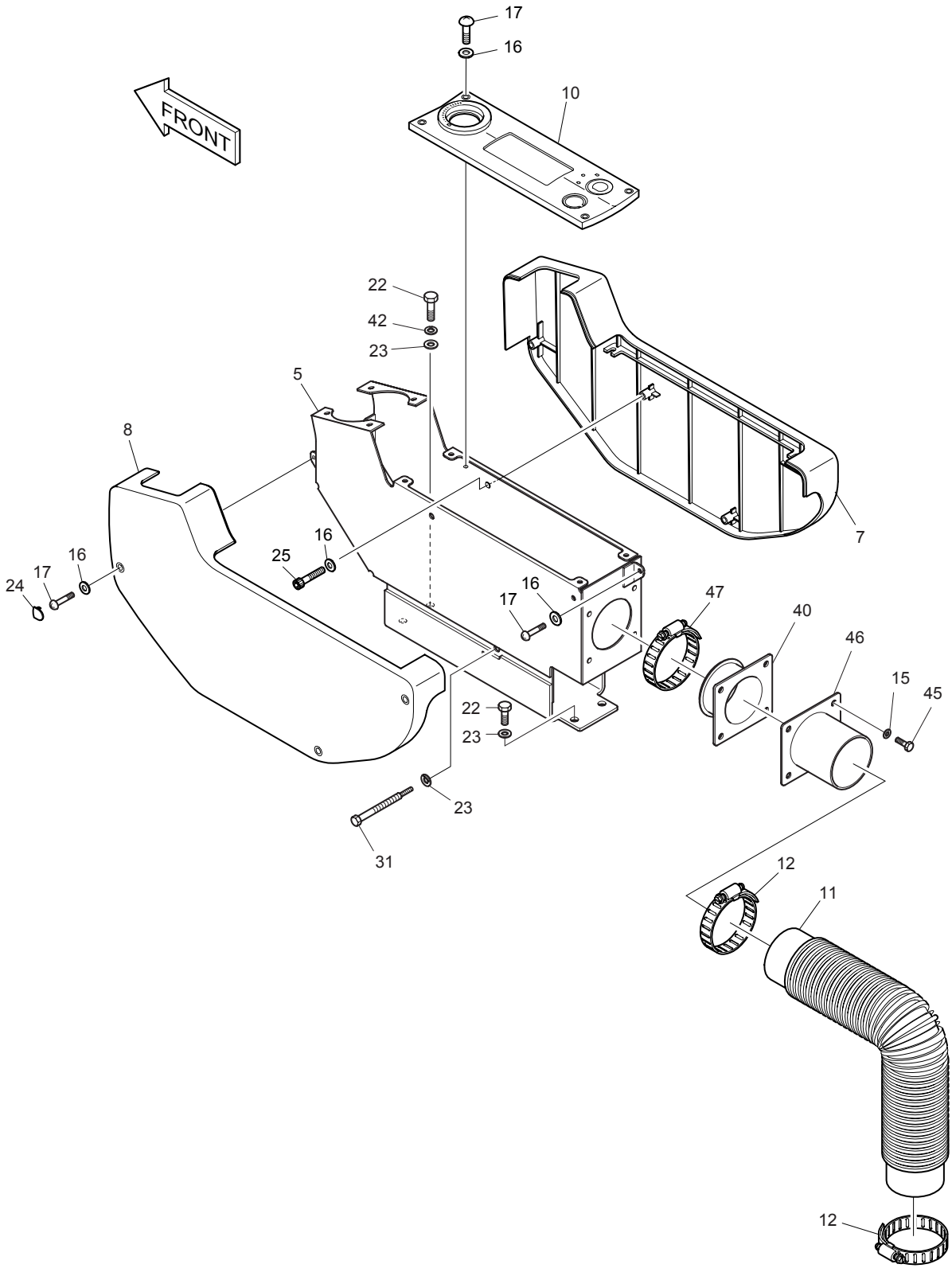

DATE	JUN. 30, 2005
REV. NO.	EXB05-05

Fig. 1400 CONTROL STAND-R.H
CONSOLE DE COMMANDE

Serial No ;

Key No.	Part No.	Description	Description	Q'ty	S.C	Serial No.	ICA	Replaceable part	
								Part No.	Q'ty
1400--	195-01710E	STAND ASS'Y	CARTER	-	D	1001–1003			
	195-01710G	STAND ASS'Y	CARTER	-	D	1004–1560			
	195-01710H	STAND ASS'Y	CARTER	-	D	1561–1859			
	195-01710J	**STAND ASS'Y**	CARTER	-	D	**1860–**			
5	195-01616A	BRACKET;STAND	SUPPORT	1					
7	621-01822	CASE;STAND	CARTER	1					
8	621-01823	CASE;STAND	CARTER	1					
10	621-01826	PLATE;SWITCH	PLAQUE	1					
11	2158-1021	PROTECTOR	PROTECTEUR	1					
12	S8450066	CLAMP;HOSE	FIXATION DE TUYAU	2					
15	2114-1898D3	WASHER M6	RONDELLE	4					
16	2114-1898D4	WASHER;PLAIN M5	RONDELLE PLATE	11					
17	2120-2166D8	SCREW M5X0.8X14	VIS	10					
22	2120-2166D5	BOLT M8X1.25X20	BOULON A 6 PANS	4					
23	2114-1898D2	WASHER M8	RONDELLE	5					
24	621-01850	COVER;HOLE	COUVERCLE	1					
25	S2202866	BOLT;SOCKET M5X0.8X10	BOULON DE PLOT	4					
31	120-00274	BOLT	BOULON A 6 PANS	1					
40	160-00030	BOOT	BOOT	1					
42	2114-2031D4	WASHER;SPRING M8	RONDELLE ELASTIQUE	1					
45	2120-2166D36	BOLT M6X1.0X20	BOULON A 6 PANS	4					
46	195-01765B	BRACKET	SUPPORT	1					
47	S8450053	CLAMP;HOSE	FIXATION DE TUYAU	1					

DATE	JUN. 30, 2005
REV. NO.	EXB05-05

Fig. 1410 SEAT & ELECTRIC BOX
SIEGE ET ELECTRIQUE BOITIES

Serial No. ;

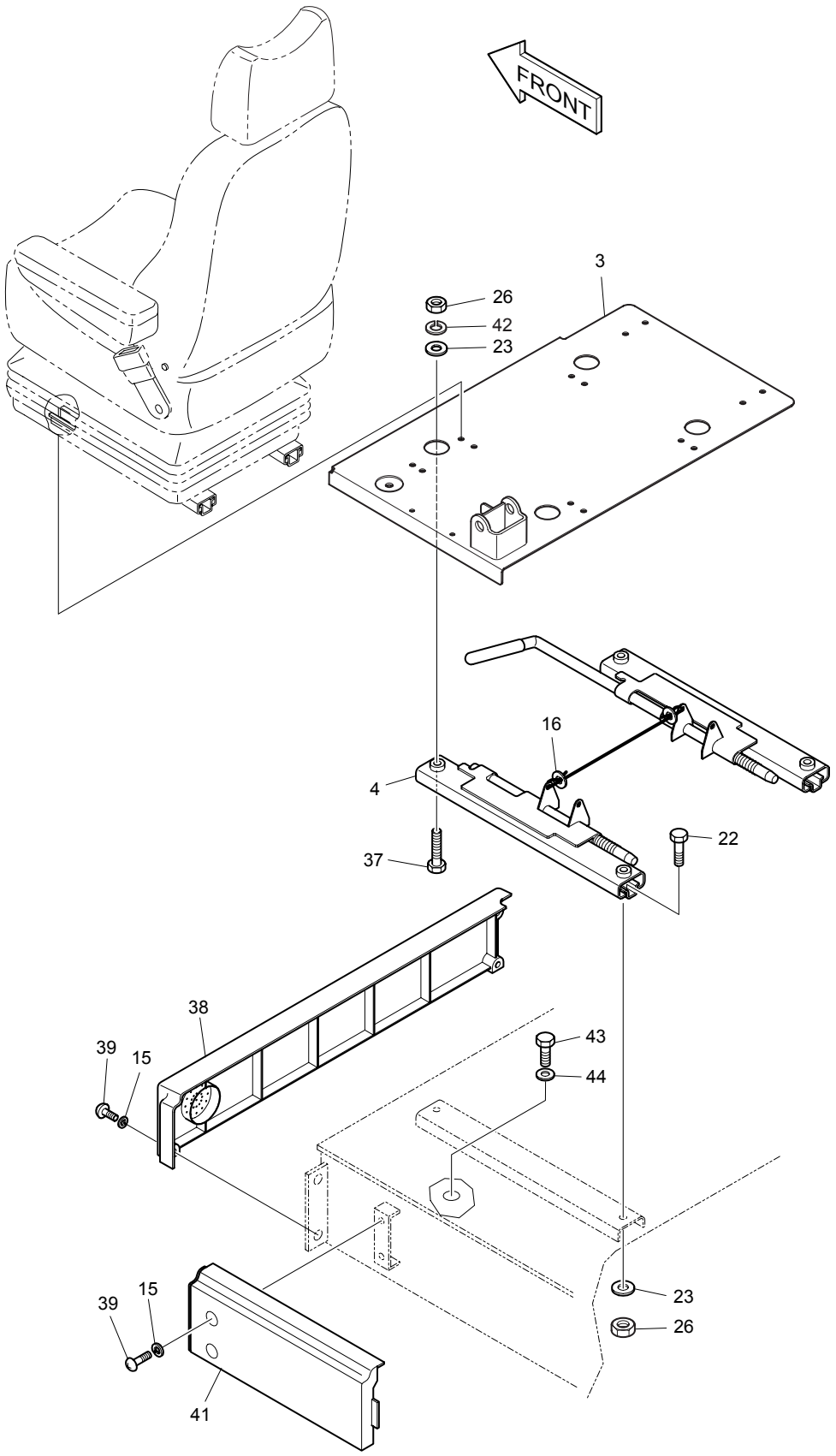

DATE	JUN. 30, 2005
REV. NO.	EXB05-05

Fig. 1410 SEAT & ELECTRIC BOX
SIEGE ET ELECTRIQUE BOITIES

Serial No ;

Key No.	Part No.	Description	Description	Q'ty	S.C	Serial No.	ICA	Replaceable part	
								Part No.	Q'ty
1410--	195-01710E	SEAT & ELECTRIC COVER	SIEGE LE SUPPORT	-	D	1001–1003			
	195-01710G	SEAT & ELECTRIC COVER	SIEGE LE SUPPORT	-	D	1004–1560			
	195-01710H	SEAT & ELECTRIC COVER	SIEGE LE SUPPORT	-	D	1561–1859			
	195-01710J	**SEAT & ELECTRIC COVER**	SIEGE LE SUPPORT	-	D	**1860–**			
3	901-00024C	PLATE;SEAT	PLAQUE	1		1001–1003			
	901-00024E	PLATE;SEAT	PLAQUE	1		1004–			
4	194-00024	RAIL;SEAT	CHEMIN DE FER	1					
15	2114-1898D3	WASHER M6	RONDELLE	6					
16	2114-1898D4	WASHER;PLAIN M5	RONDELLE PLATE	2					
22	2120-2166D5	BOLT M8X1.25X20	BOULON A 6 PANS	4					
23	2114-1898D2	WASHER M8	RONDELLE	8					
26	2121-1311D2	NUT M8X1.25	ECROU	8					
37	2120-2166D46	BOLT M8X1.25X25	BOULON A 6 PANS	4					
38	621-01824	COVER;ELEC. BOX(FRONT)	COUVERCLE	1					
39	2120-2166D7	SCREW M6X1.0X14	VIS	6					
41	621-01825	COVER;ELEC. BOX(L.H)	COUVERCLE	1					
42	2114-2031D4	WASHER;SPRING M8	RONDELLE ELASTIQUE	4					
43	S0514853	BOLT M12X1.75X20	BOULON A 6 PANS	4					
44	2114-1058D46	WASHER	RONDELLE	4					

DATE	DEC. 30, 2004
REV. NO.	EXB04-09

Fig. 1420 SEAT MOUNTING-EUROPE & U.S.A
SIEGE LE SUPPORT

Serial No. ;

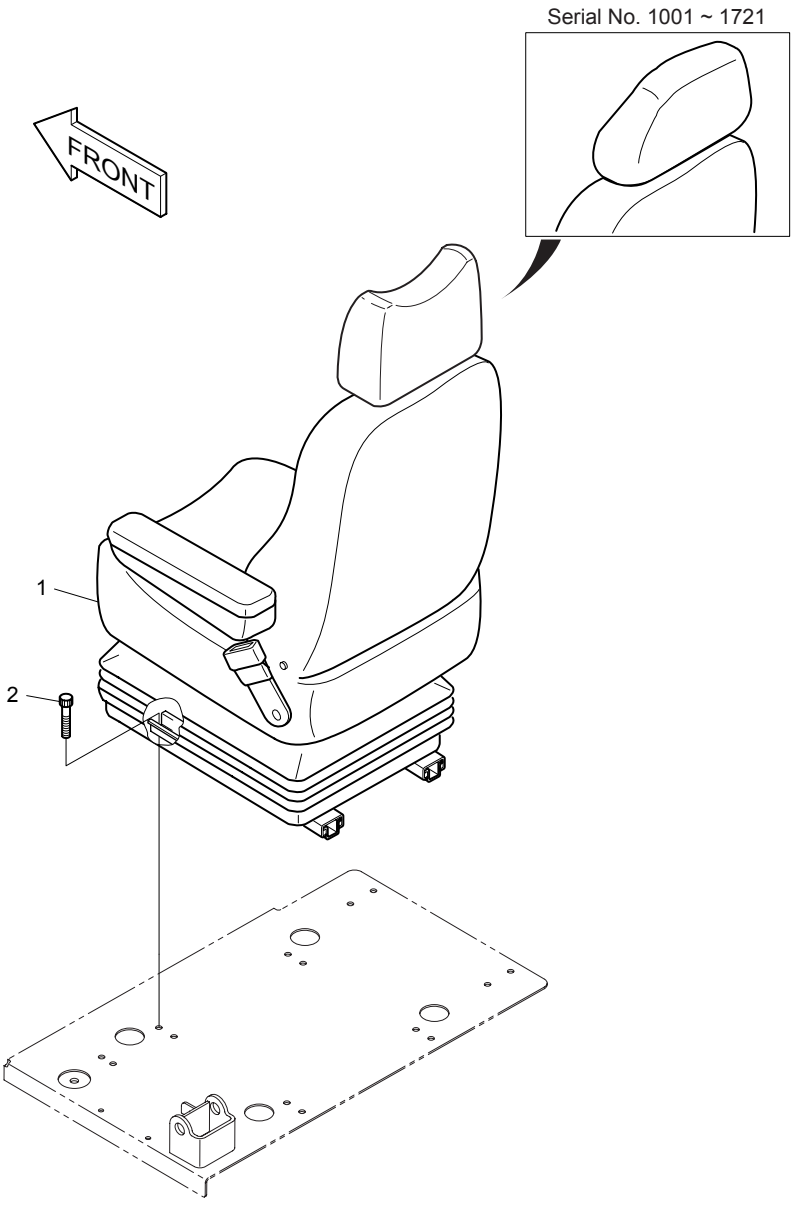

DATE	DEC. 30, 2004
REV. NO.	EXB04-09

Fig. 1420 SEAT MOUNTING-EUROPE & U.S.A SIEGE LE SUPPORT

Serial No ;

Key No.	Part No.	Description	Description	Q'ty	S.C	Serial No.	ICA	Replaceable part	
								Part No.	Q'ty
1420--	901-00031	SEAT MOUNTING	SIEGE LE SUPPORT	-	D	1001–1721			
	901-00031A	**SEAT MOUNTING**	SIEGE LE SUPPORT	-	D	**1722–**			
1	901-00029	SEAT	SIEGE	1		1001–1721	I	901-00029A	1
	901-00029A	**SEAT**	SIEGE	1		**1722–**			
2	S2208761	BOLT;SOCKET M8X1.25X18	BOULON DE PLOT	4					

DATE	DEC. 29, 2005
REV. NO.	EXB05-20

Fig. 1425 SEAT-EUROPE & U.S.A SIEGE

Serial No. ;

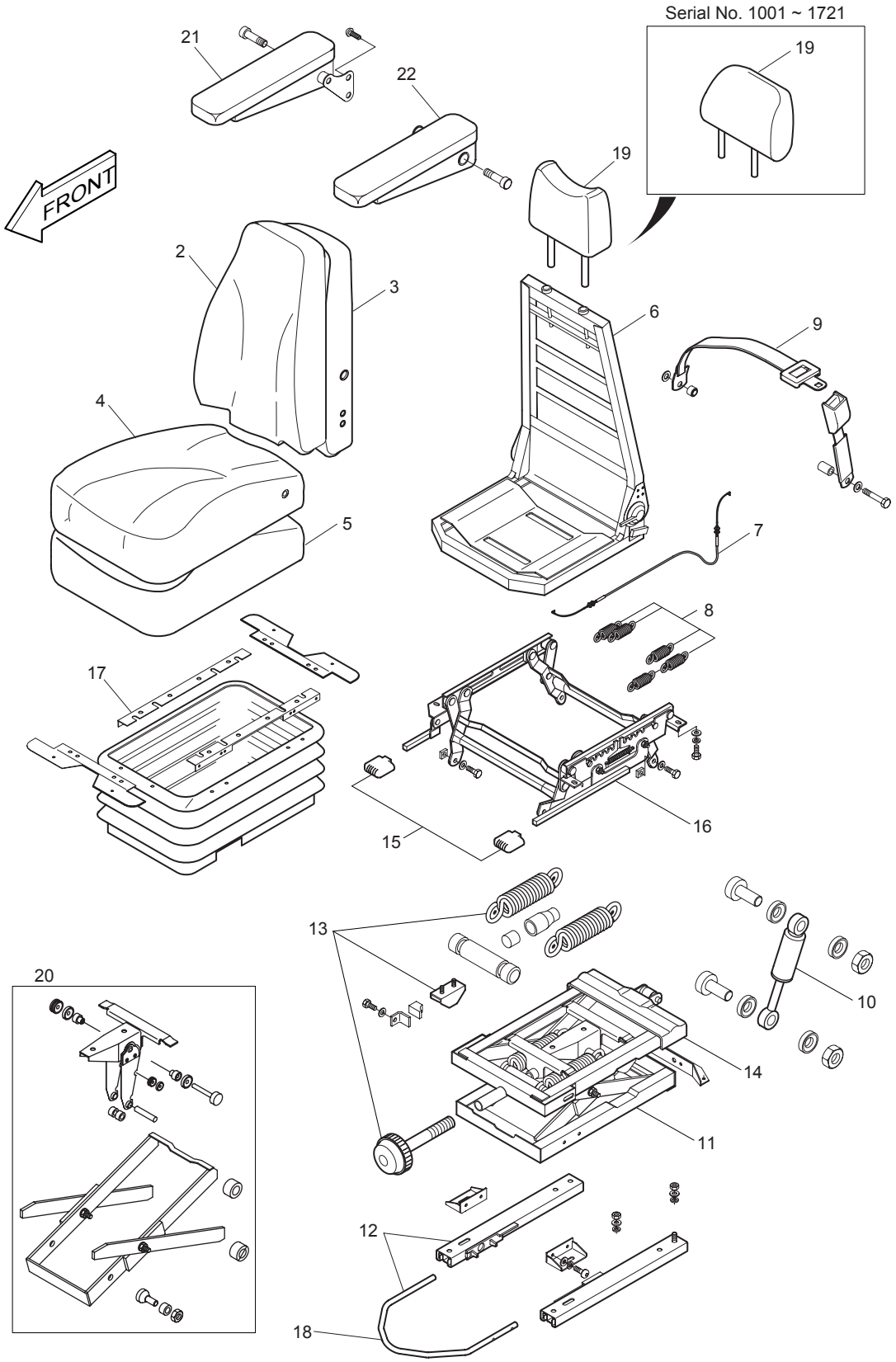

DATE	DEC. 29, 2005
REV. NO.	EXB05-20

Fig. 1425 SEAT-EUROPE & U.S.A SIEGE

Serial No ;

Key No.	Part No.	Description	Description	Q'ty	S.C	Serial No.	ICA	Replaceable part	
								Part No.	Q'ty
1425--	901-00029	SEAT	SIEGE	1		1001–1721	I	901-00029A	1
	901-00029A	SEAT	SIEGE	1		1722–			
1	185184	UPPER ASS'Y	SUPERIEUR	1					
2	185183	COVER;BACK	COUVERCLE	1					
3	183708	FOAM;BACK	EPONGE	1					
4	161395	COVER;SEAT	COUVERCLE	1					
5	183709	FOAM;SEAT	EPONGE	1					
6	-	FRAME ASS'Y	BATI PRINCIPAL	1	D				
7	179981	CABLE;ADJUSTMENT	CABLE	1					
8	162056	SPRING;HEIGHT RISER	RESSORT	1					
9	172561	BELT;SEAT	COURROIE	1					
10	158116	DAMPER ASS'Y	RESSORT	1					
11	157230	SUSPENSION ASS'Y	SUSPENSION	1					
12	162035	FORE & AFT ADJUSTER	ADJUSTER	1					
13	156737	WEIGHT ADJUSTER KIT	KIT	1					
14	156717	UPSTOP/BUMPSTOP KIT	KIT	1					
15	185193	KNOB KIT	LIT DE MOLETTE	1					
16	163369	HEIGHT RISER KIT	CANALISATION VERTICALE	1					
17	162047	COVER;SUSPENSION	COUVERCLE	1					
18	161796	SLIDERAIL HANDLE	TRAITEMENT	1					
19	172526	HEADREST KIT	KIT DE SIEGE	1		1001–1721	I	161392	1
	161392	HEADREST KIT	KIT DE SIEGE	1		1722–			
20	156738	BEARING KIT	PALIER	1					
21	162666	ARM REST-R.H	REPOSER	1		1001–1721			
	191723	ARM REST-R.H	REPOSER	1		1722–			
22	162665	ARM REST-L.H	REPOSER	1		1001–1721			
	191722	ARM REST-L.H	REPOSER	1		1722–			

DATE	DEC. 30, 2004
REV. NO.	EXB04-09

Fig. 1430 SEAT MOUNTING-EXCEPT EUROPE & U.S.A
SIEGE LE SUPPORT

Serial No. ;

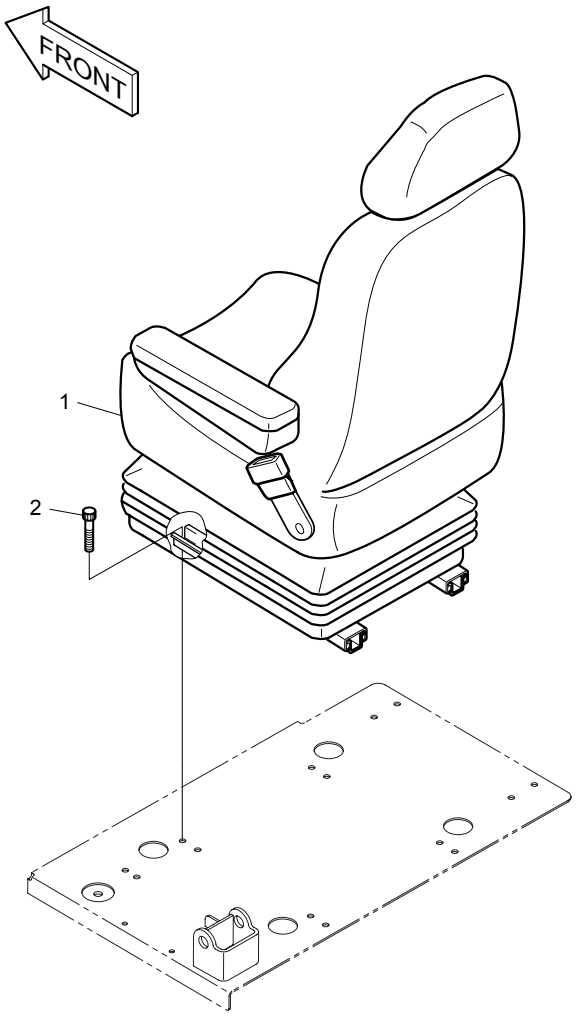

DATE	DEC. 30, 2004
REV. NO.	EXB04-09

Fig. 1430 SEAT MOUNTING-EXCEPT EUROPE & U.S.A SIEGE LE SUPPORT

Serial No ;

Key No.	Part No.	Description	Description	Q'ty	S.C	Serial No.	ICA	Replaceable part	
								Part No.	Q'ty
1430--	901-00035	SEAT MOUNTING	SIEGE LE SUPPORT	-	D				
1	901-00033	SEAT	SIEGE	1					
2	S2209061	BOLT;SOCKET M8X1.25X25	BOULON DE PLOT	4					

DATE	DEC. 22, 2003
REV. NO.	EXB03-15

Fig. 1435 SEAT-EXCEPT EUROPE & U.S.A
SIEGE

Serial No. ;

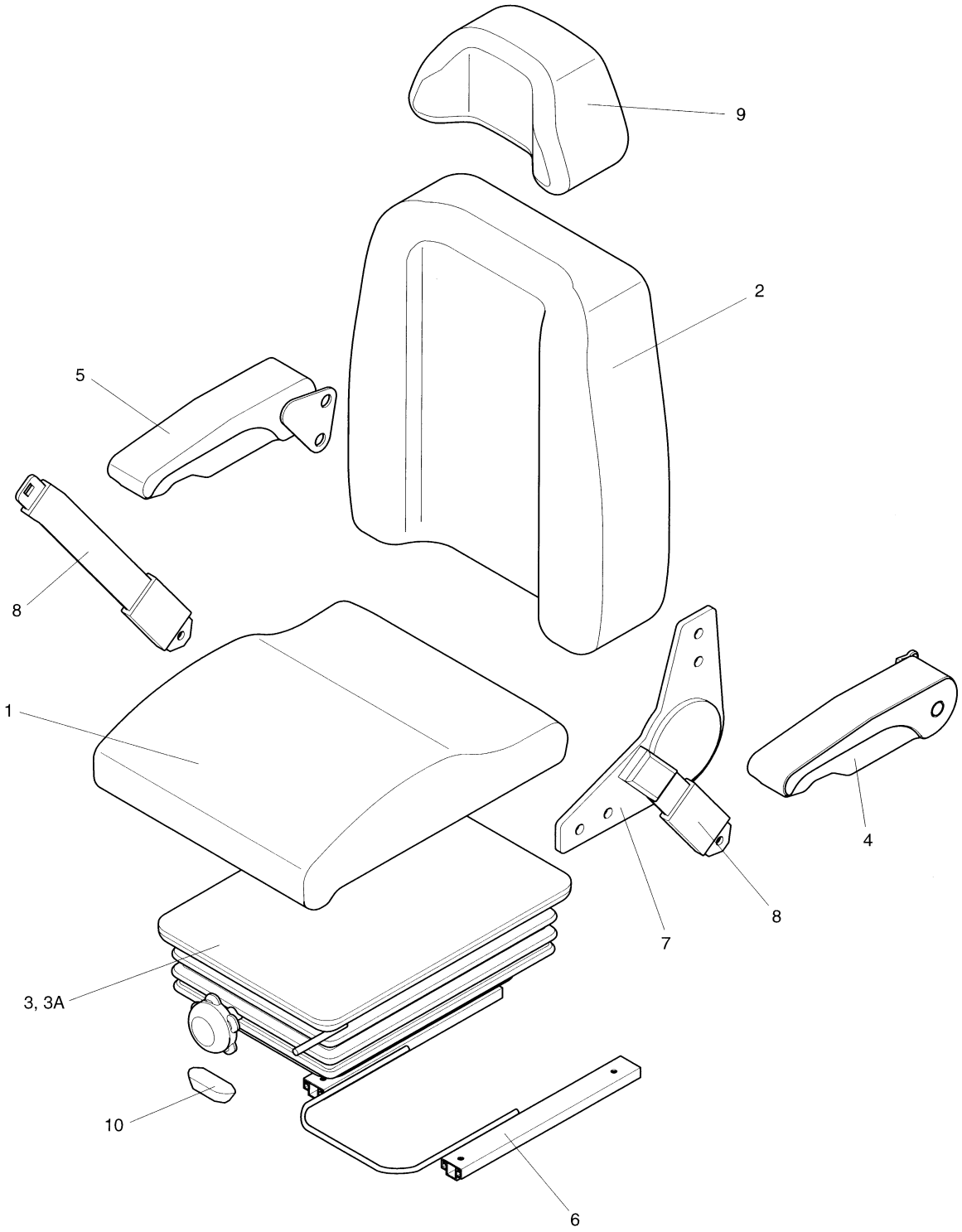

DATE	DEC. 22, 2003
REV. NO.	EXB03-15

Fig. 1435 SEAT-EXCEPT EUROPE & U.S.A SIEGE

Serial No ;

Key No.	Part No.	Description	Description	Q'ty	S.C	Serial No.	ICA	Replaceable part	
								Part No.	Q'ty
1435--	901-00033	SEAT	SIEGE	1					
1	H28000-100	CUSHION ASS'Y	COUSSIN	1					
2	H28000-200	BACK ASS'Y	COUVERCLE	1					
3	H28000-300D	LEG ASS'Y	SUSPENSION	1					
3A	1.161-00012	. DAMPER	. AMORTISSEUR	1					
4	901-00003A	ARM REST ASS'Y(L.H.)	REPOSER	1					
5	901-00004A	ARM REST ASS'Y(R.H.)	REPOSER	1					
6	H28003-400A	TRACK ASS'Y	CHEMIN DE FER	1					
7	H28003-240D	RECLINER	RECLINER	1					
8	H28003-600	SAFETY BELT ASS'Y	COURROIE	1					
9	H28000-800	HEAD REST ASS'Y	REPOS PRINCIPAL	1					
10	H28003-902	KNOB;TILTING	LIT DE MOLETTE	1					

DATE	AUG. 12, 2002
1st EDITION	

Fig. 1440 DUCT COVER ASS'Y
CONDUITES COUVERCLE

Serial No. ;

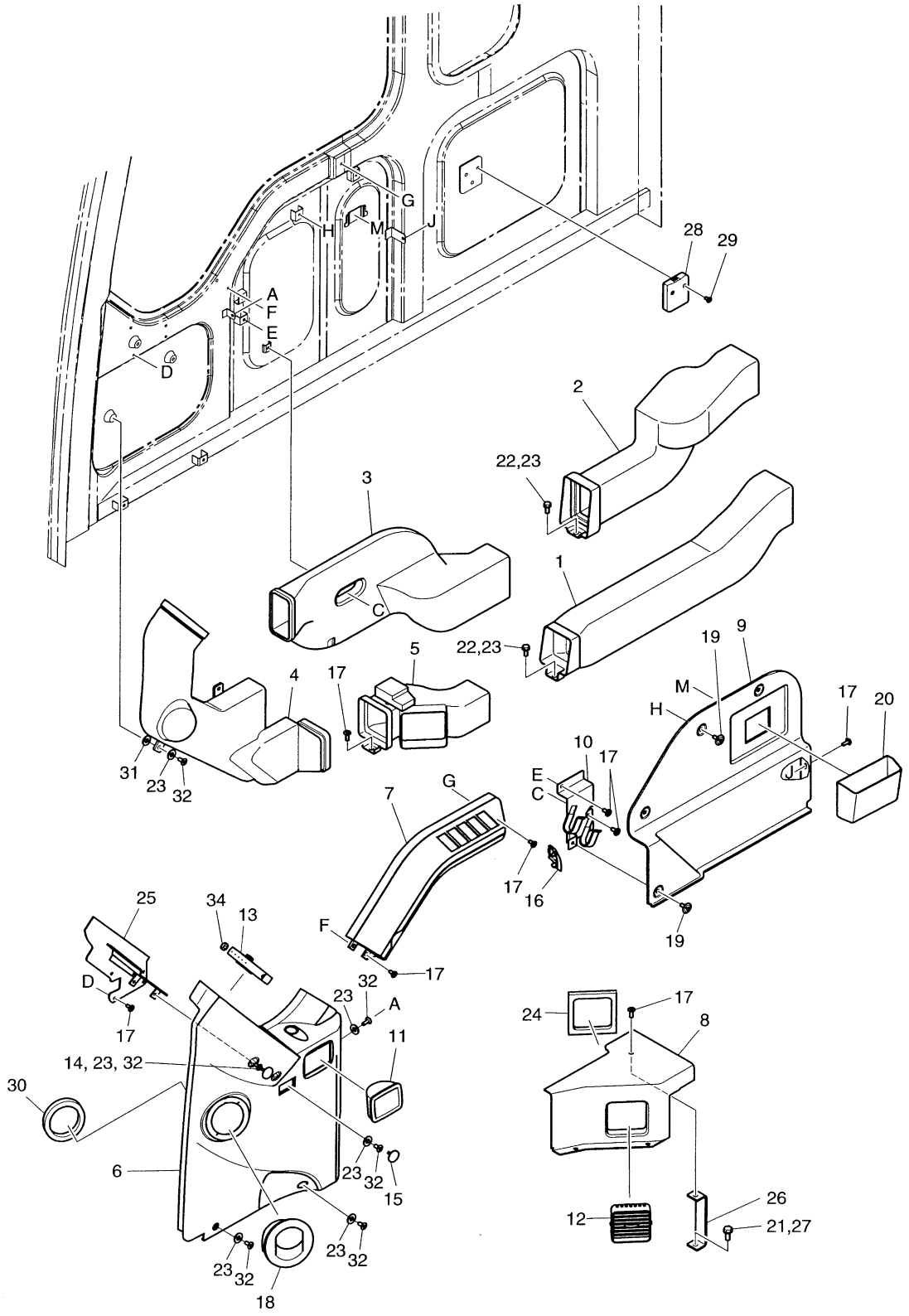

DATE	AUG. 12, 2002
1st EDITION	

Fig. 1440 DUCT COVER ASS'Y
CONDUITES COUVERCLE

Serial No. ;

Key No.	Part No.	Description	Description	Q'ty	S.C	Serial No.	ICA	Replaceable part	
								Part No.	Q'ty
1440--	621-01885C	DUCT & DUCT COVER ASS'Y	INSERTION	-	D				
1	2213-1097	DUCT;FOOT REAR	COUVERCLE	1					
2	2213-1095	DUCT;FACE REAR	COUVERCLE	1					
3	213-00025	DUCT;FACE REAR	COUVERCLE	1					
4	213-00026	DUCT;FACE FRONT	COUVERCLE	1					
5	2213-9002	DUCT;FOOT	COUVERCLE	1					
6	621-01859A	COVER;SIDE INNER(FRONT)	COUVERCLE	1					
7	621-01860	COVER;SIDE INNER(REAR)	COUVERCLE	1					
8	621-01849	COVER;FOOT DUCT	COUVERCLE	1					
9	621-00340	PANEL	PANNEAU	1					
10	195-01847	BRACKET	SUPPORT	1					
11	2906-9005	ASHTRAY	CENDRIER	1					
12	2415-1014	LOUVER;DEF& FOOT	COUVERCLE	1					
13	415-00039	LOUVER;FACE	COUVERCLE	1					
14	621-01873	COVER;HOLE	COUVERCLE	1					
15	621-01874	COVER;HOLE	COUVERCLE	1					
16	621-01875	COVER;HOLE	COUVERCLE	1					
17	2120-2166D10	SCREW M6X1.0X14	VIS	14					
18	2415-9007	NOZZLE;ROUND	INJECTEUR	1					
19	2120-2174	SCRIVET	RIVET	4					
20	621-01908	BOX	BOITE	1					
21	2114-1898D2	WASHER M8	RONDELLE	1					
22	2120-2166D6	BOLT M6X1.0X16	BOULON A 6 PANS	2					
23	2114-1898D5	WASHER M6	RONDELLE	10					
24	2161-2397	RUBBER;CUSHION 15T	CAOUTCHOUC	1					
25	195-01640C	BRACKET	SUPPORT	1					
26	195-01746	BRACKET	SUPPORT	1					
27	2120-2166D5	BOLT M8X1.25X20	BOULON A 6 PANS	1					
28	621-01984	HOLDER;CUP	POSSESSEUR	1					
29	S3452853	SCREW M5X0.8X16	VIS	2					
30	161-00427A	RUBBER;CUSHION	CAOUTCHOUC	1					
31	2114-1058D54	WASHER	RONDELLE	3					
32	2120-2166D24	SCREW M6X1.0X20	VIS	8					
34	161-00495	RUBBER;CUSHION	TAQUET D'ARRET	1					

DATE	JUN. 30, 2005
REV. NO.	EXB05-05

Fig. 1450 HEATER COVER ASS'Y
BOITIES DE CHAUFFAGE

Serial No. ;

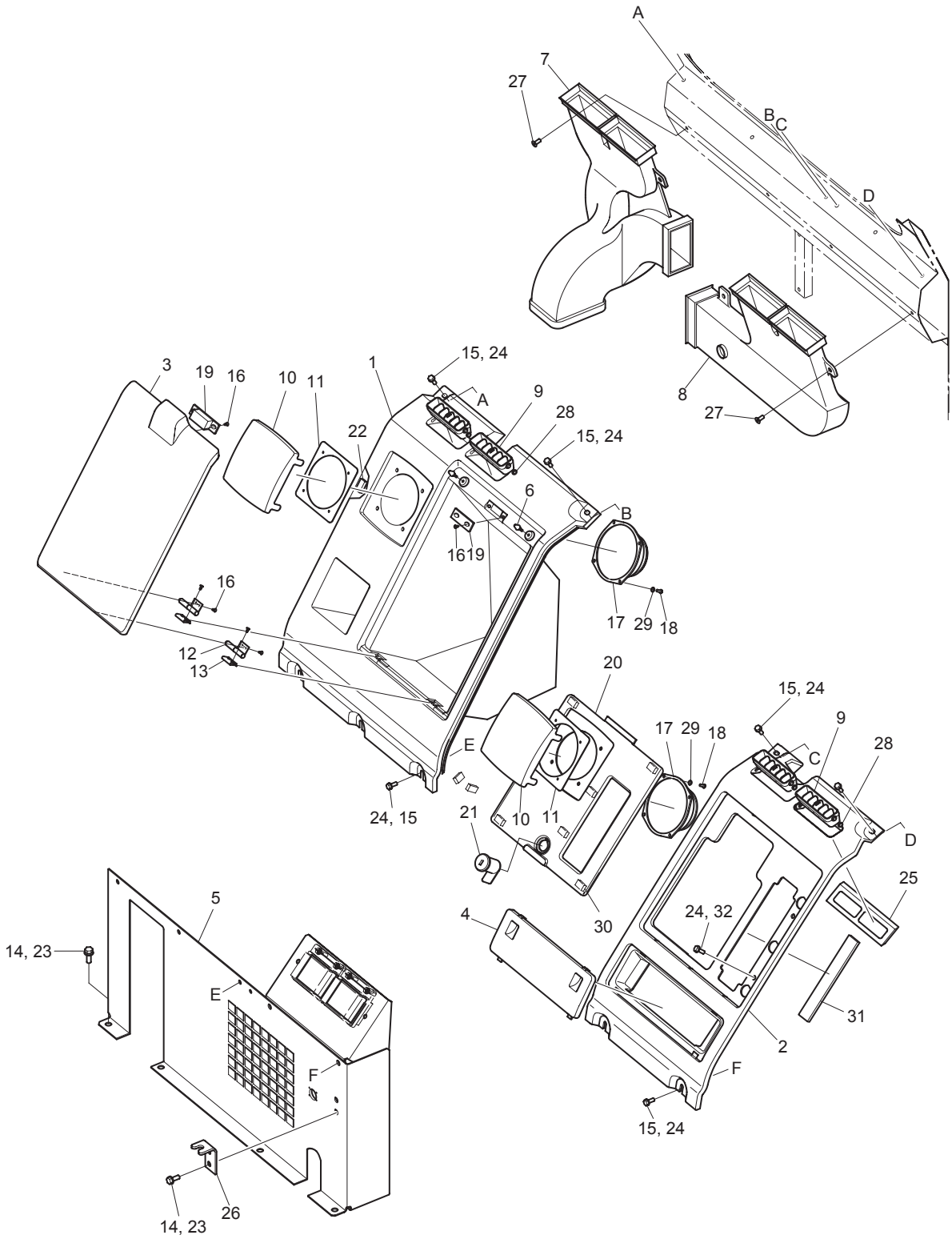

DATE	JUN. 30, 2005
REV. NO.	EXB05-05

Fig. 1450 HEATER COVER ASS'Y BOITIES DE CHAUFFAGE

Serial No ;

Key No.	Part No.	Description	Description	Q'ty	S.C	Serial No.	ICA	Replaceable part	
								Part No.	Q'ty
1450--	621-01917C	HEATER COVER ASS'Y	COUVERCLE	-	D	1001–1206			
	621-01917E	HEATER COVER ASS'Y	COUVERCLE	-	D	1207–1859			
	621-01917G	**HEATER COVER ASS'Y**	COUVERCLE	-	D	**1860–**			
1	621-01839	COVER;HEATER(R.H)	COUVERCLE	1					
2	621-01924	COVER;LOWER HEATER(L.H)	COUVERCLE	1					
3	621-01840	LID;CENTER	LID	1					
4	621-01841	LID;FUSE BOX	LID	1					
5	621-01755A	LOW HEATER COVER ASS'Y	COUVERCLE	1					
6	2116-1520	STOPPER;H/C LID	TAQUET D'ARRET	2					
7	2213-1098A	DUCT;VENT(R.H)	COUVERCLE	1					
8	2213-1099B	DUCT;VENT(L.H)	COUVERCLE	1					
9	2415-1015A	LOUVER;FACE & VENT	COUVERCLE	4					
10	2623-1252A	SPEAKER;GRILL	HAUT-PARLEUR	2					
11	2197-1741A	BRACKET;SPEAKER	SUPPORT	2					
12	2171-1084A	HINGE	CHARNIERE	2					
13	2121-1304	NUT;SPIRE	ECROU	2					
14	2120-2166D5	BOLT M8X1.25X20	BOULON A 6 PANS	8					
15	2120-2166D6	BOLT M6X1.0X16	BOULON A 6 PANS	9					
16	S3644183	SCREW;TAPPING	VIS	12					
17	2541-9020	SPEAKER	HAUT-PARLEUR	2					
18	S3450373	SCREW	VIS	8					
19	2125-1095A	CATCH;MAGNETIC	LOQUET	1					
20	621-01923	COVER;HEATER(L.H)	COUVERCLE	1					
21	2172-9035	CYLINDER;KEY	CLE	1		1001–1206	I	172-00215	1
	172-00215	CYLINDER;KEY	CLE	1		1207–1859			
	K1006160	**CYLINDER;KEY**	CLE	1		**1860–**			
22	2161-2289	RUBBER;CUSHION	CAOUTCHOUC	1					
23	2114-1898D2	WASHER M8	RONDELLE	8					
24	2114-1898D5	WASHER;PLAIN M6	RONDELLE PLATE	11					
25	2161-2397	RUBBER;CUSHION 15T	CAOUTCHOUC	2					
26	195-01782A	BRACKET	SUPPORT	1					
27	2120-2166D10	SCREW M6X1.0X14	VIS	6					
28	2160-1329	BUSHING	MANCHON	1					
29	S5000003	WASHER;PLAIN M3	RONDELLE PLATE	8					
30	161-00468	RUBBER	CAOUTCHOUC	6					
31	161-00469	SPONGE	EPONGE	1					
32	2120-2166D36	BOLT M6X1.0X20	BOULON A 6 PANS	2					

DATE	DEC. 30, 2004
REV. NO.	EXB04-09

Fig. 1460 CABIN MOUNT ASS'Y
SUPPORT DE CABINE

Serial No. ;

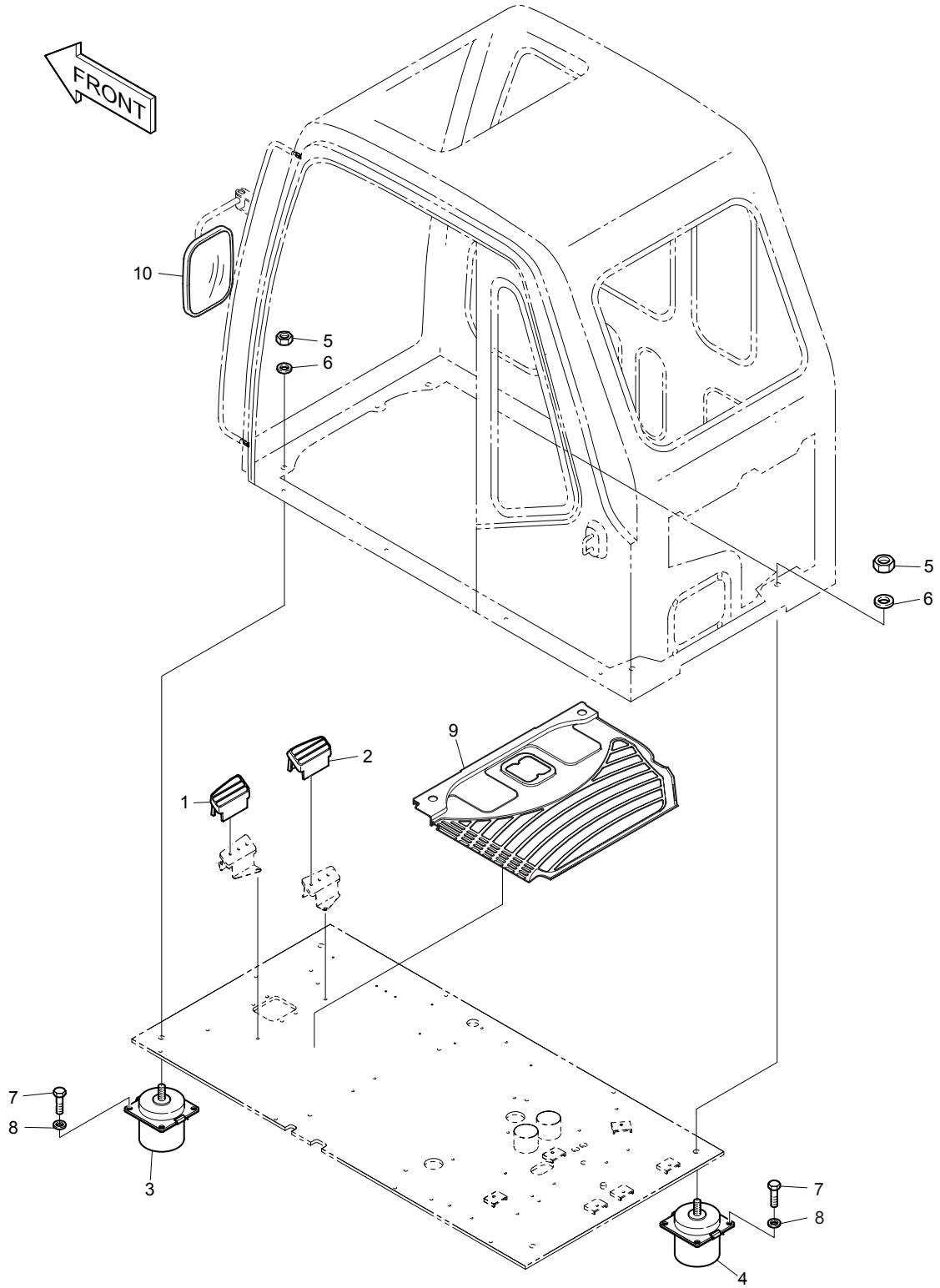

DATE	DEC. 30, 2004
REV. NO.	EXB04-09

Fig. 1460 CABIN MOUNT ASS'Y
SUPPORT DE CABINE

Serial No ;

Key No.	Part No.	Description	Description	Q'ty	S.C	Serial No.	ICA	Replaceable part	
								Part No.	Q'ty
1460--	622-00296	CABIN MOUNT ASS'Y	SUPPORT DE CABINE	-	D				
1	2161-2216	COVER;FOOT REST(L.H)	COUVERCLE	1					
2	2161-2235	COVER;FOOT REST(R.H)	COUVERCLE	1					
3	161-00010	CABIN MOUNT;FRONT	SUPPORT	2					
4	161-00011	CABIN MOUNT;REAR	SUPPORT	2					
5	2121-9007	NUT	ECROU	4					
6	2114-1058D2	WASHER	RONDELLE	4					
7	2120-2166D2	BOLT M10X1.5X25	BOULON A 6 PANS	16					
8	2114-1898D1	WASHER;PLAIN	RONDELLE PLATE	16					
9	161-00383	MAT;FLOOR	PLAQUE	1					
10	903-00052	MIRROR	RETROVISEUR	1		1001–1009	Y	2903-9012A	1
	2903-9012A	MIRROR	RETROVISEUR	1		1010–1410	I	903-00068	1
	903-00068	**MIRROR**	RETROVISEUR	1		**1411–**			

DATE	JUN. 30, 2005
REV. NO.	EXB05-05

Fig. 1470 CABIN ASS'Y
CABINE

Serial No. ;

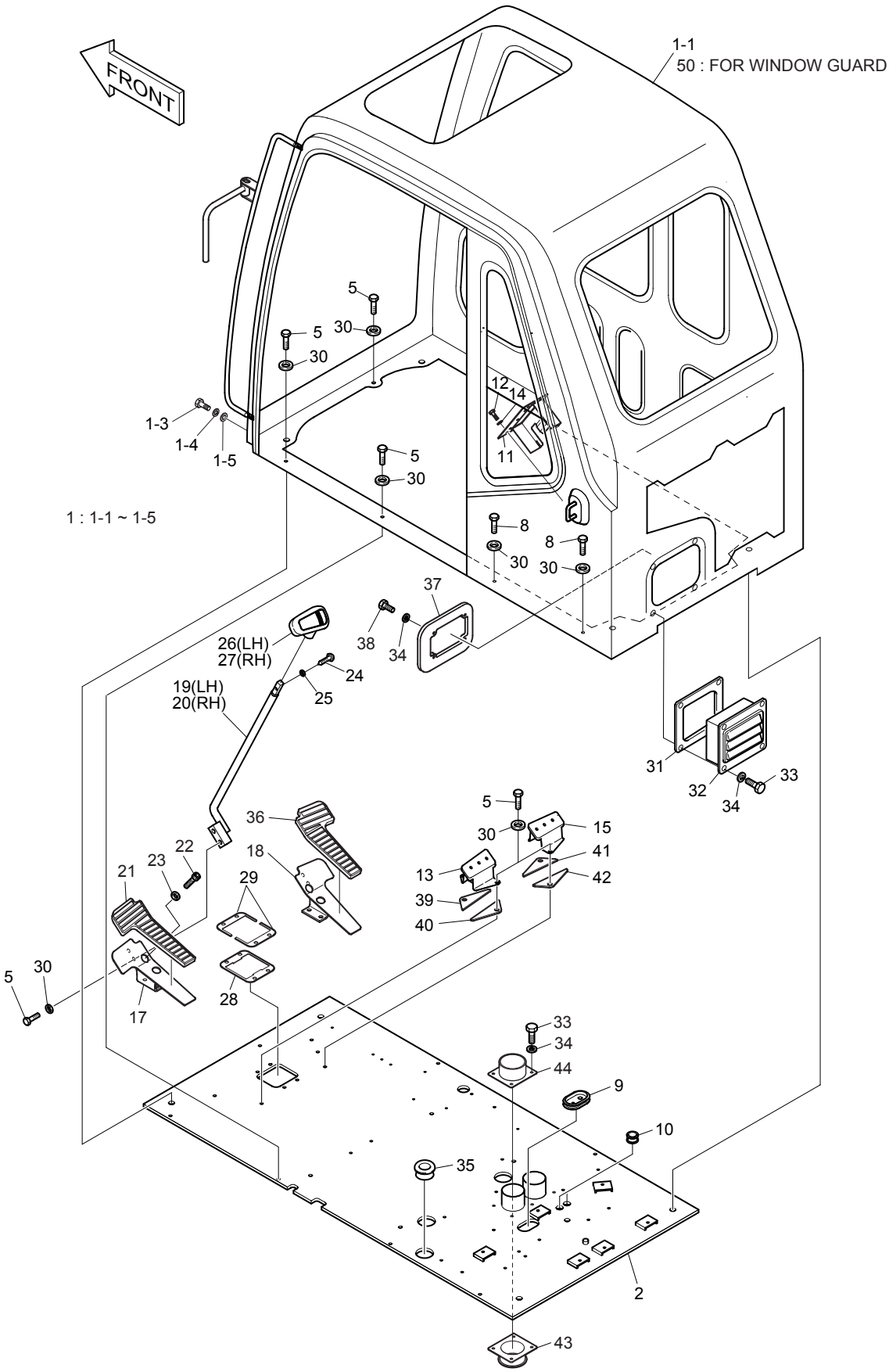

DATE	JUN. 30, 2005
REV. NO.	EXB05-05

Fig. 1470 CABIN ASS'Y CABINE

Serial No ;

Key No.	Part No.	Description	Description	Q'ty	S.C	Serial No.	ICA	Replaceable part	
								Part No.	Q'ty
1470--	622-00197H	CABIN ASS'Y	CABINE	-	D	1001–1194			
	622-00197L	CABIN ASS'Y	CABINE	-	D	1195–1206			
	622-00197M	CABIN ASS'Y	CABINE	-	D	1207–1519			
	622-00197N	CABIN ASS'Y	CABINE	-	D	1520–1694			
	622-00197P	CABIN ASS'Y	CABINE	-	D	1695–1859			
	622-00197R	**CABIN ASS'Y**	CABINE	-	D	**1860–**			
1	622-00297	CABIN ASS'Y	CABINE	1		1001–1194	I	622-00297A	1
	622-00297A	CABIN ASS'Y	CABINE	1		1195–1206	I	622-00297B	1
	622-00297B	CABIN ASS'Y	CABINE	1		1207–1519	I	622-00297C	1
	622-00297C	CABIN ASS'Y	CABINE	1		1520–1694	I	622-00297E	1
	622-00297E	CABIN ASS'Y	CABINE	1		1695–1859			
	622-00297H	**CABIN ASS'Y**	CABINE	1		**1860–**			
1-1	622-00177J	. CABIN ASS'Y	. CABINE	1	D	1001–1194			
	622-00177K	. CABIN ASS'Y	. CABINE	1	D	1195–1206			
	622-00177L	. CABIN ASS'Y	. CABINE	1	D	1207–1519			
	622-00177M	. CABIN ASS'Y	. CABINE	1	D	1520–1694			
	622-00177N	. CABIN ASS'Y	. CABINE	1	D	1695–1859			
	622-00177Q	**. CABIN ASS'Y**	. CABINE	1	D	**1860–**			
1-3	2120-2166D4	. BOLT M10X1.5X20	. BOULON A 6PANS	4					
1-4	2114-2031D5	. WASHER;SPRING M10	. RONDELLE	4					
1-5	2114-1898D1	. WASHER;PLAIN M10	. RONDELLE	4					
2	621-01920B	PLATE;FLOOR	PLAQUE	1					
5	2120-2166D2	BOLT M10X1.5X25	BOULON A 6 PANS	11					
8	2120-2166D3	BOLT M10X1.5X65	BOULON A 6 PANS	4					
9	2160-1308	BUSHING;RUBBER	DOUILLE EN CAOUTCHOUC	1					
10	2160-1004D48	BUSHING;RUBBER	DOUILLE EN CAOUTCHOUC	2					
11	195-01784B	BRACKET;AUDIO CASSETTE	SUPPORT	1		1001–1206	I	195-01784C	1
	195-01784C	BRACKET;AUDIO CASSETTE	SUPPORT	1		1207–			
12	S0508853	BOLT M8X1.25X20	BOULON A 6 PANS	3					
13	2197-1704A	BRACKET;FOOT REST(L.H)	SUPPORT	1					
14	S5010513	WASHER;PLAIN	RONDELLE PLATE	3					
15	2197-1744A	BRACKET;FOOT REST(R.H)	SUPPORT	1					
17	195-01684A	BRACKET;PEDAL(L.H)	SUPPORT	1					
18	195-01683A	BRACKET;PEDAL(R.H)	SUPPORT	1					
19	133-00155A	LEVER(L.H)	LEVIER	1					
20	133-00156A	LEVER(R.H)	LEVIER	1					
21	161-00382	RUBBER;PEDAL(L.H)	CAOUTCHOUC	1					
22	S2211866	BOLT;SOCKET M10X1.5X20	BOULON DE PLOT	4					

DATE	JUN. 30, 2005
REV. NO.	EXB05-05

Fig. 1470 CABIN ASS'Y
CABINE

Serial No. ;

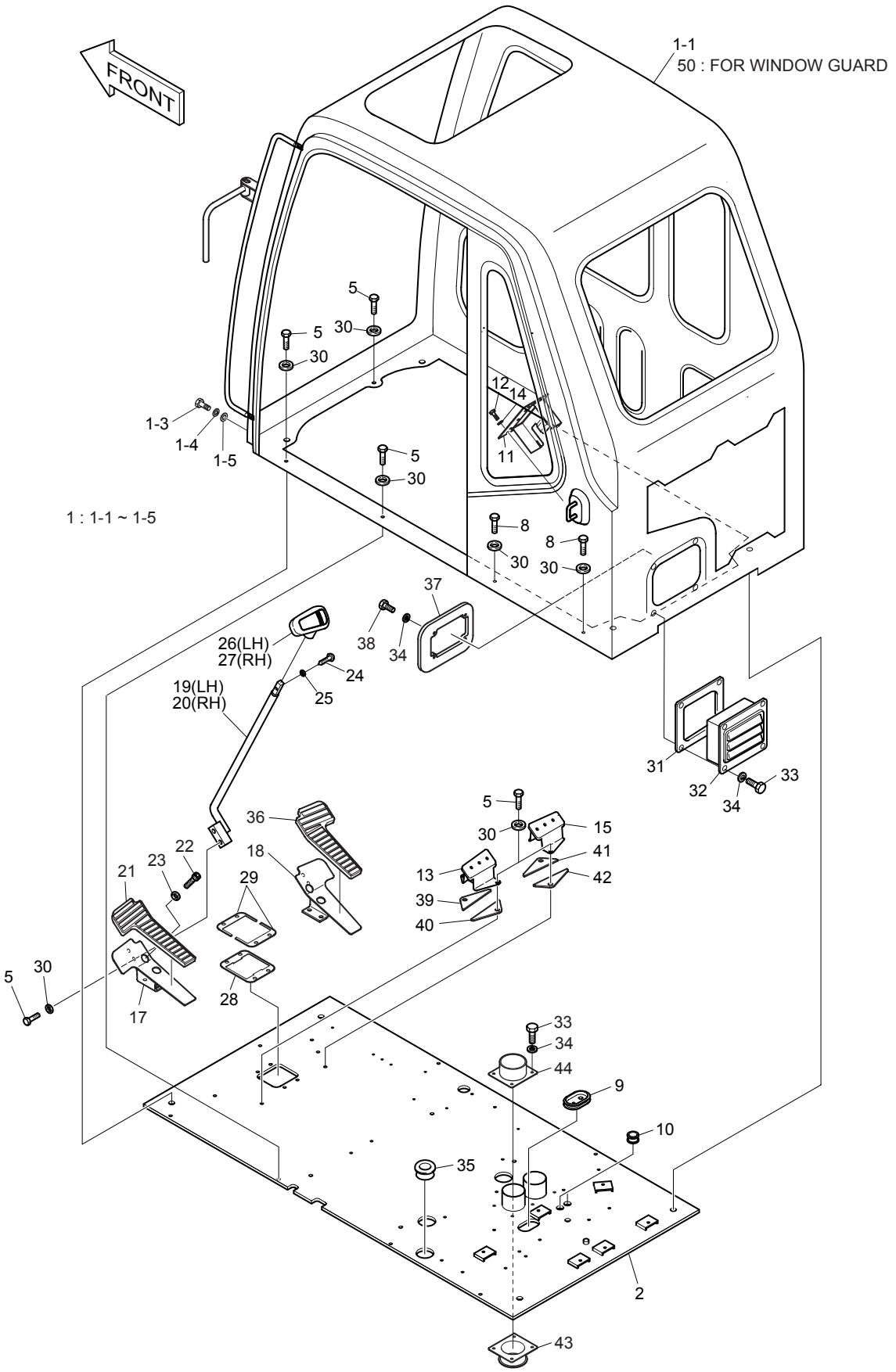

DATE	JUN. 30, 2005
REV. NO.	EXB05-05

Fig. 1470 CABIN ASS'Y CABINE

Serial No ;

Key No.	Part No.	Description	Description	Q'ty	S.C	Serial No.	ICA	Replaceable part	
								Part No.	Q'ty
1470-23	S5110601	WASHER;SPRING M10	RONDELLE ELASTIQUE	4					
24	S2201766	BOLT;SOCKET M4X0.7X14	BOULON DE PLOT	2					
25	S5000113	WASHER;PLAIN M4	RONDELLE PLATE	2					
26	2132-1133B	GRIP;LEVER(L.H)	POIGNEE	1					
27	2132-1134B	GRIP;LEVER(R.H)	POIGNEE	1					
28	161-00077	PLATE;RUBBER	PLAQUE	1					
29	621-00564	SHIM	CALE	2					
30	2114-1898D1	WASHER	RONDELLE	15					
31	2161-2317	RUBBER;PLATE	CAOUTCHOUC	1					
32	621-01159	PLATE;COVER	PLAQUE	1					
33	2120-2166D6	BOLT M6X1.0X16	BOULON A 6 PANS	12					
34	2114-1898D3	WASHER M6	RONDELLE	16					
35	160-00035	BUSHING;RUBBER	DOUILLE EN CAOUTCHOUC	1					
36	161-00381	RUBBER;PEDAL(R.H)	CAOUTCHOUC	1					
37	621-01160	COVER;FRESH AIR DUCT	COUVERCLE	1					
38	2120-2166D19	BOLT M6X1.0X12	BOULON A 6 PANS	4					
39	161-00329	RUBBER;DAMPER(L.H)	CAOUTCHOUC	1					
40	161-00330	RUBBER;DAMPER(L.H)	CAOUTCHOUC	1					
41	161-00331	RUBBER;DAMPER(R.H)	CAOUTCHOUC	1					
42	161-00335	RUBBER;DAMPER(R.H)	CAOUTCHOUC	1					
43	160-00030	BOOT	GAINE DE PROTECTION	2					
44	195-01765B	BRACKET	SUPPORT	2					
50	622-00309	CABIN ASS'Y-OPT.	CABINE	1		1004–1519	I	622-00309C	1
	622-00309C	CABIN ASS'Y-OPT.	CABINE	1		1520–1694	I	622-00309E	1
	622-00309E	CABIN ASS'Y-OPT.	CABINE	1		1695–1859	I	622-00309G	1
	622-00309G	**CABIN ASS'Y-OPT.**	CABINE	1		**1860–**			

DATE	JUN. 30, 2005
REV. NO.	EXB05-05

Fig. 1480 CABIN(1) CABINE

Serial No. ;

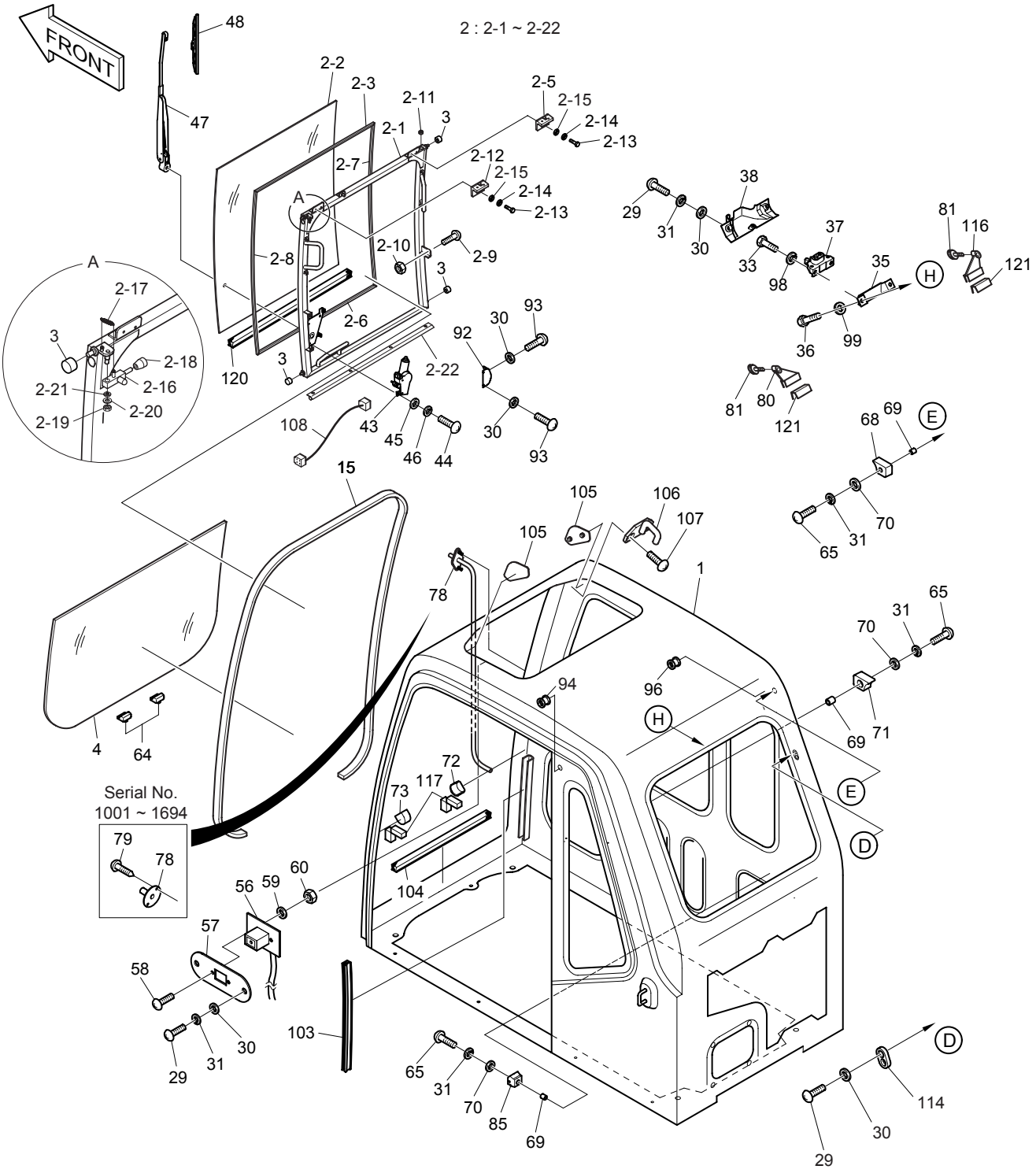

DATE	JUN. 30, 2005
REV. NO.	EXB05-05

Fig. 1480 CABIN(1) CABINE

Serial No ;

Key No.	Part No.	Description	Description	Q'ty	S.C	Serial No.	ICA	Replaceable part	
								Part No.	Q'ty
1480--	622-00177J	CABIN ASS'Y	CABINE	1	D	1001–1194			
	622-00177K	CABIN ASS'Y	CABINE	1	D	1195–1206			
	622-00177L	CABIN ASS'Y	CABINE	1	D	1207–1519			
	622-00177M	CABIN ASS'Y	CABINE	1	D	1520–1694			
	622-00177N	CABIN ASS'Y	CABINE	1	D	1695–1859			
	622-00177Q	**CABIN ASS'Y**	CABINE	1	D	**1860**–			
1	-	CAB ASS'Y	CABINE	1	D				
2	622-00191B	DOOR ASS'Y;FRONT	VERROU	1		1001–1519	I	622-00191C	1
	622-00191C	DOOR ASS'Y;FRONT	VERROU	1		1520–			
2-1	622-00194B	. DOOR;FRONT	. VERROU	1	D	1001–1519			
	622-00194C	. DOOR;FRONT	. VERROU	1	D	1520–			
2-2	903-00055A	. GLASS 6.76t	. VITRE	1					
2-3	161-00395	. DAMPER	. REGISTRE	1					
2-5	125-00031A	. CATCH	. LOQUET	1					
2-6	161-00395	. DAMPER	. REGISTRE	1					
2-7	161-00395	. DAMPER	. REGISTRE	1					
2-8	161-00395	. DAMPER	. REGISTRE	1					
2-9	2161-2069	. STOPPER	. FRAPPER	1					
2-10	S4032633	. NUT	. ECROU	1					
2-11	2110-1347	. BUSH	. MANCHON	2					
2-12	125-00043	. CATCH	. LOQUET	1					
2-13	2120-2166D36	. BOLT M6X1.0X20	. BOULON A 6 PANS	4					
2-14	2114-2031D3	. WASHER;SPRING M6	. RONDELLE ELASTIQUE	4					
2-15	2114-1898D3	. WASHER;PLAIN M6	. RONDELLE PLATE	4					
2-16	133-00168	. BAR	. CAOUTCHOUC	1					
2-17	129-00146A	. SPRING	. RESSORT	1					
2-18	2160-1307	. CAP;RUBBER	. CHAPEAU	1					
2-19	S4012533	. NUT	. ECROU	1					
2-20	2114-1898D2	. WASHER	. RONDELLE	1					
2-21	S5102503	. WASHER;SPRING	. RONDELLE ELASTIQUE	1					
2-22	K1000868	. RUBBER 920L	. CAOUTCHOUC	1		1520–			
3	2154-1033	ROLLER	GALET	4					
4	903-00049	GLASS;FRONT LOWER	VITRE	1					
15	162-00025A	STRIP;WEATHER 3800L	TAMPON	1					
29	S3450973	SCREW M6X1.0X16	VIS	7					
30	S5010313	WASHER;PLAIN M6	RONDELLE PLATE	11					
31	S5102303	WASHER;SPRING M6	RONDELLE ELASTIQUE	9					
33	2120-2166D5	BOLT M8X1.25X20	BOULON A 6 PANS	2					

DATE	JUN. 30, 2005
REV. NO.	EXB05-05

Fig. 1480 CABIN(1) CABINE

Serial No. ;

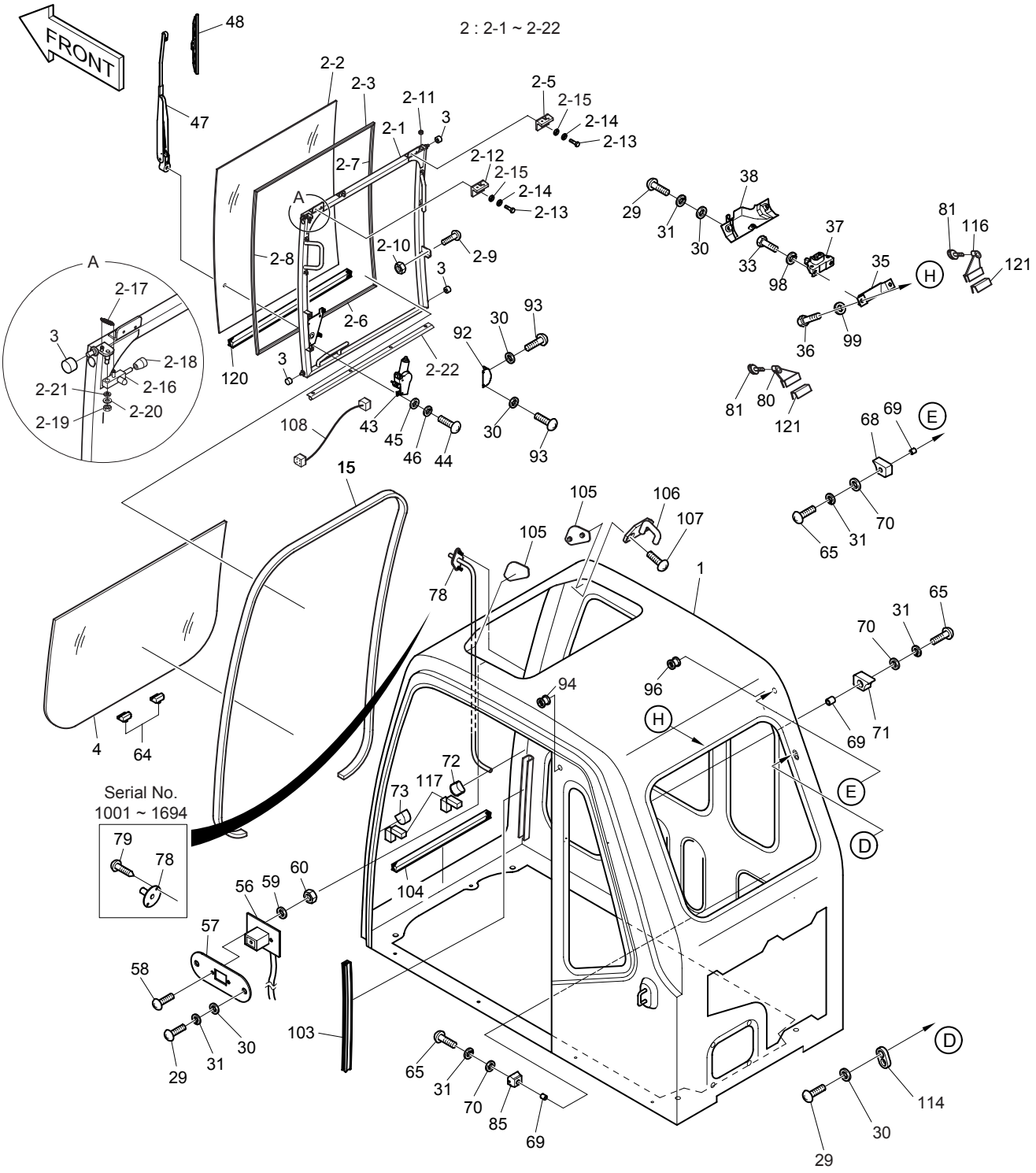

DATE	JUN. 30, 2005
REV. NO.	EXB05-05

Fig. 1480 CABIN(1) CABINE

Serial No ;

Key No.	Part No.	Description	Description	Q'ty	S.C	Serial No.	ICA	Replaceable part	
								Part No.	Q'ty
1480-35	2197-1711	BRACKET;AUTO LOCK	SUPPORT	1					
36	2120-2166D4	BOLT M10X1.5X20	BOULON A 6 PANS	2					
37	2125-9056	CATCH;AUTO LOCK	VERROU	1					
38	621-01990	COVER;AUTO LOCK	COUVERCLE	1					
43	538-00009	MOTOR;WIPER	MOTEUR	1					
44	S3450833	SCREW M5X0.8X12	VIS	3					
45	S5010213	WASHER;PLAIN M5	RONDELLE PLATE	3					
46	S5102203	WASHER;SPRING M5	RONDELLE ELASTIQUE	3					
47	2541-6020	WIPER ARM ASS'Y	BRAS D'ESSUIE-GLACE	1					
48	507-00005	BLADE;WIPER	BALAI D'ESSUIE-GLACE	1					
56	530-00212	HARNESS;CABIN LAMP	HARNAIS	1					
57	2891-1323	PLATE	PLAQUE	1					
58	S3450343	SCREW M3X0.5X10	VIS	2					
59	S5020013	WASHER;PLAIN M3	RONDELLE PLATE	2					
60	S4010003	NUT M3X0.5	ECROU	2					
64	2161-2211	STOPPER;RUBBER	TAQUET D'ARRET	2					
65	S3450993	SCREW M6X1.0X25	VIS	4					
68	2161-2208	STOPPER;RUBBER RH	TAQUET D'ARRET	1					
69	2140-1338	PIPE;SPACER	CONDUITE	4					
70	2114-1058D52	WASHER M6	RONDELLE	4					
71	2161-2207	STOPPER;RUBBER LH	TAQUET D'ARRET	1					
72	2161-2210	STOPPER;RUBBER RH	TAQUET D'ARRET	1					
73	2161-2209	STOPPER;RUBBER LH	TAQUET D'ARRET	1					
78	2114-1855	WASHER ASS'Y	RONDELLE	1		1001–1694	I	K1002429	1
	K1002429	NOZZLE ASS'Y	INJECTEUR	1		1695–			
79	S3643359	SCREW;TAPPING	VIS	2		1001–1694			
80	195-01549A	BRACKET	SUPPORT	1					
81	120-00226	BOLT;KNOB M8X1.25X30	BOULON	2					
85	2161-2212	STOPPER;RUBBER	TAQUET D'ARRET	2					
92	621-01991	COVER;WIPER MOTOR	COUVERCLE	1					
93	S3450953	SCREW M6X1.0X12	VIS	4					
94	110-00230	BUSHING;RUBBER	DOUILLE EN CAOUTCHOUC	1					
96	2160-1310	BUSHING;RUBBER	DOUILLE EN CAOUTCHOUC	1					
98	2114-1898D2	WASHER M8	RONDELLE	2					
99	2114-1058D45	WASHER	RONDELLE	2					
103	2160-1026	TRIM	CANAL	2					
104	162-00027	STRIP;WEATHER L=920	TAMPON	1		1001–1519	I	2160-1023	1
	2160-1023	RUBBER;CUSHION	CAOUTCHOUC	1		1520–1694	I	162-00027	1

DATE	JUN. 30, 2005
REV. NO.	EXB05-05

Fig. 1480 CABIN(1) CABINE

Serial No. ;

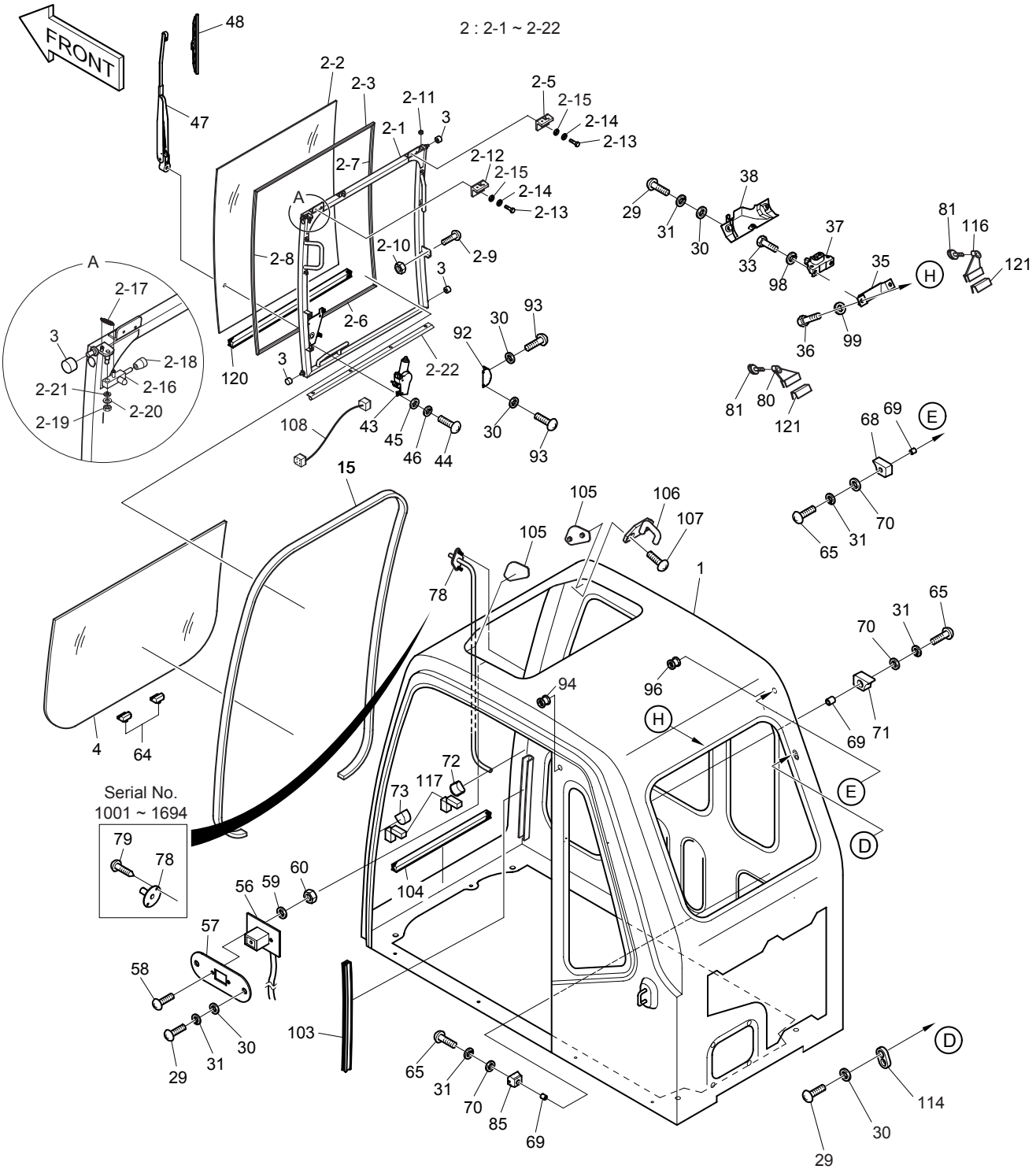

DATE	JUN. 30, 2005
REV. NO.	EXB05-05

Fig. 1480 CABIN(1) CABINE

Serial No ;

Key No.	Part No.	Description	Description	Q'ty	S.C	Serial No.	ICA	Replaceable part	
								Part No.	Q'ty
1480-104	162-00027	STRIP;WEATHER L=920	TAMPON	1		1695–			
105	160-00038	RUBBER	CAOUTCHOUC	2					
106	142-00067	STRIKER	FRAPPER	2					
107	S3453118	SCREW M8X1.25X20	VIS	4					
108	530-00251	HARNESS;W/MOTOR JOINT	HARNAIS	1					
114	2514-1013	HOLDER	POSSESSEUR	2					
116	195-02099	BRACKET	SUPPORT	1					
117	2161-2289	RUBBER;CUSHION	CAOUTCHOUC	2		1001–1519	I	2161-2289A	2
	2161-2289A	RUBBER;CUSHION	CAOUTCHOUC	2		1520–			
120	162-00030	STRIP;WEATHER	CAOUTCHOUC	1		1001–1206	I	198-00036A	1
	198-00036A	STRIP;WEATHER	CAOUTCHOUC	1		1207–			
121	162-00031	TRIM;RUBBER	CAOUTCHOUC	2					

DATE	JUN. 30, 2006
REV. NO.	EXB06-08

Fig. 1490 CABIN(2)
CABINE

Serial No. ;

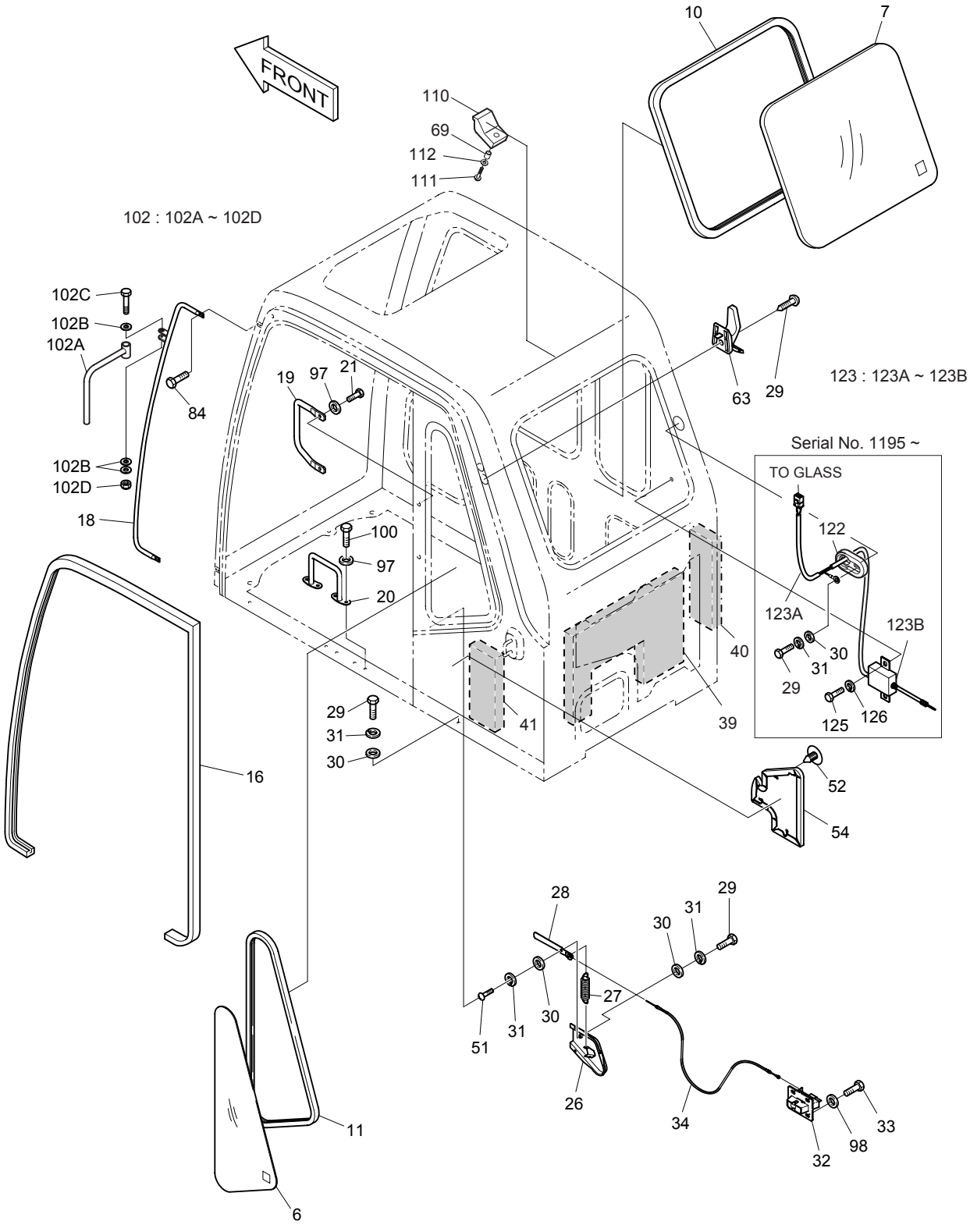

DATE	JUN. 30, 2006
REV. NO.	EXB06-08

Fig. 1490 CABIN(2) CABINE

Serial No. ;

Key No.	Part No.	Description	Description	Q'ty	S.C	Serial No.	ICA	Replaceable part	
								Part No.	Q'ty
1490--	622-00177J	CABIN ASS'Y	CABINE	1	D	1001–1194			
	622-00177K	CABIN ASS'Y	CABINE	1	D	1195–1206			
	622-00177L	CABIN ASS'Y	CABINE	1	D	1207–1519			
	622-00177M	CABIN ASS'Y	CABINE	1	D	1520–1694			
	622-00177N	CABIN ASS'Y	CABINE	1	D	1695–1859			
	622-00177Q	CABIN ASS'Y	CABINE	1	D	1860–			
6	2903-1212	GLASS(L.H)	VITRE	1					
7	2903-1213	GLASS;REAR	VITRE	1		1001–1194			
	903-00067	GLASS;REAR	VITRE	1		1195–			
10	2198-1058	H-RUBBER 2590L	CAOUTCHOUC	1					
11	2198-1055	S-RUBBER;REAR(L.H)	CAOUTCHOUC	1					
16	2162-1064A	STRIP;WEATHER 3500L	TAMPON	1					
18	172-00027A	HANDLE;FRONT(L.H)	POIGNER	1					
19	172-00043	HANDLE;CENTER(L.H)	POIGNER	1					
20	2172-1109	HANDLE;LOWER(L.H)	POIGNER	1					
21	2120-2166D1	BOLT M10X1.5X30	BOULON A 6 PANS	2					
26	2197-1639A	BRACKET;LEVER CASE	SUPPORT	1					
27	2129-1446	SPRING	RESSORT	1					
28	2133-2014	LEVER;CATCH DOOR	LEVIER	1					
29	S3450973	SCREW M6X1.0X16	VIS	5		1001–1194			
	S3450973	SCREW M6X1.0X16	VIS	6		1195–			
30	S5010313	WASHER;PLAIN M6	RONDELLE PLATE	5		1001–1194			
	S5010313	WASHER;PLAIN M6	RONDELLE PLATE	6		1195–			
31	S5102303	WASHER;SPRING M6	RONDELLE ELASTIQUE	5		1001–1194			
	S5102303	WASHER;SPRING M6	RONDELLE ELASTIQUE	6		1195–			
32	2125-9055	CATCH;DOOR ASM	LOQUET	1					
33	2120-2166D5	BOLT M8X1.25X20	BOULON A 6 PANS	4					
34	2127-1002A	WIRE ASM;RELEASE	CABLE	1					
39	161-00317	FOAM;POLYURETHANE	EPONGE	1					
40	161-00318	FOAM;POLYURETHANE	EPONGE	1					
41	161-00319	FOAM;POLYURETHANE	EPONGE	1					
51	S3450953	SCREW M6X1.0X12	VIS	1					
52	2124-1607	CLIP;TRIM	ATTACHE	4					
54	161-00430A	PAD(L.H)	CAOUTCHOUC	1					
63	2150-1133	HOOK;COAT	CROCHET	1					
69	2140-1338	PIPE;SPACER	CONDUITE	1					
84	2120-2150D1	BOLT M10X1.5X25	BOULON A 6 PANS	4					
97	2114-1898D1	WASHER M10	RONDELLE	5					

DATE	JUN. 30, 2006
REV. NO.	EXB06-08

Fig. 1490 CABIN(2)
CABINE

Serial No. ;

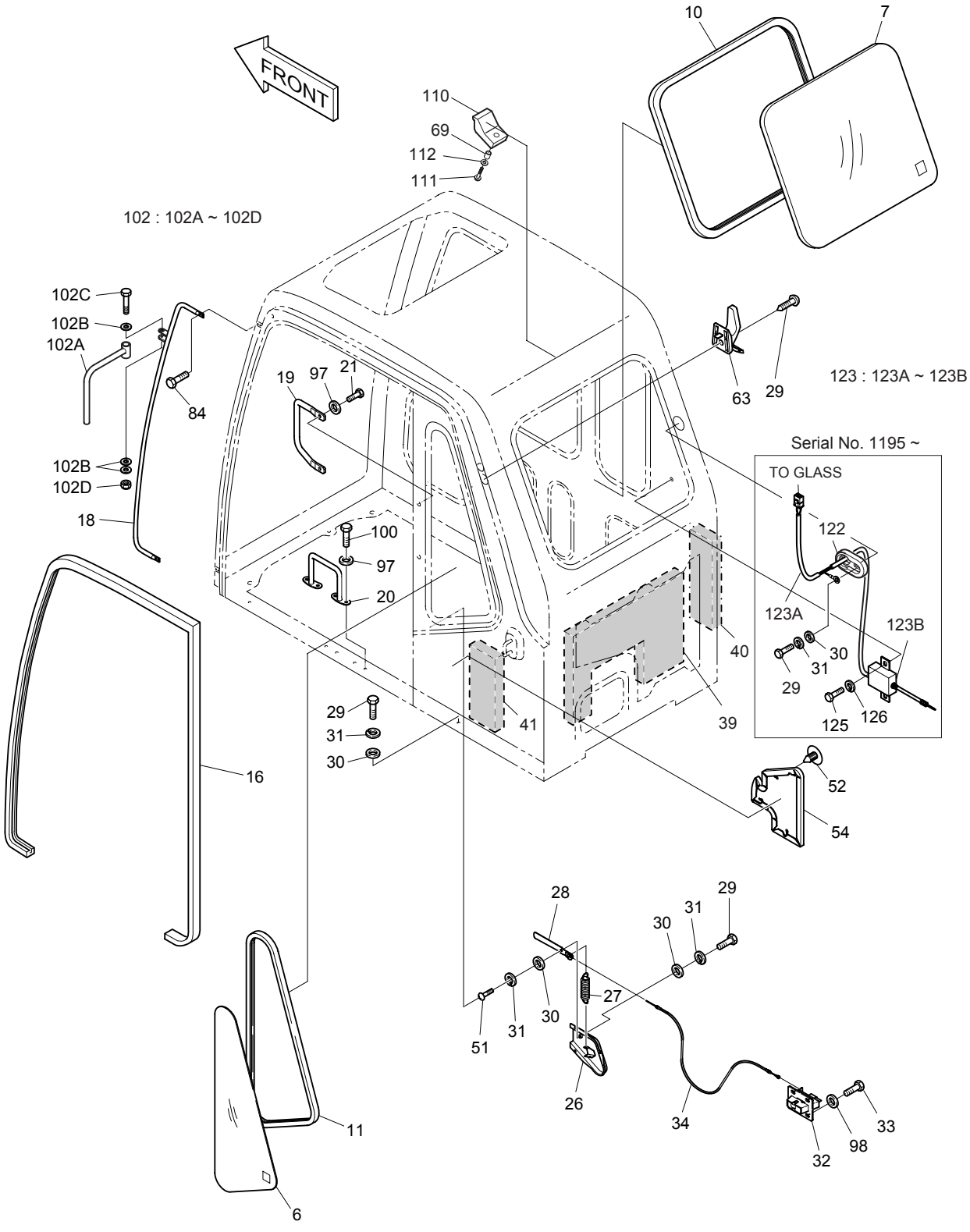

DATE	JUN. 30, 2006
REV. NO.	EXB06-08

Fig. 1490 CABIN(2) CABINE

Serial No. ;

Key No.	Part No.	Description	Description	Q'ty	S.C	Serial No.	ICA	Replaceable part	
								Part No.	Q'ty
1490-98	2114-1898D2	WASHER M8	RONDELLE	4					
100	2120-2166D2	BOLT M10X1.5X25	BOULON A 6 PANS	3					
102	623-00023	STAY;SIDE MIRROR	ENTRETOISE	1					
102A	623-00024	. STAY	. ENTRETOISE	1	D				
102B	2114-1898D16	. WASHER M10	. RONDELLE	3	D				
102C	2120-2166D40	. BOLT M10X1.5X70	. BOULON A 6 PANS	1	D				
102D	2121-1311D5	. NUT;CAP M10X1.5	. ECROU	1	D				
110	**161-00461A**	**STOPPER**	TAQUET D'ARRET	2					
111	2120-2166D14	SCREW M5X0.8X25	VIS	2					
112	2114-1058D64	WASHER	RONDELLE	2					
122	160-00084	BUSHING;RUBBER	GARNISSAGE	1		1195–			
123	537-00074	MODULE ASS'Y	MODULE	1		1195–			
123A	563-00016	. MAIN FEEDER	. CONDUCTEUR PRINCIPAL	1		1195–			
123B	537-00078	. SUB MODULE ASS'Y	. MODULE	1		1195–			
125	S0508853	BOLT M8X1.25X20	BOULON A 6 PANS	1		1195–			
126	S5102503	WASHER;SPRING M8	RONDELLE	1		1195–			

DATE	JUN. 30, 2005
REV. NO.	EXB05-05

Fig. 1500 CABIN(3) CABINE

Serial No. ;

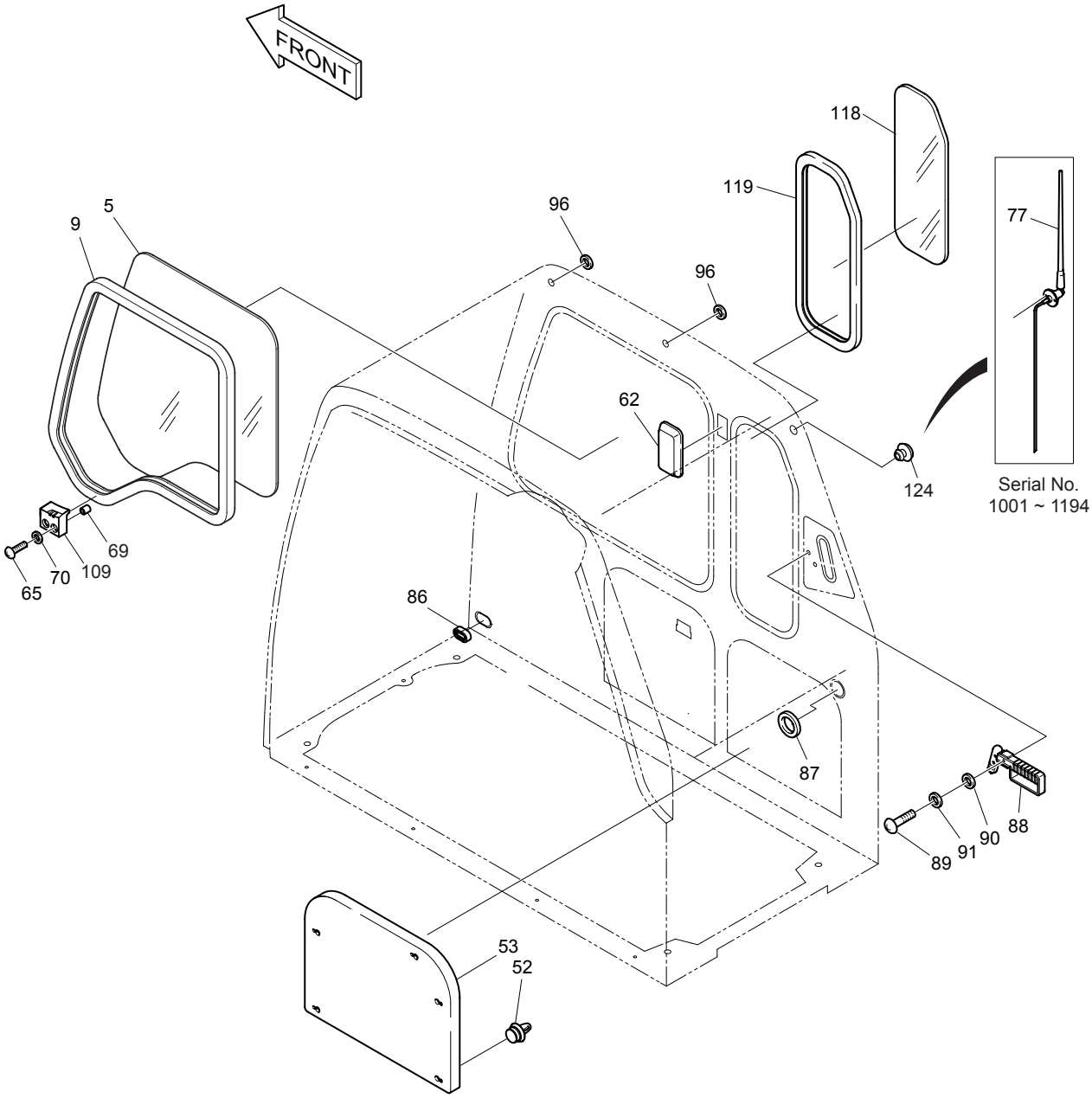

DATE	JUN. 30, 2005
REV. NO.	EXB05-05

Fig. 1500 CABIN(3) CABINE

Serial No ;

Key No.	Part No.	Description	Description	Q'ty	S.C	Serial No.	ICA	Replaceable part	
								Part No.	Q'ty
1500--	622-00177J	CABIN ASS'Y	CABINE	1	D	1001–1194			
	622-00177K	CABIN ASS'Y	CABINE	1	D	1195–1206			
	622-00177L	CABIN ASS'Y	CABINE	1	D	1207–1519			
	622-00177M	CABIN ASS'Y	CABINE	1	D	1520–1694			
	622-00177N	CABIN ASS'Y	CABINE	1	D	1695–1859			
	622-00177Q	**CABIN ASS'Y**	CABINE	1	D	**1860**–			
5	903-00051	GLASS;FRONT(R.H)	VITRE	1					
9	198-00034	H-RUBBER 3800L	CAOUTCHOUC	1					
52	2124-1607	CLIP;TRIM	ATTACHE	6					
53	161-00429A	PAD;REAR(R.H)	CAOUTCHOUC	1					
62	2534-9063	LAMP;ROOM	LAMPE	1					
65	S3450993	SCREW M6X1.0X25	VIS	2					
69	2140-1338	PIPE;SPACER	CONDUITE	2					
70	2114-1058D52	WASHER	RONDELLE	2					
77	541-00005	ANTENNA	ANTENNE	1		1001–1194			
86	2110-1347	BUSH 135L	MANCHON	1					
87	2110-1349	BUSH 188L	MANCHON	1					
88	2199-9058	HAMMER	MARTEAU	1					
89	S3458582	SCREW M4X0.7X12	VIS	2					
90	S5000111	WASHER;PLAIN M4	RONDELLE PLATE	2					
91	S5102101	WASHER;SPRING M4	RONDELLE ELASTIQUE	2					
96	2160-1310	BUSHING;RUBBER	DOUILLE EN CAOUTCHOUC	2					
109	161-00449	STOPPER	TAQUET D'ARRET	1					
118	903-00060	GLASS;R.H	VERRE	1					
119	198-00044	RUBBER;H	CAOUTCHOUC	1					
124	160-00083	BUSHING;RUBBER	DOUILLE EN CAOUTCHOUC	1		1194–			

DATE	JUN. 30, 2005
REV. NO.	EXB05-05

Fig. 1510 CABIN(4) CABINE

Serial No. ;

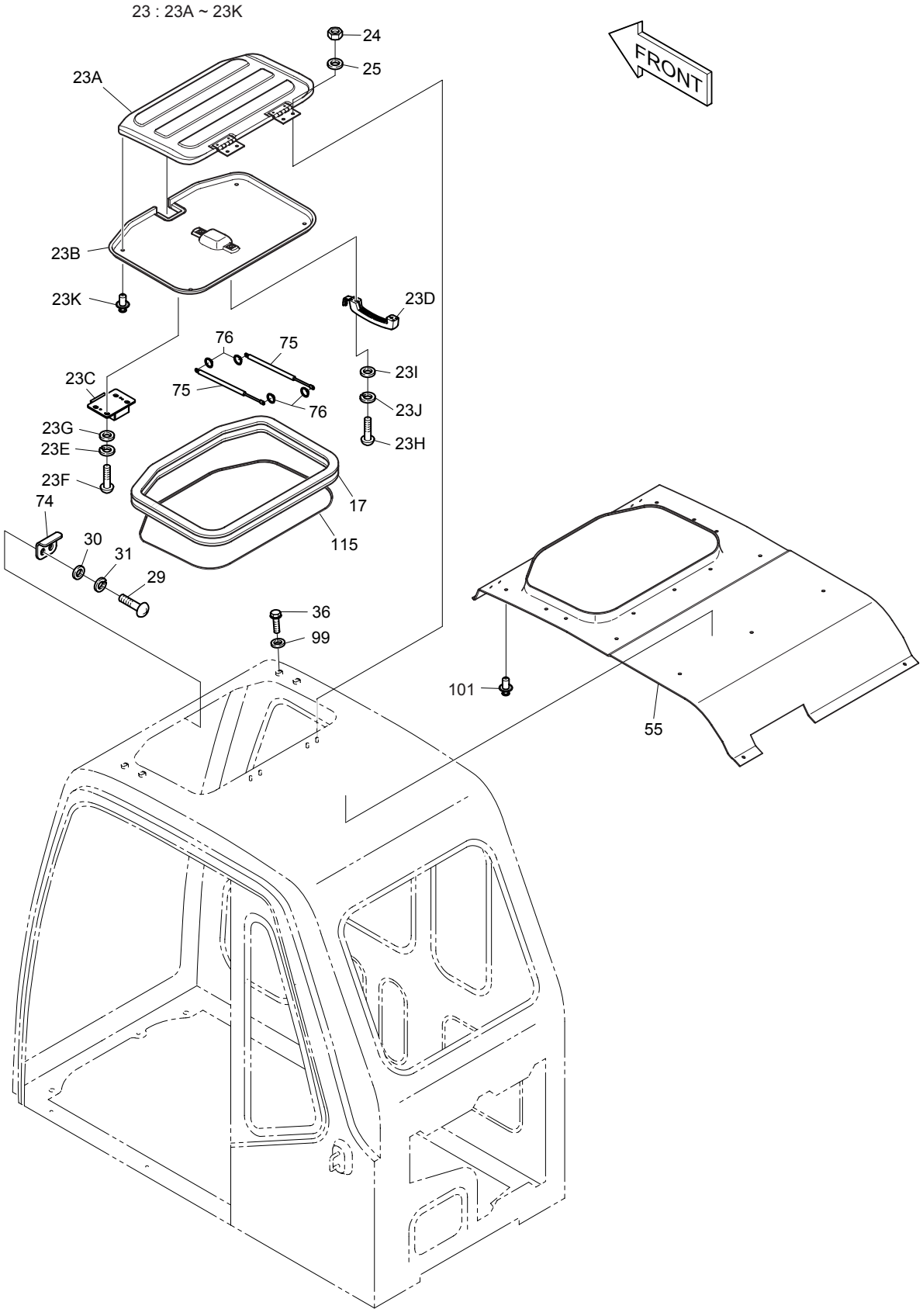

DATE	JUN. 30, 2005
REV. NO.	EXB05-05

Fig. 1510 CABIN(4) CABINE

Serial No ;

Key No.	Part No.	Description	Description	Q'ty	S.C	Serial No.	ICA	Replaceable part	
								Part No.	Q'ty
1510--	622-00177J	CABIN ASS'Y	CABINE	1	D	1001–1194			
	622-00177K	CABIN ASS'Y	CABINE	1	D	1195–1206			
	622-00177L	CABIN ASS'Y	CABINE	1	D	1207–1519			
	622-00177M	CABIN ASS'Y	CABINE	1	D	1520–1694			
	622-00177N	CABIN ASS'Y	CABINE	1	D	1695–1859			
	622-00177Q	**CABIN ASS'Y**	CABINE	1	D	**1860–**			
17	162-00026	STRIP;WEATHER 2000L	TAMPON	1					
23	621-01667	ROOF COVER ASS'Y	COUVERCLE	1					
23A	621-01668	. COVER;ROOF	. COUVERCLE	1					
23B	161-00326	. PAD;ROOF COVER	. CAOUTCHOUC	1					
23C	2125-9057	. CATCH;ROOF COVER	. LOQUET	1					
23D	2172-1112	. HANDLE;PULL	. POIGNER	1					
23E	S5100203	. WASHER;SPRING M5	. RONDELLE ELASTIQUE	4					
23F	S3450833	. SCREW M5X0.8X12	. VIS	4					
23G	S5000213	. WASHER;PLAIN M5	. RONDELLE PLATE	4					
23H	S3450993	. SCREW M6X1.0X25	. VIS	2					
23I	S5010313	. WASHER;PLAIN M6	. RONDELLE PLATE	2					
23J	S5102303	. WASHER;SPRING M6	. RONDELLE ELASTIQUE	2					
23K	2120-2174	. SCRIVET	. RIVET	4					
24	S4012533	NUT M8	ECROU	4					
25	S5010513	WASHER M8	RONDELLE	4					
29	S3450973	SCREW M6X1.0X16	VIS	2					
30	S5010313	WASHER;PLAIN M6	RONDELLE PLATE	2					
31	S5102303	WASHER;SPRING M6	RONDELLE ELASTIQUE	2					
36	2120-2166D4	BOLT M10X1.5X20	BOULON A 6 PANS	4					
55	161-00323	PAD;ROOF	CAOUTCHOUC	1					
74	2142-1122A	STRIKER	FRAPPER	1					
75	2440-9251	SPRING;GAS	RESSORT	2					
76	S6540600	RING;RETAINING	BAGUE	4					
99	2114-1058D45	WASHER M10	RONDELLE	4					
101	2120-2174	SCRIVET	RIVET	14					
115	161-00486	FINISHER	FINISHER	1					

DATE	DEC. 29, 2005
REV. NO.	EXB05-20

Fig. 1520 CABIN(5) CABINE

Serial No. ;

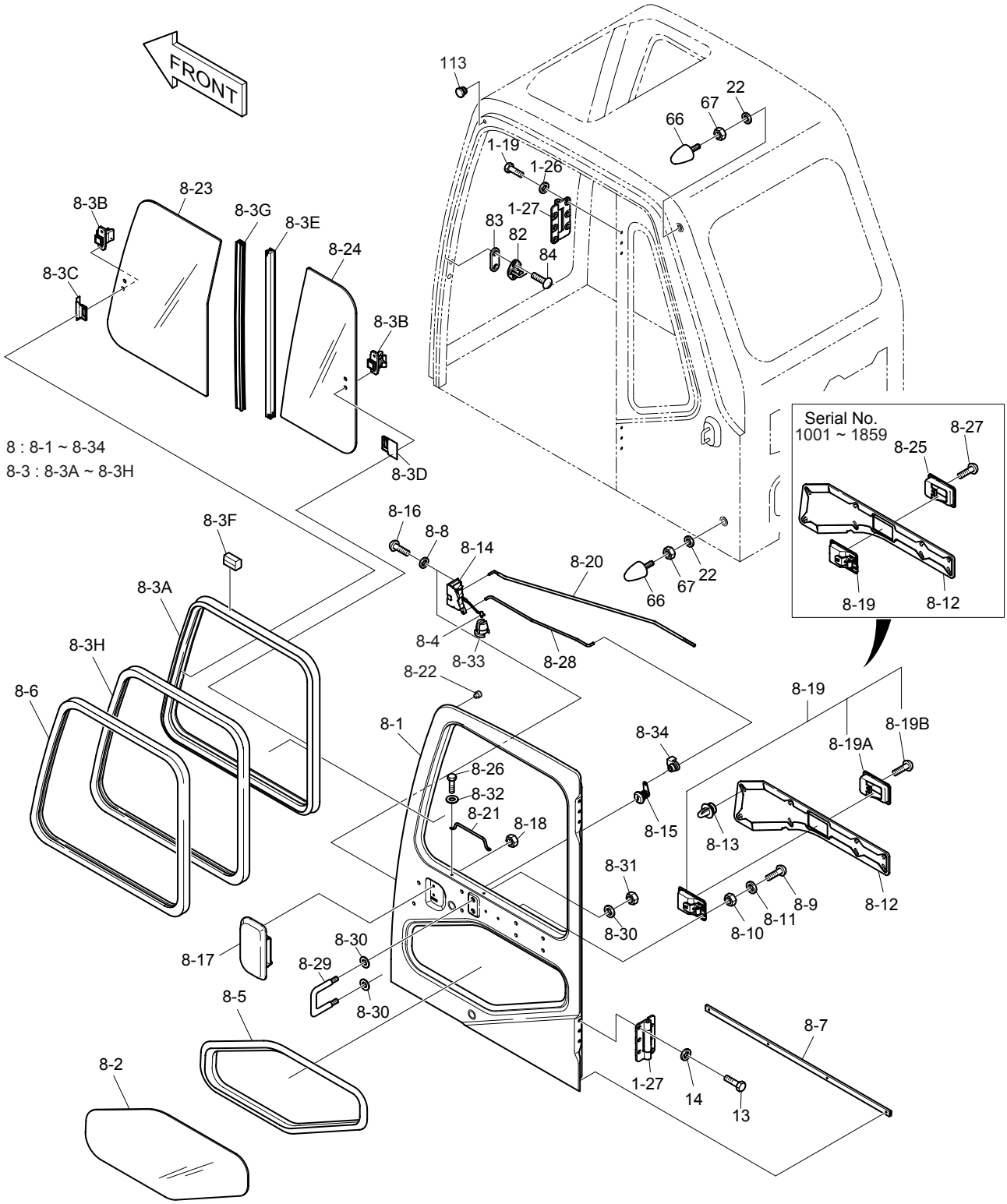

DATE	DEC. 29, 2005
REV. NO.	EXB05-20

Fig. 1520 CABIN(5) CABINE

Serial No ;

Key No.	Part No.	Description	Description	Q'ty	S.C	Serial No.	ICA	Replaceable part	
								Part No.	Q'ty
1520--	622-00177J	CABIN ASS'Y	CABINE	1	D	1001–1194			
	622-00177K	CABIN ASS'Y	CABINE	1	D	1195–1206			
	622-00177L	CABIN ASS'Y	CABINE	1	D	1207–1519			
	622-00177M	CABIN ASS'Y	CABINE	1	D	1520–1694			
	622-00177N	CABIN ASS'Y	CABINE	1	D	1695–1859			
	622-00177Q	CABIN ASS'Y	CABINE	1	D	1860–			
1-19	S0512263	. BOLT M10X1.5X30	. BOULON A 6 PANS	6					
1-26	2114-1058D45	. WASHER M10	. RONDELLE	6					
1-27	2171-1078	. HINGE	. PAUMELLE	2					
8	622-00219A	PANEL;DOOR ASS'Y	PANNEAU	1		1001–1206	I	622-00219B	1
	622-00219B	PANEL;DOOR ASS'Y	PANNEAU	1		1207–1519	I	622-00219C	1
	622-00219C	PANEL;DOOR ASS'Y	PANNEAU	1		1520–1859			
	622-00219G	PANEL;DOOR ASS'Y	PANNEAU	1		1860–			
8-1	622-00242	. PANEL ASM;DOOR	. PANNEAU	1					
8-2	2903-1214	. GLASS;DOOR t=5	. VITRE	1					
8-3	-	. SASH ASSY;DOOR	. CHASSIS	1	D				
8-3A	2622-6014	.. SASH	.. CHASSIS	1					
8-3B	2123-6119	.. DOOR LOCK	.. VERROU	2					
8-3C	2116-6006	.. STOPPER;LOCK	.. PLAQUE	1					
8-3D	2116-6007	.. STOPPER;LOCK	.. PLAQUE	1					
8-3E	2731-6002	.. BAR;SEAL	.. CAOUTCHOUC	1					
8-3F	2161-6063	.. STOPPER;CLASS	.. ARRET	2					
8-3G	2731-6003	.. BAR;CENTER	.. CAOUTCHOUC	1					
8-3H	2161-6060	.. RUN CHANNEL	.. PROFILE	1					
8-4	2123-2247	. PIN	. GOUJON	1					
8-5	2198-1054	. S-RUBBER;DOOR	. CAOUTCHOUC	1					
8-6	2161-2229	. FINISHER;SASH DOOR	. SASH	1					
8-7	2180-1267	. SEAL;DOOR	. JOINT	1					
8-8	S5210303	. WASHER;TOOTHED LOCK	. RONDELLEELASTIQUE	3					
8-9	S3450833	. SCREW M5X0.8X12	. VIS	2					
8-10	S5010213	. WASHER PLAIN M5	. RONDELLE PLATE	2					
8-11	S5102203	. WASHER SPRING M5	. RONDELLE ELASTIQUE	2					
8-12	161-00428A	. PAD;DOOR	. CAOUTCHOUC	1					
8-13	2124-1607	. TRIM CLIP	. ATTACHE	8					
8-14	2125-9036	. CATCH;DOOR LOCK	. LOQUET	1					
8-15	2172-9036	. CYLINDER;KEY	. CLEF DE CYLINDRE	1		1001–1206	I	172-00212	1
	172-00212	. CYLINDER;KEY	. CLEF DE CYLINDRE	1		1207–1859			
	K1003900	. CYLINDER;KEY	. CLEF DE CYLINDRE	1		1860–			

DATE	DEC. 29, 2005
REV. NO.	EXB05-20

Fig. 1520 CABIN(5)
CABINE

Serial No. ;

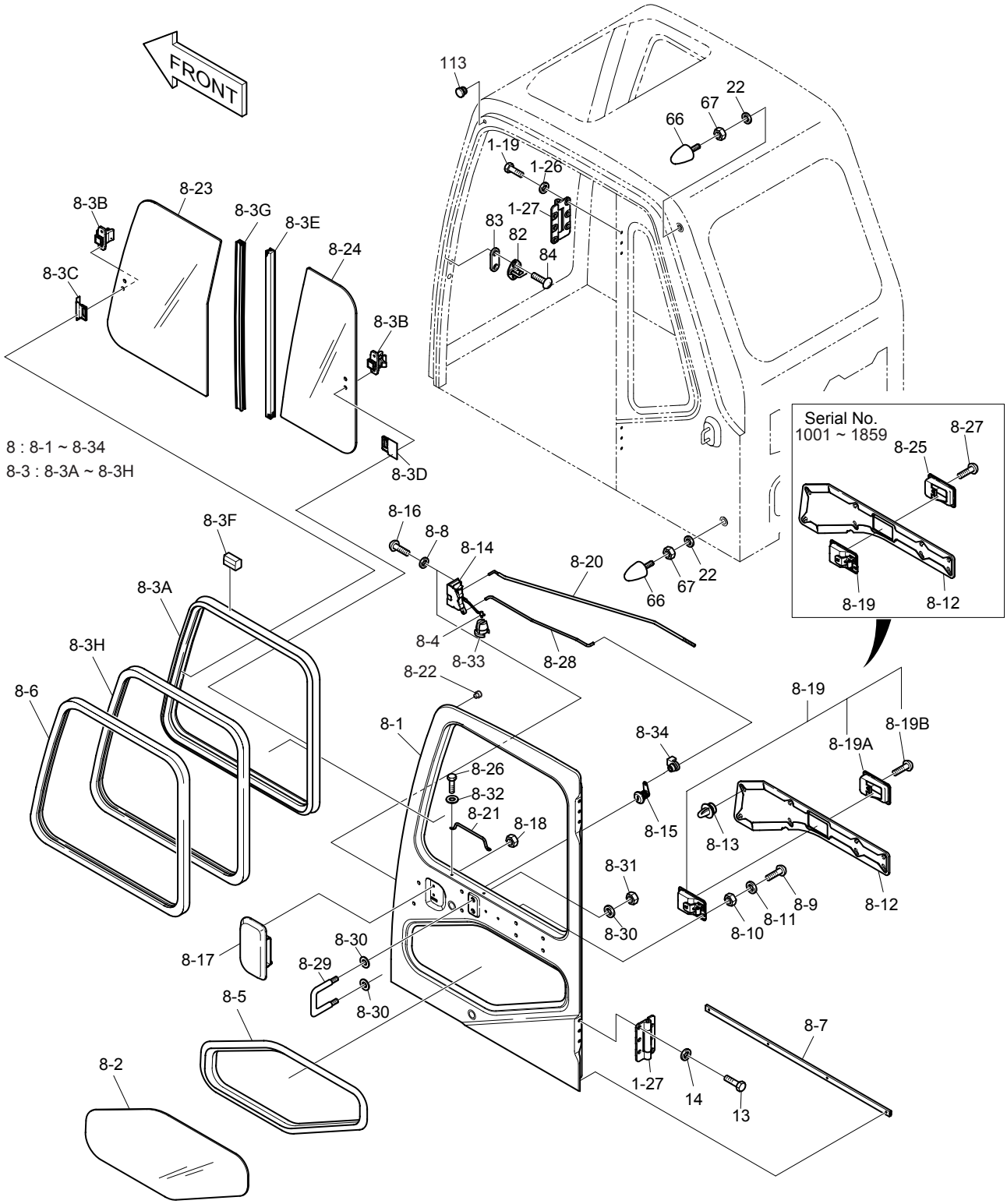

DATE	DEC. 29, 2005
REV. NO.	EXB05-20

Fig. 1520 CABIN(5) CABINE

Serial No ;

Key No.	Part No.	Description	Description	Q'ty	S.C	Serial No.	ICA	Replaceable part	
								Part No.	Q'ty
1520-8-16	2120-2150D3	. BOLT M6X1.0X16	. BOULONA6PANS	3					
8-17	2172-9021	. HANDLE;OUTER	. POIGNEE	1					
8-18	S4012303	. NUT M6X1.0	. ECROU	2					
8-19	2172-9022	. HANDLE;INNER	. POIGNEE	1		1001–1859	I	K1004085	1
	K1004085	. HANDLE;INNER	. POIGNEE	1		1860–			
8-19A	2621-9005	.. COVER;HANDLE	.. COUVERCLE	1		1860–			
8-19B	S3452823	.. SCREW M5X0.8X10	.. VIS	1		1860–			
8-20	2136-1431	. ROD;HANDLE INNER DOOR	. TIGE	1					
8-21	2172-1110B	. HANDLE;DOOR	. POIGNER	1					
8-22	2161-2227	. STOPPER;RUBBER	. TAQUET D'ARRET	1					
8-23	2903-1219A	. GLASS 5T	. VITRE	1					
8-24	2903-1220	. GLASS 5T	. VITRE	1					
8-25	2621-9005	. COVER;HANDLE	. COUVERCLE	1		1001–1859			
8-26	2120-2166D5	. BOLT M8X1.25X20	. BOULON A 6 PANS	2					
8-27	S3452823	. SCREW M5X0.8X10	. VIS	1		1001–1859			
8-28	2123-2239A	. ROD;DOOR LOCK	. TIGE	1					
8-29	2150-1132A	. HOOK;CATCH DOOR	. CROCHET	1					
8-30	2891-1311	. PLATE;PLAIN	. PLAQUE	4					
8-31	S4012533	. NUT M8X1.25	. ECROU	2					
8-32	2114-1898D2	. WASHER	. RONDELLE	2					
8-33	2124-1689A	. ROD;SNAP	. TIGE	1					
8-34	124-00010	. CLIP;ROD	. ATTACHE	1					
13	S0512263	BOLT M10X1.5X30	BOULON A 6 PANS	6					
14	2114-1058D45	WASHER	RONDELLE	6					
22	S5010613	WASHER;PLAIN M10	RONDELLE PLATE	2					
66	2161-2226	STOPPER;RUBBER	TAQUET D'ARRET	2					
67	S4014633	NUT M10X1.5	ECROU	2					
82	2142-9005	STRIKER;DOOR LOCK	FRAPPER	1					
83	2114-1856	SHIM;STRIKER 1.0T	CALE	1					
84	2120-2150D1	BOLT M10X1.5X25	BOULON A 6 PANS	2					
113	2161-2227	STOPPER	TAQUET D'ARRET	1					

DATE	JUN. 30, 2004
REV. NO.	EXB04-04

Fig. 1530 SUPPORT(1) SUPPORT

Serial No. ;

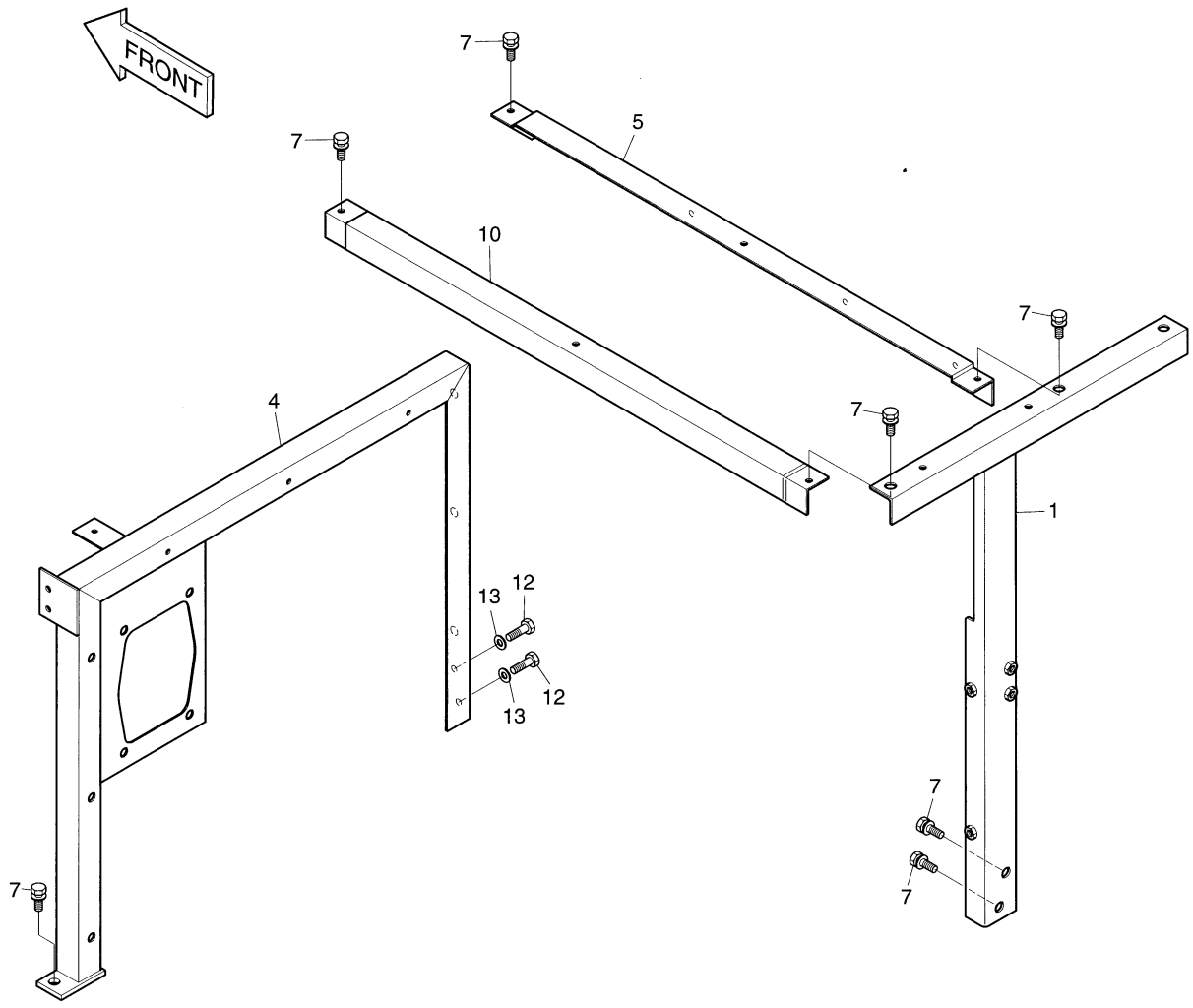

DATE	JUN. 30, 2004
REV. NO.	EXB04-04

Fig. 1530 SUPPORT(1) SUPPORT

Serial No ;

Key No.	Part No.	Description	Description	Q'ty	S.C	Serial No.	ICA	Replaceable part	
								Part No.	Q'ty
1530--	195-01764A	SUPPORT ASS'Y	SUPPORT	-	D				
1	195-01769B	SUPPORT	SUPPORT	1					
4	195-01772B	SUPPORT	SUPPORT	1		1001–1009	I	195-01772C	1
	195-01772C	SUPPORT	SUPPORT	1		1010–1221	I	195-01772E	1
	195-01772E	**SUPPORT**	SUPPORT	1		**1222–**			
5	195-01773A	SUPPORT	SUPPORT	1					
7	2120-2196D9	BOLT;SET M10X1.75X25	BOULON	10					
10	195-01899A	SUPPORT	SUPPORT	1					
12	S0560553	BOLT M12X1.75X40	BOULON A 6PANS	2					
13	2114-1154	WASHER;PLAIN	RONDELLE M12	2					

DATE	JUN. 30, 2005
REV. NO.	EXB05-05

Fig. 1540 SUPPORT(2) SUPPORT

Serial No. ;

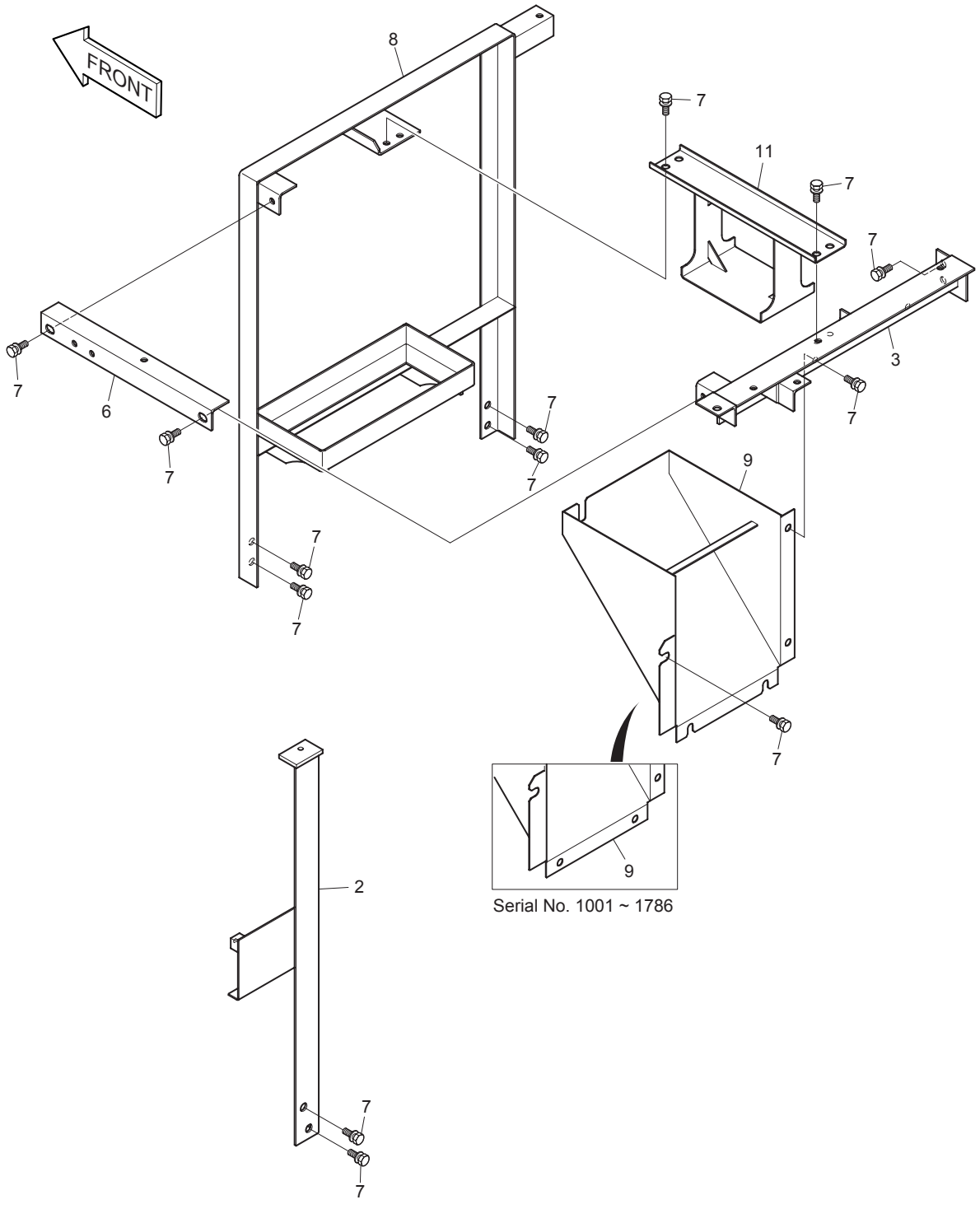

DATE	JUN. 30, 2005
REV. NO.	EXB05-05

Fig. 1540 SUPPORT(2) SUPPORT

Serial No ;

Key No.	Part No.	Description	Description	Q'ty	S.C	Serial No.	ICA	Replaceable part	
								Part No.	Q'ty
1540--	195-01764A	SUPPORT ASS'Y	SUPPORT	-	D				
2	195-01770C	SUPPORT	SUPPORT	1					
3	195-01771B	SUPPORT	SUPPORT	1					
6	195-02173	SUPPORT	SUPPORT	1					
7	2120-2196D9	BOLT;SET M12X1.75X25	BOULON	16					
8	195-01896B	SUPPORT	SUPPORT	1					
9	195-01774B	SUPPORT	SUPPORT	1		1001–1786	I	195-01774C	1
	195-01774C	**SUPPORT**	SUPPORT	1		**1787–**			
11	195-01897A	SUPPORT	SUPPORT	1					

DATE	JUN. 30, 2005
REV. NO.	EXB05-05

Fig. 1550 COVER(1) COUVERCLE

Serial No. ;

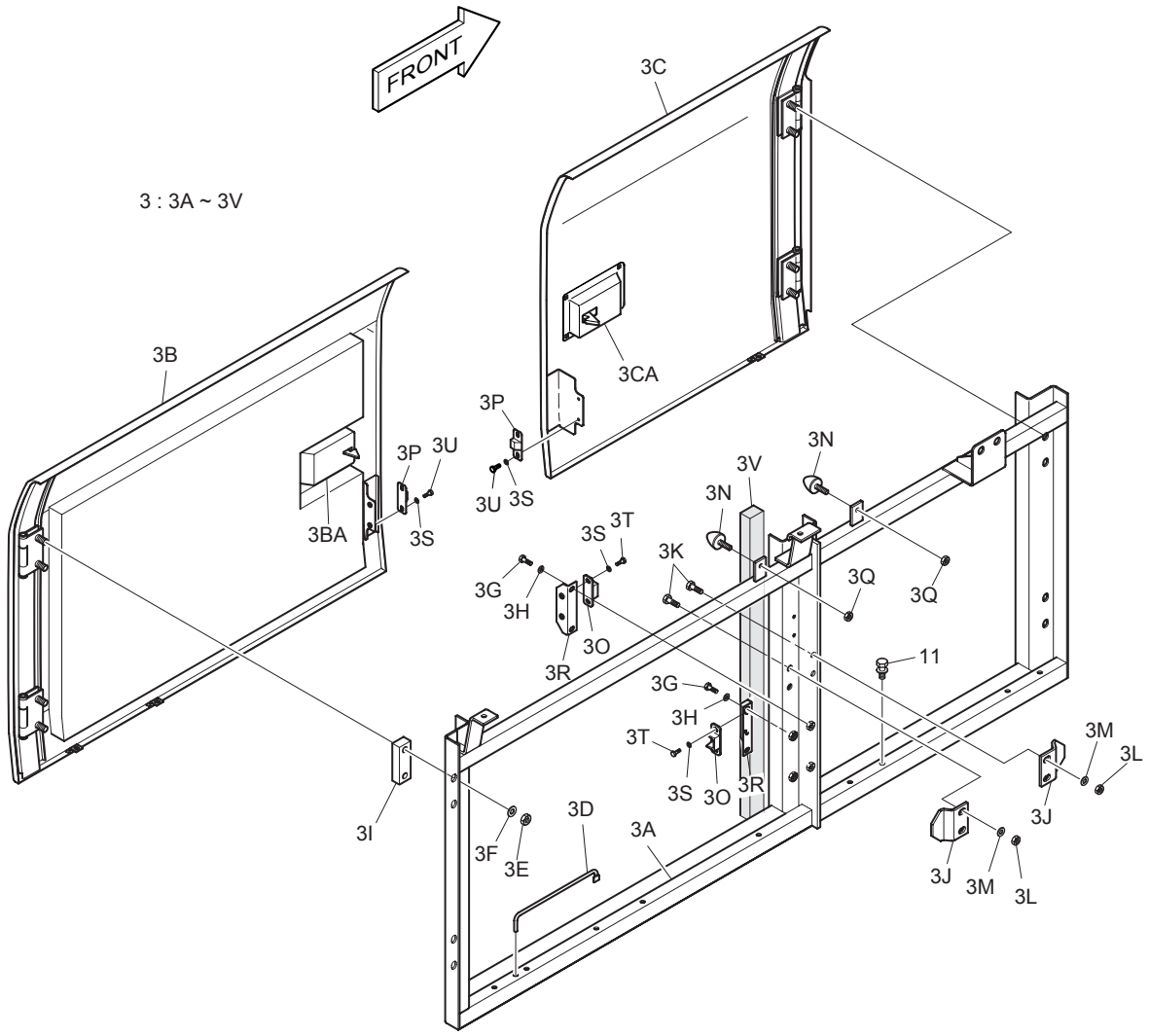

DATE	JUN. 30, 2005
REV. NO.	EXB05-05

Fig. 1550 COVER(1) COUVERCLE

Serial No ;

Key No.	Part No.	Description	Description	Q'ty	S.C	Serial No.	ICA	Replaceable part	
								Part No.	Q'ty
1550--	621-01915A	COVER ASS'Y	COUVERCLE	-	D				
3	621-01912B	SIDE DOOR ASS'Y	VERROU	1		1001–1206	I	621-01912C	1
	621-01912C	SIDE DOOR ASS'Y	VERROU	1		1207–1414	I	621-01912E	1
	621-01912E	SIDE DOOR ASS'Y	VERROU	1		1415–1859			
	621-01912G	SIDE DOOR ASS'Y	VERROU	1		1860–1967	I	621-01912H	1
	621-01912H	**SIDE DOOR ASS'Y**	VERROU	1		**1968–**			
3A	195-01826B	. SUPPORT	. SUPPORT	1					
3B	621-01944	. DOOR;SIDE	. VERROU	1		1001–1206	I	621-01944A	1
	621-01944A	. DOOR;SIDE	. VERROU	1		1207–1414	I	621-01944B	1
	621-01944B	. DOOR;SIDE	. VERROU	1		1415–1859			
	621-01944C	**. DOOR;SIDE**	. VERROU	1		**1860–1967**	I	621-01944E	1
	621-01944E	**. DOOR;SIDE**	. VERROU	1		**1968–**			
3BA	125-00034	.. LOCK(R.H)	.. SERRURE	1		1001–1206	I	125-00082	1
	125-00082	.. LOCK(R.H)	.. SERRURE	1		1207–1414	I	125-00082A	1
	125-00082A	.. LOCK(R.H)	.. SERRURE	1		1415–1859			
	K1006422	**.. LOCK(R.H)**	.. SERRURE	1		**1860–**			
3C	621-02495	. DOOR;SIDE	. VERROU	1		1001–1206	I	621-02495A	1
	621-02495A	. DOOR;SIDE	. VERROU	1		1207–1414	I	621-02495B	1
	621-02495B	. DOOR;SIDE	. VERROU	1		1415–1859			
	621-02495C	**. DOOR;SIDE**	. VERROU	1		**1860–**			
3CA	125-00035	.. LOCK(L.H)	.. SERRURE	1		1001–1206	I	125-00083	1
	125-00083	.. LOCK(L.H)	.. SERRURE	1		1207–1414	I	125-00083A	1
	125-00083A	.. LOCK(L.H)	.. SERRURE	1		1415–1859			
	K1006423	**.. LOCK(L.H)**	.. SERRURE	1		**1860–**			
3D	2145-1237	. STAY	. ENTRETOISE	2					
3E	S4012733	. NUT	. ECROU	8					
3F	2114-1058D30	. WASHER;PLAIN	. RONDELLE	8					
3G	S0508753	. BOLT M8X1.25X18	. BOULON A 6PANS	4					
3H	S5010513	. WASHER;PLAIN M8	. RONDELLE	4					
3I	2891-1101	. SEAT;SCREW	. VIS DE SIEGE	4					
3J	621-01575	. PLATE;STOPPER	. PLAQUE	2					
3K	S0512053	. BOLT M10X1.5X25	. BOULON A 6PANS	4					
3L	S4012633	. NUT	. ECROU	4					
3M	2114-1058D10	. WASHER;PLAIN	. RONDELLE PLATE	4					
3N	2161-2226	. STOPPER;RUBBER	. ARRET	2					
3O	2161-9052	. STOPPER;PLATE	. ARRET	2					
3P	2161-9053	. STOPPER;RUBBER	. ARRET	2					
3Q	S4012633	. NUT	. ECROU	2					

DATE	JUN. 30, 2005
REV. NO.	EXB05-05

Fig. 1550 COVER(1) COUVERCLE

Serial No. ;

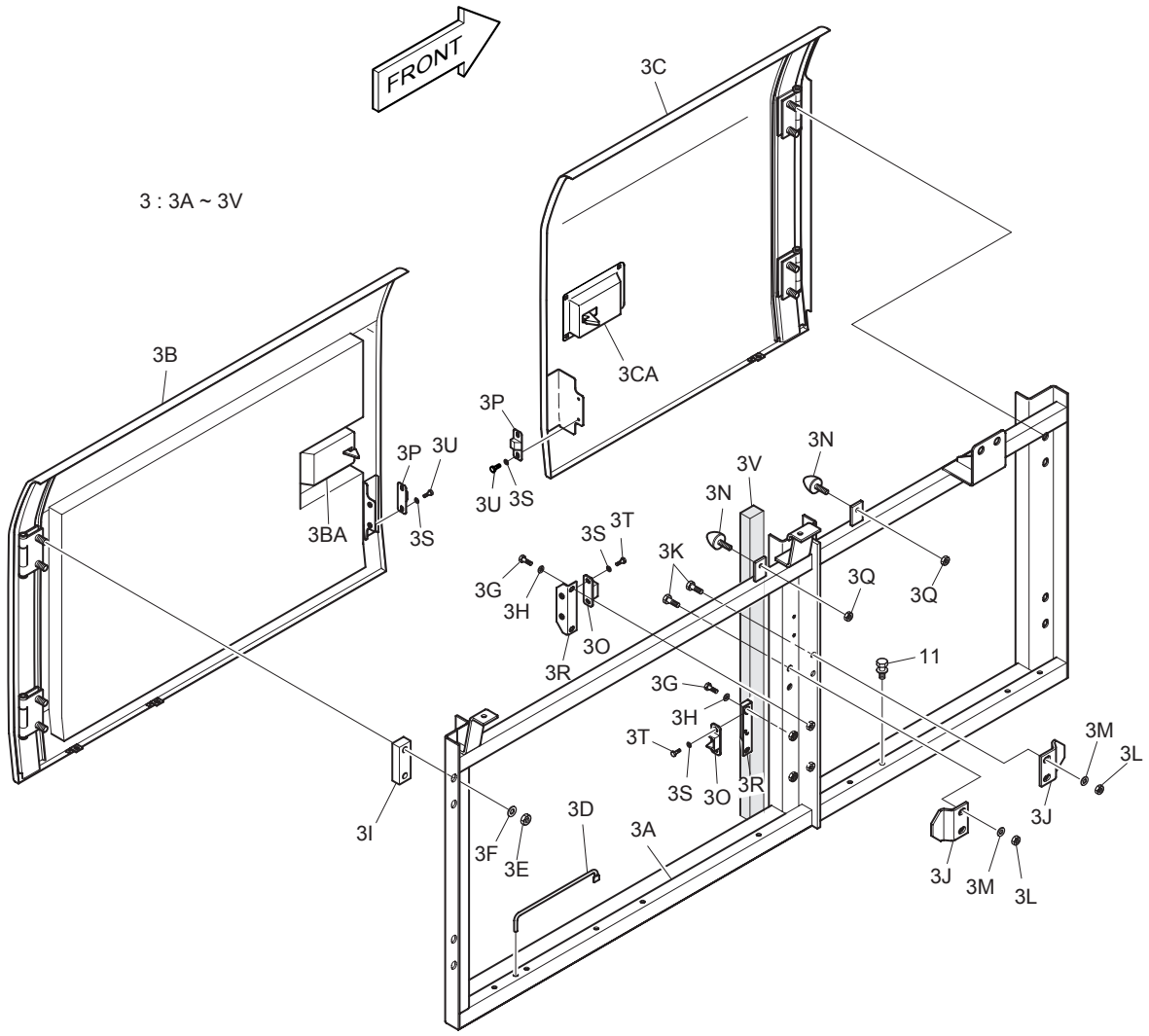

DATE	JUN. 30, 2005
REV. NO.	EXB05-05

Fig. 1550 COVER(1) COUVERCLE

Serial No ;

Key No.	Part No.	Description	Description	Q'ty	S.C	Serial No.	ICA	Replaceable part	
								Part No.	Q'ty
1550-3R	2116-1522	. PLATE	. PLAQUE	2					
3S	S5010313	. WASHER;PLAIN	. RONDELLE	8					
3T	S0504553	. BOLT	. BOULON A 6PANS	4					
3U	S0504453	. BOLT	. BOULON A 6PANS	4					
3V	2161-2155A	. FOAM	. EPONGE	1					
11	2120-2196D9	BOLT;SET M12X1.75X25	BOULON	7					

DATE	JUN. 30, 2005
REV. NO.	EXB05-05

Fig. 1560 COVER(2) COUVERCLE

Serial No. ;

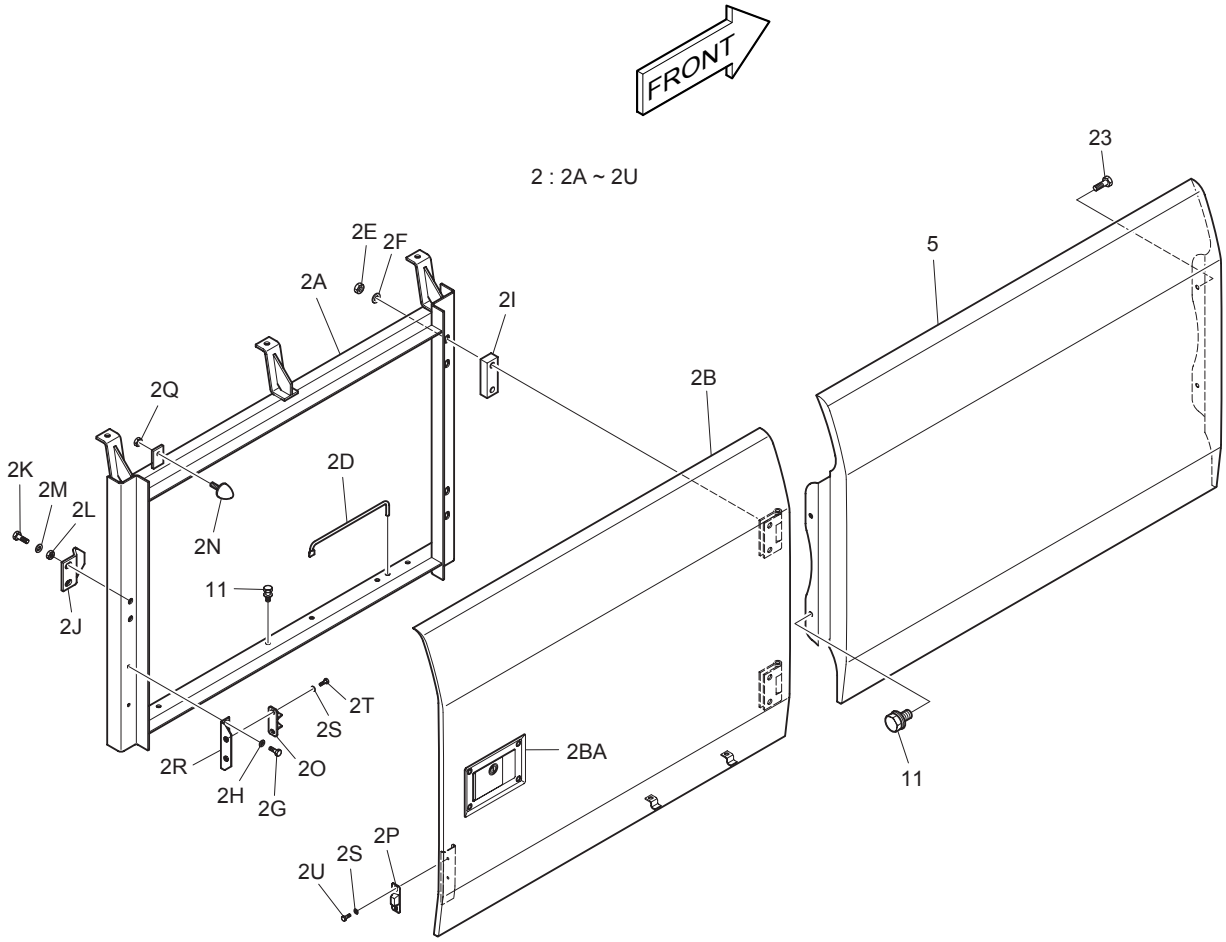

DATE	JUN. 30, 2005
REV. NO.	EXB05-05

Fig. 1560 COVER(2) COUVERCLE

Serial No ;

Key No.	Part No.	Description	Description	Q'ty	S.C	Serial No.	ICA	Replaceable part	
								Part No.	Q'ty
1560--	621-01915A	COVER ASS'Y	COUVERCLE	-	D				
2	621-02176B	SIDE DOOR ASS'Y	VERROU	1		1001–1206	I	621-02176C	1
	621-02176C	SIDE DOOR ASS'Y	VERROU	1		1207–1414	I	621-02176E	1
	621-02176E	SIDE DOOR ASS'Y	VERROU	1		1415–1859			
	621-02176G	**SIDE DOOR ASS'Y**	VERROU	1		**1860–1967**	I	621-02176H	1
	621-02176H	**SIDE DOOR ASS'Y**	VERROU	1		**1968–**			
2A	195-02167A	. SUPPORT	. SUPPORT	1					
2B	621-02177A	. DOOR;SIDE	. VERROU	1		1001–1206	I	621-02177B	1
	621-02177B	. DOOR;SIDE	. VERROU	1		1207–1414	I	621-02177C	1
	621-02177C	. DOOR;SIDE	. VERROU	1		1415–1859			
	621-02177E	**. DOOR;SIDE**	. VERROU	1		**1860–1967**	I	621-02177G	1
	621-02177G	**. DOOR;SIDE**	. VERROU	1		**1968–**			
2BA	125-00034	.. LOCK(R.H)	.. SERRURE	1		1001–1206	I	125-00082	1
	125-00082	.. LOCK(R.H)	.. SERRURE	1		1207–1414	I	125-00082A	1
	125-00082A	.. LOCK(R.H)	.. SERRURE	1		1415–1859			
	K1006422	**.. LOCK(R.H)**	.. SERRURE	1		**1860–**			
2D	2145-1237	. STAY	. ENTRETOISE	1					
2E	S4012733	. NUT	. ECROU	4					
2F	2114-1058D30	. WASHER;PLAIN	. RONDELLE	4					
2G	S0508753	. BOLT M8X1.25X18	. BOULON A 6PANS	2					
2H	S5010513	. WASHER;PLAIN M8	. RONDELLE	2					
2I	2891-1101	. SEAT;SCREW	. VIS DE SIEGE	2					
2J	621-01575	. PLATE;STOPPER	. PLAQUE	1					
2K	S0512053	. BOLT M10X1.5X25	. BOULON A 6PANS	2					
2L	S4012633	. NUT	. ECROU	2					
2M	2114-1058D10	. WASHER;PLAIN	. RONDELLE PLATE	2					
2N	2161-2226	. STOPPER RUBBER	. ARRET	1					
2O	2161-9052	. STOPPER;PLATE	. ARRET	1					
2P	2161-9053	. STOPPER;RUBBER	. ARRET	1					
2Q	S4012633	. NUT	. ECROU	1					
2R	2116-1522	. PLATE	. PLAQUE	1					
2S	S5010313	. WASHER;PLAIN	. RONDELLE	4					
2T	S0504553	. BOLT	. BOULON A 6PANS	2					
2U	S0504453	. BOLT	. BOULON A 6PANS	2					
5	2621-3498G	COVER;TANK	COUVERCLE	1					
11	2120-2196D9	BOLT;SET M12X1.75X25	BOULON	7					
23	2120-2196D6	BOLT;SET M12X1.75X20	BOULON	2					

DATE	JUN. 30, 2005
REV. NO.	EXB05-05

Fig. 1570 COVER(3) COUVERCLE

Serial No. ;

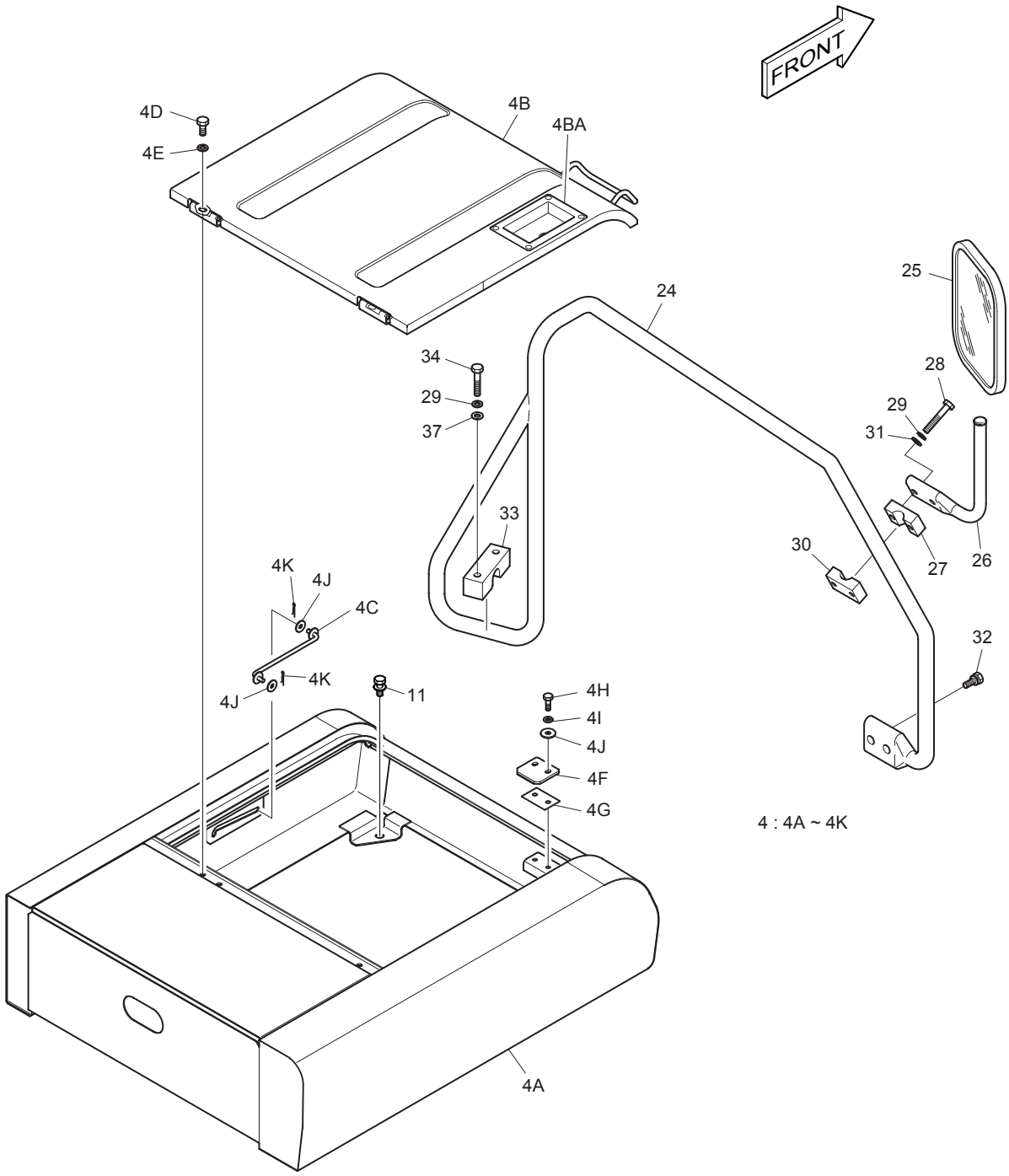

DATE	JUN. 30, 2005
REV. NO.	EXB05-05

Fig. 1570 COVER(3) COUVERCLE

Serial No ;

Key No.	Part No.	Description	Description	Q'ty	S.C	Serial No.	ICA	Replaceable part	
								Part No.	Q'ty
1570--	621-01915A	COVER ASS'Y	COUVERCLE	-	D				
4	621-01876A	BATTERY COVER ASS'Y	COUVERCLE	1		1001–1206	I	621-01876B	1
	621-01876B	BATTERY COVER ASS'Y	COUVERCLE	1		1207–1371	I	621-01876C	1
	621-01876C	BATTERY COVER ASS'Y	COUVERCLE	1		1372–1414	I	621-01876E	1
	621-01876E	BATTERY COVER ASS'Y	COUVERCLE	1		1415–1859			
	621-01876G	**BATTERY COVER ASS'Y**	COUVERCLE	1		**1860–**			
4A	621-01894	. COVER;BATTERY	. COUVERCLE	1					
4B	621-01877A	. COVER	. COUVERCLE	1		1001–1206	I	621-01877B	1
	621-01877B	. COVER	. COUVERCLE	1		1207–1371	I	621-01877C	1
	621-01877C	. COVER	. COUVERCLE	1		1372–1414	I	621-01877E	1
	621-01877E	. COVER	. COUVERCLE	1		1415–1859			
	621-01877G	**. COVER**	. COUVERCLE	1		**1860–**			
4BA	125-00034	.. LOCK(R.H)	.. SERRURE	1		1001–1206	I	125-00082	1
	125-00082	.. LOCK(R.H)	.. SERRURE	1		1207–1414	I	125-00082A	1
	125-00082A	.. LOCK(R.H)	.. SERRURE	1		1415–1859			
	K1006422	**.. LOCK(R.H)**	.. SERRURE	1		**1860–**			
4C	2145-1243	. STAY	. ENTRETOISE	1					
4D	S0512053	. BOLT M10X1.5X25	. BOULON A 6PANS	4					
4E	S5010613	. WASHER;PLAIN	. RONDELLE PLATE	4					
4F	2621-3003B	. PLATE	. PLAQUE	1					
4G	2114-1727A	. SHIM	. CALE	1					
4H	S0555753	. BOLT M8X1.25X25	. BOULON A 6PANS	2					
4I	S5010513	. WASHER;PLAIN M8	. RONDELLE	2					
4J	2114-1058D29	. WASHER	. RONDELLE	4					
4K	2705-9002	. PIN;LOCK	. GOUPILLE DE BLOCAGE	2					
11	2120-2196D9	BOLT;SET M12X1.75X25	BOULON	4					
24	145-00045B	STAY	ENTRETOISE	1		1001–1249	I	145-00045C	1
	145-00045C	STAY	ENTRETOISE	1		1250–			
25	903-00052	MIRROR	RETROVISEUR	1		1001–1009	Y	2903-9012A	1
	2903-9012A	MIRROR	RETROVISEUR	1		1010–1410	I	903-00068	1
	903-00068	MIRROR	RETROVISEUR	1		1411–			
26	145-00052	STAY	ENTRETOISE	1					
27	124-00216	CLAMP	ATTACHE	1					
28	S0561253	BOLT M12X1.75X75	BOULON A 6PANS	2					
29	S5102703	WASHER;SPRING M12	RONDELLE ELASTIQUE	4					
30	124-00217	CLAMP	ATTACHE	1					
31	S5010713	WASHER;PLAIN M12	RONDELLE	2					
32	2120-2196D11	BOLT;SET M12X1.75X35	BOULON	2					

DATE	JUN. 30, 2005
REV. NO.	EXB05-05

Fig. 1570 COVER(3) COUVERCLE

Serial No. ;

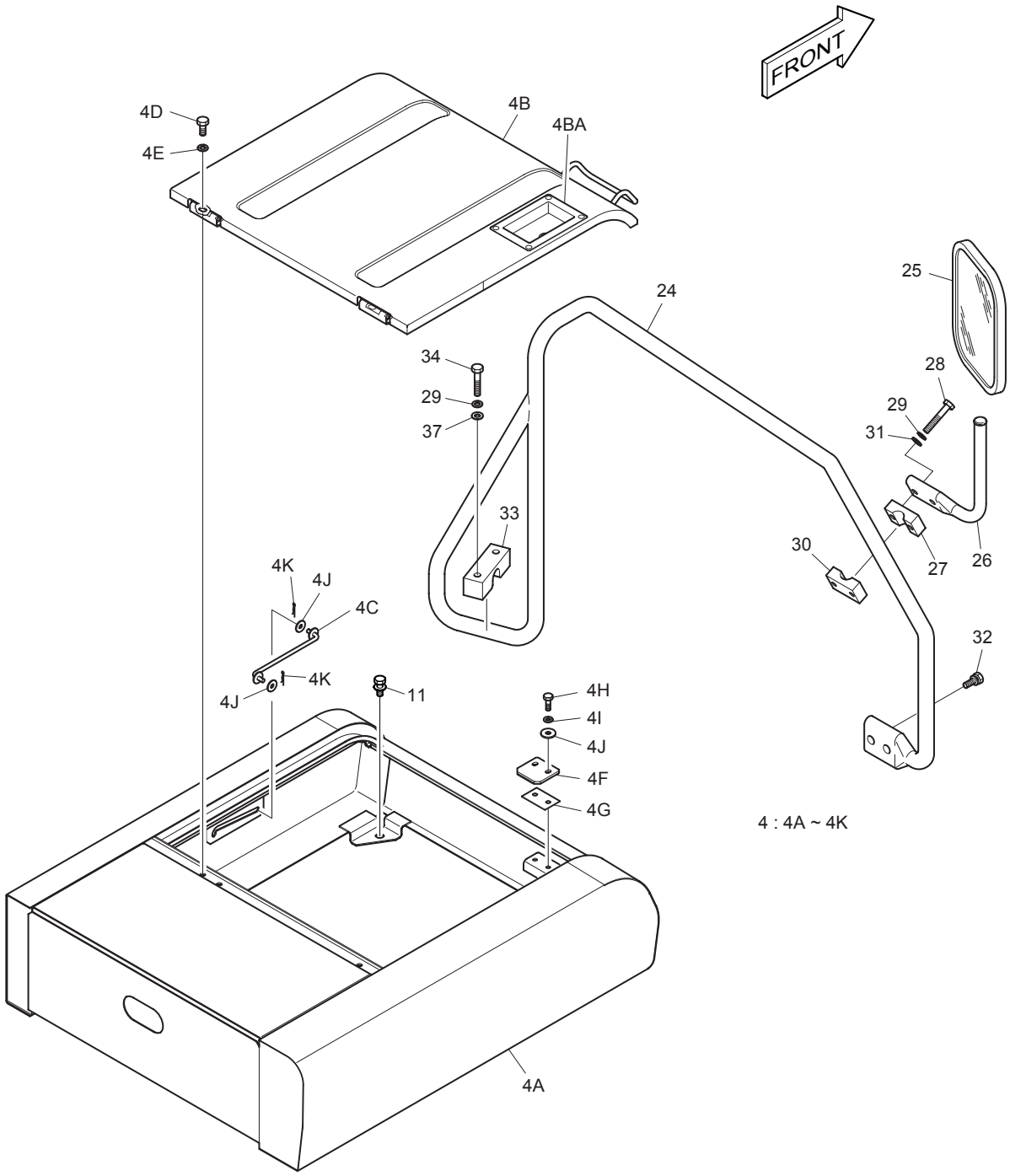

DATE	JUN. 30, 2005
REV. NO.	EXB05-05

Fig. 1570 COVER(3) COUVERCLE

Serial No ;

Key No.	Part No.	Description	Description	Q'ty	S.C	Serial No.	ICA	Replaceable part	
								Part No.	Q'ty
1570-33	124-00246	CLAMP	ATTACHE	1					
34	S0561053	BOLT M12X1.75X65	BOULON A 6PANS	2					
37	2114-1154	WASHER	RONDELLE	2					

DATE	JUN. 30, 2006
REV. NO.	EXB06-08

Fig. 1580 COVER(4) COUVERCLE

Serial No. ;

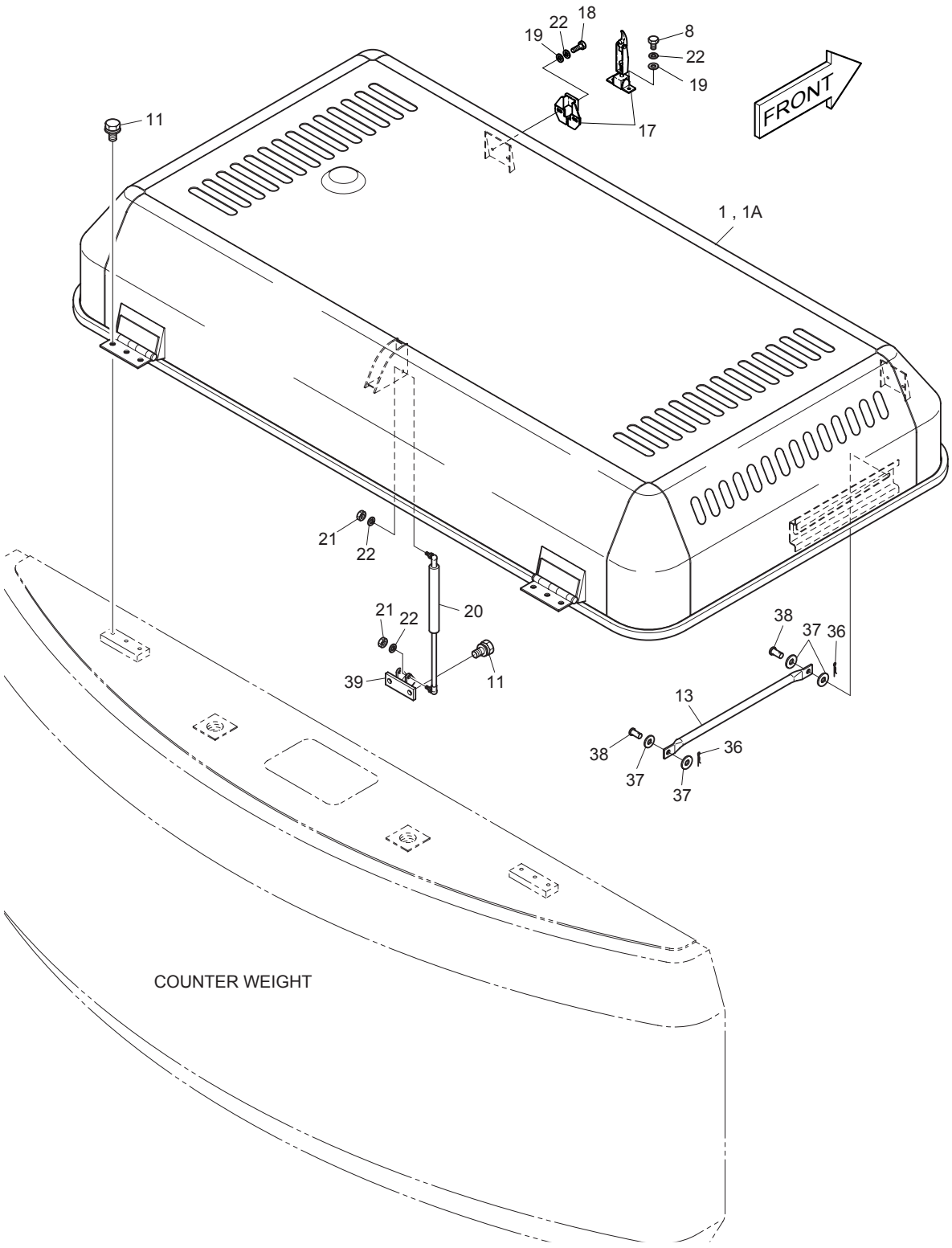

DATE	JUN. 30, 2006
REV. NO.	EXB06-08

Fig. 1580 COVER(4) COUVERCLE

Serial No. ;

Key No.	Part No.	Description	Description	Q'ty	S.C	Serial No.	ICA	Replaceable part	
								Part No.	Q'ty
1580--	621-01915A	COVER ASS'Y	COUVERCLE	-	D				
1	621-02260	COVER;ENGINE	COUVERCLE	1		1001–1214	I	621-02260A	1
	621-02260A	COVER;ENGINE	COUVERCLE	1		1215–			
1A	1.162-00001	. RUBBER;CUSHION	. CAOUTCHOUC	1					
8	S0508553	BOLT M8X1.25X14	BOULON A 6PANS	4					
11	2120-2196D9	BOLT;SET M12X1.75X25	BOULON	8					
13	145-00070	STAY	ENTRETOISE	1					
17	125-00045	CATCH;BONNET	LOQUET	2		1001–1206	I	125-00084	2
	125-00084	CATCH;BONNET	LOQUET	2		1207–1859			
	K1006424	CATCH;BONNET	LOQUET	2		1860–			
18	S0508853	BOLT M8X1.25X20	BOULON A 6PANS	4					
19	2114-1058D56	WASHER;PLAIN	RONDELLE	8					
20	2440-9141	SPRING;GAS	VERIN PNEUMATIQUE	2		1001–1002	Y	2440-9142	2
	2440-9142	SPRING;GAS	VERIN PNEUMATIQUE	2		1003–			
21	S4012533	NUT	ECROU	4					
22	S5102503	WASHER;SPRING	RONDELLE ELASTIQUE	12					
36	2705-9002	PIN;LOCK	GOUPILLE DE BLOCAGE	2					
37	2114-1154	WASHER	RONDELLE	4					
38	2123-1057D47	PIN	GOUPILLE	2					
39	195-02178	BRACKET	SUPPORT	1					

DATE	AUG. 12, 2002
1st EDITION	

Fig. 1590 COVER(5) COUVERCLE

Serial No. ;

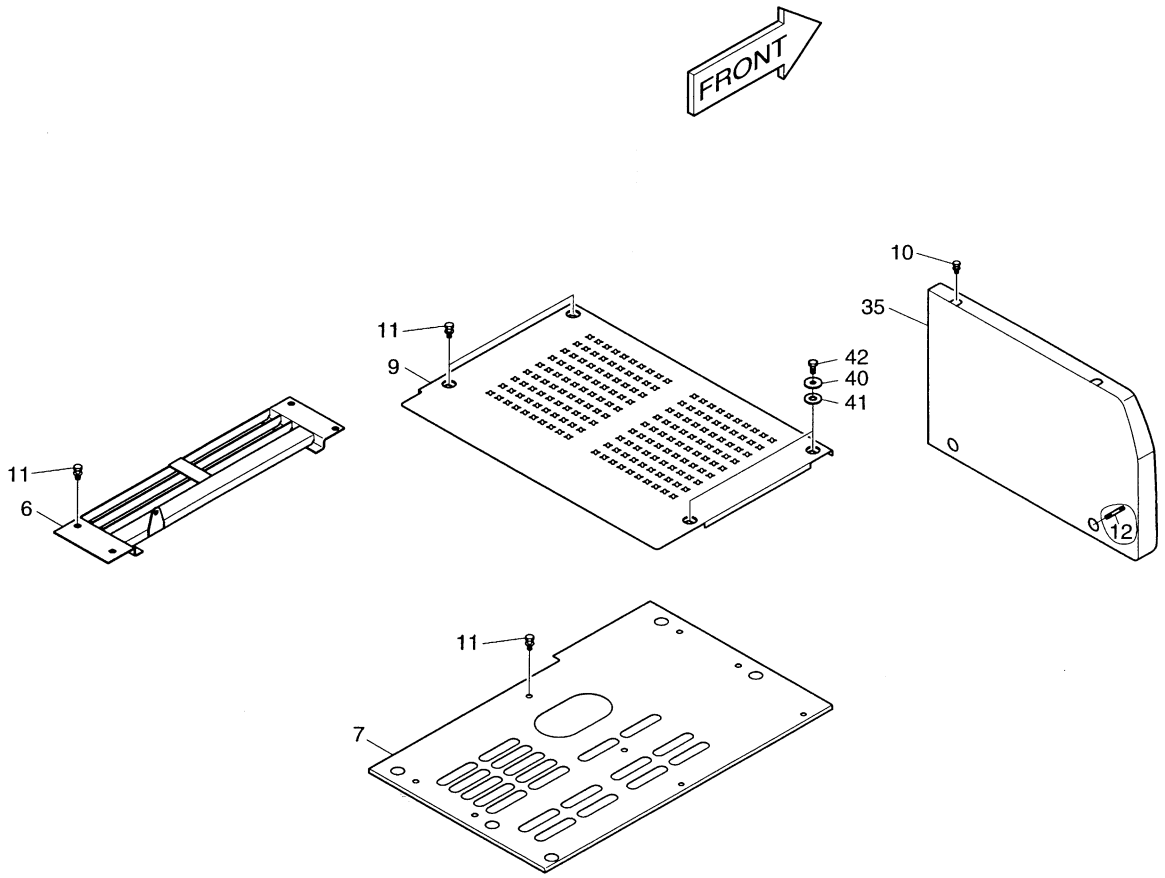

DATE	AUG. 12, 2002
1st EDITION	

Fig. 1590 COVER(5) COUVERCLE

Serial No. ;

Key No.	Part No.	Description	Description	Q'ty	S.C	Serial No.	ICA	Replaceable part	
								Part No.	Q'ty
1590--	621-01915A	COVER ASS'Y	COUVERCLE	-	D				
6	621-01913C	COVER	COUVERCLE	1					
7	621-02162B	COVER	COUVERCLE	1					
9	621-01916A	COVER	COUVERCLE	1					
10	2120-2196D5	BOLT;SET M10X1.5X20	BOULON A 6PANS	4					
11	2120-2196D9	BOLT;SET M12X1.75X25	BOULON A 6PANS	15					
12	120-00279	BOLT;STUD M10X1.5X69	BOULON A 6PANS	2					
35	621-02000	COVER	COUVERCLE	1					
40	114-00529	SPACER	BAGUE D'ECARTEMENT	2					
41	160-00050	RUBBER	CAOUTCHOUC	2					
42	S0515253	BOLT M12X1.75X30	BOULON A 6PANS	2					

DATE	JUN. 30, 2004
REV. NO.	EXB04-04

Fig. 1600 BAFFLE COUVERCLE

Serial No. ;

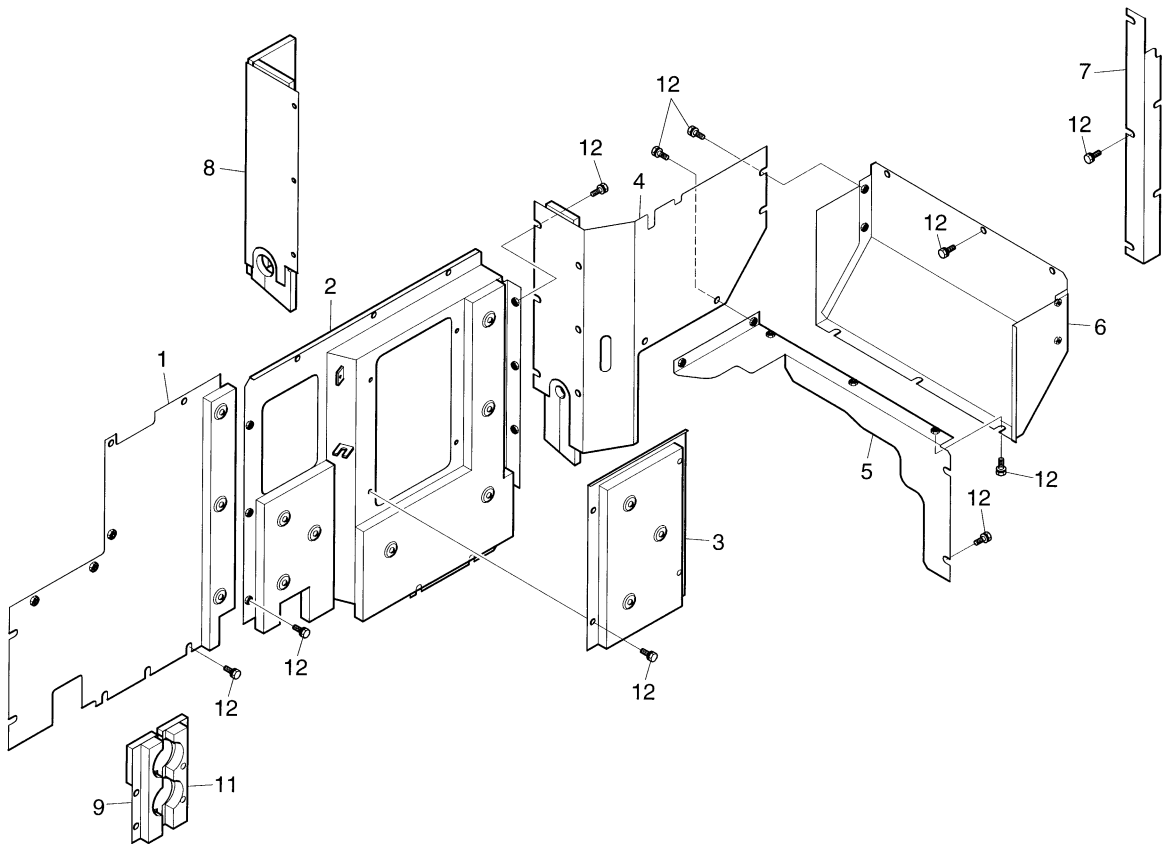

DATE	JUN. 30, 2004
REV. NO.	EXB04-04

Fig. 1600 BAFFLE COUVERCLE

Serial No ;

Key No.	Part No.	Description	Description	Q'ty	S.C	Serial No.	ICA	Replaceable part	
								Part No.	Q'ty
1600--	621-01896A	COVER	COUVERCLE	-	D				
1	621-01897A	COVER	COUVERCLE	1		1001–1374	I	621-01897B	1
	621-01897B	**COVER**	COUVERCLE	1		**1375–**			
2	621-01898B	COVER	COUVERCLE	1		1001–1009	I	621-01898C	1
	621-01898C	COVER	COUVERCLE	1		1010–			
3	621-02019	COVER	COUVERCLE	1					
4	621-01901C	COVER;BAFFLE	COUVERCLE	1					
5	621-01902B	COVER;BAFFLE	COUVERCLE	1					
6	621-01903C	COVER;BAFFLE	COUVERCLE	1					
7	621-02164A	COVER	COUVERCLE	1					
8	621-01904C	COVER	COUVERCLE	1					
9	621-01945A	COVER	COUVERCLE	1					
11	621-01946A	COVER	COUVERCLE	1					
12	2120-2196D9	BOLT;SET M12X1.75X25	BOULON	40					

DATE	JUN. 30, 2006
REV. NO.	EXB06-08

Fig. 1610 ACOUSTIC FOAM
ENSEMBLE DE EPONGE

Serial No. ;

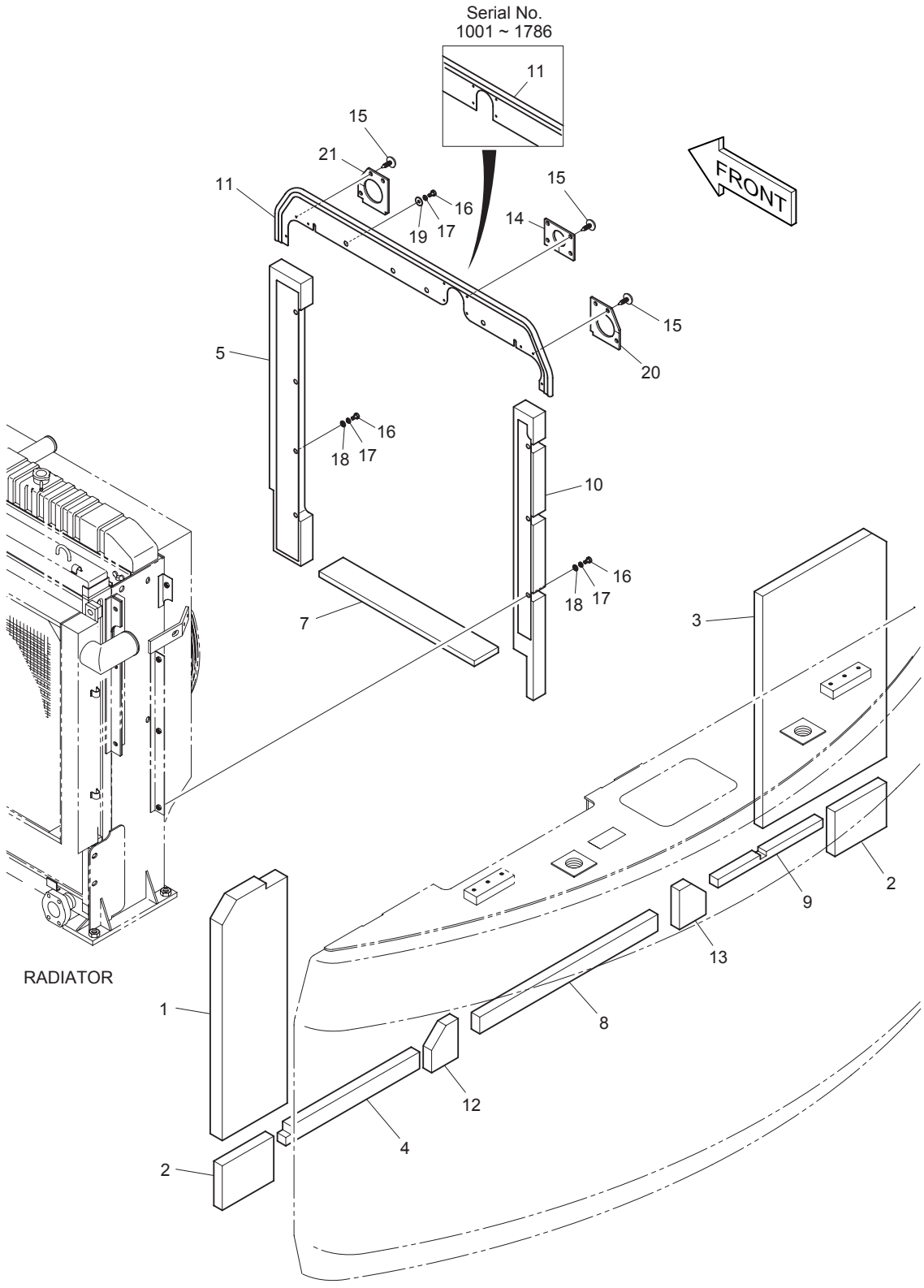

DATE	JUN. 30, 2006
REV. NO.	EXB06-08

Fig. 1610 ACOUSTIC FOAM ENSEMBLE DE EPONGE

Serial No. ;

Key No.	Part No.	Description	Description	Q'ty	S.C	Serial No.	ICA	Replaceable part	
								Part No.	Q'ty
1610--	161-00411B	ACOUSTIC FOAM ASS'Y	ENSEMBLE DE EPONGE	-	D				
1	161-00503	FOAM;POLYURETHANE	EPONGE	1		1001–1967	I	161-00503A	1
	161-00503A	FOAM;POLYURETHANE	EPONGE	1		1968–2344	I	161-00503B	1
	161-00503B	**FOAM;POLYURETHANE**	EPONGE	1		**2345–**			
2	161-00504	FOAM;POLYURETHANE	EPONGE	2					
3	161-00505A	FOAM;POLYURETHANE	EPONGE	1					
4	161-00417A	FOAM;POLYURETHANE	EPONGE	1					
5	621-01938A	COVER	COUVERCLE	1					
7	161-00419	FOAM;POLYURETHANE	EPONGE	1					
8	2161-2153A	FOAM;POLYURETHANE	EPONGE	1					
9	161-00418A	FOAM;POLYURETHANE	EPONGE	1					
10	621-01940A	COVER	COUVERCLE	1					
11	621-01941B	COVER	COUVERCLE	1		1001–1054	I	621-01941C	1
	621-01941C	COVER	COUVERCLE	1		1055–1340	I	621-01941E	1
	621-01941E	COVER	COUVERCLE	1		1341–1786	I	621-01941G	1
	621-01941G	COVER	COUVERCLE	1		1787–			
12	2161-2261	FOAM;POLYURETHANE	EPONGE	1					
13	2161-2262	FOAM;POLYURETHANE	EPONGE	1					
14	161-00501A	RUBBER	CAOUTCHOUC	1					
15	124-00070	X-MAS TREE CLIP	CLIP	10					
16	S0508653	BOLT M8X1.25X16	BOULON A 6PANS	11					
17	S5102503	WASHER;SPRING M8	RONDELLE ELASTIQUE	11					
18	S5010513	WASHER	RONDELLE	7					
19	2114-1058D29	WASHER	RONDELLE	4					
20	161-00434C	RUBBER	CAOUTCHOUC	1		1001–1054	I	161-00434E	1
	161-00434E	RUBBER	CAOUTCHOUC	1		1055–			
21	161-00506A	RUBBER	CAOUTCHOUC	1		1001–1054	I	161-00506B	1
	161-00506B	RUBBER	CAOUTCHOUC	1		1055–			

DATE	JUN. 30, 2005
REV. NO.	EXB05-05

Fig. 1620 UNDER COVER TOLES IMFERIEVRES

Serial No. ;

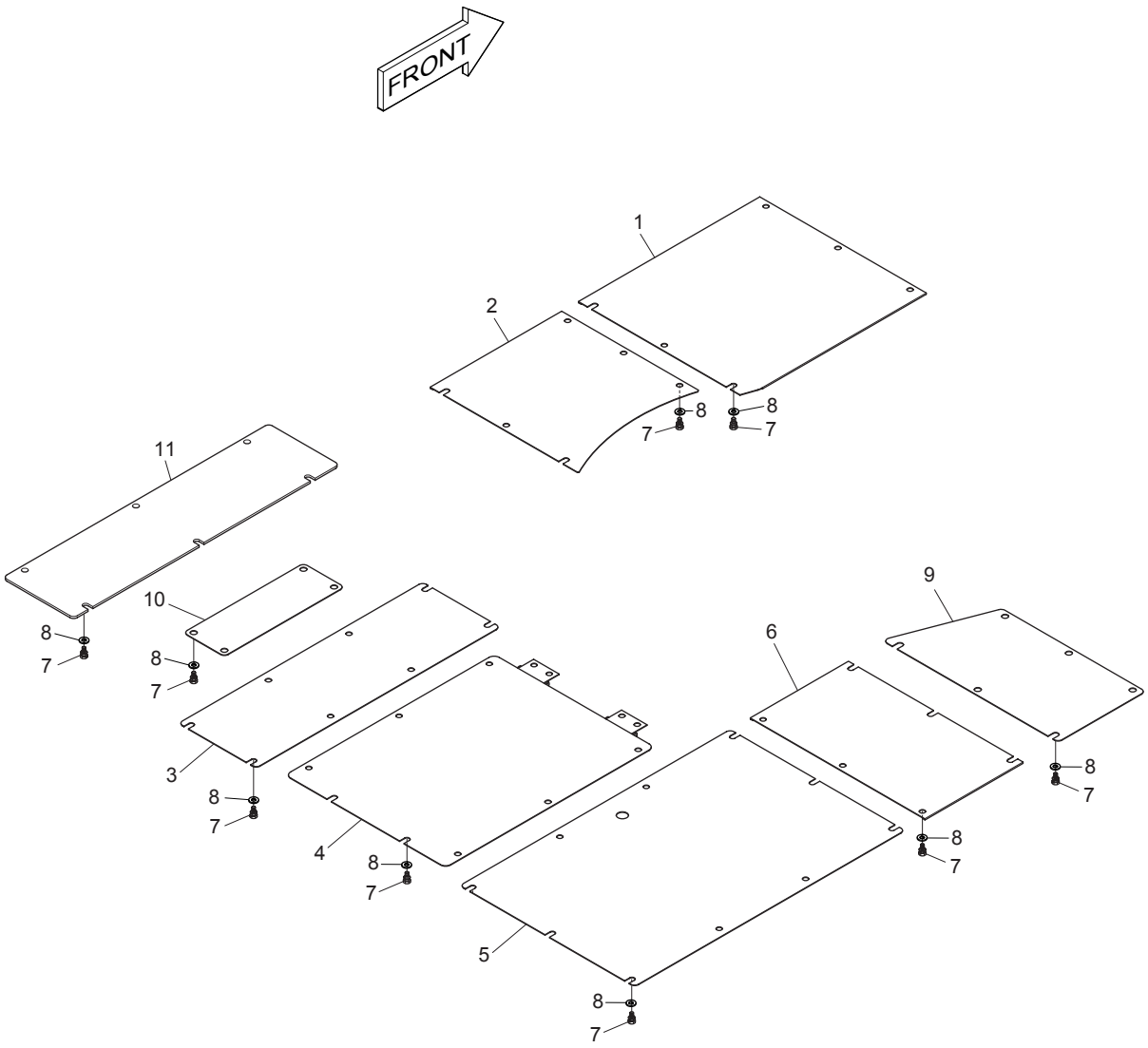

DATE	JUN. 30, 2005
REV. NO.	EXB05-05

Fig. 1620 UNDER COVER TOLES IMFERIEVRES

Serial No ;

Key No.	Part No.	Description	Description	Q'ty	S.C	Serial No.	ICA	Replaceable part	
								Part No.	Q'ty
1620--	621-01881A	UNDER COVER ASS'Y	COUVERCLE	-	D				
1	621-02133A	COVER	COUVERCLE	1					
2	621-01882A	COVER	COUVERCLE	1					
3	621-01883	COVER	COUVERCLE	1					
4	621-01884B	COVER	COUVERCLE	1					
5	621-01886C	COVER	COUVERCLE	1					
6	621-01888B	COVER	COUVERCLE	1					
7	2120-2196D2	BOLT;SET M10X1.5X25	BOULON A 6PANS	48		1001–1031			
	2120-2196D13	BOLT;SET M10X1.5X25	BOULON A 6PANS	48		1032–1221			
	2120-2196D13	BOLT;SET M10X1.5X25	BOULON A 6PANS	58		1222–1922			
	2120-2196D13	**BOLT;SET M10X1.5X25**	BOULON A 6PANS	64		**1923**–			
8	2114-1058D10	WASHER;PLAIN	RONDELLE	48		1032–1221			
	2114-1058D10	WASHER;PLAIN	RONDELLE	58		1222–1922			
	2114-1058D10	**WASHER;PLAIN**	RONDELLE	64		**1923**–			
9	621-03661	COVER	COUVERCLE	1		1222–			
10	621-03665	COVER	COUVERCLE	1		1222–			
11	**K1006907**	**COVER**	COUVERCLE	1		**1923**–			

DATE	AUG. 12, 2002
1st EDITION	

Fig. 1630 LUBRICATION PIPING
LUBRIFICATION

Serial No. ;

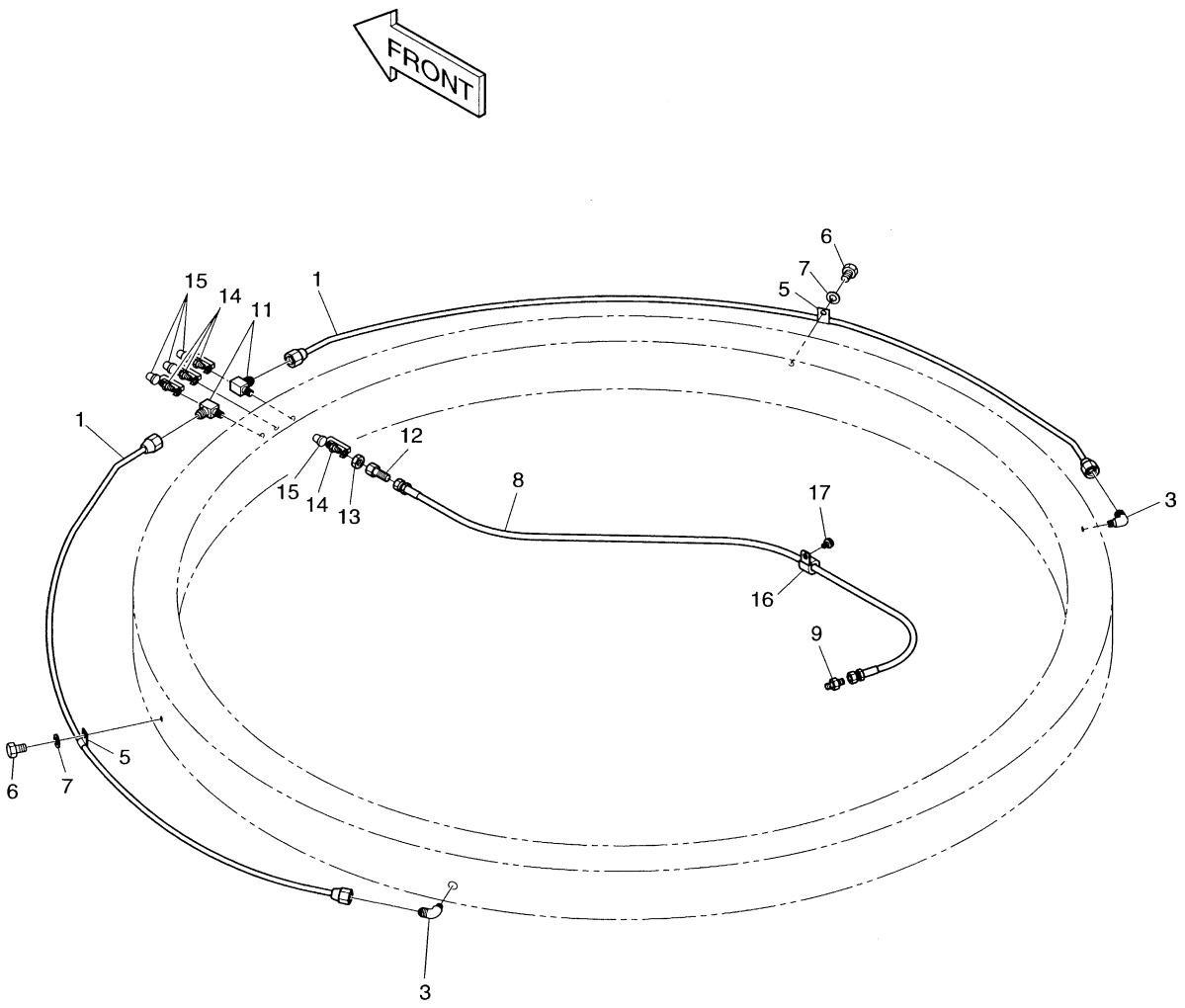

DATE	AUG. 12, 2002
1st EDITION	

Fig. 1630 LUBRICATION PIPING LUBRIFICATION

Serial No. ;

Key No.	Part No.	Description	Description	Q'ty	S.C	Serial No.	ICA	Replaceable part	
								Part No.	Q'ty
1630--	400-00833	LUBRICATION PIPING	LUBRIFICATION	-	D				
1	2140-1252	PIPE	TUYAU	2					
3	2181-1925	ELBOW M14X1.5-PT1/5	COUDE	2					
5	2124-1027D2	CLIP;PIPE	ATTACHE	2					
6	S0504353	BOLT M6X1.0X10	BOULON A 6PANS	2					
7	S5102303	WASHER;SPRING M6	RONDELLE ELASTIQUE M6	2					
8	2184-1045D207	HOSE PF1/4-1150L	TUYAU FLEXIBLE	1					
9	2181-1110D1	ADAPTER PF1/4-PT1/4	ADAPTEUR	1					
11	2181-2527	TEE PT1/8	TE	2					
12	181-00103	REDUCER PT1/8-PF1/4	REDUCTEUR	1					
13	121-00006	NUT PF1/4	ECROU	1					
14	S6710041	NIPPLE;GREASE PT1/8	GRAISSEUR	4					
15	160-00020	CAP	CHAPEAU	4					
16	124-00208D2	CLAMP;HOSE	COLLIER	1					
17	120-00276	BOLT M8X1.25X12	BOULON A 6PANS	1					

DATE	AUG. 12, 2002
1st EDITION	

Fig. 1640 ELECTRIC BOX ASS'Y(1)-BOX EQUIPMENT ELECTRIQUE

Serial No. ;

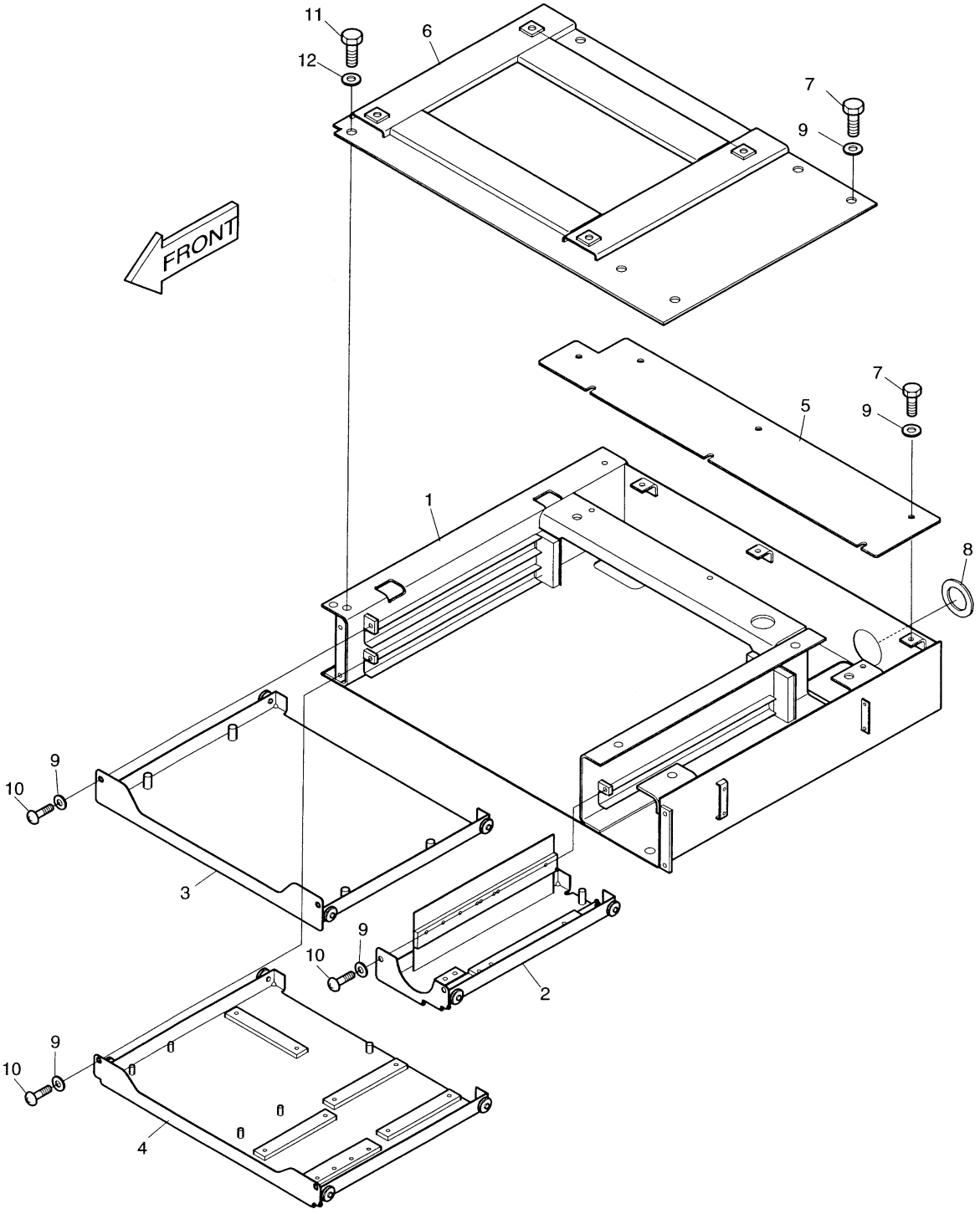

DATE	AUG. 12, 2002
1st EDITION	

Fig. 1640 ELECTRIC BOX ASS'Y(1)-BOX EQUIPMENT ELECTRIQUE

Serial No. ;

Key No.	Part No.	Description	Description	Q'ty	S.C	Serial No.	ICA	Replaceable part	
								Part No.	Q'ty
1640--	512-00031	ELECTRIC BOX ASS'Y	EQUIPMENT ELECTRIQUE	-	D				
1	2512-1118B	ELECTRIC BOX	BOITE	1					
2	2891-1266A	PLATE	PLAQUE	1					
3	2891-1267	PLATE	PLAQUE	1					
4	2891-1265	PLATE	PLAQUE	1					
5	2891-1268	PLATE	PLAQUE	1					
6	621-01952	PLATE	PLAQUE	1					
7	2120-2166D6	BOLT M6X1.0X16	BOULON A 6PANS	9					
8	2110-1349	BUSH;RUBBER	MANCHON	1					
9	2114-1898D3	WASHER	RONDELLE	15					
10	S3458953	SCREW M6X1.0X12	VIS	6					
11	2120-2166D4	BOLT M10X1.5X20	BOULON A 6PANS	4					
12	2114-1898D1	WASHER	RONDELLE	4					

DATE	JUN. 30, 2004
REV. NO.	EXB04-04

Fig. 1650 ELECTRIC BOX ASS'Y(2)-ELECTRIC PARTS EQUIPMENT ELECTRIQUE

Serial No. ;

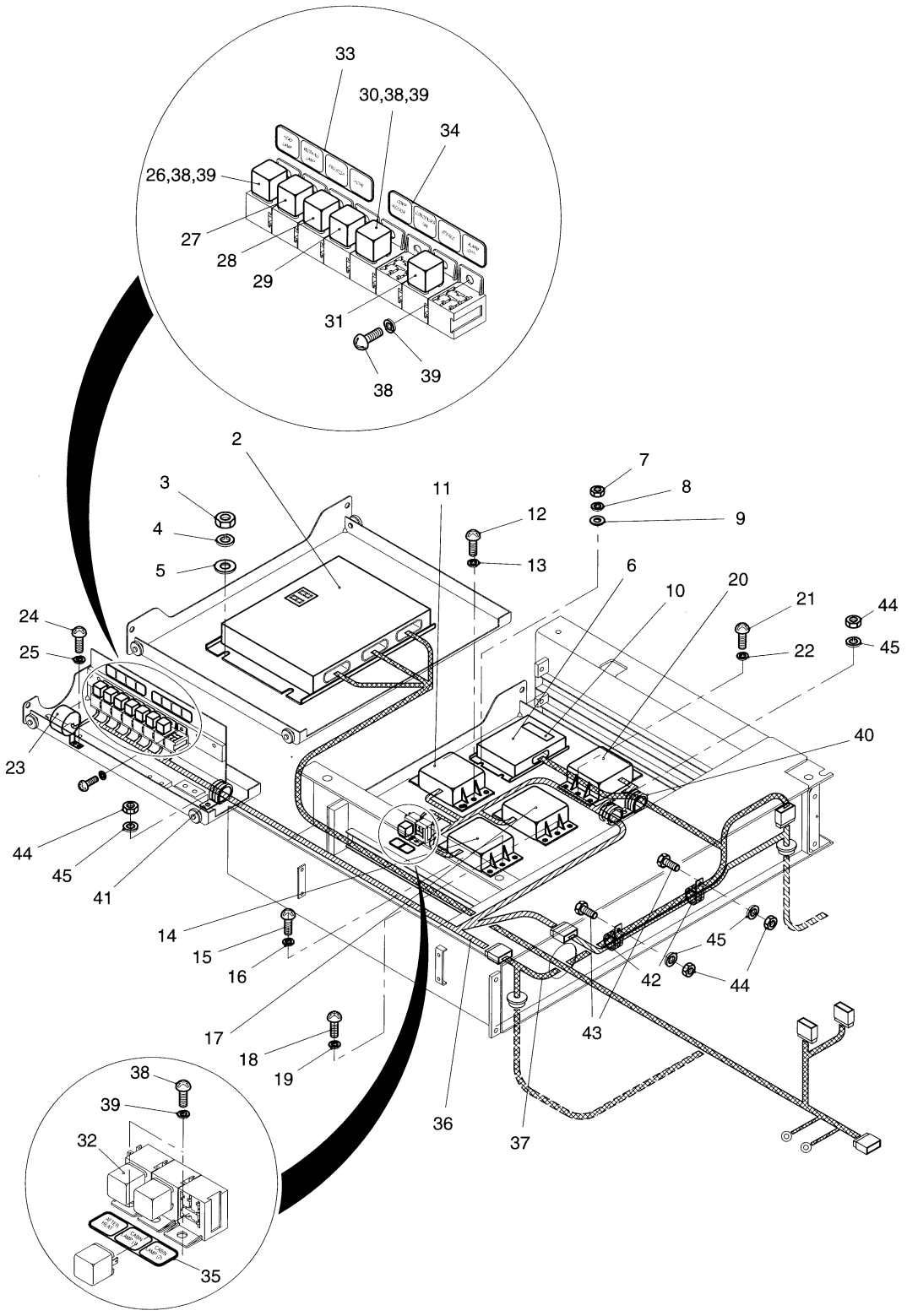

DATE	JUN. 30, 2004
REV. NO.	EXB04-04

Fig. 1650 ELECTRIC BOX ASS'Y(2)-ELECTRIC PARTS EQUIPMENT ELECTRIQUE

Serial No ;

Key No.	Part No.	Description	Description	Q'ty	S.C	Serial No.	ICA	Replaceable part	
								Part No.	Q'ty
1650--	500-00145A	ELECTRIC BOX ASS'Y	EQUIPMENT ELECTRIQUE	1		1001–1299	I	500-00145B	1
	500-00145B	**ELECTRIC BOX ASS'Y**	EQUIPMENT ELECTRIQUE	1		**1300–**			
2	543-00055A	CONTROLLER;e-EPOS	CONTROLEUR	1					
3	S4012633	NUT M10X1.5	ECROU	4					
4	S5102603	WASHER;SPRING M10	RONDELLE ELASTIQUE	4					
5	S5010613	WASHER;PLAIN M10	RONDELLE PLATE	4					
6	543-00074	CONTROLLER;THROTTLE	CONTROLEUR	1					
7	S4012333	NUT M6X1.0	ECROU	4					
8	S5102303	WASHER;SPRING M6	RONDELLE ELASTIQUE M6	4					
9	S5010313	WASHER;PLAIN M6	RONDELLE	4					
10	2190-3231D26	PLATE;NAME	PLAQUE D'IDENTIFICATION	1					
11	2543-9015	STARTER;CONTROLLER	COMMANDE DEMARREUR	1					
12	S3450943	SCREW M6X1.0X10	VIS	2					
13	S5102303	WASHER;SPRING M6	RONDELLE ELASTIQUE M6	2					
14	2537-9008	TIMER;WIPER	INTERRUPTEUR	1					
15	S3450943	SCREW M6X1.0X10	VIS	2					
16	S5102303	WASHER;SPRING M6	RONDELLE ELASTIQUE M6	2					
17	2531-1003	CONVERTER;DC-DC (1)	CONVERTEUR	1					
18	S3450953	SCREW M6X1.0X12	VIS	2					
19	S5102303	WASHER;SPRING M6	RONDELLE ELASTIQUE M6	2					
20	2531-1003	CONVERTER;DC-DC (2)	CONVERTEUR	1					
21	S3450953	SCREW M6X1.0X12	VIS	2					
22	S5102303	WASHER;SPRING M6	RONDELLE ELASTIQUE M6	2					
23	2516-1116	BUZZER;PILOT	VIBREUR ARRIERE	1					
24	S3450943	SCREW M6X1.0X10	VIS	2					
25	S5102303	WASHER;SPRING M6	RONDELLE ELASTIQUE M6	2					
26	2544-9033	RELAY;HAED LAMP 24V 20/30A	RELAIS AVERTISSEUR	1					
27	2544-9033	RELAY;WORKING LAMP 24V	RELAIS AVERTISSEUR	1					
28	2544-9033	RELAY;ENGINE STOP 24V 20/30A	RELAIS AVERTISSEUR	1					
29	2544-9033	RELAY;HORN 24V 20/30A	RELAIS AVERTISSEUR	1					
30	2544-9033	RELAY;COMPRESSOR 24V 20/30A	RELAIS AVERTISSEUR	1					
31	2544-9033	RELAY;STEREO 24V 20/30A	RELAIS AVERTISSEUR	1					
32	2544-9033	RELAY;AFTER HEAT 24V 20/30A	RELAIS AVERTISSEUR	1					
33	2190-2037D19	PLATE;NAME	PLAQUE SIGNALETIQUES	1					
34	2190-2037D20	PLATE;NAME	PLAQUE SIGNALETIQUES	1					
35	2190-2037D56	PLATE;NAME	PLAQUE D'IDENTIFICATION	1					
36	530-00207A	HARNESS;ELECTRIC BOX	HARNAIS	1					
37	530-00208A	HARNESS;CABIN	HARNAIS	1		1001–1299	I	530-00208B	1

DATE	JUN. 30, 2004
REV. NO.	EXB04-04

Fig. 1650 ELECTRIC BOX ASS'Y(2)-ELECTRIC PARTS EQUIPMENT ELECTRIQUE

Serial No. ;

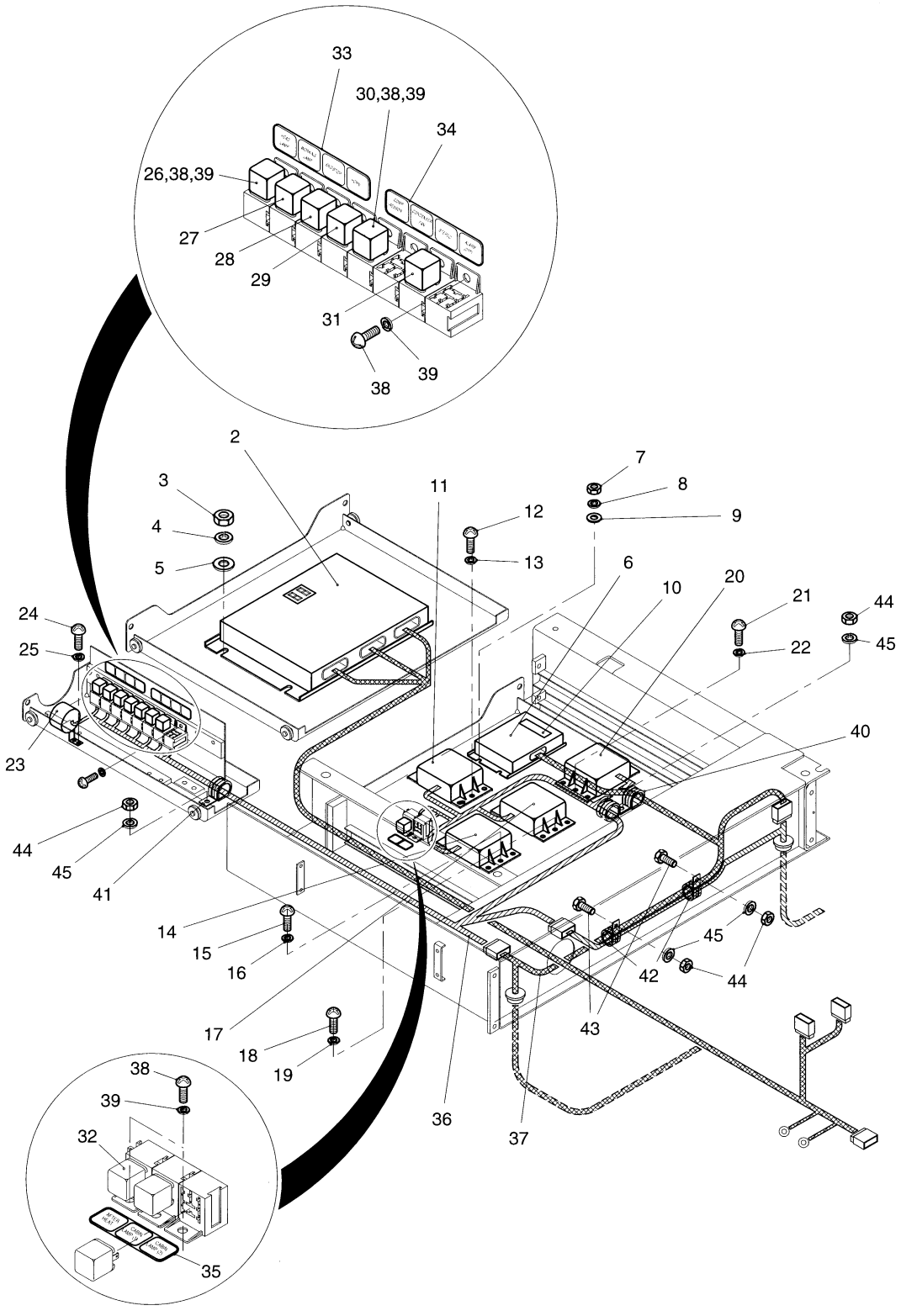

DATE	JUN. 30, 2004
REV. NO.	EXB04-04

Fig. 1650 ELECTRIC BOX ASS'Y(2)-ELECTRIC PARTS EQUIPMENT ELECTRIQUE

Serial No ;

Key No.	Part No.	Description	Description	Q'ty	S.C	Serial No.	ICA	Replaceable part	
								Part No.	Q'ty
1650-37	**530-00208B**	**HARNESS;CABIN**	HARNAIS	1		**1300–**			
38	S3450823	SCREW M5X0.8X10	VIS	5					
39	S5100203	WASHER;SPRING M5	RONDELLE ELASTIQUE	5					
40	124-00208D3	CLIP d20/M8	CLIP	2					
41	124-00208D5	CLIP d32/M8	CLIP	1					
42	124-00208D6	CLIP d38/M8	CLIP	2					
43	S0508853	BOLT M8X1.25X20	BOULON A 6PANS	2					
44	S4012533	NUT M8X1.25	ECROU	4					
45	S5102503	WASHER;SPRING M8	RONDELLE ELASTIQUE	4					

DATE	JUN. 30, 2006
REV. NO.	EXB06-08

Fig. 1660 ELECTRIC PARTS(1)-GAUGE & SWITCH PANEL
EQUIPMENT ELECTRIQUE

Serial No. ;

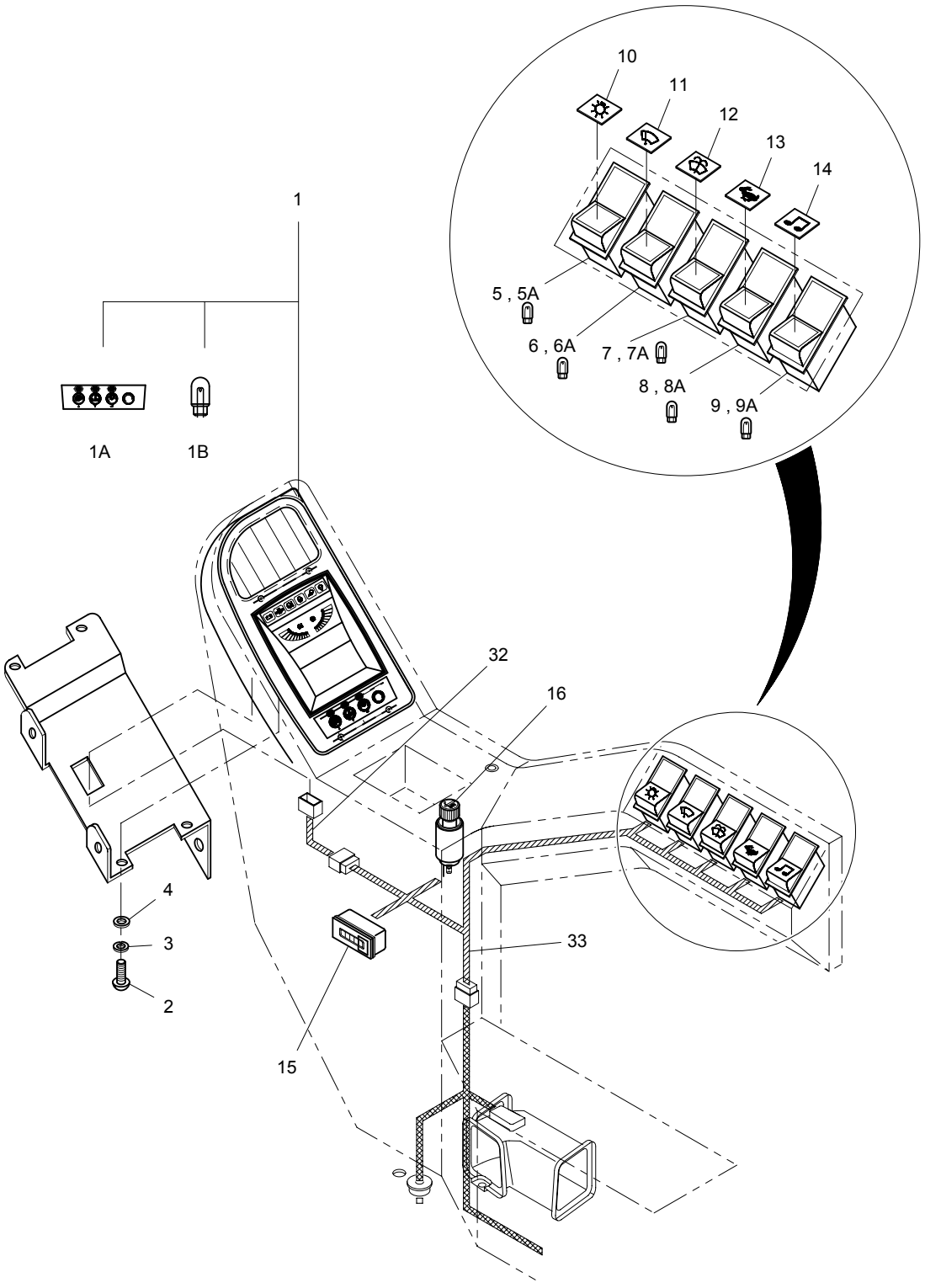

DATE	JUN. 30, 2006
REV. NO.	EXB06-08

Fig. 1660 ELECTRIC PARTS(1)-GAUGE & SWITCH PANEL EQUIPMENT ELECTRIQUE

Serial No. ;

Key No.	Part No.	Description	Description	Q'ty	S.C	Serial No.	ICA	Replaceable part	
								Part No.	Q'ty
1660--	500-00146A	ELECTRIC PARTS(1)-GAUGE &	EQUIPMENT ELECTRIQUE	-	D	1001–1206			
	500-00146C	ELECTRIC PARTS(1)-GAUGE &	EQUIPMENT ELECTRIQUE	-	D	1207–1439			
	500-00146G	ELECTRIC PARTS(1)-GAUGE &	EQUIPMENT ELECTRIQUE	-	D	1440–1708			
	500-00146H	ELECTRIC PARTS(1)-GAUGE &	EQUIPMENT ELECTRIQUE	-	D	1709–1859			
	500-00146I	ELECTRIC PARTS(1)-GAUGE &	EQUIPMENT ELECTRIQUE	-	D	1860–			
1	539-00048C	PANEL;LCD GAUGE	PANNEAU	1		1001–1439	I	539-00048E	1
	539-00048E	PANEL;LCD GAUGE	PANNEAU	1		1440–2268	I	539-00048G	1
	539-00048G	**PANEL;LCD GAUGE**	PANNEAU	1		**2269–**			
1A	159-00195	. SHEET;SWITCH	. FEUILLE	1					
1B	515-00012A	. BULB 24V 1.2W	. AMPOULE	6					
2	S3450853	SCREW M5X0.8X16	VIS	4					
3	S5100203	WASHER;SPRING M5	RONDELLE ELASTIQUE	4					
4	S5000213	WASHER;PLAIN M5	RONDELLE	4					
5	2549-9109	SWITCH;LAMP	INTERRUPTEUR	1					
5A	K9000353	. LAMP;PILOT	. LAMPE	1					
6	2549-9109	SWITCH;WIPER	INTERRUPTEUR	1					
6A	K9000353	. LAMP;PILOT	. LAMPE	1					
7	2549-9110	SWITCH;WASHER	INTERRUPTEUR	1					
7A	K9000353	. LAMP;PILOT	. LAMPE	1					
8	2549-9109	SWITCH;HIGH SPEED	INTERRUPTEUR	1					
8A	K9000353	. LAMP;PILOT	. LAMPE	1					
9	2549-9098	SWITCH;CAR STEREO	INTERRUPTEUR	1					
9A	K9000353	. LAMP;PILOT	. LAMPE	1					
10	2190-2036D24	INSERT;LAMP	INSERTION	1					
11	2190-2036D11	INSERT;WIPER	INSERTION	1					
12	2190-2036D12	INSERT;WASHER	INSERTION	1					
13	2190-2036D13	INSERT;HIGH SPEED	INSERTION	1					
14	2190-2036D23	INSERT;CAR STEREO	RACCORD	1					
15	2528-9040	METER;HOUR	TOTALISATEUR HORAIRE	1					
16	545-00001	LIGHTER;CIGAR	ALLUME-CIGARE	1					
32	530-00231A	HARNESS;GAUGE PANEL JOINT	HARNAIS	1					
33	530-00209	HARNESS;SWITCH BOX	HARNAIS	1					

DATE	DEC. 15, 2006
REV. NO.	EXB06-13

Fig. 1670 ELECTRIC PARTS(2)-STAND R.H EQUIPMENT ELECTRIQUE

Serial No. ;

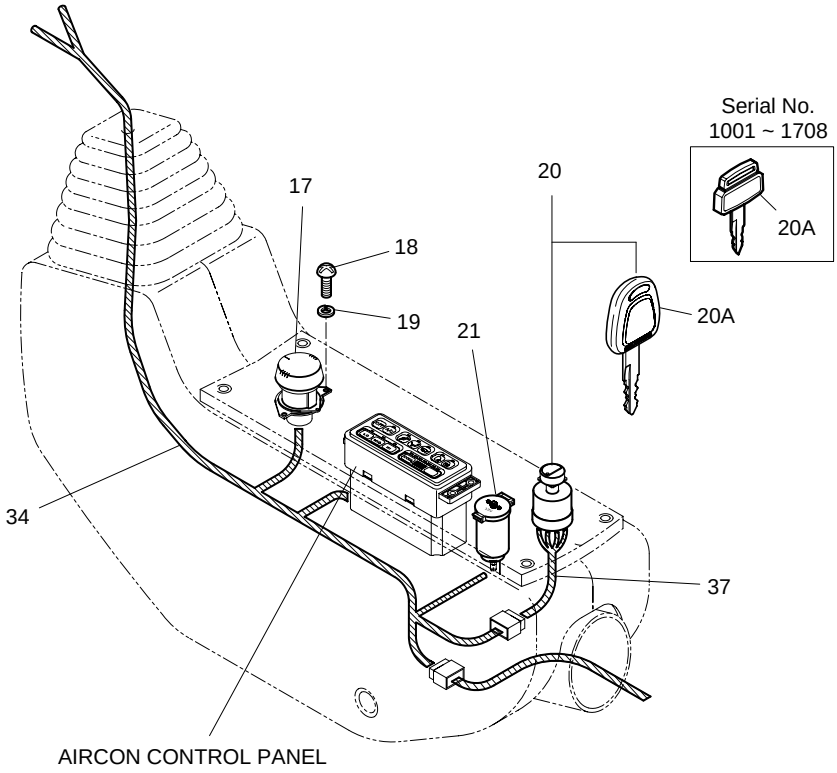

DATE	DEC. 15, 2006
REV. NO.	EXB06-13

Fig. 1670 ELECTRIC PARTS(2)-STAND R.H EQUIPMENT ELECTRIQUE

Serial No. ;

Key No.	Part No.	Description	Description	Q'ty	S.C	Serial No.	ICA	Replaceable part	
								Part No.	Q'ty
1670--	500-00146A	ELECTRIC PARTS(2)-STAND R.H	EQUIPMENT ELECTRIQUE	-	D	1001–1206			
	500-00146C	ELECTRIC PARTS(2)-STAND R.H	EQUIPMENT ELECTRIQUE	-	D	1207–1439			
	500-00146G	ELECTRIC PARTS(2)-STAND R.H	EQUIPMENT ELECTRIQUE	-	D	1440–1708			
	500-00146H	ELECTRIC PARTS(2)-STAND R.H	EQUIPMENT ELECTRIQUE	-	D	1709–1859			
	500-00146I	ELECTRIC PARTS(2)-STAND R.H	EQUIPMENT ELECTRIQUE	-	D	1860–			
17	2552-1004	DIAL;E/G CONTROL	CADRAN	1		1001–2994	I	K1013846	1
	K1013846	**DIAL;E/G CONTROL**	CADRAN	1		**2995**–			
18	S3450583	SCREW M4X0.7X12	VIS	2					
19	S5100103	WASHER;SPRING M4	RONDELLE ELASTIQUE	2					
20	2549-1152	SWITCH;STARTER	INTERRUPTEUR	1		1001–1206			
	549-00210	SWITCH;STARTER	INTERRUPTEUR	1		1207–1708	I	549-00210A	1
	549-00210A	SWITCH;STARTER	INTERRUPTEUR	1		1709–1859			
	K1001858	SWITCH;STARTER	INTERRUPTEUR	1		1860–2174	I	K1001858A	1
	K1001858A	SWITCH;STARTER	INTERRUPTEUR	1		2174–			
20A	2172-1134	. KEY;STARTER SWITCH	. CLAVETTE	2		1001–1206			
	172-00320	. KEY;STARTER SWITCH	. CLAVETTE	2		1207–1708	I	172-00320A	2
	172-00320A	. KEY;STARTER SWITCH	. CLAVETTE	2		1709–1859			
	K1009605	. KEY;STARTER SWITCH	. CLAVETTE	2		1860–2173	I	K1009605B	2
	K1009605B	. KEY;STARTER SWITCH	. CLAVETTE	2		2174–			
21	527-00006	SOCKET;12V POWER	DOUILLE D'AMPOULE	1					
34	530-00205	HARNESS;STAND(R.H)	HARNAIS	1					
37	530-00150	HARNESS;STARTER SW	HARNAIS	1					

DATE	JUN. 30, 2005
REV. NO.	EXB05-05

Fig. 1680 ELECTRIC PARTS(3)-STAND L.H EQUIPMENT ELECTRIQUE

Serial No. ;

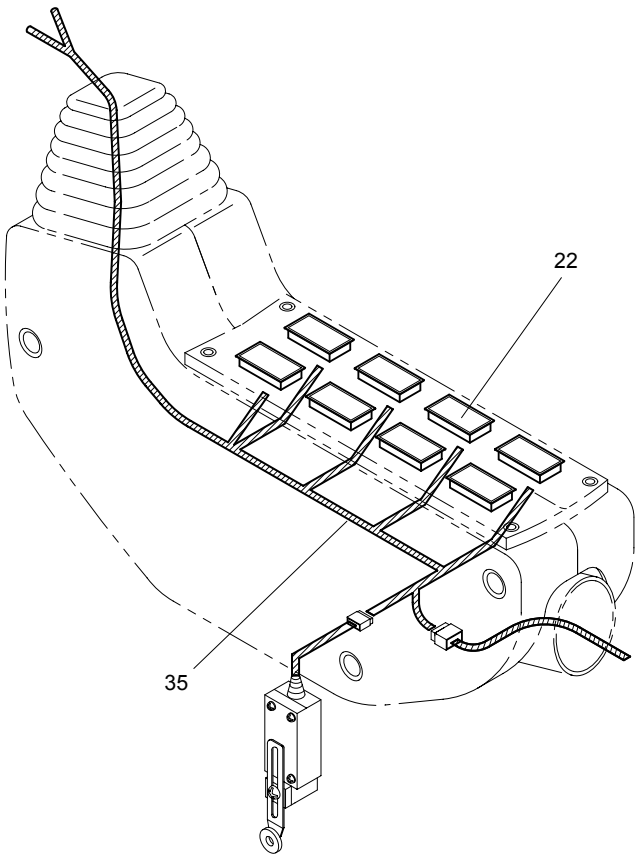

DATE	JUN. 30, 2005
REV. NO.	EXB05-05

Fig. 1680 ELECTRIC PARTS(3)-STAND L.H EQUIPMENT ELECTRIQUE

Serial No ;

Key No.	Part No.	Description	Description	Q'ty	S.C	Serial No.	ICA	Replaceable part	
								Part No.	Q'ty
1680--	500-00146A	ELECTRIC PARTS(3)-STAND L.H	EQUIPMENT ELECTRIQUE	-	D	1001–1206			
	500-00146C	ELECTRIC PARTS(3)-STAND L.H	EQUIPMENT ELECTRIQUE	-	D	1207–1439			
	500-00146G	ELECTRIC PARTS(3)-STAND L.H	EQUIPMENT ELECTRIQUE	-	D	1440–1708			
	500-00146H	ELECTRIC PARTS(3)-STAND L.H	EQUIPMENT ELECTRIQUE	-	D	1709–1859			
	500-00146I	**ELECTRIC PARTS(3)-STAND**	EQUIPMENT ELECTRIQUE	-	D	**1860**–			
22	2621-9002	COVER	COUVERCLE	8					
35	530-00206	HARNESS;STAND(L.H)	HARNAIS	1					

DATE	DEC. 15, 2006
REV. NO.	EXB06-13

Fig. 1690 ELECTRIC PARTS(4)-CABIN EQUIPMENT ELECTRIQUE

Serial No. ;

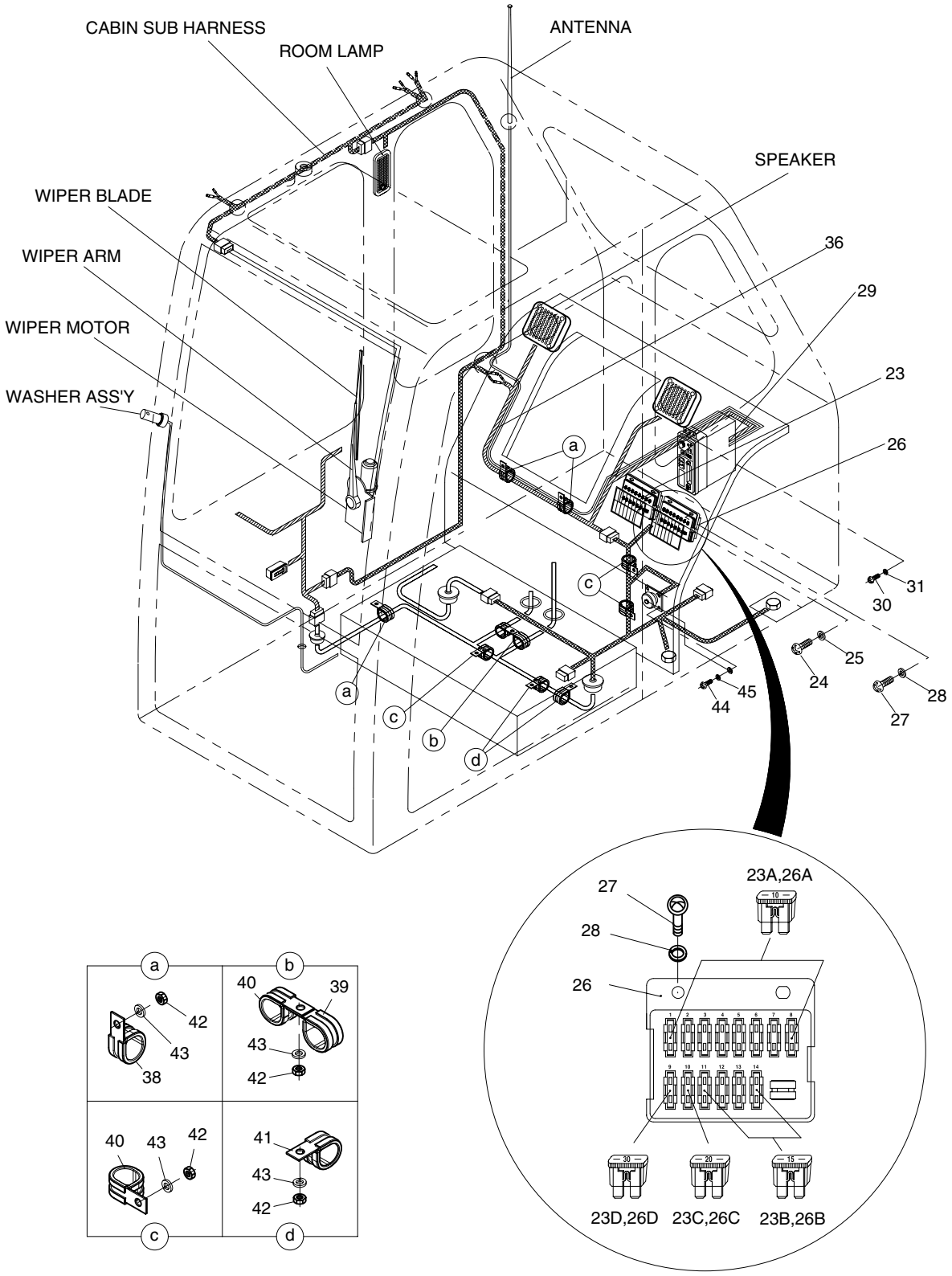

DATE	DEC. 15, 2006
REV. NO.	EXB06-13

Fig. 1690 ELECTRIC PARTS(4)-CABIN EQUIPMENT ELECTRIQUE

Serial No. ;

Key No.	Part No.	Description	Description	Q'ty	S.C	Serial No.	ICA	Replaceable part	
								Part No.	Q'ty
1690--	500-00146A	ELECTRIC PARTS(4)-CABIN	EQUIPMENT ELECTRIQUE	-	D	1001–1206			
	500-00146C	ELECTRIC PARTS(4)-CABIN	EQUIPMENT ELECTRIQUE	-	D	1207–1439			
	500-00146G	ELECTRIC PARTS(4)-CABIN	EQUIPMENT ELECTRIQUE	-	D	1440–1708			
	500-00146H	ELECTRIC PARTS(4)-CABIN	EQUIPMENT ELECTRIQUE	-	D	1709–1859			
	500-00146I	ELECTRIC PARTS(4)-CABIN	EQUIPMENT ELECTRIQUE	-	D	1860–			
23	2510-1010	BOX ASS'Y;FUSE (1)	BOITE ELECTRIQUE	1					
23A	2527-1016	. FUSE;BLADE 10A	. LAME DE FUSIBLE	8					
23B	2527-1017	. FUSE;BLADE 15A	. LAME DE FUSIBLE	4					
23C	2527-1018	. FUSE;BLADE 20A	. FUSIBLE	1					
23D	2527-1025	. FUSE;BLADE 30A	. FUSIBLE	1					
24	S3450983	SCREW M6X1.0X20	VIS	2					
25	S5102303	WASHER;SPRING M6	RONDELLE ELASTIQUE M6	2					
26	2510-1010	BOX ASS'Y;FUSE (2)	BOITE ELECTRIQUE	1					
26A	2527-1016	. FUSE;BLADE 10A	. LAME DE FUSIBLE	8					
26B	2527-1017	. FUSE;BLADE 15A	. LAME DE FUSIBLE	4					
26C	2527-1018	. FUSE;BLADE 20A	. FUSIBLE	1					
26D	2527-1025	. FUSE;BLADE 30A	. FUSIBLE	1					
27	S3450983	SCREW M6X1.0X20	VIS	2					
28	S5102303	WASHER;SPRING M6	RONDELLE ELASTIQUE M6	2					
29	541-00014	CAR STEREO 12V	STEREO DE VOITURE	1		1001–1206	I	541-00014A	1
	541-00014A	CAR STEREO 12V	STEREO DE VOITURE	1		1207–2929	I	K1013232	1
	K1013232	**CAR STEREO 12V**	STEREO DE VOITURE	1		**2930**–			
30	S3450823	SCREW M5X0.8X10	VIS	4					
31	S5100203	WASHER;SPRING M5	RONDELLE ELASTIQUE	4					
36	530-00213	HARNESS;STEREO	HARNAIS	1		1001–1439	I	530-00213A	1
	530-00213A	HARNESS;STEREO	HARNAIS	1		1440–			
38	124-00208D3	CLIP Φ20/M8	CLIP	3					
39	124-00208D4	CLIP Φ26/M8	CLIP	1					
40	124-00208D5	CLIP Φ32/M8	CLIP	4					
41	124-00208D6	CLIP Φ38/M8	CLIP	2					
42	S4012533	NUT M8X1.25	ECROU	9					
43	S5102503	WASHER;SPRING M8	RONDELLE ELASTIQUE	9					
44	S3450343	SCREW M3X0.5X10	VIS	4					
45	S5100003	WASHER;SPRING M3	RONDELLE ELASTIQUE	4					

DATE	AUG. 12, 2002
1st EDITION	

Fig. 1700 ELECTRIC PARTS(5)-BATTERY EQUIPMENT ELECTRIQUE

Serial No. ;

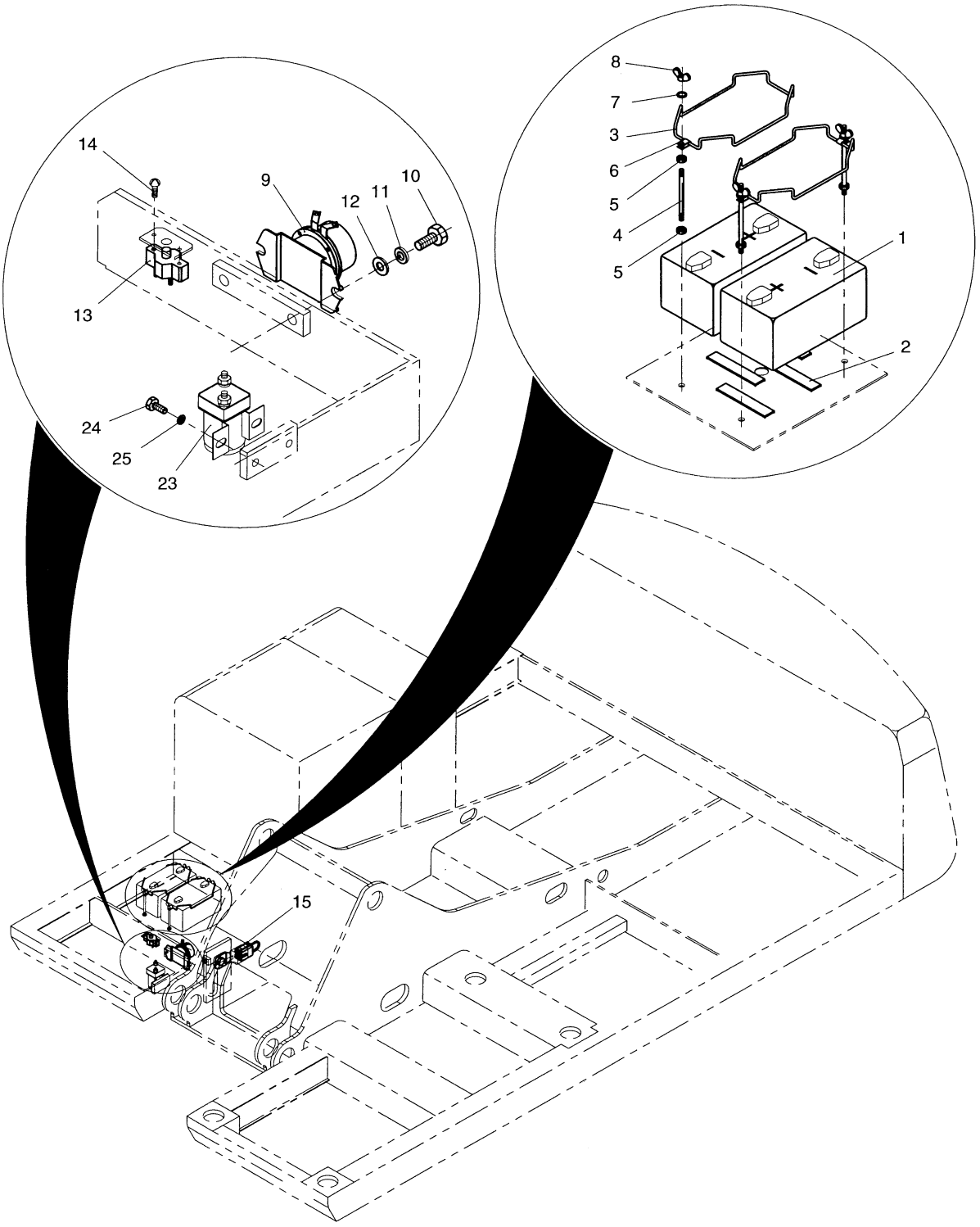

DATE	AUG. 12, 2002
1st EDITION	

Fig. 1700 ELECTRIC PARTS(5)-BATTERY EQUIPMENT ELECTRIQUE

Serial No. ;

Key No.	Part No.	Description	Description	Q'ty	S.C	Serial No.	ICA	Replaceable part	
								Part No.	Q'ty
1700--	500-00147	ELECTRIC PARTS(5)-BATTERY	EQUIPMENT ELECTRIQUE	-	D				
1	2506-1104	BATTERY MF100	BATTERIE	2					
2	2161-1061	CUSHION	COUSSIN	4					
3	2514-1005	HOLDER;BATTERY	SAISIR	2					
4	2120-1419	BOLT;STUD M10X1.5X210	BOULON DE PLOT	4					
5	S4012633	NUT M10X1.5	ECROU	8					
6	2124-1441	CLIP	ATTACHE	4					
7	S5010613	WASHER;PLAIN M10	RONDELLE PLATE	4					
8	S4540603	NUT;WING M10X1.5	ECROU	4					
9	2544-9024	RELAY;BATTERY	RELAIS BATTERIE	1					
10	S0509053	BOLT M8X1.25X25	BOULON A 6PANS	2					
11	S5102503	WASHER;SPRING M8	RONDELLE ELASTIQUE	2					
12	S5010513	WASHER;PLAIN M8	RONDELLE	2					
13	2527-9004	BREAKER;CIRCUIT 60A	COUPE-CIRCUIT	1					
14	2120-1354	SCREW	VIS	2					
15	2527-1023A	FUSIBLE LINK 27A	FUSIBLE	1					
23	2544-1022	RELAY;STARTER	RELAIS DEMARREUR	1					
24	S0504453	BOLT M6X1.0X12	BOULON A 6PANS	2					
25	S5102303	WASHER;SPRING M6	RONDELLE ELASTIQUE	2					

DATE	AUG. 12, 2002
1st EDITION	

Fig. 1710 ELECTRIC PARTS(6)-ENGINE EQUIPMENT ELECTRIQUE

Serial No. ;

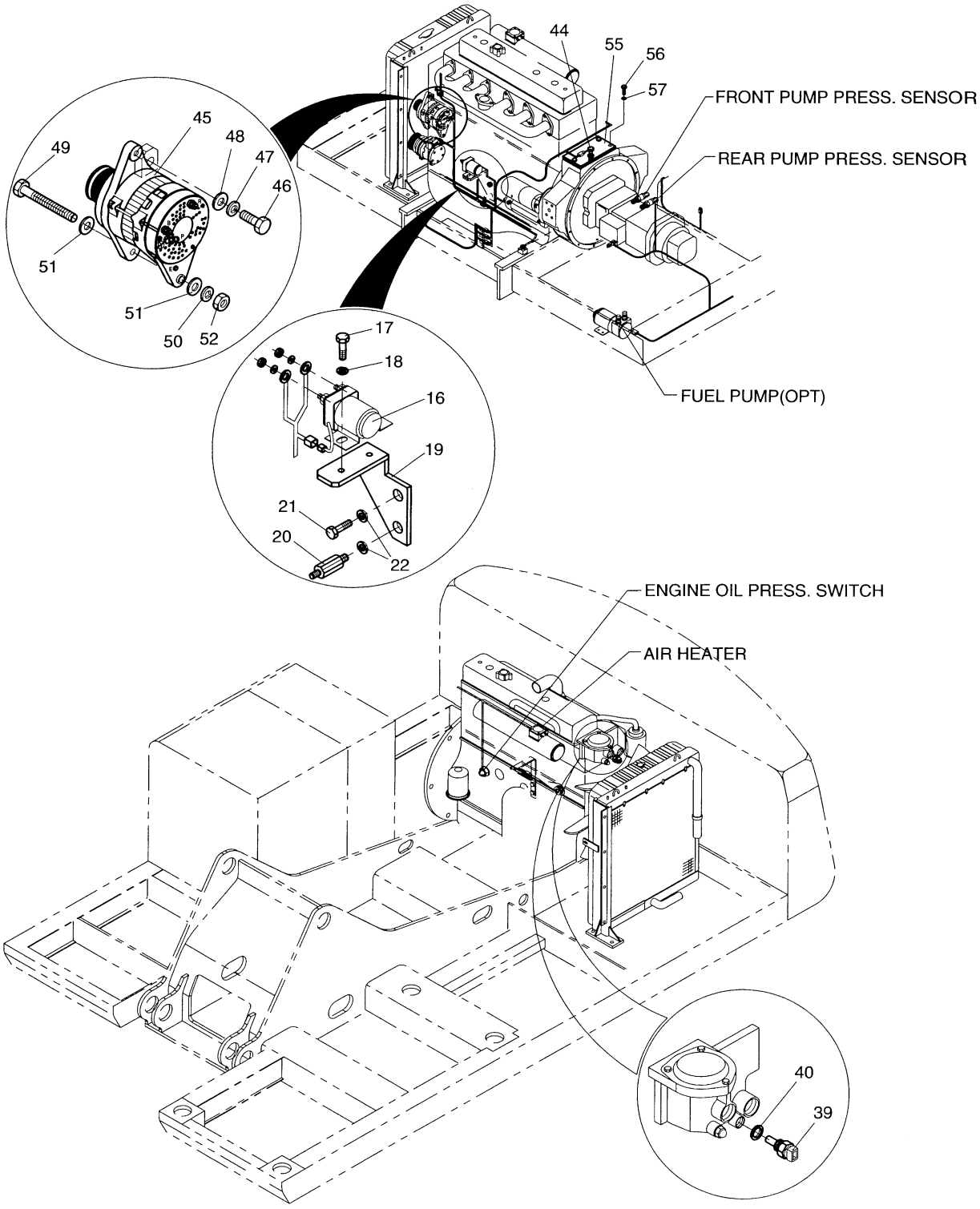

DATE	AUG. 12, 2002
1st EDITION	

Fig. 1710 ELECTRIC PARTS(6)-ENGINE EQUIPMENT ELECTRIQUE

Serial No. ;

Key No.	Part No.	Description	Description	Q'ty	S.C	Serial No.	ICA	Replaceable part	
								Part No.	Q'ty
1710--	500-00147	ELECTRIC PARTS(6)-ENGINE	EQUIPMENT ELECTRIQUE	-	D				
16	544-00007	RELAY;PREHEAT	RELAIS	1					
17	S0504453	BOLT M6X1.0X12	BOULON A 6PANS	2					
18	S5102303	WASHER;SPRING	RONDELLE ELASTIQUE	2					
19	195-01967	BRACKET;RELAY PL4.5	SUPPORT	1					
20	2120-2235	BOLT;STUD M10X1.25X15/M8	BOULON DE PLOT	1					
21	S0711653	BOLT M10X1.25X16	BOULON A 6PANS	1					
22	S5102603	WASHER;SPRING M10	RONDELLE ELASTIQUE	2					
39	2547-9038B	SENSOR;WATER TEMP	CAPTEUR	1					
40	S8180251	PACKING M16/Φ 22	RONDELLE D'ETANCHEITE	1					
44	2547-1015	SENSOR;ENG SPEED	CAPTEUR	1					
45	2502-9007B	ALTERNATOR 24V 60A	ALTERNATEUR	1					
46	S0760853	BOLT M12X1.25X55	BOULON A 6PANS	1					
47	S5102703	WASHER;SPRING M12	RONDELLE ELASTIQUE	1					
48	2114-1058D54	WASHER M12	RONDELLE	1					
49	S0562653	BOLT M12X1.75X160	BOULON A 6PANS	1					
50	S5102703	WASHER;SPRING M12	RONDELLE ELASTIQUE	1					
51	S5010713	WASHER;PLAIN M12	RONDELLE	1					
52	S4012733	NUT M12	ECROU	1					
55	2197-1793	BRACKET;SPEED SENSOR	SUPPORT	1					
56	S0512053	BOLT M10X1.5X25	BOULON A 6PANS	3					
57	S5102603	WASHER;SPRING M10	RONDELLE ELASTIQUE	3					

DATE	DEC. 22, 2003
REV. NO.	EXB03-15

Fig. 1720 ELECTRIC PARTS(7)-RELATED PARTS EQUIPMENT ELECTRIQUE

Serial No. ;

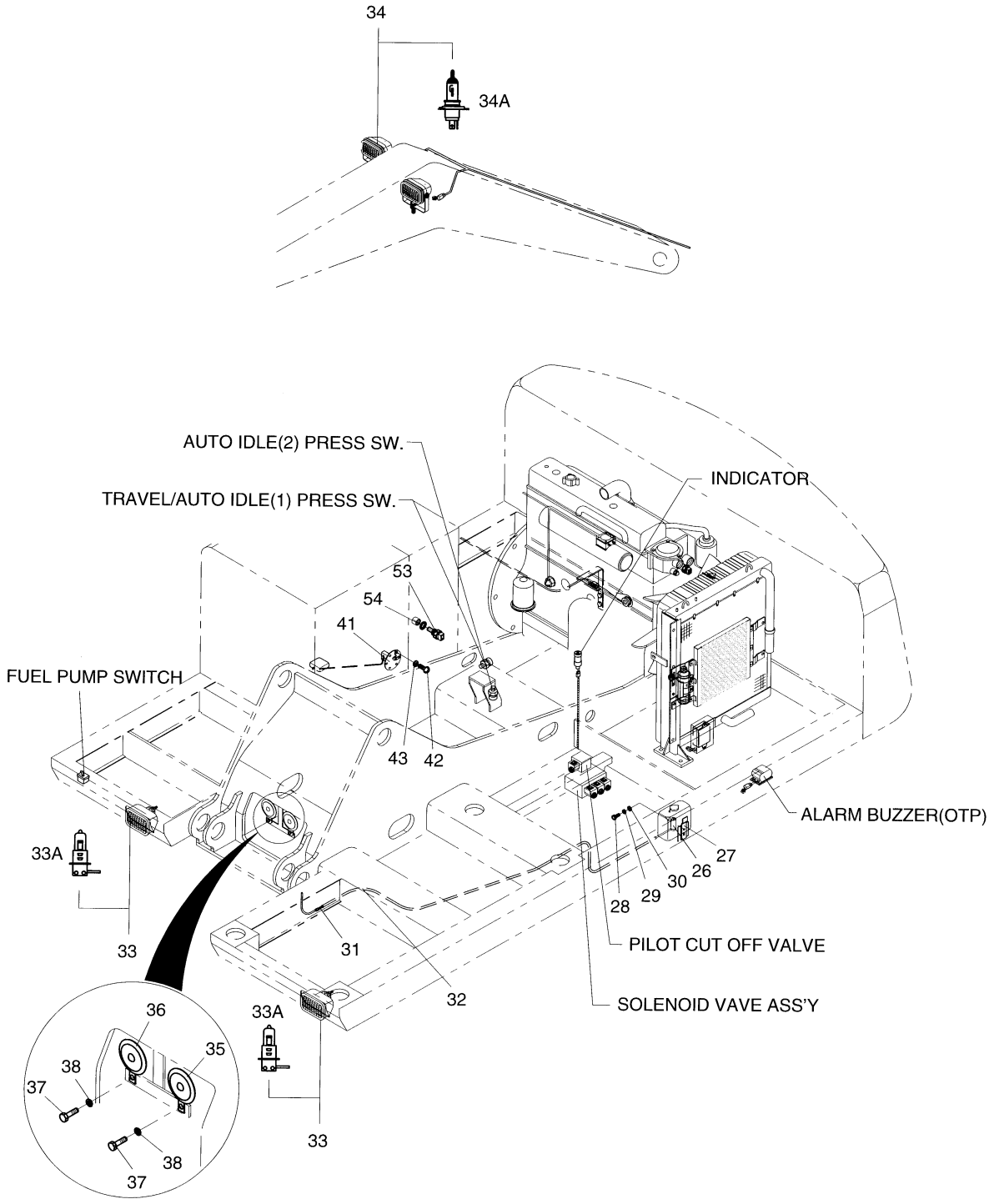

DATE	DEC. 22, 2003
REV. NO.	EXB03-15

Fig. 1720 ELECTRIC PARTS(7)-RELATED PARTS EQUIPMENT ELECTRIQUE

Serial No ;

Key No.	Part No.	Description	Description	Q'ty	S.C	Serial No.	ICA	Replaceable part	
								Part No.	Q'ty
1720--	500-00147	ELECTRIC PARTS(7)-RELATED	EQUIPMENT ELECTRIQUE	-	D				
26	2554-9005A	WINDOW-WASHER	RONDELLE	1					
27	2195-1534	BRACKET	SUPPORT	1					
28	S0504453	BOLT M6X1.0X12	BOULON A 6PANS	2					
29	S5102303	WASHER;SPRING M6	RONDELLE ELASTIQUE M6	2					
30	S5010313	WASHER;PLAIN M6	RONDELLE	2					
31	2415-1018	ADAPTER;HOSE	ADAPTEUR	1					
32	2185-1681D4	TUBE;CORRUGATE	TUYAU FLEXIBLE	1					
33	534-00063	LAMP;HEAD 24V 70W	LAMPE	2					
33A	2515-1016D4	BULB;HALOGEN H3 24V 70W	LAMPE	1					
34	534-00064	LAMP;WORKING 24V 75/70W	LAMPE	4					
34A	2515-1022D1	BULB;HALOGEN H4 24V 75/70W	AMPOULE	1					
35	516-00014	HORN;HIGH	KLAXON	1					
36	516-00015	HORN;LOW	KLAXON	1					
37	S0508653	BOLT M8X1.25X16	BOULON A 6PANS	2					
38	S5102503	WASHER;SPRING M8	RONDELLE ELASTIQUE	2					
41	2547-9035	SENSOR;FUEL	CAPTEUR	1		1001-1150	I	2547-9035A	1
	2547-9035A	SENSOR;FUEL	CAPTEUR	1		1151-			
42	S3450833	BOLT M5X0.8X12	BOULON	6					
43	S5100203	WASHER;SPRING M5	RONDELLE ELASTIQUE	6					
53	2547-9038B	SENSOR;OIL TEMP	CAPTEUR	1					
54	S8180251	PACKING M16/Φ 22	RONDELLE D'ETANCHEITE	1					

DATE	DEC. 29, 2005
REV. NO.	EXB05-20

Fig. 1730 ELECTRIC WIRING(1)-BATTERY
POSE DE FILES ELECTRIQUES

Serial No. ;

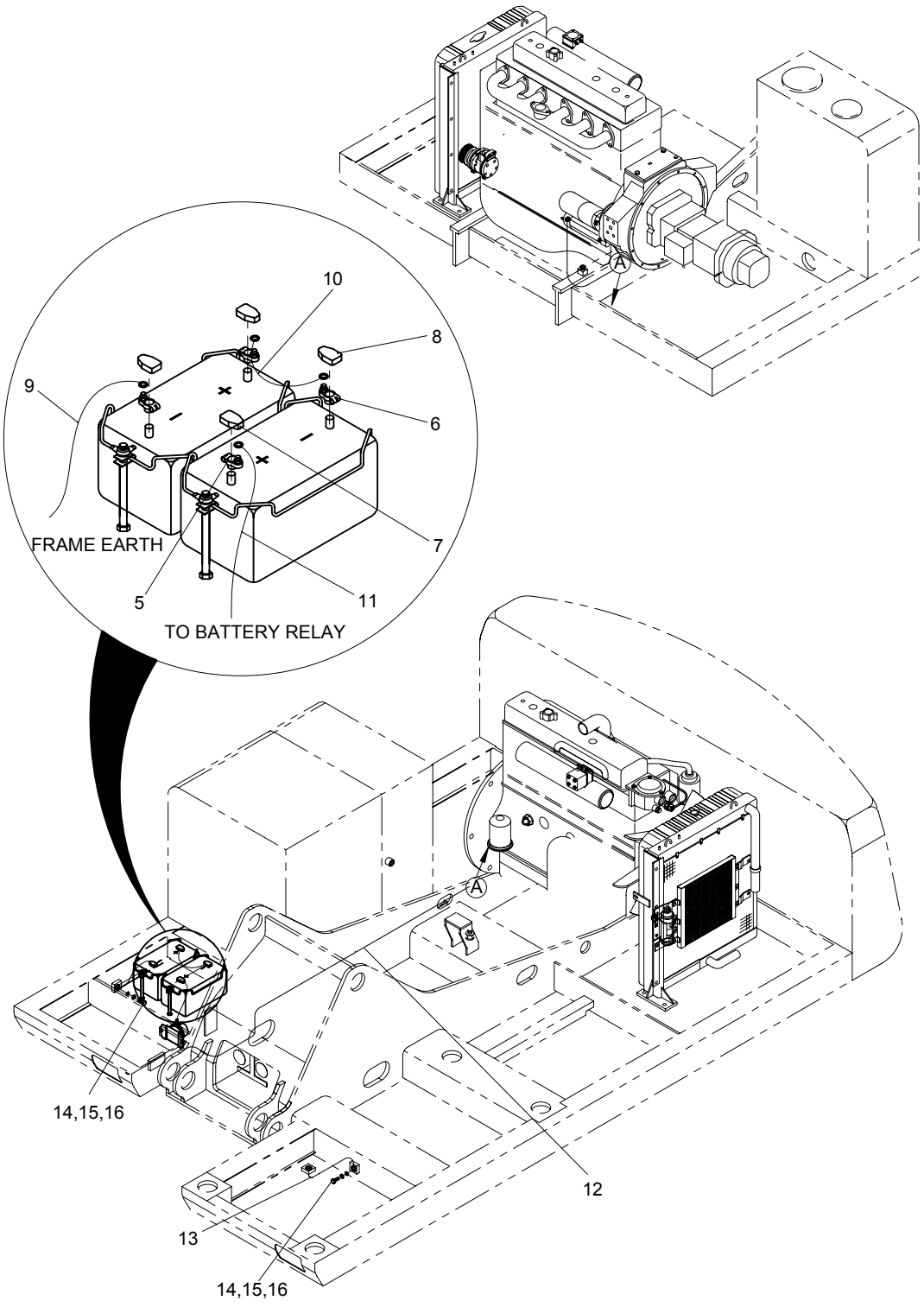

DATE	DEC. 29, 2005
REV. NO.	EXB05-20

Fig. 1730 ELECTRIC WIRING(1)-BATTERY POSE DE FILES ELECTRIQUES

Serial No ;

Key No.	Part No.	Description	Description	Q'ty	S.C	Serial No.	ICA	Replaceable part	
								Part No.	Q'ty
1730--	500-00148	ELECTRIC WIRING(1)-BATTERY	POSE DE FILES	-	D				
5	2550-1014D1	TERMINAL;BATTERY(+)	BORNE	2					
6	2550-1014D2	TERMINAL;BATTERY(-)	BORNE	2					
7	2160-1212	CAP ; BATT. TML (+)	CHAPEAU DE	2					
8	2160-1213	CAP ; BATT. TML (-)	BOUCHON	2					
9	2553-1275D5	CABLE;BATT-EARTH 60B-L300	CABLE	1					
10	2553-1275D46	CABLE;BATT-BATT 60R-L300	CABLE BATTERIE A	1					
11	2553-1275D69	CABLE;BATT-BATT RELAY	CABLE	1					
12	2553-1275D8	CABLE;BATT RY-STARTER	CABLE	1					
13	2553-1275D5	CABLE;FL PLATE-EARTH	CABLE	1					
15	S0511653	BOLT M10X1.5X16	BOULON A 6PANS	2					
16	S5102603	WASHER;SPRING M10	RONDELLE ELASTIQUE	2					
17	S5010613	WASHER;PLAIN M10	RONDELLE PLATE	2					

DATE	DEC. 29, 2005
REV. NO.	EXB05-20

Fig. 1740 ELECTRIC WIRING(2)-ENGINE
POSE DE FILES ELECTRIQUES

Serial No. ;

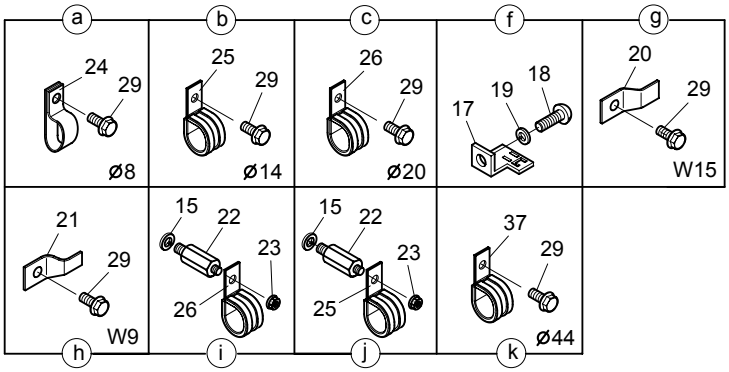

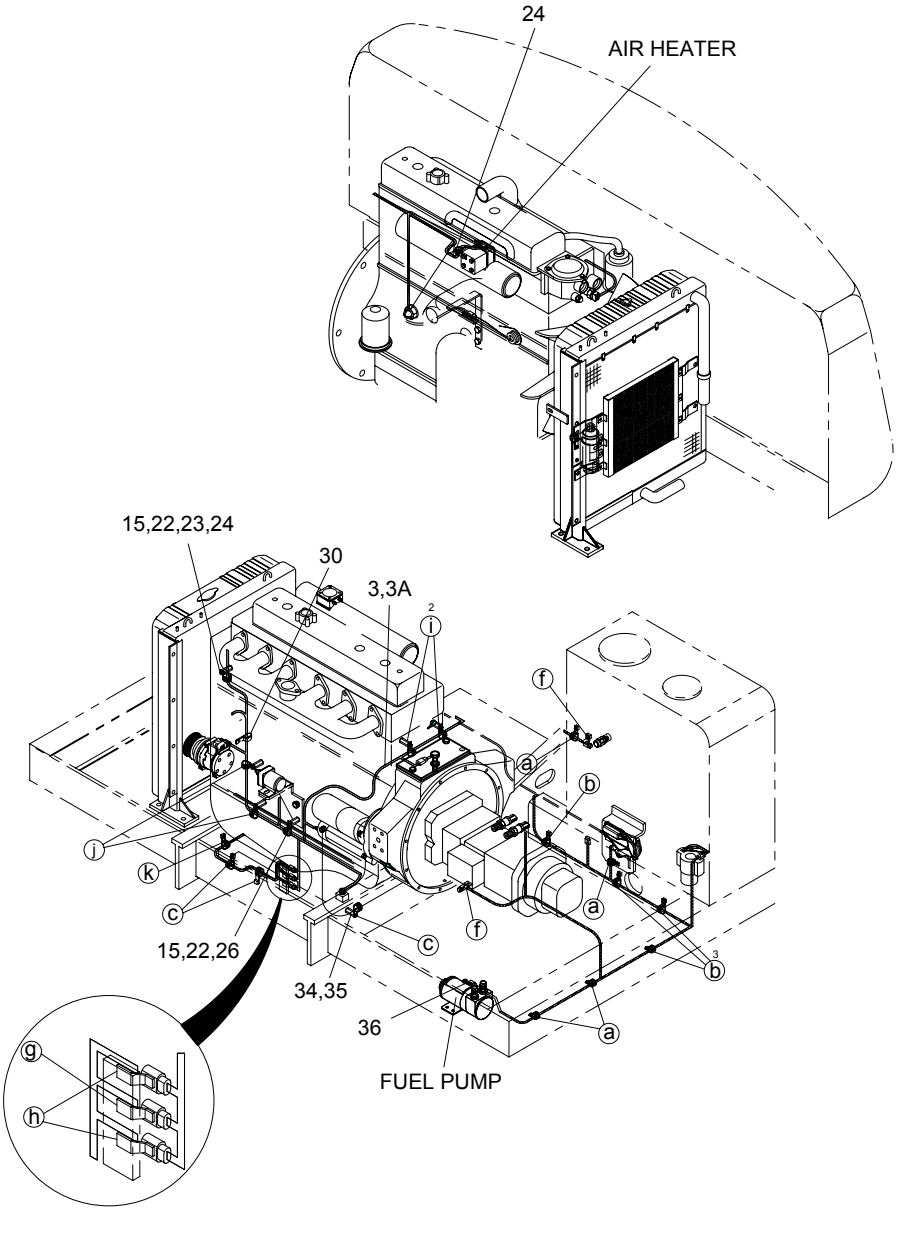

DATE	DEC. 29, 2005
REV. NO.	EXB05-20

Fig. 1740 ELECTRIC WIRING(2)-ENGINE POSE DE FILES ELECTRIQUES

Serial No ;

Key No.	Part No.	Description	Description	Q'ty	S.C	Serial No.	ICA	Replaceable part	
								Part No.	Q'ty
1740--	500-00148	ELECTRIC WIRING(2)-ENGINE	POSE DE FILES	-	D				
3	530-00190A	HARNESS;ENGINE	HARNAIS	1					
3A	2548-1027	DIODE ASS'Y 3A	DIODE	2					
15	S5102603	WASHER;SPRING M10	RONDELLE ELASTIQUE	4					
17	2195-3500	BRACKET;HOUSING	SUPPORT	2					
18	S3450953	SCREW M6X1.0X12	VIS	2					
19	S5102303	WASHER;SPRING M6	RONDELLE ELASTIQUE M6	2					
20	2197-1660	BRACKET;HOUSING W15	SUPPORT	1					
21	2197-1661	BRACKET;HOUSING W9	SUPPORT	1					
22	2120-2235	BOLT;STUD M10X1.25X15/M8	BOULON DE GOUJON	4					
23	2121-1305	NUT M8X1.25	ECROU	3					
24	2124-1509D1	CLIP φ12/M8	CLIP	6					
25	124-00208D2	CLIP φ14/M8	CLIP	6					
26	124-00208D3	CLIP φ20/M8	CLIP	5					
29	120-00276	BOLT M8X1.25X12	BOULON	14					
30	2124-1353D8	CLIP φ22/M12	CLIP	1					
34	2120-2187	BLOT;STUD M8X1.25	BOULON DE PLOT	1					
35	S5102503	WASHER;SPRING M8	RONDELLE ELASTIQUE	1					
36	195-02154	BRACKET;HOUSING W12	SUPPORT	1					
37	124-00208D7	CLIP φ44/M8	CLIP	1					

DATE	JUN. 30, 2004
REV. NO.	EXB04-04

Fig. 1750 ELECTRIC WIRING(3)-RELATED PARTS
POSE DE FILES ELECTRIQUES

Serial No. ;

1 WIRING DIAGRAM

31

32

33

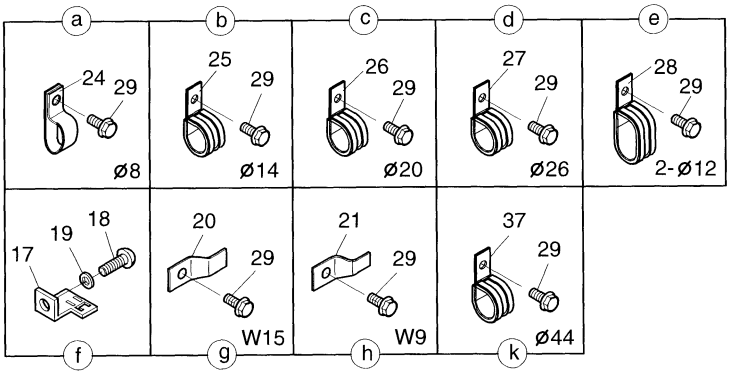

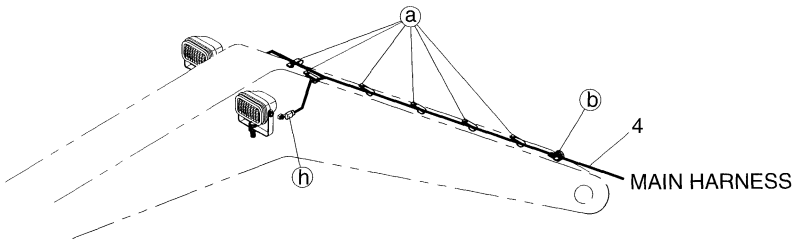

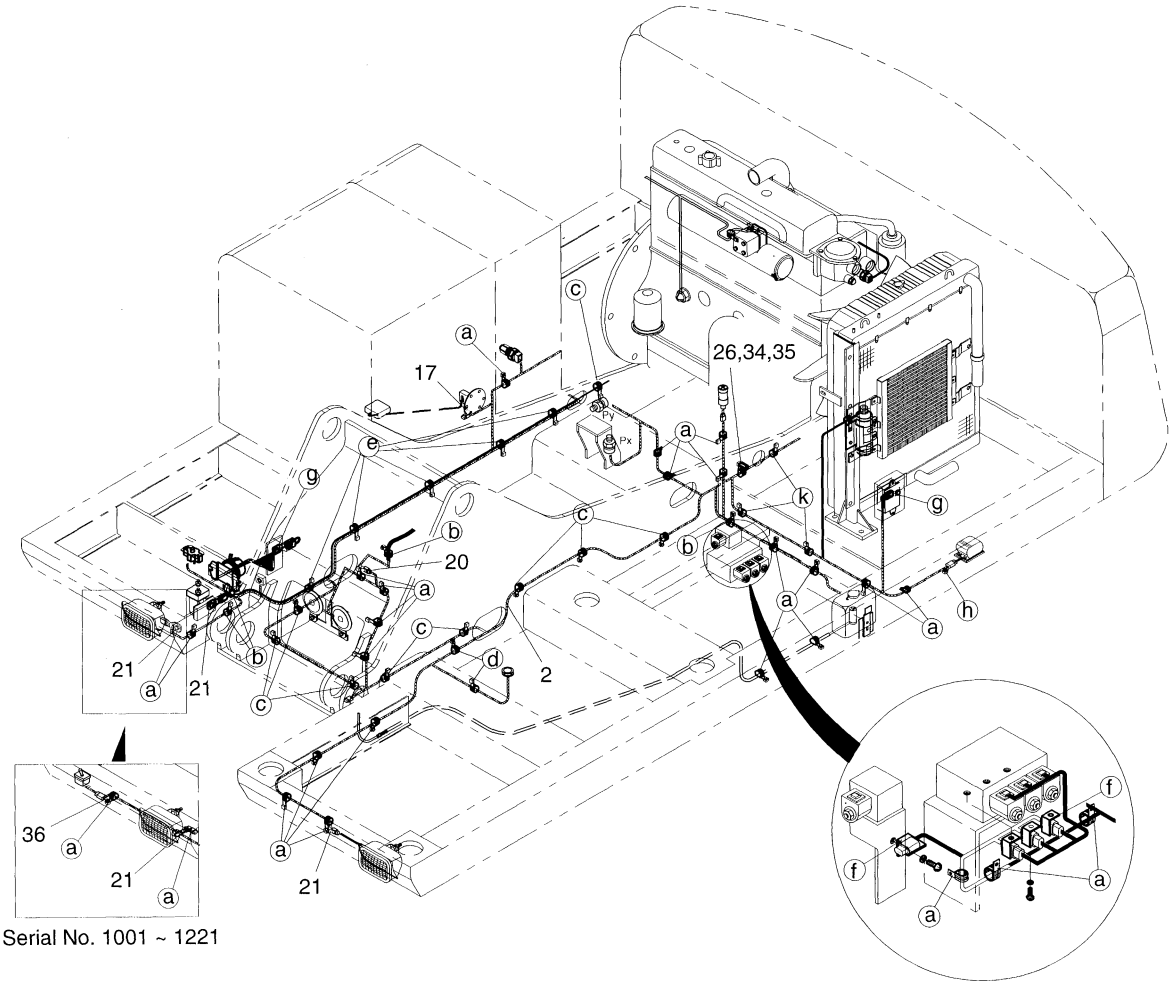

Serial No. 1001 ~ 1221

DATE	JUN. 30, 2004
REV. NO.	EXB04-04

Fig. 1750 ELECTRIC WIRING(3)-RELATED PARTS
POSE DE FILES ELECTRIQUES

Serial No ;

Key No.	Part No.	Description	Description	Q'ty	S.C	Serial No.	ICA	Replaceable part	
								Part No.	Q'ty
1750--	500-00148	ELECTRIC WIRING(3)-RELATED	POSE DE FILES	-	D				
1	599-00044	WIRING DIAGRAM	DIAGRAMME DE CABLAGE	1	D	1001–1299			
	599-00044A	**WIRING DIAGRAM**	DIAGRAMME DE CABLAGE	1	D	**1300-**			
2	530-00259A	HARNESS;MAIN	HARNAIS	1		1001–1221			
	530-00259B	**HARNESS;MAIN**	HARNAIS	1		**1222–**			
2A	2548-1027	DIODE ASS'Y 3A	DIODE	7					
2B	548-00003	DIODE ASS'Y 3A	DIODE	1					
4	530-00311D3	HARNESS;WORKING LAMP	HARNAIS	1					
17	2195-3500	BRACKET;HOUSING	SUPPORT	5					
18	S3450953	SCREW M8x1.0X12	VIS	4					
19	S5102303	WASHER;SPRING M4	RONDELLE ELASTIQUE M6	4					
20	2197-1660	BRACKET;HOUSING W15	SUPPORT	3					
21	2197-1661	BRACKET;HOUSING W9	SUPPORT	6					
24	2124-1509D1	CLIP	CLIP	31		1001–1221			
	2124-1509D1	**CLIP**	CLIP	30		**1222–**			
25	124-00208D2	CLIP φ14/M8	CLIP	5					
26	124-00208D3	CLIP φ20/M8	CLIP	10					
27	124-00208D4	CLIP φ26/M8	CLIP	2					
28	124-00209D1	CLIP 2-φ26/M8	CLIP	5					
29	120-00276	BOLT M8x1.25X12	BOULON	60		1001–1221			
	120-00276	**BOLT M8x1.25X12**	BOULON	59		**1222–**			
31	2124-1622D1	CLIP;BAND L150	CLIP	10					
32	2124-1622D2	CLIP;BAND L200	CLIP	15					
33	2124-1622D3	CLIP;BAND L280	CLIP	10					
34	2120-2187	BOLT;STUD M8x1.25	BOULON DE GOUJON	1					
35	S5102503	WASHER;SPRING M8	RONDELLE ELASTIQUE	1					
36	195-02154	BRACKET;HOUSING W12	SUPPORT	1					
37	124-00208D7	CLIP φ44/M8	CLIP	3					

DATE	DEC. 15, 2006
REV. NO.	EXB06-13

Fig. 1760 AIRCONDITIONER(1) REFRIGERATION

Serial No. ;

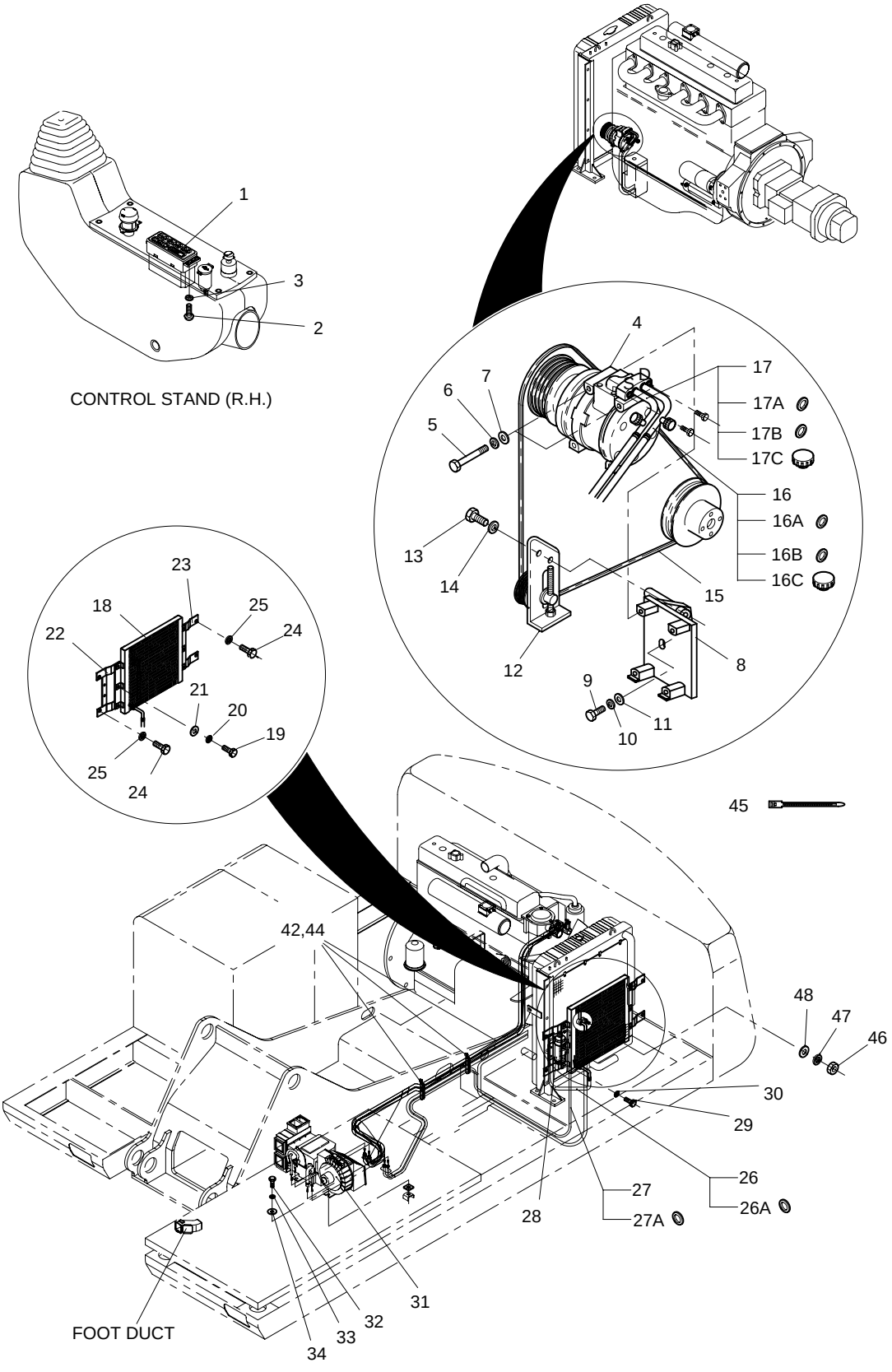

DATE	DEC. 15, 2006
REV. NO.	EXB06-13

Fig. 1760 AIRCONDITIONER(1) REFRIGERATION

Serial No. ;

Key No.	Part No.	Description	Description	Q'ty	S.C	Serial No.	ICA	Replaceable part	
								Part No.	Q'ty
1760--	**920-00083A**	**COOLER & HEATER PIPING**	REFRIGERATION	-	D				
1	543-00049	PANEL;AIRCON CONTROL	PANNEAU	1					
2	S3450583	SCREW	VIS	4					
3	S5000113	WASHER;PLAIN M4	RONDELLE PLATE	4					
4	2208-6013B	COMPRESSOR	COMPRESSEUR	1					
5	S0557153	BOLT M8X1.25X90	BOULON A 6PANS	4					
6	S5102503	WASHER;SPRING M8	RONDELLE ELASTIQUE	4					
7	S5010513	WASHER;PLAIN M8	RONDELLE	4					
8	**2197-1798B**	**BRACKET;COMPRESSOR**	SUPPORT	1		**1001–3103**	I	2197-1798C	1
	2197-1798C	**BRACKET;COMPRESSOR**	SUPPORT	1		**3104–**			
9	S0712153	BOLT M10X1.25X28	BOULON A 6PANS	1					
10	S5102603	WASHER;SPRING M10	RONDELLE ELASTIQUE	1					
11	S5010613	WASHER;PLAIN M10	RONDELLE PLATE	1					
12	2107-6006	PULLEY ASS'Y;IDLE 4PK	ENSEMBLE POULIE FOU	1					
13	S0759853	BOLT M10X1.25X115	BOULON A 6PANS	2					
14	S5102603	WASHER;SPRING M10	RONDELLE ELASTIQUE	2					
15	2106-1019D10	V-BELT 4PK L990	COURROIE-V	1					
16	185-00344A	HOSE;DISCHARGE L2500	TUYAU FLEXIBLE	1					
16A	2180-6089	. O-RING(COND)	. JONT TORIQUE	1					
16B	2180-6088	. O-RING(COMP)	. JONT TORIQUE	1					
16C	1.161-00018	. CAP;CHECK PORT(H)	. CHAPEAU	1					
17	2185-1703B	HOSE;SUCTION L2790	TUYAU FLEXIBLE	1					
17A	2180-6086	. O-RING(COMP)	. JONT TORIQUE	1					
17B	2180-6087	. O-RING(EVA)	. JONT TORIQUE	1					
17C	1.161-00019	. CAP;CHECK PORT(L)	. CHAPEAU	1					
18	2520-6007C	CONDENSER ASS'Y	CONDENSATEUR	1					
19	S0555953	BOLT M8X1.25X30	BOULON A 6PANS	6					
20	S5102503	WASHER;SPRING M8	RONDELLE ELASTIQUE	6					
21	S5010513	WASHER;PLAIN M8	RONDELLE	6					
22	195-01904	BRACKET;CONDENSER(L.H)	SUPPORT	1					
23	195-01905	BRACKET;CONDENSER(R.H)	SUPPORT	1					
24	S0508853	BOLT M8X1.25X20	BOULON A 6PANS	4					
25	S5102503	WASHER;SPRING M8	RONDELLE ELASTIQUE	4					
26	2185-1736D2	HOSE;LIQUID(1) L530	TUYAU FLEXIBLE	1					
26A	2180-6090	. O-RING d6.07/t1.78	. JONT TORIQUE	2					
27	2185-1698D4	HOSE;LIQUID(2) L2650	TUYAU FLEXIBLE	1					
27A	2180-6090	. O-RING d6.07/t1.78	. JONT TORIQUE	2					
28	2204-6039A	RECEIVER DRIER	RESERVOIR DESSICATEUR	1					

DATE	DEC. 15, 2006
REV. NO.	EXB06-13

Fig. 1760 AIRCONDITIONER(1) REFRIGERATION

Serial No. ;

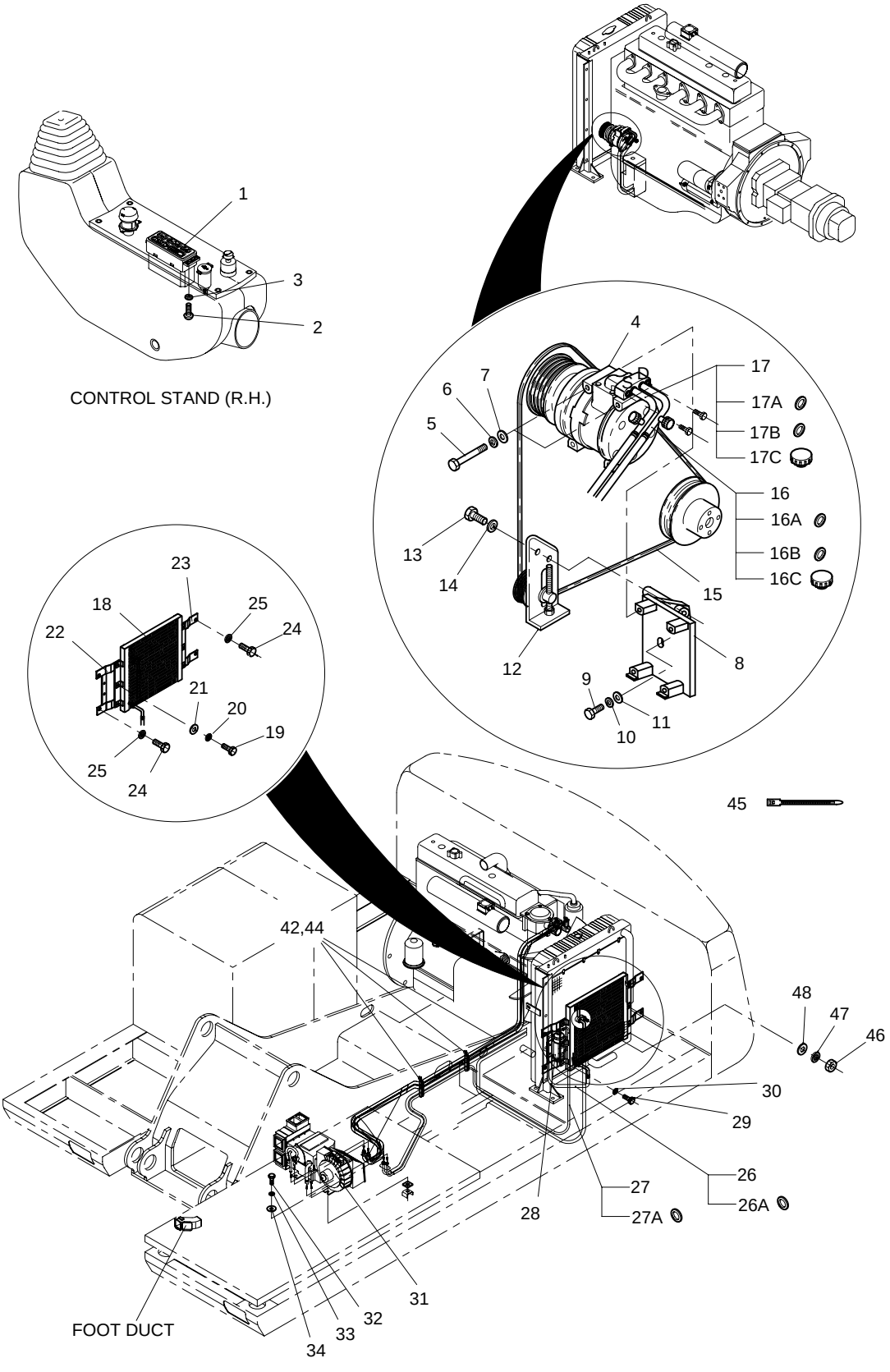

DATE	DEC. 15, 2006
REV. NO.	EXB06-13

Fig. 1760 AIRCONDITIONER(1) REFRIGERATION

Serial No. ;

Key No.	Part No.	Description	Description	Q'ty	S.C	Serial No.	ICA	Replaceable part	
								Part No.	Q'ty
1760-29	S0508653	BOLT M8X1.25X16	BOULON A 6PANS	2					
30	S5102503	WASHER;SPRING M8	RONDELLE ELASTIQUE	2					
31	920-00020B	UNIT;AIRCON	UNITE D'AIRCON	1					
32	S0509053	BOLT M8X1.25X25	BOULON A 6PANS	6					
33	S5102503	WASHER;SPRING M8	RONDELLE ELASTIQUE	6					
34	2114-1058D29	WASHER D26/D9	RONDELLE	6					
42	124-00208D7	CLIP D44/M8	CLIP	3					
44	120-00276	BOLT M8X1.25	BOULON	3					
45	2124-1622D3	CLIP;BAND L280	CLIP	10					
46	S4012333	NUT M6X1.0	ECROU	1					
47	S5102303	WASHER;SPRING M6	RONDELLE ELASTIQUE M6	1					
48	S5010313	WASHER;PLAIN M6	RONDELLE	1					

DATE	JUN. 30, 2004
REV. NO.	EXB04-04

Fig. 1770 AIRCONDITIONER(2)-AIRCON UNIT REFRIGERATION

Serial No. ;

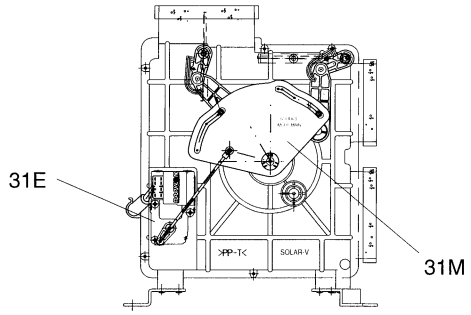

VIEW **A**

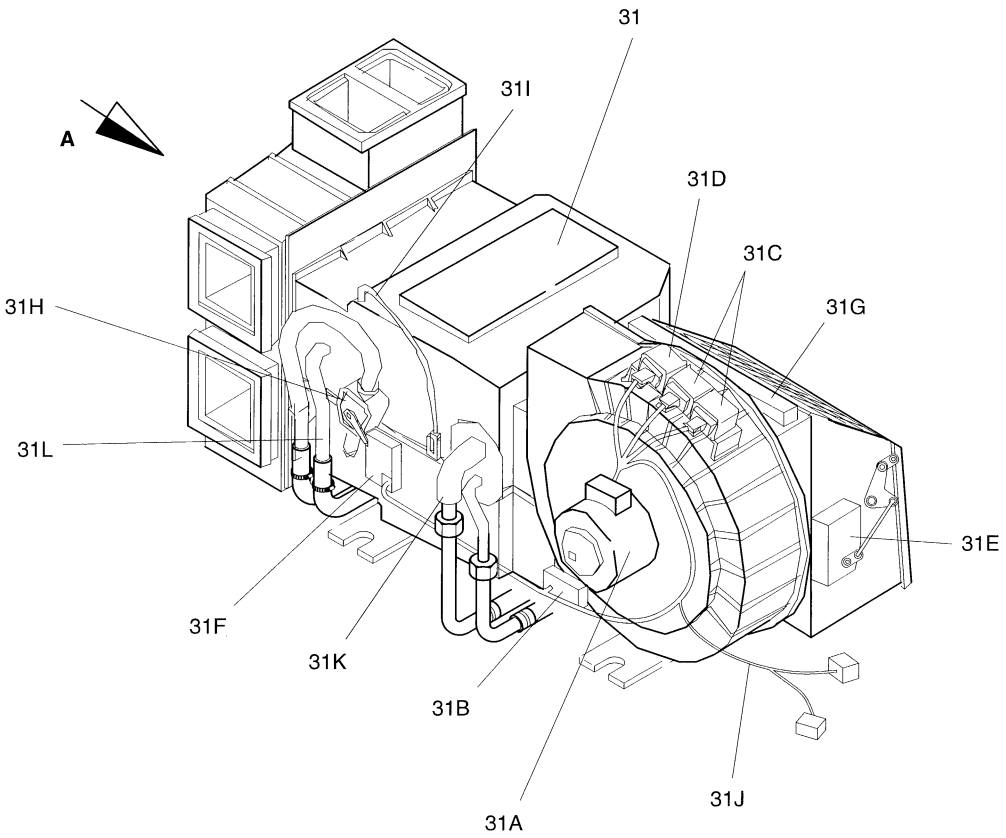

DATE	JUN. 30, 2004
REV. NO.	EXB04-04

Fig. 1770 AIRCONDITIONER(2)-AIRCON UNIT REFRIGERATION

Serial No ;

Key No.	Part No.	Description	Description	Q'ty	S.C	Serial No.	ICA	Replaceable part	
								Part No.	Q'ty
1770--	920-00083	COOLER & HEATER PIPING	REFRIGERATION	-	D				
31	920-00020B	UNIT;AIRCON	UNITE D'AIRCON	1					
31A	2538-6015	. MOTOR;BLOWER 24V	. MOTEUR	1					
31B	545-00003	. RESISTOR;BLOWER	. RESISTOR	1					
31C	2544-6023	. RELAY 10A	. RELAIS DEMARREUR	2					
31D	2544-6024	. RELAY 20A	. RELAIS DEMARREUR	1					
31E	2538-6016	. MOTOR;INTAKE 24V	. MOTEUR	2					
31F	2538-6017	. MOTOR;MIX 12V	. MOTEUR	1					
31G	2471-6050A	. FILTER;AIRCON	. FILTRE	1					
31H	2426-6048	. VALVE;STEM	. VANNE	1					
31I	2547-6033	. SENSOR;TEMPERATURE	. CAPTEUR REGIME	1					
31J	2530-6005A	. HARNESS;AIRCON UNIT	. HARNAIS	1					
31K	2920-6111	. EVAPORATOR	. CHAUFFAGE	1					
31L	2920-6112	. HEATER CORE	. CHAUFFAGE	1					
31M	133-00161	. MAIN LEVER	. LEVIER	1					

DATE	AUG. 12, 2002
1st EDITION	

Fig. 1780 HEATER PIPING
CONDUITES DE CHAUFFAGE

Serial No. ;

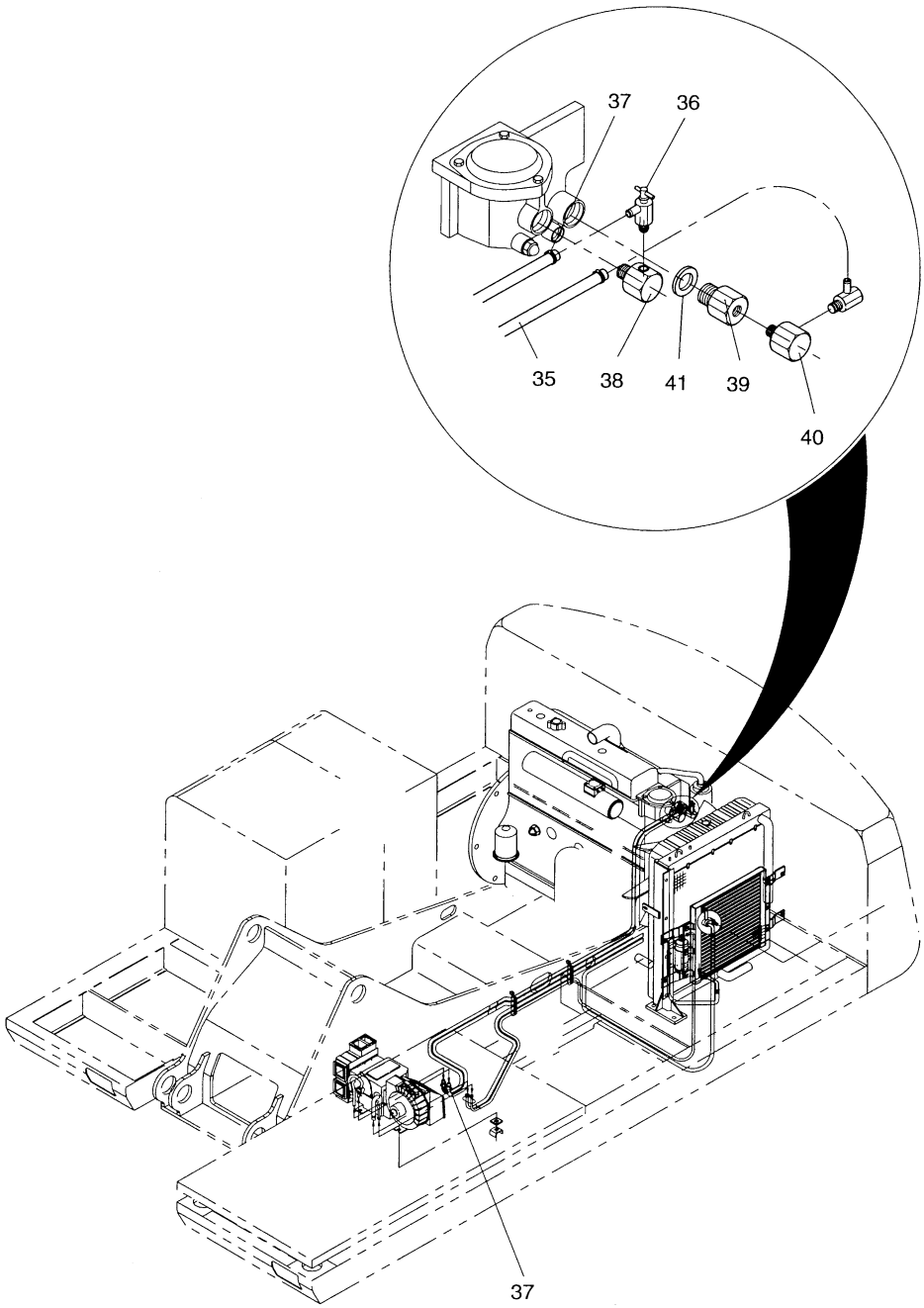

DATE	AUG. 12, 2002
1st EDITION	

Fig. 1780 HEATER PIPING
CONDUITES DE CHAUFFAGE

Serial No. ;

Key No.	Part No.	Description	Description	Q'ty	S.C	Serial No.	ICA	Replaceable part	
								Part No.	Q'ty
1780--	920-00083	COOLER & HEATER PIPING	CONDUITES DE	-	D				
35	2185-1308D5	HOSE;HEATER D30/L3000	TUYAU FLEXIBLE	2					
36	2186-9003	COCK;HEATER PT3/8	VANNE	2					
37	S8450016	CLAMP;HOSE	COLLIER	4					
38	2181-1159	ADAPTER PT3/4-PT3/8	ADAPTEUR	1					
39	2181-1160A	ADAPTER PT3/8	ADAPTEUR	1					
40	2181-1161A	ADAPTER PT3/8-PT3/8	ADAPTEUR	1					
41	S8180411	SEAL;COPPER D33/D25	RONDELLE	1					

DATE	JUN. 30, 2004
REV. NO.	EXB04-04

Fig. 2100 TRACK FRAME
TRAIN DE ROULEMENT

Serial No. ;

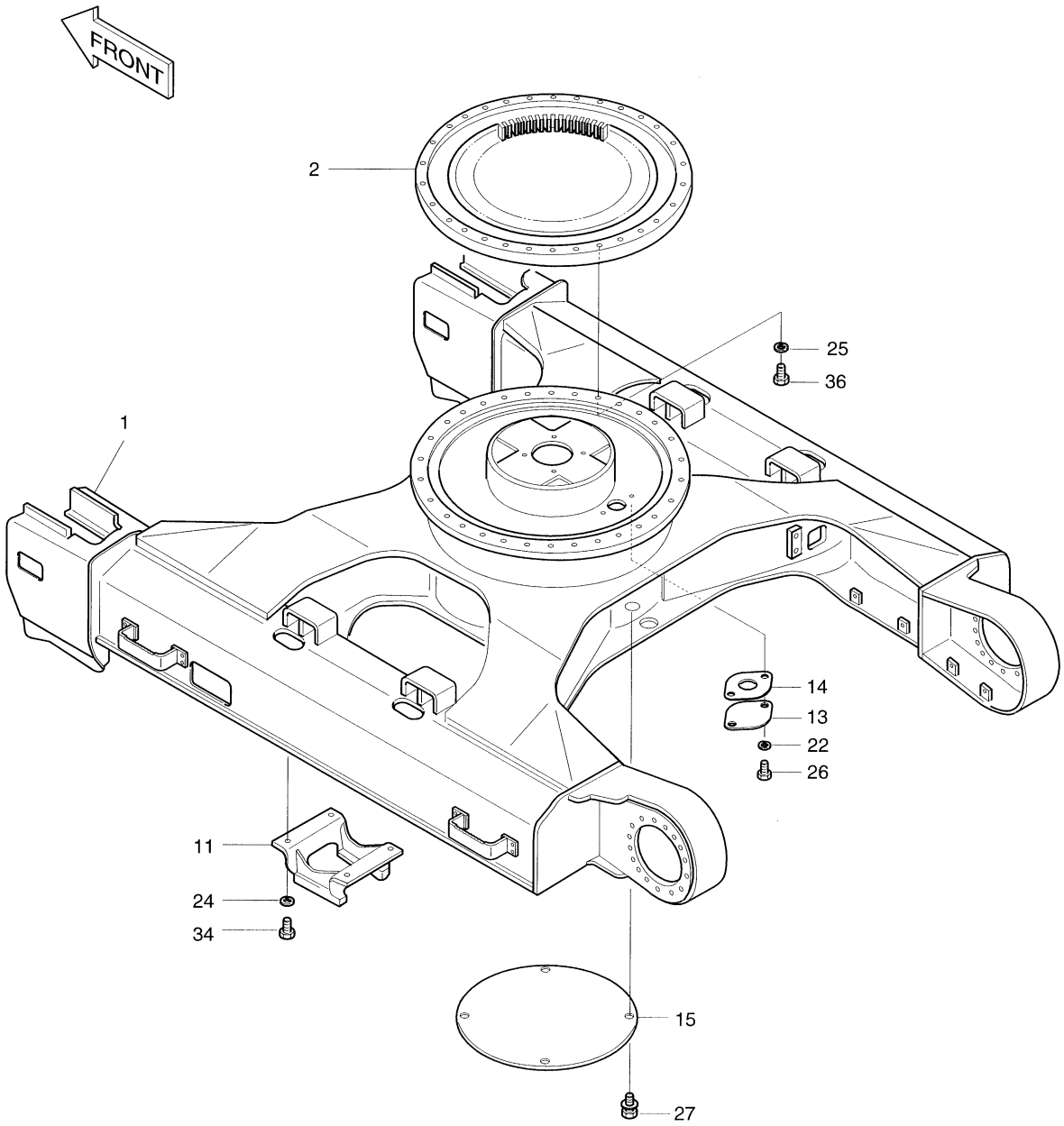

DATE	JUN. 30, 2004
REV. NO.	EXB04-04

Fig. 2100 TRACK FRAME TRAIN DE ROULEMENT

Serial No ;

Key No.	Part No.	Description	Description	Q'ty	S.C	Serial No.	ICA	Replaceable part	
								Part No.	Q'ty
2100--	604-00168	TRACK ASS'Y	TRAIN DE ROULEMENT	-	D				
1	604-00036C	FRAME;TRACK	ARMATURE	1		1001–1231	I	604-00036H	1
	604-00036H	**FRAME;TRACK**	ARMATURE	1		**1232–**			
2	109-00162	BEARING;SWING	PALIER	1					
11	2623-1176B	GUARD;LINK	GARDE A MAILLON	2					
13	2403-1002	PLATE	COUVERCLE	1					
14	2180-1017A	PACKING	RONDELLE ETANCHE	1					
15	2621-1428B	COVER	COUVERCLE	1					
22	S5102603	WASHER;SPRING	RONDELLE ELASTIQUE	2					
24	S5102903	WASHER;SPRING	RONDELLE ELASTIQUE	8					
25	2114-9012	WASHER;HARDEN D22XD38X4t	RONDELLE ELASTIQUE	36					
26	S0511853	BOLT M10X1.5X20	BOULON A 6PANS	2					
27	2120-2196D2	BOLT M10X1.5X25	BOULON A 6PANS	4					
34	S0721461	BOLT M16X1.5X40	BOULON A 6PANS	8		1001–1147	I	S0721466	8
	S0721466	BOLT M16X1.5X40	BOULON A 6PANS	8		1148–			
36	S0770261	BOLT M20X1.5X70	BOULON A 6PANS	36		1001–1147	I	S0770266	36
	S0770266	BOLT M20X1.5X70	BOULON A 6PANS	36		1148–			

DATE	JUN. 30, 2005
REV. NO.	EXB05-05

Fig. 2110 TRAVEL DEVICE
SYSTEME D'TRANSLATION

Serial No. ;

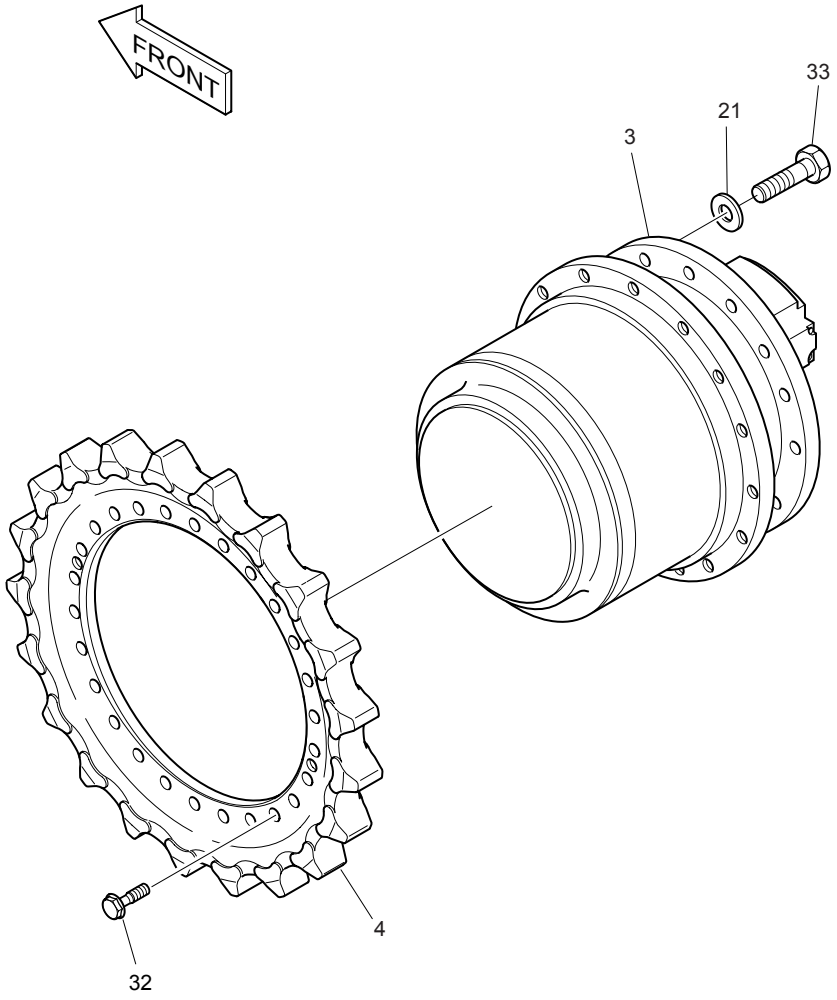

DATE	JUN. 30, 2005
REV. NO.	EXB05-05

Fig. 2110 TRAVEL DEVICE SYSTEME D'TRANSLATION

Serial No ;

Key No.	Part No.	Description	Description	Q'ty	S.C	Serial No.	ICA	Replaceable part	
								Part No.	Q'ty
2110--	604-00168	TRACK ASS'Y	TRAIN DE ROULEMENT	-	D				
3	2401-9287A	MOTOR;TRAVEL	MOTEUR	2		1001–1114	I	401-00454	2
	401-00454	MOTOR;TRAVEL	MOTEUR	2		1115–1191	I	401-00454A	2
	401-00454A	MOTOR;TRAVEL	MOTEUR	2		1192–1325	I	401-00454B	2
	401-00454B	**MOTOR;TRAVEL**	MOTEUR	2		**1326–1993**	I	401-00454C	2
	401-00454C	**MOTOR;TRAVEL**	MOTEUR	2		**1994–**			
4	108-00017A	SPROCKET	COURONNE DENTEE	2		1001–1147	I	108-00017B	2
	108-00017B	SPROCKET	COURONNE DENTEE	2		1148–			
21	2114-1816A	WASHER;HARD	RONDELLE	60					
32	120-00050A	BOLT;FLANGE	BOULON	60		1001–1147	I	120-00050B	60
	120-00050B	BOLT;FLANGE	BOULON	60		1148–			
33	S0565666	BOLT M16X2.0X70	BOULON A 6PANS	60					

DATE	JUN. 30, 2006
REV. NO.	EXB06-08

Fig. 2120 IDLER BARBOTIN

Serial No. ;

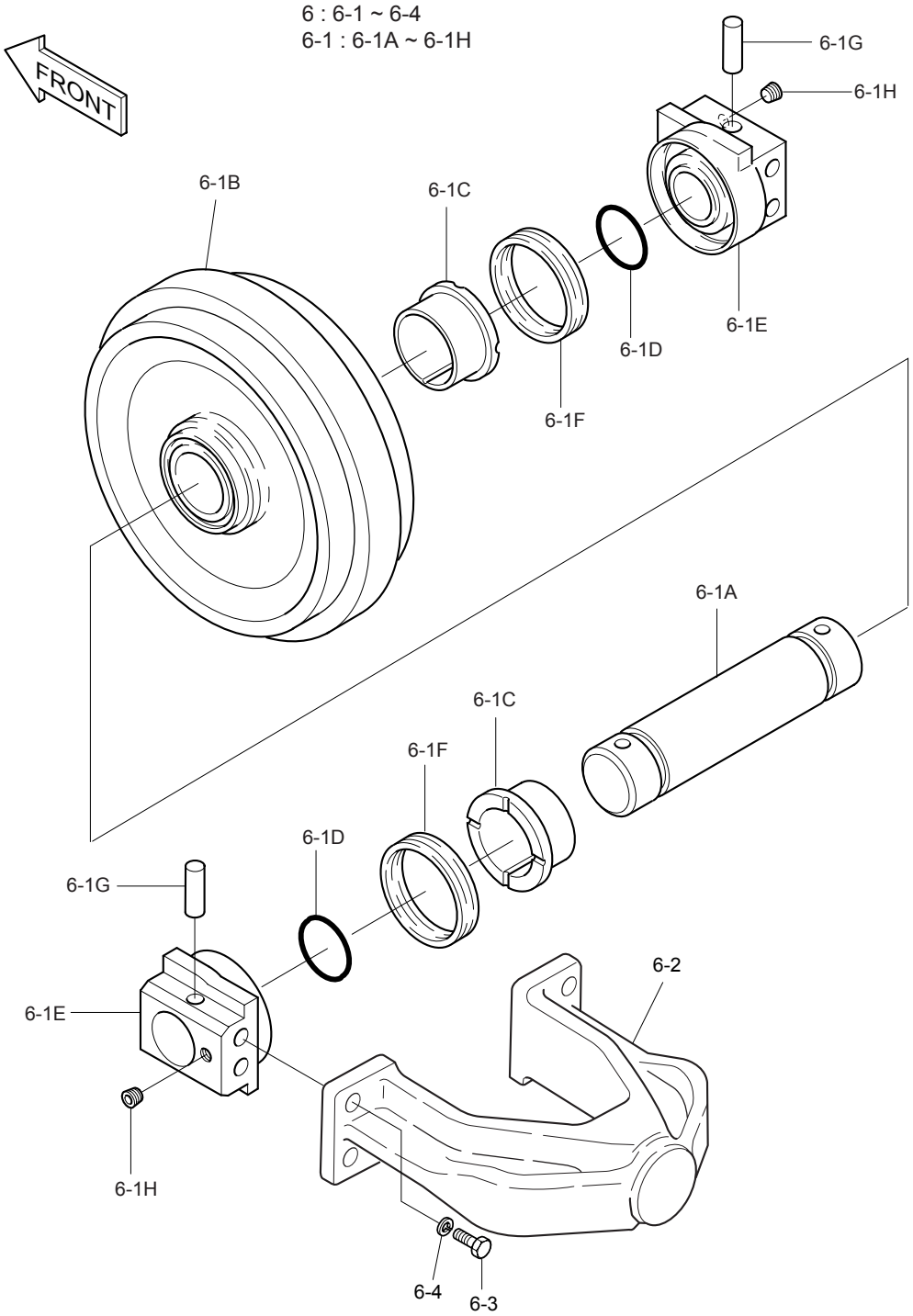

DATE	JUN. 30, 2006
REV. NO.	EXB06-08

Fig. 2120 IDLER BARBOTIN

Serial No. ;

Key No.	Part No.	Description	Description	Q'ty	S.C	Serial No.	ICA	Replaceable part	
								Part No.	Q'ty
2120--	**604-00168A**	**TRACK ASS'Y**	TRAIN DE ROULEMENT	-	D				
6	2270-1108A	IDLER ASS'Y	ENSEMBLE BARBOTIN	2		1001–2219	I	2270-1108B	2
	2270-1108B	**IDLER ASS'Y**	ENSEMBLE BARBOTIN	2		**2220**–			
6-1	2270-6098	IDLER ASS'Y	ENSEMBLE BARBOTIN	2		1001–2219	I	2270-6098A	2
	2270-6098A	**IDLER ASS'Y**	ENSEMBLE BARBOTIN	2		**2220**–			
6-1A	2220-1013	. AXLE	. AXE	1					
6-1B	2270-1063	. IDLER;BODY	. BARBOTIN	1					
6-1C	2110-1013A	. BUSHING	. MANCHON	2		1001–2219	I	K1014428	2
	K1014428	**. BUSHING**	. MANCHON	2		**2220**–			
6-1D	S8010700	. O-RING	. JONT TORIQUE	2					
6-1E	2271-1004	. BEARING	. SUPPORT	2					
6-1F	2180-9020	. SEAL;GROUP	. ETANCHEITE	2					
6-1G	2123-1011	. PIN	. GOUPILLE	2					
6-1H	2181-1116D2	. PLUG	. BOUCHON	2					
6-2	2157-1023	YOKE	ETRIER	1					
6-3	S0721451	BOLT M16X1.5X40	BOULON A 6PANS	4		1001–1147	I	S0721456	4
	S0721456	BOLT M16X1.5X40	BOULON A 6PANS	4		1148–			
6-4	S5102901	WASHER;SPRING	RONDELLE ELASTIQUE	4					

DATE	DEC. 30, 2004
REV. NO.	EXB04-09

Fig. 2130 TRACK SPRING
TENDEUR DE CHENILLE

Serial No. ; 1001 ~ 1399

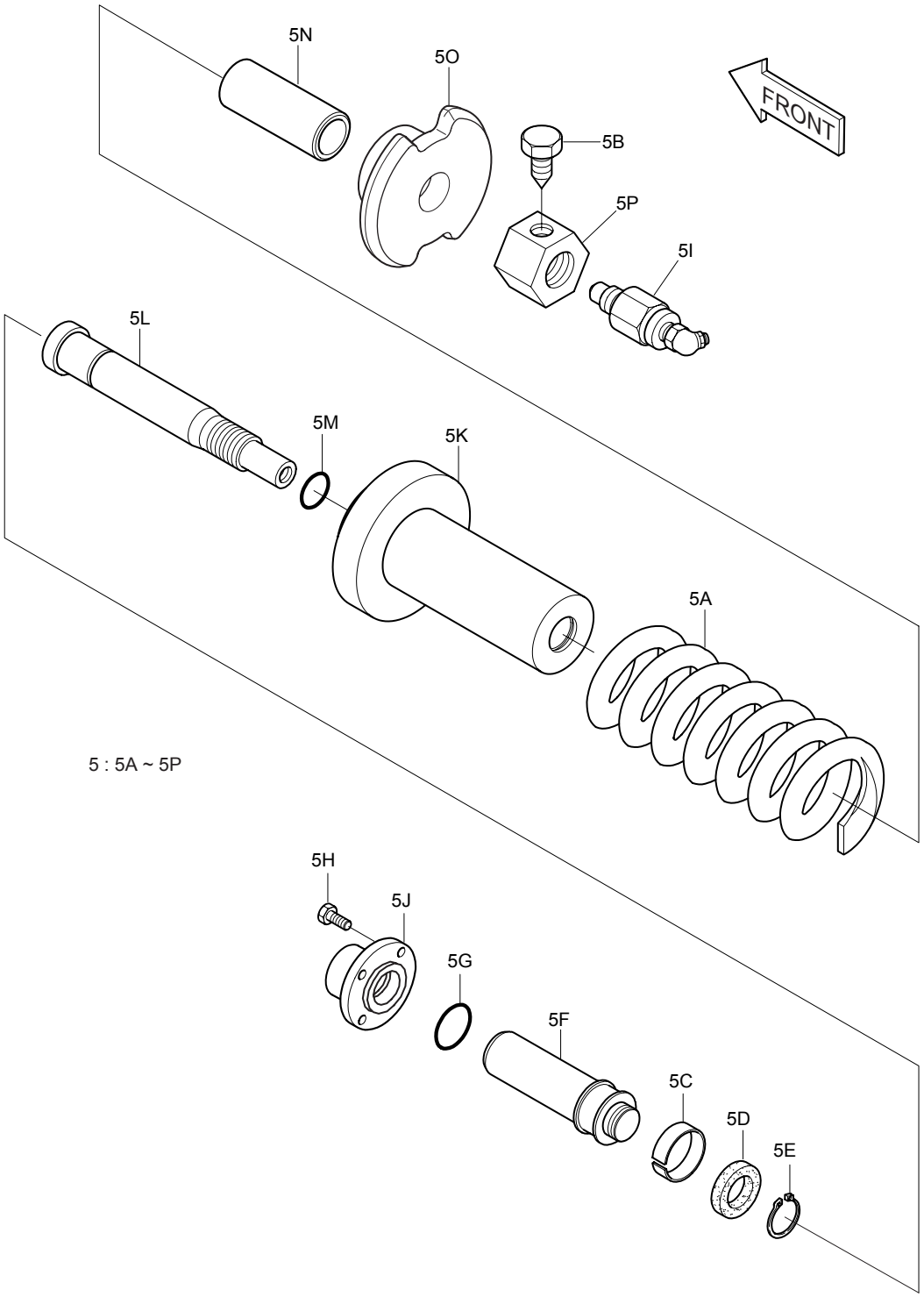

DATE	DEC. 30, 2004
REV. NO.	EXB04-09

Fig. 2130 TRACK SPRING
TENDEUR DE CHENILLE

Serial No ; 1001 ~ 1399

Key No.	Part No.	Description	Description	Q'ty	S.C	Serial No.	ICA	Replaceable part	
								Part No.	Q'ty
2130--	604-00168	TRACK ASS'Y	TRAIN DE ROULEMENT	-	D				
5	2274-1025E	TRACK SPRING ASS'Y	ENSEMBLE TENDEUR DE	2		1001–1399	I	274-00011	2
5A	2129-1236	. SPRING;TRACK	. RESSORT	1					
5B	2120-1105	. BOLT M10X1.25	. BOULON A 6PANS	1					
5C	2411-1001	. RING;PISTON	. SEGMENT DE PISTON	1	K				
5D	2180-9001	. U-PACKING	. JOINT	1	K				
5E	S6500400	. RING;RETAINING	. BAGUE	1					
5F	2409-1010	. ROD;PISTON	. TIGE	1					
5G	S8010551	. O-RING 1BG55	. JONT TORIQUE	1	K				
5H	S2212066	. BOLT;SOCKET M10X1.5X25	. BOULON DE PLOT	4					
5I	2420-1242A	. VALVE	. ENSEMBLE CLAPET	1					
5J	2181-1618	. FLANGE	. BRIDE	1					
5K	2440-1055B	. CYLINDER	. CYLINDRE	1					
5L	2444-1015A	. ROD	. TIGE	1					
5M	2180-1026D21	. O-RING	. JONT TORIQUE	1	K				
5N	2114-1369	. SPACER	. BAGUE D'ECARTEMENT	1					
5O	2131-1109	. WASHER	. RONDELLE	1					
5P	2121-1208	. NUT M45X2.0	. ECROU	1					
*	2274-1008BKT	SEAL KIT;TRACK SPRING	KIT D'ETANCHEITE	1					

DATE	DEC. 30, 2004
REV. NO.	EXB04-09

Fig. 2131 TRACK SPRING
TENDEUR DE CHENILLE

Serial No. ; 1400 ~

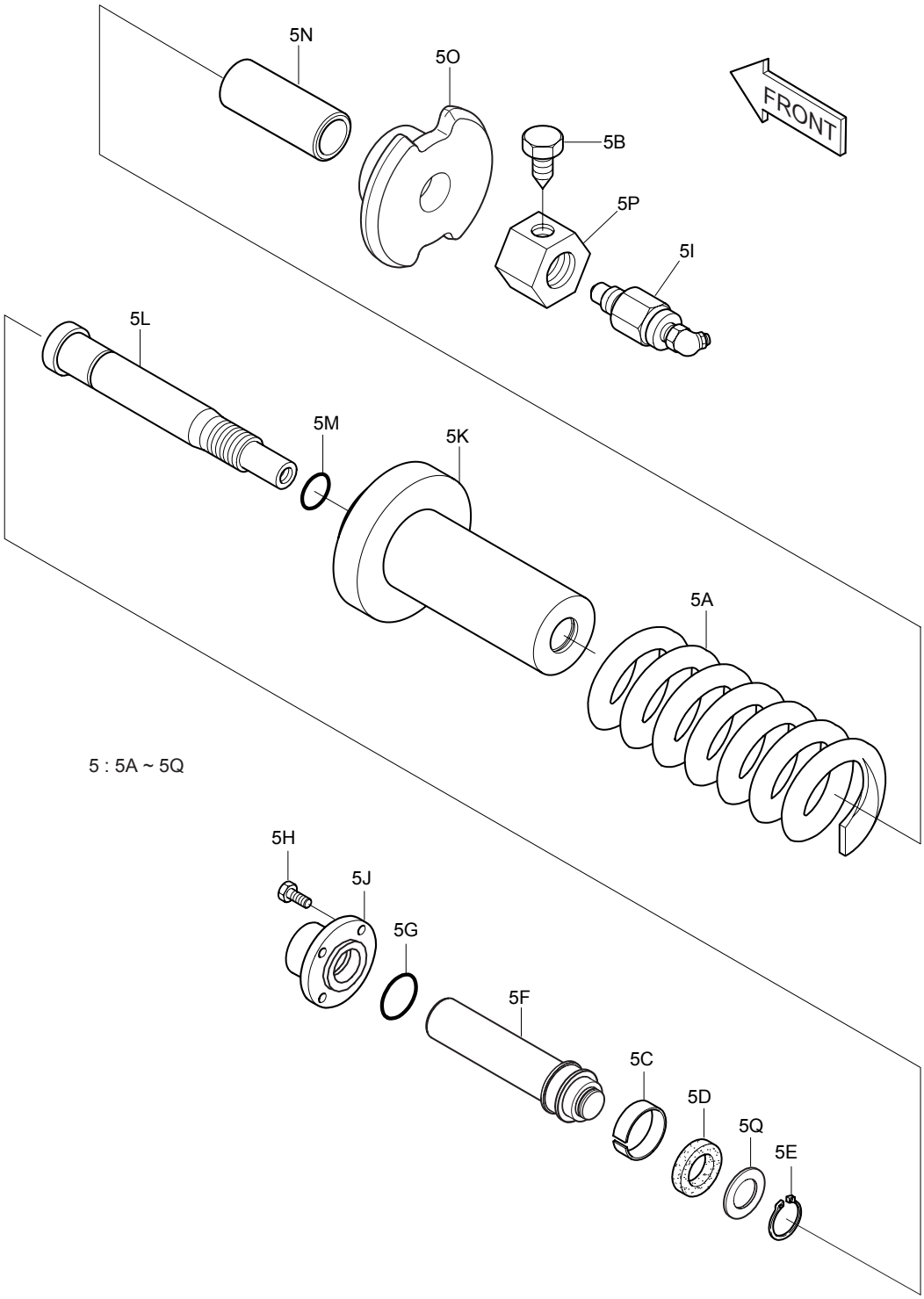

DATE	DEC. 30, 2004
REV. NO.	EXB04-09

Fig. 2131 TRACK SPRING TENDEUR DE CHENILLE

Serial No ; 1400 ~

Key No.	Part No.	Description	Description	Q'ty	S.C	Serial No.	ICA	Replaceable part	
								Part No.	Q'ty
2131--	604-00168	TRACK ASS'Y	TRAIN DE ROULEMENT	-	D				
5	274-00011	TRACK SPRING ASS'Y	ENSEMBLE TENDEUR DE	2		1400–			
5A	2129-1236	. SPRING;TRACK	. RESSORT	1					
5B	2120-1105	. BOLT M10X1.25	. BOULON A 6PANS	1					
5C	2411-1001	. RING;PISTON	. SEGMENT DE PISTON	1	K				
5D	180-00465	. U-PACKING	. JOINT	1	K				
5E	S6500400	. RING;RETAINING	. BAGUE	1					
5F	444-00010	. ROD;PISTON	. TIGE	1					
5G	S8010551	. O-RING 1BG55	. JONT TORIQUE	1	K				
5H	S2212066	. BOLT;SOCKET M10X1.5X25	. BOULON DE PLOT	4					
5I	2420-1242A	. VALVE	. ENSEMBLE CLAPET	1					
5J	2181-1618	. FLANGE	. BRIDE	1					
5K	2440-1055B	. CYLINDER	. CYLINDRE	1					
5L	2444-1015A	. ROD	. TIGE	1					
5M	2180-1026D21	. O-RING	. JONT TORIQUE	1	K				
5N	2114-1369	. SPACER	. BAGUE D'ECARTEMENT	1					
5O	2131-1109	. WASHER	. RONDELLE	1					
5P	2121-1208	. NUT M45X2.0	. ECROU	1					
5Q	621-03020	. PLATE	. PLAQUE	1					
*	K9000480	SEAL KIT;TRACK SPRING	KIT D'ETANCHEITE	1					

DATE	AUG. 12, 2002
1st EDITION	

Fig. 2140 UPPER ROLLER GALET SUPERIEUR

Serial No. ;

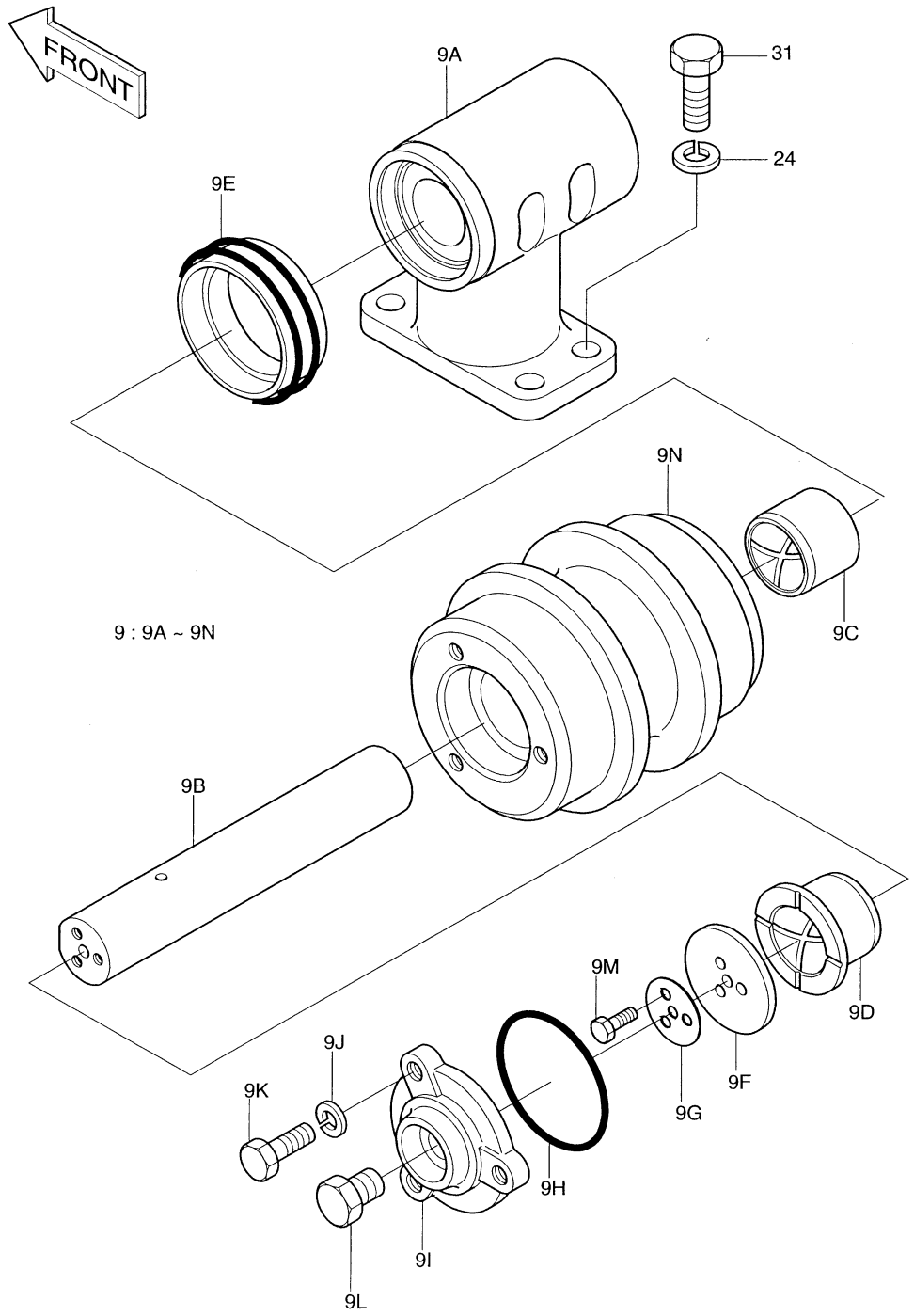

DATE	AUG. 12, 2002
1st EDITION	

Fig. 2140 UPPER ROLLER GALET SUPERIEUR

Serial No. ;

Key No.	Part No.	Description	Description	Q'ty	S.C	Serial No.	ICA	Replaceable part	
								Part No.	Q'ty
2140--	604-00168	TRACK ASS'Y	TRAIN DE ROULEMENT	-	D				
9	2270-1005E	ROLLER;UPPER	GALET SUPERIEUR	4					
9A	2271-1002A	. BRACKET	. SUPPORT	1					
9B	2112-1004A	. SHAFT	. ARBRE	1					
9C	2110-1005	. BUSHING	. MANCHON	1					
9D	2110-1004	. BUSHING	. MANCHON	1					
9E	2180-9021	. SEAL;GROUP	. ETANCHEITE	1					
9F	2114-1019A	. WASHER	. RONDELLE	1					
9G	2116-1007	. PLATE;LOCK	. RONDELLE FREIN	1					
9H	2180-1026D3	. O-RING	. JONT TORIQUE	1					
9I	2229-1003A	. COVER	. COUVERCLE	1					
9J	S5102702	. WASHER;SPRING	. RONDELLE ELASTIQUE	3					
9K	S0715351	. BOLT M8X1.25X35	. BOULON A 6PANS	3					
9L	2181-1133	. PLUG	. BOUCHON	1					
9M	S0508861	. BOLT M8X1.25X20	. BOULON A 6PANS	3					
9N	2270-1001B	. ROLLER	. GALET	1					
24	S5102903	WASHER;SPRING	RONDELLE ELASTIQUE	16					
31	S0521356	BOLT	BOULON A 6PANS	16					

DATE	DEC. 22, 2003
REV. NO.	EXB03-15

Fig. 2150 LOWER ROLLER
GALET INFERIEUR

Serial No. ;

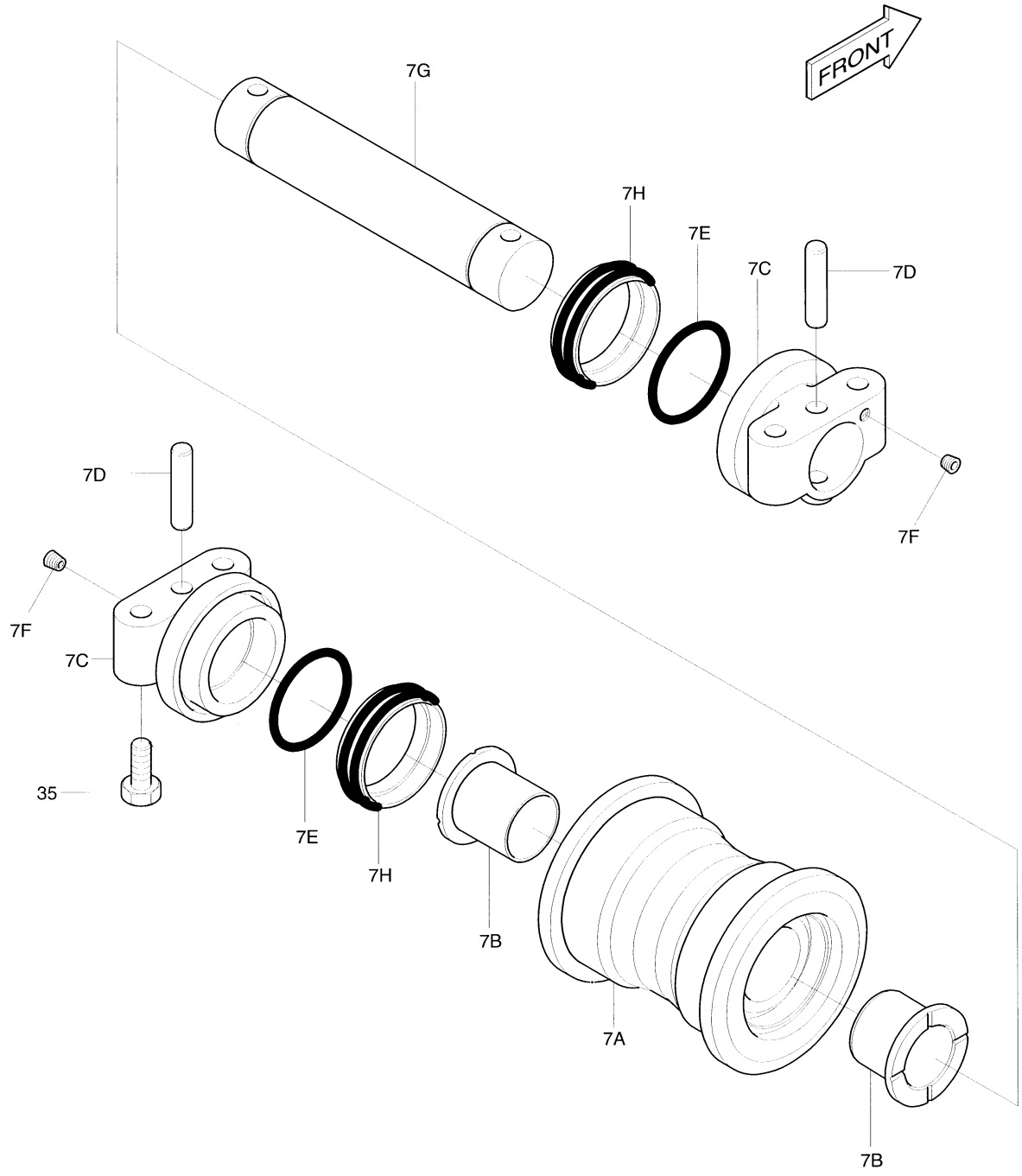

DATE	DEC. 22, 2003
REV. NO.	EXB03-15

Fig. 2150 LOWER ROLLER GALET INFERIEUR

Serial No ;

Key No.	Part No.	Description	Description	Q'ty	S.C	Serial No.	ICA	Replaceable part	
								Part No.	Q'ty
2150--	604-00168	TRACK ASS'Y	TRAIN DE ROULEMENT	-	D				
7	2270-1098A	ROLLER;LOWER	GALET INFERIEUR	18					
7A	2270-1099A	. BODY;ROLLER	. GALET	1					
7B	2110-1303	. BUSHING	. MANCHON	2					
7C	2271-1037A	. COLLAR	. BRIDE	2					
7D	2123-1719	. PIN	. BROCHE	2					
7E	S8010650	. O-RING	. JONT TORIQUE	2					
7F	2181-1116D2	. PLUG	. BOUCHON	2					
7G	2220-1028A	. AXLE	. AXE	1					
7H	2180-9149A	. SEAL;GROUP	. JOINT	2					
35	S0766061	BOLT M16X1.5X90	BOULON A 6PANS	72		1001-1147	I	S0766066	72
	S0766066	**BOLT M16X1.5X90**	BOULON A 6PANS	72		**1148-**			

DATE	AUG. 12, 2002
1st EDITION	

Fig. 2160 TRACK SHOE ASS'Y-600G
MAILLON DE CHAINE

Serial No. ;

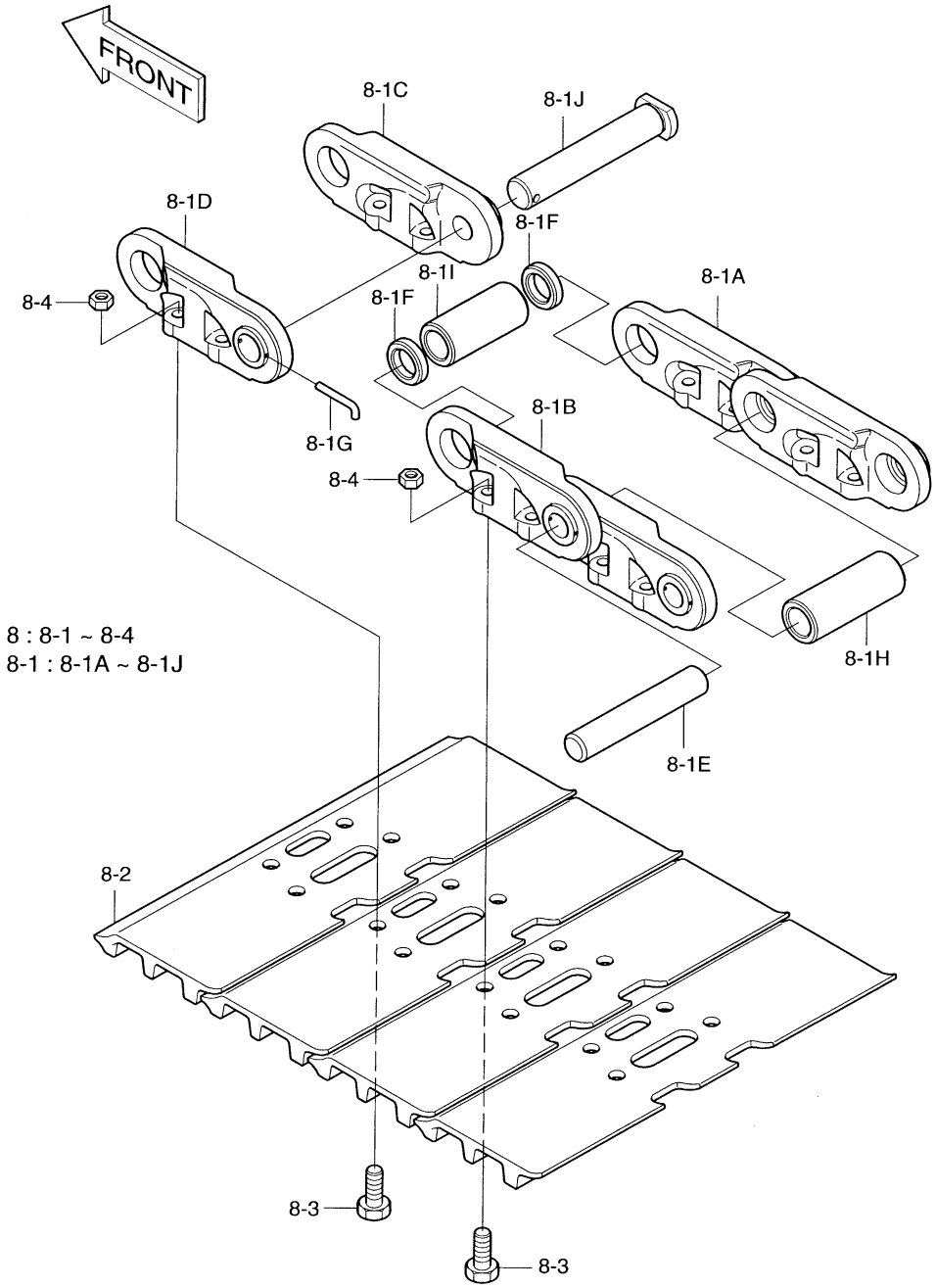

8 : 8-1 ~ 8-4
8-1 : 8-1A ~ 8-1J

DATE	AUG. 12, 2002
1st EDITION	

Fig. 2160 TRACK SHOE ASS'Y-600G MAILLON DE CHAINE

Serial No. ;

Key No.	Part No.	Description	Description	Q'ty	S.C	Serial No.	ICA	Replaceable part	
								Part No.	Q'ty
2160--	604-00168	TRACK ASS'Y	TRAIN DE ROULEMENT	-	D				
8	2272-9032D1	TRACK SHOE ASS'Y	ENSEMBLE MAILLON DE	2					
8-1	2272-6137	. TRACK LINK ASS'Y	. ENSEMBLE MAILLON DE	1					
8-1A	2272-6104R	.. LINK;TRACK(RH)	.. PIECE DE JONCTION	48					
8-1B	2272-6104L	.. LINK;TRACK(LH)	.. PIECE DE JONCTION	48					
8-1C	2272-6105R	.. LINK;MASTER(RH)	.. PIECE DE JONCTION	1					
8-1D	2272-6105L	.. LINK;MASTER(LH)	.. PIECE DE JONCTION	1					
8-1E	2123-6060	.. PIN	.. GOUPILLE	48					
8-1F	2114-6035	.. SPACER	.. ENTERTOISE	2					
8-1G	2123-6062	.. PIN;SMALL	.. GOUPILLE	1					
8-1H	2110-6051	.. BUSHING	.. DOUILLE	48					
8-1I	2110-6052	.. BUSHING;MASTER	.. MANCHON	1					
8-1J	2123-6061	.. PIN;MASTER	.. BROCHE	1					
8-2	2273-6040D1	. SHOE 600mm	. SABOT	49					
8-3	2120-6017	. BOLT	. BOULON A 6PANS	196					
8-4	2121-6017	. NUT	. ECROU	196					

DATE	AUG. 12, 2002
1st EDITION	

Fig. 2170 CENTER JOINT
JOINT CENTRAL

Serial No. ;

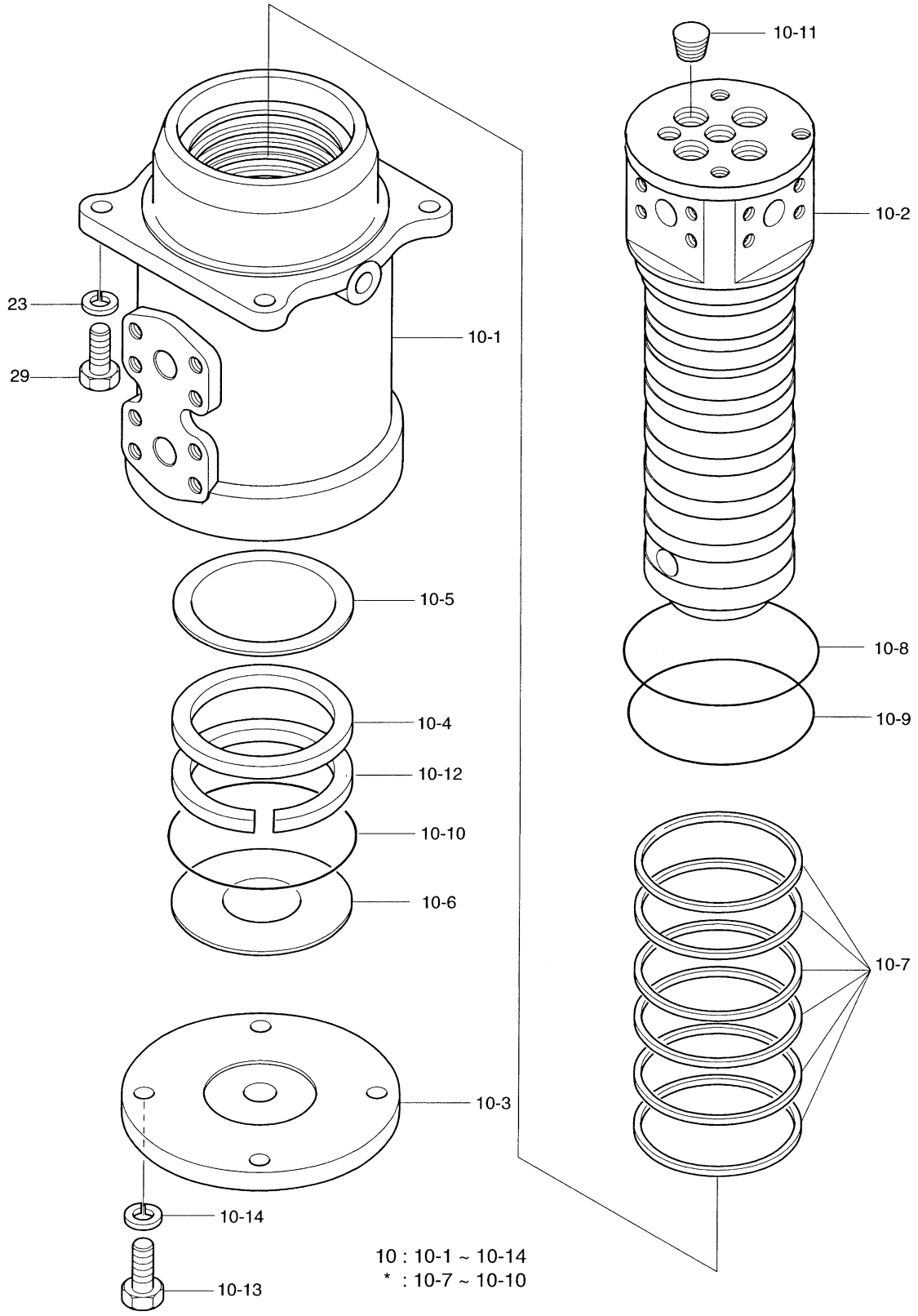

DATE	AUG. 12, 2002
1st EDITION	

Fig. 2170 CENTER JOINT
JOINT CENTRAL

Serial No. ;

Key No.	Part No.	Description	Description	Q'ty	S.C	Serial No.	ICA	Replaceable part	
								Part No.	Q'ty
2170--	604-00168	TRACK ASS'Y	TRAIN DE ROULEMENT	-	D				
10	2480-6043	CENTER JOINT	JOINT TOURNANT	1					
10-1	2480-6002	. BODY	. CARTER	1					
10-2	2481-6007	. SPINDLE	. TOUPIE	1					
10-3	2482-6002	. COVER	. COUVERCLE	1					
10-4	SJD-100-40	. SPACER	. PLAQUE D'ANCRAGE	1					
10-5	SJD-100-50	. SHIM	. CALE	1					
10-6	SJD-100-60	. SHIM	. CALE	1					
10-7	SJD-100-70	. SEAL;SLIPPER	. JOINT	6	K				
10-8	SJD-100-80	. O-RING 1AP-120	. JONT TORIQUE	1	K				
10-9	SJD-100-90	. O-RING 1BP-100	. JONT TORIQUE	1	K				
10-10	SJD-100-100	. O-RING 1BG-120	. JONT TORIQUE	1	K				
10-11	SJD-100-110	. PLUG PT3/4	. BOUCHON	4					
10-12	SJD-100-120	. RING;RETAINING	. BOUCHON	1					
10-13	SJD-100-130	. BOLT M12X1.75X30	. BOULON A 6PANS	4					
10-14	SJD-100-140	. WASHER;SPRING M12	. RONDELLE ELASTIQUE	4					
23	S5102703	WASHER;SPRING	RONDELLE ELASTIQUE	4					
29	S0515353	BOLT	BOULON A 6PANS	4					
*	2480-6043KT	SEAL KIT;CENTER JOINT	KIT DE JOINTS	1	S				

DATE	AUG. 12, 2002
1st EDITION	

Fig. 2180 TRAVEL PIPING COVER COUVERCLE DE TRANSLATION

Serial No. ;

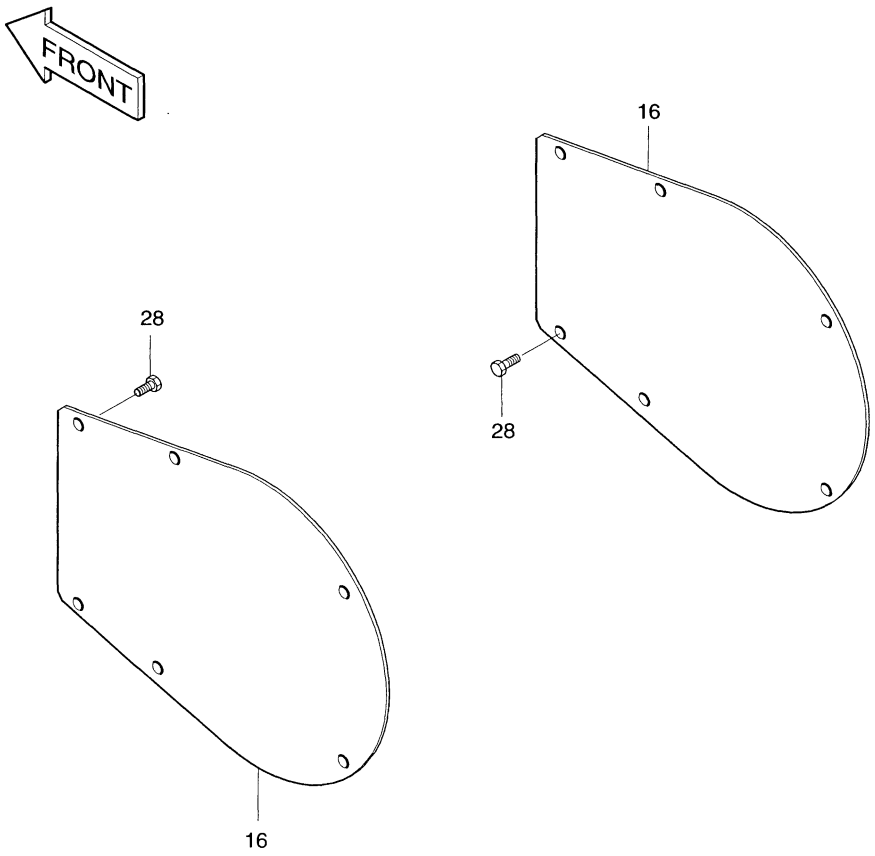

DATE	AUG. 12, 2002
1st EDITION	

Fig. 2180 TRAVEL PIPING COVER
COUVERCLE DE TRANSLATION

Serial No. ;

Key No.	Part No.	Description	Description	Q'ty	S.C	Serial No.	ICA	Replaceable part	
								Part No.	Q'ty
2180--	604-00168	TRACK ASS'Y	TRAIN DE ROULEMENT	-	D				
16	621-02074	COVER	COUVERCLE	2					
28	2120-2196D10	BOLT;SET	BOULON A 6PANS	12					

DATE	DEC. 29, 2005
REV. NO.	EXB05-20

Fig. 2190 TRAVEL PIPING
CONDUITES DE TRANSLATION

Serial No. ;

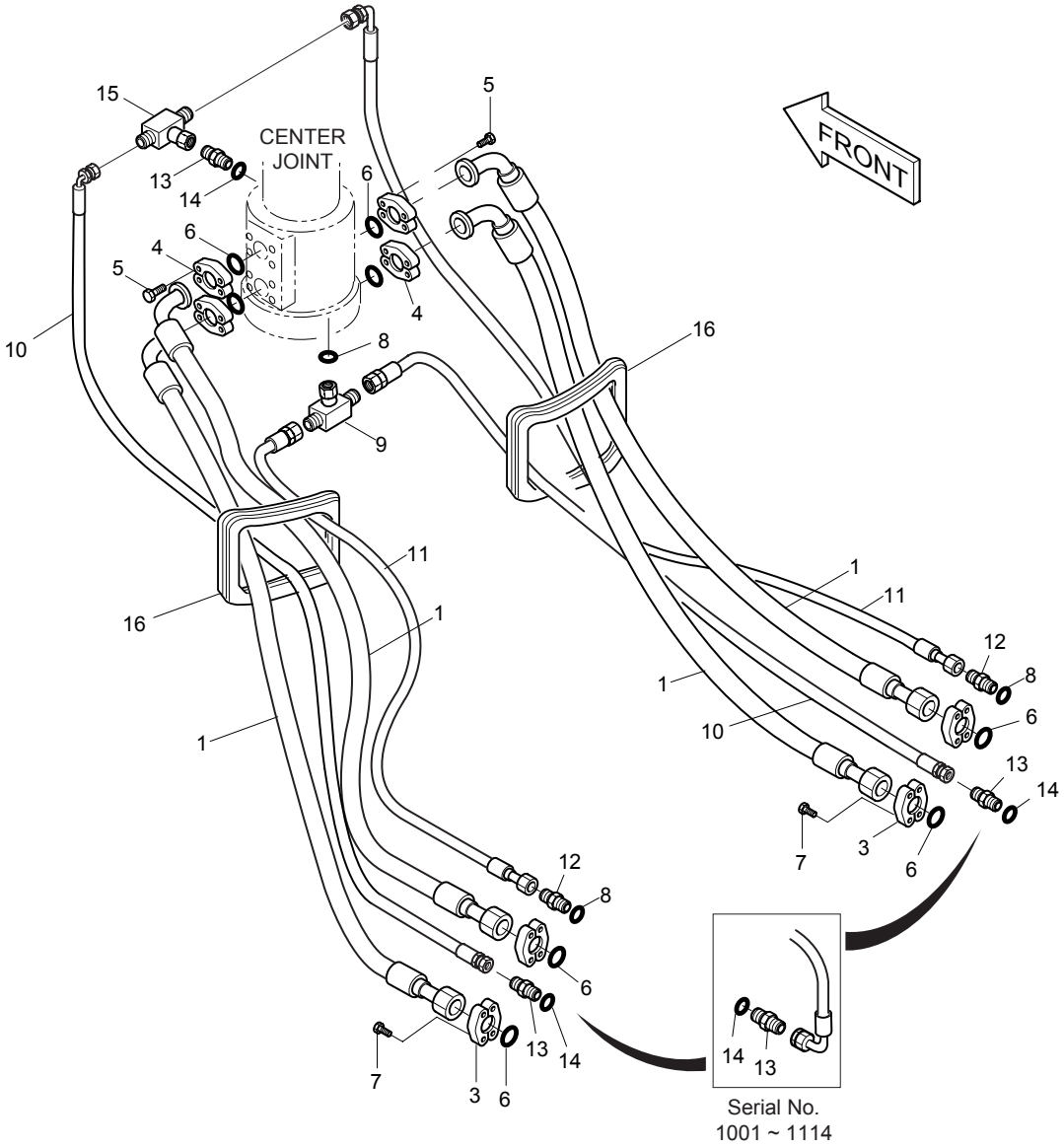

DATE	DEC. 29, 2005
REV. NO.	EXB05-20

Fig. 2190 TRAVEL PIPING
CONDUITES DE TRANSLATION

Serial No ;

Key No.	Part No.	Description	Description	Q'ty	S.C	Serial No.	ICA	Replaceable part	
								Part No.	Q'ty
2190--	400-01065	TRAVEL PIPING	CONDUITES DE	-	D	1001–2079			
	400-01065A	**TRAVEL PIPING**	CONDUITES DE	-	D	**2080–**			
1	2184-1098D56	HOSE	TUYAU FLEXIBLE	4		1001–2079	I	DS2039083	4
	DS2039083	**HOSE**	TUYAU FLEXIBLE	4		**2080–**			
3	2181-9078	FLANGE;SPLIT 1"-5000psi	BRIDE	8					
4	2181-9081	FLANGE;SPLIT 1"-6000psi	BRIDE	8					
5	S2215466	BOLT;SOCKET M12X1.75X35	BOULON DE PLOT	16					
6	2180-1026D19	O-RING SAE1	JONT TORIQUE	8					
7	S2212266	BOLT;SOCKET M10X1.5X30	BOULON DE PLOT	16					
8	S8000181	O-RING 1BP-8	JONT TORIQUE	3					
9	2181-2281D10	TEE 3-PF1/2	TE	1					
10	2184-1076D103	HOSE PF1/4-2700L	TUYAU FLEXIBLE	2		1001–1114			
	DS2054022	HOSE PF1/4-2600L	TUYAU FLEXIBLE	2		1115–1166			
	DS2054016	HOSE PF1/4-2400L	TUYAU FLEXIBLE	2		1167–			
11	2184-1070D47	HOSE	TUYAU FLEXIBLE	2					
12	2181-1126D6	ADAPTER PF1/2-PF1/2	ADAPTEUR	2					
13	2181-1126D14	ADAPTER	ADAPTEUR	3					
14	S8000111	O-RING 1BP-11	JONT TORIQUE	3					
15	2181-4125	TEE 1/4	TE	1					
16	2160-4003	BUSHING;RUBBER	GARNISSAGE	4					

DATE	DEC. 15, 2006
REV. NO.	EXB06-13

Fig. 3100 BOOM-5.7m ENSEMBLE FLEHCE

Serial No. ;

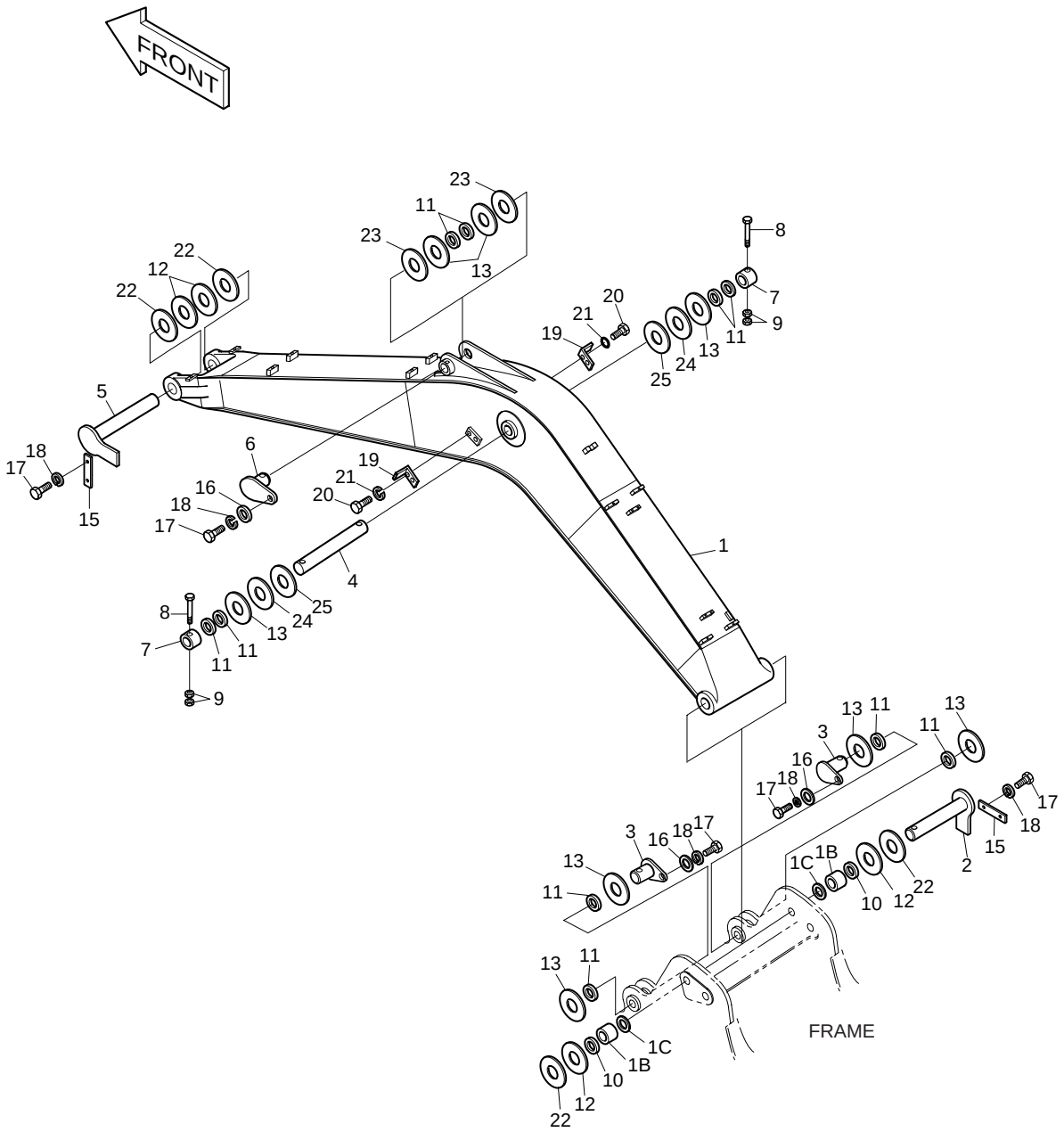

DATE	DEC. 15, 2006
REV. NO.	EXB06-13

Fig. 3100 BOOM-5.7m ENSEMBLE FLECHE

Serial No. ;

Key No.	Part No.	Description	Description	Q'ty	S.C	Serial No.	ICA	Replaceable part	
								Part No.	Q'ty
3100--	2701-1413A	BOOM ASS'Y-5.7m	ENSEMBLE FLECHE	-	D				
1	2701-1414N	BOOM SUB ASS'Y-5.7m	FLECHE	1		1001–2939	I	2701-1414P	1
	2701-1414P	**BOOM SUB ASS'Y-5.7m**	FLECHE	1		**2940–**			
1B	2110-1315A	. BUSHING	. MANCHON	2					
1C	2180-1106BD6	. SEAL;DUST	. PARE-POUSSIERES	2					
2	2123-2180E	PIN	GOUJON	1					
3	123-00409	PIN	GOUPILLE	2					
4	2123-2184C	PIN	GOUJON	1					
5	2123-2185E	PIN	GOUJON	1					
6	2123-2187C	PIN	GOUJON	1					
7	2116-1531A	STOPPER	TAQUET D'ARRET	2					
8	S0567066	BOLT M16X2.0X150	BOULON A 6PANS	2					
9	S4012933	NUT M16X2.0	ECROU	4					
10	2180-1106BD6	SEAL;DUST	PARE-POUSSIERES	2					
11	2180-1106BD24	SEAL;DUST	PARE-POUSSIERES	10					
12	114-00001D5	SHIM	CALE	4	R				
13	2114-1059D63	SHIM	CALE	8	R				
15	2116-1514A	PLATE;STOPPER	PLAQUE	2					
16	2116-1060D6	STOPPER	TAQUET D'ARRET	3					
17	S0521366	BOLT M16X2.0X35	BOULON A 6PANS	7					
18	S5102903	WASHER;SPRING	RONDELLE ELASTIQUE	7					
19	2195-2394B	BRACKET	SUPPORT	2					
20	S0515053	BOLT M12X1.75X25	BOULON A 6PANS	4					
21	S5102703	WASHER;SPRING	RONDELLE ELASTIQUE	4					
22	114-00001D6	SHIM	CALE	4	R				
23	2114-1059D118	SHIM	CALE	2	R				
24	2114-1059D255	SHIM	CALE	2					
25	2114-1059D256	SHIM	CALE	2					

DATE	DEC. 30, 2004
REV. NO.	EXB04-09

Fig. 3110 ARM-2.9m BALANCIER

Serial No. ;

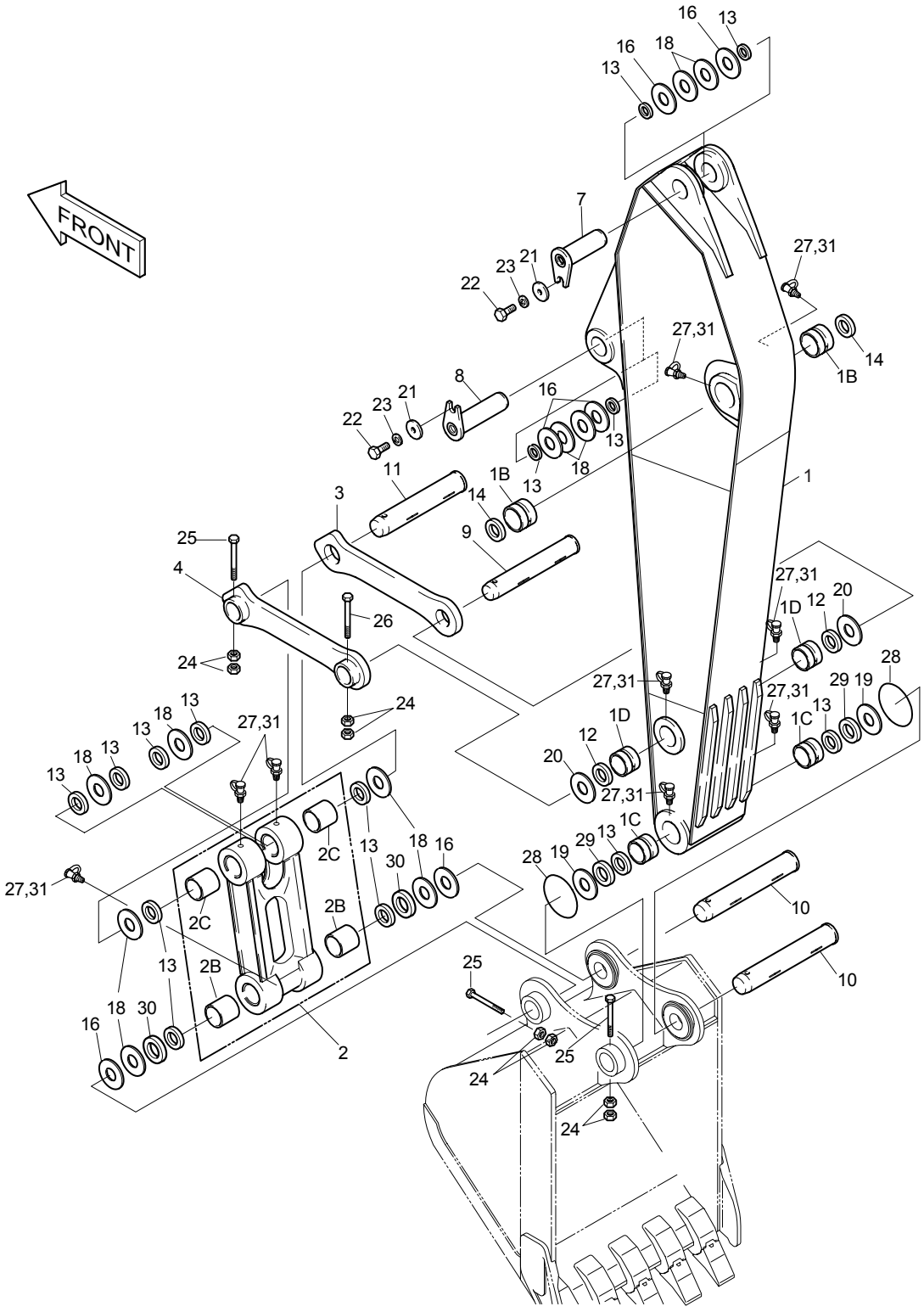

DATE	DEC. 30, 2004
REV. NO.	EXB04-09

Fig. 3110 ARM-2.9m BALANCIER

Serial No ;

Key No.	Part No.	Description	Description	Q'ty	S.C	Serial No.	ICA	Replaceable part	
								Part No.	Q'ty
3110--	2701-1417A	ARM ASS'Y-2.9m	BALANCIER	-	D				
1	2701-1602N	ARM SUB ASS'Y-2.9m	BALANCIER	1		1001–1669	I	2701-1602P	1
	2701-1602P	**ARM SUB ASS'Y-2.9m**	BALANCIER	1		**1670–**			
1B	2110-1316A	. BUSHING	. MANCHON	2					
1C	110-00064	. BUSHING	. MANCHON	2					
1D	2110-1318A	. BUSHING	. MANCHON	2					
2	2155-1335G	LINK ASS'Y;PUSH	ARTICULATION	1					
2B	2110-1228B	. BUSHING	. MANCHON	2					
2C	2110-1360A	. BUSHING	. MANCHON	2					
3	2155-1299B	LINK;GUIDE(RH)	ARTICULATION	1					
4	2155-1300B	LINK;GUIDE(LH)	ARTICULATION	1					
7	2123-2187C	PIN	GOUJON	1					
8	2123-2182C	PIN	GOUJON	1					
9	2123-2191B	PIN	GOUJON	1					
10	2123-2192C	PIN	GOUJON	2					
11	2123-2193B	PIN	GOUJON	1					
12	2180-1106BD4	SEAL;DUST	PARE-POUSSIERES	2					
13	2180-1106BD24	SEAL;DUST	PARE-POUSSIERES	14					
14	2180-1106BD6	SEAL;DUST	PARE-POUSSIERES	2					
16	2114-1059D118	SHIM	CALE	6					
18	2114-1059D63	SHIM	CALE	10					
19	2114-1059D175	SHIM	CALE	2					
20	2114-1059D122	SHIM	CALE	2					
21	2116-1060D6	STOPPER	TAQUET D'ARRET	2					
22	S0521366	BOLT M16X2.0X35	BOULON A 6PANS	2					
23	S5102903	WASHER;SPRING	RONDELLE ELASTIQUE	2					
24	S4012933	NUT M16X2.0	ECROU	8					
25	S0566966	BOLT M16X2.0X140	BOULON A 6PANS	3					
26	S0566866	BOLT M16X2.0X130	BOULON A 6PANS	1					
27	S6710041	FITTING	GRAISSEUR	9					
28	180-00077D5	O-RING	JONT TORIQUE	2					
29	2114-1997A	SPACER	ENTRETOISE	2		1001–1207	I	2114-1997B	2
	2114-1997B	SPACER	ENTRETOISE	2		1208–			
30	2114-1998A	SPACER	ENTRETOISE	2		1001–1207	I	2114-1998B	2
	2114-1998B	SPACER	ENTRETOISE	2		1208–			
31	160-00020	CAP;GREASE NIPPLE	CHAPEAU	9					

DATE	DEC. 30, 2004
REV. NO.	EXB04-09

Fig. 3120 BUCKET ASS'Y-0.8m^3 GODET

Serial No. ;

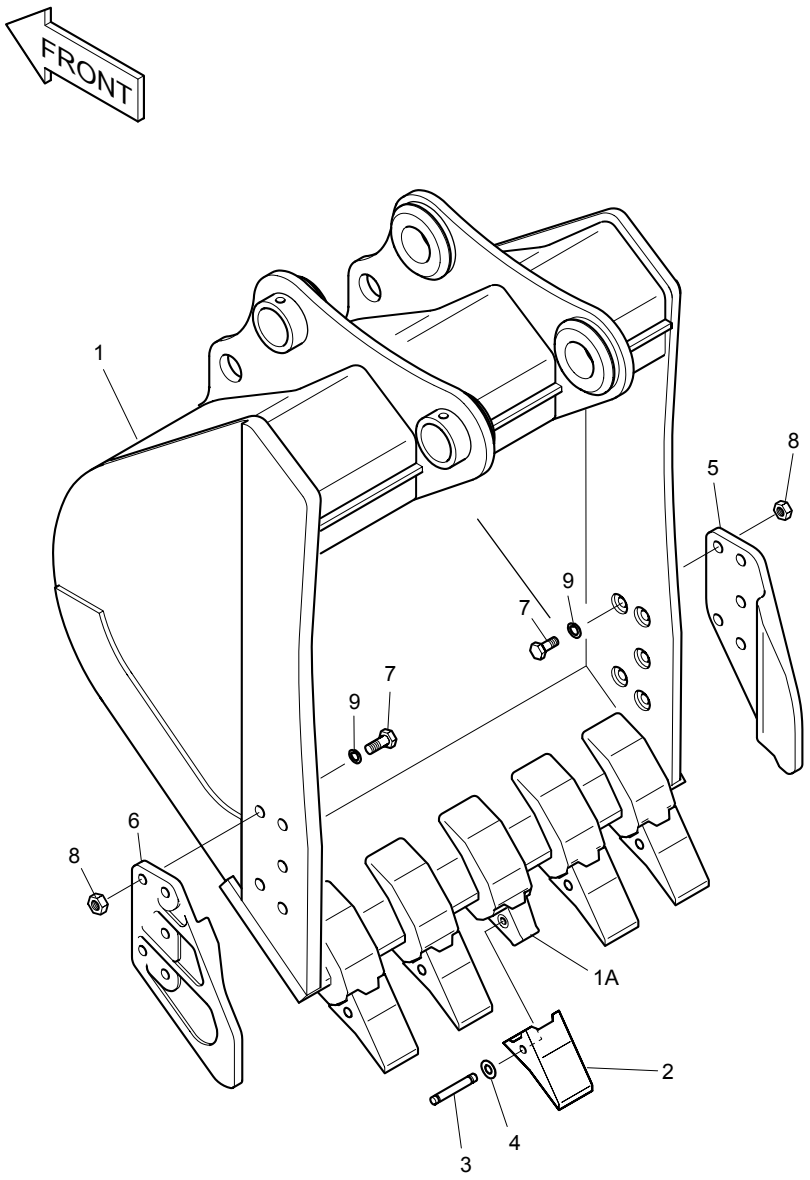

DATE	DEC. 30, 2004
REV. NO.	EXB04-09

Fig. 3120 BUCKET ASS'Y-0.8㎥ GODET

Serial No ;

Key No.	Part No.	Description	Description	Q'ty	S.C	Serial No.	ICA	Replaceable part	
								Part No.	Q'ty
3120--	2704-1365G	BUCKET ASS'Y-0.8㎥	ENSEMBLE GODET	1		1001–1469	I	2704-1365H	1
	2704-1365H	**BUCKET ASS'Y-0.8㎥**	ENSEMBLE GODET	1		**1470–**			
1	-	BUCKET-0.8㎥	ENSEMBLE GODET	1	D				
1A	2713-1218	. ADAPTER;TOOTH	. DENT DE ADAPTEUR	5					
2	2713-1217	POINT;TOOTH	DENT	5		1001–1469	Y	K1000344	5
	K1000344	**POINT;TOOTH**	DENT	5		**1470–**			
3	2705-1020	PIN;LOCKING	GOUPILLE DE BLOCAGE	5					
4	2114-1848A	WASHER;LOCKING	RONDELLE	5					
5	2713-1059A	CUTTER;SIDE(RH)	COIN DE GODET DROIT	1					
6	2713-1060A	CUTTER;SIDE(LH)	COIN DE GODET GAUCHE	1					
7	S0574761	BOLT M24X3.0X70	BOULON A 6PANS	10					
8	S4013333	NUT M24X3.0	ECROU	10					
9	2114-1831	WASHER;HARDEN	RONDELLE ELASTIQUE	10					

DATE	JUN. 30, 2006
REV. NO.	EXB06-08

Fig. 3130 FRONT PIPING
CONDUITES DE FRONTALES

Serial No. ;

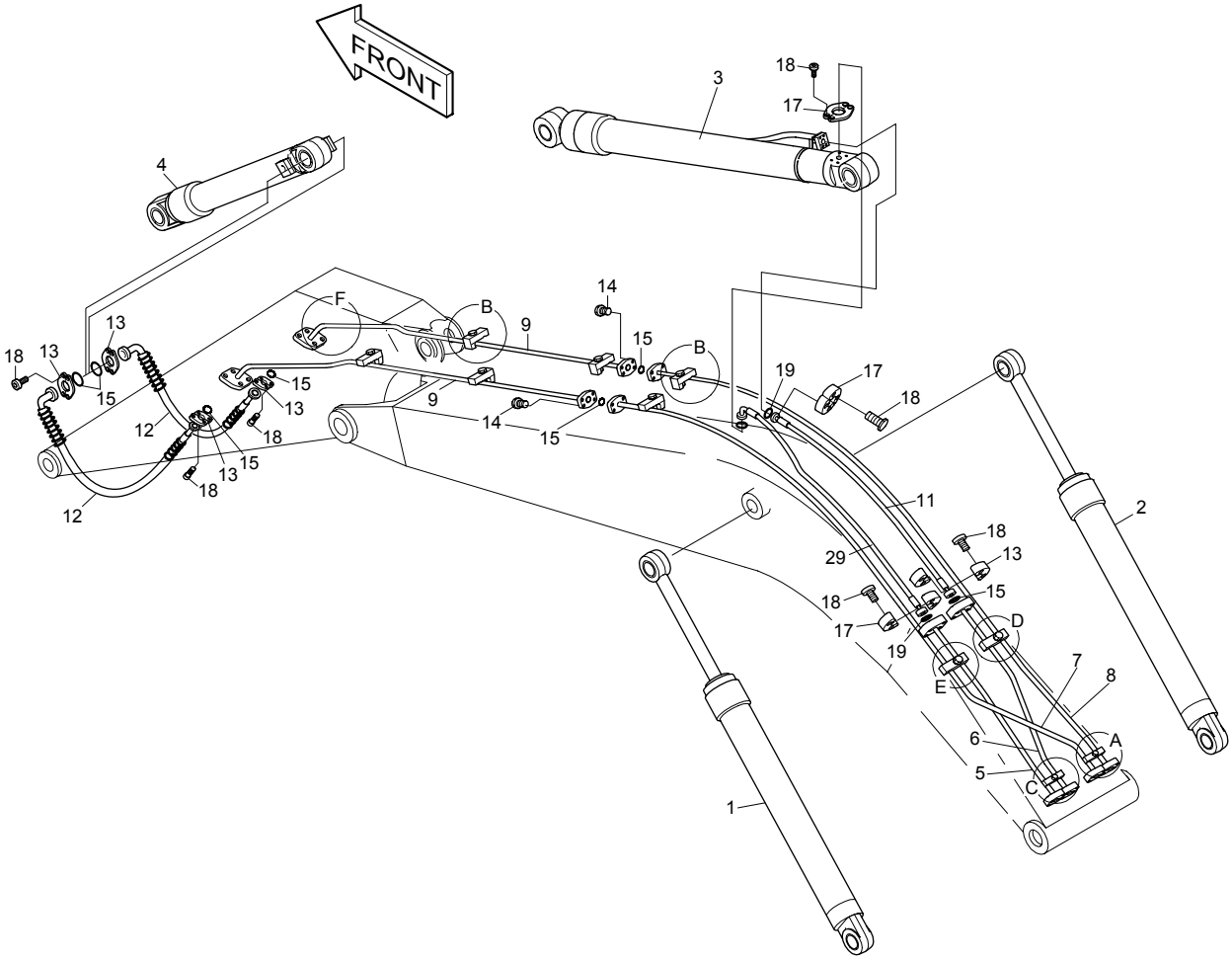

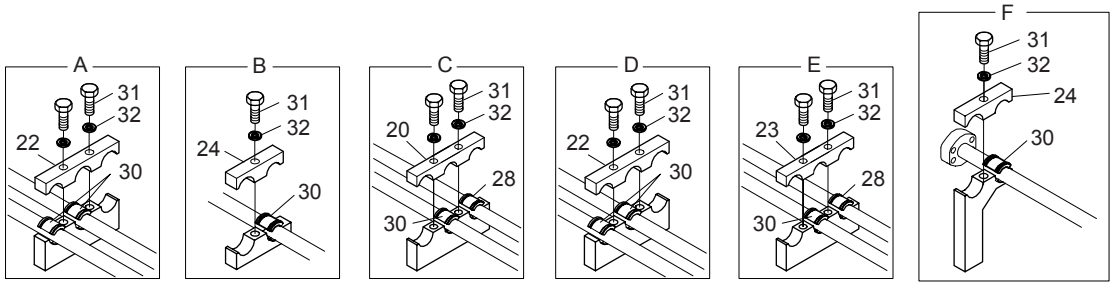

DATE	JUN. 30, 2006
REV. NO.	EXB06-08

Fig. 3130 FRONT PIPING CONDUITES DE FRONTALES

Serial No. ;

Key No.	Part No.	Description	Description	Q'ty	S.C	Serial No.	ICA	Replaceable part	
								Part No.	Q'ty
3130--	400-01060	FRONT PIPING	CONDUITES DE	-	D	1001–2113			
	400-01060A	FRONT PIPING	CONDUITES DE	-	D	2114–			
1	440-00355A	CYLINDER;BOOM(LH)	VERIN DE FLECHE	1					
2	440-00356A	CYLINDER;BOOM(RH)	VERIN DE FLECHE	1					
3	2440-9236B	CYLINDER;ARM	VERIN DE BALANCIER	1					
4	440-00059	CYLINDER;BUCKET	VERIN DE GODET	1		1001–2386	I	440-00059A	1
	440-00059A	**CYLINDER;BUCKET**	VERIN DE GODET	1		**2387**–			
5	2140-1255B	PIPE	TUYAU	1					
6	2140-1254B	PIPE	TUYAU	1					
7	2140-1258B	PIPE	TUYAU	1					
8	2140-1257B	PIPE	TUYAU	1					
9	2140-1256A	PIPE	TUYAU	2					
11	2184-1081D120	HOSE PF3/4-1170L	TUYAU FLEXIBLE	1					
12	2184-1100D38	HOSE PF3/4-1650L	TUYAU FLEXIBLE	2		1001–2113			
	2184-1100D29	HOSE PF3/4-1500L	TUYAU FLEXIBLE	2		2114–			
13	2181-9079	FLANGE;SPLIT PF3/4-5000psi	FLASQUE EN DEUX	10					
14	S2212466	BOLT;SOCKETM10X1.5X40	BOULON DE PLOT	8					
15	2180-1026D2	O-RING SAE3/4	JONT TORIQUE	7					
17	2181-9078	FLANGE;SPLIT PF1-5000psi	BRIDE	6					
18	S2212366	BOLT;SOCKETM10X1.5X35	BOULON DE PLOT	32					
19	2180-1026D19	O-RING SAE1	JONT TORIQUE	3					
20	124-00175	CLAMP;PIPE	ATTACHE DE TUYAU	1					
22	124-00012	CLAMP;PIPE	ATTACHE DE TUYAU	3					
23	124-00173	CLAMP;PIPE	ATTACHE DE TUYAU	2					
24	124-00011	CLAMP;PIPE	COLLIER	6					
28	2161-2251A	RUBBER	CAOUTCHOUC	6					
29	2184-1100D129	HOSE	TUYAU FLEXIBLE	1					
30	2161-2250A	RUBBER	CAOUTCHOUC	30					
31	S0565466	BOLT M16X2.0X60	BOULON A 6PANS	18					
32	S5102903	WASHER;SPRING	RONDELLE ELASTIQUE	18					

DATE	AUG. 12, 2002
1st EDITION	

Fig. 3140 LUBRICATION PIPING
LUBRIFICATION

Serial No. ;

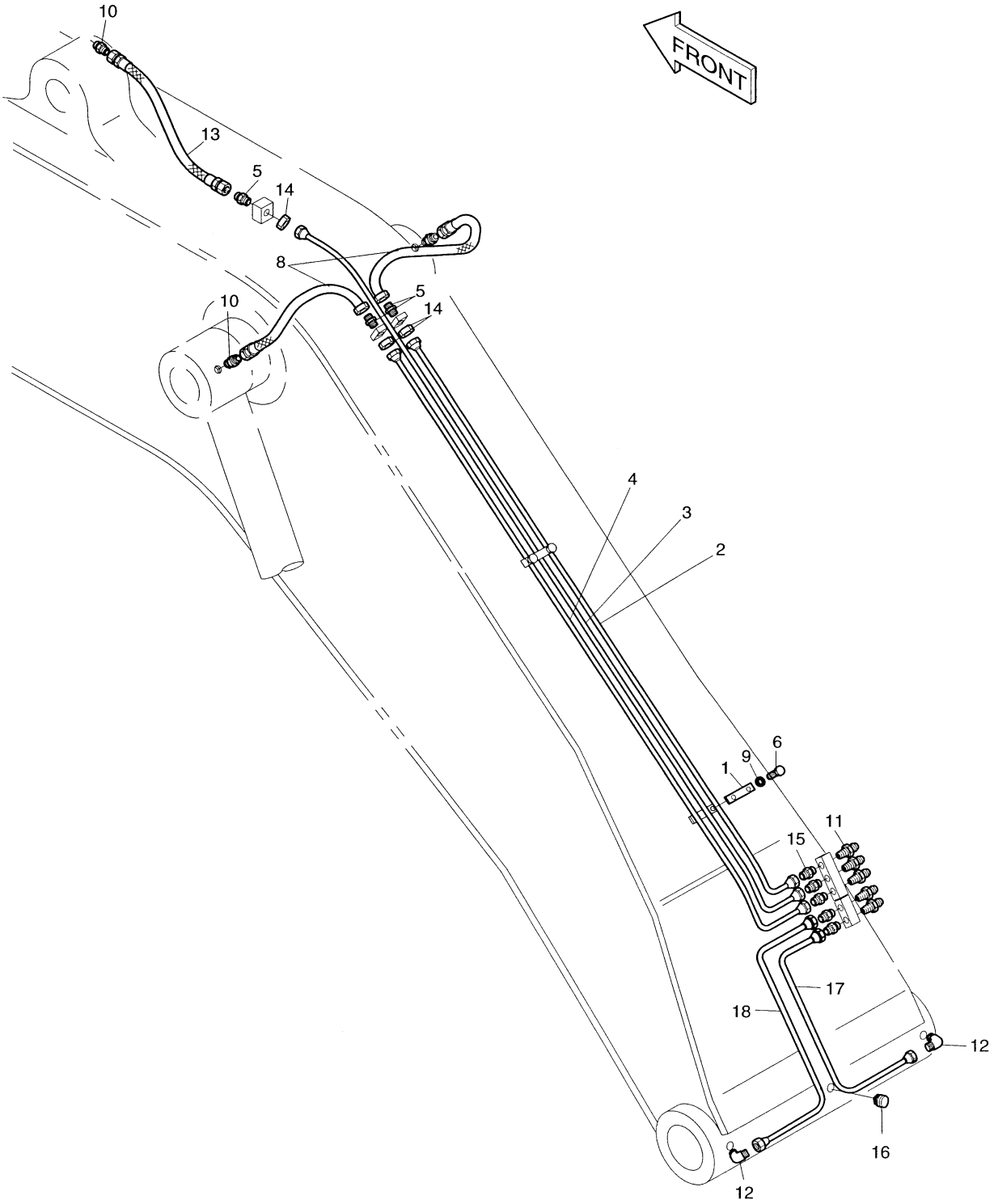

DATE	AUG. 12, 2002
1st EDITION	

Fig. 3140 LUBRICATION PIPING LUBRIFICATION

Serial No. ;

Key No.	Part No.	Description	Description	Q'ty	S.C	Serial No.	ICA	Replaceable part	
								Part No.	Q'ty
3140--	2400-1784A	LUBRICATION PIPING	LUBRIFICATION	-	D				
1	2124-1625	CLAMP;PIPE	ATTACHE DE TUYAU	2					
2	2140-1259B	PIPE	TUYAU	1					
3	2140-1260B	PIPE	TUYAU	1					
4	2140-1261B	PIPE	TUYAU	1					
5	2181-1923D12	ADAPTER M14X1.5-PT1/4	ADAPTEUR	3					
6	S0511553	BOLT M10X1.5X14	BOULON A 6PANS	4					
8	DS2053770	HOSE PF1/4-970L	TUYAU FLEXIBLE	2					
9	S5102603	WASHER;SPRING	RONDELLE ELASTIQUE	4					
10	2181-1110D30	ADAPTER;PF1/4-PT1/8	ADAPTEUR	3					
11	S6710052	NIPPLE;GREASE	GRAISSEUR	5					
12	2181-1925	ELBOW	COUDE	3					
13	2184-1045D90	HOSE PF1/4-800L	TUYAU FLEXIBLE	1					
14	S4032833	NUT	ECROU	3					
15	2181-1184	ADAPTER	ADAPTEUR	5					
16	S3524403	SCREW;SET	VIS	1					
17	182-00062	PIPE	TUYAU	1					
18	182-00063	PIPE	TUYAU	1					

DATE	DEC. 15, 2006
REV. NO.	EXB06-13

Fig. 4100 MAIN PUMP POMPE

Serial No. ;

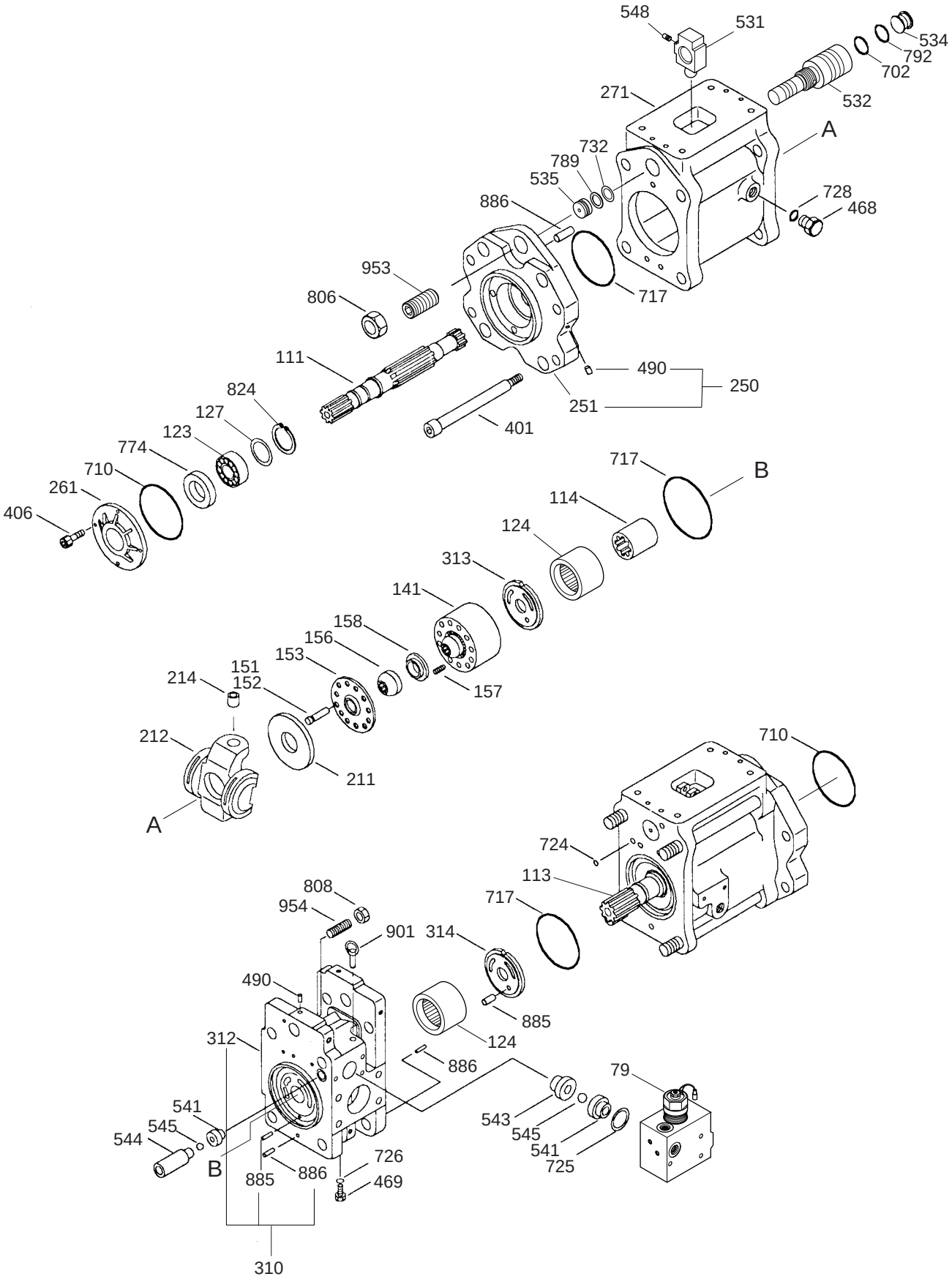

DATE	DEC. 15, 2006
REV. NO.	EXB06-13

Fig. 4100 MAIN PUMP POMPE

Serial No. ;

Key No.	Part No.	Description	Description	Q'ty	S.C	Serial No.	ICA	Replaceable part	
								Part No.	Q'ty
4100--	401-00356A	MAIN PUMP	POMPE	1					
79	719753	VALVE;PROPORTIONAL	VANNE	1					
111	124568	SHAFT;DRIVING(F)	ARBRE	1					
113	124569	SHAFT;DRIVING(R)	ARBRE	1					
114	113783	COUPLING;SPLINE	FIXATION DE POMPE	1					
123	219362	BEARING;ROLLER	PALIER	2					
124	219363	BEARING;SPACER	PALIER	2					
127	113784	BEARING;SPACER	PALIER	4					
*	720777-PH	CYLINDER ASS'Y(R)	ENSEMBLE DE CYLINDRE	1					
141	137491	. BLOCK;CYLINDER	. BLOC	1	D				
313	115798	. PLATE;VALVE(R)	. PLAQUE	1	D				
*	720778-PH	CYLINDER ASS'Y(L)	ENSEMBLE DE CYLINDRE	1					
141	137491	. BLOCK;CYLINDER	. BLOC	1	D				
314	115799	. PLATE;VALVE(L)	. PLAQUE	1	D				
*	704543A	PISTON & SHOE ASS'Y	PISTON & SABOT	2					
151	-	. PISTON	. PISTON	18	D				
152	-	. SHOE	. SABOT	18	D				
153	115786	PLATE;PUSH	PLAQUE	2					
156	121437	BUSH;SPHERICAL	COUSSINET	2					
157	113787	SPRING;CYLINDER	RESSORT	18					
158	113789	SPACER	BAGUE D'ECARTEMENT	2					
211	113790	PLATE;SHOE	PLAQUE	2					
*	717008	SWASH PLATE ASS'Y	PLAQUE	2					
212	113780	. PLATE;SWASH	. PLAQUE	1	D				
214	218550	. BUSH;TILTING	. COUSSINET	1	D				
250	718424	SUPPORT KIT	SUPPORT	1					
251	113791	SUPPORT	SUPPORT	2					
261	113792	COVER;SEAL(F)	COUVERCLE	1					
271	113794	CASING;PUMP	CARTER	2	D				
310	707849	VALVE BLOCK KIT	BLOC DE VANNE	1					
312	113795	BLOCK;VALVE	BLOC	1	D				
401	113797	BOLT;SOCKET M20X210	BOULON DE PLOT	8					
406	200846	BOLT;SOCKET M8X20	BOULON DE PLOT	4					
468	108847	PLUG PF1/4	BOUCHON	3					
469	108848	PLUG PF1/8	BOUCHON	2					
490	224308	EXPANDER	EXTENSEUR	21	D				
*	717005	TILTING PIN ASS'Y	BOUCHON	2					
531	113807	. PIN;TILTING	. BROCHE	1	D				

DATE	DEC. 15, 2006
REV. NO.	EXB06-13

Fig. 4100 MAIN PUMP POMPE

Serial No. ;

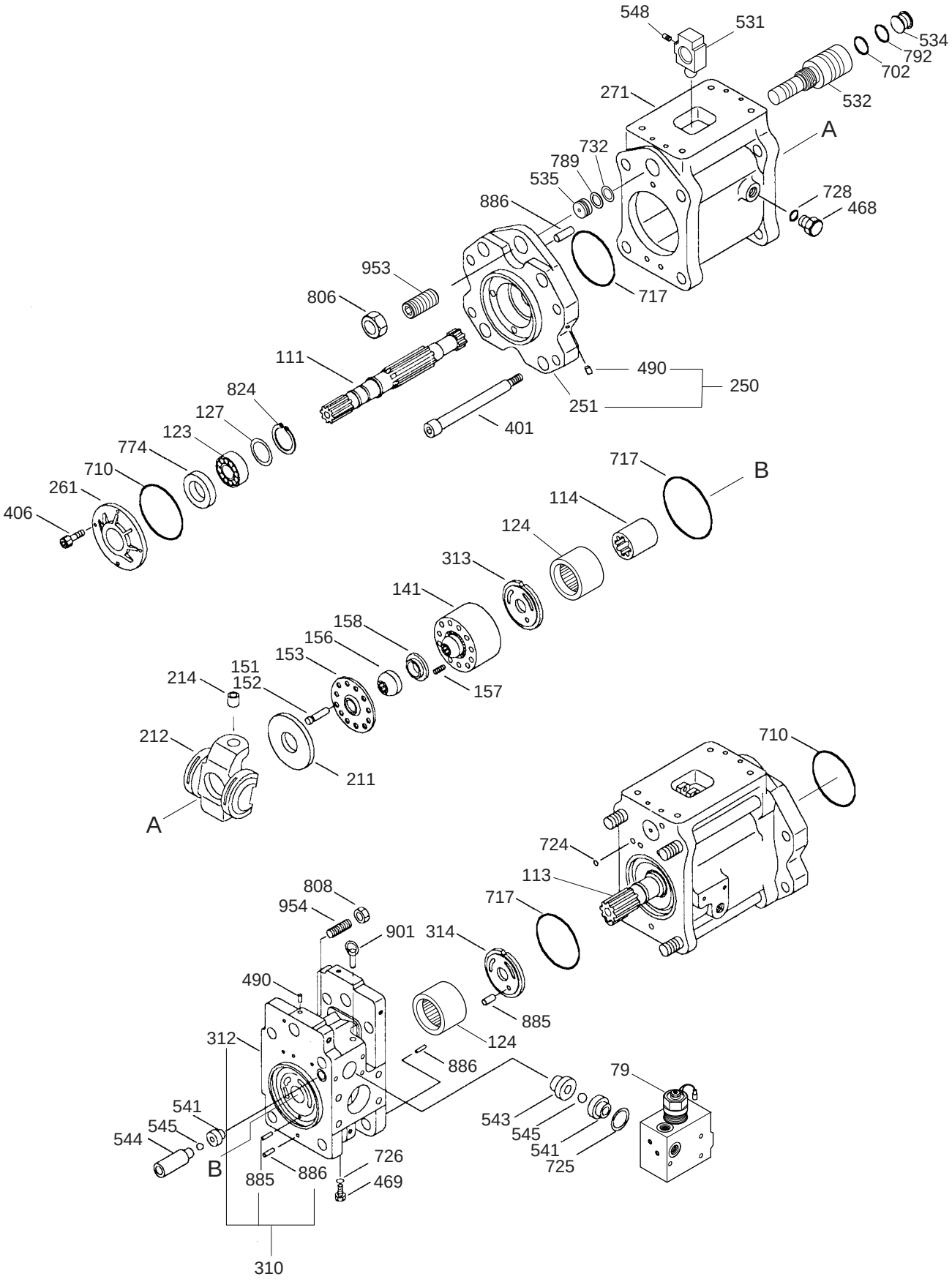

DATE	DEC. 15, 2006
REV. NO.	EXB06-13

Fig. 4100 MAIN PUMP POMPE

Serial No. ;

Key No.	Part No.	Description	Description	Q'ty	S.C	Serial No.	ICA	Replaceable part	
								Part No.	Q'ty
4100-548	113380	. PIN;FEEDBACK	. BROCHE	1	D				
532	113798	PISTON;SERVO	PISTON	2					
534	113799	STOPPER(L)	ARRET	2					
535	113800	STOPPER(S)	ARRET	2					
*	704550A	CHECK 1 ASS'Y	CHECK	2					
541	113706	. SEAT	. SIEGE	2	D				
543	113705	. STOPPER 1	. ARRET	2	D				
545	200166	. BALL;STEEL 7/32"	. BILLE	2	D				
*	704544A	CHECK 2 ASS'Y	CHECK	2					
541	113706	. SEAT	. SIEGE	2	D				
544	113703	. STOPPER 2	. ARRET	2	D				
545	200166	. BALL;STEEL 7/32"	. BILLE	2	D				
702	220019	O-RING 1BG35	JOINT TORIQUE	2	K				
710	204452	O-RING 1BG95	JOINT TORIQUE	2	K				
717	201639	O-RING 1BG145	JOINT TORIQUE	4	K				
724	201765	O-RING 1BP8	JOINT TORIQUE	16	K				
725	201689	O-RING 1BP11	JOINT TORIQUE	5	K				
726	S8000141	O-RING 1BP14	JOINT TORIQUE	2	K				
728	201721	O-RING 1BP24	JOINT TORIQUE	3	K				
732	220016	O-RING 1BP18	JOINT TORIQUE	2	K				
774	212231	SEAL;OIL TCV40V	JOINT	1	K				
789	203480	RING;BACK-UP T2P18	BAGUE(T2G45)	2	K				
792	203418	RING;BACK-UP T2G35	BAGUE	2	K				
806	201557	NUT M16	ECROU	2					
808	102048	NUT M20	ECROU	2					
824	202606	RING;SNAP C-40CS	BAGUE	2					
885	113801	PIN D8X12L	BROCHE	2					
886	200678	PIN;SPRING	BROCHE	2					
901	212033	BOLT;EYE M10X1.5	BOULON A 6 PANS	2					
953	118892	SCREW;SET M16X30L	VIS	2					
954	113803	SCREW;ADJUST	VIS	2					
*	2401-9223KT	SEAL KIT;MAIN PUMP+REG.	KIT DE REPARATION	1					

DATE	AUG. 12, 2002
1st EDITION	

Fig. 4110 REGULATOR REGULATEUR

Serial No. ;

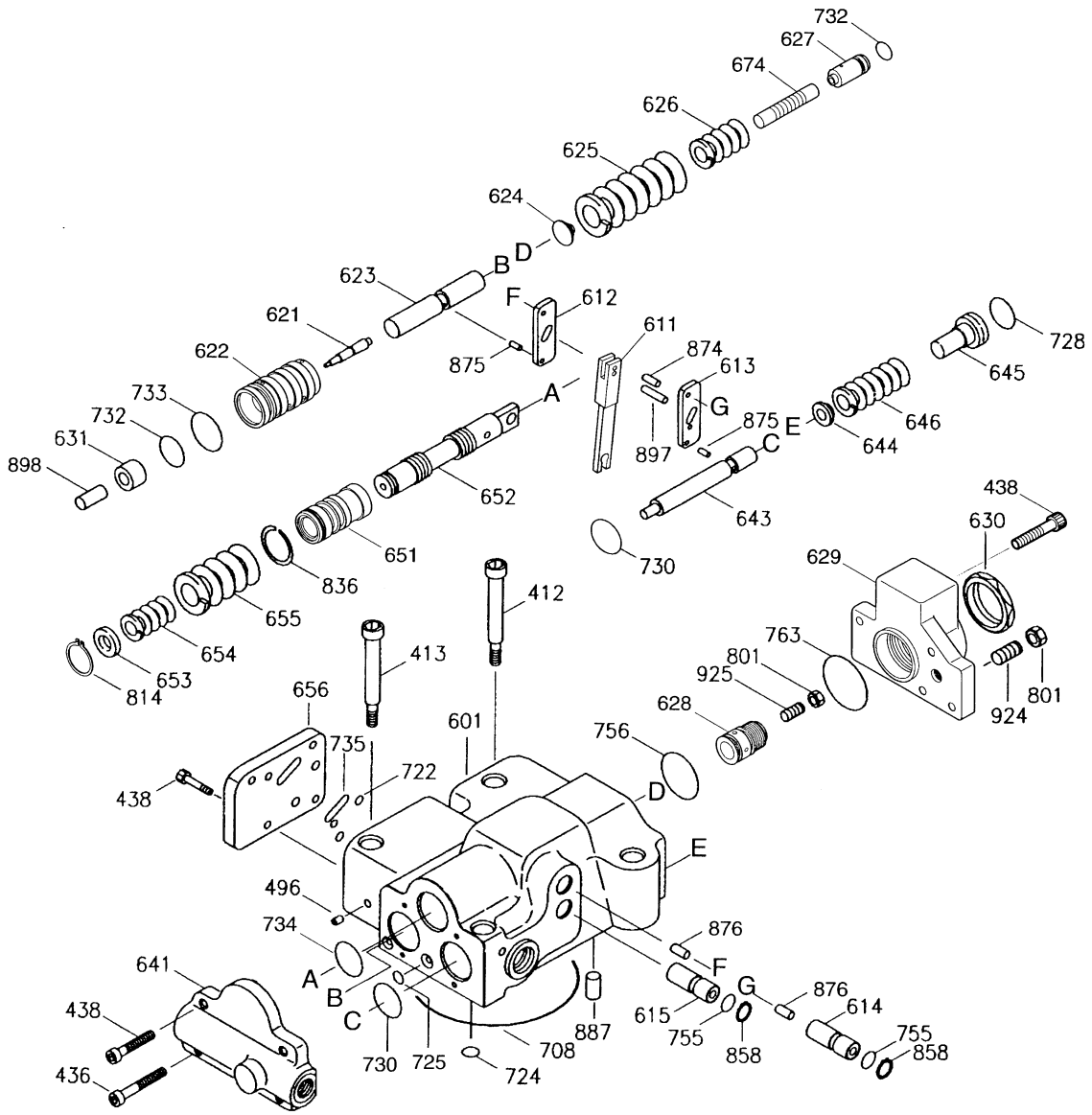

DATE	AUG. 12, 2002
1st EDITION	

Fig. 4110 REGULATOR REGULATEUR

Serial No. ;

Key No.	Part No.	Description	Description	Q'ty	S.C	Serial No.	ICA	Replaceable part	
								Part No.	Q'ty
4110--	722473	REGULATOR	REGULATEUR	2					
412	200852	BOLT;SOCKET M8X50L	BOULON A 6 PANS CREUX	2					
413	205526	BOLT;SOCKET M8X70L	BOULON A 6 PANS CREUX	2					
436	200833	BOLT;SOCKET M6X30L	BOULON A 6 PANS CREUX	2					
438	200830	BOLT;SOCKET M6X20L	BOULON A 6 PANS CREUX	10					
496	134596	PLUG	EXTENSEUR	5	D				
601	140783	CASING	CARTER	1	D				
611	140790	LEVER;FEED BACK	LEVIER	1	D				
612	140787	LEVER(1)	LEVIER	1	D				
613	140788	LEVER(2)	LEVIER	1	D				
614	140795	PLUG;SUPPORT	BOUCHON	1	D				
615	140796	PLUG;ADJUST	BOUCHON	1	D				
621	113413A	PISTON;COMPEN	PISTON	1	D				
622	113414A	CASE;PISTON	CARTER	1	D				
623	113415	ROD;COMPEN	TIGE	1	D				
624	113416	SPRING;SEAT	RESSORT	1	D				
625	133587	SPRING;OUTER	RESSORT	1	D				
626	131659	SPRING;INNER	RESSORT	1	D				
627	120009	RING;ADJUST(C)	BAGUE	1	D				
628	120010	SCREW;ADJUST(C)	VIS	1	D				
629	140785	COVER(C)	COUVERCLE	1	D				
630	113396	NUT;LOCK	ECROU	1	D				
631	141977	SLEEVE;PF	MANCHON	1	D				
641	115804	COVER;PILOT	COUVERCLE	1	D				
643	113406	PISTON;PILOT	PISTON	1	D				
644	113431	SPRING;SEAT	RESSORT	1	D				
645	113436	RING;ADJUST(Q)	BAGUE	1	D				
646	131663	SPRING;PILOT	RESSORT	1	D				
651	117387	SLEEVE	MANCHON	1	D				
652	140786	SPOOL	BOBINE	1	D				
653	113442	SPRING;SEAT	RESSORT	1	D				
654	131664	SPRING;RETURN	RESSORT	1	D				
655	131665	SPRING;SET	RESSORT	1	D				
656	113445	COVER	COUVERCLE	1	D				
674	120055	PISTON;PF	PISTON	1	D				
708	201673	O-RING 1BG75	JOINT TORIQUE	1	K				
722	201757	O-RING 1BP6	JOINT TORIQUE	3	K				
724	201765	O-RING 1BP8	JOINT TORIQUE	9	K				

DATE	AUG. 12, 2002
1st EDITION	

Fig. 4110 REGULATOR
REGULATEUR

Serial No. ;

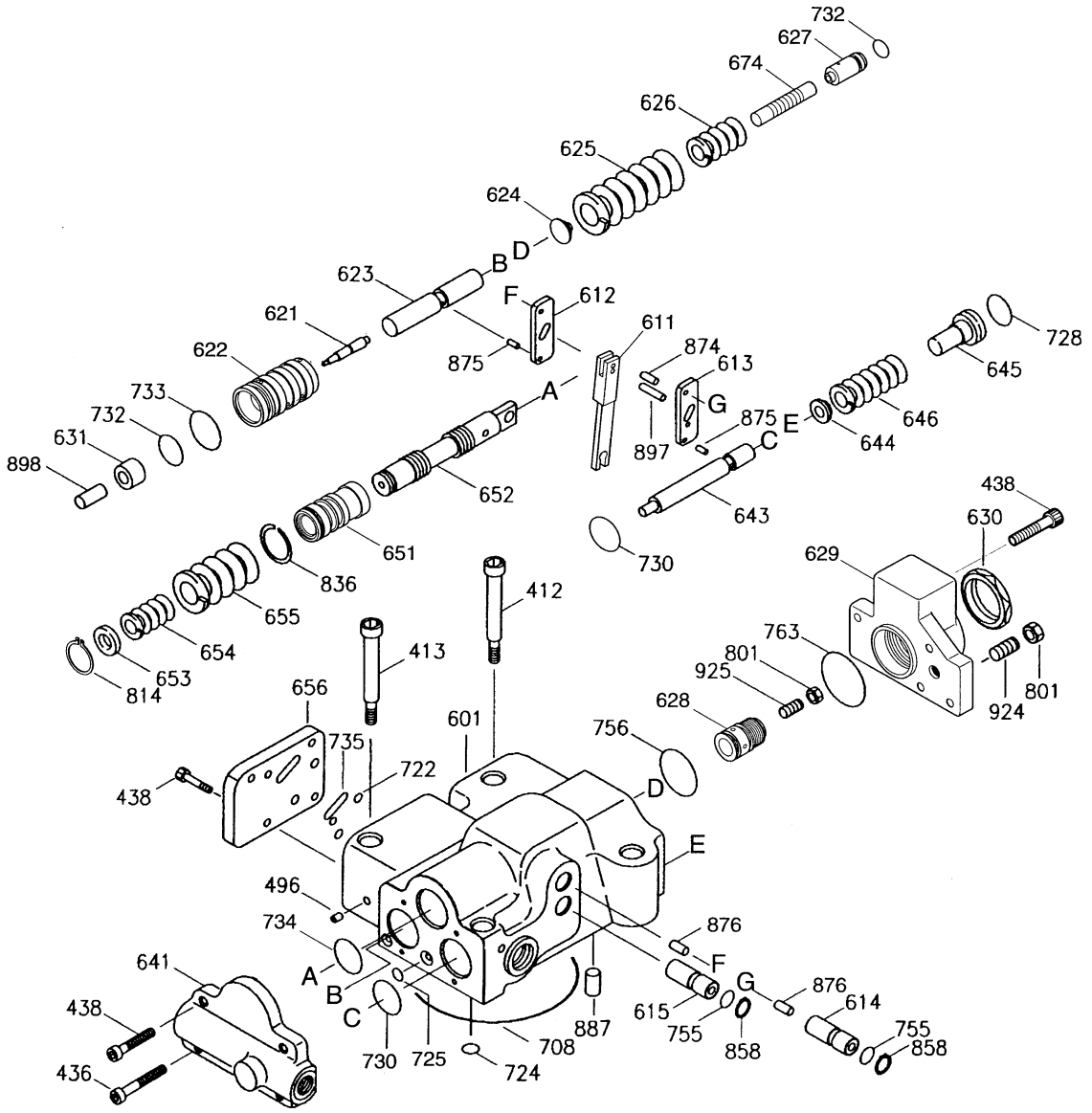

DATE	AUG. 12, 2002
1st EDITION	

Fig. 4110 REGULATOR REGULATEUR

Serial No. ;

Key No.	Part No.	Description	Description	Q'ty	S.C	Serial No.	ICA	Replaceable part	
								Part No.	Q'ty
4110-725	201685	O-RING 1BP10	JOINT TORIQUE	1	K				
728	201710	O-RING 1BP18	JOINT TORIQUE	1	K				
730	201718	O-RING 1BP22	JOINT TORIQUE	1	K				
732	201706	O-RING 1BP16	JOINT TORIQUE	2	K				
733	201713	O-RING 1BP20	JOINT TORIQUE	2	K				
734	201654	O-RING 1BP25	JOINT TORIQUE	1	K				
735	204458	O-RING 1BP12.5	JOINT TORIQUE	1	K				
755	201689	O-RING 1BP11	JOINT TORIQUE	2	K				
756	201723	O-RING 1BP26	JOINT TORIQUE	2	K				
763	201660	O-RING 1BG35	JOINT TORIQUE	1	K				
801	212035	NUT M8	ECROU	2					
814	204956	RING;SNAP	BAGUE	1					
836	215018	RING;SNAP	BAGUE	1	D				
858	212036	RING;SNAP C-15(R)	BAGUE	2					
874	217841	PIN ϕ 4X11.7L	BROCHE	1	D				
875	140793	PIN	BROCHE	2	D				
876	140792	PIN	BROCHE	2	D				
887	113394	PIN	BROCHE	1	D				
897	140794	PIN ϕ 5X211L	BROCHE	1	D				
898	141975	PISTON	BROCHE	1	D				
924	202523	SEAT SCREW	VIS	1					
925	113395	SCREW;ADJUST(QI)	VIS	1	D				

DATE	DEC. 30, 2004
REV. NO.	EXB04-09

Fig. 4120 GEAR PUMP POMPE

Serial No. ;

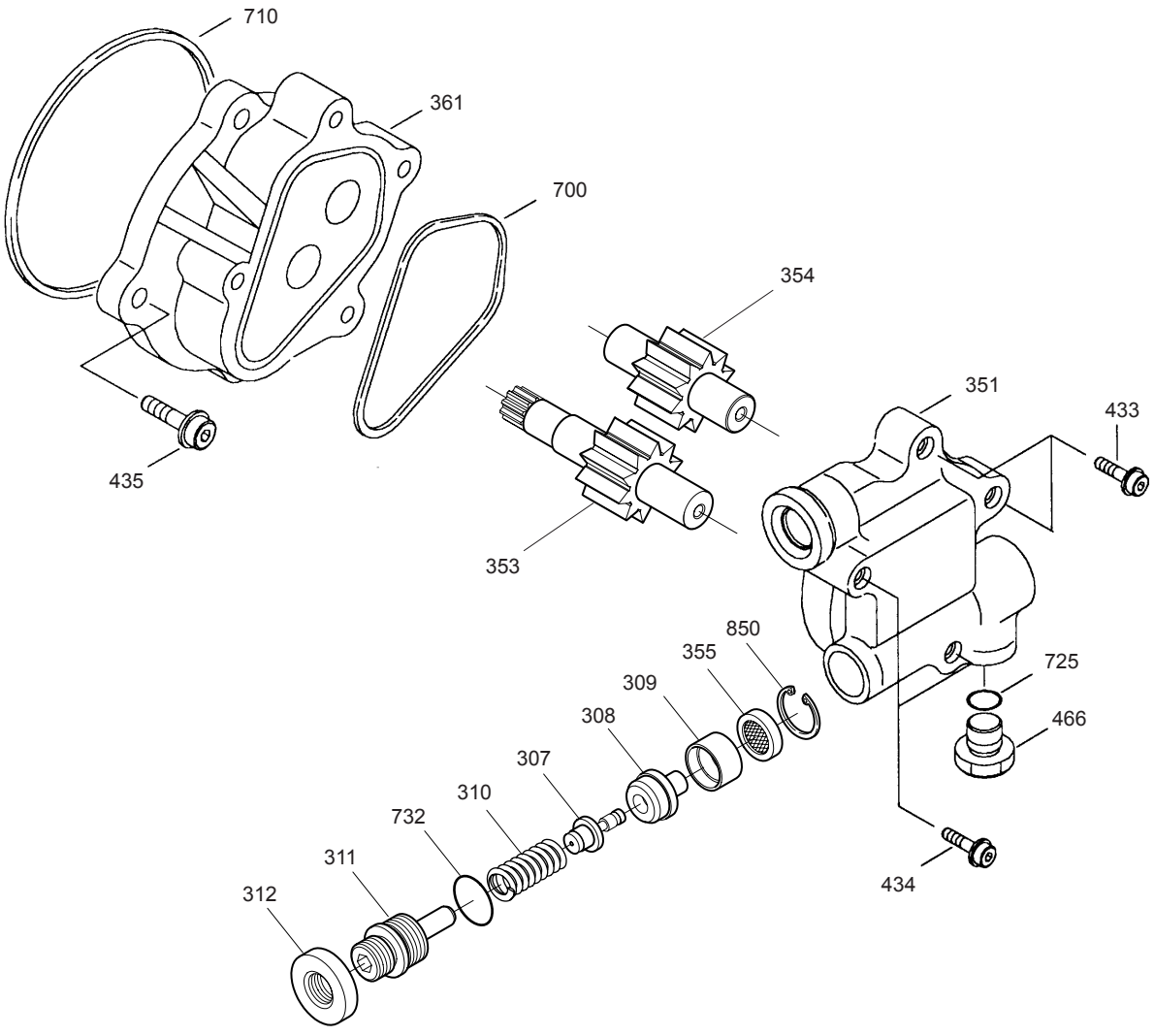

DATE	DEC. 30, 2004
REV. NO.	EXB04-09

Fig. 4120 GEAR PUMP POMPE

Serial No ;

Key No.	Part No.	Description	Description	Q'ty	S.C	Serial No.	ICA	Replaceable part	
								Part No.	Q'ty
4120--	719212	PUMP;GEAR	POMPE	1					
307	136300	POPPET	SOUPAPE SOULEVANTE	1					
308	136301	SEAT	SIEGE	1					
309	139302	RING	BAGUE	1					
310	117400	SPRING	RESSORT	1					
311	136299	SCREW;ADJUSTING	VIS	1					
312	130391	NUT;LOCK	ECROU	1					
351	136298	CASE;GEAR	CARTER	1	D				
353	131028	GEAR;DRIVE	PIGNON MOTEUR	1	D				
354	131030	GEAR;DRIVEN	PIGNON ENTRAINE	1	D				
355	129640	FILTER	FILTRE	1					
361	130395A	CASE;FRONT	CARTER	1	D				
433	130400	BOLT;SOCKET	BOULON DE PLOT	2					
434	130402	BOLT;SOCKET	BOULON DE PLOT	2					
435	130399	BOLT;SOCKET	BOULON DE PLOT	4					
466	108844	PLUG PF1/4	BOUCHON VP	1					
700	129642	RING	BAGUE	1	K				
710	204452	O-RING 1BG95	JOINT TORIQUE	1	K				
725	206598	O-RING 1BP11	JOINT TORIQUE	1	K				
732	201706	O-RING 1BP16	JOINT TORIQUE	1	K				
850	202596	RING;SNAP	BAGUE	1					
*	**719212KT**	**SEAL KIT;GEAR PUMP**	KIT D'ETANCHEITE	1					

DATE	AUG. 12, 2002
1st EDITION	

Fig. 4130 SWING MOTOR MOTEUR D'ORIENTATION

Serial No. ;

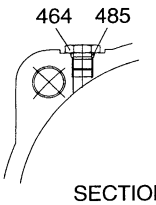

SECTION A

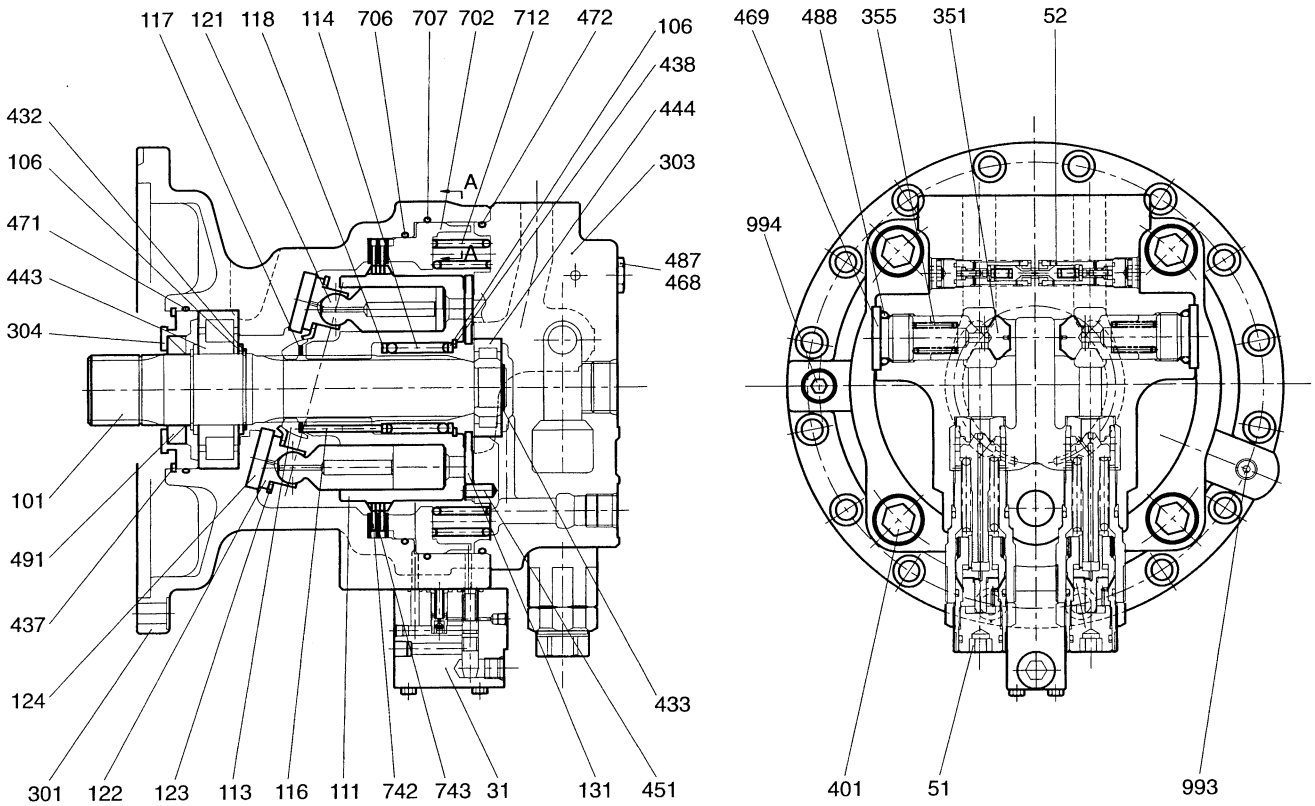

DATE	AUG. 12, 2002
1st EDITION	

Fig. 4130 SWING MOTOR MOTEUR D'ORIENTATION

Serial No. ;

Key No.	Part No.	Description	Description	Q'ty	S.C	Serial No.	ICA	Replaceable part	
								Part No.	Q'ty
4130--	401-00391	MOTOR;SWING	MOTEUR D'ORIENTATION	1					
31	722901	VALVE;BRAKE	VANNE DE FREIN	1					
51	233457	VALVE;RELIEF	CLAPET DE DECHASGE	2					
52	722944	VALVE	VANNE	1					
101	132528A	SHAFT;DRIVE	ARBRE	1					
106	113372	SPACER	BAGUE D'ECARTEMENT	3					
111	116635A	CYLINDER BLOCK	BLOC	1					
113	113374B	BUSH;SPHERICAL	COUSSINET	1					
114	211949A	SPRING;CYLINDER	RESSORT	1					
116	113375A	ROD;PUSH	TIGE DE POUSSOIR	12					
117	113376	SPACER F	BAGUE D'ECARTEMENT	1					
118	113350	SPACER R	BAGUE D'ECARTEMENT	1					
*	704502	PISTON SHOE ASS'Y	PISTON	1					
121	113351	. PISTON	. PISTON	9	D				
122	113352B	. SHOE	. SABOT	9	D				
123	113353	RETAINER	ARRETOIR	1					
124	113354C	PLATE;SHOE	PLAQUE	1					
131	135306	PLATE;VALVE	PLAQUE DE VANNE	1					
301	142696	CASING;F10	CARTER	1					
303	142683	CASING VALVE R	CARTER	1					
304	113360	COVER;FRONT	COUVERCLE	1					
351	135309	PLUNGER;H	PLONGEUR	2					
355	214337A	SPRING	RESSORT	2					
401	200741	BOLT;SOCKET M20X2.5X45	BOULON 6 PANS CREUX	4					
432	202608	RING;STOP	BAGUE D'ARRET	2					
433	202599	RING;STOP	BAGUE D'ARRET	1					
437	202558	RING;LOCK	BAGUE	1					
438	212014	RING;LOCK	BAGUE	1					
443	225681	BEARING;ROLLER	PALIER	1					
444	225680	BEARING;ROLLER	PALIER	1					
451	212881	SPRING;PIN	GOUPILLE	2					
464	108844	PLUG;VP	BOUCHON VP	1					
468	108844	PLUG;VP	BOUCHON VP	2					
469	108892	PLUG;RO	BOUCHON	2					
471	201630	O-RING 1BG-100	JOINT TORIQUE	1	K				
472	212009	O-RING OORWG44	JOINT TORIQUE	1	K				
485	201689	O-RING 1BP-11	JOINT TORIQUE	1	K				
487	201689	O-RING 1BP-11	JOINT TORIQUE	2	K				

DATE	AUG. 12, 2002
1st EDITION	

Fig. 4130 SWING MOTOR MOTEUR D'ORIENTATION

Serial No. ;

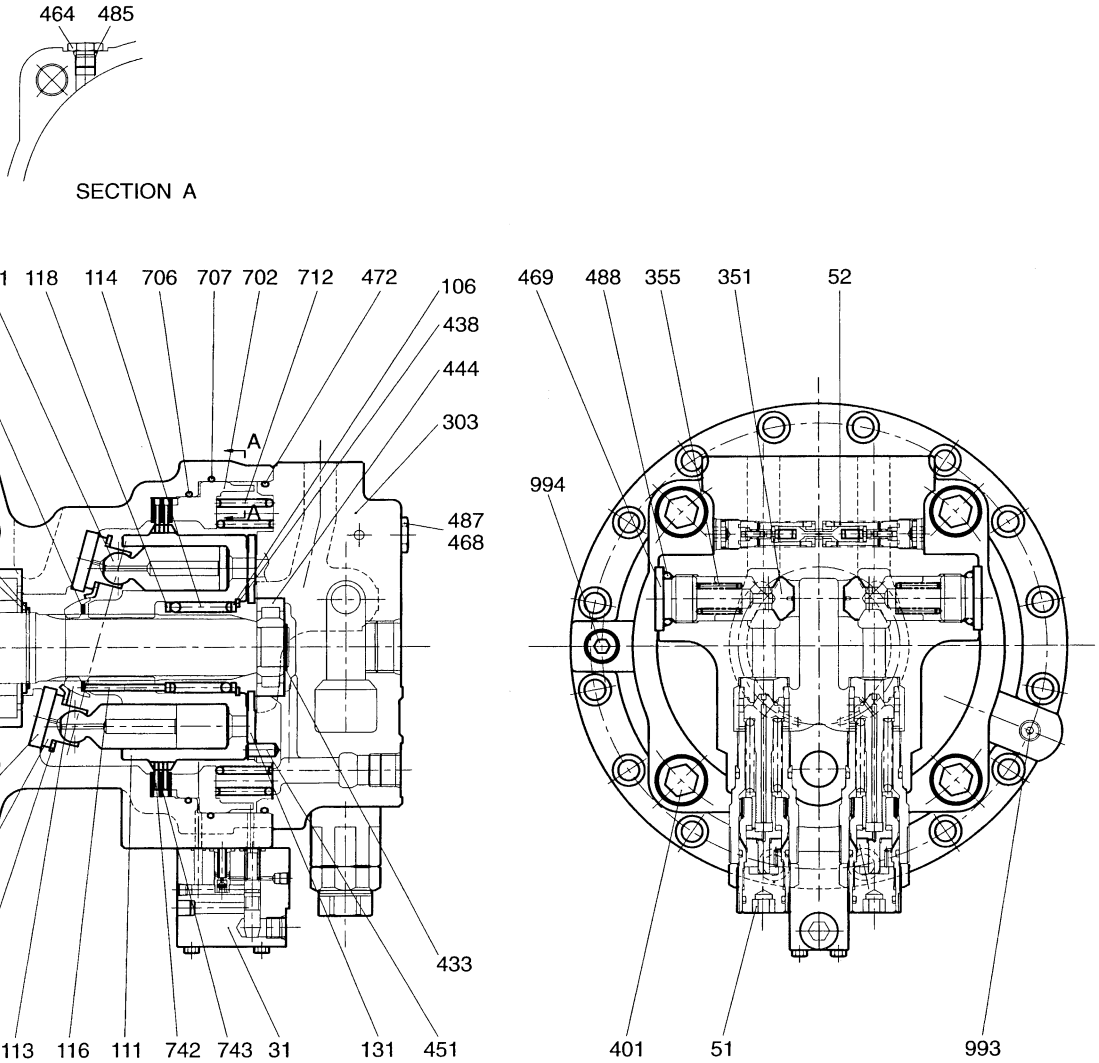

DATE	AUG. 12, 2002
1st EDITION	

Fig. 4130 SWING MOTOR MOTEUR D'ORIENTATION

Serial No. ;

Key No.	Part No.	Description	Description	Q'ty	S.C	Serial No.	ICA	Replaceable part	
								Part No.	Q'ty
4130-488	201727	O-RING 1BP-28	JOINT TORIQUE	2	K				
491	211952	SEAL;OIL	JOINT D'HUILE	1	K				
702	113363	PISTON;BRAKE	PISTON	1					
706	212008	O-RING	JOINT TORIQUE	1	K				
707	212010	O-RING	JOINT TORIQUE	1	K				
712	211953A	SPRING;BRAKE	RESSORT	18					
742	125812	PLATE;FRICTION	RESSORT EXTERIEUR	2					
743	113365	PLATE;SEPARATION	PLAQUE	3					
993	206699	PLUG;PT OBP14	BOUCHON	1					
994	208276	PLUG;PT OBP12	BOUCHON	1					
*	2401-9242KT	SEAL KIT	KIT DE REPARATION	1					

DATE	DEC. 29, 2005
REV. NO.	EXB05-20

Fig. 4140 SWING REDUCTION GEAR REDEUTEUR D'ORIENTATION

Serial No. ; 1001 ~ 2064

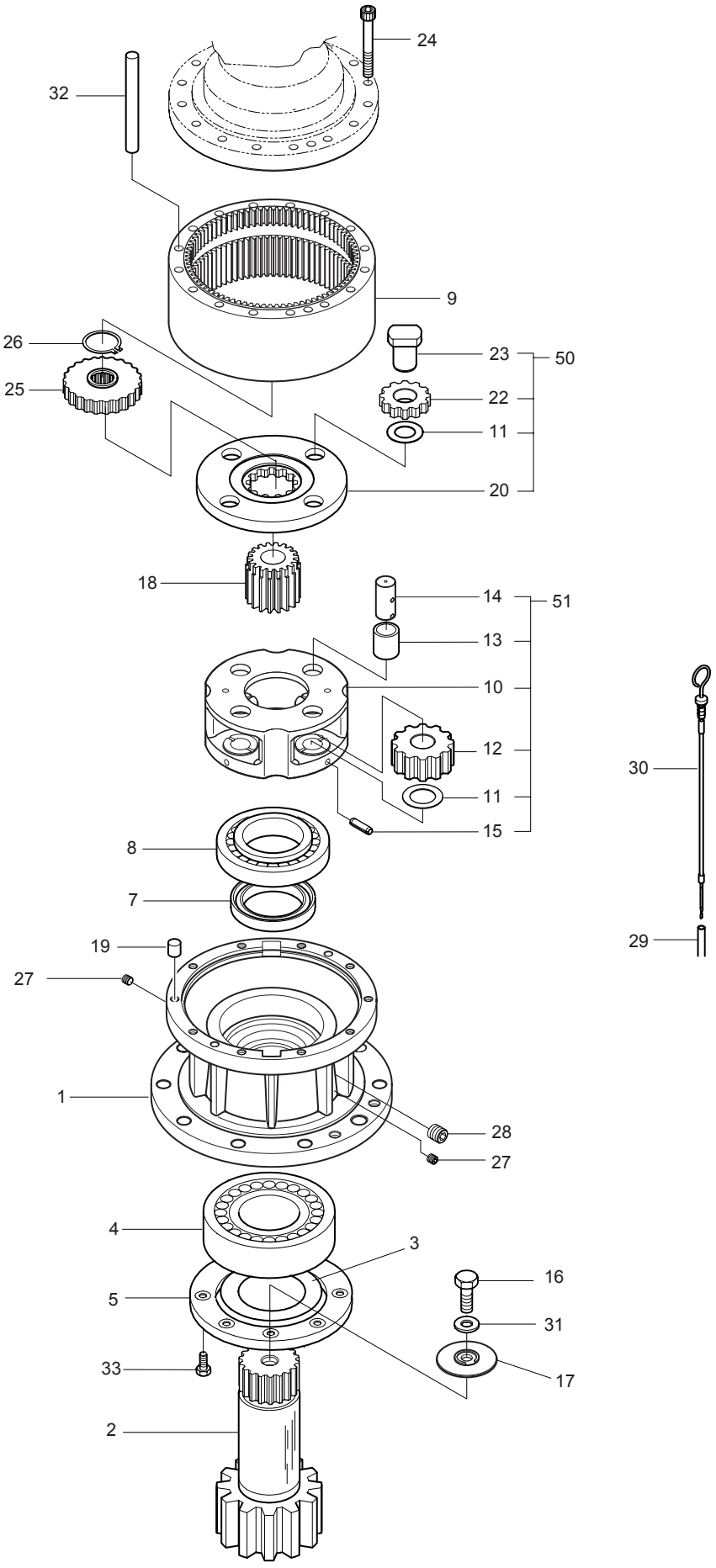

DATE	DEC. 29, 2005
REV. NO.	EXB05-20

Fig. 4140 SWING REDUCTION GEAR REDEUTEUR D'ORIENTATION

Serial No ; 1001 ~ 2064

Key No.	Part No.	Description	Description	Q'ty	S.C	Serial No.	ICA	Replaceable part	
								Part No.	Q'ty
4140--	2404-1063I	GEAR;REDUCTION	REDEUTEUR	1		1001–1257	I	2404-1063J	1
	2404-1063J	**GEAR;REDUCTION**	REDEUTEUR	1		**1258–2064**			
1	2423-1496E	CASING	CARTER	1	D	1001–1257			
	2423-1496G	CASING	CARTER	1	D	1258–			
2	2112-1248B	SHAFT;DRIVE	AXE	1		1001–1257	I	2112-1248C	1
	2112-1248C	SHAFT;DRIVE	AXE	1		1258–			
3	2412-1040	PLATE	RONDELLE	1					
4	2109-9033	BEARING;ROLLER	ROULEMENT A BILLES	1					
5	2891-1421B	PLATE;COVER	PLAQUE	1					
7	2180-1254	SEAL;OIL	JOINT D'HUILE	1					
8	2109-1050	BEARING;ROLLER	ROULEMENT A BILLES	1		1001–1257	I	109-00174	1
	109-00174	BEARING;ROLLER	ROULEMENT A BILLES	1		1258–			
9	2104-1013A	GEAR;RING	PIGNON	1					
10	2230-1037A	CARRIER NO.2	SUPPORT	1					
11	2114-1901A	WASHER;THRUST NO.2	RONDELLE	8					
12	2104-1022B	GEAR;PLANET NO.2	PIGNON	4					
13	2110-1371A	BUSH NO.2	MANCHON	4					
14	2123-2322B	PIN NO.2	GOUJON	4					
15	S5741341	PIN;SPRING	GOUPILLE FENDUE	4					
16	S0121061	BOLT M16X25	BOULONE A 6 PANS	1					
17	2114-1902	WASHER;THRUST NO.3	RONDELLE	1					
18	2104-1021B	GEAR;SUN NO.2	PIGNON	1					
19	2705-1030	PIN;KNOCK	BROCHE DE BLOCAGE	4					
20	2230-1036B	CARRIER NO.1	SUPPORT	1					
22	2104-1020C	GEAR;PLANET NO.1	PIGNON	4					
23	2123-2327A	PIN ASS'Y NO.1	GOUJON	4					
24	S2217471	BOLT;SOCKET M12X150	BOULON DE PLOT	16					
25	2104-1019B	GEAR;SUN NO.1	PIGNON	1					
26	S6500450	RING;SNAP	BAGUE D'ARRET	1					
27	2181-1116D2	PLUG PT1/4	BOUCHON	2					
28	2181-1116D4	PLUG PT1/2	BOUCHON	1					
29	2140-1406	PIPE;LEVEL GAUGE	TUYAU	1					
30	2119-1065	LEVEL GAUGE	JAUGE DE NIVEAU	1					
31	S5231090	WASHER;DOUBLE TAP	RONDELLE	1					
32	2182-1756A	PIPE	TUYAU	4					
33	120-00144	BOLT;HEX. M10X1.5X25	BOULON A 6 PANS	8					
50	230-00050	CARRIER NO.1 ASS'Y	ENSEMBLE SUPPORT	1					
51	230-00051	CARRIER NO.2 ASS'Y	ENSEMBLE SUPPORT	1					

DATE	DEC. 29, 2005
REV. NO.	EXB05-20

Fig. 4141 SWING REDUCTION GEAR REDEUTEUR D'ORIENTATION

Serial No. ; 2065 ~

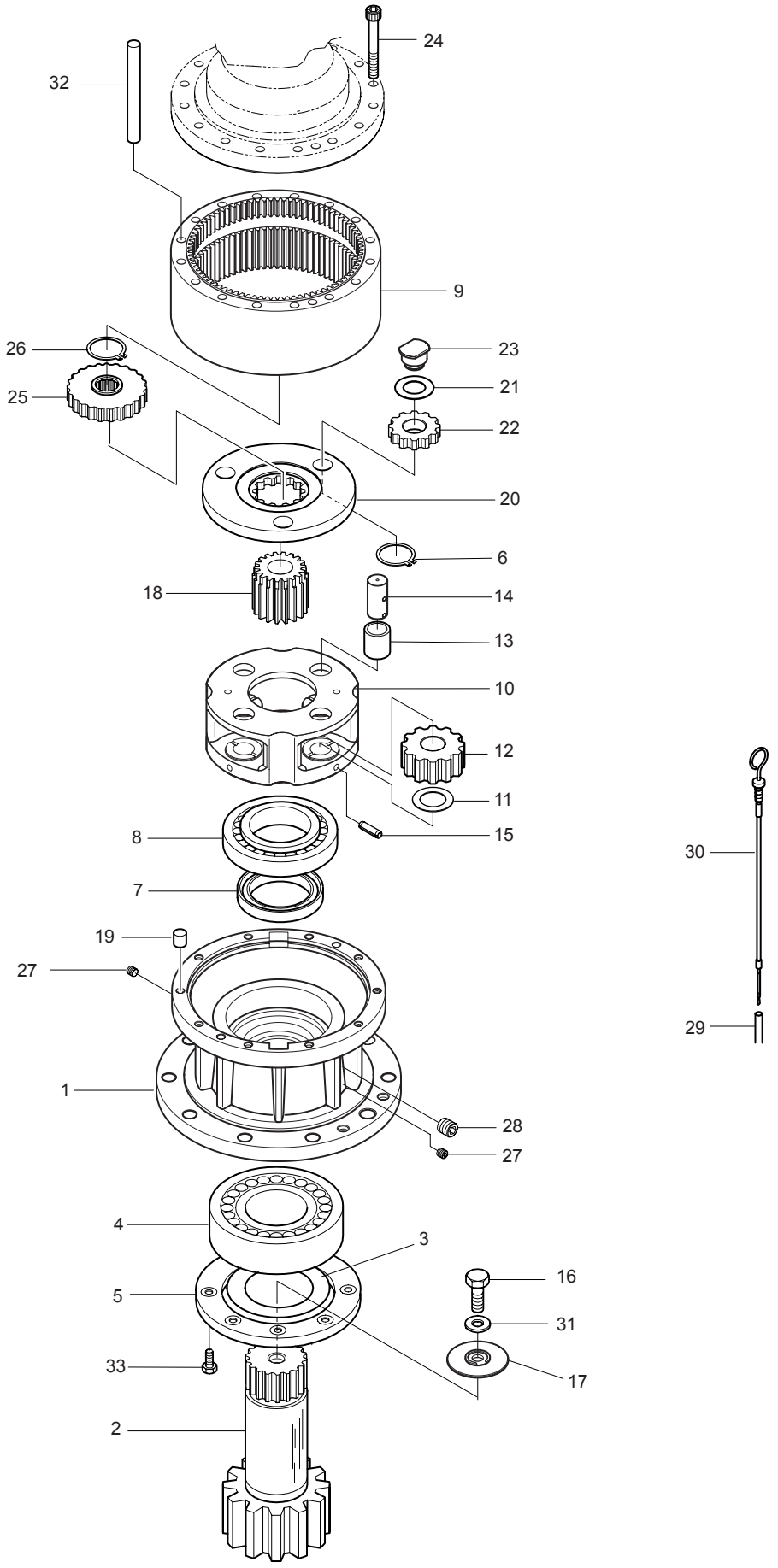

DATE	DEC. 29, 2005
REV. NO.	EXB05-20

Fig. 4141 SWING REDUCTION GEAR REDEUTEUR D'ORIENTATION

Serial No ; 2065 ~

Key No.	Part No.	Description	Description	Q'ty	S.C	Serial No.	ICA	Replaceable part	
								Part No.	Q'ty
4141--	**K1004160A**	**GEAR;REDUCTION**	REDEUTEUR	1		**2065–**			
1	2423-1496G	CASING	CARTER	1					
2	2112-1248E	SHAFT;DRIVE	AXE	1					
3	2412-1040	PLATE	RONDELLE	1					
4	2109-9033	BEARING;ROLLER	ROULEMENT A BILLES	1					
5	2891-1421B	PLATE;COVER	PLAQUE	1					
6	S6500380	RING;SNAP	PLAQUE	3					
7	2180-1254	SEAL;OIL	JOINT D'HUILE	1					
8	109-00174	BEARING;ROLLER	ROULEMENT A BILLES	1					
9	104-00051A	GEAR;RING	PIGNON	1					
10	230-00061	CARRIER NO.2	SUPPORT	1					
11	2114-1901A	WASHER;THRUST NO.2	RONDELLE	4					
12	104-00050	GEAR;PLANET NO.2	PIGNON	4					
13	110-00219	BUSH NO.2	MANCHON	4					
14	123-00437A	PIN NO.2	GOUJON	4					
15	S5741341	PIN;SPRING	GOUPILLE FENDUE	4					
16	S0121061	BOLT M16X25	BOULONE A 6 PANS	1					
17	114-00548	WASHER;THRUST NO.3	RONDELLE	1					
18	104-00048	GEAR;SUN NO.2	PIGNON	1					
19	2705-1030	PIN;KNOCK	BROCHE DE BLOCAGE	4					
20	230-00060A	CARRIER NO.1	SUPPORT	1					
21	114-00527	WASHER;THRUST NO.1	RONDELLE	3					
22	104-00049A	GEAR;PLANET NO.1	PIGNON	3					
23	123-00435A	PIN ASS'Y NO.1	GOUJON	3					
24	S2217471	BOLT;SOCKET M12X150	BOULON DE PLOT	16					
25	104-00047A	GEAR;SUN NO.1	PIGNON	1					
26	S6500450	RING;SNAP	BAGUE D'ARRET	1					
27	2181-1116D2	PLUG PT1/4	BOUCHON	2					
28	2181-1116D4	PLUG PT1/2	BOUCHON	1					
29	2140-1406	PIPE;LEVEL GAUGE	TUYAU	1					
30	2119-1065	LEVEL GAUGE	JAUGE DE NIVEAU	1					
31	S5231090	WASHER;DOUBLE TAP	RONDELLE	1					
32	140-01374A	PIPE	TUYAU	4					
33	120-00144	BOLT;HEX. M10X1.5X25	BOULON A 6 PANS	8					

DATE	DEC. 15, 2006
REV. NO.	EXB06-13

Fig. 4150 TRAVEL MOTOR
MOTEUR DE TRANSLATION

Serial No. ; 1001 ~ 1114

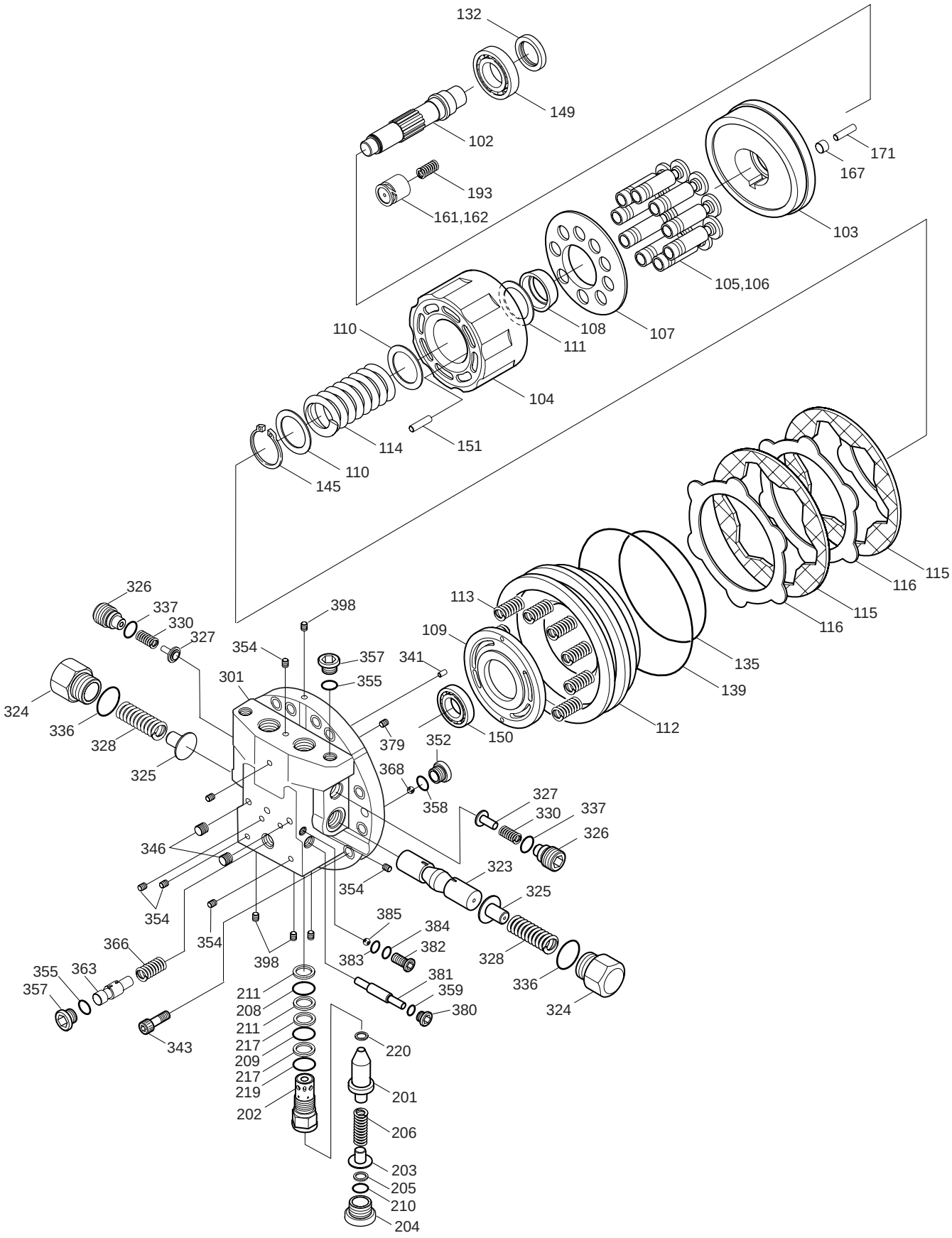

DATE	DEC. 15, 2006
REV. NO.	EXB06-13

Fig. 4150 TRAVEL MOTOR MOTEUR DE TRANSLATION

Serial No. ; 1001 ~ 1114

Key No.	Part No.	Description	Description	Q'ty	S.C	Serial No.	ICA	Replaceable part	
								Part No.	Q'ty
4150--	2401-9287A	TRAVEL DEVICE	SYSTEME DE	2		1001–1114			
*	718191	TRAVEL MOTOR	MOTEUR DE TRANSLATION	1					
102	131155	SHAFT	ARBRE	1					
103	133591	PLATE;SWASH	PLAQUE	1					
104	131149	BLOCK;CYLINDER	BLOC DE CYLINDRE	1					
*	716689	PISTON & SHOE ASS'Y	ENSEMBLE DE PISTON	9					
105	131147	. PISTON	. PISTON	1	D				
106	131148	. SHOE	. SABOT	1	D				
107	131150	PLATE;RETAINER	PLAQUE	1					
108	132323	BALL;THRUST	BILLE	1					
109	132324	PLATE;TIMING	PLAQUE	1					
110	116976	WASHER;PLAIN	RONDELLE	2					
111	131356A	COLLAR(WASHER)	BAGUE	1					
112	131158	P/PISTON	PISTON	1					
113	131159	SPRING	RESSORT	12					
114	131153	SPRING	RESSORT	1					
115	131160	PLATE;FRICTION	PLAQUE	2					
116	116979	PLATE;MATING	PLAQUE	2					
132	215823	SEAL;OIL	JOINT	1	K				
135	228569	O-RING	JOINT TORIQUE	1	K				
139	228570	O-RING	JOINT TORIQUE	1	K				
145	215824	RING;SNAP	BAGUE	1					
149	229127	BEARING;BALL	PALIER	1					
150	229128	BEARING;BALL	PALIER	1					
151	131154	ROLLER	PALIER	5					
*	716694	PISTON & SHOE ASS'Y	ENSEMBLE DE PISTON	1					
161	131184	. PISTON(TWO SPEED)	. PISTON	1	D				
162	131185	. SHOE(TWO SPEED)	. SABOT	1	D				
167	131161	PIVOT	PIVOT	1					
171	131146	PIN;PARALELL	BROUCHE	2					
193	123744	SPRING	RESSORT	1					
*	716680	RELIEF VALVE ASS'Y	SOUPAPE SOULEVANTE	2					
201	131178	. VALVE	. SOUPAPE	2					
202	131179	. SLEEVE	. BROUCHE	2					
203	131180	. RETAINER;SPRING	. BAGUE DE RESSORT	2					
204	131181	. PLUG	. BOUCHON	2					
205	131182	. SHIM	. CALE	2					
206	131183	. SPRING	. RESSORT	2					

DATE	DEC. 15, 2006
REV. NO.	EXB06-13

Fig. 4150 TRAVEL MOTOR
MOTEUR DE TRANSLATION

Serial No. ; 1001 ~ 1114

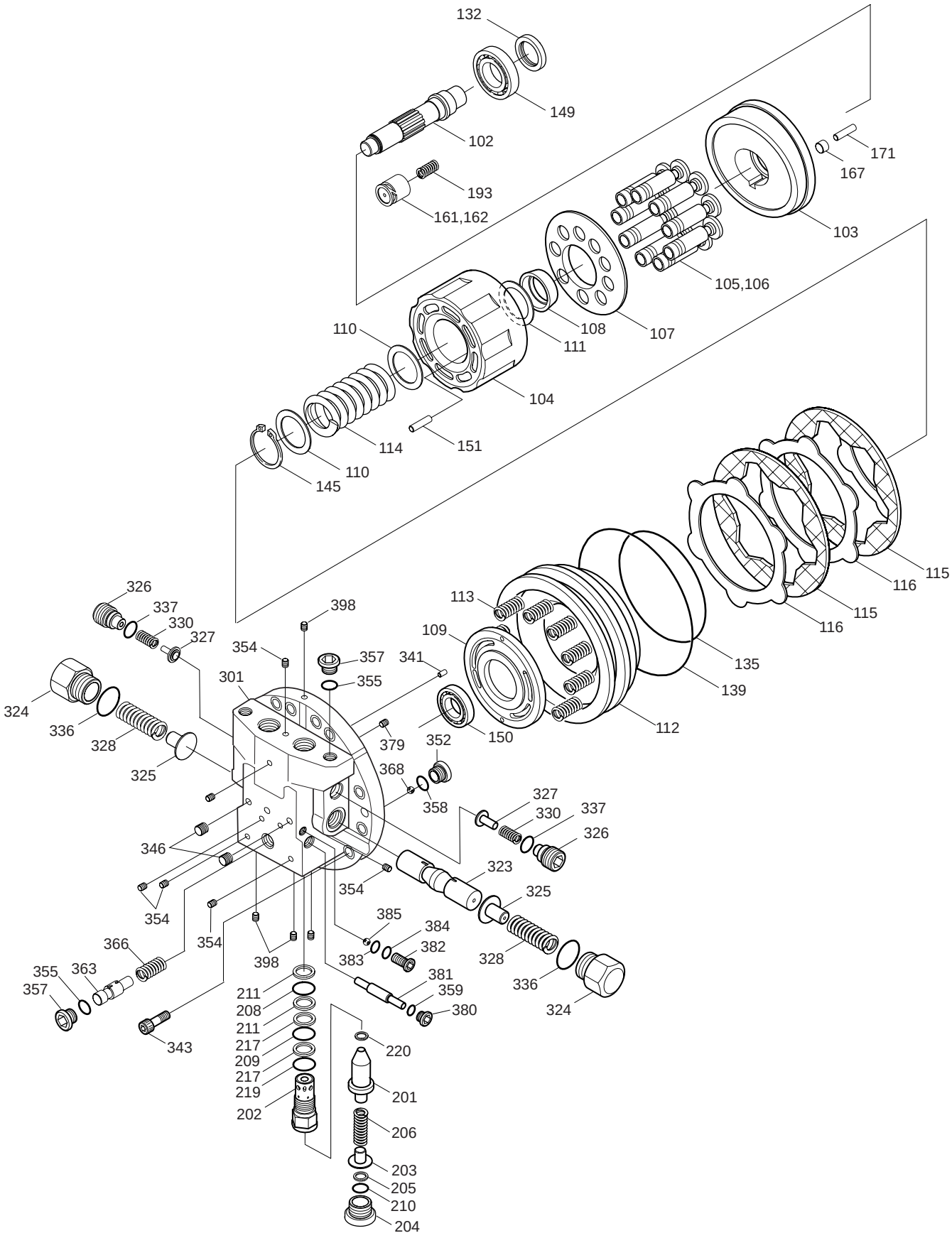

DATE	DEC. 15, 2006
REV. NO.	EXB06-13

Fig. 4150 TRAVEL MOTOR MOTEUR DE TRANSLATION

Serial No. ; 1001 ~ 1114

Key No.	Part No.	Description	Description	Q'ty	S.C	Serial No.	ICA	Replaceable part	
								Part No.	Q'ty
4150-208	201706	. O-RING 1BP16	. JOINT TORIQUE	2	K				
209	206597	. O-RING 1BP22	. JOINT TORIQUE	2	K				
210	201710	. O-RING 1BP18	. JOINT TORIQUE	2	K				
211	228576	. RING;BACK UP	. BAGUE	4	K				
217	228577	. RING;BACK UP	. BAGUE	4	K				
219	201729	. O-RING 1BP29	. JOINT TORIQUE	2	K				
220	228578	. SEAL;PISTON	. JOINT DE PISTON	2	K				
*	718553	REAR FLANGE KIT	KIT BRIDE DE BOBINE	1					
301	132622	. FLANGE;REAR	. BRIDE	1	D				
323	132318	. SPOOL	. BOBINE	1	D				
324	204548	. PLUG	. BOUCHON	2	D				
325	131167	STOPPER	ARRET	2					
326	104126A	PLUG	BOUCHON	2					
327	105637	VALVE	VANNE	2					
328	211668B	SPRING	RESSORT	2					
330	123743	SPRING	RESSORT	2					
336	201733	O-RING 1BP32	JOINT TORIQUE	2	K				
337	201719	O-RING 1BP22A	JOINT TORIQUE	2	K				
341	131177	PIN;PARALELL	BROUCHE	1					
343	200709	BOLT;SOCKET M16XX40	BOULON DE PLOT	12					
346	108061A	PLUG;PT	BOUCHON	2					
352	131170	PLUG;RO	BOUCHON	2					
354	224308	PLUG;PT	BOUCHON	8					
355	201710	O-RING 1BP18	JOINT TORIQUE	2	K				
357	131145	PLUG;RO	BOUCHON	2					
358	201689	O-RING 1BP11	JOINT TORIQUE	2	K				
359	207424	O-RING 1BP14	JOINT TORIQUE	2	K				
363	131173	SPOOL	BOBINE	1					
366	131174	SPIRNG	RESSORT	1					
368	200162	BALL;STEEL	BILLE	2					
379	228574	FILTER	FILTRE	1					
380	131186	PLUG	BOUCHON	2					
381	131165	PISTON	PISTON	1					
382	131187	PLUG	BOUCHON	2					
383	201749	O-RING 1BP5	JOINT TORIQUE	2	K				
384	225118	O-RING 1BP8	JOINT TORIQUE	2	K				
385	228582	BALL;STEEL	BILLE	2					
397	116482	ORIFICE	ORIFICE	1					

DATE	DEC. 15, 2006
REV. NO.	EXB06-13

Fig. 4150 TRAVEL MOTOR
MOTEUR DE TRANSLATION

Serial No. ; 1001 ~ 1114

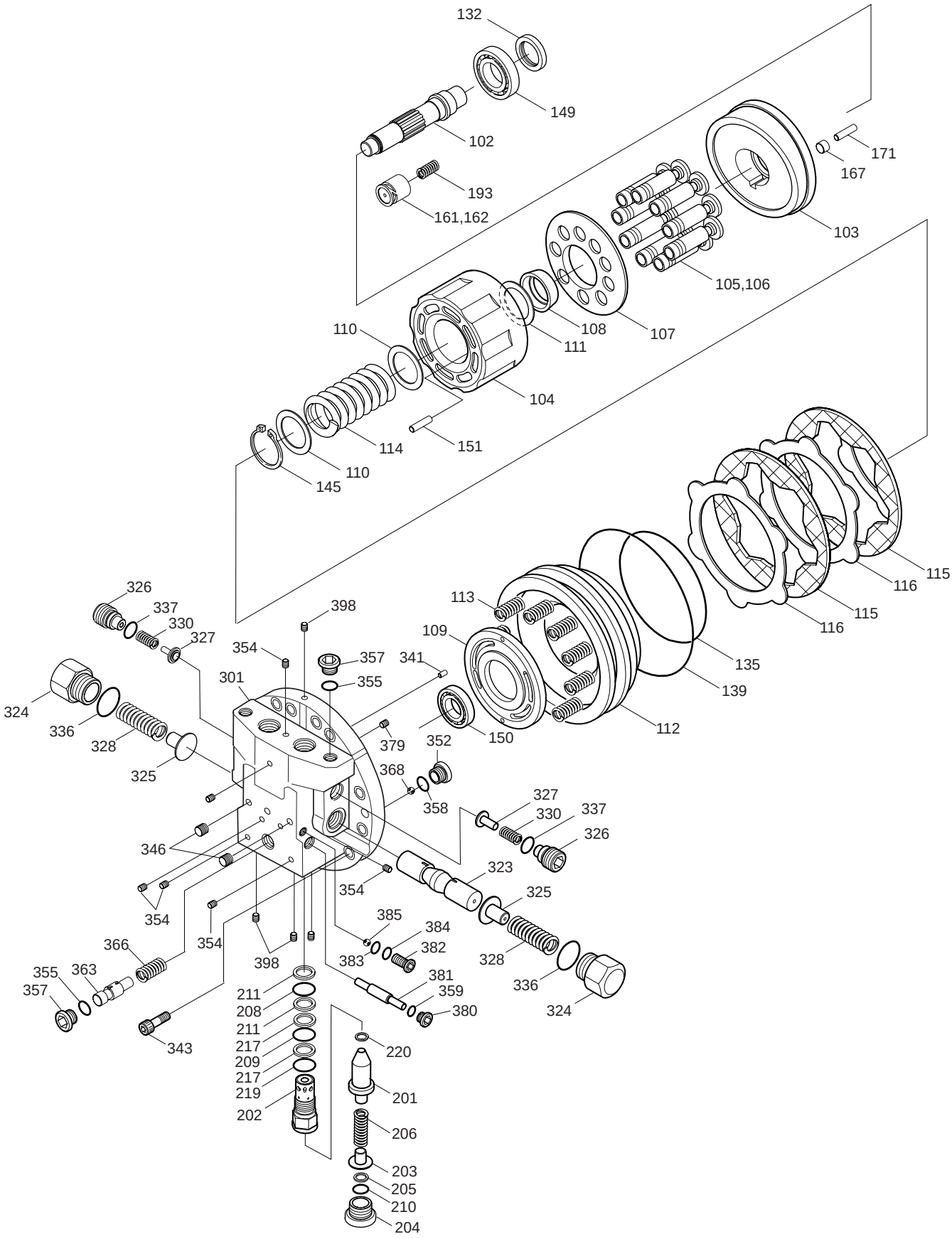

DATE	DEC. 15, 2006
REV. NO.	EXB06-13

Fig. 4150 TRAVEL MOTOR MOTEUR DE TRANSLATION

Serial No. ; 1001 ~ 1114

Key No.	Part No.	Description	Description	Q'ty	S.C	Serial No.	ICA	Replaceable part	
								Part No.	Q'ty
4150-398	108064A	PLUG;PT	BOUCHON	4					
*	2401-9287KT	SEAL KIT;TRAVEL MOTOR	KIT DE REPARATION	1					

DATE	JUN. 30, 2005
REV. NO.	EXB05-05

Fig. 4151 TRAVEL MOTOR
MOTEUR DE TRANSLATION

Serial No. ; 1115 ~

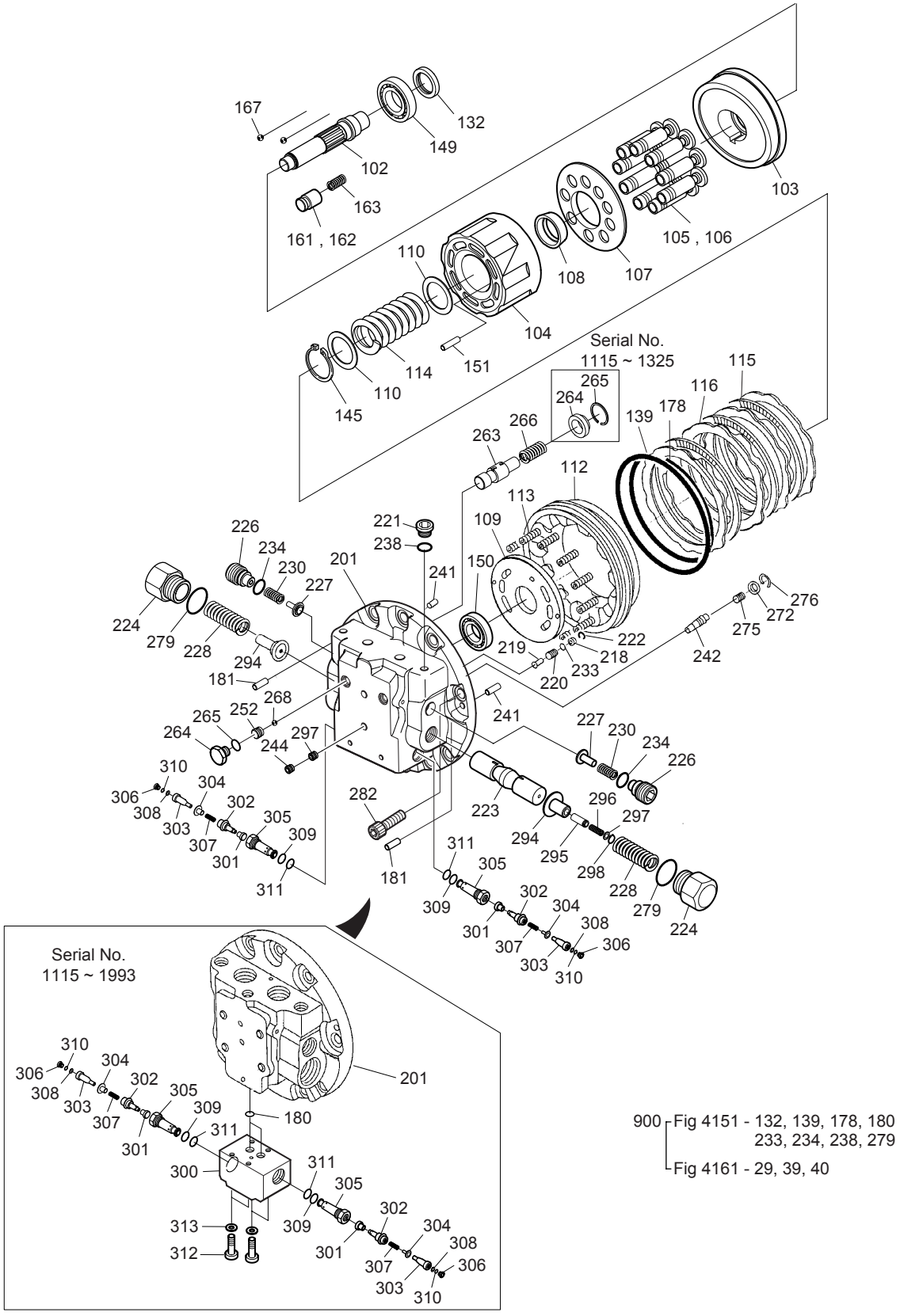

DATE	JUN. 30, 2005
REV. NO.	EXB05-05

Fig. 4151 TRAVEL MOTOR MOTEUR DE TRANSLATION

Serial No ; 1115 ~

Key No.	Part No.	Description	Description	Q'ty	S.C	Serial No.	ICA	Replaceable part	
								Part No.	Q'ty
4151--	**401-00454**	**TRAVEL DEVICE**	MOTEUR DE TRANSLATION	2		**1115–1191**	I	401-00454A	1
	401-00454A	**TRAVEL DEVICE**	MOTEUR DE TRANSLATION	2		**1192–1325**	I	401-00454B	1
	401-00454B	**TRAVEL DEVICE**	MOTEUR DE TRANSLATION	2		**1326–1993**	I	401-00454C	1
	401-00454C	**TRAVEL DEVICE**	MOTEUR DE TRANSLATION	2		**1994–**			
RL	1.215-00001	REAR FLANGE ASS'Y	KIT BRIDE DE BOBINE	1		1115–1993			
	K9001812	**REAR FLANGE ASS'Y**	KIT BRIDE DE BOBINE	1		**1994–**			
RL1	1.215-00002	. KIT;REAR FLANGE	. KIT BRIDE DE BOBINE	1		1115–1993			
	K9001813	**. KIT;REAR FLANGE**	. KIT BRIDE DE BOBINE	1		**1994–**			
201	1.215-00003	.. FLANGE;REAR	.. BRIDE	1	D	1115–1993			
	-	**.. FLANGE;REAR**	.. BRIDE	1	D	**1994–**			
223	1.424-00062	.. SPOOL;MAIN	.. BOBINE	1	D				
RL2	1.416-00026	. STOPPER ASS'Y	. ARRET	2					
294	1.416-00027	.. STOPPER	.. ARRET	1	D				
295	1.424-00063	.. SPOOL;MAIN	.. BOBINE	1	D				
296	1.129-00018	.. SPRING	.. RESSORT	1	D				
297	1.114-00542	.. WASHER	.. RONDELLE	1	D				
298	S6550100	.. RING;SNAP	.. BAGUE	1	D				
224	1.181-00059	. PLUG;FOR MAIN	. BOUCHON	2					
228	1.131-00058	. SPRING;FOR MAIN	. RESSORT	2					
279	S8000321	. O-RING	. JONT TORIQUE	2	K				
226	1.181-00067	. PLUG;CHECK	. BOUCHON	2					
227	1.420-00013	. VALVE;CHECK	. VANNE	2					
230	1.129-00006	. SPRING;CHECK	. RESSORT	2					
234	S8002731	. O-RING	. JONT TORIQUE	2	K				
221	2181-1890D4	. PLUG ;RO	. BOUCHON	1					
238	S8000181	. O-RING	. JONT TORIQUE	1	K				
252	2181-1116D2	. PLUG;PT1/4	. BOUCHON	4					
244	2181-1116D1	. PLUG;PT1/8	. BOUCHON	1					
268	S6250161	. BALL;STEEL	. BILLE	2					
242	1.420-00014	. VALVE;REDUCING	. VANNE	1					
272	1.427-00031	. SEAT;VALVE REDUCING	. SIEGE	1					
276	1.115-00141	. RING;REDUCING	. BAGUE	1					
275	1.131-00062	. SPRING;REDUCING V/V	. RESSORT	1					
218	1.427-00029	. VALVE;SEAT T-TYPE	. VANNE	1					
219	1.420-00009	. VALVE;T-TYPE	. VANNE	1					
220	1.131-00041	. SPRING;T-TYPE	. RESSORT	1					
222	1.115-00139	. RING;T-TYPE	. BAGUE	1					
233	S8000091	. O-RING	. JONT TORIQUE	1	K				

DATE	JUN. 30, 2005
REV. NO.	EXB05-05

Fig. 4151 TRAVEL MOTOR
MOTEUR DE TRANSLATION

Serial No. ; 1115 ~

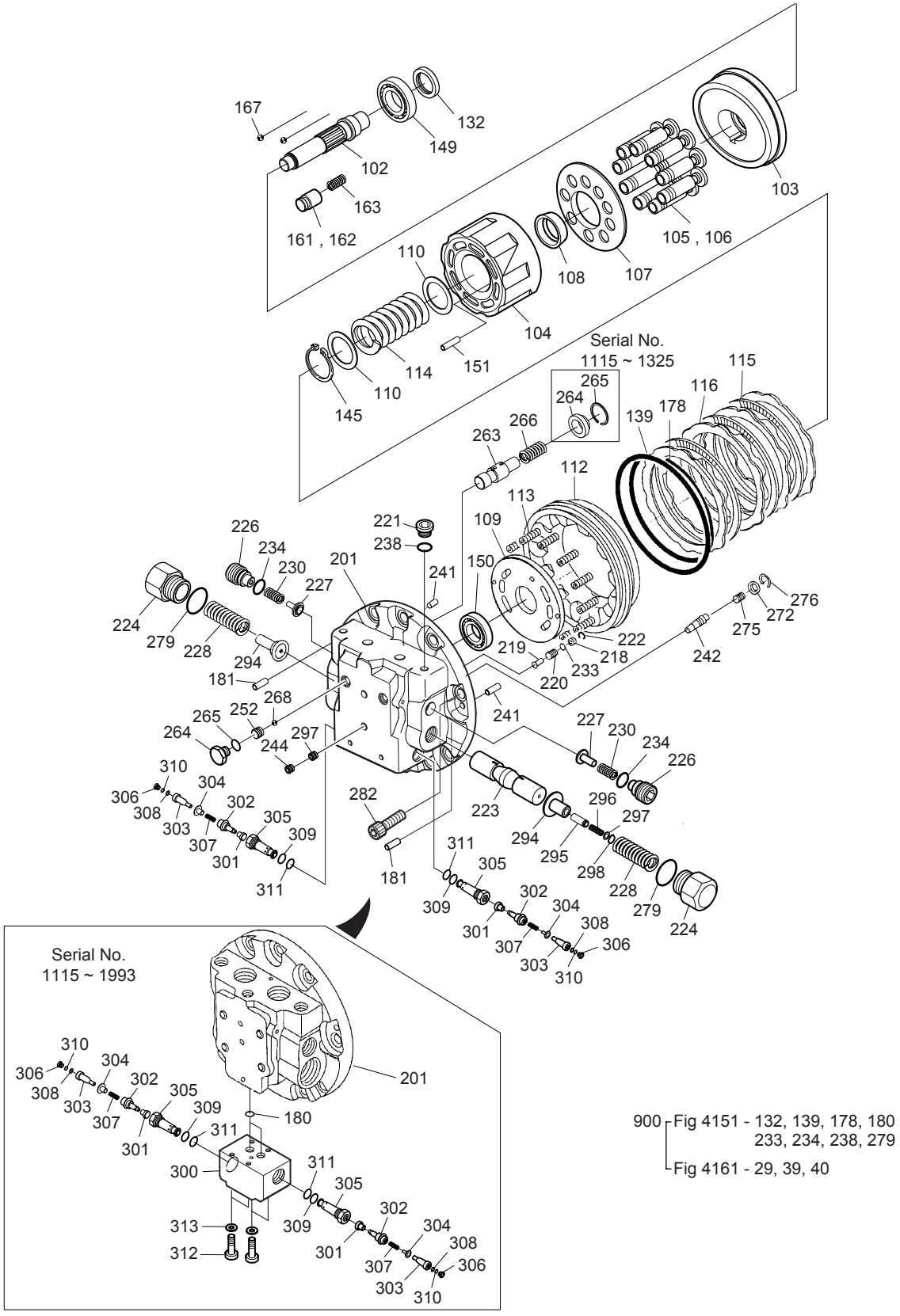

900 ┌ Fig 4151 - 132, 139, 178, 180
233, 234, 238, 279
└ Fig 4161 - 29, 39, 40

DATE	JUN. 30, 2005
REV. NO.	EXB05-05

Fig. 4151 TRAVEL MOTOR MOTEUR DE TRANSLATION

Serial No ; 1115 ~

Key No.	Part No.	Description	Description	Q'ty	S.C	Serial No.	ICA	Replaceable part	
								Part No.	Q'ty
4151-263	422-00031	. VALVE;TWO SPEED	. VANNE	1					
264	116-00016	. STOPPER;T/SPEED	. ARRET	1		1115–1325			
	K9001047	**. PLUG**	. BOUCHON	1		**1326–**			
265	411-00005	. RING;TWO SPEED	. BAGUE	1		1115–1325			
	S8000111	**. O-RING**	. JONT TORIQUE	1		**1326–**			
266	1.131-00099	. SPRING ;TWO SPEED	. RESSORT	1					
241	S5700891	. PIN;PARALLEL	. GOUPILLE	2					
282	S2221471	BOLT;SOCKET M16X2.0X40	BOULON A 6PANS	9					
297	1.415-00005	ORIFICE	ORIFICE	1					
M	1.401-00011	MOTOR PART	MOTEUR DE TRANSLATION	1					
M1	1.441-00291	KIT;CYL'D BLOCK & PISTON	KIT DE CYLINDRE	1					
104	1.441-00292	. BLOCK;CYL'D	. BLOC DE CYLINDRE	1	D				
110	1.114-00305	. WASHER	. RONDELLE	2	D				
114	1.129-00019	. SPRING;FOR CYL'D	. RESSORT	1	D				
145	S6510700	. RING;SNAP	. BAGUE	1	D				
M11	1.409-00231	. PISTON ASS'Y	. PISTON	1					
105	1.409-00232	.. PISTON	.. PISTON	9	D				
106	1.355-00011	.. SHOE	.. SABOT	9	D				
151	1.109-00135	. ROLLER	. ROULEAU	6	D				
107	1.412-00093	. PLATE;RETAINER	. PLAQUE	1	D				
108	1.148-00016	. BALL;THRUST	. BILLE	1	D				
M2	1.452-00004	PISTON ASS'Y	ENSEMBLE DE PISTON	1		1115–1993			
	K9001814	**PISTON ASS'Y**	ENSEMBLE DE PISTON	1		**1994–**			
161	1.409-00116	. PISTON	. PISTON	1	D				
162	1.355-00012	. SHOE	. SABOT	1	D				
163	1.131-00042	SPRING	RESSORT	1					
102	1.405-00022	SHAFT;MAIN	ARBRE	1					
103	1.412-00202	PLATE;SWASH	PLAQUE	1					
109	1.412-00203	PLATE;TIMING	PLAQUE	1					
115	1.412-00061	PLATE;FRICTION	PLAQUE	3					
116	1.412-00072	PLATE;MATING	PLAQUE	4					
112	1.409-00115	PISTON;PARKING	PISTON	1					
113	1.131-00055	SPRING;P/PISTON	RESSORT	9					
132	1.180-00631	SEAL;OIL	JOINT D'HUILE	1	K				
149	1.109-00147	BEARING;BALL	A BILLES ROULEMENT	1					
150	1.109-00026	BEARING;BALL	A BILLES ROULEMENT	1					
139	S8002101	O-RING	JONT TORIQUE	1	K				
178	S8011951	O-RING	JONT TORIQUE	1	K				

DATE	JUN. 30, 2005
REV. NO.	EXB05-05

Fig. 4151 TRAVEL MOTOR
MOTEUR DE TRANSLATION

Serial No. ; 1115 ~

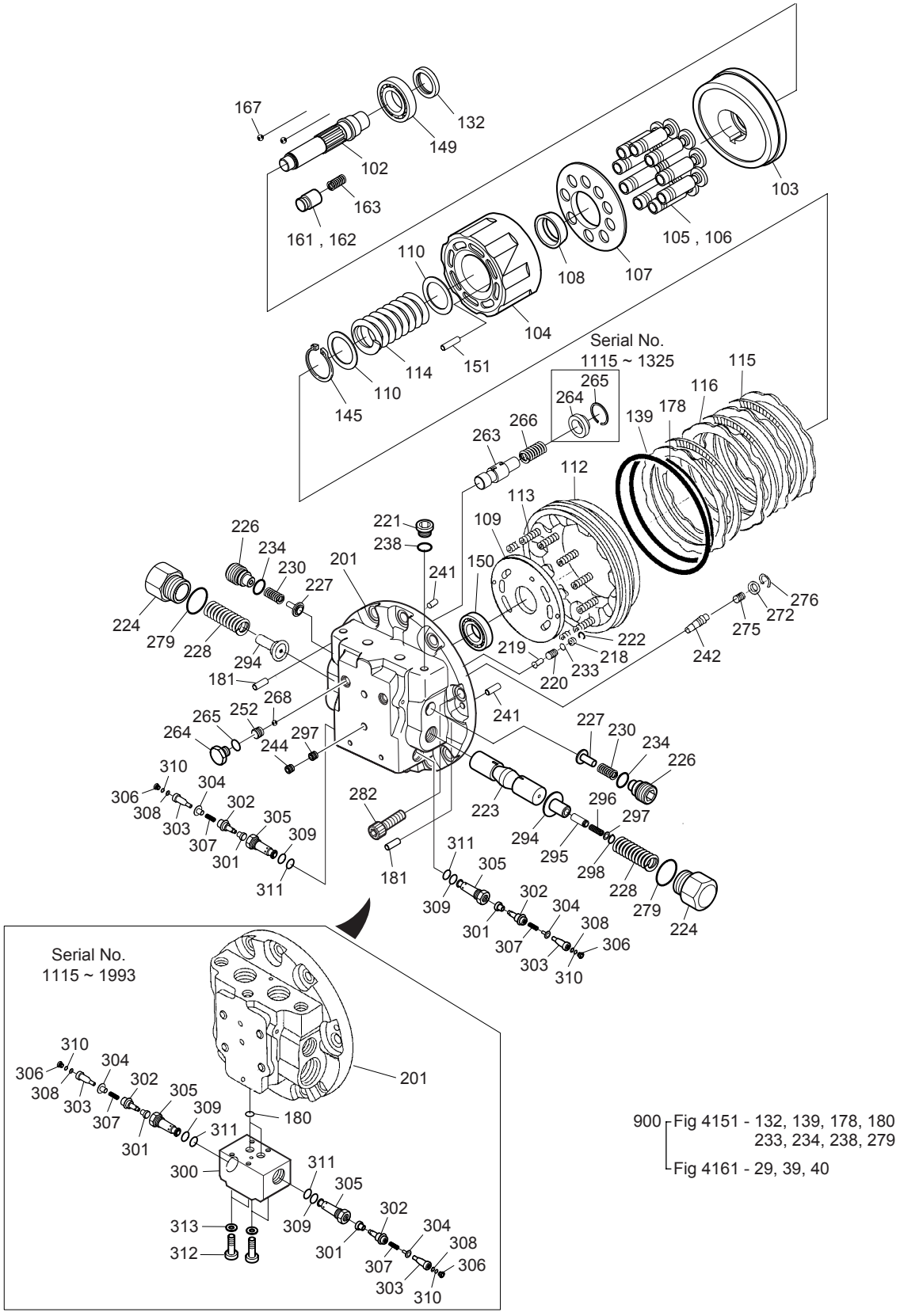

900 Fig 4151 - 132, 139, 178, 180
233, 234, 238, 279
Fig 4161 - 29, 39, 40

DATE	JUN. 30, 2005
REV. NO.	EXB05-05

Fig. 4151 TRAVEL MOTOR MOTEUR DE TRANSLATION

Serial No ; 1115 ~

Key No.	Part No.	Description	Description	Q'ty	S.C	Serial No.	ICA	Replaceable part	
								Part No.	Q'ty
4151-180	**S8000201**	**O-RING**	JONT TORIQUE	2	K	**1115–1993**			
181	S5701242	PIN	GOUPILLE	2					
167	1.540-00006	PIVOT	PIVOT	2					
R	**1.441-00293**	**KIT;RELIEF V/V BLOCK**	COUVERCLE ETANCHE	1		**1115–1993**			
300	**1.441-00294**	**. BLOCK;VALVE**	. ENSEMBLE CLAPET	1	D	**1115–1993**			
R1	1.426-00024	. RELIEF VALVE ASS'Y	. COUVERCLE ETANCHE	2	D				
301	1.429-00037	.. SEAT	.. CUVETTE DE RESSORT	1	D				
302	1.424-00064	.. PLUNGER	.. PLONGEUR	1	D				
303	1.424-00065	.. ROD	.. TIGE	1	D				
304	1.409-00233	.. PISTON	.. PISTON	1	D				
305	1.441-00295	.. BODY	.. CORPS	1	D				
306	1.181-00154	.. PLUG	.. BOUCHON	1	D				
307	1.129-00020	.. SPRING	.. RESSORT	1	D				
308	1.114-00543	.. SHIM	.. CALE	1	D				
309	S8000181	.. O-RING	.. JONT TORIQUE	1	D				
310	S8000181	.. O-RING	.. JONT TORIQUE	1	D				
311	S8060181	.. RING;BACKUP	.. ANNEAU DE SOUTIEN	1	D				
312	**S2209661**	**BOLT;SOCKET M8X1.25X50**	BOULON A 6PANS	4		**1115–1993**			
313	**S5110501**	**WASHER;SPRING M8**	RONDELLE ELASTIQUE	4		**1115–1993**			
900	2401-9082K	SEAL KIT	KIT DE JOINT	1					

DATE	DEC. 30, 2004
REV. NO.	EXB04-09

Fig. 4160 TRAVEL REDUCTION GEAR BOITE REDUCTEUR

Serial No. ; 1001 ~ 1114

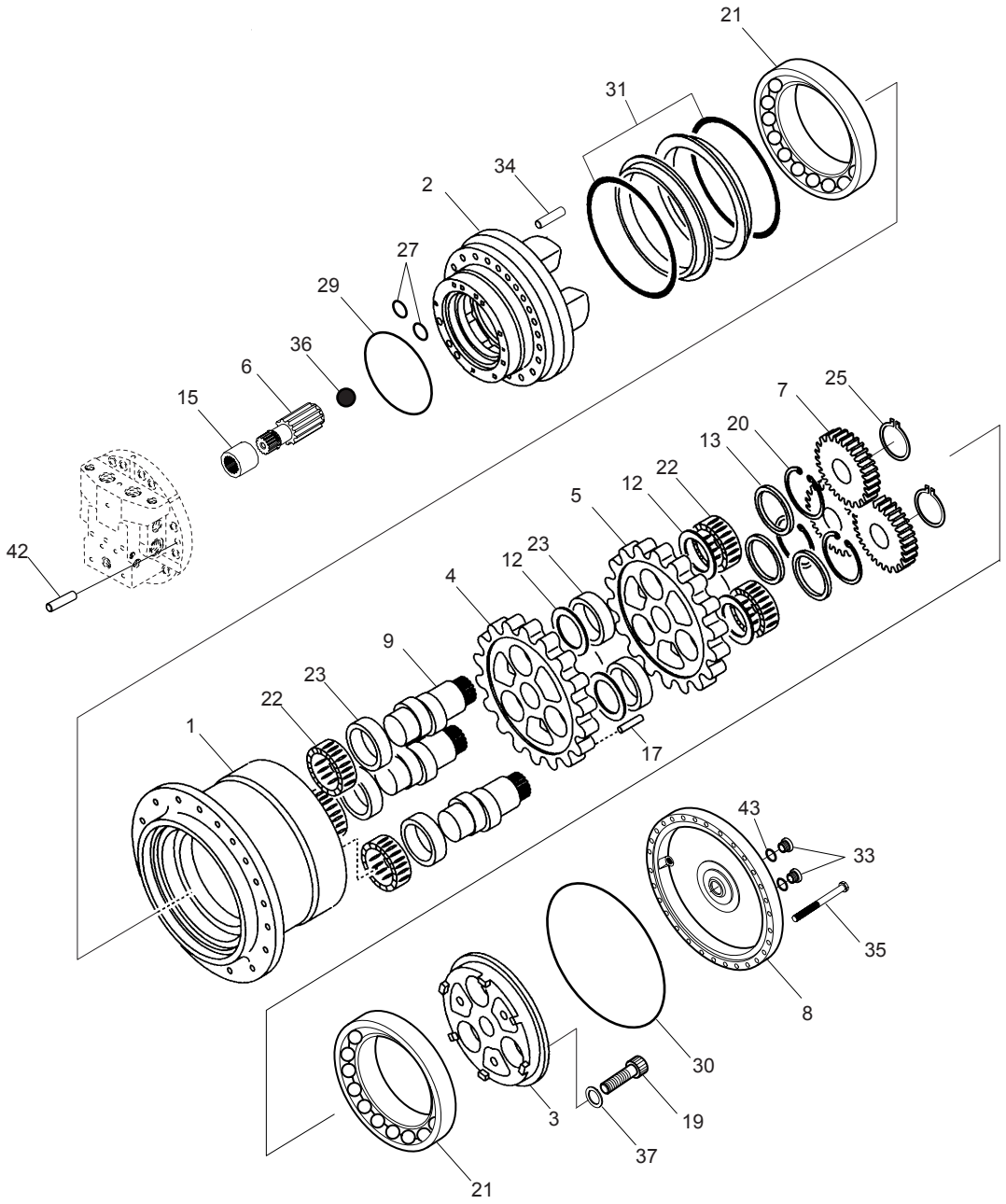

DATE	DEC. 30, 2004
REV. NO.	EXB04-09

Fig. 4160 TRAVEL REDUCTION GEAR BOITE REDUCTEUR

Serial No ; 1001 ~ 1114

Key No.	Part No.	Description	Description	Q'ty	S.C	Serial No.	ICA	Replaceable part	
								Part No.	Q'ty
4160--	2401-9287A	TRAVEL DEVICE	MOTEUR DE TRANSLATION	2		1001–1114			
*	718494B	TRAVEL REDUCTION GEAR	BOITE REDUCTEUR	1					
1	141927	HUB	MOYEU DE FIXATION	1					
*	716683	SPINDLE ASS'Y	TOUPIE	1					
2	131132	. SPINDLE	. TOUPIE	1					
3	131133	. FLANGE;HOLDER	. BRIDE	1					
*	718554	RV GEAR KIT	KIT DE PIGNON	1					
4	131136A	. RV GEAR A	. PIGNON	1					
5	131137A	. RV GEAR B	. PIGNON	1					
6	133594	GEAR;INPUT	PIGNON	1					
*	718551	SPUR GEAR KIT	ENSEMBLE DE PIGNON	1					
7	133593	GEAR;SPUR	PIGNON	3					
8	131141	CVOER	COUVERCLE	1					
9	131134A	CRANK;SHAFT	ARBRE DE BARBOTIN	3					
12	131135A	SPACER	BAGUE	6					
13	131142	DISTANCE PIECE	DISQUE	3					
15	107589	COUPLING	ACCOUPLEMENT	1					
17	131144	PIN	BROUCHE	24					
19	228558	BOLT;SOCKET M24X70	BOULON DE PLOT	3					
20	204958	RING;SNAP	BAGUE	3					
21	229126	BEARING;A/BALL	PALIER	2					
22	229124	BEARING;T/R	PALIER	6					
23	229125A	BEARING;NEEDLE	PALIER	6					
25	202606	RING;SNAP	BAGUE ELASTIQUE	3					
27	225118	O-RING 1BP8	JOINT TORIQUE	2	K				
29	204449A	O-RING 1AG230	JOINT TORIQUE	1	K				
30	204456A	O-RING 1AP335	JOINT TORIQUE	1	K				
31	**228561**	**SEAL;FLOATING**	JOINT	1					
33	131145	PLUG	BOUCHONE	3					
34	131130	PIN;PARALLEL	BROUCHE	6					
35	228565	BOLT;SOCKET M12X32	BOULON DE PLOT	12					
36	203316	BALL;STEEL	BILLE	1					
37	131131	WASHER;PLAIN	RONDELLE	3					
42	131146	PIN;PARALLEL	BROUCHE	2					
43	201710	O-RING 1BP18	JOINT TORIQUE	3	K				
*	718550	GEAR ASS'Y(4.5.9.12.23)	ENSEMBLE DE PIGNON	1					
	718549	SPINDLE KIT(2.3.19.34.37)	KIT DE TOUPIE	1					

DATE	JUN. 30, 2005
REV. NO.	EXB05-05

Fig. 4161 TRAVEL REDUCTION GEAR BOITE REDUCTEUR

Serial No. ; 1115 ~

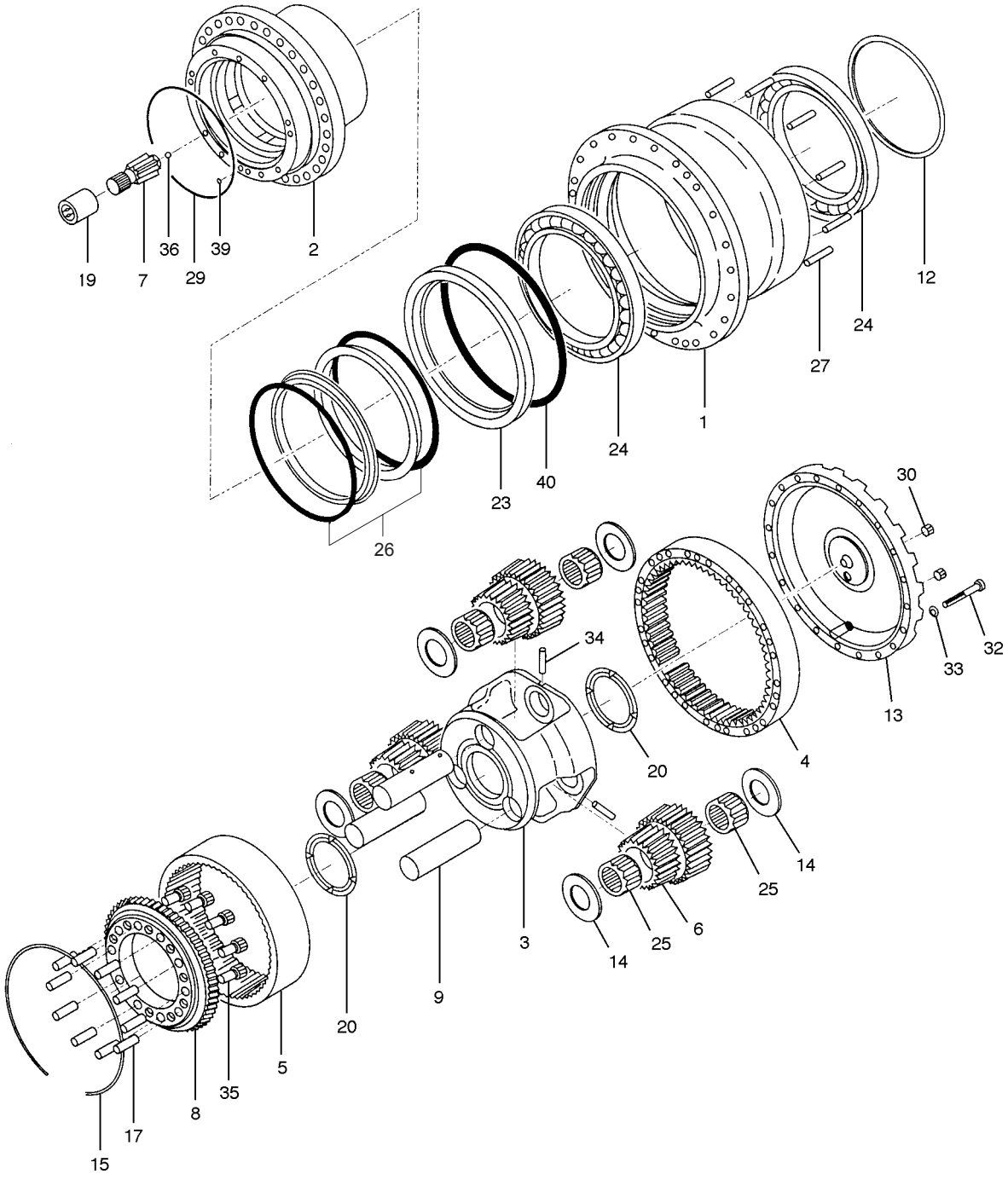

DATE	JUN. 30, 2005
REV. NO.	EXB05-05

Fig. 4161 TRAVEL REDUCTION GEAR BOITE REDUCTEUR

Serial No ; 1115 ~

Key No.	Part No.	Description	Description	Q'ty	S.C	Serial No.	ICA	Replaceable part	
								Part No.	Q'ty
4161--	401-00454	TRAVEL DEVICE	MOTEUR DE TRANSLATION	1		1115–1191	I	401-00454A	1
	401-00454A	TRAVEL DEVICE	MOTEUR DE TRANSLATION	1		1192–1325	I	401-00454B	1
	401-00454B	**TRAVEL DEVICE**	MOTEUR DE TRANSLATION	1		**1326–1993**	I	401-00454C	1
	401-00454C	**TRAVEL DEVICE**	MOTEUR DE TRANSLATION	1		**1994–**			
RG	1.404-00001	REDUCTION GEAR ASS'Y	BOITE REDUCTEUR	1					
RG1	1.156-00001	. HUB ASS'Y	. MOYEU DE FIXATION	1					
1	1.156-00002	.. HUB	.. MOYEU DE FIXATION	1	D				
4	1.104-00001	.. GEAR;RING A	.. PIGNON	1	D				
27	1.123-00107	.. PIN;PARALLEL D12X63	.. BROUCHE	10	D				
RG2	1.220-00001	. SPINDLE ASS'Y	. TOUPIE	1					
2	1.220-00002	.. SPINDLE	.. TOUPIE	1	D				
8	1.404-00002	.. GEAR;COUPLING	.. PIGNON	1	D				
35	S2224471	..BOLT;SOCKET M8X2.5X40	.. BOULON A 6 PANS CREUX	10					
17	1.123-00034	.. PIN	.. BROUCHE	10					
RG3	1.230-00053	CARRIER ASS'Y	SUPPORT	1					
3	1.230-00054	. CARRIER	. SUPPORT	1					
6	1.404-00007	. GEAR;CLUSTER	. PIGNON	3					
9	1.405-00121	. SHAFT;CLUSTER	. ARBRE	3					
14	1.114-00541	. COLLAR;THRUST	. BAGUE	6					
25	1.109-00145	. BEARING;NEEDLE	. PALIER	6					
5	1.104-00003	GAER;RING B	PIGNON	1					
7	1.403-00111	GEAR;SUN	PIGNON	1					
12	1.540-00004	PIECE;DISTANCE	DISQUE	1					
13	1.430-00030	COVER	COUVERCLE	1					
15	1.115-00138	RING	BAGUE	1					
19	1.414-00009	COUPLING	FIXATION DE POMPE	1					
20	1.412-00164	PLATE;THRUST	PLAQUE	2					
23	1.180-00355	RING;SEAL	BAGUE	1					
24	1.109-00146	BEARING;ANGULAR BALL	PALIER	2					
26	1.180-00512	SEAL;FLOATING	BAGUE	1					
29	S8010230	O-RING	JOINT TORIQUE	1	K				
30	2181-1116D4	PLUG;PT1/2	BOUCHON	3					
32	S0561471	BOLT;HEX M12X1.75X85	BOULON A 6 PANS CREUX	20					
33	S5110701	WASHER;SPRING M12	RONDELLE ELASTIQUE	20					
34	1.123-00026	PIN;PARALLEL	BROUCHE	3					
36	S6250200	BALL;STELL	BILLE	1					
39	S8000081	O-RING	JONT TORIQUE	2	K				
40	S8003401	O-RING	JONT TORIQUE	1	K				

DATE	JUN. 30, 2005
REV. NO.	EXB05-05

Fig. 4170 CONTROL VALVE(1) DISTRIBUTEUR

Serial No. ;

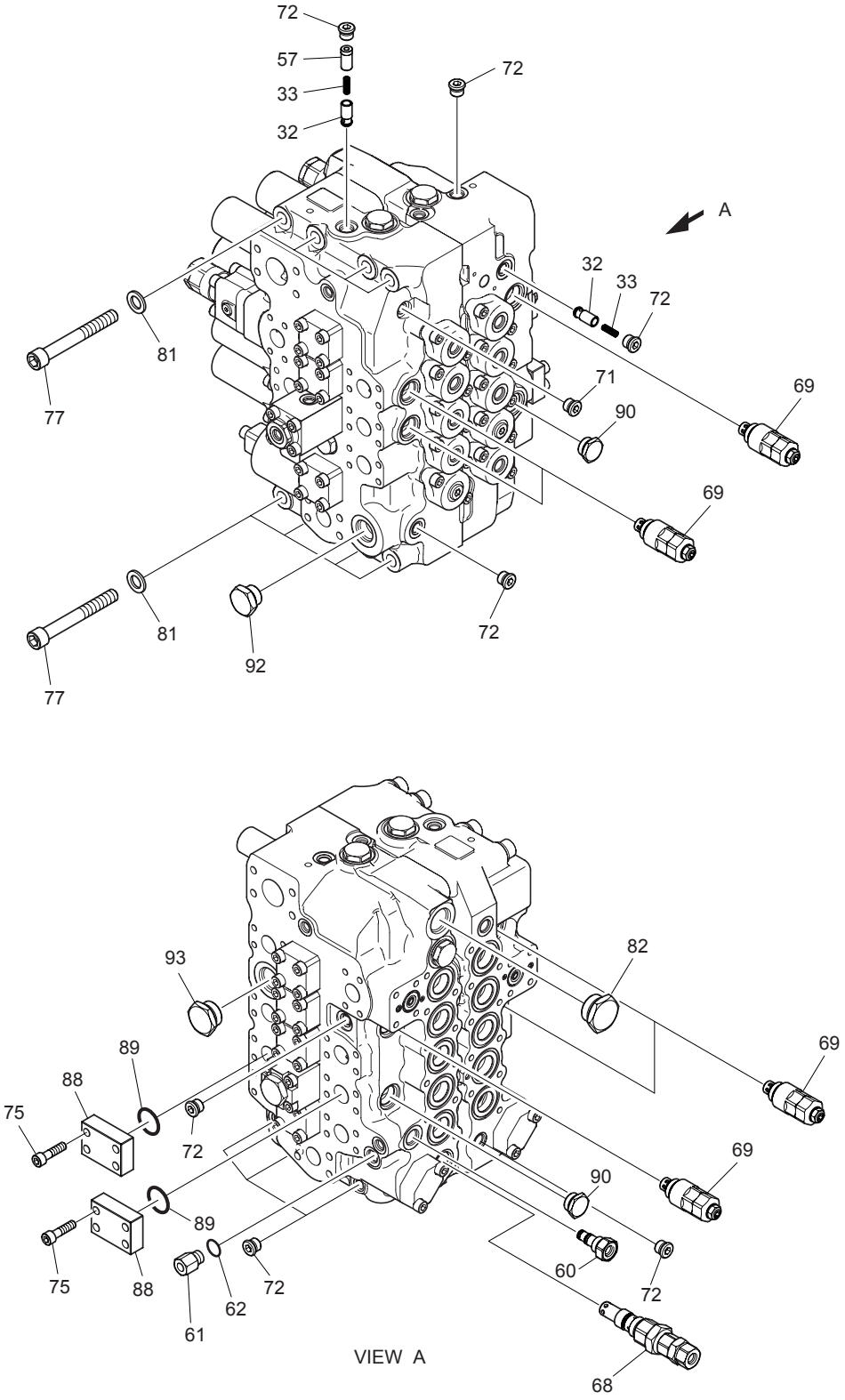

DATE	JUN. 30, 2005
REV. NO.	EXB05-05

Fig. 4170 CONTROL VALVE(1) DISTRIBUTEUR

Serial No ;

Key No.	Part No.	Description	Description	Q'ty	S.C	Serial No.	ICA	Replaceable part	
								Part No.	Q'ty
4170--	**420-00295**	**VALVE;CONTROL**	VANNE	1					
32	21111-54511	POPET	POPET	2					
33	21111-56508	SPRING	RESSORT	2					
57	T1311-14002	SPACER	BAGUE D'ECARTEMENT	1					
60	C0003-01208	PLUG ASS'Y	BOUCHON	1					
61	21001-90347	PLUG	BOUCHON	1					
62	95113-01400	O-RING	JOINT TORIQUE	1	K				
68	C011B-50146	VALVE;MAIN RELIEF	CLAPET DE DECHARGE	1					
69	C011B-40377	VALVE;OVERLOAD RELIEF	CLAPET DE DECHARGE	6					
71	21003-00382	PLUG ASS'Y	BOUCHON	1					
72	21003-00383	PLUG ASS'Y	BOUCHON	9					
75	92703-10401	BOLT;SOCKET M10X40L	BOULON A 6 PANS CREUX	8					
77	92703-16131	BOLT;SOCKET M16X130L	BOULON A 6 PANS CREUX	8					
81	94341-16302	WASHER	RONDELLE	8					
82	21003-00386	PLUG ASS'Y	BOUCHON	1					
88	21001-91002	CAP	CHAPEAU	2					
89	95131-02400	O-RING	JOINT TORIQUE	2	K				
90	21113-40308	PLUG ASS'Y	BOUCHON	2					
92	21003-00393	PLUG ASS'Y	BOUCHON	1					
93	21003-00205	PLUG ASS'Y	BOUCHON	1					
*	420-00295KT	SEAL KIT;CONTROL VALVE	KIT DE JOINT	1					

DATE	JUN. 30, 2005
REV. NO.	EXB05-05

Fig. 4180 CONTROL VALVE(2) DISTRIBUTEUR

Serial No. ;

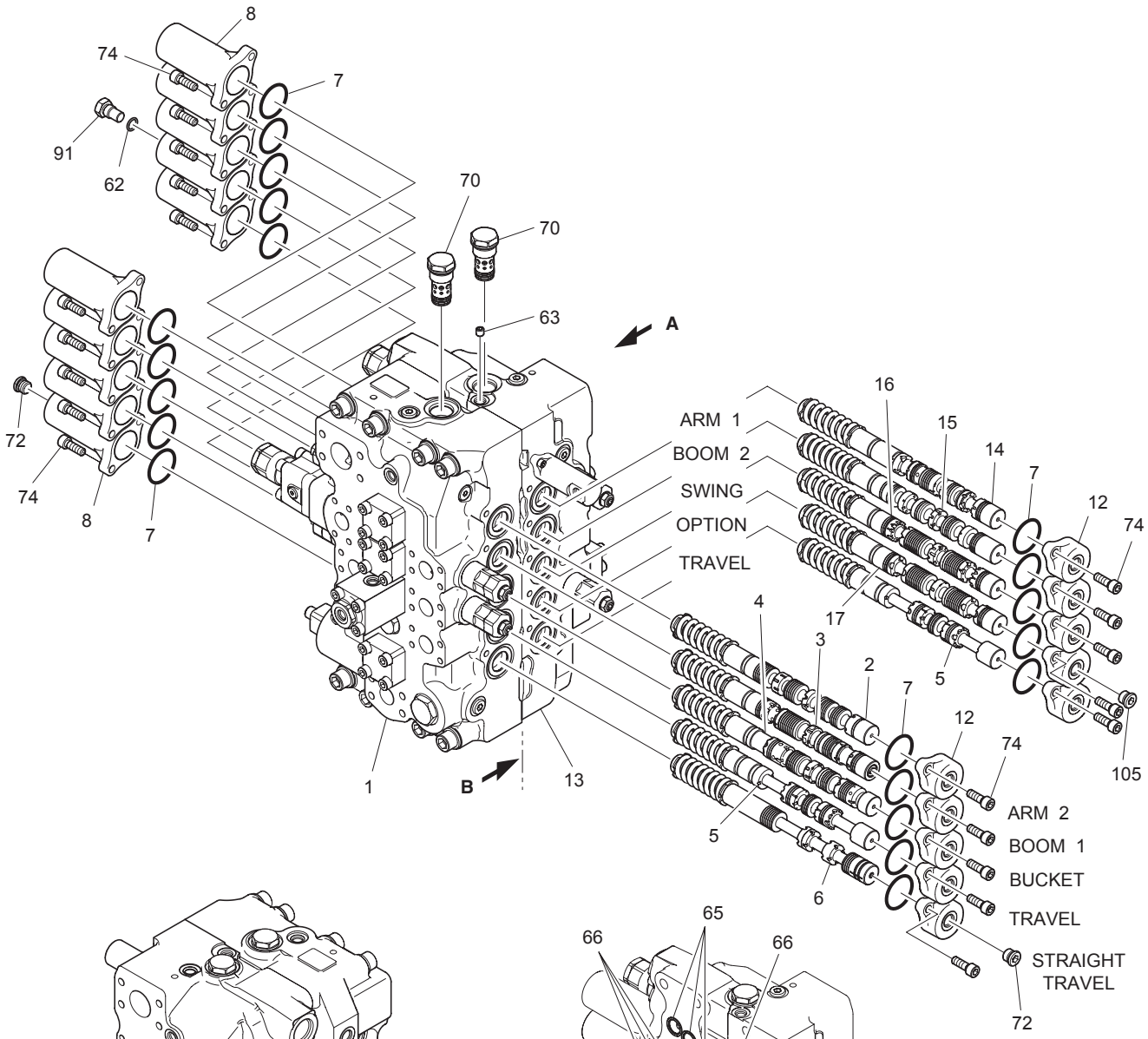

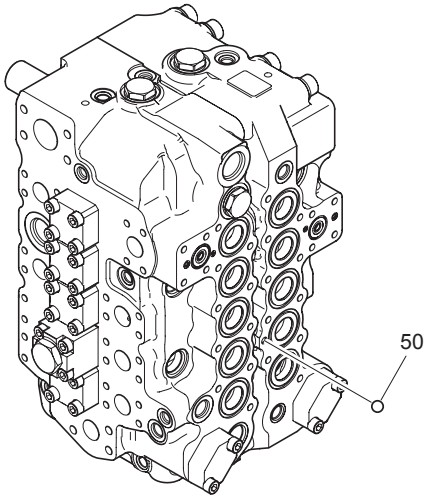

VIEW A

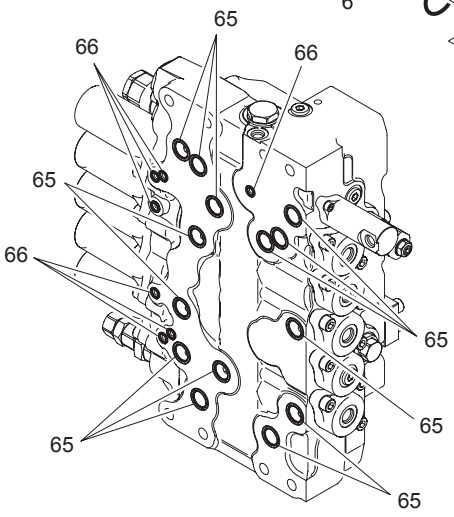

SECTION B

DATE	JUN. 30, 2005
REV. NO.	EXB05-05

Fig. 4180 CONTROL VALVE(2) DISTRIBUTEUR

Serial No ;

Key No.	Part No.	Description	Description	Q'ty	S.C	Serial No.	ICA	Replaceable part	
								Part No.	Q'ty
4180--	**420-00295**	**VALVE;CONTROL**	VANNE	1					
1	C0151-55007	HOUSING;VALVE	CARTER	1	D				
2	C011B-50252	SPOOL ASS'Y-ARM2	PLUNGEUR	1					
3	C011B-50247	SPOOL ASS'Y-BOOM1	PLUNGEUR	1					
4	C011B-50248	SPOOL ASS'Y-BUCKET	PLUNGEUR	1					
5	C011B-50249	SPOOL ASS'Y-TRAVEL	PLUNGEUR	2					
6	C011B-50237	SPOOL ASS'Y-T/S	PLUNGEUR	1					
7	95123-04500	O-RING	JOINT TORIQUE	20	K				
8	C0001-53009	CAP	CHAPEAU	10					
12	C0001-53005	CAP	CHAPEAU	10					
13	C0151-55008	HOUSING;VALVE	CARTER	1	D				
14	C011B-50250	SPOOL ASS'Y-ARM1	PLUNGEUR	1					
15	C011B-50251	SPOOL ASS'Y-BOOM2	PLUNGEUR	1					
16	C011B-50256	SPOOL ASS'Y-SWING	PLUNGEUR	1					
17	C0113-55214	SPOOL ASS'Y-OPTION	PLUNGEUR	1					
50	96321-06350	BALL;STEEL	BILLE	1	D				
62	95113-01400	O-RING	JOINT TORIQUE	1	K				
63	T1172-01008	PLUG;ORIFICE	BOUCHON	1					
65	T1515-22001	O-RING	JOINT TORIQUE	14	K				
66	T1515-10001	O-RING	JOINT TORIQUE	7	K				
70	C0003-50003	RELIFE VALVE ASS'Y	CLAPET DE DECHARGE	2					
72	21003-00383	PLUG ASS'Y	BOUCHON	2					
74	92703-10281	BOLT;SOCKET M10X28L	BOULON A 6 PANS CREUX	40					
91	T1151-17504	PLUG	BOUCHON	1					
105	21003-00202	PLUG ASS'Y	BOUCHON	1					

DATE	JUN. 30, 2005
REV. NO.	EXB05-05

Fig. 4190 CONTROL VALVE(3) DISTRIBUTEUR

Serial No. ;

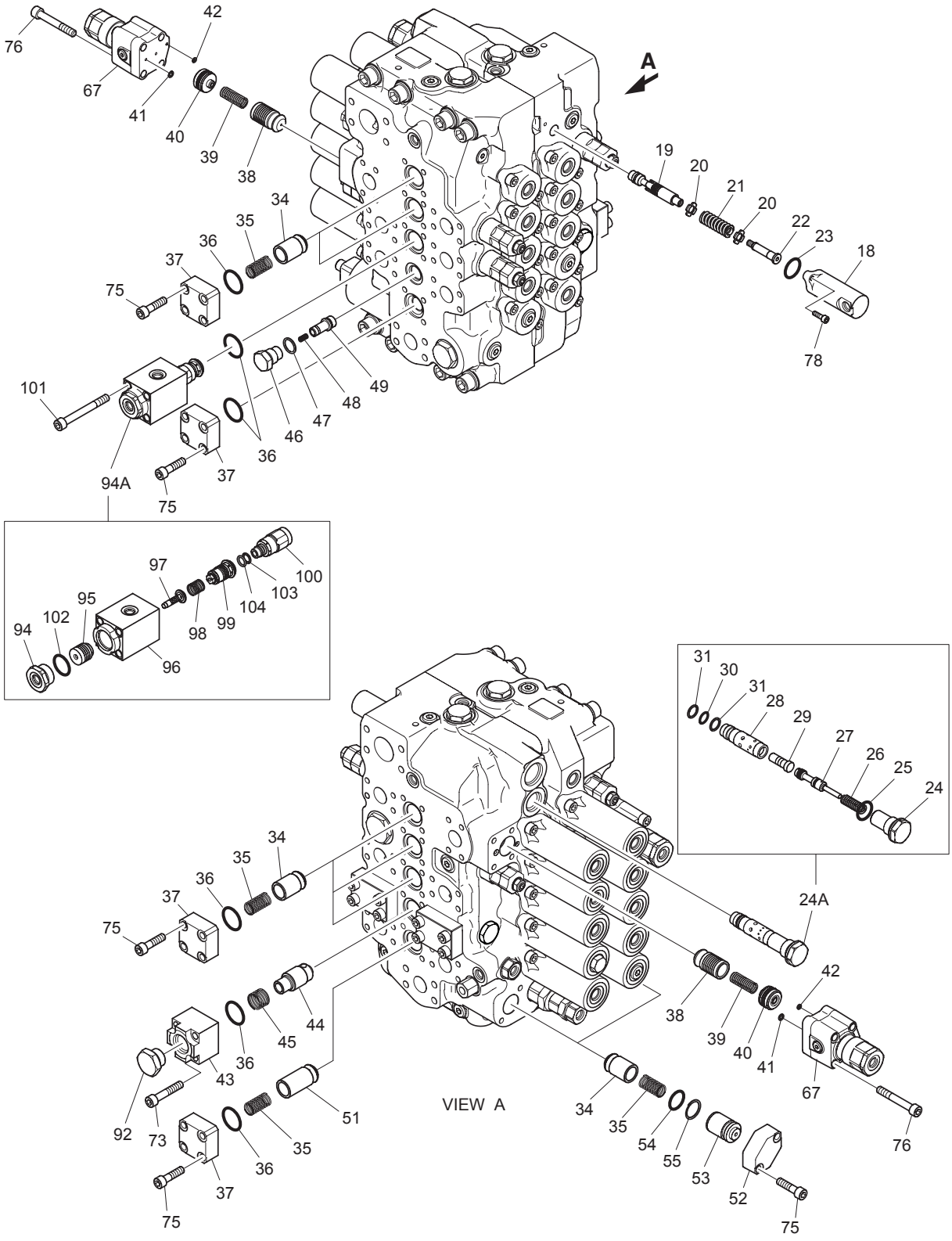

DATE	JUN. 30, 2005
REV. NO.	EXB05-05

Fig. 4190 CONTROL VALVE(3) DISTRIBUTEUR

Serial No ;

Key No.	Part No.	Description	Description	Q'ty	S.C	Serial No.	ICA	Replaceable part	
								Part No.	Q'ty
4190--	**420-00295**	**VALVE;CONTROL**	VANNE	1					
18	C0001-33015	CAP	CHAPEAU	1					
19	C0111-31263	SPOOL	PLUNGEUR	1					
20	21111-30702	SPRING SEAT	RESSORT	2					
21	T1461-19008	SPRING	RESSORT	1					
22	21011-30576	SPOOL END	PLUNGEUR	1					
23	95111-02600	O-RING	JOINT TORIQUE	1	K				
24A	C011B-50263	ARM REGEN ASS'Y	VANNE	1					
24	T1152-27503	. PLUG	. BOUCHON	1					
25	95113-02400	. O-RING	. JOINT TORIQUE	1	K				
26	T1461-14002	. SPRING	. RESSORT	1					
27	C0112-51203	. SPOOL	. PLUNGEUR	1	D				
28	-	. SLEEVE	. DOUILLE	1	D				
29	-	. PISTON	. PISTON	1	D				
30	95113-01600	. O-RING	. JOINT TORIQUE	1	K				
31	95712-01600	. RING;BACK-UP	. BAGUE DE SOUTIEN	2	K				
34	T1411-28001	POPET	POPET	7					
35	T1461-19007	SPRING	RESSORT	8					
36	95113-03200	O-RING	JOINT TORIQUE	9	K				
37	T1631-00006	FLANGE	BRIDE	7					
38	21111-54501	POPET	POPET	2					
39	21111-56501	SPRING	RESSORT	2					
40	21113-50803	SPACER ASS'Y	BAGUE D'ECARTEMENT	2					
41	95113-00600	O-RING	JOINT TORIQUE	2	K				
42	95113-00400	O-RING	JOINT TORIQUE	2	K				
43	T1631-00007	FLANGE	BRIDE	1					
44	T1411-28003	POPET	POPET	1					
45	T1461-25001	SPRING	RESSORT	1					
46	21001-90227	PLUG	BOUCHON	1					
47	21001-00036	O-RING	JOINT TORIQUE	1	K				
48	21011-30644	SPRING	RESSORT	1					
49	T1411-19003	POPET	POPET	1					
51	T1411-28004	POPET	POPET	1					
52	T1631-00004	FLANGE	BRIDE	2					
53	T1311-46001	SPACER	BAGUE D'ECARTEMENT	2					
54	95121-02500	O-RING	JOINT TORIQUE	2	K				
55	95722-02500	RING;BACK-UP	BAGUE DE SOUTIEN	2	K				
67	C0113-55501	ANTI-DRIFT VALVE ASS'Y	VANNE	2					

DATE	JUN. 30, 2005
REV. NO.	EXB05-05

Fig. 4190 CONTROL VALVE(3) DISTRIBUTEUR

Serial No. ;

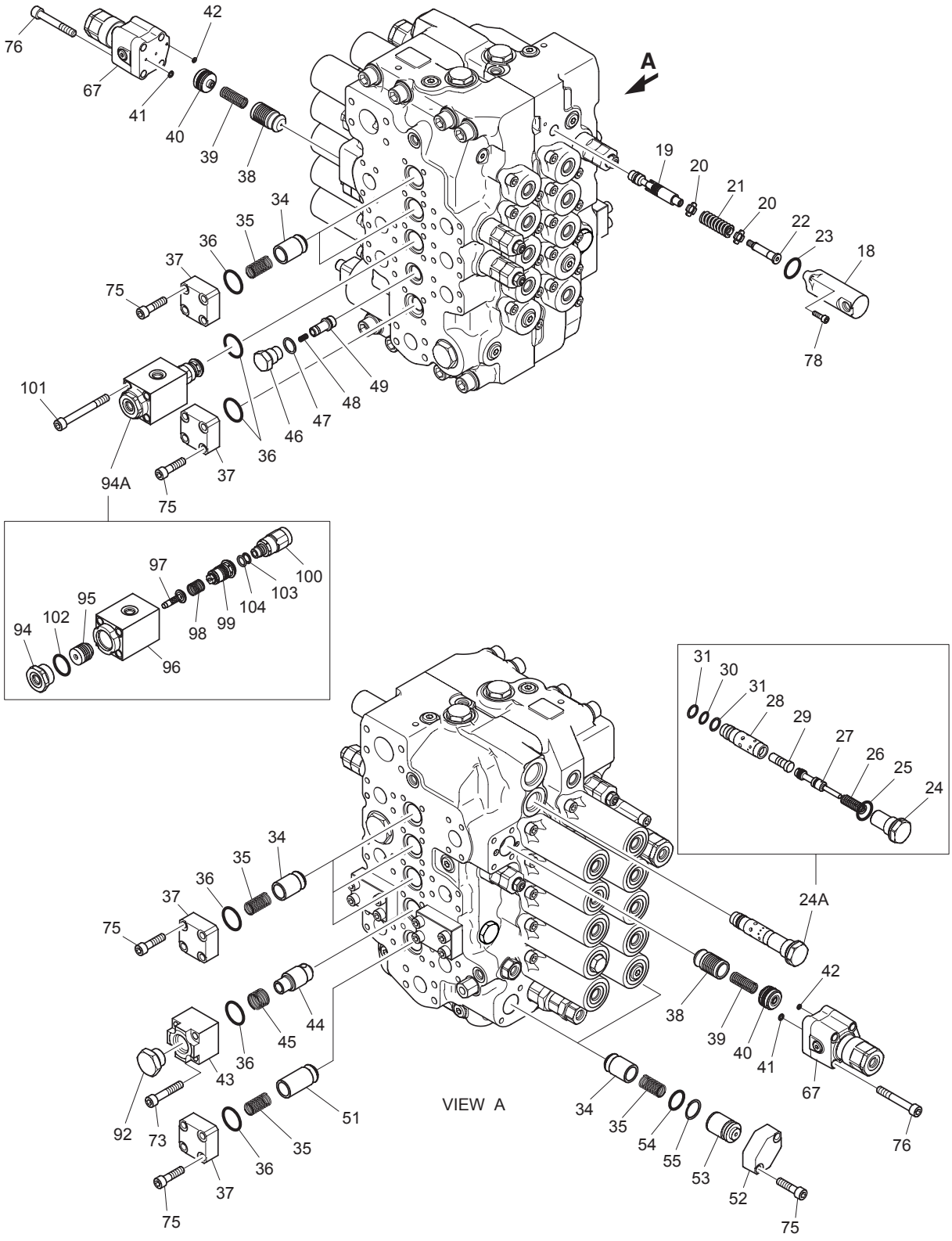

DATE	JUN. 30, 2005
REV. NO.	EXB05-05

Fig. 4190 CONTROL VALVE(3) DISTRIBUTEUR

Serial No ;

Key No.	Part No.	Description	Description	Q'ty	S.C	Serial No.	ICA	Replaceable part	
								Part No.	Q'ty
4190-73	92703-10551	BOLT;SOCKET M10X55L	BOULON A 6 PANS CREUX	4					
75	92703-10401	BOLT;SOCKET M10X40L	BOULON A 6 PANS CREUX	32					
76	92703-10701	BOLT;SOCKET M10X70L	BOULON A 6 PANS CREUX	8					
78	92703-06201	BOLT;SOCKET M6X20L	BOULON A 6 PANS CREUX	2					
92	21003-00393	PLUG ASS'Y	BOUCHON	1					
94A	C011B-50301	BOOM PRIORITY VALVE	VANNE	1					
94	21001-90364	. PLUG	BOUCHON	1					
95	21111-52233	. PISTON	. PISTON	1					
96	C0001-57006	. BODY	. CARTER	1	D				
97	21111-52232	. PISTON	. PISTON	1					
98	21111-56525	. SPRING	. RESSORT	1					
99	T1331-28003	. SLEEVE	. DOUILLE	1	D				
100	21113-50805	. POPET ASS'Y	. POPET	1					
102	21001-00213	. O-RING	. JOINT TORIQUE	1	K				
103	95712-01200	. RING;BACK-UP	. BAGUE DE SOUTIEN	1	K				
104	95113-01200	. O-RING P12 HS90	. JOINT TORIQUE	1	K				
101	92703-10901	BOLT;SOCKET M10X90	BOULON A 6 PANS CREUX	4					

DATE	JUN. 30, 2005
REV. NO.	EXB05-05

Fig. 4195 CONTROL VALVE-ARTI.BOOM
DISTRIBUTEUR

Serial No. ; 1001 ~ 1819

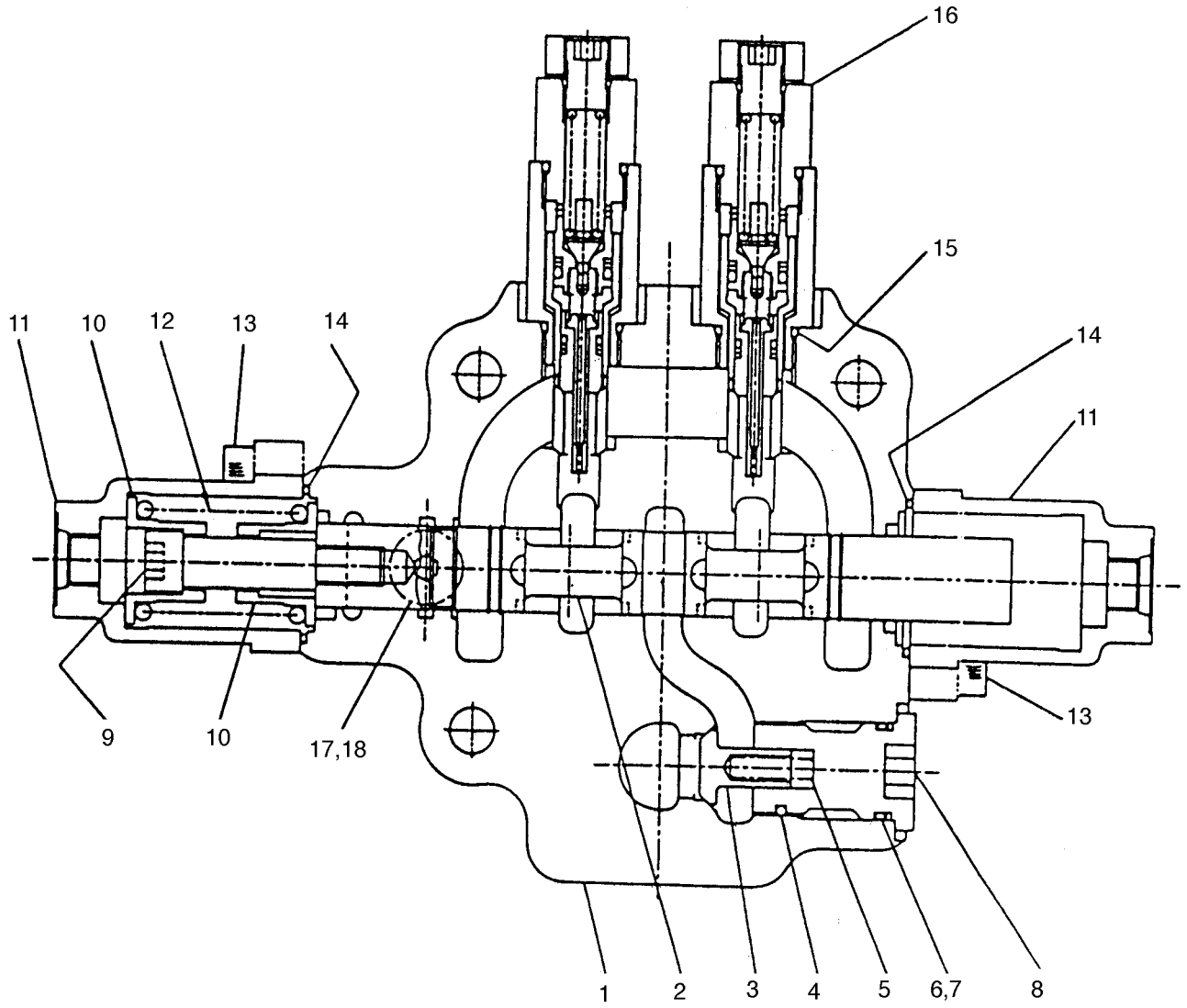

DATE	JUN. 30, 2005
REV. NO.	EXB05-05

Fig. 4195 CONTROL VALVE-ARTI.BOOM DISTRIBUTEUR

Serial No ; 1001 ~ 1819

Key No.	Part No.	Description	Description	Q'ty	S.C	Serial No.	ICA	Replaceable part	
								Part No.	Q'ty
4195--	2420-9365	CONTROL VALVE	VANNE DE COMMANDE	1		1001–1819			
1	3501-755	HOUSING	BOITIER	1	D				
2	3510-825	D-PLUNGER	PLONGEUR	1	D				
3	3513-108	CHECK	CARTIUCHE DE CONTROLE	1					
4	1099-000	CHIP;NYLON	CHIP NYLON	1					
5	3390-101	SPRING	RESSORT	1					
6	8202-016	O-RING P21 HS90	JOINT TORIQUE	1					
7	0859-181	RING;BACK UP P21 B1AS	BAGUE DE SOUTIEN	1					
8	3526-337	CAP	BOUCHON	1					
9	3526-418	CAP(PL)	BOUCHON	1					
10	3531-109	GUIDE(SP)	GUIDE	2					
11	3503-181	COVER	COUVERCLE	2					
12	3590-306	SPRING	RESSORT	4					
13	8072-084	BOLT	BOULON A 6 PANS	2					
14	0201-063	O-RING MS9021-127 HS90	JOINT TORIQUE	2					
15	8202-014	O-RING P18 HS90	JOINT TORIQUE	2					
16	3537-250	RELIEF ASS'Y	DECHARGE	2					
17	8202-009	O-RING P11 HS90	JOINT TORIQUE	1					
18	0824-051	PLUG	BOUCHON	1					

DATE	JUN. 30, 2005
REV. NO.	EXB05-05

Fig. 4196 CONTROL VALVE-ARTI.BOOM
DISTRIBUTEUR

Serial No. ; 1820 ~

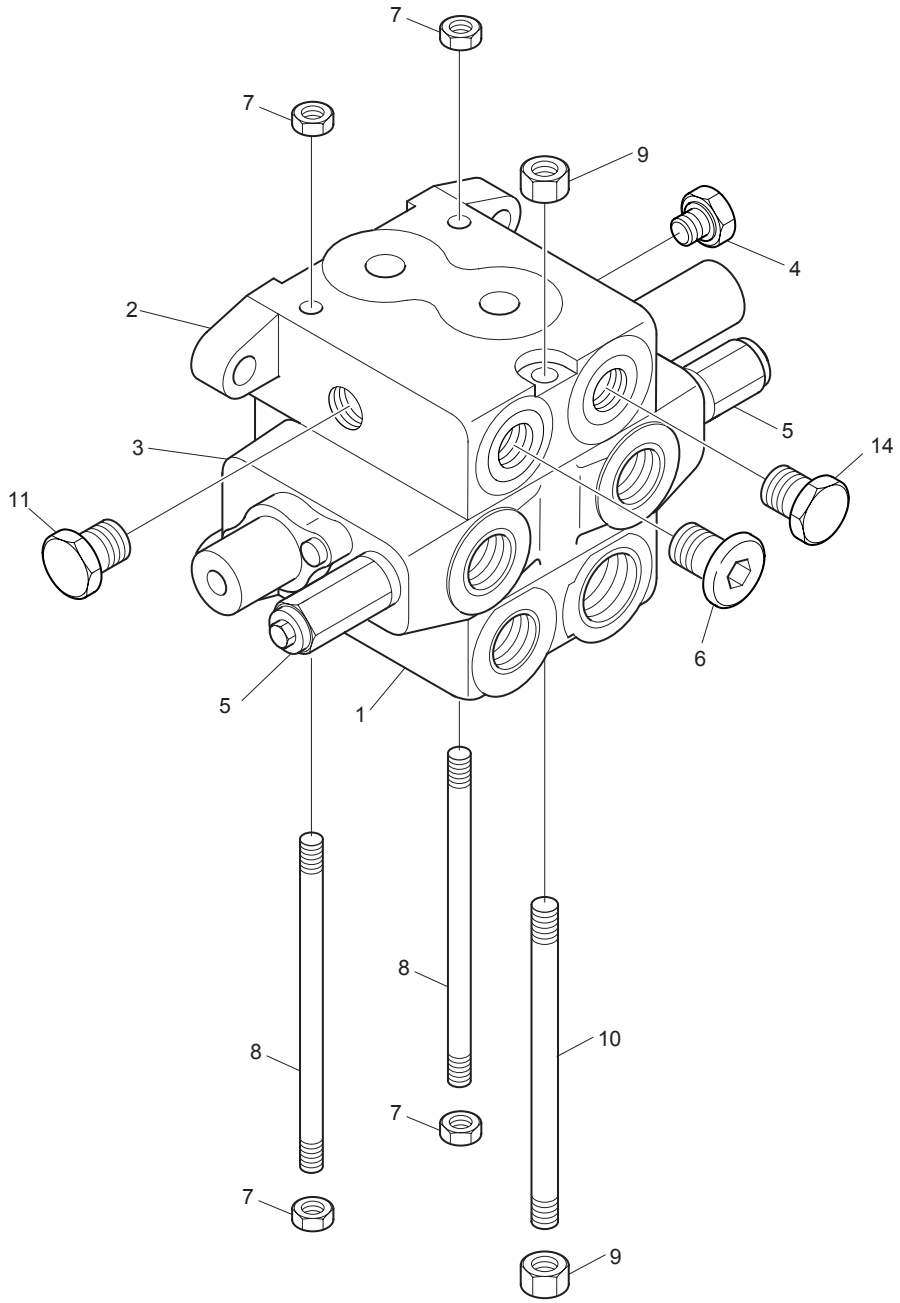

DATE	JUN. 30, 2005
REV. NO.	EXB05-05

Fig. 4196 CONTROL VALVE-ARTI.BOOM DISTRIBUTEUR

Serial No ; 1820 ~

Key No.	Part No.	Description	Description	Q'ty	S.C	Serial No.	ICA	Replaceable part	
								Part No.	Q'ty
4196--	**K1004312**	**CONTROL VALVE**	VANNE DE COMMANDE	1		**1820–**			
1	K9001070	INLET SECTION ASS'Y	SECTION D'ADMISSION	1					
2	K9001071	OUTLET SECTION ASS'Y	SECTION DE SORTIE	1					
3	K9001072	SPOOL SECTION ASS'Y	SECTION DE BOBINE	1					
4	K9001073	PLUG ASS'Y	BOUCHON	1					
5	420-00258	RELIEF VALVE	VANNE	2					
6	2.181-00321	PLUG ASS'Y	BOUCHON	1					
7	K9001075	NUT	ECROU	4					
8	K9001076	BOLT;STUD	BOULON DE GOUJON	2					
9	K9001077	NUT	ECROU	2					
10	K9001078	BOLT;STUD	BOULON DE GOUJON	1					
11	K9001079	PLUG ASS'Y	BOUCHON	1					
14	K9001080	PLUG	BOUCHON	1					

DATE	DEC. 15, 2006
REV. NO.	EXB06-13

Fig. 4200 REMOTE CONTROL VALVE
VANNE DE COMMAND A DISTANCE

Serial No. ; 1001 ~ 2219

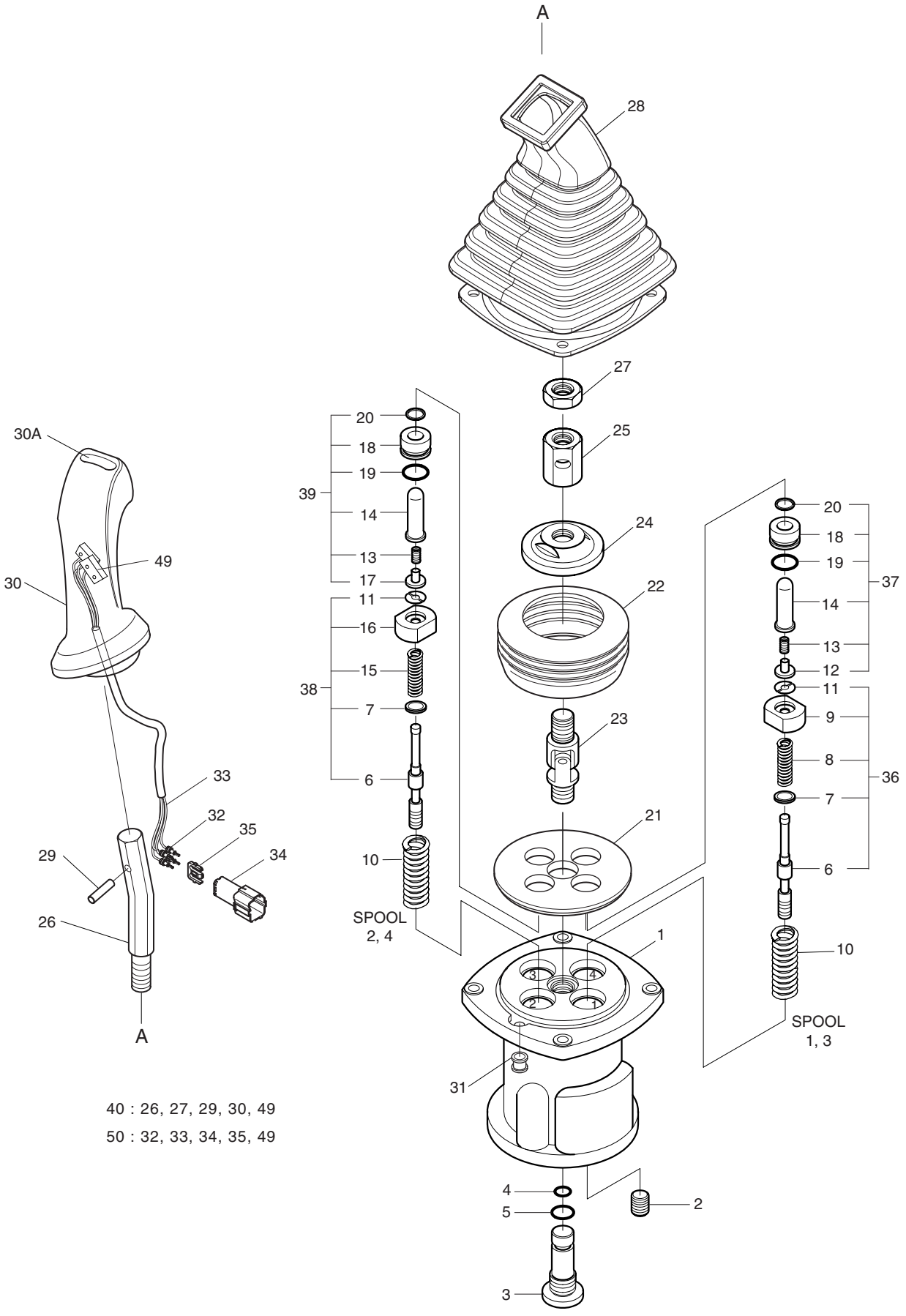

40 : 26, 27, 29, 30, 49

50 : 32, 33, 34, 35, 49

DATE	DEC. 15, 2006
REV. NO.	EXB06-13

Fig. 4200 REMOTE CONTROL VALVE VANNE DE COMMAND A DISTANCE

Serial No. ; 1001 ~ 2219

Key No.	Part No.	Description	Description	Q'ty	S.C	Serial No.	ICA	Replaceable part	
								Part No.	Q'ty
4200--	**420-00342A**	**REMOTE CONTROL**	MANETTE DE CONTROLE	1		**1001–2219**	I	420-00342B	1
	420-00343A	**REMOTE CONTROL**	MANETTE DE CONTROLE	1		**1001–2219**	I	420-00343B	1
1	JA1G1001	CASE	CARTER	1					
2	WPT18	PLUG	BOUCHON	1					
3	J95C1002	PLUG	BOUCHON	1					
4	P0010A	O-RING	JOINT TORIQUE	1					
5	P0014	O-RING	JOINT TORIQUE	1					
6	J95C1003	SPOOL	PLUNGEUR	4	D				
7	J95C1004	SHIM	CALE	4	D				
8	JA0D3001	SPRING(1.3)	RESSORT	2	D				
9	JA0D3002	SEAT;SPRING(1.3)	SIEGE	2	D				
10	J95C1007	SPRING	RESSORT	4					
11	JA0D3003	STOPPER	ARRET	4	D				
12	J97A5011	STOPPER(1.3)	ARRET	2	D				
13	JA0D3004	SPRING	RESSORT	4	D				
14	JA0D3005	ROD;PUSH	TIGE DE POUSSOIR	4	D				
15	JA0D3006	SPRING(2.4)	RESSORT	2	D				
16	JA0D3007	SEAT;SPRING(2.4)	SIEGE	2	D				
17	J97A5012	STOPPER(2.4)	ARRET	2	D				
18	JA0D3008	PLUG	BOUCHON	4	D				
19	P0020	O-RING	JOINT TORIQUE	4	D				
20	RSY12	SEAL;ROD	TIGE D'ETANCHEITE	4	D				
21	JA1G1002	PLATE	PLAQUE	1					
22	J97A5018	BOOT	GAINE DE PROTECTION	1					
23	J95C1012	JOINT ASS'Y	ENSEMBLE DE JOINT	1					
24	JA1G1004	PLATE;SWASH	PLAQUE	1					
25	J95C1014	NUT;HEX.	ECROU 6 PANS	1					
26	JA1D2001	BAR;HANDLE	JAGUE DE NIVEAU	1	D				
27	HNM14	NUT;HEX.	ECROU 6 PANS	1	D				
28	JA1D2002	BOOT	GAINE DE PROTECTION	1					
29	SP0528	PIN;SPRING	GOUPILLE ELASTIQUE	1	D				
30	JA0E3026	HANDLE ASS'Y	HANDLE ASS'Y	1	D				
	1.172-00016	HANDLE ASS'Y	HANDLE ASS'Y	1	D				
30A	1.161-00016	. CAP;PEANUT	. CHAPEAU	1					
	1.161-00021	. CAP;PEANUT	. CHAPEAU	1					
31	JA1G1003	BUSHING	DOUILLE	1					
32	-	TERMINAL	BORNE	4	D				
33	-	WIRE;SEAL	FIL	4	D				

DATE	DEC. 15, 2006
REV. NO.	EXB06-13

Fig. 4200 REMOTE CONTROL VALVE
VANNE DE COMMAND A DISTANCE

Serial No. ; 1001 ~ 2219

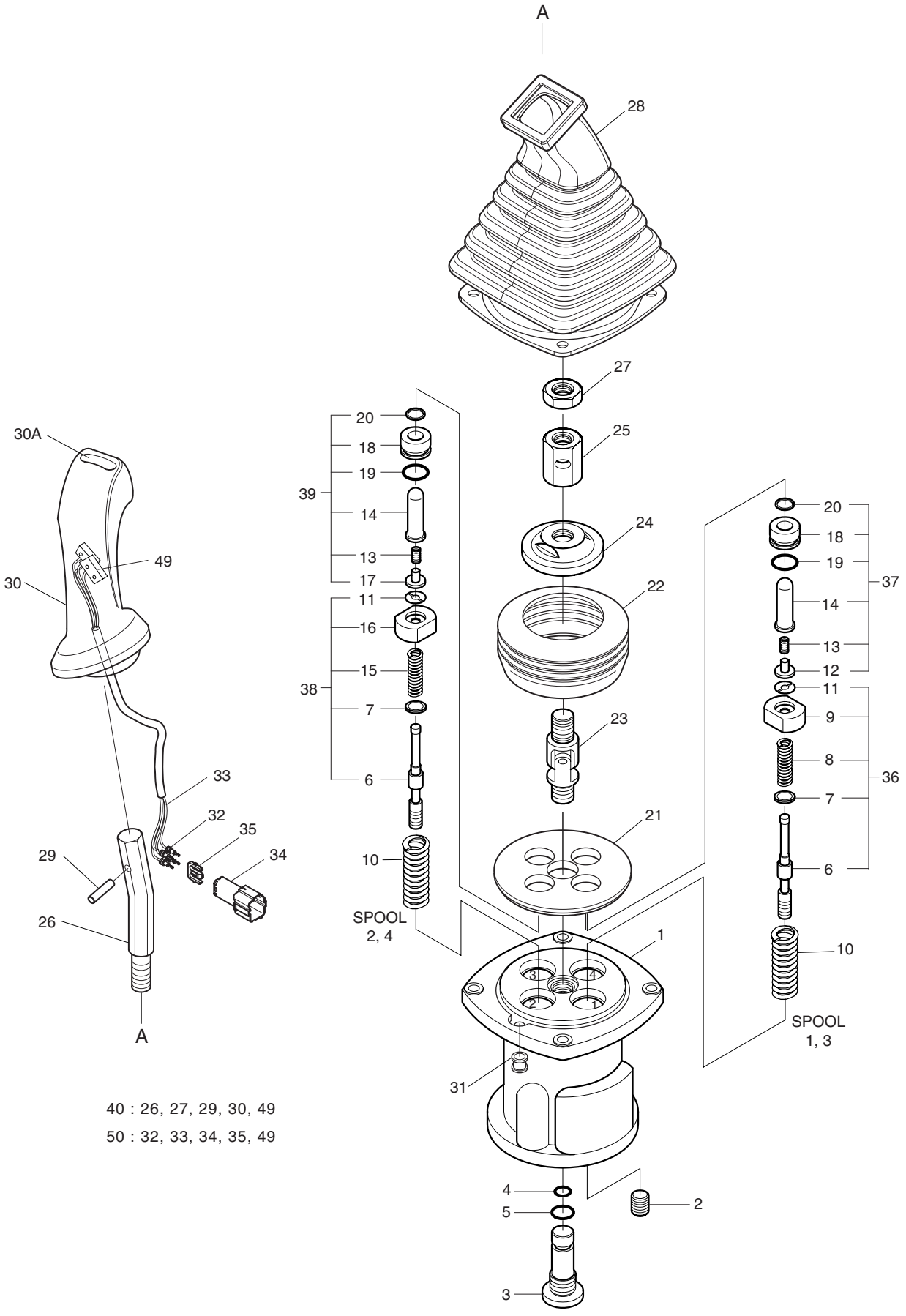

40 : 26, 27, 29, 30, 49

50 : 32, 33, 34, 35, 49

DATE	DEC. 15, 2006
REV. NO.	EXB06-13

Fig. 4200 REMOTE CONTROL VALVE
VANNE DE COMMAND A DISTANCE

Serial No. ; 1001 ~ 2219

Key No.	Part No.	Description	Description	Q'ty	S.C	Serial No.	ICA	Replaceable part	
								Part No.	Q'ty
4200-34	SWP4PT	HOUSING	CARTER	1	D				
35	SWP4P	HOLDER;REAR	POSSESSEUR	1	D				
36	JA0D3009	SPOOL KIT(1.3PORT)	KIT DE TRAITEMENT	2					
37	JA0D3010	PLUG KIT (1.3PORT)	KIT DE PRISE	2					
38	JA0D3011	SPOOL KIT(2.4PORT)	KIT DE TRAITEMENT	2					
39	JA0D3012	PLUG KIT (2.4PORT)	KIT DE PRISE	2					
40	JA1G1005	HANDLE KIT	KIT ASS'Y	1					
49	-	SWITCH	INTERRUPTEUR	2	D				
50	K9001001	SWITCH ASS'Y	INTERRUPTEUR	1					

DATE	DEC. 15, 2006
REV. NO.	EXB06-13

Fig. 4201 REMOTE CONTROL VALVE
VANNE DE COMMAND A DISTANCE

Serial No. ; 2220 ~

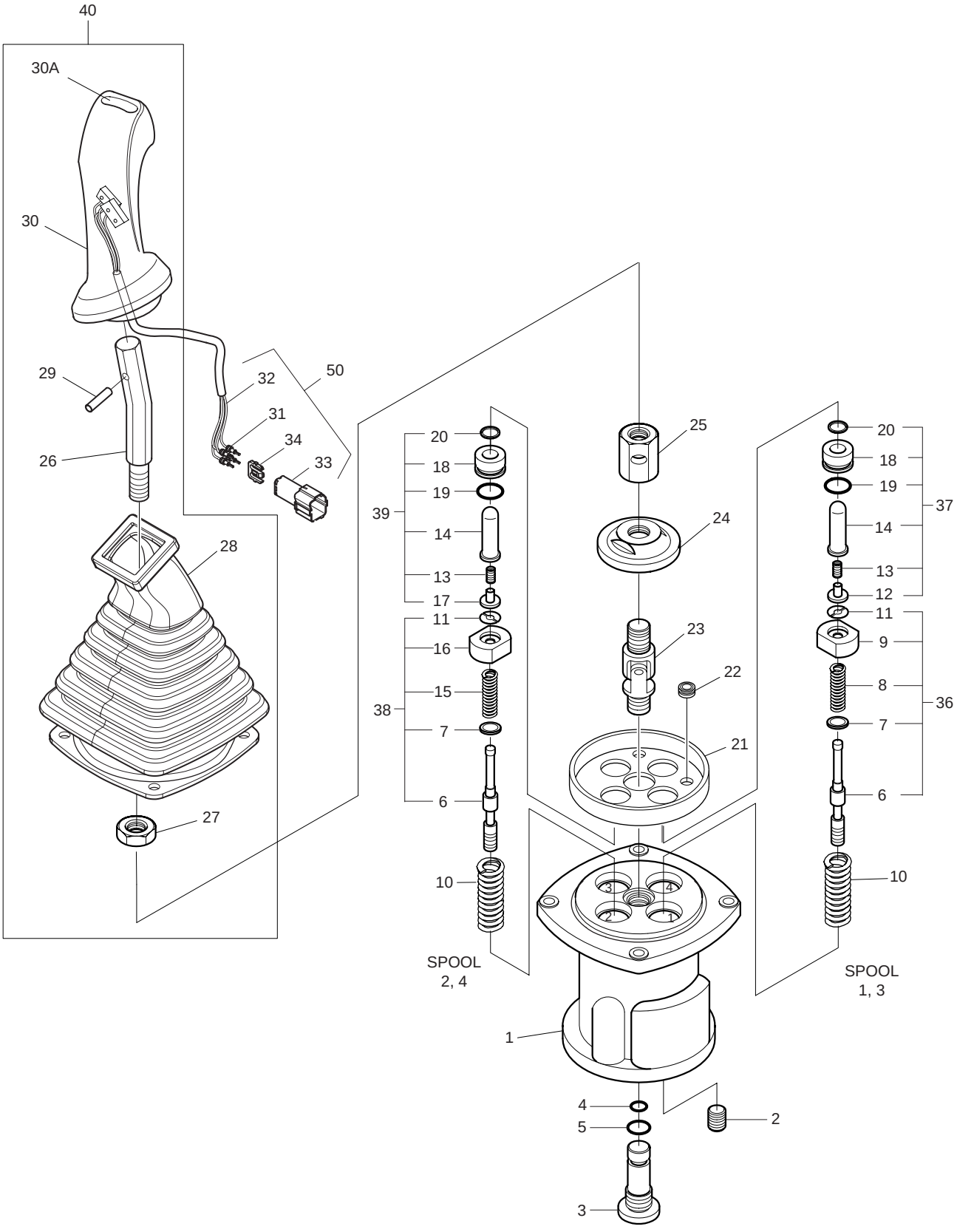

DATE	DEC. 15, 2006
REV. NO.	EXB06-13

Fig. 4201 REMOTE CONTROL VALVE VANNE DE COMMAND A DISTANCE

Serial No. ; 2220 ~

Key No.	Part No.	Description	Description	Q'ty	S.C	Serial No.	ICA	Replaceable part	
								Part No.	Q'ty
4201--	**420-00342B**	**REMOTE CONTROL**	MANETTE DE CONTROLE	1		**2220–**			
	420-00343B	**REMOTE CONTROL**	MANETTE DE CONTROLE	1		**2220–**			
1	1.402-00001	CASE	CARTER	1					
2	2181-1116D1	PLUG	BOUCHON	1					
3	K9002911	PLUG	BOUCHON	1					
4	S8002701	O-RING	JOINT TORIQUE	1					
5	S8000141	O-RING	JOINT TORIQUE	1					
6	1.424-00015	SPOOL	PLUNGEUR	4	D				
7	1.114-00012	SHIM	CALE	4	D				
8	1.131-00093	SPRING(1.3)	RESSORT	2	D				
9	1.427-00021	SEAT;SPRING(1.3)	SIEGE	2	D				
10	1.131-00023	SPRING	RESSORT	4					
11	1.416-00006	STOPPER	ARRET	4	D				
12	K9001120	STOPPER(1.3)	ARRET	2	D				
13	1.131-00028	SPRING	RESSORT	4	D				
14	K9001122	ROD;PUSH	TIGE DE POUSSOIR	4	D				
15	1.131-00094	SPRING(2.4)	RESSORT	2	D				
16	1.427-00022	SEAT;SPRING(2.4)	SIEGE	2	D				
17	K9001125	STOPPER(2.4)	ARRET	2	D				
18	-	PLUG	BOUCHON	4	D				
19	S8000201	O-RING	JOINT TORIQUE	4					
20	K9001127	SEAL;ROD	TIGE D'ETANCHEITE	4					
21	1.412-00016	PLATE	PLAQUE	1					
22	1.110-00168	BUSHING	DOUILLE	1					
23	1.138-00004	JOINT ASS'Y	ENSEMBLE DE JOINT	1					
24	1.412-00131	PLATE;SWASH	PLAQUE	1					
25	1.121-00028	NUT;HEX.	ECROU 6 PANS	1					
26	1.178-00004	BAR;HANDLE	JAGUE DE NIVEAU	1					
27	S4012833	NUT;HEX.	ECROU 6 PANS	1					
28	1.160-00007	BOOT	GAINE DE PROTECTION	1					
29	S5740800	PIN;SPRING	GOUPILLE	1					
30	K9001224	HANDLE ASS'Y(L.H)	HANDLE ASS'Y	1					
	K9001225	HANDLE ASS'Y(R.H)	HANDLE ASS'Y	1					
30A	1.161-00016	. CAP;PEANUT	. CHAPEAU	1					
31	-	TERMINAL	TERMINAL	4	D				
32	-	WIRE;SEAL	FIL	4	D				
33	-	HOUSING	CARTER	1	D				
34	-	HOLDER;REAR	POSESSEUR	1	D				

DATE	DEC. 15, 2006
REV. NO.	EXB06-13

Fig. 4201 REMOTE CONTROL VALVE
VANNE DE COMMAND A DISTANCE

Serial No. ; 2220 ~

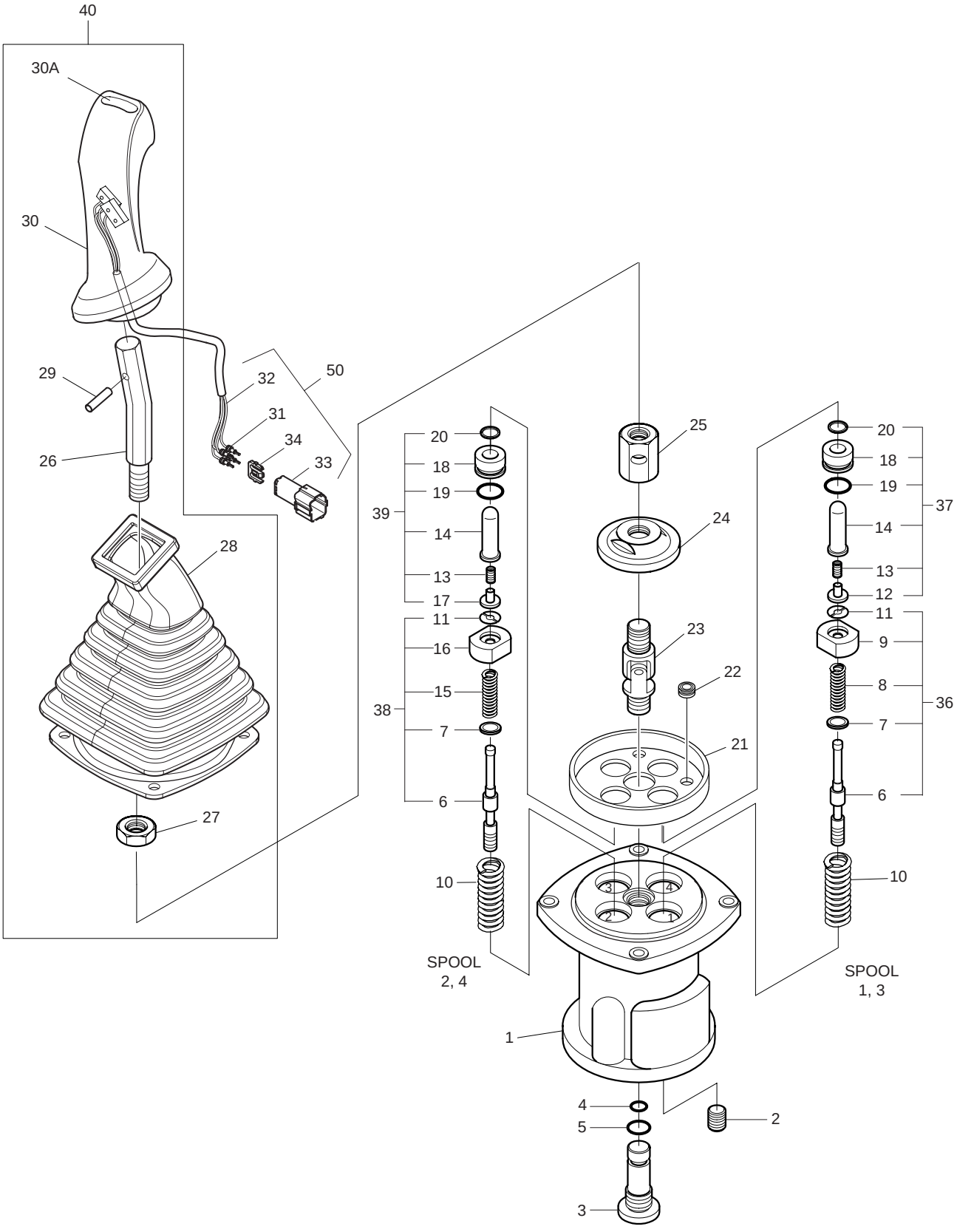

DATE	DEC. 15, 2006
REV. NO.	EXB06-13

Fig. 4201 REMOTE CONTROL VALVE VANNE DE COMMAND A DISTANCE

Serial No. ; 2220 ~

Key No.	Part No.	Description	Description	Q'ty	S.C	Serial No.	ICA	Replaceable part	
								Part No.	Q'ty
4201-36	K9002914	SPOOL KIT(1.3PORT)	KIT DE TRAITEMENT	2					
37	K9002916	PLUG KIT (1.3PORT)	KIT DE PRISE	2					
38	K9002915	SPOOL KIT(2.4PORT)	KIT DE TRAITEMENT	2					
39	K9002917	PLUG KIT (2.4PORT)	KIT DE PRISE	2					
40	K9001228	HANDLE KIT(L.H)	KIT ASS'Y	1					
	K9001229	HANDLE KIT(R.H)	INTERRUPTEUR	1					
50	K9001001	SWITCH ASS'Y	INTERRUPTEUR	1					

DATE	DEC. 29, 2005
REV. NO.	EXB05-20

Fig. 4210 REMOTE CONTROL VALVE-3 SWITCH
VANNE DE COMMAND A DISTANCE

Serial No. ;

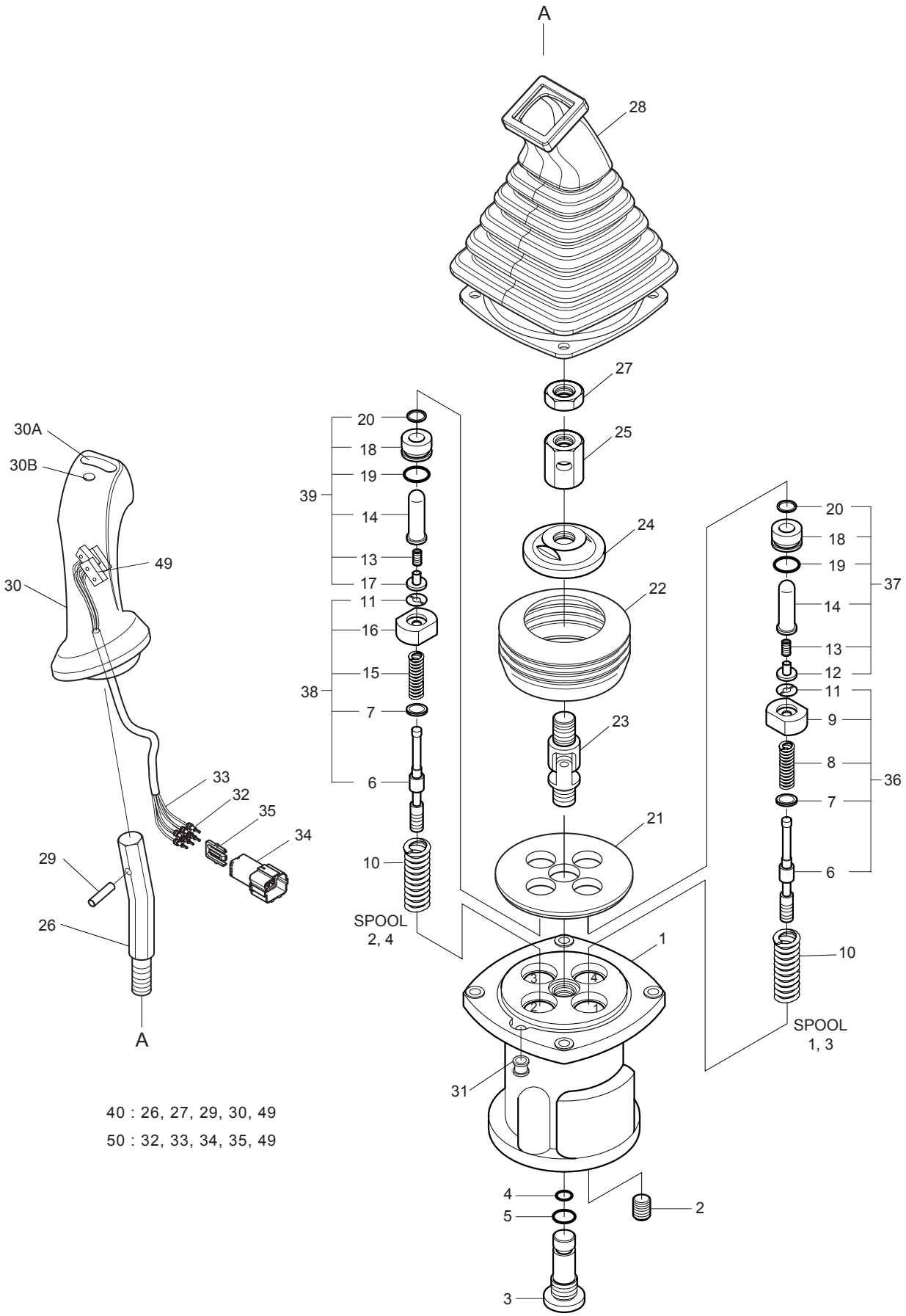

DATE	DEC. 29, 2005
REV. NO.	EXB05-20

Fig. 4210 REMOTE CONTROL VALVE-3 SWITCH VANNE DE COMMAND A DISTANCE

Serial No ;

Key No.	Part No.	Description	Description	Q'ty	S.C	Serial No.	ICA	Replaceable part	
								Part No.	Q'ty
4210--	420-00344A	REMOTE CONTROL VALVE(L.H)	MANETTE DE CONTROLE	1					
	420-00345A	REMOTE CONTROL VALVE(R.H)	MANETTE DE CONTROLE	1					
1	JA1G1001	CASE	CARTER	1					
2	WPT18	PLUG	BOUCHON	1					
3	J95C1002	PLUG	BOUCHON	1					
4	P0010A	O-RING	JOINT TORIQUE	1					
5	P0014	O-RING	JOINT TORIQUE	1					
6	J95C1003	SPOOL	PLUNGEUR	4	D				
7	J95C1004	SHIM	CALE	4	D				
8	JA0D3001	SPRING(1.3)	RESSORT	2	D				
9	JA0D3002	SEAT;SPRING(1.3)	SIEGE	2	D				
10	**J95C1007**	**SPRING**	RESSORT	4					
11	JA0D3003	STOPPER	ARRET	4	D				
12	J97A5011	STOPPER(1.3)	ARRET	2	D				
13	JA0D3004	SPRING	RESSORT	4	D				
14	JA0D3005	ROD;PUSH	TIGE DE POUSSOIR	4	D				
15	JA0D3006	SPRING(2.4)	RESSORT	2	D				
16	JA0D3007	SEAT;SPRING(2.4)	SIEGE	2	D				
17	J97A5012	STOPPER(2.4)	ARRET	2	D				
18	JA0D3008	PLUG	BOUCHON	4	D				
19	P0020	O-RING	JOINT TORIQUE	4	D				
20	RSY12	SEAL;ROD	TIGE D'ETANCHEITE	4	D				
21	JA1G1002	PLATE	PLAQUE	1					
22	J97A5018	BOOT	GAINE DE PROTECTION	1					
23	J95C1012	JOINT ASS'Y	ENSEMBLE DE JOINT	1					
24	JA1G1004	PLATE;SWASH	PLAQUE	1					
25	J95C1014	NUT;HEX.	ECROU 6 PANS	1					
26	JA1D2001	BAR;HANDLE	JAGUE DE NIVEAU	1	D				
27	HNM14	NUT;HEX.	ECROU 6 PANS	1	D				
28	JA1D2002	BOOT	GAINE DE PROTECTION	1					
29	SP0528	PIN;SPRING	GOUPILLE ELASTIQUE	1	D				
30	1.172-00004	HANDLE ASS'Y	HANDLE ASS'Y	1	D				
	1.172-00017	HANDLE ASS'Y	HANDLE ASS'Y	1	D				
30A	1.161-00016	. CAP;PEANUT	. CHAPEAU	1					
	1.161-00021	. CAP;PEANUT	. CHAPEAU	1					
30B	1.161-00017	. CAP;ROUND	. CHAPEAU	1					
31	JA1G1003	BUSHING	DOUILLE	1					
32	-	TERMINAL	BORNE	4	D				

DATE	DEC. 29, 2005
REV. NO.	EXB05-20

Fig. 4210 REMOTE CONTROL VALVE-3 SWITCH
VANNE DE COMMAND A DISTANCE

Serial No. ;

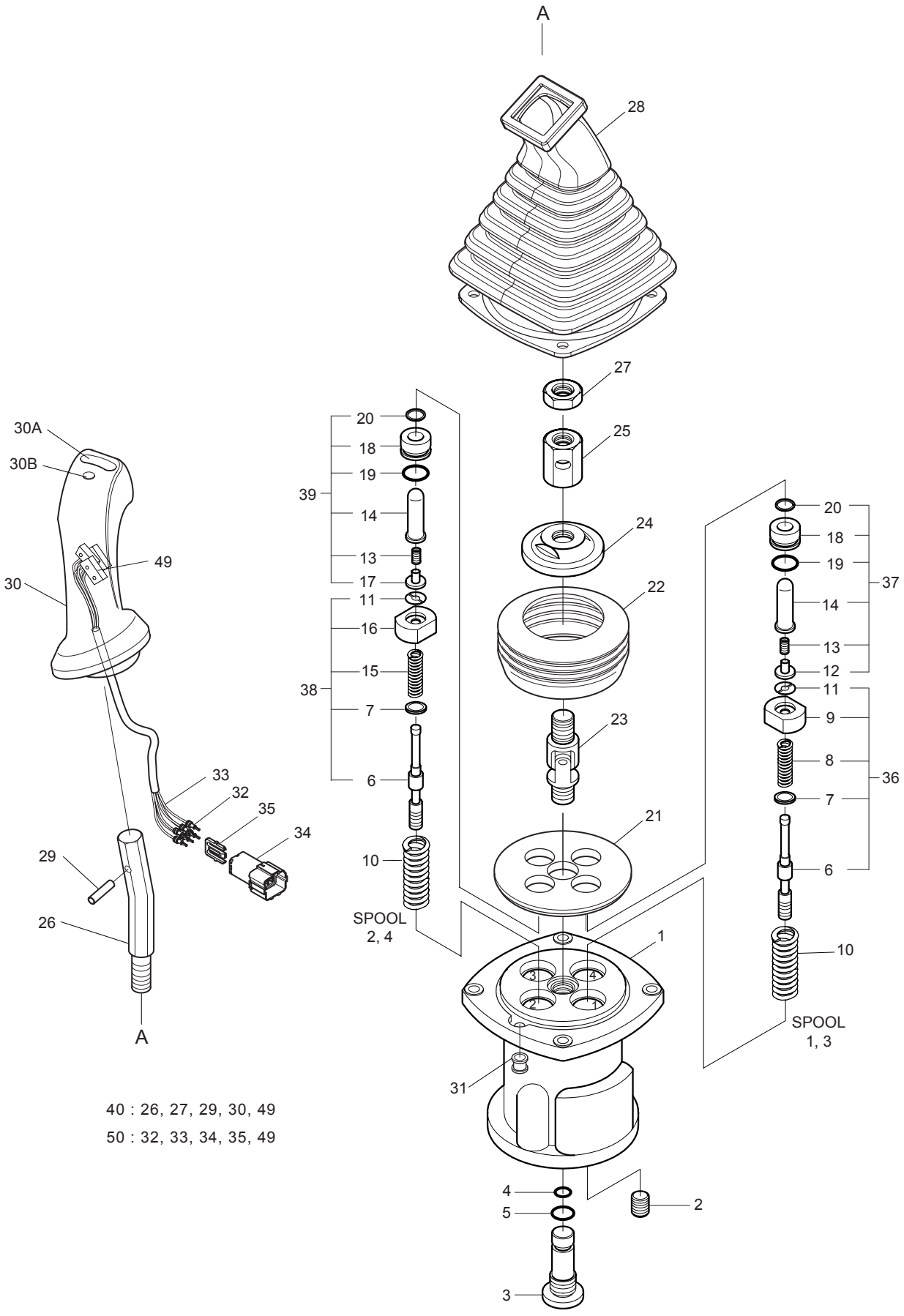

40 : 26, 27, 29, 30, 49

50 : 32, 33, 34, 35, 49

DATE	DEC. 29, 2005
REV. NO.	EXB05-20

Fig. 4210 REMOTE CONTROL VALVE-3 SWITCH
VANNE DE COMMAND A DISTANCE

Serial No ;

Key No.	Part No.	Description	Description	Q'ty	S.C	Serial No.	ICA	Replaceable part	
								Part No.	Q'ty
4210-33	-	WIRE;SEAL	FIL	4	D				
34	SWP6PT	HOUSING	CARTER	1	D				
35	SWP6P	HOLDER;REAR	POSSESSEUR	1	D				
36	JA0D3009	SPOOL KIT(1.3PORT)	KIT DE TRAITEMENT	2					
37	JA0D3010	PLUG KIT (1.3PORT)	KIT DE PRISE	2					
38	JA0D3011	SPOOL KIT(2.4PORT)	KIT DE TRAITEMENT	2					
39	JA0D3012	PLUG KIT (2.4PORT)	KIT DE PRISE	2					
40	JA1G2001	HANDLE KIT	KIT ASS'Y	1					
49	-	SWITCH	INTERRUPTEUR	3	D				
50	K9001002	SWITCH ASS'Y	INTERRUPTEUR	1					

DATE	AUG. 12, 2002
1st EDITION	

Fig. 4220 PEDAL VALVE
VANNE DE PEDALE

Serial No. ;

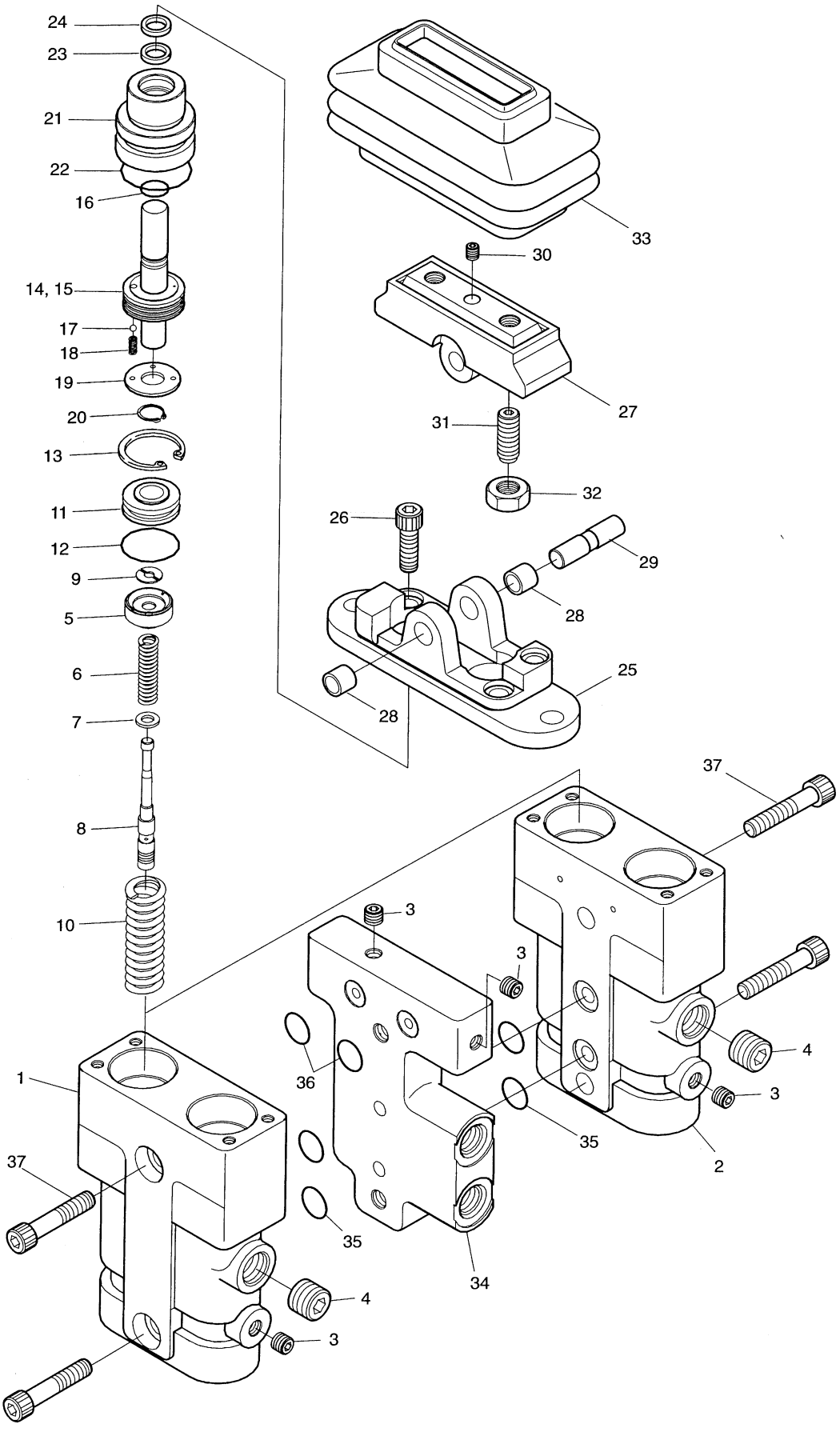

DATE	AUG. 12, 2002
1st EDITION	

Fig. 4220 PEDAL VALVE VANNE DE PEDALE

Serial No. ;

Key No.	Part No.	Description	Description	Q'ty	S.C	Serial No.	ICA	Replaceable part	
								Part No.	Q'ty
4220--	420-00030	PEDAL VALVE	VANNE	1					
1	J98J1001	BODY(1)	BOITIER	1					
2	J98J1002	BODY(2)	BOITIER	1					
3	NWP116	PLUG NPT1/16	BOUCHON	4					
4	WPT38	PLUG PT3/8	BOUCHON	2					
5	J98J1003	SEAT;SPRING	RESSORT DE SIEGE	4					
6	J98J1004	SPRING	RESSORT	4					
7	J24D2008	SEAT;SPRING	RESSORT DE SIEGE	4					
8	J98J1005	SPOOL	PLUNGEUR	4					
9	J98J1006	STOPPER	ARRET	4					
10	J98J1007	SPRING	RESSORT	4					
11	J98J1008	GUIDE;ROD	GUIDE	4					
12	P022	O-RING	JOINT TORIQUE	4					
13	SR28CH	RING;SNAP	ARRET	4					
14	J98J1009	ROD;PUSH	TIGE DE POUSSOIR	4					
15	SP0306	PIN;SPRING	GOUPILLE FENDUE	4					
16	J98J1010	SEAL	JOINT D'HUILE	4					
17	SB18	BALL;STEEL	BILLE	4					
18	J98J1011	SPRING	RESSORT	4					
19	J98J1012	PLATE	PLAQUE	4					
20	SR11CS	RING;SNAP	ARRET	4					
21	J98J1013	PLUG	BOUCHON	4					
22	G025	O-RING	JOINT TORIQUE	4					
23	RSY12	SEAL;ROD	TIGE D'ETANCHEITE	4					
24	DSP12	SEAL;DUST	JOINT D'HUILE	4					
25	J98J1014	COVER	COUVERCLE	2					
26	WBM0630	BOLT;WRENCH M6X1.0X30	BOULON A 6 PANS CREUX	4					
27	J24D2005	CAM	CAME	2					
28	DU1010	BUSHING	DOUILLE	4					
29	J24D2016	SHAFT;CAM	ARBRE A CAMES	2					
30	SBM0605	SCREW;SET	VIS	2					
31	J24D2015	SCREW;SET	VIS	4					
32	HNM10	NUT M10	ECROU	4					
33	J24D2006	BELLOWS	SOUFFLET	2					
34	J98J1015	SPACER	BAGUE D'ECARTEMENT	1					
35	P012	O-RING	JOINT TORIQUE	4					
36	P010	O-RING	JOINT TORIQUE	2					
37	WBM1042	BOLT;WRENCH M10X1.5X42	BOULON A 6 PANS CREUX	4					

DATE	DEC. 22, 2003
REV. NO.	EXB03-15

Fig. 4225 PEDAL VALVE-ARTI.BOOM
VANNE DE PEDALE

Serial No. ;

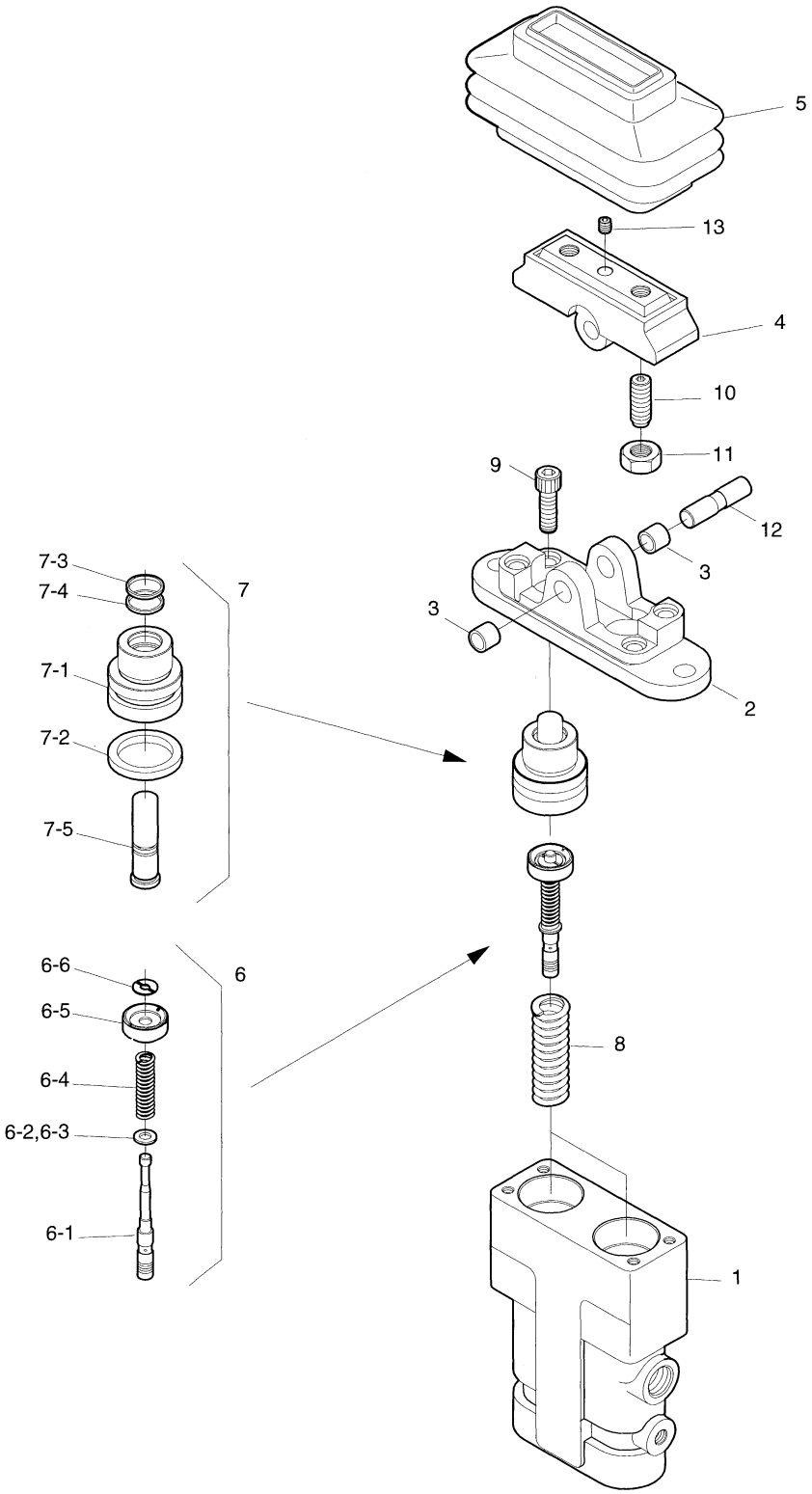

DATE	DEC. 22, 2003
REV. NO.	EXB03-15

Fig. 4225 PEDAL VALVE-ARTI.BOOM VANNE DE PEDALE

Serial No ;

Key No.	Part No.	Description	Description	Q'ty	S.C	Serial No.	ICA	Replaceable part	
								Part No.	Q'ty
4225--	420-00347	PEDAL VALVE	VANNE	1					
1	-	CASING	CARTER	1	D				
2	-	COVER	COUVERCLE	1	D				
3	DU1010	BUSH;DU 10x10	COUSSINET	2					
4	J24D2005	CAM	CAME	1	D				
5	J24D2006	BELLOW	GAINE DE PROTECTION	1					
6	JA1E1001	SPOOL ASS'Y	BOBINE	2					
6-1	-	. SPOOL	. BOBINE	1	D				
6-2	-	. SHIM	. CALE	1	R				
6-3	-	. SEAT;SPRING	. SIEGE DE RESSORT	1	D				
6-4	-	. SPRING	. RESSORT	1	D				
6-5	-	. SEAT;SPRING	. SIEGE DE RESSORT	1	D				
6-6	-	. STOPPER	. ARRET	1	D				
7	J98D3007	PLUG ASS'Y	BRANCHER	2					
7-1	-	. PLUG	. BRANCHER	1	D				
7-2	-	. O-RING	. JOINT TORQUE	1	D				
7-3	-	. SEAL;DUST	. BAGUE D'ETANCHEITE	1	D				
7-4	-	. SEAL;ROD	. BAGUE D'ETANCHEITE	1	D				
7-5	-	. ROD;PUSH	. TIGE DE POUSSIOR	1	D				
8	J98D3003	SPRING	RESSORT	2					
9	S2209261	BOLT;WRENCH M8X30	BOULON A 6 PANS CREUX	2					
10	J24D2015	SCREW;SET	VIS	2					
11	S4014633	NUT M10	ECROU	2					
12	J24D2016	SHAFT;CAM	AXE	1					
13	S3523601	SCREW;SET M8X12	VIS	1					

DATE	DEC. 30, 2004
REV. NO.	EXB04-09

Fig. 4230 SOLENOID VALVE
VANNE DE SOLENOIDE

Serial No. ;

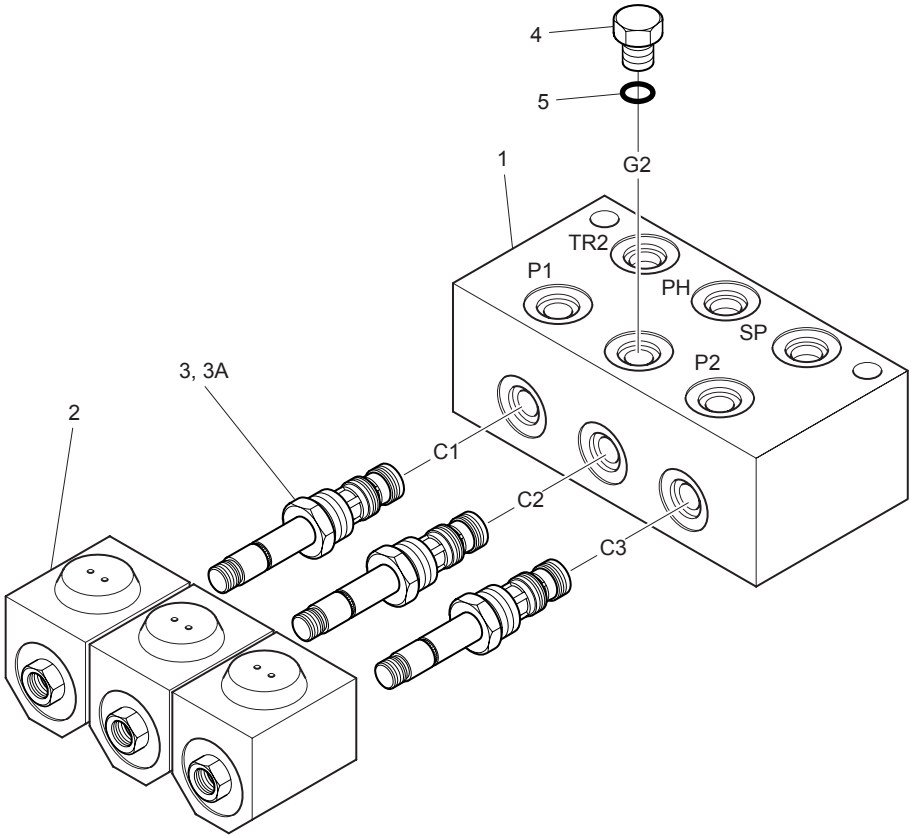

DATE	DEC. 30, 2004
REV. NO.	EXB04-09

Fig. 4230 SOLENOID VALVE VANNE DE SOLENOIDE

Serial No ;

Key No.	Part No.	Description	Description	Q'ty	S.C	Serial No.	ICA	Replaceable part	
								Part No.	Q'ty
4230--	426-00163	SOLENOID VALVE	SOUPAPE A SOLENOIDE	1		1001–1404	I	426-00163A	1
	426-00163A	**SOLENOID VALVE**	SOUPAPE A SOLENOIDE	1		**1405–**			
1	-	BLOCK	BLOC	1	D				
2	VDL24	COIL	COIL	3					
3	DF-S3A-00	SOLENOID VALVE	VANNE SOLENOIDE	3		1001–1404	I	TF-S3A-00	3
	TF-S3A-00	**SOLENOID VALVE**	VANNE SOLENOIDE	3		**1405–**			
3A	DF-S3A-S-01	. SEAL KIT	. KIT D'ETANCHEITE	1		1001–1404			
	TF-S3A-S-01	**. SEAL KIT**	. KIT D'ETANCHEITE	1		**1405–**			
4	2181-1950D1	PLUG PF1/4	BOUCHON	1					
5	S8000111	O-RING P11	JOINT TORIQUE	1					

DATE	DEC. 30, 2004
REV. NO.	EXB04-09

Fig. 4240 PILOT VALVE
VANNE DE PILOTE

Serial No. ;

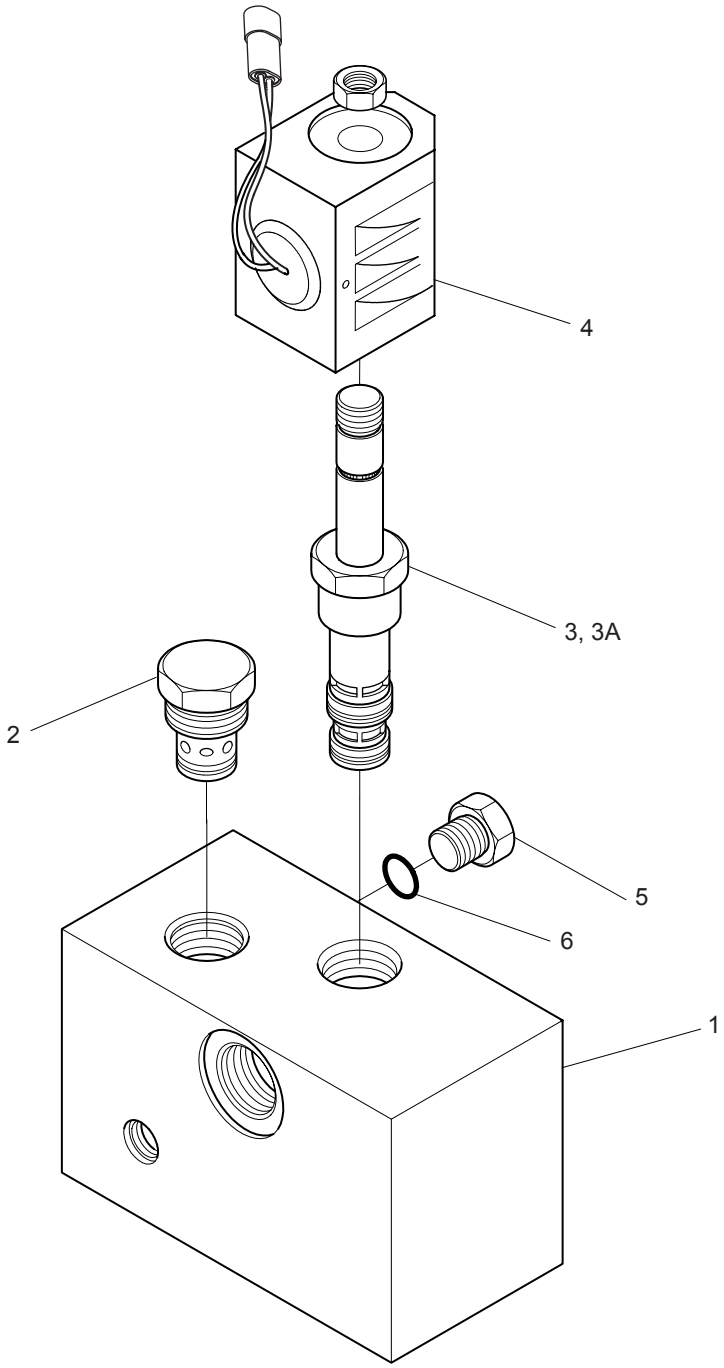

DATE	DEC. 30, 2004
REV. NO.	EXB04-09

Fig. 4240 PILOT VALVE VANNE DE PILOTE

Serial No ;

Key No.	Part No.	Description	Description	Q'ty	S.C	Serial No.	ICA	Replaceable part	
								Part No.	Q'ty
4240--	2426-9039B	PILOT VALVE	VANNE	1		1001–1404	I	2426-9039C	1
	2426-9039C	**PILOT VALVE**	VANNE	1		**1405–**			
1	-	BODY	CARTER	1	D				
2	FD-DC-0-B	VALVE;CHECK	CLAPET DE RETENUE	1					
3	DF-S3A-00	SOLENOID SPOOL	VANNE SOLENOIDE	1		1001–1404	I	TF-S3A-00	1
	TF-S3A-00	**SOLENOID SPOOL**	VANNE SOLENOIDE	1		**1405–**			
3A	DF-S3A-S-01	. SEAL KIT	. KIT D'ETANCHEITE	1		1001–1404			
	TF-S3A-S-01	**. SEAL KIT**	. KIT D'ETANCHEITE	1		**1405–**			
4	VDL24	COIL	COIL	1					
5	2181-1950D1	PLUG PF1/4	BOUCHON	1					
6	S8000111	O-RING P11	JOINT TORIQUE	1					

DATE	AUG. 12, 2002
1st EDITION	

Fig. 4250 BOOM CYLINDER-L.H
VERIN DE FLECHE

Serial No. ;

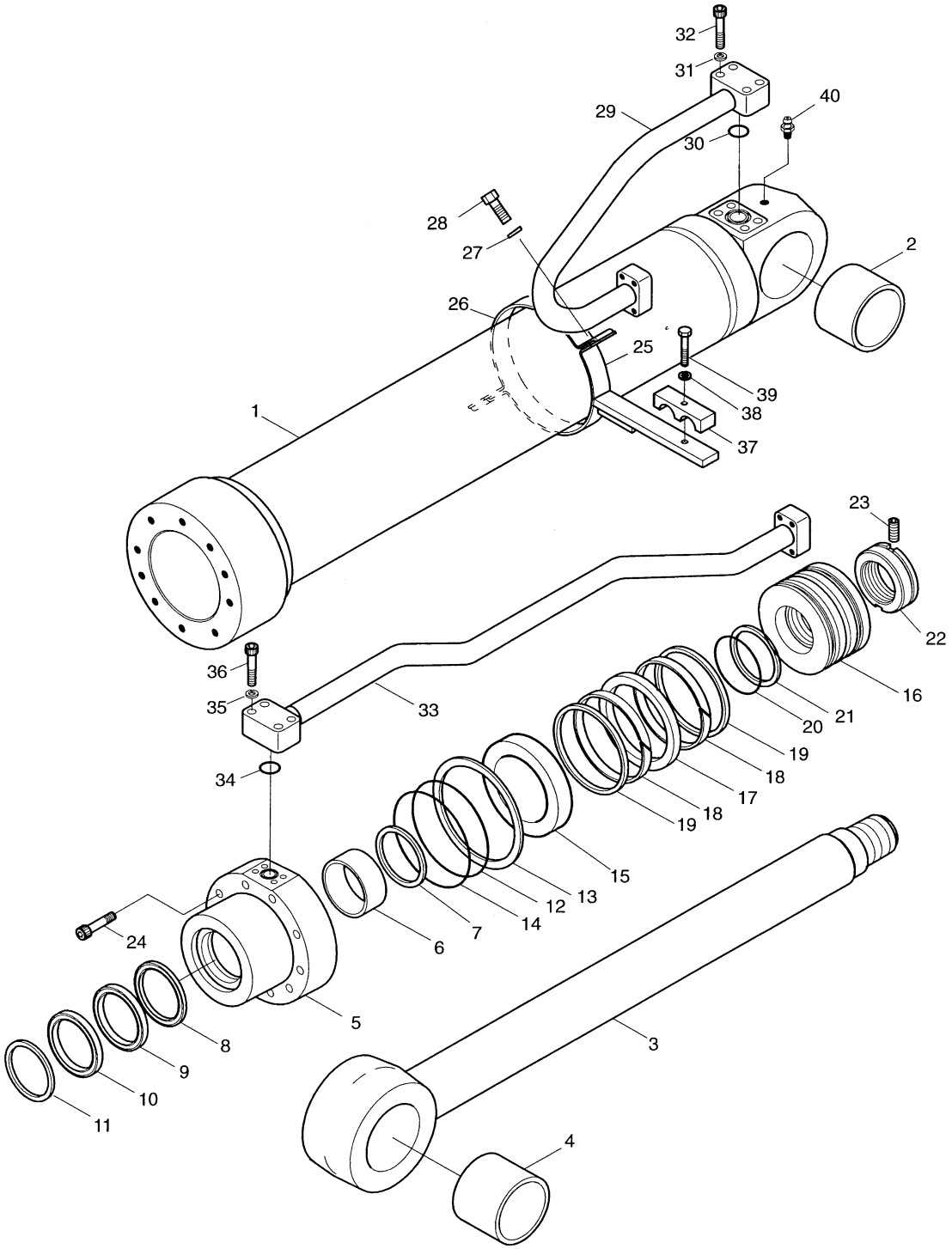

DATE	AUG. 12, 2002
1st EDITION	

Fig. 4250 BOOM CYLINDER-L.H VERIN DE FLECHE

Serial No. ;

Key No.	Part No.	Description	Description	Q'ty	S.C	Serial No.	ICA	Replaceable part	
								Part No.	Q'ty
4250--	440-00355A	BOOM CYLINDER(L.H.)	VERIN DE FLECHE	1					
1	53B846-0	TUBE ASS'Y	ENSEMBLE TUBE	1					
2	00T195-0	BUSH;STEEL	DOUILLE	1					
3	53B704-0	ROD ASS'Y	ENSEMBLE PISTON	1					
4	00T193-0	BUSH;STEEL	DOUILLE	1					
5	53B394-2	COVER;ROD	COUVERCLE DE TIGE	1					
6	E8412280	BUSH;DU	COUSSINET	1					
7	00M320-0	RING;RETAINING	RONDELLE DE RETENUE	1					
8	E5500280	SEAL;BUFFER	JOINT EN U	1	K				
9	E5303140	PACKING;U	BAGUE	1	K				
10	E6020280	WIPER;DUST	JOINT TORIQUE	1	K				
11	00M314-0	RING;RETAINING	BAGUE D'ARRET	1					
12	E6311621	O-RING	JOINT TORIQUE	1	K				
13	53B423-1	RING;BACK UP	ANNEAU DE SOUTIEN	1	K				
14	E6311641	O-RING	JOINT TORIQUE	1	K				
15	00C363-0	RING;CUSHION	BAGUE	1					
16	53B393-1	PISTON	PISTON	1					
17	E5130260	SEAL;SLIPPER	JOINT EN U	1	K				
18	00Z105-0	RING;WEAR	BAGUE DE SOUTIEN	2	K				
19	00R097-0	RING;SLYD	BAGUE	2	K				
20	E6311301	O-RING	JOINT TORIQUE	1	K				
21	53B422-0	RING;BACK UP	ANNEAU DE SOUTIEN	2	K				
22	80B485-2	NUT;PISTON	ECROU	1					
23	E1330544	SCREW	VIS	1					
24	E0502139	BOLT;SOCKET	BOULON A 6 PANS CREUX	10					
25	53B847-0	PIPE BAND ASS'Y	FIXATION DES CONDUITES	1					
26	03B243-0	BAND;PIPE	BRIDE DE FIXATION	1					
27	E3110102	WASHER;SPRING	RONDELLE ELASTIQUE	2					
28	E0020673	BOLT;HEX	BOULON A 6 PANS	2					
29	53B849-0	PIPE ASS'Y-H	CONDUITE	1					
30	E6300621	O-RING	JOINT TORIQUE	1					
31	E3110102	WASHER;SPRING	RONDELLE ELASTIQUE	4					
32	E0501246	BOLT;SOCKET	BOULON A 6 PANS CREUX	4					
33	53B876-0	PIPE ASS'Y-R	CONDUITE	1					
34	E6300621	O-RING	JOINT TORIQUE	1					
35	E3110102	WASHER;SPRING	RONDELLE ELASTIQUE	4					
36	E0501246	BOLT;SOCKET	BOULON A 6 PANS CREUX	4					
37	00C261-0	CLAMP;PIPE	FIXATION DE TUYAU	1					

DATE	AUG. 12, 2002
1st EDITION	

Fig. 4250 BOOM CYLINDER-L.H VERIN DE FLECHE

Serial No. ;

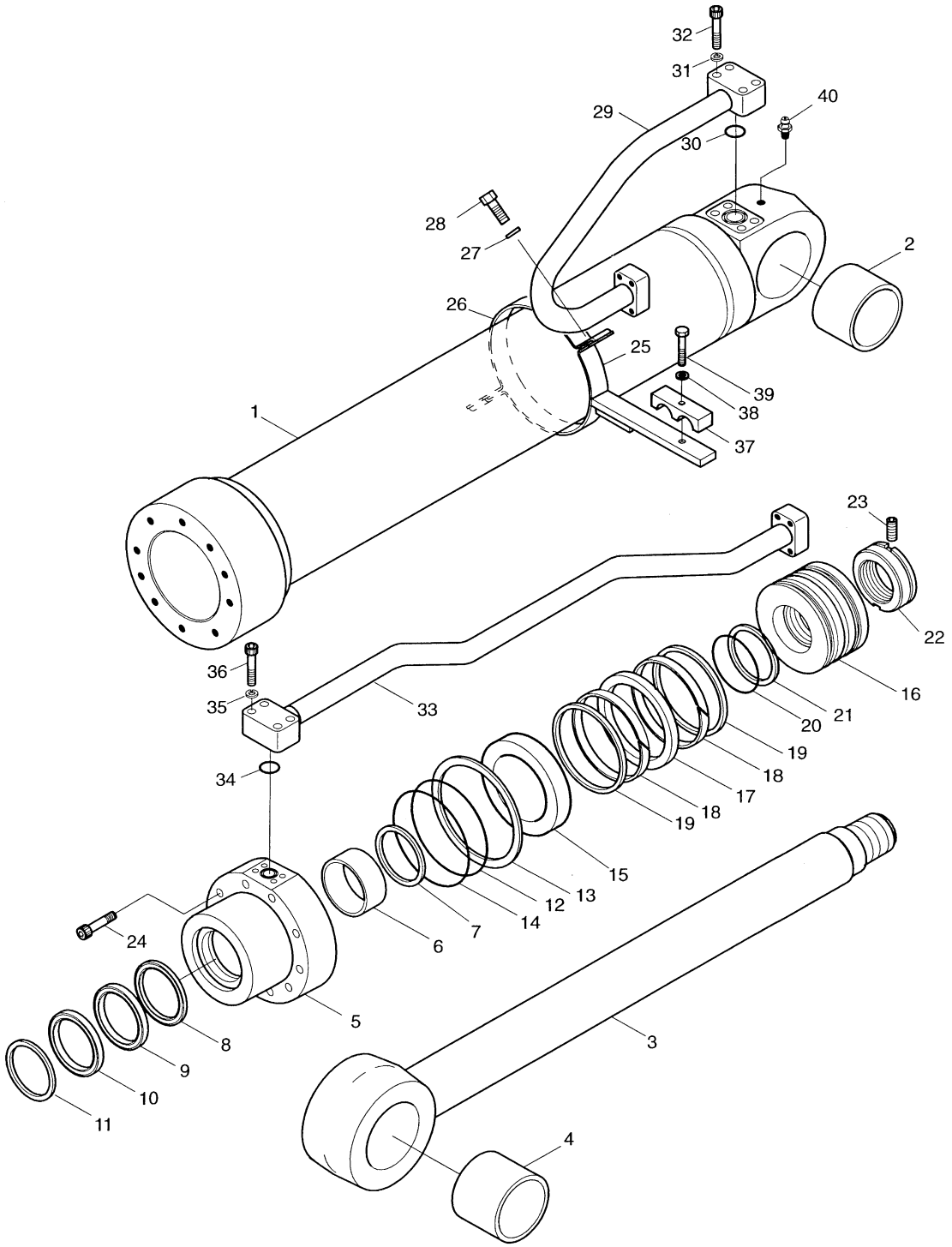

DATE	AUG. 12, 2002
1st EDITION	

Fig. 4250 BOOM CYLINDER-L.H VERIN DE FLECHE

Serial No. ;

Key No.	Part No.	Description	Description	Q'ty	S.C	Serial No.	ICA	Replaceable part	
								Part No.	Q'ty
4250-38	E3110112	WASHER;SPRING	RONDELLE ELASTIQUE	1					
39	E0021023	BOLT;HEX	BOULON A 6 PANS	1					
40	E8841022	NIPPLE;GREASE	GRAISSEUR	1					
*	440-00355AKT	SEAL KIT;BOOM CYL.	KIT DE JOINTS	1					

DATE	AUG. 12, 2002
1st EDITION	

Fig. 4260 BOOM CYLINDER-R.H
VERIN DE FLECHE

Serial No. ;

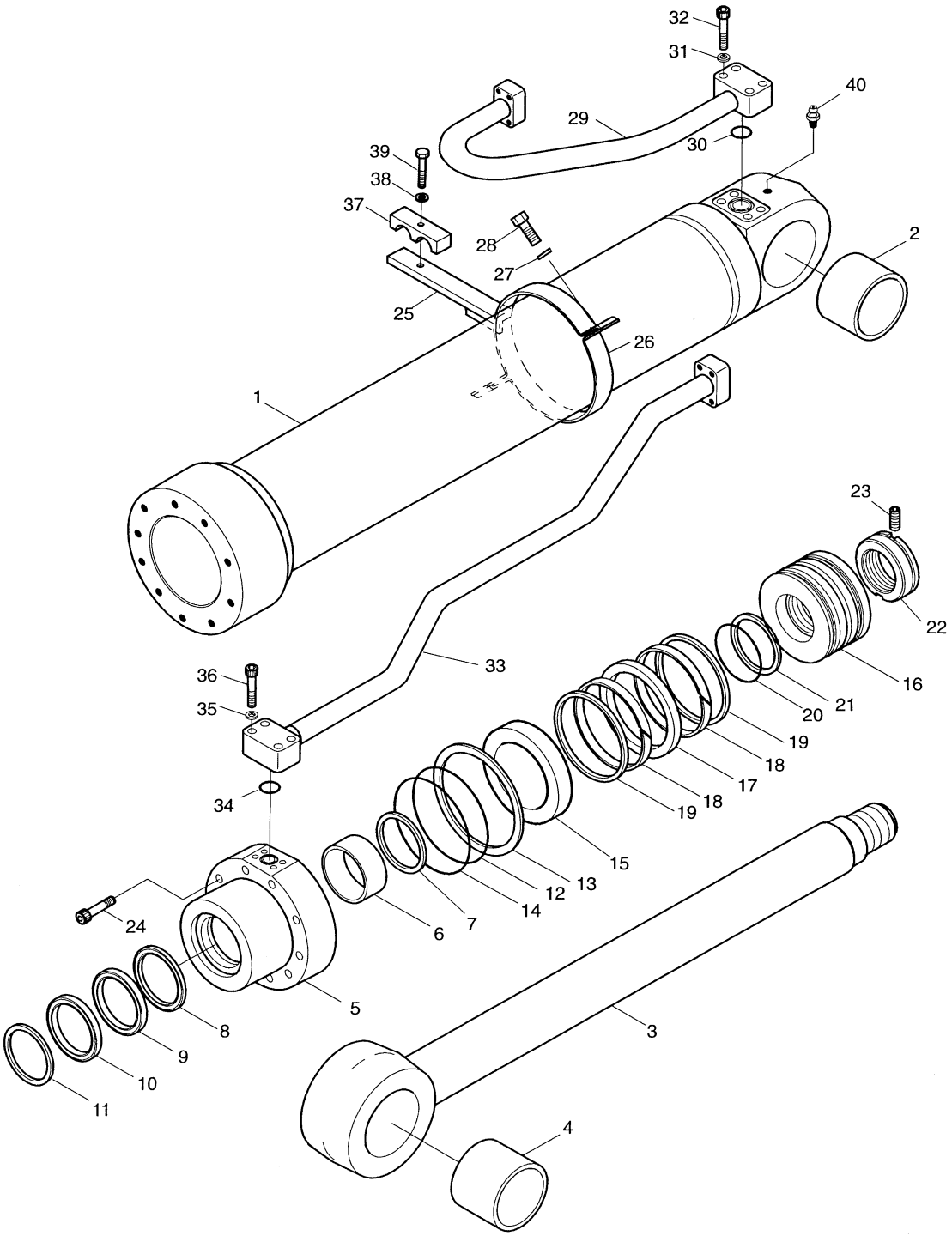

DATE	AUG. 12, 2002
1st EDITION	

Fig. 4260 BOOM CYLINDER-R.H VERIN DE FLECHE

Serial No. ;

Key No.	Part No.	Description	Description	Q'ty	S.C	Serial No.	ICA	Replaceable part	
								Part No.	Q'ty
4260--	440-00356A	BOOM CYLINDER(R.H.)	VERIN DE FLECHE	1					
1	53B846-0	TUBE ASS'Y	ENSEMBLE TUBE	1					
2	00T195-0	BUSH;STEEL	DOUILLE	1					
3	53B704-0	ROD ASS'Y	ENSEMBLE PISTON	1					
4	00T193-0	BUSH;STEEL	DOUILLE	1					
5	53B394-2	COVER;ROD	COUVERCLE DE TIGE	1					
6	E8412280	BUSH;DU	COUSSINET	1					
7	00M320-0	RING;RETAINING	RONDELLE DE RETENUE	1					
8	E5500280	SEAL;BUFFER	JOINT EN U	1	K				
9	E5303140	PACKING;U	BAGUE	1	K				
10	E6020280	WIPER;DUST	JOINT TORIQUE	1	K				
11	00M314-0	RING;RETAINING	BAGUE D'ARRET	1					
12	E6311621	O-RING	JOINT TORIQUE	1	K				
13	53B423-1	RING;BACK UP	ANNEAU DE SOUTIEN	1	K				
14	E6311641	O-RING	JOINT TORIQUE	1	K				
15	00C363-0	RING;CUSHION	BAGUE	1					
16	53B393-1	PISTON	PISTON	1					
17	E5130260	SEAL;SLIPPER	JOINT EN U	1	K				
18	00Z105-0	RING;WEAR	BAGUE DE SOUTIEN	2	K				
19	00R097-0	RING;SLYD	BAGUE	2	K				
20	E6311301	O-RING	JOINT TORIQUE	1	K				
21	53B422-0	RING;BACK UP	ANNEAU DE SOUTIEN	2	K				
22	80B485-2	NUT;PISTON	ECROU	1					
23	E1330544	SCREW	VIS	1					
24	E0502139	BOLT;SOCKET	BOULON A 6 PANS CREUX	10					
25	53B847-0	PIPE BAND ASS'Y	FIXATION DES CONDUITES	1					
26	03B243-0	BAND;PIPE	BRIDE DE FIXATION	1					
27	E3110102	WASHER;SPRING	RONDELLE ELASTIQUE	2					
28	E0020673	BOLT;HEX	BOULON A 6 PANS	2					
29	53B849-0	PIPE ASS'Y-H	CONDUITE	1					
30	E6300621	O-RING	JOINT TORIQUE	1					
31	E3110102	WASHER;SPRING	RONDELLE ELASTIQUE	4					
32	E0501246	BOLT;SOCKET	BOULON A 6 PANS CREUX	4					
33	53B876-0	PIPE ASS'Y-R	CONDUITE	1					
34	E6300621	O-RING	JOINT TORIQUE	1					
35	E3110102	WASHER;SPRING	RONDELLE ELASTIQUE	4					
36	E0501246	BOLT;SOCKET	BOULON A 6 PANS CREUX	4					
37	00C261-0	CLAMP;PIPE	FIXATION DE TUYAU	1					

DATE	AUG. 12, 2002
1st EDITION	

Fig. 4260 BOOM CYLINDER-R.H VERIN DE FLECHE

Serial No. ;

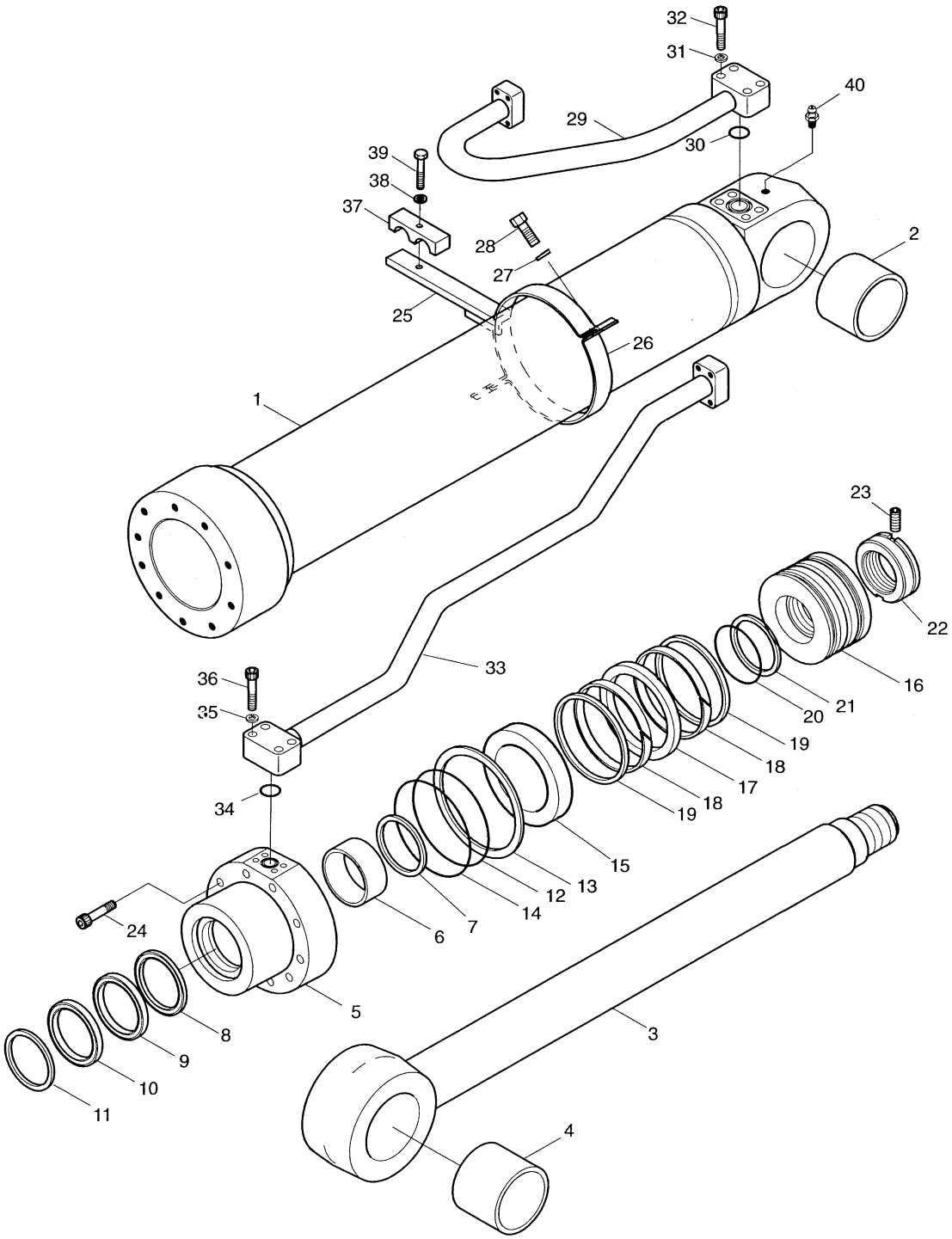

DATE	AUG. 12, 2002
1st EDITION	

Fig. 4260 BOOM CYLINDER-R.H VERIN DE FLECHE

Serial No. ;

Key No.	Part No.	Description	Description	Q'ty	S.C	Serial No.	ICA	Replaceable part	
								Part No.	Q'ty
4260-38	E3110112	WASHER;SPRING	RONDELLE ELASTIQUE	1					
39	E0021023	BOLT;HEX	BOULON A 6 PANS	1					
40	E8841022	NIPPLE;GREASE	GRAISSEUR	1					
*	440-00355AKT	SEAL KIT;BOOM CYL.	KIT DE JOINTS	1					

DATE	AUG. 12, 2002
1st EDITION	

Fig. 4270 ARM CYLINDER VERIN DE BALANCIER

Serial No. ;

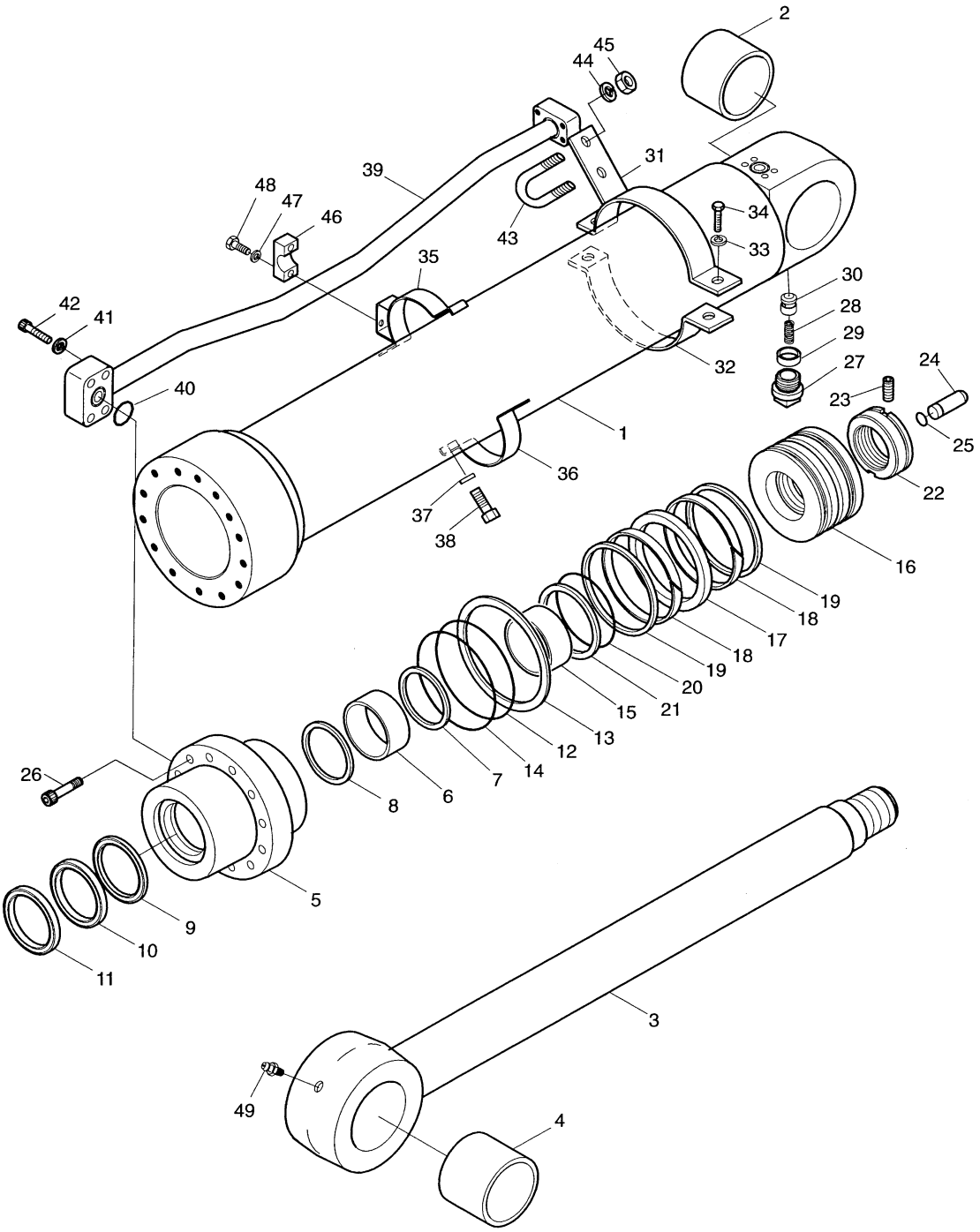

DATE	AUG. 12, 2002
1st EDITION	

Fig. 4270 ARM CYLINDER VERIN DE BALANCIER

Serial No. ;

Key No.	Part No.	Description	Description	Q'ty	S.C	Serial No.	ICA	Replaceable part	
								Part No.	Q'ty
4270--	2440-9236B	ARM CYLINDER	VERIN DE BALANCIER	1					
1	53A288-2	TUBE ASS'Y	ENSEMBLE TUBE	1					
2	00T194-0	BUSH;STEEL	DOUILLE	1					
3	53A292-2	ROD ASS'Y	ENSEMBLE TIGE	1					
4	00T194-0	BUSH;STEEL	DOUILLE	1					
5	53A295-1	COVER;ROD	COUVERCLE DE TIGE	1					
6	E8412282	BUSH;DU	COUSSINET	1					
7	00M314-0	RING;RETAINING	BAGUE D'ARRET	1					
8	E5500310	SEAL;BUFFER	ETANCHEITE A GRADINS	1	K				
9	E5303260	PACKING;U	JOINT EN U	1	K				
10	E6020310	WIPER;DUST	PARE-POUSSIERE	1	K				
11	00M316-0	RING;RETAINING	BAGUE D'ARRET	1					
12	E6311701	O-RING	JOINT TORIQUE	1	K				
13	53A379-0	RING;BACK UP	BAGUE DE SOUTIEN	1	K				
14	E6311741	O-RING	JOINT TORIQUE	1	K				
15	00C307-0	RING;CUSHION	BAGUE	1					
16	53A304-0	PISTON	PISTON	1					
17	E5130310	SEAL;SLIPPER	JOINT	1	K				
18	00Z108-0	RING;WEAR	BAGUE DE SOUTIEN	2	K				
19	00R725-0	RING;SLYD	BAGUE DE SOUTIEN	2	K				
20	E6311421	O-RING	JOINT TORIQUE	1	K				
21	53B315-0	RING;BACK UP	BAGUE DE SOUTIEN	2	K				
22	80A478-2	NUT;PISTON	ECROU DE PISTON	1					
23	E1330544	SCREW	VIS	1					
24	03A713-0	PLUNGER;CUSHION	PLONGEUR	1					
25	03A714-0	RING;STOP	BAGUE D'ARRET	1					
26	E0502149	BOLT;SOCKET	BOULON A 6 PANS CREUX	14					
27	03A260-0	VALVE;CHECK	VANNE	1					
28	03A729-0	SPRING	RESSORT	1					
29	03A728-0	SUPPORT;SPRING	SUPPORT	1					
30	E1500030	PLUG	BOUCHON	1					
31	53A551-0	PIPE BAND ASS'Y-A	FIXATION DES CONDUITES	1					
32	00P373-0	BAND;PIPE	BRIDE DE FIXATION	1					
33	E3110102	WASHER;SPRING	RONDELLE ELASTIQUE	2					
34	E0020683	BOLT;HEX	BOULON A 6 PANS	2					
35	53A563-0	PIPE BAND ASS'Y-B	FIXATION DES CONDUITES	1					
36	00P373-0	BAND;PIPE	BRIDE DE FIXATION	1					
37	E3110102	WASHER;SPRING	RONDELLE ELASTIQUE	2					

DATE	AUG. 12, 2002
1st EDITION	

Fig. 4279 ARM CYLINDER VERIN DE BALANCIER

Serial No. ;

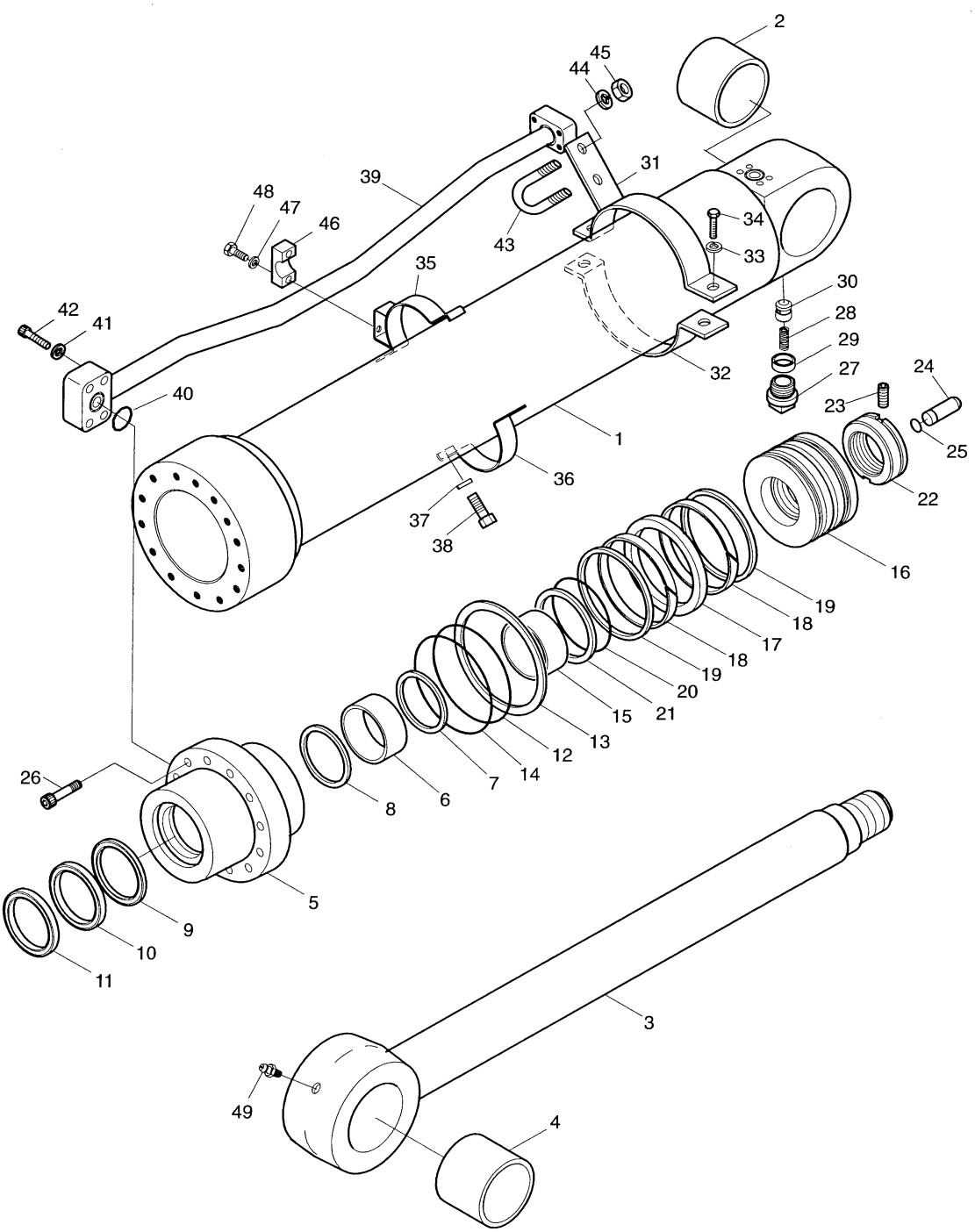

DATE	AUG. 12, 2002
1st EDITION	

Fig. 4270 ARM CYLINDER VERIN DE BALANCIER

Serial No. ;

Key No.	Part No.	Description	Description	Q'ty	S.C	Serial No.	ICA	Replaceable part	
								Part No.	Q'ty
4270-38	E0020683	BOLT;HEX	BOULON A 6 PANS	2					
39	53A296-1	PIPE ASS'Y-R	CONDUITE	1					
40	E6300761	O-RING	JOINT TORIQUE	1					
41	E3110112	WASHER;SPRING	RONDELLE ELASTIQUE	4					
42	E0501546	BOLT;SOCKET	BOULON EN U	4					
43	03A534-0	BOLT;U	BOULON U	1					
44	E3110102	WASHER;SPRING	RONDELLE ELASTIQUE	2					
45	E2022033	NUT;HEX	ECROU 6 PANS	2					
46	00C270-0	CLAMP;PIPE	COLLIER	1					
47	E3110102	WASHER;SPRING	RONDELLE ELASTIQUE	2					
48	E0020733	BOLT;HEX	BOULON EN U	2					
49	E8841022	NIPPLE;GREASE	GRAISSEUR	1					
*	2440-9236KT	SEAL KIT;ARM CYL.	KIT D'ETANCHEITE	1					

DATE	JUN. 30, 2006
REV. NO.	EXB06-08

Fig. 4280 BUCKET CYLINDER VERIN DE GODET

Serial No. ;

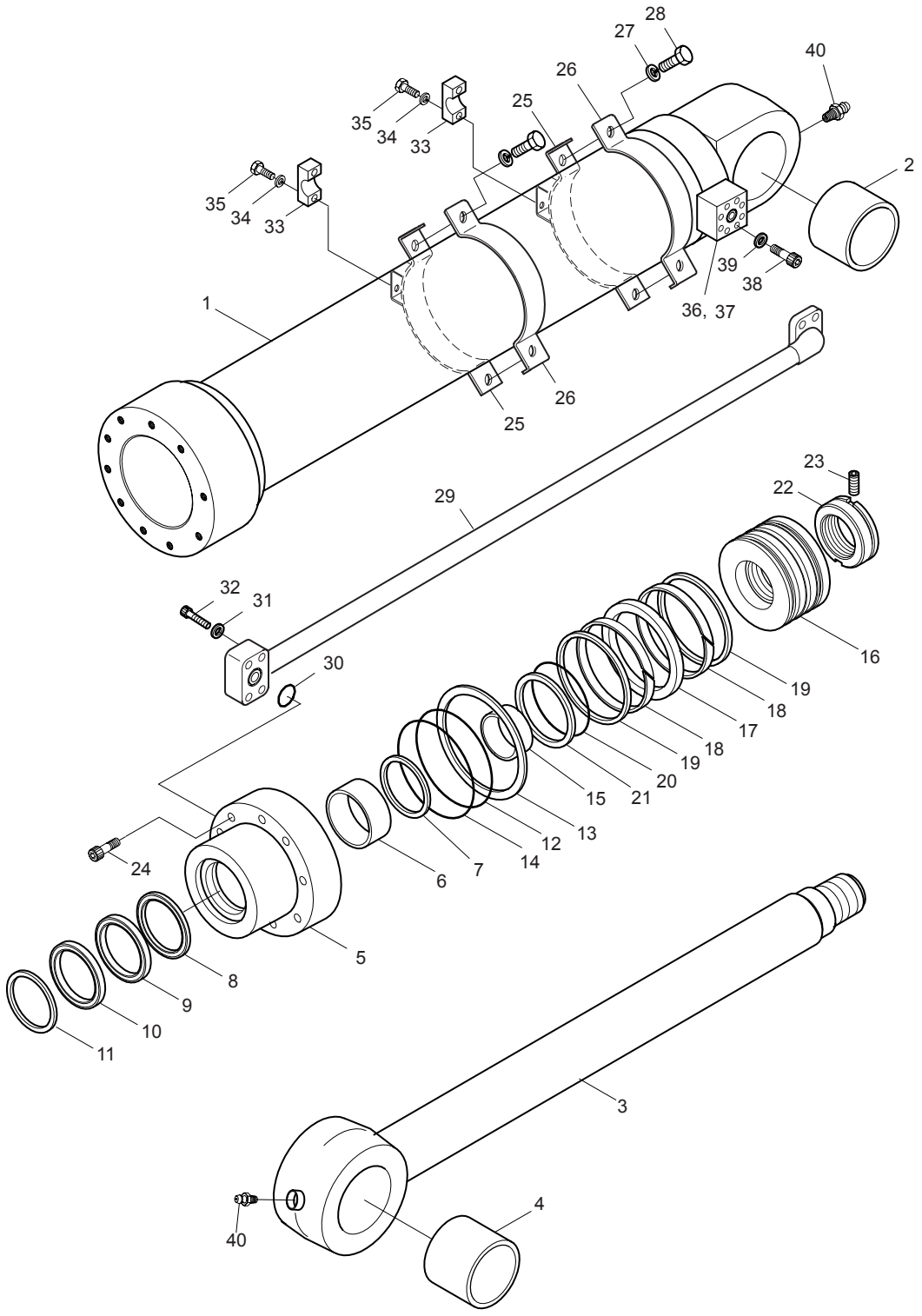

DATE	JUN. 30, 2006
REV. NO.	EXB06-08

Fig. 4280 BUCKET CYLINDER VERIN DE GODET

Serial No. ;

Key No.	Part No.	Description	Description	Q'ty	S.C	Serial No.	ICA	Replaceable part	
								Part No.	Q'ty
4280--	440-00059	BUCKET CYLINDER	VERIN DE GODET	1		1001–2386	I	440-00059A	1
	440-00059A	**BUCKET CYLINDER**	VERIN DE GODET	1		**2387–**			
1	53U470-1	TUBE ASS'Y	ENSEMBLE TUBE	1					
2	00T193-0	BUSH;STEEL	DOUILLE	1					
3	53U474-0	ROD ASS'Y	ENSEMBLE TIGE	1		1001–2386	I	53U474-3	1
	53U474-3	**ROD ASS'Y**	ENSEMBLE TIGE	1		**2387–**			
4	00T193-0	BUSH;STEEL	DOUILLE	1					
5	53U477-1	COVER;ROD	COUVERCLE DE TIGE	1					
6	E8412908	BUSH;DU	COUSSINET	1					
7	00M312-0	RING;RETAINING	ARRET	1					
8	E5500260	SEAL;BUFFER	JOINT	1	K				
9	E5303040	PACKING;U	JOINT EN U	1	K				
10	E6020260	WIPER;DUST	JOINT PARE-POUSSIERE	1	K				
11	00M313-0	RING;RETAINING	TAQUET D'ARRET	1					
12	E6311621	O-RING	JOINT TORIQUE	1	K				
13	53B423-0	RING;BACK UP	BAGUE DE SOUTIEN	1	K				
14	E6311641	O-RING	JOINT TORIQUE	1	K				
15	00C304-0	RING;CUSHION	BAGUE	1					
16	53U478-0	PISTON	PISTON	1					
17	E5130260	SEAL;SLIPPER	JOINT EN U	1	K				
18	00Z105-0	RING;WEAR	BAGUE DE SOUTIEN	2	K				
19	00R097-0	RING;SLYD	BAGUE	2	K				
20	E6490086	O-RING	JOINT TORIQUE	1	K				
21	53A387-0	RING;BACK UP	ANNEAU DE SOUTIEN	2	K				
22	80B485-2	NUT;PISTON	ECROU	1					
23	E1330544	SCREW;SET	VIS	1					
24	E0502139	BOLT;SOCKET	BOULON DE PLOT	10					
25	53U508-0	PIPE BAND ASS'Y	FIXATION DES CONDUITES	2					
26	00P371-0	BAND;PIPE	BRIDE DE FIXATION	2					
27	E3110102	WASHER;SPRING	RONDELLE ELASTIQUE	4					
28	E0020683	BOLT;HEX	BOULON A 6 PANS	4					
29	53U334-2	PIPE ASS'Y	CONDUITES	1					
30	E6300621	O-RING	JOINT TORIQUE	1					
31	E3110102	WASHER;SPRING	RONDELLE ELASTIQUE	4					
32	E0501246	BOLT;SOCKET	BOULON DE PLOT	4					
33	00C267-0	CLAMP;PIPE	FIXATION DE TUYAU	2					
34	E3110102	WASHER;SPRING	RONDELLE ELASTIQUE	4					
35	E0020723	BOLT;HEX.	BOULON A 6 PANS	4					

DATE	JUN. 30, 2006
REV. NO.	EXB06-08

Fig. 4280 BUCKET CYLINDER VERIN DE GODET

Serial No. ;

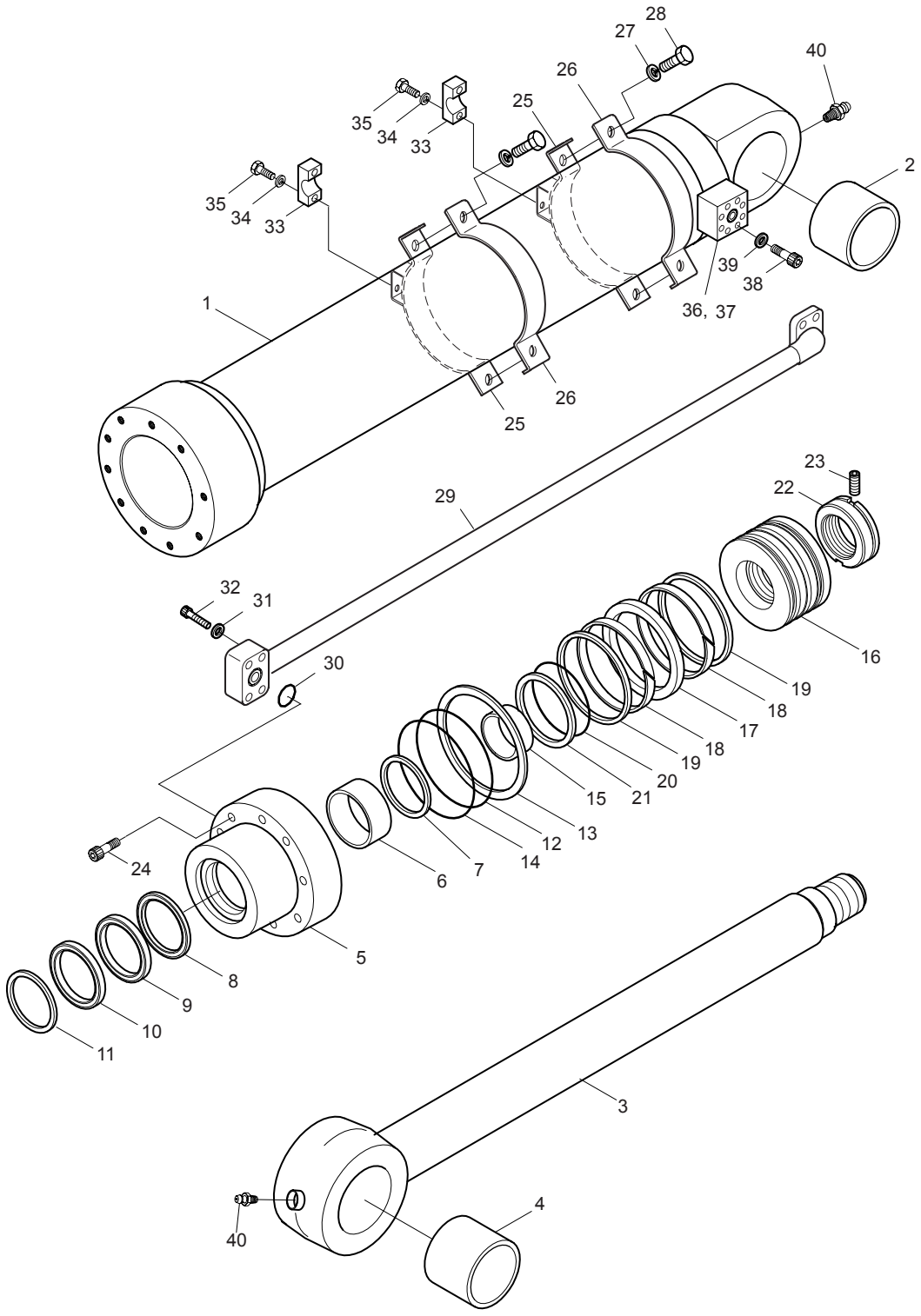

DATE	JUN. 30, 2006
REV. NO.	EXB06-08

Fig. 4280 BUCKET CYLINDER VERIN DE GODET

Serial No. ;

Key No.	Part No.	Description	Description	Q'ty	S.C	Serial No.	ICA	Replaceable part	
								Part No.	Q'ty
4280-36	53U481-0	FLANGE;PORT	BRIDE	1					
37	E6300621	O-RING	JOINT TORIQUE	1					
38	E3110102	WASHER;SPRING	RONDELLE ELASTIQUE	4					
39	E0501236	BOLT;SOCKET	BOULON DE PLOT	4					
40	E8841022	NIPPLE;GREASE	GRAISSEUR	2					
*	2440-9339KT	SEAL KIT;BUCKET	KIT D'ETANCHEITE	1	S				

DATE	JUL. 30, 2003
REV. NO.	EXB03-13

Fig. 4290 BUCKET CYLINDER-6.2m ARM VERIN DE GODET

Serial No. ;

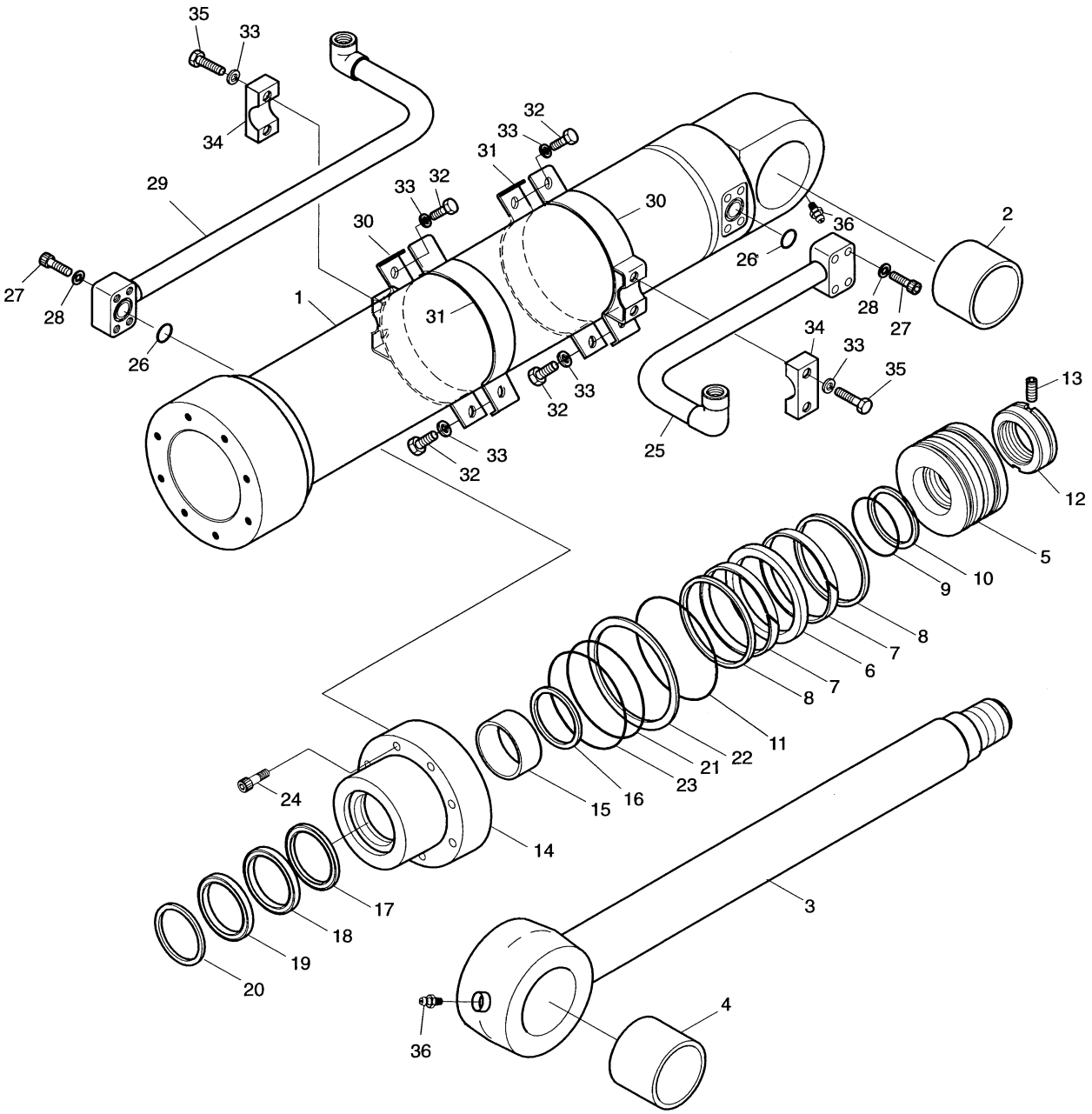

DATE	JUL. 30, 2003
REV. NO.	EXB03-13

Fig. 4290 BUCKET CYLINDER-6.2m ARM VERIN DE GODET

Serial No ;

Key No.	Part No.	Description	Description	Q'ty	S.C	Serial No.	ICA	Replaceable part	
								Part No.	Q'ty
4290--	2440-9233B	BUCKET CYLINDER	VERIN DE GODET	1		1001-1009	I	440-00398	1
	440-00398	**BUCKET CYLINDER**	VERIN DE GODET	1		**1010-**			
1	53U295-2	TUBE ASS'Y	ENSEMBLE TUBE	1					
2	53U301-0	BUSH;STEEL	DOUILLE	1					
3	53U302-2	ROD ASS'Y	ENSEMBLE TIGE	1		1001-1009			
	53U302-5	**ROD ASS'Y**	ENSEMBLE TIGE	1		**1010-**			
4	53U301-0	BUSH;STEEL	DOUILLE	1					
5	53U307-1	PISTON	PISTON	1		1001-1009			
	53U307-2	**PISTON**	PISTON	1		**1010-**			
6	E5130190	SEAL;SLIPPER	JOINT EN U	1	K				
7	00Z116-0	RING;WEAR	BAGUE DE SOUTIEN	2	K				
8	00R726-0	RING;SLYD	BAGUE	2	K				
9	E6490082	O-RING	JOINT TORIQUE	1	K				
10	53U258-0	RING;BACK UP	ANNEAU DE SOUTIEN	1	K	1001-1009			
	53U258-1	**RING;BACK UP**	ANNEAU DE SOUTIEN	1	K	**1010-**			
11	00C301-0	RING;CUSHION	BAGUE	1		1001-1009			
	00C368-0	**RING;CUSHION**	BAGUE	1		**1010-**			
12	53U309-2	NUT;PISTON	ECROU	1					
13	E1330544	SCREW;SET	VIS	1					
14	53U306-2	COVER;ROD	COUVERCLE DE TIGE	1					
15	E8412163	BUSH;DU	COUSSINET	1					
16	00M321-0	RING;RETAINING	ARRET	1					
17	E5500260	SEAL;BUFFER	JOINT	1	K				
18	E5302620	PACKING;U	JOINT EN U	1	K				
19	E6020200	WIPER;DUST	JOINT PARE-POUSSIERE	1	K				
20	00M323-0	RING;RETAINING	TAQUET D'ARRET	1					
21	E6311481	O-RING	JOINT TORIQUE	1	K				
22	53U259-0	RING;BACK UP	BAGUE DE SOUTIEN	1	K	1001-1009			
	53U259-1	**RING;BACK UP**	BAGUE DE SOUTIEN	1	K	**1010-**			
23	E6311501	O-RING	JOINT TORIQUE	1	K				
24	E0501839	BOLT;SOCKET	BOULON DE PLOT	8					
25	03U522-3	PIPE ASS'Y-H	CONDUITES	1					
26	E6300471	O-RING	JOINT TORIQUE	2					
27	E0500936	BOLT;SOCKET	BOULON DE PLOT	8					
28	E3110092	WASHER;SPRING	RONDELLE ELASTIQUE	8					
29	53U310-1	PIPE ASS'Y-R	CONDUITES	1					
30	53U256-0	PIPE BAND ASS'Y	FIXATION DES CONDUITES	2					
31	04B320-0	BAND;PIPE	BRIDE DE FIXATION	2					

DATE	JUL. 30, 2003
REV. NO.	EXB03-13

Fig. 4290 BUCKET CYLINDER-6.2m ARM
VERIN DE GODET

Serial No. ;

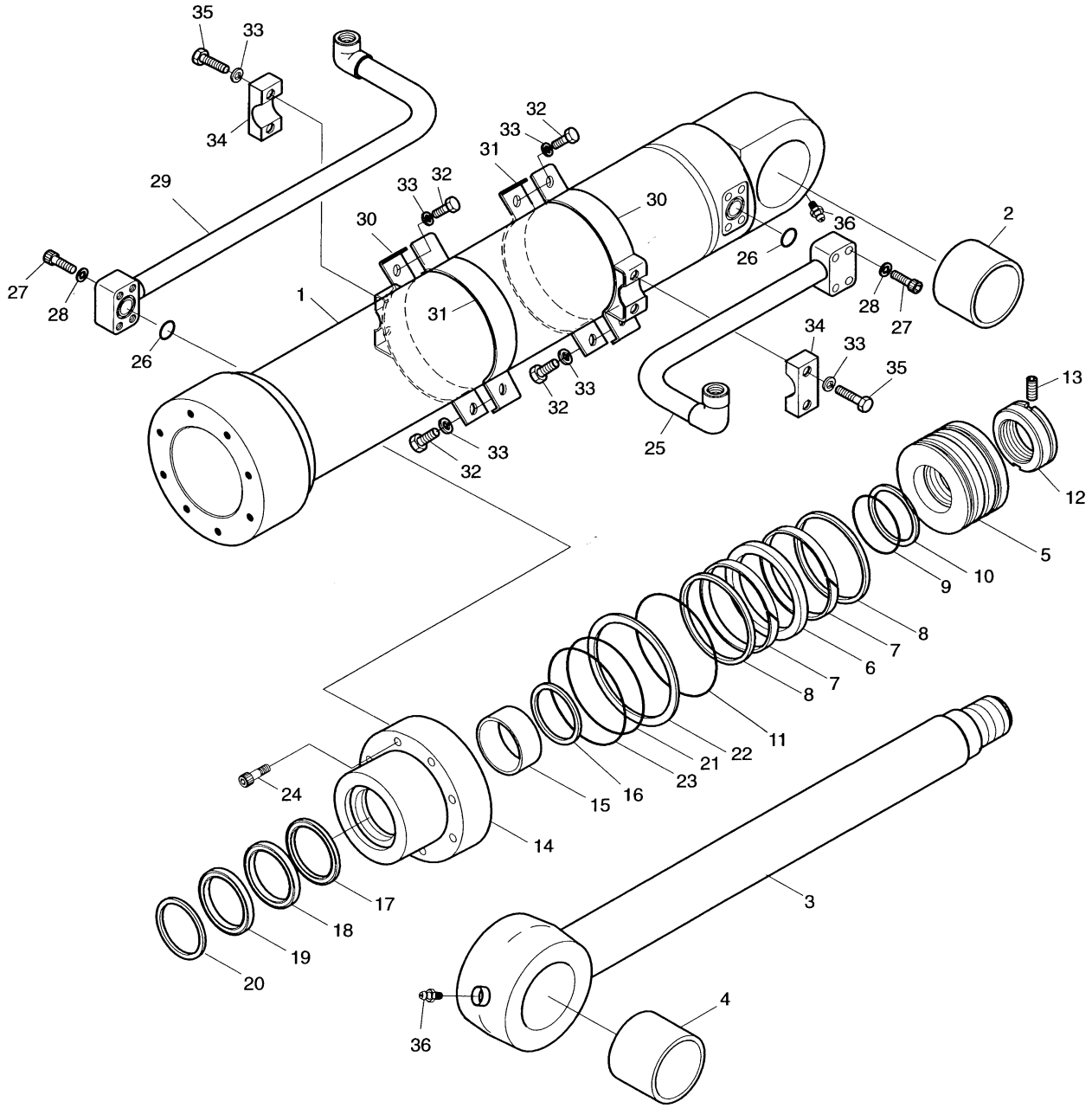

DATE	JUL. 30, 2003
REV. NO.	EXB03-13

Fig. 4290 BUCKET CYLINDER-6.2m ARM VERIN DE GODET

Serial No ;

Key No.	Part No.	Description	Description	Q'ty	S.C	Serial No.	ICA	Replaceable part	
								Part No.	Q'ty
4290-32	E0020673	BOLT;HEX	BOULON A 6 PANS	4					
33	E3110102	WASHER;SPRING	RONDELLE ELASTIQUE	8					
34	00C266-0	CLAMP;PIPE	FIXATION DE TUYAU	2					
35	E0020713	BOLT;HEX.	BOULON A 6 PANS	4					
36	E8841022	NIPPLE;GREASE	GRAISSEUR	2					
*	2440-9233KT	SEAL KIT;BUCKET	KIT D'ETANCHEITE	1	S				

DATE	AUG. 12, 2002
1st EDITION	

Fig. 4300 BOOM CYLINDER(L.H)-LOCK VALVE VERIN DE FLECHE

Serial No. ;

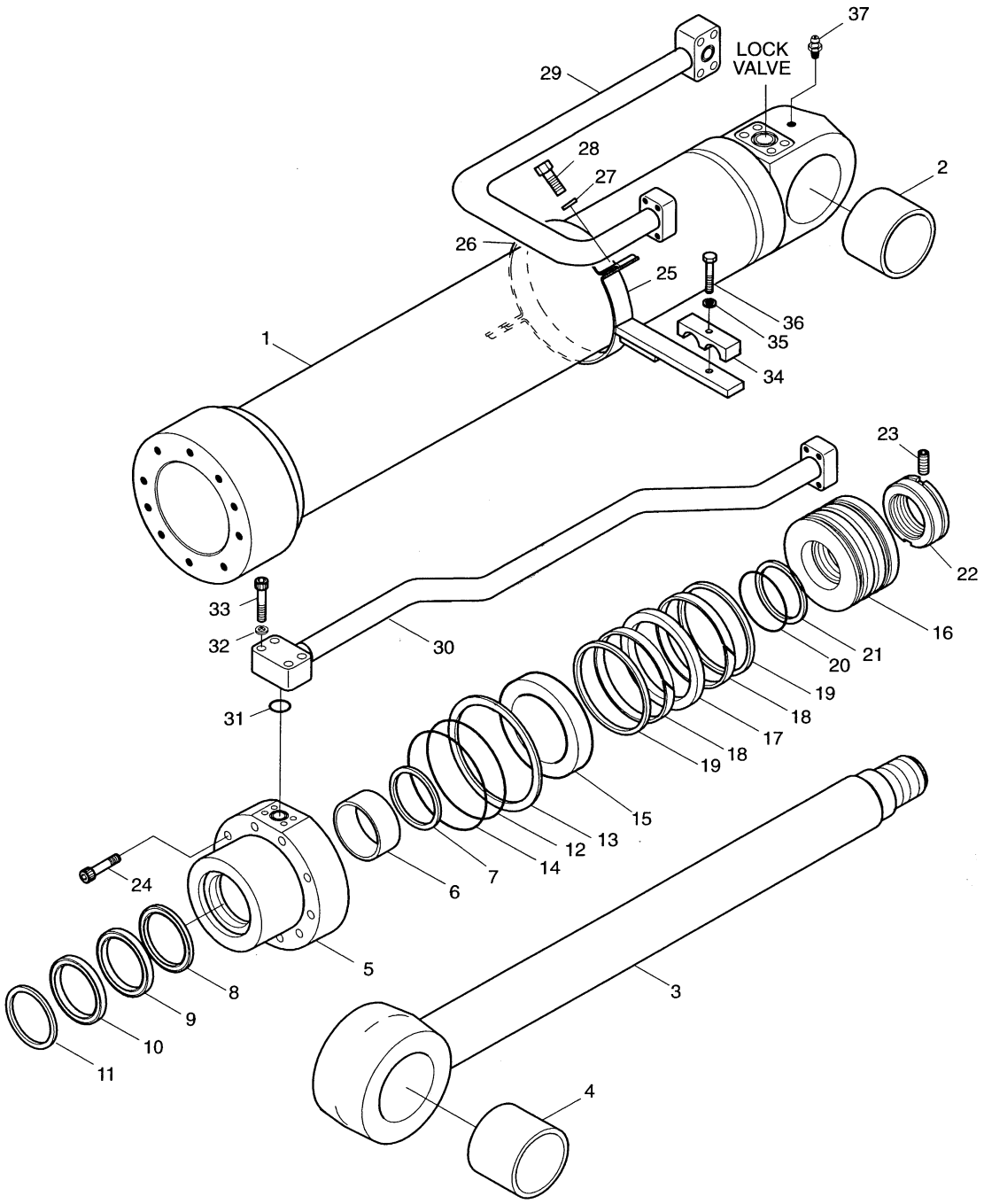

DATE	AUG. 12, 2002
1st EDITION	

Fig. 4300 BOOM CYLINDER(L.H)-LOCK VALVE VERIN DE FLECHE

Serial No. ;

Key No.	Part No.	Description	Description	Q'ty	S.C	Serial No.	ICA	Replaceable part	
								Part No.	Q'ty
4300--	440-00360A	BOOM CYLINDER(L.H.)-LOCK	VERIN DE FLECHE	1					
1	53B846-0	TUBE ASS'Y	ENSEMBLE TUBE	1					
2	00T195-0	BUSH;STEEL	DOUILLE	1					
3	53B704-0	ROD ASS'Y	ENSEMBLE PISTON	1					
4	00T193-0	BUSH;STEEL	DOUILLE	1					
5	53B394-2	COVER;ROD	COUVERCLE DE TIGE	1					
6	E8412280	BUSH;DU	COUSSINET	1					
7	00M320-0	RING;RETAINING	RONDELLE DE RETENUE	1					
8	E5500280	SEAL;BUFFER	JOINT EN U	1	K				
9	E5303140	PACKING;U	BAGUE	1	K				
10	E6020280	WIPER;DUST	JOINT TORIQUE	1	K				
11	00M314-0	RING;RETAINING	BAGUE D'ARRET	1					
12	E6311621	O-RING	JOINT TORIQUE	1	K				
13	53B423-1	RING;BACK UP	ANNEAU DE SOUTIEN	1	K				
14	E6311641	O-RING	JOINT TORIQUE	1	K				
15	00C363-0	RING;CUSHION	BAGUE	1					
16	53B393-1	PISTON	PISTON	1					
17	E5130260	SEAL;SLIPPER	JOINT EN U	1	K				
18	00Z105-0	RING;WEAR	BAGUE DE SOUTIEN	2	K				
19	00R097-0	RING;SLYD	BAGUE	2	K				
20	E6311301	O-RING	JOINT TORIQUE	1	K				
21	53B422-0	RING;BACK UP	ANNEAU DE SOUTIEN	2	K				
22	80B485-2	NUT;PISTON	ECROU	1					
23	E1330544	SCREW	VIS	1					
24	E0502139	BOLT;SOCKET	BOULON A 6 PANS CREUX	10					
25	53B847-0	PIPE BAND ASS'Y	FIXATION DES CONDUITES	1					
26	03B243-0	BAND;PIPE	BRIDE DE FIXATION	1					
27	E3110102	WASHER;SPRING	RONDELLE ELASTIQUE	2					
28	E0020673	BOLT;HEX	BOULON A 6 PANS	2					
29	53B853-0	PIPE ASS'Y-H	CONDUITE	1					
30	53B876-0	PIPE ASS'Y-R	CONDUITE	1					
31	E6300621	O-RING	JOINT TORIQUE	1					
32	E3110102	WASHER;SPRING	RONDELLE ELASTIQUE	4					
33	E0501246	BOLT;SOCKET	BOULON A 6 PANS CREUX	4					
34	00C261-0	CLAMP;PIPE	FIXATION DE TUYAU	1					
35	E3110112	WASHER;SPRING	RONDELLE ELASTIQUE	1					
36	E0021023	BOLT;HEX	BOULON A 6 PANS	1					
37	E8841022	NIPPLE;GREASE	GRAISSEUR	1					

DATE	AUG. 12, 2002
1st EDITION	

Fig. 4300 BOOM CYLINDER(L.H)-LOCK VALVE VERIN DE FLECHE

Serial No. ;

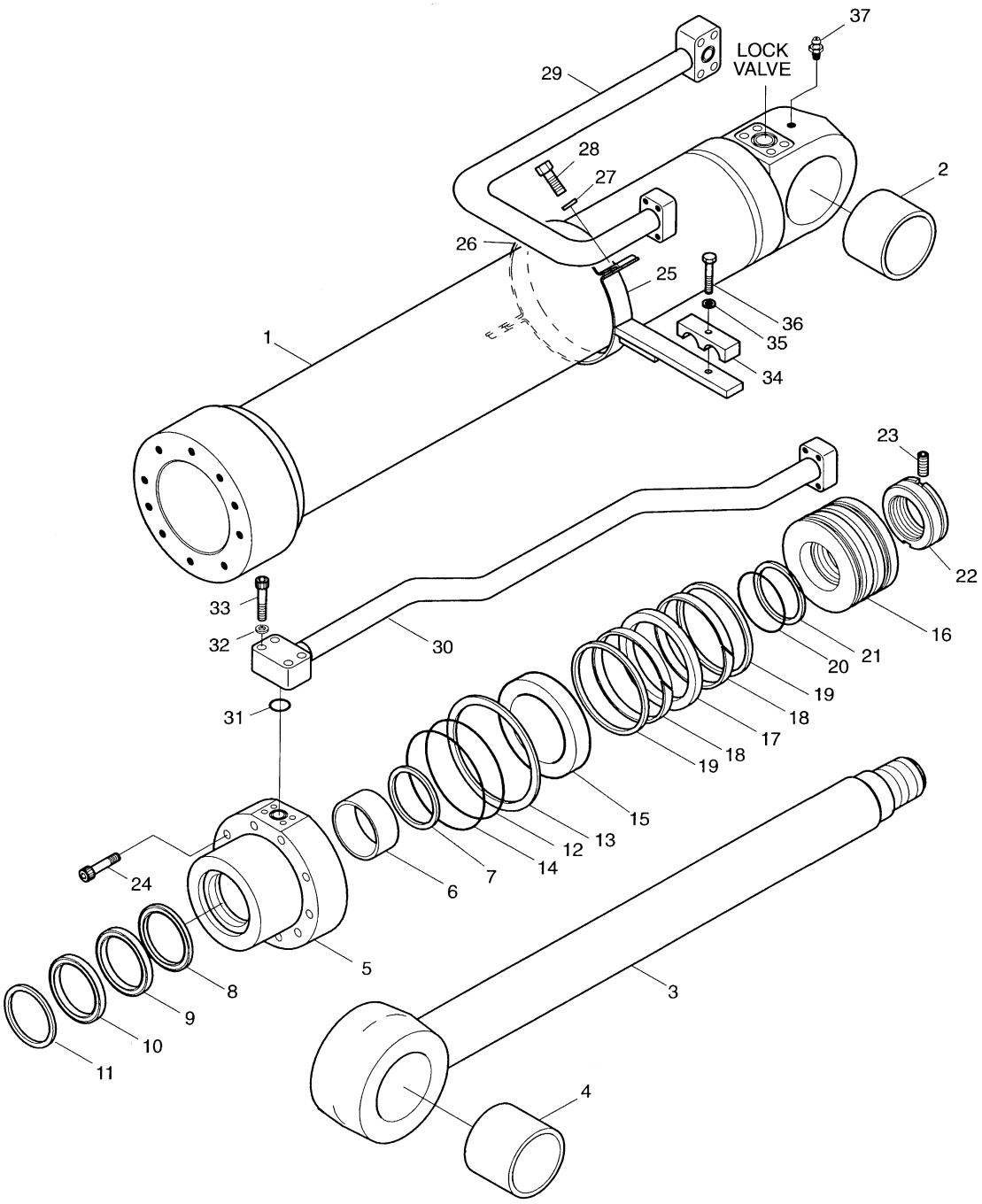

DATE	AUG. 12, 2002
1st EDITION	

Fig. 4300 BOOM CYLINDER(L.H)-LOCK VALVE VERIN DE FLECHE

Serial No. ;

Key No.	Part No.	Description	Description	Q'ty	S.C	Serial No.	ICA	Replaceable part	
								Part No.	Q'ty
4300-*	440-00355AKT	SEAL KIT;BOOM CYL.	KIT DE JOINTS	1					

DATE	AUG. 12, 2002
1st EDITION	

Fig. 4310 BOOM CYLINDER(R.H)-LOCK VALVE VERIN DE FLECHE

Serial No. ;

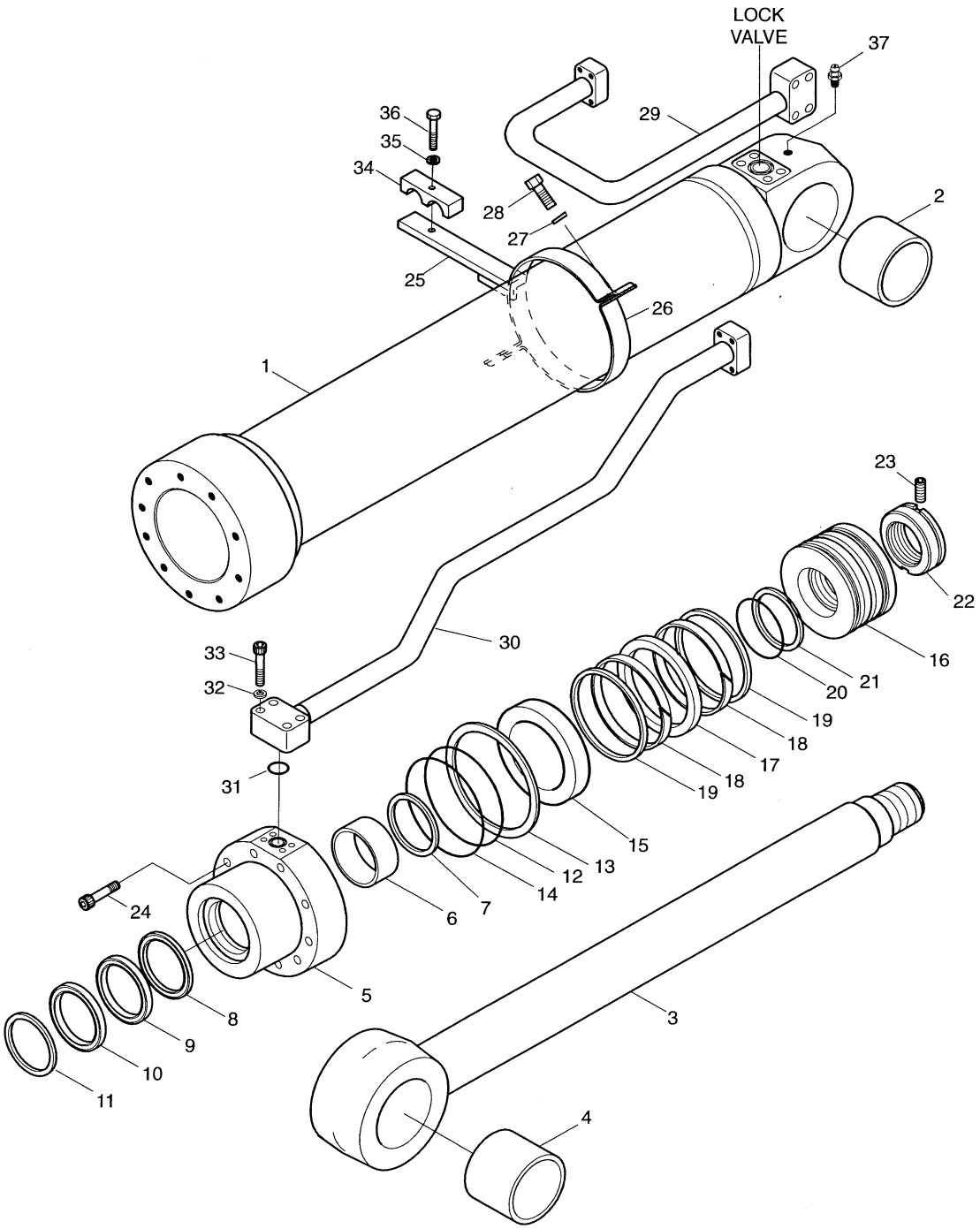

DATE	AUG. 12, 2002
1st EDITION	

Fig. 4310 BOOM CYLINDER(R.H)-LOCK VALVE VERIN DE FLECHE

Serial No. ;

Key No.	Part No.	Description	Description	Q'ty	S.C	Serial No.	ICA	Replaceable part	
								Part No.	Q'ty
4310--	440-00361A	BOOM CYLINDER(R.H.)-LOCK	VERIN DE FLECHE	1					
1	53B846-0	TUBE ASS'Y	ENSEMBLE TUBE	1					
2	00T195-0	BUSH;STEEL	DOUILLE	1					
3	53B704-0	ROD ASS'Y	ENSEMBLE PISTON	1					
4	00T193-0	BUSH;STEEL	DOUILLE	1					
5	53B394-2	COVER;ROD	COUVERCLE DE TIGE	1					
6	E8412280	BUSH;DU	COUSSINET	1					
7	00M320-0	RING;RETAINING	RONDELLE DE RETENUE	1					
8	E5500280	SEAL;BUFFER	JOINT EN U	1	K				
9	E5303140	PACKING;U	BAGUE	1	K				
10	E6020280	WIPER;DUST	JOINT TORIQUE	1	K				
11	00M314-0	RING;RETAINING	BAGUE D'ARRET	1					
12	E6311621	O-RING	JOINT TORIQUE	1	K				
13	53B423-1	RING;BACK UP	ANNEAU DE SOUTIEN	1	K				
14	E6311641	O-RING	JOINT TORIQUE	1	K				
15	00C363-0	RING;CUSHION	BAGUE	1					
16	53B393-1	PISTON	PISTON	1					
17	E5130260	SEAL;SLIPPER	JOINT EN U	1	K				
18	00Z105-0	RING;WEAR	BAGUE DE SOUTIEN	2	K				
19	00R097-0	RING;SLYD	BAGUE	2	K				
20	E6311301	O-RING	JOINT TORIQUE	1	K				
21	53B422-0	RING;BACK UP	ANNEAU DE SOUTIEN	2	K				
22	80B485-2	NUT;PISTON	ECROU	1					
23	E1330544	SCREW	VIS	1					
24	E0502139	BOLT;SOCKET	BOULON A 6 PANS CREUX	10					
25	53B847-0	PIPE BAND ASS'Y	FIXATION DES CONDUITES	1					
26	03B243-0	BAND;PIPE	BRIDE DE FIXATION	1					
27	E3110102	WASHER;SPRING	RONDELLE ELASTIQUE	2					
28	E0020673	BOLT;HEX	BOULON A 6 PANS	2					
29	53B852-0	PIPE ASS'Y-H	CONDUITE	1					
30	53B875-0	PIPE ASS'Y-R	CONDUITE	1					
31	E6300621	O-RING	JOINT TORIQUE	1					
32	E3110102	WASHER;SPRING	RONDELLE ELASTIQUE	4					
33	E0501246	BOLT;SOCKET	BOULON A 6 PANS CREUX	4					
34	00C261-0	CLAMP;PIPE	FIXATION DE TUYAU	1					
35	E3110112	WASHER;SPRING	RONDELLE ELASTIQUE	1					
36	E0021023	BOLT;HEX	BOULON A 6 PANS	1					
37	E8841022	NIPPLE;GREASE	GRAISSEUR	1					

DATE	AUG. 12, 2002
1st EDITION	

Fig. 4310 BOOM CYLINDER(R.H)-LOCK VALVE VERIN DE FLECHE

Serial No. ;

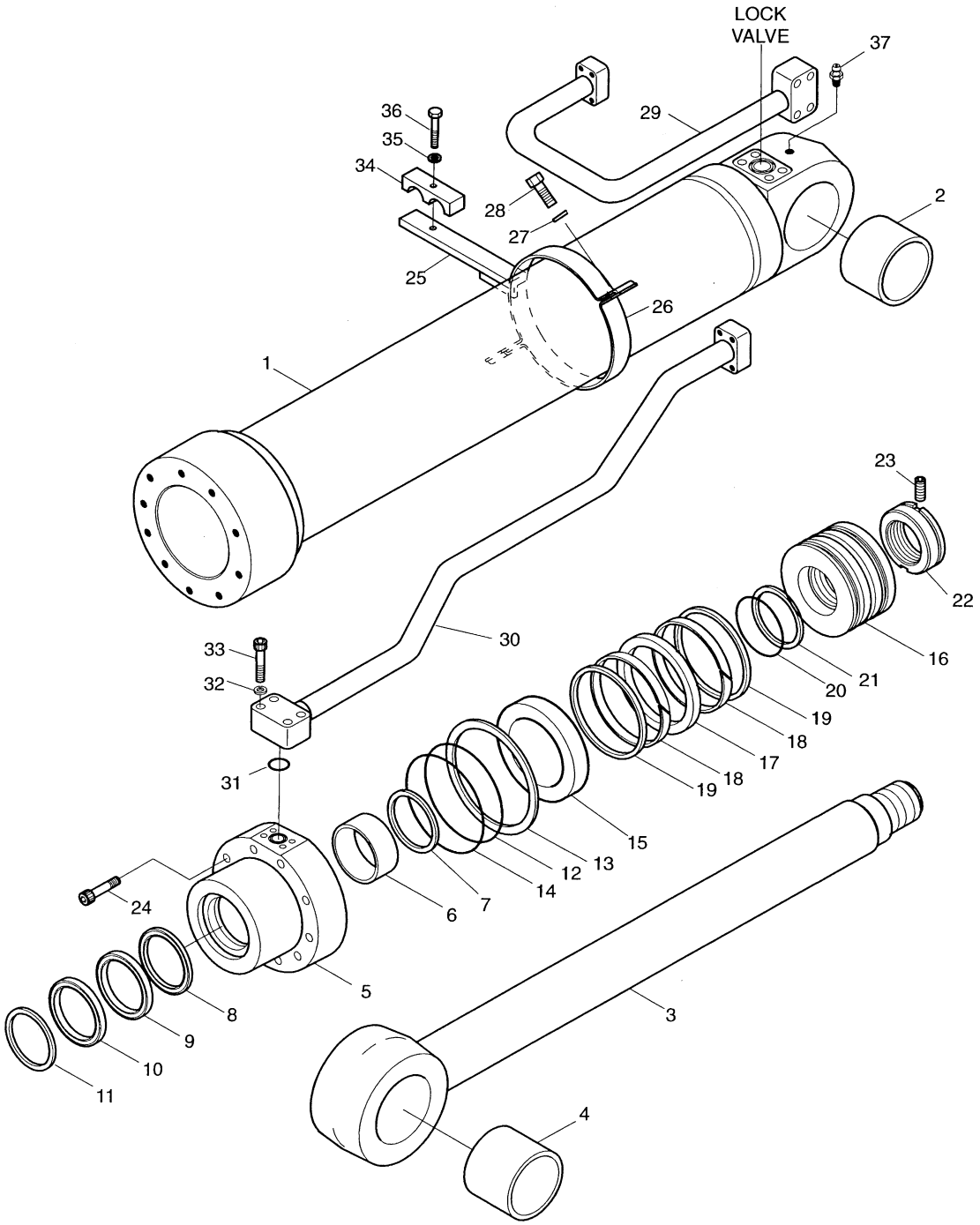

DATE	AUG. 12, 2002
1st EDITION	

Fig. 4310 BOOM CYLINDER(R.H)-LOCK VALVE VERIN DE FLECHE

Serial No. ;

Key No.	Part No.	Description	Description	Q'ty	S.C	Serial No.	ICA	Replaceable part	
								Part No.	Q'ty
4310-*	440-00355AKT	SEAL KIT;BOOM CYL.	KIT DE JOINTS	1					

DATE	JUL. 30, 2003
REV. NO.	EXB03-13

Fig. 4320 ARM CYLINDER-LOCK VALVE
VERIN DE BALANCIER

Serial No. ;

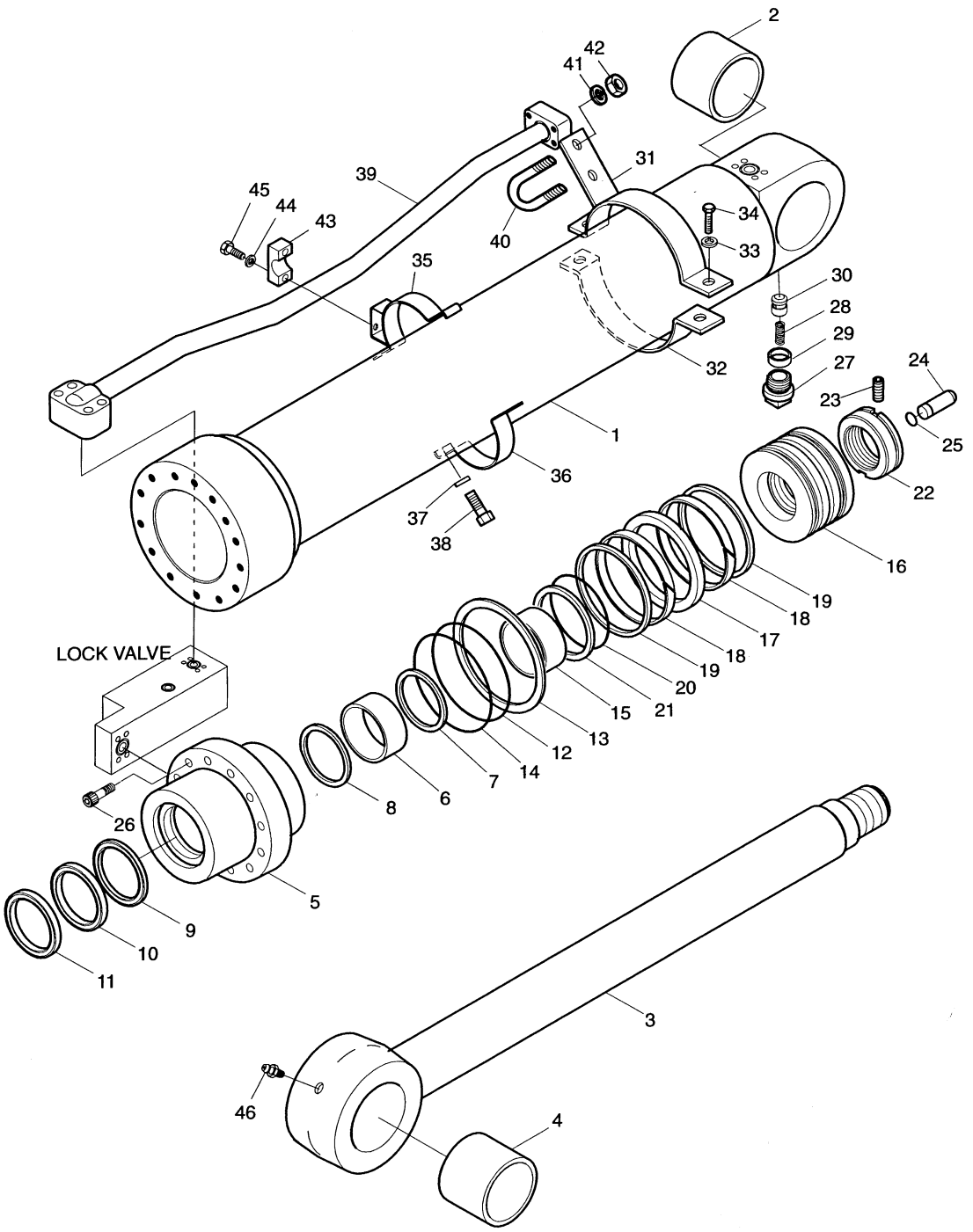

DATE	JUL. 30, 2003
REV. NO.	EXB03-13

Fig. 4320 ARM CYLINDER-LOCK VALVE VERIN DE BALANCIER

Serial No ;

Key No.	Part No.	Description	Description	Q'ty	S.C	Serial No.	ICA	Replaceable part	
								Part No.	Q'ty
4320--	2440-6493C	ARM CYLINDER-LOCK VALVE	VERIN DE BALANCIER	1					
1	53A531-1	TUBE ASS'Y	ENSEMBLE TUBE	1					
2	00T194-0	BUSH;STEEL	DOUILLE	1					
3	53A292-2	ROD ASS'Y	ENSEMBLE TIGE	1					
4	00T194-0	BUSH;STEEL	DOUILLE	1					
5	53A295-1	COVER;ROD	COUVERCLE DE TIGE	1					
6	E8412282	BUSH;DU	COUSSINET	1					
7	00M314-0	RING;RETAINING	BAGUE D'ARRET	1					
8	E5500310	SEAL;BUFFER	ETANCHEITE A GRADINS	1	K				
9	E5303260	PACKING;U	JOINT EN U	1	K				
10	E6020310	WIPER;DUST	PARE-POUSSIERE	1	K				
11	00M316-0	RING;RETAINING	BAGUE D'ARRET	1					
12	E6311701	O-RING	JOINT TORIQUE	1	K				
13	53A379-0	RING;BACK UP	BAGUE DE SOUTIEN	1	K				
14	E6311741	O-RING	JOINT TORIQUE	1	K				
15	00C307-0	RING;CUSHION	BAGUE	1					
16	53A304-0	PISTON	PISTON	1					
17	E5130310	SEAL;SLIPPER	JOINT	1	K				
18	00Z108-0	RING;WEAR	BAGUE DE SOUTIEN	2	K				
19	00R725-0	RING;SLYD	BAGUE DE SOUTIEN	2	K				
20	E6311421	O-RING	JOINT TORIQUE	1	K				
21	53B315-0	RING;BACK UP	BAGUE DE SOUTIEN	2	K				
22	80A478-2	NUT;PISTON	ECROU DE PISTON	1					
23	E1330544	SCREW	VIS	1					
24	03A713-0	PLUNGER;CUSHION	PLONGEUR	1					
25	03A714-0	RING;STOP	BAGUE D'ARRET	1					
26	E0502149	BOLT;SOCKET	BOULON DE PLOT	14					
27	03A260-0	VALVE;CHECK	VANNE	1					
28	03A729-0	SPRING	RESSORT	1					
29	03A728-0	SUPPORT;SPRING	SUPPORT	1					
30	E1500030	PLUG	BOUCHON	1					
31	53A551-0	PIPE BAND ASS'Y-A	FIXATION DES CONDUITES	1					
32	00P373-0	BAND;PIPE	BRIDE DE FIXATION	1					
33	E3110102	WASHER;SPRING	RONDELLE ELASTIQUE	2					
34	E0020683	BOLT;HEX	BOULON A 6 PANS	2					
35	53A563-0	PIPE BAND ASS'Y-B	FIXATION DES CONDUITES	1					
36	00P373-0	BAND;PIPE	BRIDE DE FIXATION	1					
37	E3110102	WASHER;SPRING	RONDELLE ELASTIQUE	2					

DATE	JUL. 30, 2003
REV. NO.	EXB03-13

Fig. 4320 ARM CYLINDER-LOCK VALVE
VERIN DE BALANCIER

Serial No. ;

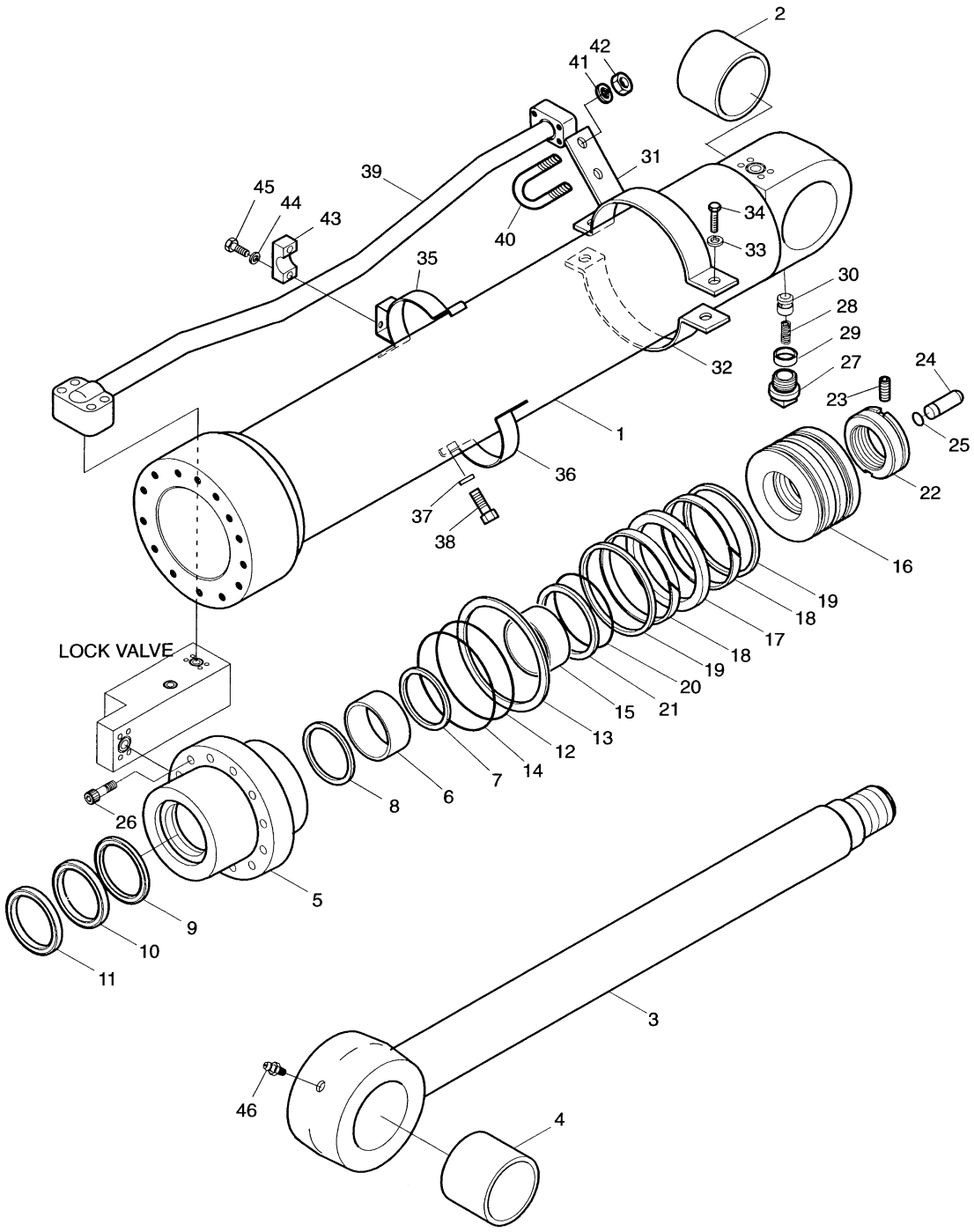

DATE	JUL. 30, 2003
REV. NO.	EXB03-13

Fig. 4320 ARM CYLINDER-LOCK VALVE VERIN DE BALANCIER

Serial No ;

Key No.	Part No.	Description	Description	Q'ty	S.C	Serial No.	ICA	Replaceable part	
								Part No.	Q'ty
4320-38	E0020683	BOLT;HEX	BOULON A 6 PANS	2					
39	53A411-1	PIPE ASS'Y-R	CONDUITE	1					
40	03A534-0	BOLT;U	BOULON U	1					
41	E3110102	WASHER;SPRING	RONDELLE ELASTIQUE	2					
42	E2022033	NUT;HEX	ECROU 6 PANS	2					
43	00C270-0	CLAMP;PIPE	COLLIER	1					
44	E3110102	WASHER;SPRING	RONDELLE ELASTIQUE	2					
45	E0020733	BOLT;HEX	BOULON A 6 PANS	2					
46	E8841022	NIPPLE;GREASE	GRAISSEUR	1					
*	2440-9236KT	SEAL KIT;ARM CYL.	KIT D'ETANCHEITE	1					

DATE	DEC. 22, 2003
REV. NO.	EXB03-15

Fig. 4330 BOOM CYLINDER(L.H)-ARTI.BOOM VERIN DE FLECHE

Serial No. ;

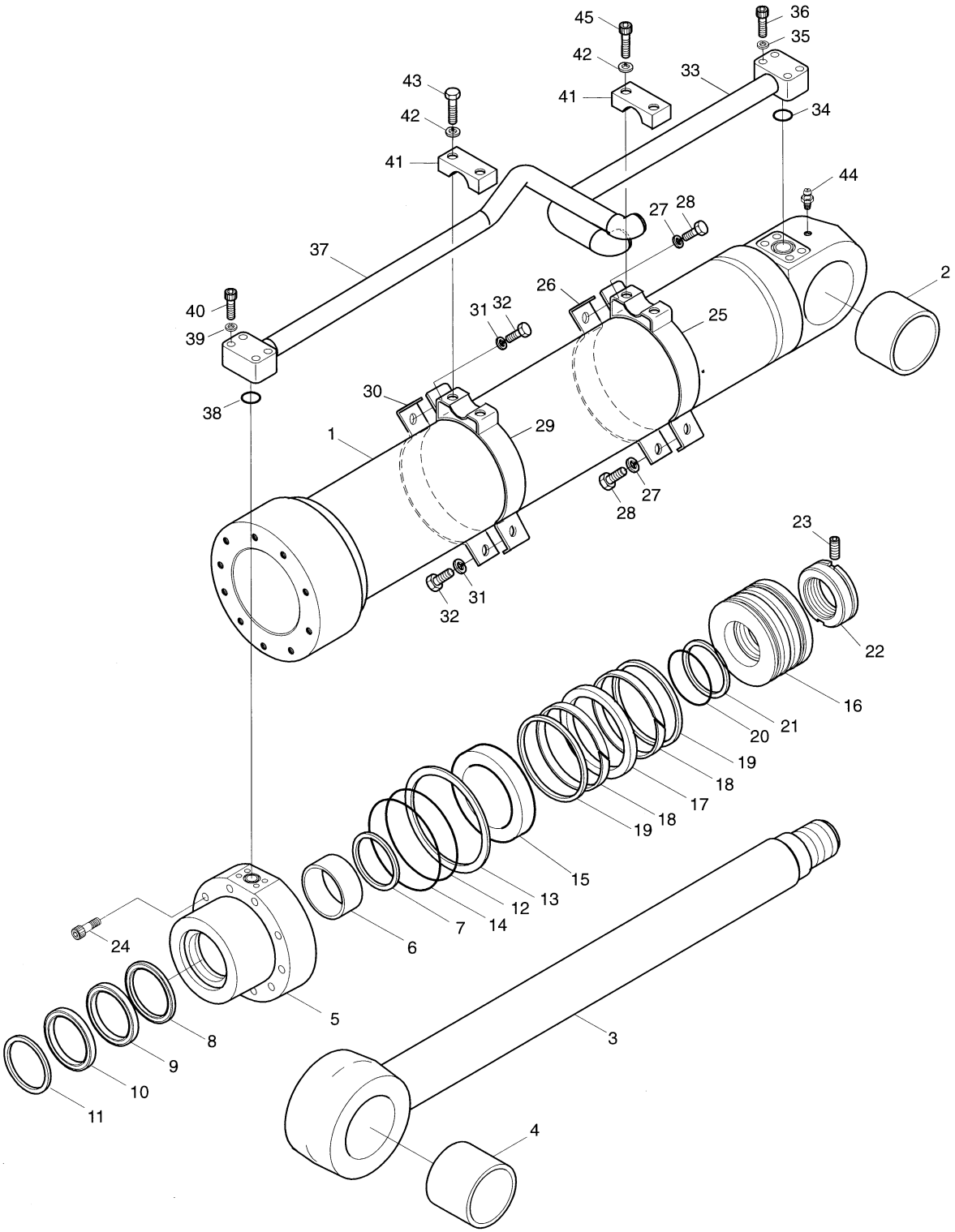

DATE	DEC. 22, 2003
REV. NO.	EXB03-15

Fig. 4330 BOOM CYLINDER(L.H)-ARTI.BOOM VERIN DE FLECHE

Serial No ;

Key No.	Part No.	Description	Description	Q'ty	S.C	Serial No.	ICA	Replaceable part	
								Part No.	Q'ty
4330--	440-00094	BOOM	VERIN DE FLECHE	1					
1	53B625-0	TUBE ASS'Y	ENSEMBLE TUBE	1					
2	00T195-0	BUSH;STEEL	DOUILLE	1					
3	53B626-0	ROD ASS'Y	ENSEMBLE PISTON	1					
4	53B238-0	BUSH;STEEL	DOUILLE	1					
5	53B394-2	COVER;ROD	COUVERCLE DE TIGE	1					
6	E8412280	BUSH;DU	COUSSINET	1					
7	00M320-0	RING;RETAINING	RONDELLE DE RETENUE	1					
8	E5500280	SEAL;BUFFER	JOINT EN U	1	K				
9	E5303140	PACKING;U	BAGUE	1	K				
10	E6020280	WIPER;DUST	JOINT TORIQUE	1	K				
11	00M314-0	RING;RETAINING	RONDELLE DE RETENUE	1					
12	E6311621	O-RING	JOINT TORIQUE	1	K				
13	53B423-0	RING;BACK UP	ANNEAU DE SOUTIEN	1	K				
14	E6311641	O-RING	JOINT TORIQUE	1	K				
15	00C305-0	RING;CUSHION	BAGUE	1					
16	53B393-1	PISTON	PISTON	1					
17	E5130260	SEAL;SLIPPER	JOINT EN U	1	K				
18	00Z105-0	RING;WEAR	BAGUE DE SOUTIEN	2	K				
19	00R097-0	RING;SLYD	BAGUE	2	K				
20	E6311301	O-RING	JOINT TORIQUE	1	K				
21	53B422-0	RING;BACK UP	ANNEAU DE SOUTIEN	2	K				
22	80B485-2	NUT;PISTON	ECROU	1					
23	E1330544	SCREW	VIS	1					
24	E0502139	BOLT;SOCKET	BOULON A 6 PANS CREUX	10					
25	53B658-0	PIPE BAND ASS'Y	FIXATION DES CONDUITES	1					
26	03B243-0	BAND;PIPE	BRIDE DE FIXATION	1					
27	E3110102	WASHER;SPRING	RONDELLE ELASTIQUE	2					
28	E0020673	BOLT;HEX	BOULON A 6 PANS	2					
29	53B637-0	PIPE BAND ASS'Y	FIXATION DES CONDUITES	1					
30	03B243-0	BAND;PIPE	BRIDE DE FIXATION	1					
31	E3110102	WASHER;SPRING	RONDELLE ELASTIQUE	2					
32	E0020673	BOLT;HEX	BOULON A 6 PANS	2					
33	53B628-1	PIPE ASS'Y-H	CONDUITE	1					
34	E6300621	O-RING	JOINT TORIQUE	1					
35	E3110102	WASHER;SPRING	RONDELLE ELASTIQUE	4					
36	E0501246	BOLT;SOCKET	BOULON A 6 PANS CREUX	4					
37	53B630-1	PIPE ASS'Y-R	CONDUITE	1					

DATE	DEC. 22, 2003
REV. NO.	EXB03-15

Fig. 4330 BOOM CYLINDER(L.H)-ARTI.BOOM VERIN DE FLECHE

Serial No. ;

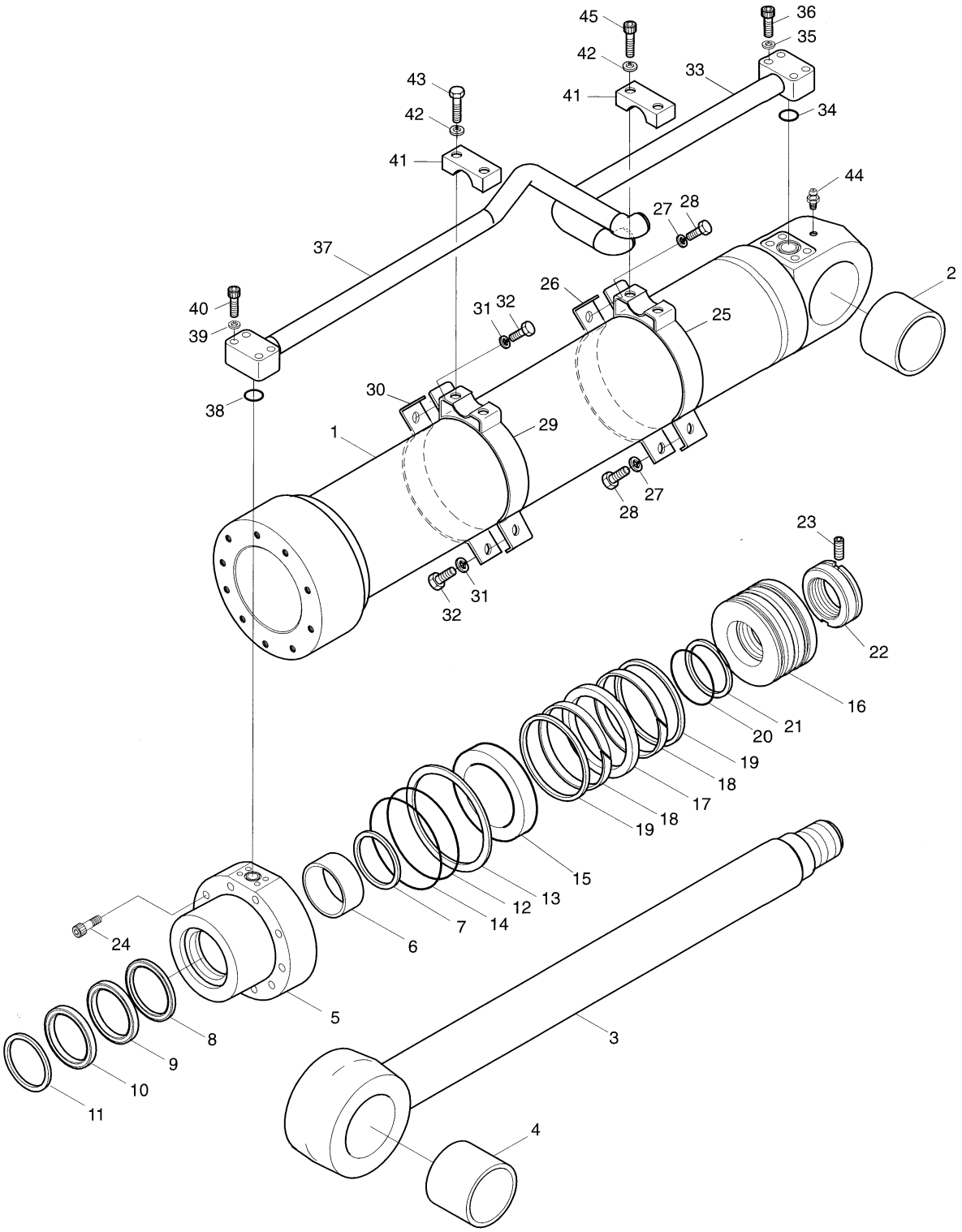

DATE	DEC. 22, 2003
REV. NO.	EXB03-15

Fig. 4330 BOOM CYLINDER(L.H)-ARTI.BOOM VERIN DE FLECHE

Serial No ;

Key No.	Part No.	Description	Description	Q'ty	S.C	Serial No.	ICA	Replaceable part	
								Part No.	Q'ty
4330-38	E6300621	O-RING	JOINT TORIQUE	1					
39	E3110102	WASHER;SPRING	RONDELLE ELASTIQUE	4					
40	E0501246	BOLT;SOCKET	BOULON A 6 PANS CREUX	4					
41	00C267-0	CLAMP;PIPE	FIXATION DE TUYAU	2					
42	E3110102	WASHER;SPRING	RONDELLE ELASTIQUE	4					
43	E0020723	BOLT;HEX	BOULON A 6 PANS	2					
44	E8841022	NIPPLE;GREASE	GRAISSEUR	1					
45	E0501216	BOLT;SOCKET	BOULON A 6 PANS CREUX	2					
*	2440-9234KT	SEAL KIT;BOOM CYL.	KIT DE JOINTS	1					

DATE	DEC. 22, 2003
REV. NO.	EXB03-15

Fig. 4340 BOOM CYLINDER(R.H)-ARTI.BOOM VERIN DE FLECHE

Serial No. ;

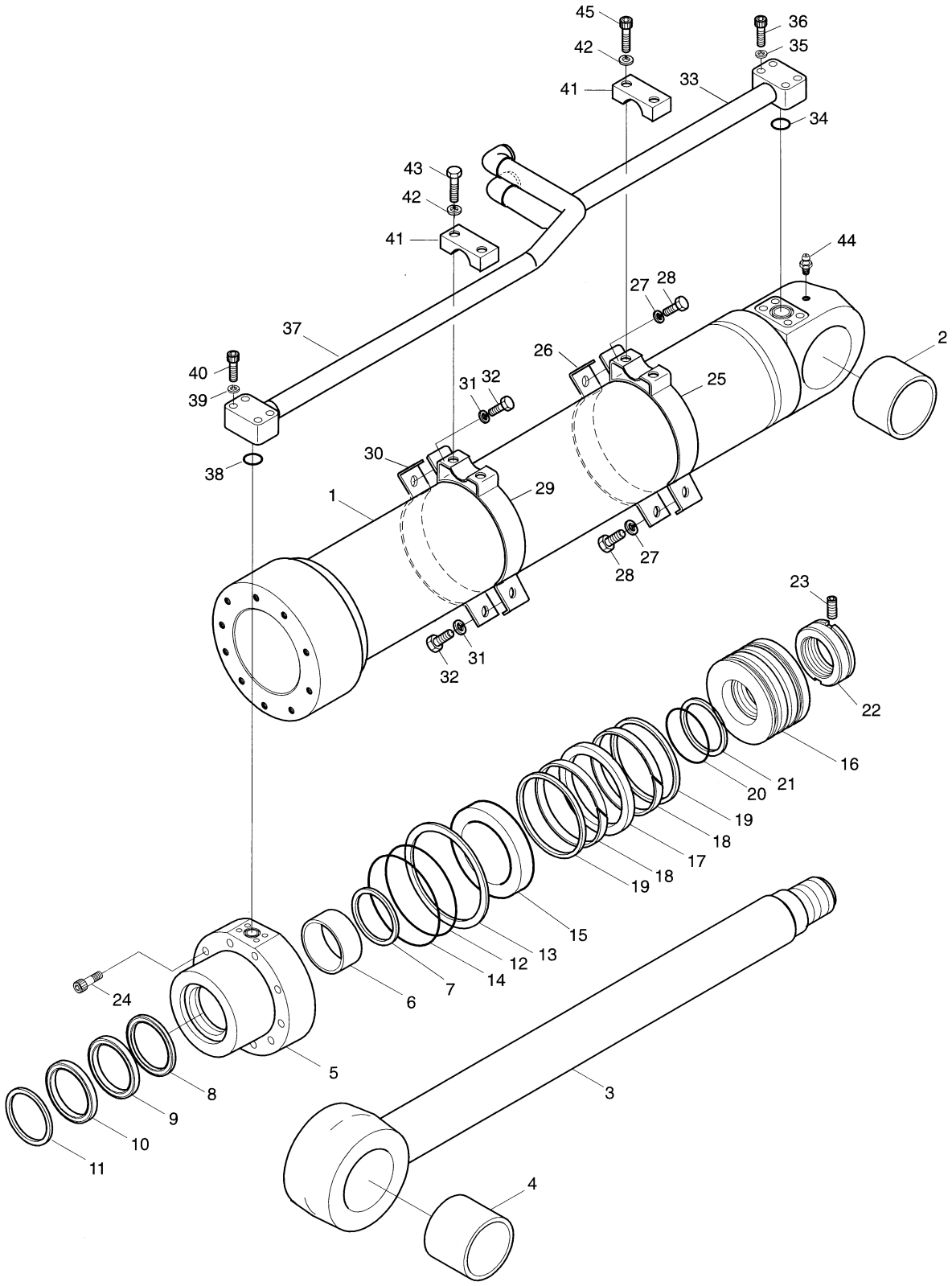

DATE	DEC. 22, 2003
REV. NO.	EXB03-15

Fig. 4340 BOOM CYLINDER(R.H)-ARTI.BOOM VERIN DE FLECHE

Serial No ;

Key No.	Part No.	Description	Description	Q'ty	S.C	Serial No.	ICA	Replaceable part	
								Part No.	Q'ty
4340--	440-00095	BOOM	VERIN DE FLECHE	1					
1	53B625-0	TUBE ASS'Y	ENSEMBLE TUBE	1					
2	00T195-0	BUSH;STEEL	DOUILLE	1					
3	53B626-0	ROD ASS'Y	ENSEMBLE PISTON	1					
4	53B238-0	BUSH;STEEL	DOUILLE	1					
5	53B394-2	COVER;ROD	COUVERCLE DE TIGE	1					
6	E8412280	BUSH;DU	COUSSINET	1					
7	00M320-0	RING;RETAINING	RONDELLE DE RETENUE	1					
8	E5500280	SEAL;BUFFER	JOINT EN U	1	K				
9	E5303140	PACKING;U	BAGUE	1	K				
10	E6020280	WIPER;DUST	JOINT TORIQUE	1	K				
11	00M314-0	RING;RETAINING	RONDELLE DE RETENUE	1					
12	E6311621	O-RING	JOINT TORIQUE	1	K				
13	53B423-0	RING;BACK UP	ANNEAU DE SOUTIEN	1	K				
14	E6311641	O-RING	JOINT TORIQUE	1	K				
15	00C305-0	RING;CUSHION	BAGUE	1					
16	53B393-1	PISTON	PISTON	1					
17	E5130260	SEAL;SLIPPER	JOINT EN U	1	K				
18	00Z105-0	RING;WEAR	BAGUE DE SOUTIEN	2	K				
19	00R097-0	RING;SLYD	BAGUE	2	K				
20	E6311301	O-RING	JOINT TORIQUE	1	K				
21	53B422-0	RING;BACK UP	ANNEAU DE SOUTIEN	2	K				
22	80B485-2	NUT;PISTON	ECROU	1					
23	E1330544	SCREW	VIS	1					
24	E0502139	BOLT;SOCKET	BOULON A 6 PANS CREUX	10					
25	53B658-0	PIPE BAND ASS'Y	FIXATION DES CONDUITES	1					
26	03B243-0	BAND;PIPE	BRIDE DE FIXATION	1					
27	E3110102	WASHER;SPRING	RONDELLE ELASTIQUE	2					
28	E0020673	BOLT;HEX	BOULON A 6 PANS	2					
29	53B637-0	PIPE BAND ASS'Y	FIXATION DES CONDUITES	1					
30	03B243-0	BAND;PIPE	BRIDE DE FIXATION	1					
31	E3110102	WASHER;SPRING	RONDELLE ELASTIQUE	2					
32	E0020673	BOLT;HEX	BOULON A 6 PANS	2					
33	53B627-1	PIPE ASS'Y-H	CONDUITE	1					
34	E6300621	O-RING	JOINT TORIQUE	1					
35	E3110102	WASHER;SPRING	RONDELLE ELASTIQUE	4					
36	E0501246	BOLT;SOCKET	BOULON A 6 PANS CREUX	4					
37	53B629-1	PIPE ASS'Y-R	CONDUITE	1					

DATE	DEC. 22, 2003
REV. NO.	EXB03-15

Fig. 4340 BOOM CYLINDER(R.H)-ARTI.BOOM VERIN DE FLECHE

Serial No. ;

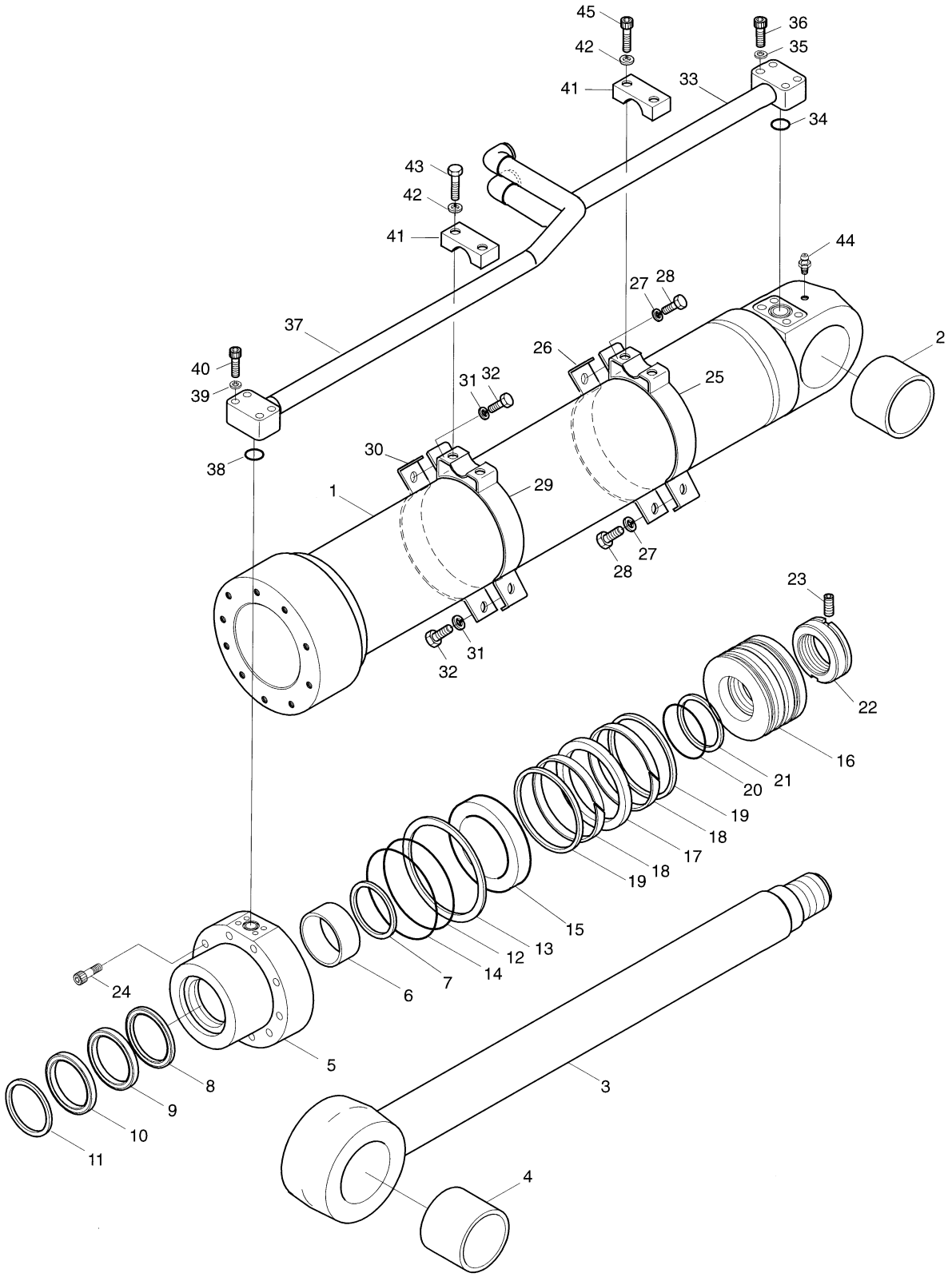

DATE	DEC. 22, 2003
REV. NO.	EXB03-15

Fig. 4340 BOOM CYLINDER(R.H)-ARTI.BOOM VERIN DE FLECHE

Serial No ;

Key No.	Part No.	Description	Description	Q'ty	S.C	Serial No.	ICA	Replaceable part	
								Part No.	Q'ty
4340-38	E6300621	O-RING	JOINT TORIQUE	1					
39	E3110102	WASHER;SPRING	RONDELLE ELASTIQUE	4					
40	E0501246	BOLT;SOCKET	BOULON A 6 PANS CREUX	4					
41	00C267-0	CLAMP;PIPE	FIXATION DE TUYAU	2					
42	E3110102	WASHER;SPRING	RONDELLE ELASTIQUE	4					
43	E0020723	BOLT;HEX	BOULON A 6 PANS	2					
44	E8841022	NIPPLE;GREASE	GRAISSEUR	1					
45	E0501216	BOLT;SOCKET	BOULON A 6 PANS CREUX	2					
*	2440-9234KT	SEAL KIT;BOOM CYL.	KIT DE JOINTS	1					

DATE	DEC. 22, 2003
REV. NO.	EXB03-15

Fig. 4350 ARTI.BOOM CYLINDER VERIN DE ARTICULAIRE FLECHE

Serial No. ;

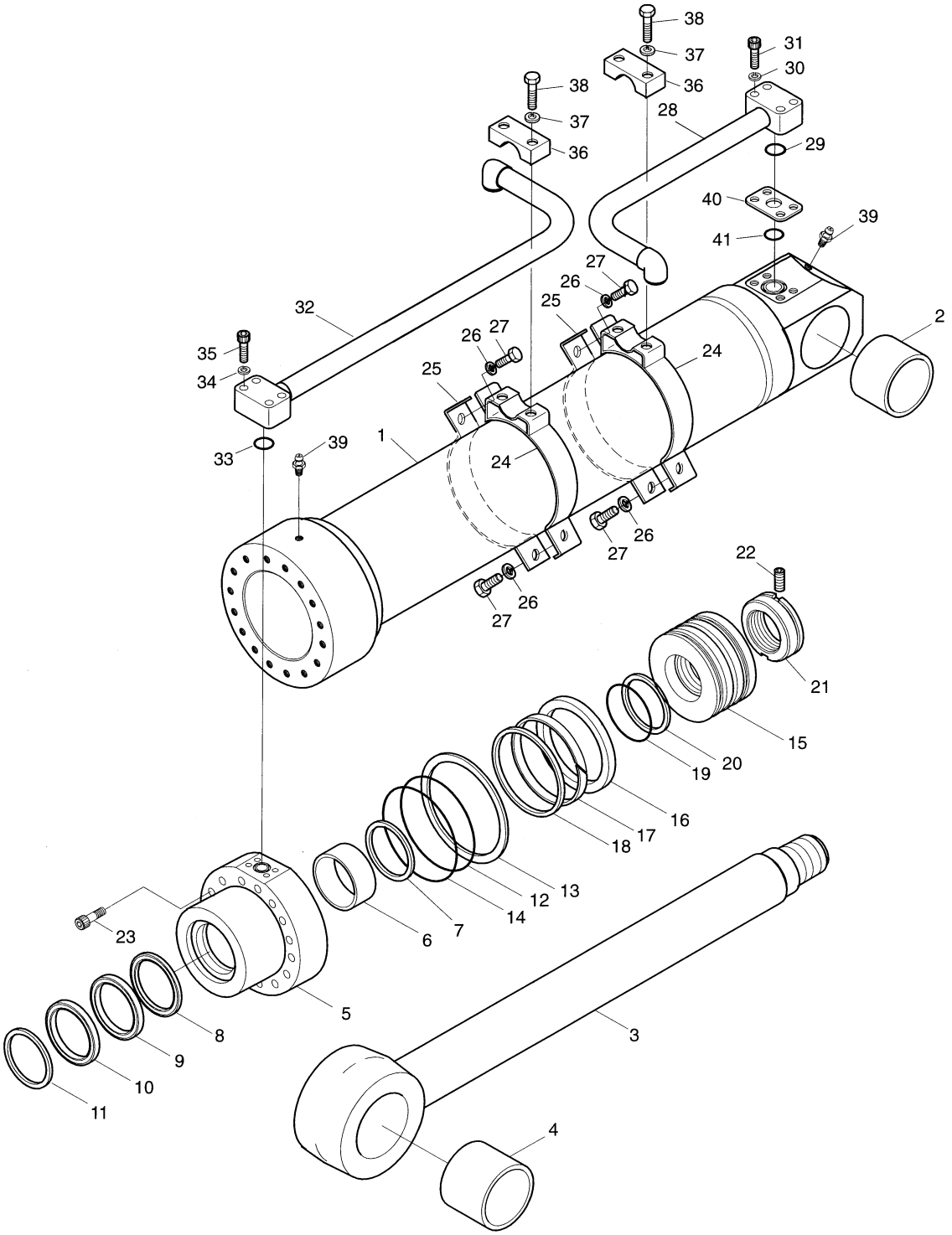

DATE	DEC. 22, 2003
REV. NO.	EXB03-15

Fig. 4350 ARTI.BOOM CYLINDER VERIN DE ARTICULAIRE FLECHE

Serial No ;

Key No.	Part No.	Description	Description	Q'ty	S.C	Serial No.	ICA	Replaceable part	
								Part No.	Q'ty
4350--	440-00454	ARTI. BOOM CYLINDER	VERIN DE ARTICULAIRE	1					
1	1.441-00143	TUBE ASS'Y	ENSEMBLE TUBE	1					
2	1.110-00130	BUSH;STEEL	DOUILLE ACIER	1					
3	1.444-00003	ROD ASS'Y	ENSEMBLE PISTON	1					
4	1.110-00115	BUSH;STEEL	DOUILLE ACIER	1					
5	1.442-00002	COVER;ROD	COUVERCLE DE TIGE	1					
6	110-00121	BUSH;DU	COUSSINET	1					
7	115-00108	RING;RETAINING	RONDELLE DE RETENUE	1					
8	180-00324	SEAL;BUFFER	JOINT EN U	1	K				
9	115-00114	PACKING;U	BAGUE	1	K				
10	115-00115	WIPER;DUST	JOINT TORIQUE	1	K				
11	115-00109	RING;RETAINING	BAGUE D'ARRET	1					
12	S8011901	O-RING	JOINT TORIQUE	1	K				
13	1.180-00300	RING;BACK UP	ANNEAU DE SOUTIEN	1	K				
14	S8012001	O-RING	JOINT TORIQUE	1	K				
15	1.409-00230	PISTON	PISTON	1					
16	1.180-00556	SEAL;SLIPPER	JOINT EN U	1	K				
17	1.180-00629	RING;WEAR	BAGUE DE SOUTIEN	1	K				
18	1.180-00364	RING;SLYD	BAGUE	1	K				
19	S8011051-90	O-RING	JOINT TORIQUE	1	K				
20	1.180-00630	RING;BACK UP	ANNEAU DE SOUTIEN	2	K				
21	1.121-00070	NUT;PISTON	ECROU	1					
22	1.120-00219	SCREW	VIS	1					
23	S2224971	BOLT;SOCKET	BOULON A 6 PANS CREUX	16					
24	1.124-00017	PIPE BAND ASS'Y	FIXATION DES CONDUITES	2					
25	1.124-00018	BAND;PIPE	BRIDE DE FIXATION	2					
26	S5100603	WASHER;SPRING	RONDELLE ELASTIQUE	4					
27	S0558153	BOLT;HEX	BOULON A 6 PANS	4					
28	1.140-00151	PIPE ASS'Y-H	CONDUITE	1					
29	S8000281	O-RING	JOINT TORIQUE	1					
30	S5100603	WASHER;SPRING	RONDELLE ELASTIQUE	4					
31	S2212961	BOLT;SOCKET	BOULON A 6 PANS CREUX	4					
32	1.140-00230	PIPE ASS'Y-R	CONDUITE	1					
33	S8000281	O-RING	JOINT TORIQUE	1					
34	S5100603	WASHER;SPRING	RONDELLE ELASTIQUE	4					
35	S2212761	BOLT;SOCKET	BOULON A 6 PANS CREUX	4					
36	124-00059	CLAMP;PIPE	FIXATION DE TUYAU	2					
37	S5100603	WASHER;SPRING	RONDELLE ELASTIQUE	4					

DATE	DEC. 22, 2003
REV. NO.	EXB03-15

Fig. 4350 ARTI.BOOM CYLINDER VERIN DE ARTICULAIRE FLECHE

Serial No. ;

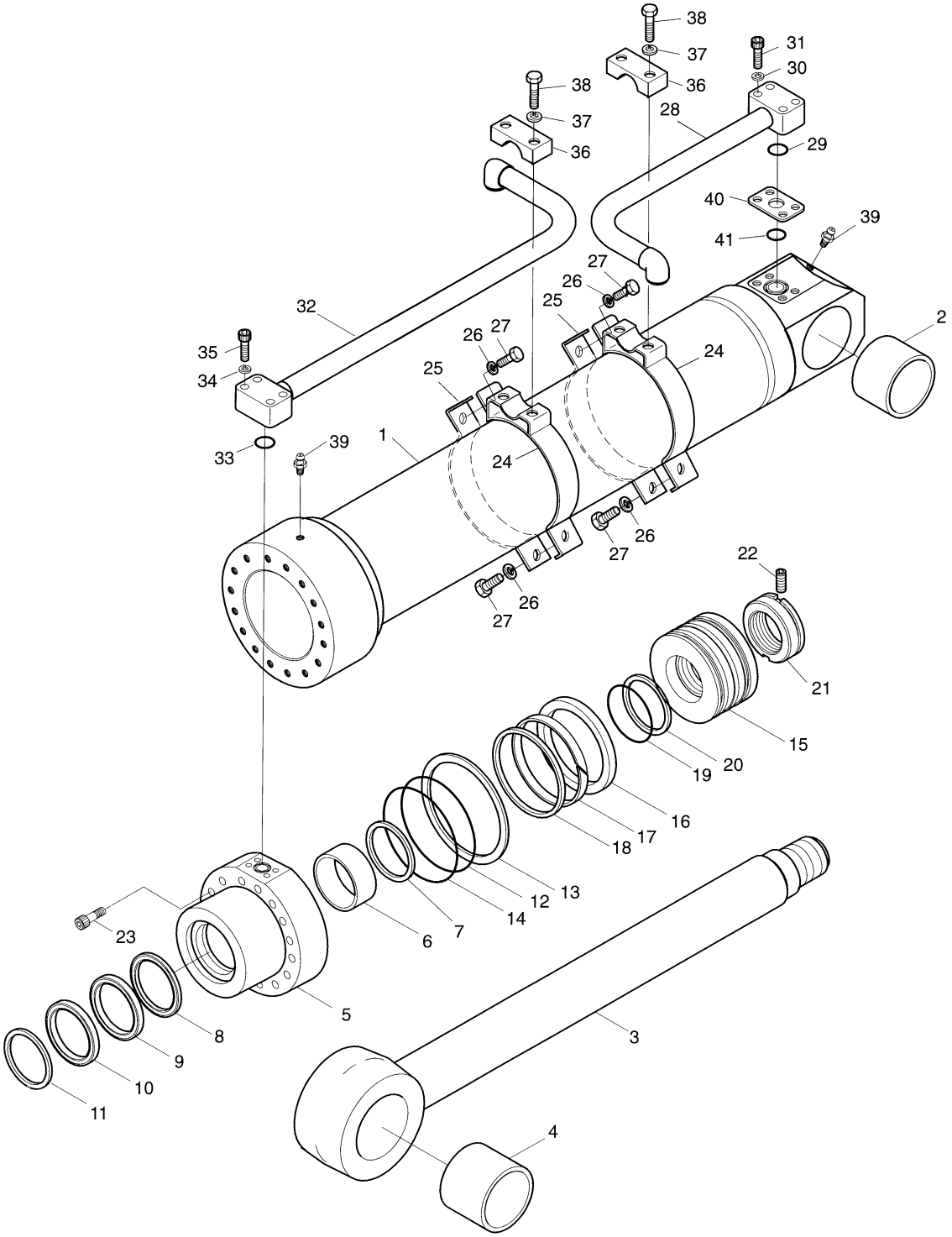

DATE	DEC. 22, 2003
REV. NO.	EXB03-15

Fig. 4350 ARTI.BOOM CYLINDER VERIN DE ARTICULAIRE FLECHE

Serial No ;

Key No.	Part No.	Description	Description	Q'ty	S.C	Serial No.	ICA	Replaceable part	
								Part No.	Q'ty
4350-38	S2212461	BOLT;HEX	BOULON A 6 PANS	4					
39	S6710032	NIPPLE;GREASE	GRAISSEUR	2					
40	114-00292	SPACER	BAGUE D'ECARTEMENT	1					
41	S8000281	O-RING	JOINT TORIQUE	1					
99	440-00184KT	SEAL KIT	KIT DE JOINTS	1					

DATE	DEC. 22, 2003
REV. NO.	EXB03-15

Fig. 4360 BOOM CYLINDER(L.H)-L/V FOR ARTI.BOOM VERIN DE FLECHE

Serial No. ;

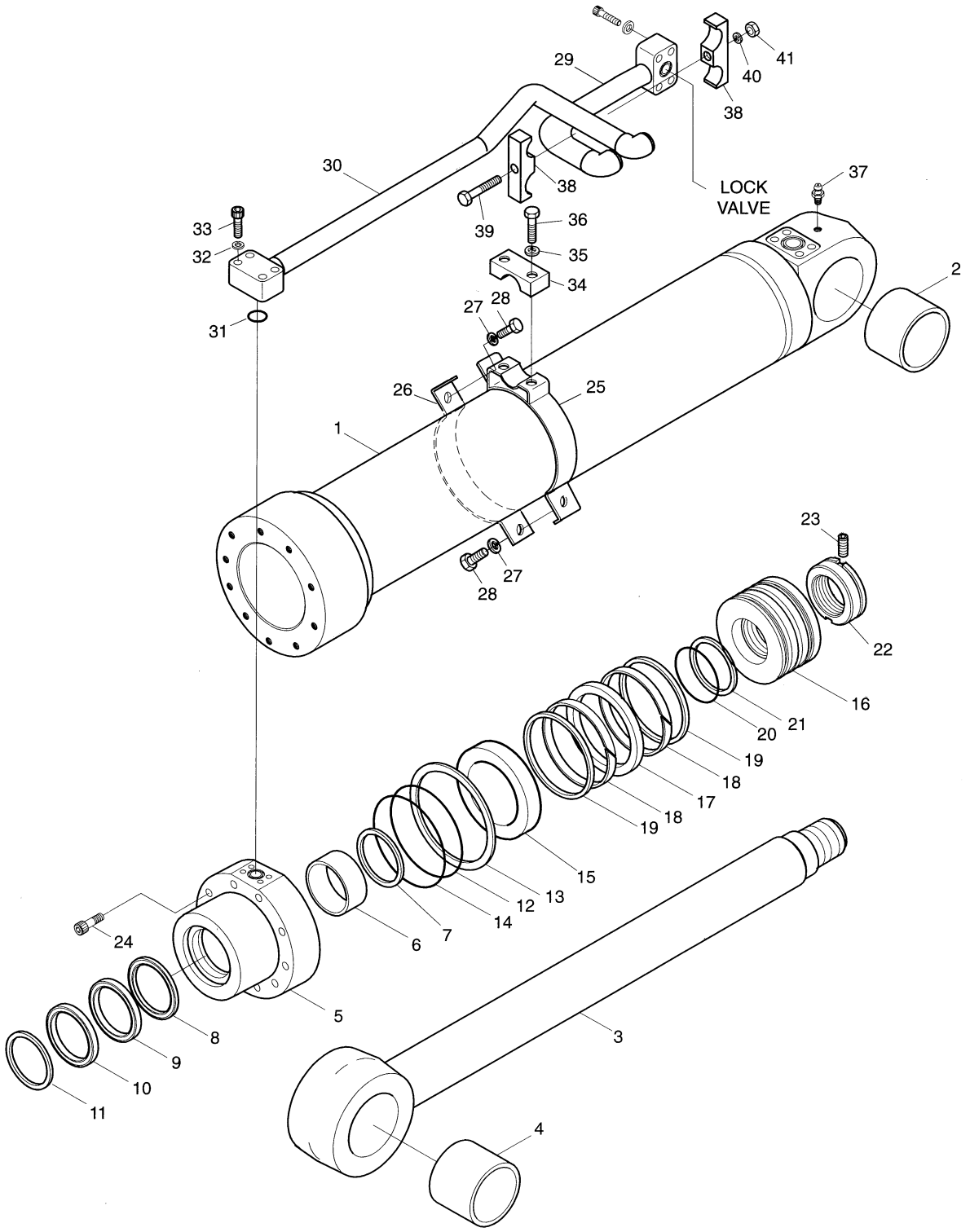

DATE	DEC. 22, 2003
REV. NO.	EXB03-15

Fig. 4360 BOOM CYLINDER(L.H)-L/V FOR ARTI.BOOM VERIN DE FLECHE

Serial No ;

Key No.	Part No.	Description	Description	Q'ty	S.C	Serial No.	ICA	Replaceable part	
								Part No.	Q'ty
4360--	440-00182A	BOOM CYLINDER(L.H.)-LOCK	VERIN DE FLECHE	1					
1	53B625-0	TUBE ASS'Y	ENSEMBLE TUBE	1					
2	00T195-0	BUSH;STEEL	DOUILLE	1					
3	53B626-0	ROD ASS'Y	ENSEMBLE PISTON	1					
4	53B238-0	BUSH;STEEL	DOUILLE	1					
5	53B394-2	COVER;ROD	COUVERCLE DE TIGE	1					
6	E8412280	BUSH;DU	COUSSINET	1					
7	00M320-0	RING;RETAINING	RONDELLE DE RETENUE	1					
8	E5500280	SEAL;BUFFER	JOINT EN U	1	K				
9	E5303140	PACKING;U	BAGUE	1	K				
10	E6020280	WIPER;DUST	JOINT TORIQUE	1	K				
11	00M314-0	RING;RETAINING	RONDELLE DE RETENUE	1					
12	E6311621	O-RING	JOINT TORIQUE	1	K				
13	53B423-0	RING;BACK UP	ANNEAU DE SOUTIEN	1	K				
14	E6311641	O-RING	JOINT TORIQUE	1	K				
15	00C305-0	RING;CUSHION	BAGUE	1					
16	53B393-1	PISTON	PISTON	1					
17	E5130260	SEAL;SLIPPER	JOINT EN U	1	K				
18	00Z105-0	RING;WEAR	BAGUE DE SOUTIEN	2	K				
19	00R097-0	RING;SLYD	BAGUE	2	K				
20	E6311301	O-RING	JOINT TORIQUE	1	K				
21	53B422-0	RING;BACK UP	ANNEAU DE SOUTIEN	2	K				
22	80B485-2	NUT;PISTON	ECROU	1					
23	E1330544	SCREW	VIS	1					
24	E0502139	BOLT;SOCKET	BOULON A 6 PANS CREUX	10					
25	53B637-0	PIPE BAND ASS'Y	FIXATION DES CONDUITES	1					
26	03B243-0	BAND;PIPE	BRIDE DE FIXATION	1					
27	E3110102	WASHER;SPRING	RONDELLE ELASTIQUE	2					
28	E0020673	BOLT;HEX	BOULON A 6 PANS	2					
29	53B683-2	PIPE ASS'Y-H	CONDUITE	1					
30	53B824-1	PIPE ASS'Y-R	CONDUITE	1					
31	E6300621	O-RING	JOINT TORIQUE	1					
32	E3110102	WASHER;SPRING	RONDELLE ELASTIQUE	4					
33	E0501246	BOLT;SOCKET	BOULON A 6 PANS CREUX	4					
34	00C267-0	CLAMP;PIPE	FIXATION DE TUYAU	1					
35	E3110102	WASHER;SPRING	RONDELLE ELASTIQUE	2					
36	E0020723	BOLT;HEX	BOULON A 6 PANS	2					
37	E8841022	NIPPLE;GREASE	GRAISSEUR	1					

DATE	DEC. 22, 2003
REV. NO.	EXB03-15

Fig. 4360 BOOM CYLINDER(L.H)-L/V FOR ARTI.BOOM VERIN DE FLECHE

Serial No. ;

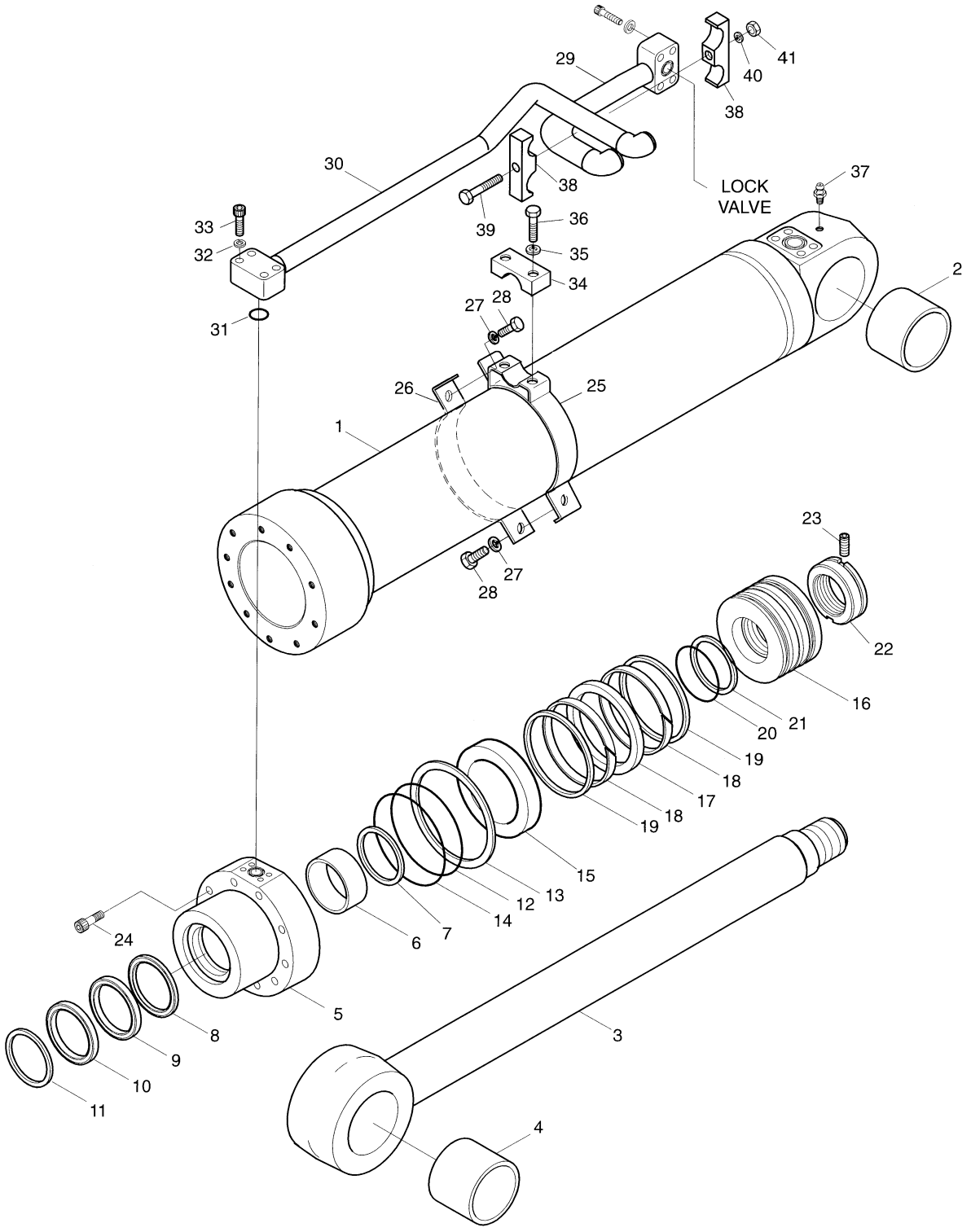

DATE	DEC. 22, 2003
REV. NO.	EXB03-15

Fig. 4360 BOOM CYLINDER(L.H)-L/V FOR ARTI.BOOM VERIN DE FLECHE

Serial No ;

Key No.	Part No.	Description	Description	Q'ty	S.C	Serial No.	ICA	Replaceable part	
								Part No.	Q'ty
4360-38	00C257-0	CLAMP;PIPE	FIXATION DE TUYAU	2					
39	E0021052	BOLT;HEX	BOULON A 6 PANS	1					
40	E3110112	WASHER;SPRING	RONDELLE ELASTIQUE	1					
41	E2022043	NUT;HEX	ECROU	1					
*	2440-9234KT	SEAL KIT;BOOM CYL.	KIT DE JOINTS	1					

DATE	DEC. 22, 2003
REV. NO.	EXB03-15

Fig. 4370 BOOM CYLINDER(R.H)-L/V FOR ARTI.BOOM VERIN DE FLECHE

Serial No. ;

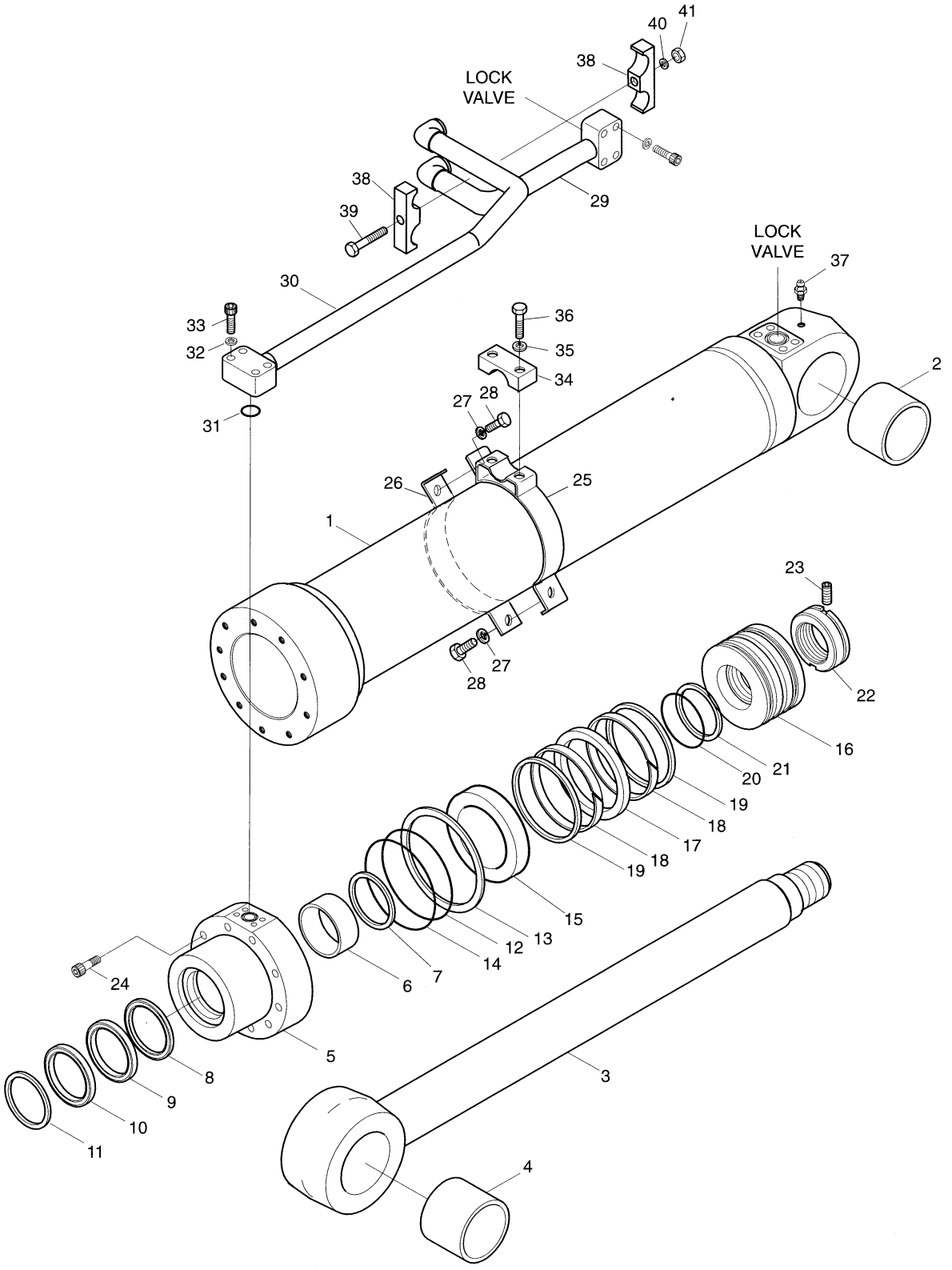

DATE	DEC. 22, 2003
REV. NO.	EXB03-15

Fig. 4370 BOOM CYLINDER(R.H)-L/V FOR ARTI.BOOM VERIN DE FLECHE

Serial No ;

Key No.	Part No.	Description	Description	Q'ty	S.C	Serial No.	ICA	Replaceable part	
								Part No.	Q'ty
4370--	440-00183A	BOOM CYLINDER(R.H.)-LOCK	VERIN DE FLECHE	1					
1	53B625-0	TUBE ASS'Y	ENSEMBLE TUBE	1					
2	00T195-0	BUSH;STEEL	DOUILLE	1					
3	53B626-0	ROD ASS'Y	ENSEMBLE PISTON	1					
4	53B238-0	BUSH;STEEL	DOUILLE	1					
5	53B394-2	COVER;ROD	COUVERCLE DE TIGE	1					
6	E8412280	BUSH;DU	COUSSINET	1					
7	00M320-0	RING;RETAINING	RONDELLE DE RETENUE	1					
8	E5500280	SEAL;BUFFER	JOINT EN U	1	K				
9	E5303140	PACKING;U	BAGUE	1	K				
10	E6020280	WIPER;DUST	JOINT TORIQUE	1	K				
11	00M314-0	RING;RETAINING	RONDELLE DE RETENUE	1					
12	E6311621	O-RING	JOINT TORIQUE	1	K				
13	53B423-0	RING;BACK UP	ANNEAU DE SOUTIEN	1	K				
14	E6311641	O-RING	JOINT TORIQUE	1	K				
15	00C305-0	RING;CUSHION	BAGUE	1					
16	53B393-1	PISTON	PISTON	1					
17	E5130260	SEAL;SLIPPER	JOINT EN U	1	K				
18	00Z105-0	RING;WEAR	BAGUE DE SOUTIEN	2	K				
19	00R097-0	RING;SLYD	BAGUE	2	K				
20	E6311301	O-RING	JOINT TORIQUE	1	K				
21	53B422-0	RING;BACK UP	ANNEAU DE SOUTIEN	2	K				
22	80B485-2	NUT;PISTON	ECROU	1					
23	E1330544	SCREW	VIS	1					
24	E0502139	BOLT;SOCKET	BOULON A 6 PANS CREUX	10					
25	53B637-0	PIPE BAND ASS'Y	FIXATION DES CONDUITES	1					
26	03B243-0	BAND;PIPE	BRIDE DE FIXATION	1					
27	E3110102	WASHER;SPRING	RONDELLE ELASTIQUE	2					
28	E0020673	BOLT;HEX	BOULON A 6 PANS	2					
29	53B382-2	PIPE ASS'Y-H	CONDUITE	1					
30	53B823-0	PIPE ASS'Y-R	CONDUITE	1					
31	E6300621	O-RING	JOINT TORIQUE	1					
32	E3110102	WASHER;SPRING	RONDELLE ELASTIQUE	4					
33	E0501246	BOLT;SOCKET	BOULON A 6 PANS CREUX	4					
34	00C267-0	CLAMP;PIPE	FIXATION DE TUYAU	1					
35	E3110102	WASHER;SPRING	RONDELLE ELASTIQUE	2					
36	E0020723	BOLT;HEX	BOULON A 6 PANS	2					
37	E8841022	NIPPLE;GREASE	GRAISSEUR	1					

DATE	DEC. 22, 2003
REV. NO.	EXB03-15

Fig. 4370 BOOM CYLINDER(R.H)-L/V FOR ARTI.BOOM VERIN DE FLECHE

Serial No. ;

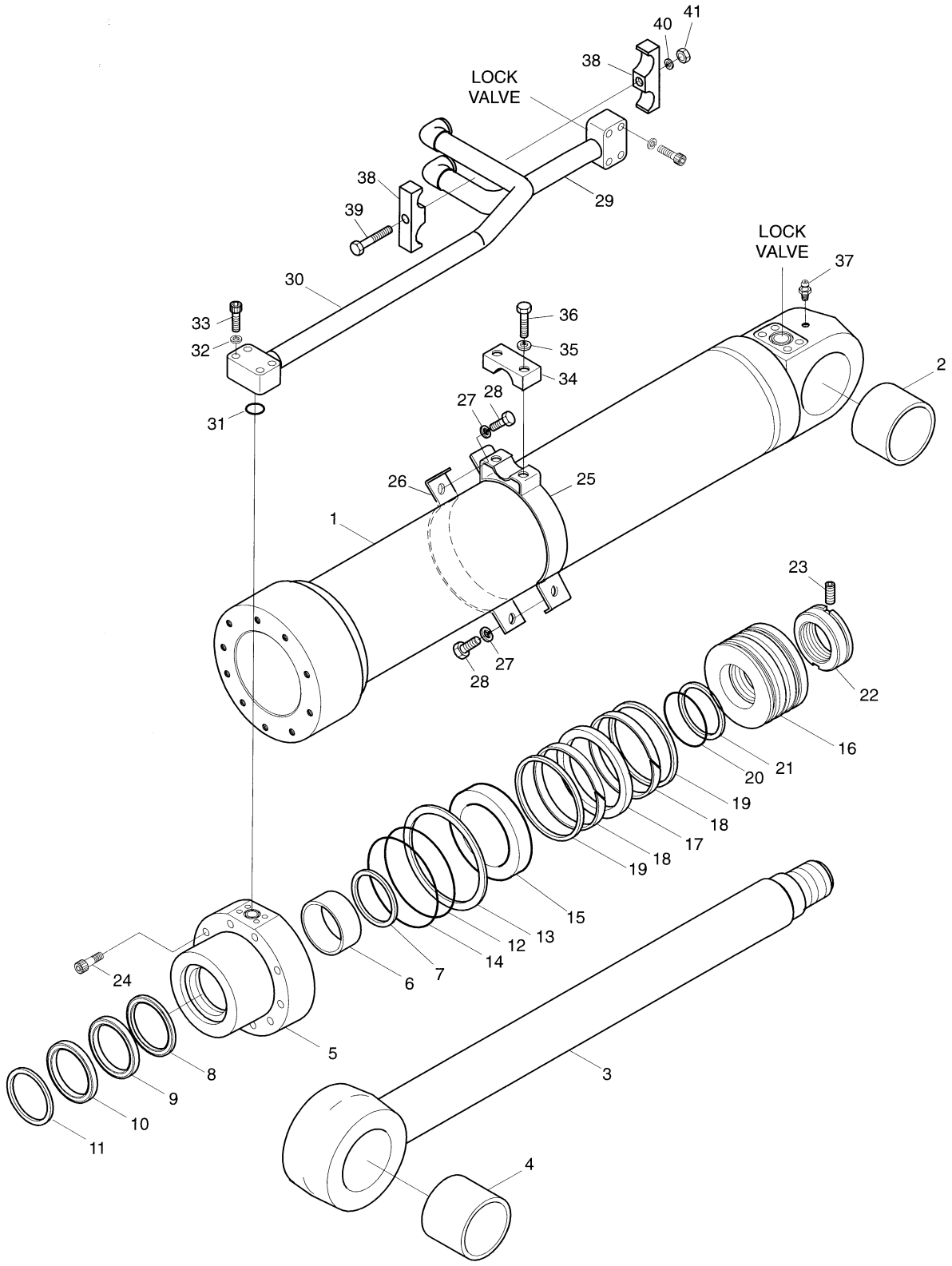

DATE	DEC. 22, 2003
REV. NO.	EXB03-15

Fig. 4370 BOOM CYLINDER(R.H)-L/V FOR ARTI.BOOM VERIN DE FLECHE

Serial No ;

Key No.	Part No.	Description	Description	Q'ty	S.C	Serial No.	ICA	Replaceable part	
								Part No.	Q'ty
4370-38	00C257-0	CLAMP;PIPE	FIXATION DE TUYAU	2					
39	E0021052	BOLT;HEX	BOULON A 6 PANS	1					
40	E3110112	WASHER;SPRING	RONDELLE ELASTIQUE	1					
41	E2022043	NUT;HEX	ECROU	1					
*	2440-9234KT	SEAL KIT;BOOM CYL.	KIT DE JOINTS	1					

DATE	JUN. 30, 2005
REV. NO.	EXB05-05

Fig. 4380 ARTI.BOOM CYLINDER-LOCK VALVE VERIN DE ARTICULAIRE FLECHE

Serial No. ;

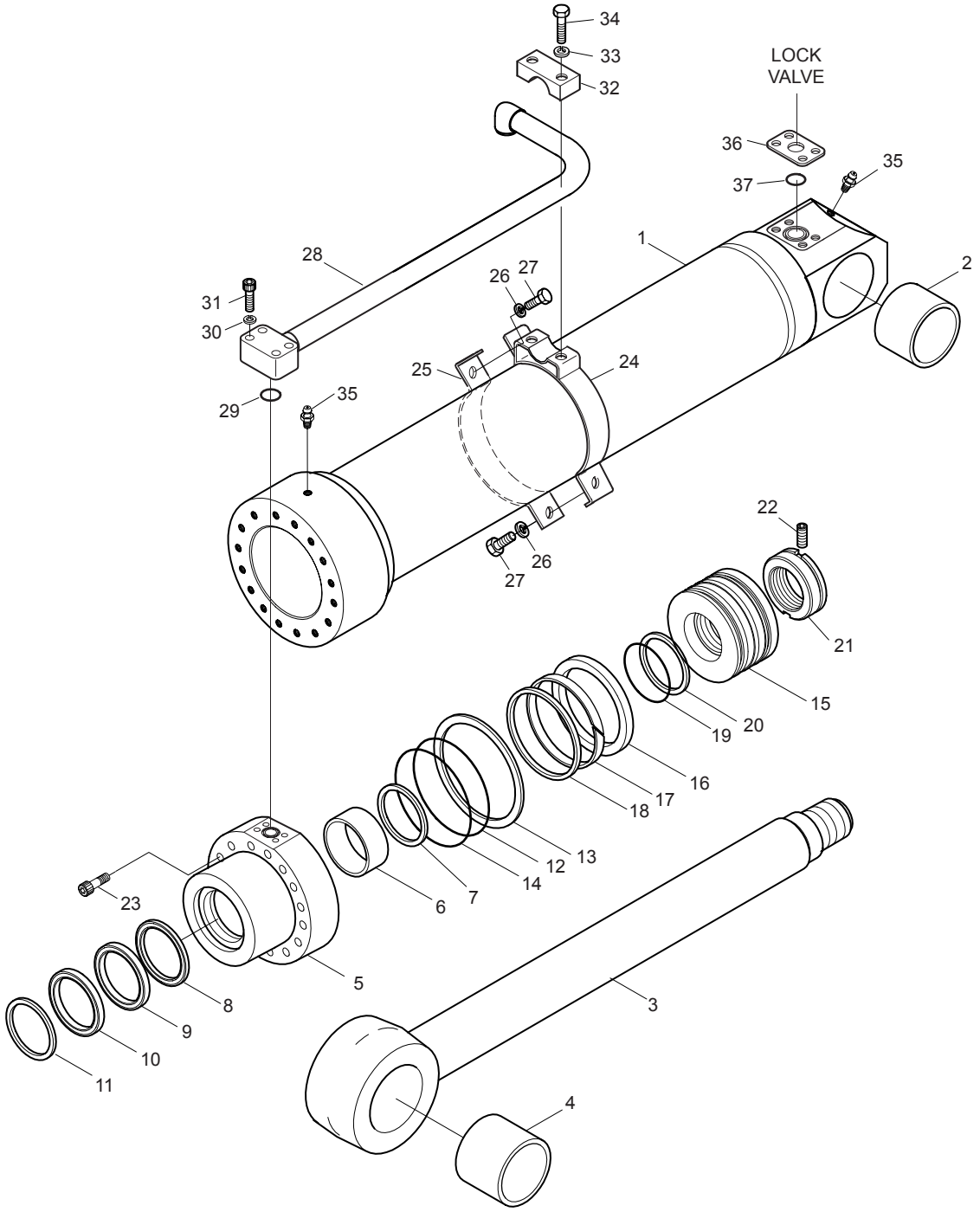

DATE	JUN. 30, 2005
REV. NO.	EXB05-05

Fig. 4380 ARTI.BOOM CYLINDER-LOCK VALVE VERIN DE ARTICULAIRE FLECHE

Serial No ;

Key No.	Part No.	Description	Description	Q'ty	S.C	Serial No.	ICA	Replaceable part	
								Part No.	Q'ty
4380--	440-00444	ARTI. BOOM CYLINDER	VERIN DE ARTICULAIRE	1					
1	1.441-00143	TUBE ASS'Y	ENSEMBLE TUBE	1					
2	1.110-00130	BUSH;STEEL	DOUILLE	1					
3	1.444-00003	ROD ASS'Y	ENSEMBLE PISTON	1					
4	1.110-00115	BUSH;STEEL	DOUILLE	1					
5	1.442-00002	COVER;ROD	COUVERCLE DE TIGE	1					
6	110-00121	BUSH;DU	COUSSINET	1					
7	115-00108	RING;RETAINING	RONDELLE DE RETENUE	1					
8	180-00324	SEAL;BUFFER	JOINT EN U	1	K				
9	115-00114	PACKING;U	BAGUE	1	K				
10	115-00115	WIPER;DUST	JOINT TORIQUE	1	K				
11	115-00109	RING;RETAINING	RONDELLE DE RETENUE	1					
12	S8011901	O-RING	JOINT TORIQUE	1	K				
13	1.180-00300	RING;BACK UP	ANNEAU DE SOUTIEN	1	K				
14	S8012001	O-RING	JOINT TORIQUE	1	K				
15	1.409-00230	PISTON	PISTON	1					
16	1.180-00556	SEAL;SLIPPER	JOINT EN U	1	K				
17	1.180-00629	RING;WEAR	BAGUE DE SOUTIEN	1	K				
18	1.180-00364	RING;SLYD	BAGUE	1	K				
19	S8011051-90	O-RING	JOINT TORIQUE	1	K				
20	1.180-00630	RING;BACK UP	ANNEAU DE SOUTIEN	2	K				
21	1.121-00070	NUT;PISTON	ECROU	1					
22	1.120-00219	SCREW	VIS	1					
23	S2224971	BOLT;SOCKET	BOULON A 6 PANS CREUX	16					
24	1.124-00017	PIPE BAND ASS'Y	FIXATION DES CONDUITES	1					
25	1.124-00018	BAND;PIPE	BRIDE DE FIXATION	1					
26	S5100603	WASHER;SPRING	RONDELLE ELASTIQUE	2					
27	S0558153	BOLT;HEX	BOULON A 6 PANS	2					
28	1.140-00230	PIPE ASS'Y-R	CONDUITE	1					
29	S8000281	O-RING	JOINT TORIQUE	1					
30	S5100603	WASHER;SPRING	RONDELLE ELASTIQUE	4					
31	S2212761	BOLT;SOCKET	BOULON A 6 PANS CREUX	4					
32	124-00059	CLAMP;PIPE	FIXATION DE TUYAU	1					
33	S5100603	WASHER;SPRING	RONDELLE ELASTIQUE	2					
34	S2212461	BOLT;HEX	BOULON A 6 PANS	2					
35	S6710032	NIPPLE;GREASE	GRAISSEUR	2					
36	114-00292	SPACER	BAGUE D'ECARTEMENT	1					
37	S8000281	O-RING	JOINT TORIQUE	1					

DATE	JUN. 30, 2005
REV. NO.	EXB05-05

Fig. 4380 ARTI.BOOM CYLINDER-LOCK VALVE VERIN DE ARTICULAIRE FLECHE

Serial No. ;

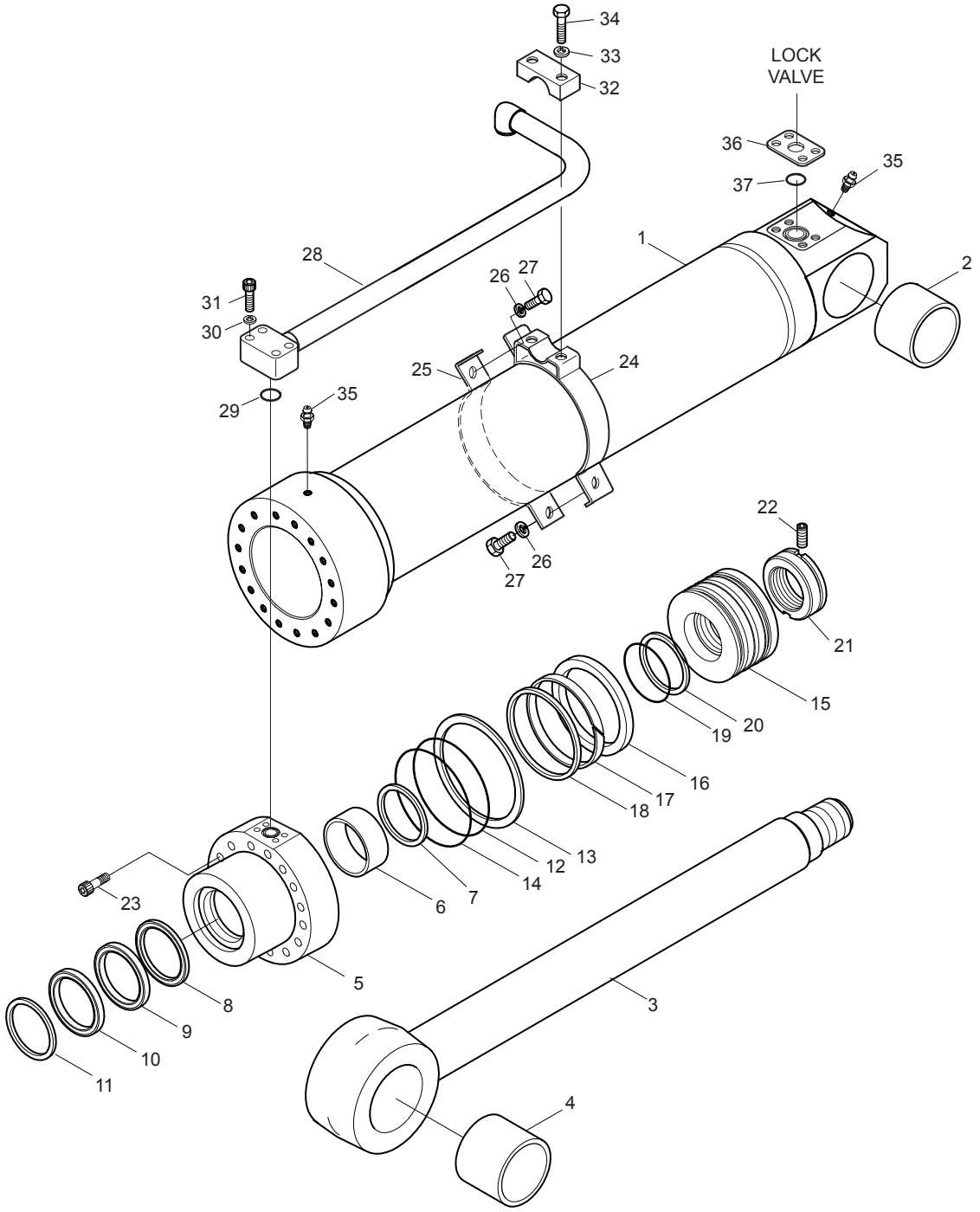

DATE	JUN. 30, 2005
REV. NO.	EXB05-05

Fig. 4380 ARTI.BOOM CYLINDER-LOCK VALVE VERIN DE ARTICULAIRE FLECHE

Serial No ;

Key No.	Part No.	Description	Description	Q'ty	S.C	Serial No.	ICA	Replaceable part	
								Part No.	Q'ty
4380-*	440-00184KT	SEAL KIT	KIT DE JOINTS	1					

DATE	JUN. 30, 2004
REV. NO.	EXB04-04

Fig. 4390 OPTION VALVE VANNE

Serial No. ;

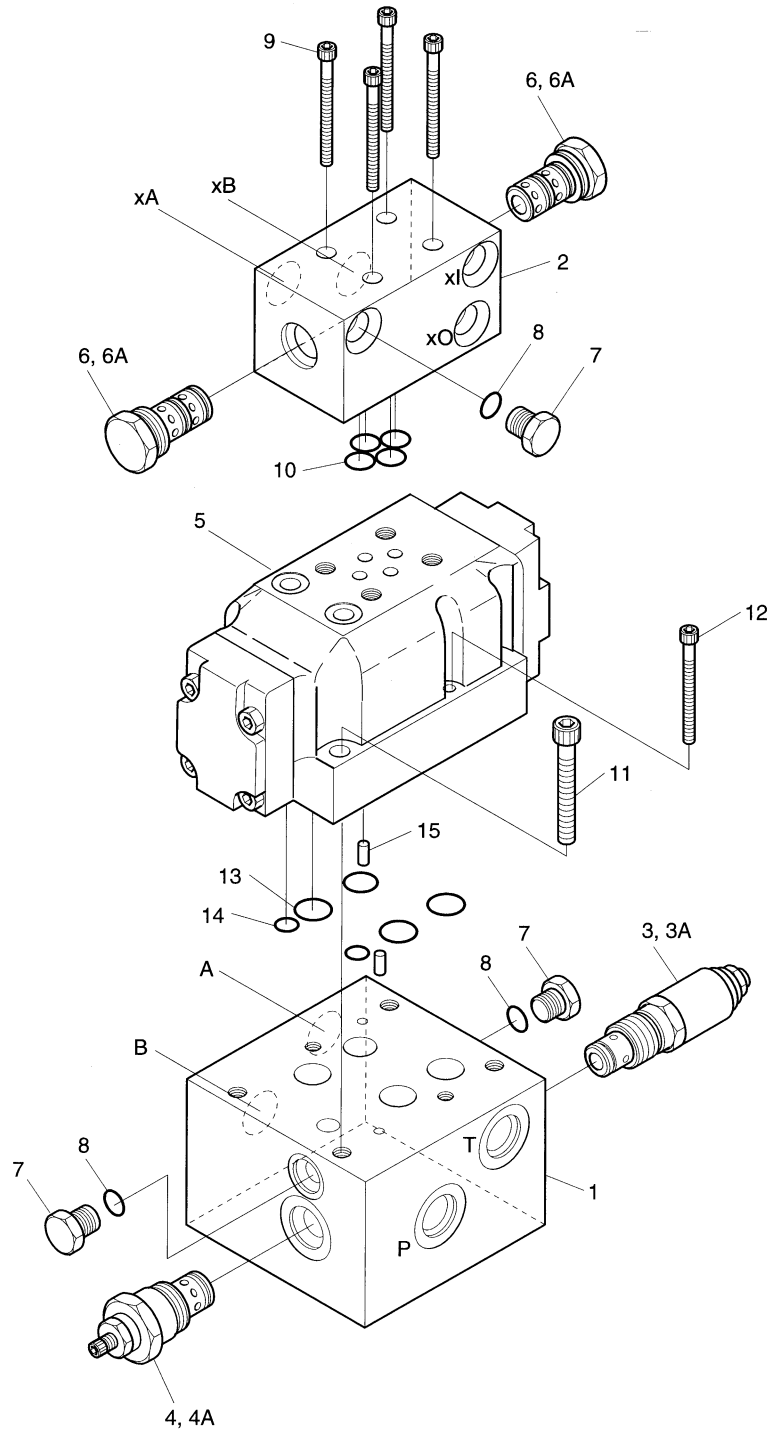

DATE	JUN. 30, 2004
REV. NO.	EXB04-04

Fig. 4390 OPTION VALVE VANNE

Serial No ;

Key No.	Part No.	Description	Description	Q'ty	S.C	Serial No.	ICA	Replaceable part	
								Part No.	Q'ty
4390--	420-00322C	OPTION VALVE	VANNE	1					
1	K9000439	BLOCK;MAIN	BLOC	1	D				
2	K9000440	BLOCK;PILOT	BLOC	1	D				
3	K9000441	VALVE;RELIEF	VANNE	1					
3A	K9000442	. SEAL KIT	. KIT DE JOINT	1					
4	K9000443	VALVE;FLOW CONTROL	VANNE	1					
4A	K9000444	. SEAL KIT	. KIT DE JOINT	1					
5	K9000445	VALVE;DIRE. CONT.	VANNE	1					
6	K9000446	VALVE;SHUTTLE	VANNE	2					
6A	K9000447	. SEAL KIT	. KIT DE JOINT	1					
7	2181-1950D1	PLUG	BOUCHON	3					
8	S8000111	O-RING	JOINT TORIQUE	3					
9	K9000448	BOLT;SOCKET	BOULON DE PLOT	4					
10	S8000091	O-RING	JOINT TORIQUE	4					
11	S2212861	BOLT;SOCKET	BOULON DE PLOT	4					
12	S2205761	BOLT;SOCKET	BOULON DE PLOT	2					
13	2180-1217D54	O-RING	JOINT TORIQUE	4					
14	2180-1217D13	O-RING	JOINT TORIQUE	2					
15	S5740470	PIN;SPRING	GOUPILLE	2					

DATE	DEC. 30, 2004
REV. NO.	EXB04-09

Fig. 4400 BREAKER VALVE VANNE DE BRISEUR

Serial No. ;

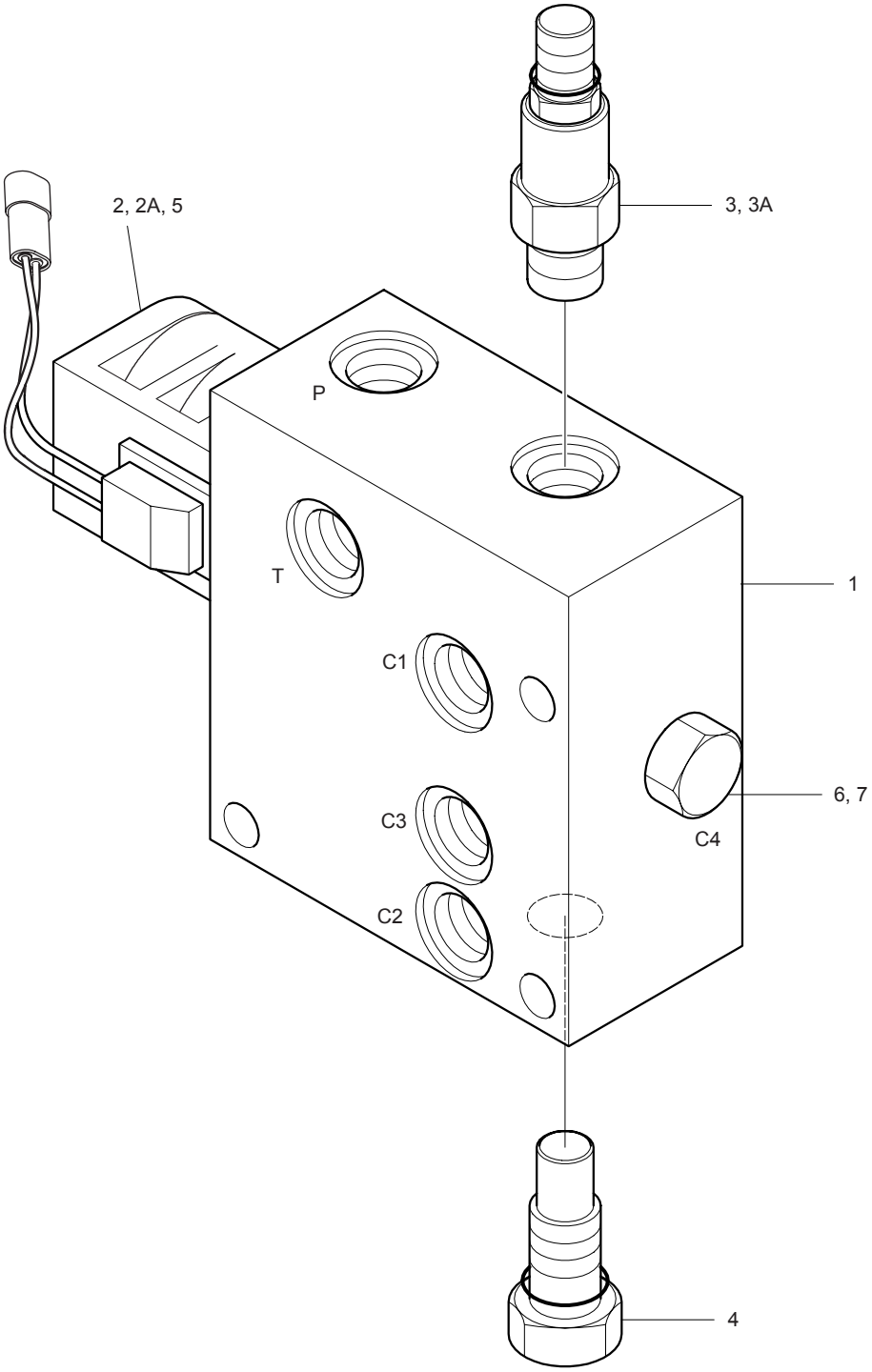

DATE	DEC. 30, 2004
REV. NO.	EXB04-09

Fig. 4400 BREAKER VALVE VANNE DE BRISEUR

Serial No ;

Key No.	Part No.	Description	Description	Q'ty	S.C	Serial No.	ICA	Replaceable part	
								Part No.	Q'ty
4400--	420-00340	VALVE;BREAKER	SOUPAPE A SOLENOIDE	1		1001–1354	I	420-00340A	1
	420-00340A	VALVE;BREAKER	SOUPAPE A SOLENOIDE	1		1355–1419	I	420-00340B	1
	420-00340B	**VALVE;BREAKER**	SOUPAPE A SOLENOIDE	1		**1420–**			
1	-	BODY	BOITIER	1	D				
2	DF-S3A-00	VALVE;SOLENOID	VANNE SOLENOIDE	1		1001–1419	I	TF-S3A-00	1
	TF-S3A-00	**VALVE;SOLENOID**	VANNE SOLENOIDE	1		**1420–**			
2A	DF-S3A-S-01	. SEAL KIT	. KIT D'ETANCHEITE	1		1001–1419			
	TF-S3A-S-01	**. SEAL KIT**	. KIT D'ETANCHEITE	1		**1420–**			
3	PBDB-LNN	VALVE;REDUCING	CLAPET DE TROP-PLEIN	1					
3A	990-011-007	. SEAL KIT	. KIT D'ETANCHEITE	1					
4	CSAB-XXN	VALVE;SHUTTLE	CLAPET BALADEUR	1					
4A	990-011-007	. SEAL KIT	. KIT D'ETANCHEITE	1					
5	VDL24	COIL	COIL	1					
6	2181-1950D1	PLUG PF1/4	BOUCHON	1					
7	S8000111	O-RING P11	JOINT TORIQUE	1					

DATE	JUN. 30, 2005
REV. NO.	EXB05-05

Fig. 4410 CONTROL VALVE(1) - KVMG270 DISTRIBUTEUR

Serial No. ;

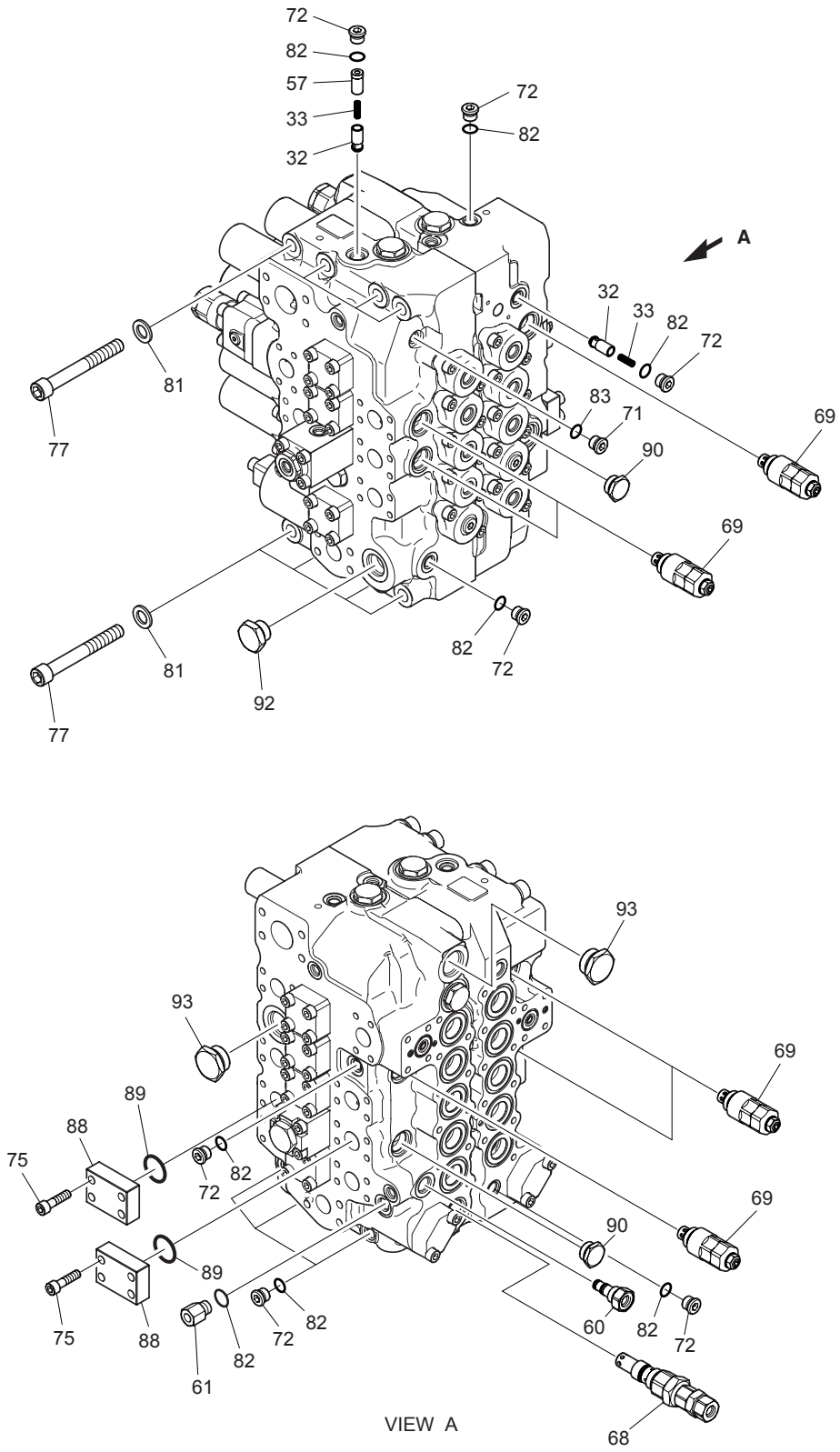

DATE	JUN. 30, 2005
REV. NO.	EXB05-05

Fig. 4410 CONTROL VALVE(1) - KVMG270 DISTRIBUTEUR

Serial No ;

Key No.	Part No.	Description	Description	Q'ty	S.C	Serial No.	ICA	Replaceable part	
								Part No.	Q'ty
4410--	**426-00231**	**VALVE;CONTROL**	VANNE	1					
32	426-00168	POPET	POPET	2					
33	129-00126	SPRING	RESSORT	2					
57	114-00414	SPACER	BAGUE D'ECARTEMENT	1					
60	181-00633	PLUG ASS'Y	BOUCHON	1					
61	2181-2337D13	PLUG	BOUCHON	1					
68	420-00257	VALVE;MAIN RELIEF	CLAPET DE DECHARGE	1					
69	420-00258	VALVE;OVERLOAD RELIEF	CLAPET DE DECHARGE	6					
71	181-00656	PLUG	BOUCHON	1					
72	181-00701	PLUG	BOUCHON	8					
75	S2212466	BOLT;SOCKET M10X40	BOULON A 6 PANS CREUX	8					
77	S2223266	BOLT;SOCKET M16X130	BOULON A 6 PANS CREUX	8					
81	S5010913	WASHER	RONDELLE	8					
82	S8000141	O-RING	JOINT TORIQUE	9	K				
83	S8000111	O-RING	JOINT TORIQUE	1	K				
88	2181-2434	CAP	CHAPEAU	2					
89	2180-1217D109	O-RING	JOINT TORIQUE	2	K				
90	181-00644	PLUG ASS'Y	BOUCHON	2					
92	181-00647	PLUG ASS'Y	BOUCHON	1					
93	181-00649	PLUG ASS'Y	BOUCHON	2					
*	420-00295KT	SEAL KIT;CONTROL VALVE	KIT DE JOINT	1					

DATE	JUN. 30, 2005
REV. NO.	EXB05-05

Fig. 4420 CONTROL VALVE(2) - KVMG270 DISTRIBUTEUR

Serial No. ;

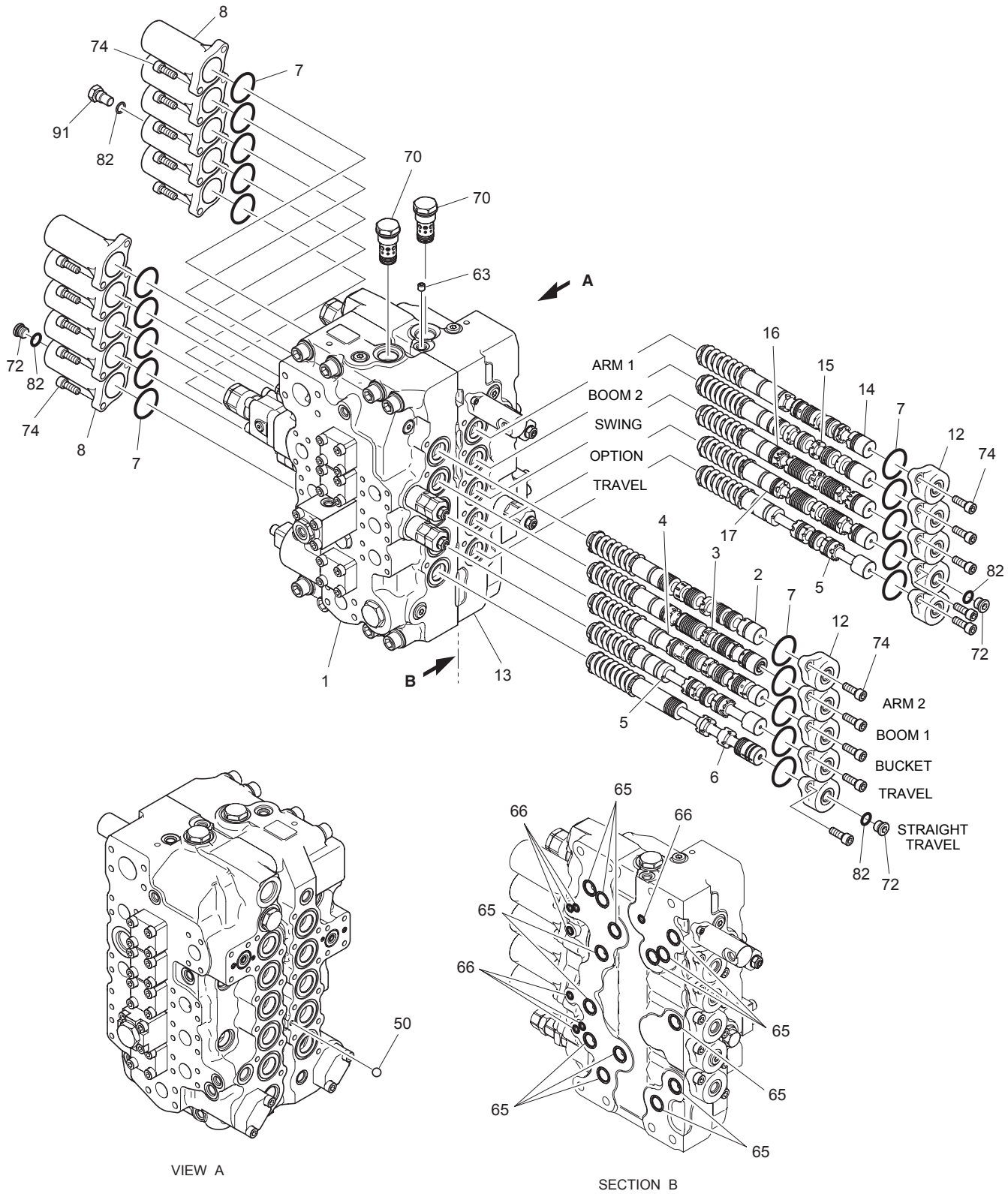

DATE	JUN. 30, 2005
REV. NO.	EXB05-05

Fig. 4420 CONTROL VALVE(2) - KVMG270 DISTRIBUTEUR

Serial No ;

Key No.	Part No.	Description	Description	Q'ty	S.C	Serial No.	ICA	Replaceable part	
								Part No.	Q'ty
4420--	**426-00231**	**VALVE;CONTROL**	VANNE	1					
1	423-00096	HOUSING;VALVE	CARTER	1	D				
2	424-00185	SPOOL ASS'Y-ARM2	PLUNGEUR	1					
3	424-00191	SPOOL ASS'Y-BOOM1	PLUNGEUR	1					
4	424-00199	SPOOL ASS'Y-BUCKET	PLUNGEUR	1					
5	424-00201	SPOOL ASS'Y-TRAVEL	PLUNGEUR	2					
6	424-00115	SPOOL ASS'Y-T/S	PLUNGEUR	1					
7	S8010451	O-RING	JOINT TORIQUE	20	K				
8	430-00033	CAP	CHAPEAU	10					
12	430-00035	CAP	CHAPEAU	10					
13	423-00097	HOUSING;VALVE	CARTER	1	D				
14	424-00196	SPOOL ASS'Y-ARM1	PLUNGEUR	1					
15	424-00194	SPOOL ASS'Y-BOOM2	PLUNGEUR	1					
16	424-00187	SPOOL ASS'Y-SWING	PLUNGEUR	1					
17	424-00123	SPOOL ASS'Y-OPTION	PLUNGEUR	1					
50	23-0146	BALL;STEEL	BILLE	1					
63	415-00037	PLUG;ORIFICE	BOUCHON	1					
65	180-00403	O-RING	JOINT TORIQUE	14	K				
66	180-00402	O-RING	JOINT TORIQUE	7	K				
70	420-00259	RELIFE VALVE ASS'Y	CLAPET DE DECHARGE	2					
72	181-00701	PLUG	BOUCHON	3					
74	S2212266	BOLT;SOCKET M10X28	BOULON A 6 PANS CREUX	40					
82	S8000141	O-RING	JOINT TORIQUE	4	K				
91	181-00646	PLUG	BOUCHON	1					

DATE	JUN. 30, 2005
REV. NO.	EXB05-05

Fig. 4430 CONTROL VALVE(3) - KVMG270
DISTRIBUTEUR

Serial No. ;

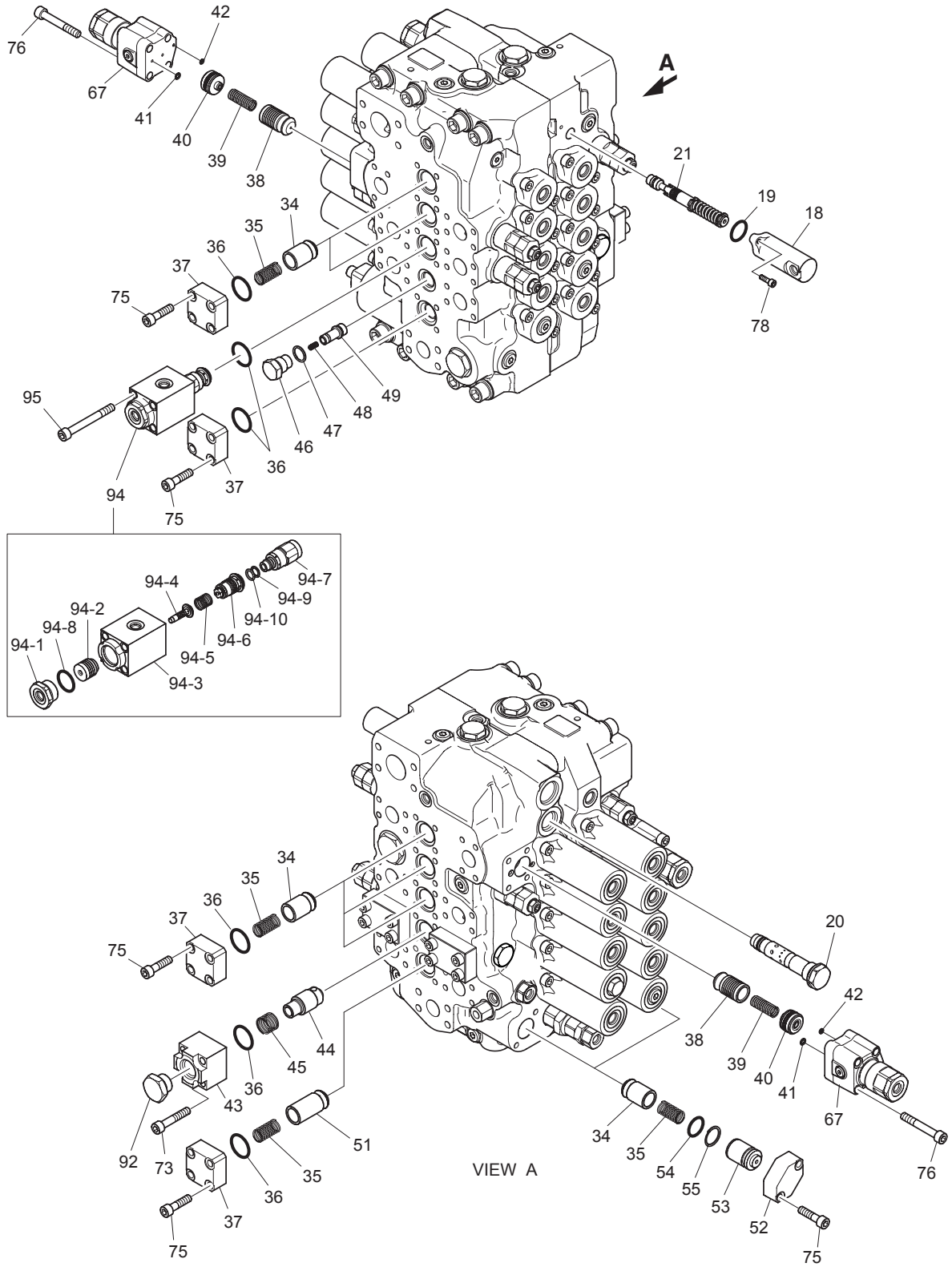

DATE	JUN. 30, 2005
REV. NO.	EXB05-05

Fig. 4430 CONTROL VALVE(3) - KVMG270 DISTRIBUTEUR

Serial No ;

Key No.	Part No.	Description	Description	Q'ty	S.C	Serial No.	ICA	Replaceable part	
								Part No.	Q'ty
4430--	**426-00231**	**VALVE;CONTROL**	VANNE	1					
18	430-00038	CAP	CHAPEAU	1					
19	S8000261	O-RING	JOINT TORIQUE	1	K				
20	420-00314	ARM REGEN ASS'Y	VANNE	1					
21	420-00393	SP SPOOL ASS'Y	PLUNGEUR	1					
34	426-00169	POPET	POPET	7	D				
35	129-00127	SPRING	RESSORT	8					
36	S8000321	O-RING	JOINT TORIQUE	9	K				
37	181-00628	FLANGE	BRIDE	7					
38	426-00170	POPET	POPET	2					
39	129-00128	SPRING	RESSORT	2					
40	114-00411	SPACER ASS'Y	BAGUE D'ECARTEMENT	2					
41	S8000061	O-RING	JOINT TORIQUE	2	K				
42	S8000041	O-RING	JOINT TORIQUE	2	K				
43	181-00630	FLANGE	BRIDE	1					
44	426-00171	POPET	POPET	1					
45	129-00130	SPRING	RESSORT	1					
46	430-00042	PLUG	BOUCHON	1					
47	180-00398	O-RING	JOINT TORIQUE	1	K				
48	129-00129	SPRING	RESSORT	1					
49	426-00172	POPET	POPET	1					
51	426-00173	POPET	POPET	1					
52	181-00631	FLANGE	BRIDE	2					
53	114-00413	SPACER	BAGUE D'ECARTEMENT	2					
54	S8010250	O-RING	JOINT TORIQUE	2	K				
55	180-00445	RING;BACK-UP	BAGUE DE SOUTIEN	2	K				
67	420-00246	ANTI-DRIFT VALVE ASS'Y	VANNE	2					
73	S2212766	BOLT;SOCKET M10X55L	BOULON A 6 PANS CREUX	4					
75	S2212466	BOLT;SOCKET M10X40L	BOULON A 6 PANS CREUX	32					
76	S2213066	BOLT;SOCKET M10X70L	BOULON A 6 PANS CREUX	8					
78	S2204866	BOLT;SOCKET M6X20L	BOULON A 6 PANS CREUX	2					
92	181-00647	PLUG ASS'Y	BOUCHON	1					
94	420-00309	BOOM PRIORITY VALVE	VANNE	1					
94-1	430-00045	. PLUG	BOUCHON	1					
94-2	409-00049	. PISTON	. PISTON	1					
94-3	423-00107	. BODY	. CARTER	1	D				
94-4	409-00050	. PISTON	. PISTON	1					
94-5	129-00139	. SPRING	. RESSORT	1					

DATE	JUN. 30, 2005
REV. NO.	EXB05-05

Fig. 4430 CONTROL VALVE(3) - KVMG270 DISTRIBUTEUR

Serial No. ;

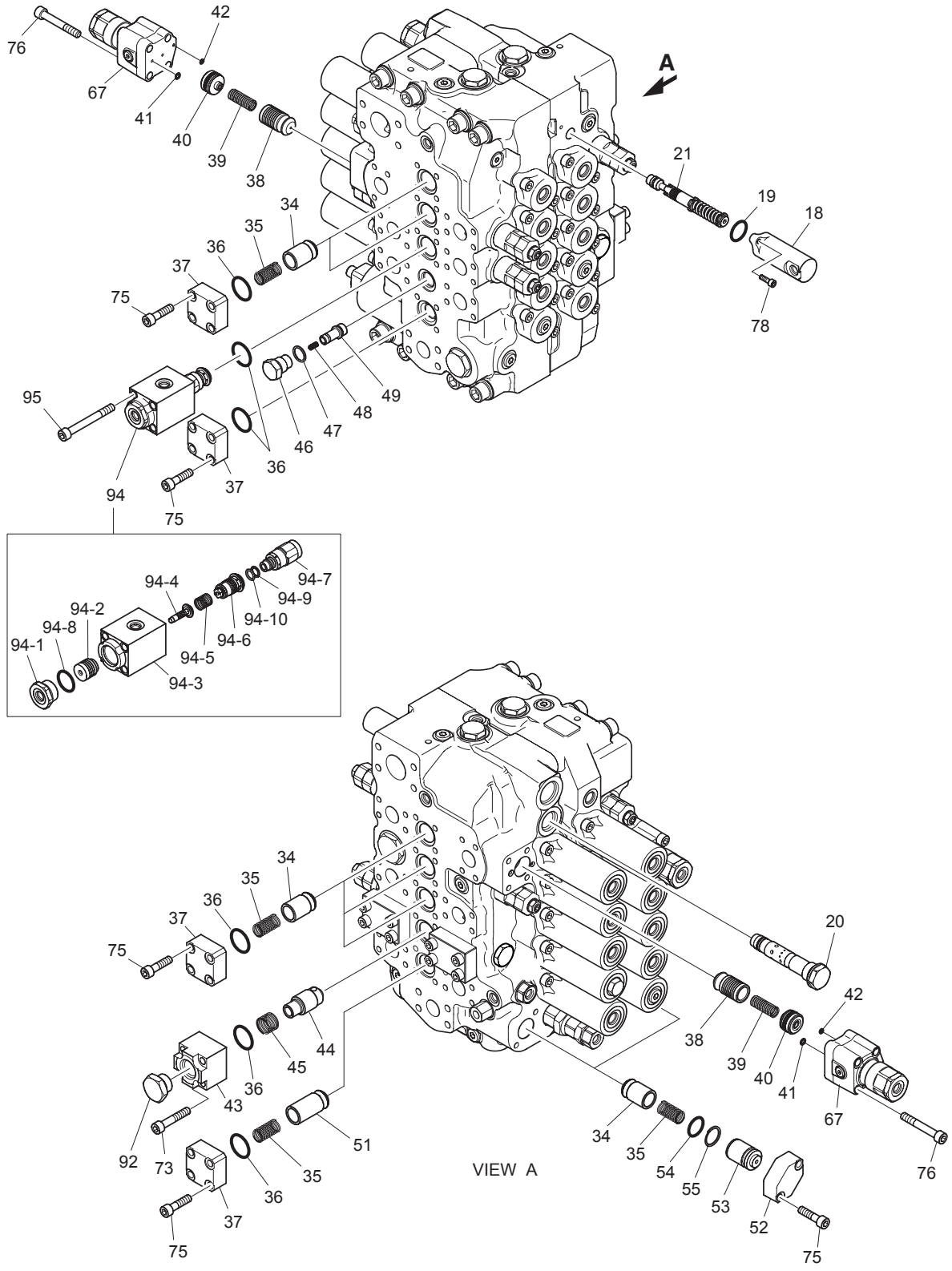

DATE	JUN. 30, 2005
REV. NO.	EXB05-05

Fig. 4430 CONTROL VALVE(3) - KVMG270 DISTRIBUTEUR

Serial No ;

Key No.	Part No.	Description	Description	Q'ty	S.C	Serial No.	ICA	Replaceable part	
								Part No.	Q'ty
4430-94-6	425-00015	. SLEEVE	. DOUILLE	1	D				
94-7	426-00182	. POPET ASS'Y	. POPET	1					
94-8	180-00400	. O-RING	. JOINT TORIQUE	1	K				
94-9	S8060121	. RING;BACK-UP	. BAGUE DE SOUTIEN	1	K				
94-10	S8000121	. O-RING P12 HS90	. JOINT TORIQUE	1	K				
95	S2213466	BOLT;SOCKET M10X90	BOULON A 6 PANS CREUX	4					

DATE	JUN. 30, 2005
REV. NO.	EXB05-05

Fig. 5100 TOOLS OUTILLAGE

Serial No. ;

1

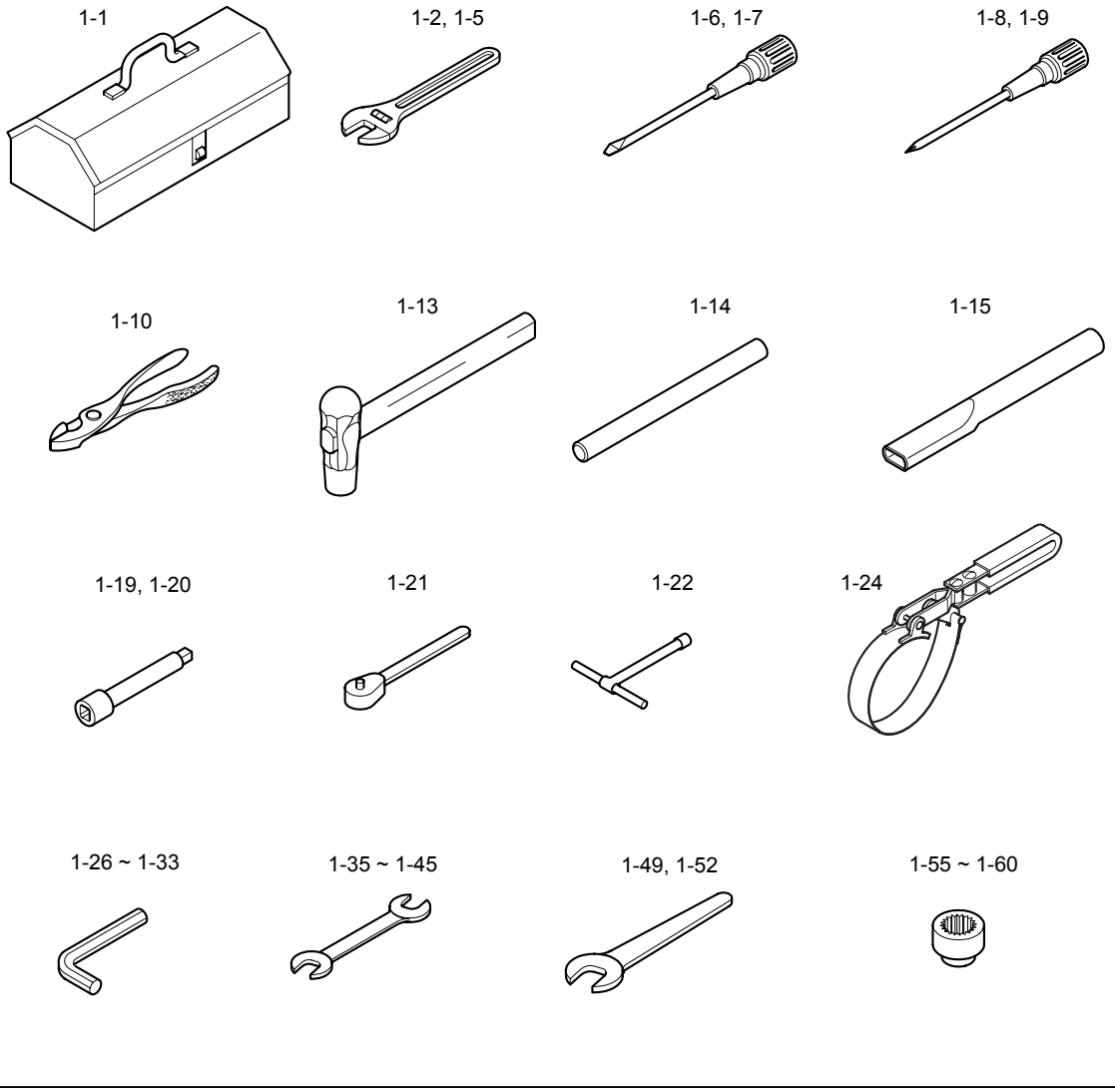

3

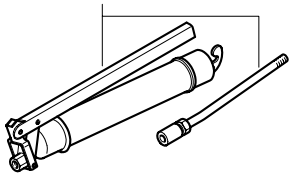

4

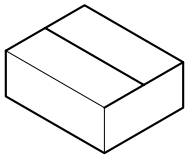

5

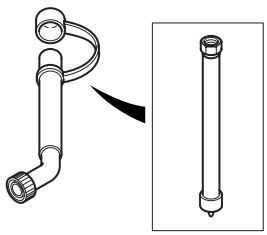

Serial No. 1001 ~ 2019

DATE	JUN. 30, 2005
REV. NO.	EXB05-05

Fig. 5100 TOOLS OUTILLAGE

Serial No ;

Key No.	Part No.	Description	Description	Q'ty	S.C	Serial No.	ICA	Replaceable part	
								Part No.	Q'ty
5100--	199-00124	TOOLS	OUTILLAGE	-	D				
1	2199-1063F9B	TOOL ASS'Y	OUTILLAGE	1					
1-1	2199-9043	. BOX;TOOL	. BOITE	1					
1-2	T6580008	. WRENCH:ADJUST(6")	. CLE A MOLETTE	1					
1-5	T6580020	. WRENCH:ADJUST(12")	. CLE A MOLETTE	1					
1-6	T7050003	. DRIVER (-) 6X100	. ENTRAINEUR	1					
1-7	T7050013	. DRIVER (-) 8X150	. ENTRAINEUR	1					
1-8	T7050021	. DRIVER (+) 6X100	. CROIX	1					
1-9	T7050022	. DRIVER (+) 8X150	. ENTRAINEUR	1					
1-10	T7500004	. PILER;COMBI 8"	. PLIER	1					
1-13	T7260057	. HAMMER 2.0lb	. MARTEAU	1					
1-14	2199-1004	. BAR D28X400L	. BARRE	1					
1-15	2199-1005	. PIPE D34X400L	. CONDUITE	1					
1-19	T6690012	. BAR;EXTENSION 5"	. BARRE	1					
1-20	T6690013	. BAR;EXTENSION 10"	. BARRE	1					
1-21	T6750003	. HANDLE;RATCHET 1/2	. POIGNEE	1					
1-22	2199-9009	. CLIP;DRIVER 13	. CLIP	1					
1-24	199-00075	. WRENCH;FILTER	. CLE MALE	1					
1-26	T6550005	. L-WRENCH 4	. CLE MALE	1					
1-27	T6550006	. L-WRENCH 5	. CLE MALE	1					
1-28	T6550007	. L-WRENCH 6	. CLE MALE	1					
1-29	T6550009	. L-WRENCH 8	. CLE MALE	1					
1-30	T6550011	. L-WRENCH 10	. CLE 6 PANS MALE	1					
1-32	T6550015	. L-WRENCH 14	. CLE MALE	1					
1-33	T6550018	. L-WRENCH 17	. CLE MALE	1					
1-35	T6510062	. SPANNER 8X10	. CLE PLATE	1					
1-36	T6510066	. SPANNER 10X13	. CLE PLATE	1					
1-37	T6510070	. SPANNER 13X17	. CLE PLATE	1					
1-38	T6510072	. SPANNER 17X19	. CLE PLATE	1					
1-39	T6510075	. SPANNER 19X22	. CLE PLATE	1					
1-41	T6510081	. SPANNER 24X27	. CLE PLATE	1					
1-42	T6510085	. SPANNER 27X30	. CLE PLATE	1					
1-44	T6510089	. SPANNER 32X36	. CLE PLATE	1					
1-45	T6510091	. SPANNER 36X41	. CLE A MOLETTE	1					
1-49	T6510018	. SPANNER 24	. CLE PLATE	1					
1-52	T6510027	. SPANNER 41	. CLE PLATE	1					
1-55	T6600183	. SOCKET M6	. CLE A MOLETTE	1					
1-56	T6600189	. SOCKET M8	. CLE A MOLETTE	1					

DATE	JUN. 30, 2005
REV. NO.	EXB05-05

Fig. 5100 TOOLS OUTILLAGE

Serial No. ;

1

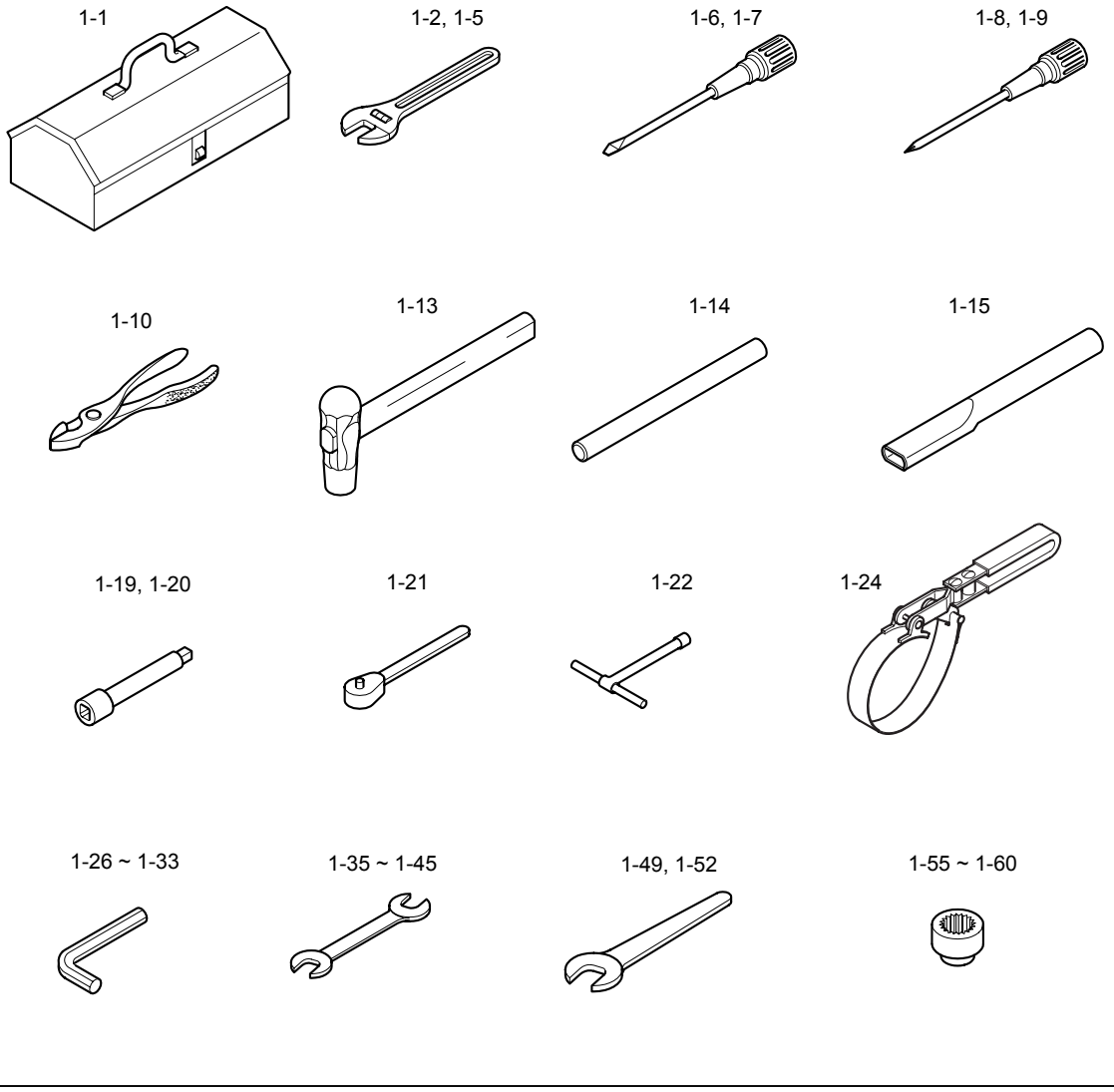

3

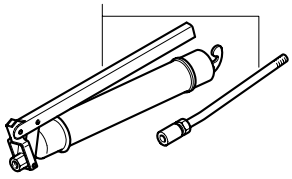

4

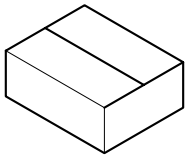

5

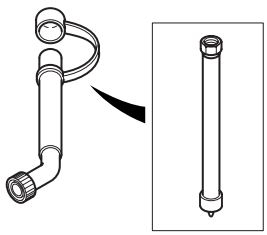

Serial No. 1001 ~ 2019

DATE	JUN. 30, 2005
REV. NO.	EXB05-05

Fig. 5100 TOOLS OUTILLAGE

Serial No ;

Key No.	Part No.	Description	Description	Q'ty	S.C	Serial No.	ICA	Replaceable part	
								Part No.	Q'ty
5100-1-57	T6600197	. SOCKET M10	. CLE A MOLETTE	1					
1-58	T6600201	. SOCKET M12	. CLE A MOLETTE	1					
1-59	T6600211	. SOCKET M16	. CLE A MOLETTE	1					
1-60	T6600223	. SOCKET M20	. CLE A MOLETTE	1					
3	2199-9008	GREASE GUN	PISTOLET DE GRAISSAGE	1					
4	2199-9007	BOX	BOITE	1					
5	184-00085	HOSE;OIL CHANGE	TUYAU FLEXIBLE	1		1001–2019	I	K1004092	1
	K1004092	**HOSE;OIL CHANGE**	TUYAU FLEXIBLE	1		**2020–**			

DATE	JUN. 30, 2006
REV. NO.	EXB06-08

Fig. 5110 SPARE PARTS PIECES DE RECHANGE

Serial No. ;

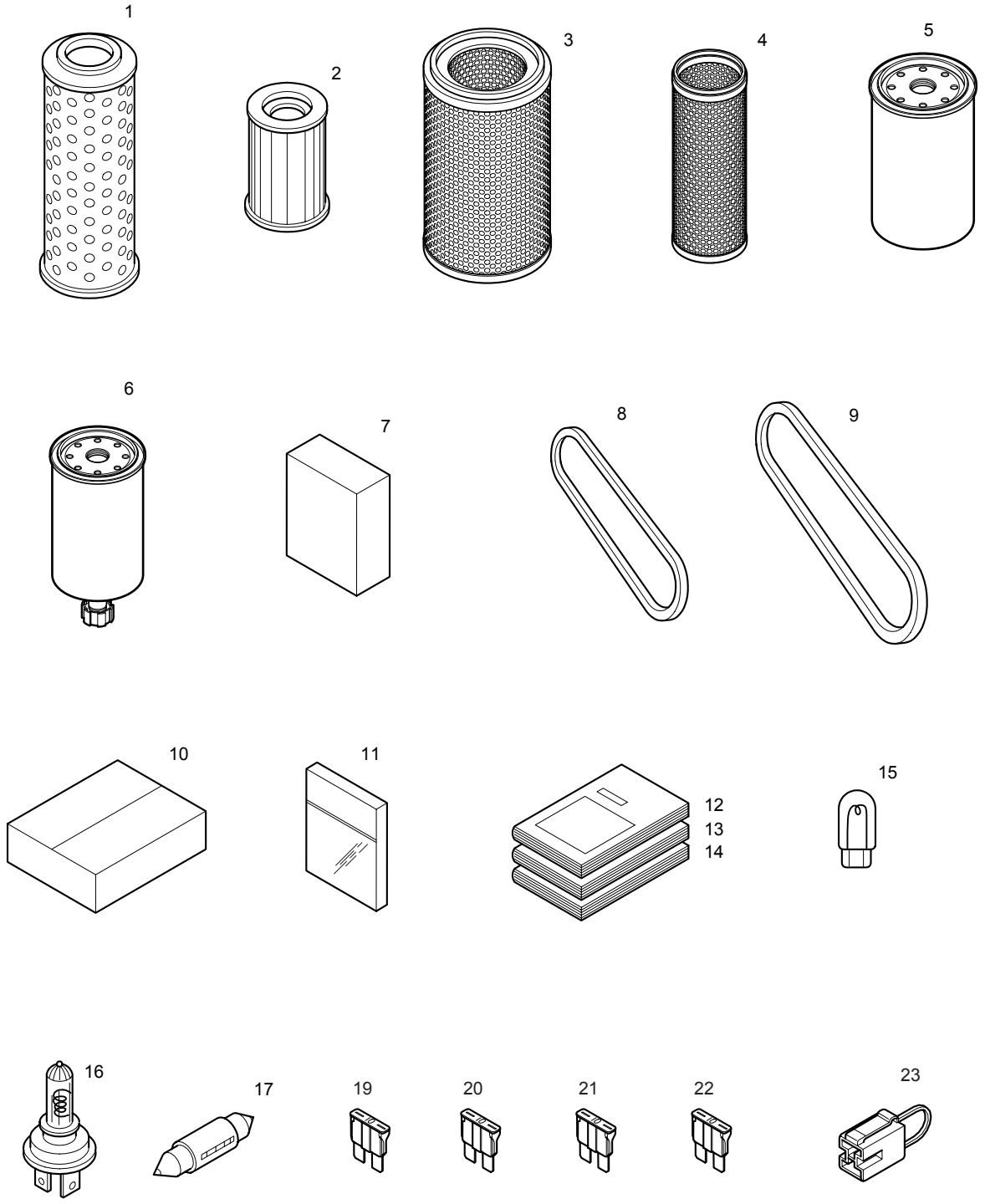

DATE	JUN. 30, 2006
REV. NO.	EXB06-08

Fig. 5110 SPARE PARTS PIECES DE RECHANGE

Serial No. ;

Key No.	Part No.	Description	Description	Q'ty	S.C	Serial No.	ICA	Replaceable part	
								Part No.	Q'ty
5110--	918-00169	SPACE PARTS	PIECES DE RECHANGE	-	D				
1	2474-9404A	ELEMENT;FILTER	ELEMENT FILTRANT	1					
2	2471-1154	ELEMENT;PILOT FILTER	ELEMENT FILTRANT	1					
3	2474-9053A	ELEMENT;AIR(OUTER)	ELEMENT FILTRANT	1					
4	2474-9054A	ELEMENT;AIR(INNER)	ELEMENT FILTRANT	1					
5	471-00093	CARTRIDGE;E/G OIL FILTER	FILTRE	1					
6	2474-9060A	ELEMENT;E/G FUEL FILTER	ELEMENT FILTRANT	1					
7	910-00019	OIL;ENGINE	HUILE MOTEUR	6					
8	**2106-1019D10**	**V-BELT(AIR CON)**	COURROIE-V	1					
9	**2106-1019D4**	**V-BELT(FAN)**	COURROIE-V	1					
10	2512-1095D1	BOX;SPARE PARTS	BOITE DE PIECES DE	1					
11	2180-9153	O-RING KIT	JONT TORIQUE	1					
12	021-00030EF	PARTS BOOK	MANUEL DE PIECES DE	1					
13	022-00032E	OPERATION MANUAL	MANUEL D'UTILISATION	1					
14	023-00058E	SERVICE MANUAL	MANUEL D'ENTRETIEN	1					
15	515-00012A	BULB	AMPOULE	2					
16	2515-1022D1	BULB;HALOGEN	AMPOULE	1					
17	2515-1016D4	BULB	LAMPE	1					
19	2527-1016	FUSE;BLADE 10A	LAME DE FUSIBLE	2					
20	2527-1017	FUSE;BLADE 15A	LAME DE FUSIBLE	2					
21	2527-1018	FUSE;BLADE 20A	FUSIBLE	1					
22	2527-1025	FUSE;BLADE 30A	FUSIBLE	1					
23	2527-1023A	FUSIBLE LINK	FUSIBLE	1					

DATE	DEC. 30, 2004
REV. NO.	EXB04-09

Fig. 5120 CABIN NAME PLATE-EUROPE PLAQUE D'IDENTIFICATION

Serial No. ;

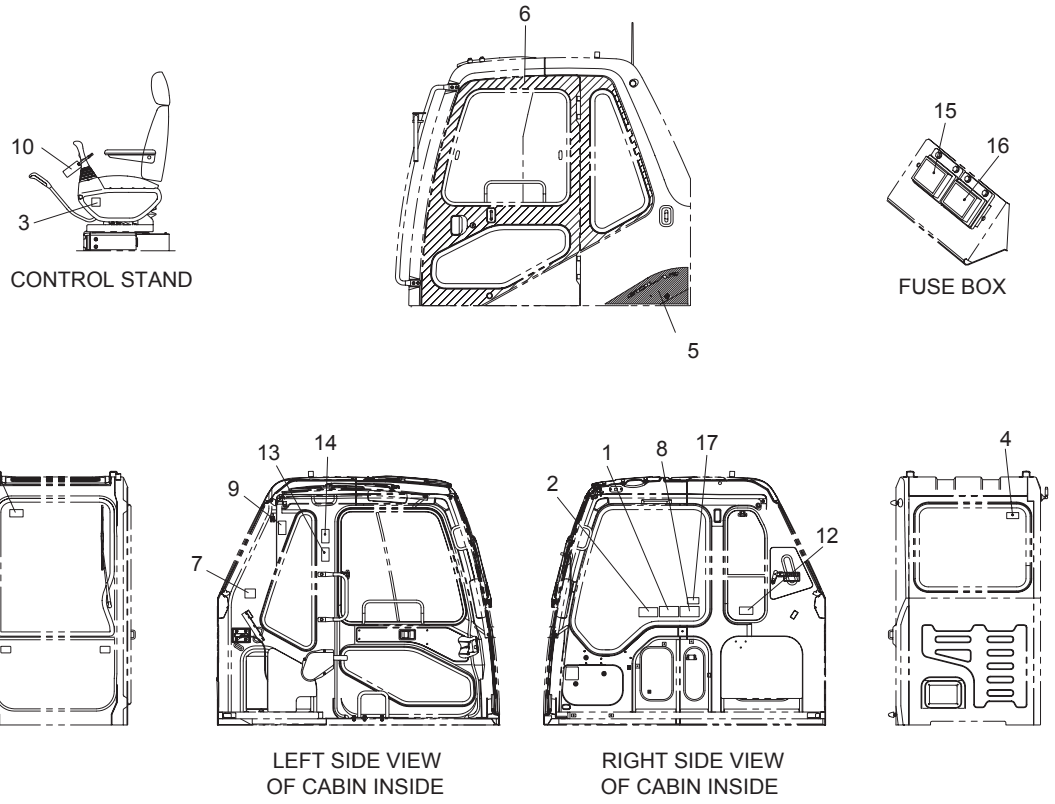

DATE	DEC. 30, 2004
REV. NO.	EXB04-09

Fig. 5120 CABIN NAME PLATE-EUROPE PLAQUE D'IDENTIFICATION

Serial No ;

Key No.	Part No.	Description	Description	Q'ty	S.C	Serial No.	ICA	Replaceable part	
								Part No.	Q'ty
5120--	190-00813	CABIN NAME PLATE-EUROPE	PLAQUE D'IDENTIFICATION	-	D				
1	190-00092	PLATE;NAME	PLAQUE D'IDENTIFICATION	1					
2	2190-3297	PLATE;NAME	PLAQUE D'IDENTIFICATION	1					
3	2190-3309	PLATE;NAME(LAVER LOCK)	PLAQUE D'IDENTIFICATION	1					
4	190-00101	PLATE;NAME(HAMMER)	PLAQUE D'IDENTIFICATION	1					
5	190-00851	PLATE;NAME	PLAQUE D'IDENTIFICATION	1					
6	2116-9003	PLATE	PLAQUE	1					
7	2190-2524	PLATE;NAME	PLAQUE D'IDENTIFICATION	1					
8	190-00096	PLATE;NAME(ELEC. LINE)	PLAQUE D'IDENTIFICATION	1					
9	190-00093	PLATE;NAME(SLIDE WINDOW)	PLAQUE D'IDENTIFICATION	1					
10	190-00098	PLATE;NAME	PLAQUE D'IDENTIFICATION	1					
11	190-00315	PLATE;NAME(WIPER MOTOR)	PLAQUE D'IDENTIFICATION	1					
12	190-00102	PLATE;NAME	PLAQUE D'IDENTIFICATION	1					
13	190-00094	PLATE;NAME(CAUTION)	PLAQUE D'IDENTIFICATION	1					
14	190-00521	PLATE;NAME	PLAQUE D'IDENTIFICATION	1					
15	2190-3244D11	PLATE;NAME(FUSE BOX1)	PLAQUE D'IDENTIFICATION	1					
16	2190-3244D12	PLATE;NAME(FUSE BOX2)	PLAQUE D'IDENTIFICATION	1					
17	**190-00123**	**PLATE;NAME(ARTI.BOOM)**	PLAQUE D'IDENTIFICATION	1		**1490–**			

DATE	JUN. 30, 2006
REV. NO.	EXB06-08

Fig. 5130 NAME PLATE-EUROPE PLAQUE D'IDENTIFICATION

Serial No. ;

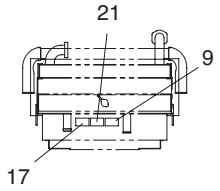

DETAIL A

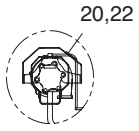

DETAIL C

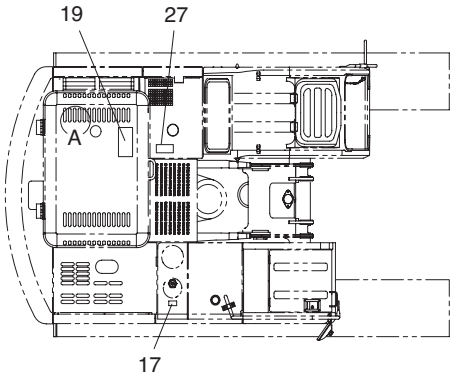

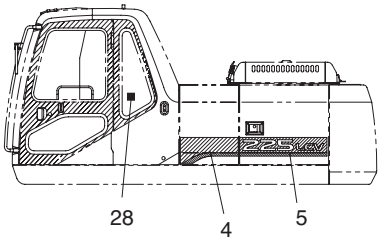



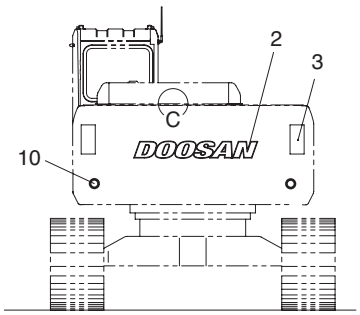

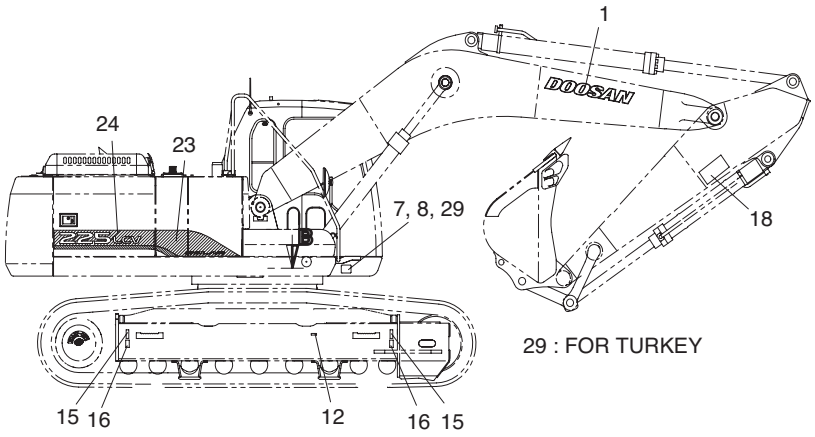

29 : FOR TURKEY

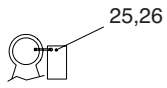

ENG. LIFTING RING

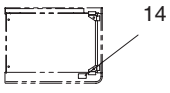

SECTION **B**

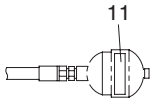

ACCUMULATOR

30 : ARTI. BOOM

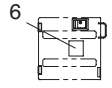

DETAIL OF BATTERY DOOR INSIDE

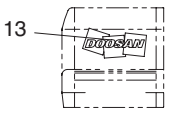

FRONT VIEW OF BATTERY COVER

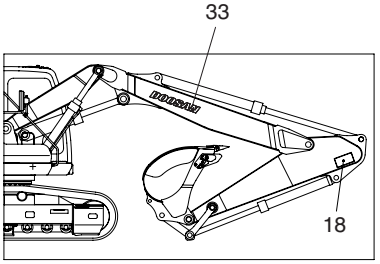

ARTI.BOOM

DATE	JUN. 30, 2006
REV. NO.	EXB06-08

Fig. 5130 NAME PLATE-EUROPE PLAQUE D'IDENTIFICATION

Serial No. ;

Key No.	Part No.	Description	Description	Q'ty	S.C	Serial No.	ICA	Replaceable part	
								Part No.	Q'ty
5130--	**190-00865C**	**NAME PLATE ASS'Y**	PLAQUE D'IDENTIFICATION	-	D				
1	K1011645D5	PLATE;NAME(DOOSAN)	PLAQUE D'IDENTIFICATION	2					
2	K1011645D1	PLATE;NAME(DOOSAN)	PLAQUE D'IDENTIFICATION	1					
3	190-00090	PLATE;NAME	PLAQUE D'IDENTIFICATION	2					
4	190-00966	PLATE;NAME	PLAQUE D'IDENTIFICATION	1					
5	190-00967	PLATE;NAME	PLAQUE D'IDENTIFICATION	1					
6	190-00866	PLATE;NAME	PLAQUE D'IDENTIFICATION	1		1001–1074	I	190-00866A	1
	190-00866A	PLATE;NAME	PLAQUE D'IDENTIFICATION	1		1075–			
7	K1012204	PLATE;NAME	PLAQUE D'IDENTIFICATION	1					
8	2122-1002D2	RIVET	RIVET	4					
9	190-00095	PLATE;NAME	PLAQUE D'IDENTIFICATION	1					
10	190-00647	PLATE;NAME(SWING AREA)	PLAQUE D'IDENTIFICATION	2					
11	190-00099	PLATE;NAME(ACCUMULATOR)	PLAQUE D'IDENTIFICATION	1					
12	190-00122	PLATE;NAME(TRACK ADJUSTER)	PLAQUE SIGNALETIQUES	2					
13	K1011648	PLATE;NAME(DOOSAN MARK)	PLAQUE SIGNALETIQUES	1					
14	190-00100	PLATE;NAME(BATTERY)	PLAQUE D'IDENTIFICATION	1					
15	2190-2476	PLATE;NAME(TIE DOWN)	PLAQUE D'IDENTIFICATION	4					
16	2190-2477	PLATE;NAME(LIFTING)	PLAQUE D'IDENTIFICATION	4					
17	190-00097	PLATE;NAME(HOT WATER)	PLAQUE D'IDENTIFICATION	2					
18	190-00652	PLATE;NAME	PLAQUE D'IDENTIFICATION	2					
19	190-00522	PLATE;NAME	PLAQUE D'IDENTIFICATION	1					
20	190-00648A	PLATE;NAME(HOT SURFACE)	PLAQUE D'IDENTIFICATION	1					
21	190-00557	PLATE;NAME	PLAQUE D'IDENTIFICATION	1					
22	2122-1002D4	RIVET	RIVET	4					
23	190-00968	PLATE;NAME	PLAQUE D'IDENTIFICATION	1					
24	190-00969	PLATE;NAME	PLAQUE D'IDENTIFICATION	1					
25	190-00509AD14	PLATE;NAME(E/G EMISSION)	PLAQUE D'IDENTIFICATION	1		1004–			
26	2124-1622D1	CLIP;BAND	CLIP	1		1004–			
27	2190-2314D3	TAPE;ANTI-SKID	TAPE	6		1004–			
28	190-01059D15	PLATE;NAME(SOUND POWER)	PLAQUE D'IDENTIFICATION	1		1032–2169	I	190-01059D13	1
	190-01059D13	PLATE;NAME(SOUND POWER)	PLAQUE D'IDENTIFICATION	1		2170–2334			
	190-01059D14	**PLATE;NAME(SOUND**	PLAQUE D'IDENTIFICATION	1		**2335**–			
29	K1012205	PLATE;NAME	PLAQUE D'IDENTIFICATION	1		1716–			
30	K1004375	PLATE;NAME	PLAQUE D'IDENTIFICATION	1		1490–			
33	K1011645D13	PLATE;NAME(DOOSAN)	PLAQUE D'IDENTIFICATION	2					

DATE	JUN. 30, 2006
REV. NO.	EXB06-08

Fig. 5140 CABIN NAME PLATE-ENGLISH PLAQUE D'IDENTIFICATION

Serial No. ;

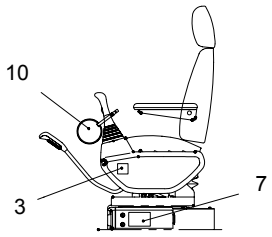

LEFT SIDE VIEW
OF CONTROL STAND

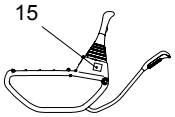

RIGHT VIEW OF
LEFT CONTROL STAND

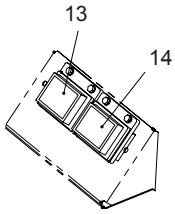

FUSE BOX COVER

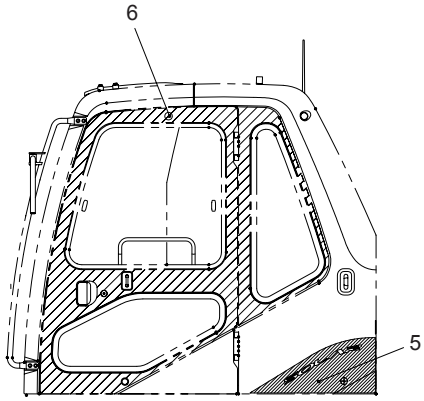

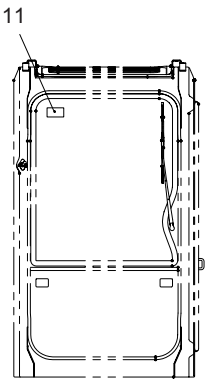

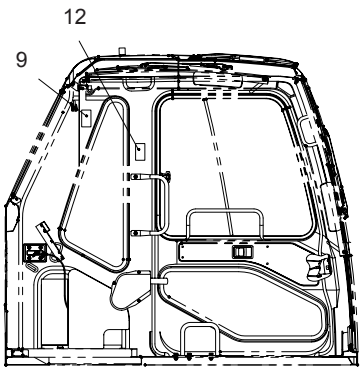

LEFT SIDE VIEW OF CABIN INSIDE

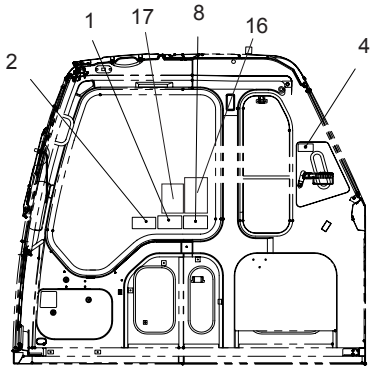

RIGHT SIDE VIEW OF CABIN INSIDE

DATE	JUN. 30, 2006
REV. NO.	EXB06-08

Fig. 5140 CABIN NAME PLATE-ENGLISH PLAQUE D'IDENTIFICATION

Serial No. ;

Key No.	Part No.	Description	Description	Q'ty	S.C	Serial No.	ICA	Replaceable part	
								Part No.	Q'ty
5140--	**190-01029A**	**CABIN NAME PLATE ASS'Y**	PLAQUE D'IDENTIFICATION	-	D				
1	190-00688	PLATE;NAME	PLAQUE D'IDENTIFICATION	1					
2	2190-3297	PLATE;NAME	PLAQUE D'IDENTIFICATION	1					
3	2190-3309	PLATE;NAME	PLAQUE D'IDENTIFICATION	1					
4	2190-2480	PLATE;NAME	PLAQUE D'IDENTIFICATION	1					
5	190-00851	PLATE;NAME	PLAQUE D'IDENTIFICATION	1					
6	2116-9003	PLATE	PLAQUE	1					
7	2190-3386A	PLATE;NAME	PLAQUE D'IDENTIFICATION	1					
8	190-00689	PLATE;NAME	PLAQUE D'IDENTIFICATION	1					
9	190-00690	PLATE;NAME	PLAQUE D'IDENTIFICATION	1					
10	190-00695	PLATE;NAME	PLAQUE D'IDENTIFICATION	1					
11	2190-3384	PLATE;NAME	PLAQUE D'IDENTIFICATION	1					
12	190-00693	PLATE;NAME	PLAQUE D'IDENTIFICATION	1					
13	2190-3244D11	PLATE;NAME	PLAQUE D'IDENTIFICATION	1					
14	2190-3244D12	PLATE;NAME	PLAQUE D'IDENTIFICATION	1					
15	2190-3383	PLATE;NAME	PLAQUE D'IDENTIFICATION	1					
16	**K1016614**	**PLATE;NAME**	PLAQUE D'IDENTIFICATION	1		**2280–**			
17	**K1018396**	**PLATE;NAME**	PLAQUE D'IDENTIFICATION	1		**2280–**			

DATE	JUN. 30, 2005
REV. NO.	EXB05-05

Fig. 5150 NAME PLATE-ENGLISH PLAQUE D'IDENTIFICATION

Serial No. ;

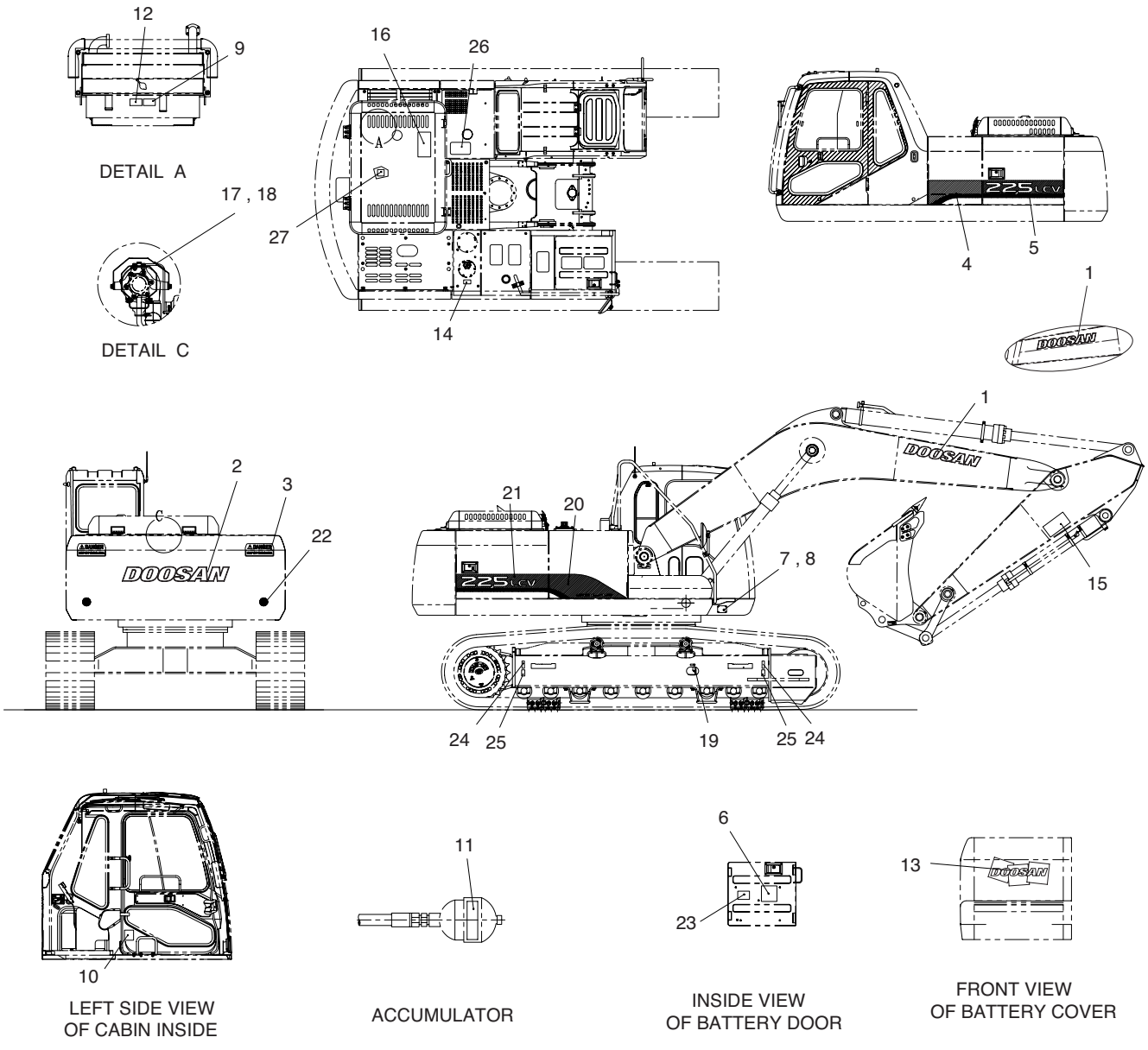

DATE	JUN. 30, 2005
REV. NO.	EXB05-05

Fig. 5150 NAME PLATE-ENGLISH PLAQUE D'IDENTIFICATION

Serial No ;

Key No.	Part No.	Description	Description	Q'ty	S.C	Serial No.	ICA	Replaceable part	
								Part No.	Q'ty
5150--	**190-01036A**	**NAME PLATE ASS'Y-ENGLISH**	PLAQUE D'IDENTIFICATION	-	D				
1	**K1011645D5**	**PLATE;NAME(DOOSAN)**	PLAQUE D'IDENTIFICATION	2					
2	**K1011645D1**	**PLATE;NAME(DOOSAN)**	PLAQUE D'IDENTIFICATION	1					
3	2190-3379	PLATE;NAME	PLAQUE D'IDENTIFICATION	2		1001–1480	I	2190-3379A	2
	2190-3379A	PLATE;NAME	PLAQUE D'IDENTIFICATION	2		1481–			
4	190-00966	PLATE;NAME	PLAQUE D'IDENTIFICATION	1					
5	190-00967	PLATE;NAME	PLAQUE D'IDENTIFICATION	1					
6	190-01035	PLATE;NAME	PLAQUE D'IDENTIFICATION	1		1001–1074	I	190-01035A	1
	190-01035A	PLATE;NAME	PLAQUE D'IDENTIFICATION	1		1075–			
7	**K1011647A**	**PLATE;NAME**	PLAQUE D'IDENTIFICATION	1					
8	2122-1002D2	RIVET	RIVET	4					
9	190-00694	PLATE;NAME	PLAQUE D'IDENTIFICATION	1					
10	2190-2556D106	PLATE;NAME	PLAQUE D'IDENTIFICATION	1					
11	190-00703	PLATE;NAME	PLAQUE D'IDENTIFICATION	1					
12	190-00692	PLATE;NAME	PLAQUE D'IDENTIFICATION	1					
13	**K1011648**	**PLATE;NAME(DOOSAN**	PLAQUE D'IDENTIFICATION	1					
14	190-00691	PLATE;NAME	PLAQUE D'IDENTIFICATION	1					
15	190-00652	PLATE;NAME	PLAQUE D'IDENTIFICATION	2					
16	190-00522	PLATE;NAME	PLAQUE D'IDENTIFICATION	1					
17	190-00648A	PLATE;NAME	PLAQUE D'IDENTIFICATION	1					
18	2122-1002D4	RIVET	RIVET	4					
19	190-00122	PLATE;NAME	PLAQUE D'IDENTIFICATION	2					
20	190-00968	PLATE;NAME	PLAQUE D'IDENTIFICATION	1					
21	190-00969	PLATE;NAME	PLAQUE D'IDENTIFICATION	1					
22	190-00647	PLATE;NAME	PLAQUE D'IDENTIFICATION	2					
23	2190-2533A	PLATE;NAME	PLAQUE D'IDENTIFICATION	1					
24	2190-2476	PLATE;NAME	PLAQUE D'IDENTIFICATION	4					
25	2190-2477	PLATE;NAME	PLAQUE D'IDENTIFICATION	4					
26	2190-2314D3	TAPE;ANTI-SKID	TAPE	4					
27	**190-00798AD25**	**PLATE;NAME(E/G EMISSION)**	PLAQUE D'IDENTIFICATION	1		**1032**–			

DATE	JUN. 30, 2005
REV. NO.	EXB05-05

Fig. 6100 FUEL FILLER PUMP ASS'Y POMPE

Serial No. ;

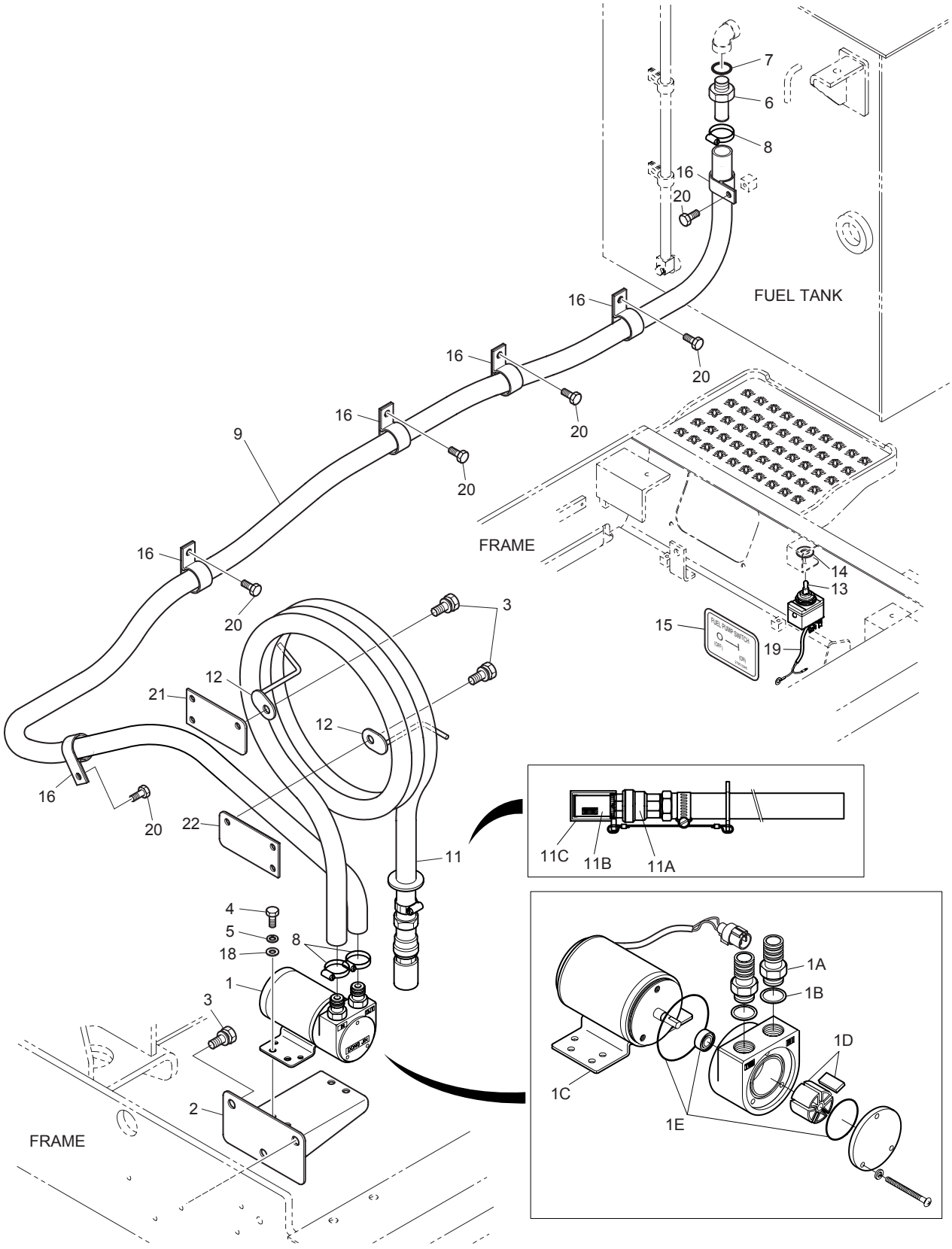

DATE	JUN. 30, 2005
REV. NO.	EXB05-05

Fig. 6100 FUEL FILLER PUMP ASS'Y POMPE

Serial No ;

Key No.	Part No.	Description	Description	Q'ty	S.C	Serial No.	ICA	Replaceable part	
								Part No.	Q'ty
6100--	401-00339	FUEL FILLER PUMP ASS'Y	POMPE	-	D				
1	401-00238	PUMP;FUEL TRANSFER	POMPE	1					
1A	2181-2755B	. ADAPTER	. RACCORD ADAPTATEUR	2					
1B	S8180321	. SEAL;WASHER	. BAGUE D'ETANCHEITE	2					
1C	523-00012	. MOTOR;FUEL TRANSFER PUMP	. MOTEUR	1					
1D	407-00001	. VANE KIT	. KIT DE VANE	1					
1E	2401-1276KT	. SEAL KIT	. KIT D'ETANCHEITE	1					
2	195-01628	BRACKET	SUPPORT	1					
3	2120-2196D10	BOLT;SET	BOULON	9					
4	S0508853	BOLT	BOULON A 6PANS	4					
5	S5102503	WASHER;SPRING	RONDELLE ELASTIQUE	4					
6	2181-2104D6	ADAPTER	ADAPTEUR	1					
7	S8000181	O-RING	JONT TORIQUE	1					
8	S8470032	CLAMP;HOSE	FIXATION DE TUYAU	3					
9	2185-1247D148	HOSE	TUYAU FLEXIBLE	1					
11	185-00167D3	HOSE ASS'Y	TUYAU FLEXIBLE	1					
11A	2420-1258	. VALVE;CHECK	. CARTOUCHE DE VANNE	1					
11B	2471-1152	. STRAINER	. FILTRE	1					
11C	2160-1336	. CAP;STRAINER	. CHAPEAU	1					
12	195-01630	BRACKET	SUPPORT	2					
13	2549-9096	SWITCH	INTERRUPTEUR	1					
14	2114-1683	WASHER;SWITCH	RONDELLE PLATE	1					
15	190-00519	PLATE;NAME	PLAQUE D'IDENTIFICATION	1					
16	124-00208D5	CLIP	CLIP	4		1001–1819			
	124-00208D5	**CLIP**	CLIP	6		**1820–**			
18	S5010513	WAHSER;PLAIN	RONDELLE	4					
19	530-00214	HARNESS;SWTICH	HARNAIS	1					
20	120-00276	BOLT	BOULON	2		1001–1819			
	120-00276	**BOLT**	BOULON	6		**1820–**			
21	195-02179	BRACKET	SUPPORT	1					
22	195-02180A	BRACKET	SUPPORT	1					

DATE	DEC. 29, 2005
REV. NO.	EXB05-20

Fig. 6110 DOUBLE FUEL FILTER ASS'Y
FILTRE A GAZOLE

Serial No. ;

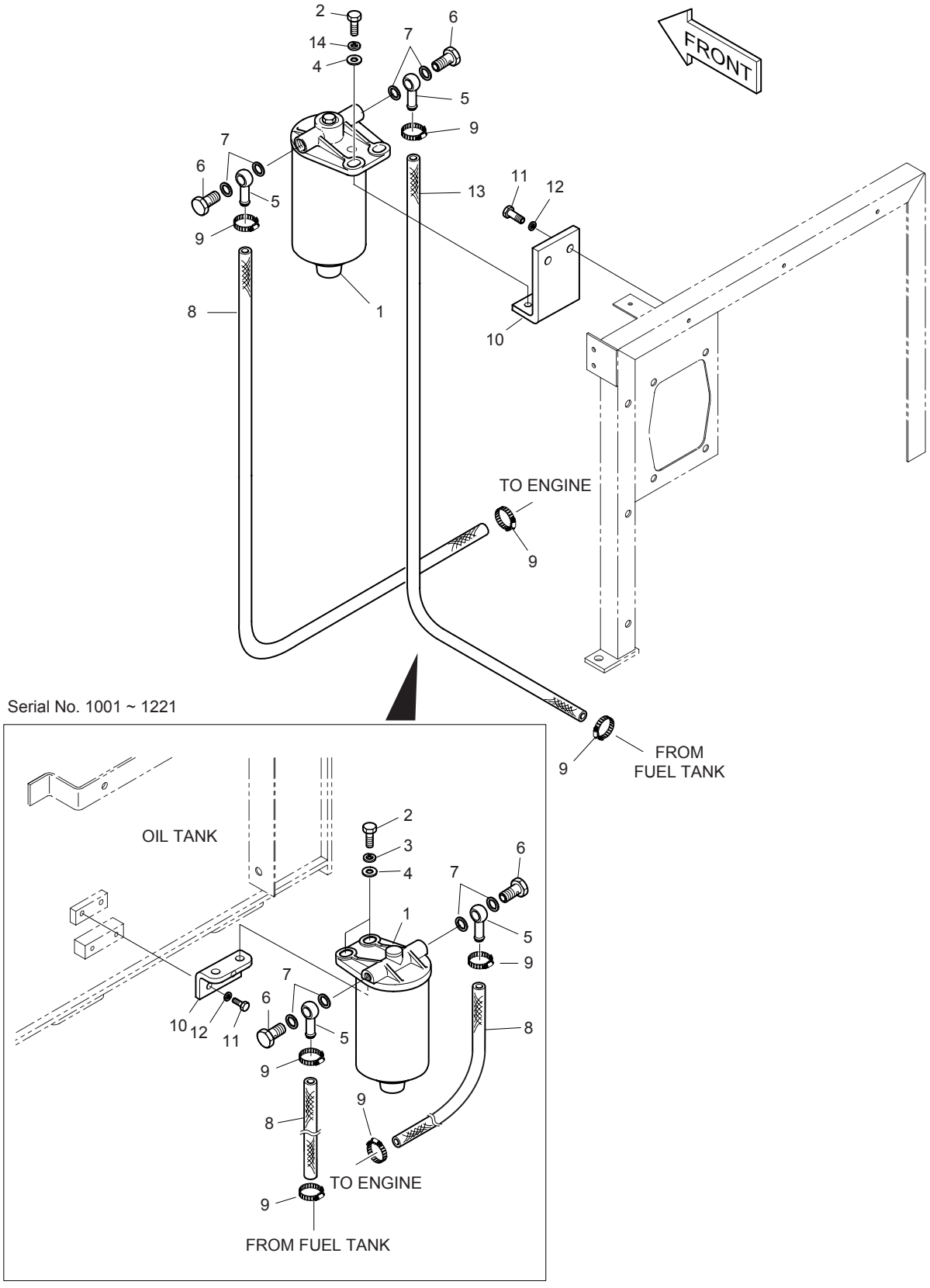

DATE	DEC. 29, 2005
REV. NO.	EXB05-20

Fig. 6110 DOUBLE FUEL FILTER ASS'Y FILTRE A GAZOLE

Serial No ;

Key No.	Part No.	Description	Description	Q'ty	S.C	Serial No.	ICA	Replaceable part	
								Part No.	Q'ty
6110--	471-00097	DOUBLE FUEL FILTER ASS'Y	FILTRE A GAZOLE	-	D				
1	2471-9053	FUEL FILTER ASS'Y	FILTRE A GAZOLE	1					
2	S0515353	BOLT M12X1.75X35	BOULON A 6PANS	2		1001–1221			
	S0512353	BOLT M10X1.5X35	BOULON A 6PANS	2		1222–1754			
	S0515353	BOLT M12X1.75X35	BOULON A 6PANS	2		1755–			
3	S5102703	WASHER;SPRING	RONDELLE ELASTIQUE	2		1001–1221			
4	S5010713	WASHER;PLAIN M12	RONDELLE	2		1001–1221			
	S5010613	WASHER;PLAIN M10	RONDELLE	2		1222–1754			
	S5010713	WASHER;PLAIN M12	RONDELLE	2		1755–			
5	2181-9015	PIPE;FUEL	CANALISATION DE GAZOLE	2					
6	2120-9013	SCREW;HOLLOW	VIS	2					
7	S8180221	PACKING	RONDELLE D'ETANCHEITE	4					
8	2185-1247D122	HOSE	TUYAU FLEXIBLE	2		1001–1221			
	2185-1247D25	HOSE 2100L	TUYAU FLEXIBLE	1		1222–			
9	S8450012	CLAMP;HOSE	FIXATION DE TUYAU	4					
10	2197-2561	BRACKET	SUPPORT	1		1001–1221			
	195-03415	BRACKET	SUPPORT	1		1222–1754			
	195-03415A	BRACKET	SUPPORT	1		1755–			
11	S0509053	BOLT	BOULON A 6PANS	2		1001–1221			
	S0512053	BOLT M10X1.5X25	BOULON A 6PANS	2		1222–			
12	S5102503	WASHER;SPRING M8	RONDELLE ELASTIQUE	2		1001–1221			
	S5102603	WASHER;SPRING	RONDELLE ELASTIQUE	4		1222–1754			
	S5102603	WASHER;SPRING	RONDELLE ELASTIQUE	2		1755–			
13	2185-1247D26	HOSE 3500L	TUYAU FLEXIBLE	1		1222–			
14	S5102703	WASHER;SPRING	RONDELLE ELASTIQUE	2					

DATE	AUG. 12, 2002
1st EDITION	

Fig. 6120 NOISE FILTER ASS'Y-EUROPE SILENCIEUX FILTRE

Serial No. ;

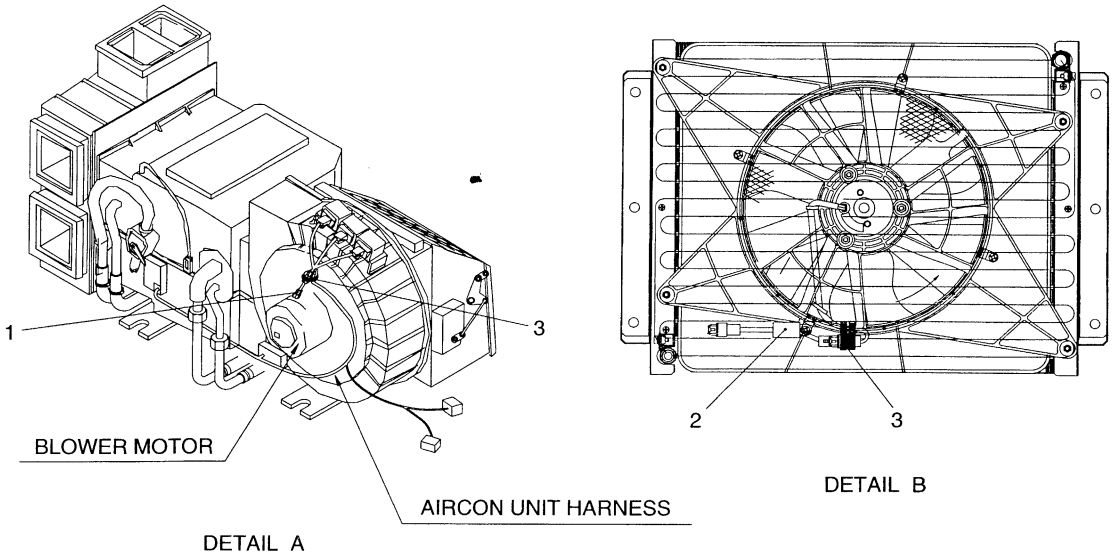

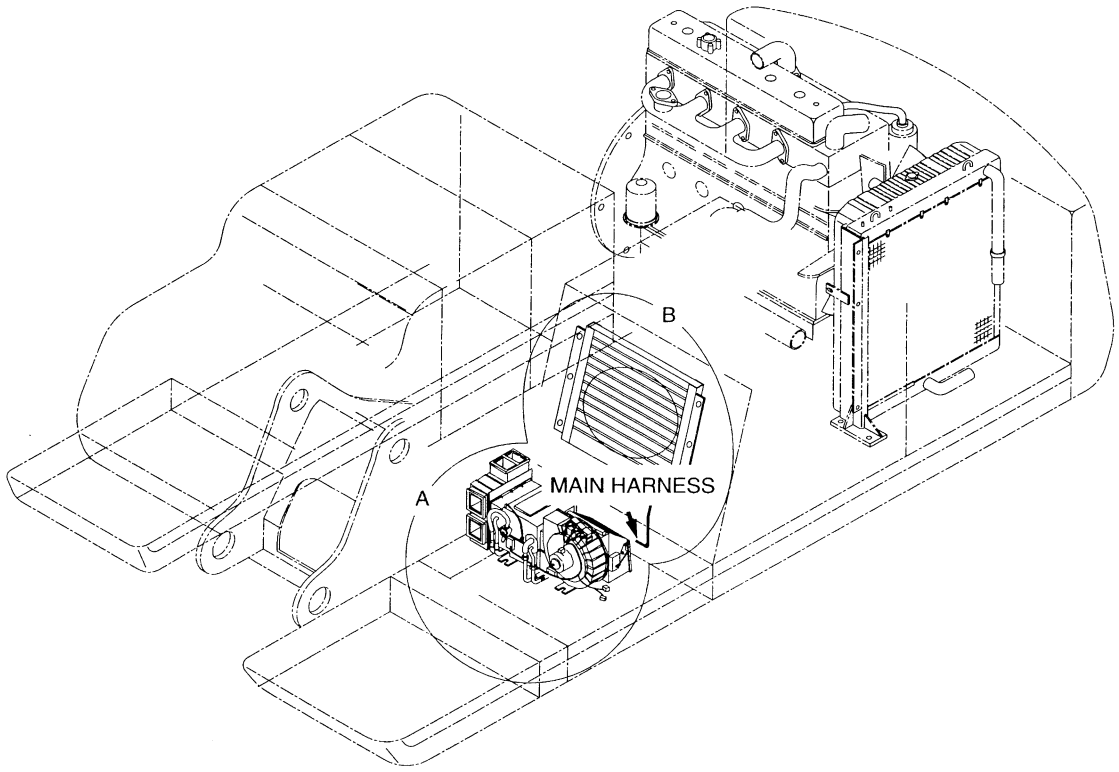

DATE	AUG. 12, 2002
1st EDITION	

Fig. 6120 NOISE FILTER ASS'Y-EUROPE SILENCIEUX FILTRE

Serial No. ;

Key No.	Part No.	Description	Description	Q'ty	S.C	Serial No.	ICA	Replaceable part	
								Part No.	Q'ty
6120--	2471-1158	FILTER ASS'Y-EUROPE	FILTRE	-	D				
1	2471-6062	FILTER;NOISE(BLOWER)	FILTRE	1					
2	2471-6063	FILTER;NOISE(CONDENSER)	FILTRE	1					
3	2124-1622D2	CLIP;BAND 200L	ATTACHE	3					

DATE	JUN. 30, 2004
REV. NO.	EXB04-04

Fig. 6130 CABIN LAMP ASS'Y LAMPE

Serial No. ;

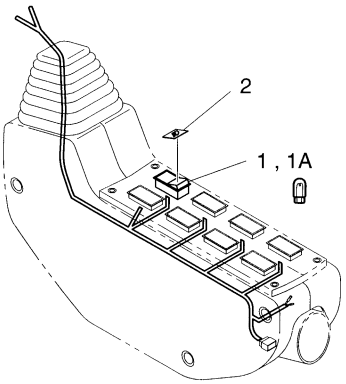

CONTROL STAND (L.H.)

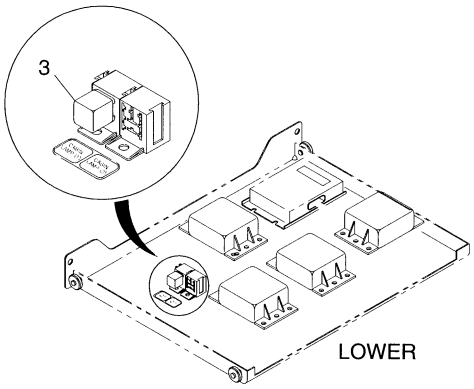

ELECTRIC BOX

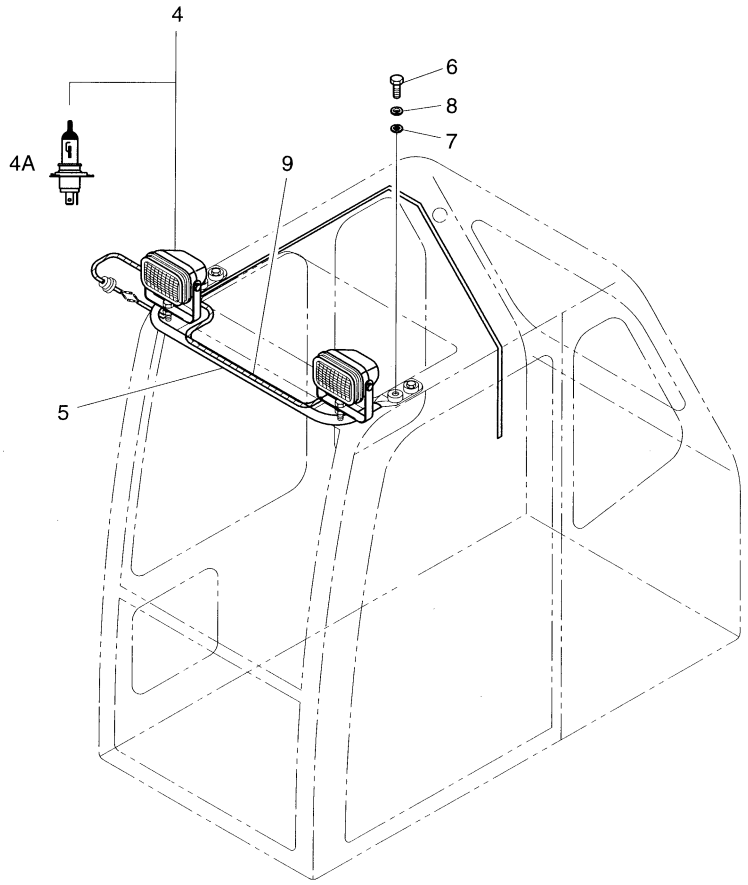

DATE	JUN. 30, 2004
REV. NO.	EXB04-04

Fig. 6130 CABIN LAMP ASS'Y LAMPE

Serial No ;

Key No.	Part No.	Description	Description	Q'ty	S.C	Serial No.	ICA	Replaceable part	
								Part No.	Q'ty
6130--	534-00065	CABIN LAMP ASS'Y (OPT)	LAMPE	-	D				
1	2549-9109	SWITCH;CABIN LAMP	INTERRUPTEUR	1					
1A	**K9000353**	**. LAMP;PILOT**	. LAMPE	1					
2	2190-2584D14	INSERT;CABIN LAMP	INSERTION	1					
3	2544-9033	RELAY;CABIN LAMP 24V 20/30A	RELAIS AVERTISSEUR	1					
4	2534-1127	LAMP;CABIN 24V 70W	LAMPE	2					
4A	2515-1022D1	. BULB;HALOGEN H4 24V 75/70W	. AMPOULE	1					
5	2197-1740B	BRACKET;CABIN LAMP	SUPPORT	1					
6	2120-2166D2	BOLT M10X1.5X25	BOULON A 6 PANS	4					
7	2114-1898D1	WASHER	RONDELLE	4					
8	2114-2031D5	WASHER;SPRING M10	RONDELLE ELASTIQUE	4					
9	2530-1611	HARNESS;CABIN LAMP	HARNAIS	1					

DATE	JUN. 30, 2004
REV. NO.	EXB04-04

Fig. 6140 6-LAMP & BEACON(TELESCOPIC) LAMPE & FEU DE CIRCULATION

Serial No. ;

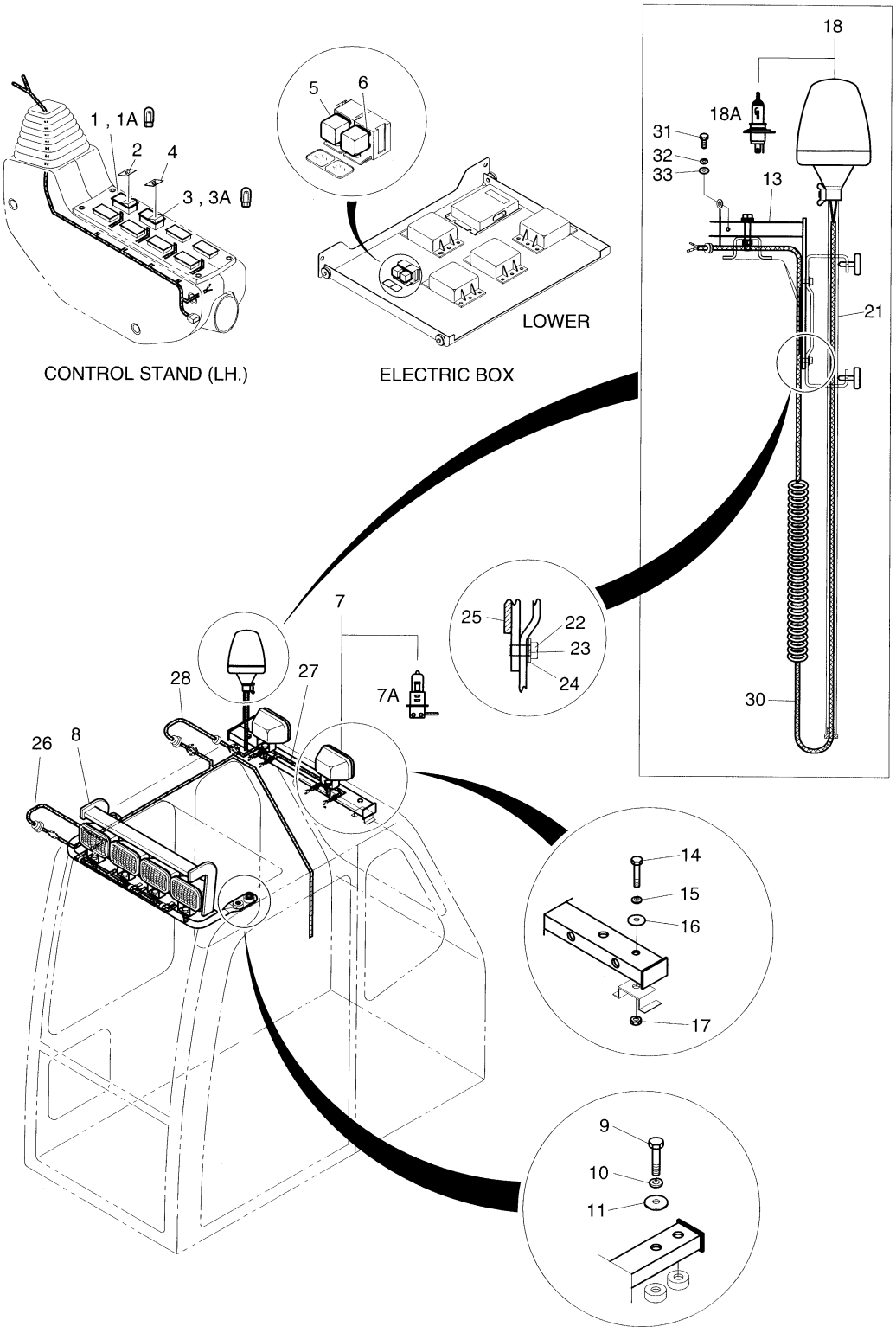

DATE	JUN. 30, 2004
REV. NO.	EXB04-04

Fig. 6140 6-LAMP & BEACON(TELESCOPIC) LAMPE & FEU DE CIRCULATION

Serial No ;

Key No.	Part No.	Description	Description	Q'ty	S.C	Serial No.	ICA	Replaceable part	
								Part No.	Q'ty
6140--	534-00066F2	6-LAMP &	LAMPE	-	D				
1	2549-9109	SWITCH;CABIN LAMP	INTERRUPTEUR	1					
1A	**K9000353**	**. LAMP;PILOT**	. LAMPE	1					
2	2190-2584D14	INSERT;CABIN LAMP	INSERTION	1					
3	2549-9098	SWITCH;ROTATING BEACON	INTERRUPTEUR	1					
3A	**K9000353**	**. LAMP;PILOT**	. LAMPE	1					
4	2190-2036D10	INSERT;ROTATING BEACON	INSERTION	1					
5	2544-9033	RELAY;CABIN LAMP (1) 24V	RELAIS AVERTISSEUR	1					
6	2544-9033	RELAY;CABIN LAMP (2) 24V	RELAIS AVERTISSEUR	1					
7	534-00077	LAMP;CABIN 24V 70W	LAMPE	6					
7A	2515-1016D4	. BULB;HALOGEN H3 24V 70W	. AMPOULE	1					
8	195-01693	SUPPORT;FRONT CABIN LAMP	SUPPORT	1					
9	2120-2166D2	BOLT M10X1.5X25	BOULON A 6 PANS	4					
10	S5102603	WASHER;SPRING M10	RONDELLE ELASTIQUE	4					
11	2114-1898D1	WASHER	RONDELLE	4					
13	195-01804	SUPPORT;REAR LAMP & BEACON	SUPPORT	1					
14	S0556453	BOLT M8X1.25X55	BOULON A 6 PANS	2					
15	S5102503	WASHER;SPRING M8	RONDELLE ELASTIQUE	2					
16	2114-1898D8	WASHER;PLAIN	RONDELLE PLATE	2					
17	S4012533	NUT M8X1.25	ECROU	2					
18	534-00062	LAMP;ROTATING BEACON	LAMPE	1					
18A	515-00013	. BULB;HALOGEN H1 24V 70W	. AMPOULE	1					
21	195-01805	SUPPORT;BEACON	SUPPORT	1					
22	S0508653	BOLT M8X1.25X16	BOULON A 6 PANS	2					
23	S5102503	WASHER;SPRING M8	RONDELLE ELASTIQUE	2					
24	S5010513	WASHER;PLAIN M8	RONDELLE PLATE	2					
25	161-00404	RUBBER;PLATE	CAOUTCHOUC	1					
26	530-00235	HARNESS;FRONT CABIN LAMP	HARNAIS	1					
27	530-00237	HARNESS;REAR CABIN LAMP	HARNAIS	1					
28	530-00248	HARNESS;REAR LAMP JOINT	HARNAIS	1					
30	530-00249	HARNESS;BEACON TELESCOPIC	HARNAIS	1					
31	S0504453	BOLT M6X1.0X12	BOULON A 6 PANS	1					
32	S5102303	WASHER;SPRING M6	RONDELLE ELASTIQUE	1					
33	S5010313	WASHER;PLAIN M6	RONDELLE PLATE	1					

DATE	JUN. 30, 2004
REV. NO.	EXB04-04

Fig. 6150 ROTATING BEACON
FEU DE CIRCULATION

Serial No. ;

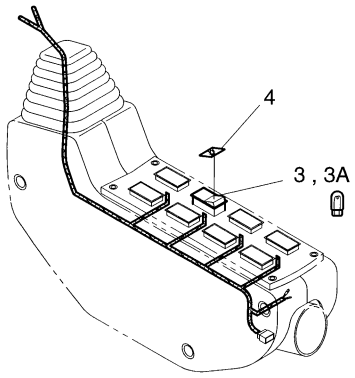

CONTROL STAND (LH)

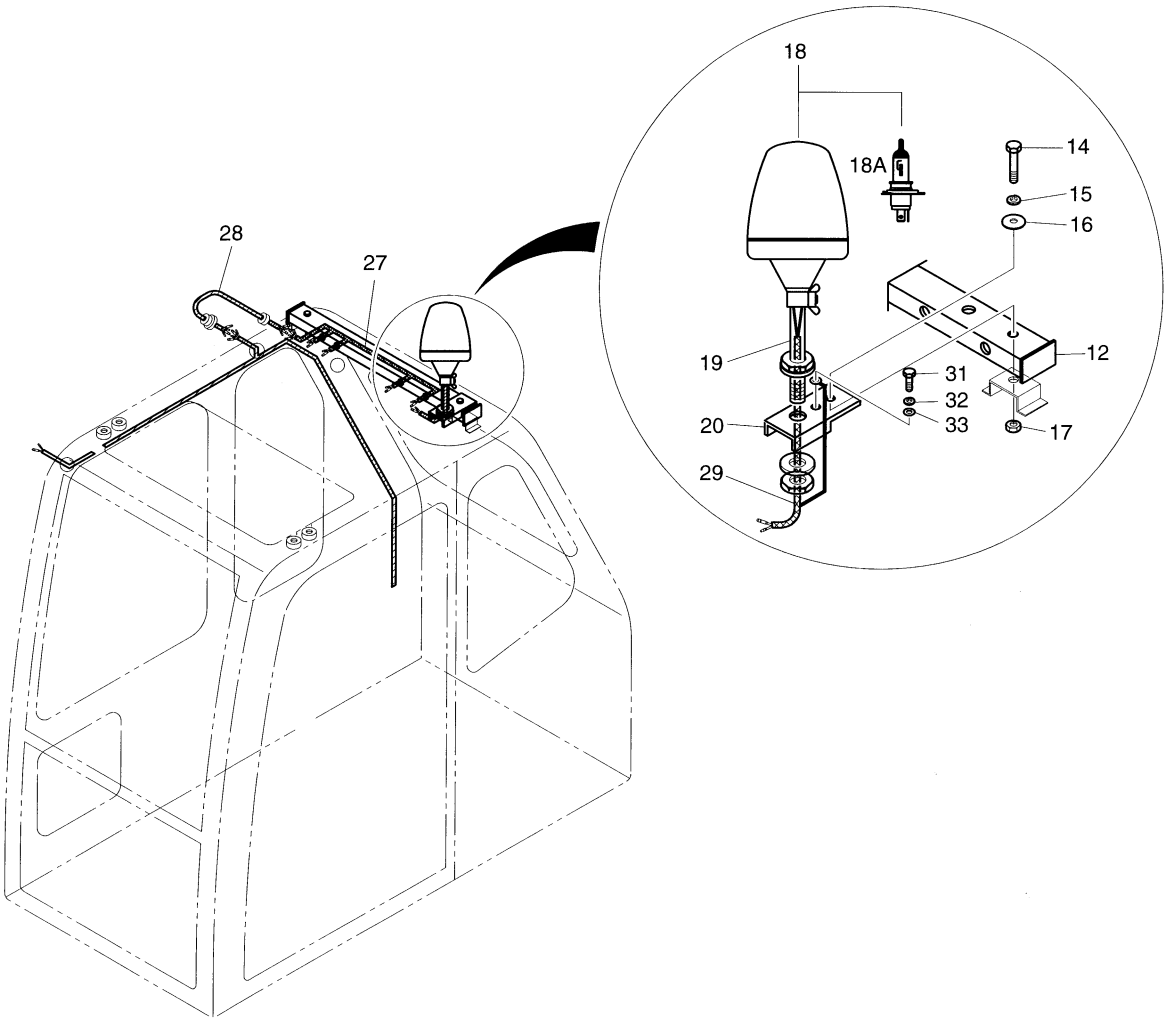

DATE	JUN. 30, 2004
REV. NO.	EXB04-04

Fig. 6150 ROTATING BEACON FEU DE CIRCULATION

Serial No ;

Key No.	Part No.	Description	Description	Q'ty	S.C	Serial No.	ICA	Replaceable part	
								Part No.	Q'ty
6150--	534-00066F4	BEACON ASS'Y-OPT.	FEU DE CIRCULATION	-	D				
3	2549-9098	SWITCH;ROTATING BEACON	INTERRUPTEUR	1					
3A	**K9000353**	**. LAMP;PILOT**	. LAMPE	1					
4	2190-2036D10	INSERT;ROTATING BEACON	INSERTION	1					
12	195-01694	SUPPORT;REAR CABIN LAMP	SUPPORT	1					
14	S0556453	BOLT M8X1.25X55	BOULON A 6 PANS	2					
15	S5102503	WASHER;SPRING M8	RONDELLE ELASTIQUE	2					
16	2114-1898D8	WASHER;PLAIN	RONDELLE PLATE	2					
17	S4012533	NUT M8X1.25	ECROU	2					
18	534-00062	LAMP;ROTATING BEACON	LAMPE	1					
18A	515-00013	. BULB;HALOGEN H1 24V 70W	. AMPOULE	1					
19	160-00032	BUSH;MOUNTING	MANCHON	1					
20	195-01692	BRACKET	SUPPORT	1					
27	530-00237	HARNESS;REAR CABIN LAMP	HARNAIS	1					
28	530-00248	HARNESS;REAR LAMP JOINT	HARNAIS	1					
29	530-00238A	HARNESS;BEACON	HARNAIS	1					
31	S0504453	BOLT M6X1.0X12	BOULON A 6 PANS	1					
32	S5102303	WASHER;SPRING M6	RONDELLE ELASTIQUE	1					
33	S5010313	WASHER;PLAIN M6	RONDELLE PLATE	1					

DATE	JUN. 30, 2004
REV. NO.	EXB04-04

Fig. 6160 TRAVEL/SWING ALARM ASS'Y SIGNALISATEUR

Serial No. ;

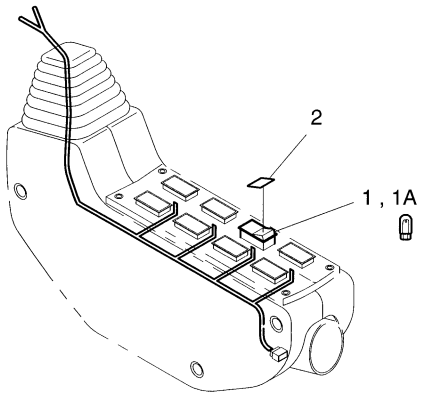

CONTROL STAND (LH)

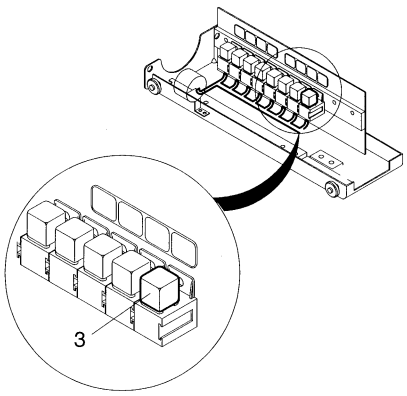

ELECTRIC BOX

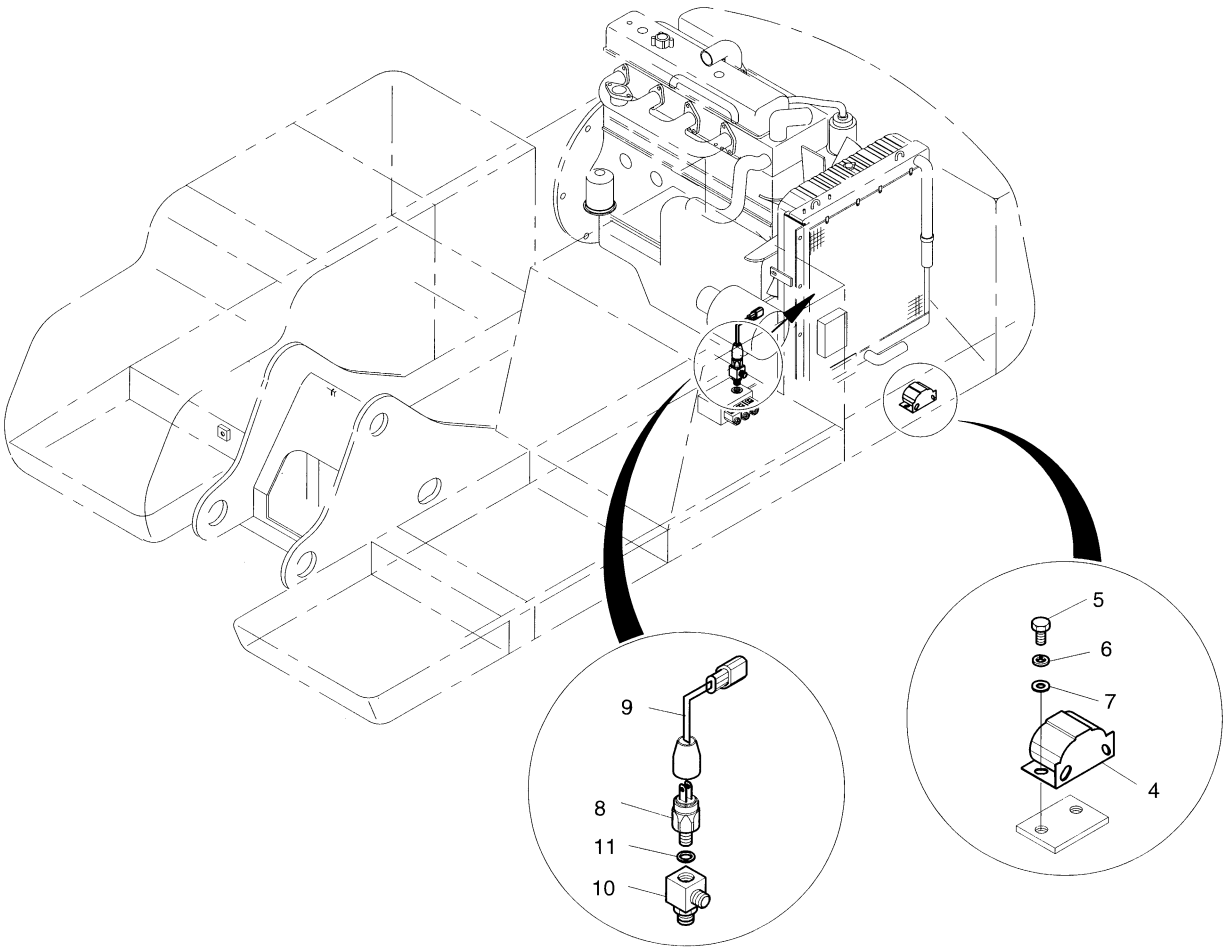

DATE	JUN. 30, 2004
REV. NO.	EXB04-04

Fig. 6160 TRAVEL/SWING ALARM ASS'Y SIGNALISATEUR

Serial No ;

Key No.	Part No.	Description	Description	Q'ty	S.C	Serial No.	ICA	Replaceable part	
								Part No.	Q'ty
6160--	516-00016	TRAVEL/SWING ALARM ASSY	AVERTISSEUR	-	D				
1	2549-9109	SWITCH;ALARM	INTERRUPTEUR	1					
1A	**K9000353**	**. LAMP;PILOT**	. LAMPE	1					
2	2190-2584D13	INSERT;TRAVEL/SWING ALARM	INSERTION	1					
3	2544-9033	RELAY;ALARM 24V 20/30A	RELAIS AVERTISSEUR	1					
4	516-00011	BUZZER;ALARM	VIBREUR ARRIERE	1					
5	S0508653	BOLT M8X1.25X16	BOULON A 6 PANS	2					
6	S5102503	WASHER;SPRING M8	RONDELLE ELASTIQUE	2					
7	S5010513	WASHER;PLAIN M8	RONDELLE PLATE	2					
8	2549-9407	SWITCH;PRESSURE 4BAR(NC)	INTERRUPTEUR	1					
9	2530-1423A	HARNESS;LOW PRESS SWITCH	HARNAIS	1					
10	2181-2666	TEE	TE	1					
11	S8180221	RING;SEAL	RONDELLE D'ETANCHEITE	1					

DATE	JUN. 30, 2004
REV. NO.	EXB04-04

Fig. 6170 TRAVEL ALARM ASS'Y ALARME DE VOYAGE

Serial No. ;

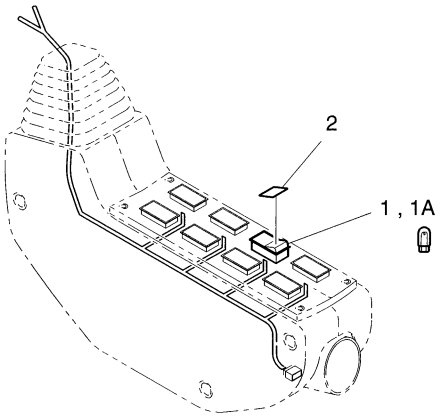

CONTROL STAND (LH)

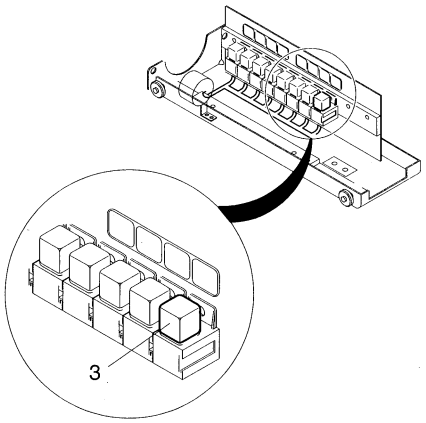

ELECTRIC BOX

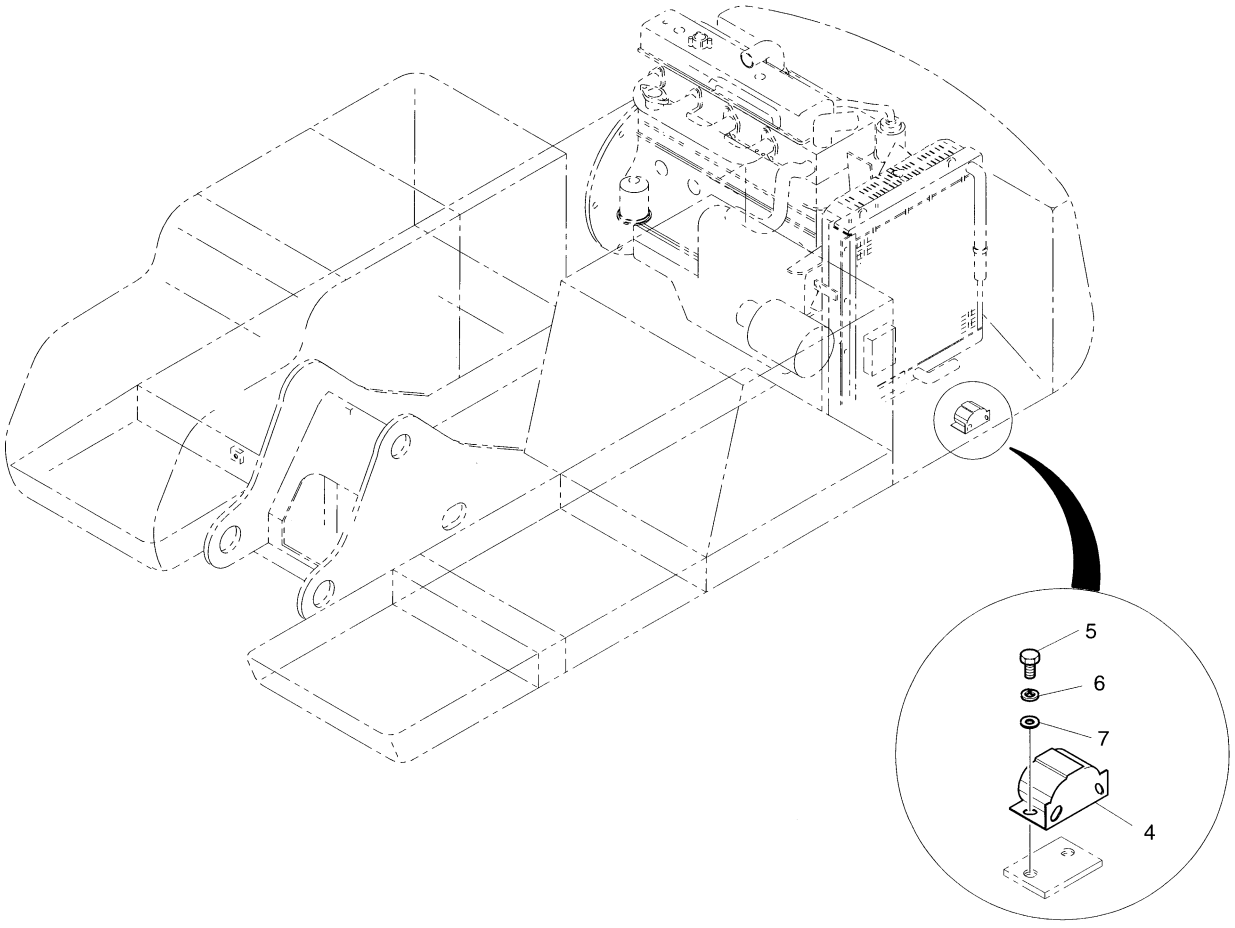

DATE	JUN. 30, 2004
REV. NO.	EXB04-04

Fig. 6170 TRAVEL ALARM ASS'Y ALARME DE VOYAGE

Serial No ;

Key No.	Part No.	Description	Description	Q'ty	S.C	Serial No.	ICA	Replaceable part	
								Part No.	Q'ty
6170--	516-00017	TRAVEL ALARM ASSY	AVERTISSEUR	-	D				
1	2549-9109	SWITCH;ALARM	INTERRUPTEUR	1					
1A	**K9000353**	**. LAMP;PILOT**	. LAMPE	1					
2	190-00674D1	INSERT;TRAVEL ALARM	INSERTION	1					
3	2544-9033	RELAY;ALARM 24V 20/30A	RELAIS AVERTISSEUR	1					
4	516-00011	BUZZER;ALARM	VIBREUR ARRIERE	1					
5	S0508653	BOLT M8X1.25X16	BOULON A 6 PANS	2					
6	S5102503	WASHER;SPRING M8	RONDELLE ELASTIQUE	2					
7	S5010513	WASHER;PLAIN M8	RONDELLE PLATE	2					

DATE	AUG. 12, 2002
1st EDITION	

Fig. 6180 RETURN FILTER PRESS SWITCH
COMMUTATEUR DE FILTRE DE RETURUN

Serial No. ;

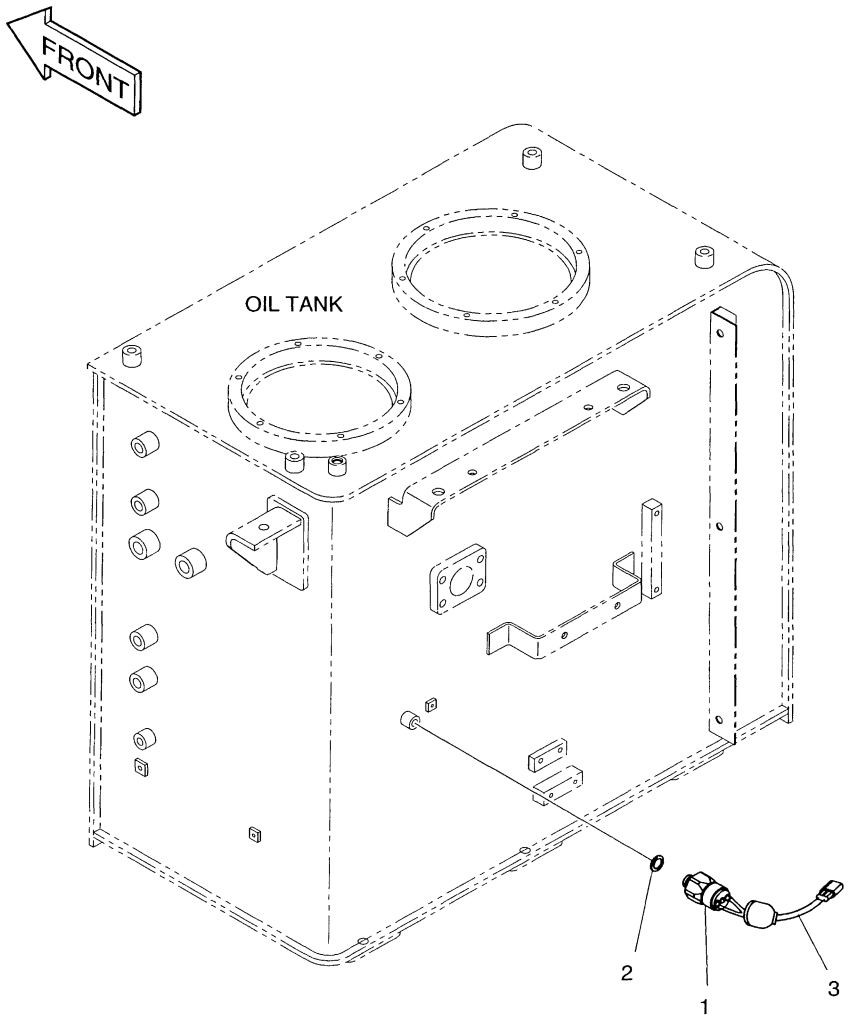

DATE	AUG. 12, 2002
1st EDITION	

Fig. 6180 RETURN FILTER PRESS SWITCH
COMMUTATEUR DE FILTRE DE RETURUN

Serial No. ;

Key No.	Part No.	Description	Description	Q'ty	S.C	Serial No.	ICA	Replaceable part	
								Part No.	Q'ty
6180--	549-00023	RETURN FILTER SWITCH ASS'Y	INTERRUPTEUR	-	D				
1	2549-1135D2	SWITCH;PRESS	INTERRUPTEUR	1					
2	S8180221	RING;SEAL	RONDELLE D'ETANCHEITE	1					
3	2530-1400	HARNESS;PRESSURE SWITCH	FAISCEAU	1					

DATE	AUG. 12, 2002
1st EDITION	

Fig. 6190 ALTERNATOR ALTERNATEUR

Serial No. ;

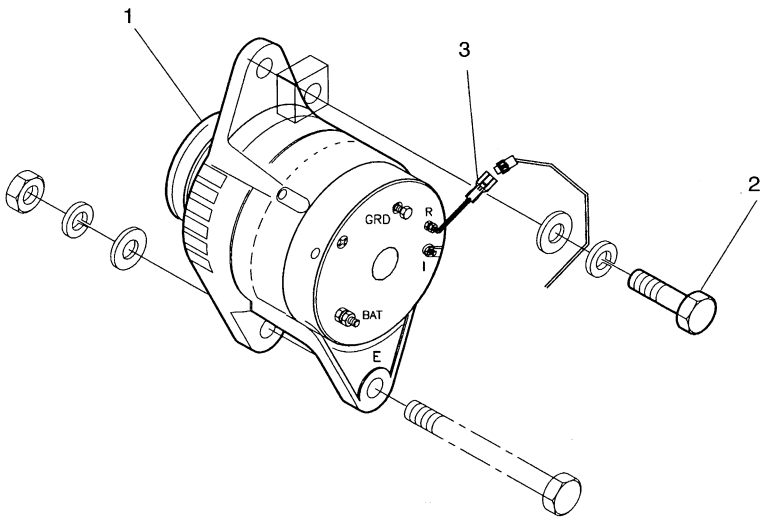

DATE	AUG. 12, 2002
1st EDITION	

Fig. 6190 ALTERNATOR ALTERNATEUR

Serial No. ;

Key No.	Part No.	Description	Description	Q'ty	S.C	Serial No.	ICA	Replaceable part	
								Part No.	Q'ty
6190--	500-00081	ALTERNATOR ASS'Y	ALTERNATEUR	-	D				
1	502-00003A	ALTERNATOR 24V 80A	ALTERNATEUR	1					
2	S0760853	BOLT M12X1.25X55	BOULON A 6 PANS	1					
3	530-00123	HARNESS;ALTERNATOR	FAISCEAU	1					

DATE	JUN. 30, 2004
REV. NO.	EXB04-04

Fig. 6200 OVERLOAD WARNING ASS'Y AVERTISSEMENT DE SURCHARGE

Serial No. ;

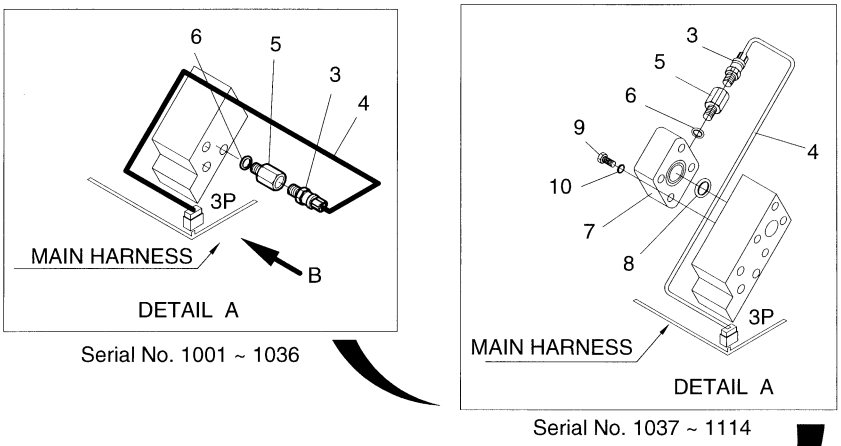

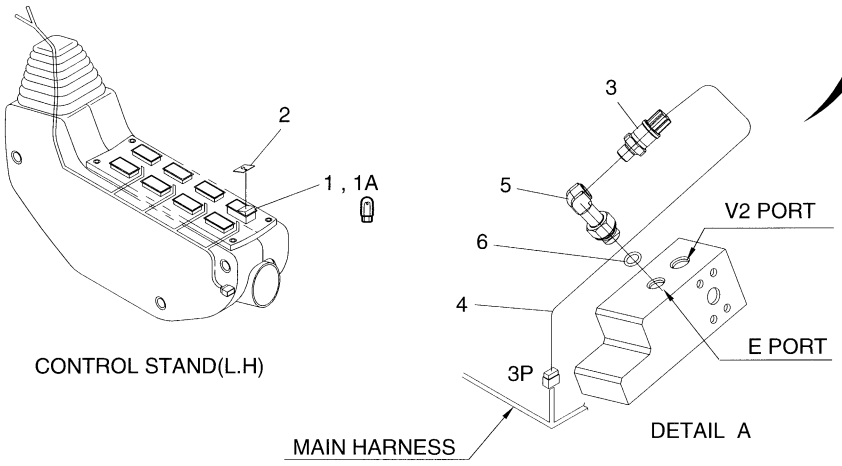

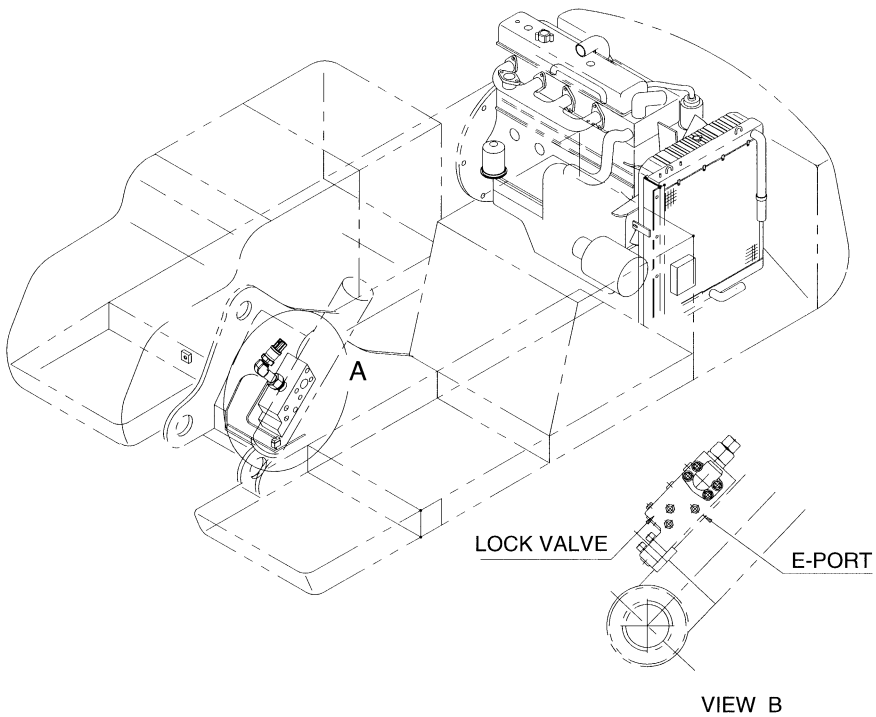

DATE	JUN. 30, 2004
REV. NO.	EXB04-04

Fig. 6200 OVERLOAD WARNING ASS'Y AVERTISSEMENT DE SURCHARGE

Serial No ;

Key No.	Part No.	Description	Description	Q'ty	S.C	Serial No.	ICA	Replaceable part	
								Part No.	Q'ty
6200--	500-00134	OVERLOAD WARNING DEVICE	AVERTISSEMENT DE	-	D	1001–1036			
	500-00228	OVERLOAD WARNING DEVICE	AVERTISSEMENT DE	-	D	1037–			
1	2549-9098	SWITCH;OVERLOAD WARNING	INTERRUPTEUR	1					
1A	**K9000353**	**. LAMP;PILOT**	. LAMPE	1					
2	2190-2036D25	INSERT;OVERLOAD WARNING	INSERTION	1					
3	2547-9045	SENSOR;PRESSURE	CAPTEUR	1					
4	530-00256	HARNESS;OVERLOAD WARNING	HARNAIS	1					
5	2181-2439A	REDUCER	REDUCTEUR	1		1001–1114			
	DS2308021	ELBOW	COUDE	1		1115–			
6	S8000111	O-RING	JOINT TORIQUE	1		1001–1114			
	S8000161	O-RING	JOINT TORIQUE	1		1115–			
7	181-00774	FLANGE	BRIDE	1		1037–1114			
8	S8000281	O-RING	JOINT TORIQUE	1		1037–1114			
9	S2212561	BOLT;SOCKET	BOULON	4		1037–1114			
10	S5110603	WASHER;SPRING	RONDELLE ELASTIQUE	4		1037–1114			

DATE	JUN. 30, 2004
REV. NO.	EXB04-04

Fig. 6210 FLOOR PLATE-TILTING
TOLE DE PLANCHER

Serial No. ;

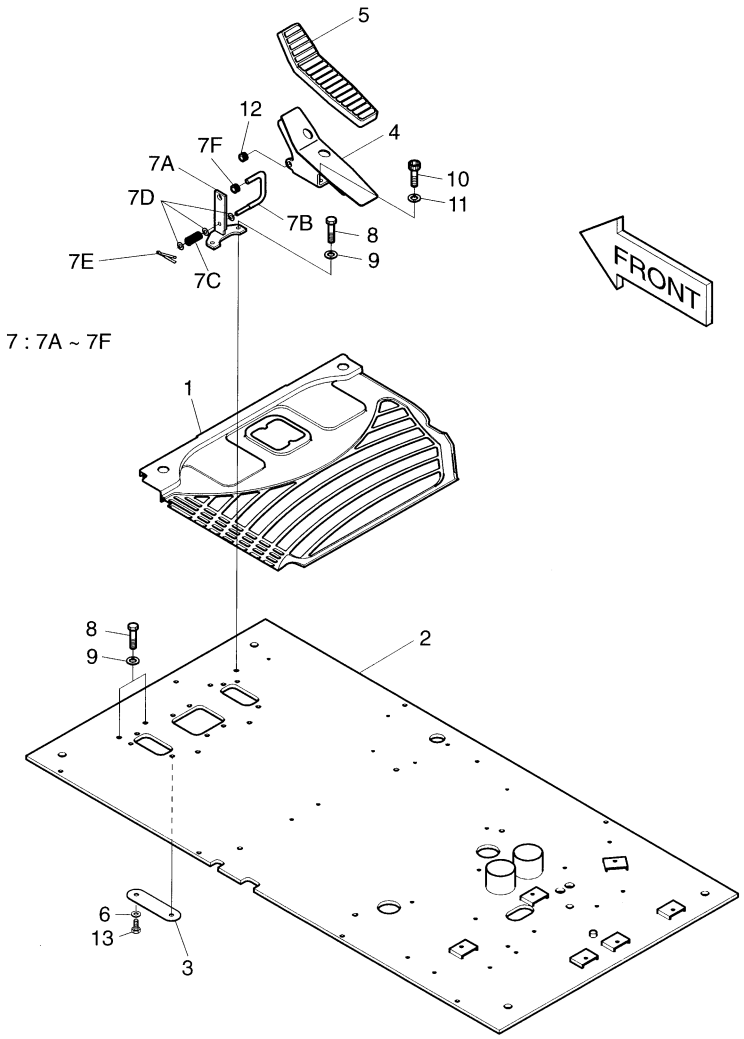

DATE	JUN. 30, 2004
REV. NO.	EXB04-04

Fig. 6210 FLOOR PLATE-TILTING TOLE DE PLANCHER

Serial No ;

Key No.	Part No.	Description	Description	Q'ty	S.C	Serial No.	ICA	Replaceable part	
								Part No.	Q'ty
6210--	621-02077	FLOOR ASS'Y	PLAQUE	-	D				
1	161-00448	MAT;FLOOR	PLAQUE	1					
2	621-02072A	PLATE;FLOOR	PLAQUE	1		1001–1215	I	621-02072B	1
	621-02072B	**PLATE;FLOOR**	PLAQUE	1		**1216–**			
3	621-01507	PLATE;FLOOR	PLAQUE	1					
4	195-01736	BRACKET;PEDAL(R.H)	SUPPORT	1					
5	161-00386	RUBBER;PEDAL	CAOUTCHOUC	1					
6	2114-1898D1	WASHER	RONDELLE	2					
7	195-01940	BRACKET	SUPPORT	1					
7A	195-01937	. BRACKET	. SUPPORT	1	D				
7B	133-00167	. BAR	. CONDUITE	1	D				
7C	129-00144	. SPRING	. RESSORT	1	D				
7D	2114-1898D14	. WASHER	. RONDELLE	1	D				
7E	S5735351	. PIN;SPLIT	. GOUJON	1	D				
7F	160-00045	. BUSHING;RUBBER	. DOUILLE	1	D				
8	2120-2166D5	BOLT M8X1.25X20	BOULON A 6 PANS	4					
9	2114-1898D14	WASHER	RONDELLE	4					
10	S2211866	BOLT;SOCKET M10X1.5X20	BOULON DE PLOT	2					
11	S5110601	WASHER;SPRING	RONDELLE ELASTIQUE	2					
12	160-00045	BUSHING;RUBBER	GARNISSAGE	1					
13	S0511653	BOLT M10X1.5X16	BOULON A 6 PANS	2					

DATE	AUG. 12, 2002
1st EDITION	

Fig. 6220 SUN VISOR ASS'Y PARE-SOLEIL

Serial No. ;

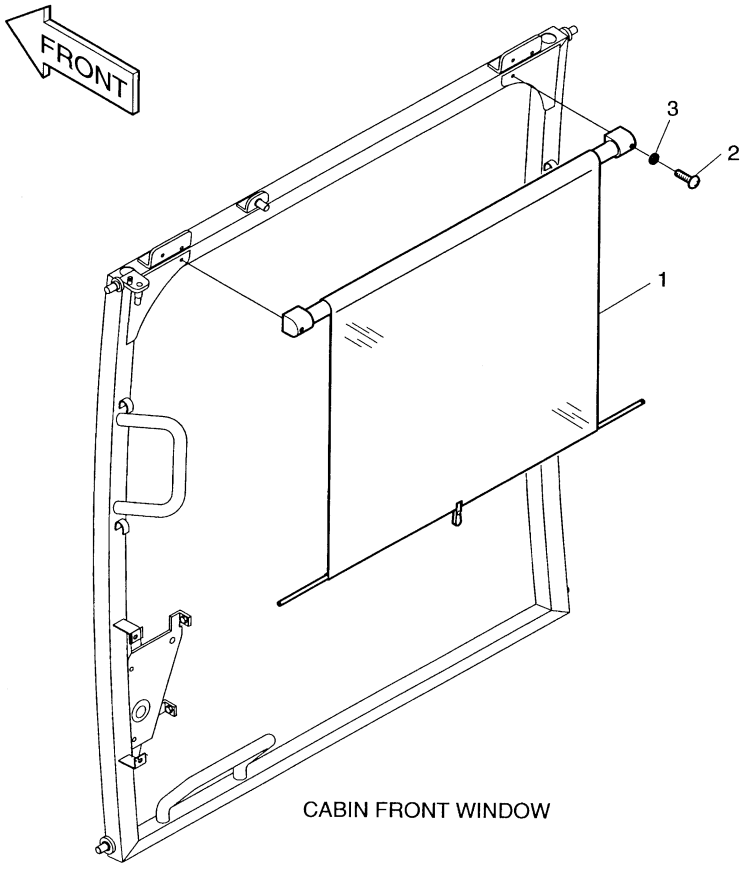

CABIN FRONT WINDOW

DATE	AUG. 12, 2002
1st EDITION	

Fig. 6220 SUN VISOR ASS'Y PARE-SOLEIL

Serial No. ;

Key No.	Part No.	Description	Description	Q'ty	S.C	Serial No.	ICA	Replaceable part	
								Part No.	Q'ty
6220--	623-00043	SUN VISOR ASS'Y	PARE-SOLEIL	-	D				
1	621-01495	SUN VISOR	VISIERE	1					
2	2120-2166D10	SCREW M6X1.0X14	VIS	2					
3	2114-1898D3	WASHER	RONDELLE	2					

DATE	AUG. 12, 2002
1st EDITION	

Fig. 6230 SUN ROOF ASS'Y COUVERTURE DE TOIT

Serial No. ;

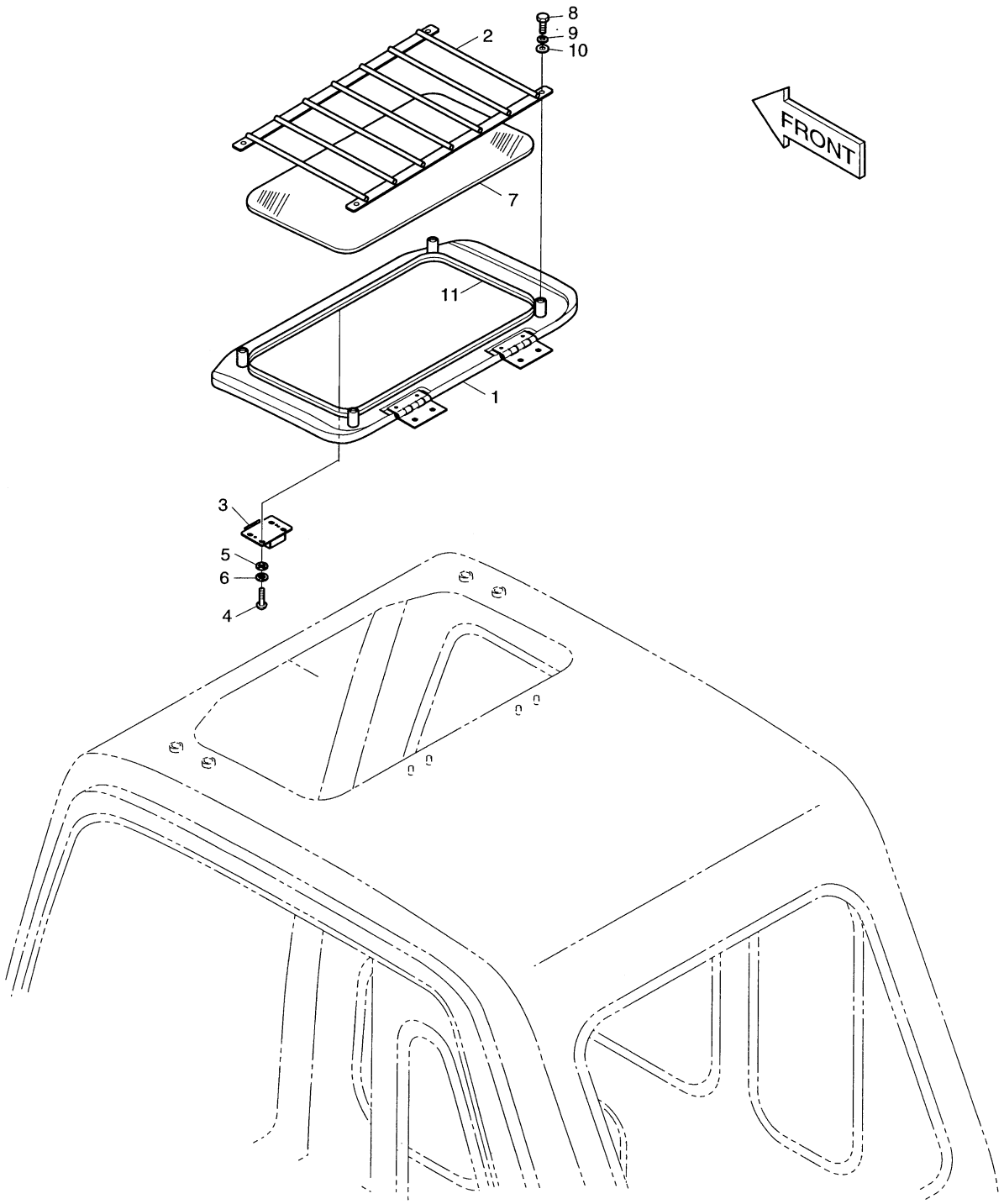

DATE	AUG. 12, 2002
1st EDITION	

Fig. 6230 SUN ROOF ASS'Y COUVERTURE DE TOIT

Serial No. ;

Key No.	Part No.	Description	Description	Q'ty	S.C	Serial No.	ICA	Replaceable part	
								Part No.	Q'ty
6230--	621-01957	SUN ROOF ASS'Y	COUVERTURE DE TOIT	-	D				
1	621-01956	COVER ASS'Y;ROOF	COUVERCLE	1					
2	195-01843	GUARD;ROOF	GARDE	1					
3	2125-9057	CATCH;FOOF COVER	LOQUET	1					
4	2120-2166D8	SCREW M5X0.8X14	VIS	4					
5	S5000213	WASHER;PLAIN	RONDELLE PLATE	4					
6	S5100203	WASHER;SPRING	RONDELLE ELASTIQUE	4					
7	903-00056	GLASS	VITRE	1					
8	2120-2166D5	BOLT M8X1.25X20	BOULON A 6 PANS	4					
9	2114-2031D4	WASHER;SPRING	RONDELLE ELASTIQUE	4					
10	2114-1898D2	WASHER;PLAIN	RONDELLE PLATE	4					
11	2161-2254	DAMPER	RESSORT	1					

DATE	JUN. 30, 2006
REV. NO.	EXB06-08

Fig. 6240 AIR CLEANER ASS'Y
ENSEMLE FILTRE A AIR

Serial No. ;

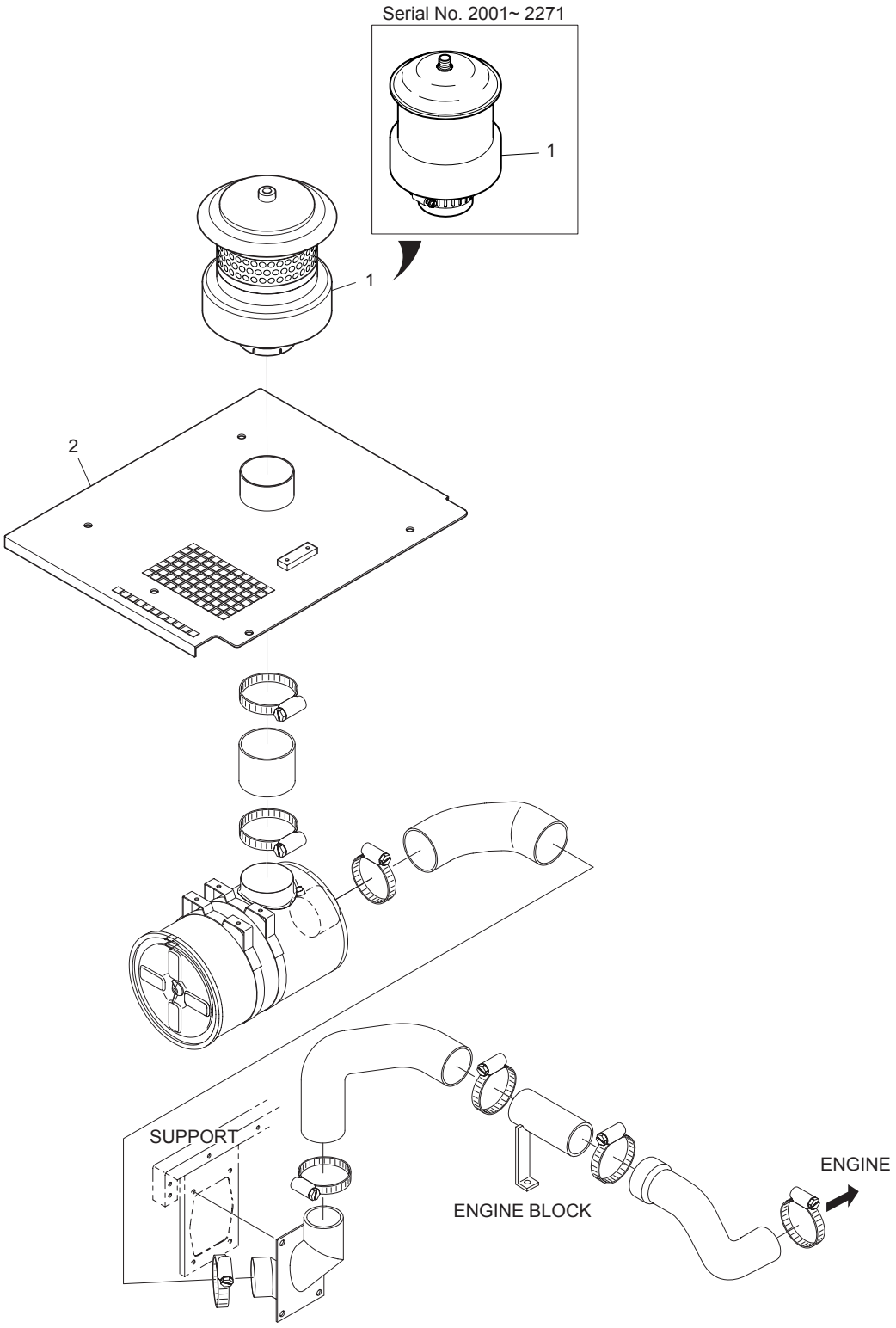

DATE	JUN. 30, 2006
REV. NO.	EXB06-08

Fig. 6240 AIR CLEANER ASS'Y
ENSEMLE FILTRE A AIR

Serial No. ;

Key No.	Part No.	Description	Description	Q'ty	S.C	Serial No.	ICA	Replaceable part	
								Part No.	Q'ty
6240--	204-00061A	AIR CLEANER ASS'Y	ENSEMLE FILTRE A AIR	-	D				
1	2204-9032A	PRE CLEANER	PRE-FILTRE A AIR	1		1001–1459	Y	2204-9032	1
	2204-9032	PRE CLEANER	PRE-FILTRE A AIR	1		1460–2271	I	K1017883	1
	K1017883	**PRE CLEANER**	PRE-FILTRE A AIR	1		**2272–**			
2	621-02374	COVER	COUVERCLE	1		1001–1054	I	621-02374A	1
	621-02374A	COVER	COUVERCLE	1		1055–2021	I	621-02374B	1
	621-02374B	COVER	COUVERCLE	1		2022–			

DATE	AUG. 12, 2002
1st EDITION	

Fig. 6250 JOYSTICK VALVE ASS'Y-3 SWITCH VANNE DE COMMAND A DISTANCE

Serial No. ;

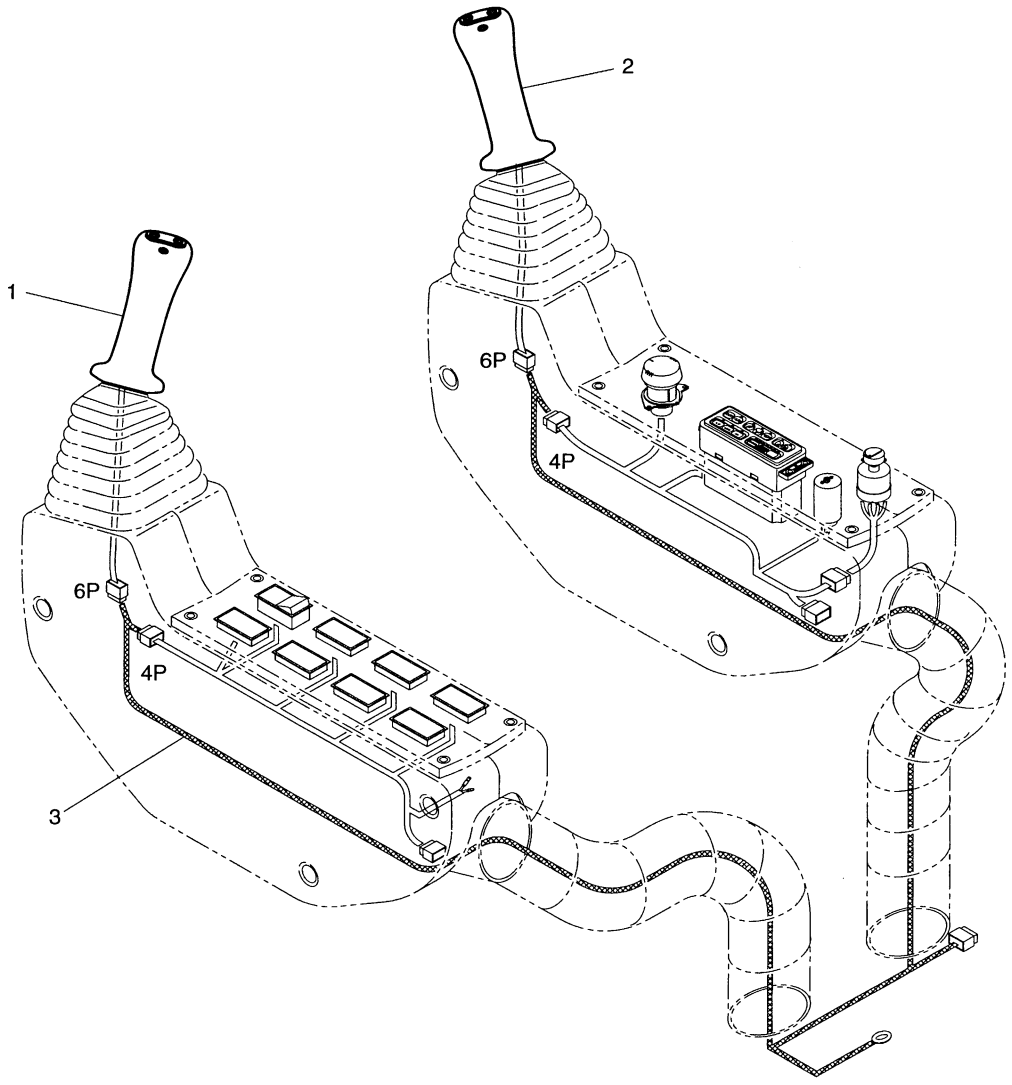

DATE	AUG. 12, 2002
1st EDITION	

Fig. 6250 JOYSTICK VALVE ASS'Y-3 SWITCH VANNE DE COMMAND A DISTANCE

Serial No. ;

Key No.	Part No.	Description	Description	Q'ty	S.C	Serial No.	ICA	Replaceable part	
								Part No.	Q'ty
6250--	420-00348	JOYSTICK VALVE ASS'Y	VANNE DE COMMAND A	-	D				
1	420-00344A	VALVE;JOYSTICK(L.H)	VANNE	1					
2	420-00345A	VALVE;JOYSTICK(R.H)	VANNE	1					
3	530-00105	HARNESS	FAISCEAU	1					

DATE	AUG. 12, 2002
1st EDITION	

Fig. 6260 CABIN LOW GUARD GARDE

Serial No. ;

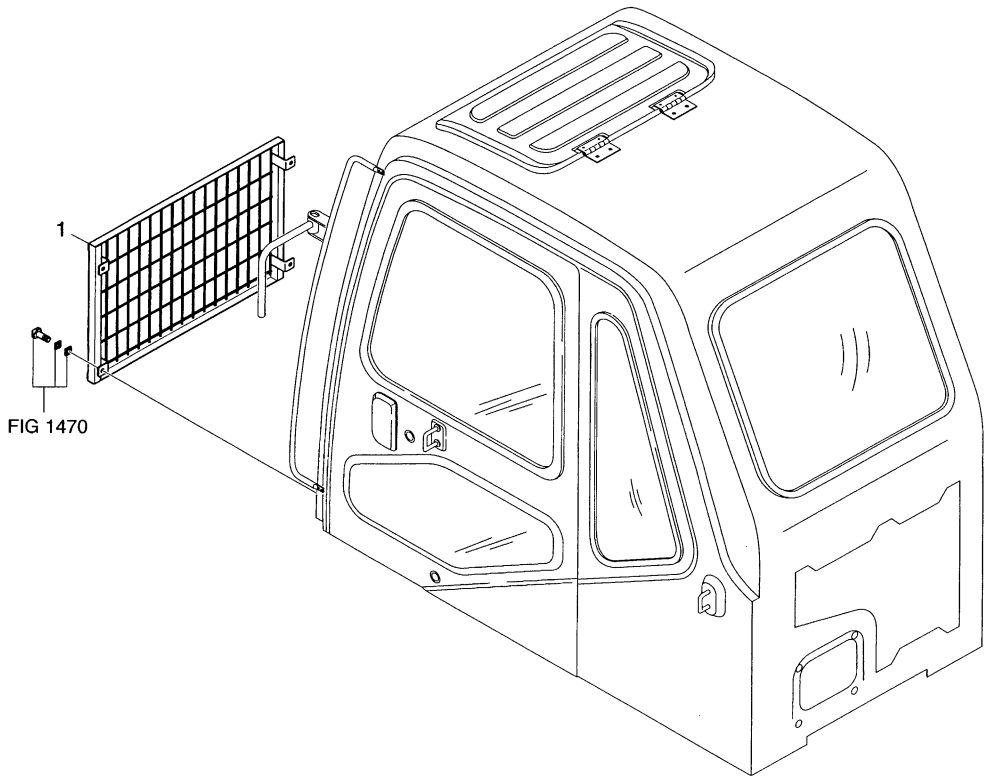

DATE	AUG. 12, 2002
1st EDITION	

Fig. 6260 CABIN LOW GUARD GARDE

Serial No. ;

Key No.	Part No.	Description	Description	Q'ty	S.C	Serial No.	ICA	Replaceable part	
								Part No.	Q'ty
6260--	142-00093	CABIN LOW GUARD ASS'Y	GARDE	-	D				
1	142-00094	GUARD;CABIN FRONT LOW	GARDE	1					

DATE	JUN. 30, 2005
REV. NO.	EXB05-05

Fig. 6270 F.O.G.S GUARD GARDE

Serial No. ;

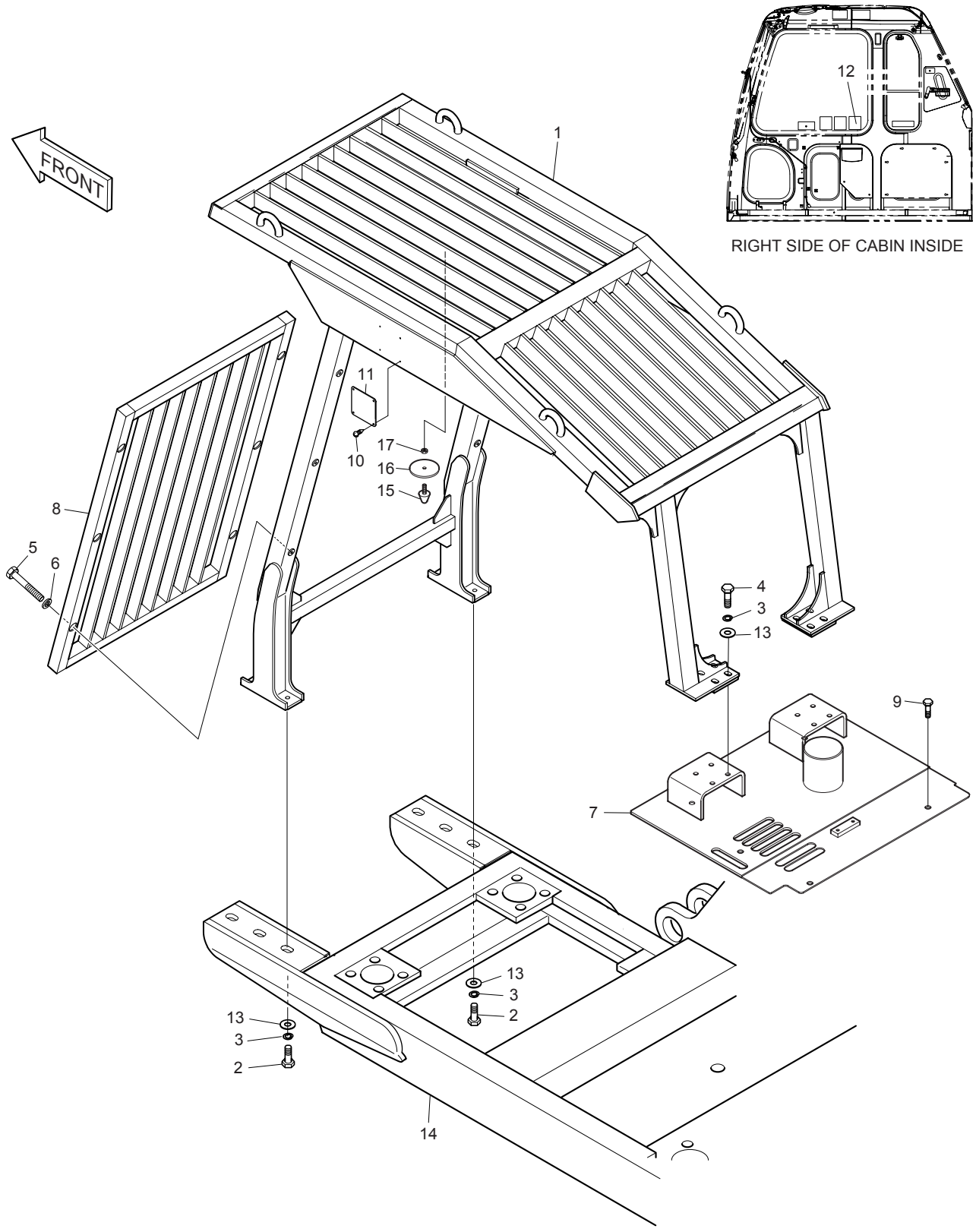

DATE	JUN. 30, 2005
REV. NO.	EXB05-05

Fig. 6270 F.O.G.S GUARD GARDE

Serial No ;

Key No.	Part No.	Description	Description	Q'ty	S.C	Serial No.	ICA	Replaceable part	
								Part No.	Q'ty
6270--	**733-00022A**	**F.O.G.S ASS'Y**	GARDE	-	D				
1	2623-1253C	FOGS;GUARD	GARDE	1					
2	S0521466	BOLT M16X2.0X40	BOULON	6					
3	S5102903	WASHER;SPRING	RONDELLE ELASTIQUE	14					
4	S0521666	BOLT M16X2.0X50	BOULON	8					
5	S0558853	BOLT M10X1.5X65	BOULON A 6PANS	6					
6	S5102603	WASHER;SPRING M10	RONDELLE ELASTIQUE	6					
7	621-02473	COVER	COUVERCLE	1		1001–1054	I	621-02473A	1
	621-02473A	COVER	COUVERCLE	1		1055–			
8	2142-1123	GUARD;FRONT	GARDE	1					
9	2120-2196D7	BOLT;SET M12X1.75X30	BOULON	5					
10	2122-1002D2	RIVET	RIVET	4					
11	**K1013180**	**PLATE;NAME**	PLAQUE D'IDENTIFICATION	1					
12	190-00003	PLATE;NAME	PLAQUE D'IDENTIFICATION	1					
13	2114-1058D39	WASHER	RONDELLE	14					
14	603-00306	FRAME;BED	ARMATURE	1					
15	2161-2226	STOPPER RUBBER	ARRET	1					
16	S5010613	WASHER;PLAIN	RONDELLE PLATE	1					
17	S4012633	NUT	ECROU	1					

DATE	DEC. 29, 2005
REV. NO.	EXB05-20

Fig. 6280 TRACK SHOE ASS'Y-700G
MAILLON DE CHAINE

Serial No. ;

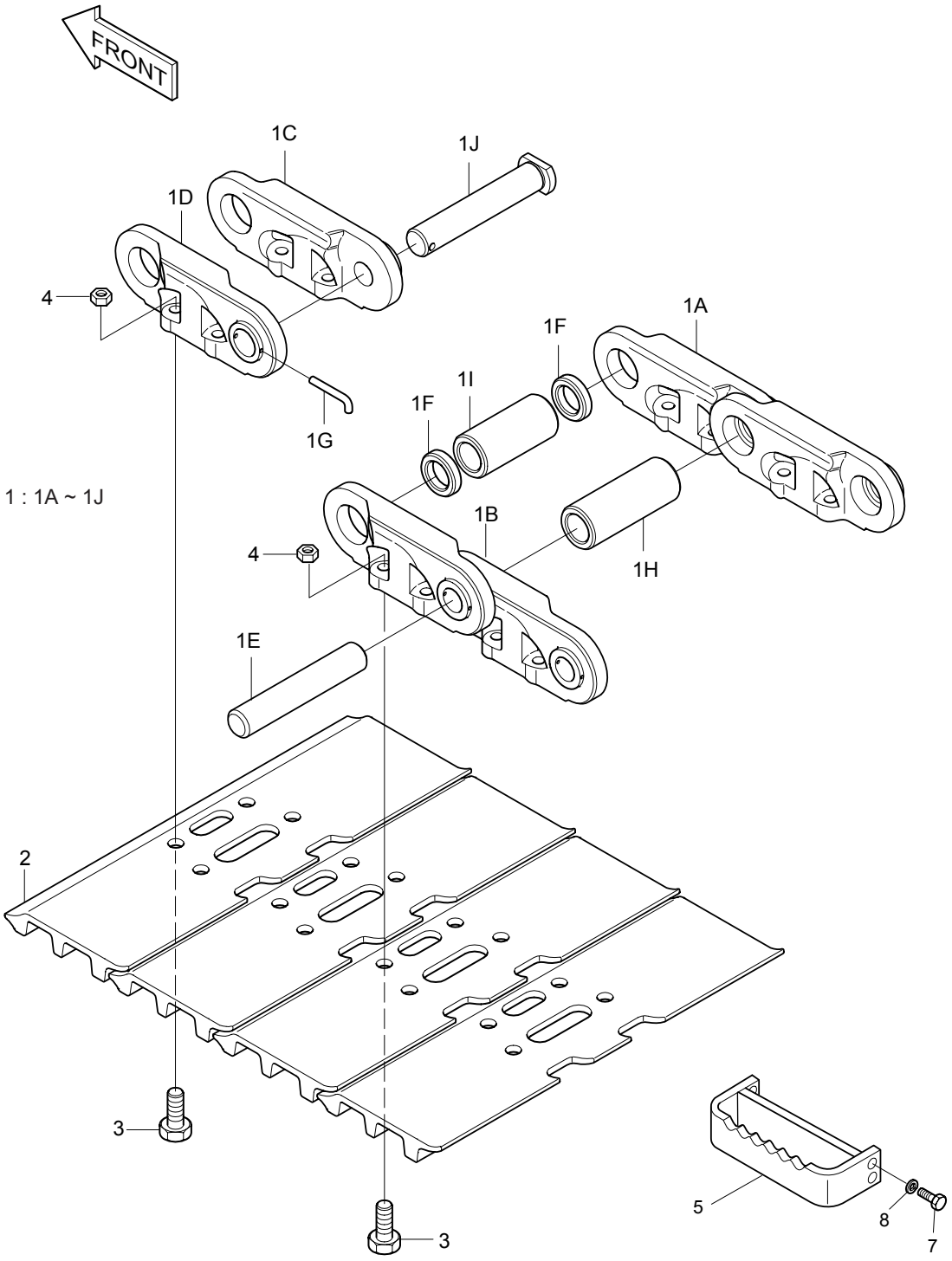

DATE	DEC. 29, 2005
REV. NO.	EXB05-20

Fig. 6280 TRACK SHOE ASS'Y-700G
MAILLON DE CHAINE

Serial No ;

Key No.	Part No.	Description	Description	Q'ty	S.C	Serial No.	ICA	Replaceable part	
								Part No.	Q'ty
6280--	2272-6106D2	TRACK SHOE ASS'Y	ENSEMBLE MAILLON DE	1					
1	2272-6137	TRACK LINK ASS'Y	ENSEMBLE MAILLON DE	1					
1A	2272-6104R	. LINK;TRACK(RH)	. PIECE DE JONCTION	48					
1B	2272-6104L	. LINK;TRACK(LH)	. PIECE DE JONCTION	48					
1C	2272-6105R	. LINK;MASTER(RH)	. PIECE DE JONCTION	1					
1D	2272-6105L	. LINK;MASTER(LH)	. PIECE DE JONCTION	1					
1E	2123-6060	. PIN	. GOUPILLE	48					
1F	2114-6035	. SPACER	. ENTERTOISE	2					
1G	2123-6062	. PIN;SMALL	. GOUPILLE	1					
1H	2110-6051	. BUSHING	. DOUILLE	48					
1I	2110-6052	. BUSHING;MASTER	. MANCHON	1					
1J	2123-6061	. PIN;MASTER	. BROCHE	1					
2	2273-6040D2	SHOE 700G	SABOT	49					
3	2120-6017	BOLT	BOULON A 6PANS	196					
4	2121-6017	NUT	ECROU	196					
5	2625-1220D1	BRACKET	SUPPORT	4					
7	S0558253	BOLT M10X1.5X35	BOULON A 6PANS	16					
8	S5102603	WASHER;SPRING	RONDELLE ELASTIQUE	16					

DATE	DEC. 29, 2005
REV. NO.	EXB05-20

Fig. 6290 TRACK SHOE ASS'Y-800G
MAILLON DE CHAINE

Serial No. ;

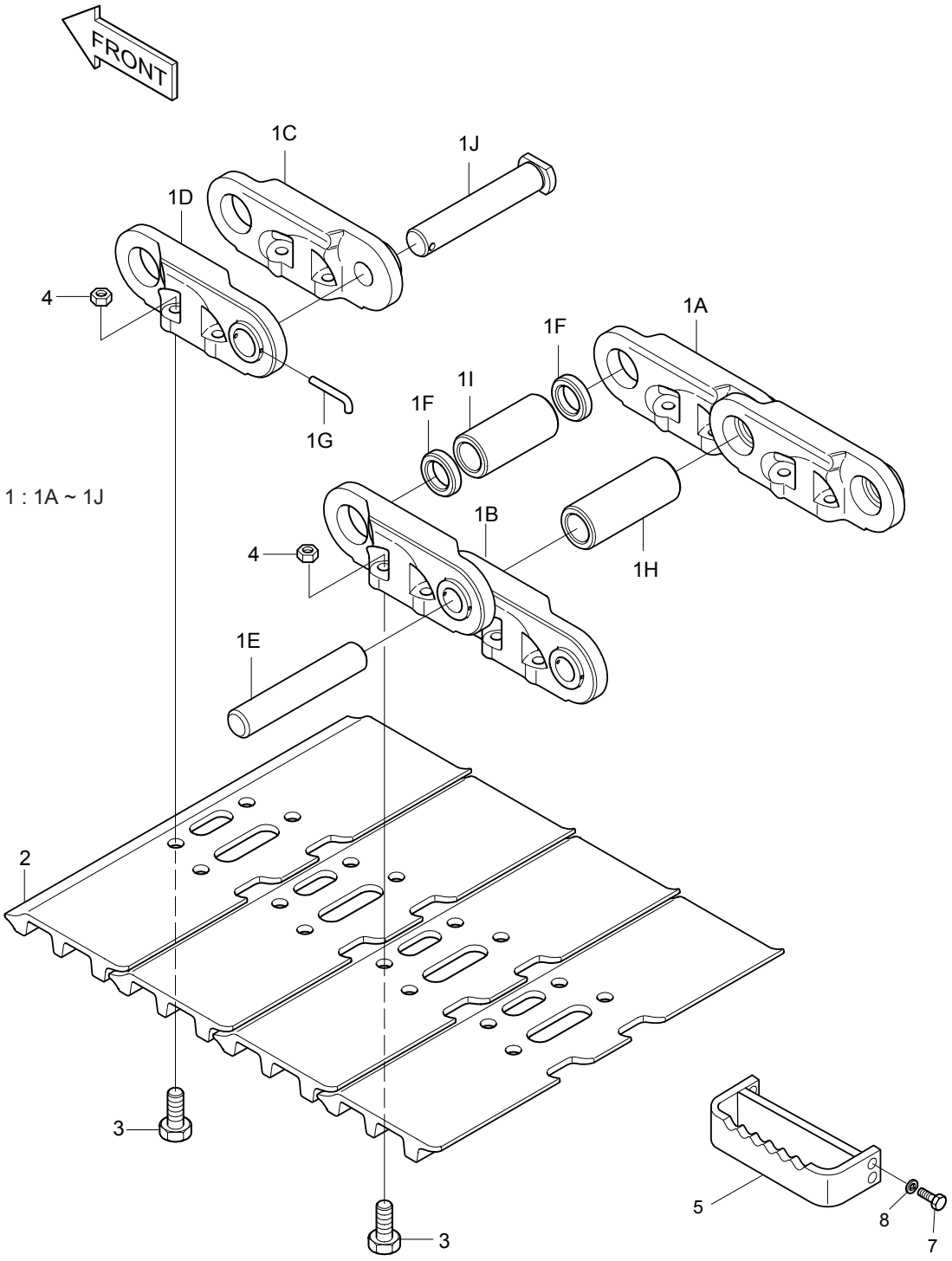

DATE	DEC. 29, 2005
REV. NO.	EXB05-20

Fig. 6290 TRACK SHOE ASS'Y-800G MAILLON DE CHAINE

Serial No ;

Key No.	Part No.	Description	Description	Q'ty	S.C	Serial No.	ICA	Replaceable part	
								Part No.	Q'ty
6290--	2272-6106D3	TRACK SHOE ASS'Y	ENSEMBLE MAILLON DE	1					
1	2272-6137	TRACK LINK ASS'Y	ENSEMBLE MAILLON DE	1					
1A	2272-6104R	. LINK;TRACK(RH)	. PIECE DE JONCTION	48					
1B	2272-6104L	. LINK;TRACK(LH)	. PIECE DE JONCTION	48					
1C	2272-6105R	. LINK;MASTER(RH)	. PIECE DE JONCTION	1					
1D	2272-6105L	. LINK;MASTER(LH)	. PIECE DE JONCTION	1					
1E	2123-6060	. PIN	. GOUPILLE	48					
1F	2114-6035	. SPACER	. ENTERTOISE	2					
1G	2123-6062	. PIN;SMALL	. GOUPILLE	1					
1H	2110-6051	. BUSHING	. DOUILLE	48					
1I	2110-6052	. BUSHING;MASTER	. MANCHON	1					
1J	2123-6061	. PIN;MASTER	. BROCHE	1					
2	2273-6040D3	SHOE 800G	SABOT	49					
3	2120-6017	BOLT	BOULON A 6PANS	196					
4	2121-6017	NUT	ECROU	196					
5	2625-1220D3	BRACKET	SUPPORT	4					
7	S0558253	BOLT M10X1.5X35	BOULON A 6PANS	16					
8	S5102603	WASHER;SPRING	RONDELLE ELASTIQUE	16					

DATE	DEC. 29, 2005
REV. NO.	EXB05-20

Fig. 6300 TRACK SHOE ASS'Y-900G
MAILLON DE CHAINE

Serial No. ;

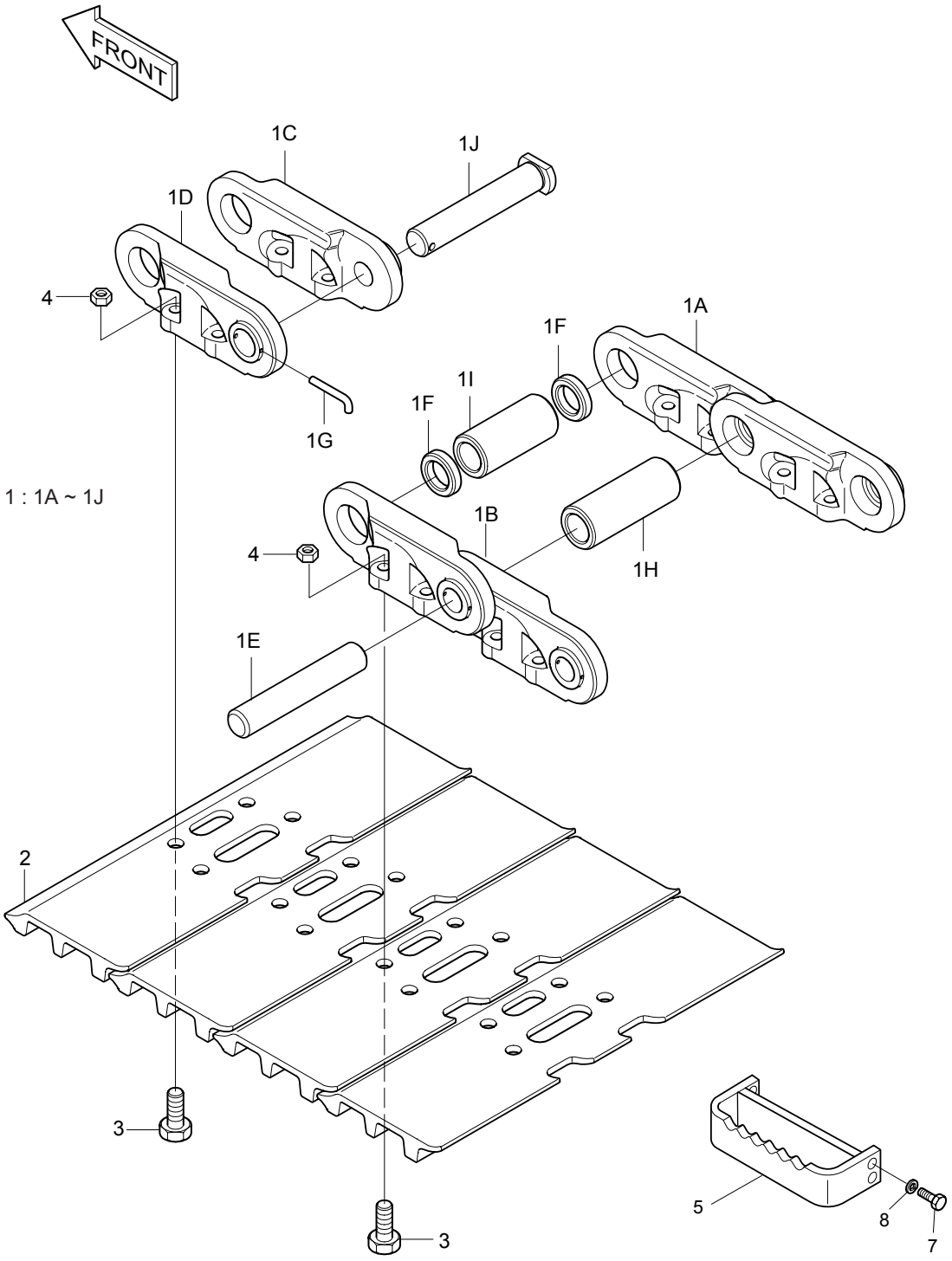

DATE	DEC. 29, 2005
REV. NO.	EXB05-20

Fig. 6300 TRACK SHOE ASS'Y-900G MAILLON DE CHAINE

Serial No ;

Key No.	Part No.	Description	Description	Q'ty	S.C	Serial No.	ICA	Replaceable part	
								Part No.	Q'ty
6300--	2272-6106D4	TRACK SHOE ASS'Y	ENSEMBLE MAILLON DE	1					
1	2272-6137	TRACK LINK ASS'Y	ENSEMBLE MAILLON DE	1					
1A	2272-6104R	. LINK;TRACK(RH)	. PIECE DE JONCTION	48					
1B	2272-6104L	. LINK;TRACK(LH)	. PIECE DE JONCTION	48					
1C	2272-6105R	. LINK;MASTER(RH)	. PIECE DE JONCTION	1					
1D	2272-6105L	. LINK;MASTER(LH)	. PIECE DE JONCTION	1					
1E	2123-6060	. PIN	. GOUPILLE	48					
1F	2114-6035	. SPACER	. ENTERTOISE	2					
1G	2123-6062	. PIN;SMALL	. GOUPILLE	1					
1H	2110-6051	. BUSHING	. DOUILLE	48					
1I	2110-6052	. BUSHING;MASTER	. MANCHON	1					
1J	2123-6061	. PIN;MASTER	. BROCHE	1					
2	2273-6040D4	SHOE 900G	SABOT	49					
3	2120-6017	BOLT	BOULON A 6PANS	196					
4	2121-6017	NUT	ECROU	196					
5	2625-1220D10	BRACKET	SUPPORT	4					
7	S0558253	BOLT M10X1.5X35	BOULON A 6PANS	16					
8	S5102603	WASHER;SPRING	RONDELLE ELASTIQUE	16					

DATE	DEC. 29, 2005
REV. NO.	EXB05-20

Fig. 6310 TRACK SHOE ASS'Y-910T
MAILLON DE CHAINE

Serial No. ;

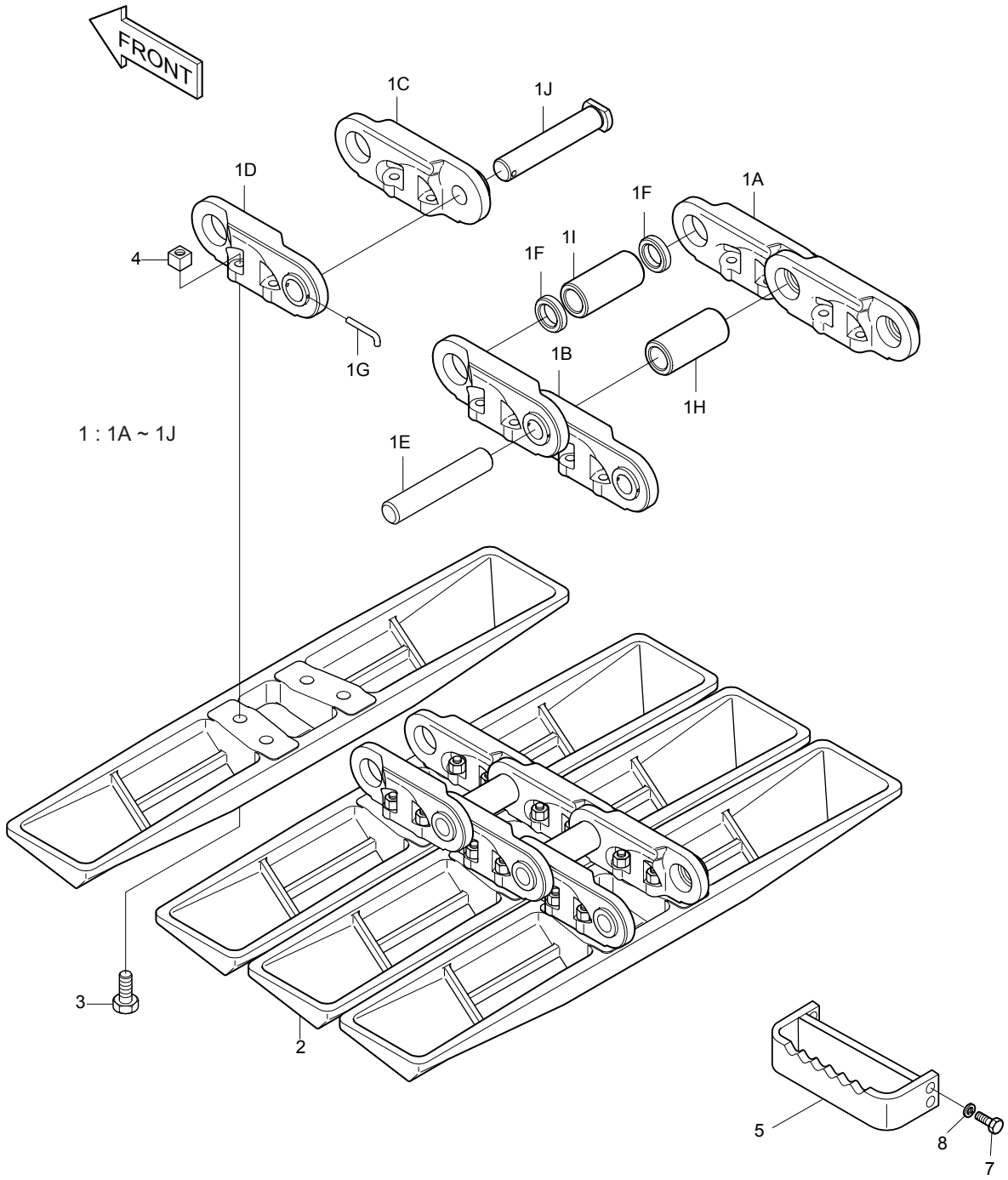

DATE	DEC. 29, 2005
REV. NO.	EXB05-20

Fig. 6310 TRACK SHOE ASS'Y-910T MAILLON DE CHAINE

Serial No ;

Key No.	Part No.	Description	Description	Q'ty	S.C	Serial No.	ICA	Replaceable part	
								Part No.	Q'ty
6310--	2273-7051	TRACK SHOE ASS'Y	ENSEMBLE MAILLON DE	1					
1	2272-6137	TRACK LINK ASS'Y	ENSEMBLE MAILLON DE	1					
1A	2272-6104R	. LINK;TRACK(RH)	. PIECE DE JONCTION	48					
1B	2272-6104L	. LINK;TRACK(LH)	. PIECE DE JONCTION	48					
1C	2272-6105R	. LINK;MASTER(RH)	. PIECE DE JONCTION	1					
1D	2272-6105L	. LINK;MASTER(LH)	. PIECE DE JONCTION	1					
1E	2123-6060	. PIN	. GOUPILLE	48					
1F	2114-6035	. SPACER	. ENTERTOISE	2					
1G	2123-6062	. PIN;SMALL	. GOUPILLE	1					
1H	2110-6051	. BUSHING	. DOUILLE	48					
1I	2110-6052	. BUSHING;MASTER	. MANCHON	1					
1J	2123-6061	. PIN;MASTER	. BROCHE	1					
2	2273-1050	SHOE 910T	SABOT	49					
3	2120-2182	BOLT	BOULON A 6PANS	196					
4	2121-1203	NUT	ECROU	196					
5	2625-1220D10	BRACKET	SUPPORT	4					
7	S0558253	BOLT M10X1.5X35	BOULON A 6PANS	16					
8	S5102603	WASHER;SPRING	RONDELLE ELASTIQUE	16					

DATE	AUG. 12, 2002
1st EDITION	

Fig. 6320 SEALED TRACK SHOE ASS'Y-600G
ENSEMBLE MAILLON DE CHAINES

Serial No. ;

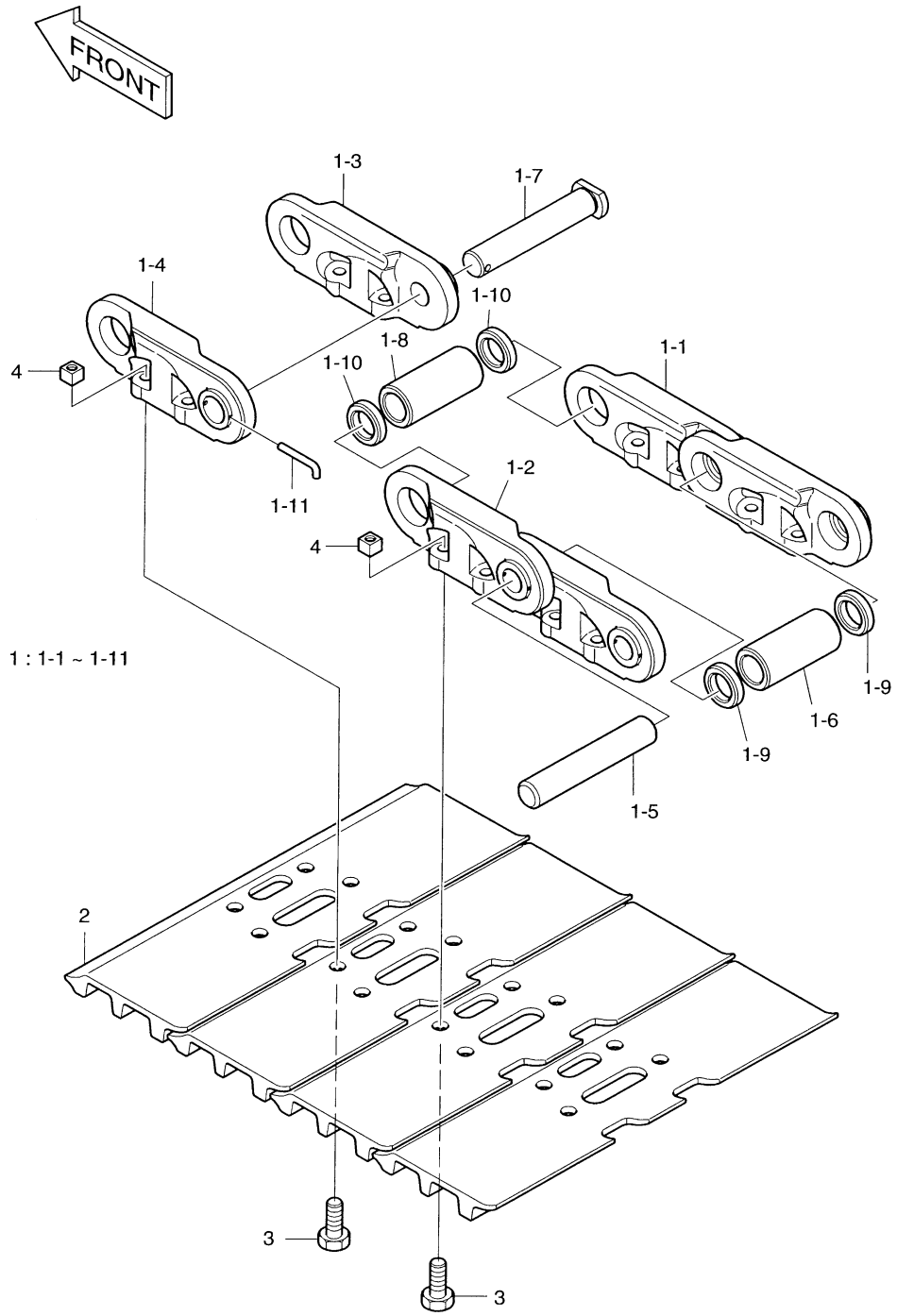

DATE	AUG. 12, 2002
1st EDITION	

Fig. 6320 SEALED TRACK SHOE-600G ENSEMBLE MAILLON DE CHAINES

Serial No. ;

Key No.	Part No.	Description	Description	Q'ty	S.C	Serial No.	ICA	Replaceable part	
								Part No.	Q'ty
6320--	273-00096	SEALED TRACK LINK ASS'Y	TRAIN A MAILLON	1					
1	272-00054	TRACK LINK ASS'Y	TRAIN A MAILLON	1					
1-1	2272-6104R	. LINK(R.H)	. PIECE DE JONCTION	48					
1-2	2272-6104L	. LINK(L.H)	. PIECE DE JONCTION	48					
1-3	2272-6105R	. LINK;MASTER(R.H)	. PIECE DE JONCTION	1					
1-4	2272-6105L	. LINK;MASTER(L.H)	. PIECE DE JONCTION	1					
1-5	2123-6060	. PIN	. BROCHE	48					
1-6	110-00226	. BUSHING	. DOUILLE	48					
1-7	2123-6061	. PIN;MASTER	. BROCHE PRINCIPALE	1					
1-8	2110-6052	. BUSHING;MASTER	. DOUILLE PRINCIPALE	1					
1-9	180-00441	. SEAL;DUST	. JOINT	96					
1-10	2114-6035	. SPACER	. ENTERTOISE	2					
1-11	2123-6062	. PIN	. BROCHE	1					
2	2273-6040D1	SHOE;600G	SABOT	49					
3	2120-6017	BOLT	BOULON A 6 PANS	196					
4	2121-6017	NUT	ECROU	196					

DATE	DEC. 29, 2005
REV. NO.	EXB05-20

Fig. 6330 SEALED TRACK SHOE-700G
ENSEMBLE MAILLON DE CHAINES

Serial No. ;

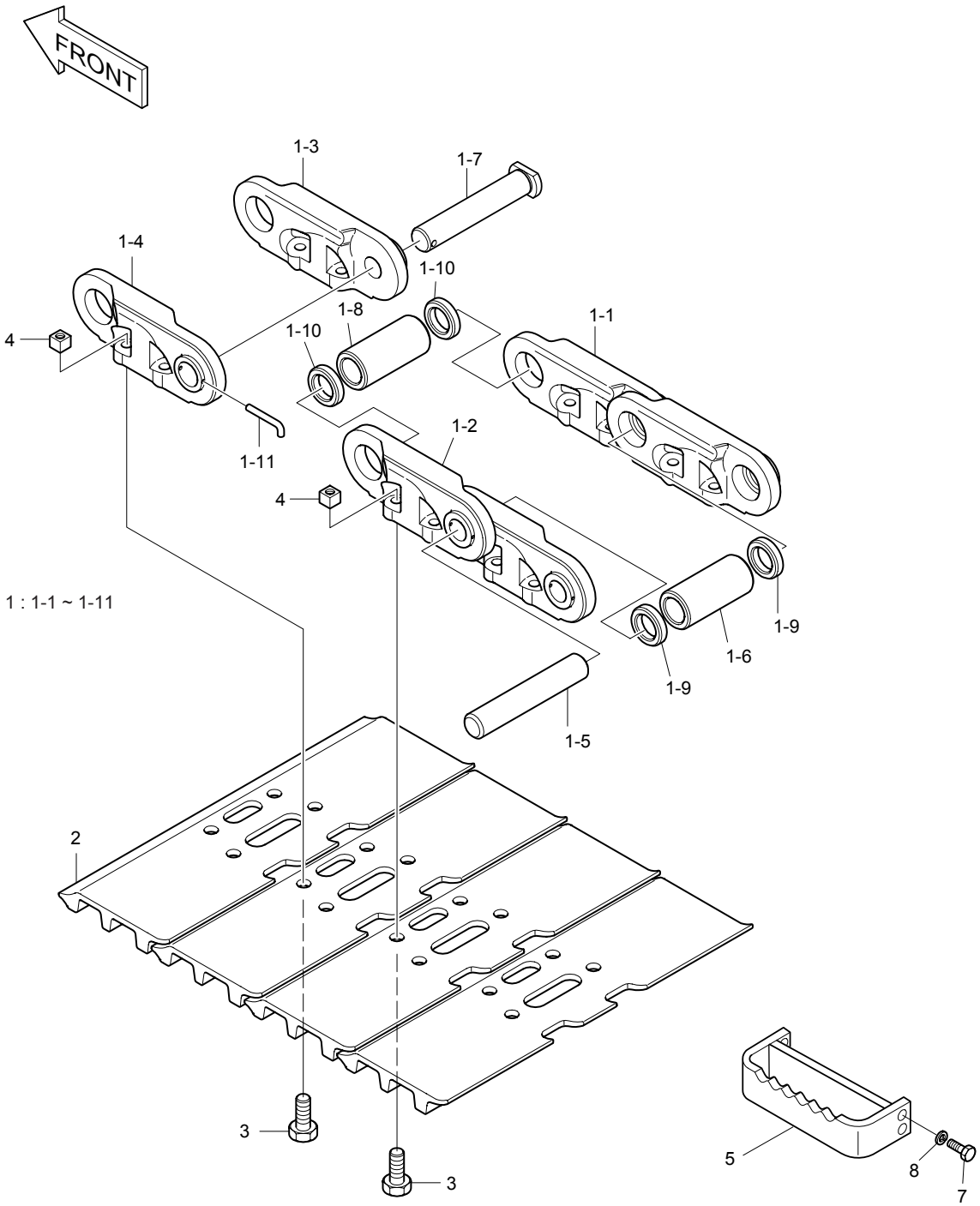

DATE	DEC. 29, 2005
REV. NO.	EXB05-20

Fig. 6330 SEALED TRACK SHOE-700G
ENSEMBLE MAILLON DE CHAINES

Serial No ;

Key No.	Part No.	Description	Description	Q'ty	S.C	Serial No.	ICA	Replaceable part	
								Part No.	Q'ty
6330--	273-00097	SEALED TRACK LINK ASS'Y	TRAIN A MAILLON	1					
1	272-00054	TRACK LINK ASS'Y	TRAIN A MAILLON	1					
1-1	2272-6104R	. LINK(R.H)	. PIECE DE JONCTION	48					
1-2	2272-6104L	. LINK(L.H)	. PIECE DE JONCTION	48					
1-3	2272-6105R	. LINK;MASTER(R.H)	. PIECE DE JONCTION	1					
1-4	2272-6105L	. LINK;MASTER(L.H)	. PIECE DE JONCTION	1					
1-5	2123-6060	. PIN	. BROCHE	48					
1-6	110-00226	. BUSHING	. DOUILLE	48					
1-7	2123-6061	. PIN;MASTER	. BROCHE PRINCIPALE	1					
1-8	2110-6052	. BUSHING;MASTER	. DOUILLE PRINCIPALE	1					
1-9	180-00441	. SEAL;DUST	. JOINT	96					
1-10	2114-6035	. SPACER	. ENTERTOISE	2					
1-11	2123-6062	. PIN	. BROCHE	1					
2	2273-6040D2	SHOE;700G	SABOT	49					
3	2120-6017	BOLT	BOULON A 6 PANS	196					
4	2121-6017	NUT	ECROU	196					
5	2625-1220D1	BRACKET	SUPPORT	4					
7	S0558253	BOLT M10X1.5X35	BOULON A 6PANS	16					
8	S5102603	WASHER;SPRING	RONDELLE ELASTIQUE	16					

DATE	DEC. 29, 2005
REV. NO.	EXB05-20

Fig. 6340 SEALED TRACK SHOE-800G
ENSEMBLE MAILLON DE CHAINES

Serial No. ;

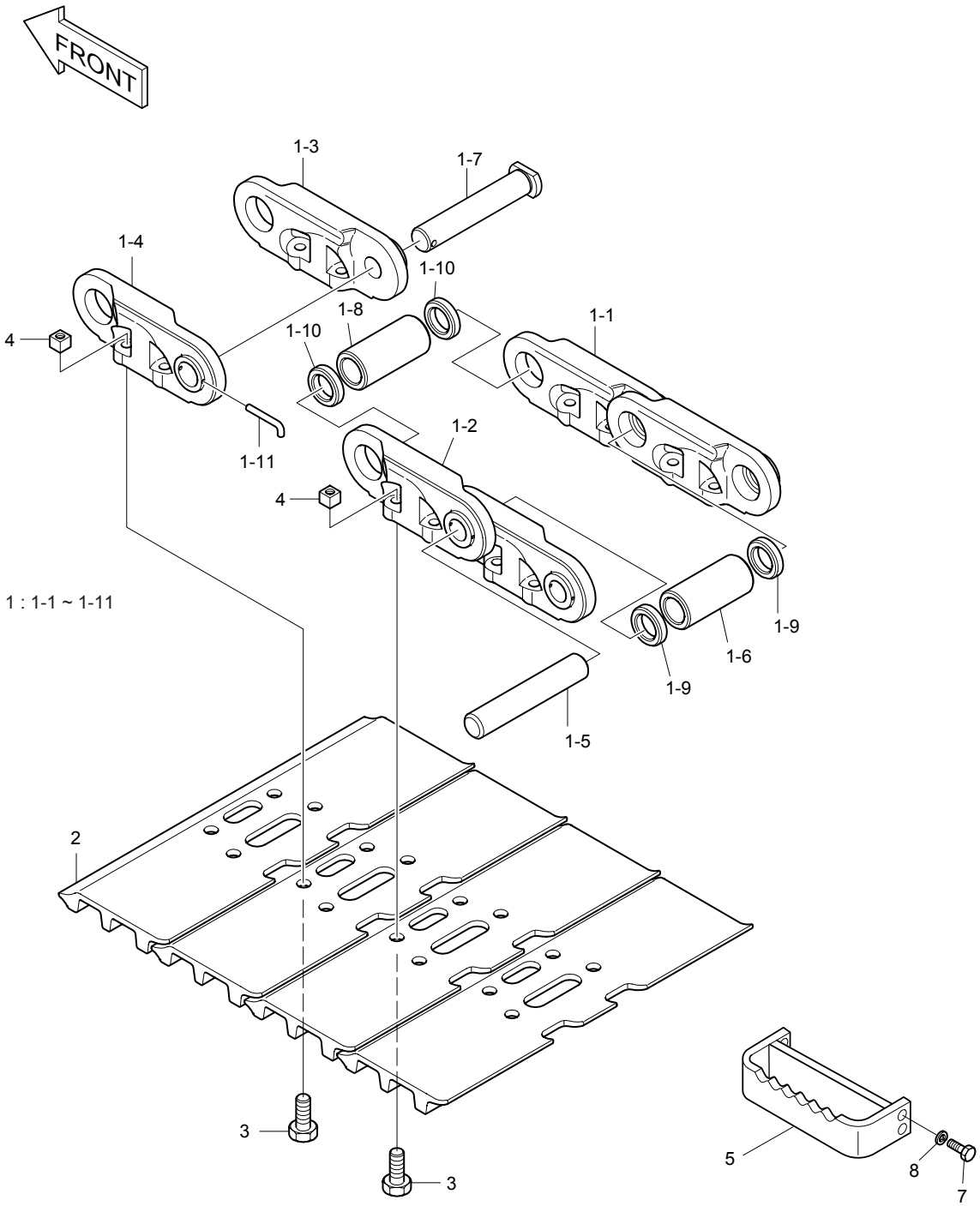

DATE	DEC. 29, 2005
REV. NO.	EXB05-20

Fig. 6340 SEALED TRACK SHOE-800G
ENSEMBLE MAILLON DE CHAINES

Serial No ;

Key No.	Part No.	Description	Description	Q'ty	S.C	Serial No.	ICA	Replaceable part	
								Part No.	Q'ty
6340--	273-00098	SEALED TRACK LINK ASS'Y	TRAIN A MAILLON	1					
1	272-00054	TRACK LINK ASS'Y	TRAIN A MAILLON	1					
1-1	2272-6104R	. LINK(R.H)	. PIECE DE JONCTION	48					
1-2	2272-6104L	. LINK(L.H)	. PIECE DE JONCTION	48					
1-3	2272-6105R	. LINK;MASTER(R.H)	. PIECE DE JONCTION	1					
1-4	2272-6105L	. LINK;MASTER(L.H)	. PIECE DE JONCTION	1					
1-5	2123-6060	. PIN	. BROCHE	48					
1-6	110-00226	. BUSHING	. DOUILLE	48					
1-7	2123-6061	. PIN;MASTER	. BROCHE PRINCIPALE	1					
1-8	2110-6052	. BUSHING;MASTER	. DOUILLE PRINCIPALE	1					
1-9	180-00441	. SEAL;DUST	. JOINT	96					
1-10	2114-6035	. SPACER	. ENTERTOISE	2					
1-11	2123-6062	. PIN	. BROCHE	1					
2	2273-6040D3	SHOE;800G	SABOT	49					
3	2120-6017	BOLT	BOULON A 6 PANS	196					
4	2121-6017	NUT	ECROU	196					
5	2625-1220D3	BRACKET	SUPPORT	4					
7	S0558253	BOLT M10X1.5X35	BOULON A 6PANS	16					
8	S5102603	WASHER;SPRING	RONDELLE ELASTIQUE	16					

DATE	DEC. 29, 2005
REV. NO.	EXB05-20

Fig. 6350 SEALED TRACK SHOE-900G
ENSEMBLE MAILLON DE CHAINES

Serial No. ;

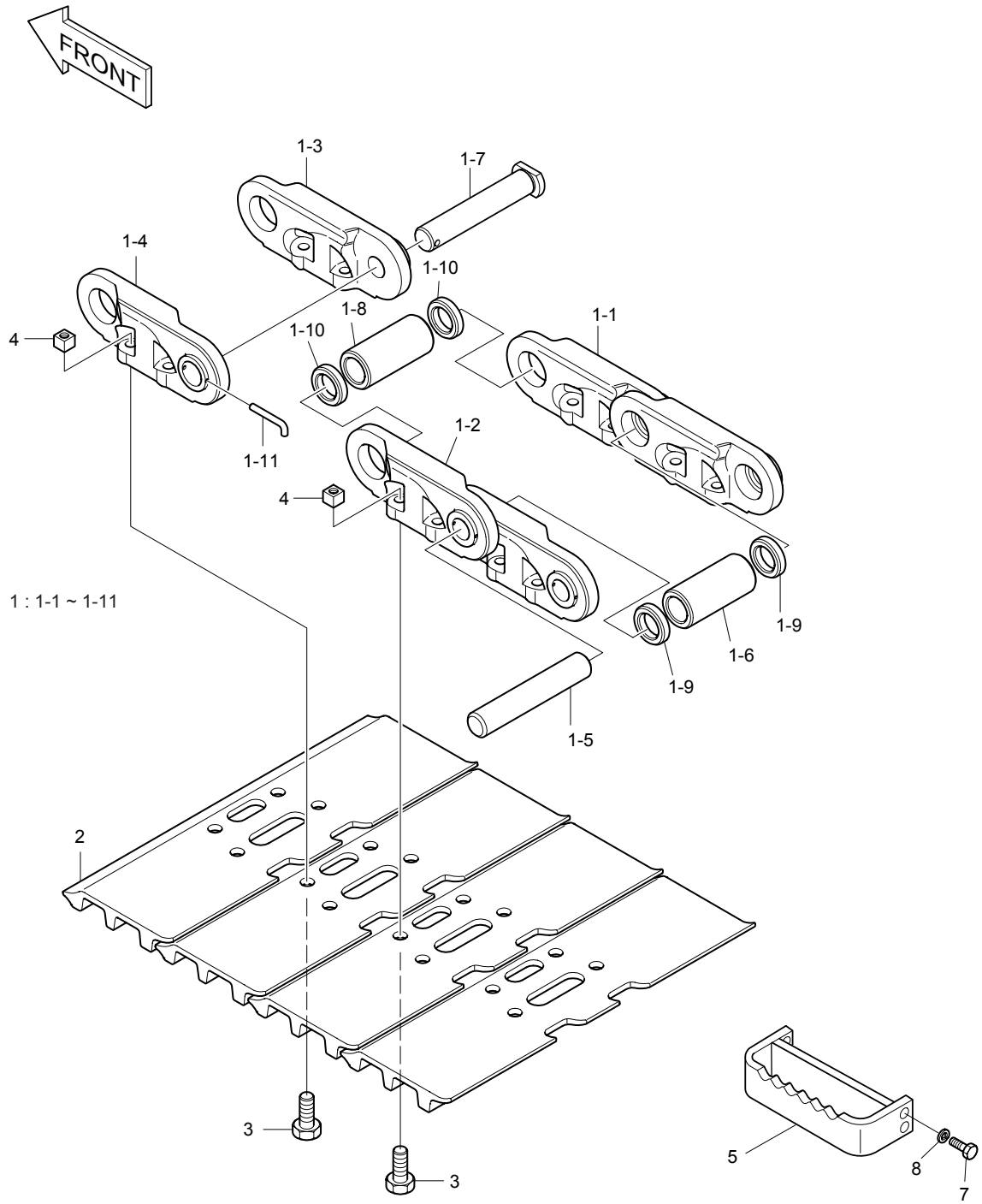

DATE	DEC. 29, 2005
REV. NO.	EXB05-20

Fig. 6350 SEALED TRACK SHOE-900G
ENSEMBLE MAILLON DE CHAINES

Serial No ;

Key No.	Part No.	Description	Description	Q'ty	S.C	Serial No.	ICA	Replaceable part	
								Part No.	Q'ty
6350--	273-00099	SEALED TRACK LINK ASS'Y	TRAIN A MAILLON	1					
1	272-00054	TRACK LINK ASS'Y	TRAIN A MAILLON	1					
1-1	2272-6104R	. LINK(R.H)	. PIECE DE JONCTION	48					
1-2	2272-6104L	. LINK(L.H)	. PIECE DE JONCTION	48					
1-3	2272-6105R	. LINK;MASTER(R.H)	. PIECE DE JONCTION	1					
1-4	2272-6105L	. LINK;MASTER(L.H)	. PIECE DE JONCTION	1					
1-5	2123-6060	. PIN	. BROCHE	48					
1-6	110-00226	. BUSHING	. DOUILLE	48					
1-7	2123-6061	. PIN;MASTER	. BROCHE PRINCIPALE	1					
1-8	2110-6052	. BUSHING;MASTER	. DOUILLE PRINCIPALE	1					
1-9	180-00441	. SEAL;DUST	. JOINT	96					
1-10	2114-6035	. SPACER	. ENTERTOISE	2					
1-11	2123-6062	. PIN	. BROCHE	1					
2	2273-6040D4	SHOE;900G	SABOT	49					
3	2120-6017	BOLT	BOULON A 6 PANS	196					
4	2121-6017	NUT	ECROU	196					
5	2625-1220D10	BRACKET	SUPPORT	4					
7	S0558253	BOLT M10X1.5X35	BOULON A 6PANS	16					
8	S5102603	WASHER;SPRING	RONDELLE ELASTIQUE	16					

DATE	DEC. 15, 2006
REV. NO.	EXB06-13

Fig. 6360 BOOM-5.2m FLECHE

Serial No. ;

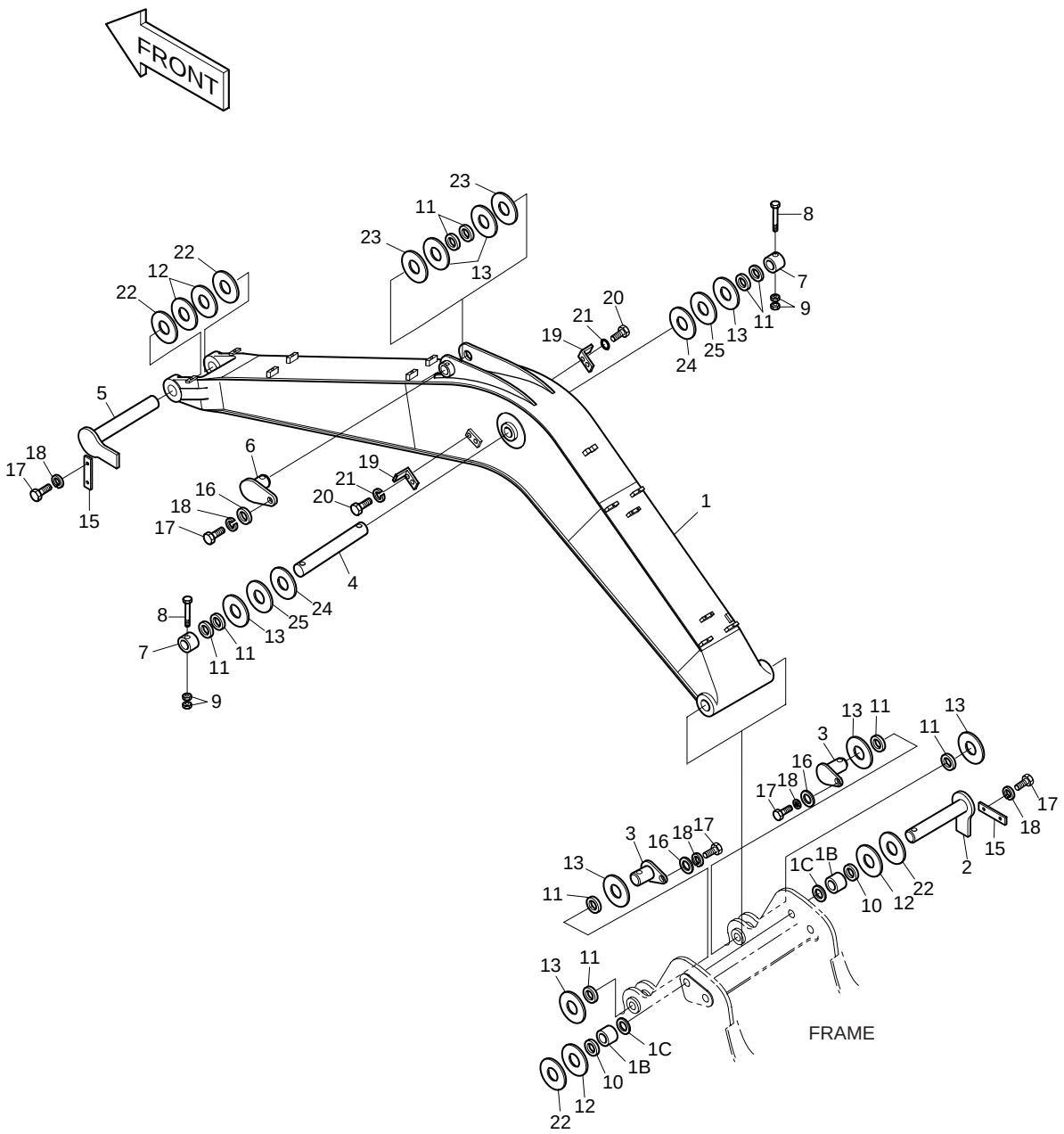

DATE	DEC. 15, 2006
REV. NO.	EXB06-13

Fig. 6360 BOOM-5.2m FLECHE

Serial No. ;

Key No.	Part No.	Description	Description	Q'ty	S.C	Serial No.	ICA	Replaceable part	
								Part No.	Q'ty
6360--	2701-1677A	BOOM ASS'Y-5.2m	ENSEMBLE FLECHE	-	D				
1	2701-1678J	BOOM;MACH.-5.2m	FLECHE	1		1001–2939	I	2701-1678K	1
	2701-1678K	**BOOM;MACH.-5.2m**	FLECHE	1		**2940–**			
1B	2110-1315A	. BUSHING	. MANCHON	2					
1C	2180-1106BD6	. SEAL;DUST	. PARE-POUSSIERES	2					
2	2123-2180E	PIN	GOUJON	1					
3	123-00409	PIN	GOUPILLE	2					
4	2123-2184C	PIN	GOUJON	1					
5	2123-2185E	PIN	GOUJON	1					
6	2123-2187C	PIN	GOUJON	1					
7	2116-1531A	STOPPER	TAQUET D'ARRET	2					
8	S0567066	BOLT M16X2.0X150	BOULON A 6PANS	2					
9	S4012933	NUT M16X2.0	ECROU	4					
10	2180-1106BD6	SEAL;DUST	PARE-POUSSIERES	2					
11	2180-1106BD24	SEAL;DUST	PARE-POUSSIERES	10					
12	2114-1059D113	SHIM	CALE	4					
13	2114-1059D63	SHIM	CALE	8					
15	2116-1514A	PLATE;STOPPER	PLAQUE	2					
16	2116-1060D6	STOPPER	TAQUET D'ARRET	3					
17	S0521366	BOLT M16X2.0X35	BOULON A 6PANS	7					
18	S5102903	WASHER;SPRING	RONDELLE ELASTIQUE	7					
19	2195-2394B	BRACKET	SUPPORT	2					
20	S0515053	BOLT M12X1.75X25	BOULON A 6PANS	4					
21	S5102703	WASHER;SPRING	RONDELLE ELASTIQUE	4					
22	2114-1059D114	SHIM	CALE	4					
23	2114-1059D118	SHIM	CALE	2					
24	2114-1059D255	SHIM	CALE	2					
25	2114-1059D256	SHIM	CALE	2					

DATE	JUL. 30, 2003
REV. NO.	EXB03-13

Fig. 6370 BOOM PIPING-5.2m
CONDUITES DE FLECHE

Serial No. ;

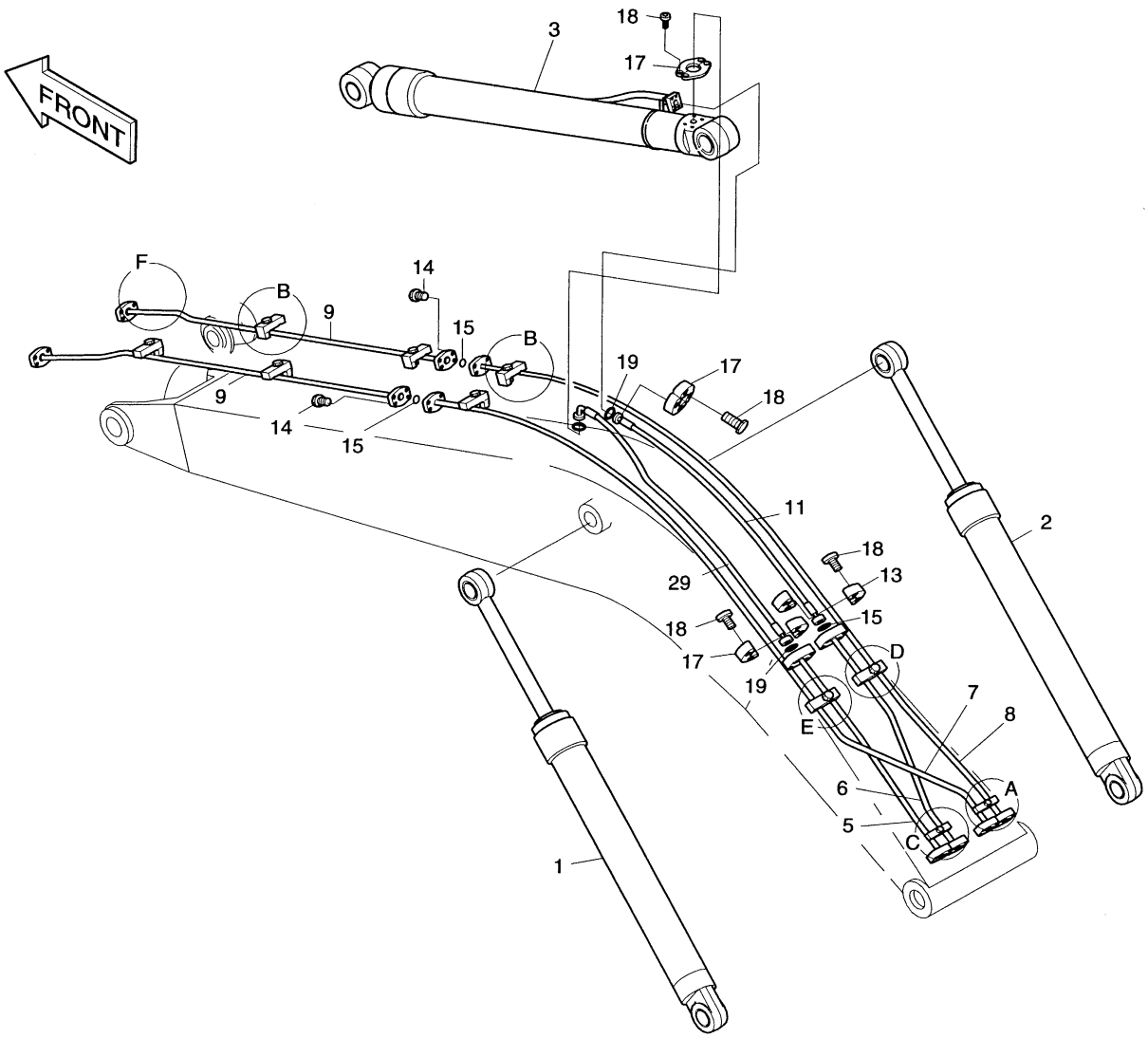

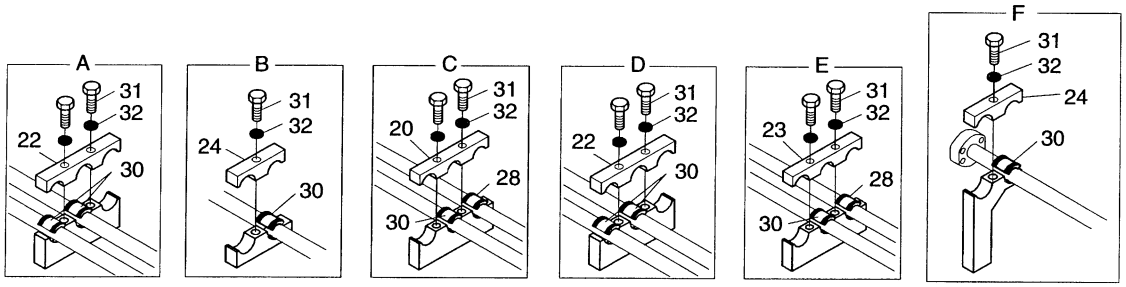

DATE	JUL. 30, 2003
REV. NO.	EXB03-13

Fig. 6370 BOOM PIPING-5.2m CONDUITES DE FLECHE

Serial No ;

Key No.	Part No.	Description	Description	Q'ty	S.C	Serial No.	ICA	Replaceable part	
								Part No.	Q'ty
6370--	400-01062	FRONT PIPING	CONDUITES DE FLECHE	-	D				
1	440-00355A	CYLINDER;BOOM(L.H)	VERIN DE FLECHE	1					
2	440-00356A	CYLINDER;BOOM(R.H)	VERIN DE FLECHE	1					
3	2440-9236B	CYLINDER;ARM	VERIN DE BALANCIER	1					
5	140-00702	PIPE	TUYAU	1					
6	140-00703	PIPE	TUYAU	1					
7	140-00704	PIPE	TUYAU	1					
8	140-00705	PIPE	TUYAU	1					
9	2140-1599	PIPE	TUYAU	2					
	2140-1599A	PIPE	TUYAU	2					
11	2184-1081D129	HOSE PF3/4-1080L	TUYAU FLEXIBLE	1					
13	2181-9079	FLANGE	FLASQUE EN DEUX	2					
14	S2212466	BOLT;SOCKET M10X1.5X40	BOULON DE PLOT	8					
15	2180-1026D2	O-RING	JONT TORIQUE	3					
17	2181-9078	FLANGE	BRIDE	6					
18	S2212366	BOLT;SOCKET M10X1.5X35	BOULON DE PLOT	16					
19	2180-1026D19	O-RING	JONT TORIQUE	3					
20	124-00175	CLAMP;PIPE	ATTACHE DE TUYAU	1					
22	124-00012	CLAMP;PIPE	ATTACHE DE TUYAU	3					
23	124-00173	CLAMP;PIPE	ATTACHE DE TUYAU	2					
24	124-00011	CLAMP;PIPE	COLLIER	6					
28	2161-2251A	RUBBER	CAOUTCHOUC	6					
29	2184-1100D76	HOSE	TUYAU FLEXIBLE	1					
30	2161-2250A	RUBBER	CAOUTCHOUC	30					
31	S0565466	BOLT M16X2.0X60	BOULON A 6PANS	18					
32	S5102903	WASHER;SPRING	RONDELLE ELASTIQUE	18					

DATE	JUL. 30, 2003
REV. NO.	EXB03-13

Fig. 6380 LUBRICATION PIPING
LUBRIFICATION

Serial No. ;

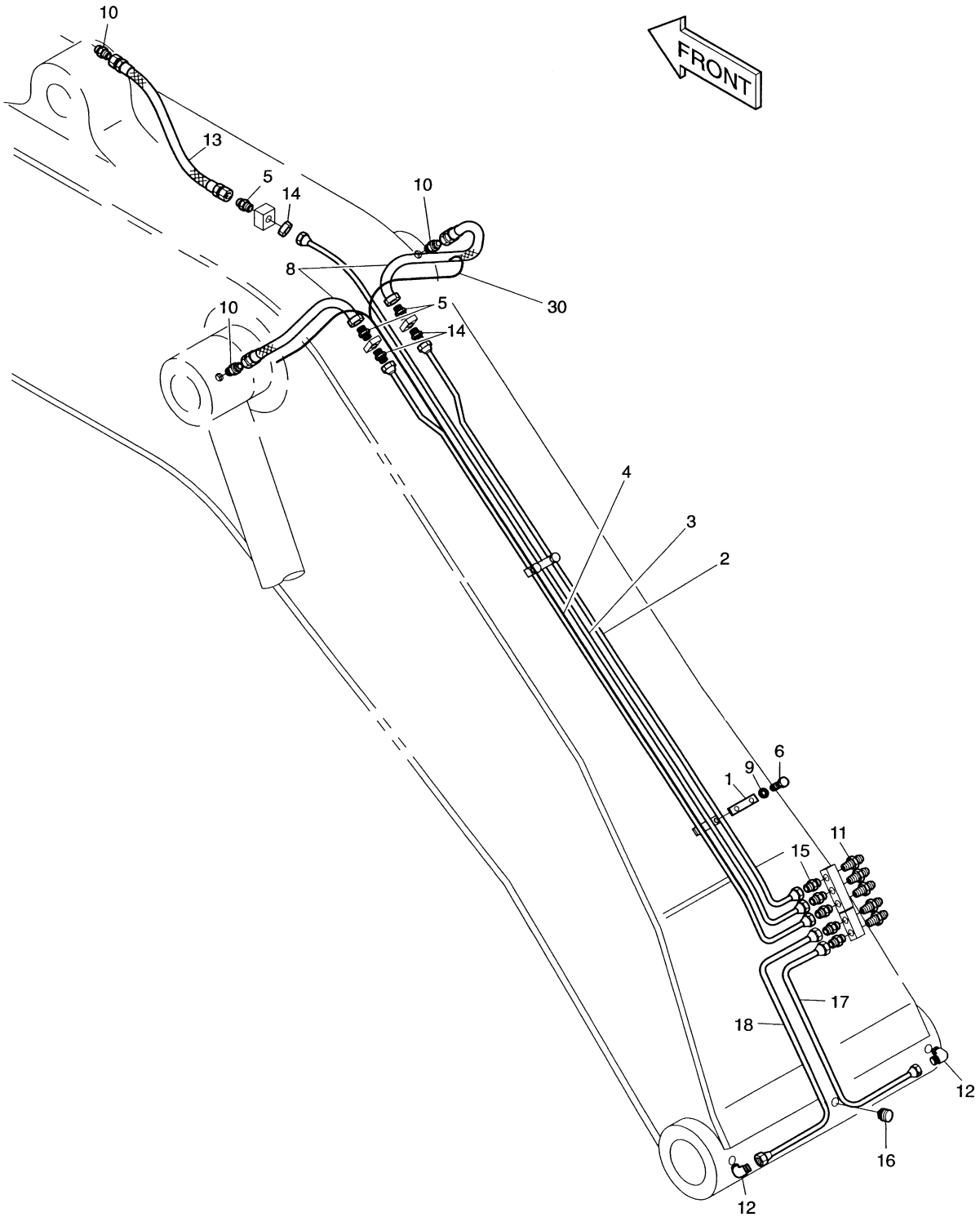

DATE	JUL. 30, 2003
REV. NO.	EXB03-13

Fig. 6380 LUBRICATION PIPING LUBRIFICATION

Serial No ;

Key No.	Part No.	Description	Description	Q'ty	S.C	Serial No.	ICA	Replaceable part	
								Part No.	Q'ty
6380--	2400-2071A	LUBRICATION PIPING	LUBRIFICATION	-	D				
1	2124-1625	CLAMP;PIPE	ATTACHE DE TUYAU	2					
2	2140-1259B	PIPE	TUYAU	1					
3	2140-1596A	PIPE	TUYAU	1					
4	2140-1261B	PIPE	TUYAU	1					
5	2181-1923D12	ADAPTER M14X1.5-PF1/4	ADAPTEUR	3					
6	S0511553	BOLT M10X1.5X14	BOULON A 6PANS	4					
8	2184-1045D71	HOSE PF1/4-860L	TUYAU FLEXIBLE	2					
	2184-1060D201	HOSE PF1/4-900L	TUYAU FLEXIBLE	2					
9	S5102603	WASHER'SPRING	RONDELLE ELASTIQUE	4					
10	2181-1110D30	ADAPTER;PF1/4-PT1/8	ADAPTEUR	3					
11	S6710052	NIPPLE;GREASE	GRAISSEUR	5					
12	2181-1925	ELBOW	COUDE	2					
13	2184-1045D90	HOSE PF1/4-800L	TUYAU FLEXIBLE	1					
14	S4032833	NUT M14X1.5	ECROU	3					
15	2181-1184	ADAPTER	ADAPTEUR	5					
16	S3524403	SCREW;SET	VIS	1					
17	182-00062	PIPE	TUYAU	1					
18	182-00063	PIPE	TUYAU	1					
30	2530-1609D9	HARNESS;WORKING LAMP	HARNAIS	1					

DATE	JUN. 30, 2006
REV. NO.	EXB06-08

Fig. 6390 ARM-2.0m BALANCIER

Serial No. ;

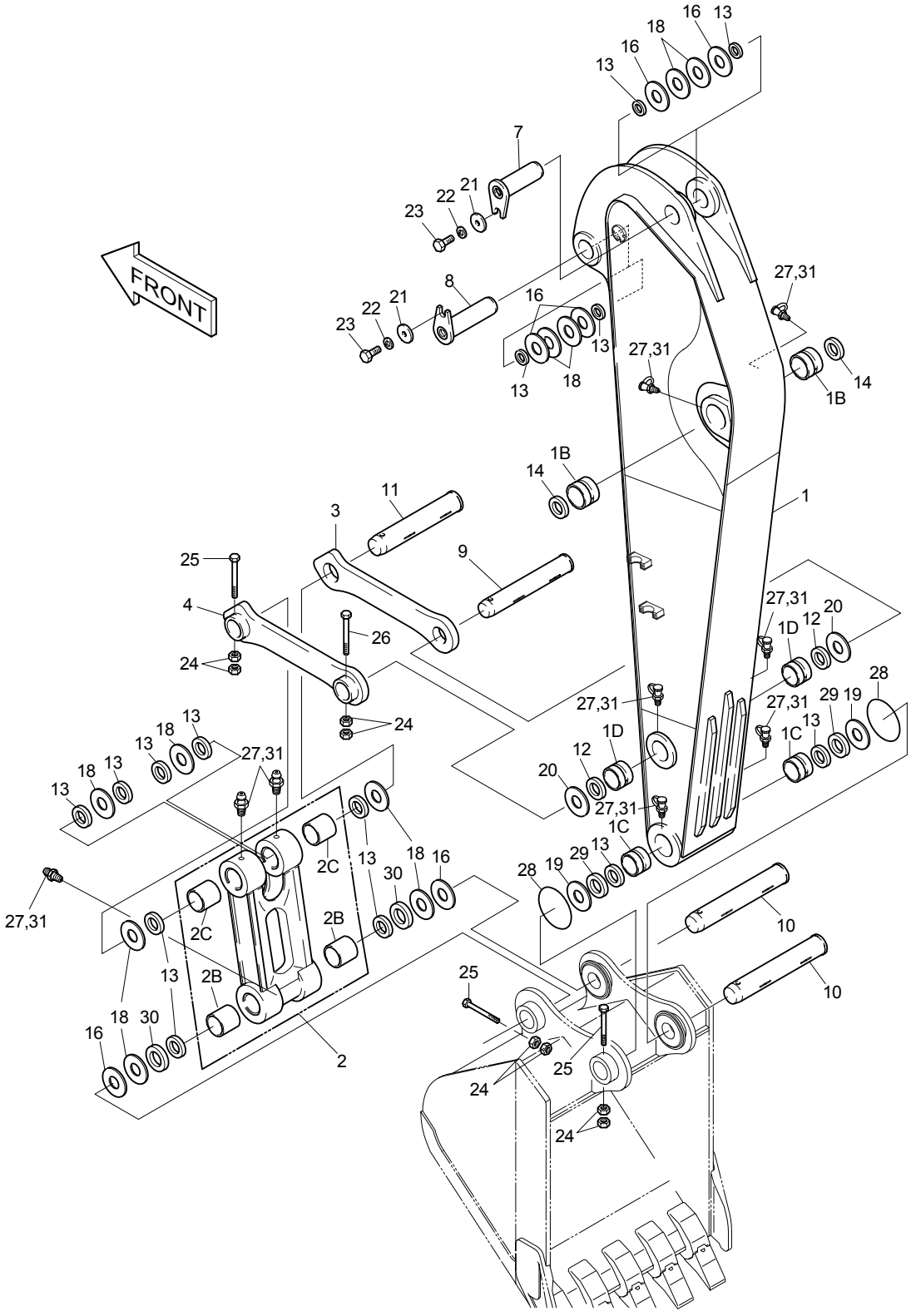

DATE	JUN. 30, 2006
REV. NO.	EXB06-08

Fig. 6390 ARM-2.0m BALANCIER

Serial No. ;

Key No.	Part No.	Description	Description	Q'ty	S.C	Serial No.	ICA	Replaceable part	
								Part No.	Q'ty
6390--	**2701-1672B**	**ARM ASS'Y-2.0m**	BALANCIER	-	D				
1	2701-1673K	ARM;MACH.-2.0m	BALANCIER	1		1001–2379	I	2701-1673L	1
	2701-1673L	**ARM;MACH.-2.0m**	BALANCIER	1		**2380–**			
1B	2110-1316A	. BUSHING	. MANCHON	2					
1C	110-00064	. BUSHING	. MANCHON	2					
1D	2110-1318A	. BUSHING	. MANCHON	2					
2	2155-1335G	LINK ASS'Y;PUSH	ARTICULATION	1					
2B	2110-1228B	. BUSHING	. MANCHON	2					
2C	2110-1360A	. BUSHING	. MANCHON	2					
3	2155-1299B	LINK;GUIDE(R.H)	ARTICULATION	1					
4	2155-1300B	LINK;GUIDE(L.H)	ARTICULATION	1					
7	2123-2187C	PIN	GOUJON	1					
8	2123-2182C	PIN	GOUJON	1					
9	2123-2191B	PIN	GOUJON	1					
10	2123-2192C	PIN	GOUJON	2					
11	2123-2193B	PIN	GOUJON	1					
12	2180-1106BD4	SEAL;DUST	PARE-POUSSIERES	2					
13	2180-1106BD24	SEAL;DUST	PARE-POUSSIERES	14					
14	2180-1106BD6	SEAL;DUST	PARE-POUSSIERES	2					
16	2114-1059D118	SHIM	CALE	6					
18	2114-1059D63	SHIM	CALE	10					
19	2114-1059D175	SHIM	CALE	2					
20	2114-1059D122	SHIM	CALE	2					
21	2116-1060D6	STOPPER	TAQUET D'ARRET	2					
22	S0521366	BOLT M16X2.0X35	BOULON A 6PANS	2					
23	S5102903	WASHER;SPRING	RONDELLE ELASTIQUE	2					
24	S4012933	NUT M16X2.0	ECROU	8					
25	S0566966	BOLT M16X2.0X140	BOULON A 6PANS	3					
26	S0566866	BOLT M16X2.0X130	BOULON A 6PANS	1					
27	S6710041	FITTING	GRAISSEUR	9					
28	180-00077D5	O-RING	JONT TORIQUE	2					
29	2114-1997A	SPACER	ENTRETOISE	2		1001–1207	I	2114-1997B	2
	2114-1997B	SPACER	ENTRETOISE	2		1208–			
30	2114-1998A	SPACER	ENTRETOISE	2		1001–1207	I	2114-1998B	2
	2114-1998B	SPACER	ENTRETOISE	2		1208–			
31	160-00020	CAP;GREASE NIPPLE	CHAPEAU	9					

DATE	JUN. 30, 2006
REV. NO.	EXB06-08

Fig. 6400 ARM-2.4m BALANCIER

Serial No. ;

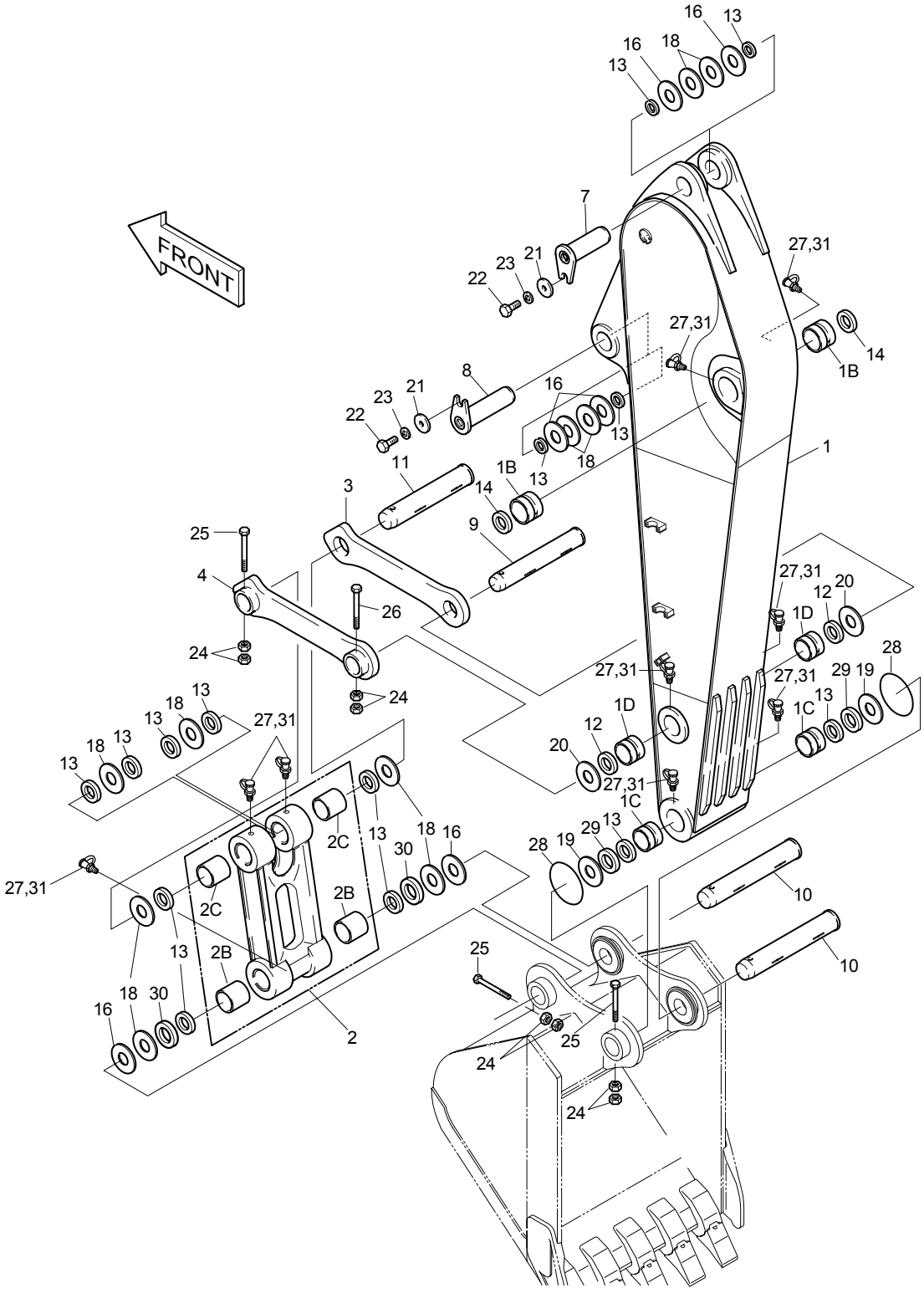

DATE	JUN. 30, 2006
REV. NO.	EXB06-08

Fig. 6400 ARM-2.4m BALANCIER

Serial No. ;

Key No.	Part No.	Description	Description	Q'ty	S.C	Serial No.	ICA	Replaceable part	
								Part No.	Q'ty
6400--	**2701-1464B**	**ARM ASS'Y-2.4m**	BALANCIER	-	D				
1	2701-1465K	ARM;MACH.-2.4m	BALANCIER	1		1001–1409	I	2701-1465L	1
	2701-1465L	ARM;MACH.-2.4m	BALANCIER	1		1410–2379	I	2701-1465M	1
	2701-1465M	**ARM;MACH.-2.4m**	BALANCIER	1		**2380–**			
1B	2110-1316A	. BUSHING	. MANCHON	2					
1C	110-00064	. BUSHING	. MANCHON	2					
1D	2110-1318A	. BUSHING	. MANCHON	2					
2	2155-1335G	LINK ASS'Y;PUSH	ARTICULATION	1					
2B	2110-1228B	. BUSHING	. MANCHON	2					
2C	2110-1360A	. BUSHING	. MANCHON	2					
3	2155-1299B	LINK;GUIDE(RH)	ARTICULATION	1					
4	2155-1300B	LINK;GUIDE(LH)	ARTICULATION	1					
7	2123-2187C	PIN	GOUJON	1					
8	2123-2182C	PIN	GOUJON	1					
9	2123-2191B	PIN	GOUJON	1					
10	2123-2192C	PIN	GOUJON	2					
11	2123-2193B	PIN	GOUJON	1					
12	2180-1106BD4	SEAL;DUST	PARE-POUSSIERES	2					
13	2180-1106BD24	SEAL;DUST	PARE-POUSSIERES	14					
14	2180-1106BD6	SEAL;DUST	PARE-POUSSIERES	2					
16	2114-1059D118	SHIM	CALE	6					
18	2114-1059D63	SHIM	CALE	10					
19	2114-1059D175	SHIM	CALE	2					
20	2114-1059D122	SHIM	CALE	2					
21	2116-1060D6	STOPPER	TAQUET D'ARRET	2					
22	S0521366	BOLT	BOULON A 6PANS	2					
23	S5102903	WASHER;SPRING	RONDELLE ELASTIQUE	2					
24	S4012933	NUT	ECROU	8					
25	S0566966	BOLT	BOULON A 6PANS	3					
26	S0566866	BOLT	BOULON A 6PANS	1					
27	S6710041	FITTING	GRAISSEUR	9					
28	180-00077D5	O-RING	JONT TORIQUE	2					
29	2114-1997A	SPACER	ENTRETOISE	2		1001–1207	I	2114-1997B	2
	2114-1997B	SPACER	ENTRETOISE	2		1208–			
30	2114-1998A	SPACER	ENTRETOISE	2		1001–1207	I	2114-1998B	2
	2114-1998B	SPACER	ENTRETOISE	2		1208–			
31	160-00020	CAP;GREASE NIPPLE	CHAPEAU	9					

DATE	DEC. 15, 2006
REV. NO.	EXB06-13

Fig. 6410 ARM-3.5m BALANCIER

Serial No. ;

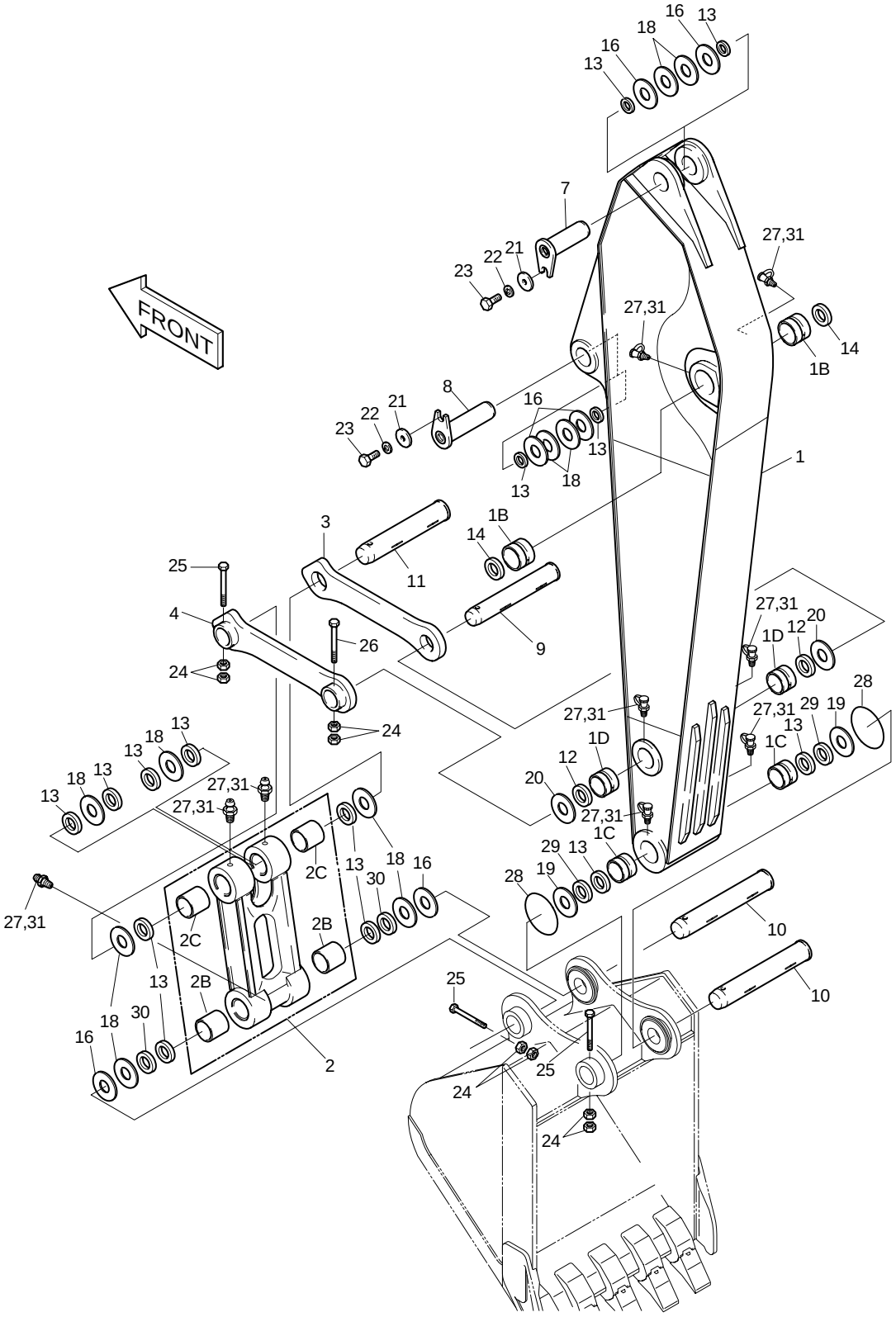

DATE	DEC. 15, 2006
REV. NO.	EXB06-13

Fig. 6410 ARM-3.5m BALANCIER

Serial No. ;

Key No.	Part No.	Description	Description	Q'ty	S.C	Serial No.	ICA	Replaceable part	
								Part No.	Q'ty
6410--	2701-1467	ARM ASS'Y-3.5m	BALANCIER	-	D				
1	2701-1468K	ARM ASS'Y-3.5m	BALANCIER	1					
1B	2110-1316A	. BUSHING	. MANCHON	2					
1C	110-00064	. BUSHING	. MANCHON	2					
1D	2110-1318A	. BUSHING	. MANCHON	2					
2	2155-1335G	LINK ASS'Y;PUSH	ARTICULATION	1					
2B	2110-1228B	. BUSHING	. MANCHON	2					
2C	2110-1360A	. BUSHING	. MANCHON	2					
3	2155-1299B	LINK;GUIDE(RH)	ARTICULATION	1					
4	2155-1300B	LINK;GUIDE(LH)	ARTICULATION	1					
7	2123-2187C	PIN	GOUJON	1					
8	2123-2182C	PIN	GOUJON	1					
9	2123-2191B	PIN	GOUJON	1					
10	2123-2192C	PIN	GOUJON	1					
11	2123-2193B	PIN	GOUJON	1					
12	2180-1106BD4	SEAL;DUST	PARE-POUSSIERES	2					
13	2180-1106BD24	SEAL;DUST	PARE-POUSSIERES	14					
14	2180-1106BD6	SEAL;DUST	PARE-POUSSIERES	2					
16	2114-1059D118	SHIM	CALE	6					
18	2114-1059D63	SHIM	CALE	10					
19	2114-1059D175	SHIM	CALE	2					
20	2114-1059D122	SHIM	CALE	2					
21	2116-1060D6	STOPPER	TAQUET D'ARRET	2					
22	S0521366	BOLT	BOULON A 6PANS	2					
23	S5102903	WASHER;SPRING	RONDELLE ELASTIQUE	2					
24	S4012933	NUT	ECROU	8					
25	S0566966	BOLT	BOULON A 6PANS	3					
26	S0566866	BOLT	BOULON A 6PANS	1					
27	S6710041	FITTING	GRAISSEUR	9					
28	180-00077D5	O-RING	JONT TORIQUE	2					
29	2114-1997A	SPACER	ENTRETOISE	2		1001–1207	I	2114-1997B	2
	2114-1997B	SPACER	ENTRETOISE	2		1208–			
30	2114-1998A	SPACER	ENTRETOISE	2		1001–1207	I	2114-1998B	2
	2114-1998B	SPACER	ENTRETOISE	2		1208–			
31	160-00020	CAP;GREASE NIPPLE	CHAPEAU	9					

DATE	JUL. 30, 2003
REV. NO.	EXB03-13

Fig. 6420 ARM PIPING-ARM 2.0m CONDUITES DE BALANCIER

Serial No. ;

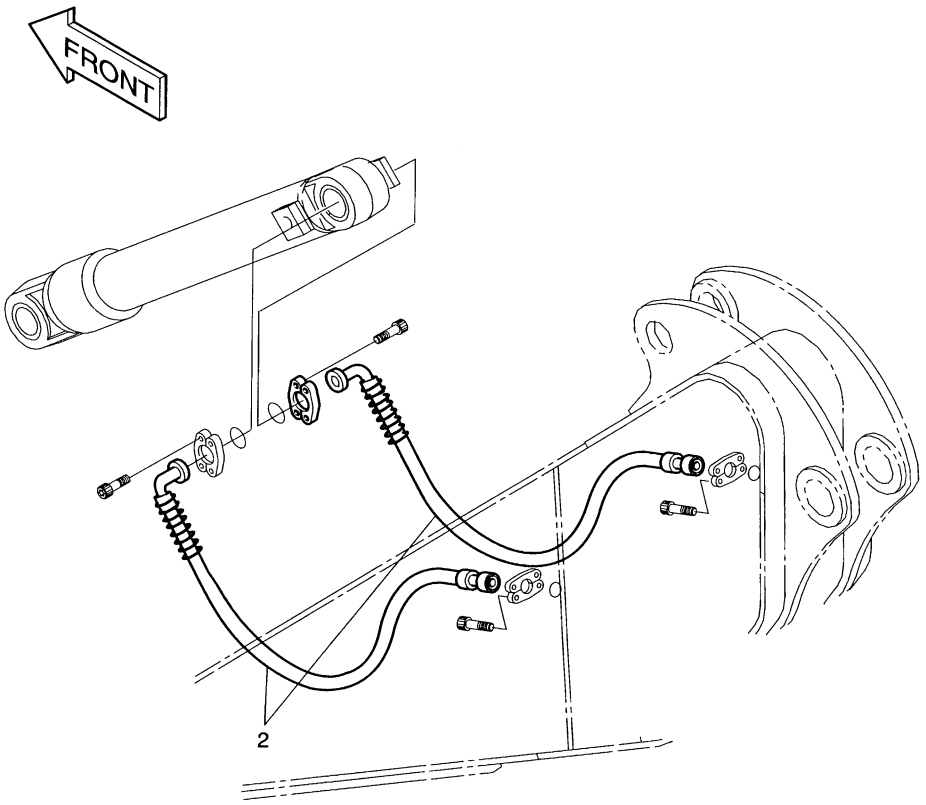

DATE	JUL. 30, 2003
REV. NO.	EXB03-13

Fig. 6420 ARM PIPING-ARM 2.0m CONDUITES DE BALANCIER

Serial No ;

Key No.	Part No.	Description	Description	Q'ty	S.C	Serial No.	ICA	Replaceable part	
								Part No.	Q'ty
6420--	2400-2092	ARM PIPING-ARM 2.0m	CONDUITES DE	-	D				
2	2184-1100D237	HOSE PF3/4-1350L	TUYAU FLEXIBLE	2					
	2184-1100D139	HOSE PF3/4-1250L	TUYAU FLEXIBLE	2					

DATE	AUG. 12, 2002
1st EDITION	

Fig. 6430 ARM PIPING-ARM 2.4m CONDUITES DE BALANCIER

Serial No. ;

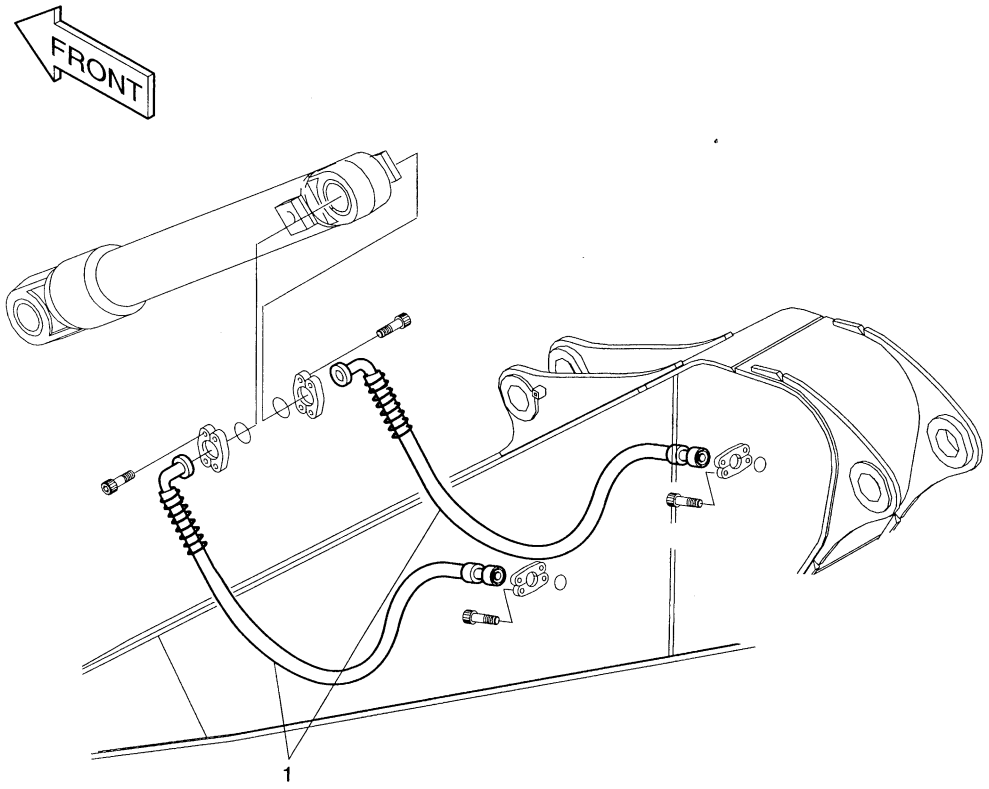

DATE	AUG. 12, 2002
1st EDITION	

Fig. 6430 ARM PIPING-ARM 2.4m CONDUITES DE BALANCIER

Serial No. ;

Key No.	Part No.	Description	Description	Q'ty	S.C	Serial No.	ICA	Replaceable part	
								Part No.	Q'ty
6430--	2400-1994	ARM PIPING-ARM 2.4m	CONDUITES DE	-	D				
1	2184-1100D178	HOSE PF3/4-1450L	TUYAU FLEXIBLE	2					

DATE	DEC. 30, 2004
REV. NO.	EXB04-09

Fig. 6440 ARM PIPING-ARM 3.5m
CONDUITES DE BALANCIER

Serial No. ;

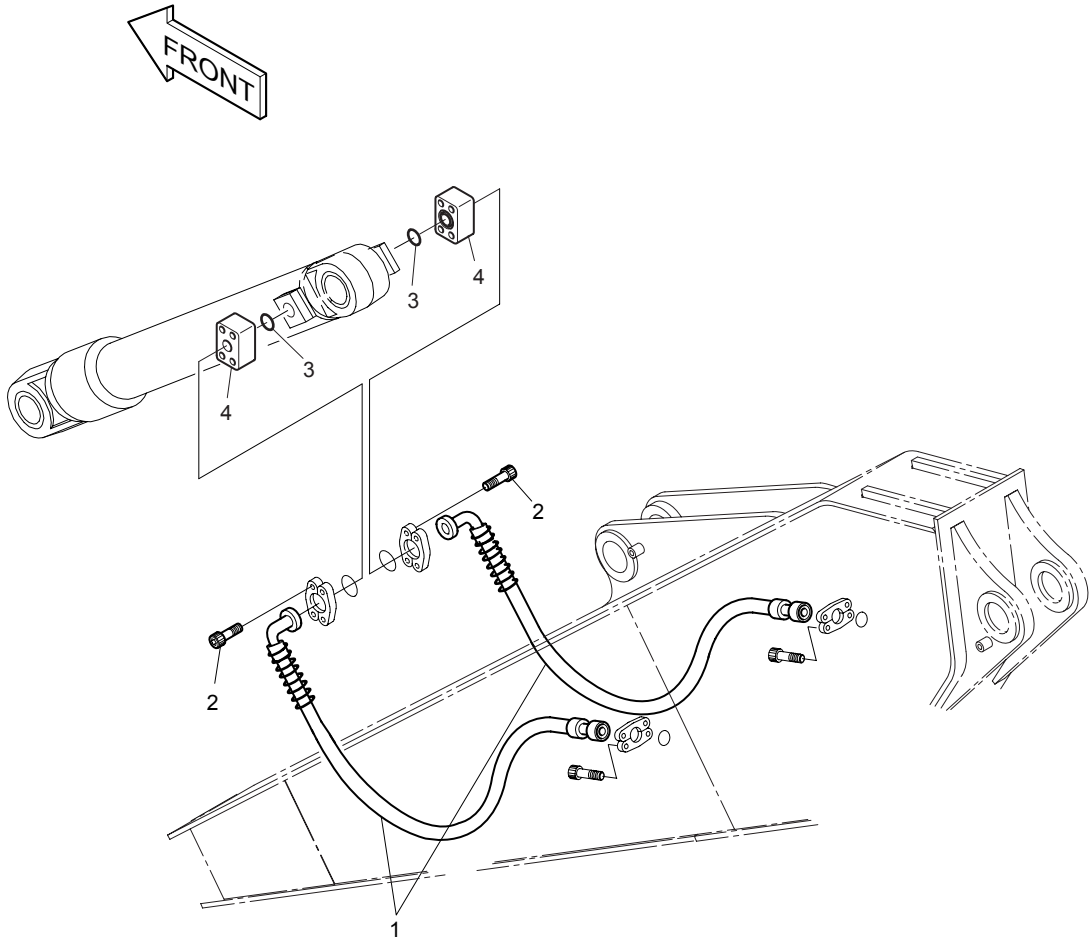

DATE	DEC. 30, 2004
REV. NO.	EXB04-09

Fig. 6440 ARM PIPING-ARM 3.5m CONDUITES DE BALANCIER

Serial No ;

Key No.	Part No.	Description	Description	Q'ty	S.C	Serial No.	ICA	Replaceable part	
								Part No.	Q'ty
6440--	2400-1993	ARM PIPING-ARM 3.5m	CONDUITES DE	-	D				
1	2184-1100D149	HOSE PF3/4-2000L	TUYAU FLEXIBLE	2					
2	**S2213066**	**BOLT;SOCKET**	BOULON A 6PANS	8		**1635–**			
3	**2180-1026D2**	**O-RING**	JONT TORIQUE	2		**1635–**			
4	**423-00032**	**BLOCK;SPACER**	BLOC	2		**1635–**			

DATE	DEC. 30, 2004
REV. NO.	EXB04-09

Fig. 6450 BUCKET-0.45m³ GODET

Serial No. ;

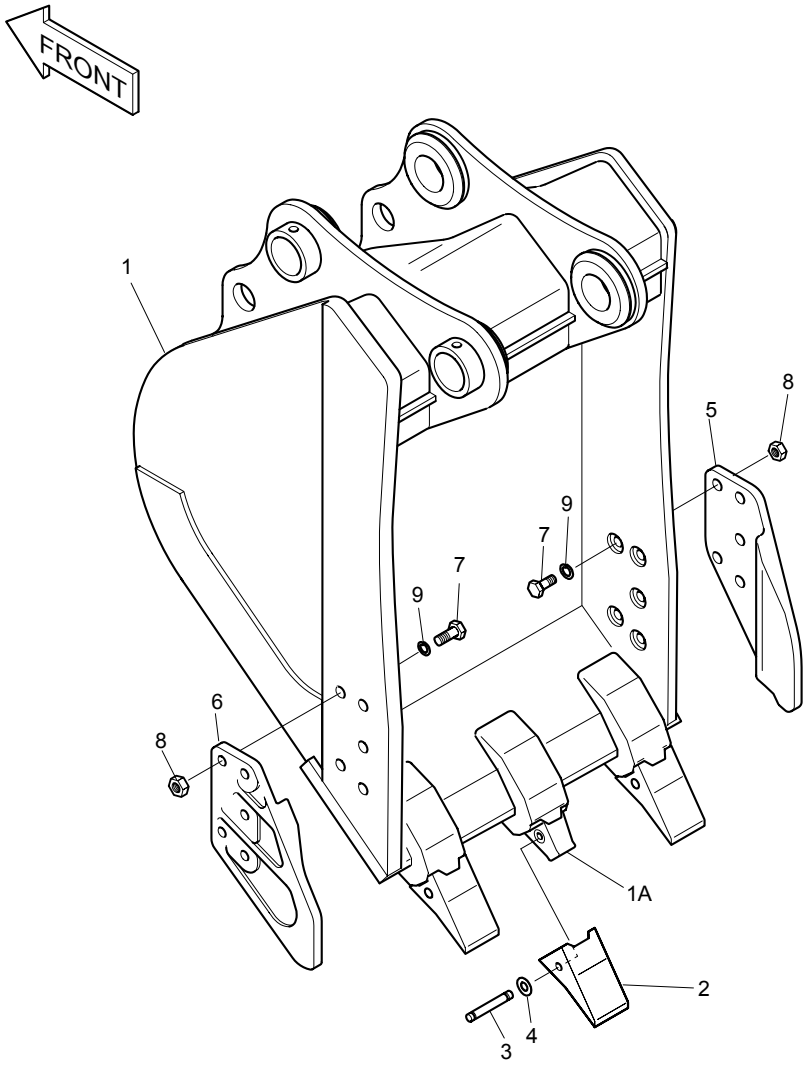

DATE	DEC. 30, 2004
REV. NO.	EXB04-09

Fig. 6450 BUCKET-0.45㎥ GODET

Serial No ;

Key No.	Part No.	Description	Description	Q'ty	S.C	Serial No.	ICA	Replaceable part	
								Part No.	Q'ty
6450--	2704-1386B	BUCKET ASS'Y-0.45㎥	ENSEMBLE GODET	1		1001–1469	I	2704-1386C	1
	2704-1386C	**BUCKET ASS'Y-0.45㎥**	ENSEMBLE GODET	1		**1470–**			
1	-	BUCKET-0.45㎥	ENSEMBLE GODET	1	D				
1A	2713-1218	. ADAPTER;TOOTH	. DENT DE ADAPTEUR	3					
2	2713-1217	POINT;TOOTH	DENT	3		1001–1469	Y	K1000344	3
	K1000344	**POINT;TOOTH**	DENT	3		**1470–**			
3	2705-1020	PIN;LOCKING	GOUPILLE DE BLOCAGE	3					
4	2114-1848A	WASHER;LOCK	RONDELLE	3					
5	2713-1059A	CUTTER;SIDE(R)	COIN DE GODET DROIT	1					
6	2713-1060A	CUTTER;SIDE(L)	COIN DE GODET GAUCHE	1					
7	S0574761	BOLT M24X3.0X70	BOULON A 6PANS	10					
8	S4013333	NUT M24X3.0	ECROU	10					
9	2114-1831	WASHER;HARDEN	RONDELLE ELASTIQUE	10					

DATE	DEC. 30, 2004
REV. NO.	EXB04-09

Fig. 6460 BUCKET-0.7m^3 GODET

Serial No. ;

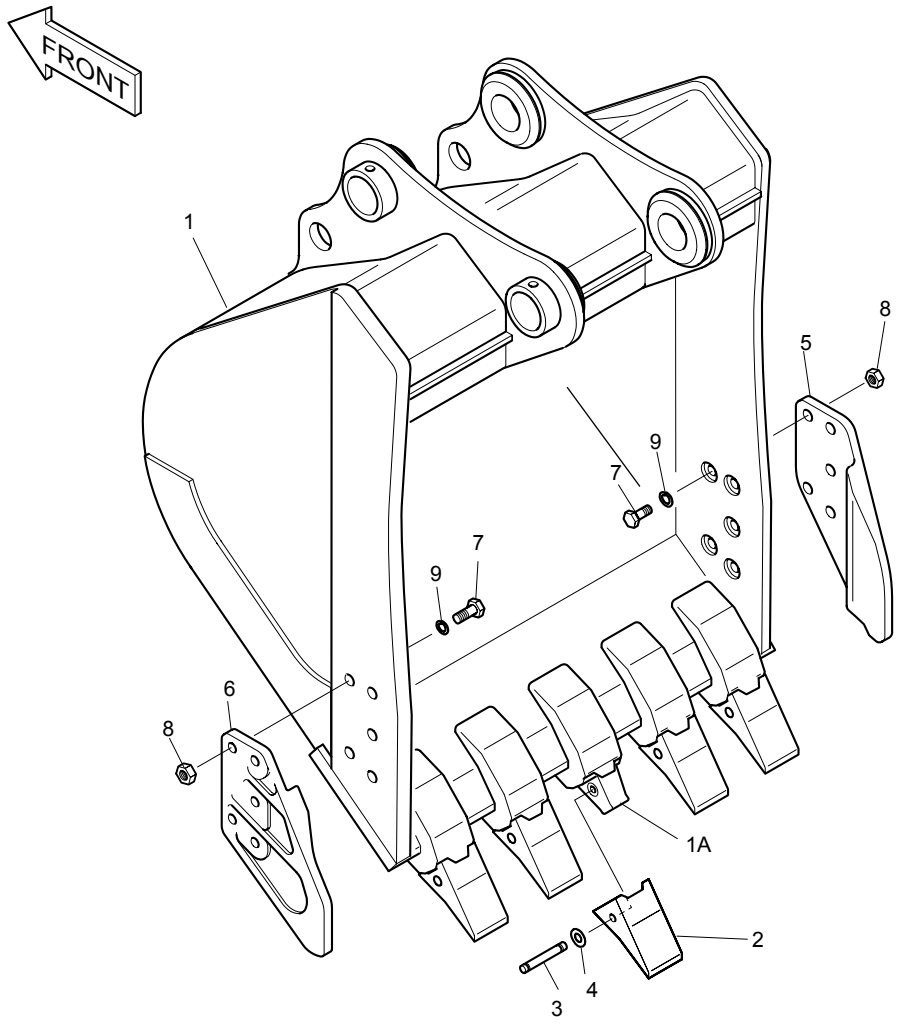

DATE	DEC. 30, 2004
REV. NO.	EXB04-09

Fig. 6460 BUCKET-0.7㎥ GODET

Serial No ;

Key No.	Part No.	Description	Description	Q'ty	S.C	Serial No.	ICA	Replaceable part	
								Part No.	Q'ty
6460--	2704-1388B	BUCKET ASS'Y-0.7㎥	ENSEMBLE GODET	1		1001–1469	I	2704-1388C	1
	2704-1388C	**BUCKET ASS'Y-0.7㎥**	ENSEMBLE GODET	1		**1470–**			
1	-	BUCKET-0.7㎥	ENSEMBLE GODET	1	D				
1A	2713-1218	. ADAPTER;TOOTH	. DENT DE ADAPTEUR	5					
2	2713-1217	POINT;TOOTH	DENT	5		1001–1469	Y	K1000344	5
	K1000344	**POINT;TOOTH**	DENT	5		**1470–**			
3	2705-1020	PIN;LOCKING	GOUPILLE DE BLOCAGE	5					
4	2114-1848A	WASHER;LOCK	RONDELLE	5					
5	2713-1059A	CUTTER;SIDE(R)	COIN DE GODET DROIT	1					
6	2713-1060A	CUTTER;SIDE(L)	COIN DE GODET GAUCHE	1					
7	S0574761	BOLT M24X3.0X70	BOULON A 6PANS	10					
8	S4013333	NUT M24X3.0	ECROU	10					
9	2114-1831	WASHER;HARDEN	RONDELLE ELASTIQUE	10					

DATE	JUL. 30, 2003
REV. NO.	EXB03-13

Fig. 6470 BUCKET-0.8m³ H.D TYPE GODET

Serial No. ;

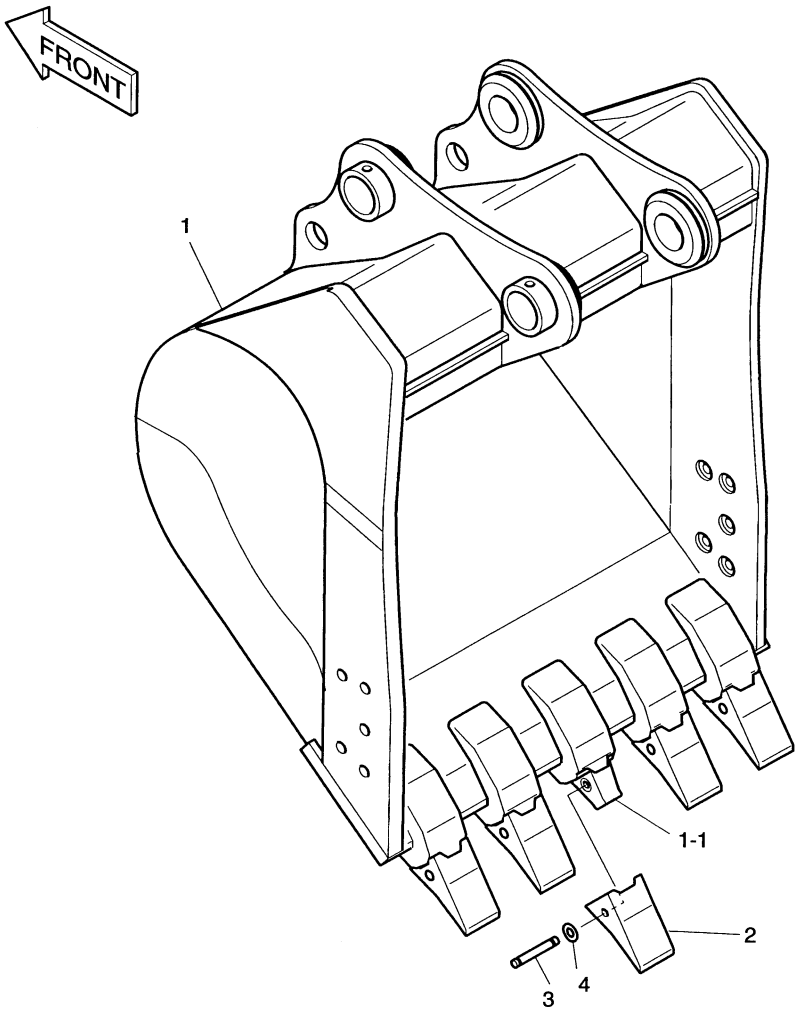

DATE	JUL. 30, 2003
REV. NO.	EXB03-13

Fig. 6470 BUCKET-0.8㎥ H.D TYPE GODET

Serial No ;

Key No.	Part No.	Description	Description	Q'ty	S.C	Serial No.	ICA	Replaceable part	
								Part No.	Q'ty
6470--	2704-1604	BUCKET ASS'Y-0.8㎥ H.D TYPE	ENSEMBLE GODET	1					
1	-	BUCKET;WELD	ENSEMBLE GODET	1	D				
1-1	2713-1218	. ADAPTER;TOOTH	. RACCORD	5					
2	2713-1269	POINT;TOOTH	DENT	5					
3	2705-1020	PIN;LOCKING	BROCHE DE BLOCAGE	5					
4	2114-1848A	WASHER;LOCK	RONDELLE D'ARRET	5					

DATE	DEC. 30, 2004
REV. NO.	EXB04-09

Fig. 6480 BUCKET-0.9m^3 GODET

Serial No. ;

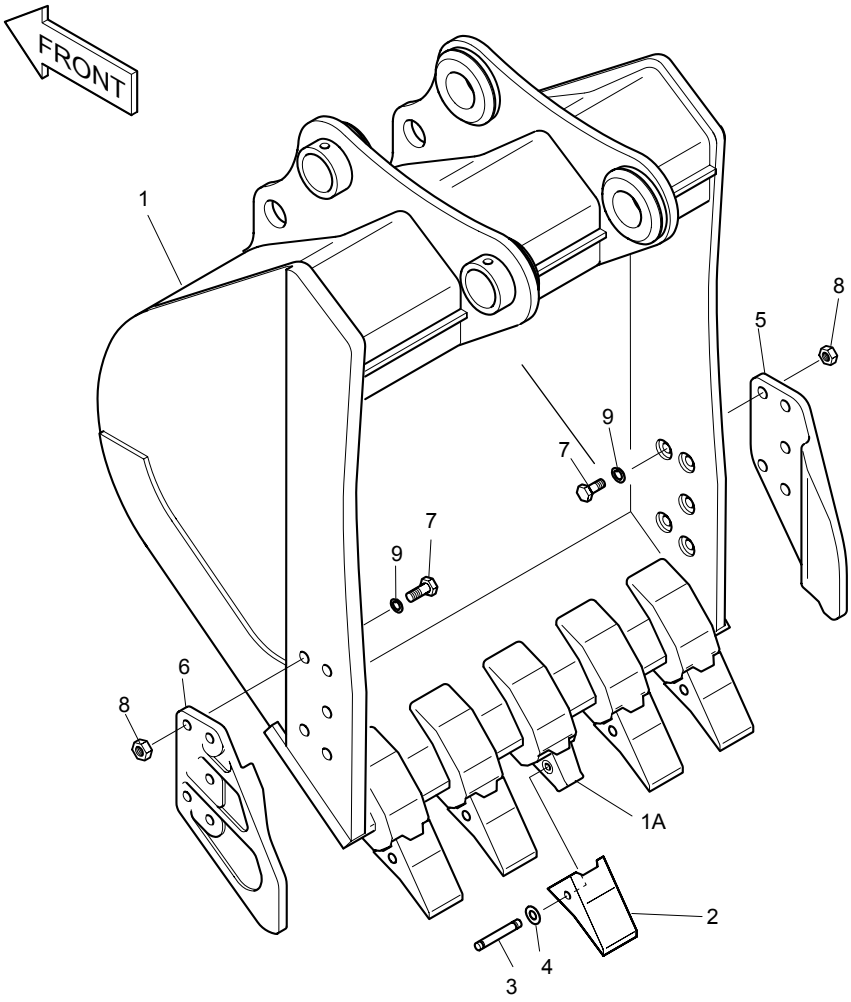

DATE	DEC. 30, 2004
REV. NO.	EXB04-09

Fig. 6480 BUCKET-0.9㎥ GODET

Serial No ;

Key No.	Part No.	Description	Description	Q'ty	S.C	Serial No.	ICA	Replaceable part	
								Part No.	Q'ty
6480--	2704-1392B	BUCKET ASS'Y-0.9㎥	ENSEMBLE GODET	1		1001–1469	I	2704-1392C	1
	2704-1392C	**BUCKET ASS'Y-0.9㎥**	ENSEMBLE GODET	1		**1470–**			
1	-	BUCKET-0.9㎥	ENSEMBLE GODET	1	D				
1A	2713-1218	. ADAPTER;TOOTH	. DENT DE ADAPTEUR	5					
2	2713-1217	POINT;TOOTH	DENT	5		1001–1469	Y	K1000344	5
	K1000344	**POINT;TOOTH**	DENT	5		**1470–**			
3	2705-1020	PIN;LOCKING	GOUPILLE DE BLOCAGE	5					
4	2114-1848A	WASHER;LOCK	RONDELLE	5					
5	2713-1059A	CUTTER;SIDE(R)	COIN DE GODET DROIT	1					
6	2713-1060A	CUTTER;SIDE(L)	COIN DE GODET GAUCHE	1					
7	S0574761	BOLT M24X3.0X70	BOULON A 6PANS	10					
8	S4013333	NUT M24X3.0	ECROU	10					
9	2114-1831	WASHER;HARDEN	RONDELLE ELASTIQUE	10					

DATE	DEC. 30, 2004
REV. NO.	EXB04-09

Fig. 6490 BUCKET-1.0m³ GODET

Serial No. ;

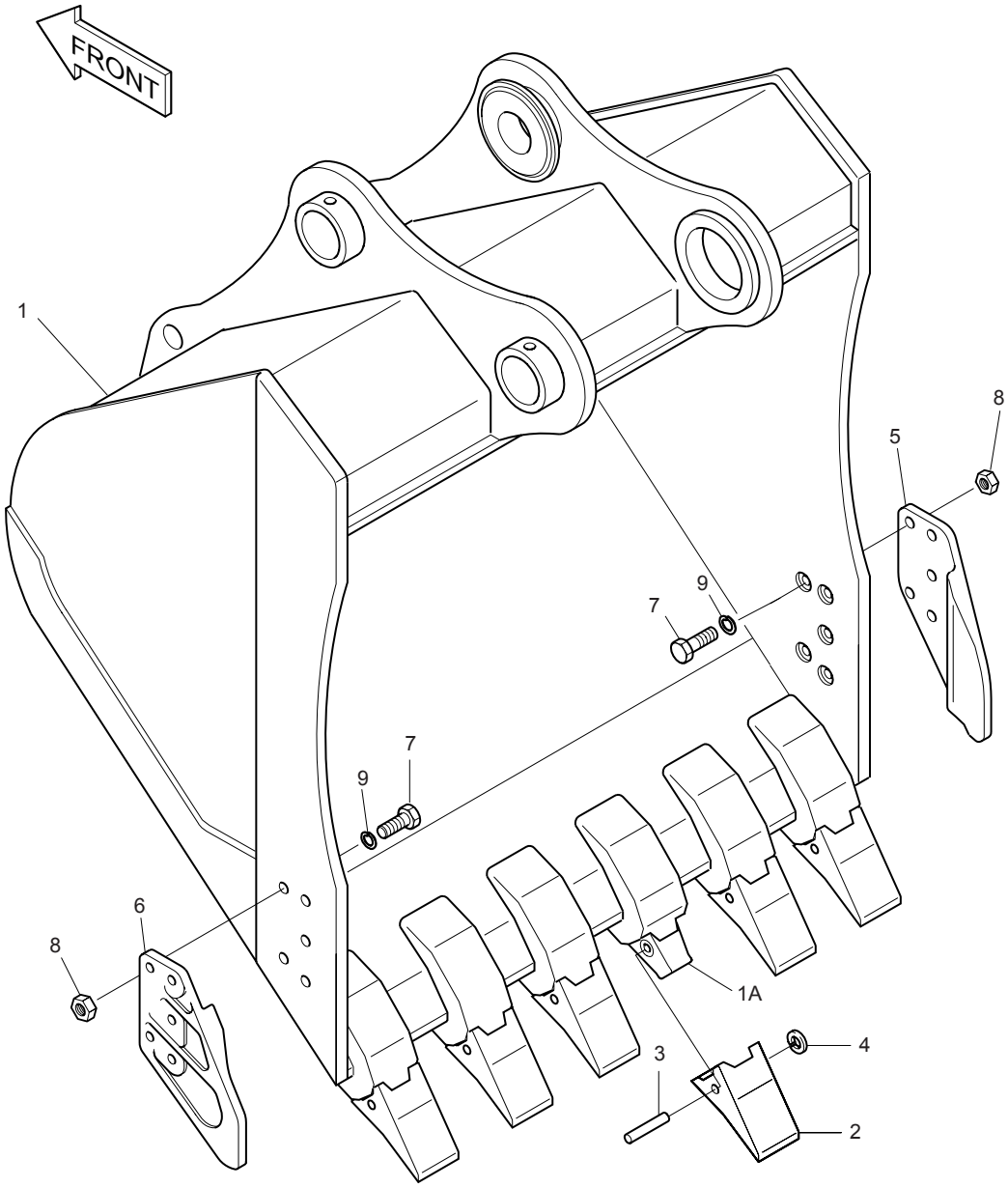

DATE	DEC. 30, 2004
REV. NO.	EXB04-09

Fig. 6490 BUCKET-1.0㎥ GODET

Serial No ;

Key No.	Part No.	Description	Description	Q'ty	S.C	Serial No.	ICA	Replaceable part	
								Part No.	Q'ty
6490--	2704-1394B	BUCKET ASS'Y-1.0㎥	ENSEMBLE GODET	1		1001–1469	I	2704-1394C	1
	2704-1394C	**BUCKET ASS'Y-1.0㎥**	ENSEMBLE GODET	1		**1470–**			
1	-	BUCKET-1.0㎥	ENSEMBLE GODET	1	D				
1A	2713-1218	. ADAPTER;TOOTH	. DENT DE ADAPTEUR	6					
2	2713-1217	POINT;TOOTH	DENT	6		1001–1469	Y	K1000344	6
	K1000344	**POINT;TOOTH**	DENT	6		**1470–**			
3	2705-1020	PIN;LOCKING	GOUPILLE DE BLOCAGE	6					
4	2114-1848A	WASHER;LOCK	RONDELLE	6					
5	2713-1059A	CUTTER;SIDE(R)	COIN DE GODET DROIT	1					
6	2713-1060A	CUTTER;SIDE(L)	COIN DE GODET GAUCHE	1					
7	S0574761	BOLT M24X3.0X70	BOULON A 6PANS	10					
8	S4013333	NUT M24X3.0	ECROU	10					
9	2114-1831	WASHER;HARDEN	RONDELLE ELASTIQUE	10					

DATE	DEC. 30, 2004
REV. NO.	EXB04-09

Fig. 6500 BUCKET-1.1m^3 GODET

Serial No. ;

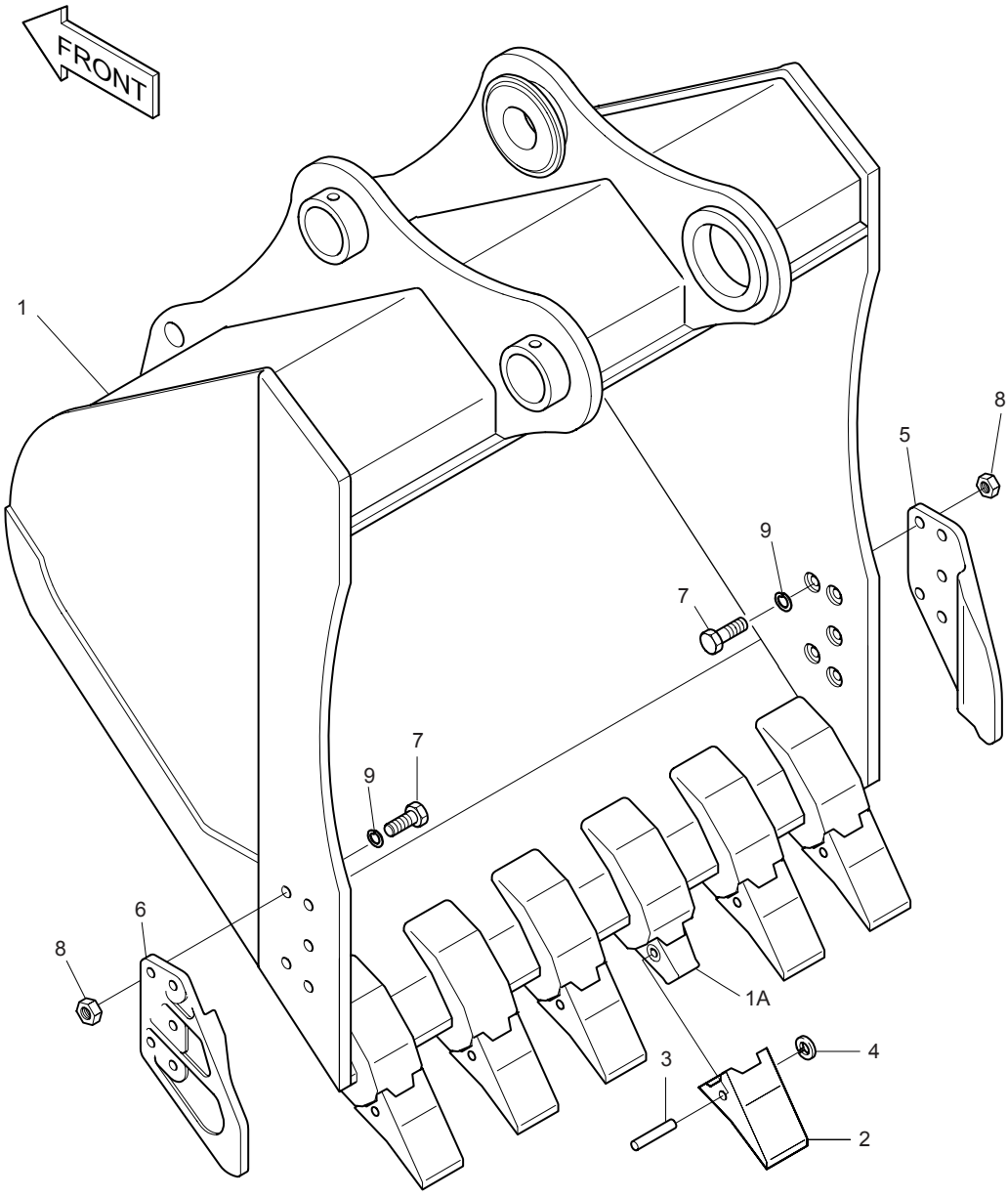

DATE	DEC. 30, 2004
REV. NO.	EXB04-09

Fig. 6500 BUCKET-1.1㎥ GODET

Serial No ;

Key No.	Part No.	Description	Description	Q'ty	S.C	Serial No.	ICA	Replaceable part	
								Part No.	Q'ty
6500--	2704-1396C	BUCKET ASS'Y-1.1㎥	ENSEMBLE GODET	1		1001–1469	I	2704-1396E	1
	2704-1396E	**BUCKET ASS'Y-1.1㎥**	ENSEMBLE GODET	1		**1470–**			
1	-	BUCKET-1.1㎥	ENSEMBLE GODET	1	D				
1A	2713-1218	. ADAPTER;TOOTH	. DENT DE ADAPTEUR	6					
2	2713-1217	POINT;TOOTH	DENT	6		1001–1469	Y	K1000344	6
	K1000344	**POINT;TOOTH**	DENT	6		**1470–**			
3	2705-1020	PIN;LOCKING	GOUPILLE DE BLOCAGE	6					
4	2114-1848A	WASHER;LOCK	RONDELLE	6					
5	2713-1059A	CUTTER;SIDE(R)	COIN DE GODET DROIT	1					
6	2713-1060A	CUTTER;SIDE(L)	COIN DE GODET GAUCHE	1					
7	S0574761	BOLT M24X3.0X70	BOULON A 6PANS	10					
8	S4013333	NUT M24X3.0	ECROU	10					
9	2114-1831	WASHER;HARDEN	RONDELLE ELASTIQUE	10					

DATE	JUL. 30, 2003
REV. NO.	EXB03-13

Fig. 6510 BUCKET-0.67m³(36")-SIDE PIN GODET

Serial No. ;

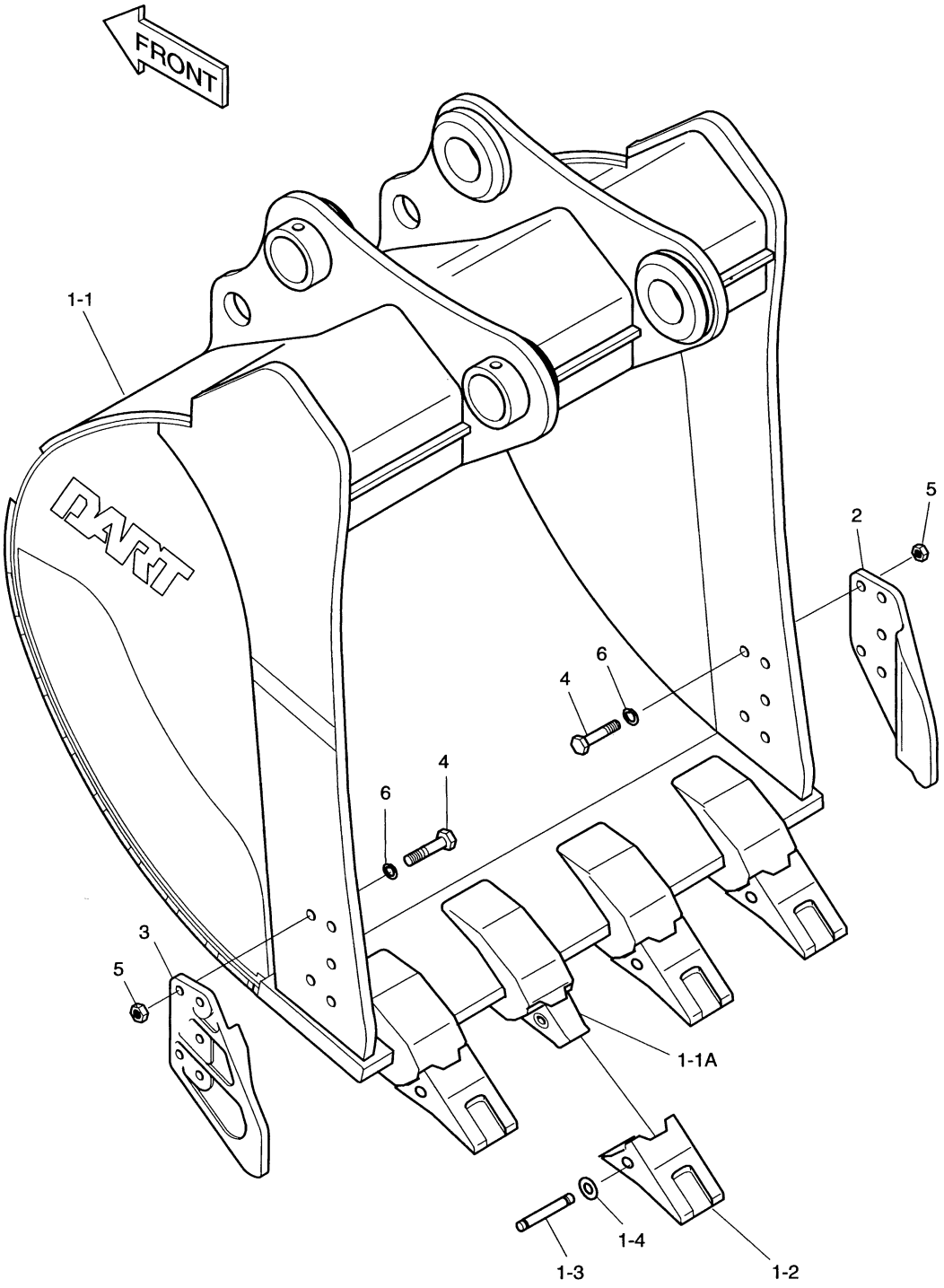

DATE	JUL. 30, 2003
REV. NO.	EXB03-13

Fig. 6510 BUCKET-0.67㎥(36")-SIDE PIN GODET

Serial No ;

Key No.	Part No.	Description	Description	Q'ty	S.C	Serial No.	ICA	Replaceable part	
								Part No.	Q'ty
6510--	2704-1645	BUCKET ASS'Y-0.67㎥(H.D)	GODET	1					
1	2704-1646	BUCKET SUB ASS'Y-0.67㎥	GODET	1	D				
1-1	-	. BUCKET;WELD	. GODET	1	D				
1-1A	2713-1218	.. ADAPTER;TOOTH	.. DENT DE ADAPTEUR	4					
1-2	713-00024	. POINT;TOOTH	. DENT	4					
1-3	2705-1020	. PIN;LOCKING	. GOUPILLE DE BLOCAGE	4					
1-4	2114-1848A	. WASHER;LOCKING	. RONDELLE	4					
2	2713-1059A	CUTTER;SIDE(R.H)	COIN DE GODET DROIT	1					
3	2713-1060A	CUTTER;SIDE(L.H)	COIN DE GODET GAUCHE	1					
4	S0574861	BOLT M24X3.0X75	BOULON A 6 PANS	10					
5	S4013333	NUT M24X3.0	ECROU	10					
6	2114-1831	WASHER;HARDEN	RONDELLE ELASTIQUE	10					

DATE	JUL. 30, 2003
REV. NO.	EXB03-13

Fig. 6520 BUCKET-0.67m³(36")-VERTICAL PIN GODET

Serial No. ;

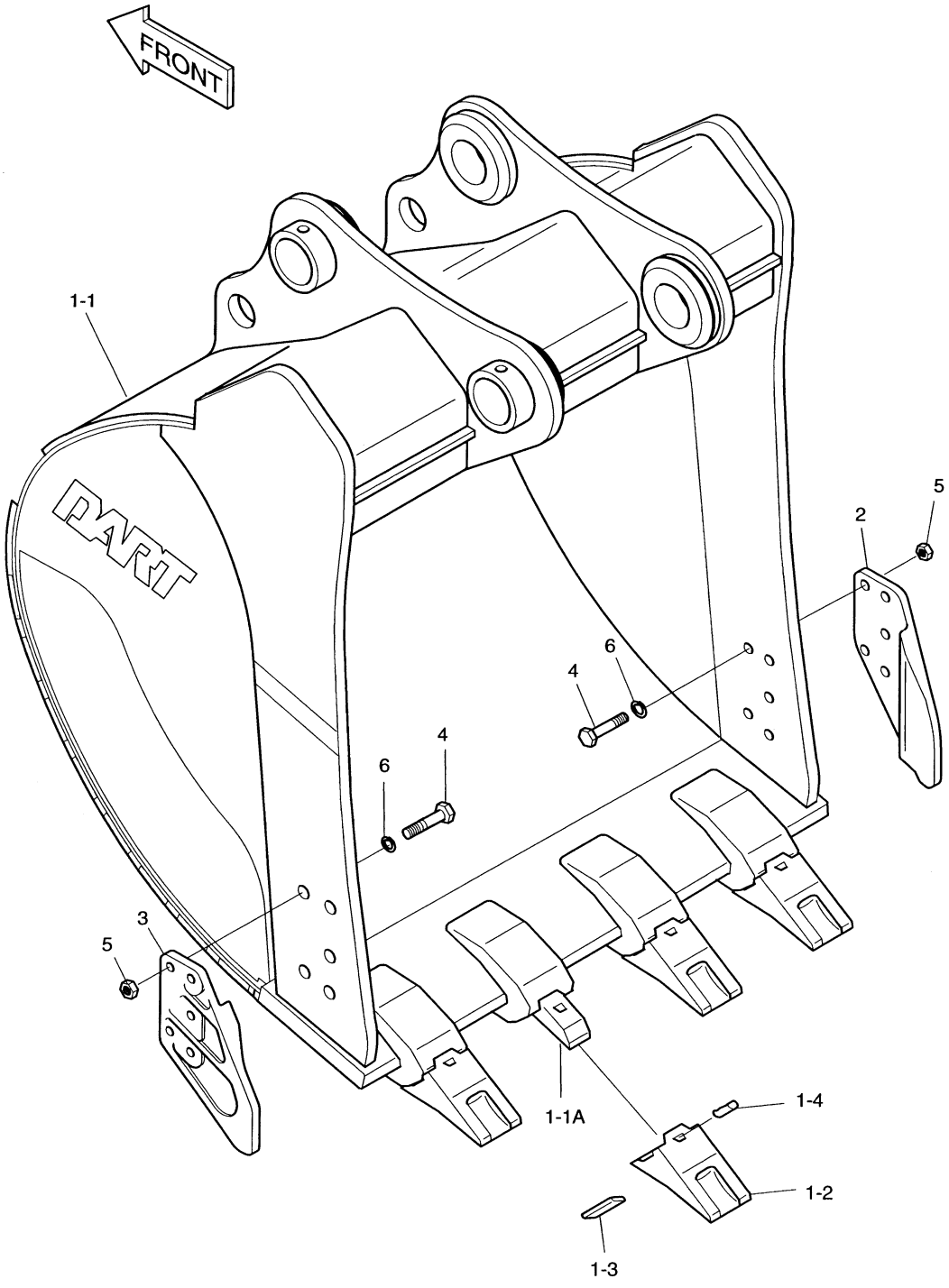

DATE	JUL. 30, 2003
REV. NO.	EXB03-13

Fig. 6520 BUCKET-0.67㎥(36")-VERTICAL PIN GODET

Serial No ;

Key No.	Part No.	Description	Description	Q'ty	S.C	Serial No.	ICA	Replaceable part	
								Part No.	Q'ty
6520--	2704-1675	BUCKET ASS'Y-0.67㎥(H.D)	GODET	1					
1	2704-1676	BUCKET SUB ASS'Y-0.67㎥	GODET	1	D				
1-1	-	. BUCKET;WELD	. GODET	1	D				
1-1A	2713-6078	.. ADAPTER;TOOTH	.. DENT DE ADAPTEUR	4					
1-2	2713-9061	. POINT;TOOTH	. DENT	4					
1-3	2705-6034	. PIN;LOCKING	. GOUPILLE DE BLOCAGE	4					
1-4	2705-6033	. PIN;RUBBER	. GOUPILLE	4					
2	2713-1059A	CUTTER;SIDE(R.H)	COIN DE GODET DROIT	1					
3	2713-1060A	CUTTER;SIDE(L.H)	COIN DE GODET GAUCHE	1					
4	S0574861	BOLT M24X3.0X75	BOULON A 6 PANS	10					
5	S4013333	NUT M24X3.0	ECROU	10					
6	2114-1831	WASHER;HARDEN	RONDELLE ELASTIQUE	10					

DATE	JUL. 30, 2003
REV. NO.	EXB03-13

Fig. 6530 BUCKET-0.80m³(42")-SIDE PIN GODET

Serial No. ;

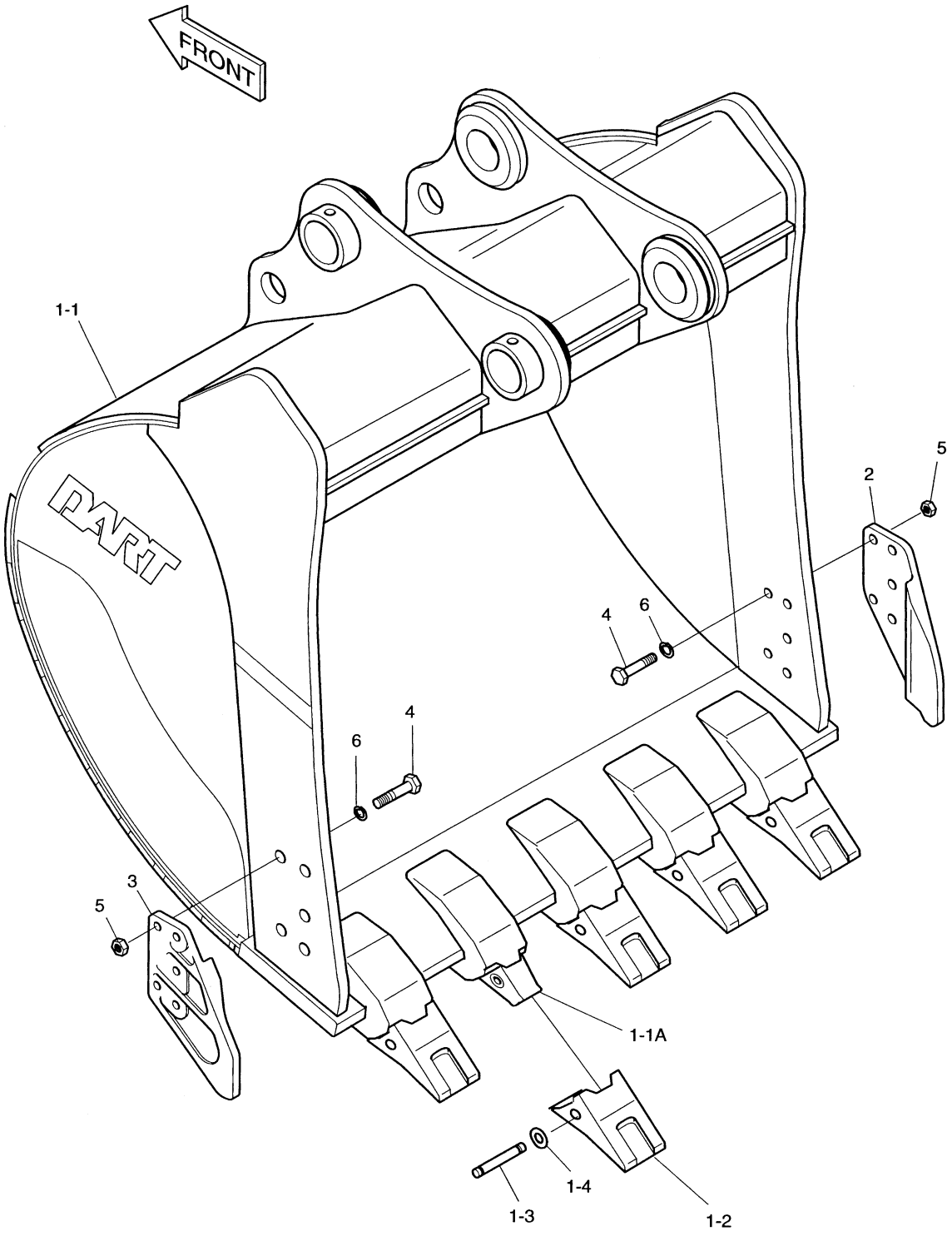

DATE	JUL. 30, 2003
REV. NO.	EXB03-13

Fig. 6530 BUCKET-0.80m³(42")-SIDE PIN GODET

Serial No ;

Key No.	Part No.	Description	Description	Q'ty	S.C	Serial No.	ICA	Replaceable part	
								Part No.	Q'ty
6530--	2704-1632A	BUCKET ASS'Y-0.80㎥(H.D)	GODET	1					
1	2704-1604A	BUCKET SUB ASS'Y-0.80㎥	GODET	1	D				
1-1	-	. BUCKET;WELD	. GODET	1	D				
1-1A	2713-1218	.. ADAPTER;TOOTH	.. DENT DE ADAPTEUR	5					
1-2	713-00024	. POINT;TOOTH	. DENT	5					
1-3	2705-1020	. PIN;LOCKING	. GOUPILLE DE BLOCAGE	5					
1-4	2114-1848A	. WASHER;LOCKING	. RONDELLE	5					
2	2713-1059A	CUTTER;SIDE(R.H)	COIN DE GODET DROIT	1					
3	2713-1060A	CUTTER;SIDE(L.H)	COIN DE GODET GAUCHE	1					
4	S0574861	BOLT M24X3.0X75	BOULON A 6 PANS	10					
5	S4013333	NUT M24X3.0	ECROU	10					
6	2114-1831	WASHER;HARDEN	RONDELLE ELASTIQUE	10					

DATE	JUL. 30, 2003
REV. NO.	EXB03-13

Fig. 6540 BUCKET-0.80m³(42")-VERTICAL PIN GODET

Serial No. ;

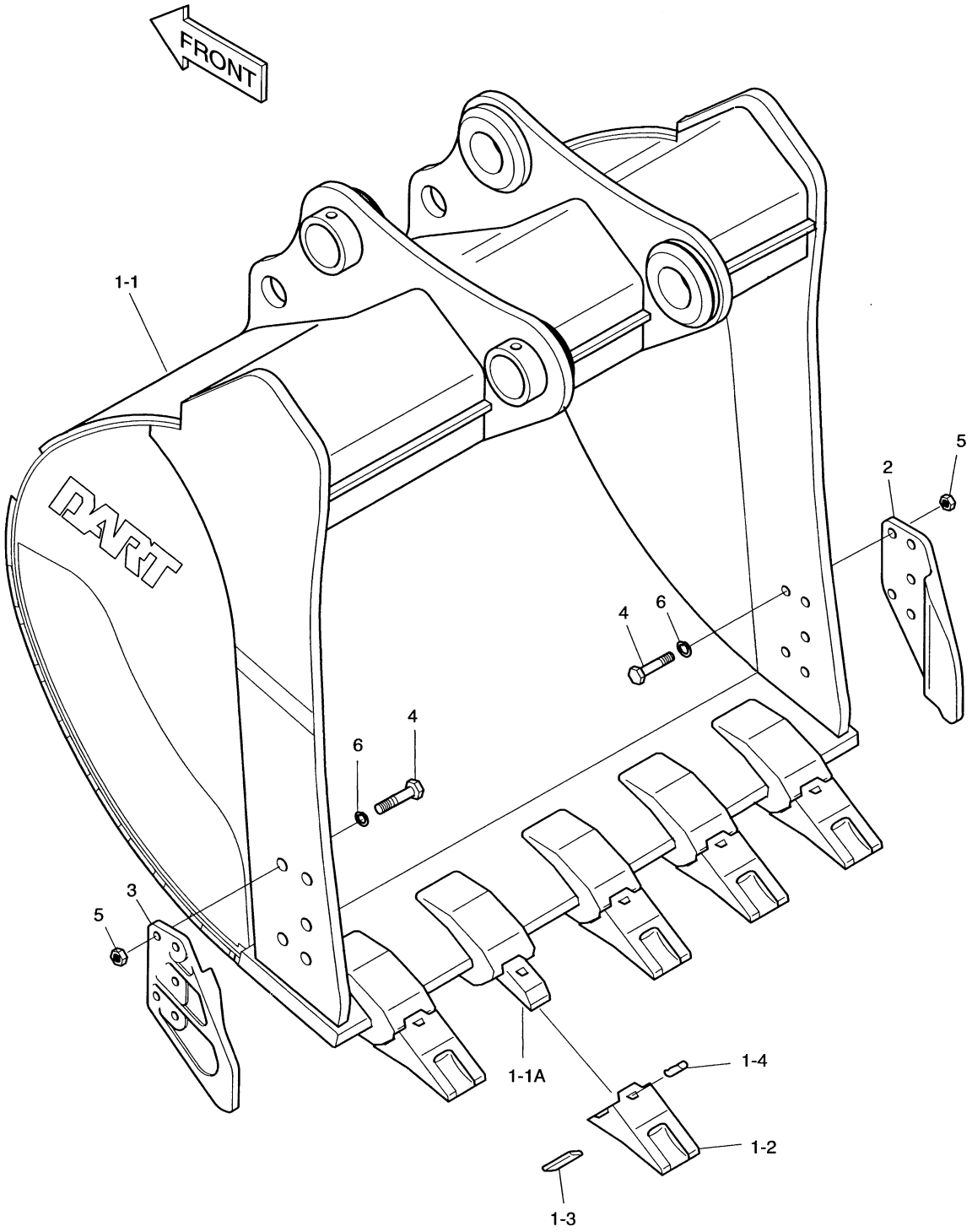

DATE	JUL. 30, 2003
REV. NO.	EXB03-13

Fig. 6540 BUCKET-0.80㎥(42")-VERTICAL PIN GODET

Serial No ;

Key No.	Part No.	Description	Description	Q'ty	S.C	Serial No.	ICA	Replaceable part	
								Part No.	Q'ty
6540--	2704-1678	BUCKET ASS'Y-0.80㎥(H.D)	GODET	1					
1	2704-1679	BUCKET SUB ASS'Y-0.80㎥	GODET	1	D				
1-1	-	. BUCKET;WELD	. GODET	1	D				
1-1A	2713-6078	.. ADAPTER;TOOTH	.. DENT DE ADAPTEUR	5					
1-2	2713-9061	. POINT;TOOTH	. DENT	5					
1-3	2705-6034	. PIN;LOCKING	. GOUPILLE DE BLOCAGE	5					
1-4	2705-6033	. PIN;RUBBER	. GOUPILLE	5					
2	2713-1059A	CUTTER;SIDE(R.H)	COIN DE GODET DROIT	1					
3	2713-1060A	CUTTER;SIDE(L.H)	COIN DE GODET GAUCHE	1					
4	S0574861	BOLT M24X3.0X75	BOULON A 6 PANS	10					
5	S4013333	NUT M24X3.0	ECROU	10					
6	2114-1831	WASHER;HARDEN	RONDELLE ELASTIQUE	10					

DATE	JUL. 30, 2003
REV. NO.	EXB03-13

Fig. 6550 BUCKET-0.95m³(48")-SIDE PIN GODET

Serial No. ;

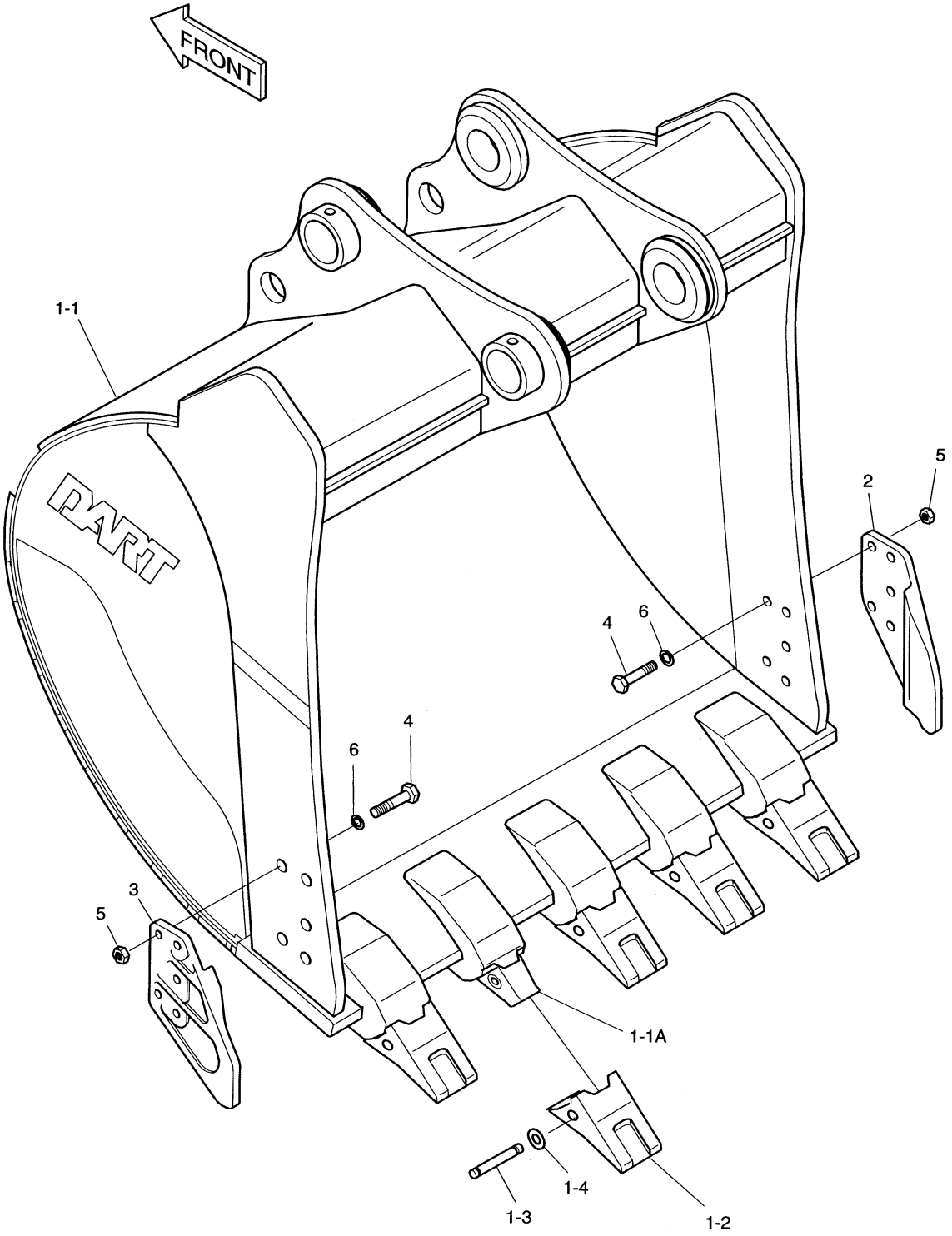

DATE	JUL. 30, 2003
REV. NO.	EXB03-13

Fig. 6550 BUCKET-0.95㎥(48")-SIDE PIN GODET

Serial No ;

Key No.	Part No.	Description	Description	Q'ty	S.C	Serial No.	ICA	Replaceable part	
								Part No.	Q'ty
6550--	2704-1648	BUCKET ASS'Y-0.95㎥(H.D)	GODET	1					
1	2704-1649	BUCKET SUB ASS'Y-0.95㎥	GODET	1	D				
1-1	-	. BUCKET;WELD	. GODET	1	D				
1-1A	2713-1218	.. ADAPTER;TOOTH	.. DENT DE ADAPTEUR	5					
1-2	713-00024	. POINT;TOOTH	. DENT	5					
1-3	2705-1020	. PIN;LOCKING	. GOUPILLE DE BLOCAGE	5					
1-4	2114-1848A	. WASHER;LOCKING	. RONDELLE	5					
2	2713-1059A	CUTTER;SIDE(R.H)	COIN DE GODET DROIT	1					
3	2713-1060A	CUTTER;SIDE(L.H)	COIN DE GODET GAUCHE	1					
4	S0574861	BOLT M24X3.0X75	BOULON A 6 PANS	10					
5	S4013333	NUT M24X3.0	ECROU	10					
6	2114-1831	WASHER;HARDEN	RONDELLE ELASTIQUE	10					

DATE	JUL. 30, 2003
REV. NO.	EXB03-13

Fig. 6560 BUCKET-0.95m³(48")-VERTICAL PIN GODET

Serial No. ;

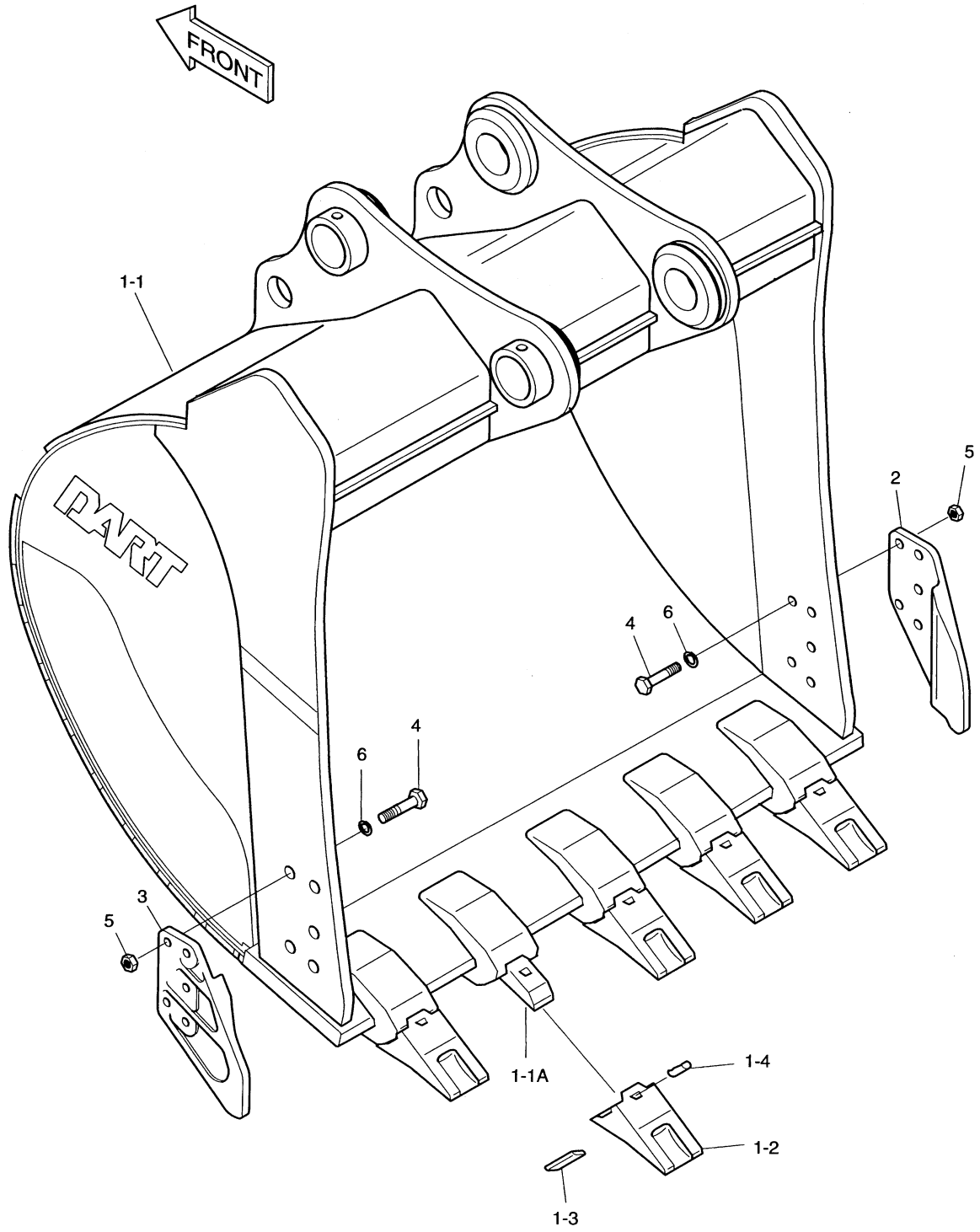

DATE	JUL. 30, 2003
REV. NO.	EXB03-13

Fig. 6560 BUCKET-0.95㎥(48")-VERTICAL PIN GODET

Serial No ;

Key No.	Part No.	Description	Description	Q'ty	S.C	Serial No.	ICA	Replaceable part	
								Part No.	Q'ty
6560--	2704-1681	BUCKET ASS'Y-0.95㎥(H.D)	GODET	1					
1	2704-1682	BUCKET SUB ASS'Y-0.95㎥	GODET	1	D				
1-1	-	. BUCKET;WELD	. GODET	1	D				
1-1A	2713-6078	.. ADAPTER;TOOTH	.. DENT DE ADAPTEUR	5					
1-2	2713-9061	. POINT;TOOTH	. DENT	5					
1-3	2705-6034	. PIN;LOCKING	. GOUPILLE DE BLOCAGE	5					
1-4	2705-6033	. PIN;RUBBER	. GOUPILLE	5					
2	2713-1059A	CUTTER;SIDE(R.H)	COIN DE GODET DROIT	1					
3	2713-1060A	CUTTER;SIDE(L.H)	COIN DE GODET GAUCHE	1					
4	S0574861	BOLT M24X3.0X75	BOULON A 6 PANS	10					
5	S4013333	NUT M24X3.0	ECROU	10					
6	2114-1831	WASHER;HARDEN	RONDELLE ELASTIQUE	10					

DATE	JUL. 30, 2003
REV. NO.	EXB03-13

Fig. 6570 BUCKET-1.1m³(54")-SIDE PIN GODET

Serial No. ;

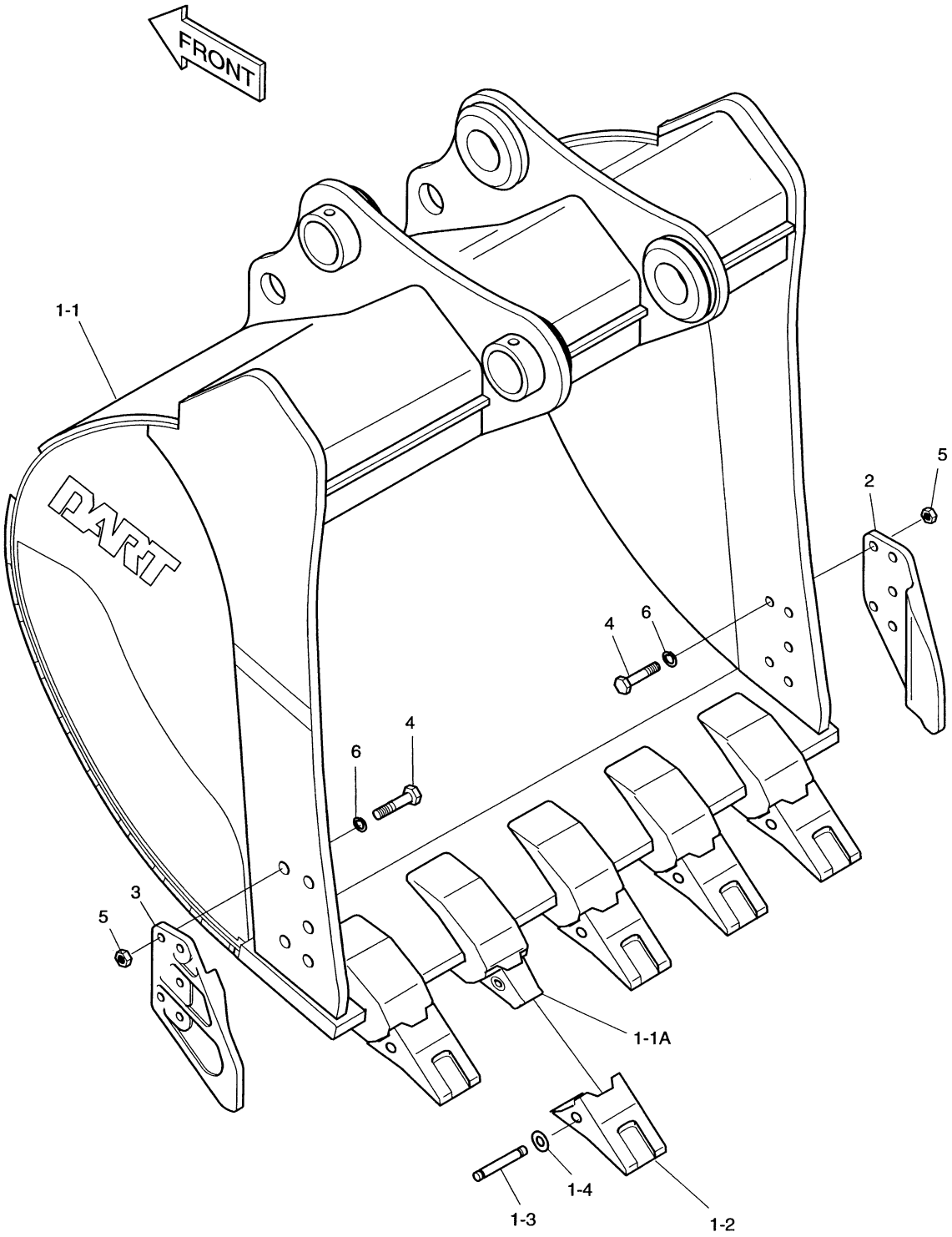

DATE	JUL. 30, 2003
REV. NO.	EXB03-13

Fig. 6570 BUCKET-1.1㎥(54")-SIDE PIN GODET

Serial No ;

Key No.	Part No.	Description	Description	Q'ty	S.C	Serial No.	ICA	Replaceable part	
								Part No.	Q'ty
6570--	704-00049	BUCKET ASS'Y-1.1㎥(H.D)	GODET	1					
1	704-00050	BUCKET SUB ASS'Y-1.1㎥	GODET	1	D				
1-1	-	. BUCKET;WELD	. GODET	1	D				
1-1A	2713-1218	.. ADAPTER;TOOTH	.. DENT DE ADAPTEUR	5					
1-2	713-00024	. POINT;TOOTH	. DENT	5					
1-3	2705-1020	. PIN;LOCKING	. GOUPILLE DE BLOCAGE	5					
1-4	2114-1848A	. WASHER;LOCKING	. RONDELLE	5					
2	2713-1059A	CUTTER;SIDE(R.H)	COIN DE GODET DROIT	1					
3	2713-1060A	CUTTER;SIDE(L.H)	COIN DE GODET GAUCHE	1					
4	S0574861	BOLT M24X3.0X75	BOULON A 6 PANS	10					
5	S4013333	NUT M20X2.5	ECROU	10					
6	2114-1831	WASHER;HARDEN	RONDELLE ELASTIQUE	10					

DATE	JUL. 30, 2003
REV. NO.	EXB03-13

Fig. 6580 BUCKET-1.1m³(54")-VERTICAL PIN GODET

Serial No. ;

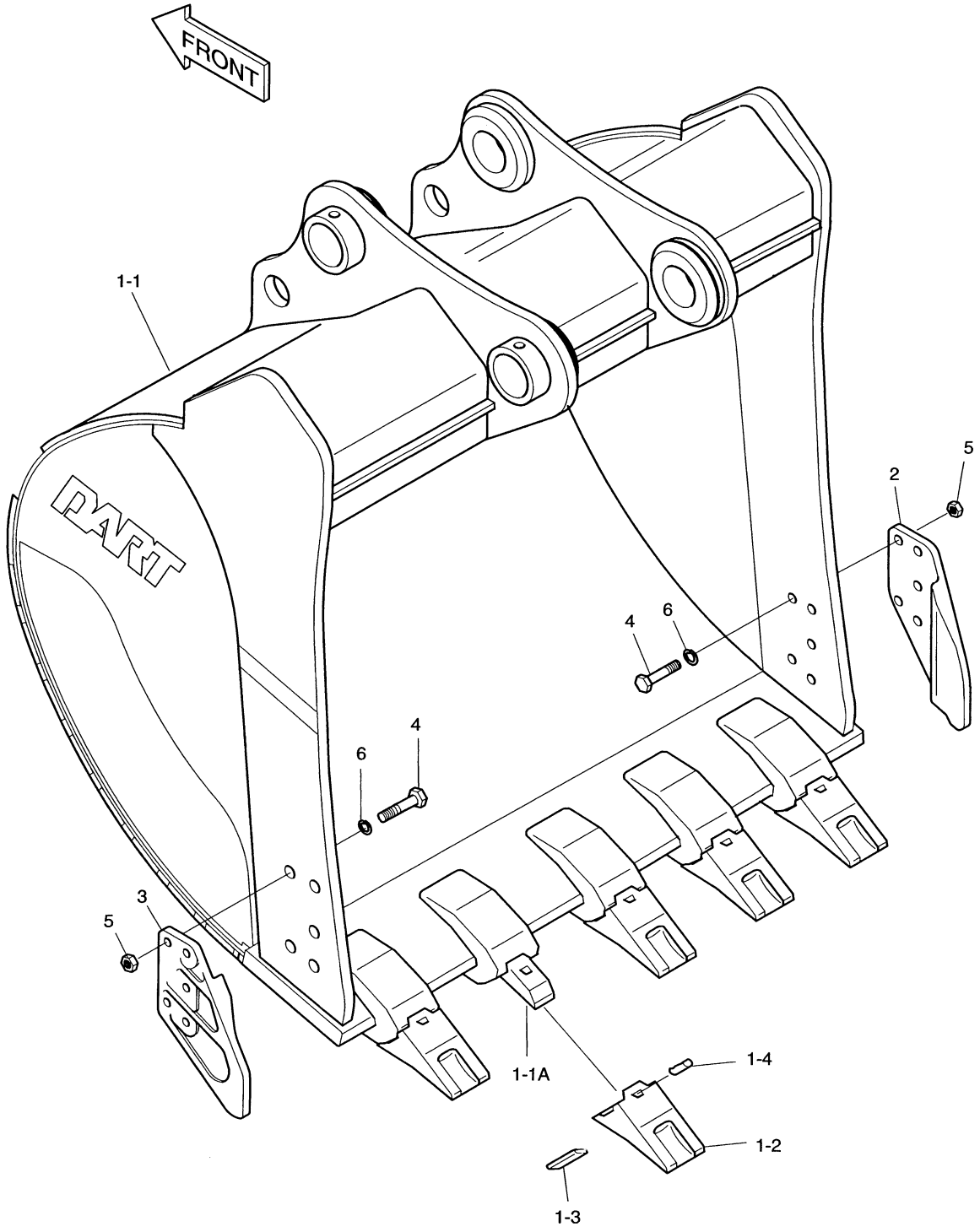

DATE	JUL. 30, 2003
REV. NO.	EXB03-13

Fig. 6580 BUCKET-1.1m³(54")-VERTICAL PIN GODET

Serial No ;

Key No.	Part No.	Description	Description	Q'ty	S.C	Serial No.	ICA	Replaceable part	
								Part No.	Q'ty
6580--	704-00055	BUCKET ASS'Y-1.1㎥(H.D)	GODET	1					
1	704-00056	BUCKET SUB ASS'Y-1.1㎥	GODET	1	D				
1-1	-	. BUCKET;WELD	. GODET	1	D				
1-1A	2713-6078	.. ADAPTER;TOOTH	.. DENT DE ADAPTEUR	5					
1-2	2713-9061	. POINT;TOOTH	. DENT	5					
1-3	2705-6034	. PIN;LOCKING	. GOUPILLE DE BLOCAGE	5					
1-4	2705-6033	. PIN;RUBBER	. GOUPILLE	5					
2	2713-1059A	CUTTER;SIDE(R.H)	COIN DE GODET DROIT	1					
3	2713-1060A	CUTTER;SIDE(L.H)	COIN DE GODET GAUCHE	1					
4	S0574861	BOLT M24X3.0X75	BOULON A 6 PANS	10					
5	S4013333	NUT M24X3.0	ECROU	10					
6	2114-1831	WASHER;HARDEN	RONDELLE ELASTIQUE	10					

DATE	JUL. 30, 2003
REV. NO.	EXB03-13

Fig. 6590 BUCKET-1.17m³(57")-SIDE PIN GODET

Serial No. ;

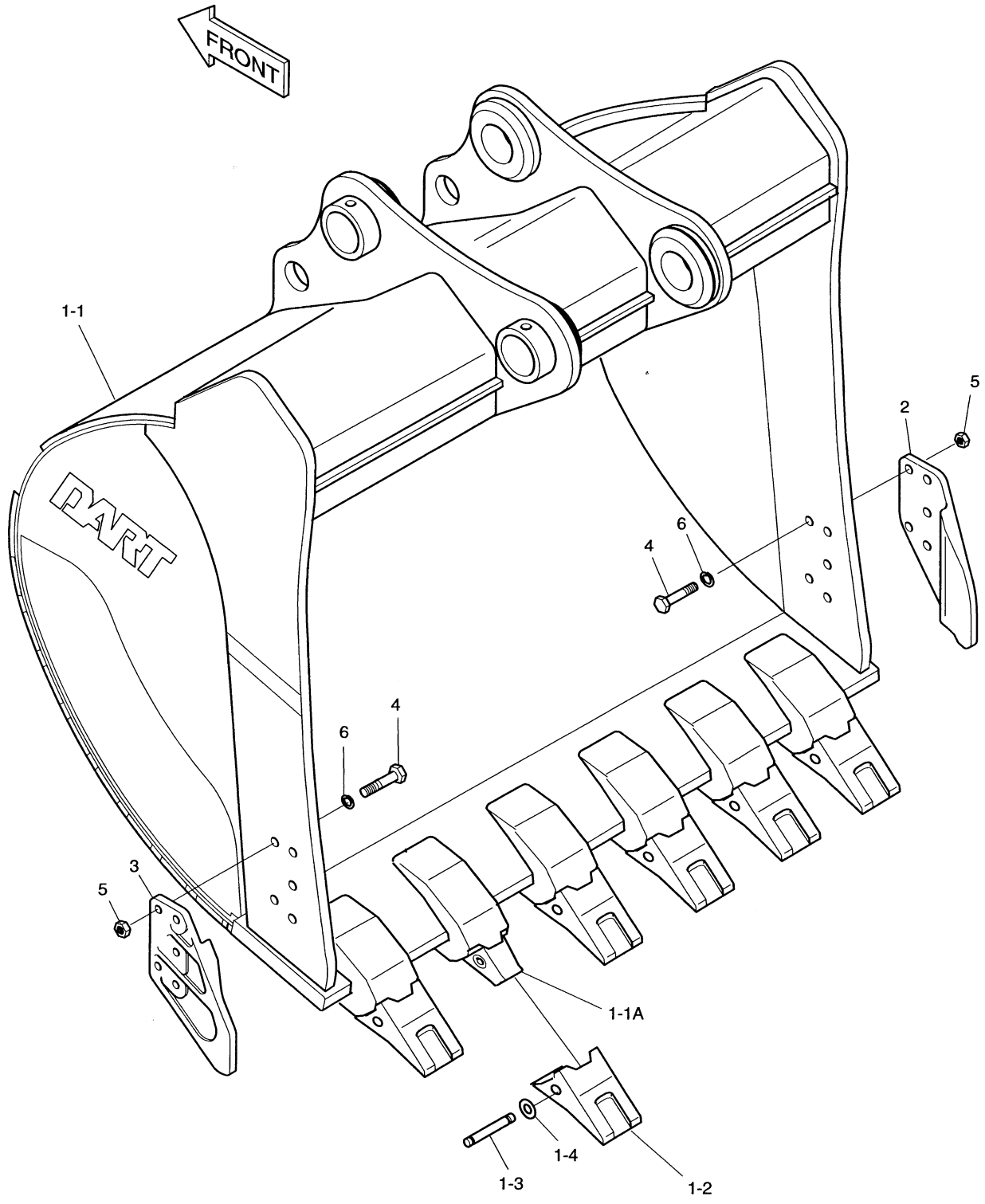

DATE	JUL. 30, 2003
REV. NO.	EXB03-13

Fig. 6590 BUCKET-1.17㎥(57")-SIDE PIN GODET

Serial No ;

Key No.	Part No.	Description	Description	Q'ty	S.C	Serial No.	ICA	Replaceable part	
								Part No.	Q'ty
6590--	704-00052	BUCKET ASS'Y-1.17㎥(H.D)	GODET	1					
1	704-00053	BUCKET SUB ASS'Y-1.17㎥	GODET	1	D				
1-1	-	. BUCKET;WELD	. GODET	1	D				
1-1A	2713-1218	.. ADAPTER;TOOTH	.. DENT DE ADAPTEUR	6					
1-2	713-00024	. POINT;TOOTH	. DENT	6					
1-3	2705-1020	. PIN;LOCKING	. GOUPILLE DE BLOCAGE	6					
1-4	2114-1848A	. WASHER;LOCKING	. RONDELLE	6					
2	2713-1059A	CUTTER;SIDE(R.H)	COIN DE GODET DROIT	1					
3	2713-1060A	CUTTER;SIDE(L.H)	COIN DE GODET GAUCHE	1					
4	S0574861	BOLT M24X3.0X75	BOULON A 6 PANS	10					
5	S4013333	NUT M24X3.0	ECROU	10					
6	2114-1831	WASHER;HARDEN	RONDELLE ELASTIQUE	10					

DATE	JUL. 30, 2003
REV. NO.	EXB03-13

Fig. 6600 BUCKET-1.17m³(57")-VERTICAL PIN GODET

Serial No. ;

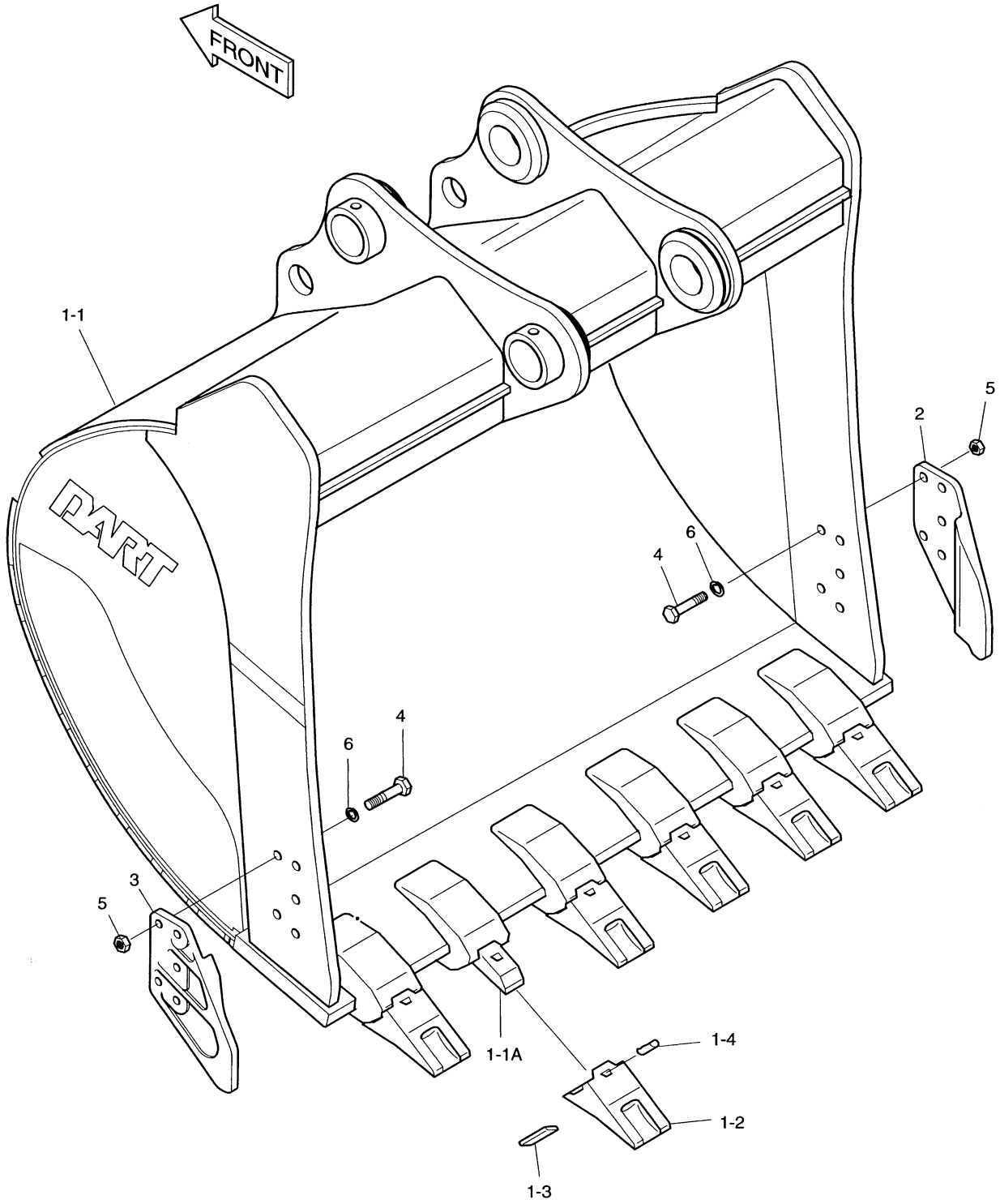

DATE	JUL. 30, 2003
REV. NO.	EXB03-13

Fig. 6600 BUCKET-1.17㎥(57")-VERTICAL PIN GODET

Serial No ;

Key No.	Part No.	Description	Description	Q'ty	S.C	Serial No.	ICA	Replaceable part	
								Part No.	Q'ty
6600--	704-00058	BUCKET ASS'Y-1.17㎥(H.D)	GODET	1					
1	704-00059	BUCKET SUB ASS'Y-1.17㎥	GODET	1	D				
1-1	-	. BUCKET;WELD	. GODET	1	D				
1-1A	2713-6078	.. ADAPTER;TOOTH	.. DENT DE ADAPTEUR	6					
1-2	2713-9061	. POINT;TOOTH	. DENT	6					
1-3	2705-6034	. PIN;LOCKING	. GOUPILLE DE BLOCAGE	6					
1-4	2705-6033	. PIN;RUBBER	. GOUPILLE	6					
2	2713-1059A	CUTTER;SIDE(R.H)	COIN DE GODET DROIT	1					
3	2713-1060A	CUTTER;SIDE(L.H)	COIN DE GODET GAUCHE	1					
4	S0574861	BOLT M24X3.0X75	BOULON A 6 PANS	10					
5	S4013333	NUT M20X2.5	ECROU	10					
6	2114-1831	WASHER;HARDEN	RONDELLE ELASTIQUE	10					

DATE	JUL. 30, 2003
REV. NO.	EXB03-13

Fig. 6610 BUCKET-1.31m³(63")-SIDE PIN GODET

Serial No. ;

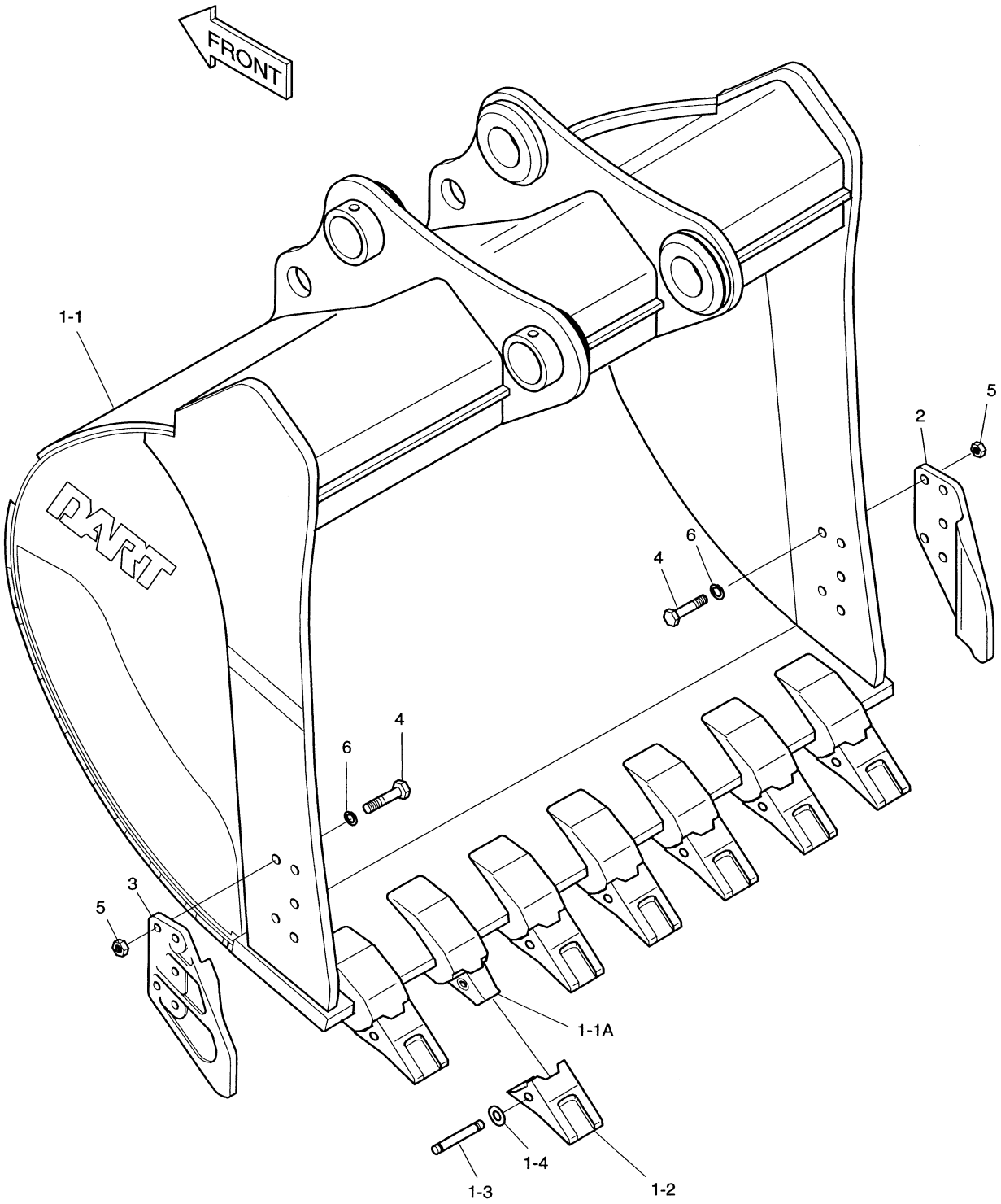

DATE	JUL. 30, 2003
REV. NO.	EXB03-13

Fig. 6610 BUCKET-1.31㎥(63")-SIDE PIN GODET

Serial No ;

Key No.	Part No.	Description	Description	Q'ty	S.C	Serial No.	ICA	Replaceable part	
								Part No.	Q'ty
6610--	2704-1642	BUCKET ASS'Y-1.31㎥(H.D)	GODET	1					
1	2704-1643	BUCKET SUB ASS'Y-1.31㎥	GODET	1	D				
1-1	-	. BUCKET;WELD	. GODET	1	D				
1-1A	2713-1218	.. ADAPTER;TOOTH	.. DENT DE ADAPTEUR	7					
1-2	713-00024	. POINT;TOOTH	. DENT	7					
1-3	2705-1020	. PIN;LOCKING	. GOUPILLE DE BLOCAGE	7					
1-4	2114-1848A	. WASHER;LOCKING	. RONDELLE	7					
2	2713-1059A	CUTTER;SIDE(R.H)	COIN DE GODET DROIT	1					
3	2713-1060A	CUTTER;SIDE(L.H)	COIN DE GODET GAUCHE	1					
4	S0574861	BOLT M24X3.0X75	BOULON A 6 PANS	10					
5	S4013333	NUT M24X3.0	ECROU	10					
6	2114-1831	WASHER;HARDEN	RONDELLE ELASTIQUE	10					

DATE	JUL. 30, 2003
REV. NO.	EXB03-13

Fig. 6620 BUCKET-1.31m³(63")-VERTICAL PIN GODET

Serial No. ;

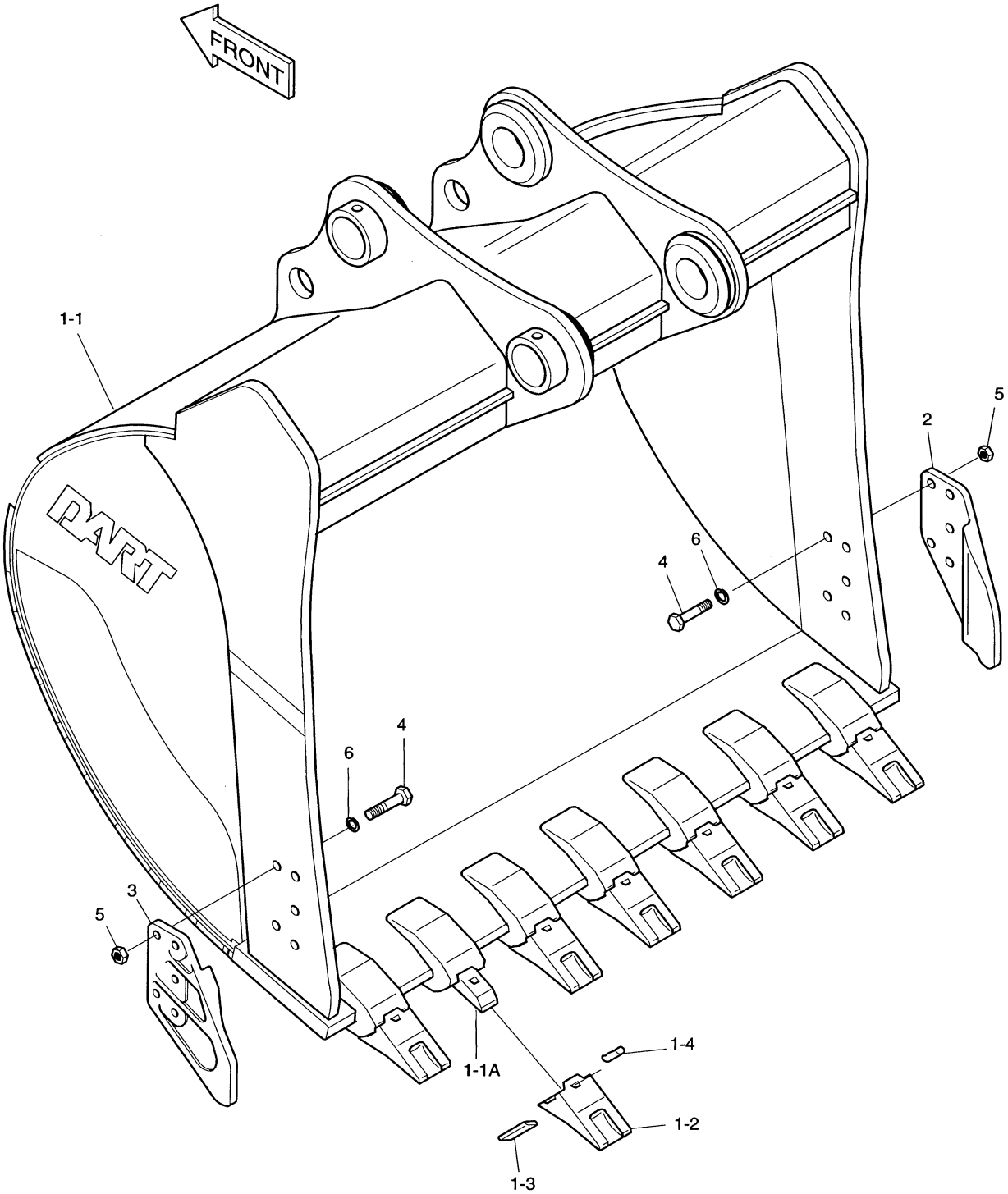

DATE	JUL. 30, 2003
REV. NO.	EXB03-13

Fig. 6620 BUCKET-1.31㎥(63")-VERTICAL PIN GODET

Serial No ;

Key No.	Part No.	Description	Description	Q'ty	S.C	Serial No.	ICA	Replaceable part	
								Part No.	Q'ty
6620--	2704-1684	BUCKET ASS'Y-1.31㎥(H.D)	GODET	1					
1	2704-1685	BUCKET SUB ASS'Y-1.31㎥	GODET	1	D				
1-1	-	. BUCKET;WELD	. GODET	1	D				
1-1A	2713-6078	.. ADAPTER;TOOTH	.. DENT DE ADAPTEUR	7					
1-2	2713-9061	. POINT;TOOTH	. DENT	7					
1-3	2705-6034	. PIN;LOCKING	. GOUPILLE DE BLOCAGE	7					
1-4	2705-6033	. PIN;RUBBER	. GOUPILLE	7					
2	2713-1059A	CUTTER;SIDE(R.H)	COIN DE GODET DROIT	1					
3	2713-1060A	CUTTER;SIDE(L.H)	COIN DE GODET GAUCHE	1					
4	S0574861	BOLT M24X3.0X75	BOULON A 6 PANS	10					
5	S4013333	NUT M24X3.0	ECROU	10					
6	2114-1831	WASHER;HARDEN	RONDELLE ELASTIQUE	10					

DATE	AUG. 12, 2002
1st EDITION	

Fig. 6630 BOOM-8.5m FLECHE

Serial No. ;

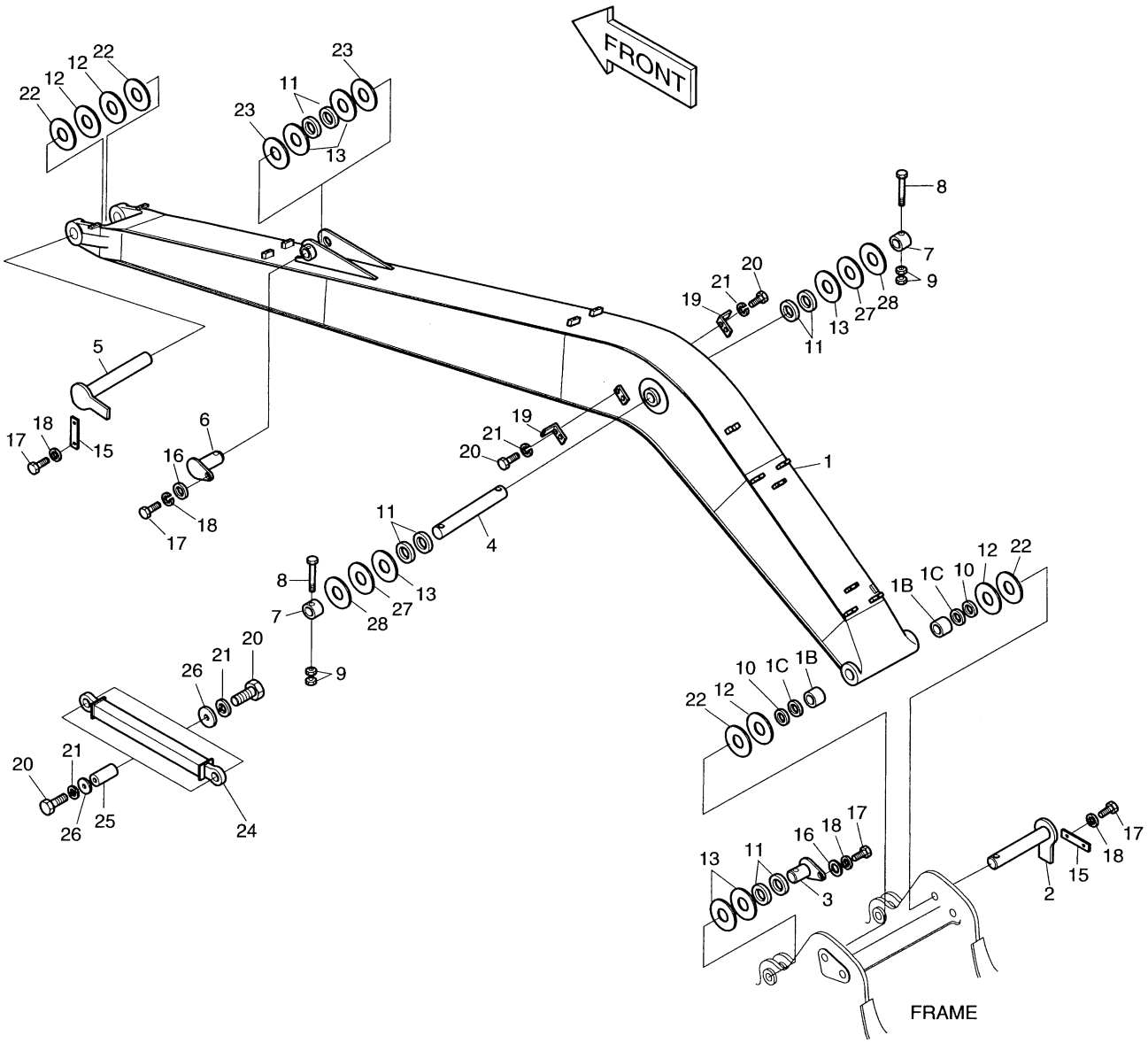

DATE	AUG. 12, 2002
1st EDITION	

Fig. 6630 BOOM-8.5m FLECHE

Serial No. ;

Key No.	Part No.	Description	Description	Q'ty	S.C	Serial No.	ICA	Replaceable part	
								Part No.	Q'ty
6630--	2701-1613	BOOM ASS'Y-8.5m	ENSEMBLE FLECHE	-	D				
1	2701-1614H	BOOM;MACH.-8.5m	FLECHE	1					
1B	2110-1315A	. BUSHING	. MANCHON	2					
1C	2180-1106BD6	. SEAL;DUST	. PARE-POUSSIERES	2					
2	2123-2180E	PIN	GOUJON	1					
3	123-00409	PIN	GOUJON	2					
4	2123-2184C	PIN	GOUJON	1					
5	2123-2185E	PIN	GOUJON	1					
6	2123-2187C	PIN	GOUJON	1					
7	2116-1531A	STOPPER	TAQUET D'ARRET	2					
8	S0567066	BOLT	BOULON A 6PANS	2					
9	S4012933	NUT	ECROU	4					
10	2180-1106BD6	SEAL;DUST	PARE-POUSSIERES	2					
11	2180-1106BD24	SEAL;DUST	PARE-POUSSIERES	10					
12	2114-1059D113	SHIM	CALE	4					
13	2114-1059D63	SHIM	CALE	8					
15	2116-1514A	PLATE;STOPPER	PLAQUE	2					
16	2116-1060D6	STOPPER	TAQUET D'ARRET	3					
17	S0521366	BOLT	BOULON A 6PANS	7					
18	S5102903	WASHER;SPRING	RONDELLE ELASTIQUE	7					
19	2195-2394B	BRACKET	SUPPORT	2					
20	S0515053	BOLT	BOULON A 6PANS	1					
21	S5102703	WASHER;SPRING	RONDELLE ELASTIQUE	1					
22	2114-1059D114	SHIM	CALE	4					
23	2114-1059D118	SHIM	CALE	2					
24	2312-1004A	ROD;TIE	TIGE	1					
25	2123-1915A	PIN	GOUJON	2					
26	2116-1472A	PLATE;STOPPER	PLAQUE	4					
27	2114-1059D255	SHIM	CALE	2					
28	2114-1059D256	SHIM	CALE	2					

DATE	JUN. 30, 2004
REV. NO.	EXB04-04

Fig. 6640 ARM-6.2m BALANCIER

Serial No. ;

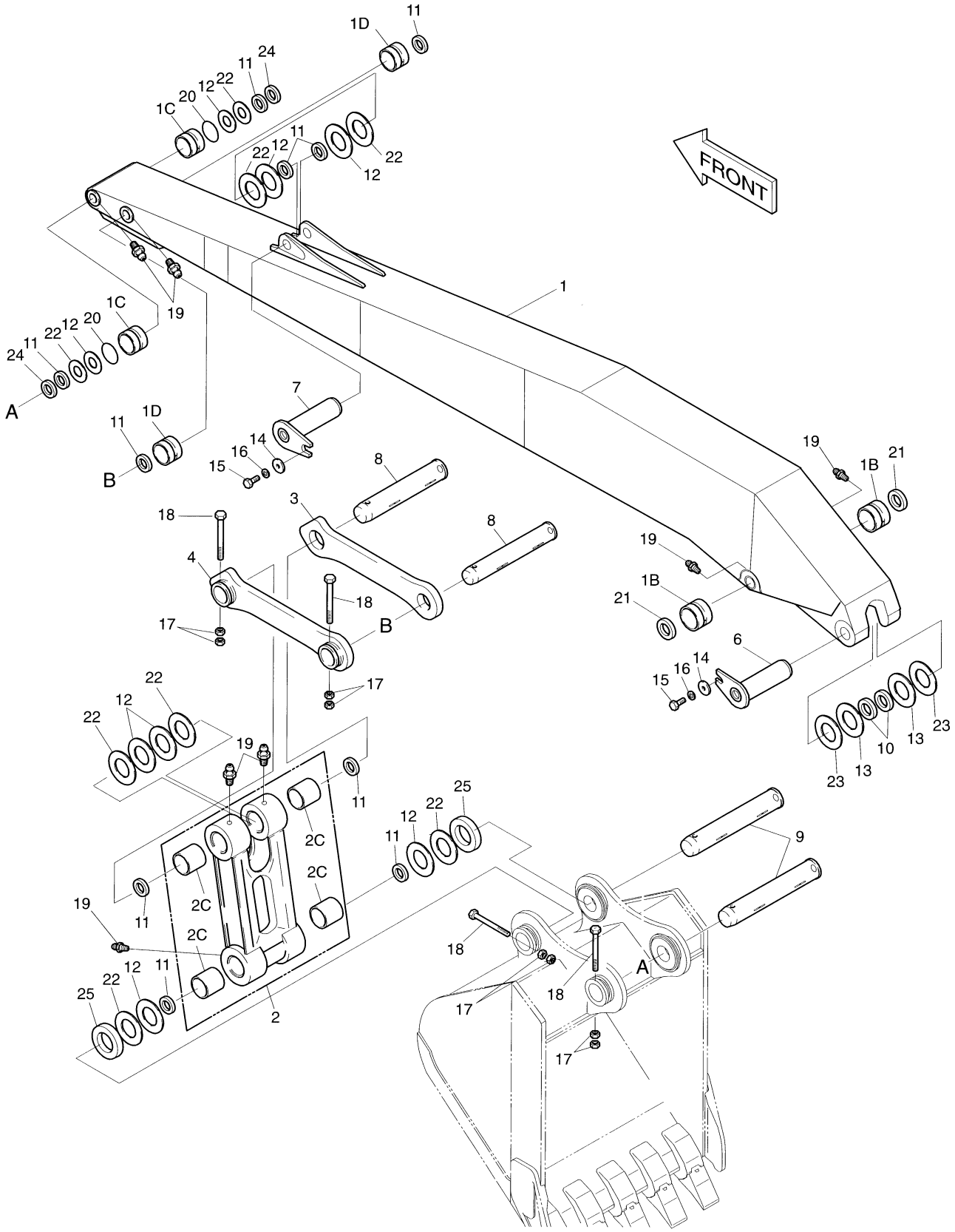

DATE	JUN. 30, 2004
REV. NO.	EXB04-04

Fig. 6640 ARM-6.2m BALANCIER

Serial No ;

Key No.	Part No.	Description	Description	Q'ty	S.C	Serial No.	ICA	Replaceable part	
								Part No.	Q'ty
6640--	2701-1617	ARM ASS'Y-6.2m	BALANCIER	-	D				
1	2701-1618H	ARM;MACH.-6.2m	BALANCIER	1					
1B	2110-1316A	. BUSHING	. MANCHON	2					
1C	2110-1329A	. BUSHING	. MANCHON	2					
1D	2110-1330A	. BUSHING	. MANCHON	2					
2	2155-1339E	LINK ASS'Y;PUSH	ARTICULATION	1					
2C	2110-1366A	. BUSHING	. MANCHON	4					
3	2155-1306B	LINK;GUIDE(R)	ARTICULATION	1					
4	2155-1307B	LINK;GUIDE(L)	ARTICULATION	1					
6	2123-2187C	PIN	GOUJON	1					
7	2123-2225C	PIN	GOUJON	1					
8	2123-2211C	PIN	BROCHE	2					
9	2123-2212C	PIN	GOUJON	2					
10	2180-1106BD24	SEAL;DUST	PARE-POUSSIERES	2					
11	2180-1106BD3	SEAL;DUST	JOINT TORIQUE	16					
12	2114-1058D12	SHIM	CALE	8					
13	2114-1059D100	SHIM	CALE	2					
14	2116-1060D6	STOPPER	TAQUET D'ARRET	2					
15	S0521366	BOLT	BOULON A 6PANS	2					
16	S5102903	WASHER;SPRING	RONDELLE ELASTIQUE	2					
17	S4012933	NUT	ECROU	8					
18	S0566766	BOLT	BOULON A 6PANS	4					
19	S6710041	FITTING	GRAISSEUR	9					
20	180-00077D3	O-RING	JONT TORIQUE	2					
21	2180-1106BD6	SEAL;DUST	PARE-POUSSIERES	2					
22	2114-1059D89	SHIM	CALE	8					
23	2114-1059D98	SHIM	CALE	2					
24	2114-1994A	SPACER	ENTRETOISE	2		1001–1207	I	2114-1994B	2
	2114-1994B	SPACER	ENTRETOISE	2		1208–			
25	2114-1995A	SPACER	ENTRETOISE	2		1001–1207	I	2114-1995B	2
	2114-1995B	SPACER	ENTRETOISE	2		1208–			

DATE	JUN. 30, 2004
REV. NO.	EXB04-04

Fig. 6650 BUCKET-0.35m³-LONG FRONT GODET

Serial No. ;

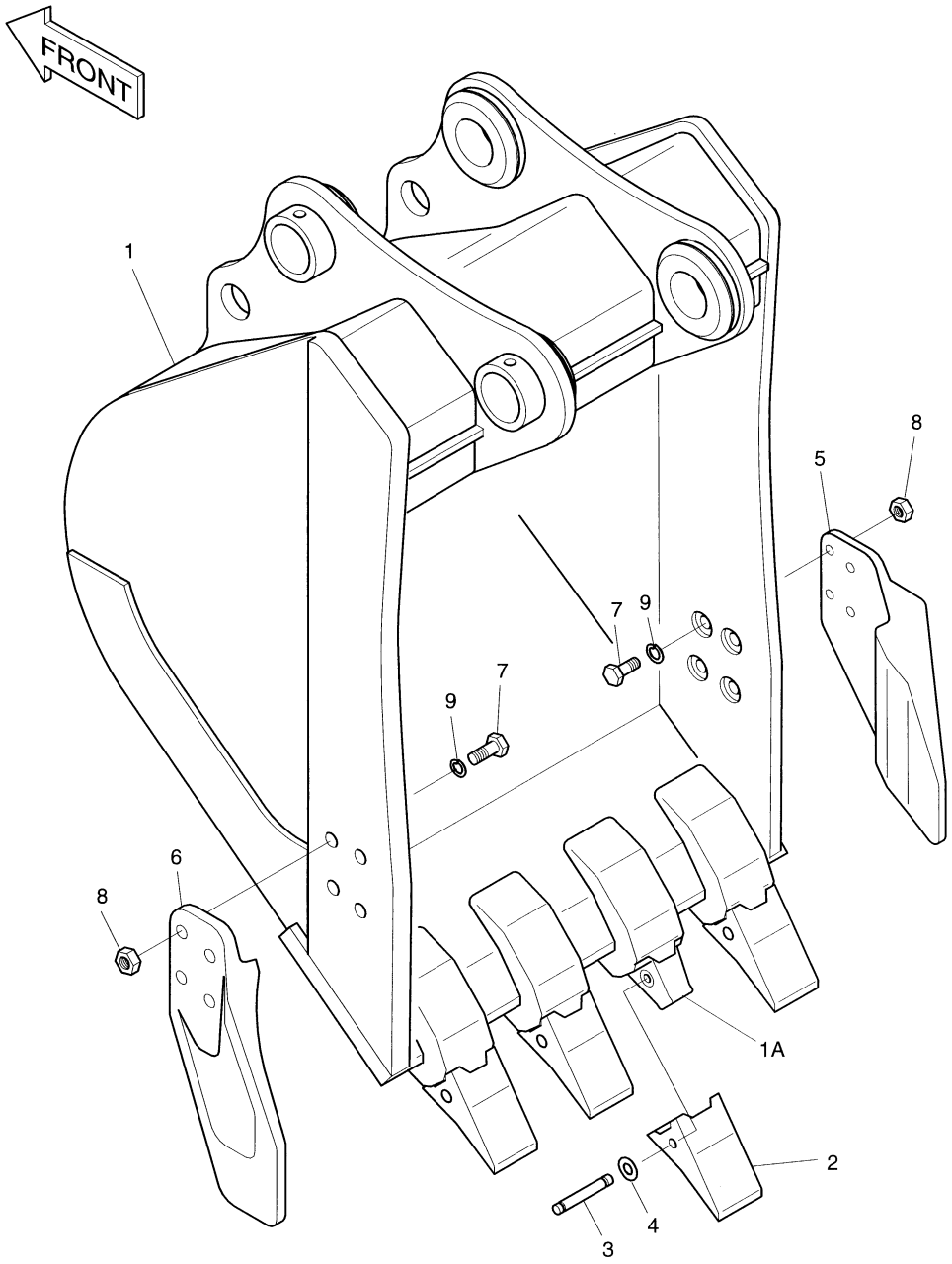

DATE	JUN. 30, 2004
REV. NO.	EXB04-04

Fig. 6650 BUCKET-0.35㎥-LONG FRONT GODET

Serial No ;

Key No.	Part No.	Description	Description	Q'ty	S.C	Serial No.	ICA	Replaceable part	
								Part No.	Q'ty
6650--	2704-1380H	BUCKET SUB ASS'Y-0.35㎥	ENSEMBLE GODET	1		1001–1284	I	2704-1380I	1
	2704-1380I	**BUCKET SUB ASS'Y-0.35㎥**	ENSEMBLE GODET	1		**1285–**			
1	-	BUCKET;WELD-0.35㎥	ENSEMBLE GODET	1	D				
1A	2713-1222A	. ADAPTER;TOOTH	. ADAPTEUR	4					
2	2713-1221A	POINT;TOOTH	DENT	4					
3	2705-1022	PIN;TOOTH	BROCHE DE BLOCAGE	4					
4	2114-1859	WASHER;LOCK	RONDELLE	4					
5	2713-1228A	CUTTER;SIDE(R)	COUTEAU LATERAL	1					
6	2713-1229A	CUTTER;SIDE(L)	COUTEAU LATERAL	1					
7	S0574561	BOLT M24X3.0X60	BOULON A 6PANS	8					
8	S4013333	NUT M24X3.0	ECROU	8					
9	2114-1831	WASHER;HARDEN	RONDELLE ELASTIQUE	8					

DATE	AUG. 12, 2002
1st EDITION	

Fig. 6660 BOOM PIPING-8.5m CONDUITES DE FLECHE

Serial No. ;

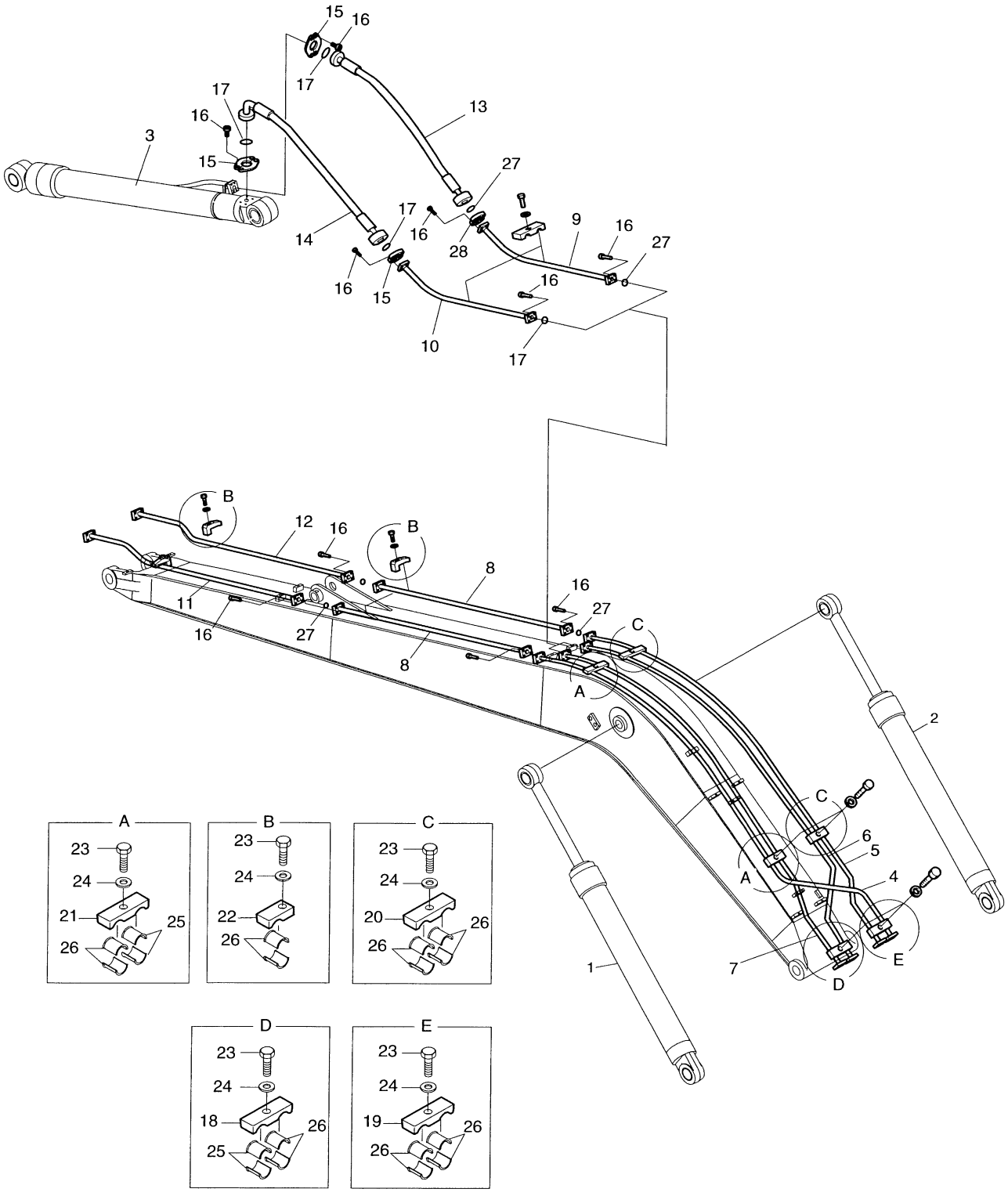

DATE	AUG. 12, 2002
1st EDITION	

Fig. 6660 BOOM PIPING-8.5m CONDUITES DE FLECHE

Serial No. ;

Key No.	Part No.	Description	Description	Q'ty	S.C	Serial No.	ICA	Replaceable part	
								Part No.	Q'ty
6660--	400-01061	BOOM PIPING-8.5m	CONDUITES DE FLECHE	-	D				
1	440-00355A	CYLINDER;BOOM(L)	VERIN DE FLECHE	1					
2	440-00356A	CYLINDER;BOOM(R)	VERIN DE FLECHE	1					
3	2440-9236B	CYLINDER;ARM	VERIN DE BALANCIER	1					
4	2140-1558	PIPE	TUYAU	1					
5	2140-1559	PIPE	TUYAU	1					
6	2140-1560	PIPE	TUYAU	1					
7	2140-1561	PIPE	TUYAU	1					
8	2140-1562	PIPE	TUYAU	2					
9	2140-1563	PIPE	TUYAU	1					
10	2140-1572	PIPE	TUYAU	1					
11	2140-1564	PIPE	TUYAU	1					
12	2140-1565	PIPE	TUYAU	1					
13	2184-1081D120	HOSE PF3/4-1170L	TUYAU FLEXIBLE	1					
14	2184-1100D129	HOSE	TUYAU FLEXIBLE	1					
15	2181-9078	FLANGE	BRIDE	6					
16	S2212366	BOLT;SOCKET	BOULON A 6PANS	40					
17	2180-1026D19	O-RING	JONT TORIQUE	4					
18	2124-1597	CLAMP;PIPE	ATTACHE DE TUYAU	1					
19	2124-1598	CLAMP;PIPE	ATTACHE DE TUYAU	1					
20	2124-1599	CLAMP;PIPE	ATTACHE DE TUYAU	3					
21	2124-1600A	CLAMP;PIPE	ATTACHE DE TUYAU	3					
22	2124-1601A	CLAMP;PIPE	ATTACHE DE TUYAU	4					
23	S0560853	BOLT	BOULON A 6PANS	12					
24	S5102703	WASHER;SPRING	RONDELLE ELASTIQUE	12					
25	2161-2251A	RUBBER	CAOUTCHOUC	8					
26	2161-2250A	RUBBER	CAOUTCHOUC	32					
27	2180-1026D2	O-RING	JONT TORIQUE	6					
28	2181-9079	FLANGE;SPLIT PF3/4-5000psi	FLASQUE EN DEUX	2					

DATE	JUL. 30, 2003
REV. NO.	EXB03-13

Fig. 6670 ARM PIPING-ARM 6.2m CONDUITES DE BALANCIER

Serial No. ;

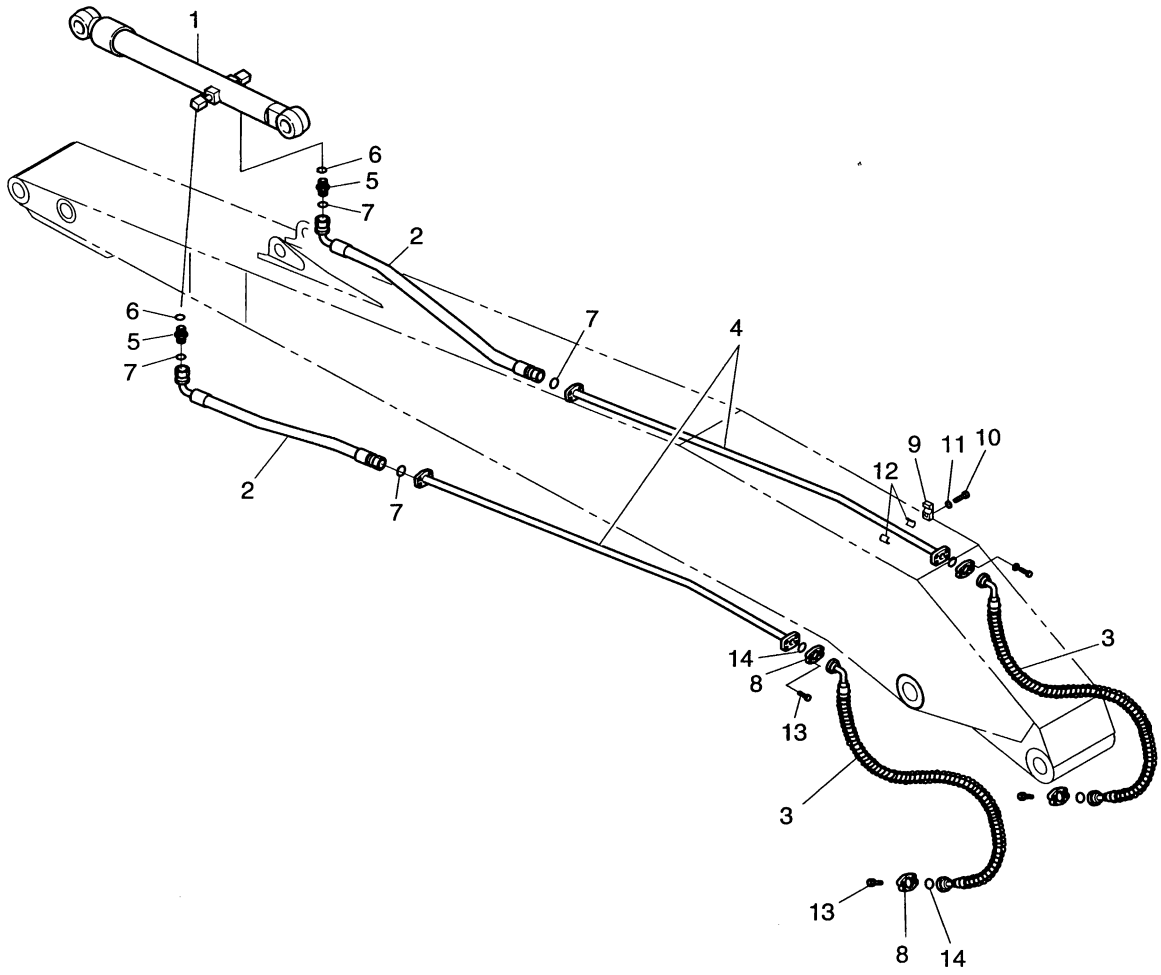

DATE	JUL. 30, 2003
REV. NO.	EXB03-13

Fig. 6670 ARM PIPING-ARM 6.2m CONDUITES DE BALANCIER

Serial No ;

Key No.	Part No.	Description	Description	Q'ty	S.C	Serial No.	ICA	Replaceable part	
								Part No.	Q'ty
6670--	2400-2048	ARM PIPING-6.2m	CONDUITES DE BALANCIER	-	D				
1	2440-9233B	CYLINDER;BUCKET	VERIN DE GODET	1		1001-1009	I	440-00398	1
	440-00398	**CYLINDER;BUCKET**	VERIN DE GODET	1		**1010-**			
2	2184-1197D5	HOSE	TUYAU FLEXIBLE	2					
3	2184-1100D160	HOSE	TUYAU FLEXIBLE	2					
4	2140-1573	PIPE	TUYAU	2					
5	2181-2627D1	ADAPTER;ORFS	ADAPTEUR	2					
6	S8000231	O-RING	JONT TORIQUE	2					
7	S8030121	O-RING	JONT TORIQUE	4					
8	2181-9079	FLANGE;SPLIT PF3/4-5000psi	FLASQUE EN DEUX	8					
9	2124-1601A	CLAMP;PIPE	ATTACHE DE TUYAU	6					
10	S0560853	BOLT	BOULON A 6PANS	6					
11	S5102703	WASHER;SPRING	RONDELLE ELASTIQUE	6					
12	2161-2250A	RUBBER	CAOUTCHOUC	12					
13	S2212366	BOLT;SOCKET	BOULON DE PLOT	16					
14	2180-1026D2	O-RING	JONT TORIQUE	4					

DATE	AUG. 12, 2002
1st EDITION	

Fig. 6680 LUBRICATION PIPING
LUBRIFICATION

Serial No. ;

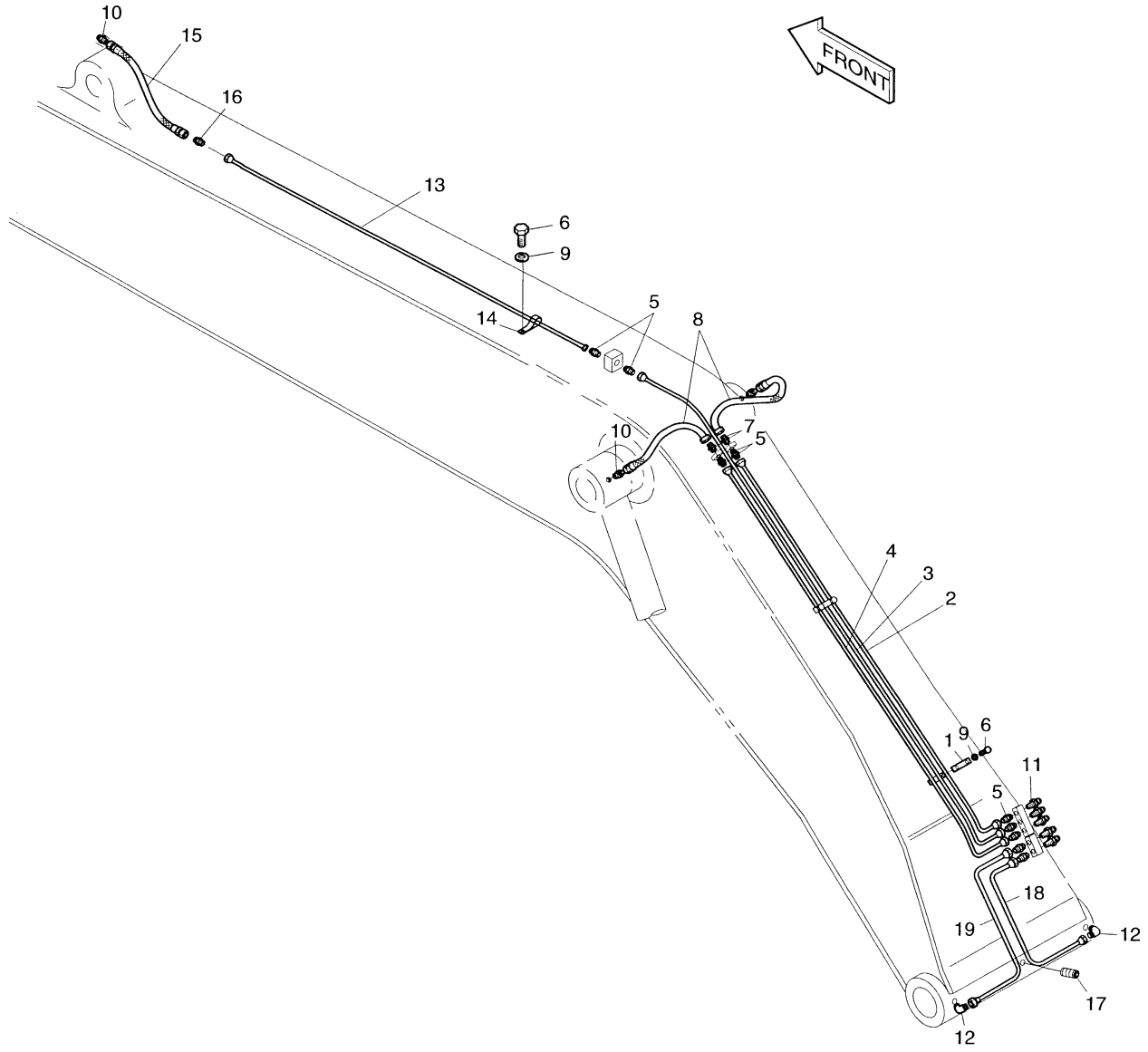

DATE	AUG. 12, 2002
1st EDITION	

Fig. 6680 LUBRICATION PIPING LUBRIFICATION

Serial No. ;

Key No.	Part No.	Description	Description	Q'ty	S.C	Serial No.	ICA	Replaceable part	
								Part No.	Q'ty
6680--	2400-2049	LUBRICATION PIPING	LUBRIFICATION	-	D				
1	2124-1625	CLAMP;PIPE	ATTACHE DE TUYAU	2					
2	2140-1259B	PIPE	TUYAU	1					
3	2140-1576A	PIPE	TUYAU	1					
4	2140-1261B	PIPE	TUYAU	1					
5	2181-1184	FITTING;PIPE	ADAPTEUR	9					
6	S0511553	BOLT	BOULON A 6PANS	7					
7	2181-1110D1	ADAPTER;S	ADAPTEUR	2					
8	2184-1045D64	HOSE PF1/4-920L	TUYAU FLEXIBLE	2					
9	S5102603	WASHER;SPRING	RONDELLE ELASTIQUE	7					
10	2181-1110D30	ADAPTER	ADAPTEUR	3					
11	S6710052	NIPPLE;GREASE	GRAISSEUR	5					
12	2181-1925	ELBOW	COUDE	2					
13	2140-1577	PIPE	TUYAU	1					
14	2124-1353D1	CLIP	ATTACHE	3					
15	2184-1026D68	HOSE	TUYAU FLEXIBLE	1					
16	2181-1923D9	ADAPTER	ADAPTEUR	1					
17	S3524403	SCREW;SET	VIS	1					
18	182-00062	PIPE	TUYAU	1					
19	182-00063	PIPE	TUYAU	1					

DATE	AUG. 12, 2002
1st EDITION	

Fig. 6690 BUCKET-0.38m³-DITCH CLEANING GODET

Serial No. ;

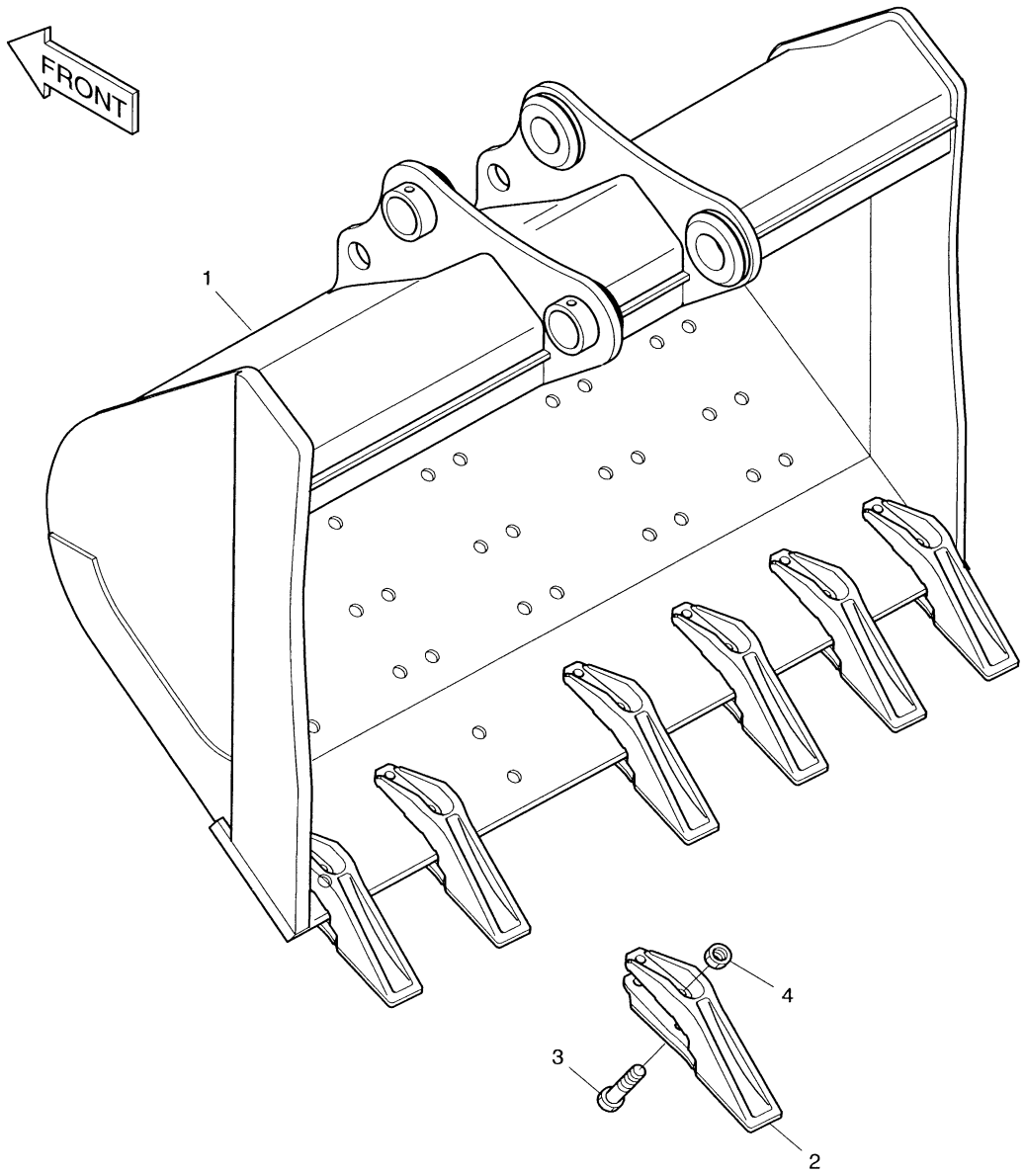

DATE	AUG. 12, 2002
1st EDITION	

Fig. 6690 BUCKET-0.38㎥-DITCH CLEANING GODET

Serial No. ;

Key No.	Part No.	Description	Description	Q'ty	S.C	Serial No.	ICA	Replaceable part	
								Part No.	Q'ty
6690--	704-00033	BUCKET ASS'Y-0.38㎥	GODET	1					
1	704-00034	BUCKET;WELD	GODET	1					
2	4713-4004A	TOOTH	DENT	7					
3	S0565461	BOLT M16X2.0X60	BOULON A 6PANS	14					
4	S4012933	NUT	ECROU	14					

DATE	AUG. 12, 2002
1st EDITION	

Fig. 6700 BUCKET-0.46m³-DITCH CLEANING GODET

Serial No. ;

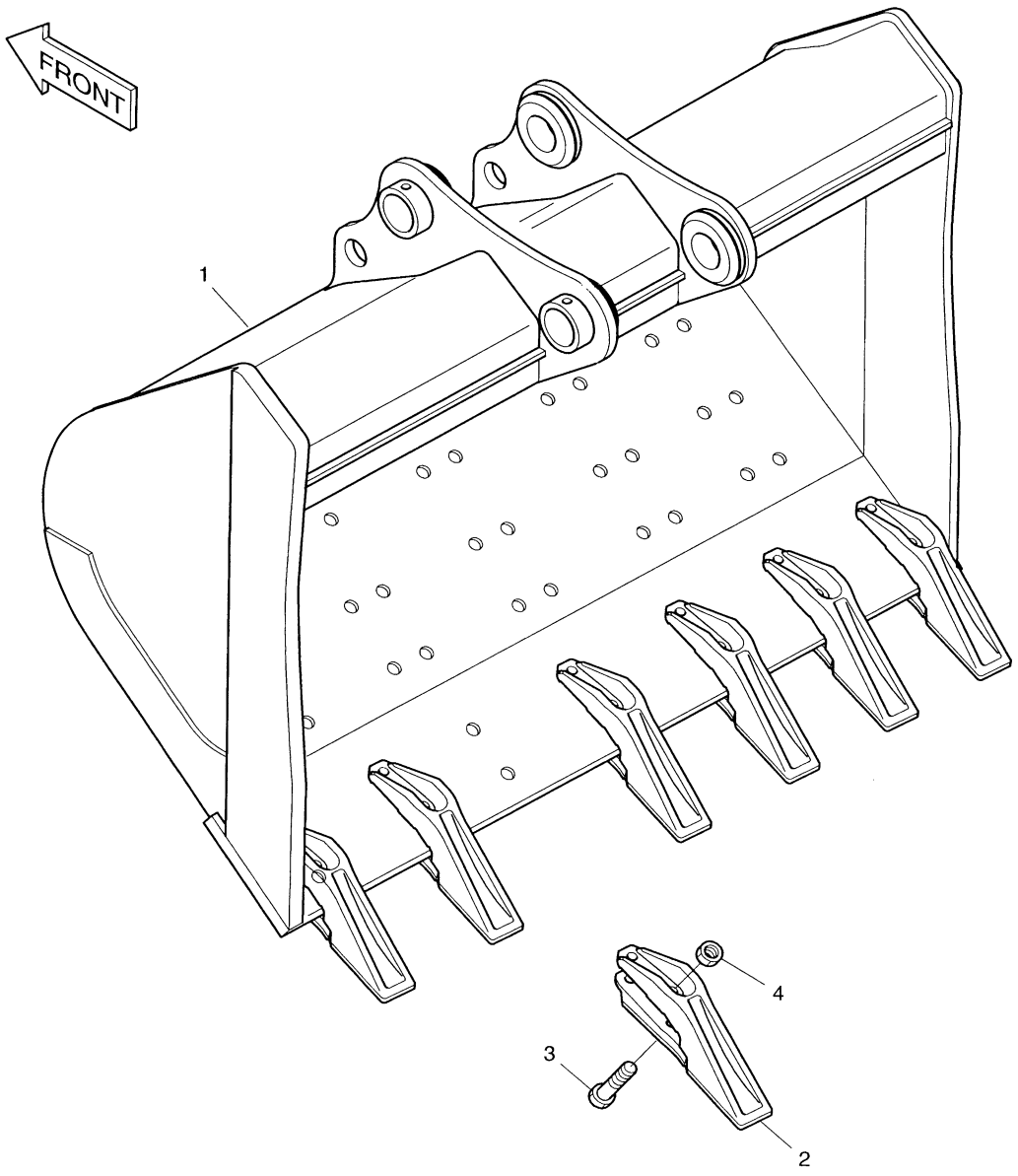

DATE	AUG. 12, 2002
1st EDITION	

Fig. 6700 BUCKET-0.46m³-DITCH CLEANING GODET

Serial No. ;

Key No.	Part No.	Description	Description	Q'ty	S.C	Serial No.	ICA	Replaceable part	
								Part No.	Q'ty
6700--	704-00027	BUCKET ASS'Y-0.46m³	GODET	1					
1	704-00028	BUCKET;WELD	GODET	1					
2	4713-4004A	TOOTH	DENT	7					
3	S0565461	BOLT M16X2.0X60	BOULON A 6PANS	14					
4	S4012933	NUT	ECROU	14					

DATE	AUG. 12, 2002
1st EDITION	

Fig. 6710 COUNTER WEIGHT-LONG FRONT
MASSE D'EQUILIBRAGE

Serial No. ;

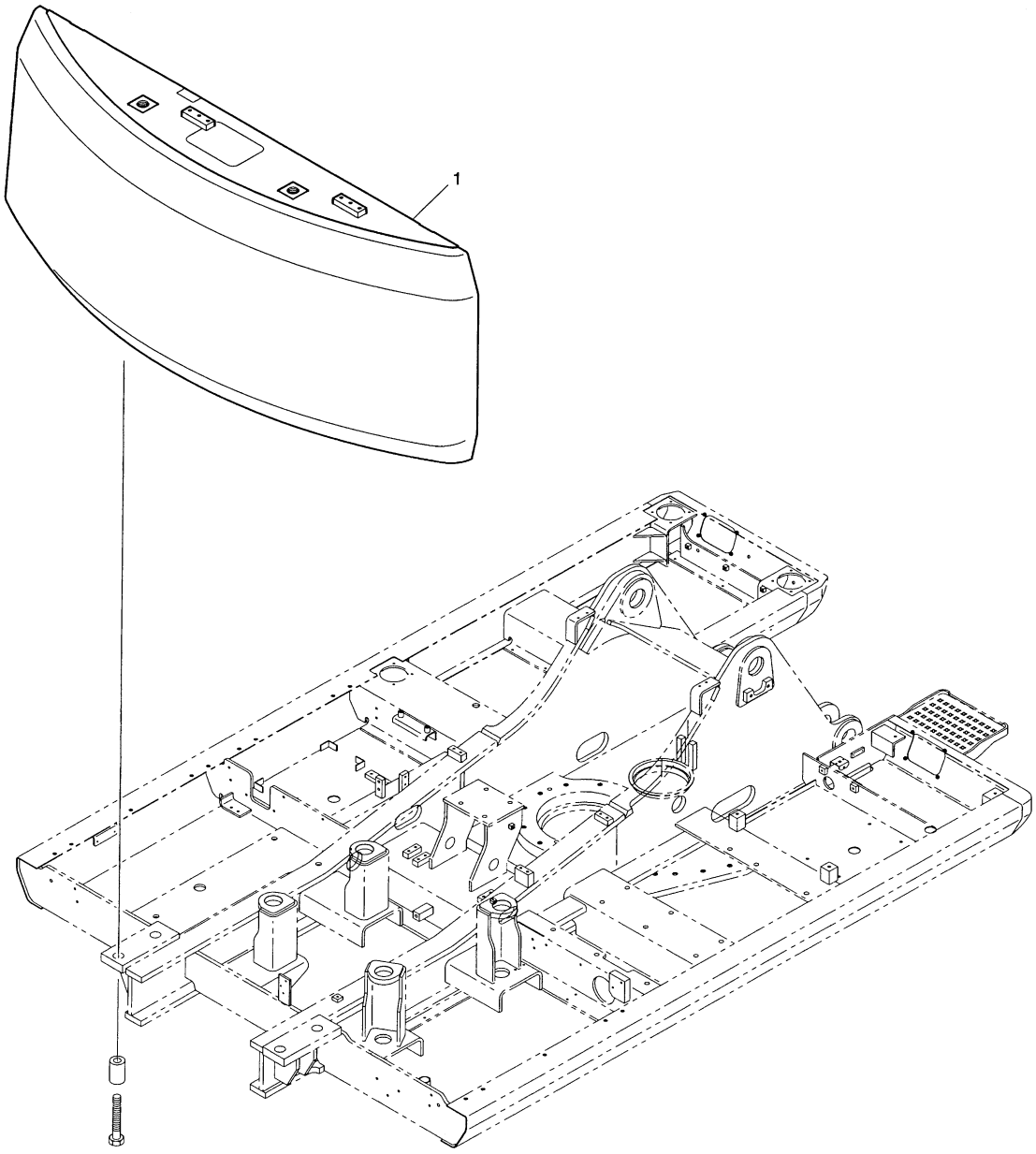

DATE	AUG. 12, 2002
1st EDITION	

Fig. 6710 COUNTER WEIGHT-LONG FRONT MASSE D'EQUILIBRAGE

Serial No. ;

Key No.	Part No.	Description	Description	Q'ty	S.C	Serial No.	ICA	Replaceable part	
								Part No.	Q'ty
6710-1	624-00059	WEIGHT;COUNTER	MASSE D'EQUILIBRAGE	1					

DATE	DEC. 30, 2004
REV. NO.	EXB04-09

Fig. 6720 LOCK VALVE PIPING-BOOM 5.2m
CONDUITES DE VERROU VANNE

Serial No. ;

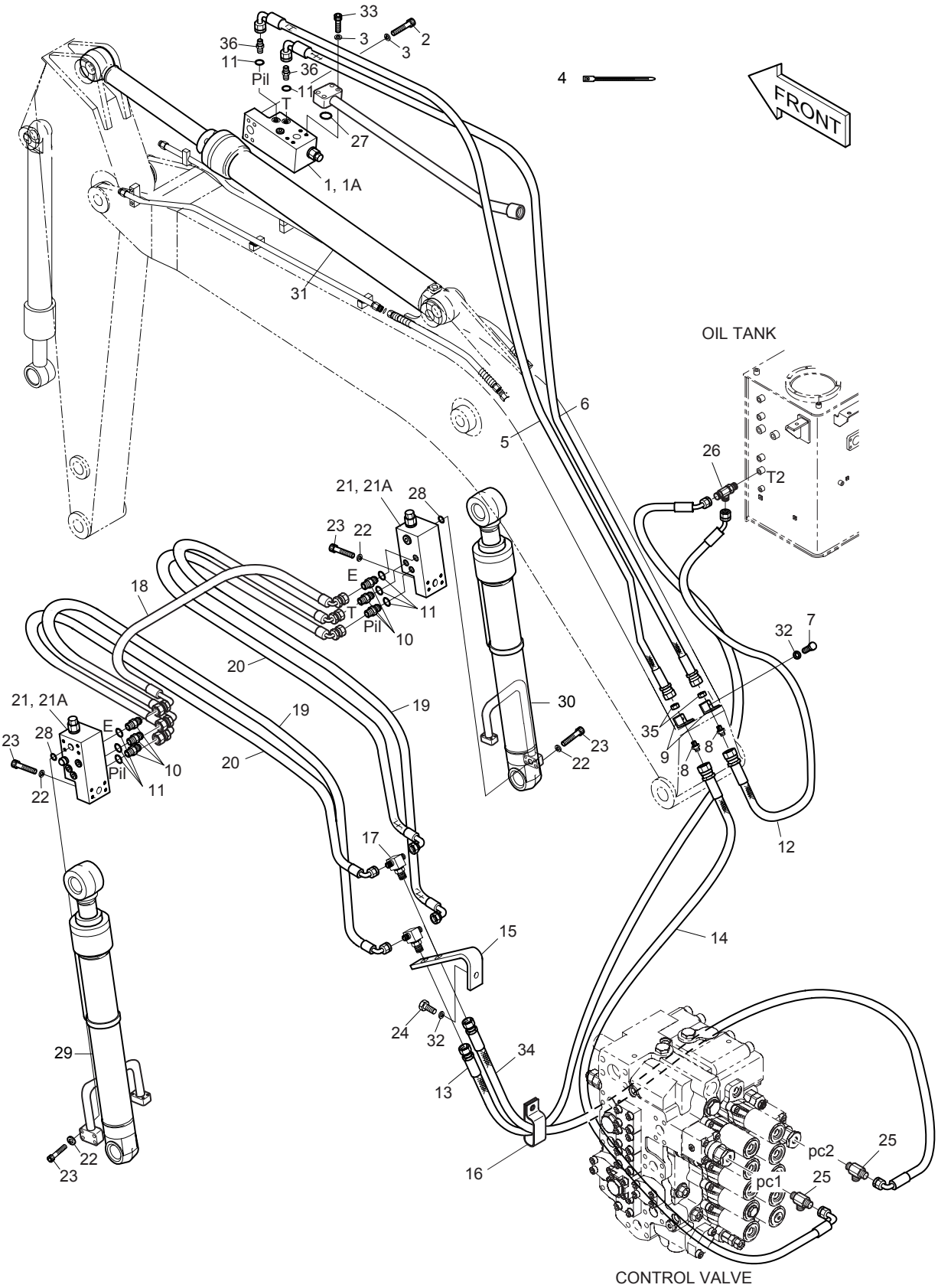

DATE	DEC. 30, 2004
REV. NO.	EXB04-09

Fig. 6720 LOCK VALVE PIPING-BOOM 5.2m CONDUITES DE VERROU VANNE

Serial No ;

Key No.	Part No.	Description	Description	Q'ty	S.C	Serial No.	ICA	Replaceable part	
								Part No.	Q'ty
6720--	400-01192	LOCK VALVE PIPING	CONDUITES DE VERROU	-	D				
1	420-00004A	VALVE;LOCK	VANNE	1					
1A	K9000999	. SEAL KIT	. JOINT DE KIT	1					
2	S2215766	BOLT;SOCKET M12X1.75X55	BOULON DE PLOT	4					
3	S5110703	WASHER;SPRING M12	RONDELLE ELASTIQUE	8					
4	2124-1084D2	CLIP;BAND	CLIP	25					
5	DS2055672	HOSE PF3/8-4650L	TUYAU FLEXIBLE	1					
6	DS2055671	HOSE PF3/8-4550L	TUYAU FLEXIBLE	1					
7	S0565666	BOLT M16X2.0X70	BOULON A 6PANS	2					
8	181-00078D1	ADAPTER 2PF3/8	ADAPTEUR	2					
9	195-02266	BRACKET	SUPPORT	2					
10	2181-1126D14	ADAPTER	ADAPTEUR	6					
11	S8000111	O-RING	JONT TORIQUE	8					
12	2184-1060D145	HOSE PF3/8-1700L	TUYAU FLEXIBLE	1					
13	2184-1060D154	HOSE PF3/8-1850L	TUYAU FLEXIBLE	1					
14	DS2055755	HOSE PF3/8-2400L	TUYAU FLEXIBLE	1					
15	195-02115	BRACKET	SUPPORT	1					
16	124-00208D5	CLIP	CLIP	1					
17	181-00008	TEE 2PF1/4-2PF3/8	TE	2					
18	DS2059383	HOSE PF1/4-800L	TUYAU FLEXIBLE	1		1001–1335	I	DS2059468	1
	DS2059468	HOSE PF1/4-880L	TUYAU FLEXIBLE	1		1336–			
19	2184-1062D12	HOSE PF1/4-1400L	TUYAU FLEXIBLE	2					
20	2184-1062D12	HOSE PF1/4-1400L	TUYAU FLEXIBLE	2					
21	420-00226	VALVE;LOCK	VANNE	2					
21A	K9000998	. SEAL KIT	. JOINT DE KIT	1					
22	S5110603	WASHER;SPRING M10	RONDELLE ELASTIQUE	16					
23	S2212766	B0LT;SOCKET M10X1.5X55	BOULON A 6PANS	16					
24	S0561353	BOLT M12X1.75X80	BOULON A 6PANS	1					
25	2181-2375D7	TEE PFO1/4-2PF3/8	TE	2					
26	2181-1951D16	TEE PFO3/8-2PF3/8	TE	1					
27	S8000341	O-RING	JONT TORIQUE	1					
28	S8000281	O-RING	JONT TORIQUE	2					
29	440-00360A	CYLINDER;BOOM(L.H)	VERIN DE FLECHE	1					
30	440-00361A	CYLINDER;BOOM(R.H)	VERIN DE FLECHE	1					
31	2440-6493C	CYLINDER;ARM	VERIN DE BALANCIER	1					
32	S5102703	WASHER;SPRING M12	RONDELLE ELASTIQUE	1					
33	S2215866	BOLT;SOCKET M12X1.75X60	BOULON DE PLOT	4					
34	2184-1046D238	HOSE PF3/8-2300L	TUYAU FLEXIBLE	1					

DATE	DEC. 30, 2004
REV. NO.	EXB04-09

Fig. 6720 LOCK VALVE PIPING-BOOM 5.2m
CONDUITES DE VERROU VANNE

Serial No. ;

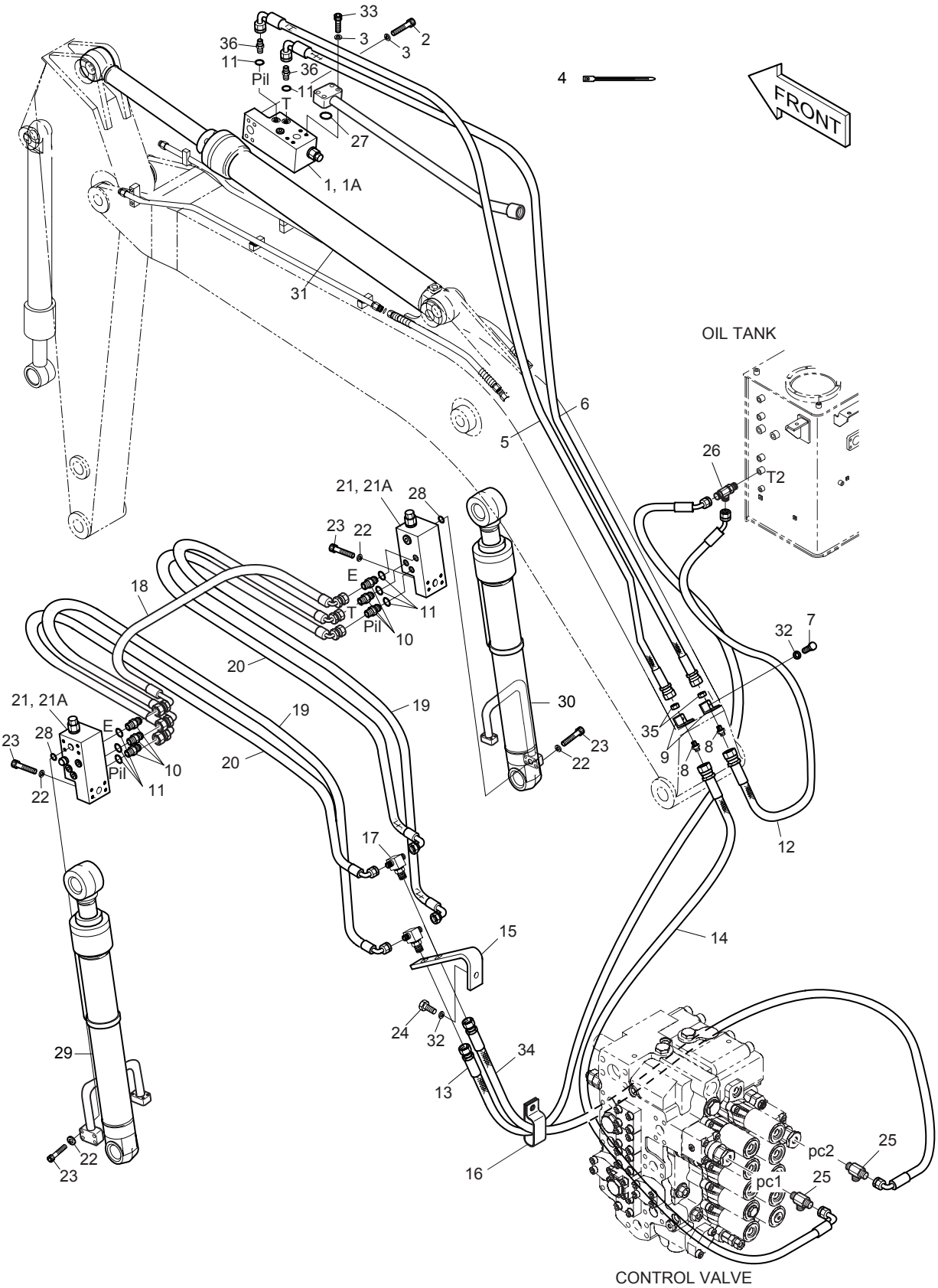

DATE	DEC. 30, 2004
REV. NO.	EXB04-09

Fig. 6720 LOCK VALVE PIPING-BOOM 5.2m
CONDUITES DE VERROU VANNE

Serial No ;

Key No.	Part No.	Description	Description	Q'ty	S.C	Serial No.	ICA	Replaceable part	
								Part No.	Q'ty
6720-35	121-00010D1	NUT	ECROU	2					
36	2181-1126D85	ADAPTER PFO1/4-PF3/8	ADAPTEUR	2					

DATE	DEC. 30, 2004
REV. NO.	EXB04-09

Fig. 6730 LOCK VALVE PIPING-BOOM 5.7m
CONDUITES DE VERROU VANNE

Serial No. ;

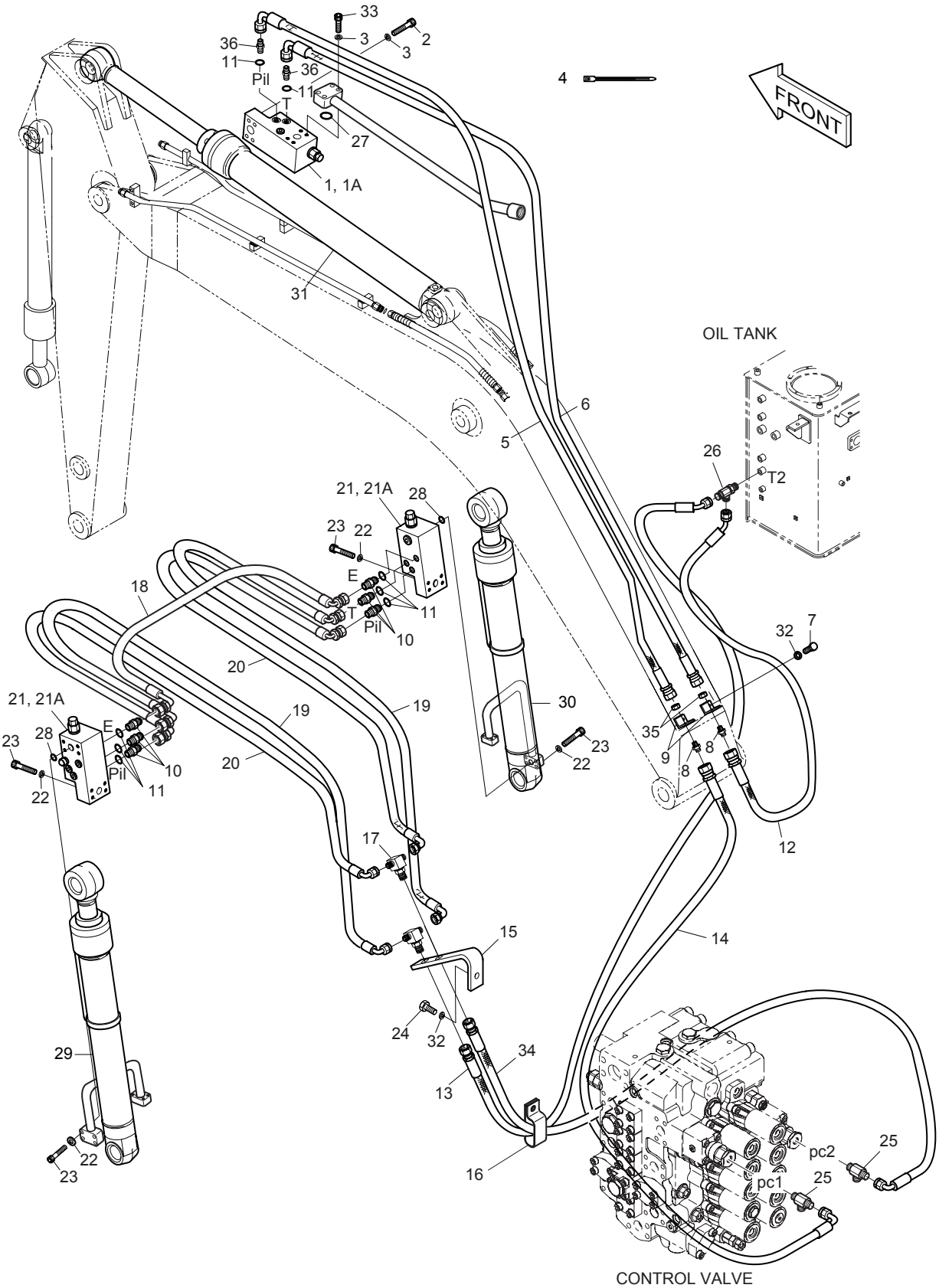

DATE	DEC. 30, 2004
REV. NO.	EXB04-09

Fig. 6730 LOCK VALVE PIPING-BOOM 5.7m CONDUITES DE VERROU VANNE

Serial No ;

Key No.	Part No.	Description	Description	Q'ty	S.C	Serial No.	ICA	Replaceable part	
								Part No.	Q'ty
6730--	400-01009A	LOCK VALVE PIPING	CONDUITES DE VERROU	-	D				
1	420-00004A	VALVE;LOCK	VANNE	1					
1A	K9000999	. SEAL KIT	. JOINT DE KIT	1					
2	S2215766	BOLT;SOCKET M12X1.75X55	BOULON DE PLOT	4					
3	S5110703	WASHER;SPRING M12	RONDELLE ELASTIQUE	8					
4	2124-1084D2	CLIP;BAND	CLIP	25					
5	DS2055743	HOSE PF3/8-5030L	TUYAU FLEXIBLE	1					
6	DS2055742	HOSE PF3/8-4930L	TUYAU FLEXIBLE	1					
7	S0565666	BOLT M16X2.0X70	BOULON A 6PANS	2					
8	181-00078D1	ADAPTER 2PF3/8	ADAPTEUR	2					
9	195-02266	BRACKET	SUPPORT	2					
10	2181-1126D14	ADAPTER	ADAPTEUR	6					
11	S8000111	O-RING	JONT TORIQUE	8					
12	2184-1060D145	HOSE PF3/8-1700L	TUYAU FLEXIBLE	1					
13	2184-1060D154	HOSE PF3/8-1850L	TUYAU FLEXIBLE	1					
14	DS2055755	HOSE PF3/8-2400L	TUYAU FLEXIBLE	1					
15	195-02115	BRACKET	SUPPORT	1					
16	124-00208D5	CLIP	CLIP	1					
17	181-00008	TEE 2PF1/4-2PF3/8	TE	2					
18	DS2059383	HOSE PF1/4-800L	TUYAU FLEXIBLE	1		1001–1335	I	DS2059468	1
	DS2059468	HOSE PF1/4-880L	TUYAU FLEXIBLE	1		1336–			
19	2184-1062D12	HOSE PF1/4-1400L	TUYAU FLEXIBLE	2					
20	2184-1062D12	HOSE PF1/4-1400L	TUYAU FLEXIBLE	2					
21	420-00226	VALVE;LOCK	VANNE	2					
21A	K9000998	. SEAL KIT	. JOINT DE KIT	1					
22	S5110603	WASHER;SPRING M10	RONDELLE ELASTIQUE	16					
23	S2212766	B0LT;SOCKET M10X1.5X55	BOULON A 6PANS	16					
24	S0561353	BOLT M12X1.75X80	BOULON A 6PANS	1					
25	2181-2375D7	TEE PFO1/4-2PF3/8	TE	2					
26	2181-1951D16	TEE PFO3/8-2PF3/8	TE	1					
27	S8000341	O-RING	JONT TORIQUE	1					
28	S8000281	O-RING	JONT TORIQUE	2					
29	440-00360A	CYLINDER;BOOM(L.H)	VERIN DE FLECHE	1					
30	440-00361A	CYLINDER;BOOM(R.H)	VERIN DE FLECHE	1					
31	2440-6493C	CYLINDER;ARM	VERIN DE BALANCIER	1					
32	S5102703	WASHER;SPRING M12	RONDELLE ELASTIQUE	1					
33	S2215866	BOLT;SOCKET M12X1.75X60	BOULON DE PLOT	4					
34	2184-1046D238	HOSE PF3/8-2300L	TUYAU FLEXIBLE	1					

DATE	DEC. 30, 2004
REV. NO.	EXB04-09

Fig. 6730 LOCK VALVE PIPING-BOOM 5.7m
CONDUITES DE VERROU VANNE

Serial No. ;

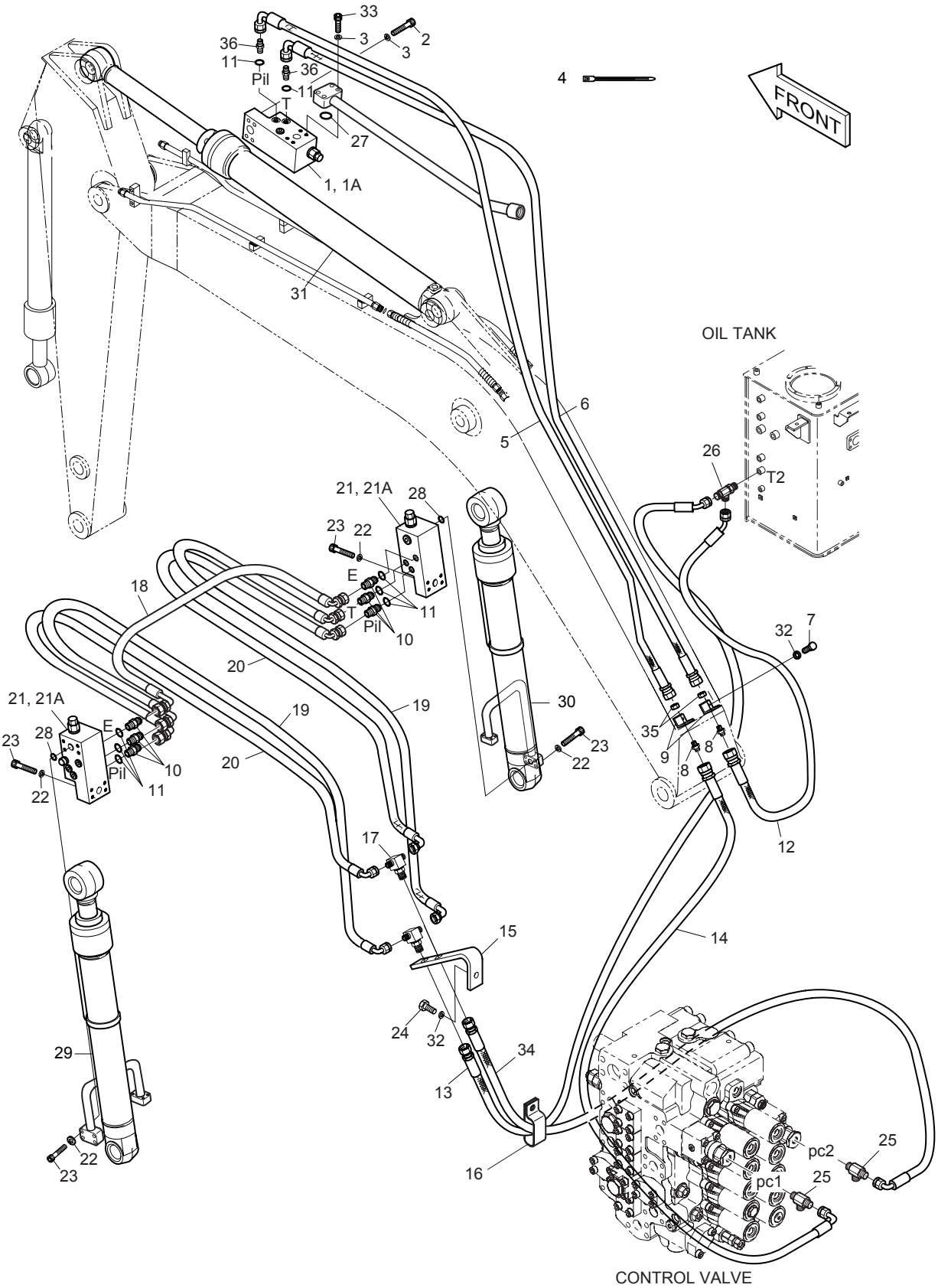

DATE	DEC. 30, 2004
REV. NO.	EXB04-09

Fig. 6730 LOCK VALVE PIPING-BOOM 5.7m CONDUITES DE VERROU VANNE

Serial No ;

Key No.	Part No.	Description	Description	Q'ty	S.C	Serial No.	ICA	Replaceable part	
								Part No.	Q'ty
6730-35	121-00010D1	NUT	ECROU	2					
36	2181-1126D85	ADAPTER PFO1/4-PF3/8	ADAPTEUR	2					

DATE	DEC. 30, 2004
REV. NO.	EXB04-09

Fig. 6740 LOCK VALVE PIPING-BOOM 8.5m
CONDUITES DE VERROU VANNE

Serial No. ;

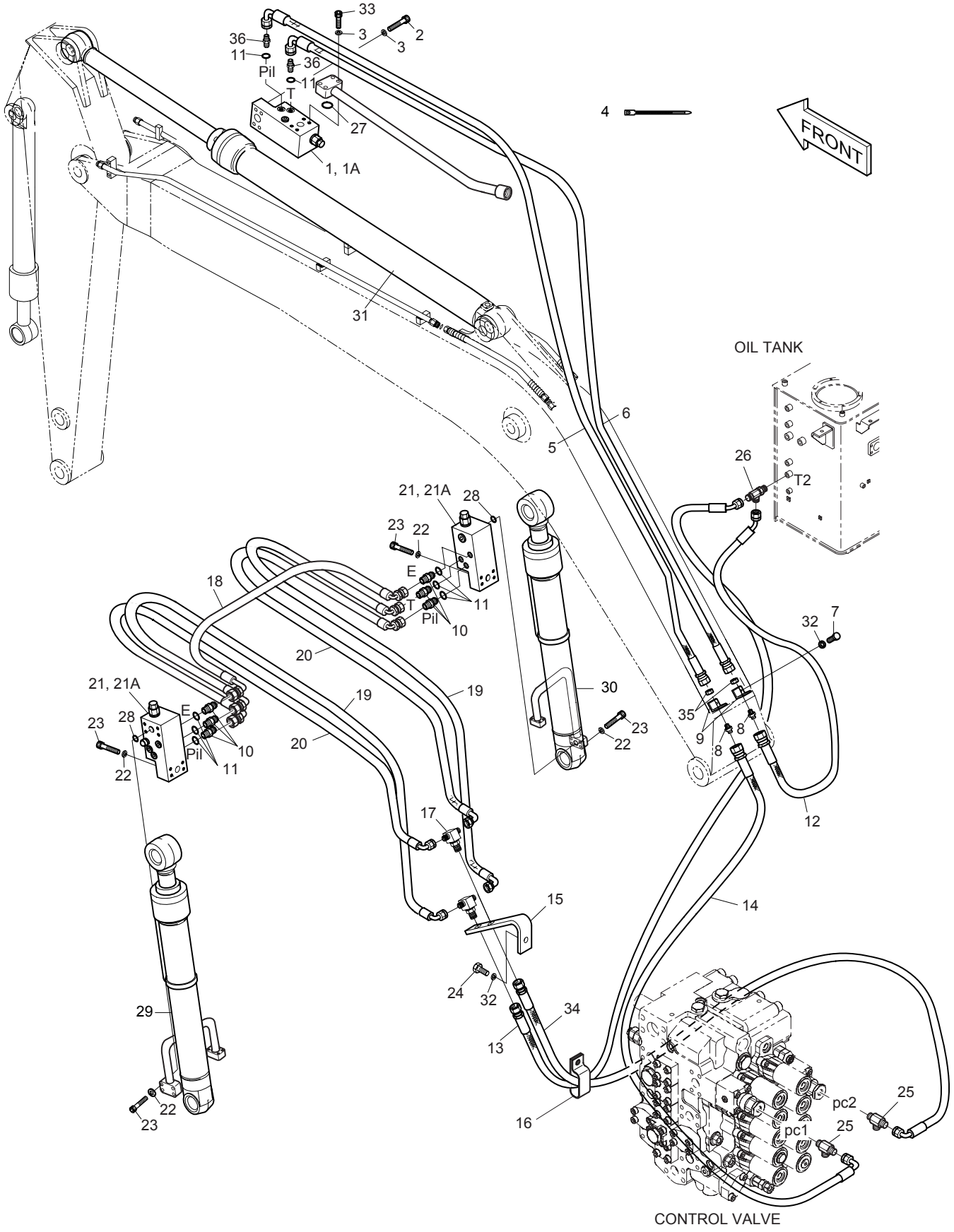

DATE	DEC. 30, 2004
REV. NO.	EXB04-09

Fig. 6740 LOCK VALVE PIPING-BOOM 8.5m CONDUITES DE VERROU VANNE

Serial No ;

Key No.	Part No.	Description	Description	Q'ty	S.C	Serial No.	ICA	Replaceable part	
								Part No.	Q'ty
6740--	400-01193	LOCK VALVE PIPING	CONDUITES DE VERROU	-	D				
1	420-00004A	VALVE;LOCK	VANNE	1					
1A	K9000999	. SEAL KIT	. JOINT DE KIT	1					
2	S2215766	BOLT;SOCKET M12X1.75X55	BOULON DE PLOT	4					
3	S5110703	WASHER;SPRING M12	RONDELLE ELASTIQUE	8					
4	2124-1084D2	CLIP;BAND	CLIP	25					
5	DS2055670	HOSE PF3/8-7800L	TUYAU FLEXIBLE	1					
6	DS2055669	HOSE PF3/8-7700L	TUYAU FLEXIBLE	1					
7	S0565666	BOLT M16X2.0X70	BOULON A 6PANS	2					
8	181-00078D1	ADAPTER 2PF3/8	ADAPTEUR	2					
9	195-02266	BRACKET	SUPPORT	2					
10	2181-1126D14	ADAPTER	ADAPTEUR	6					
11	S8000111	O-RING	JONT TORIQUE	8					
12	2184-1060D145	HOSE PF3/8-1700L	TUYAU FLEXIBLE	1					
13	2184-1060D154	HOSE PF3/8-1850L	TUYAU FLEXIBLE	1					
14	DS2055755	HOSE PF3/8-2400L	TUYAU FLEXIBLE	1					
15	195-02115	BRACKET	SUPPORT	1					
16	124-00208D5	CLIP	CLIP	1					
17	181-00008	TEE 2PF1/4-2PF3/8	TE	2					
18	DS2059383	HOSE PF1/4-800L	TUYAU FLEXIBLE	1		1001–1335	I	DS2059468	1
	DS2059468	HOSE PF1/4-880L	TUYAU FLEXIBLE	1		1336–			
19	2184-1062D12	HOSE PF1/4-1400L	TUYAU FLEXIBLE	2					
20	2184-1062D12	HOSE PF1/4-1400L	TUYAU FLEXIBLE	2					
21	420-00226	VALVE;LOCK	VANNE	2					
21A	K9000998	. SEAL KIT	. JOINT DE KIT	1					
22	S5110603	WASHER;SPRING M10	RONDELLE ELASTIQUE	16					
23	S2212766	B0LT;SOCKET M10X1.5X55	BOULON A 6PANS	16					
24	S0561353	BOLT M12X1.75X80	BOULON A 6PANS	1					
25	2181-2375D7	TEE PFO1/4-2PF3/8	TE	2					
26	2181-1951D16	TEE PFO3/8-2PF3/8	TE	1					
27	S8000341	O-RING	JONT TORIQUE	1					
28	S8000281	O-RING	JONT TORIQUE	2					
29	440-00360A	CYLINDER;BOOM(L.H)	VERIN DE FLECHE	1					
30	440-00361A	CYLINDER;BOOM(R.H)	VERIN DE FLECHE	1					
31	2440-6493C	CYLINDER;ARM	VERIN DE BALANCIER	1					
32	S5102703	WASHER;SPRING M12	RONDELLE ELASTIQUE	1					
33	S2215866	BOLT;SOCKET M12X1.75X60	BOULON DE PLOT	4					
34	2184-1046D238	HOSE PF3/8-2300L	TUYAU FLEXIBLE	1					

DATE	DEC. 30, 2004
REV. NO.	EXB04-09

Fig. 6740 LOCK VALVE PIPING-BOOM 8.5m
CONDUITES DE VERROU VANNE

Serial No. ;

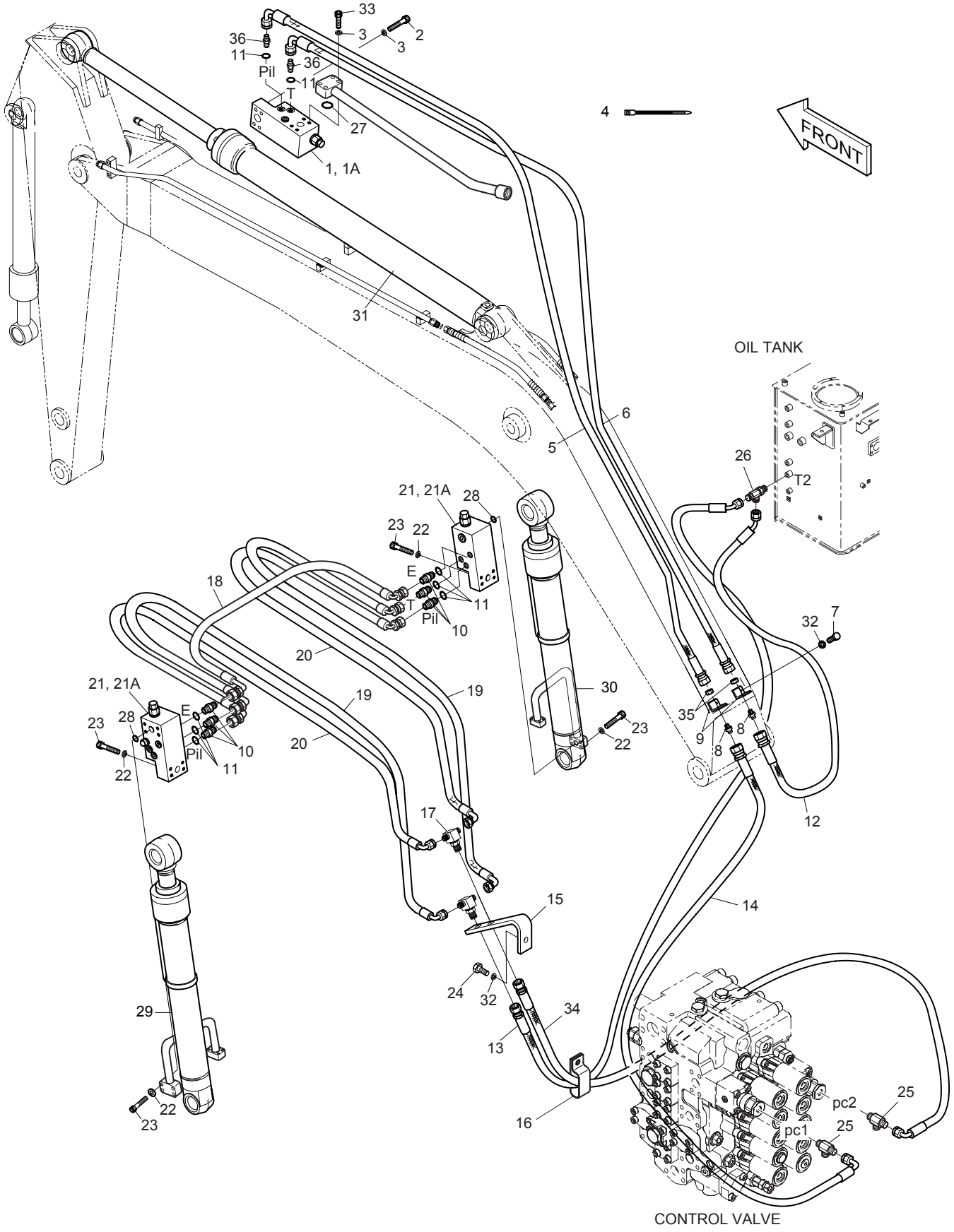

DATE	DEC. 30, 2004
REV. NO.	EXB04-09

Fig. 6740 LOCK VALVE PIPING-BOOM 8.5m CONDUITES DE VERROU VANNE

Serial No ;

Key No.	Part No.	Description	Description	Q'ty	S.C	Serial No.	ICA	Replaceable part	
								Part No.	Q'ty
6740-35	121-00010D1	NUT	ECROU	2					
36	2181-1126D85	ADAPTER PFO1/4-PF3/8	ADAPTEUR	2					

DATE	DEC. 30, 2004
REV. NO.	EXB04-09

Fig. 6750 MAIN PIPING-BREAKER
CONDUITES DE BATI PRINCIPAL

Serial No. ;

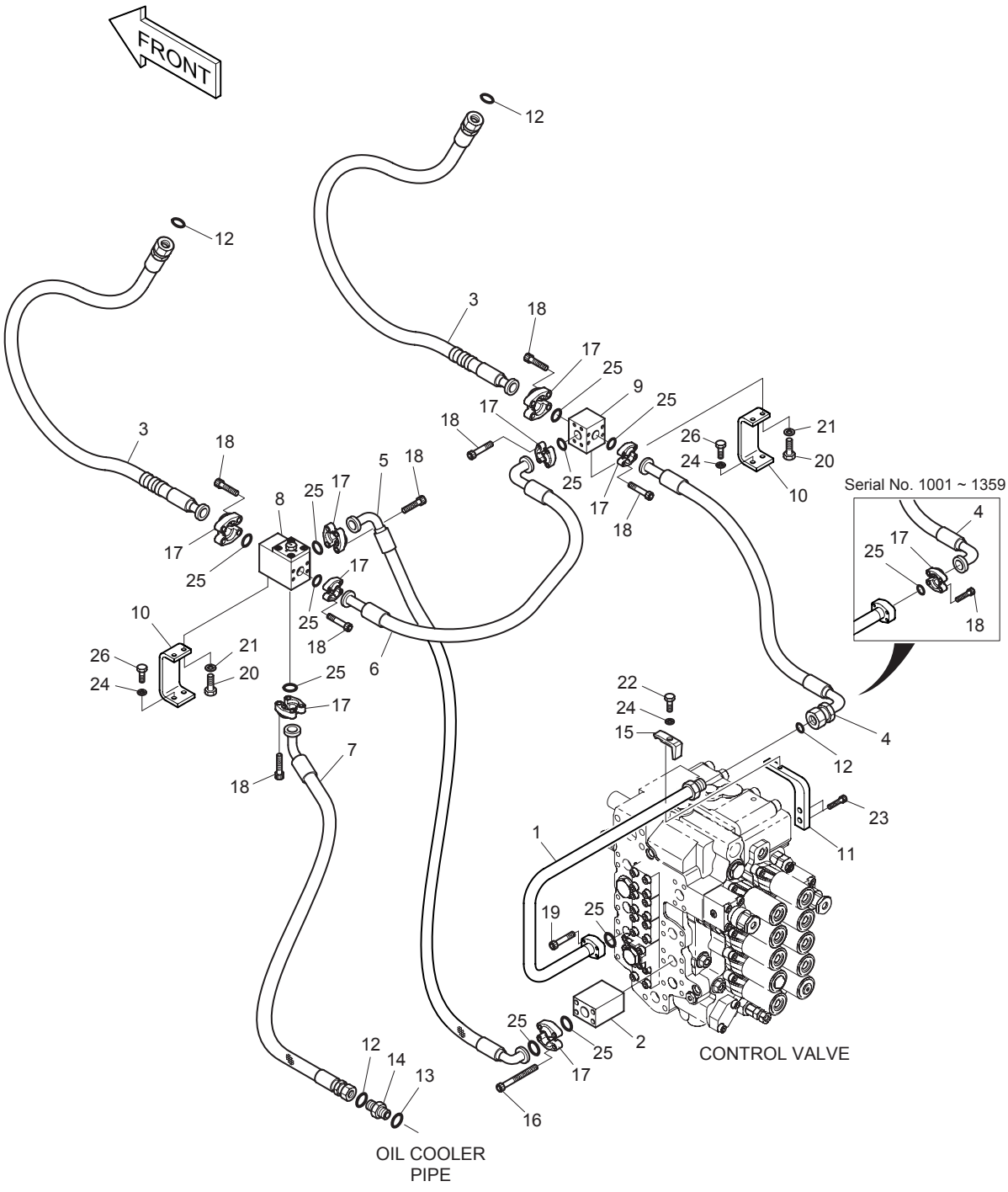

DATE	DEC. 30, 2004
REV. NO.	EXB04-09

Fig. 6750 MAIN PIPING-BREAKER
CONDUITES DE BATI PRINCIPAL

Serial No ;

Key No.	Part No.	Description	Description	Q'ty	S.C	Serial No.	ICA	Replaceable part	
								Part No.	Q'ty
6750--	400-00978	MAIN PIPING	CONDUITES DE BATI	-	D				
1	140-01224	PIPE	TUYAU	1		1001–1359			
	140-01224A	PIPE	TUYAU	1		1360–			
2	423-00171	BLOCK;SPACER	BLOC	1					
3	DS2016018	HOSE	TUYAU FLEXIBLE	2					
4	DS2040354	HOSE	TUYAU FLEXIBLE	1		1001–1359			
	DS2025040	HOSE 610L	TUYAU FLEXIBLE	1		1360–			
5	DS2045301	HOSE	TUYAU FLEXIBLE	1					
6	DS2040066	HOSE	TUYAU FLEXIBLE	1					
7	DS2018069	HOSE	TUYAU FLEXIBLE	1					
8	421-00019	VALVE;SWITCH	VANNE	1					
9	423-00150	BLOCK	BLOC	1					
10	195-01938A	BRACKET	SUPPORT	2					
11	195-02016	BRACKET	SUPPORT	1					
12	S8030161	O-RING	JONT TORIQUE	3		1001–1359			
	S8030161	O-RING	JONT TORIQUE	4		1360–			
13	S8000291	O-RING	JONT TORIQUE	1					
14	2181-4133D6	ADAPTER	RACCORD ADAPTATEUR	1					
15	2124-1026D3	CLAMP;PIPE	ATTACHE DE TUBE	1					
16	S2214166	BOLT;SOCKET M10X1.5X125	BOULON DE PLOT	4		1001–1408			
	S2214066	**BOLT;SOCKET M10X1.5X120**	BOULON DE PLOT	4		**1409**–			
17	2181-9078	FLANGE;SPLIT	BRIDE	18		1001–1359			
	2181-9078	FLANGE;SPLIT	BRIDE	16		1360–			
18	S2212266	BOLT;SOCKET M10X1.5X30	BOULON DE PLOT	32		1001–1359			
	S2212266	BOLT;SOCKET M10X1.5X30	BOULON DE PLOT	28		1360–			
19	S2212466	BOLT;SOCKET M10X1.5X40	BOULON DE PLOT	4					
20	S0512253	BOLT M10X1.5X30	BOULON A 6PANS	4					
21	S5102603	WASHER;SPRING M10	RONDELLE ELASTIQUE	4					
22	S0561053	BOLT M12X1.75X65	BOULON A 6PANS	1					
23	S2215866	BOLT;SOCKET M12X1.75X60	BOULON DE PLOT	2					
24	S5102703	WASHER;SPRING M12	RONDELLE ELASTIQUE	5					
25	2180-1026D19	O-RING	JONT TORIQUE	11		1001–1359			
	2180-1026D19	O-RING	JONT TORIQUE	10		1360–			
26	S0515253	BOLT M12X1.75X30	BOULON A 6PANS	4					

DATE	JUN. 30, 2006
REV. NO.	EXB06-08

Fig. 6760 PILOT PIPING-BREAKER CIRCUIT DE PILOTE

Serial No. ;

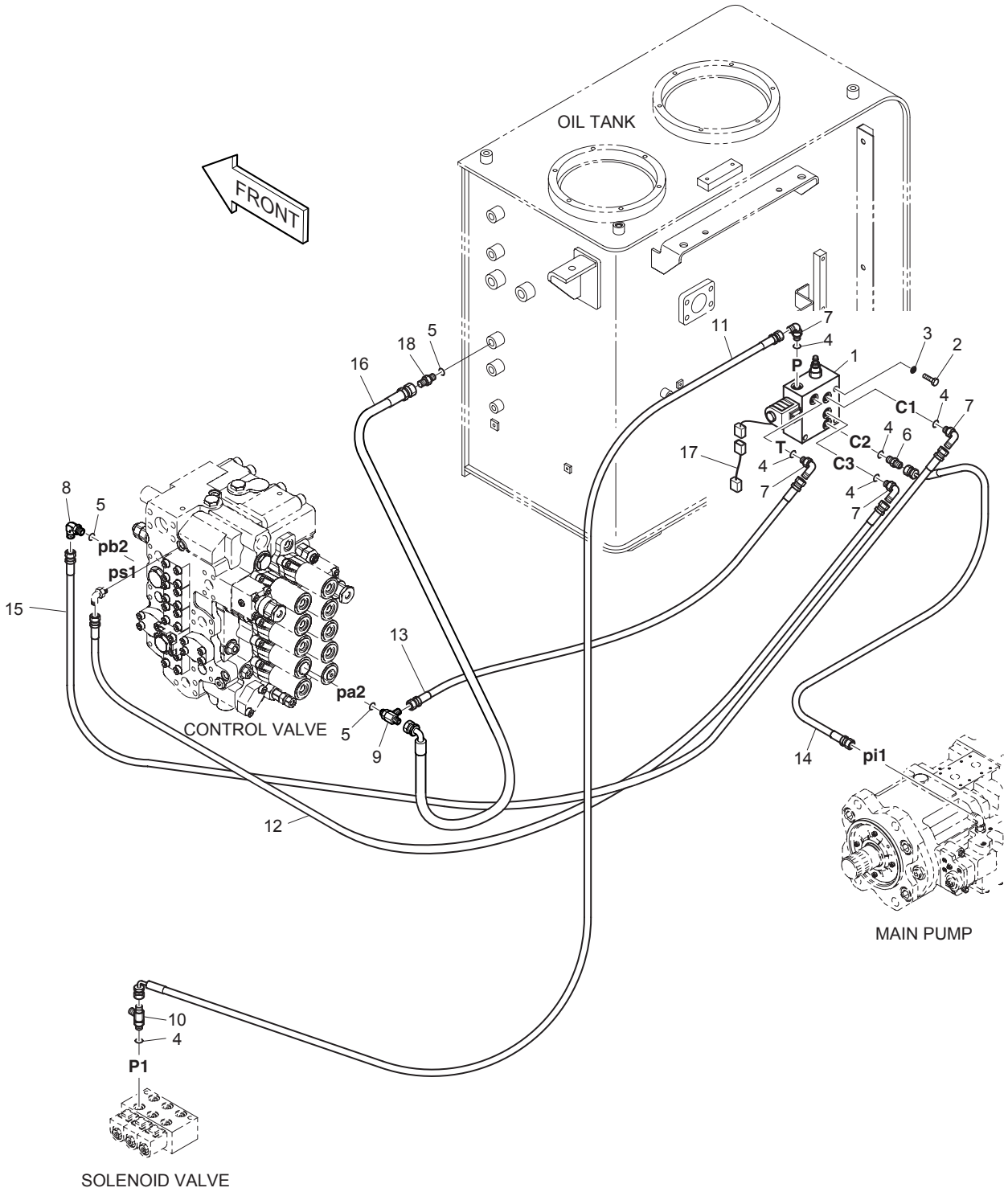

DATE	JUN. 30, 2006
REV. NO.	EXB06-08

Fig. 6760 PILOT PIPING-BREAKER CIRCUIT DE PILOTE

Serial No. ;

Key No.	Part No.	Description	Description	Q'ty	S.C	Serial No.	ICA	Replaceable part	
								Part No.	Q'ty
6760--	400-00981A	PILOT PIPING;BREAKER	CIRCUIT DE PILOTE	-	D				
1	420-00340	VALVE;BREAKER PACKAGE	VANNE	1		1001–1354	I	420-00340A	1
	420-00340A	VALVE;BREAKER PACKAGE	VANNE	1		1355–1419	I	420-00340B	1
	420-00340B	VALVE;BREAKER PACKAGE	VANNE	1		1420–			
2	S0558953	BOLT M10X1.5X70	BOULON A 6PANS	3					
3	S5102603	WASHER;SPRING M10	RONDELLE ELASTIQUE	3					
4	S8000111	O-RING	JONT TORIQUE	6					
5	S8000141	O-RING	JONT TORIQUE	3					
6	2181-1126D14	ADAPTER PFO1/4-PF1/4	ADAPTEUR	1					
7	2181-1702D4	ELBOW PFO1/4-PF1/4	COUDE	4					
8	2181-1702D10	ELBOW PFO3/8-PF1/4	COUDE	1					
9	2181-1951D7	TEE PFO3/8-PF1/4-PF1/4	TE	1					
10	2181-1951D1	TEE PFO1/4-PF1/4-PF1/4	TE	1					
11	2184-1046D196	HOSE PF1/4-1550L	TUYAU FLEXIBLE	1					
12	2184-1046D117	HOSE PF1/4-1700L	TUYAU FLEXIBLE	1					
13	2184-1045D117	HOSE PF1/4-1220L	TUYAU FLEXIBLE	1					
14	2184-1046D185	HOSE PF1/4-950L	TUYAU FLEXIBLE	1					
15	2184-1045D221	HOSE PF1/4-1650L	TUYAU FLEXIBLE	1		1001–1631			
	2184-1045D209	HOSE PF1/4-1350L	TUYAU FLEXIBLE	1		1632–			
16	2184-1046D143	HOSE PF1/4-1150L	TUYAU FLEXIBLE	1					
17	530-00232	HARNESS;BREAKER(OPTION)	HARNAIS	1					
18	2181-1126D36	ADAPTER PFO3/8-PF1/4	ADAPTEUR	1		1001–1002			
	2181-1126D37	ADAPTER	ADAPTEUR	1		1003–			

DATE	JUN. 30, 2004
REV. NO.	EXB04-04

Fig. 6770 BOOM PIPING-BREAKER-BOOM 5.2m
CONDUITES DE FLECHE

Serial No. ;

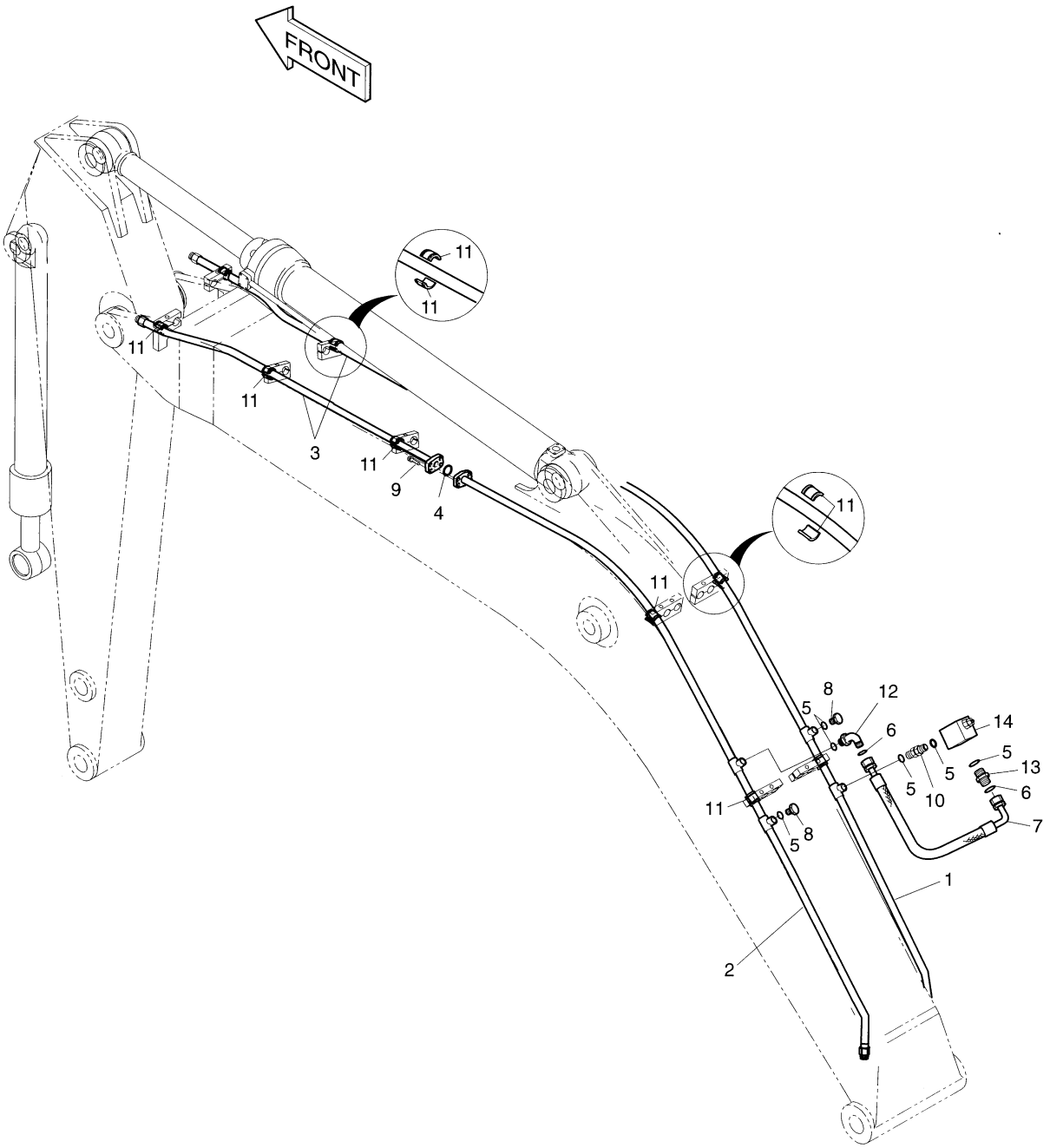

DATE	JUN. 30, 2004
REV. NO.	EXB04-04

Fig. 6770 BOOM PIPING-BREAKER-BOOM 5.2m CONDUITES DE FLECHE

Serial No ;

Key No.	Part No.	Description	Description	Q'ty	S.C	Serial No.	ICA	Replaceable part	
								Part No.	Q'ty
6770--	400-01206	BOOM PIPING	CONDUITES DE FLECHE	-	D				
1	140-01366	PIPE	TUYAU	1					
2	140-01367	PIPE	TUYAU	1					
3	140-00707	PIPE	CONDUITE	2					
4	2180-1026D19	O-RING	JONT TORIQUE	2					
5	S8000291	O-RING	JONT TORIQUE	6					
6	S8030161	O-RING	JONT TORIQUE	4					
7	2184-1197D87	HOSE	TUYAU FLEXIBLE	1					
8	2181-1950D9	PLUG	BOUCHON	2					
9	S2212466	BOLT;SOCKET M10X1.5X40	BOULON DE PLOT	8					
10	2181-2818	ADAPTER;SP	ADAPTEUR	1					
11	2161-2251A	RUBBER	CAOUTCHOUC	20					
12	2181-2815D1	ELBOW	ECROU	1					
13	2181-4133D6	ADAPTER	RACCORD ADAPTATEUR	1					
14	2420-9627A	VALVE;RELIEF	VANNE	1		1001–1429	I	2420-9627B	1
	2420-9627B	**VALVE;RELIEF**	VANNE	1		**1430–**			

DATE	JUN. 30, 2004
REV. NO.	EXB04-04

Fig. 6780 BOOM PIPING-BREAKER-BOOM 5.7m
CONDUITES DE FLECHE

Serial No. ;

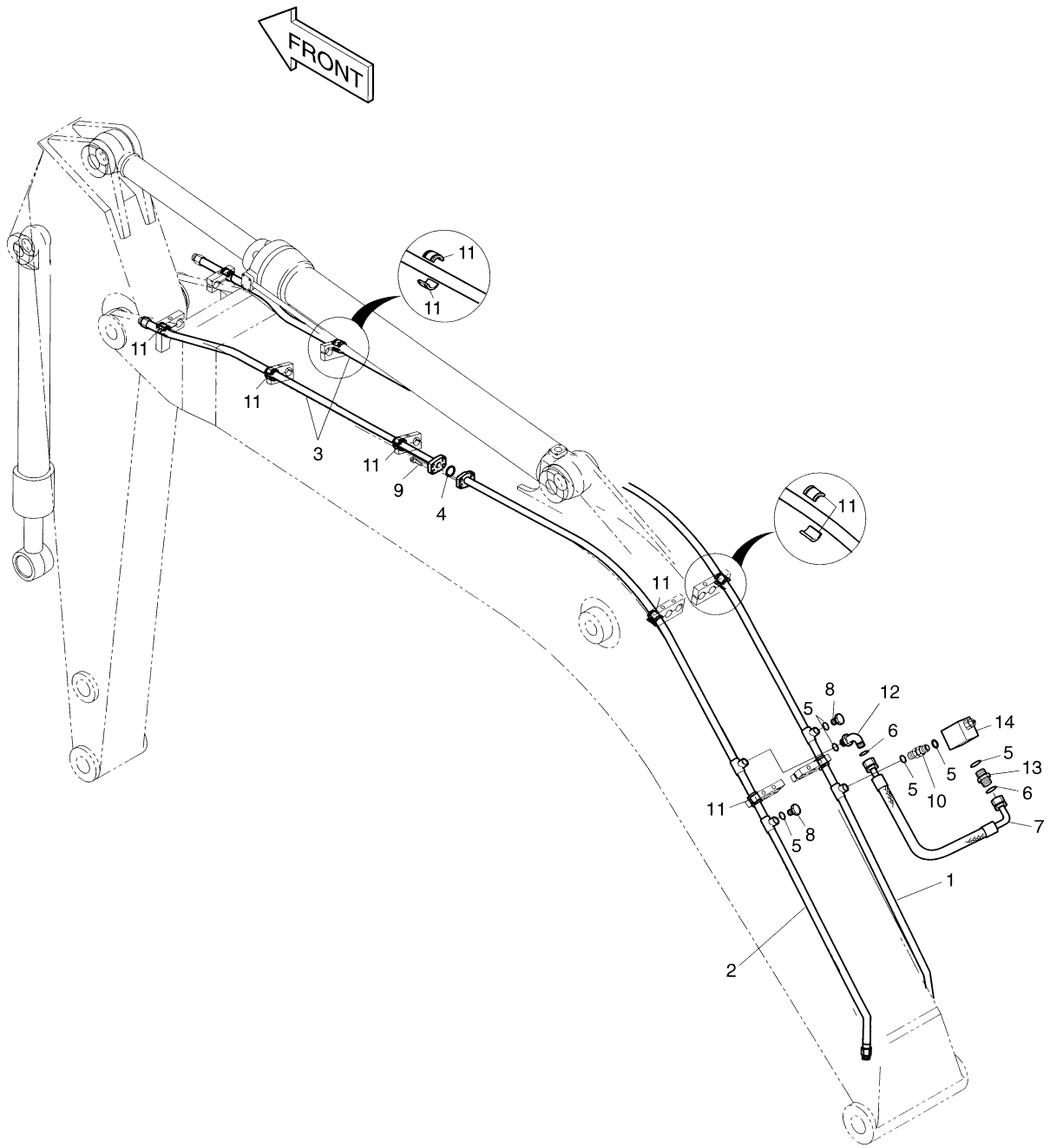

DATE	JUN. 30, 2004
REV. NO.	EXB04-04

Fig. 6780 BOOM PIPING-BREAKER-BOOM 5.7m CONDUITES DE FLECHE

Serial No ;

Key No.	Part No.	Description	Description	Q'ty	S.C	Serial No.	ICA	Replaceable part	
								Part No.	Q'ty
6780--	400-01008	BOOM PIPING	CONDUITES DE FLECHE	-	D				
1	140-01235	PIPE	TUYAU	1					
2	140-01237	PIPE	TUYAU	1					
3	140-00691	PIPE	TUYAU	2					
4	2180-1026D19	O-RING	JONT TORIQUE	2					
5	S8000291	O-RING	JONT TORIQUE	6					
6	S8030161	O-RING	JONT TORIQUE	4					
7	2184-1197D87	HOSE	TUYAU FLEXIBLE	1					
8	2181-1950D9	PLUG	BOUCHON	2					
9	S2212466	BOLT;SOCKET M10X1.5X40	BOULON DE PLOT	8					
10	2181-2818	ADAPTER;SP	ADAPTEUR	1					
11	2161-2251A	RUBBER	CAOUTCHOUC	20					
12	2181-2815D1	ELBOW	ECROU	1					
13	2181-4133D6	ADAPTER	RACCORD ADAPTATEUR	1					
14	2420-9627A	VALVE;RELIEF	VANNE	1		1001–1429	I	2420-9627B	1
	2420-9627B	**VALVE;RELIEF**	VANNE	1		**1430–**			

DATE	AUG. 12, 2002
1st EDITION	

Fig. 6790 ARM PIPING-ARM 2.0m(ONE & TWO WAY)
CONDUITES DE BALANCIER

Serial No. ;

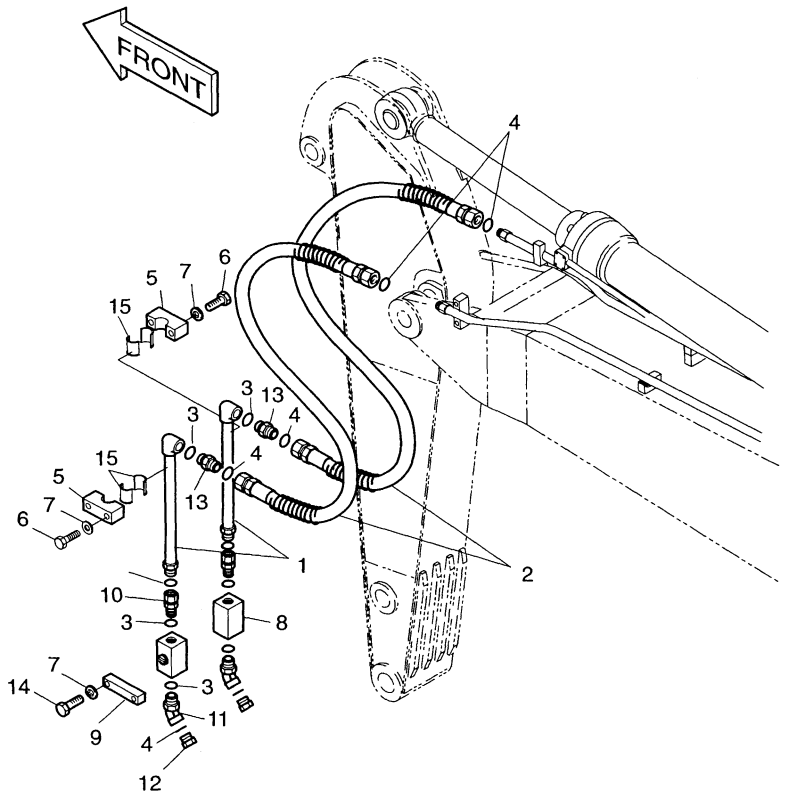

DATE	AUG. 12, 2002
1st EDITION	

Fig. 6790 ARM PIPING-ARM 2.0m(ONE & TWO WAY) CONDUITES DE BALANCIER

Serial No. ;

Key No.	Part No.	Description	Description	Q'ty	S.C	Serial No.	ICA	Replaceable part	
								Part No.	Q'ty
6790--	400-00040	ARM PIPING;ONE & TWO WAY	CONDUITES DE	-	D				
1	140-00720	PIPE	CONDUITES	2					
2	2184-1196D162	HOSE PF1-2050L	TUYAU FLEXIBLE	2					
3	S8000291	O-RING	JONT TORIQUE	6					
4	S8030161	O-RING	JONT TORIQUE	8					
5	2124-1696	CLAMP;PIPE	ATTACHE DE TUBE	2					
6	S0560953	BOLT M12X1.75X60	BOULON A 6PANS	4					
7	S5102703	WASHER;SPRING	RONDELLE ELASTIQUE	8					
8	2420-9628A	VALVE;STOP	VANNE	2					
9	124-00178	CLAMP;STOP VALVE	ATTACHE DE VANNE	2					
10	2181-2566D8	ADAPTER;UNION	ADAPTEUR	2					
11	2181-2816D2	ELBOW	COUDE	2					
	DS2332012	ELBOW(FOR KOREA)	COUDE	2					
12	2181-2817D2	CAP	CHAPEAU	2					
	2181-2820D5	CAP(FOR KOREA)	CHAPEAU	2					
13	2181-4133D6	ADAPTER	RACCORD ADAPTATEUR	2					
14	S0561353	BOLT M12X1.75X80	BOULON A 6PANS	4					
15	2161-2251A	RUBBER	CAOUTCHOUC	4					

DATE	AUG. 12, 2002
1st EDITION	

Fig. 6800 ARM PIPING-ARM 2.4m(ONE & TWO WAY)
CONDUITES DE BALANCIER

Serial No. ;

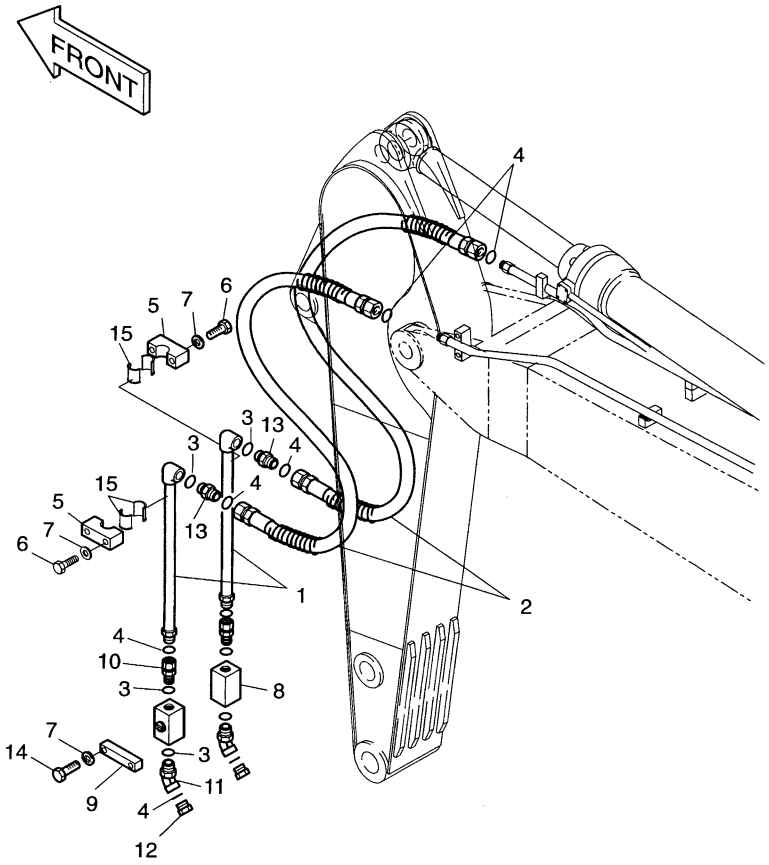

DATE	AUG. 12, 2002
1st EDITION	

Fig. 6800 ARM PIPING-ARM 2.4m(ONE & TWO WAY) CONDUITES DE BALANCIER

Serial No. ;

Key No.	Part No.	Description	Description	Q'ty	S.C	Serial No.	ICA	Replaceable part	
								Part No.	Q'ty
6800--	2400-2137	ARM PIPING;ONE & TWO WAY	CONDUITES DE	-	D				
1	140-00717	PIPE;OPTION	TUYAU	2					
2	2184-1196D77	HOSE PF1-1800L	TUYAU FLEXIBLE	2					
3	S8000291	O-RING	JONT TORIQUE	6					
4	S8030161	O-RING	JONT TORIQUE	8					
5	2124-1696	CLAMP;PIPE	ATTACHE DE TUBE	2					
6	S0560953	BOLT M12X1.75X60	BOULON A 6PANS	4					
7	S5102703	WASHER;SPRING	RONDELLE ELASTIQUE	8					
8	2420-9628A	VALVE;STOP	VANNE	2					
9	124-00178	CLAMP;STOP VALVE	ATTACHE DE VANNE	2					
10	2181-2566D8	ADAPTER;UNION	ADAPTEUR	2					
11	2181-2816D2	ELBOW	COUDE	2					
	DS2332012	ELBOW(FOR KOREA)	COUDE	2					
12	2181-2817D2	CAP	CHAPEAU	2					
	2181-2820D5	CAP(FOR KOREA)	CHAPEAU	2					
13	2181-4133D6	ADAPTER	RACCORD ADAPTATEUR	2					
14	S0561353	BOLT M12X1.75X80	BOULON A 6PANS	4					
15	2161-2251A	RUBBER	CAOUTCHOUC	4					

DATE	DEC. 22, 2003
REV. NO.	EXB03-15

Fig. 6810 ARM PIPING-ARM 2.9m(ONE & TWO WAY) CONDUITES DE BALANCIER

Serial No. ;

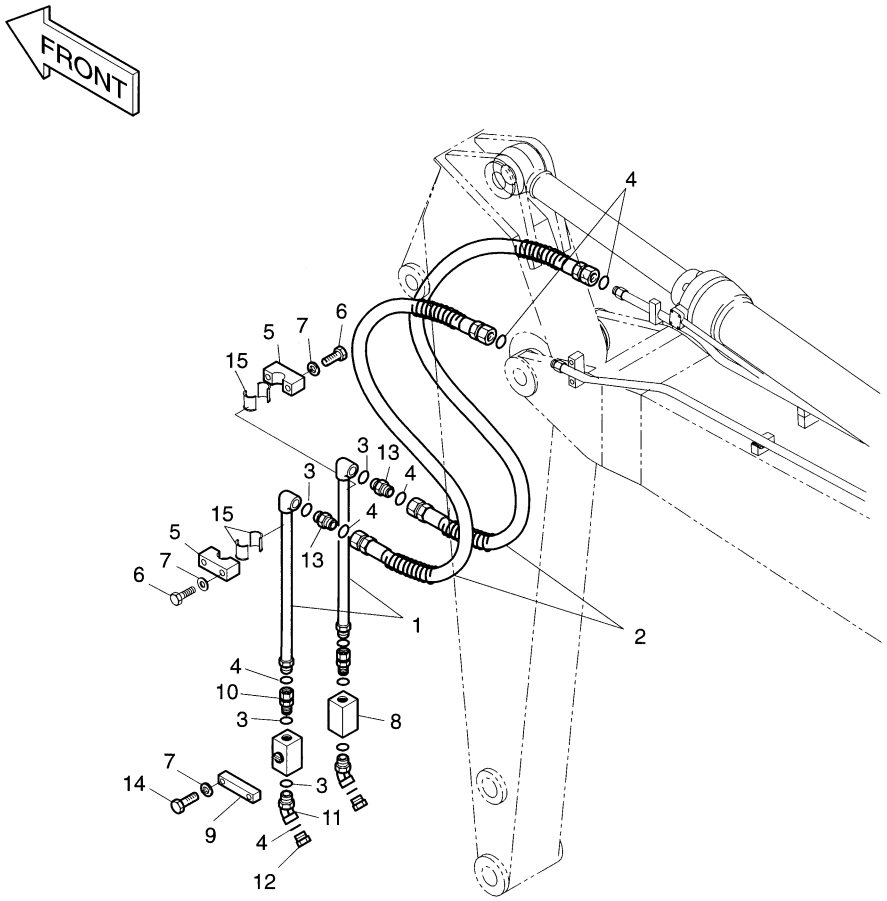

DATE	DEC. 22, 2003
REV. NO.	EXB03-15

Fig. 6810 ARM PIPING-ARM 2.9m(ONE & TWO WAY) CONDUITES DE BALANCIER

Serial No ;

Key No.	Part No.	Description	Description	Q'ty	S.C	Serial No.	ICA	Replaceable part	
								Part No.	Q'ty
6810--	2400-2136	ARM PIPING;ONE & TWO WAY	CONDUITES DE BALANCIER	-	D				
1	140-00696	PIPE;OPTION	TUYAU	2		1001-1145			
	140-00659A	**PIPE;OPTION**	TUYAU	2		**1146-**			
2	2184-1196D162	HOSE PF1-2050L	TUYAU FLEXIBLE	2					
3	S8000291	O-RING	JONT TORIQUE	6					
4	S8030161	O-RING	JONT TORIQUE	8					
5	2124-1696	CLAMP;PIPE	ATTACHE DE TUBE	4					
6	S0560953	BOLT M12X1.75X60	BOULON A 6PANS	8					
7	S5102703	WASHER;SPRING	RONDELLE ELASTIQUE	12					
8	2420-9628A	VALVE;STOP	VANNE	2					
9	124-00178	CLAMP;STOP VALVE	ATTACHE DE VANNE	2					
10	2181-2566D8	ADAPTER;UNION	ADAPTEUR	2					
11	2181-2816D2	ELBOW	COUDE	2					
	DS2332012	ELBOW(FOR KOREA)	COUDE	2					
12	2181-2817D2	CAP	CHAPEAU	2					
	2181-2820D5	CAP(FOR KOREA)	CHAPEAU	2					
13	2181-4133D6	ADAPTER	RACCORD ADAPTATEUR	2					
14	S0561353	BOLT M12X1.75X80	BOULON A 6PANS	4					
15	2161-2251A	RUBBER	CAOUTCHOUC	8					

DATE	JUN. 30, 2005
REV. NO.	EXB05-05

Fig. 6820 ARM PIPING-ARM 3.5m(ONE & TWO WAY) CONDUITES DE BALANCIER

Serial No. ;

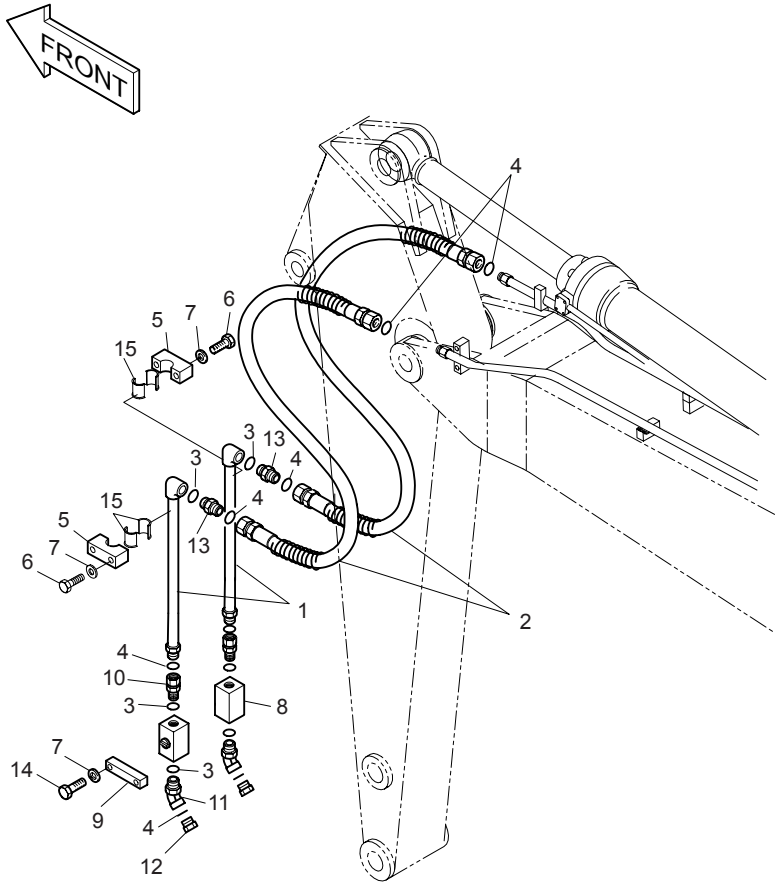

DATE	JUN. 30, 2005
REV. NO.	EXB05-05

Fig. 6820 ARM PIPING-ARM 3.5m(ONE & TWO WAY) CONDUITES DE BALANCIER

Serial No ;

Key No.	Part No.	Description	Description	Q'ty	S.C	Serial No.	ICA	Replaceable part	
								Part No.	Q'ty
6820--	2400-2138	ARM PIPING;ONE & TWO WAY	CONDUITES DE BALANCIER	-	D				
1	140-00718	PIPE;OPTION	TUYAU	2		1001–1769			
	140-00718A	**PIPE;OPTION**	TUYAU	2		**1770–**			
2	2184-1196D78	HOSE PF1-2200L	TUYAU FLEXIBLE	2					
3	S8000291	O-RING	JONT TORIQUE	6					
4	S8030161	O-RING	JONT TORIQUE	8					
5	2124-1696	CLAMP;PIPE	ATTACHE DE TUBE	4					
6	S0560953	BOLT M12X1.75X60	BOULON A 6PANS	8					
7	S5102703	WASHER;SPRING	RONDELLE ELASTIQUE	12					
8	2420-9628A	VALVE;STOP	VANNE	2					
9	124-00178	CLAMP;STOP VALVE	ATTACHE DE VANNE	2					
10	2181-2566D8	ADAPTER;UNION	ADAPTEUR	2					
11	2181-2816D2	ELBOW	COUDE	2					
	DS2332012	ELBOW(FOR KOREA)	COUDE	2					
12	2181-2817D2	CAP	CHAPEAU	2					
	2181-2820D5	CAP(FOR KOREA)	CHAPEAU	2					
13	2181-4133D6	ADAPTER	RACCORD ADAPTATEUR	2					
14	S0561353	BOLT M12X1.75X80	BOULON A 6PANS	4					
15	2161-2251A	RUBBER	CAOUTCHOUC	8					

DATE	AUG. 12, 2002
1st EDITION	

Fig. 6830 NAME PLATE-ONE & TWO WAY PLAQUE D'IDENTIFICATION

Serial No. ;

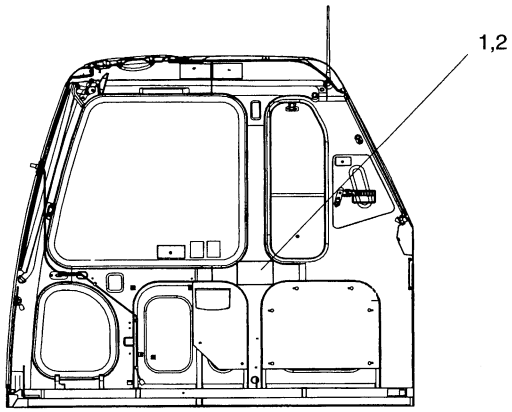

DATE	AUG. 12, 2002
1st EDITION	

Fig. 6830 NAME PLATE-ONE & TWO WAY PLAQUE D'IDENTIFICATION

Serial No. ;

Key No.	Part No.	Description	Description	Q'ty	S.C	Serial No.	ICA	Replaceable part	
								Part No.	Q'ty
6830-1	2190-3602	PLATE;NAME(KOREAN)	PLAQUE D'IDENTIFICATION	1					
2	2190-3603	PLATE;NAME(ENGLISH)	PLAQUE D'IDENTIFICATION	1					

DATE	JUL. 30, 2003
REV. NO.	EXB03-13

Fig. 6840 PILOT PIPING(CABIN)-ROTATING & TILTING CONDUITES DE PILOTE

Serial No. ;

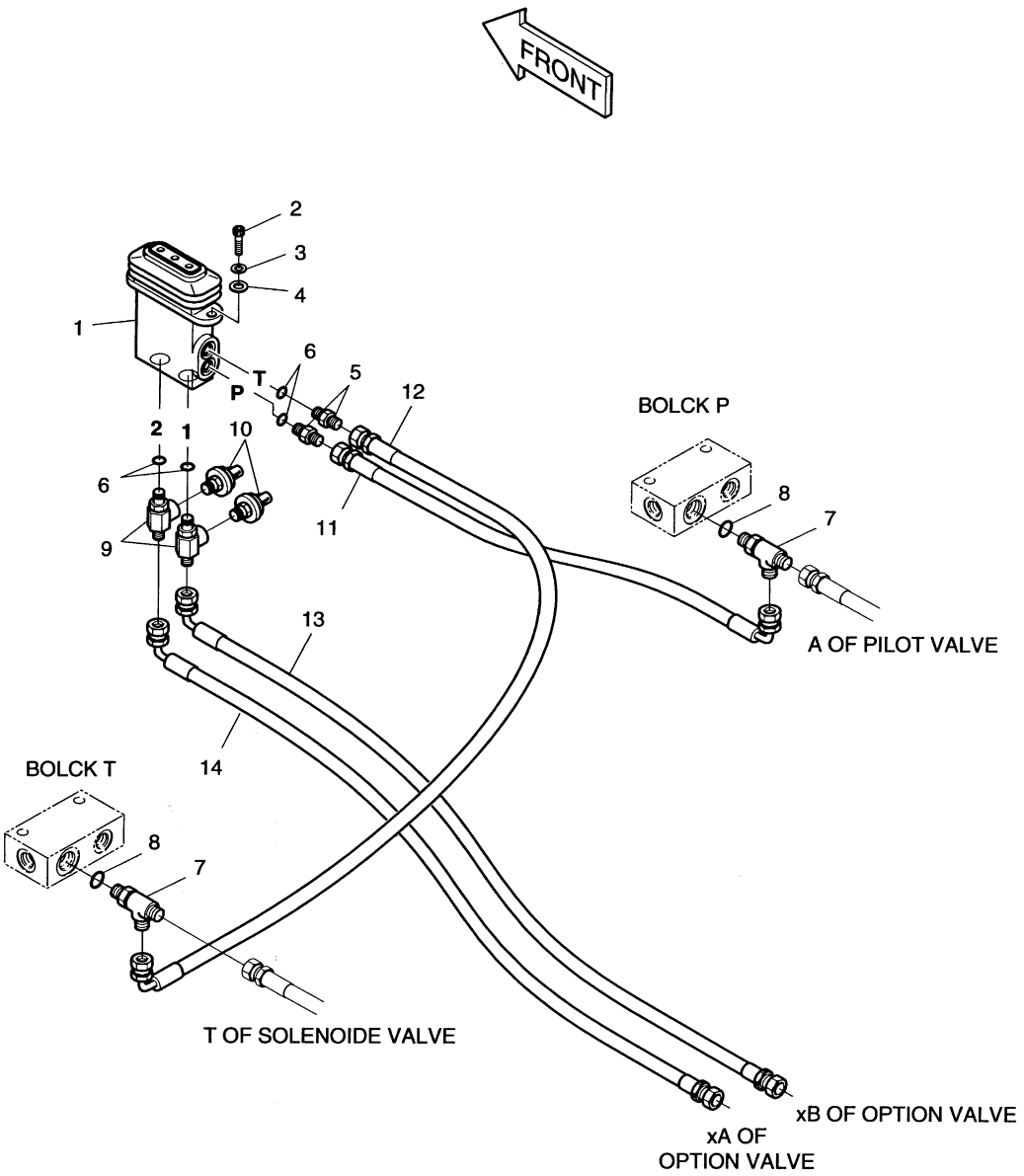

DATE	JUL. 30, 2003
REV. NO.	EXB03-13

Fig. 6840 PILOT PIPING(CABIN)-ROTATING & TILTING CONDUITES DE PILOTE

Serial No ;

Key No.	Part No.	Description	Description	Q'ty	S.C	Serial No.	ICA	Replaceable part	
								Part No.	Q'ty
6840--	400-01258	PILOT	CONDUITES DE PILOTE	-	D				
1	420-00347	VALVE;PEDAL	VANNE	1					
2	S2212266	BOLT;SOCKET M10X1.5X30	BOULON A 6 PANS CREUX	2					
3	S5110603	WASHER;SPRING M10	RONDELLE ELASTIQUE	2					
4	S5010613	WASHER;PLAIN M10	RONDELLE PLATE	2					
5	2181-1126D14	ADAPTER	RACCORD ADAPTEUR	2					
6	S8000111	O-RING	JOINT TORIQUE	4					
7	2181-1951D6	TEE	TE	2					
8	S8000141	O-RING	JOINT TORIQUE	2					
9	181-00760	TEE	TE	2					
10	549-00010	SWITCH;PRESSURE	INTERRUPTEUR	2					
11	2184-1046D153	HOSE(ST-90) PF1/4-350L	TUYAU FLEXIBLE	1					
12	2184-1046D33	HOSE(ST-90) PF1/4-620L	TUYAU FLEXIBLE	1					
13	2184-1046D245	HOSE(ST-90) PF3/8-2700L	TUYAU FLEXIBLE	1					
14	2184-1046D245	HOSE(ST-90) PF3/8-2700L	TUYAU FLEXIBLE	1					

DATE	JUN. 30, 2004
REV. NO.	EXB04-04

Fig. 6850 MAIN PIPING-ROTATING & TILTING CONDUITES DE BATI PRINCIPAL

Serial No. ;

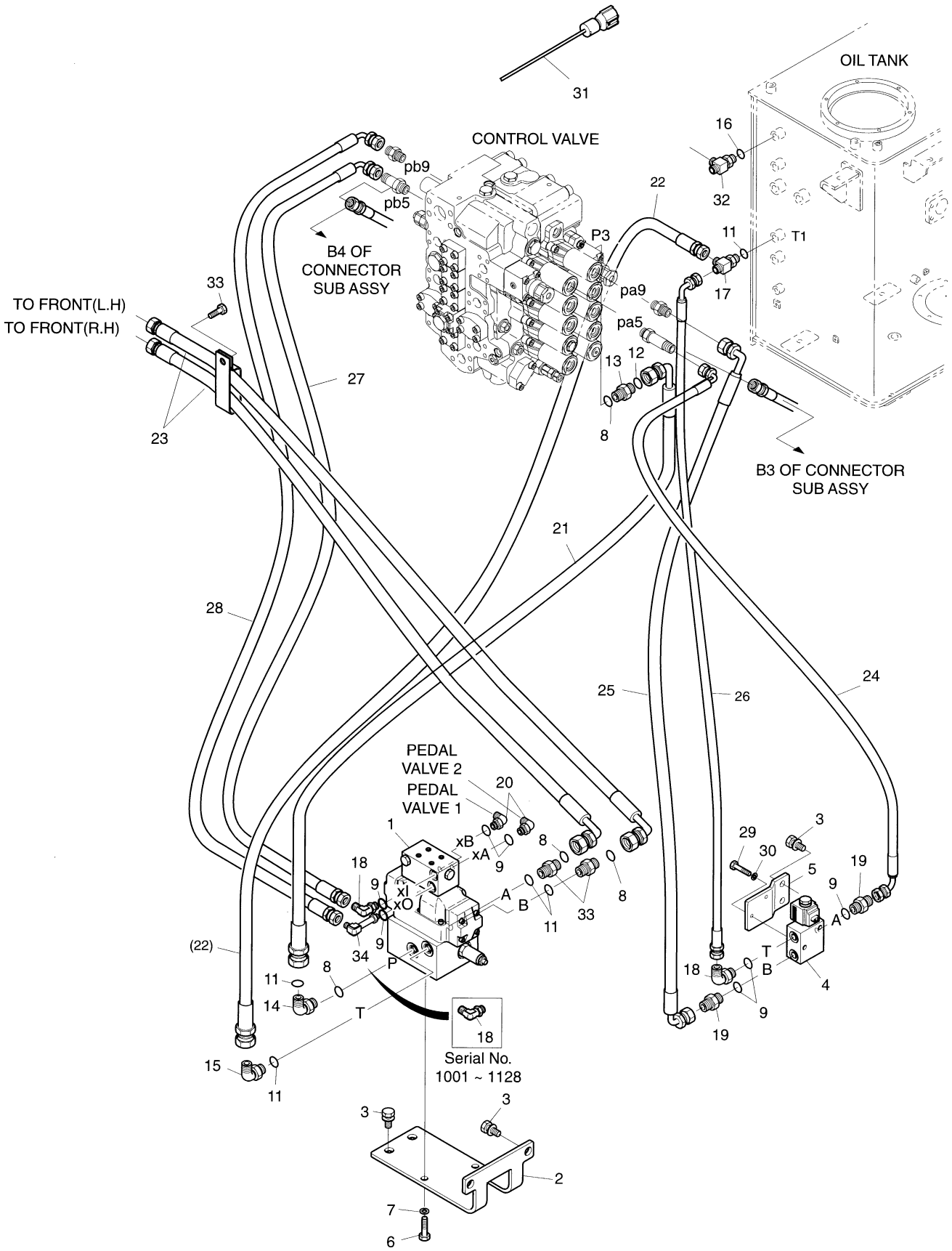

DATE	JUN. 30, 2004
REV. NO.	EXB04-04

Fig. 6850 MAIN PIPING-ROTATING & TILTING CONDUITES DE BATI PRINCIPAL

Serial No ;

Key No.	Part No.	Description	Description	Q'ty	S.C	Serial No.	ICA	Replaceable part	
								Part No.	Q'ty
6850--	400-01257	MAIN PIPING-ROTATING&TILTING	CONDUITES DE	-	D				
1	420-00322C	VALVE ASS'Y;OPT.	VANNE	1					
2	195-02414	BRACKET;OPT. C/V	SUPPORT	1					
3	2120-2196D10	BOLT;SET	BOULON A 6 PANS	6					
4	420-00370	VALVE;SOLENOID	VANNE	1					
5	195-02044	BRACKET;OPT.	SUPPORT	1					
6	S0515053	BOLT M12X1.75X25	BOULON A 6 PANS	3					
7	S5102703	WASHER;SPRING	RONDELLE ELASTIQUE	2					
8	S8030081	O-RING	JOINT TORIQUE	4					
9	S8000111	O-RING	JOINT TORIQUE	7					
11	S8000181	O-RING	JOINT TORIQUE	5					
12	S8000231	O-RING	JOINT TORIQUE	1					
13	2181-2627D2	ADAPTER	RACCORD ADAPTEUR	1					
14	2181-2815D3	ELBOW	COUDE	1					
15	2181-1702D2	ELBOW	COUDE	1					
16	2181-1951D6	TEE	TE	1					
17	2181-1951D21	TEE	TE	1					
18	2181-1702D3	ELBOW	COUDE	3		1001–1128			
	2181-1702D3	ELBOW	COUDE	2		1129–			
19	2181-1126D89	ADAPTER	RACCORD ADAPTEUR	2					
20	2181-1702D3	ELBOW	COUDE	2					
21	DS2013450	HOSE	TUYAU FLEXIBLE	1					
22	DS2054135	HOSE	TUYAU FLEXIBLE	1					
23	DS2012184	HOSE	TUYAU FLEXIBLE	2					
24	2184-1046D240	HOSE	TUYAU FLEXIBLE	1					
25	2184-1061D364	HOSE PF3/8-800L	TUYAU FLEXIBLE	1					
26	2184-1046D183	HOSE PF3/8-830L	TUYAU FLEXIBLE	1					
27	2184-1046D165	HOSE PF3/8-610L	TUYAU FLEXIBLE	1					
28	2184-1046D272	HOSE PF3/8-860L	TUYAU FLEXIBLE	1					
29	S0556353	BOLT M8X1.25X50	BOULON A 6 PANS	2					
30	S5102503	WASHER;SPRING	RONDELLE ELASTIQUE	2					
31	530-00287	HARNESS	FAISCEAU	1					
32	S8000141	O-RING	JOINT TORIQUE	1					
33	2181-4133D3	ADAPTER	RACCORD ADAPTEUR	2					
34	DS2281093	ELBOW	COUDE	1		1129–			

DATE	JUL. 30, 2003
REV. NO.	EXB03-13

Fig. 6860 BOOM PIPING-ROTATING & TILTING
CONDUITES DE FLECHE

Serial No. ;

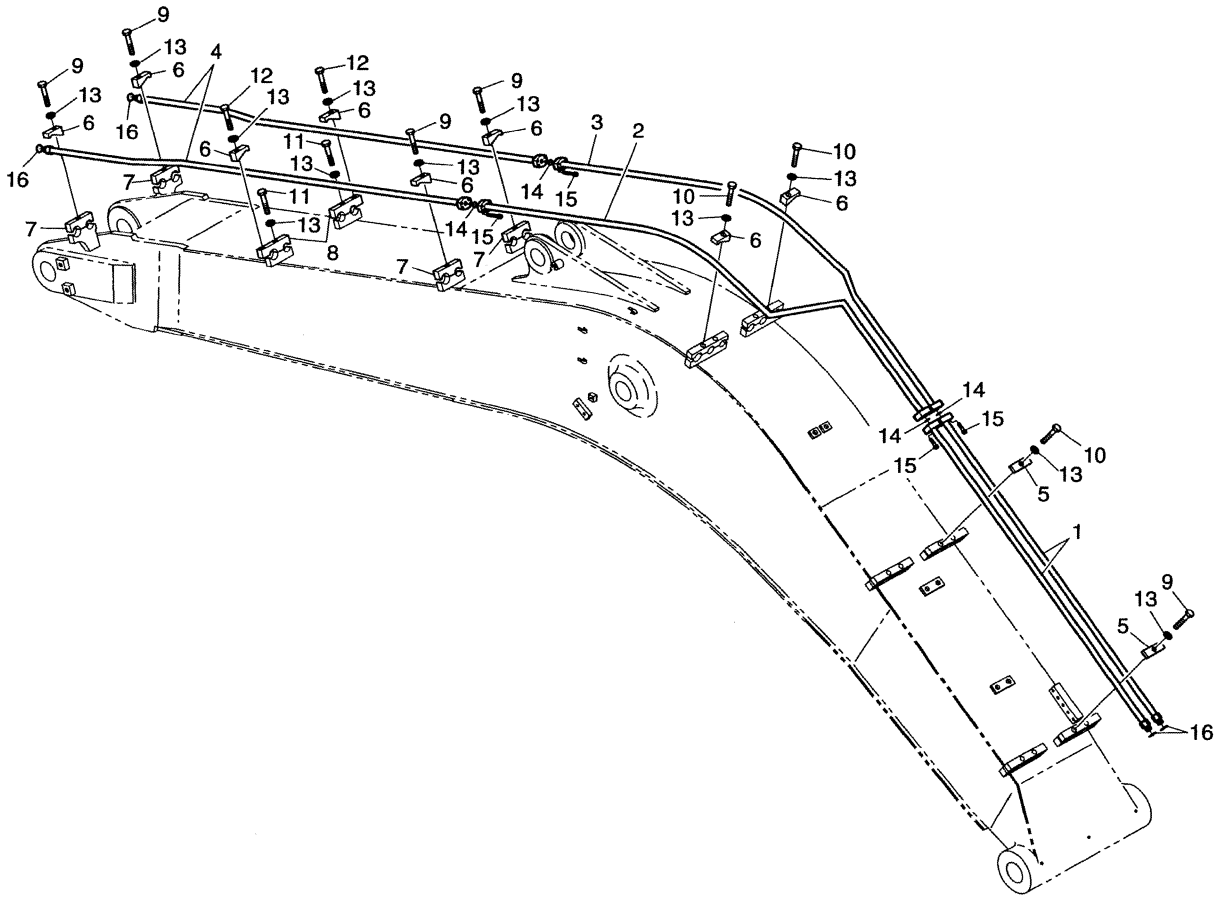

DATE	JUL. 30, 2003
REV. NO.	EXB03-13

Fig. 6860 BOOM PIPING-ROTATING & TILTING CONDUITES DE FLECHE

Serial No ;

Key No.	Part No.	Description	Description	Q'ty	S.C	Serial No.	ICA	Replaceable part	
								Part No.	Q'ty
6860--	400-00753A	BOOM	CONDUITES DE FLECHE	-	D				
1	140-01170	PIPE	TUYAU	2					
2	140-01096	PIPE;BOOM(L.H)	TUYAU	1					
3	140-01097	PIPE;BOOM(R.H)	TUYAU	1					
4	140-01098	PIPE	TUYAU	2					
5	124-00211A	CLAMP;PIPE	FIXATION DE TUYAU	2					
6	124-00212	CLAMP;PIPE	FIXATION DE TUYAU	8					
7	124-00214	CLAMP;PIPE	FIXATION DE TUYAU	4					
8	124-00215	CLAMP;PIPE	FIXATION DE TUYAU	2					
9	S0566266	BOLT M16X2.0X100	BOULON A 6 PANS	5					
10	S0566066	BOLT M16X2.0X90	BOULON A 6 PANS	3					
11	S0565666	BOLT M16X2.0X70	BOULON A 6 PANS	2					
12	S0565266	BOLT M16X2.0X50	BOULON A 6 PANS	2					
13	S5102903	WASHER;SPRING M16	RONDELLE ELASTIQUE	12					
14	2180-1026D30	O-RING	JOINT TORIQUE	4					
15	S2209366	BOLT;SOCKET M8X1.25X35	BOULON A 6 PANS CREUX	16					
16	S8030081	O-RING	JOINT TORIQUE	4					

DATE	DEC. 30, 2004
REV. NO.	EXB04-09

Fig. 6870 ARM PIPING-2.9m- ROTATING & TILTING
CONDUITES DE BALANCIER

Serial No. ;

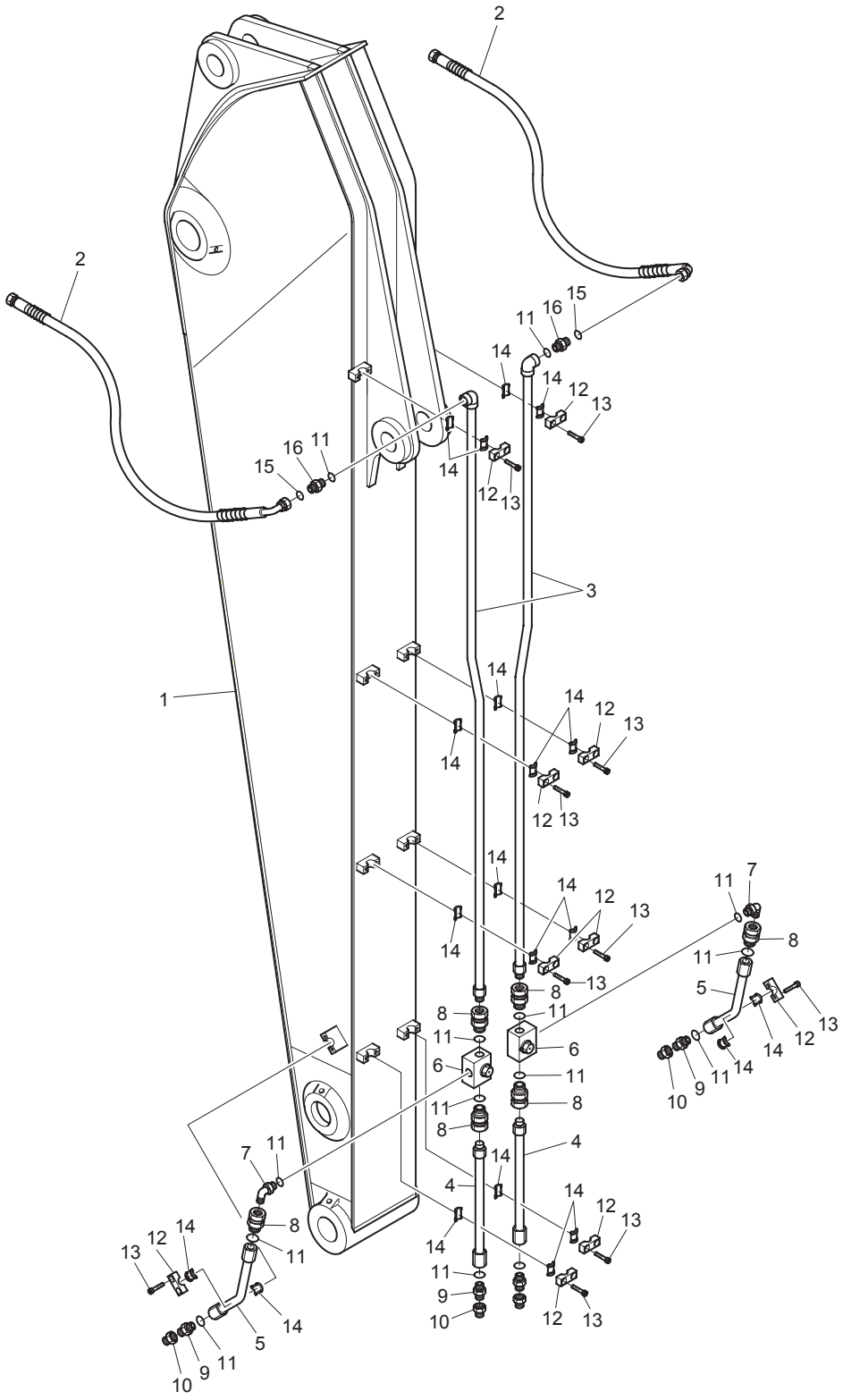

DATE	DEC. 30, 2004
REV. NO.	EXB04-09

Fig. 6870 ARM PIPING-2.9m-ROTATING & TILTING CONDUITES DE BALANCIER

Serial No ;

Key No.	Part No.	Description	Description	Q'ty	S.C	Serial No.	ICA	Replaceable part	
								Part No.	Q'ty
6870--	400-00754A	ARM PIPING-2.9m	CONDUITES DE BALANCE	-	D				
1	701-00425	ARM;ROTATING&TILTING	BALANCE	1		1001–1669	I	701-00425A	1
	701-00425A	**ARM;ROTATING&TILTING**	BALANCE	1		**1670–**			
2	DS2013356	HOSE ORS1/2-1250L	TUYAU FLEXIBLE	2					
3	140-01178	PIPE;ARM	CONDUITE	2					
4	140-01115A	PIPE;TILTING	CONDUITE	2					
5	193-00625A	PIPE;ROTATING	CONDUITE	2					
6	420-00277	VALVE;SWITCH	VANNE	2					
7	2181-1702D2	ELBOW	COUDE	2					
8	111-00031D1	ADAPTER;UNION	ADAPTEUR	6					
9	2181-1126D6	ADAPTER PFO1/2-PF1/2	ADAPTEUR	4					
10	2181-2820D3	PLUG	BOUCHON	4					
11	S8000181	O-RING	JOINT TORIQUE	14					
12	124-00204A	CLAMP	COLLIER	10					
13	S2212066	BOLT;SOCKET M10X1.5X25	BOULON A 6PANS	20					
14	161-00313	RUBBER	CAOUTCHOUC	20					
15	S8030081	O-RING	JOINT TORIQUE	2					
16	2181-4133D3	ADAPTER	ADAPTEUR	2					

DATE	JUN. 30, 2005
REV. NO.	EXB05-05

Fig. 6880 TROPICAL COVER
COUVERCLE

Serial No. ; 1075 ~

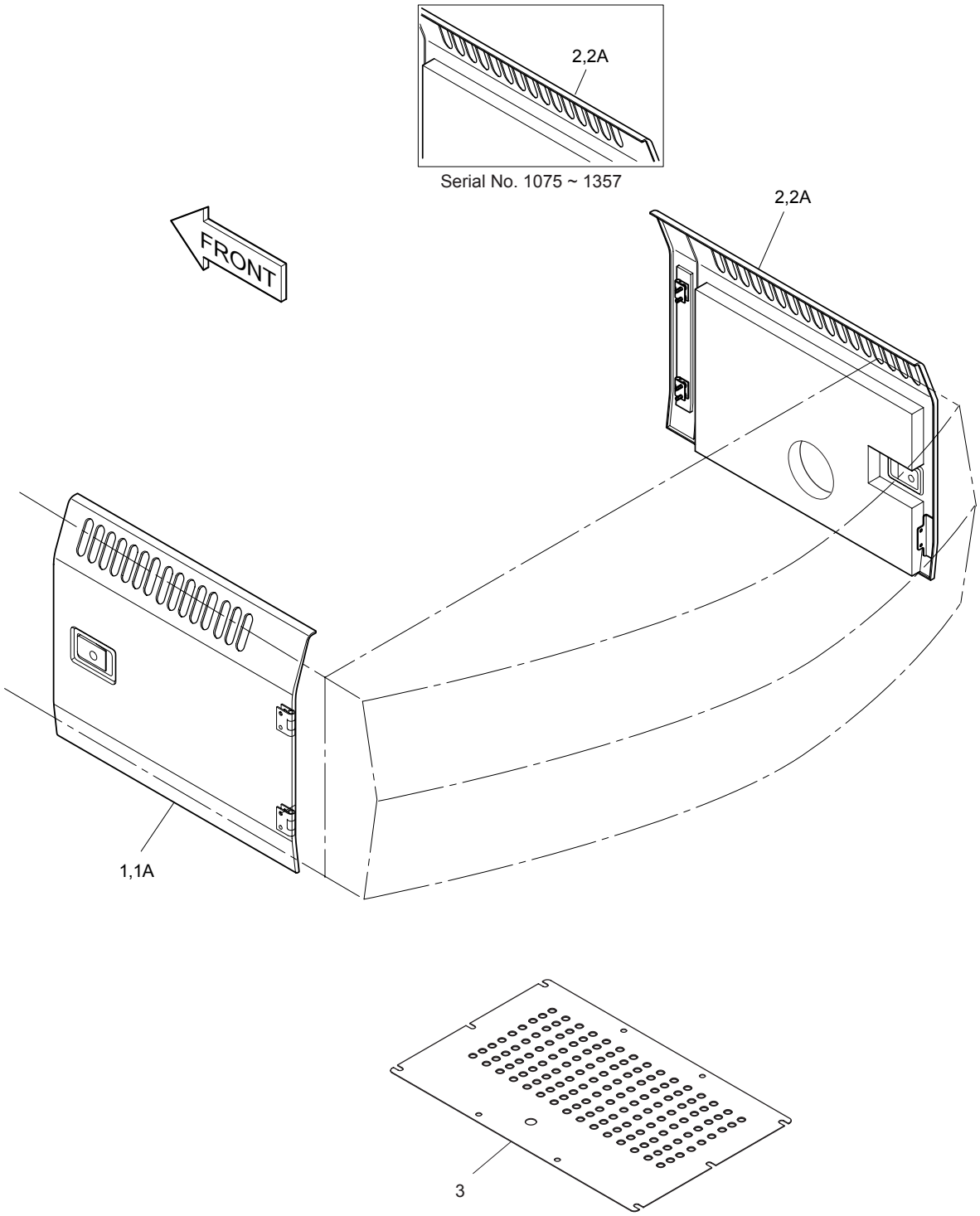

DATE	JUN. 30, 2005
REV. NO.	EXB05-05

Fig. 6880 TROPICAL COVER COUVERCLE

Serial No ; 1075 ~

Key No.	Part No.	Description	Description	Q'ty	S.C	Serial No.	ICA	Replaceable part	
								Part No.	Q'ty
6880--	621-02628	TROPICAL COVER	COUVERCLE	-	D	1075–			
1	621-02556	SIDE DOOR ASS'Y(L.H)	PORTE	1		1075–1206	I	621-02556A	1
	621-02556A	SIDE DOOR ASS'Y(L.H)	PORTE	1		1207–1357	I	621-02556B	1
	621-02556B	SIDE DOOR ASS'Y(L.H)	PORTE	1		1358–1414	I	621-02556C	1
	621-02556C	SIDE DOOR ASS'Y(L.H)	PORTE	1		1415–1859			
	621-02556E	**SIDE DOOR ASS'Y(L.H)**	PORTE	1		**1860–1967**	I	621-02556G	1
	621-02556G	**SIDE DOOR ASS'Y(L.H)**	PORTE	1		**1968–**			
1A	621-02555	. DOOR;SIDE(L.H)	. PORTE	1		1075–1206	I	621-02555A	1
	621-02555A	. DOOR;SIDE(L.H)	. PORTE	1		1207–1357	I	621-02555B	1
	621-02555B	. DOOR;SIDE(L.H)	. PORTE	1		1358–1414	I	621-02555C	1
	621-02555C	. DOOR;SIDE(L.H)	. PORTE	1		1415–1859			
	621-02555E	**. DOOR;SIDE(L.H)**	. PORTE	1		**1860–1967**	I	621-02555G	1
	621-02555G	**. DOOR;SIDE(L.H)**	. PORTE	1		**1968–**			
2	621-02558	SIDE DOOR ASS'Y(R.H)	PORTE	1		1075–1206	I	621-02558A	1
	621-02558A	SIDE DOOR ASS'Y(R.H)	PORTE	1		1207–1357	I	621-02558B	1
	621-02558B	SIDE DOOR ASS'Y(R.H)	PORTE	1		1358–1414	I	621-02558C	1
	621-02558C	SIDE DOOR ASS'Y(R.H)	PORTE	1		1415–1859			
	621-02558E	**SIDE DOOR ASS'Y(R.H)**	PORTE	1		**1860–1967**	I	621-02558G	1
	621-02558G	**SIDE DOOR ASS'Y(R.H)**	PORTE	1		**1968–**			
2A	621-02557	. DOOR;SIDE(R.H)	. PORTE	1		1075–1206	I	621-02557A	1
	621-02557A	. DOOR;SIDE(R.H)	. PORTE	1		1207–1357	I	621-02557B	1
	621-02557B	. DOOR;SIDE(R.H)	. PORTE	1		1358–1414	I	621-02557C	1
	621-02557C	. DOOR;SIDE(R.H)	. PORTE	1		1415–1859			
	621-02557E	**. DOOR;SIDE(R.H)**	. PORTE	1		**1860–1967**	I	621-02557G	1
	621-02557G	**. DOOR;SIDE(R.H)**	. PORTE	1		**1968–**			
3	621-02559	COVER;UNDER	COUVERCLE	1					

DATE	JUN. 30, 2006
REV. NO.	EXB06-08

Fig. 6890 ARTI.BOOM ASS'Y
ARTICULAIRE FLECHE

Serial No. ;

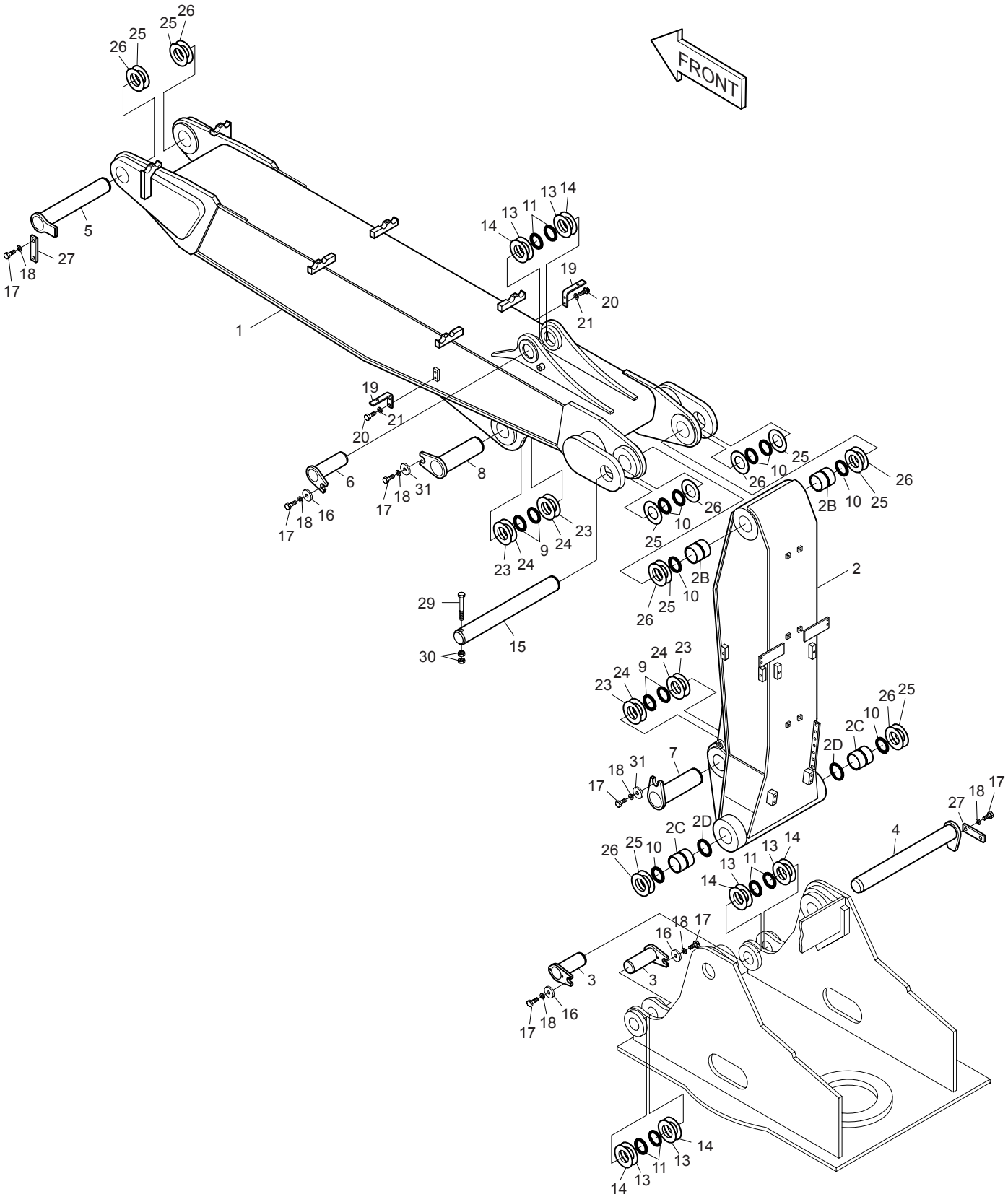

DATE	JUN. 30, 2006
REV. NO.	EXB06-08

Fig. 6890 ARTI.BOOM ASS'Y ARTICULAIRE FLECHE

Serial No. ;

Key No.	Part No.	Description	Description	Q'ty	S.C	Serial No.	ICA	Replaceable part	
								Part No.	Q'ty
6890--	**701-00584A**	**BOOM ASS'Y**	ENSEMBLE FLECHE	-	D				
1	701-00585	BOOM;UPPER	FLECHE	1		1001–1354	I	701-00585A	1
	701-00585A	BOOM;UPPER	FLECHE	1		1355–2193	I	701-00585B	1
	701-00585B	**BOOM;UPPER**	FLECHE	1		**2194–**			
2	2701-1667G	BOOM ;LOWER MACH.	FLECHE	1					
2B	2110-1316A	. BUSHING	. MANCHON	2					
2C	2110-1315A	. BUSHING	. MANCHON	2					
2D	2180-1106BD6	. SEAL;DUST	. PARE-POUSSIERES	2					
3	123-00409	PIN	GOUJON	2					
4	2123-2180E	PIN	GOUJON	1					
5	2123-2185E	PIN	GOUJON	1					
6	2123-2187C	PIN	GOUJON	1					
7	123-00030	PIN	GOUJON	1					
8	2123-2031C	PIN	GOUJON	1					
9	2180-1106BD14	SEAL;DUST	PARE-POUSSIERES	4					
10	2180-1106BD6	SEAL;DUST	PARE-POUSSIERES	6					
11	2180-1106BD24	SEAL;DUST	PARE-POUSSIERES	6					
13	2114-1059D63	SHIM	CALE	6					
14	2114-1059D118	SHIM	CALE	6					
15	123-00361	PIN	GOUJON	1					
16	2116-1060D6	STOPPER	TAQUET D'ARRET	3					
17	S0521361	BOLT M16X2.0	BOULON A 6 PANS	9					
18	S5102903	WASHER;SPRING M16	RONDELLE ELASTIQUE	9					
19	2195-2394B	BRACKET	SUPPORT	2					
20	S0515053	BOLT M12X1.75X25	BOULON A 6 PANS	4					
21	S5102703	WASHER;SPRING M12	RONDELLE ELASTIQUE	4					
23	2114-1059D72	SHIM	CALE	4					
24	2114-1059D73	SHIM	CALE	4					
25	114-00001D5	SHIM	CALE	8					
26	114-00001D6	SHIM	CALE	8					
27	2116-1514A	PLATE;STOPPER	PLAQUE	2					
29	S0571866	BOLT M20X2.5X170	BOULON A 6 PANS	1					
30	S4013133	NUT M20X2.5	ECROU	2					
31	2116-1060D5	STOPPER	TAQUET D'ARRET	2					

DATE	JUN. 30, 2005
REV. NO.	EXB05-05

Fig. 6900 MAIN PIPING-ARTI.BOOM
CONDUITES DE BATI PRINCIPAL

Serial No. ;

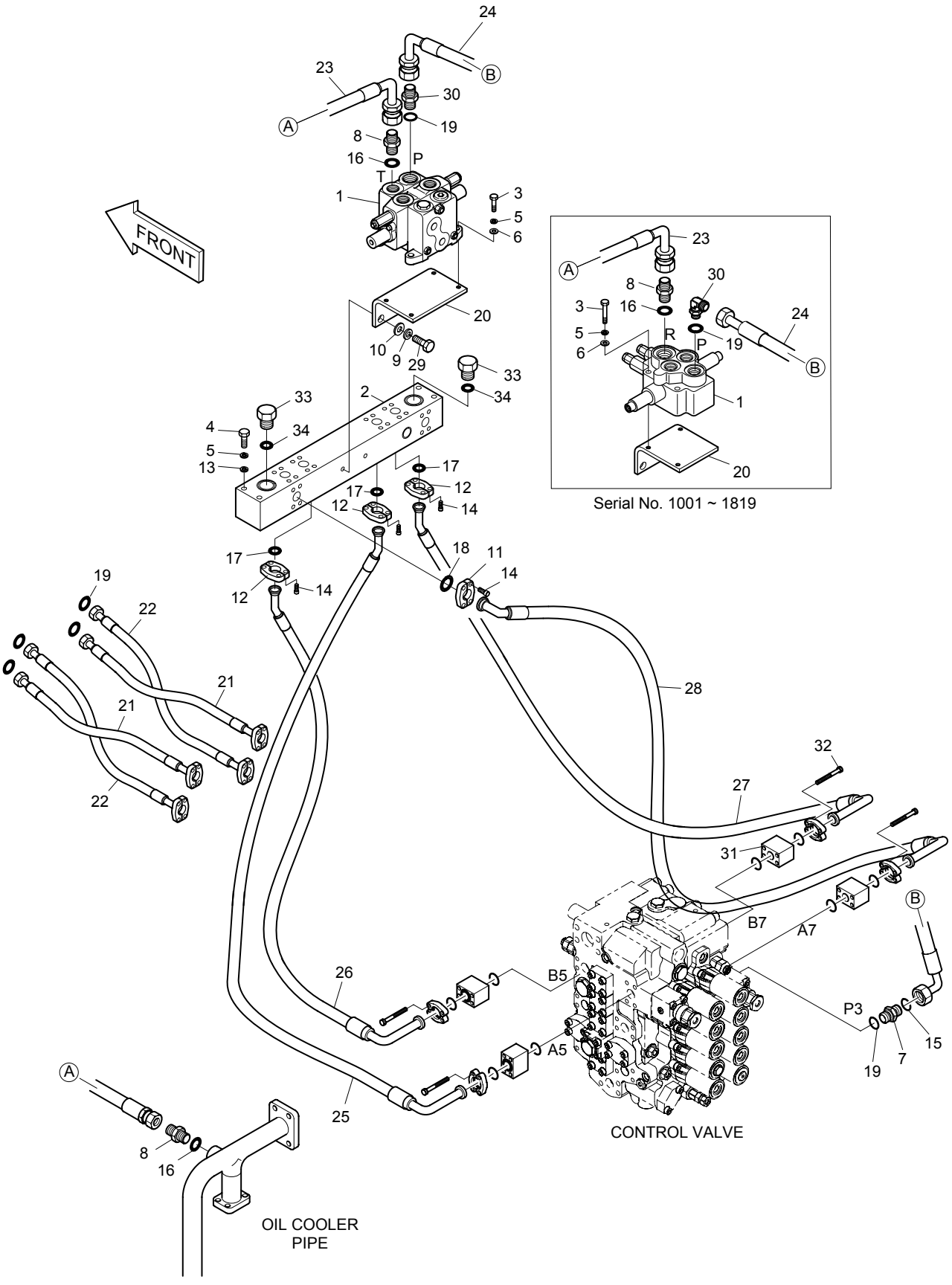

DATE	JUN. 30, 2005
REV. NO.	EXB05-05

Fig. 6900 MAIN PIPING-ARTI.BOOM CONDUITES DE BATI PRINCIPAL

Serial No ;

Key No.	Part No.	Description	Description	Q'ty	S.C	Serial No.	ICA	Replaceable part	
								Part No.	Q'ty
6900--	400-01299	MAIN PIPING	CONDUITES DE BATI	-	D				
1	2420-9365	VALVE;CONTROL	VANNE	1		1001–1819			
	K1004312	**VALVE;CONTROL**	VANNE	1		**1820–**			
2	423-00185B	BLOCK	BLOC	1					
3	S0559353	BOLT M10X1.5X90	BOULON A 6 PANS	3		1001–1819			
	S0558453	**BOLT M10X1.5X45**	BOULON A 6 PANS	4		**1820–**			
4	S0559553	BOLT M10X1.5X100	BOULON A 6 PANS	4					
5	S5102603	WASHER;SPRING M10	RONDELLE ELASTIQUE	7		1001–1819			
	S5102603	**WASHER;SPRING M10**	RONDELLE ELASTIQUE	8		**1820–**			
6	S5010613	WASHER;PLAIN	RONDELLE PLATE	3		1001–1819			
	S5010613	**WASHER;PLAIN**	RONDELLE PLATE	4		**1820–**			
7	2181-2627D1	ADAPTER PFO3/4-UNF1 3/16	RACCORD ADAPTATEUR	1					
8	2181-1126D25	ADAPTER PFO1-PF1	RACCORD ADAPTATEUR	2					
9	S5102903	WASHER;SPRING	RONDELLE ELASTIQUE	2					
10	S5010913	WASHER	RONDELLE	2					
11	2181-9083	FLANGE;SPLIT	FLASQUE	2					
12	2181-9079	FLANGE	FLASQUE EN DEUX	6					
13	2114-1058D10	WASHER;PLAIN	RONDELLE PLATE	4					
14	S2212266	BOLT;SOCKET M10X1.5X30	BOULON A 6 PANS CREUX	16					
15	S8000231	O-RING	JOINT TORIQUE	2					
16	S8000291	O-RING	JOINT TORIQUE	2					
17	2180-1026D2	O-RING	JOINT TORIQUE	3					
18	2180-1026D19	O-RING	JOINT TORIQUE	2					
19	S8030121	O-RING	JOINT TORIQUE	4					
20	195-00419	BRACKET	SUPPORT	1		1001–1819			
	195-00419A	**BRACKET**	SUPPORT	1		**1820–**			
21	2184-1229D6	HOSE 3/4"-760L	TUYAU FLEXIBLE	2					
22	2184-1229D10	HOSE 3/4"-720L	TUYAU FLEXIBLE	2					
23	2184-1036D112	HOSE 1"-1200L	TUYAU FLEXIBLE	1					
24	DS2013482	HOSE 3/4"-800L	TUYAU FLEXIBLE	1		1001–1819			
	2184-1198D5	**HOSE 3/4"-1000L**	TUYAU FLEXIBLE	1		**1820–**			
25	DS2043084	HOSE 1"-3/4"-1200L	TUYAU FLEXIBLE	1					
26	DS2043081	HOSE 1"-900L	TUYAU FLEXIBLE	1					
27	DS2043083	HOSE 1"-3/4"-830L	TUYAU FLEXIBLE	1					
28	DS2045331	HOSE 1"-3/4"-1300L	TUYAU FLEXIBLE	1					
29	S0521266	BOLT M16X2X30	BOULON A 6 PANS	2					
30	2181-1702D78	ELBOW	COUDE	1		1001–1474			
	2181-2628D1	ELBOW	COUDE	1		1475–1819			

DATE	JUN. 30, 2005
REV. NO.	EXB05-05

Fig. 6900 MAIN PIPING-ARTI.BOOM
CONDUITES DE BATI PRINCIPAL

Serial No. ;

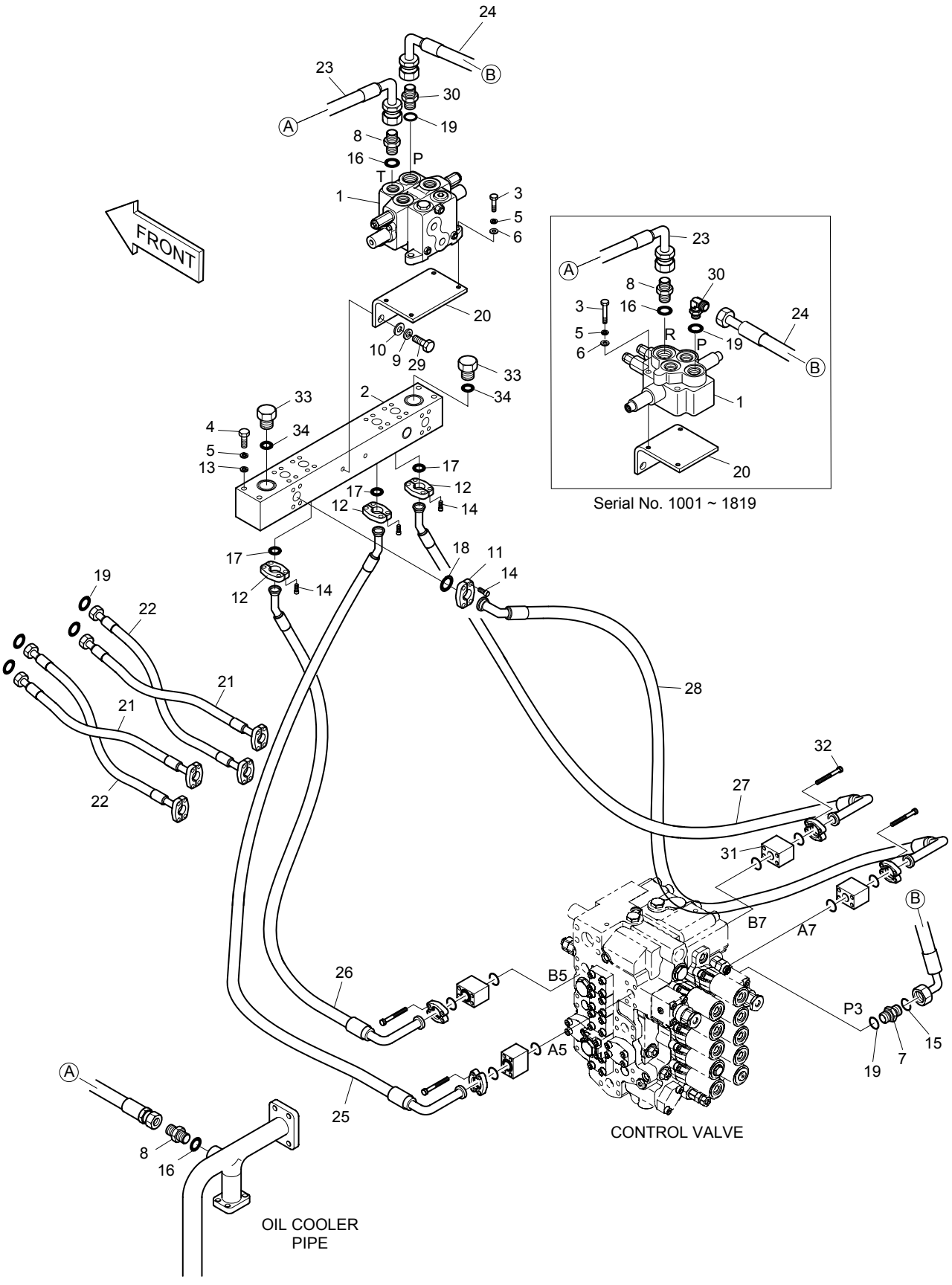

DATE	JUN. 30, 2005
REV. NO.	EXB05-05

Fig. 6900 MAIN PIPING-ARTI.BOOM CONDUITES DE BATI PRINCIPAL

Serial No ;

Key No.	Part No.	Description	Description	Q'ty	S.C	Serial No.	ICA	Replaceable part	
								Part No.	Q'ty
6900-30	**2181-2627D1**	**ADAPTER**	ADAPTEUR	1		**1820–**			
31	181-00806	BLOCK;SPACER	BLOC	1					
32	S2213266	BOLT;SOCKET M10X1.5X80	BOULON DE PLOT	4					
33	2181-1950D3	PLUG	BOUCHON	2					
34	S8000181	O-RING	JOINT TORIQUE	4					

DATE	JUN. 30, 2005
REV. NO.	EXB05-05

Fig. 6910 PILOT PIING-ARTI.BOOM
CONDUITES DE PILOTE

Serial No. ;

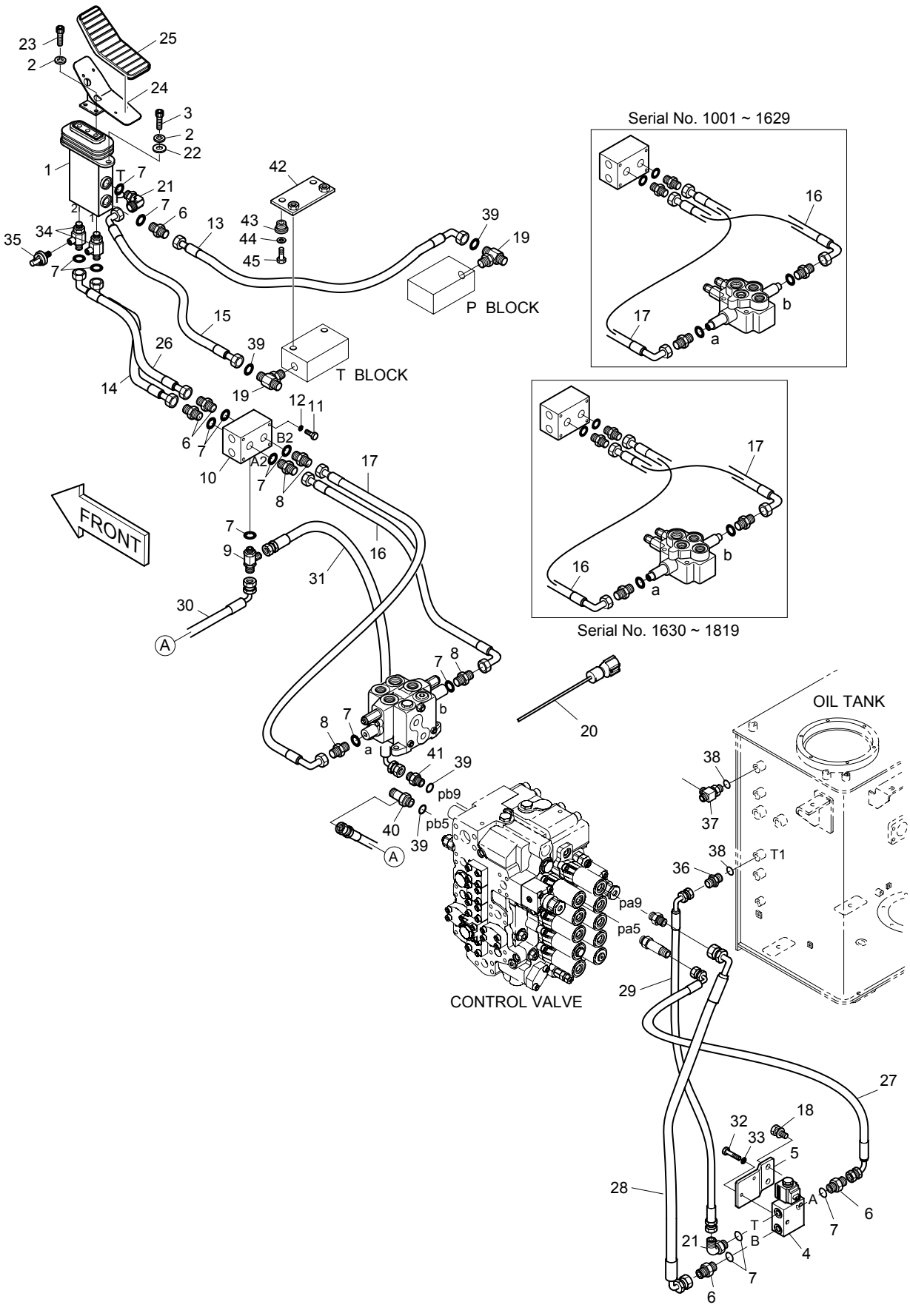

DATE	JUN. 30, 2005
REV. NO.	EXB05-05

Fig. 6910 PILOT PIPING-ARTI.BOOM CONDUITES DE PILOTE

Serial No ;

Key No.	Part No.	Description	Description	Q'ty	S.C	Serial No.	ICA	Replaceable part	
								Part No.	Q'ty
6910--	400-01293	PILOT PIPING-ARTI. BOOM	CONDUITES DE PILOTE	-	D				
1	420-00347	VALVE;PEDAL(ARTI. BOOM)	VANNE	1					
2	S5110603	WASHER	RONDELLE	4					
3	S2212266	BOLT;SOCKET M10X1.5X30	BOULON DE PLOT	2					
4	420-00370	VALVE;SOLENOID	VANNE	1					
5	195-02044	BRACKET	SUPPORT	1					
6	2181-1126D89	ADAPTER PFO1/4-PF3/8	ADAPTEUR	5					
7	S8000111	O-RING	JOINT TORIQUE	13					
8	2181-1126D14	ADAPTER PFO1/4-PF1/4	ADAPTEUR	4					
9	181-00779	TEE PFO1/4-2PF1/4	TE	1					
10	2420-9158P	VALVE;SHUTTLE	VANNE	1					
11	S0556453	BOLT M8X1.25X55	BOULON	2					
12	S5102503	WASHER;SPRING	RONDELLE ELASTIQUE	2					
13	2184-1046D165	HOSE PF3/8-610L	TUYAU FLEXIBLE	1					
14	2184-1046D64	HOSE PF3/8-530L	TUYAU FLEXIBLE	1					
15	DS2054215	HOSE PF3/8-310L	TUYAU FLEXIBLE	1		1001–1629			
	2184-1060D26	HOSE PF3/4-300L	TUYAU FLEXIBLE	1		1630–			
16	2184-1046D121	HOSE PF1/4-2240L	TUYAU FLEXIBLE	1					
17	2184-1046D79	HOSE PF1/4-2000L	TUYAU FLEXIBLE	1					
18	2120-2196D10	BOLT;SET M12X1.75X25	BOULON	2					
19	2181-2281D13	TEE PFO3/8-2PF3/8	TE	2					
20	530-00287	HARNESS	HARNAIS	1					
21	2181-1702D3	ELBOW PFO1/4-PF3/8	COUDE	2					
22	S5010613	WASHER;PLAIN M10	RONDELLE PLATE	2					
23	S2211866	BOLT;SOCKET M10X1.5X20	BOULON DE PLOT	2					
24	2197-1818	BRACKET;PEDAL(L)	SUPPORT	1					
25	2161-2257	RUBBER;PEDAL	CAOUTCHOUC	1					
26	2184-1046D211	HOSE PF3/8-650L	TUYAU FLEXIBLE	1					
27	2184-1046D240	HOSE PF3/8-950L	TUYAU FLEXIBLE	1					
28	2184-1061D364	HOSE PF3/8-800L	TUYAU FLEXIBLE	1					
29	2184-1046D183	HOSE PF3/8-830L	TUYAU FLEXIBLE	1					
30	2184-1046D121	HOSE PF1/4-2240L	TUYAU FLEXIBLE	1					
31	2184-1046D121	HOSE PF1/4-2240L	TUYAU FLEXIBLE	1					
32	S0556353	BOLT M8X1.25X50	BOULON	2					
33	S5102503	WASHER;SPRING M8	RONDELLE ELASTIQUE	2					
34	181-00760	TEE	TE	2					
35	549-00010	SWITCH;PRESSURE	INTERRUPTEUR	2					
36	2181-1126D23	ADAPTER PFO1/2-PF3/8	ADAPTEUR	1					

DATE	JUN. 30, 2005
REV. NO.	EXB05-05

Fig. 6910 PILOT PIING-ARTI.BOOM CONDUITES DE PILOTE

Serial No. ;

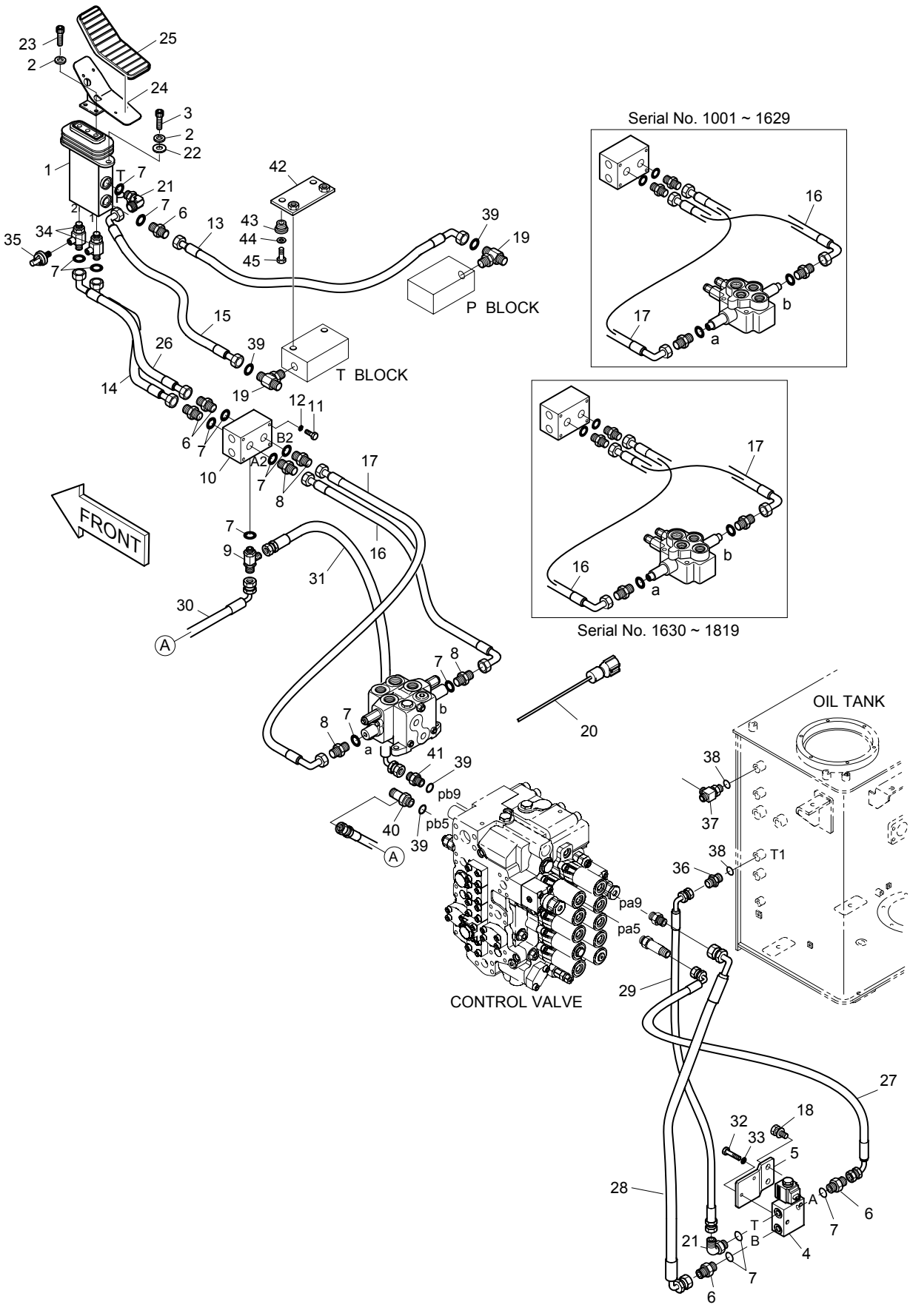

DATE	JUN. 30, 2005
REV. NO.	EXB05-05

Fig. 6910 PILOT PIPING-ARTI.BOOM CONDUITES DE PILOTE

Serial No ;

Key No.	Part No.	Description	Description	Q'ty	S.C	Serial No.	ICA	Replaceable part	
								Part No.	Q'ty
6910-37	2181-1951D6	TEE PFO3/8-PF1/4-PF3/8	TE	1					
38	S8000181	O-RING	JOINT TORIQUE	1					
39	S8000141	O-RING	JOINT TORIQUE	1					
40	2181-1951D6	TEE PFO3/8-PF1/4-PF3/8	TE	1					
41	2181-1126D36	ADAPTER PFO3/8-PF1/4	ADAPTEUR	1					
42	621-02151	PLATE	PLAQUE	1		1630–			
43	198-00016	RUBBER	CAOUTCHOUC	2		1630–			
44	2114-1058D10	WASHER	RONDELLE PLATE	2		1630–			
45	S0512253	BOLT M10X1.5X30	BOULON A 6 PANS	2		1630–			

DATE	JUN. 30, 2004
REV. NO.	EXB04-04

Fig. 6920 FLOOR ASS'Y-ARTI.BOOM
TOLE DE PLANCHER

Serial No. ;

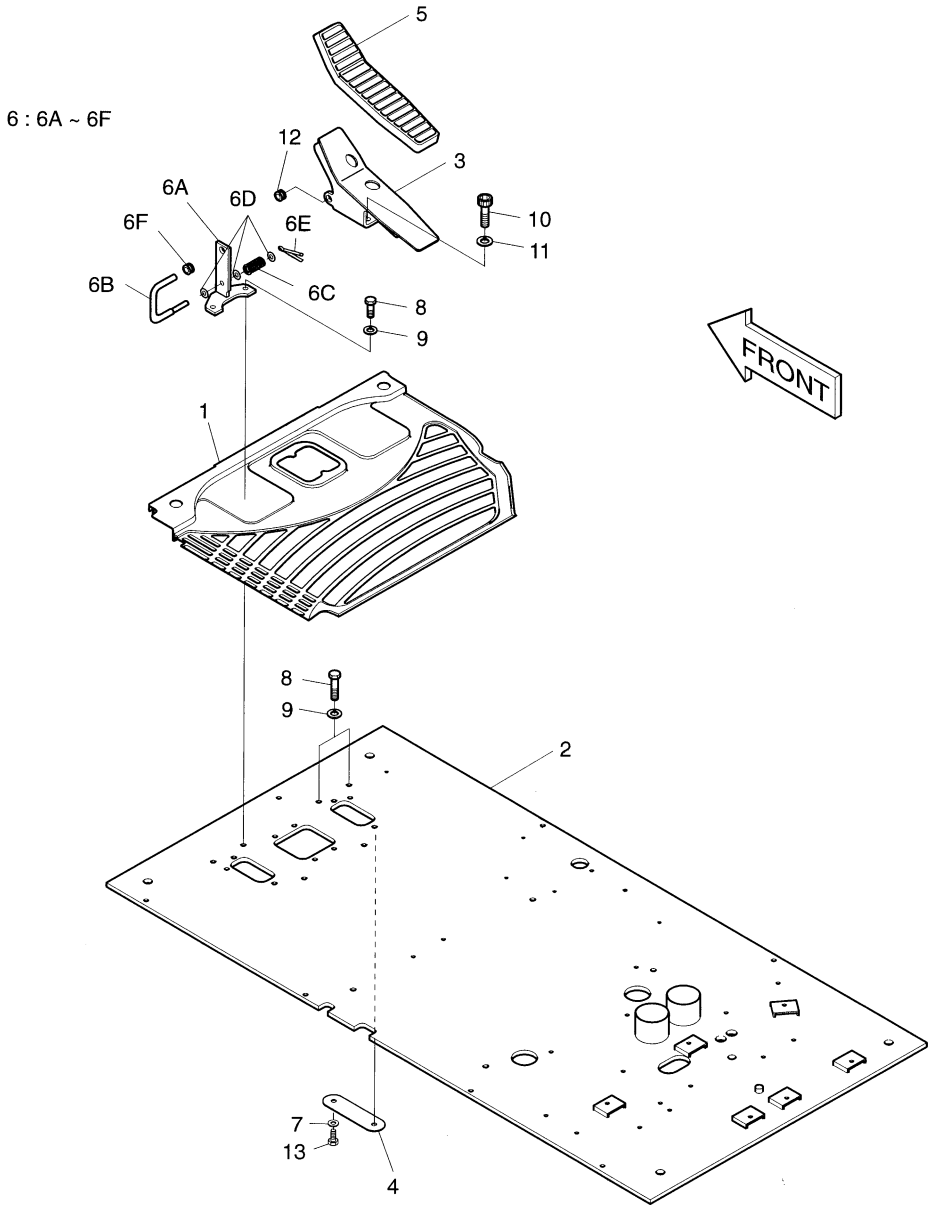

DATE	JUN. 30, 2004
REV. NO.	EXB04-04

Fig. 6920 FLOOR ASS'Y-ARTI.BOOM TOLE DE PLANCHER

Serial No ;

Key No.	Part No.	Description	Description	Q'ty	S.C	Serial No.	ICA	Replaceable part	
								Part No.	Q'ty
6920--	621-02929	FLOOR ASS'Y	PLAQUE	-	D				
1	161-00447	MAT;FLOOR	PLAQUE	1					
2	621-02072A	PLATE;FLOOR	PLAQUE	1		1001–1215	I	621-02072B	1
	621-02072B	**PLATE;FLOOR**	PLAQUE	1		**1216–**			
3	195-01735	BRACKET;PEDAL(L.H)	SUPPORT	1					
4	621-01507	PLATE;FLOOR	PLAQUE	1					
5	161-00386	RUBBER;PEDAL	CAOUTCHOUC	1					
6	195-01939	BRACKET	SUPPORT	1					
6A	195-01937	. BRACKET	. SUPPORT	1	D				
6B	133-00167	. BAR	. CONDUITE	1	D				
6C	129-00144	. SPRING	. RESSORT	1	D				
6D	2114-1898D14	. WASHER	. RONDELLE	3	D				
6E	S5735351	. PIN;SPLIT	GOUPILLE	1	D				
6F	160-00045	. BUSHING;RUBBER	DOUILLE EN CAOUTCHOUC	1	D				
7	2114-1898D1	WASHER	RONDELLE	2					
8	2120-2166D5	BOLT M8X1.25X20	BOULON A 6 PANS	4					
9	2114-1898D14	WASHER	RONDELLE	4					
10	S2211866	BOLT;SOCKET M10X1.5X20	BOULON A 6 PANS CREUX	2					
11	S5110601	WASHER;SPRING	RONDELLE ELASTIQUE	2					
12	160-00045	BUSHING;RUBBER	GARNISSAGE	1					
13	S0511653	BOLT M10X1.5X16	BOULON A 6 PANS	2					

DATE	JUN. 30, 2004
REV. NO.	EXB04-04

Fig. 6930 FLOOR ASS'Y-ARTI.BOOM & TILT
TOLE DE PLANCHER

Serial No. ;

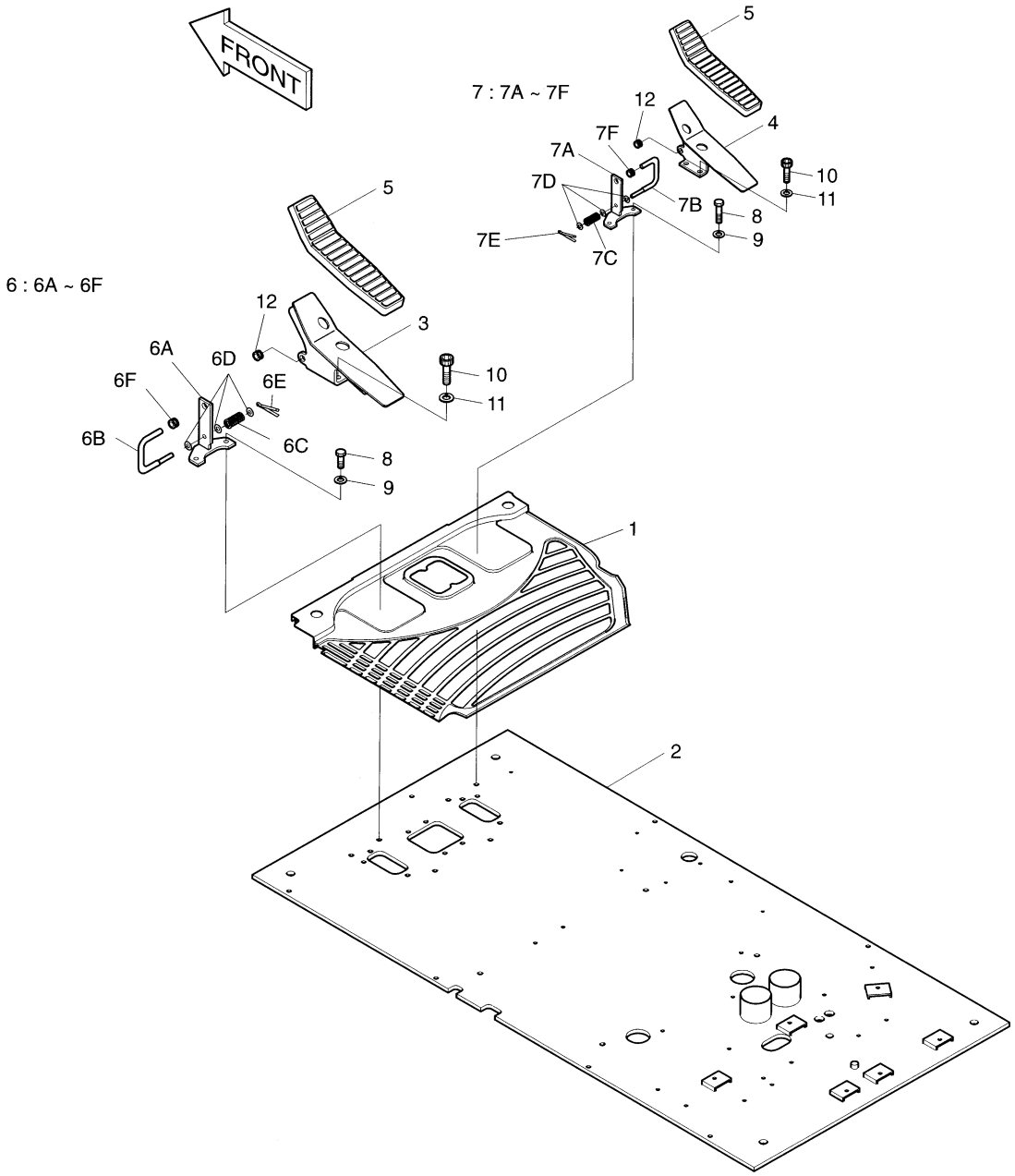

DATE	JUN. 30, 2004
REV. NO.	EXB04-04

Fig. 6930 FLOOR ASS'Y-ARTI.BOOM & TILT
TOLE DE PLANCHER

Serial No ;

Key No.	Part No.	Description	Description	Q'ty	S.C	Serial No.	ICA	Replaceable part	
								Part No.	Q'ty
6930--	621-02930	FLOOR ASS'Y	PLAQUE	-	D				
1	161-00445	MAT;FLOOR	PLAQUE	1					
2	621-02072A	PLATE;FLOOR	PLAQUE	1		1001–1215	I	621-02072B	1
	621-02072B	**PLATE;FLOOR**	PLAQUE	1		**1216–**			
3	195-01735	BRACKET;PEDAL(L.H)	SUPPORT	1					
4	195-01736	BRACKET;PEDAL(R.H)	SUPPORT	1					
5	161-00386	RUBBER;PEDAL	CAOUTCHOUC	2					
6	195-01939	BRACKET	SUPPORT	1					
6A	195-01937	. BRACKET	. SUPPORT	1	D				
6B	133-00167	. BAR	. CONDUITE	1	D				
6C	129-00144	. SPRING	. RESSORT	1	D				
6D	2114-1898D14	. WASHER	. RONDELLE	3	D				
6E	S5735351	. PIN;SPLIT	GOUPILLE	1	D				
6F	160-00045	. BUSHING;RUBBER	DOUILLE EN CAOUTCHOUC	1	D				
7	195-01940	BRACKET	SUPPORT	1					
7A	195-01937	. BRACKET	. SUPPORT	1	D				
7B	133-00167	. BAR	. CONDUITE	1	D				
7C	129-00144	. SPRING	. RESSORT	1	D				
7D	2114-1898D14	. WASHER	. RONDELLE	1	D				
7E	S5735351	. PIN;SPLIT	. GOUJON	1	D				
7F	160-00045	. BUSHING;RUBBER	. DOUILLE EN	1	D				
8	2120-2166D5	BOLT M8X1.25X20	BOULON A 6 PANS	4					
9	2114-1898D14	WASHER	RONDELLE	4					
10	S2211866	BOLT;SOCKET M10X1.5X20	BOULON DE PLOT	4					
11	S5110601	WASHER;SPRING	RONDELLE ELASTIQUE	4					
12	160-00045	BUSHING;RUBBER	GARNISSAGE	2					

DATE	DEC. 22, 2003
REV. NO.	EXB03-15

Fig. 6940 FRONT PIPING-ARTI.BOOM CONDUITES DE FRONTALES

Serial No. ;

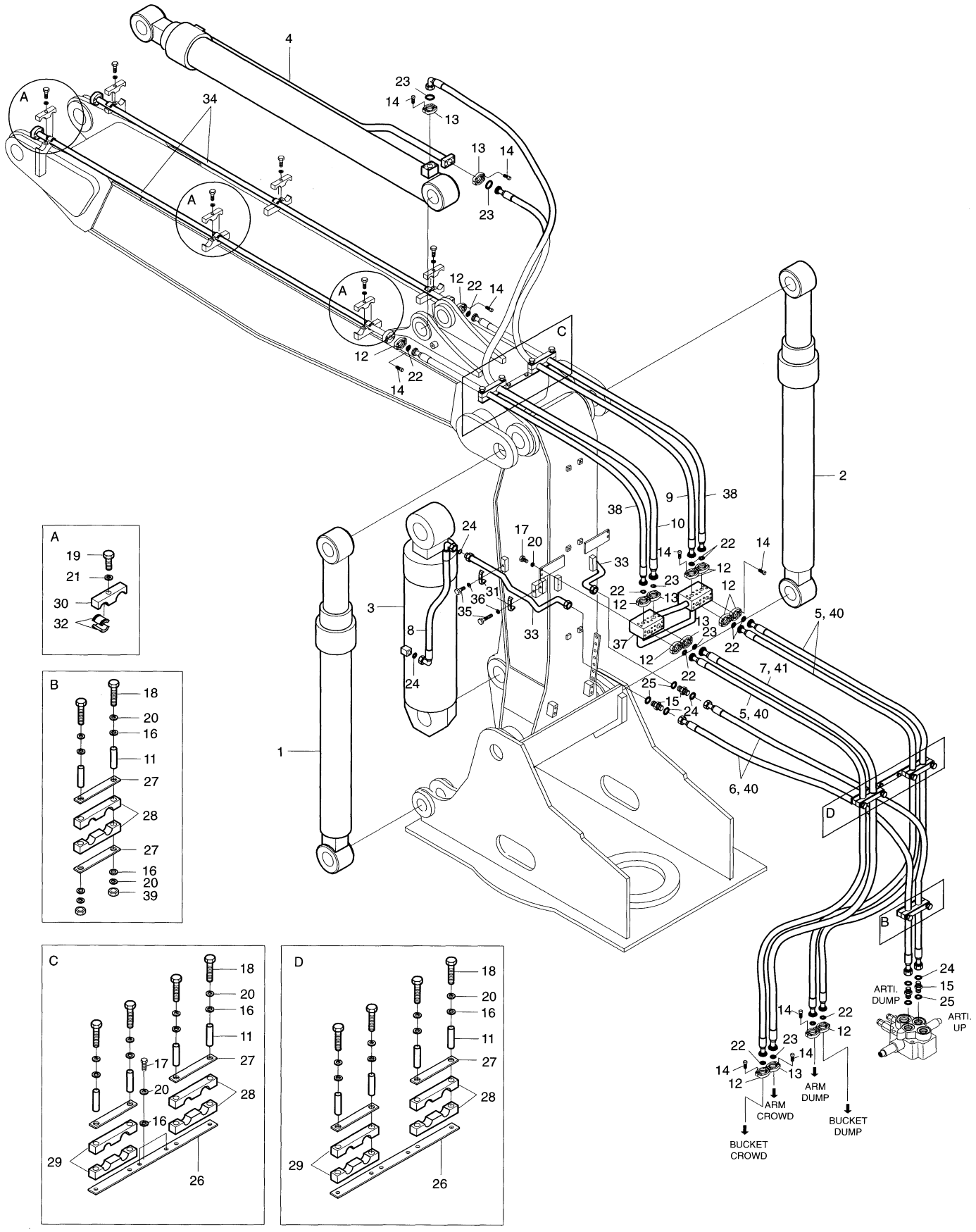

DATE	DEC. 22, 2003
REV. NO.	EXB03-15

Fig. 6940 FRONT PIPING-ARTI.BOOM CONDUITES DE FRONTALES

Serial No ;

Key No.	Part No.	Description	Description	Q'ty	S.C	Serial No.	ICA	Replaceable part	
								Part No.	Q'ty
6940--	400-01401	FRONT PIPING	CONDUITES DE	-	D				
1	440-00094	CYLINDER;BOOM(L.H)	VERIN DE FLECHE	1					
2	440-00095	CYLINDER;BOOM(R.H)	VERIN DE FLECHE	1					
3	440-00454	CYLINDER;ARTI.	VERIN DE BALANCIER	1					
4	2440-9236B	CYLINDER;ARM	VERIN DE BALANCIER	1					
5	2184-1081D156	HOSE 3/4"-1950L	TUYAU FLEXIBLE	3					
6	2184-1196D152	HOSE 3/4"-1900L	TUYAU FLEXIBLE	2					
7	2184-1081D157	HOSE 1"-1950L	TUYAU FLEXIBLE	1					
8	2184-1198D67	HOSE 3/4"-520L	TUYAU FLEXIBLE	2					
9	DS2038138	HOSE 3/4"-2200L	TUYAU FLEXIBLE	1					
10	DS2040355	HOSE 3/4"-2200L	TUYAU FLEXIBLE	1					
11	2182-1018D47	PIPE	TUYAU	10					
12	2181-9079	FLANGE	FLASQUE EN DEUX	22					
13	2181-9078	FLANGE	BRIDE	10					
14	S2212266	BOLT;SOCKET M10X1.5X30	BOULON A 6 PANS CREUX	64					
15	2181-2627D1	ADAPTER;ORFS PFO3/4-UNF1	RACCORD ADAPTATEUR	4					
16	S5010613	WASHER;PLAIN	RONDELLE PLATE	14					
17	S0512153	BOLT M10X1.5X28	BOULON A 6 PANS	6					
18	S0559253	BOLT M10X1.5X85	BOULON A 6 PANS	10					
19	S0565466	BOLT M16X2.0X60	BOULON A 6 PANS	6					
20	S5102603	WASHER;SPRING M10	RONDELLE ELASTIQUE	16					
21	S5102903	WASHER;SPRING M16	RONDELLE ELASTIQUE	6					
22	2180-1026D2	O-RING	JOINT TORIQUE	11					
23	2180-1026D19	O-RING	JOINT TORIQUE	5					
24	S8030121	O-RING	JOINT TORIQUE	8					
25	S8000231	O-RING	JOINT TORIQUE	4					
26	621-00443	PLATE	PLAQUE	2					
27	2191-4689	PLATE	PLAQUE	6					
28	124-00027	CLAMP;RUBBER	ATTACHE	6					
29	124-00028	CLAMP;RUBBER	ATTACHE	4					
30	124-00011	CLAMP	COLLIER	6					
31	2124-1026D2	CLAMP;PIPE	ATTACHE DE TUBE	6					
32	2161-2250A	RUBBER	CAOUTCHOUC	12					
33	140-00360A	PIPE	TUYAU	2					
34	140-00156	PIPE;BUCKET	CONDUITE	2					
35	S0560853	BOLT M12X1.75X55	BOULON A 6 PANS	6					
36	S5102703	WASHER;SPRING M12	RONDELLE ELASTIQUE	6					
37	423-00065	BLOCK	BLOC	1					

DATE	DEC. 22, 2003
REV. NO.	EXB03-15

Fig. 6940 FRONT PIPING-ARTI.BOOM CONDUITES DE FRONTALES

Serial No. ;

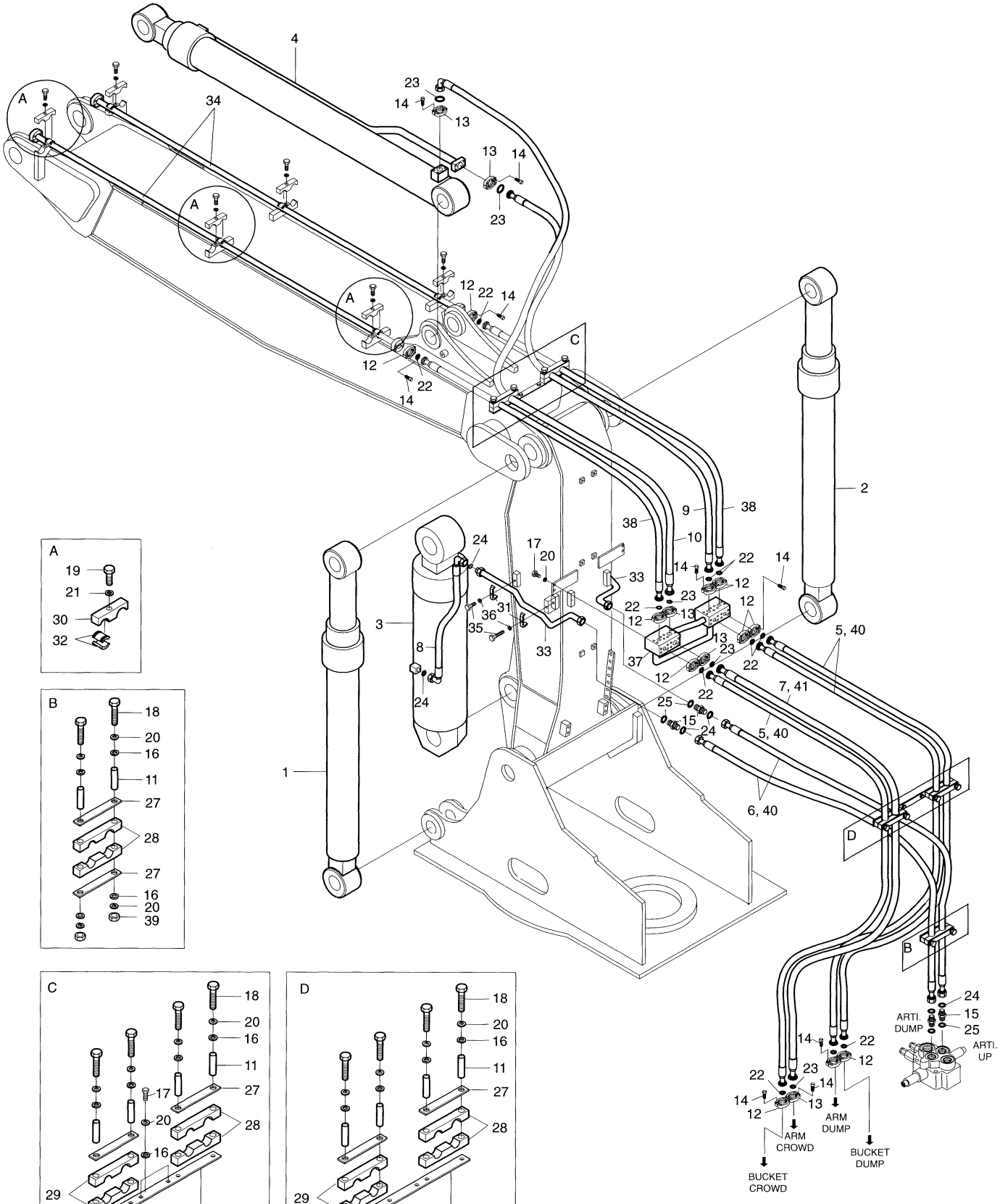

DATE	DEC. 22, 2003
REV. NO.	EXB03-15

Fig. 6940 FRONT PIPING-ARTI.BOOM CONDUITES DE FRONTALES

Serial No ;

Key No.	Part No.	Description	Description	Q'ty	S.C	Serial No.	ICA	Replaceable part	
								Part No.	Q'ty
6940-38	DS2038137	HOSE 3/4"-2200L	TUYAU FLEXIBLE	2					
39	S4012633	NUT M10X1.5	ECROU	2					
40	2158-1003D36	PROTECTOR;HOSE	PROTECTEUR	5					
41	2158-1003D37	PROTECTOR;HOSE	PROTECTEUR	1					

DATE	DEC. 22, 2003
REV. NO.	EXB03-15

Fig. 6950 ARM PIPING-ARM 2.0m(ARTI.BOOM) CONDUITES DE BALANCIER

Serial No. ;

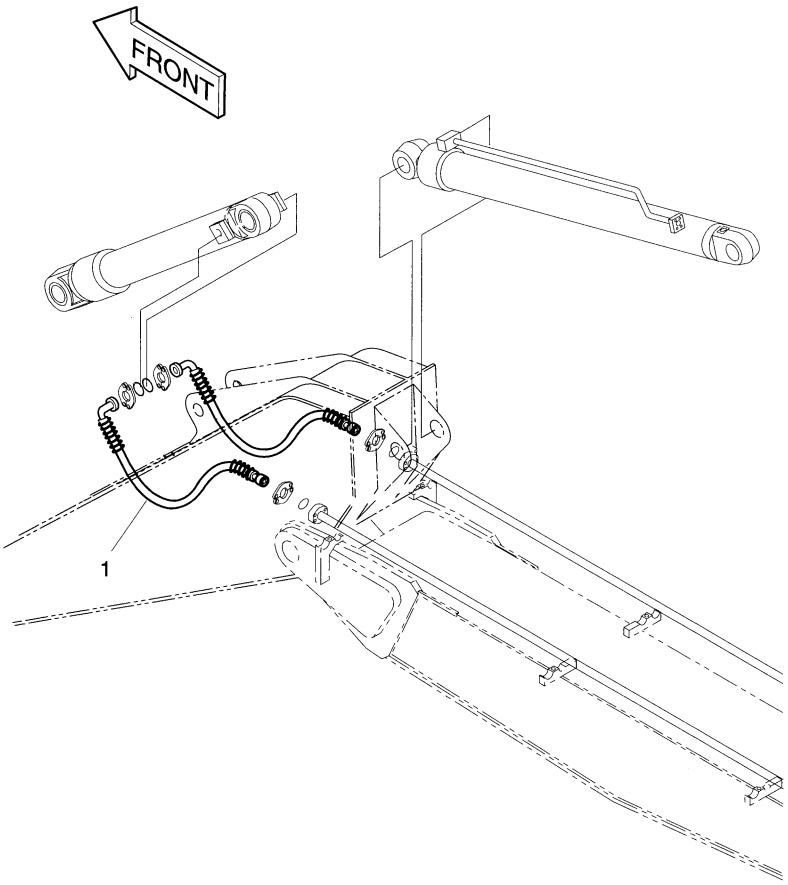

DATE	DEC. 22, 2003
REV. NO.	EXB03-15

Fig. 6950 ARM PIPING-ARM 2.0m(ARTI.BOOM) CONDUITES DE BALANCIER

Serial No ;

Key No.	Part No.	Description	Description	Q'ty	S.C	Serial No.	ICA	Replaceable part	
								Part No.	Q'ty
6950--	400-00389	ARM PIPING-2.0m	CONDUITES DE BALANCIER	-	D				
1	2184-1100D237	HOSE PF3/4-1350L	TUYAU FLEXIBLE	2					

DATE	JUN. 30, 2006
REV. NO.	EXB06-08

Fig. 6960 ARM PIPING-ARM 2.4m(ARTI.BOOM)
CONDUITES DE BALANCIER

Serial No. ;

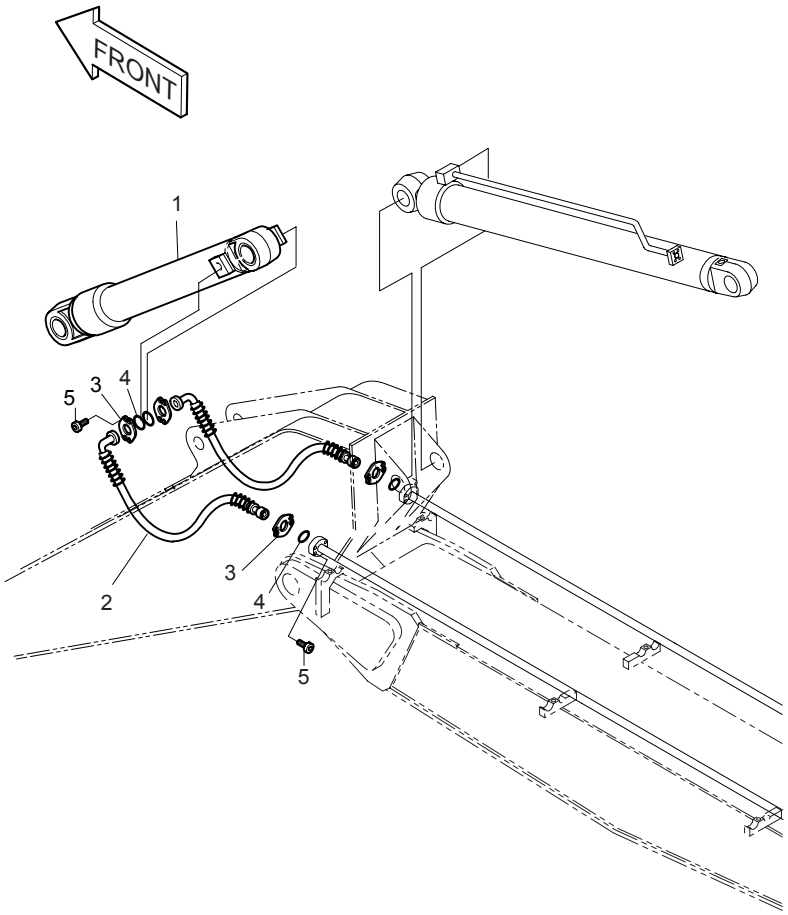

DATE	JUN. 30, 2006
REV. NO.	EXB06-08

Fig. 6960 ARM PIPING-ARM 2.4m(ARTI.BOOM) CONDUITES DE BALANCIER

Serial No. ;

Key No.	Part No.	Description	Description	Q'ty	S.C	Serial No.	ICA	Replaceable part	
								Part No.	Q'ty
6960--	400-00377	ARM PIPING-2.4m	CONDUITES DE BALANCIER	-	D				
1	440-00059	CYLINDER;BUCKET	VERIN DE GODET	1		1001–2386	I	440-00059A	1
	440-00059A	**CYLINDER;BUCKET**	VERIN DE GODET	1		**2387–**			
2	2184-1100D178	HOSE PF3/4-1450L	TUYAU FLEXIBLE	2					
3	2181-9079	FLANGE;SPLIT 3/4"-5000PSI	FLASQUE EN DEUX	8					
4	2180-1026D2	O-RING	JOINT TORIQUE	4					
5	S2212366	BOLT;SOCKET M10X1.5X35	BOULON A 6 PANS CREUX	16					

DATE	DEC. 29, 2005
REV. NO.	EXB05-20

Fig. 6970 ARM PIPING-ARM 2.9m(ARTI.BOOM)
CONDUITES DE BALANCIER

Serial No. ;

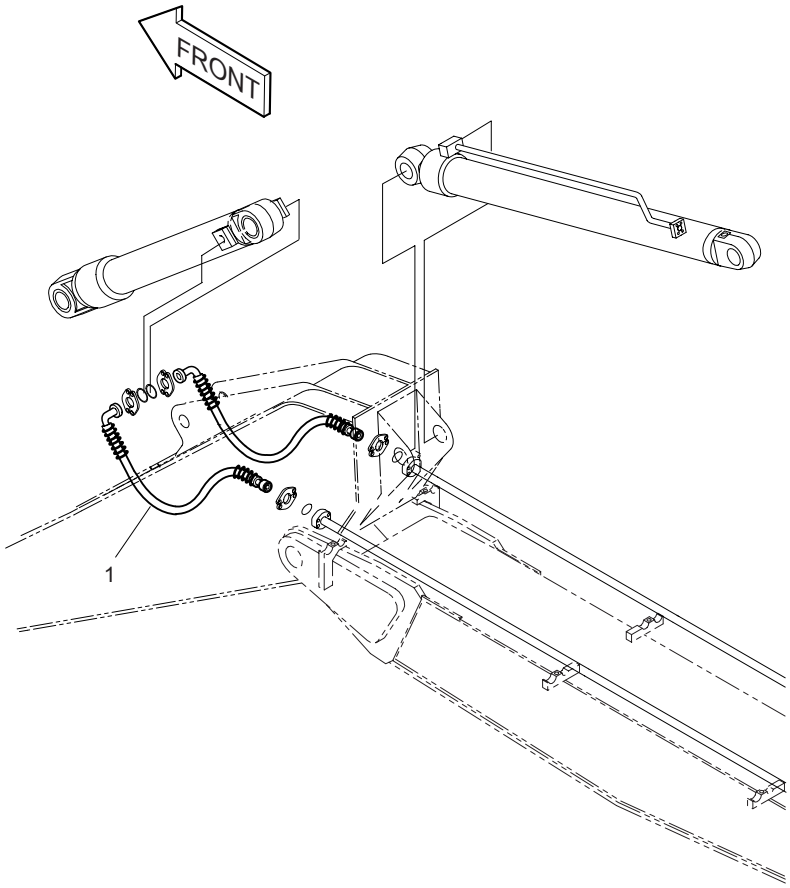

DATE	DEC. 29, 2005
REV. NO.	EXB05-20

Fig. 6970 ARM PIPING-ARM 2.9m(ARTI.BOOM) CONDUITES DE BALANCIER

Serial No ;

Key No.	Part No.	Description	Description	Q'ty	S.C	Serial No.	ICA	Replaceable part	
								Part No.	Q'ty
6970--	400-00388	ARM PIPING-2.9m	CONDUITES DE BALANCIER	-	D	1001–2113			
	400-00388A	**ARM PIPING-2.9m**	CONDUITES DE BALANCIER	-	D	**2114–**			
1	2184-1100D38	HOSE PF3/4-1650L	TUYAU FLEXIBLE	2		1001–2113			
	2184-1100D29	**HOSE PF3/4-1500L**	TUYAU FLEXIBLE	2		**2114–**			

DATE	DEC. 22, 2003
REV. NO.	EXB03-15

Fig. 6980 FRONT LUBRICATION PIPING-ARTI.BOOM LUBRIFICATION

Serial No. ;

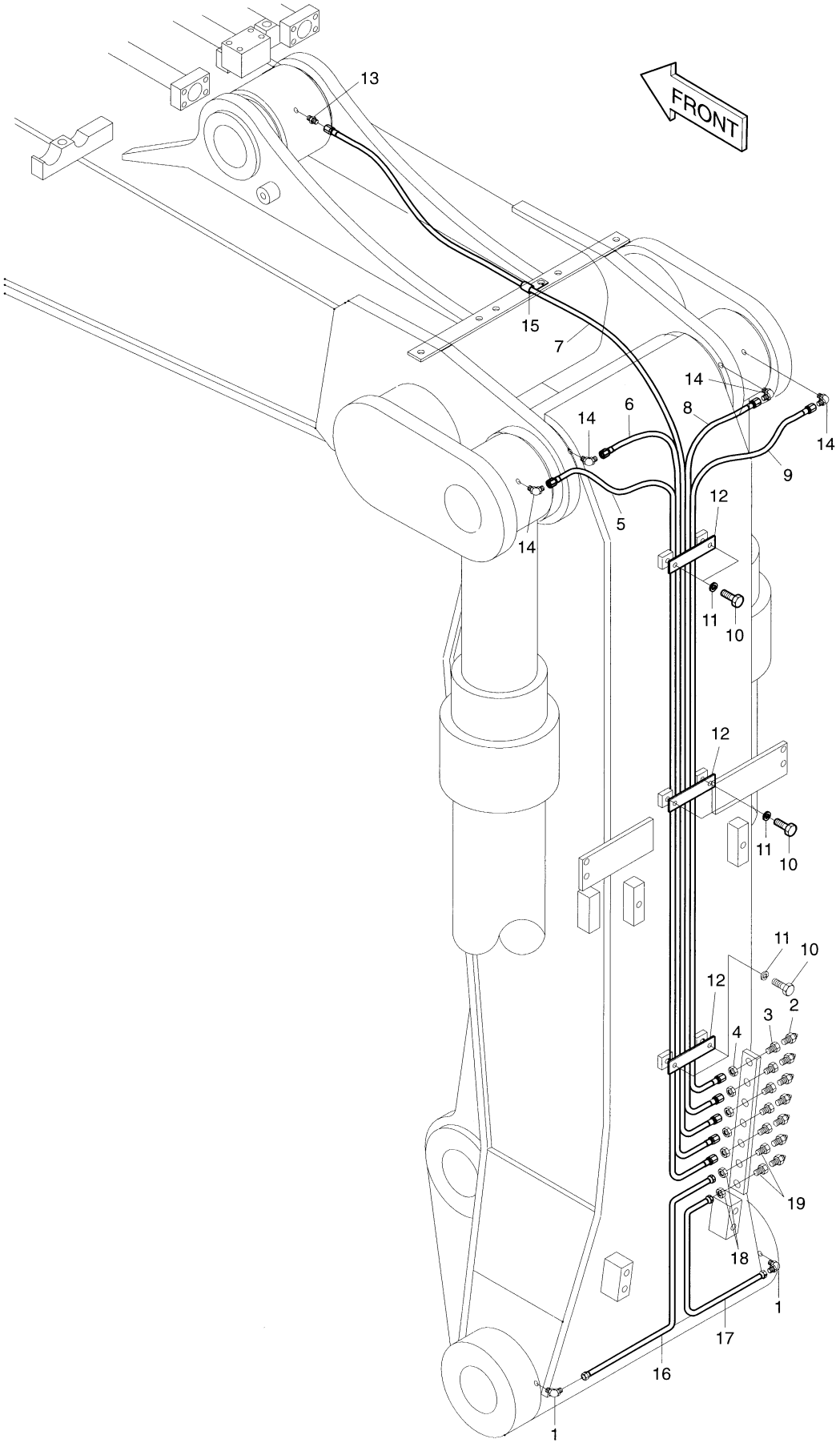

DATE	DEC. 22, 2003
REV. NO.	EXB03-15

Fig. 6980 FRONT LUBRICATION PIPING-ARTI.BOOM LUBRIFICATION

Serial No ;

Key No.	Part No.	Description	Description	Q'ty	S.C	Serial No.	ICA	Replaceable part	
								Part No.	Q'ty
6980--	400-00384A	FRONT PIPING	CONDUITES DE	-	D				
1	2181-1925	ELBOW PT1/8-M14X1.5	COUDE	2					
2	S6710041	NIPPLE;GREASE	GRAISSEUR	7					
3	181-00103	REDUCER PT1/8-PF1/4	REDUCTEUR	5					
4	121-00006	NUT PF1/4	ECROU	5					
5	2184-1045D152	HOSE PF1/4-2000L	TUYAU FLEXIBLE	1					
6	2184-1045D110	HOSE PF1/4-1850L	TUYAU FLEXIBLE	1					
7	2184-1045D131	HOSE PF1/4-2700L	TUYAU FLEXIBLE	1					
8	2184-1045D125	HOSE PF1/4-1700L	TUYAU FLEXIBLE	1					
9	2184-1045D196	HOSE PF1/4-1730L	TUYAU FLEXIBLE	1					
10	S0511553	BOLT M10X1.5X14	BOULON A 6 PANS	6					
11	S5102603	WASHER;SPRING M10	RONDELLE ELASTIQUE	6					
12	124-00030	CLAMP;PIPE	ATTACHE DE TUBE	3					
13	2181-1110D30	ADAPTER PF1/4-PT1/8	RACCORD ADAPTATEUR	1					
14	2181-1186D12	ELBOW PF1/4-PT1/8	COUDE	4					
15	2124-1353D2	CLIP	ATTACHE	1					
16	140-00678	PIPE	TUYAU	1					
17	140-00679	PIPE	TUYAU	1					
18	S4032833	NUT M14X1.5	ECROU	2					
19	181-00525	REDUCER	REDUCTEUR	2					

DATE	JUN. 30, 2005
REV. NO.	EXB05-05

Fig. 6990 LOCK VALVE PIPING-ARTI.BOOM
CONDUITES DE VERROU VANNE

Serial No. ;

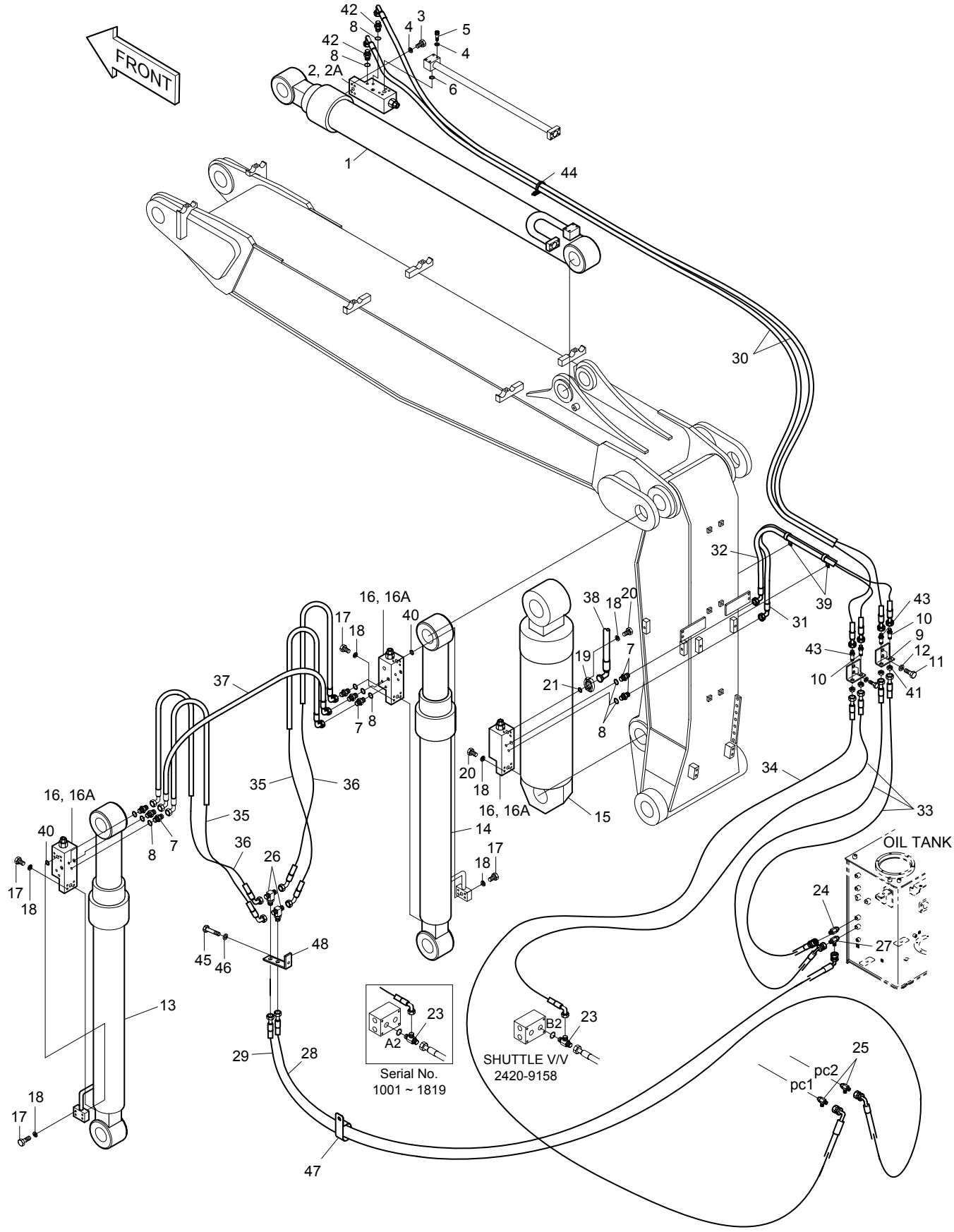

DATE	JUN. 30, 2005
REV. NO.	EXB05-05

Fig. 6990 LOCK VALVE PIPING-ARTI.BOOM CONDUITES DE VERROU VANNE

Serial No ;

Key No.	Part No.	Description	Description	Q'ty	S.C	Serial No.	ICA	Replaceable part	
								Part No.	Q'ty
6990--	400-01402	LOCK VALVE PIPING	CONDUITES DE VERROU	-	D				
1	2440-6493C	CYLINDER;ARM	VERIN DE BALANCIER	1					
2	420-00004A	VALVE;LOCK	VANNE	1					
2A	K9000999	. SEAL KIT	. JOINT DE KIT	1					
3	S2215766	BOLT M12X1.75X55	BOULON A 6 PANS	4					
4	S5110703	WASHER;SPRING M12	RONDELLE ELASTIQUE	8					
5	S2215866	BOLT:SOCKET M12X1.75X60	BOULON A 6 PANS CREUX	4					
6	S8000341	O-RING	JOINT TORIQUE	1					
7	2181-1126D14	ADAPTER PF1/4-PF1/4	RACCORD ADAPTATEUR	8					
8	S8000111	O-RING	JOINT TORIQUE	10					
9	195-00163	BRACKET	SUPPORT	2					
10	181-00078D5	ADAPTER PF1/4-PF3/8	RACCORD ADAPTATEUR	2					
11	S0562766	BOLT M14X20.X40	BOULON A 6 PANS	4					
12	S5102801	WASHER;SPRING M14	RONDELLE ELASTIQUE	4					
13	440-00182A	CYLINDER;BOOM(L.H)	VERIN DE FLECHE	1					
14	440-00183A	CYLINDER;BOOM(R.H)	VERIN DE FLECHE	1					
15	440-00444	CYLINDER;ARTI. BOOM	VERIN DE ARTICULAIRE	1					
16	420-00226	VALVE;LOCK	VANNE	3					
16A	K9000998	. SEAL KIT	. JOINT DE KIT	1					
17	S2212766	BOLT;SOCKET M10X1.5X55	BOULON A 6 PANS CREUX	20					
18	S5110613	WASHER;SPRING M10	RONDELLE ELASTIQUE	24					
19	2181-9080	FLANGE;SPLIT	FLASQUE EN DEUX	2					
20	S2212366	BOLT;SOCKET M10X1.5X35	BOULON A 6 PANS CREUX	4					
21	2180-1026D2	O-RING	JOINT TORIQUE	1					
23	2181-1951D14	TEE PF1/4-PF3/8-PF1/4	TE	1					
24	2181-1951D31	TEE PFO1/2-2PF3/8	TE	1					
25	2181-2375D7	TEE PFO1/4-2PF3/8	TE	3					
26	181-00008	TEE PF1/4-PF1/4-PF3/8	TE	2					
27	2181-1951D16	TEE PF3/8-PF3/8-PF3/8	TE	1					
28	DS2057010	HOSE PF3/8-1850L	TUYAU FLEXIBLE	1					
29	DS2058248	HOSE PF3/8-2300L	TUYAU FLEXIBLE	1					
30	2184-1046D290	HOSE PF3/8-4800L	TUYAU FLEXIBLE	2					
31	2184-1046D219	HOSE PF1/4-2100L	TUYAU FLEXIBLE	1					
32	2184-1046D120	HOSE PF1/4-1950L	TUYAU FLEXIBLE	1					
33	2184-1046D238	HOSE PF3/8-2300L	TUYAU FLEXIBLE	3					
34	2184-1060D148	HOSE PF3/8-2600L	TUYAU FLEXIBLE	1					
35	2184-1062D12	HOSE PF1/4-1400L	TUYAU FLEXIBLE	2					
36	2184-1062D12	HOSE PF1/4-1400L	TUYAU FLEXIBLE	2					

DATE	JUN. 30, 2005
REV. NO.	EXB05-05

Fig. 6990 LOCK VALVE PIPING-ARTI.BOOM
CONDUITES DE VERROU VANNE

Serial No. ;

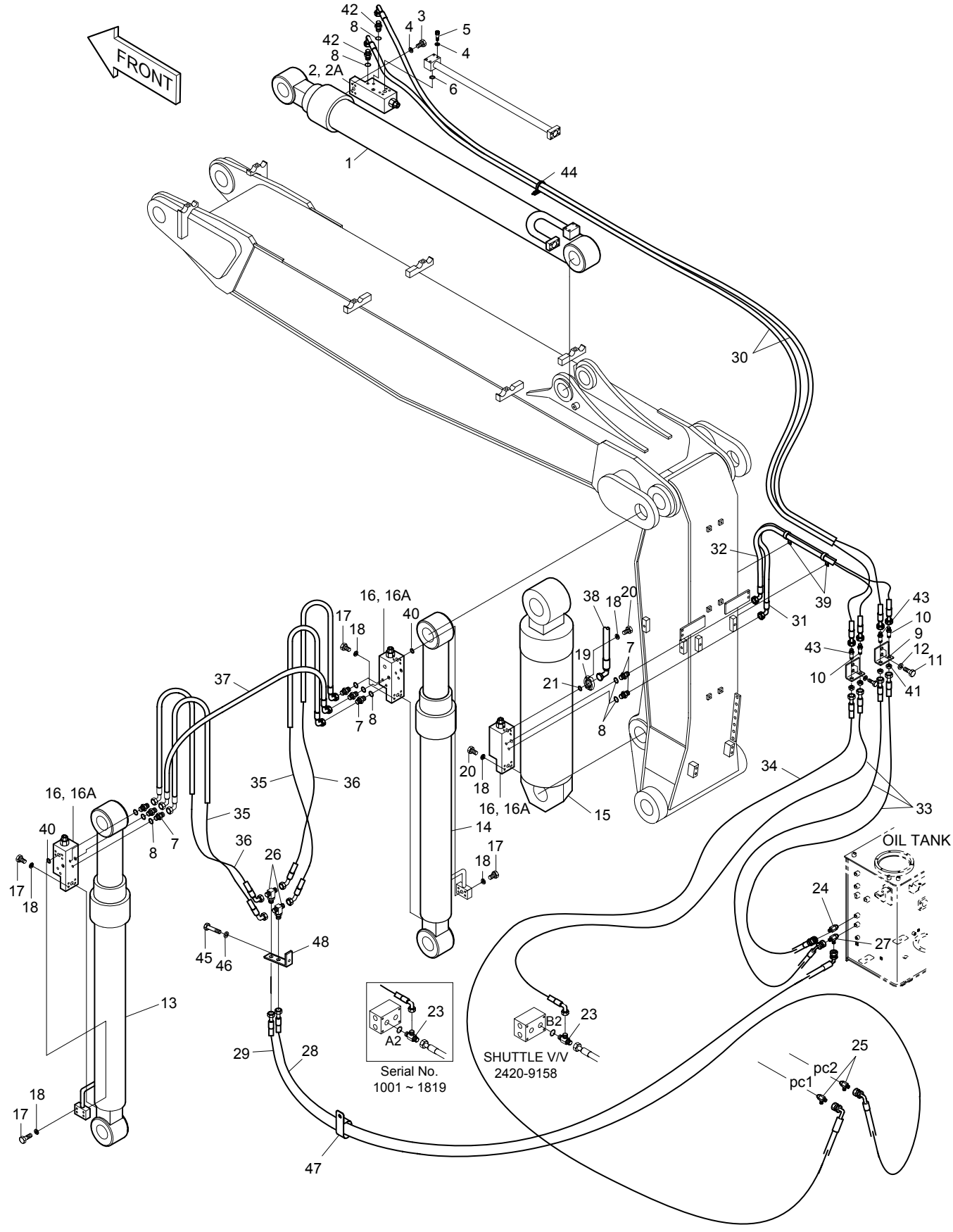

DATE	JUN. 30, 2005
REV. NO.	EXB05-05

Fig. 6990 LOCK VALVE PIPING-ARTI.BOOM
CONDUITES DE VERROU VANNE

Serial No ;

Key No.	Part No.	Description	Description	Q'ty	S.C	Serial No.	ICA	Replaceable part	
								Part No.	Q'ty
6990-37	DS2059383	HOSE PF1/4-800L	TUYAU FLEXIBLE	1		1001–1335	I	DS2059468	1
	DS2059468	HOSE PF1/4-880L	TUYAU FLEXIBLE	1		1336–			
38	2184-1202D77	HOSE PF3/4-630L	TUYAU FLEXIBLE	1					
39	2124-1353D19	CLIP	ATTACHE	2					
40	S8000281	O-RING	JOINT TORIQUE	2					
41	121-00010D1	NUT PF3/8	ECROU	4					
42	2181-1126D85	ADAPTER PFO1/4-PF3/8	RACCORD ADAPTATEUR	2					
43	181-00078D3	ADAPTER PFO3/8-PF3/8	RACCORD ADAPTATEUR	2					
44	2124-1084D2	CLIP;BAND 150L	ATTACHE	30					
45	S0561353	BOLT M12X1.75X80	BOULON A 6 PANS	1					
46	S5102703	WASHER;SPRING M12	RONDELLE ELASTIQUE	3					
47	124-00208D5	CLIP	CLIP	1					
48	195-02752	BRACKET	SUPPORT	1					

DATE	JUN. 30, 2004
REV. NO.	EXB04-04

Fig. 7000 MAIN PIPING-ONE & TWO WAY(ARTI.BOOM) CONDUITES DE BATI PRINCIPAL

Serial No. ;

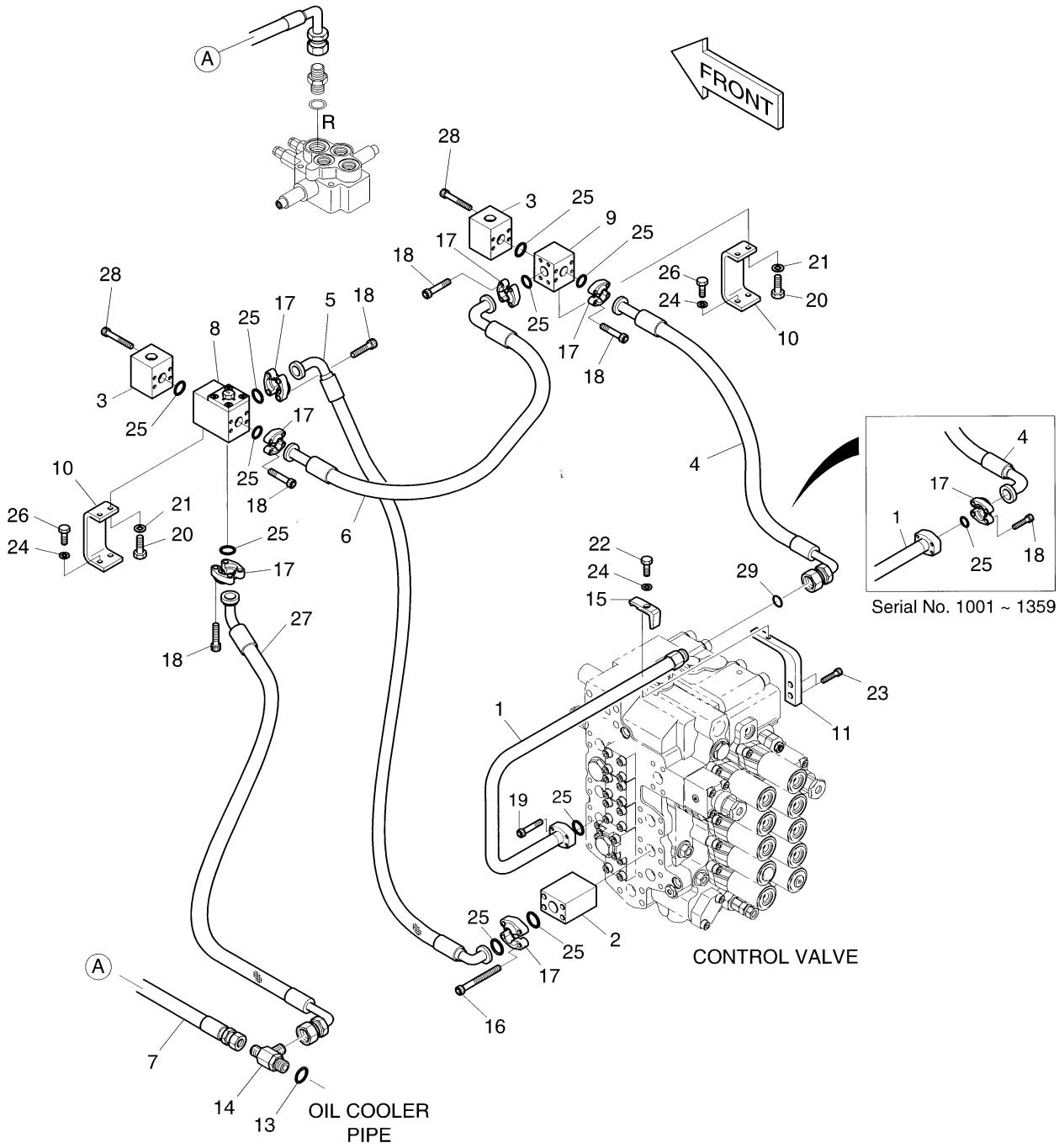

DATE	JUN. 30, 2004
REV. NO.	EXB04-04

Fig. 7000 MAIN PIPING-ONE & TWO WAY(ARTI.BOOM) CONDUITES DE BATI PRINCIPAL

Serial No ;

Key No.	Part No.	Description	Description	Q'ty	S.C	Serial No.	ICA	Replaceable part	
								Part No.	Q'ty
7000--	400-01341	MAIN PIPING	CONDUITES DE BATI	-	D				
1	140-01224	PIPE	TUYAU	1		1001–1359			
	140-01224A	**PIPE**	TUYAU	1		**1360–**			
2	423-00171	BLOCK;SPACER	BLOC	1					
3	423-00190	BLOCK	BLOC	2					
4	DS2040354	HOSE	TUYAU FLEXIBLE	1		1001–1359			
	DS2025040	**HOSE 610L**	TUYAU FLEXIBLE	1		**1360–**			
5	DS2045301	HOSE	TUYAU FLEXIBLE	1					
6	DS2040066	HOSE	TUYAU FLEXIBLE	1					
7	2184-1036D112	HOSE	TUYAU FLEXIBLE	1					
8	421-00019	VALVE;SWITCH	VANNE	1					
9	423-00150	BLOCK	BLOC	1					
10	195-01938A	BRACKET	SUPPORT	2					
11	195-02016	BRACKET	SUPPORT	1					
13	S8000291	O-RING	JONT TORIQUE	1					
14	DS2371036	TEE	TE	1					
15	2124-1026D3	CLAMP;PIPE	ATTACHE DE TUBE	1					
16	S2214166	BOLT;SOCKET M10X1.5X125	BOULON DE PLOT	4					
17	2181-9078	FLANGE;SPLIT	BRIDE	14		1001–1359			
	2181-9078	**FLANGE;SPLIT**	BRIDE	12		**1360–**			
18	S2212266	BOLT;SOCKET M10X1.5X30	BOULON DE PLOT	24		1001–1359			
	S2212266	**BOLT;SOCKET M10X1.5X30**	BOULON DE PLOT	20		**1360–**			
19	S2212466	BOLT;SOCKET M10X1.5X40	BOULON DE PLOT	4					
20	S0512253	BOLT M10X1.5X30	BOULON A 6PANS	4					
21	S5102603	WASHER;SPRING M10	RONDELLE ELASTIQUE	4					
22	S0561053	BOLT M12X1.75X65	BOULON A 6PANS	1					
23	S2215866	BOLT;SOCKET M12X1.75X60	BOULON DE PLOT	2					
24	S5102703	WASHER;SPRING M12	RONDELLE ELASTIQUE	5					
25	2180-1026D19	O-RING	JONT TORIQUE	11		1001–1359			
	2180-1026D19	**O-RING**	JONT TORIQUE	10		**1360–**			
26	S0515253	BOLT M12X1.75X30	BOULON A 6PANS	4					
27	DS2047011	HOSE	TUYAU FLEXIBLE	1					
28	S2213166	BOLT;SOCKET M10X1.5X75	BOULON DE PLOT	8					
29	**S8030161**	**O-RING**	JOINT TORIQUE	1		**1360–**			

DATE	JUN. 30, 2004
REV. NO.	EXB04-04

Fig. 7010 FRONT PIPING-ONE & TWO WAY(ARTI.BOOM)
CONDUITES DE FRONTALES

Serial No. ;

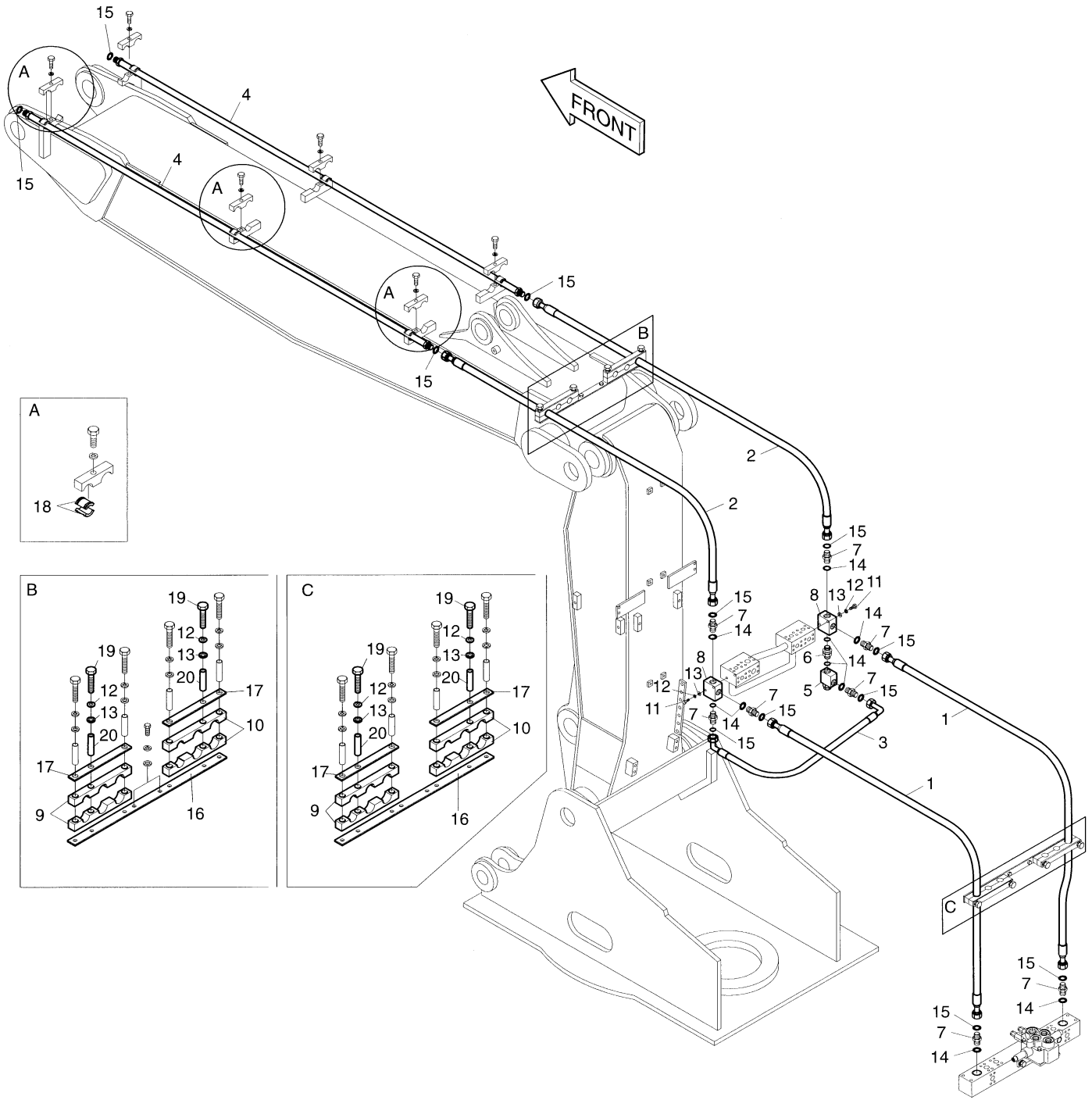

DATE	JUN. 30, 2004
REV. NO.	EXB04-04

Fig. 7010 FRONT PIPING-ONE & TWO WAY(ARTI.BOOM) CONDUITES DE FRONTALES

Serial No ;

Key No.	Part No.	Description	Description	Q'ty	S.C	Serial No.	ICA	Replaceable part	
								Part No.	Q'ty
7010--	400-01342	FRONT PIPING	CONDUITES DE	-	D				
1	DS2011370	HOSE PF1-1850L	TUYAU FLEXIBLE	2					
2	2184-1196D148	HOSE PF1-2150L	TUYAU FLEXIBLE	2					
3	2184-1198D68	HOSE PF1-580L	TUYAU FLEXIBLE	1					
4	140-00199	PIPE	TUYAU	2					
5	2420-9627A	VALVE;RELIEF	CLAPET DE DECHARGE	1		1001–1429	I	2420-9627B	1
	2420-9627B	**VALVE;RELIEF**	CLAPET DE DECHARGE	1		**1430–**			
6	2181-2818	ADAPTER;SP 2-PFO1"	RACCORD ADAPTATEUR	1					
7	2181-4133D6	ADAPTER PFO1"-UNF1 7/16	RACCORD ADAPTATEUR	8					
8	423-00066	BLOCK	BLOC	2					
9	124-00033A	CLAMP;RUBBER	ATTACHE	4					
10	124-00034A	CLAMP;RUBBER	ATTACHE	4					
11	S0558953	BOLT M10X1.5X70	BOULON A 6 PANS	4					
12	S5102603	WASHER;SPRING M10	RONDELLE ELASTIQUE	8					
13	S5010613	WASHER M10	RONDELLE	8					
14	S8000291	O-RING	JOINT TORIQUE	10					
15	S8030161	O-RING	JOINT TORIQUE	8					
16	621-00503A	PLATE	PLAQUE	2					
17	621-00504A	PLATE	PLAQUE	4					
18	2161-2251A	RUBBER	CAOUTCHOUC	12					
19	S0559253	BOLT M10X1.5X85	TUYAU	4					
20	2182-1018D47	PIPE	TUYAU	4					

DATE	DEC. 22, 2003
REV. NO.	EXB03-15

Fig. 7020 ARM PIPING-ARM 2.0m 1 & 2 WAY(ARTI.BOOM)
CONDUITES DE BALANCIER

Serial No. ;

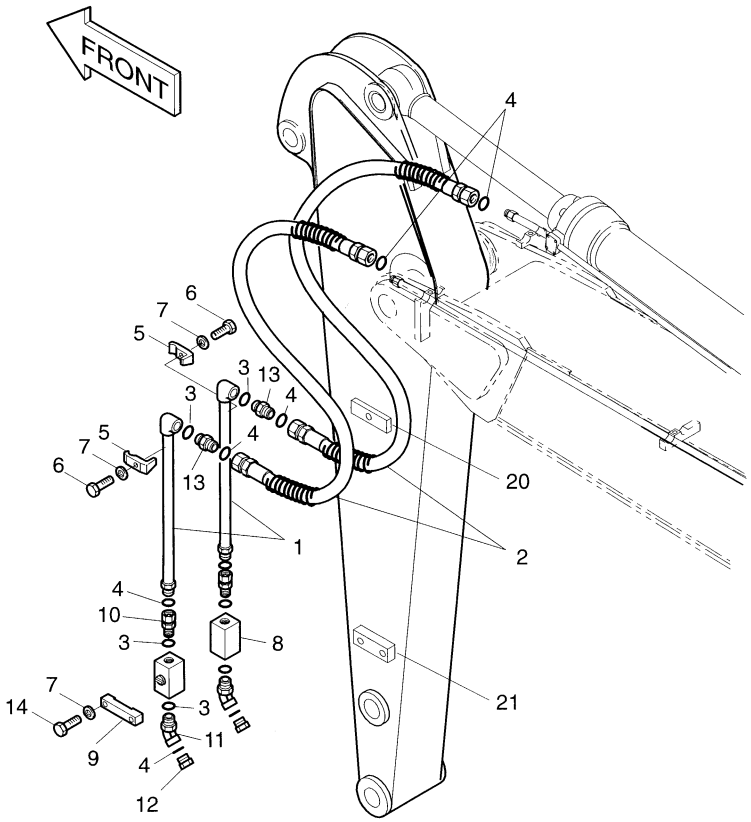

DATE	DEC. 22, 2003
REV. NO.	EXB03-15

Fig. 7020 ARM PIPING-ARM 2.0m 1 & 2 WAY(ARTI.BOOM) CONDUITES DE BALANCIER

Serial No ;

Key No.	Part No.	Description	Description	Q'ty	S.C	Serial No.	ICA	Replaceable part	
								Part No.	Q'ty
7020--	400-00391	ARM PIPING-2.0m	CONDUITES DE BALANCIER	-	D				
1	140-00032	PIPE	TUYAU	2					
2	2184-1196D161	HOSE PF1-1680L	TUYAU FLEXIBLE	2					
3	S8000291	O-RING	JOINT TORIQUE	6					
4	S8030161	O-RING	JOINT TORIQUE	8					
5	2124-1026D3	CLAMP;PIPE	ATTACHE DE TUBE	2					
6	S0560953	BOLT M12X1.75X60	BOULON A 6 APNS	2					
7	S5102703	WASHER;SPRING M12	RONDELLE ELASTIQUE	6					
8	2420-9628A	VALVE;STOP	VANNE	2					
9	2124-1695	CLAMP;STOP	ATTACHE DE TUYAU	2					
10	2181-2566D8	ADAPTER	RACCORD ADAPTATEUR	2					
11	2181-2816D2	ELBOW	COUDE	2					
12	2181-2817D2	CAP	CHAPEAU	2					
13	2181-4133D6	ADAPETER	RACCORD ADAPTATEUR	2					
14	S0561353	BOLT M12X1.75X80	BOULON A 6 PANS	4					
20	2191-1799D78	SEAT;SCREW	SIEGE	2					
21	2191-1067D180	SEAT;SCREW	SIEGE	2					

DATE	DEC. 22, 2003
REV. NO.	EXB03-15

Fig. 7030 ARM PIPING-ARM 2.4m 1 & 2 WAY(ARTI.BOOM)
CONDUITES DE BALANCIER

Serial No. ;

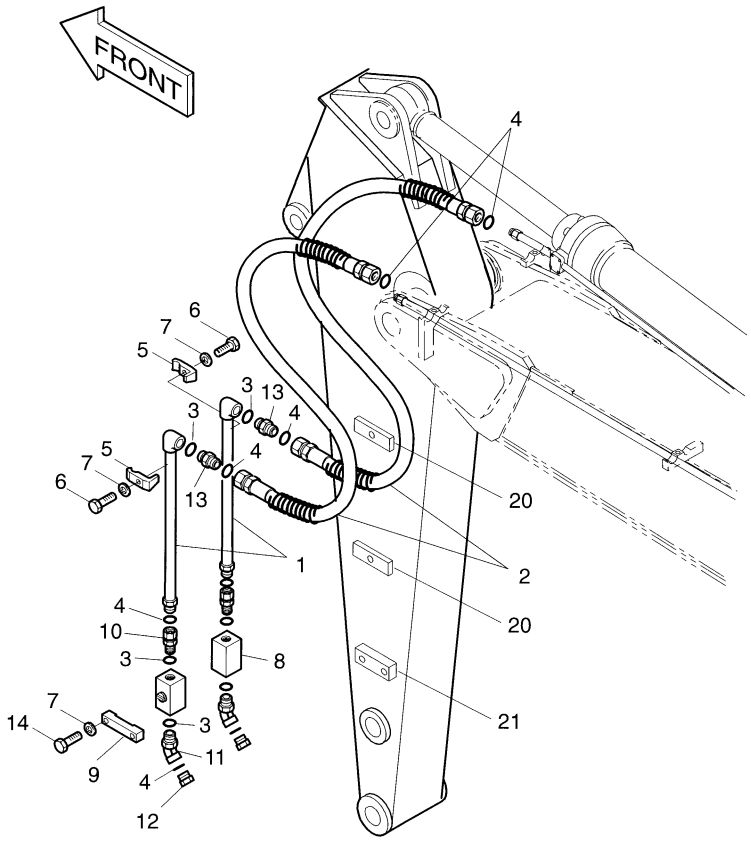

DATE	DEC. 22, 2003
REV. NO.	EXB03-15

Fig. 7030 ARM PIPING-ARM 2.4m 1 & 2 WAY(ARTI.BOOM) CONDUITES DE BALANCIER

Serial No ;

Key No.	Part No.	Description	Description	Q'ty	S.C	Serial No.	ICA	Replaceable part	
								Part No.	Q'ty
7030--	400-00378	ARM PIPING-2.4m	CONDUITES DE BALANCIER	-	D				
1	2140-1679	PIPE	TUYAU	2					
2	2184-1196D161	HOSE PF1-1680L	TUYAU FLEXIBLE	2					
3	S8000291	O-RING	JOINT TORIQUE	6					
4	S8030161	O-RING	JOINT TORIQUE	8					
5	2124-1026D3	CLAMP;PIPE	ATTACHE DE TUBE	4					
6	S0560953	BOLT M12X1.75X60	BOULON A 6 APNS	4					
7	S5102703	WASHER;SPRING M12	RONDELLE ELASTIQUE	8					
8	2420-9628A	VALVE;STOP	VANNE	2					
9	2124-1695	CLAMP;STOP	ATTACHE DE TUYAU	2					
10	2181-2566D8	ADAPTER	RACCORD ADAPTATEUR	2					
11	2181-2816D2	ELBOW	COUDE	2					
12	2181-2817D2	CAP	CHAPEAU	2					
13	2181-4133D6	ADAPTER	RACCORD ADAPTATEUR	2					
14	S0561353	BOLT M12X1.75X80	BOULON A 6 PANS	4					
20	2191-1799D78	SEAT;SCREW	SIEGE	4					
21	2191-1067D180	SEAT;SCREW	SIEGE	2					

DATE	DEC. 22, 2003
REV. NO.	EXB03-15

Fig. 7040 ARM PIPING-ARM 2.9m 1 & 2 WAY(ARTI.BOOM)
CONDUITES DE BALANCIER

Serial No. ;

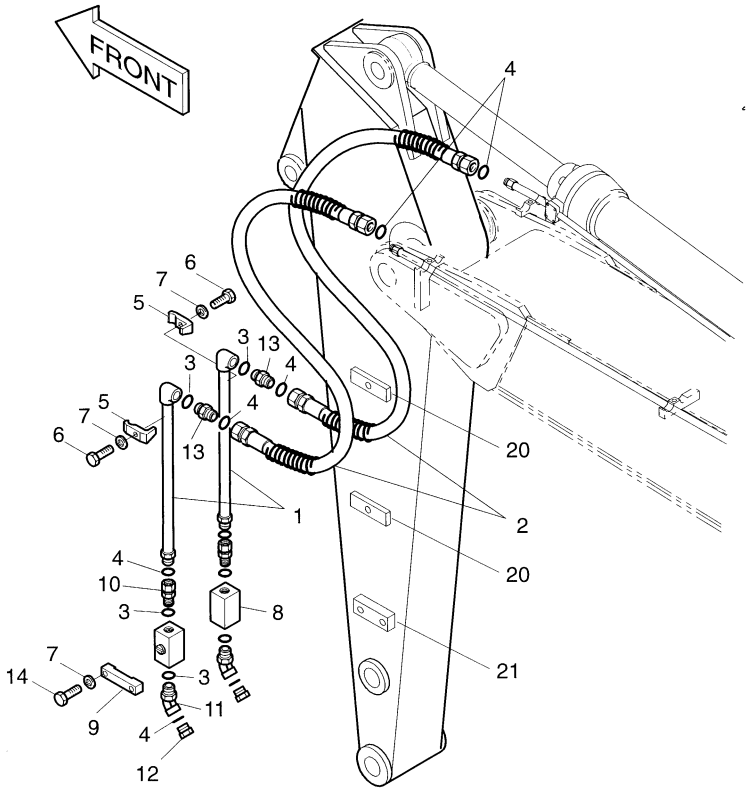

DATE	DEC. 22, 2003
REV. NO.	EXB03-15

Fig. 7040 ARM PIPING-ARM 2.9m 1 & 2 WAY(ARTI.BOOM) CONDUITES DE BALANCIER

Serial No ;

Key No.	Part No.	Description	Description	Q'ty	S.C	Serial No.	ICA	Replaceable part	
								Part No.	Q'ty
7040--	400-00390	ARM PIPING-2.9m	CONDUITES DE BALANCIER	-	D				
1	2140-1677	PIPE	TUYAU	2					
2	2184-1196D76	HOSE PF1-1900L	TUYAU FLEXIBLE	2					
3	S8000291	O-RING	JOINT TORIQUE	6					
4	S8030161	O-RING	JOINT TORIQUE	8					
5	2124-1026D3	CLAMP;PIPE	ATTACHE DE TUBE	4					
6	S0560953	BOLT M12X1.75X60	BOULON A 6 APNS	4					
7	S5102703	WASHER;SPRING M12	RONDELLE ELASTIQUE	8					
8	2420-9628A	VALVE;STOP	VANNE	2					
9	2124-1695	CLAMP;STOP	ATTACHE DE TUYAU	2					
10	2181-2566D8	ADAPTER	RACCORD ADAPTATEUR	2					
11	2181-2816D2	ELBOW	COUDE	2					
12	2181-2817D2	CAP	CHAPEAU	2					
13	2181-4133D6	ADAPETER	RACCORD ADAPTATEUR	2					
14	S0561353	BOLT M12X1.75X80	BOULON A 6 PANS	4					
20	2191-1799D78	SEAT;SCREW	SIEGE	4					
21	2191-1067D180	SEAT;SCREW	SIEGE	2					

DATE	DEC. 22, 2003
REV. NO.	EXB03-15

Fig. 7050 WORKING LAMP ASS'Y-ARTI.BOOM FONCTIONNEMENT LAMPE

Serial No. ;

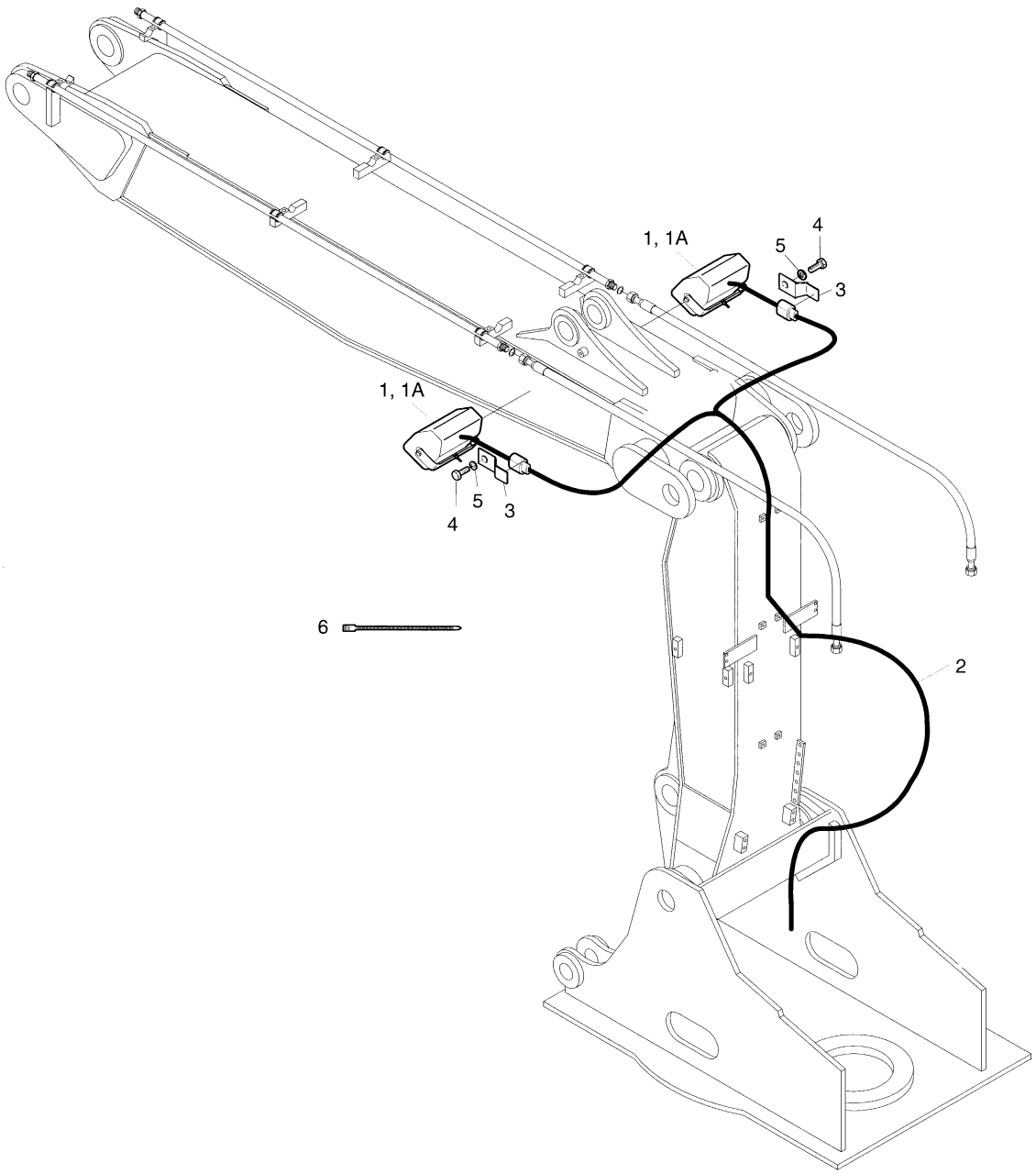

DATE	DEC. 22, 2003
REV. NO.	EXB03-15

Fig. 7050 WORKING LAMP ASS'Y-ARTI.BOOM FONCTIONNEMENT LAMPE

Serial No ;

Key No.	Part No.	Description	Description	Q'ty	S.C	Serial No.	ICA	Replaceable part	
								Part No.	Q'ty
7050--	534-00042	WORKING LAMP ASS'Y	FONCTIONNEMENT LAMPE	-	D				
1	2534-1160	LAMP;WORKING	PROJECTEUR DE FLENCHE	2					
1A	2515-1022D1	. BULB;HALOGEN 24V-70/75W	. AMPOULE	1					
2	2530-1609D14	HARNESS;WORKING LAMP	FAISCEAU	1					
3	2197-1660	BRACKET;HOUSING	SUPPORT	2					
4	S0508353	BOLT	BOULON A 6 PANS	2					
5	S5102503	WASHER;SPRING	RONDELLE ELASTIQUE	2					
6	2124-1622D1	CLIP;BAND	ATTACHE	10					

DATE	DEC. 22, 2003
REV. NO.	EXB03-15

Fig. 7060 CLAMSHELL PIPING
CONDUITES DE CLAMSHELL

Serial No. ;

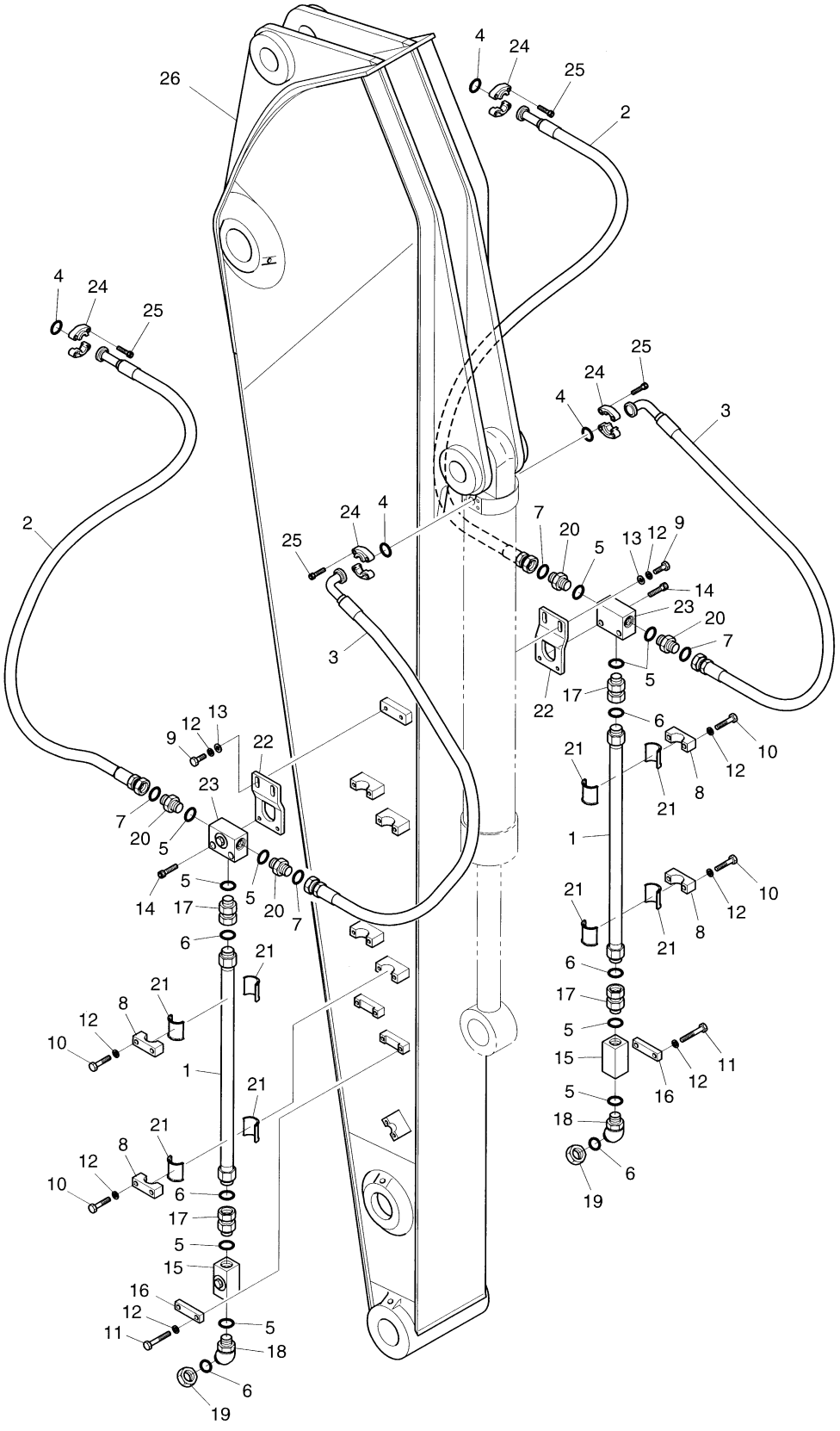

DATE	DEC. 22, 2003
REV. NO.	EXB03-15

Fig. 7060 CLAMSHELL PIPING CONDUITES DE CLAMSHELL

Serial No ;

Key No.	Part No.	Description	Description	Q'ty	S.C	Serial No.	ICA	Replaceable part	
								Part No.	Q'ty
7060--	H220-9063	CLAMSHELL PIPING	CONDUITES DE	-	D				
1	A004-0020A	PIPE	TUYAU	2					
2	H001-0003D16	HOSE 1750L	TUYAU FLEXIBLE	2					
3	H001-0004D49	HOSE 800L	TUYAU FLEXIBLE	2					
4	2180-1026D2	O-RING	JOINT TORIQUE	4					
5	S8000291	O-RING	JOINT TORIQUE	10					
6	S8030161	O-RING	JOINT TORIQUE	6					
7	S8030121	O-RING	JOINT TORIQUE	4					
8	2124-1696	CLAMP;PIPE	FIXATION DE TUYAU	4					
9	S0515366	BOLT;HEX M12X1.75X35	BOULON A 6 PANS	4					
10	S0560966	BOLT;HEX M12X1.75X60	BOULON A 6 PANS	8					
11	S0561366	BOLT;HEX M12X1.75X80	BOULON A 6 PANS	4					
12	S5102703	WASHER;SPRING M12	RONDELLE ELASTIQUE	16					
13	S5010703	WASHER;PLAN M12	RONDELLE PLATE	4					
14	S2215666	BOLT;SOCKET M12X1.75X50	BOULON DE PLOT	4					
15	2420-9628A	VALVE;STOP	VANNE	2					
16	124-00178	CLAMP;STOP V/V	ATTACHE	2					
17	2181-2566D8	ADAPTER;UNION	ADAPTEUR	4					
18	2181-2816D2	ELBOW	COUDE	2					
19	2181-2817D2	CAP	CHAPEAU	2					
20	2181-2627D15	ADAPTER	ADAPTEUR	4					
21	2161-2251A	RUBBER	CAOUTCHOUC	8					
22	A042-0043A	BRACKET	SUPPORT	2					
23	A006-0006A	VALVE;SWITCH	VANNE	2					
24	2181-9079	FLANGE;SPLIT	BRIDE	8					
25	S2212366	BOLT;SOCKET M10X1.0X35	BOULON DE PLOT	16					
26	H220-9064	ARM;SEAT WELDMENT	BALANCHER	1					

DATE	DEC. 29, 2005
REV. NO.	EXB05-20

Fig. 7070 NOISE KIT - EUROPE
KIT DE BRUIT

Serial No. ;

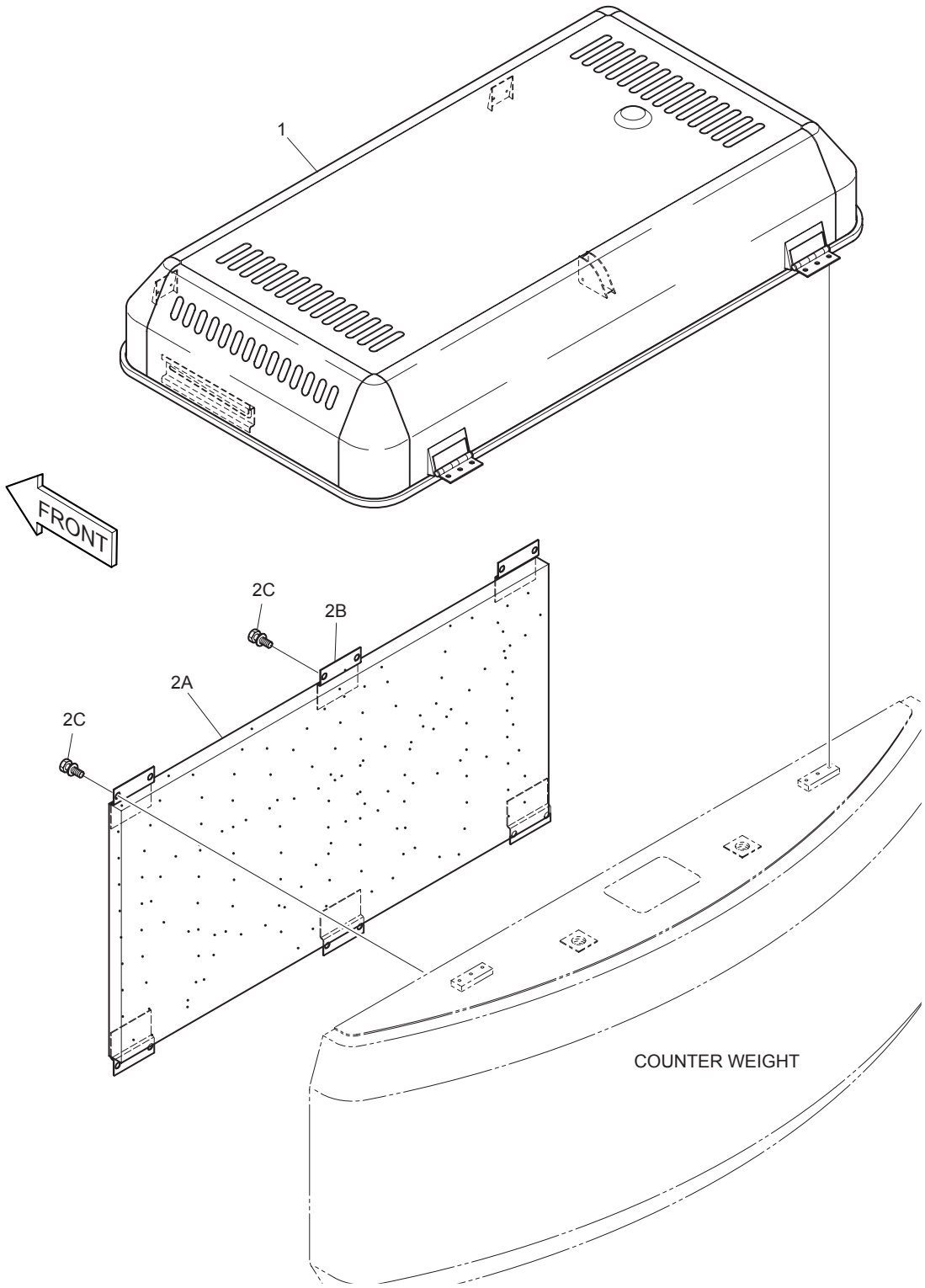

DATE	DEC. 29, 2005
REV. NO.	EXB05-20

Fig. 7070 NOISE KIT - EUROPE KIT DE BRUIT

Serial No ;

Key No.	Part No.	Description	Description	Q'ty	S.C	Serial No.	ICA	Replaceable part	
								Part No.	Q'ty
7070--	K1009655	NOISE KIT - EUROPE	KIT DE BRUIT	-	D				
1	K1009348	COVER;ENGINE	COUVERCLE	1					
2	K1009346	ACOUSTIC FOAM	ENSEMBLE DE EPONGE	1	D	1001–2037			
	K1009346A	**ACOUSTIC FOAM**	ENSEMBLE DE EPONGE	1	D	**2038–**			
2A	K1011226	. FOAM;POLYURETHANE	. EPONGE	1		1001–2037	I	K1011226A	1
	K1011226A	**. FOAM;POLYURETHANE**	. EPONGE	1		**2038–**			
2B	195-00692	. BRACKET	. SUPPORT	6					
2C	2120-2196D1	. BOLT;SET	. BOULON A 6 PANS	12					

INDEX

PART NO.	FIG NO.	KEY NO.
00C257-0	4360	38
	4370	38
00C261-0	4250	37
	4260	37
	4300	34
	4310	34
00C266-0	4290	34
00C267-0	4280	33
	4330	41
	4340	41
	4360	34
	4370	34
00C270-0	4270	46
	4320	43
00C301-0	4290	11
00C304-0	4280	15
00C305-0	4330	15
	4340	15
	4360	15
	4370	15
00C307-0	4270	15
	4320	15
00C363-0	4250	15
	4260	15
	4300	15
	4310	15
00C368-0	4290	11
00M312-0	4280	7
00M313-0	4280	11
00M314-0	4250	11
	4260	11
	4270	7
	4300	11
	4310	11
	4320	7
	4330	11
	4340	11
	4360	11
	4370	11
00M316-0	4270	11
	4320	11
00M320-0	4250	7
	4260	7
	4300	7
	4310	7
	4330	7
	4340	7
	4360	7
	4370	7
00M321-0	4290	16
00M323-0	4290	20
00P371-0	4280	26
00P373-0	4270	32
	4270	36
	4320	32
	4320	36
00R097-0	4250	19
	4260	19
	4280	19
	4300	19
	4310	19
	4330	19
	4340	19
	4360	19
	4370	19
00R725-0	4270	19
	4320	19
00R726-0	4290	8
00T193-0	4250	4
	4260	4
	4280	2
	4280	4
	4300	4
	4310	4
00T194-0	4270	2
	4270	4
	4320	2
	4320	4
00T195-0	4250	2
	4260	2
	4300	2
	4310	2
	4330	2
	4340	2
	4360	2
	4370	2
00Z105-0	4250	18
	4260	18
	4280	18
	4300	18
	4310	18
	4330	18
	4340	18
	4360	18
	4370	18
00Z108-0	4270	18
	4320	18
00Z116-0	4290	7
0201-063	4195	14
021-00030EF	5110	12
022-00032E	5110	13
023-00058E	5110	14
03A260-0	4270	27
	4320	27
03A534-0	4270	43
	4320	40
03A713-0	4270	24
	4320	24
03A714-0	4270	25
	4320	25
03A728-0	4270	29
	4320	29
03A729-0	4270	28
	4320	28
03B243-0	4250	26
	4260	26
	4300	26
	4310	26
	4330	26
	4330	30
	4340	26
	4340	30
	4360	26
	4370	26
03U522-3	4290	25
04.50010-0811	001	44
04B320-0	4290	31
06.01013-9117	007	109
06.01013-9118	006	214
06.01013-9127	012	204
	013	213
06.01013-9128	013	205
06.01283-7128	015	404
06.01493-4206	008	90
06.01493-4211	012	112
06.01493-4214	008	130
06.01493-4215	012	111
06.01493-4216	011	11
06.01493-4217	011	10
06.01494-4407	003	5
06.01494-4409	003	6
06.01494-4506	004	207
06.01733-4208	005	131
06.01733-4409	005	129
06.01733-4410	006	504
06.01913-2911	002	19
06.01913-3110	014	118
06.01913-3111	005	231
	013	221
06.01913-3112	010	9

PART NO.	FIG NO.	KEY NO.
06.01913-3113	001	22
	001	30
	002	6
	007	117
06.01913-3114	009	100
06.01913-3115	002	12
	006	404
	014	121
06.01913-3120	002	5
06.01913-3122	002	15
	015	401
06.01913-3124	015	402
06.01923-3113	009	50
06.01923-3114	011	6
06.01923-3115	009	40
	013	212
	013	212
06.01923-3120	007	120
	009	30
06.01923-3215	014	205
06.01943-3213	005	134
	018	5
06.01943-3217	011	12
06.01943-3218	012	113
	017	3
06.01943-3222	006	512
06.01943-3318	018	2
06.01943-3319	017	14
06.01944-3215	007	122
	017	2
06.01953-3213	015	407
06.01953-3318	016	7
06.04190-8808	005	206
06.04200-9009	012	110
06.06125-8709	005	118
06.06125-8717	005	117
06.06125-8723	005	123
06.06175-8208	013	103
06.06225-0706	005	116
06.06225-0708	014	106
06.11024-9202	014	103
06.11063-8214	005	230
	009	59
	013	106
	013	214
	014	107
	015	109
	015	203
06.11063-9215	015	409
06.11063-9217	003	9
06.11063-9217	013	13
06.12172-9314	014	116
	015	310
06.15010-2311	006	215
	009	57
	011	9
	013	105
	013	208
	013	216
	015	204
06.15010-2312	008	150
	015	408
06.15090-2305	005	111
06.15090-2313	005	110
06.15091-0313	001	18
06.15091-0319	001	12
06.15091-0322	001	13
06.16044-0211	011	13
06.16731-2104	005	207
06.16731-2107	005	229
	007	110
	009	58
	011	8
	012	207
	013	104
	013	207
	013	215
	014	108
	015	110
	015	205
	015	405
06.16731-2108	005	130
	008	140
	012	114
	014	104
	015	410
	018	7
06.16731-2110	003	8
	005	128
06.16731-2111	004	208
06.22022-3111	002	10
	003	10
06.22022-3119	002	4
06.22022-3212	004	105
06.22070-0913	007	113
06.29010-0116	006	213
06.29020-0132	012	105
06.29151-4608	006	402
06.31641-0222	007	116
	008	70
06.56017-0303	010	16
06.56021-0102	001	48
	020	4
06.56021-0106	001	37
	020	1
06.56180-0712	015	509
	019	13
	020	30
06.56180-0714	014	115
	015	307
	015	311
06.56180-0716	016	6
06.56190-0704	001	16
	014	113
06.56190-0706	001	39
06.56190-0709	008	40
	014	112
06.56190-0713	001	45
06.56190-0715	010	8
	010	8
06.67020-0105	005	219
06.67020-0106	011	20
	014	123
06.67020-0109	014	203
06.78144-2204	015	503
	015	505
06.78144-2403	014	111
0824-051	4195	18
0859-181	4195	7
1.104-00001	4161	4
1.104-00003	4161	5
1.109-00026	4151	150
1.109-00135	4151	151
1.109-00145	4161	25
1.109-00146	4161	24
1.109-00147	4151	149
1.110-00115	4350	4
	4380	4
1.110-00130	4350	2
	4380	2
1.110-00168	4201	22
1.114-00012	4201	7
1.114-00305	4151	110
1.114-00541	4161	14
1.114-00542	4151	297
1.114-00543	4151	308
1.115-00138	4161	15
1.115-00139	4151	222
1.115-00141	4151	276
1.120-00219	4350	22

PART NO.	FIG NO.	KEY NO.
1.120-00219	4380	22
1.121-00028	4201	25
1.121-00070	4350	21
	4380	21
1.123-00026	4161	34
1.123-00034	4161	17
1.123-00107	4161	27
1.124-00017	4350	24
	4380	24
1.124-00018	4350	25
	4380	25
1.129-00006	4151	230
1.129-00018	4151	296
1.129-00019	4151	114
1.129-00020	4151	307
1.131-00023	4201	10
1.131-00028	4201	13
1.131-00041	4151	220
1.131-00042	4151	163
1.131-00055	4151	113
1.131-00058	4151	228
1.131-00062	4151	275
1.131-00093	4201	8
1.131-00094	4201	15
1.131-00099	4151	266
1.138-00004	4201	23
1.140-00151	4350	28
1.140-00230	4350	32
	4380	28
1.148-00016	4151	108
1.156-00001	4161	RG1
1.156-00002	4161	1
1.160-00007	4201	28
1.161-00012	1435	3A
1.161-00016	4200	30A
	4201	30A
	4210	30A
1.161-00017	4210	30B
1.161-00018	1760	16C
1.161-00019	1760	17C
1.161-00021	4200	30A
	4210	30A
1.162-00001	1580	1A
1.172-00004	4210	30
1.172-00016	4200	30
1.172-00017	4210	30
1.178-00004	4201	26
1.180-00300	4350	13
	4380	13
1.180-00355	4161	23
1.180-00364	4350	18
	4380	18
1.180-00512	4161	26
1.180-00556	4350	16
	4380	16
1.180-00629	4350	17
	4380	17
1.180-00630	4350	20
	4380	20
1.180-00631	4151	132
1.181-00059	4151	224
1.181-00067	4151	226
1.181-00154	4151	306
1.215-00001	4151	RL
1.215-00002	4151	RL1
1.215-00003	4151	201
1.220-00001	4161	RG2
1.220-00002	4161	2
1.230-00053	4161	RG3
1.230-00054	4161	3
1.355-00011	4151	106
1.355-00012	4151	162
1.401-00011	4151	M
1.402-00001	4201	1
1.403-00111	4161	7
1.404-00001	4161	RG
1.404-00002	4161	8
1.404-00007	4161	6
1.405-00022	4151	102
1.405-00121	4161	9
1.409-00115	4151	112
1.409-00116	4151	161
1.409-00230	4350	15
	4380	15
1.409-00231	4151	M11
1.409-00232	4151	105
1.409-00233	4151	304
1.412-00016	4201	21
1.412-00061	4151	115
1.412-00072	4151	116
1.412-00093	4151	107
1.412-00131	4201	24
1.412-00164	4161	20
1.412-00202	4151	103
1.412-00203	4151	109
1.414-00009	4161	19
1.415-00005	4151	297
1.416-00006	4201	11
1.416-00026	4151	RL2
1.416-00027	4151	294
1.420-00009	4151	219
1.420-00013	4151	227
1.420-00014	4151	242
1.424-00015	4201	6
1.424-00062	4151	223
1.424-00063	4151	295
1.424-00064	4151	302
1.424-00065	4151	303
1.426-00024	4151	R1
1.427-00021	4201	9
1.427-00022	4201	16
1.427-00029	4151	218
1.427-00031	4151	272
1.429-00037	4151	301
1.430-00030	4161	13
1.441-00143	4350	1
	4380	1
1.441-00291	4151	M1
1.441-00292	4151	104
1.441-00293	4151	R
1.441-00294	4151	300
1.441-00295	4151	305
1.442-00002	4350	5
	4380	5
1.444-00003	4350	3
	4380	3
1.452-00004	4151	M2
1.540-00004	4161	12
1.540-00006	4151	167
102048	4100	808
104-00047A	4141	25
104-00048	4141	18
104-00049A	4141	22
104-00050	4141	12
104-00051A	4141	9
104126A	4150	326
105220-6490	015	301A
105637	4150	327
107589	4160	15
108-00017A	2110	4
108-00017B	2110	4
108061A	4150	346
108064A	4150	398
108844	4120	466
	4130	464
	4130	468
108847	4100	468
108848	4100	469
108892	4130	469
109-00162	2100	2

PART NO.	FIG NO.	KEY NO.
109-00174	4140	8
	4141	8
1099-000	4195	4
110-00064	3110	1C
	6390	1C
	6400	1C
	6410	1C
110-00121	4350	6
	4380	6
110-00219	4141	13
110-00226	6320	1-6
	6330	1-6
	6340	1-6
	6350	1-6
110-00230	1480	94
111-00031D1	6870	8
113350	4130	118
113351	4130	121
113352B	4130	122
113353	4130	123
113354C	4130	124
113360	4130	304
113360A	4130	304
113363	4130	702
113365	4130	743
113372	4130	106
113374B	4130	113
113375A	4130	116
113376	4130	117
113380	4100	548
113394	4110	887
113395	4110	925
113396	4110	630
113406	4110	643
113413A	4110	621
113414A	4110	622
113415	4110	623
113416	4110	624
113431	4110	644
113436	4110	645
113442	4110	653
113445	4110	656
113703	4100	544
113705	4100	543
113706	4100	541
	4100	541
113780	4100	212
113783	4100	114
113784	4100	127
113787	4100	157
113789	4100	158
113790	4100	211
113791	4100	251
113792	4100	261
113794	4100	271
113795	4100	312
113797	4100	401
113798	4100	532
113799	4100	534
113800	4100	535
113801	4100	885
113803	4100	954
113807	4100	531
114-00001D5	3100	12
	6890	25
114-00001D6	3100	22
	6890	26
114-00292	4350	40
	4380	36
114-00411	4430	40
114-00413	4430	53
114-00414	4410	57
114-00425	1190	23
	1210	27
	1250	3
114-00527	4141	21
114-00529	1590	40
114-00548	4141	17
114-00553	1250	62
115-00108	4350	7
	4380	7
115-00109	4350	11
	4380	11
115-00114	4350	9
	4380	9
115-00115	4350	10
	4380	10
115786	4100	153
115798	4100	313
115799	4100	314
115804	4110	641
116-00016	4151	264
116482	4150	397
116635A	4130	111
116976	4150	110
116979	4150	116
117387	4110	651
117400	4120	310
118892	4100	953
119-00014D1	1190	14
120-00050A	2110	32
120-00050B	2110	32
120-00144	4140	33
	4141	33
120-00226	1480	81
120-00258A	1230	39
120-00274	1400	31
120-00276	1130	41
	1140	41
	1140	41
	1180	22
	1180	22
	1190	22
	1300	20
	1310	42
	1310	42
	1320	42
	1330	42
	1360	45
	1370	45
	1380	45
	1630	17
	1740	29
	1750	29
	1750	29
	1760	44
	6100	20
	6100	20
120-00279	1590	12
120009	4110	627
120010	4110	628
120055	4110	674
121-00006	1630	13
	6980	4
121-00010D1	1330	11
	1340	11
	6720	35
	6730	35
	6740	35
	6990	41
121-00010D3	1200	1G
121-00066	1110	36
121-00076	1165	4
121-00077	1165	5
121437	4100	156
123-00030	6890	7
123-00361	6890	15
123-00409	3100	3
	6360	3
	6630	3

PART NO.	FIG NO.	KEY NO.
123-00409	6890	3
123-00435A	4141	23
123-00437A	4141	14
123-00456A	1390	30-4
123743	4150	330
123744	4150	193
124-00010	1520	8-34
124-00011	3130	24
	6370	24
	6940	30
124-00012	3130	22
	6370	22
124-00027	6940	28
124-00028	6940	29
124-00030	6980	12
124-00033A	7010	9
124-00034A	7010	10
124-00059	4350	36
	4380	32
124-00070	1610	15
124-00173	3130	23
	6370	23
124-00175	3130	20
	6370	20
124-00178	6790	9
	6800	9
	6810	9
	6820	9
	7060	16
124-00192	1290	48
124-00194	1150	3
124-00204A	6870	12
124-00208D2	1130	42
	1630	16
	1740	25
	1750	25
124-00208D3	1180	21
	1650	40
	1690	38
	1740	26
	1750	26
124-00208D4	1690	39
	1750	27
124-00208D5	1650	41
	1690	40
	6100	16
	6100	16
	6720	16
	6730	16
	6740	16
124-00208D5	6990	47
124-00208D6	1650	42
	1690	41
124-00208D7	1180	2
	1740	37
	1750	37
	1760	42
124-00208D9	1310	14
	1310	14
	1320	14
124-00209D1	1180	24
	1180	24
	1320	41
	1750	28
124-00209D3	1380	46
124-00209D4	1330	18
	1380	24
124-00211A	6860	5
124-00212	6860	6
124-00214	6860	7
124-00215	6860	8
124-00216	1570	27
124-00217	1570	30
124-00226A	1360	23
	1370	23
124-00246	1570	33
124-00267	1330	16
124-00285	1250	60
124568	4100	111
124569	4100	113
125-00021	1390	30-9
125-00031A	1480	2-5
125-00034	1550	3BA
	1560	2BA
	1570	4BA
125-00035	1550	3CA
125-00043	1480	2-12
125-00045	1580	17
125-00082	1550	3BA
	1560	2BA
	1570	4BA
125-00082A	1550	3BA
	1560	2BA
	1570	4BA
125-00083	1550	3CA
125-00083A	1550	3CA
125-00084	1580	17
125812	4130	742
129-00126	4410	33
129-00127	4430	35
129-00128	4430	39
129-00129	4430	48
129-00130	4430	45
129-00139	4430	94-5
129-00144	6210	7C
	6920	6C
	6930	6C
	6930	7C
129-00146A	1480	2-17
129640	4120	355
129642	4120	700
130391	4120	312
130395A	4120	361
130399	4120	435
130400	4120	433
130402	4120	434
131028	4120	353
131030	4120	354
131110-5520	015	301C
131130	4160	34
131131	4160	37
131132	4160	2
131133	4160	3
131134A	4160	9
131135A	4160	12
131136A	4160	4
131137A	4160	5
131141	4160	8
131142	4160	13
131144	4160	17
131145	4150	357
	4160	33
131146	4150	171
	4160	42
131147	4150	105
131148	4150	106
131149	4150	104
131150	4150	107
131150-2620	015	301B
131153	4150	114
131154	4150	151
131155	4150	102
131158	4150	112
131159	4150	113
131160	4150	115
131161	4150	167
131165	4150	381
131167	4150	325
131170	4150	352
131173	4150	363

PART NO.	FIG NO.	KEY NO.
131174	4150	366
131177	4150	341
131178	4150	201
131179	4150	202
131180	4150	203
131181	4150	204
131182	4150	205
131183	4150	206
131184	4150	161
131185	4150	162
131186	4150	380
131187	4150	382
131356A	4150	111
131424-1520	015	301D
131659	4110	626
131663	4110	646
131664	4110	654
131665	4110	655
132318	4150	323
132323	4150	108
132324	4150	109
132528A	4130	101
132622	4150	301
133-00130A	1390	30-2
133-00130B	1390	30-2
133-00155A	1470	19
133-00156A	1470	20
133-00161	1770	31M
133-00163C	1390	30
133-00163E	1390	30
133-00163G	1390	30
133-00163H	1390	30
133-00167	6210	7B
	6920	6B
	6930	6B
	6930	7B
133-00168	1480	2-16
133-00172	1300	7
133587	4110	625
133591	4150	103
133593	4160	7
133594	4160	6
134596	4110	496
135306	4130	131
135309	4130	351
136-00002	1210	14
136298	4120	351
136299	4120	311
136300	4120	307
136301	4120	308
137491	4100	141
	4100	141
139302	4120	309
13G21000	1120	2A
13G22000	1120	2B
13G23000	1120	2C
13G24000	1120	2D
13G25000	1120	2E
13G26000	1120	2F
13G27000	1120	2G
13G28000	1120	2H
140-00032	7020	1
140-00156	6940	34
140-00199	7010	4
140-00360A	6940	33
140-00659A	6810	1
140-00678	6980	16
140-00679	6980	17
140-00691	6780	3
140-00696	6810	1
140-00702	6370	5
140-00703	6370	6
140-00704	6370	7
140-00705	6370	8
140-00707	6770	3
140-00717	6800	1
140-00718	6820	1
140-00718A	6820	1
140-00720	6790	1
140-01017	1220	1
140-01018A	1230	16
140-01019B	1230	31
140-01020B	1230	34
140-01020C	1230	34
140-01021A	1230	37
140-01025A	1260	8
140-01025B	1260	8
140-01026A	1260	9
140-01026B	1260	9
140-01096	6860	2
140-01097	6860	3
140-01098	6860	4
140-01115A	6870	4
140-01170	6860	1
140-01178	6870	3
140-01223A	1150	4
140-01224	6750	1
	7000	1
140-01224A	6750	1
	7000	1
140-01235	6780	1
140-01237	6780	2
140-01301	1250	4
140-01305	1250	5
140-01344	1210	16
140-01366	6770	1
140-01367	6770	2
140-01374A	4141	32
140-01505	1230	31
140783	4110	601
140785	4110	629
140786	4110	652
140787	4110	612
140788	4110	613
140790	4110	611
140792	4110	876
140793	4110	875
140794	4110	897
140795	4110	614
140796	4110	615
141927	4160	1
141975	4110	898
141977	4110	631
142-00052	1390	27
142-00067	1480	106
142-00093	6260	-
142-00094	6260	1
142683	4130	303
142696	4130	301
145-00004A	1120	8
145-00045B	1570	24
145-00045C	1570	24
145-00052	1570	26
145-00070	1580	13
156639-882C	015	301E
156717	1425	14
156737	1425	13
156738	1425	20
157230	1425	11
158116	1425	10
159-00114	1390	28
159-00195	1660	1A
159-00223A	1390	30-1
159-00223B	1390	30-1
159-00223C	1390	30-1
159-00227	1300	14
160-00020	1630	15
	3110	31
	6390	31
	6400	31

PART NO.	FIG NO.	KEY NO.
160-00020	6410	31
160-00027	1200	5
160-00030	1390	40
	1400	40
	1470	43
160-00032	6150	19
160-00035	1470	35
160-00038	1480	105
160-00045	6210	7F
	6210	12
	6920	6F
	6920	12
	6930	6F
	6930	7F
	6930	12
160-00050	1590	41
160-00083	1500	124
160-00084	1490	122
161-00010	1460	3
161-00011	1460	4
161-00077	1470	28
161-00195	1390	36
161-00297	1390	30-5
161-00313	6870	14
161-00317	1490	39
161-00318	1490	40
161-00319	1490	41
161-00323	1510	55
161-00326	1510	23B
161-00329	1470	39
161-00330	1470	40
161-00331	1470	41
161-00335	1470	42
161-00381	1470	36
161-00382	1470	21
161-00383	1460	9
161-00386	6210	5
	6920	5
	6930	5
161-00395	1480	2-3
	1480	2-6
	1480	2-7
	1480	2-8
161-00404	6140	25
161-00411B	1610	-
161-00417A	1610	4
161-00418A	1610	9
161-00419	1610	7
161-00427A	1440	30
161-00428A	1520	8-12
161-00429A	1500	53
161-00430A	1490	54
161-00434C	1610	20
161-00434E	1610	20
161-00445	6930	1
161-00447	6920	1
161-00448	6210	1
161-00449	1500	109
161-00461A	1490	110
161-00468	1450	30
161-00469	1450	31
161-00486	1510	115
161-00495	1440	34
161-00501A	1610	14
161-00503	1610	1
161-00503A	1610	1
161-00503B	1610	1
161-00504	1610	2
161-00505A	1610	3
161-00506A	1610	21
161-00506B	1610	21
161-00524	1390	34
161-00548	1110	31
161-00550	1110	32
161392	1425	19
161395	1425	4
161796	1425	18
162-00025A	1480	15
162-00026	1510	17
162-00027	1480	104
	1480	104
162-00030	1480	120
162-00031	1480	121
162035	1425	12
162047	1425	17
162056	1425	8
162665	1425	22
162666	1425	21
163369	1425	16
170-00004	1160	13
172-00027A	1490	18
172-00043	1490	19
172-00212	1520	8-15
172-00215	1450	21
172-00320	1670	20A
172-00320A	1670	20A
172526	1425	19
172561	1425	9
179981	1425	7
180-00077D3	6640	20
180-00077D5	3110	28
	6390	28
	6400	28
	6410	28
180-00200	1210	21A
180-00324	4350	8
	4380	8
180-00398	4430	47
180-00400	4430	94-8
180-00402	4420	66
180-00403	4420	65
180-00441	6320	1-9
	6330	1-9
	6340	1-9
	6350	1-9
180-00445	4430	55
180-00465	2131	5D
181-00008	6720	17
	6730	17
	6740	17
	6990	26
181-00078D1	1330	15
	1340	15
	6720	8
	6730	8
	6740	8
181-00078D3	6990	43
181-00078D5	6990	10
181-00086D1	1340	13
181-00086D2	1330	12
	1340	12
181-00103	1630	12
	6980	3
181-00144D5	1330	95
181-00525	6980	19
181-00628	4430	37
181-00630	4430	43
181-00631	4430	52
181-00633	4410	60
181-00644	4410	90
181-00646	4420	91
181-00647	4410	92
	4430	92
181-00649	4410	93
181-00656	4410	71
181-00698	1200	1H
181-00701	4410	72
	4420	72
181-00760	6840	9
	6910	34

PART NO.	FIG NO.	KEY NO.
181-00774	6200	7
181-00779	6910	9
181-00806	6900	31
182-00062	3140	17
	6380	17
	6680	18
182-00063	3140	18
	6380	18
	6680	19
183708	1425	3
183709	1425	5
184-00085	5100	5
185-00167D3	6100	11
185-00245A	1150	2
185-00280	1130	13
185-00282A	1120	19
185-00284	1160	6
185-00307	1160	12
185-00320	1130	18
185-00325B	1120	20
185-00326	1150	5
185-00344A	1760	16
185183	1425	2
185184	1425	1
185193	1425	15
186-00017	1190	7
186-00017A	1190	7
188-00014A	1190	12
188-00018	1190	12
190-00003	6270	12
190-00090	5130	3
190-00092	5120	1
190-00093	5120	9
190-00094	5120	13
190-00095	5130	9
190-00096	5120	8
190-00097	5130	17
190-00098	5120	10
190-00099	5130	11
190-00100	5130	14
190-00101	5120	4
190-00102	5120	12
190-00122	5130	12
	5150	19
190-00123	5120	17
190-00315	5120	11
190-00509AD14	5130	25
190-00519	6100	15
190-00521	5120	14
190-00522	5130	19
190-00522	5150	16
190-00557	5130	21
190-00647	5130	10
	5150	22
190-00648A	5130	20
	5150	17
190-00652	5130	18
	5150	15
190-00674D1	6170	2
190-00688	5140	1
190-00689	5140	8
190-00690	5140	9
190-00691	5150	14
190-00692	5150	12
190-00693	5140	12
190-00694	5150	9
190-00695	5140	10
190-00703	5150	11
190-00798AD25	5150	27
190-00813	5120	-
190-00851	5120	5
	5140	5
190-00865C	5130	-
190-00866	5130	6
190-00866A	5130	6
190-00966	5130	4
	5150	4
190-00967	5130	5
	5150	5
190-00968	5130	23
	5150	20
190-00969	5130	24
	5150	21
190-01029A	5140	-
190-01035	5150	6
190-01035A	5150	6
190-01036A	5150	-
190-01059D13	5130	28
190-01059D14	5130	28
190-01059D15	5130	28
191722	1425	22
191723	1425	21
193-00625A	6870	5
193-00682B	1160	5
193-00697A	1160	8
193-00719A	1150	1
193-00813	1160	8
194-00024	1410	4
195-00163	6990	9
195-00419	6900	20
195-00419A	6900	20
195-00692	7070	2B
195-01469A	1330	8
195-01549A	1480	80
195-01583B	1320	23
195-01601	1310	1
195-01616A	1400	5
195-01617B	1390	6
195-01628	6100	2
195-01630	6100	12
195-01640C	1440	25
195-01683A	1470	18
195-01684A	1470	17
195-01692	6150	20
195-01693	6140	8
195-01694	6150	12
195-01710E	1390	-
	1400	-
	1410	-
195-01710G	1390	-
	1400	-
	1410	-
195-01710H	1390	-
	1400	-
	1410	-
195-01710J	1400	-
	1410	-
195-01710K	1390	-
195-01730A	1390	13
195-01735	6920	3
	6930	3
195-01736	6210	4
	6930	4
195-01746	1440	26
195-01764A	1530	-
	1540	-
195-01765B	1400	46
	1470	44
195-01769B	1530	1
195-01770C	1540	2
195-01771B	1540	3
195-01772B	1530	4
195-01772C	1530	4
195-01772E	1530	4
195-01773A	1530	5
195-01774B	1540	9
195-01774C	1540	9
195-01782A	1450	26
195-01784B	1470	11
195-01784C	1470	11

PART NO.	FIG NO.	KEY NO.
195-01799	1250	42
	1260	42
195-01802A	1260	46
195-01804	6140	13
195-01805	6140	21
195-01826B	1550	3A
195-01843	6230	2
195-01847	1440	10
195-01896B	1540	8
195-01897A	1540	11
195-01899A	1530	10
195-01901A	1230	47
195-01903A	1250	55
195-01904	1760	22
195-01905	1760	23
195-01924	1110	17
195-01925	1110	16
195-01926	1110	37
195-01927	1110	38
195-01937	6210	7A
	6920	6A
	6930	6A
	6930	7A
195-01938A	6750	10
	7000	10
195-01939	6920	6
	6930	6
195-01940	6210	7
	6930	7
195-01965B	1140	21B
195-01965C	1140	21B
195-01967	1710	19
195-01990	1230	44
195-01993	1320	19
195-02016	6750	11
	7000	11
195-02044	6850	5
	6910	5
195-02079	1300	10
195-02099	1480	116
195-02115	6720	15
	6730	15
	6740	15
195-02148	1300	19
195-02154	1740	36
	1750	36
195-02157	1300	28
195-02167A	1560	2A
195-02173	1540	6
195-02178	1580	39
195-02179	6100	21
195-02180A	6100	22
195-02188	1140	39
195-02190	1150	7
195-02266	6720	9
	6730	9
	6740	9
195-02320	1140	39
195-02414	6850	2
195-02438	1250	55
195-02439	1250	59
195-02465	1110	43
195-02752	6990	48
195-03415	6110	10
195-03415A	6110	10
198-00016	1310	2
	1380	49
	6910	43
198-00034	1500	9
198-00036A	1480	120
198-00044	1500	119
199-00075	5100	1-24
199-00124	5100	-
2.181-00321	4196	6
200162	4150	368
200166	4100	545
	4100	545
200678	4100	886
200709	4150	343
200741	4130	401
200830	4110	438
200833	4110	436
200846	4100	406
200852	4110	412
201-00012	1110	1
201-00111B	1110	-
	1120	-
	1130	-
	1140	-
201-00111C	1110	-
	1120	-
	1130	-
	1140	-
201-00132A	1300	-
201557	4100	806
201630	4130	471
201639	4100	717
201654	4110	734
201660	4110	763
201673	4110	708
201685	4110	725
201689	4100	725
	4110	755
	4130	485
	4130	487
	4150	358
201706	4110	732
	4120	732
	4150	208
201710	4110	728
	4150	210
	4150	355
	4160	43
201713	4110	733
201718	4110	730
201719	4150	337
201721	4100	728
201723	4110	756
201727	4130	488
201729	4150	219
201733	4150	336
201749	4150	383
201757	4110	722
201765	4100	724
	4110	724
202-00022B	1120	2
202-00022C	1120	2
202523	4110	924
202558	4130	437
202596	4120	850
202599	4130	433
202606	4100	824
	4160	25
202608	4130	432
203-00067B	1140	21
203-00067C	1140	21
203-00067E	1140	21
203-00068A	1140	21A
203316	4160	36
203418	4100	792
203480	4100	789
204-00049B	1160	-
204-00061A	6240	-
204449A	4160	29
204452	4100	710
	4120	710
204456A	4160	30
204458	4110	735
204548	4150	324
204956	4110	814

PART NO.	FIG NO.	KEY NO.
204958	4160	20
205526	4110	413
206597	4150	209
206598	4120	725
206699	4130	993
207424	4150	359
208276	4130	994
21001-00036	4190	47
21001-00213	4190	102
21001-90227	4190	46
21001-90347	4170	61
21001-90364	4190	94
21001-91002	4170	88
21003-00202	4180	105
21003-00205	4170	93
21003-00382	4170	71
21003-00383	4170	72
	4180	72
21003-00386	4170	82
21003-00393	4170	92
	4190	92
21011-30576	4190	22
21011-30644	4190	48
2104-1013A	4140	9
2104-1019B	4140	25
2104-1020C	4140	22
2104-1021B	4140	18
2104-1022B	4140	12
2106-1019D10	1760	15
	5110	8
2106-1019D4	5110	9
2107-6006	1760	12
2109-1050	4140	8
2109-9033	4140	4
	4141	4
2110-1004	2140	9D
2110-1005	2140	9C
2110-1013A	2120	6-1C
2110-1184D29	1390	30-11
2110-1184D37	1390	6-12
2110-1228B	3110	2B
	6390	2B
	6400	2B
	6410	2B
2110-1303	2150	7B
2110-1315A	3100	1B
	6360	1B
	6630	1B
	6890	2C
2110-1316A	3110	1B
2110-1316A	6390	1B
	6400	1B
	6410	1B
	6640	1B
	6890	2B
2110-1318A	3110	1D
	6390	1D
	6400	1D
	6410	1D
2110-1329A	6640	1C
2110-1330A	6640	1D
2110-1347	1480	2-11
	1500	86
2110-1349	1500	87
	1640	8
2110-1360A	3110	2C
	6390	2C
	6400	2C
	6410	2C
2110-1366A	6640	2C
2110-1371A	4140	13
2110-6051	2160	8-1H
	6280	1H
	6290	1H
	6300	1H
	6310	1H
2110-6052	2160	8-1I
	6280	1I
	6290	1I
	6300	1I
	6310	1I
	6320	1-8
	6330	1-8
	6340	1-8
	6350	1-8
21111-30702	4190	20
21111-52232	4190	97
21111-52233	4190	95
21111-54501	4190	38
21111-54511	4170	32
21111-56501	4190	39
21111-56508	4170	33
21111-56525	4190	98
21113-40308	4170	90
21113-50803	4190	40
21113-50805	4190	100
2112-1004A	2140	9B
2112-1248B	4140	2
2112-1248C	4140	2
2112-1248E	4141	2
2114-1019A	2140	9F
2114-1058D10	1310	3
	1380	50
	1550	3M
	1560	2M
	1620	8
	1620	8
	1620	8
	6900	13
	6910	44
2114-1058D12	6640	12
2114-1058D2	1460	6
2114-1058D29	1570	4J
	1610	19
	1760	34
2114-1058D30	1230	40
	1550	3F
	1560	2F
2114-1058D39	6270	13
2114-1058D45	1480	99
	1510	99
	1520	1-26
	1520	14
2114-1058D46	1410	44
2114-1058D52	1480	70
	1500	70
2114-1058D54	1440	31
	1710	48
2114-1058D56	1580	19
2114-1058D64	1490	112
2114-1059D100	6640	13
2114-1059D113	6360	12
	6630	12
2114-1059D114	6360	22
	6630	22
2114-1059D118	3100	23
	3110	16
	6360	23
	6390	16
	6400	16
	6410	16
	6630	23
	6890	14
2114-1059D122	3110	20
	6390	20
	6400	20
	6410	20
2114-1059D175	3110	19
	6390	19
	6400	19

PART NO.	FIG NO.	KEY NO.
2114-1059D175	6410	19
2114-1059D255	3100	24
	6360	24
	6630	27
2114-1059D256	3100	25
	6360	25
	6630	28
2114-1059D31	1390	21
2114-1059D37	1390	30-6
2114-1059D63	3100	13
	3110	18
	6360	13
	6390	18
	6400	18
	6410	18
	6630	13
	6890	13
2114-1059D72	6890	23
2114-1059D73	6890	24
2114-1059D89	6640	22
2114-1059D98	6640	23
2114-1154	1530	13
	1570	37
	1580	37
2114-1369	2130	5N
	2131	5N
2114-1683	6100	14
2114-1727A	1570	4G
2114-1737	1290	50
2114-1813	1190	9
	1210	3
2114-1814	1190	10
	1210	4
2114-1816A	2110	21
2114-1817	1100	3
2114-1831	3120	9
	6450	9
	6460	9
	6480	9
	6490	9
	6500	9
	6510	6
	6520	6
	6530	6
	6540	6
	6550	6
	6560	6
	6570	6
	6580	6
	6590	6
2114-1831	6600	6
	6610	6
	6620	6
	6650	9
2114-1848A	3120	4
	6450	4
	6460	4
	6470	4
	6480	4
	6490	4
	6500	4
	6510	1-4
	6530	1-4
	6550	1-4
	6570	1-4
	6590	1-4
	6610	1-4
2114-1855	1480	78
2114-1856	1520	83
2114-1859	6650	4
2114-1898D1	1460	8
	1470	1-5
	1470	30
	1490	97
	1640	12
	6130	7
	6140	11
	6210	6
	6920	7
2114-1898D14	6210	7D
	6210	9
	6920	6D
	6920	9
	6930	6D
	6930	7D
	6930	9
2114-1898D16	1390	50
	1490	102B
2114-1898D2	1390	23
	1390	23
	1400	23
	1410	23
	1440	21
	1450	23
	1480	2-20
	1480	98
	1490	98
	1520	8-32
	6230	10
2114-1898D3	1390	15
2114-1898D3	1390	30-15
	1400	15
	1410	15
	1470	34
	1480	2-15
	1640	9
	6220	3
2114-1898D4	1390	16
	1390	30-18
	1400	16
	1410	16
2114-1898D5	1440	23
	1450	24
2114-1898D8	1390	51
	6140	16
	6150	16
2114-1901A	4140	11
	4141	11
2114-1902	4140	17
2114-1929	1110	34
2114-1994A	6640	24
2114-1994B	6640	24
2114-1995A	6640	25
2114-1995B	6640	25
2114-1997A	3110	29
	6390	29
	6400	29
	6410	29
2114-1997B	3110	29
	6390	29
	6400	29
	6410	29
2114-1998A	3110	30
	6390	30
	6400	30
	6410	30
2114-1998B	3110	30
	6390	30
	6400	30
	6410	30
2114-2031D3	1480	2-14
2114-2031D4	1390	42
	1400	42
	1410	42
	6230	9
2114-2031D5	1470	1-4
	6130	8
2114-4129	1390	20
2114-6035	2160	8-1F
	6280	1F

PART NO.	FIG NO.	KEY NO.
2114-6035	6290	1F
	6300	1F
	6310	1F
	6320	1-10
	6330	1-10
	6340	1-10
	6350	1-10
2114-9012	2100	25
2114-9012A	1100	21
	1110	6
	1120	6
	1200	3
2116-1007	2140	9G
2116-1060D5	6890	31
2116-1060D6	3100	16
	3110	21
	6360	16
	6390	21
	6400	21
	6410	21
	6630	16
	6640	14
	6890	16
2116-1472A	6630	26
2116-1514A	3100	15
	6360	15
	6630	15
	6890	27
2116-1520	1450	6
2116-1522	1550	3R
	1560	2R
2116-1531A	3100	7
	6360	7
	6630	7
2116-6006	1520	8-3C
2116-6007	1520	8-3D
211668B	4150	328
2116-9003	5120	6
	5140	6
2119-1007	1210	20
2119-1063A	1200	1C
2119-1065	4140	30
	4141	30
211949A	4130	114
211952	4130	491
211953A	4130	712
212008	4130	706
212009	4130	472
212010	4130	707
2120-1105	2130	5B
2120-1105	2131	5B
2120-1354	1700	14
212014	4130	438
2120-1419	1700	4
2120-2135	1140	21C
2120-2135A	1140	21C
2120-2137	1100	4
2120-2137A	1100	4
2120-2150D1	1490	84
	1520	84
2120-2150D3	1520	8-16
2120-2165	1160	15
	1160	15
2120-2166D1	1490	21
2120-2166D10	1440	17
	1450	27
	6220	2
2120-2166D14	1490	111
2120-2166D18	1390	30-17
2120-2166D19	1390	30-14
	1470	38
2120-2166D2	1460	7
	1470	5
	1490	100
	6130	6
	6140	9
2120-2166D24	1440	32
2120-2166D3	1470	8
2120-2166D36	1390	45
	1400	45
	1450	32
	1480	2-13
2120-2166D4	1470	1-3
	1480	36
	1510	36
	1640	11
2120-2166D40	1490	102C
2120-2166D41	1210	29
2120-2166D46	1410	37
2120-2166D5	1390	22
	1400	22
	1410	22
	1440	27
	1450	14
	1480	33
	1490	33
	1520	8-26
	6210	8
	6230	8
	6920	8
2120-2166D5	6930	8
2120-2166D6	1390	14
	1440	22
	1450	15
	1470	33
	1640	7
2120-2166D7	1410	39
2120-2166D8	1390	17
	1400	17
	6230	4
2120-2174	1440	19
	1510	23K
	1510	101
2120-2182	6310	3
2120-2187	1740	34
	1750	34
2120-2196D1	1130	11
	7070	2C
2120-2196D10	1300	22
	2180	28
	6100	3
	6850	3
	6910	18
2120-2196D11	1250	38
	1260	38
	1570	32
2120-2196D13	1620	7
	1620	7
	1620	7
2120-2196D2	1140	30
	1300	17
	1620	7
	2100	27
2120-2196D4	1320	24
2120-2196D5	1150	6
	1590	10
2120-2196D6	1560	23
2120-2196D7	6270	9
2120-2196D8	1230	43
	1320	9
	1330	9
2120-2196D9	1110	44
	1160	3
	1530	7
	1540	7
	1550	11
	1560	11
	1570	11
	1580	11
	1590	11

PART NO.	FIG NO.	KEY NO.
2120-2196D9	1600	12
2120-2235	1710	20
	1740	22
212033	4100	901
212035	4110	801
212036	4110	858
2120-6017	2160	8-3
	6280	3
	6290	3
	6300	3
	6320	3
	6330	3
	6340	3
	6350	3
2120-9013	6110	6
2121-1203	6310	4
2121-1208	2130	5P
	2131	5P
2121-1304	1450	13
2121-1305	1740	23
2121-1311D2	1390	26
	1390	26
	1410	26
2121-1311D4	1390	50
2121-1311D5	1490	102D
2121-6017	2160	8-4
	6280	4
	6290	4
	6300	4
	6320	4
	6330	4
	6340	4
	6350	4
2121-9007	1460	5
2122-1002D2	5130	8
	5150	8
	6270	10
2122-1002D4	5130	22
	5150	18
212231	4100	774
2123-1011	2120	6-1G
2123-1057D47	1580	38
2123-1107D4	1100	14
2123-1719	2150	7D
2123-1915A	6630	25
2123-2031C	6890	8
2123-2180E	3100	2
	6360	2
	6630	2
	6890	4
2123-2182C	3110	8
	6390	8
	6400	8
	6410	8
2123-2184C	3100	4
	6360	4
	6630	4
2123-2185E	3100	5
	6360	5
	6630	5
	6890	5
2123-2187C	3100	6
	3110	7
	6360	6
	6390	7
	6400	7
	6410	7
	6630	6
	6640	6
	6890	6
2123-2191B	3110	9
	6390	9
	6400	9
	6410	9
2123-2192C	3110	10
	6390	10
	6400	10
	6410	10
2123-2193B	3110	11
	6390	11
	6400	11
	6410	11
2123-2211C	6640	8
2123-2212C	6640	9
2123-2225C	6640	7
2123-2239A	1520	8-28
2123-2240	1390	18
2123-2247	1520	8-4
2123-2322B	4140	14
2123-2327A	4140	23
2123-4030	1200	2
2123-6060	2160	8-1E
	6280	1E
	6290	1E
	6300	1E
	6310	1E
	6320	1-5
	6330	1-5
	6340	1-5
	6350	1-5
2123-6061	2160	8-1J
	6280	1J
	6290	1J
	6300	1J
	6310	1J
	6320	1-7
	6330	1-7
	6340	1-7
	6350	1-7
2123-6062	2160	8-1G
	6280	1G
	6290	1G
	6300	1G
	6310	1G
	6320	1-11
	6330	1-11
	6340	1-11
	6350	1-11
2123-6119	1520	8-3B
2124-1025D5	1260	40
2124-1026D2	6940	31
2124-1026D3	1250	54
	6750	15
	7000	15
	7020	5
	7030	5
	7040	5
2124-1027D2	1630	5
2124-1084D2	6720	4
	6730	4
	6740	4
	6990	44
2124-1244	1130	10
2124-1353D1	6680	14
2124-1353D19	6990	39
2124-1353D2	6980	15
2124-1353D8	1740	30
2124-1441	1700	6
2124-1509D1	1300	25
	1740	24
	1750	24
	1750	24
2124-1509D10	1300	21
2124-1592A	1140	26
2124-1593A	1160	2
2124-1597	6660	18
2124-1598	6660	19
2124-1599	6660	20
2124-1600A	6660	21
2124-1601A	6660	22

PART NO.	FIG NO.	KEY NO.
2124-1601A	6670	9
2124-1607	1490	52
	1500	52
	1520	8-13
2124-1622D1	1750	31
	5130	26
	7050	6
2124-1622D2	1750	32
	6120	3
2124-1622D3	1750	33
	1760	45
2124-1625	3140	1
	6380	1
	6680	1
2124-1689A	1520	8-33
2124-1695	7020	9
	7030	9
	7040	9
2124-1696	6790	5
	6800	5
	6810	5
	6820	5
	7060	8
2125-1095A	1450	19
2125-9036	1520	8-14
2125-9055	1490	32
2125-9056	1480	37
2125-9057	1510	23C
	6230	3
2127-1002A	1490	34
212881	4130	451
2129-1008	1210	15
2129-1236	2130	5A
	2131	5A
2129-1393	1210	7
2129-1432	1390	30-7
2129-1446	1490	27
213-00022	1390	30-3
213-00025	1440	3
213-00026	1440	4
2131-1109	2130	5O
	2131	5O
2132-1132A	1390	30-13
2132-1133B	1470	26
2132-1134B	1470	27
2133-2014	1490	28
2136-1431	1520	8-20
2138-9006B	1300	11
2139-6055D16	1300	24
2140-1252	1630	1
2140-1254B	3130	6
2140-1255B	3130	5
2140-1256A	3130	9
2140-1257B	3130	8
2140-1258B	3130	7
2140-1259B	3140	2
	6380	2
	6680	2
2140-1260B	3140	3
2140-1261B	3140	4
	6380	4
	6680	4
2140-1338	1480	69
	1490	69
	1500	69
2140-1406	4140	29
	4141	29
2140-1558	6660	4
2140-1559	6660	5
2140-1560	6660	6
2140-1561	6660	7
2140-1562	6660	8
2140-1563	6660	9
2140-1564	6660	11
2140-1565	6660	12
2140-1572	6660	10
2140-1573	6670	4
2140-1576A	6680	3
2140-1577	6680	13
2140-1596A	6380	3
2140-1599	6370	9
2140-1599A	6370	9
2140-1677	7040	1
2140-1679	7030	1
2142-1122A	1510	74
2142-1123	6270	8
2142-9005	1520	82
214337A	4130	355
2145-1237	1550	3D
	1560	2D
2145-1243	1570	4C
2150-1122	1300	6
2150-1132A	1520	8-29
2150-1133	1490	63
215018	4110	836
2154-1033	1480	3
2155-1299B	3110	3
	6390	3
	6400	3
	6410	3
2155-1300B	3110	4
	6390	4
	6400	4
	6410	4
2155-1306B	6640	3
2155-1307B	6640	4
2155-1335G	3110	2
	6390	2
	6400	2
	6410	2
2155-1339E	6640	2
2157-1023	2120	6-2
2158-1003D36	6940	40
2158-1003D37	6940	41
2158-1021	1390	11
	1400	11
215823	4150	132
215824	4150	145
2160-1004D34	1100	15
2160-1004D39	1100	16
2160-1004D48	1470	10
2160-1004D55	1100	27
2160-1023	1480	104
2160-1026	1480	103
2160-1201D11	1100	17
2160-1201D12	1100	26
2160-1201D26	1100	24
2160-1201D27	1100	25
2160-1212	1730	7
2160-1213	1730	8
2160-1307	1480	2-18
2160-1308	1470	9
2160-1310	1480	96
	1500	96
2160-1329	1450	28
2160-1336	6100	11C
2160-4003	2190	16
2160-9010	1100	6
2160-9034	1100	18
2161-1061	1700	2
2161-2069	1480	2-9
2161-2153A	1610	8
2161-2155A	1550	3V
2161-2207	1480	71
2161-2208	1480	68
2161-2209	1480	73
2161-2210	1480	72
2161-2211	1480	64
2161-2212	1480	85
2161-2216	1460	1

PART NO.	FIG NO.	KEY NO.
2161-2226	1520	66
	1550	3N
	1560	2N
	6270	15
2161-2227	1520	8-22
	1520	113
2161-2229	1520	8-6
2161-2235	1460	2
2161-2250A	3130	30
	6370	30
	6660	26
	6670	12
	6940	32
2161-2251A	3130	28
	6370	28
	6660	25
	6770	11
	6780	11
	6790	15
	6800	15
	6810	15
	6820	15
	7010	18
	7060	21
2161-2254	6230	11
2161-2257	6910	25
2161-2261	1610	12
2161-2262	1610	13
2161-2289	1450	22
	1480	117
2161-2289A	1480	117
2161-2317	1470	31
2161-2367	1390	36
2161-2397	1440	24
	1450	25
2161-6060	1520	8-3H
2161-6063	1520	8-3F
2161-9052	1550	3O
	1560	2O
2161-9053	1550	3P
	1560	2P
2161-9066	1110	31
2162-1064A	1490	16
2171-1078	1520	1-27
2171-1084A	1450	12
2172-1109	1490	20
2172-1110B	1520	8-21
2172-1112	1510	23D
2172-1134	1670	20A
2172-9021	1520	8-17
2172-9022	1520	8-19
2172-9035	1450	21
2172-9036	1520	8-15
217841	4110	874
2180-1017A	1100	7
	2100	14
2180-1026D19	1250	12
	1260	12
	1270	12
	1280	12
	1290	12
	2190	6
	3130	19
	6370	19
	6660	17
	6750	25
	6750	25
	6770	4
	6780	4
	6900	18
	6940	23
	7000	25
	7000	25
2180-1026D2	1250	24
	1260	24
	1270	24
	1280	24
	1290	24
	3130	15
	6370	15
	6440	3
	6660	27
	6670	14
	6900	17
	6940	22
	6960	4
	6990	21
	7060	4
2180-1026D21	2130	5M
	2131	5M
2180-1026D24	1230	18
	1280	16
2180-1026D27	1230	28
2180-1026D3	2140	9H
2180-1026D30	6860	14
2180-1026D31	1220	2
	1230	23
2180-1026D32	1230	26
2180-1106BD14	6890	9
2180-1106BD24	3100	11
2180-1106BD24	3110	13
	6360	11
	6390	13
	6400	13
	6410	13
	6630	11
	6640	10
	6890	11
2180-1106BD3	6640	11
2180-1106BD4	3110	12
	6390	12
	6400	12
	6410	12
2180-1106BD6	3100	1C
	3100	10
	3110	14
	6360	1C
	6360	10
	6390	14
	6400	14
	6410	14
	6630	1C
	6630	10
	6640	21
	6890	2D
	6890	10
2180-1217D109	4410	89
2180-1217D13	4390	14
2180-1217D54	4390	13
2180-1254	4140	7
	4141	7
2180-1267	1520	8-7
2180-6086	1760	17A
2180-6087	1760	17B
2180-6088	1760	16B
2180-6089	1760	16A
2180-6090	1760	26A
	1760	27A
2180-9001	2130	5D
2180-9020	2120	6-1F
2180-9021	2140	9E
2180-9149A	2150	7H
2180-9153	5110	11
2181-1110D1	1630	9
	6680	7
2181-1110D3	1200	1E
2181-1110D30	3140	10
	6380	10
	6680	10
	6980	13

PART NO.	FIG NO.	KEY NO.
2181-1116D1	4151	244
	4201	2
2181-1116D2	2120	6-1H
	2150	7F
	4140	27
	4141	27
	4151	252
2181-1116D4	4140	28
	4141	28
	4161	30
2181-1126D120	1360	18
2181-1126D14	1310	34
	1320	34
	1380	14
	2190	13
	6720	10
	6730	10
	6740	10
	6760	6
	6840	5
	6910	8
	6990	7
2181-1126D23	6910	36
2181-1126D25	1240	49
	6900	8
2181-1126D27	1350	92
2181-1126D34	1310	40
2181-1126D36	1380	16
	6760	18
	6910	41
2181-1126D37	6760	18
2181-1126D6	1240	6
	1310	36
	1320	36
	1380	19
	2190	12
	6870	9
2181-1126D7	1330	35
	1330	35
	1340	35
	1340	35
	1350	35
	1360	15
	1370	15
2181-1126D75	1320	43
	1330	43
2181-1126D83	1240	55
2181-1126D85	6720	36
	6730	36
	6740	36
2181-1126D85	6990	42
2181-1126D89	1360	17
	1370	17
	6850	19
	6910	6
2181-1133	2140	9L
2181-1159	1780	38
2181-1160A	1780	39
2181-1161A	1780	40
2181-1184	3140	15
	6380	15
	6680	5
2181-1186D12	6980	14
2181-1618	2130	5J
	2131	5J
2181-1702D10	1340	38
	6760	8
2181-1702D2	1310	39
	1320	39
	1350	39
	6850	15
	6870	7
2181-1702D3	1330	45
	1340	45
	6850	18
	6850	18
	6850	20
	6910	21
2181-1702D4	1310	37
	1320	37
	1330	37
	1340	37
	6760	7
2181-1702D5	1350	33
	1360	21
	1370	21
2181-1702D78	6900	30
2181-1890D4	4151	221
2181-1913D24	1200	1D
2181-1923D12	3140	5
	6380	5
2181-1923D9	6680	16
2181-1925	1630	3
	3140	12
	6380	12
	6680	12
	6980	1
2181-1950D1	1190	13
	1210	23
	4230	4
2181-1950D1	4240	5
	4390	7
	4400	6
2181-1950D2	1210	26
	1210	26
	1350	32
2181-1950D3	1200	1I
	6900	33
2181-1950D7	1190	20
	1210	18
	1210	18
2181-1950D9	1230	30
	6770	8
	6780	8
2181-1951D1	1320	48
	6760	10
2181-1951D14	6990	23
2181-1951D16	1330	51
	1340	51
	1350	51
	6720	26
	6730	26
	6740	26
	6990	27
2181-1951D19	1320	47
2181-1951D21	6850	17
2181-1951D31	6990	24
2181-1951D5	1240	53
2181-1951D6	6840	7
	6850	16
	6910	37
	6910	40
2181-1951D7	6760	9
2181-2047A	1230	17
2181-2104D6	6100	6
2181-2157D6	1280	15
2181-2218D5	1250	26
2181-2281D10	2190	9
2181-2281D13	6910	19
2181-2281D21	1350	49
2181-2337D13	4410	61
2181-2375D7	6720	25
	6730	25
	6740	25
	6990	25
2181-2419D1	1350	91
	1350	94
2181-2419D3	1310	50
2181-2434	4410	88
2181-2439A	6200	5

PART NO.	FIG NO.	KEY NO.
2181-2527	1630	11
2181-2566D8	6790	10
	6800	10
	6810	10
	6820	10
	7020	10
	7030	10
	7040	10
	7060	17
2181-2627D1	1220	15
	6670	5
	6900	7
	6900	30
	6940	15
2181-2627D15	7060	20
2181-2627D2	6850	13
2181-2628D1	6900	30
2181-2635	1330	54
2181-2666	6160	10
2181-2667	1210	25
2181-2755B	6100	1A
2181-2815D1	6770	12
	6780	12
2181-2815D3	6850	14
2181-2816D2	6790	11
	6800	11
	6810	11
	6820	11
	7020	11
	7030	11
	7040	11
	7060	18
2181-2817D2	6790	12
	6800	12
	6810	12
	6820	12
	7020	12
	7030	12
	7040	12
	7060	19
2181-2818	6770	10
	6780	10
	7010	6
2181-2820D3	6870	10
2181-2820D5	6790	12
	6800	12
	6810	12
	6820	12
2181-4125	2190	15
2181-4127A	1270	7
2181-4133D3	6850	33
	6870	16
2181-4133D5	1220	11
2181-4133D6	6750	14
	6770	13
	6780	13
	6790	13
	6800	13
	6810	13
	6820	13
	7010	7
	7020	13
	7030	13
	7040	13
2181-9015	6110	5
2181-9078	1250	19
	1270	19
	1280	19
	1290	19
	2190	3
	3130	17
	6370	17
	6660	15
	6750	17
	6750	17
	6940	13
	7000	17
	7000	17
2181-9079	1250	23
	1260	23
	1270	23
	1280	23
	1290	23
	3130	13
	6370	13
	6660	28
	6670	8
	6900	12
	6940	12
	6960	3
	7060	24
2181-9080	6990	19
2181-9081	2190	4
2181-9083	1270	25
	6900	11
2182-1018D47	6940	11
	7010	20
2182-1573B	1140	25
2182-1573C	1140	25
2182-1662	1200	1B
2182-1756A	4140	32
2184-1026D24	1240	54
2184-1026D435	1350	60
2184-1026D68	6680	15
2184-1026D9	1350	60
2184-1036D112	6900	23
	7000	7
2184-1036D12	1240	50
2184-1036D16	1240	50
2184-1036D224	1380	43
2184-1036D269	1240	50
2184-1036D70	1320	58
2184-1045D110	6980	6
2184-1045D117	6760	13
2184-1045D125	6980	8
2184-1045D131	6980	7
2184-1045D152	6980	5
2184-1045D157	1320	78
2184-1045D159	1320	59
2184-1045D196	6980	9
2184-1045D207	1630	8
2184-1045D209	6760	15
2184-1045D221	6760	15
2184-1045D252	1350	87
2184-1045D42	1380	37
	1380	38
2184-1045D64	1350	84
	6680	8
2184-1045D71	6380	8
2184-1045D77	1320	80
2184-1045D90	3140	13
	6380	13
2184-1046D108	1320	79
2184-1046D117	6760	12
2184-1046D120	6990	32
2184-1046D121	6910	16
	6910	30
	6910	31
2184-1046D123	1330	64
2184-1046D143	6760	16
2184-1046D148	1320	79
2184-1046D149	1340	73
2184-1046D153	6840	11
2184-1046D158	1350	85
2184-1046D162	1320	81
2184-1046D165	6850	27
	6910	13
2184-1046D169	1320	82
2184-1046D177	1310	61
2184-1046D179	1380	39

PART NO.	FIG NO.	KEY NO.
2184-1046D183	6850	26
	6910	29
2184-1046D185	6760	14
2184-1046D188	1310	62
2184-1046D196	6760	11
2184-1046D198	1310	88
2184-1046D211	6910	26
2184-1046D213	1330	67
2184-1046D215	1310	90
2184-1046D219	6990	31
2184-1046D238	6720	34
	6730	34
	6740	34
	6990	33
2184-1046D240	6850	24
	6910	27
2184-1046D245	6840	13
	6840	14
2184-1046D247	1330	69
2184-1046D272	6850	28
2184-1046D275	1340	71
	1340	75
2184-1046D284	1340	72
2184-1046D290	6990	30
2184-1046D291	1330	66
	1330	70
	1340	76
2184-1046D33	6840	12
2184-1046D35	1330	65
2184-1046D44	1330	65
2184-1046D64	6910	14
2184-1046D78	1380	41
	1380	42
2184-1046D79	6910	17
2184-1046D86	1380	40
2184-1060D145	6720	12
	6730	12
	6740	12
2184-1060D147	1370	33
	1370	34
	1370	35
	1370	36
2184-1060D148	6990	34
2184-1060D151	1370	31
	1370	32
2184-1060D154	6720	13
	6730	13
	6740	13
2184-1060D169	1310	56
2184-1060D201	6380	8
2184-1060D26	6910	15
2184-1061D191	1330	83
2184-1061D245	1310	89
2184-1061D364	6850	25
	6910	28
2184-1062D12	6720	19
	6720	20
	6730	19
	6730	20
	6740	19
	6740	20
	6990	35
	6990	36
2184-1070D47	2190	11
2184-1076D103	2190	10
2184-1081D117	1260	35
2184-1081D120	3130	11
	6660	13
2184-1081D129	6370	11
2184-1081D156	6940	5
2184-1081D157	6940	7
2184-1098D56	2190	1
2184-1100D129	3130	29
	6660	14
2184-1100D139	6420	2
2184-1100D149	6440	1
2184-1100D160	6670	3
2184-1100D178	6430	1
	6960	2
2184-1100D237	6420	2
	6950	1
2184-1100D29	3130	12
	6970	1
2184-1100D38	3130	12
	6970	1
2184-1100D76	6370	29
2184-1196D148	7010	2
2184-1196D152	6940	6
2184-1196D161	7020	2
	7030	2
2184-1196D162	6790	2
	6810	2
2184-1196D76	7040	2
2184-1196D77	6800	2
2184-1196D78	6820	2
2184-1197D34	1220	13
2184-1197D5	6670	2
2184-1197D87	6770	7
	6780	7
2184-1198D5	6900	24
2184-1198D67	6940	8
2184-1198D68	7010	3
2184-1202D77	6990	38
2184-1229D10	6900	22
2184-1229D6	6900	21
2184-1250D85	1270	31
2184-1267D10	1360	26
2184-1267D9	1360	25
2185-1247D122	1180	17
	1180	17
	6110	8
2185-1247D148	6100	9
2185-1247D25	6110	8
2185-1247D26	6110	13
2185-1247D31	1180	30
2185-1308D5	1780	35
2185-1671A	1160	9
2185-1681D4	1720	32
2185-1698D4	1760	27
2185-1703B	1760	17
2185-1724	1160	4
2185-1736D2	1760	26
2185-1737D1	1220	4
2185-1776D1	1230	35
218550	4100	214
2186-9003	1780	36
2188-9008	1190	12
2190-2036D10	6140	4
	6150	4
2190-2036D11	1660	11
2190-2036D12	1660	12
2190-2036D13	1660	13
2190-2036D23	1660	14
2190-2036D24	1660	10
2190-2036D25	6200	2
2190-2037D19	1650	33
2190-2037D20	1650	34
2190-2037D56	1650	35
2190-2314D3	5130	27
	5150	26
2190-2476	5130	15
	5150	24
2190-2477	5130	16
	5150	25
2190-2480	5140	4
2190-2524	5120	7
2190-2533A	5150	23
2190-2556D106	5150	10
2190-2584D13	6160	2
2190-2584D14	6130	2

PART NO.	FIG NO.	KEY NO.
2190-2584D14	6140	2
2190-3231D26	1650	10
2190-3244D11	5120	15
	5140	13
2190-3244D12	5120	16
	5140	14
2190-3297	5120	2
	5140	2
2190-3309	5120	3
	5140	3
2190-3379	5150	3
2190-3379A	5150	3
2190-3383	5140	15
2190-3384	5140	11
2190-3386A	5140	7
2190-3602	6830	1
2190-3603	6830	2
2191-1067D180	7020	21
	7030	21
	7040	21
2191-1799D78	7020	20
	7030	20
	7040	20
2191-4689	6940	27
219362	4100	123
219363	4100	124
2195-1534	1720	27
2195-2394B	3100	19
	6360	19
	6630	19
	6890	19
2195-2534C	1100	13
2195-3500	1740	17
	1750	17
2197-1639A	1490	26
2197-1660	1740	20
	1750	20
	7050	3
2197-1661	1310	5I
	1740	21
	1750	21
2197-1704A	1470	13
2197-1711	1480	35
2197-1740B	6130	5
2197-1741A	1450	11
2197-1744A	1470	15
2197-1777A	1300	1
2197-1793	1710	55
2197-1798B	1760	8
2197-1798C	1760	8
2197-1818	6910	24
2197-2561	6110	10
2198-1054	1520	8-5
2198-1055	1490	11
2198-1058	1490	10
2199-1004	5100	1-14
2199-1005	5100	1-15
2199-1063F9B	5100	1
2199-9007	5100	4
2199-9008	5100	3
2199-9009	5100	1-22
2199-9043	5100	1-1
2199-9058	1500	88
220016	4100	732
220019	4100	702
2204-6039A	1760	28
2204-9014A	1160	14
2204-9032	6240	1
2204-9032A	6240	1
2204-9039A	1160	1
	1165	-
2208-6013B	1760	4
2213-1095	1440	2
2213-1097	1440	1
2213-1098A	1450	7
2213-1099B	1450	8
2213-9002	1440	5
2220-1013	2120	6-1A
2220-1028A	2150	7G
2229-1003A	2140	9I
2230-1036B	4140	20
2230-1037A	4140	10
224308	4100	490
	4150	354
225118	4150	384
	4160	27
225680	4130	444
225681	4130	443
2270-1001B	2140	9N
2270-1005E	2140	9
2270-1063	2120	6-1B
2270-1098A	2150	7
2270-1099A	2150	7A
2270-1108A	2120	6
2270-1108B	2120	6
2270-6098	2120	6-1
2270-6098A	2120	6-1
2271-1002A	2140	9A
2271-1004	2120	6-1E
2271-1037A	2150	7C
2272-6104L	2160	8-1B
	6280	1B
	6290	1B
	6300	1B
	6310	1B
	6320	1-2
	6330	1-2
	6340	1-2
	6350	1-2
2272-6104R	2160	8-1A
	6280	1A
	6290	1A
	6300	1A
	6310	1A
	6320	1-1
	6330	1-1
	6340	1-1
	6350	1-1
2272-6105L	2160	8-1D
	6280	1D
	6290	1D
	6300	1D
	6310	1D
	6320	1-4
	6330	1-4
	6340	1-4
	6350	1-4
2272-6105R	2160	8-1C
	6280	1C
	6290	1C
	6300	1C
	6310	1C
	6320	1-3
	6330	1-3
	6340	1-3
	6350	1-3
2272-6106D2	6280	-
2272-6106D3	6290	-
2272-6106D4	6300	-
2272-6137	2160	8-1
	6280	1
	6290	1
	6300	1
	6310	1
2272-9032D1	2160	8
2273-1050	6310	2
2273-6040D1	2160	8-2
	6320	2
2273-6040D2	6280	2
	6330	2

PART NO.	FIG NO.	KEY NO.
2273-6040D3	6290	2
	6340	2
2273-6040D4	6300	2
	6350	2
2273-7051	6310	-
2274-1008BKT	2130	*
2274-1025E	2130	5
228558	4160	19
228561	4160	31
228565	4160	35
228569	4150	135
228570	4150	139
228574	4150	379
228576	4150	211
228577	4150	217
228578	4150	220
228582	4150	385
229-00012A	1170	2
229124	4160	22
229125A	4160	23
229126	4160	21
229127	4150	149
229128	4150	150
230-00050	4140	50
230-00051	4140	51
230-00060A	4141	20
230-00061	4141	10
23-0146	4420	50
2312-1004A	6630	24
233457	4130	51
238795	4130	491
2400-1784A	3140	-
2400-1993	6440	-
2400-1994	6430	-
2400-2048	6670	-
2400-2049	6680	-
2400-2071A	6380	-
2400-2092	6420	-
2400-2136	6810	-
2400-2137	6800	-
2400-2138	6820	-
2401-1276KT	6100	1E
2401-9082K	4151	900
2401-9223KT	4100	*
2401-9242KT	4130	*
2401-9287A	2110	3
	4150	-
	4160	-
2401-9287KT	4150	*
2403-1002	1100	8
2403-1002	2100	13
2404-1063I	1200	1AB
	4140	-
2404-1063J	1200	1AB
	4140	-
2409-1010	2130	5F
2411-1001	2130	5C
	2131	5C
2412-1040	4140	3
	4141	3
2414-9008A	1170	3
2415-1014	1440	12
2415-1015A	1450	9
2415-1018	1720	31
2415-9007	1440	18
2420-1242A	2130	5I
	2131	5I
2420-1258	6100	11A
2420-9158P	6910	10
2420-9365	4195	-
	6900	1
2420-9627A	6770	14
	6780	14
	7010	5
2420-9627B	6770	14
	6780	14
	7010	5
2420-9628A	6790	8
	6800	8
	6810	8
	6820	8
	7020	8
	7030	8
	7040	8
	7060	15
2422-6021	1165	6
2423-1407	1270	6
	1290	6
2423-1470	1380	8
2423-1496E	4140	1
2423-1496G	4140	1
	4141	1
2423-1554A	1250	11
2423-1556	1250	10
2426-1175	1210	8
2426-1237	1310	5D
	1310	5D
2426-6048	1770	31H
2426-9039B	1320	25
	4240	-
2426-9039C	1320	25
	4240	-
2440-1055B	2130	5K
	2131	5K
2440-6493C	4320	-
	6720	31
	6730	31
	6740	31
	6990	1
2440-9141	1580	20
2440-9142	1580	20
2440-9233B	4290	-
	6670	1
2440-9233KT	4290	*
2440-9234KT	4330	*
	4340	*
	4360	*
	4370	*
2440-9236B	3130	3
	4270	-
	6370	3
	6660	3
	6940	4
2440-9236KT	4270	*
	4320	*
2440-9251	1510	75
2440-9339KT	4280	*
2444-1015A	2130	5L
	2131	5L
2460-9060	1320	27
2470-9016	1130	9
2471-1135	1380	20
2471-1152	6100	11B
2471-1154	1310	5C
	1310	5C
	5110	2
2471-1155A	1310	5E
2471-1158	6120	-
2471-6050A	1770	31G
2471-6062	6120	1
2471-6063	6120	2
2471-9046	1190	11
2471-9053	6110	1
2471-9062	1310	5
2472-7003	1310	5B
	1310	5B
2473-1080A	1210	5
2473-1088B	1210	12
2474-7009	1170	3B
2474-7009K	1170	3H

PART NO.	FIG NO.	KEY NO.
2474-9016A	1210	17
2474-9053A	1165	3
	5110	3
2474-9054A	1165	2
	5110	4
2474-9060A	5110	6
2474-9404A	1210	9
	5110	1
2480-6002	2170	10-1
2480-6043	2170	10
2480-6043KT	2170	*
2481-6007	2170	10-2
2482-6002	2170	10-3
2502-9007B	1710	45
2506-1104	1700	1
2510-1010	1690	23
	1690	26
2512-1095D1	5110	10
2512-1118B	1640	1
2514-1005	1700	3
2514-1013	1480	114
2515-1016D4	1720	33A
	5110	17
	6140	7A
2515-1022D1	1720	34A
	5110	16
	6130	4A
	7050	1A
2516-1116	1650	23
2520-6007C	1760	18
2523-9016	1300	13
2527-1016	1690	23A
	1690	26A
	5110	19
2527-1017	1690	23B
	1690	26B
	5110	20
2527-1018	1690	23C
	1690	26C
	5110	21
2527-1023A	1700	15
	5110	23
2527-1025	1690	23D
	1690	26D
	5110	22
2527-9004	1700	13
2528-9040	1660	15
2530-1400	6180	3
2530-1423A	6160	9
2530-1609D14	7050	2
2530-1609D9	6380	30
2530-1611	6130	9
2530-6005A	1770	31J
2531-1003	1650	17
	1650	20
2534-1127	6130	4
2534-1160	7050	1
2534-9063	1500	62
2537-9008	1650	14
2538-6015	1770	31A
2538-6016	1770	31E
2538-6017	1770	31F
2541-6020	1480	47
2541-9020	1450	17
2543-9015	1650	11
2544-1022	1700	23
2544-6023	1770	31C
2544-6024	1770	31D
2544-9024	1700	9
2544-9033	1650	26
	1650	27
	1650	28
	1650	29
	1650	30
	1650	31
	1650	32
	6130	3
	6140	5
	6140	6
	6160	3
	6170	3
2547-1015	1710	44
2547-6033	1770	31I
2547-9035	1720	41
2547-9035A	1720	41
2547-9038B	1710	39
	1720	53
2547-9045	1310	44
	6200	3
2548-1027	1740	3A
	1750	2A
2549-1135D2	6180	1
2549-1152	1670	20
2549-9096	6100	13
2549-9098	1660	9
	6140	3
	6150	3
	6200	1
2549-9109	1660	5
	1660	6
2549-9109	1660	8
	6130	1
	6140	1
	6160	1
	6170	1
2549-9110	1660	7
2549-9112	1330	55
2549-9407	6160	8
2550-1014D1	1730	5
2550-1014D2	1730	6
2552-1004	1670	17
2553-1275D46	1730	10
2553-1275D5	1730	9
	1730	13
2553-1275D69	1730	11
2553-1275D8	1730	12
2554-9005A	1720	26
2621-1428B	2100	15
2621-2752	1360	22
	1370	22
2621-3003B	1570	4F
2621-3498G	1560	5
2621-9002	1680	22
2621-9005	1520	8-19A
	1520	8-25
2622-6014	1520	8-3A
2623-1176B	2100	11
2623-1252A	1450	10
2623-1253C	6270	1
2625-1220D1	6280	5
	6330	5
2625-1220D10	6300	5
	6310	5
	6350	5
2625-1220D3	6290	5
	6340	5
2701-1413A	3100	-
2701-1414N	3100	1
2701-1414P	3100	1
2701-1417A	3110	-
2701-1464B	6400	-
2701-1465K	6400	1
2701-1465L	6400	1
2701-1465M	6400	1
2701-1467	6410	-
2701-1468K	6410	1
2701-1602N	3110	1
2701-1602P	3110	1
2701-1613	6630	-
2701-1614H	6630	1

PART NO.	FIG NO.	KEY NO.
2701-1617	6640	-
2701-1618H	6640	1
2701-1667G	6890	2
2701-1672B	6390	-
2701-1673K	6390	1
2701-1673L	6390	1
2701-1677A	6360	-
2701-1678J	6360	1
2701-1678K	6360	1
2704-1365G	3120	-
2704-1365H	3120	-
2704-1380H	6650	-
2704-1380I	6650	-
2704-1386B	6450	-
2704-1386C	6450	-
2704-1388B	6460	-
2704-1388C	6460	-
2704-1392B	6480	-
2704-1392C	6480	-
2704-1394B	6490	-
2704-1394C	6490	-
2704-1396C	6500	-
2704-1396E	6500	-
2704-1604	6470	-
2704-1604A	6530	1
2704-1632A	6530	-
2704-1642	6610	-
2704-1643	6610	1
2704-1645	6510	-
2704-1646	6510	1
2704-1648	6550	-
2704-1649	6550	1
2704-1675	6520	-
2704-1676	6520	1
2704-1678	6540	-
2704-1679	6540	1
2704-1681	6560	-
2704-1682	6560	1
2704-1684	6620	-
2704-1685	6620	1
2705-1020	3120	3
	6450	3
	6460	3
	6470	3
	6480	3
	6490	3
	6500	3
	6510	1-3
	6530	1-3
	6550	1-3

PART NO.	FIG NO.	KEY NO.
2705-1020	6570	1-3
	6590	1-3
	6610	1-3
2705-1022	6650	3
2705-1030	4140	19
	4141	19
2705-6033	6520	1-4
	6540	1-4
	6560	1-4
	6580	1-4
	6600	1-4
	6620	1-4
2705-6034	6520	1-3
	6540	1-3
	6560	1-3
	6580	1-3
	6600	1-3
	6620	1-3
2705-9002	1570	4K
	1580	36
2713-1059A	3120	5
	6450	5
	6460	5
	6480	5
	6490	5
	6500	5
	6510	2
	6520	2
	6530	2
	6540	2
	6550	2
	6560	2
	6570	2
	6580	2
	6590	2
	6600	2
	6610	2
	6620	2
2713-1060A	3120	6
	6450	6
	6460	6
	6480	6
	6490	6
	6500	6
	6510	3
	6520	3
	6530	3
	6540	3
	6550	3
	6560	3

PART NO.	FIG NO.	KEY NO.
2713-1060A	6570	3
	6580	3
	6590	3
	6600	3
	6610	3
	6620	3
2713-1217	3120	2
	6450	2
	6460	2
	6480	2
	6490	2
	6500	2
2713-1218	3120	1A
	6450	1A
	6460	1A
	6470	1-1
	6480	1A
	6490	1A
	6500	1A
	6510	1-1A
	6530	1-1A
	6550	1-1A
	6570	1-1A
	6590	1-1A
	6610	1-1A
2713-1221A	6650	2
2713-1222A	6650	1A
2713-1228A	6650	5
2713-1229A	6650	6
2713-1269	6470	2
2713-6078	6520	1-1A
	6540	1-1A
	6560	1-1A
	6580	1-1A
	6600	1-1A
	6620	1-1A
2713-9061	6520	1-2
	6540	1-2
	6560	1-2
	6580	1-2
	6600	1-2
	6620	1-2
272-00054	6320	1
	6330	1
	6340	1
	6350	1
273-00096	6320	-
273-00097	6330	-
273-00098	6340	-
273-00099	6350	-

PART NO.	FIG NO.	KEY NO.
2731-6002	1520	8-3E
2731-6003	1520	8-3G
274-00011	2131	5
2891-1101	1550	3I
	1560	2I
2891-1265	1640	4
2891-1266A	1640	2
2891-1267	1640	3
2891-1268	1640	5
2891-1311	1520	8-30
2891-1323	1480	57
2891-1421B	4140	5
	4141	5
2903-1212	1490	6
2903-1213	1490	7
2903-1214	1520	8-2
2903-1219A	1520	8-23
2903-1220	1520	8-24
2903-9012A	1460	10
	1570	25
2906-9005	1440	11
2920-6111	1770	31K
2920-6112	1770	31L
3390-101	4195	5
3501-755	4195	1
3503-181	4195	11
3510-825	4195	2
3513-108	4195	3
3526-337	4195	8
3526-418	4195	9
3531-109	4195	10
3537-250	4195	16
3590-306	4195	12
400-00040	6790	-
400-00377	6960	-
400-00378	7030	-
400-00384A	6980	-
400-00388	6970	-
400-00388A	6970	-
400-00389	6950	-
400-00390	7040	-
400-00391	7020	-
400-00753A	6860	-
400-00754A	6870	-
400-00833	1630	-
400-00852A	1310	-
	1330	-
	1340	-
	1350	-
400-00852B	1320	-
400-00853A	1360	-
	1370	-
	1380	-
400-00854A	1250	-
	1260	-
	1270	-
	1280	-
	1290	-
400-00855A	1220	-
	1230	-
	1240	-
400-00978	6750	-
400-00980B	1150	-
400-00981A	6760	-
400-01008	6780	-
400-01009A	6730	-
400-01060	3130	-
400-01060A	3130	-
400-01061	6660	-
400-01062	6370	-
400-01065	2190	-
400-01065A	2190	-
400-01192	6720	-
400-01193	6740	-
400-01206	6770	-
400-01257	6850	-
400-01258	6840	-
400-01293	6910	-
400-01299	6900	-
400-01341	7000	-
400-01342	7010	-
400-01401	6940	-
400-01402	6990	-
401-00238	6100	1
401-00280A	1170	-
401-00289B	1200	-
401-00289C	1200	-
401-00290A	1200	1A
401-00290B	1200	1A
401-00290C	1200	1A
401-00325B	1200	1
401-00325C	1200	1
401-00325E	1200	1
401-00325G	1200	1
401-00339	6100	-
401-00356A	1170	1
	4100	-
401-00391	1200	1AA
	4130	-
401-00391A	1200	1AA
401-00391A	4130	-
401-00454	2110	3
	4151	-
	4161	-
401-00454A	2110	3
	4151	-
	4161	-
401-00454B	2110	3
	4151	-
	4161	-
401-00454C	2110	3
	4151	-
	4161	-
407-00001	6100	1D
409-00049	4430	94-2
409-00050	4430	94-4
411-00005	4151	265
415-00037	4420	63
415-00039	1440	13
4161-9067	1110	32
420-00004A	6720	1
	6730	1
	6740	1
	6990	2
420-00030	1380	4
	4220	-
420-00226	6720	21
	6730	21
	6740	21
	6990	16
420-00246	4430	67
420-00257	4410	68
420-00258	4196	5
	4410	69
420-00259	4420	70
420-00261B	1230	22
420-00277	6870	6
420-00295	1250	1
	4170	-
	4180	-
	4190	-
420-00295KT	4170	*
	4410	*
420-00304	1230	27
420-00307	1330	10
420-00309	4430	94
420-00314	4430	20
420-00322C	4390	-
	6850	1
420-00340	4400	-

PART NO.	FIG NO.	KEY NO.
420-00340	6760	1
420-00340A	4400	-
	6760	1
420-00340B	4400	-
	6760	1
420-00342A	1360	1
	4200	-
420-00342B	1360	1
	4201	-
420-00343A	1370	2
	4200	-
420-00343B	1370	2
	4201	-
420-00344A	4210	-
	6250	1
420-00345A	4210	-
	6250	2
420-00347	4225	-
	6840	1
	6910	1
420-00348	6250	-
420-00352D1	1330	96
420-00370	6850	4
	6910	4
420-00393	4430	21
421-00019	6750	8
	7000	8
4215-1003D6	1230	56
422-00027A	1210	21
422-00031	4151	263
422-00041	1230	22
423-00032	6440	4
423-00065	6940	37
423-00066	7010	8
423-00096	4420	1
423-00097	4420	13
423-00107	4430	94-3
423-00114A	1230	21
423-00150	6750	9
	7000	9
423-00171	6750	2
	7000	2
423-00185B	6900	2
423-00190	7000	3
424-00115	4420	6
424-00123	4420	17
424-00185	4420	2
424-00187	4420	16
424-00191	4420	3
424-00194	4420	15
424-00196	4420	14
424-00199	4420	4
424-00201	4420	5
425-00015	4430	94-6
426-00163	1320	20
	4230	-
426-00163A	1320	20
	4230	-
426-00168	4410	32
426-00169	4430	34
426-00170	4430	38
426-00171	4430	44
426-00172	4430	49
426-00173	4430	51
426-00182	4430	94-7
426-00231	4410	-
	4420	-
	4430	-
430-00033	4420	8
430-00035	4420	12
430-00038	4430	18
430-00042	4430	46
430-00045	4430	94-1
440-00059	3130	4
	4280	-
	6960	1
440-00059A	3130	4
	4280	-
	6960	1
440-00094	4330	-
	6940	1
440-00095	4340	-
	6940	2
440-00182A	4360	-
	6990	13
440-00183A	4370	-
	6990	14
440-00184KT	4350	99
	4380	*
440-00355A	3130	1
	4250	-
	6370	1
	6660	1
440-00355AKT	4250	*
	4260	*
	4300	*
	4310	*
440-00356A	3130	2
	4260	-
	6370	2
440-00356A	6660	2
440-00360A	4300	-
	6720	29
	6730	29
	6740	29
440-00361A	4310	-
	6720	30
	6730	30
	6740	30
440-00398	4290	-
	6670	1
440-00444	4380	-
	6990	15
440-00454	4350	-
	6940	3
444-00010	2131	5F
470-00088C	1190	1
470-00088E	1190	1
470-00088G	1190	1
470-00088H	1190	1
470-00089A	1180	-
	1190	-
470-00091E	1210	1
470-00091G	1210	1
470-00091H	1210	1
470-00092A	1210	-
471-00075A	1310	5
471-00082	1180	25
471-00082A	1180	25
471-00093	5110	5
471-00097	6110	-
471-00105	1190	11
471-00118	1320	98
4713-4004A	6690	2
	6700	2
473-00033	1190	4
500-00081	6190	-
500-00134	6200	-
500-00145A	1650	-
500-00145B	1650	-
500-00146A	1660	-
	1670	-
	1680	-
	1690	-
500-00146C	1660	-
	1670	-
	1680	-
	1690	-
500-00146G	1660	-
	1670	-

PART NO.	FIG NO.	KEY NO.
500-00146G	1680	-
	1690	-
500-00146H	1660	-
	1670	-
	1680	-
	1690	-
500-00146I	1660	-
	1670	-
	1680	-
	1690	-
500-00147	1700	-
	1710	-
	1720	-
500-00148	1730	-
	1740	-
	1750	-
500-00228	6200	-
502-00003A	6190	1
507-00005	1480	48
512-00031	1640	-
515-00012A	1660	1B
	5110	15
515-00013	6140	18A
	6150	18A
516-00011	6160	4
	6170	4
516-00014	1720	35
516-00015	1720	36
516-00016	6160	-
516-00017	6170	-
523-00006	1300	12
523-00012	6100	1C
527-00006	1670	21
530-00105	6250	3
530-00123	6190	3
530-00150	1670	37
530-00190A	1740	3
530-00205	1670	34
530-00206	1680	35
530-00207A	1650	36
530-00208A	1650	37
530-00208B	1650	37
530-00209	1660	33
530-00212	1480	56
530-00213	1690	36
530-00213A	1690	36
530-00214	6100	19
530-00231A	1660	32
530-00232	6760	17
530-00235	6140	26
530-00236	1310	5H
530-00237	6140	27
	6150	27
530-00238A	6150	29
530-00248	6140	28
	6150	28
530-00249	6140	30
530-00251	1480	108
530-00256	6200	4
530-00259A	1750	2
530-00259B	1750	2
530-00287	6850	31
	6910	20
530-00311D3	1750	4
534-00042	7050	-
534-00062	6140	18
	6150	18
534-00063	1720	33
534-00064	1720	34
534-00065	6130	-
534-00066F2	6140	-
534-00066F4	6150	-
534-00077	6140	7
537-00074	1490	123
537-00078	1490	123B
538-00009	1480	43
539-00048C	1660	1
539-00048E	1660	1
539-00048G	1660	1
53A288-2	4270	1
53A292-2	4270	3
	4320	3
53A295-1	4270	5
	4320	5
53A296-1	4270	39
53A304-0	4270	16
	4320	16
53A379-0	4270	13
	4320	13
53A387-0	4280	21
53A411-1	4320	39
53A531-1	4320	1
53A551-0	4270	31
	4320	31
53A563-0	4270	35
	4320	35
53B238-0	4330	4
	4340	4
	4360	4
	4370	4
53B315-0	4270	21
	4320	21
53B382-2	4370	29
53B393-1	4250	16
	4260	16
	4300	16
	4310	16
	4330	16
	4340	16
	4360	16
	4370	16
53B394-2	4250	5
	4260	5
	4300	5
	4310	5
	4330	5
	4340	5
	4360	5
	4370	5
53B422-0	4250	21
	4260	21
	4300	21
	4310	21
	4330	21
	4340	21
	4360	21
	4370	21
53B423-0	4280	13
	4330	13
	4340	13
	4360	13
	4370	13
53B423-1	4250	13
	4260	13
	4300	13
	4310	13
53B625-0	4330	1
	4340	1
	4360	1
	4370	1
53B626-0	4330	3
	4340	3
	4360	3
	4370	3
53B627-1	4340	33
53B628-1	4330	33
53B629-1	4340	37
53B630-1	4330	37
53B637-0	4330	29
	4340	29

PART NO.	FIG NO.	KEY NO.
53B637-0	4360	25
	4370	25
53B658-0	4330	25
	4340	25
53B683-2	4360	29
53B704-0	4250	3
	4260	3
	4300	3
	4310	3
53B823-0	4370	30
53B824-1	4360	30
53B846-0	4250	1
	4260	1
	4300	1
	4310	1
53B847-0	4250	25
	4260	25
	4300	25
	4310	25
53B848-0	4260	29
53B849-0	4250	29
53B852-0	4310	29
53B853-0	4300	29
53B875-0	4260	33
	4310	30
53B876-0	4250	33
	4300	30
53U256-0	4290	30
53U258-0	4290	10
53U258-1	4290	10
53U259-0	4290	22
53U259-1	4290	22
53U295-2	4290	1
53U301-0	4290	2
	4290	4
53U302-2	4290	3
53U302-5	4290	3
53U306-2	4290	14
53U307-1	4290	5
53U307-2	4290	5
53U309-2	4290	12
53U310-1	4290	29
53U334-2	4280	29
53U470-1	4280	1
53U474-0	4280	3
53U474-3	4280	3
53U477-1	4280	5
53U478-0	4280	16
53U481-0	4280	36
53U508-0	4280	25
541-00005	1500	77
541-00014	1690	29
541-00014A	1690	29
543-00049	1760	1
543-00055A	1650	2
543-00074	1650	6
544-00007	1710	16
545-00001	1660	16
545-00003	1770	31B
548-00003	1750	2B
549-00010	6840	10
	6910	35
549-00023	6180	-
549-00046	1390	33
549-00210	1670	20
549-00210A	1670	20
563-00016	1490	123A
599-00044	1750	1
599-00044A	1750	1
600-00119	1100	-
600-00119A	1100	-
600-00119B	1100	-
603-00226C	1100	1
603-00226E	1100	1
603-00226G	1100	1
603-00306	6270	14
604-00036C	2100	1
604-00036H	2100	1
604-00168	2100	-
	2110	-
	2130	-
	2131	-
	2140	-
	2150	-
	2160	-
	2170	-
	2180	-
604-00168A	2120	-
621-00340	1440	9
621-00443	6940	26
621-00503A	7010	16
621-00504A	7010	17
621-00564	1470	29
621-01159	1470	32
621-01160	1470	37
621-01495	6220	1
621-01507	6210	3
	6920	4
621-01527A	1100	19
621-01575	1550	3J
621-01575	1560	2J
621-01579A	1100	23
621-01667	1510	23
621-01668	1510	23A
621-01755A	1450	5
621-01811	1290	49
621-01822	1390	7
	1400	7
621-01823	1390	8
	1400	8
621-01824	1410	38
621-01825	1410	41
621-01826	1400	10
621-01827	1390	9
621-01839	1450	1
621-01840	1450	3
621-01841	1450	4
621-01849	1440	8
621-01850	1390	24
	1400	24
621-01859A	1440	6
621-01860	1440	7
621-01873	1440	14
621-01874	1440	15
621-01875	1440	16
621-01876A	1570	4
621-01876B	1570	4
621-01876C	1570	4
621-01876E	1570	4
621-01876G	1570	4
621-01877A	1570	4B
621-01877B	1570	4B
621-01877C	1570	4B
621-01877E	1570	4B
621-01877G	1570	4B
621-01881A	1620	-
621-01882A	1620	2
621-01883	1620	3
621-01884B	1620	4
621-01885C	1440	-
621-01886C	1620	5
621-01888B	1620	6
621-01893B	1160	11
621-01893C	1160	11
621-01894	1570	4A
621-01896A	1600	-
621-01897A	1600	1
621-01897B	1600	1
621-01898B	1600	2
621-01898C	1600	2

PART NO.	FIG NO.	KEY NO.
621-01898E	1600	2
621-01901C	1600	4
621-01902B	1600	5
621-01903C	1600	6
621-01904C	1600	8
621-01908	1440	20
621-01912B	1550	3
621-01912C	1550	3
621-01912E	1550	3
621-01912G	1550	3
621-01912H	1550	3
621-01913C	1590	6
621-01915A	1550	-
	1560	-
	1570	-
	1580	-
	1590	-
621-01916A	1590	9
621-01917C	1450	-
621-01917E	1450	-
621-01917G	1450	-
621-01920B	1470	2
621-01923	1450	20
621-01924	1450	2
621-01938A	1610	5
621-01940A	1610	10
621-01941B	1610	11
621-01941C	1610	11
621-01941E	1610	11
621-01941G	1610	11
621-01944	1550	3B
621-01944A	1550	3B
621-01944B	1550	3B
621-01944C	1550	3B
621-01944E	1550	3B
621-01945A	1600	9
621-01946A	1600	11
621-01951	1390	32
621-01952	1640	6
621-01956	6230	1
621-01957	6230	-
621-01984	1440	28
621-01990	1480	38
621-01991	1480	92
621-02000	1590	35
621-02019	1600	3
621-02019A	1600	3
621-02072A	6210	2
	6920	2
	6930	2
621-02072B	6210	2
	6920	2
	6930	2
621-02074	2180	16
621-02077	6210	-
621-02133A	1620	1
621-02151	1380	48
	6910	42
621-02162B	1590	7
621-02164A	1600	7
621-02176B	1560	2
621-02176C	1560	2
621-02176E	1560	2
621-02176G	1560	2
621-02176H	1560	2
621-02177A	1560	2B
621-02177B	1560	2B
621-02177C	1560	2B
621-02177E	1560	2B
621-02177G	1560	2B
621-02260	1580	1
621-02260A	1580	1
621-02266	1140	40
621-02363	1140	40
621-02364	1140	45
621-02374	6240	2
621-02374A	6240	2
621-02374B	6240	2
621-02473	6270	7
621-02473A	6270	7
621-02495	1550	3C
621-02495A	1550	3C
621-02495B	1550	3C
621-02495C	1550	3C
621-02548	1250	61
621-02555	6880	1A
621-02555A	6880	1A
621-02555B	6880	1A
621-02555C	6880	1A
621-02555E	6880	1A
621-02555G	6880	1A
621-02556	6880	1
621-02556A	6880	1
621-02556B	6880	1
621-02556C	6880	1
621-02556E	6880	1
621-02556G	6880	1
621-02557	6880	2A
621-02557A	6880	2A
621-02557B	6880	2A
621-02557C	6880	2A
621-02557E	6880	2A
621-02557G	6880	2A
621-02558	6880	2
621-02558A	6880	2
621-02558B	6880	2
621-02558C	6880	2
621-02558E	6880	2
621-02558G	6880	2
621-02559	6880	3
621-02628	6880	-
621-02929	6920	-
621-02930	6930	-
621-03020	2131	5Q
621-03661	1620	9
621-03665	1620	10
622-00177J	1470	1-1
	1480	-
	1490	-
	1500	-
	1510	-
	1520	-
622-00177K	1470	1-1
	1480	-
	1490	-
	1500	-
	1510	-
	1520	-
622-00177L	1470	1-1
	1480	-
	1490	-
	1500	-
	1510	-
	1520	-
622-00177M	1470	1-1
	1480	-
	1490	-
	1500	-
	1510	-
	1520	-
622-00177N	1470	1-1
	1480	-
	1490	-
	1500	-
	1510	-
	1520	-
622-00177Q	1470	1-1
	1480	-
	1490	-
	1500	-

PART NO.	FIG NO.	KEY NO.
622-00177Q	1510	-
	1520	-
622-00191B	1480	2
622-00191C	1480	2
622-00194B	1480	2-1
622-00194C	1480	2-1
622-00197H	1470	-
622-00197L	1470	-
622-00197M	1470	-
622-00197N	1470	-
622-00197P	1470	-
622-00197R	1470	-
622-00219A	1520	8
622-00219B	1520	8
622-00219C	1520	8
622-00219G	1520	8
622-00242	1520	8-1
622-00296	1460	-
622-00297	1470	1
622-00297A	1470	1
622-00297B	1470	1
622-00297C	1470	1
622-00297E	1470	1
622-00297H	1470	1
622-00309	1470	50
622-00309C	1470	50
622-00309E	1470	50
622-00309G	1470	50
623-00023	1490	102
623-00024	1490	102A
623-00043	6220	-
624-00038B	1100	2
624-00038C	1100	2
624-00038E	1100	2
624-00059	6710	1
65.01101-0030F	001	2
65.01101-0030G	001	2
65.01101-0030H	001	2
65.01101-0030I	001	2
65.01101-6079	001	1
65.01101-6079A	001	1
65.01101-6079B	001	1
65.01101-6079C	001	1
65.01101-6079D	001	1
65.01105-1047	001	5
65.01105-1047A	001	5
65.01105-1048	001	3
65.01105-1048A	001	3
65.01110-6090B	001	27
65.01110-6091B	001	27
65.01110-6092B	001	27
65.01112-0021A	001	23
65.01112-5018	001	24
65.01150-6008	001	28
65.01150-6010A	001	28
65.01150-6034A	001	28
65.01150-6035A	001	28
65.01201-0067	001	31
65.01201-0068	001	31
65.01201-0069	001	31
65.01201-0070	001	31
65.01201-0071	001	31
65.01304-0003C	002	1
65.01305-5074	002	7
65.01305-5074A	002	7
65.01307-0002B	002	17
65.01401-0119	003	1
65.01510-0001	002	29
	020	5
65.01510-0101	003	15
	020	9
65.01601-5010A	001	46
65.01801-0011	005	204
65.01801-5035	005	223
65.01801-5035A	005	223
65.01810-5007	005	220
65.01810-5011	005	220
65.01901-0020	001	36
	020	2
65.01903-0002C	002	31
	020	6
65.01903B0003	002	33
	020	7
65.01903B0004	002	34
	020	8
65.01904-0021	003	16
	020	10
65.02101-0045A	004	103
65.02101-6018A	004	101
65.02115-0009	004	104
65.02120-0002	004	108
65.02122-0001	004	503
65.02301-0245A	004	204
65.02301-5099A	004	201
65.02310-0006	004	202
65.02401-0163D	004	306
65.02401-6021	004	301
65.02405-0006	004	307
65.02410-6083	004	308
65.02410-6083B	004	308
65.02410-6124B	004	308
65.02410-6125B	004	308
65.02411-0006A	004	305
65.02501-0410	004	401
65.02501-0416	004	401
	004	402
65.02501-0417	004	403
65.02501-0418	004	403
65.02501-0440	004	401
65.02501-0443	004	402
65.02501-0444	004	403
65.02501-0445	004	403
65.02502-0082A	004	412
65.02503-0099	004	404
65.02503-0114	004	406
65.02503-0116	004	405
65.02503-0137	004	404
65.02503-0138	004	405
65.02601-5019	004	501
65.03101-1038	005	102
65.03101-1043C	005	102
65.03101-6069	005	101
65.03101-6071A	005	101
65.03101-6071B	005	101
65.03201-1013	005	104
65.03201-1013A	005	104
65.03203-1019	005	106
65.03203-1020	005	105
65.03203-1053	005	106
65.03203-1054	005	105
65.03401-0061A	005	202
65.03401-6057A	005	201
65.03401-6064	005	201
65.03401-6064A	005	201
65.03401-6094	005	202
65.03401-6097	005	201
65.03901-0066	005	125
65.03901-0066A	005	125
	019	1
	020	11
65.03903-0001	005	205
	019	5
	020	15
65.03905-0002B	005	203
	019	4
	020	14
65.03905-0023	005	212
65.03905-0023A	019	3
	020	13
65.04101-0025A	006	102

PART NO.	FIG NO.	KEY NO.
65.04101-0032	006	101
65.04102-0005	006	103
65.04103-0001B	006	104
65.04103-0002	006	105
65.04104-0001	006	106
65.04200-6019C	006	201
65.04200-6019D	006	201
65.04201-5002B	006	202
65.04201-5002C	006	202
65.04202-0003C	006	211
65.04202-0009	006	210
65.04203-5008C	006	208
65.04205-0001	006	206
65.04301-0009	006	301
65.04302-5006	006	302
65.04401-0018A	006	401
65.04401-0018B	006	401
65.04410-0006A	001	10
65.04410-0006B	001	10
65.04410-0006C	001	10
65.04410-0007A	001	9
65.04410-0007B	001	9
65.04410-0007C	001	9
65.04410-0007D	001	9
65.04501-0004	006	501
65.04505-5012	006	505
65.04506-0011	006	510
65.04902-0011A	006	107
	019	2
	020	12
65.04902-0015	006	107
	019	2
	020	12
65.05101-7021	007	101
65.05102-0018	007	102
65.05103-0051	007	111
65.05104-0177	007	107
65.05104-6065	007	103
65.05105-0044	007	106
65.05201-0065	007	202
65.05202-0001A	007	204
65.05202-0001B	007	204
65.05207-0006	007	203
65.05401-5002F	001	52
65.05401-5023	001	47
65.05501-7065C	008	10
65.05501-7065D	008	10
65.05501-7076	008	10
65.05503-0033B	008	20
65.05510-5021A	008	15
65.05510-5021B	008	15
65.05510-5028	008	15
65.05601-7056B	009	10
65.05601-7056C	009	10
65.05601-7056D	009	10
65.05601-7056E	009	10
65.05604-0013A	009	11
65.05604-0013B	009	11
65.05606-5024	009	15
65.05701-5200	015	308
65.05701-5341	009	60
65.05701-5342	014	110
65.05701-5343	014	119
65.05701-5636	007	119
65.05701-5636A	007	119
65.05705-6016	007	108
65.05801-5191	010	1
65.05801-5191A	010	1
65.05801-5252	010	1
65.05805-5188A	010	10
65.05805-5188B	010	10
65.05806-5102	010	13
65.05901C0004	008	160
	020	17
65.05902-0025	009	12
65.05902A0005	009	150
	020	18
65.05903A0001	009	140
	020	19
65.05903A0002	007	121
	020	16
65.05903A0013	001	40
	020	3
65.05904A0002	010	29
	020	20
65.06310-0122	001	42
65.06310-6003	001	42
65.06310-6003A	001	42
65.06402-5015	011	4
65.06404-5003B	011	1
65.06404-5032	011	1
65.06405-0012	011	5
65.06405-0012A	011	5
65.06405-0039	011	5
65.06500-6144	012	101
65.06500-6144A	012	101
65.06501-0214	012	102
65.06504-0033	012	106
65.06506-0085	012	107
65.06512-0016	012	108
65.06520-6007	012	103
65.06601-5051	012	201
65.06606-0039	012	115
65.06611-0108	012	203
65.06611-0108A	012	203
65.06901-0003A	012	109
65.06901-0035	012	109
65.06901-0035A	012	109
65.06901B0002	012	116
	020	23
65.06904-0003	011	18
	019	6
	020	21
65.06904A0004	011	17
	019	7
	020	22
65.08101-0199	013	101
65.08101-0274	013	101
65.08120-0025	017	15
65.08120-0026	013	220
65.08120-0027	017	15
65.08120-0042A	017	15
65.08201-5060	013	201
65.08202-0136	013	202
65.08301-6010A	015	305
65.08901-0028	013	107
	019	8
	020	24
65.08902A0004	013	219
	019	9
	020	25
65.09100-7080	014	101
65.09100-7080A	014	101
65.09411-5054	014	201
65.09440-0016	014	204
65.09901-0018A	014	102
	019	15
	020	33
65.09901-0020	014	105
	019	16
	020	34
65.09904-0008	013	204
	019	10
	020	26
65.10101-7090	015	101
65.10101-7092	015	101
65.10101-7099	015	101
65.10101-7099A	015	101
65.10102-6060	015	102
65.10102-6064	015	102

PART NO.	FIG NO.	KEY NO.
65.10102-6069	015	102
65.10301-6085	015	201
65.10301-6086	015	202
65.10301-6088	015	201
65.10301-6089	015	202
65.10301-6202	015	201
65.10301-6203	015	202
65.11101-7384	015	301
65.11101-7391	015	301
65.11401-0002C	015	406
65.11596-0001	015	303
65.11596-0002	015	304
65.11902A0001	015	411
	020	29
65.12301-5022	015	501
65.12301-5824	015	507
65.12301-5825	015	510
65.12501-7023	016	1
65.12501-7023A	016	1
65.12503-5016	016	4
65.12503-5016A	016	4
65.12504-5013A	016	2
65.12504-5013B	016	2
65.19102-0013B	017	1
65.19103-6010	017	5
65.19103-6010A	017	5
65.19107-0001	017	11
65.19107-0001A	017	11
65.19202-0005	005	133
65.19202-5005	005	124
65.26201-7044	018	1
65.26201-7076	018	1
65.26803-7028	013	203
65.26803-7028A	013	203
65.26803-7028B	013	203
65.26815-0002	005	132
65.27441-7006	001	53
65.29101-5001	018	3
65.90001-0162	008	120
65.90020-0049	001	25
65.90020-0066A	001	8
65.90021-0002	005	120
	005	120
65.90021-0003	005	121
65.90021-0004	005	122
	005	122
65.90201-0037	011	7
65.90201-0058	001	20
65.90201-0066	009	55
65.90201-0081	006	216
65.90201-0096	014	106
65.90201-0099	015	108
65.90201-0103	009	56
65.90201-0168	018	6
65.90201-0182	001	54
65.90302-0009	001	11
65.90302-0011	005	112
65.90302-0015	005	107
65.90302-0016	005	108
65.90302-0017	005	113
65.90302-0019B	005	109
65.90302-0027	005	111
65.90302-0030	005	108
65.90302-0041	001	12
65.90302-0042	001	13
65.90302-0045	005	110
65.90310-0030	001	15
65.90310-0036A	008	30
65.90310-0050B	010	2
65.90310-0135	001	38
65.90310-0143	016	5
65.90320-0019	001	17
	011	16
65.90320-0022	001	19
65.90350-0005	008	80
65.90441-0009A	017	10
65.90501-0006	004	109
65.90501-0013	006	207
65.90501-0028	005	210
65.90701-0059	006	503
65.90701-0202	005	211
65.90720-0016	006	511
65.90815-0007	004	413
65.91305-0007	007	114
65.91501-0006	004	110
65.91605-0001E	001	21
65.91615-0011	001	29
65.91701-0029	013	222
65.91701-0086	010	17
65.91710-0001	001	7
65.91710-0004	005	119
65.91710-0012	007	112
65.93020-0015	004	106
65.93020-0055	017	12
65.93410-0027	012	104
65.96301-0045C	011	19
65.96301-0176	015	511
65.96301-0279	014	202
65.96301-0280A	014	122
65.96301-0354	005	218
65.96341-0080	015	515
65.96341-0100	015	502
	015	515
65.96341-0107	015	502
65.96401-0007	003	11
65.96501-0032B	005	224
	019	14
	020	32
65.96507-0007	001	26
	020	31
65.96507-0043	015	504
	015	506
65.96507-0044A	015	104
65.96507-0044B	015	104
	019	11
	020	27
65.96507-0047	015	106
65.96507-0050	015	106
	019	12
	020	28
65.96601-0045A	014	120
	019	17
	020	35
65.96601-0058	007	118
65.96601-0067	014	120
	019	17
	020	35
65.96801-0124	012	209
65.96801-0124A	012	209
65.97401-0050	001	55
65.97401-0089	015	512
65.97401-0179	005	228
65.97460-0002	015	513
65.97480-0135	014	117
65.97480-0223	018	4
65.97601-0045	008	50
65.97601-0048	006	212
65.97601-0090	007	115
65.98112-0009	006	403
65.98112-0009A	006	403
65.98125-5020	010	3
65.98125-5021	010	3
65.98125-5021A	010	3
65.98130-0040A	001	41
65.98130-0200	014	109
65.98130-0200A	014	109
65.98150-0015B	015	508
65.98150-0053B	015	306
65.98155-0011	014	114
	015	309

PART NO.	FIG NO.	KEY NO.
65.99601-8027	020	-
65.99605-8020	019	-
701-00425	6870	1
701-00425A	6870	1
701-00584A	6890	-
701-00585	6890	1
701-00585A	6890	1
701-00585B	6890	1
704-00027	6700	-
704-00028	6700	1
704-00033	6690	-
704-00034	6690	1
704-00049	6570	-
704-00050	6570	1
704-00052	6590	-
704-00053	6590	1
704-00055	6580	-
704-00056	6580	1
704-00058	6600	-
704-00059	6600	1
704502	4130	*
704543A	4100	*
704544A	4100	*
704550A	4100	*
707849	4100	310
713-00024	6510	1-2
	6530	1-2
	6550	1-2
	6570	1-2
	6590	1-2
	6610	1-2
716680	4150	*
716683	4160	*
716689	4150	*
716694	4150	*
717005	4100	*
717008	4100	*
718191	4150	*
718424	4100	250
718494B	4160	*
718549	4160	*
718550	4160	*
718551	4160	*
718553	4150	*
718554	4160	*
719212	4120	-
719212KT	4120	*
719753	4100	79
720777-PH	4100	*
720778-PH	4100	*

PART NO.	FIG NO.	KEY NO.
722473	4110	-
722901	4130	31
722944	4130	52
733-00022A	6270	-
8072-084	4195	13
80A478-2	4270	22
	4320	22
80B485-2	4250	22
	4260	22
	4280	22
	4300	22
	4310	22
	4330	22
	4340	22
	4360	22
	4370	22
8202-009	4195	17
8202-014	4195	15
8202-016	4195	6
901-00003A	1435	4
901-00004A	1435	5
901-00024C	1410	3
901-00024E	1410	3
901-00029	1420	1
	1425	-
901-00029A	1420	1
	1425	-
901-00031	1420	-
901-00031A	1420	-
901-00033	1430	1
	1435	-
901-00035	1430	-
903-00049	1480	4
903-00051	1500	5
903-00052	1460	10
	1570	25
903-00055A	1480	2-2
903-00056	6230	7
903-00060	1500	118
903-00067	1490	7
903-00068	1460	10
	1570	25
910-00019	5110	7
918-00169	5110	-
920-00020B	1760	31
	1770	31
920-00083	1770	-
	1780	-
920-00083A	1760	-
92703-06201	4190	78

PART NO.	FIG NO.	KEY NO.
92703-10281	4180	74
92703-10401	4170	75
	4190	75
92703-10551	4190	73
92703-10701	4190	76
92703-10901	4190	101
92703-16131	4170	77
94341-16302	4170	81
95111-02600	4190	23
95113-00400	4190	42
95113-00600	4190	41
95113-01200	4190	104
95113-01400	4170	62
	4180	62
95113-01600	4190	30
95113-02400	4190	25
95113-03200	4190	36
95121-02500	4190	54
95123-04500	4180	7
95131-02400	4170	89
95712-01200	4190	103
95712-01600	4190	31
95722-02500	4190	55
96321-06350	4180	50
990-011-007	4400	3A
	4400	4A
A004-0020A	7060	1
A006-0006A	7060	23
A042-0043A	7060	22
C0001-33015	4190	18
C0001-53005	4180	12
C0001-53009	4180	8
C0001-57006	4190	96
C0003-01208	4170	60
C0003-50003	4180	70
C0111-31263	4190	19
C0112-51203	4190	27
C0113-55214	4180	17
C0113-55501	4190	67
C011B-40377	4170	69
C011B-50146	4170	68
C011B-50237	4180	6
C011B-50247	4180	3
C011B-50248	4180	4
C011B-50249	4180	5
C011B-50250	4180	14
C011B-50251	4180	15
C011B-50252	4180	2
C011B-50256	4180	16
C011B-50263	4190	24A

PART NO.	FIG NO.	KEY NO.
C011B-50301	4190	94A
C0151-55007	4180	1
C0151-55008	4180	13
CSAB-XXN	4400	4
DF-S3A-00	4230	3
	4240	3
	4400	2
DF-S3A-S-01	4230	3A
	4240	3A
	4400	2A
DS1001045	1390	29
DS2011370	7010	1
DS2012136	1220	9
DS2012184	6850	23
DS2013356	6870	2
DS2013450	6850	21
DS2013482	6900	24
DS2016018	6750	3
DS2016022	1250	44
DS2016023	1250	47
	1250	47
DS2018069	6750	7
DS2025040	6750	4
	7000	4
DS2038135	1260	43
DS2038137	6940	38
DS2038138	6940	9
DS2039083	2190	1
DS2040066	6750	6
	7000	6
DS2040335	1290	56
DS2040336	1290	37
DS2040343	1250	28
DS2040346	1230	33
DS2040347	1270	30
DS2040348	1270	32
DS2040349	1270	29
DS2040350	1250	27
DS2040354	6750	4
	7000	4
DS2040355	6940	10
DS2040372	1230	32
DS2043081	6900	26
DS2043083	6900	27
DS2043084	6900	25
DS2045301	6750	5
	7000	5
DS2045304	1290	57
DS2045305	1290	36
DS2045309	1280	33
DS2045314	1230	32
DS2045315	1280	34
DS2045321	1230	32
DS2045331	6900	28
DS2047011	7000	27
DS2053757	1310	57
DS2053770	3140	8
DS2054016	2190	10
DS2054022	2190	10
DS2054135	6850	22
DS2054215	6910	15
DS2054251	1380	44
DS2055669	6740	6
DS2055670	6740	5
DS2055671	6720	6
DS2055672	6720	5
DS2055676	1340	77
DS2055732	1340	74
DS2055733	1330	63
	1340	74
DS2055735	1330	68
DS2055742	6730	6
DS2055743	6730	5
DS2055755	6720	14
	6730	14
	6740	14
DS2055756	1240	48
DS2057010	6990	28
DS2058248	6990	29
DS2059383	6720	18
	6730	18
	6740	18
	6990	37
DS2059420	1200	1F
DS2059421	1350	86
DS2059468	6720	18
	6730	18
	6740	18
	6990	37
DS2062020	1360	27
	1360	28
	1360	29
	1360	30
DS2281093	6850	34
DS2308021	6200	5
DS2332012	6790	11
	6800	11
	6810	11
	6820	11
DS2349012	1350	46
DS2371036	7000	14
DS2802021	1190	18
DS7601022	1100	24
DSP12	4220	24
DU1010	4220	28
	4225	3
E0020673	4250	28
	4260	28
	4290	32
	4300	28
	4310	28
	4330	28
	4330	32
	4340	28
	4340	32
	4360	28
	4370	28
E0020683	4270	34
	4270	38
	4280	28
	4320	34
	4320	38
E0020713	4290	35
E0020723	4280	35
	4330	43
	4340	43
	4360	36
	4370	36
E0020733	4270	48
	4320	45
E0021023	4250	39
	4260	39
	4300	36
	4310	36
E0021052	4360	39
	4370	39
E0500936	4290	27
E0501216	4330	45
	4340	45
E0501236	4280	39
E0501246	4250	32
	4250	36
	4260	32
	4260	36
	4280	32
	4300	33
	4310	33
	4330	36
	4330	40
	4340	36

PART NO.	FIG NO.	KEY NO.
E0501246	4340	40
	4360	33
	4370	33
E0501546	4270	42
E0501839	4290	24
E0502139	4250	24
	4260	24
	4280	24
	4300	24
	4310	24
	4330	24
	4340	24
	4360	24
	4370	24
E0502149	4270	26
	4320	26
E1330544	4250	23
	4260	23
	4270	23
	4280	23
	4290	13
	4300	23
	4310	23
	4320	23
	4330	23
	4340	23
	4360	23
	4370	23
E1500030	4270	30
	4320	30
E2022033	4270	45
	4320	42
E2022043	4360	41
	4370	41
E3110092	4290	28
E3110102	4250	27
	4250	31
	4250	35
	4260	27
	4260	31
	4260	35
	4270	33
	4270	37
	4270	44
	4270	47
	4280	27
	4280	31
	4280	34
	4280	38
	4290	33
E3110102	4300	27
	4300	32
	4310	27
	4310	32
	4320	33
	4320	37
	4320	41
	4320	44
	4330	27
	4330	31
	4330	35
	4330	39
	4330	42
	4340	27
	4340	31
	4340	35
	4340	39
	4340	42
	4360	27
	4360	32
	4360	35
	4370	27
	4370	32
	4370	35
E3110112	4250	38
	4260	38
	4270	41
	4300	35
	4310	35
	4360	40
	4370	40
E5130190	4290	6
E5130260	4250	17
	4260	17
	4280	17
	4300	17
	4310	17
	4330	17
	4340	17
	4360	17
	4370	17
E5130310	4270	17
	4320	17
E5302620	4290	18
E5303040	4280	9
E5303140	4250	9
	4260	9
	4300	9
	4310	9
	4330	9
E5303140	4340	9
	4360	9
	4370	9
E5303260	4270	9
	4320	9
E5500260	4280	8
	4290	17
E5500280	4250	8
	4260	8
	4300	8
	4310	8
	4330	8
	4340	8
	4360	8
	4370	8
E5500310	4270	8
	4320	8
E6020200	4290	19
E6020260	4280	10
E6020280	4250	10
	4260	10
	4300	10
	4310	10
	4330	10
	4340	10
	4360	10
	4370	10
E6020310	4270	10
	4320	10
E6300471	4290	26
E6300621	4250	30
	4250	34
	4260	30
	4260	34
	4280	30
	4280	37
	4300	31
	4310	31
	4330	34
	4330	38
	4340	34
	4340	38
	4360	31
	4370	31
E6300761	4270	40
E6311301	4250	20
	4260	20
	4300	20
	4310	20
	4330	20

PART NO.	FIG NO.	KEY NO.
E6311301	4340	20
	4360	20
	4370	20
E6311421	4270	20
	4320	20
E6311481	4290	21
E6311501	4290	23
E6311621	4250	12
	4260	12
	4280	12
	4300	12
	4310	12
	4330	12
	4340	12
	4360	12
	4370	12
E6311641	4250	14
	4260	14
	4280	14
	4300	14
	4310	14
	4330	14
	4340	14
	4360	14
	4370	14
E6311701	4270	12
	4320	12
E6311741	4270	14
	4320	14
E6490082	4290	9
E6490086	4280	20
E8412163	4290	15
E8412280	4250	6
	4260	6
	4300	6
	4310	6
	4330	6
	4340	6
	4360	6
	4370	6
E8412282	4270	6
	4320	6
E8412908	4280	6
E8841022	4250	40
	4260	40
	4270	49
	4280	40
	4290	36
	4300	37
	4310	37
E8841022	4320	46
	4330	44
	4340	44
	4360	37
	4370	37
FD-DC-0-B	4240	2
G025	4220	22
H001-0003D16	7060	2
H001-0004D49	7060	3
H220-9063	7060	-
H220-9064	7060	26
H28000-100	1435	1
H28000-200	1435	2
H28000-300D	1435	3
H28000-800	1435	9
H28003-240D	1435	7
H28003-400A	1435	6
H28003-600	1435	8
H28003-902	1435	10
HNM10	4220	32
HNM14	4200	27
	4210	27
J24D2005	4220	27
	4225	4
J24D2006	4220	33
	4225	5
J24D2008	4220	7
J24D2015	4220	31
	4225	10
J24D2016	4220	29
	4225	12
J95C1002	4200	3
	4210	3
J95C1003	4200	6
	4210	6
J95C1004	4200	7
	4210	7
J95C1007	4200	10
	4210	10
J95C1012	4200	23
	4210	23
J95C1014	4200	25
	4210	25
J97A5011	4200	12
	4210	12
J97A5012	4200	17
	4210	17
J97A5018	4200	22
	4210	22
J98D3003	4225	8
J98D3007	4225	7
J98J1001	4220	1
J98J1002	4220	2
J98J1003	4220	5
J98J1004	4220	6
J98J1005	4220	8
J98J1006	4220	9
J98J1007	4220	10
J98J1008	4220	11
J98J1009	4220	14
J98J1010	4220	16
J98J1011	4220	18
J98J1012	4220	19
J98J1013	4220	21
J98J1014	4220	25
J98J1015	4220	34
JA0D3001	4200	8
	4210	8
JA0D3002	4200	9
	4210	9
JA0D3003	4200	11
	4210	11
JA0D3004	4200	13
	4210	13
JA0D3005	4200	14
	4210	14
JA0D3006	4200	15
	4210	15
JA0D3007	4200	16
	4210	16
JA0D3008	4200	18
	4210	18
JA0D3009	4200	36
	4210	36
JA0D3010	4200	37
	4210	37
JA0D3011	4200	38
	4210	38
JA0D3012	4200	39
	4210	39
JA0E3026	4200	30
JA1D2001	4200	26
	4210	26
JA1D2002	4200	28
	4210	28
JA1E1001	4225	6
JA1G1001	4200	1
	4210	1
JA1G1002	4200	21
	4210	21

PART NO.	FIG NO.	KEY NO.
JA1G1003	4200	31
	4210	31
JA1G1004	4200	24
	4210	24
JA1G1005	4200	40
JA1G2001	4210	40
K1000344	3120	2
	6450	2
	6460	2
	6480	2
	6490	2
	6500	2
K1000868	1480	2-22
K1001858	1670	20
K1001858A	1670	20
K1002429	1480	78
K1003180	1130	9
K1003180A	1130	9
K1003664D1	1340	97
K1003900	1520	8-15
K1003998	1390	30-9
K1004085	1520	8-19
K1004092	5100	5
K1004160A	1200	1AB
	4141	-
K1004166	1190	12
K1004312	4196	-
	6900	1
K1004375	5130	30
K1006160	1450	21
K1006422	1550	3BA
	1560	2BA
	1570	4BA
K1006423	1550	3CA
K1006424	1580	17
K1006907	1620	11
K1008200	1390	30-2
K1009346	7070	2
K1009346A	7070	2
K1009348	7070	1
K1009605	1670	20A
K1009605B	1670	20A
K1009655	7070	-
K1011226	7070	2A
K1011226A	7070	2A
K1011645D1	5130	2
	5150	2
K1011645D13	5130	33
K1011645D5	5130	1
	5150	1
K1011647A	5150	7
K1011648	5130	13
	5150	13
K1012204	5130	7
K1012205	5130	29
K1012470D11	5130	31
	5150	28
K1012470D4	5130	32
	5150	29
K1012470D5	5130	34
K1013180	6270	11
K1013232	1690	29
K1013846	1670	17
K1014428	2120	6-1C
K1016614	5140	16
K1017883	6240	1
K1018396	5140	17
K9000353	1660	5A
	1660	6A
	1660	7A
	1660	8A
	1660	9A
	6130	1A
	6140	1A
	6140	3A
	6150	3A
	6160	1A
	6170	1A
	6200	1A
K9000422	1170	3E
K9000439	4390	1
K9000440	4390	2
K9000441	4390	3
K9000442	4390	3A
K9000443	4390	4
K9000444	4390	4A
K9000445	4390	5
K9000446	4390	6
K9000447	4390	6A
K9000448	4390	9
K9000480	2131	*
K9000998	6720	21A
	6730	21A
	6740	21A
	6990	16A
K9000999	6720	1A
	6730	1A
	6740	1A
	6990	2A
K9001001	4200	50
K9001001	4201	50
K9001002	4210	50
K9001047	4151	264
K9001070	4196	1
K9001071	4196	2
K9001072	4196	3
K9001073	4196	4
K9001075	4196	7
K9001076	4196	8
K9001077	4196	9
K9001078	4196	10
K9001079	4196	11
K9001080	4196	14
K9001120	4201	12
K9001122	4201	14
K9001125	4201	17
K9001127	4201	20
K9001224	4201	30
K9001225	4201	30
K9001228	4201	40
K9001229	4201	40
K9001812	4151	RL
K9001813	4151	RL1
K9001814	4151	M2
K9002875	4130	*
K9002911	4201	3
K9002914	4201	36
K9002915	4201	38
K9002916	4201	37
K9002917	4201	39
NWP116	4220	3
P0010A	4200	4
	4210	4
P0014	4200	5
	4210	5
P0020	4200	19
	4210	19
P010	4220	36
P012	4220	35
P022	4220	12
P03	1120	2K
P04	1120	2J
P06A	1120	2I
P1106	1120	2L
P1110A	1120	2O
P1110B	1120	2P
P1306	1120	2M
P1406	1120	2N
PBDB-LNN	4400	3
RSY12	4200	20

PART NO.	FIG NO.	KEY NO.
RSY12	4210	20
	4220	23
S0121061	4140	16
	4141	16
S0503353	1390	30-14
S0503553	1390	30-16
S0504353	1630	6
S0504453	1550	3U
	1560	2U
	1700	24
	1710	17
	1720	28
	6140	31
	6150	31
S0504553	1300	4
	1550	3T
	1560	2T
S0505063	1390	30-16
S0508353	7050	4
S0508553	1580	8
S0508653	1610	16
	1720	37
	1760	29
	6140	22
	6160	5
	6170	5
S0508753	1550	3G
	1560	2G
S0508853	1100	20
	1180	26
	1470	12
	1490	125
	1580	18
	1650	43
	1760	24
	6100	4
S0508861	2140	9M
S0508953	1300	15
S0509053	1700	10
	1760	32
	6110	11
S0509353	1300	29
S0511553	3140	6
	6380	6
	6680	6
	6980	10
S0511653	1730	14
	6210	13
	6920	13
S0511853	1100	9
S0511853	2100	26
S0512053	1140	30
	1160	20
	1170	6
	1190	5
	1210	10
	1320	26
	1550	3K
	1560	2K
	1570	4D
	1710	56
	6110	11
S0512153	6940	17
S0512253	1310	4
	1380	51
	6750	20
	6910	45
	7000	20
S0512263	1520	1-19
	1520	13
S0512353	6110	2
S0514653	1190	29
	1210	33
S0514853	1410	43
S0515053	1100	10
	3100	20
	6360	20
	6630	20
	6850	6
	6890	20
S0515253	1590	42
	6750	26
	7000	26
S0515353	1110	27
	1140	27
	2170	29
	6110	2
	6110	2
S0515366	7060	9
S0521266	6900	29
S0521356	2140	31
S0521361	6890	17
S0521366	3100	17
	3110	22
	6360	17
	6390	22
	6400	22
	6410	22
	6630	17
	6640	15
S0521466	1120	3
	6270	2
S0521666	6270	4
S0553753	1310	6
S0555753	1570	4H
S0555953	1760	19
S0556353	6850	29
	6910	32
S0556453	6140	14
	6150	14
	6910	11
S0557153	1760	5
S0558153	4350	27
	4380	27
S0558253	6280	7
	6290	7
	6300	7
	6310	7
	6330	7
	6340	7
	6350	7
S0558453	6900	3
S0558653	1380	10
S0558753	1380	47
S0558853	6270	5
S0558953	1320	21
	6760	2
	7010	11
S0559253	6940	18
	7010	19
S0559353	1250	63
	6900	3
S0559553	6900	4
S0560553	1530	12
S0560853	6660	23
	6670	10
	6940	35
S0560953	6790	6
	6800	6
	6810	6
	6820	6
	7020	6
	7030	6
	7040	6
S0560966	7060	10
S0561053	1250	41
	1260	41
	1570	34
	6750	22
	7000	22

PART NO.	FIG NO.	KEY NO.
S0561253	1570	28
S0561353	6720	24
	6730	24
	6740	24
	6790	14
	6800	14
	6810	14
	6820	14
	6990	45
	7020	14
	7030	14
	7040	14
S0561366	7060	11
S0561471	4161	32
S0561753	1230	8
S0562653	1710	49
S0562766	6990	11
S0565266	6860	12
S0565461	1190	8
	1210	2
	6690	3
	6700	3
S0565466	1250	2
	3130	31
	6370	31
	6940	19
S0565666	2110	33
	6720	7
	6730	7
	6740	7
	6860	11
S0566053	1290	51
S0566066	6860	10
S0566266	6860	9
S0566766	6640	18
S0566866	3110	26
	6390	26
	6400	26
	6410	26
S0566966	3110	25
	6390	25
	6400	25
	6410	25
S0567066	3100	8
	6360	8
	6630	8
S0569866	1120	5
S0570166	1200	4
S0571261	1100	5
S0571266	1100	5
S0571866	6890	29
S0574561	6650	7
S0574761	3120	7
	6450	7
	6460	7
	6480	7
	6490	7
	6500	7
S0574861	6510	4
	6520	4
	6530	4
	6540	4
	6550	4
	6560	4
	6570	4
	6580	4
	6590	4
	6600	4
	6610	4
	6620	4
S0711653	1710	21
S0711853	1300	2
S0712153	1760	9
S0712253	1110	33
S0715351	2140	9K
S0721451	2120	6-3
S0721456	2120	6-3
S0721461	2100	34
S0721466	2100	34
S0759853	1760	13
S0760853	1710	46
	6190	2
S0766061	2150	35
S0766066	2150	35
S0770261	2100	36
S0770266	2100	36
S0771466	1110	7
S0786253	1110	22
S2201766	1470	24
S2202866	1390	25
	1400	25
S2204866	4430	78
S2205066	1360	3
	1370	3
S2205761	4390	12
S2208761	1420	2
S2209061	1430	2
S2209261	4225	9
S2209366	6860	15
S2209661	4151	312
S2211866	1470	22
	6210	10
	6910	23
	6920	10
	6930	10
S2212066	1250	18
	1260	18
	1290	18
	2130	5H
	2131	5H
	6870	13
S2212266	1250	21
	1260	21
	1270	21
	1280	21
	1290	21
	1380	5
	2190	7
	4420	74
	6750	18
	6750	18
	6840	2
	6900	14
	6910	3
	6940	14
	7000	18
	7000	18
S2212366	3130	18
	6370	18
	6660	16
	6670	13
	6960	5
	6990	20
	7060	25
S2212461	4350	38
	4380	34
S2212466	1260	14
	3130	14
	4410	75
	4430	75
	6370	14
	6750	19
	6770	9
	6780	9
	7000	19
S2212561	6200	9
S2212761	4350	35
	4380	31
S2212766	4430	73
	6720	23

PART NO.	FIG NO.	KEY NO.
S2212766	6730	23
	6740	23
	6990	17
S2212861	4390	11
S2212866	1270	20
	1290	20
S2212961	4350	31
S2213066	1270	22
	4430	76
	6440	2
S2213166	7000	28
S2213266	6900	32
S2213466	1250	17
	4430	95
S2214066	6750	16
S2214166	6750	16
	7000	16
S2215466	1220	19
	1230	19
	1250	13
	1280	13
	2190	5
S2215666	7060	14
S2215766	6720	2
	6730	2
	6740	2
	6990	3
S2215866	6720	33
	6730	33
	6740	33
	6750	23
	6990	5
	7000	23
S2217471	4140	24
	4141	24
S2221471	4151	282
S2221566	1230	24
S2223266	4410	77
S2224471	4161	35
S2224971	4350	23
	4380	23
S2227966	1170	4
S3450343	1480	58
	1690	44
S3450373	1450	18
S3450583	1390	30-8
	1670	18
	1760	2
S3450823	1390	48
	1650	38
S3450823	1690	30
S3450833	1480	44
	1510	23F
	1520	8-9
	1720	42
S3450853	1660	2
S3450943	1650	12
	1650	15
	1650	24
S3450953	1480	93
	1490	51
	1650	18
	1650	21
	1740	18
	1750	18
S3450973	1480	29
	1490	29
	1490	29
	1510	29
S3450983	1690	24
	1690	27
S3450993	1480	65
	1500	65
	1510	23H
S3452823	1520	8-19B
	1520	8-27
S3452833	1390	30-19
S3452853	1390	35
	1440	29
S3453118	1480	107
S3458582	1500	89
S3458953	1640	10
S3523601	4225	13
S3524403	3140	16
	6380	16
	6680	17
S3643359	1480	79
S3644183	1450	16
S4010003	1480	60
S4012233	1300	26
S4012303	1520	8-18
S4012333	1650	7
	1760	46
S4012533	1300	8
	1480	2-19
	1510	24
	1520	8-31
	1580	21
	1650	44
	1690	42
S4012533	6140	17
	6150	17
S4012633	1140	21D
	1160	16
	1160	16
	1550	3L
	1550	3Q
	1560	2L
	1560	2Q
	1650	3
	1700	5
	6270	17
	6940	39
S4012733	1140	28
	1210	30
	1230	42
	1550	3E
	1560	2E
	1710	52
S4012833	4201	27
S4012933	3100	9
	3110	24
	6360	9
	6390	24
	6400	24
	6410	24
	6630	9
	6640	17
	6690	4
	6700	4
S4013133	6890	30
S4013333	3120	8
	6450	8
	6460	8
	6480	8
	6490	8
	6500	8
	6510	5
	6520	5
	6530	5
	6540	5
	6550	5
	6560	5
	6570	5
	6580	5
	6590	5
	6600	5
	6610	5
	6620	5
	6650	8

PART NO.	FIG NO.	KEY NO.
S4014633	1520	67
	4225	11
S4032633	1110	35
	1480	2-10
S4032833	3140	14
	6380	14
	6980	18
S4540603	1700	8
S5000003	1450	29
S5000111	1500	90
S5000113	1390	30-10
	1470	25
	1760	3
S5000203	1390	49
S5000213	1390	30-15
	1510	23G
	1660	4
	6230	5
S5010213	1480	45
	1520	8-10
S5010313	1480	30
	1490	30
	1490	30
	1510	23I
	1510	30
	1550	3S
	1560	2S
	1650	9
	1720	30
	1760	48
	6140	33
	6150	33
S5010513	1100	22
	1180	27
	1300	16
	1470	14
	1510	25
	1550	3H
	1560	2H
	1570	4I
	1610	18
	1700	12
	1760	7
	1760	21
	6100	18
	6140	24
	6160	7
	6170	7
S5010613	1140	21E
	1160	19

PART NO.	FIG NO.	KEY NO.
S5010613	1160	19
	1250	64
	1380	7
	1520	22
	1570	4E
	1650	5
	1700	7
	1730	16
	1760	11
	6110	4
	6270	16
	6840	4
	6900	6
	6900	6
	6910	22
	6940	16
	7010	13
S5010703	7060	13
S5010713	1110	29
	1140	29
	1570	31
	1710	51
	6110	4
	6110	4
S5010913	1120	24
	1290	52
	4410	81
	6900	10
S5011113	1200	1K
S5020013	1480	59
S5100003	1690	45
S5100103	1670	19
S5100203	1510	23E
	1650	39
	1660	3
	1690	31
	1720	43
	6230	6
S5100603	4350	26
	4350	30
	4350	34
	4350	37
	4380	26
	4380	30
	4380	33
S5102101	1500	91
S5102203	1300	27
	1480	46
	1520	8-11
S5102303	1300	5

PART NO.	FIG NO.	KEY NO.
S5102303	1310	7
	1480	31
	1490	31
	1490	31
	1510	23J
	1510	31
	1630	7
	1650	8
	1650	13
	1650	16
	1650	19
	1650	22
	1650	25
	1690	25
	1690	28
	1700	25
	1710	18
	1720	29
	1740	19
	1750	19
	1760	47
	6140	32
	6150	32
S5102503	1300	9
	1480	2-21
	1490	126
	1580	22
	1610	17
	1650	45
	1690	43
	1700	11
	1720	38
	1740	35
	1750	35
	1760	6
	1760	20
	1760	25
	1760	30
	1760	33
	6100	5
	6110	12
	6140	15
	6140	23
	6150	15
	6160	6
	6170	6
	6850	30
	6910	12
	6910	33
	7050	5

PART NO.	FIG NO.	KEY NO.
S5102603	1100	11
	1110	12
	1140	12
	1160	17
	1160	17
	1170	7
	1190	6
	1210	11
	1250	65
	1300	3
	1320	22
	1380	9
	1650	4
	1710	22
	1710	57
	1730	15
	1740	15
	1760	10
	1760	14
	2100	22
	3140	9
	6110	12
	6110	12
	6140	10
	6270	6
	6280	8
	6290	8
	6300	8
	6310	8
	6330	8
	6340	8
	6350	8
	6380	9
	6680	9
	6750	21
	6760	3
	6900	5
	6900	5
	6940	20
	6980	11
	7000	21
	7010	12
S5102702	2140	9J
S5102703	1100	12
	1110	23
	1230	41
	1250	39
	1260	39
	1570	29
	1710	47
S5102703	1710	50
	2170	23
	3100	21
	6110	3
	6110	14
	6360	21
	6630	21
	6660	24
	6670	11
	6720	32
	6730	32
	6740	32
	6750	24
	6790	7
	6800	7
	6810	7
	6820	7
	6850	7
	6890	21
	6940	36
	6990	46
	7000	24
	7020	7
	7030	7
	7040	7
	7060	12
S5102801	6990	12
S5102901	2120	6-4
S5102903	1120	4
	1290	53
	2100	24
	2140	24
	3100	18
	3110	23
	3130	32
	6270	3
	6360	18
	6370	32
	6390	23
	6400	23
	6410	23
	6630	18
	6640	16
	6860	13
	6890	18
	6900	9
	6940	21
S5110501	4151	313
S5110601	1470	23
	6210	11
S5110601	6920	11
	6930	11
S5110603	1380	6
	6200	10
	6720	22
	6730	22
	6740	22
	6840	3
	6910	2
S5110613	6990	18
S5110701	4161	33
S5110703	1220	20
	1230	20
	6720	3
	6730	3
	6740	3
	6990	4
S5110903	1230	25
S5111103	1170	5
S5210303	1520	8-8
S5231090	4140	31
	4141	31
S5700891	4151	241
S5701242	4151	181
S5735351	6210	7E
	6920	6E
	6930	6E
	6930	7E
S5740470	4390	15
S5740800	4201	29
S5741341	4140	15
	4141	15
S6250161	4151	268
S6250200	4161	36
S6500380	4141	6
S6500400	2130	5E
	2131	5E
S6500450	4140	26
	4141	26
S6510700	4151	145
S6540600	1510	76
S6541200	1390	30-12
S6541500	1390	30-20
S6541900	1390	19
S6550100	4151	298
S6710032	4350	39
	4380	35
S6710041	1630	14
	3110	27
	6390	27

PART NO.	FIG NO.	KEY NO.
S6710041	6400	27
	6410	27
	6640	19
	6980	2
S6710052	3140	11
	6380	11
	6680	11
S8000041	4430	42
S8000061	4430	41
S8000081	4161	39
S8000091	4151	233
	4390	10
S8000111	1190	16
	1210	24
	1310	28
	1320	28
	1320	28
	1330	28
	1340	28
	1350	28
	1360	11
	1370	11
	1380	11
	2190	14
	4151	265
	4230	5
	4240	6
	4390	8
	4400	7
	4410	83
	6200	6
	6720	11
	6730	11
	6740	11
	6760	4
	6840	6
	6850	9
	6910	7
	6990	8
S8000121	4430	94-10
S8000141	1210	28
	1210	28
	1330	29
	1340	29
	1350	29
	1360	12
	1370	12
	1380	12
	4100	726
	4201	5
S8000141	4410	82
	4420	82
	6760	5
	6840	8
	6850	32
	6910	39
S8000161	6200	6
S8000181	1190	19
	1200	1J
	1210	19
	1210	19
	1240	51
	1310	30
	1320	30
	1350	30
	1380	13
	2190	8
	4151	238
	4151	309
	4151	310
	6100	7
	6850	11
	6870	11
	6900	34
	6910	38
S8000201	4151	180
	4201	19
S8000231	1220	14
	6670	6
	6850	12
	6900	15
	6940	25
S8000241	1220	7
S8000261	4430	19
S8000281	4350	29
	4350	33
	4350	41
	4380	29
	4380	37
	6200	8
	6720	28
	6730	28
	6740	28
	6990	40
S8000291	1230	29
	1240	29
	6750	13
	6770	5
	6780	5
	6790	3
S8000291	6800	3
	6810	3
	6820	3
	6900	16
	7000	13
	7010	14
	7020	3
	7030	3
	7040	3
	7060	5
S8000321	4151	279
	4430	36
S8000341	6720	27
	6730	27
	6740	27
	6990	6
S8002101	4151	139
S8002701	4201	4
S8002731	4151	234
S8003401	4161	40
S8010230	4161	29
S8010250	4430	54
S8010451	4420	7
S8010551	2130	5G
	2131	5G
S8010650	2150	7E
S8010700	2120	6-1D
S8011051-90	4350	19
	4380	19
S8011200	1210	22
S8011450	1190	3
S8011650	1210	13
S8011901	4350	12
	4380	12
S8011951	4151	178
S8012000	1210	6
S8012001	4350	14
	4380	14
S8030081	6850	8
	6860	16
	6870	15
S8030121	1220	10
	1250	58
	6670	7
	6900	19
	6940	24
	7060	7
S8030161	6750	12
	6750	12
	6770	6

PART NO.	FIG NO.	KEY NO.
S8030161	6780	6
	6790	4
	6800	4
	6810	4
	6820	4
	7000	29
	7010	15
	7020	4
	7030	4
	7040	4
	7060	6
S8060121	4430	94-9
S8060181	4151	311
S8180221	1210	32
	6110	7
	6160	11
	6180	2
S8180251	1710	40
	1720	54
S8180321	6100	1B
S8180411	1780	41
S8450012	1180	15
	6110	9
S8450016	1780	37
S8450053	1390	47
	1400	47
S8450066	1390	12
	1400	12
S8470014	1130	14
S8470032	6100	8
S8470075	1120	15
S8470085	1230	36
S8470112	1220	5
S8510092	1160	10
S8510118	1160	7
SB18	4220	17
SBM0605	4220	30
SJD-100-100	2170	10-10
SJD-100-110	2170	10-11
SJD-100-120	2170	10-12
SJD-100-130	2170	10-13
SJD-100-140	2170	10-14
SJD-100-40	2170	10-4
SJD-100-50	2170	10-5
SJD-100-60	2170	10-6
SJD-100-70	2170	10-7
SJD-100-80	2170	10-8
SJD-100-90	2170	10-9
SP0306	4220	15
SP0528	4200	29
SP0528	4210	29
SR11CS	4220	20
SR28CH	4220	13
SWP4P	4200	35
SWP4PT	4200	34
SWP6P	4210	35
SWP6PT	4210	34
T1151-17504	4180	91
T1152-27503	4190	24
T1172-01008	4180	63
T1311-14002	4170	57
T1311-46001	4190	53
T1331-28003	4190	99
T1411-19003	4190	49
T1411-28001	4190	34
T1411-28003	4190	44
T1411-28004	4190	51
T1461-14002	4190	26
T1461-19007	4190	35
T1461-19008	4190	21
T1461-25001	4190	45
T1515-10001	4180	66
T1515-22001	4180	65
T1631-00004	4190	52
T1631-00006	4190	37
T1631-00007	4190	43
T6510018	5100	1-49
T6510027	5100	1-52
T6510062	5100	1-35
T6510066	5100	1-36
T6510070	5100	1-37
T6510072	5100	1-38
T6510075	5100	1-39
T6510081	5100	1-41
T6510085	5100	1-42
T6510089	5100	1-44
T6510091	5100	1-45
T6550005	5100	1-26
T6550006	5100	1-27
T6550007	5100	1-28
T6550009	5100	1-29
T6550011	5100	1-30
T6550015	5100	1-32
T6550018	5100	1-33
T6580008	5100	1-2
T6580020	5100	1-5
T6600183	5100	1-55
T6600189	5100	1-56
T6600197	5100	1-57
T6600201	5100	1-58
T6600211	5100	1-59
T6600223	5100	1-60
T6690012	5100	1-19
T6690013	5100	1-20
T6750003	5100	1-21
T7050003	5100	1-6
T7050013	5100	1-7
T7050021	5100	1-8
T7050022	5100	1-9
T7260057	5100	1-13
T7500004	5100	1-10
TF-S3A-00	4230	3
	4240	3
	4400	2
TF-S3A-S-01	4230	3A
	4240	3A
	4400	2A
VDL24	4230	2
	4240	4
	4400	5
WBM0630	4220	26
WBM1042	4220	37
WPT18	4200	2
	4210	2
WPT38	4220	4
Y-3738-04	1310	5F
	1310	5F
Y-3738-05	1310	5E
	1310	5G

DOOSAN INFRACORE CO., LTD.
AROUND THE WORLD

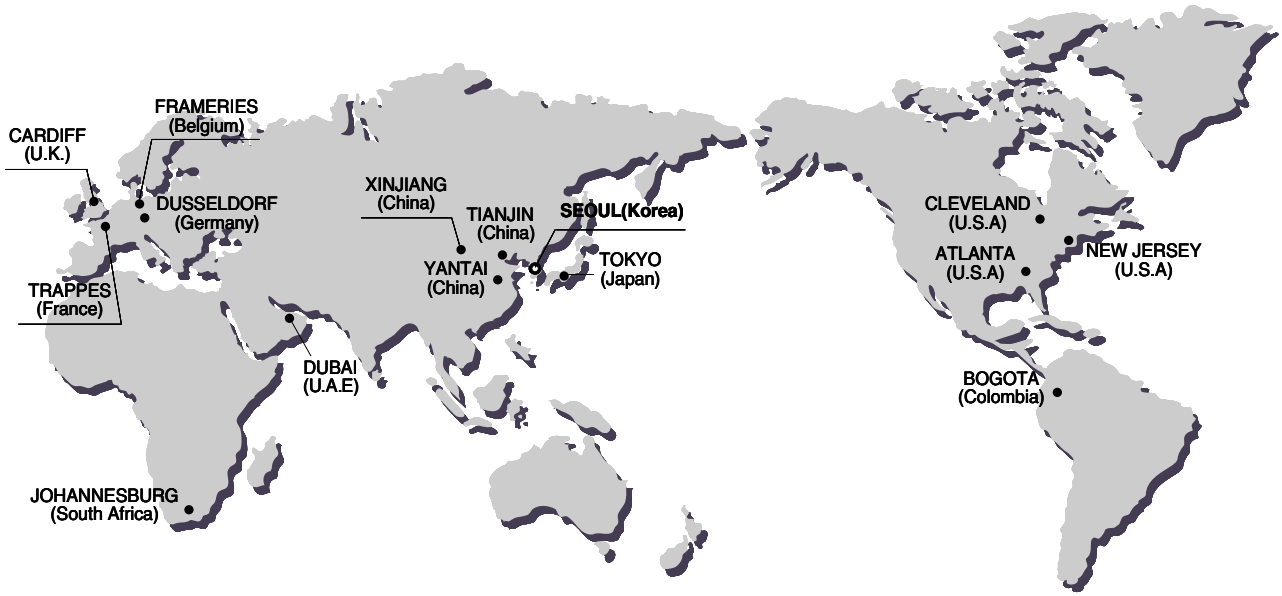

Head Office
Hwasu-Dong 7-11, Dong-Gu, Incheon, Korea.
Tel : +82-32-211-1114 Fax : +82-32-211-1231

Seoul Office
Doosan Tower 26TH FL. 18-12, Euljiro-6Ga,
Jung-Gu, Seoul, korea 100-730
Tel : +82-2-3389-8114 Fax : +82-2-3389-8117

ASIA & OCEANIA

Doosan Infracore Machine Tools Yantai Co.,Ltd.
1, Dayu Road 1, ETDZ, Yantai, Shandong, China
Tel : +86-0535-693-5060 , Fax : +86-0535-693-5619

Doosan Infracore Liaoning Machinery Co.,Ltd.
No.32 DongLing Road, DongLing District, ShenYang,
Liaoning, China
Tel : +86-24-8841-1407, Fax : +86-24-8841-1404

Doosan Infracore Xinjiang Machinery Co.,Ltd.
No. 178, Hetanbei Road, Wurumuqi, Xinjiang, China
Tel : +86-991-469-7217 , Fax : +86-991-469-8641

Dajian(Tianjin) Mechanical Construction Co., Ltd
No.87 Gongxing Road, Tanggu, Tianjin, china
Tel : +86-22-2521-0540 Fax : +86-22-2521-0714

Doosan Infracore (China) Co., Ltd.
#28, Wuzhishan Road, Eco. & Tech, Development Zone,
Yantai, Shandong, China
Tel : +86-535-638-2000 Fax : +86-535-638-2004

Doosan Infracore Japan Corporation
3rd Floor, k-1 Bld.,19-4, Nishi-shinbashi 2-Chome,
Minato-Ku, Tokyo, Japan
Phone : +81-3-3434-2547 Fax : +81-3-3434-2548

Doosan Infracore Middle East Center(Dubai)
183127, Al-Serkal Building, Air Port Road, Dubai, U.A.E
Phone : +971-4-295-2781, 2782 Fax : +971-4-295-2783

NORTH AMERICA

Doosan Infracore America Corporation
2905 Shawnee Industrial Way, Suwanee,
Georgia 30024, U. S. A
Tel : +1-770-831-2200 Fax : +1-770-831-0480

Doosan Infracore America Corporation Cleveland Office
4530 Renaissance Parkway, Warrensville Heights, OH 44128, U.S.A
Tel : +1-216-595-1212 Fax : +1-216-595-1214

Doosan Infracore America Corporation N.J. Office
8 York Avenue, West Caldwell, N.J. 07006, U.S.A
Tel : +1-973-618-2500 Fax : +1-973-618-2501

EUROPE

Doosan Infracore U.K., Ltd.
Doosan House, Unit 6.3, Nantgarw Park, Cardiff
CF47QU, U.K.
Tel : +44-1443-84-2273 Fax : +44-1443-84-1933

Doosan Infracore Germany GmbH
Hans-Boeckler strasse 27-29, D-40764, Langenfeld-Fuhrkamp,
Germany / Tel : +49-2173-8509-20 Fax : +49-2173-8509-60

Doosan Infracore Europe S.A. (Europe Head Office)
1A, Rue Achille Degrace, 7080 Frameries, Belgium
Tel : +32-65-61-3231 Fax : +32-65-61-3238

Doosan Infracore France SARL
(Doosan Infracore Europe S.A. France Office)
2Eme Etage, 1/3 Avenue Pavlov, Z.A.I. Des Bruyeres, 78190 Trappes France
Tel : +33-1-3016-2140 Fax : +33-1-3016-2144

Doosan Infracore Europe S.A. Italy Office
Via Monfalcone 41, 20090 Cinisello B.mo (MI)
Tel : +39-2-612-0565 Fax : +39-2-612-6322

SOUTH AMERICA

Colombia Liaison Office
Diagonal127 A No. 17-34 Oficina 302
Bogota, Colombia
Tel : +57-1-625-3470 Fax : 57-1 -625-3883

AFRICA

Doosan Infracore South Africa (PTY)Ltd.
60C Electron Road, Isando 1600, Johannesburg, South Africa
Tel : +27-11-974-2095 Fax : +27-11 -974-2778