RUTHZIL TRATOR COMERCIAL DE PEÇAS LTDA 11 97083-6812 ROLANDO CITRANGULO

Bobcat®

Parts Manual
S250 Skid-Steer Loader

S/N 530911001 & Above
S/N 531011001 & Above

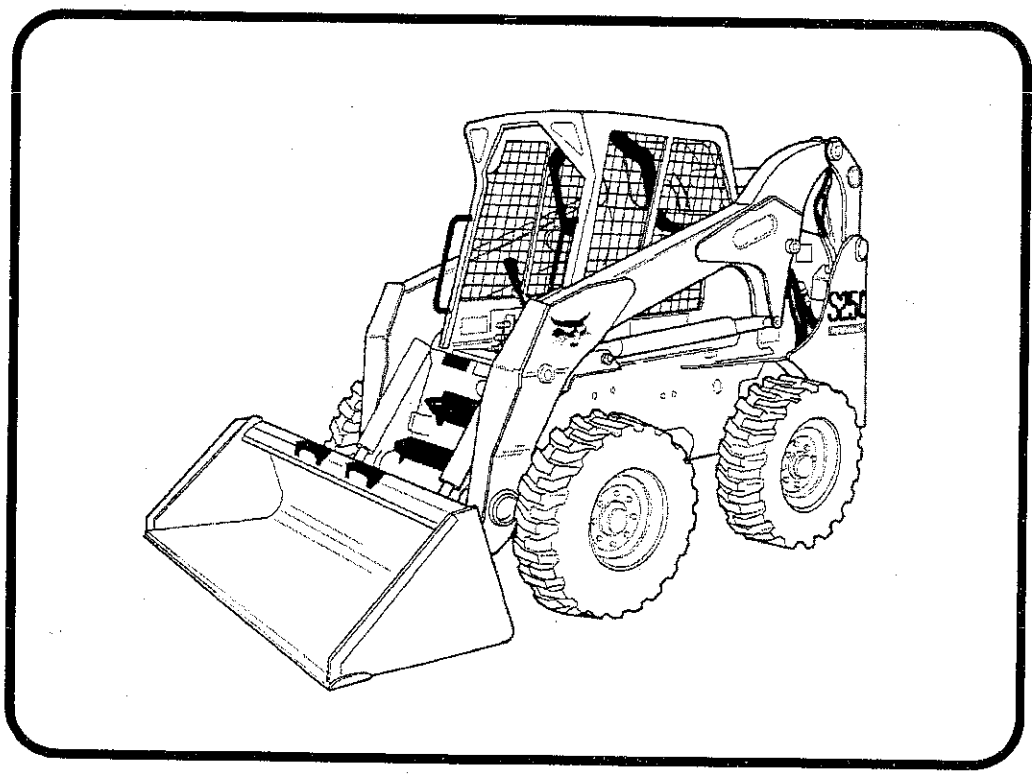

EQUIPPED WITH
BOBCAT INTERLOCK
CONTROL SYSTEM (BICS)

6904244 (11-05) Revised (4-06)

Printed in U.S.A.

© Bobcat Company 2006

GENERAL INFORMATION

Before ordering parts, ALWAYS provide dealer with your product model number and complete serial number information. Before ordering parts, verify correct part numbers and/or serial numbers with your dealer. When using the machine serial number, use the complete number.

Some Serial Number breaks are not available at time of printing.
These are listed as & Bel or & Abv or - (thru)

The number shown in the quantity column in this manual is the number of parts needed for the illustration on the page. For some parts an "x" will be shown in the quantity column. This "x" indicates that the quantity to be used is "As Needed".

When references L.H. (Left Hand) and R.H. (Right Hand) are used in this manual, it is done from the operator's seat in the forward operating position.

When "See Illustration...." appears in the remarks column, refer to the contents page for the illustration title to find page number location.

Some of the illustrations and information found in this parts manual were supplied to Bobcat by machine component companies.

For additional information on the Bobcat website visit www.bobcat.com

ABBREVIATIONS

SALES	=	Order from Gwinner Sales Department
NSS	=	Not Serviced Seperately
NAP	=	Not Available as Parts
BTI	=	Bobcat Technical Information Bulletin
P/M	=	Parts Manual
O/M	=	Operation & Maintenance Manual
S/M	=	Service Manual
S/L	=	Service Letter
AHC	=	Advanced Hand Controls
ACS	=	Advanced Control System
SJC	=	Selectable Joystick Controls

W/	=	With
W/O	=	Without
I.D.	=	Inside Diameter
O.D.	=	Outside Diameter
"	=	Inches
'	=	Feet
mm	=	Millimeters

DISPOSITION CODE DEFINITIONS

(Found in Remarks Column)

[A]	=	Use Up
[B]	=	Use Up on Other Application
[C]	=	File PDR Report with Bobcat Parts Sales
[D]	=	Part Number Error

NOTE D'INFORMATION

Pour toute référence au numéro de série de l'engin, toujours donner le numéro complet.

Le chiffré apparaissant dans la colonne des quantités de ce manuel représentent le nombre de pièces nécessaires pour l'illustration reprise sur la page. Dans certains cas, on lira un "x" dans la colonne des quantités. Cet "x" indique que la quantité nécessaire est "selon besoin".

Pour toute référence vers la GAUCHE ou la DROITE dans ce manuel, considérer que la personne se trouve assise dans le siège de l'opérateur, en position de fonctionnement en marche avant.

Certaines illustrations et informations reprises dans ce manuel de pièces de rechange ont été fournies à Bobcat/Ingersoll-Rand par des fabricants de composants.

ABREVIATIONS & SYMBOLES

SALES	= Commander au Service Ventes à Bruxelles
NSS	= Pas vendu séparément
NAP	= Non disponible comme pièce de rechange
*	= Chapitre, page ou numéro de pièce modifié ou supplémentaire
BTI	= Bobcat Technical Information Bulletin : voir à la fin de la microfiché du modèle concerné ou la microfiche générale reprenant l' ensemble des "BTI".
was 6535403	= était avant 6535403
adj. (adjustment)	= réglage
Assembly	= ensemble
available W/Ref.	= disponible avec réf.
bulk/sold per foot	= en vrac/vendu par pied
does not include	= ne comprend pas
included with	= compris dans
I.D.	= D.I. (diamètre intérieur)
O.D.	= D.E. (diamètre extérieur)
not in kit	= pas en kit
W/ - WO/	= inclus/ - non inclus/
Qty	= quantité requise
see page/ref.	= voir page/réf.
used with ref/	= utilisé avec réf.
0,05 inch thickness	= 0,05 pouce d'épaisseur (un pouce = 25.4 mm)
weld on	= à souder

ALLGEMEINE INFORMATIONEN

Bei Angabe der Maschinen-Seriennummer stets die komplette Nummer angeben.

Bei der in der Mengenspalte (Anzahl) in diesem Handbuch angegebenen Zahl handelt es sich um die Anzahl von Teilen, die für die Abbildung auf der betreffenden Seite benötigt werden. Bei manchen Teilen in der Mengenspalte ist ein "x" angegeben. Dieses "x" weist darauf hin, dass sich die Anzahl der verwendeten Teile auf den "Bedarf" bezieht.

Bei Verwendung der Seitenangaben links und rechts in diesem Handbuch gelten diese für die Blickrichtung vom Fahrersitz aus, und zwar in Vorwärts-Betriebsrichtung.

Einige der in diesem Ersatzteilhandbuch aufgeführten Abbildungen und Informationen wurden der Bobcat/Ingersoll-Rand von den Herstellern von Maschinenbauteilen zur Verfügung gestellt.

ABKÜRZUNGEN UND SYMBOLE

SALES	= Bestellung bei der Verkaufsabteilung in Brüssel
NSS	= Nicht einzeln erhältlich
NAP	= Nicht als Ersatzteil erhältlich
*	= Geänderte oder hinzugefügte Abschnitte, Seiten oder Teilenummern
BTI	= Bobcat Technical Information Bulletin : Siehe am Ende der Mikrokarte des jeweiligen Modells oder der allgemeinen Mikrokarte der BTI.
was 6535403	= War 6535403
adj.	= Einstellung
Assembly	= Baugruppe
available W/Ref.	= erhältlich mit der Referenz
bulk/sold per foot	= Mengenabnahme / Verkauf pro Fuss
does not include	= beinhaltet nicht
included with	= enthalten in
I.D.	= Innendurchmesser
O.D.	= Aussendurchmesser
not in kit	= nicht in Bausatz
W/ - WO/	= mit/ - ohne/
Qty	= Anzahl
see page/ref.	= Siehe Seite / Referenz
used with ref.	= verwendet mit Referenz
0.05 inch thickness	= Dicke : 0.05 Zoll (ein Zoll = 25.4 mm)
weld on	= anschweissen

INFORMAZIONI GENERALI

Quando si usa il numero di serie della macchina usare il numero completo.

Il numero mostrato nella colonna della quantità di questo manuale corrisponde al numero di componenti necessari per l'illustrazione della pagina. Per alcuni componenti appare "X" nella colonna delle quantità. Questa "X" indica che la quantità da usare è "come necessario".

See in questo manuale si fa riferimento alla parte destra o sinistra, si intende dal sedile dell'operatore nella posizione in avanti di funzionamento.

Alcune delle illustrazioni e informazioni trovate in questo manuale di componenti sono state fornite alla Bobcat/Ingersoll-Rand da società di componenti di macchine.

SIMBOLI E ABBREVIAZIONI

SALES	= Ordinare al servizio vendite di Bruxelles
NSS	= Non vendute separatamente
NAP	= Non disponibile come componente
*	= Sezioni, pagine o numeri di componente cambiati o aggiunti
BTI	= (Bobcat Technical information) Ved. al termine del microfiche del modello relativo oppure microfiche generale
was 6535403	= era 6535403
adj. (adjustment)	= regol. (regolazione)
Assembly	= Complessivo
available W/Ref.	= disponibile con rif.
bulk/sold per foot	= alla rinfusa/venduto al piede
does not include	= non comprende
Included with	= compreso con
I.D.	= d. i.
O.D.	= d. e.
not in kit	= non fa parte del kit
W/ - WO/	= con - senza
Qty	= Qtà
see page/ref	= ved. pagina/rif.
used with ref.	= usato con il rif.
0,05 inch thickness	= spessore 0,05 pollici (un pollice = 25,4 mm)
weld on	= a saldare

INFORMACION GENERAL

Al utilizar el número de serie de la máquina, debe emplearse el número completo.

El número que figura en la columna de "Unidades" en este manual es el número de piezas que se necesitan para la ilustración que consta en la página. En algunas piezas aparece una "x" en la columna de "Unidades". Esta "x" indica que las unidades a utilizar son "según sea necesario".

Cuando se empleen las referencias izq. y dcha., éstas se entienden mirando desde el asiento del conductor, en posición de marcha adelante.

Algunas de las ilustraciones y la información que figuran en este manual de piezas han sido facilitadas a Bobcat/Ingersoll-Rand por empresas de componentes de máquinas.

ABREVIATURAS Y SIMBOLOS

VENTAS	= Pedido al Departamento de Ventas de Bruselas
NSS	= No se vende por separado
NAP	= No disponible como pieza de repuesto
*	= Secciones, páginas o referencias modificadas o añadidas
BTI	= (Bobcat Tecnical Information) Ver al final de la microficha del modelo afectado o en la microficha general "Boletín de Información Técnica Bobcat".
was 6535403	= era anteriormente el 6535403
adj. (adjustment)	= ajuste
assembly	= conjunto
available W/Ref.	= disponible con la ref.
bulk/sold per foot	= a granel/vendido por pies
does not include	= no incluye
included with	= incluido en
I.D.	= diámetro interior
O.D.	= diámetro exterior
not in kit	= no en el kit
W/ - WO/	= con/ - sin
Qty	= Unidades
see page /ref.	= ver página/ref.
used with ref.	= empleado con la ref.
0,05 inch thickness	= 0,05 pulgadas de espesor (1 pulgada = 25,4 mm)
weld on	= debe ser soldado

ALGEMENE INFORMATIE

Als u het serienummer van de machine gebruikt, geef dan het gehele serienummer.

Het cijfer dat voorkomt in de kolom "Aantal", in deze handleiding, is het aantal onderdelen dat nodig is van de illustratie op de pagina. Voor sommige onderdelen staat er een "x" in de kolom "Aantal". Deze "x" betekent dat er een aantal "zoals nodig" vereist is.

Wanneer er in deze handleiding naar "links" en naar "rechts" gerefereerd wordt, moet dit verstaan worden voor een bestuurder die in de bestuurdersstoel zit in de voorwaartse bedrijfsstand.

Sommige van de illustraties en informatie in deze onderdelen-handleiding werden door firma's van machine-componenten geleverd aan Bobcat/Ingersoll-Rand.

AFKORTINGEN EN SYMBOLEN

SALES	= Bestellen bij de Verkoopafdeling te Brussel
NSS	= Niet afzonderlijk te verkrijgen
NAP	= Niet beschikbaar als onderdeel
*	= Gewijzigde of toegevoegde paragrafen, pagina's of onderdeelnummers
BTI	= Bobcat Technical Information Bulletin : Zie einde van de microfiche van het desbetreffende model of einde van de algemene microfiche die het geheel van alle "BTI" herneemt.
was 6535403	= was vroeger 6535403
adj. (adjustment)	= afstelling
Assembly	= geheel
available W/Ref.	= beschikbaar met ref.
bulk/sold per foot	= bulk/aan de meter verkocht
does not include	= bevat niet
includes with	= is bevat in
I.D.	= ϕ inw. (inwendige diameter)
O.D.	= ϕ uitw. (uitwendige diameter)
not in kit	= niet in de kit
W/ - WO/	= met/ - zonder/
Qty	= vereiste aantal
see page/ref.	= zie pagina/ref.
used with ref/	= gebruikt met ref.
0,05 inch thickness	= 0.05 inch dik (een inch = 25.4 mm)
weld on	= te lassen

Use only Bobcat belts and hoses to maintain maximum service life.

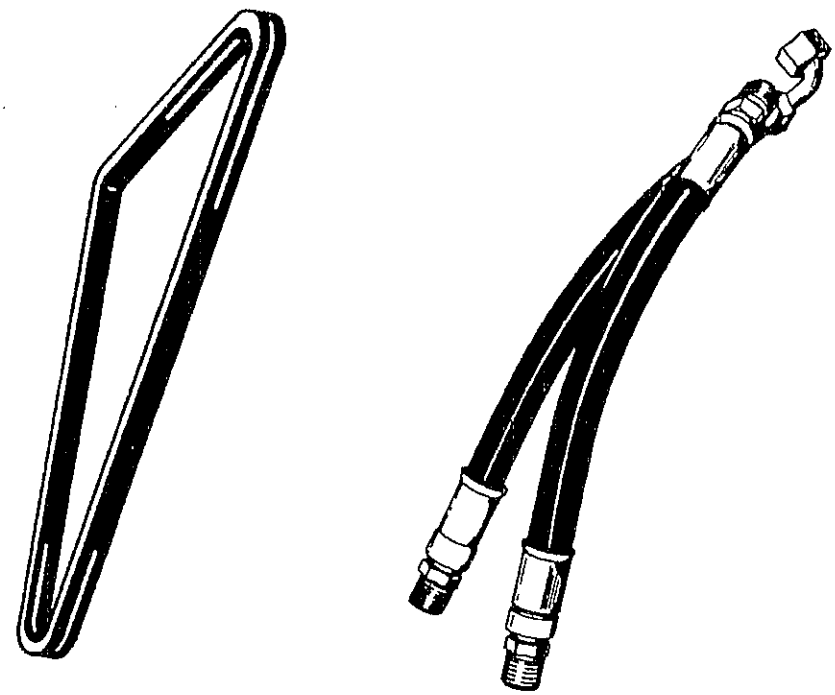

Available from Bobcat Parts.

Bobcat®

CONTENTS

MAINTENANCE ITEMS **1-10**
MAINTENANCE ITEMS 1
SCHEDULED MAINTENANCE ITEMS 3-10

MAIN FRAME **11-34**
MAIN FRAME 11
OPERATOR CAB 13-18
SEAT & SEAT BAR 19
SEAT 21
REAR DOOR 23
LIFT ARMS & BOBTACH 25
BOB-TACH 27
PANELS 29-32
FUEL SYSTEM 33

DRIVE TRAIN **35-46**
DRIVE TRAIN 35
MOTOR CARRIER 37-40
TRANSMISSION COVERS 41-44
AXLE 45

HYDRAULIC SYSTEM **47-72**
HYDRAULIC CIRCUITRY 47-50
LIFT & TILT CONTROL CIRCUITRY 51
AUXILIARY HYDRAULICS 53
TILT CYLINDER 55
LIFT CYLINDER 57
MANUAL LIFT RELEASE VALVE 59
CONTROL PEDALS 61
HYDRAULIC CONTROL VALVE 63-70
BUCKET POSITIONING VALVE 71

HIGH FLOW HYDRAULICS **73-76**
HIGH FLOW HYDRAULICS 73-76

HYDROSTATIC SYSTEM **77-132**
HYDROSTATIC PUMP 101-122
GEAR PUMP 123
MOTOR 125
2-SPEED VALVE 127
HYDROSTATIC OIL FILTER 129-132
HYDROSTATIC CIRCUITRY 77-90
HAND CONTROLS 91
HYDROSTATIC MOTOR 93
HYDROSTATIC MOTOR & BRAKE 95-98
HYDROSTATIC PUMP/GEAR PUMP 99

ELECTRICAL SYSTEM **133-158**
CAB ELECTRICAL CIRCUITRY 133
ENGINE ELECTRICAL 135-138
CONTROLS ELECTRICAL 139-154
ELECTRICAL CONTROLS 147-150
ALTERNATOR 155
STARTER 157

POWER UNIT **159-208**
COOLING SYSTEM 159-162
ENGINE & ATTACHING PARTS 163-168
ENGINE SPEED CONTROL 169-172

CONTENTS (Cont'd)

POWER UNIT

ENGINE 173
MANIFOLDS 175
TURBOCHARGER 177
CYLINDER HEAD & COVER 179
CYLINDER HEAD 181
OIL PAN 183
PISTON & CRANKSHAFT 185
CAMSHAFT 187
FRONT COVER 189
WATER PUMP & THERMOSTAT 191
WATER PUMP 193
FUEL INJECTION SYSTEM 195-198
FUEL INJECTION PUMP 199
GOVERNOR 201-206
AIR CLEANER 207

ACCESSORIES & OPTIONS 209-346

ACCESS COVER 209
ACS CONVERSION KIT 211
BACK-UP ALARM KIT 213-216
BEACON 217
BLOCK HEATER 219
BUCKET POSITIONING KIT 221
CAB DOOR 223-230
CAB ENCLOSURE 231-234
CAB WINDOWS 235-240
COUNTERWEIGHT KIT 241-244
DEBRIS SHIELD KIT 245
DECALS 247-250
ELECTRICAL CONNECTOR KIT 251
ELECTRICAL CONTROLS KIT 253-256
EUROPEAN ACCESSORIES 257-264
EXPORT ACCESSORIES 259
FIRE EXTINGUISHER 265
FLASHER LIGHTS 267
F.O.P.S. KIT 269
FRONT AUXILIARY 271
GAS SPRING KIT 273
HEATER & A/C 275-294
HEATER & AC 283
HORN KIT 295-298
LIFT KIT 299-302
LIGHT KIT 303
PURIFIER 305
POWER BOB-TACH KIT 307
POWER BOB-TACH CYLINDER 309
POWER BOB-TACH 311
RADIATOR SCREEN KIT 313
REAR AUXILIARY HYDRAULIC KIT 315
REAR AUXILIARY VALVE 317
REAR DOOR LOCK 319
REAR WIPER 321

CONTENTS (Cont'd)

ACCESSORIES & OPTIONS

SEAT 323-326
SEAT BELT 327-332
SOUND/NOISE REDUCTION OPTION 333-338
STROBE LIGHT 339
TIRES & RIMS 341-344
BULK ITEMS 345

NUMERICAL INDEX **348-393**

MAINTENANCE ITEMS



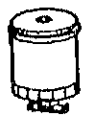





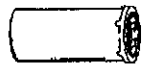



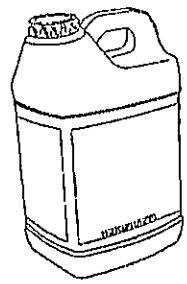

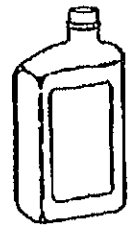



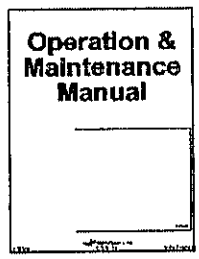

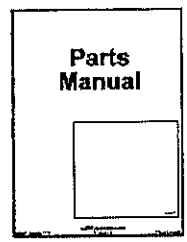



B–22668

MAINTENANCE ITEMS (Cont'd)

Ref No	Part Number	Description	Remarks	Serial Number	Qty
1	6678233	OIL FILTER	See Illustration OIL PAN/ B22921 - engine oil (6 pack)		x
2	6667352	FILTER FUEL	See Illustration FUEL SYSTEM/ PE3064 - fuel		x
3	6681475	CARTRIDGE	See Illustration AIR CLEANER/ MS1516 - Inner Air Cleaner		x
4	6681474	CARTRIDGE	See Illustration AIR CLEANER/ MS1516 - Outer Air Cleaner		x
5	6661248	ELEMENT	See Illustration HYDROSTATIC OIL FILTER/ C2818 - Hydrostatic # 3 Media		x
6	6665427	BATTERY	See Illustration ENGINE ELECTRICAL/ PE2826 - 950 AMP		x
7	6903117	HYD FLUID 2.5 GAL. 2	See Illustration BULK ITEMS/ B16462R		x
7	6903118	HYD. FLUID 5GAL	See Illustration BULK ITEMS/ B16462R		x
7	6903119	HYD. FLUID 55GAL	See Illustration BULK ITEMS/ B16462R		x
8	6903107	OIL 10W30 QT. 12	See Illustration BULK ITEMS/ B16462R		x
8	6903105	OIL 15W40 QT. 12	See Illustration BULK ITEMS/ B16462R		x
8	6903109	OIL 30W QT. 12	See Illustration BULK ITEMS/ B16462R		x
8	6903106	OIL 15W40 GAL. 6	See Illustration BULK ITEMS/ B16462R		x
8	6903108	OIL 10W30 GAL. 6	See Illustration BULK ITEMS/ B16462R		x
8	6903110	OIL 30W GAL. 6	See Illustration BULK ITEMS/ B16462R		x
8	6903112	OIL 10W30 2.5 GAL 2	See Illustration BULK ITEMS/ B16462R		x
8	6903113	OIL 15W40 2.5 GAL. 2	See Illustration BULK ITEMS/ B16462R		x
8	6903111	OIL 30W 2.5 GAL 2	See Illustration BULK ITEMS/ B16462R		x
9	6904158	S/M S250/S300 "K"	service		1
0	6904156	O/M S250 "K"	operation & maintenance		1
11	6904244	P/M S250K,S300K	parts manual		1
12	6737783	KIT	See Illustration DECALS/ B26132 - operators handbook		1

SCHEDULED MAINTENANCE ITEMS
(50 Hour)

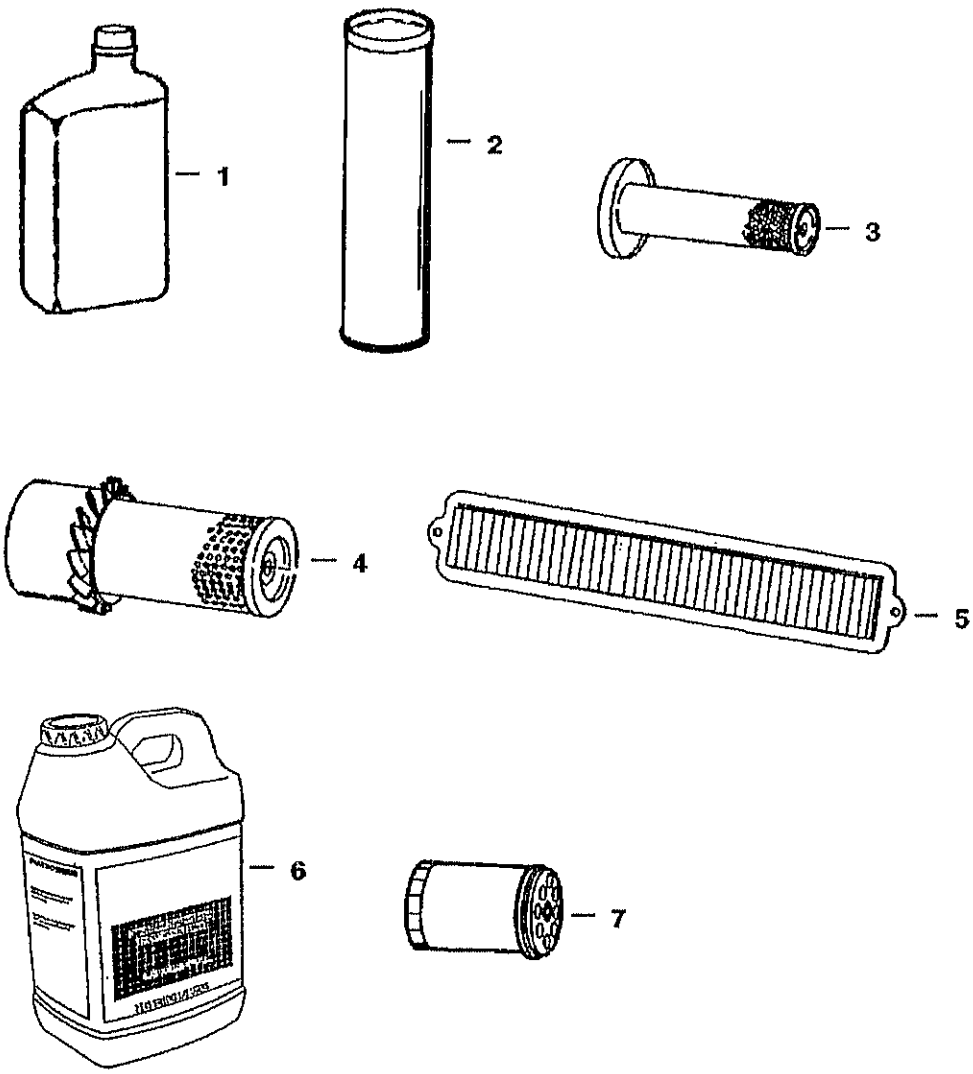

SCHEDULED MAINTENANCE ITEMS (Cont'd)
(50 Hour)

ef No	Part Number	Description	Remarks	Serial Number	Qty
1	6903107	OIL 10W30 QT. 12			x
1	6903105	OIL 15W40 QT. 12			x
1	6903109	OIL 30W QT. 12	30W - 1 Qt.		x
1	6903106	OIL 15W40 GAL. 6			x
1	6903108	OIL 10W30 GAL. 6			x
1	6903110	OIL 30W GAL. 6			x
1	6903112	OIL 10W30 2.5 GAL 2			x
1	6903113	OIL 15W40 2.5 GAL. 2			x
1	6903111	OIL 30W 2.5 GAL 2			x
2	6903122	GREASE 10			x
3	6681475	CARTRIDGE	Inner Air Cleaner		x
4	6681474	CARTRIDGE	Outer Air Cleaner		x
5	6677983	FILTER	HVAC		x
6	6903117	HYD FLUID 2.5 GAL. 2			x
6	6903118	HYD. FLUID 5GAL			x
6	6903119	HYD. FLUID 55GAL			x
7	6678233	OIL FILTER	Engine Oil (6 Pack)		x

SCHEDULED MAINTENANCE ITEMS
(250 Hour)

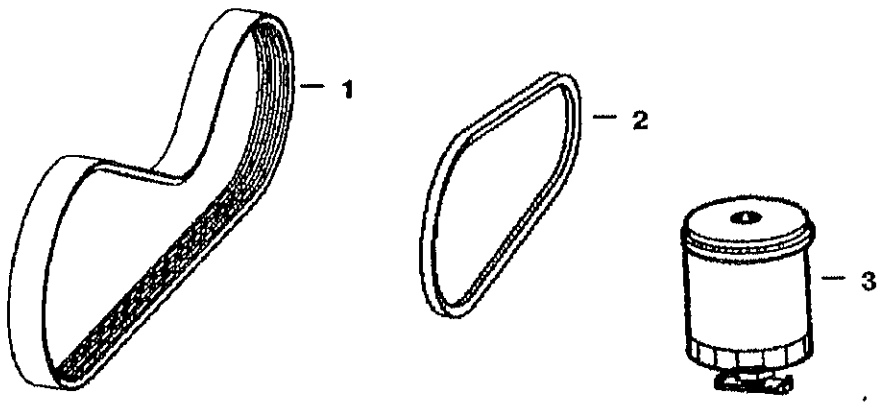

B–25008

SCHEDULED MAINTENANCE ITEMS (Cont'd)
(250 Hour)

Ref No	Part Number	Description	Remarks	Serial Number	Qty
1	6662855	BELT	drive		x
2	6730819	BELT	air conditioner		x
3	6667352	FILTER FUEL			x

SCHEDULED MAINTENANCE ITEMS
(500 HOUR)





B–22776

SCHEDULED MAINTENANCE ITEMS (Cont'd)
(500 HOUR)

Ref No	Part Number	Description	Remarks	Serial Number	Qty
1	6727475	CAP	HYD. RESERVOIR BREATHER		x
2	6661248	ELEMENT	HYD./HYDRO.		x

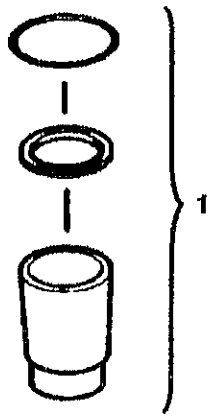

B–25009

SCHEDULED MAINTENANCE ITEMS (Cont'd)
(1000 Hour)

Ref No	Part Number	Description	Remarks	Serial Number	Qty
1	6661807	KIT	in-line filter		x

MAIN FRAME

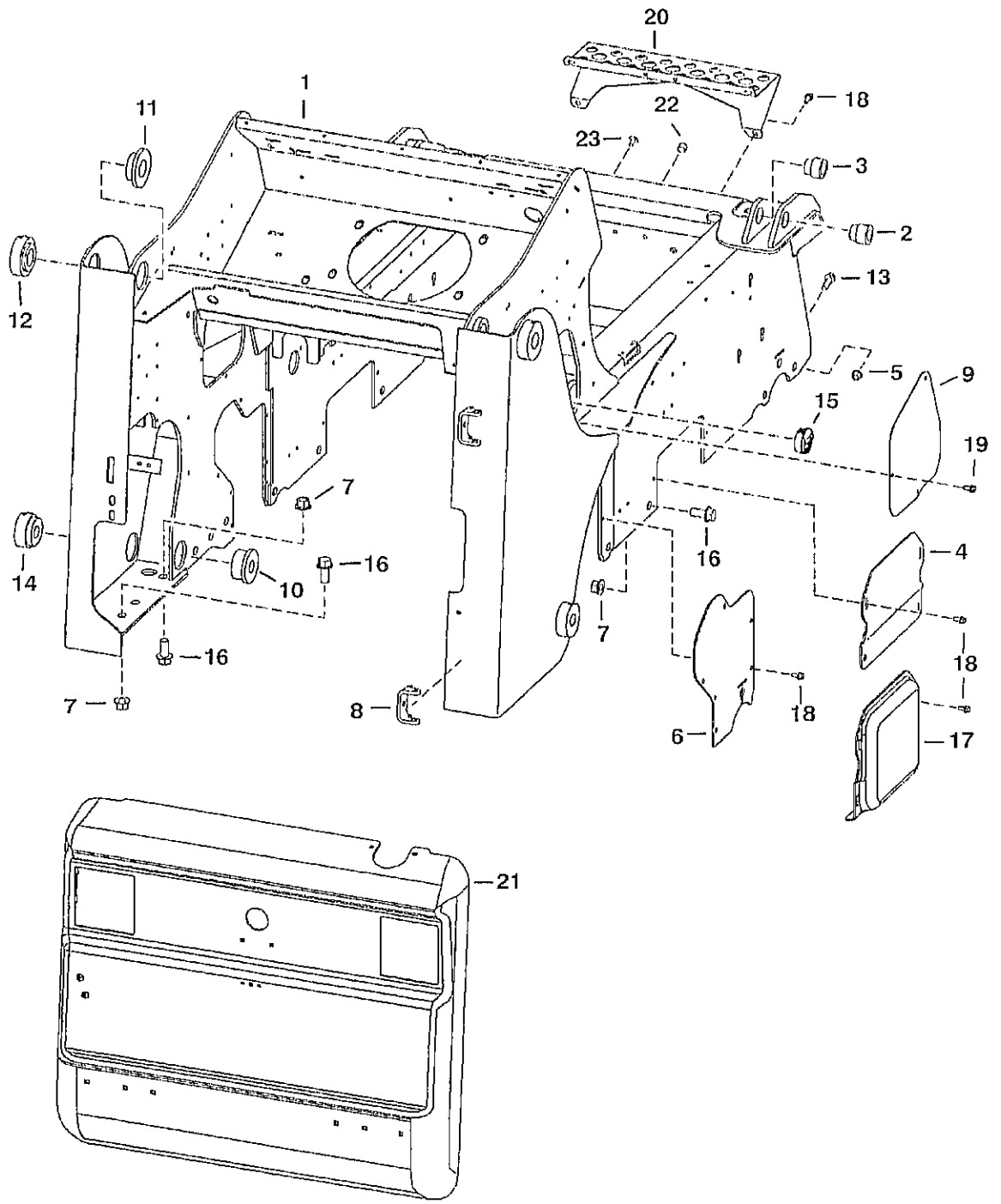
20
1
11
22
18
23
3
2
13
12
5
9
15
19
7
16
14
10
16
4
7
16
18
7
8
6
18
17
21
PE 2899

MAIN FRAME (Cont'd)

ef No	Part Number	Description	Remarks	Serial Number	Qty
1	7101453	MAIN FRAME			1
2	6717277	BUSHING	weld-on		2
3	6717278	BUSHING	weld-on		2
4	6719201	COVER			2
5	83D8	NUT 5			4
6	7107573	COVER			2
7	53D12	NUT			18
8	6708987	HINGE			2
9	6730783	COVER			2
10	6730785	BUSHING	inside upright weld-on		2
11	6729401	BUSHING	inside upright weld-on		2
12	6729402	BUSHING	outside upright weld-on		2
13	31C824	BOLT 10			4
14	6730784	BUSHING	outside upright weld-on		2
15	6718796	PLUG	Bobcat head		1
16	31C1228	BOLT			18
17	6719168	COVER	2-speed		2
18	84G3712	BOLT			24
19	84G3708	SCREW			4
20	6732577	STEP			1
21	6729991	REAR DOOR	See Illustration REAR DOOR/ PE3062		1
22	6679966	PLUG			8
23	6669308	RETAINER			2

OPERATOR CAB

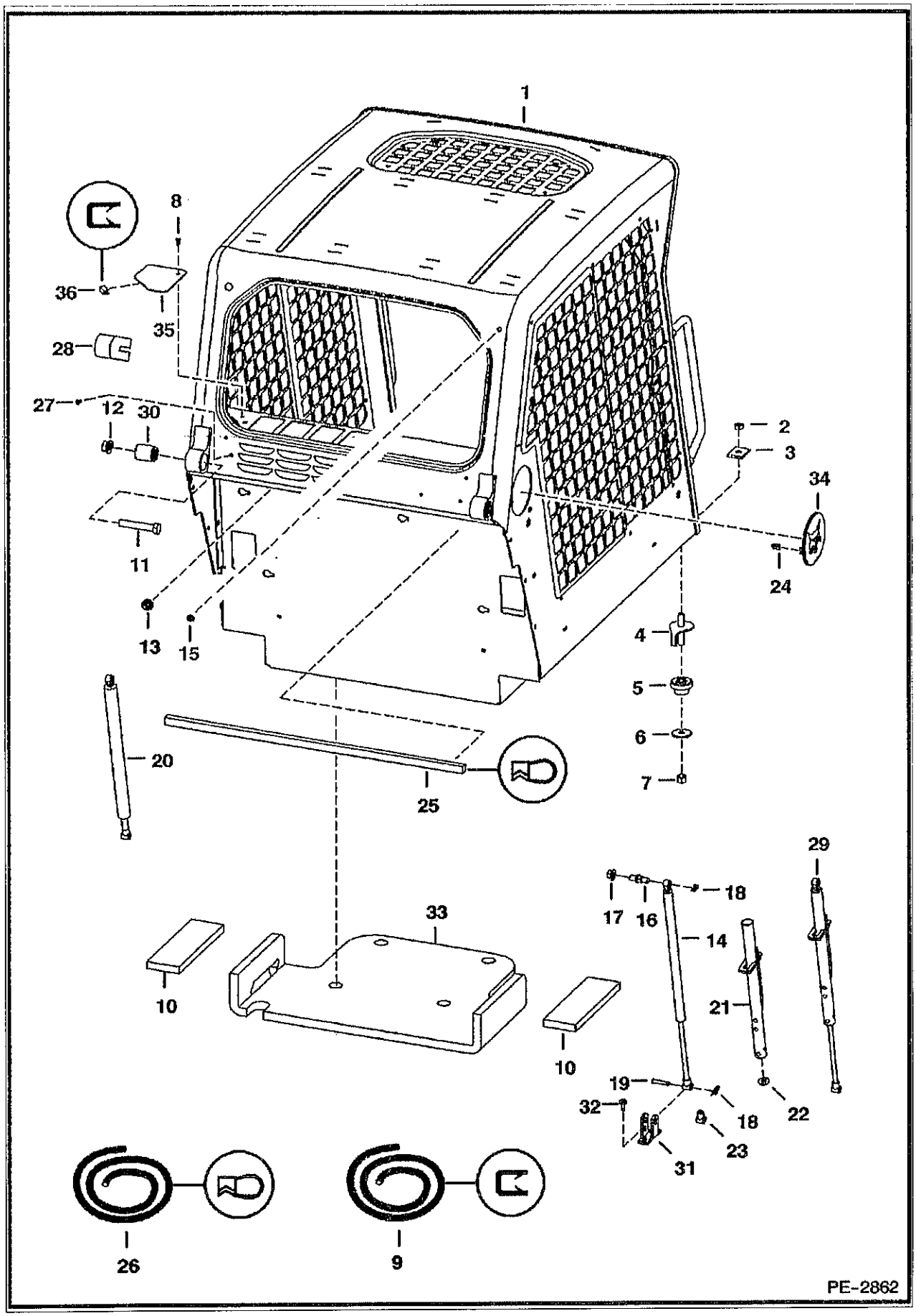

OPERATOR CAB (Cont'd)

Ref No	Part Number	Description	Remarks	Serial Number	Qty
1		OPERATOR CAB	NAP - Does not include cab decals - Order 6719672 cab, Ref. 8, 35 & (1) ft. of Ref. 9 - Was 6719672 [B]		1
2	59D8	NUT 5			2
3	6553709	WASHER	rectangular		2
4	6702971	BOLT			2
5	6560633	DAMPENER			2
6	6515817	WASHER			2
7	85D8	NUT 5			2
8	6630207	RIVET			1
9	6654139	MOULDING	bulk - sold per foot		x
10	6729012	INSULATION	seat pan		2
11	17C1056	BOLT			2
12	53D10	NUT			2
13	53D6	NUT			4
14	7100506	GAS SPRING	R.H.		1
15	5289686	PLUG			1
16	6719064	MOUNT			2
17	97D8	NUT			2
18	6631418	PIN	ring		4
19	6567743	PIN			2
20	7100508	GAS SPRING	L.H.		1
20	6675136	GAS SPRING	L.H. - heavy duty		1
21	6708189	TUBE	stop - R.H.		1
22	6701174	WASHER			1
23	6675257	CLEVIS			1
24	6679990	CLIP			2
25	6733121	SEAL(31"STRIP)	31"(787,4 mm) long of Ref. 26		1
26	6679994	SEAL	bulk - sold per foot		x
27	6675033	INSERT	filter cover		2
28	6579613	STOP			2
29		GAS SPRING	NSS - R.H. - W/latch - Order Ref. 14 & 21-23		1
30	6562602	BUSHING			2
31	6706349	MOUNT	gas spring		2
32	84G3112	BOLT 5			4
33	6729013	INSULATION	seat pan		1
34	6733107	PLUG ASSY	W/ Bobcat head - W/Ref. 24		2
35	7122316	COVER			1
36		MOULDING	NAP - 1" (25,4 mm) long - Order Ref. 9		1

OPERATOR CAB

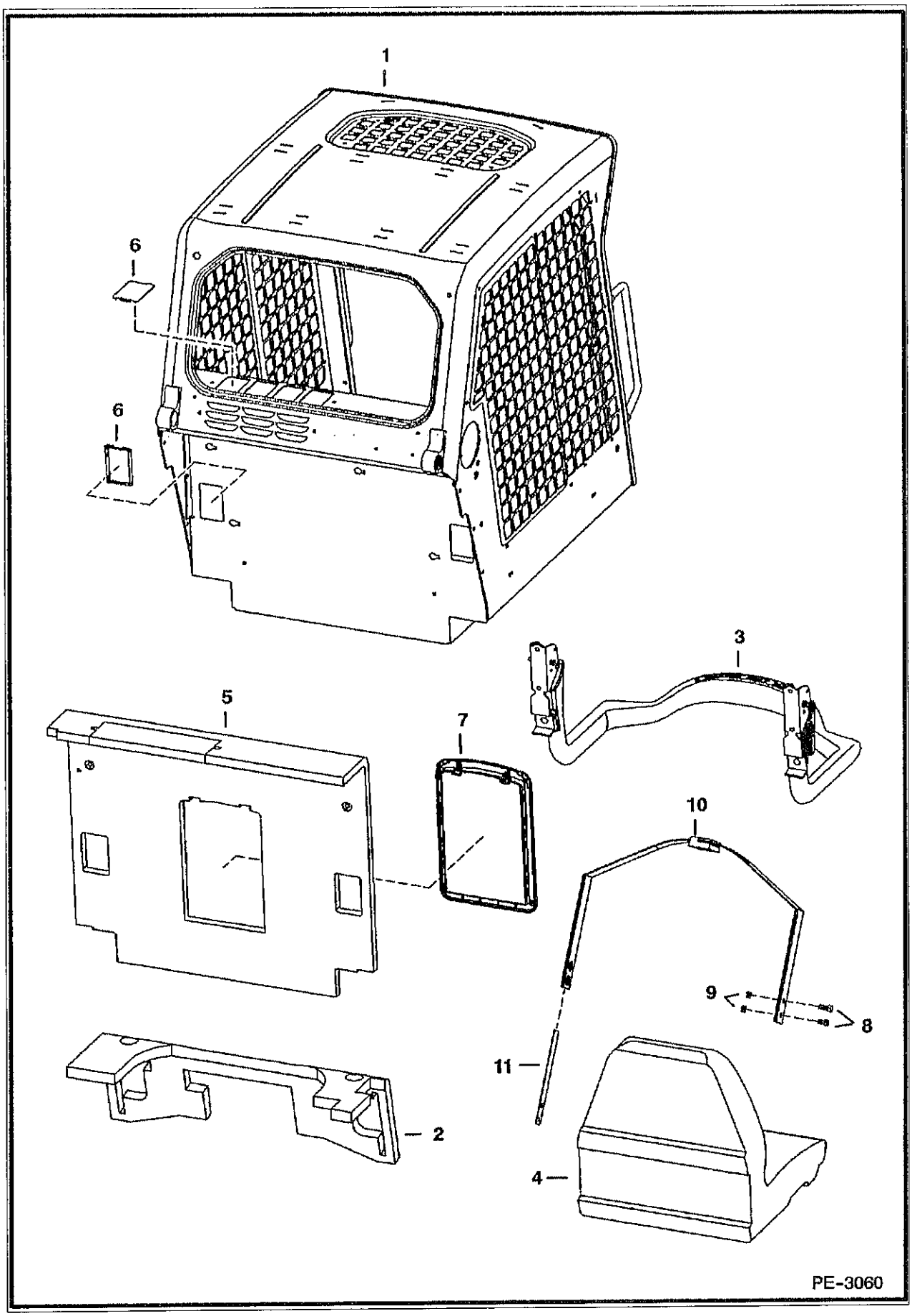

OPERATOR CAB (Cont'd)

⌟f No	Part Number	Description	Remarks	Serial Number	Qty
1		OPERATOR CAB	NAP - Does not include cab decals - Order 6719672 cab, 7122338 cover, 6630207 rivet & (1) ft. of 6654139 moulding - Was 6719672 [B]		1
2	6716800	INSULATION			1
3		SEAT BAR			1
4		SEAT	See Illustration SEAT/ B26226 See Illustration SEAT/ B25136		1
5	6719504	INSULATION			1
6	6718101	COVER			6
7		CONTAINER	NAP - manuals - Order 6725301 Cover & 6725303 Frame - Was 6719503 [A]		1
7	6675524	CLIP			2
7	6725301	COVER			1
7	6725303	FRAME			1
8	17C716	BOLT			4
9	85D7	NUT			4
10	6675074	SEAT BELT			1
1	6725373	SPRING PLATE			2

OPERATOR CAB
(Deluxe)

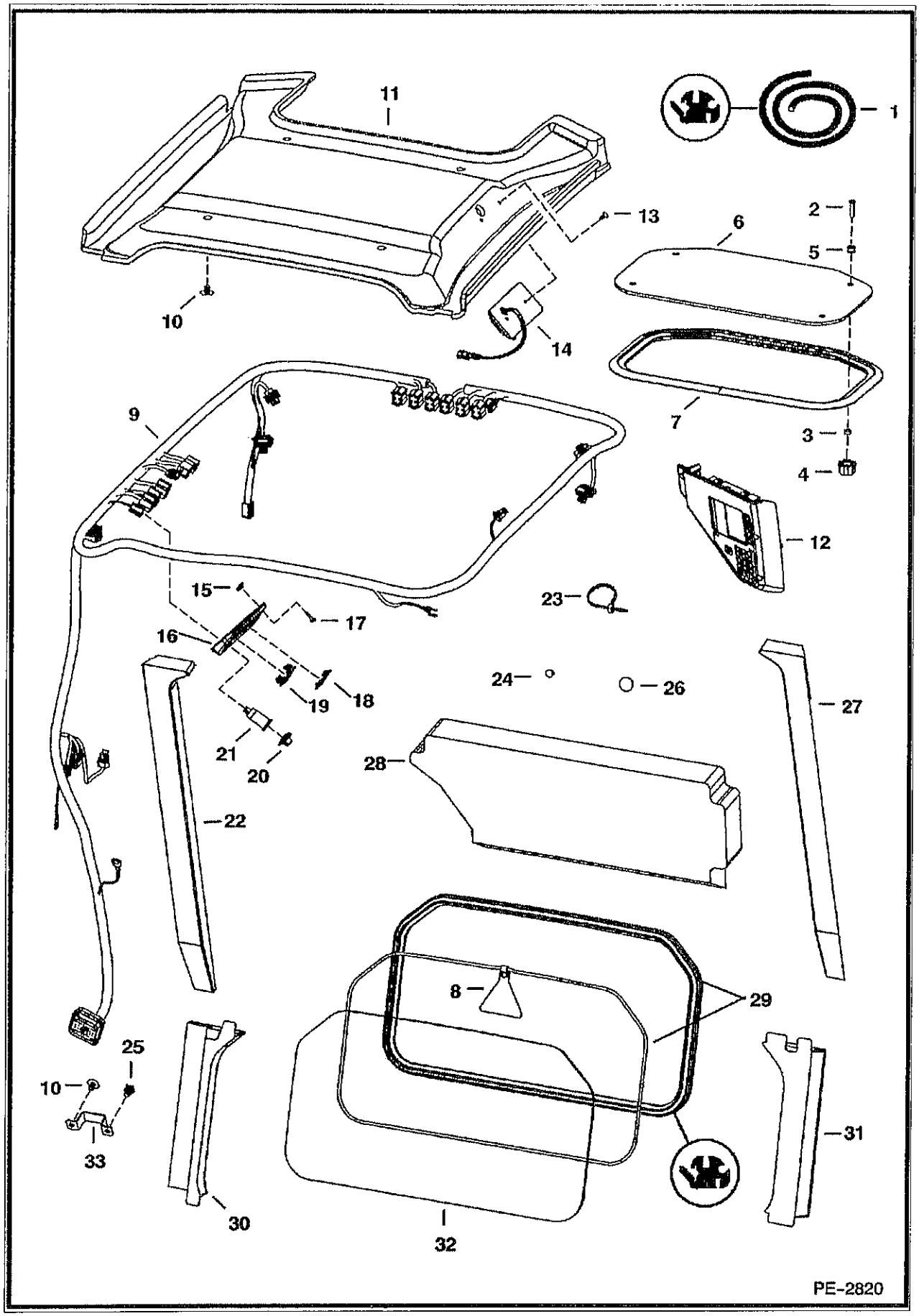

OPERATOR CAB (Cont'd)
(Deluxe)

Ref No	Part Number	Description	Remarks	Serial Number	Qty
1	6675387	EXTRUSION	bulk - Sold Per Foot		x
1	6554149	CORD	bulk - Sold Per Foot		x
2	91G420	SCREW			4
3	6664085	BUSHING	nylon		4
4	6681614	KNOB			4
5	6675545	GROMMET			4
6	7105035	WINDOW	assy. - W/ Ref. 2, 3, 5 & 7		1
7		SEAL	NAP - Order Ref. 6		1
8	6731478	EXIT TAG			1
9	7116260	HARNESS	deluxe - required to operate beacon, 4-way flashers, power bob-tach & strobe lights		1
9	7116261	HARNESS	standard		1
10	6674895	RETAINER	snap in	& Bel.	4
10	6674895	RETAINER	snap in	& Abv.	5
11	6737704	INSULATION	headliner		1
12	6688403	PANEL	R.H. - deluxe - keyless - export		1
13	6664221	RETAINER	snap in		2
14	6680326	LIGHT	dome		1
14	6665367	BULB			1
15	6669091	CLIP			4
16	6718580	PANEL			1
17	6669224	BOLT			4
18	6665314	PLUG	switch		5
19	6668742	SWITCH	travel control - export		1
20	6664224	CAP			1
21	6664223	OUTLET			1
22	6717519	INSULATION			1
23	6624289	CABLE TIE			1
24	5289686B	PLUG	black - .375" hole		1
25	6678666	TREE MOUNT			1
26	6657719	PLUG	.75" hole		1
27	6717520	INSULATION			1
28	6727299	INSULATION	cab back		1
29		EXTRUSION	NAP - 75.75" (1924mm) long - Order Ref. 1		x
29		CORD	NAP - 75.75" (1924mm) long - Order Ref. 1		x
30	6717517	INSULATION			1
1	6717518	INSULATION			1
32	6717874	WINDOW	rear		1
33	7121119	BRACKET		& Abv	1

SEAT & SEAT BAR

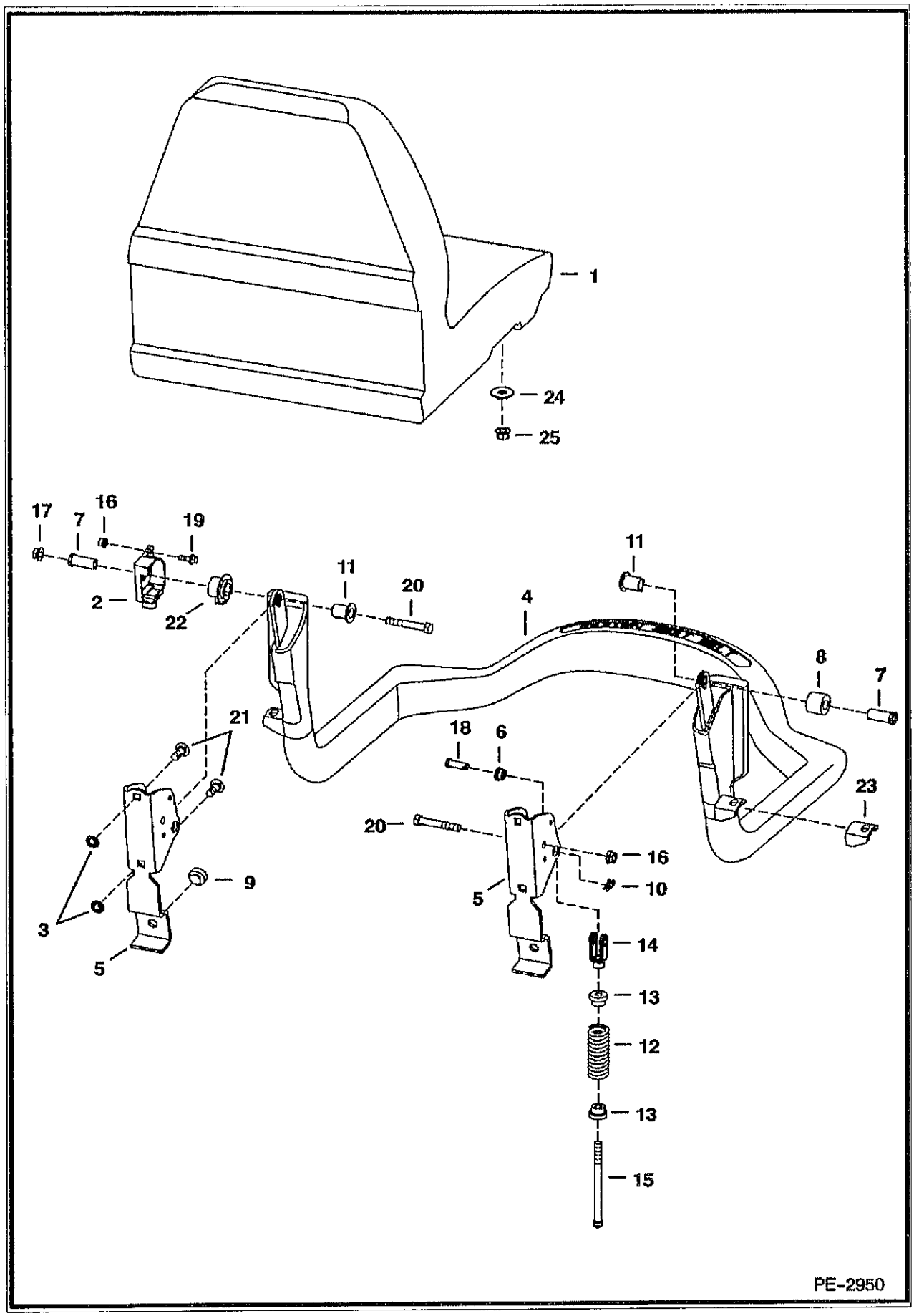

SEAT & SEAT BAR (Cont'd)

ef No	Part Number	Description	Remarks	Serial Number	Qty
1		SEAT	See Illustration SEAT/ B25136		1
2	6680429	SENSOR			1
3	6674894	NUT			4
4	6715860	SEAT BAR			1
5	6715863	BRACKET			1
6	6715864	BUSHING			2
7	6715865	BUSHING			2
8	6715866	BUSHING			1
9	6519178	BUMPER			2
10	6631418	PIN	ring		2
11	6680441	BUSHING	keyed		2
12	6701535	SPRING			2
13	6710659	BUSHING			2
14	6713589	CLEVIS			2
15	6713887	BOLT			2
16	83D4	NUT 10			1
17	97D6	NUT 10			2
8	4F6106	PIN			2
19	35C412	BOLT			1
20	17C640	BOLT 5			2
21	10C616	BOLT 10			4
22	6680443	BUSHING			1
23		MOUNT	NAP - Order Ref. 4		2
24	619021B	WASHER			6
25	59D5	NUT 5			4

SEAT
(Michigan)

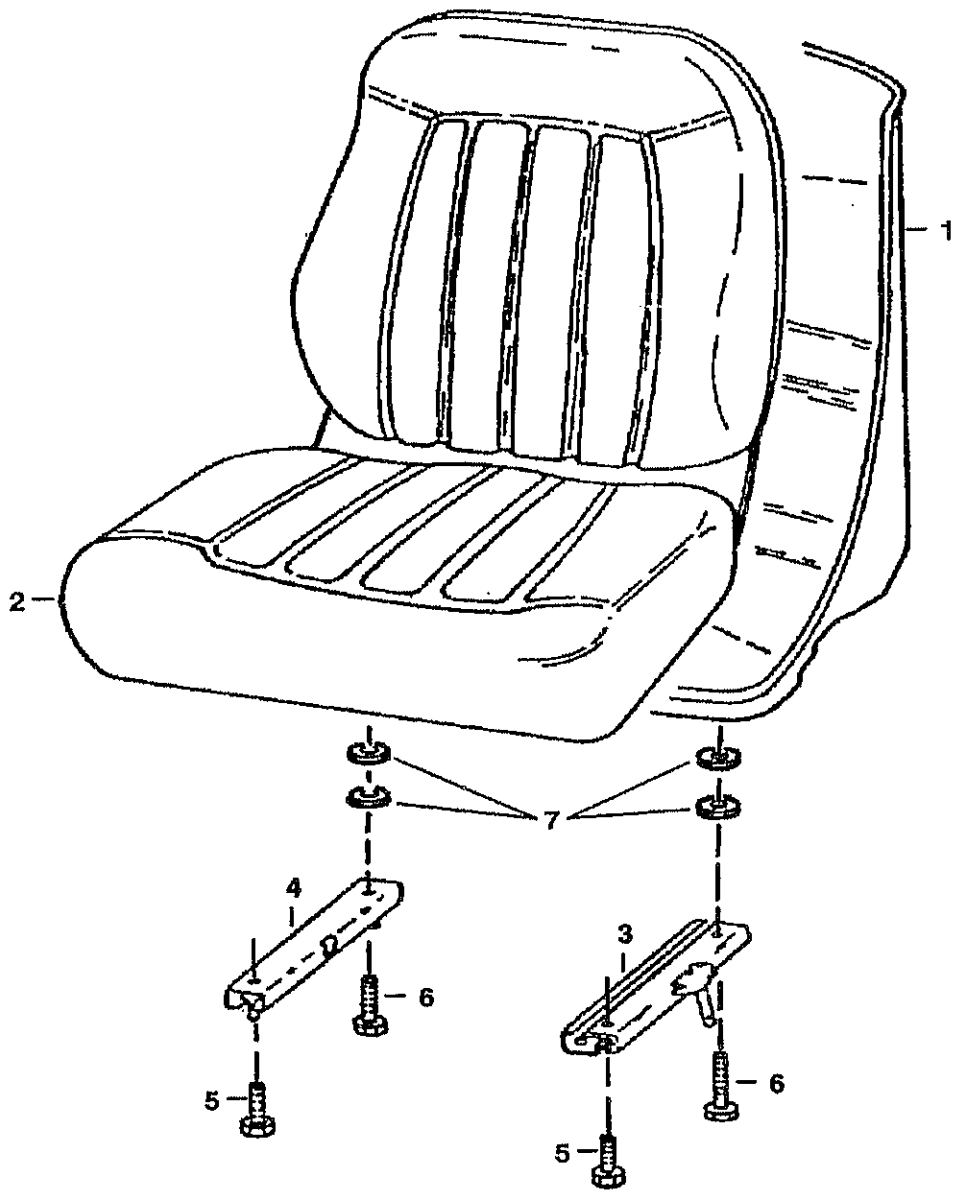

B-26226

SEAT (Cont'd)
(Michigan)

Ref No	Part Number	Description	Remarks	Serial Number	Qty
1	6669135	SEAT	W/Ref. 2-7		1
2	6670160	CUSHION	W/ edging, clip & (2) grommets		1
2		EDGING	NSS		1
2		CLIP	NSS		1
3	6674013	TRACK	L.H. - W/ 8" (203mm) latch		1
4	6669089	TRACK	R.H. - W/O latch		1
5	25G512	SCREW			2
6	25G520	SCREW			2
7	6672715	SPACER			4

REAR DOOR

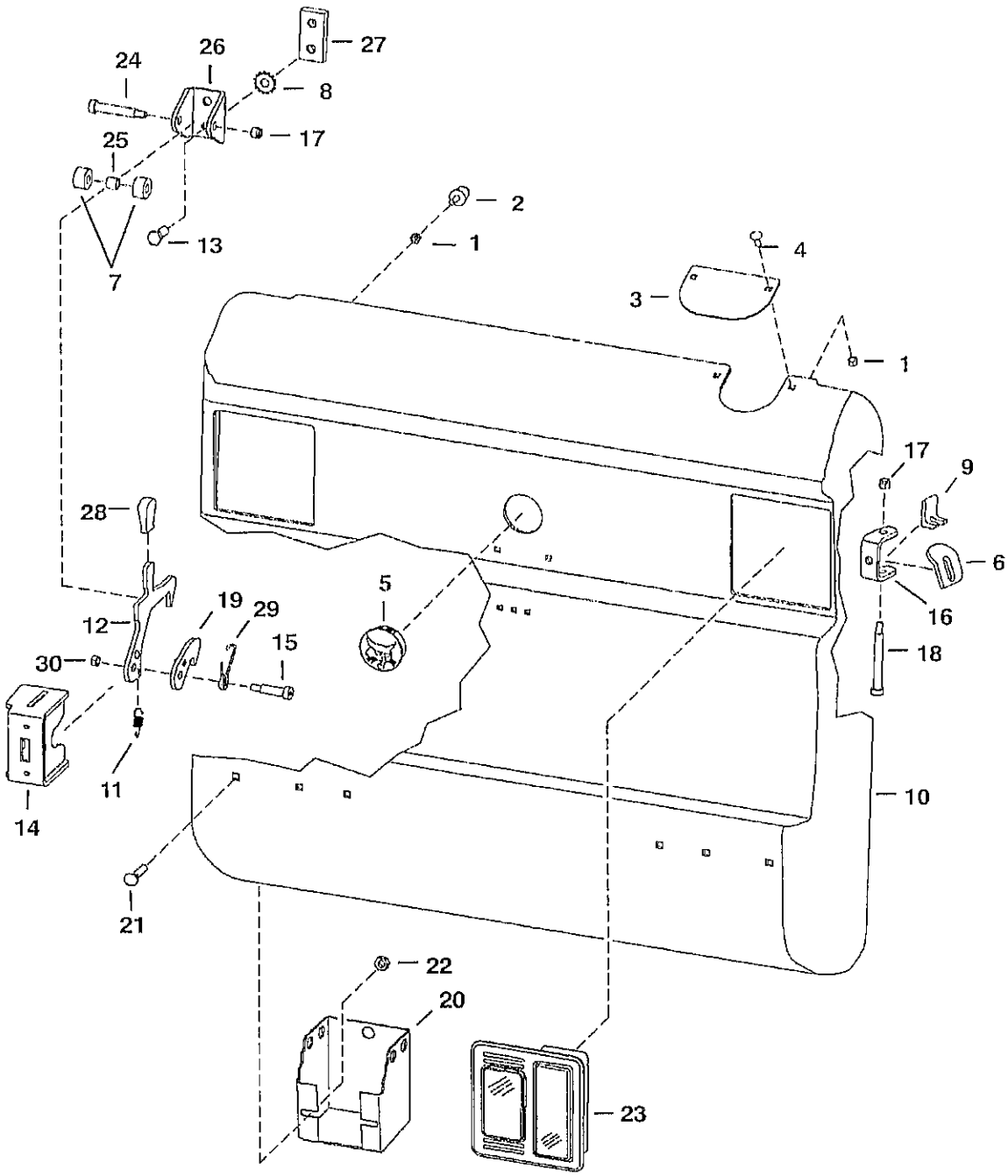
27
24
26
8
17
25
2
1
13
7
4
3
1
17
9
6
16
18
28
12
19
29
15
30
5
11
14
10
21
22
20
23
PE-3062

REAR DOOR (Cont'd)

ef No	Part Number	Description	Remarks	Serial Number	Qty
1	61D5	NUT			4
2	6733616	BUMPER			2
3	6714509	COVER	exhaust		1
4	37C512	BOLT			2
5	6718796	PLUG	back-up alarm		1
6	6714126	DOOR STOP			1
7	6809726	ROLLER			2
8	6675273	WASHER	lock		2
9	6719766	STOP			1
10	6729991	REAR DOOR			1
11	6810141	SPRING			1
12	6732715	LATCH			1
13	17C820	BOLT			2
14	6729939	LATCH PLATE	weld-on		1
15	38C824	SCREW			1
16	6733575	HINGE	weld-on		2
17	59D6	NUT			3
8	6809845	BOLT			2
19	6733667	LATCH			1
20	6715318	TOOL HOLDER	Europe		1
21	37C612	BOLT			2
22	55D6	NUT			2
23		LIGHT ASSY	See Illustration LIGHT KIT/ PE3084		2
24	38C840	BOLT	carriage		1
25	6809734	BUSHING	striker		1
26	6809727	CHANNEL			1
27	6719525	BAR	threaded striker		1
28	6564452	GRIP			1
29	6810132	SPRING			1
30	85D6	LOCK NUT			1

LIFT ARMS & BOBTACH

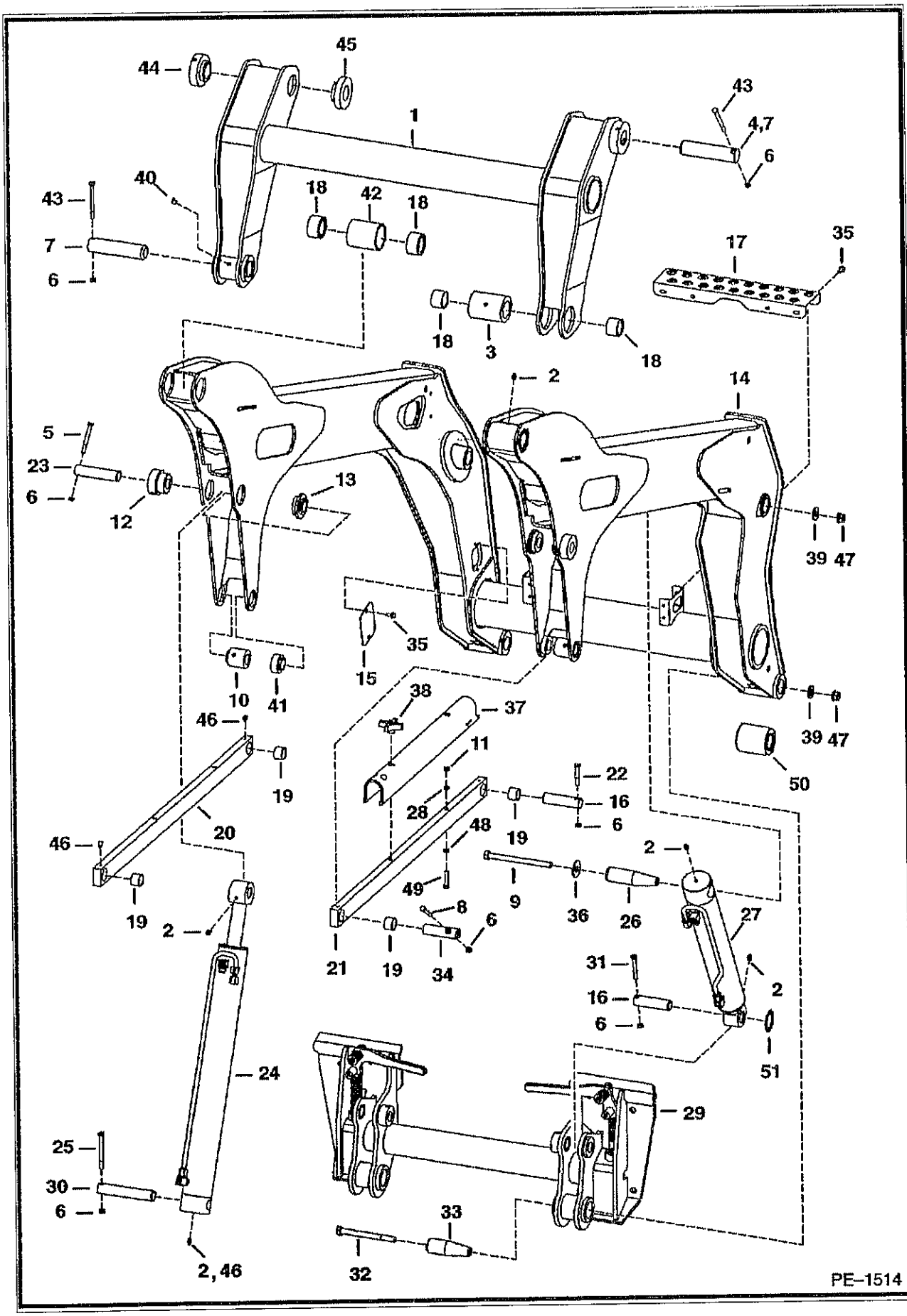

LIFT ARMS & BOBTACH (Cont'd)

Ref No	Part Number	Description	Remarks	Serial Number	Qty
1	6726966	FRAME LINK	H-Frame		1
2	10H25	GREASE ZERK			8
3	6728800	BUSHING			4
4	6732687	PIN	9.60" (243,84mm) long - for 4 pt. lift		2
5	17C656	BOLT			4
6	85D6	LOCK NUT			12
7	6728819	PIN	6.90" (175,26mm) long		2
8	17C644	BOLT			2
9	17C10136	BOLT			2
10	6729423	BUSHING	weld-on		2
11	6718942	NUT			2
12	6729005	BUSHING	weld-on		2
13	6729006	BUSHING	weld-on		2
14	6726965	LIFT ARM			1
15	6731179	COVER			1
16	6577954	PIN			4
17	6729888	STEP			1
8	6730995	BUSHING	wear		8
19	6731647	BUSHING	wear		4
20	6729468	LINK ASSY	L.H. - W/Ref. 19		1
21	6726969	LINK ASSY	R.H. - W/Ref. 11, 19, 28, 48 & 49		1
22	17C640	BOLT 5			2
23	6729007	PIN			2
24		CYLINDER	See Illustration LIFT CYLINDER/ PE2260 LIFT		2
25	17C664	BOLT			2
26	6728971	PIN			2
?7		CYLINDER	See Illustration TILT CYLINDER/ PE1520 TILT		1
.8	6532347	SPACER			2
29		BOB-TACH	See Illustration BOB-TACH/ PE3063		1
30	6730887	PIN			2
31	17C648	SCREW			2
32	17C10112	BOLT			2
33	6729358	PIN			2
34	6731139	PIN			2
35	84G3112	BOLT 5			6
36	6731160	WASHER			2
7	6731569	STOP	lift arm		1
38	6684932	KNOB			2
39	27E10	WASHER			4
40	11H15	GREASE FITTING	45 degree		2
41	6731138	BUSHING			4
42	6728972	BUSHING	weld-on		2
43	17C672	BOLT			2
44	6727525	BUSHING	weld-on		2
45	6727832	BUSHING	weld-on		2
46	12H15	GREASE FITTING	90 degree		6
47	53D10	NUT	locking		4
48	25E15	WASHER			2
49	6731646	BOLT	stainless steel		2
50	6728999	BUSHING	weld-in		2
51	225855	OIL SEAL	Was 225855B [D]		4

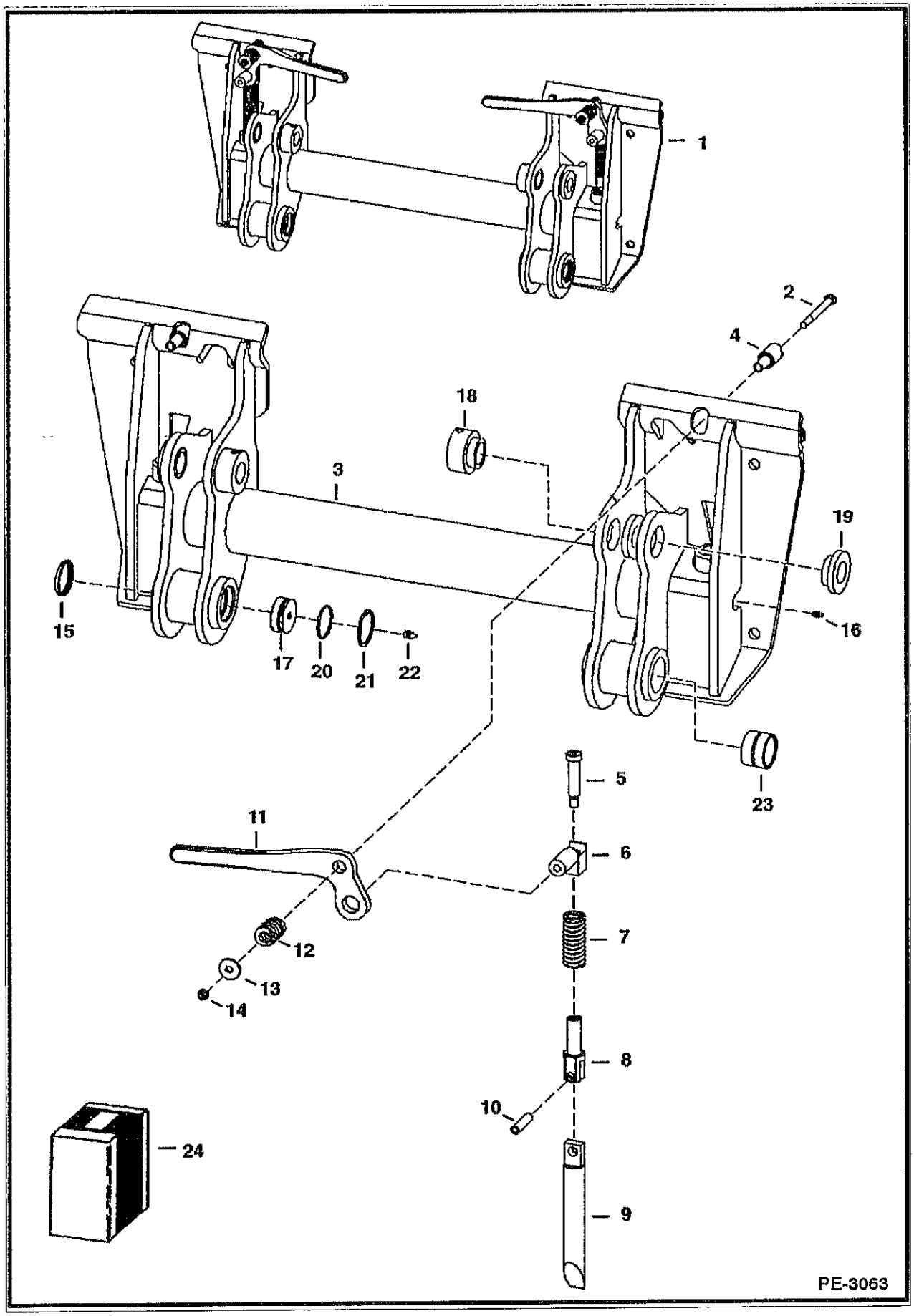
1
2
4
18
3
19
15
16
17
20
21
22
23
5
11
6
12
7
13
14
8
10
24
9
PE-3063

BOB-TACH (Cont'd)

Ref No	Part Number	Description	Remarks	Serial Number	Qty
1	6729029	BOB-TACH	See Illustration DECALS/ B26132 REF. 2-22 - ALSO ORDER 6561383 DECAL		1
2	17C660	BOLT			2
3		FRAME	NAP		1
4	6702958	BUSHING	weld-on		2
5	6728473	BOLT	shoulder		2
6	6731119	PIVOT ASSY			2
7	6578253	SPRING	Was 6562018 [A]		2
8	6704248	PIVOT	wedge		2
9	6737191	WEDGE			2
10	14J5032	PIN			2
11	6702904	LEVER	R.H.		1
11	6702903	LEVER	L.H.		1
12	6713040	SPRING			2
13	619021	WASHER 5			2
14	85D6	LOCK NUT			2
15	6678960	SEAL			2
16	10H35	GREASE ZERK			2
17	6729491	PLUG			2
18	6717260	BUSHING	weld-on		2
19	6717259	BUSHING	weld-on		2
20	25K30126	O RING 10			2
21	7105856	SNAP RING			2
22	10H25	GREASE ZERK			2
23	6718329	BUSHING	wear		2
24	6724775	LEVER KIT	R.H. Bob-tach - Ref. 2 & 5 - 14		1
24	6724776	LEVER KIT	L.H. Bob-tach - Ref. 2 & 5 - 14		1

PANELS
(Manual Controls, AHC & ACS)

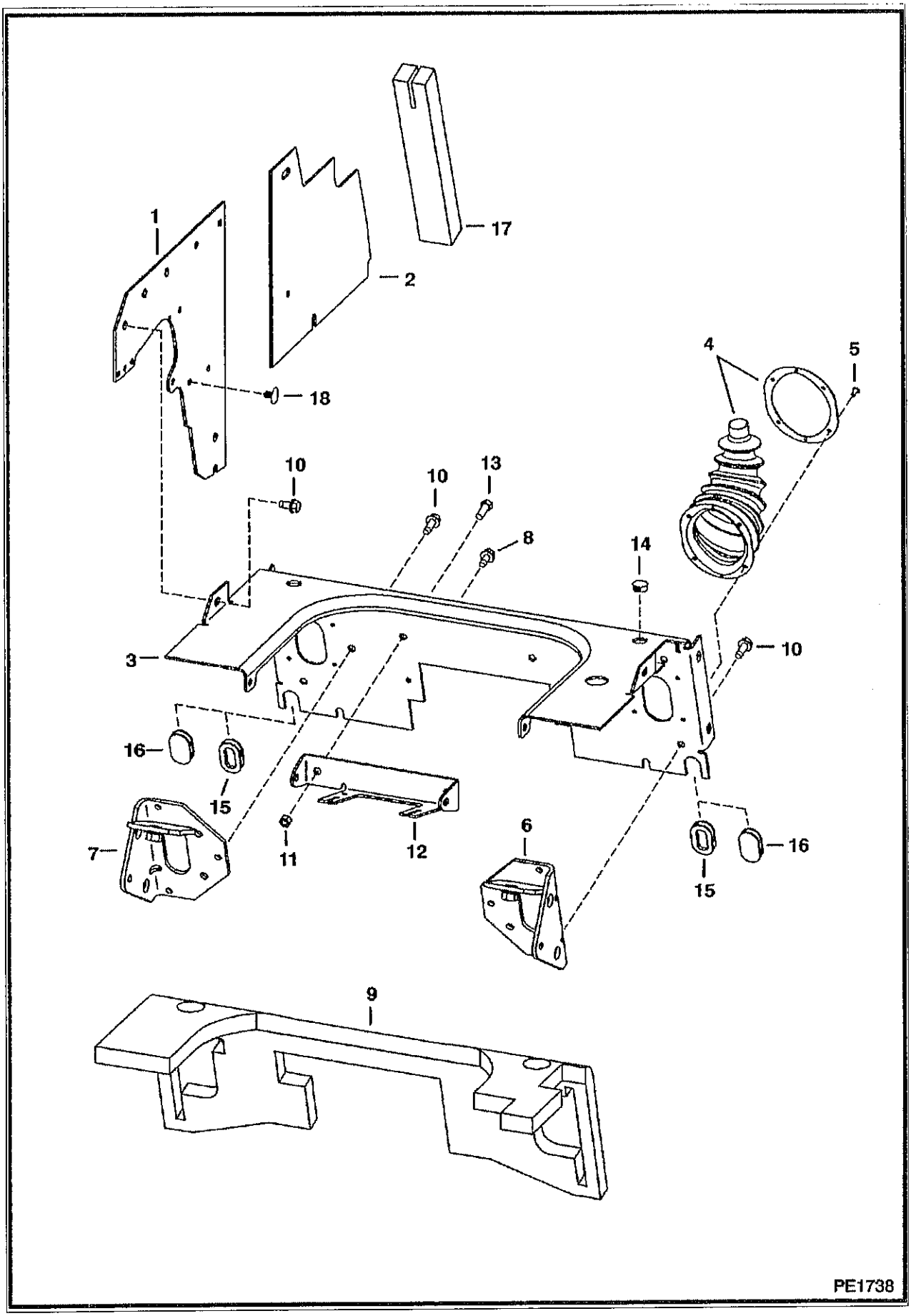

PANELS (Cont'd)
(Manual Controls, AHC & ACS)

ef No	Part Number	Description	Remarks	Serial Number	Qty
1	6734521	PANEL	15.25" long x 16.33" tall		2
2	7117124	PANEL			2
3	7106707	SHIELD			1
4	6532127	BOOT	W/ mounting ring		2
4		RING	NSS - mounting ring		2
5	6630207	RIVET			8
6	6733022	BRACKET	R.H. steering		1
7	6733024	BRACKET	L.H. steering		1
8	84G3716	SCREW 5			2
9	6716800	INSULATION			1
10	84G3712	BOLT			28
11	95D6	NUT			2
12	7100795	MOUNT	damper		1
13	17C612	BOLT 5			1
14	6648348	PLUG			2
15	6577961	GROMMET	for manual controls		2
16	6714726	GROMMET	plug - for AHC/ACS controls		2
7	6732618	SEAL			2
18	6674895	RETAINER			4

PANELS
(SJC)

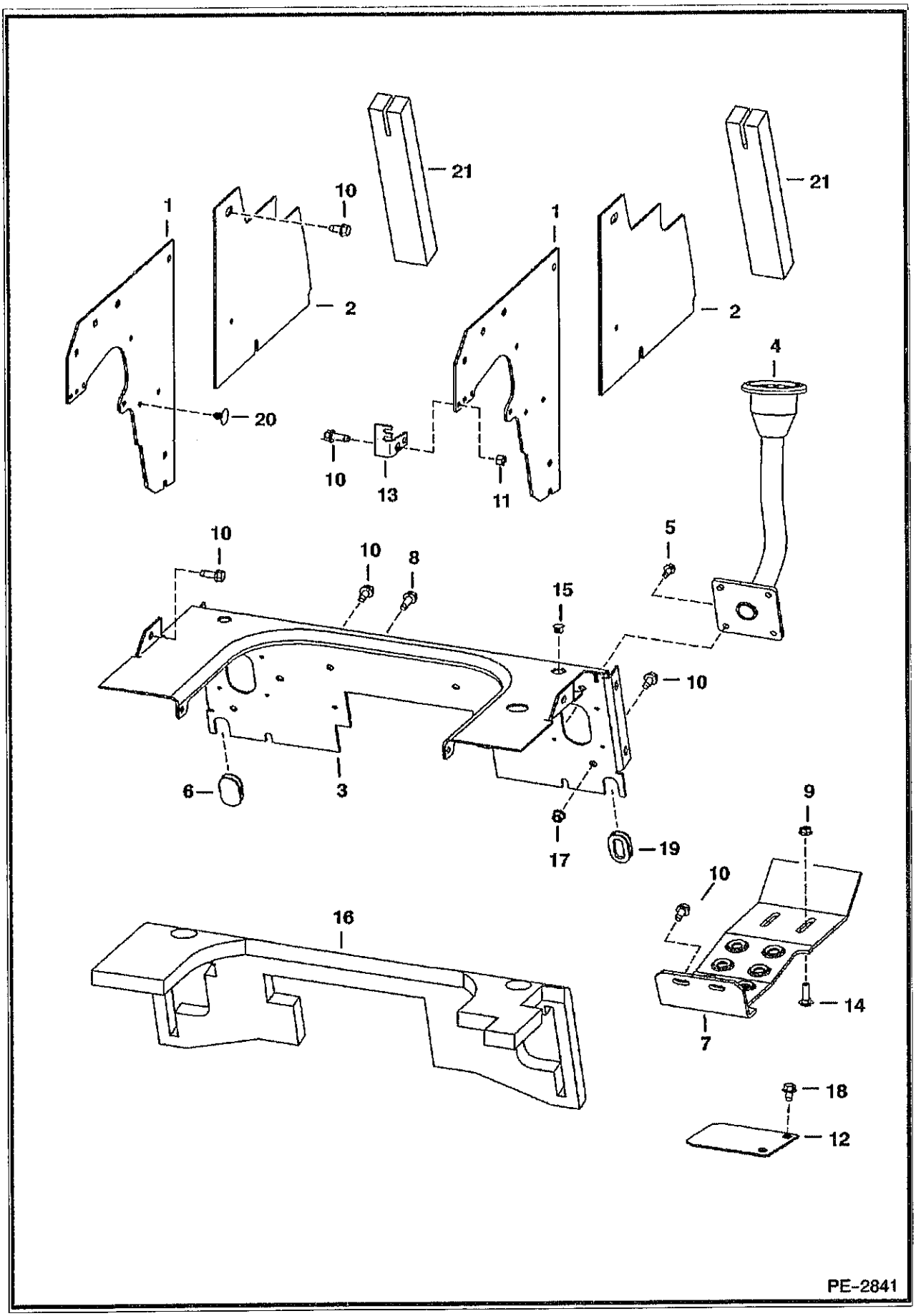
21
10
1
2
20
10
13
11
1
21
2
4
5
10
10
8
15
10
6
3
17
19
9
10
16
14
7
18
12
PE-2841

PANELS (Cont'd)
(SJC)

Ref No	Part Number	Description	Remarks	Serial Number	Qty
1	6734521	PANEL			2
2	7117124	PANEL			2
3	7106707	SHIELD			1
4		HANDLE	See Illustration CONTROLS ELECTRICAL/ PE2024 - NAP - joystick - R.H. - Order 7111992 joystick assembly - Was 6729791 [A]		1
4		HANDLE	See Illustration CONTROLS ELECTRICAL/ PE2024 - NAP - joystick - L.H. - Order 7111993 joystick assembly - Was 6729792 [A]		1
5	35C512	BOLT			4
6	6714726	GROMMET	plug		1
7	6729237	STEP			2
8	84G3716	SCREW 5			2
9	57D6	NUT 5			4
10	84G3712	BOLT			24
11	95D6	NUT			2
12	6729774	COVER	cylinder access		2
13	6732450	BRACKET	cable		1
14	37C620	BOLT			4
15	6648348	PLUG			2
16	6716800	INSULATION			1
17	89D5	NUT			4
18	84G3710	SCREW			4
19	6714726	GROMMET			1
20	6674895	RETAINER			4
21	6732618	SEAL			2

FUEL SYSTEM

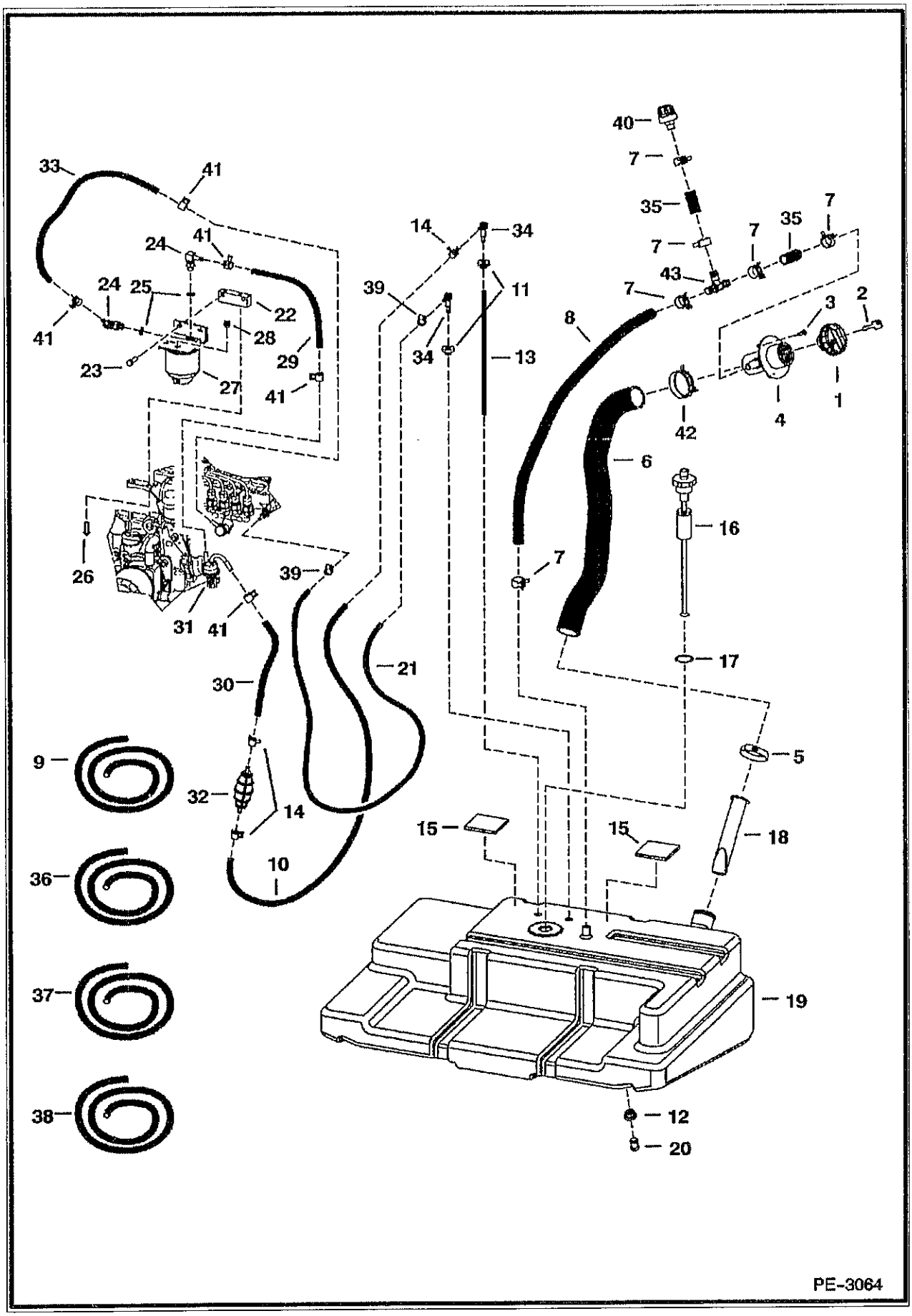

FUEL SYSTEM (Cont'd)

Ref No	Part Number	Description	Remarks	Serial Number	Qty
1	6661114	CAP	green fuel fill		1
1	6661696	CAP	locking - W/REF. 2 - Code PK510		1
1	7113340	CAP	non-locking - European		1
1	7121223	CAP	locking - European		1
2	6587458	KEY	Code PK510		1
3	7106279	BOLT			3
4	6701449	FILLER TUBE			1
5	42HL250	CLAMP			1
6	7110942	HOSE			1
7	5HM24	CLAMP			6
8		HOSE	NAP - 33.5" (850mm) long - Order Ref. 36		1
9	6578169	HOSE	Bulk - sold per foot		x
10		HOSE	NAP - 29.5" (749mm) long - Order Ref. 38		1
11	6735696	BUSHING	.37" (9,4mm) ID - brown		2
12	6717402	BUSHING	.54" (13,7mm) ID		1
13	6729854	HOSE	12" (305mm) long		1
14	5HM13	CLAMP			3
15	6578278	PAD	self adhesive one side		2
16	6680438	SENSOR	fuel - W/REF. 17		1
17	6717579	GASKET			1
18	6569219	SCREEN			1
19	6735614	TANK			1
20	6717401	PLUG	.75" shoulder		1
21		HOSE	NAP - 50" (1270mm) long - Order Ref. 9		1
22	6731152	MOUNT			1
23	43C516	BOLT			2
24	6715183	ELBOW	W/Ref. 25		2
25	79K5	O RING 10			x
26	53C516	BOLT			2
27	6667353	FILTER ASSY			1
27	6667352	FILTER FUEL			1
27	72F1	FITTING			1
28	6658180	BREATHER	plug		1
29		HOSE	NAP - 13" (330mm) long - Order Ref. 37		1
30		HOSE	NAP - 9.25" (235mm) long - Order Ref. 38		1
31		FUEL PUMP	See Illustration FUEL INJECTION PUMP/ B17614		1
32	6657734	PUMP	hand primer		1
33		HOSE	NAP - 16" (406 mm) long - Order Ref 37		1
34	7101291	ELBOW			2
35		HOSE	NAP - 2.5" (63mm) long - Order Ref. 36		2
36	6578172	HOSE	bulk - Sold Per Foot		x
37	6577822	HOSE	.375 I.D. - bulk - Sold Per Foot		x
38	6577821	HOSE	.25" I.D. - bulk - Sold Per Foot		x
39	42HS4	CLAMP			2
40	6684923	BREATHER	vent		1
41	5HM14	CLAMP			5
42	5HM58	CLAMP			1
43	7102705	TEE			1

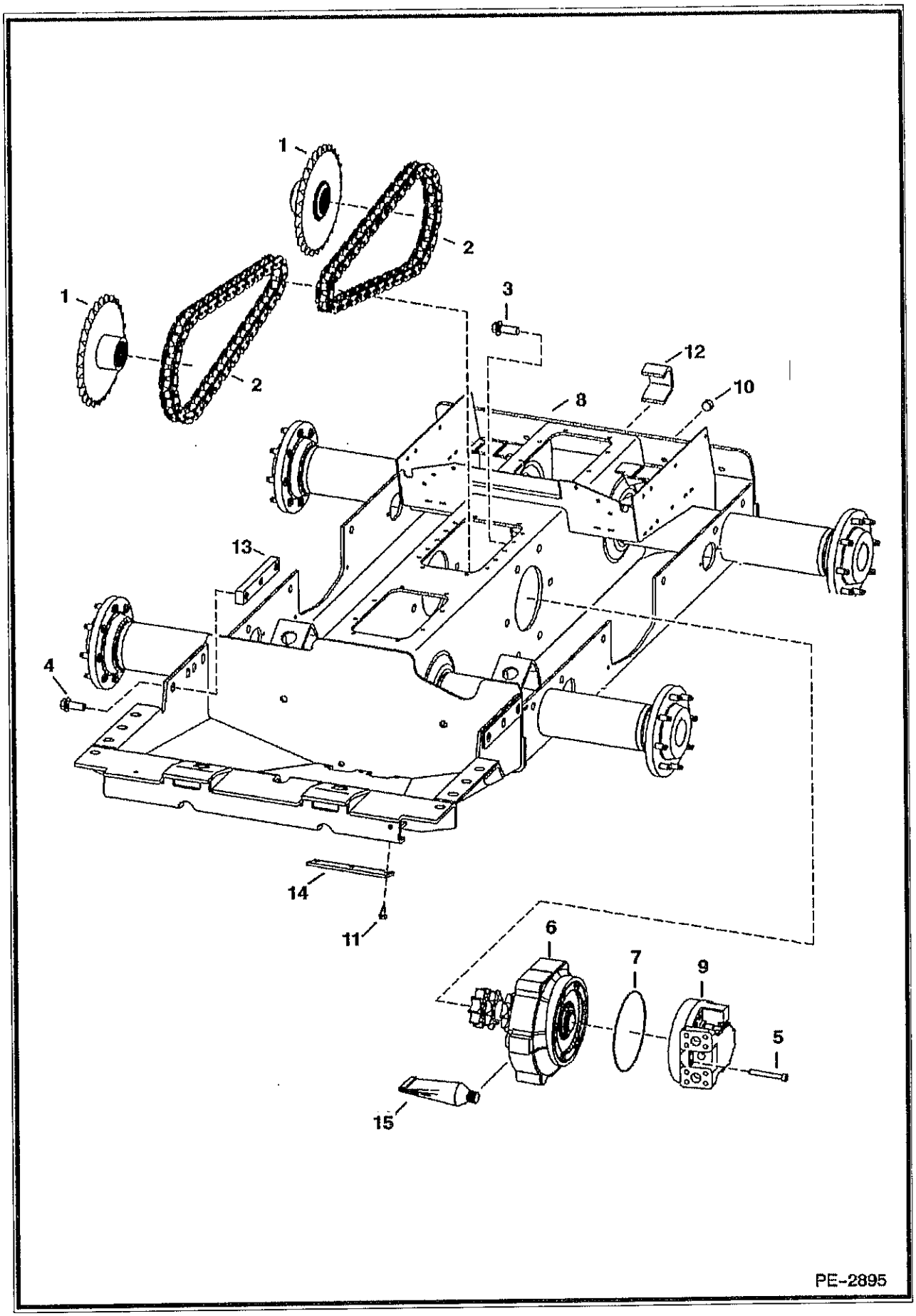
1
2
1
2
3
12
10
8
13
4
14
11
6
7
9
5
15
PE-2895

DRIVE TRAIN (Cont'd)

Ref No	Part Number	Description	Remarks	Serial Number	Qty
1	7106737	SPROCKET	See Illustration AXLE/ PE1544		4
2	7106862	CHAIN	endless - 48 pitches		4
3	6678971	BOLT			12
4	31C1228	BOLT			6
5	6717806	BOLT			20
6		MOTOR CARRIER	See Illustration MOTOR CARRIER/ PE1543 See Illustration MOTOR CARRIER/ PE1395 DRIVE MOTOR		2
7	25K30812	O RING 10			2
8	7112333	CHAINCASE	frame only		1
9		MOTOR	See Illustration HYDROSTATIC MOTOR/ MS2199 See Illustration HYDROSTATIC MOTOR & BRAKE/ MS2218		2
10	6731121	PLUG	chaincase fill		1
11	84G3712	BOLT			3
12	6706485	HOOK	tie-down - weld on		1
13	6706857	BLOCK	threaded		2
4	6700182	COVER	drain		1
15	6685372	SEAL	liquid gasket 20oz.		x

MOTOR CARRIER
(Drive Motor Mount Assy) (Manual Controls, AHC, & ACS)

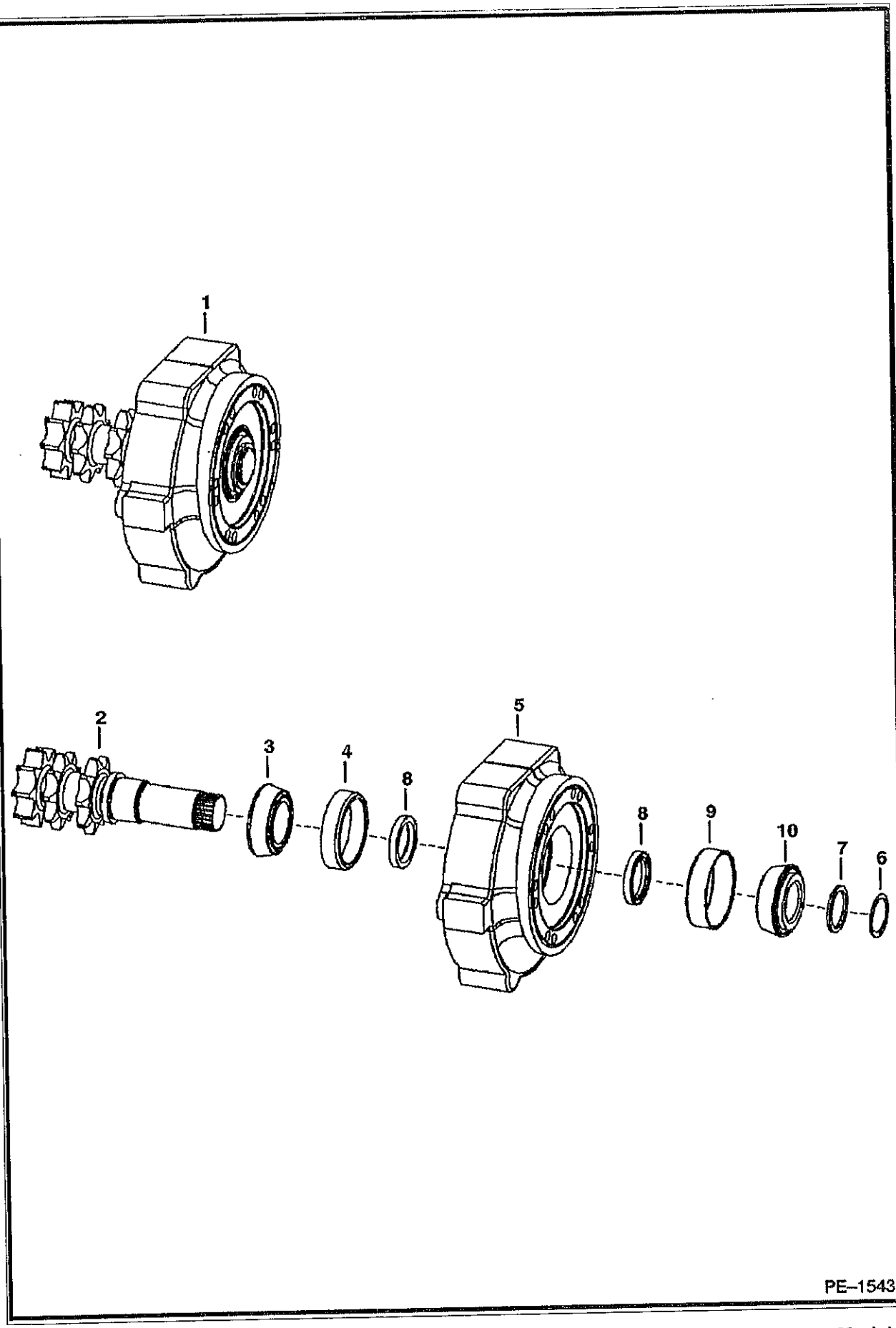

MOTOR CARRIER (Cont'd)
(Drive Motor Mount Assy) (Manual Controls, AHC, & ACS)

Ref No	Part Number	Description	Remarks	Serial Number	Qty
1	7107272	MOTOR CARRIER	drive motor - Ref. 2-10		1
2	7106738	SHAFT	W/snap ring groove		1
3	6664845	BEARING			2
4	6650120	RACE			2
5	6717242	HOUSING			1
6	6664848	SNAP RING	.118" (3,0mm) thickness		1
7	6706817	SPACER	.152" (3,86mm) thickness		1
8	6665755	SEAL			2
9	7100240	RACE			1
10	7100239	BEARING			1

MOTOR CARRIER
(Drive Motor Mount Assy.) (SJC)

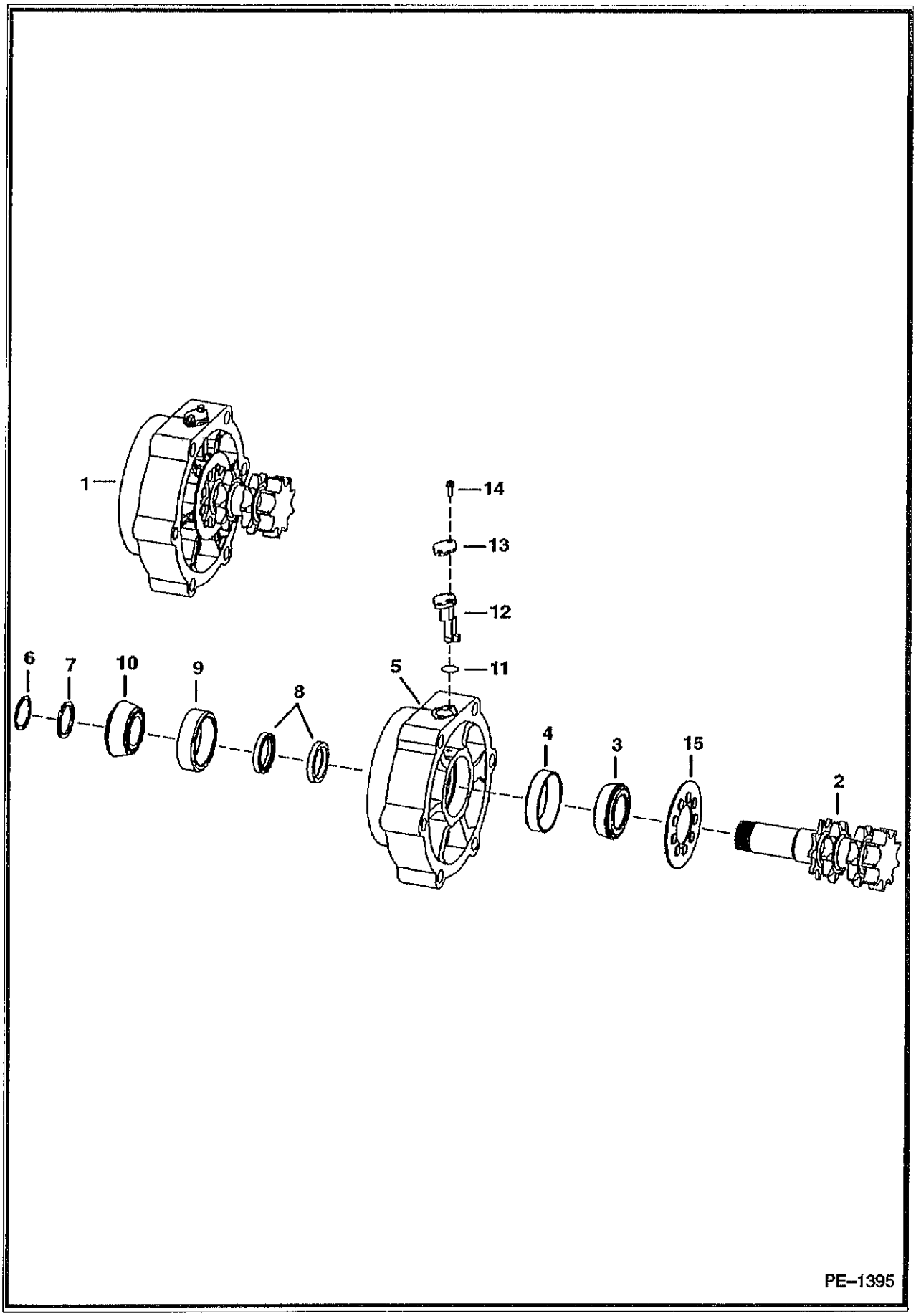

MOTOR CARRIER (Cont'd)
(Drive Motor Mount Assy.) (SJC)

ef No	Part Number	Description	Remarks	Serial Number	Qty
1	7107274	MOTOR CARRIER	drive motor - Ref. 2-15		1
2	7106739	SHAFT	W/ snap ring groove		1
3	6664845	BEARING			1
4	6650120	RACE			1
5	6729663	HOUSING			1
6	6664848	SNAP RING	.118" (3,0 mm) thick		1
7	6706817	SPACER	.152" (3,86 mm) thick		1
8	6665755	SEAL			2
9	7100240	RACE			1
10	7100239	BEARING			1
11	25K20100	O RING 10			1
12	6677181	SENSOR	wheel speed		1
13	6730013	COVER			1
14	35C412	BOLT			2
15	6688924	MAGNET	speed sensor		1

TRANSMISSION COVERS
(W/Disc Brake)

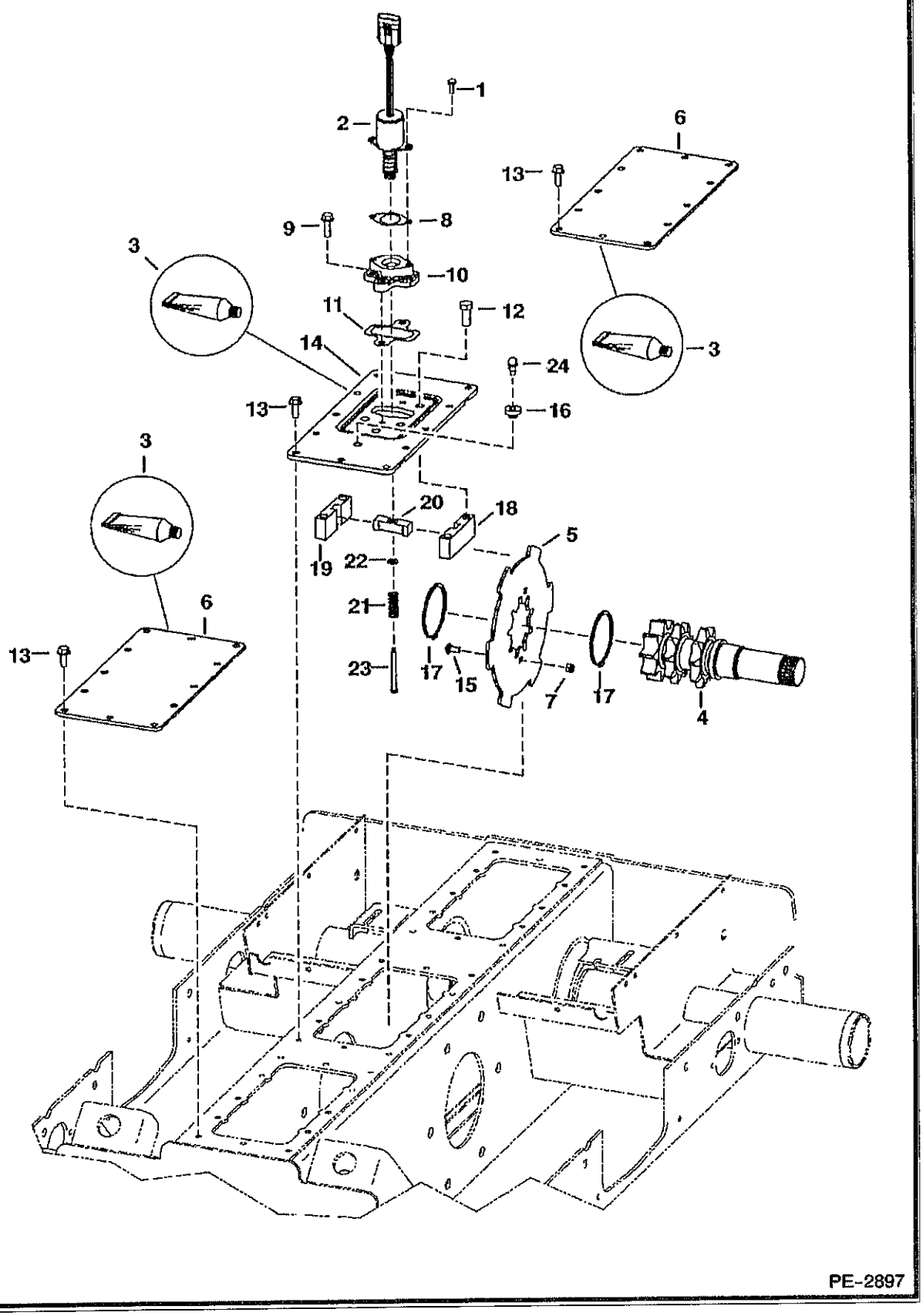

TRANSMISSION COVERS (Cont'd)
(W/Disc Brake)

Ref No	Part Number	Description	Remarks	Serial Number	Qty
1	17C412	BOLT 5			2
2	6681512	SOLENOID			1
3	6685372	SEAL	liquid gasket - 20 oz. tube		x
4		SHAFT	See Illustration MOTOR CARRIER/ PE1543 - manual hand controls		2
5	7106744	BRAKE DISC			2
5	6710195	PLATE	W/disc brake		1
6	6733956	COVER			2
7	59D5	NUT 5			4
8	6706737	GASKET			1
9	84G3720	BOLT			2
10	6706718	MOUNT			1
11	6708016	GASKET			1
12	47C820	BOLT			4
13	84G3716	SCREW 5			36
14	7111593	COVER	single speed		1
15	37C512	BOLT			4
16	6553411	BUSHING			1
17	6662298	SNAP RING			2
18	6719057	BLOCK	guide - R.H.		1
19	6719056	BLOCK	guide - L.H.		1
20	6714278	GUIDE	for brake disc		1
21	6708018	SPRING			1
22	25E13	WASHER 5			2
23	6708267	BOLT			2
24	6680970	BREATHER			1

TRANSMISSION COVERS
(W/O Disc Brake)

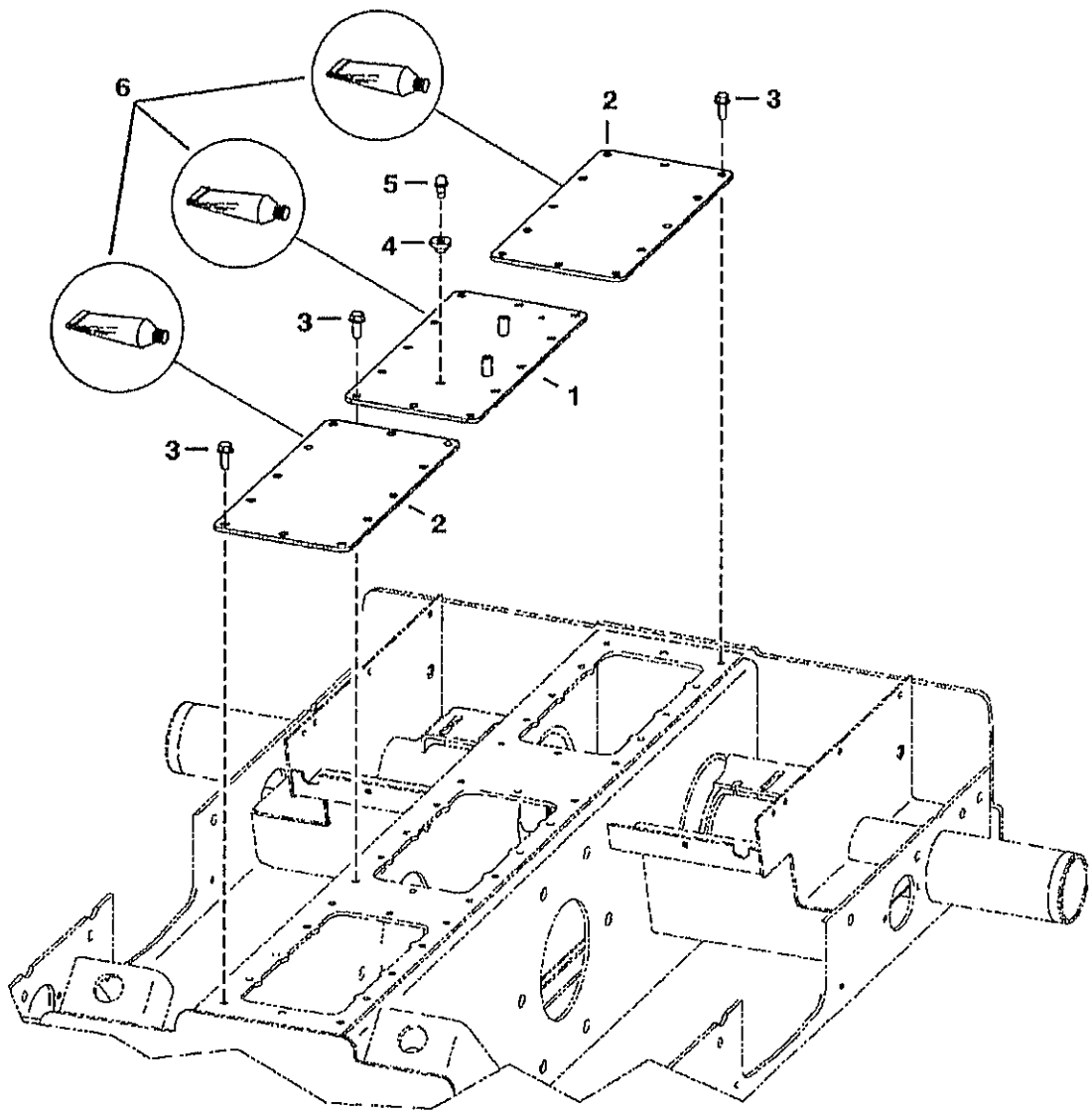

TRANSMISSION COVERS (Cont'd)
(W/O Disc Brake)

Ref No	Part Number	Description	Remarks	Serial Number	Qty
1	7111595	COVER			1
2	6733956	COVER			2
3	84G3716	SCREW 5			36
4	6553411	BUSHING			1
5	6680970	BREATHER			1
6	6685372	SEAL			x

AXLE

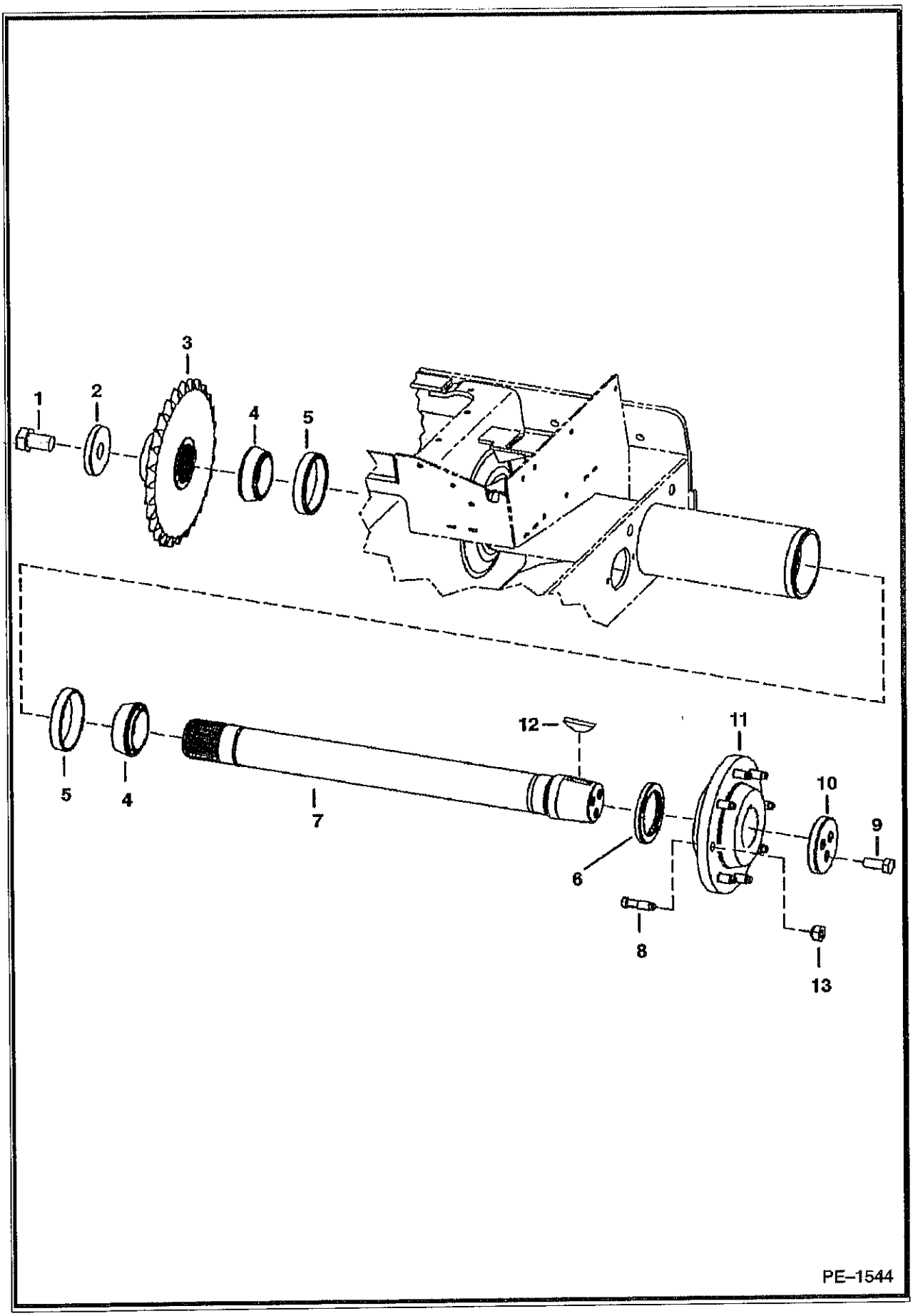

AXLE (Cont'd)

Ref No	Part Number	Description	Remarks	Serial Number	Qty
1	2C1626	BOLT			1
2	7107271	WASHER			1
3	7106737	SPROCKET			1
4	1321608B	BEARING			2
5	1321607B	RACE			2
6	6671138	SEAL			1
7	6709757	AXLE	W/O wear ring		1
8	6709170	STUD	wheel		8
9	17C1024	BOLT			3
10	6565947	WASHER	recessed		1
11	6578857	HUB	W/Ref. 8		1
12	6J1664	KEY			1
13	6564669	NUT	wheel		8

HYDRAULIC CIRCUITRY
(W/O Bucket Positioning Valve)

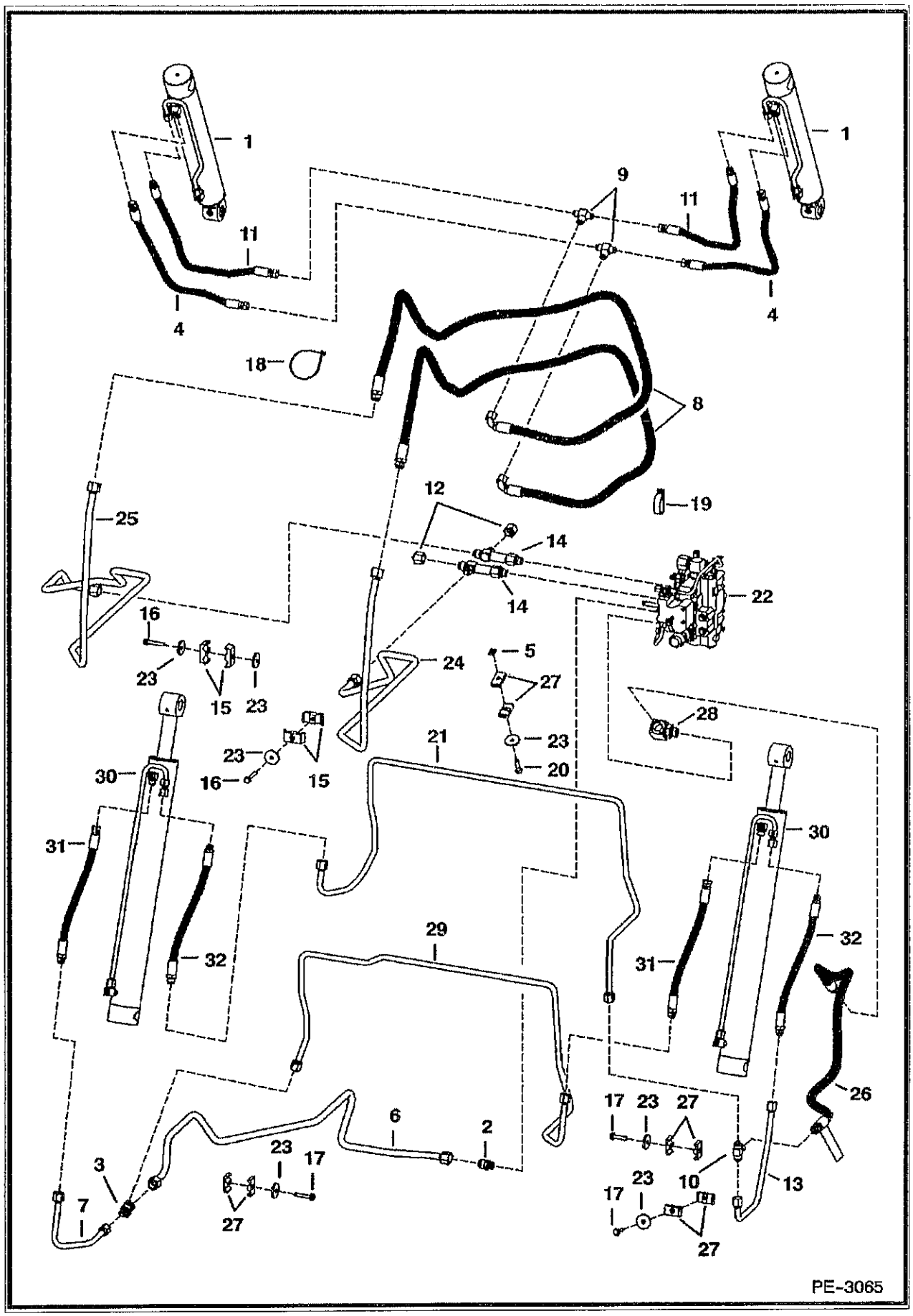

HYDRAULIC CIRCUITRY (Cont'd)
(W/O Bucket Positioning Valve)

Ref No	Part Number	Description	Remarks	Serial Number	Qty
1		CYLINDER	See Illustration TILT CYLINDER/ PE1520 tilt		2
2	15KB1210	ADAPTER			1
2	79K10	O RING 10			x
3	6729686	TEE			1
4	7102090	HOSE			2
5	6684033	NUT			2
6	7114812	TUBELINE			1
7	7114820	TUBELINE			1
8	6729721	HOSE			2
9	6716061	TEE			2
10	6729694	TEE			1
11	7102089	HOSE			2
12	36K8	FITTING			2
13	6730858	TUBELINE			1
14	6730914	TEE			2
14	79K10	O RING 10			x
15	6592506	CLAMP			4
6	84G3740	BOLT			3
17	84G3732	BOLT			3
18	6624289	CABLE TIE			3
19	31H49	CLAMP			1
20	84G3728	BOLT			2
21	7114821	TUBELINE		& Bel	1
21	7124200	TUBELINE		& Abv	1
22		VALVE			1
23	872229B	WASHER			8
24	7114814	TUBELINE	tilt		1
25	7114815	TUBELINE	tilt		1
26	6729604	HOSE			1
26	79K10	O RING 10			x
26	6809511	DECAL	danger		2
27	6701893	CLAMP			10
28	7109623	ELBOW	Was 6817335 [A]		1
28	79K10	O RING 10			x
29	7114813	TUBELINE	lift	& Bel	1
29	7124199	TUBELINE	lift	& Abv	1
30		CYLINDER	See Illustration LIFT CYLINDER/ PE2260 lift		2
31	7120055	HOSE ASSEMBLY			2
32	7120439	HOSE ASSEMBLY			2

HYDRAULIC CIRCUITRY
(W/Bucket Positioning Valve)

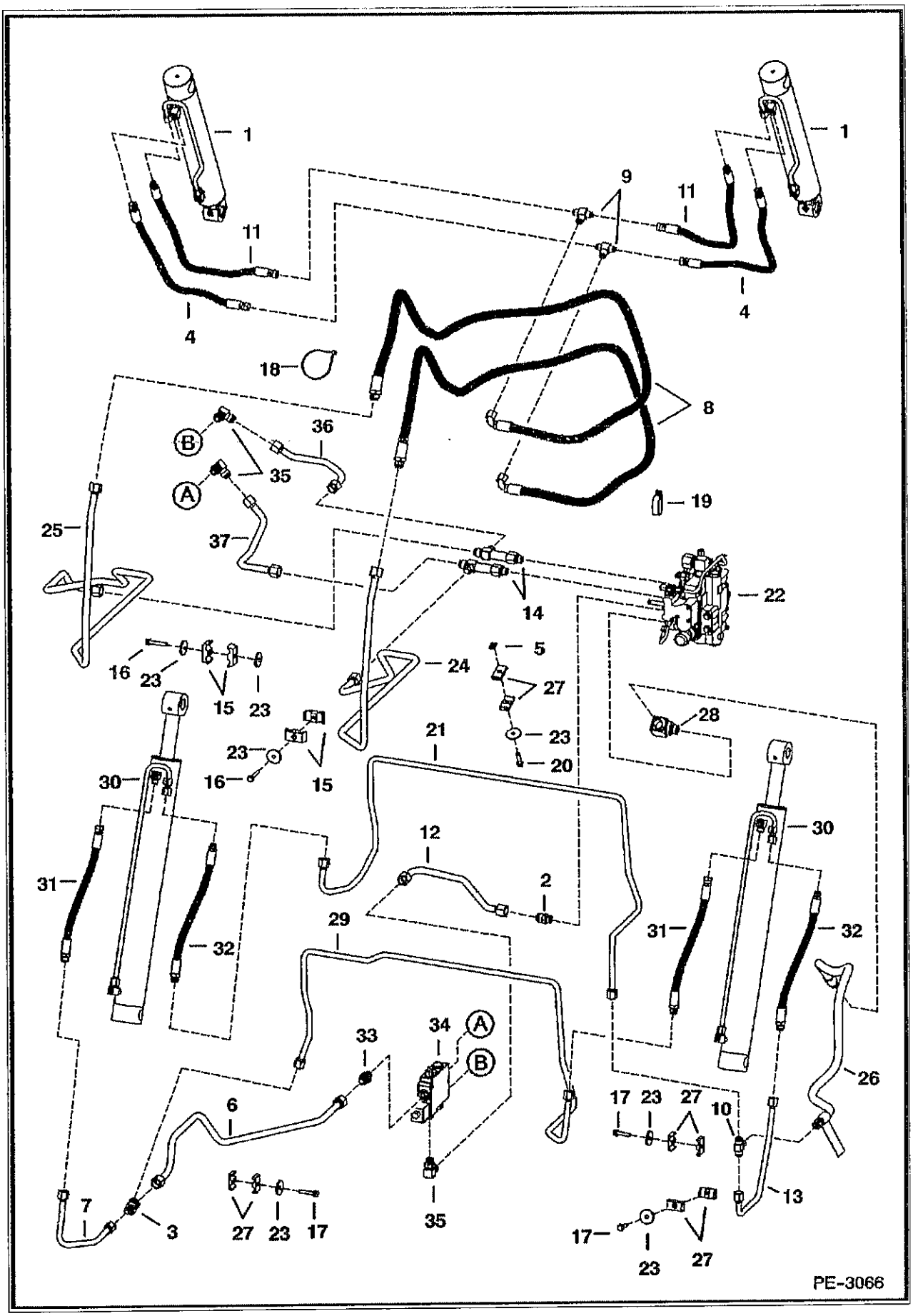

HYDRAULIC CIRCUITRY (Cont'd)
(W/Bucket Positioning Valve)

Ref No	Part Number	Description	Remarks	Serial Number	Qty
1		CYLINDER	See Illustration TILT CYLINDER/ PE1520 - tilt		2
2	15KB1210	ADAPTER			1
2	79K10	O RING 10			x
3	6729686	TEE			1
4	7102090	HOSE			2
5	6684033	NUT			2
6	7114823	TUBELINE			1
7	7114820	TUBELINE			1
8	6729721	HOSE			2
9	6716061	TEE			2
10	6729694	TEE			1
11	7102089	HOSE			2
12	6732992	TUBELINE			1
13	6730858	TUBELINE			1
14	6730914	TEE			1
14	79K10	O RING 10			x
15	6592506	CLAMP			4
6	84G3740	BOLT			3
17	84G3732	BOLT			3
18	6624289	CABLE TIE			3
19	6729320	CLAMP			1
20	84G3728	BOLT			2
21	7114821	TUBELINE		& Bel	1
21	7124200	TUBELINE		& Abv	1
22		VALVE	See Illustration HYDRAULIC CONTROL VALVE/ PE2379 See Illustration HYDRAULIC CONTROL VALVE/ PE2378		1
23	872229B	WASHER			8
24	7114814	TUBELINE	tilt		1
25	7114815	TUBELINE	tilt		1
26	6729604	HOSE			1
26	79K10	O RING 10			x
26	6809511	DECAL	danger		2
27	6701893	CLAMP			10
28	7109623	ELBOW	Was 6817335 [A]		1
28	79K10	O RING 10			x
29	7114813	TUBELINE		& Bel	1
29	7124199	TUBELINE		& Abv	1
30		CYLINDER	See Illustration LIFT CYLINDER/ PE2260 - lift		2
31	7120055	HOSE ASSEMBLY			2
32	7120439	HOSE ASSEMBLY			2
33	15KB1210	ADAPTER			1
33	79K10	O RING 10			x
34		VALVE	See Illustration BUCKET POSITIONING VALVE/ MS1943 See Illustration BUCKET POSITIONING KIT/ PE2364 - BPV		1
35	17KB1210	ELBOW			3
35	79K10	O RING 10			x
36	7108458	TUBELINE			1
37	6732991	TUBELINE			1

LIFT & TILT CONTROL CIRCUITRY

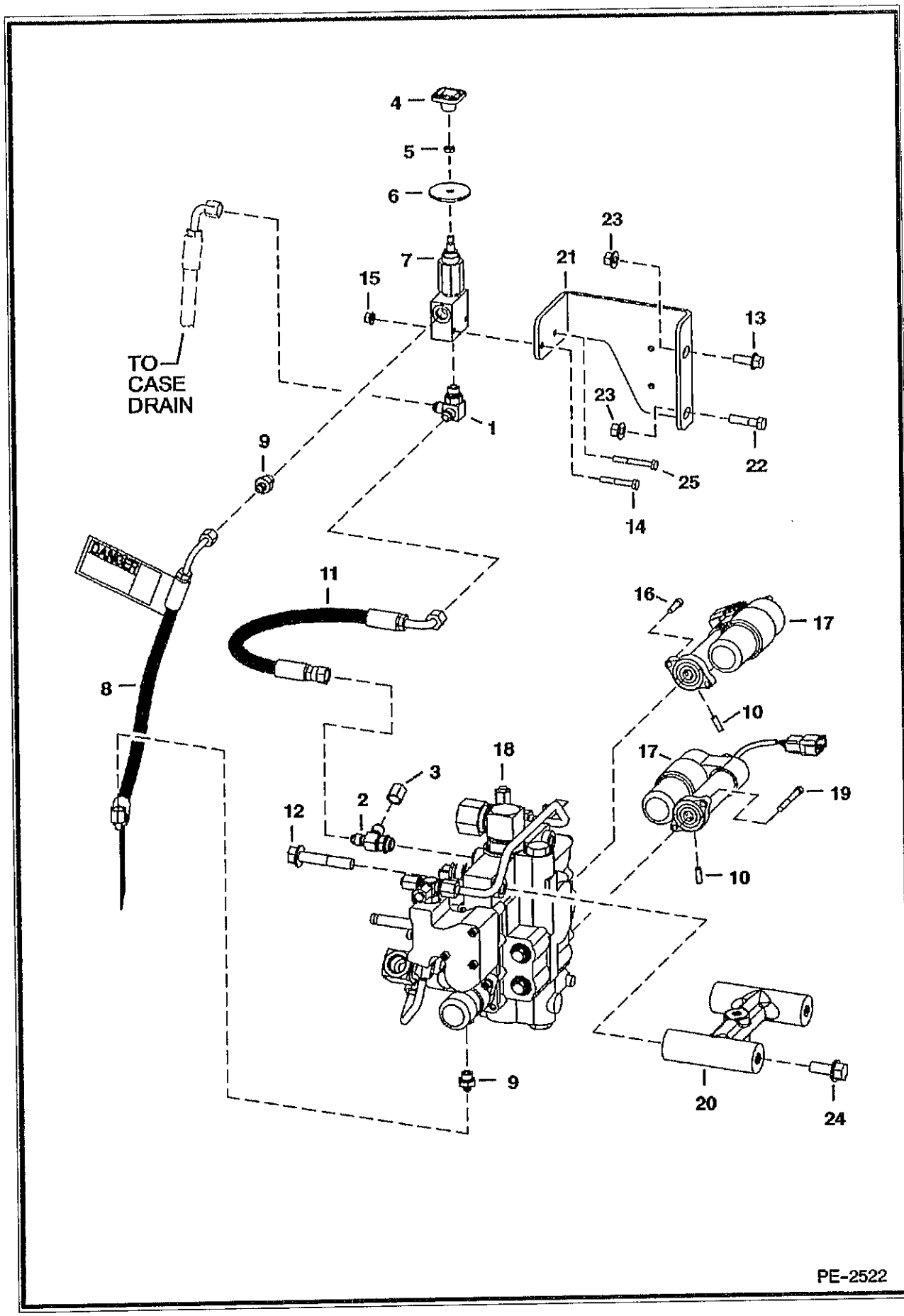

LIFT & TILT CONTROL CIRCUITRY (Cont'd)

Ref No	Part Number	Description	Remarks	Serial Number	Qty
1	6725182	TEE			1
1	79K6	O RING 10			x
2	21KB606	TEE			1
2	79K6	O RING 10			x
3	36K5	CAP			1
4	6737524	KNOB			1
5	7D4	NUT			1
6	6707101	SEAL	neoprene		1
7	6667844	VALVE ASSY	manual lift		1
8	7103172	HOSE			1
8	6809511	DECAL	danger		2
9	15KB406	ADAPTER			2
9	79K6	O RING 10			x
10	7108236	PIN	AHC, ACS & SJC		2
11	7110284	HOSE			1
12	17C844	BOLT			2
13	35C616	BOLT 5			3
14	17C428	BOLT			1
15	83D4	NUT 10			2
16	29G416	BOLT	AHC, ACS & SJC		2
17	7101672	ACTUATOR	AHC, ACS & SJC		2
18		VALVE	See Illustration HYDROSTATIC PUMP/GEAR PUMP/ PE2824 - control		1
19	69G436	BOLT	AHC, ACS & SJC		2
20	7109934	MOUNT			1
21	6718881	BRACKET			1
22	17C624	BOLT 5			1
23	83D6	NUT 5			2
24	35C820	BOLT			2
25	17C432	BOLT			1

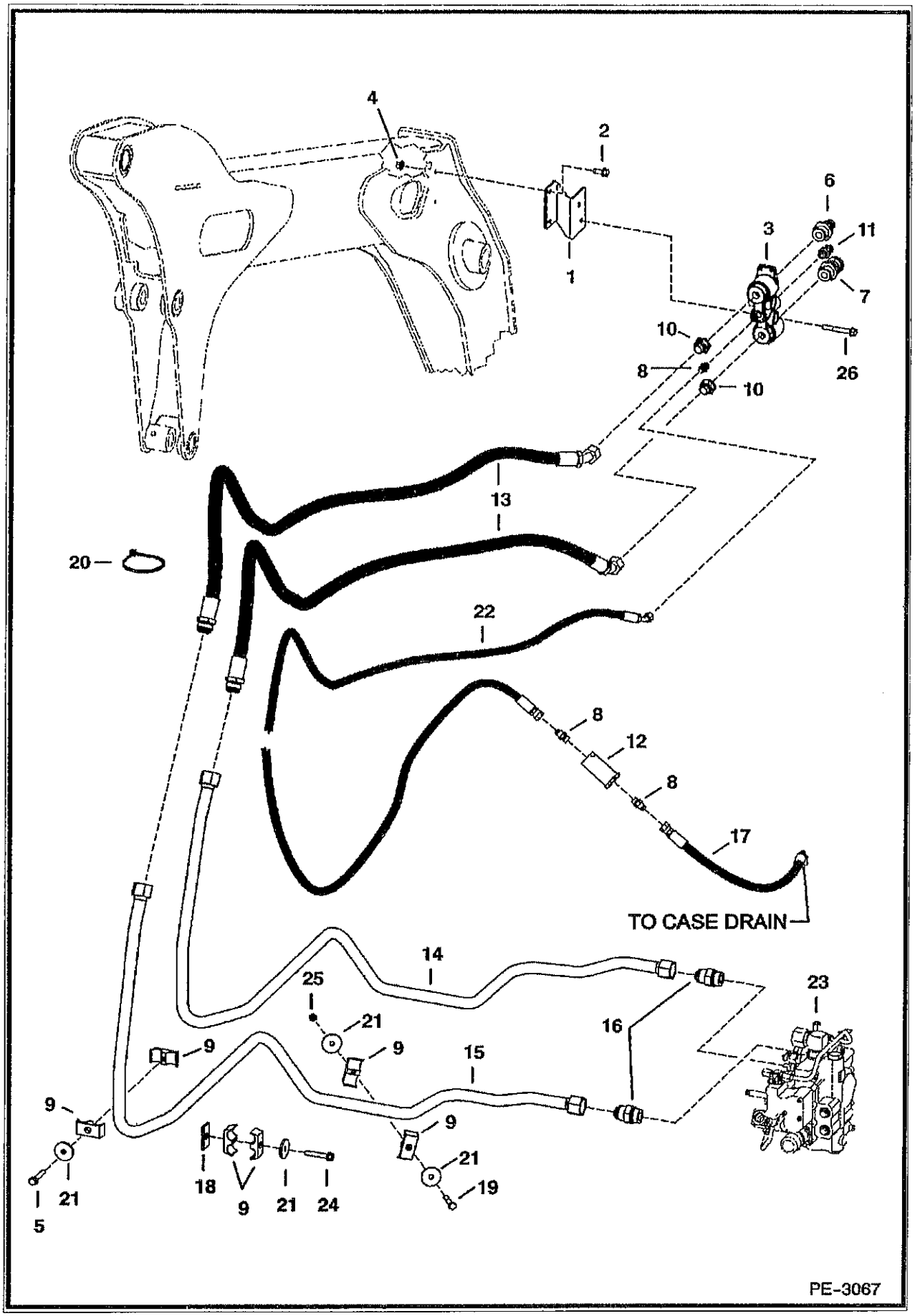
4
2
1
6
3
11
7
10
8
10
26
13
20
22
8
12
8
17
TO CASE DRAIN
14
25
21
9
9
15
16
23
9
9
21
9
21
19
18
9
21
24
5
PE-3067

AUXILIARY HYDRAULICS (Cont'd)

Ref No	Part Number	Description	Remarks	Serial Number	Qty
1	7102414	BRACKET			1
2	84G3716	SCREW 5			2
3	6678076	BLOCK	Ref. 6, 7 & 11		1
4	83D6	NUT 5			2
5	84G3740	BOLT			1
6	6679837	COUPLER	male		1
6	6679841	SEAL	blue - front		1
6	6680020	SEAL KIT	3 o-rings & back-up washers		1
7	6680018	KIT	coupler - female - FF - Was 6679839 [A]		1
7	6680020	SEAL KIT	3 o-rings & back-up washers		1
8	15KB606	ADAPTER			3
8	79K6	O RING 10			x
9	6729320	CLAMP			6
10	6679836	ADAPTER	W/spring		2
11	6679838	COUPLER	male - casedrain - W/spring, valve, seat & o-ring		1
11	6679840	SEAL	blue - front		1
12	6661022	FILTER			1
13	6734769	HOSE			2
14	7114817	TUBELINE			1
15	7114816	TUBELINE			1
16	15KB1210	ADAPTER			2
16	79K10	O RING 10			x
17	7106215	HOSE			1
18	7113465	SPACER			1
19	17C640	BOLT 5			1
20	6624289	CABLE TIE			4
21	872229B	WASHER			4
22	6729746	HOSE			1
23		VALVE	See Illustration HYDRAULIC CONTROL VALVE/ PE2379 See Illustration HYDRAULIC CONTROL VALVE/ PE2378 - control		1
24	84G3748	BOLT			1
25	85D6	LOCK NUT			1
26	31C644	BOLT			2

TILT CYLINDER

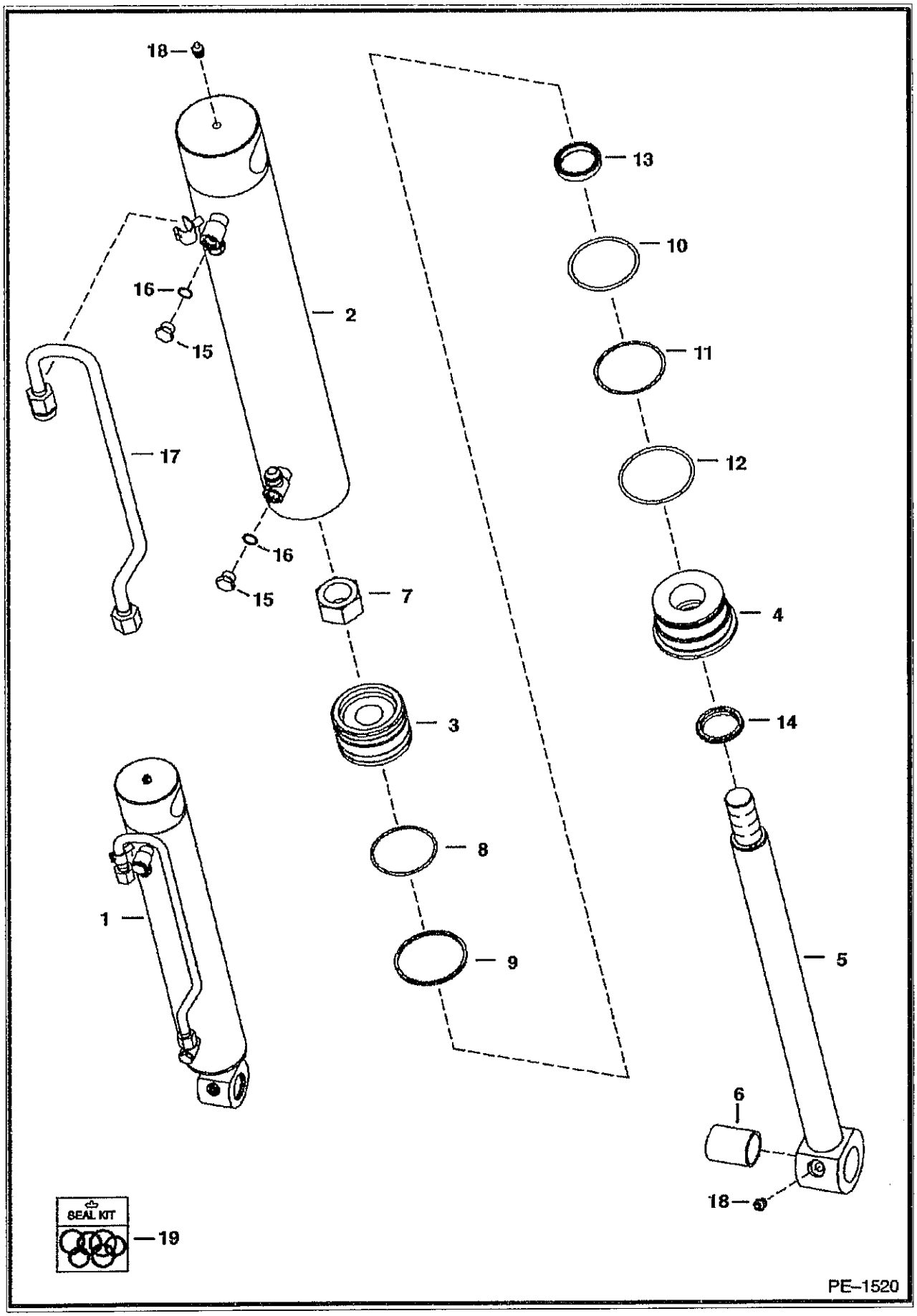

TILT CYLINDER (Cont'd)

Ref No	Part Number	Description	Remarks	Serial Number	Qty
1	6810233	CYLINDER	tilt - Ref. 2-18		1
2	6810234	CASE	3" (76,2 mm) I.D.		1
3	6810237	PISTON			1
4	6538367	HEAD			1
5	6810235	ROD	W/Ref. 6 - 1.5" (38,1 mm) O.D.		1
6	6805453	BUSHING			1
7	6810539	NUT			1
8	54K30218	O-RING			1
9	947088B	SEAL			1
10	54K40224	O-RING			1
11	73K232	RING	back-up		1
12	54K40300	O-RING			1
13	6667326	SEAL	1.5" (38,1 mm)		1
14	6665086	SEAL	wiper		1
15	6812171	PLUG	W/Ref. 16 - hex head		2
16	75K6	O-RING			x
17	6810213	TUBELINE			1
8	10H25	GREASE ZERK	grease		2
19	6816325	SEAL KIT	Ref. 7-14		1

LIFT CYLINDER

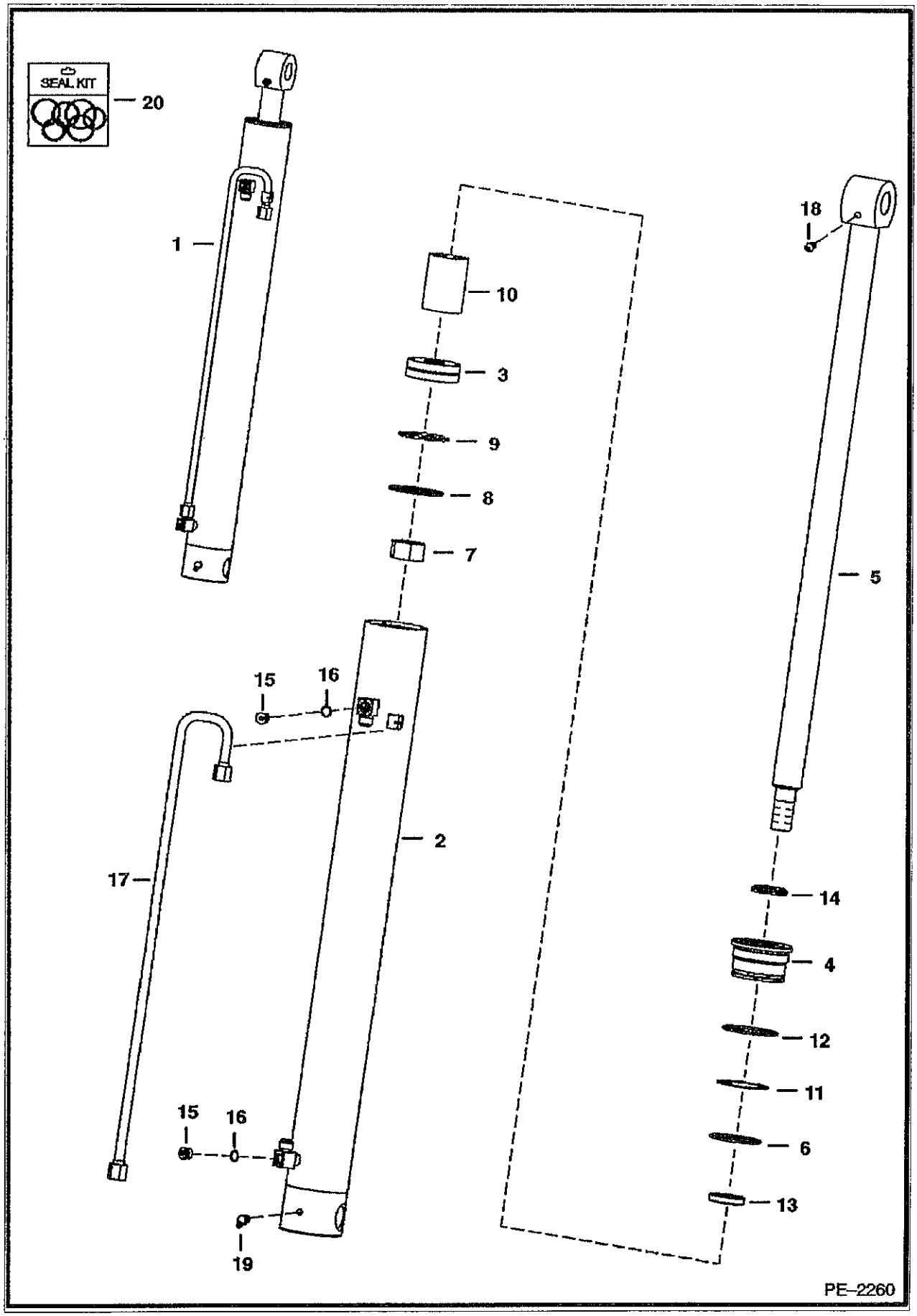

LIFT CYLINDER (Cont'd)

₰f No	Part Number	Description	Remarks	Serial Number	Qty
1	7106456	LIFT CYL	lift - Ref. 2-20		1
2	7106459	TUBE			1
3	6678933	PISTON			1
4	6804427	HEAD			1
5	6810188	ROD	W/Ref. 6		1
6	54K40224	O-RING			1
7	6810539	NUT			1
8	947088B	SEAL			1
9	25K30218	O RING 10			1
10	6808235	SPACER			1
11	73K232	RING	back-up		1
12	54K40300	O-RING			1
13	6669267	SEAL	rod		1
14	6687000	SEAL	wiper		1
15	6812171	PLUG	W/Ref. 16 - hex head		2
16	75K6	O-RING			x
17	7106458	TUBELINE			1
8	10H25	GREASE ZERK			1
19	12H15	GREASE FITTING	90 degrees		1
20	6816536	SEAL KIT	Ref. 6-9 & 11-14		1

MANUAL LIFT RELEASE VALVE

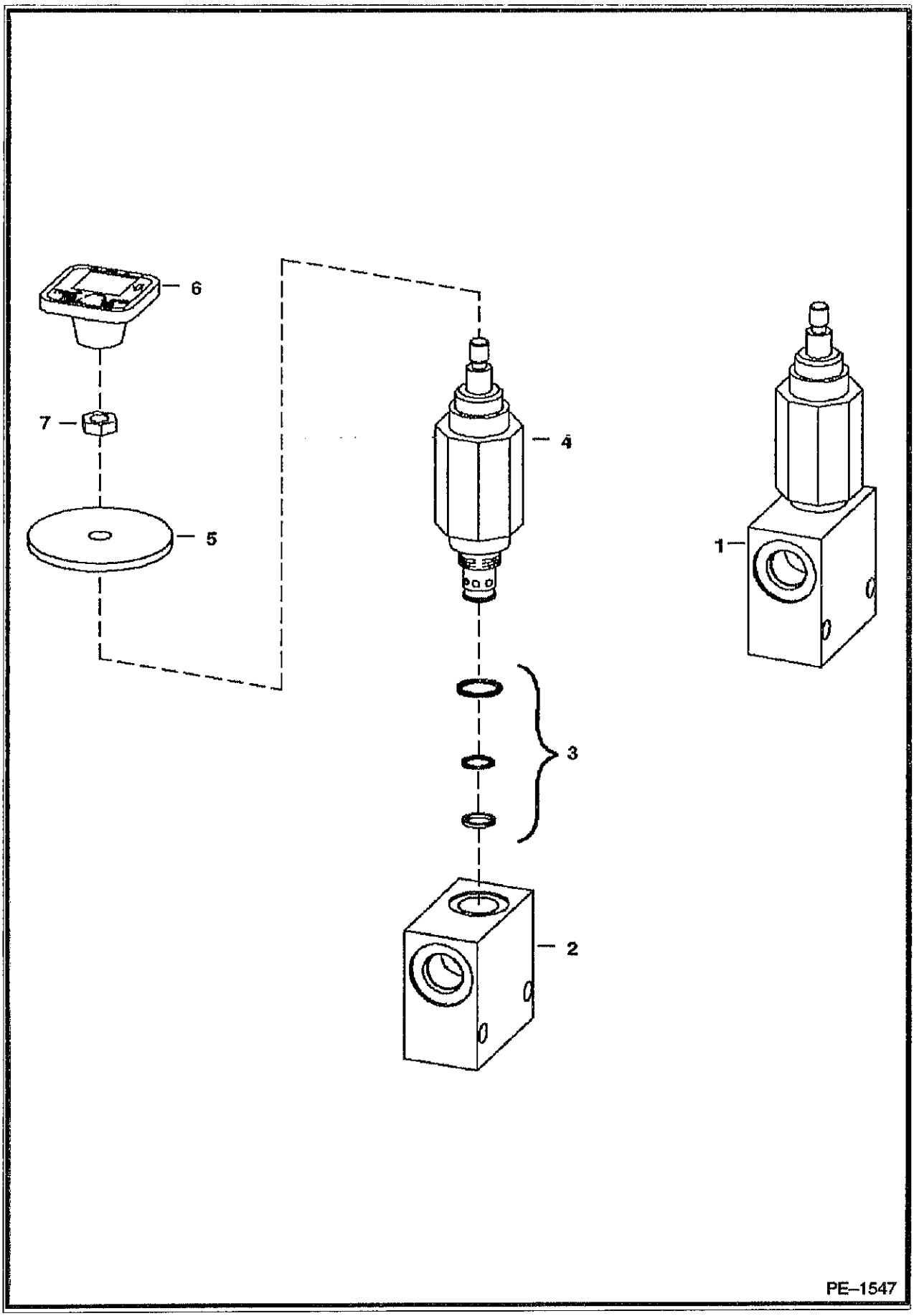

MANUAL LIFT RELEASE VALVE (Cont'd)

⌀f No	Part Number	Description	Remarks	Serial Number	Qty
1	6667844	VALVE ASSY	Ref. 2-4		1
2		BLOCK	NSS - Order Ref. 1		1
3	6669087	SEAL KIT			1
4		VALVE	NSS - Order Ref. 1		1
5	6707101	SEAL	neoprene		1
6	6737524	KNOB	red square		1
7	7D4	NUT			1

CONTROL PEDALS

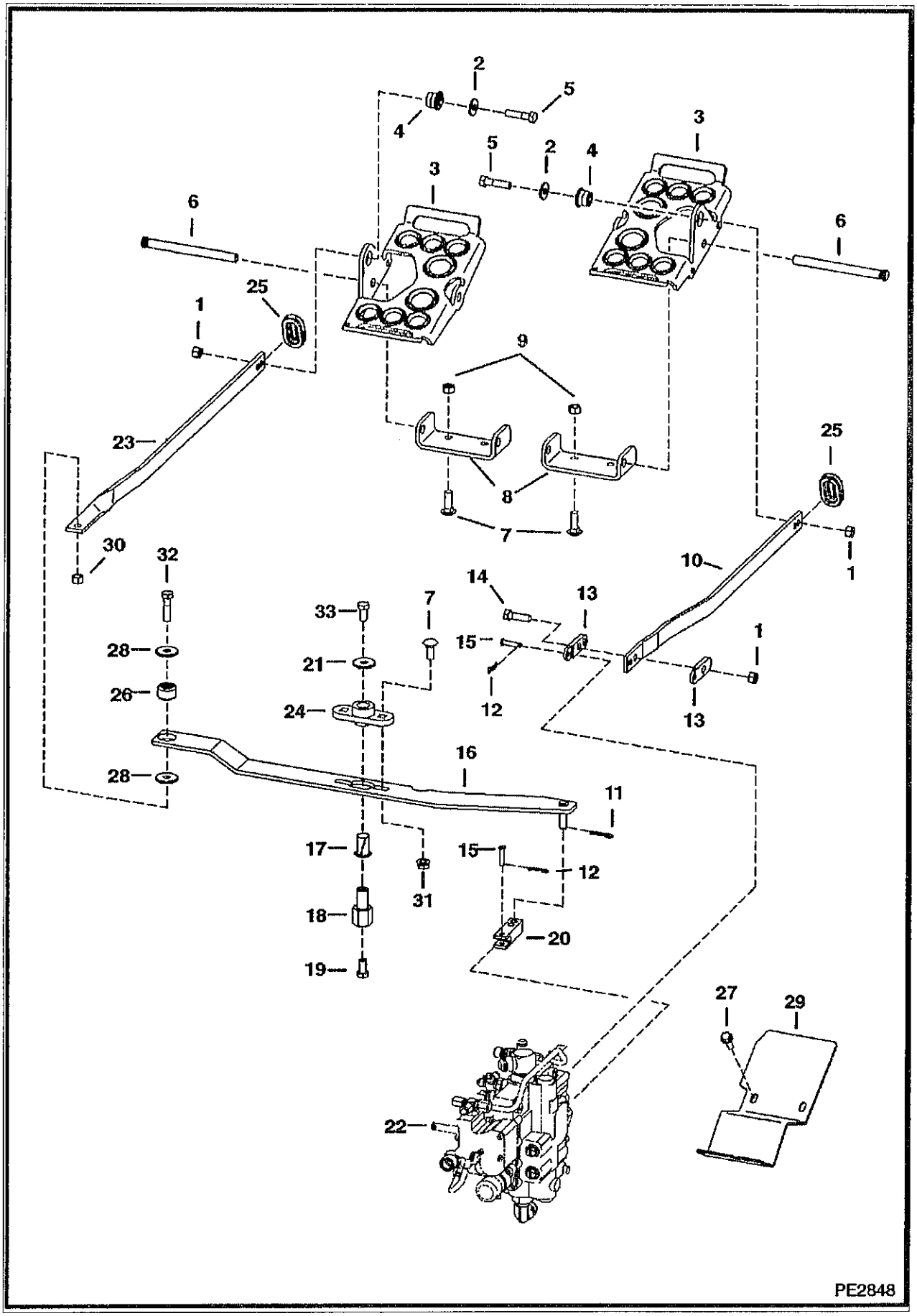

CONTROL PEDALS (Cont'd)

Ref No	Part Number	Description	Remarks	Serial Number	Qty
1	95D6	NUT			5
2	6563914	WASHER			2
3	7115219	PEDAL			2
4	6665701	BUSHING			3
5	17C624	BOLT 5			2
6	6564657	PIN			2
7	37C620	BOLT			6
8	7115220	MOUNT			2
9	61D6	NUT 5			4
10	6731251	BAR			1
11	1306637B	PIN			2
12	6513495	COTTER PIN			2
13	6708009	LINK			2
14	17C620	BOLT			1
15	6564654	PIN			2
16	7122324	LEVER	Was 6718285 [A]		1
17	6512026	BUSHING			1
18	6706104	RETAINING NUT			1
19	17C612	BOLT 5			1
20	6706105	YOKE			1
21	619021B	WASHER			1
22		VALVE	See Illustration HYDRAULIC CONTROL VALVE/ PE2378 See Illustration HYDRAULIC CONTROL VALVE/ PE2379		1
23	6731252	BAR			1
24	6708043	BUSHING			1
25	6577961	GROMMET			2
26	6685060	BUSHING			1
27	84G3710	SCREW			4
28	6737388	WASHER			2
29	6737095	STEP	rest - R.H.		1
29	6737120	STEP	rest - L.H.		1
30	63D6	NUT			1
31	53D6	NUT			2
32	49C628	BOLT			1
33	17C616	BOLT 5			1

HYDRAULIC CONTROL VALVE
(Manual Controls)

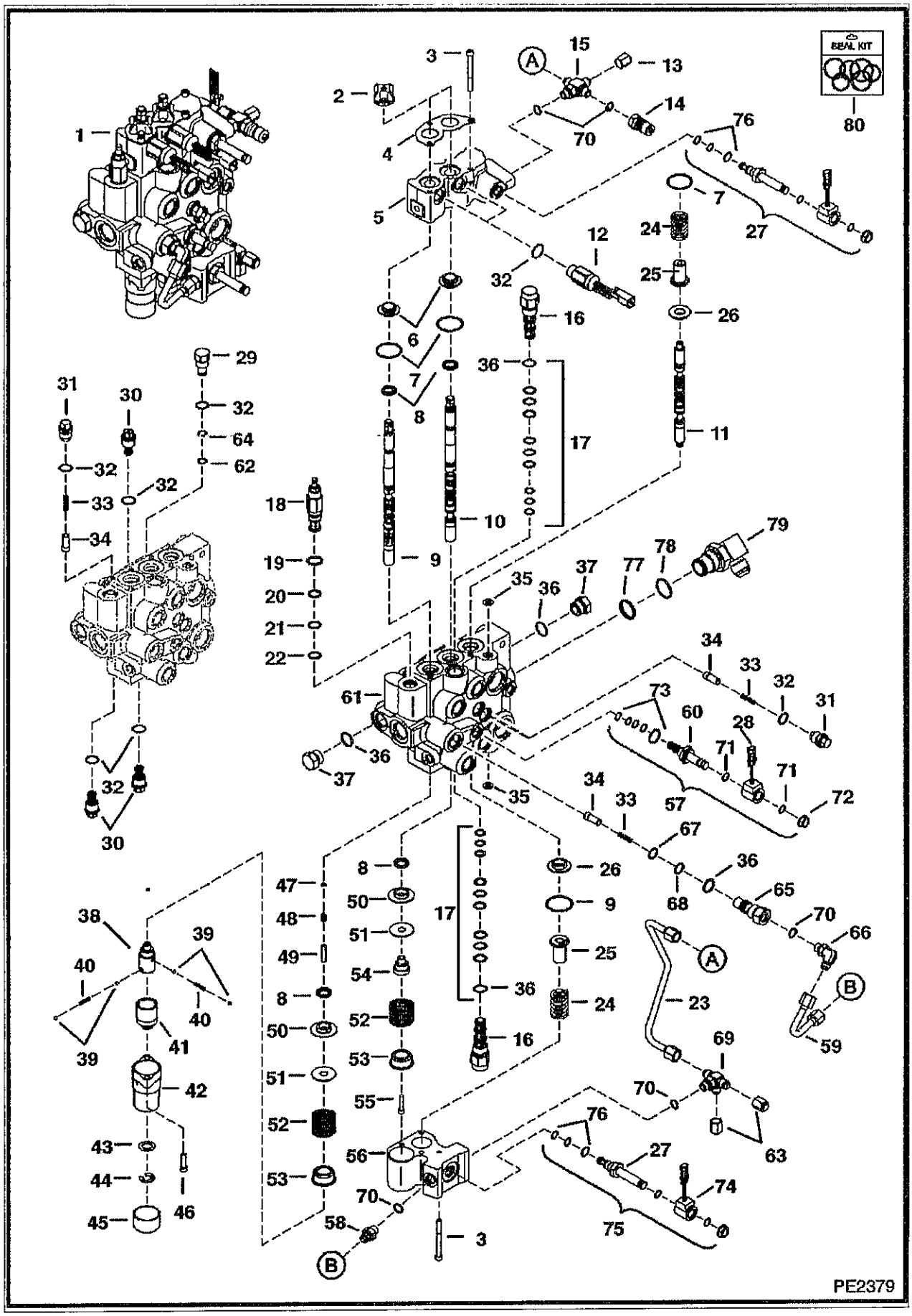

HYDRAULIC CONTROL VALVE (Cont'd)
(Manual Controls)

Ref No	Part Number	Description	Remarks	Serial Number	Qty
1	6813080	VALVE ASSY			1
2	6587763	BOOT			2
3	29G444	BOLT			7
4	6813153	PLATE	retainer		1
5	6817003	BODY			1
6	6805102	BUSHING			2
7	58K127	O RING 10			x
8	6683274	SEAL	See BTI374		4
9	7108781	SPOOL	lift		1
10	6815152	SPOOL			1
11	7112383	AUX SPOOL			1
12	6677383	SOLENOID	W/Ref. 32		2
13	36K5	CAP			1
14	6684125	COUPLER	male		1
15	7102066	CROSS	W/Ref. 70		1
16	6689739	VALVE	pilot operated - W/Ref. 17		2
17	6690431	SEAL KIT	B]		2
8	6686360	VALVE	main relief - W/Ref. 19-22 - pressure to be set in field		1
19	58K17	O RING 10			x
20	6665569	WASHER	back-up		x
21	25K20016	O RING 10			x
22	6665570	RING	guide		x
23	7110914	TUBELINE			1
24	7121399	SPRING			2
25	6814694	RETAINER			2
26	6804920	BUSHING			2
27	6688743	STEM	Was 6688397 [A]		2
28	6671025	COIL			1
29	6816549	PLUG	port relief - W/Ref. 32, 62, 64		1
30	6684646	VALVE	anti-cav - W/Ref. 32		3
31	6817707	PLUG	check valve - W/Ref. 32		3
32	79K8	O RING 10			x
33	6592117	SPRING			4
34	7106712	SEAT			4
35	55K204	O RING 10			x
36	79K10	O RING 10			x
7	24K7	PLUG	W/Ref. 36		2
38	6587575	ADAPTER			1
39	6592105	BALL			4
40	6592107	SPRING			2
41	6531270	SLEEVE			1
42	6589226	BONNET			1
43	6592098	WASHER			1
44	799119B	SNAP RING			1
45	6660644	CAP			1
46	29G416	BOLT			2
47	58K4	O-RING	Was 54K020002B [B]		1
48	6596807	PLUG	plastic - .460" long		1
49	6586918	SCREW			1
50	6595663	BUSHING			2
51	6587523	WASHER			2
52	6587580	SPRING			2
53	6592100	COLLAR			2
4	6592109	ADAPTER			1

HYDRAULIC CONTROL VALVE (Cont'd)
(Manual Controls)

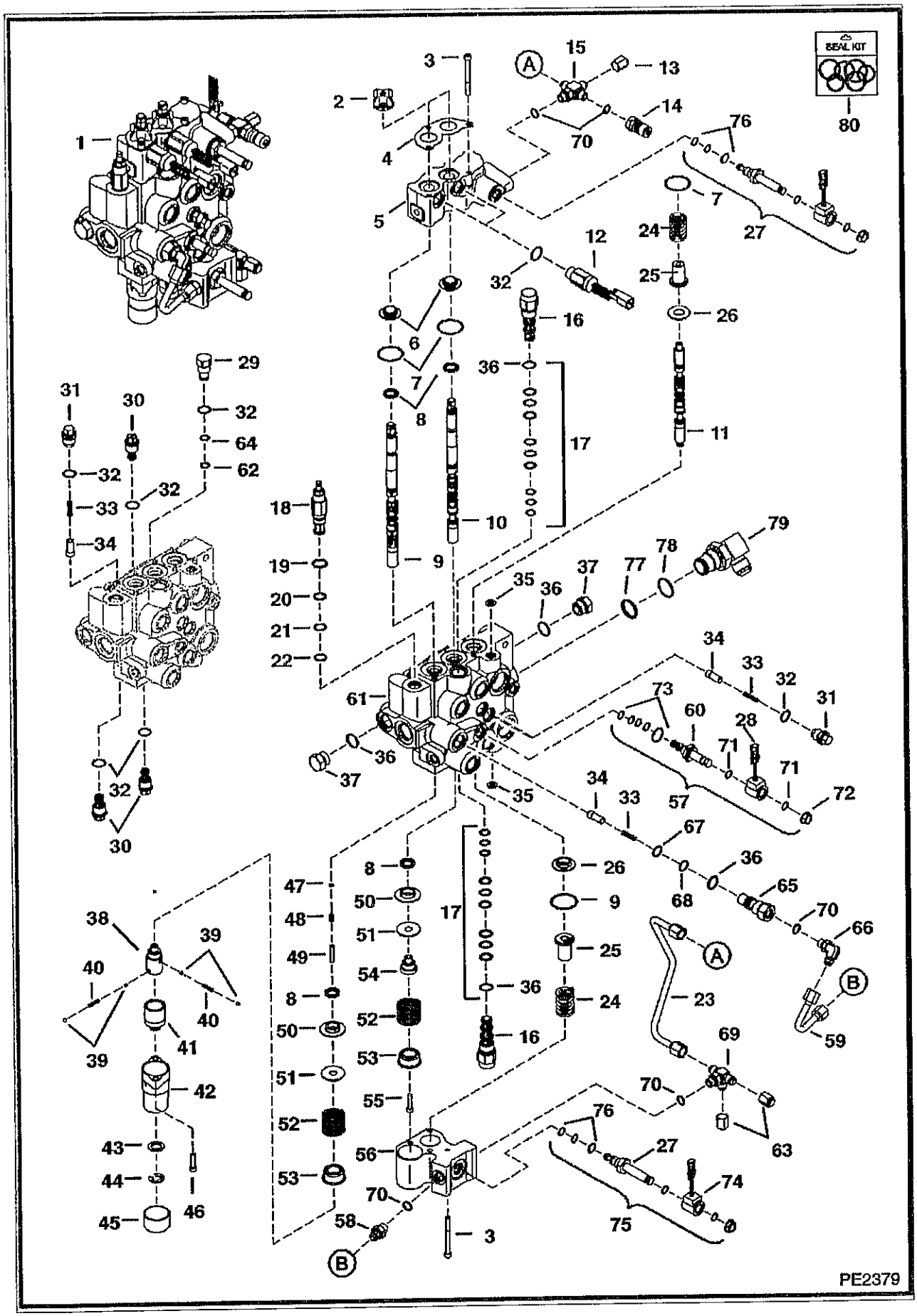

HYDRAULIC CONTROL VALVE (Cont'd)
(Manual Controls)

ef No	Part Number	Description	Remarks	Serial Number	Qty
55	7102652	SCREW			1
56	6814279	BLOCK			1
57	6672471	VALVE	solenoid - W/Ref. 28, 60 & 70-73		1
58	6688845	VALVE	check - W/Ref. 70		1
59	7116995	TUBELINE			1
60	6667687	STEM			1
61		VALVE BODY	NSS		1
62	73K13	RING			x
63	36K5	CAP			2
64	58K13	O-RING			x
65	6815014	CHECK VALVE	W/Ref. 36, 67 & 68		1
66	17KB606	ELBOW	W/Ref. 70		1
67	58K16	O RING 10			x
68	73K16	RING	back-up		x
69	7102019	FITTING	W/Ref. 70		1
70	79K6	O RING 10			x
71	54K20028	O RING 10			x
72	6668820	NUT			1
73	6669732	SEAL KIT			1
74	6678891	COIL			2
75	6678893	SOLENOID	W/Ref 27 & 74		2
76	6685603	SEAL KIT	solenoid valve		2
77	58K22	O RING 10			1
78	79K16	O RING 10			1
79	6813964	ELBOW	W/Ref. 77 & 78		1
80	7123964	SEAL KIT, COMPLETE	Includes 7123963, 7123965, 6632279, 6685603 (2), 6669732, & 6690431 (2)		x
80	7123963	SEAL KIT	3 spool - Ref. 2, 7, 8, 35, 47, & 48		x
80	7123965	SEAL KIT	external fitting - Ref. 32, 36, 62, 64, 67, 68, 70, 71, 77, & 78		x
80	6685603	SEAL KIT	solenoid valve - Ref. 76		2
80	6632279	SEAL KIT	main relief - Ref. 19-22		x
80	6669732	SEAL KIT	solenoid valve - Ref. 73		x
80	6690431	SEAL KIT	pilot valve - Ref. 17		x

HYDRAULIC CONTROL VALVE
(AHC/ACS/SJC)

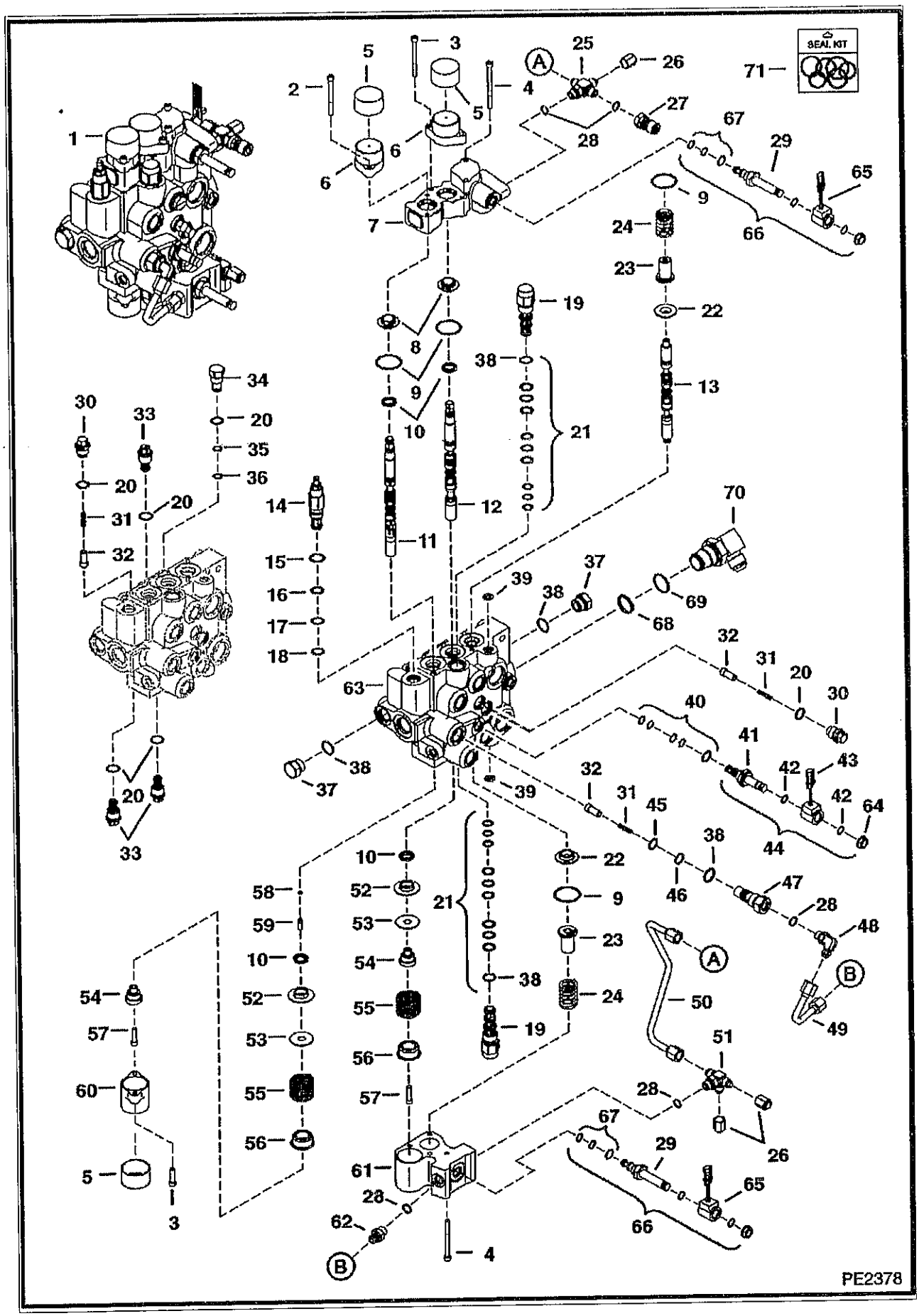

HYDRAULIC CONTROL VALVE (Cont'd)
(AHC/ACS/SJC)

Ref No	Part Number	Description	Remarks	Serial Number	Qty
1	6814600	CONTROL VALVE	ACS/AHC/SJC)		1
2	69G436	BOLT			2
3	29G416	BOLT			4
4	29G444	BOLT			5
5	6662848	CAP			3
6	7101345	BONNET			2
7	6817004	BODY			1
8	6805102	BUSHING			2
9	58K127	O RING 10			4
10	6683274	SEAL	See BTI374		4
11	7108241	SPOOL	lift		1
12	7108242	SPOOL	tilt		1
13	7112383	AUX SPOOL			1
14	6686360	VALVE	main relief - W/Ref. 15-18 - pressure to be set in field		1
15	58K17	O RING 10			x
16	6665569	WASHER	back-up		x
7	25K20016	O RING 10			x
18	6665570	RING	guide		x
19	6689739	VALVE	pilot operated - W/Ref. 21		2
20	79K8	O RING 10			x
21	6690431	SEAL KIT	B]		2
22	6804920	BUSHING			2
23	6814694	RETAINER			2
24	7121399	SPRING			2
25	7102066	CROSS	W/Ref. 28		1
26	36K5	CAP			2
27	6684125	COUPLER	male		1
28	79K6	O RING 10			x
29	6688743	STEM	Was 6688397 [A]		2
30	6817707	PLUG	check valve - W/Ref. 20		3
31	6592117	SPRING			4
32	7106712	SEAT			4
33	6684646	VALVE	anti-cav - W/Ref. 20		3
34	6816549	PLUG	W/Ref. 20, 35 & 36		1
35	58K13	O-RING			x
6	73K13	RING			x
37	24K7	PLUG	W/Ref. 38		2
38	79K10	O RING 10			x
39	55K204	O RING 10			x
40	6669732	SEAL KIT			1
41	6667687	STEM			1
42	54K20028	O RING 10			x
43	6671025	COIL			1
44	6672471	VALVE	solenoid - W/Ref. 40-43 & 64		1
45	58K16	O RING 10			x
46	73K16	RING	back-up		x
47	6815014	CHECK VALVE	W/Ref. 38, 45 & 46		1
48	17KB606	ELBOW	W/Ref. 28		1
49	7116995	TUBELINE			1
50	7110914	TUBELINE			1
51	7102018	TEE	W/Ref. 28		1
52	6595663	BUSHING			2
3	6587523	WASHER			2
54	6592109	ADAPTER			2

HYDRAULIC CONTROL VALVE (Cont'd)
(AHC/ACS/SJC)

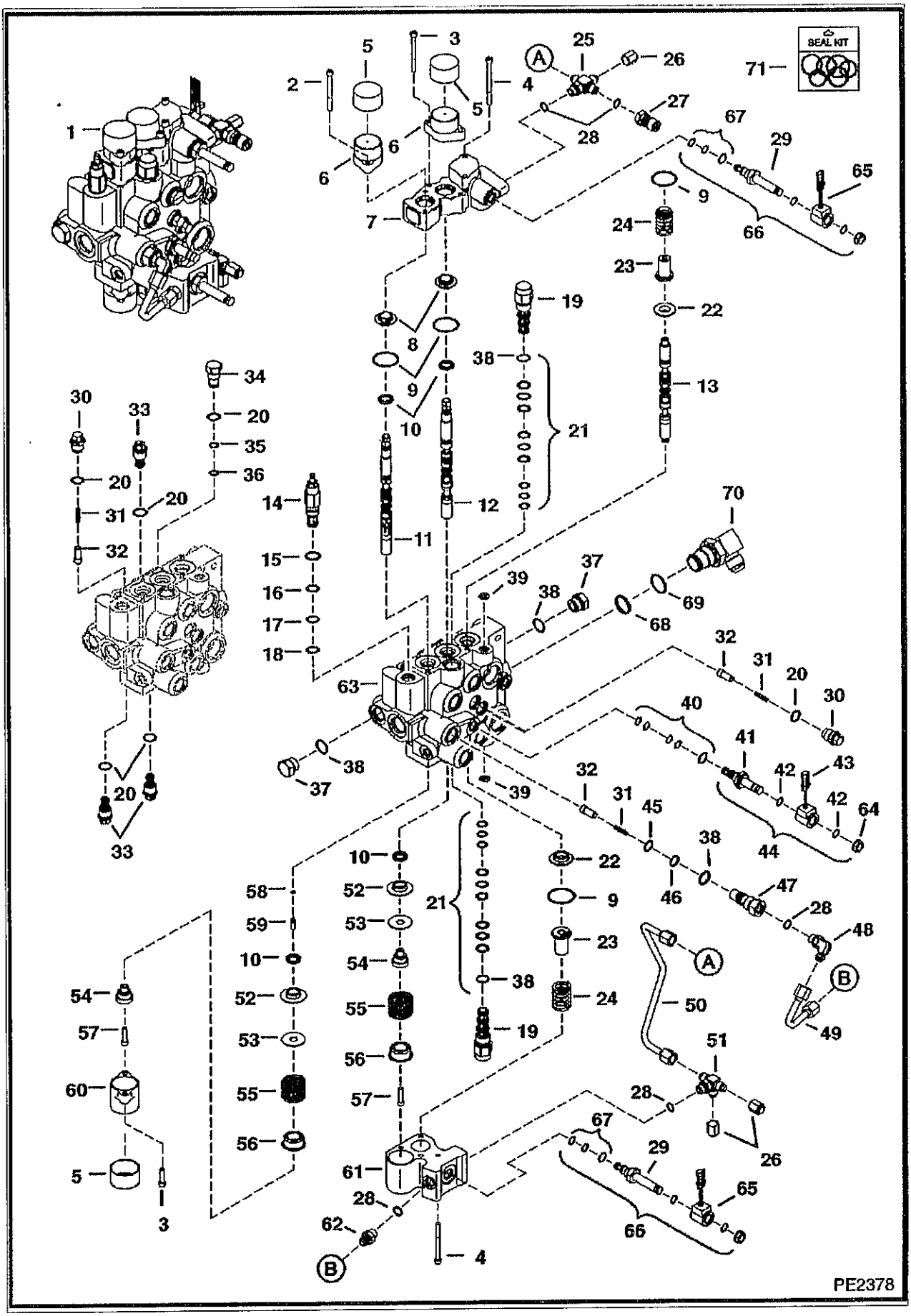

HYDRAULIC CONTROL VALVE (Cont'd)
(AHC/ACS/SJC)

Ref No	Part Number	Description	Remarks	Serial Number	Qty
55	6587580	SPRING			2
56	6592100	COLLAR			2
57	7102652	SCREW			2
58	58K4	O-RING	Was 54K020002B [B]		1
59	6801167	PLUG	plastic - .685" long		1
60	6803092	BONNET			1
61	6814279	BLOCK			1
62	6688845	VALVE	check - W/Ref. 28		1
63		BODY	NSS		1
64	6668820	NUT			1
65	6678891	COIL			2
66	6678893	SOLENOID	W/Ref 29 & 65		2
67	6685603	SEAL KIT	solenoid valve		1
68	58K22	O RING 10			1
69	79K16	O RING 10			1
70	6813964	ELBOW	W/Ref. 68 & 69		1
71	7123964	SEAL KIT, COMPLETE	Includes 7123963, 7123965, 6632279, 6685603 (2), 6669732, & 6690431 (2)		x
71	7123963	SEAL KIT	3 spool - Ref. 9, 10, 39, 58, & 59		x
71	7123965	SEAL KIT	external fitting - Ref. 20, 28, 35, 36, 38, 42, 45, 46, 68, & 69		x
71	6685603	SEAL KIT	solenoid valve -Ref. 67		x
71	6632279	SEAL KIT	main relief - Ref. 15-18		x
71	6669732	SEAL KIT	solenoid valve - Ref. 21		x
71	6690431	SEAL KIT	pilot valve - Ref. 40		x

BUCKET POSITIONING VALVE

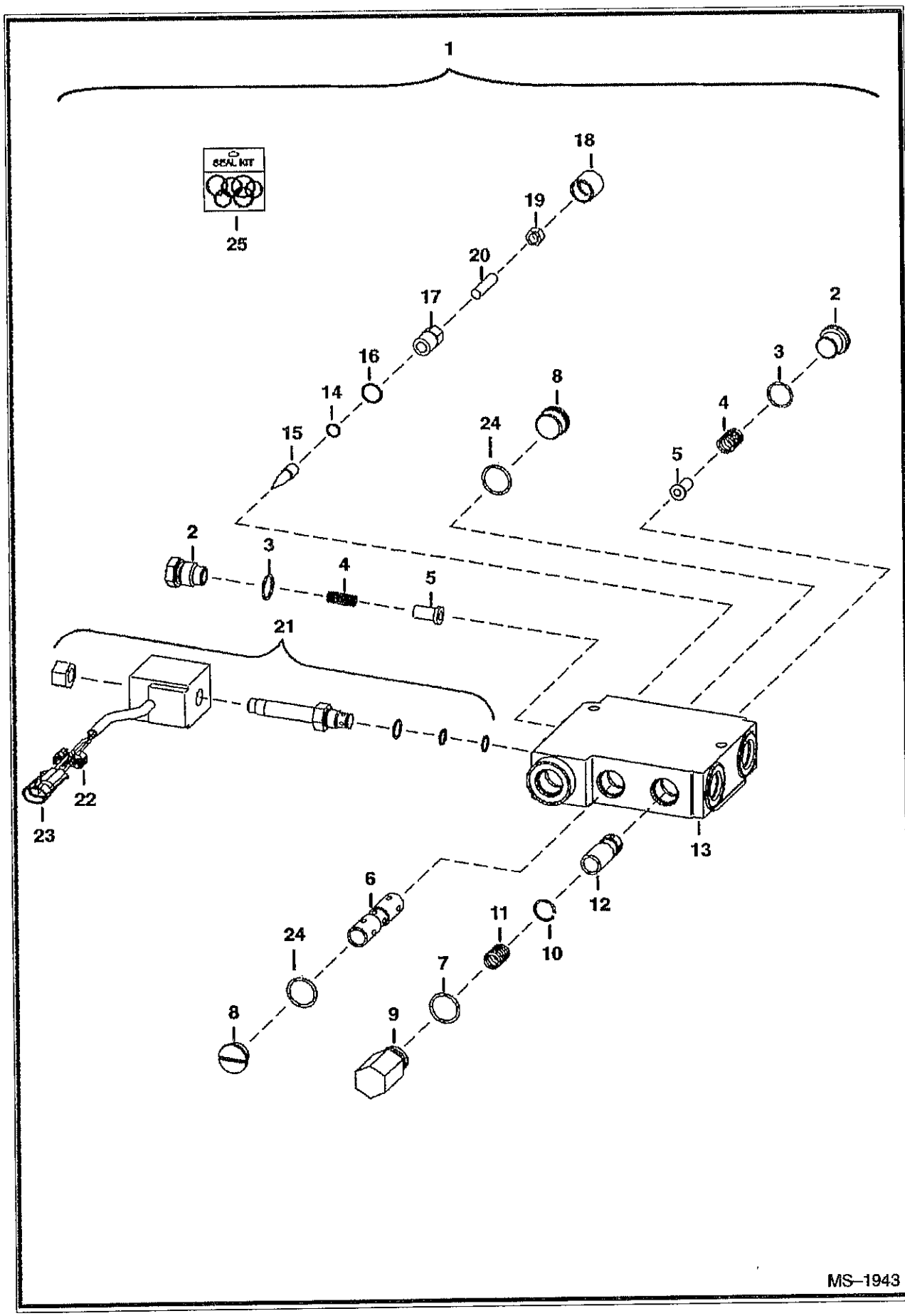

BUCKET POSITIONING VALVE (Cont'd)

Ref No	Part Number	Description	Remarks	Serial Number	Qty
1	6675669	VALVE	primer red - Ref. 2-21		1
2	6647784	PLUG	W/Ref. 3		2
3	79K8	O RING 10			2
4	6647785	SPRING			2
5	6647783	LOAD CHECK			2
6		SPOOL	NSS		1
7	58K116	O RING 10			3
8	6676543	PLUG	W/Ref. 24		2
9	6667176	PLUG	W/Ref. 7		1
10	6667680	SNAP RING			1
11	6676544	SPRING			1
12		SPOOL	NSS		1
13		BODY	NSS		1
14	6667677	O-RING			1
15	6647777	PIN			1
16	6634874	O-RING			1
17	6676542	CAP			1
18	6667676	COVER			1
19	6631561	NUT			1
20	6648293	SCREW			1
21	6672863	SOLENOID			1
21	6671527	NUT			1
21	6670634	SEAL KIT			1
21	6674331	COIL	W/Ref. 22 & 23		1
21	6676545	CARTRIDGE			1
22	6641180	LOCK	2-pin		1
23	6641179	CONNECTOR	2-pin		1
24	79K10	O RING 10			2
25	6667185	SEAL KIT	Ref. 3, 7, 14, 16, 18 & 24		1

HIGH FLOW HYDRAULICS

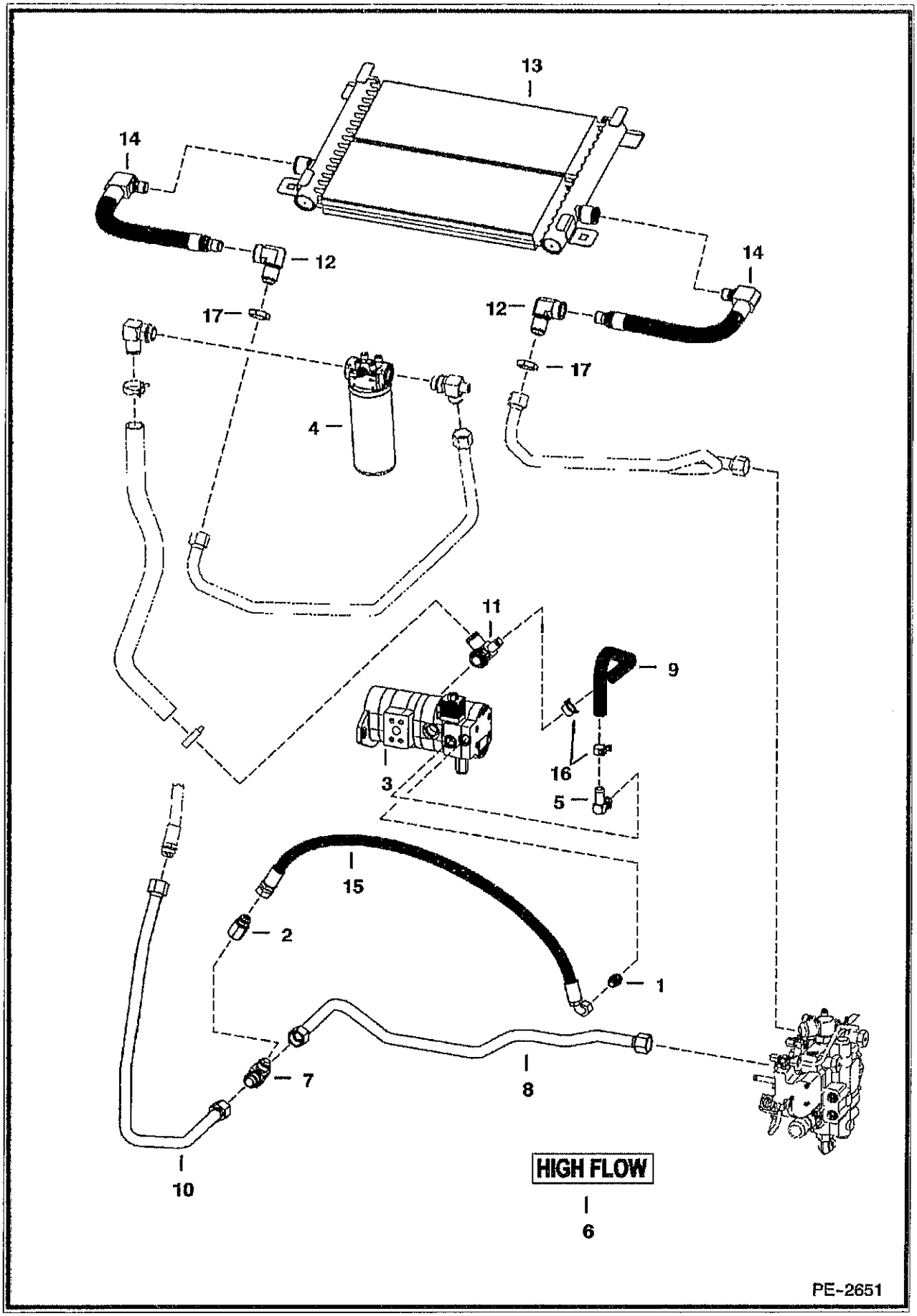

HIGH FLOW HYDRAULICS (Cont'd)

Ref No	Part Number	Description	Remarks	Serial Number	Qty
1	15KB1008	ADAPTER			1
1	79K8	O RING 10			x
2	7113552	VALVE			1
3		PUMP	See Illustration HYDROSTATIC PUMP/GEAR PUMP/ PE2824		1
4	6685847	FILTER	See Illustration HYDROSTATIC OIL FILTER/ C2818		1
5	6717885	ELBOW			1
5	79K10	O RING 10			x
6	7120602	DECAL	high flow		2
7	6730143	TEE			1
8	7114818	TUBELINE			1
9	7109888	HOSE			1
10	7114819	TUBELINE			1
11	7109885	TEE			1
11	79K16	O RING 10			x
12	7103749	ELBOW	W/STC-16 fitting		2
12	6688523	SEAL KIT STC-16			x
3	7103750	EXCHANGER	W/STC-16 fitting		1
13	6688523	SEAL KIT STC-16			x
14	7103751	HOSE	W/STC-16 fitting		2
14	6688523	SEAL KIT STC-16			x
15	7109144	hose			1
16	5HM24	CLAMP			2
17	86F10	NUT			2

HIGH FLOW HYDRAULICS
(Gear Pump)

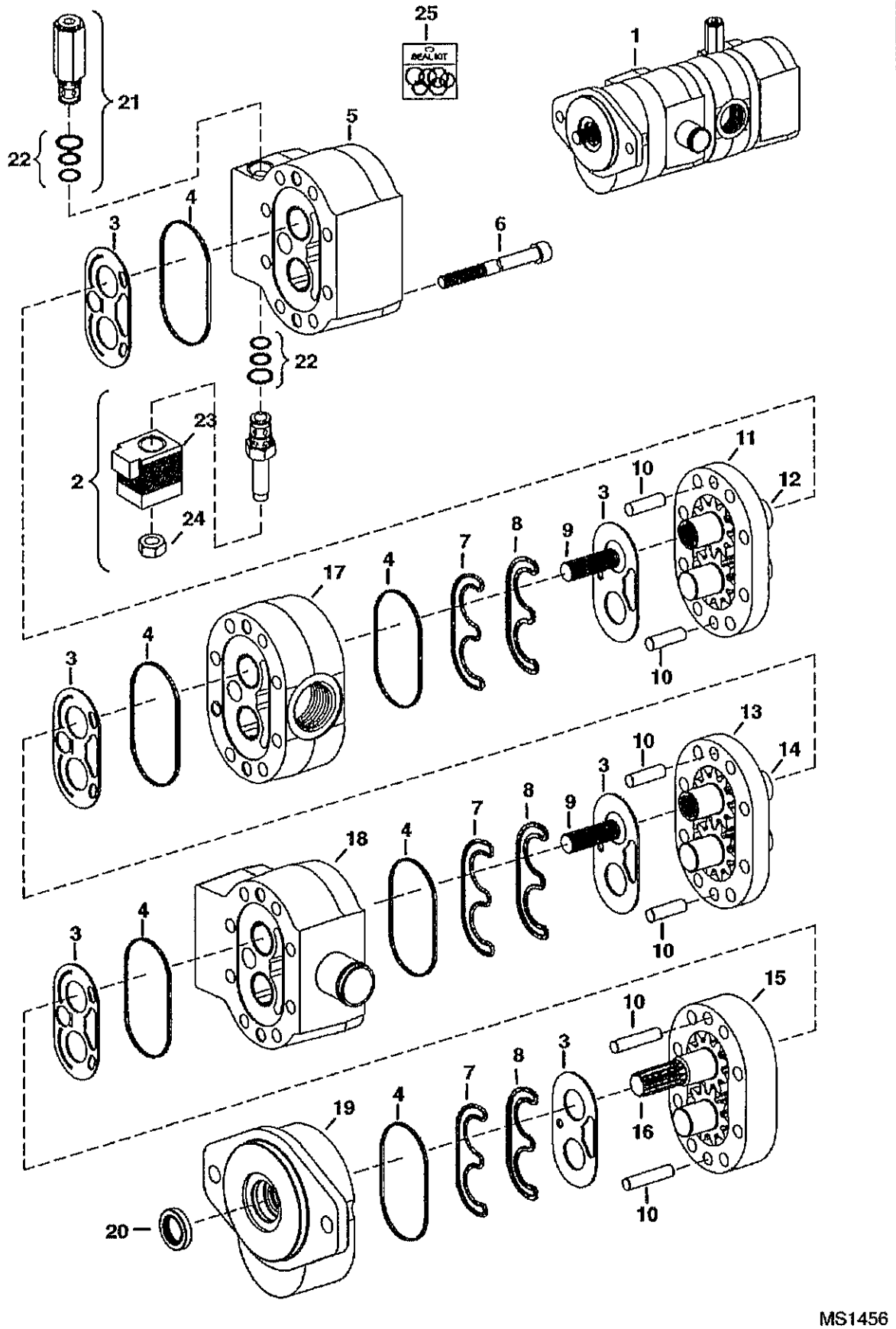

HIGH FLOW HYDRAULICS (Cont'd)
(Gear Pump)

Ref No	Part Number	Description	Remarks	Serial Number	Qty
1	6688713	GEAR PUMP	163D72022		1
2	6688321	SEAL KIT			1
3		WEAR PLATE	NSS		6
4		SEAL, SECTION	NSS		6
5		HOUSING, REAR	NSS		1
6		BOLT	NSS		8
7		SEAL, PRE-LOAD	NSS		6
8		SEAL, LOAD	NSS		6
9		CONNECTOR, SPLINE	NSS		2
10		PIN	NSS		6
11		HOUSING, GEAR	NSS - #3		1
12		GEAR SET	NSS - #3		1
13		HOUSING, GEAR	NSS - #2		1
14		GEAR SET	NSS - #2		1
15		HOUSING, GEAR	NSS - #1		1
16		GEAR SET	NSS - drive		1
7		HOUSING, CENTER	NSS		1
18		HOUSING, CENTER	NSS		1
19		HOUSING, FRONT	NSS		1
20		SEAL, SHAFT	NSS		1
21	6685027	VALVE			1
22	6683206	SEAL KIT			2
23	6684590	COIL			1
24	6681492	NUT			1
25	6685027	VALVE	W/Ref. 22, 23 & 24		1

HYDROSTATIC CIRCUITRY
(W/Tank) (Manual Controls, AHC, ACS)

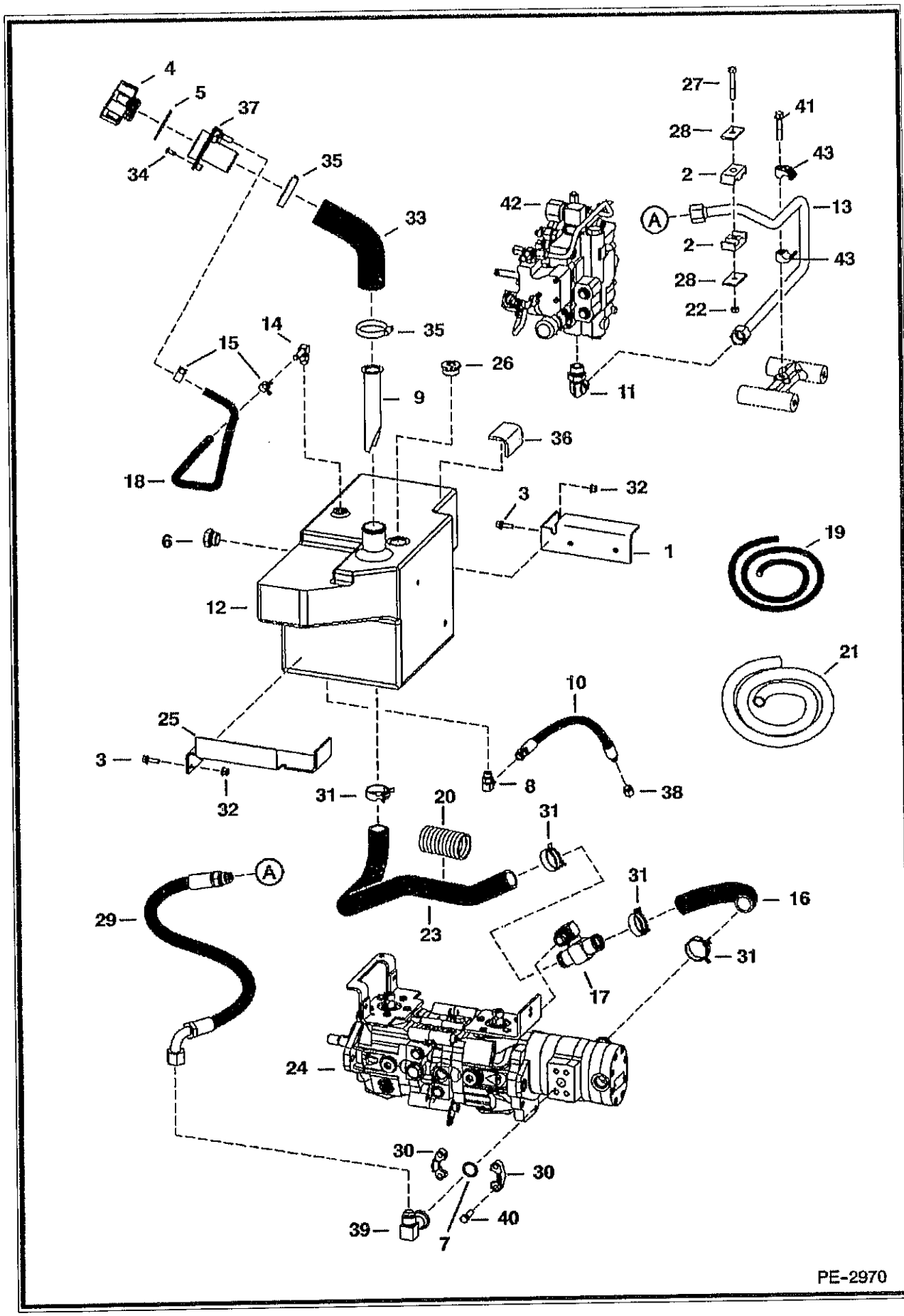

HYDROSTATIC CIRCUITRY (Cont'd)
(W/Tank) (Manual Controls, AHC, ACS)

Ref No	Part Number	Description	Remarks	Serial Number	Qty
1	6718851	BRACKET			1
2	6592506	CLAMP			2
3	35C516	BOLT 10			4
4	6727475	CAP	breather & fill - also Order Ref. 6		1
5	6700631	GASKET			2
6	6665915	GAUGE	sight		1
6	79K12	O RING 10			x
7	55K214	O'RING			1
8	17KB606	ELBOW			1
8	79K6	O RING 10			x
9	6569219	SCREEN			1
10	7106212	HOSE			1
11	7101797	ELBOW			1
11	79K12	O RING 10			x
12	6731209	TANK	hydraulic		1
13	7115066	TUBELINE			1
14	6727313	ELBOW			1
4	79K6	O RING 10			x
15	5HM15	CLAMP			2
16	7109343	HOSE			1
17	7107785	TEE			1
17	79K12	O RING 10			x
18		HOSE	NAP - 23" (584mm long) - Order Ref. 19		1
19	6586251	HOSE	bulk - sold per foot		x
20		SHIELD	NAP - 5" (127mm) long - Order Ref. 21		1
21	6705749	SHIELD	bulk - sold by the foot		x
22	59D6	NUT			1
23	7108441	HOSE			1
24		PUMP	See Illustration HYDROSTATIC PUMP/GEAR PUMP/ PE2824 - hydrostatic		1
25	6718850	BRACKET			1
26	47K10	PLUG	tank flushing hole		1
26	79K16	O RING 10			x
27	17C644	BOLT			1
28	6592507	PLATE			2
29	7115185	HOSE			1
30	19J12	CLAMP			2
31	5HM42	HOSECLAMP			4
32	83D5	NUT 5			4
33	6731638	HOSE			1
34	7106279	BOLT			3
35	42HL250	CLAMP			2
36	6578278	PAD			1
37	6727354	INLET			1
38	36K5	CAP			1
39	7106040	TEE	split flange		1
40	17C620	BOLT			4
41	35C632	BOLT			1
42		VALVE	See Illustration HYDRAULIC CONTROL VALVE/ PE2379 - control		1
43	7100462	CLAMP			2

HYDROSTATIC CIRCUITRY
(W/Tank) (SJC)

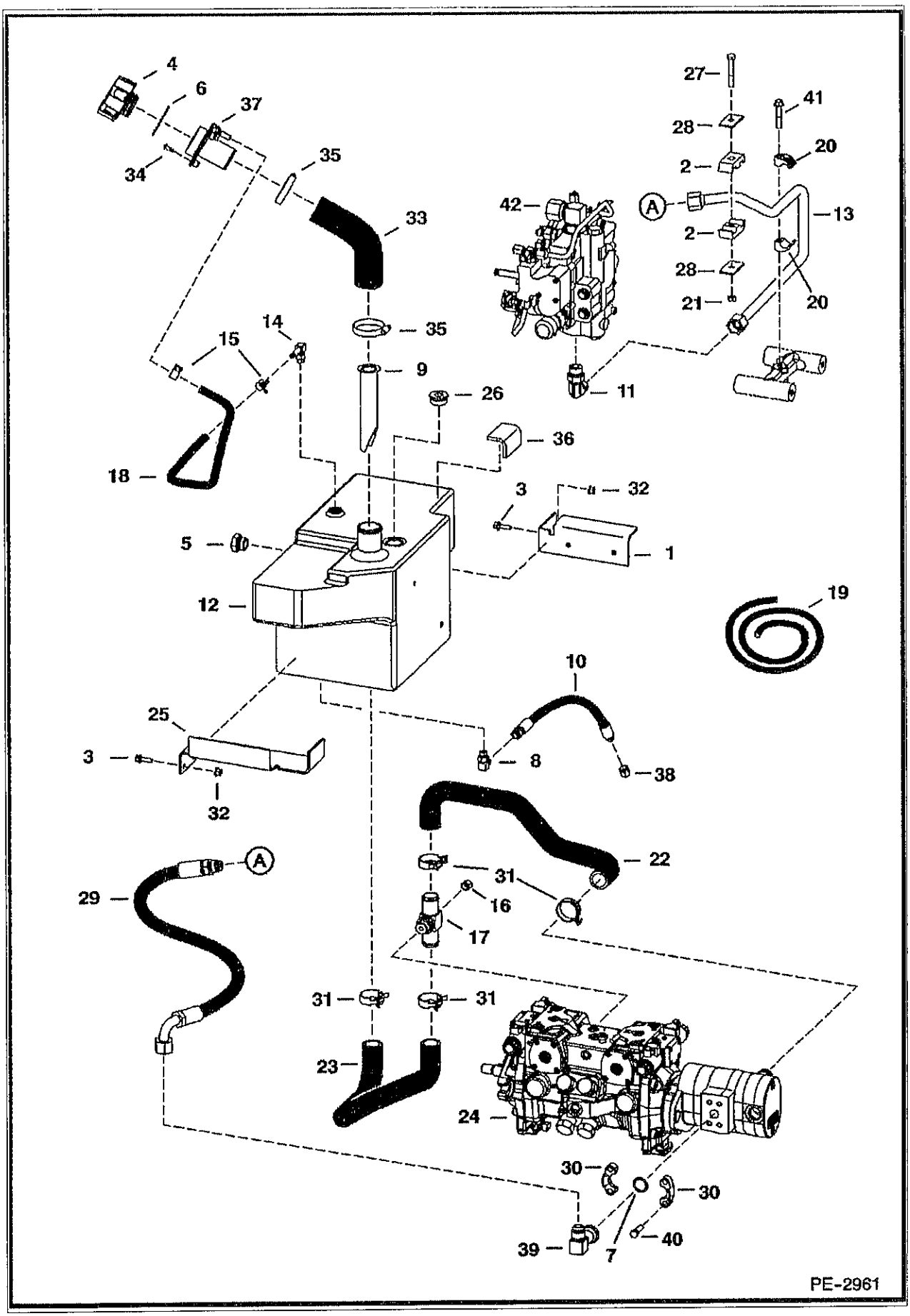

HYDROSTATIC CIRCUITRY (Cont'd)
(W/Tank) (SJC)

Ref No	Part Number	Description	Remarks	Serial Number	Qty
1	6718851	BRACKET			1
2	6592506	CLAMP			2
3	35C516	BOLT 10			4
4	6727475	CAP	breather & fill - also Order Ref. 6		1
5	6665915	GAUGE	sight		1
5	79K12	O RING 10			x
6	6700631	GASKET			2
7	55K214	O'RING			1
8	17KB606	ELBOW			1
8	79K6	O RING 10			x
9	6569219	SCREEN			1
10	7106212	HOSE			1
11	7101797	ELBOW			1
11	79K12	O RING 10			x
12	6731209	TANK	hydraulic		1
13	7115066	TUBELINE			1
14	6727313	ELBOW			1
4	79K6	O RING 10			x
15	5HM15	CLAMP			2
16	24K5	PLUG			1
17	7108633	TEE			1
17	79K12	O RING 10			x
18		HOSE	NAP - 23" (584mm long) - Order Ref. 19		1
19	6586251	HOSE	bulk - sold per foot		x
20	7100462	CLAMP			2
21	59D6	NUT			1
22	7107562	HOSE			1
23	7107561	HOSE			1
24		PUMP	See Illustration HYDROSTATIC PUMP/GEAR PUMP/ PE2824 - hydrostatic		1
25	6718850	BRACKET			1
26	47K10	PLUG	tank flushing hole		1
26	79K16	O RING 10			x
27	17C644	BOLT			1
28	6592507	PLATE			2
29	7115185	HOSE			1
30	19J12	CLAMP			2
31	5HM42	HOSECLAMP			4
32	83D5	NUT 5			4
33	6731638	HOSE			1
34	7106279	BOLT			3
35	42HL250	CLAMP			2
36	6578278	PAD			1
37	6727354	INLET			1
38	36K5	CAP			1
39	7106040	TEE	split flange		1
40	17C620	BOLT			4
41	35C632	BOLT			1
42		VALVE	See Illustration HYDRAULIC CONTROL VALVE/ PE2378 - control		1

HYDROSTATIC CIRCUITRY
(W/Cooler)

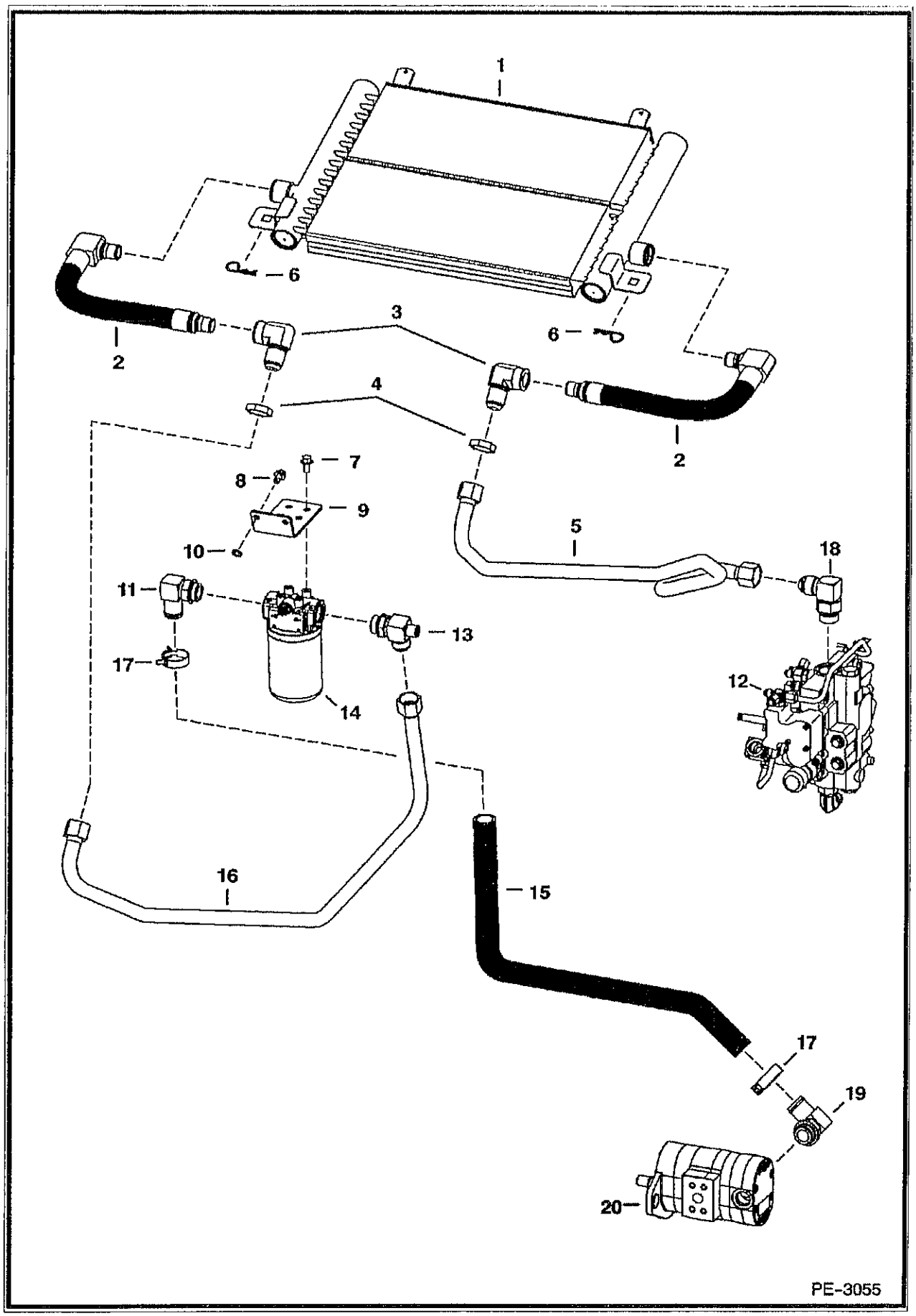

HYDROSTATIC CIRCUITRY (Cont'd)
(W/Cooler)

Ref No	Part Number	Description	Remarks	Serial Number	Qty
1	6678156	COOLER	for manual controls, AHC, ACS - W/STC-12 fitting		1
1	6681501	SEAL KIT	STC-12		x
1	7103750	EXCHANGER	for SJC - W/STC-16 fitting		1
1	6688523	SEAL KIT STC-16			x
2	6684457	HOSE	for manual controls, AHC, ACS - W/STC-12 fitting		2
2	6681501	SEAL KIT	STC-12		x
2	7103751	HOSE	for SJC - W/STC-16 fitting		2
2	6688523	SEAL KIT STC-16			x
3	6678970	ELBOW	for manual controls, AHC, ACS - W/STC-12 fitting		2
3	6681501	SEAL KIT	STC-12		x
3	7103749	ELBOW	for SJC - W/STC-16 fitting		2
3	6688523	SEAL KIT STC-16			x
4	86F10	NUT			2
5	7115091	TUBELINE		& Bel	1
5	7125181	TUBELINE		& Abv	1
6	1318565	COTTER PIN			2
7	35C612	BOLT			4
8	84G3710	SCREW			2
9	7103903	MOUNT	filter		1
10	6E6	WASHER			2
11	6729306	ELBOW			1
12		VALVE	See Illustration HYDRAULIC CONTROL VALVE/ PE2378 See Illustration HYDRAULIC CONTROL VALVE/ PE2379 control		1
13	6731527	TEE			1
13	79K16	O RING 10			x
14	6678155	FILTER ASSY			1
14	6661248	ELEMENT			1
15	7114886	HOSE		& Bel	1
15	7126554	HOSE		& Abv	1
16	7113355	TUBELINE		& Bel	1
16	7125182	TUBELINE		& Abv	1
17	5HM42	HOSECLAMP			2
18	6813964	ELBOW			1
18	79K16	O RING 10			x
18	58K22	O RING 10			x
19	7112788	ELBOW			1
20		PUMP	See Illustration GEAR PUMP/ MS1454		1

HYDROSTATIC CIRCUITRY
(W/Cooling Fan)

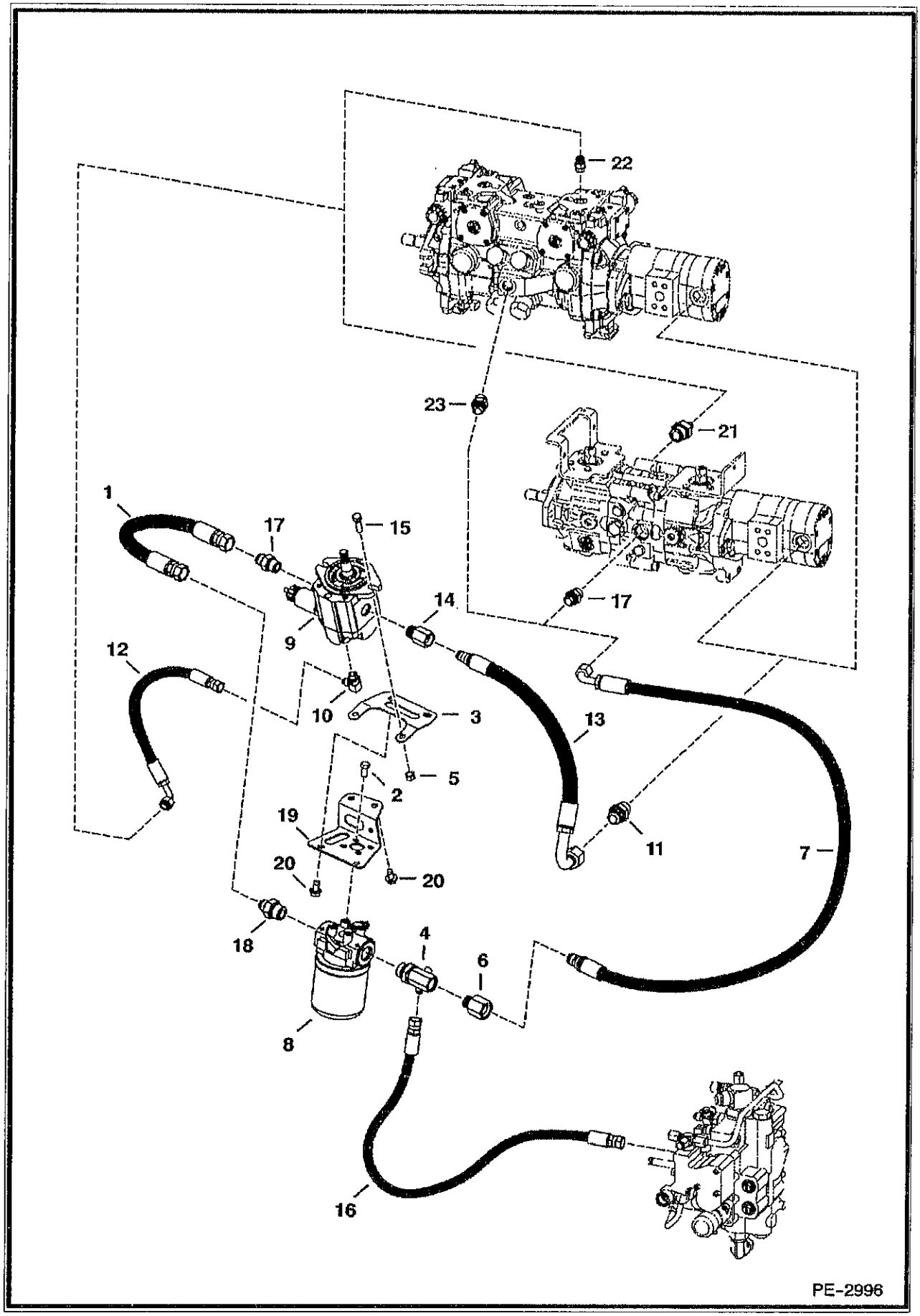

HYDROSTATIC CIRCUITRY (Cont'd)
(W/Cooling Fan)

Ref No	Part Number	Description	Remarks	Serial Number	Qty
1	7110809	HOSE			1
2	17C612	BOLT 5			4
3	7110243	BRACKET			1
4	7108685	TEE			1
4	79K12	O RING 10			1
5	95D6	NUT			2
6	78HA1210	ADAPTER	Also order Ref. 7 (6689768 hose)		1
6	79K10	O RING 10			x
7		HOSE	NAP - .875" thread - Order 6689768 hose & Ref. 6 - Was 7107174 [A]		1
7	6689768	HOSE	.875" thread - Also order Ref. 6		1
8		FILTER ASSY	See Illustration HYDROSTATIC OIL FILTER/ C2818 - Charge		1
9		MOTOR	See Illustration MOTOR/ PE2811		1
10	17KB606	ELBOW			1
10	79K6	O RING 10			1
11		ADAPTER	NAP - Order 15KB1212 adapter, Ref. 13 (6689767 hose) & Ref. 14 - Was 15KB1012 [A]		1
11	79K12	O RING 10			1
11	15KB1212	ADAPTER	Use W/ 6689767 hose		1
12	7107179	HOSE			1
13		HOSE	NAP - .875" thread - Order 6689767 hose, Ref. 11 (15KB1212 adapter), & Ref. 14 - Was 7107153 [A]		1
13	6689767	HOSE	1.0625" thread - Also order Ref. 14		1
14	78HA1010	ADAPTER	Also order Ref. 13 (6689767 hose) & Ref. 11 (15KB1212 adapter)		1
14	79K10	O RING 10			1
15	17C620	BOLT			2
16	6815887	HOSE			1
17	15KB1010	FITTING			2
17	79K10	O RING 10			2
18	15KB1012	ADAPTER			1
18	79K12	O RING 10			1
19	7110244	TUBE			1
20	84G3712	BOLT			4
21	15KB612	ADAPTER	manual controls, AHC & ACS		1
1	79K12	O RING 10			1
22	15KB606	ADAPTER	SJC		1
22	79K6	O RING 10			1
23	15KB1008	ADAPTER	SJC		1
23	79K8	O RING 10			1

HYDROSTATIC CIRCUITRY
(W/Motors) (Manual Controls, AHC & ACS)

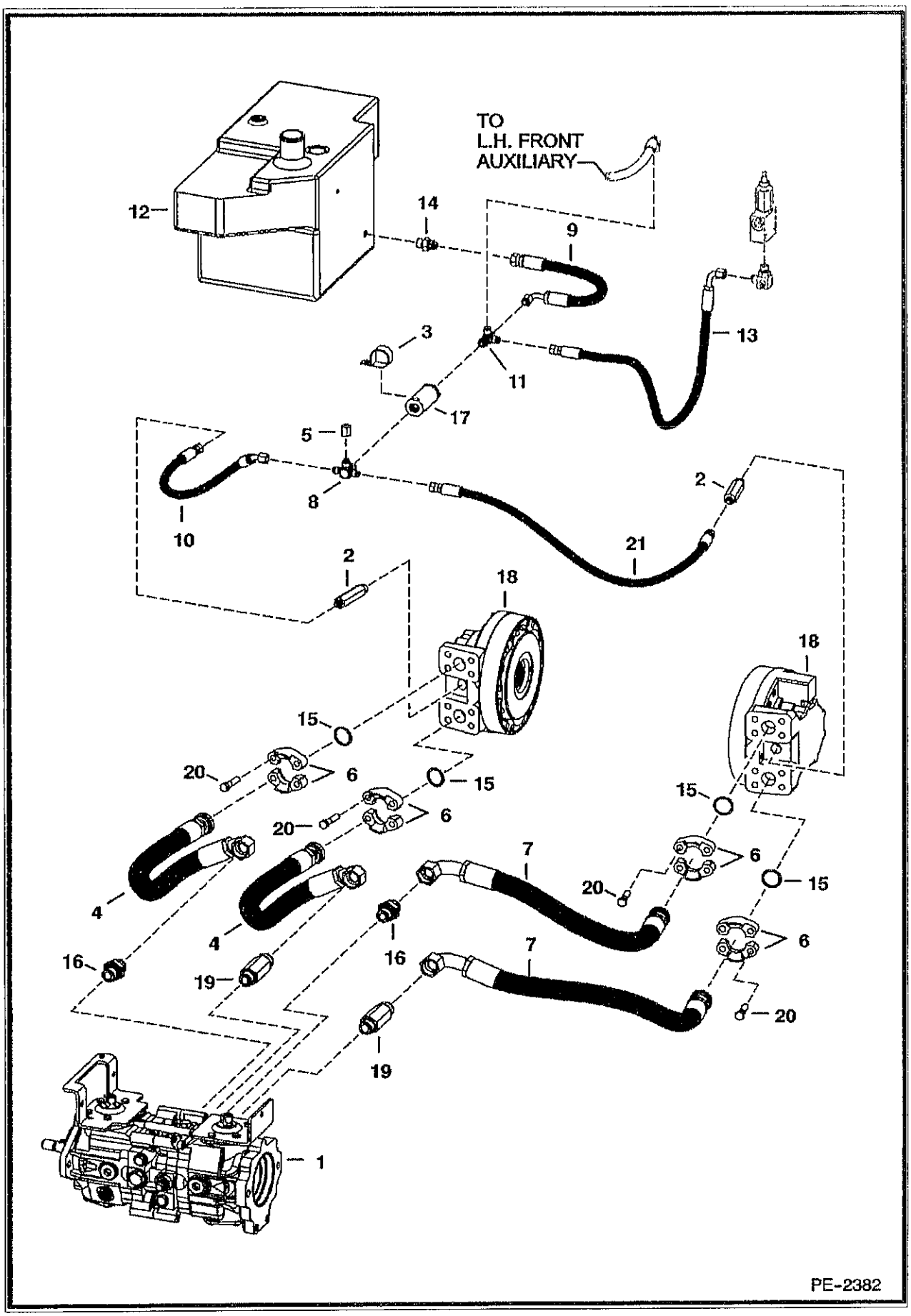

HYDROSTATIC CIRCUITRY (Cont'd)
(W/Motors) (Manual Controls, AHC & ACS)

ef No	Part Number	Description	Remarks	Serial Number	Qty
1		PUMP	See Illustration HYDROSTATIC PUMP/GEAR PUMP/ PE2824		1
2	6717306	ADAPTER			2
2	79K6	O RING 10			x
3	30H79	CLAMP			1
4	6673954	HOSE	mega seal - standard control		2
5	36K5	CAP			1
6	20J16	FLANGE			8
7	6679141	HOSE	mega seal - standard control		2
8	6725497	CROSS			1
8	79K6	O RING 10			x
9	6733219	HOSE			1
10	6732484	HOSE			1
11	6718031	TEE			1
11	79K6	O RING 10			x
12	6731209	TANK	hydraulic		1
13	6732483	HOSE			1
4	15KB808	CONNECTOR			1
14	79K8	O RING 10			x
15	55K219	O'RING			4
16	15KB1612	CONNECTOR			2
16	79K12	O RING 10			x
17	6661022	FILTER	in-line - 90 micron		1
18	6716243	ADAPTER			2
19	6716243	ADAPTER			2
19	79K12	O RING 10			x
20	17C728	BOLT			16
21	6732485	HOSE			1

HYDROSTATIC CIRCUITRY
(W/Motors) (SJC)

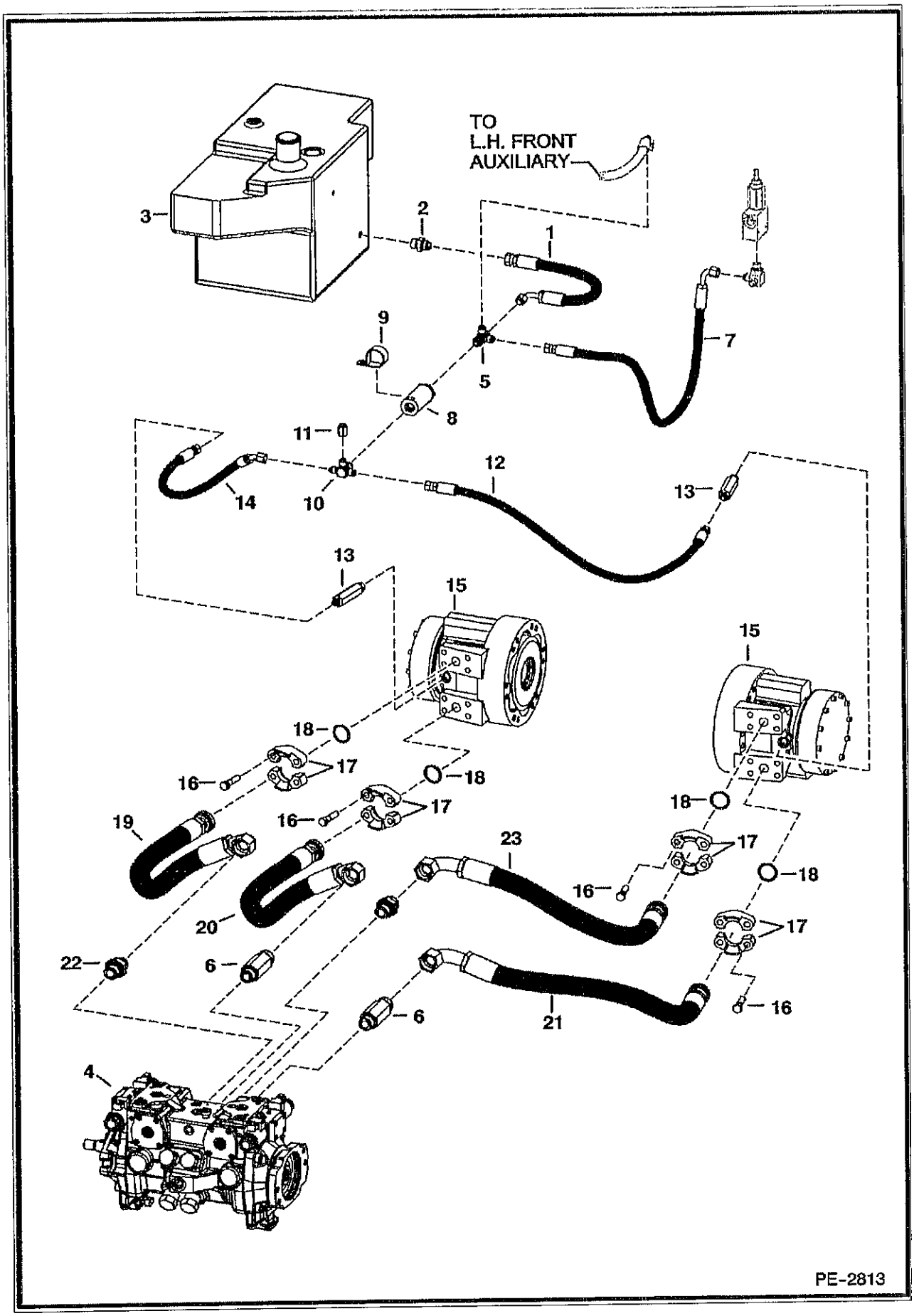

HYDROSTATIC CIRCUITRY (Cont'd)
(W/Motors) (SJC)

ef No	Part Number	Description	Remarks	Serial Number	Qty
1	6733219	HOSE			1
2	15KB808	CONNECTOR			1
2	79K8	O RING 10			x
3	6731209	TANK	hydraulic		1
4		PUMP	See Illustration HYDROSTATIC PUMP/GEAR PUMP/ PE2824 - hydrostatic		1
5	6718031	TEE			1
5	79K6	O RING 10			x
6	6716243	ADAPTER			2
6	79K12	O RING 10			x
7	6732483	HOSE			1
8	6661022	FILTER	in-line		1
9	30H79	CLAMP			1
10	6725497	CROSS			1
10	79K6	O RING 10			x
11	36K5	CAP			1
12	6732485	HOSE			1
3	6717306	ADAPTER			2
13	79K8	O RING 10			x
14	6732484	HOSE			1
15		MOTOR	See Illustration HYDROSTATIC MOTOR & BRAKE/ MS2218 - drive		2
16	17C728	BOLT			16
17	20J16	FLANGE			8
18	55K219	O'RING			4
19	7107557	HOSE			1
20	7107558	HOSE			1
21	7107559	HOSE			1
22	15KB1612	CONNECTOR			2
22	79K12	O RING 10			x
23	7107560	HOSE			1

HYDROSTATIC CIRCUITRY
(2-Speed Option)

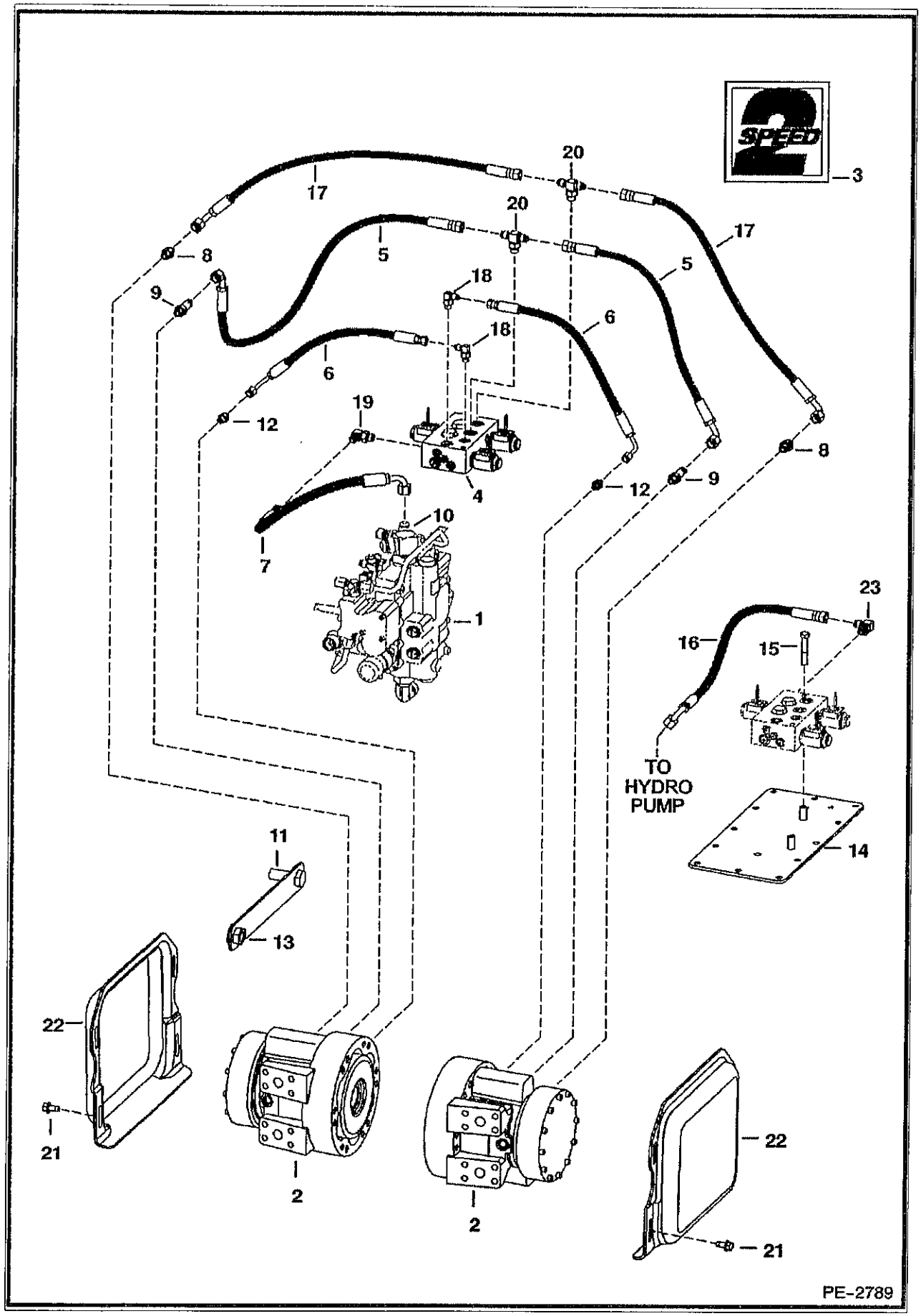

HYDROSTATIC CIRCUITRY (Cont'd)
(2-Speed Option)

ef No	Part Number	Description	Remarks	Serial Number	Qty
1		VALVE			1
2		MOTOR	See Illustration HYDROSTATIC MOTOR & BRAKE/ MS2218		2
3	6729078	DECAL	2-speed		2
4	6679102	VALVE	See Illustration 2-SPEED VALVE/ MS1385 2-speed		1
5	6725899	HOSE	2-speed port		2
6	6725900	HOSE	make-up		2
7	6806058	HOSE			1
8	15KB606	ADAPTER			2
8	99K6	O'RING			x
9	7122214	ADAPTER			2
9	99K6	O'RING			x
10	7102066	TEE			1
10	97K6	O'RING			x
11	31C1228	BOLT			1
12	15KB404	CONNECTOR			2
12	99K4	O'RING			x
3	83D12	NUT			1
14	7111595	COVER	chaincase		1
15	17C636	BOLT			2
16	6628613	HOSE			1
17	6716391	HOSE	brake		2
18	17KB404	ELBOW			2
18	99K4	O'RING			x
19	6812815	FITTING			1
19	99K6	O'RING			x
20	19KB606	TEE			2
20	99K6	O'RING			x
21	84G3712	BOLT			8
22	6719168	COVER			2
23	17KB606	ELBOW			1

HAND CONTROLS

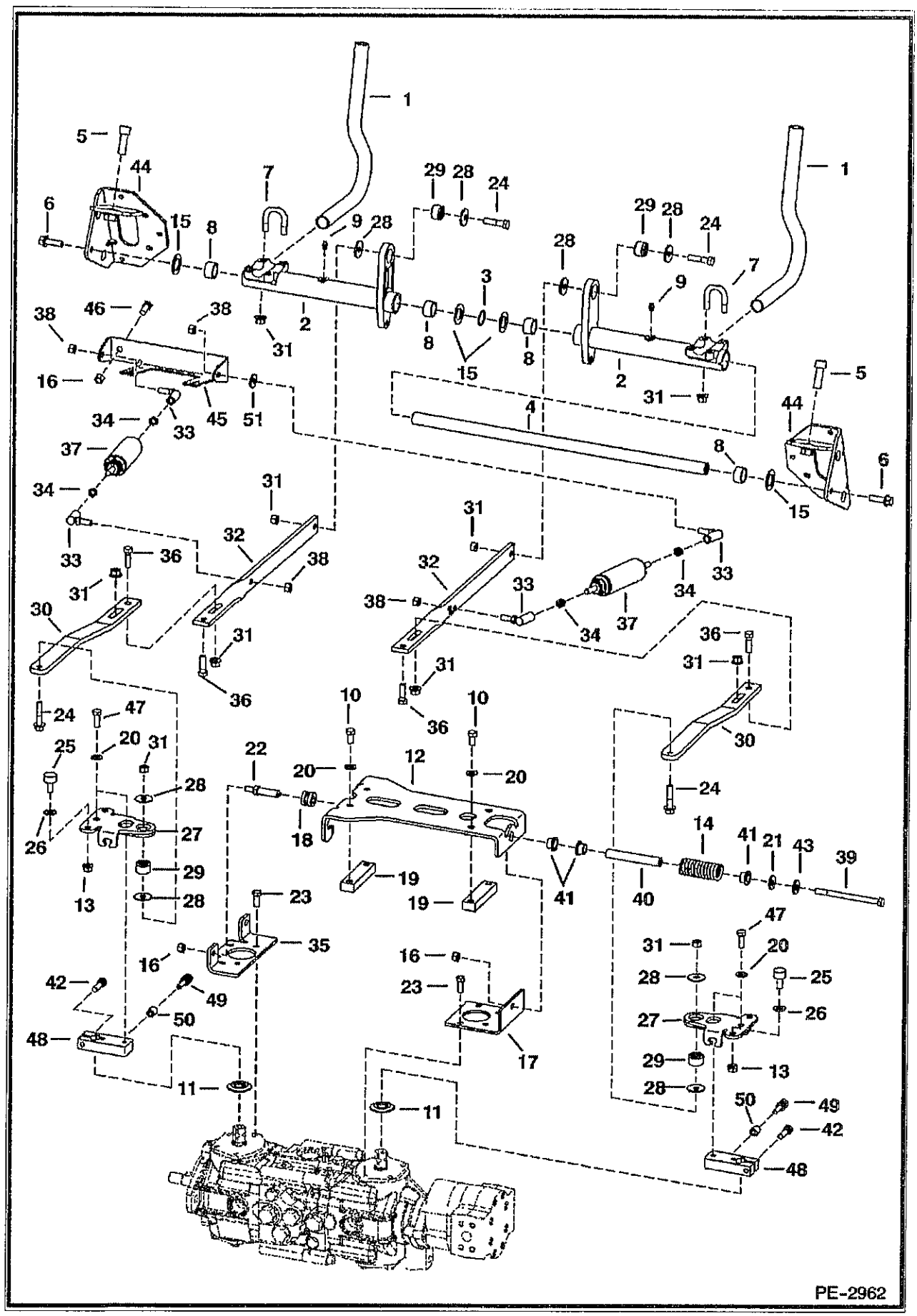

HAND CONTROLS (Cont'd)

Ref No	Part Number	Description	Remarks	Serial Number	Qty
1	6702543	LEVER			2
2	7110572	BELLCRANK			2
3	6599741	WASHER	wave		1
4	6716545	ROD			1
5	93G824	BOLT	Was 73G824 [A]		2
6	45C620	BOLT			2
7	6732997	U-BOLT			4
8	6673710	BEARING			4
9	10H35	GREASE ZERK	threaded		2
10	7105192	BOLT			4
11	6687913	SEAL			2
12	6734298	MOUNT			1
13	98D6	NUT			4
14	6701535	SPRING			1
15	6716916	WASHER			4
16	95D6	NUT			5
17	7109904	BRACKET			1
18	6706098	GUIDE			2
19	6702716	BLOCK			2
20	7103217	WASHER			8
21	6563914	WASHER			1
22	6577058	PIN			2
23	1CM820	BOLT			8
24	49C628	BOLT			4
25	6673789	BEARING			4
26	7100699	WASHER			4
27	7110365	PINTLE ARM			2
28	6737388	WASHER			8
29	6685060	BUSHING	torsion - 1.055" (26,8mm) O.D.		4
30	6737746	LINK			2
31	83D6	NUT			16
32	7100266	LINK			2
33	6599744	BALL JOINT			4
35	7109905	BRACKET			1
36	17C620	BOLT			4
37	6649551	SHOCK			2
38	96D6	NUT			4
39	17C680	BOLT			1
40	6715164	SLEEVE			1
41	6715163	BUSHING			3
42	73G624	BOLT			2
43	25E22	WASHER	for AHC & ACS		1
44	6733022	BRACKET	R.H.		1
44	6733024	BRACKET	L.H.		1
45	7100795	MOUNT	damper		1
46	17C612	BOLT 5			2
47	7105193	BOLT			4
48	7103708	BRACKET	pintle arm		2
49	7103711	BOLT			2
50	7105223	SPACER			2
51	7110945	SPACER			1

HYDROSTATIC MOTOR

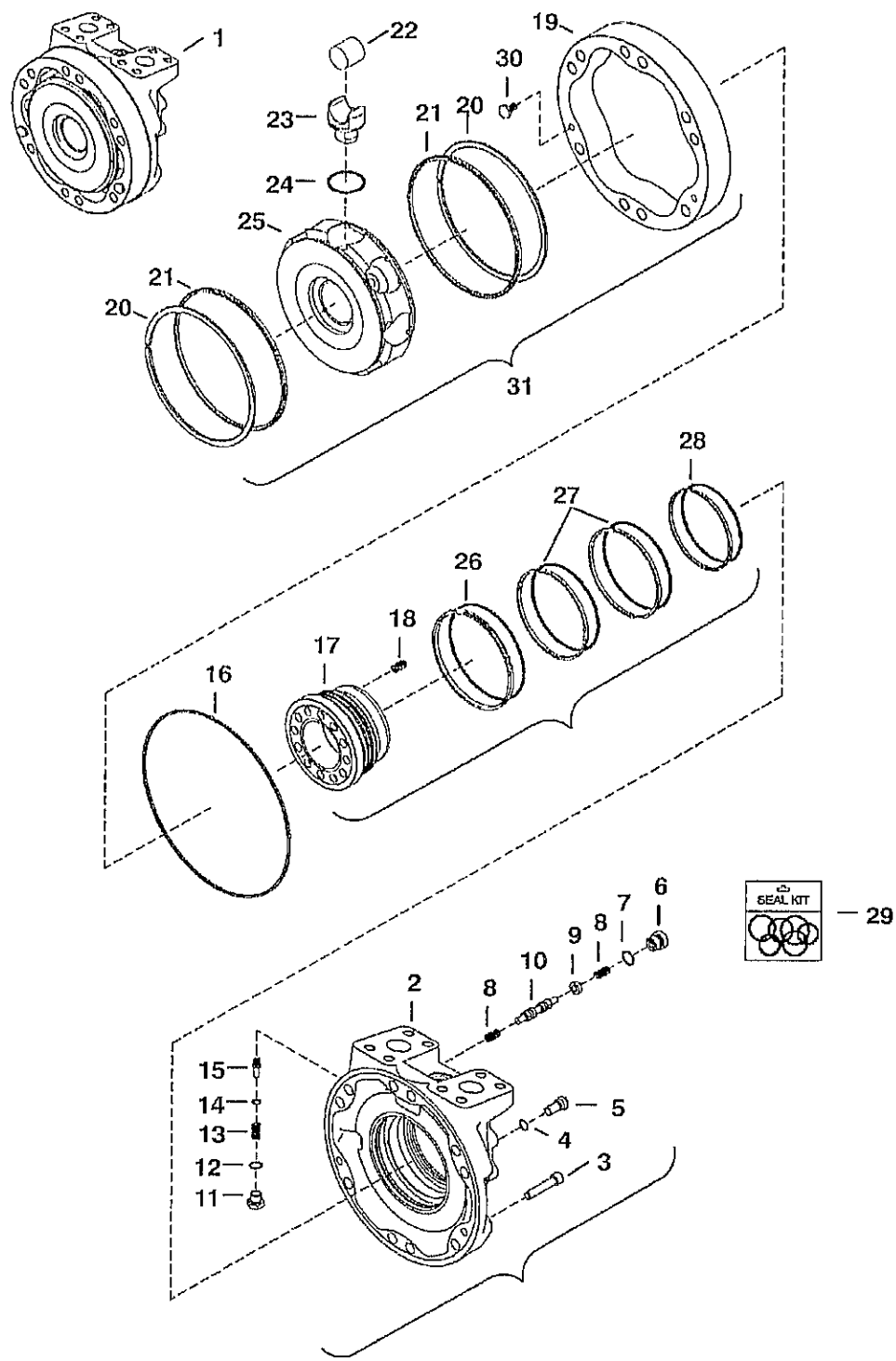

MS-2199

HYDROSTATIC MOTOR (Cont'd)

Ref No	Part Number	Description	Remarks	Serial Number	Qty
1	6687825	MOTOR			1
2	6690026	HOUSING			1
3	6690039	SCREW			2
4	6689132	O-RING			1
5	6690030	PLUG			1
6	6688866	PLUG			1
7	6689133	O-RING			1
8	6690042	SPRING			2
9	6690043	WASHER			1
10	6690041	SPOOL			1
11	6690047	PLUG			1
12	6689132	O-RING			1
13	6690046	SPRING			1
14	6690044	SHIM			1
15	6690045	ORIFICE			1
16	6690033	SEAL			1
17	6690027	RING			1
8	6690031	SPRING			9
19	6690025	CAM			1
20	6690023	CLAMP			2
21	6690024	RING			2
22	6690022	ROLLER			8
23	6689126	PISTON			8
24	6690048	RING			8
25	6690021	BLOCK			1
26	6690028	SEAL			1
27	6690049	SEAL			2
28	6690029	SEAL			1
29	6690004	SEAL KIT			1
30	6688449	LOCATING PIN			2
31	6690158	ROTOR GROUP	W/Ref. 19-25		1
32		RING AND SEALS KIT	NSS- Order individual parts or Ref. 1		1
33		REAR HOUSING ASSY.	NSS- Order individual parts or Ref. 1		1

HYDROSTATIC MOTOR & BRAKE
(W/2-Speed Option) (SJC)

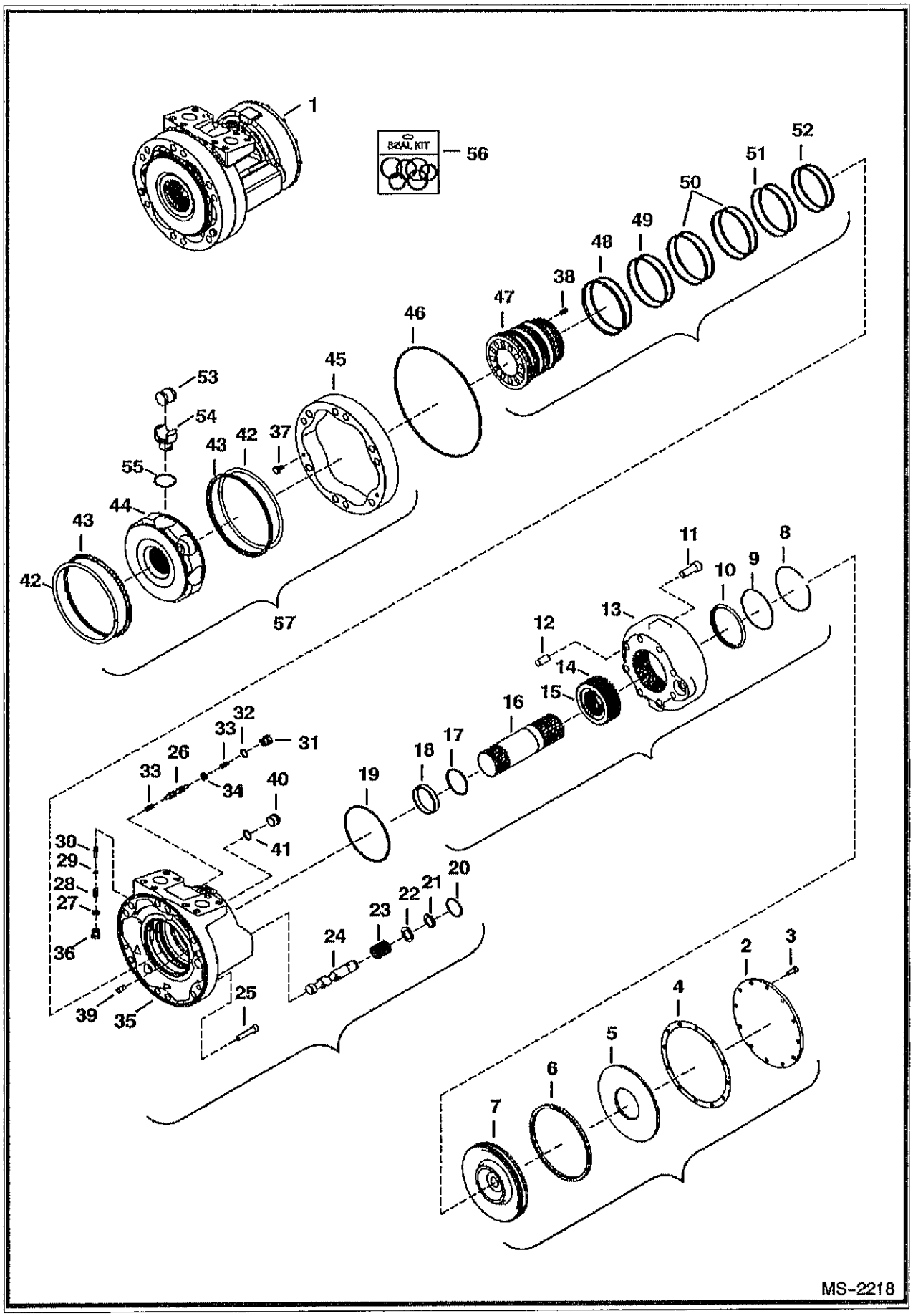

HYDROSTATIC MOTOR & BRAKE (Cont'd)
(W/2-Speed Option) (SJC)

Ref No	Part Number	Description	Remarks	Serial Number	Qty
1	6687826	MOTOR	R921810406 - Ref. 2-55		1
2	6690086	COVER			1
3	6690095	SCREW			12
4	6690091	GASKET			1
5	6690098	SPRING	disc		1
6	6690092	O-RING			1
7	6690085	PISTON			1
8	6690094	CLAMP			1
9	6690097	O-RING			1
10	6690093	SEAL			1
11	6690096	SCREW			5
12	6690099	PIN			3
13	6690082	HOUSING			1
14	6690088	PLATE	inner		14
15	6690087	PLATE	outer		16
16	6690084	SHAFT			1
17	6690081	CLAMP			1
8	6690100	BUSHING			1
19	6690078	RING			1
20	6690077	O-RING			1
21	6690076	CLAMP			1
22	6690105	WASHER			1
23	6690075	SPRING			1
24	6690074	SPOOL			1
25	6690039	SCREW			2
25	6690041	SPOOL			1
27	6689132	O-RING			1
28	6690046	SPRING			1
29	6690044	SHIM			1
30	6690045	ORIFICE			1
31	6688866	PLUG			1
32	6689133	O-RING			2
33	6690042	SPRING			2
34	6690043	WASHER			1
35	6690066	HOUSING			1
36	6690047	PLUG			1
37	6688449	LOCATING PIN			2
38	6690031	SPRING			15
39	6690068	PIN			1
40	6689129	PLUG			1
41	6690080	O-RING			1
42	6690023	CLAMP			2
43	6690024	RING			2
44	6690065	BLOCK			1
45	6690025	CAM			1
46	6690033	SEAL			1
47	6690067	RING			1
48	6690069	SEAL			1
49	6690070	SEAL			1
50	6690071	SEAL			2
51	6690072	SEAL			1
52	6690073	SEAL			1
53	6690022	ROLLER	Roller		8
4	6689126	PISTON			8

HYDROSTATIC MOTOR & BRAKE (Cont'd)
(W/2-Speed Option) (SJC)

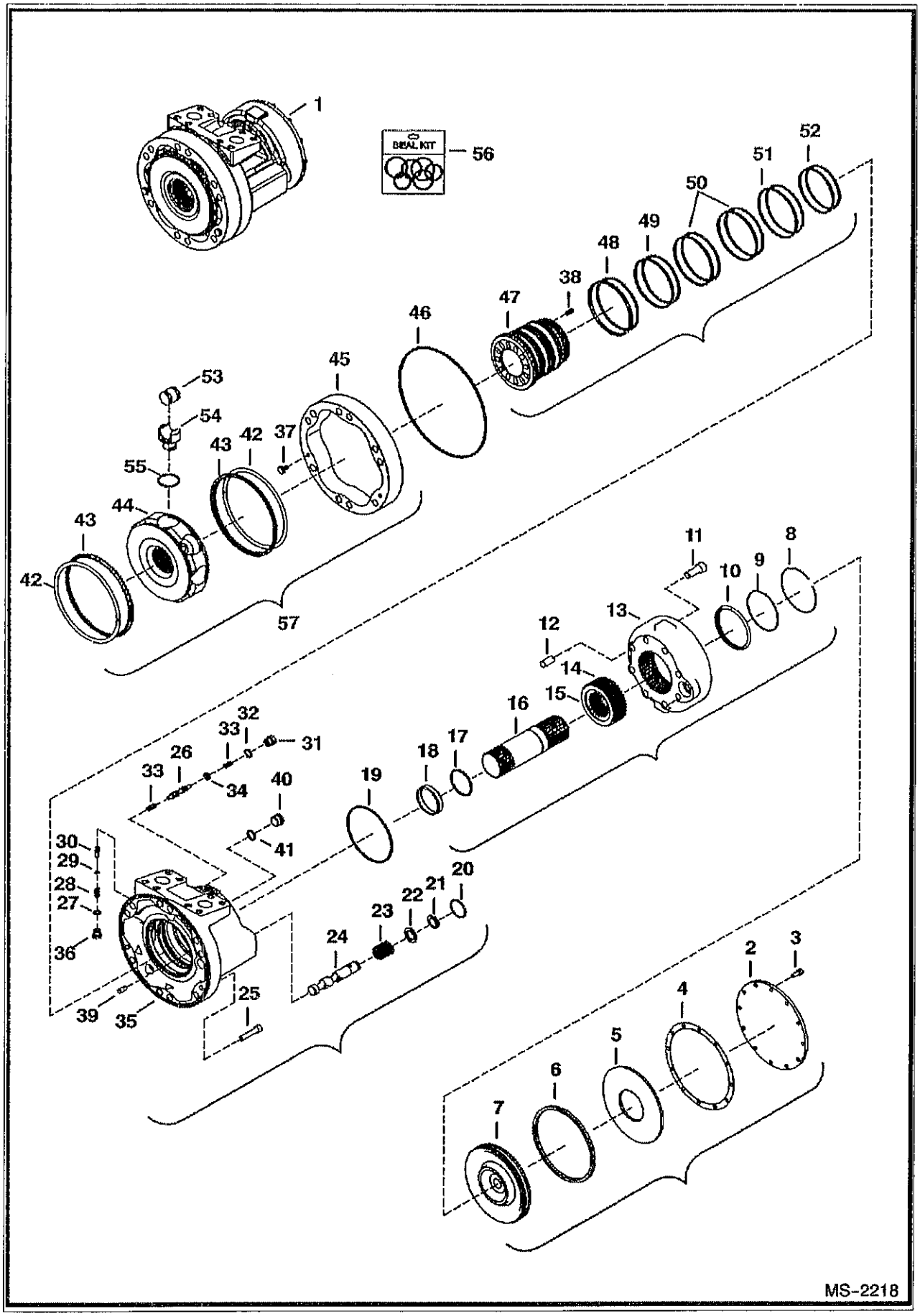

HYDROSTATIC MOTOR & BRAKE (Cont'd)
(W/2-Speed Option) (SJC)

Ref No	Part Number	Description	Remarks	Serial Number	Qty
55	6690048	RING			8
56	6690005	SEAL KIT			1
57	6690157	ROTOR GROUP	W/Ref. 42-45 & 53-55		1
58		RING AND SEALS KIT	NSS- Order individual parts or Ref. 1		1
59		REAR HOUSING ASSY.	NSS- Order individual parts or Ref. 1		1
60		BRAKE HOUSING ASSY.	NSS- Order individual parts or Ref. 1		1
61		BRAKE PISTON ASSY.	NSS- Order individual parts or Ref. 1		1

HYDROSTATIC PUMP/GEAR PUMP
(Identification)

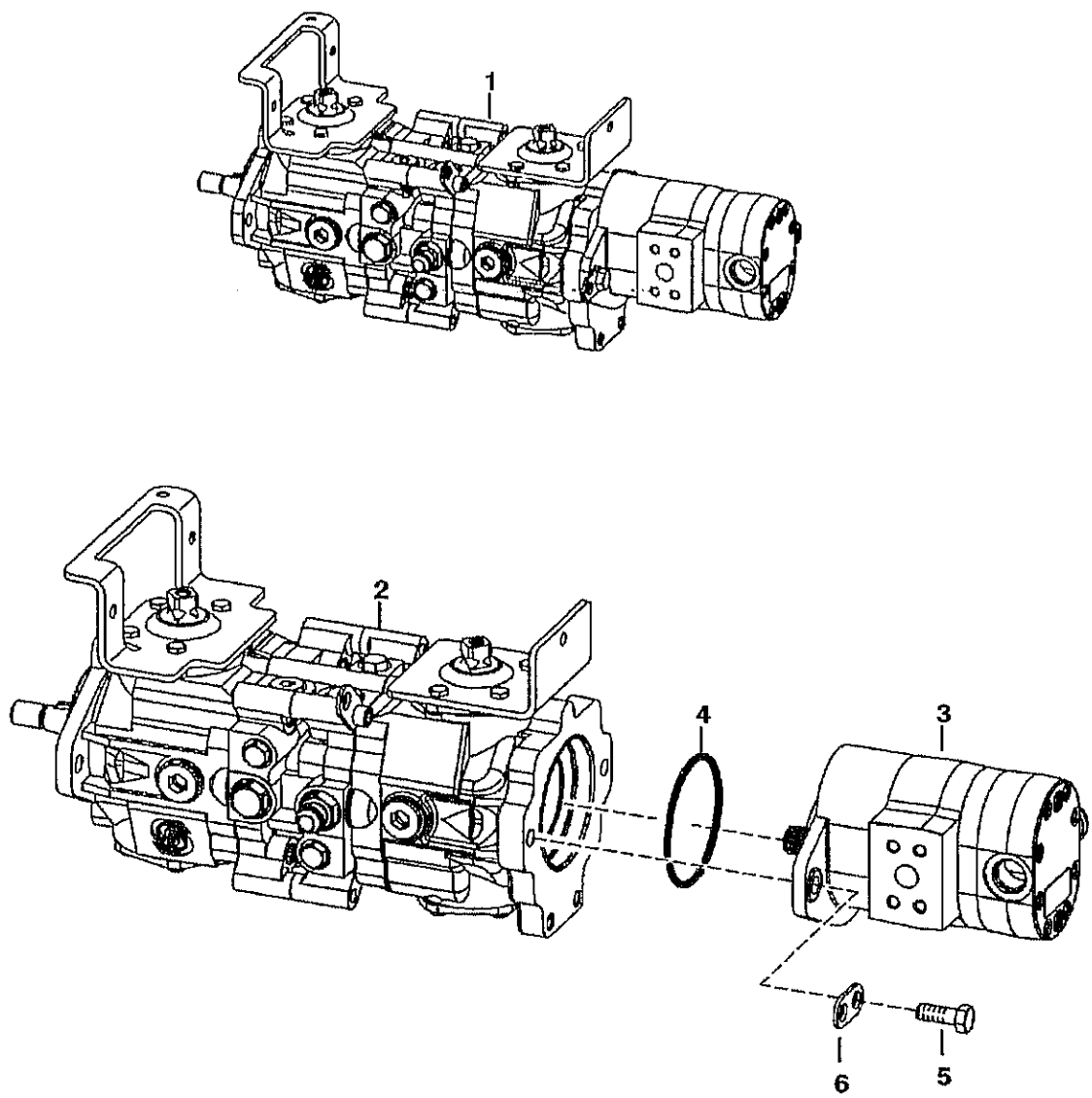

PE-2824

HYDROSTATIC PUMP/GEAR PUMP (Cont'd)
(Identification)

Ref No	Part Number	Description	Remarks	Serial Number	Qty
1		PUMP ASSY	NAP - Order Ref. 2-6		1
2		HYDROSTATIC PUMP	See Illustration HYDROSTATIC PUMP/ MS2184 See Illustration HYDROSTATIC PUMP/ MS2183 - manual controls, AHC, ACS		1
2		HYDROSTATIC PUMP	See Illustration HYDROSTATIC PUMP/ B25010 - SJC		1
3		GEAR PUMP	See Illustration GEAR PUMP/ MS1454		1
3		GEAR PUMP	See Illustration HIGH FLOW HYDRAULICS/ MS1456 - high flow		1
4	6671520	O-RING	manual controls, AHC, ACS		1
4	6688019	O-RING	SJC		1
5	45C824	BOLT	manual controls, AHC, ACS - Was 31C824 [B,D]		2
5	59CM1240	BOLT	SJC		2
6	6631643	PLATE			2

HYDROSTATIC PUMP
(Manual Controls, AHC & ACS)

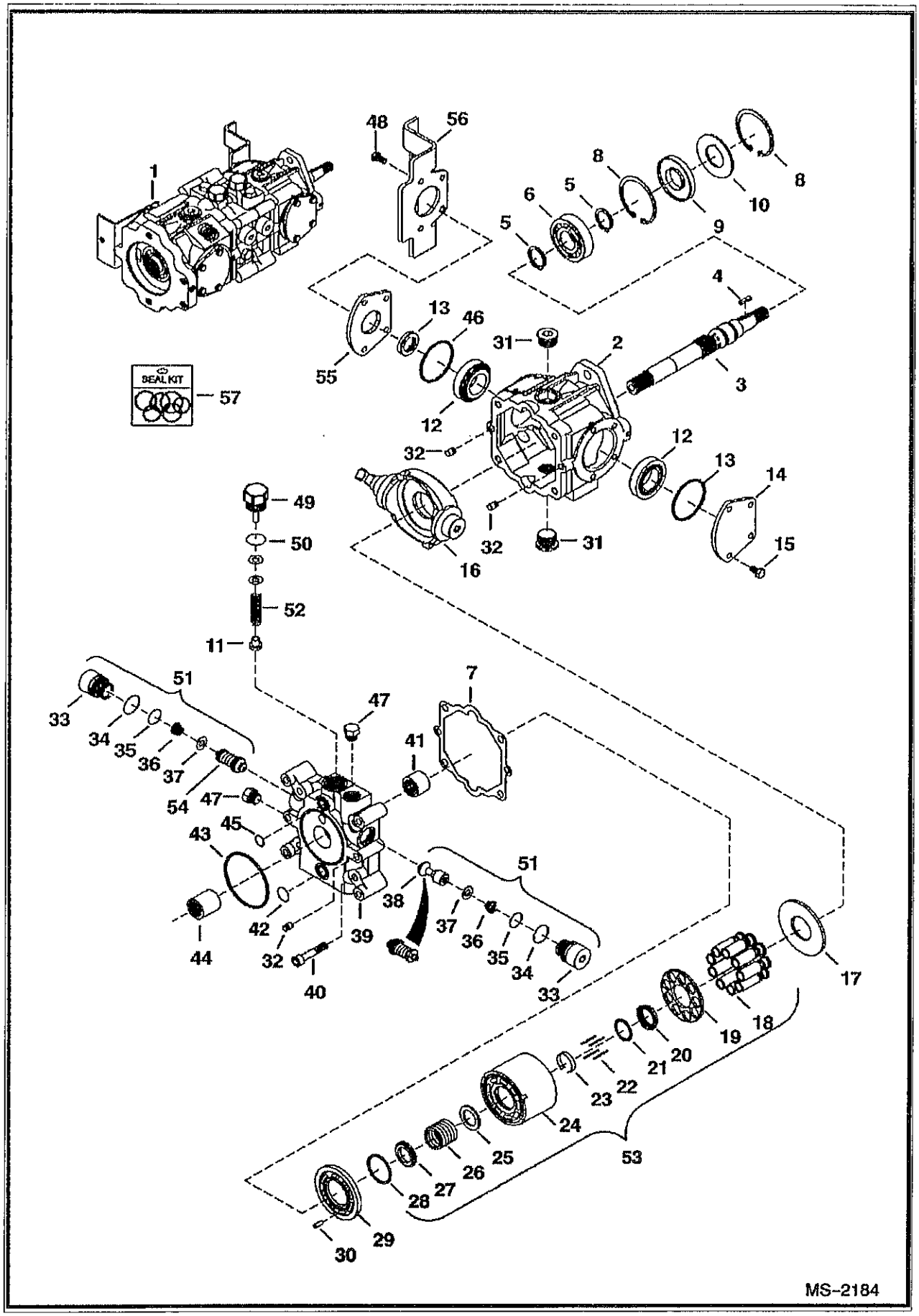

HYDROSTATIC PUMP (Cont'd)
(Manual Controls, AHC & ACS)

Ref No	Part Number	Description	Remarks	Serial Number	Qty
1	6687832	PUMP	Model 4445208		1
2	6669402	HOUSING			1
3	6682260	SHAFT	W/square key		1
4	6683169	KEY			1
5	658128B	SNAP RING			2
6	654299B	BEARING			1
7	6650634	GASKET			1
8	669863B	SNAP RING			2
9	6687191	SEAL			1
10	6669409	WASHER			1
11	6650652	POPPET	Charge relief		1
12	6669411	BEARING			2
13	6660814	O-RING			2
14	6657068	COVER			2
15	6650668	BOLT			4
16	6685344	SWASH PLATE	W/threaded shaft hole		1
17	6650627	PLATE			1
18	6683168	PISTON ASSY			1
19	6657072	RETAINER			1
20	6657073	RETAINER			1
21	6666338	WASHER			1
22	6650629	PIN			4
23	6650630	RETAINER			1
24	6683167	BLOCK			1
25		WASHER	NAP - Order Ref. 53		1
26		SPRING	NAP - Order Ref. 53		1
27		WASHER	NAP - Order Ref. 53		1
28	6666881	WASHER			1
29	6687774	PLATE			1
30	6650636	PIN			1
31	47K8	PLUG			2
31	79K12	O RING 10			2
32	6675342	PIN			4
33		PLUG	NAP - Order Ref. 51		2
34	6657028	O-RING			2
35	79K8	O RING 10			2
36		SPRING	NAP - Order Ref. 51		2
37		RETAINER	NAP - Order Ref. 51		2
38		CHECK VALVE	NAP - poppet - Order Ref. 51		1
39	6669406	END PLATE			1
40	6650637	BOLT			4
41	6650635	BEARING			1
42	6650647	O-RING			1
43	6673884	O-RING			1
44	6650675	COUPLER			1
45	6650646	O-RING			1
46	6660814	O-RING			1
47	6645086	PLUG			2
47	6661481	O-RING			1
48	6671518	BOLT			4
49	6650648	PLUG	Charge relief - W/Ref. 50		1
50	79K10	O RING 10			1
51	6689601	VALVE			1
2	6684038	SPRING			1

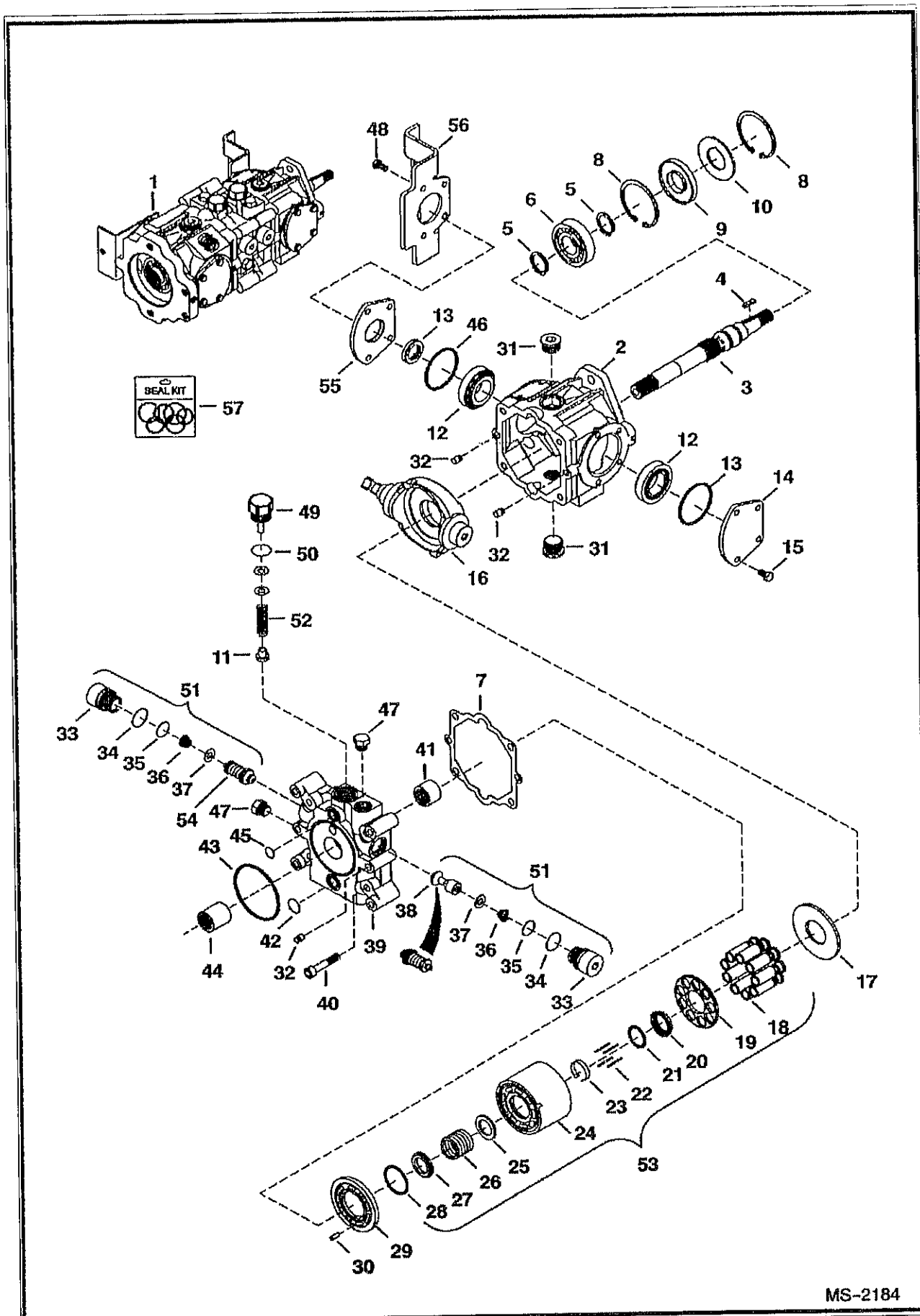
1
48
56
8
6
5
10
9
4
13
46
31
2
3
55
12
32
14
15
16
49
50
52
11
51
33
34
35
36
37
54
47
41
7
45
43
38
39
42
44
40
17
18
19
20
21
22
23
24
25
26
27
28
29
30
53
SEAL KIT
57
MS-2184

HYDROSTATIC PUMP (Cont'd)
(Manual Controls, AHC & ACS)

Ref No	Part Number	Description	Remarks	Serial Number	Qty
53	6675341	BLOCK ASSY			1
54		RELIEF VALVE	NAP - 5000 PSI (345 bar)- Order Ref. 51		1
55	6657067	COVER	W/Ref. 46		1
56	7109905	BRACKET			1
57	6671516	SEAL KIT	Ref. 7, 9, 13, 34, 35, 42, 43, 45, 46 & 50 - Also includes Ref. 2, 3, 12, 31 & 41 on next page		1

HYDROSTATIC PUMP
(Manual Controls, AHC & ACS)

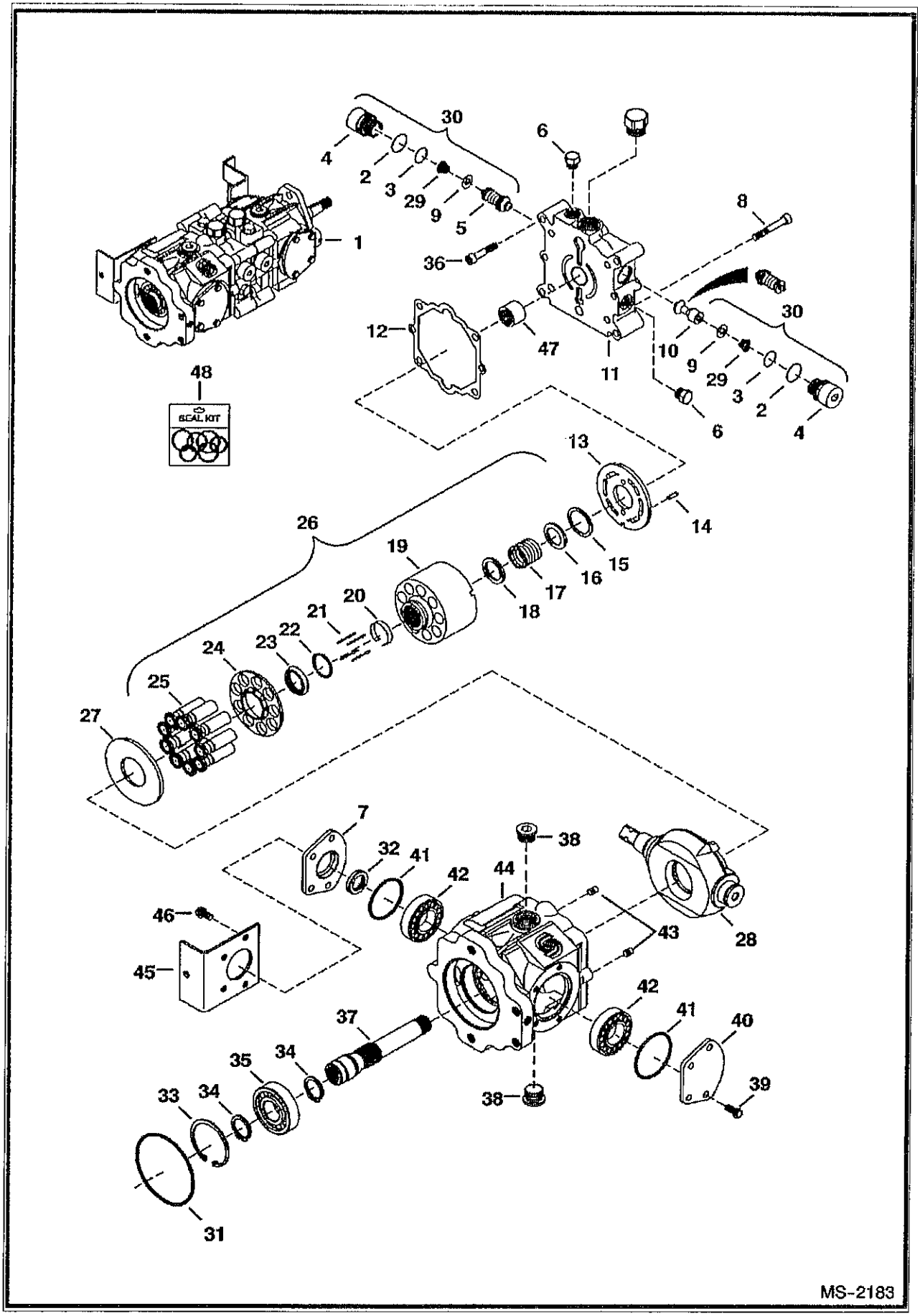

HYDROSTATIC PUMP (Cont'd)
(Manual Controls, AHC & ACS)

Ref No	Part Number	Description	Remarks	Serial Number	Qty
1	6687832	PUMP	Model 4445208		1
2	6657028	O-RING			2
3	79K8	O RING 10			2
4		PLUG	NAP - Order Ref. 30		2
5		RELIEF VALVE	NAP - 5000 PSI (345 bar)- Order Ref. 30		2
6	6645086	PLUG			4
7	6675338	COVER	W/Ref. 32		1
8	6650637	BOLT			2
9		RETAINER	NAP - Order Ref. 30		4
10		CHECK VALVE	NAP - poppet - Order Ref. 30		1
11	6669405	END CAP			1
12	6650634	GASKET			1
13	6676147	VALVE PLATE			1
14	6650636	PIN			2
15		RETAINER	NAP - Order Ref. 26		1
16		WASHER	NAP - Order Ref. 26		1
17		SPRING	NAP - Order Ref. 26		1
8		WASHER	NAP - Order Ref. 26		1
19	6683167	BLOCK			1
20	6650630	RETAINER			1
21	6650629	PIN			4
22	6666338	WASHER			1
23	6657073	RETAINER			1
24	6657072	RETAINER			1
25	6683168	PISTON ASSY			1
26	6671512	BLOCK ASSY	W/Ref. 15-25		1
27	6650627	PLATE			1
28	6685344	SWASH PLATE	W/threaded shaft hole		1
29		SPRING	NAP - Order Ref. 30		2
30	6689601	VALVE	W/Ref. 2-5, 9, 10 & 29		2
31	6671520	O-RING			1
32	6678226	SEAL			1
33	669863B	SNAP RING			1
34	658128B	SNAP RING			2
35	654299B	BEARING			1
36	6652018	BOLT			4
37	6682264	SHAFT			1
38	47K8	PLUG			1
38	79K12	GEAR PUMP			2
39	6650668	BOLT			4
40	6657068	COVER			1
41	6660814	O-RING			2
42	6669411	BEARING			2
43	6675342	PIN			2
44	6689602	HOUSING			1
45	7109904	BRACKET			1
46	6671518	BOLT			4
47	6650635	BEARING			1
48	6671516	SEAL KIT	Ref. 2, 3, 12, 31 & 41 - Also includes Ref. 7, 9, 13, 34, 35, 42, 43, 45, 46 & 50 on previous page		1

HYDROSTATIC PUMP
(SJC)

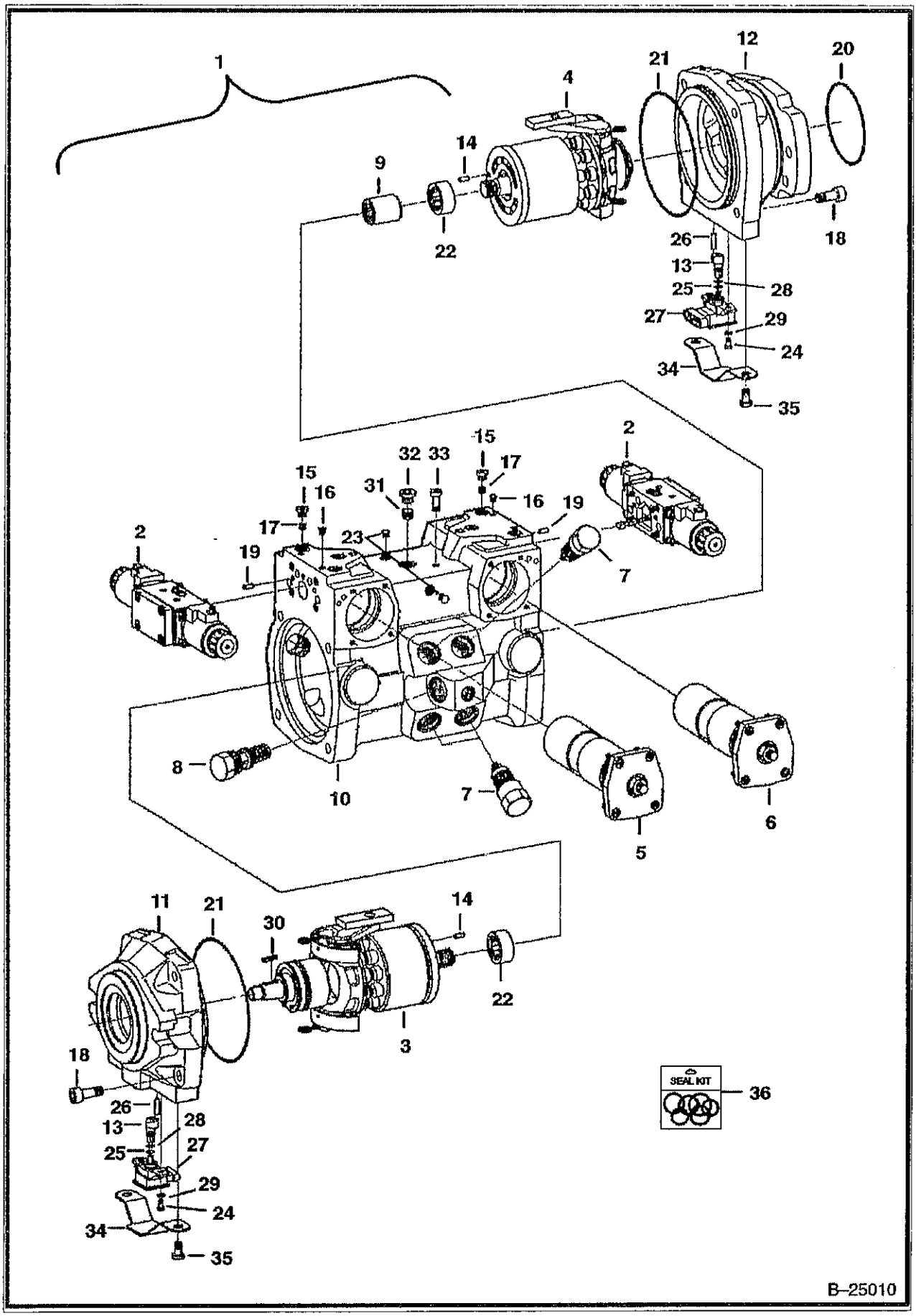

HYDROSTATIC PUMP (Cont'd)
(SJC)

Ref No	Part Number	Description	Remarks	Serial Number	Qty
1	6686267	PUMP	model R902095064		1
2	6687970	MODULATOR	See Illustration HYDROSTATIC PUMP/ B25016		2
3	6687957	GROUP	See Illustration HYDROSTATIC PUMP/ B25011 L.H. rotation		1
4	6687958	GROUP	See Illustration HYDROSTATIC PUMP/ B25012 R.H. rotation		1
5	6687960	CONTROL	See Illustration HYDROSTATIC PUMP/ B25013		1
6	6687961	CONTROL	See Illustration HYDROSTATIC PUMP/ B25013A		1
7	6687924	VALVE	See Illustration HYDROSTATIC PUMP/ B25014		4
8	6687938	VALVE	See Illustration HYDROSTATIC PUMP/ B25015		1
9	6687941	COUPLER			1
10	6687964	HOUSING			1
11	6687973	FLANGE			1
12	6687974	FLANGE			1
13	6687965	SHAFT			2
14	6688011	PIN			2
15	6688016	SCREW			11
16	6688039	PIN			3
17	6688020	ORIFICE			4
18	6688008	SCREW			8
19	6686934	PIN			2
20	6688019	SEAL			1
21	6688009	SEAL			2
22	6688040	BEARING			2
23	6687932	PIN			2
24	6687994	SCREW			4
25	6687990	RING			2
26	6688014	PIN			2
27	6687984	SENSOR			2
28	6688007	SEAL			2
29	6687998	SHIM			4
30	6687991	KEY			1
31	6687988	FILTER			1
32	6688015	SCREW			1
33	6687992	SCREW			1
34	6687993	COVER			2
35	6688003	SCREW			4
36	6689021	SEAL KIT	complete		1

HYDROSTATIC PUMP
(Rotary Group - L.H.)
(SJC)

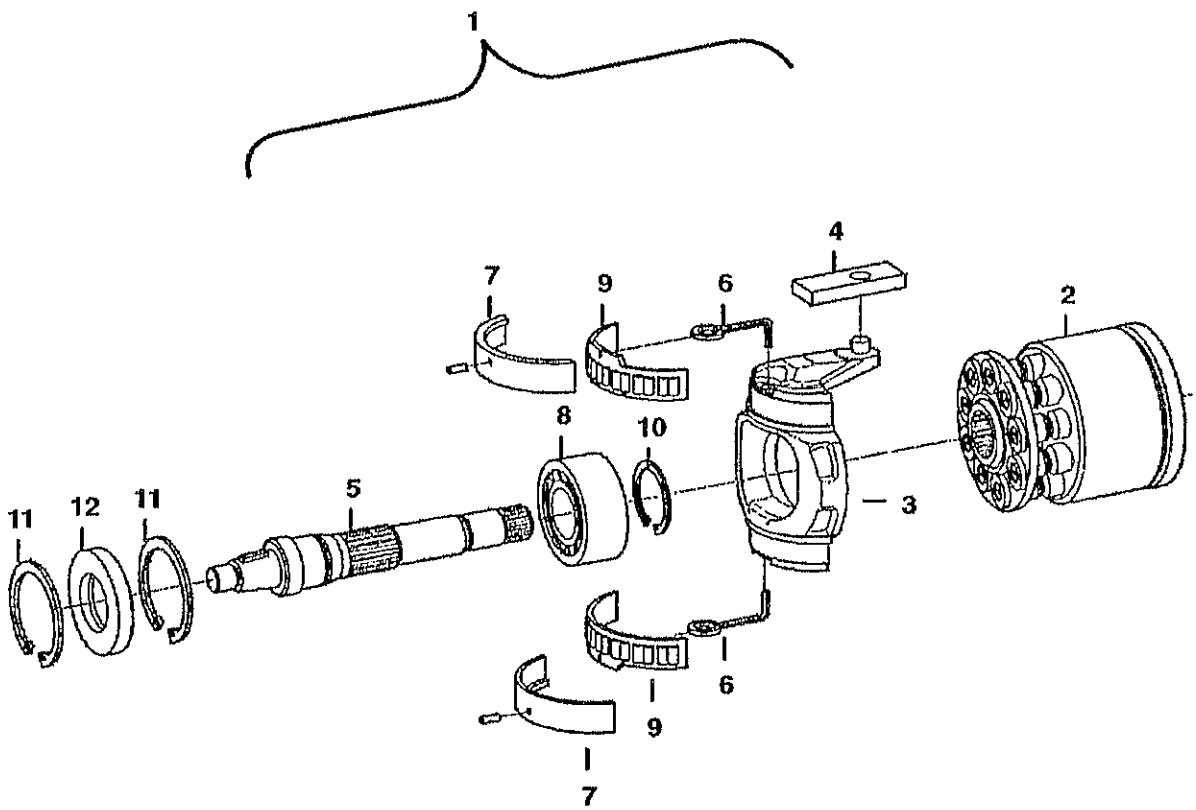

HYDROSTATIC PUMP (Cont'd)
(Rotary Group - L.H.)
(SJC)

ef No	Part Number	Description	Remarks	Serial Number	Qty
1	6687957	GROUP	L.H. rotation		1
2	6687977	GROUP			1
2	6687979	GROUP			1
2	6687976	PLATE			1
3	6687951	BRACKET			1
4	6687940	RING			1
5	6687959	SHAFT			1
6	6687930	WIRE			2
7	6687956	BEARING			1
8	6688018	BEARING			1
9	6687987	BEARING			1
10	6687999	RING			1
11	6688042	RING			2
12	6688038	RING			1

HYDROSTATIC PUMP
(Rotary Group - R.H.)
(SJC)

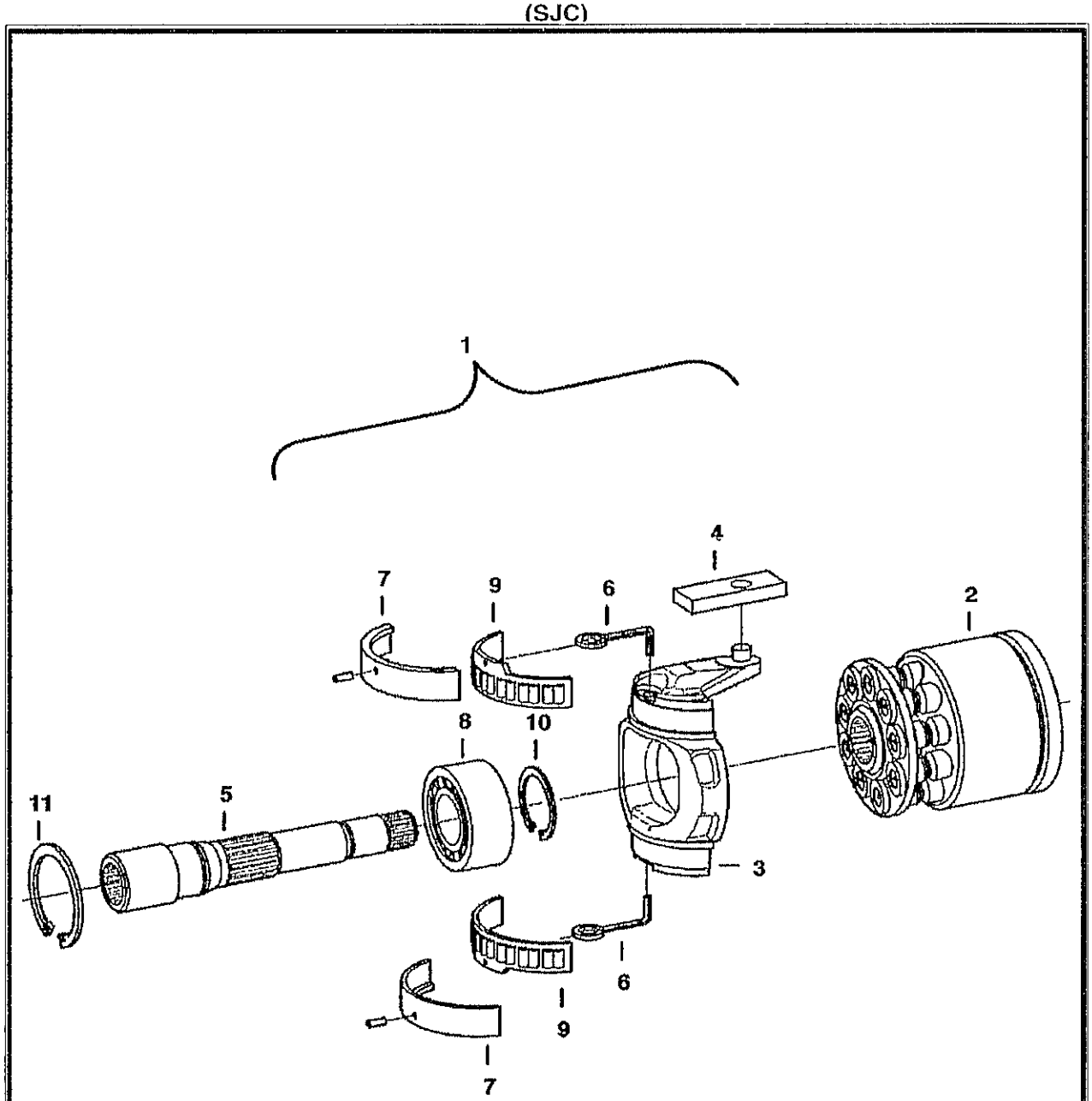

HYDROSTATIC PUMP (Cont'd)
(Rotary Group - R.H.)
(SJC)

Ref No	Part Number	Description	Remarks	Serial Number	Qty
1	6687958	GROUP	R.H. rotation		1
2	6687978	GROUP			1
2	6687979	GROUP			1
2	6687975	PLATE			1
3	6687951	BRACKET			1
4	6687940	RING			1
5	6687943	SHAFT			1
6	6687930	WIRE			2
7	6687956	BEARING			1
8	6688018	BEARING			1
9	6687987	BEARING			1
10	6687999	RING			1
11	6688042	RING			2

HYDROSTATIC PUMP
(Control)
(SJC)

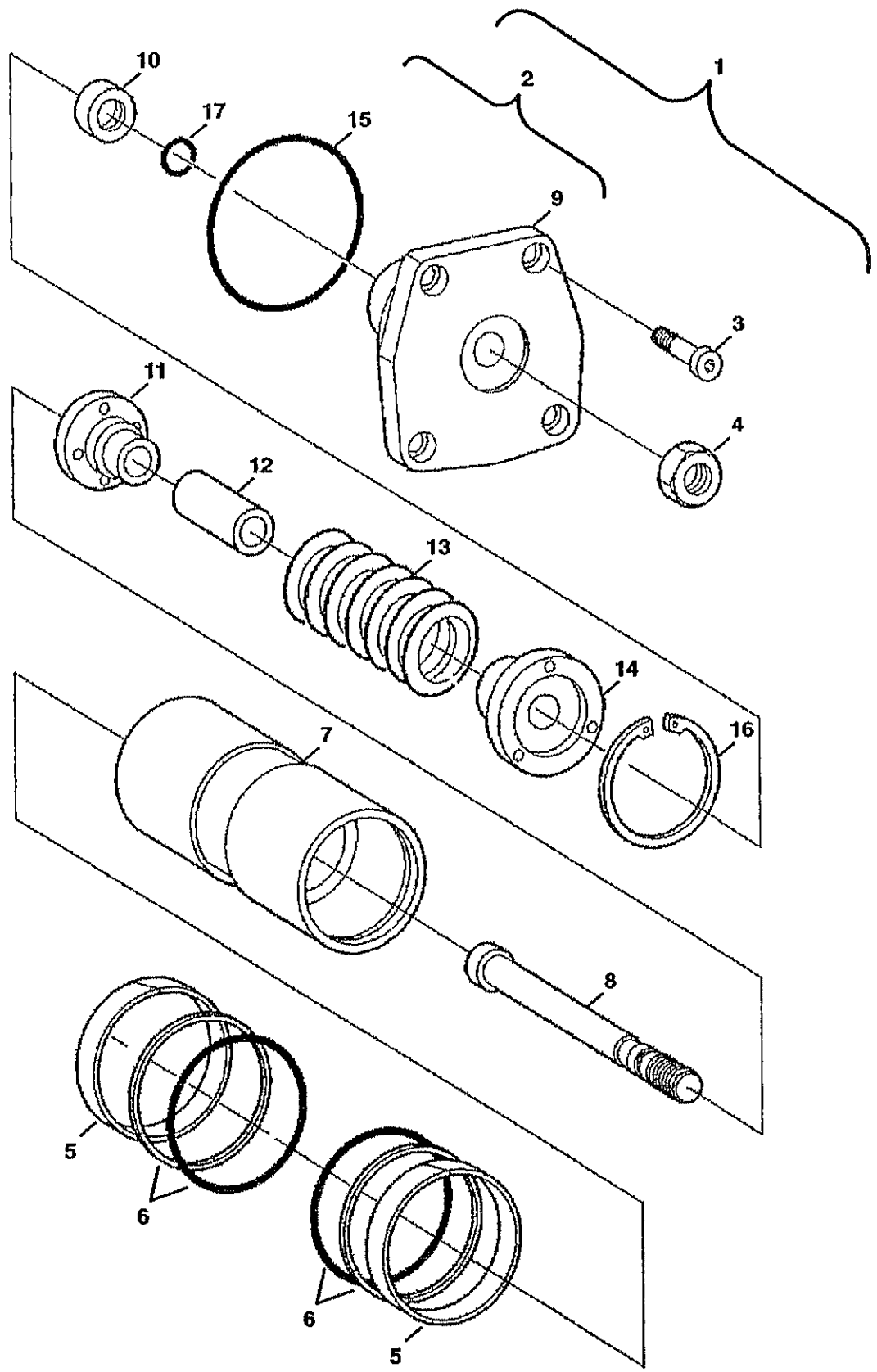

HYDROSTATIC PUMP (Cont'd)
(Control)
(SJC)

ef No	Part Number	Description	Remarks	Serial Number	Qty
1	6687960	CONTROL			1
2	6687962	PISTON			1
3	6687995	SCREW			4
4	6674907	NUT			1
5	6687985	RING			2
6	6687986	KIT			2
7	6687953	PISTON			1
8	6688031	ROD			1
9	6688024	COVER			1
10	6688037	RING	6,70 mm		1
10	6688036	RING	6,75 mm		1
10	6688035	RING	6,80 mm		1
10	6688025	RING	6,85 mm		1
10	6688026	RING	6,90 mm		1
10	6688027	RING	6,95 mm		1
10	6688028	RING	7,00 mm		1
10	6688029	RING	7,05 mm		1
0	6688030	RING	7,10 mm		1
11	6687926	COLLAR			1
12	6688033	SPACER	54,60 cm		1
12	6687942	SPACER	54,65 cm		1
12	6688032	SPACER	54,70 cm		1
12	6687948	SPACER	54,75 cm		1
12	6687949	SPACER	54,80 cm		1
13	6687928	SPRING			1
14	6687927	COLLAR			1
15	6688005	SEAL			1
6	6688002	RING			1
17	6688006	SEAL			1

HYDROSTATIC PUMP
(Control)
(SJC)

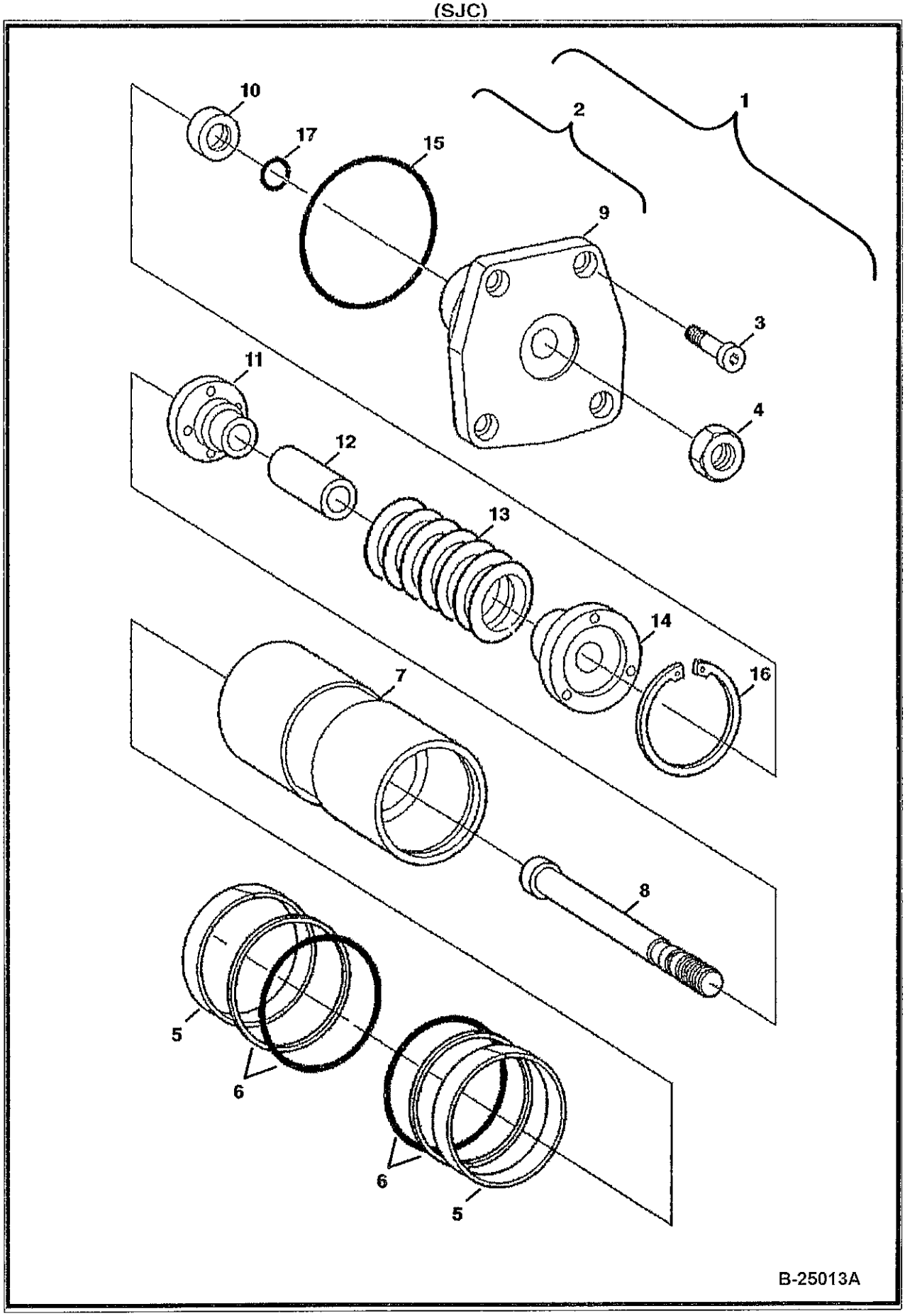

HYDROSTATIC PUMP (Cont'd)
(Control)
(SJC)

ef No	Part Number	Description	Remarks	Serial Number	Qty
1	6687961	CONTROL			1
2	6687963	PISTON			1
3	6687995	SCREW			4
4	6674907	NUT			1
5	6687985	RING			2
6	6687986	KIT			2
7	6687953	PISTON			1
8	6688031	ROD			1
9	6688024	COVER			1
10	6688037	RING	6,70 mm		1
10	6688036	RING	6,75 mm		1
10	6688035	RING	6,80 mm		1
10	6688025	RING	6,85 mm		1
10	6688026	RING	6,90 mm		1
10	6688027	RING	6,95 mm		1
10	6688028	RING	7,00 mm		1
10	6688029	RING	7,05 mm		1
0	6688030	RING	7,10 mm		1
11	6687926	COLLAR			1
12	6688033	SPACER	54,60 cm		1
12	6687942	SPACER	54,65 cm		1
12	6688032	SPACER	54,70 cm		1
12	6687948	SPACER	54,75 cm		1
12	6687949	SPACER	54,80 cm		1
13	6687928	SPRING			1
14	6687927	COLLAR			1
15	6688005	SEAL			1
16	6688002	RING			1
17	6688006	SEAL			1

HYDROSTATIC PUMP
(Pressure Relief Valve)
(SJC)

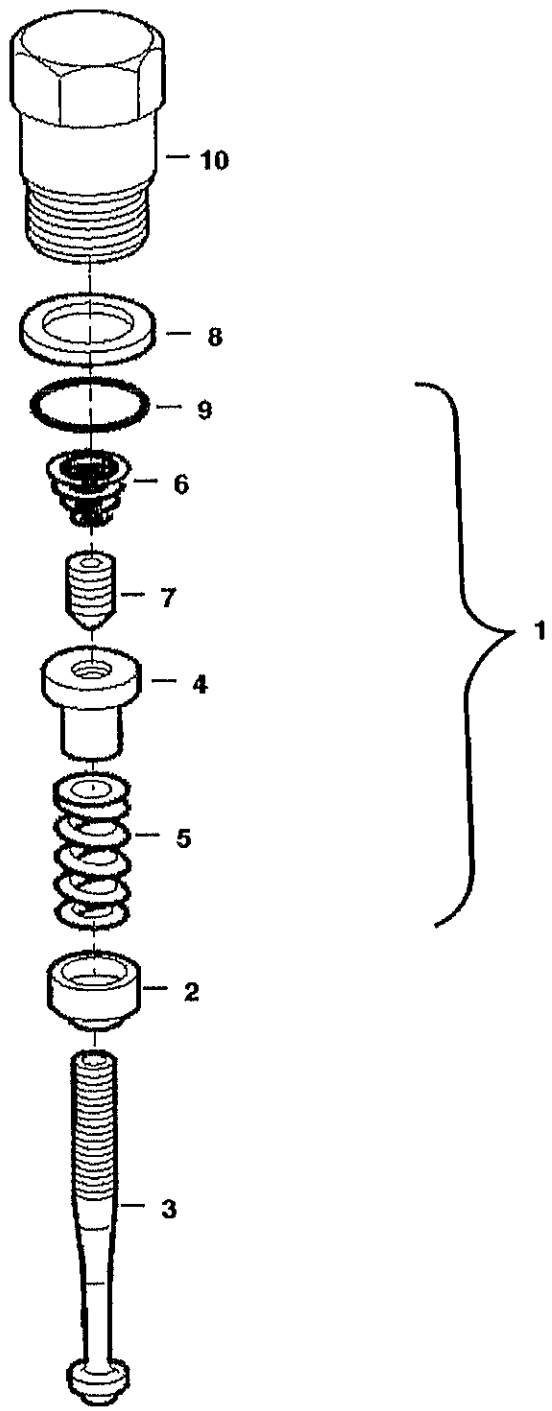

HYDROSTATIC PUMP (Cont'd)
(Pressure Relief Valve)
(SJC)

Ref No	Part Number	Description	Remarks	Serial Number	Qty
1	6687924	VALVE			1
2	6687921	COLLAR			1
3	6687920	SPINDLE			1
4	6687922	NUT			1
5	6688043	SPRING			1
6	6688021	SPRING			1
7	6687923	PIN			1
8	6688041	RING			1
9	6688000	SEAL			1
10	6688034	SCREW			1

HYDROSTATIC PUMP
(Pressure Relief Valve)
(SJC)

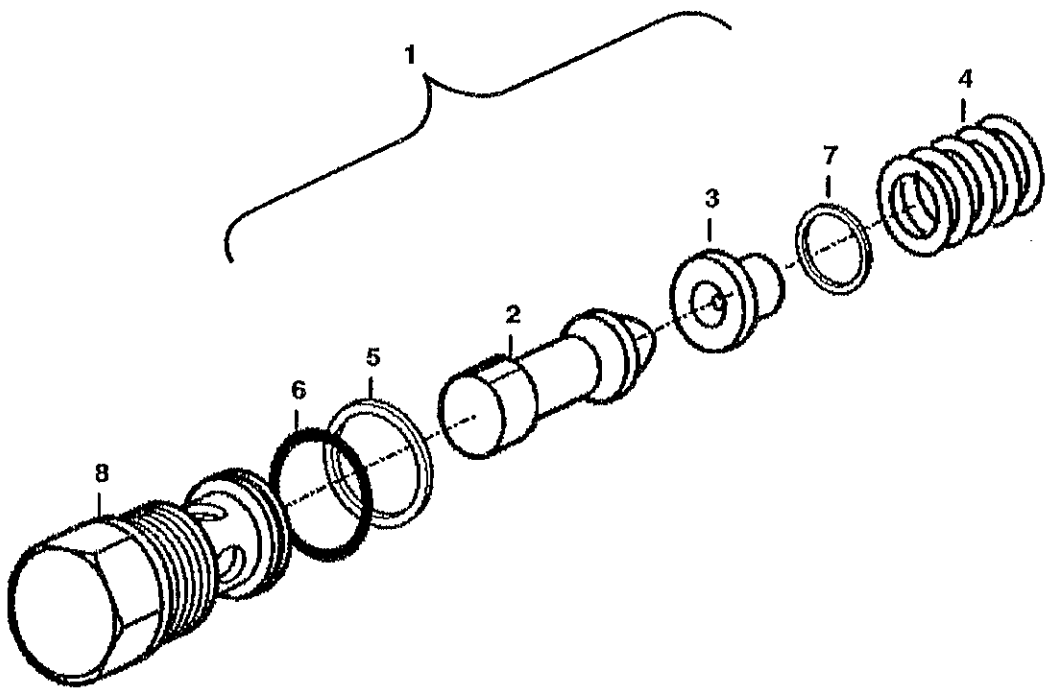

B–25015

HYDROSTATIC PUMP (Cont'd)
(Pressure Relief Valve)
(SJC)

Ref No	Part Number	Description	Remarks	Serial Number	Qty
1	6687938	VALVE			1
2	6688022	PISTON			1
3	6687919	COLLAR			1
4	6688023	SPRING			1
5	6687983	RING			1
6	6688013	SEAL			1
7	6688017	SHIM			1
8	6687939	SCREW			1

HYDROSTATIC PUMP
Selectable Joystick Controls
Control Module

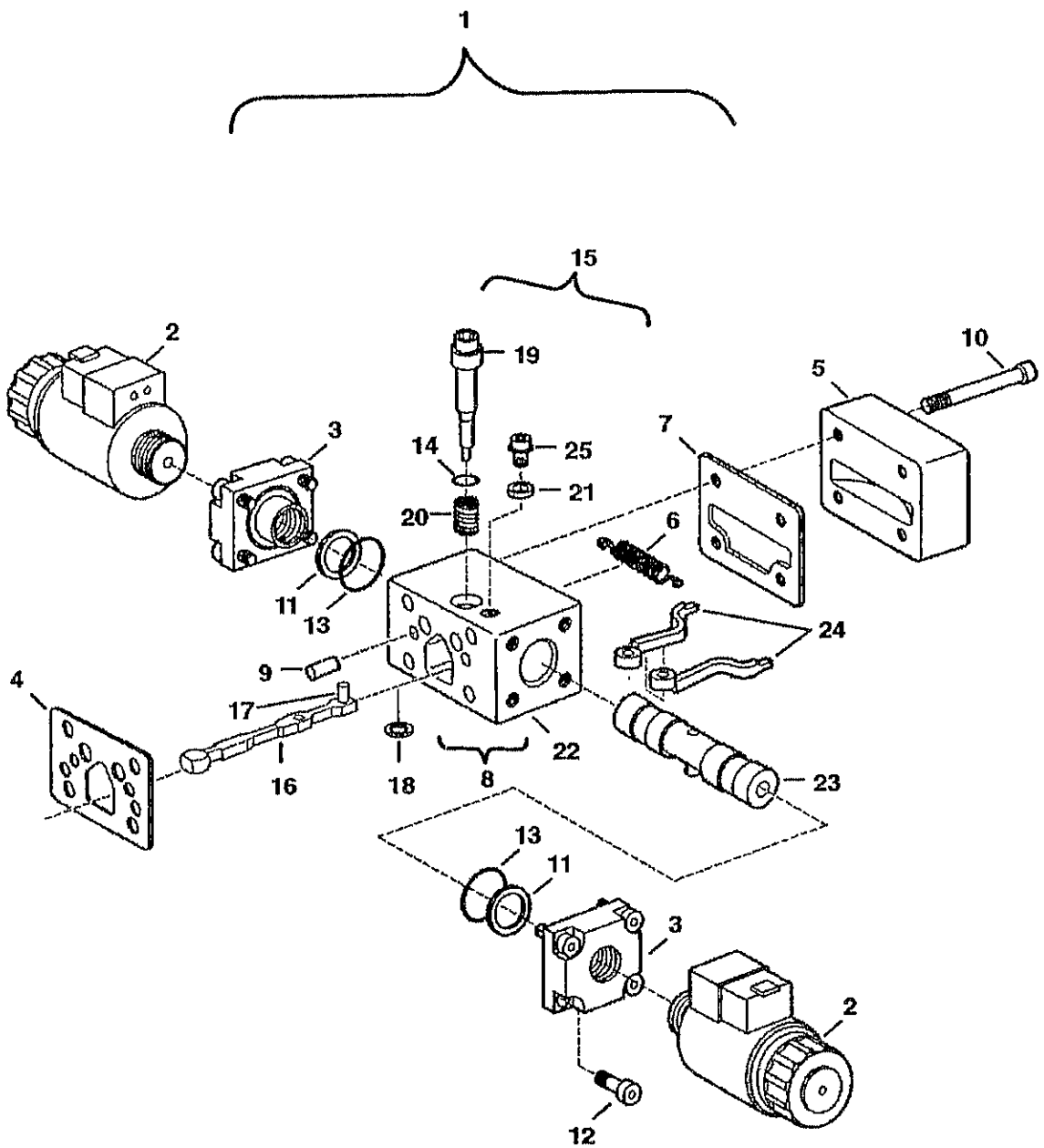

HYDROSTATIC PUMP (Cont'd)
Selectable Joystick Controls
Control Module

Ref No	Part Number	Description	Remarks	Serial Number	Qty
1	6687970	MODULATOR			2
2	6687989	SOLENOID			2
3	6687931	BUSHING			2
4	6687954	GASKET			1
5	6687969	COVER			1
6	6687967	SPRING			1
7	6687950	GASKET			1
8	6687972	MODULE	Ref. 15-18		1
9	6688010	PIN			2
10	6687996	SCREW			4
11	6687982	SPRING			2
12	6687997	SCREW			8
13	6688001	SEAL			2
14	6688004	SEAL			1
15	6687971	ROLLER	Ref. 14 & 19-25		1
16	6687929	LEVER			1
17	6688012	ROLLER			1
8	6687944	SHIM	0,60 mm		1
18	6687933	SHIM	0,80 mm		1
18	6687934	SHIM	1,00 mm		1
18	6687935	SHIM	1,20 mm		1
18	6687936	SHIM	1,40 mm		1
18	6687937	SHIM	1,60 mm		1
19	6687947	PIN			1
20	6687946	SPRING			1
21	6687945	PLATE			1
22	6687955	HOUSING			1
23	6687966	PISTON			1
24	6687968	LEVER			2
25	6687981	SCREW			1

GEAR PUMP

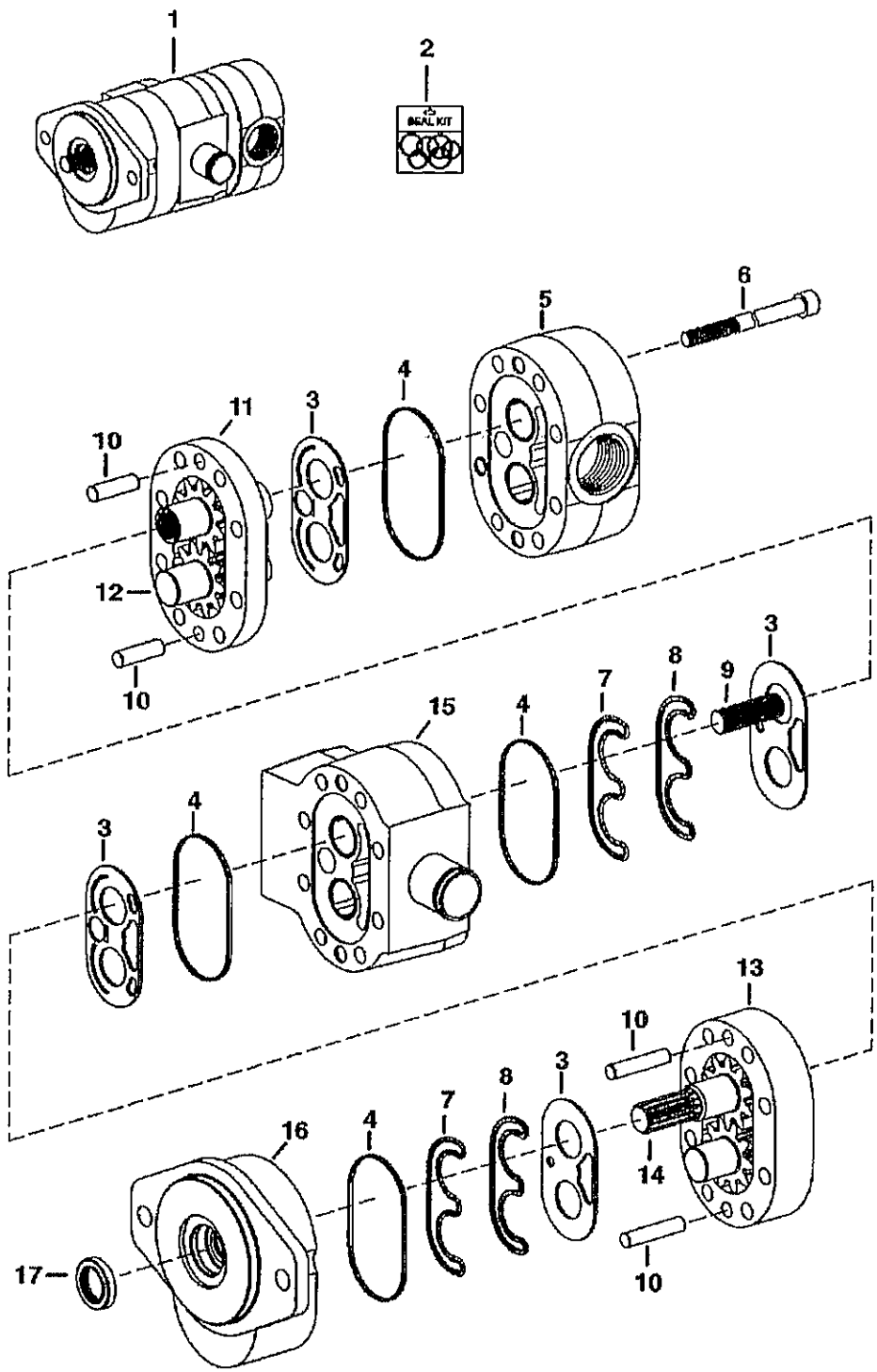
1
2
SEAL KIT
6
5
4
3
11
10
12
10
3
8
9
7
4
15
3
4
13
10
3
8
7
4
16
17
14
10
MS1454

GEAR PUMP (Cont'd)

Ref No	Part Number	Description	Remarks	Serial Number	Qty
1	6686885	GEAR PUMP	163D71021		1
2	6687866	SEAL KIT			1
3		WEAR PLATE	NSS		6
4		SEAL, SECTION	NSS		6
5		HOUSING, REAR	NSS		1
6		BOLT	NSS		8
7		SEAL, PRE-LOAD	NSS		6
8		SEAL, LOAD	NSS		6
9		CONNECTOR, SPLINE	NSS		2
10		PIN	NSS		6
11		HOUSING, GEAR	NSS - #2		1
12		GEAR SET	NSS - #2		1
13		HOUSING, GEAR	NSS - #1		1
14		GEAR SET	NSS - drive		1
15		HOUSING, CENTER	NSS		1
6		HOUSING, FRONT	NSS		1
17		SEAL, SHAFT	NSS		1

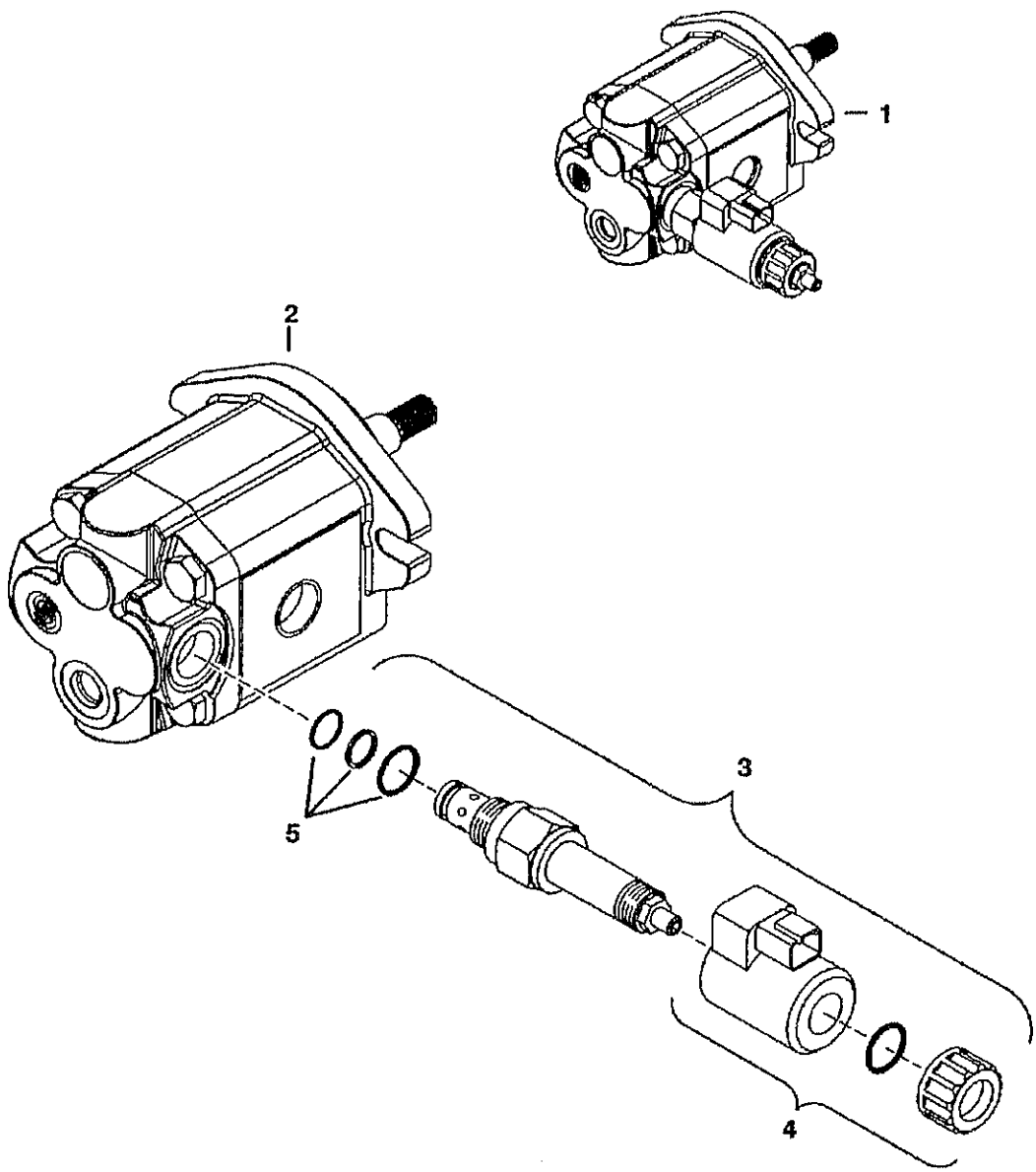

PE-2811

MOTOR (Cont'd)
Cooling Fan

Ref No	Part Number	Description	Remarks	Serial Number	Qty
1	6687142	MOTOR	W/proportional valve		1
2	6689058	MOTOR	W/O proportional valve		1
3	6689059	VALVE ASSY			1
4	6689060	COIL ASSY			1
5	6683206	SEAL KIT			1

2-SPEED VALVE

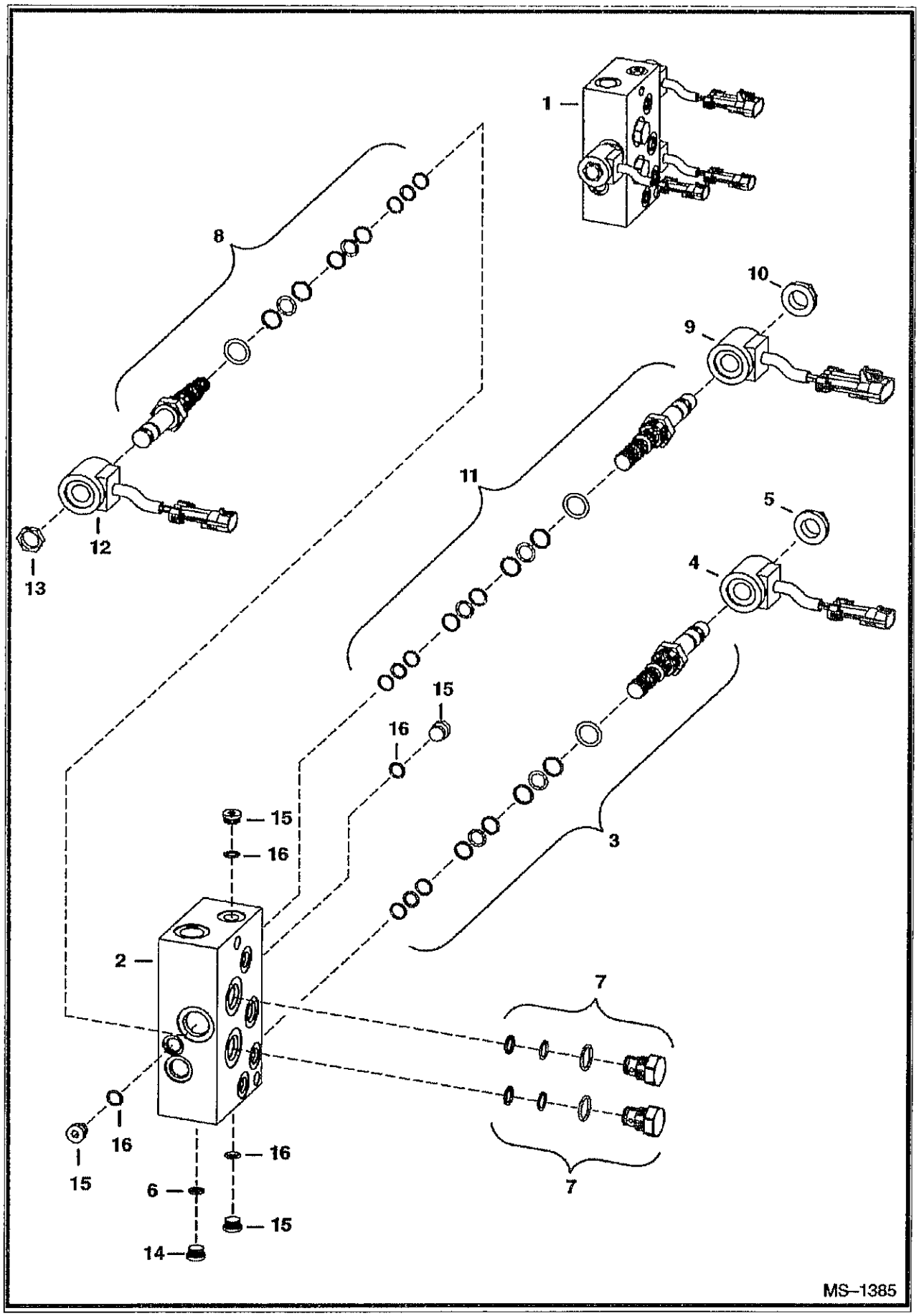

2-SPEED VALVE (Cont'd)

ef No	Part Number	Description	Remarks	Serial Number	Qty
1	6679102	VALVE	assy.		1
2		BLOCK	NSS - Order Ref. 1		1
3	6677982	CARTRIDGE	make up valve - W/Ref. 5		1
3	6672756	SEAL KIT			x
4	6676243	COIL			1
5	6668820	NUT			1
6	75K4	ORING			x
7	6675265	CHECK VALVE			2
7	6669087	SEAL KIT			x
8	6676239	CARTRIDGE	two speed valve - W/Ref. 10		1
8	6673188	SEAL KIT			x
9	6676242	COIL			1
10	6677980	NUT			1
11	6680120	CARTRIDGE	brake valve - W/Ref. 13		1
11	6676205	SEAL KIT			x
12	6676244	COIL			1
13	6676247	NUT			1
4	6672762	PLUG	W/Ref. 6		1
15	6677177	PLUG	W/Ref. 16		5
16		O-RING			x

HYDROSTATIC OIL FILTER
(In-Line)

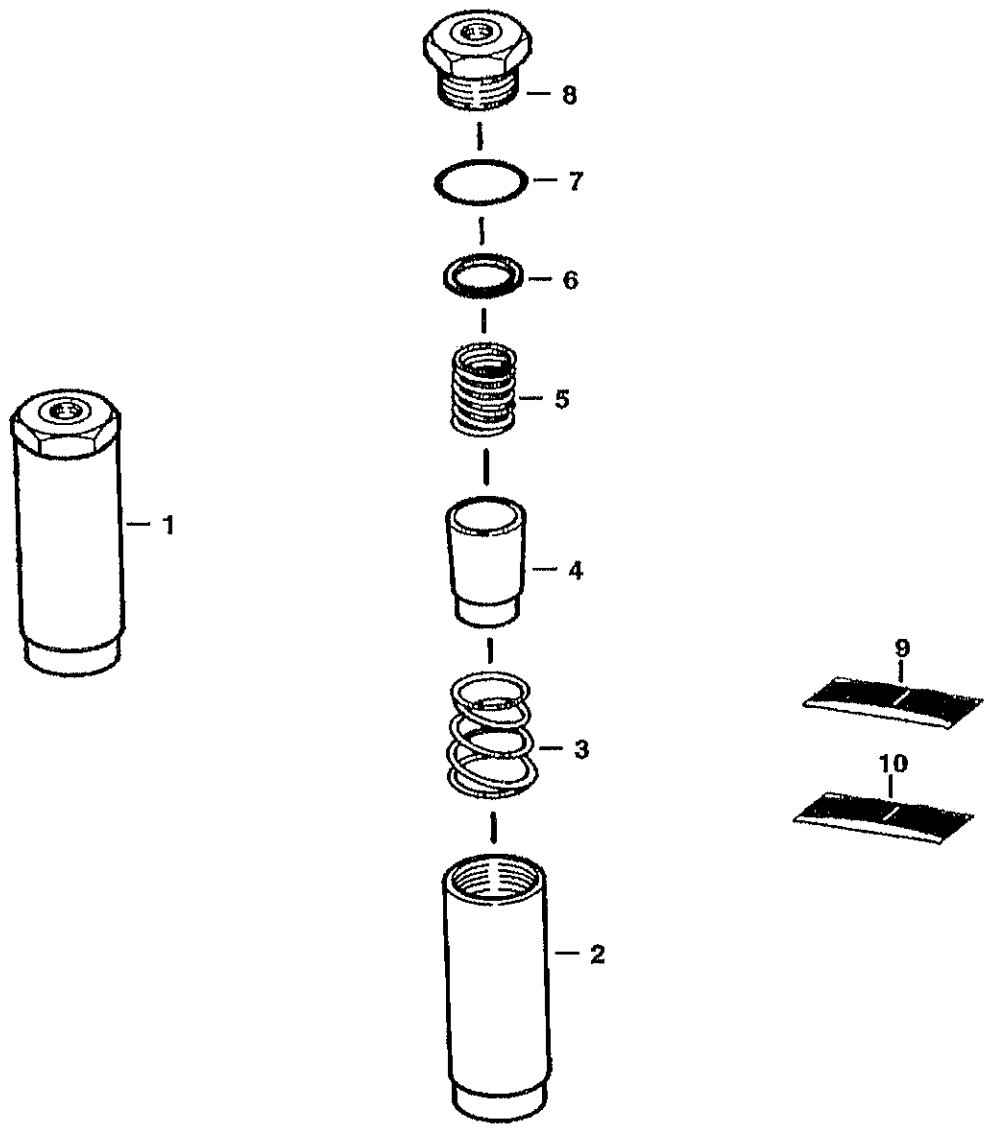

HYDROSTATIC OIL FILTER (Cont'd)
(In-Line)

Ref No	Part Number	Description	Remarks	Serial Number	Qty
1	6661022	FILTER	Ref. 2-8		1
2		HOUSING	NSS		1
3		SPRING	NSS		1
4		ELEMENT	NSS		1
5		SPRING	NSS		1
6		GASKET	NSS		1
7		O-RING	NSS		1
8		PLUG	NSS		1
9	6661807	KIT	element - Ref. 4, 6 & 7		1
10	6661808	KIT	spring - Ref. 3 & 5		1

HYDROSTATIC OIL FILTER

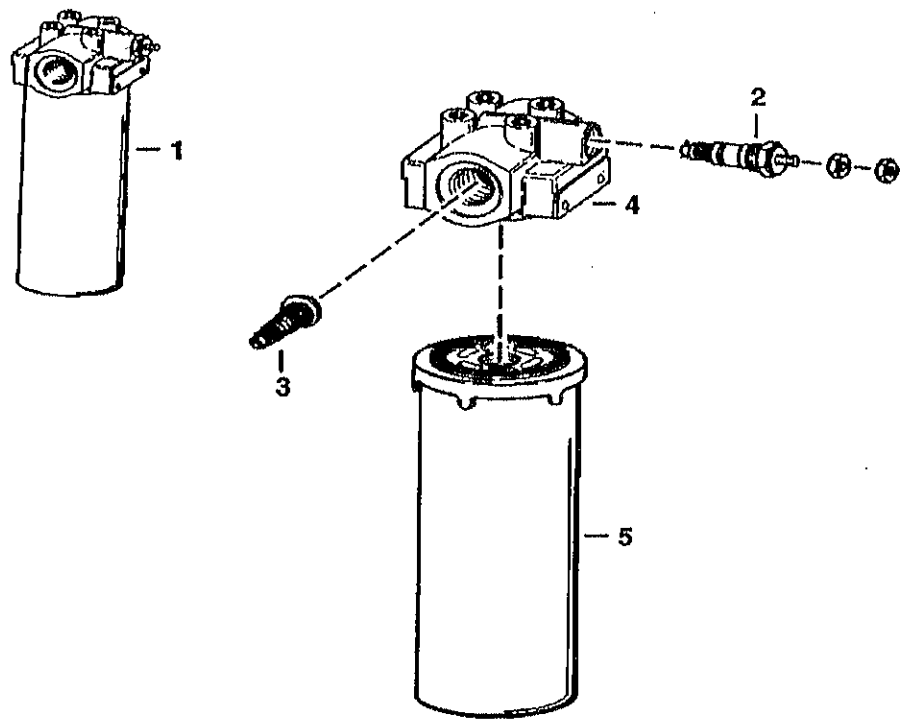

C–2818

HYDROSTATIC OIL FILTER (Cont'd)

Ref No	Part Number	Description	Remarks	Serial Number	Qty
1	6678155	FILTER ASSY	W/Ref. 2-5 - 50 PSI by-pass & switch		1
1	6685847	FILTER ASSY	W/Ref. 2-5 - 50 PSI by-pass & switch - HIGH FLOW		1
1	6687266	FILTER ASSY	W/Ref. 2-5 - 50 PSI by-pass & switch - CHARGE		1
2	6660260	SWITCH	pressure - normally closed		1
2	6599365	KIT	nut, washer & O-rings for switch		1
3		VALVE	NAP - by-pass - 50 PSI - Order Ref. 1		1
4		HEAD	NSS - Order Ref. 1 filter assy.		1
5	6661248	ELEMENT	6" (152,4 mm) long		1
5	6668819	FILTER	9.5" (241,3 mm) long - HIGH FLOW		1
5	6686926	ELEMENT FILTER	4.5" (113,5mm) long - CHARGE		1

CAB ELECTRICAL CIRCUITRY

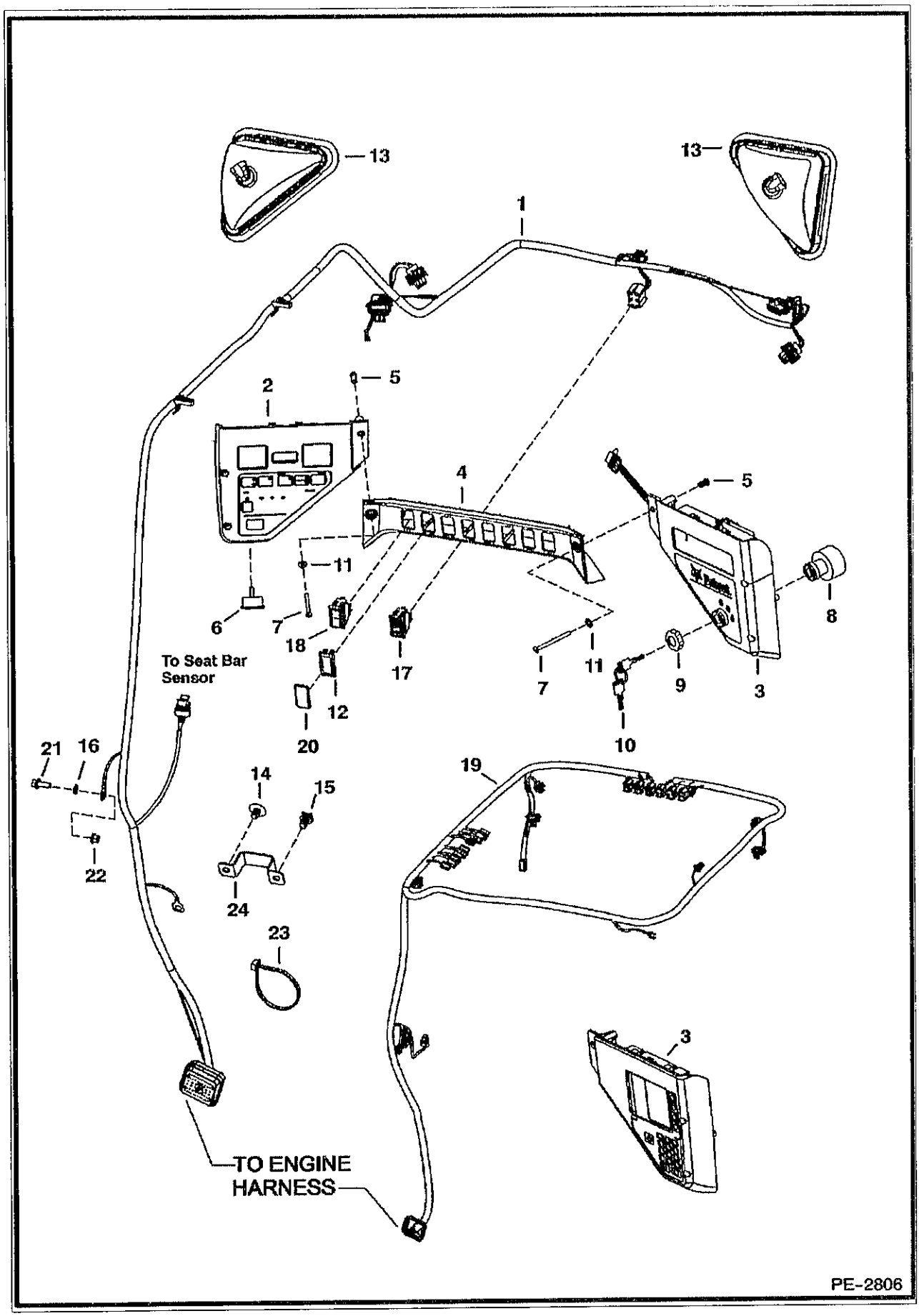

CAB ELECTRICAL CIRCUITRY (Cont'd)

ef No	Part Number	Description	Remarks	Serial Number	Qty
1	7116261	HARNESS	standard		1
2	6688405	PANEL	L.H.		1
3	6688404	PANEL	R.H. - keyed - W/Ref. 8 & 9		1
3		PANEL	See Illustration OPERATOR CAB/ PE2820 - R.H. - deluxe - keyless		1
4	6679845	CROSSMEMBER			1
5	6675033	INSERT	threaded		6
6	6679856	ALARM	W/nut		1
7	7105983	BOLT			6
8	6675470	SWITCH	ignition - W/Ref. 9 & 10		1
9	6674202	NUT			2
10	6709527	KEY	ignition		1
11	25E10	WASHER			2
12	6665314	PLUG			x
13		LIGHT ASSY	See Illustration LIGHT KIT/ PE3084 - NAP		1
14	6674895	RETAINER			1
15	6678666	TREE MOUNT			2
6	6E5	WASHER			1
17	6676536	SWITCH	park brake		1
18	6683812	SWITCH	selectable joystick control		1
19		HARNESS	See Illustration OPERATOR CAB/ PE2820 - deluxe		x
20	6737248	DECAL	warning - joystick controls		1
21	25G512	SCREW			1
22	95D5	NUT			1
23	6624289	CABLE TIE			3
24	7121119	BRACKET			1

ENGINE ELECTRICAL
(W/Controller)

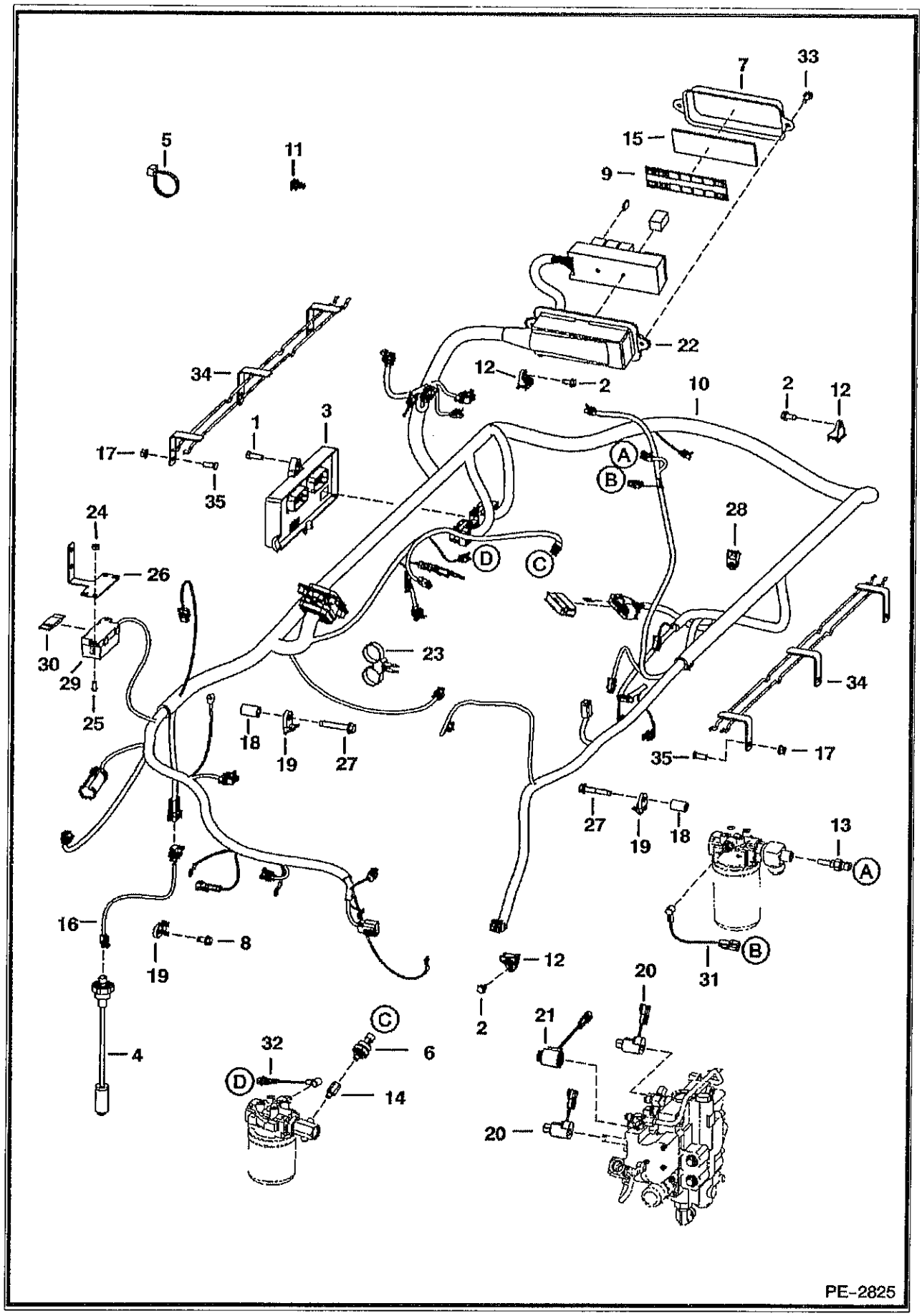

ENGINE ELECTRICAL (Cont'd)
(W/Controller)

ef No	Part Number	Description	Remarks	Serial Number	Qty
1	43C616	BOLT			3
2	84G3112	BOLT 5			3
3	6688439	CONTROLLER			1
4	6680438	SENSOR	fuel - w/gasket		1
4	6717579	GASKET			1
5	6624289	CABLE TIE			21
6	6674316	SENSOR	hyd pressure		1
7	6716621	COVER	fuse box		1
7	6736071	KIT	extreme applications - W/ decal & insulation		1
8	84G3712	BOLT			1
9	7117407	DECAL	fuse/relay - 2" x 7" (51 mm x 178 mm)		1
10	7116257	HARNESS LF MFR	loader		1
11	6678666	TREE MOUNT			8
12	6678818	MOUNT			3
13	6718417	SENDER	hyd temp		1
14	6718948	SNUBBER			1
4	6675278	FILTER			1
15	6731275	INSULATION			1
16	7110159	HARNESS	fuel sender - standard		1
16	7110160	HARNESS	fuel sender - deluxe cab		1
17	97D6	NUT 10			8
18	7101893	SPACER			2
19	6679034	MOUNT			3
20	6678891	COIL	10 volt		2
21	6675559	COIL	W/ diode		1
22	6718659	HOUSING	fuse		1
.2	6663289	FUSE	5 amp		x
22	6654806	FUSE	15 amp (3)		x
22	6702444	FUSE	25 amp (6)		x
22	6718034	FUSE	30 amp (2)		x
22	6679820	RELAY	switch (8)		x
23	6678668	TIE			2
24	59D4	NUT 5			2
25	25G410	CAPSCREW			2
26	6728621	BRACKET			1
7	84G3736	BOLT			2
28	6678667	MOUNT			2
29	6675154	HOLDER	fuse		1
30	6675155	FUSE	100 amp		1
31	7115893	HARNESS DIFF SWITCH			1
32	6728626	HARNESS			1
33	84G3116	SCREW			2
34		BRACKET	NSS - Order Ref. 10		2
35	6689032	STUD			6

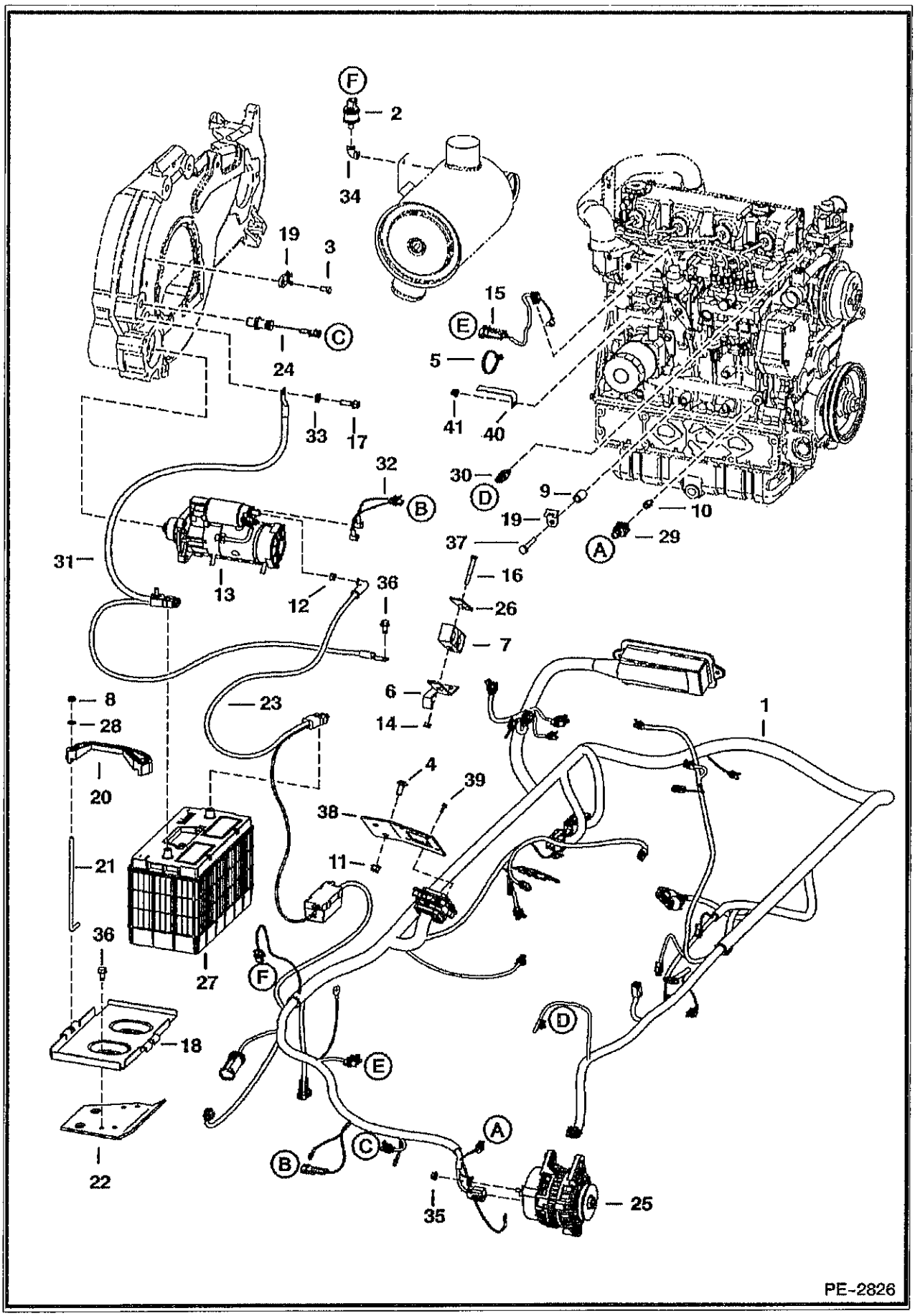
F
2
34
19
3
C
24
33
17
15
E
5
41
40
30
D
9
19
10
A
29
37
16
26
7
6
14
32
B
31
13
12
36
8
28
20
21
36
27
18
22
23
4
39
38
11
1
F
E
D
A
B
C
35
25
PE-2826

ENGINE ELECTRICAL (Cont'd)
Engine

₰f No	Part Number	Description	Remarks	Serial Number	Qty
1	7116257	HARNESS LF MFR	loader		1
2	6665371	SWITCH	vacuum		1
3	17C610	SCREW			2
4	37C616	BOLT			2
5	6624289	CABLE TIE			17
6	6715131	BRACKET			1
7	6715197	CLAMP			1
8	59D5	NUT 5			2
9	7101893	SPACER			1
10	7102451	FITTING			1
11	97D6	NUT 10			2
12	4DM10	NUT	starter		1
13		STARTER	See Illustration STARTER/ B16488R		1
14	95D5	NUT			1
15	6736515	HARNESS	fuel shut off solenoid		1
16	17C540	BOLT			1
7	35C612	BOLT	negative cable ground		1
18	6712536	PAN	battery		1
19	6679034	MOUNT			1
20	6569203	CLAMP	battery		1
21	6576280	BOLT	battery hold down		2
22	6579989	BRACKET			1
23	6719141	CABLE	positive		1
24	6684037	SENSOR	rpm		1
25		ALTERNATOR	See Illustration ALTERNATOR/ C3529		1
26	6715132	RETAINER			1
27	6665427	BATTERY	950 AMP		1
28	25E15	WASHER			2
29	6674315	SENSOR	engine pressure		1
30	6718414	SENDER	engine temp		1
31	6727803	CABLE	negative		1
32	6733370	HARNESS			1
33	6E6	WASHER			1
34	24F1	ELBOW	elbow		1
35	43DM8	NUT			1
6	84G3712	BOLT			2
37	2CM1055	SCREW			1
38	7112760	BRACKET			1
39	6688980	BOLT			4
40	7120084	BRACKET			1
41	51DM8	NUT			1

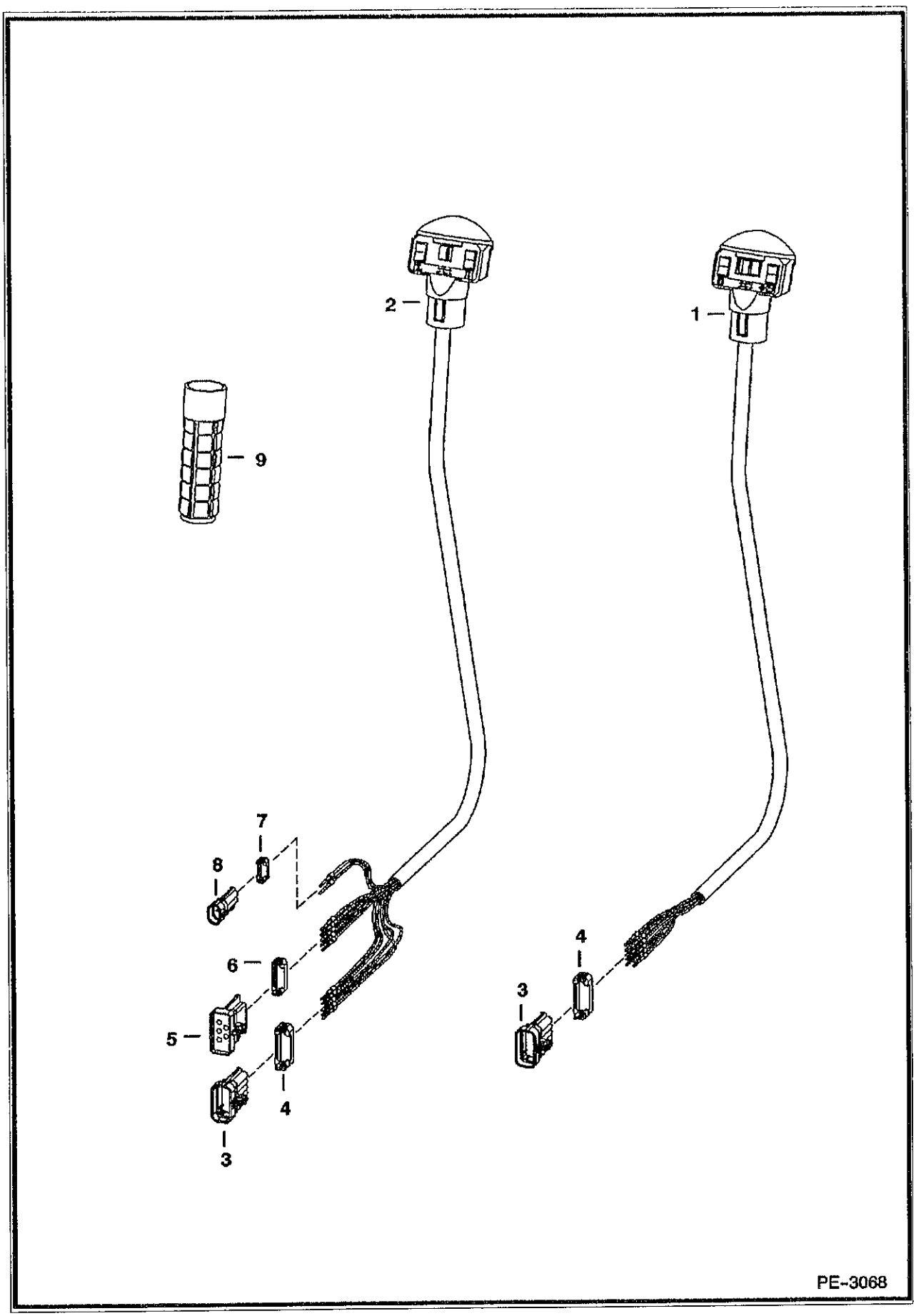
2
1
9
7
8
6
5
4
3
4
3
PE-3068

CONTROLS ELECTRICAL (Cont'd)
(Manual Controls)

Ref No	Part Number	Description	Remarks	Serial Number	Qty
1	6680418	HANDLE ASSY.	R.H. - Also Order Ref. 3 & 4		1
1	6640690	PIN			9
1	6641176	SEAL			9
2	6680419	HANDLE ASSY.	L.H. - Also Order Ref. 3-8		1
2	6640690	PIN			10
2	6641176	SEAL			10
3	6640692	CONNECTOR	10-pin		1
4	6640694	LOCK	10-pin		1
5	6667144	CONNECTOR	5 - way		1
6	6667145	LOCK	5 - way		1
7	6641180	LOCK	2 - pin		1
8	6641179	CONNECTOR	2 - pin		2
9	6702621	GRIP			2

CONTROLS ELECTRICAL
(AHC & ACS)

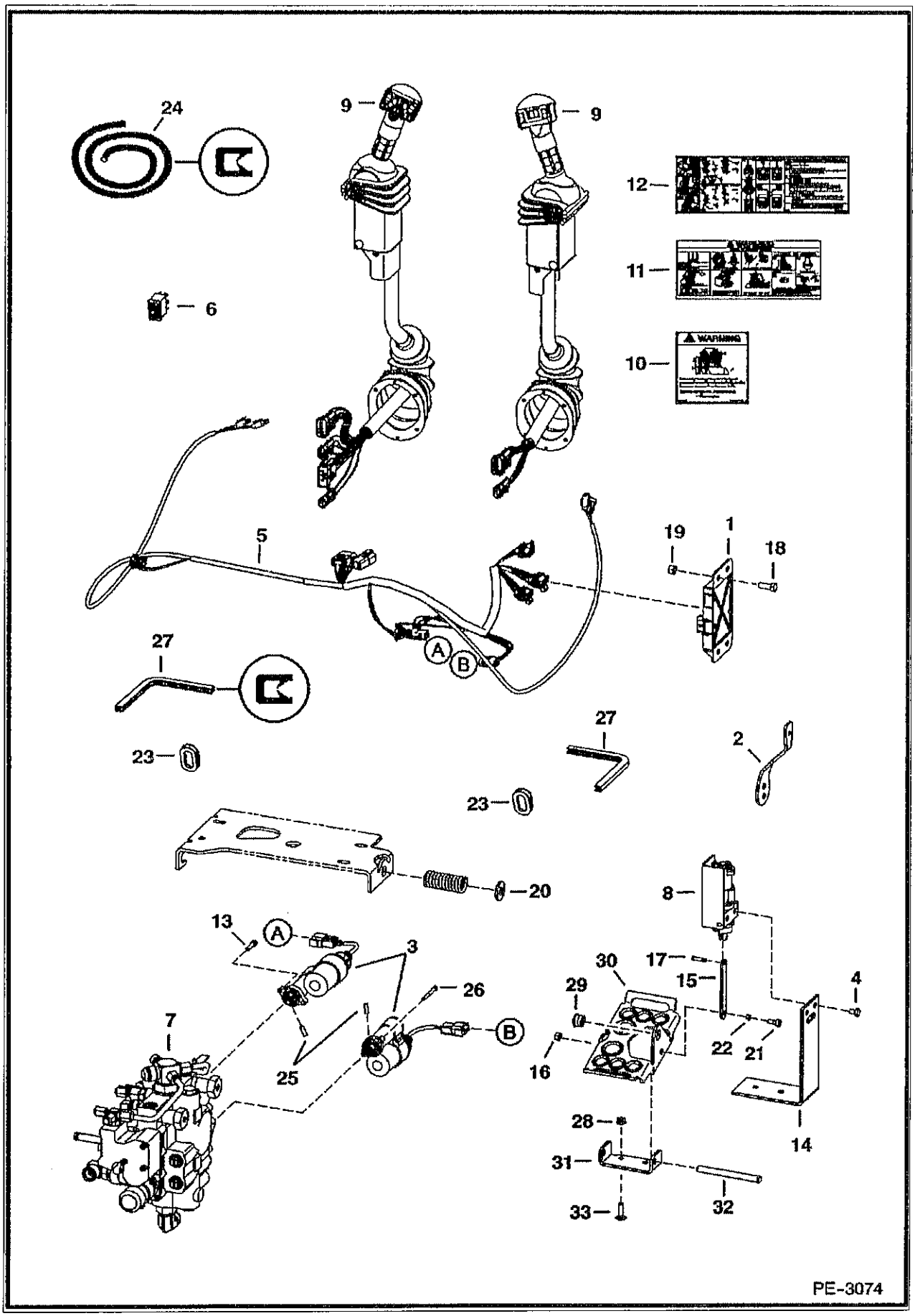

CONTROLS ELECTRICAL (Cont'd)
(AHC & ACS)

Ref No	Part Number	Description	Remarks	Serial Number	Qty
1	6680410	CONTROLLER	plastic		1
2	6717393	LEVER	throttle		1
3	7101672	ACTUATOR			2
3	58K120	O-RING			x
4	17C608	BOLT			4
5	6733292	HARNESS			1
6	6676537	SWITCH			1
7		VALVE	See Illustration HYDRAULIC CONTROL VALVE/ PE2378 - ACS control		1
8		SENSOR	See Illustration CONTROLS ELECTRICAL/ PE1553 - foot pedal - R.H.		1
8		SENSOR	See Illustration CONTROLS ELECTRICAL/ PE1553 - foot pedal - L.H.		1
9	6684915	LEVER	See Illustration CONTROLS ELECTRICAL/ PE1365 - ACS - tilt - R.H.		1
9	6684916	LEVER	See Illustration CONTROLS ELECTRICAL/ PE1365 - ACS - lift - L.H.		1
9	6684913	LEVER	See Illustration ELECTRICAL CONTROLS/ PE2992 - AHC - tilt - R.H.		1
9	6684914	LEVER	See Illustration ELECTRICAL CONTROLS/ PE2992 - AHC - lift - L.H.		1
10	6718706	DECAL	used on S250 ACS		1
11	6728539	DECAL	used on S250 ACS		1
12	6727926	DECAL	operations AHC		1
13	29G416	BOLT			2
14	7126869	BRACKET	Was 6726573 [A]		2
15	6726681	LINK			2
16	95D5	NUT			2
17	6727496	PIN			2
18	17C616	BOLT 5			2
19	95D6	NUT			2
20	25E22	WASHER			1
21	35C514	BOLT			2
22	6729467	SPACER			2
23	6714726	GROMMET			2
24	6654139	MOULDING	bulk - sold per foot		x
25	7108236	PIN			2
26	69G436	BOLT			2
27		MOULDING	NAP - 10.5" (267mm) long - Order Ref. 24		1
28	61D6	NUT 5			4
29	6665701	BUSHING			2
30	7115219	PEDAL			2
31	7115220	MOUNT			2
32	6564657	PIN			2
33	37C620	BOLT			4

CONTROLS ELECTRICAL
(ACS) (Handle Assembly)

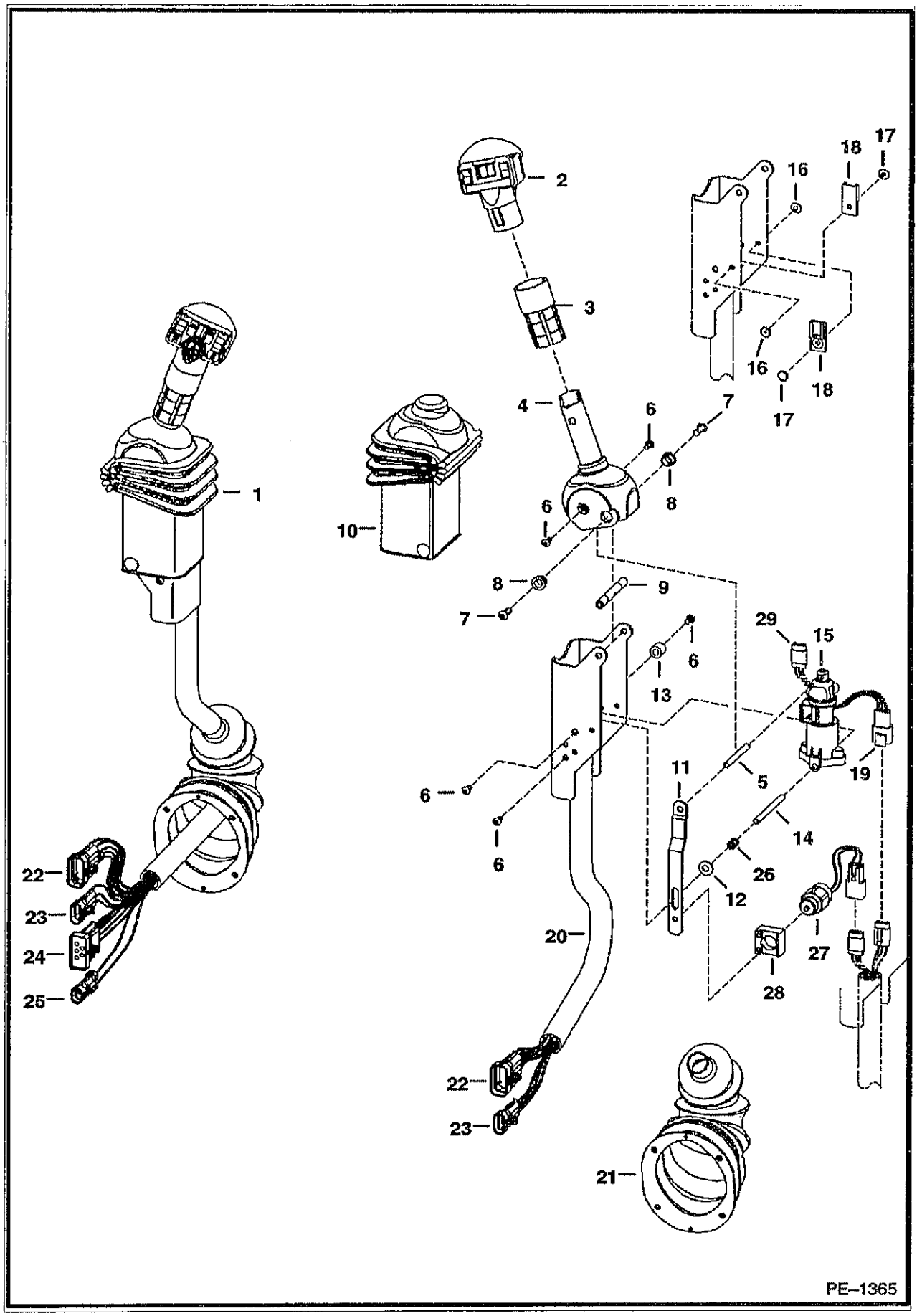

CONTROLS ELECTRICAL (Cont'd)
(ACS) (Handle Assembly)

ef No	Part Number	Description	Remarks	Serial Number	Qty
1	6684915	LEVER	tilt - R.H.		1
1	6684916	LEVER	lift - L.H.		1
2	6680462	HANDLE	tilt - R.H.		1
2	6680417	HANDLE	lift - L.H.		1
3		GRIP	NAP - Order 6702621 grip & cut to 2.8" (71,1mm) long		2
4	6729594	HANDLE	R.H.		1
4	6729595	HANDLE	L.H.		1
5	6680469	SPACER	threaded		1
6	6727065	BOLT			6
7	25GT410	SCREW			8
8	6702990	BUSHING			4
9	6713043	SPACER			4
10	6680471	COVER			2
11	6680477	STRAP	stop		1
12	25E13	WASHER 5			1
13	6719835	SLEEVE			4
4	6719834	SPACER	threaded		2
15	6684910	SENSOR			2
15	6670706	CONNECTOR			1
15	6670715	PIN			3
15	6670710	LOCK			1
16	6665322	RIVET	female		2
17	6665321	RIVET	male		2
18	6665000	CLIP			2
19	6670707	CONNECTOR			1
19	6670715	PIN			3
9	6670711	LOCK			1
20	6680481	CHANNEL	R.H.		1
20	6680480	CHANNEL	L.H.		1
21	6532127	BOOT			2
22	6640692	CONNECTOR	10-pin		1
22	6640690	PIN			8
22	6640694	LOCK			1
22	6641176	SEAL			8
22	6646582	PLUG	cavity		1
3	6640699	CONNECTOR	3-pin		2
23	6640690	PIN			3
23	6641176	SEAL			3
23	6640700	LOCK			3
24	6667144	CONNECTOR	5-pin		2
24	6640690	PIN			3
24	6641176	SEAL			3
24	6646582	PLUG	cavity		1
24	6641180	LOCK			1
25	6641179	CONNECTOR	2-pin		1
25	6640690	PIN			2
25	6641176	SEAL			2
25	6641180	LOCK			1
26	6680470	SPRING			1
27	6676029	SOLENOID			1
28	6680468	MOUNT			1
29	6676870	CONNECTOR	3-pin		1
9	6670711	LOCK			1
29	6670715	PIN			1

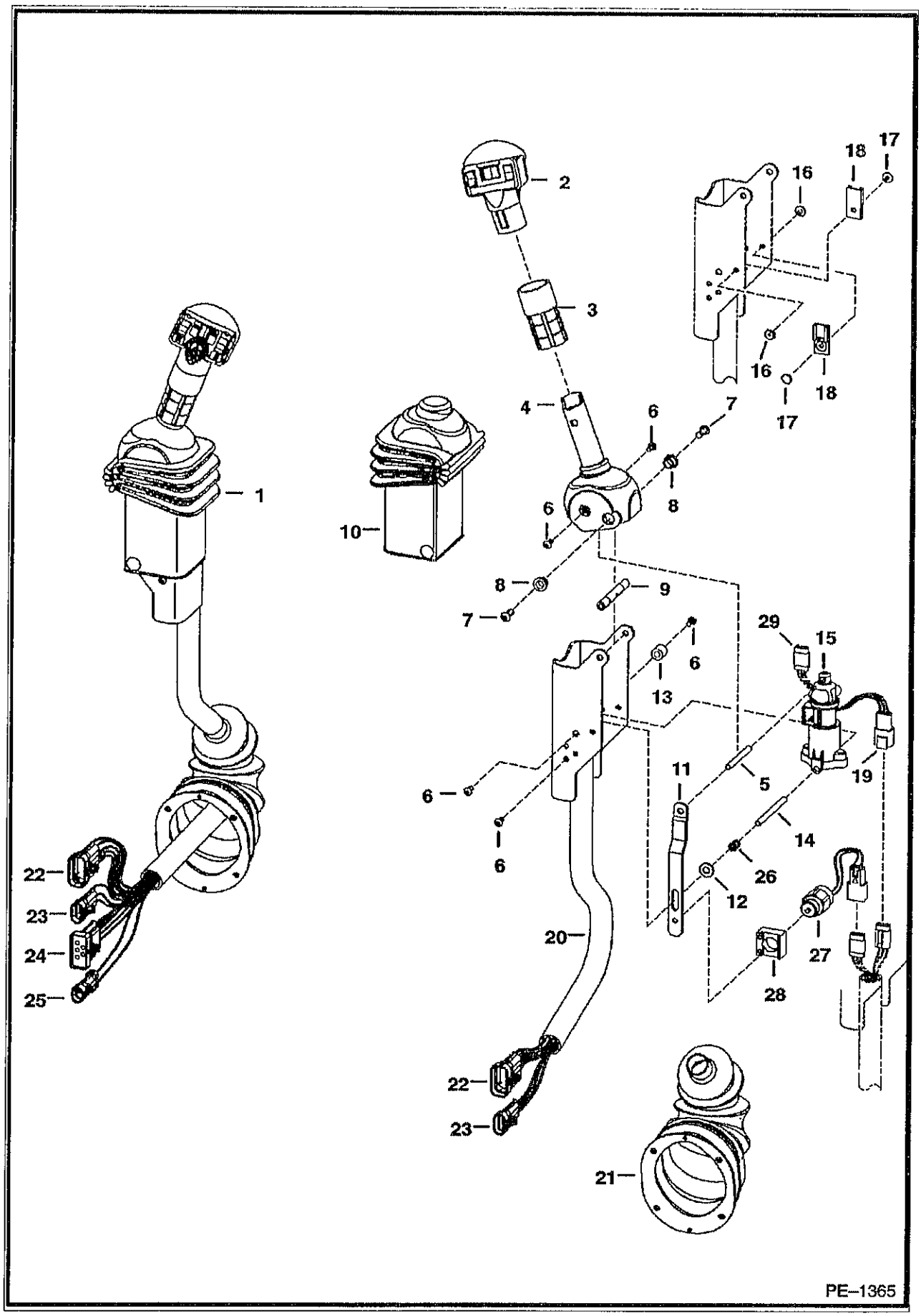
1
2
3
4
6
7
8
9
10
11
12
13
14
15
16
17
18
19
20
21
22
23
24
25
26
27
28
29
PE–1365

CONTROLS ELECTRICAL (Cont'd)
(ACS) (Handle Assembly)

Ref No	Part Number	Description	Remarks	Serial Number	Qty
9	6676640	SEAL			5

ELECTRICAL CONTROLS
(AHC) (Handle Assembly)

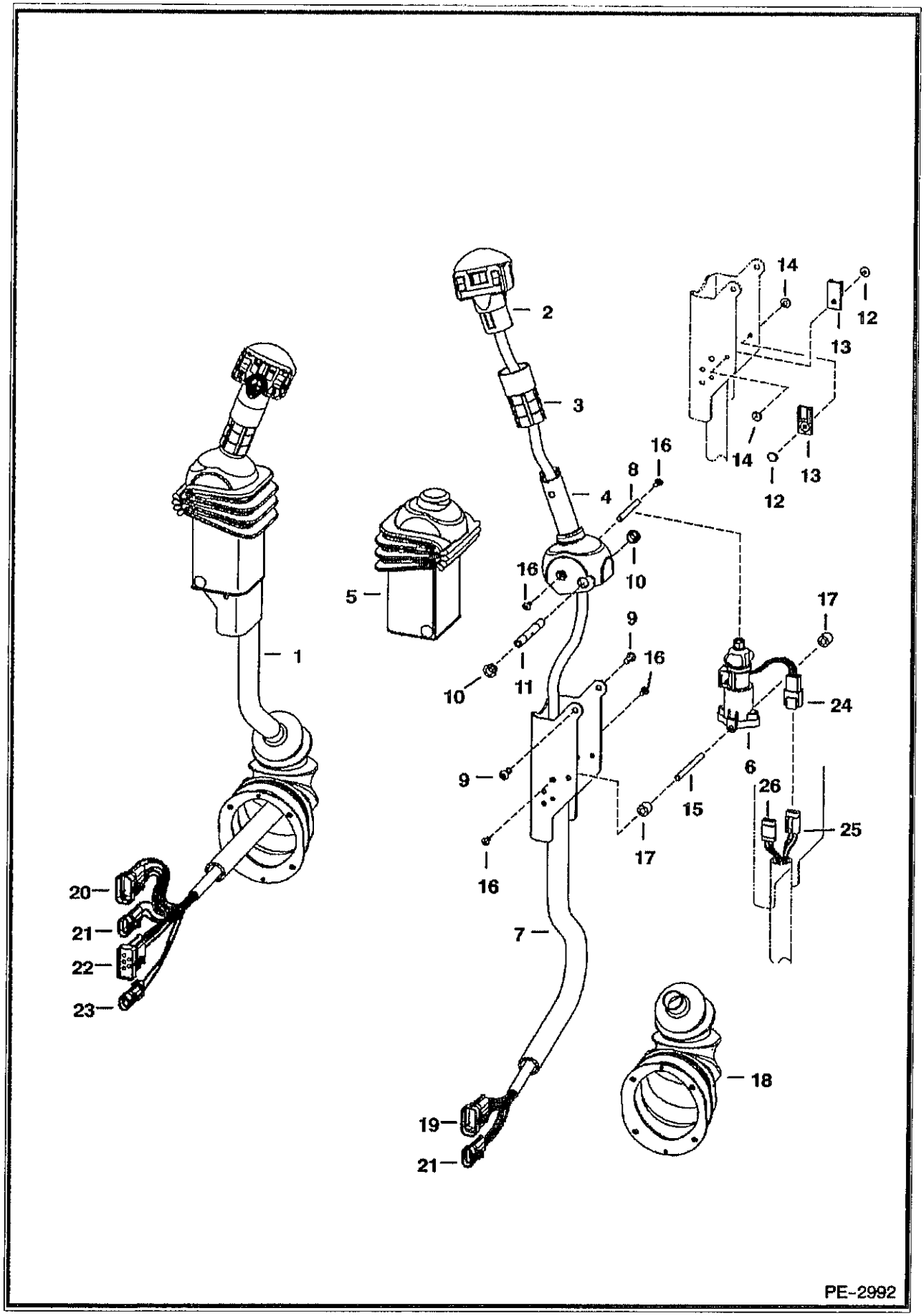

ELECTRICAL CONTROLS (Cont'd)
(AHC) (Handle Assembly)

Ref No	Part Number	Description	Remarks	Serial Number	Qty
1	6684913	LEVER	tilt - R.H.		1
1	6684914	LEVER	lift - L.H.		1
2	6677536	HANDLE	tilt - R.H.		1
2	6680417	HANDLE	lift - L.H.		1
3	6702621	GRIP			2
4	6729594	HANDLE	R.H.		1
4	6729595	HANDLE	L.H.		1
5	6680471	COVER			2
6	6684910	SENSOR			2
6	6670706	CONNECTOR	3-pin		1
6	6670714	PIN			3
6	6670710	LOCK			1
7	6680481	CHANNEL	R.H.		1
7	6680480	CHANNEL	L.H.		1
8	6680469	SPACER			1
9	25GT00410B	BOLT			4
10	6702990	BUSHING			4
1	6713043	SPACER			2
12	6665321	RIVET	male		4
13	6665000	CLIP			4
14	6665322	RIVET	female		4
15	6719834	SPACER	threaded		2
16	6727065	BOLT			8
17	6719835	SLEEVE			4
18	6532127	BOOT			2
19	6640692	CONNECTOR	10-pin - R.H.		1
19	6640690	PIN			8
19	6640694	LOCK			1
19	6641176	SEAL			8
19	6646582	PLUG	cavity		2
20	6640692	CONNECTOR	10-pin - L.H.		1
20	6640690	PIN			6
20	6640694	LOCK			1
20	6641176	SEAL			6
20	6646582	PLUG	cavity		4
21	6640699	CONNECTOR	3-pin - R.H. & L.H.		2
1	6640690	PIN			3
21	6641176	SEAL			3
21	6640700	LOCK			1
22	6667144	CONNECTOR	5-pin - L.H.		1
22	6640690	PIN			3
22	6641176	SEAL			3
22	6646582	PLUG	cavity		1
22	6667145	LOCK			1
23	6641179	CONNECTOR	2-pin - L.H.		1
23	6640690	PIN			2
23	6641176	SEAL			2
23	6641180	LOCK			1
24	6670707	CONNECTOR	3-pin		1
24	6670715	PIN			3
24	6670711	LOCK			1
25	6676870	CONNECTOR	3 - pin		1
25	6670711	LOCK			1
5	6670715	PIN			3

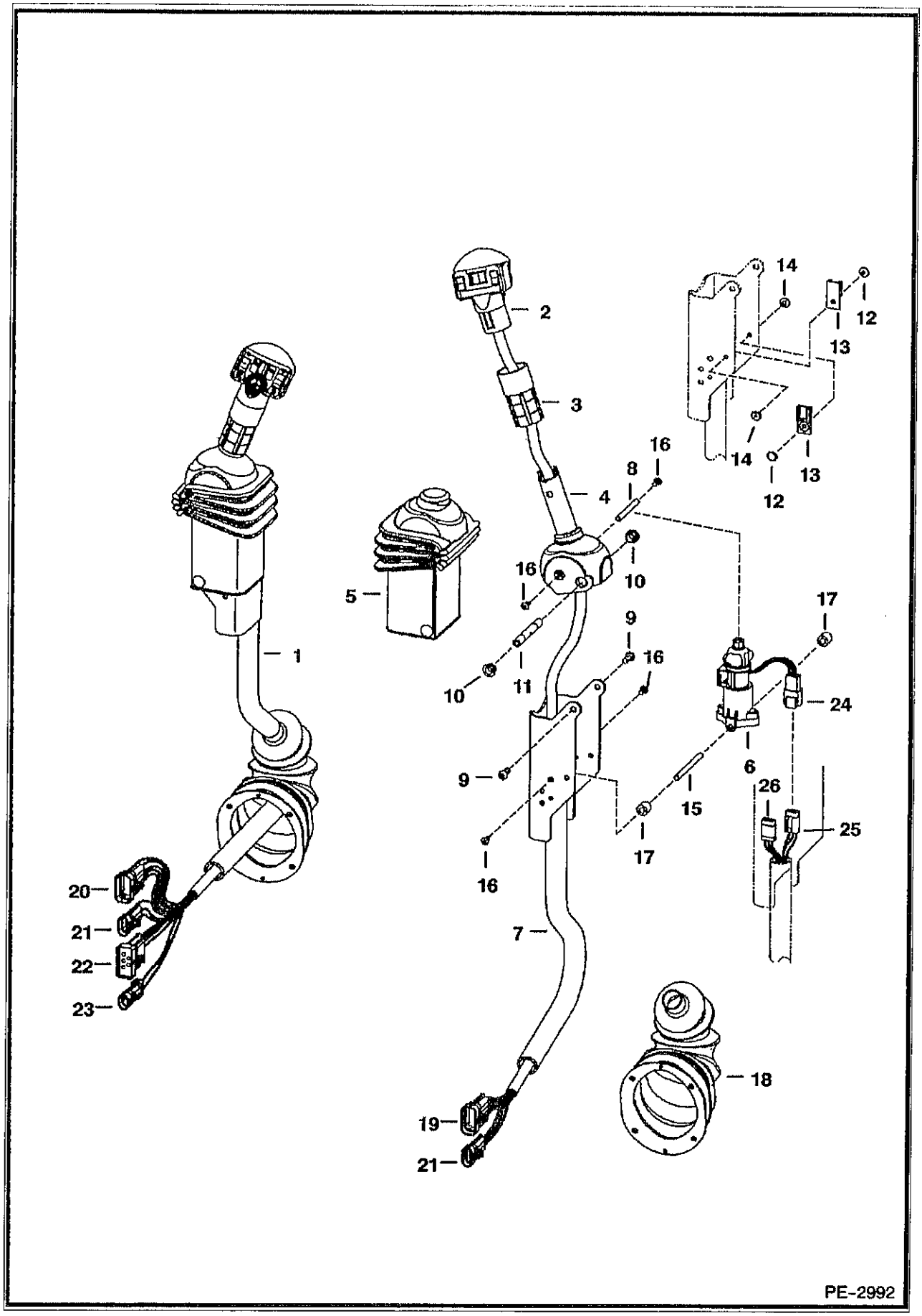
1
2
3
4
5
6
7
8
9
10
11
12
13
14
15
16
17
18
19
20
21
22
23
24
25
26
PE-2992

ELECTRICAL CONTROLS (Cont'd)
(AHC) (Handle Assembly)

Ref No	Part Number	Description	Remarks	Serial Number	Qty
25	6676640	SEAL	plug		1
26	6677364	CONNECTOR	3-pin - R.H. & L.H.		1
26	6676640	SEAL	plug		3
26	6670715	PIN			2

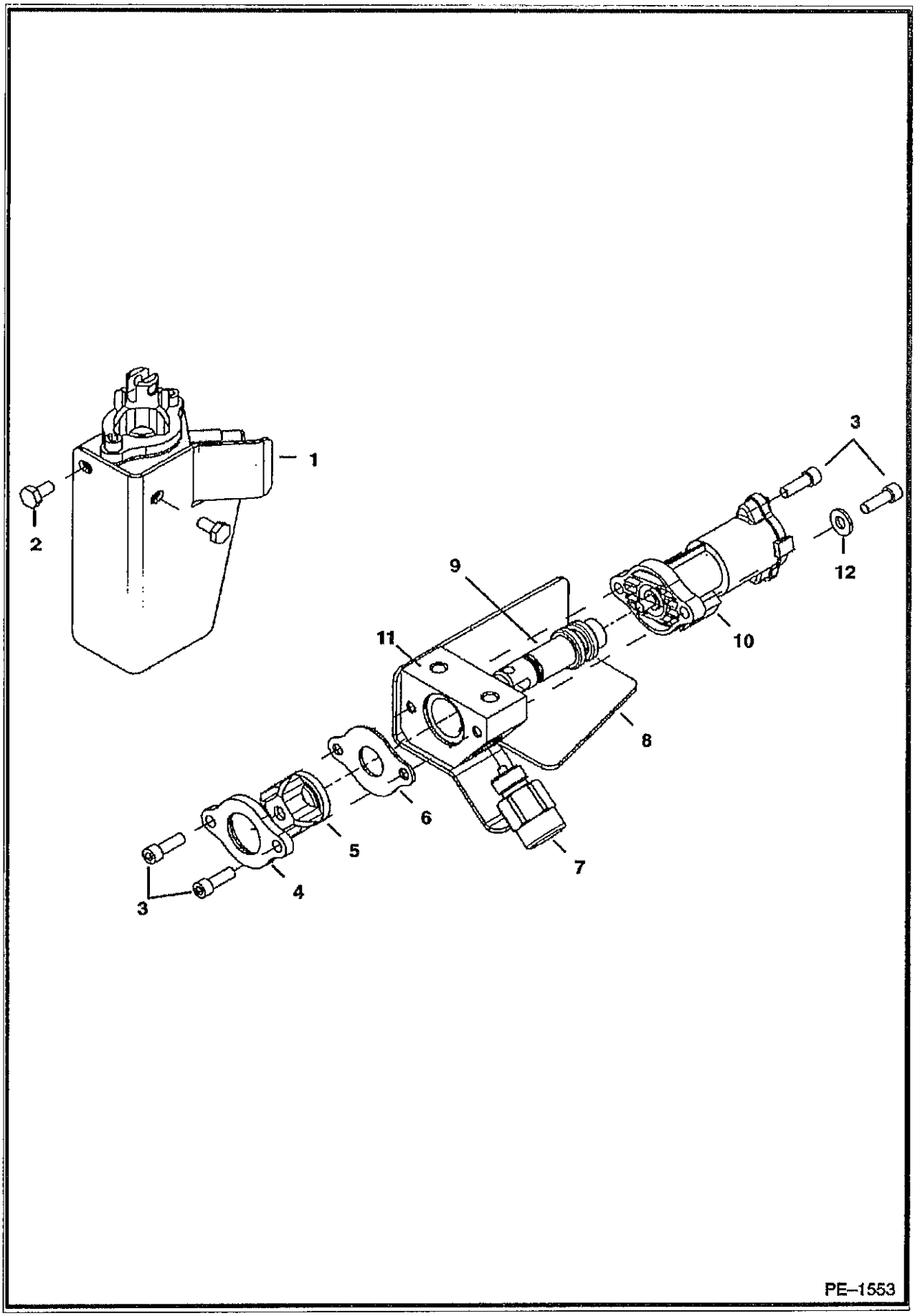
1
2
3
3
4
5
6
7
8
9
10
11
12
PE–1553

CONTROLS ELECTRICAL (Cont'd)
(ACS) (Foot Pedal Assemblies)

Ref No	Part Number	Description	Remarks	Serial Number	Qty
1	6684912	SENSOR	foot pedal - R.H.		1
1	6684911	SENSOR	foot pedal - L.H.		1
2	43C408	BOLT			2
3	98G412	BOLT			4
4		RETAINER	NAP - boot		1
5	6587763	BOOT			1
6		STOP PLATE	NAP		1
7	6676029	SOLENOID			1
8	6680478	SHIELD	R.H.		1
8	6680479	SHIELD	L.H.		1
9		SPOOL	NSS		1
10		SENSOR	NSS		1
11		BLOCK	NSS		1
12	25E13	WASHER 5			2

CONTROLS ELECTRICAL
(SJC)

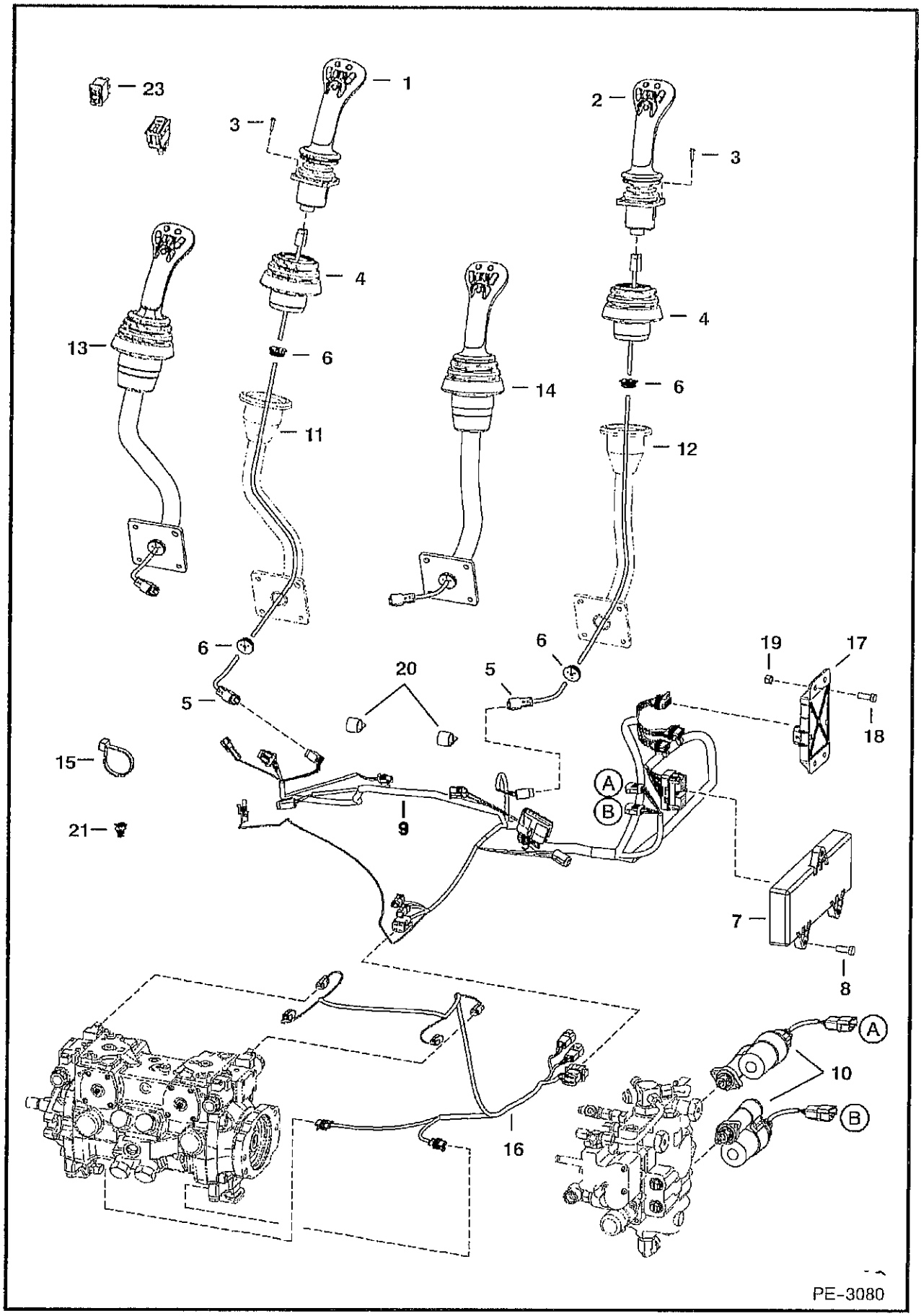

CONTROLS ELECTRICAL (Cont'd)
(SJC)

Ref No	Part Number	Description	Remarks	Serial Number	Qty
1		JOYSTICK LH	NSS - Order Ref. 13 - Was 6687883 [A]		1
2		JOYSTICK RH	NSS - Order Ref. 14 - Was 6687882 [A]		1
3		BOLT	NSS- L.H. - Order Ref. 13 - R.H - Order Ref. 14 - Was 6678659 [A]		8
4		BOOT	NSS- L.H. - Order Ref. 13 - R.H. Order Ref. 14 - Was 6678903 [A]		2
5		HARNESS	NSS- L.H. - Order Ref. 13 - R.H. Order Ref. 14. Was 6729397 [A]		2
6		GROMMET	NSS- L.H. - Order Ref 13 - R.H. Order Ref 14. - Was 6684294 [A]		4
7	6679485	CONTROLLER JC	joystick		1
8	43C616	BOLT			3
9	7117036	HARNESS SJC	joystick control		1
10	7101672	ACTUATOR	See Illustration LIFT & TILT CONTROL CIRCUITRY/ PE2522		2
11		HANDLE	NSS - L.H. - Order Ref. 13 - Was 6729792 [A]		1
2		HANDLE	NSS - R.H. - Order Ref. 14 - Was 6729791 [A]		1
13	7111993	JOYSTICK ASMBLY LH	L.H. - Ref. 1, 3-6 & 11		1
14	7111992	JOYSTICK ASMBLY RH	R.H. - Ref. 2-6 & 12		1
15	6689641	CABLE TIE			4
16	7114735	HARNESS	pump		1
17	6680410	CONTROLLER	joystick		1
18	17C616	BOLT 5			2
19	97D6	NUT 10			2
20	30H42	CLAMP			2
21	6681871	MOUNT			4

ALTERNATOR
(90 Amp)

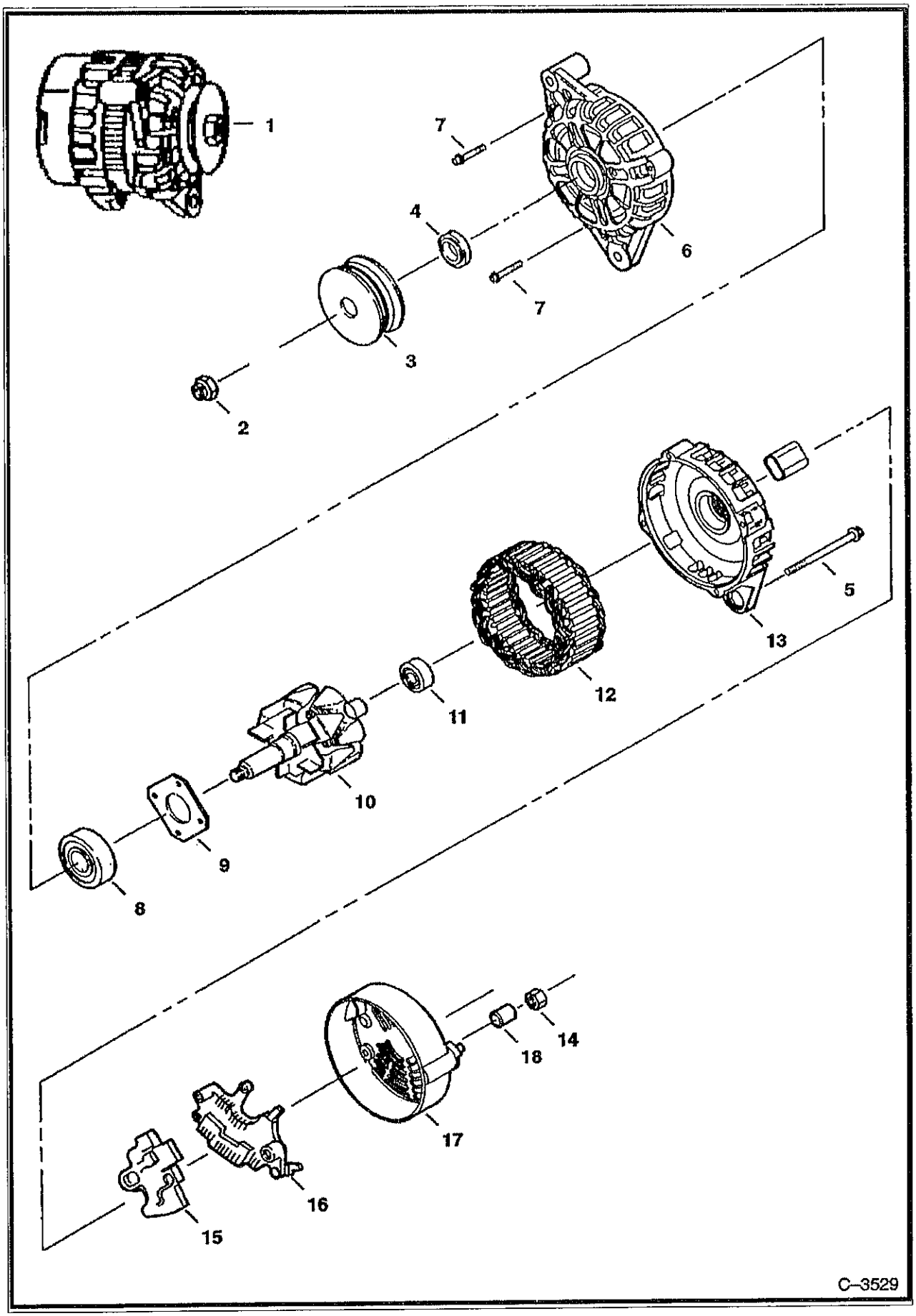

ALTERNATOR (Cont'd)
(90 Amp)

Ref No	Part Number	Description	Remarks	Serial Number	Qty
1	6678205	ALTERNATOR	90 amp - Ref. 2-14		1
2	6677497	NUT			1
3	6677496	PULLEY			1
4	6677495	SPACER			1
5	6677494	BOLT			4
6	6677491	BRACKET	front		1
7	6677817	BOLT			4
8	6677818	BEARING			1
9	6677819	RETAINER			1
10	6677492	ROTOR			1
11	6677820	BEARING			1
12	6677493	STATOR			1
13	6677490	BRACKET			1
14	6677486	NUT			1
15	6677489	REGULATOR ASSY	Order Ref. 1		1
16	6677488	RECTIFIER			1
7	6677487	COVER			1
18	6677485	SPACER			1

STARTER
(Valeo)

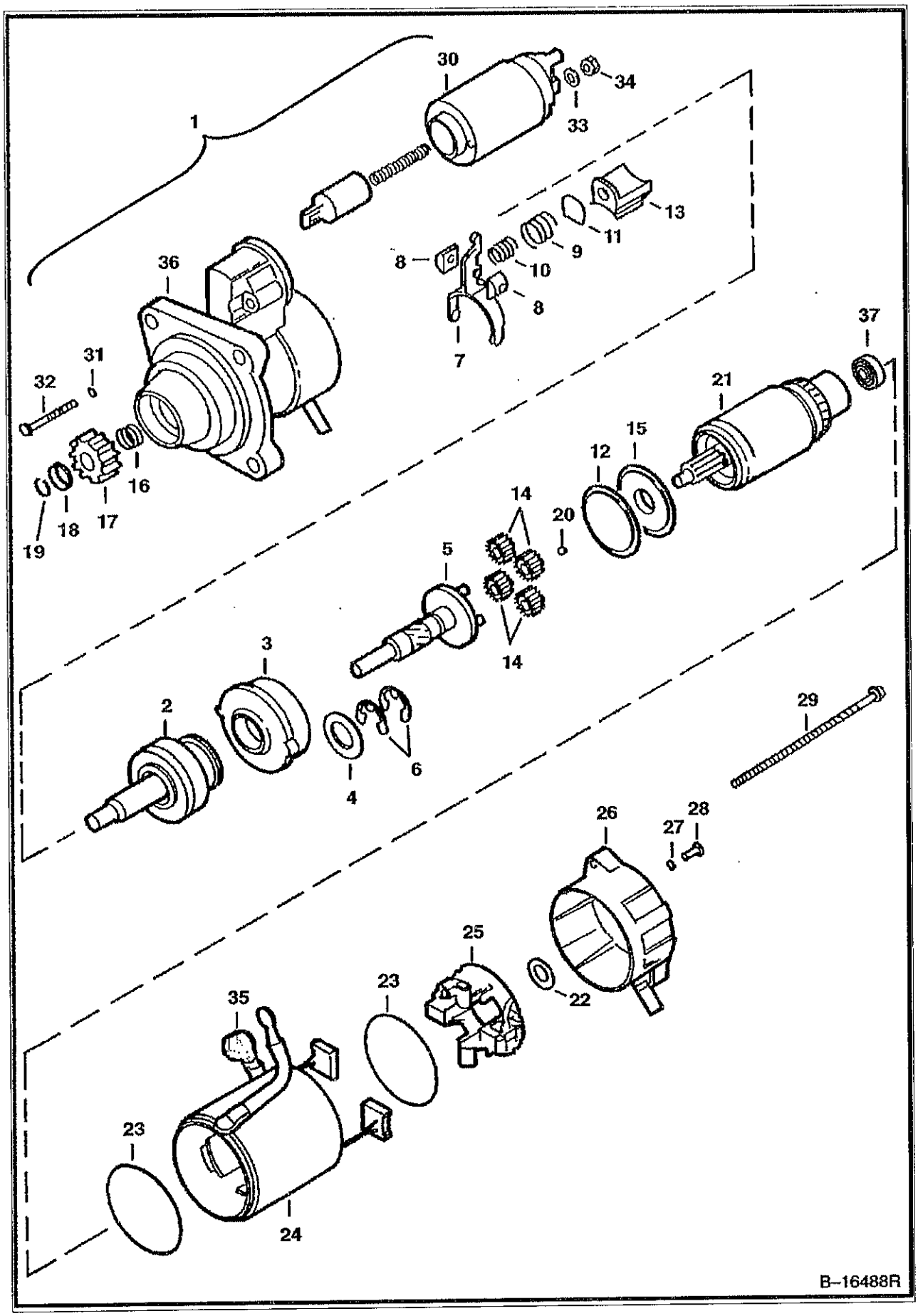

STARTER (Cont'd)
(Valeo)

Ref No	Part Number	Description	Remarks	Serial Number	Qty
1	6685190	STARTER			1
2	6680375	SHAFT	O.R.C. assy.		1
3	6680367	GEAR			1
4	6680378	WASHER			1
5	6680365	SHAFT			1
6	6680368	STOP RING			2
7		LEVER	NSS - Order Ref. 36		1
8		HOLDER	NSS - Order Ref. 36		2
9		SPRING	NSS - Order Ref. 36		1
10		SPRING	NSS - Order Ref. 36		1
11		PLATE	NSS - Order Ref. 36		1
12	6680369	SEAL			1
13	6680371	LEVER			1
14	6680366	GEAR			4
15	6680372	BRACKET			1
16	6680361	SPRING			1
17	6680390	GEAR			1
8	6680360	STOP			1
19	6680359	STOP RING			1
20	6680362	BALL			1
21	6680374	ARMATURE	W/Ref. 37		1
22	6680363	WASHER			1
23	6680380	SEAL			2
24	6680373	YOKE			1
25	6680377	HOLDER			1
26	6680389	BRACKET			1
27	6680358	RING	rubber		2
28	6680384	BOLT			2
29	6680356	BOLT			2
30	6680376	SWITCH			1
31	6680379	SEAL			2
32	6680383	BOLT			2
33	6EM80	WASHER, SPRING			1
34	4DM8	NUT			1
35	6680355	BOOT			1
36	6680388	BRACKET	W/Ref. 7-11		1
37	6687631	BEARING			1

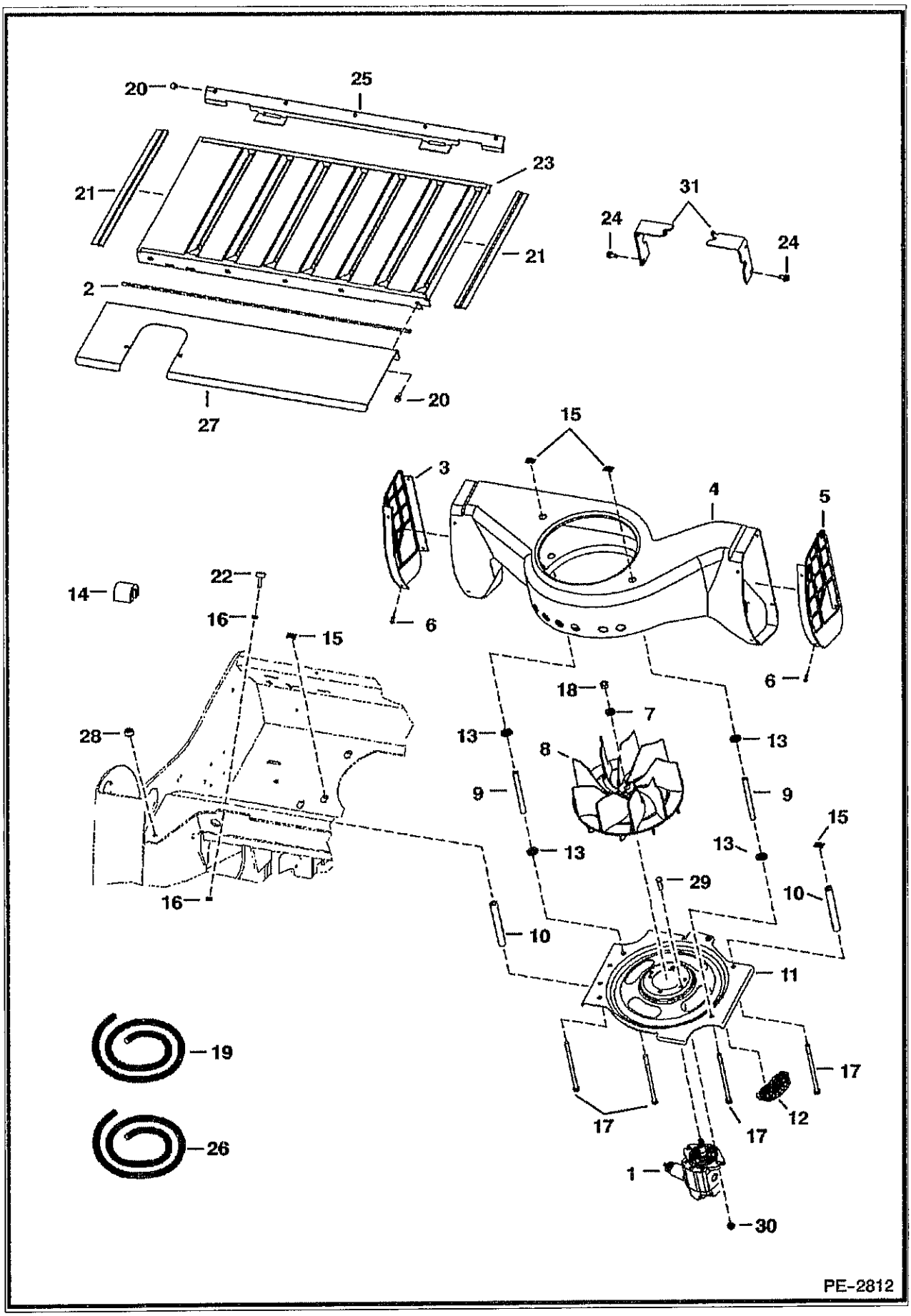
20
25
23
21
21
2
20
27
31
24
24
15
3
4
5
6
6
14
22
16
15
28
16
18
7
13
8
13
9
9
13
13
15
29
10
10
11
19
26
17
17
12
17
1
30
PE-2812

COOLING SYSTEM (Cont'd)

Ref No	Part Number	Description	Remarks	Serial Number	Qty
1	6687142	MOTOR	See Illustration MOTOR/ PE2811		1
2		SEAL	34.5" (900 mm) long - Order Ref 28		2
3	6716574	LOUVER	L.H. - plastic		1
4	6732931	HOUSING			1
5	6716572	LOUVER	R.H. - plastic		1
6	6706517	SCREW			8
7	6701097	WASHER			1
8	6715142	FAN			1
9	6577382	SPACER			2
10	6732318	SPACER			2
11	7107175	INLET	4 slot		1
12	6684474	INSERT FAN INLET	inlet		4
13	6732457	WASHER	step		4
14	6579613	STOP	cab tilt		2
15	6684033	NUT	spring		4
16	61D5	NUT			4
7	17C6116	BOLT			4
18	96D8	NUT			1
19	6646705	SEAL	bulk - Order per foot		x
20	84G3112	BOLT 5			8
21		SEAL	NAP - 19" (483mm) long - Order Ref. 20		2
22	6655399	BUMPER			4
23	6731078	GRILL			1
24	84G3716	SCREW 5			4
25	6731915	BRACKET			1
26	6511855	SEAL	bulk - Sold Per Foot		x
27	6731916	SHIELD			1
28	6714454	BUMPER			2
29	17C620	BOLT			2
30	95D6	NUT			2
31	6731970	BRACKET			2

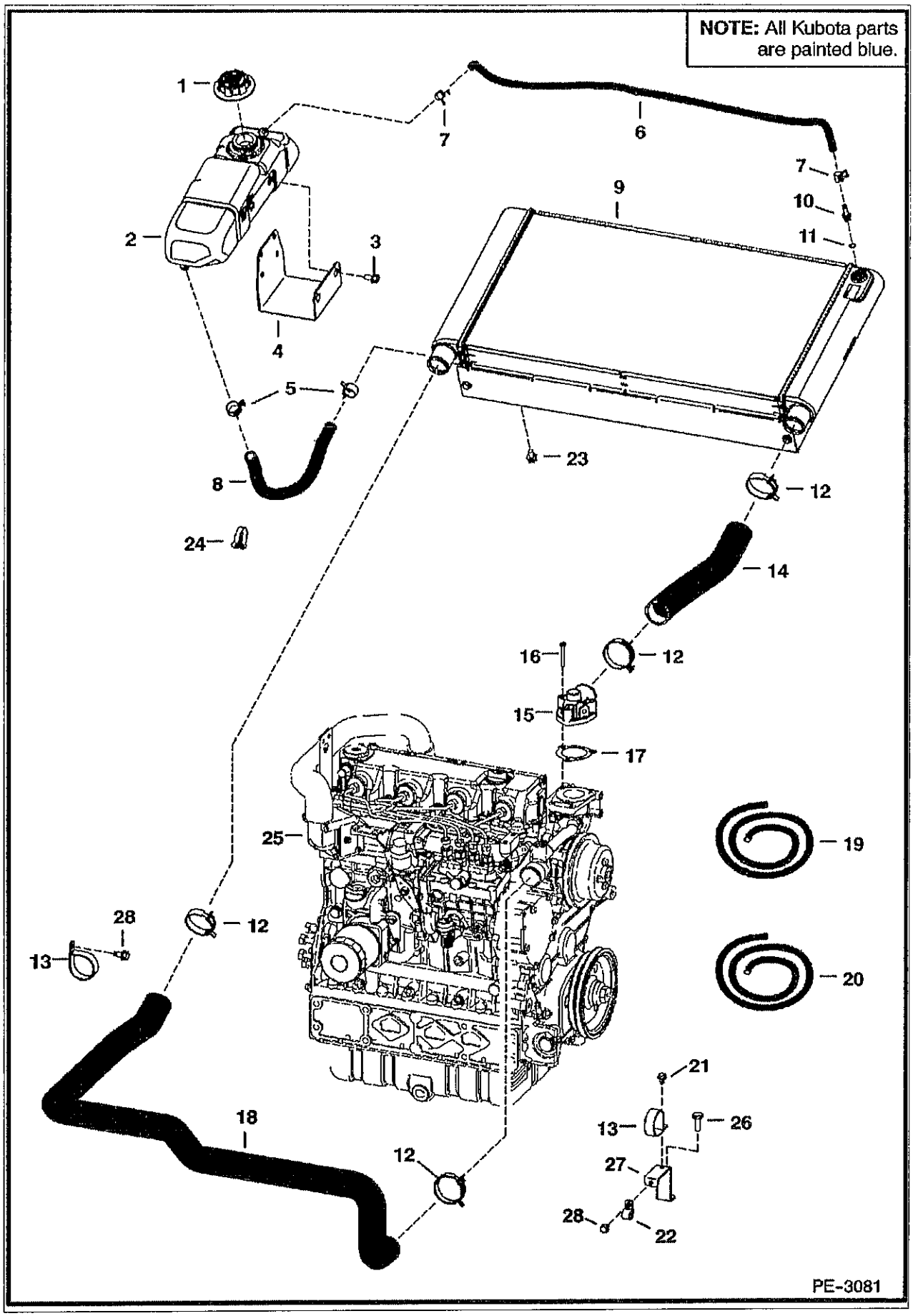
NOTE: All Kubota parts are painted blue.
1
2
3
4
5
6
7
8
9
10
11
12
13
14
15
16
17
18
19
20
21
22
23
24
25
26
27
28
PE-3081

COOLING SYSTEM (Cont'd)

Ref No	Part Number	Description	Remarks	Serial Number	Qty
1	6733429	CAP			1
1	6733996	DECAL	14 psi		1
2	6732375	TANK			1
3	6733886	BOLT			2
4	6732870	MOUNT			1
5	5HM23	CLAMP			2
6		HOSE	NAP - Order Ref. 19 - .25" I.D. - 36" (914mm) long		1
7	5HM14	CLAMP			2
8		HOSE	NAP - Order Ref. 20 - .63" I.D. - 20" (508mm) long		1
9	6684367	RADIATOR			1
10	6734090	ADAPTER			1
11	79K4	O RING 10			x
12	5HM55	CLAMP			4
13	30H91	CLAMP			2
14	6728749	HOSE			1
15	6680843	COVER	See Illustration WATER PUMP & THERMOSTAT/ B17610 See Illustration WATER PUMP & THERMOSTAT/ B22925 thermostat		1
16	6680845	BOLT	See Illustration WATER PUMP & THERMOSTAT/ B17610 See Illustration WATER PUMP & THERMOSTAT/ B22925		3
17	6680844	GASKET	See Illustration WATER PUMP & THERMOSTAT/ B17610 See Illustration WATER PUMP & THERMOSTAT/ B22925		1
18	6736566	HOSE			1
19	6577822	HOSE	bulk - sold per foot		x
20	6578172	HOSE	bulk - sold per foot		x
21	84G3712	BOLT			2
22	30H34	CLAMP			1
23	35C516	BOLT 10			4
24	6513471	CLAMP			1
25		ENGINE	See Illustration ENGINE/ B26157		1
26	5CM1020	SCREW			1
27	7112683	BRACKET			1
28	84G3108	BOLT			2

ENGINE & ATTACHING PARTS
(Air Cleaner, Muffler)

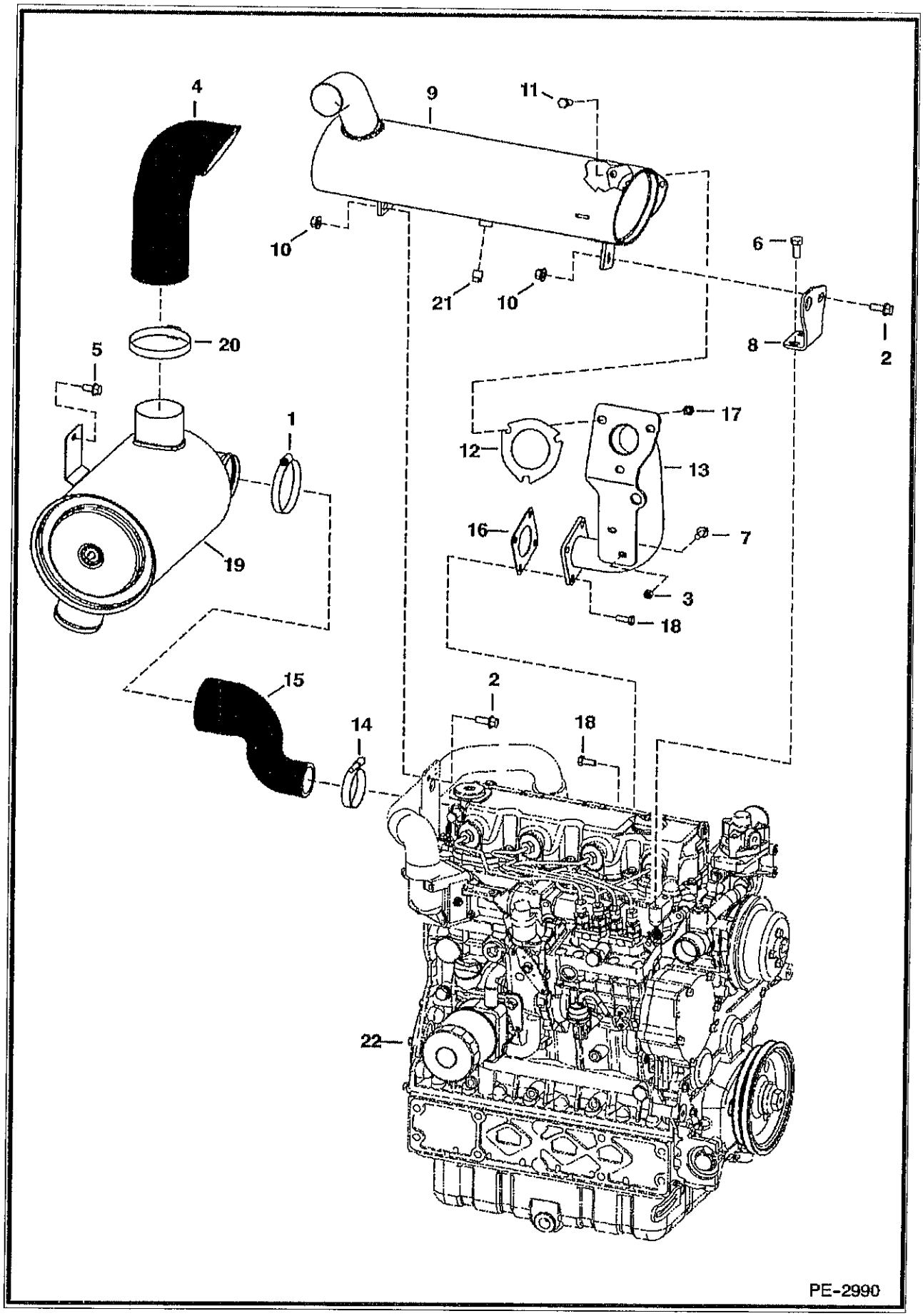

ENGINE & ATTACHING PARTS (Cont'd)
(Air Cleaner, Muffler)

ef No	Part Number	Description	Remarks	Serial Number	Qty
1	42HC375	CLAMP			1
2	45C616	BOLT			2
3	53DM8	NUT			1
4	6730726	HOSE	air intake		1
5	84G3712	BOLT			2
6	6719825	BOLT			2
7	29CM820	SCREW			1
8	7111805	MOUNT	muffler		1
8	6730753	MOUNT	See Illustration PURIFIER/ PE2827 purifier		1
9	6687887	MUFFLER	oval - double insulated		1
10	83D6	NUT 5			3
11	17C620	BOLT			3
12	6732032	GASKET	exhaust		1
13	7102368	TUBE	exhaust - square bolt pattern		1
14	42HC250	CLAMP			1
15	6734114	HOSE			1
16	7102747	GASKET	square bolt pattern		1
7	85D6	LOCK NUT			3
18	5CM1020	SCREW			4
19		AIR CLEANER	See Illustration AIR CLEANER/ MS1516		1
20	42H52	CLAMP			1
21	6661062	PLUG	brass - 3/8" straight pipe thread		1
22		ENGINE	See Illustration ENGINE/ B26157		1

ENGINE & ATTACHING PARTS
(Belt Drive System)

NOTE: All Kubota parts are painted blue.

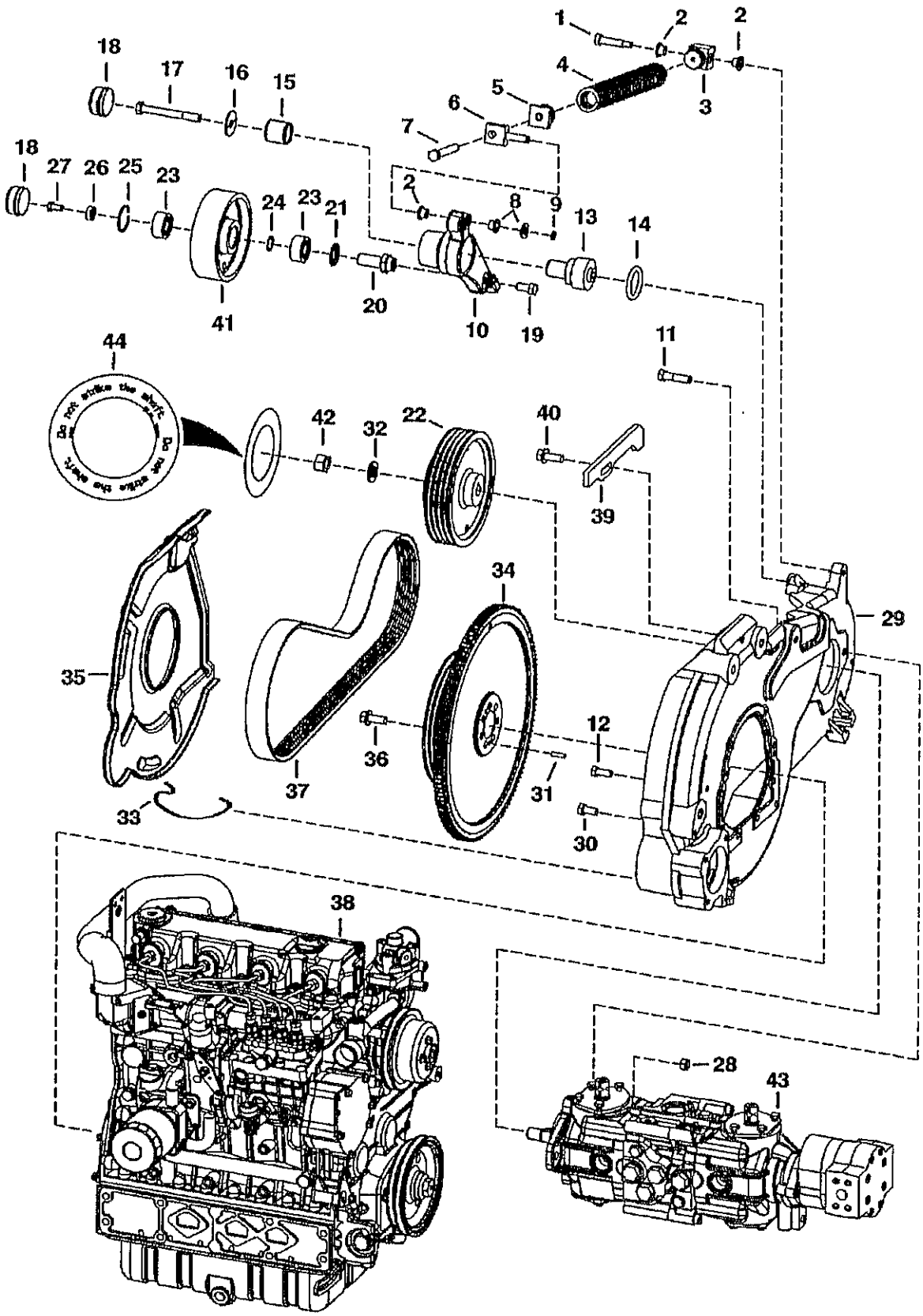

ENGINE & ATTACHING PARTS (Cont'd)
(Belt Drive System)

Ref No	Part Number	Description	Remarks	Serial Number	Qty
1	38C828	BOLT	shoulder		1
2	1313116	BUSHING			3
3	6568424	ADAPTER			1
4	6569498	SPRING ASSY			1
5	6568425	ADAPTER			1
6	6587182	SWIVEL PIN			1
7	6586710	BOLT			1
8	25E21	WASHER 5			2
9	6518955	SNAP RING			1
10	6735709	IDLER			1
11	17C832	BOLT	hydrostatic pump mount		2
12	6730894	BOLT			2
13	6707699	PIVOT			1
14	6661377	SEAL			1
15	6587765	BUSHING			1
16	6707698	WASHER			1
17	17C872	BOLT			1
8	6660967	CAP	grease		2
19	17C816	BOLT			1
20	6707654	SPINDLE			1
21	6665307	SEAL			1
22	7111581	PULLEY	pump - 8.5" (216 mm) O.D.		1
23	6661229	BEARING			2
24	6701159	SHIM			1
25	6665308	SNAP RING			1
26	6707697	WASHER			1
27	17C612	BOLT 5			1
28	85D8	NUT 5			2
29	6735980	MOUNT			1
30	6719828	BOLT			10
31	14J3112	PIN			2
32	6576033	WASHER			1
33	6701160	CLIP			3
34	7100859	FLYWHEEL ASSY	W/ ring gear		1
34	6665222	RING GEAR			1
35	6731100	SHIELD			1
36	6680747	BOLT			6
37	6662855	BELT	pump drive		1
38		ENGINE	See Illustration ENGINE/ B26157		1
39	6729944	STOP	idler		1
40	31C820	BOLT			1
41	6708445	PULLEY	drive idler		1
42	92D12	NUT			1
43		PUMP	See Illustration HYDROSTATIC PUMP/GEAR PUMP/ PE2824		1
44	7122009	DECAL	pulley - do not strike		1

ENGINE & ATTACHING PARTS
(Engine Mounts)

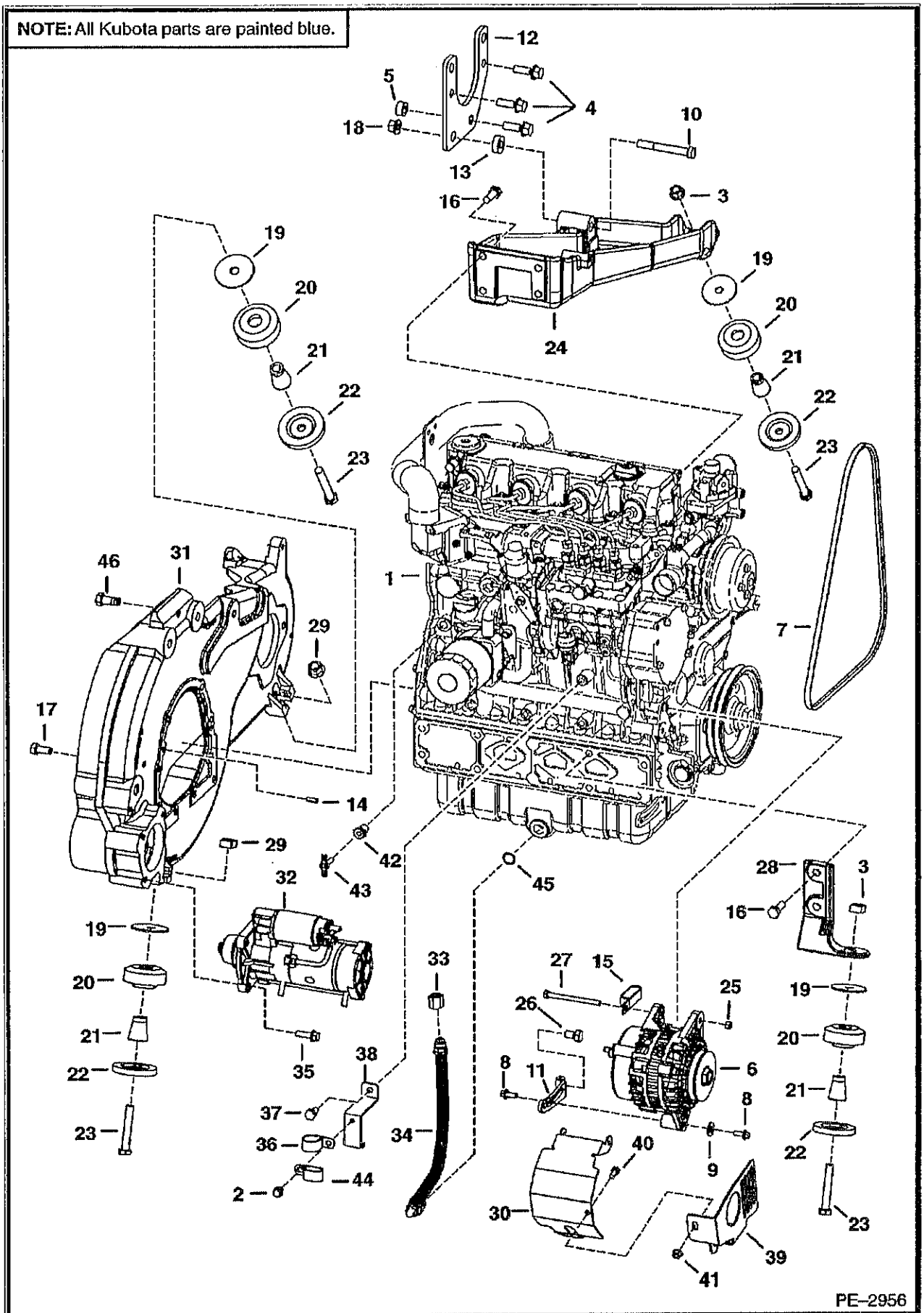

ENGINE & ATTACHING PARTS (Cont'd)
(Engine Mounts)

Ref No	Part Number	Description	Remarks	Serial Number	Qty
1		ENGINE	See Illustration ENGINE/ B26157		1
2	84G3108	BOLT			1
3	83D8	NUT 5			2
4	31C824	BOLT 10	for manual controls, AHC, ACS		3
4	59CM1240	BOLT	for SJC		2
5	7105753	SPACER			1
6		ALTERNATOR	See Illustration ALTERNATOR/ C3529		1
7	6686655	BELT	alternator / water pump		1
8	29CM00820B	BOLT			2
9	6E5	WASHER			1
10	17C1064	BOLT 5			1
11	6732193	BRACKET			1
12	7106240	SUPPORT			1
13	7106750	SPACER	for manual controls, AHC, ACS		1
13	7107572	SPACER	for SJC		1
14	14J3112	PIN	align Ref. 31 to the engine		2
15	31H38	CLAMP			1
6	6719829	BOLT			6
17	6719828	BOLT			10
18	83D10	NUT 5			1
19	6705106	WASHER	3" (76,2mm) O.D.		4
20	6668104	MOUNT			4
21	7110276	SPACER			4
22	6661787	WASHER			4
23	43C000852B	BOLT			4
24	7109792	MOUNT			1
25	53DM8	NUT			1
26	6CM1220	BOLT			1
27	1CM8100	SCREW			1
28	6735346	MOUNT	cast		2
29	6652918	NUT	square		2
30	6733873	SHIELD	alternator		1
31	6735980	MOUNT			1
32		STARTER	See Illustration STARTER/ B16488R		1
33	36K6	CAP			1
34	6734573	HOSE	12.5" (318mm) long		1
5	45C620	BOLT			3
36	30H73	CLAMP			1
37	5CM1020	SCREW			1
38	7112683	SPACER			1
39	6734436	SHIELD	alternator belt		1
40	17C510	BOLT			1
41	83D5	NUT 5			1
42	7101136	BUSHING			1
43	72F1	FITTING			1
44	31H34	CLIP			1
45	79K8	O RING 10			1
46	31C820	BOLT			1

ENGINE SPEED CONTROL

NOTE: All Kubota parts are painted blue.

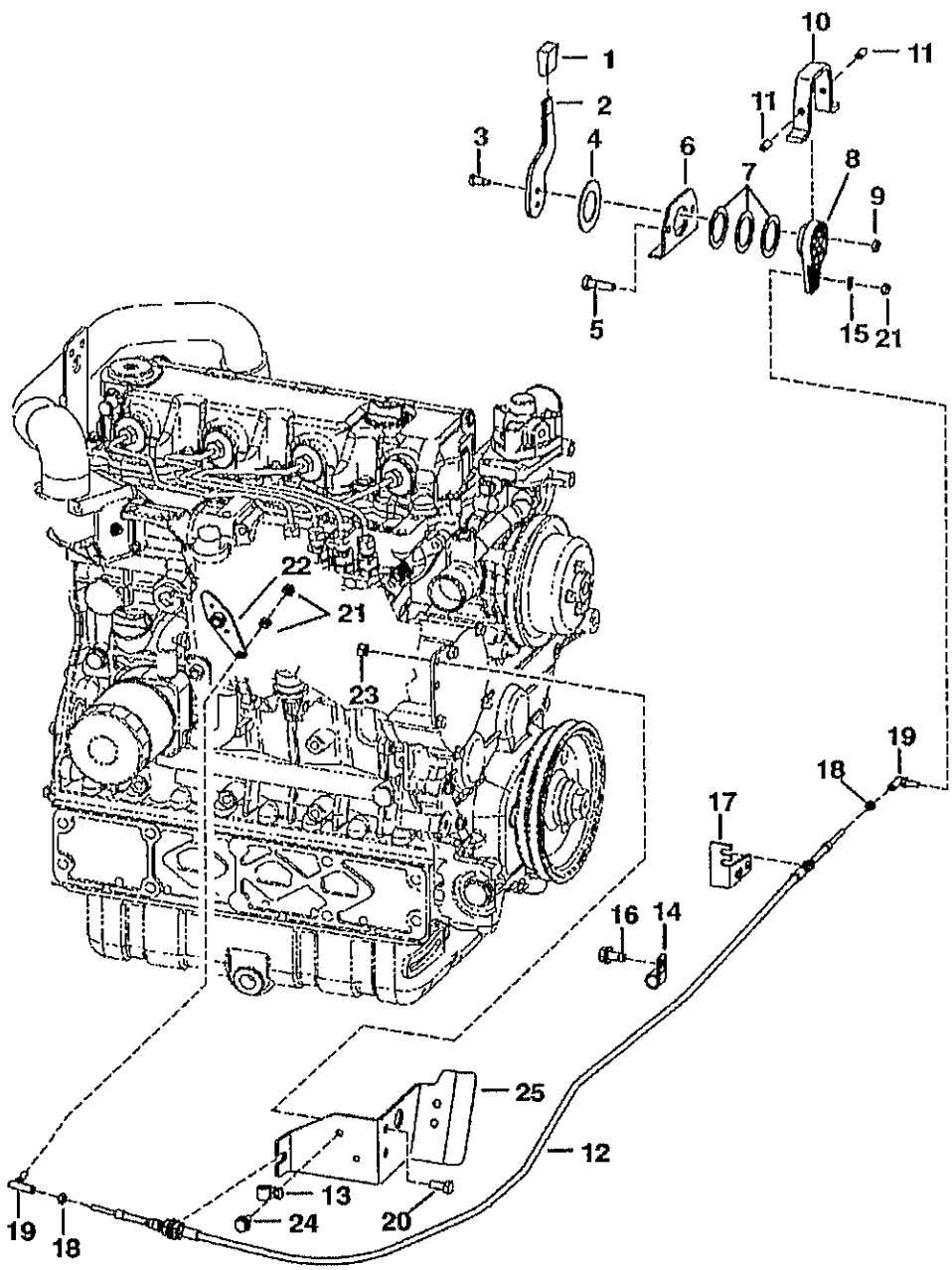

ENGINE SPEED CONTROL (Cont'd)

ef No	Part Number	Description	Remarks	Serial Number	Qty
1	6564452	GRIP			1
2	6705452	LEVER			1
3	38C610	BOLT	shoulder		2
4	6567962	WASHER			1
5	84G3724	BOLT			2
6	6576262	MOUNT			1
7	6630945	WASHER			3
8	6734416	LEVER			1
9	85D5	NUT 5			2
10	6734520	COVER			1
11	6706572	SET SCREW			2
12	6675668	CABLE			1
13	30H26	CLIP			1
14	30H31	CLAMP 10			1
15	25E11	WASHER			1
16	84G3712	BOLT			1
17	6732450	BRACKET			1
8	14D10	NUT			2
19	6644965	BALL JOINT			2
20	17C512	BOLT 5			2
21	62D4	NUT			3
22		LEVER	See Illustration GOVERNOR/ B22930 - Ref. 12		1
23	95D5	NUT			2
24	84G3110	SCREW			1
25	6734772	MOUNT			1

ENGINE SPEED CONTROL
(W/SJC)

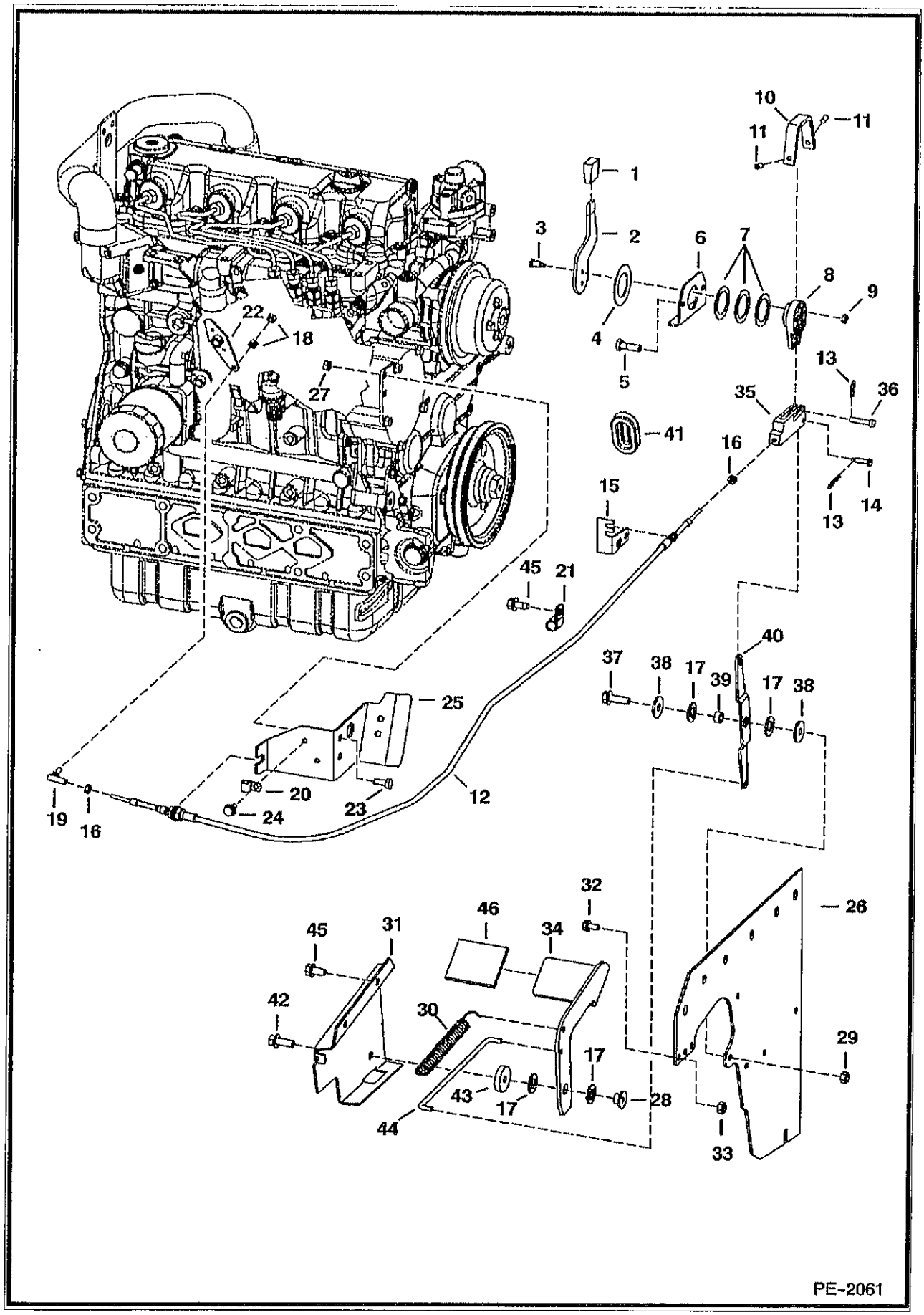

ENGINE SPEED CONTROL (Cont'd)
(W/SJC)

Ref No	Part Number	Description	Remarks	Serial Number	Qty
1	6564452	GRIP			1
2	6730270	LEVER			1
3	38C610	BOLT	shoulder		2
4	6567962	WASHER			1
5	84G3724	BOLT			2
6	6576262	MOUNT			1
7	6630945	WASHER			3
8	6734416	LEVER			1
9	85D5	NUT 5			6
10	6734520	COVER			1
11	6706572	SET SCREW			2
12	6675668	CABLE			1
13	6513495	COTTER PIN			1
14	2F4051	PIN			1
15	6732450	BRACKET			1
16	14D10	NUT			2
17	6700170	WASHER	plastic		4
8	62D4	NUT			2
19	6644965	BALL JOINT			1
20	30H26	CLIP			1
21	30H31	CLAMP 10			1
22		LEVER	See Illustration GOVERNOR/ B22930 - Ref. 12		1
23	17C512	BOLT 5			2
24	84G3110	SCREW			1
25	6734772	MOUNT			1
26		PANEL	See Illustration PANELS/ PE2841		1
27	95D5	NUT			2
28	6559479	NUT	retaining		1
29	85D6	LOCK NUT			1
30	6700743	SPRING			1
31	6732323	BRACKET			1
32	84G3712	BOLT			2
33	95D6	NUT			2
34	6735680	FOOT PEDAL			1
35	6734503	CLEVIS			1
36	1304227B	PIN			1
37	84G3720	BOLT			1
38	619021B	WASHER			2
39	6564343	SPACER			1
40	6734417	LEVER			1
41	6577961	GROMMET			1
42	45C616	BOLT			1
43	6732322	SPACER			1
44	6731900	ROD			1
45	84G3712	BOLT			2
46	6554100	TREAD	3" x 6" (76,2 mm x 152,4 mm)		1

ENGINE
(V3300 DI T Kubota)

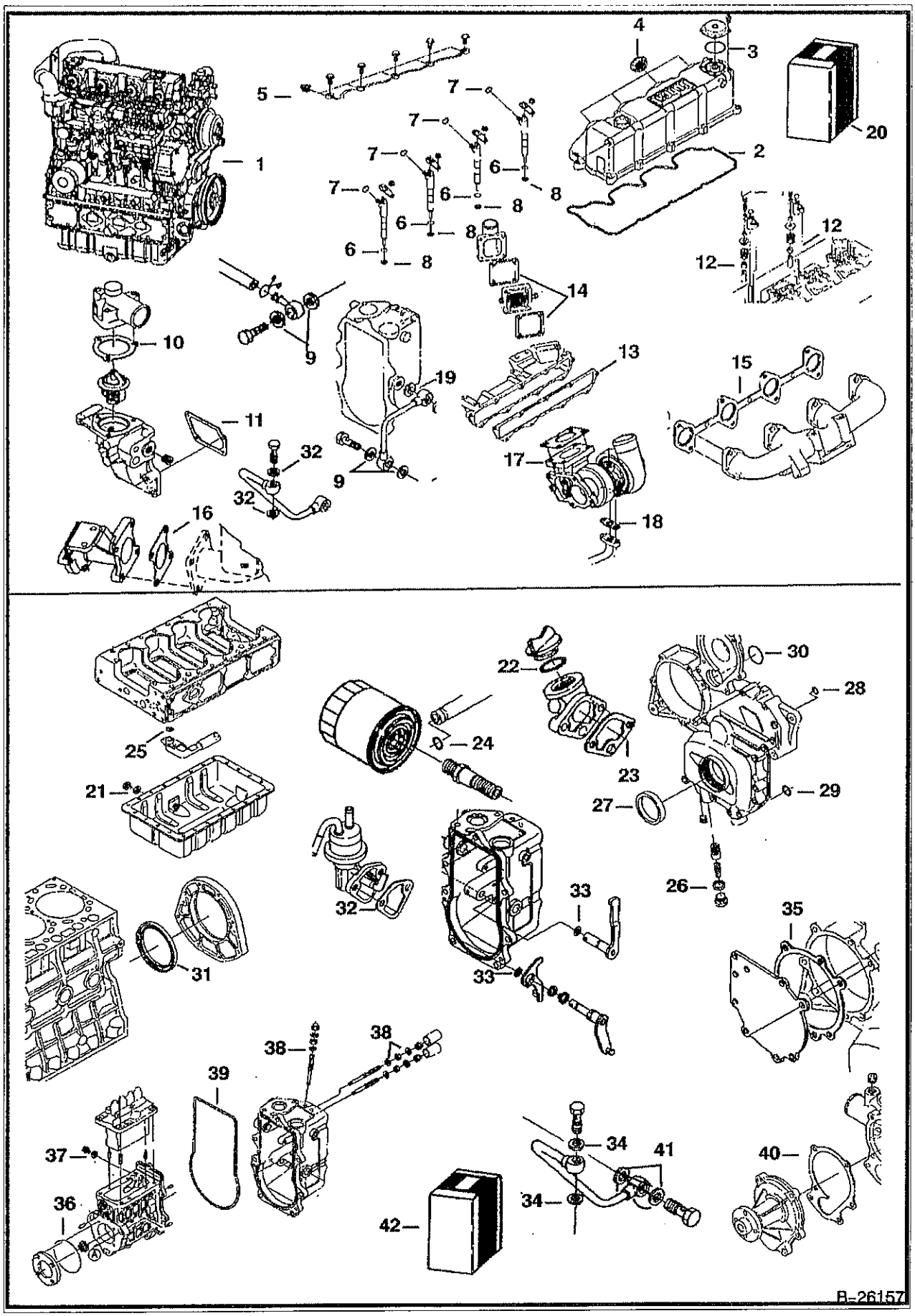

ENGINE (Cont'd)
(V3300 DI T Kubota)

Ref No	Part Number	Description	Remarks	Serial Number	Qty
1	6684576	ENGINE-V3300T TIER 2			1
2	6680690	GASKET	head cover		1
3	6680691	O-RING			1
4	6680695	SEAL	injection pipe		4
5	6685498	GASKET	overflow pipe		5
6	6670769	O-RING			4
7	6680778	O-RING			4
8	6680779	GASKET	nozzle		4
9	6680792	GASKET			2
10	6685955	GASKET	thermostat cover		1
11	6680849	GASKET	water flange		1
12	6672436	SEAL			16
13	6680884	GASKET			1
14	6685960	GASKET			2
15	6680891	GASKET			1
16	6687147	GASKET			1
7	6680893	GASKET			1
18	6685964	GASKET	oil pipe		1
19	6685962	GASKET	oil pipe		1
20	6689756	KIT	upper gasket- W/Ref 2-19		1
21	6631046	SEAL			1
22	3966602B	O-RING			1
23	6685923	GASKET	oil filler flange		1
24	6685971	O-RING			1
25	6680661	O-RING			1
26	6670347	GASKET			1
27	6680680	SEAL	oil		1
28	6680681	O-RING			1
29	6680682	O-RING			1
30	6680855	O-RING			1
31	6680705	SEAL			1
32	6670782	GASKET	fuel pump		1
33	6683023	O-RING			3
34	6685962	GASKET	oil pipe		2
35	6685948	GASKET			1
6	6680816	O-RING			1
37	3974095B	GASKET			4
38	3974972B	GASKET			6
39	6680829	GASKET	governor housing		1
40	6680853	GASKET	water pump		1
41	6689331	gasket	one piece aluminum		1
42	6689755	KIT	lower gasket - W/Ref 21-41		1

MANIFOLDS
(V3300 DI T Kubota)

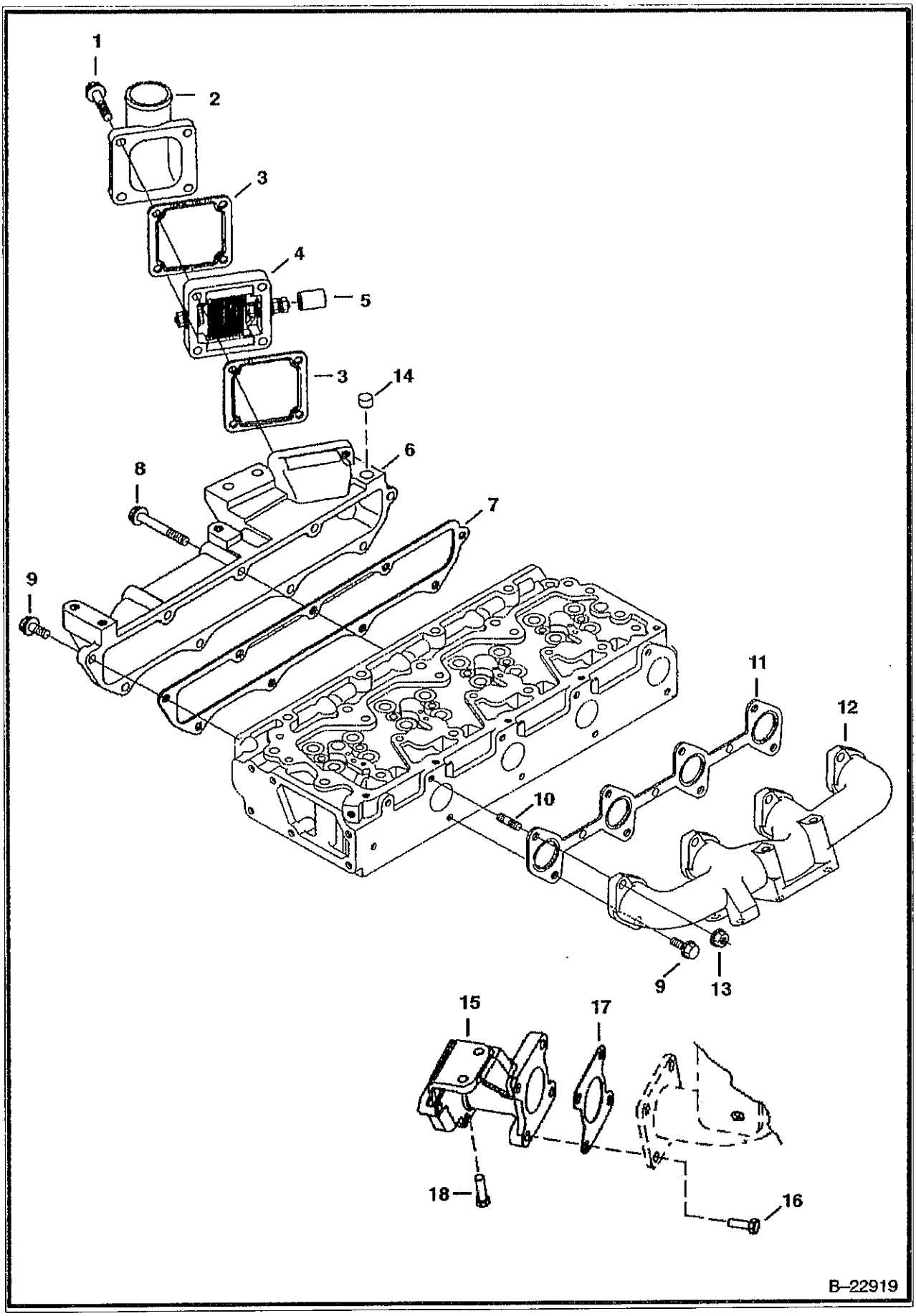

MANIFOLDS (Cont'd)
(V3300 DI T Kubota)

Ref No	Part Number	Description	Remarks	Serial Number	Qty
1	6680851	BOLT			4
2	6680886	FLANGE			1
3	6685960	GASKET			1
4	6680888	HEATER			1
5	6598112	CAP			1
6	6680883	MANIFOLD	intake		1
7	6680884	GASKET	manifold		1
8	6680885	BOLT			3
9	6680801	BOLT			10
10	3974916B	STUD			4
11	6680891	GASKET	manifold		1
12	6680890	MANIFOLD	exhaust		1
13	6680663	NUT			1
14	6685961	PLUG			1
15	6687145	FLANGE	muffler		1
16	6687146	BOLT			4
17	6687147	GASKET			2
8	6680755	BOLT			2

TURBOCHARGER
(V3300 DI T Kubota)

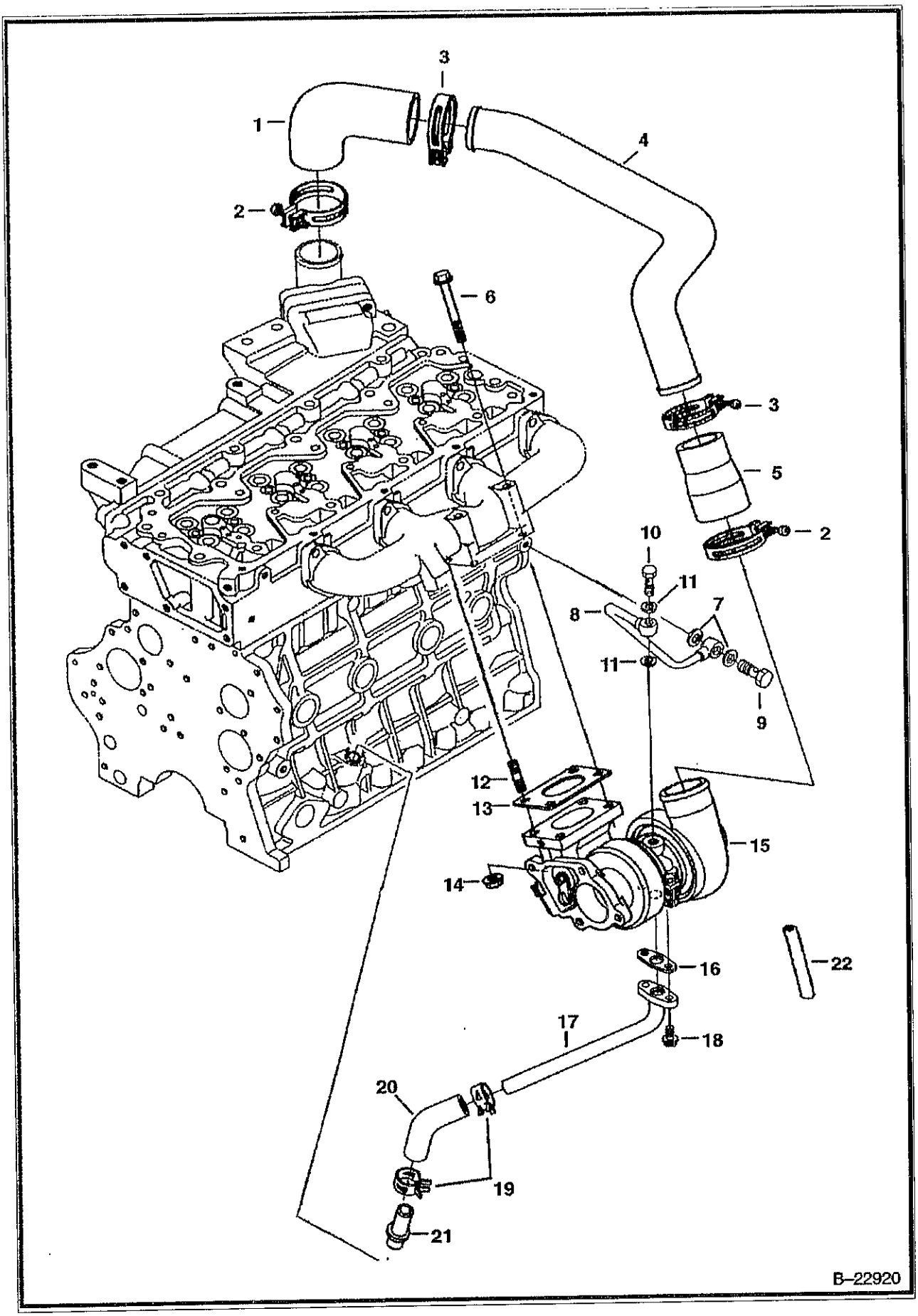

TURBOCHARGER (Cont'd)
(V3300 DI T Kubota)

Ref No	Part Number	Description	Remarks	Serial Number	Qty
1	6680896	HOSE			1
2	6680897	CLAMP			2
3	6680898	CLAMP			2
4	6680895	HOSE			1
5	6680894	HOSE			1
6	6680802	BOLT			2
7	6680792	GASKET	copper		2
7	6689331	GASKET	one piece aluminum		1
8	6680899	TUBE			1
9	6680791	BOLT	hollow		1
10	6680900	BOLT	hollow		1
11	6685962	GASKET			2
12	6680564	STUD			2
13	6680893	GASKET			1
14	6680663	NUT			2
15	6680892	TURBOCHARGER	W/Ref. 22		1
6	6685964	GASKET			1
17	6685963	PIPE			1
18	6652762	BOLT			2
19	6680903	CLAMP			2
20	6685965	HOSE			1
21	6680649	TUBE			1
22	6688069	HOSE	turbo		1

CYLINDER HEAD & COVER
(V3300 DI T Kubota)

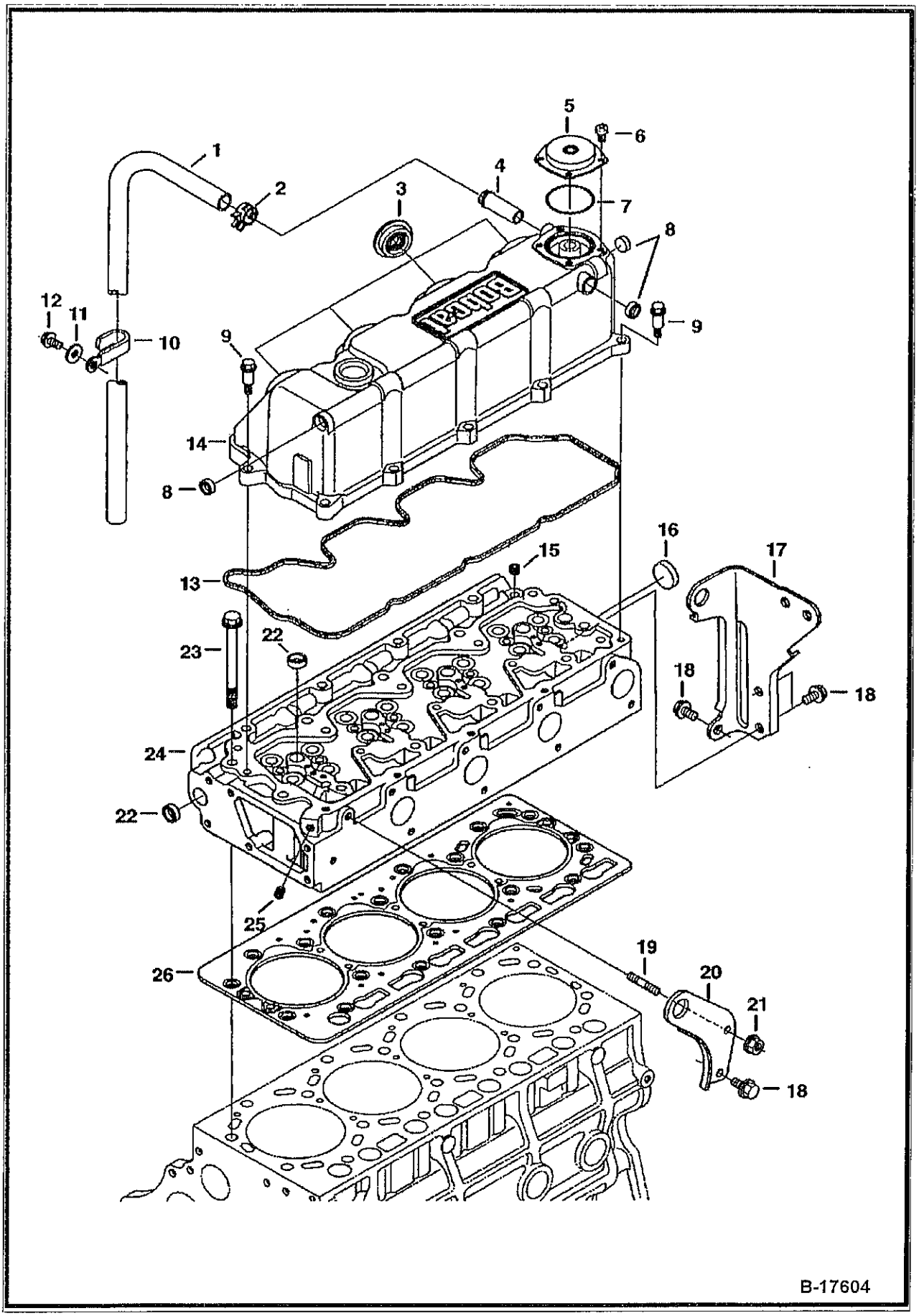

CYLINDER HEAD & COVER (Cont'd)
(V3300 DI T Kubota)

ef No	Part Number	Description	Remarks	Serial Number	Qty
1	6685930	HOSE			1
2	6680698	CLAMP			1
3	6680695	SEAL	injection tube		4
4	6680689	ADAPTER			1
5	6680692	COVER	breather		1
6	6680693	SCREW			4
7	6680691	O-RING			1
8	6680694	PLUG			3
9	6680696	BOLT			10
10	6680699	CLAMP			1
11	6680700	WASHER			1
12	6680658	BOLT			1
13	6680690	GASKET			1
14	6680688	HEAD COVER	W/Ref. 3-8 & 13		1
15	6598169	PLUG			1
16	6680666	PLUG			1
17	6685926	BRACKET			1
8	6680662	BOLT			4
19	3974916B	STUD			1
20	6598133	BRACKET			1
21	6680663	NUT			1
22	3974432B	CAP	Was 6680665 [A]		5
23	6680668	BOLT			18
24	6685927	HEAD	W/Ref. 15, 16, 22 & B17605A/ CYLINDER HEAD Ref. 15-21, 25 & 26		1
25	6680667	PLUG			1
26	6680669	HEAD GASKET	0.80mm - .0315" thick tightened - 2 notch		1
.6	6680670	HEAD GASKET	0.90mm - .0354" thick tightened - 1 notch		1
26	6680671	HEAD GASKET	0.95mm - .0374" thick tightened - 0 notch		1

CYLINDER HEAD
(V3300 DI T Kubota)

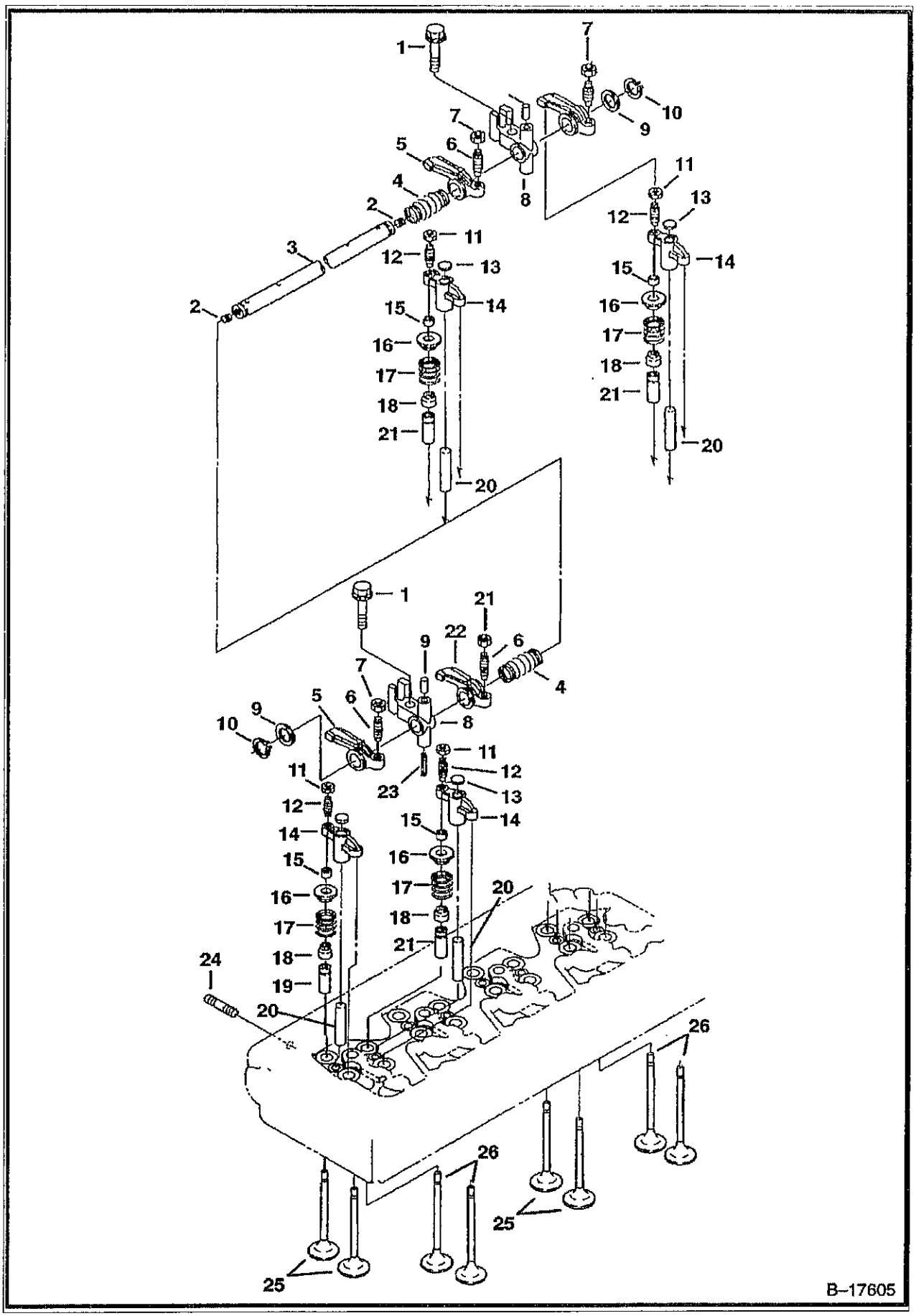

CYLINDER HEAD (Cont'd)
(V3300 DI T Kubota)

Ref No	Part Number	Description	Remarks	Serial Number	Qty
1	6680878	BOLT			4
2	25GM08010B	SET SCREW			2
3	6680868	SHAFT	W/Ref. 2		1
4	6680872	SPRING			3
5	6680873	ROCKER ARM	intake - W/Ref. 6 & 7		4
6	3974920B	SCREW	adjusting		4
7	2DM00008B	NUT	Was 6680874 [A]		4
8	6680869	BRACKET	rocker arm		4
9	6680870	WASHER			2
10	6680871	SNAP RING			2
11	6680881	NUT			8
12	6680880	SCREW	adjusting		8
13	6680882	PAD			8
14	6680879	ARM	valve bridge - W/Ref. 11 & 12		8
15	3974161B	COLLET	valve spring - set - Was 6680865 [A]		16
16	6685959	RETAINER	valve spring		16
17	6680863	VALVE SPRING			16
18	6672436	SEAL	valve stem		16
19	6685957	GUIDE	inlet valve		8
20	6680866	SHAFT	valve		8
21	6685958	GUIDE	exhaust valve		8
22	6680875	ROCKER ARM	exhaust - W/Ref. 6 & 7		4
23	6667461	PIN			1
24	6680867	STUD			4
25	6680861	VALVE	inlet		8
26	6680862	VALVE	exhaust		8
27	6680877	PIN			4

OIL PAN
(V3300 DI T Kubota)

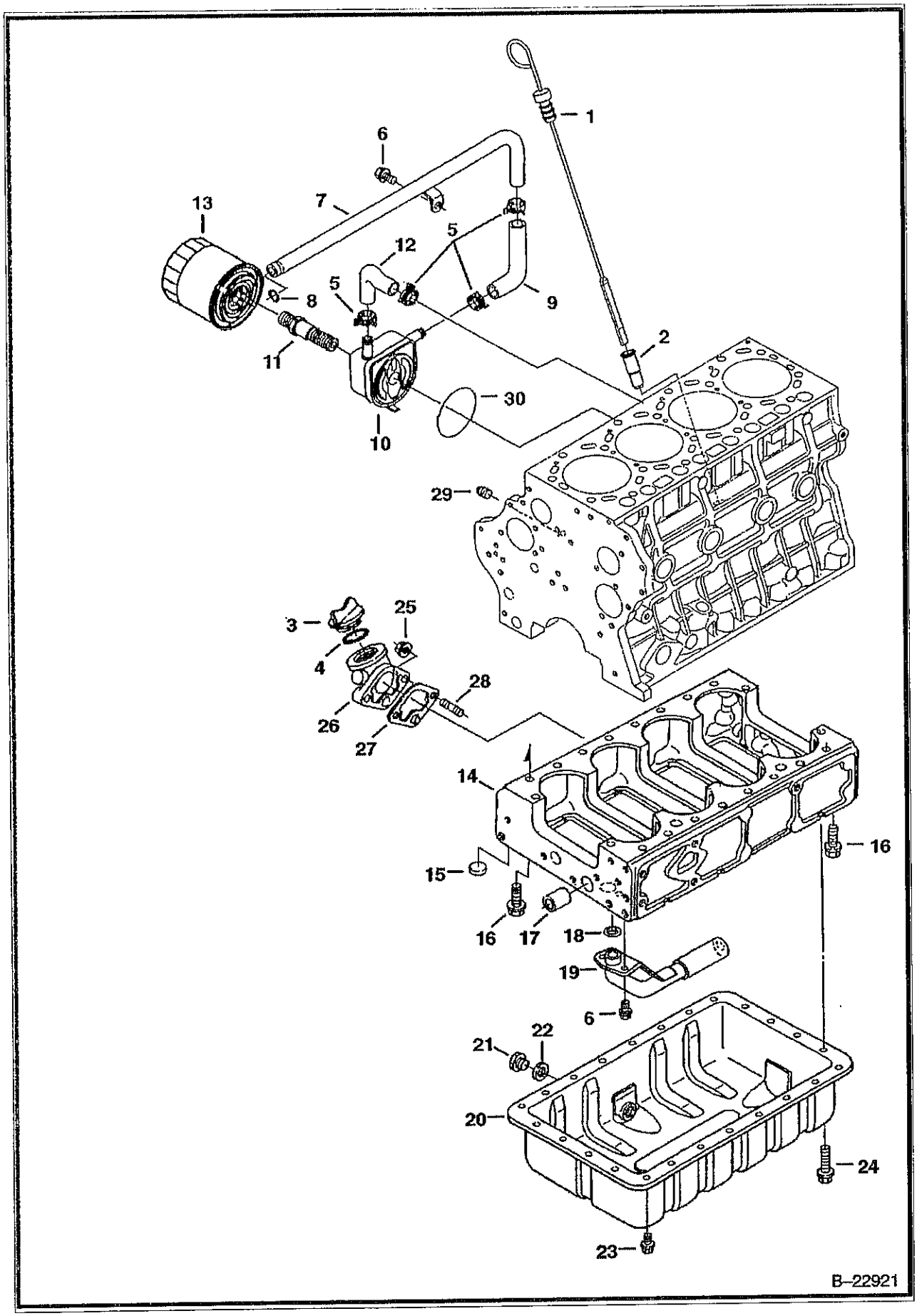

OIL PAN (Cont'd)
(V3300 DI T Kubota)

Ref No	Part Number	Description	Remarks	Serial Number	Qty
1	6680703	DIPSTICK			1
2	6680702	TUBE	dipstick		1
3	6685924	CAP			1
4	3966602B	O-RING			1
5	6675618	CLAMP			4
6	6680662	BOLT			3
7	6685970	HOSE			1
8	6685971	O-RING			1
9	6685972	HOSE			1
10	6680909	OIL COOLER			1
11	6680910	ADAPTER			1
12	6685969	HOSE			1
13	6678233	OIL FILTER			1
14	6685921	CRANKCASE			1
15	6680638	PLUG			10
16	6680654	BOLT			16
17	6680655	PIN	gear case		1
8	6680661	O-RING			1
19	6680660	OIL SUMP			1
20	6680656	OIL PAN	W/Ref. 21 & 22		1
21	6680657	PLUG	oil		1
22	6631046	SEAL	rubber		1
23	6685925	BOLT			20
24	6680659	BOLT			4
25	6680663	NUT			2
26	6685922	FLANGE	oil fill		1
27	6685923	GASKET			1
28	3974916B	STUD			2
29	16F000002B	PLUG			1
30	6686402	SEAL			1

PISTON & CRANKSHAFT
(V3300 DI T Kubota)

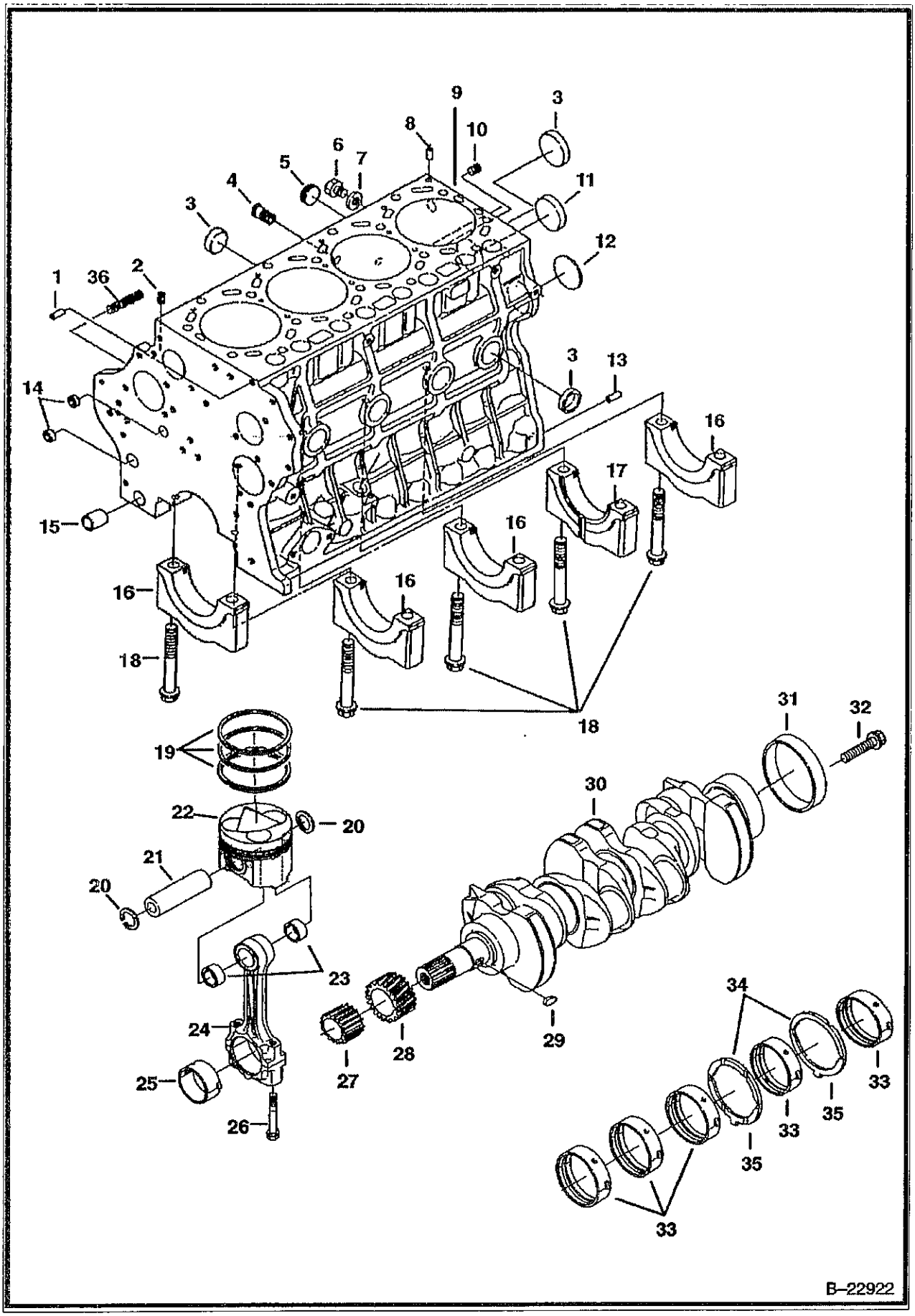

PISTON & CRANKSHAFT (Cont'd)
(V3300 DI T Kubota)

Ref No	Part Number	Description	Remarks	Serial Number	Qty
1	21JM814	PIN			1
2	6598169	PLUG			3
3	6680638	PLUG			7
4	6685920	ADAPTER			1
5	6672354	PLUG			1
6	6652750	PLUG			1
7	6652751	GASKET			1
8	6680643	PIN			2
9	6685917	CRANKCASE	W/Ref. 1-3, 5, 8, 10-18 & 36		1
10	6680636	PLUG			1
11	3974390B	CAP	Was 6680639 [A]		1
12	6680640	PLUG			1
13	6685918	PIN			2
14	3974056B	CAP	Was 6680637 [A]		2
15	6680644	PIN			1
16		CAP	NSS - main bearing - Order Ref. 9		4
17		CAP	NSS - main bearing - Order Ref. 9		1
8	6680645	BOLT			10
19	6680723	PISTON RINGS	standard		4
19	6680724	PISTON RINGS	0.50mm oversized		4
20	6680726	SNAP RING	internal		8
21	6680725	PIN			4
22	6685933	PISTON	standard		4
22	6685934	PISTON	0.50mm oversized		4
23	6680728	BUSHING			8
24	6680727	ROD	connecting - W/Ref. 23 & 25 - marked blue, yellow or w/o color		4
5	6680730	BEARING	rod - set - blue		4
25	6680731	BEARING	rod - set - yellow or w/o color		4
25	6680732	BEARING	rod - set - 0.20 mm		4
25	6680733	BEARING	rod - set - 0.40 mm		4
26	6680729	BOLT			8
27	6680737	GEAR	oil pump		1
28	6680736	GEAR	crankshaft		1
29	3974226B	KEY			1
30	6680734	CRANKSHAFT	W/Ref. 27-29 & 31		1
1	6680735	SLEEVE	crankshaft		1
32	6680747	BOLT	flywheel		7
33	6680738	MAIN BEARING	standard - set		5
33	6680739	MAIN BEARING	0.20mm undersized - set		5
33	6680740	MAIN BEARING	0.40mm undersized - set		5
34	6680741	THRUST WASHER	standard		2
34	6680742	THRUST WASHER	0.20mm oversized		2
34	6680743	THRUST WASHER	0.40mm oversized		2
35	6680744	THRUST WASHER	standard		2
35	6680745	THRUST WASHER	0.20mm oversized		2
35	6680746	THRUST WASHER	0.40mm oversized		2
6	6685919	STUD			3

CAMSHAFT
(V3300 DI T Kubota)

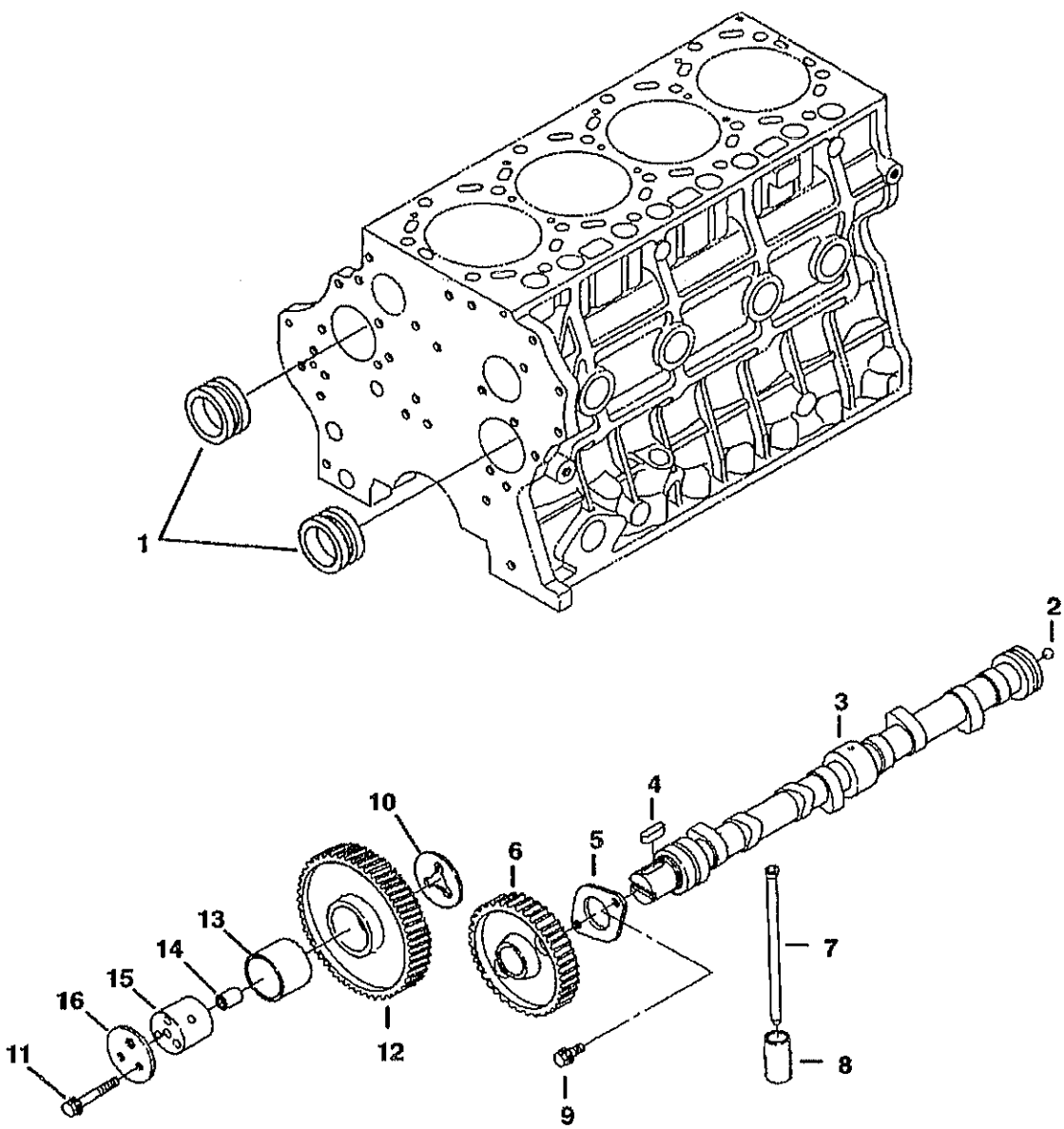

CAMSHAFT (Cont'd)
(V3300 DI T Kubota)

Ref No	Part Number	Description	Remarks	Serial Number	Qty
1	6680748	BALANCER			2
2	6680710	BALL			1
3	6680709	CAMSHAFT	W/Ref. 2 & 4-6		1
4	6652679	KEY			1
5	6680712	FLANGE			1
6	6680711	GEAR	cam		1
7	6680708	PUSH ROD			8
8	6667428	TAPPET			8
9	6680662	BOLT			2
10	6680716	COLLAR			1
11	6680685	BOLT			6
12	6685932	GEAR	W/Ref. 13		1
13	6680720	BUSHING			2
14	6680715	PIN			2
15	6680714	SHAFT	idler gear		2
16	6680717	COLLAR			2

FRONT COVER
(V3300 DI T Kubota)

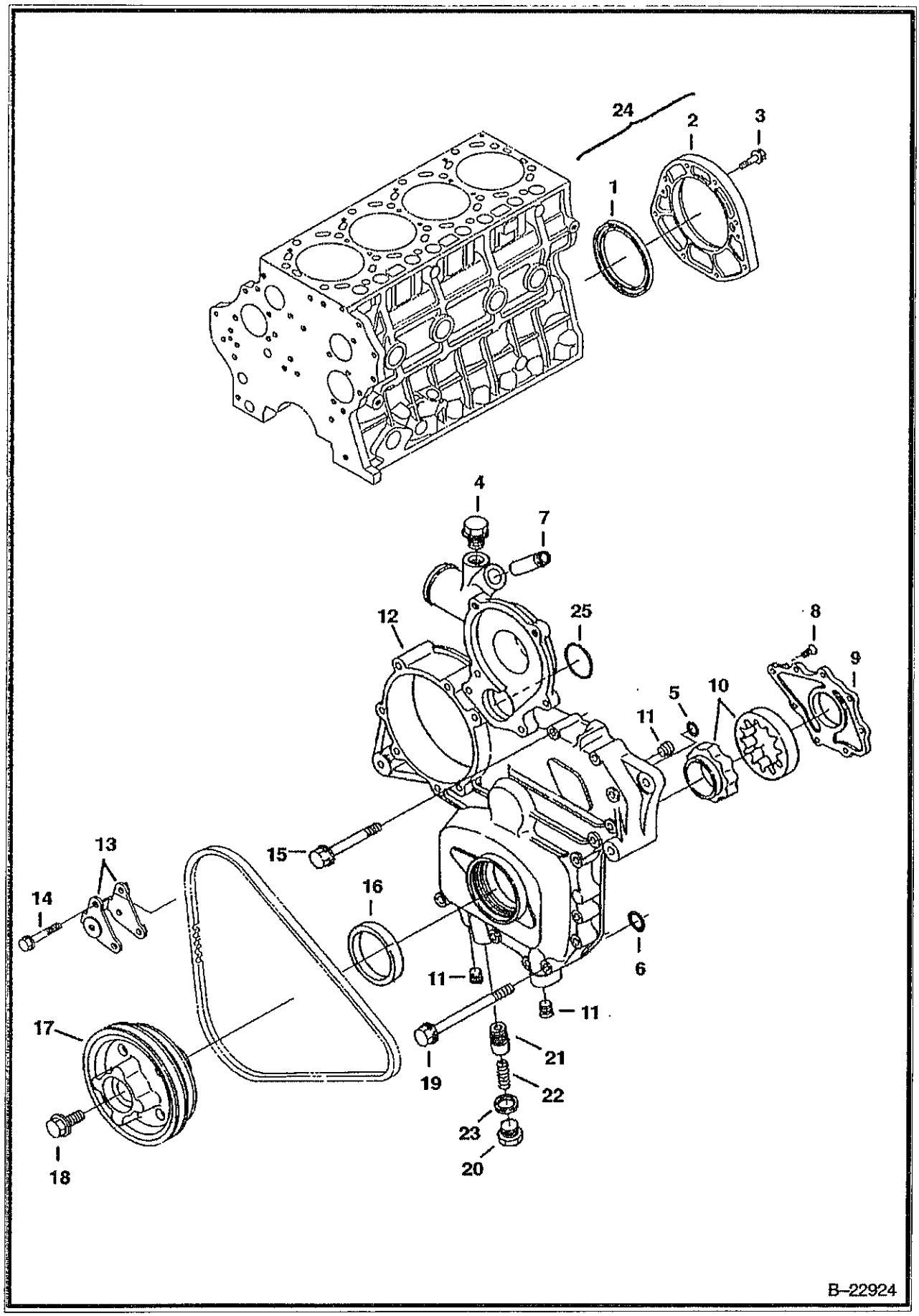

FRONT COVER (Cont'd)
(V3300 DI T Kubota)

ɹf No	Part Number	Description	Remarks	Serial Number	Qty
1	6680705	SEAL	rear		1
2	6685931	COVER	W/Ref. 1		1
3	6680706	BOLT			8
4	6670504	PLUG			1
5	6680681	O-RING			1
6	6680682	O-RING			1
7	6680689	ADAPTER			1
8	6680678	SCREW			8
9	6680677	COVER	oil pump		1
10	6680676	ROTOR	oil pump		1
11	6680679	PLUG			3
12	6685928	COVER	front - W/Ref. 4, 7-11 & 20-23		1
13	6680839	BRACKET	alternator		2
14	6680687	BOLT			2
15	6680685	BOLT			13
16	6680680	SEAL			1
17	6685953	PULLEY	fan		1
8	6680841	BOLT			1
19	6680686	BOLT			2
20	6680675	PLUG			1
21	6685929	RELIEF VALVE			1
22	6680673	SPRING			1
23	6670347	GASKET			1
24	6680704	COVER	Ref. 1 & 2		1
25	6680855	O-RING			1

WATER PUMP & THERMOSTAT
(V3300 DI T Kubota)

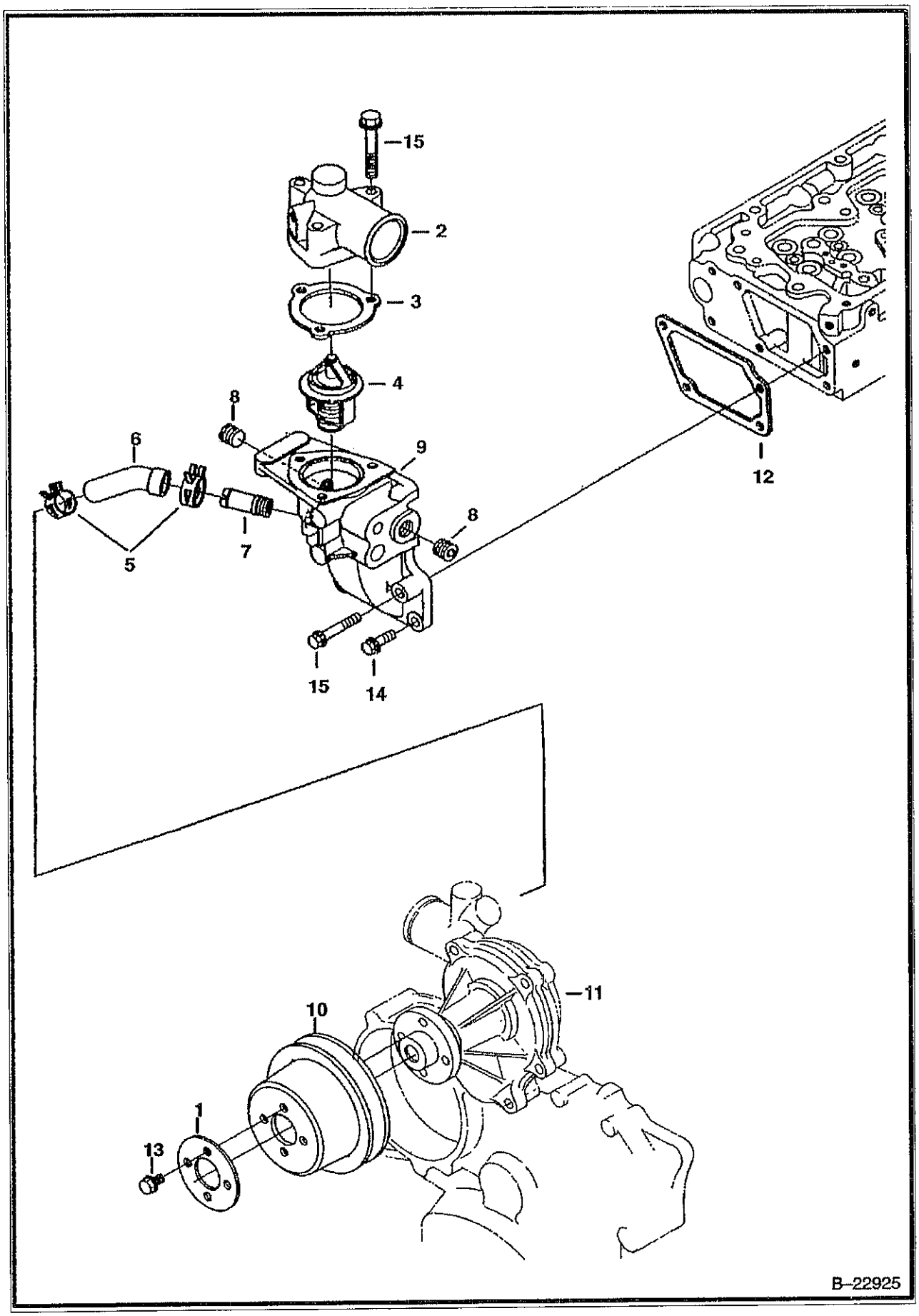

WATER PUMP & THERMOSTAT (Cont'd)
(V3300 DI T Kubota)

Ref No	Part Number	Description	Remarks	Serial Number	Qty
1	6680858	WASHER			1
2	6685954	COVER	thermostat		1
3	6685955	GASKET			1
4	6680850	THERMOSTAT			1
5	6675618	CLAMP			2
6	6680842	HOSE			1
7	6685920	ADAPTER			1
8	6670504	PLUG			2
9	6685956	HOUSING	thermostat - W/Ref. 7 & 8		1
10	6680857	PULLEY	fan		1
11		WATER PUMP	See Illustration WATER PUMP/ B22926		1
12	6680849	GASKET			1
13	6680662	BOLT			4
14	6680755	BOLT			3
15	6680851	BOLT			4

WATER PUMP
(V3300 DI T Kubota)

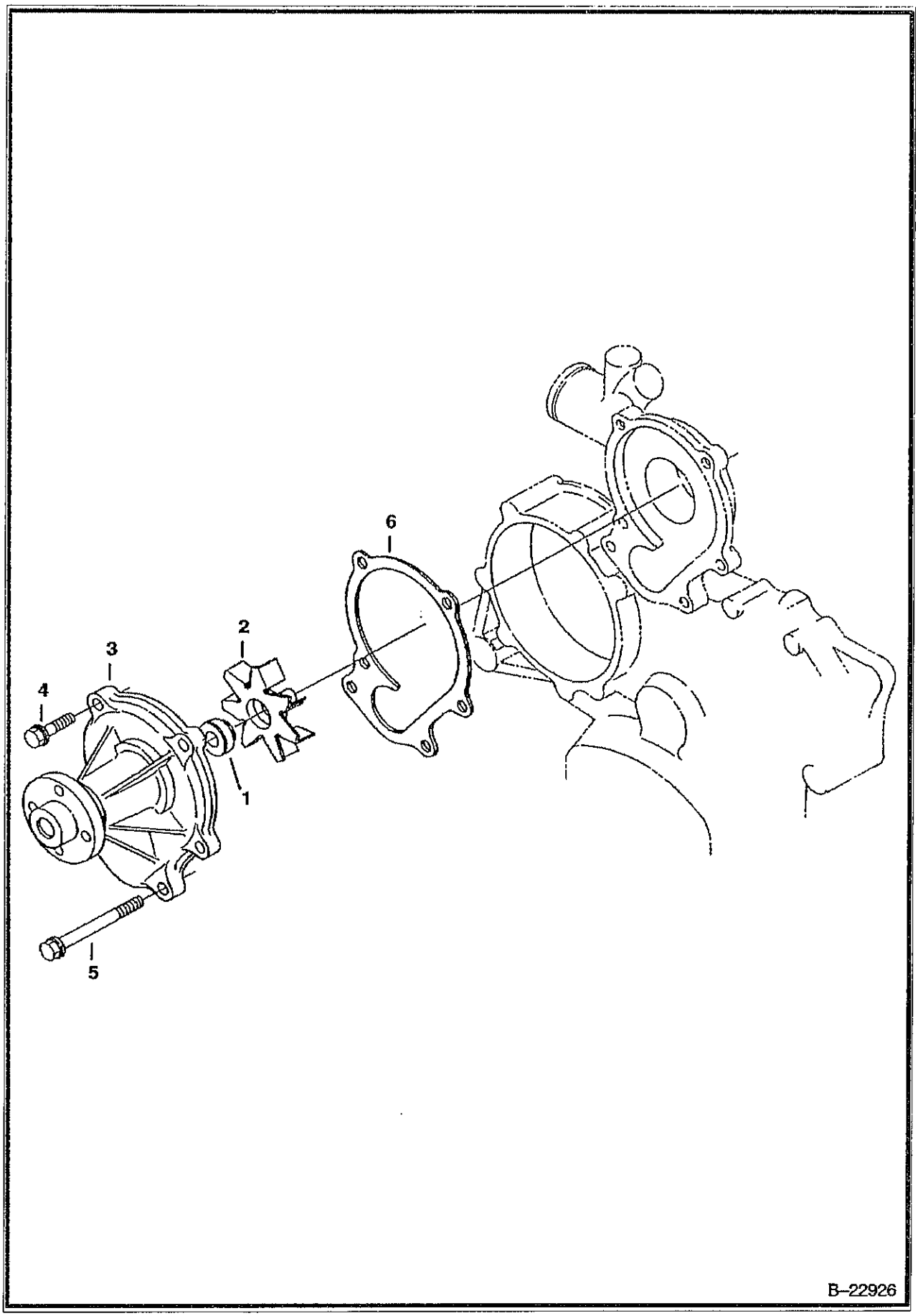

WATER PUMP (Cont'd)
(V3300 DI T Kubota)

Ref No	Part Number	Description	Remarks	Serial Number	Qty
1	6680280	SEAL			1
2		IMPELLER	NSS - Order Ref. 3		1
3	6680852	PUMP	water - W/Ref. 1 & 2		1
4	6680706	BOLT			2
5	6680856	BOLT			4
6	6680853	GASKET			1

FUEL INJECTION SYSTEM
(V3300 DI T Kubota)

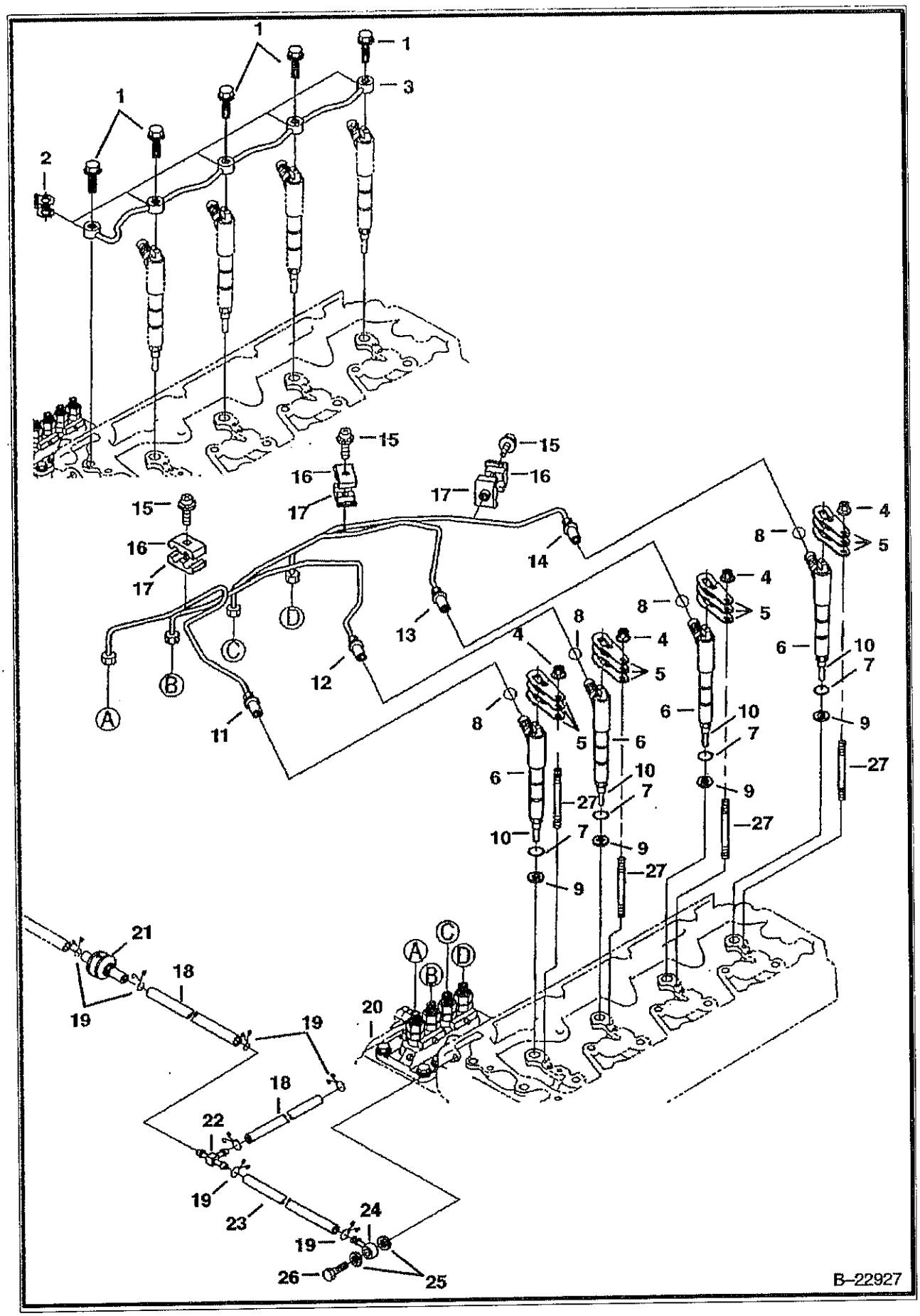

FUEL INJECTION SYSTEM (Cont'd)
(V3300 DI T Kubota)

Ref No	Part Number	Description	Remarks	Serial Number	Qty
1	6680788	BOLT			5
2	6685498	GASKET			5
3	6680787	PIPE			1
4	6680663	NUT			4
5	6680780	CLAMP	hold down		12
6	6685854	INJECTOR	W/Ref. 10		4
7	6670769	O-RING			4
8	6680778	O-RING			4
9	6680779	GASKET			4
10	6680777	NOZZLE			4
11	6685940	TUBE			1
12	6685941	TUBE			1
13	6685942	TUBE			1
14	6685943	TUBE			1
15	3974260B	BOLT			3
16	6680786	CLAMP			3
17	6680785	CLAMP			3
8	6685945	HOSE			2
19	6680795	CLAMP			6
20		PUMP	See Illustration FUEL INJECTION PUMP/ B17614 injection		1
21	6680796	VALVE	check		1
22	6680797	TEE			1
23	6685944	HOSE			1
24	6680790	FITTING			1
25	6680792	GASKET			2
26	6680791	BOLT	hollow		1
27	6680867	STUD			4

FUEL INJECTION SYSTEM
(V3300 DI T Kubota)

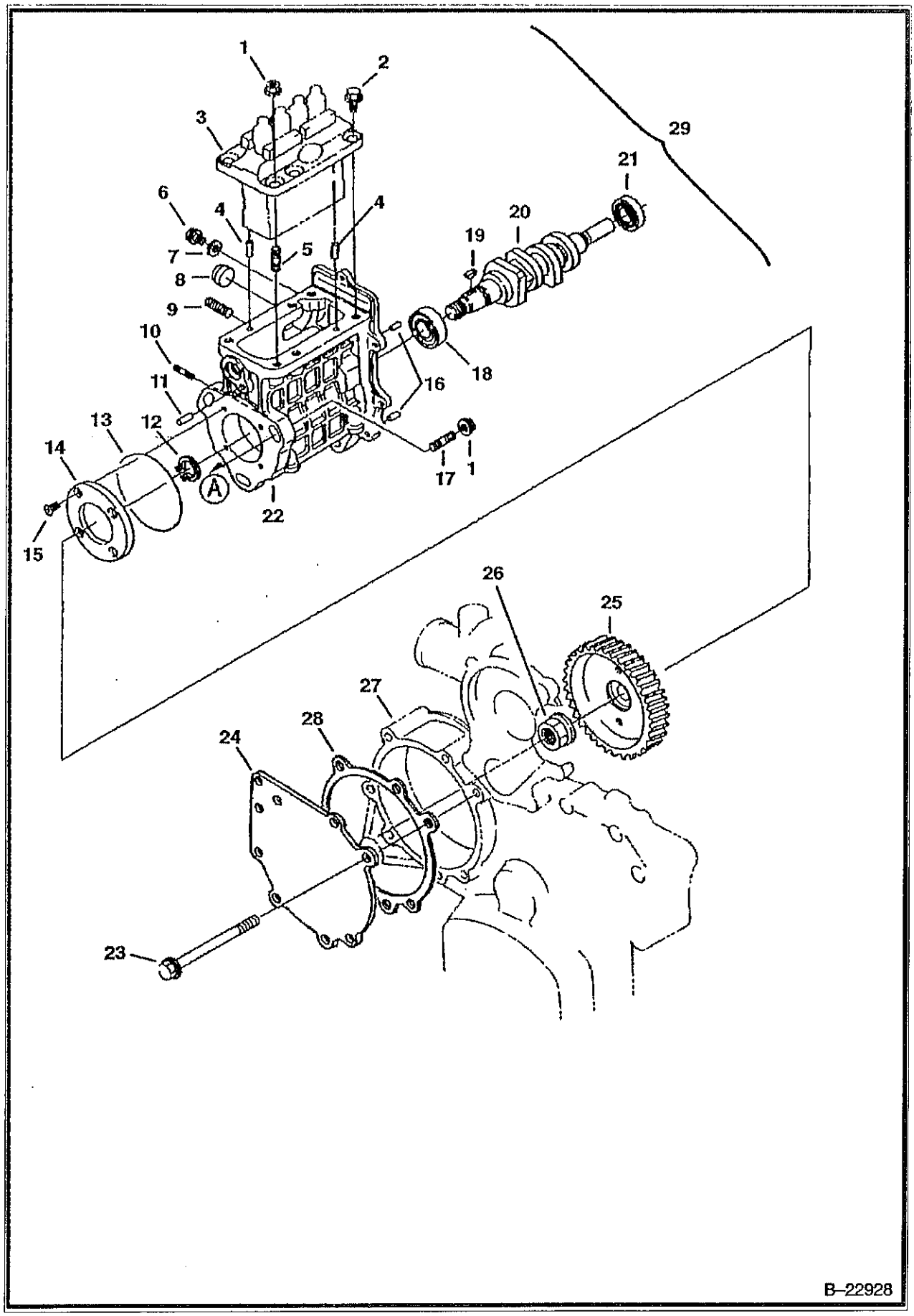

FUEL INJECTION SYSTEM (Cont'd)
(V3300 DI T Kubota)

Ref No	Part Number	Description	Remarks	Serial Number	Qty
1	6680663	NUT			6
2	6680801	BOLT			5
3		INJECTION PUMP	See Illustration FUEL INJECTION PUMP/ B17614		1
4	3974394B	PIN			2
5	6680807	STUD			3
6	6680815	BOLT			2
7	3974095B	GASKET			2
8	6680808	PLUG			1
9	6680815	BOLT			2
10	3974503B	STUD			2
11	21JM00020B	PIN			2
12	5JM00020B	SNAP RING			1
13	6680816	O-RING			1
14	6680814	FLANGE			1
15	6680678	SCREW			4
16	6680809	PIN			2
7	6680799	STUD			3
18	6685950	BEARING			1
19	6680813	KEY	woodruff		1
20	6685949	CAMSHAFT	fuel		1
21	6680812	BEARING			1
22	6680806	HOUSING	W/Ref. 4, 5, 8, 10 & 16		1
23	6680802	BOLT			7
24	6685947	COVER			1
25	6685946	GEAR			1
26	6680818	NUT			1
27		FRONT COVER	See Illustration FRONT COVER/ B22924		1
28	6685948	GASKET			1
29	6685935	INJECTION PUMP	complete w/housing, fuel pump, camshaft, injection pump & governor		1

FUEL INJECTION PUMP
(V3300 DI T Kubota)

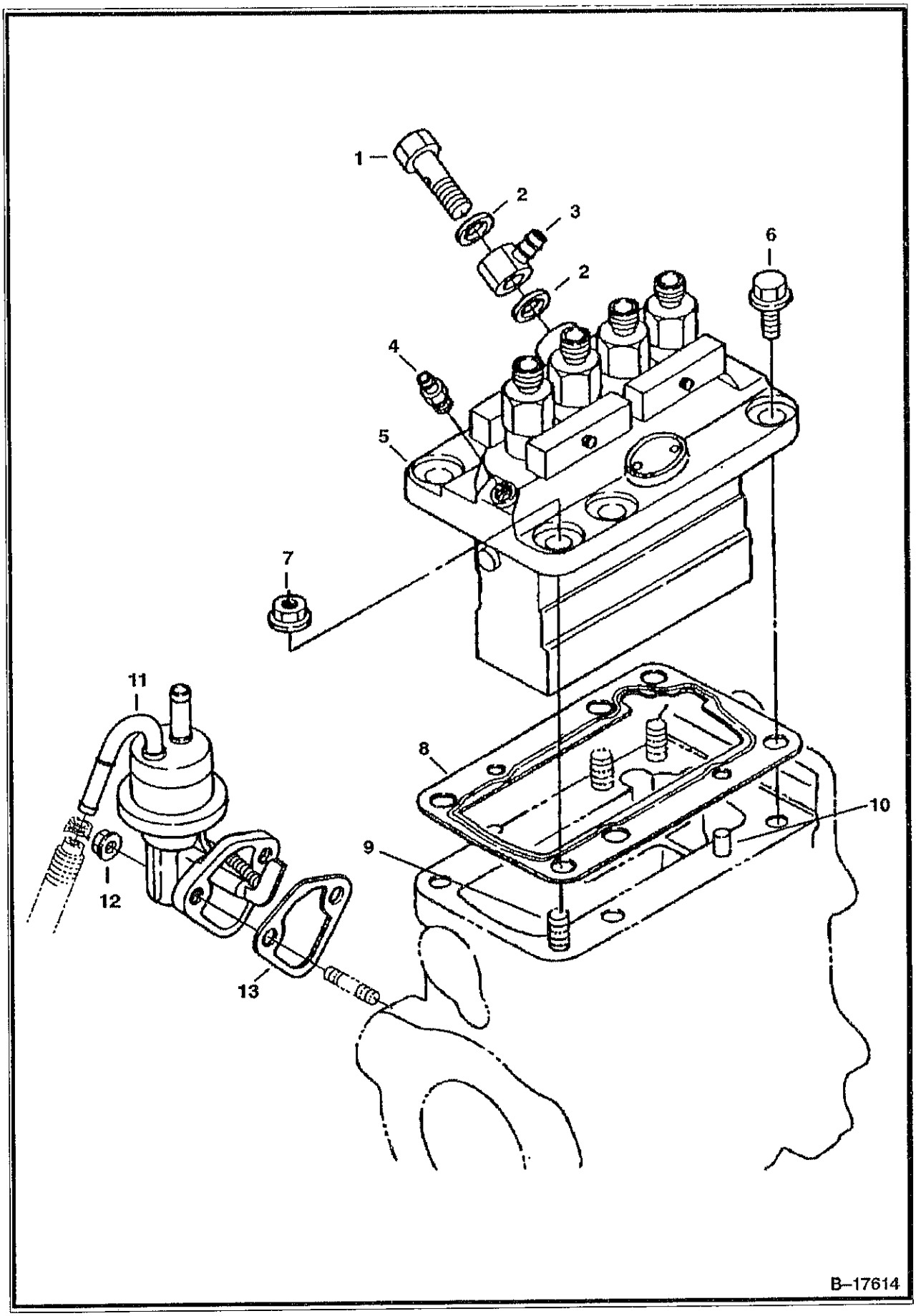

FUEL INJECTION PUMP (Cont'd)
(V3300 DI T Kubota)

ef No	Part Number	Description	Remarks	Serial Number	Qty
1	6680752	BOLT			1
2	6680753	GASKET			2
3	3974500B	JOINT	eye		1
4	6680756	SCREW	air		1
5	6685936	PUMP	injection - W/Ref. 1 & 2		1
6	6680755	BOLT			5
7	6680663	NUT			3
8		SHIM	See Illustration FUEL INJECTION SYSTEM/ B22928 NSS - Order Ref. 29 (6685935) or see authorized Kubota pump shop		1
9	6680807	STUD			3
10	3974394B	PIN			2
11	6680838	FUEL PUMP			1
12	6670533	NUT			2
13	6670782	GASKET			1

GOVERNOR
(V3300 DI T Kubota)

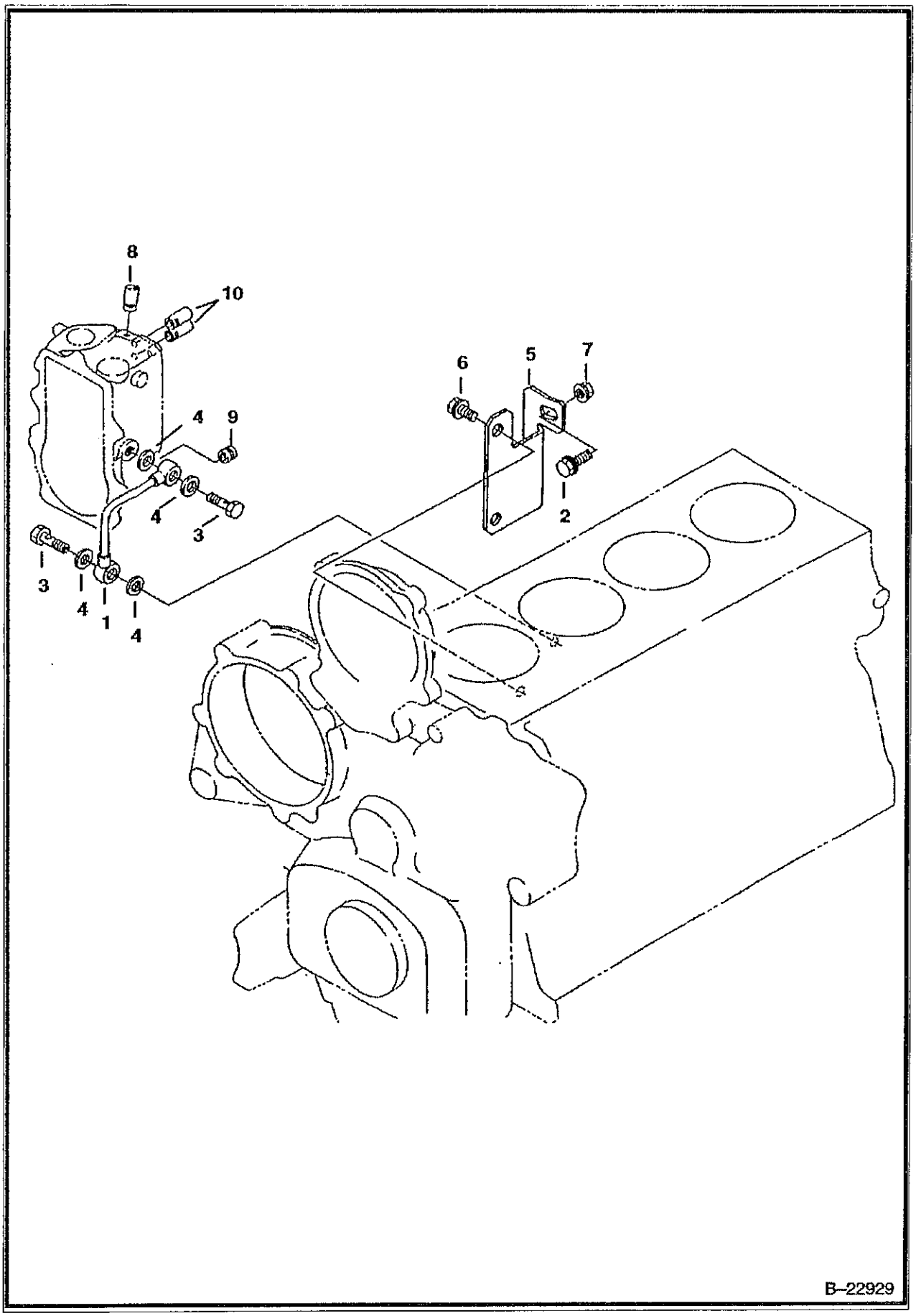

GOVERNOR (Cont'd)
(V3300 DI T Kubota)

Ref No	Part Number	Description	Remarks	Serial Number	Qty
1	6685966	TUBE			1
2	6680654	BOLT			1
3	6680906	BOLT			1
4	6685962	GASKET			2
5	6685967	BRACKET	injection pump		1
6	6680658	BOLT			2
7	6652656	NUT			1
8	6672384	CAP			1
9	6670427	CAP			1
10	6598112	CAP			2

GOVERNOR
(V3300 DI T Kubota)

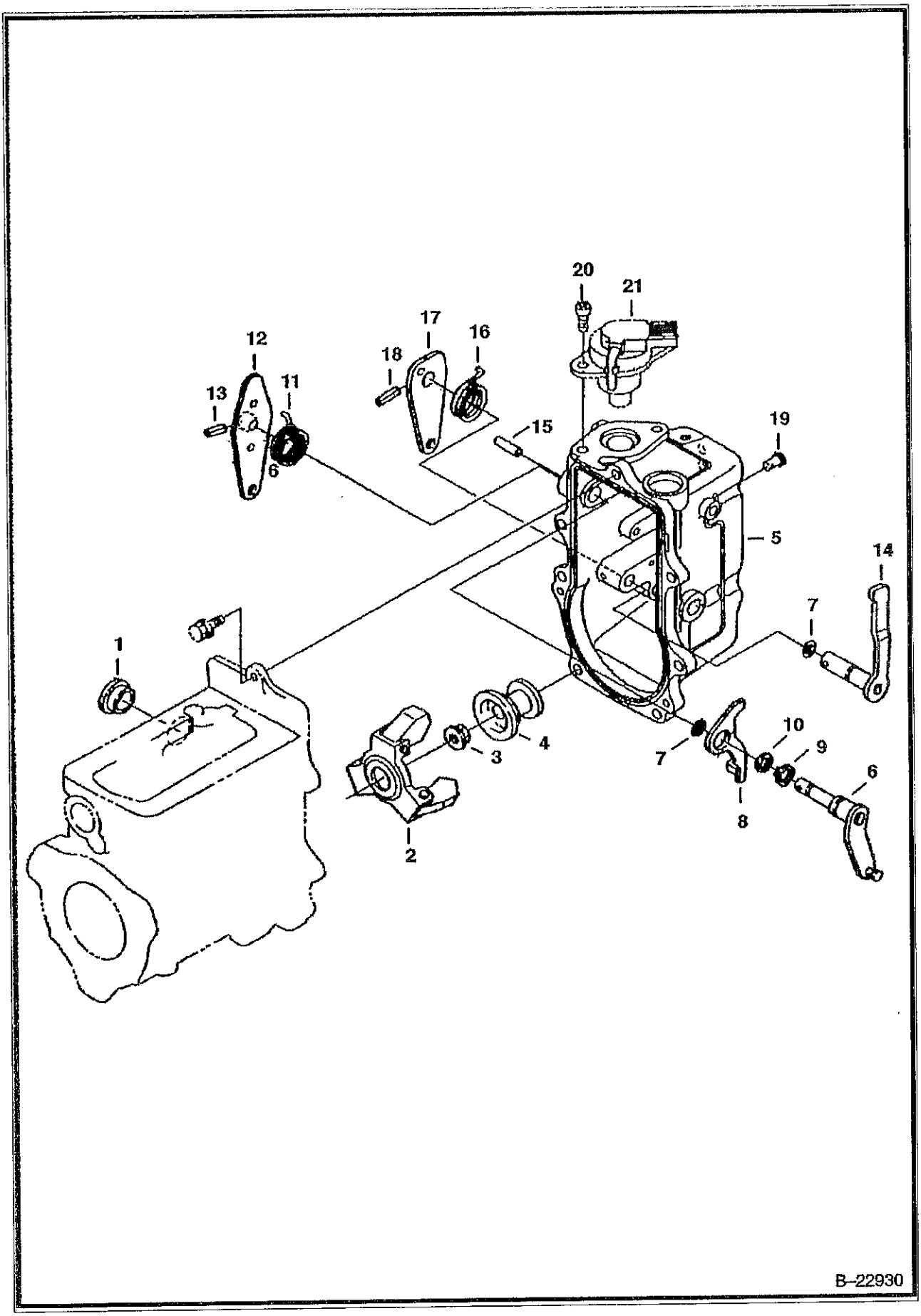

GOVERNOR (Cont'd)
(V3300 DI T Kubota)

Ref No	Part Number	Description	Remarks	Serial Number	Qty
1	6680757	COVER			1
2	6680759	NUT			1
3	6680758	WEIGHT			1
4	6680761	SLEEVE	governor		1
5	6685937	HOUSING			1
6	6680763	LEVER			1
7	6683023	O-RING			3
8	6680764	LEVER	stop		1
9	6680765	SNAP RING			1
10	6680766	WASHER			1
11	6685938	SPRING			1
12	6685939	LEVER	speed control		1
13	6680769	PIN			1
14	6680770	LEVER	engine stop		1
15	6680775	PIN			1
16	6598702	SPRING			1
17	6680772	LEVER	engine stop		1
8	6680773	PIN			1
19	6670774	PIN			1
20	6680750	SCREW			2
21		SOLENOID	NAP - fuel shut-off - used w/jumper harness - order 6689034		1
21	6689034	SOLENOID	fuel shutoff - no jumper harness needed		1

GOVERNOR
(V3300 DI T Kubota)

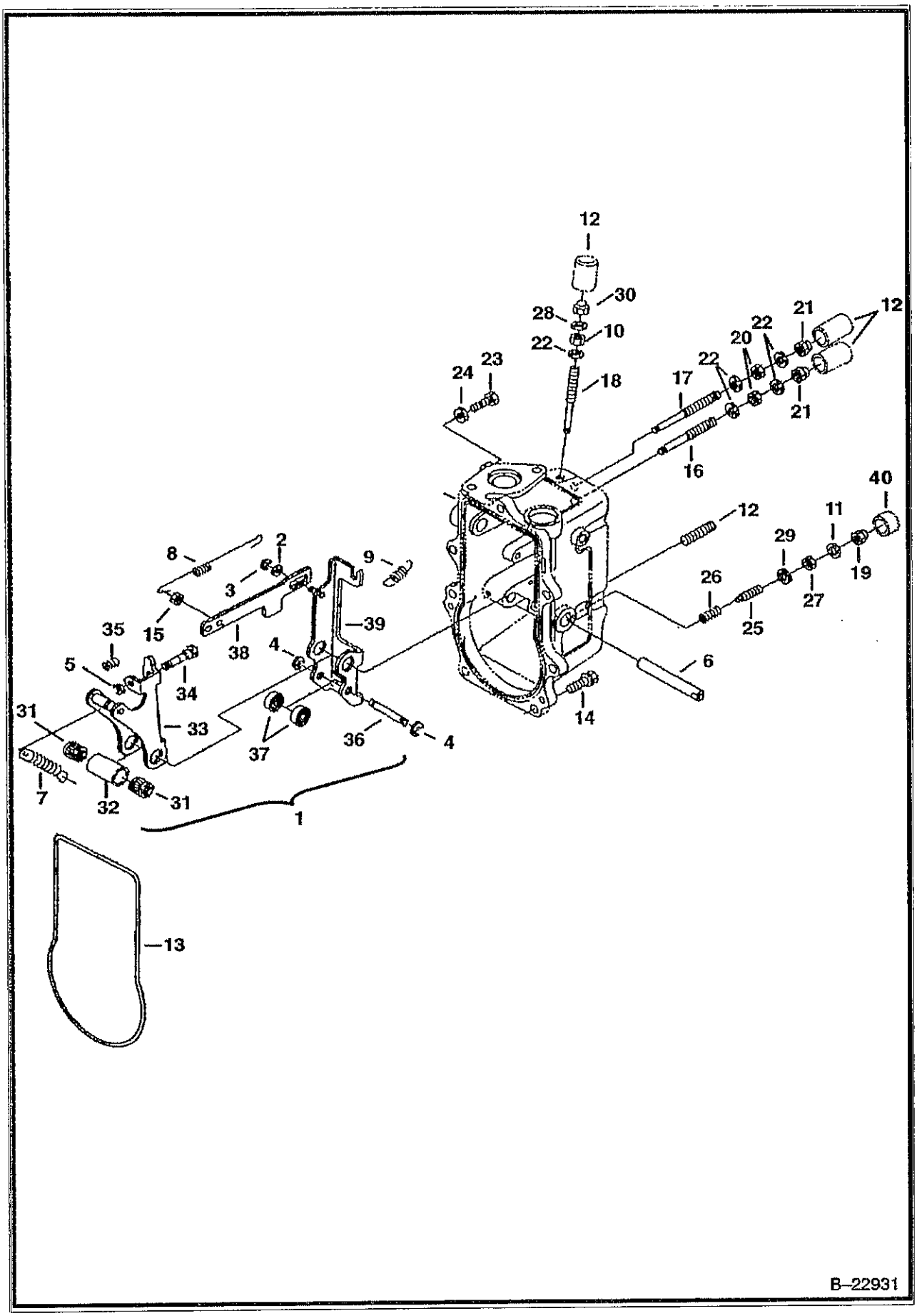

GOVERNOR (Cont'd)
(V3300 DI T Kubota)

ef No	Part Number	Description	Remarks	Serial Number	Qty
1	6685951	LEVER	assy. - Ref. 2-5, 65-9, 15 & 31-39		1
2	6680820	WASHER			1
3	6680821	SNAP RING			1
4	6680822	SNAP RING			2
5	6680823	SNAP RING			1
6	6680824	SHAFT			1
7	6680825	SPRING			1
8	6680826	SPRING			1
9	6680827	SPRING			1
10	6680272	NUT			2
11	6680792	GASKET			1
12	6680828	STUD			2
13	6680829	GASKET			1
14	6680830	BOLT			7
15	6685952	NUT			1
16	6680832	SCREW	adjusting		1
17	3974970B	SCREW	adjusting		1
8	6680833	SCREW	adjusting		1
19	6670426	NUT			1
20	6680499	NUT			1
21	6670462	NUT			2
22	3974972B	GASKET			1
23	6680834	STOPPER			1
24	1DM00006B	NUT			1
25	6670425	SCREW	adjusting - W/Ref. 27		1
26		SPRING	NAP		1
27	6599085	NUT			1
28	3974972B	GASKET			5
29	3974095B	GASKET			1
30	6670462	NUT			1
31		BUSHING	NSS		2
32		TUBE	NSS		1
33		LEVER	NSS		1
34		BOLT	NSS		1
35		SPRING	NSS		1
36		ROD	NSS		1
37		BEARING	NSS		2
38		BRACKET	NSS		1
39		LEVER	NSS		1
40	6670427	CAP			1

AIR CLEANER
(V3300 DI T Kubota)

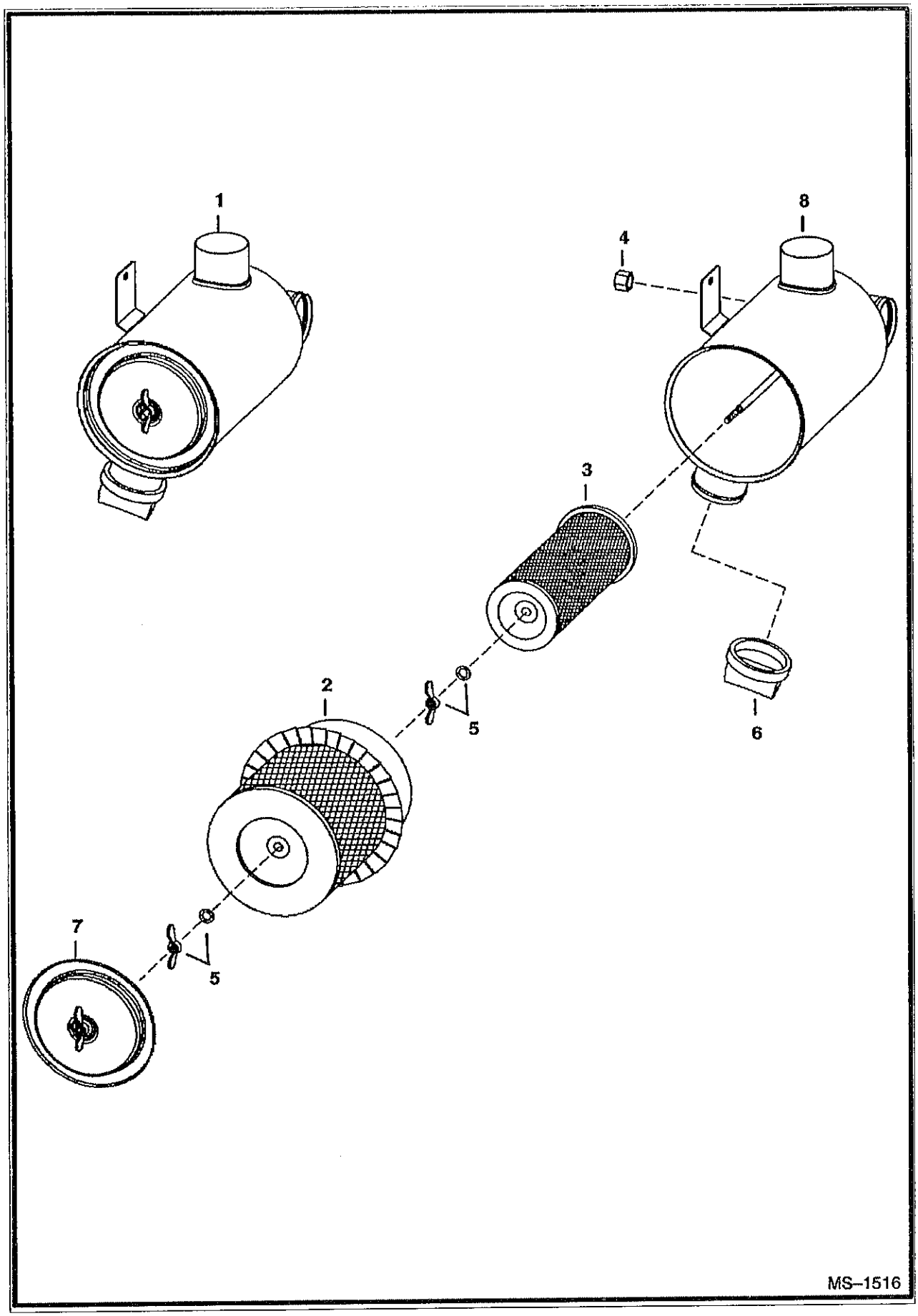

AIR CLEANER (Cont'd)
(V3300 DI T Kubota)

Ref No	Part Number	Description	Remarks	Serial Number	Qty
1	6678066	AIR CLEANER	W/Ref. 2-8		1
2	6681474	CARTRIDGE	outer		1
3	6681475	CARTRIDGE	inner		1
4	6681476	CAP			1
5	3291290B	WING NUT	W/ washer		2
6	6652373	VALVE	dust unloader		1
7	6681477	COVER			1
8		TANK	NSS		1

ACCESS COVER
(Cleanout - Lower Front of Chaincase)

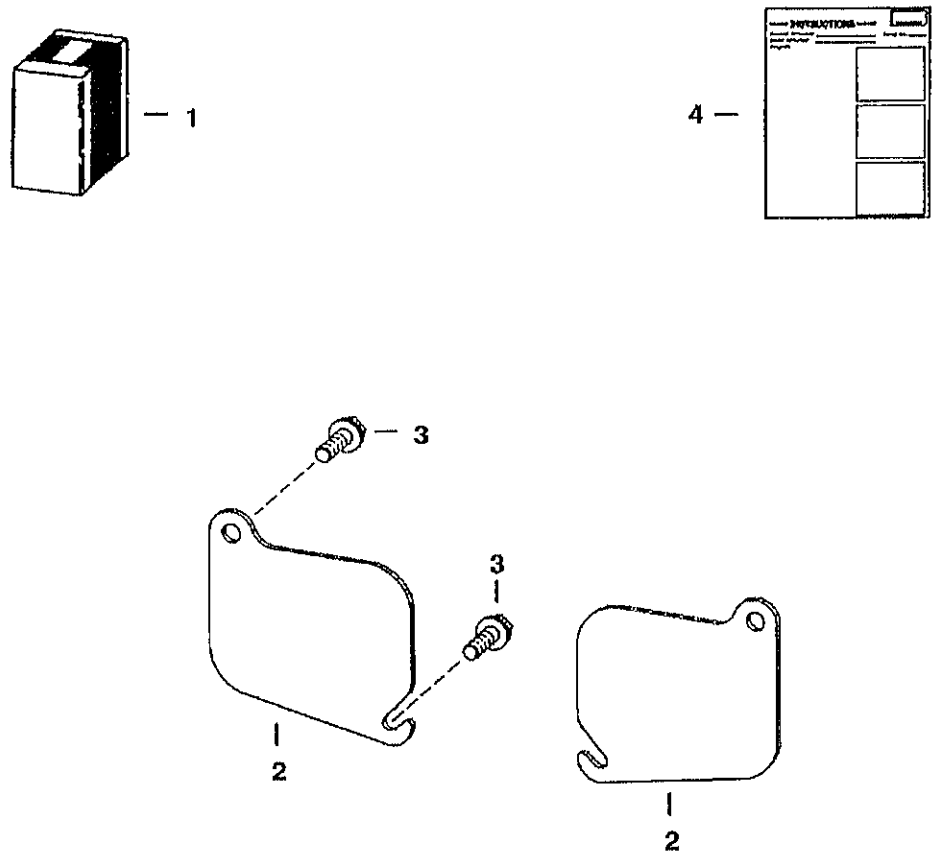

MS-2238

ACCESS COVER (Cont'd)
(Cleanout - Lower Front of Chaincase)

Ref No	Part Number	Description	Remarks	Serial Number	Qty
1	6577880	KIT	Ref. 2-5		1
2	6737088	COVER			2
3	84G3720	BOLT			4
4	6570931	INSTRUCTIONS			1

ACS CONVERSION KIT

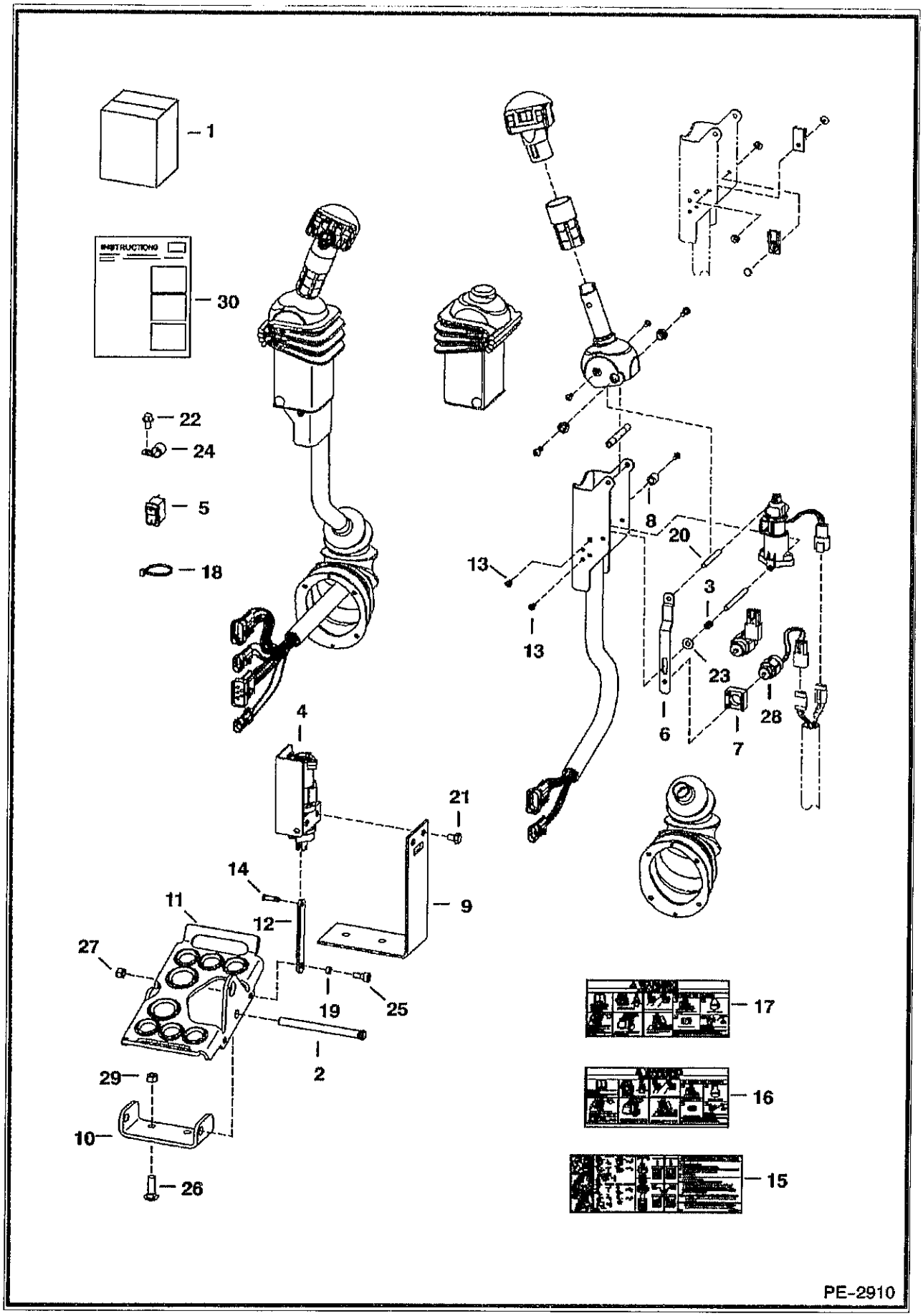

ACS CONVERSION KIT (Cont'd)

Ref No	Part Number	Description	Remarks	Serial Number	Qty
1	6731151	KIT	foot control - Ref. 2-14 & 17-30 SEE NOTE - If loader is not equipped W/ heater, air conditioning, SJC, beacon, power bobtach, non-power port plug-in strobe lights and/or non-power port plug-in 4 way flashers, also order 7116260 deluxe harness		1
2	6564657	PIN			2
3	6680470	SPRING			2
4	6684912	SENSOR	foot pedal - R.H.		1
4	6676029	SOLENOID			1
4	6684911	SENSOR	foot pedal - L.H.		1
4	6676029	SOLENOID			1
5	6676537	SWITCH			1
6	6680477	STRAP			2
7	6680468	MOUNT	solenoid		2
8	6719834	SPACER			2
9	7126869	BRACKET	Was 6726573 [A]		2
10	7115220	MOUNT			2
1	7115219	PEDAL			2
12	6726681	LINK			2
13	6727065	BOLT			12
14	6727496	PIN			2
15	6727926	DECAL	ACS operations		1
16	6728540	DECAL	warning		1
17	6728539	DECAL	warning		1
18	6624289	CABLE TIE			2
19	6729467	SPACER			2
20	6680469	SPACER	threaded		2
21	17C608	BOLT			4
22	84G3710	SCREW			2
23	25E13	WASHER 5			2
24	30H62	CLIP			2
25	35C514	BOLT			2
26	37C620	BOLT			4
27	95D5	NUT			2
28	6676029	SOLENOID			2
29	61D6	NUT 5			4
0	6901492	INSTRUCTIONS			1

BACK-UP ALARM KIT
(Manual Controls, AHC & ACS)

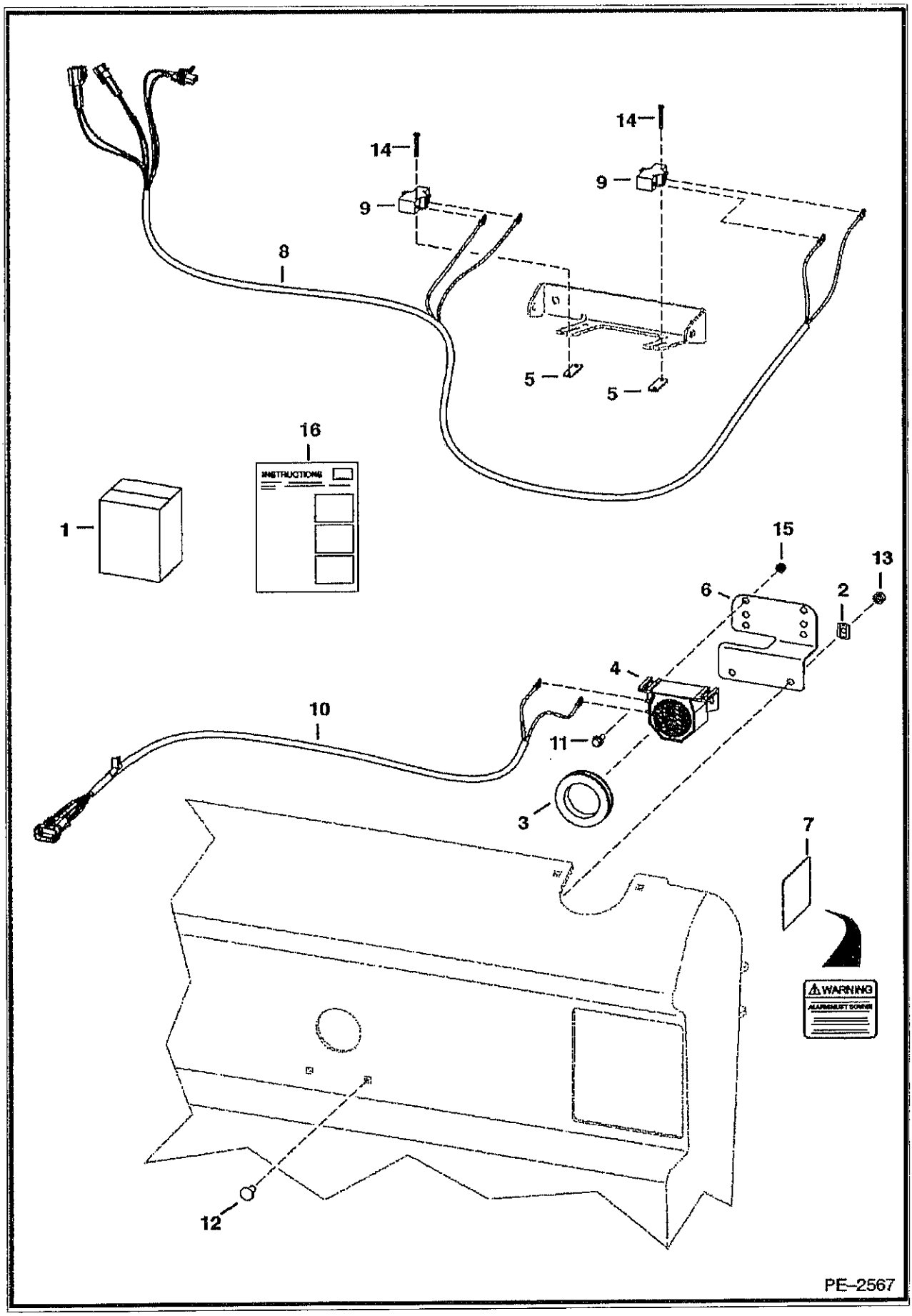

BACK-UP ALARM KIT (Cont'd)
(Manual Controls, AHC & ACS)

of Part No	Number	Description	Remarks	Serial Number	Qty
1	7107829	BACK UP ALARM KIT			1
2	774220	NUT			2
3	6577545	GROMMET			1
4	6599931	ALARM			1
5	6702593	SPACER			2
6	6733970	MOUNT			1
7	6737189	DECAL			1
8	7107544	HARNESS			1
9	6646781	SWITCH			2
10	6715659	HARNESS			1
11	35C410	BOLT 5			2
12	10C512	BOLT			2
13	57D5	NUT			2
14	84G1320	BOLT			4
15	97D4	NUT			2
16	6903293	INSTRUCTIONS			1

BACK-UP ALARM KIT
(SJC)

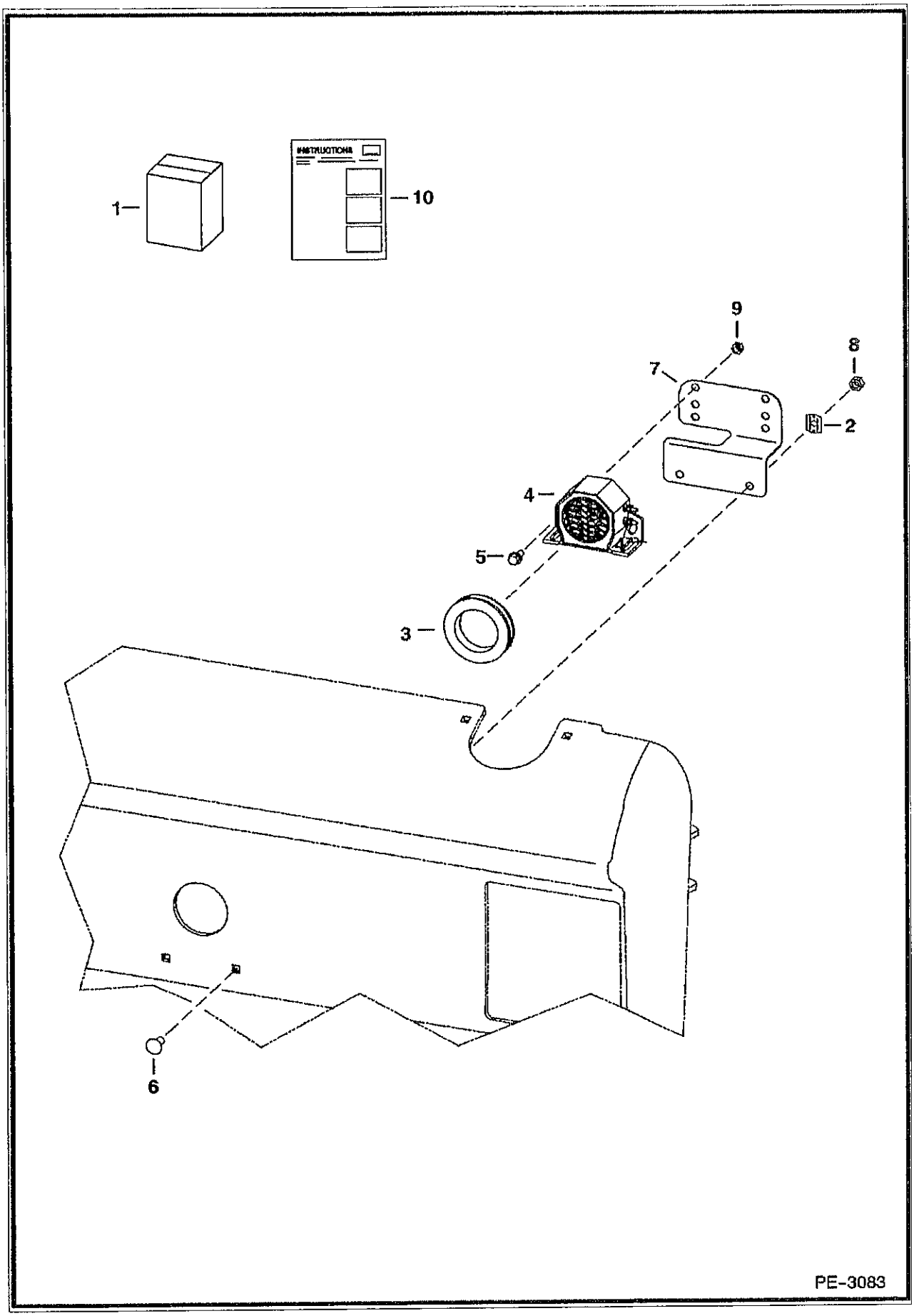

BACK-UP ALARM KIT (Cont'd)
(SJC)

Ref No	Part Number	Description	Remarks	Serial Number	Qty
1	6732235	KIT	Ref. 2-11		1
2	774220	NUT	spring		2
3	6577545	GROMMET			1
4	6599931	ALARM			1
5	17C410	BOLT 5			2
6	37C512	BOLT			2
7	6733970	MOUNT			1
8	97D4	NUT			2
9	61D5	NUT			2
10	6901690	INSTRUCTIONS			1

BEACON

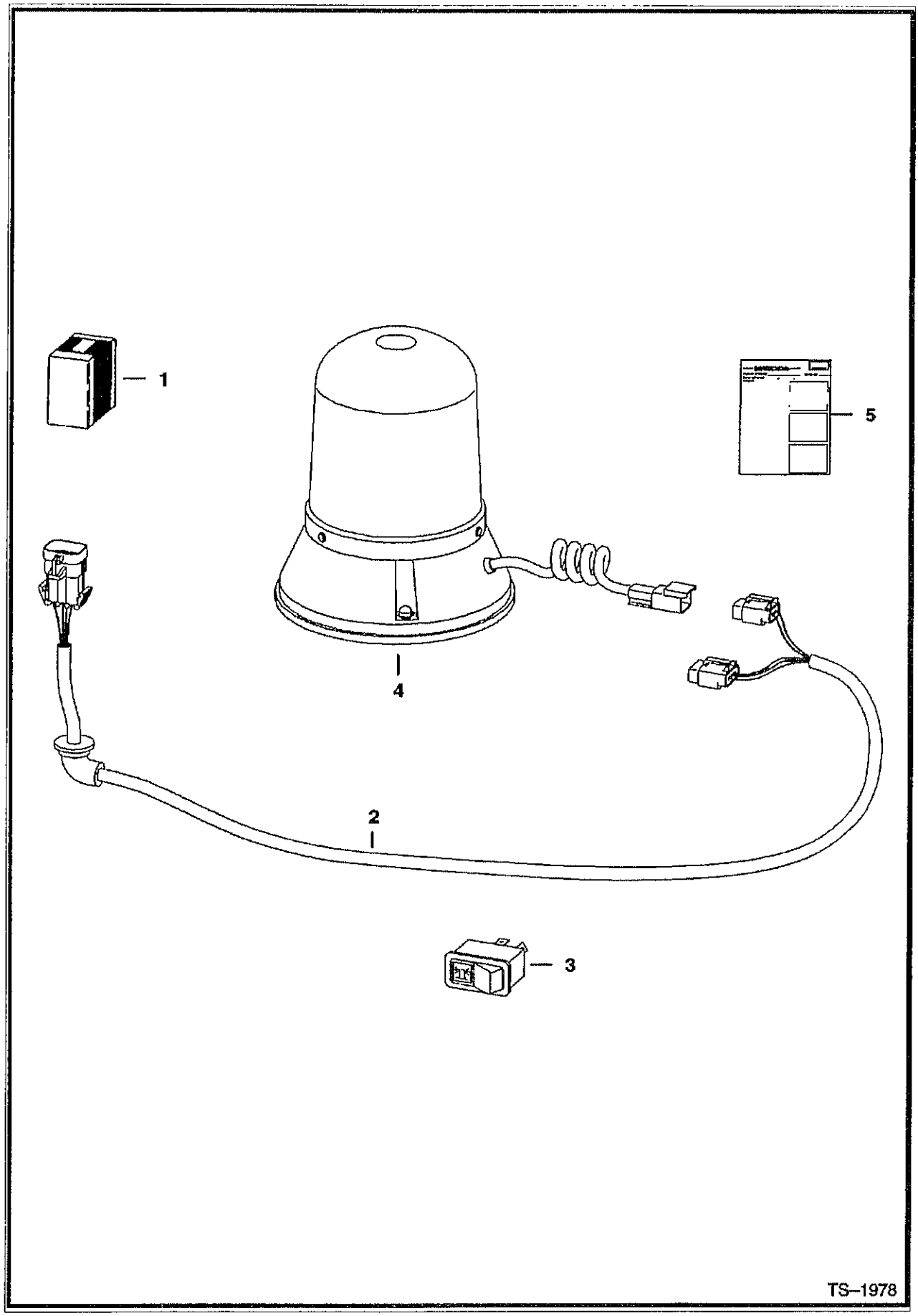

BEACON (Cont'd)

Ref No	Part Number	Description	Remarks	Serial Number	Qty
1	6719854	KIT	rotating beacon - If loader is not equipped W/heater, air conditioning, SJC, ACS, power bob-tach, non-power port plug-in strobe lights and/or non-power port plug-in 4-way flashers, also order 7116260 deluxe harness		1
2	6718872	HARNESS			1
3	6665317	SWITCH	horizontal		1
3	6668816	SWITCH	vertical		1
4	6675523	BEACON			1
4	6666571	BULB			1
5	6900991	INSTRUCTIONS			1

BLOCK HEATER
(Engine)

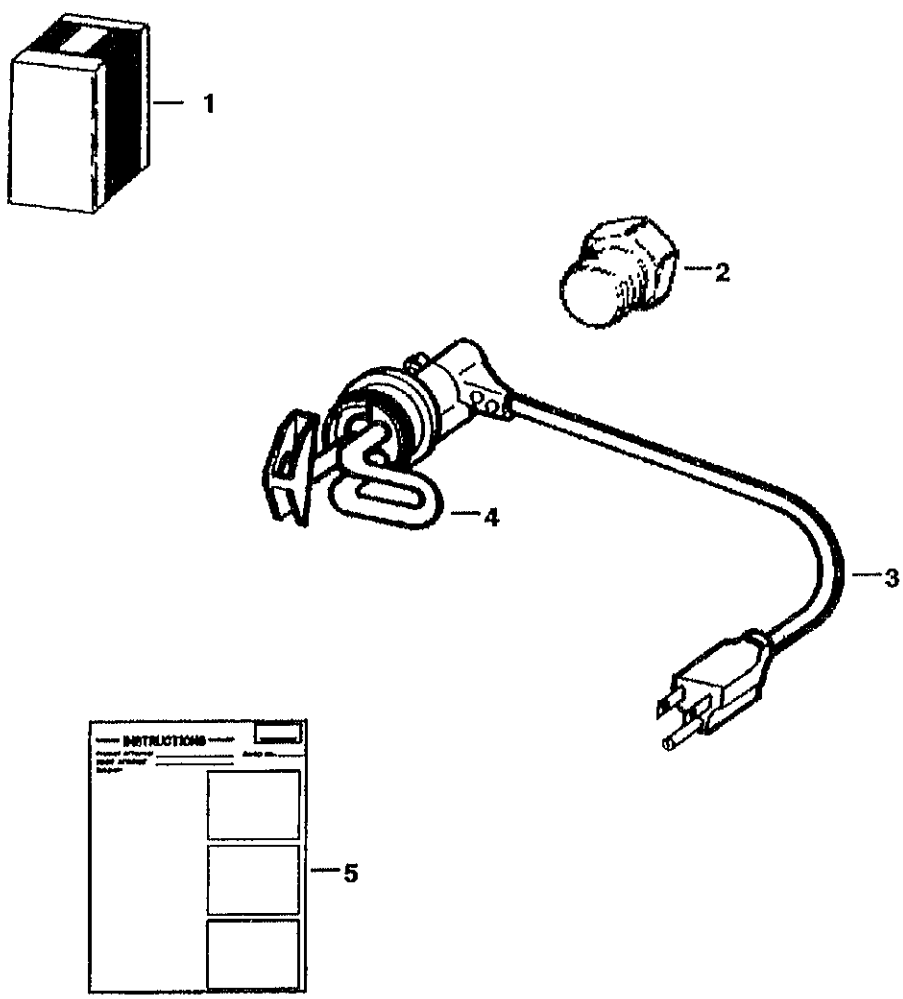

PE–1762

BLOCK HEATER (Cont'd)
(Engine)

Ref No	Part Number	Description	Remarks	Serial Number	Qty
1	6720808	KIT	W/Ref. 2, 4 & 5		1
2	19F12	BUSHING			1
3	6685850	CORD			1
4	6659369	HEATER	W/Ref. 3		1
5	6720038	INSTRUCTIONS			1

BUCKET POSITIONING KIT

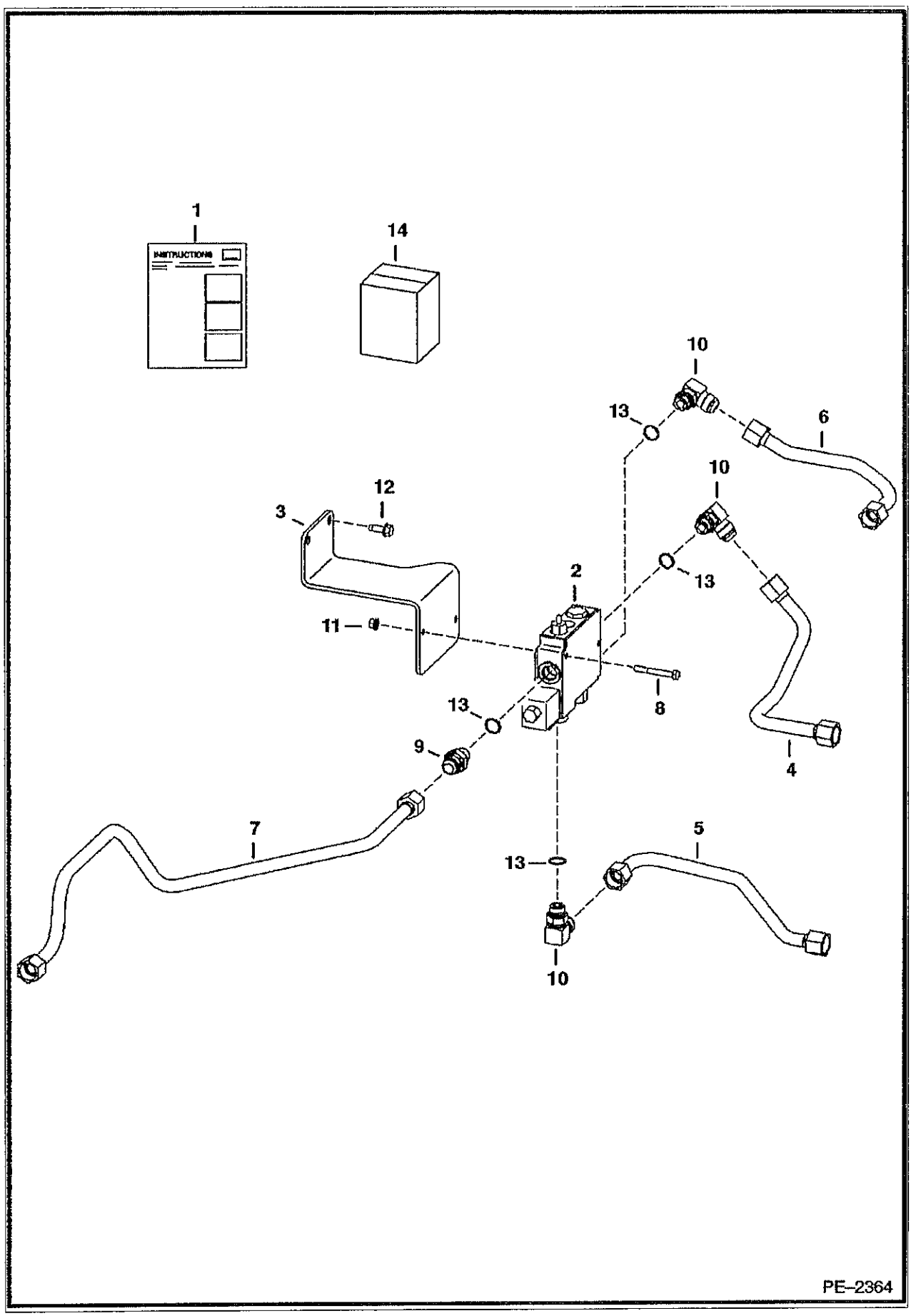

BUCKET POSITIONING KIT (Cont'd)

Ref No	Part Number	Description	Remarks	Serial Number	Qty
1	7104829	KIT	Ref. 2-13		1
2	6675669	VALVE	See Illustration BUCKET POSITIONING VALVE/ MS1943 painted primer red		1
3	6730898	MOUNT	BPV		1
4	6732991	TUBELINE			1
5	6732992	TUBELINE			1
6	7108458	TUBELINE			1
7	7114823	TUBELINE			1
8	17C540	BOLT			2
9	15KB1210	ADAPTER	W/Ref. 13		1
10	17KB1210	ELBOW	W/Ref. 13		3
11	83D5	NUT 5			2
12	84G3716	SCREW 5			2
13	79K10	O RING 10			x
14	6903132	INSTRUCTIONS			1

CAB DOOR

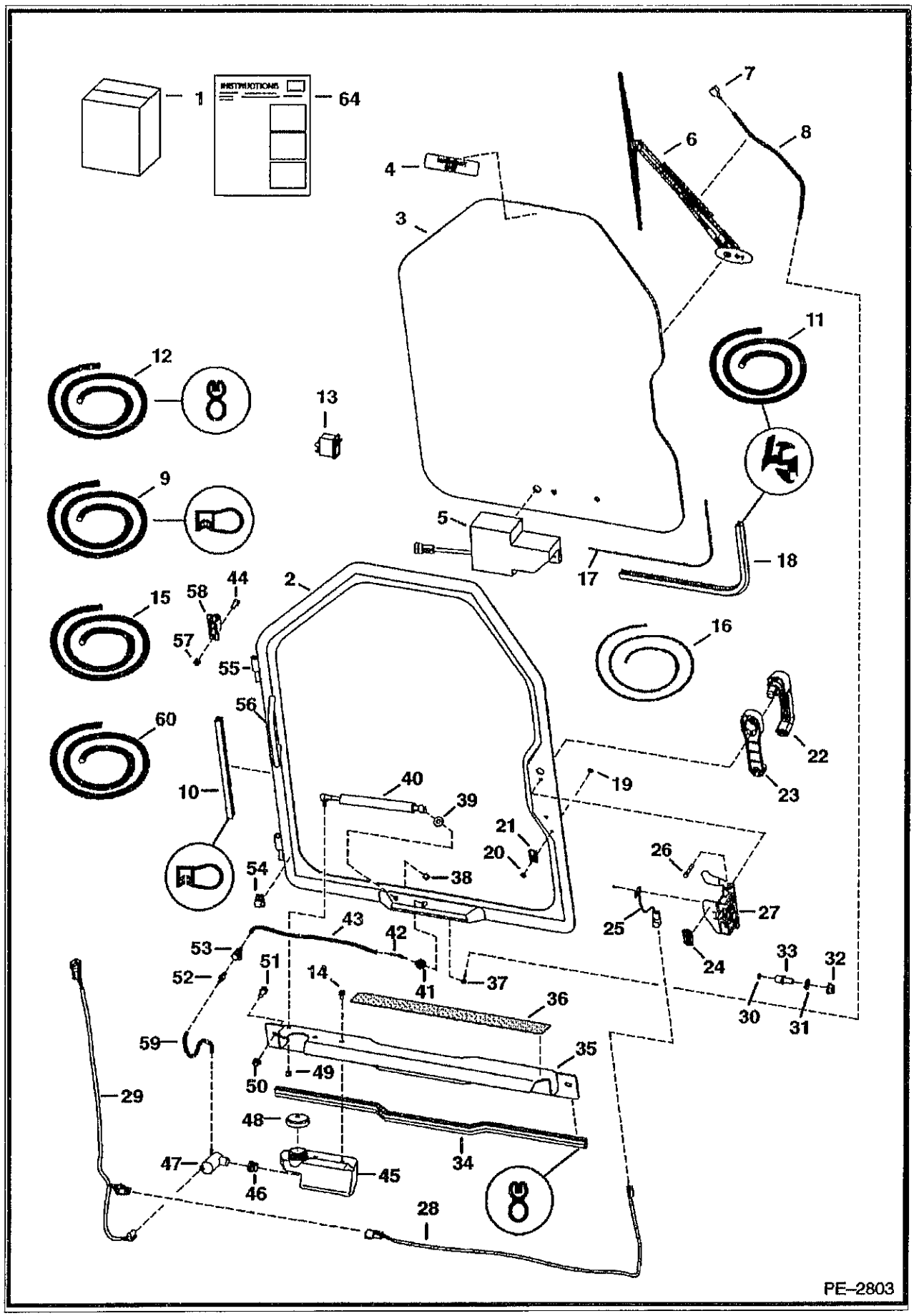

Model S250 K
6904244

CAB DOOR (Cont'd)

Ref No	Part Number	Description	Remarks	Serial Number	Qty
1	6730822	KIT	door - Ref. 2-61 & Ref. 1-21 on ILL. MS1355		1
2	7109665	DOOR	W/Ref. 55 & 56		1
3		WINDOW	See Illustration CAB DOOR/ MS1355 - .25" thick glass		1
4	6707852	DECAL	exit		1
5		MOTOR	See Illustration CAB DOOR/ MS1355 - wiper		1
6		ARM ASSY	See Illustration CAB DOOR/ MS1355 - wiper		1
7		NOZZLE	See Illustration CAB DOOR/ MS1355 - wiper arm mounted		1
8		HOSE	See Illustration CAB DOOR/ MS1355		1
9	6675558	SEAL	bulk - sold per foot		x
10		SEAL	NAP - 127.3" (3233mm) - Order Ref. 9		1
11	6665568	EXTRUSION	bulk - sold per foot		x
12	6513152	SEAL	bulk - sold per foot		x
13	6665707	SWITCH	front wiper		1
14	35C408	BOLT			2
15	6676003	HOSE	bulk - sold per foot - .109" I.D. - black		x
6	6554149	CORD	bulk - sold per foot		x
17		CORD	NAP - window - 113" (2878mm) - Order Ref. 16		1
18		SEAL	NAP - window - 113" (2878mm) - Order Ref. 11		1
19	6665321	RIVET	male - plastic		1
20	6665322	RIVET	female - plastic		1
21	6665000	CLIP			1
22	7109662	HANDLE			1
22	6709527	KEY	ignition/rear door		1
23	7109663	SPACER			1
24	7110316	DECAL	door switch		1
25	6728459	DOOR SENSOR			1
25	6677193	RIVET	plastic		2
26	1CM640	NUT			2
27	7109661	DOOR LATCH	W/Ref. 25		1
28	7104465	DOOR SWITCH HARNESS			1
29	7117322	HARNESS	wiper		1
30	6677192	MAGNET			1
31	18EM1224	WASHER			1
2	51DM12	NUT	12 mm thread		1
33	7109664	BOLT	striker - 12 mm thread		1
34		SEAL	NAP - threshold - 36" (914mm) - Order Ref. 12		1
35	6730816	SHIELD			1
36	6542731	SAFETY TREAD			1
37	6676500	ELBOW			1
38	46D5	NUT	acorn		1
39	25E16	WSHR			1
40	6682586	GAS SPRING			1
40	6678548	SOCKET	ball		2
40	6649244	STUD			2
40	6649245	RETAINER	spring		2
41	6676499	GROMMET	wiper		1
42	6676917	ELBOW			1
43		HOSE	NAP - 18.25" (464mm) - Order Ref. 15		1
44	17C512	BOLT 5			4
45	6736875	TANK	washer		1
6	6666766	GROMMET			1
47	6664554	PUMP	washer bottle		1
48	6674993	CAP	vented		1
9	61D5	NUT			1

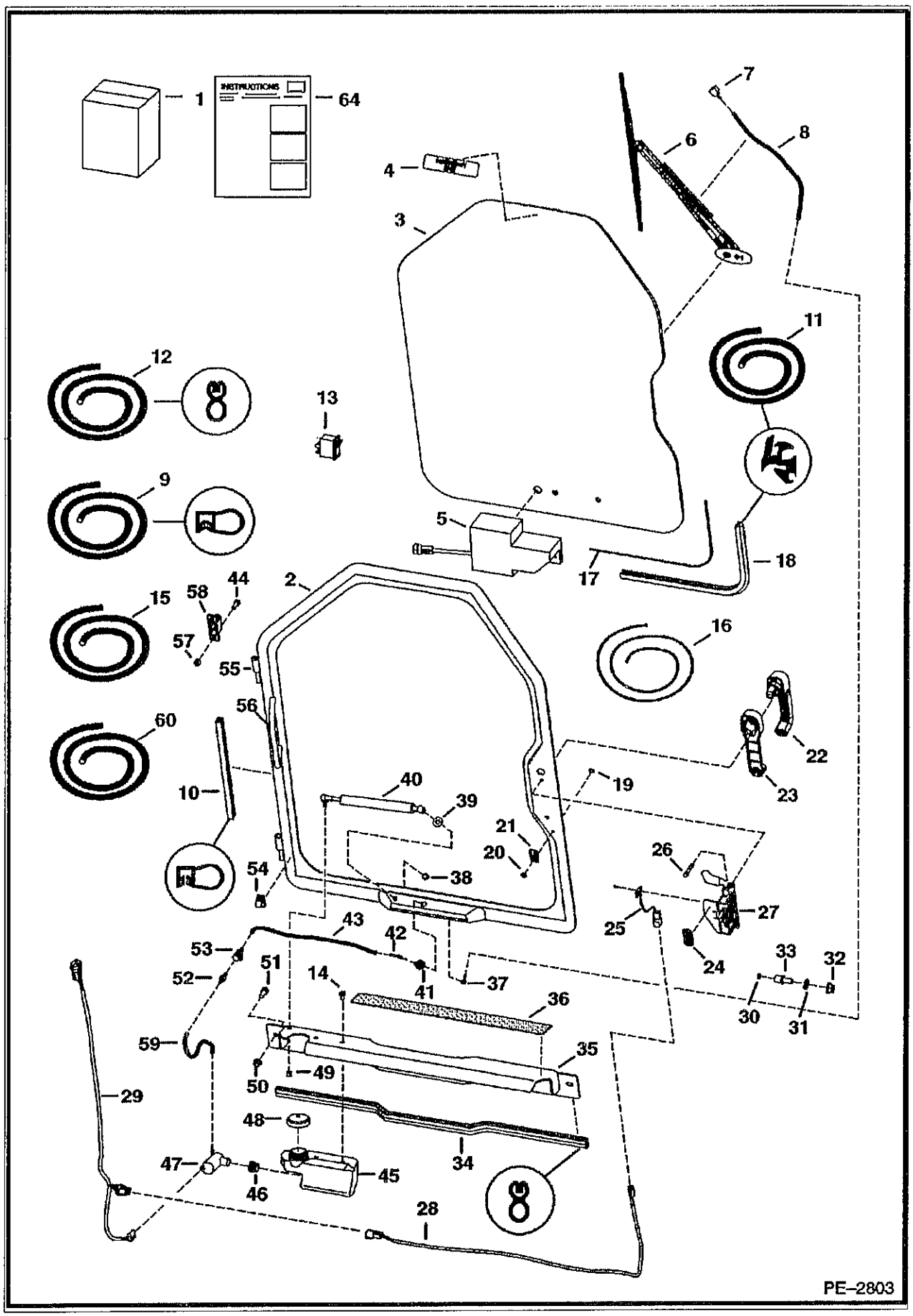
INSTRUCTIONS
1
64
4
3
7
6
8
12
13
11
9
5
18
17
15
58
44
2
57
55
16
56
60
22
10
40
39
19
23
21
20
26
54
38
27
25
43
42
53
24
33
32
52
51
14
41
37
36
30
31
59
35
50
49
29
48
34
47
45
46
28
PE-2803

CAB DOOR (Cont'd)

Ref No	Part Number	Description	Remarks	Serial Number	Qty
50	61D6	NUT 5			2
51	17C612	BOLT 5			2
52	6675299	COUPLER	insert		1
53	6675298	COUPLER	body		1
54	6675378	CLIP			3
55	6718376	HINGE	door		2
56	6718521	HANDLE	grab		1
57	59D5	NUT 5			4
58	6717593	HINGE	base		2
59		HOSE	NAP - 4.25" (108mm) long - Order Ref. 60		1
60	6708310	HOSE	bulk - sold per foot - .149 I.D. - clear		x
61	6900854	INSTRUCTIONS INSTL	INSTRUCTIONS INSTL		1

CAB DOOR
(Window & Wiper)

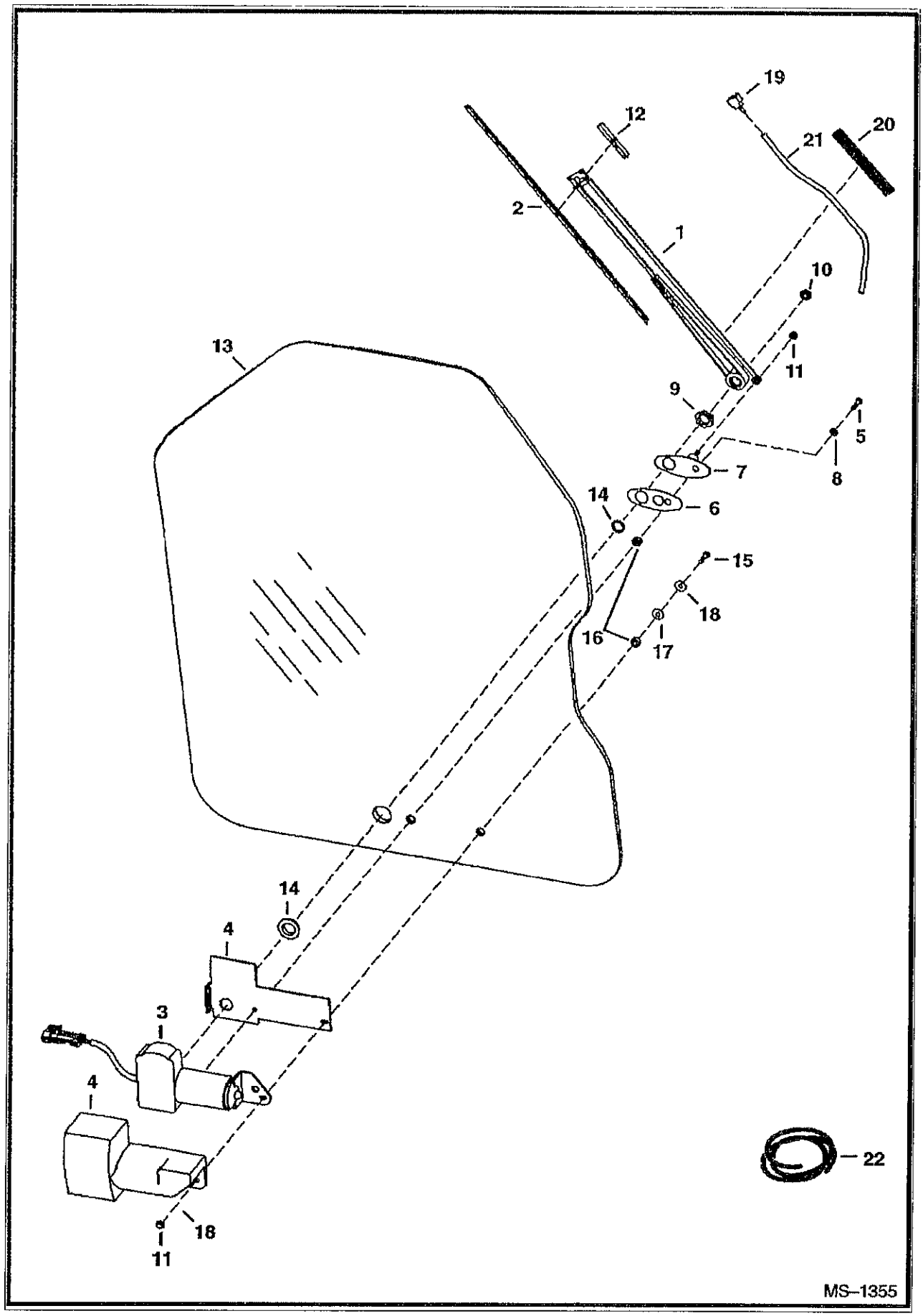

CAB DOOR (Cont'd)
(Window & Wiper)

Ref No	Part Number	Description	Remarks	Serial Number	Qty
1	6677833	ARM ASSY	W/Ref. 19-21		1
2	6677834	BLADE	also Order Ref. 12		1
3	6679476	MOTOR	W/threaded shaft end & built in fuse		1
4	6677836	COVER			1
5	6677837	BOLT			1
6	6677839	GASKET			1
7	6677840	SWIVEL			1
8	6677841	WASHER	tooth lock		1
9	6677842	NUT			1
10	6677843	NUT			1
11	6677844	NUT			2
12	6677845	ADAPTER	arm		1
13	6729776	WINDOW	.25" thick glass W/1.00" dia. wiper motor shaft hole		1
14	6677847	GROMMET	rubber		1
15	6678198	BOLT			1
16	6664085	BUSHING	nylon		2
17	6801059	WASHER	neoprene		1
8	6678739	WASHER	steel		2
19	6678920	NOZZLE	For Ref. 1		1
20	6678921	GUIDE	hose		1
21		HOSE	NAP - 18" (457mm) long - Order Ref. 22		x
22	6676003	HOSE	bulk - Sold Per Foot - .109" I.D. - black		x

CAB DOOR
(Special Applications)

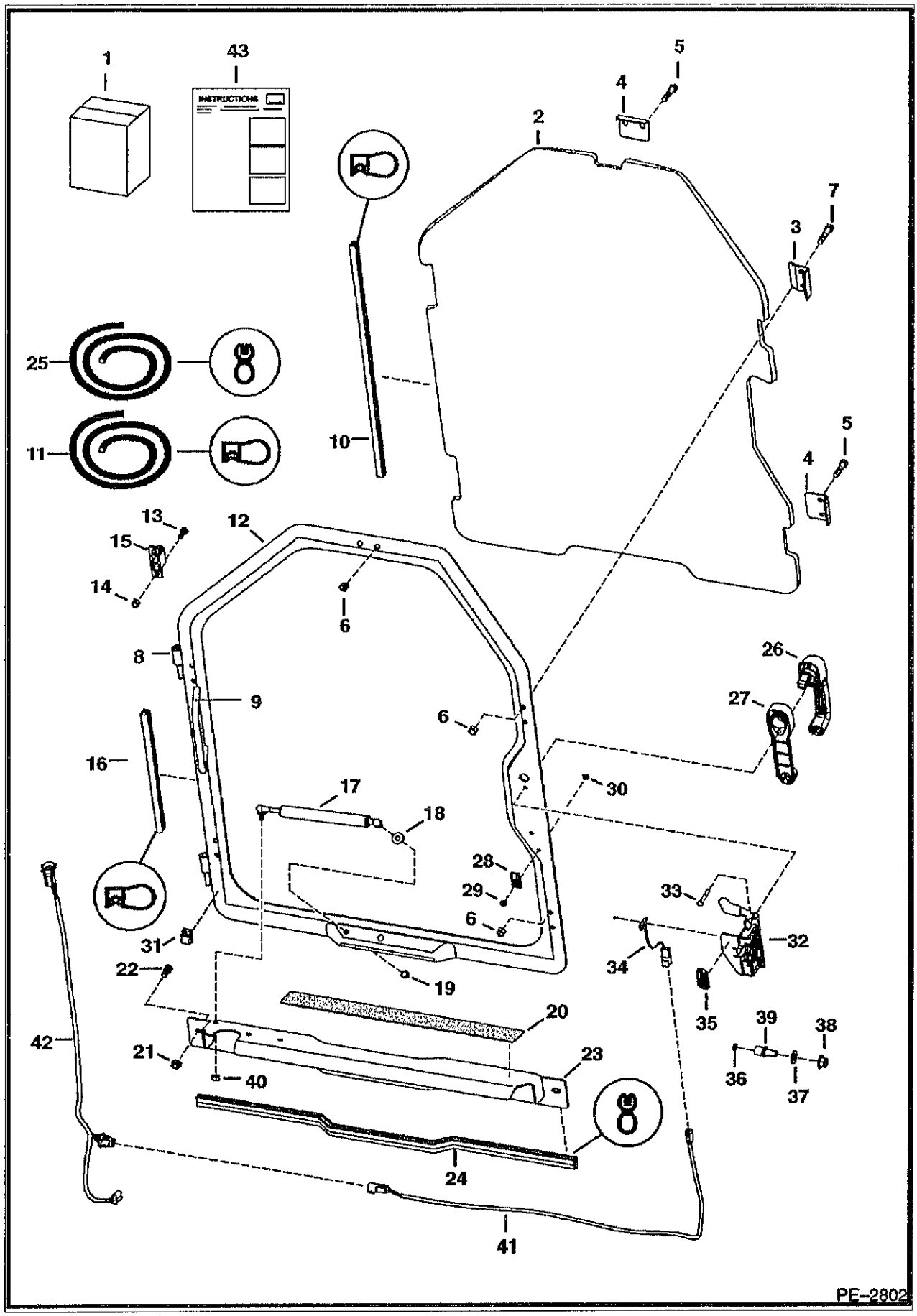

CAB DOOR (Cont'd)
(Special Applications)

Ref No	Part Number	Description	Remarks	Serial Number	Qty
1	6730823	KIT	door - Ref. 2-43		1
2	6732351	WINDOW	.5" thick polycarbonate		1
3	6725938	CLAMP			2
4	6725937	CLAMP			3
5	17C628	BOLT			6
6	95D6	NUT			10
7	17C624	BOLT 5			4
8	6718376	HINGE	door		2
9	6718521	HANDLE	grab		1
10		SEAL	NAP - 115" (2921 mm) long - Order Ref. 11		1
11	6675558	SEAL	bulk - sold per foot		x
12	7110430	SPECIAL APPS DOOR	W/Ref. 8 & 9		1
13	59D5	NUT 5			4
14	17C512	BOLT 5			4
15	6717593	HINGE	base		2
16		SEAL	NAP - 127.3" (3233,4 mm) long - Order Ref. 11		1
7	6682586	GAS SPRING			1
17	6678548	SOCKET	ball		2
17	6649244	STUD	ball		2
17	6649245	RETAINER	spring		2
18	25E16	WSHR			1
19	46D5	NUT	acorn		1
20	6542731	SAFETY TREAD			1
21	55D6	NUT			2
22	17C612	BOLT 5			2
?3	6730816	SHIELD			1
.4		SEAL	NAP - 36" (914,4 mm) long - Order Ref 25		1
25	6513152	SEAL	bulk - sold per foot		x
26	7109662	HANDLE			1
26	6709527	KEY	ign. & rear door		1
27	7109663	SPACER			1
28	6665000	CLIP			1
29	6665321	RIVET	male - plastic		1
30	6665322	RIVET	female - plastic		1
31	6675378	CLIP			3
2	7109661	DOOR LATCH	W/Ref. 34		1
33	1CM640	NUT			2
34	6728459	DOOR SENSOR			1
34	6677193	RIVET	plastic		2
35	7110316	DECAL			1
36	6677192	MAGNET			1
37	18EM1224	WASHER			1
38	51DM12	NUT	12 mm thread		1
39	7109664	BOLT	striker - 12 mm thread		1
40	61D5	NUT			1
41	7104465	DOOR SWITCH HARNESS	door sensor		1
42	7117322	HARNESS	wiper		1
43	6901013	INSTRUCTIONS			1

CAB ENCLOSURE

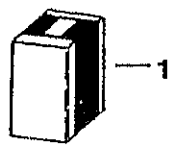

B–17100

CAB ENCLOSURE (Cont'd)

Ref No	Part Number	Description	Remarks	Serial Number	Qty
1		KIT	See Illustration CAB WINDOWS/ MS1340 See Illustration CAB DOOR/ PE1566 cab enclosure - SALES Kit #6731938		1
1		KIT	See Illustration CAB WINDOWS/ MS1340 special cab enclosure - SALES Kit #6731937		1

CAB ENCLOSURE
(Envelope)

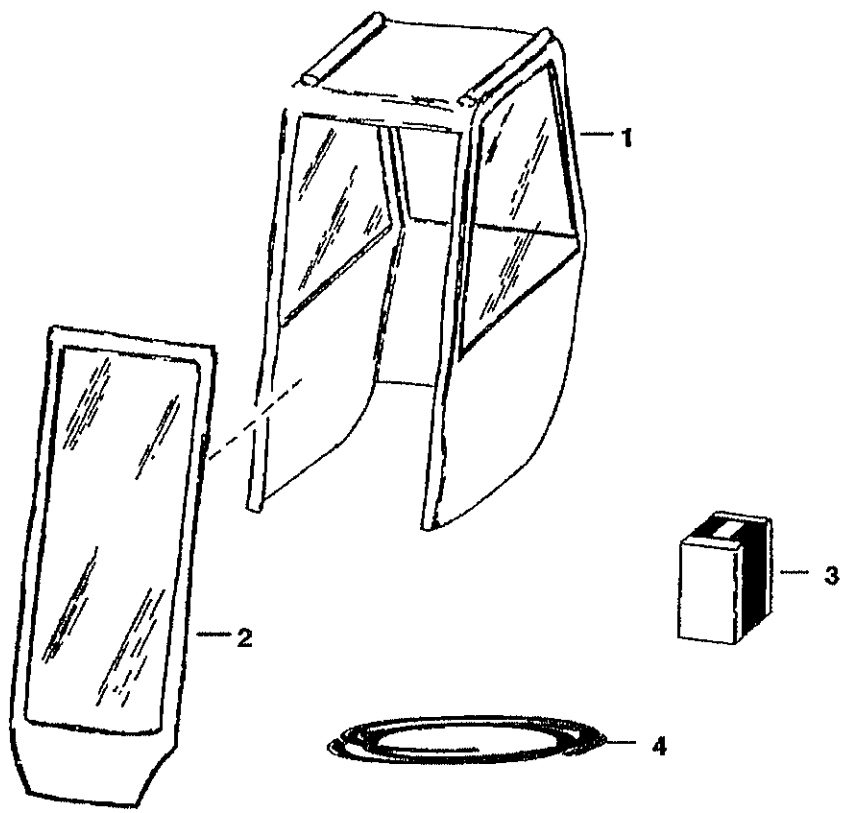

B–1413

CAB ENCLOSURE (Cont'd)
(Envelope)

Ref No	Part Number	Description	Remarks	Serial Number	Qty
1	6675544	CANVAS CAB	fits over cab - W/Ref. 2 & 3		1
2	6675590	DOOR	vinyl		1
3	6675591	HINGE KIT			1

CAB WINDOWS
(Rear Window Removal Kit)

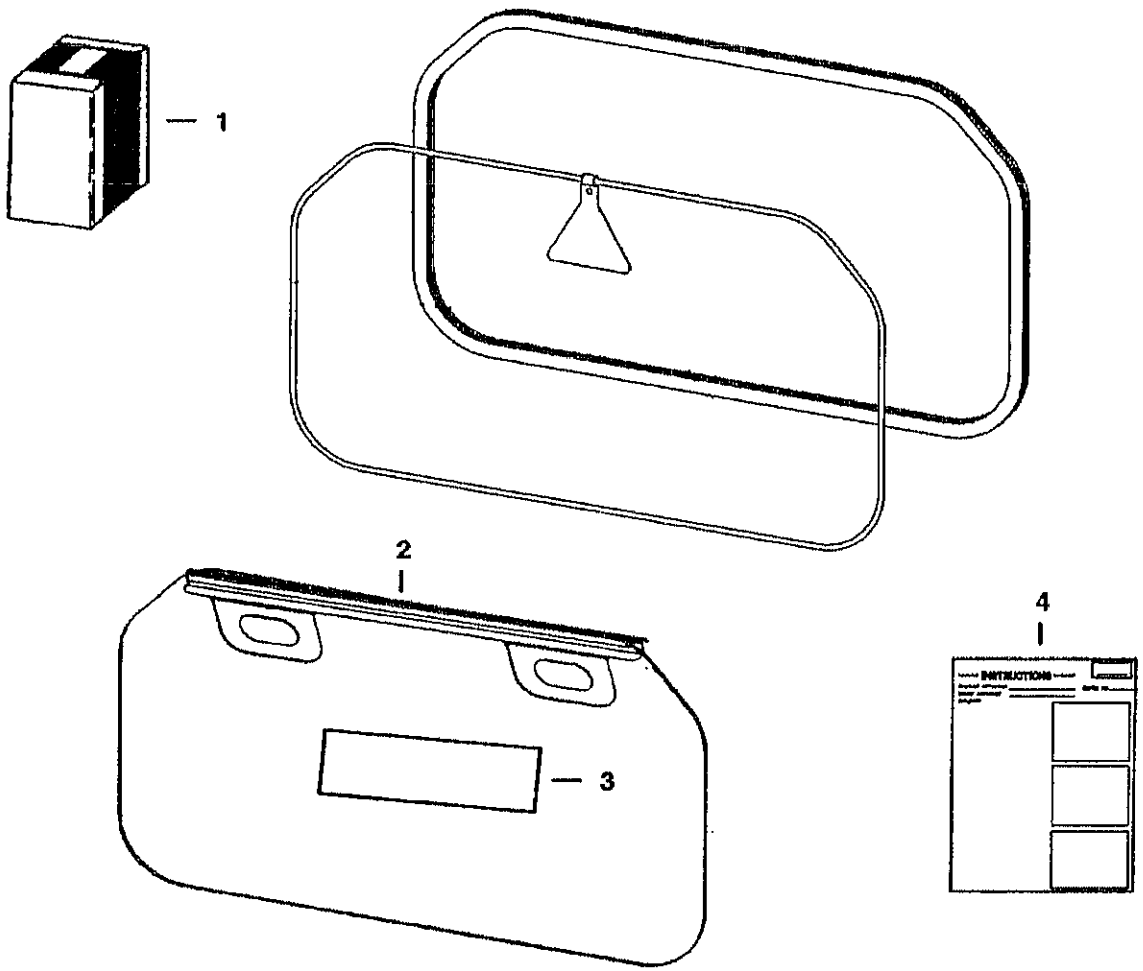

TS–2006

CAB WINDOWS (Cont'd)
(Rear Window Removal Kit)

Ref No	Part Number	Description	Remarks	Serial Number	Qty
1	6725946	KIT	Ref. 2-4		1
2	6725421	HANDLE			1
3	6726303	DECAL			1
4	6901029	INSTRUCTIONS			1

CAB WINDOWS
(Top, Rear & Side)

NOTE: Order Side Window Kit from Gwinner Sales # 6718806.

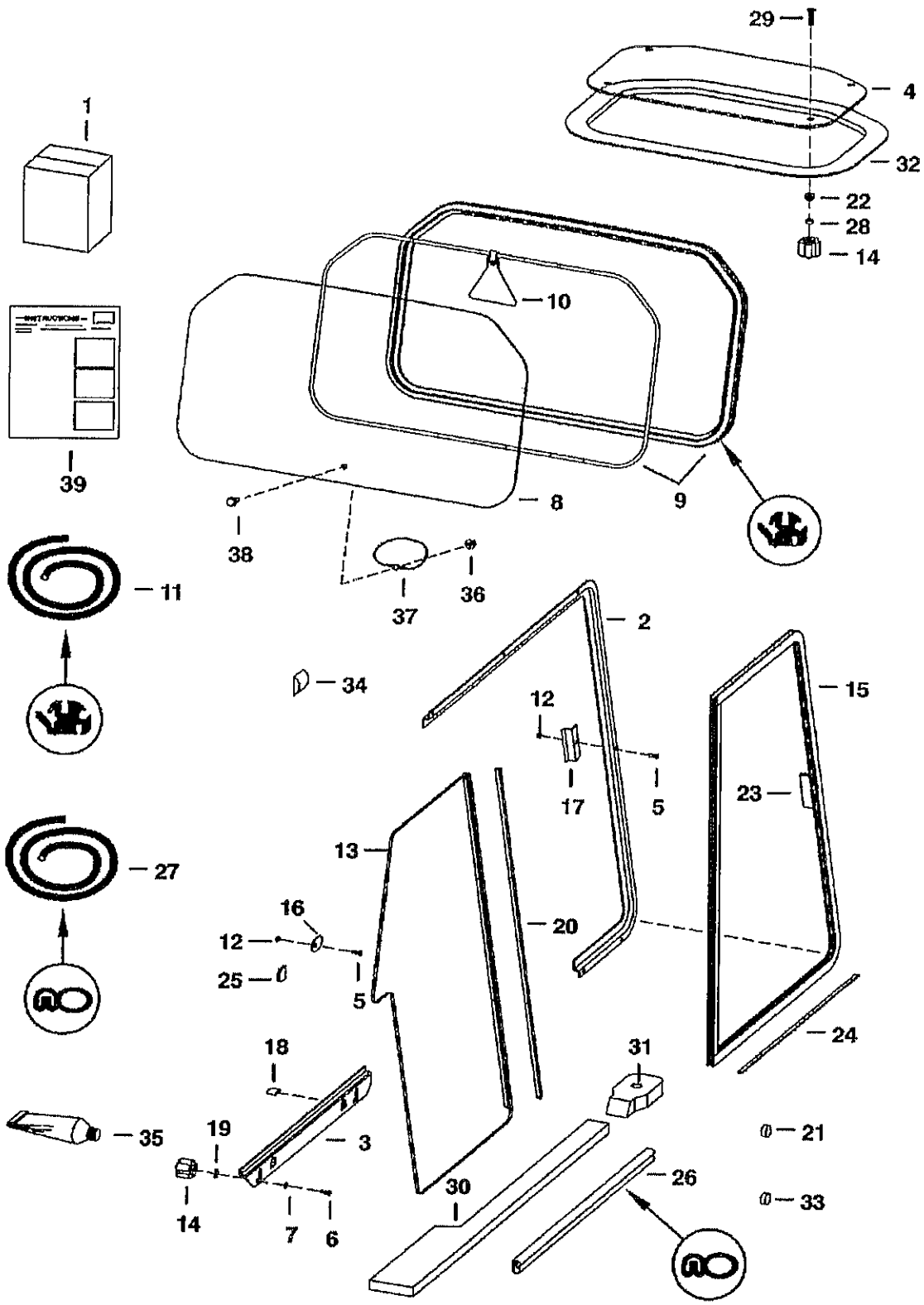

CAB WINDOWS (Cont'd)
(Top, Rear & Side)

Ref No	Part Number	Description	Remarks	Serial Number	Qty
1	6718805	KIT	Top & Rear Window - Ref. 4, 8-10, 14 & 36		1
1		KIT	SALES - side windows - SEE NOTE		1
2	6717870	FRAME	L.H. side		1
2	6717872	FRAME	R.H. side		1
3	6717871	FRAME	L.H. bottom		1
3	6717873	FRAME	R.H. bottom		1
4	7105035	WINDOW	assy. - lexan - W/Ref. 22, 28, 29 & 32		1
5	10C410	BOLT	carriage		18
6	10C412	BOLT	carriage		4
7	25E14	WSHR			4
8	6717874	WINDOW	rear - 3/16" thick		1
8	6719413	WINDOW	rear - lexan		1
9		EXTRUSION	NAP - 75.75" (1924mm) long - Order Ref. 11		1
9		CORD	NAP - 75.75" (1924mm) long - Order Ref. 11		1
10	6731478	EXIT TAG			1
11	6675387	EXTRUSION	Bulk - Sold Per Foot		x
11	6554149	CORD	Bulk - Sold Per Foot		x
12	59D4	NUT 5			18
13	6674520	WINDOW	L.H. rear - W/Ref. 20		1
13	6674522	WINDOW	R.H. rear - W/Ref. 20		1
14		KNOB	NAP - .625" (15,9mm) deep threads		8
14	6681614	KNOB	.69" (17,5mm) deep threads		8
15	6674519	WINDOW	L.H. front - W/Ref. 23		1
15	6674521	WINDOW	R.H. front - W/Ref. 23		1
16	6719063	STOP	window		2
17	6719037	STRIKER			2
18	6719065	COVER TAB			4
19	6675212	RETAINER	tab bolt		4
20	6675833	SEAL	rear window - dual wiper w/tape		2
21	6657719	PLUG	for .75" dia. hole		2
22	6675545	GROMMET			4
23	6678283	HANDLE	side window - W/ tape & vendor instructions		2
24	6676927	FELT STRIP	20.38" (518mm) long		2
25	6677198	TAB	cab		2
26		SEAL	NAP - 24" (609mm) long - Order Ref. 27		2
27	6555351	SEAL	bulk - sold per foot		x
28	6664085	BUSHING	nylon		4
29	91G416	SCREW	used W/ 6674741 knob		4
29	91G420	SCREW	used W/ 6681614 knob		4
30	6729010	SEAL	cab - main frame - L.H. - foam		1
30	6729009	SEAL	cab - main frame - R.H. - foam		1
31	6729011	SEAL	cab mount		2
32		SEAL	NAP - Order Ref. 4		1
33	6677973	PLUG	for .22" dia. hole		2
34	7103075	SEAL			2
35		ADHESIVE	NAP - 1 oz. - for top window seal Ref. 1		1
36	83D5	NUT 5	for lexan window		1
37	6555331	WIRE ROPE	for lexan window		1
38	35C516	BOLT 10	for lexan window		1
39	6901013	INSTRUCTIONS INSTL	INSTRUCTIONS INSTL top & rear window		1
39	6900853	INSTRUCTIONS	INSTRUCTIONS side windows		1

CAB WINDOWS
(Window Rib Kit)

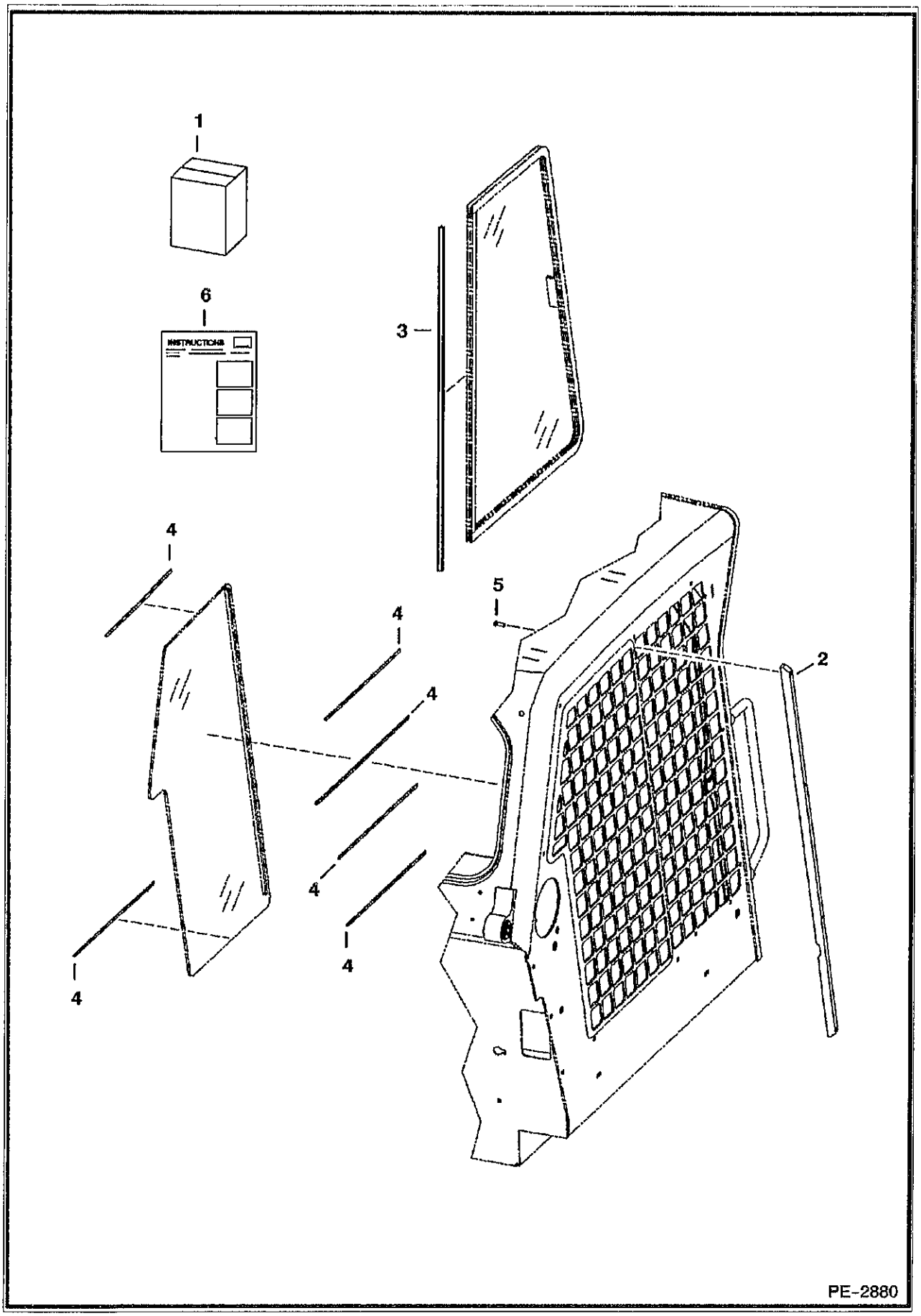

CAB WINDOWS (Cont'd)
(Window Rib Kit)

Ref No	Part Number	Description	Remarks	Serial Number	Qty
1	7122462	KIT, WINDOW RIB	Inc. Ref. 2-6		1
2	7121556	BRACE, CAB			2
3	7122487	2 SEAL, WIPER			2
4	7122488	SEAL, BULB	180.0" long - cut to fit		1
5	25GT410	SCREW			8
6	6904744	INSTRUCTION, INSTALL	INSTRUCTION, INSTALL		1

COUNTERWEIGHT KIT
(2000/2500 lb. Rear Axle)

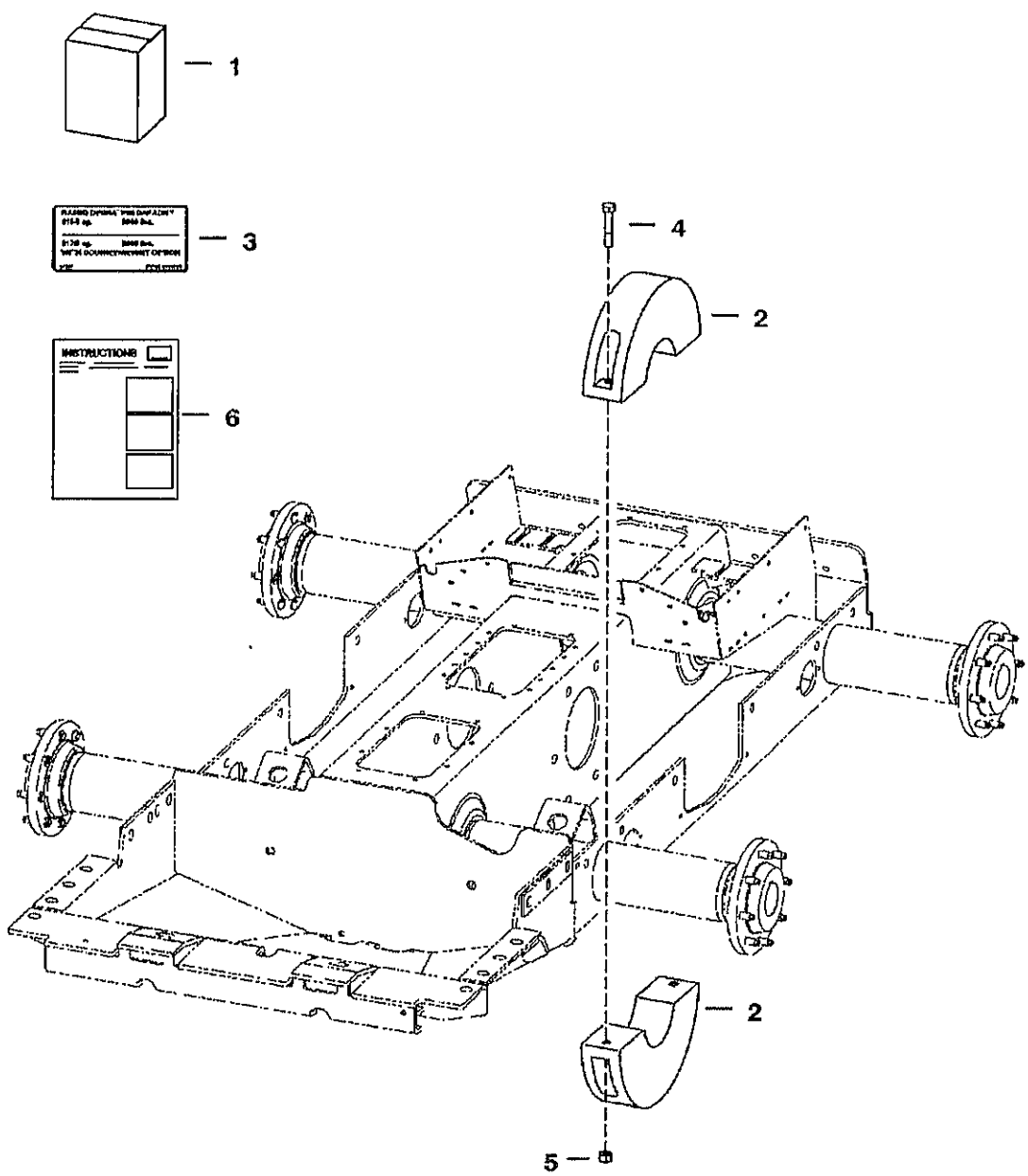

COUNTERWEIGHT KIT (Cont'd)
(2000/2500 lb. Rear Axle)

Ref No	Part Number	Description	Remarks	Serial Number	Qty
1	6712911	KIT	counterweight		1
2	6714362	WEIGHT	rear axle - 42.8 lbs (19,4 kg) - 4.5" (114,3 mm) wide		4
3	6733924	DECAL	2500 lb / 2600 lb load		1
3	6712912	DECAL	2000 lb load		1
4	17C640	BOLT 5			4
5	61D6	NUT 5			4
6	6900366	INSTRUCTIONS			1

COUNTERWEIGHT KIT
(400 lb. Rear Axle)

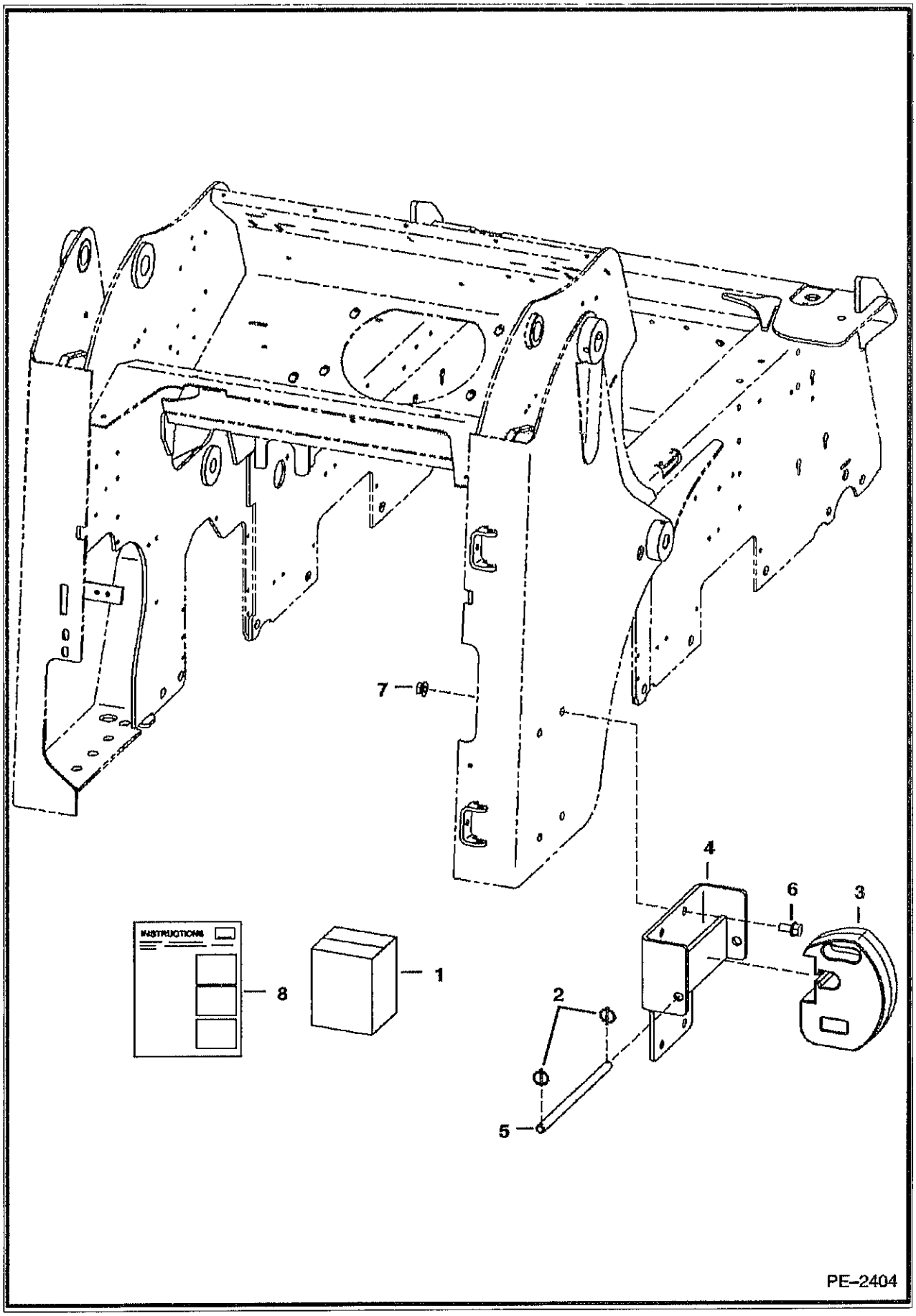

COUNTERWEIGHT KIT (Cont'd)
(400 lb. Rear Axle)

Ref No	Part Number	Description	Remarks	Serial Number	Qty
1	7105764	KIT	Ref. 2-8		1
2	6649706	PIN			4
3	6811483	COUNTERWEIGHT	49 lb (20.142 kg)		8
4	7105818	MOUNT	assy		2
5	7105827	ROD			2
6	35C1020	BOLT			8
7	57D10	NUT			8
8	6903283	INSTRUCTIONS			1

DEBRIS SHIELD KIT

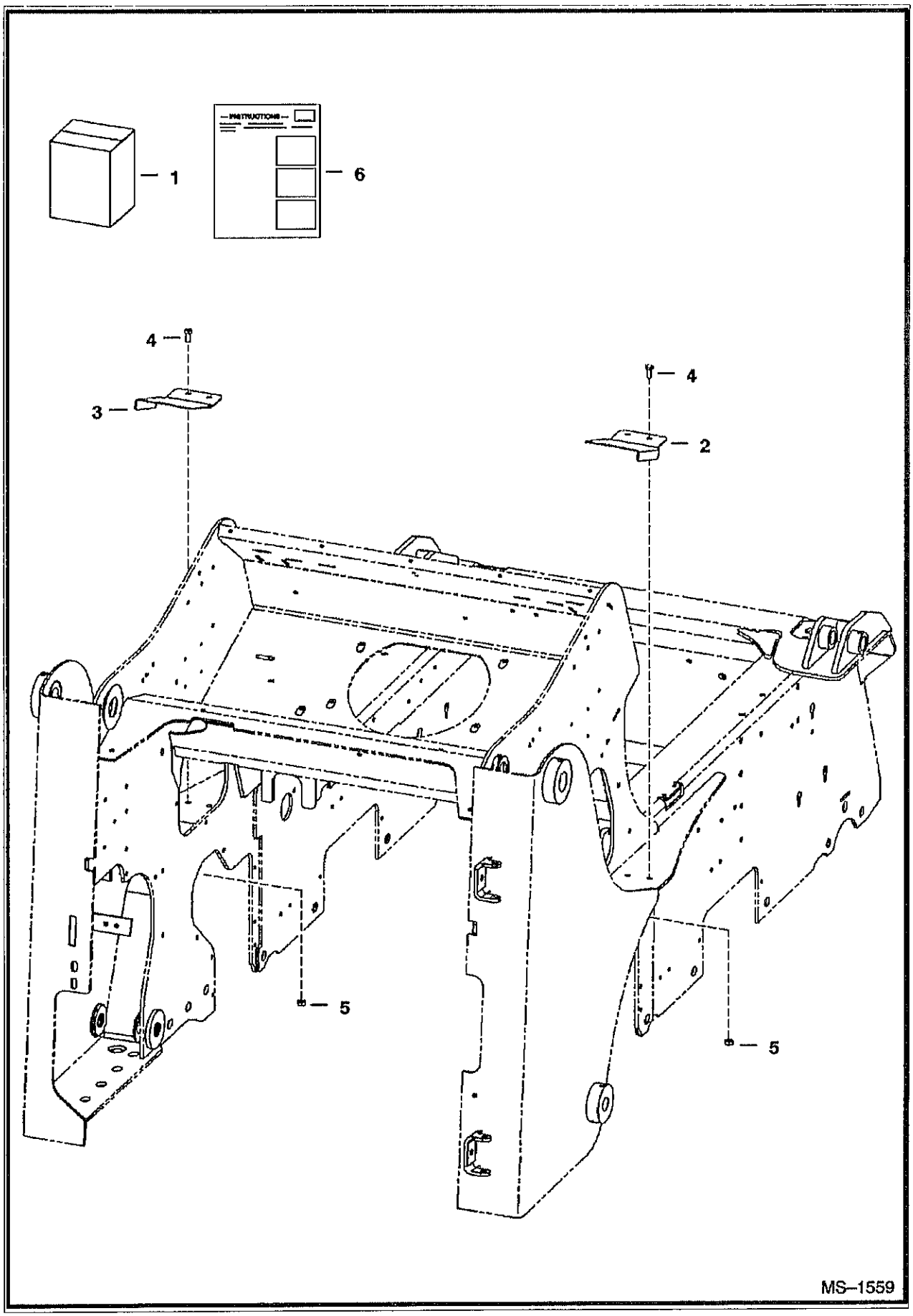

DEBRIS SHIELD KIT (Cont'd)

Ref No	Part Number	Description	Remarks	Serial Number	Qty
1	6734461	KIT	Ref. 2-6		1
2	6734447	SHIELD	R.H.		1
3	6734446	SHIELD	L.H.		1
4	17C614	BOLT			4
5	61D6	NUT 5			4
6	6902252	INSTRUCTIONS			1

DECALS
(Front)

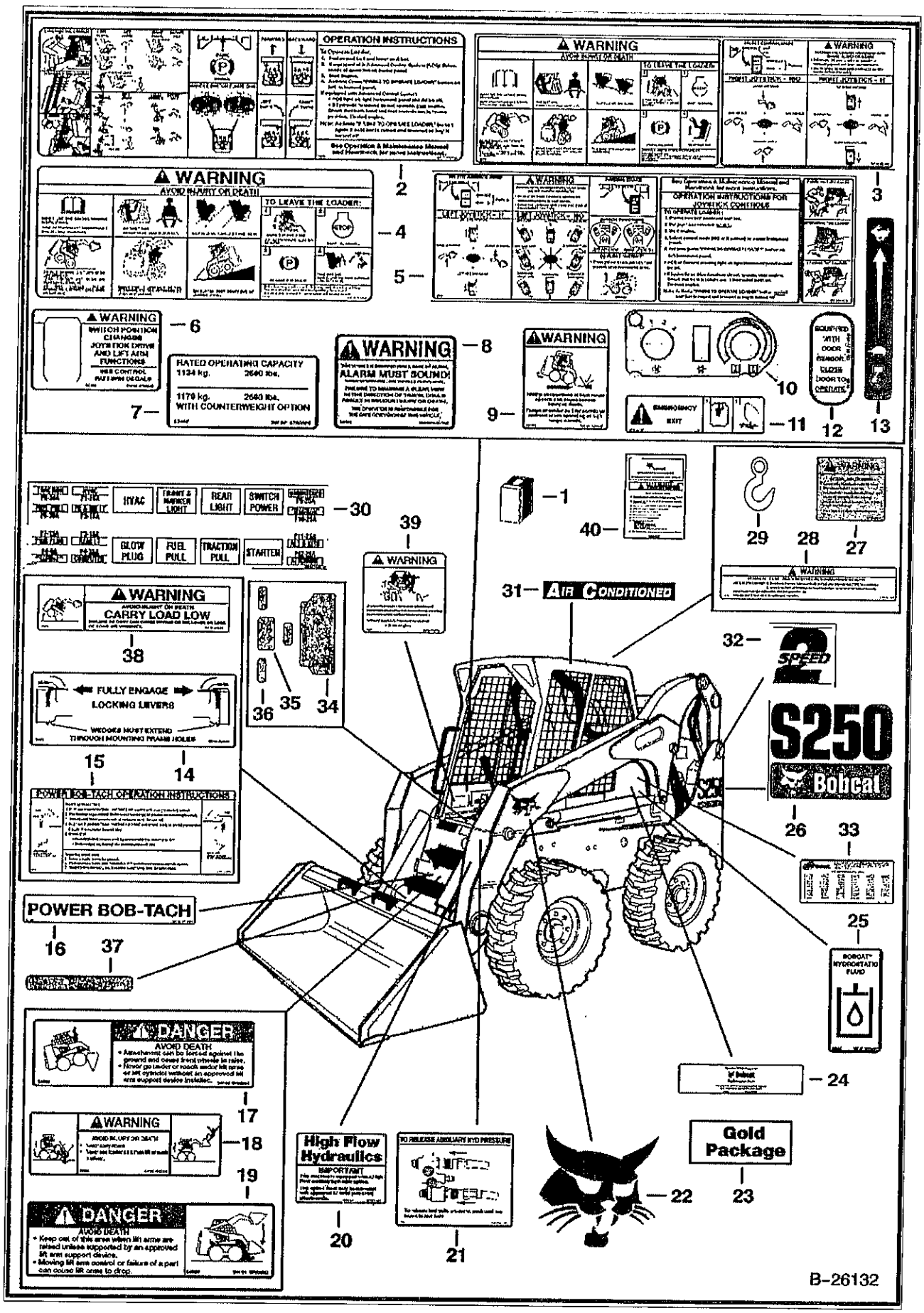

DECALS (Cont'd)
(Front)

ef No	Part Number	Description	Remarks	Serial Number	Qty
1	6904765	KIT, DECAL	Except where noted, includes decals from this ILL. & ILL. B26133		1
1	7120290AR	KIT, TRANSLATION	Argentina		1
1	7120290BR	KIT, TRANSLATION	Brazil		1
1	7120291AR	KIT, DECAL	Argentina		1
1	7120291BR	KIT, DECAL	Brazil		1
1	7120291JP	KIT, DECAL	Japan		1
2	6727926	DECAL	standard & ACS		1
3	6734646	DECAL	warning - selectable joystick controls		1
4	6728539	DECAL	warning		1
5	6734647	DECAL	operation - selectable joystick controls		1
6	6737248	DECAL	selectable joystick control		1
7	6733924	DECAL	load cap.		1
8	6737189	DECAL	backup alarm		1
9	6725370	DECAL	3-pt seat belt - Not In Kit		1
0	6718579	DECAL	heater control - Not In Kit		1
11	6707852	DECAL	emergency exit		1
12	7110316	DECAL	door sensor		1
13	6735140	DECAL	throttle		1
14	6561383	DECAL	locking lever		1
15	6725907	DECAL	bob-tach operation		1
16	6719888	DECAL	power bob-tach - Not In Kit		1
17	6702301	DECAL	danger		1
18	6732696	DECAL	warning		1
19	6702302	DECAL	danger		1
.0	7120602	DECAL	high flow hydraulics - Not In Kit		1
21	6731757	DECAL	to release auxiliary hyd. pressure		1
22	7116870	DECAL	bobcat		2
23	6735862	DECAL	gold package - Not In Kit		1
24	6565200	DECAL	filter		1
25	6565990	DECAL	hydrostatic fluid		1
26	7120594	DECAL	S250		2
27	6726423	DECAL	4 pt. lift opt.		1
28	6704786	DECAL	sgl. pt. lift warning		1
9	6533898	DECAL	sgl. pt. lift opt. - Not In Kit		1
30	7117407	DECAL	inside fuse cover		1
31	6729077	DECAL	air conditioned - Not In Kit		2
32	6729078	DECAL	2 speed - Not In Kit		2
33	6557224	DECAL	patent		1
34	7108222	SAFETY TREAD	8.5" x 22"		1
35	6553976	SAFETY TREAD	5" x 8"		1
36	6554100	TREAD	3" x 6"		3
37	6555341	SAFETY TREAD	3" x 12"		1
38	6579528	DECAL	carry load low		1
39	6718706	DECAL	warning		1
40	6737783	KIT	Operation & Maintenance		1
40	6558309	WIRE ROPE	bulk - sold per foot		3
40	6558310	SLEEVE	wire rope		2
40	84G3112	BOLT 5			1

DECALS
(Rear)

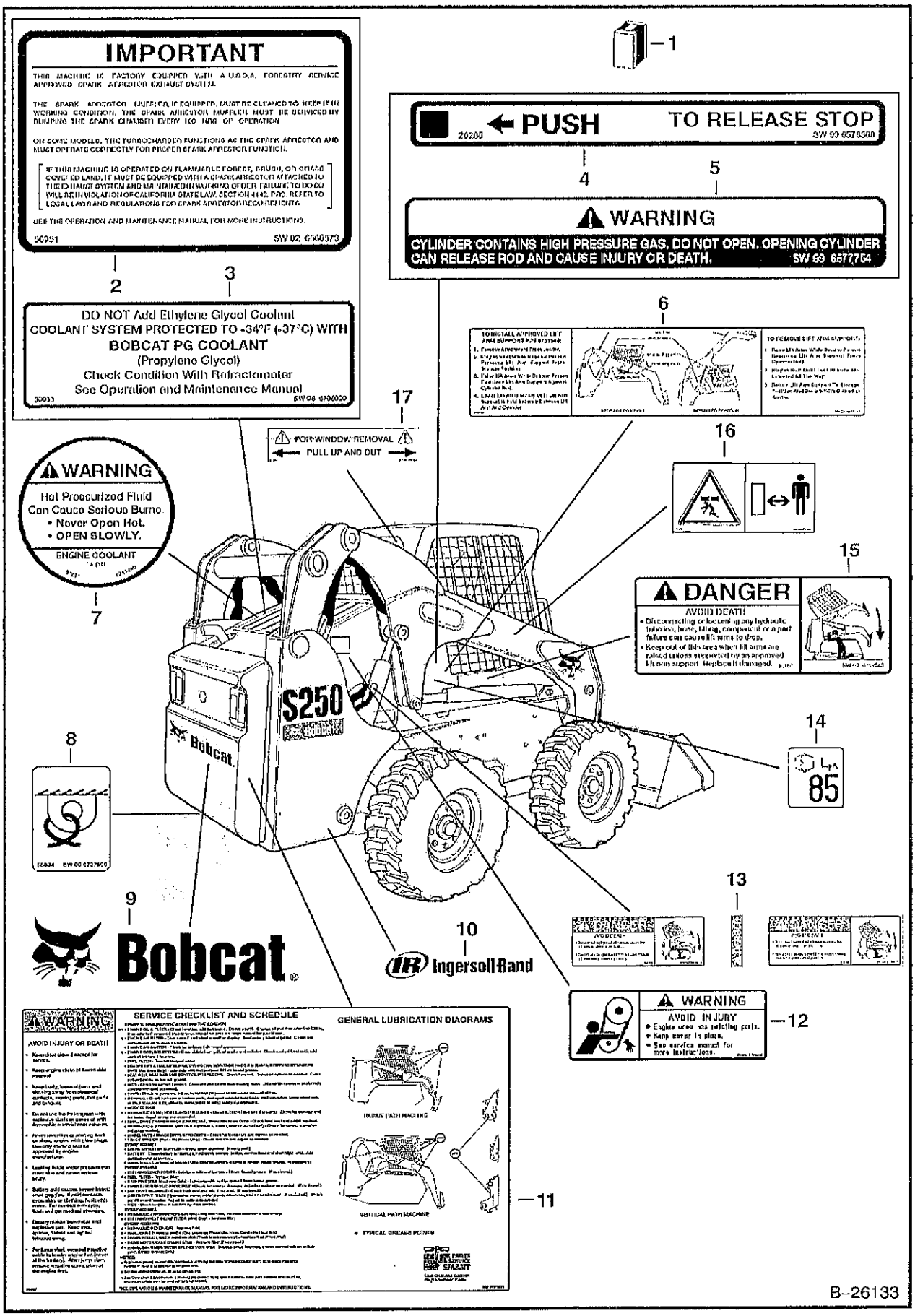
IMPORTANT
THIS MACHINE IS FACTORY EQUIPPED WITH A U.S.D.A. FORESTRY SERVICE APPROVED SPARK ARRESTOR EXHAUST SYSTEM.
THE SPARK ARRESTOR MUFFLER, IF EQUIPPED, MUST BE CLEANED TO KEEP IT IN WORKING CONDITION. THE SPARK ARRESTOR MUFFLER MUST BE SERVICED BY DUMPING THE SPARK CHAMBER EVERY 100 HRS OF OPERATION.
ON SOME MODELS, THE TURBOCHARGER FUNCTIONS AS THE SPARK ARRESTOR AND MUST OPERATE CORRECTLY FOR PROPER SPARK ARRESTOR FUNCTION.
IF THIS MACHINE IS OPERATED ON FLAMMABLE FOREST, BRUSH, OR GRASS COVERED LAND, IT MUST BE EQUIPPED WITH A SPARK ARRESTOR ATTACHED TO THE EXHAUST SYSTEM AND MAINTAINED IN WORKING ORDER. FAILURE TO DO SO WILL BE IN VIOLATION OF CALIFORNIA STATE LAW, SECTION 4442. PRC. REFER TO LOCAL LAWS AND REGULATIONS FOR SPARK ARRESTOR REQUIREMENTS.
SEE THE OPERATION AND MAINTENANCE MANUAL FOR MORE INSTRUCTIONS.
SW 02 6560573
2
3
DO NOT Add Ethylene Glycol Coolant
COOLANT SYSTEM PROTECTED TO -34°F (-37°C) WITH
BOBCAT PG COOLANT
(Propylene Glycol)
Check Condition With Refractometer
See Operation and Maintenance Manual
SW 06 6700020
1
PUSH
TO RELEASE STOP
SW 99 6578568
4
5
WARNING
CYLINDER CONTAINS HIGH PRESSURE GAS. DO NOT OPEN. OPENING CYLINDER CAN RELEASE ROD AND CAUSE INJURY OR DEATH.
SW 99 6577764
6
FOR WINDOW REMOVAL
PULL UP AND OUT
17
WARNING
Hot Pressurized Fluid
Can Cause Serious Burns
• Never Open Hot.
• OPEN SLOWLY.
ENGINE COOLANT
7
16
15
DANGER
AVOID DEATH!
S250
Bobcat
8
14
85
9
Bobcat
10
Ingersoll Rand
13
WARNING
AVOID INJURY
12
WARNING
AVOID INJURY OR DEATH!
SERVICE CHECKLIST AND SCHEDULE
GENERAL LUBRICATION DIAGRAMS
RADIUS PATH MACHINE
VERTICAL PATH MACHINE
11
B-26133

DECALS (Cont'd)
(Rear)

ef No	Part Number	Description	Remarks	Serial Number	Qty
1	6904765	KIT, DECAL	Except where noted, includes decals from this ILL. & ILL. B26132		1
2	6560573	DECAL	muffler		1
3	6708929	DECAL	coolant		1
4	6578368	DECAL	push to release stop		1
5	6577754	DECAL	warning		2
6	6732774	DECAL	lift arm support		1
7	6733996	DECAL	warning - engine coolant		1
8	6727595	DECAL	tie down		3
9	6735901	DECAL	Bobcat		1
10	6735864	DECAL	IR logo		2
11	6734534	DECAL	service checklist & schedule		1
12	6708941	DECAL	warning		2
13	6809511	DECAL	hose & tube danger		2
14	6579385	DECAL	85db noise level - European - Not In Kit		1
15	6717343	DECAL	danger		2
16	6713507	DECAL	stay clear - European - Not in Kit		2
7	6726303	DECAL	removeable rear window		1

ELECTRICAL CONNECTOR KIT
(7-Pin)

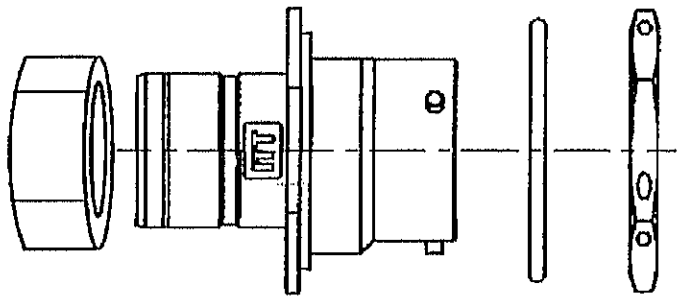

2

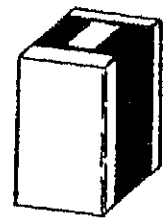

1

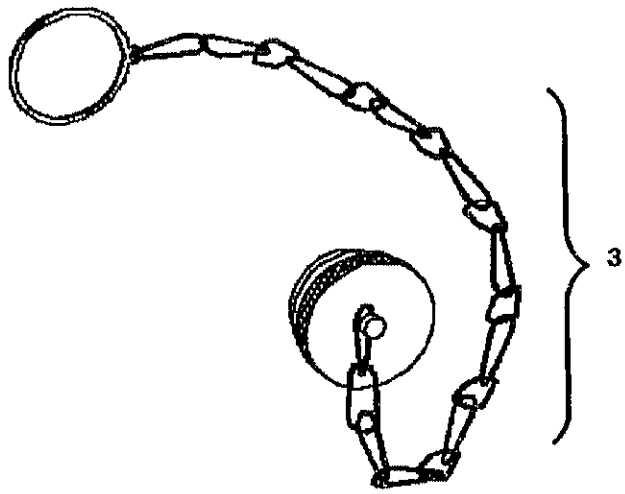

3

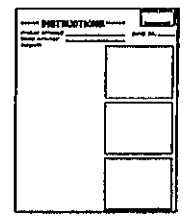

4

P–16385

ELECTRICAL CONNECTOR KIT (Cont'd)
(7-Pin)

Ref No	Part Number	Description	Remarks	Serial Number	Qty
1	6727176	KIT			1
2	6674802	CONNECTOR	7-pin		1
2	6669549	SOCKET	small		4
2	6677136	SOCKET	12 ga		3
3	6675026	CAP			1
4	6901076	INSTRUCTIONS			1

ELECTRICAL CONTROLS KIT
(7 Pin Attachments)

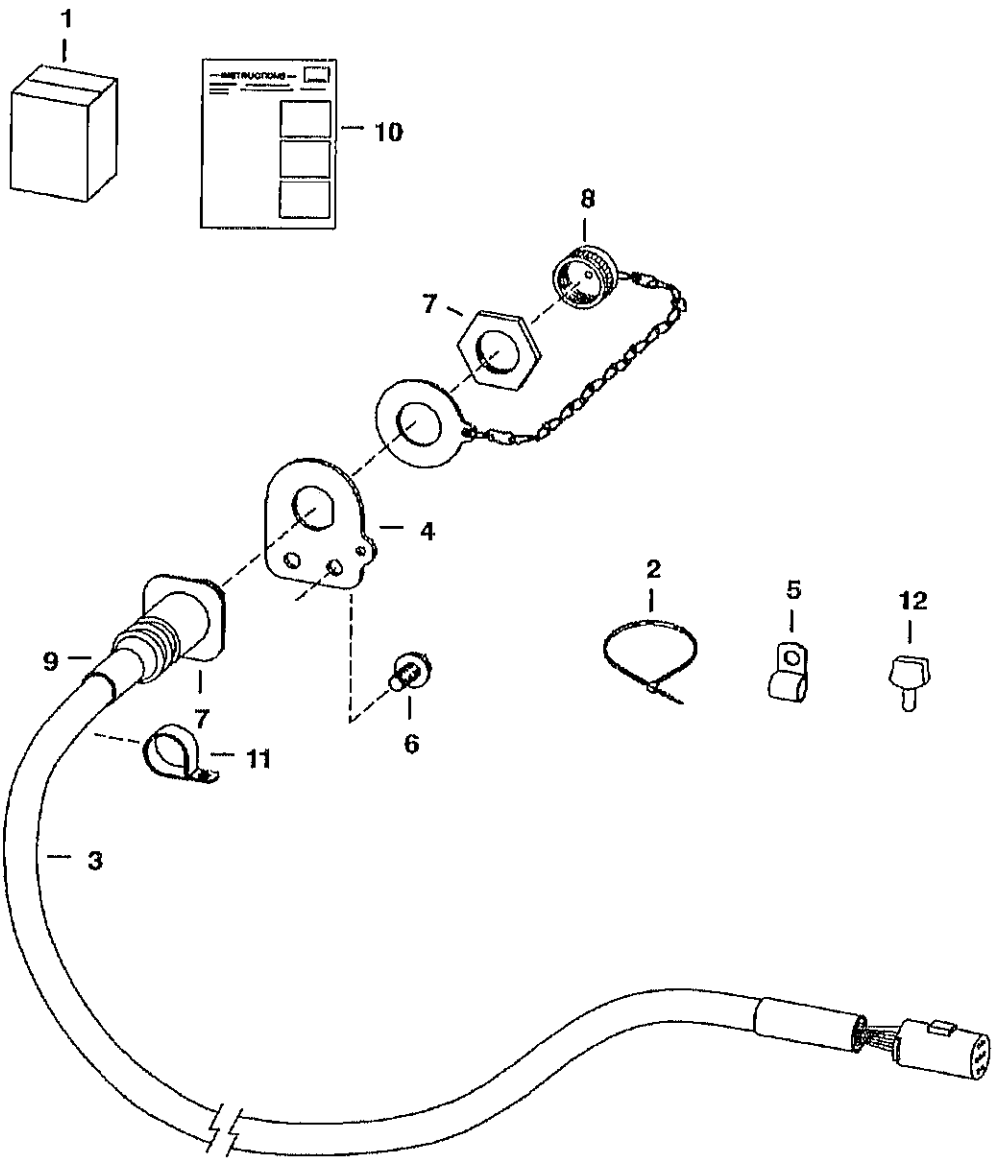

ELECTRICAL CONTROLS KIT (Cont'd)
(7 Pin Attachments)

Ref No	Part Number	Description	Remarks	Serial Number	Qty
1	6733142	KIT	Ref. 2-12		1
2	6624289	CABLE TIE			7
3	6718426	HARNESS	W/Ref. 4 & 7		1
4	6718750	MOUNT			1
5	30H27	CLAMP			6
6	84G3112	BOLT 5			8
7	6674802	CONNECTOR	See Illustration ELECTRICAL CONNECTOR KIT/ P16385 7-pin		1
7	6669549	SOCKET	small		4
7	6677136	SOCKET	large - 12 ga.		3
8	6675026	CAP			1
9	6674799	ADAPTER	heat shrink		1
10	6675281	MOUNT			1
11	30H35	CLAMP 10			1
12	6901871	INSTRUCTIONS			1

ELECTRICAL CONTROLS KIT
(14 Pin Attachments)

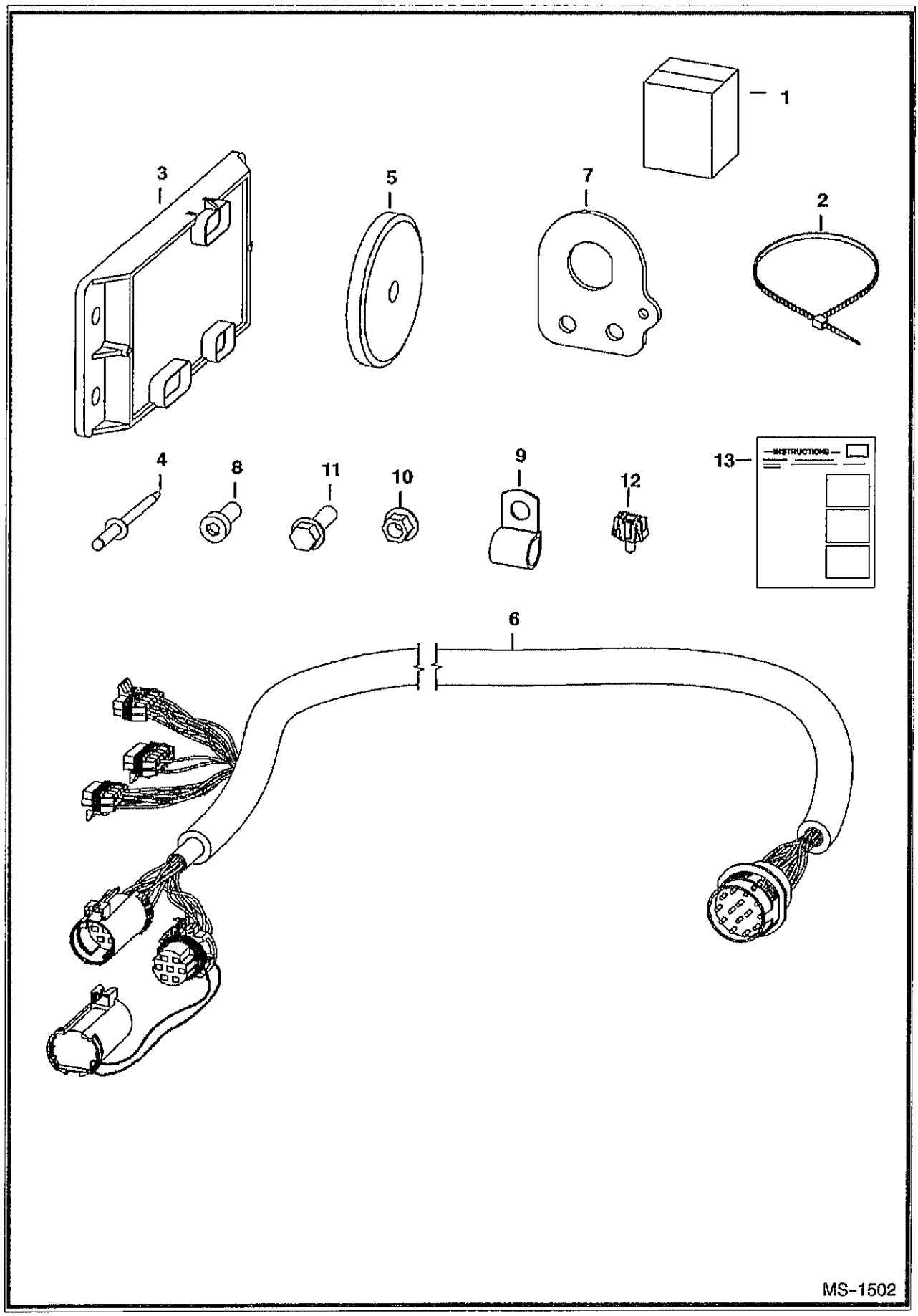

ELECTRICAL CONTROLS KIT (Cont'd)
(14 Pin Attachments)

Ref No	Part Number	Description	Remarks	Serial Number	Qty
1	6733136	KIT			1
2	6624289	CABLE TIE			4
3	6678675	CONTROLLER			1
4	6704892	RIVET			1
5	6719448	MAGNET			2
6	6732730	HARNESS			1
7	6733144	MOUNT			1
8	25G612	SCREW			2
9	30H50	CLIP			6
10	83D6	NUT 5			2
11	84G3112	BOLT 5			8
12	6675281	MOUNT			1
13	6901872	INSTRUCTIONS			1

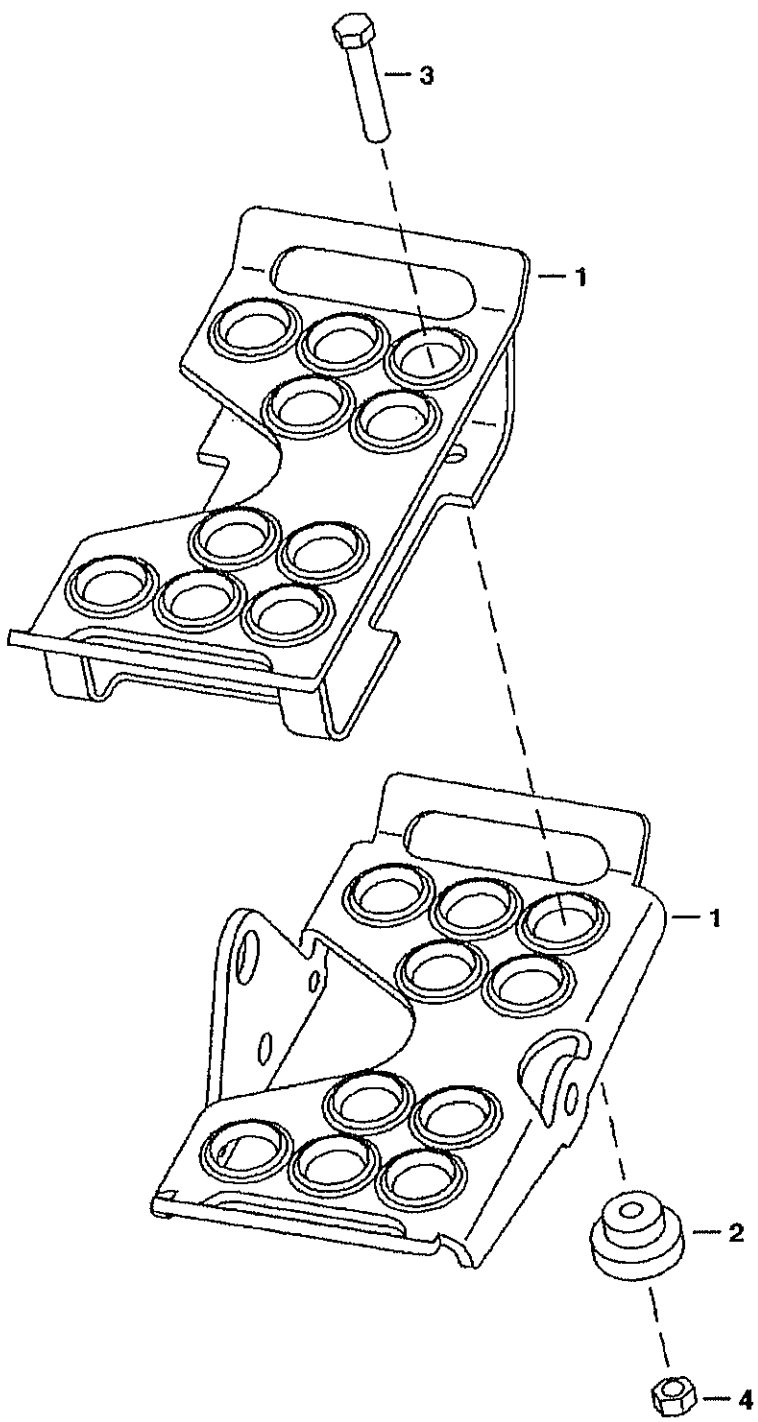
3
1
1
2
4
PE–2455

EUROPEAN ACCESSORIES (Cont'd)
(Pedal Extenders)

Ref No	Part Number	Description	Remarks	Serial Number	Qty
1	6713115	PEDAL	extender		2
2	6713116	BUSHING			8
3	17C516	BOLT			8
4	85D5	NUT 5			8

EXPORT ACCESSORIES
(Road Kit)

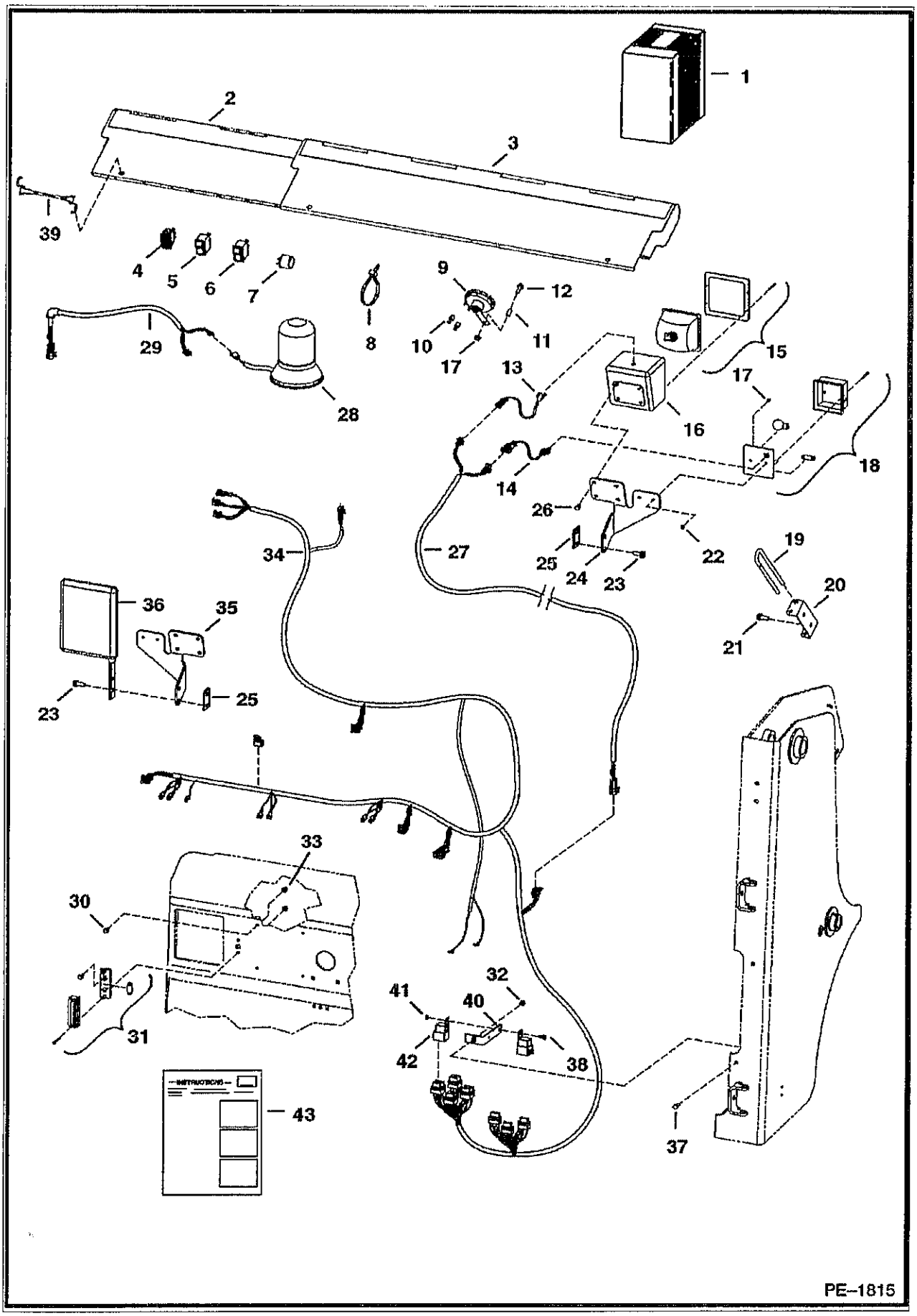

EXPORT ACCESSORIES (Cont'd)
(Road Kit)

ef No	Part Number	Description	Remarks	Serial Number	Qty
1		KIT	SALES - Order 6731237 - For Europe Only		1
2	6713841	SHIELD	bucket		1
3	6714820	SHIELD	bucket		1
3	6713840	DECAL			1
4	6676872	TURN SIGNAL			1
5	6668815	SWITCH	hazard		1
6	6668816	SWITCH	beacon		1
7	6557904	FLASHER			1
8	6624289	CABLE TIE			26
9	6671106	HORN			1
10	6675064	TERMINAL			2
11	6732206	SPACER			1
12	35C536	BOLT			1
13	6713994	HARNESS	adapter - headlight		2
14	6713993	HARNESS	adapter - light		2
15	6665728	LIGHT	front		2
16	6707804	HOUSING			2
7	85G808	SCREW			4
18	6665727	LIGHT	front turn		2
19	6731222	PIN	Bob-tach		1
20	6731973	HOLDER	pin		1
21	84G3712	BOLT			2
22	12D8	NUT			4
23	84G3716	SCREW 5			4
24	6713151	MOUNT	light - R.H.		1
25	6735825	SPACER			2
26	17C508	SCREW			8
27	6731239	HARNESS	boom light		2
28	6675523	BEACON	light		1
29	6718872	HARNESS	cab exterior		1
30	35C410	BOLT 5			4
31	6665729	LIGHT			1
32	55D5	NUT			2
33	83D4	NUT 10			4
34	6726430	HARNESS	engine/tail - Italian		1
35	6713150	MOUNT	light - L.H.		1
6	6665860	KIT	side mirror		1
37	17C512	BOLT 5			1
38	17C410	BOLT 10			2
39	6731819	STRAP	rubber		3
40	6702650	MOUNT	fuse		1
41	85D4	NUT 5			2
42	6670312	RELAY	magnetic		4
43	6901663	INSTRUCTIONS			1

EUROPEAN ACCESSORIES
(Road Kit) (SJC)

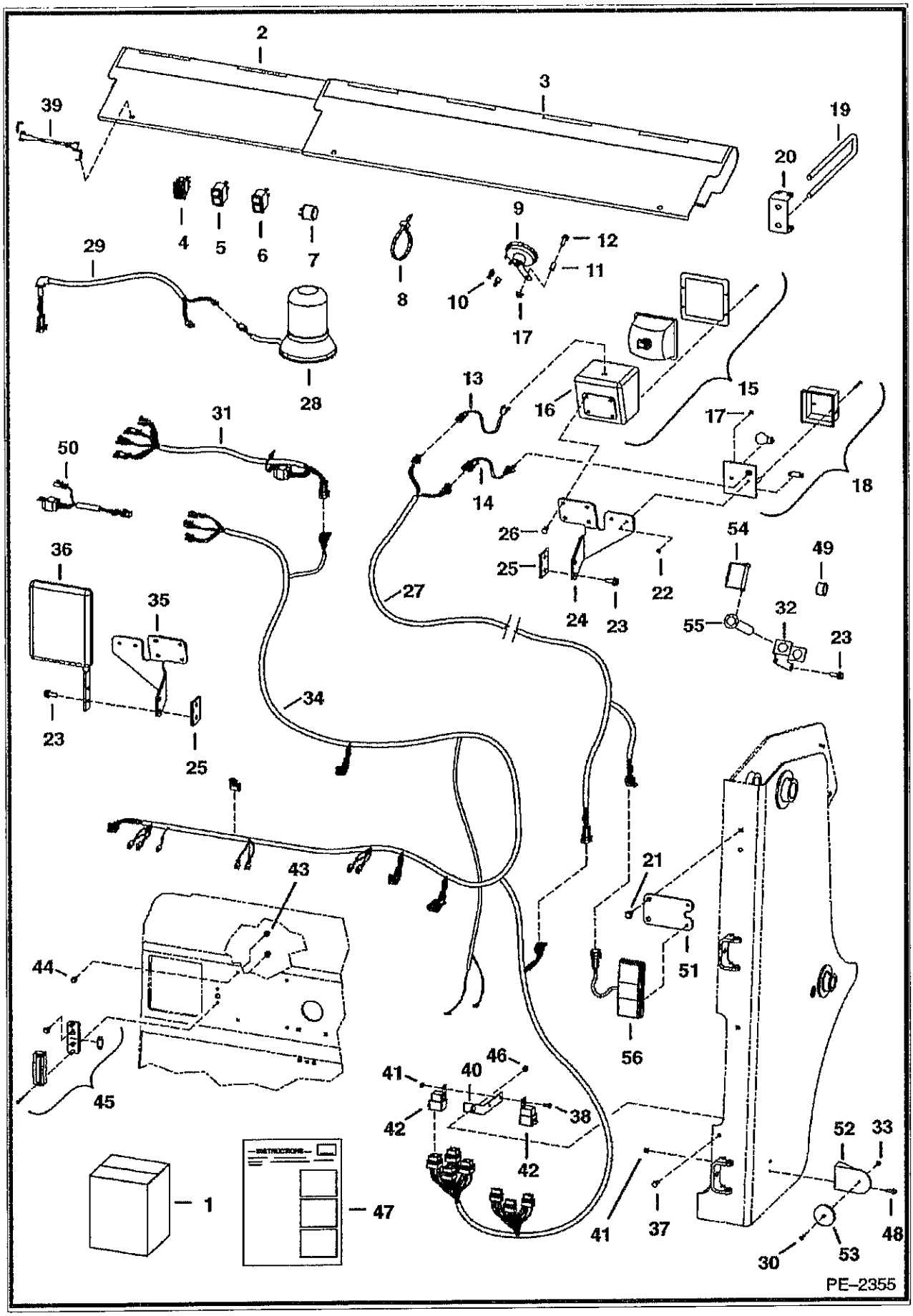

EUROPEAN ACCESSORIES (Cont'd)
(Road Kit) (SJC)

ef No	Part Number	Description	Remarks	Serial Number	Qty
1		KIT	SALES - Order 6732387 from SALES		1
2	6713841	SHIELD	bucket		1
3	6713842	SHIELD	bucket		1
4	6676872	TURN SIGNAL			1
5	6668815	SWITCH	hazard		1
6	6668816	SWITCH	beacon		1
7	6557904	FLASHER			1
8	6624289	CABLE TIE			20
9	6671106	HORN			1
10	6675064	TERMINAL			2
11	6732206	SPACER			1
12	35C536	BOLT			1
13	6713994	HARNESS	adapter - headlight		2
14	6713993	HARNESS	adapter - light		2
15	6665728	LIGHT	front		2
16	6707804	HOUSING			2
17	85G808	SCREW			4
8	6665727	LIGHT	front turn		2
19	6731222	PIN	Bob-tach		1
20	6731973	HOLDER	pin		1
21	84G3712	BOLT			4
22	12D8	NUT			4
23	84G3716	SCREW 5			6
24	6713151	MOUNT	light - R.H.		1
25	6735825	SPACER			2
26	17C508	SCREW			8
27	6732081	HARNESS	boom light		2
28	6675523	BEACON	light		1
29	6718872	HARNESS	cab exterior		1
30	85G1010	SCREW			2
31	6732045	HARNESS	AWS stop lights		1
32	6733296	BRACKET	pin holder		1
33	14D10	NUT			2
34	6726430	HARNESS	engine/tail - Italian		1
35	6713150	MOUNT	light - L.H.		1
36	6665860	KIT	side mirror		1
7	17C512	BOLT 5			1
38	17C410	BOLT 10			2
39	6731819	STRAP	rubber		3
40	6702650	MOUNT	fuse		1
41	85D4	NUT 5			6
42	6670312	RELAY	magnetic		4
43	83D4	NUT 10			4
44	35C410	BOLT 5			4
45	6665729	LIGHT	license plate		1
46	55D5	NUT			2
47	6901909	INSTRUCTIONS			1
48	35C412	BOLT			4
49	6733270	MOUNT			1
50	6733851	HARNESS	SJC stop lights		1
51	7101104	MOUNT	rear lights		2
52	6670620	MOUNT	reflector		2
53	6670621	LENS	reflector		2
4	6670668	PIN			1

EUROPEAN ACCESSORIES (Cont'd)
(Road Kit) (SJC)

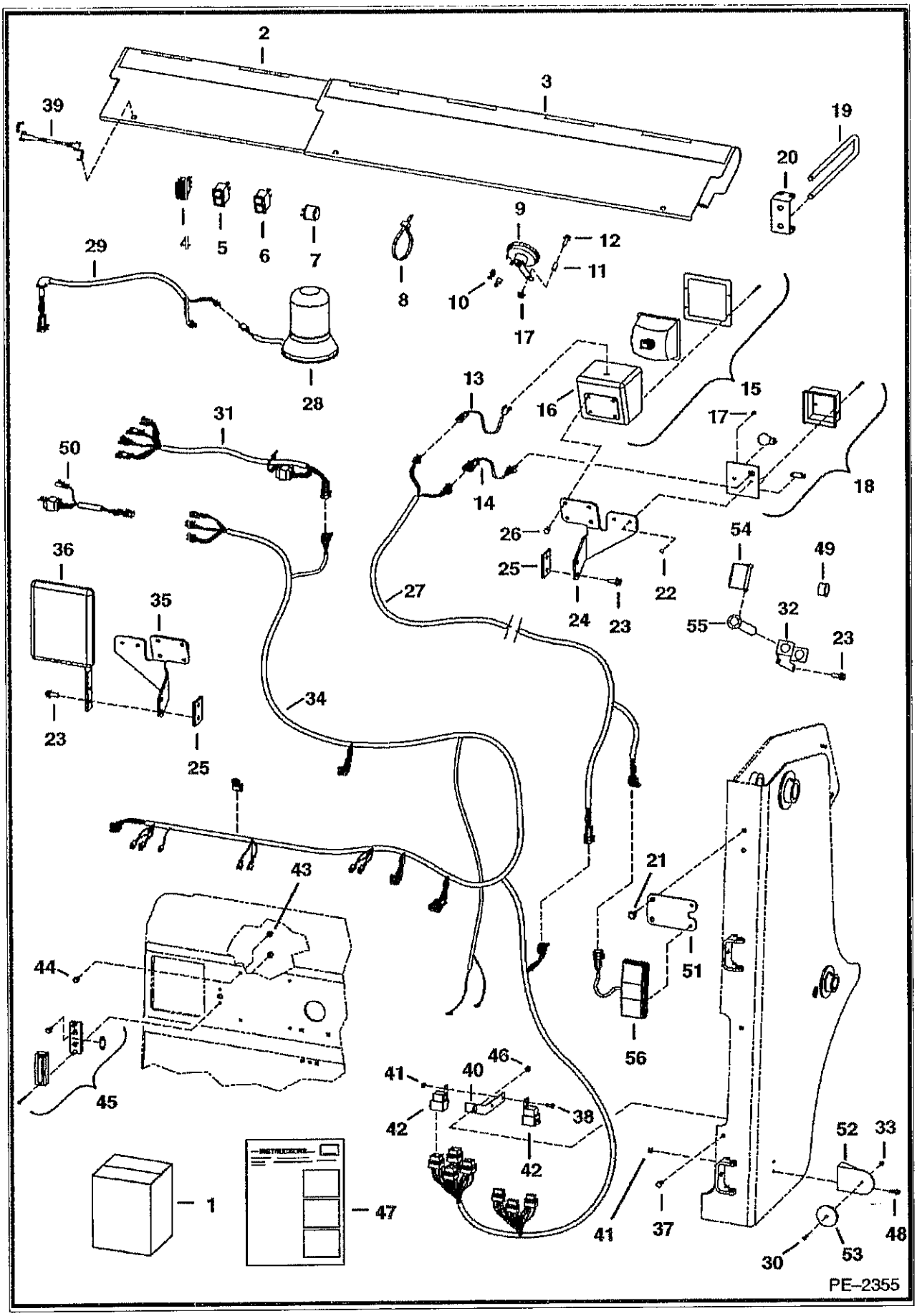

EUROPEAN ACCESSORIES (Cont'd)
(Road Kit) (SJC)

⌟f No	Part Number	Description	Remarks	Serial Number	Qty
55	6713990	PIN	B/T lock		1
56	7101384	LIGHT	rear		2
56	6686096	LENS	amber - turn		1
56	6686097	BULB	turn		1
56	6686098	BULB	stop		1
56	6686099	LENS	red - stop		1
56	6686100	SCREW			2

FIRE EXTINGUISHER

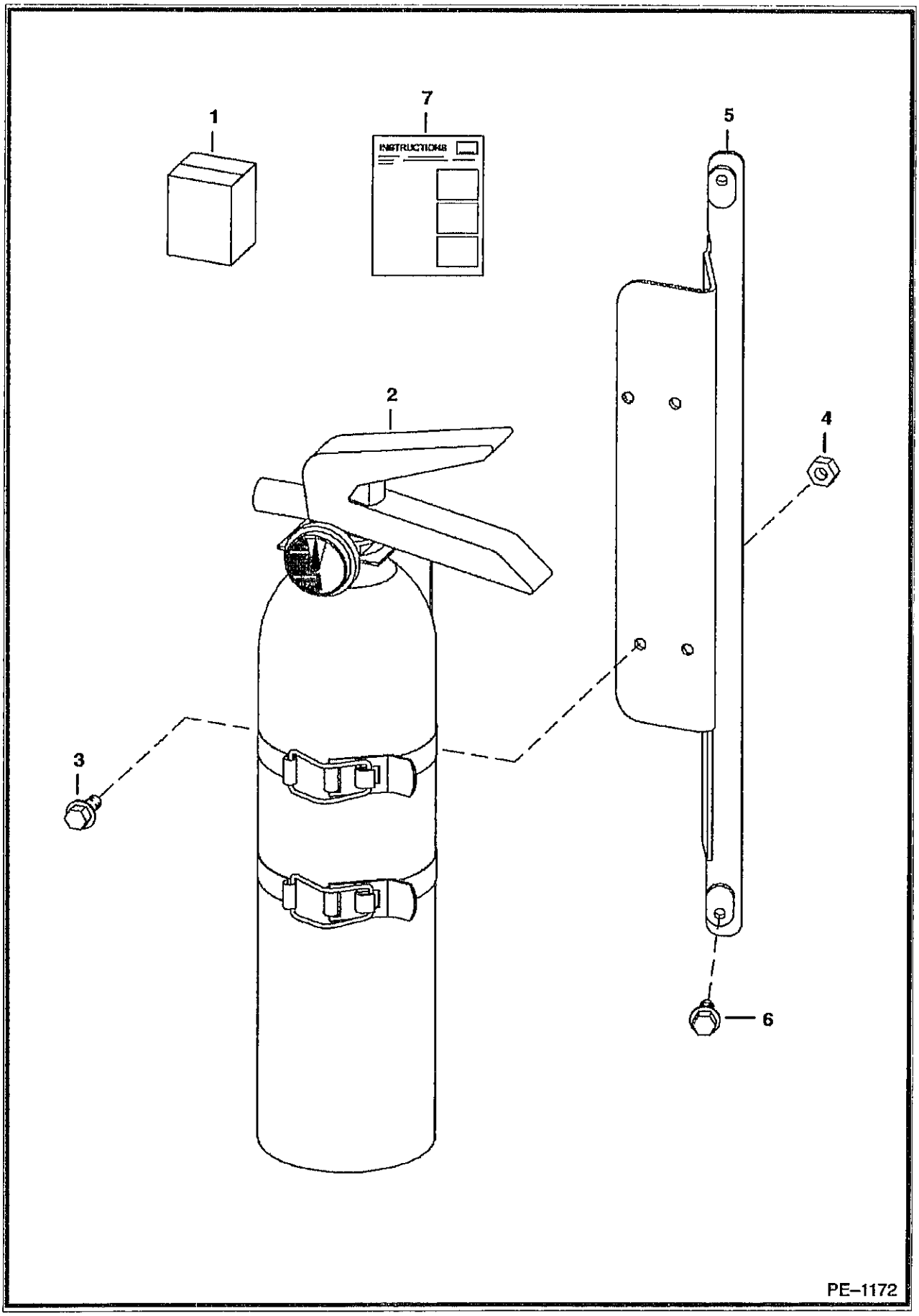

FIRE EXTINGUISHER (Cont'd)

Ref No	Part Number	Description	Remarks	Serial Number	Qty
1	6725898	KIT	fire extinguisher - Ref. 2-7		1
2	6675581	EXTINGUISHER			1
3	45G1006	BOLT			4
4	12D10	NUT			4
5	6725906	BRACKET			1
6	31C410	BOLT			2
7	6901025	INSTRUCTIONS			1

FLASHER LIGHTS
(4-Way) (Turn Indicators)

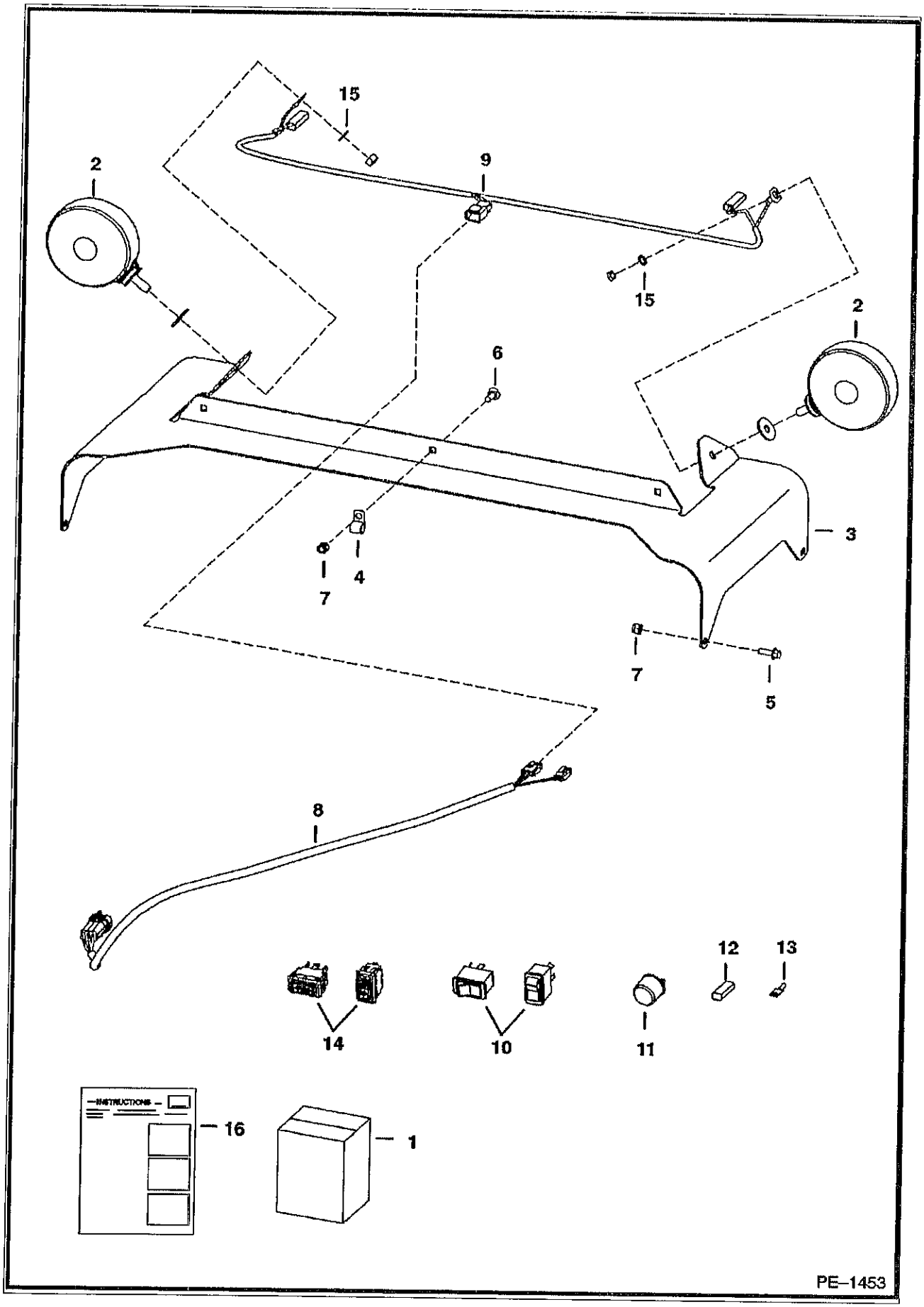

FLASHER LIGHTS (Cont'd)
(4-Way) (Turn Indicators)

ef No	Part Number	Description	Remarks	Serial Number	Qty
1	6718411	KIT	flasher lights - Ref. 2, 3 & 5-16 - If loader is not equipped W/ heater, air conditioning, SJC, ACS, power bob-tach, non-power port plug-in strobe lights and/or rotating beacon, also order 7116260 deluxe harness		1
2	6517516	LIGHT			2
3	6718326	MOUNT			1
4	30H21	CLAMP 10	not in kit		3
5	35C412	BOLT			4
6	37C412	BOLT			3
7	59D4	NUT 5			7
8	6718872	HARNESS	ext. cab		1
9	6718873	HARNESS	4-way flasher		1
10	6665316	SWITCH	horizontal		1
10	6668815	SWITCH	vertical		1
11	6557904	FLASHER			1
12	614142B	SLEEVE			1
3	6515131	TERMINAL			1
14	6675835	TURN SIGNAL	horizontal		1
14	6676872	TURN SIGNAL	vertical		2
15	6E5	WASHER	lock		1
16	6900848	INSTRUCTIONS			

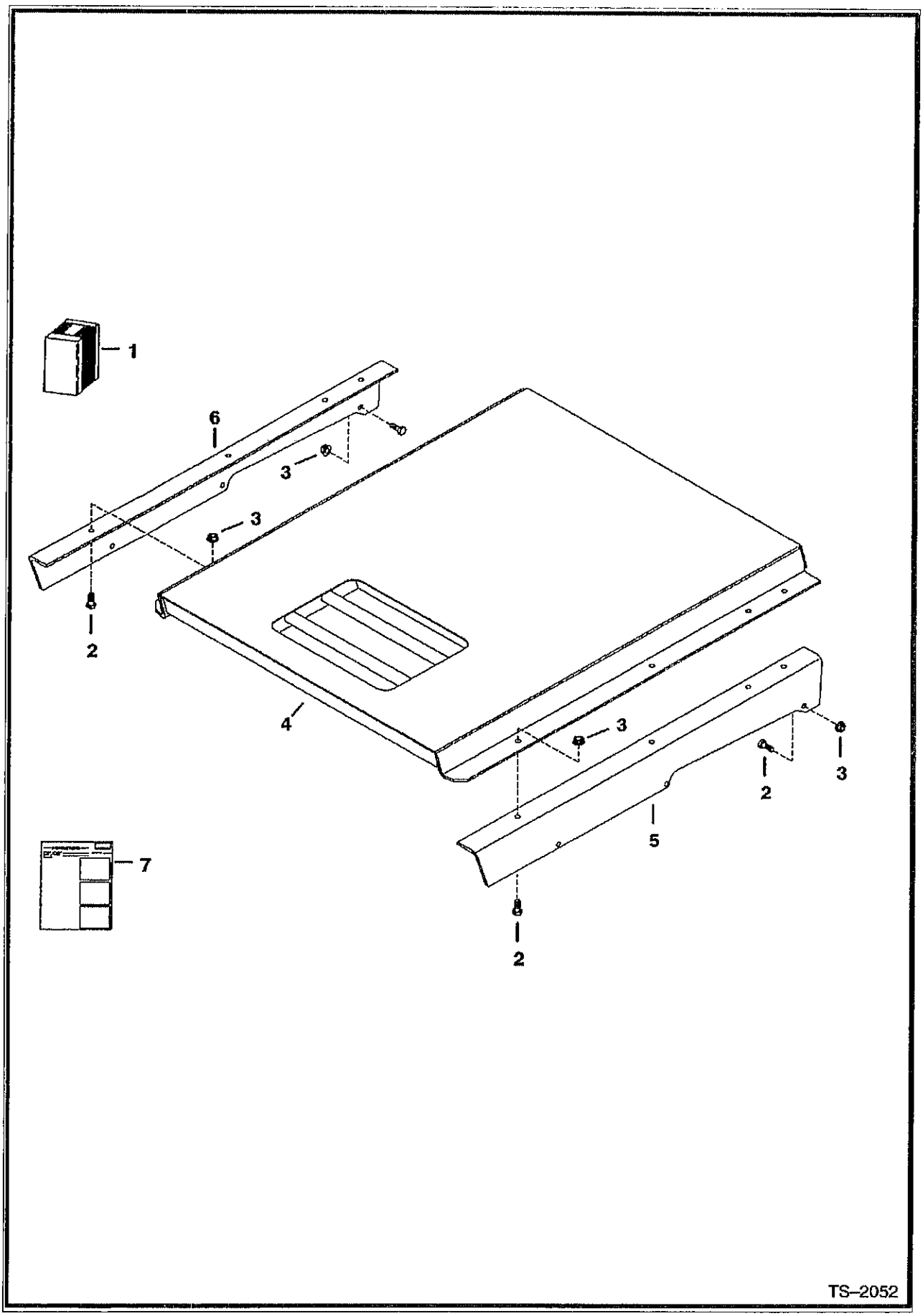
1
6
3
3
2
4
3
2
3
5
7
2
TS–2052

F.O.P.S. KIT (Cont'd)

Ref No	Part Number	Description	Remarks	Serial Number	Qty
1	6718924	KIT	Ref. 2-7		1
2	17C616	BOLT 5			14
3	83D6	NUT 5			14
4	6702402	SHIELD			1
5	6718833	BRACKET	L.H.		1
6	6718834	BRACKET	R.H.		1
7	6720592	INSTRUCTIONS			1

FRONT AUXILIARY
(R.H. Kit)

NOTE: This front aux kit requires the rear aux kit or factory installed option in order to operate.

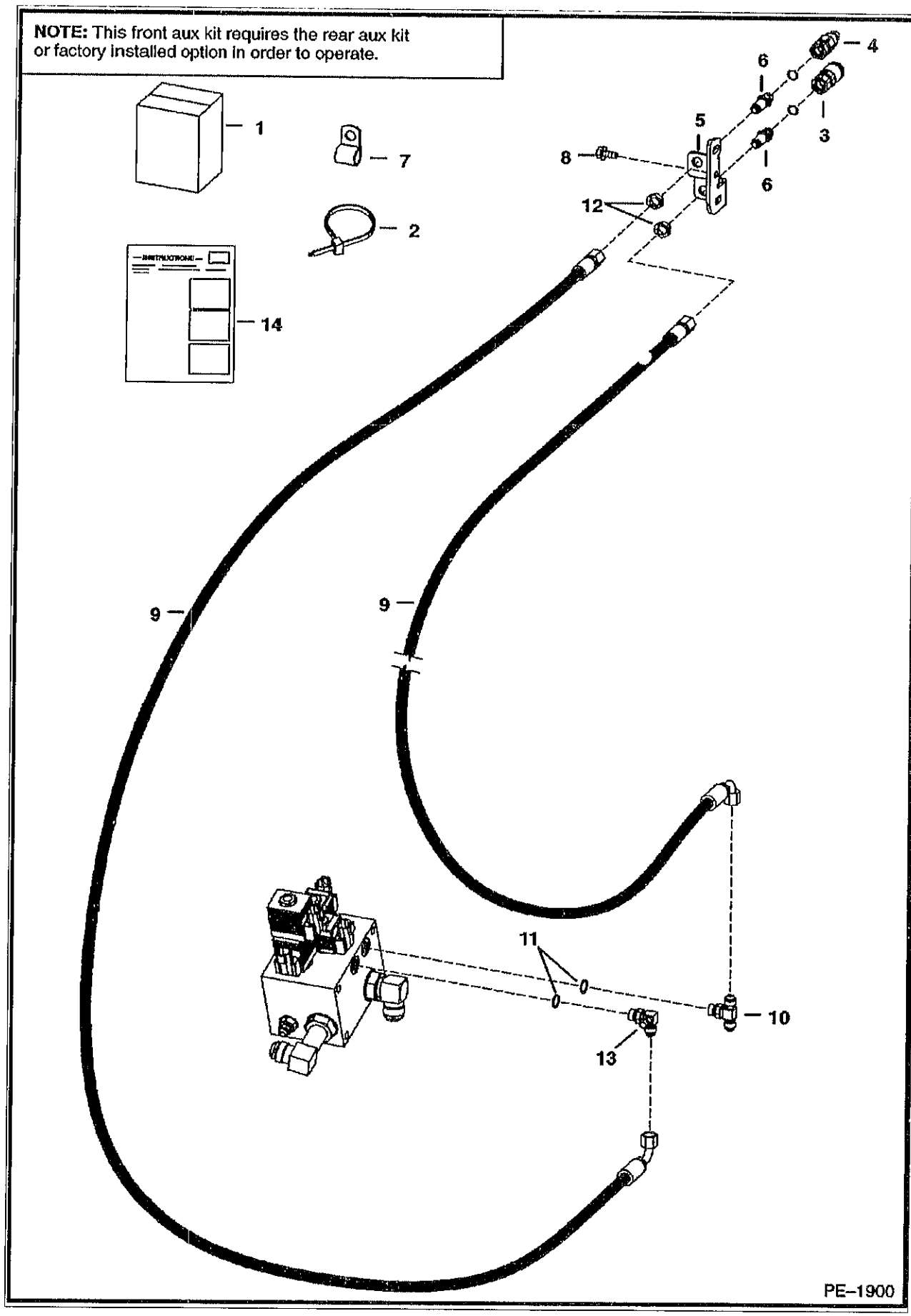

FRONT AUXILIARY (Cont'd)
(R.H. Kit)

Ref No	Part Number	Description	Remarks	Serial Number	Qty
1	6736655	KIT	this front aux kit requires the rear aux kit, or factory installed option in order to operate		1
2	6624289	CABLE TIE			10
3	6667803	COUPLER	female		1
4	6667804	COUPLER	male		1
4	6669657	SEAL KIT			x
5	6711674	MOUNT	quick coupler		1
6	6716089	CONNECTOR	bulkhead		2
7	31H42	CLIP			4
8	84G3716	SCREW 5			6
9	6736664	HOSE			2
10	19KB606	TEE	W/Ref. 11		1
11	79K6	O RING 10			x
12	86F5	NUT			2
13	6725182	TEE	W/Ref. 11		1
14	6901916	INSTRUCTIONS			1

GAS SPRING KIT

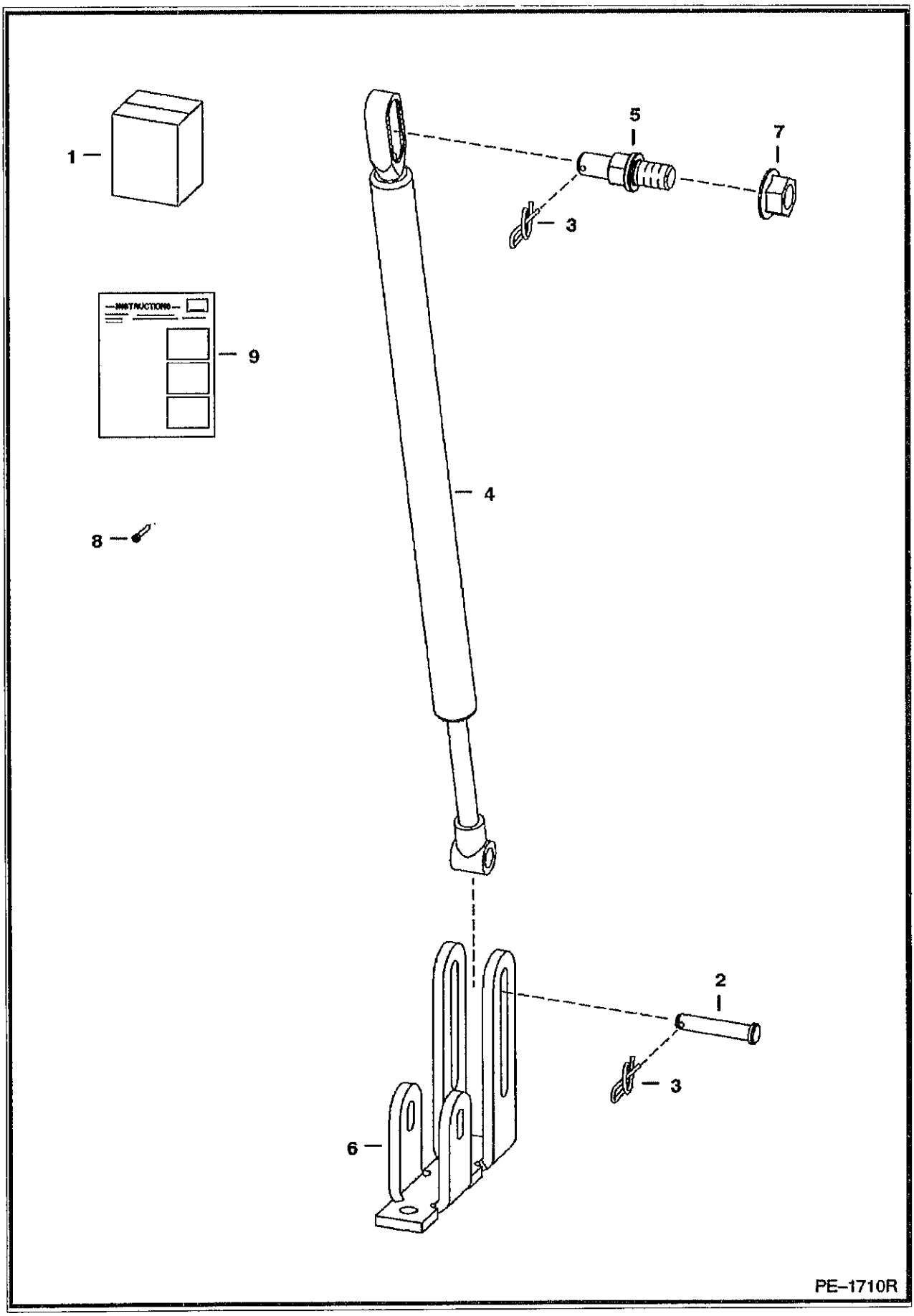

GAS SPRING KIT (Cont'd)

ef No	Part Number	Description	Remarks	Serial Number	Qty
1	6732928	KIT			1
2	6567743	PIN			1
3	6631418	PIN			2
4	6678292	GAS SPRING			1
5	6719064	MOUNT			1
6	6729141	MOUNT			1
7	97D8	NUT			1
8	21G804	BOLT			1
9	6901816	INSTRUCTIONS			1

HEATER & A/C
(Heater Kit)

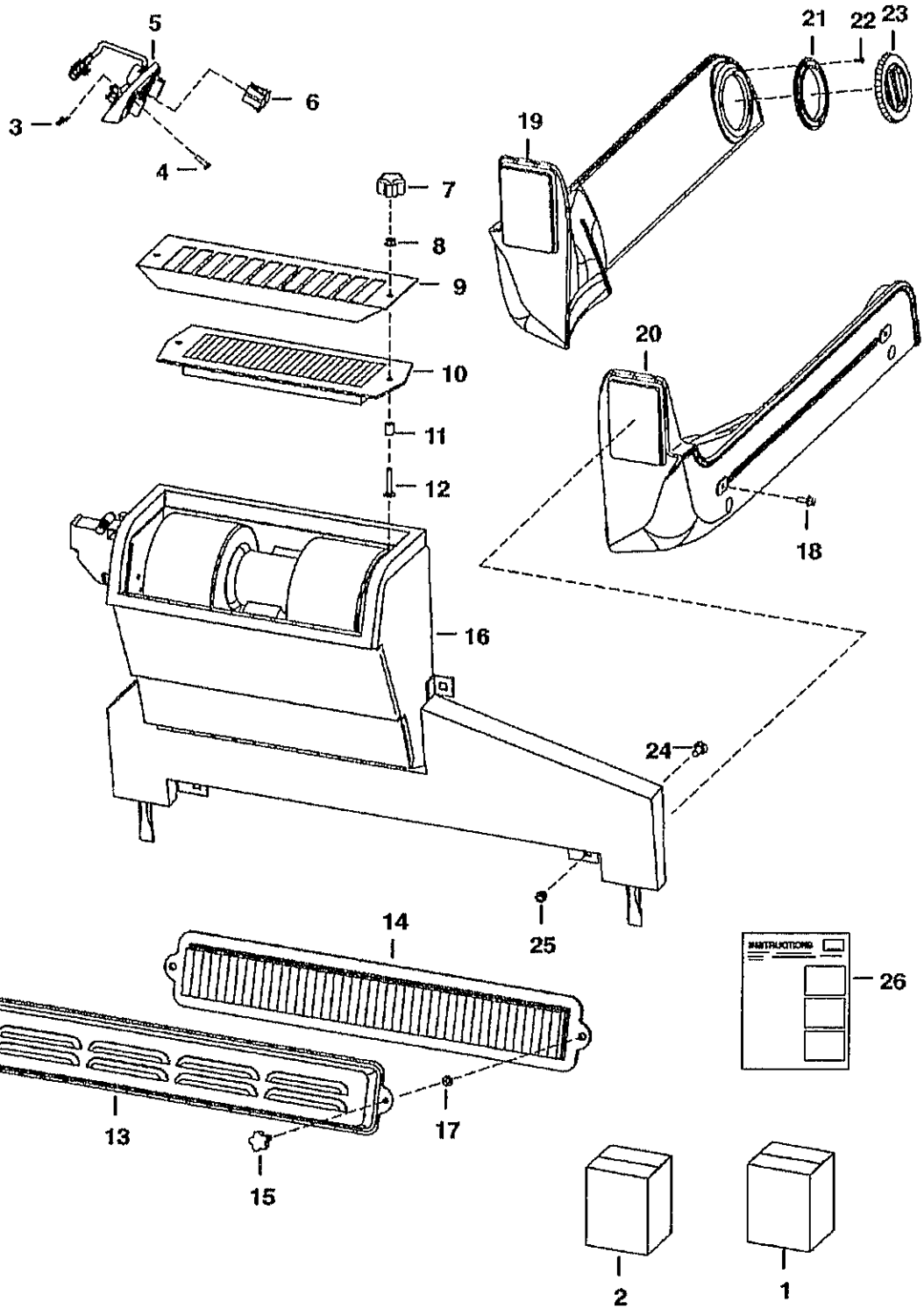

HEATER & A/C (Cont'd)
(Heater Kit)

Ref No	Part Number	Description	Remarks	Serial Number	Qty
1	7116899	KIT HEATER CAB	If loader is not equipped W/ beacon, air conditioning, SJC, ACS, power bob-tach, non-power port plug-in strobe lights and/or non-power port plug-in 4 way flashers, also order 7116260 deluxe harness		1
2	6725513	PACKAGE	Decal		1
3	6669091	CLIP	retainer		3
4	6669224	BOLT			3
5	6674228	PANEL	control		1
5	6640699	CONNECTOR			1
5	6718579	DECAL			1
5	6718887	PANEL			1
5	6675176	SWITCH	blower		1
5	6675177	KNOB			1
5	6675846	POTENTIOMETER			1
6	6675181	PLUG	switch hole - AC		1
7	6681614	KNOB			2
8	59D4	NUT 5			2
9	6718175	SCREEN	filter		1
10	6678207	FILTER	recirculation		1
11	6718837	SPACER			2
12	37C424	BOLT			2
13	6727847	COVER	W/ Ref. 15 & 17		1
14	6677983	FILTER			1
15	6726386	KNOB			2
16	6688543	HEATER	See Illustration HEATER & A/C/ PE3077		1
17	6676516	NUT	Push		2
18	35C410	BOLT 5			4
19	6735246	DUCT	L.H.		1
20	6735245	DUCT	R.H.		1
21	6675179	FLANGE	round		4
22	57G608	SCREW			16
23	6674231	VENT	round		4
24	37C512	BOLT			4
25	59D5	NUT 5			4
6	6904255	INSTRUCTIONS			1

HEATER & A/C
(Heater Assembly)

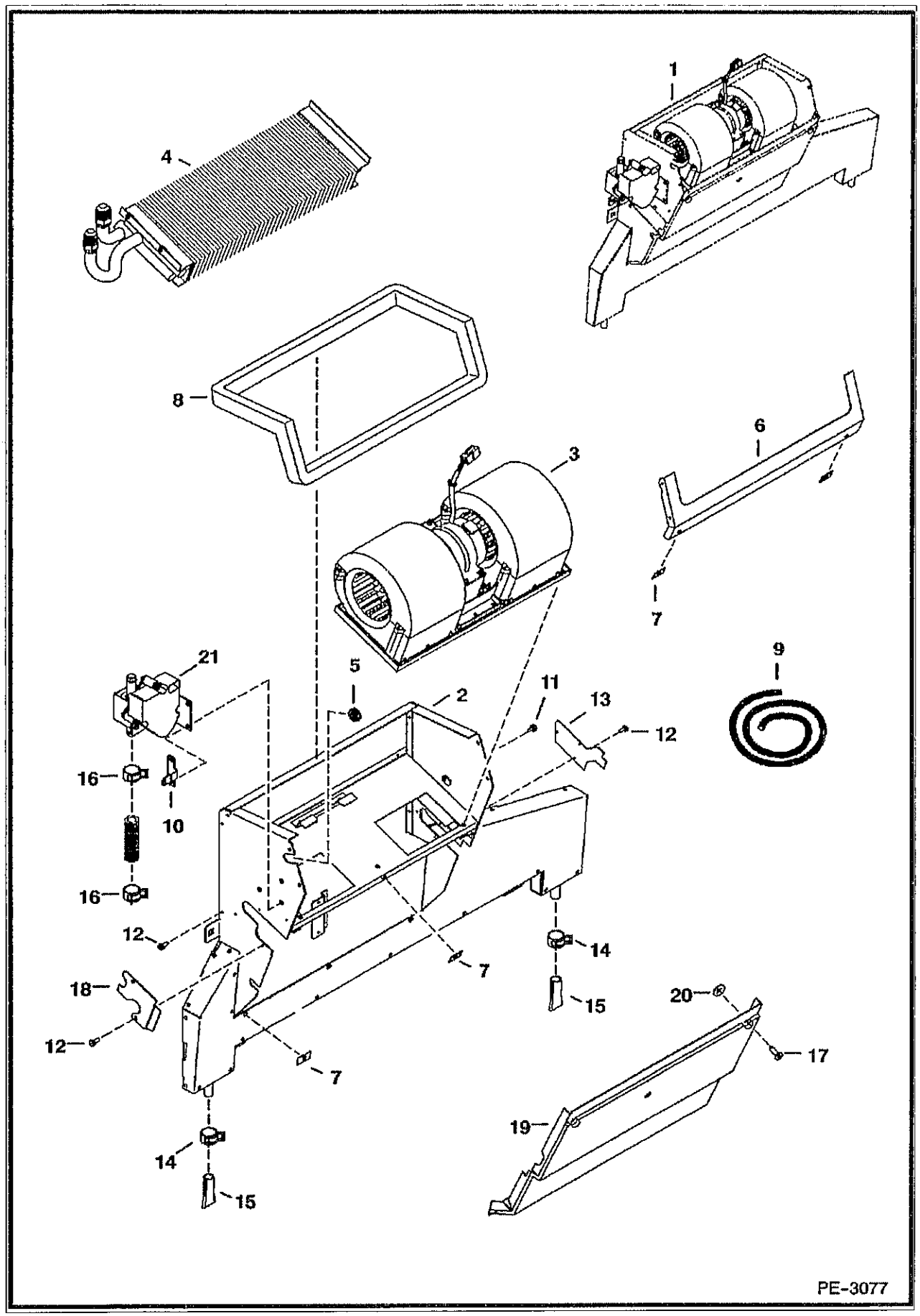

HEATER & A/C (Cont'd)
(Heater Assembly)

Ref No	Part Number	Description	Remarks	Serial Number	Qty
1	6688543	HEATER	Ref. 2-21		1
2	6690478	HOUSING			1
3	6689762	BLOWER	See Illustration HEATER & A/C/ B26156 assy		1
4		COIL	See Illustration HEATER & A/C/ PE1228 NAP - Order 6689770 Heater Coil kit		1
5	6690482	GROMMET			1
6	6678152	SEAL			1
7	6677115	RECEPTACLE			6
8		SEAL	NAP - 48.75"(1238,25mm) long - Order Ref. 9		1
9	6677111	SEAL	bulk - Sold Per Foot		x
10	6690481	SEAL	harness		1
11	6677119	SCREW	sheetmetal		7
12	6677118	SCREW	w/washer		4
13	6690487	COVER			1
14	6675510	CLAMP	drain hose		2
15	6675511	DRAIN VALVE			2
16	6675512	CLAMP	hose		2
7	6677117	SCREW	captive		1
18	6690479	COVER			1
19	6690476	COVER			1
20	6677116	RETAINER			6
21	6689696	VALVE			1

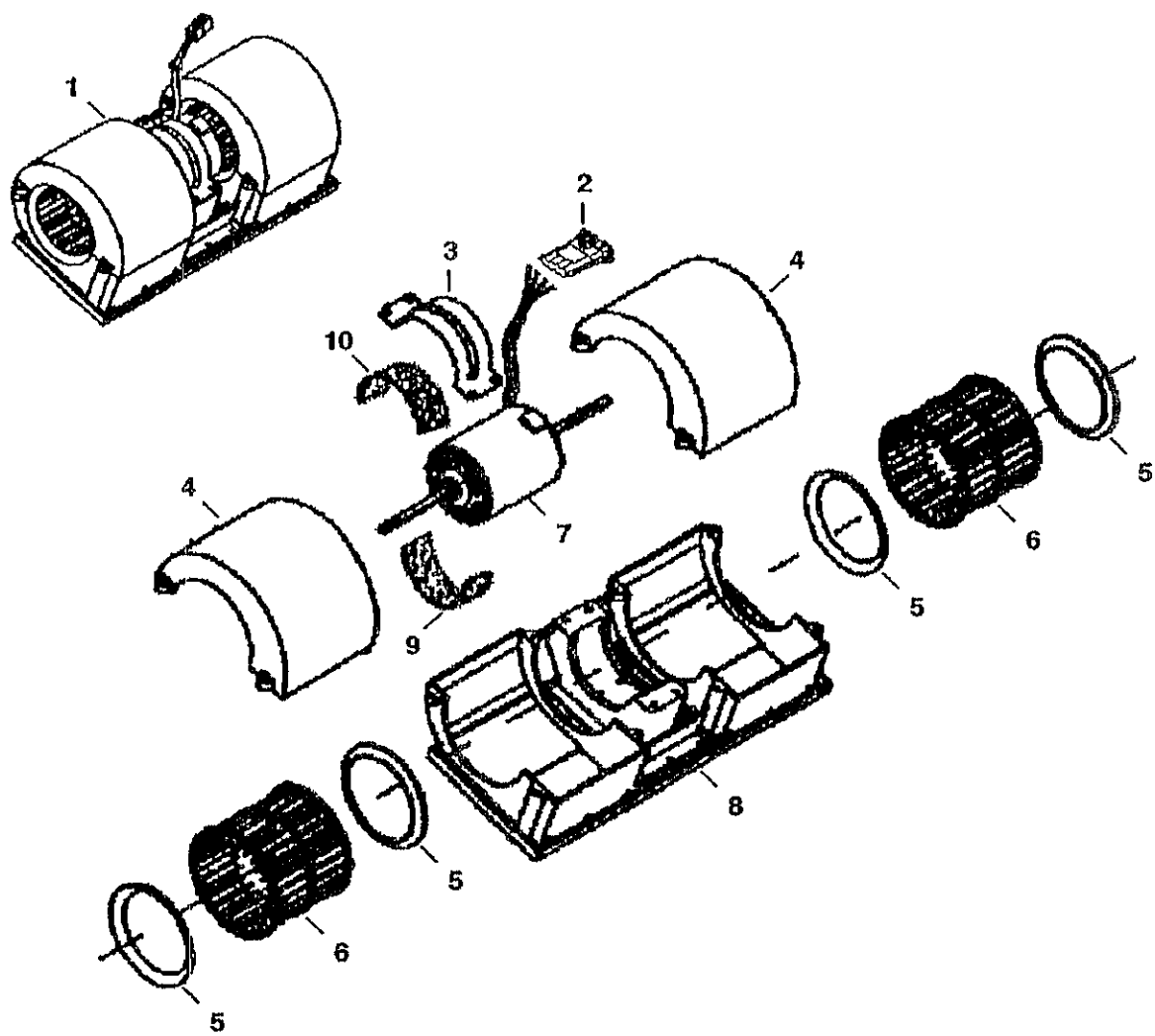

B-26156

HEATER & A/C (Cont'd)
(Blower Assembly)

Ref No	Part Number	Description	Remarks	Serial Number	Qty
1	6689762	BLOWER	Ref. 2-10		1
2	6665017	CONNECTOR	4-pin		1
2	6665018	LOCK	4-pin		1
2	6648312	TERMINAL			4
2	6648320	SEAL			4
2	6650107	SEAL			4
3	6675506	MOUNT			1
4	6675507	COVER			2
5	6675504	RING			4
6	6675505	BLOWER WHEEL			2
6	6676618	CLIP			2
7	6689766	MOTOR	W/ Ref. 2		1
8	6675503	HOUSING			1
9	6689765	PAD	bottom		1
10	6689764	PAD	top		1

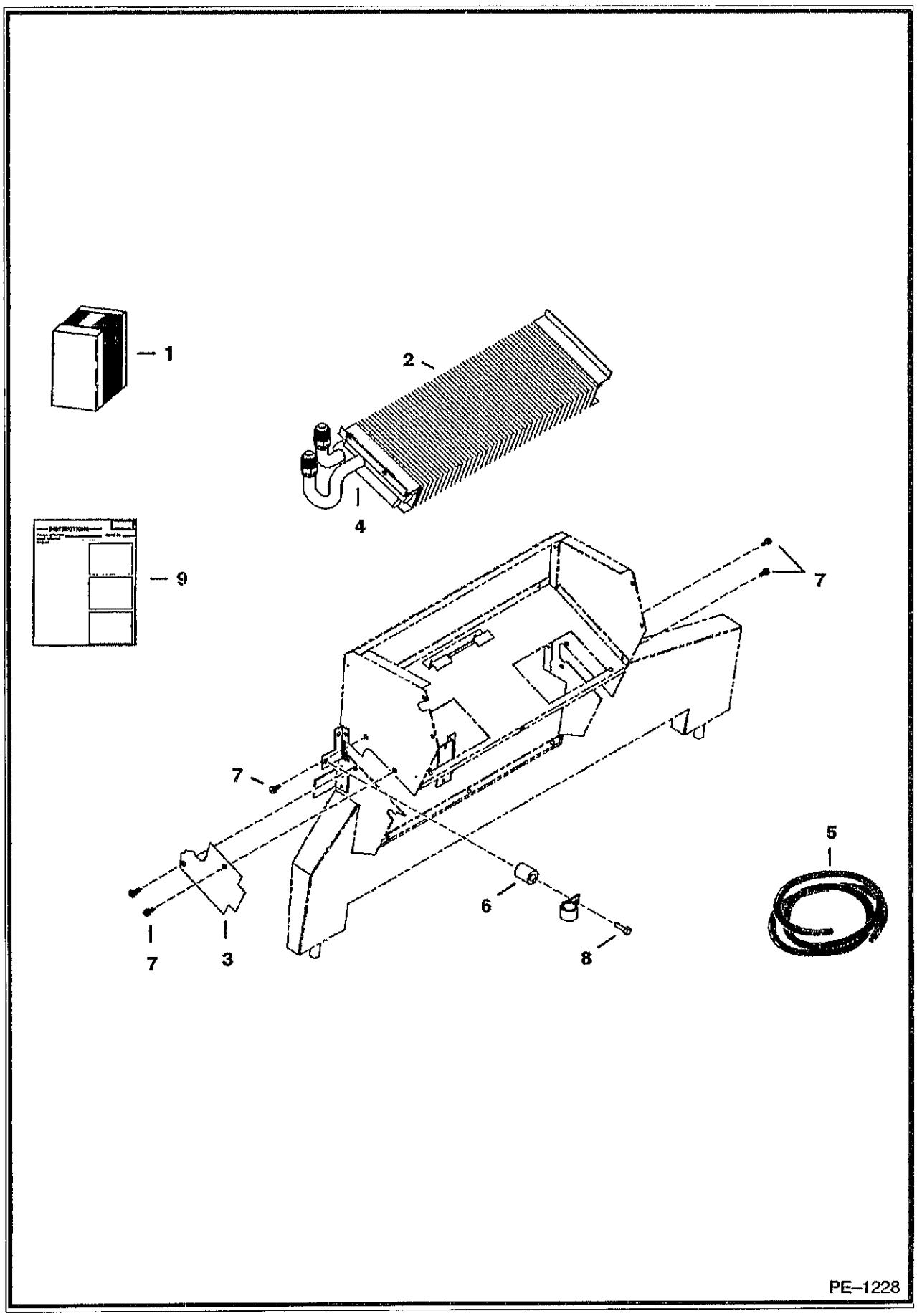
1
2
4
9
7
7
5
6
8
7
3
PE–1228

HEATER & A/C (Cont'd)
(Heater Coil Kit)

Ref No	Part Number	Description	Remarks	Serial Number	Qty
1	6689770	KIT, HEATER COIL	heater coil - barbed hose connectors - Ref. 2 & 4		1
2		HEATER COIL	NSS- barbed hose connectors - Order Ref. 1		1
3	6677504	COVER	.279" (7,1 mm) thick		1
4		INSULATION	NAP - 6" (152mm) long - Order Ref. 5		1
5	6676538	INSULATION	bulk - Sold Per Foot		x
6	6676606	SPACER			1
7	6726621	SCREW			2
8	6676653	SCREW			1
9	6901120	INSTRUCTIONS			1

HEATER & AC
(Heater Plumbing Kit)

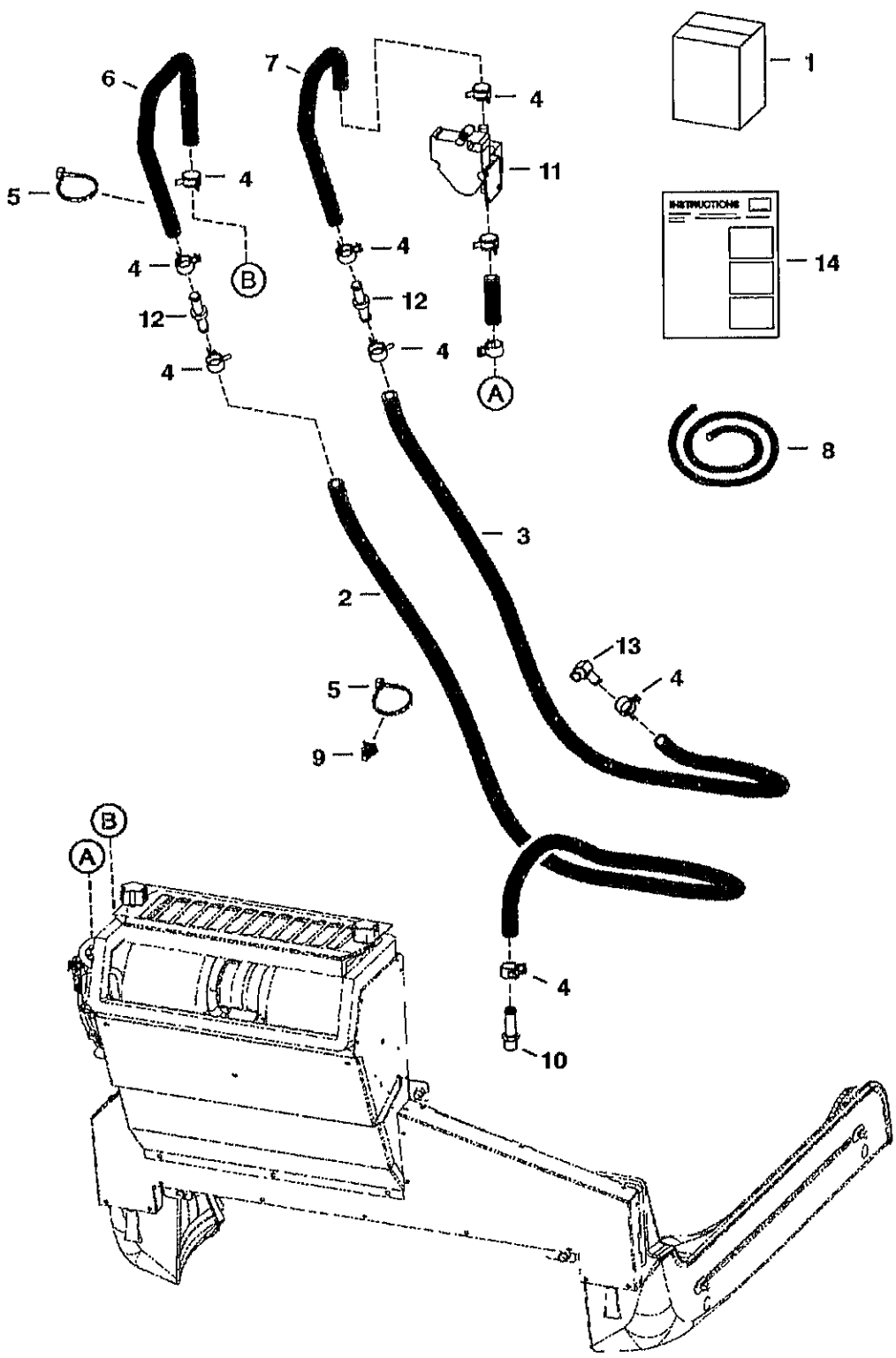

HEATER & AC (Cont'd)
(Heater Plumbing Kit)

Ref No	Part Number	Description	Remarks	Serial Number	Qty
1	7116902	KIT	Ref. 2 - 10, 12 & 13 - for heater kit		1
2		HOSE	NAP - 72 in. (1828,8 mm) long - order Ref. 8 - Was 6733432 [A]		1
3		HOSE	NAP - 84 in. (2133,6 mm) long - order Ref.8 - Was 6732817 [A]		1
4	5HM20	CLAMP			8
5	6624289	CABLE TIE			7
6	7113208	HOSE			1
7	7113209	HOSE			1
8	6565977	HOSE	bulk - sold per foot		x
9	6678666	TREE MOUNT	tree		2
10	6731084	ADAPTER			1
11		VALVE	See Illustration HEATER & A/C/ PE2805 heater - not in kit		1
12	6732023	CONNECTOR			2
13	6731085	ELBOW			1
14	6904255	INSTRUCTIONS	INSTRUCTIONS Not in Kit - part of heater kit - Was 6903305 [B]		1

HEATER & A/C
(A/C Kit)

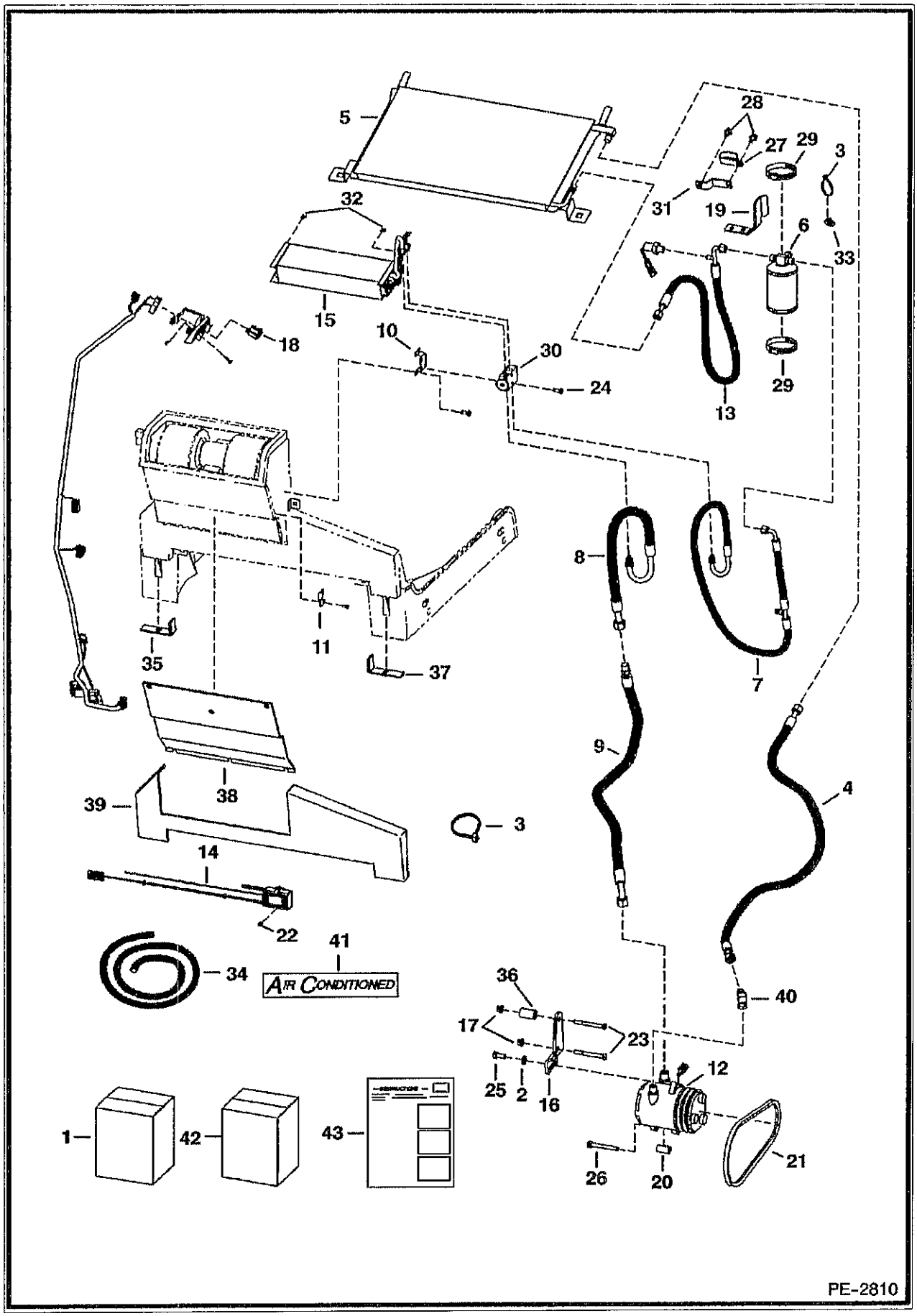

HEATER & A/C (Cont'd)
(A/C Kit)

ef No	Part Number	Description	Remarks	Serial Number	Qty
1	7116904	AC KIT	A/C - Ref. 2-19, 21-41 & 43 - If loader is not equipped W/ heater, rotating beacon, SJC, ACS, power bob-tach, non-power port plug-in strobe lights and/or non-power port plug-in 4 way flashers, also order 7116260 deluxe harness. Also, if not equipped with high flow or power bobtach, also order 7110160 deluxe fuel harness.		1
2	6557831	WASHER			1
3	6624289	CABLE TIE			2
4	6684907	HOSE	AC		1
4	6675538	O-RING	#8		x
5	6674234	CONDENSER			1
6	6674235	RECEIVER DRIER			1
6	6676062	VALVE	relief		1
7	6675075	HOSE	AC		1
7	6677122	CAP			1
7	6675824	O-RING	#6		x
8	6675076	HOSE	AC		1
8	6677121	CAP			1
8	6675825	O-RING	#10		x
9	6684908	HOSE	AC		1
9	6675825	O-RING	#10		x
10	6676984	MOUNT	valve		1
11	6677105	COVER	plate		1
12	6733655	COMPRESSOR	W/Ref. 20		1
12	6679145	CLUTCH			1
2	6648307	CONNECTOR	2-pin		1
12	6648308	CONNECTOR			1
13	6675685	HOSE	AC		1
13	6675779	PRESS. SWITCH	W/harness		1
13	6676399	VALVE CORE			1
13	6675824	O-RING	#6		x
14	6683004	THERMOSTAT			1
15	6683003	COIL	evaporator		1
16	6730265	MOUNT	compressor		1
7	83D6	NUT 5			2
18	6719176	SWITCH	rocker		1
19	6719459	MOUNT	receiver drier		1
20	6732732	BUSHING	not in kit		1
21	6730819	BELT	compressor		1
22	6726621	SCREW			2
23	1CM635	BOLT			2
24	17C656	BOLT			2
25	5CM1025	BOLT			1
26	5CM1080	SCREW			1
27	31H46	CLAMP			1
28	84G3710	SCREW			2
29	44H48	CLAMP			2
30	6675534	BLOCK VALVE			1
31	6727326	MOUNT	clamp		1
32	6676539	CLIP			2
33	6679034	INSULATION			1
4	6676538	INSULATION	bulk - sold per foot		x
35	6675608	INSULATION			1
36	6730266	SPACER			1
7	6675609	INSULATION			1

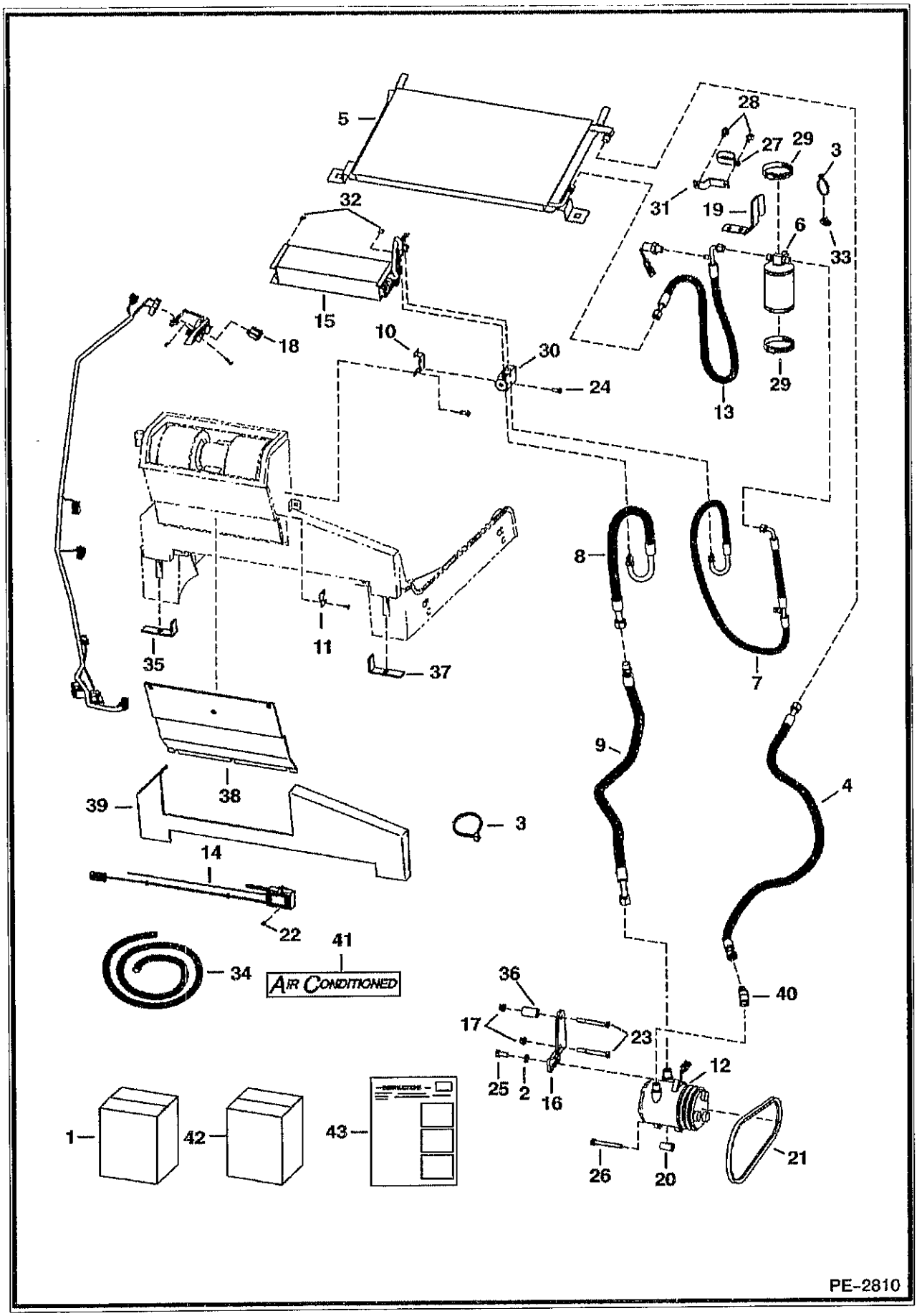
5
28
27
29
3
31
19
6
33
32
15
18
10
30
24
29
13
35
11
37
8
7
9
4
39
38
3
14
22
41
34
AIR CONDITIONED
36
40
17
23
12
25
2
16
1
42
43
26
20
21
PE-2810

HEATER & A/C (Cont'd)
(A/C Kit)

Ref No	Part Number	Description	Remarks	Serial Number	Qty
38	6689179	INSULATION			1
39	6689180	INSULATION			1
40	6731255	ELBOW			1
41	6729077	DECAL	air conditioned		2
42	6676063	KIT	fitting caps - not in kit		1
43	6904258	INSTRUCTIONS			1

HEATER & A/C
(HVAC Assembly)

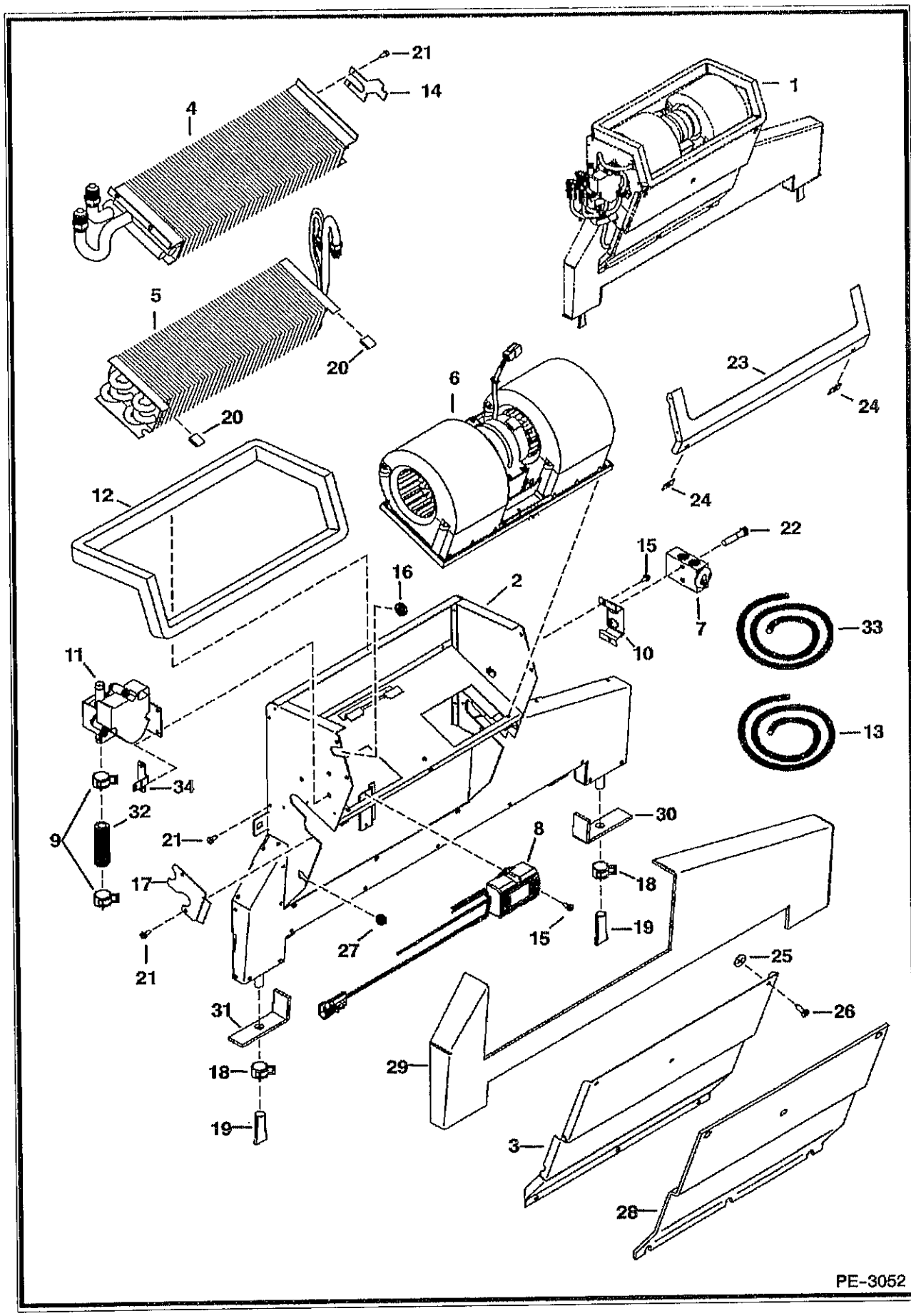

HEATER & A/C (Cont'd)
(HVAC Assembly)

Ref No	Part Number	Description	Remarks	Serial Number	Qty
1	6688542	HVAC HEATER	assy - Ref. 2-34		1
2	6690478	HOUSING			1
3		COVER	NAP - Order 6690476, also Order Ref. 23 (6678152)		1
3	6690476	COVER			1
4		COIL	NSS - heater - Order 6689770 heater coil kit		1
5	6690477	EVAPORATOR			1
6	6689762	BLOWER	assy		1
7	6675534	BLOCK VALVE			1
8	6683004	THERMOSTAT			1
9	6675512	CLAMP	hose		2
10	6676984	MOUNT	valve		1
11	6689696	SEAL			1
12		SEAL	NAP - 48.75" (1238,25mm) - Order Ref. 13		1
13	6677111	SEAL	bulk - Sold Per Foot		x
14	6690480	COVER			1
15	6677118	SCREW	w/washer		3
16	6690482	GROMMET			1
17	6690479	COVER			1
18	6675510	CLAMP	drain hose		2
19	6675511	DRAIN VALVE			2
20	6676539	CLIP			2
21	6726621	SCREW	sheet metal		7
22	1CM635	BOLT			2
23		SEAL	NAP - Order 6678152, Also Order Ref. 3 (6690476)		1
23	6678152	SEAL			1
24	6677115	RECEPTACLE			6
25	6677116	RETAINER			6
26	6677117	SCREW	captive		6
27	6684947	GROMMET			1
28	6689179	INSULATION			1
29	6689180	INSULATION			1
30	6675609	INSULATION			1
31	6675608	INSULATION			1
32		HOSE	NAP - 1/2" heater hose 2.75" (69,85mm) - Order Ref. 33		1
33	6565977	HOSE	bulk - sold per foot		x
34	6690481	BRACKET	harness		1

HEATER & A/C
(Heater & A/C Option)

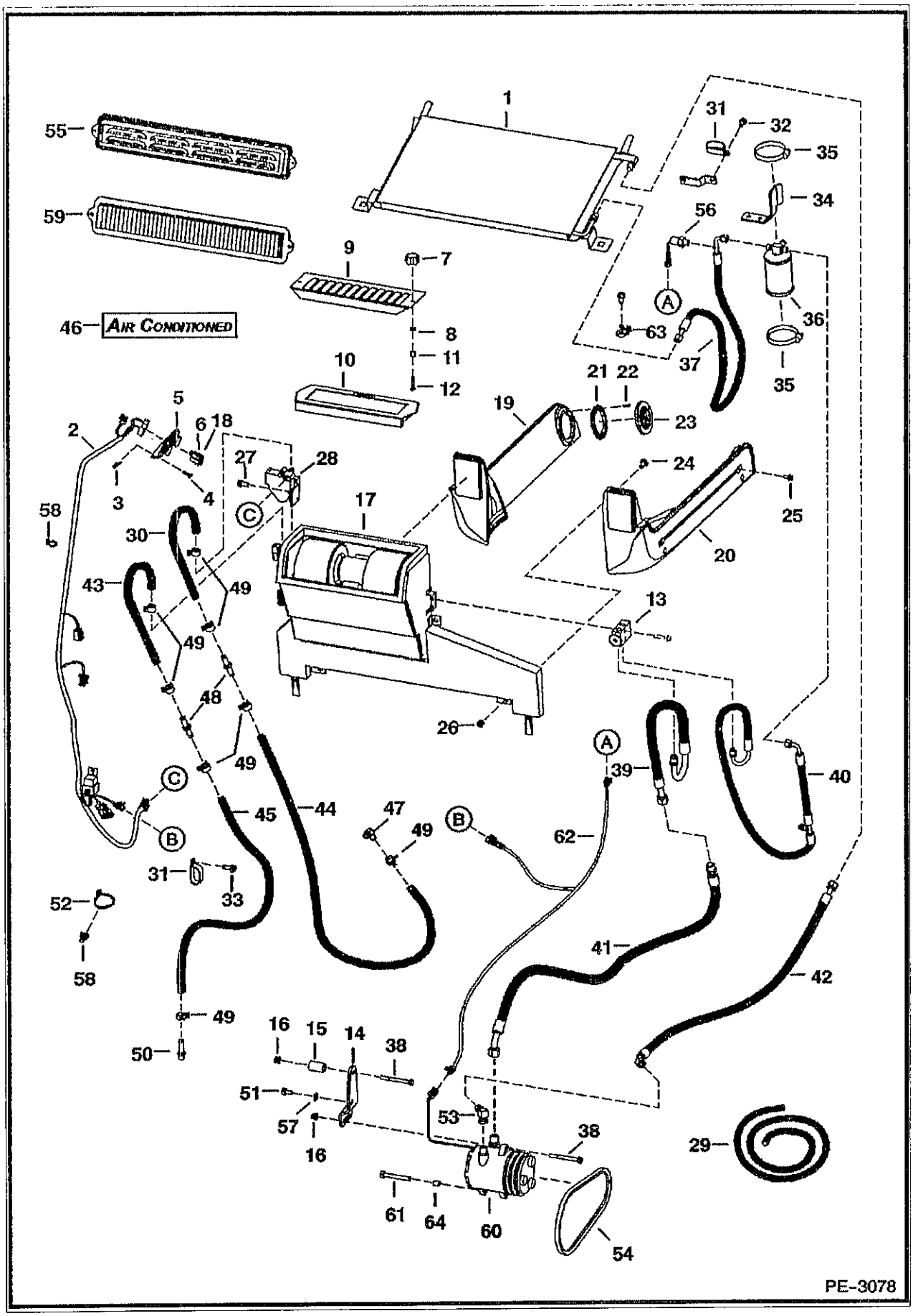

HEATER & A/C (Cont'd)
(Heater & A/C Option)

Ref No	Part Number	Description	Remarks	Serial Number	Qty
1	6674234	CONDENSER	A/C		1
2	6725933	HARNESS	hvac		1
3	6669091	CLIP	retainer		3
4	6669224	BOLT			3
5	6674228	PANEL	control		1
5	6640699	CONNECTOR			1
5	6718579	DECAL			1
5	6718887	PANEL	A/C		1
5	6675176	SWITCH	blower		1
5	6675177	KNOB			1
5	6675846	POTENTIOMETER			1
6	6675181	PLUG	switch hole		1
7	6681614	KNOB			2
8	59D4	NUT 5			2
9	6718175	SCREEN	filter		1
10	6678207	FILTER	recirculation		1
1	6718837	SPACER			2
12	37C424	BOLT			2
13	6675534	BLOCK VALVE			1
14	6730265	MOUNT	compressor		1
15	6730266	SPACER			1
16	83D6	NUT 5			2
17	6688542	HVAC ASSY	See Illustration HEATER & A/C/ PE3052		1
18	6719176	SWITCH			1
19	6735246	DUCT	L.H.		1
20	6735245	DUCT	R.H.		1
21	6675179	FLANGE			4
22	57G608	SCREW			16
23	6674231	VENT	round		4
24	37C512	BOLT			4
25	35C410	BOLT 5			4
26	59D5	NUT 5			4
27	84G3110	SCREW			2
28	6689696	VALVE			1
29	6565977	HOSE	bulk - Sold Per Foot		x
30	7113209	HOSE			1
31	31H46	CLAMP			2
32	84G3710	SCREW			2
33	84G3716	SCREW 5			1
34	6719459	MOUNT			1
35	44H48	CLAMP			2
36	6674235	RECEIVER DRIER			1
37	6675685	HOSE	W/Ref. 56		1
38	17C656	BOLT			2
39	6675076	HOSE			1
40	6675075	HOSE			1
40	6677122	CAP			1
41	6684908	HOSE			1
41	6685199	CAP			1
42	6684907	HOSE			1
42	6685198	CAP			1
43	7113208	HOSE			1
44		HOSE	NAP - 84" (2133,6 mm) long - Order Ref. 29		1
45		HOSE	NAP - 72" (1828,8mm) long - Order Ref. 29		1

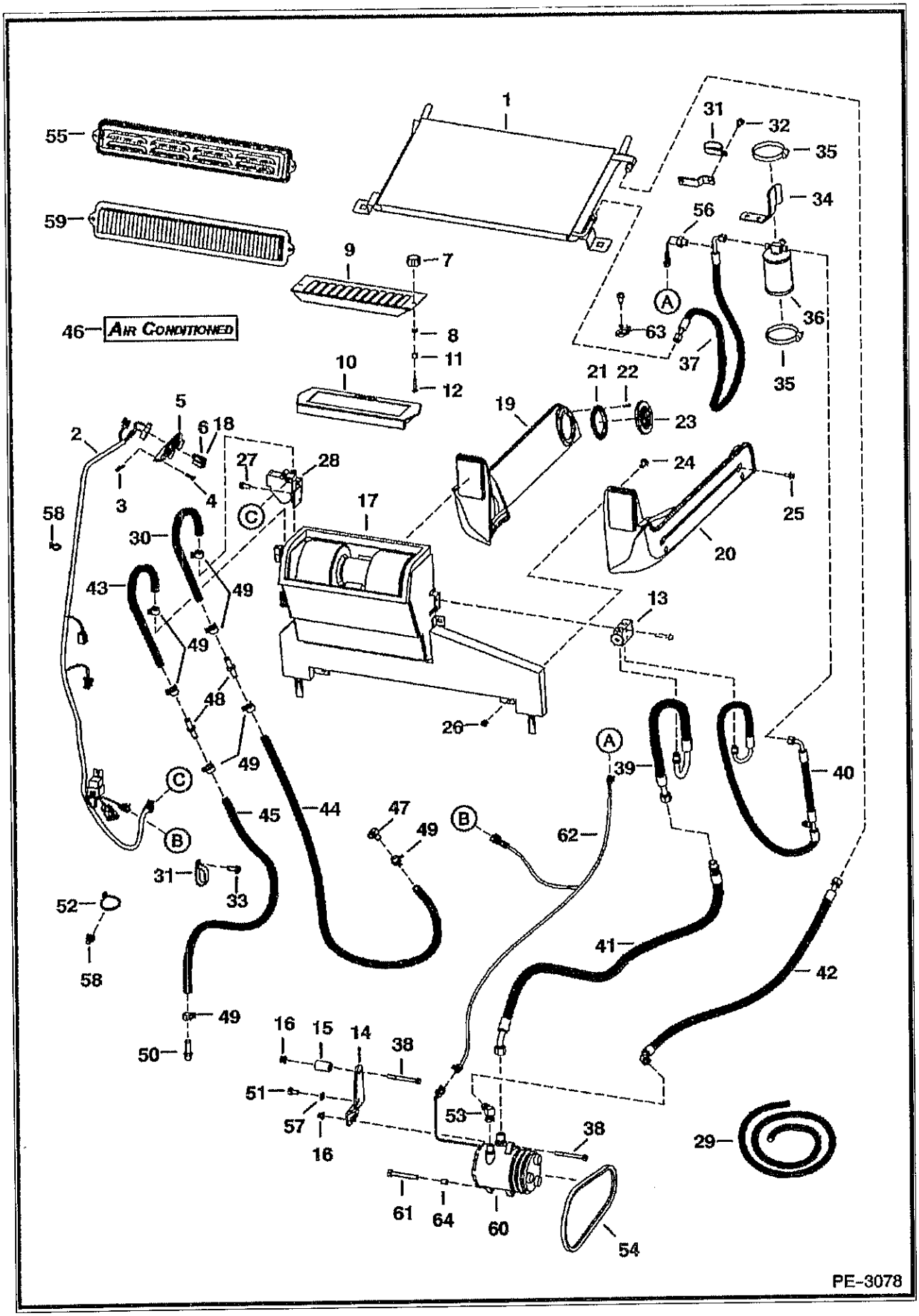
AIR CONDITIONED
PE-3078

HEATER & A/C (Cont'd)
(Heater & A/C Option)

ef No	Part Number	Description	Remarks	Serial Number	Qty
6	6729077	DECAL			2
7	6731085	ELBOW			1
48	6732023	CONNECTOR			2
49	5HM20	CLAMP			8
50	6731084	ADAPTER			1
51	5CM1020	SCREW			1
52	6624289	CABLE TIE			6
53	6731255	ELBOW			1
54	6730819	BELT	compressor		1
55	6727848	COVER			1
56	6675779	PRESS. SWITCH	W/harness		1
57	6557831	WASHER			1
58	6678666	TREE MOUNT	tree		2
59	6677983	FILTER			1
60	6733655	COMPRESSOR	W/Ref. 64		1
60	6679145	CLUTCH			1
60	6648307	CONNECTOR	2-pin		1
0	6648308	CONNECTOR			1
61	5CM1080	SCREW			1
62	6719630	HARNESS	ACS		1
63	6679034	MOUNT			1
64	6732732	BUSHING			1

HORN KIT
(Manual Controls, AHC & ACS)

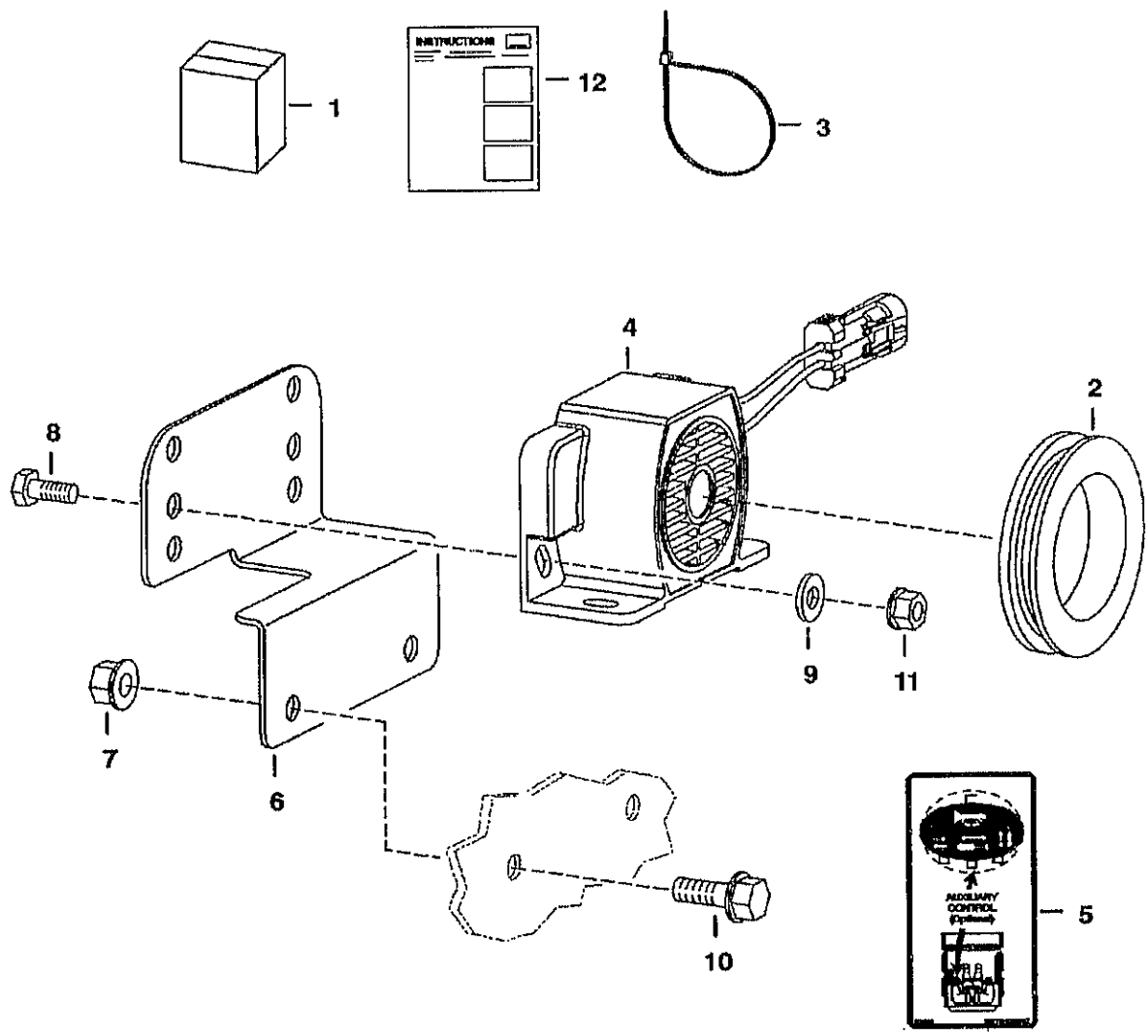

HORN KIT (Cont'd)
(Manual Controls, AHC & ACS)

Ref No	Part Number	Description	Remarks	Serial Number	Qty
1	7122028	KIT, HORN	horn - Ref. 2-12		1
2	6577545	GROMMET			1
3	6610510	TIE			3
4	6675099	ALARM			1
5	6703727	DECAL			1
6	6733970	MOUNT			1
7	83D5	NUT 5			2
8	17C410	BOLT 10			2
9	25E13	WASHER			2
10	35C514	BOLT			2
11	83D4	NUT 10			2
12	6904732	INSTRUCTIONS			1

HORN KIT
(SJC)

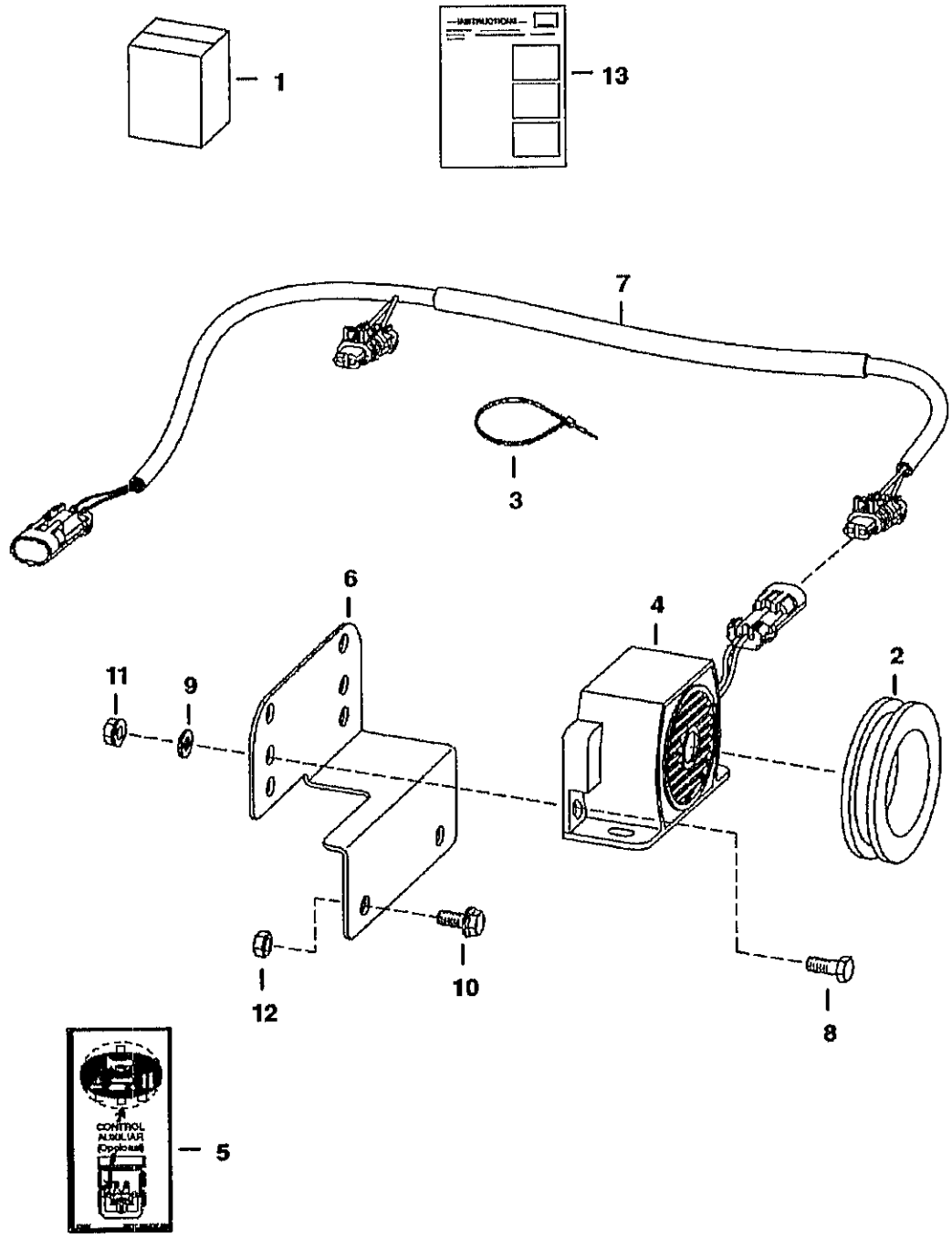

MS–1813

HORN KIT (Cont'd)
(SJC)

Ref No	Part Number	Description	Remarks	Serial Number	Qty
1	6732234	KIT	horn - Ref. 2-13		1
2	6577545	GROMMET			1
3	6610510	TIE			3
4	6675099	ALARM	alarm		1
5	6703727	DECAL	horn/aux.		1
6	6733970	MOUNT	alarm		1
7	6726662	HARNESS			1
8	17C410	BOLT 10			2
9	25E13	WASHER 5			2
10	35C514	BOLT			2
11	83D4	NUT 10			2
12	83D5	NUT 5			2
13	6901691	INSTRUCTIONS			1

LIFT KIT
(Four Point)

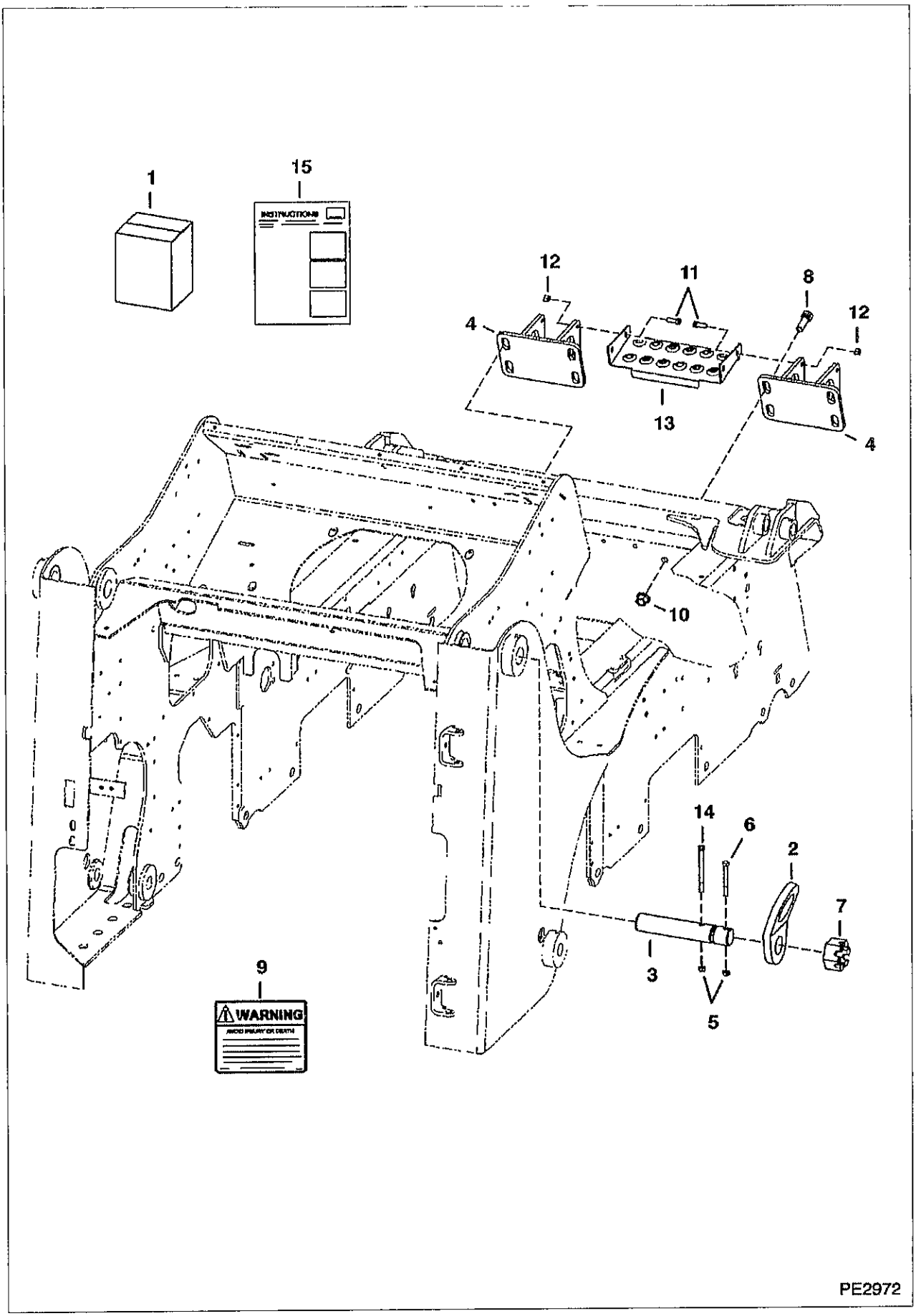

LIFT KIT (Cont'd)
(Four Point)

ef No	Part Number	Description	Remarks	Serial Number	Qty
1	6732678	KIT	lift - Ref. 2-15		1
2	6726908	LIFT EYE			2
3	6732687	PIN			2
4	6734108	BRACKET			2
5	85D6	LOCK NUT			4
6	17C652	SCREW			2
7	4D28	NUT			2
8	17C1028	BOLT			8
9	6726423	DECAL			1
10	83D10	NUT 5			8
11	17C616	BOLT 5			4
12	95D6	NUT			4
13	6813078	STEP			1
14	17C672	BOLT	not in kit		2
15	6901772	INSTRUCTIONS			1

LIFT KIT
(Single Point)

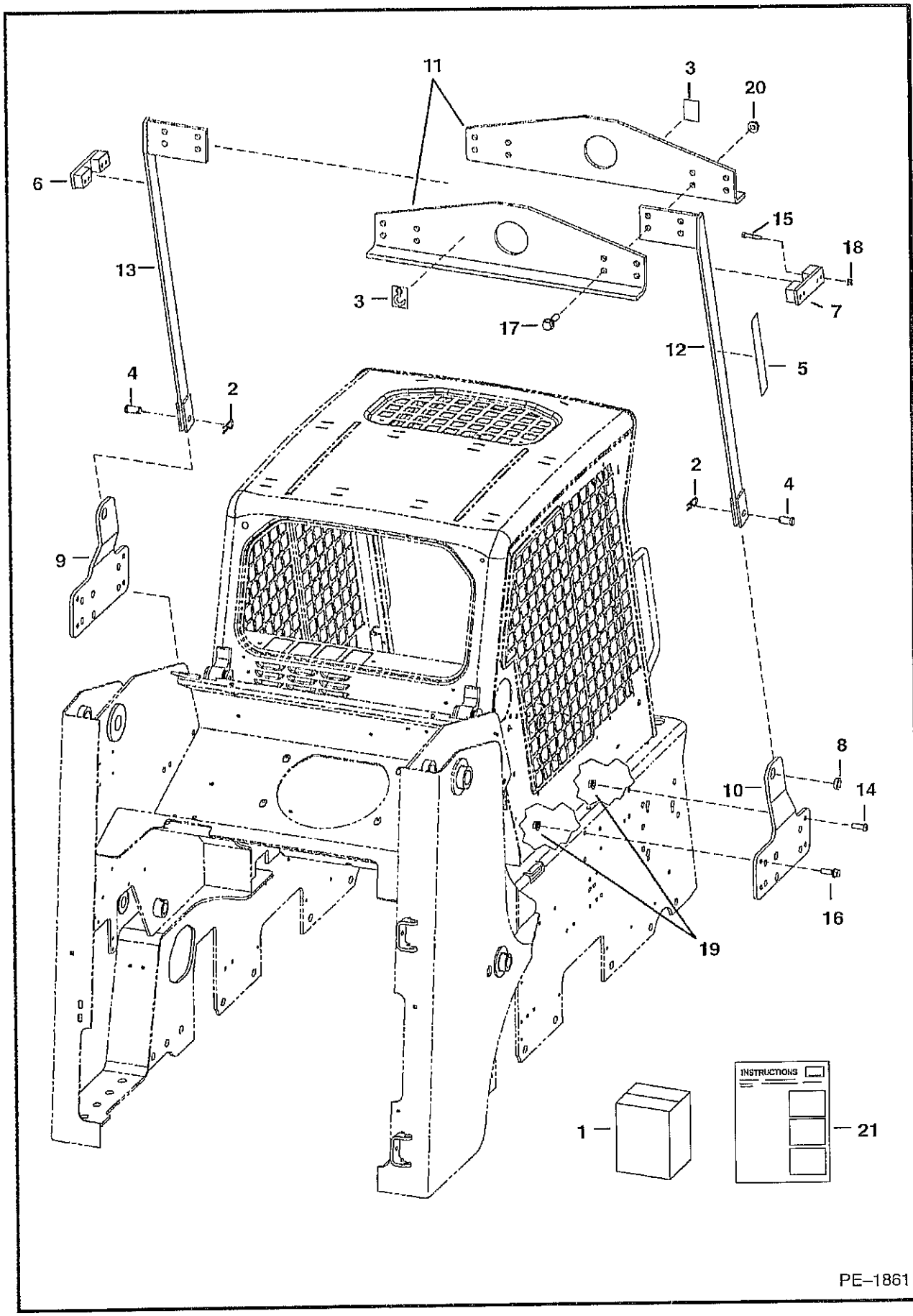

LIFT KIT (Cont'd)
(Single Point)

Ref No	Part Number	Description	Remarks	Serial Number	Qty
1	6735279	KIT	Ref. 2-21		1
2	1320075	COTTER PIN			2
3	6533898	DECAL	hook		2
4	6567838	PIN			2
5	6704786	DECAL	safety		2
6	6719184	MOUNT	L.H.		1
7	6719185	MOUNT	R.H.		1
8	6734560	BUSHING			2
9	6734627	MOUNT	L.H.		1
10	6734628	MOUNT	R.H.		1
11	6734657	ANGLE			2
12	6734666	ARM	R.H.		1
13	6734667	ARM	L.H.		1
14	6735282	SCREW	socket head		2
15	17C000632B	BOLT			8
16	31C824	BOLT 10			6
17	31C001036B	BOLT			8
8	57D6	NUT 5			8
19	57D000008B	NUT			8
20	57D10	NUT			8
21	6900888	INSTRUCTIONS			1

LIGHT KIT

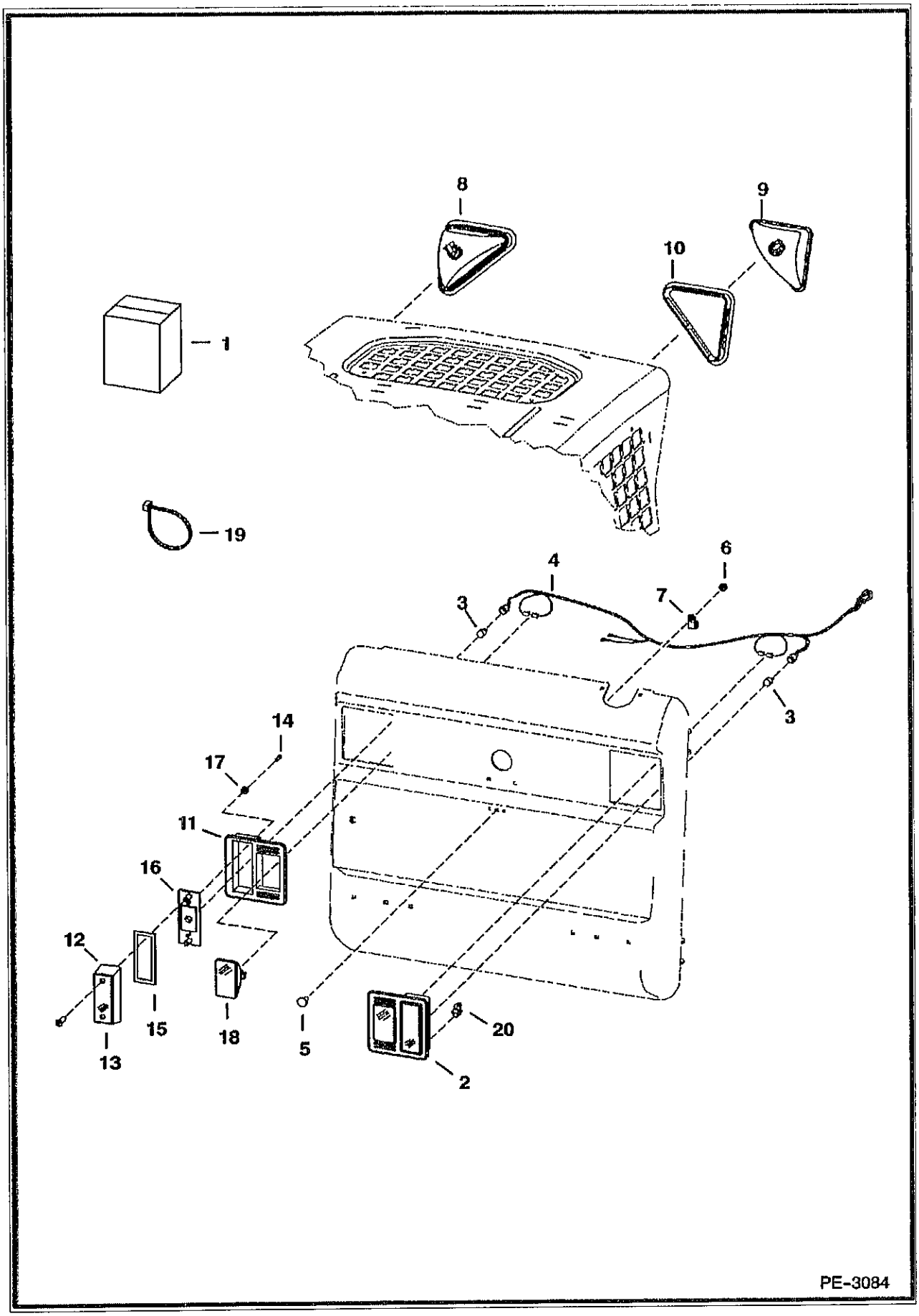

LIGHT KIT (Cont'd)

Ref No	Part Number	Description	Remarks	Serial Number	Qty
1		KIT	NAP - Order components		1
2	6670284	LIGHT ASSY	rear		2
2	7104670	LIGHT	rear - R.H. European		1
2	7104671	LIGHT	rear - L.H. European		1
3	6649481	BULB			2
4	7109403	HARNESS	standard		1
4	7109404	HARNESS	deluxe		1
5	37C512	BOLT			4
6	95D5	NUT			4
7	30H42	CLAMP			1
8		LIGHT ASSY	NAP - R.H. - Ref. 9 & 10		1
8		LIGHT ASSY	NAP - L.H. - Ref. 9 & 10		1
9	6674401	HOUSING	R.H.		1
9	6675336	BULB	55 watt		1
9	6674400	HOUSING	L.H.		1
9	6675336	BULB	55 watt		1
10	6674402	MOUNT			2
11	6672279	MOUNT	rubber		2
12	6672276	LENS	red		2
13	6672274	SCREW			4
14	6672273	SCREW			2
15	6672275	GASKET			2
16	6672277	BRACKET			2
17	6672272	WASHER			4
18	6661353	LIGHT ASSY	W/bulb - white work		2
18	898731B	BULB			2
19	6624289	CABLE TIE			1
20	6688637	MOUNT	mounts european rear light assys.		2

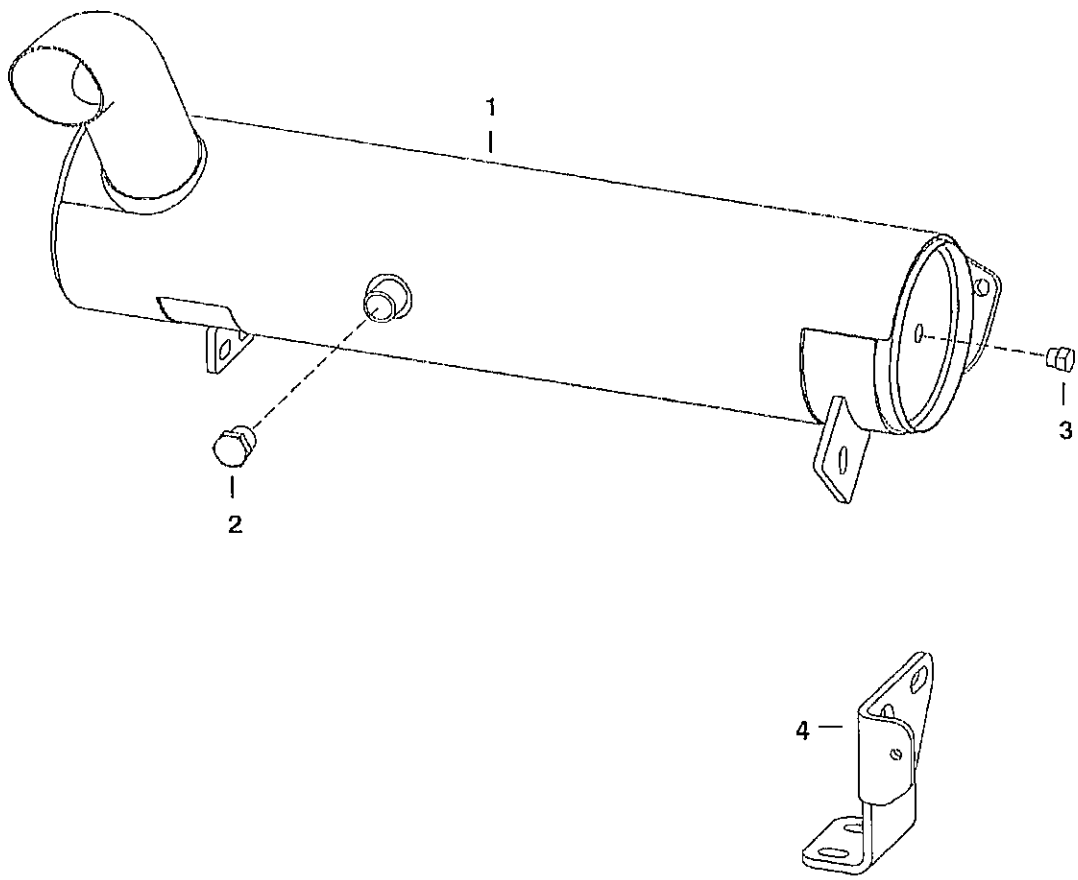
1
2
3
4
PE–2827

PURIFIER (Cont'd)

Ref No	Part Number	Description	Remarks	Serial Number	Qty
1	6687886	MUFFLER PURIFIER	purifier		1
2	6661062	PLUG	3/8" - brass		1
3	6659543	PLUG	1/8" - brass		1
4	6730753	MOUNT			1

POWER BOB-TACH KIT
(Hydraulic Assisted)

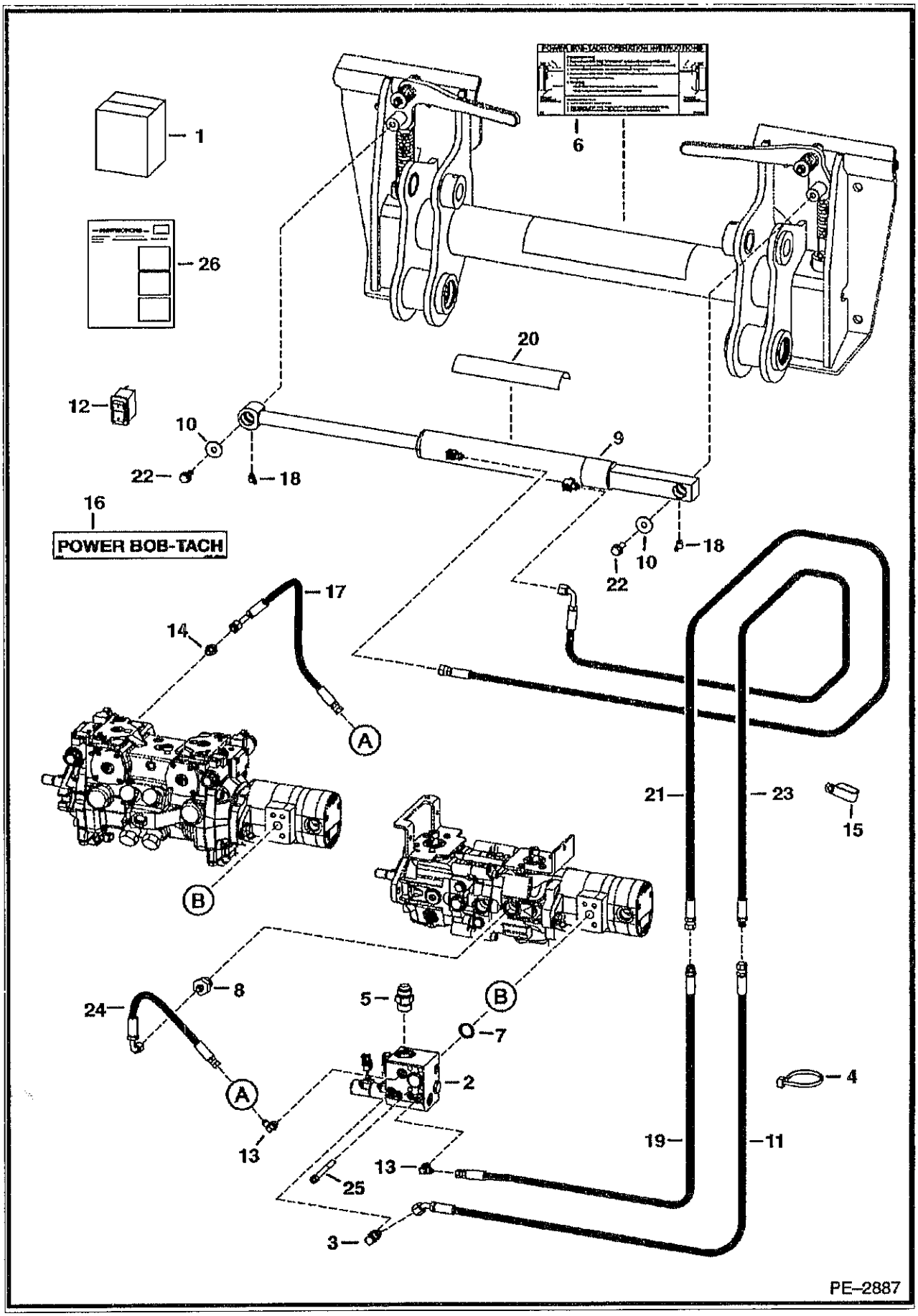

POWER BOB-TACH KIT (Cont'd)
(Hydraulic Assisted)

Ref No	Part Number	Description	Remarks	Serial Number	Qty
1	7121116	KIT, POWER BOBTACH	Ref. 2-26 - If loader is not equipped W/ heater, air conditioning, SJC, ACS, rotating beacon, non-power port plug-in strobe lights and/or non-power port plug-in 4 way flashers, also order 7116260 deluxe harness. Also, if not equipped with high flow or A/C, also order 7110160 deluxe fuel harness.		1
2		VALVE	See Illustration POWER BOB-TACH/ MS1835R		1
3	17KB606	ELBOW			1
3	79K6	O RING 10			1
4	6624289	CABLE TIE			1
5	15KB1212	ADAPTER			1
5	79K12	O RING 10			1
6	6725907	DECAL			1
7	55K214	O'RING			1
8	15KB612	ADAPTER	for loaders equipped W/ manual controls, AHC, ACS		1
8	79K12	O RING 10			1
9		CYLINDER	See Illustration POWER BOB-TACH CYLINDER/ PE1064		1
10	619021B	WASHER			2
11	6726987	HOSE			1
12	6676732	SWITCH	vertical		1
13	17KB404	ELBOW			2
13	79K4	O RING 10			2
14	15KB406	ADAPTER	for loaders equipped W/ SJC		1
14	79K6	O RING 10			1
15	31H42	CLIP			1
16	6719888	DECAL			1
17	6701854	HOSE	for loaders equipped W/ SJC - 25.5" (647.7 mm) long		1
18	12H25	FITTING			2
19	6735475	HOSE			1
20	6555341	SAFETY TREAD	safety		1
21	6733630	HOSE			1
22	35C612	BOLT			2
23	6733629	HOSE			1
24	6806403	HOSE	for loaders equipped W/ manual controls, AHC, ACS - 16 in. (406,4 mm) Long		1
5	73G656	SCREW			4
26	6902361	INSTRUCTIONS			1

POWER BOB-TACH CYLINDER

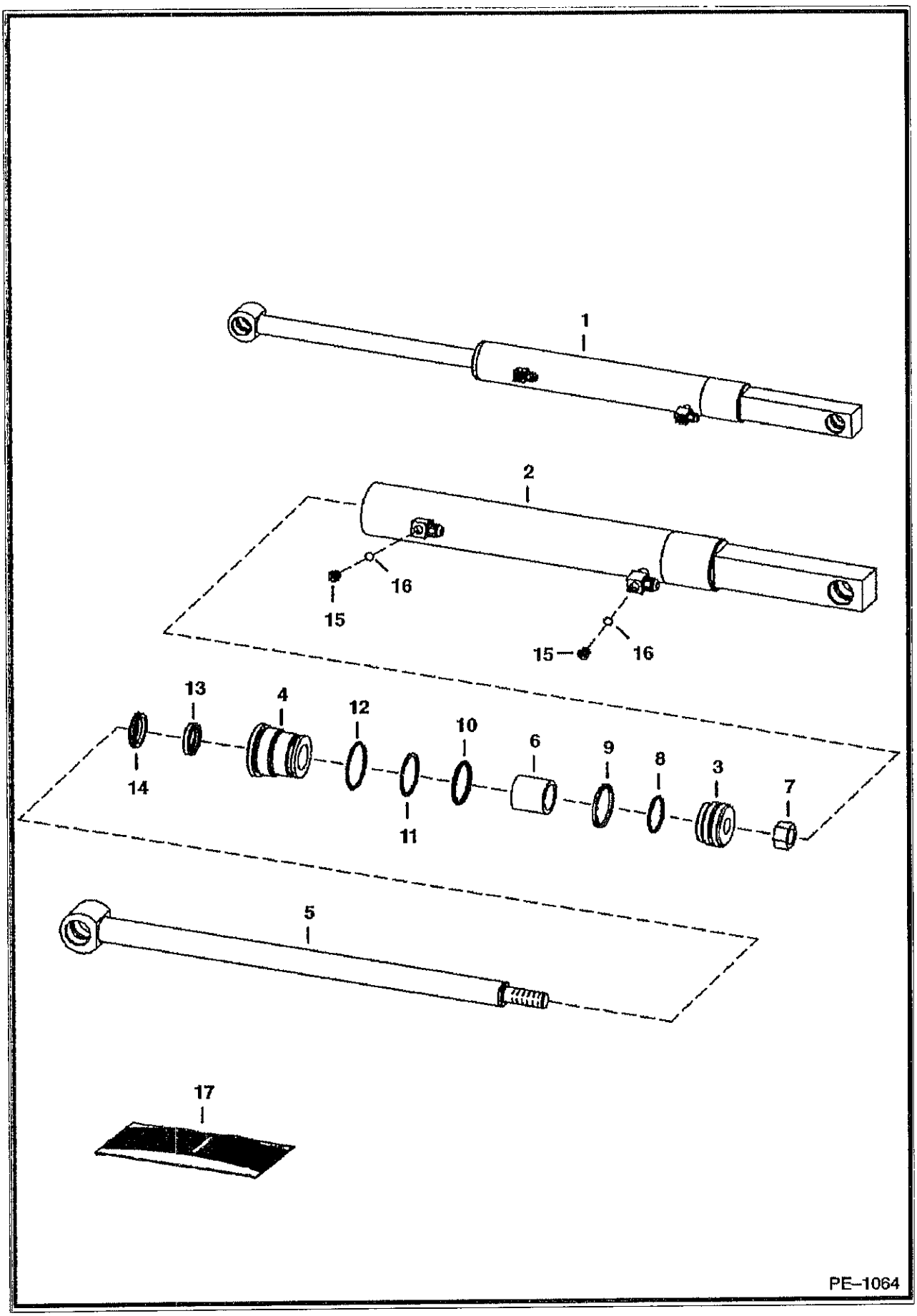

POWER BOB-TACH CYLINDER (Cont'd)

ref No	Part Number	Description	Remarks	Serial Number	Qty
1	6810611	CYLINDER	Ref. 2-16		1
2	6810349	CASE	1.75" (45mm) I.D.		1
3	6586543	PISTON			1
4	6586542	HEAD			1
5	6810612	ROD	W/ .25" grease zerk hole		1
6	6810356	SPACER			1
7	92D10	NUT			1
8	54K30110	O-RING			1
9	6532453	RING			1
10	54K40116	O-RING			1
11	73K222	RING	back-up		1
12	58K132	O'RING			1
13	6667323	SEAL	rod		1
14	6666542	SEAL	wiper		1
15	90KV2	PLUG	W/Ref. 16 - tapered boss face - allen socket head		2
15	6812170	PLUG	W/Ref. 16 - flat boss face - hex head		2
16	95K3	O'RING	tapered boss face		x
6	75K3	O-RING	flat boss face		x
17	6803473	SEAL KIT	Ref. 7-14		1

POWER BOB-TACH
(Valve Assembly)

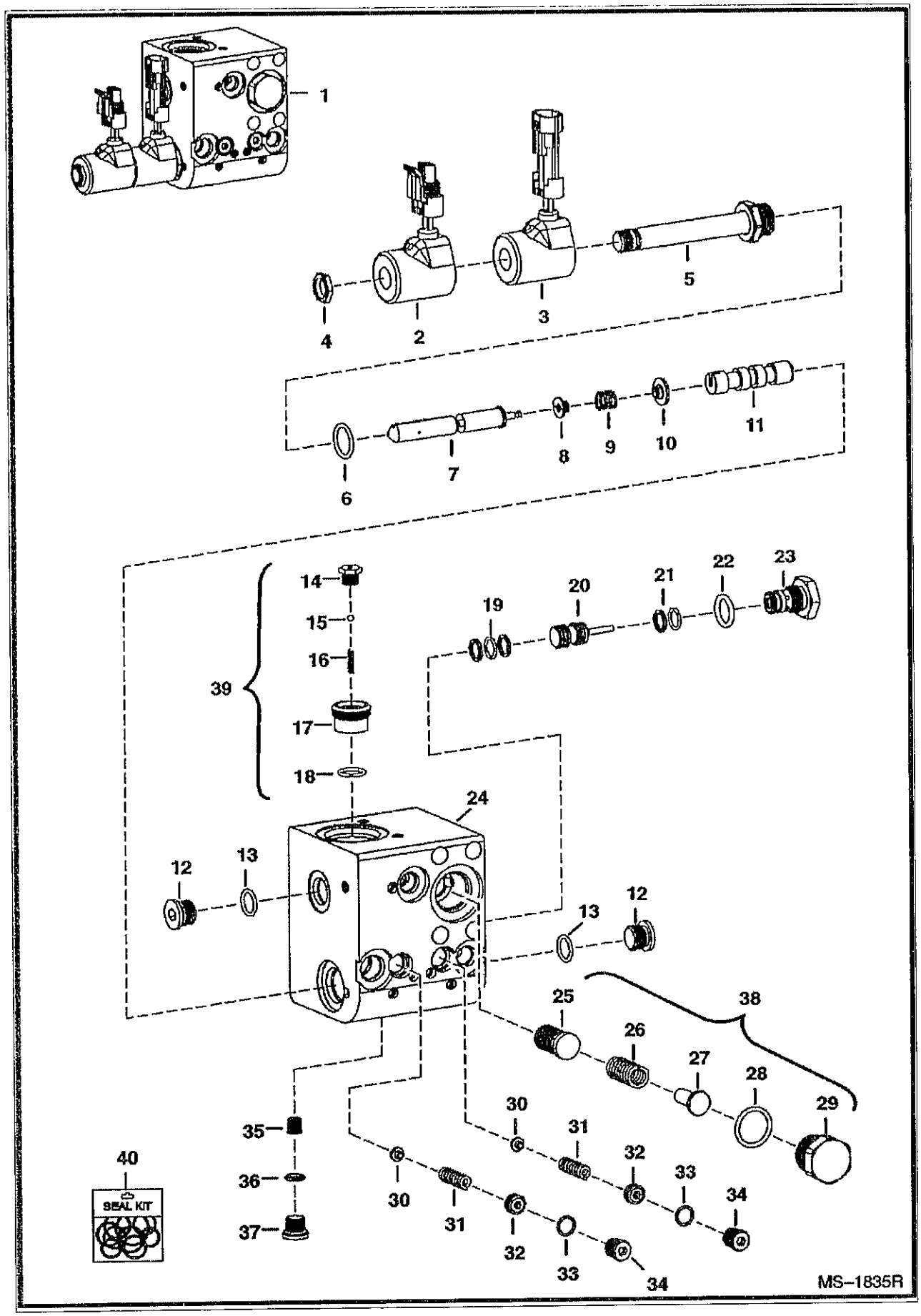

POWER BOB-TACH (Cont'd)
(Valve Assembly)

Ref No	Part Number	Description	Remarks	Serial Number	Qty
1	6686949	VALVE			1
2	6684743	SOLENOID	W/male connector		1
3	6684744	SOLENOID	W/female connector		1
4	6684742	NUT			1
5		STEM	NSS		x
6	79K000008B	O-RING			x
7		STEM	NSS		x
8		RETAINER	NSS		x
9		SPRING	NSS		x
10		WASHER	NSS		x
11	6685540	PISTON			x
12	6685545	PLUG	W/Ref. 13		x
13		O-RING	NSS		x
14		PLUG	NSS		x
15		BALL	NSS		x
16		SPRING	NSS		x
17		VALVE	NSS		x
8	6685542	O-RING			x
19		RINGS	NSS		x
20	6684745	PISTON			1
21		RINGS	NSS		x
22	79K000007B	O-RING			x
23	6684746	CHECK VALVE	W/Ref. 22		1
24		BLOCK	NSS		x
25		STEM	NSS		x
26		SPRING	NSS		x
27		POPPET	NSS		x
28	79K000010B	O-RING			x
29		PLUG	NSS		x
30		POPPET	NSS		x
31		SPRING	NSS		x
32		PLUG	NSS		x
33		O-RING	NSS		x
34		PLUG	NSS		x
35	6685541	POPPET			x
36		O-RING	NSS		x
7	6685546	PLUG			x
38	6685544	COMPENSATOR	assy. - Ref. 25-29		1
39	6685543	CHECK VALVE	assy. - Ref. 14-18		1
40	6684747	SEAL KIT	complete		1

RADIATOR SCREEN KIT

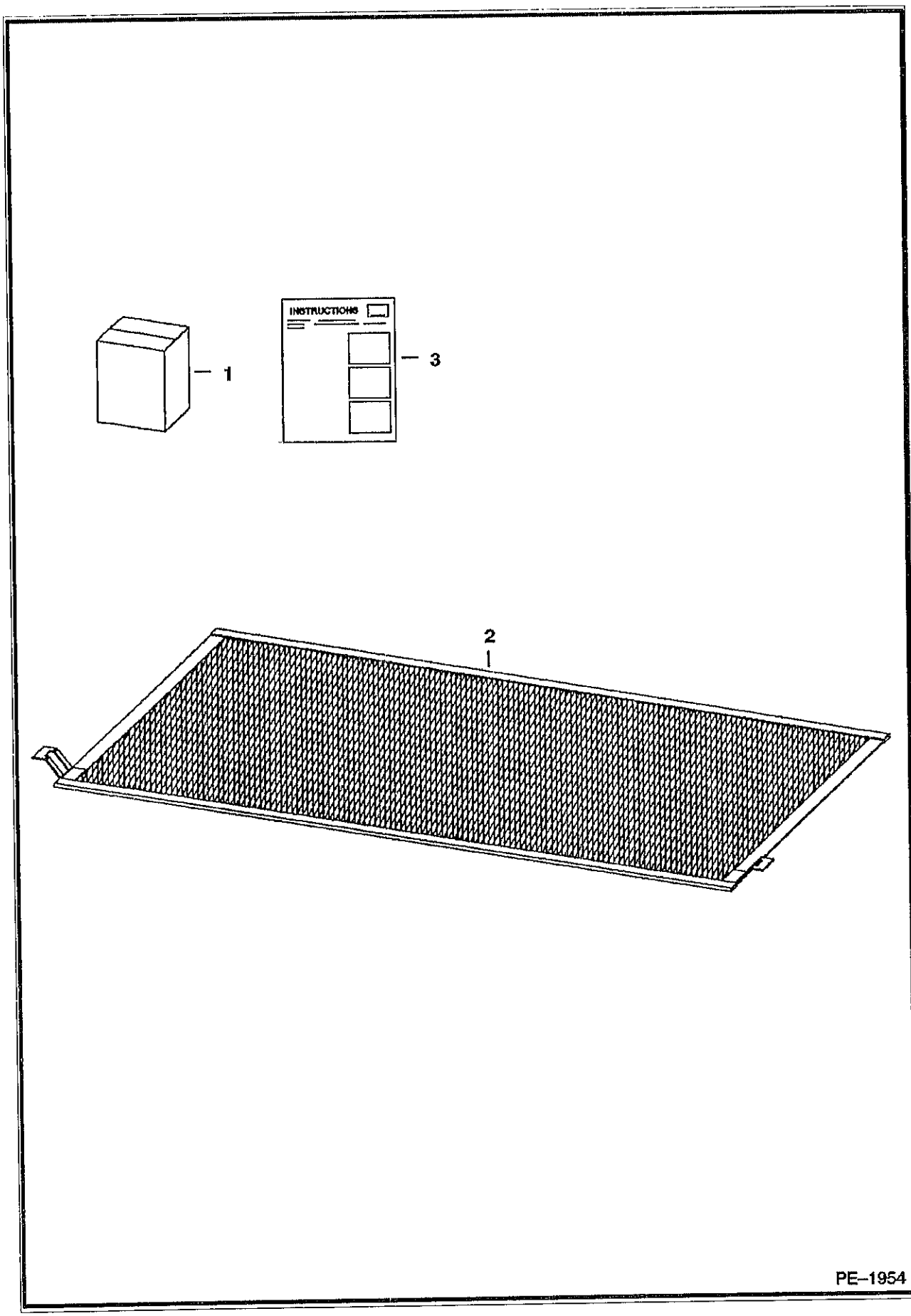

RADIATOR SCREEN KIT (Cont'd)

Ref No	Part Number	Description	Remarks	Serial Number	Qty
1	6734696	KIT	Ref. 2 & 3		1
2	6734697	SCREEN			1
3	6902288	INSTRUCTIONS			1

REAR AUXILIARY HYDRAULIC KIT

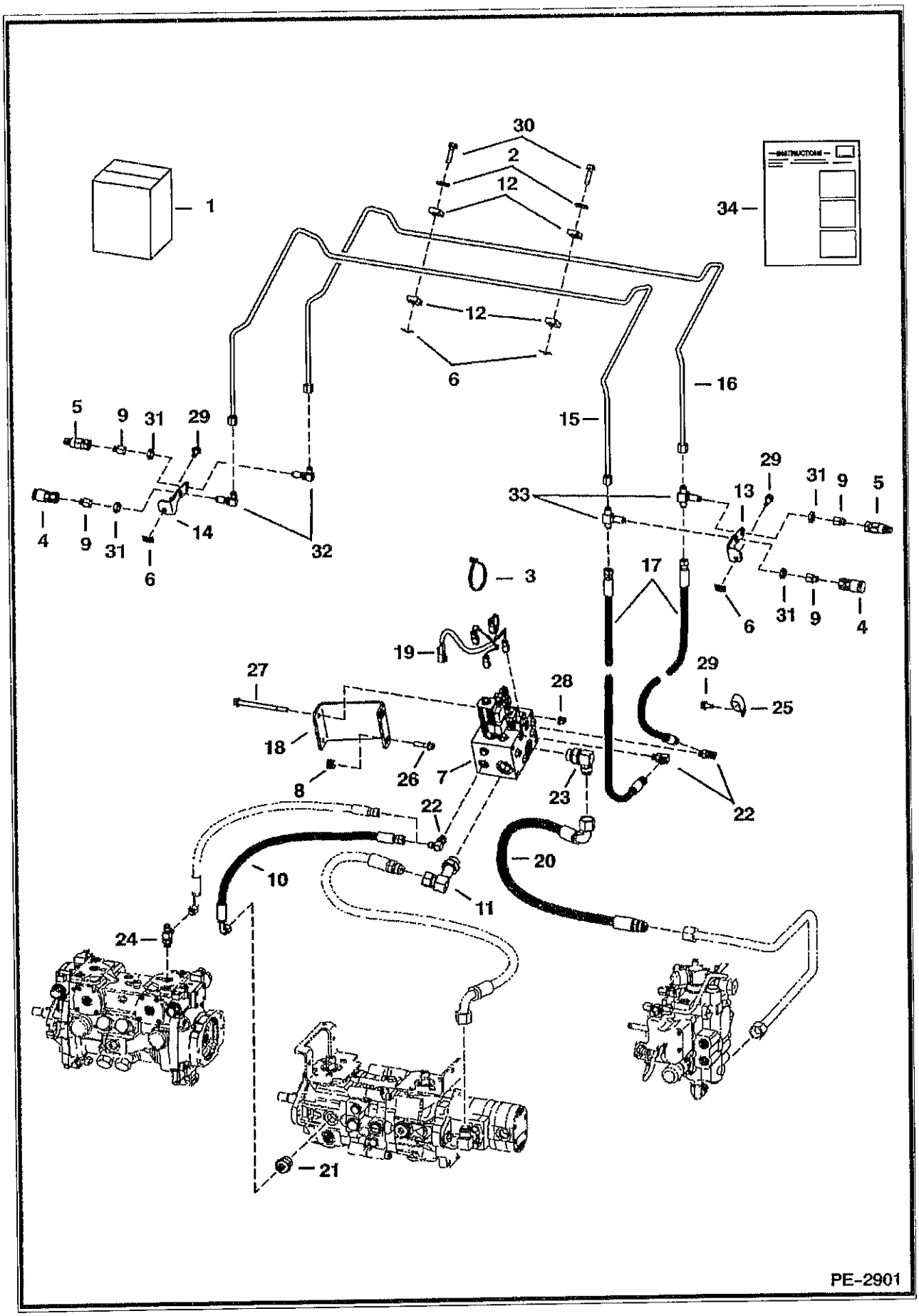

REAR AUXILIARY HYDRAULIC KIT (Cont'd)

Ref No	Part Number	Description	Remarks	Serial Number	Qty
1	7116601	KIT, REAR AUX			1
2	619021	WASHER 5			2
3	6624289	CABLE TIE			5
4	6667803	COUPLER			2
5	6667804	COUPLER			2
6	6684033	NUT			4
7	6685624	CONTROL VALVE			1
8	6685663	RETAINER			2
9	6706633	ADAPTER			4
10	6711166	HOSE			1
11	7124922	ELBOW			1
12	6726277	CLAMP			4
13	6735639	MOUNT			1
14	6735640	MOUNT			1
15	6735642	TUBELINE			1
16	6735643	TUBELINE			1
7	6735684	HOSE			2
18	6737201	MOUNT			1
19	7102338	HARNESS			1
20	7120956	HOSE			1
21	15KB612	ADAPTER	for manual control, ACS & AHC		1
22	17KB606	ELBOW			1
23	17KB1212	ELBOW			1
24	21KB606	TEE	for SJC		1
25	31H38	CLAMP			1
26	35C624	BOLT			2
27	17C680	BOLT			2
28	83D6	NUT 5			2
29	84G3712	BOLT			3
30	84G3724	BOLT			2
31	86F5	NUT			4
32	88F5	ELBOW			2
33	90F5	TEE			2
34	6904733	INSTRUCTIONS			1

REAR AUXILIARY VALVE

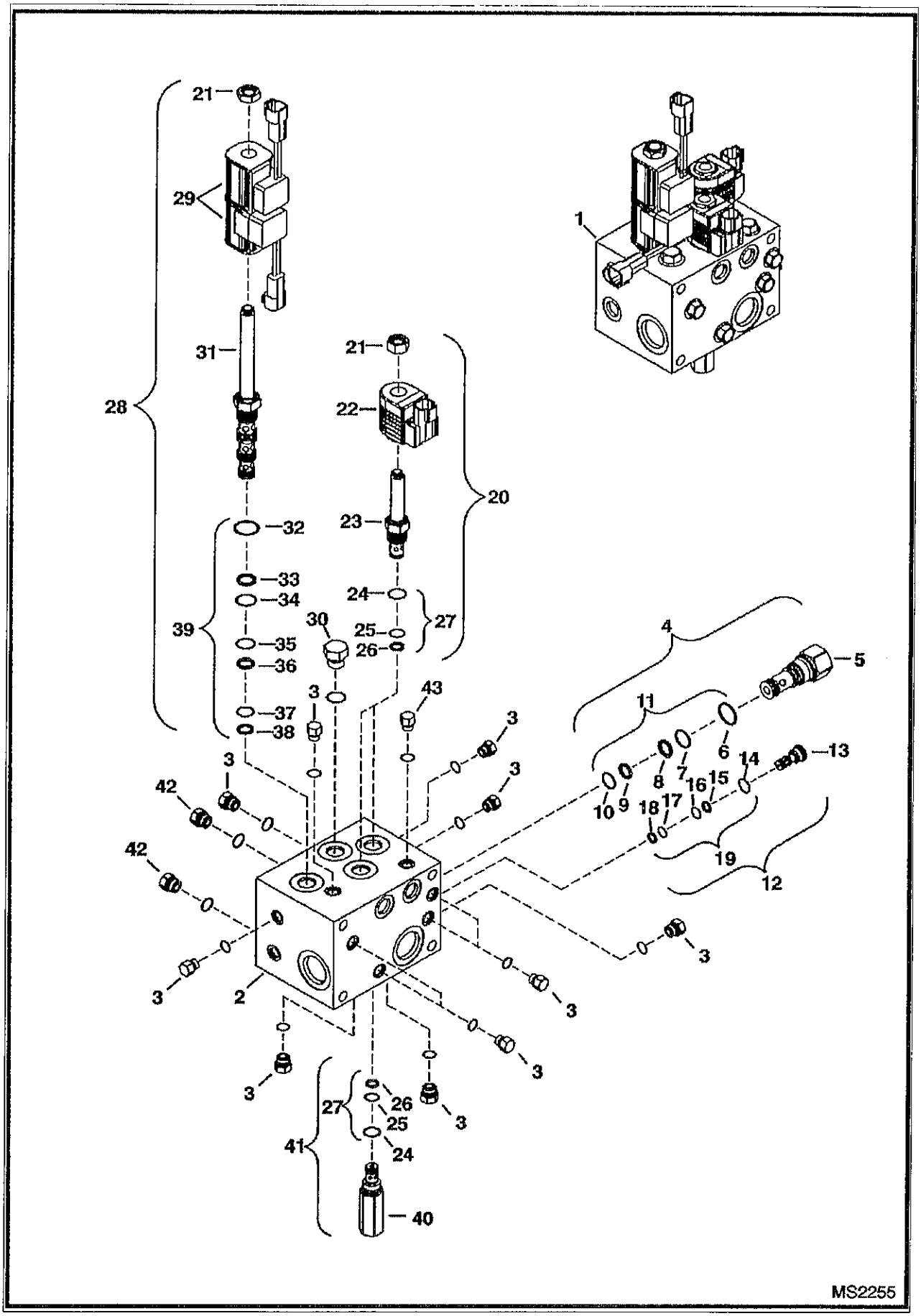

REAR AUXILIARY VALVE (Cont'd)

Ref No	Part Number	Description	Remarks	Serial Number	Qty
1	6685624	CONTROL VALVE	CP12646		1
2		BLOCK	NSS		1
3		PLUG	NSS - #4 SAE W/ O-ring		11
4	6684044	VALVE	assy - Ref. 5-10 - differential sensing		1
5		VALVE	NSS - Order Ref. 4		1
6	6684046	O-RING			1
7	6684048	O-RING			1
8	6684047	BACK-UP RING			1
9	6684050	BACK-UP RING			1
10	6684049	O-RING			1
11	6684045	SEAL KIT	Ref. 6-10		1
12	6684061	VALVE	assy - Ref. 13-18 - shuttle		1
13		VALVE	NSS - Order Ref. 12		1
14	6684063	O-RING			1
15	6684064	BACK-UP RING			1
16	6684065	O-RING			1
7	6684066	O-RING			1
18	6684067	BACK-UP RING			1
19	6684062	SEAL KIT	Ref. 14-18		1
20	6685061	VALVE	assy - Ref. 21-26 - solenoid		2
21	6684060	NUT			2
22	6684073	COIL	12 volt		2
23		VALVE	NSS - Order Ref. 20		2
24	6684070	O-RING			2
25	6684071	O-RING			2
26	6684072	BACK-UP RING			2
27	6684069	SEAL KIT	Ref. 24-26		2
28	6688933	VALVE ASSY	assy - Ref. 21, 29 & 31-38 - solenoid W/coils		1
29	6688934	COIL			2
30		PLUG	NSS - #8 SAE W/ O-ring		1
31		VALVE	NSS - Order Ref. 28		1
32	6681489	O-RING			1
33	6684053	BACK-UP RING			1
34	6684054	O-RING			1
35	6684056	O-RING			1
6	6684055	BACK-UP RING			1
37	6681487	O-RING			1
38	6684057	BACK-UP RING			1
39	6684052	SEAL KIT	Ref. 32-38		1
40		VALVE	NSS - Order Ref. 41		x
41	6685328	RELIEF VALVE	assy - W/Ref. 24 - 26		1
42		PLUG	NSS - #6 SAE W/ O-ring		4
43		PLUG	NSS - metric		1

REAR DOOR LOCK

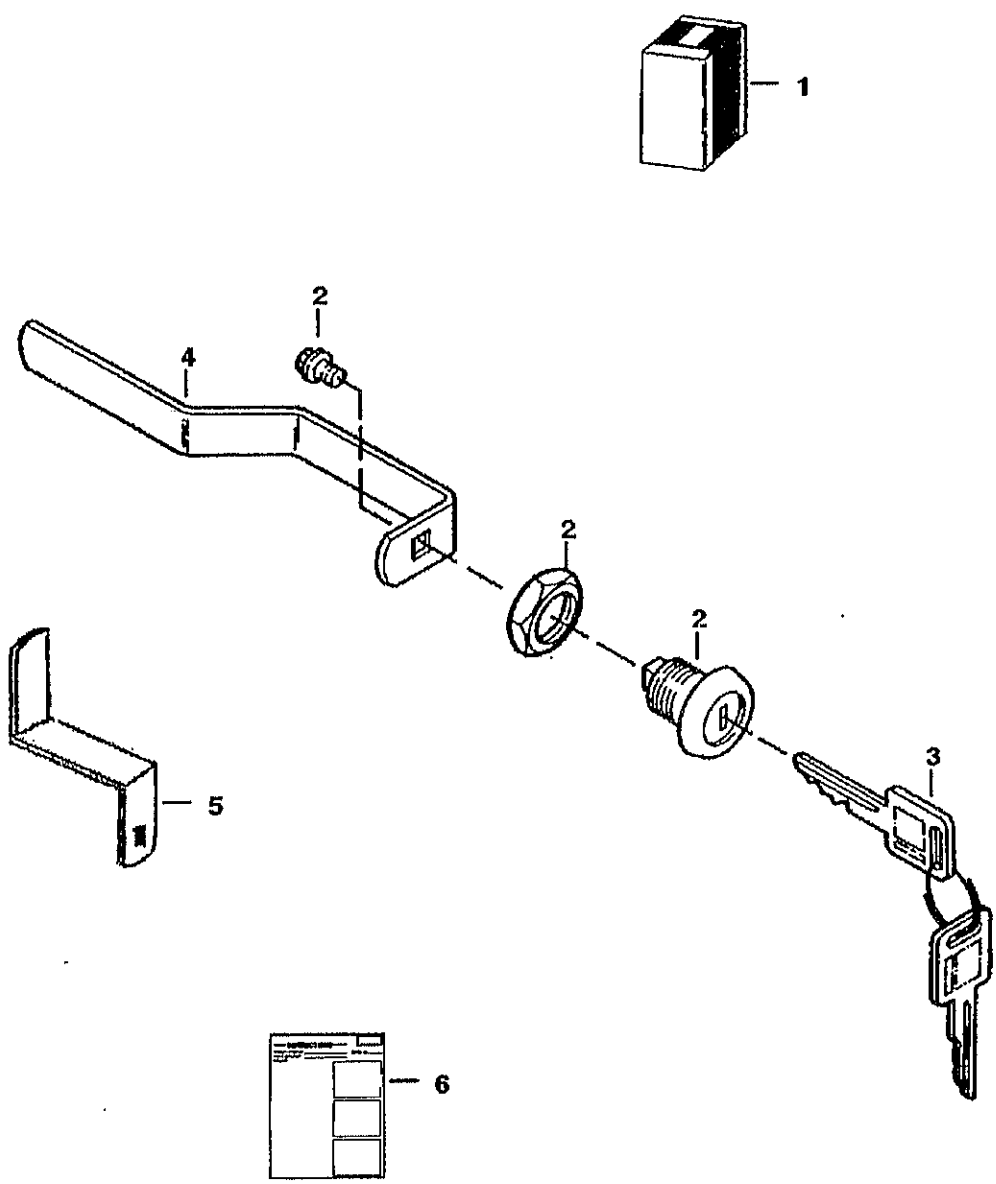

REAR DOOR LOCK (Cont'd)

Ref No	Part Number	Description	Remarks	Serial Number	Qty
1	6732001	KIT	lock - Ref. 2-6		1
2	6670726	LOCK			1
3	6709527	KEY	ignition		1
4	6714037	LATCH			1
5	6729688	LATCH			1
6	6901656	INSTRUCTIONS			1

REAR WIPER

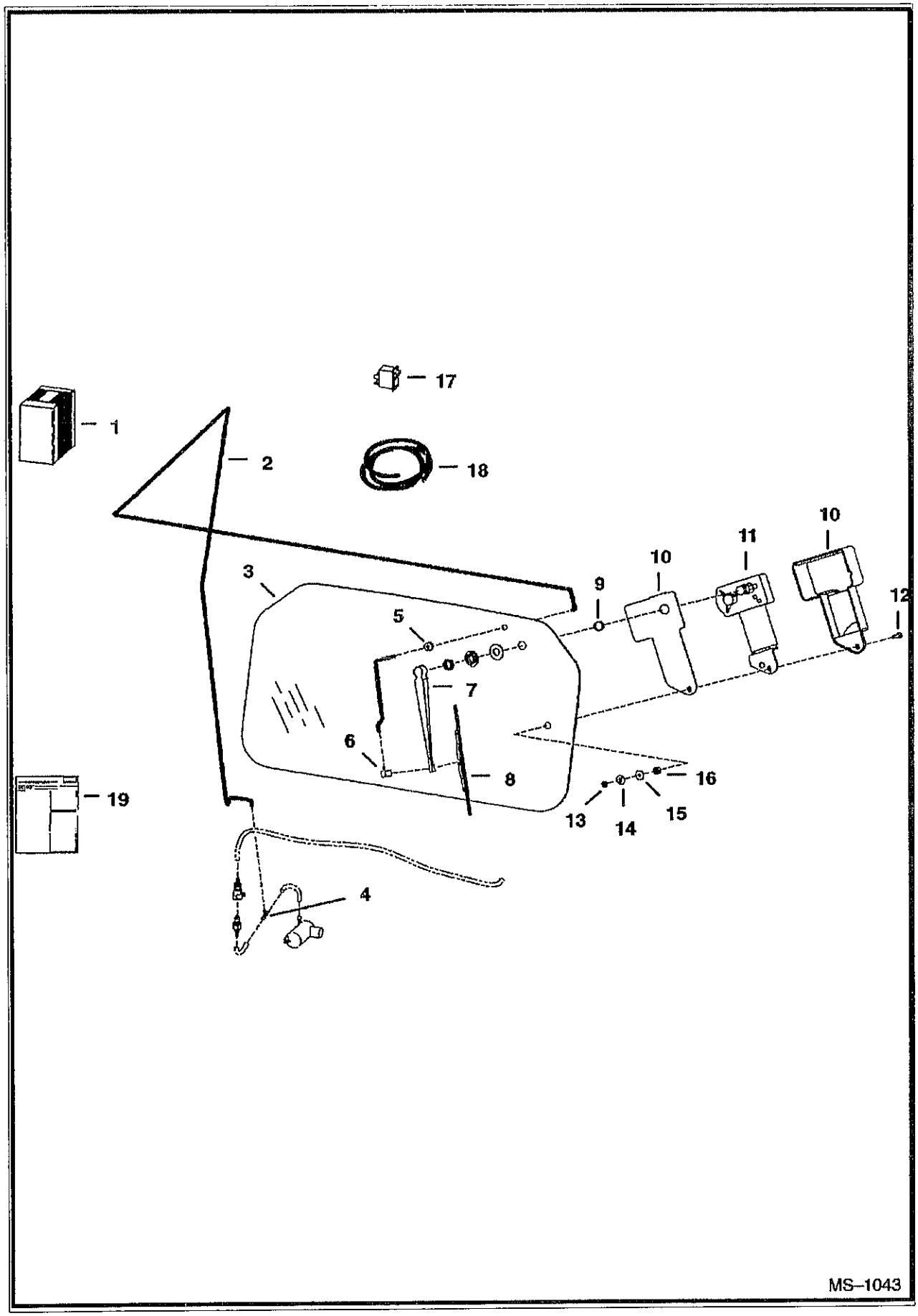

REAR WIPER (Cont'd)

ef No	Part Number	Description	Remarks	Serial Number	Qty
1	6726655	KIT	rear wiper		1
2		HOSE	NAP - 96"(2438,4 mm) long - Order Ref. 18		1
3	6719317	WINDOW			1
4	6676000	TEE			1
5	6557493	GROMMET			1
6	6676028	NOZZLE			1
7	6676001	ARM			1
8	6676002	BLADE			1
9	6667201	SPACER	nylon		1
10	6664097	COVER	wiper		1
11	6665602	MOTOR			1
12	6664566	BOLT			1
13	6664103	NUT			1
14	6664065	WASHER	nylon		1
15	6801059	WASHER	neoprene		1
16	6664085	BUSHING	nylon		1
17	6675999	SWITCH			1
8	6676003	HOSE	bulk - Sold Per Foot		x
19	6901061	INSTRUCTIONS			1

SEAT
(Suspension - Sears)

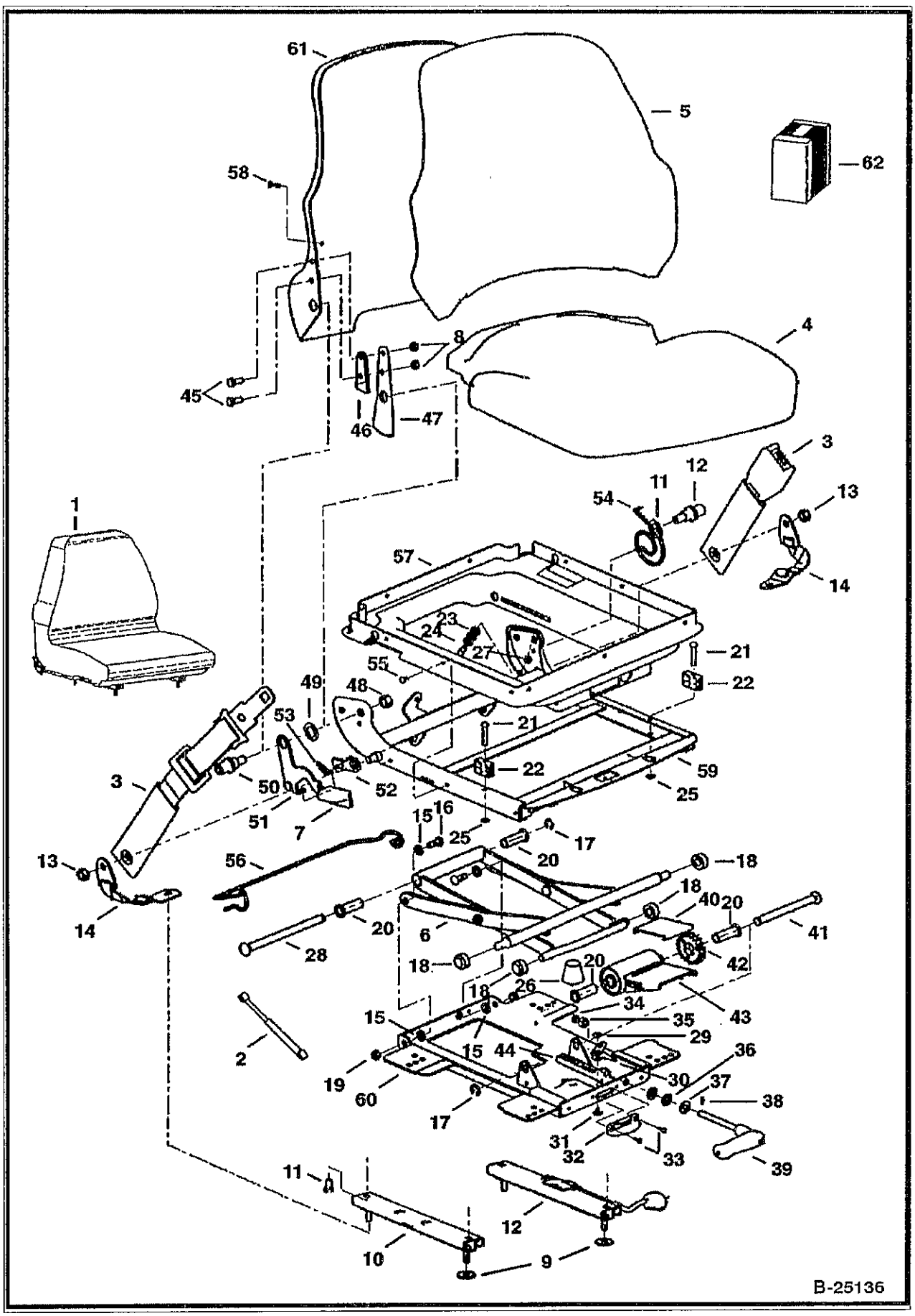

SEAT (Cont'd)
(Suspension - Sears)

Ref No	Part Number	Description	Remarks	Serial Number	Qty
1	6675595	SEAT	vinyl - L.H. recliner lever		1
1	6675596	SEAT	fabric - L.H. recliner lever		1
2	6676338	GAS SPRING			1
3	6675170	SEAT BELT	lap		1
4	6675320	SEAT	seat - fabric		1
4	6675322	SEAT	seat - vinyl		1
5	6675319	SEAT	backrest - fabric - W/Ref. 58		1
5	6675321	SEAT	backrest - vinyl - W/Ref. 58		1
6	6675317	SCISSORS			1
7	6675323	KNOB	recliner		1
8		NUT	NSS		6
9	619021B	WASHER			4
10		SLIDE	NSS - slave		1
11		BOLT	NSS		4
12		SLIDE	NSS - locking		1
13		NUT	NSS		2
14		BELT	NSS - tether		2
15		WASHER	NSS - cross pivot		4
16		BOLT	NSS - pivot		2
17		RING	NSS - retaining		2
18		ROLLER	NSS		4
19		NUT	NSS		2
20		BUSHING	NSS - wt adjustment		4
21		RIVET	NSS		2
22		BLOCK	NSS - up stop		2
23		WASHER	NSS		3
24		STOP	NSS - armrest		1
25		PUSHNUT	NSS		2
26		BUMPER	NSS		1
27		NUT	NSS		1
28		SHAFT	NSS - bearing		1
29		RIVET	NSS - female snap		1
30		INDICATOR	NSS - weight		1
31		RIVET	NSS - male snap		1
32		DIAL	NSS - weight indicator		1
33		POP RIVET	NSS		2
34		SPACER	NSS		1
35		NUT	NSS		1
36		BEARING	NSS - thrust		1
37		RACE	NSS - thrust		2
38		SHEAR PIN	NSS		1
39		HANDLE	NSS - weight adjustment		1
40		PLATE	NSS - wear		1
41		SHAFT	NSS - torsion		1
42		DRIVE GEAR	NSS		1
43		BUSHING	NSS - torsion		1
44		RACK	NSS - wt adjustment		1
45		BOLT	NSS		2
46		SPACER	NSS - recliner		1
47		BRACKET	NSS - back tilt		1
48		NUT	NSS		2
49		WASHER	NSS - plastic		2
50		BOSS	NSS - back pan pivot		2
1		HANDLE	NSS - recliner (RH)		1

SEAT (Cont'd)
(Suspension - Sears)

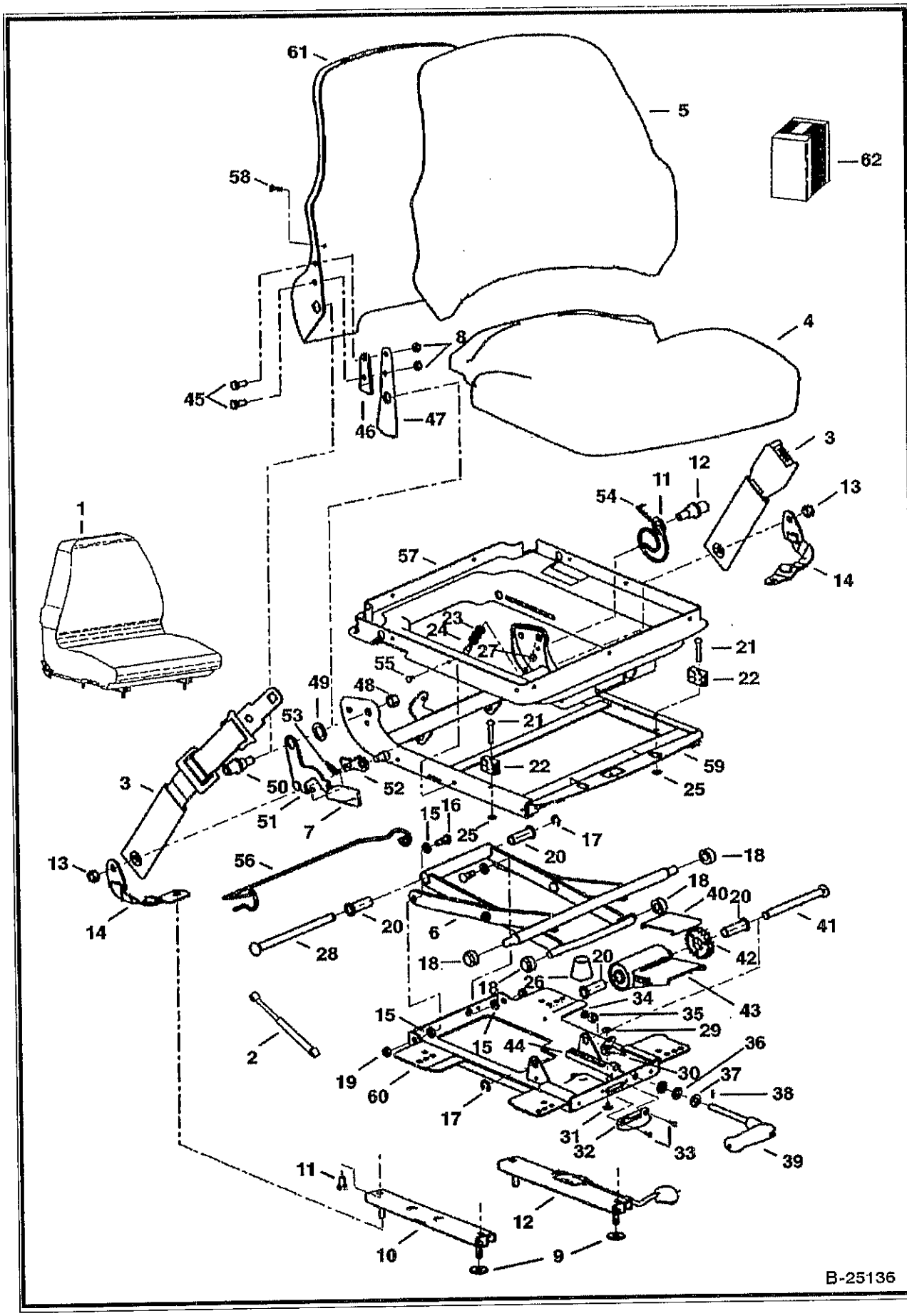

SEAT (Cont'd)
(Suspension - Sears)

Ref No	Part Number	Description	Remarks	Serial Number	Qty
52		LATCH	NSS - recliner		1
53		SPRING	NSS - extension		1
54		SPRING	NSS - tilt latch		1
55		CLIP	NSS		6
56		WIRE	NSS - boot support		1
57		SUSPENSION	NSS - boot		1
58		SCREW	NSS		2
59		HOUSING	NSS - upper		1
60		HOUSING	NSS - lower		1
61		BACK PAN	NSS		1
62	6675309	KIT	slides - W/Ref. 8-12		1
62	6675310	KIT	tether belt - W/Ref. 9, 13 & 14		1
62	6675311	KIT	suspension rollers & bearings - W/Ref. 15-20		1
62	6675312	KIT	suspension bumpers & stops - W/Ref. 21-27		1
62	6675313	KIT	rear tube - W/Ref. 17, 20 & 28		1
62	6675314	KIT	weight adj. indicator - W/Ref. 29-33		1
62	6675315	KIT	weight adj. handle - W/Ref. 34-39		1
62	6675316	KIT	weight adj. - W/Ref. 17, 20 & 40-44		1
62	6675318	KIT	R.H. recliner - W/Ref. 7,8 & 45-54		1
62	6676034	KIT	L.H. recliner - W/Ref. 7,8 & 45-54		1
62	6675308	KIT	susp. boot - W/Ref. 55-57		1

SEAT BELT
(Three Point Retractable)

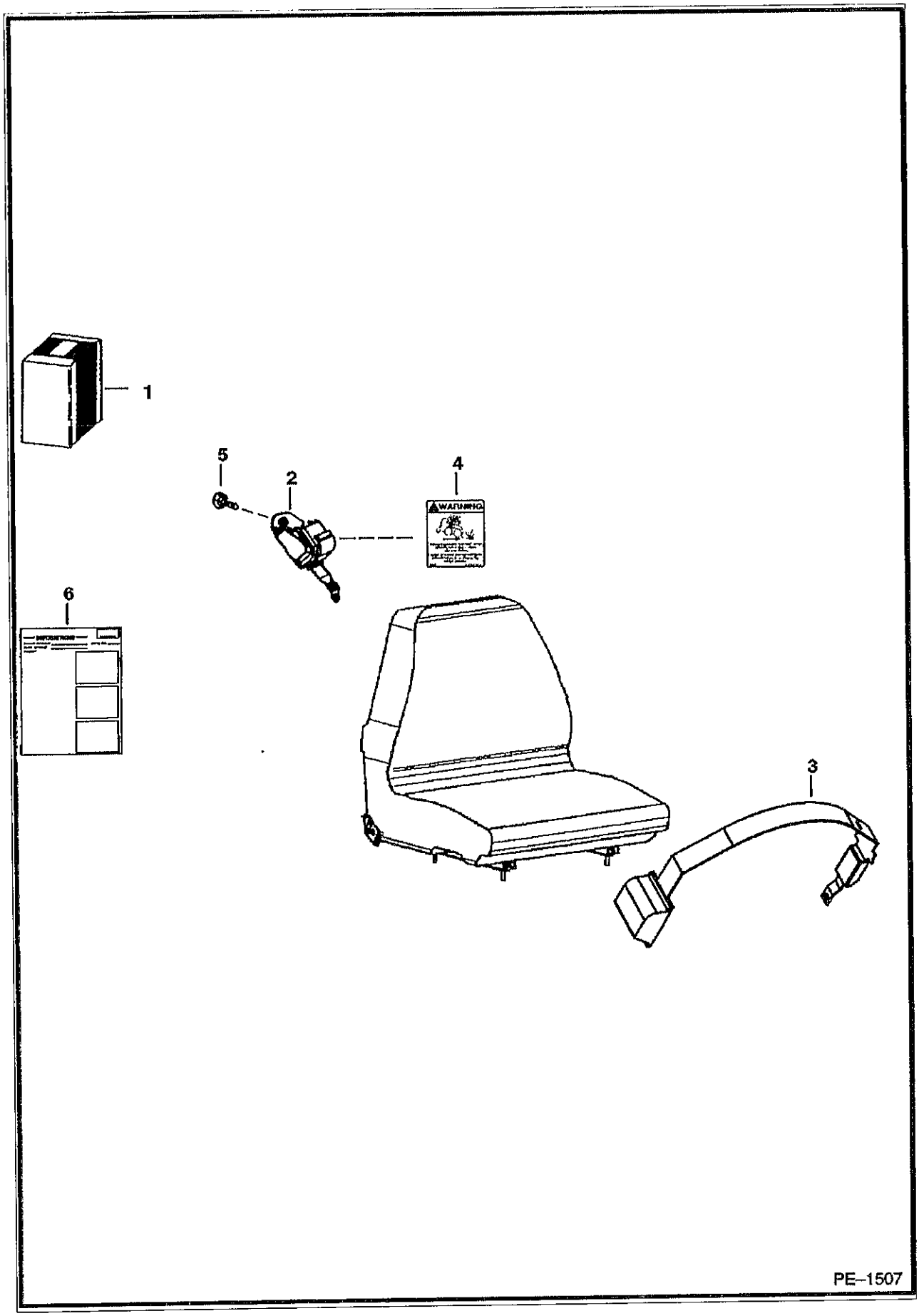

SEAT BELT (Cont'd)
(Three Point Retractable)

Ref No	Part Number	Description	Remarks	Serial Number	Qty
1	6732219	KIT	See Illustration SEAT/ B25136 three point retractable seat belt - Use with Sears brand Suspension Seats with a L.H. recliner lever		1
2	6674407	SHOULDER BELT			1
3	6679308	SEAT BELT			1
4	6725370	DECAL			1
5	35C612	BOLT			1
6	6901010	INSTRUCTIONS			1

SEAT BELT
(3" Wide Retractable)

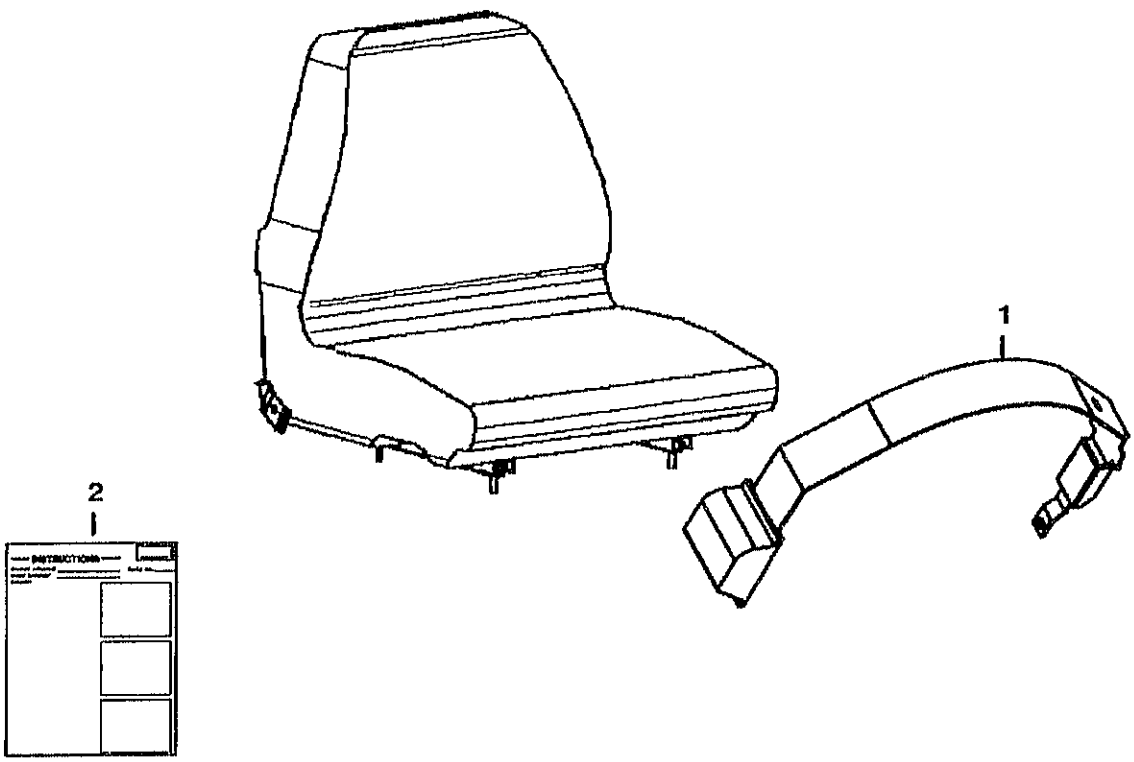

PE–1508

SEAT BELT (Cont'd)
(3" Wide Retractable)

Ref No	Part Number	Description	Remarks	Serial Number	Qty
1	6675562	SEAT BELT	3" wide retractable seat belt - Use with Sears brand Suspension Seats with a L.H. recliner lever		1
2	6901011	INSTRUCTIONS			1

SEAT BELT
(3" Wide)

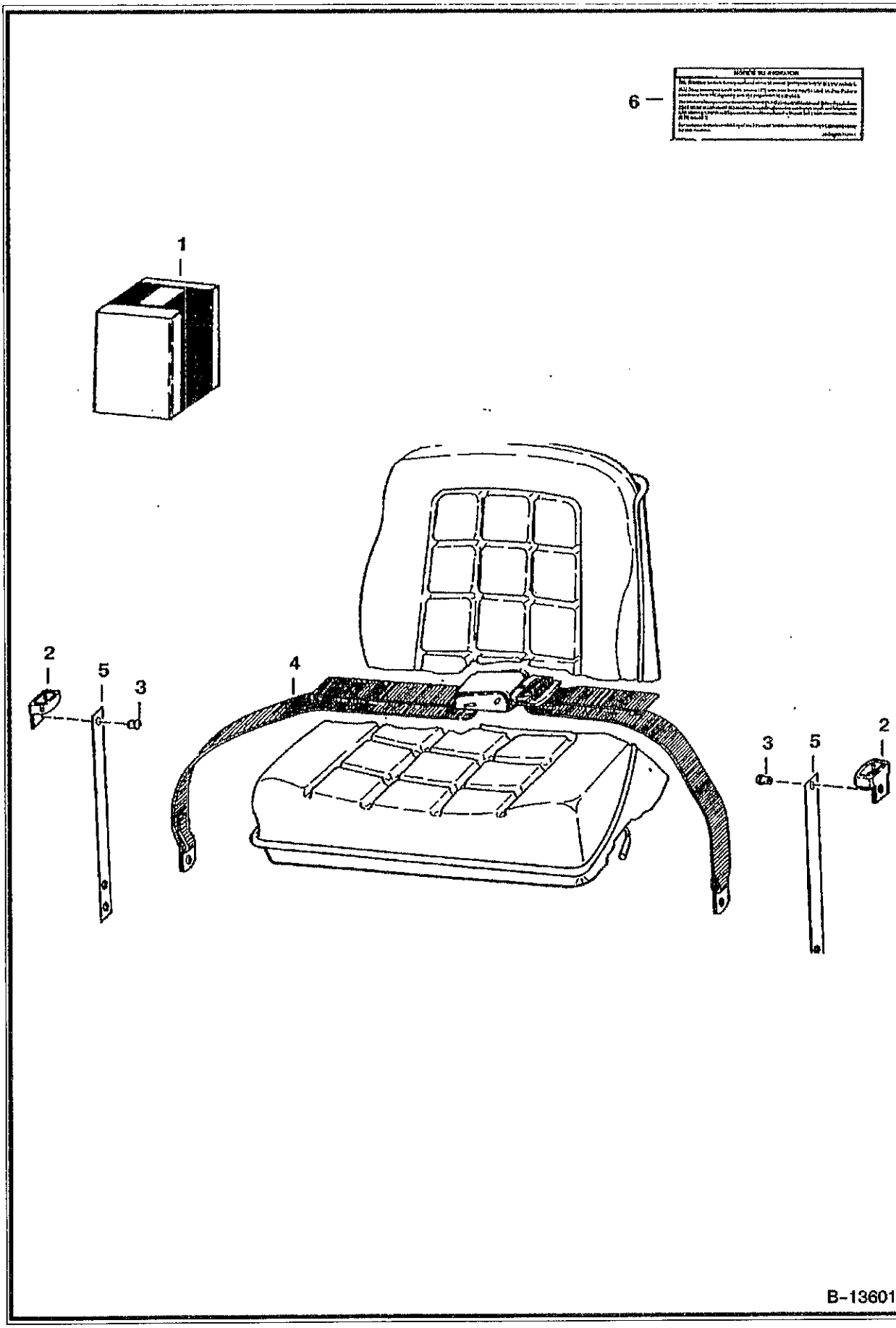

SEAT BELT (Cont'd)
(3" Wide)

Ref No	Part Number	Description	Remarks	Serial Number	Qty
1	6703640	KIT	W/Ref. 2-6		1
2	6703703	GUIDE			2
3	6512797	RIVET			4
4	6659999	BELT			1
5	6711908	SPRING PLATE			2
6	6703641	DECAL			1

SOUND/NOISE REDUCTION OPTION
(Manual Controls, ACS & AHC)

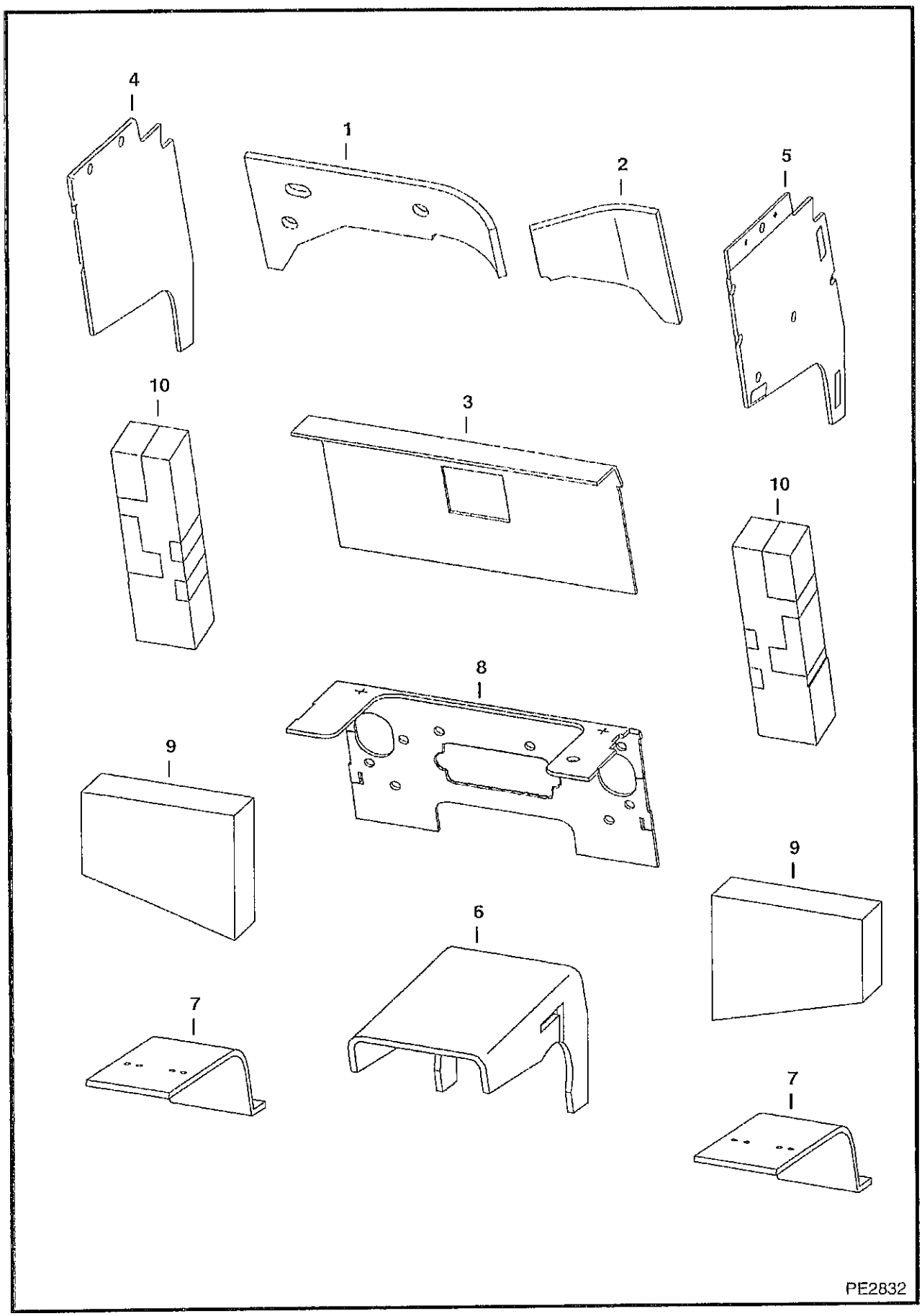

SOUND/NOISE REDUCTION OPTION (Cont'd)
(Manual Controls, ACS & AHC)

Ref No	Part Number	Description	Remarks	Serial Number	Qty
1	6719332	INSULATION	blower housing		1
2	6719333	INSULATION	blower housing		1
3	7101538	INSULATION	crossmember		1
4	7101536	INSULATION	panel shield - L.H.		1
5	7101537	INSULATION	panel shield - R.H.		1
6	7101533	INSULATION	transmission		1
7	6732583	INSULATION	pedal shield		2
8	7101535	INSULATION	steering panel		1
9	6703967	INSULATION	fender		2
10	6703968	INSULATION	transmission		2

SOUND/NOISE REDUCTION OPTION
(SJC)

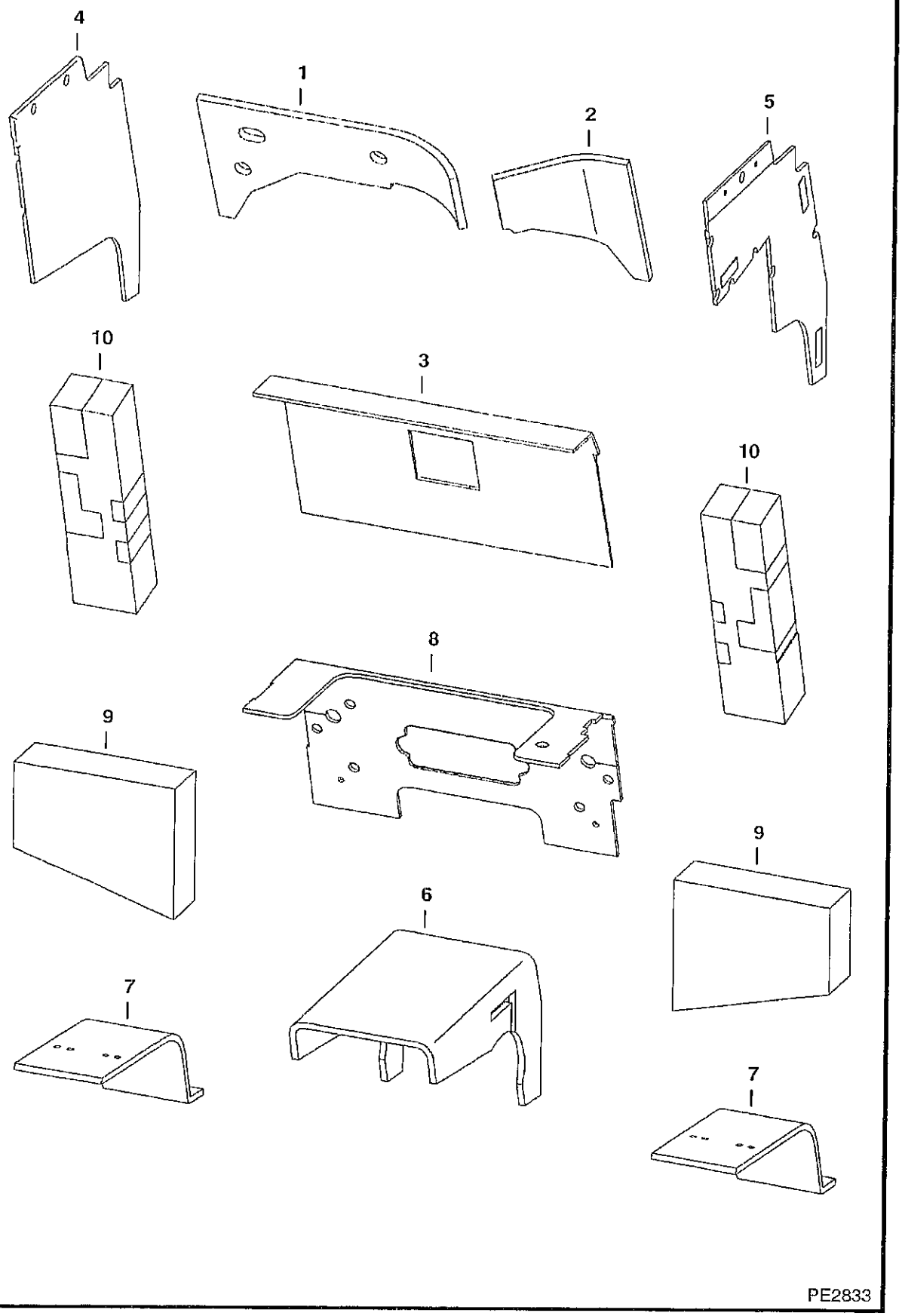

SOUND/NOISE REDUCTION OPTION (Cont'd)
(SJC)

Ref No	Part Number	Description	Remarks	Serial Number	Qty
1	6719332	INSULATION	blower housing		1
2	6719333	INSULATION	blower housing		1
3	7101538	INSULATION	crossmember		1
4	7101536	INSULATION	panel shield - L.H.		1
5	7101539	INSULATION	panel shield - R.H.		1
6	7101533	INSULATION	transmission		1
7	6732583	INSULATION	pedal shield		2
8	7101534	INSULATION	steering panel		1
9	6703967	INSULATION	fender		2
10	6703968	INSULATION	transmission		2

SOUND/NOISE REDUCTION OPTION
(Bystander)

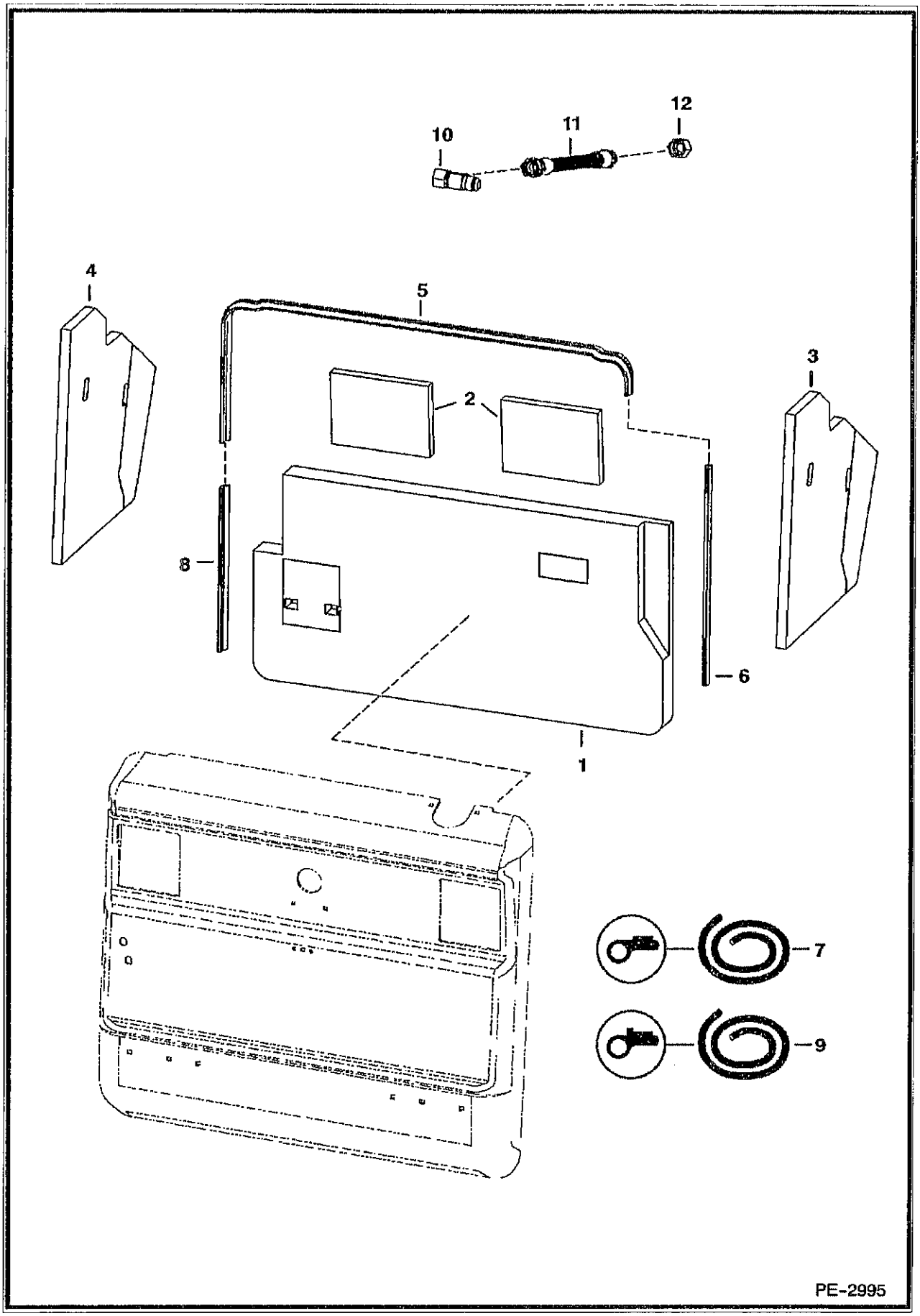

SOUND/NOISE REDUCTION OPTION (Cont'd)
(Bystander)

Ref No	Part Number	Description	Remarks	Serial Number	Qty
1	7109317	INSULATOR	tailgate		1
2	7109318	INSULATOR	upper tailgate		2
3	7109319	INSULATOR	R.H. upright		1
4	7109320	INSULATOR	L.H. upright		1
5		SEAL	NAP - 57.25" (1454,00mm) long - Order Ref. 7		1
6		SEAL	NAP - 16.75" (425,45 mm) long - Order Ref. 7		1
7	7108716	SEAL	bulk - sold per foot		x
8		SEAL	NAP - 21.25" (539,75 mm) long - Order Ref. 9		1
9	7108677	SEAL - BULK/FT	bulk - sold per foot		x
10	13K8	TEE			1
11	7112349	HOSE	15.8" (401,2 mm) long		1
12	36K8	FITTING			1

STROBE LIGHT

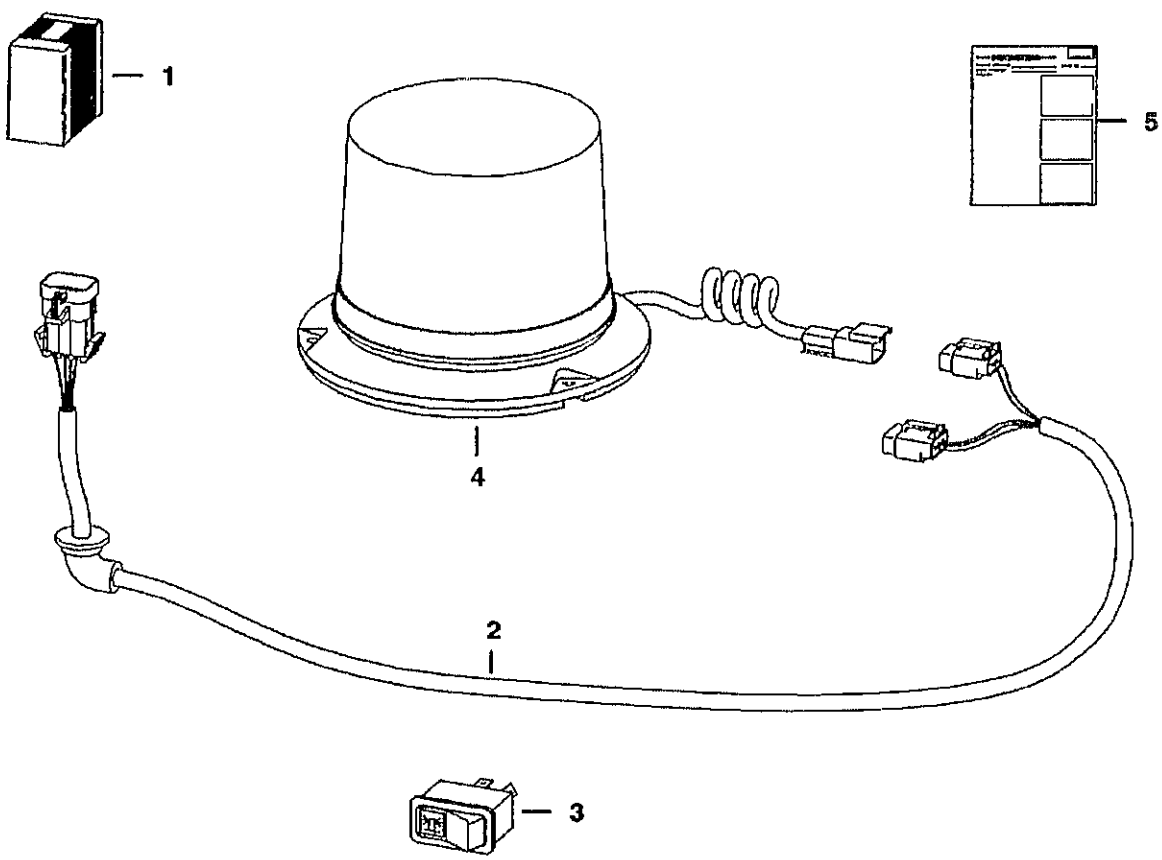

TS–1977

STROBE LIGHT (Cont'd)

Ref No	Part Number	Description	Remarks	Serial Number	Qty
1	6719857	KIT	See Illustration CAB ELECTRICAL CIRCUITRY/ PE2806 strobe light - If loader is not equipped W/ heater, air conditioning, SJC, ACS, power bob-tach, rotating beacon and/or non-power port plug-in 4 way flashers, also order 7116260 deluxe harness		1
2	6718872	HARNESS			1
3	6665317	SWITCH	horizontal		1
3	6668816	SWITCH	vertical		1
4	6675522	STROBE			1
4	6675858	FLASH TUBES			1
5	6900992	INSTRUCTIONS			1

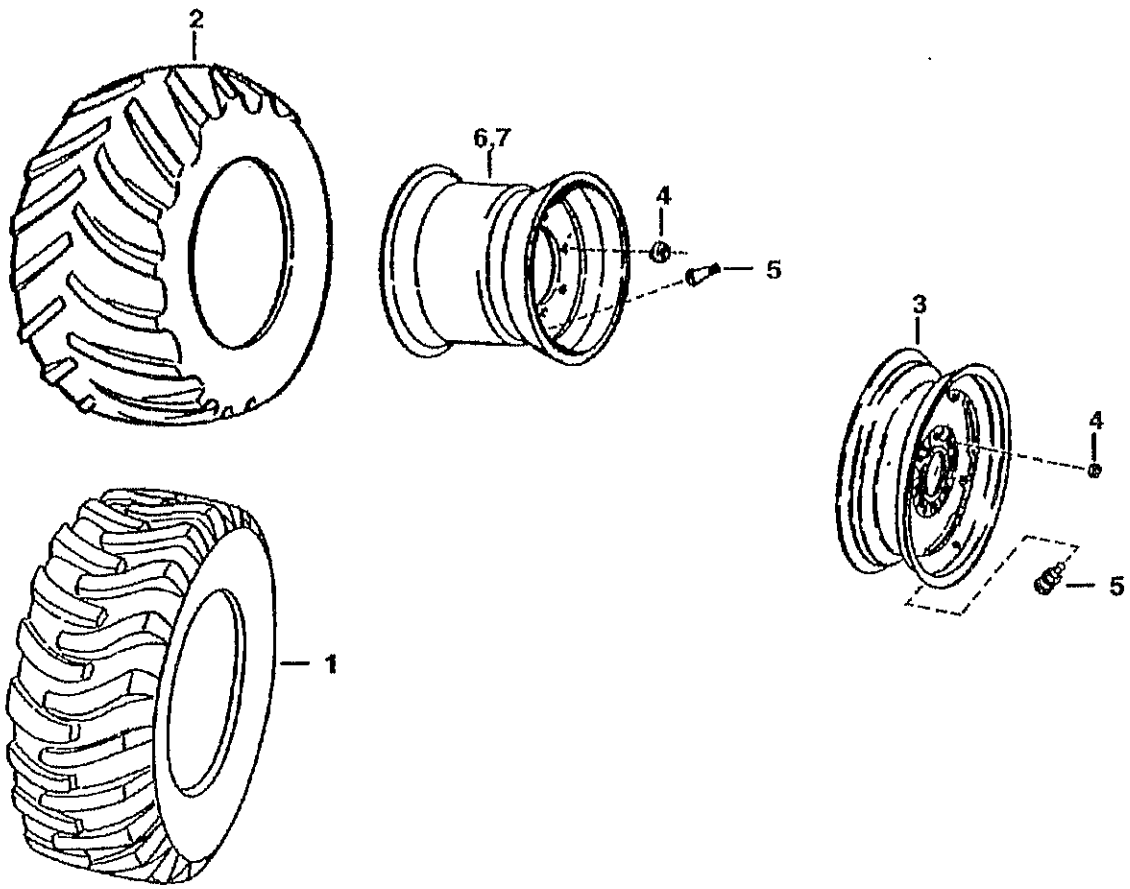

B–17175

TIRES & RIMS (Cont'd)

Ref No	Part Number	Description	Remarks	Serial Number	Qty
1	6729901	TIRE	12 x 16.5 12 ply rating - Bobcat - heavy duty		4
1	6730108	TIRE	12 x 16.5 12 ply rating - Bobcat - severe duty		4
2	6730109	TIRE	33x15.5x16.5 12 ply - Hippo - Galaxy		4
3	6730772	RIM	Used W/Ref. 1 - 72" wide		4
4	6564669	NUT	wheel		32
5	1614765B	STEM	valve		4
6	6732847	RIM	used W/Ref. 2 - 74" wide		4
7	6733578	RIM	offset - 68" wide		4

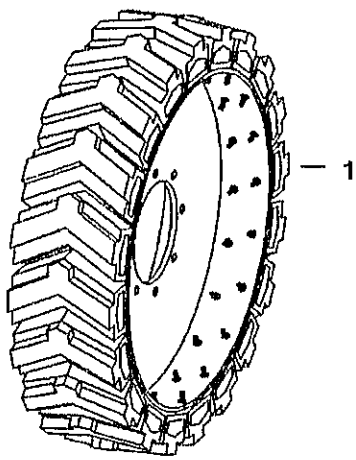

PE2852

TIRES & RIMS (Cont'd)
(Solid Tire)

Ref No	Part Number	Description	Remarks	Serial Number	Qty
1	6903773	31X6X10 SOLID FLEX TIRE AND WHEEL (LEFT)	L.H. - 12 x 16.5		2
1	6903774	31X6X10 SOLID FLEX TIRE AND WHEEL (RIGHT)	R.H. - 12 x 16.5		2

BULK ITEMS
(See Note)

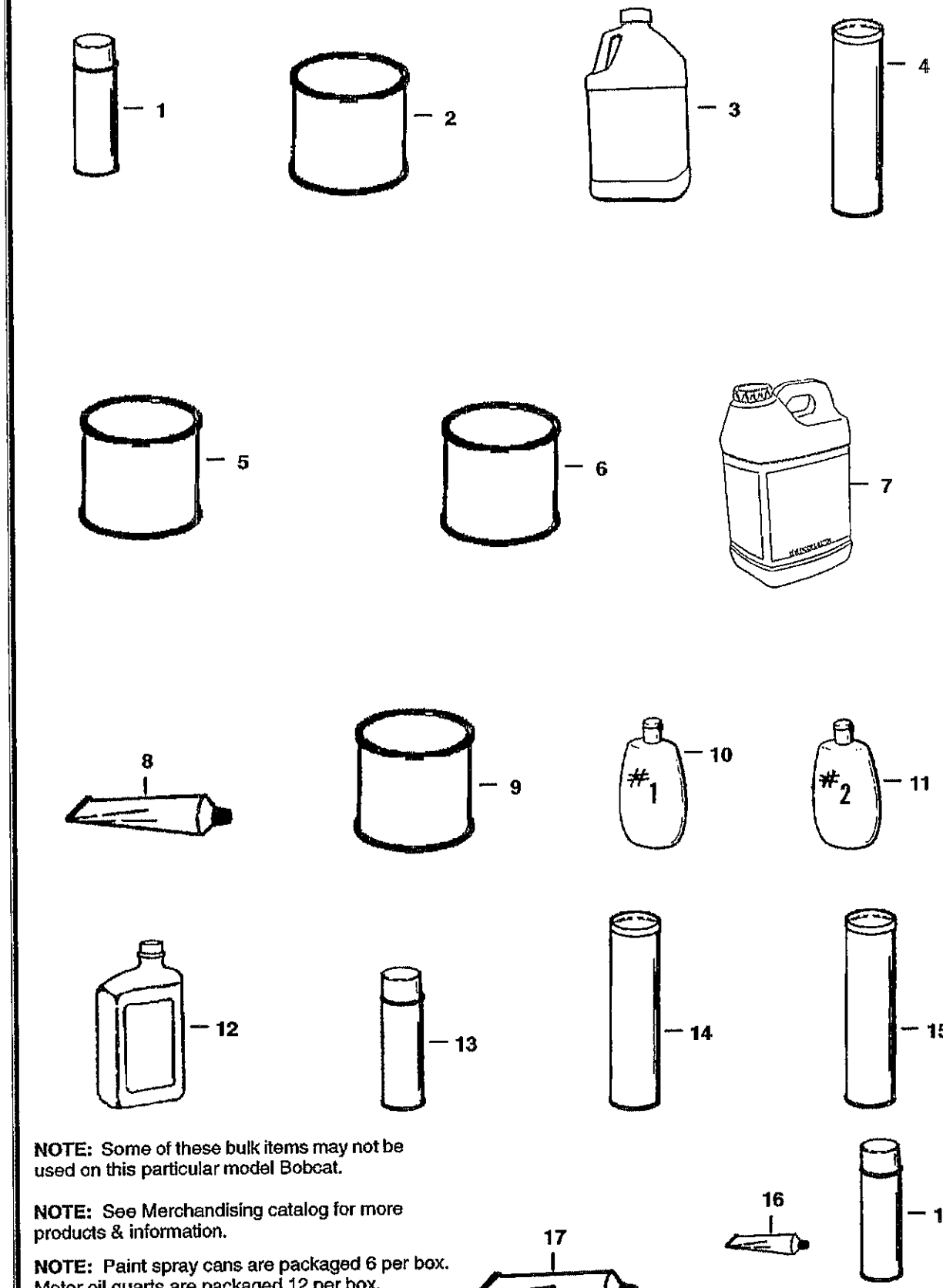

NOTE: Some of these bulk items may not be used on this particular model Bobcat.

NOTE: See Merchandising catalog for more products & information.

NOTE: Paint spray cans are packaged 6 per box.
Motor oil quarts are packaged 12 per box.
Motor oil 1 gal. jugs are packaged 6 per box.
Motor oil 2.5 gal. jugs are packaged 2 per box.

B–16462R

BULK ITEMS (Cont'd)
(See Note)

Ref No	Part Number	Description	Remarks	Serial Number	Qty
1	6902228	PAINT	orange - spray can - SEE NOTE		x
1	6902229	PAINT	charcoal - spray can - SEE NOTE		x
1	6902230	PAINT	white - spray can - SEE NOTE		x
2		PAINT	NAP - orange - gallon - also Order Ref. 5		x
2	6902233	PAINT	orange - Qt.		x
2		PAINT	NAP - charcoal - gallon - also Order Ref. 5		x
2	6902234	PAINT	charcoal - Qt.		x
2		PAINT	NAP - white - gallon - also Order Ref. 5		x
2	6902235	PAINT	white - Qt.		x
3	6724094	ANTI-FREEEZE	Gal. - Premixed PG		x
3	6724354	ANTI-FREEZE	Gal. - PG concentrate		x
4	6633583	SEALANT	chaincase covers		x
5		REDUCER	NAP - gallon		x
6		PRIMER	NAP - gallon		x
6	6902236	PRIMER QT. 6	quart - Was 6653519 [A]		x
7	6903117	HYD FLUID 2.5 GAL. 2			x
7	6903118	HYD. FLUID 5GAL			x
7		FLUID	NAP - 30 gallon drum		x
7	6903119	HYD. FLUID 55GAL			x
8	6599360	SEALANT	electrical - 3 oz. tube		x
9	6903121	GEAR LUBE 12			x
10	6630188	POLISH	window - #1 (8 oz.)		x
11	6630189	POLISH	window - #2 (8 oz.) - scratch remover		x
12	6903109	OIL 30W QT. 12	30W - 1 Qt. - SEE NOTE		x
12	6903107	OIL 10W30 QT. 12			x
12	6903105	OIL 15W40 QT. 12			x
12	6903108	OIL 10W30 GAL. 6			x
12	6903106	OIL 15W40 GAL. 6			x
12	6903110	OIL 30W GAL. 6			x
12	6903113	OIL 15W40 2.5 GAL. 2			x
12	6903112	OIL 10W30 2.5 GAL 2			x
12	6903111	OIL 30W 2.5 GAL 2			x
13	6675380	ADHESIVE	insulation - spray can		x
14	6903122	GREASE 10			x
15	6599719	GREASE	14.5 oz. cartridge - for fan idler bearing		x
16	6650407	ADHESIVE	1 oz. tube		x
17	6650388	SEALANT	flange		x
18	6736644	PAINT	orange - .5oz. spray can		x
18	6736641	PAINT	charcoal - .5oz. spray can		x
18	6736642	PAINT	white - .5oz. spray can		x
18	6736645	PAINT	red - .5oz. spray can		x

NUMERICAL INDEX

Part No.	Description	Was	Code	Page
10C410	BOLT			238
10C412	BOLT			238
10C512	BOLT			214
10C616	BOLT 10			20
10H25	GREASE ZERK			26, 28, 56, 58
10H35	GREASE ZERK			28, 92
11H15	GREASE FITTING			26
12D10	NUT			266
12D8	NUT			260, 262
12H15	GREASE FITTING			26, 58
12H25	FITTING			308
1304227B	PIN			172
1306637B	PIN			62
1313116	BUSHING			166
1318565	COTTER PIN			82
1320075	COTTER PIN			302
1321607B	RACE			46
1321608B	BEARING			46
13K8	TEE			338
14D10	NUT			170, 172, 262
14J3112	PIN			166, 168
14J5032	PIN			28
15KB1008	ADAPTER			73, 74, 84
15KB1010	FITTING			84
15KB1012	ADAPTER			84
15KB1210	ADAPTER			48, 50, 54, 222
15KB1212	ADAPTER			84, 308
15KB1612	CONNECTOR			86, 88
15KB404	CONNECTOR			90
15KB406	ADAPTER			52, 308
15KB606	ADAPTER			54, 84, 90
15KB612	ADAPTER			84, 308, 316
15KB808	CONNECTOR			86, 88
1614765B	STEM			342
16F000002B	PLUG			184
17C000632B	BOLT			302
17C10112	BOLT			26
17C10136	BOLT			26
17C1024	BOLT			46
17C1028	BOLT			300
17C1056	BOLT			14
17C1064	BOLT 5			168
17C410	BOLT 10			216, 260, 262, 296, 298
17C412	BOLT 5			41, 42
17C428	BOLT			52
17C432	BOLT			52
17C508	SCREW			260, 262
17C510	BOLT			168
17C512	BOLT 5			170, 172, 224, 230, 260, 262
17C516	BOLT			258
17C540	BOLT			138, 222
17C608	BOLT			142, 212
17C610	SCREW			138
17C6116	BOLT			160

Code for disposition of old part number
A -- Use up
B -- Use on other application (See PNI)
C -- File PDR Report with Bobcat Parts Sales
D -- Part Number Error

Part No.	Description	Was	Code	Page
17C612	BOLT 5			30, 62, 84, 92, 166, 226, 230
17C614	BOLT			246
17C616	BOLT 5			62, 142, 154, 270, 30
17C620	BOLT			62, 78, 80, 84, 92, 160, 16
17C624	BOLT 5			52, 62, 230
17C628	BOLT			230
17C636	BOLT			90
17C640	BOLT 5			20, 26, 54, 242
17C644	BOLT			26, 78, 80
17C648	SCREW			26
17C652	SCREW			300
17C656	BOLT			26, 286, 292
17C660	BOLT			28
17C664	BOLT			26
17C672	BOLT			26, 300
17C680	BOLT			92, 316
17C716	BOLT			16
17C728	BOLT			86, 88
17C816	BOLT			166
17C820	BOLT			2
17C832	BOLT			166
17C844	BOLT			52
17C872	BOLT			166
17KB1210	ELBOW			50, 222
17KB1212	ELBOW			316
17KB404	ELBOW			90, 308
17KB606	ELBOW			66, 68, 78, 80, 84, 90, 308, 316
18EM1224	WASHER			224, 230
19F12	BUSHING			220
19J12	CLAMP			78, 8
19KB606	TEE			90, 272
1CM635	BOLT			286, 290
1CM640	NUT			224, 230
1CM8100	SCREW			168
1CM820	BOLT			92
1DM00006B	NUT			206
20J16	FLANGE			86, 88
21G804	BOLT			274
21JM00020B	PIN			19
21JM814	PIN			185, 18
21KB606	TEE			52, 316
225855	OIL SEAL	225855B	D	26
24F1	ELBOW			138
24K5	PLUG			80
24K7	PLUG			64, 68
25E10	WASHER			134
25E11	WASHER			170
25E13	WASHER 5			42, 144, 152, 212, 296, 298
25E14	WSHR			238
25E15	WASHER			26, 138
25E16	WSHR			224, 230
25E21	WASHER 5			166
25E22	WASHER			92, 142
25G410	CAPSCREW			136

Code for disposition of old part number
A -- Use up
B -- Use on other application (See PNI)
C -- File PDR Report with Bobcat Parts Sales
D -- Part Number Error

Part No.	Description	Was	Code	Page
25G512	SCREW			22, 134
25G520	SCREW			22
25G612	SCREW			256
25GM08010B	SET SCREW			182
25GT00410B	BOLT			148
25GT410	SCREW			144, 240
25K20016	O RING 10			64, 68
25K20100	O RING 10			40
25K30126	O RING 10			28
25K30218	O RING 10			58
25K30812	O RING 10			36
27E10	WASHER			26
29CM00820B	BOLT			168
29CM820	SCREW			164
29G416	BOLT			52, 64, 68, 142
29G444	BOLT			64, 68
2C1626	BOLT			45, 46
2CM1055	SCREW			138
2DM00008B	NUT	6680874	A	182
2F4051	PIN			172
30H21	CLAMP 10			268
30H26	CLIP			170, 172
30H27	CLAMP			254
30H31	CLAMP 10			170, 172
30H34	CLAMP			162
30H35	CLAMP 10			254
30H42	CLAMP			154, 304
30H50	CLIP			256
30H62	CLIP			212
30H73	CLAMP			168
30H79	CLAMP			86, 88
30H91	CLAMP			162
31C001036B	BOLT			302
31C1228	BOLT			12, 36, 90
31C410	BOLT			266
31C644	BOLT			54
31C820	BOLT			166, 168
31C824	BOLT 10			12, 168, 302
31H34	CLIP			168
31H38	CLAMP			168, 316
31H42	CLIP			272, 308
31H46	CLAMP			286, 292
31H49	CLAMP			48
3291290B	WING NUT			208
35C1020	BOLT			244
35C408	BOLT			224
35C410	BOLT 5			214, 260, 262, 276, 292
35C412	BOLT			20, 40, 262, 268
35C512	BOLT			32
35C514	BOLT			142, 212, 296, 298
35C516	BOLT 10			78, 80, 162, 238
35C536	BOLT			260, 262
35C612	BOLT			82, 138, 308, 328
35C616	BOLT 5			52

Code for disposition of old part number
A -- Use up
B -- Use on other application (See PNI)
C -- File PDR Report with Bobcat Parts Sales
D -- Part Number Error

Part No.	Description	Was	Code	Page
35C624	BOLT			316
35C632	BOLT			78, 80
35C820	BOLT			[illegible]
36K5	CAP			52, 64, 66, 68, 78, 80, 86, 8[illegible]
36K6	CAP			168
36K8	FITTING			48, 338
37C412	BOLT			268
37C424	BOLT			276, 292
37C512	BOLT			24, 42, 216, 276, 292, 304
37C612	BOLT			24
37C616	BOLT			138
37C620	BOLT			32, 62, 142, 212
38C610	BOLT			170, 172
38C824	SCREW			24
38C828	BOLT			165, 166
38C840	BOLT			24
3966602B	O-RING			174, 184
3974056B	CAP	6680637	A	186
3974095B	GASKET			174, 198, 206
3974161B	COLLET	6680865	A	18[illegible]
3974226B	KEY			186
3974260B	BOLT			196
3974390B	CAP	6680639	A	186
3974394B	PIN			198, 200
3974432B	CAP	6680665	A	180
3974500B	JOINT			200
3974503B	STUD			198
3974916B	STUD			176, 180, 184
3974920B	SCREW			182
3974970B	SCREW			20[illegible]
3974972B	GASKET			174, 206
42H52	CLAMP			164
42HC250	CLAMP			164
42HC375	CLAMP			163, 164
42HL250	CLAMP			34, 78, 80
42HS4	CLAMP			34
43C000852B	BOLT			168
43C408	BOLT			152
43C516	BOLT			3[illegible]
43C616	BOLT			135, 136, 15[illegible]
43DM8	NUT			138
44H48	CLAMP			286, 292
45C616	BOLT			164, 172
45C620	BOLT			92, 168
45C824	BOLT	31C824	B,D	100
45G1006	BOLT			266
46D5	NUT			224, 230
47C820	BOLT			42
47K10	PLUG			78, 80
47K8	PLUG			102, 106
49C628	BOLT			62, 92
4D28	NUT			300
4DM10	NUT			138
4DM8	NUT			158

Code for disposition of old part number
A -- Use up
B -- Use on other application (See PNI)
C -- File PDR Report with Bobcat Parts Sales
D -- Part Number Error

Part No.	Description	Was	Code	Page
4F6106	PIN			20
51DM12	NUT			224, 230
51DM8	NUT			138
5289686	PLUG			14
5289686B	PLUG			18
53C516	BOLT			34
53D10	NUT			14, 26
53D12	NUT			12
53D6	NUT			14, 62
53DM8	NUT			164, 168
54K20028	O RING 10			66, 68
54K30110	O-RING			310
54K30218	O-RING			56
54K40116	O-RING			310
54K40224	O-RING			56, 58
54K40300	O-RING			56, 58
55D5	NUT			260, 262
55D6	NUT			24, 230
55K204	O RING 10			64, 68
55K214	O'RING			78, 80, 308
55K219	O'RING			86, 88
57D000008B	NUT			302
57D10	NUT			244, 302
57D5	NUT			214
57D6	NUT 5			32, 302
57G608	SCREW			276, 292
58K116	O RING 10			72
58K120	O-RING			142
58K127	O RING 10			64, 68
58K13	O-RING			66, 68
58K132	O'RING			310
58K16	O RING 10			66, 68
58K17	O RING 10			64, 68
58K22	O RING 10			66, 70, 82
58K4	O-RING	54K020002B	B	64, 70
59CM1240	BOLT			100, 168
59D4	NUT 5			136, 238, 268, 276, 292
59D5	NUT 5			20, 42, 138, 226, 230, 276, 292
59D6	NUT			24, 78, 80
59D8	NUT 5			14
5CM1020	SCREW			162, 164, 168, 294
5CM1025	BOLT			286
5CM1080	SCREW			286, 294
5HM13	CLAMP			34
5HM14	CLAMP			34, 162
5HM15	CLAMP			78, 80
5HM20	CLAMP			284, 294
5HM23	CLAMP			162
5HM24	CLAMP			34, 74
5HM42	HOSECLAMP			78, 80, 82
5HM55	CLAMP			162
5HM58	CLAMP			34
5JM00020B	SNAP RING			198
614142B	SLEEVE			268

Code for disposition of old part number
A -- Use up
B -- Use on other application (See PNI)
C -- File PDR Report with Bobcat Parts Sales
D -- Part Number Error

Part No.	Description	Was	Code	Page
619021	WASHER 5			28, 316
619021B	WASHER			20, 62, 172, 308, 324
61D5	NUT			23, 24, 160, 216, 224, 23
61D6	NUT 5			62, 142, 212, 225, 226, 242, 24
62D4	NUT			170, 172
63D6	NUT			62
6511855	SEAL			160
6512026	BUSHING			62
6512797	RIVET			332
6513152	SEAL			224, 230
6513471	CLAMP			162
6513495	COTTER PIN			62, 172
6515131	TERMINAL			268
6515817	WASHER			14
6517516	LIGHT			268
6518955	SNAP RING			166
6519178	BUMPER			20
6531270	SLEEVE			64
6532127	BOOT			30, 144, 148
6532347	SPACER			2
6532453	RING			316
6533898	DECAL			248, 302
6538367	HEAD			56
6542731	SAFETY TREAD			224, 230
654299B	BEARING			102, 106
6553411	BUSHING			42, 44
6553709	WASHER			14
6553976	SAFETY TREAD			248
6554100	TREAD			172, 248
6554149	CORD			18, 224, 23
6555331	WIRE ROPE			238
6555341	SAFETY TREAD			248, 308
6555351	SEAL			238
6557224	DECAL			248
6557493	GROMMET			322
6557831	WASHER			286, 294
6557904	FLASHER			260, 262, 268
6558309	WIRE ROPE			248
6558310	SLEEVE			24
6559479	NUT			17
6560573	DECAL			250
6560633	DAMPENER			14
6561383	DECAL			248
6562602	BUSHING			14
6563914	WASHER			62, 92
6564343	SPACER			172
6564452	GRIP			24, 169, 170, 171, 172
6564654	PIN			62
6564657	PIN			62, 142, 212
6564669	NUT			46, 342
6565200	DECAL			248
6565947	WASHER			46
6565977	HOSE			284, 290, 292
6565990	DECAL			248

Code for disposition of old part number
A -- Use up
B -- Use on other application (See PNI)
C -- File PDR Report with Bobcat Parts Sales
D -- Part Number Error

Part No.	Description	Was	Code	Page
6567743	PIN			14, 274
6567838	PIN			302
6567962	WASHER			170, 172
6568424	ADAPTER			166
6568425	ADAPTER			166
6569203	CLAMP			138
6569219	SCREEN			34, 78, 80
6569498	SPRING ASSY			166
6570931	INSTRUCTIONS			210
6576033	WASHER			166
6576262	MOUNT			170, 172
6576280	BOLT			138
6577058	PIN			92
6577382	SPACER			160
6577545	GROMMET			214, 216, 296, 298
6577754	DECAL			250
6577821	HOSE			34
6577822	HOSE			34, 162
6577880	KIT			209, 210
6577954	PIN			26
6577961	GROMMET			30, 62, 172
6578169	HOSE			34
6578172	HOSE			34, 162
6578253	SPRING	6562018	A	28
6578278	PAD			34, 78, 80
6578368	DECAL			250
6578857	HUB			46
6579385	DECAL			250
6579528	DECAL			248
6579613	STOP			14, 160
6579989	BRACKET			138
658128B	SNAP RING			102, 106
6586251	HOSE			78, 80
6586542	HEAD			310
6586543	PISTON			310
6586710	BOLT			166
6586918	SCREW			64
6587182	SWIVEL PIN			166
6587458	KEY			34
6587523	WASHER			64, 68
6587575	ADAPTER			64
6587580	SPRING			64, 69, 70
6587763	BOOT			64, 152
6587765	BUSHING			166
6589226	BONNET			64
6592098	WASHER			64
6592100	COLLAR			64, 70
6592105	BALL			64
6592107	SPRING			64
6592109	ADAPTER			64, 68
6592117	SPRING			64, 68
6592506	CLAMP			48, 50, 78, 80
6592507	PLATE			78, 80
6595663	BUSHING			64, 68

Code for disposition of old part number
A -- Use up
B -- Use on other application (See PNI)
C -- File PDR Report with Bobcat Parts Sales
D -- Part Number Error

NUMERICAL INDEX (Cont'd)

Part No.	Description	Was	Code	Page
6596807	PLUG			64
6598112	CAP			176, 202
6598133	BRACKET			1[illegible]
6598169	PLUG			180, 18[illegible]
6598702	SPRING			204
6599085	NUT			206
6599360	SEALANT			346
6599365	KIT			132
6599719	GREASE			346
6599741	WASHER			92
6599744	BALL JOINT			92
6599931	ALARM			214, 216
6610510	TIE			296, 298
6624289	CABLE TIE			18, 48, 50, 54, 134, 136, 138, 212, 254, 256, 260, 262, 272, 284, 286, 294, 304, 308, 316
6628613	HOSE			90
6630188	POLISH			346
6630189	POLISH			346
6630207	RIVET			14, 30
6630945	WASHER			170, 17[illegible]
6631046	SEAL			174, 184
6631418	PIN			14, 20, 274
6631561	NUT			72
6631643	PLATE			100
6632279	SEAL KIT			66, 70
6633583	SEALANT			346
6634874	O-RING			72
6640690	PIN			140, 144, 148
6640692	CONNECTOR			140, 144, 148
6640694	LOCK			140, 144, 14[illegible]
6640699	CONNECTOR			144, 148, 276, 292
6640700	LOCK			144, 148
6641176	SEAL			140, 144, 148
6641179	CONNECTOR			72, 140, 144, 148
6641180	LOCK			72, 140, 144, 148
6644965	BALL JOINT			170, 172
6645086	PLUG			102, 106
6646582	PLUG			144, 148
6646705	SEAL			16[illegible]
6646781	SWITCH			21[illegible]
6647777	PIN			72
6647783	LOAD CHECK			72
6647784	PLUG			72
6647785	SPRING			72
6648293	SCREW			72
6648307	CONNECTOR			286, 294
6648308	CONNECTOR			286, 294
6648312	TERMINAL			280
6648320	SEAL			280
6648348	PLUG			30, 32
6649244	STUD			224, 230
6649245	RETAINER			224, 230
6649481	BULB			304
6649551	SHOCK			92
6649706	PIN			244

Code for disposition of old part number
A -- Use up
B -- Use on other application (See PNI)
C -- File PDR Report with Bobcat Parts Sales
D -- Part Number Error

Part No.	Description	Was	Code	Page
6650107	SEAL			280
6650120	RACE			38, 40
6650388	SEALANT			346
6650407	ADHESIVE			346
6650627	PLATE			102, 106
6650629	PIN			102, 106
6650630	RETAINER			102, 106
6650634	GASKET			102, 106
6650635	BEARING			102, 106
6650636	PIN			102, 106
6650637	BOLT			102, 106
6650646	O-RING			102
6650647	O-RING			102
6650648	PLUG			102
6650652	POPPET			102
6650668	BOLT			102, 106
6650675	COUPLER			102
6652018	BOLT			106
6652373	VALVE			208
6652656	NUT			202
6652679	KEY			188
6652750	PLUG			186
6652751	GASKET			186
6652762	BOLT			178
6652918	NUT			168
6654139	MOULDING			14, 142
6654806	FUSE			136
6655399	BUMPER			160
6657028	O-RING			102, 106
6657067	COVER			104
6657068	COVER			102, 106
6657072	RETAINER			102, 106
6657073	RETAINER			102, 106
6657719	PLUG			18, 238
6657734	PUMP			34
6658180	BREATHER			34
6659369	HEATER			220
6659543	PLUG			306
6659999	BELT			332
6660260	SWITCH			132
6660644	CAP			64
6660814	O-RING			102, 106
6660967	CAP			166
6661022	FILTER			54, 86, 88, 129, 130
6661062	PLUG			164, 306
6661114	CAP			33, 34
6661229	BEARING			166
6661248	ELEMENT			2, 8, 82, 132
6661353	LIGHT ASSY			304
6661377	SEAL			166
6661481	O-RING			102
6661696	CAP			34
6661787	WASHER			168
6661807	KIT			9, 10, 130

Code for disposition of old part number
A -- Use up
B -- Use on other application (See PNI)
C -- File PDR Report with Bobcat Parts Sales
D -- Part Number Error

Part No.	Description	Was	Code	Page
6661808	KIT			130
6662298	SNAP RING			42
6662848	CAP			6
6662855	BELT			5, 6, 160
6663289	FUSE			136
6664065	WASHER			322
6664085	BUSHING			18, 228, 238, 322
6664097	COVER			322
6664103	NUT			322
6664221	RETAINER			18
6664223	OUTLET			18
6664224	CAP			18
6664554	PUMP			224
6664566	BOLT			322
6664845	BEARING			38, 40
6664848	SNAP RING			38, 40
6665000	CLIP			144, 148, 224, 230
6665017	CONNECTOR			280
6665018	LOCK			280
6665086	SEAL			5
6665222	RING GEAR			166
6665307	SEAL			166
6665308	SNAP RING			166
6665314	PLUG			18, 134
6665316	SWITCH			268
6665317	SWITCH			218, 340
6665321	RIVET			144, 148, 224, 230
6665322	RIVET			144, 148, 224, 230
6665367	BULB			18
6665371	SWITCH			13
6665427	BATTERY			2, 138
6665568	EXTRUSION			224
6665569	WASHER			64, 68
6665570	RING			64, 68
6665602	MOTOR			322
6665701	BUSHING			62, 142
6665707	SWITCH			224
6665727	LIGHT			260, 262
6665728	LIGHT			260, 262
6665729	LIGHT			260, 262
6665755	SEAL			38, 40
6665860	KIT			260, 262
6665915	GAUGE			78, 80
6666338	WASHER			102, 106
6666542	SEAL			310
6666571	BULB			218
6666766	GROMMET			224
6666881	RETAINER			102
6667144	CONNECTOR			140, 144, 148
6667145	LOCK			140, 148
6667176	PLUG			72
6667185	SEAL KIT			72
6667201	SPACER			322
6667323	SEAL			310

Code for disposition of old part number
A -- Use up
B -- Use on other application (See PNI)
C -- File PDR Report with Bobcat Parts Sales
D -- Part Number Error

NUMERICAL INDEX (Cont'd)

Part No.	Description	Was	Code	Page
6667326	SEAL			56
6667352	FILTER FUEL			2, 6, 34
6667353	FILTER ASSY			34
6667428	TAPPET			188
6667461	PIN			182
6667676	COVER			72
6667677	O-RING			72
6667680	SNAP RING			72
6667687	STEM			66, 68
6667803	COUPLER			272, 316
6667804	COUPLER			272, 316
6667844	VALVE ASSY			52, 59, 60
6668104	MOUNT			168
6668742	SWITCH			18
6668815	SWITCH			260, 262, 268
6668816	SWITCH			218, 260, 262, 340
6668819	FILTER			132
6668820	NUT			66, 70, 128
6669087	SEAL KIT			60, 128
6669089	TRACK			22
6669091	CLIP			18, 276, 292
6669135	SEAT			21, 22
6669224	BOLT			18, 276, 292
6669267	SEAL			58
6669308	RETAINER			12
6669402	HOUSING			102
6669405	END CAP			106
6669406	END PLATE			102
6669409	WASHER			102
6669411	BEARING			102, 106
6669549	SOCKET			252, 254
6669657	SEAL KIT			272
6669732	SEAL KIT			66, 68, 70
6670160	CUSHION			22
6670284	LIGHT ASSY			304
6670312	RELAY			260, 262
6670347	GASKET			174, 190
6670425	SCREW			206
6670426	NUT			206
6670427	CAP			202, 206
6670462	NUT			206
6670504	PLUG			190, 192
6670533	NUT			200
6670620	MOUNT			262
6670621	LENS			262
6670634	SEAL KIT			72
6670668	PIN			262
6670706	CONNECTOR			144, 148
6670707	CONNECTOR			144, 148
6670710	LOCK			144, 148
6670711	LOCK			144, 148
6670714	PIN			148
6670715	PIN			144, 148, 150
6670726	LOCK			320

Code for disposition of old part number
A -- Use up
B -- Use on other application (See PNI)
C -- File PDR Report with Bobcat Parts Sales
D -- Part Number Error

Part No.	Description	Was	Code	Page
6670769	O-RING			174, 196
6670774	PIN			204
6670782	GASKET			174, 20
6671025	COIL			64, 6
6671106	HORN			260, 262
6671138	SEAL			46
6671512	BLOCK ASSY			106
6671516	SEAL KIT			104, 106
6671518	BOLT			102, 106
6671520	O-RING			100, 106
6671527	NUT			72
6672272	WASHER			304
6672273	SCREW			304
6672274	SCREW			304
6672275	GASKET			304
6672276	LENS			304
6672277	BRACKET			304
6672279	MOUNT			304
6672354	PLUG			186
6672384	CAP			20
6672436	SEAL			174, 18
6672471	VALVE			66, 68
6672715	SPACER			22
6672756	SEAL KIT			128
6672762	PLUG			128
6672863	SOLENOID			72
6673188	SEAL KIT			128
6673710	BEARING			92
6673789	BEARING			9
6673884	O-RING			1
6673954	HOSE			8
6674013	TRACK			22
6674202	NUT			134
6674228	PANEL			276, 292
6674231	VENT			276, 292
6674234	CONDENSER			286, 291, 292
6674235	RECEIVER DRIER			286, 292
6674315	SENSOR			138
6674316	SENSOR			13
6674331	COIL			7
6674400	HOUSING			304
6674401	HOUSING			304
6674402	MOUNT			304
6674407	SHOULDER BELT			328
6674519	WINDOW			238
6674520	WINDOW			238
6674521	WINDOW			238
6674522	WINDOW			238
6674799	ADAPTER			254
6674802	CONNECTOR			252, 254
6674894	NUT			20
6674895	RETAINER			18, 30, 32, 134
6674907	NUT			114, 116
6674993	CAP			224

Code for disposition of old part number
A -- Use up
B -- Use on other application (See PNI)
C -- File PDR Report with Bobcat Parts Sales
D -- Part Number Error

NUMERICAL INDEX (Cont'd)

Part No.	Description	Was	Code	Page
6675026	CAP			252, 254
6675033	INSERT			14, 134
6675064	TERMINAL			260, 262
6675074	SEAT BELT			16
6675075	HOSE			286, 292
6675076	HOSE			286, 292
6675099	ALARM			296, 298
6675136	GAS SPRING			14
6675154	HOLDER			136
6675155	FUSE			136
6675170	SEAT BELT			324
6675176	SWITCH			276, 292
6675177	KNOB			276, 292
6675179	FLANGE			276, 292
6675181	PLUG			276, 292
6675212	RETAINER			238
6675257	CLEVIS			14
6675265	CHECK VALVE			128
6675273	WASHER			24
6675278	FILTER			136
6675281	MOUNT			254, 256
6675298	COUPLER			226
6675299	COUPLER			226
6675308	KIT			326
6675309	KIT			326
6675310	KIT			326
6675311	KIT			326
6675312	KIT			326
6675313	KIT			326
6675314	KIT			326
6675315	KIT			326
6675316	KIT			326
6675317	SCISSORS			324
6675318	KIT			326
6675319	SEAT			324
6675320	SEAT			324
6675321	SEAT			324
6675322	SEAT			324
6675323	KNOB			324
6675336	BULB			304
6675338	COVER			106
6675341	BLOCK ASSY			103, 104
6675342	PIN			102, 106
6675378	CLIP			226, 230
6675380	ADHESIVE			346
6675387	EXTRUSION			17, 18, 238
6675470	SWITCH			134
6675503	HOUSING			280
6675504	RING			280
6675505	BLOWER WHEEL			280
6675506	MOUNT			280
6675507	COVER			280
6675510	CLAMP			278, 290
6675511	DRAIN VALVE			278, 290

Code for disposition of old part number
A -- Use up
B -- Use on other application (See PNI)
C -- File PDR Report with Bobcat Parts Sales
D -- Part Number Error

Part No.	Description	Was	Code	Page
6675512	CLAMP			278, 290
6675522	STROBE			340
6675523	BEACON			218, 260, 2[illegible]
6675524	CLIP			1[illegible]
6675534	BLOCK VALVE			286, 290, 292
6675538	O-RING			286
6675544	CANVAS CAB			233, 234
6675545	GROMMET			18, 238
6675558	SEAL			224, 230
6675559	COIL			136
6675562	SEAT BELT			329, 330
6675581	EXTINGUISHER			266
6675590	DOOR			234
6675591	HINGE KIT			234
6675595	SEAT			323, 324
6675596	SEAT			324
6675608	INSULATION			286, 290
6675609	INSULATION			286, 290
6675618	CLAMP			184, 192
6675668	CABLE			170, 17[illegible]
6675669	VALVE			71, 72, 22[illegible]
6675685	HOSE			286, 292
6675779	PRESS. SWITCH			286, 294
6675824	O-RING			286
6675825	O-RING			286
6675833	SEAL			238
6675835	TURN SIGNAL			268
6675846	POTENTIOMETER			276, 292
6675858	FLASH TUBES			340
6675999	SWITCH			32[illegible]
6676000	TEE			322
6676001	ARM			322
6676002	BLADE			322
6676003	HOSE			224, 228, 322
6676028	NOZZLE			322
6676029	SOLENOID			144, 152, 212
6676034	KIT			326
6676062	VALVE			286
6676063	KIT			28[illegible]
6676147	VALVE PLATE			10[illegible]
6676205	SEAL KIT			128
6676239	CARTRIDGE			128
6676242	COIL			128
6676243	COIL			128
6676244	COIL			128
6676247	NUT			128
6676338	GAS SPRING			324
6676399	VALVE CORE			286
6676499	GROMMET			224
6676500	ELBOW			224
6676516	NUT			276
6676536	SWITCH			134
6676537	SWITCH			142, 212
6676538	INSULATION			282, 286

Code for disposition of old part number
A -- Use up
B -- Use on other application (See PNI)
C -- File PDR Report with Bobcat Parts Sales
D -- Part Number Error

Part No.	Description	Was	Code	Page
6676539	CLIP			286, 290
6676542	CAP			72
6676543	PLUG			72
6676544	SPRING			72
6676545	CARTRIDGE			72
6676606	SPACER			282
6676618	CLIP			280
6676640	SEAL			145, 146, 149, 150
6676653	SCREW			282
6676732	SWITCH			308
6676870	CONNECTOR			144, 148
6676872	TURN SIGNAL			260, 262, 268
6676917	ELBOW			224
6676927	FELT STRIP			238
6676984	MOUNT			286, 290
6677105	COVER			286
6677111	SEAL			278, 290
6677115	RECEPTACLE			278, 290
6677116	RETAINER			278, 290
6677117	SCREW			278, 290
6677118	SCREW			278, 290
6677119	SCREW			278
6677121	CAP			286
6677122	CAP			286, 292
6677136	SOCKET			252, 254
6677177	PLUG			128
6677181	SENSOR			40
6677192	MAGNET			224, 230
6677193	RIVET			224, 230
6677198	TAB			238
6677364	CONNECTOR			150
6677383	SOLENOID			64
6677485	SPACER			156
6677486	NUT			156
6677487	COVER			156
6677488	RECTIFIER			156
6677489	REGULATOR ASSY			156
6677490	BRACKET			156
6677491	BRACKET			156
6677492	ROTOR			156
6677493	STATOR			156
6677494	BOLT			156
6677495	SPACER			156
6677496	PULLEY			156
6677497	NUT			156
6677504	COVER			282
6677536	HANDLE			148
6677817	BOLT			156
6677818	BEARING			156
6677819	RETAINER			156
6677820	BEARING			156
6677833	ARM ASSY			227, 228
6677834	BLADE			228
6677836	COVER			228

Code for disposition of old part number
A -- Use up
B -- Use on other application (See PNI)
C -- File PDR Report with Bobcat Parts Sales
D -- Part Number Error

Part No.	Description	Was	Code	Page
6677837	BOLT			228
6677839	GASKET			228
6677840	SWIVEL			27
6677841	WASHER			226
6677842	NUT			228
6677843	NUT			228
6677844	NUT			228
6677845	ADAPTER			228
6677847	GROMMET			228
6677973	PLUG			238
6677980	NUT			128
6677982	CARTRIDGE			128
6677983	FILTER			4, 276, 294
6678066	AIR CLEANER			207, 208
6678076	BLOCK			54
6678152	SEAL			278, 290
6678155	FILTER ASSY			82, 131, 132
6678156	COOLER			81, 82
6678198	BOLT			228
6678205	ALTERNATOR			155, 15
6678207	FILTER			276, 292
6678226	SEAL			106
6678233	OIL FILTER			1, 2, 4, 184
6678283	HANDLE			238
6678292	GAS SPRING			274
6678548	SOCKET			224, 230
6678666	TREE MOUNT			18, 134, 136, 284, 294
6678667	MOUNT			136
6678668	TIE			136
6678675	CONTROLLER			25
6678739	WASHER			228
6678818	MOUNT			136
6678891	COIL			66, 70, 136
6678893	SOLENOID			66, 70
6678920	NOZZLE			228
6678921	GUIDE			228
6678933	PISTON			58
6678960	SEAL			28
6678970	ELBOW			8
6678971	BOLT			3
6679034	MOUNT			136, 138, 286, 294
6679102	VALVE			90, 127, 128
6679141	HOSE			86
6679145	CLUTCH			286, 294
6679308	SEAT BELT			328
6679476	MOTOR			228
6679485	CONTROLLER SJC			154
6679820	RELAY			136
6679836	ADAPTER			54
6679837	COUPLER			54
6679838	COUPLER			54
6679840	SEAL			54
6679841	SEAL			54
6679845	CROSSMEMBER			134

Code for disposition of old part number
A -- Use up
B -- Use on other application (See PNI)
C -- File PDR Report with Bobcat Parts Sales
D -- Part Number Error

NUMERICAL INDEX (Cont'd)

Part No.	Description	Was	Code	Page
6679856	ALARM			134
6679966	PLUG			12
6679990	CLIP			14
6679994	SEAL			14
6680018	KIT	6679839	A	54
6680020	SEAL KIT			54
6680120	CARTRIDGE			128
6680272	NUT			206
6680280	SEAL			193, 194
6680326	LIGHT			18
6680355	BOOT			158
6680356	BOLT			158
6680358	RING			158
6680359	STOP RING			158
6680360	STOP			158
6680361	SPRING			158
6680362	BALL			158
6680363	WASHER			158
6680365	SHAFT			158
6680366	GEAR			158
6680367	GEAR			158
6680368	STOP RING			158
6680369	SEAL			158
6680371	LEVER			158
6680372	BRACKET			158
6680373	YOKE			158
6680374	ARMATURE			158
6680375	SHAFT			158
6680376	SWITCH			158
6680377	HOLDER			158
6680378	WASHER			158
6680379	SEAL			158
6680380	SEAL			158
6680383	BOLT			158
6680384	BOLT			158
6680388	BRACKET			158
6680389	BRACKET			158
6680390	GEAR			158
6680410	CONTROLLER			158
6680417	HANDLE			141, 142, 154
6680418	HANDLE ASSY.			144, 148
6680419	HANDLE ASSY.			139, 140
6680429	SENSOR			140
6680438	SENSOR			20
6680441	BUSHING			34, 136
6680443	BUSHING			20
6680462	HANDLE			20
6680468	MOUNT			144
6680469	SPACER			144, 212
6680470	SPRING			144, 148, 212
6680471	COVER			144, 212
6680477	STRAP			144, 148
6680478	SHIELD			144, 212
6680479	SHIELD			152
				152

Code for disposition of old part number
A -- Use up
B -- Use on other application (See PNI)
C -- File PDR Report with Bobcat Parts Sales
D -- Part Number Error

Part No.	Description	Was	Code	Page
6680480	CHANNEL			144, 148
6680481	CHANNEL			144, 148
6680499	NUT			2(
6680564	STUD			17(
6680636	PLUG			186
6680638	PLUG			184, 186
6680640	PLUG			186
6680643	PIN			186
6680644	PIN			186
6680645	BOLT			186
6680649	TUBE			178
6680654	BOLT			184, 202
6680655	PIN			184
6680656	OIL PAN			184
6680657	PLUG			184
6680658	BOLT			180, 202
6680659	BOLT			184
6680660	OIL SUMP			184
6680661	O-RING			174, 184
6680662	BOLT			180, 184, 188, 19
6680663	NUT			176, 178, 180, 184, 196, 197, 198, 200
6680666	PLUG			180
6680667	PLUG			180
6680668	BOLT			180
6680669	HEAD GASKET			180
6680670	HEAD GASKET			180
6680671	HEAD GASKET			180
6680673	SPRING			190
6680675	PLUG			190
6680676	ROTOR			19
6680677	COVER			190
6680678	SCREW			190, 198
6680679	PLUG			190
6680680	SEAL			174, 190
6680681	O-RING			174, 190
6680682	O-RING			174, 190
6680685	BOLT			188, 190
6680686	BOLT			190
6680687	BOLT			19
6680688	HEAD COVER			18(
6680689	ADAPTER			180, 190
6680690	GASKET			174, 180
6680691	O-RING			174, 180
6680692	COVER			180
6680693	SCREW			180
6680694	PLUG			180
6680695	SEAL			174, 180
6680696	BOLT			180
6680698	CLAMP			180
6680699	CLAMP			180
6680700	WASHER			180
6680702	TUBE			184
6680703	DIPSTICK			183, 184
6680704	COVER			190

Code for disposition of old part number
A -- Use up
B -- Use on other application (See PNI)
C -- File PDR Report with Bobcat Parts Sales
D -- Part Number Error

NUMERICAL INDEX (Cont'd)

Part No.	Description	Was	Code	Page
6680705	SEAL			174, 189, 190
6680706	BOLT			190, 194
6680708	PUSH ROD			188
6680709	CAMSHAFT			188
6680710	BALL			188
6680711	GEAR			188
6680712	FLANGE			188
6680714	SHAFT			188
6680715	PIN			188
6680716	COLLAR			188
6680717	COLLAR			188
6680720	BUSHING			188
6680723	PISTON RINGS			186
6680724	PISTON RINGS			186
6680725	PIN			186
6680726	SNAP RING			186
6680727	ROD			186
6680728	BUSHING			186
6680729	BOLT			186
6680730	BEARING			186
6680731	BEARING			186
6680732	BEARING			186
6680733	BEARING			186
6680734	CRANKSHAFT			186
6680735	SLEEVE			186
6680736	GEAR			186
6680737	GEAR			186
6680738	MAIN BEARING			186
6680739	MAIN BEARING			186
6680740	MAIN BEARING			186
6680741	THRUST WASHER			186
6680742	THRUST WASHER			186
6680743	THRUST WASHER			186
6680744	THRUST WASHER			186
6680745	THRUST WASHER			186
6680746	THRUST WASHER			186
6680747	BOLT			186
6680748	BALANCER			166, 186
6680750	SCREW			187, 188
6680752	BOLT			204
6680753	GASKET			199, 200
6680755	BOLT			200
6680756	SCREW			176, 192, 200
6680757	COVER			200
6680758	WEIGHT			203, 204
6680759	NUT			204
6680761	SLEEVE			204
6680763	LEVER			204
6680764	LEVER			204
6680765	SNAP RING			204
6680766	WASHER			204
6680769	PIN			204
6680770	LEVER			204
6680772	LEVER			204

Code for disposition of old part number
A -- Use up
B -- Use on other application (See PNI)
C -- File PDR Report with Bobcat Parts Sales
D -- Part Number Error

Part No.	Description	Was	Code	Page
6680773	PIN			204
6680775	PIN			204
6680777	NOZZLE			1[illegible]
6680778	O-RING			174, 19[illegible]
6680779	GASKET			174, 196
6680780	CLAMP			196
6680785	CLAMP			196
6680786	CLAMP			196
6680787	PIPE			196
6680788	BOLT			195, 196
6680790	FITTING			196
6680791	BOLT			178, 196
6680792	GASKET			174, 178, 196, 206
6680795	CLAMP			196
6680796	VALVE			196
6680797	TEE			196
6680799	STUD			198
6680801	BOLT			176, 198
6680802	BOLT			178, 198
6680806	HOUSING			19[illegible]
6680807	STUD			198, 20[illegible]
6680808	PLUG			198
6680809	PIN			198
6680812	BEARING			198
6680813	KEY			198
6680814	FLANGE			198
6680815	BOLT			198
6680816	O-RING			174, 198
6680818	NUT			19[illegible]
6680820	WASHER			20[illegible]
6680821	SNAP RING			206
6680822	SNAP RING			206
6680823	SNAP RING			206
6680824	SHAFT			206
6680825	SPRING			206
6680826	SPRING			206
6680827	SPRING			206
6680828	STUD			206
6680829	GASKET			174, 20[illegible]
6680830	BOLT			20[illegible]
6680832	SCREW			206
6680833	SCREW			206
6680834	STOPPER			206
6680838	FUEL PUMP			200
6680839	BRACKET			190
6680841	BOLT			190
6680842	HOSE			192
6680843	COVER			162
6680844	GASKET			162
6680845	BOLT			162
6680849	GASKET			174, 192
6680850	THERMOSTAT			192
6680851	BOLT			175, 176, 192
6680852	PUMP			194

Code for disposition of old part number
A -- Use up
B -- Use on other application (See PNI)
C -- File PDR Report with Bobcat Parts Sales
D -- Part Number Error

NUMERICAL INDEX (Cont'd)

Part No.	Description	Was	Code	Page
6680853	GASKET			174, 194
6680855	O-RING			174, 190
6680856	BOLT			194
6680857	PULLEY			192
6680858	WASHER			191, 192
6680861	VALVE			182
6680862	VALVE			182
6680863	VALVE SPRING			182
6680866	SHAFT			182
6680867	STUD			182, 196
6680868	SHAFT			182
6680869	BRACKET			182
6680870	WASHER			182
6680871	SNAP RING			182
6680872	SPRING			182
6680873	ROCKER ARM			182
6680875	ROCKER ARM			182
6680877	PIN			182
6680878	BOLT			181, 182
6680879	ARM			182
6680880	SCREW			182
6680881	NUT			182
6680882	PAD			182
6680883	MANIFOLD			176
6680884	GASKET			174, 176
6680885	BOLT			176
6680886	FLANGE			176
6680888	HEATER			176
6680890	MANIFOLD			176
6680891	GASKET			174, 176
6680892	TURBOCHARGER			178
6680893	GASKET			174, 178
6680894	HOSE			178
6680895	HOSE			178
6680896	HOSE			177, 178
6680897	CLAMP			178
6680898	CLAMP			178
6680899	TUBE			178
6680900	BOLT			178
6680903	CLAMP			178
6680906	BOLT			202
6680909	OIL COOLER			184
6680910	ADAPTER			184
6680970	BREATHER			42, 44
6681474	CARTRIDGE			2, 4, 208
6681475	CARTRIDGE			2, 4, 208
6681476	CAP			208
6681477	COVER			208
6681487	O-RING			318
6681489	O-RING			318
6681492	NUT			76
6681501	SEAL KIT			82
6681512	SOLENOID			42
6681614	KNOB			18, 238, 276, 292

Code for disposition of old part number
A -- Use up
B -- Use on other application (See PNI)
C -- File PDR Report with Bobcat Parts Sales
D -- Part Number Error

Part No.	Description	Was	Code	Page
6681871	MOUNT			154
6682260	SHAFT			102
6682264	SHAFT			1(
6682586	GAS SPRING			224, 23
6683003	COIL			286
6683004	THERMOSTAT			286, 290
6683023	O-RING			174, 204
6683167	CYLINDER BLOCK			102, 106
6683168	PISTON ASSEMBLY			102, 106
6683169	KEY			102
6683206	SEAL KIT			76, 126
6683274	SEAL			64, 68
6683812	SWITCH			134
6684033	NUT			48, 50, 160, 316
6684037	SENSOR			138
6684038	SPRING			102
6684044	VALVE			318
6684045	SEAL KIT			318
6684046	O-RING			318
6684047	BACK-UP RING			31
6684048	O-RING			318
6684049	O-RING			318
6684050	BACK-UP RING			318
6684052	SEAL KIT			318
6684053	BACK-UP RING			318
6684054	O-RING			318
6684055	BACK-UP RING			318
6684056	O-RING			318
6684057	BACK-UP RING			318
6684060	NUT			31
6684061	VALVE			318
6684062	SEAL KIT			318
6684063	O-RING			318
6684064	BACK-UP RING			318
6684065	O-RING			318
6684066	O-RING			318
6684067	BACK-UP RING			318
6684069	SEAL KIT			318
6684070	O-RING			31
6684071	O-RING			31
6684072	BACK-UP RING			318
6684073	COIL			318
6684125	COUPLER			64, 68
6684367	RADIATOR			162
6684457	HOSE			82
6684474	INSERT FAN INLET			160
6684576	ENGINE-V3300T TIER 2			173, 174
6684590	COIL			76
6684646	VALVE			64, 68
6684742	NUT			312
6684743	SOLENOID			312
6684744	SOLENOID			312
6684745	PISTON			312
6684746	CHECK VALVE			312

Code for disposition of old part number
A -- Use up
B -- Use on other application (See PNI)
C -- File PDR Report with Bobcat Parts Sales
D -- Part Number Error

Part No.	Description	Was	Code	Page
6684747	SEAL KIT			312
6684907	HOSE			286, 292
6684908	HOSE			286, 292
6684910	SENSOR			144, 148
6684911	SENSOR			152, 212
6684912	SENSOR			151, 152, 212
6684913	LEVER			142, 147, 148
6684914	LEVER			142, 148
6684915	LEVER			142, 143, 144
6684916	LEVER			142, 144
6684923	BREATHER			34
6684932	KNOB			26
6684947	GROMMET			290
6685027	VALVE			76
6685060	BUSHING			62, 92
6685061	VALVE			318
6685190	STARTER			157, 158
6685198	CAP			292
6685199	CAP			292
6685328	RELIEF VALVE			318
6685344	SWASH PLATE			102, 106
6685372	SEAL			36, 42, 44
6685498	GASKET			174, 196
6685540	PISTON			312
6685541	POPPET			312
6685542	O-RING			312
6685543	CHECK VALVE			312
6685544	COMPENSATOR			312
6685545	PLUG			312
6685546	PLUG			312
6685603	SEAL KIT			66, 70
6685624	CONTROL VALVE			316, 317, 318
6685663	RETAINER			316
6685847	FILTER ASSY			74, 132
6685850	CORD			220
6685854	INJECTOR			196
6685917	CRANKCASE			186
6685918	PIN			186
6685919	STUD			186
6685920	ADAPTER			186, 192
6685921	CRANKCASE			184
6685922	FLANGE			184
6685923	GASKET			174, 184
6685924	CAP			184
6685925	BOLT			184
6685926	BRACKET			180
6685927	HEAD			180
6685928	COVER			190
6685929	RELIEF VALVE			190
6685930	HOSE			179, 180
6685931	COVER			190
6685932	GEAR			188
6685933	PISTON			186
6685934	PISTON			186

Code for disposition of old part number
A -- Use up
B -- Use on other application (See PNI)
C -- File PDR Report with Bobcat Parts Sales
D -- Part Number Error

Part No.	Description	Was	Code	Page
6685935	INJECTION PUMP			196
6685936	PUMP			200
6685937	HOUSING			20(
6685938	SPRING			20-
6685939	LEVER			204
6685940	TUBE			196
6685941	TUBE			196
6685942	TUBE			196
6685943	TUBE			196
6685944	HOSE			196
6685945	HOSE			196
6685946	GEAR			198
6685947	COVER			198
6685948	GASKET			174, 198
6685949	CAMSHAFT			198
6685950	BEARING			198
6685951	LEVER			205, 206
6685952	NUT			206
6685953	PULLEY			190
6685954	COVER			19
6685955	GASKET			174, 192
6685956	HOUSING			192
6685957	GUIDE			182
6685958	GUIDE			182
6685959	RETAINER			182
6685960	GASKET			174, 176
6685961	PLUG			176
6685962	GASKET			174, 178, 202
6685963	PIPE			178
6685964	GASKET			174, 17
6685965	HOSE			178
6685966	TUBE			201, 202
6685967	BRACKET			202
6685969	HOSE			184
6685970	HOSE			184
6685971	O-RING			174, 184
6685972	HOSE			184
6686096	LENS			264
6686097	BULB			26
6686098	BULB			26-
6686099	LENS			264
6686100	SCREW			264
6686267	PUMP			107, 108
6686360	VALVE			64, 68
6686402	SEAL			184
6686655	BELT			168
6686885	GEAR PUMP			123, 124
6686926	ELEMENT FILTER			132
6686934	PIN			108
6686949	VALVE			311, 312
6687000	WIPER ROD			58
6687142	MOTOR			125, 126, 159, 160
6687145	FLANGE			176
6687146	BOLT			176

Code for disposition of old part number
A -- Use up
B -- Use on other application (See PNI)
C -- File PDR Report with Bobcat Parts Sales
D -- Part Number Error

Part No.	Description	Was	Code	Page
6687147	GASKET			174, 176
6687191	SEAL			102
6687266	FILTER ASSY			132
6687631	BEARING			158
6687774	PLATE			102
6687825	MOTOR			93, 94
6687826	MOTOR			95, 96
6687832	PUMP			101, 102, 105, 106
6687866	SEAL KIT			124
6687886	MUFFLER PURIFIER			305, 306
6687887	MUFFLER			164
6687913	SEAL			92
6687919	COLLAR			120
6687920	SPINDLE			118
6687921	COLLAR			118
6687922	NUT			118
6687923	PIN			118
6687924	VALVE			108, 117, 118
6687926	COLLAR			114, 116
6687927	COLLAR			114, 116
6687928	SPRING			114, 116
6687929	LEVER			122
6687930	WIRE			110, 112
6687931	BUSHING			122
6687932	PIN			108
6687933	SHIM			122
6687934	SHIM			122
6687935	SHIM			122
6687936	SHIM			122
6687937	SHIM			122
6687938	VALVE			108, 119, 120
6687939	SCREW			120
6687940	RING			110, 112
6687941	COUPLER			108
6687942	SPACER			114, 116
6687943	SHAFT			112
6687944	SHIM			122
6687945	PLATE			122
6687946	SPRING			122
6687947	PIN			122
6687948	SPACER			114, 116
6687949	SPACER			114, 116
6687950	GASKET			122
6687951	BRACKET			110, 112
6687953	PISTON			114, 116
6687954	GASKET			122
6687955	HOUSING			122
6687956	BEARING			110, 112
6687957	GROUP			108, 109, 110
6687958	GROUP			108, 111, 112
6687959	SHAFT			110
6687960	CONTROL			108, 113, 114
6687961	CONTROL			108, 115, 116
6687962	PISTON			114

Code for disposition of old part number
A -- Use up
B -- Use on other application (See PNI)
C -- File PDR Report with Bobcat Parts Sales
D -- Part Number Error

Part No.	Description	Was	Code	Page
6687963	PISTON			116
6687964	HOUSING			108
6687965	SHAFT			1(
6687966	PISTON			12.
6687967	SPRING			122
6687968	LEVER			122
6687969	COVER			122
6687970	MODULATOR			108, 121, 122
6687971	ROLLER			122
6687972	MODULE			122
6687973	FLANGE			108
6687974	FLANGE			108
6687975	PLATE			112
6687976	PLATE			110
6687977	GROUP			110
6687978	GROUP			112
6687979	GROUP			110, 112
6687981	SCREW			122
6687982	SPRING			122
6687983	RING			12
6687984	SENSOR			108
6687985	RING			114, 116
6687986	KIT			114, 116
6687987	BEARING			110, 112
6687988	FILTER			108
6687989	SOLENOID			122
6687990	RING			108
6687991	KEY			108
6687992	SCREW			108
6687993	COVER			1(
6687994	SCREW			108
6687995	SCREW			114, 116
6687996	SCREW			122
6687997	SCREW			122
6687998	SHIM			108
6687999	RING			110, 112
6688000	SEAL			118
6688001	SEAL			122
6688002	RING			114, 11
6688003	SCREW			10.
6688004	SEAL			122
6688005	SEAL			114, 116
6688006	SEAL			114, 116
6688007	SEAL			108
6688008	SCREW			108
6688009	SEAL			108
6688010	PIN			122
6688011	PIN			108
6688012	ROLLER			122
6688013	SEAL			120
6688014	PIN			108
6688015	SCREW			108
6688016	SCREW			108
6688017	SHIM			120

Code for disposition of old part number
A -- Use up
B -- Use on other application (See PNI)
C -- File PDR Report with Bobcat Parts Sales
D -- Part Number Error

Part No.	Description	Was	Code	Page
6688018	BEARING			110, 112
6688019	SEAL			100, 108
6688020	ORIFICE			108
6688021	SPRING			118
6688022	PISTON			120
6688023	SPRING			120
6688024	COVER			114, 116
6688025	RING			114, 116
6688026	RING			114, 116
6688027	RING			114, 116
6688028	RING			114, 116
6688029	RING			114, 116
6688030	RING			114, 116
6688031	ROD			114, 116
6688032	SPACER			114, 116
6688033	SPACER			114, 116
6688034	SCREW			118
6688035	RING			114, 116
6688036	RING			114, 116
6688037	RING			114, 116
6688038	RING			110
6688039	PIN			108
6688040	BEARING			108
6688041	RING			118
6688042	RING			110, 112
6688043	SPRING			118
6688069	HOSE			178
6688321	SEAL KIT			76
6688403	PANEL			18
6688404	PANEL			134
6688405	PANEL			134
6688439	CONTROLLER			136
6688449	LOCATING PIN			94, 96
6688523	SEAL KIT STC-16			74, 82
6688542	HVAC HEATER			289, 290, 292
6688543	HEATER			276, 277, 278
6688637	MOUNT			304
6688713	GEAR PUMP			75, 76
6688743	STEM	6688397	A	64, 68
6688845	VALVE			66, 70
6688866	PLUG			94, 96
6688924	MAGNET			40
6688933	VALVE ASSY			318
6688934	COIL			318
6688980	BOLT			138
6689021	SEAL KIT			108
6689032	STUD			136
6689034	SOLENOID			204
6689058	MOTOR			126
6689059	VALVE ASSY			126
6689060	COIL ASSY			126
6689126	PISTON			94, 96
6689129	PLUG			96
6689132	O-RING			94, 96

Code for disposition of old part number
A -- Use up
B -- Use on other application (See PNI)
C -- File PDR Report with Bobcat Parts Sales
D -- Part Number Error

Part No.	Description	Was	Code	Page
6689133	O-RING			94, 96
6689179	INSULATION			286, 287, 288, 290
6689180	INSULATION			288, 29
6689331	GASKET			174, 17
6689601	VALVE			102, 106
6689602	HOUSING			106
6689641	CABLE TIE			154
6689696	VALVE			278, 290, 292
6689739	VALVE			64, 68
6689755	KIT			174
6689756	KIT			174
6689762	BLOWER			278, 279, 280, 290
6689764	PAD			280
6689765	PAD			280
6689766	MOTOR			280
6689767	HOSE			84
6689768	HOSE			84
6689770	KIT, HEATER COIL			281, 282
6690004	SEAL KIT			94
6690005	SEAL KIT			9
6690021	BLOCK			94
6690022	ROLLER			94, 96
6690023	CLAMP			94, 96
6690024	RING			94, 96
6690025	CAM			94, 96
6690026	HOUSING			94
6690027	RING			94
6690028	SEAL			94
6690029	SEAL			94
6690030	PLUG			9
6690031	SPRING			94, 96
6690033	SEAL			94, 96
6690039	SCREW			94, 96
6690041	SPOOL			94, 96
6690042	SPRING			94, 96
6690043	WASHER			94, 96
6690044	SHIM			94, 96
6690045	ORIFICE			94, 96
6690046	SPRING			94, 9
6690047	PLUG			94, 9
6690048	RING			94, 97, 98
6690049	SEAL			94
6690065	BLOCK			96
6690066	HOUSING			96
6690067	RING			96
6690068	PIN			96
6690069	SEAL			96
6690070	SEAL			96
6690071	SEAL			96
6690072	SEAL			96
6690073	SEAL			96
6690074	SPOOL			96
6690075	SPRING			96
6690076	CLAMP			96

Code for disposition of old part number
A -- Use up
B -- Use on other application (See PNI)
C -- File PDR Report with Bobcat Parts Sales
D -- Part Number Error

NUMERICAL INDEX (Cont'd)

Part No.	Description	Was	Code	Page
6690077	O-RING			96
6690078	RING			96
6690080	O-RING			96
6690081	CLAMP			96
6690082	HOUSING			96
6690084	SHAFT			96
6690085	PISTON			96
6690086	COVER			96
6690087	PLATE			96
6690088	PLATE			96
6690091	GASKET			96
6690092	O-RING			96
6690093	SEAL			96
6690094	CLAMP			96
6690095	SCREW			96
6690096	SCREW			96
6690097	O-RING			96
6690098	SPRING			96
6690099	PIN			96
6690100	BUSHING			96
6690105	WASHER			96
6690157	ROTOR GROUP			96
6690158	ROTOR GROUP			98
6690431	SEAL KIT			94
6690431	SEAL KIT		B	64, 66, 68, 70
6690476	COVER			64, 66, 68, 70
6690477	EVAPORATOR			278, 290
6690478	HOUSING			290
6690479	COVER			278, 290
6690480	COVER			278, 290
6690481	BRACKET			290
6690482	GROMMET			278, 290
6690487	COVER			278, 290
669863B	SNAP RING			278
6700170	WASHER			102, 106
6700182	COVER			172
6700631	GASKET			36
6700743	SPRING			78, 80
6701097	WASHER			172
6701159	SHIM			160
6701160	CLIP			166
6701174	WASHER			166
6701449	FILLER TUBE			14
6701535	SPRING			34
6701854	HOSE			20, 92
6701893	CLAMP			308
6702301	DECAL			48, 50
6702302	DECAL			248
6702402	SHIELD			248
6702444	FUSE			270
6702543	LEVER			136
6702593	SPACER			91, 92
6702621	GRIP			214
6702650	MOUNT			140, 148 260, 262

Code for disposition of old part number
A -- Use up
B -- Use on other application (See PNI)
C -- File PDR Report with Bobcat Parts Sales
D -- Part Number Error

Part No.	Description	Was	Code	Page
6702716	BLOCK			92
6702903	LEVER			28
6702904	LEVER			7
6702958	BUSHING			2
6702971	BOLT			14
6702990	BUSHING			144, 148
6703640	KIT			331, 332
6703641	DECAL			332
6703703	GUIDE			332
6703727	DECAL			296, 298
6703967	INSULATION			334, 336
6703968	INSULATION			334, 336
6704248	PIVOT			28
6704786	DECAL			248, 302
6704892	RIVET			256
6705106	WASHER			168
6705452	LEVER			170
6705749	SHIELD			78
6706098	GUIDE			92
6706104	RETAINING NUT			6
6706105	YOKE			62
6706349	MOUNT			14
6706485	HOOK			36
6706517	SCREW			160
6706572	SET SCREW			170, 172
6706633	ADAPTER			316
6706718	MOUNT			42
6706737	GASKET			42
6706817	SPACER			38, 40
6706857	BLOCK			3
6707101	SEAL			52, 60
6707654	SPINDLE			166
6707697	WASHER			166
6707698	WASHER			166
6707699	PIVOT			166
6707804	HOUSING			260, 262
6707852	DECAL			224, 248
6708009	LINK			62
6708016	GASKET			4
6708018	SPRING			4
6708043	BUSHING			62
6708189	TUBE			14
6708267	BOLT			42
6708310	HOSE			226
6708445	PULLEY			166
6708929	DECAL			250
6708941	DECAL			250
6708987	HINGE			12
6709170	STUD			46
6709527	KEY			134, 224, 230, 320
6709757	AXLE			46
6710195	PLATE			42
6710659	BUSHING			20
6711166	HOSE			316

Code for disposition of old part number
A -- Use up
B -- Use on other application (See PNI)
C -- File PDR Report with Bobcat Parts Sales
D -- Part Number Error

Part No.	Description	Was	Code	Page
6711674	MOUNT			272
6711908	SPRING PLATE			332
6712536	PAN			138
6712911	COUNTER WEIGHT KIT			241, 242
6712912	DECAL			242
6713040	SPRING			28
6713043	SPACER			144, 148
6713115	PEDAL			257, 258
6713116	BUSHING			258
6713150	MOUNT			260, 262
6713151	MOUNT			260, 262
6713507	DECAL			250
6713589	CLEVIS			20
6713840	DECAL			260
6713841	SHIELD			260, 262
6713842	SHIELD			262
6713887	BOLT			20
6713990	PIN			263, 264
6713993	HARNESS			260, 262
6713994	HARNESS			260, 262
6714037	LATCH			320
6714126	DOOR STOP			24
6714278	GUIDE			42
6714362	WEIGHT			242
6714454	BUMPER			160
6714509	COVER			24
6714726	GROMMET			30, 32, 142
6714820	SHIELD			260
6715131	BRACKET			138
6715132	RETAINER			138
6715142	FAN			160
6715163	BUSHING			92
6715164	SLEEVE			92
6715183	ELBOW			34
6715197	CLAMP			138
6715318	TOOL HOLDER			24
6715659	HARNESS			214
6715860	SEAT BAR			20
6715863	BRACKET			20
6715864	BUSHING			20
6715865	BUSHING			20
6715866	BUSHING			20
6716061	TEE			48, 50
6716089	CONNECTOR			272
6716243	ADAPTER			86, 88
6716391	HOSE			90
6716545	ROD			92
6716572	LOUVER			160
6716574	LOUVER			160
6716621	COVER			136
6716800	INSULATION			16, 30, 32
6716916	WASHER			92
6717242	HOUSING			38
6717259	BUSHING			28

Code for disposition of old part number
A -- Use up
B -- Use on other application (See PNI)
C -- File PDR Report with Bobcat Parts Sales
D -- Part Number Error

Part No.	Description	Was	Code	Page
6717260	BUSHING			26
6717277	BUSHING			12
6717278	BUSHING			1
6717306	ADAPTER			86, 8
6717343	DECAL			250
6717393	LEVER			142
6717401	PLUG			34
6717402	BUSHING			34
6717517	INSULATION			18
6717518	INSULATION			18
6717519	INSULATION			18
6717520	INSULATION			18
6717579	GASKET			34, 136
6717593	HINGE			226, 230
6717806	BOLT			36
6717870	FRAME			238
6717871	FRAME			238
6717872	FRAME			238
6717873	FRAME			238
6717874	WINDOW			18, 23
6717885	ELBOW			74
6718031	TEE			86, 88
6718034	FUSE			136
6718101	COVER			16
6718175	SCREEN			276, 292
6718326	MOUNT			268
6718329	BUSHING			28
6718376	HINGE			226, 230
6718411	KIT			267, 268
6718414	SENDER			13
6718417	SENDER			136
6718426	HARNESS			254
6718521	HANDLE			226, 230
6718579	DECAL			248, 276, 292
6718580	PANEL			18
6718659	HOUSING			136
6718706	DECAL			142, 248
6718750	MOUNT			254
6718796	PLUG			12, 2
6718805	KIT			237, 23
6718833	BRACKET			270
6718834	BRACKET			270
6718837	SPACER			276, 292
6718850	BRACKET			78, 80
6718851	BRACKET			77, 78, 79, 80
6718872	HARNESS			218, 260, 262, 268, 340
6718873	HARNESS			268
6718881	BRACKET			52
6718887	PANEL			276, 292
6718924	KIT			269, 270
6718942	NUT			26
6718948	SNUBBER			136
6719037	STRIKER			238
6719056	BLOCK			42

Code for disposition of old part number
A -- Use up
B -- Use on other application (See PNI)
C -- File PDR Report with Bobcat Parts Sales
D -- Part Number Error

Part No.	Description	Was	Code	Page
6719057	BLOCK			42
6719063	STOP			238
6719064	MOUNT			14, 274
6719065	COVER TAB			238
6719141	CABLE			138
6719168	COVER			12, 90
6719176	SWITCH			286, 292
6719184	MOUNT			302
6719185	MOUNT			302
6719201	COVER			12
6719317	WINDOW			322
6719332	INSULATION			333, 334, 335, 336
6719333	INSULATION			334, 336
6719413	WINDOW			238
6719448	MAGNET			256
6719459	MOUNT			286, 292
6719504	INSULATION			16
6719525	BAR			24
6719630	HARNESS			294
6719766	STOP			24
6719825	BOLT			164
6719828	BOLT			166, 168
6719829	BOLT			168
6719834	SPACER			144, 148, 212
6719835	SLEEVE			144, 148
6719854	KIT			217, 218
6719857	KIT			339, 340
6719888	DECAL			248, 308
6720038	INSTRUCTIONS			220
6720592	INSTRUCTIONS			270
6720808	KIT			219, 220
6724094	ANTI-FREEEZE			346
6724354	ANTI-FREEZE			346
6724775	LEVER KIT			28
6724776	LEVER KIT			28
6725182	TEE			51, 52, 272
6725301	COVER			16
6725303	FRAME			16
6725370	DECAL			248, 328
6725373	SPRING PLATE			16
6725421	HANDLE			236
6725497	CROSS			86, 88
6725513	PACKAGE			276
6725898	KIT			265, 266
6725899	HOSE			90
6725900	HOSE			90
6725906	BRACKET			266
6725907	DECAL			248, 308
6725933	HARNESS			292
6725937	CLAMP			230
6725938	CLAMP			230
6725946	KIT			235, 236
6726277	CLAMP			316
6726303	DECAL			236, 250

Code for disposition of old part number

A -- Use up

B -- Use on other application (See PNI)

C -- File PDR Report with Bobcat Parts Sales

D -- Part Number Error

Part No.	Description	Was	Code	Page
6726386	KNOB			276
6726423	DECAL			248, 300
6726430	HARNESS			260, 2(
6726621	SCREW			282, 286, 29(
6726655	KIT			321, 322
6726662	HARNESS			298
6726681	LINK			142, 212
6726908	LIFT EYE			300
6726965	LIFT ARM			26
6726966	FRAME LINK			25, 26
6726969	LINK ASSY			26
6726987	HOSE			308
6727065	BOLT			144, 148, 212
6727176	KIT			251, 252
6727299	INSULATION			18
6727313	ELBOW			78, 80
6727326	MOUNT			286
6727354	INLET			78, 80
6727475	CAP			7, 8, 78, 80
6727496	PIN			142, 21
6727525	BUSHING			26
6727595	DECAL			250
6727803	CABLE			138
6727832	BUSHING			26
6727847	COVER			276
6727848	COVER			294
6727926	DECAL			142, 212, 248
6728459	DOOR SENSOR			224, 230
6728473	BOLT			28
6728539	DECAL			142, 212, 24
6728540	DECAL			212
6728621	BRACKET			136
6728626	HARNESS			136
6728749	HOSE			162
6728800	BUSHING			26
6728819	PIN			26
6728971	PIN			26
6728972	BUSHING			26
6728999	BUSHING			2(
6729005	BUSHING			2(
6729006	BUSHING			26
6729007	PIN			26
6729009	SEAL			238
6729010	SEAL			238
6729011	SEAL			238
6729012	INSULATION			14
6729013	INSULATION			14
6729029	BOB-TACH			27, 28
6729077	DECAL			248, 288, 293, 294
6729078	DECAL			90, 248
6729141	MOUNT			274
6729237	STEP			32
6729306	ELBOW			82
6729320	CLAMP			50, 54

Code for disposition of old part number
A -- Use up
B -- Use on other application (See PNI)
C -- File PDR Report with Bobcat Parts Sales
D -- Part Number Error

Part No.	Description	Was	Code	Page
6729358	PIN			26
6729401	BUSHING			12
6729402	BUSHING			12
6729423	BUSHING			26
6729467	SPACER			142, 212
6729468	LINK ASSY			26
6729491	PLUG			28
6729594	HANDLE			144, 148
6729595	HANDLE			144, 148
6729604	HOSE			48, 50
6729663	HOUSING			40
6729686	TEE			48, 50
6729688	LATCH			320
6729694	TEE			48, 50
6729721	HOSE			48, 50
6729746	HOSE			54
6729774	COVER			32
6729776	WINDOW			228
6729854	HOSE			34
6729888	STEP			26
6729901	TIRE			341, 342
6729939	LATCH PLATE			24
6729944	STOP			166
6729991	REAR DOOR			12, 24
6730013	COVER			40
6730108	TIRE			342
6730109	TIRE			342
6730143	TEE			74
6730265	MOUNT			286, 292
6730266	SPACER			286, 292
6730270	LEVER			172
6730726	HOSE			164
6730753	MOUNT			164, 306
6730772	RIM			342
6730783	COVER			12
6730784	BUSHING			12
6730785	BUSHING			12
6730816	SHIELD			224, 230
6730819	BELT			6, 286, 294
6730822	KIT			223, 224
6730823	KIT			229, 230
6730858	TUBELINE			48, 50
6730887	PIN			26
6730894	BOLT			166
6730898	MOUNT			222
6730914	TEE			48, 50
6730995	BUSHING			26
6731078	GRILL			160
6731084	ADAPTER			284, 294
6731085	ELBOW			284, 294
6731100	SHIELD			166
6731119	PIVOT ASSY			28
6731121	PLUG			36
6731138	BUSHING			26

Code for disposition of old part number
A -- Use up
B -- Use on other application (See PNI)
C -- File PDR Report with Bobcat Parts Sales
D -- Part Number Error

Part No.	Description	Was	Code	Page
6731139	PIN			26
6731151	KIT			211, 212
6731152	MOUNT			7
6731160	WASHER			2
6731179	COVER			26
6731209	TANK			78, 80, 86, 88
6731222	PIN			260, 262
6731239	HARNESS			260
6731251	BAR			62
6731252	BAR			62
6731255	ELBOW			288, 294
6731275	INSULATION			136
6731478	EXIT TAG			18, 238
6731527	TEE			82
6731569	STOP			26
6731638	HOSE			78, 80
6731646	BOLT			26
6731647	BUSHING			26
6731757	DECAL			248
6731819	STRAP			260, 26
6731900	ROD			172
6731915	BRACKET			160
6731916	SHIELD			160
6731970	BRACKET			160
6731973	HOLDER			260, 262
6732001	KIT			319, 320
6732023	CONNECTOR			284, 294
6732032	GASKET			164
6732045	HARNESS			262
6732081	HARNESS			26
6732193	BRACKET			168
6732206	SPACER			260, 262
6732219	KIT			327, 328
6732234	KIT			297, 298
6732235	KIT			215, 216
6732318	SPACER			160
6732322	SPACER			172
6732323	BRACKET			172
6732351	WINDOW			23
6732375	TANK			16
6732450	BRACKET			32, 170, 172
6732457	WASHER			160
6732483	HOSE			86, 88
6732484	HOSE			86, 88
6732485	HOSE			86, 88
6732577	STEP			12
6732583	INSULATION			334, 336
6732618	SEAL			30, 32
6732678	KIT			299, 300
6732687	PIN			26, 300
6732696	DECAL			248
6732715	LATCH			24
6732730	HARNESS			256
6732732	BUSHING			286, 294

Code for disposition of old part number
A -- Use up
B -- Use on other application (See PNI)
C -- File PDR Report with Bobcat Parts Sales
D -- Part Number Error

NUMERICAL INDEX (Cont'd)

Part No.	Description	Was	Code	Page
6732774	DECAL			250
6732847	RIM			342
6732870	MOUNT			162
6732928	KIT			273, 274
6732931	HOUSING			160
6732991	TUBELINE			50, 222
6732992	TUBELINE			50, 222
6732997	U-BOLT			92
6733022	BRACKET			30, 92
6733024	BRACKET			30, 92
6733107	PLUG ASSY			14
6733121	SEAL(31"STRIP)			14
6733136	KIT			255, 256
6733142	KIT			253, 254
6733144	MOUNT			256
6733219	HOSE			86, 87, 88
6733270	MOUNT			262
6733292	HARNESS			142
6733296	BRACKET			262
6733370	HARNESS			138
6733429	CAP			161, 162
6733575	HINGE			24
6733578	RIM			342
6733616	BUMPER			24
6733629	HOSE			308
6733630	HOSE			308
6733655	COMPRESSOR			286, 294
6733667	LATCH			24
6733851	HARNESS			262
6733873	SHIELD			168
6733886	BOLT			162
6733924	DECAL			242, 248
6733956	COVER			42, 44
6733970	MOUNT			214, 216, 296, 298
6733996	DECAL			162, 250
6734090	ADAPTER			162
6734108	BRACKET			300
6734114	HOSE			164
6734298	MOUNT			92
6734416	LEVER			170, 172
6734417	LEVER			172
6734436	SHIELD			168
6734446	SHIELD			246
6734447	SHIELD			246
6734461	KIT			245, 246
6734503	CLEVIS			172
6734520	COVER			170, 172
6734521	PANEL			29, 30, 31, 32
6734534	DECAL			250
6734560	BUSHING			302
6734573	HOSE			168
6734627	MOUNT			302
6734628	MOUNT			302
6734646	DECAL			248

Code for disposition of old part number
A -- Use up
B -- Use on other application (See PNI)
C -- File PDR Report with Bobcat Parts Sales
D -- Part Number Error

Part No.	Description	Was	Code	Page
6734647	DECAL			248
6734657	ANGLE			302
6734666	ARM			30(
6734667	ARM			30[illegible]
6734696	KIT			313, 314
6734697	SCREEN			314
6734769	HOSE			54
6734772	MOUNT			170, 172
6735140	DECAL			248
6735245	DUCT			276, 292
6735246	DUCT			276, 292
6735279	KIT			301, 302
6735282	SCREW			302
6735346	MOUNT			168
6735475	HOSE			308
6735614	TANK			34
6735639	MOUNT			316
6735640	MOUNT			316
6735642	TUBELINE			316
6735643	TUBELINE			31[illegible]
6735680	FOOT PEDAL			172
6735684	HOSE			316
6735696	BUSHING			34
6735709	IDLER			166
6735825	SPACER			260, 262
6735862	DECAL			248
6735864	DECAL			250
6735901	DECAL			250
6735980	MOUNT			166, 168
6736071	KIT			13[illegible]
6736515	HARNESS			138
6736566	HOSE			162
6736641	PAINT			346
6736642	PAINT			346
6736644	PAINT			346
6736645	PAINT			346
6736655	KIT			271, 272
6736664	HOSE			272
6736875	TANK			22[illegible]
6737088	COVER			21[illegible]
6737095	STEP			62
6737120	STEP			62
6737189	DECAL			214, 248
6737191	WEDGE			28
6737201	MOUNT			316
6737248	DECAL			134, 248
6737388	WASHER			62, 92
6737524	KNOB			52, 60
6737704	INSULATION			18
6737746	LINK			92
6737783	KIT			2, 248
6801059	WASHER			228, 322
6801167	PLUG			70
6803092	BONNET			70

Code for disposition of old part number
A -- Use up
B -- Use on other application (See PNI)
C -- File PDR Report with Bobcat Parts Sales
D -- Part Number Error

Part No.	Description	Was	Code	Page
6803473	SEAL KIT			310
6804427	HEAD			58
6804920	BUSHING			64, 68
6805102	BUSHING			64, 68
6805453	BUSHING			56
6806058	HOSE			90
6806403	HOSE			308
6808235	SPACER			58
6809511	DECAL			48, 50, 52, 250
6809726	ROLLER			24
6809727	CHANNEL			24
6809734	BUSHING			24
6809845	BOLT			24
6810132	SPRING			24
6810141	SPRING			24
6810188	ROD			58
6810213	TUBELINE			56
6810233	CYLINDER			55, 56
6810234	CASE			56
6810235	ROD			56
6810237	PISTON			56
6810349	CASE			310
6810356	SPACER			310
6810539	NUT			56, 58
6810611	CYLINDER			309, 310
6810612	ROD			310
6811483	COUNTERWEIGHT			244
6812170	PLUG			310
6812171	PLUG			56, 58
6812815	FITTING			90
6813078	STEP			300
6813080	VALVE ASSY			63, 64
6813153	PLATE			64
6813964	ELBOW			66, 70, 82
6814279	BLOCK			66, 70
6814600	CONTROL VALVE			67, 68
6814694	RETAINER			64, 68
6815014	CHECK VALVE			66, 68
6815152	SPOOL			64
6815887	HOSE			84
6816325	SEAL KIT			56
6816536	SEAL KIT			58
6816549	PLUG			64, 68
6817003	BODY			64
6817004	BODY			68
6817707	PLUG			64, 68
6900366	INSTRUCTIONS			242
6900848	INSTRUCTIONS			268
6900853	INSTRUCTIONS			238
6900854	INSTRUCTIONS INSTL			226
6900888	INSTRUCTIONS			302
6900991	INSTRUCTIONS			218
6900992	INSTRUCTIONS			340
6901010	INSTRUCTIONS			328

Code for disposition of old part number

A -- Use up

B -- Use on other application (See PNI)

C -- File PDR Report with Bobcat Parts Sales

D -- Part Number Error

Part No.	Description	Was	Code	Page
6901011	INSTRUCTIONS			330
6901013	INSTRUCTIONS			230, 238
6901025	INSTRUCTIONS			26
6901029	INSTRUCTIONS			236
6901061	INSTRUCTIONS			322
6901076	INSTRUCTIONS			252
6901120	INSTRUCTIONS			282
6901492	INSTRUCTIONS			212
6901656	INSTRUCTIONS			320
6901663	INSTRUCTIONS			260
6901690	INSTRUCTIONS			216
6901691	INSTRUCTIONS			298
6901772	INSTRUCTIONS			300
6901816	INSTRUCTIONS			274
6901871	INSTRUCTIONS			254
6901872	INSTRUCTIONS			256
6901909	INSTRUCTIONS			262
6901916	INSTRUCTIONS			272
6902228	PAINT			345, 346
6902229	PAINT			34
6902230	PAINT			346
6902233	PAINT			346
6902234	PAINT			346
6902235	PAINT			346
6902236	PRIMER QT. 6	6653519	A	346
6902252	INSTRUCTIONS			246
6902288	INSTRUCTIONS			314
6902361	INSTRUCTIONS			308
6903105	OIL 15W40 QT. 12			2, 4, 346
6903106	OIL 15W40 GAL. 6			2, 4, 34
6903107	OIL 10W30 QT. 12			2, 3, 4, 346
6903108	OIL 10W30 GAL. 6			2, 4, 346
6903109	OIL 30W QT. 12			2, 4, 346
6903110	OIL 30W GAL. 6			2, 4, 346
6903111	OIL 30W 2.5 GAL 2			2, 4, 346
6903112	OIL 10W30 2.5 GAL 2			2, 4, 346
6903113	OIL 15W40 2.5 GAL. 2			2, 4, 346
6903117	HYD FLUID 2.5 GAL. 2			2, 4, 346
6903118	HYD. FLUID 5GAL			2, 4, 346
6903119	HYD. FLUID 55GAL			2, 4, 346
6903121	GEAR LUBE 12			346
6903122	GREASE 10			4, 346
6903132	INSTRUCTIONS			222
6903283	INSTRUCTIONS			244
6903293	INSTRUCTIONS			214
6903773	33X6X11 SOLID FLEX TIRE AND WHEEL (LEFT)			343, 344
6903774	33X6X11 SOLID FLEX TIRE AND WHEEL (RIGHT)			344
6904156	O/M S250 "K"			2

Code for disposition of old part number
A -- Use up
B -- Use on other application (See PNI)
C -- File PDR Report with Bobcat Parts Sales
D -- Part Number Error

NUMERICAL INDEX (Cont'd)

Part No.	Description	Was	Code	Page
6904158	S/M S250/S300 "K"			2
6904244	P/M S250K,S300K			2
6904255	INSTRUCTIONS	6903305	B	276, 284
6904255	INSTRUCTIONS			276, 284
6904258	INSTRUCTIONS			288
6904732	INSTRUCTIONS			296
6904733	INSTRUCTIONS			316
6904744	INSTRUCTION, INSTALL			240
6904765	DECAL KIT			247, 248, 249, 250
69G436	BOLT			52, 68, 142
6CM1220	BOLT			168
6E5	WASHER			134, 168, 268
6E6	WASHER			82, 138
6EM80	WASHER, SPRING			158
6J1664	KEY			46
7100239	BEARING			38, 40
7100240	RACE			38, 40
7100266	LINK			92
7100462	CLAMP			78, 80
7100506	GAS SPRING			14
7100508	GAS SPRING			14
7100699	WASHER			92
7100795	MOUNT			30, 92
7100859	FLYWHEEL ASSY			166
7101104	MOUNT			262
7101136	BUSHING			168
7101291	ELBOW			34
7101345	BONNET			68
7101384	LIGHT			264
7101453	MAIN FRAME			11, 12
7101533	INSULATION			334, 336
7101534	INSULATION			336
7101535	INSULATION			334
7101536	INSULATION			334, 336
7101537	INSULATION			334
7101538	INSULATION			334, 336
7101539	INSULATION			336
7101672	ACTUATOR			52, 142, 154
7101797	ELBOW			78, 80
7101893	SPACER			136, 138
7102018	TEE			68
7102019	FITTING			66
7102066	CROSS			64, 68, 90
7102089	HOSE			48, 50
7102090	HOSE			48, 50
7102338	HARNESS			316
7102368	TUBE			164
7102414	BRACKET			53, 54
7102451	FITTING			138
7102652	SCREW			65, 66, 70
7102705	TEE			34
7102747	GASKET			164
7103075	SEAL			238
7103172	HOSE			52

Code for disposition of old part number
A -- Use up
B -- Use on other application (See PNI)
C -- File PDR Report with Bobcat Parts Sales
D -- Part Number Error

Part No.	Description	Was	Code	Page
7103217	WASHER			92
7103708	BRACKET			92
7103711	BOLT			9
7103749	ELBOW			74, 8
7103750	EXCHANGER			74, 82
7103751	HOSE			74, 82
7103903	MOUNT			82
7104465	DOOR SWITCH			224, 230
	HARNESS			
7104670	LIGHT			304
7104671	LIGHT			304
7104829	KIT			221, 222
7105035	WINDOW			18, 238
7105192	BOLT			92
7105193	BOLT			92
7105223	SPACER			92
7105753	SPACER			168
7105764	KIT			243, 244
7105818	MOUNT			244
7105827	ROD			24
7105856	SNAP RING			28
7105983	BOLT			134
7106040	ELBOW			78, 80
7106212	HOSE			78, 80
7106215	HOSE			54
7106240	SUPPORT			168
7106279	BOLT			34, 78, 80
7106456	LIFT CYL			57, 58
7106458	TUBELINE			58
7106459	TUBE			5
7106707	SHIELD			30, 32
7106712	SEAT			64, 68
7106737	SPROCKET			35, 36, 46
7106738	SHAFT			38
7106739	SHAFT			40
7106744	BRAKE DISC			42
7106750	SPACER			168
7106862	CHAIN			36
7107175	INLET			16
7107179	HOSE			8
7107271	WASHER			46
7107272	MOTOR CARRIER			37, 38
7107274	MOTOR CARRIER			39, 40
7107544	HARNESS			214
7107557	HOSE			88
7107558	HOSE			88
7107559	HOSE			88
7107560	HOSE			88
7107561	HOSE			80
7107562	HOSE			80
7107572	SPACER			168
7107573	COVER			12
7107785	TEE			78
7107829	BACK UP ALARM KIT			213, 214

Code for disposition of old part number
A -- Use up
B -- Use on other application (See PNI)
C -- File PDR Report with Bobcat Parts Sales
D -- Part Number Error

Part No.	Description	Was	Code	Page
7108222	SAFETY TREAD			248
7108236	PIN			52, 142
7108241	LIFT SPOOL			68
7108242	TILT SPOOL			68
7108441	HOSE			78
7108458	TUBELINE			50, 222
7108633	TEE			80
7108677	SEAL - BULK/FT			338
7108685	TEE			84
7108716	SEAL			338
7108781	SPOOL			64
7109144	HOSE			74
7109317	INSULATOR			337, 338
7109318	INSULATOR			338
7109319	INSULATOR			338
7109320	INSULATOR			338
7109343	HOSE			78
7109403	HARNESS			304
7109404	HARNESS			304
7109623	ELBOW	6817335	A	48, 50
7109661	DOOR LATCH			224, 230
7109662	HANDLE			224, 230
7109663	SPACER			224, 230
7109664	BOLT			224, 230
7109665	DOOR			224
7109792	MOUNT			168
7109885	TEE			74
7109888	HOSE			74
7109904	BRACKET			92, 106
7109905	BRACKET			92, 104
7109934	MOUNT			52
7110159	HARNESS			136
7110160	HARNESS			136
7110243	BRACKET			84
7110244	BRACKET			84
7110276	SPACER			168
7110284	HOSE			52
7110316	DECAL			224, 230, 248
7110365	PINTLE ARM			92
7110430	SPECIAL APPS DOOR			230
7110572	BELLCRANK			92
7110809	HOSE			83, 84
7110914	TUBELINE			64, 68
7110942	HOSE			34
7110945	SPACER			92
7111581	PULLEY			166
7111593	COVER			42
7111595	COVER			43, 44, 90
7111805	MOUNT			164
7111992	JOYSTICK ASMBLY RH			154
7111993	JOYSTICK ASMBLY LH			154
7112333	CHAINCASE			36

Code for disposition of old part number
A -- Use up
B -- Use on other application (See PNI)
C -- File PDR Report with Bobcat Parts Sales
D -- Part Number Error

Part No.	Description	Was	Code	Page
7112349	HOSE			336
7112383	AUX SPOOL			64, 68
7112683	BRACKET			162, 1
7112760	BRACKET			13
7112788	ELBOW			82
7113208	HOSE			284, 292
7113209	HOSE			284, 292
7113340	CAP			34
7113355	TUBELINE			82
7113465	SPACER			54
7113552	CHECK VALVE			74
7114735	HARNESS			154
7114812	TUBELINE			48
7114813	TUBELINE			48, 50
7114814	TUBELINE			48, 50
7114815	TUBELINE			48, 50
7114816	TUBELINE			54
7114817	TUBELINE			54
7114818	TUBELINE			74
7114819	TUBELINE			7
7114820	TUBELINE			48, 50
7114821	TUBELINE			48, 50
7114823	TUBELINE			50, 222
7114886	HOSE			82
7115066	TUBELINE			78, 80
7115091	TUBELINE			82
7115185	HOSE			78, 80
7115219	PEDAL			62, 142, 212
7115220	MOUNT			62, 142, 212
7115893	HARNESS DIFF SWITCH			13
7116257	HARNESS LF MFR			136, 137, 138
7116260	HARNESS			18
7116261	HARNESS			18, 133, 134
7116601	KIT, REAR AUX			315, 316
7116870	DECAL			248
7116899	KIT HEATER CAB			275, 276
7116902	KIT			283, 284
7116904	AC KIT			285, 28
7116995	TUBELINE			66, 6
7117036	HARNESS SJC			154
7117124	PANEL			30, 32
7117322	HARNESS			224, 230
7117407	DECAL			136, 248
7120055	HOSE ASSEMBLY			48, 50
7120084	BRACKET			138
7120290AR	KIT, TRANSLATION			248
7120290BR	KIT, TRANSLATION			248
7120291AR	KIT, DECAL			248
7120291BR	KIT, DECAL			248
7120291JP	KIT, DECAL			248
7120439	HOSE ASSEMBLY			48, 50
7120594	DECAL			248
7120602	DECAL			74, 248
7120956	HOSE			316

Code for disposition of old part number
A -- Use up
B -- Use on other application (See PNI)
C -- File PDR Report with Bobcat Parts Sales
D -- Part Number Error

Part No.	Description	Was	Code	Page
7121116	KIT, POWER BOBTACH			307, 308
7121119	BRACKET			18, 134
7121223	CAP			34
7121399	SPRING			64, 68
7121556	BRACE, CAB			240
7122009	DECAL			166
7122028	KIT, HORN			295, 296
7122214	ADAPTER			90
7122316	COVER			14
7122324	LEVER	6718285	A	62
7122462	KIT, WINDOW RIB			239, 240
7122487	2 SEAL, WIPER			240
7122488	SEAL, BULB (BULK/FOOT)			240
7123963	SEAL KIT			66, 70
7123964	SEAL KIT, COMPLETE			66, 70
7123965	SEAL KIT			66, 70
7124199	TUBELINE			48, 50
7124200	TUBELINE			48, 50
7124922	ELBOW			316
7125181	TUBELINE			82
7125182	TUBELINE			82
7126554	HOSE			82
7126869	BRACKET	6726573	A	142, 212
72F1	FITTING			34, 168
73G624	BOLT			92
73G656	SCREW			308
73K13	RING			66, 68
73K16	RING			66, 68
73K222	RING			310
73K232	RING			56, 58
75K3	O-RING			310
75K4	ORING			128
75K6	O-RING			56, 58
774220	NUT			214, 216
78HA1010	ADAPTER			84
78HA1210	ADAPTER			84
799119B	SNAP RING			64
79K000007B	O-RING			312
79K000008B	O-RING			312
79K000010B	O-RING			312
79K10	O RING 10			48, 50, 54, 64, 68, 72, 74, 84, 102, 222
79K12	O RING 10			78, 80, 84, 86, 88, 102, 106, 308
79K16	O RING 10			66, 70, 74, 78, 80, 82
79K4	O RING 10			162, 308
79K5	O RING 10			34
79K6	O RING 10			52, 54, 66, 68, 78, 80, 84, 86, 88, 272, 308
79K8	O RING 10			64, 68, 72, 74, 84, 86, 88, 102, 106, 168
7D4	NUT			52, 60
83D10	NUT 5			168, 300
83D12	NUT			90
83D4	NUT 10			20, 52, 260, 262, 296, 298
83D5	NUT 5			78, 80, 168, 222, 238, 296, 298

Code for disposition of old part number
A -- Use up
B -- Use on other application (See PNI)
C -- File PDR Report with Bobcat Parts Sales
D -- Part Number Error

Part No.	Description	Was	Code	Page
83D6	NUT 5			52, 54, 92, 164, 256, 270, 286, 292, 316
83D8	NUT 5			12, 16
84G1320	BOLT			2
84G3108	BOLT			162, 16
84G3110	SCREW			170, 172, 292
84G3112	BOLT 5			14, 26, 136, 160, 248, 254, 256
84G3116	SCREW			136
84G3708	SCREW			12
84G3710	SCREW			32, 62, 82, 212, 286, 292
84G3712	BOLT			12, 30, 32, 36, 84, 90, 136, 138, 162, 164, 170, 172, 260, 262, 316
84G3716	SCREW 5			30, 32, 42, 44, 54, 160, 222, 260, 262, 272, 292
84G3720	BOLT			42, 172, 210
84G3724	BOLT			170, 172, 316
84G3728	BOLT			48, 50
84G3732	BOLT			48, 50
84G3736	BOLT			136
84G3740	BOLT			48, 50, 5
84G3748	BOLT			5
85D4	NUT 5			260, 262
85D5	NUT 5			170, 172, 258
85D6	LOCK NUT			24, 26, 28, 54, 164, 172, 300
85D7	NUT			16
85D8	NUT 5			14, 166
85G1010	SCREW			262
85G808	SCREW			260, 262
86F10	NUT			74, 82
86F5	NUT			272, 31
872229B	WASHER			48, 50, 5
88F5	ELBOW			316
898731B	BULB			304
89D5	NUT			32
90F5	TEE			316
90KV2	PLUG			310
91G416	SCREW			238
91G420	SCREW			18, 238
92D10	NUT			310
92D12	NUT			16
93G824	BOLT	73G824	A	9
947088B	SEAL			56, 58
95D5	NUT			134, 138, 142, 170, 172, 212, 304
95D6	NUT			30, 32, 61, 62, 84, 92, 142, 160, 172, 230, 300
95K3	O'RING			310
96D6	NUT			92
96D8	NUT			160
97D4	NUT			214, 216
97D6	NUT 10			20, 136, 138, 154
97D8	NUT			14, 274
97K6	O'RING			90
98D6	NUT			92
98G412	BOLT			152
99K4	O'RING			90
99K6	O'RING			90

Code for disposition of old part number
A -- Use up
B -- Use on other application (See PNI)
C -- File PDR Report with Bobcat Parts Sales
D -- Part Number Error

MINISTÉRIO DA SAÚDE

CERTIFICADO DE INCAPACIDADE TEMPORÁRIA PARA O TRABALHO POR ESTADO DE DOENÇA

Identificação e Declaração do Médico

Nome do Médico **LEONILDE MELO** portador da Cédula Profissional

Nº **27702** emitida pela Ordem dos Médicos, declara por sua honra profissional que observou o doente, cuja identidade confirmou,

tendo verificado que o mesmo se encontra em estado de doença X incapacitado para a sua actividade profissional exigindo cuidados inadiáveis

Identificação do Beneficiário e do Familiar Doente

Nº Beneficiário da Segurança Social **10951665676** Data de Nascimento **22-02-1951**

Nome do Beneficiário **JOSE AGOSTINHO CANTADOR SOUSA PINHEIRO**

Nome do Familiar Doente

Parentesco Nº de B.I. do Beneficiário **4992816**

Elementos Relativos ao Estado de Incapacidade

CLASSIFICAÇÃO DA SITUAÇÃO

Doença natural	X	DN
Doença directa		DD
D.L. nº28/2004 (Artº16 nº3)		T
Assistência a familiares		DF
Doença profissional		DP
Acidente de trabalho		AT

INTERNAMENTO Sim Não X

PERÍODO DE INCAPACIDADE

X Inicial Prorrogação

Data de início **09-01-2013**

Data do termo **16-01-2013**

Nº de dias **8**

PERMANÊNCIA NO DOMICÍLIO

O doente só pode ausentar-se do domicílio para tratamento.
Em casos devidamente fundamentados o médico pode autorizar a ausência no período das 11 às 15H e das 18 às 21H.

AUTORIZAÇÃO

Rubrica do Médico

Autenticação

A informação clínica que fundamenta o presente certificado está devidamente anotada e guardada no processo clínico.

Instituição de Saúde
Centro de Saúde UCSP BENAVENTE

U140500

Local de arquivo/
Nº de processo

Data **12-01-2013**

Assinatura do Médico

Médico
LEONILDE MELO

M27702

Mod. 141.10
Processado por computador - Sistema de Apoio ao Médico - ACSS

CERTIFICADO DE INCAPACIDADE TEMPORÁRIA PARA O TRABALHO
POR ESTADO DE DOENÇA

MINISTÉRIO DA SAUDE

Identificação e Declaração do Médico

Nome do Médico **Susana Reis Peres** portador da Cédula Profissional

Nº **41183** emitida pela Ordem dos Médicos, declara por sua honra profissional que observou o doente, cuja identidade confirmou,

tendo verificado que o mesmo se encontra em estado de doença X incapacitado para a sua actividade profissional exigindo cuidados inadiáveis

Identificação do Beneficiário e do Familiar Doente

Nº Beneficiário da Segurança Social 10951665676 Data de Nascimento 22-02-1951

Nome do Beneficiário JOSÉ AGOSTINHO CANTADOR DE SOUSA PINHEIRO

Nome do Familiar Doente

Parentesco Nº de B.I. do Beneficiário 4992816

Elementos Relativos ao Estado de Incapacidade

CLASSIFICAÇÃO DA SITUAÇÃO

Doença natural	X	DN		X Inicial	Prorrogação
Doença directa		DD			
D.L nº132/88 (Artº16 nº2)		T	Data de início	17-01-2013	
Assistência a familiares		DF			
Doença profissional		DP	Data do termo	28-01-2013	
Acidente de trabalho		AT			
	Sim	Não	Nº de dias	12	
INTERNAMENTO		X			

PERMANÊNCIA NO DOMICÍLIO

O doente só pode ausentar-se do domicílio para tratamento
Em casos devidamente fundamentados o médico pode autorizar a ausência no periodo das 11 às 15H e das 18 às 21H.

AUTORIZAÇÃO

Pode sair de casa, para deslocar-se à farmácia ou Serviços de Saúde

Rubrica do Médico

Autenticação

A informação clinica que fundamenta o presente certificado está devidamente anotada e guardada no processo clinico.

Etiquela da Instituição de Saúde

U3117031

Local de arquivo/ Nº de processo

Data 21-01-2013

Assinatura do Médico

Etiquela do Médico

M41183

Mod. 141.10
Processado por computador - Sistema de Apoio ao Médico - IGIF

Mario Galante

De: Mario Galante
Enviado: terça-feira, 22 de Janeiro de 2013 11:59
Para: Pedro Marques; João Paulino
Cc: Antonio J. Santos; José Morgado; Fernando Andrade
Assunto: Recepção Electrobombas GRUNDFOS CR15- 8 - Fichas de Características Téc.
Anexos: Mario_Galante_20130122_120313.pdf; Mario_Galante_20130122_121201.pdf; DSC01874.JPG

Bom Dia Pedro Marques / João Paulino,

Conforme acordado envio em anexo Fichas de Características Téc. Referentes a:

-Electrobomba GRUNDFOS CR15- 8 Nº Série 0002 **a atribuir N/Nº----------**

-Electrobomba GRUNDFOS CR15- 8 Nº Série 0006 **a atribuir N/Nº----------**

Obs.: Com destino à O. 3331 – GHANA

PS – **O Manual seguirá 1º transporte para Sede – conf. Pedido por P. Marques**

Com os melhores cumprimentos,

Mário Galante

SOA - Serviços de Oficinas e Armazéns Centrais
MSF Engenharia, SA

Tlm + 351 969 658 830
Tel + 351 263 749 211
Fax + 351 263 748 167

Casal Maria Magra, IC-2 Km 44,4
2580-243 Ota - Portugal

www.msf.pt

Este email é amigo do ambiente, pondere antes de imprimir!

Mario Galante

De: Mario Galante
Enviado: terça-feira, 22 de Janeiro de 2013 15:35
Para: Pedro Marques
Cc: Antonio J. Santos; José Morgado; Fernando Andrade
Assunto: Recepção de AMASSADEIRA edesa - Ficha de Características Téc.
Anexos: Mario_Galante_20130122_133831.pdf; DSC01881.JPG; DSC01883.JPG

Boa Tarde Pedro Marques e João Paulino,

Conforme acordado envio em anexo Ficha de Características Téc. Referente a:

-AMASSADEIRA edesa AE50TNV405T Nº Série 120801511 **a atribuir N/Nº---------**

OBS.: **Com destino à O. 2777 – GUINÉ**

PS – **O Manual seguirá 1º transporte para a Sede – conf. Pedido por P. Marques**

Com os melhores cumprimentos,

Mário Galante

SOA - Serviços de Oficinas e Armazéns Centrais
MSF Engenharia, SA

Tlm + 351 969 658 830
Tel + 351 263 749 211
Fax + 351 263 748 167

Casal Maria Magra, IC-2 Km 44,4
2580-243 Ota - Portugal

www.msf.pt

Este email é amigo do ambiente, pondere antes de imprimir!