RUTHZIL TRATOR COMERCIAL DE PEÇAS LTDA 11 97083-6812 ROLANDO

S250

Bobcat®

Parts Manual

S/N 5309 11001 & Above
S/N 5310 11001 & Above

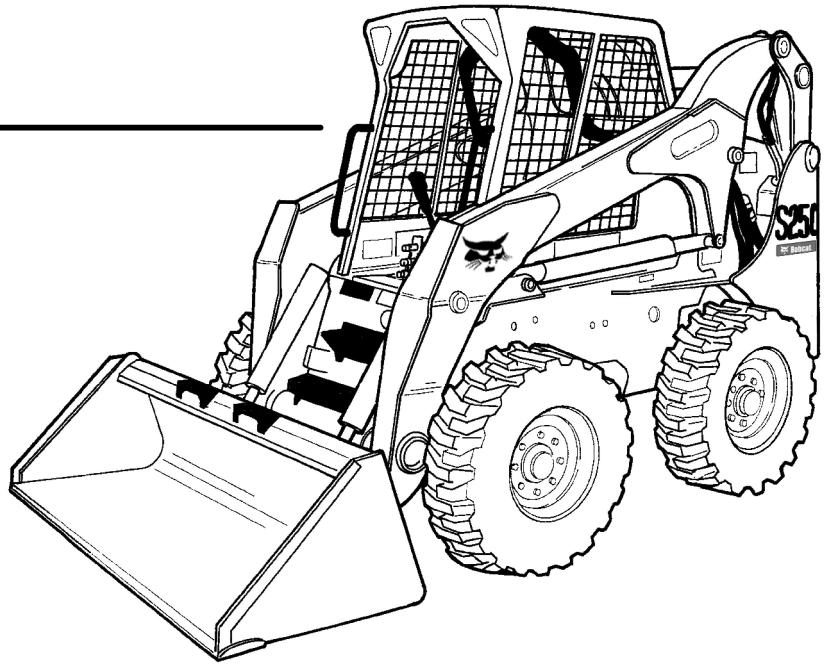

EQUIPPED WITH BOBCAT INTERLOCK CONTROL SYSTEM (BICS™)

An Ingersoll-Rand business

6904244 (11-05) Revised (12-05)

Printed in U.S.A.

© Bobcat Company 2005

GENERAL INFORMATION

Before ordering parts, ALWAYS provide dealer with your product model number and complete serial number information. Before ordering parts, verify correct part numbers and/or serial numbers with your dealer. When using the machine serial number, use the complete number.

Some Serial Number breaks are not available at time of printing.
These are listed as & Bel or & Abv or - (thru)

The number shown in the quantity column in this manual is the number of parts needed for the illustration on the page. For some parts an "x" will be shown in the quantity column. This "x" indicates that the quantity to be used is "As Needed".

When references L.H. (Left Hand) and R.H. (Right Hand) are used in this manual, it is done from the operator's seat in the forward operating position.

When "See Illustration...." appears in the remarks column, refer to the contents page for the illustration title to find page number location.

Some of the illustrations and information found in this parts manual were supplied to Bobcat by machine component companies.

For additional information on the Bobcat website visit www.bobcat.com

ABBREVIATIONS

SALES	=	Order from Gwinner Sales Department	W/	=	With
NSS	=	Not Serviced Seperately	W/O	=	Without
NAP	=	Not Available as Parts	I.D.	=	Inside Diameter
BTI	=	Bobcat Technical Information Bulletin	O.D.	=	Outside Diameter
P/M	=	Parts Manual	"	=	Inches
O/M	=	Operation & Maintenance Manual	'	=	Feet
S/M	=	Service Manual	mm	=	Millimeters
S/L	=	Service Letter			

DISPOSITION CODE DEFINITIONS

(Found in Remarks Column)

[A]	=	Use Up
[B]	=	Use Up on Other Application
[C]	=	File PDR Report with Bobcat Parts Sales
[D]	=	Part Number Error

NOTE D'INFORMATION

Pour toute référence au numéro de série de l'engin, toujours donner le numéro complet.

Le chiffré apparaissant dans la colonne des quantités de ce manuel représentent le nombre de pièces nécessaires pour l'illustration reprise sur la page. Dans certains cas, on lira un "x" dans la colonne des quantités. Cet "x" indique que la quantité nécessaire est "selon besoin".

Pour toute référence vers la GAUCHE ou la DROITE dans ce manuel, considérer que la personne se trouve assise dans le siège de l'opérateur, en position de fonctionnement en marche avant.

Certaines illustrations et informations reprises dans ce manuel de pièces de rechange ont été fournies à Bobcat/Ingersoll–Rand par des fabricants de composants.

ABREVIATIONS & SYMBOLES

SALES	= Commander au Service Ventes à Bruxelles
NSS	= Pas vendu séparément
NAP	= Non disponible comme pièce de rechange
*****	= Chapitre, page ou numéro de pièce modifié ou supplémentaire
BTI	= Bobcat Technical Information Bulletin : voir à la fin de la microfiché du modèle concerné ou la microfiche générale reprenant l' ensemble des "BTI".
was 6535403	= était avant 6535403
adj. (adjustment)	= réglage
Assembly	= ensemble
available W/Ref.	= disponible avec réf.
bulk/sold per foot	= en vrac/vendu par pied
does not include	= ne comprend pas
included with	= compris dans
I.D.	= D.I. (diamètre intérieur)
O.D.	= D.E. (diamètre extérieur)
not in kit	= pas en kit
W/ – WO/	= inclus/ – non inclus/
Qty	= quantité requise
see page/ref.	= voir page/réf.
used with ref/	= utilisé avec réf.
0,05 inch thickness	= 0,05 pouce d'épaisseur (un pouce = 25.4 mm)
weld on	= à souder

ALLGEMEINE INFORMATIONEN

Bei Angabe der Maschinen-Seriennummer stets die komplette Nummer angeben.

Bei der in der Mengenspalte (Anzahl) in diesem Handbuch angegebenen Zahl handelt es sich um die Anzahl von Teilen, die für die Abbildung auf der betreffenden Seite benötigt werden. Bei manchen Teilen in der Mengenspalte ist ein “x” angegeben. Dieses “x” weist darauf hin, dass sich die Anzahl der verwendeten Teile auf den “Bedarf” bezieht.

Bei Verwendung der Seitenangaben links und rechts in diesem Handbuch gelten diese für die Blickrichtung vom Fahrersitz aus, und zwar in Vorwärts-Betriebsrichtung.

Einige der in diesem Ersatzteilhandbuch aufgeführten Abbildungen und Informationen wurden der Bobcat/Ingersoll-Rand von den Herstellern von Maschinenbauteilen zur Verfügung gestellt.

ABKÜRZUNGEN UND SYMBOLE

SALES	= Bestellung bei der Verkaufsabteilung in Brüssel
NSS	= Nicht einzeln erhältlich
NAP	= Nicht als Ersatzteil erhältlich
*****	= Geänderte oder hinzugefügte Abschnitte, Seiten oder Teilenummern
BTI	= Bobcat Technical Information Bulletin : Siehe am Ende der Mikrokarte des jeweiligen Modells oder der allgemeinen Mikrokarte der BTI.
was 6535403	= War 6535403
adj.	= Einstellung
Assembly	= Baugruppe
available W/Ref.	= erhältlich mit der Referenz
bulk/sold per foot	= Mengenabnahme / Verkauf pro Fuss
does not include	= beinhaltet nicht
included with	= enthalten in
I.D.	= Innendurchmesser
O.D.	= Aussendurchmesser
not in kit	= nicht in Bausatz
W/ - WO/	= mit/ - ohne/
Qty	= Anzahl
see page/ref.	= Siehe Seite / Referenz
used with ref.	= verwendet mit Referenz
0.05 inch thickness	= Dicke : 0.05 Zoll (ein Zoll = 25.4 mm)
weld on	= anschweissen

INFORMAZIONI GENERALI

Quando si usa il numero di serie della macchina usare il numero completo.

Il numero mostrato nella colonna della quantità di questo manuale corrisponde al numero di componenti necessari per l'illustrazione della pagina. Per alcuni componenti appare "X" nella colonna delle quantità. Questa "X" indica che la quantità da usare è "come necessario".

See in questo manuale si fa riferimento alla parte destra o sinistra, si intende dal sedile dell'operatore nella posizione in avanti di funzionamento.

Alcune delle illustrazioni e informazioni trovate in questo manuale di componenti sono state fornite alla Bobcat/Ingersoll–Rand da società di componenti di macchine.

SIMBOLI E ABBREVIAZIONI

SALES	= Ordinare al servizio vendite di Bruxelles
NSS	= Non vendute separatamente
NAP	= Non disponibile come componente
*****	= Sezioni, pagine o numeri di componente cambiati o aggiunti
BTI	= (Bobcat Technical information) Ved. al termine del microfiche del modello relativo oppure microfiche generale
was 6535403	= era 6535403
adj. (adjustment)	= regol. (regolazione)
Assembly	= Complessivo
available W/Ref.	= disponibile con rif.
bulk/sold per foot	= alla rinfusa/venduto al piede
does not include	= non comprende
Included with	= compreso con
I.D.	= d. i.
O.D.	= d. e.
not in kit	= non fa parte del kit
W/ – WO/	= con – senza
Qty	= Qtà
see page/ref	= ved. pagina/rif.
used with ref.	= usato con il rif.
0,05 inch thickness	= spessore 0,05 pollici (un pollice = 25,4 mm)
weld on	= a saldare

INFORMACION GENERAL

Al utilizar el número de serie de la máquina, debe emplearse el número completo.

El número que figura en la columna de “Unidades” en este manual es el número de piezas que se necesitan para la ilustración que consta en la página. En algunas piezas aparece una “x” en la columna de “Unidades”. Esta “x” indica que las unidades a utilizar son “según sea necesario”.

Cuando se empleen las referencias izq. y dcha., éstas se entienden mirando desde el asiento del conductor, en posición de marcha adelante.

Algunas de las ilustraciones y la información que figuran en este manual de piezas han sido facilitadas a Bobcat/Ingersoll–Rand por empresas de componentes de máquinas.

ABREVIATURAS Y SIMBOLOS

VENTAS	= Pedido al Departamento de Ventas de Bruselas
NSS	= No se vende por separado
NAP	= No disponible como pieza de repuesto
*****	= Secciones, páginas o referencias modificadas o añadidas
BTI	= (Bobcat Tecnical Information) Ver al final de la microficha del modelo afectado o en la microficha general “Boletín de Información Técnica Bobcat”.
was 6535403	= era anteriormente el 6535403
adj. (adjustment)	= ajuste
assembly	= conjunto
available W/Ref.	= disponible con la ref.
bulk/sold per foot	= a granel/vendido por pies
does not include	= no incluye
included with	= incluido en
I.D.	= diámetro interior
O.D.	= diámetro exterior
not in kit	= no en el kit
W/ – WO/	= con/ – sin
Qty	= Unidades
see page /ref.	= ver página/ref.
used with ref.	= empleado con la ref.
0,05 inch thickness	= 0,05 pulgadas de espesor (1 pulgada = 25,4 mm)
weld on	= debe ser soldado

ALGEMENE INFORMATIE

Als u het serienummer van de machine gebruikt, geef dan het gehele serienummer.

Het cijfer dat voorkomt in de kolom “Aantal”, in deze handleiding, is het aantal onderdelen dat nodig is van de illustratie op de pagina. Voor sommige onderdelen staat er een “x” in de kolom “Aantal”. Deze “x” betekent dat er een aantal “zoals nodig” vereist is.

Wanneer er in deze handleiding naar “links” en naar “rechts” gerefereerd wordt, moet dit verstaan worden voor een bestuurder die in de bestuurdersstoel zit in de voorwaartse bedrijfsstand.

Sommige van de illustraties en informatie in deze onderdelen–handleiding werden door firma’s van machine–componenten geleverd aan Bobcat/Ingersoll–Rand.

AFKORTINGEN EN SYMBOLEN

SALES	= Bestellen bij de Verkoopafdeling te Brussel
NSS	= Niet afzonderlijk te verkrijgen
NAP	= Niet beschikbaar als onderdeel
*****	= Gewijzigde of toegevoegde paragrafen, pagina’s of onderdeelnummers
BTI	= Bobcat Technical Information Bulletin : Zie einde van de microfiche van het desbetreffende model of einde van de algemene microfiche die het geheel van alle “BTI” herneemt.
was 6535403	= was vroeger 6535403
adj. (adjustment)	= afstelling
Assembly	= geheel
available W/Ref.	= beschikbaar met ref.
bulk/sold per foot	= bulk/aan de meter verkocht
does not include	= bevat niet
includes with	= is bevat in
I.D.	= ϕ inw. (inwendige diameter)
O.D.	= ϕ uitw. (uitwendige diameter)
not in kit	= niet in de kit
W/ – WO/	= met/ – zonder/
Qty	= vereiste aantal
see page/ref.	= zie pagina/ref.
used with ref/	= gebruikt met ref.
0,05 inch thickness	= 0.05 inch dik (een inch = 25.4 mm)
weld on	= te lassen

Use only Bobcat belts and hoses to maintain maximum service life.

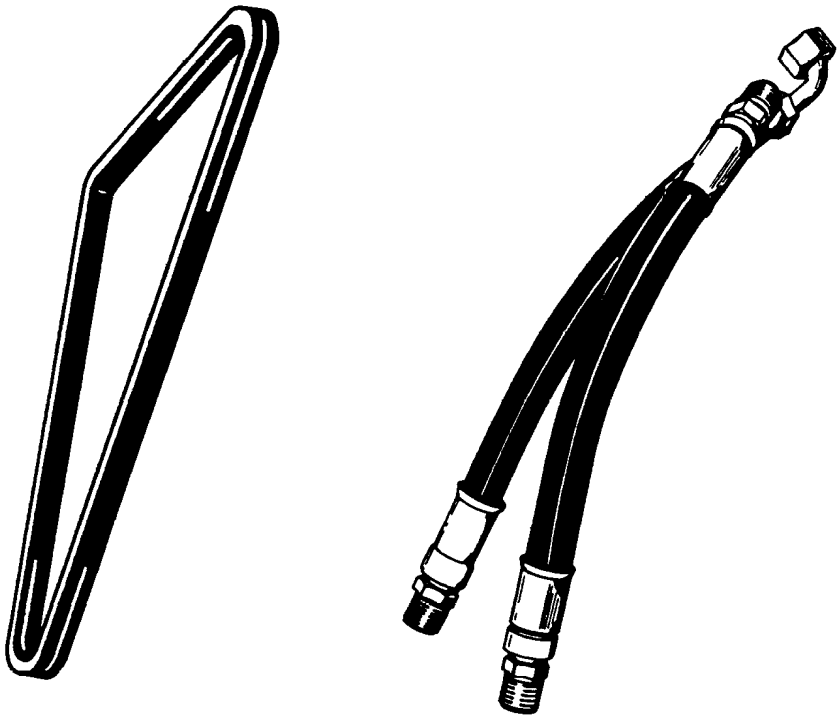

Available from Bobcat Parts.

Bobcat®

CONTENTS

MAINTENANCE ITEMS 1-10
MAINTENANCE ITEMS 1
SCHEDULED MAINTENANCE ITEMS 3-10

MAIN FRAME 11-34
MAIN FRAME 11
OPERATOR CAB 13-18
SEAT & SEAT BAR 19
SEAT 21
REAR DOOR 23
LIFT ARMS & BOBTACH 25
BOB-TACH 27
PANELS 29-32
FUEL SYSTEM 33

DRIVE TRAIN 35-44
DRIVE TRAIN 35
MOTOR CARRIER 37-40
DISC BRAKE 41
AXLE 43

HYDRAULIC SYSTEM 45-70
HYDRAULIC CIRCUITRY 45-48
LIFT & TILT CONTROL CIRCUITRY 49
AUXILIARY HYDRAULICS 51
TILT CYLINDER 53
LIFT CYLINDER 55
MANUAL LIFT RELEASE VALVE 57
CONTROL PEDALS 59
HYDRAULIC CONTROL VALVE 61-68
BUCKET POSITIONING VALVE 69

HIGH FLOW HYDRAULICS 71-76
HIGH FLOW HYDRAULICS 71-74
HIGH FLOW GEAR PUMP 75

HYDROSTATIC SYSTEM 77-130
GEAR PUMP 121
MOTOR 123
2-SPEED VALVE 125
HYDROSTATIC OIL FILTER 127-130
HYDROSTATIC CIRCUITRY 77-86
HAND CONTROLS 87-90
HYDROSTATIC MOTOR 91
HYDROSTATIC MOTOR & BRAKE 93-96
HYDROSTATIC PUMP/GEAR PUMP 97
HYDROSTATIC PUMP 99-120

ELECTRICAL SYSTEM 131-152
CAB ELECTRICAL CIRCUITRY 131
ENGINE ELECTRICAL 133-136
CONTROLS ELECTRICAL 137-148
ALTERNATOR 149
STARTER 151

POWER UNIT 153-206
COOLING SYSTEM 153-156
ENGINE & ATTACHING PARTS 157-166
ENGINE SPEED CONTROL 167-170

CONTENTS (Cont'd)

POWER UNIT

ENGINE 171
MANIFOLDS 173
TURBOCHARGER 175
CYLINDER HEAD & COVER 177
CYLINDER HEAD 179
OIL PAN 181
PISTON & CRANKSHAFT 183
CAMSHAFT 185
FRONT COVER 187
WATER PUMP & THERMOSTAT 189
WATER PUMP 191
FUEL INJECTION SYSTEM 193-196
FUEL INJECTION PUMP 197
GOVERNOR 199-204
AIR CLEANER 205

ACCESSORIES & OPTIONS 207-350

ACCESS COVER 207
ACS CONVERSION KIT 209
BACK-UP ALARM KIT 211-214
BEACON 215
BLOCK HEATER 217
BUCKET POSITIONING KIT 219
CAB DOOR 221-230
CAB ENCLOSURE 231-234
CAB WINDOWS 235-238
COUNTERWEIGHT KIT 239-242
DECALS 243-246
DEBRIS SHIELD KIT 247
ELECTRICAL CONNECTOR KIT 249
ELECTRICAL CONTROLS KIT 251-254
EXPORT ACCESSORIES 255
EUROPEAN ACCESSORIES 257-264
FIRE EXTINGUISHER 265
FLASHER LIGHTS 267
F.O.P.S. KIT 269
FRONT AUXILIARY 271
GAS SPRING KIT 273
HEATER & A/C 275-298
HEATER & AC 277
HEATER 279
HORN KIT 299-302
LIFT KIT 303-306
LIGHT KIT 307
OPERATOR EAR NOISE REDUCTION 309-312
NOISE REDUCTION KIT 313
PURIFIER 315
POWER BOB-TACH KIT 317
POWER BOB-TACH CYLINDER 319
POWER BOB-TACH 321
RADIATOR SCREEN KIT 323
REAR AUXILIARY HYDRAULIC KIT 325

CONTENTS (Cont'd)

ACCESSORIES & OPTIONS
REAR AUXILIARY VALVE 327
REAR DOOR LOCK 329
REAR WIPER 331
SEAT 333-336
SEAT BELT 337-342
STROBE LIGHT 343
TIRES & RIMS 345-348
BULK ITEMS 349
NUMERICAL INDEX 352-399

MAINTENANCE ITEMS

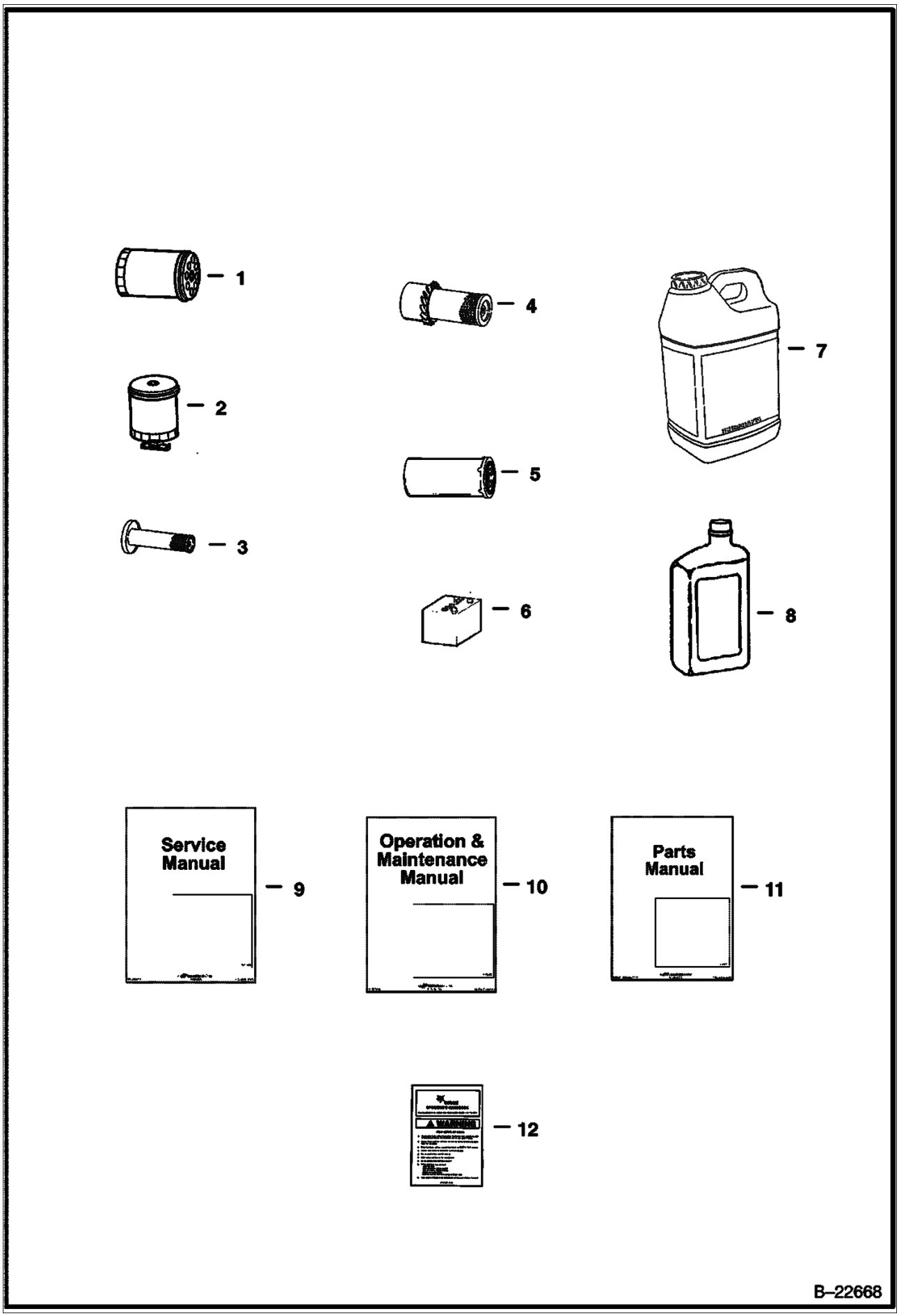

MAINTENANCE ITEMS (Cont'd)

Ref No	Part Number	Description	Remarks	Serial Number	Qty
1	6678233	OIL FILTER	See Illustration OIL PAN/ B17606 See Illustration OIL PAN/ B22921 Engine Oil (6 Pack)		1
2	6667352	FILTER FUEL	See Illustration FUEL SYSTEM/ PE1701 Fuel		1
3	6681475	CARTRIDGE	See Illustration AIR CLEANER/ MS1516 See Illustration AIR CLEANER/ MS1516 Inner Air Cleaner		1
4	6681474	CARTRIDGE	See Illustration AIR CLEANER/ MS1516 See Illustration AIR CLEANER/ MS1516 Outer Air Cleaner		1
5	6661248	ELEMENT	See Illustration HYDROSTATIC OIL FILTER/ C2818 Hydrostatic # 3 Media		1
6	6665427	BATTERY	See Illustration ENGINE ELECTRICAL/ PE1489R 950 AMP		1
7	6903117	HYD FLUID 2.5 GAL. 2			x
7	6903118	HYD. FLUID 5GAL			x
7	6903119	HYD. FLUID 55GAL			x
8	6903107	OIL 10W30 QT. 12			x
8	6903105	OIL 15W40 QT. 12			x
8	6903109	OIL 30W QT. 12	30W - 1 Qt.		x
8	6903106	OIL 15W40 GAL. 6			x
8	6903108	OIL 10W30 GAL. 6			x
8	6903110	OIL 30W GAL. 6			x
8	6903112	OIL 10W30 2.5 GAL 2			x
8	6903113	OIL 15W40 2.5 GAL. 2			x
8	6903111	OIL 30W 2.5 GAL 2			x
9	6904158	S/M S250/S300 "K"	Service		1
10	6904156	O/M S250 "K"	Operation & Maintenance		1
11	6904244	P/M S250K,S300K	parts manual		1
12	6737783	KIT	See Illustration DECALS/ B26132 Operator		1

SCHEDULED MAINTENANCE ITEMS
(50 Hour)

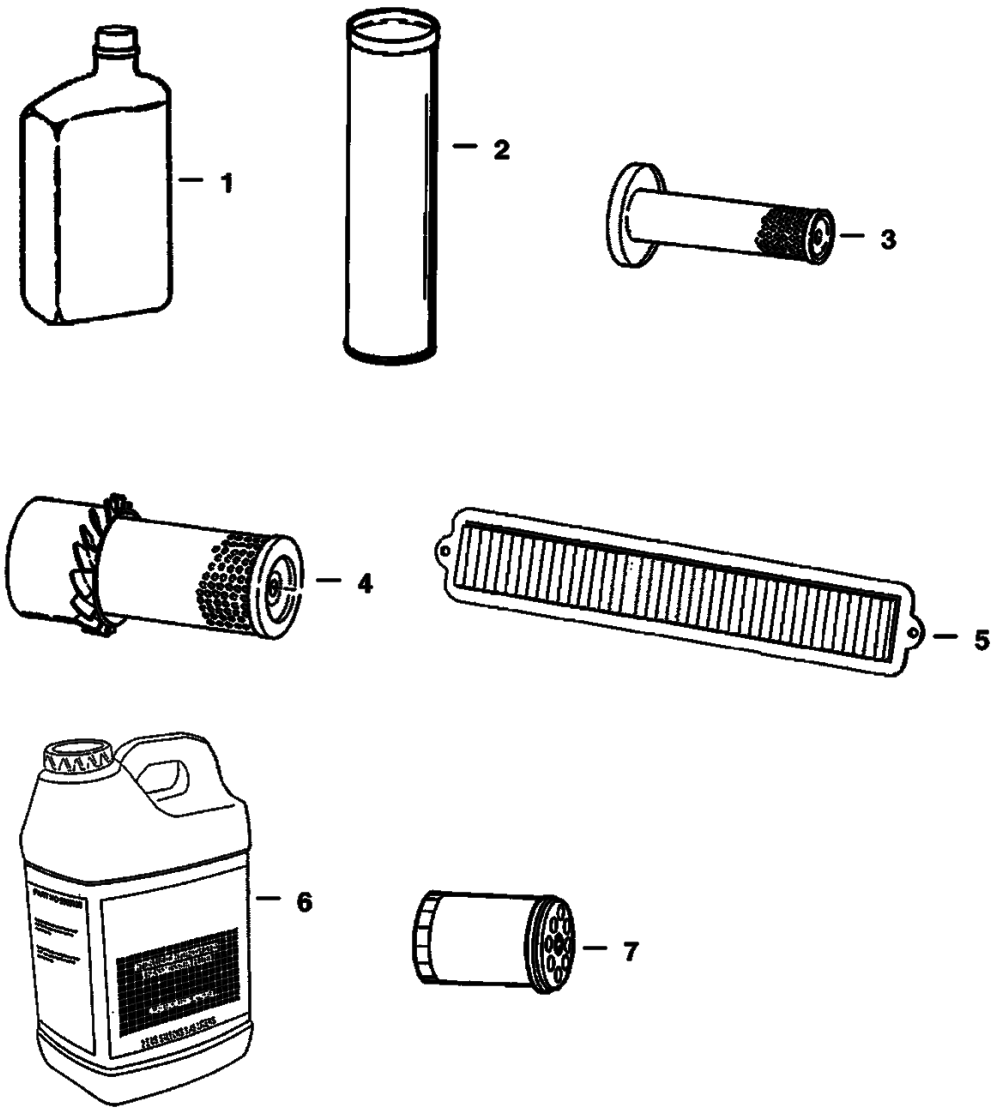

SCHEDULED MAINTENANCE ITEMS (Cont'd)
(50 Hour)

Ref No	Part Number	Description	Remarks	Serial Number	Qty
1	6903107	OIL 10W30 QT. 12			x
1	6903105	OIL 15W40 QT. 12			x
1	6903109	OIL 30W QT. 12	30W - 1 Qt.		x
1	6903106	OIL 15W40 GAL. 6			x
1	6903108	OIL 10W30 GAL. 6			x
1	6903110	OIL 30W GAL. 6			x
1	6903112	OIL 10W30 2.5 GAL 2			x
1	6903113	OIL 15W40 2.5 GAL. 2			x
1	6903111	OIL 30W 2.5 GAL 2			x
2	6903122	GREASE 10			x
3	6681475	CARTRIDGE	Inner Air Cleaner		x
4	6681474	CARTRIDGE	Outer Air Cleaner		x
5	6677983	FILTER	HVAC		x
6	6903117	HYD FLUID 2.5 GAL. 2			x
6	6903118	HYD. FLUID 5GAL			x
6	6903119	HYD. FLUID 55GAL			x
7	6678233	OIL FILTER	Engine Oil (6 Pack)		x

SCHEDULED MAINTENANCE ITEMS
(250 Hour)

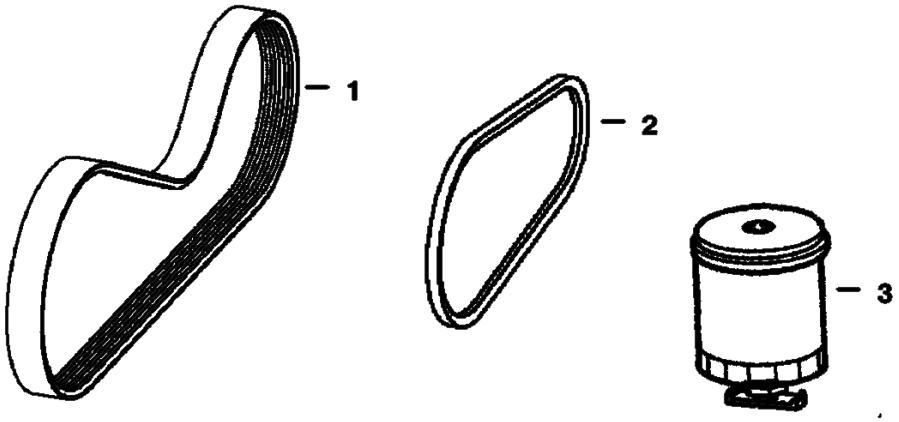

B–25008

SCHEDULED MAINTENANCE ITEMS (Cont'd)
(250 Hour)

Ref No	Part Number	Description	Remarks	Serial Number	Qty
1	6662855	BELT	drive		x
2	6730819	BELT	air conditioner		x
3	6667352	FILTER FUEL			x



B–22776

SCHEDULED MAINTENANCE ITEMS (Cont'd)
(500 HOUR)

Ref No	Part Number	Description	Remarks	Serial Number	Qty
1	6727475	CAP	HYD. RESERVOIR BREATHER		x
2	6661248	ELEMENT	HYD./HYDRO.		x

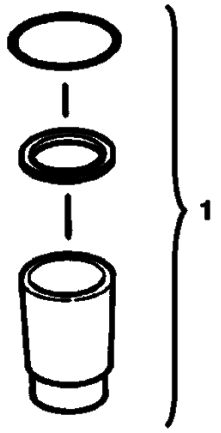

B–25009

SCHEDULED MAINTENANCE ITEMS (Cont'd)
(1000 Hour)

Ref No	Part Number	Description	Remarks	Serial Number	Qty
1	6661807	KIT	in-line filter		x

MAIN FRAME

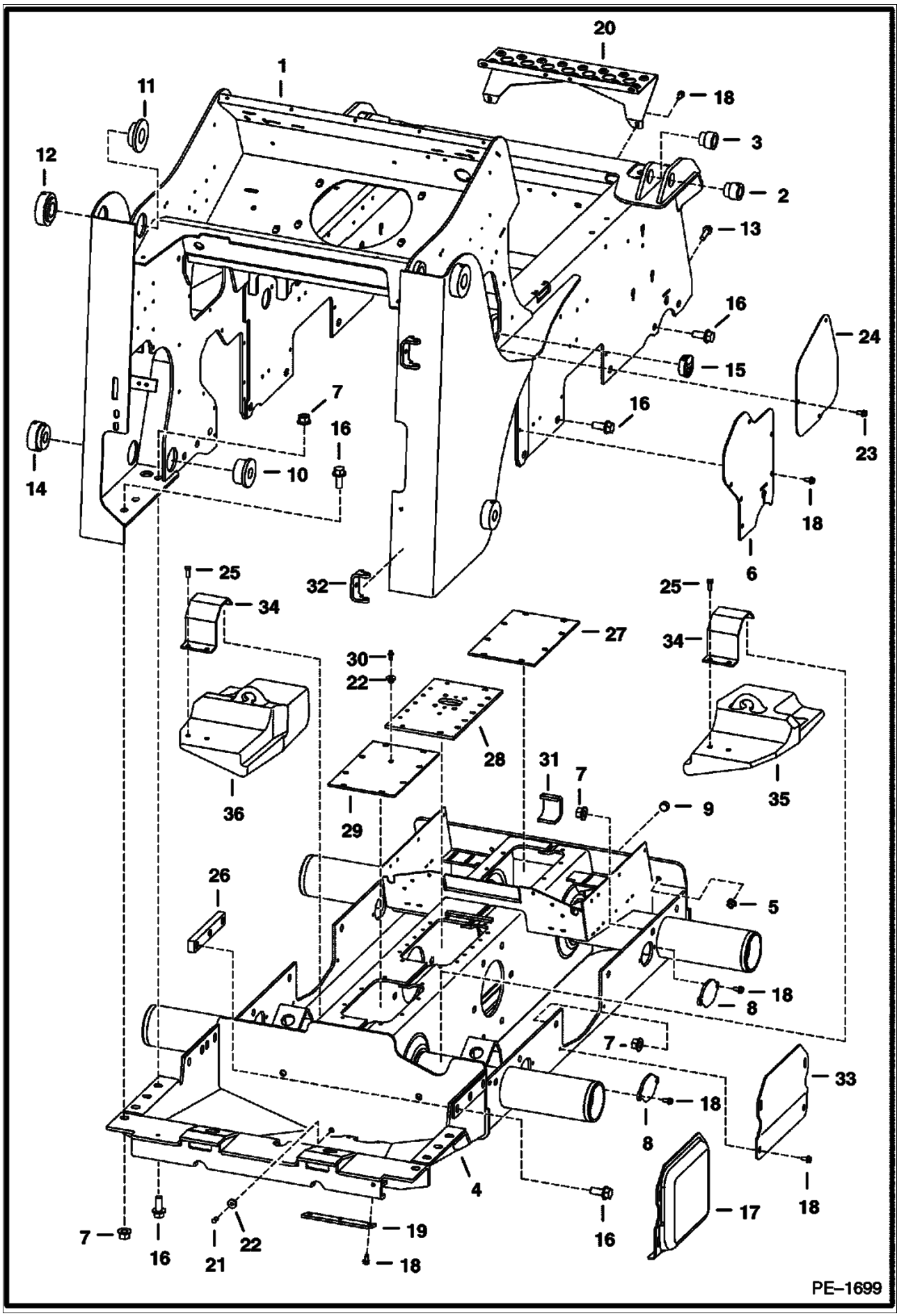
20
1
11
18
12
3
2
13
16
24
15
7
16
16
23
14
10
18
6
25
32
25
34
27
34
30
22
28
31
7
9
36
29
35
26
5
18
8
7
33
18
8
4
16
17
18
7
16
21
22
19
18
16
PE–1699

MAIN FRAME (Cont'd)

Ref No	Part Number	Description	Remarks	Serial Number	Qty
1	7101453	MAIN FRAME			1
2	6717277	BUSHING	weld-on		2
3	6717278	BUSHING	weld-on		2
4		CHAINCASE	See Illustration DRIVE TRAIN/ PE1537 FRAME ONLY		1
5	83D000008B	NUT			4
6	6736768	COVER			2
7	53D000012B	NUT			19
8	6730078	COVER			4
9	6731121	PLUG	chaincase fill		1
10	6730785	BUSHING	inside upright weld-on		2
11	6729401	BUSHING	inside upright weld-on		2
12	6729402	BUSHING	outside upright weld-on		2
13	31C000824B	BOLT			4
14	6730784	BUSHING	outside upright weld-on		2
15	6718796	PLUG	Bobcat head		1
16	31C001228B	BOLT			22
17	6719168	COVER	2-speed		2
18	84G003712B	BOLT			8
19	6700182	COVER	drain		1
20	6732577	STEP			1
21	6599645	PLUG	chaincase drain		1
22	6553411	BUSHING			2
23	84G003708B	BOLT			4
24	6730783	COVER			2
25					x
26	6706857	BLOCK	threaded		2
27		COVER	See Illustration DISC BRAKE/ PE1542		2
28		COVER	See Illustration DISC BRAKE/ PE1542		1
29					x
30		BREATHER	See Illustration DISC BRAKE/ PE1542		1
31	6706485	HOOK	tie down - weld-on		2
32	6708987	HINGE	weld-on		2
33	6719201	COVER	single speed		2

OPERATOR CAB

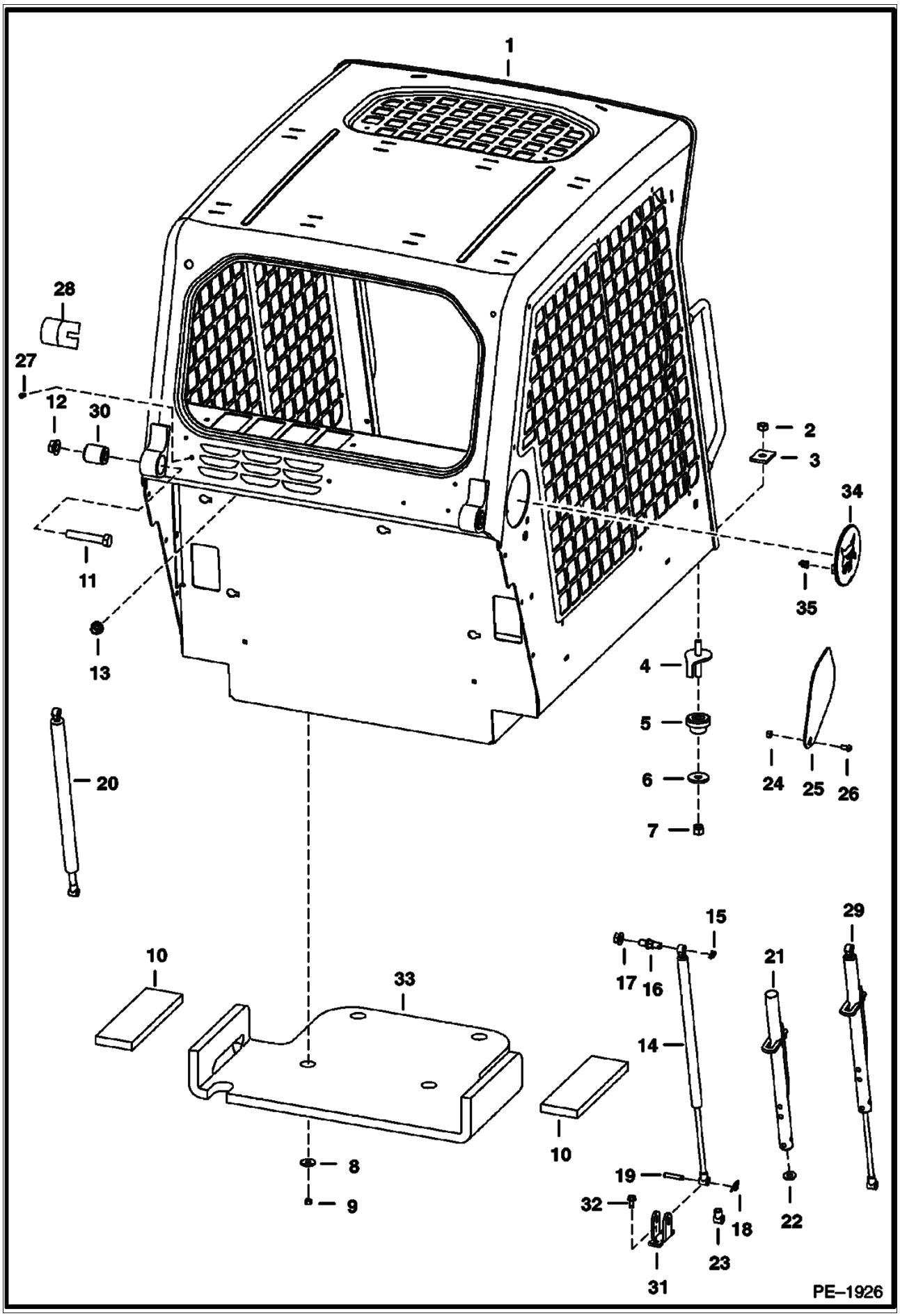

Ref No	Part Number	Description	Remarks	Serial Number	Qty
1	6719672	OPERATOR CAB	Does not include cab decals		1
2	59D000008B	NUT			2
3	6553709	WASHER	rectangular		2
4	6702971	BOLT			2
5	6560633	DAMPENER			2
6	6515817	WASHER			2
7	85D000008B	NUT			2
8	619021B	WASHER			4
9	59D000005B	NUT			4
10	6729012	INSULATION	seat pan		2
11	17C001056B	BOLT			2
12	53D000010B	NUT			2
13	53D000006B	NUT			4
14	6675135	GAS SPRING	R.H.		1
15	6675140	SNAP RING			2
16	6719064	MOUNT			2
17	97D000008B	NUT			2
18	6631418	PIN	ring		2
19	6567743	PIN			2
20	6675137	GAS SPRING	L.H.		1
20	6675139	GAS SPRING	L.H. - for cab W/ enclosure		1
21	6708189	TUBE	stop - R.H.		1
22	6701174	WASHER			1
23	6675258	CLEVIS			1
24					x
25					x
26					x
27	6675033	INSERT			x
28	6579613	STOP			2
29		GAS SPRING	NAP - R.H. - W/ latch - ORDER REF. 14 & 21-23		1
30	6562602	BUSHING			2
31	6706349	MOUNT	gas spring		2
32	84G003112B	BOLT			4
33	6729013	INSULATION	seat pan		1
34	6733107	PLUG ASSY	W/ Bobcat head - W/Ref. 35		2
35	6679990	CLIP			2

OPERATOR CAB

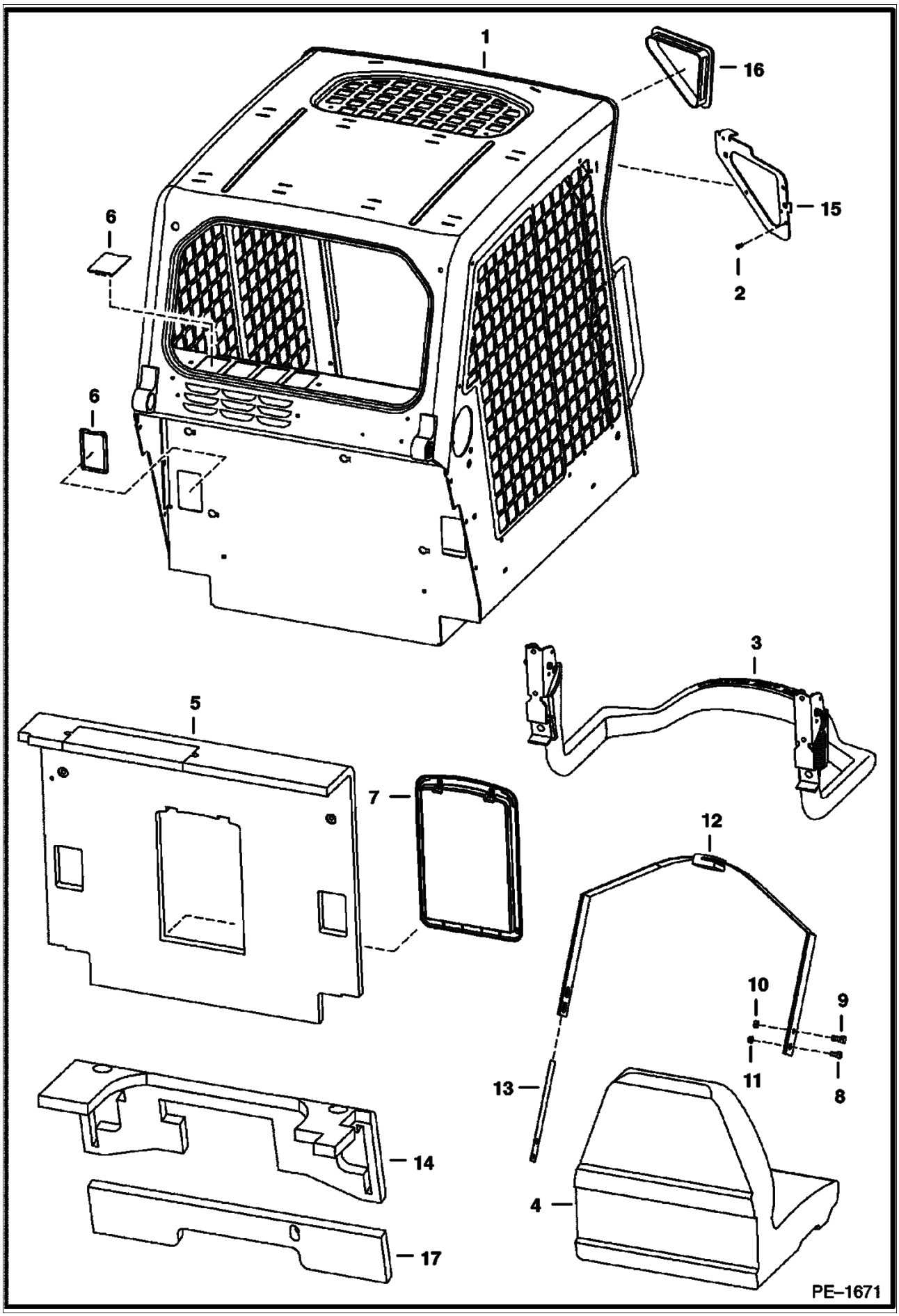

Ref No	Part Number	Description	Remarks	Serial Number	Qty
1	6719672	OPERATOR CAB	Does not include cab decals		1
2	6675033	INSERT			6
3		SEAT BAR	See Illustration SEAT & SEAT BAR/ PE1051		1
4		SEAT	See Illustration SEAT/ B14720 See Illustration SEAT/ B16411		1
5	6719504	INSULATION			1
6	6718101	COVER			6
7		CONTAINER	NAP - manuals		1
7	6675524	CLIP			2
7	6725301	COVER			1
7	6725303	FRAME			1
8	17C000716B	BOLT			4
9	85D000007B	NUT			4
10	6675074	SEAT BELT			1
11	6725373	SPRING PLATE			2
12	6716800	INSULATION			1
13		FRAME	NSS - L.H. - weld-on		1
13		FRAME	NSS - R.H. - weld-on		1
14	6674403	COVER	no lights		2
15	6701674	INSULATION			1

OPERATOR CAB
(Deluxe)

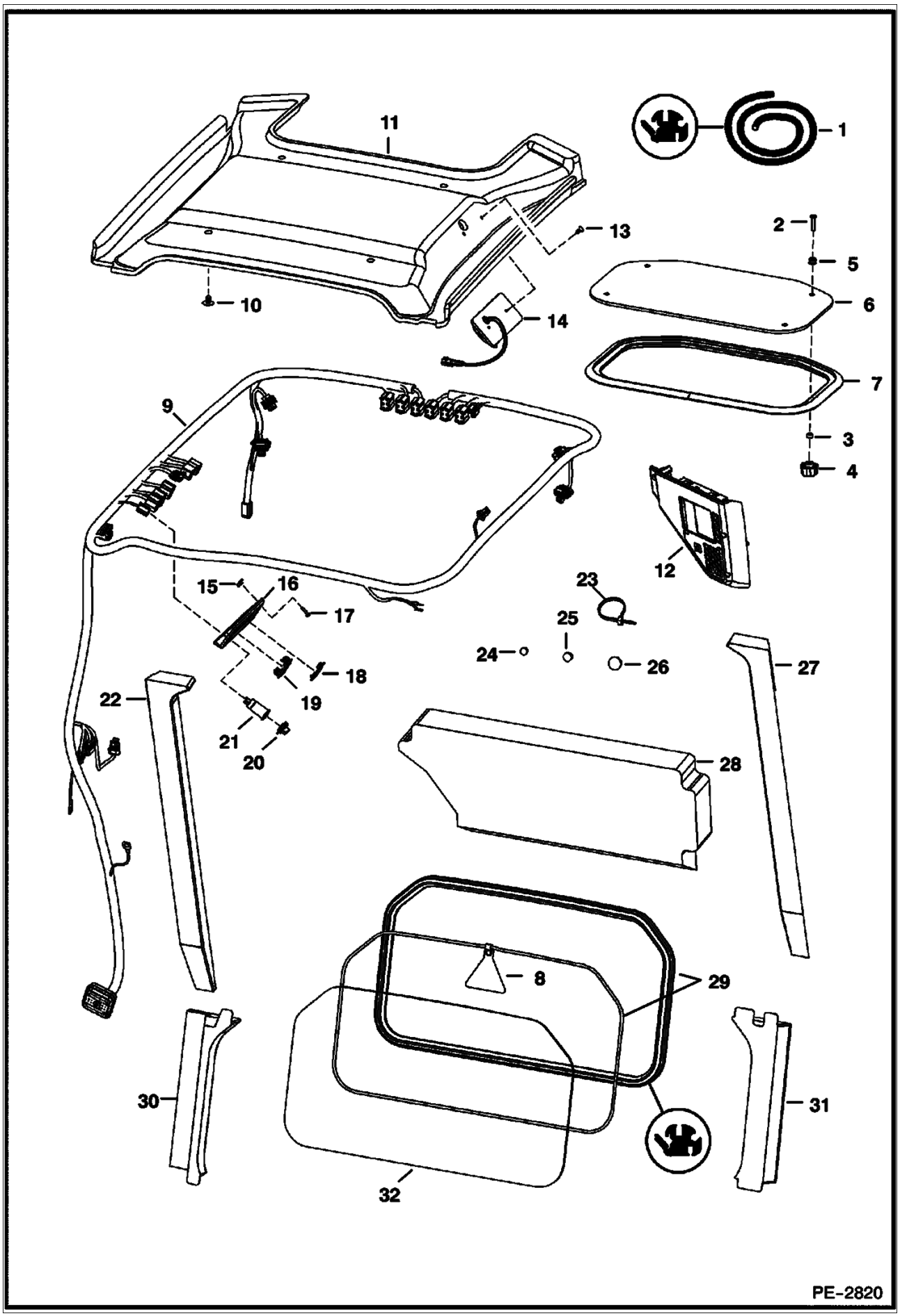

OPERATOR CAB (Cont'd)
(Deluxe)

Ref No	Part Number	Description	Remarks	Serial Number	Qty
1	6675387	EXTRUSION	bulk - Sold Per Foot		x
1	6554149	CORD	bulk - Sold Per Foot		x
2	91G000420B	BOLT			4
3	6664085	BUSHING	nylon		4
4	6681614	KNOB			4
5	6675545	GROMMET			4
6	7105035	WINDOW	assy. - W/ Ref. 2, 3, 5 & 7		1
7		SEAL	NAP - Order Ref. 6		1
8	6731478	EXIT TAG			1
9	7116260	HARNESS	deluxe - required to operate beacon, 4-way flashers, power bob-tach & strobe lights		1
9	7116261	HARNESS	standard		1
10	6674895	RETAINER	snap in		4
11	6737704	INSULATION	headliner		1
12	6688403	PANEL	R.H. - deluxe - keyless - export		1
13	6664221	RETAINER	snap in		2
14	6680326	LIGHT	dome		1
14	6665367	BULB			1
15	6669091	CLIP			4
16	6718580	PANEL			1
17	6669224	BOLT			4
18	6665314	PLUG	switch		5
19	6668742	SWITCH	travel control - export		1
20	6664224	CAP			1
21	6664223	OUTLET			1
22	6717519	INSULATION			1
23	6610510	TIE			6
24	5289686B	PLUG	black - .375" hole		1
25	6649949	PLUG	.5" hole		2
26	6657719	PLUG	.75" hole		1
27	6717520	INSULATION			1
28	6727299	INSULATION	cab back		1
29		EXTRUSION	NAP - 75.75" (1924mm) long - Order Ref. 1		x
29		CORD	NAP - 75.75" (1924mm) long - Order Ref. 1		x
30	6717517	INSULATION			1
31	6717518	INSULATION			1
32	6717874	WINDOW	rear		1

SEAT & SEAT BAR

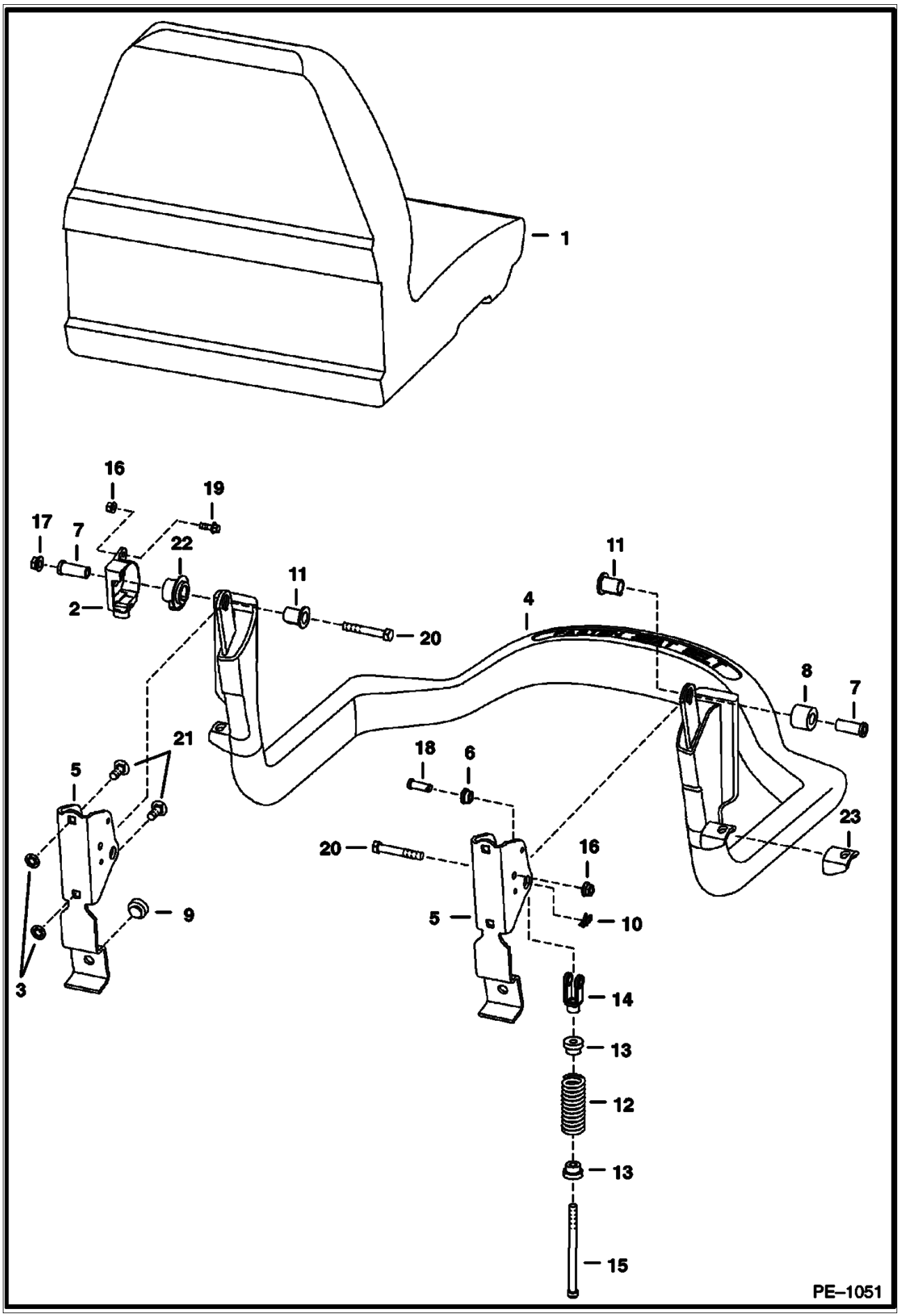

Ref No	Part Number	Description	Remarks	Serial Number	Qty
1		SEAT	See Illustration SEAT/ B14720 See Illustration SEAT/ B16411		1
2	6674406	SENSOR			1
3	6674894	NUT			4
4	6715860	SEAT BAR			1
5	6715863	BRACKET			1
6	6715864	BUSHING			2
7	6715865	BUSHING			2
8	6715866	BUSHING			1
9	6519178	BUMPER			2
10	6631418	PIN	ring		2
11	6680441	BUSHING	keyed		2
12	6701535	SPRING			2
13	6710659	BUSHING			2
14	6713589	CLEVIS			2
15	6713887	BOLT			2
16	83D000004B	NUT			1
17	53D000006B	NUT			2
18	4F006106B	PIN			2
19	35C000412B	BOLT			1
20	17C000640B	BOLT			2
21	10C000616B	BOLT			4
22	6674405	BUSHING			1
23		MOUNT	NAP - ORDER REF. 4		2

SEAT
(Michigan)

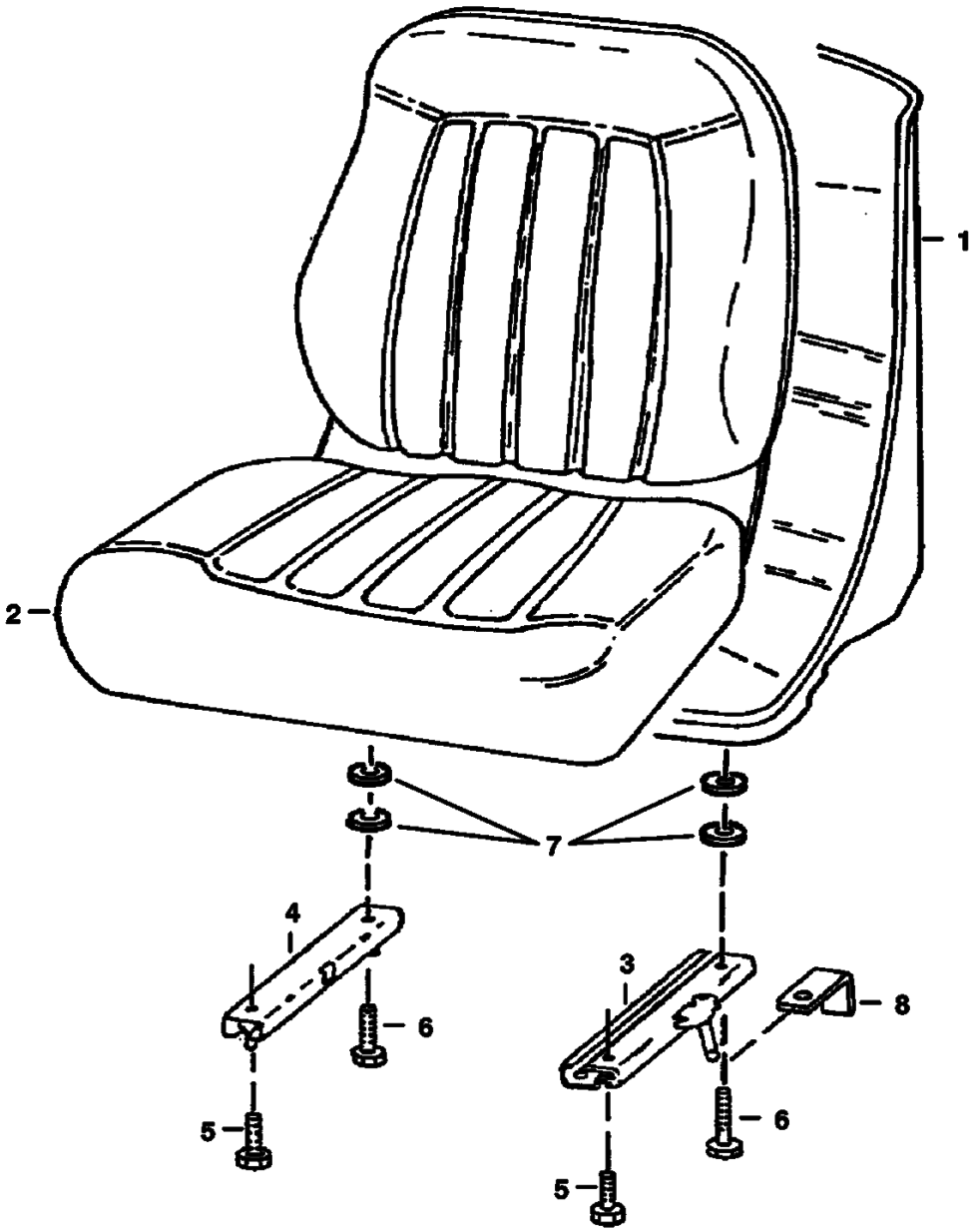

SEAT (Cont'd)
(Michigan)

Ref No	Part Number	Description	Remarks	Serial Number	Qty
1	6669135	SEAT	W/Ref. 2-7		1
2	6670160	CUSHION	W/ edging, clip & (2) grommets		1
2		EDGING	NSS		1
2		CLIP	NSS		1
3	6674013	TRACK	L.H. - W/ 8" (203mm) latch		1
4	6669089	TRACK	R.H. - W/O latch		1
5	25G000512B	BOLT			4
6	25G000520B	BOLT			2
7	6672715	SPACER			4

REAR DOOR

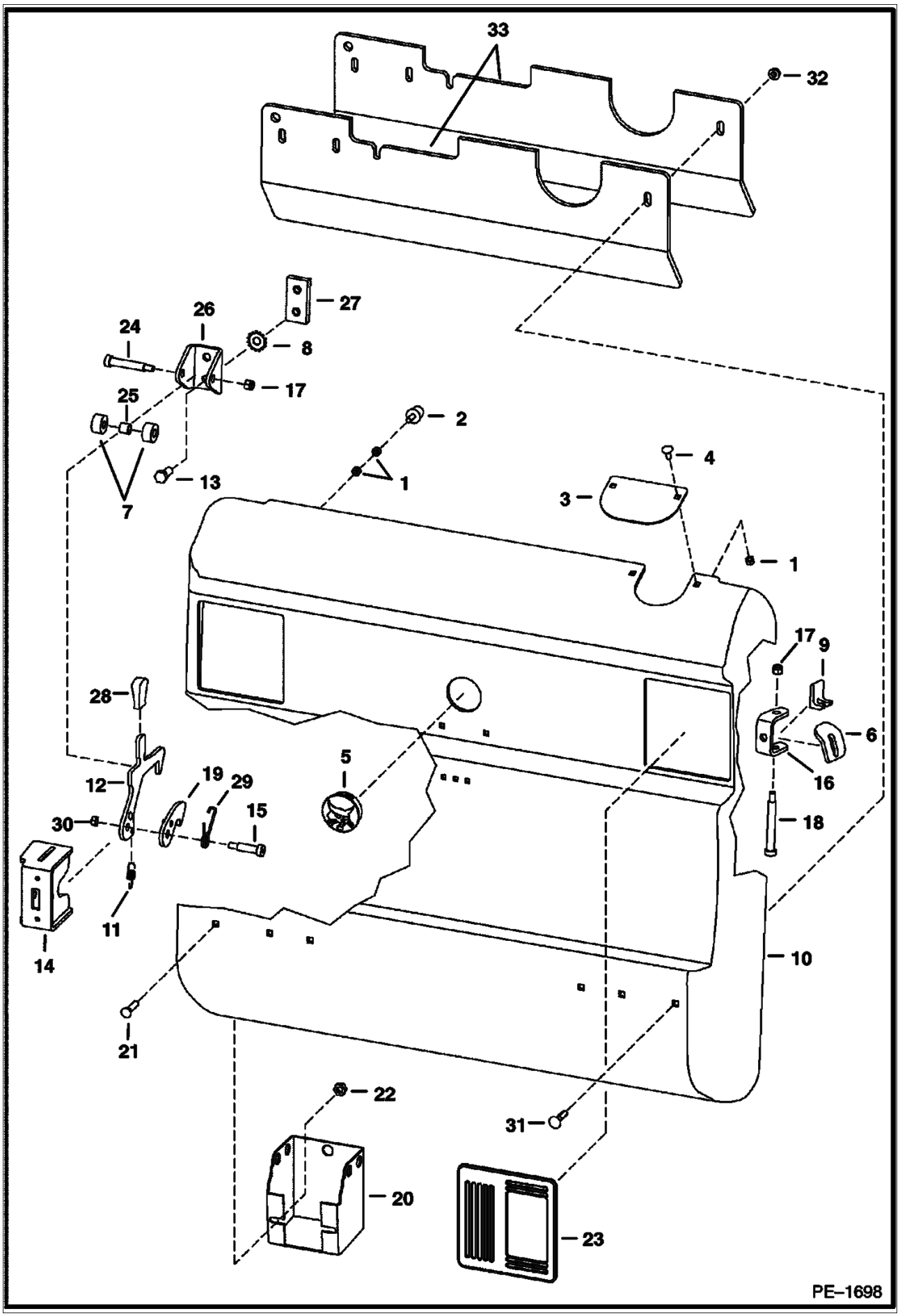
33
32
27
26
24
8
17
25
2
1
13
7
4
3
1
17
9
28
6
5
19
29
12
16
15
30
18
11
14
10
21
22
31
20
23
PE–1698

Ref No	Part Number	Description	Remarks	Serial Number	Qty
1	61D000005B	NUT			4
2	6655399	BUMPER			2
3	6714509	COVER	exhaust		1
4	37C000512B	BOLT			2
5	6718796	PLUG	back-up alarm		1
6	6714126	DOOR STOP			1
7	6809726	ROLLER			2
8	6675273	WASHER	lock		2
9	6719766	STOP			1
10	6729991	REAR DOOR			1
11	6810141	SPRING			1
12	6732715	LATCH			1
13	17C000820B	BOLT			2
14	6729939	LATCH PLATE	weld-on		1
15	38C000824B	BOLT			1
16	6711526	HINGE	weld-on		2
17	59D000006B	NUT			3
18	6809845	BOLT			2
19	6811910	LATCH			1
20	6715318	TOOL HOLDER	Europe		1
21	37C000612B	BOLT			2
22	55D000006B	NUT			2
23	6670287	COVER			2
24	38C000840B	BOLT	carriage		1
25	6809734	BUSHING	striker		1
26	6809727	CHANNEL			1
27	6719525	BAR	threaded striker		1
28	6564452	GRIP			1
29	6810132	SPRING			1
30	85D000006B	NUT			1
31	37C000628B	BOLT			2
32	57D000006B	NUT			2
33	6725256	COUNTERWEIGHT			2

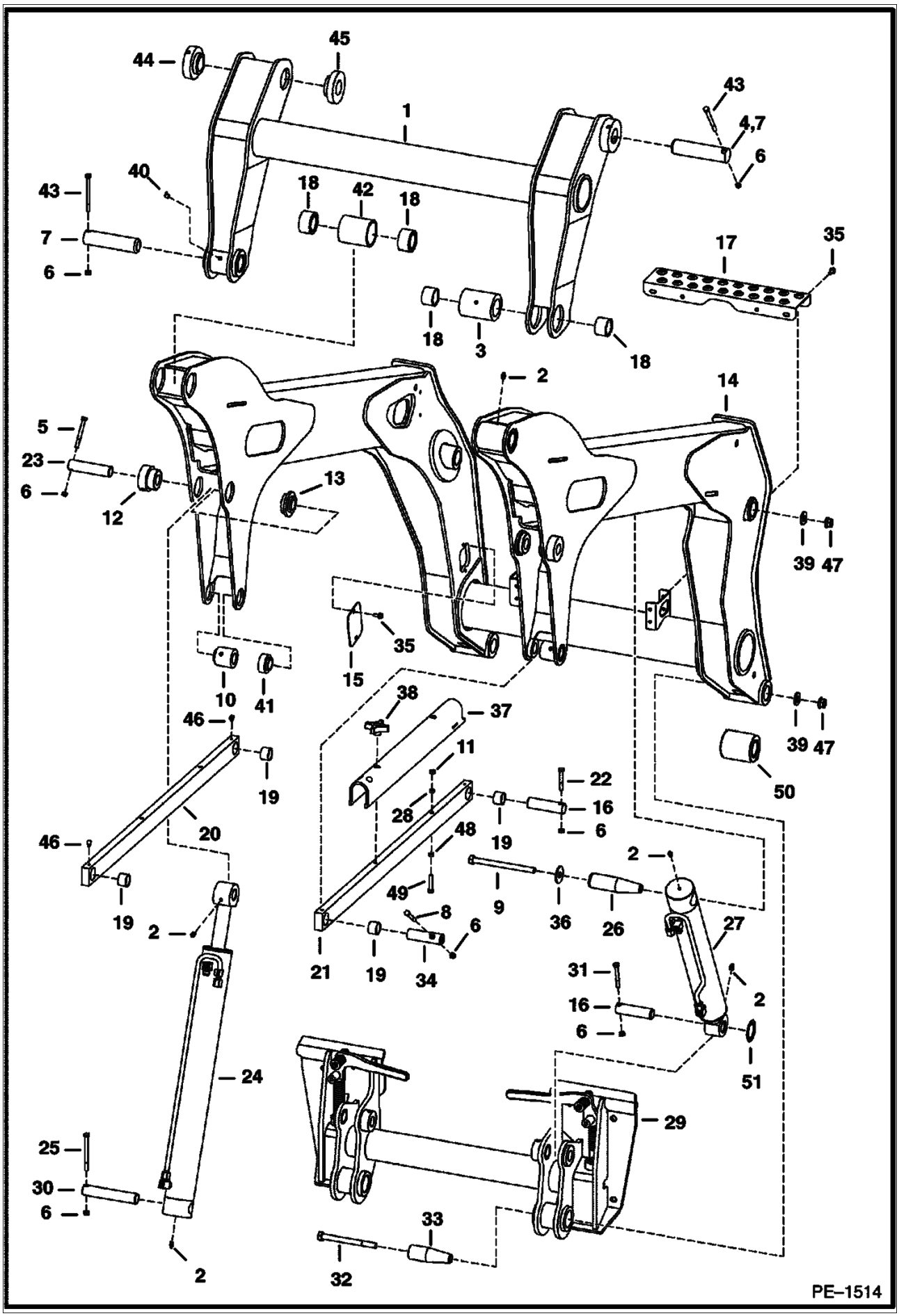
PE–1514

Ref No	Part Number	Description	Remarks	Serial Number	Qty
1	6726966	FRAME LINK	H-Frame		1
2	10H000025B	GREASE ZERK			8
2	15H000015B	GREASE ZERK	60 degree		2
3	6728800	BUSHING			4
4	6728820	PIN	7.118" long		2
5	17C000656B	BOLT			4
6	85D000006B	NUT			16
7	6728819	PIN	6.9" long		2
8	17C000644B	BOLT			2
9	17C010136B	BOLT			2
10	6729423	BUSHING	weld-on		4
11	6718942	NUT			2
12	6729005	BUSHING	weld-on		2
13	6729006	BUSHING	weld-on		2
14	6726965	LIFT ARM			1
15	6731179	COVER			1
16	6577954	PIN			2
17	6729888	STEP			1
18	6730995	BUSHING	wear		8
19	6731647	BUSHING	wear		x
20	6729468	LINK ASSY	L.H. - W/Ref. 19		1
21	6726969	LINK ASSY	R.H. - W/Ref. 19, 28, 48 & 49		1
22	17C000640B	BOLT			4
23	6729007	PIN			2
24		CYLINDER	See Illustration LIFT CYLINDER/ PE1519 LIFT		2
25	17C000664B	BOLT			2
26	6728971	PIN			2
27		CYLINDER	See Illustration TILT CYLINDER/ PE1520 TILT		1
28	6532347	SPACER			2
29		BOB-TACH	See Illustration BOB-TACH/ PE1513		1
30	6730887	PIN			2
31	17C000648B	BOLT			2
32	17C010112B	BOLT			2
33	6729358	PIN			2
34	6731139	PIN			2
35	84G003112B	BOLT			5
36	6731160	WASHER			2
37	6731569	STOP	lift arm		1
38	6684932	KNOB			2
39	27E000010B	WASHER			4
40	11H000015B	GREASE ZERK	45 degree		2
41	6731138	BUSHING			4
42	6728972	BUSHING	weld-on		2
43	17C000672B	BOLT			2
44	6727525	BUSHING	weld-on		2
45	6727832	BUSHING	weld-on		2
46	12H000015B	GREASE ZERK	90 degree		4
47	57D000010B	NUT			4
48	25E000015B	WASHER			2
49	6731646	BOLT	stainless steel		2
50	6728999	BUSHING	weld-in		2
51	225855B	SEAL	grease		4

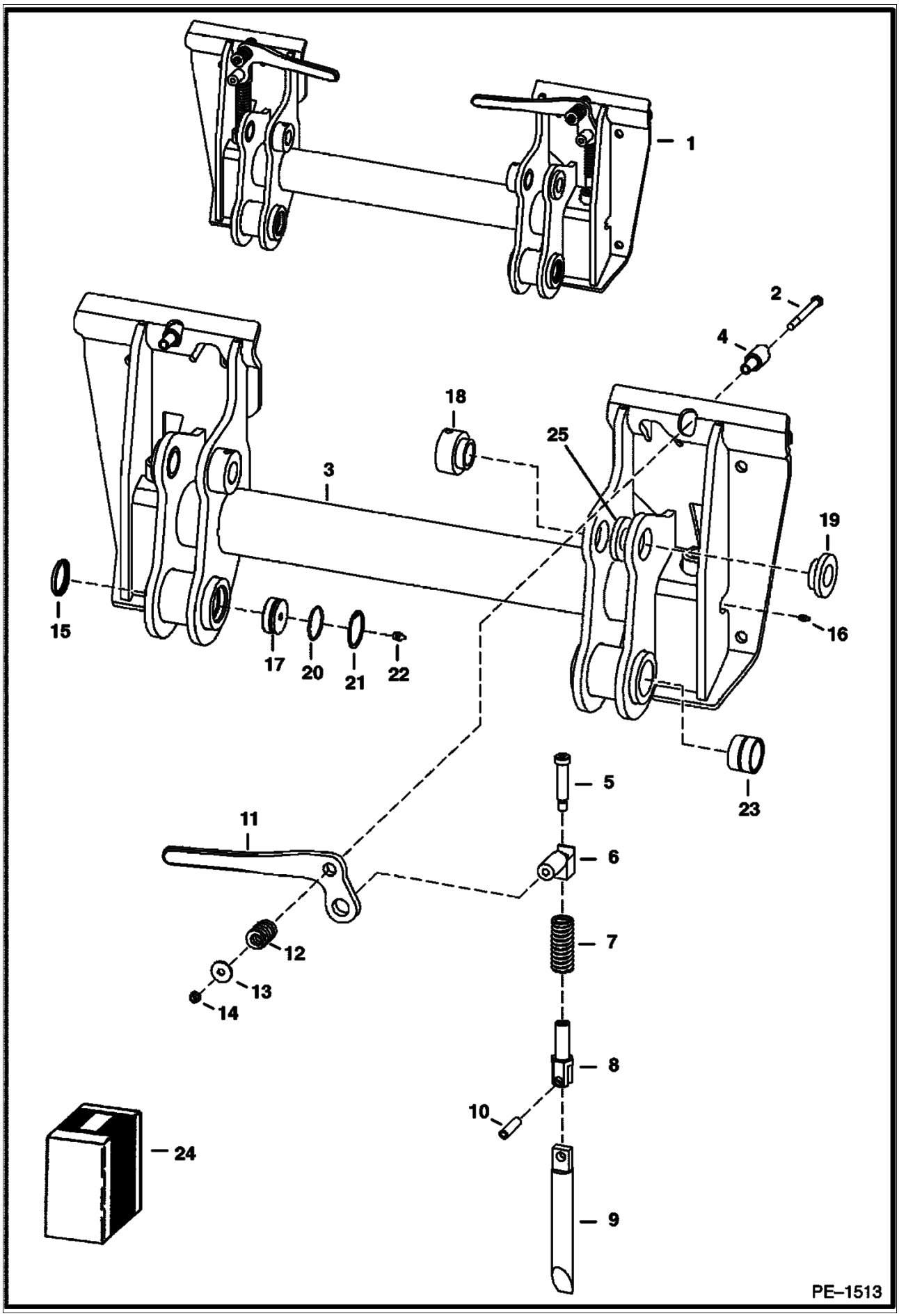
1
2
4
18
25
3
19
15
16
17
20
21
22
23
5
11
6
12
7
13
14
8
10
24
9
PE–1513

Ref No	Part Number	Description	Remarks	Serial Number	Qty
1	6729029	BOB-TACH	See Illustration DECALS/ B26132 REF. 2-22 - ALSO ORDER 6561383 DECAL		1
2	17C000660B	BOLT			2
3		FRAME	NAP		1
4	6702958	BUSHING	weld-on		2
5	6728473	BOLT	shoulder		2
6	6731119	PIVOT ASSY			2
7	6562018	SPRING			2
8	6704248	PIVOT	wedge		2
9	6737191	WEDGE			2
10	14J005032B	PIN			2
11	6702904	LEVER	R.H.		1
11	6702903	LEVER	L.H.		1
12	6713040	SPRING			2
13	619021B	WASHER			2
14	85D000006B	NUT			2
15	6678960	SEAL			2
16	10H000035B	GREASE ZERK			2
17	6729491	PLUG			2
18	6717260	BUSHING	weld-on		2
19	6717259	BUSHING	weld-on		2
20	25K030126B	O-RING			2
21	7105856	SNAP RING			2
22	10H000025B	GREASE ZERK			2
23	6718329	BUSHING	wear		2
24	6724775	LEVER KIT	R.H. Bob-tach - Ref. 2 & 5 - 14		1
24	6724776	LEVER KIT	L.H. Bob-tach - Ref. 2 & 5 - 14		1

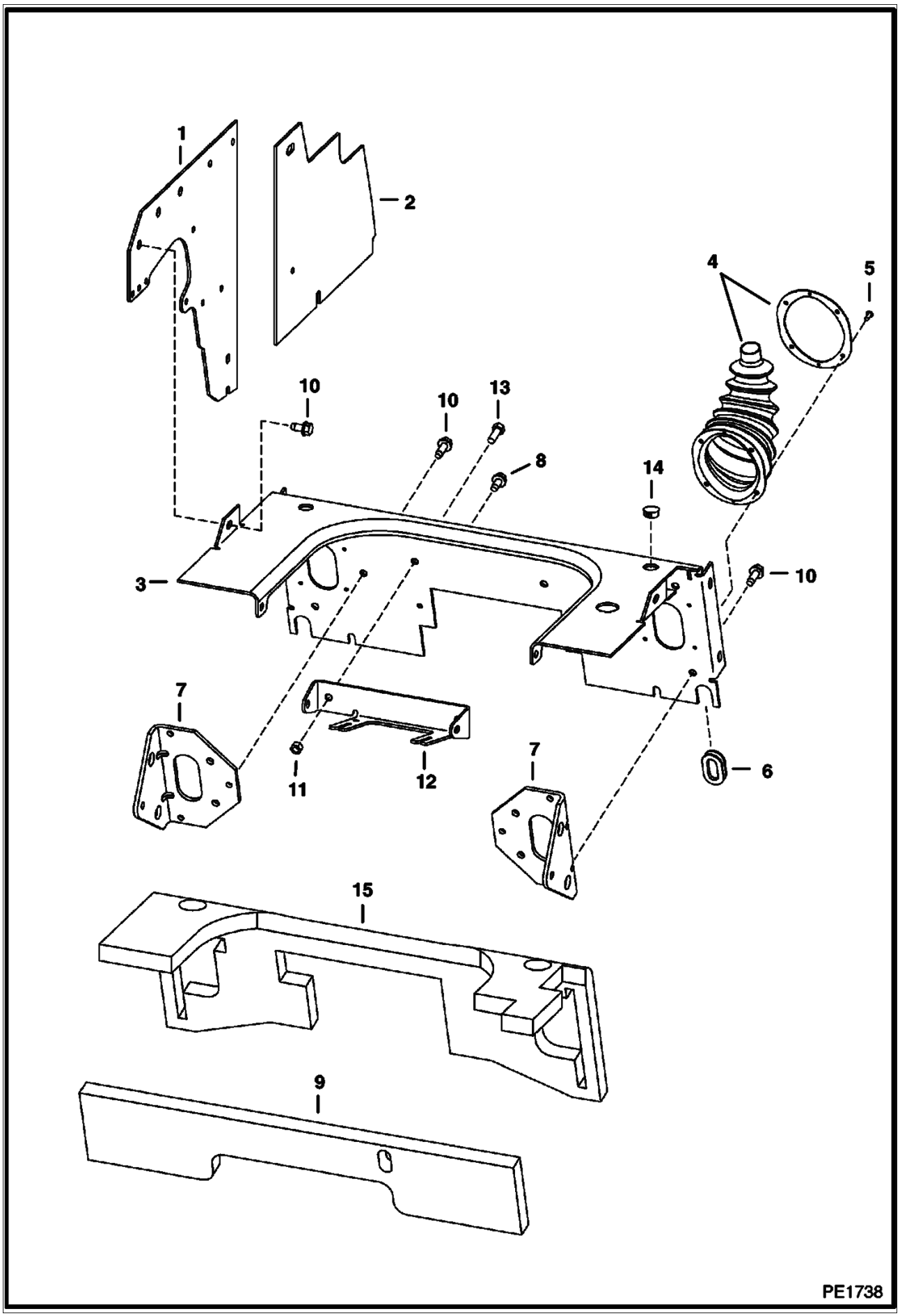
1
2
4
5
10
10
13
8
14
3
10
7
11
12
7
6
15
9
PE1738

Ref No	Part Number	Description	Remarks	Serial Number	Qty
1	6734521	PANEL	15.25" long x 16.33" tall		2
2	7117124	PANEL			2
3	7106707	SHIELD			1
4	6532127	BOOT	W/ mounting ring		2
4		RING	NSS - mounting ring		2
5	6630207	RIVET			8
6	6577961	GROMMET			2
7	6577230	BRACKET	steering		2
8	84G003716B	BOLT			2
9	6701674	INSULATION			1
10	84G003712B	BOLT			30
11	95D000006B	NUT			2
12	7100795	MOUNT	damper		1
13	17C000612B	BOLT			1
14	6648348	PLUG			2
15	6716800	INSULATION			1

PANELS
(W/ Selectable Joystick Control)

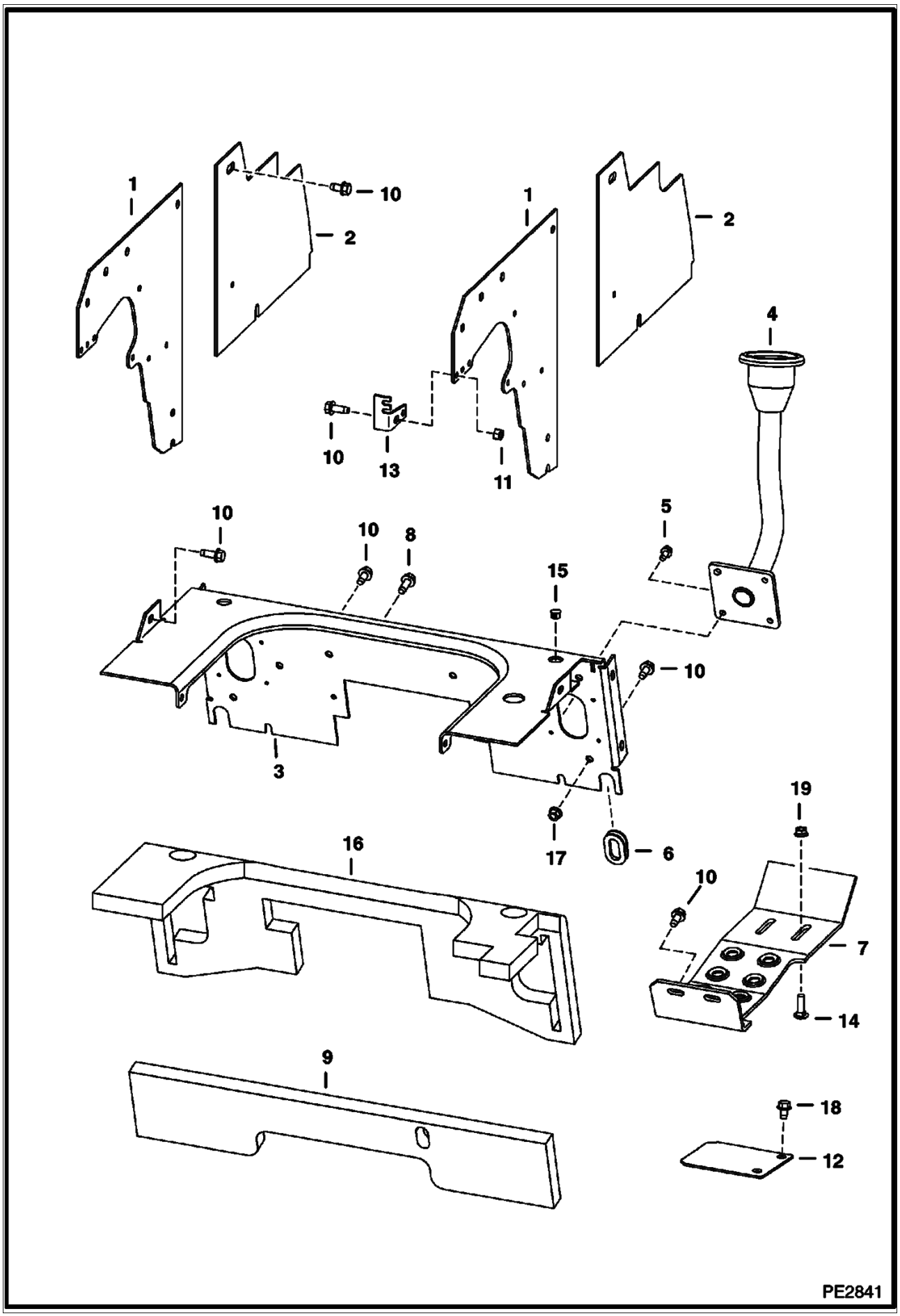

PANELS (Cont'd)
(W/ Selectable Joystick Control)

Ref No	Part Number	Description	Remarks	Serial Number	Qty
1	6734521	PANEL			2
2	7117124	PANEL			2
3	7106707	SHIELD			1
4		HANDLE	See Illustration CONTROLS ELECTRICAL/ PE2024 - NAP - joystick - R.H. - Order 7111992 joystick assembly - Was 6729791 [A]		1
4		HANDLE	See Illustration CONTROLS ELECTRICAL/ PE2024 - NAP - joystick - L.H. - Order 7111993 joystick assembly - Was 6729792 [A]		1
5	35C000512B	BOLT			4
6	6714726	GROMMET			1
7	6729237	STEP			2
8	84G003716B	BOLT			2
9	6701674	INSULATION			1
10	84G003712B	BOLT			28
11	95D000006B	NUT			2
12	6729774	COVER	cylinder access		2
13	6732450	BRACKET	cable		1
14	37C000620B	BOLT			4
15	6648348	PLUG			2
16	6716800	INSULATION			1
17	89D000005B	NUT			4
18	84G003710B	BOLT			4
19	57D000006B	NUT			4

DRAWING NOT AVAILABLE AT TIME OF PRINTING

PE-1701

Ref No	Part Number	Description	Remarks	Serial Number	Qty
1	6661114	CAP	green fuel fill		1
1	6661696	CAP	locking - W/REF. 2 - Code PK510		1
1	7113340	CAP	non-locking - European		1
1	7121223	CAP	locking - European		1
2	6587458	KEY	Code PK510		1
2		KEY	European		1
3	6706517	SCREW			3
4	6701449	FILLER TUBE			1
5	42HL00250B	CLAMP			1
6	7110942	HOSE			1
7	5HM00024B	CLAMP			6
8		HOSE	NAP - 32.4" (823mm) long - ORDER REF. 36		1
9	6578169	HOSE	Bulk - sold per foot		x
10		HOSE	NAP - 29.5" (749mm) long - ORDER REF. 38		1
11	6735696	BUSHING	.37" (9,4mm) ID - brown		2
12	6717402	BUSHING	.54" (13,7mm) ID		1
13	6729854	HOSE	12" (305mm) long		1
14	5HM00013B	CLAMP			3
15	6578278	PAD	self adhesive one side		2
16	6680438	SENSOR	fuel - W/REF. 17		1
17	6717579	GASKET			1
18	6569219	SCREEN			1
19	6735614	TANK			1
20	6717401	PLUG	.75" shoulder		1
21		HOSE	NAP - 50" (1270mm) long - ORDER REF. 9		1
22	6731152	MOUNT			1
23	43C000516B	BOLT			2
24	6715183	ELBOW	W/REF. 25 - check boss face to determine correct replacement o-ring		2
25	79K000005B	O-RING			x
26	53C000516B	BOLT			2
27	6667353	FILTER ASSY			1
27	6667352	FILTER FUEL			1
27	72F000001B	DRAIN COCK			1
28	6658180	BREATHER	plug		1
29		HOSE	NAP - 13" (330mm) long - ORDER REF. 37		1
30		HOSE	NAP - 9.25" (235mm) long - ORDER REF. 38		1
31		FUEL PUMP	See Illustration FUEL INJECTION PUMP/ B17614		1
32	6657734	PUMP	hand primer		1
33		HOSE	NAP - 16" (406 mm) long - Order Ref 37		1
34	7101291	ELBOW			2
35	6726218	GASKET			1
36	6578172	HOSE	bulk - Sold Per Foot		x
37	6577822	HOSE	.375 I.D. - bulk - Sold Per Foot		x
38	6577821	HOSE	.25'' I.D. - bulk - Sold Per Foot		x
39	84G003712B	BOLT			1
40	6610510	TIE			1
41	5HM00014B	CLAMP			5
42	5HM00058B	CLAMP			1
43	6730552	BRACKET			1
44	42HS00004B	CLAMP			2
45		HOSE	NAP - 2" (51mm) long - ORDER REF. 36		2
46	6684923	BREATHER	vent		1
47	7102705	TEE			1

NOTE: Because the drive chain is an endless chain, also order link if chain is cut for installation.

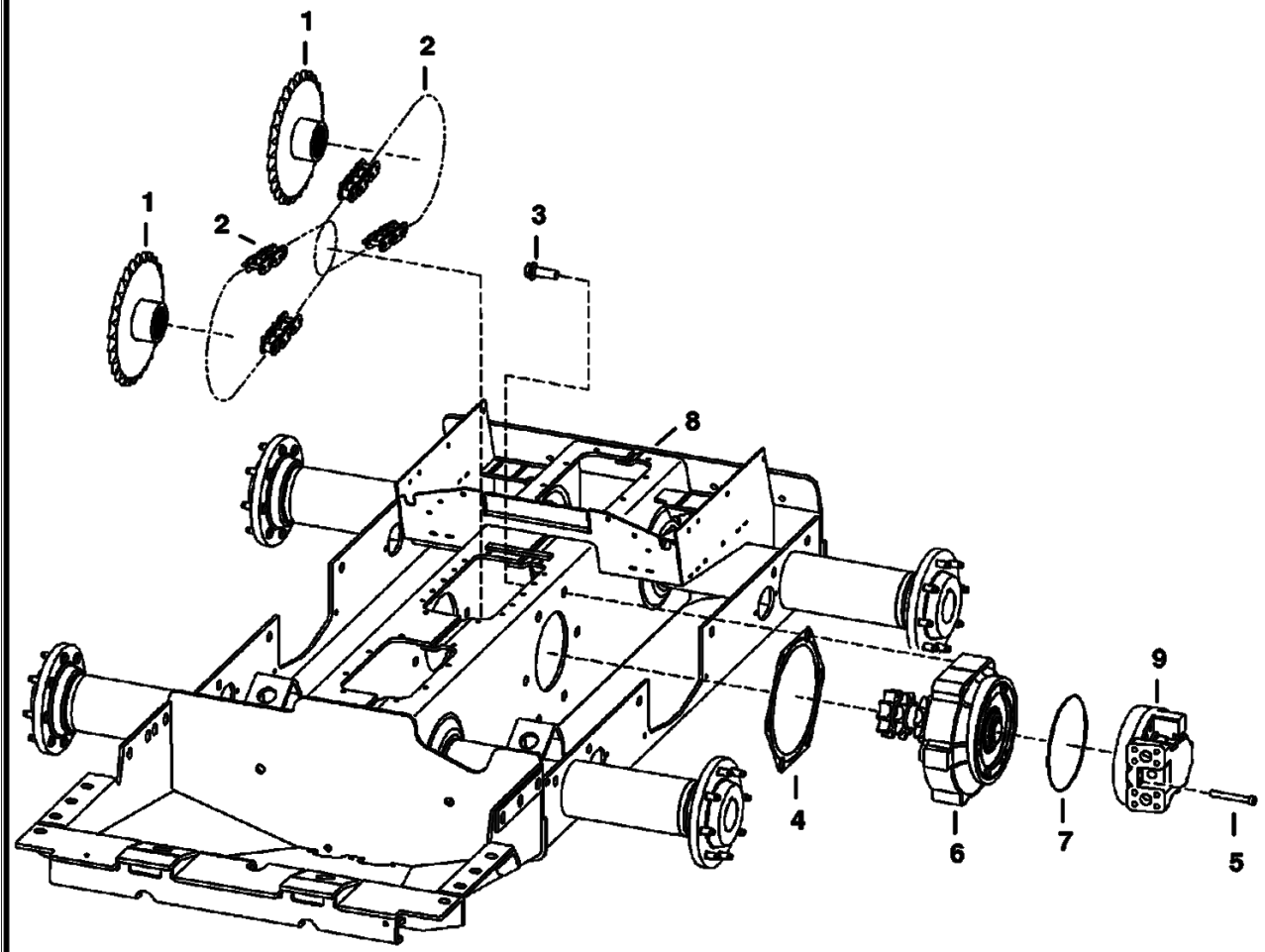

PE–1537

Ref No	Part Number	Description	Remarks	Serial Number	Qty
1	7106737	SPROCKET	See Illustration AXLE/ PE1544		4
2	7106862	CHAIN	endless - 48 pitches		4
3	6678971	BOLT			12
4	6704879	GASKET			2
5	6717806	BOLT			20
6		MOTOR CARRIER	See Illustration MOTOR CARRIER/ PE1543 See Illustration MOTOR CARRIER/ PE1395 DRIVE MOTOR		2
7	25K030812B	O-RING			2
8	7112333	CHAINCASE	frame only		1
9		MOTOR	See Illustration HYDROSTATIC MOTOR/ B17125 See Illustration HYDROSTATIC MOTOR & BRAKE/ B16392		2

MOTOR CARRIER
(Drive Motor Mount Assy) (Manual Controls)

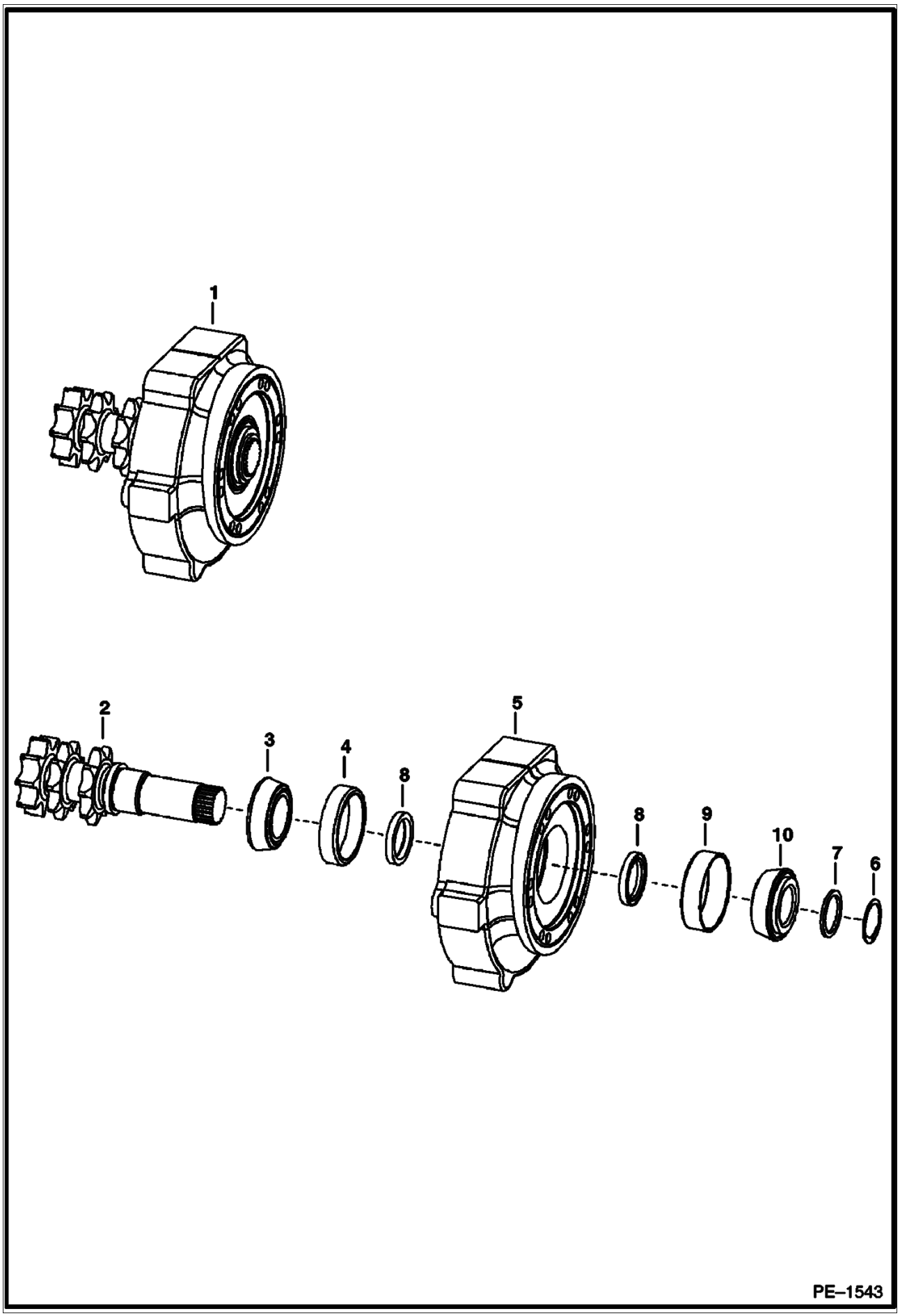

MOTOR CARRIER (Cont'd)
(Drive Motor Mount Assy) (Manual Controls)

Ref No	Part Number	Description	Remarks	Serial Number	Qty
1	7107272	MOTOR CARRIER	drive motor - Ref. 2-10		1
2	7106738	SHAFT	W/snap ring groove		1
3	6664845	BEARING			2
4	6650120	RACE			2
5	6717242	HOUSING			1
6	6664848	SNAP RING	.118" (3,0mm) thickness		1
7	6706817	SPACER	.152" (3,86mm) thickness		1
8	6665755	SEAL			2
9	7100240	RACE			1
10	7100239	BEARING			1

MOTOR CARRIER
(Drive Motor Mount Assy.) (Selectable Joystick Controls)

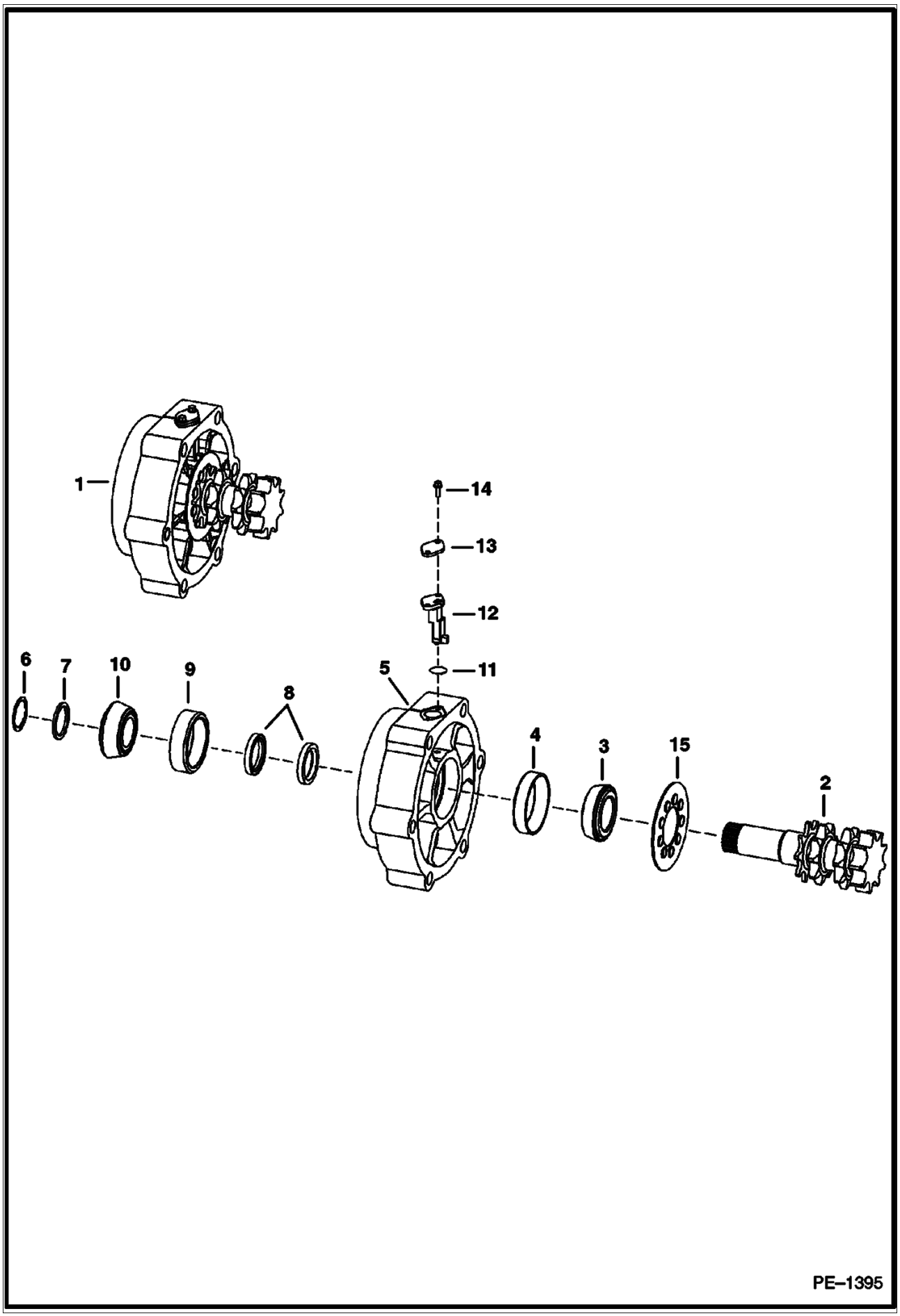

MOTOR CARRIER (Cont'd)
(Drive Motor Mount Assy.) (Selectable Joystick Controls)

Ref No	Part Number	Description	Remarks	Serial Number	Qty
1	7107274	MOTOR CARRIER	drive motor - Ref. 2-15		1
2	7106739	SHAFT	W/ snap ring groove		1
3	6664845	BEARING			2
4	6650120	RACE			1
5	6729663	HOUSING			1
6	6664848	SNAP RING	.118" (3,0 mm) thick		1
7	6706817	SPACER	.152" (3,86 mm) thick		1
8	6665755	SEAL			2
9	7100240	RACE			1
10	7100239	BEARING			1
11	25K020100B	O-RING			1
12	6677181	SENSOR	wheel speed		1
13	6730013	COVER			1
14	35C000412B	BOLT			2
15	6688924	MAGNET	speed sensor		1

DISC BRAKE

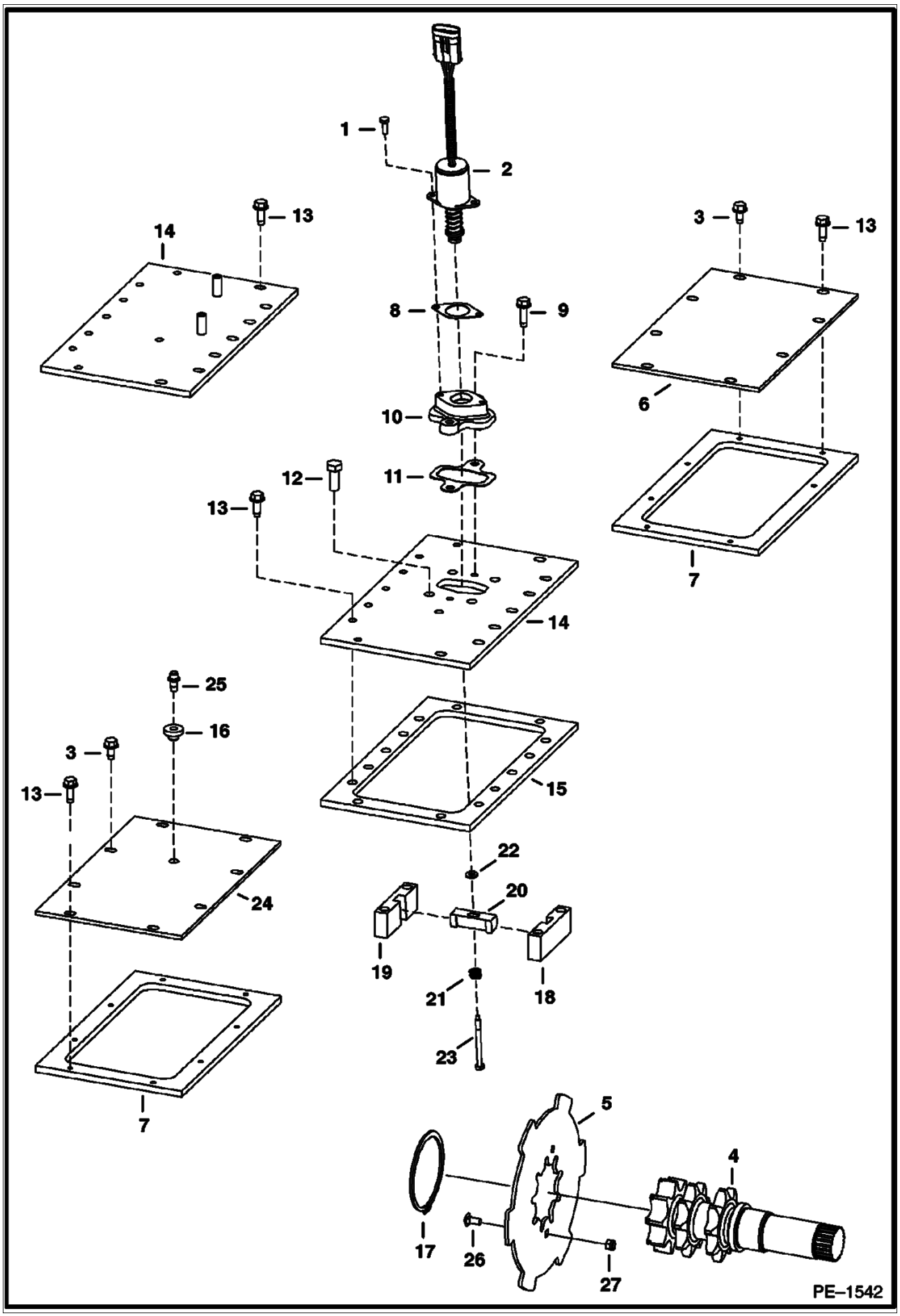
1
2
13
14
8
9
10
12
11
13
14
3
13
6
7
25
16
3
13
24
7
15
22
20
19
21
18
23
5
4
17
26
27
PE–1542

Ref No	Part Number	Description	Remarks	Serial Number	Qty
1	17C000412B	BOLT			2
2	6681512	SOLENOID			1
3					12
4	6706805	SHAFT	See Illustration MOTOR CARRIER/ PE1543 MANUAL CONTROLS		2
4	6729662	SHAFT	See Illustration MOTOR CARRIER/ PE1395 JOYSTICK CONTROLS		2
5	6715630	BRAKE	disc		2
6	6729173	COVER			1
7					2
8	6706737	GASKET			1
9	84G003720B	BOLT			2
10	6706718	MOUNT			1
11	6708016	GASKET			1
12	47C000820B	BOLT			4
13	84G003716B	BOLT			36
14	6706683	COVER			1
14	6725496	COVER	2-speed		1
15					1
16	6553411	BUSHING			1
17	6662298	SNAP RING			2
18	6719057	BLOCK	guide - R.H.		1
19	6719056	BLOCK	guide - L.H.		1
20	6714278	GUIDE	for brake disc		1
21	6708018	SPRING			1
22	25E000013B	WASHER			2
23	6708267	BOLT			2
24					1
25	6680970	BREATHER			1
26	37C000512B	BOLT	carriage		4
27	59D000005B	NUT			4
28	6685372	SEAL	liquid gasket - 20 oz.		x

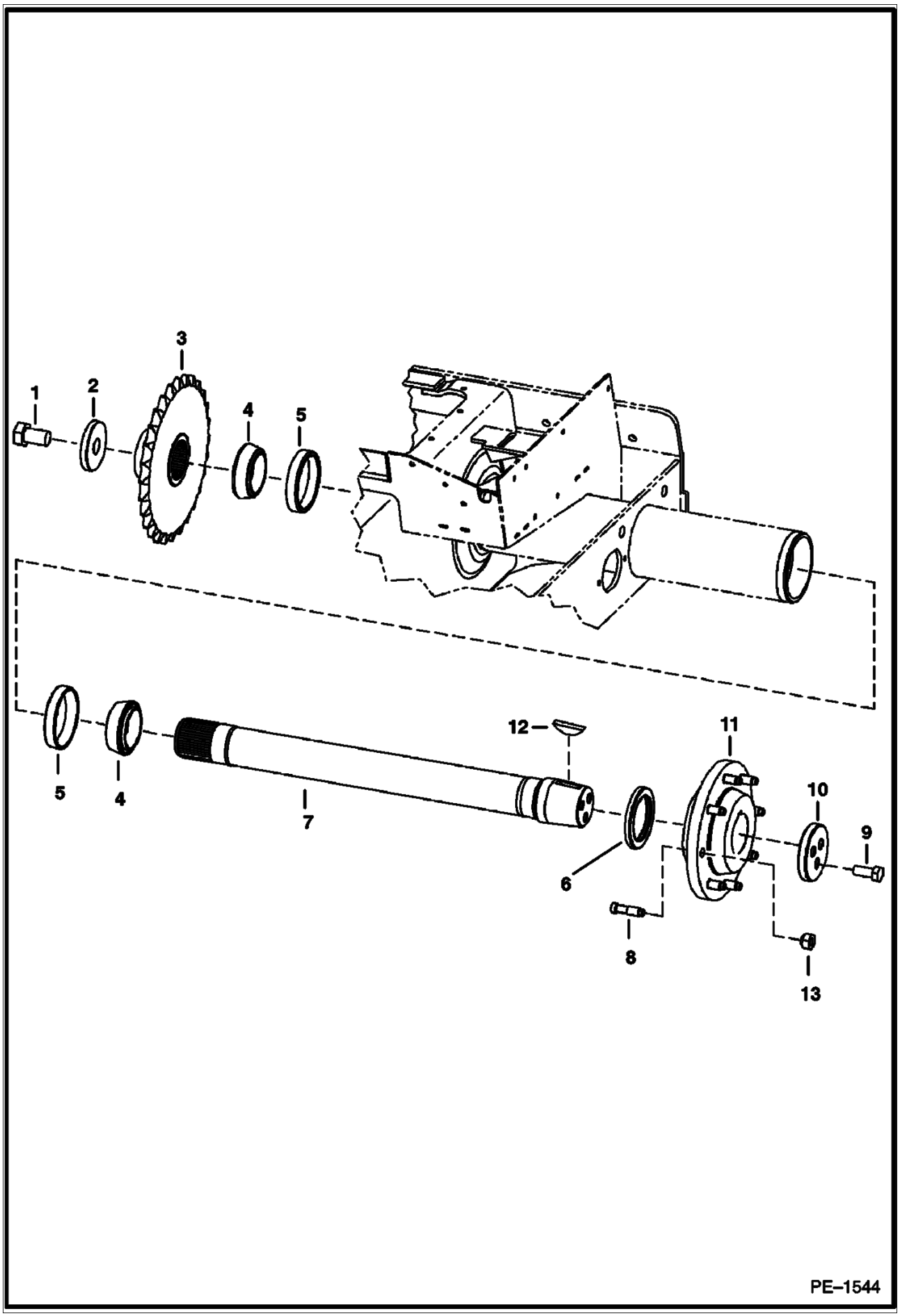
1
2
3
4
5
5
4
7
12
11
10
9
6
8
13
PE–1544

Ref No	Part Number	Description	Remarks	Serial Number	Qty
1	2C001626B	BOLT			1
2	7107271	WASHER			1
3	7106737	SPROCKET			1
4	1321608B	BEARING			2
5	1321607B	RACE			2
6	6671138	SEAL			1
7	6709757	AXLE	W/O wear ring		1
8	6709170	STUD	wheel		8
9	17C001024B	BOLT			3
10	6565947	WASHER	recessed		1
11	6578857	HUB	W/Ref. 8		1
12	6J001664B	WOODRUFF KEY			1
13	6564669	NUT	wheel		8

HYDRAULIC CIRCUITRY
(W/O Bucket Positioning Valve)

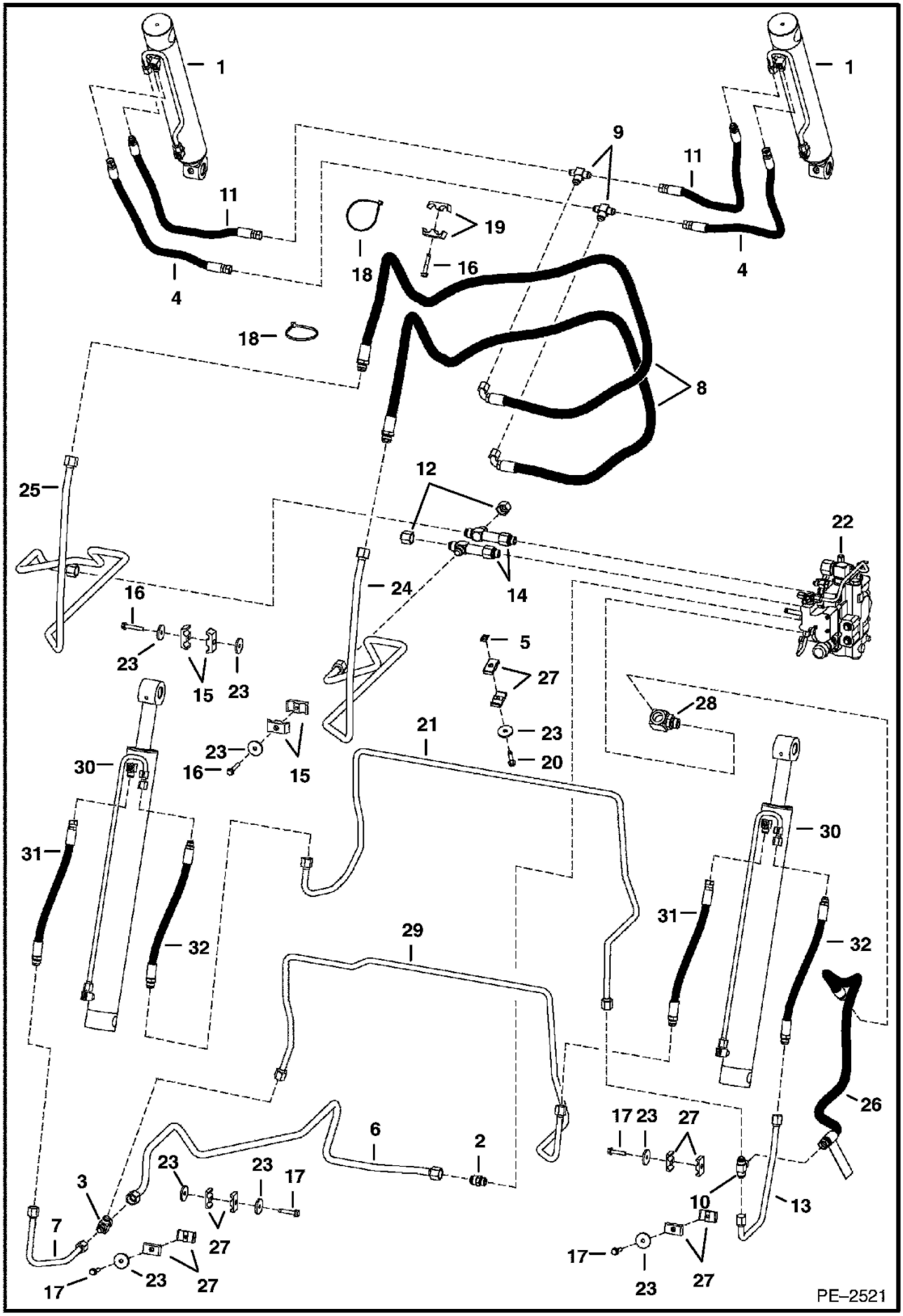

HYDRAULIC CIRCUITRY (Cont'd)
(W/O Bucket Positioning Valve)

Ref No	Part Number	Description	Remarks	Serial Number	Qty
1		CYLINDER	See Illustration TILT CYLINDER/ PE1520 tilt		2
2	6682411	ADAPTER			1
2	79K000010B	O-RING			x
3	6729686	TEE			1
4	7102090	HOSE			2
5	6684033	NUT			2
6	6732950	TUBELINE			1
7	6734201	TUBELINE			1
8	6729721	HOSE			2
9	6716061	TEE			2
10	6729694	TEE			1
11	7102089	HOSE			2
12	36K000008B	CAP			2
13	6730858	TUBELINE			1
14	6730914	TEE			2
14	79K000010B	O-RING			x
15	6592506	CLAMP			4
16	84G003740B	BOLT			3
17	84G003732B	BOLT			4
18	6624289	STA STRAP			3
19	6729320	CLAMP			2
20	84G003728B	BOLT			4
21	7114821	TUBELINE			1
22		VALVE	See Illustration HYDRAULIC CONTROL VALVE/ PE2379 See Illustration HYDRAULIC CONTROL VALVE/ PE2378		1
23	872229B	WASHER			10
24	6732953	TUBELINE	tilt		1
25	6732952	TUBELINE	tilt		1
26	6729604	HOSE			1
26	79K000010B	O-RING			x
26	6809511	DECAL	danger		2
27	6701893	CLAMP			8
28	6817335	ELBOW			1
28	79K000010B	O-RING			x
29	7114813	TUBELINE	lift		1
30		CYLINDER	See Illustration LIFT CYLINDER/ PE2260 lift		2
31	7102337	HOSE			2
32	7102336	HOSE			2

HYDRAULIC CIRCUITRY
(W/Bucket Positioning Valve)

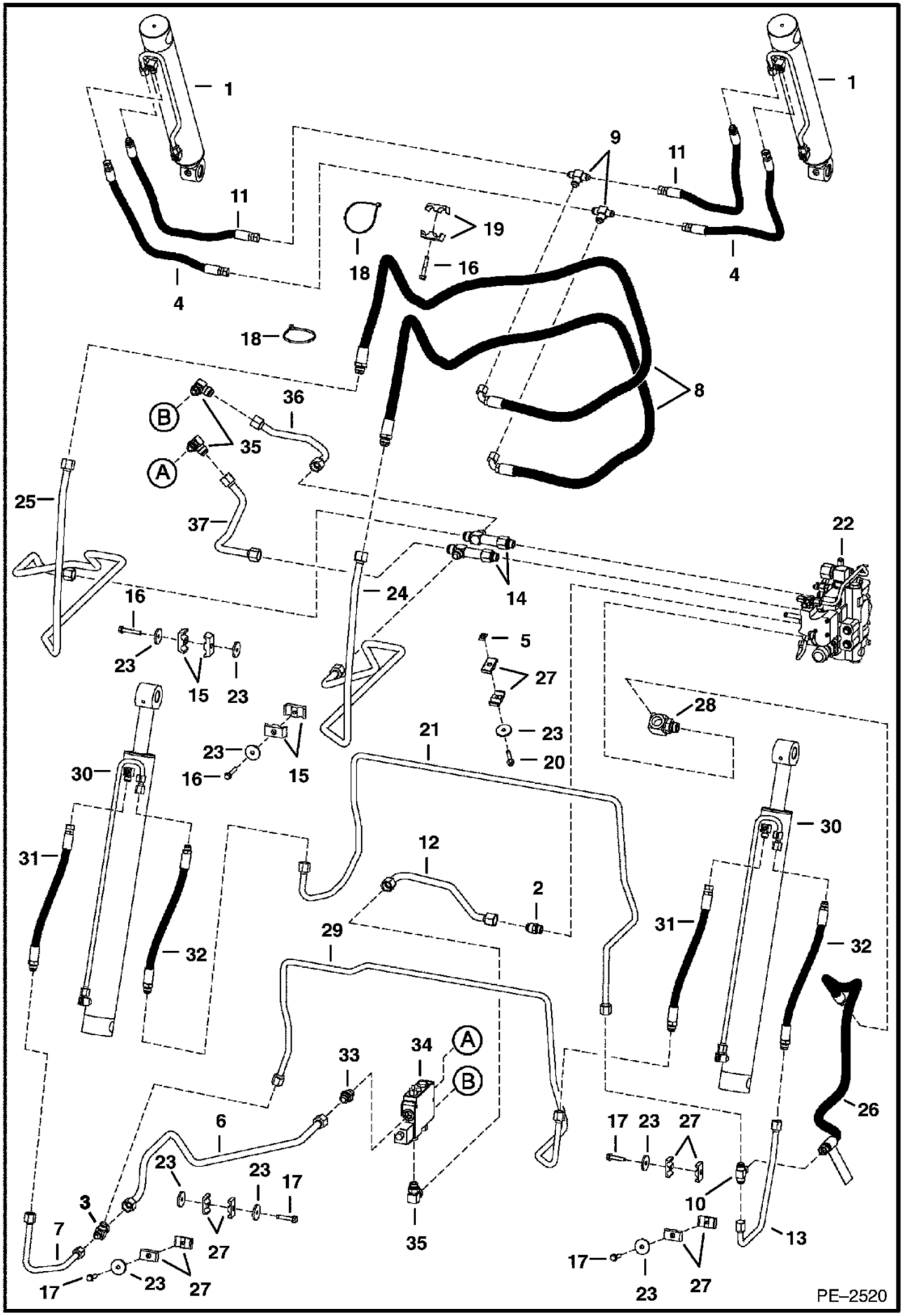

HYDRAULIC CIRCUITRY (Cont'd)
(W/Bucket Positioning Valve)

Ref No	Part Number	Description	Remarks	Serial Number	Qty
1		CYLINDER	See Illustration TILT CYLINDER/ PE1520 tilt		2
2	6682411	ADAPTER			1
2	79K000010B	O-RING			x
3	6729686	TEE			1
4	7102090	HOSE			2
5	6684033	NUT			2
6	6734208	TUBELINE			1
7	6734201	TUBELINE			1
8	6729721	HOSE			2
9	6716061	TEE			2
10	6729694	TEE			1
11	7102089	HOSE			2
12	6732992	TUBELINE			1
13	6730858	TUBELINE			1
14	6730914	TEE			1
14	79K000010B	O-RING			x
15	6592506	CLAMP			4
16	84G003740B	BOLT			3
17	84G003732B	BOLT			4
18	6624289	STA STRAP			3
19	6729320	CLAMP			2
20	84G003728B	BOLT			4
21	7114821	TUBELINE			1
22		VALVE	See Illustration HYDRAULIC CONTROL VALVE/ PE2379 See Illustration HYDRAULIC CONTROL VALVE/ PE2378		1
23	872229B	WASHER			10
24	6732953	TUBELINE	tilt		1
25	6732952	TUBELINE	tilt		1
26	6729604	HOSE			1
26	79K000010B	O-RING			x
26	6809511	DECAL	danger		2
27	6701893	CLAMP			8
28	6817335	ELBOW			1
28	79K000010B	O-RING			x
29	7114813	TUBELINE			1
30		CYLINDER	See Illustration LIFT CYLINDER/ PE2260 lift		2
31	7102337	HOSE			2
32	7102336	HOSE			2
33	15KB01210B	ADAPTER			1
33	79K000010B	O-RING			x
34		VALVE	See Illustration BUCKET POSITIONING VALVE/ MS1943 BPV		1
35	17KB01210B	ELBOW			3
35	79K000010B	O-RING			x
36	7108458	TUBELINE			1
37	6732991	TUBELINE			1

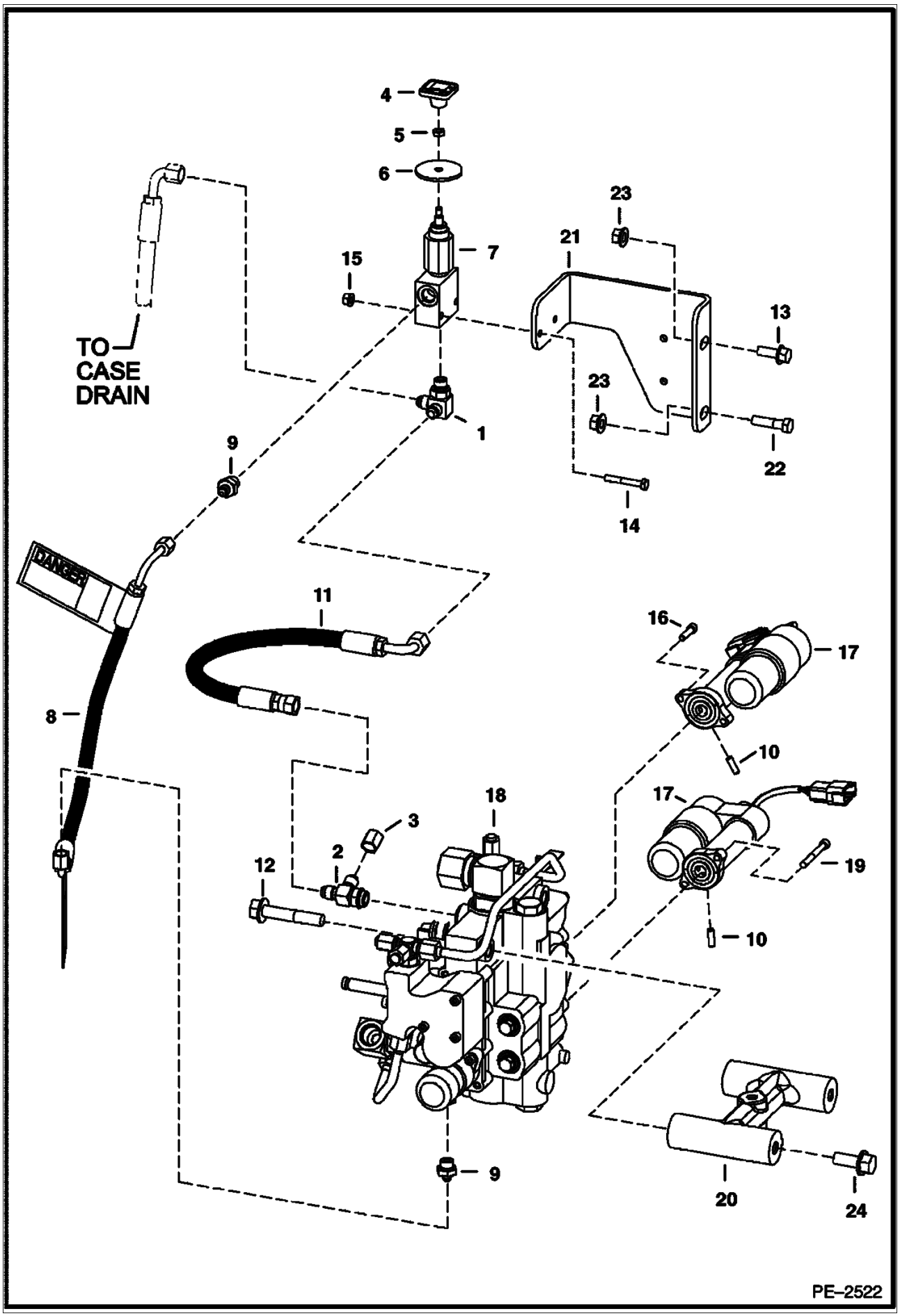
4
5
6
7
15
TO
CASE
DRAIN
1
9
DANGER
8
11
23
21
13
23
22
14
16
17
10
17
18
3
2
12
19
10
9
20
24
PE–2522

Ref No	Part Number	Description	Remarks	Serial Number	Qty
1	6725182	TEE			1
1	79K000006B	O-RING			x
2	21KB00606B	TEE			1
2	79K000006B	O-RING			x
3	36K000005B	CAP			1
4	6737524	KNOB			1
5	7D000004B	NUT			1
6	6707101	SEAL	noeprene		1
7	6667844	VALVE ASSY	manual lift		1
8	7103172	HOSE			1
8	6809511	DECAL	danger		2
9	15KB00406B	ADAPTER			2
9	79K000006B	O-RING			x
10	7108236	PIN	selectable joystick controls		2
11	7110284	HOSE			1
12	35C000844B	BOLT			2
13	35C000616B	BOLT			3
14	17C000428B	BOLT			2
15	83D000004B	NUT			2
16	6814021	BOLT	selectable joystick controls		2
17	7101672	ACTUATOR	selectable joystick controls		2
18		VALVE	See Illustration HYDRAULIC CONTROL VALVE/ PE2379 See Illustration HYDRAULIC CONTROL VALVE/ PE2378 control		1
19	69G000436B	BOLT	selectable joystick controls		2
20	7109934	MOUNT			1
21	6718881	BRACKET			1
22	17C000624B	BOLT			1
23	83D000006B	NUT			2
24	35C000820B	BOLT			2

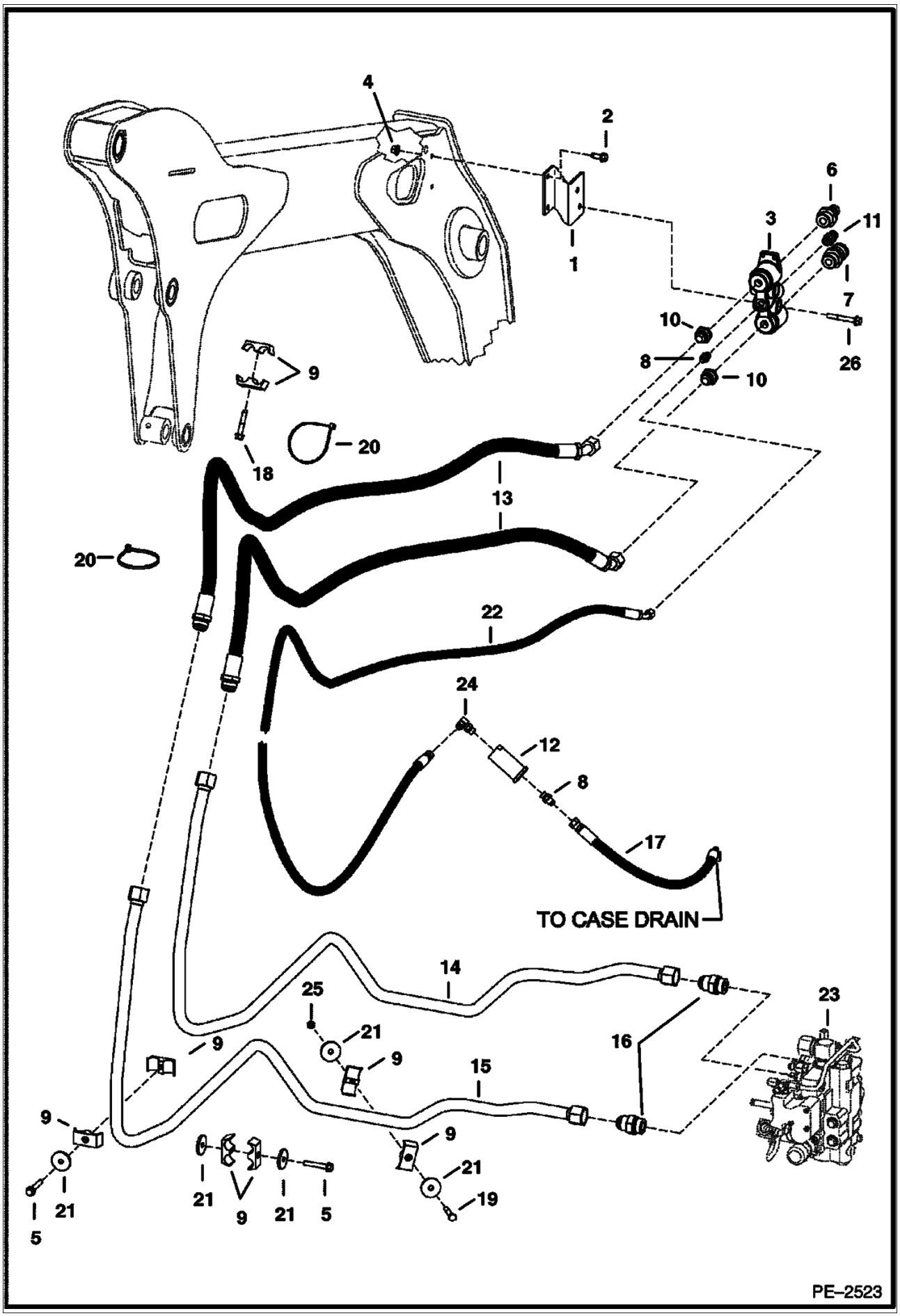
4
2
6
11
3
1
7
10
8
10
26
9
20
18
13
20
22
24
12
8
17
TO CASE DRAIN
14
25
21
9
16
23
9
15
9
21
9
21
19
9
21
9
21
5
5
PE–2523

Ref No	Part Number	Description	Remarks	Serial Number	Qty
1	7102414	BRACKET			1
2	84G003716B	BOLT			2
3	6678076	BLOCK	Ref. 6, 7 & 11		1
4	83D000006B	NUT			2
5	84G003740B	BOLT			2
6	6679837	COUPLER	male		1
6	6679841	SEAL	blue - front		1
6	6680020	SEAL KIT	3 o-rings & back-up washers		1
7	6679839	COUPLER	female		1
7	6680020	SEAL KIT	3 o-rings & back-up washers		1
7	6680018	KIT	female-Use W/Hydraulic breaker		1
8	15KB00606B	ADAPTER			2
8	79K000006B	O-RING			x
9	6729320	CLAMP			8
10	6679836	ADAPTER	W/spring,& Ref. 5		2
11	6679838	COUPLER	male - casedrain - W/spring, valve, seat & o-ring		1
11	6679840	SEAL	blue - front		1
12	6661022	FILTER			1
13	6734769	HOSE			2
14	6732954	TUBELINE			1
15	6732955	TUBELINE			1
16	15KB01616B	CONNECTOR			2
16	79K000016B	O-RING			x
17	7106215	HOSE			2
18	84G003736B	BOLT			3
19	17C000640B	BOLT			1
20	6624289	STA STRAP			2
21	872229B	WASHER			5
22	6729746	HOSE			1
23		VALVE	See Illustration HYDROSTATIC CIRCUITRY/ PE2398 See Illustration HAND CONTROLS/ PE2397 control		1
24	17KB00606B	ELBOW			1
24	79K000006B	O-RING			x
25	85D000006B	NUT			1
26	31C000644B	BOLT			2

TILT CYLINDER

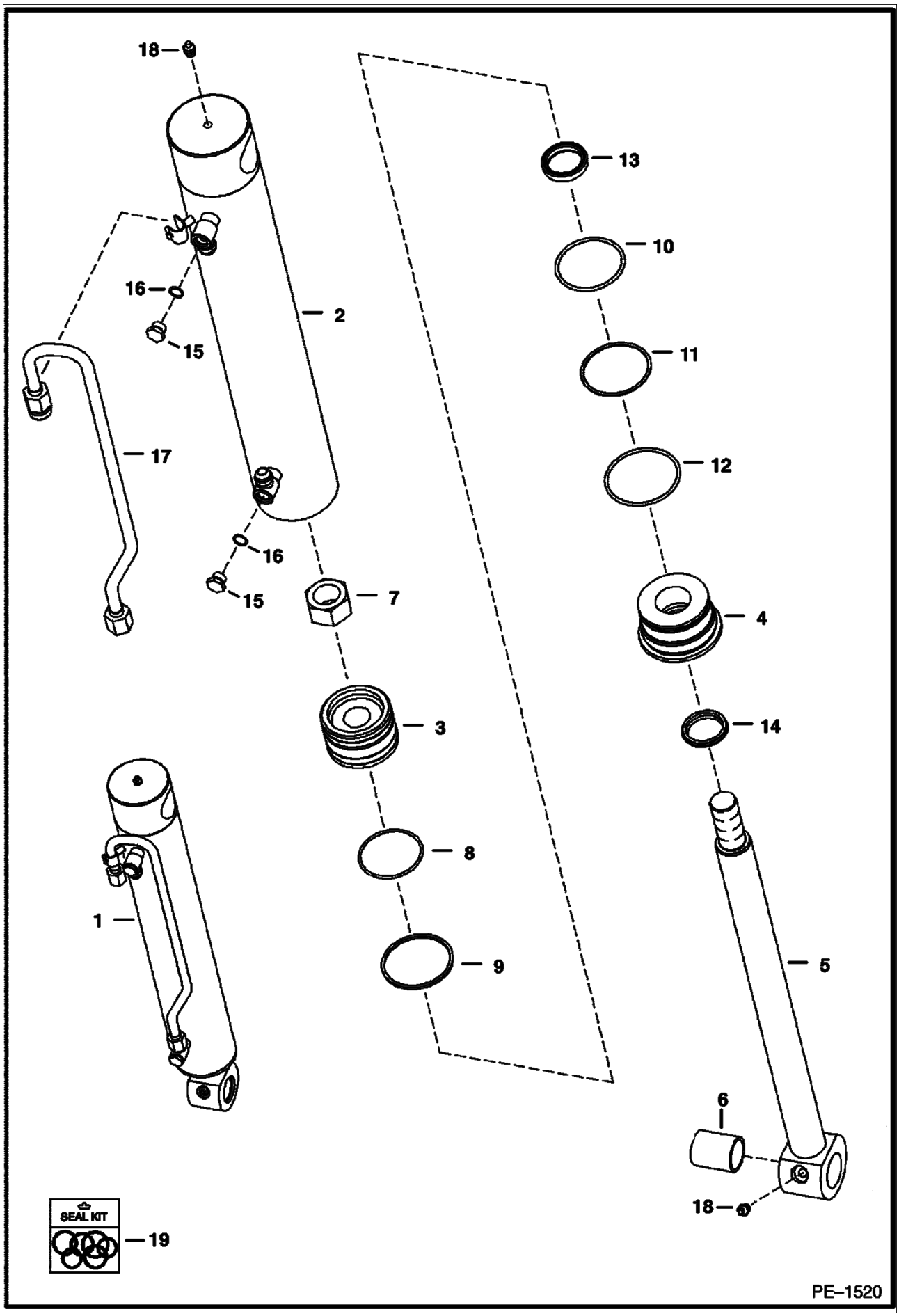

Ref No	Part Number	Description	Remarks	Serial Number	Qty
1	6810233	CYLINDER	tilt - Ref. 2-18		1
2	6810234	CASE	3" (76,2 mm) I.D.		1
3	6810237	PISTON			1
4	6538367	HEAD			1
5	6810235	ROD	W/Ref. 6 - 1.5" (38,1 mm) O.D.		1
6	6805453	BUSHING			1
7	6810539	NUT			1
8	54K030218B	O-RING			1
9	947088B	SEAL			1
10	54K040224B	O-RING			1
11	73K000232B	WASHER	back-up		1
12	54K040300B	O-RING			1
13	6667326	SEAL	1.5" (38,1 mm)		1
14	6665086	SEAL	wiper		1
15	6812171	PLUG	W/Ref. 16 - hex head		2
16	95K000006B	O-RING	tapered boss face		x
16	75K000006B	O-RING	flat boss face		x
17	6810213	TUBELINE			1
18	10H000025B	GREASE ZERK	grease		2
19	6816325	SEAL KIT	Ref. 7-14		1

LIFT CYLINDER

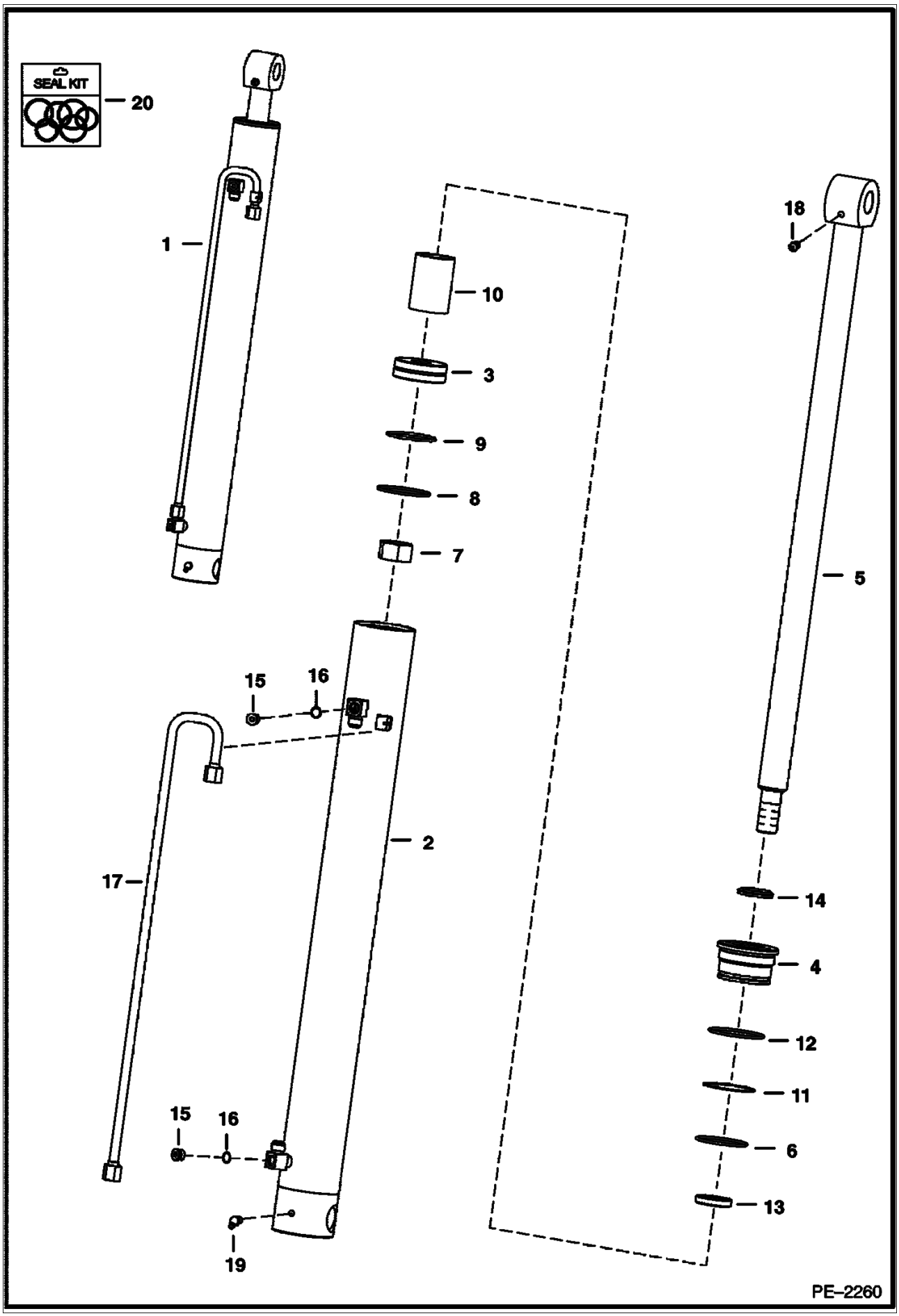

Ref No	Part Number	Description	Remarks	Serial Number	Qty
1	6817310	CYLINDER	lift - Ref. 2-16		1
2	6817311	CASE			1
3	6678933	PISTON			1
4	6804427	HEAD			1
5	6810188	ROD	W/Ref. 6		1
6	54K040224B	O-RING			1
7	6810539	NUT			1
8	947088B	SEAL			1
9	25K030218B	O-RING			1
10	6808235	SPACER			1
11	73K000232B	WASHER	back-up		1
12	54K040300B	O-RING			1
13	6669267	SEAL	rod		1
14	6669268	SEAL	wiper		1
15	6812171	PLUG	W/Ref. 16 - hex head		2
16	75K000006B	O-RING			x
17	7115550	TUBELINE ASSY	Was 6810741 [A]		1
18	10H000025B	GREASE ZERK			1
19	12H000015B	GREASE ZERK	90 degrees		1
20	6816536	SEAL KIT	Ref. 7-14		1

MANUAL LIFT RELEASE VALVE

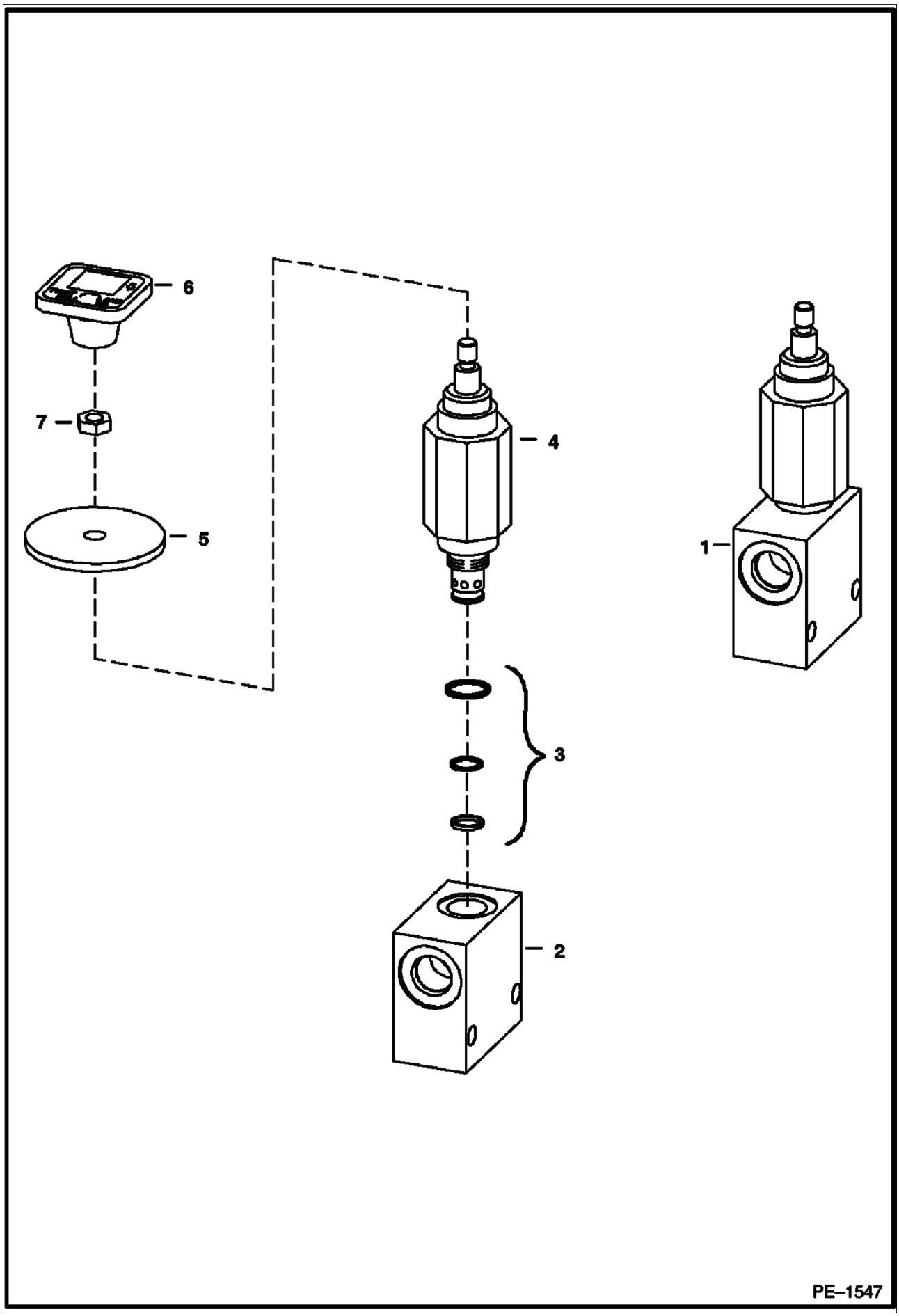

MANUAL LIFT RELEASE VALVE (Cont'd)

Ref No	Part Number	Description	Remarks	Serial Number	Qty
1	6667844	VALVE ASSY	Ref. 2-4		1
2		BLOCK	NSS		1
3	6669087	SEAL KIT			1
4	6669085	VALVE			1
5	6707101	SEAL	neoprene		1
6	6737524	KNOB	red square		1
7	7D000004B	NUT			1

CONTROL PEDALS

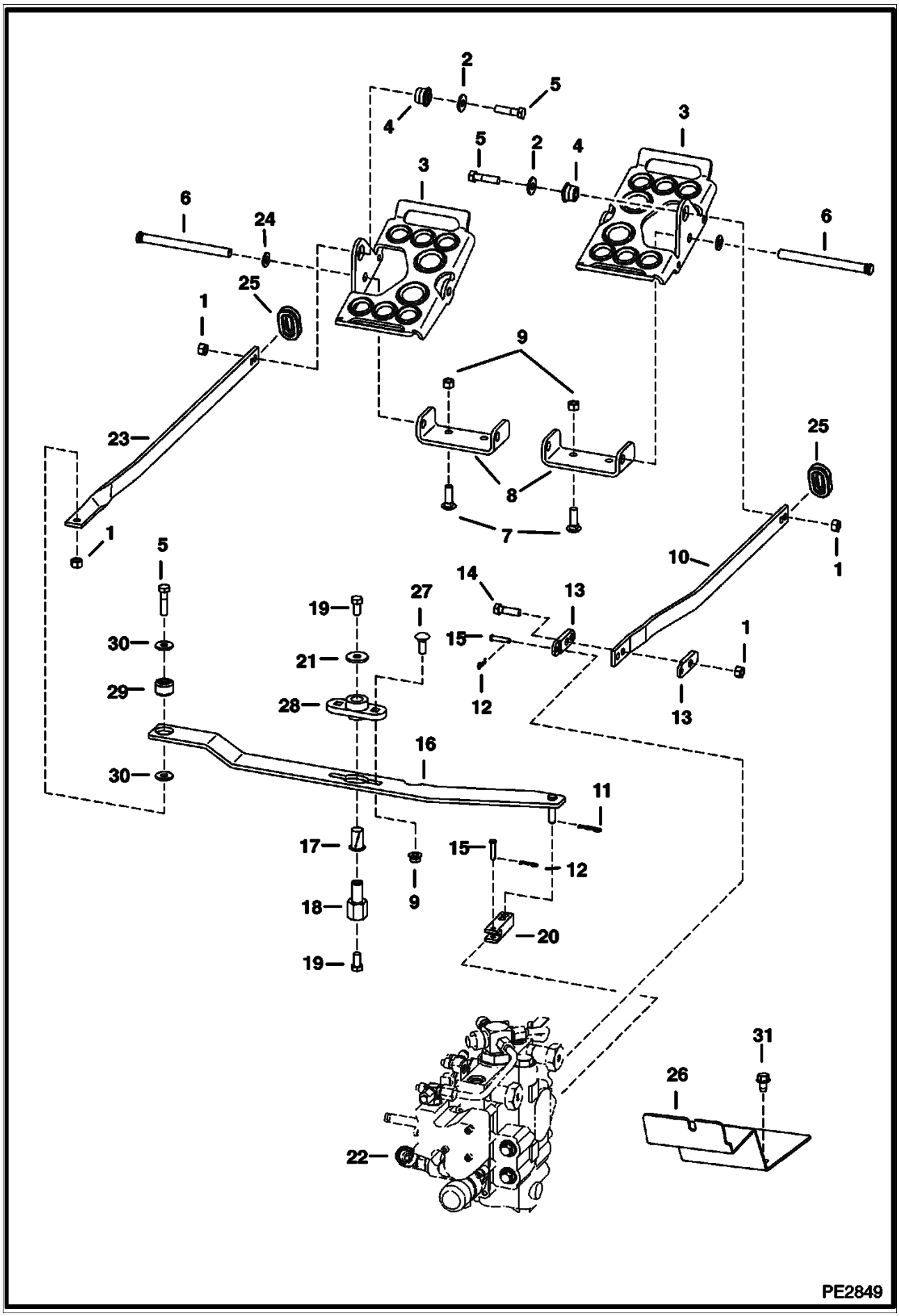

Ref No	Part Number	Description	Remarks	Serial Number	Qty
1	95D000006B	NUT			5
2	6563914	WASHER			2
3	7115219	PEDAL			2
4	6665701	BUSHING			3
5	17C000624B	BOLT			3
6	6564657	PIN			2
7	37C000620B	BOLT			4
8	7115220	MOUNT			2
9	57D000006B	NUT			4
10	6731251	BAR			1
11	1306637B	PIN			2
12	6513495	COTTER PIN			2
13	6708009	LINK			2
14	17C000620B	BOLT			1
15		PIN	NAP		2
16	6718285	LEVER			1
17	6512026	BUSHING			1
18	6718283	RETAINING NUT			1
19	17C000612B	BOLT			2
20	6706105	YOKE			1
21	619021B	WASHER			1
22		VALVE	See Illustration HYDRAULIC CONTROL VALVE/ PE1935 See Illustration HYDRAULIC CONTROL VALVE/ MS1600 CONTROL		1
23	6731252	BAR			1
24	25E000021B	WASHER	Used if serrations on pins are too long		2
25	6577961	GROMMET			2
26	6737095	STEP	rest - R.H.		1
26	6737120	STEP	rest - L.H.		1
27	37C000620B	BOLT			2
28	6708043	BUSHING			1
29	6685060	BUSHING			1
30	6737388	WASHER			2
31	84G003710B	BOLT			4

HYDRAULIC CONTROL VALVE
(Spool Lock) (D Series)

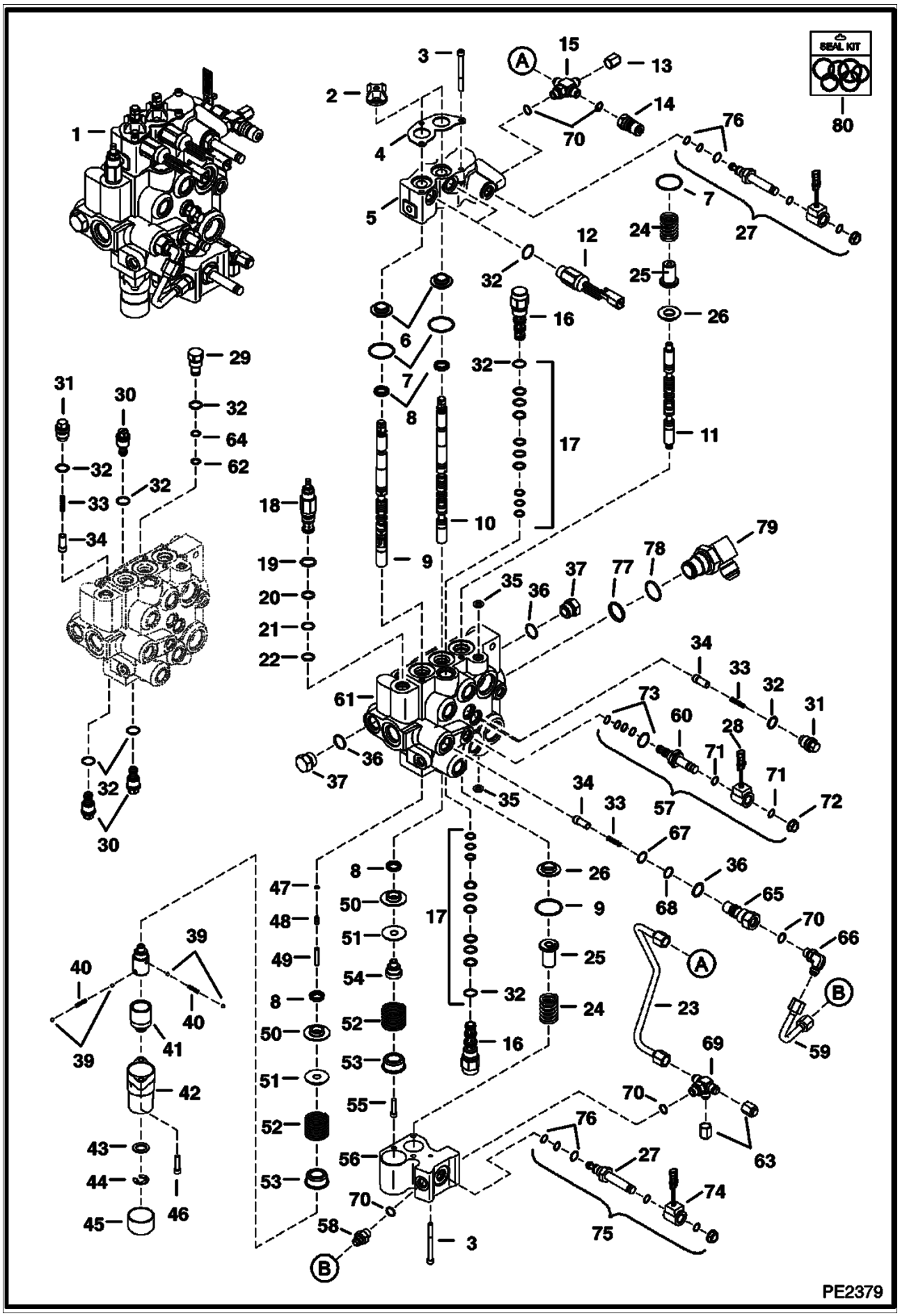

HYDRAULIC CONTROL VALVE (Cont'd)
(Spool Lock) (D Series)

Ref No	Part Number	Description	Remarks	Serial Number	Qty
1	6813080	VALVE ASSY			1
2	6587763	BOOT			2
3	29G000444B	BOLT			7
4	6813153	PLATE	retainer		1
5	6817003	BODY			1
6	6805102	BUSHING			2
7	58K000127B	O-RING			x
8	6683274	SEAL			4
9	7108781	SPOOL	lift		1
10	6815152	SPOOL			1
11	7112383	AUX SPOOL			1
12	6677383	SOLENOID	W/Ref. 32		2
13	36K000005B	CAP			1
14	6684125	COUPLER	male		1
15	7102066	CROSS	W/Ref. 70		1
16	6668765	VALVE	W/Ref. 36		2
17	6669734	SEAL KIT			1
18	6686360	VALVE	W/Ref. 19-22		1
19	58K000017B	O-RING			x
20	6665569	WASHER	back-up		x
21	25K020016B	O-RING			x
22	6665570	RING	guide		x
23	7110914	TUBELINE			1
24	7121399	SPRING			2
25	6814694	RETAINER			2
26	6804920	BUSHING			2
27	6688397	STEM			2
28	6671025	COIL			1
29	6816549	PLUG	port relief - W/Ref. 32, 62, 64		1
30	6684646	VALVE	anti-cav - W/Ref. 32		3
31	6817707	PLUG	check valve - W/Ref. 32		3
32	79K000008B	O-RING			x
33	6592117	SPRING			4
34	7106712	SEAT			4
35	55K000204B	O-RING			x
36	79K000010B	O-RING			x
37	24K000007B	PLUG	W/Ref. 36		2
38	6587575	ADAPTER			1
39	6592105	BALL			4
40	6592107	SPRING			2
41	6531270	SLEEVE			1
42	6589226	BONNET			1
43	6592098	WASHER			1
44	799119B	SNAP RING			1
45	6660644	CAP			1
46	29G000416B	SCREW			2
47	54K020002B	O-RING			x
48	6596807	PLUG	plastic - .460" long		1
49	6586918	SCREW			1
50	6595663	BUSHING			2
51	6587523	WASHER			2
52	6587580	SPRING			2
53	6592100	COLLAR			2
54	6592100	COLLAR			1

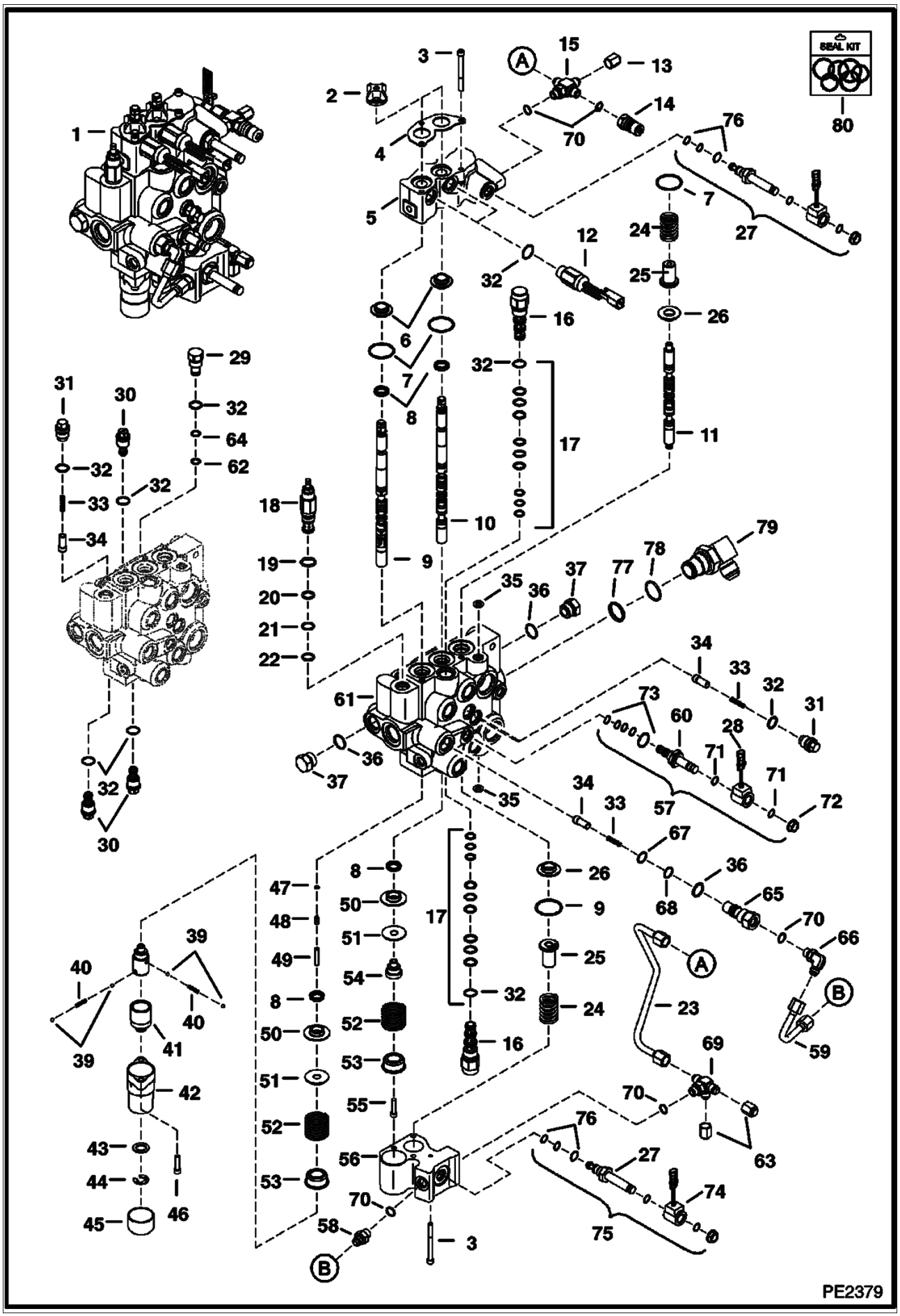
SEAL KIT
80
PE2379

HYDRAULIC CONTROL VALVE (Cont'd)
(Spool Lock) (D Series)

Ref No	Part Number	Description	Remarks	Serial Number	Qty
55	7102652	SCREW			1
56	6814279	BLOCK			1
57	6672471	VALVE	W/Ref. 28, 60 & 70-73		1
58	6688845	VALVE	W/Ref. 70		1
59	6815032	TUBELINE			1
60	6667687	STEM			1
61		VALVE BODY	NSS		1
62	73K000013B	O-RING			x
63	36K000005B	CAP			2
64	58K000013B	O-RING			x
65	6815014	CHECK VALVE	W/Ref. 36, 67 & 68		1
66	6682549	ELBOW	W/Ref. 70		1
67	58K000016B	O-RING			x
68	73K000016B	RING	back-up		x
69	7102019	FITTING	W/Ref. 70		1
70	79K000006B	O-RING			x
71	54K020028B	O-RING			x
72	6668820	NUT			1
73	6669732	SEAL KIT			1
74	6678891	COIL			2
75	6678893	SOLENOID	W/Ref 27 & 74		2
76	6685603	SEAL KIT	solenoid valve		2
77	58K000022B	O-RING			1
78	79K000016B	O-RING			1
79	6813964	ELBOW	W/Ref. 77 & 78		1
80	7123964	SEAL KIT, COMPLETE	Includes 7123963, 7123965, 6632279, 6685603 (2), 6669732, & 6669734 (2)		x
80	7123963	SEAL KIT	3 spool - Ref. 2, 7, 8, 35, 47, & 48		x
80	7123965	SEAL KIT	external fitting - Ref. 32, 36, 62, 64, 67, 68, 70, 71, 77, & 78		x
80	6685603	SEAL KIT	solenoid valve - Ref. 76		2
80	6632279	SEAL KIT	main relief - Ref. 19-22		x
80	6669732	SEAL KIT	solenoid valve - Ref. 73		x
80	6669734	SEAL KIT	pilot valve - Ref. 17		x

HYDRAULIC CONTROL VALVE
(D-Series)

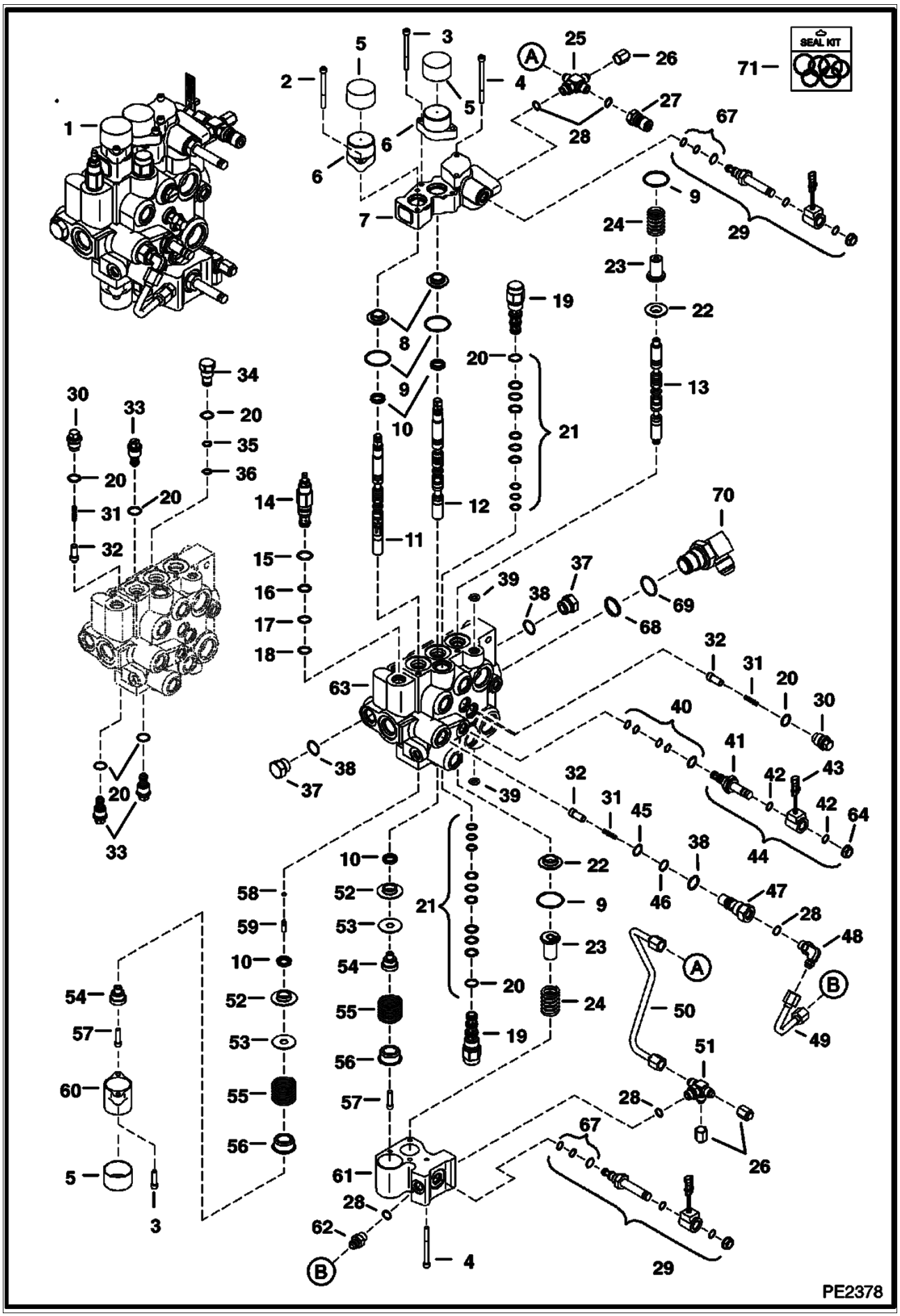

HYDRAULIC CONTROL VALVE (Cont'd)
(D-Series)

Ref No	Part Number	Description	Remarks	Serial Number	Qty
1	6814600	VALVE			1
2	69G000436B	BOLT			2
3	29G000416B	SCREW			4
4	29G000444B	BOLT			5
5	6662848	CAP			3
6	7101345	BONNET			2
7	6817004	BODY			1
8	6805102	BUSHING			2
9	58K000127B	O-RING			4
10	6683274	SEAL			4
11	7108241	SPOOL	lift		1
12	7108242	SPOOL	tilt		1
13	7112383	AUX SPOOL			1
14	6686360	VALVE	W/Ref. 15-18		1
15	58K000017B	O-RING			x
16	6665569	WASHER	back-up		x
17	25K020016B	O-RING			x
18	6665570	RING	guide		x
19	6668765	VALVE	W/Ref. 38		2
20	79K000008B	O-RING			x
21	6669734	SEAL KIT			1
22	6804920	BUSHING			2
23	6814694	RETAINER			2
24	7121399	SPRING			2
25	7102066	CROSS	W/Ref. 28		1
26	36K000005B	CAP			2
27	6684125	COUPLER	male		1
28	79K000006B	O-RING			x
29	6688397	STEM			2
30	6817707	PLUG	check valve - W/Ref. 20		3
31	6592117	SPRING			4
32	7106712	SEAT			4
33	6684646	VALVE	W/Ref. 20		3
34	6816549	PLUG	W/Ref. 20, 35 & 36		1
35	58K000013B	O-RING			x
36	73K000013B	O-RING			x
37	24K000007B	PLUG	W/Ref. 38		2
38	79K000010B	O-RING			x
39	55K000204B	O-RING			x
40	6669732	SEAL KIT			1
41	6667687	STEM			1
42	54K020028B	O-RING			x
43	6671025	COIL			1
44	6672471	VALVE	W/Ref. 40-43 & 64		1
45	58K000016B	O-RING			x
46	73K000016B	RING	back-up		x
47	6815014	CHECK VALVE	W/Ref. 38, 45 & 46		1
48	6682549	ELBOW	W/Ref. 28		1
49	6815032	TUBELINE			1
50	7110914	TUBELINE			1
51	7102018	TEE	W/Ref. 28		1
52	6595663	BUSHING			2
53	6587523	WASHER			2
54	6592109	ADAPTER			2

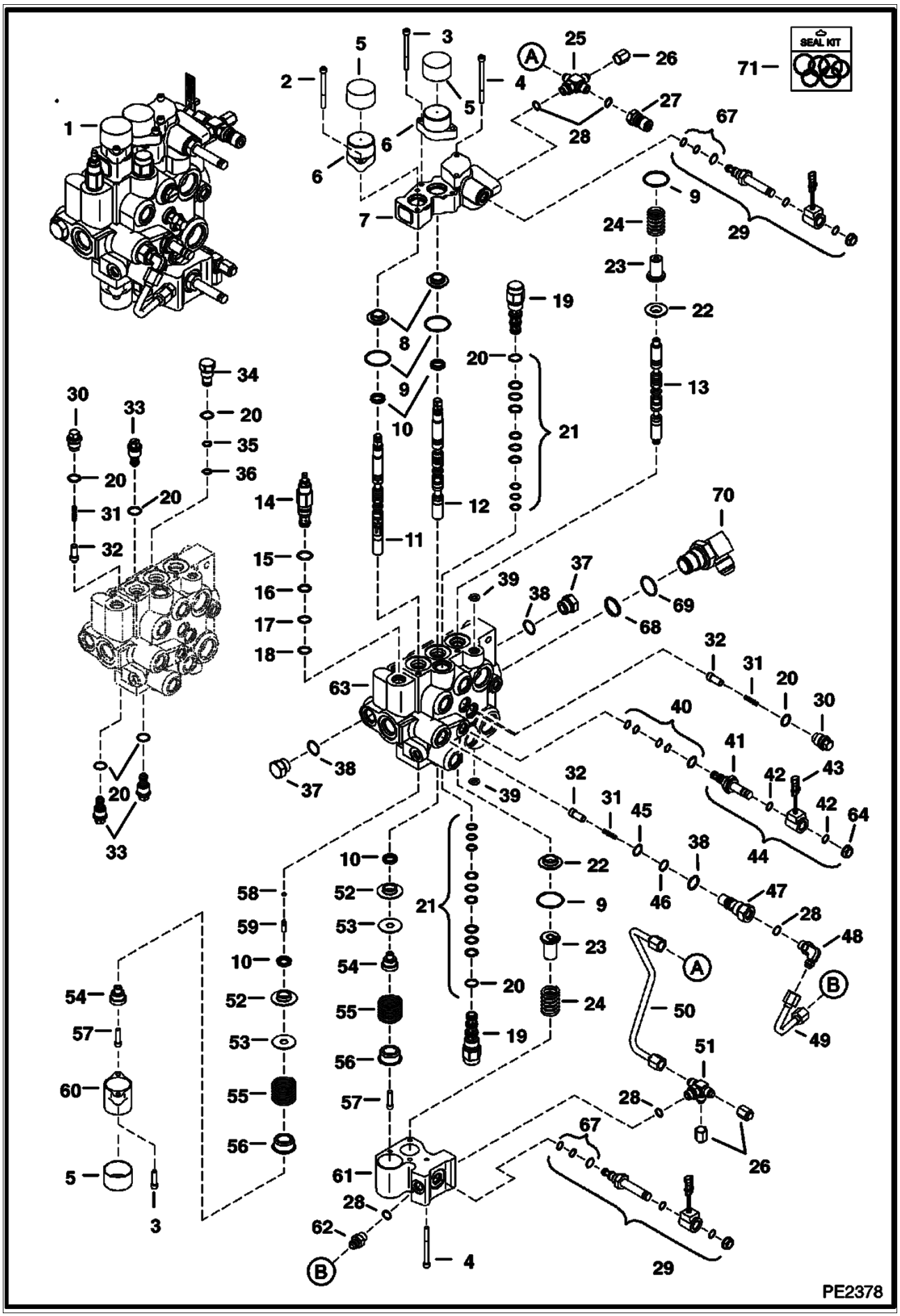
SEAL KIT
PE2378

HYDRAULIC CONTROL VALVE (Cont'd)
(D-Series)

Ref No	Part Number	Description	Remarks	Serial Number	Qty
55	6587580	SPRING			2
56	6592100	COLLAR			2
57	7102652	SCREW			2
58	54K020002B	O-RING			x
59	6801167	PLUG	plastic - .685" long		1
60	6803092	BONNET			1
61	6814279	BLOCK			1
62	6688845	VALVE	W/Ref. 28		1
63		BODY	NSS		1
64	6668820	NUT			1
65	6678891	COIL			2
66	6678893	SOLENOID	W/Ref 29 & 65		2
67	6685603	SEAL KIT	solenoid valve		1
68	58K22	O RING 10			1
69	79K16	O RING 10			1
70	6813964	ELBOW	W/Ref. 68 & 69		1
71	7123964	SEAL KIT, COMPLETE	Includes 7123963, 7123965, 6632279, 6685603 (2), 6669732, & 6669734 (2)		x
71	7123963	SEAL KIT	3 spool - Ref. 9, 10, 39, 58, & 59		x
71	7123965	SEAL KIT	external fitting - Ref. 20, 28, 35, 36, 38, 42, 45, 46, 68, & 69		x
71	6685603	SEAL KIT	solenoid valve -Ref. 67		x
71	6632279	SEAL KIT	main relief - Ref. 15-18		x
71	6669732	SEAL KIT	solenoid valve - Ref. 21		x
71	6669734	SEAL KIT	pilot valve - Ref. 40		x

BUCKET POSITIONING VALVE

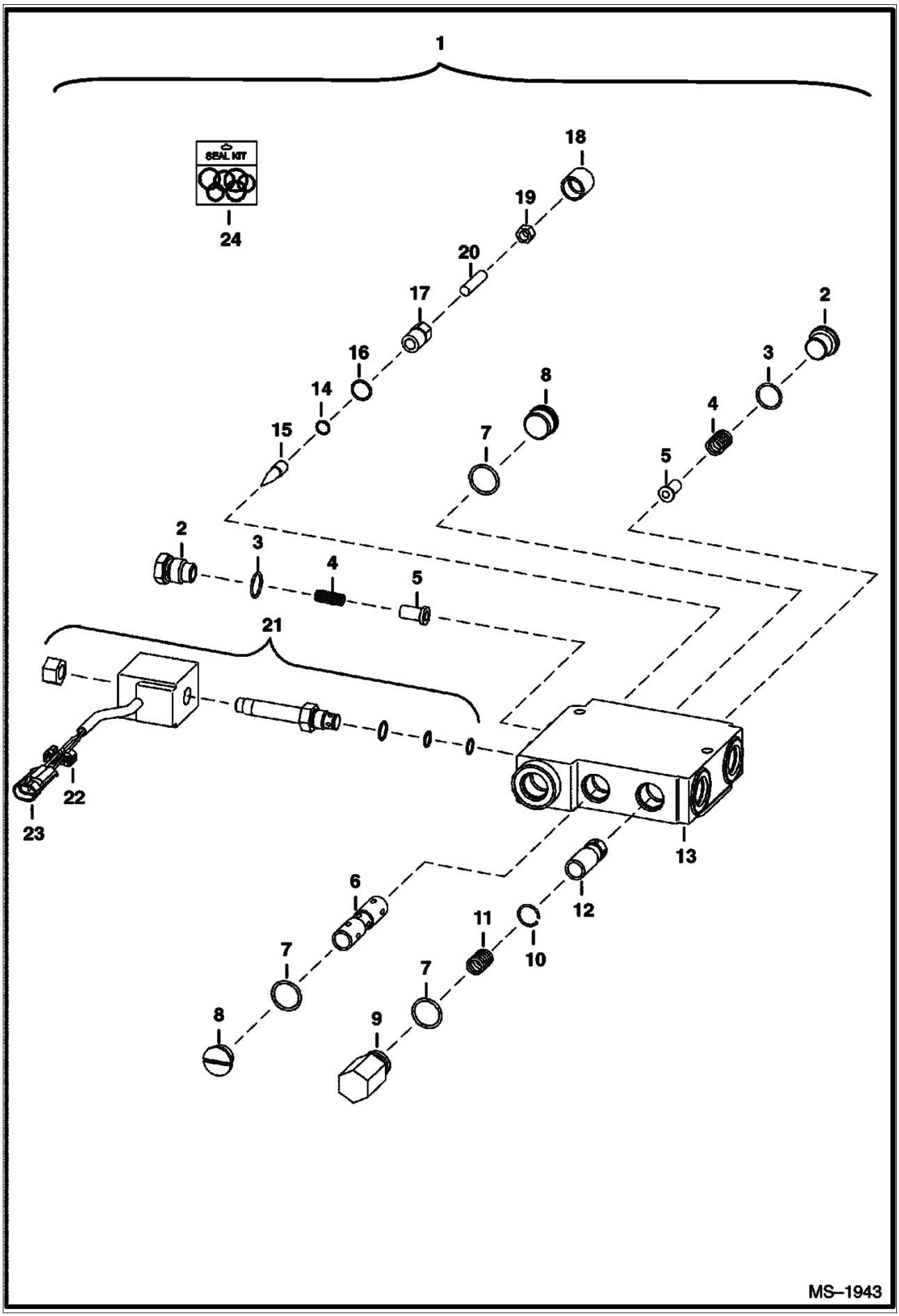

BUCKET POSITIONING VALVE (Cont'd)

Ref No	Part Number	Description	Remarks	Serial Number	Qty
1	6675669	VALVE	primer red - Ref. 2-21		1
2	6647784	PLUG	W/Ref. 3		2
3	79K000008B	O-RING			2
4	6647785	SPRING			2
5	6647783	LOAD CHECK			2
6		SPOOL	NSS		1
7	58K000116B	O-RING			3
8	6676543	PLUG	W/Ref. 7		2
9	6667176	PLUG	W/Ref. 7		1
10	6667680	SNAP RING			1
11	6676544	SPRING			1
12		SPOOL	NSS		1
13		BODY	NSS		1
14	6667677	O-RING			1
15	6647777	PIN			1
16	6634874	O-RING			1
17	6676542	CAP			1
18	6667676	COVER			1
19	6631561	NUT			1
20	6648293	SCREW			1
21	6672863	SOLENOID			1
21	6671527	NUT			1
21	6670634	SEAL KIT			1
21	6674331	COIL	W/Ref. 22 & 23		1
21	6676545	CARTRIDGE			1
22	6641180	LOCK	2-pin		1
23	6641179	CONNECTOR	2-pin		1
24	6667185	SEAL KIT	Ref. 3, 7, 14, 16 & 18		1

HIGH FLOW HYDRAULICS
(Manual Controls)

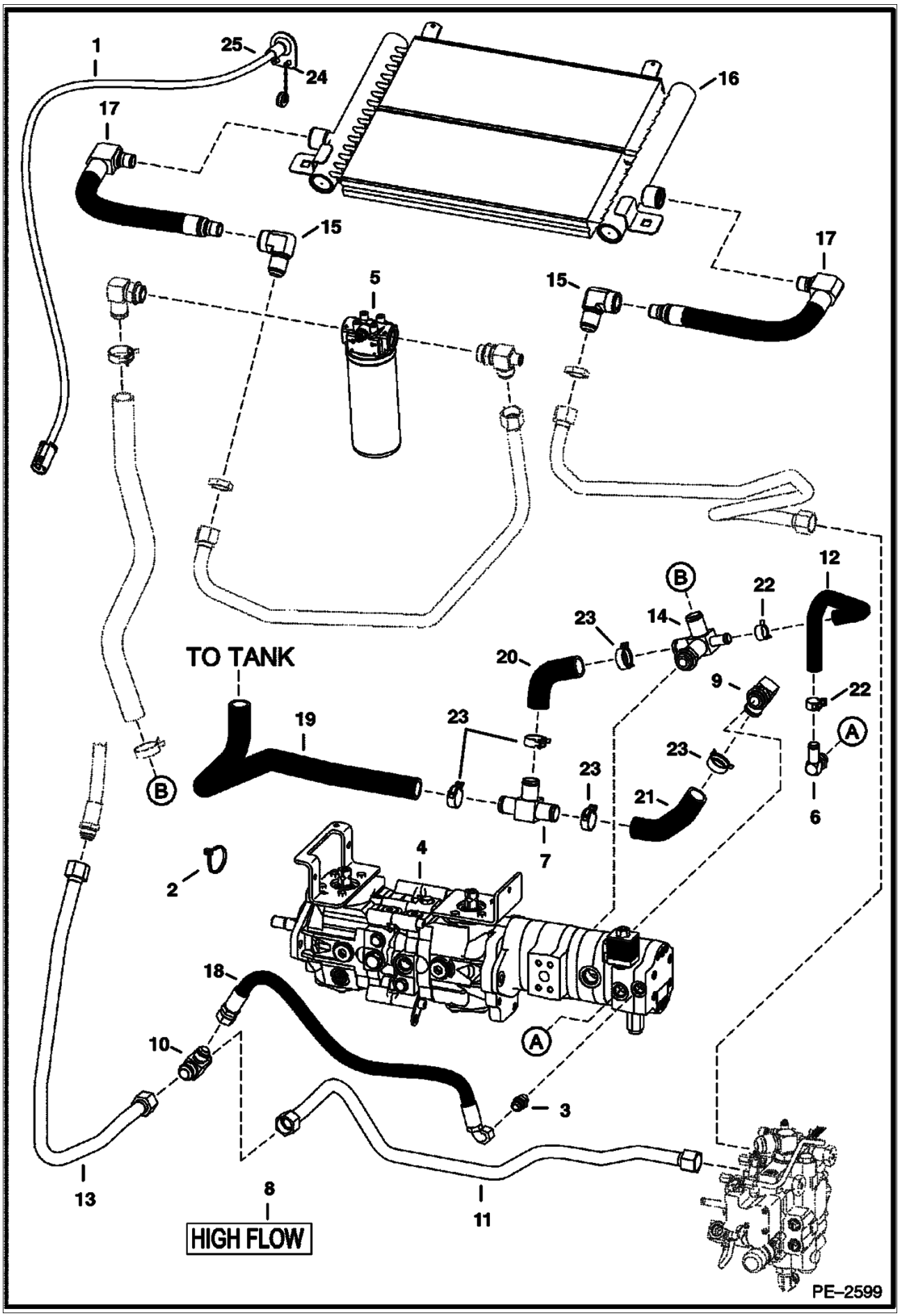

HIGH FLOW HYDRAULICS (Cont'd)
(Manual Controls)

Ref No	Part Number	Description	Remarks	Serial Number	Qty
1	6718426	HARNESS	attachment control		1
2	6624289	STA STRAP			14
3	6679943	VALVE			1
3	79K000008B	O-RING			x
4		PUMP	See Illustration HYDROSTATIC PUMP/ MS2183 See Illustration HIGH FLOW GEAR PUMP/ MS1456 See Illustration HYDROSTATIC PUMP/ MS2184		1
5		FILTER	See Illustration HYDROSTATIC OIL FILTER/ C2818		1
6	6717885	ELBOW			1
6	79K000010B	O-RING			x
7	6727064	TEE			1
8	7120602	DECAL	high flow		2
9	6729306	ELBOW			1
9	79K000016B	O-RING			x
10	6730143	TEE			1
11	6732993	TUBELINE			1
12	6733164	HOSE			1
13	6733309	TUBELINE			1
14	7102399	TEE			1
14	79K000016B	O-RING			x
15	7103749	ELBOW			2
15	6688523	SEAL KIT STC-16			x
16	7103750	EXCHANGER			1
16	6688523	SEAL KIT STC-16			x
17	7103751	HOSE			2
17	6688523	SEAL KIT STC-16			x
18	7109144	hose			1
18	6688523	SEAL KIT STC-16			x
19	7110205	HOSE			1
20	7110286	HOSE			1
21	7110339	HOSE			1
22	5HM00024B	CLAMP			2
23	5HM00035B	CLAMP			4
24	84G003112B	BOLT			2
25	30H000035B	CLAMP			1
26	7113512	DECAL	approved attachments only		1

HIGH FLOW HYDRAULICS
(Selectable Joystick Controls)

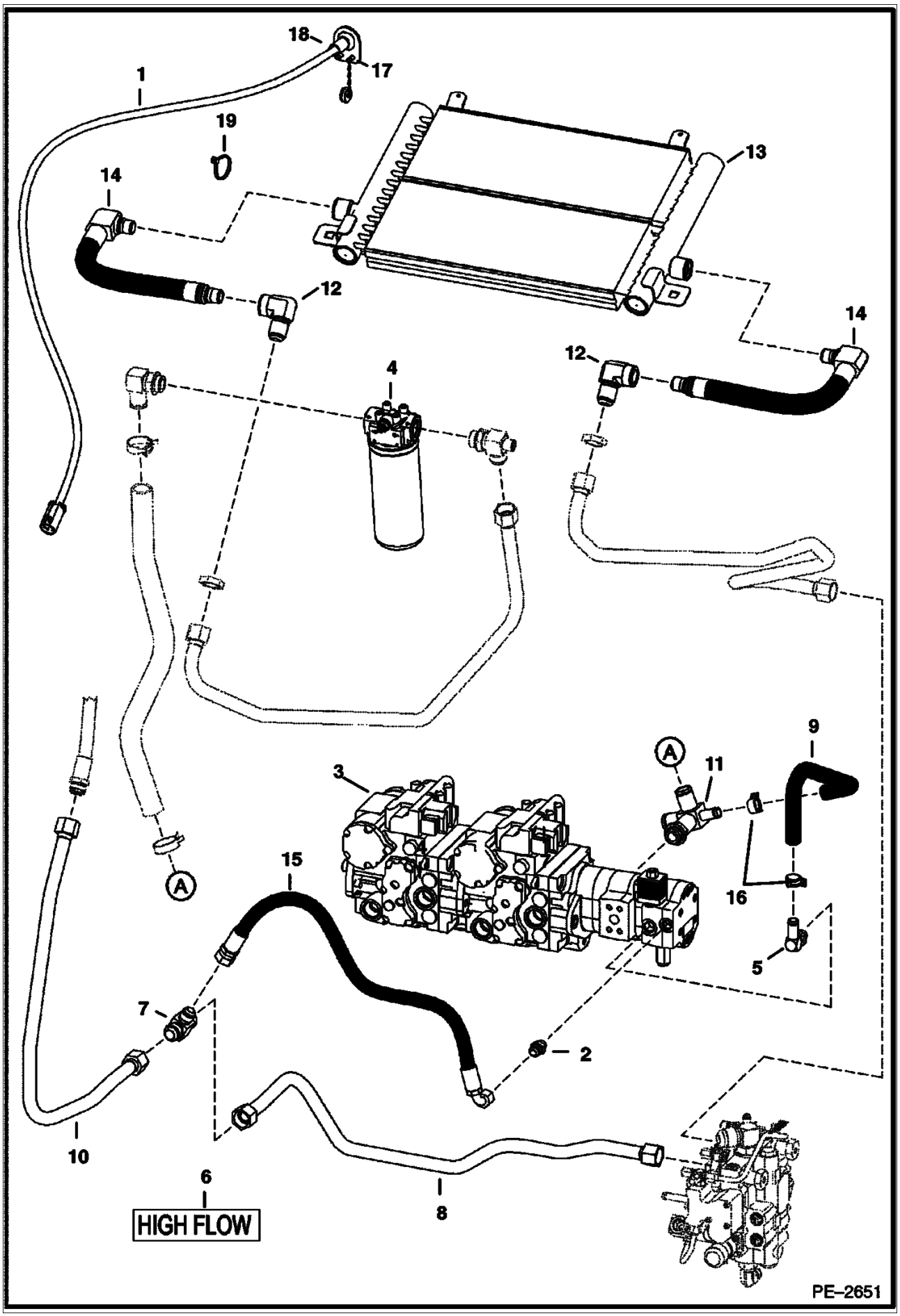

HIGH FLOW HYDRAULICS (Cont'd)
(Selectable Joystick Controls)

Ref No	Part Number	Description	Remarks	Serial Number	Qty
1	6718426	HARNESS	attachment control		1
2	6679943	VALVE			1
2	79K000008B	O-RING			x
3		PUMP	See Illustration HYDROSTATIC PUMP/ B25010 See Illustration HIGH FLOW GEAR PUMP/ MS1456		1
4		FILTER	See Illustration HYDROSTATIC OIL FILTER/ C2818		1
5	6717885	ELBOW			1
5	79K000010B	O-RING			x
6	7120602	DECAL	high flow		2
7	6730143	TEE			1
8	6732993	TUBELINE			1
9	6733164	HOSE			1
10	6733309	TUBELINE			1
11	7102399	TEE			1
11	79K000016B	O-RING			x
12	7103749	ELBOW	STC		2
12	6688523	SEAL KIT STC-16			x
13	7103750	EXCHANGER			1
13	6688523	SEAL KIT STC-16			x
14	7103751	HOSE			2
14	6688523	SEAL KIT STC-16			x
15	7109144	hose			1
16	5HM00024B	CLAMP			2
17	84G003112B	BOLT			2
18	30H000035B	CLAMP			1
19	6624289	STA STRAP			7
20	7113512	DECAL	approved attachments only		1

HIGH FLOW GEAR PUMP

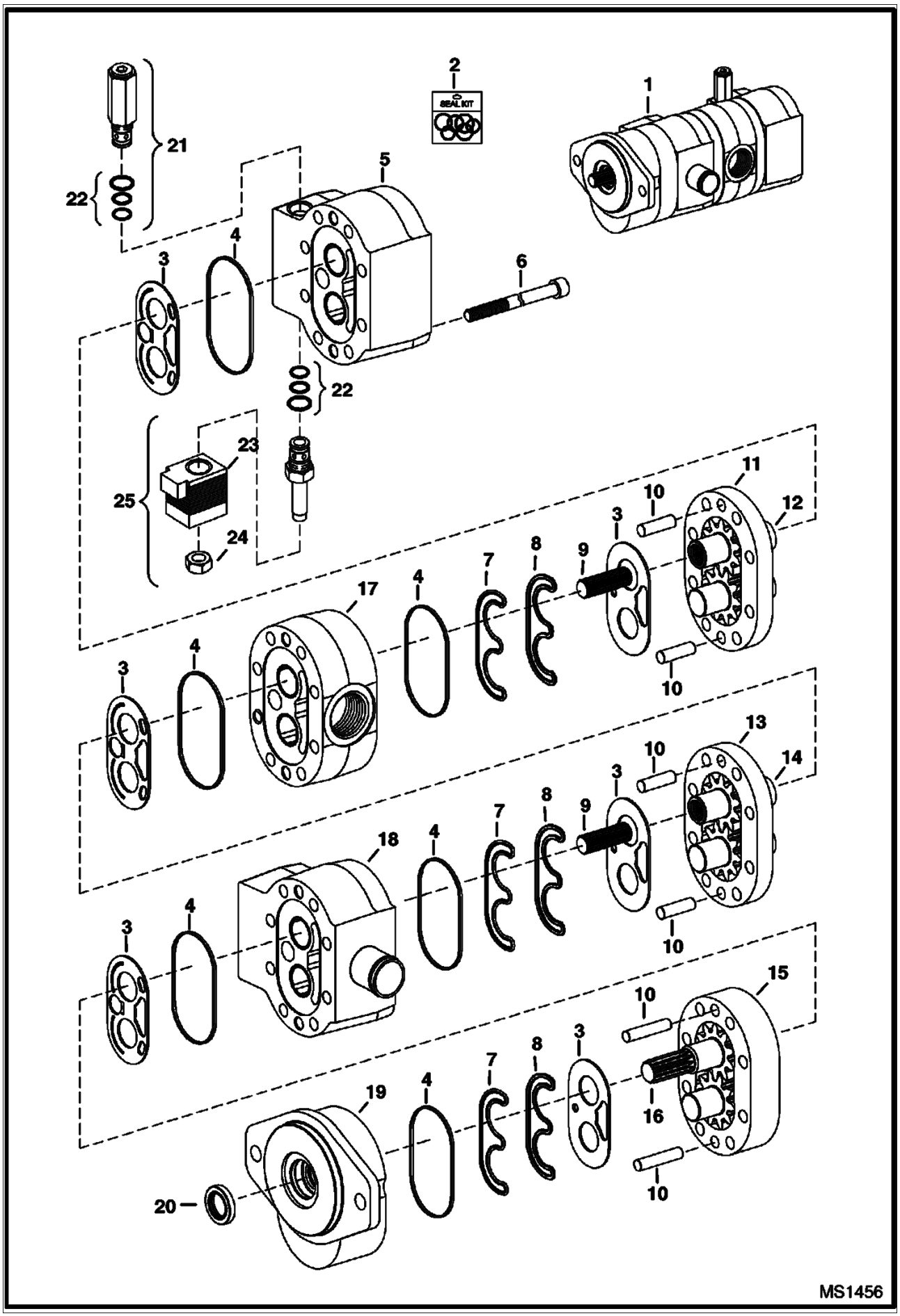

HIGH FLOW GEAR PUMP (Cont'd)

Ref No	Part Number	Description	Remarks	Serial Number	Qty
1	6688713	GEAR PUMP	163D72022		1
2	6688321	SEAL KIT			1
3		WEAR PLATE	NSS		6
4		SEAL, SECTION	NSS		6
5		HOUSING, REAR	NSS		1
6		BOLT	NSS		8
7		SEAL, PRE-LOAD	NSS		6
8		SEAL, LOAD	NSS		6
9		CONNECTOR, SPLINE	NSS		2
10		PIN	NSS		6
11		HOUSING, GEAR	NSS - #3		1
12		GEAR SET	NSS - #3		1
13		HOUSING, GEAR	NSS - #2		1
14		GEAR SET	NSS - #2		1
15		HOUSING, GEAR	NSS - #1		1
16		GEAR SET	NSS - drive		1
17		HOUSING, CENTER	NSS		1
18		HOUSING, CENTER	NSS		1
19		HOUSING, FRONT	NSS		1
20		SEAL, SHAFT	NSS		1
21	6685027	VALVE			1
22	6683206	SEAL KIT			2
23	6684590	COIL			1
24	6681492	NUT			1
25	6685027	VALVE	W/Ref. 22, 23 & 24		1

HYDROSTATIC CIRCUITRY
(W/Tank)

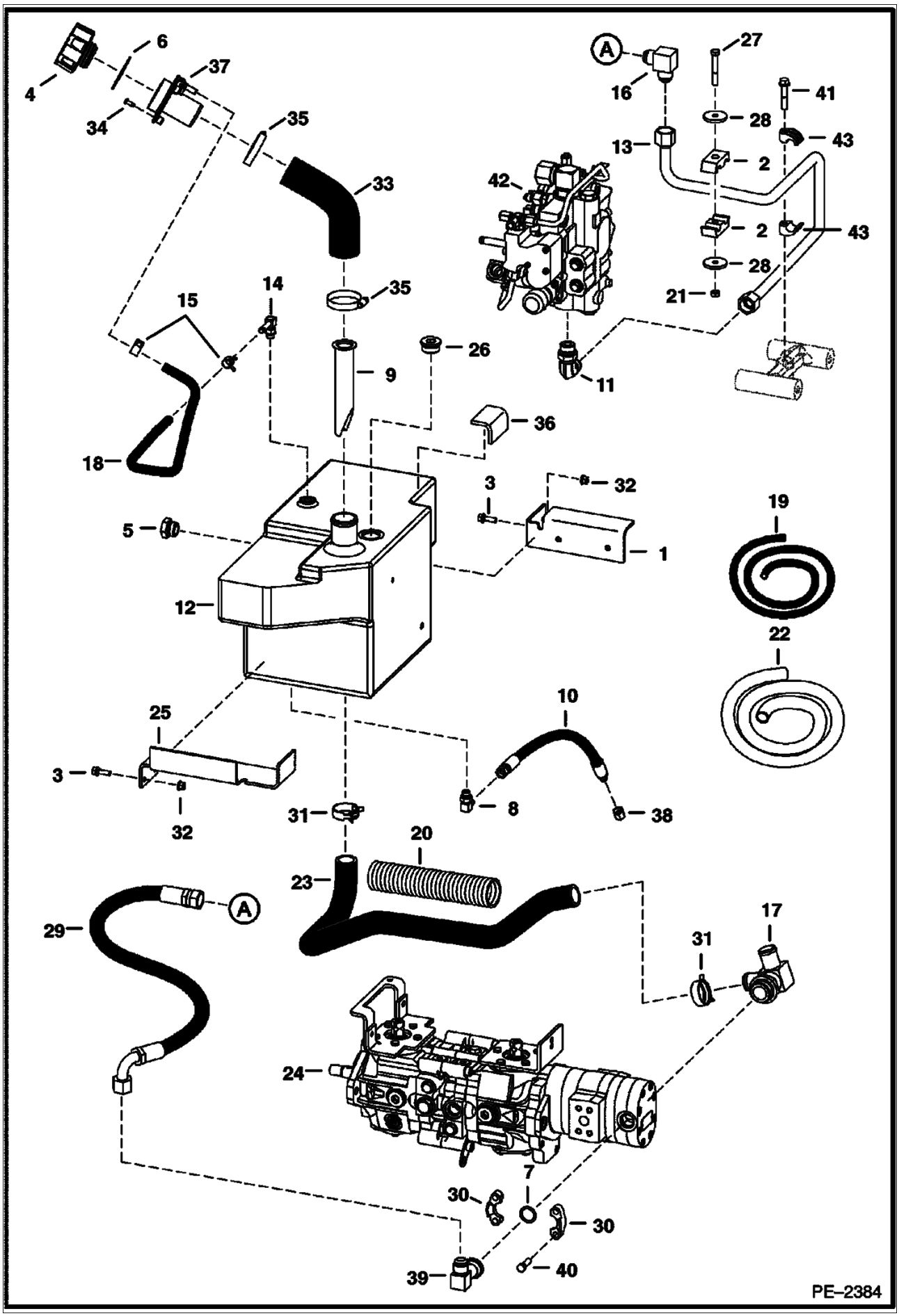

HYDROSTATIC CIRCUITRY (Cont'd)
(W/Tank)

Ref No	Part Number	Description	Remarks	Serial Number	Qty
1	6718851	BRACKET			1
2	6592506	CLAMP			2
3	35C000516B	BOLT			4
4	6727475	CAP	breather & fill - also Order Ref. 6		1
5	6665915	GAUGE	sight		1
5	79K000006B	O-RING			x
5	6734563	WASHER KIT	washer & o-ring		1
5	6734561	WASHER			1
5	25K030118B	O-RING			1
6	6700631	GASKET			2
7	55K000214B	O-RING			1
8	17KB00606B	ELBOW			1
8	79K000006B	O-RING			x
9	6569219	SCREEN			1
10	7106212	HOSE			1
11	7101797	ELBOW			1
11	79K000012B	O-RING			x
12	6731209	TANK	hydraulic		1
13	7115066	TUBELINE			1
14	6727313	ELBOW			1
14	79K000006B	O-RING			x
15	5HM00015B	CLAMP			2
16	77F000008B	ELBOW			1
17	6732586	TEE			1
17	79K000020B	O-RING			x
18		HOSE	NAP - 23" (584 mm long) - Order Ref. 19		1
19	6586251	HOSE	bulk - sold per foot		x
20		SHIELD	NAP - 10" (254 mm) long - Order Ref. 22		1
21	59D000006B	NUT			1
22	6705749	SHIELD	bulk - sold by the foot		x
23	6730345	HOSE			1
24		PUMP	See Illustration HYDROSTATIC PUMP/ MS2183 See Illustration HYDROSTATIC PUMP/ MS2184 hydrostatic		1
25	6718850	BRACKET			1
26	47K000010B	PLUG	tank flushing hole		1
26	79K000016B	O-RING			x
27	17C000644B	BOLT			1
28	6592507	PLATE			2
29	7115185	HOSE			1
30	19J000012B	CLAMP			2
31	5HM00042B	CLAMP			2
32	83D000005B	NUT			4
33	6731638	HOSE			1
34	6706517	SCREW			3
35	42HL00250B	CLAMP			2
36	6578278	PAD			1
37	6727354	INLET			1
38	36K000005B	CAP			1
39	7106040	TEE	split flange		1
40	17C000620B	BOLT			4
41	35C000632B	BOLT			1
42		VALVE	control		1
43	7100462	CLAMP			2

HYDROSTATIC CIRCUITRY
(W/Motors)

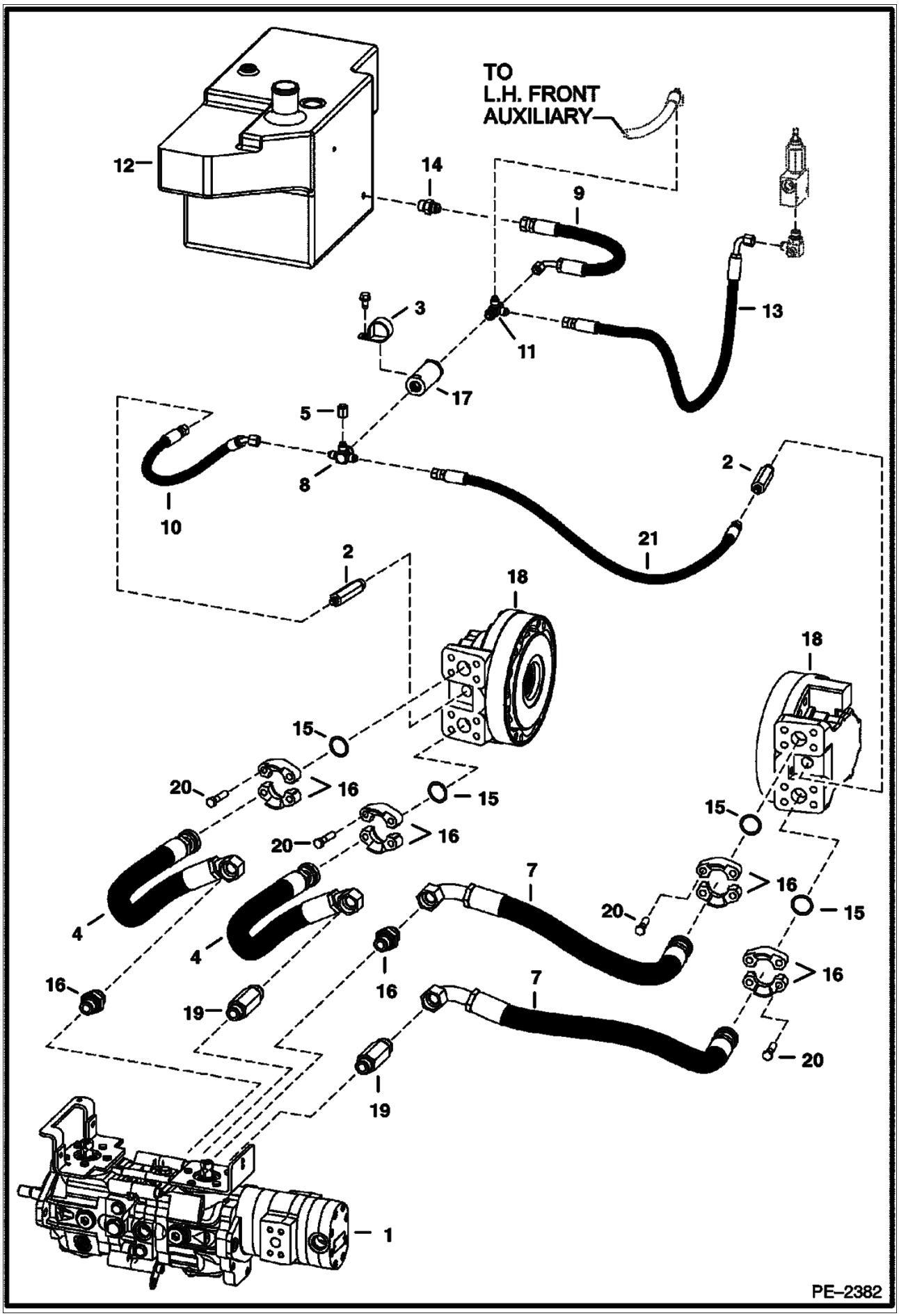

HYDROSTATIC CIRCUITRY (Cont'd)
(W/Motors)

Ref No	Part Number	Description	Remarks	Serial Number	Qty
1		PUMP	See Illustration HYDROSTATIC PUMP/ B25010 See Illustration HYDROSTATIC PUMP/ MS2183 See Illustration HYDROSTATIC PUMP/ MS2184		1
2	6717306	ADAPTER			2
2	79K000006B	O-RING			x
3	30H000079B	CLAMP			1
4	6673954	HOSE	mega seal - SEE NOTE - manual controls		2
5	36K000005B	CAP			1
6	20J000016B	CLAMP			8
7	6679141	HOSE	mega seal - SEE NOTE - manual controls		2
8	6725497	CROSS			1
8	79K000006B	O-RING			x
9	6733219	HOSE			1
10	6732484	HOSE			1
11	6718031	TEE			1
11	79K000006B	O-RING			x
12		TANK	hydraulic		1
13	6732483	HOSE			1
14	15KB00808B	ADAPTER			1
14	79K000008B	O-RING			x
15	55K000219B	O-RING			4
16	15KB01612B	ADAPTER			2
16	79K000012B	O-RING			x
17	6661022	FILTER	in-line - 90 micron		1
18		MOTOR	drive		2
19	6716243	ADAPTER			2
19	79K000012B	O-RING			x
20	17C000728B	BOLT			16
21	6732485	HOSE			1

HYDROSTATIC CIRCUITRY
W/Motors - Selectable Joystick Controls

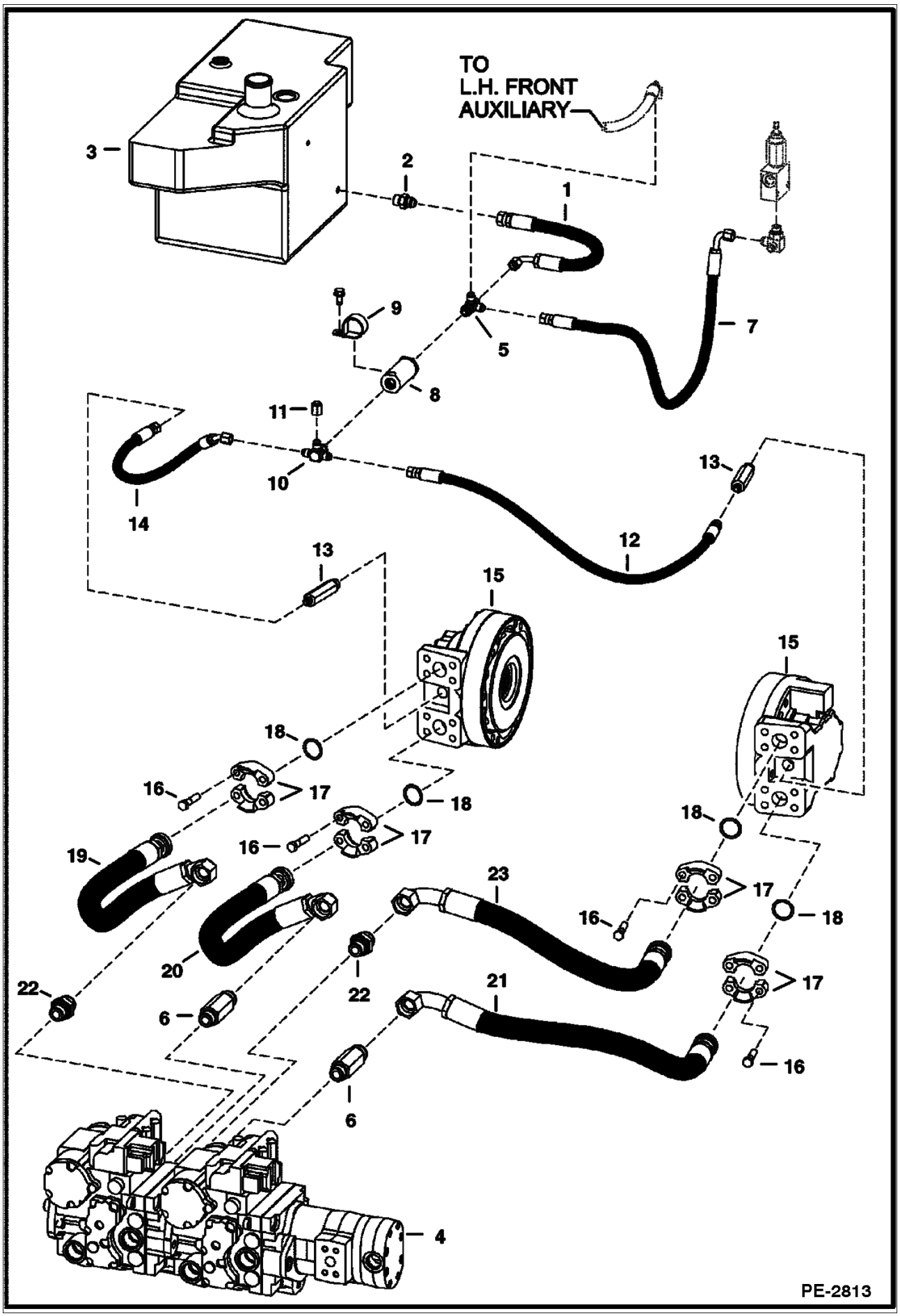

HYDROSTATIC CIRCUITRY (Cont'd)
W/Motors - Selectable Joystick Controls

Ref No	Part Number	Description	Remarks	Serial Number	Qty
1	6733219	HOSE			1
2	15KB00808B	ADAPTER			1
2	79K000008B	O-RING			x
3		TANK	hydraulic		1
4		PUMP	See Illustration HYDROSTATIC PUMP/GEAR PUMP/ PE2824 hydrostatic		1
5	6718031	TEE			1
5	79K000006B	O-RING			x
6	6716243	ADAPTER			2
6	79K000012B	O-RING			x
7	6732483	HOSE			1
8	6661022	FILTER	in-line		1
9	30H000079B	CLAMP			1
10	6725497	CROSS			1
10	79K000006B	O-RING			x
11	36K000005B	CAP			1
12	6732485	HOSE			1
13	6717306	ADAPTER			2
13	79K000008B	O-RING			x
14	6732484	HOSE			1
15		MOTOR	See Illustration HYDROSTATIC MOTOR/ B17125 See Illustration HYDROSTATIC MOTOR & BRAKE/ B16392 drive		2
16	17C000728B	BOLT			16
17	20J000016B	CLAMP			8
18	55K000219B	O-RING			4
19	7107557	HOSE			1
20	7107558	HOSE			1
21	7107559	HOSE			1
22	15KB01612B	ADAPTER			2
22	79K000012B	O-RING			x
23	7107560	HOSE			1

HYDROSTATIC CIRCUITRY
(W/Cooler)

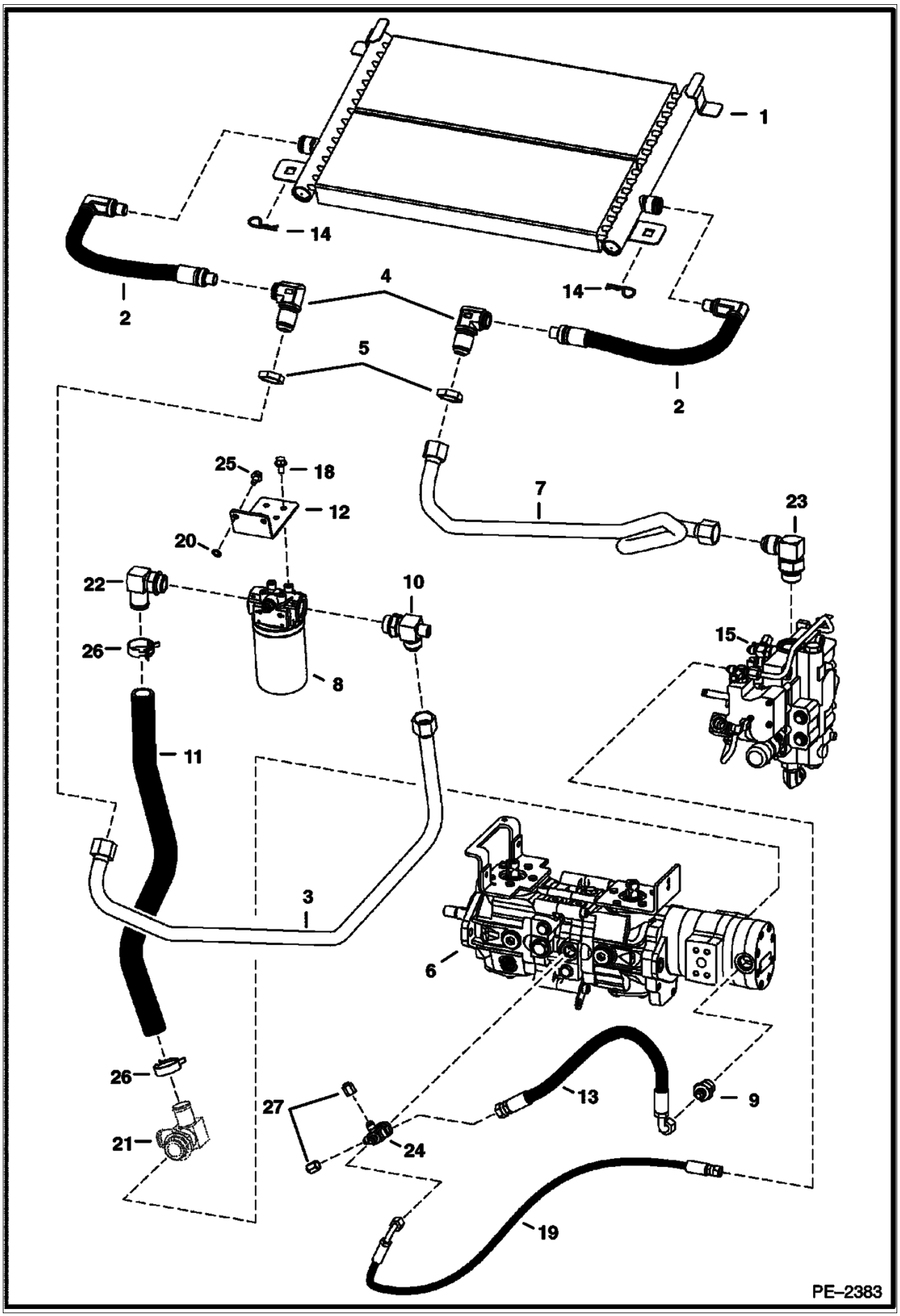

HYDROSTATIC CIRCUITRY (Cont'd)
(W/Cooler)

Ref No	Part Number	Description	Remarks	Serial Number	Qty
1	6678156	COOLER	oil		1
1	6681501	SEAL KIT			1
2	6684457	HOSE			2
2	6681501	SEAL KIT			x
3	7113355	TUBELINE			1
4	6678970	ELBOW			2
5	86F000010B	NUT			2
6		PUMP	See Illustration HYDROSTATIC PUMP/ MS2183 See Illustration HYDROSTATIC PUMP/ MS2184		1
7	7115091	TUBELINE			1
8	6678155	FILTER ASSY			1
8	6661248	ELEMENT			x
9	15KB00812B	ADAPTER			1
9	79K000012B	O-RING			x
10	6731527	TEE			1
10	79K000012B	O-RING			x
10	6674798	REPAIR KIT	internal retaining ring, back-up washer & o-ring		1
11	7114886	HOSE			1
12	7103903	MOUNT	filter		1
13	6731935	HOSE			1
14	1318565	COTTER PIN			2
15		VALVE	control		1
16	6736258	TEE			1
17	6718948	SNUBBER			1
18	35C000612B	BOLT			4
19	6628810	HOSE			1
20	6E000006B	WASHER			2
21	6732586	TEE			1
21	79K000020B	O-RING			x
22	6729306	ELBOW			1
22	79K000012B	O-RING			x
23	6813964	ELBOW	90 degree		1
23	79K000016B	O-RING			x
23	58K000022B	O-RING			x
24	6731925	TEE			1
24	79K000010B	O-RING			x
25	84G003710B	BOLT			2
26	5HM00042B	CLAMP			4

HYDROSTATIC CIRCUITRY
(2-Speed Option)

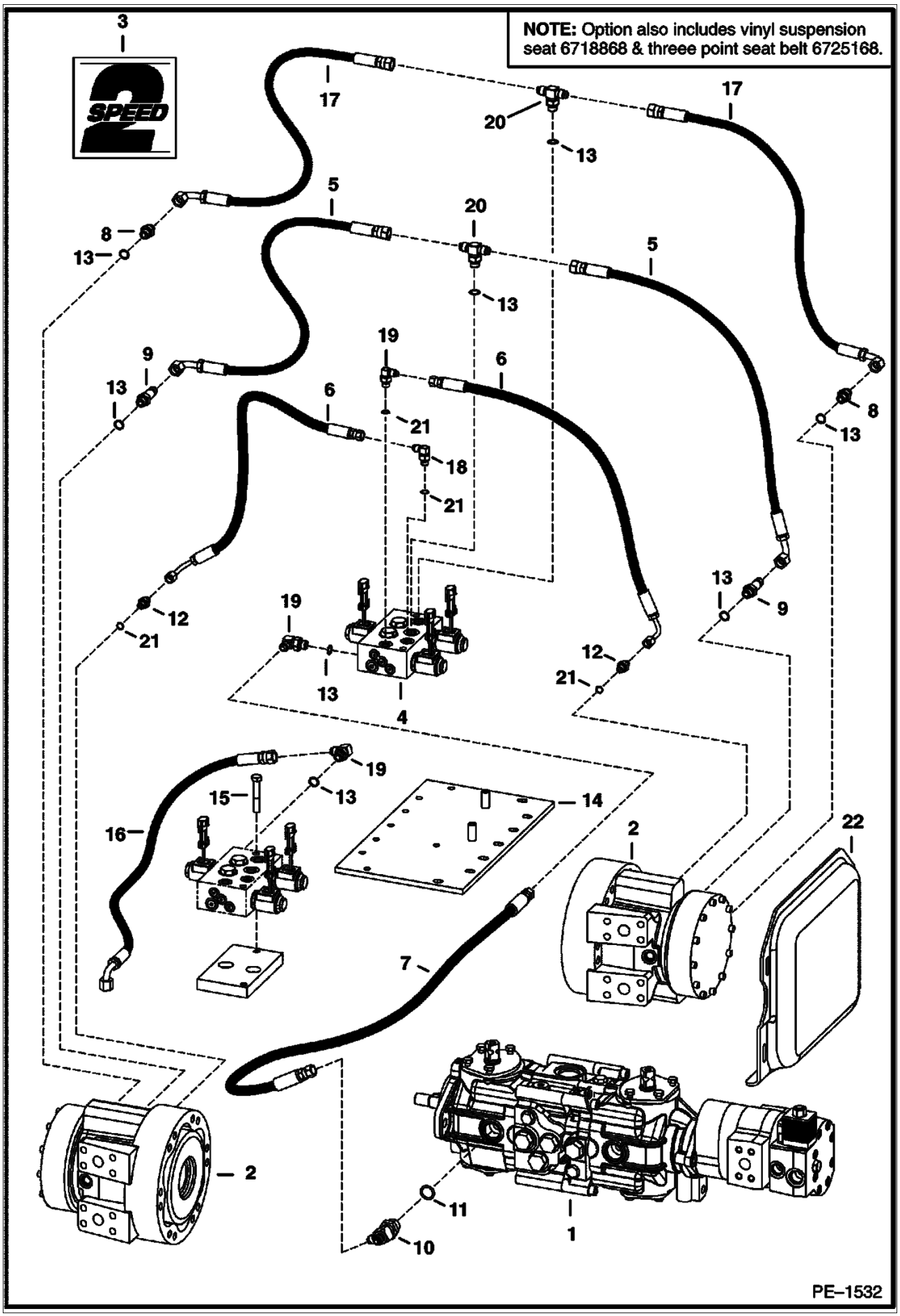

HYDROSTATIC CIRCUITRY (Cont'd)
(2-Speed Option)

Ref No	Part Number	Description	Remarks	Serial Number	Qty
1		PUMP	See Illustration HYDROSTATIC PUMP/ MS2183 See Illustration HYDROSTATIC PUMP/ MS2184 See Illustration HYDROSTATIC PUMP/ B25010		1
2		MOTOR	See Illustration HYDROSTATIC MOTOR & BRAKE/ B16392 See Illustration HYDROSTATIC MOTOR/ B17125		2
3	6729078	DECAL	2-speed		2
4	6676417	VALVE	See Illustration 2-SPEED VALVE/ MS1385 2-speed		1
5	6725899	HOSE	2-speed port		2
6	6725900	HOSE	make-up		2
7	6725901	HOSE			1
7	6579167	HOSE	for joystick controls		1
8	15KV00005B	ADAPTER	W/Ref. 13		2
8	97K000006B	O-RING	flared end		x
9	16KN00005B	ADAPTER	W/Ref. 13		2
9	97K000006B	O-RING	flared end		x
10		TEE	NAP - W/Ref. 11 - tapered boss face		1
10	97K000006B	O-RING	flared end		x
10	21KB00610B	TEE	W/Ref. 11 - flat boss face		1
10	15KB00610B	ADAPTER	W/Ref. 11 - flat boss face		1
11	99K000010B	O-RING	tapered boss face		x
11	79K000010B	O-RING	flat boss face		x
12	15KN00003B	ADAPTER	W/Ref. 21		2
12	97K000004B	O-RING	flared end		x
13	99K000006B	O-RING			x
14	6725496	COVER	chaincase		1
15	17C000636B	BOLT			2
16	6628613	HOSE			1
17	6716391	HOSE	brake		2
18	17KV00003B	ELBOW	W/Ref. 21		2
18	97K000004B	O-RING	flared end		x
19	17KV00005B	ELBOW	W/Ref. 13		3
19	97K000006B	O-RING	flared end		x
20	19KV00005B	TEE	W/Ref. 13		2
20	97K000006B	O-RING	flared end		x
21	99K000004B	O-RING			x

DRAWING NOT AVAILABLE AT TIME OF PRINTING

PE-2397

Ref No	Part Number	Description	Remarks	Serial Number	Qty
1	6702543	LEVER			2
2	7110572	BELLCRANK	Use W/Ref. 9 (10H000035B Grease Zerk)		2
3	6599741	WASHER	wave		1
4	6716545	ROD			1
5					x
6	45C000620B	BOLT			2
7	6732997	U-BOLT			4
8	6673710	BEARING			4
9	6518200	GREASE ZERK	press fit		2
9	10H000035B	GREASE ZERK	threaded		2
10	7105192	BOLT			4
11	6557831	WASHER	.15" thick		8
12	6706095	MOUNT			1
13	98D000006B	NUT			4
14	6701535	SPRING			1
15	6716916	WASHER			4
16	95D000006B	NUT			12
17	6685346	BRACKET			1
18	6706098	GUIDE			2
19	6702716	BLOCK			2
20	57D000006B	NUT			1
21	6563914	WASHER			1
22	6577058	PIN			2
23	1CM00820B	BOLT			8
24	17C000626B	BOLT			4
25	6673789	BEARING			4
26	25E000017B	WASHER			8
26	7100699	WASHER	.24" thick		4
27	7110365	PINTLE ARM			2
28	619021B	WASHER			4
29	6678067	BUSHING	torsion - 1.055" (26,8mm) O.D.		4
30	6731253	LINK			2
31	83D000006B	NUT			4
32	6716117	LINK			2
33	6599744	BALL JOINT			4
34	8D000006B	NUT			4
35	6685345	BRACKET			1
36	17C000620B	BOLT			4
37	6649551	SHOCK			2
38	96D000006B	NUT			4
39	17C000680B	BOLT			1
40	6715164	SLEEVE			1
41	6715163	BUSHING			3
42	35C000624B	BOLT			2
43	25E000024B	WASHER	for AHC		1
44	6733022	BRACKET	R.H.		1
44	6733024	BRACKET	L.H.		1
45	73G000824B	BOLT			2
46	7100795	MOUNT	damper - W/ mount for back-up alarm switch		1
47	17C000612B	BOLT			2
48	7105193	BOLT			4
49	7103708	BRACKET	Centering		2
50	7103711	BOLT			2
51	7105194	BOLT			2

DRAWING NOT AVAILABLE AT TIME OF PRINTING

PE-2397

Ref No	Part Number	Description	Remarks	Serial Number	Qty
52	7105223	SPACER			2
53	7103271	WASHER	.065" thick		8

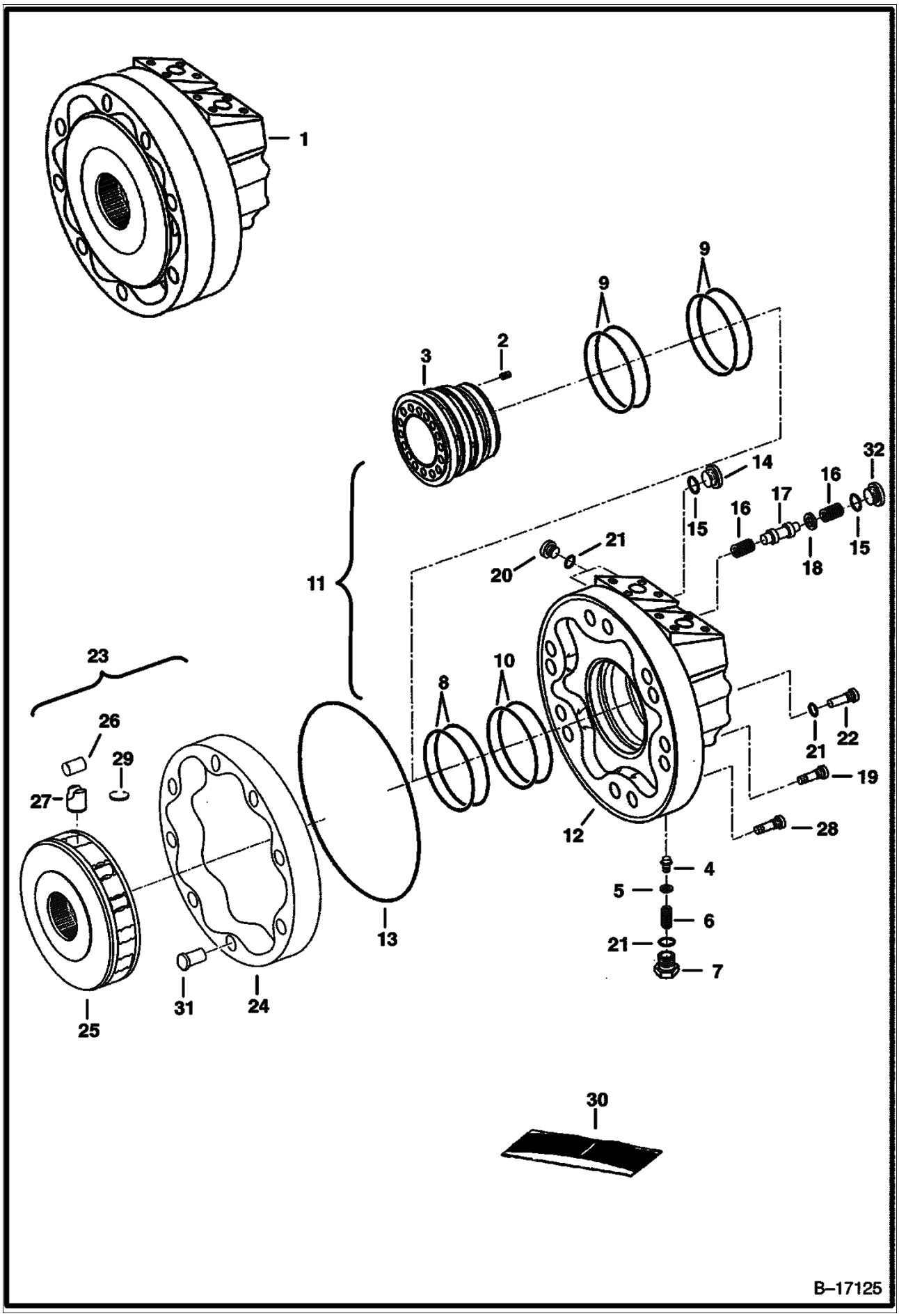
1
9
9
3
2
32
14
16
17
16
15
15
18
21
20
11
23
10
8
26
29
27
21
22
19
28
12
4
5
6
21
7
13
31
24
25
30
B–17125

Ref No	Part Number	Description	Remarks	Serial Number	Qty
1	6687825	MOTOR	model R921810312 - Ref. 2-28		1
2	6674037	SPRING			9
3	6674184	RING			1
4	6675868	POPPET			1
5	6674343	SHIM			1
6	6674344	SPRING			1
7	6674345	PLUG			1
8	6675227	SEAL	W/ O-ring		1
9	6675228	SEAL	W/ O-ring		2
10	6676022	SEAL	W/ O-ring - 86,4mm I.D.		1
11	6674335	HOUSING ASSY	rear - Ref. 2-10, 14-18 & 20-22		1
12	6674341	HOUSING	rear		1
13	6674029	SEAL			1
14	6671845	PLUG	W/Ref. 15		1
15	6676023	O-RING			1
16	6674339	SPRING			2
17	6674337	SPOOL			1
18	6674338	WASHER			1
19	6675021	BOLT			2
20	6676024	PLUG	W/Ref. 21		3
21	6675869	O-RING			3
22	6674340	PIN	locating		1
23		ROTARY GROUP	NAP - Ref. 24-27 - Order 6686719 rotary group, also Order 6677850 cam		1
23	6684036	BOLT KIT	W/ (6) bolts & (2) bushings		1
24	6675091	CAM			1
25	6674219	BLOCK			1
26		ROLLER	NSS - Order Ref. 23		8
27		PISTON	NSS - Order Ref. 23		8
28	6675020	SCREW			3
29		RING	NSS - keeper		8
30	6676021	SEAL KIT	Ref. 8-10, 13, 15 & 21		1
31	6688449	LOCATING PIN			2
32	6688866	PLUG	recessed		1

HYDROSTATIC MOTOR & BRAKE
(2-Speed & Selectable Joystick Controls)

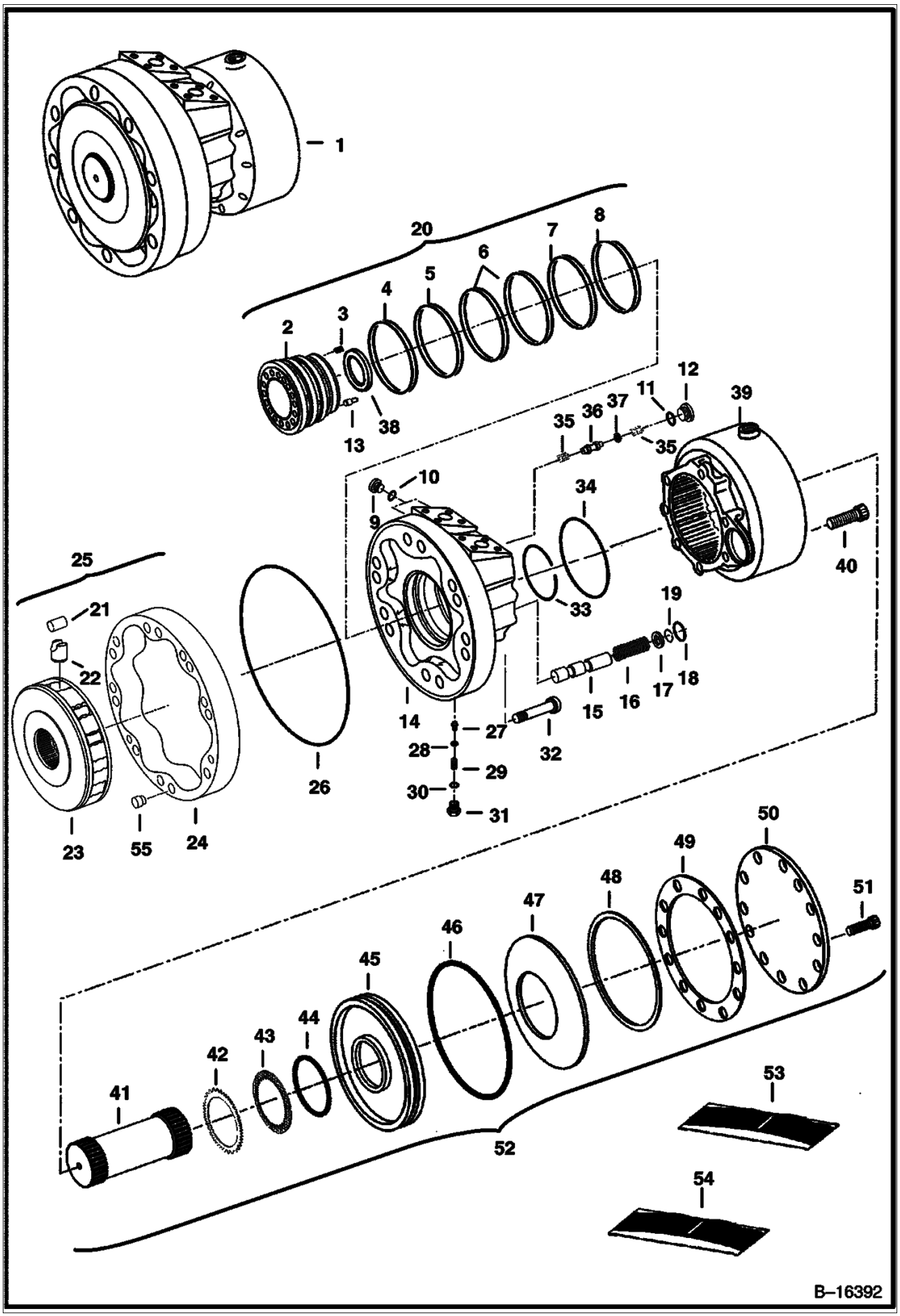

HYDROSTATIC MOTOR & BRAKE (Cont'd)
(2-Speed & Selectable Joystick Controls)

Ref No	Part Number	Description	Remarks	Serial Number	Qty
1	6674738	MOTOR	model R921810406 - Ref. 2-52		1
2	6675876	DISTRIBUTOR			1
3	6674037	SPRING			12
4	6675877	SEAL	W/ O-ring		1
5	6675878	SEAL	W/ O-ring		1
6	6675879	SEAL	W/ O-ring		2
7	6675880	SEAL	W/ O-ring		1
8	6675881	SEAL	W/ O-ring		1
9	90KV00003B	PLUG	W/Ref. 10		2
10	95K000004B	O-RING			2
11	95K000006B	O-RING			1
12	90KV00005B	PLUG	W/Ref. 11		1
13	6675189	PIN			1
14	6675875	HOUSING	rear		1
15	6675882	SPOOL	stamped "B"		1
15	6686693	SPOOL	stamped "A"		1
16		SPRING	NAP - red - Order Ref. 53		1
16		SPRING	NAP - yellow- Order Ref. 53		1
16	6676645	SPRING	green		1
16		SPRING	NAP - blue- Order Ref. 53		1
17		WASHER	NAP - 2,14mm - for red spring - Order Ref. 53		1
17		WASHER	NAP - 2,38mm - for yellow spring - Order Ref. 53		1
17		WASHER	NAP - 2,62mm - for green spring - Order Ref. 53		1
17		WASHER	NAP - 2,86mm - for blue spring - Order Ref. 53		1
18	6675886	QUAD RING			1
19	6675885	SNAP RING			1
20	6675861	REAR HOUSING	assy. - Ref. 2-19		1
21		ROLLER	NSS - Order Ref. 25		8
22		PISTON	NSS - Order Ref. 25		8
23		BLOCK	NSS - Order Ref. 25		1
24	6675874	CAM			1
25		ROTARY GROUP	NAP - Ref. 21-24		1
26	6675864	QUAD RING			1
27	6675868	POPPET	1,5mm orifice		1
28	6674343	SHIM	0,6mm		1
29	6674344	SPRING			1
30	6675869	O-RING			1
31	6674345	PLUG			1
32	6675021	BOLT	holds rotary group to the brake		2
33	6685265	SNAP RING			1
34	6675863	QUAD RING			1
35	6674841	SPRING			2
36	6675866	SPOOL			1
37	6675867	WASHER			1
38	6675898	BUSHING			1
39	6675887	HOUSING			1
40	6675896	BOLT			8
41	6675888	SHAFT			1
42	6674192	BRAKE DISC	outer		14
43	6674193	BRAKE DISC	inner		13
44	6675894	SEAL	75,4 x 85,6 x 6 mm		1
45	6675889	PISTON	brake		1
46	6675893	O-RING			1
47	6675897	WASHER			1

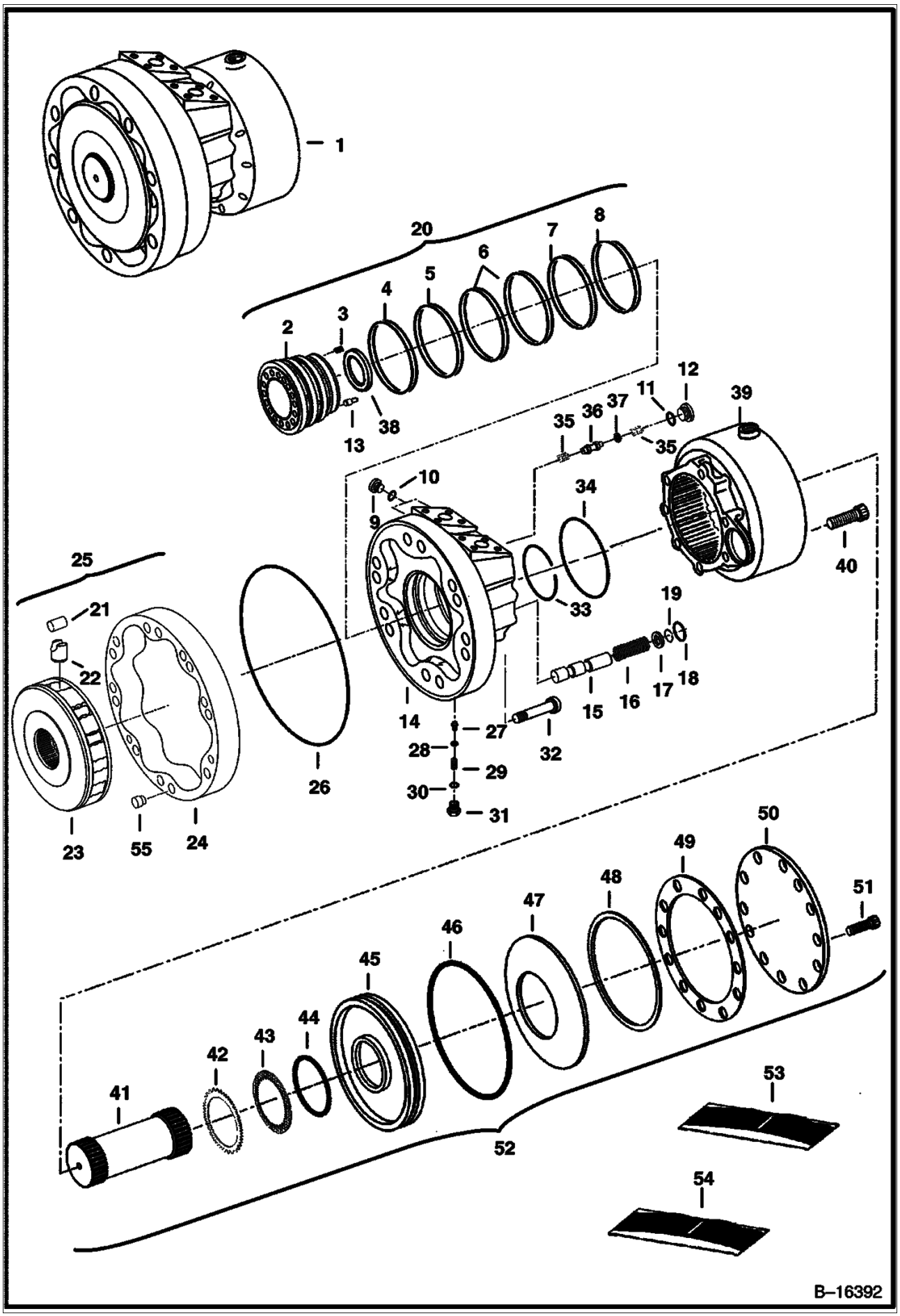
1
20
7
8
6
5
4
3
2
38
13
12
11
39
37
36
35
35
10
9
34
40
25
21
22
33
19
18
17
16
15
14
27
28
29
30
31
32
26
23
55
24
50
49
48
47
46
45
44
43
42
41
51
53
52
54
B–16392

HYDROSTATIC MOTOR & BRAKE (Cont'd)
(2-Speed & Selectable Joystick Controls)

Ref No	Part Number	Description	Remarks	Serial Number	Qty
48	6676647	WASHER	0,8mm thick		1
48	6676648	WASHER	1,05mm thick		1
48	6676649	WASHER	1,9mm thick		1
48	6676650	WASHER	2,3mm thick		1
48	6676651	WASHER	2,5mm thick		1
48	6676652	WASHER	2,9mm thick		1
49	6675892	GASKET			1
50	6675890	COVER			1
51	6675895	BOLT			12
52	6675862	BRAKE	Ref. 38-51		1
53	6678204	KIT			1
54		SEAL KIT	Ref. 4-8, 18, 26, 30, 34, 44 & 49		1
55	6688449	LOCATING PIN			2

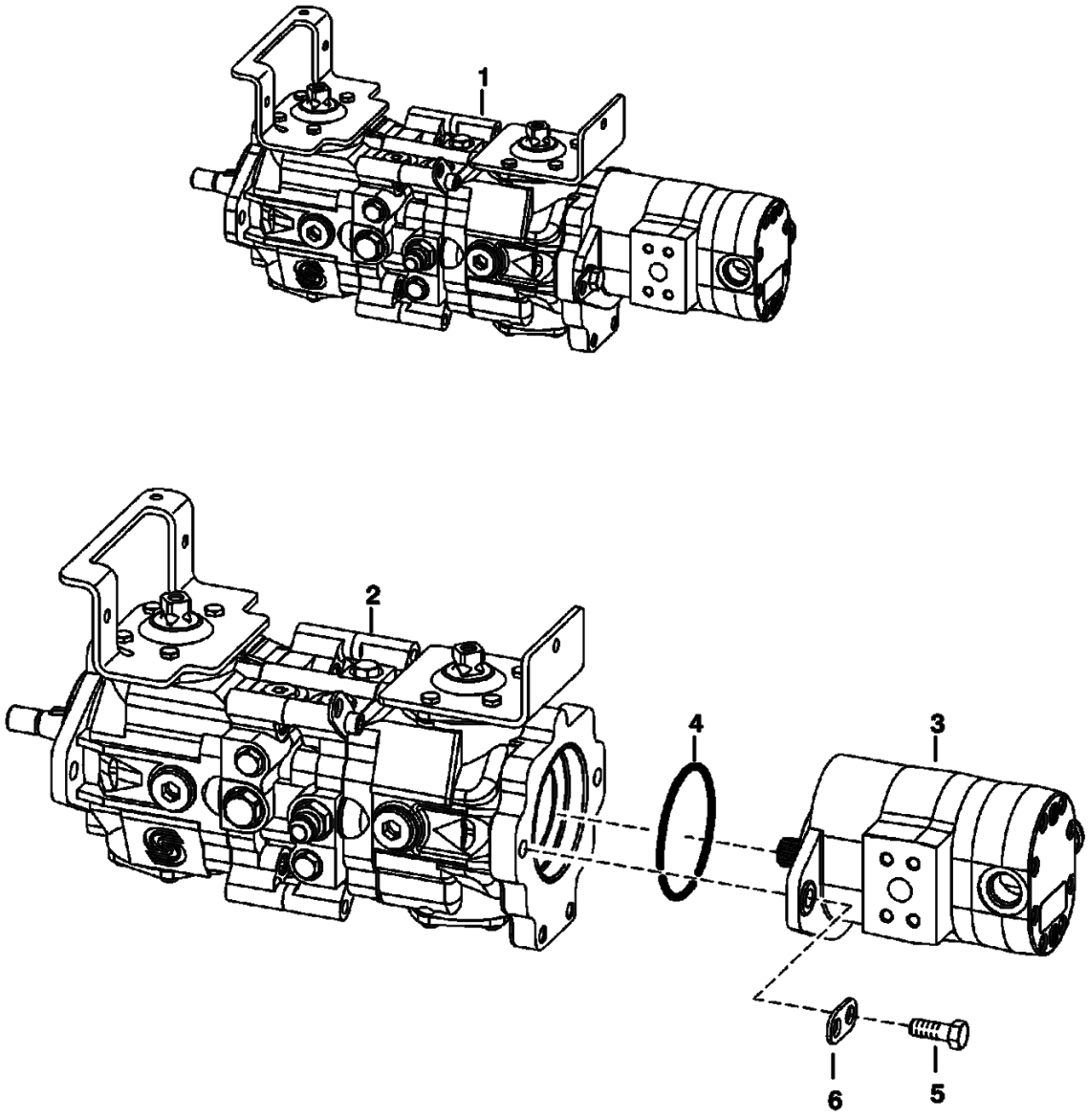
1
2
4
3
6
5
PE-2824

HYDROSTATIC PUMP/GEAR PUMP (Cont'd)
Identification

Ref No	Part Number	Description	Remarks	Serial Number	Qty
1		PUMP ASSY	NAP - Order Ref. 2-6		1
2		HYDROSTATIC PUMP	See Illustration HYDROSTATIC PUMP/ MS2184 manual hand controls		1
2		HYDROSTATIC PUMP	See Illustration HYDROSTATIC PUMP/ B25010 selectable joystick controls		1
3		GEAR PUMP	See Illustration GEAR PUMP/ MS1454 manual hand controls or selectable joystick controls		1
3		GEAR PUMP	See Illustration HIGH FLOW GEAR PUMP/ MS1456 high flow - manual hand or selectvie joystick controls		1
4	6671520	O-RING	manual hand controls		1
4	6688019	O-RING	selectable joystick controls		1
5	43C820	BOLT			2
6	6631643	PLATE			2

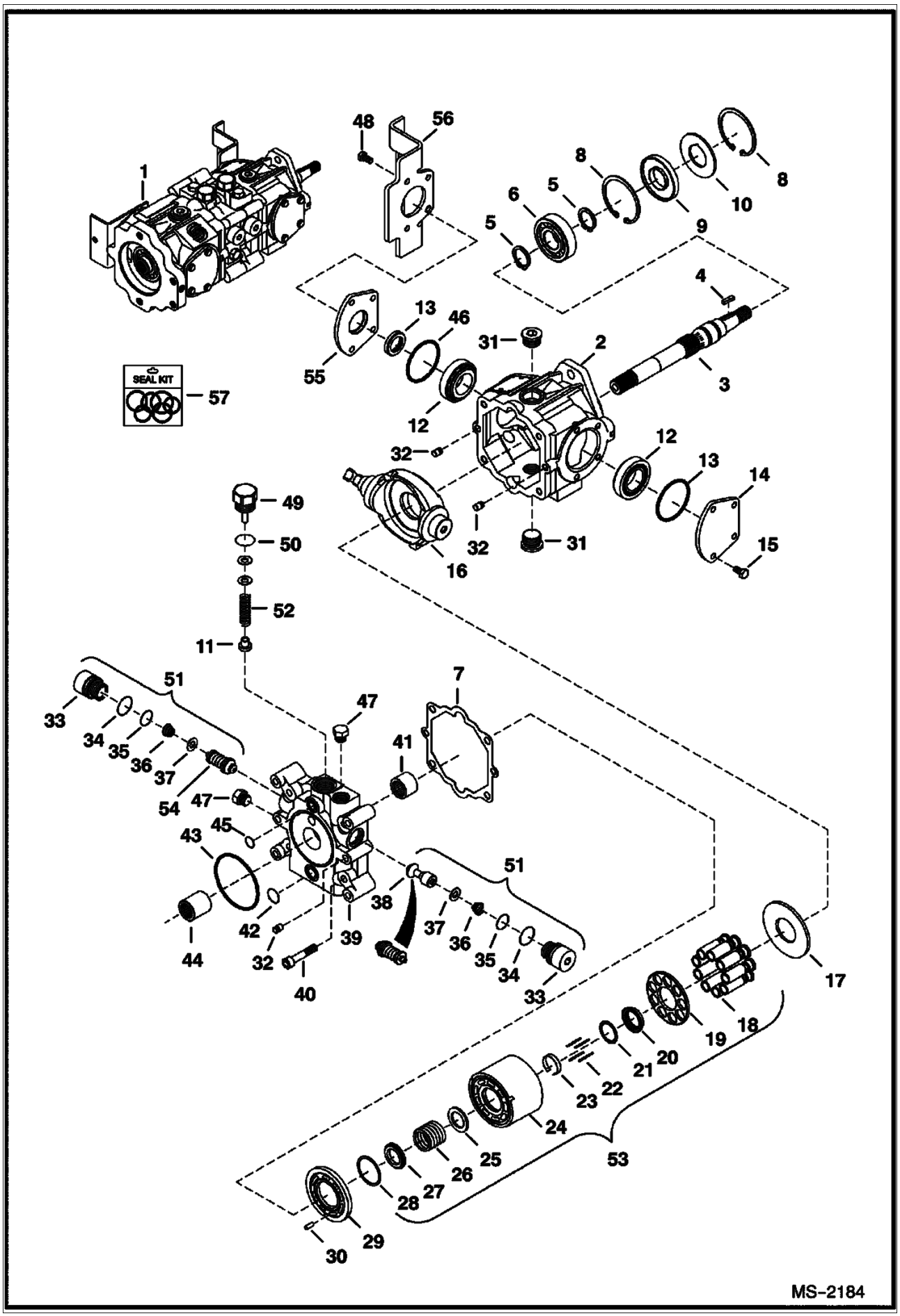
SEAL KIT
MS-2184

HYDROSTATIC PUMP (Cont'd)
Manual Hand Controls

Ref No	Part Number	Description	Remarks	Serial Number	Qty
1	6687832	PUMP	Model 4445208		1
2	6669402	HOUSING			1
3	6682260	SHAFT	W/square key		1
4	6683169	KEY			1
5	658128B	SNAP RING			2
6	654299B	BEARING			1
7	6650634	GASKET			1
8	669863B	SNAP RING			2
9	6687191	SEAL			1
10	6669409	WASHER			1
11	6650652	POPPET	Charge relief		1
12	6669411	BEARING			2
13	6660814	O-RING			2
14	6657068	COVER			2
15	6650668	BOLT			4
16	6685344	SWASH PLATE	W/threaded shaft hole		1
17	6650627	PLATE			1
18	6683168	PISTON ASSY			1
19	6657072	RETAINER			1
20	6657073	RETAINER			1
21	6666338	WASHER			1
22	6650629	PIN			4
23	6650630	RETAINER			1
24	6683167	BLOCK			1
25		WASHER	NAP - Order Ref. 53		1
26		SPRING	NAP - Order Ref. 53		1
27		WASHER	NAP - Order Ref. 53		1
28	6666881	WASHER			1
29	6687774	PLATE			1
30	6650636	PIN			1
31	47K000008B	PLUG			2
31	79K000012B	O-RING			2
32	6675342	PIN			4
33		PLUG	NAP - Order Ref. 51		2
34	6657028	O-RING			2
35	79K000008B	O-RING			2
36		SPRING	NAP - Order Ref. 51		2
37		RETAINER	NAP - Order Ref. 51		2
38		CHECK VALVE	NAP - poppet - Order Ref. 51		1
39	6669406	END PLATE			1
40	6650637	BOLT			4
41	6650635	BEARING			1
42	6650647	O-RING			1
43	6673884	O-RING			1
44	6650675	COUPLER			1
45	6650646	O-RING			1
46	6660814	O-RING			1
47	6645086	PLUG			2
47	6661481	O-RING			1
48	6671518	BOLT			4
49	6650648	PLUG	Charge relief - W/Ref. 50		1
50	79K000010B	O-RING			1
51	6689601	VALVE			1
52	6684038	SPRING			1

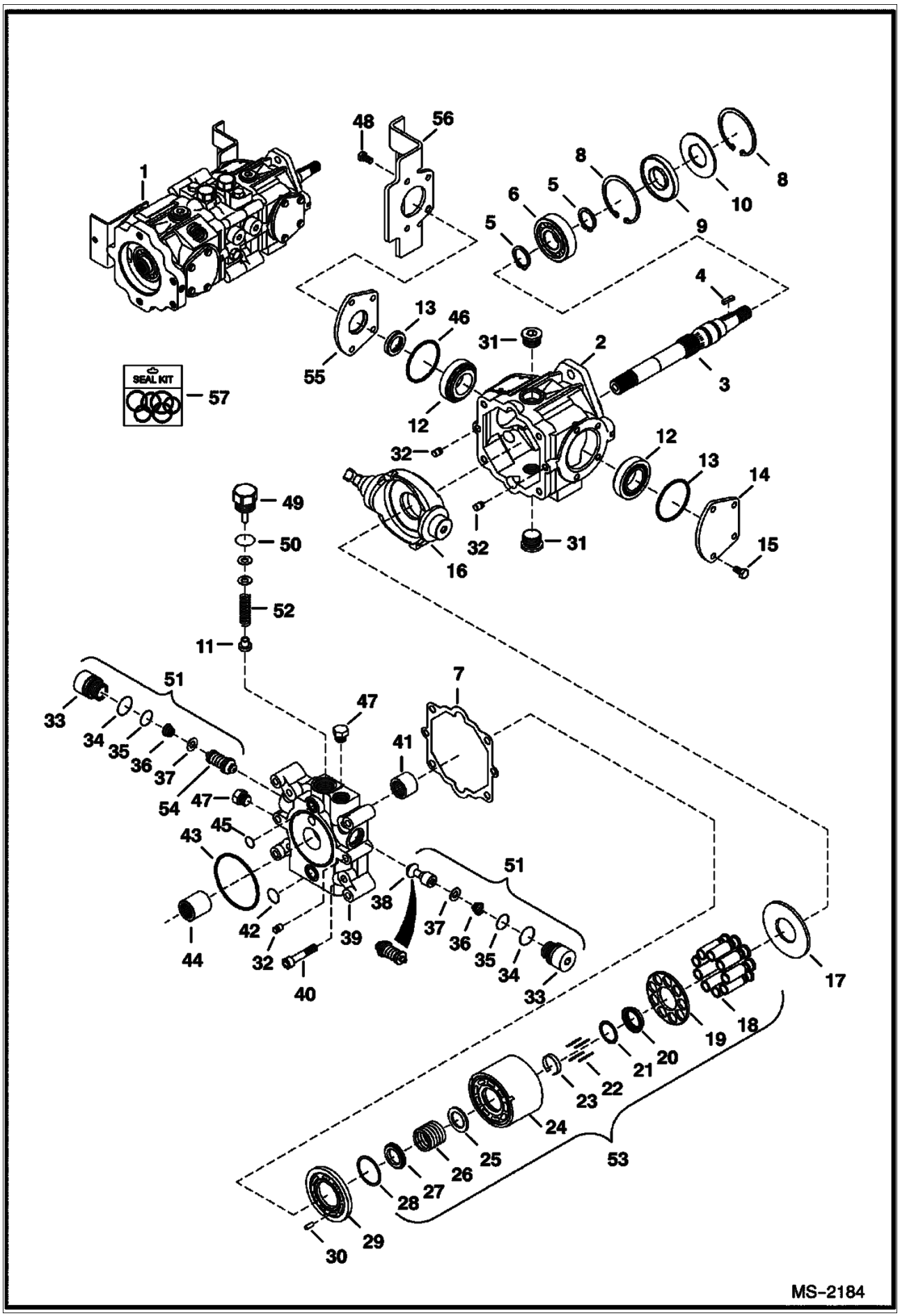
SEAL KIT
MS-2184

Ref No	Part Number	Description	Remarks	Serial Number	Qty
53	6675341	BLOCK ASSY			1
54		RELIEF VALVE	NAP - 5000 PSI (345 bar)- Order Ref. 51		1
55	6657067	COVER	W/Ref. 46		1
56	6685345	BRACKET			1
57	6671516	SEAL KIT	Ref. 7, 9, 13, 34, 35, 42, 43, 45, 46 & 50 - Also includes Ref. 2, 3, 12, 31 & 41 on next page		1

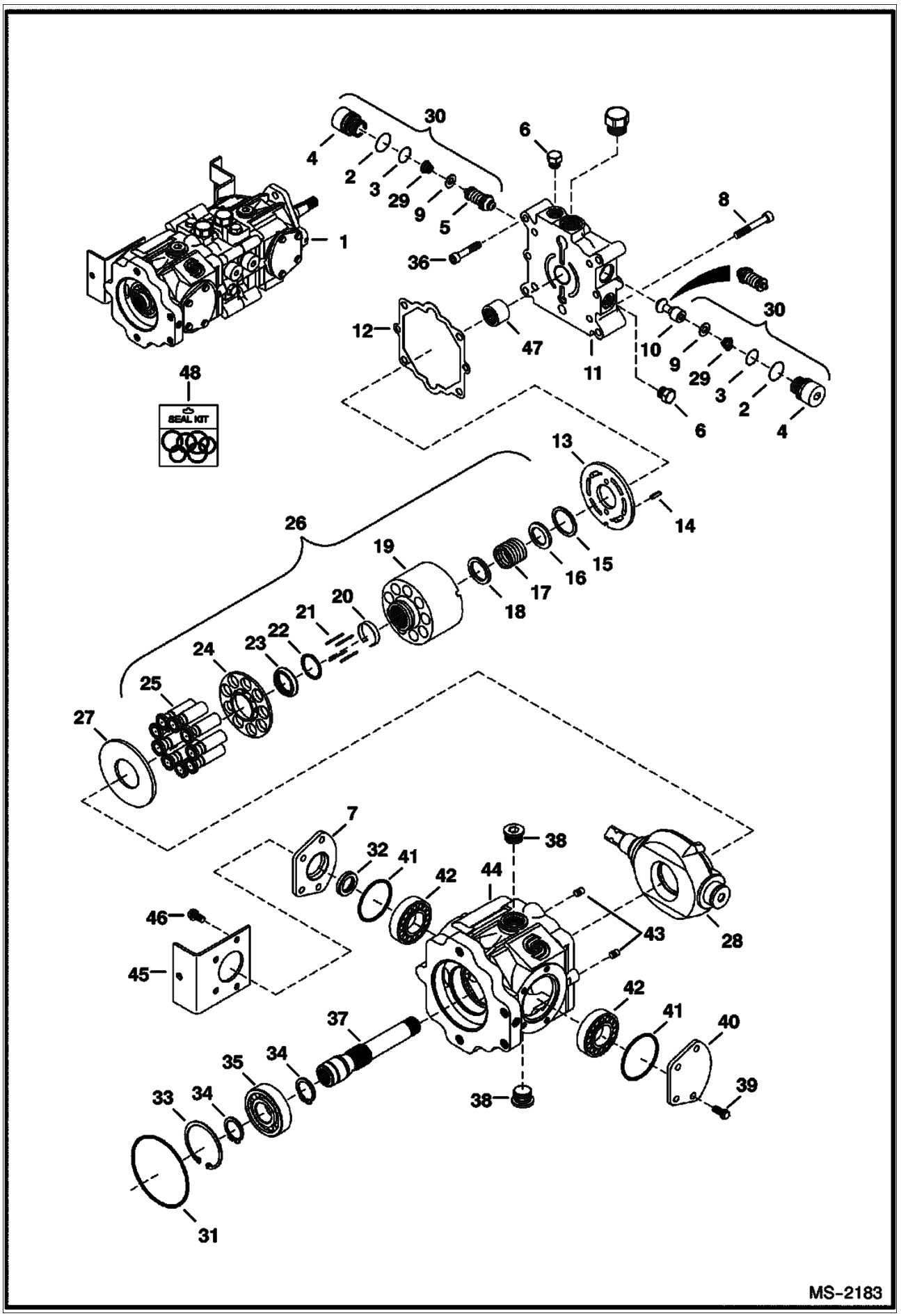
30
4
2
3
29
9
5
6
8
1
36
12
47
11
10
9
29
3
2
4
30
6
48
SEAL KIT
13
14
26
19
15
16
17
18
20
21
22
23
24
25
27
7
32
41
42
44
38
46
45
43
28
42
41
40
39
37
35
34
33
34
38
31
MS-2183

HYDROSTATIC PUMP (Cont'd)
Manual Hand Controls

Ref No	Part Number	Description	Remarks	Serial Number	Qty
1	6687832	PUMP	Model 4445208		1
2	6657028	O-RING			2
3	79K000008B	O-RING			2
4		PLUG	NAP - Order Ref. 30		2
5		RELIEF VALVE	NAP - 5000 PSI (345 bar)- Order Ref. 30		2
6	6645086	PLUG			4
7	6675338	COVER	W/Ref. 32		1
8	6650637	BOLT			2
9		RETAINER	NAP - Order Ref. 30		4
10		CHECK VALVE	NAP - poppet - Order Ref. 30		1
11	6669405	END CAP			1
12	6650634	GASKET			1
13	6676147	VALVE PLATE			1
14	6650636	PIN			2
15		RETAINER	NAP - Order Ref. 26		1
16		WASHER	NAP - Order Ref. 26		1
17		SPRING	NAP - Order Ref. 26		1
18		WASHER	NAP - Order Ref. 26		1
19	6683167	BLOCK			1
20	6650630	RETAINER			1
21	6650629	PIN			4
22	6666338	WASHER			1
23	6657073	RETAINER			1
24	6657072	RETAINER			1
25	6683168	PISTON ASSY			1
26	6671512	BLOCK ASSY	W/Ref. 15-25		1
27	6650627	PLATE			1
28	6685344	SWASH PLATE	W/threaded shaft hole		1
29		SPRING	NAP - Order Ref. 30		2
30	6689601	VALVE	W/Ref. 2-5, 9, 10 & 29		2
31	6671520	O-RING			1
32	6678226	SEAL			1
33	669863B	SNAP RING			1
34	658128B	SNAP RING			2
35	654299B	BEARING			1
36	6652018	BOLT			4
37	6682264	SHAFT			1
38	47K000008B	PLUG			1
38	79K000012B	GEAR PUMP			2
39	6650668	BOLT			4
40	6657068	COVER			1
41	6660814	O-RING			2
42	6669411	BEARING			2
43	6675342	PIN			2
44	6689602	HOUSING			1
45	6685346	BRACKET			1
46	6671518	BOLT			4
47	6650635	BEARING			1
48	6671516	SEAL KIT	Ref. 2, 3, 12, 31 & 41 - Also includes Ref. 7, 9, 13, 34, 35, 42, 43, 45, 46 & 50 on previous page		1

HYDROSTATIC PUMP
Selectable Joystick Controls

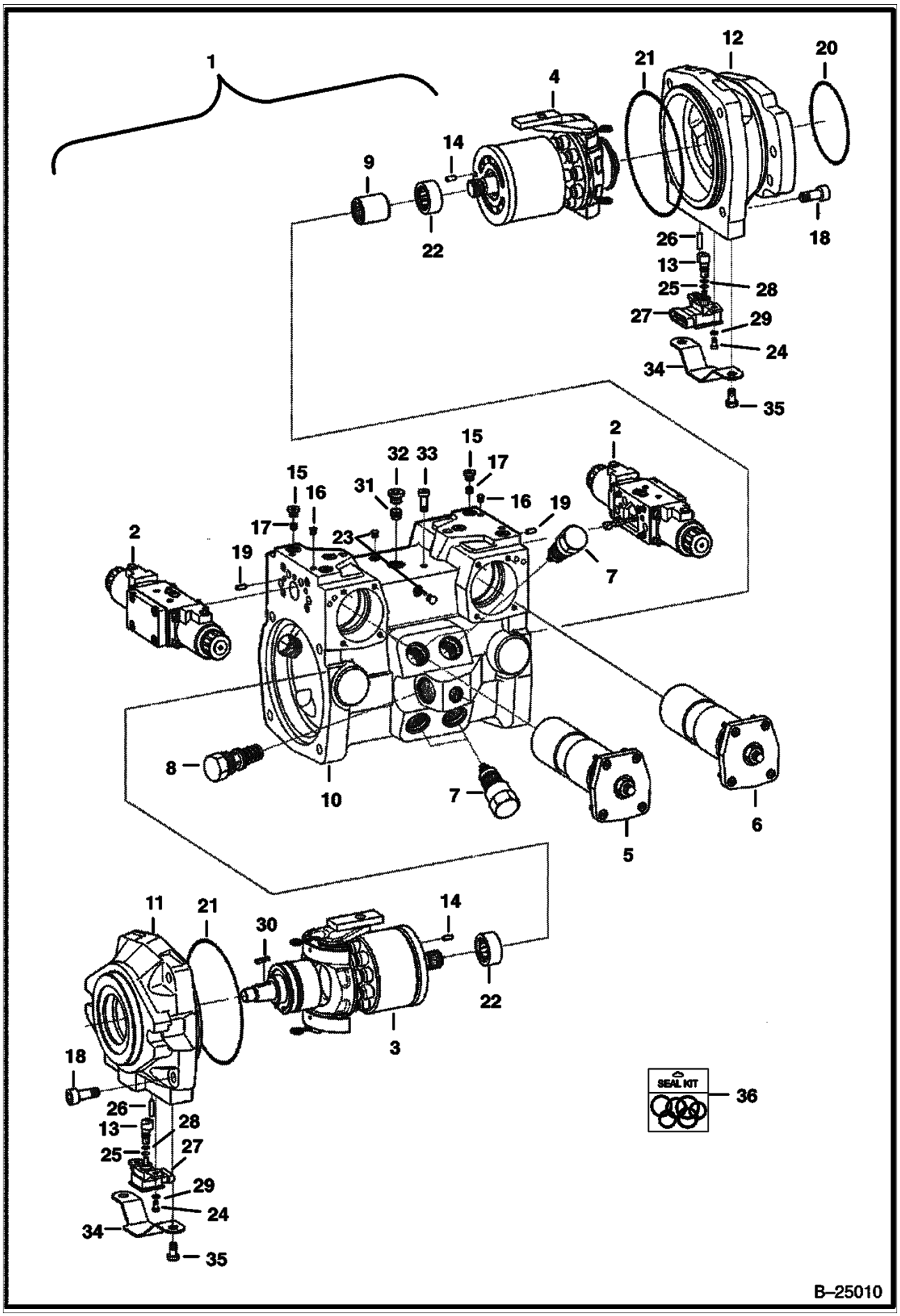

HYDROSTATIC PUMP (Cont'd)
Selectable Joystick Controls

Ref No	Part Number	Description	Remarks	Serial Number	Qty
1	6686267	PUMP			1
2	6687970	MODULATOR	See Illustration HYDROSTATIC PUMP/ B25016		2
3	6687957	GROUP	See Illustration HYDROSTATIC PUMP/ B25011 L.H. rotation		1
4	6687958	GROUP	See Illustration HYDROSTATIC PUMP/ B25012 R.H. rotation		1
5	6687960	CONTROL	See Illustration HYDROSTATIC PUMP/ B25013		1
6	6687961	CONTROL	See Illustration HYDROSTATIC PUMP/ B25013A		1
7	6687924	VALVE	See Illustration HYDROSTATIC PUMP/ B25014		4
8	6687938	VALVE	See Illustration HYDROSTATIC PUMP/ B25015		1
9	6687941	COUPLER			1
10	6687964	HOUSING			1
11	6687973	FLANGE			1
12	6687974	FLANGE			1
13	6687965	SHAFT			2
14	6688011	PIN			2
15	6688016	SCREW			11
16	6688039	PIN			3
17	6688020	ORIFICE			4
18	6688008	SCREW			8
19	6686934	PIN			2
20	6688019	SEAL			1
21	6688009	SEAL			2
22	6688040	BEARING			2
23	6687932	PIN			2
24	6687994	SCREW			4
25	6687990	RING			2
26	6688014	PIN			2
27	6687984	SENSOR			2
28	6688007	SEAL			2
29	6687998	SHIM			4
30	6687991	KEY			1
31	6687988	FILTER			1
32	6688015	SCREW			1
33	6687992	SCREW			1
34	6687993	COVER			2
35	6688003	SCREW			4
36	6689021	SEAL KIT	complete		1

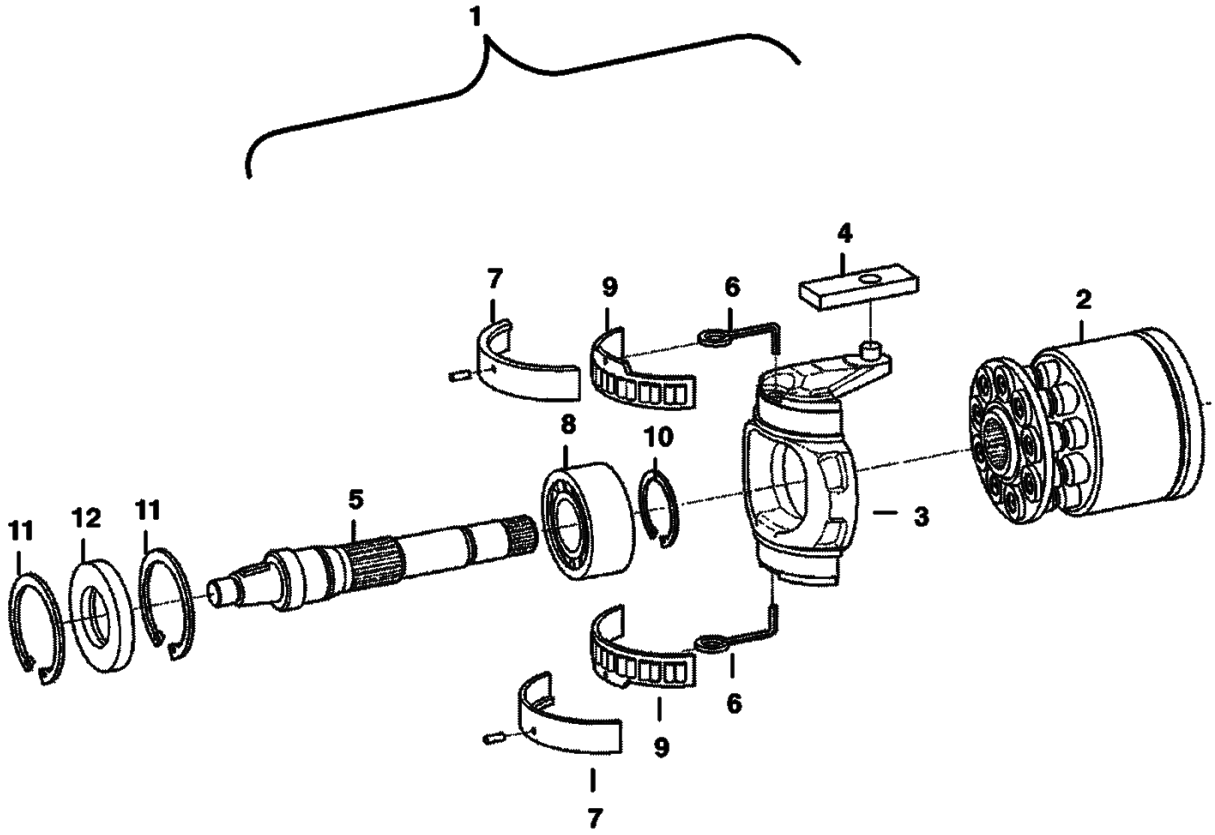
1
4
7
9
6
2
8
10
11
12
11
5
3
6
9
7
B–25011

HYDROSTATIC PUMP (Cont'd)
Selectable Joystick Controls
Rotary Group - L.H.

Ref No	Part Number	Description	Remarks	Serial Number	Qty
1	6687957	GROUP	L.H. rotation		1
2	6687977	GROUP			1
2	6687979	GROUP			1
2	6687976	PLATE			1
3	6687951	BRACKET			1
4	6687940	RING			1
5	6687959	SHAFT			1
6	6687930	WIRE			2
7	6687956	BEARING			1
8	6688018	BEARING			1
9	6687987	BEARING			1
10	6687999	RING			1
11	6688042	RING			2
12	6688038	RING			1

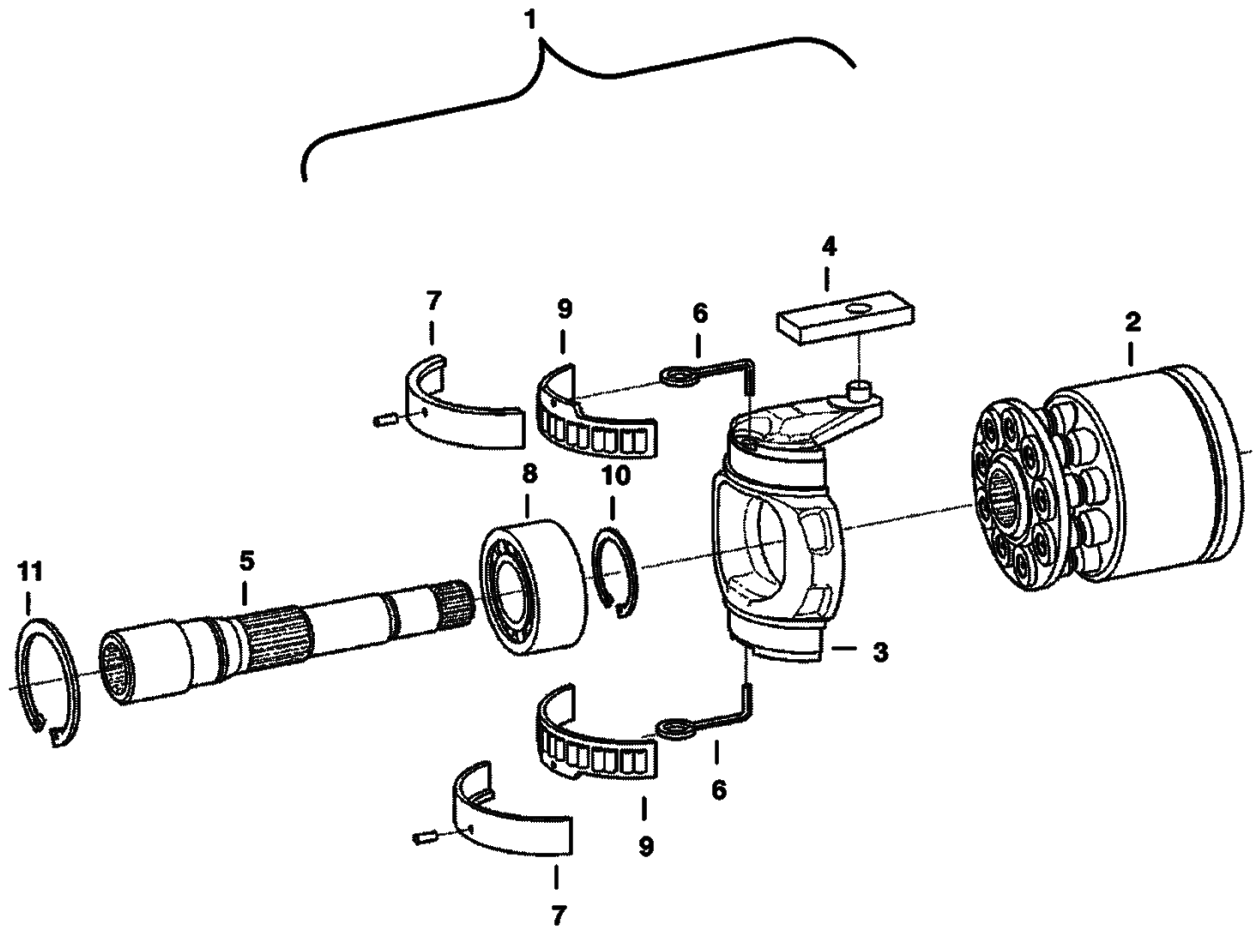
1
4
7
9
6
2
8
10
11
5
3
6
9
7
B–25012

HYDROSTATIC PUMP (Cont'd)
Selectable Joystick Controls
Rotary Group - R.H.

Ref No	Part Number	Description	Remarks	Serial Number	Qty
1	6687958	GROUP	R.H. rotation		1
2	6687978	GROUP			1
2	6687979	GROUP			1
2	6687975	PLATE			1
3	6687951	BRACKET			1
4	6687940	RING			1
5	6687943	SHAFT			1
6	6687930	WIRE			2
7	6687956	BEARING			1
8	6688018	BEARING			1
9	6687987	BEARING			1
10	6687999	RING			1
11	6688042	RING			2

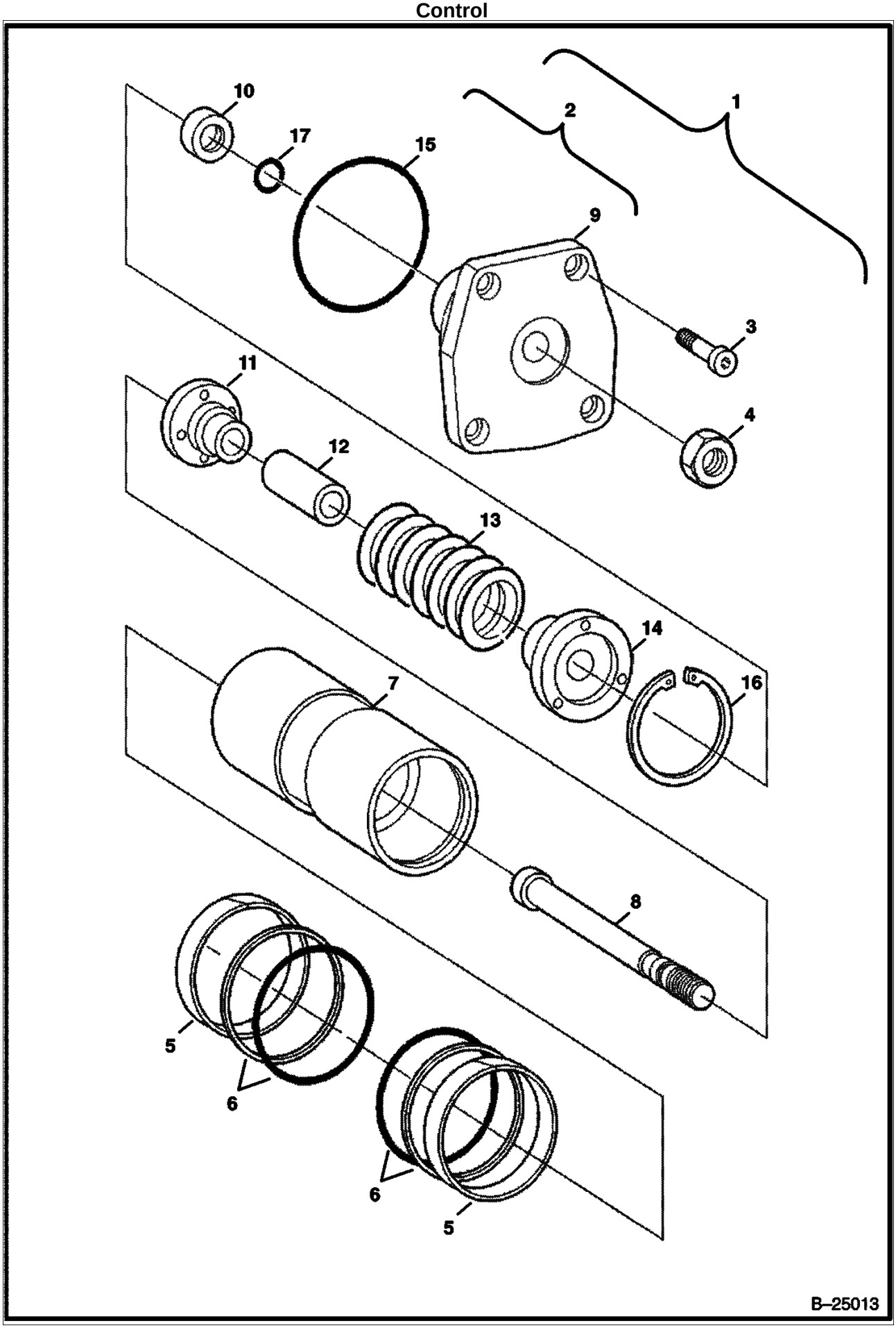
10
17
15
2
1
9
3
11
4
12
13
14
16
7
8
5
6
6
5
B–25013

HYDROSTATIC PUMP (Cont'd)
Selectable Joystick Controls
Control

Ref No	Part Number	Description	Remarks	Serial Number	Qty
1	6687960	CONTROL			1
2	6687962	PISTON			1
3	6687995	SCREW			4
4	6674907	NUT	Was 6687925 [A]		1
5	6687985	RING			2
6	6687986	KIT			2
7	6687953	PISTON			1
8	6688031	ROD			1
9	6688024	COVER			1
10	6688037	RING	6,70 mm		1
10	6688036	RING	6,75 mm		1
10	6688035	RING	6,80 mm		1
10	6688025	RING	6,85 mm		1
10	6688026	RING	6,90 mm		1
10	6688027	RING	6,95 mm		1
10	6688028	RING	7,00 mm		1
10	6688029	RING	7,05 mm		1
10	6688030	RING	7,10 mm		1
11	6687926	COLLAR			1
12	6688033	SPACER	54,60 cm		1
12	6687942	SPACER	54,65 cm		1
12	6688032	SPACER	54,70 cm		1
12	6687948	SPACER	54,75 cm		1
12	6687949	SPACER	54,80 cm		1
13	6687928	SPRING			1
14	6687927	COLLAR			1
15	6688005	SEAL			1
16	6688002	RING			1
17	6688006	SEAL			1

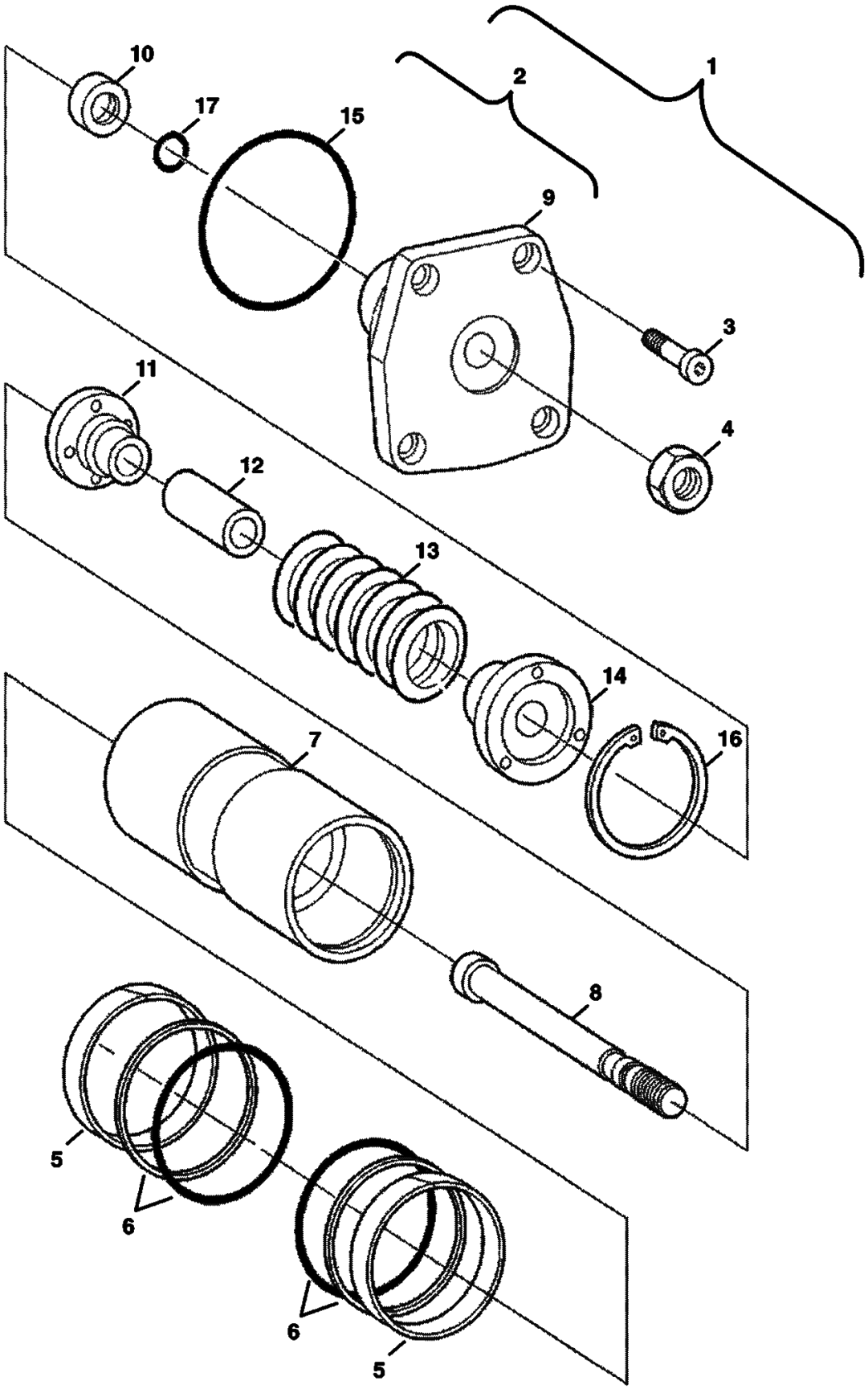
10
17
15
2
1
9
3
11
4
12
13
14
16
7
8
5
6
6
5
B-25013A

HYDROSTATIC PUMP (Cont'd)
Selectable Joystick Controls
Control

Ref No	Part Number	Description	Remarks	Serial Number	Qty
1	6687961	CONTROL			1
2	6687963	PISTON			1
3	6687995	SCREW			4
4	6674907	NUT	Was 6687925 [A]		1
5	6687985	RING			2
6	6687986	KIT			2
7	6687953	PISTON			1
8	6688031	ROD			1
9	6688024	COVER			1
10	6688037	RING	6,70 mm		1
10	6688036	RING	6,75 mm		1
10	6688035	RING	6,80 mm		1
10	6688025	RING	6,85 mm		1
10	6688026	RING	6,90 mm		1
10	6688027	RING	6,95 mm		1
10	6688028	RING	7,00 mm		1
10	6688029	RING	7,05 mm		1
10	6688030	RING	7,10 mm		1
11	6687926	COLLAR			1
12	6688033	SPACER	54,60 cm		1
12	6687942	SPACER	54,65 cm		1
12	6688032	SPACER	54,70 cm		1
12	6687948	SPACER	54,75 cm		1
12	6687949	SPACER	54,80 cm		1
13	6687928	SPRING			1
14	6687927	COLLAR			1
15	6688005	SEAL			1
16	6688002	RING			1
17	6688006	SEAL			1

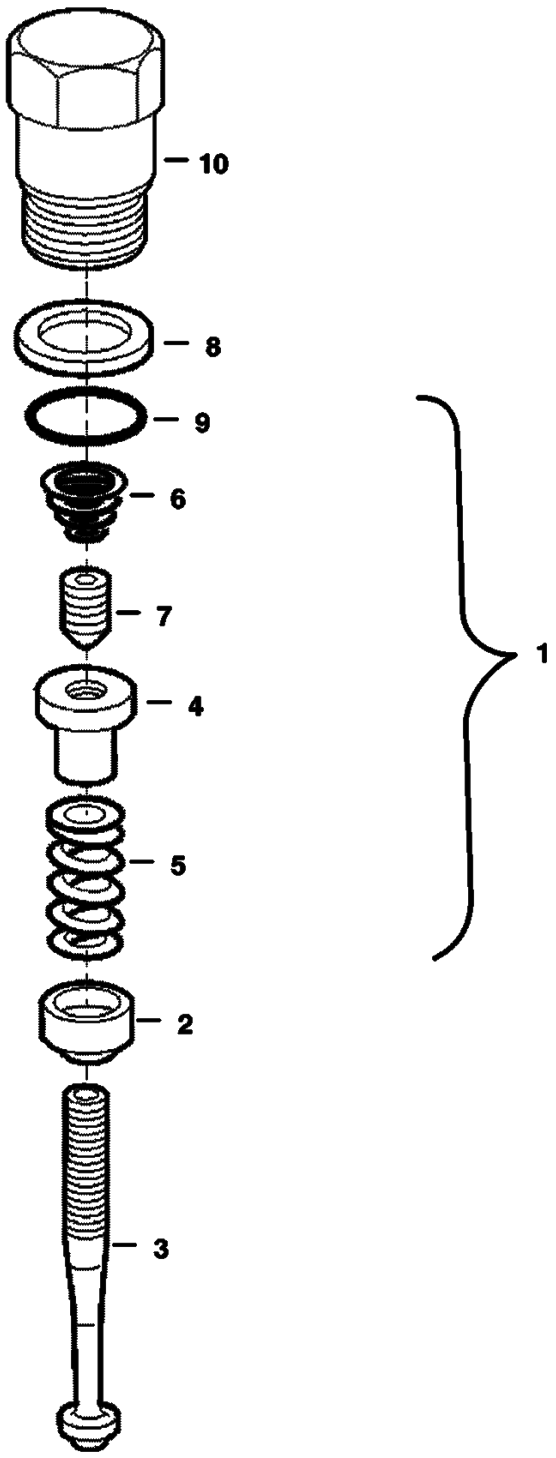
10
8
9
6
7
4
5
2
3
1
B–25014

HYDROSTATIC PUMP (Cont'd)
Selectable Joystick Controls
Pressure Relief Valve

Ref No	Part Number	Description	Remarks	Serial Number	Qty
1	6687924	VALVE			1
2	6687921	COLLAR			1
3	6687920	SPINDLE			1
4	6687922	NUT			1
5	6688043	SPRING			1
6	6688021	SPRING			1
7	6687923	PIN			1
8	6688041	RING			1
9	6688000	SEAL			1
10	6688034	SCREW			1

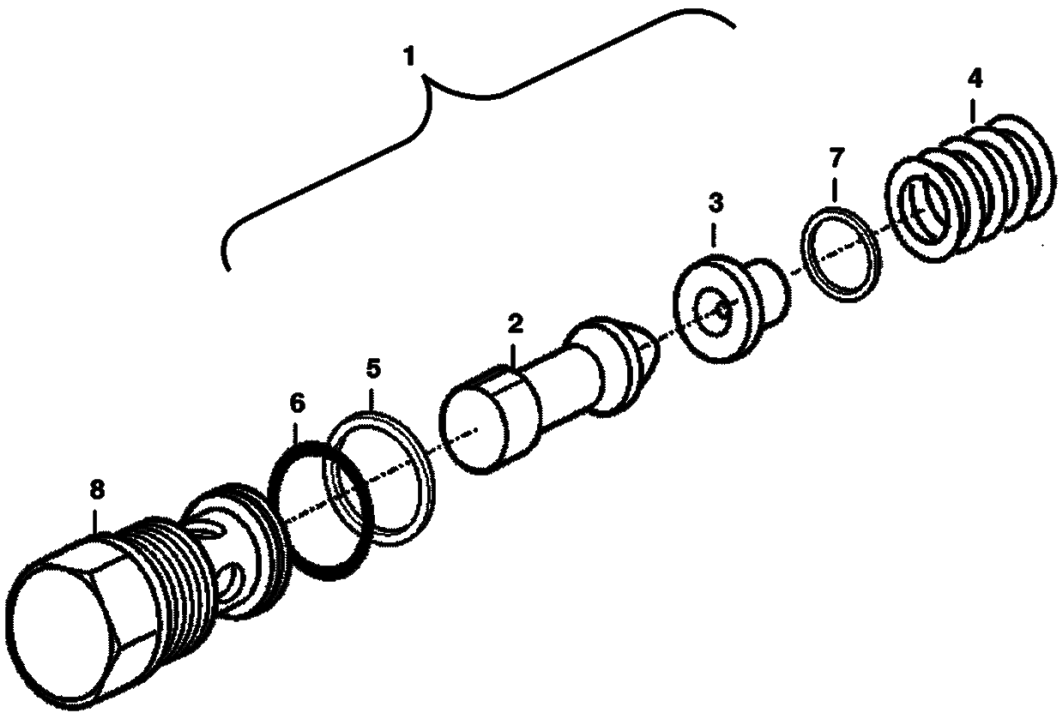

B–25015

HYDROSTATIC PUMP (Cont'd)
Selectable Joystick Controls
Pressure Relief Valve

Ref No	Part Number	Description	Remarks	Serial Number	Qty
1	6687938	VALVE			1
2	6688022	PISTON			1
3	6687919	COLLAR			1
4	6688023	SPRING			1
5	6687983	RING			1
6	6688013	SEAL			1
7	6688017	SHIM			1
8	6687939	SCREW			1

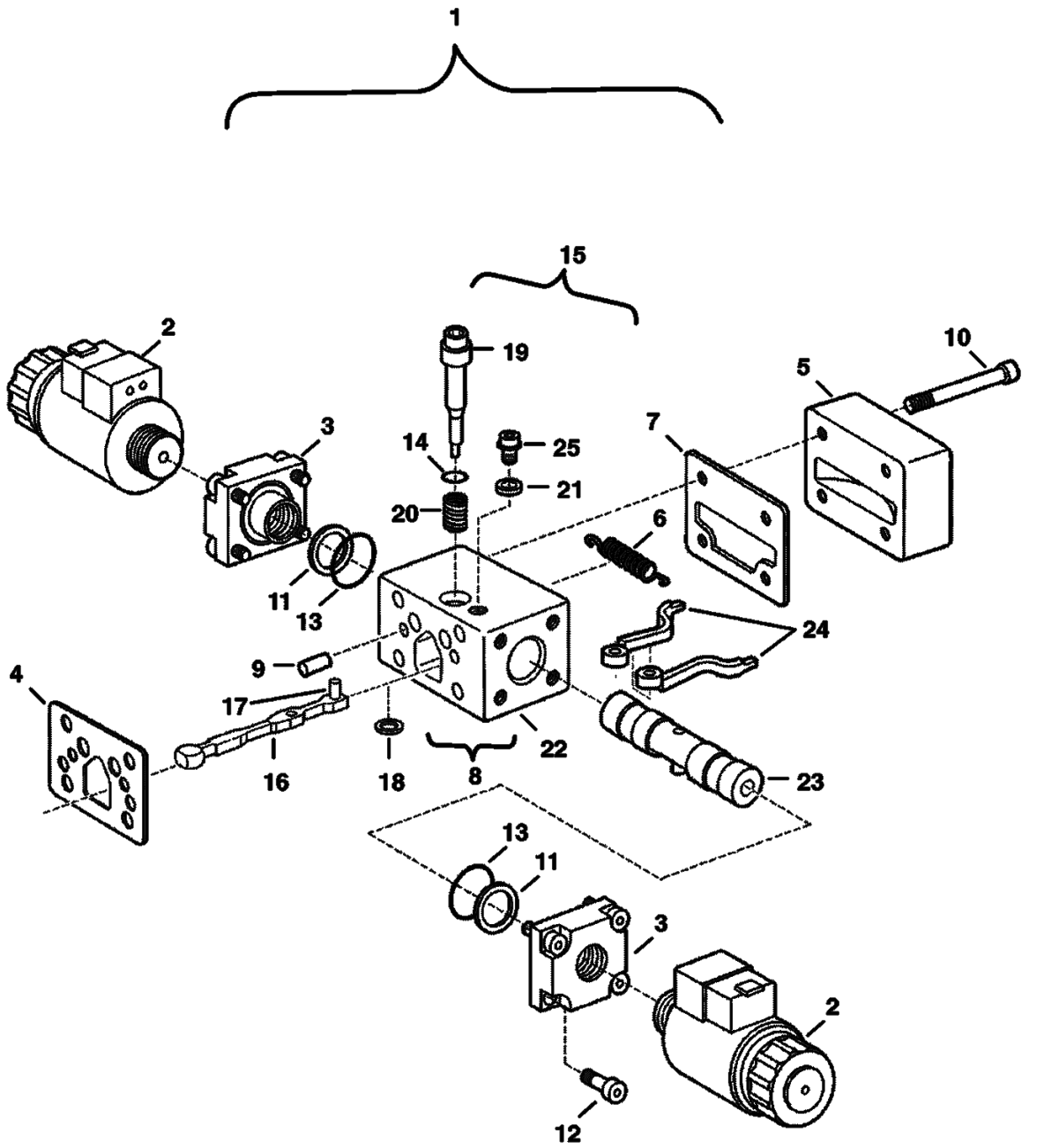
1
15
2
19
10
5
3
14
25
7
21
20
6
11
13
24
9
4
17
22
16
18
8
23
13
11
3
2
12
B–25016

HYDROSTATIC PUMP (Cont'd)
Selectable Joystick Controls
Control Module

Ref No	Part Number	Description	Remarks	Serial Number	Qty
1	6687970	MODULATOR			2
2	6687989	SOLENOID			2
3	6687931	BUSHING			2
4	6687954	GASKET			1
5	6687969	COVER			1
6	6687967	SPRING			1
7	6687950	GASKET			1
8	6687972	MODULE	Ref. 15-18		1
9	6688010	PIN			2
10	6687996	SCREW			4
11	6687982	SPRING			2
12	6687997	SCREW			8
13	6688001	SEAL			2
14	6688004	SEAL			1
15	6687971	ROLLER	Ref. 14 & 19-25		1
16	6687929	LEVER			1
17	6688012	ROLLER			1
18	6687944	SHIM	0,60 mm		1
18	6687933	SHIM	0,80 mm		1
18	6687934	SHIM	1,00 mm		1
18	6687935	SHIM	1,20 mm		1
18	6687936	SHIM	1,40 mm		1
18	6687937	SHIM	1,60 mm		1
19	6687947	PIN			1
20	6687946	SPRING			1
21	6687945	PLATE			1
22	6687955	HOUSING			1
23	6687966	PISTON			1
24	6687968	LEVER			2
25	6687981	SCREW			1

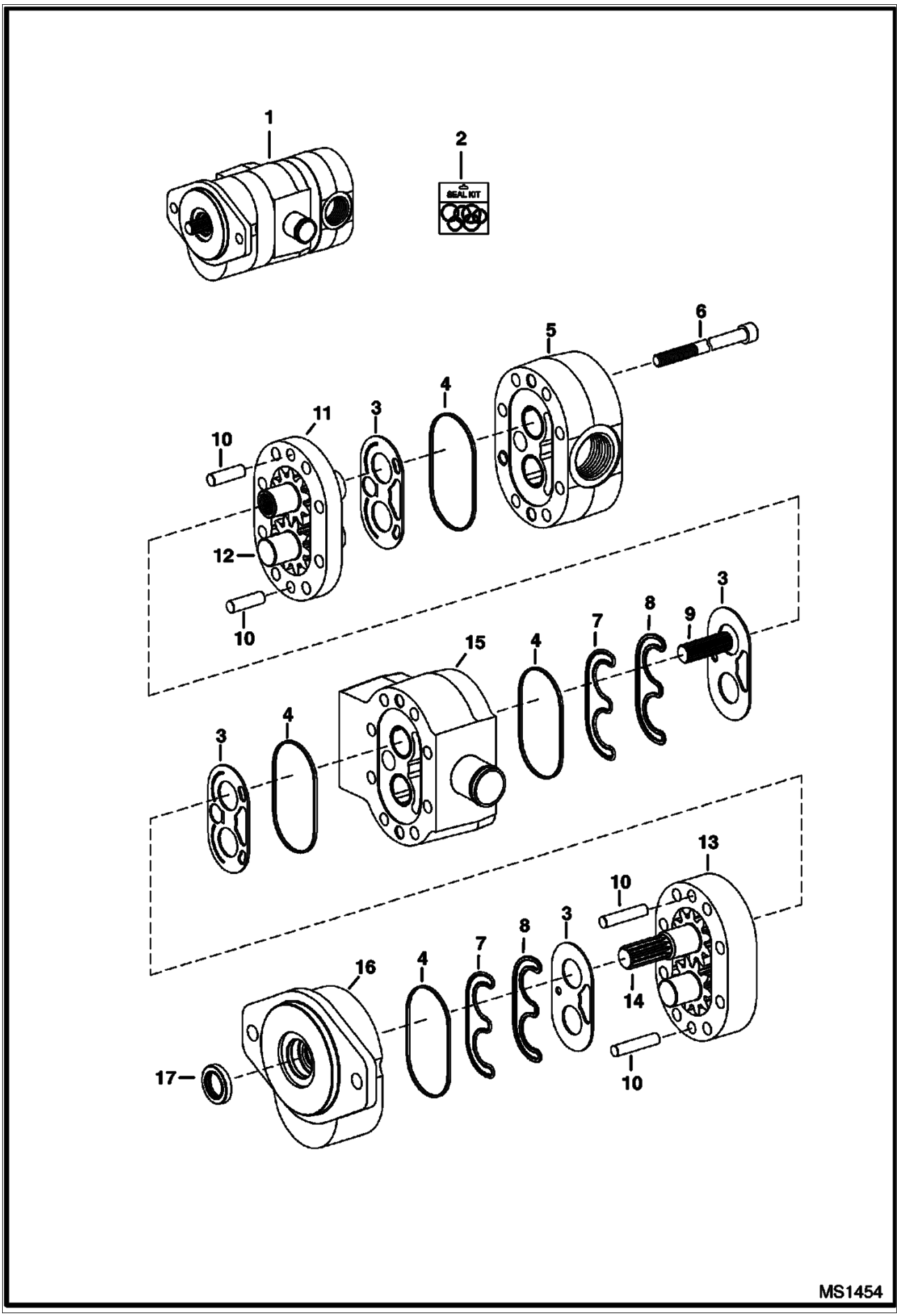
1
2
SEAL KIT
6
5
4
3
11
10
12
10
3
9
8
7
15
4
3
4
13
10
3
8
7
4
16
14
10
17
MS1454

Ref No	Part Number	Description	Remarks	Serial Number	Qty
1	6686885	GEAR PUMP	163D71021		1
2	6687866	SEAL KIT			1
3		WEAR PLATE	NSS		6
4		SEAL, SECTION	NSS		6
5		HOUSING, REAR	NSS		1
6		BOLT	NSS		8
7		SEAL, PRE-LOAD	NSS		6
8		SEAL, LOAD	NSS		6
9		CONNECTOR, SPLINE	NSS		2
10		PIN	NSS		6
11		HOUSING, GEAR	NSS - #2		1
12		GEAR SET	NSS - #2		1
13		HOUSING, GEAR	NSS - #1		1
14		GEAR SET	NSS - drive		1
15		HOUSING, CENTER	NSS		1
16		HOUSING, FRONT	NSS		1
17		SEAL, SHAFT	NSS		1

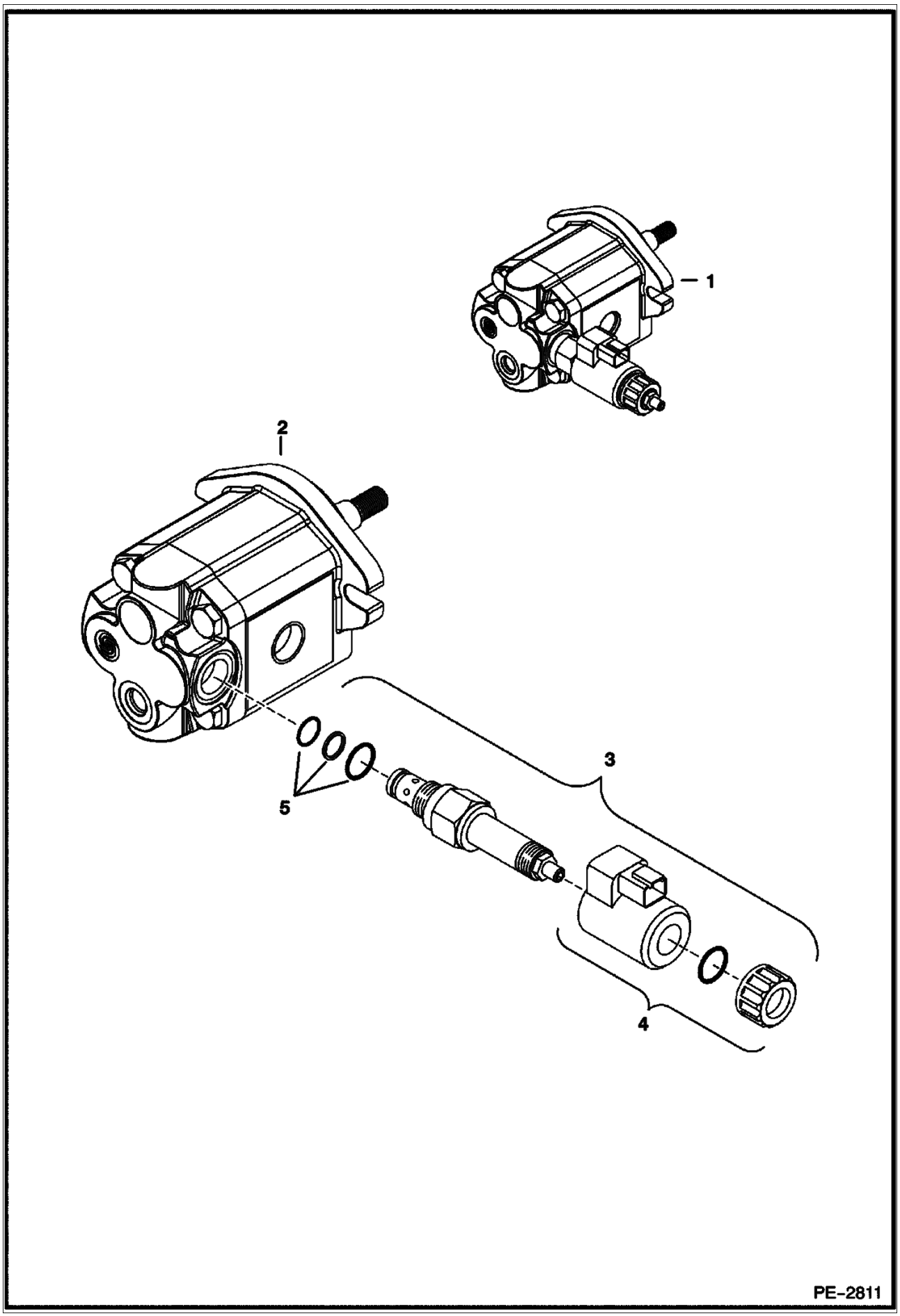
1
2
3
4
5
PE-2811

MOTOR (Cont'd)
Cooling Fan

Ref No	Part Number	Description	Remarks	Serial Number	Qty
1	6687142	MOTOR			1
2	6689058	MOTOR	W/O proportional valve		1
3	6689059	VALVE ASSY			1
4	6689060	COIL ASSY			1
5	6683206	SEAL KIT			1

2-SPEED VALVE

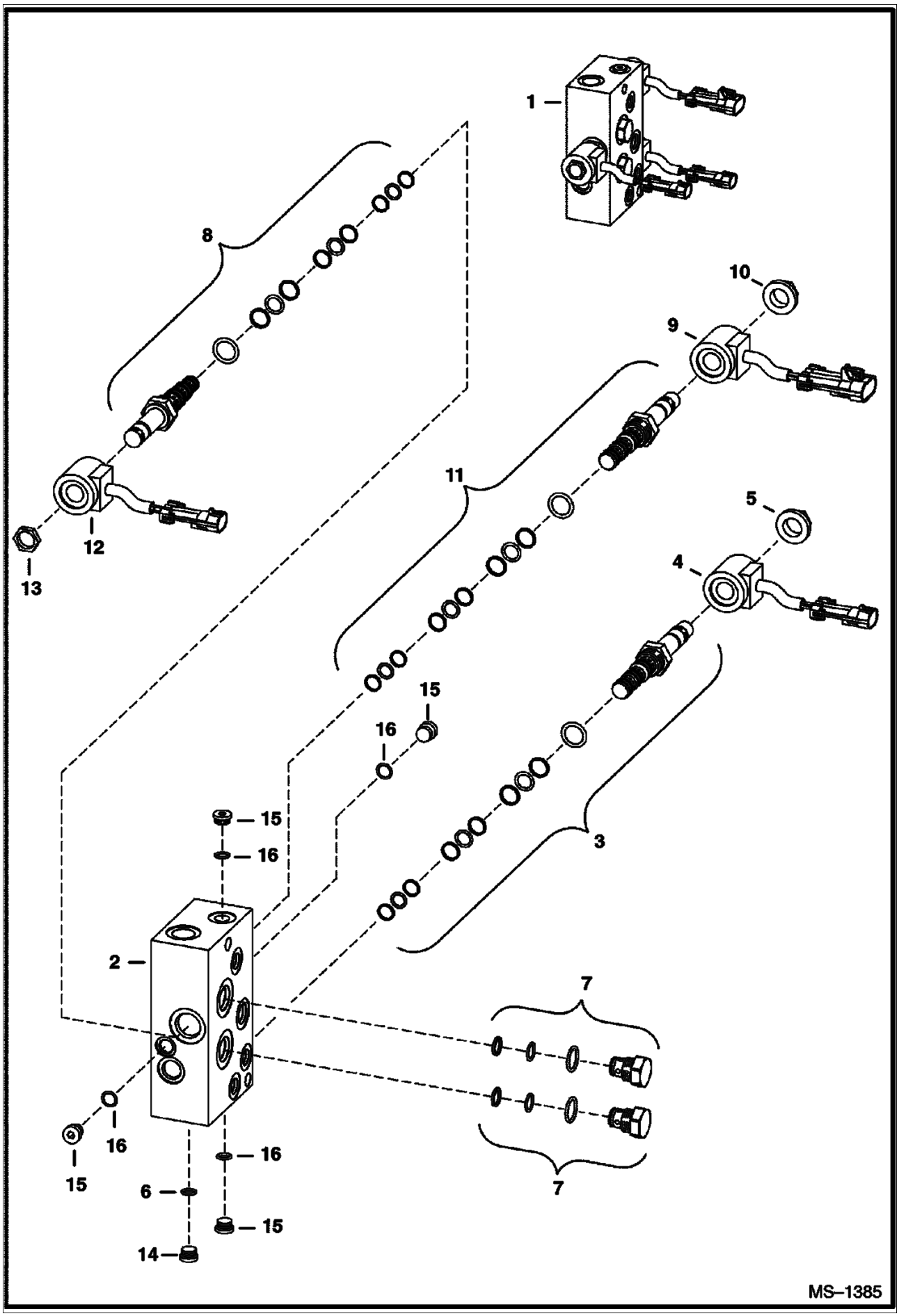

2-SPEED VALVE (Cont'd)

Ref No	Part Number	Description	Remarks	Serial Number	Qty
1	6679102	VALVE	assy.		1
2		BLOCK	NSS - Order Ref. 1		1
3	6677982	CARTRIDGE	make up valve - W/Ref. 5		1
3	6672756	SEAL KIT			x
4	6676243	COIL			1
5	6668820	NUT			1
6	75K000004B	O-RING			x
7	6675265	CHECK VALVE			2
7	6669087	SEAL KIT			x
8	6676239	CARTRIDGE	two speed valve - W/Ref. 10		1
8	6673188	SEAL KIT			x
9	6676242	COIL			1
10	6677980	NUT			1
11	6680120	CARTRIDGE	brake valve - W/Ref. 13		1
11	6676205	SEAL KIT			x
12	6676244	COIL			1
13	6676247	NUT			1
14	6672762	PLUG	W/Ref. 6		1
15	6677177	PLUG	W/Ref. 16		5
16		O-RING			x

HYDROSTATIC OIL FILTER
(In-Line)

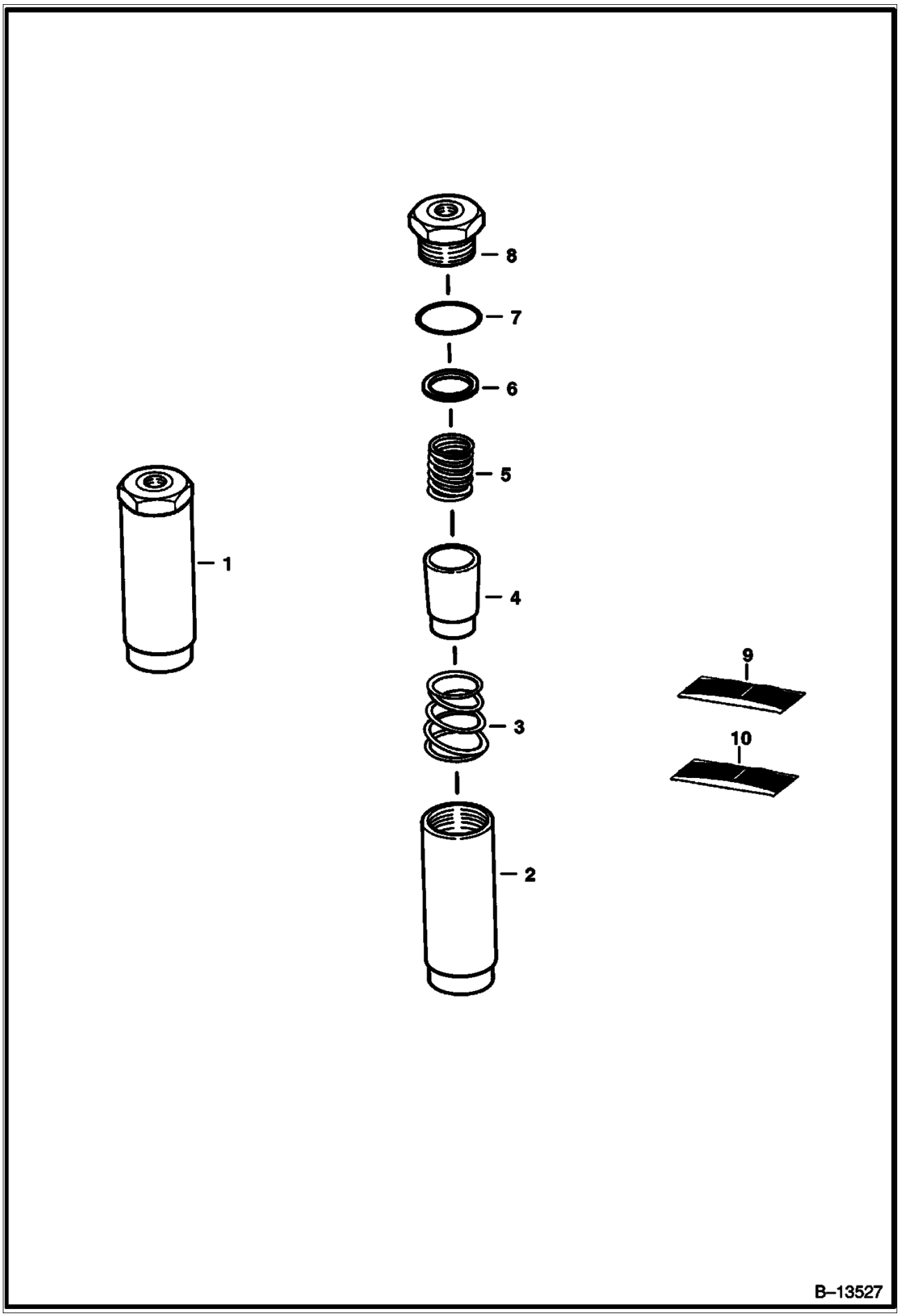

HYDROSTATIC OIL FILTER (Cont'd)
(In-Line)

Ref No	Part Number	Description	Remarks	Serial Number	Qty
1	6661022	FILTER	Ref. 2-8		1
2		HOUSING	NSS		1
3		SPRING	NSS		1
4		ELEMENT	NSS		1
5		SPRING	NSS		1
6		GASKET	NSS		1
7		O-RING	NSS		1
8		PLUG	NSS		1
9	6661807	KIT	element - Ref. 4, 6 & 7		1
10	6661808	KIT	spring - Ref. 3 & 5		1

HYDROSTATIC OIL FILTER

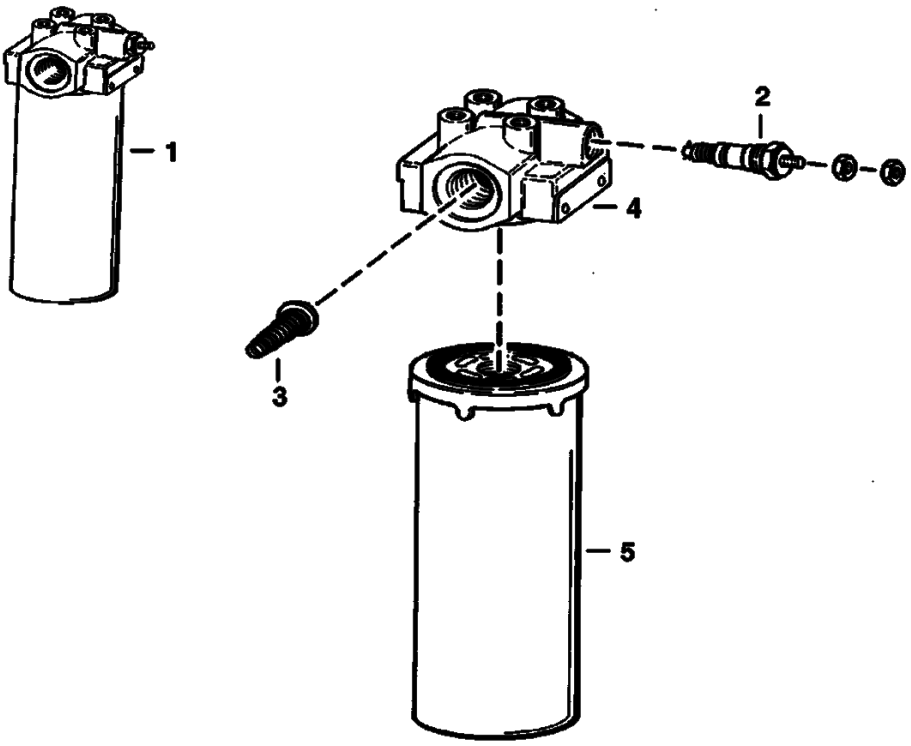

C–2818

HYDROSTATIC OIL FILTER (Cont'd)

Ref No	Part Number	Description	Remarks	Serial Number	Qty
1	6678155	FILTER ASSY	W/Ref. 2-5 - 50 PSI by-pass & switch		1
1	6685847	FILTER ASSY	W/Ref. 2-5 - 50 PSI by-pass & switch - High Flow		1
2	6660260	SWITCH	pressure - normally closed		1
2	6599365	KIT	nut, washer & O-rings for switch		1
3		VALVE	NAP - by-pass - 50 PSI - Order Ref. 1		1
4		HEAD	NSS - Order Ref. 1 filter assy.		1
5	6661248	ELEMENT	6" (152,4 mm) long		1
5	6668819	FILTER	9.5" (241,3 mm) long - High Flow		1

CAB ELECTRICAL CIRCUITRY

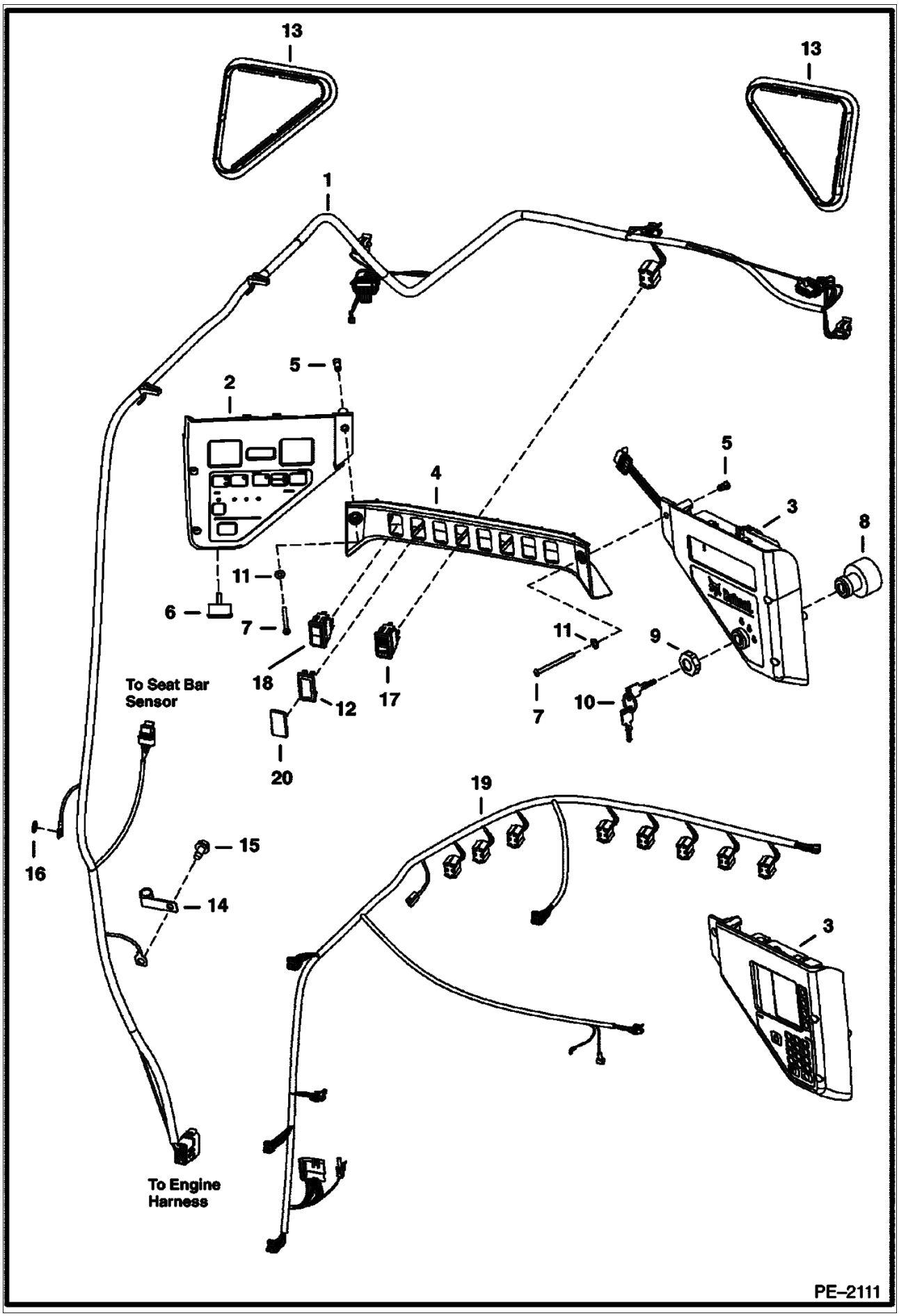

Ref No	Part Number	Description	Remarks	Serial Number	Qty
1	6727178	HARNESS			1
2	6688405	PANEL	L.H.		1
2	6675982	PLUG	service part - covers the backlighting service hole		1
2	6679855	BULB			2
3	6688404	PANEL	R.H. - keyed		1
3	6688403	PANEL	R.H. - deluxe - keyless		1
4	6679845	CROSSMEMBER			1
5	6675033	INSERT	threaded		6
6	6679856	ALARM	W/nut		1
7	7105983	BOLT			6
8	6679842	SWITCH	ignition - W/Ref. 9 & 10		1
9	6674202	NUT			2
10	6709527	KEY	ignition		1
11	25E000010B	WASHER			2
12	6719038	PLUG			x
13	6674403	COVER			2
14	6675171	CLAMP			1
15	84G003712B	BOLT			1
16	6E000005B	WASHER			1
17	6676536	SWITCH	park brake		1
18	6683812	SWITCH	selectable joystick controls		1
19	7116260	HARNESS	accessories - deluxe		1
19	6715365	HARNESS	accessories - std.		1
20	6737248	DECAL	H pattern/ISO - selectable joystick controls		1

ENGINE ELECTRICAL
(W/Controller)

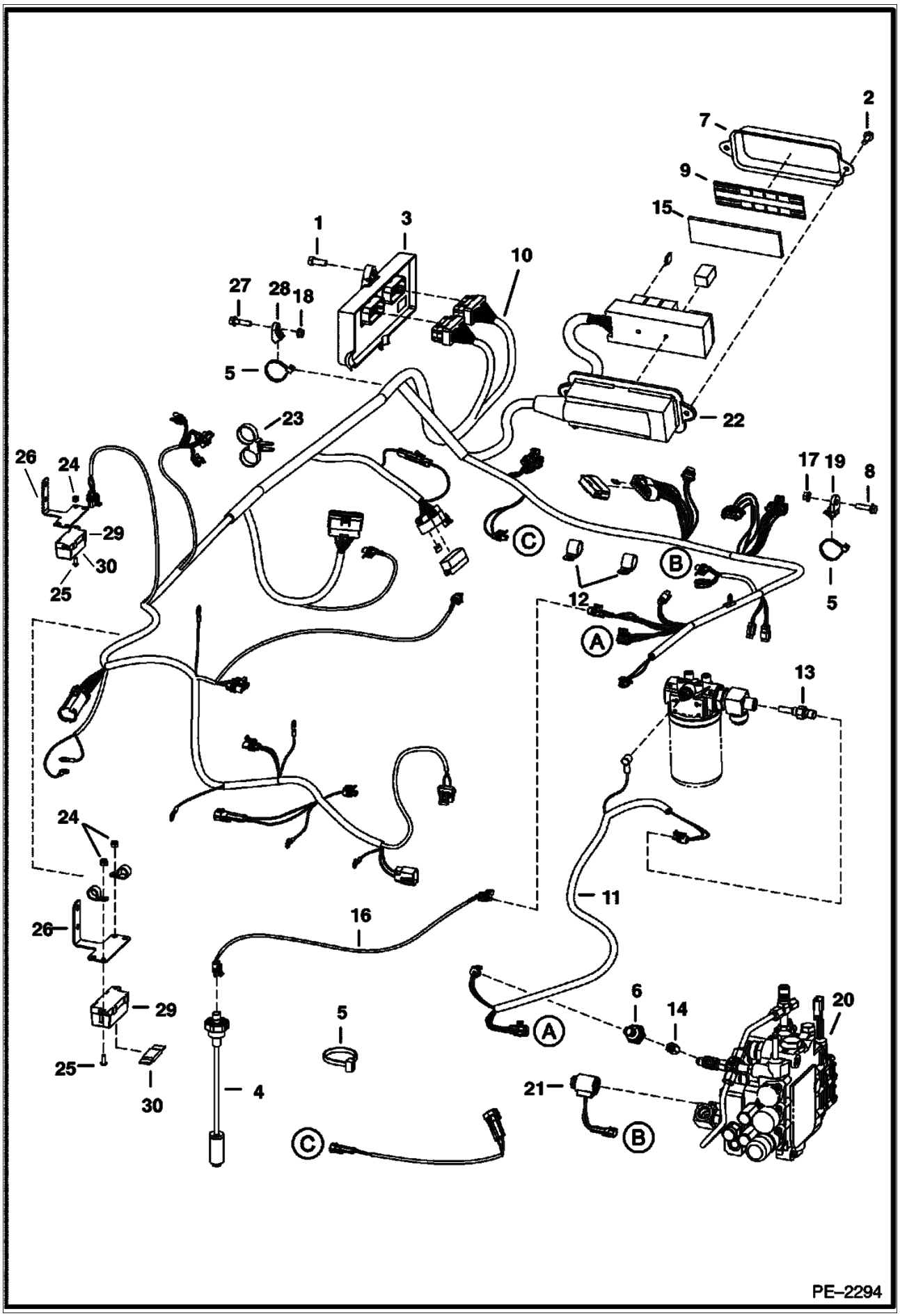

ENGINE ELECTRICAL (Cont'd)
(W/Controller)

Ref No	Part Number	Description	Remarks	Serial Number	Qty
1	43C000616B	BOLT			3
2	84G003112B	BOLT			2
3	6688439	CONTROLLER			1
4	6680438	SENSOR	fuel - w/gasket		1
4	6717579	GASKET			1
5	6624289	STA STRAP			17
6	6674316	SENSOR	hyd pressure		1
7	6716621	COVER	fuse box		1
7	6736071	KIT	extreme aplications - w/decal & insulation		1
8	84G003712B	BOLT			3
9	7117407	DECAL	fuse/relay - 2" x 7" (50,8 mm x 177,8 mm)		1
10	7116257	HARNESS LF MFR	loader		1
11	6717247	HARNESS	filter		1
12	30H000046B	CLAMP			2
13	6718417	SENDER	hyd temp		1
14	6718948	SNUBBER			1
14	6675278	FILTER			1
15	6731275	INSULATION			1
16	7110159	HARNESS	fuel sender - standard		1
16	7110160	HARNESS	fuel sender - deluxe cab - required for A/C, power bobtach and high flow options/kits		1
17	57D000006B	NUT			1
18	97D000005B	NUT			2
19	6679034	MOUNT			1
20	6717706	COIL	10 volt		2
21	6675559	COIL	W/ diode		1
22	6718659	HOUSING	fuse		1
22	6654806	FUSE	15 amp (2)		x
22	6702444	FUSE	25 amp (6)		x
22	6718034	FUSE	30 amp (2)		x
22	6679820	RELAY	switch (7)		x
23	6678668	TIE			2
24	59D000004B	NUT			3
25	25G000410B	BOLT			2
26	6728621	BRACKET			1
27	35C000520B	BOLT			1
28	6678667	MOUNT			1
29	6675154	HOLDER	fuse		1
30	6675155	FUSE	100 amp		1

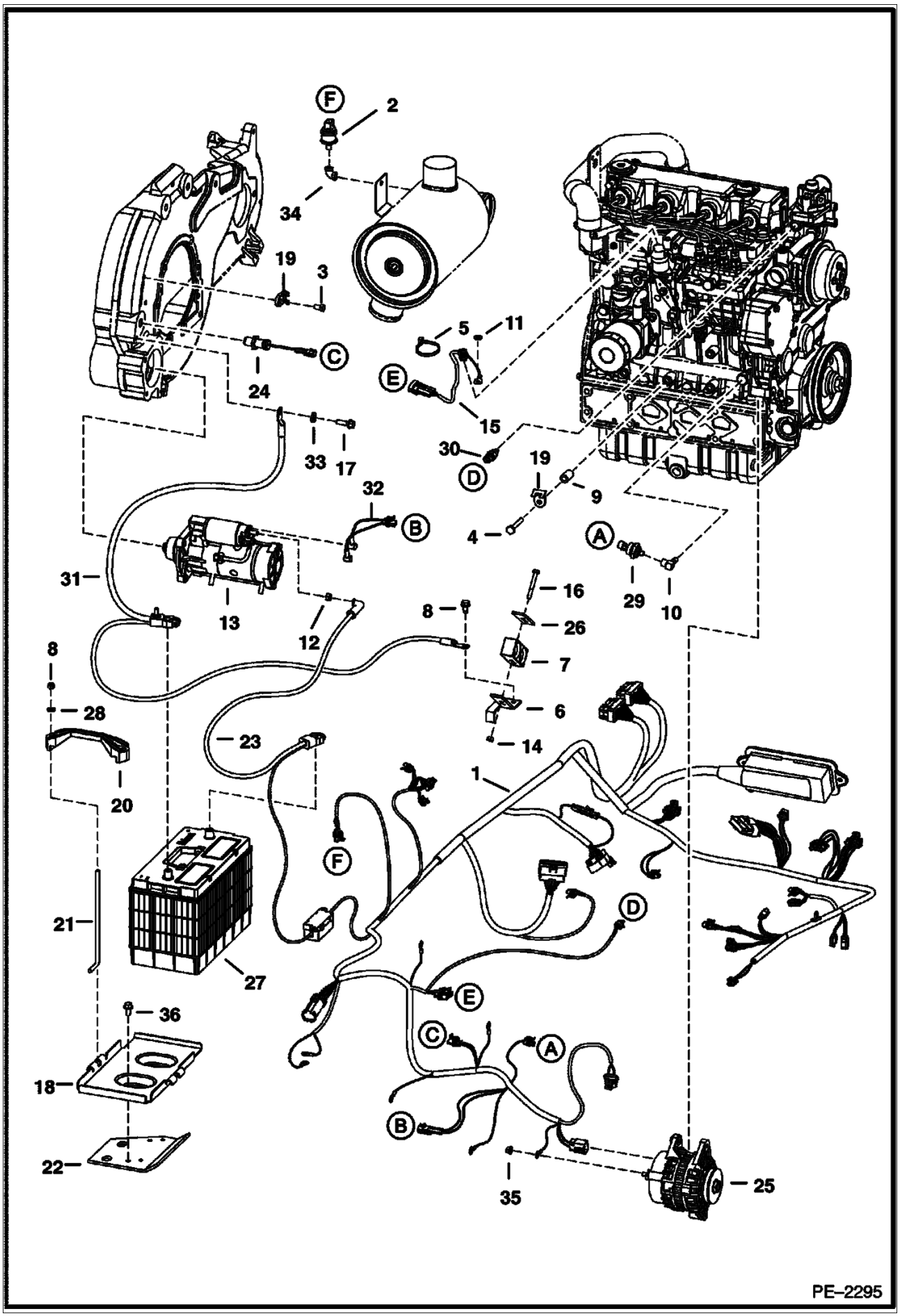
F
2
34
19
3
5
11
C
24
E
15
33
17
30
D
19
9
32
B
4
A
31
16
29
10
13
12
8
26
8
7
28
6
23
14
20
1
F
21
D
27
E
36
C
A
18
B
22
35
25
PE–2295

Ref No	Part Number	Description	Remarks	Serial Number	Qty
1	7116257	HARNESS LF MFR	loader		1
2	6665371	SWITCH	vacuum		1
3	17C000610B	BOLT			2
4	7110310	SCREW			1
5	6624289	STA STRAP			17
6	6715131	BRACKET			1
7	6715197	CLAMP			1
8	59D000005B	NUT			2
9	7101893	SPACER			1
10	6707040	ELBOW			1
11	6E000004B	WASHER			1
12	4DM00010B	NUT	starter		1
13		STARTER	See Illustration STARTER/ B16488R		1
14	95D000005B	NUT			1
15	6736515	HARNESS	fuel shut off solenoid		1
16	17C000540B	BOLT			1
17	35C000620B	BOLT	negative cable ground		1
18	6712536	PAN	battery		1
19	6679034	MOUNT			1
20	6569203	CLAMP	battery		1
21	6576280	BOLT	battery hold down		2
22	6579989	BRACKET			1
23	6719141	CABLE	positive		1
24	6684037	SENSOR	rpm		1
25		ALTERNATOR	See Illustration ENGINE & ATTACHING PARTS/ PE1668		1
26	6715132	RETAINER			1
27	6665427	BATTERY			1
28	25E000015B	WASHER			2
29	6674315	SENSOR	engine pressure		1
30	6718414	SENDER	engine temp		1
31	6727803	CABLE	negative		1
32	6733370	HARNESS			1
33	6E000006B	WASHER			1
34	24F000001B	BRACKET	cable		1
35	43DM00008B	NUT			1
36	84G003712B	BOLT			2

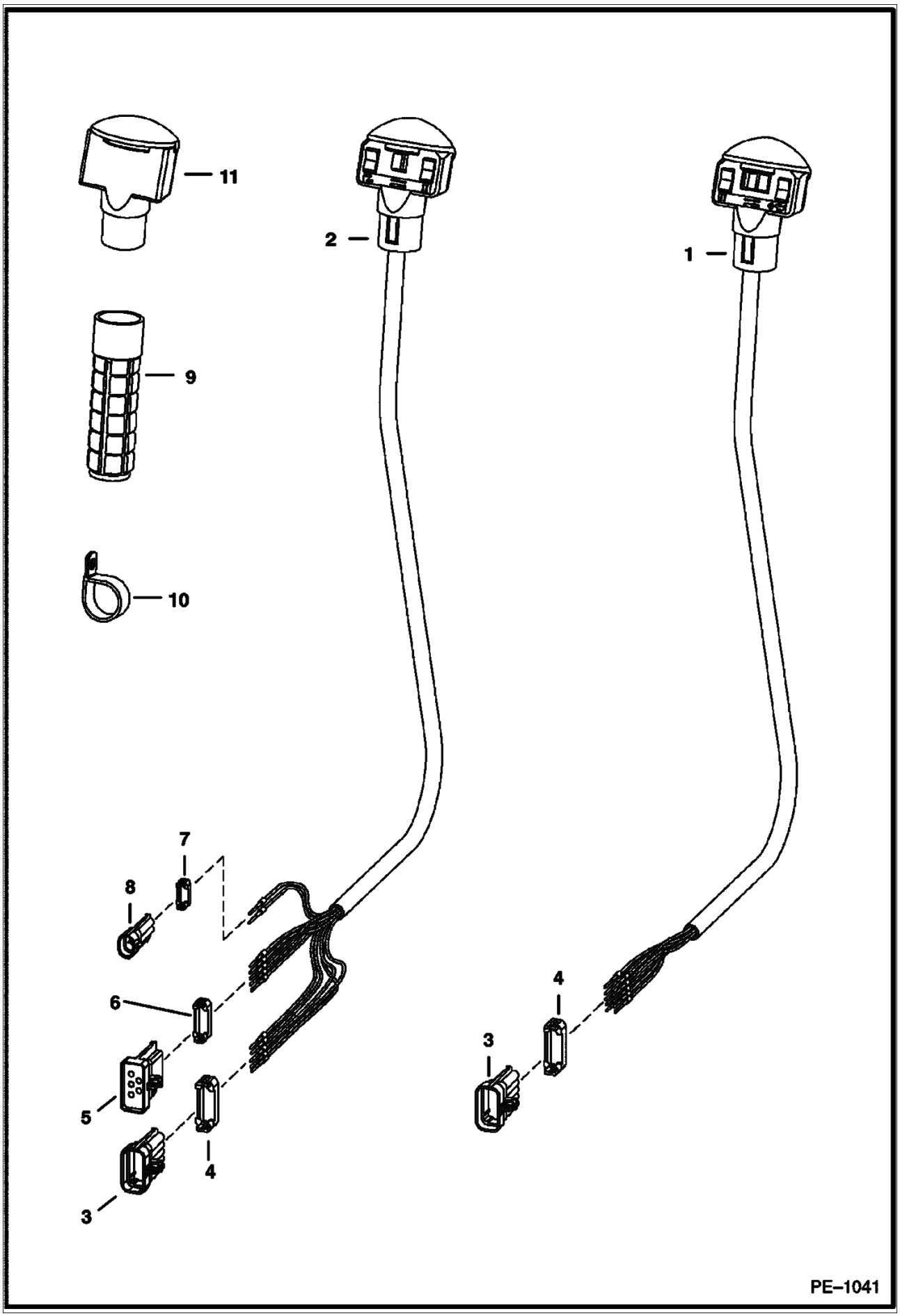
11
2
1
9
10
7
8
6
5
4
3
4
3
PE–1041

Ref No	Part Number	Description	Remarks	Serial Number	Qty
1	6680418	HANDLE ASSY.	R.H. - Also Order Ref. 3 & 4		1
1	6640690	PIN			9
1	6641176	SEAL			9
2	6680419	HANDLE ASSY.	L.H. - Also Order Ref. 3-8		1
2	6640690	PIN			10
2	6641176	SEAL			10
2	6680447	DECAL			1
3	6640692	CONNECTOR	10-pin		1
4	6640694	LOCK	10-pin		1
5	6667144	CONNECTOR	5 - way		1
6	6667145	LOCK	5 - way		1
7	6641180	LOCK	2 - pin		1
8	6641179	CONNECTOR	2 - pin		2
9	6702621	GRIP			2
10	6674000	CLAMP			2
11	6680415	HANDLE	L.H. - blank		2

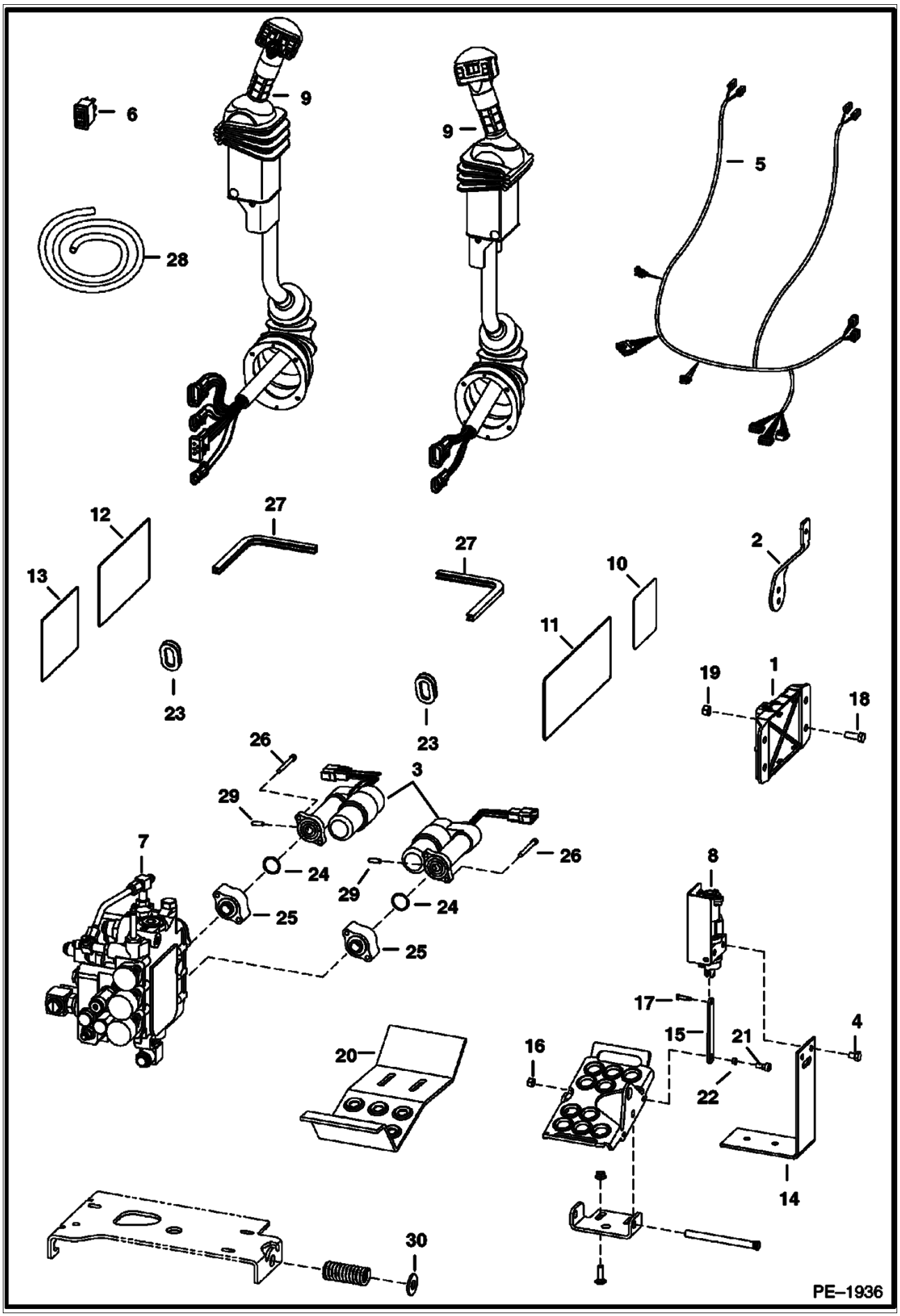
6
9
9
5
28
12
27
27
2
13
10
11
23
23
19
1
18
26
3
29
26
7
24
29
24
8
25
25
17
15
4
20
16
21
22
14
30
PE–1936

CONTROLS ELECTRICAL (Cont'd)
(ACS)

Ref No	Part Number	Description	Remarks	Serial Number	Qty
1	6680410	CONTROLLER	plastic		1
2	6717393	LEVER	throttle		1
3	7101672	ACTUATOR	W/Ref. 24		2
4	17C000608B	BOLT			4
5	6733292	HARNESS			1
6	6676537	SWITCH			1
7		VALVE	ACS control		1
8	6676493	SENSOR	See Illustration CONTROLS ELECTRICAL/ PE1553 foot pedal - R.H.		1
8	6676029	SOLENOID			1
8	6676492	SENSOR	See Illustration CONTROLS ELECTRICAL/ PE1553 foot pedal - L.H.		1
8	6676029	SOLENOID			1
9	6684915	LEVER	See Illustration CONTROLS ELECTRICAL/ PE1365 ACS - tilt - R.H.		1
9	6684916	LEVER	See Illustration CONTROLS ELECTRICAL/ PE1365 ACS - lift - L.H.		1
10	6718706	DECAL	used on S250 S300 ACS		1
11	6728539	DECAL	used on S250 S300 ACS		1
12	6727926	DECAL	operations AHC		1
13	6728328	DECAL	operations AHC		1
13	6718704	DECAL	operations AHC		1
14	6726573	BRACKET			2
15	6726681	LINK			2
16	95D000005B	NUT			2
17	6727496	PIN			2
18	17C000616B	BOLT			2
19	95D000006B	NUT			2
20	6712365	STEP	AHC		2
21	35C000514B	BOLT			2
22	6729467	SPACER			2
23	6714726	GROMMET			2
24	6686220	O-RING			2
25	7101705	ADAPTER			2
26	69G000436B	BOLT			4
27		MOULDING	NAP - 10.5" (267mm) long - Order Ref. 28		1
28	6654139	MOULDING	bulk - Sold Per Foot		x
29	7108236	PIN			2
30	25E000024B	WASHER			1

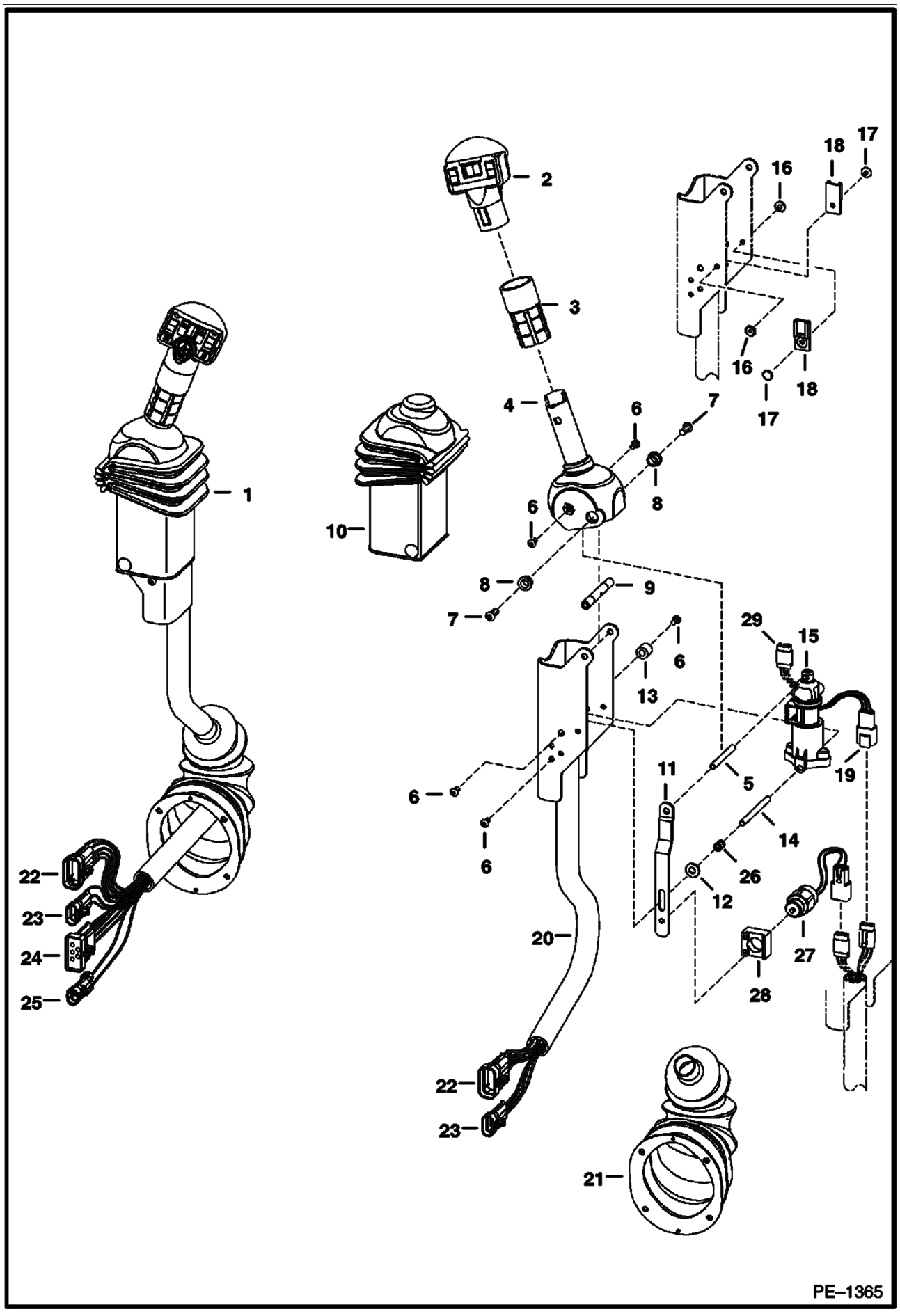
1
2
3
4
5
6
7
8
9
10
11
12
13
14
15
16
17
18
19
20
21
22
23
24
25
26
27
28
29
PE–1365

Ref No	Part Number	Description	Remarks	Serial Number	Qty
1	6684915	LEVER	tilt - R.H.		1
1	6684916	LEVER	lift - L.H.		1
2	6680462	HANDLE	tilt - R.H.		1
2	6680417	HANDLE	lift - L.H.		1
3		GRIP	NAP - Order 6702621 grip & cut to 2.8" (71,1mm) long		2
4	6729594	HANDLE	R.H.		1
4	6729595	HANDLE	L.H.		1
5	6680469	SPACER	threaded		1
6	6727065	BOLT			6
7	25GT00410B	BOLT			8
8	6702990	BUSHING			4
9	6713043	SPACER			4
10	6680471	COVER			2
11	6680477	STRAP	stop		1
12	25E000013B	WASHER			1
13	6719835	SLEEVE			4
14	6719834	SPACER	threaded		2
15	6684910	SENSOR			2
15	6670706	CONNECTOR			1
15	6670715	PIN			3
15	6670710	LOCK			1
16	6665322	RIVET	female		2
17	6665321	RIVET	male		2
18	6665000	CLIP			2
19	6670707	CONNECTOR			1
19	6670715	PIN			3
19	6670711	LOCK			1
20	6680481	CHANNEL	R.H.		1
20	6680480	CHANNEL	L.H.		1
21	6532127	BOOT			2
22	6640692	CONNECTOR	10-pin		1
22	6640690	PIN			8
22	6640694	LOCK			1
22	6641176	SEAL			8
22	6646582	PLUG	cavity		1
23	6640699	CONNECTOR	3-pin		2
23	6640690	PIN			3
23	6641176	SEAL			3
23	6640700	LOCK			3
24	6667144	CONNECTOR	5-pin		2
24	6640690	PIN			3
24	6641176	SEAL			3
24	6646582	PLUG	cavity		1
24	6641180	LOCK			1
25	6641179	CONNECTOR	2-pin		1
25	6640690	PIN			2
25	6641176	SEAL			2
25	6641180	LOCK			1
26	6680470	SPRING			1
27	6676029	SOLENOID			1
28	6680468	MOUNT			1
29	6676870	CONNECTOR	3-pin		1
29	6670711	LOCK			1
29	6670715	PIN			1

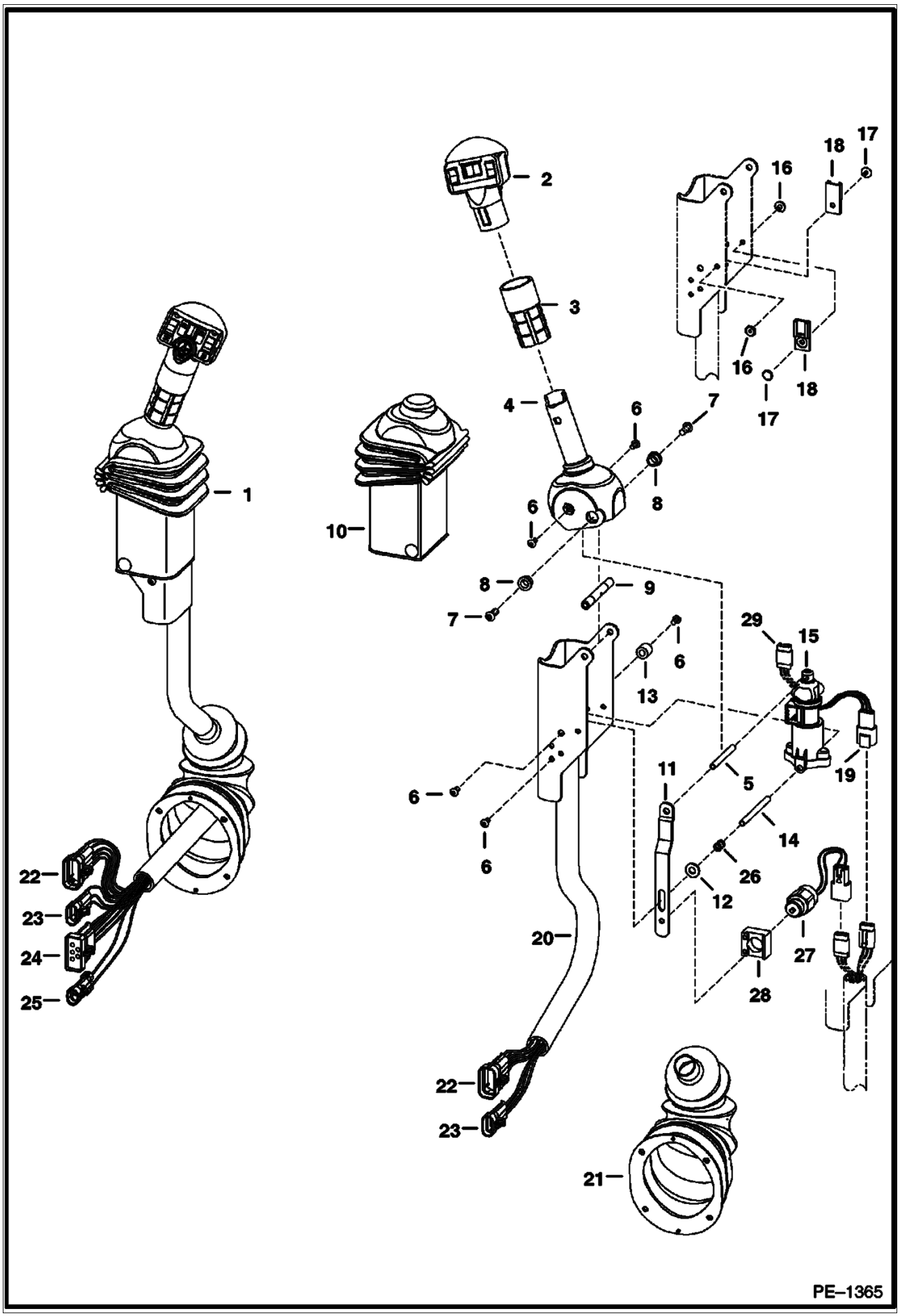
1
2
3
4
5
6
7
8
9
10
11
12
13
14
15
16
17
18
19
20
21
22
23
24
25
26
27
28
29
PE–1365

Ref No	Part Number	Description	Remarks	Serial Number	Qty
29	6676640	SEAL			5

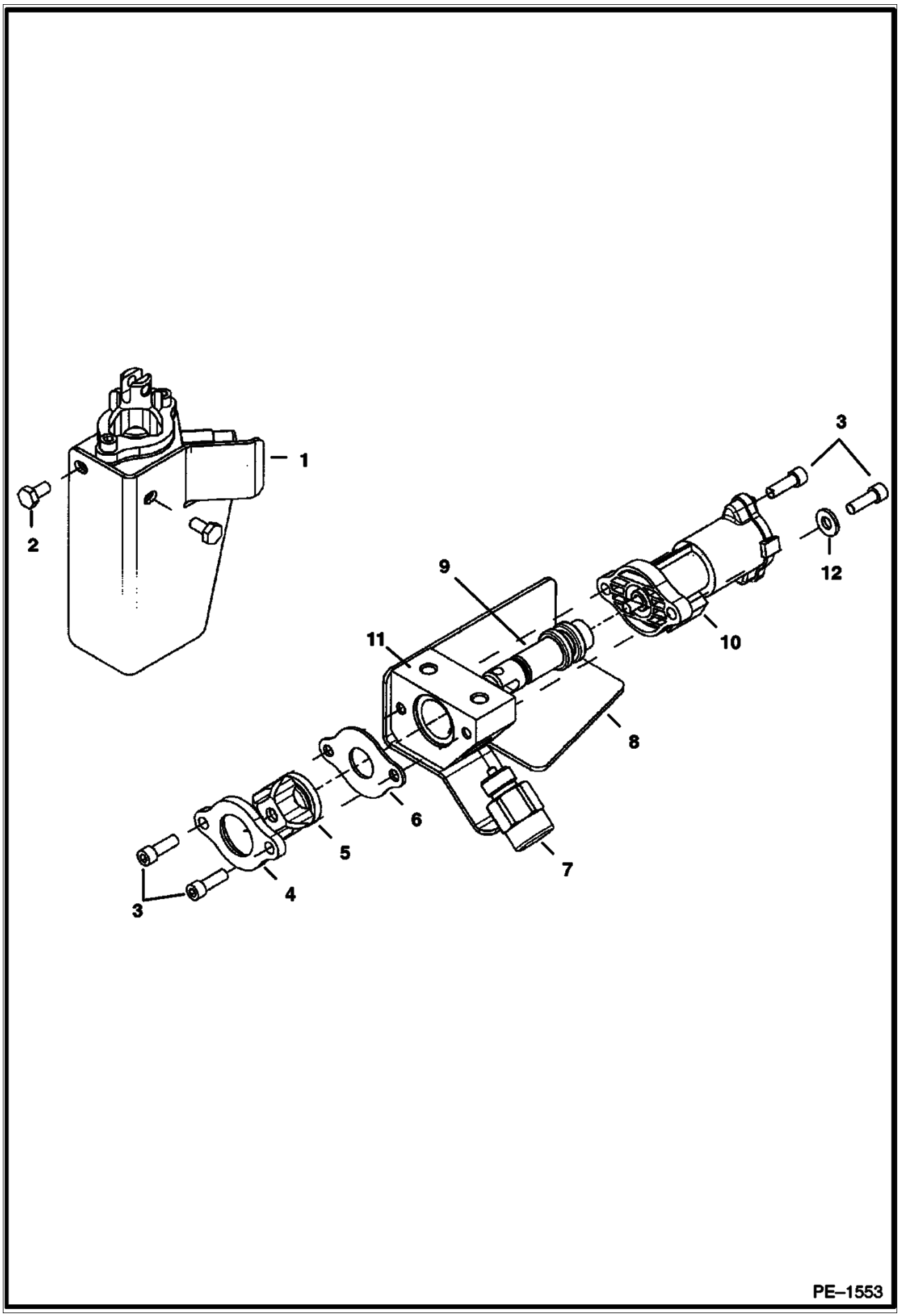
1
2
3
3
4
5
6
7
8
9
10
11
12
PE–1553

CONTROLS ELECTRICAL (Cont'd)
(ACS) (Foot Pedal Assemblies)

Ref No	Part Number	Description	Remarks	Serial Number	Qty
1	6684912	SENSOR	foot pedal - R.H.		1
1	6684911	SENSOR	foot pedal - L.H.		1
2	43C000408B	BOLT			2
3	98G000412B	BOLT			4
4		RETAINER	NAP - boot		1
5	6587763	BOOT			1
6		STOP PLATE	NAP		1
7	6676029	SOLENOID			1
8	6680478	SHIELD	R.H.		1
8	6680479	SHIELD	L.H.		1
9		SPOOL	NSS		1
10		SENSOR	NSS		1
11		BLOCK	NSS		1
12	25E000013B	WASHER			2

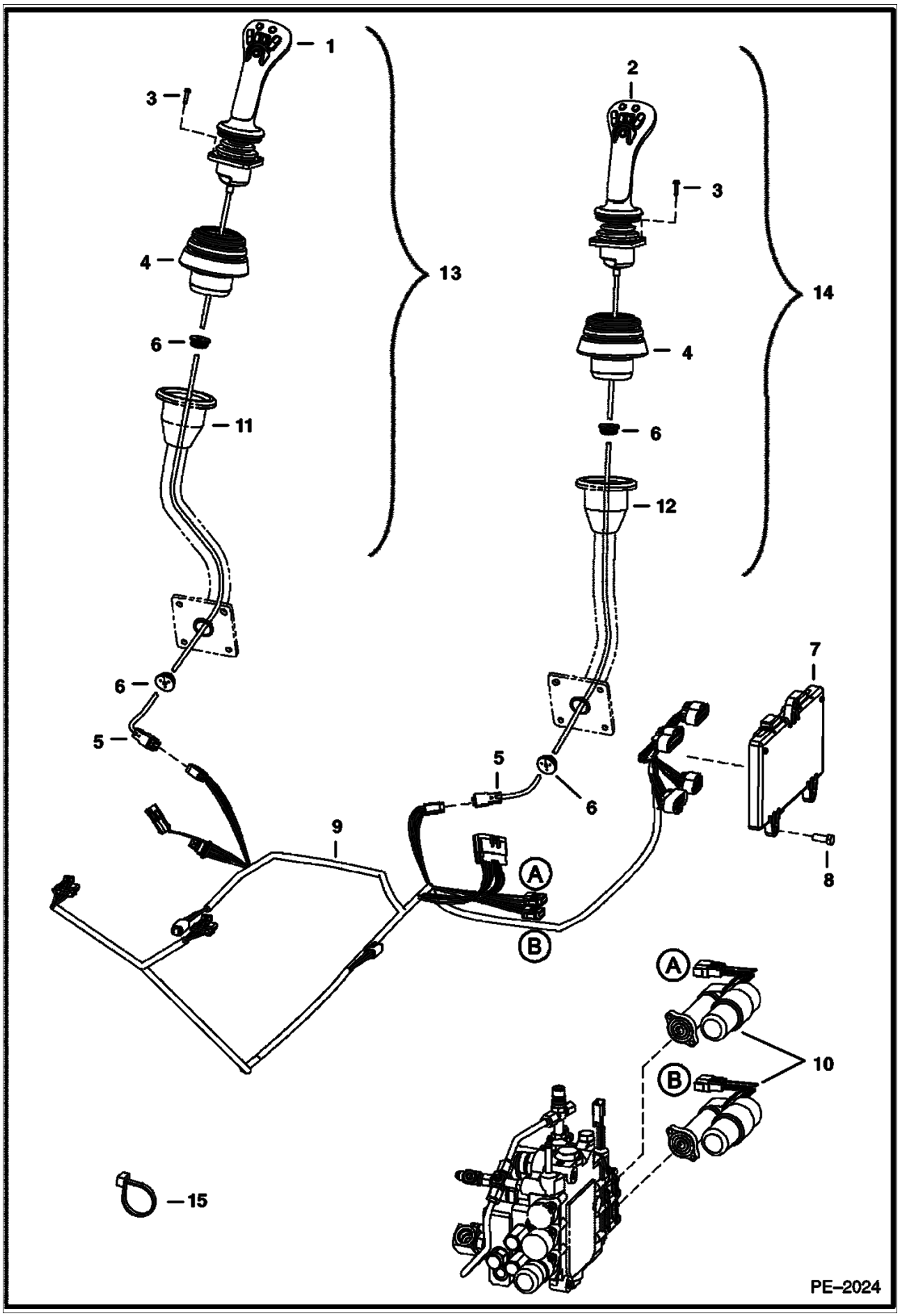
1
2
3
3
4
4
6
6
6
6
11
12
13
14
5
5
6
7
8
9
A
B
A
B
10
15
PE–2024

CONTROLS ELECTRICAL (Cont'd)
(Selectable Joystick Controls)

Ref No	Part Number	Description	Remarks	Serial Number	Qty
1		JOYSTICK LH	NSS - Order Ref. 13 - Was 6687883 [A]		1
2		JOYSTICK RH	NSS - Order Ref. 14 - Was 6687882 [A]		1
3		BOLT	NSS - L. H. - Order Ref. 13 - R.H. - Order Ref. 14 - Was 6678659 [A]		8
4		BOOT	NSS - L. H. - Order Ref. 13 - R.H. - Order Ref. 14 - Was 6678903 [A]		2
5		HARNESS	NSS - L. H. - Order Ref. 13 - R.H. - Order Ref. 14 - Was 6729397 [A]		2
6		GROMMET	NSS - L. H. - Order Ref. 13 - R.H. - Order Ref. 14 - Was 6684294 [A]		4
7	6683608	CONTROLLER	joystick		1
8	43C000616B	BOLT			3
9	6733293	HARNESS	joystick control		1
10	7101672	ACTUATOR			2
11		HANDLE	NSS - L.H. - Order Ref. 13 - Was 6729792 [A]		1
12		HANDLE	NSS - R.H. - Order Ref. 14 - Was 6729791 [A]		1
13	7111993	JOYSTICK ASMBLY LH	L.H. - Ref. 1, 3-6 & 11		1
14	7111992	JOYSTICK ASMBLY RH	R.H. - Ref. 2-6 & 12		1
15	6624289	STA STRAP			21

ALTERNATOR
(90 Amp)

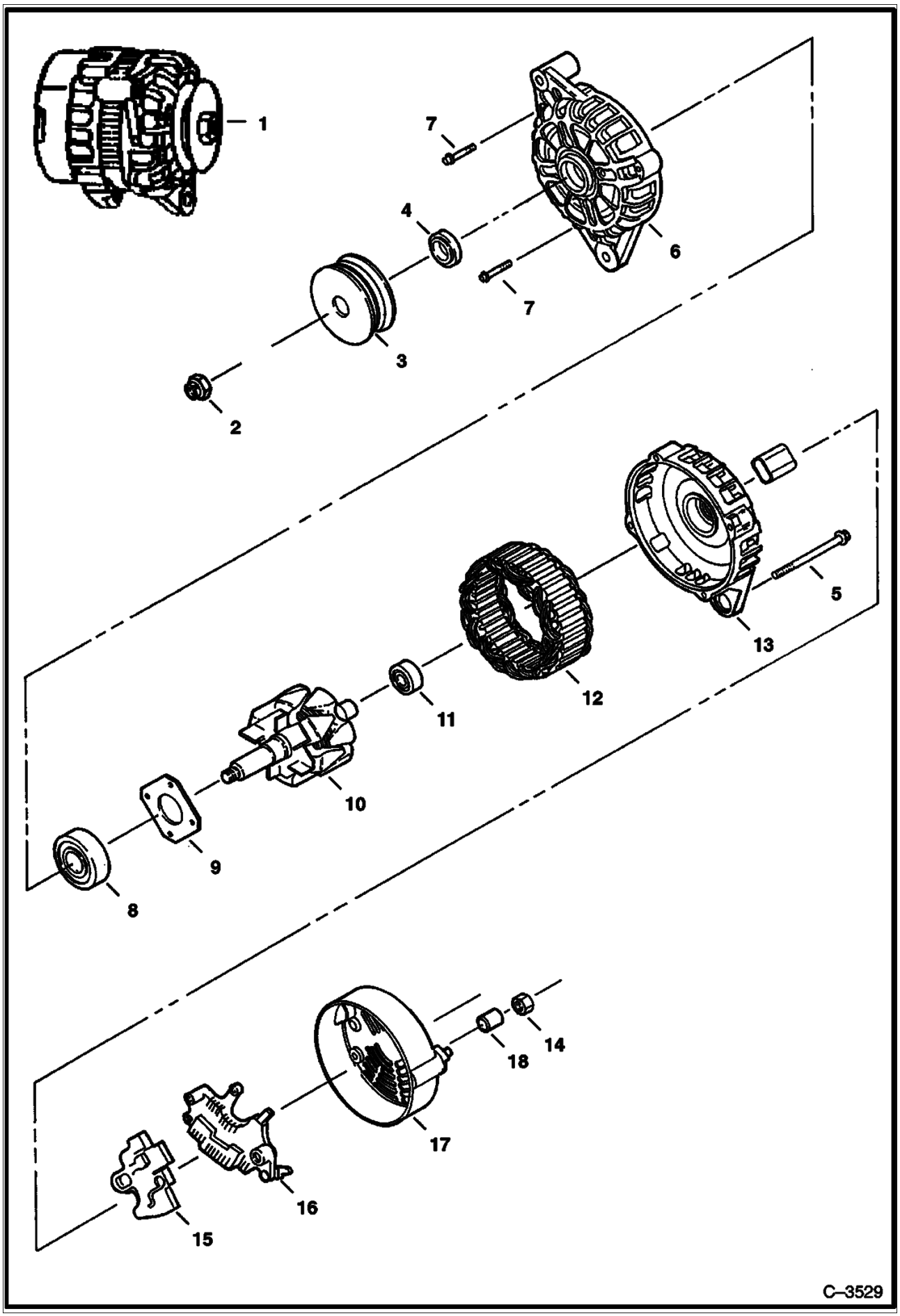

ALTERNATOR (Cont'd)
(90 Amp)

Ref No	Part Number	Description	Remarks	Serial Number	Qty
1	6678205	ALTERNATOR	90 amp - Ref. 2-14		1
2	6677497	NUT			1
3	6677496	PULLEY			1
4	6677495	SPACER			1
5	6677494	BOLT			4
6	6677491	BRACKET	front		1
7	6677817	BOLT			4
8	6677818	BEARING			1
9	6677819	RETAINER			1
10	6677492	ROTOR			1
11	6677820	BEARING			1
12	6677493	STATOR			1
13	6677490	BRACKET			1
14	6677486	NUT			1
15	6677489	REGULATOR ASSY	Order Ref. 1		1
16	6677488	RECTIFIER			1
17	6677487	COVER			1
18	6677485	SPACER			1

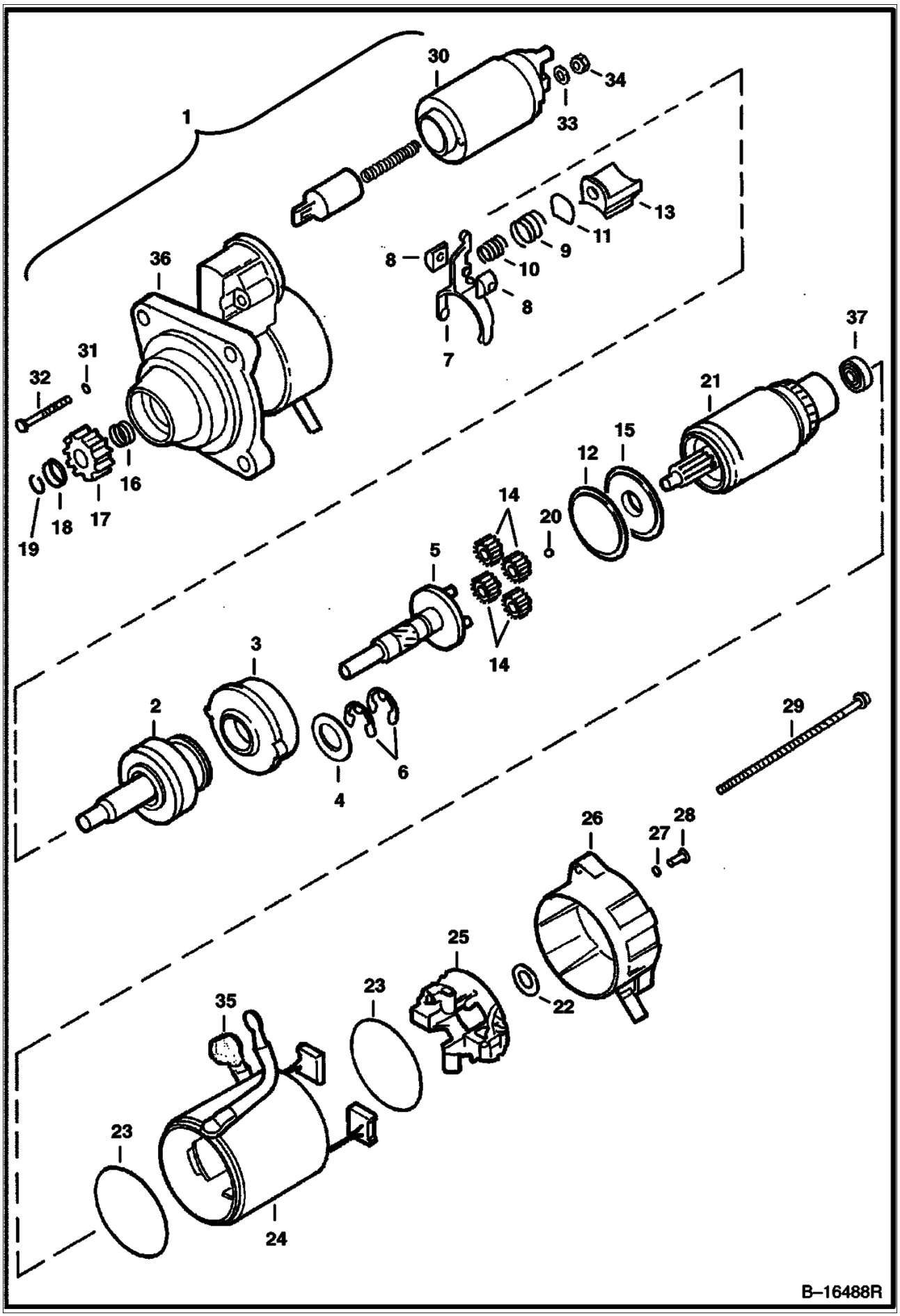
1
30
34
33
13
11
9
10
8
8
7
36
37
31
32
21
15
12
16
18
17
19
14
20
5
14
3
2
29
4
6
26
27
28
25
22
35
23
23
24
B–16488R

STARTER (Cont'd)
(Valeo)

Ref No	Part Number	Description	Remarks	Serial Number	Qty
1	6685190	STARTER			1
2	6680375	SHAFT	O.R.C. assy.		1
3	6680367	GEAR			1
4	6680378	WASHER			1
5	6680365	SHAFT			1
6	6680368	STOP RING			2
7		LEVER	NSS - Order Ref. 36		1
8		HOLDER	NSS - Order Ref. 36		2
9		SPRING	NSS - Order Ref. 36		1
10		SPRING	NSS - Order Ref. 36		1
11		PLATE	NSS - Order Ref. 36		1
12	6680369	SEAL			1
13	6680371	LEVER			1
14	6680366	GEAR			4
15	6680372	BRACKET			1
16	6680361	SPRING			1
17	6680390	GEAR			1
18	6680360	STOP			1
19	6680359	STOP RING			1
20	6680362	BALL			1
21	6680374	ARMATURE	W/Ref. 37		1
22	6680363	WASHER			1
23	6680380	SEAL			2
24	6680373	YOKE			1
25	6680377	HOLDER			1
26	6680389	BRACKET			1
27	6680358	RING	rubber		2
28	6680384	BOLT			2
29	6680356	BOLT			2
30	6680376	SWITCH			1
31	6680379	SEAL			2
32	6680383	BOLT			2
33	6EM00080B	WASHER			1
34	4DM00008B	NUT			1
35	6680355	BOOT			1
36	6680388	BRACKET	W/Ref. 7-11		1
37	6687631	BEARING			1

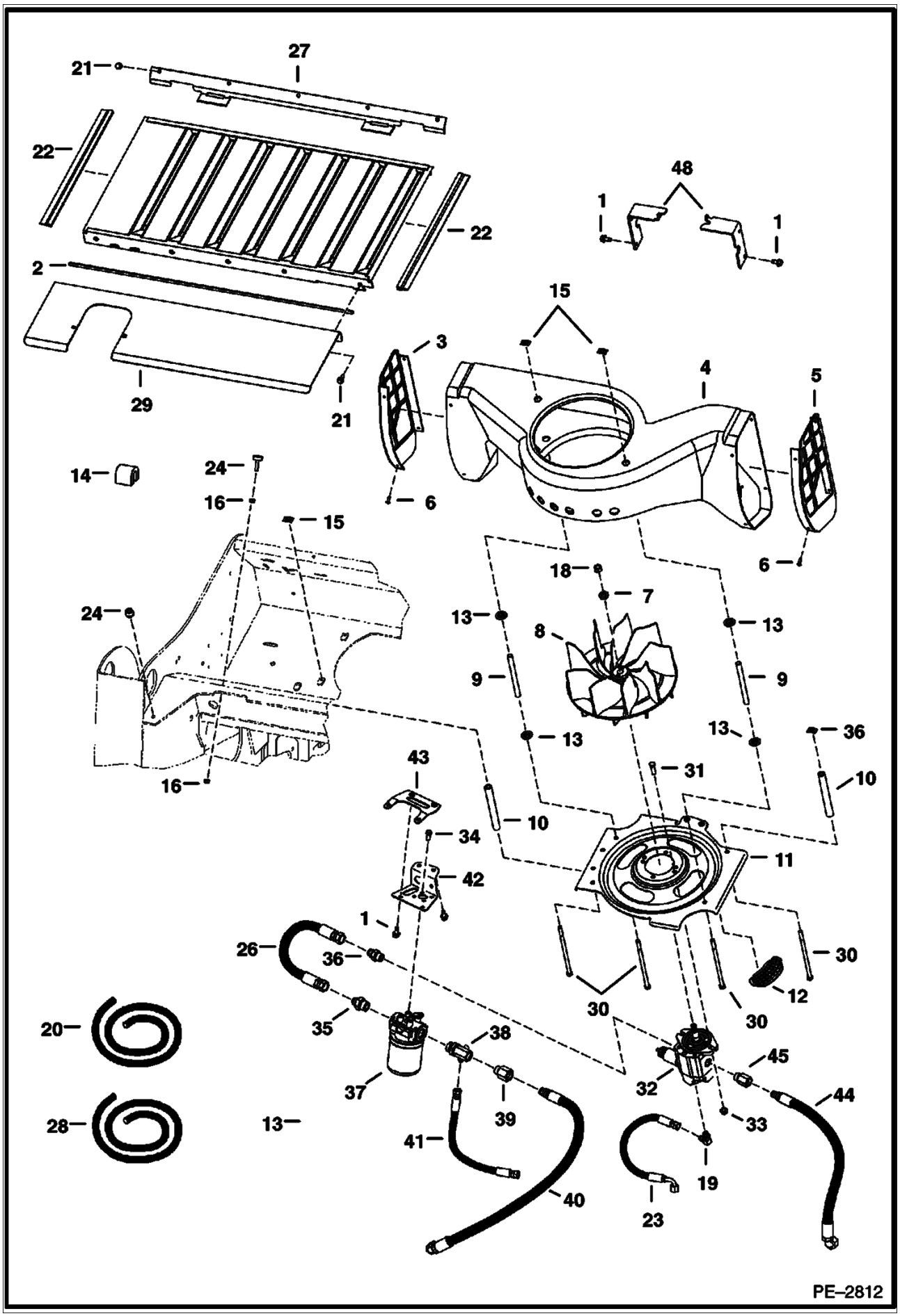
PE–2812

Ref No	Part Number	Description	Remarks	Serial Number	Qty
1	84G003712B	BOLT			8
2		SEAL	34.5" (900 mm) long - Order Ref 28		2
3	6716574	LOUVER	L.H. - plastic		1
4	6732931	HOUSING			1
5	6716572	LOUVER	R.H. - plastic		1
6	6706517	SCREW			8
7	6701097	WASHER			1
8	6715142	FAN			1
9	6577382	SPACER			2
10	6732318	SPACER			2
11	7107175	INLET	4 slot		1
12	6684474	INSERT FAN INLET	inlet		4
13	6732457	WASHER	step		4
14	6579613	STOP	cab tilt		2
15	6684033	NUT	spring		4
16	61D000005B	NUT			4
17	17C006116B	BOLT			4
18	96D000008B	NUT			1
19	17KB00606B	ELBOW			1
19	79K000006B	O-RING			x
20	6646705	SEAL	bulk - Order per foot		x
21	84G003112B	BOLT			8
22		SEAL	NAP - 19" (483mm) long - Order Ref. 20		2
23	6578804	HOSE			1
24	6655399	BUMPER			4
25	6731078	GRILL			1
26	7110809	HOSE			1
27	6731915	BRACKET			1
28	6511855	SEAL	bulk - Sold Per Foot		x
29	6731916	SHIELD			1
30	7101373	BOLT			4
31	17C000620B	BOLT			2
32	6687142	MOTOR	See Illustration MOTOR/ PE2811		1
33	95D000006B	NUT			10
34	17C000612B	BOLT			4
35	15KB01010B	ADAPTER			1
35	79K000010B	O-RING			x
36	15KB01012B	ADAPTER			1
36	79K000012B	O-RING			x
37	6687266	FILTER ASSY			1
37	6686926	ELEMENT FILTER			1
38	7108685	HOSE			1
38	79K000012B	O-RING			x
39	78HA01210B	ADAPTER			1
39	79K000010B	O-RING			x
40	7107174	HOSE			1
41	6815887	HOSE			1
42	7110243	SEAL			1
43	7110244	BRACKET			1
44	7107153	HOSE			1
45	78HA01010B	ADAPTER			1
45	79K000010B	O-RING			x
46	84G003716B	BOLT			4
47	6731970	BRACKET			2

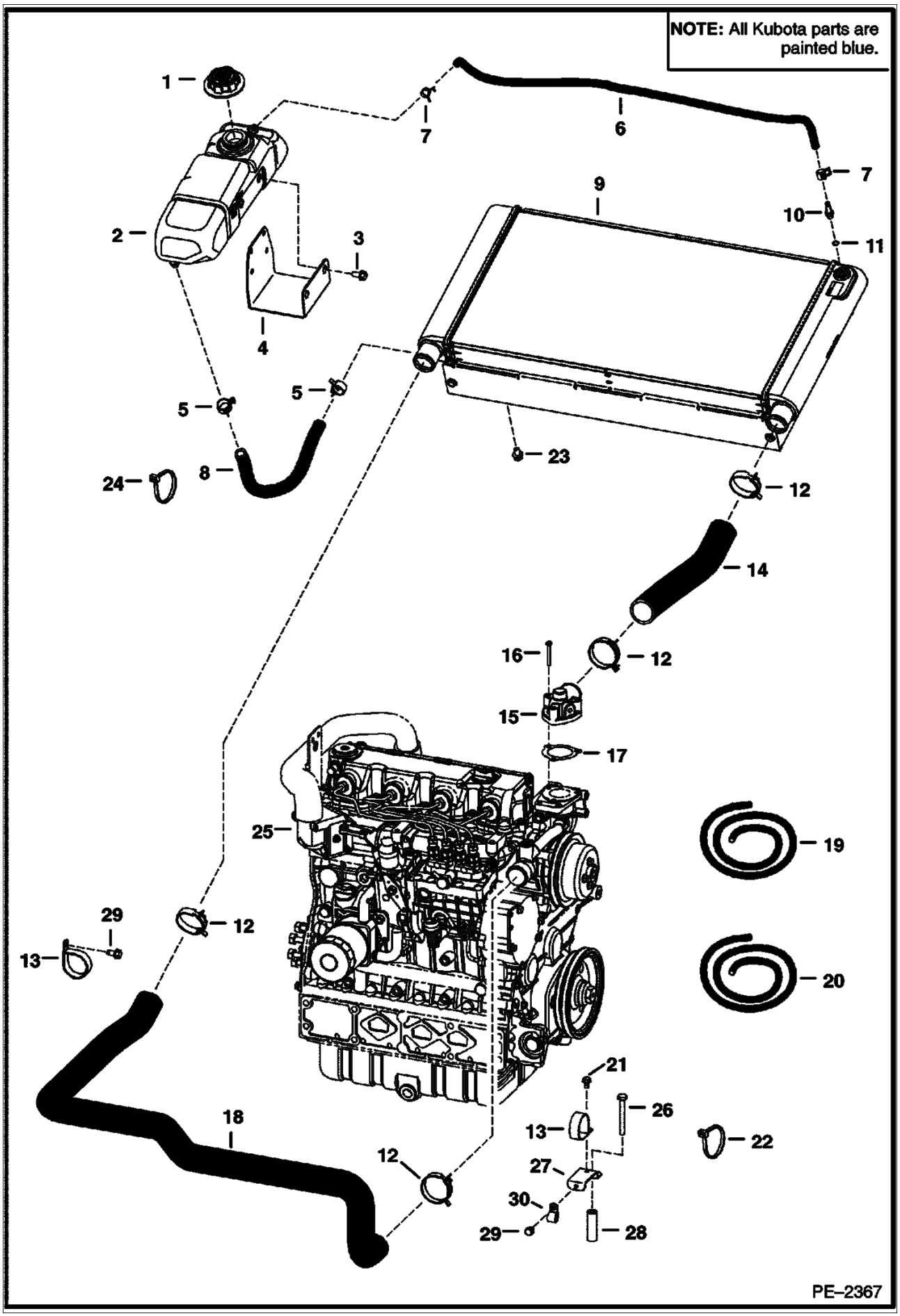
NOTE: All Kubota parts are painted blue.
1
2
3
4
5
5
6
7
7
8
9
10
11
12
12
12
13
13
14
15
16
17
18
19
20
21
22
23
24
25
26
27
28
29
29
30
PE–2367

Ref No	Part Number	Description	Remarks	Serial Number	Qty
1	6733429	CAP			1
1	6733996	DECAL	14 psi		1
2	6732375	TANK			1
3	6733886	BOLT			2
4	6732870	MOUNT			1
5	5HM00023B	CLAMP			2
6		HOSE	NAP - Order Ref. 19 - .25" I.D. - 36" (914mm) long		1
7	5HM00014B	CLAMP			2
8		HOSE	NAP - Order Ref. 20 - .63" I.D. - 20" (508mm) long		1
9	6684367	RADIATOR			1
10	6734090	ADAPTER			1
11	79K000004B	O-RING			x
12	5HM00055B	CLAMP			4
13	30H000091B	CLAMP			2
14	6728749	HOSE			1
15	6680843	COVER	See Illustration WATER PUMP & THERMOSTAT/ B17610 See Illustration WATER PUMP & THERMOSTAT/ B22925 thermostat		1
16	6680845	BOLT	See Illustration WATER PUMP & THERMOSTAT/ B17610 See Illustration WATER PUMP & THERMOSTAT/ B22925		3
17	6680844	GASKET	See Illustration WATER PUMP & THERMOSTAT/ B17610 See Illustration WATER PUMP & THERMOSTAT/ B22925		1
18	6736566	HOSE			1
19	6577822	HOSE	bulk - sold per foot		x
20	6578172	HOSE	bulk - sold per foot		x
21	84G003712B	BOLT			2
22	6610510	TIE			1
23	35C000516B	BOLT			4
24	6513471	CLAMP			1
25		ENGINE	See Illustration ENGINE & GASKET KITS/ B18620 See Illustration ENGINE/ B18620		1
26	6731198	BOLT			1
27	6737649	BRACKET			1
28	6731109	SPACER			1
29	84G003108B	BOLT			2
30	30H000034B	CLAMP			1

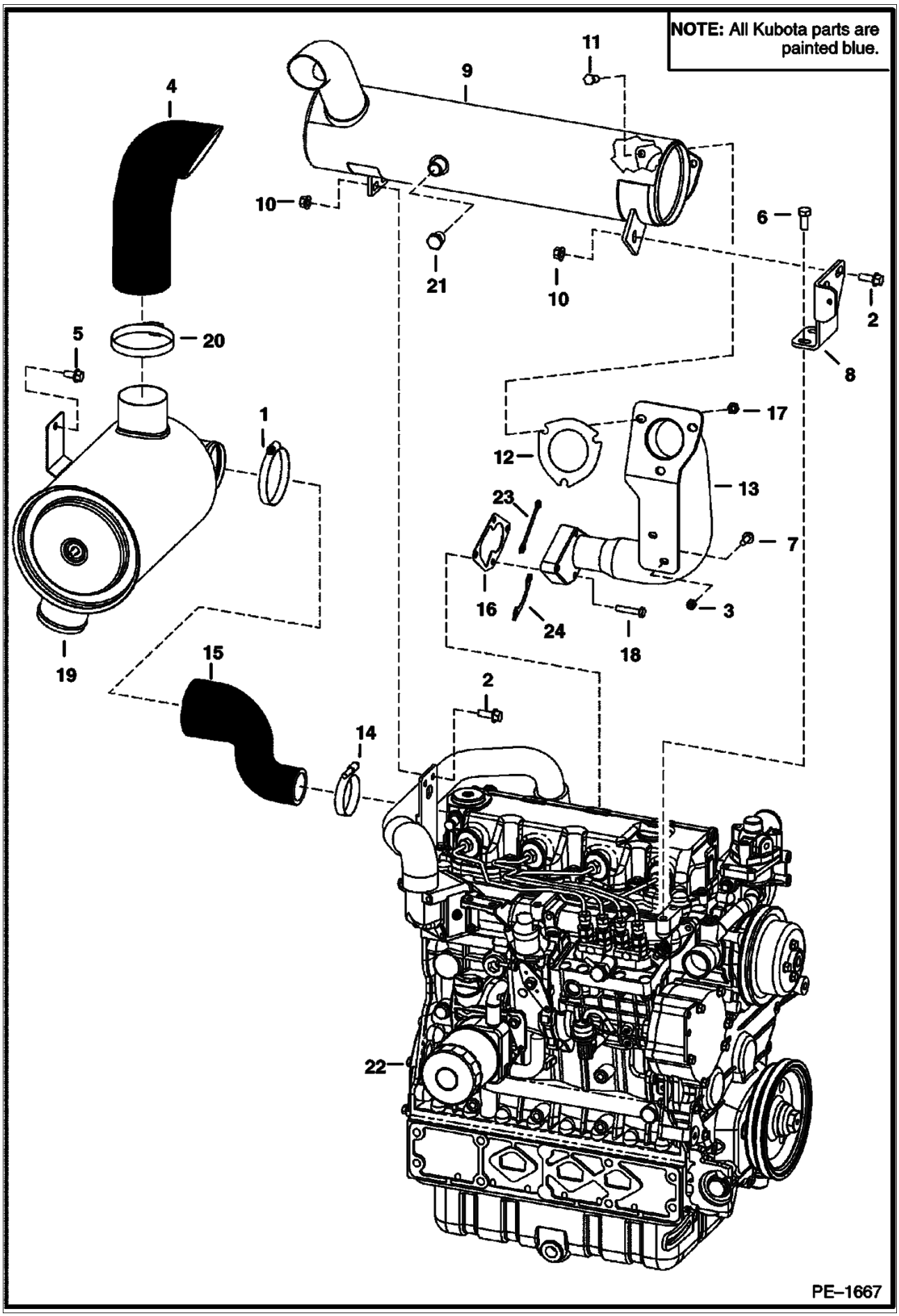
NOTE: All Kubota parts are painted blue.
11
9
4
10
21
10
6
2
5
20
8
1
17
12
13
23
7
16
24
3
18
19
15
2
14
22
PE–1667

ENGINE & ATTACHING PARTS (Cont'd)
(Air Cleaner, Muffler)

Ref No	Part Number	Description	Remarks	Serial Number	Qty
1	42HC00375B	CLAMP			1
2	45C000616B	BOLT			2
3	53DM00008B	NUT			1
4	6730726	HOSE	air intake		1
5	84G003712B	BOLT			2
6	6719825	BOLT			2
7	29CM00820B	BOLT			1
8	7111805	MOUNT	muffler		1
8	6730753	MOUNT	purifier		1
9	6687887	MUFFLER	double insulated		1
10	83D000006B	NUT			3
11	17C000620B	BOLT			3
12	6732032	GASKET	exhaust		1
13	7102368	TUBE	exhaust - square bolt pattern		1
14	42HC00250B	CLAMP			1
15	6734114	HOSE			1
16	7102747	GASKET	square bolt pattern		1
17	85D000006B	NUT			3
18	5CM01020B	BOLT			4
19		AIR CLEANER	See Illustration AIR CLEANER/ MS1516 See Illustration AIR CLEANER/ MS1516		1
20	42H000052B	CLAMP			1
21	6661062	PLUG	brass - 3/8" straight pipe thread		1
22		ENGINE	See Illustration ENGINE & GASKET KITS/ B18620 See Illustration ENGINE/ B18620		1
23	7102034	TAB			1
24	7102035	TAB			1

ENGINE & ATTACHING PARTS
(Belt Drive System)

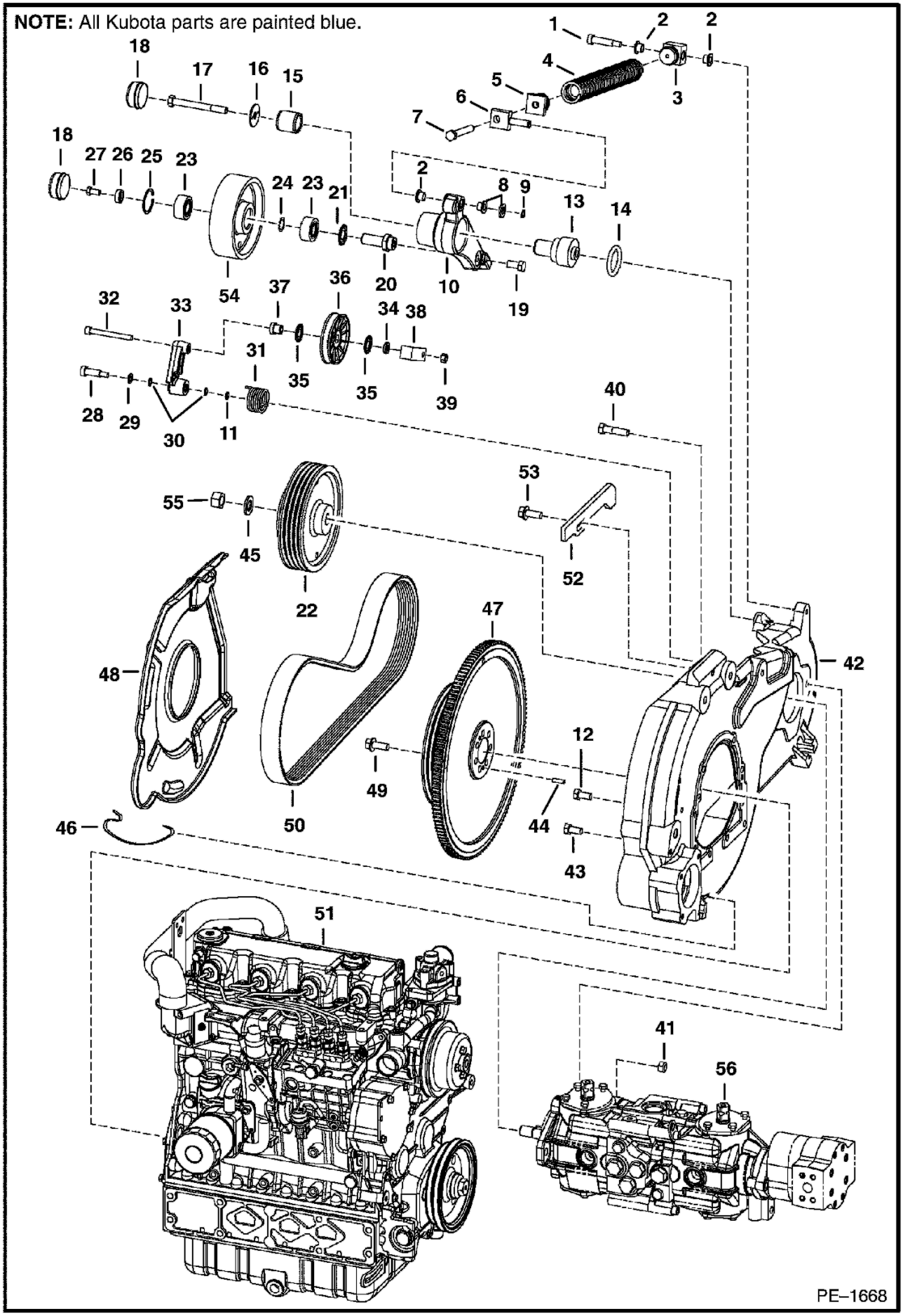

ENGINE & ATTACHING PARTS (Cont'd)
(Belt Drive System)

Ref No	Part Number	Description	Remarks	Serial Number	Qty
1	38C000828B	BOLT	shoulder		1
2	1313116	BUSHING			3
3	6568424	ADAPTER			1
4	6569498	SPRING ASSY			1
5	6568425	ADAPTER			1
6	6587182	SWIVEL PIN			1
7	6586710	BOLT			1
8	25E000021B	WASHER			2
9	6518955	SNAP RING			1
10	6735709	IDLER			1
11	6670682	BEARING	nylon		1
12	6730894	BOLT			2
13	6707699	PIVOT			1
14	6661377	SEAL			1
15	6587765	BUSHING			1
16	6707698	WASHER			1
17	17C000872B	BOLT			1
18	6660967	CAP	grease		2
19	17C000816B	BOLT			1
20	6707654	SPINDLE			1
21	6665307	SEAL			1
22	7111581	PULLEY	pump		1
23	6661229	BEARING			2
24	6701159	SHIM			1
25	6665308	SNAP RING			1
26	6707697	WASHER			1
27	17C000612B	BOLT			1
28	38C000820B	BOLT			1
29	6655781	BEARING	thrust		1
30	6704820	O-RING			2
31	6700115	SPRING			1
32	73G000656B	BOLT			1
33	6725212	ARM	W/Ref. 11		1
34	6704444	WASHER			1
35	6660995	GREASE RING			2
36	6662997	PULLEY			1
37	6704443	BUSHING			1
38	6702474	RETAINER			1
39	61D000006B	NUT			1
40	17C000832B	BOLT	hydrostatic pump mount		2
41	85D000008B	NUT			2
42	6730020	MOUNT	See Illustration ENGINE & ATTACHING PARTS/ PE1725R		1
43	6719828	BOLT			10
44	14J003112B	PIN			2
45	6576033	WASHER			1
46	6701160	CLIP			3
47	7100859	FLYWHEEL ASSY	W/ ring gear		1
47	6665222	RING GEAR			1
48	6731100	SHIELD			1
49	6680747	BOLT			6
50	6662855	BELT	pump drive		1
51		ENGINE	See Illustration ENGINE & GASKET KITS/ B18620 See Illustration ENGINE/ B18620		1
52	6729944	STOP	idler		1
53	31C000820B	BOLT			1

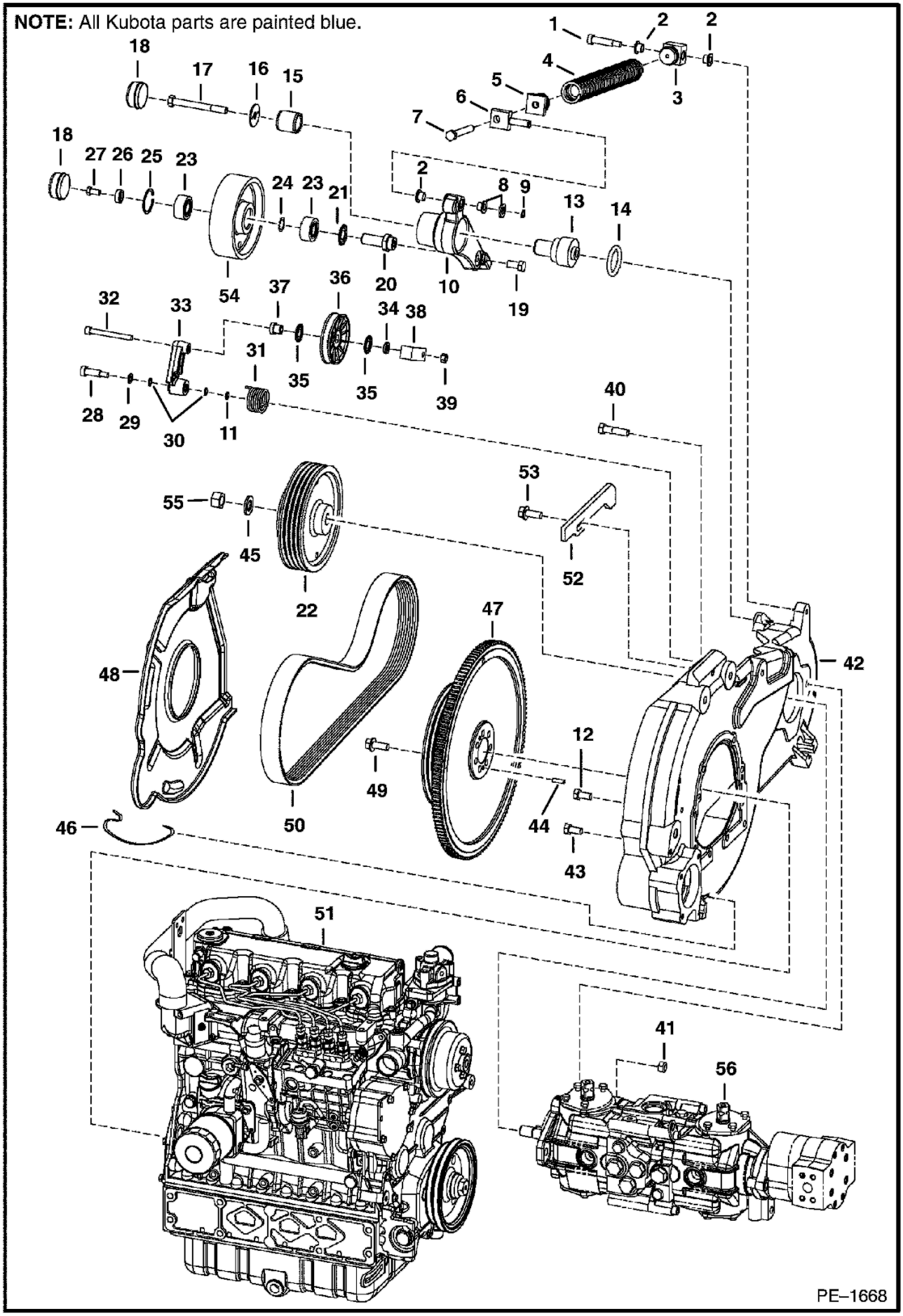
NOTE: All Kubota parts are painted blue.
1
2
2
3
4
5
6
7
8
9
10
11
12
13
14
15
16
17
18
18
19
20
21
22
23
23
24
25
26
27
28
29
30
31
32
33
34
35
35
36
37
38
39
40
41
42
43
44
45
46
47
48
49
50
51
52
53
54
55
56
PE–1668

Ref No	Part Number	Description	Remarks	Serial Number	Qty
54	6708445	PULLEY	drive idler		1
55	92D000012B	NUT			1
56		PUMP	See Illustration HYDROSTATIC PUMP/ B17765		1

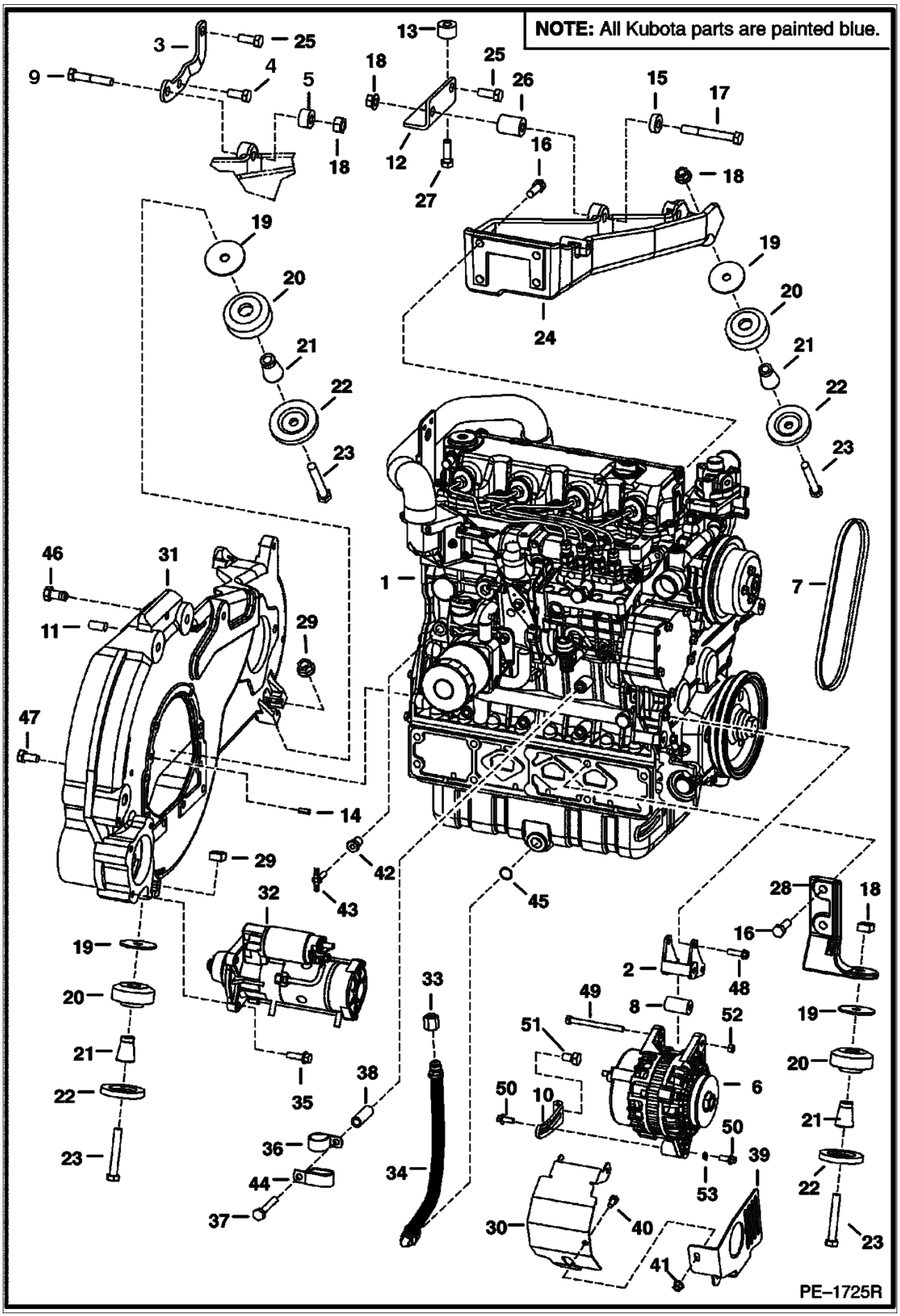
NOTE: All Kubota parts are painted blue.
PE–1725R

ENGINE & ATTACHING PARTS (Cont'd)
(Engine Mounts)

Ref No	Part Number	Description	Remarks	Serial Number	Qty
1		ENGINE	See Illustration ENGINE & GASKET KITS/ B18620 See Illustration ENGINE/ B18620		1
2	6680839	BRACKET	See Illustration FRONT COVER/ B17609 alternator		2
3	6735979	BRACKET	pump - for selectable joystick control		1
4	17C000816B	BOLT	for selectable joystick control		1
5	6736349	SPACER	for selectable joystick control		1
6		ALTERNATOR	See Illustration ALTERNATOR/ C3529		1
7	6686655	BELT	alternator / water pump		1
8	6732206	SPACER	alternator		1
9	6675221	BOLT	for selectable joystick control		1
10	6732193	BRACKET			1
11	20JM01025B	PIN			2
12	6735727	BRACKET			1
13	6732575	SPACER			1
14	6680642	PIN	align Ref. 30 to the engine		1
15	6716408	SPACER			1
16	6719829	BOLT			6
17	43C000852B	BOLT			4
18	83D000008B	NUT			3
19	6731146	WASHER	2.5" (63,5mm) O.D.		4
19	6705106	WASHER	3" (76,2mm) O.D.		4
20	6668104	MOUNT			4
21	6715287	SPACER			4
22	6661787	WASHER			4
23	17C000888B	BOLT			1
24	6729942	MOUNT			1
25	17C000820B	BOLT			1
26	6732585	SPACER	3" (76,2mm) long		1
26	6735729	SPACER	2.94" (74,7mm) long		1
27	17C000824B	BOLT			1
28	6735346	MOUNT	cast - used W/ 6735106 washer		2
29	6652918	NUT			2
30	6733873	SHIELD	alternator		1
31	6735980	MOUNT			1
32		STARTER	See Illustration STARTER/ B16488R		1
33	36K000006B	CAP			1
34	6734573	HOSE	12.5" (318mm) long		1
35	35C000620B	BOLT			3
36	30H000073B	CLAMP			1
37	6731198	BOLT			1
38	6731109	SPACER			1
39	6734436	SHIELD	alternator belt		1
40	17C000510B	BOLT			1
41	83D000005B	NUT			1
42	7101136	BUSHING			1
43	72F000001B	DRAIN COCK			1
44	31H000038B	CLAMP			1
45	79K000008B	O-RING			1
46	31C000820B	BOLT			1
47	6719828	BOLT			10
48	6680687	BOLT			2
49	1CM08100B	BOLT			1
50	29CM00820B	BOLT			2
51	6CM01220B	BOLT			1
52	53DM00008B	NUT			1

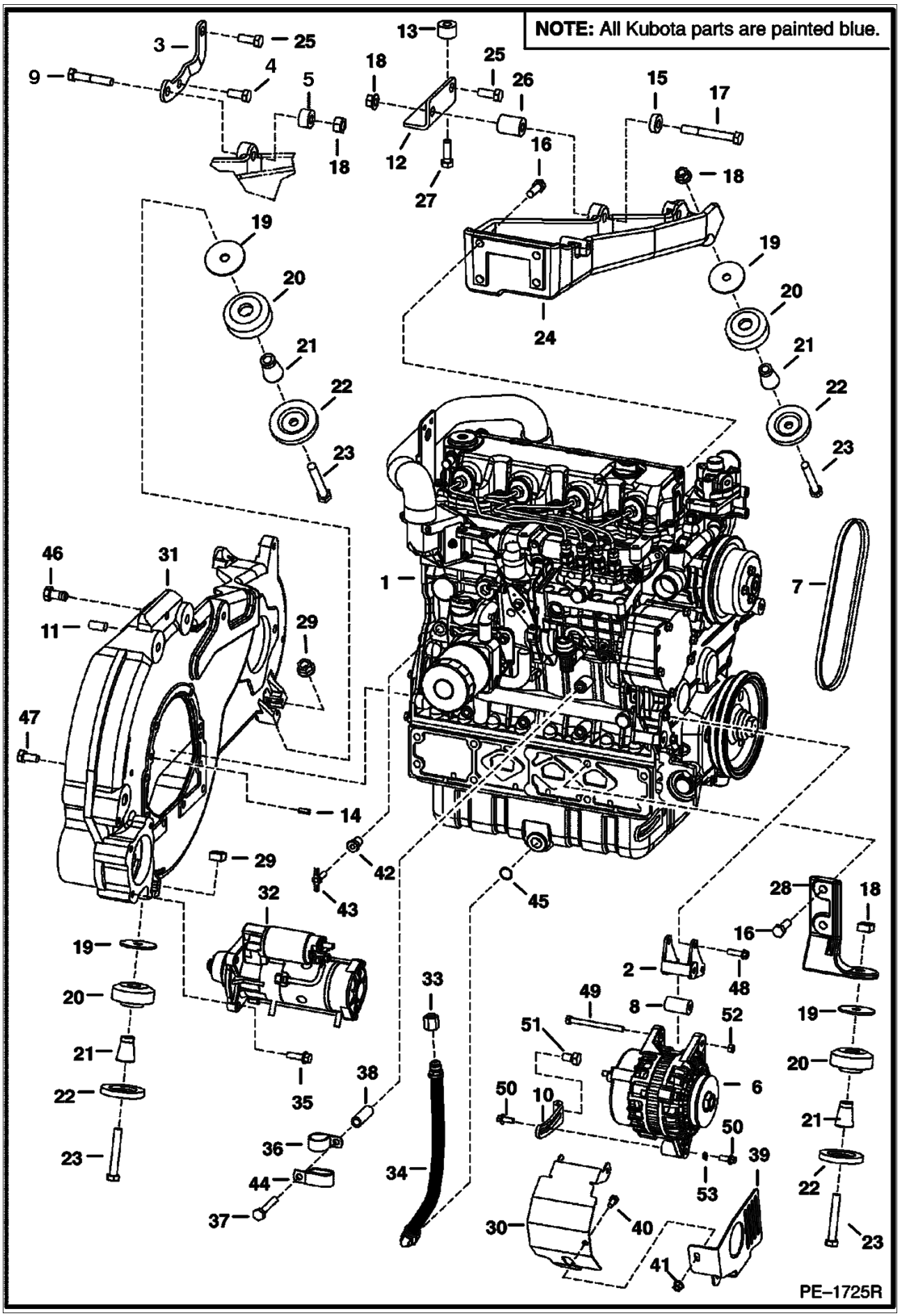
NOTE: All Kubota parts are painted blue.
PE–1725R

Ref No	Part Number	Description	Remarks	Serial Number	Qty
53	6E000005B	ENGINE			1

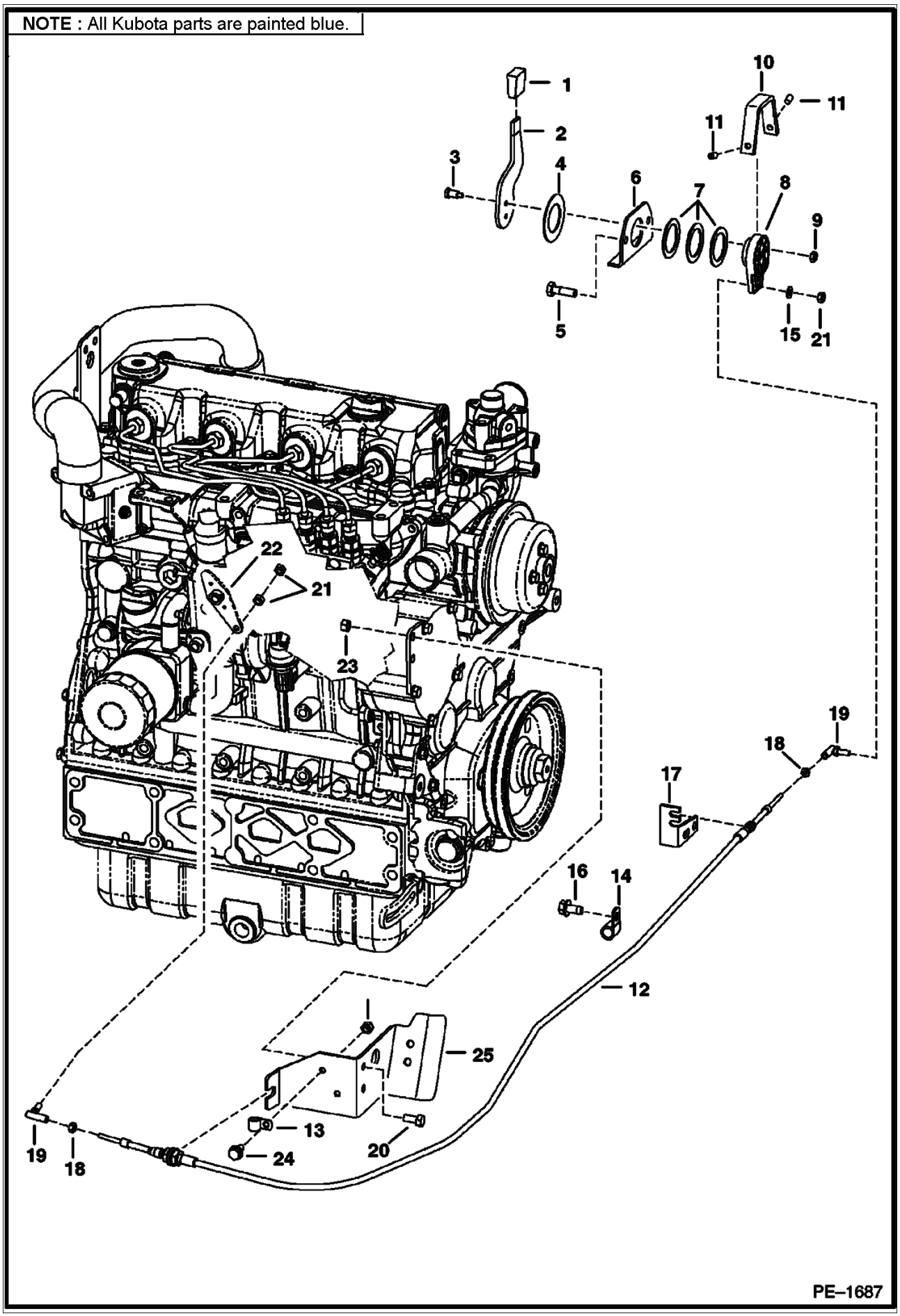
NOTE : All Kubota parts are painted blue.
1
2
3
4
5
6
7
8
9
10
11
11
15
21
22
21
23
19
18
17
16
14
12
25
13
24
20
19
18
PE–1687

Ref No	Part Number	Description	Remarks	Serial Number	Qty
1	6564452	GRIP			1
2	6705452	LEVER			1
3	38C000610B	BOLT	shoulder		2
4	6567962	WASHER			1
5	84G003724B	BOLT			2
6	6576262	MOUNT			1
7	6630945	WASHER			3
8	6709022	LEVER			1
9	85D000005B	NUT			6
10	6734520	COVER			1
11	6706572	SET SCREW			2
12	6675668	CABLE			1
13	30H000021B	CLAMP			1
14	30H000031B	CLAMP			1
15	25E000011B	WASHER			1
16	84G003712B	BOLT			1
17	6732450	BRACKET			1
18	14D000010B	NUT			2
19	6644965	BALL JOINT			1
20	17C000512B	BOLT			2
21	62D000004B	NUT			3
22		LEVER	See B-17615/GOVERNOR Ref. 3 & B-22930/* GOVERNOR Ref. 12		1
23	95D000005B	NUT			2
24	84G003110B	BOLT			1
25	6734772	MOUNT	tier II		1

ENGINE SPEED CONTROL
Selectable Joystick Controls

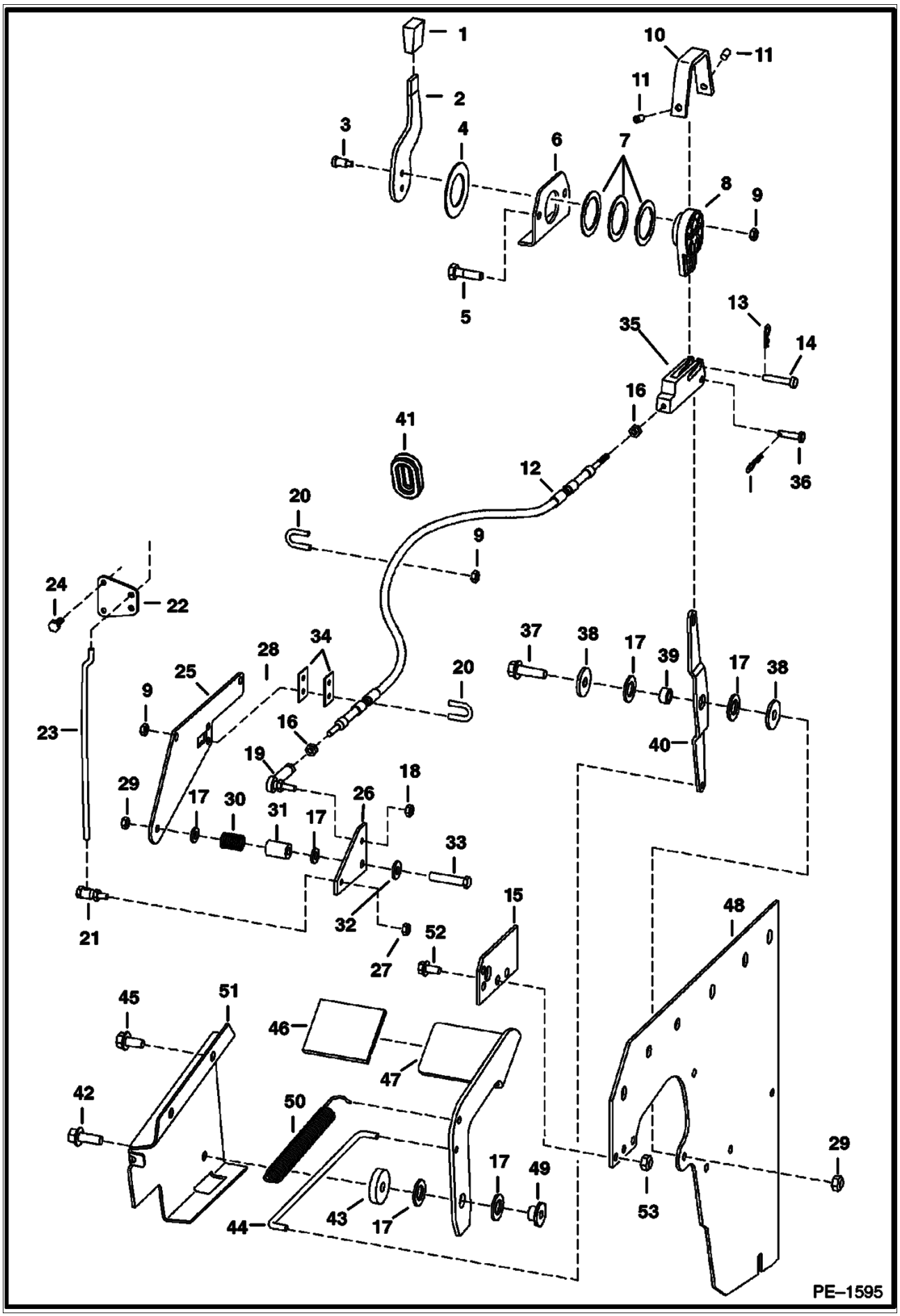

Ref No	Part Number	Description	Remarks	Serial Number	Qty
1	6564452	GRIP			1
2	6730270	LEVER			1
3	38C000610B	BOLT	shoulder		2
4	6567962	WASHER			1
5	84G003724B	BOLT			2
6	6576262	MOUNT			1
7	6630945	WASHER			3
8	6734416	LEVER			1
9	85D000005B	NUT			6
10	6734520	COVER			1
11	6706572	SET SCREW			2
12	6675668	CABLE			1
13	6513495	COTTER PIN			1
14	2F004051B	PIN			1
15	6732449	PLATE	cable		1
16	8D000004B	NUT			2
17	6700170	WASHER	plastic		4
18	86D000004B	NUT			1
19	6631036	JOINT			1
20	6592766	U-BOLT			2
21	6557291	BALL JOINT			1
22	6707903	LEVER			1
23	6707904	ROD			1
24	53CM00616B	BOLT			2
25	6709052	MOUNT			1
26	6701187	BELLCRANK			1
27	85D000004B	NUT			1
28	53CM00820B	BOLT			2
29	85D000006B	NUT			1
30	6704453	SPRING			1
31	6708314	BUSHING			1
32	25E000018B	WASHER			1
33	84G003728B	BOLT			1
34	6713920	SHIM	.0528" (1,34mm) thick		2
35	6734503	CLEVIS			1
36	1304227B	PIN			1
37	84G003720B	BOLT			1
38	619021B	WASHER			2
39	6564343	SPACER			1
40	6734417	LEVER			1
41	6577961	GROMMET			1
42	45C000616B	BOLT			1
43	6732322	SPACER			1
44	6731900	ROD			1
45	84G003712B	BOLT			2
46	6554100	TREAD	safety		1
47	6731898	PEDAL			1
48		PANEL	See Illustration PANELS/ PE2841		1
49	6559479	NUT	retaining		1
50	6700743	SPRING			1
51	6732323	BRACKET			1
52	84G003716B	BOLT			2

NOTE: All Kubota parts are painted blue.

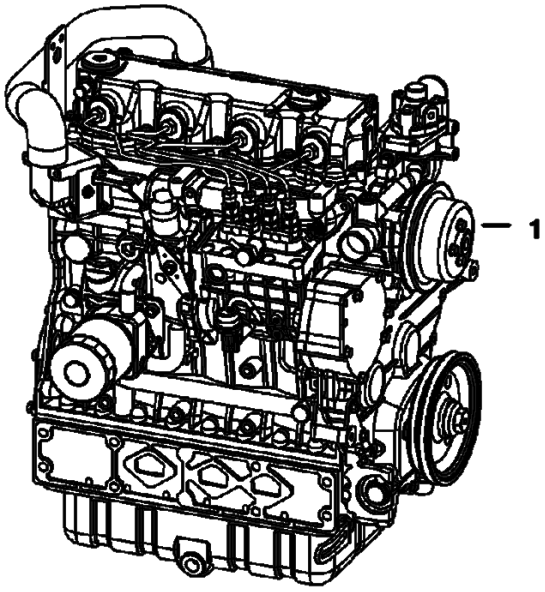

B–18620

Ref No	Part Number	Description	Remarks	Serial Number	Qty
1	6684576	ENGINE	74.9 HP - 1G-578-00000		1

MANIFOLDS
(V3300 DI T Kubota)

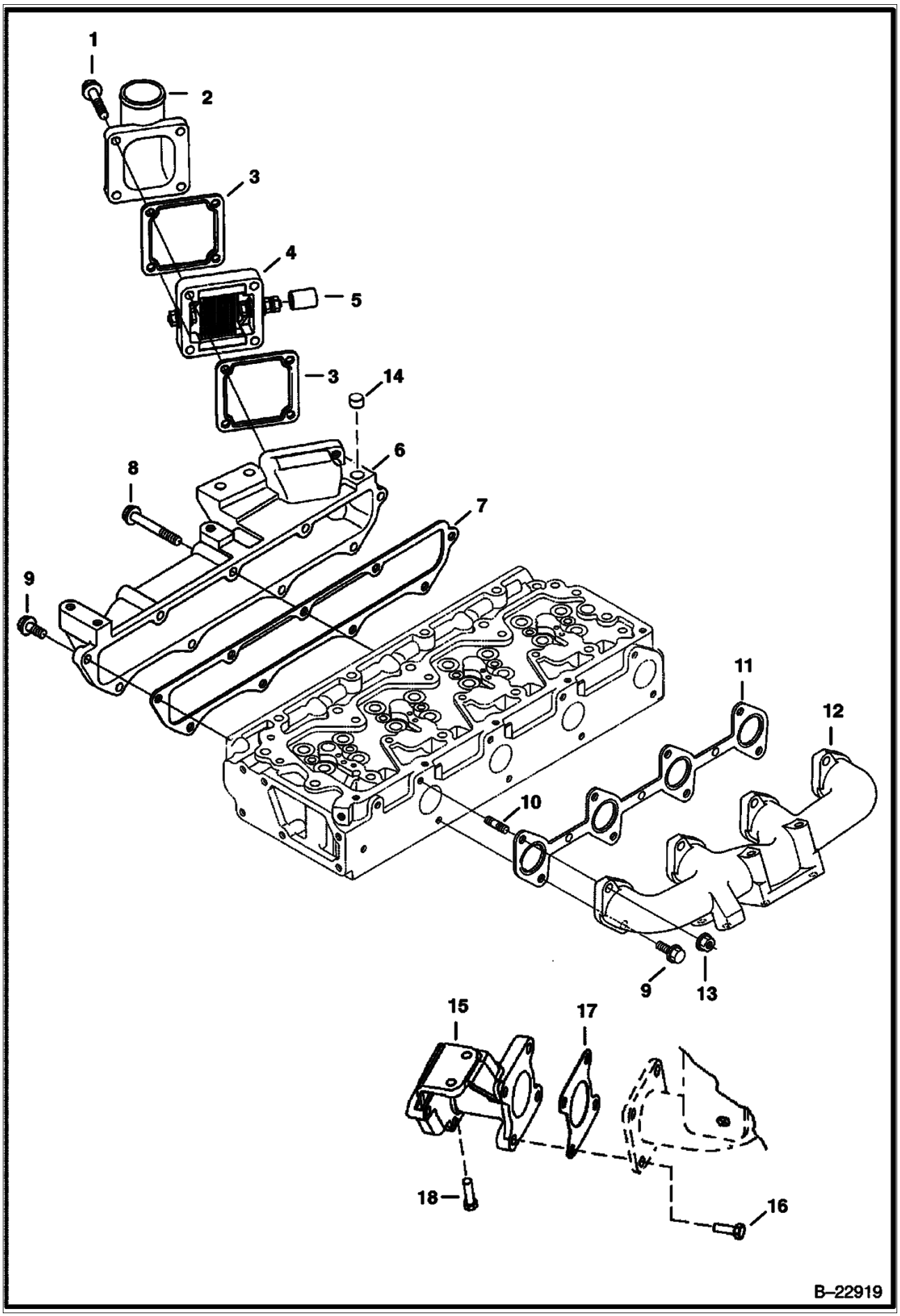

MANIFOLDS (Cont'd)
(V3300 DI T Kubota)

Ref No	Part Number	Description	Remarks	Serial Number	Qty
1	6680851	BOLT			4
2	6680886	FLANGE			1
3	6685960	GASKET			1
4	6680888	HEATER			1
5	6598112	CAP			1
6	6680883	MANIFOLD	intake		1
7	6680884	GASKET	manifold		1
8	6680885	BOLT			3
9	6680801	BOLT			10
10	3974916B	STUD			4
11	6680891	GASKET	manifold		1
12	6680890	MANIFOLD	exhaust		1
13	6680663	NUT			1
14	6685961	PLUG			1
15	6687145	FLANGE	muffler		1
16	6687146	BOLT			4
17	6687147	GASKET			2
18	6680755	BOLT			2

TURBOCHARGER
(V3300 DI T Kubota)

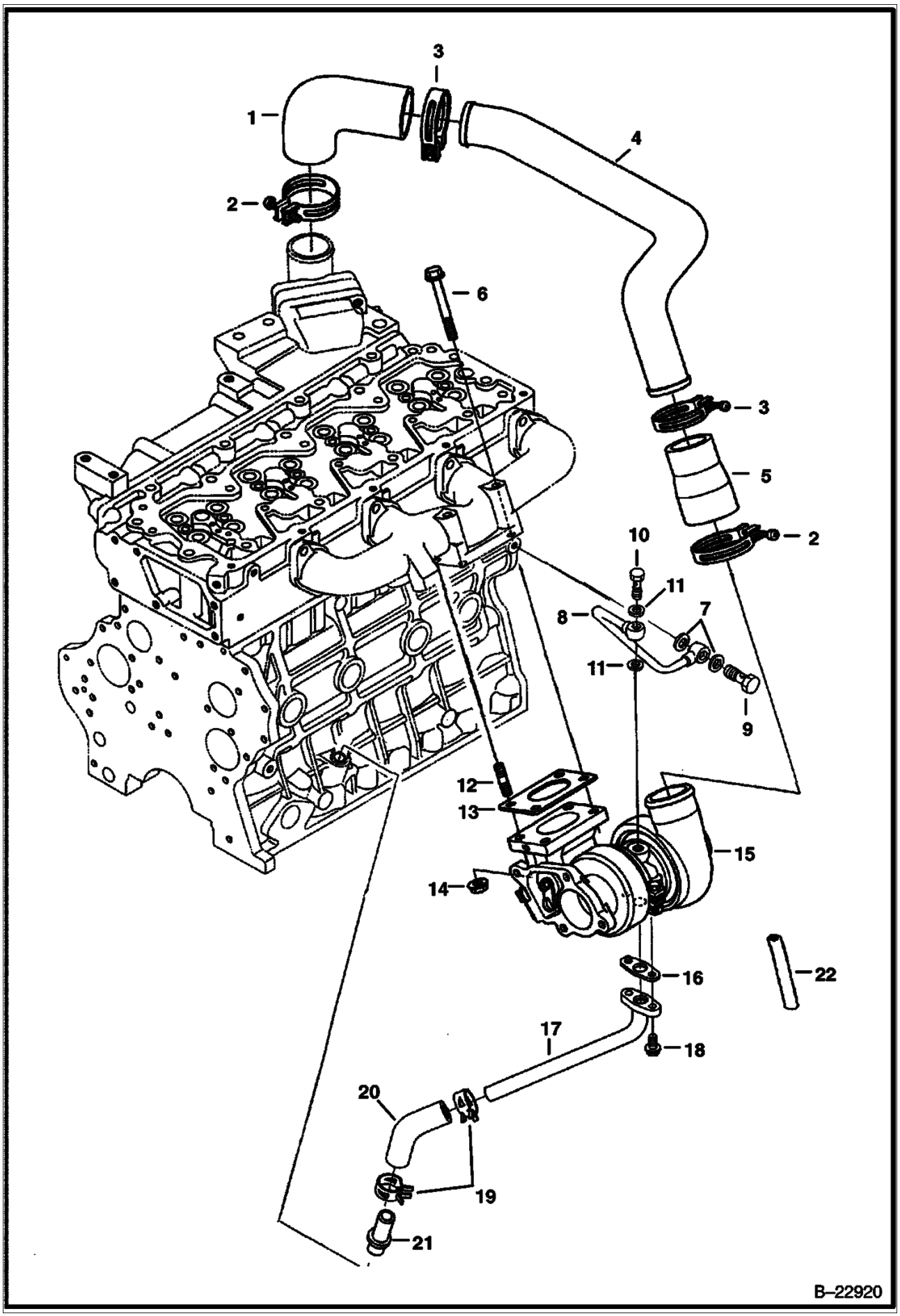

TURBOCHARGER (Cont'd)
(V3300 DI T Kubota)

Ref No	Part Number	Description	Remarks	Serial Number	Qty
1	6680896	HOSE			1
2	6680897	CLAMP			2
3	6680898	CLAMP			2
4	6680895	HOSE			1
5	6680894	HOSE			1
6	6680802	BOLT			2
7	6680792	GASKET			2
8	6680899	TUBE			1
9	6680791	BOLT	hollow		1
10	6680900	BOLT	hollow		1
11	6685962	GASKET			2
12	6680564	STUD			2
13	6680893	GASKET			1
14	6680663	NUT			2
15	6680892	TURBOCHARGER	W/Ref. 22		1
16	6685964	GASKET			1
17	6685963	PIPE			1
18	6652762	BOLT			2
19	6680903	CLAMP			2
20	6685965	HOSE			1
21	6680649	TUBE			1
22	6688069	HOSE	turbo		1

CYLINDER HEAD & COVER
(V3300 DI T Kubota)

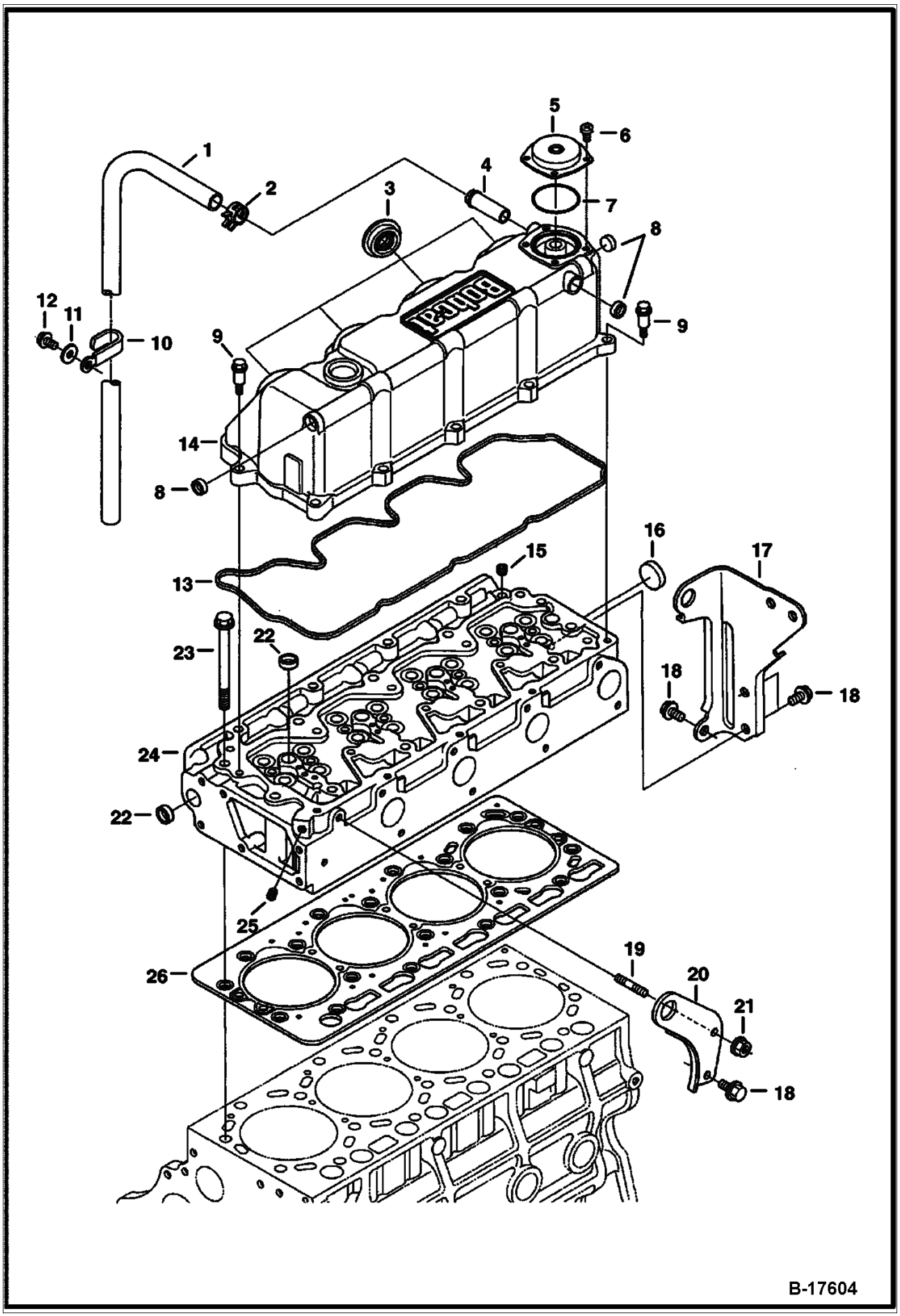

CYLINDER HEAD & COVER (Cont'd)
(V3300 DI T Kubota)

Ref No	Part Number	Description	Remarks	Serial Number	Qty
1	6685930	HOSE			1
2	6680698	CLAMP			1
3	6680695	SEAL	injection tube		4
4	6680689	ADAPTER			1
5	6680692	COVER	breather		1
6	6680693	SCREW			4
7	6680691	O-RING			1
8	6680694	PLUG			3
9	6680696	BOLT			10
10	6680699	CLAMP			1
11	6680700	WASHER			1
12	6680658	BOLT			1
13	6680690	GASKET			1
14	6680688	HEAD COVER	W/Ref. 3-8 & 13		1
15	6598169	PLUG			1
16	6680666	PLUG			1
17	6685926	BRACKET			1
18	6680662	BOLT			4
19	3974916B	STUD			1
20	6598133	BRACKET			1
21	6680663	NUT			1
22	6680665	PLUG			5
23	6680668	BOLT			18
24	6685927	HEAD	W/Ref. 15, 16, 22 & B17605A/ CYLINDER HEAD Ref. 15-21, 25 & 26		1
25	6680667	PLUG			1
26	6680669	HEAD GASKET	0.80mm - .0315" thick tightened - 2 notch		1
26	6680670	HEAD GASKET	0.90mm - .0354" thick tightened - 1 notch		1
26	6680671	HEAD GASKET	0.95mm - .0374" thick tightened - 0 notch		1

CYLINDER HEAD
(V3300 DI T Kubota)

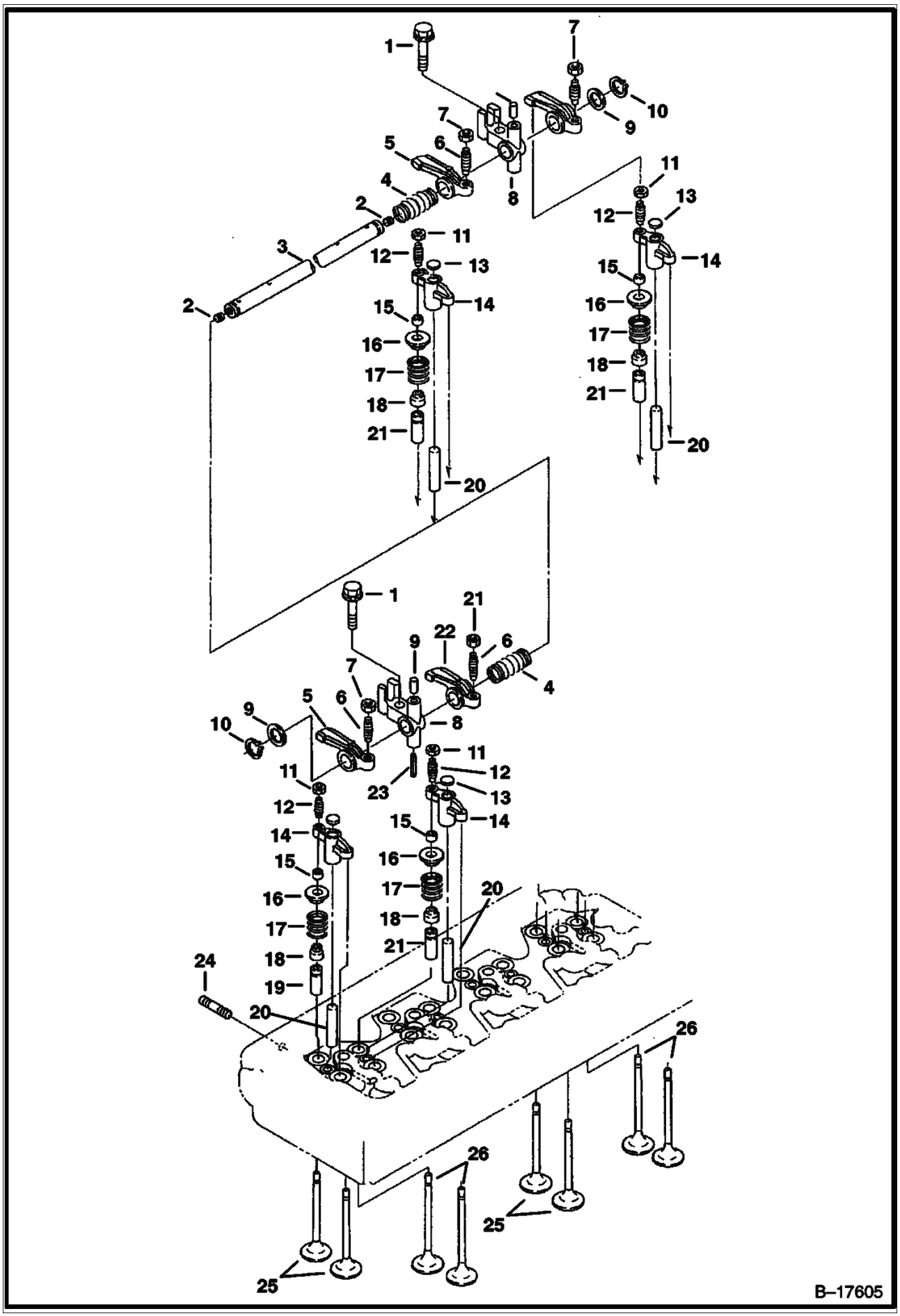

CYLINDER HEAD (Cont'd)
(V3300 DI T Kubota)

Ref No	Part Number	Description	Remarks	Serial Number	Qty
1	6680878	BOLT			4
2	25GM08010B	SET SCREW			2
3	6680868	SHAFT	W/Ref. 2		1
4	6680872	SPRING			3
5	6680873	ROCKER ARM	intake - W/Ref. 6 & 7		4
6	3974920B	SCREW	adjusting		4
7	6680874	NUT			4
8	6680869	BRACKET	rocker arm		4
9	6680870	WASHER			2
10	6680871	SNAP RING			2
11	6680881	NUT			8
12	6680880	SCREW	adjusting		8
13	6680882	PAD			8
14	6680879	ARM	valve bridge - W/Ref. 11 & 12		8
15	6680865	COLLET	valve spring - set		16
16	6685959	RETAINER	valve spring		16
17	6680863	VALVE SPRING			16
18	6672436	SEAL	valve stem		16
19	6685957	GUIDE	inlet valve		8
20	6680866	SHAFT	valve		8
21	6685958	GUIDE	exhaust valve		8
22	6680875	ROCKER ARM	exhaust - W/Ref. 6 & 7		4
23	6667461	PIN			1
24	6680867	STUD			4
25	6680861	VALVE	inlet		8
26	6680862	VALVE	exhaust		8
27	6680877	PIN			4

OIL PAN
(V3300 DI T Kubota)

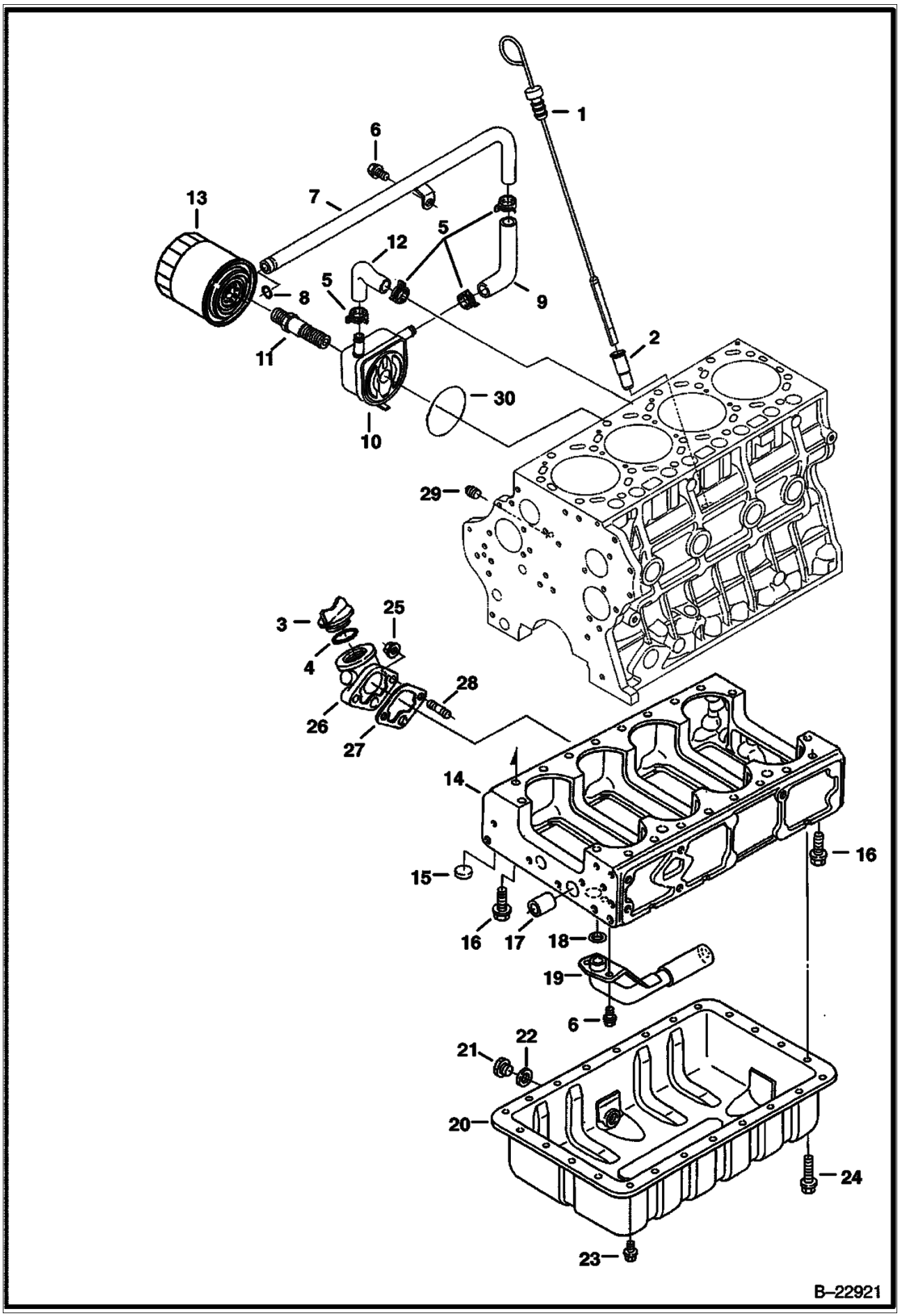

OIL PAN (Cont'd)
(V3300 DI T Kubota)

Ref No	Part Number	Description	Remarks	Serial Number	Qty
1	6680703	DIPSTICK			1
2	6680702	TUBE	dipstick		1
3	6685924	CAP			1
4	3966602B	O-RING			1
5	6675618	CLAMP			4
6	6680662	BOLT			3
7	6685970	HOSE			1
8	6685971	O-RING			1
9	6685972	HOSE			1
10	6680909	OIL COOLER			1
11	6680910	ADAPTER			1
12	6685969	HOSE			1
13	6678233	OIL FILTER			1
14	6685921	CRANKCASE			1
15	6680638	PLUG			10
16	6680654	BOLT			16
17	6680655	PIN	gear case		1
18	6680661	O-RING			1
19	6680660	OIL SUMP			1
20	6680656	OIL PAN	W/Ref. 21 & 22		1
21	6680657	PLUG	oil		1
22	6631046	SEAL	rubber		1
23	6685925	BOLT			20
24	6680659	BOLT			4
25	6680663	NUT			2
26	6685922	FLANGE	oil fill		1
27	6685923	GASKET			1
28	3974916B	STUD			2
29	16F000002B	PLUG			1
30	6686402	SEAL			1

PISTON & CRANKSHAFT
(V3300 DI T Kubota)

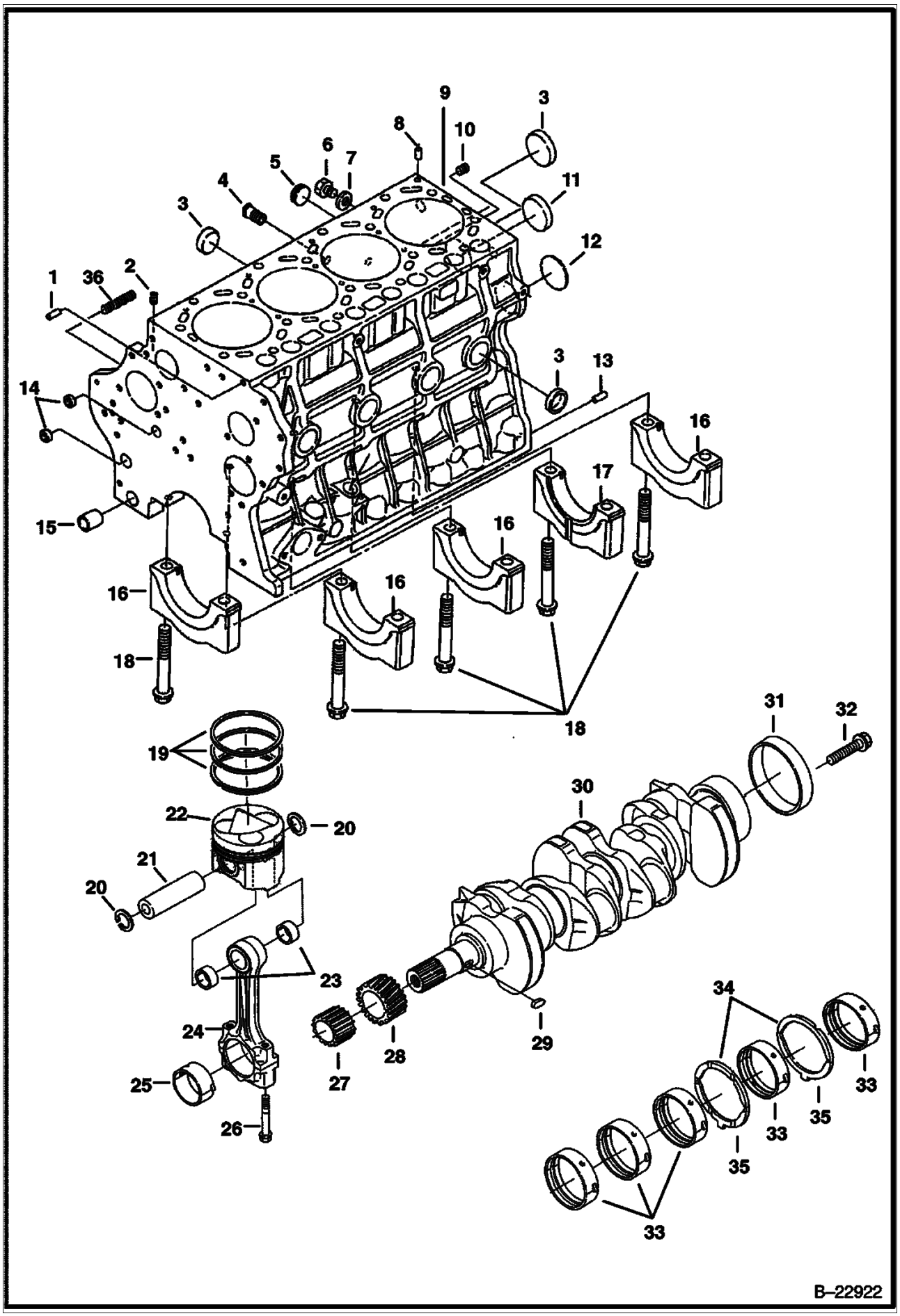

PISTON & CRANKSHAFT (Cont'd)
(V3300 DI T Kubota)

Ref No	Part Number	Description	Remarks	Serial Number	Qty
1	21JM00814B	PIN			1
2	6598169	PLUG			3
3	6680638	PLUG			7
4	6685920	ADAPTER			1
5	6672354	PLUG			1
6	6652750	PLUG			1
7	6652751	GASKET			1
8	6680643	PIN			2
9	6685917	CRANKCASE	W/Ref. 1-3, 5, 8, 10-18 & 36		1
10	6680636	PLUG			1
11	6680639	PLUG			1
12	6680640	PLUG			1
13	6685918	PIN			2
14	6680637	PLUG			2
15	6680644	PIN			1
16		CAP	NSS - main bearing - Order Ref. 9		4
17		CAP	NSS - main bearing - Order Ref. 9		1
18	6680645	BOLT			10
19	6680723	PISTON RINGS	standard		4
19	6680724	PISTON RINGS	0.50mm oversized		4
20	6680726	SNAP RING	internal		8
21	6680725	PIN			4
22	6685933	PISTON	standard		4
22	6685934	PISTON	0.50mm oversized		4
23	6680728	BUSHING			8
24	6680727	ROD	connecting - W/Ref. 23 & 25 - marked blue, yellow or w/o color		4
25	6680730	BEARING	rod - set - blue		4
25	6680731	BEARING	rod - set - yellow or w/o color		4
25	6680732	BEARING	rod - set - 0.20 mm		4
25	6680733	BEARING	rod - set - 0.40 mm		4
26	6680729	BOLT			8
27	6680737	GEAR	oil pump		1
28	6680736	GEAR	crankshaft		1
29	3974226B	KEY			1
30	6680734	CRANKSHAFT	W/Ref. 27-29 & 31		1
31	6680735	SLEEVE	crankshaft		1
32	6680747	BOLT	flywheel		7
33	6680738	MAIN BEARING	standard - set		5
33	6680739	MAIN BEARING	0.20mm undersized - set		5
33	6680740	MAIN BEARING	0.40mm undersized - set		5
34	6680741	THRUST WASHER	standard		2
34	6680742	THRUST WASHER	0.20mm oversized		2
34	6680743	THRUST WASHER	0.40mm oversized		2
35	6680744	THRUST WASHER	standard		2
35	6680745	THRUST WASHER	0.20mm oversized		2
35	6680746	THRUST WASHER	0.40mm oversized		2
36	6685919	STUD			3

CAMSHAFT
(V3300 DI T Kubota)

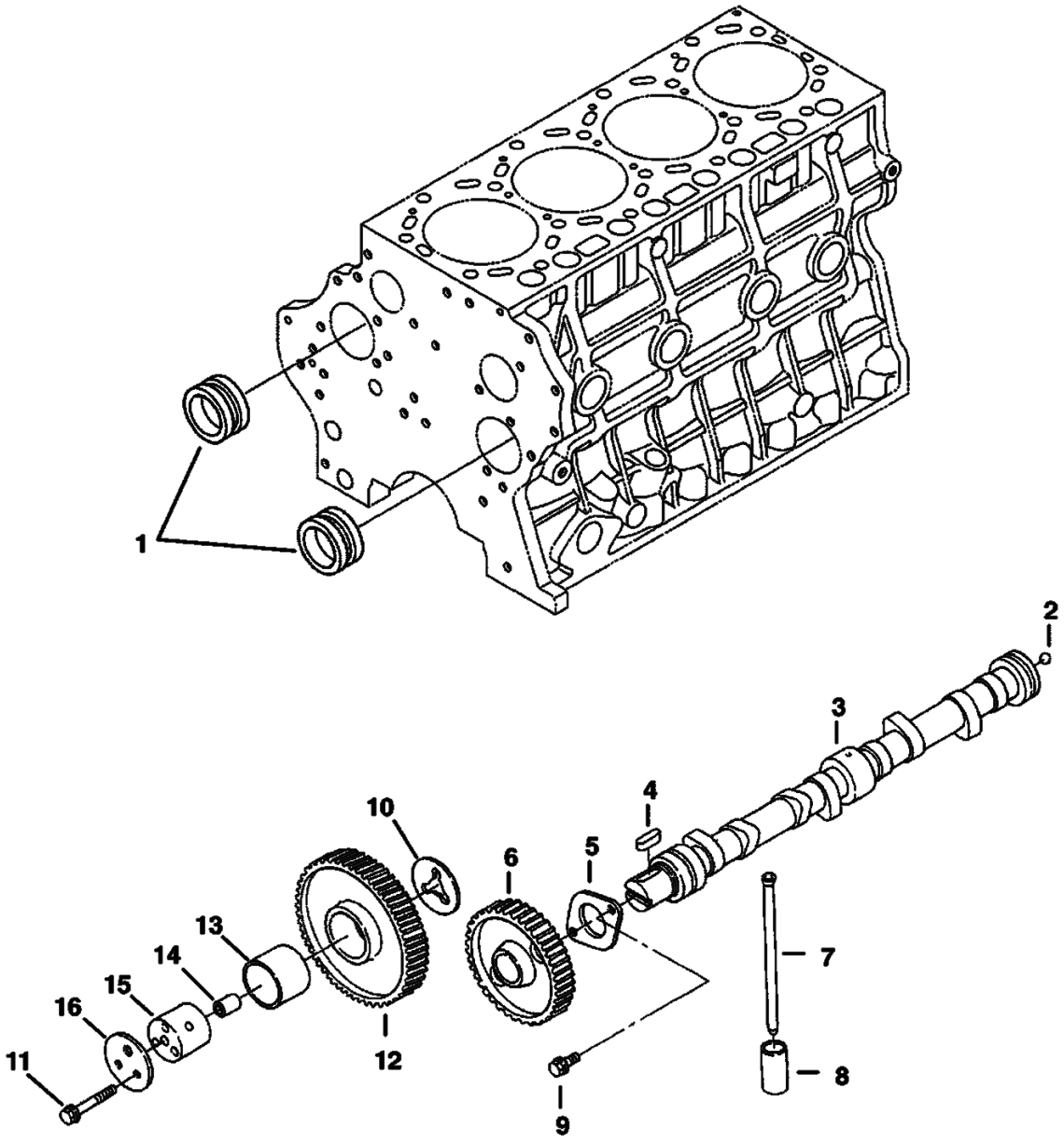

Ref No	Part Number	Description	Remarks	Serial Number	Qty
1	6680748	BALANCER			2
2	6680710	BALL			1
3	6680709	CAMSHAFT	W/Ref. 2 & 4-6		1
4	6652679	KEY			1
5	6680712	FLANGE			1
6	6680711	GEAR	cam		1
7	6680708	PUSH ROD			8
8	6680707	TAPPET			8
9	6680662	BOLT			2
10	6680716	COLLAR			1
11	6680685	BOLT			6
12	6685932	GEAR	W/Ref. 13		1
13	6680720	BUSHING			2
14	6680715	PIN			2
15	6680714	SHAFT	idler gear		2
16	6680717	COLLAR			2

FRONT COVER
(V3300 DI T Kubota)

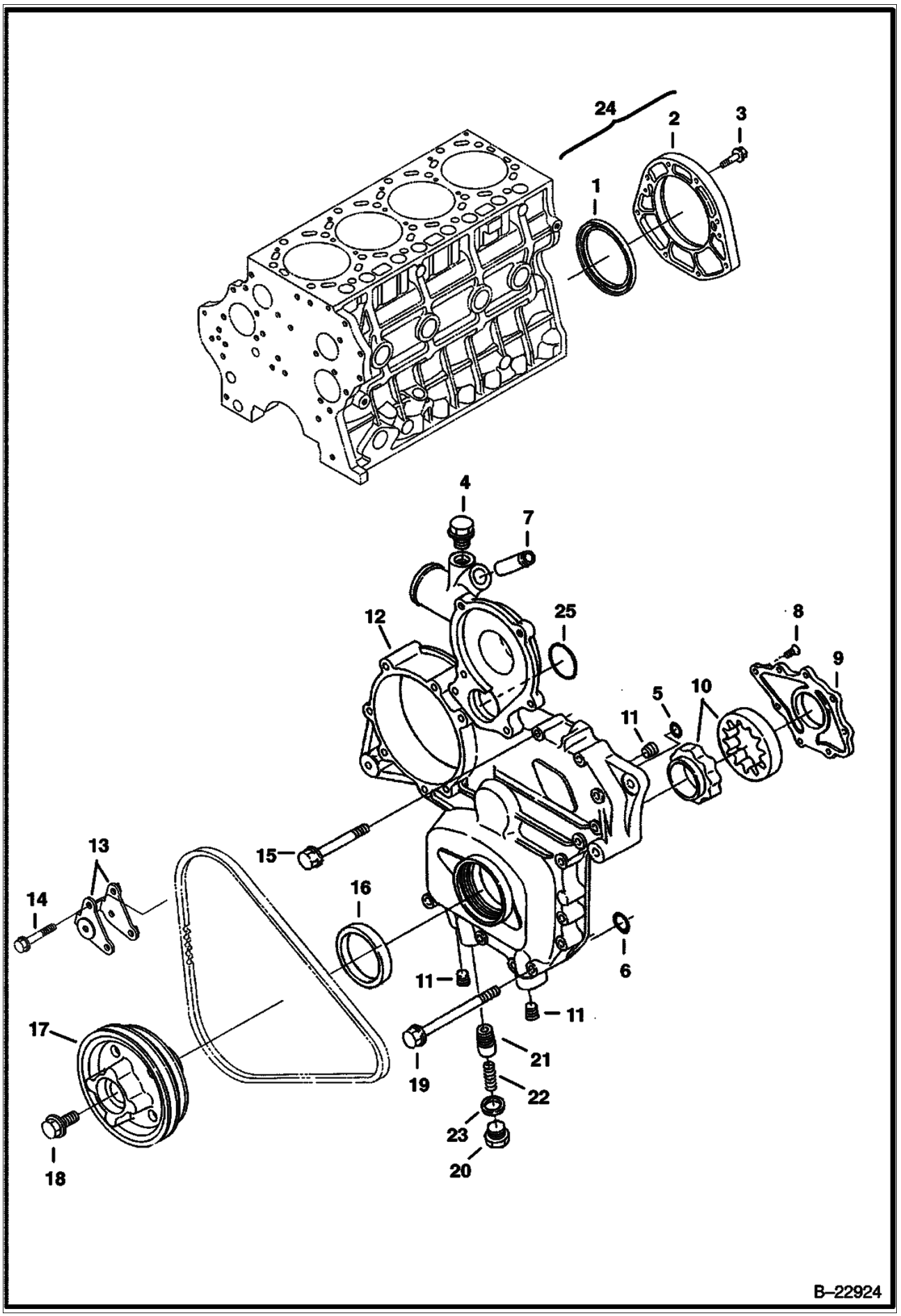

FRONT COVER (Cont'd)
(V3300 DI T Kubota)

Ref No	Part Number	Description	Remarks	Serial Number	Qty
1	6680705	SEAL	rear		1
2	6685931	COVER	W/Ref. 1		1
3	6680706	BOLT			8
4	6670504	PLUG			1
5	6680681	O-RING			1
6	6680682	O-RING			1
7	6680689	ADAPTER			1
8	6680678	SCREW			8
9	6680677	COVER	oil pump		1
10	6680676	ROTOR	oil pump		1
11	6680679	PLUG			3
12	6685928	COVER	front - W/Ref. 4, 7-11 & 20-23		1
13	6680839	BRACKET	alternator		2
14	6680687	BOLT			2
15	6680685	BOLT			13
16	6680680	SEAL			1
17	6685953	PULLEY	fan		1
18	6680841	BOLT			1
19	6680686	BOLT			2
20	6680675	PLUG			1
21	6685929	RELIEF VALVE			1
22	6680673	SPRING			1
23	6670347	GASKET			1
24	6680704	COVER	Ref. 1 & 2		1
25	6680855	O-RING			1

WATER PUMP & THERMOSTAT
(V3300 DI T Kubota)

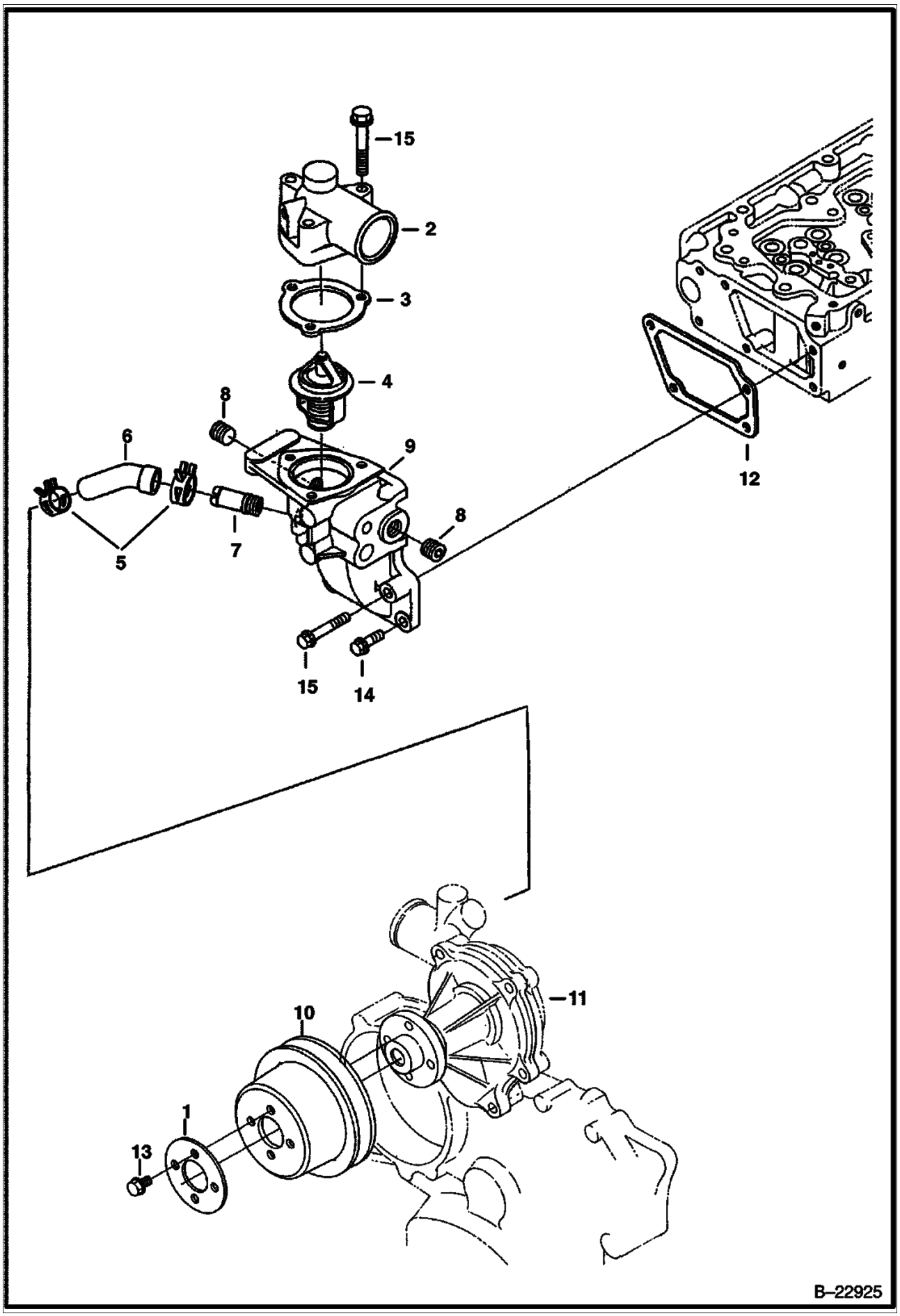

WATER PUMP & THERMOSTAT (Cont'd)
(V3300 DI T Kubota)

Ref No	Part Number	Description	Remarks	Serial Number	Qty
1	6680858	WASHER			1
2	6685954	COVER	thermostat		1
3	6685955	GASKET			1
4	6680850	THERMOSTAT			1
5	6675618	CLAMP			2
6	6680842	HOSE			1
7	6685920	ADAPTER			1
8	6670504	PLUG			2
9	6685956	HOUSING	thermostat - W/Ref. 7 & 8		1
10	6680857	PULLEY	fan		1
11		WATER PUMP	See Illustration WATER PUMP/ B22926		1
12	6680849	GASKET			1
13	6680662	BOLT			4
14	6680755	BOLT			3
15	6680851	BOLT			4

WATER PUMP
(V3300 DI T Kubota)

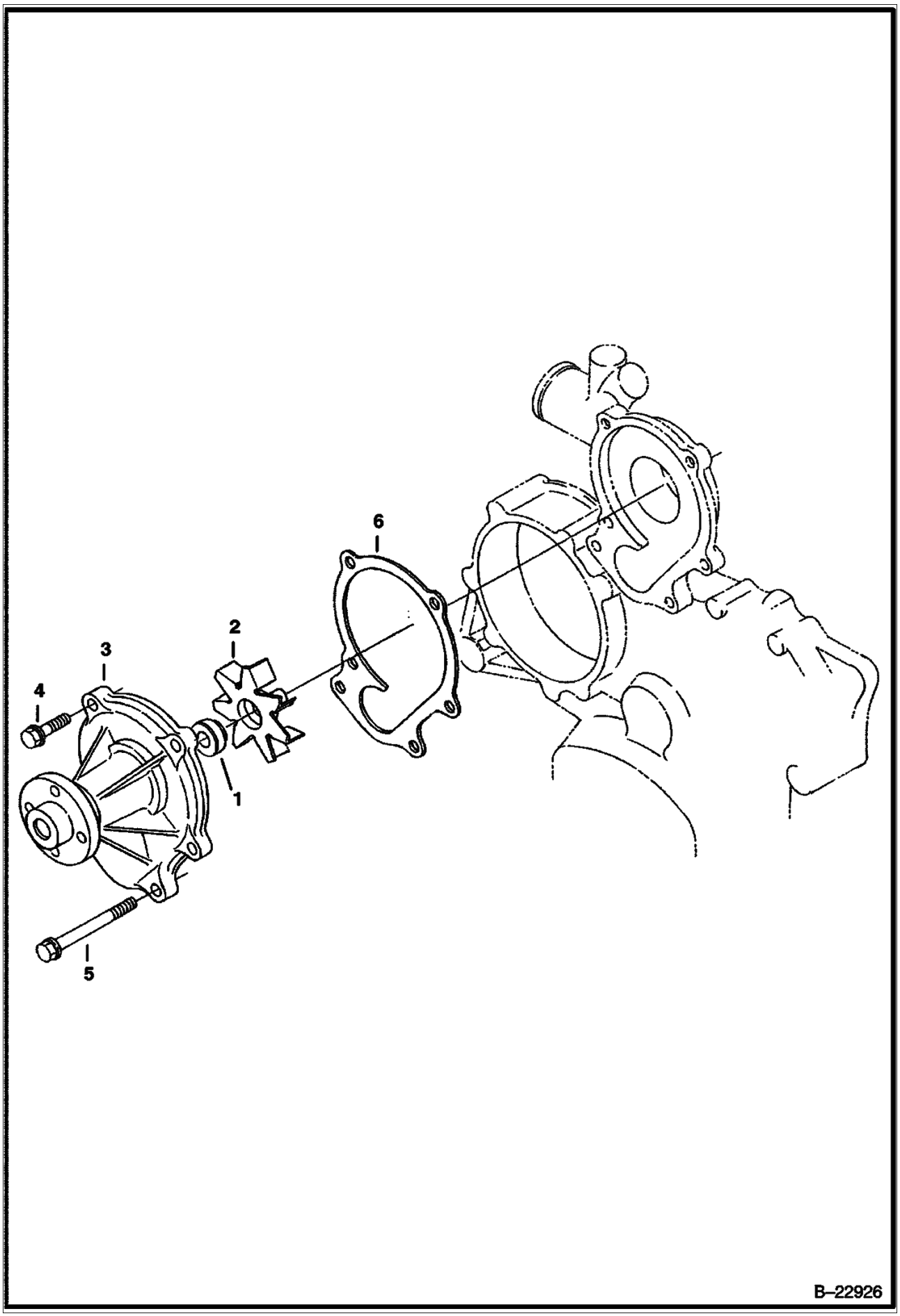

WATER PUMP (Cont'd)
(V3300 DI T Kubota)

Ref No	Part Number	Description	Remarks	Serial Number	Qty
1	6680280	SEAL			1
2		IMPELLER	NSS - Order Ref. 3		1
3	6680852	PUMP	water - W/Ref. 1 & 2		1
4	6680706	BOLT			2
5	6680856	BOLT			4
6	6680853	GASKET			1

FUEL INJECTION SYSTEM
(V3300 DI T Kubota)

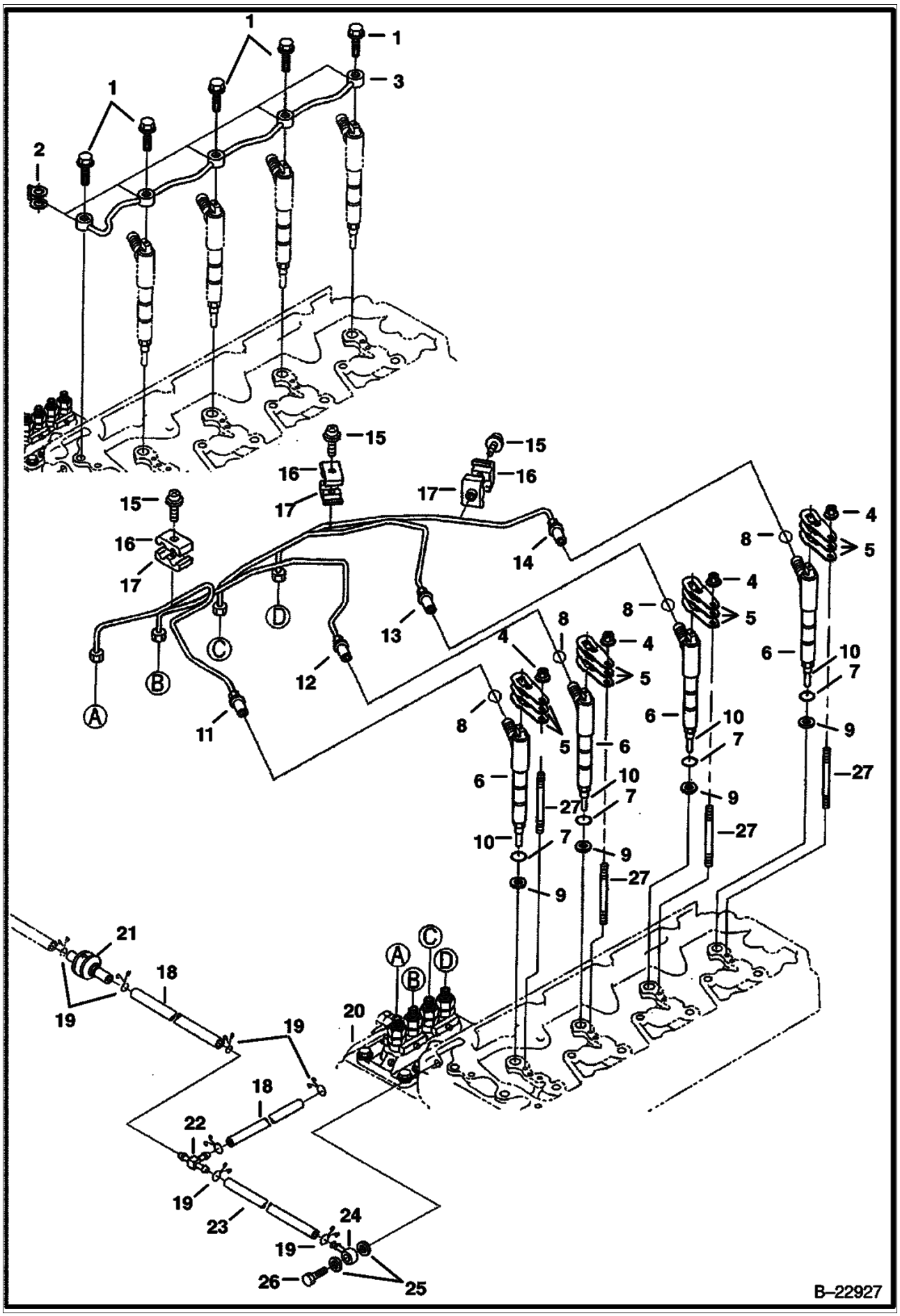

FUEL INJECTION SYSTEM (Cont'd)
(V3300 DI T Kubota)

Ref No	Part Number	Description	Remarks	Serial Number	Qty
1	6680788	BOLT			5
2	6685498	GASKET			5
3	6680787	PIPE			1
4	6680663	NUT			4
5	6680780	CLAMP	hold down		12
6	6685854	INJECTOR	W/Ref. 10		4
7	6670769	O-RING			4
8	6680778	O-RING			4
9	6680779	GASKET			4
10	6680777	NOZZLE			4
11	6685940	TUBE			1
12	6685941	TUBE			1
13	6685942	TUBE			1
14	6685943	TUBE			1
15	3974260B	BOLT			3
16	6680786	CLAMP			3
17	6680785	CLAMP			3
18	6685945	HOSE			2
19	6680795	CLAMP			6
20		PUMP	See Illustration FUEL INJECTION PUMP/ B17614 injection		1
21	6680796	VALVE	check		1
22	6680797	TEE			1
23	6685944	HOSE			1
24	6680790	FITTING			1
25	6680792	GASKET			2
26	6680791	BOLT	hollow		1
27	6680867	STUD			4

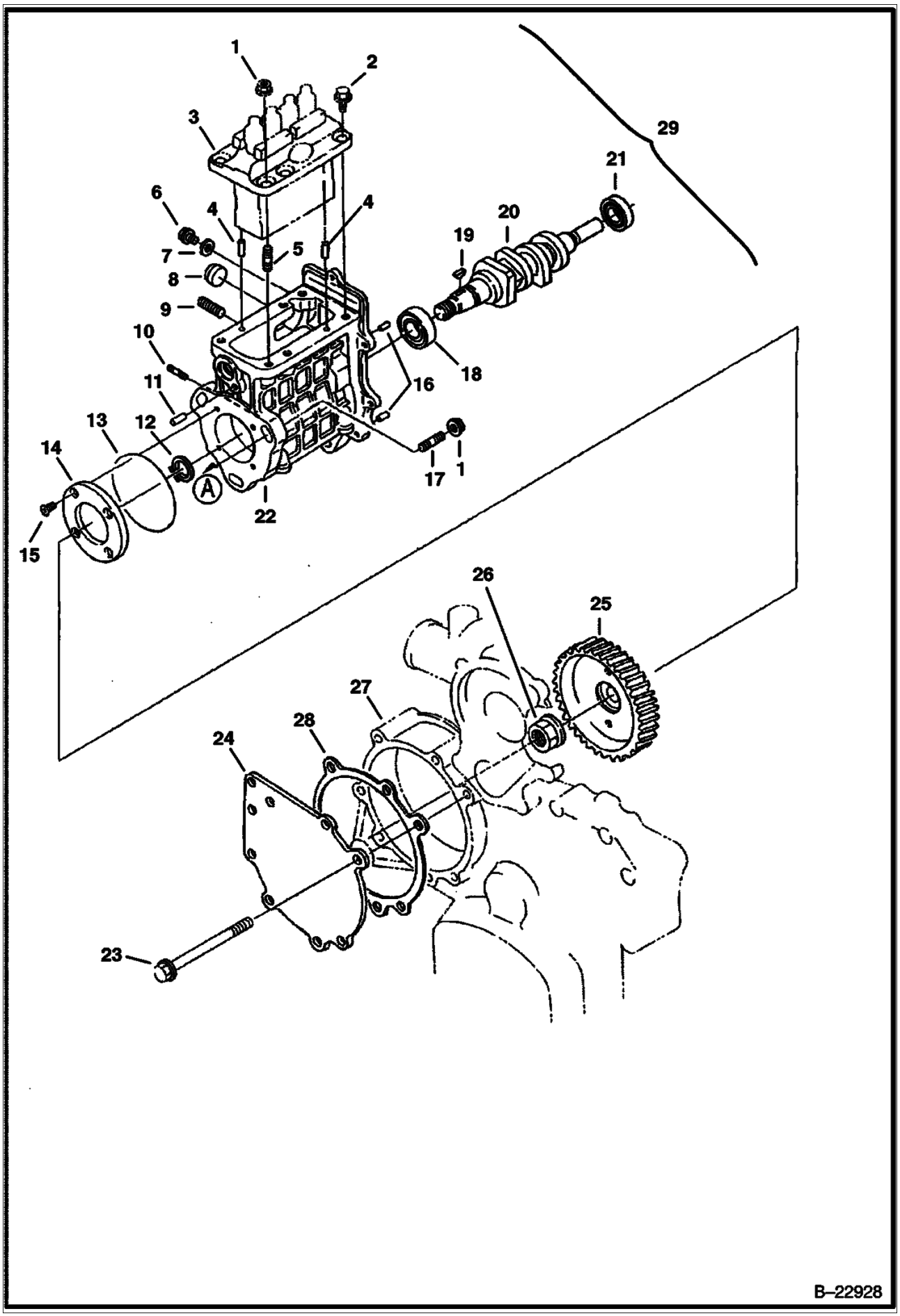
1
2
3
29
21
6
4
4
20
19
7
5
8
9
10
11
13
12
14
16
18
1
17
A
22
15
26
25
27
28
24
23
B–22928

Ref No	Part Number	Description	Remarks	Serial Number	Qty
1	6680663	NUT			6
2	6680801	BOLT			5
3		INJECTION PUMP	See Illustration FUEL INJECTION PUMP/ B17614		1
4	3974394B	PIN			2
5	6680807	STUD			3
6	6680815	BOLT			2
7	3974095B	GASKET			2
8	6680808	PLUG			1
9	6680815	BOLT			2
10	3974503B	STUD			2
11	21JM00020B	PIN			2
12	5JM00020B	SNAP RING			1
13	6680816	O-RING			1
14	6680814	FLANGE			1
15	6680678	SCREW			4
16	6680809	PIN			2
17	6680799	STUD			3
18	6685950	BEARING			1
19	6680813	KEY	woodruff		1
20	6685949	CAMSHAFT	fuel		1
21	6680812	BEARING			1
22	6680806	HOUSING	W/Ref. 4, 5, 8, 10 & 16		1
23	6680802	BOLT			7
24	6685947	COVER			1
25	6685946	GEAR			1
26	6680818	NUT			1
27		FRONT COVER	See Illustration FRONT COVER/ B22924		1
28	6685948	GASKET			1
29	6685935	INJECTION PUMP	complete w/housing, fuel pump, camshaft, injection pump & governor		1

FUEL INJECTION PUMP
(V3300 DI T Kubota)

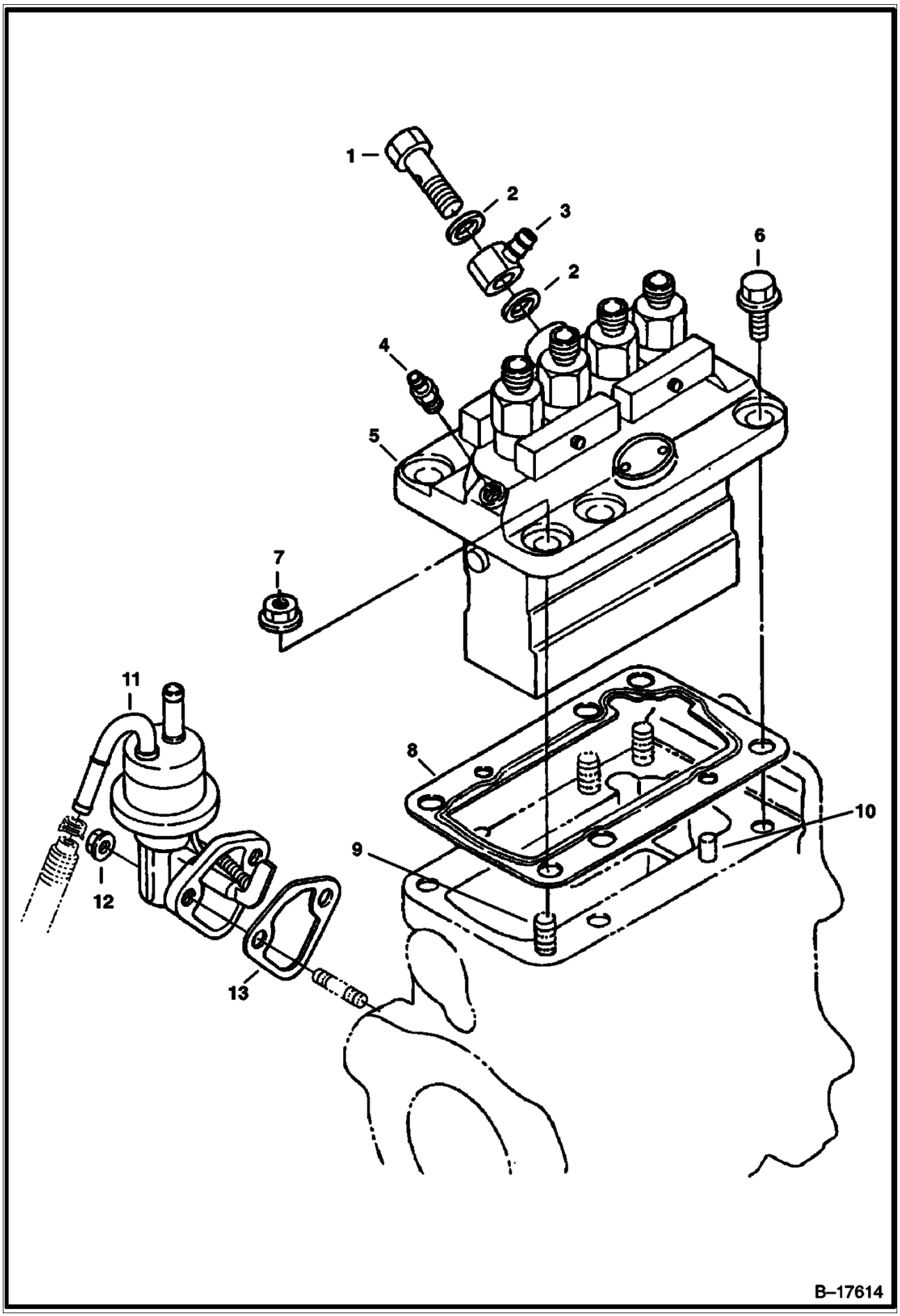

FUEL INJECTION PUMP (Cont'd)
(V3300 DI T Kubota)

Ref No	Part Number	Description	Remarks	Serial Number	Qty
1	6680752	BOLT			1
2	6680753	GASKET			2
3	3974500B	JOINT	eye		1
4	6680756	SCREW	air		1
5	6685936	PUMP	injection - W/Ref. 1 & 2		1
6	6680755	BOLT			5
7	6680663	NUT			3
8		SHIM	See Illustration FUEL INJECTION SYSTEM/ B22928 NSS - Order Ref. 29 (6685935) or see authorized Kubota pump shop		1
9	6680807	STUD			3
10	3974394B	PIN			2
11	6680838	FUEL PUMP			1
12	6670533	NUT			2
13	6670782	GASKET			1

GOVERNOR
(V3300 DI T Kubota)

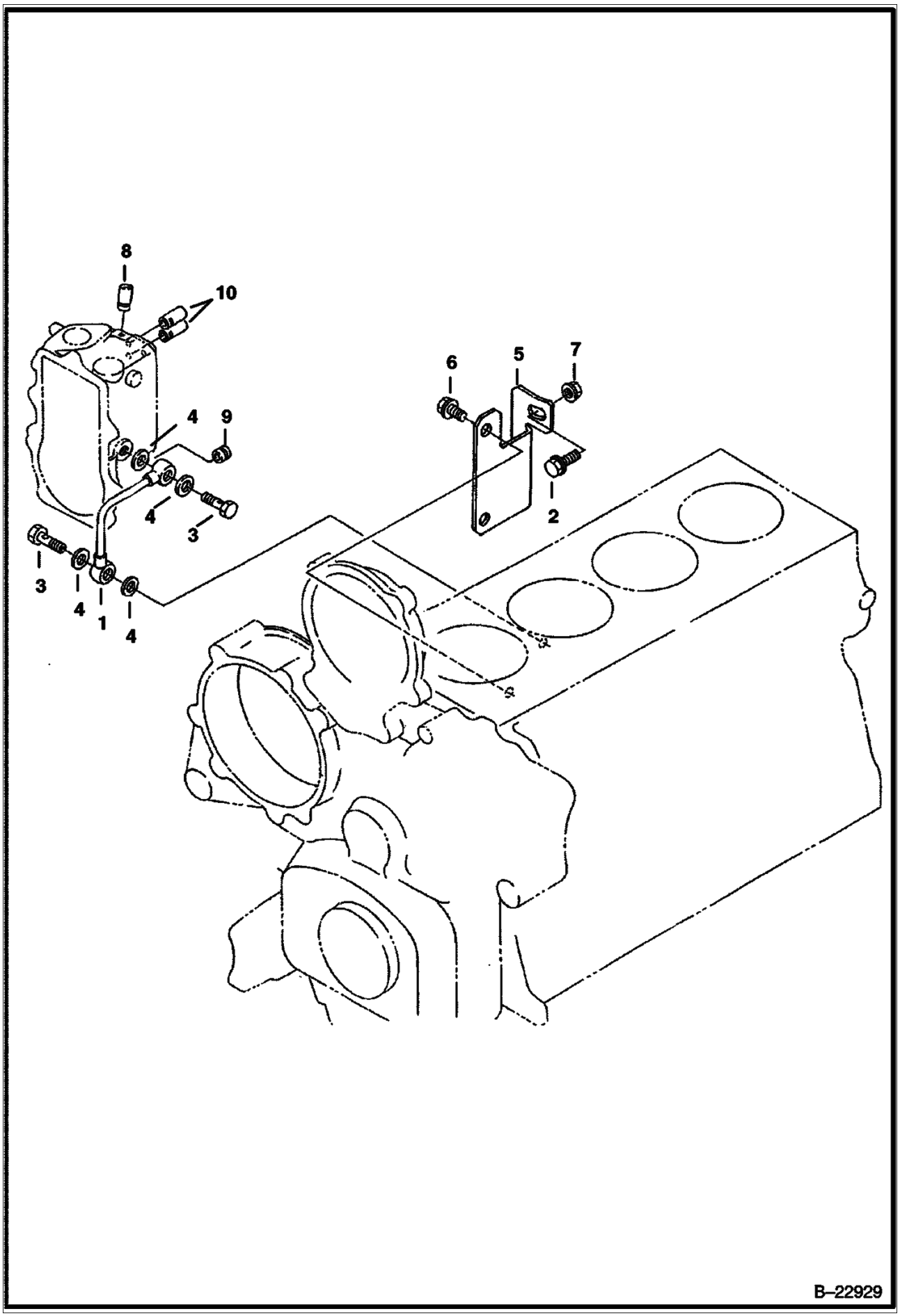

GOVERNOR (Cont'd)
(V3300 DI T Kubota)

Ref No	Part Number	Description	Remarks	Serial Number	Qty
1	6680905	TUBE			1
2	6680654	BOLT			1
3	6680906	BOLT			1
4	6685962	GASKET			2
5	6685967	BRACKET	injection pump		1
6	6680658	BOLT			2
7	6685968	NUT			1
8	6672384	CAP			1
9	6670427	CAP			1
10	6598112	CAP			2

GOVERNOR
(V3300 DI T Kubota)

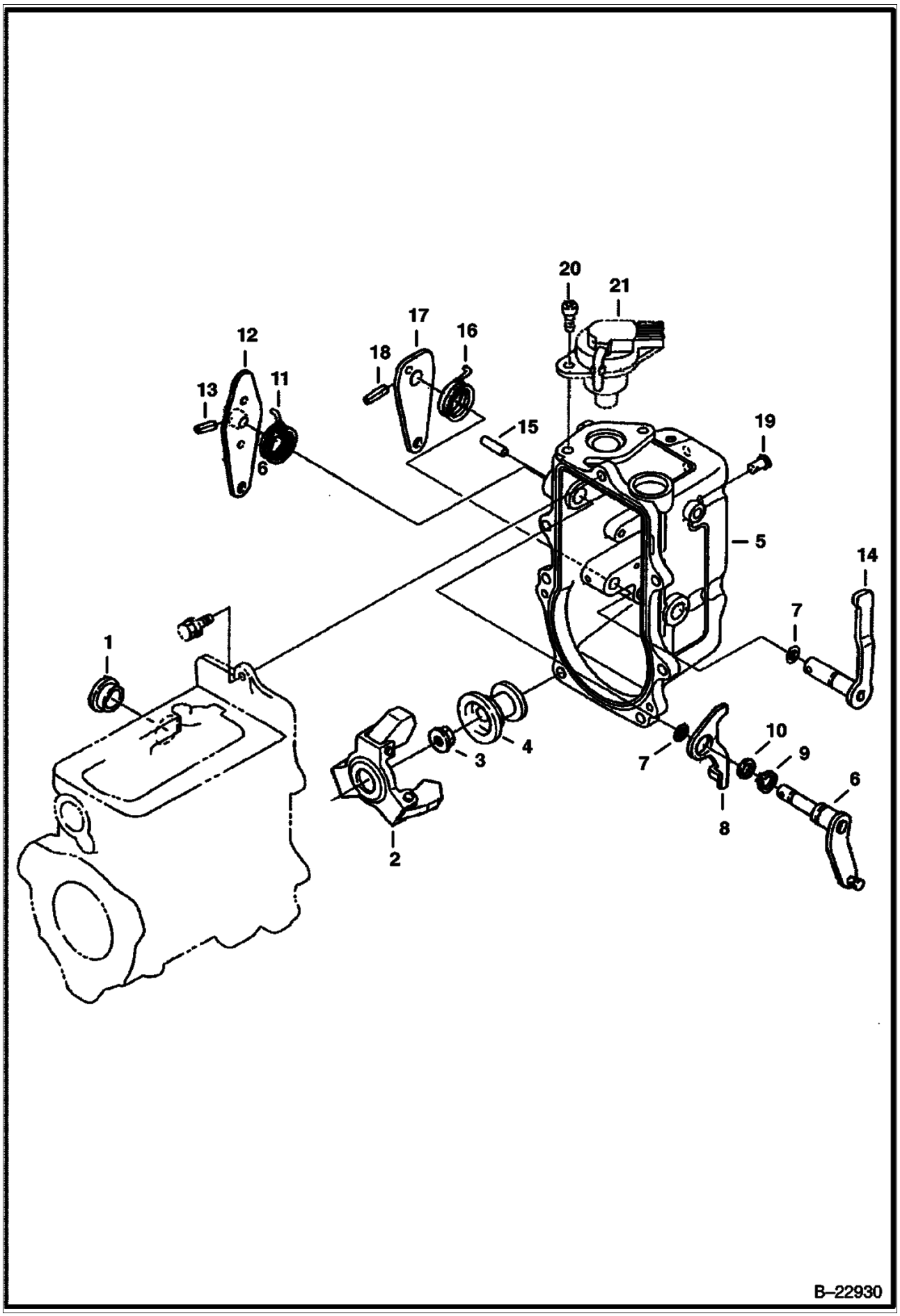

GOVERNOR (Cont'd)
(V3300 DI T Kubota)

Ref No	Part Number	Description	Remarks	Serial Number	Qty
1	6680757	COVER			1
2	6680759	NUT			1
3	6680758	WEIGHT			1
4	6680761	SLEEVE	governor		1
5	6685937	HOUSING			1
6	6680763	LEVER			1
7	6683023	O-RING			3
8	6680764	LEVER	stop		1
9	6680765	SNAP RING			1
10	6680766	WASHER			1
11	6685938	SPRING			1
12	6685939	LEVER	speed control		1
13	6680769	PIN			1
14	6680770	LEVER	engine stop		1
15	6680775	PIN			1
16	6680771	SPRING			1
17	6680772	LEVER	engine stop		1
18	6680773	PIN			1
19	6670774	PIN			1
20	6680750	SCREW			2
21	6680749	SOLENOID	fuel shut-off		1

GOVERNOR
(V3300 DI T Kubota)

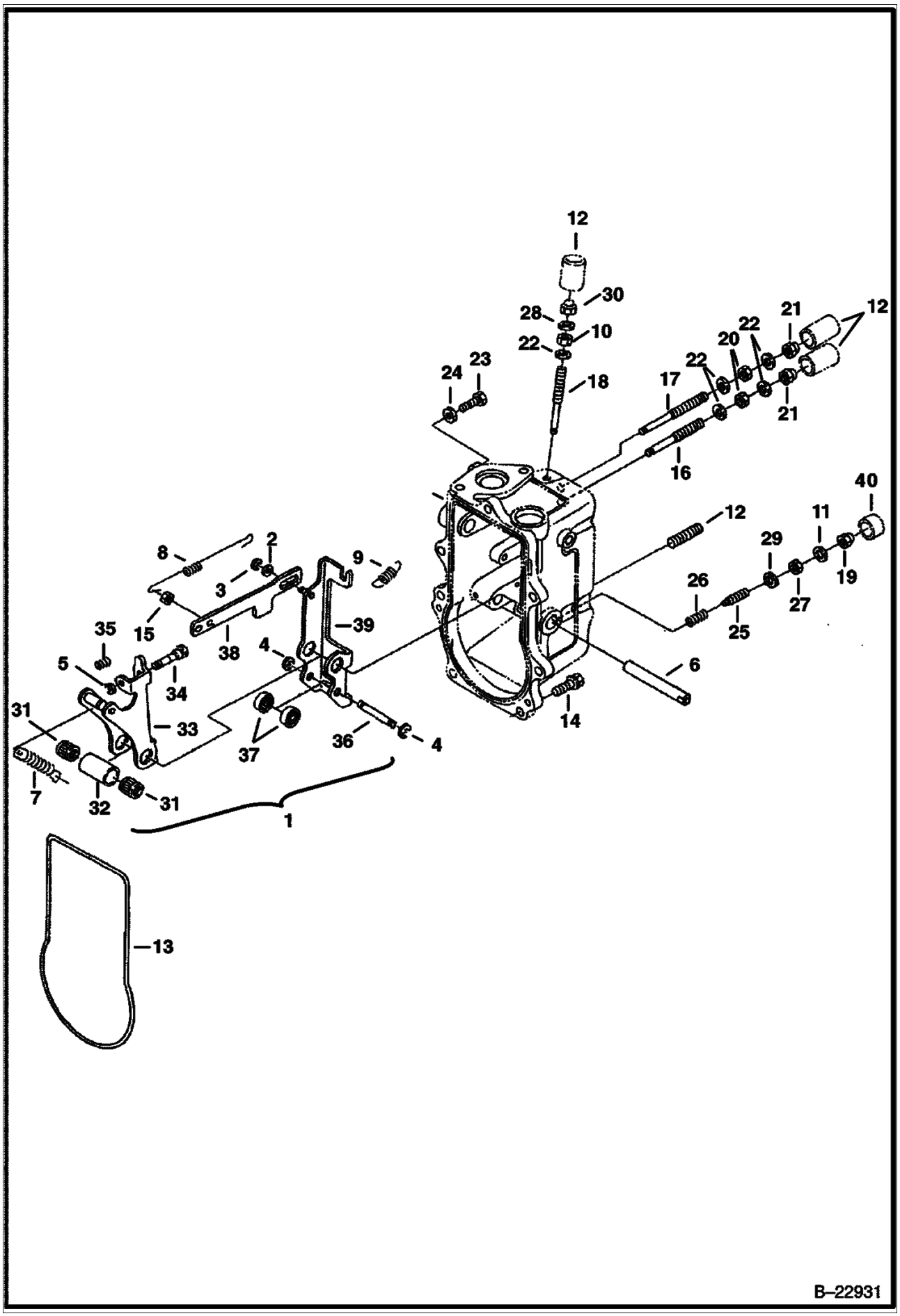

GOVERNOR (Cont'd)
(V3300 DI T Kubota)

Ref No	Part Number	Description	Remarks	Serial Number	Qty
1	6685951	LEVER	assy. - Ref. 2-5, 65-9, 15 & 31-39		1
2	6680820	WASHER			1
3	6680821	SNAP RING			1
4	6680822	SNAP RING			2
5	6680823	SNAP RING			1
6	6680824	SHAFT			1
7	6680825	SPRING			1
8	6680826	SPRING			1
9	6680827	SPRING			1
10	6680272	NUT			2
11	6680792	GASKET			1
12	6680828	STUD			2
13	6680829	GASKET			1
14	6680830	BOLT			7
15	6685952	NUT			1
16	6680832	SCREW	adjusting		1
17	3974970B	SCREW	adjusting		1
18	6680833	SCREW	adjusting		1
19	6670426	NUT			1
20	6680499	NUT			1
21	6670462	NUT			2
22	3974972B	GASKET			1
23	6680834	STOPPER			1
24	1DM00006B	NUT			1
25	6670425	SCREW	adjusting - W/Ref. 27		1
26		SPRING	NAP		1
27	6680836	NUT			1
28	3974972B	GASKET			5
29	3974095B	GASKET			1
30	6670462	NUT			1
31		BUSHING	NSS		2
32		TUBE	NSS		1
33		LEVER	NSS		1
34		BOLT	NSS		1
35		SPRING	NSS		1
36		ROD	NSS		1
37		BEARING	NSS		2
38		BRACKET	NSS		1
39		LEVER	NSS		1
40	6670427	CAP			1

AIR CLEANER
(V3300 DI T Kubota)

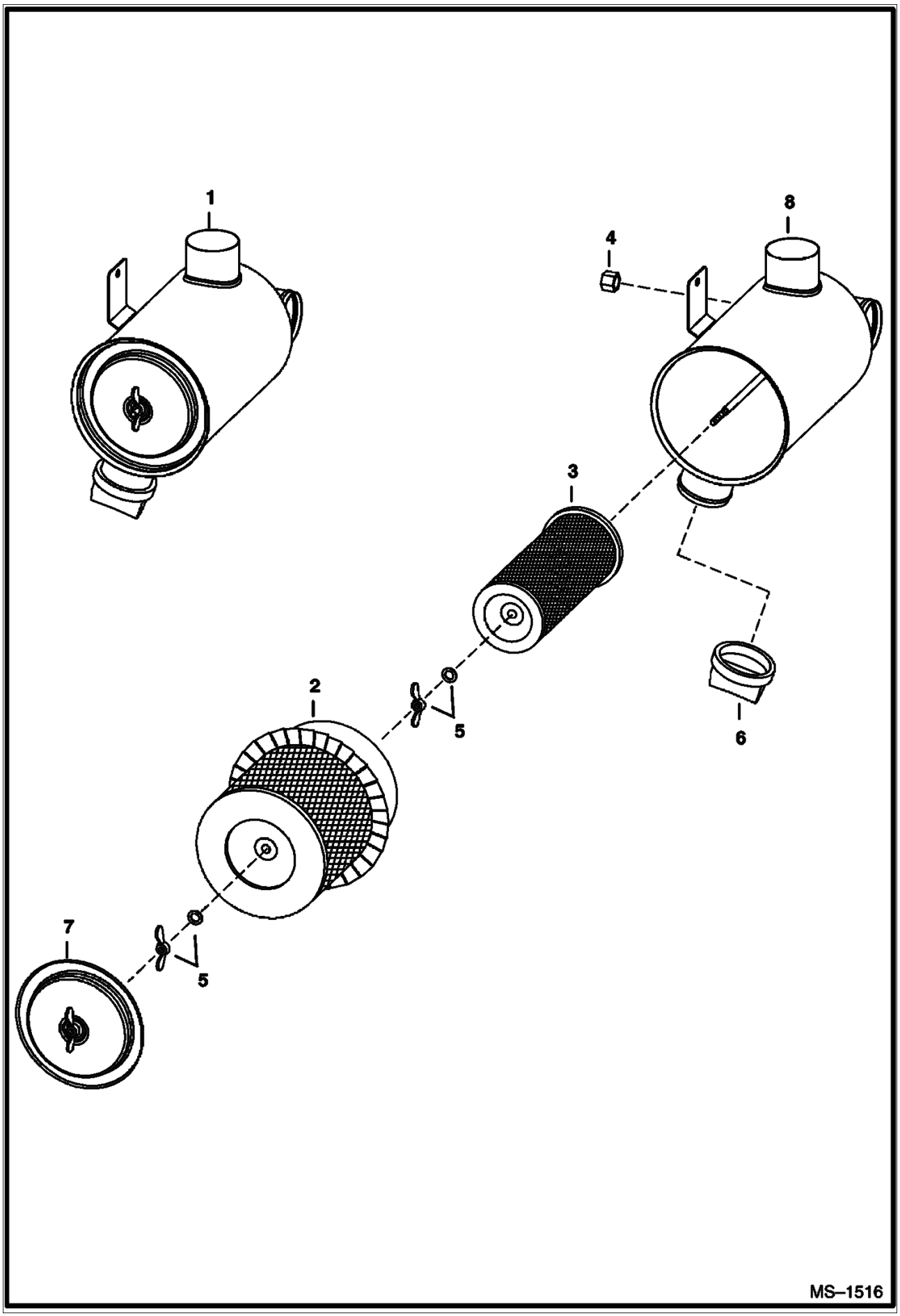

AIR CLEANER (Cont'd)
(V3300 DI T Kubota)

Ref No	Part Number	Description	Remarks	Serial Number	Qty
1	6678066	AIR CLEANER	W/Ref. 2-8		1
2	6681474	CARTRIDGE	outer		1
3	6681475	CARTRIDGE	inner		1
4	6681476	CAP			1
5	3291290B	WING NUT	W/ washer		2
6	6652373	VALVE	dust unloader		1
7	6681477	COVER			1
8		TANK	NSS		1

ACCESS COVER
(Cleanout - Lower Front of Chaincase)

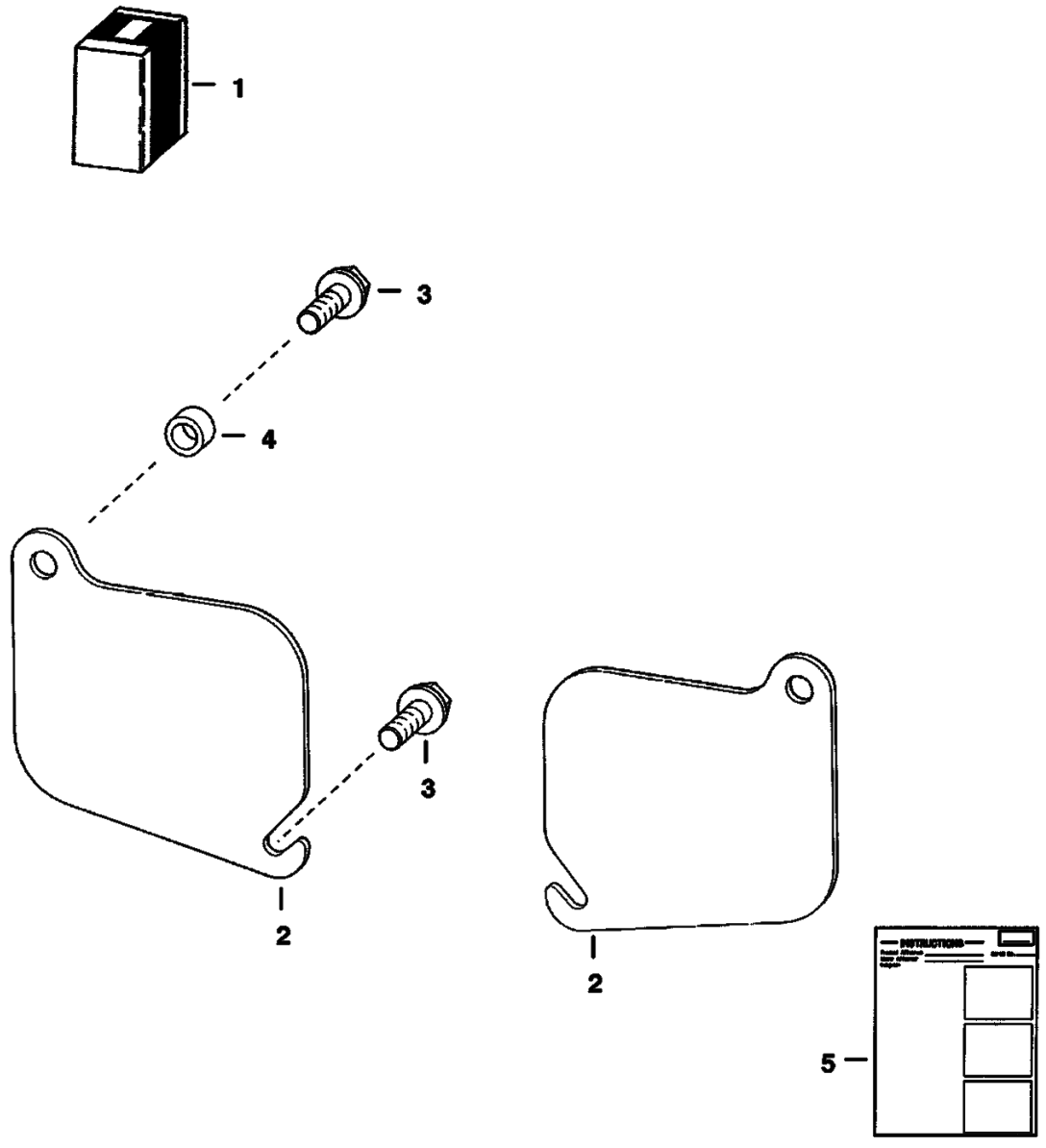

ACCESS COVER (Cont'd)
(Cleanout - Lower Front of Chaincase)

Ref No	Part Number	Description	Remarks	Serial Number	Qty
1	6577880	KIT	Ref. 2-5		1
2	6737088	COVER			2
3	84G003720B	BOLT			4
4	6562619	BUSHING	not in kit		2
5	6570931	INSTRUCTIONS			1

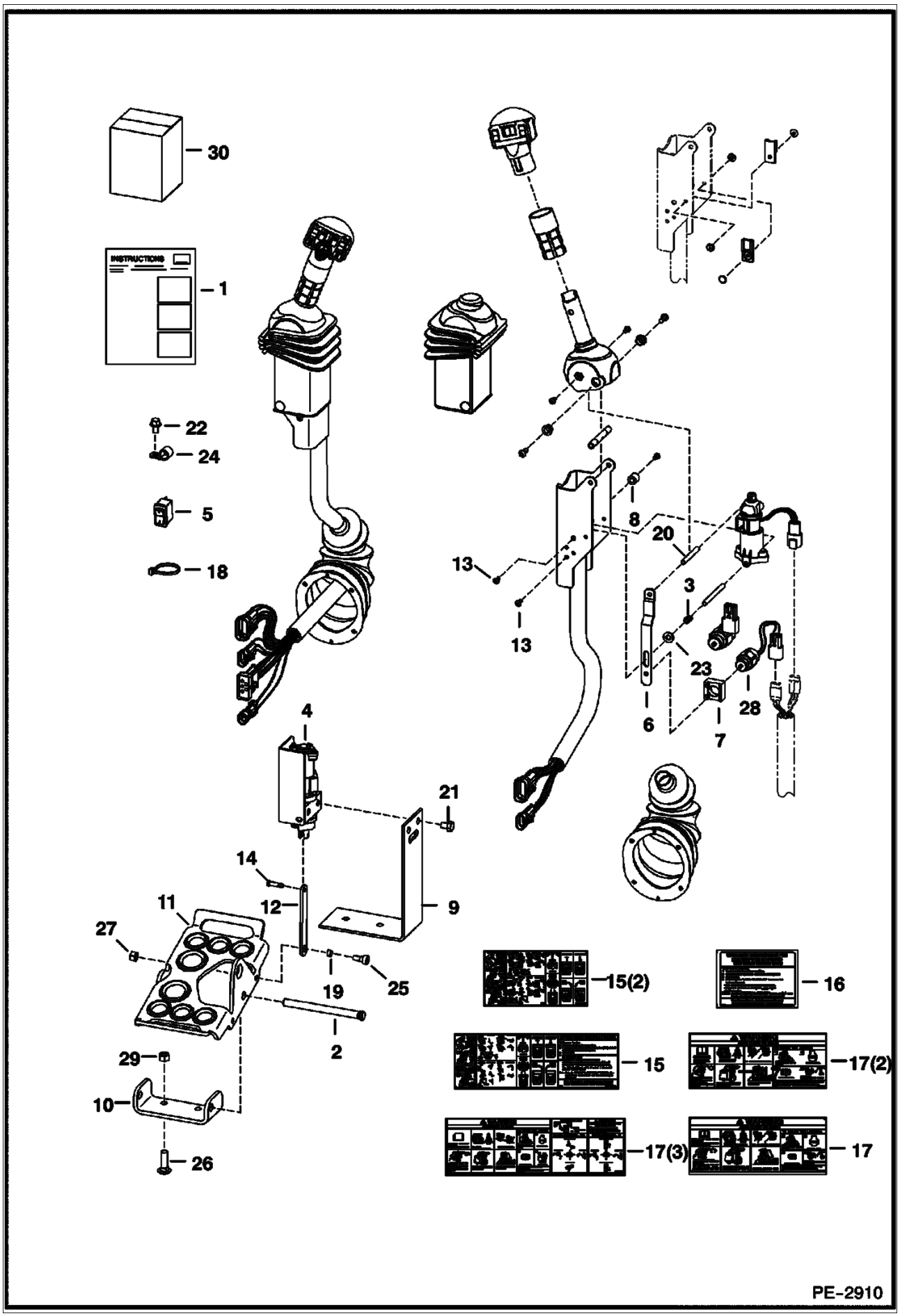
30
INSTRUCTIONS
1
22
24
5
18
4
21
14
12
9
11
27
25
19
2
29
10
26
13
13
8
20
3
23
6
7
28
15(2)
16
15
17(2)
17(3)
17
PE-2910

Ref No	Part Number	Description	Remarks	Serial Number	Qty
1	6731151	KIT	foot control - Ref. 2 - 14 & 17 - 30 - If loader is not equipped W/ heater, air conditioning, selectable joystick controls, beacon, power bobtach, non-power port plug-in strobe lights and/or non-power port plug-in 4 way flashers, also order 7116260 deluxe harness		1
2	6564657	PIN			2
3	6680470	SPRING			2
4	6684912	SENSOR	foot pedal - R.H.		1
4	6676029	SOLENOID			1
4	6684911	SENSOR	foot pedal - L.H.		1
4	6676029	SOLENOID			1
5	6676537	SWITCH			2
6	6680477	STRAP			2
7	6680468	MOUNT	solenoid		2
8		SLEEVE	NAP		2
8	6719834	SPACER			2
9	6726573	BRACKET			2
10	7115220	MOUNT			2
11	7115219	PEDAL			2
12	6726681	LINK			2
13	6727065	BOLT			12
14	6727496	PIN			2
15	6727926	DECAL	operations - 773G, 863G, 873G, 883, 963G		1
15	6728045	DECAL	operations - T190, T200		1
16		DECAL	NAP - ACS operations - not in kit - Order 6727926 decal		1
17	6728539	DECAL	warning - 773G, 863G, 873G, 883, 963G		1
17	6728540	DECAL	warning - T190, T200		1
18	6624289	STA STRAP			2
19	6729467	SPACER			2
20	6680469	SPACER	threaded		2
21	17C000608B	BOLT			4
22	84G003710B	BOLT			2
23	25E000013B	WASHER			2
24	30H000062B	CLAMP			2
25	17C000514B	BOLT			2
26	37C000620B	BOLT			4
27	95D000005B	NUT			2
28	6676029	SOLENOID			2
29	57D000006B	NUT			4
30	6901492	INSTRUCTIONS			1

BACK-UP ALARM KIT

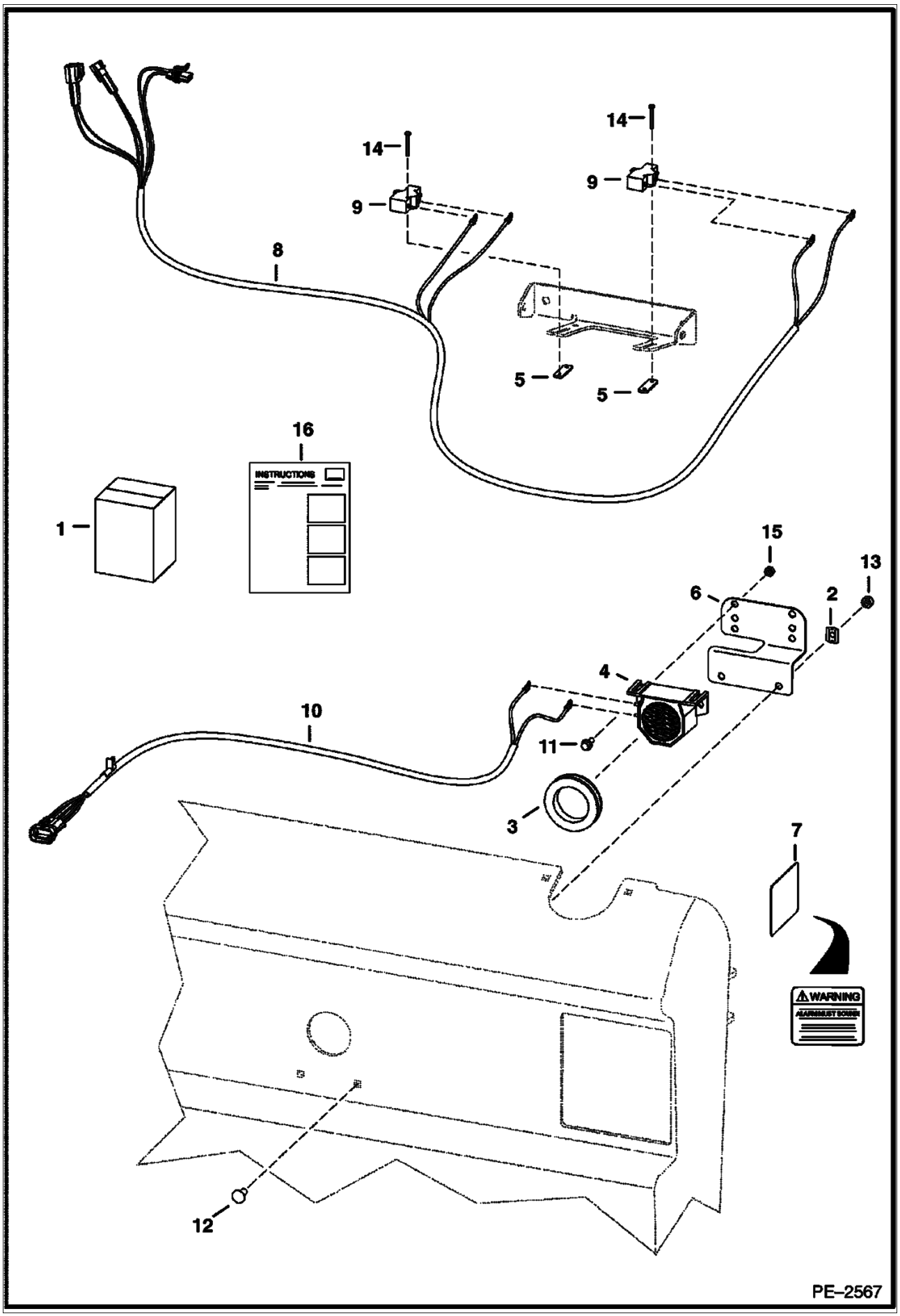

BACK-UP ALARM KIT (Cont'd)

Ref No	Part Number	Description	Remarks	Serial Number	Qty
1	7107829	BACK UP ALARM KIT			1
2	774220	NUT			2
3	6577545	GROMMET			1
4	6599931	ALARM			1
5	6702593	SPACER			2
6	6733970	MOUNT			1
7	6737189	DECAL			1
8	7107544	HARNESS			1
9	6646781	SWITCH			2
10	6715659	HARNESS			1
11	35C000410B	BOLT			2
12	37C000512B	BOLT			2
13	61D000005B	NUT			2
14	84G001320B	BOLT			4
15	97D000004B	NUT			2
16	6903293	INSTRUCTIONS			1

BACK-UP ALARM KIT
(W/ Selectable Joystick Controls)

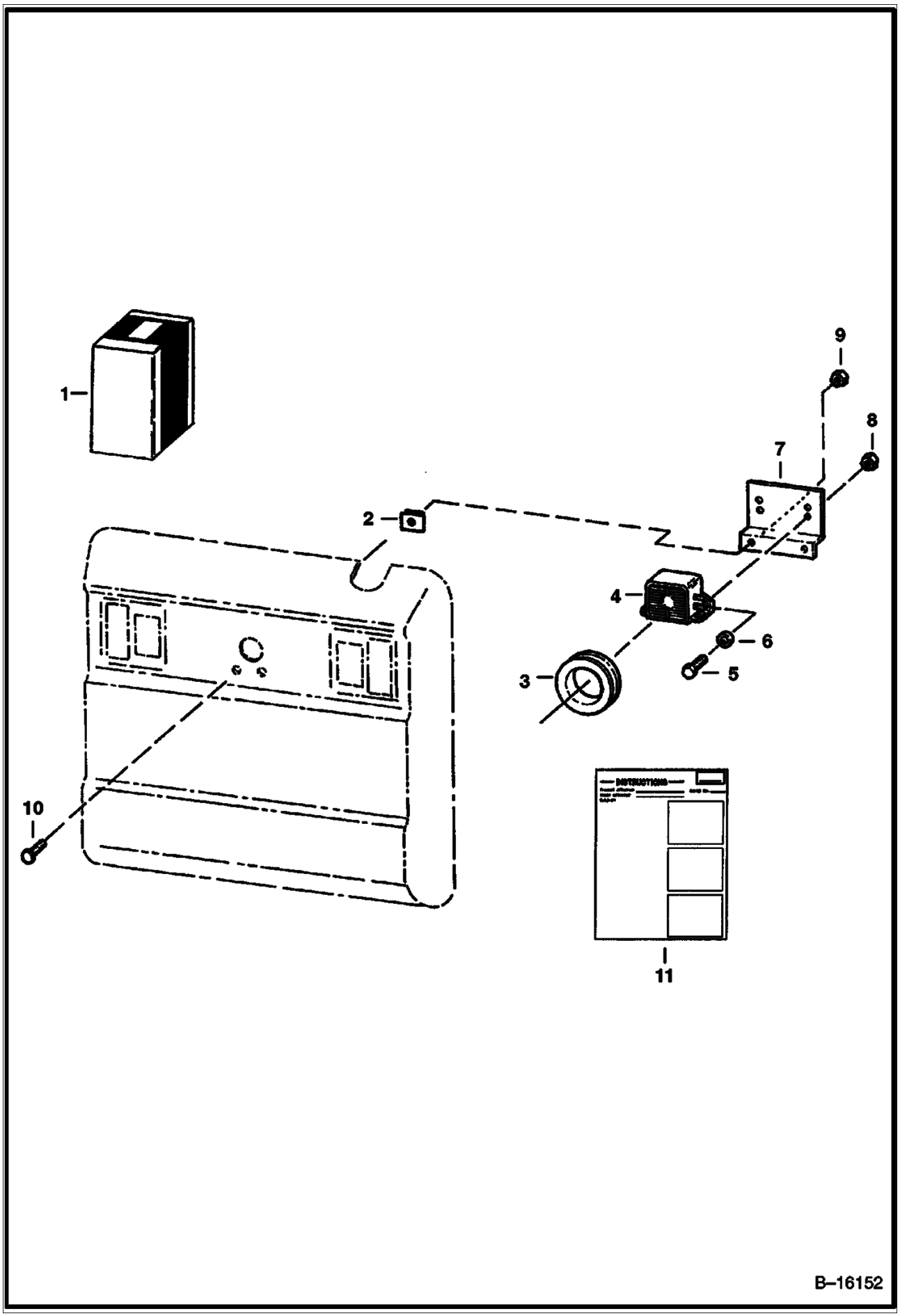

BACK-UP ALARM KIT (Cont'd)
(W/ Selectable Joystick Controls)

Ref No	Part Number	Description	Remarks	Serial Number	Qty
1	6732235	KIT	Ref. 2-11		1
2	774220	NUT	spring		2
3	6577545	GROMMET			1
4	6599931	ALARM			1
5	17C000410B	BOLT			2
6	25E000013B	WASHER			2
7	6733970	MOUNT			1
8	83D000004B	NUT			2
9	61D000005B	NUT			2
10	37C000512B	BOLT			2
11	6901690	INSTRUCTIONS			1

BEACON

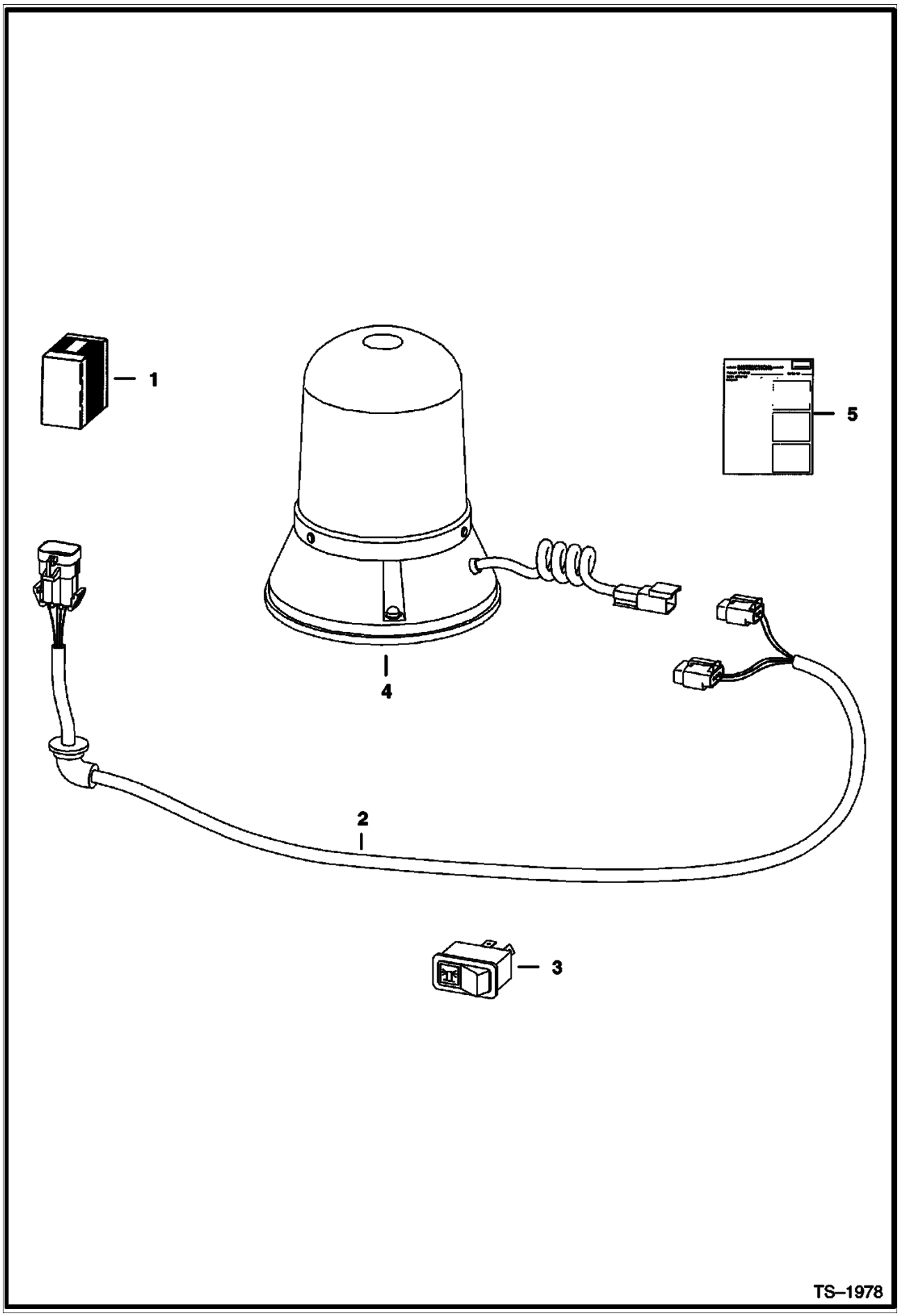

Ref No	Part Number	Description	Remarks	Serial Number	Qty
1	6719854	KIT	rotating beacon - If loader is not equipped W/heater, air conditioning, selectable joystick controls, advanced control system, power bob-tach, non-power port plug-in strobe lights and/or non-power port plug-in 4-way flashers, also order 7116260 deluxe harness		1
2	6718872	HARNESS			1
3	6665317	SWITCH	horizontal		1
3	6668816	SWITCH	vertical		1
4	6675523	BEACON			1
4	6666571	BULB			1
5	6900991	INSTRUCTIONS			1

BLOCK HEATER
(Engine)

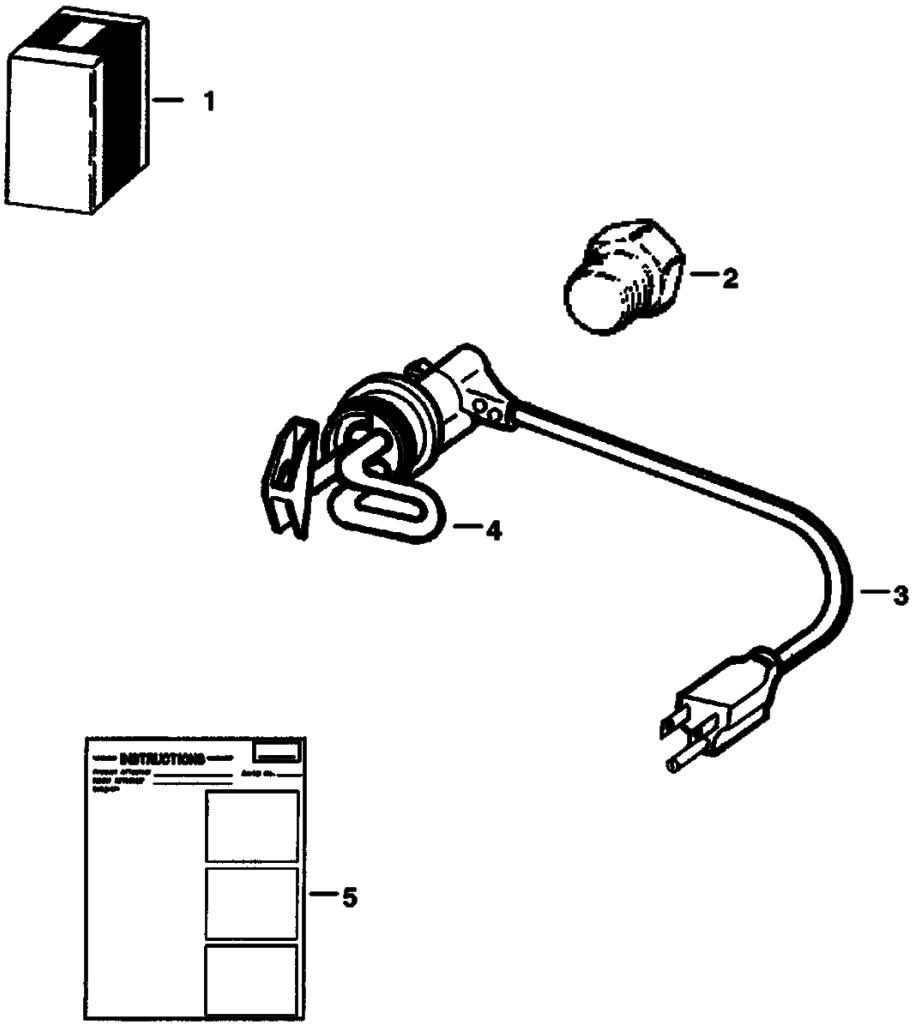

PE–1762

BLOCK HEATER (Cont'd)
(Engine)

Ref No	Part Number	Description	Remarks	Serial Number	Qty
1	6720808	KIT	W/Ref. 2, 4 & 5		1
2	19F000012B	BUSHING			1
3	6685850	CORD			1
4	6659369	HEATER	W/Ref. 3		1
5	6720038	INSTRUCTIONS			1

BUCKET POSITIONING KIT

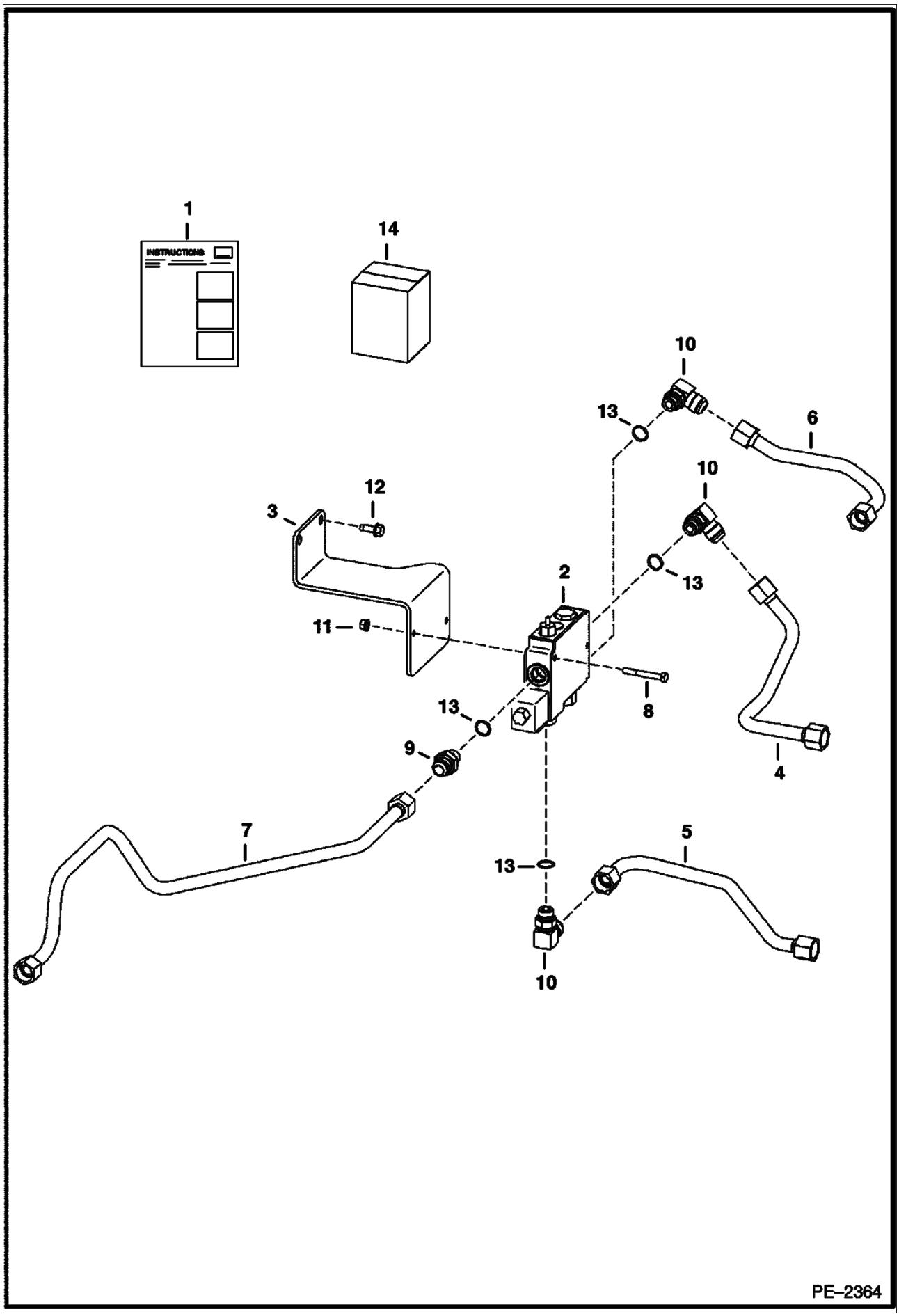

BUCKET POSITIONING KIT (Cont'd)

Ref No	Part Number	Description	Remarks	Serial Number	Qty
1	7104829	KIT	Ref. 2-13		1
2	6675669	VALVE	See Illustration BUCKET POSITIONING VALVE/ MS1943 painted primer red		1
3	6730898	MOUNT	BPV		1
4	6732991	TUBELINE			1
5	6732992	TUBELINE			1
6	7108458	TUBELINE			1
7	6734208	TUBELINE			1
8	17C000540B	BOLT			2
9	15KB01210B	ADAPTER	W/Ref. 13		1
10	17KB01210B	ELBOW	W/Ref. 13		3
11	83D000005B	NUT			2
12	84G003716B	BOLT			2
13	79K000010B	O-RING			x
14	6903132	INSTRUCTIONS			1

CAB DOOR

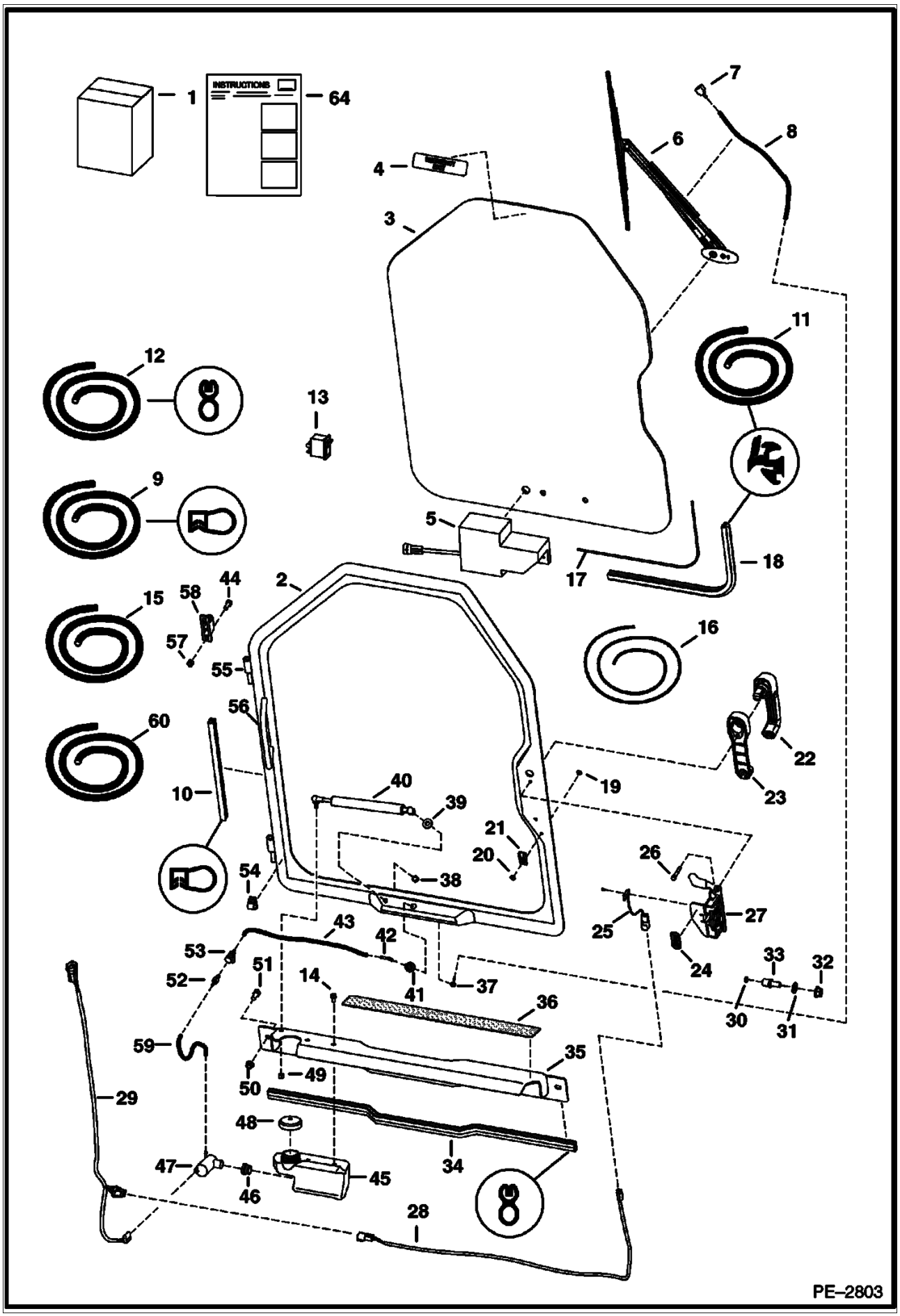
INSTRUCTIONS
1
64
7
8
6
4
3
11
12
13
9
5
18
17
2
44
58
15
57
55
16
56
60
22
10
40
39
19
23
21
20
26
54
38
27
25
43
42
24
53
51
33
32
52
14
41
37
36
30
31
59
35
50
49
29
48
34
47
45
46
28
PE–2803

Ref No	Part Number	Description	Remarks	Serial Number	Qty
1	6730822	KIT	door - Ref. 2-61 & Ref. 1-21 on ILL. MS1355		1
2	7109665	DOOR	W/Ref. 55 & 56		1
3		WINDOW	See Illustration CAB DOOR/ MS1355 - .25" thick glass		1
4	6707852	DECAL	exit		1
5		MOTOR	See Illustration CAB DOOR/ MS1355 - wiper		1
6		ARM ASSY	See Illustration CAB DOOR/ MS1355 - wiper		1
7		NOZZLE	See Illustration CAB DOOR/ MS1355 - wiper arm mounted		1
8		HOSE	See Illustration CAB DOOR/ MS1355		1
9	6675558	SEAL	bulk - sold per foot		x
10		SEAL	NAP - 127.3" (3233mm) - Order Ref. 9		1
11	6665568	EXTRUSION	bulk - sold per foot		x
12	6513152	SEAL	bulk - sold per foot		x
13	6665707	SWITCH	front wiper		1
14	35C000408B	BOLT			2
15	6676003	HOSE	bulk - sold per foot - .109" I.D. - black		x
16	6554149	CORD	bulk - sold per foot		x
17		CORD	NAP - window - 113" (2878mm) - Order Ref. 16		1
18		SEAL	NAP - window - 113" (2878mm) - Order Ref. 11		1
19	6665321	RIVET	male - plastic		1
20	6665322	RIVET	female - plastic		1
21	6665000	CLIP			1
22	7109662	HANDLE			1
22	6709527	KEY	ignition/rear door		1
23	7109663	SPACER			1
24	7110316	DECAL	door switch		1
25	6728459	DOOR SENSOR			1
25	6677193	RIVET	plastic		2
26	1CM00640B	BOLT			2
27	7109661	DOOR LATCH			1
28	7104465	DOOR SWITCH HARNESS			1
29	7117322	HARNESS	wiper		1
30	6677192	MAGNET			1
31	18EM01224B	WASHER			1
32	51DM12	NUT	12 mm thread		1
33	7109664	BOLT	striker - 12 mm thread		1
34		SEAL	NAP - threshold - 36" (914mm) - Order Ref. 12		1
35	6730816	SHIELD			1
36	6542731	SAFETY TREAD			1
37	6676500	ELBOW			1
38	46D000005B	NUT	acorn		1
39	25E000016B	WASHER			1
40	6682586	GAS SPRING			1
40	6678548	SOCKET	ball		2
40	6649244	STUD			2
40	6649245	RETAINER	spring		2
41	6676499	GROMMET	wiper		1
42	6676917	ELBOW			1
43		HOSE	NAP - 18.25" (464mm) - Order Ref. 15		1
44	17C000512B	BOLT			4
45	6736875	TANK	washer		1
46	6666766	GROMMET			1
47	6664554	PUMP	washer bottle		1
48	6674993	CAP	vented		1
49	61D000005B	NUT			1

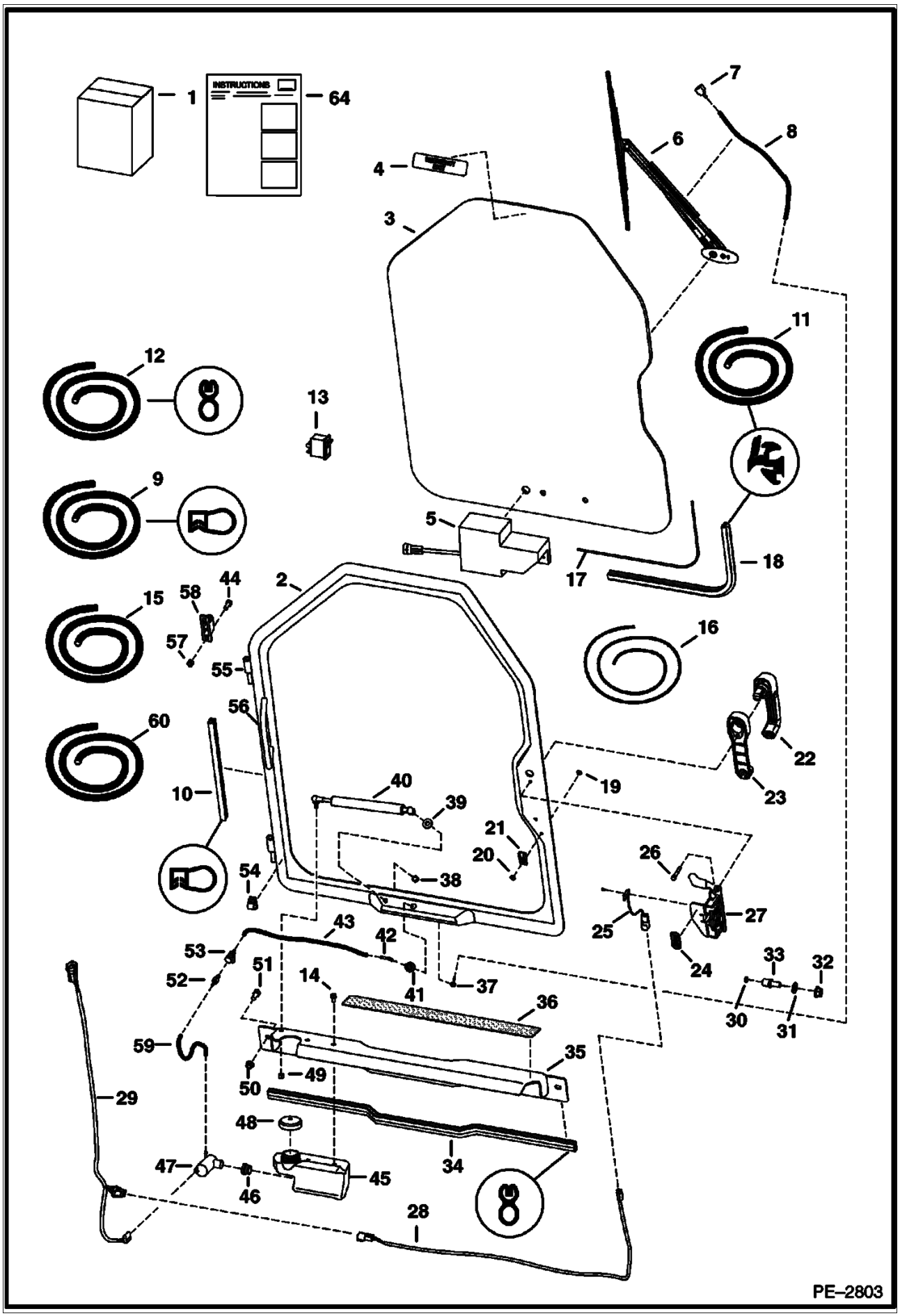
INSTRUCTIONS
1
64
7
6
8
4
3
11
12
13
9
5
18
17
2
44
58
15
57
55
16
56
60
22
10
40
39
19
23
21
20
26
54
38
27
25
43
42
53
24
33
32
51
52
14
41
37
36
30
31
59
35
50
49
29
48
34
47
45
46
28
PE–2803

Ref No	Part Number	Description	Remarks	Serial Number	Qty
50	61D000006B	NUT			2
51	17C000612B	BOLT			2
52	6675299	COUPLER	insert		1
53	6675298	COUPLER	body		1
54	6675378	CLIP			3
55	6718376	HINGE	door		2
56	6718521	HANDLE	grab		1
57	59D000005B	NUT			4
58	6717593	HINGE	base		2
59		HOSE	NAP - 4.25" (108mm) long - Order Ref. 60		1
60	6708310	HOSE	bulk - sold per foot - .149 I.D. - clear		x
61	6900854	INSTRUCTIONS INSTL	INSTRUCTIONS INSTL		1

CAB DOOR
(Window & Wiper)

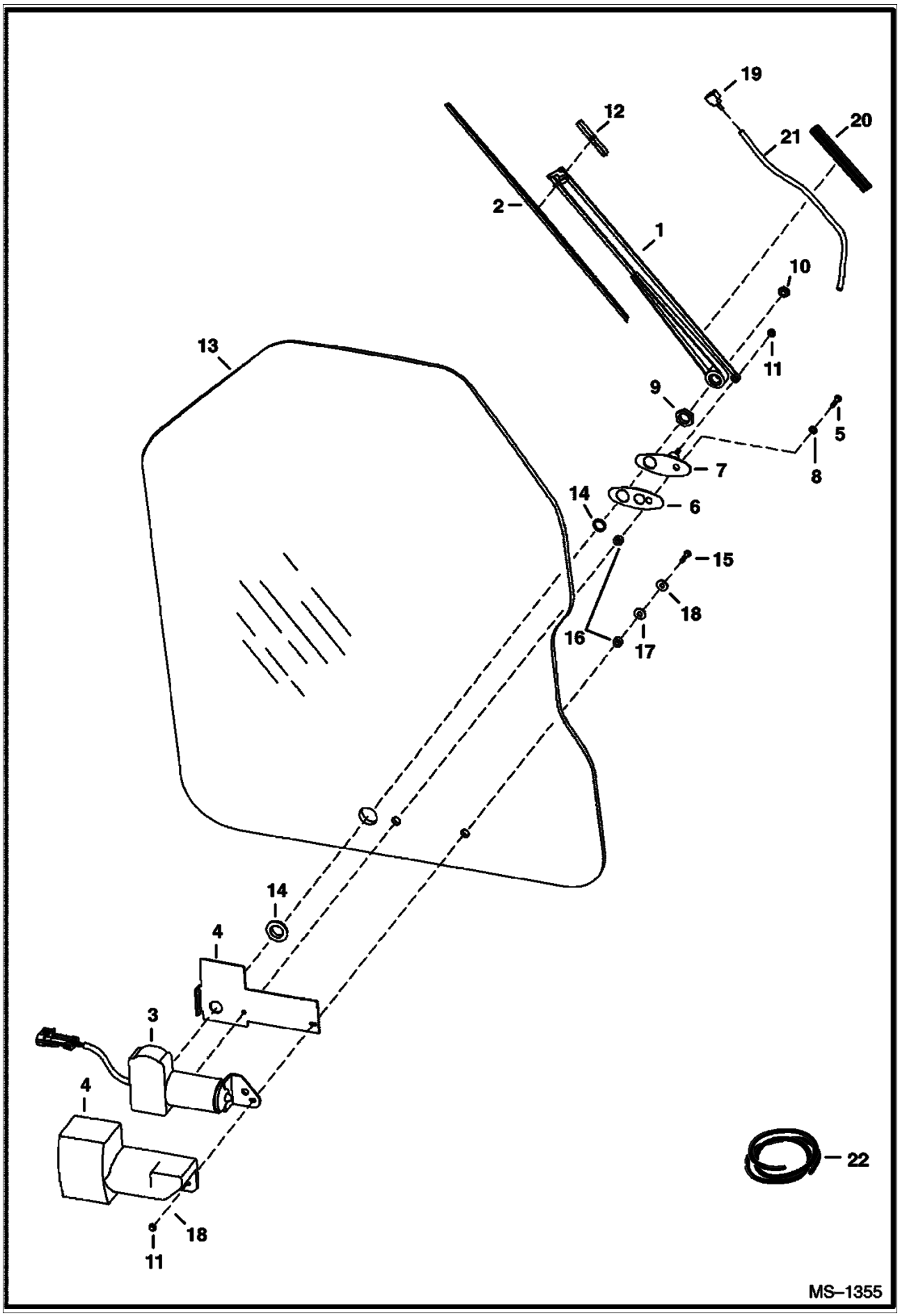

CAB DOOR (Cont'd)
(Window & Wiper)

Ref No	Part Number	Description	Remarks	Serial Number	Qty
1	6677833	ARM ASSY	W/Ref. 19-21		1
2	6677834	BLADE	also Order Ref. 12		1
3	6679476	MOTOR	W/threaded shaft end & built in fuse		1
4	6677836	COVER			1
5	6677837	BOLT			1
6	6677839	GASKET			1
7	6677840	SWIVEL			1
8	6677841	WASHER	tooth lock		1
9	6677842	NUT			1
10	6677843	NUT			1
11	6677844	NUT			2
12	6677845	ADAPTER	arm		1
13	6729776	WINDOW	.25" thick glass W/1.00" dia. wiper motor shaft hole		1
14	6677847	GROMMET	rubber		1
15	6678198	BOLT			1
16	6664085	BUSHING	nylon		2
17	6801059	WASHER	neoprene		1
18	6678739	WASHER	steel		2
19	6678920	NOZZLE	For Ref. 1		1
20	6678921	GUIDE	hose		1
21		HOSE	NAP - 18" (457mm) long - Order Ref. 22		x
22	6676003	HOSE	bulk - Sold Per Foot - .109" I.D. - black		x

CAB DOOR
(Special Applications)

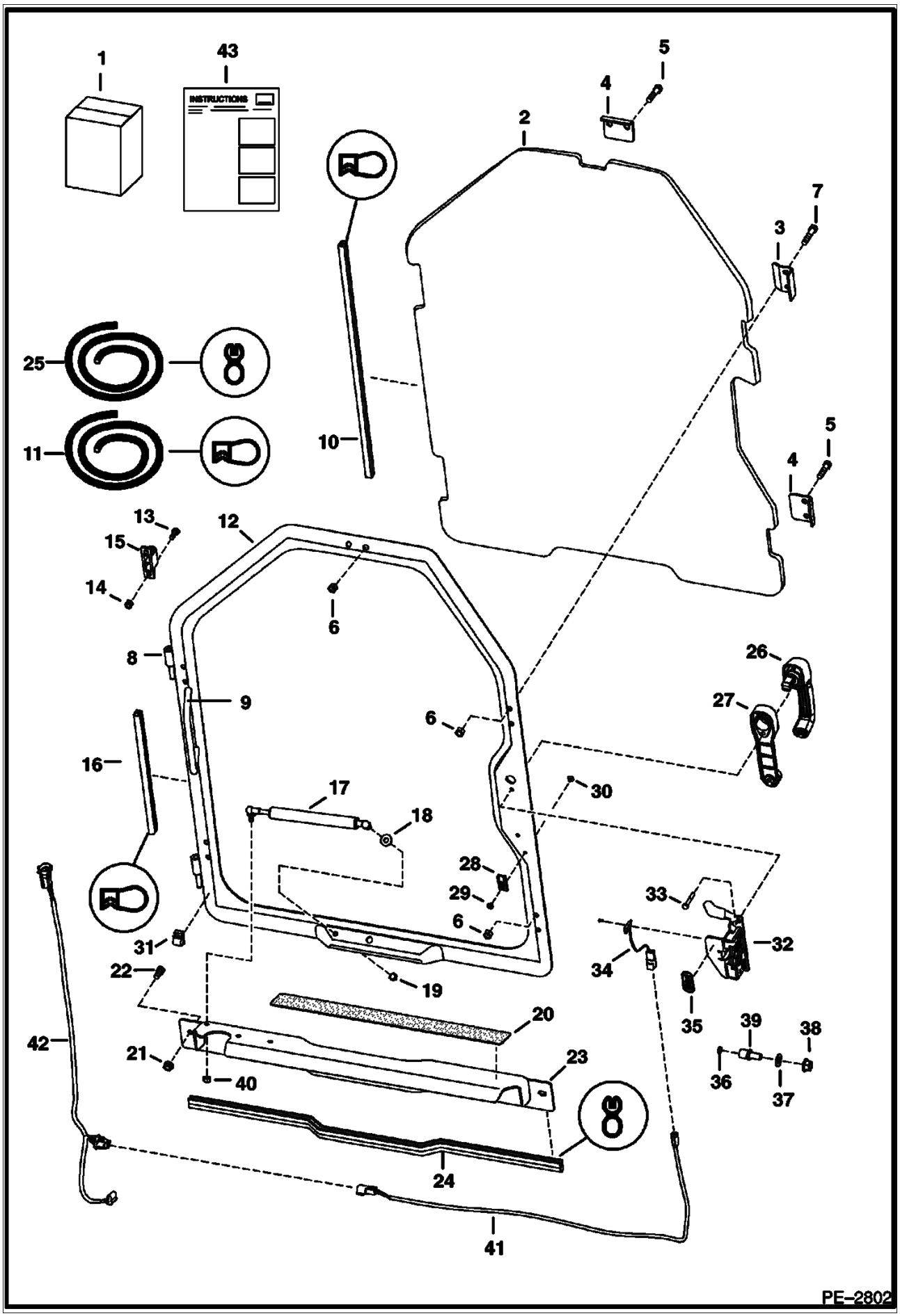

CAB DOOR (Cont'd)
(Special Applications)

Ref No	Part Number	Description	Remarks	Serial Number	Qty
1	6730823	KIT	door - Ref. 2-43		1
2	6732351	WINDOW	.5" thick polycarbonate		1
3	6725938	CLAMP			2
4	6725937	CLAMP			3
5	17C000628B	BOLT			6
6	95D000006B	NUT			10
7	17C000624B	BOLT			4
8	6718376	HINGE	door		2
9	6718521	HANDLE	grab		1
10		SEAL	NAP - 115" (2921 mm) long - Order Ref. 11		1
11	6675558	SEAL	bulk - sold per foot		x
12	7110430	SPECIAL APPS DOOR	W/Ref. 8 & 9		1
13	59D000005B	NUT			4
14	17C000512B	BOLT			4
15	6717593	HINGE	base		2
16		SEAL	NAP - 127.3" (3233,4 mm) long - Order Ref. 11		1
17	6682586	GAS SPRING			1
17	6678548	SOCKET	ball		2
17	6649244	STUD	ball		2
17	6649245	RETAINER	spring		2
18	25E000016B	WASHER			1
19	46D000005B	NUT	acorn		1
20	6542731	SAFETY TREAD			1
21	55D000006B	NUT			2
22	17C000612B	BOLT			2
23	6730816	SHIELD			1
24		SEAL	NAP - 36" (914,4 mm) long - Order Ref 25		1
25	6513152	SEAL	bulk - sold per foot		x
26	7109662	HANDLE			1
26	6709527	KEY	ign. & rear door		1
27	7109663	SPACER			1
28	6665000	CLIP			1
29	6665321	RIVET	male - plastic		1
30	6665322	RIVET	female - plastic		1
31	6675378	CLIP			3
32	7109661	DOOR LATCH			1
33	1CM00640B	BOLT			2
34	6728459	DOOR SENSOR			1
34	6677193	RIVET	plastic		2
35	7110316	DECAL			1
36	6677192	MAGNET			1
37	18EM01224B	WASHER			1
38	51DM00012B	NUT	12 mm thread		1
39	7109664	BOLT	striker - 12 mm thread		1
40	61D000005B	NUT			1
41	7104465	DOOR SWITCH HARNESS	door sensor		1
42	7117322	HARNESS	wiper		1
43	6901013	INSTRUCTIONS			1

CAB DOOR
(Lexan Window)

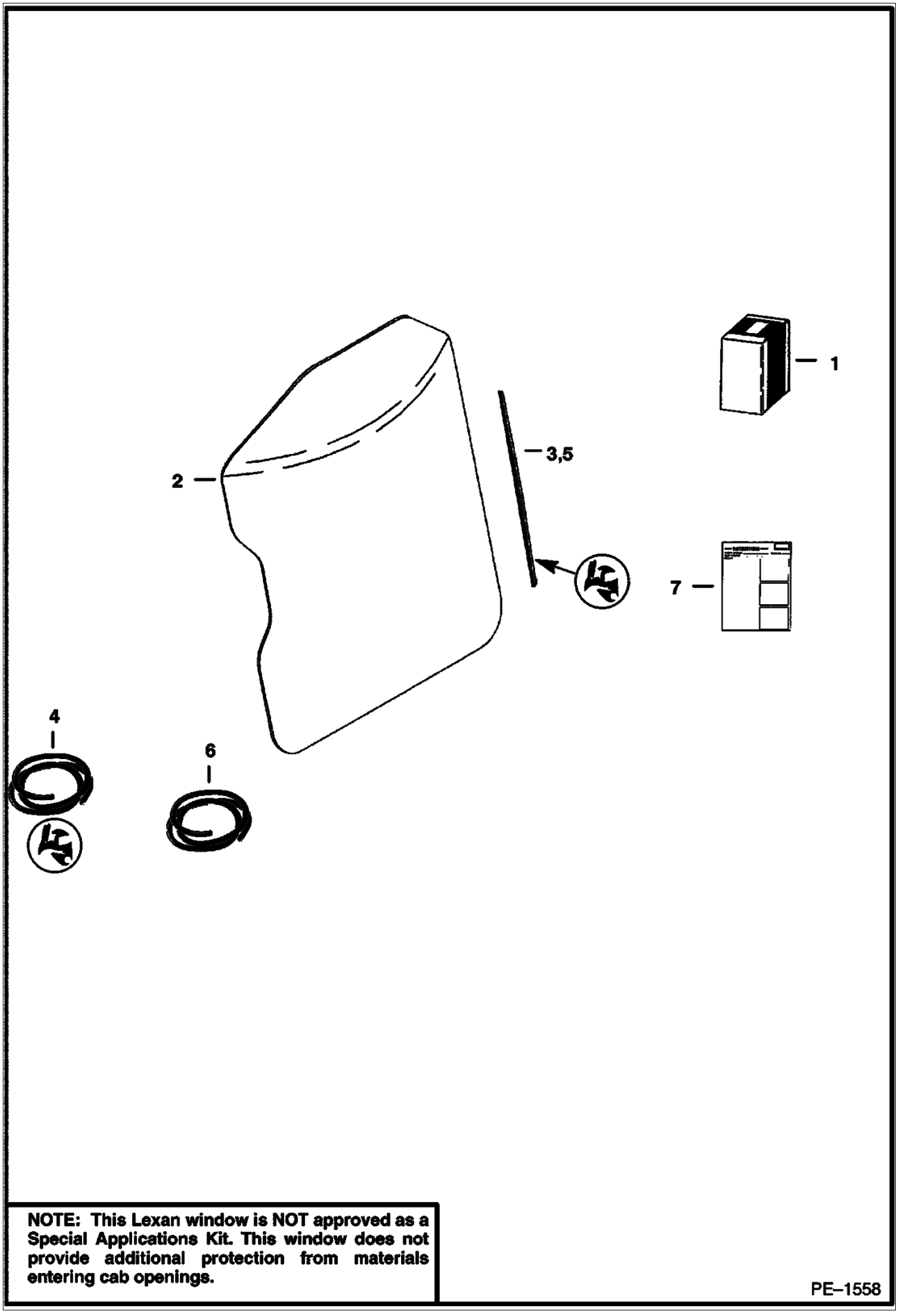

NOTE: This Lexan window is NOT approved as a Special Applications Kit. This window does not provide additional protection from materials entering cab openings.

PE–1558

CAB DOOR (Cont'd)
(Lexan Window)

Ref No	Part Number	Description	Remarks	Serial Number	Qty
1	6726427	KIT	Ref. 2-7		1
2	6675215	WINDOW	lexan		1
3		SEAL	NAP - 113.3" (2878mm) long - Order Ref. 4		1
4	6665568	EXTRUSION	bulk - Sold Per Foot		x
5		CORD	NAP - 113.3" (2878mm) long - Order Ref. 6		1
6	6554149	CORD	bulk - Sold Per Foot		x
7	6901036	INSTRUCTIONS			1

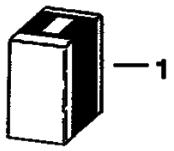

B–17100

Ref No	Part Number	Description	Remarks	Serial Number	Qty
1		KIT	See Illustration CAB WINDOWS/ MS1340 See Illustration CAB DOOR/ PE1566 cab enclosure - SALES Kit #6731938		1
1		KIT	See Illustration CAB WINDOWS/ MS1340 See Illustration CAB DOOR/ PE1703 special cab enclosure - SALES Kit #6731937		1

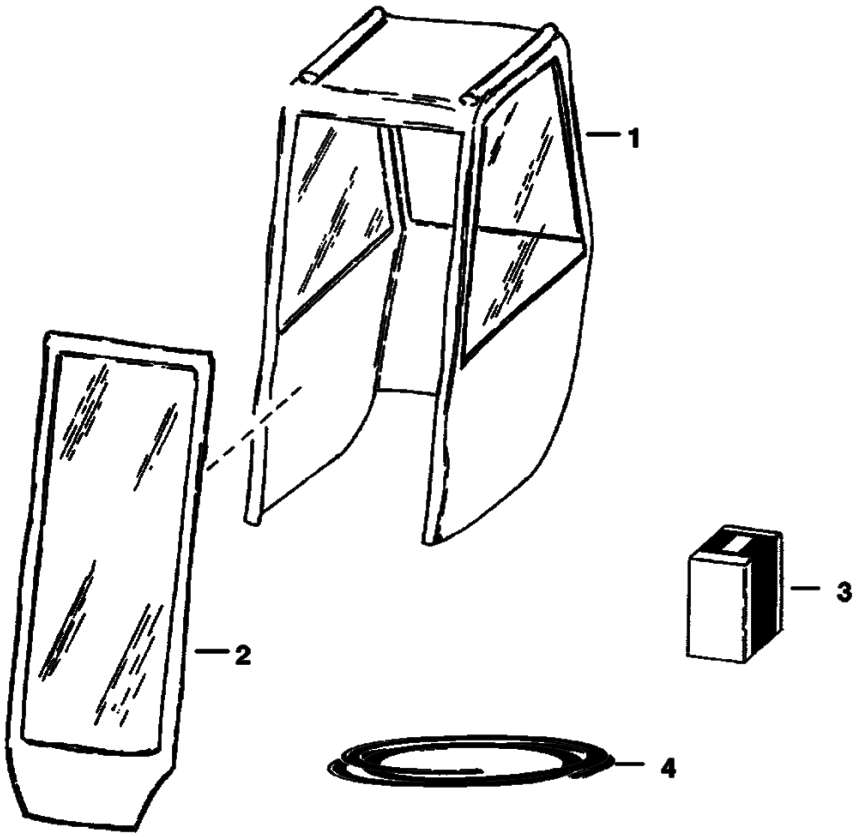

B–1413

CAB ENCLOSURE (Cont'd)
(Envelope)

Ref No	Part Number	Description	Remarks	Serial Number	Qty
1	6675544	CANVAS CAB	fits over cab - W/Ref. 2 & 3		1
2	6675590	DOOR	vinyl		1
3	6675591	HINGE KIT			1

CAB WINDOWS
(Rear Window Removal Kit)

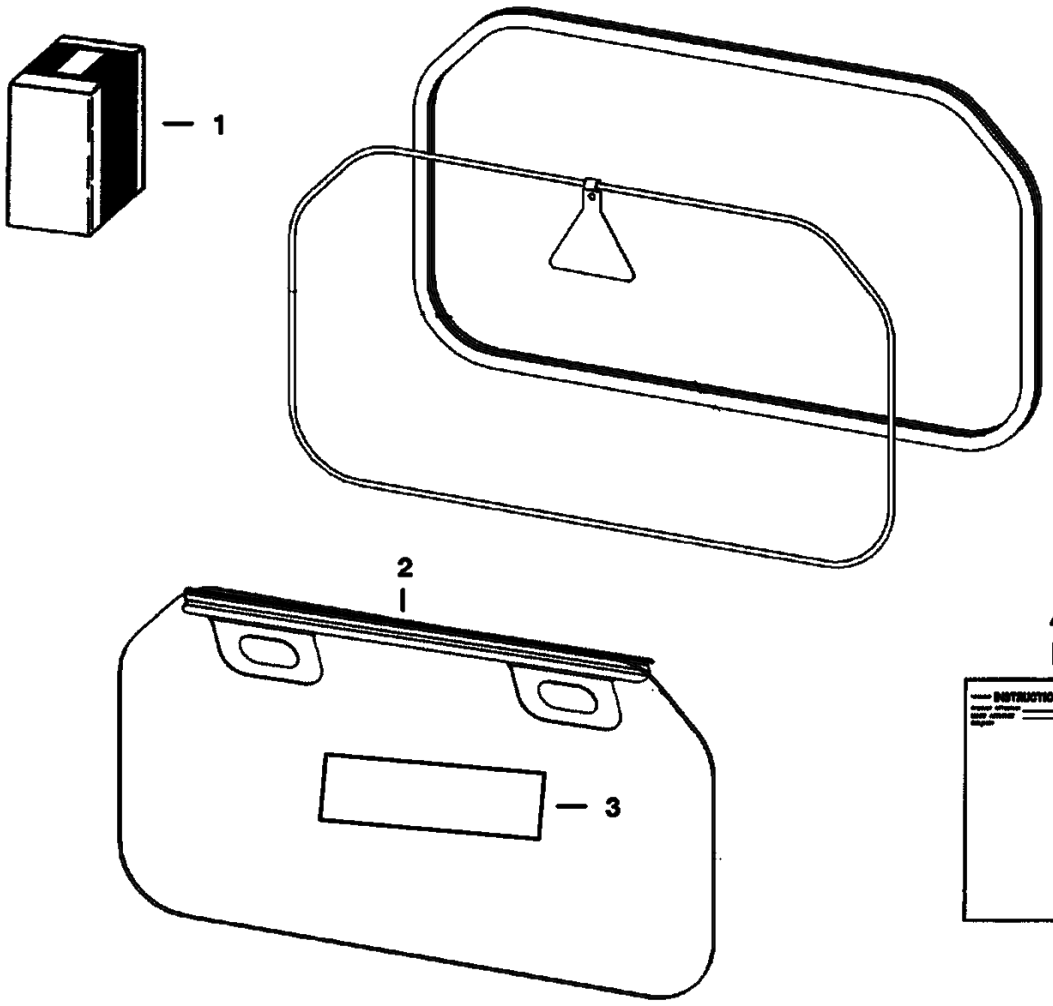

CAB WINDOWS (Cont'd)
(Rear Window Removal Kit)

Ref No	Part Number	Description	Remarks	Serial Number	Qty
1	6725946	KIT	Ref. 2-4		1
2	6725421	HANDLE			1
3	6726303	DECAL			1
4	6901029	INSTRUCTIONS			1

CAB WINDOWS
(Top, Rear & Side)

NOTE: Order Side Window Kit from Gwinner Sales # 6718806.

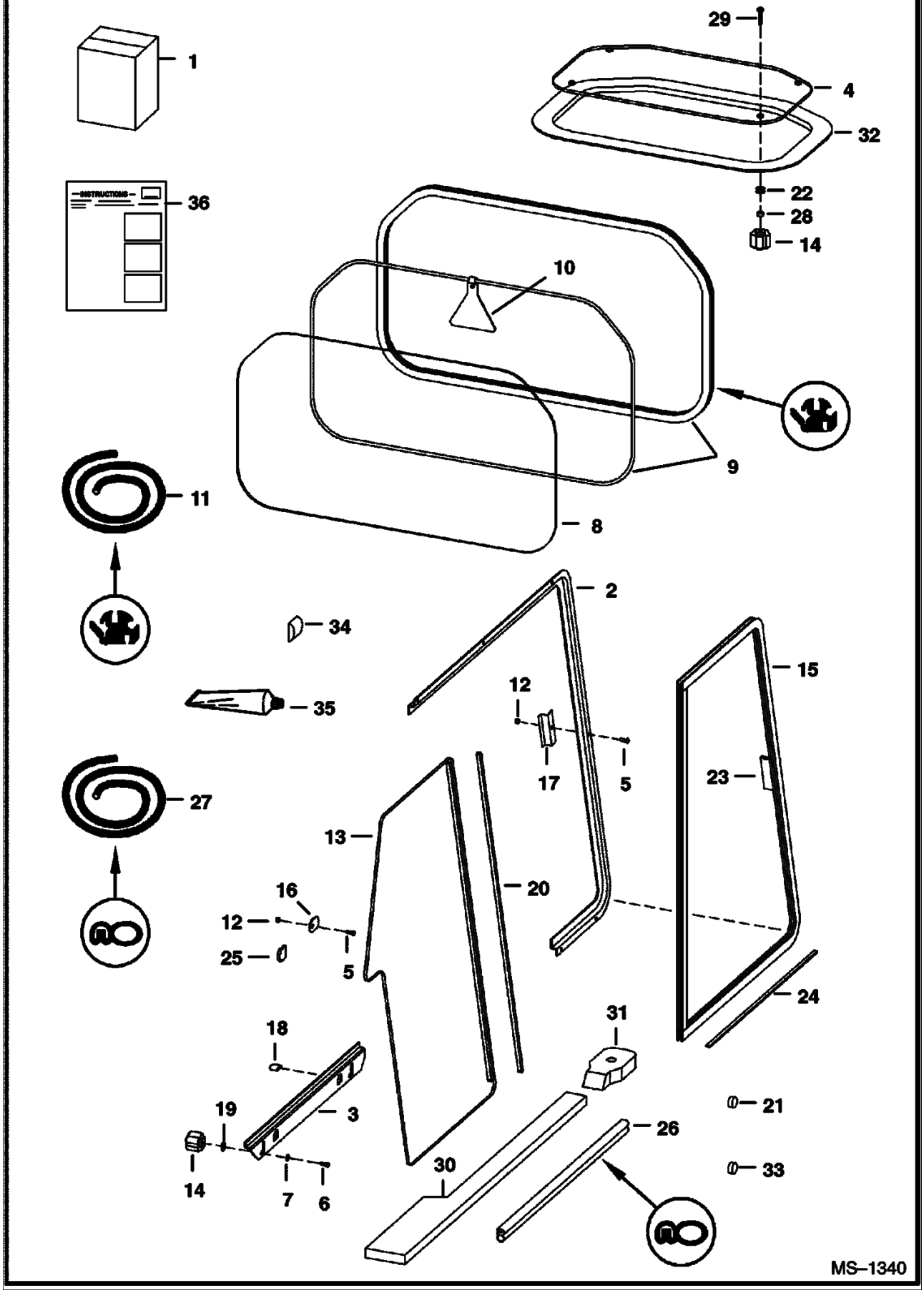

CAB WINDOWS (Cont'd)
(Top, Rear & Side)

Ref No	Part Number	Description	Remarks	Serial Number	Qty
1	6718805	KIT	Top & Rear Window - Ref. 4, 8-10, 14 & 36		1
1		KIT	SALES - side windows - SEE NOTE		1
2	6717870	FRAME	L.H. side		1
2	6717872	FRAME	R.H. side		1
3	6717871	FRAME	L.H. bottom		1
3	6717873	FRAME	R.H. bottom		1
4	7105035	WINDOW	assy. - lexan - W/Ref. 22, 28, 29 & 32		1
5	10C000410B	BOLT	carriage		18
6	10C000416B	BOLT	carriage		4
7	25E000014B	WASHER			4
8	6717874	WINDOW	rear - 3/16" thick		1
8	6719413	WINDOW	rear - lexan		1
9		EXTRUSION	NAP - 75.75" (1924mm) long - Order Ref. 11		1
9		CORD	NAP - 75.75" (1924mm) long - Order Ref. 11		1
10	6731478	EXIT TAG			1
11	6675387	EXTRUSION	Bulk - Sold Per Foot		x
11	6554149	CORD	Bulk - Sold Per Foot		x
12	59D000004B	NUT			18
13	6674520	WINDOW	L.H. rear - W/Ref. 20		1
13	6674522	WINDOW	R.H. rear - W/Ref. 20		1
14		KNOB	NAP - .625" (15,9mm) deep threads		8
14	6681614	KNOB	.69" (17,5mm) deep threads		8
15	6674519	WINDOW	L.H. front - W/Ref. 23		1
15	6674521	WINDOW	R.H. front - W/Ref. 23		1
16	6719063	STOP	window		2
17	6719037	STRIKER			2
18	6719065	COVER TAB			4
19	6675212	RETAINER	tab bolt		4
20	6675833	SEAL	rear window - dual wiper w/tape		2
21	6657719	PLUG	for .75" dia. hole		2
22	6675545	GROMMET			4
23	6678283	HANDLE	side window - W/ tape & vendor instructions		2
24	6676927	FELT STRIP	20.38" (518mm) long		2
25	6677198	TAB	cab		2
26		SEAL	NAP - 24" (609mm) long - Order Ref. 27		2
27	6555351	SEAL	bulk - sold per foot		x
28	6664085	BUSHING	nylon		4
29	91G000416B	BOLT	used W/ 6674741 knob		4
29	91G000420B	BOLT	used W/ 6681614 knob		4
30	6729010	SEAL	cab - main frame - L.H. - foam		1
30	6729009	SEAL	cab - main frame - R.H. - foam		1
31	6729011	SEAL	cab mount		2
32		SEAL	NAP - Order Ref. 4		1
33	6677973	PLUG	for .22" dia. hole		2
34	7103075	SEAL			2
35		ADHESIVE	NAP - 1 oz. - for top window seal Ref. 1		1
36	6900852	INSTRUCTIONS INSTL	top & rear window		1
36	6900853	INSTRUCTIONS	side windows		1

COUNTERWEIGHT KIT
(2000/2500 lb. Rear Axle)

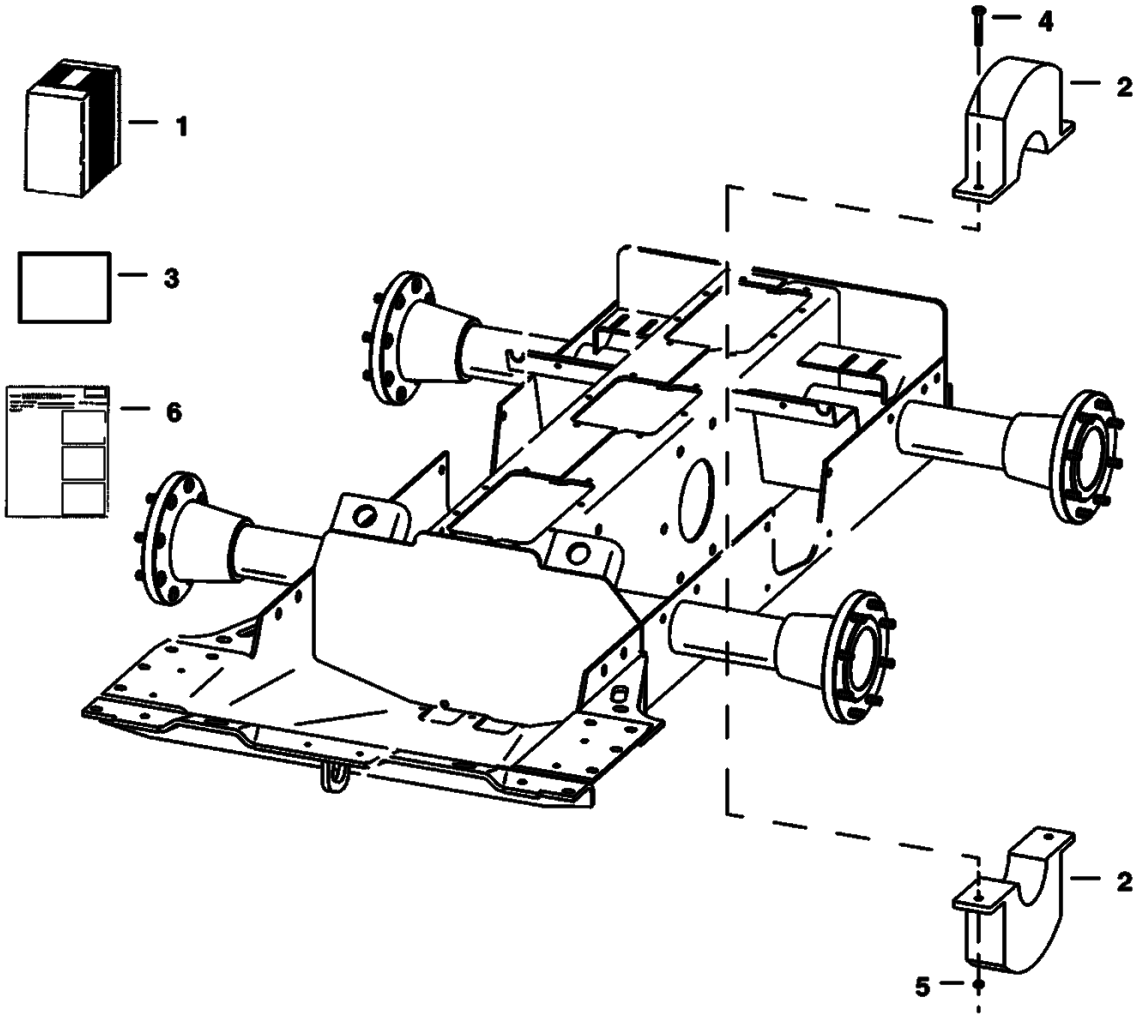

NOTE: Order Counterweight Kit from Gwinner Sales #6712911

TS–1295

COUNTERWEIGHT KIT (Cont'd)
(2000/2500 lb. Rear Axle)

Ref No	Part Number	Description	Remarks	Serial Number	Qty
1		KIT	SALES - counterweight - SEE NOTE		1
2	6714362	WEIGHT	rear axle - 42.8 lbs (19,4 kg) - 4.5" (114,3 mm) wide		4
3	6717232	DECAL	2500 lb load - 873		1
3	6712912	DECAL	2000 lb load - 863		1
4	17C000640B	BOLT			4
5	61D000006B	NUT			4
6	6900366	INSTRUCTIONS			1

COUNTERWEIGHT KIT
(400 lb. Rear Axle)

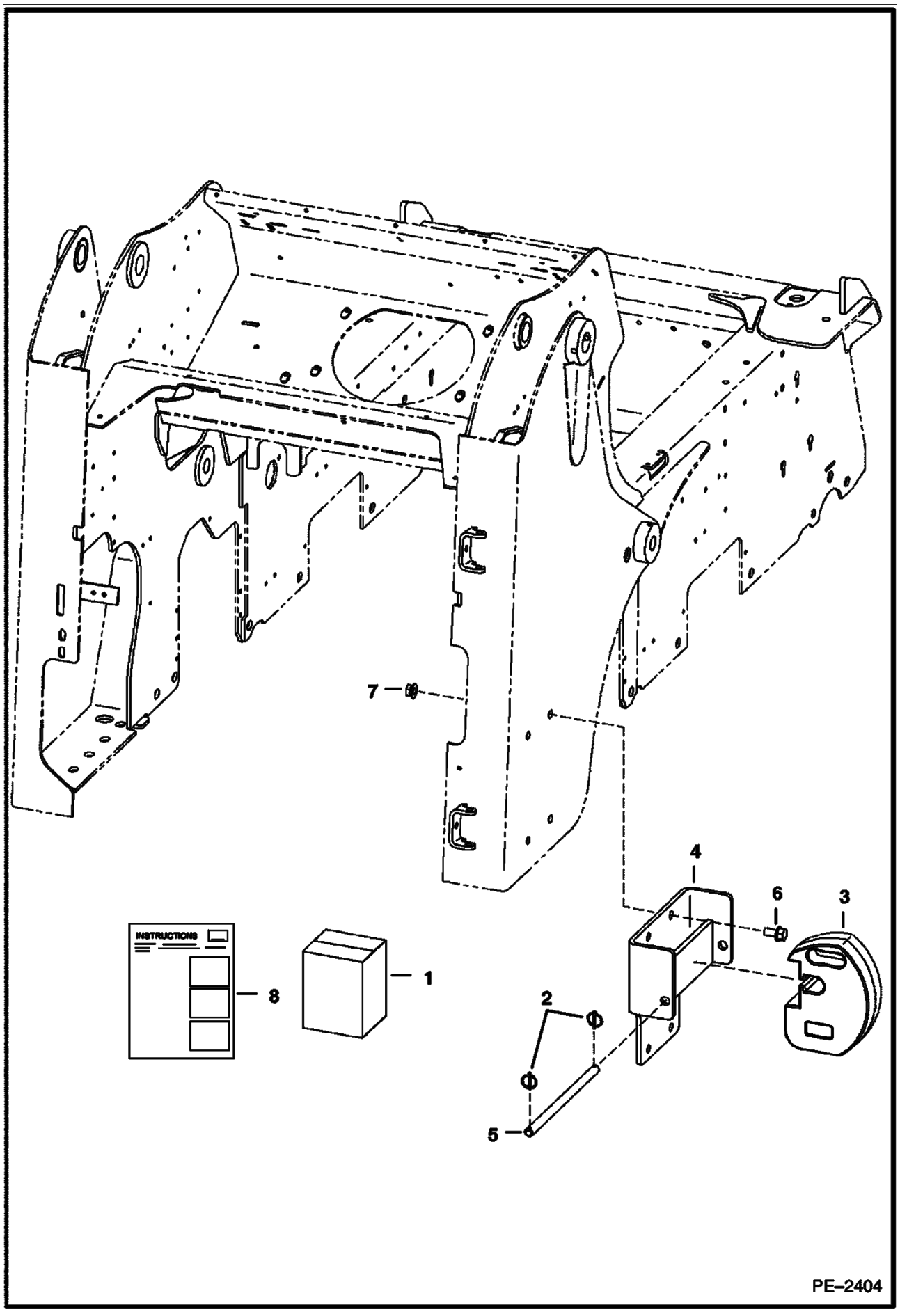

COUNTERWEIGHT KIT (Cont'd)
(400 lb. Rear Axle)

Ref No	Part Number	Description	Remarks	Serial Number	Qty
1	7105764	KIT	Ref. 2-8		1
2	6649706	PIN			4
3	6811483	COUNTERWEIGHT	49 lb (20.142 kg)		8
4	7105818	MOUNT	assy		2
5	7105827	ROD			2
6	35C001020B	BOLT			8
7	57D000010B	NUT			8
8	6903283	INSTRUCTIONS			1

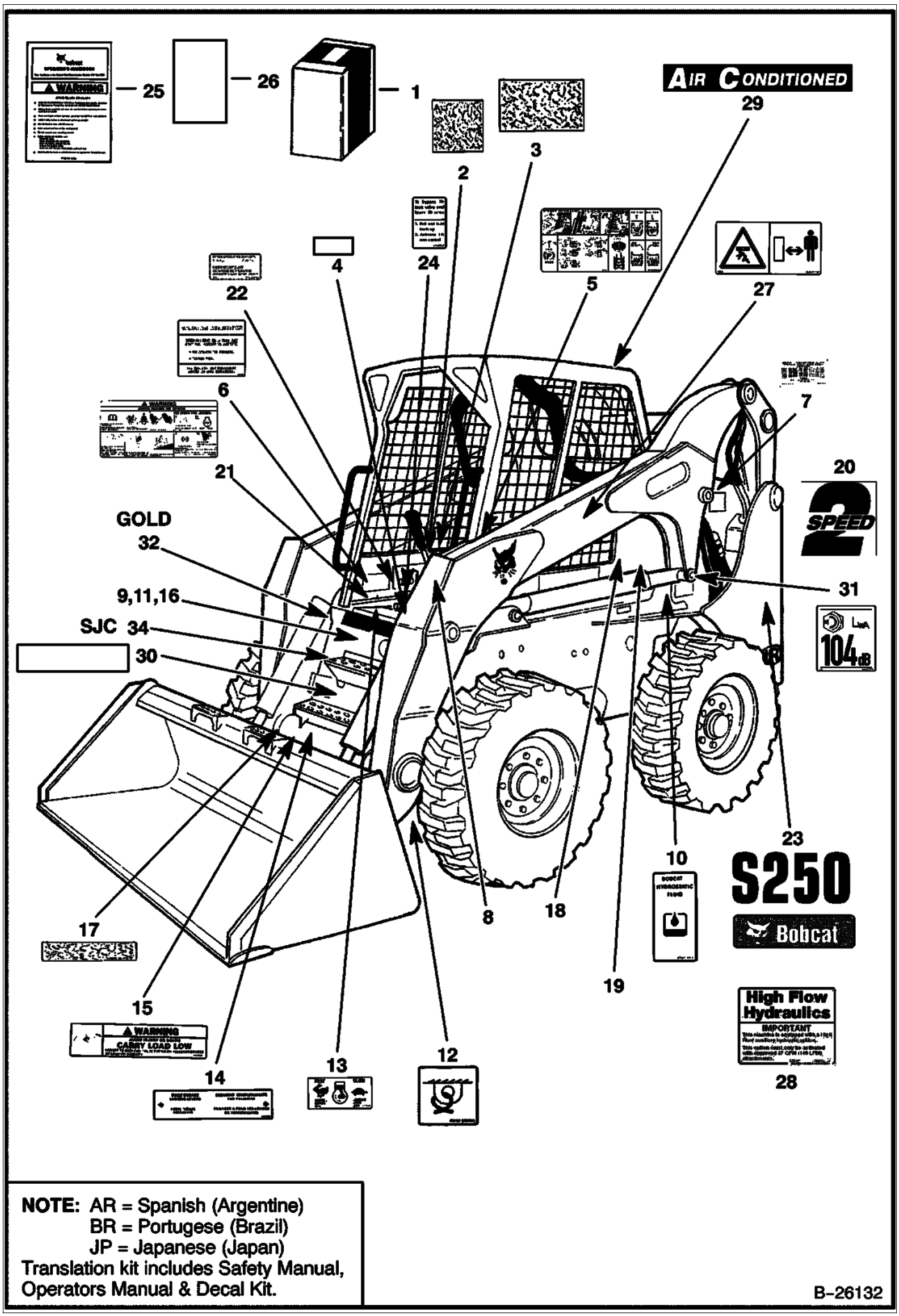

NOTE: AR = Spanish (Argentine)
BR = Portugese (Brazil)
JP = Japanese (Japan)
Translation kit includes Safety Manual, Operators Manual & Decal Kit.

B-26132

Ref No	Part Number	Description	Remarks	Serial Number	Qty
1		KIT			1
1	7120291AR	KIT, DECAL	decal - SEE NOTE		1
1	7120291BR	KIT, DECAL	decal - SEE NOTE		1
1	7120291JP	KIT, DECAL	decal - SEE NOTE		1
1	7120290AR	KIT, TRANSLATION	translation- SEE NOTE		1
1	7120290BR	KIT, TRANSLATION	translation - SEE NOTE		1
2	6553976	SAFETY TREAD	5"x8" (127mm x 203mm)		1
3	6554100	TREAD	6" x 6" (153mm x 153mm)		3
4	6717343	DECAL	danger		2
5	6727926	DECAL	operation - not in kit		1
6		DECAL	NAP - seat & seat bar operating - Order 6727926 decal		1
7	6557224	DECAL	patent		1
8	6731757	DECAL	front aux. coupler block		1
9	6702301	DECAL	danger		1
10	6565990	DECAL	hyd. fill		1
11	6732696	DECAL	warning		1
12	6727595	DECAL	See Illustration DECALS/ B26133 tie down		1
13	6735140	DECAL	throttle		1
14	6561383	DECAL	Bob-tach - not in kit		1
15	6579528	DECAL	carry load low		1
16	6702302	DECAL	danger		1
17	7108222	SAFETY TREAD	22" X 9.5" (558,8 mm X 241,3 mm)		1
18	6579385	DECAL	noise warning - Europe only		1
19	6731994	DECAL	sound power - Europe only		1
20	6729078	DECAL	2-speed - not in kit		2
21	6718698	DECAL	warning - not in kit		1
22	6733924	DECAL	ROC - 2500/2600 lbs. - S250		1
23	7120594	DECAL	model		2
24	6711840	DECAL	manual lift release		1
25	6737783	KIT	manual ref. assy		1
25	6558305	WIRE ROPE			1
25	6558309	WIRE ROPE	33" (838mm) long - bulk - sold per foot - also Order 6558310 (2)		x
25	6558310	SLEEVE	wire rope		2
25	84G003112B	BOLT			1
26	6902600	MANUAL	operator		1
27	6713507	DECAL	stay clear - Europe only		2
28	7120602	DECAL	high flow - not in kit		2
29	6729077	DECAL	air conditioned - not in kit		2
30	6555341	SAFETY TREAD	3" x 12" (76mm x 305mm)		1
31	6731994	DECAL	sound - 105 db - Europe only		1
32	6735862	DECAL	gold package		1
33	6737248	DECAL	warning - selectable joystick control		1

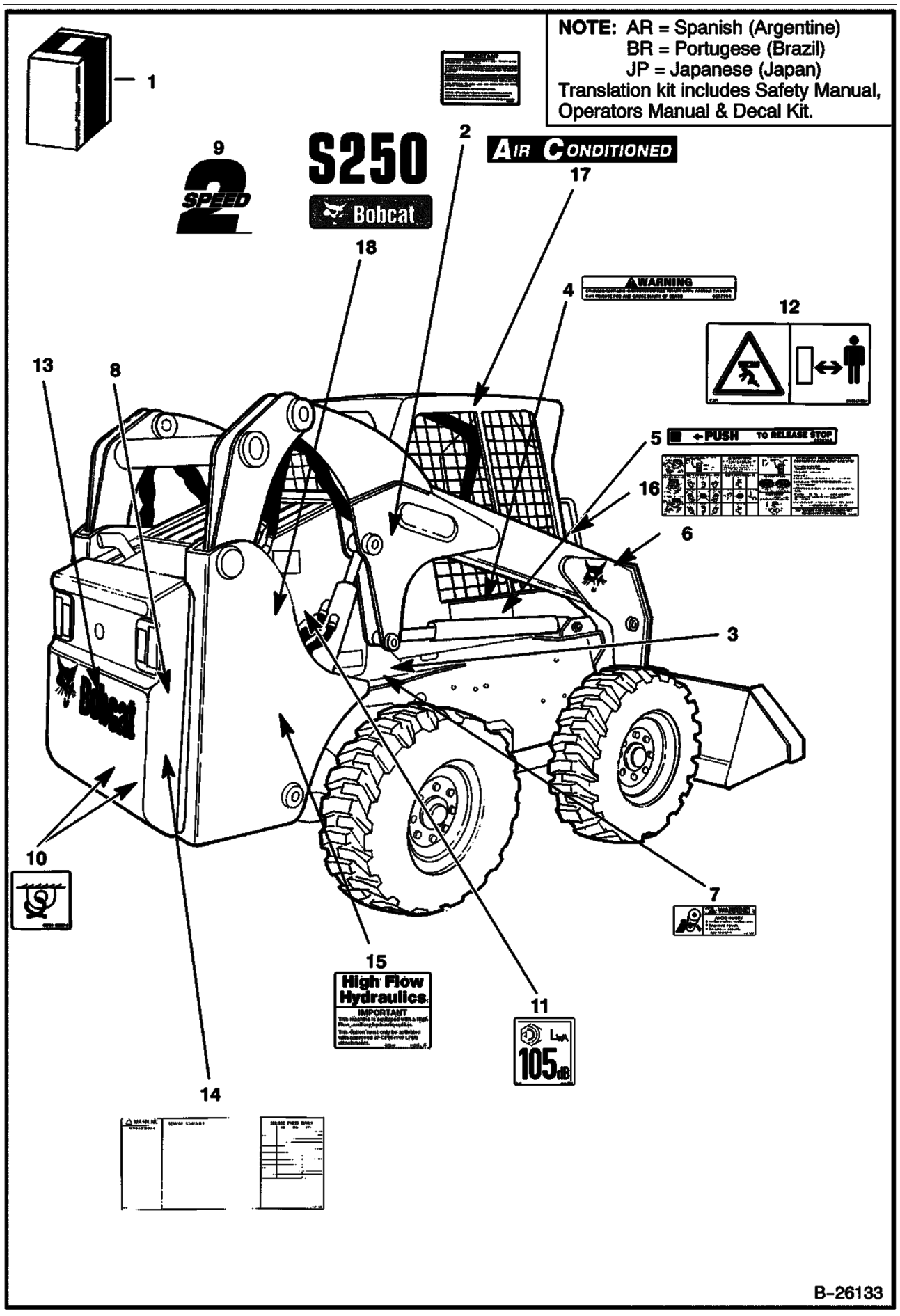
NOTE: AR = Spanish (Argentine)
BR = Portugese (Brazil)
JP = Japanese (Japan)
Translation kit includes Safety Manual, Operators Manual & Decal Kit.
1
2
9
2 SPEED
S250
Bobcat
AIR CONDITIONED
17
18
4
WARNING
12
13
8
5
PUSH TO RELEASE STOP
16
6
3
10
7
15
High Flow Hydraulics
IMPORTANT
11
105dB
14
B-26133

Ref No	Part Number	Description	Remarks	Serial Number	Qty
1		KIT			1
1	7120291AR	KIT, DECAL	decal - SEE NOTE		1
1	7120291BR	KIT, DECAL	decal - SEE NOTE		1
1	7120291JP	KIT, DECAL	decal - SEE NOTE		1
1	7120290AR	KIT, TRANSLATION	decal - SEE NOTE		1
1	7120290BR	KIT, TRANSLATION	decal - SEE NOTE		1
2	6560573	DECAL	spark arrestor		1
3	6732774	DECAL	lift arm stop		1
4	6577754	DECAL	warning		2
5	6578368	DECAL	push		1
6	7116870	DECAL	Bobcat head		1
7	6708941	DECAL	keep shield		2
8	6565200	DECAL	oil filter		1
9	6729078	DECAL	2-speed - not in kit		2
10	6727595	DECAL	See Illustration REAR AUXILIARY HYDRAULICS/ PE1533 tie down		2
11	6734803	DECAL	sound - 105db - Europe only		2
12	6713507	DECAL	stay clear - Europe only - not in kit		1
13	6735901	DECAL	Bobcat W/head - white		1
14	6734534	DECAL	service/warning/filters		1
15	7120602	DECAL	high flow - not in kit		1
16	6734646	DECAL	W/ selectable joystick controls - operation/warning		1
16	6734647	DECAL	W/ selectable joystick controls - operation/warning - Europe only		1
17	6729077	DECAL	air conditioned - not in kit		2
18	7120594	DECAL	model S250		2

DEBRIS SHIELD KIT

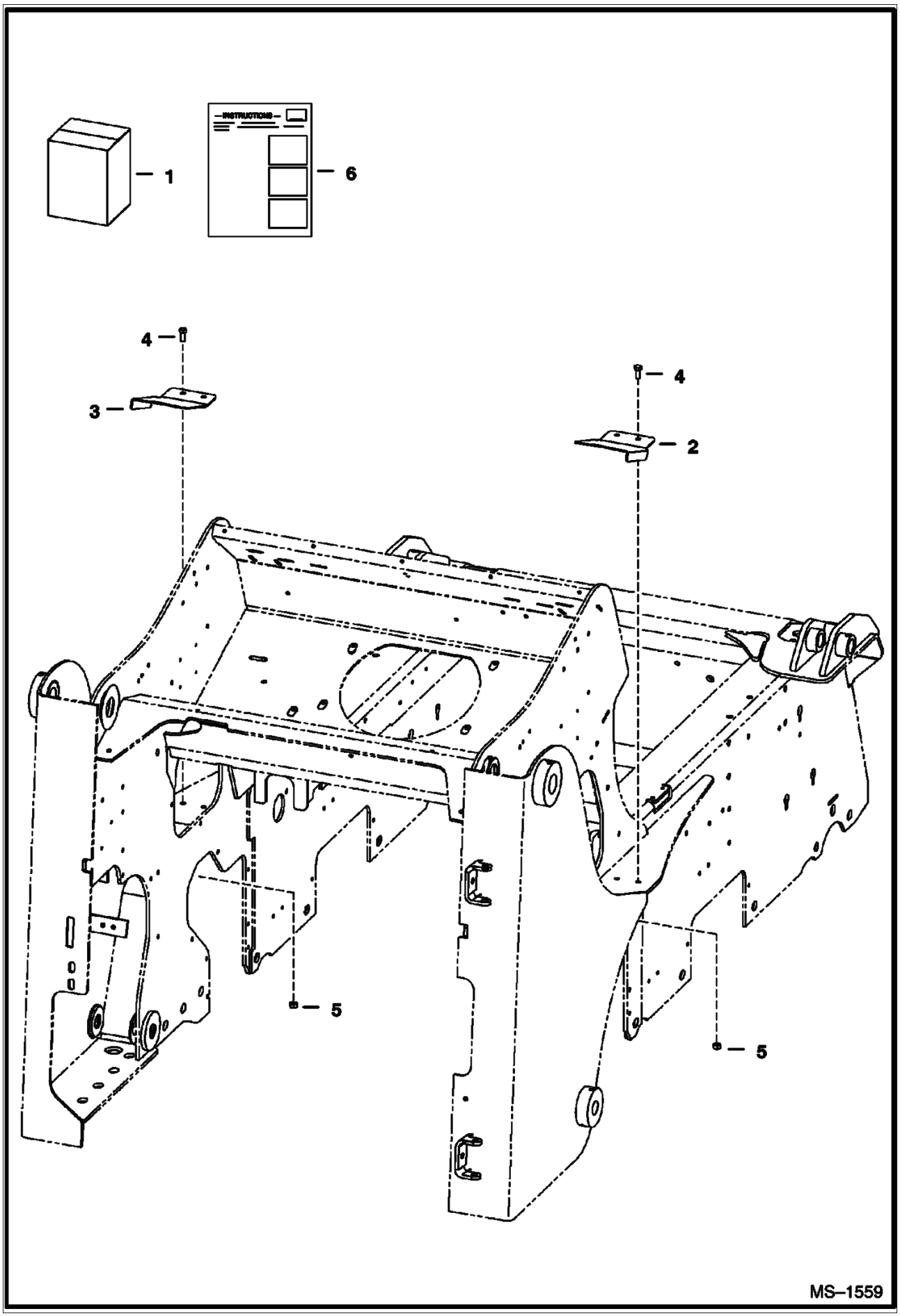

DEBRIS SHIELD KIT (Cont'd)

Ref No	Part Number	Description	Remarks	Serial Number	Qty
1	6734461	KIT	Ref. 2-6		1
2	6734447	SHIELD	R.H.		1
3	6734446	SHIELD	L.H.		1
4	17C000614B	BOLT			4
5	61D000006B	NUT			4
6	6902252	INSTRUCTIONS			1

ELECTRICAL CONNECTOR KIT
(7-Pin)

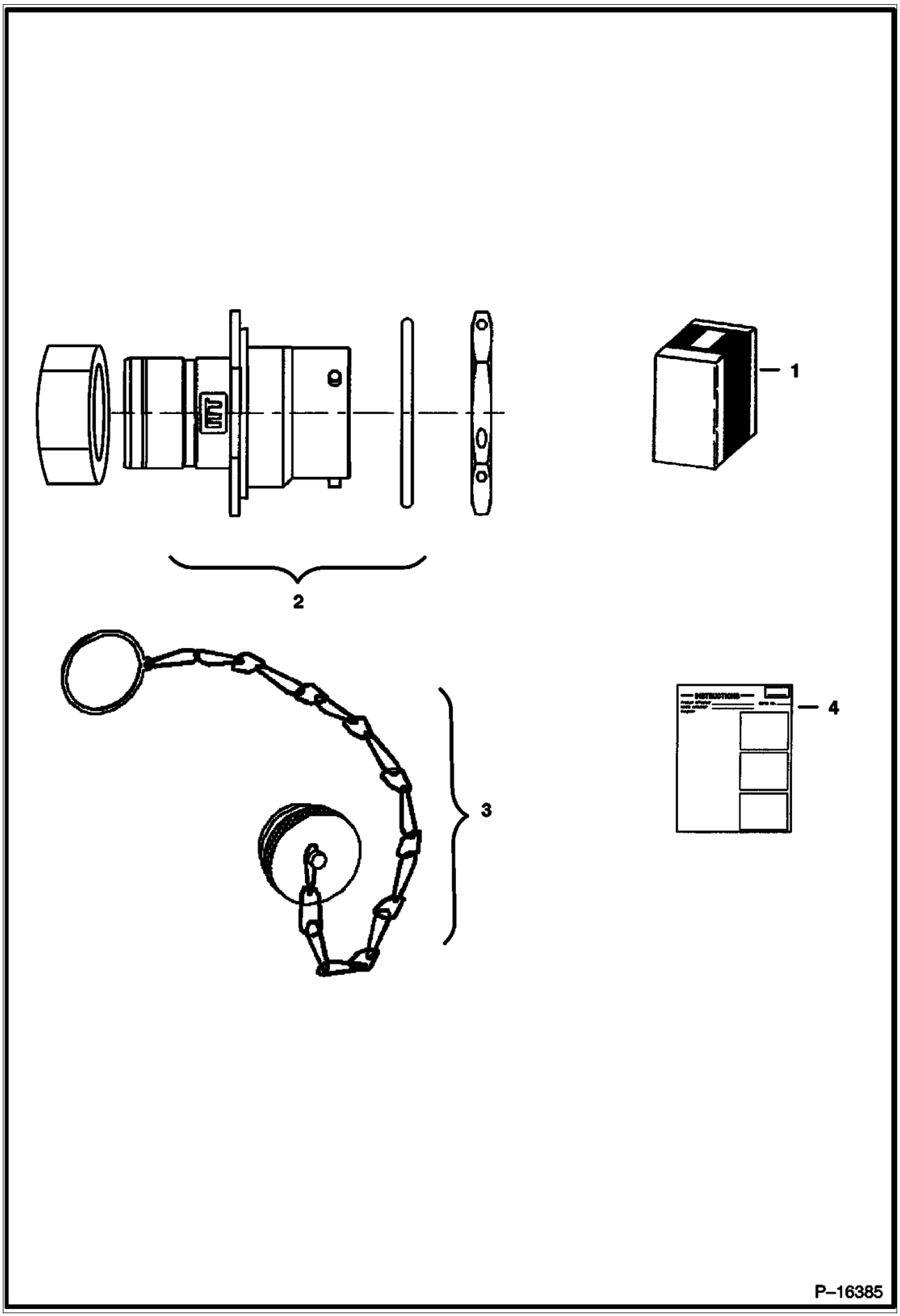

ELECTRICAL CONNECTOR KIT (Cont'd)
(7-Pin)

Ref No	Part Number	Description	Remarks	Serial Number	Qty
1	6727176	KIT	Ref. 2-4		1
2	6674802	CONNECTOR	7-pin		1
3	6675026	CAP			1
4	6901076	INSTRUCTIONS			1

ELECTRICAL CONTROLS KIT
(7 Pin Attachments)

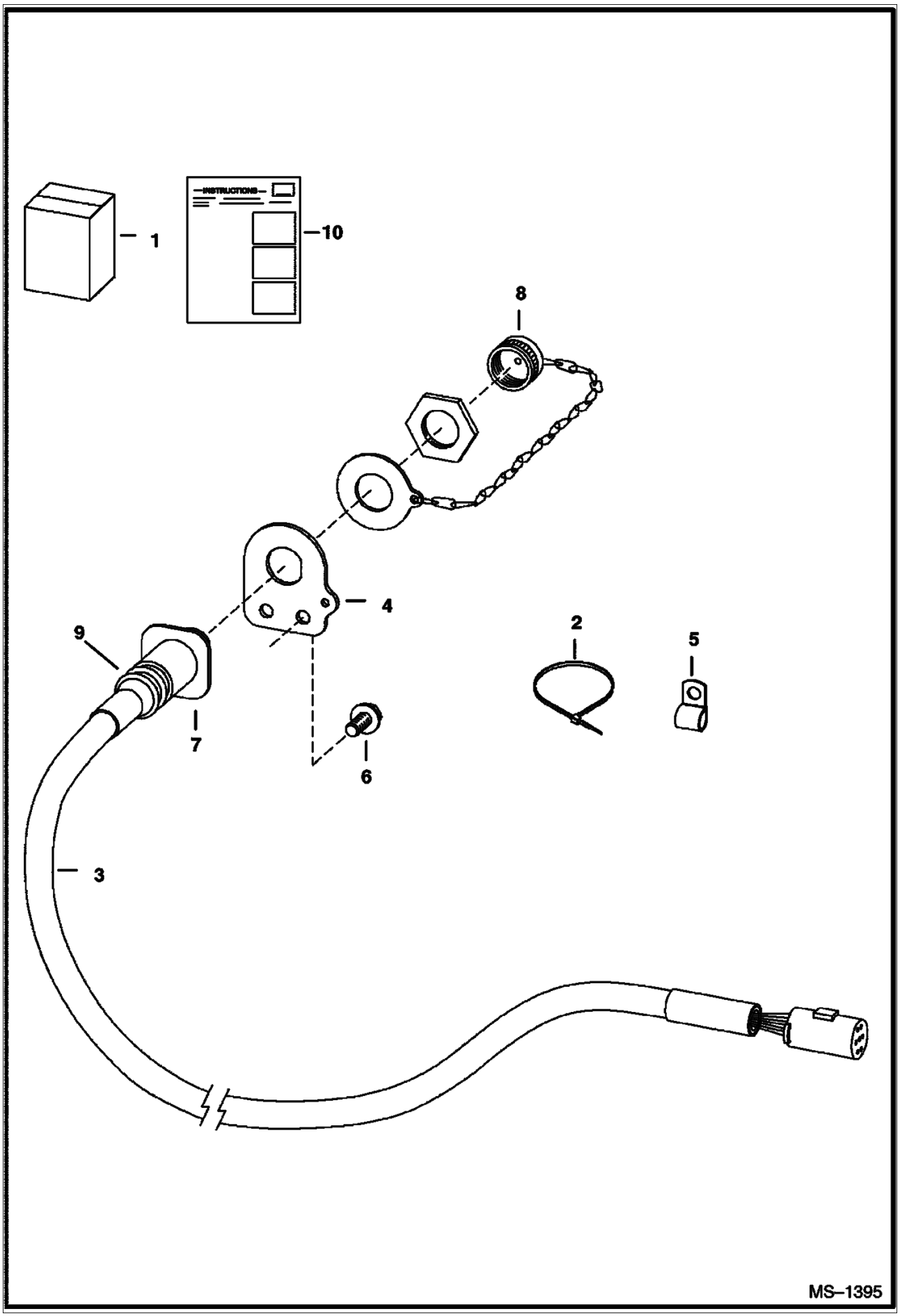

ELECTRICAL CONTROLS KIT (Cont'd)
(7 Pin Attachments)

Ref No	Part Number	Description	Remarks	Serial Number	Qty
1	6733142	KIT	Ref. 3-10		1
2	6624289	STA STRAP			4
3	6718426	HARNESS	W/Ref. 4		1
4	6718750	MOUNT			1
5	30H000027B	CLIP			6
6	84G003112B	BOLT			8
7	6674802	CONNECTOR	See Illustration ELECTRICAL CONNECTOR KIT/ P16385 7-pin		1
7	6669549	SOCKET	small		4
7	6677136	SOCKET	large - 12 ga.		3
8	6675026	CAP			1
9	6674799	ADAPTER	heat shrink		1
10	6901871	INSTRUCTIONS			1

ELECTRICAL CONTROLS KIT
(14 Pin Attachments)

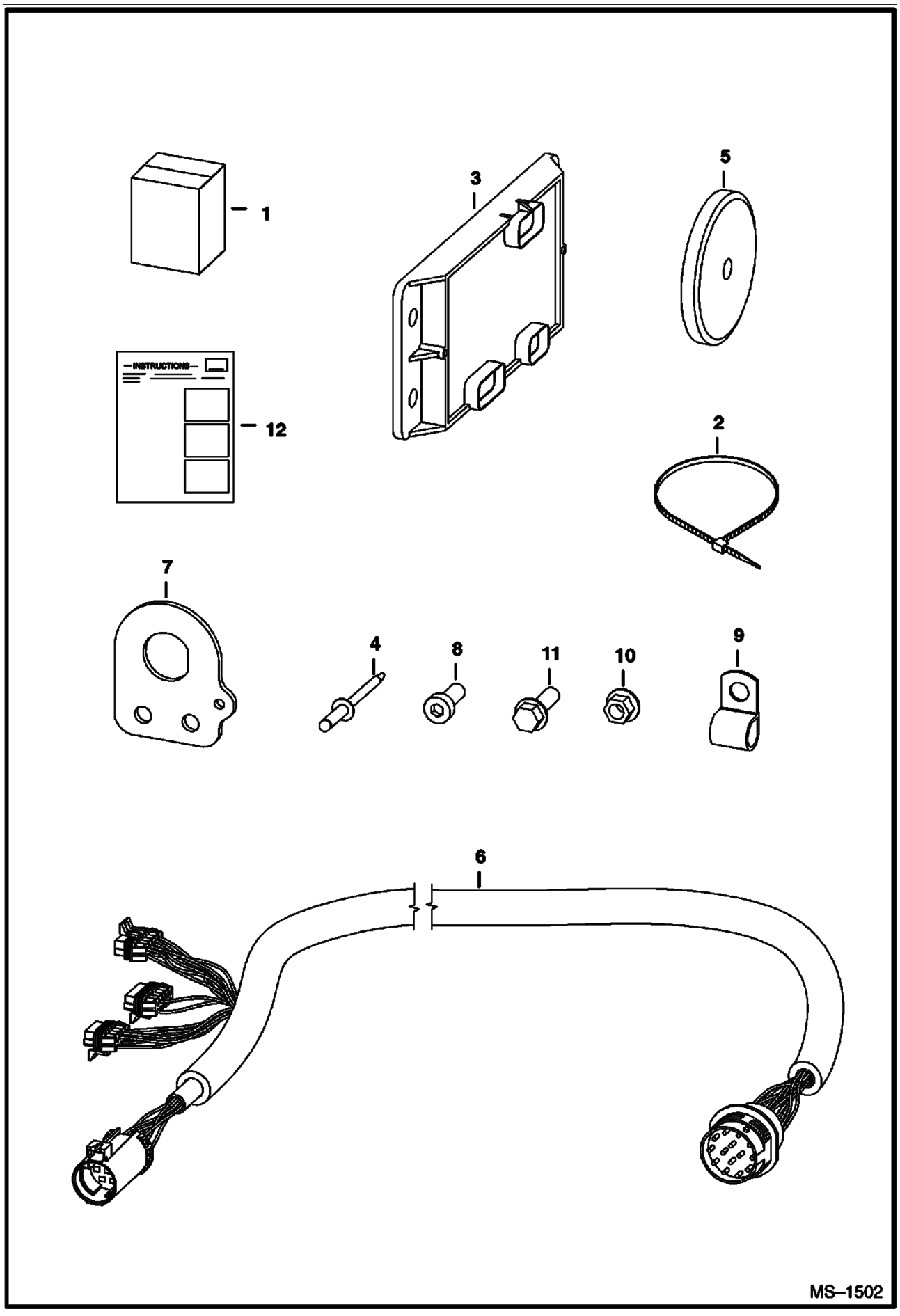

ELECTRICAL CONTROLS KIT (Cont'd)
(14 Pin Attachments)

Ref No	Part Number	Description	Remarks	Serial Number	Qty
1	6733136	KIT			1
2	6624289	STA STRAP			4
3	6678675	CONTROLLER			1
4	6704892	RIVET			1
5	6719448	MAGNET			2
6	6732730	HARNESS			1
7	6733144	MOUNT			1
8	25G000612B	BOLT			2
9	30H000050B	CLAMP			6
10	83D000006B	NUT			2
11	84G003112B	BOLT			8
12	6901872	INSTRUCTIONS			1

EXPORT ACCESSORIES
(Road Kit)

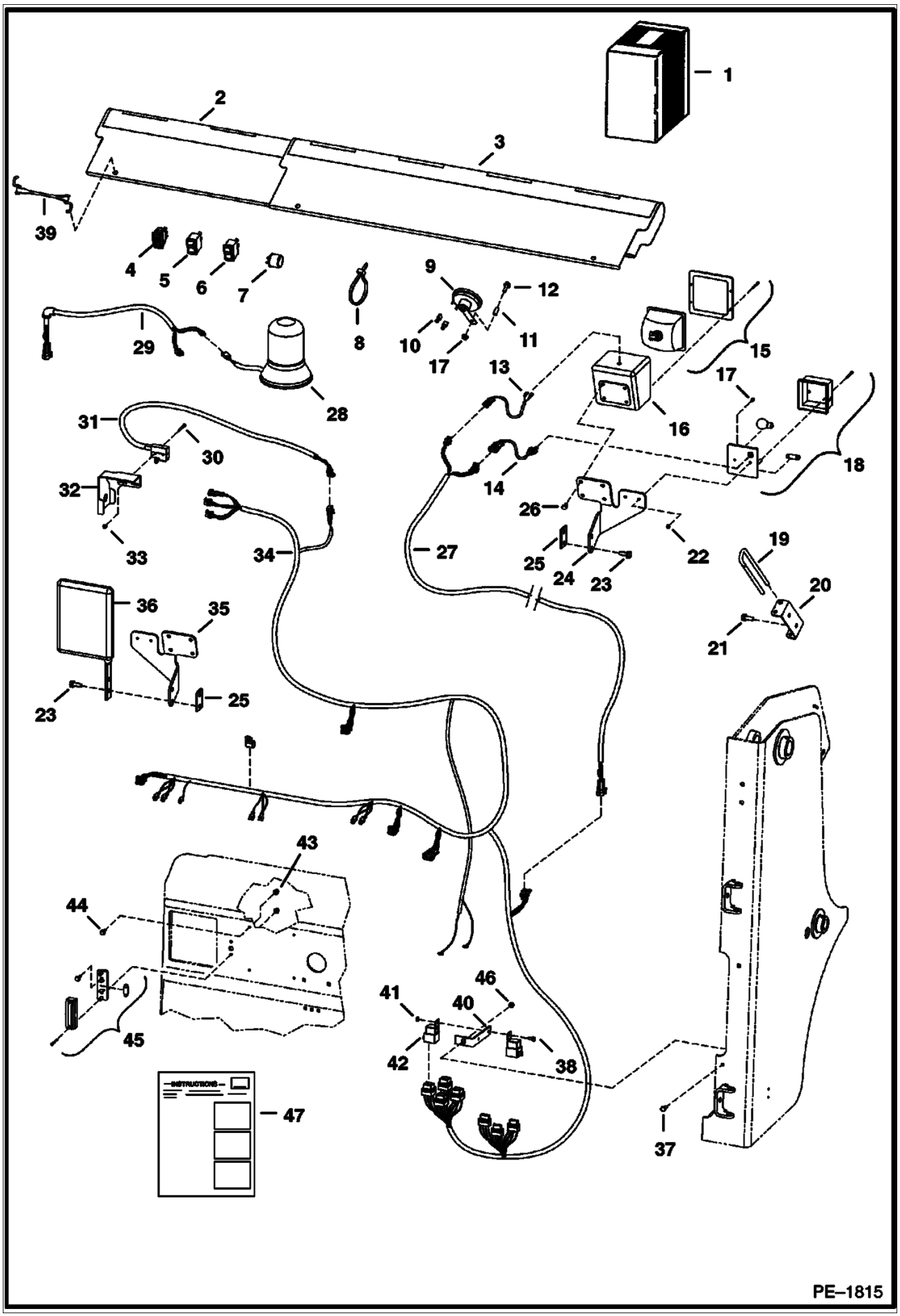

EXPORT ACCESSORIES (Cont'd)
(Road Kit)

Ref No	Part Number	Description	Remarks	Serial Number	Qty
1		KIT	SALES - Order 6731237 from SALES		1
2	6713841	SHIELD	bucket		1
3	6714820	SHIELD	bucket		1
3	6713840	DECAL			1
4	6676872	TURN SIGNAL			1
5	6668815	SWITCH	hazard		1
6	6668816	SWITCH	beacon		1
7	6557904	FLASHER			1
8	6624289	STA STRAP			26
9	6671106	HORN			1
10	6675064	TERMINAL			2
11	6732206	SPACER			1
12	35C000536B	BOLT			1
13	6713994	HARNESS	adapter - headlight		2
14	6713993	HARNESS	adapter - light		2
15	6665728	LIGHT	front		2
16	6707804	HOUSING			2
17	85G000808B	BOLT			4
18	6665727	LIGHT	front turn		2
19	6731222	PIN	Bob-tach		1
20	6731973	HOLDER	pin		1
21	84G003712B	BOLT			2
22	12D000008B	NUT			4
23	84G003716B	BOLT			4
24	6713151	MOUNT	light - R.H.		1
25	6735825	SPACER			2
26	17C000508B	BOLT			8
27	6731239	HARNESS	boom light		2
28	6675523	BEACON	light		1
29	6718872	HARNESS	cab exterior		1
30	85G000616B	SCREW			2
31	6661150	SWITCH			1
32	6713736	BRACKETS			1
33	12D000006B	NUT			2
34	6726430	HARNESS	engine/tail - Italian		1
35	6713150	MOUNT	light - L.H.		1
36	6665860	KIT	side mirror		1
37	17C000512B	BOLT			1
38	17C000410B	BOLT			2
39	6731819	STRAP	rubber		3
40	6702650	MOUNT	fuse		1
41	85D000004B	NUT			2
42	6670312	SOLENOID	magnetic		4
43	83D000004B	NUT			4
44	35C000410B	BOLT			4
45	6665729	LIGHT	license plate		1
46	55D000005B	NUT			2
47	6901663	INSTRUCTIONS			1

EUROPEAN ACCESSORIES
(Road Kit) (Selectable Joystick Controls)

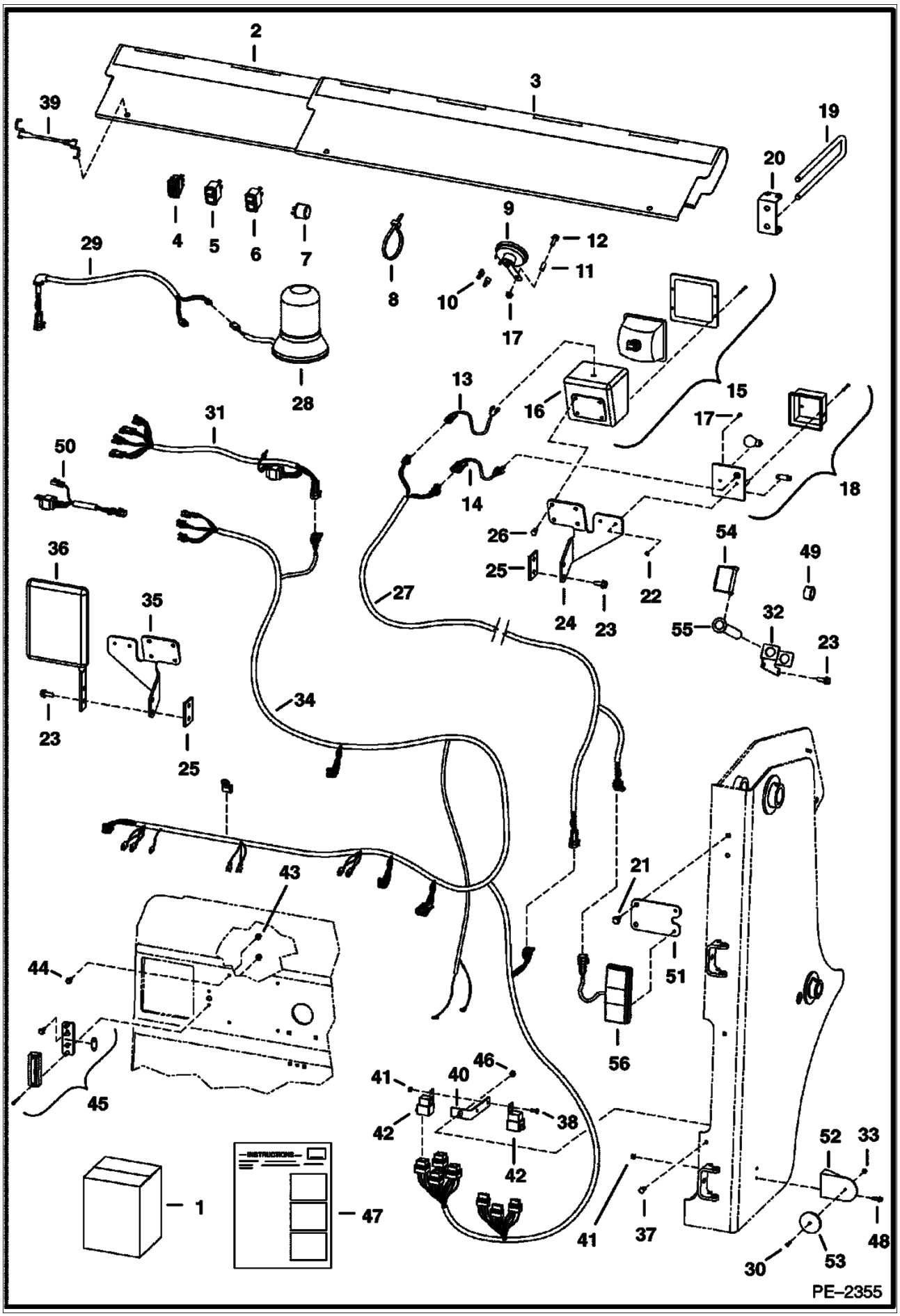

Ref No	Part Number	Description	Remarks	Serial Number	Qty
1		KIT	SALES - Order 6732387 from SALES		1
2	6713841	SHIELD	bucket		1
3	6713842	SHIELD	bucket		1
4	6676872	TURN SIGNAL			1
5	6668815	SWITCH	hazard		1
6	6668816	SWITCH	beacon		1
7	6557904	FLASHER			1
8	6624289	STA STRAP			20
9	6671106	HORN			1
10	6675064	TERMINAL			2
11	6732206	SPACER			1
12	35C000536B	BOLT			1
13	6713994	HARNESS	adapter - headlight		2
14	6713993	HARNESS	adapter - light		2
15	6665728	LIGHT	front		2
16	6707804	HOUSING			2
17	85G000808B	BOLT			4
18	6665727	LIGHT	front turn		2
19	6731222	PIN	Bob-tach		1
20	6731973	HOLDER	pin		1
21	84G003712B	BOLT			4
22	12D000008B	NUT			4
23	84G003716B	BOLT			6
24	6713151	MOUNT	light - R.H.		1
25	6735825	SPACER			2
26	17C000508B	BOLT			8
27	6732081	HARNESS	boom light		2
28	6675523	BEACON	light		1
29	6718872	HARNESS	cab exterior		1
30	85G001010B	BOLT			2
31	6732045	HARNESS	AWS stop lights		1
32	6733296	BRACKET	pin holder		1
33	14D000010B	NUT			2
34	6726430	HARNESS	engine/tail - Italian		1
35	6713150	MOUNT	light - L.H.		1
36	6665860	KIT	side mirror		1
37	17C000512B	BOLT			1
38	17C000410B	BOLT			2
39	6731819	STRAP	rubber		3
40	6702650	MOUNT	fuse		1
41	85D000004B	NUT			6
42	6670312	SOLENOID	magnetic		4
43	83D000004B	NUT			4
44	35C000410B	BOLT			4
45	6665729	LIGHT	license plate		1
46	55D000005B	NUT			2
47	6901909	INSTRUCTIONS			1
48	35C000412B	BOLT			4
49	6733270	MOUNT			1
50	6733851	HARNESS	SJC stop lights		1
51	7101104	MOUNT	rear lights		2
52	6670620	MOUNT	reflector		2
53	6670621	LENS	reflector		2
54	6670668	PIN			1

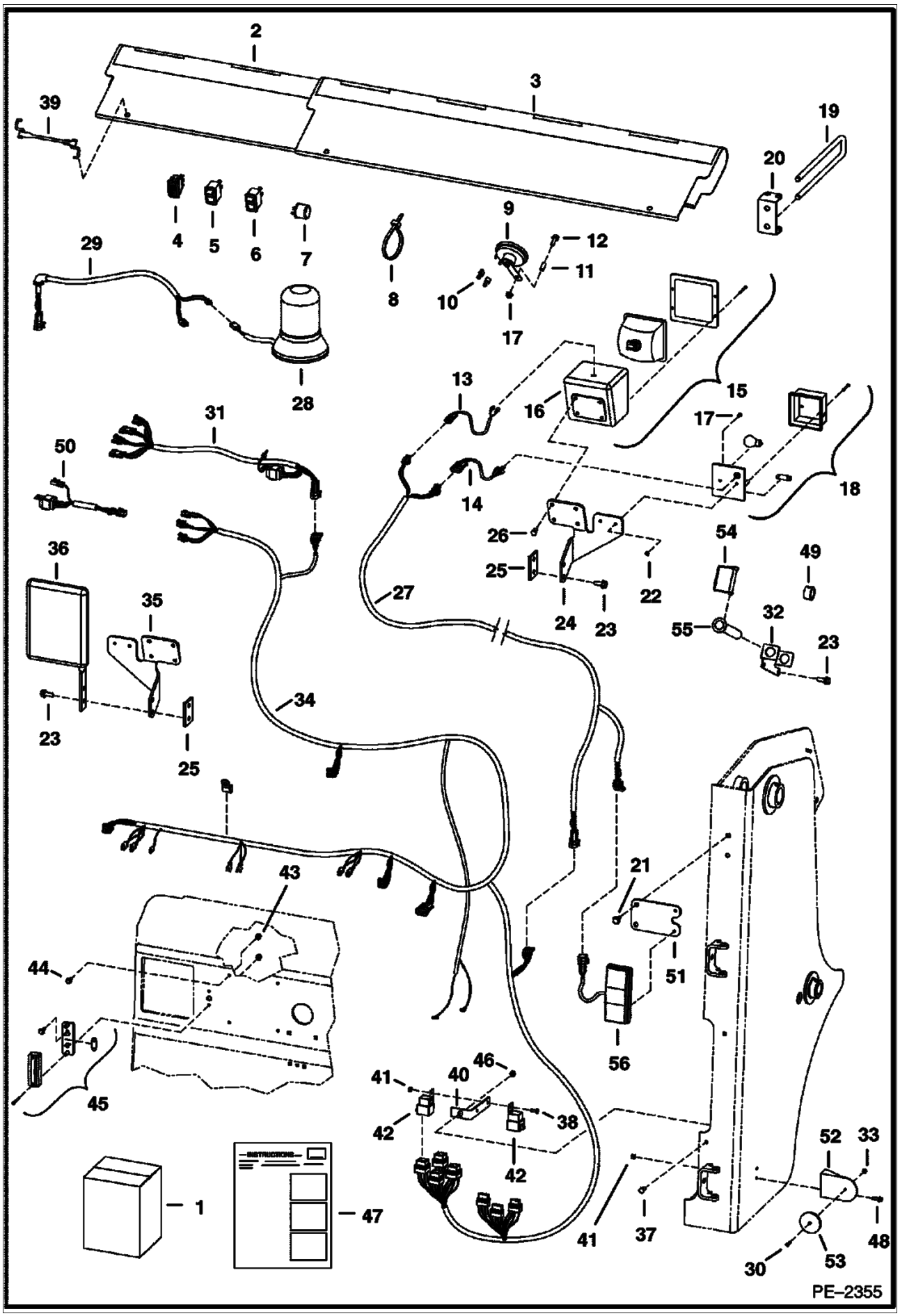
2
3
39
19
20
4
5
6
7
9
12
29
8
10
11
17
28
13
16
15
17
31
50
14
18
26
54
49
36
25
22
27
24
23
55
32
23
35
34
23
25
43
21
44
51
56
41
40
46
45
42
38
42
52
33
1
47
41
37
48
30
53
PE–2355

Ref No	Part Number	Description	Remarks	Serial Number	Qty
55	6713990	PIN	B/T lock		1
56	7101384	LIGHT	rear		2
56	6686096	LENS	amber - turn		1
56	6686097	BULB	turn		1
56	6686098	BULB	stop		1
56	6686099	LENS	red - stop		1
56	6686100	SCREW			2

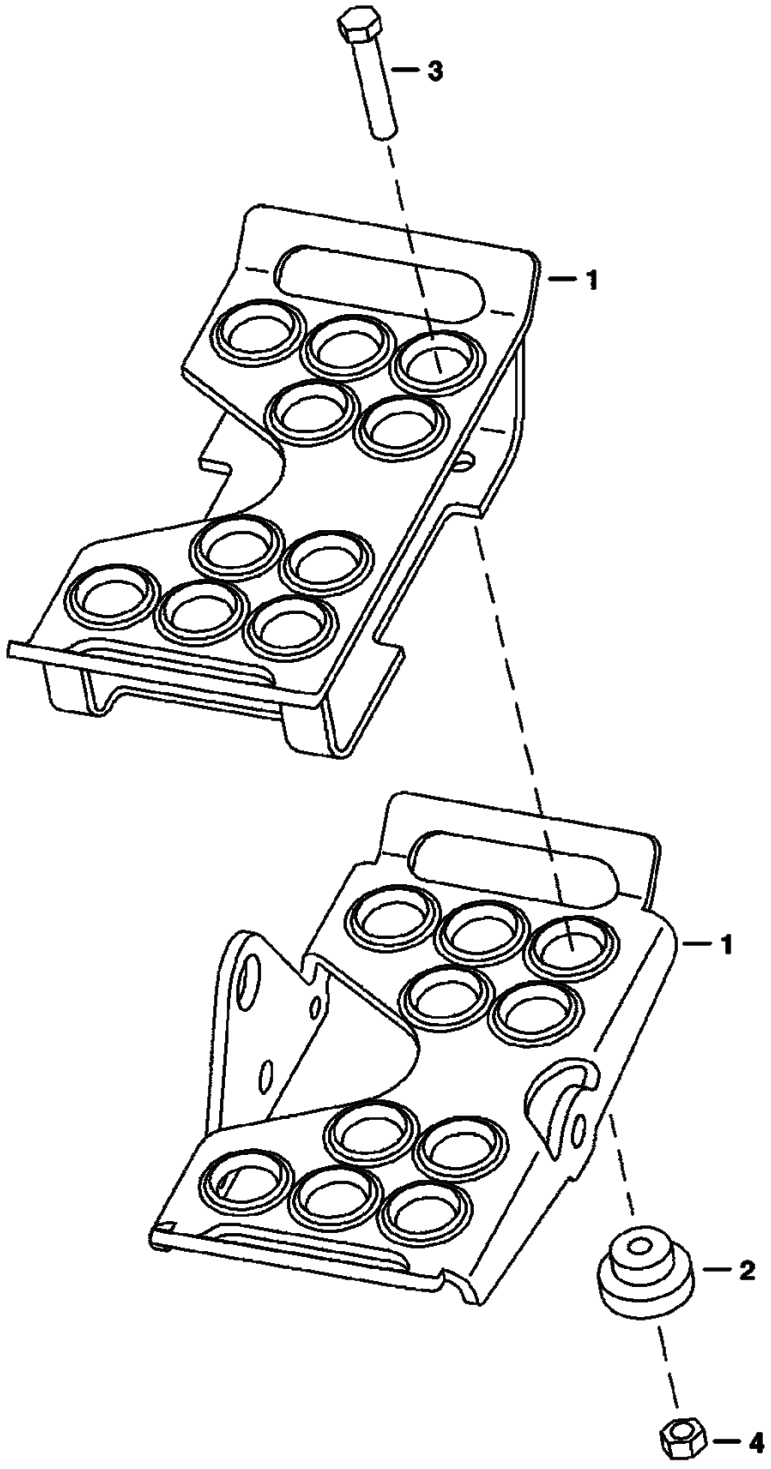
3
1
1
2
4
PE–2455

EUROPEAN ACCESSORIES (Cont'd)
(Pedal Extenders)

Ref No	Part Number	Description	Remarks	Serial Number	Qty
1	6713115	PEDAL	extender		2
2	6713116	BUSHING			8
3	17C000516B	BOLT			8
4	85D000005B	NUT			8

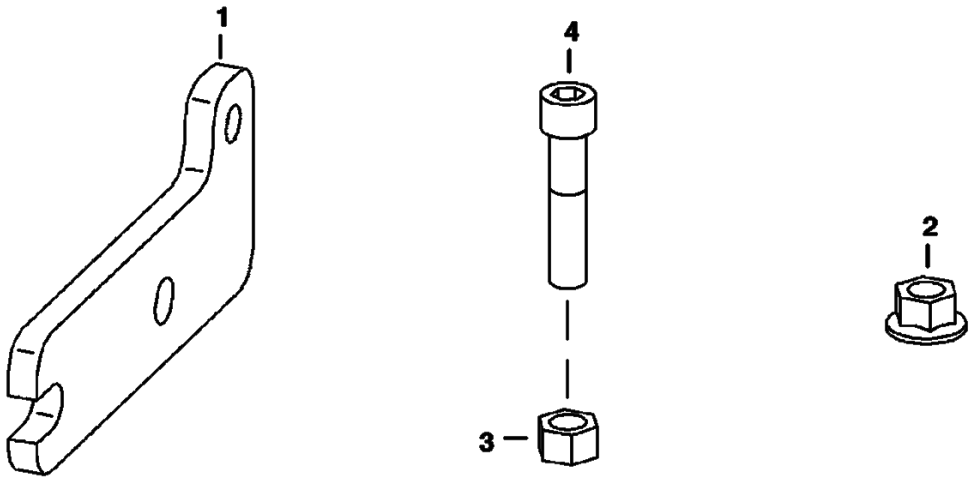

PE–2361

Ref No	Part Number	Description	Remarks	Serial Number	Qty
1	6737528	BRACKET	idle stop		1
2	43DM00008B	NUT			2
3	62D000005B	NUT			1
4	74G000536B	BOLT			1

FIRE EXTINGUISHER

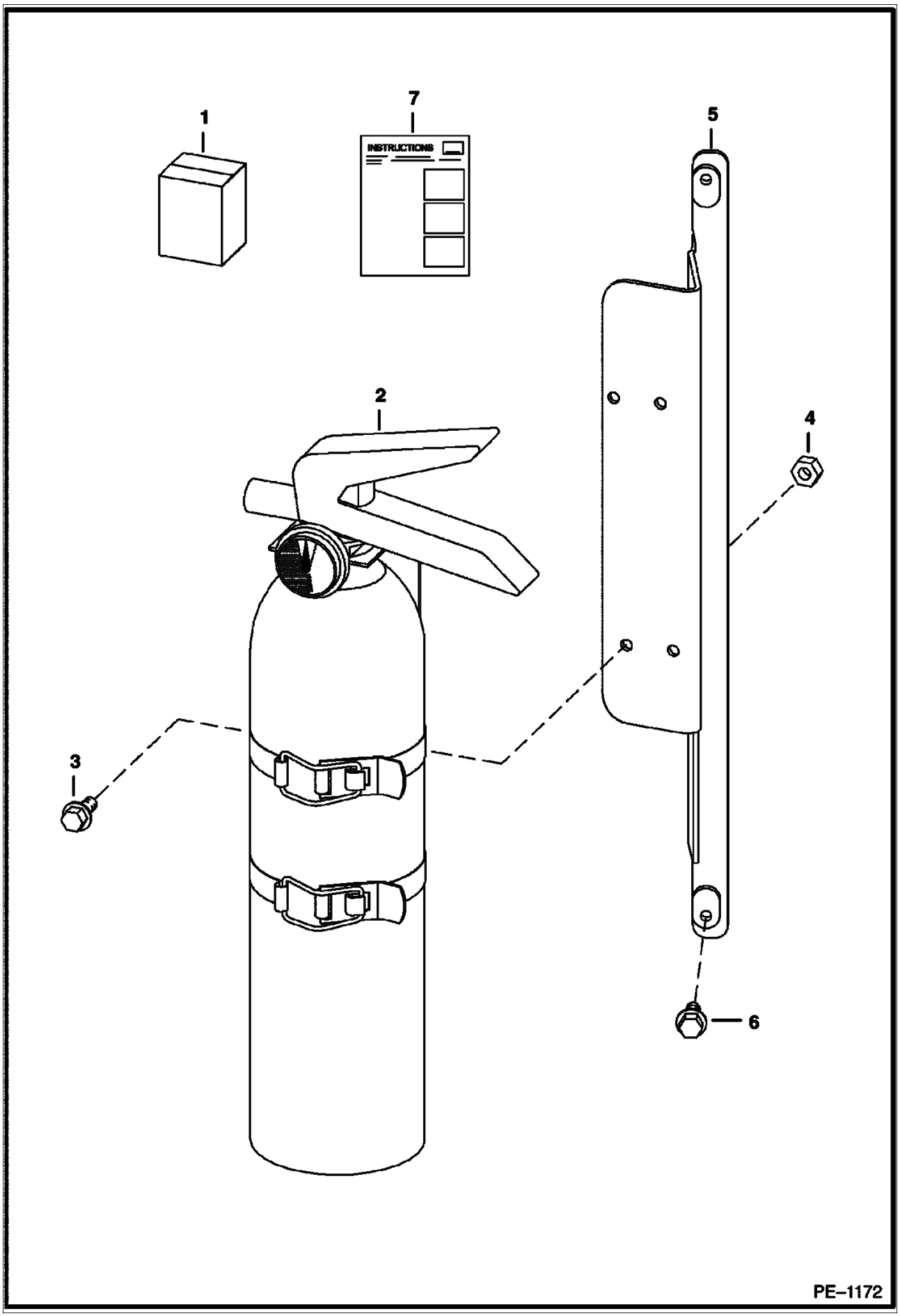

Ref No	Part Number	Description	Remarks	Serial Number	Qty
1	6725898	KIT	fire extinguisher - Ref. 2-7		1
2	6675581	EXTINGUISHER			1
3	45G001006B	BOLT			4
4	12D000010B	NUT			4
5	6725906	BRACKET			1
6	31C000410B	BOLT			2
7	6901025	INSTRUCTIONS			1

FLASHER LIGHTS
(4-Way) (Turn Indicators)

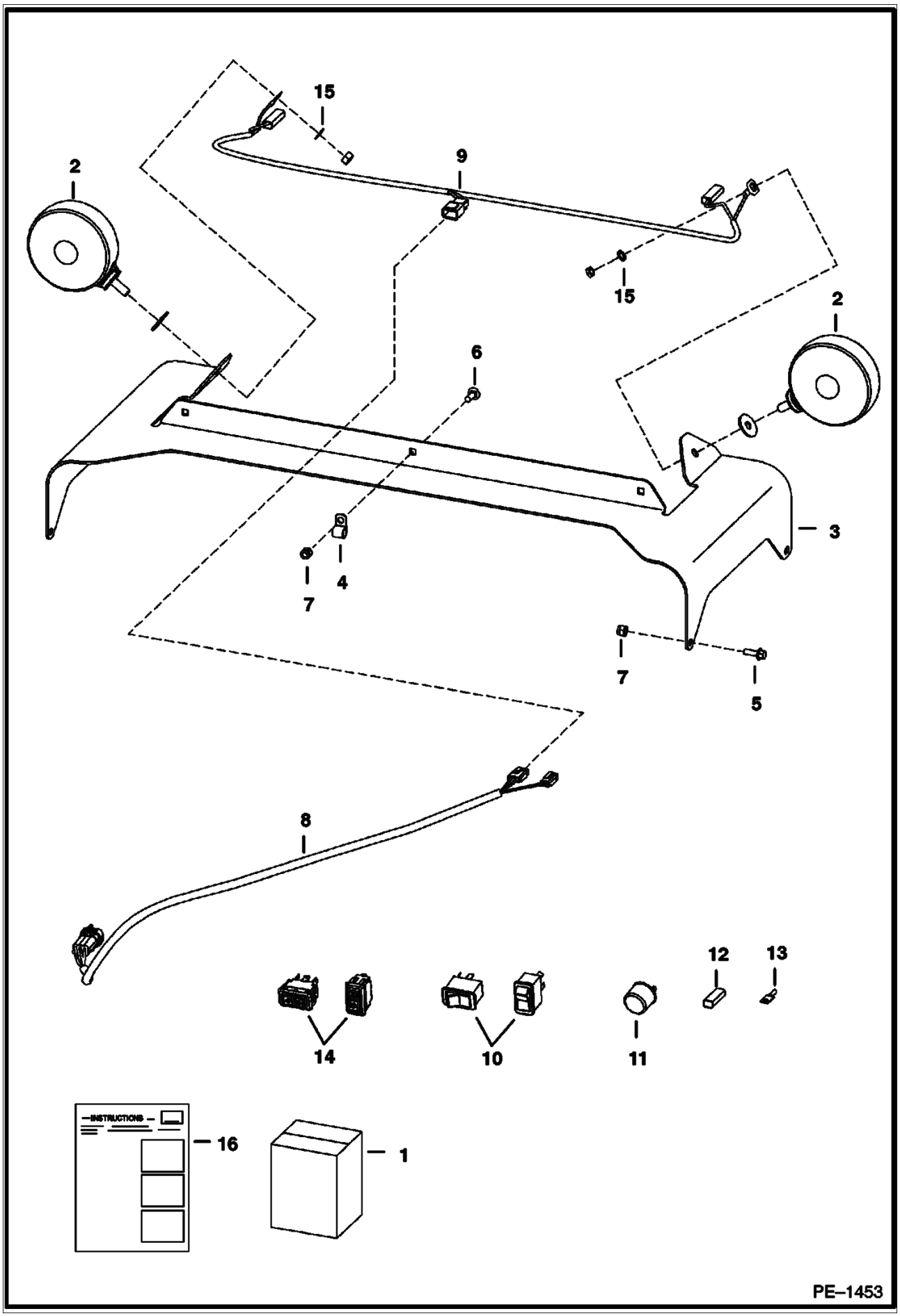

FLASHER LIGHTS (Cont'd)
(4-Way) (Turn Indicators)

Ref No	Part Number	Description	Remarks	Serial Number	Qty
1	6718411	KIT	flasher lights - Ref. 2, 3 & 5-16 - If loader is not equipped W/ heater, air conditioning, selectable joystick controls, advanced control system, power bob-tach, non-power port plug-in strobe lights and/or rotating beacon, also order 7116260 deluxe harness		1
2	6517516	LIGHT			2
3	6718326	MOUNT			1
4	30H000021B	CLAMP	not in kit		3
5	35C000412B	BOLT			4
6	37C000412B	BOLT			3
7	59D000004B	NUT			7
8	6718872	HARNESS	ext. cab		1
9	6718873	HARNESS	4-way flasher		1
10	6665316	SWITCH	horizontal		1
10	6668815	SWITCH	vertical		1
11	6557904	FLASHER			1
12	614142B	SLEEVE			1
13	6515131	TERMINAL			1
14	6675835	TURN SIGNAL	horizontal		1
14	6676872	TURN SIGNAL	vertical		1
15	6E000005B	WASHER	lock		2
16	6900848	INSTRUCTIONS			1

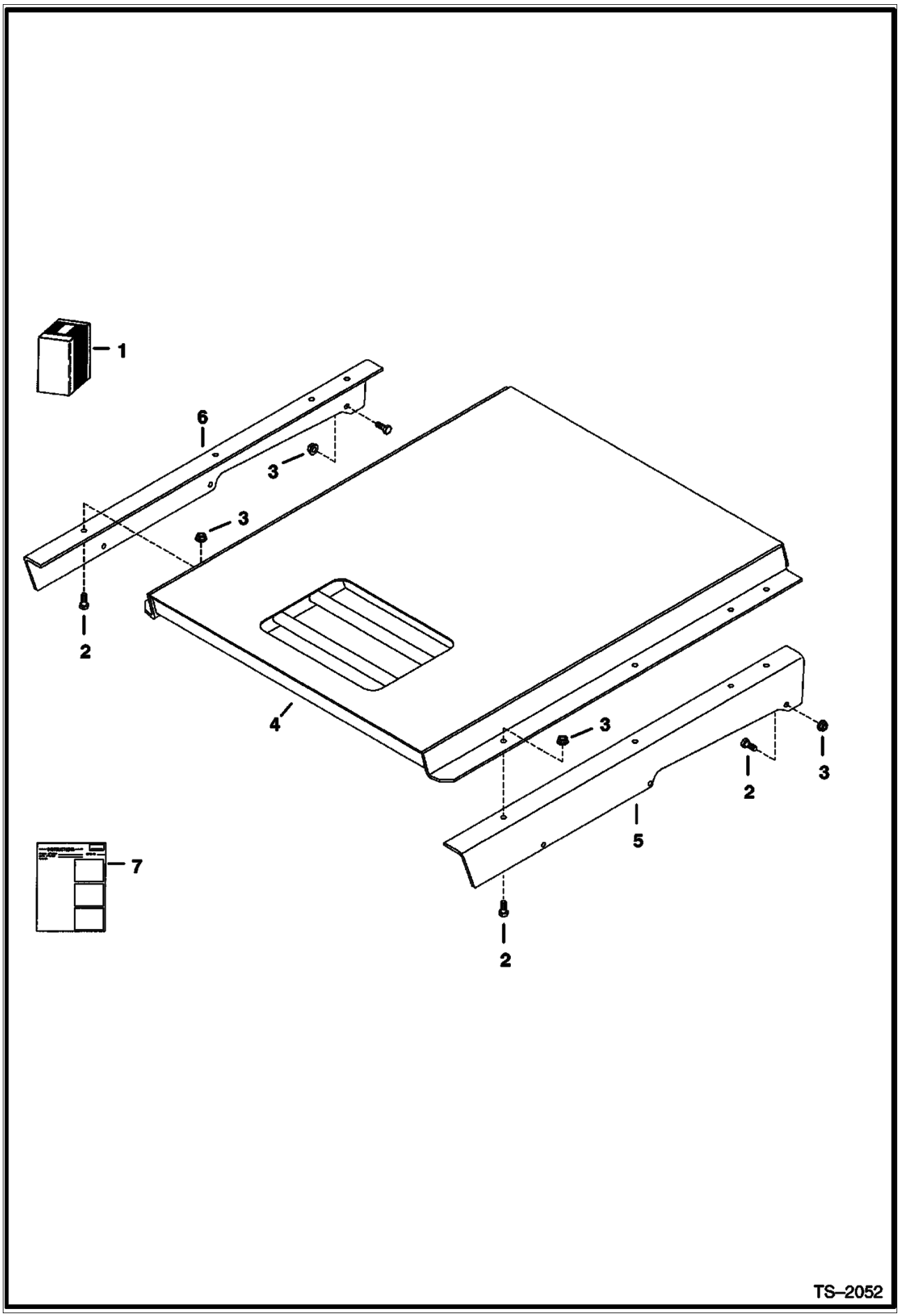
1
6
3
3
2
4
3
2
3
5
7
2
TS–2052

Ref No	Part Number	Description	Remarks	Serial Number	Qty
1	6718924	KIT	Ref. 2-7		1
2	17C000616B	BOLT			14
3	83D000006B	NUT			14
4	6702402	SHIELD			1
5	6718833	BRACKET	L.H.		1
6	6718834	BRACKET	R.H.		1
7	6720592	INSTRUCTIONS			1

FRONT AUXILIARY
(R.H. Kit)

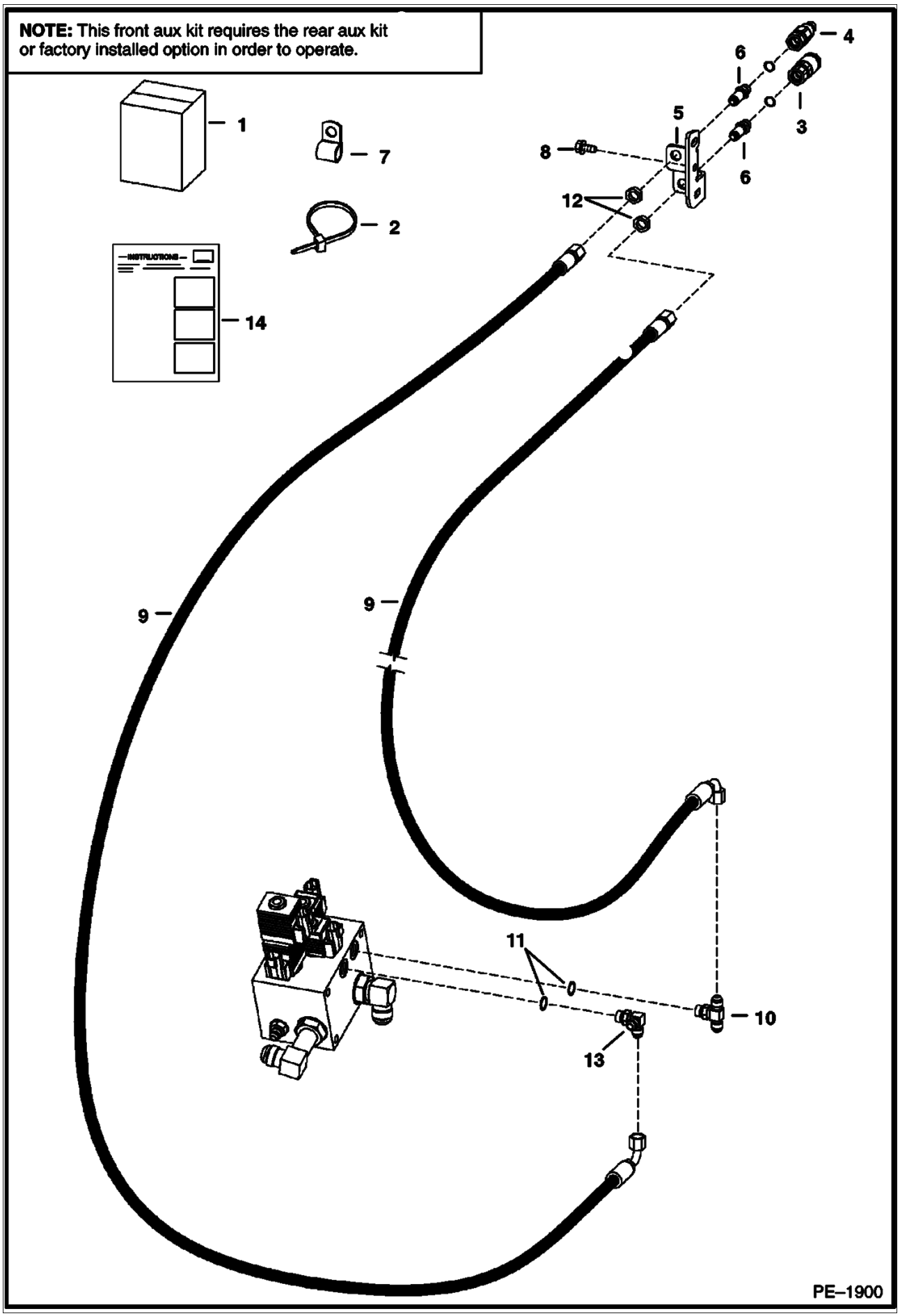

FRONT AUXILIARY (Cont'd)
(R.H. Kit)

Ref No	Part Number	Description	Remarks	Serial Number	Qty
1	6736655	KIT	this front aux kit requires the rear aux kit (6735919) or factory installed option in order to operate		1
2	6624289	STA STRAP			10
3	6667803	COUPLER	female		1
4	6667804	COUPLER	male		1
4	6669657	SEAL KIT			x
5	6711674	MOUNT	quick coupler		1
6	6716089	CONNECTOR	bulkhead		2
7	31H000042B	CLIP			4
8	84G003716B	BOLT			6
9	6736664	HOSE			2
10	19KB00606B	TEE	W/Ref. 11		2
11	79K000006B	O-RING			x
12	86F000005B	NUT			2
13	6725182	TEE	W/Ref. 11		1
14	6901916	INSTRUCTIONS			1

GAS SPRING KIT

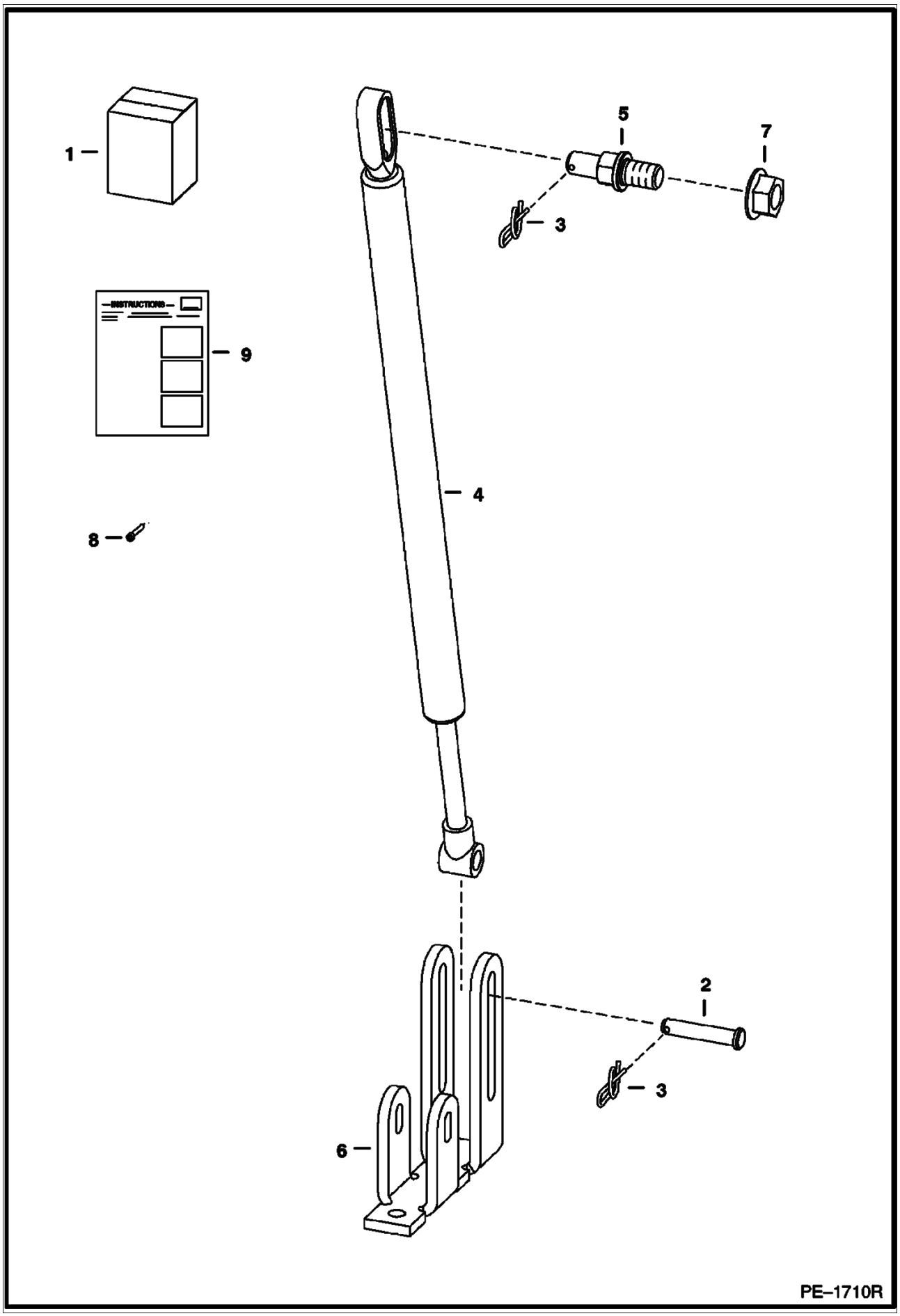

GAS SPRING KIT (Cont'd)

Ref No	Part Number	Description	Remarks	Serial Number	Qty
1	6732928	KIT			1
2	6567743	PIN			1
3	6631418	PIN			2
4	6678292	GAS SPRING			1
5	6719064	MOUNT			1
6	6729141	MOUNT			1
7	97D000008B	NUT			1
8	21G000804B	BOLT			1
9	6901816	INSTRUCTIONS			1

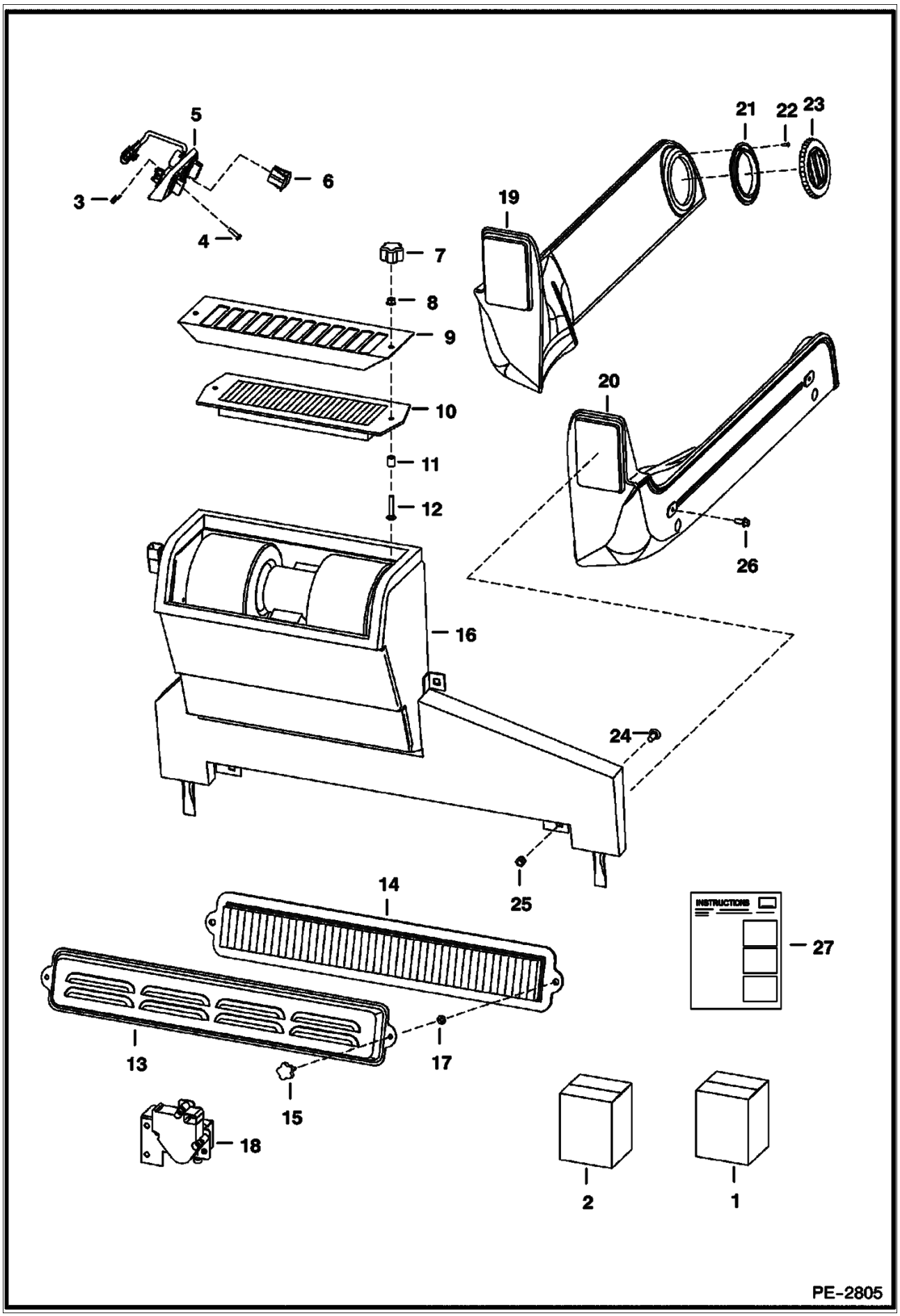
5
3
6
4
7
8
9
10
11
12
16
21
22
23
19
20
26
24
25
14
13
17
15
18
INSTRUCTIONS
27
2
1
PE-2805

Ref No	Part Number	Description	Remarks	Serial Number	Qty
1	7116899	KIT HEATER CAB	If loader is not equipped W/ beacon, air conditioning, selectable joystick controls, advanced control system, power bob-tach, non-power port plug-in strobe lights and/or non-power port plug-in 4 way flashers, also order 7116260 deluxe harness		1
2	6725513	PACKAGE	Decal		1
3	6669091	CLIP	retainer		3
4	6669224	BOLT			3
5	6674228	PANEL	control		1
5	6640699	CONNECTOR			1
5	6718579	DECAL			1
5	6718887	PANEL			1
5	6675176	SWITCH	blower		1
5	6675177	KNOB			1
5	6675846	POTENTIOMETER			1
6	6675181	PLUG	switch hole - AC		1
7	6681614	KNOB			2
8	59D4	NUT 5			2
9	6718175	SCREEN	filter		1
10	6678207	FILTER	recirculation		1
11	6718837	SPACER			2
12	37C000424B	BOLT			2
13	6727847	COVER			1
14	6677983	FILTER			1
15	6726386	KNOB			2
16	6688543	HEATER	See Illustration HEATER/ PE1143		1
17	6676516	NUT	Push		2
18	7101928	VALVE			1
18	6641174	CONNECTOR	male		1
18	6689635	BRACKET	actuator mounting		1
18	6675172	BRACKET	valve mounting		1
18	6689636	ACTUATOR			1
18	6689637	VALVE			1
19	6735246	DUCT	L.H.		1
20	6735245	DUCT	R.H.		1
21	6675179	FLANGE	round		4
22	57G000608B	SCREW			16
23	6674231	VENT	round		4
24	37C000512B	BOLT			4
25	59D000005B	NUT			4
26	35C000410B	BOLT			4
27	6904255	INSTRUCTIONS			1

DRAWING NOT AVAILABLE AT TIME OF PRINTING

PE-2808

HEATER & AC (Cont'd)
(Heater Plumbing Kit)

Ref No	Part Number	Description	Remarks	Serial Number	Qty
1	7116902	KIT	Ref. 2-9 & 11		1
2		HOSE	NAP - 72 in. (1828,8 mm) long - order Ref. 8 - Was 6733432 [A]		1
3		HOSE	NAP - 84 in. (2133,6 mm) long - order Ref.8 - Was 6732817 [A]		1
4	5HM00020B	CLAMP			7
5	6624289	STA STRAP			8
6	7113208	HOSE			1
7	7113209	HOSE			1
8	6565977	HOSE	bulk - sold per foot		x
9	6678666	TREE MOUNT	tree		2
10	6731084	ADAPTER			1
11		VALVE	heater - not in kit		1
12	6732023	CONNECTOR			2
13	6731085	ELBOW			1
14	6904255	INSTRUCTIONS	Not in Kit - part of heater kit - Was 6903305 [B]		1

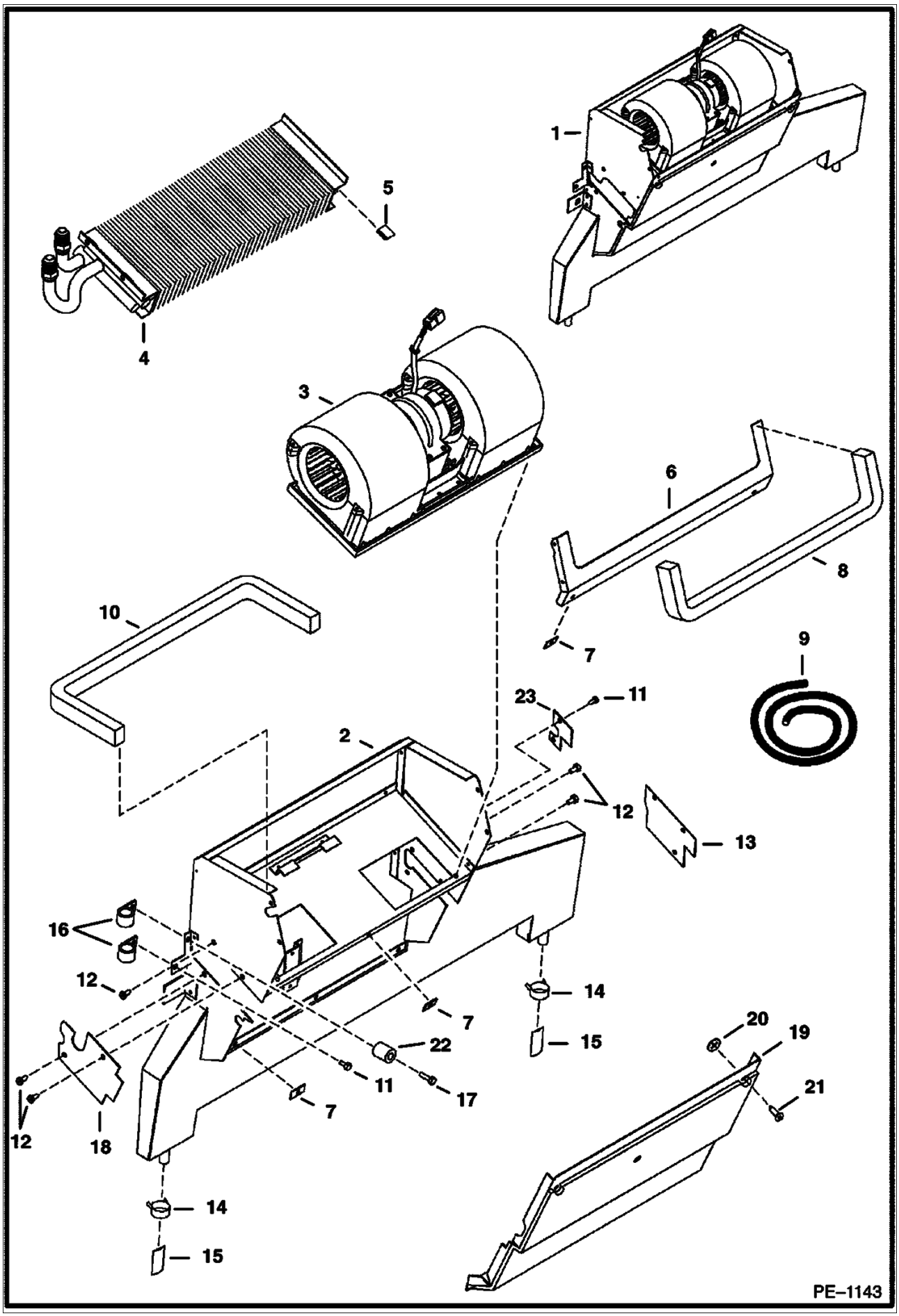
1
2
3
4
5
6
7
8
9
10
11
12
13
14
15
16
17
18
19
20
21
22
23
PE–1143

Ref No	Part Number	Description	Remarks	Serial Number	Qty
1	6688543	HEATER	Ref. 2-23		1
2	6677108	HOUSING			1
3	6675497	BLOWER	See Illustration HEATER & A/C/ B16401 assy		1
4		COIL	See Illustration HEATER & A/C/ PE1228 NAP		1
5	6676539	CLIP			3
6	6678152	SEAL			1
7	6677115	RECEPTACLE			6
8		SEAL	NAP - 22.6"(575mm) long - Order Ref. 9		1
9	6677111	SEAL	bulk - Sold Per Foot		x
10		SEAL	NAP - 25"(635mm) long - Order Ref. 9		1
11	6677119	SCREW	sheetmetal		7
12	6677118	SCREW	w/washer		4
13	6677120	COVER			1
14	6675510	CLAMP	drain hose		2
15	6675511	DRAIN VALVE			2
16	6675512	CLAMP	hose		2
17	6676653	SCREW			1
18	6677504	COVER			1
19	6678151	COVER			1
20	6677116	RETAINER			6
21	6677117	SCREW	captive		6
22	6676606	SPACER			1
23	6677105	COVER			1

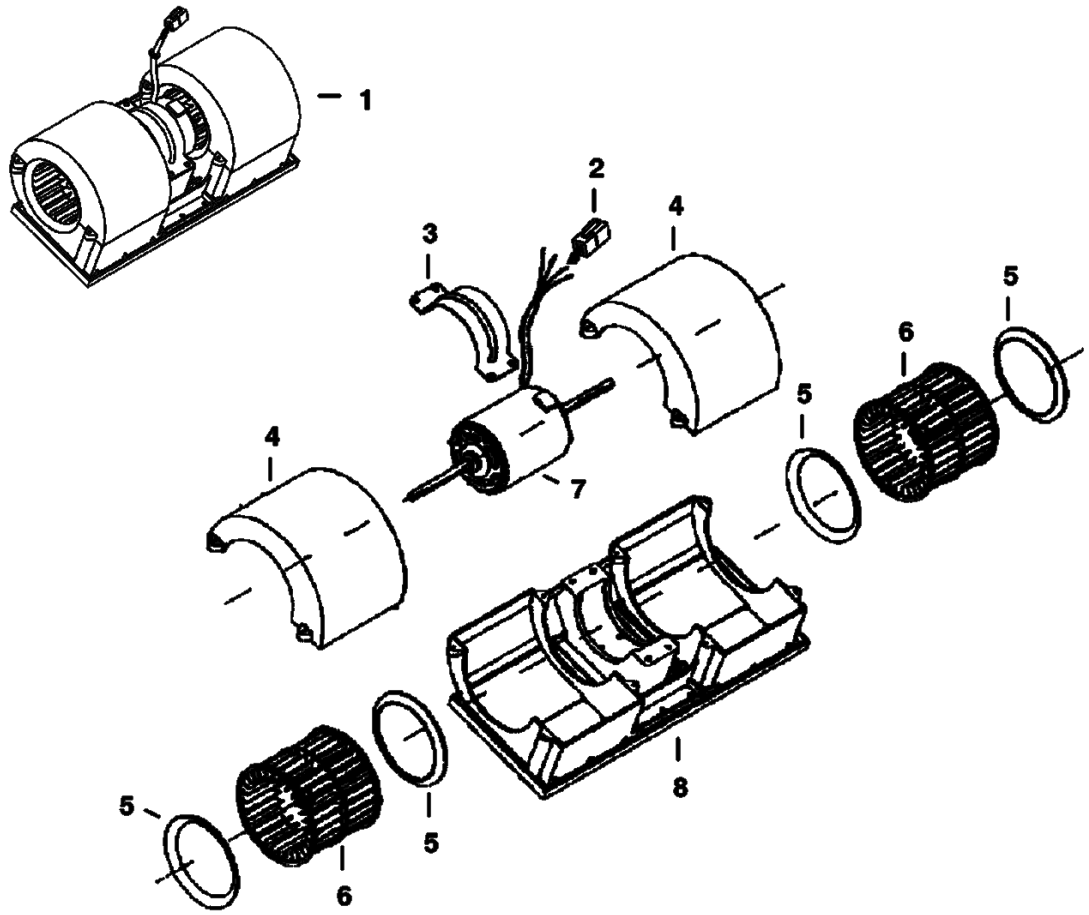
1
2
3
4
5
6
7
8
B–16401

HEATER & A/C (Cont'd)
(Blower Assembly)

Ref No	Part Number	Description	Remarks	Serial Number	Qty
1	6675497	BLOWER	Ref. 2-8		1
2	6665017	CONNECTOR	4-pin		1
2	6665018	LOCK	4-pin		1
2	6648312	TERMINAL			4
2	6648320	SEAL			4
2	6650107	SEAL			4
3	6675506	MOUNT			1
4	6675507	COVER			2
5	6675504	RING			4
6	6675505	BLOWER WHEEL			2
6	6676618	CLIP			2
7	6675509	MOTOR	W/Ref. 2		1
8	6675503	HOUSING			1

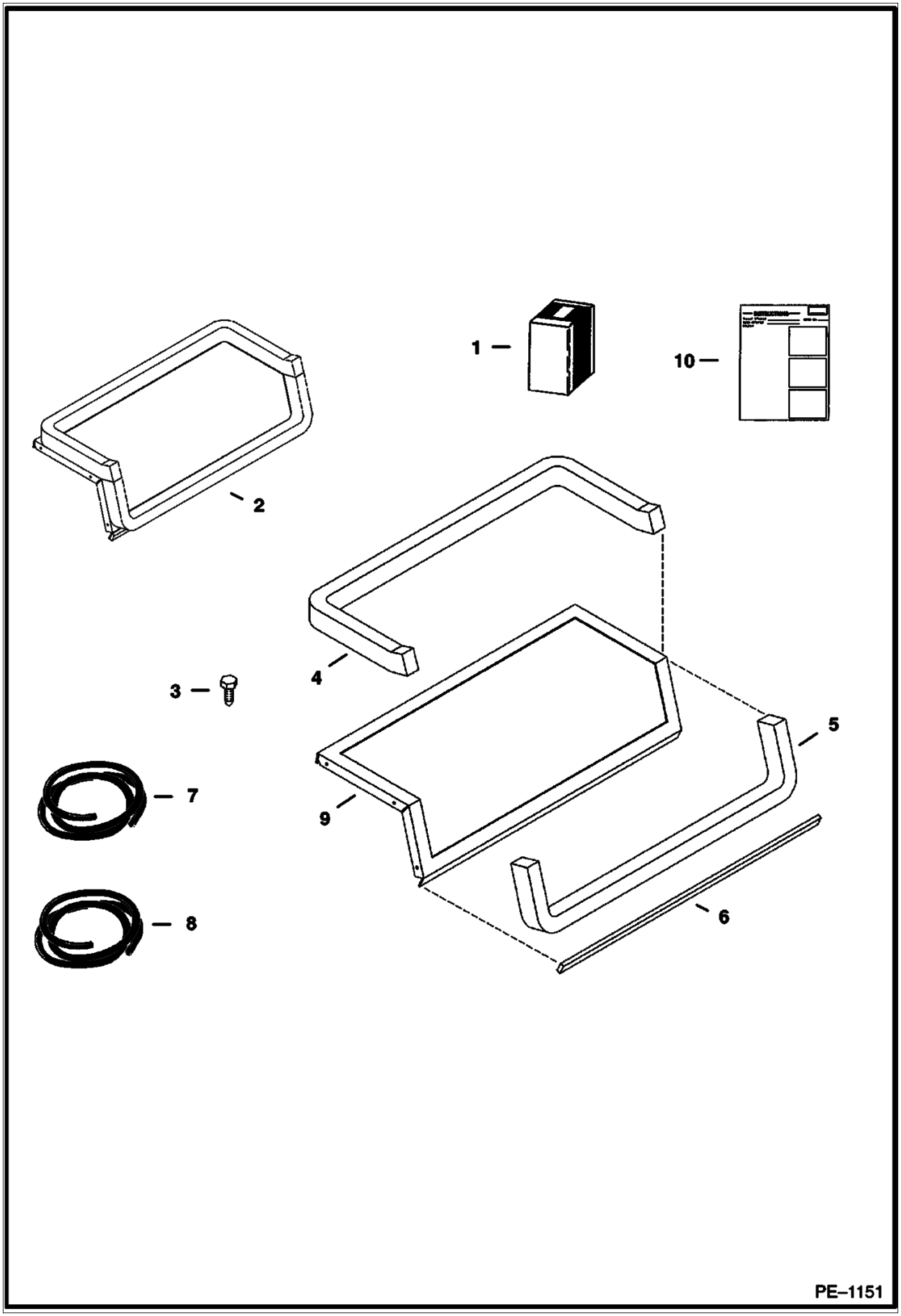
1
10
2
4
3
5
7
9
8
6
PE–1151

HEATER & A/C (Cont'd)
(Blower Seal Kit)

Ref No	Part Number	Description	Remarks	Serial Number	Qty
1	6728567	KIT	blower seal - W/Ref. 2, 3 & 10		1
2		FLANGE SEAL	NSS - assy - Ref. 4, 5, 6 & 9 - Order Ref. 1		1
3	6726621	SCREW			7
4		SEAL	NAP - 27" (686mm) long - Order Ref. 8		1
5		SEAL	NAP - 21" (534mm) long - Order Ref. 8		1
6		SEAL	NAP - 15" (384mm) long - Order Ref. 7		1
7	6675611	SEAL	bulk - Sold Per Foot		x
8	6677111	SEAL	bulk - Sold Per Foot		x
9		FLANGE	NSS - Order Ref. 1		1
10	6901213	INSTRUCTIONS			1

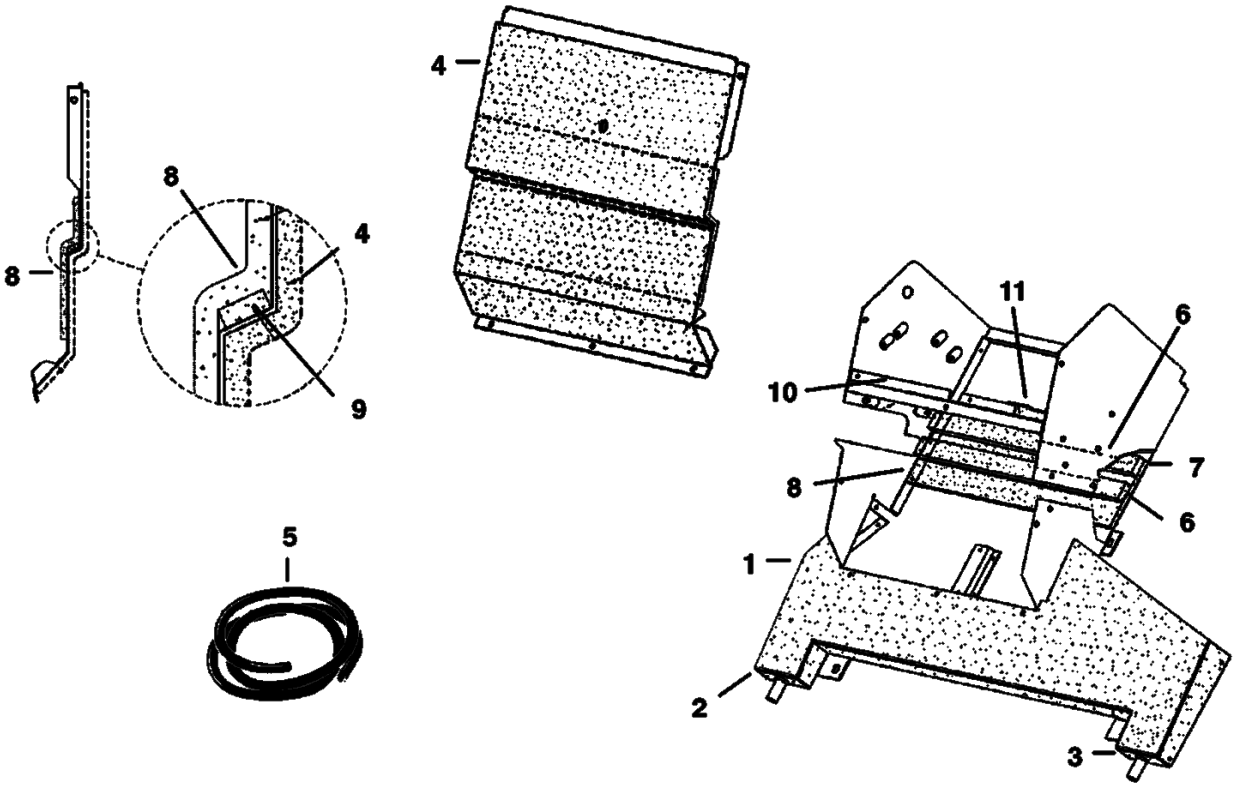
4
8
8
4
9
5
11
6
10
7
8
6
1
2
3
B–16402

HEATER & A/C (Cont'd)
(Insulation)

Ref No	Part Number	Description	Remarks	Serial Number	Qty
1	6675607	INSULATION			1
2	6675608	INSULATION			1
3	6675609	INSULATION			1
4	6675610	INSULATION			1
5	6675611	SEAL	bulk - Sold Per Foot		x
6	6675612	INSULATION			2
7	6675613	INSULATION			1
8	6675614	INSULATION			2
9		SEAL	NAP - 15" (381mm) long - Order Ref. 5		1
10		SEAL	NAP - 5.5" (140mm) long - Order Ref. 5		1
11		SEAL	NAP - 4" (102mm) long - Order Ref. 5		1

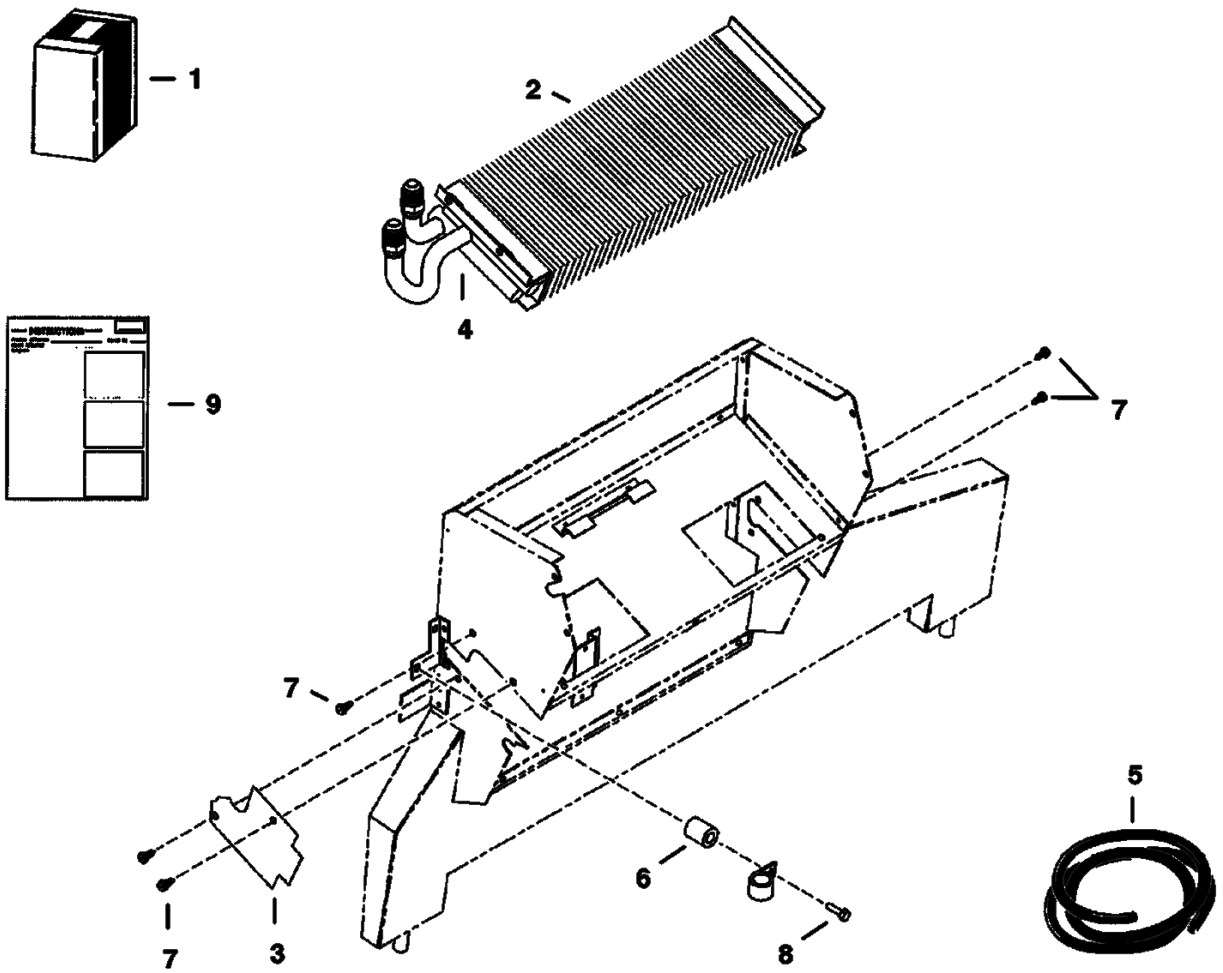
1
2
4
9
7
7
5
6
7
3
8
PE–1228

Ref No	Part Number	Description	Remarks	Serial Number	Qty
1	6727786	KIT	heater coil - W/Ref. 2-9		1
2		HEATER COIL	NSS- Order Ref. 1		1
3	6677504	COVER	.279" (7,1 mm) thick		1
4		INSULATION	NAP - 6" (152mm) long - Order Ref. 5		1
5	6676538	INSULATION	bulk - Sold Per Foot		x
6	6676606	SPACER			1
7	6726621	SCREW			2
8	6676653	SCREW			1
9	6901120	INSTRUCTIONS			1

HEATER & A/C
(Heater & A/C Option)

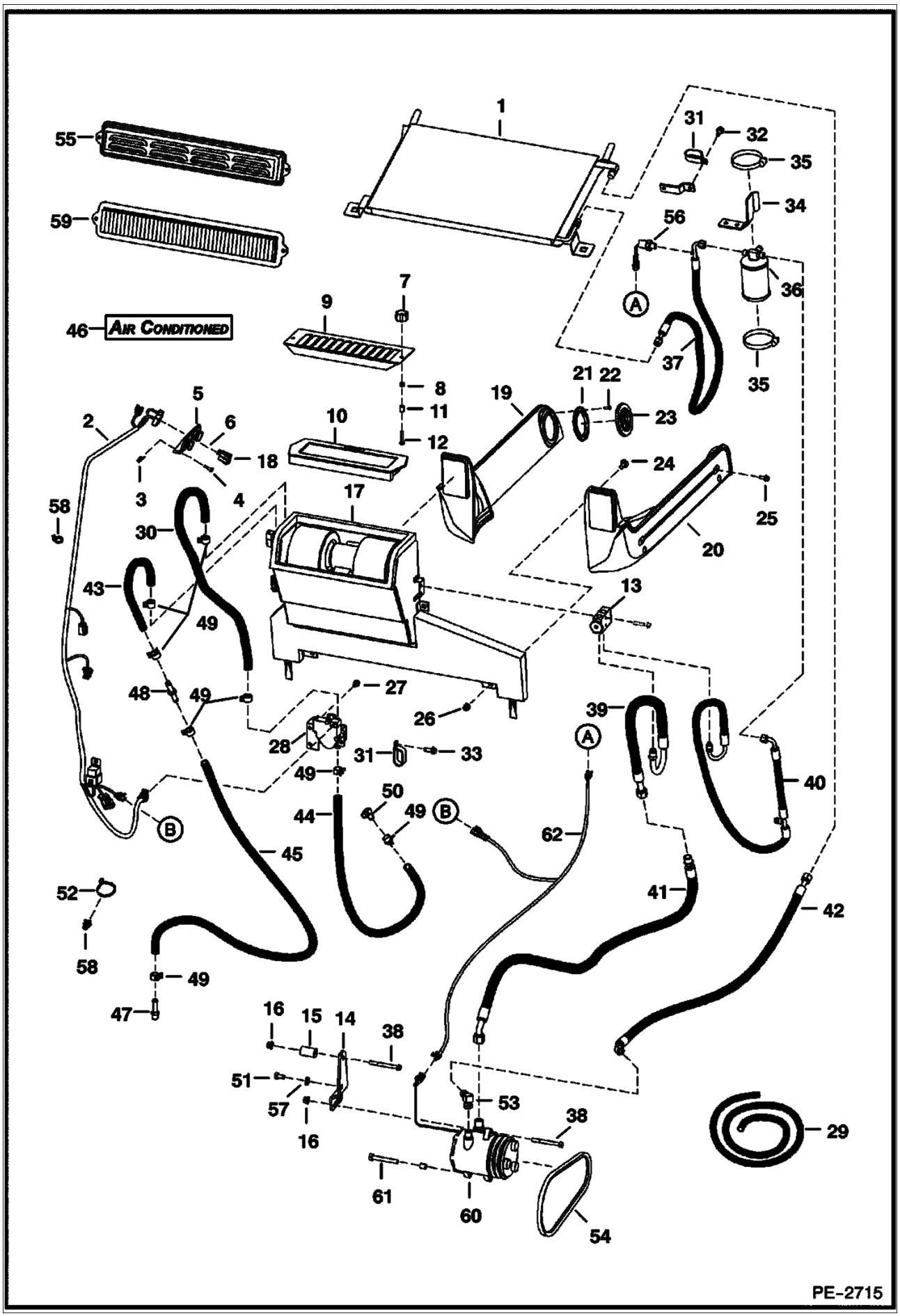

Ref No	Part Number	Description	Remarks	Serial Number	Qty
1	6674234	CONDENSER	A/C		1
2	6725933	HARNESS	hvac		1
3	6669091	CLIP	retainer		3
4	6669224	BOLT			3
5	6674228	PANEL	control		1
5	6640699	CONNECTOR			1
5	6718579	DECAL			1
5	6718887	PANEL	A/C		1
5	6675176	SWITCH	blower		1
5	6675177	KNOB			1
5	6675846	POTENTIOMETER			1
6	6675181	PLUG	switch hole		1
7	6681614	KNOB			2
8	59D000004B	NUT			2
9	6718175	SCREEN	filter		1
10	6678207	FILTER	recirculation		1
11	6718837	SPACER			2
12	37C000424B	BOLT			2
13	6727326	MOUNT			1
14	6730265	MOUNT	compressor		1
15	6730266	SPACER			1
16	83D000006B	NUT			2
17	6688542	HVAC ASSY			1
18	6719176	SWITCH			1
19	6735246	DUCT	L.H.		1
20	6735245	DUCT	R.H.		1
21	6675179	FLANGE			4
22	57G000608B	SCREW			16
23	6674231	VENT	round		4
24	37C000512B	BOLT			4
25	35C000410B	BOLT			4
26	59D000005B	NUT			4
27	84G003110B	BOLT			2
28	7101928	VALVE			1
28	6641174	CONNECTOR	male		1
28	6675172	BRACKET	valve mounting		1
28	6689635	BRACKET	actuator mounting		1
28	6689636	ACTUATOR			1
28	6689637	VALVE			1
29	6565977	HOSE	bulk - Sold Per Foot		x
30		HOSE	NAP - 16" (406,4mm) long - Order Ref. 29		1
31	31H000046B	CLAMP			2
32	84G003710B	BOLT			2
33	84G003716B	BOLT			1
34	6719459	MOUNT			1
35	44H000048B	CLAMP			2
36	6674235	RECEIVER DRIER			1
37	6675685	HOSE	W/Ref. 69		1
38	17C000656B	BOLT			2
39	6675076	HOSE			1
40	6675075	HOSE			1
40	6677122	CAP			1
41	6684908	HOSE			1
41	6685199	CAP			1

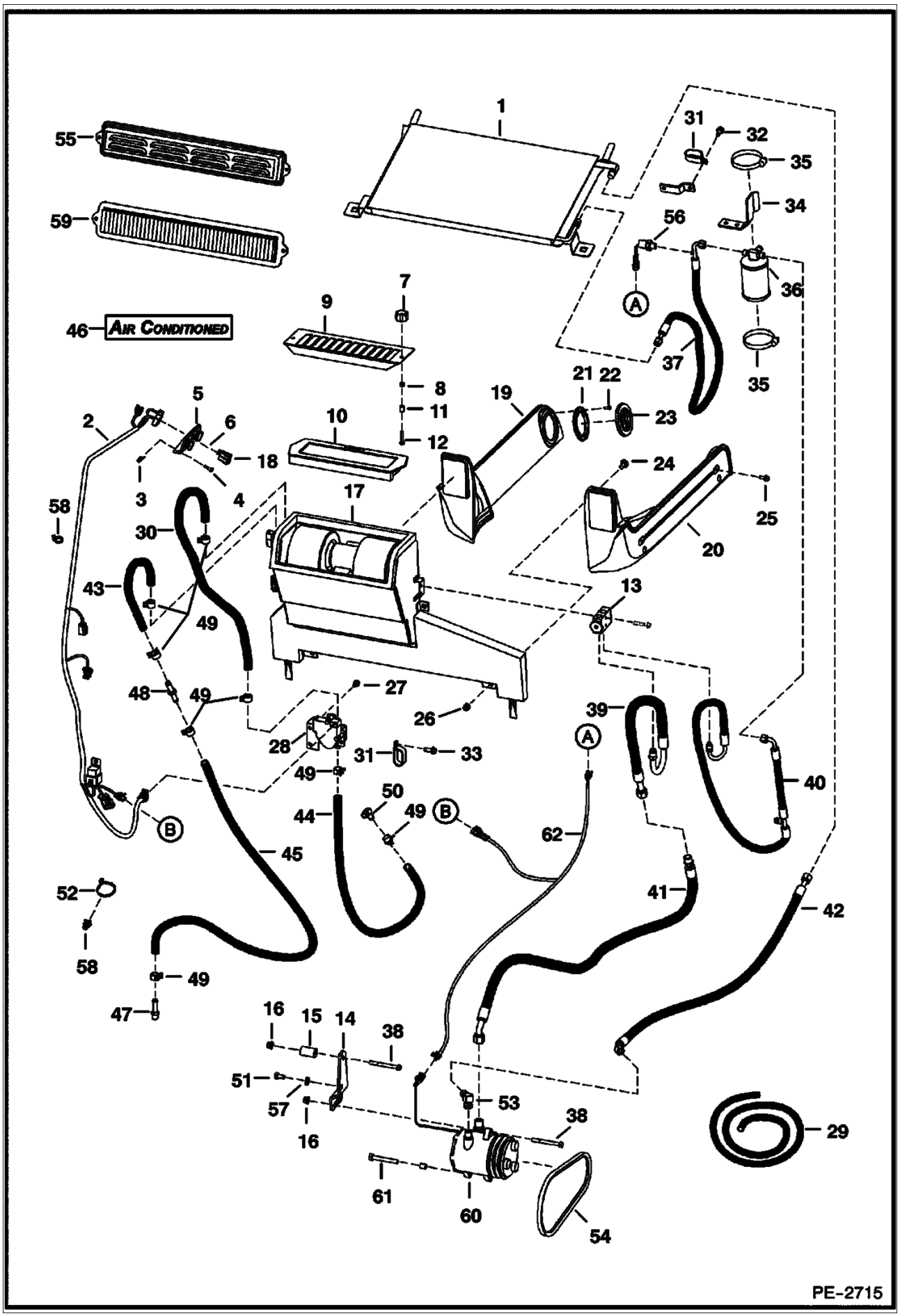
1
2
3
4
5
6
7
8
9
10
11
12
13
16
15
14
17
18
19
20
21
22
23
24
25
26
27
28
29
30
31
32
33
34
35
36
37
38
39
40
41
42
43
44
45
46 AIR CONDITIONED
47
48
49
50
51
52
53
54
55
56
57
58
59
60
61
62
A
B
PE-2715

Ref No	Part Number	Description	Remarks	Serial Number	Qty
42	6684907	HOSE			1
42	6685198	CAP			1
43		HOSE	NAP - 32" (812,8mm) long - Order Ref. 29		1
44		HOSE	NAP - 84" (2133,6 mm) long - Order Ref. 29		1
45		HOSE	NAP - 54" (1371,6 mm) long - Order Ref. 29		1
46	6729077	DECAL			2
47	6731085	ELBOW			1
48	6732023	CONNECTOR			1
49	5HM00020B	CLAMP			8
50	6731084	ADAPTER			1
51	5CM01020B	BOLT			1
52	6624289	STA STRAP			5
53	6731255	ELBOW	A]		1
54	6730819	BELT	compressor		1
55	6727848	COVER			1
56	6675779	PRESS. SWITCH	W/harness		1
57	6557831	WASHER			1
58	6678666	TREE MOUNT	tree		2
59	6677983	FILTER			1
60	6733655	COMPRESSOR	W/Ref. 68		1
60	6679145	CLUTCH			1
60	6648307	CONNECTOR	2-pin		1
60	6648308	CONNECTOR			1
61	5CM01080B	SCREW			1
62	6719630	HARNESS	ACS		1

DRAWING NOT AVAILABLE AT TIME OF PRINTING

PE-2810

Ref No	Part Number	Description	Remarks	Serial Number	Qty
1	7116904	AC KIT	A/C - Ref. 2-41 & 44 - If loader is not equipped W/ heater, rotating beacon, selectable joystick controls, advanced control system, power bob-tach, non-power port plug-in strobe lights and/or non-power port plug-in 4 way flashers, also order 7116260 deluxe harness. Also, if not equipped with high flow or power bobtach, also order 7110160 deluxe fuel harness.		1
2	6557831	WASHER			1
3	6624289	STA STRAP			2
4	6684907	HOSE	AC		1
4	6675538	O-RING	#8		x
5	6674234	CONDENSER			1
6	6674235	RECEIVER DRIER			1
6	6676062	VALVE	relief		1
7	6675075	HOSE	AC		1
7	6677122	CAP			1
7	6675824	O-RING	#6		x
8	6675076	HOSE	AC		1
8	6677121	CAP			1
8	6675825	O-RING	#10		x
9	6684908	HOSE	AC		1
9	6675825	O-RING	#10		x
10	6676984	MOUNT	valve		1
11	6677105	COVER	plate		1
12	6733655	COMPRESSOR	W/Ref. 43		1
12		CLUTCH			1
13	6675685	HOSE	AC		1
13	6675779	PRESS. SWITCH	W/harness		1
13	6676399	VALVE CORE			1
13	6675824	O-RING	#6		x
14	6683004	THERMOSTAT			1
15	6683003	COIL	evaporator		1
16	6730265	MOUNT	compressor		1
17	83D000006B	NUT			2
18	6719176	SWITCH	rocker		1
19	6719459	MOUNT	receiver drier		1
20	6719630	HARNESS	AC - Not in kit		1
21	6730819	BELT	compressor		1
22	6726621	SCREW			2
23	1CM00635B	SCREW			2
24	17C000656B	BOLT			2
25	5CM01025B	SCREW			1
26	5CM01080B	SCREW			1
27	31H000046B	CLAMP			1
28	84G003710B	BOLT			2
29	44H000048B	CLAMP			2
30	6675534	BLOCK VALVE			1
31	6727326	MOUNT	clamp		1
32	6676539	CLIP			2
33	6679034	INSULATION			1
34	6676538	INSULATION	bulk - sold per foot		x
35	6675608	INSULATION			1
36	6730266	SPACER			1
37	6675609	INSULATION			1
38	6689179	INSULATION			1

DRAWING NOT AVAILABLE AT TIME OF PRINTING

PE-2810

Ref No	Part Number	Description	Remarks	Serial Number	Qty
39	6689180	INSULATION			1
40	6731255	ELBOW			1
41	6729077	DECAL	air conditioned		2
42	6676063	KIT	fitting caps - not in kit		1
43	6732732	BUSHING	not in kit		1
44	6904258	INSTRUCTIONS			1

HEATER & A/C
(HVAC Assembly)

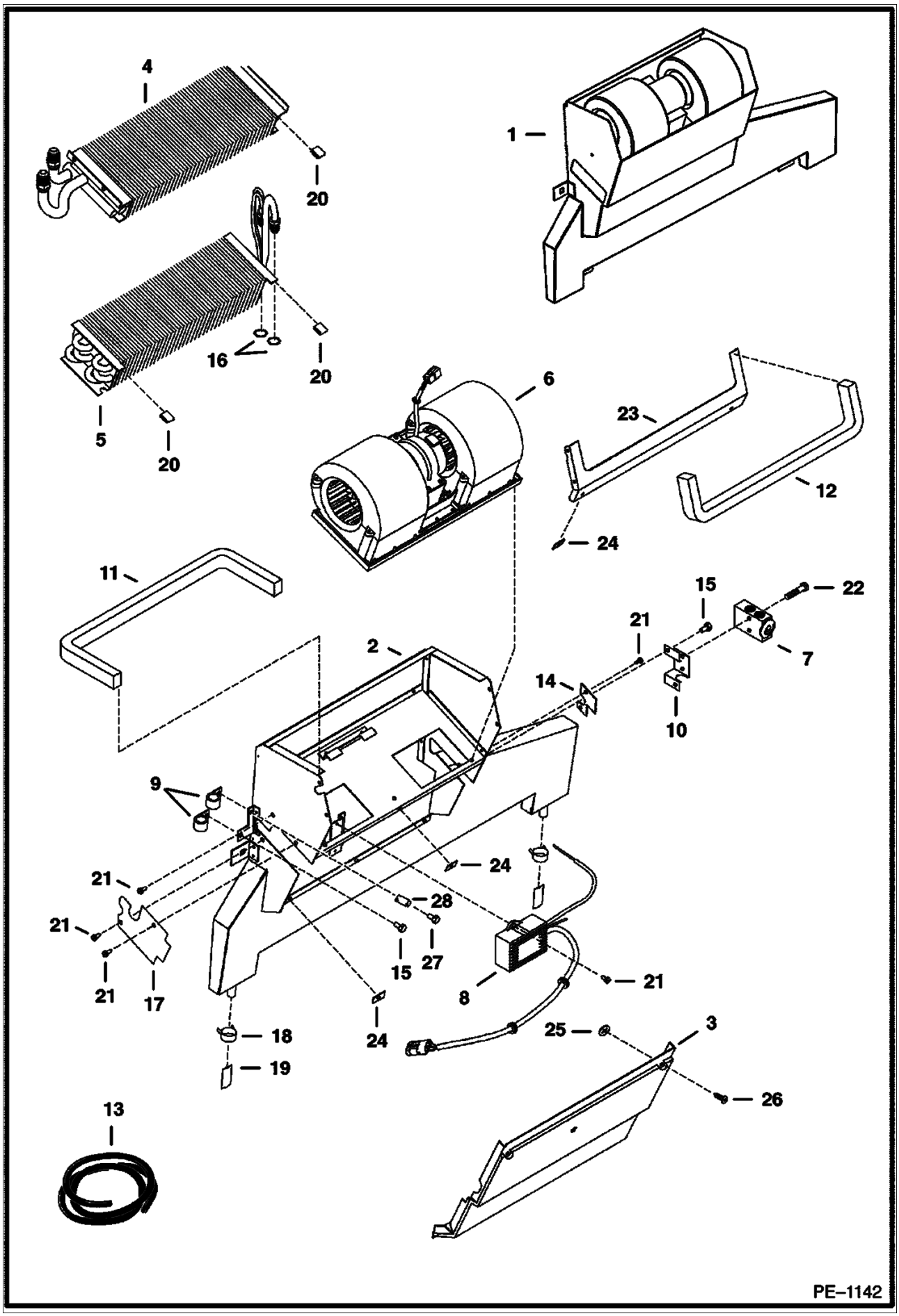

Ref No	Part Number	Description	Remarks	Serial Number	Qty
1	6683001	HVAC	assy - Ref. 2-28		1
2	6677108	HOUSING			1
3		COVER	NAP - Order 6678151, Also Order Ref. 23 (6678152)		1
3	6678151	COVER			1
4		COIL	See Illustration HEATER & A/C/ PE1228 NSS - heater - Order 6727786 Heater Coil Kit		1
5	6683003	COIL	evaporator		1
6	6675497	BLOWER	See Illustration HEATER & A/C/ B16401 assy		1
7	6675534	BLOCK VALVE			1
8	6683004	THERMOSTAT			1
9	6675512	CLAMP	hose		2
10	6676984	MOUNT	valve		1
11		SEAL	NAP - 25" (635mm) long - Order Ref. 13		1
12		SEAL	NAP - 22.6" (575mm) long - Order Ref. 13		1
13	6677111	SEAL	bulk - Sold Per Foot		x
14	6677105	COVER			1
15	6677118	SCREW	w/washer		3
16	6675538	O-RING			2
17	6677504	COVER	cover		1
18	6675510	CLAMP	drain hose		2
19	6675511	DRAIN VALVE			2
20	6676539	CLIP			2
21	6677119	SCREW	sheet metal		7
22	1CM00635B	SCREW			2
23		FLANGE	NAP - Order 6678152, Also Order Ref. 3 (6678151)		1
23	6678152	SEAL	flange		1
24	6677115	RECEPTACLE			6
25	6677116	RETAINER			6
26	6677117	SCREW	captive		6
27	6676653	SCREW			1
28	6676606	SPACER			1

HORN KIT

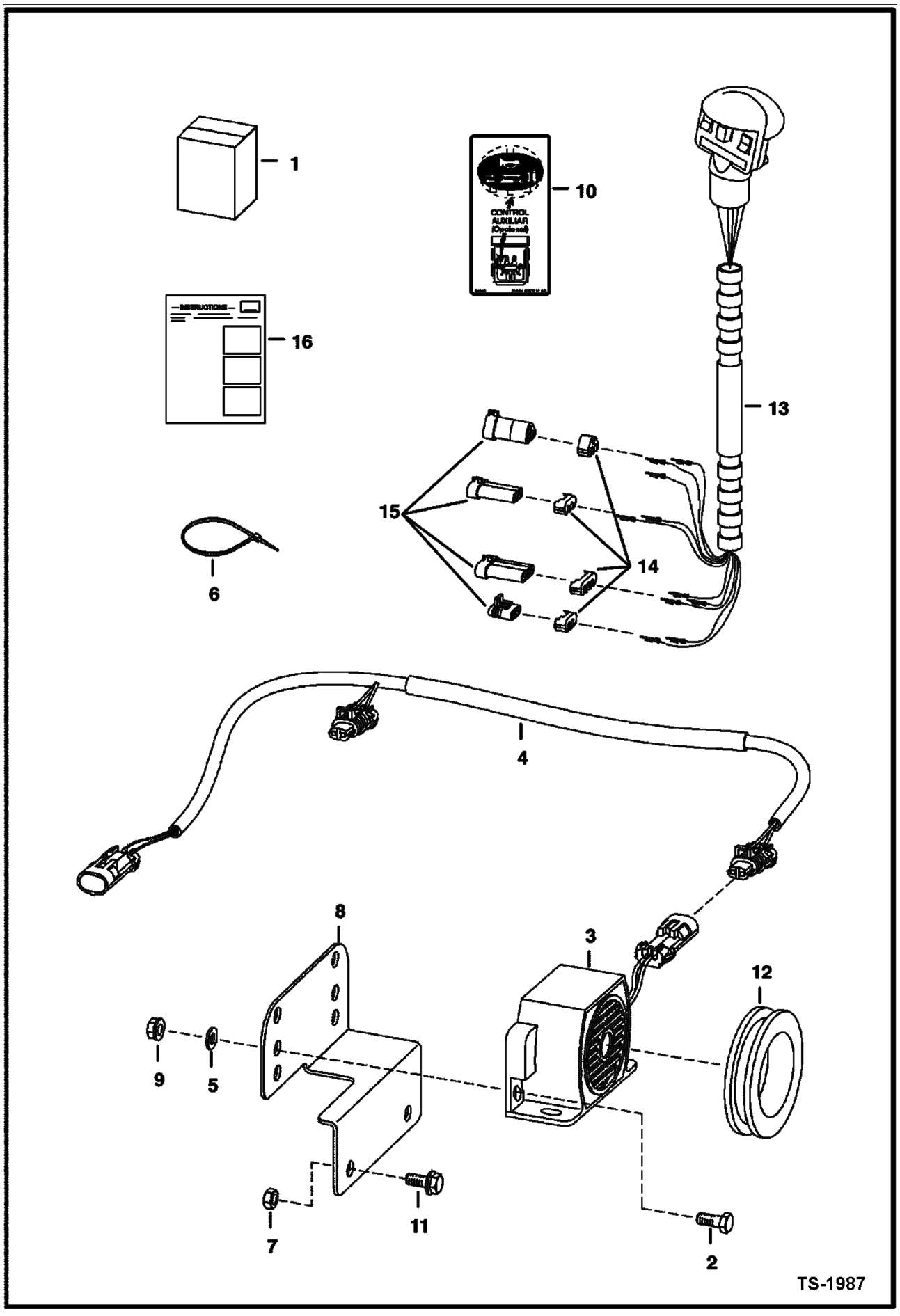

Ref No	Part Number	Description	Remarks	Serial Number	Qty
1	6727995	HORN KIT	Ref. 2-16 - Requires multi-switch handle		1
2	17C000410B	BOLT			2
3	6675099	ALARM			1
4	6727498	HARNESS	W/ metal tube		1
5	25E000013B	WASHER			1
6	30H000023B	CLAMP			1
7	83D000005B	NUT			2
8	6733970	MOUNT			1
9	6641180	LOCK	2-pin		2
9	6640700	LOCK	3-pin		2
10	6641179	CONNECTOR	2-pin		2
10	6640699	CONNECTOR	3-pin		2
11	35C000512B	BOLT			2
12	6680414	HANDLE ASSY.			1
12	6640690	PIN			5
12	6641176	SEAL	SEAL		5
13	83D000004B	NUT			2
14	6703727	DECAL			1
15	6577545	GROMMET			1
16	6901146	INSTRUCTIONS			1

HORN KIT
(Selectable Joystick Controls)

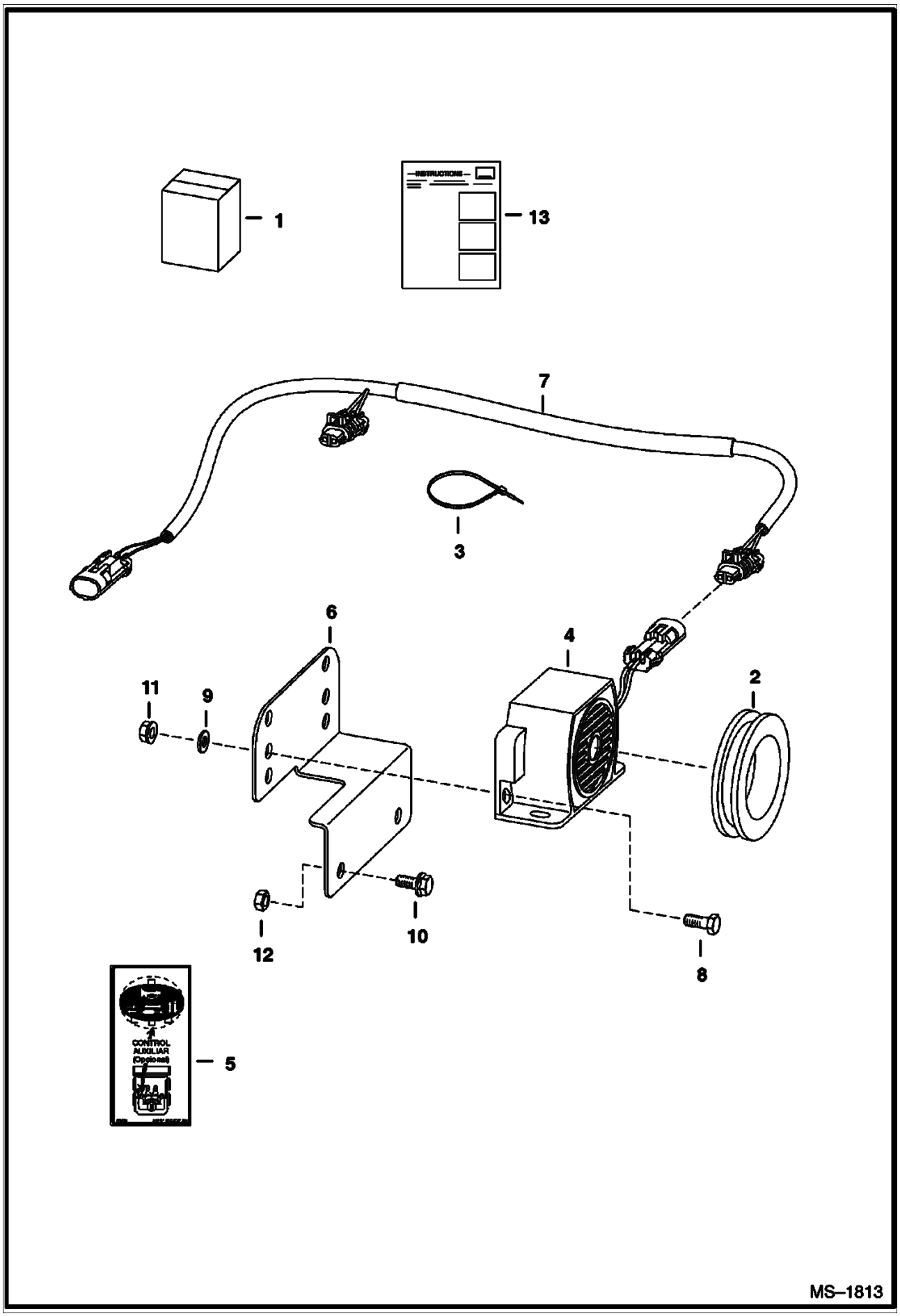

HORN KIT (Cont'd)
(Selectable Joystick Controls)

Ref No	Part Number	Description	Remarks	Serial Number	Qty
1	6732234	KIT	horn - Ref. 2-13		1
2	6577545	GROMMET			1
3	6610510	TIE			3
4	6675099	ALARM	alarm		1
5	6703727	DECAL	horn/aux.		1
6	6733970	MOUNT	alarm		1
7	6726662	HARNESS			1
8	17C000410B	BOLT			2
9	25E000013B	WASHER			2
10	35C000512B	BOLT			2
11	83D000004B	NUT			2
12	83D000005B	NUT			2
13	6901691	INSTRUCTIONS			1

LIFT KIT
(Four Point)

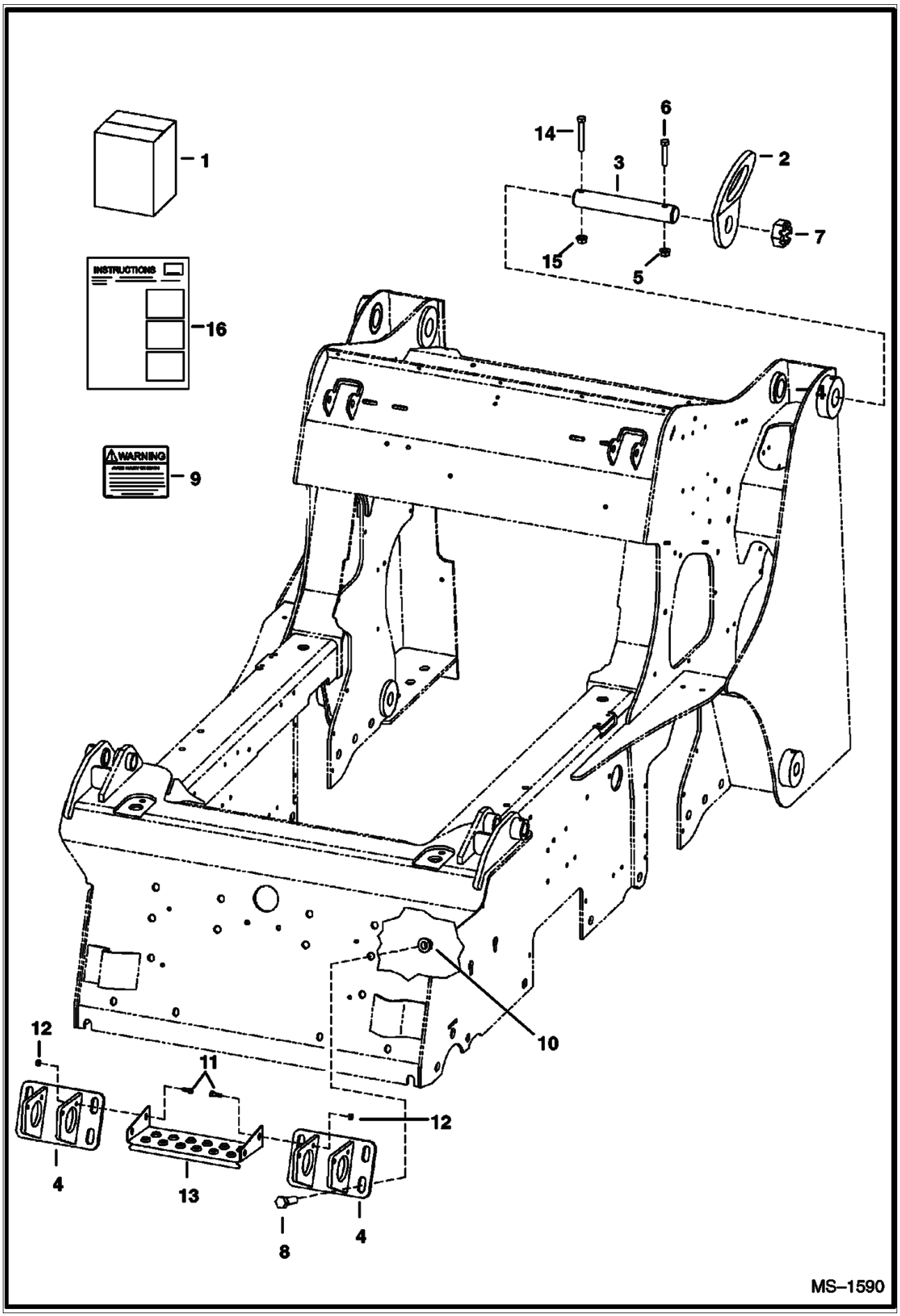

LIFT KIT (Cont'd)
(Four Point)

Ref No	Part Number	Description	Remarks	Serial Number	Qty
1	6732678	KIT	lift - Ref. 4 - 16		1
2	6726908	LIFT EYE			2
3	6732687	PIN			2
4	6734108	BRACKET			2
5	87D000006B	NUT			2
6	17C000652B	BOLT			2
7	4D000028B	NUT			2
8	17C001028B	BOLT			8
9	6726423	DECAL			1
10	83D000010B	NUT			8
11	17C000616B	BOLT			4
12	95D000006B	NUT			4
13	6813078	STEP			1
14	17C000672B	BOLT	not in kit		2
15	85D000006B	NUT	not in kit		2
16	6901772	INSTRUCTIONS			1

LIFT KIT
(Single Point)

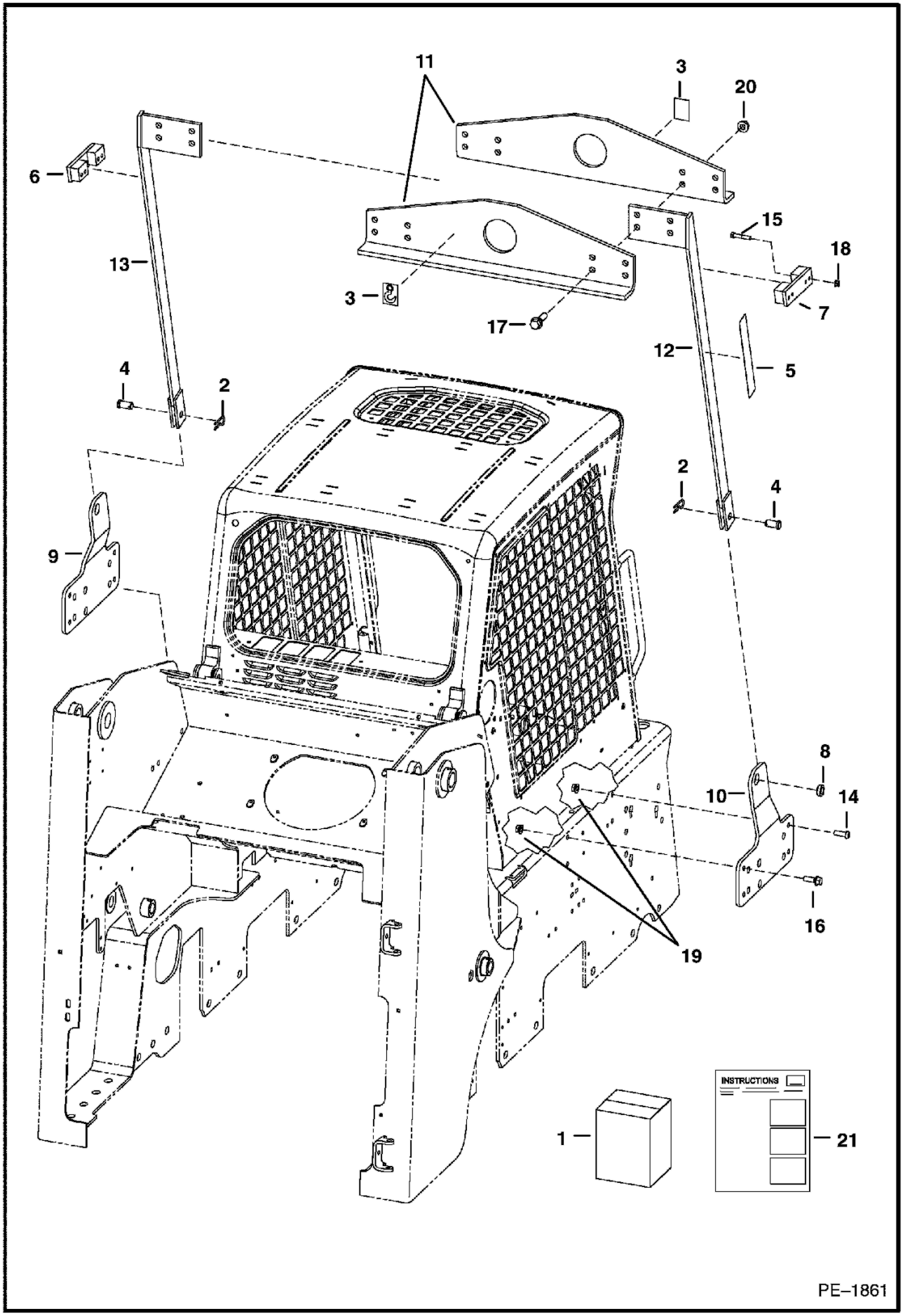

LIFT KIT (Cont'd)
(Single Point)

Ref No	Part Number	Description	Remarks	Serial Number	Qty
1	6735279	KIT	Ref. 2-21		1
2	1320075	COTTER PIN			2
3	6533898	DECAL	hook		2
4	6567838	PIN			2
5	6704786	DECAL	safety		2
6	6719184	MOUNT	L.H.		1
7	6719185	MOUNT	R.H.		1
8	6734560	BUSHING			2
9	6734627	MOUNT	L.H.		1
10	6734628	MOUNT	R.H.		1
11	6734657	ANGLE			2
12	6734666	ARM	R.H.		1
13	6734667	ARM	L.H.		1
14	6735282	SCREW	socket head		2
15	17C000632B	BOLT			8
16	31C000824B	BOLT			6
17	31C001036B	BOLT			8
18	57D000006B	NUT			8
19	57D000008B	NUT			8
20	57D000010B	NUT			8
21	6900888	INSTRUCTIONS			1

LIGHT KIT

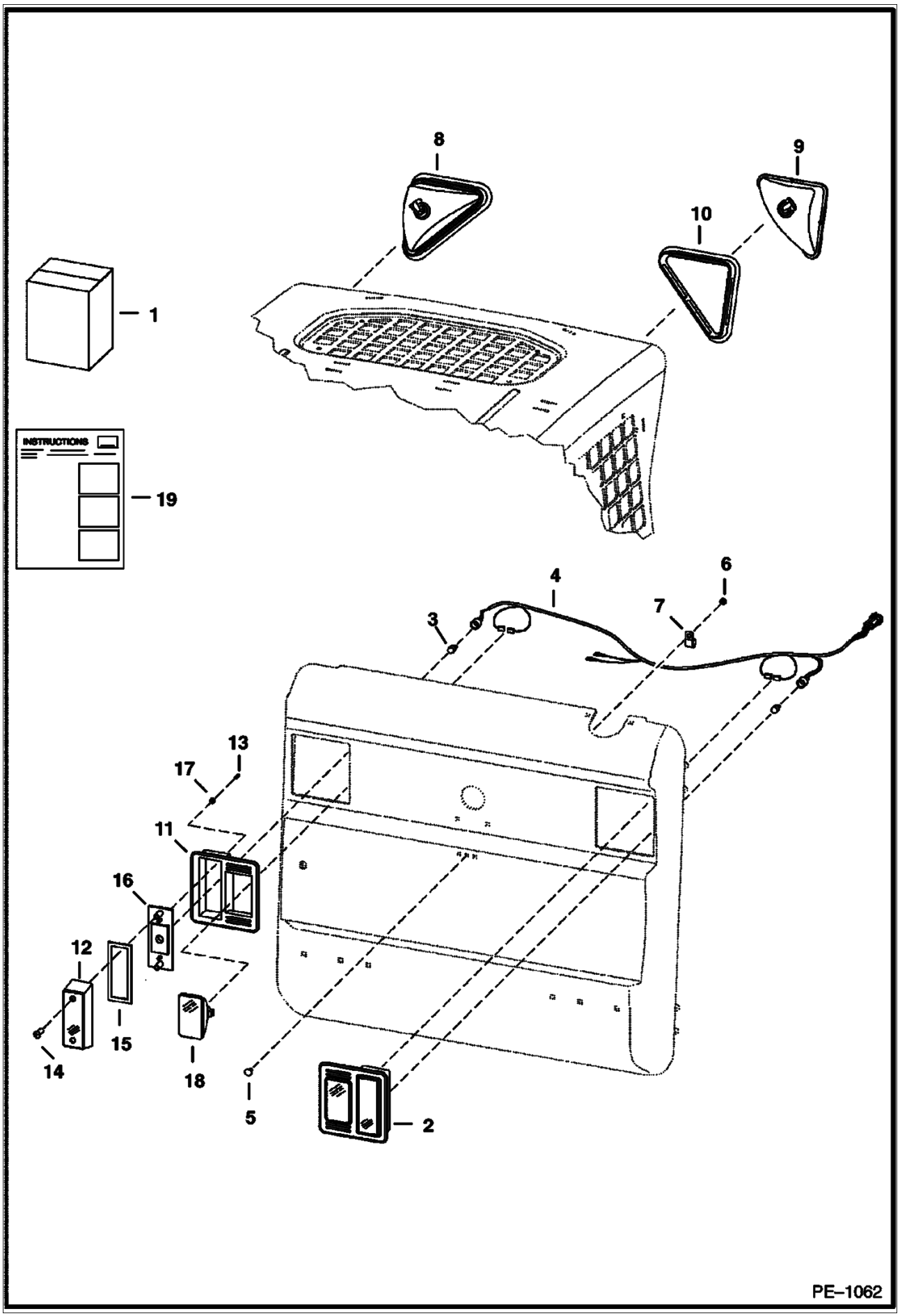

LIGHT KIT (Cont'd)

Ref No	Part Number	Description	Remarks	Serial Number	Qty
1		KIT	NAP - Order components		1
2	6670284	LIGHT ASSY	rear		2
3	6649481	BULB			2
4	7109403	HARNESS	standard		1
5	37C000512B	BOLT			1
6	85D000005B	NUT			1
7	30H000042B	CLAMP			1
8		LIGHT ASSY	NAP - R.H. - Ref. 9 & 10		1
8		LIGHT ASSY	NAP - L.H. - Ref. 9 & 10		1
9	6674401	HOUSING	R.H.		1
9	6675336	BULB	55 watt		1
9	6674400	HOUSING	L.H.		1
9	6675336	BULB	55 watt		1
10	6674402	MOUNT			1
11	6672279	MOUNT	rubber		2
12	6672276	LENS	red		2
13	6672274	SCREW			4
14	6672273	SCREW			2
15	6672275	GASKET			2
16	6672277	BRACKET			2
17	6672272	WASHER			4
18	6661353	LIGHT ASSY	W/bulb - white		2
18	898731B	BULB			2
19		INSTRUCTIONS	NAP		1

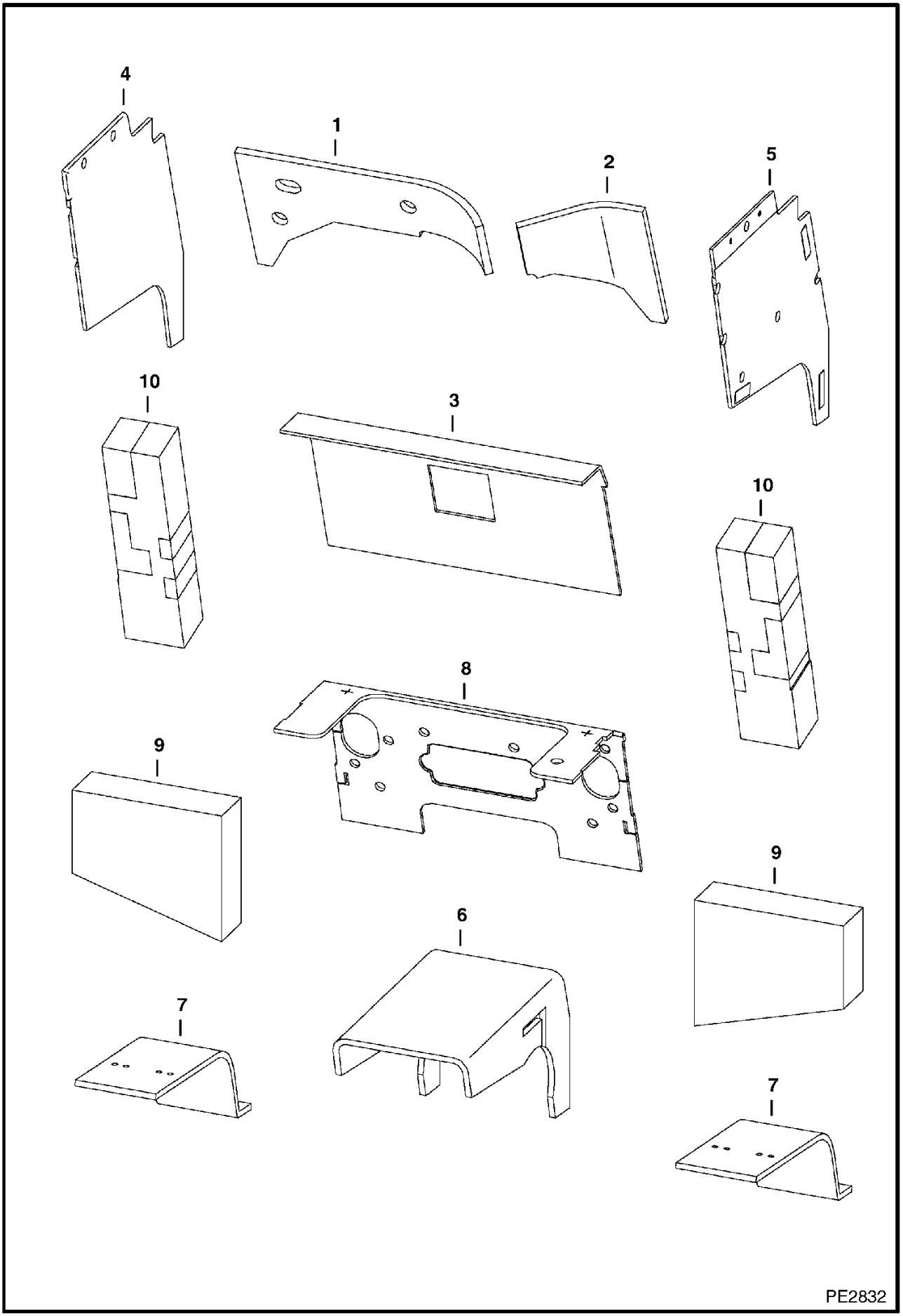
4
1
2
5
10
3
10
8
9
9
6
7
7
PE2832

OPERATOR EAR NOISE REDUCTION (Cont'd)
Manual Control

Ref No	Part Number	Description	Remarks	Serial Number	Qty
1	6719332	INSULATION	blower housing		1
2	6719333	INSULATION	blower housing		1
3	7101538	INSULATION	crossmember		1
4	7101536	INSULATION	panel shield - L.H.		1
5	7101537	INSULATION	panel shield - R.H.		1
6	7101533	INSULATION	transmission		1
7	6732583	INSULATION	pedal shield		2
8	7101535	INSULATION	steering panel		1
9	6703967	INSULATION	fender		2
10	6703968	INSULATION	transmission		2

OPERATOR EAR NOISE REDUCTION
Selectable Joystick Control

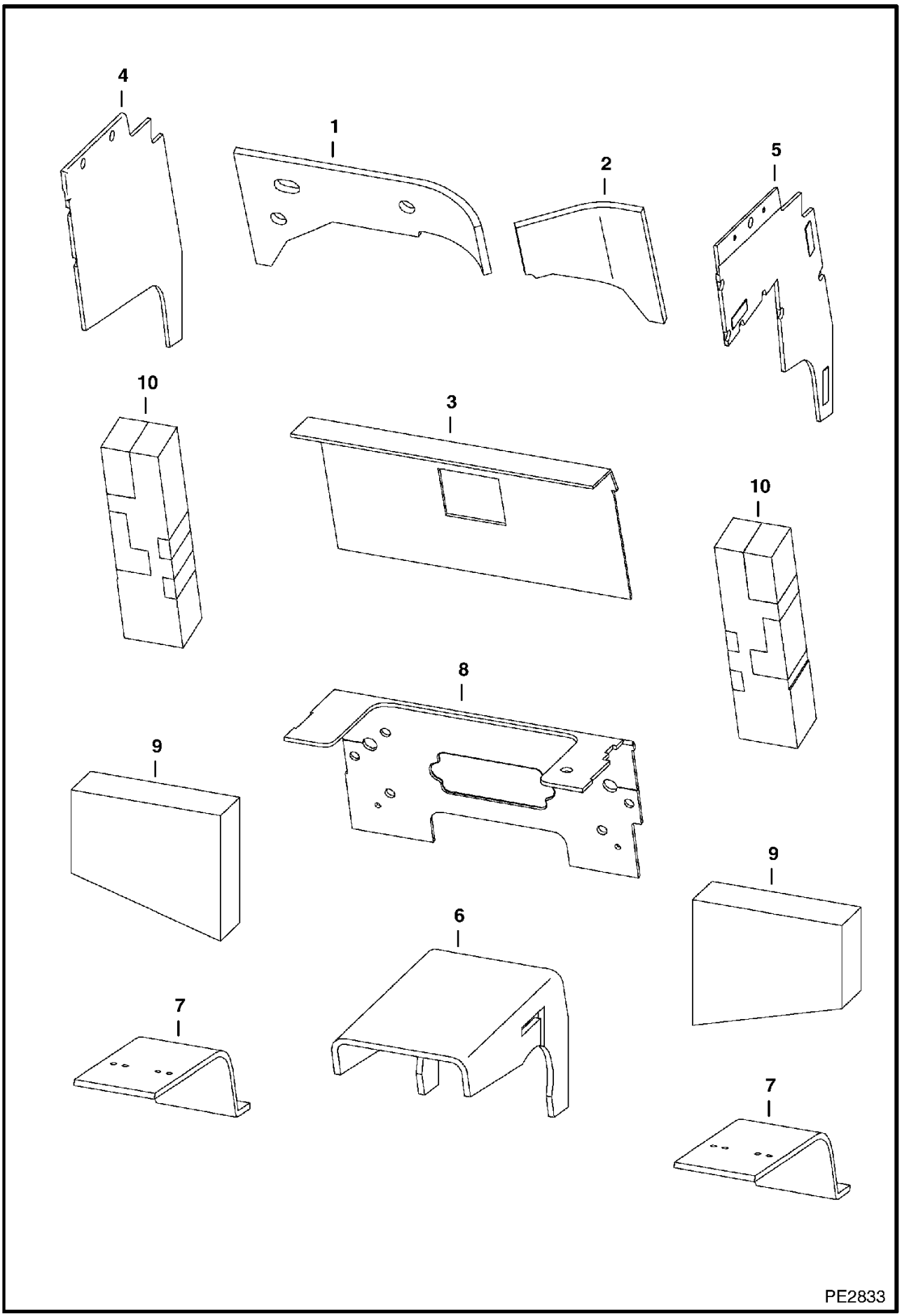

OPERATOR EAR NOISE REDUCTION (Cont'd)
Selectable Joystick Control

Ref No	Part Number	Description	Remarks	Serial Number	Qty
1	6719332	INSULATION	blower housing		1
2	6719333	INSULATION	blower housing		1
3	7101538	INSULATION	crossmember		1
4	7101536	INSULATION	panel shield - L.H.		1
5	7101539	INSULATION	panel shield - R.H.		1
6	7101533	INSULATION	transmission		1
7	6732583	INSULATION	pedal shield		2
8	7101534	INSULATION	steering panel		1
9	6703967	INSULATION	fender		2
10	6703968	INSULATION	transmission		2

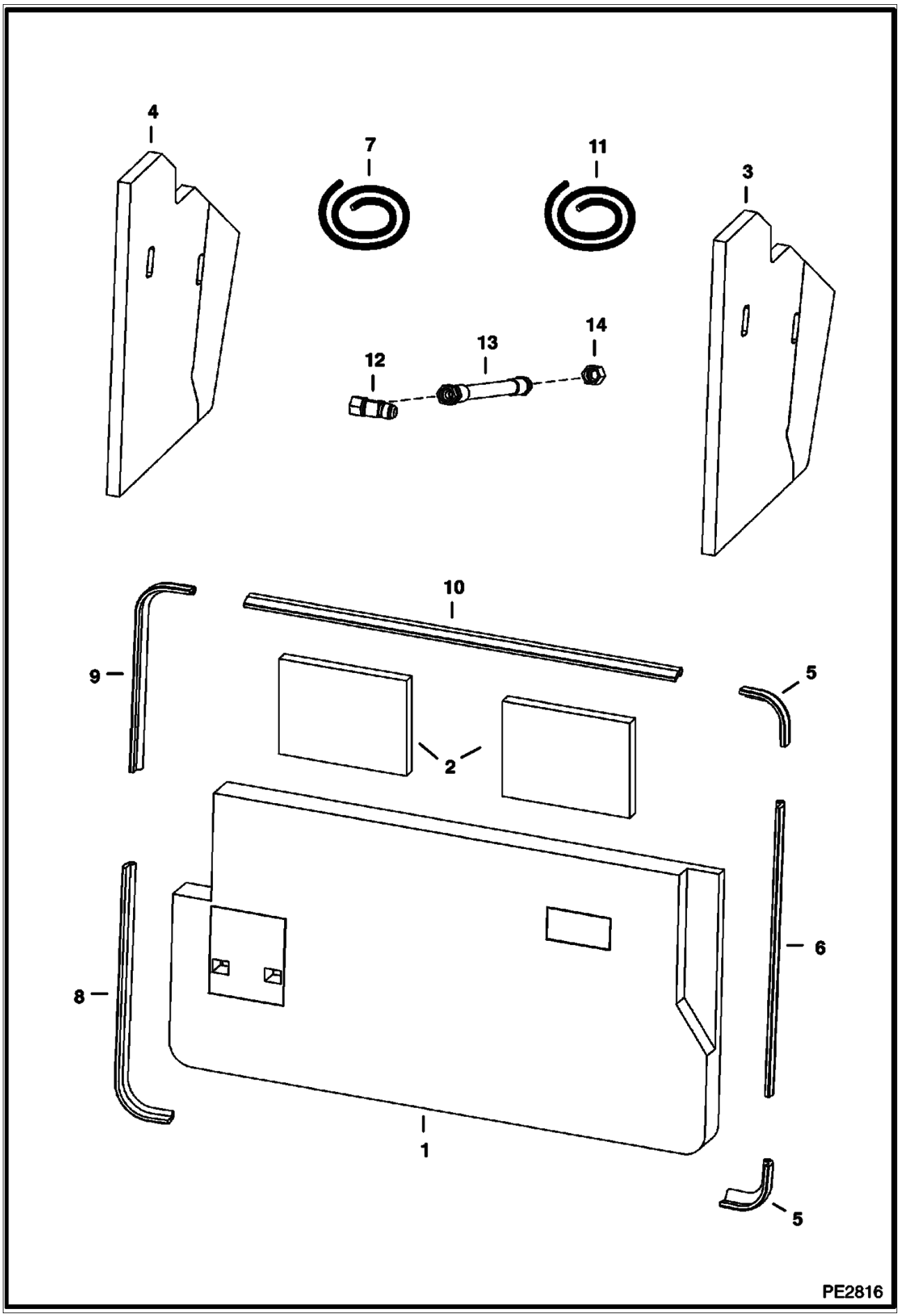
4
7
11
3
14
13
12
10
9
5
2
8
6
1
5
PE2816

NOISE REDUCTION KIT (Cont'd)
Bystander

Ref No	Part Number	Description	Remarks	Serial Number	Qty
1	7109317	INSULATOR	tailgate		1
2	7109318	INSULATOR	upper tailgate		2
3	7109319	INSULATOR	R.H. upright		1
4	7109320	INSULATOR	L.H. upright		1
5		SEAL	NAP - 6.5" (165,1 mm) long - Order Ref. 7		2
6		SEAL	NAP - 22.1" (561,34 mm) long - Order Ref. 7		1
7	7108677	SEAL	bulk - sold per foot		x
8		SEAL	NAP - 22.1" (561,34 mm) long - Order Ref. 11		1
9		SEAL	NAP - 17.6" (447,04 mm) long - Order Ref. 11		1
10		SEAL	NAP - 33.8" (858,52 mm) long - Order Ref. 11		1
11	7108716	SEAL	bulk - sold per foot		x
12	13K000008B	TEE			1
13	7112349	HOSE	15.8" (401,2 mm) long		1
14	36K000008B	CAP			1

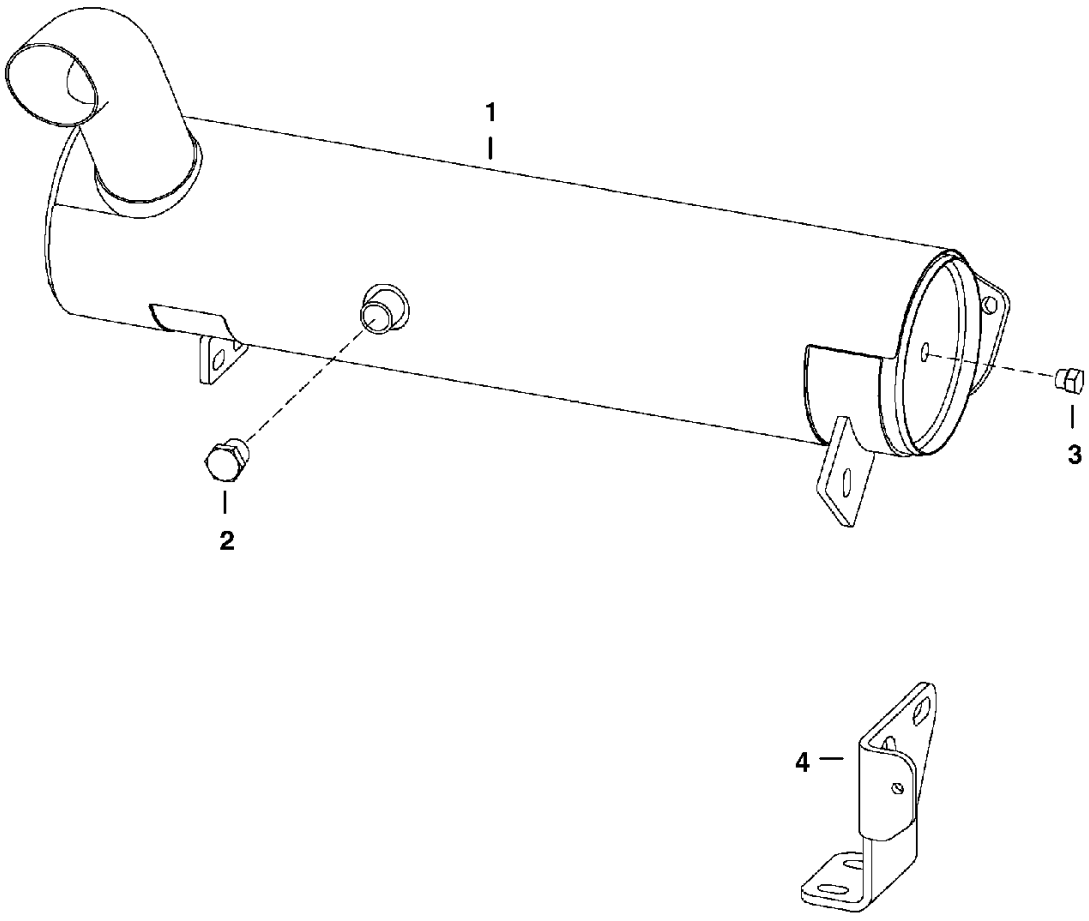
1
2
3
4
PE–2827

Ref No	Part Number	Description	Remarks	Serial Number	Qty
1	6687886	MUFFLER PURIFIER	purifier		1
2	6661062	PLUG	3/8" - brass		1
3	6659543	PLUG	1/8" - brass		1
4	6730753	MOUNT			1

POWER BOB-TACH KIT
(Hydraulic Assisted)

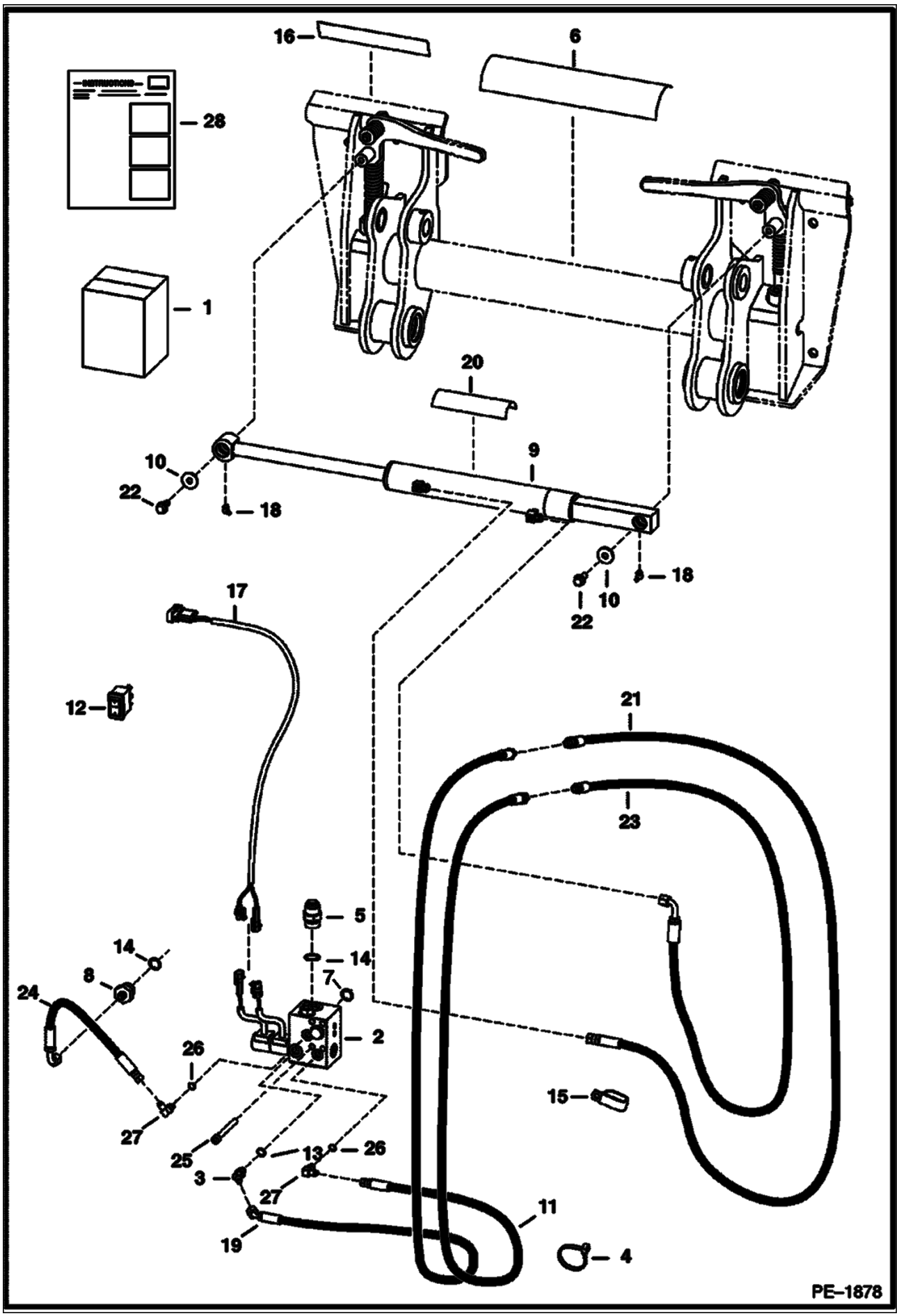

POWER BOB-TACH KIT (Cont'd)
(Hydraulic Assisted)

Ref No	Part Number	Description	Remarks	Serial Number	Qty
1	6735477	KIT	power bob-tach - Ref. 2-28 - If loader is not equipped W/ heater, air conditioning, selectable joystick controls, advanced control system, rotating beacon, non-power port plug-in strobe lights and/or non-power port plug-in 4 way flashers, also order 7116260 deluxe harness. Also, if not equipped with high flow or A/C, also order 7110160 deluxe fuel harness.		1
2		MANIFOLD	See Illustration POWER BOB-TACH/ MS1835R		1
3	7109881	ELBOW			1
4	6624289	STA STRAP			1
5	15KB01212B	ADAPTER	W/Ref. 14		1
6	6725907	DECAL			1
7	55K000214B	O-RING			1
8	15KB00612B	ADAPTER	W/Ref. 14		1
9		CYLINDER	See Illustration POWER BOB-TACH CYLINDER/ PE1064		1
10	619021B	WASHER			2
11	6726987	HOSE	59" (1498mm) long - (2) female ends		1
12	6676732	SWITCH	vertical		1
13	79K000006B	O-RING			x
14	79K000012B	O-RING			x
15	31H000042B	CLIP			1
16	6719888	DECAL			1
17		HARNESS			1
18	12H000025B	GREASE ZERK			2
19	6735475	HOSE	(1) male end & (1) 45 degree female end		1
20	6554100	TREAD	safety		1
21	6733630	HOSE	150" (3810mm) long - (2) female ends		1
22	35C000612B	BOLT			2
23	6733629	HOSE	141" (3581mm) long - (1) male end & (1) 90 degree female end		1
24	6806403	HOSE	For loaders equipped W/Manual Controls - 16 in. (406,4 mm) Long		1
24	7110367	HOSE	For loaders equipped W/Selectable Joystick Controls - 45"(1143 mm) long		1
25	73G000656B	BOLT			4
26	79K000004B	O-RING			x
27	7109882	ELBOW	W/Ref. 26		2
28	6902361	INSTRUCTIONS			1

POWER BOB-TACH CYLINDER

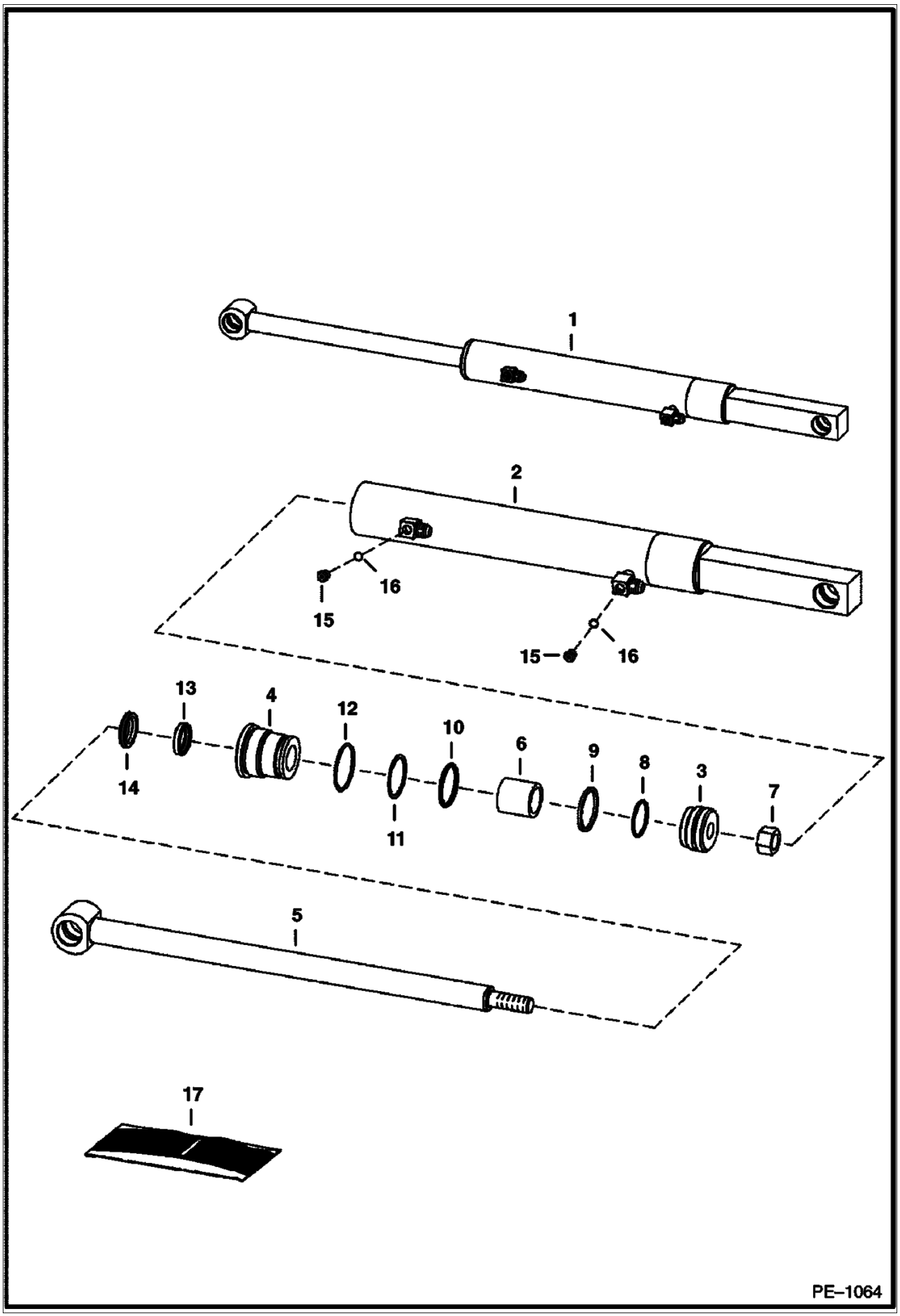

POWER BOB-TACH CYLINDER (Cont'd)

Ref No	Part Number	Description	Remarks	Serial Number	Qty
1	6810611	CYLINDER	Ref. 2-16		1
2	6810349	CASE	1.75" (45mm) I.D.		1
3	6586543	PISTON			1
4	6586542	HEAD			1
5	6810612	ROD	W/ .25" grease zerk hole		1
6	6810356	SPACER			1
7	92D000010B	NUT			1
8	54K030110B	O-RING			1
9	6532453	RING			1
10	54K040116B	O-RING			1
11	73K000222B	WASHER	back-up		1
12	58K000132B	O-RING			1
13	6667323	SEAL	rod		1
14	6666542	SEAL	wiper		1
15	90KV00002B	PLUG	W/Ref. 16 - tapered boss face - allen socket head		2
15	6812170	PLUG	W/Ref. 16 - flat boss face - hex head		2
16	95K000003B	O-RING	tapered boss face		x
16	75K000003B	O-RING	flat boss face		x
17	6803473	SEAL KIT	Ref. 7-14		1

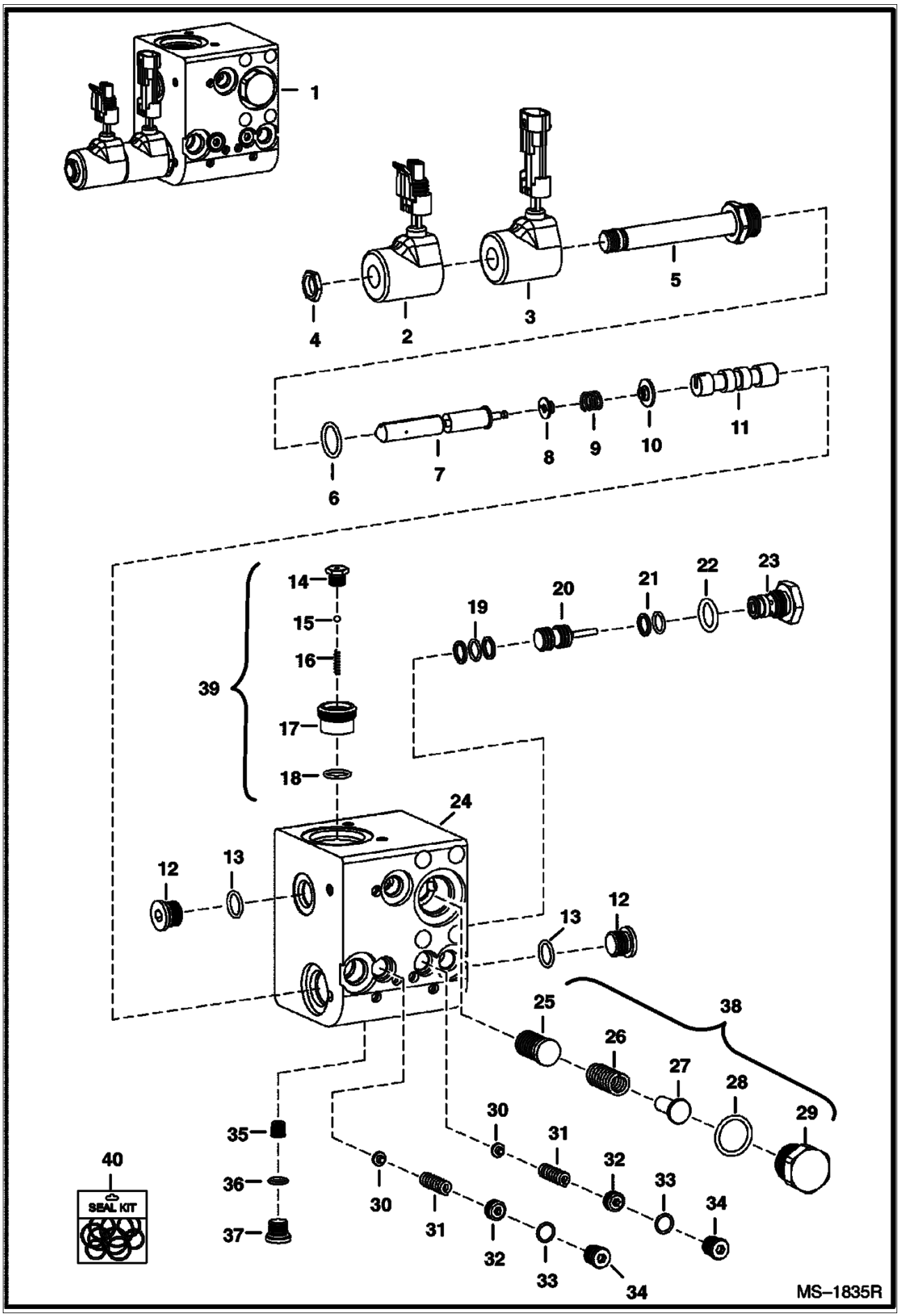
1
4
2
3
5
6
7
8
9
10
11
39
14
15
16
17
18
19
20
21
22
23
24
12
13
12
13
25
26
27
28
29
38
35
36
37
30
31
32
33
34
40
SEAL KIT
30
31
32
33
34
MS–1835R

POWER BOB-TACH (Cont'd)
(Valve Assembly)

Ref No	Part Number	Description	Remarks	Serial Number	Qty
1	6686949	VALVE			1
2	6684743	SOLENOID	W/male connector		1
3	6684744	SOLENOID	W/female connector		1
4	6684742	NUT			1
5		STEM	NSS		x
6	79K000008B	O-RING			x
7		STEM	NSS		x
8		RETAINER	NSS		x
9		SPRING	NSS		x
10		WASHER	NSS		x
11	6685540	PISTON			x
12	6685545	PLUG	W/Ref. 13		x
13		O-RING	NSS		x
14		PLUG	NSS		x
15		BALL	NSS		x
16		SPRING	NSS		x
17		VALVE	NSS		x
18	6685542	O-RING			x
19		RINGS	NSS		x
20	6684745	PISTON			1
21		RINGS	NSS		x
22	79K000007B	O-RING			x
23	6684746	CHECK VALVE	W/Ref. 22		1
24		BLOCK	NSS		x
25		STEM	NSS		x
26		SPRING	NSS		x
27		POPPET	NSS		x
28	79K000010B	O-RING			x
29		PLUG	NSS		x
30		POPPET	NSS		x
31		SPRING	NSS		x
32		PLUG	NSS		x
33		O-RING	NSS		x
34		PLUG	NSS		x
35	6685541	POPPET			x
36		O-RING	NSS		x
37	6685546	PLUG			x
38	6685544	COMPENSATOR	assy. - Ref. 25-29		1
39	6685543	CHECK VALVE	assy. - Ref. 14-18		1
40	6684747	SEAL KIT	complete		1

RADIATOR SCREEN KIT

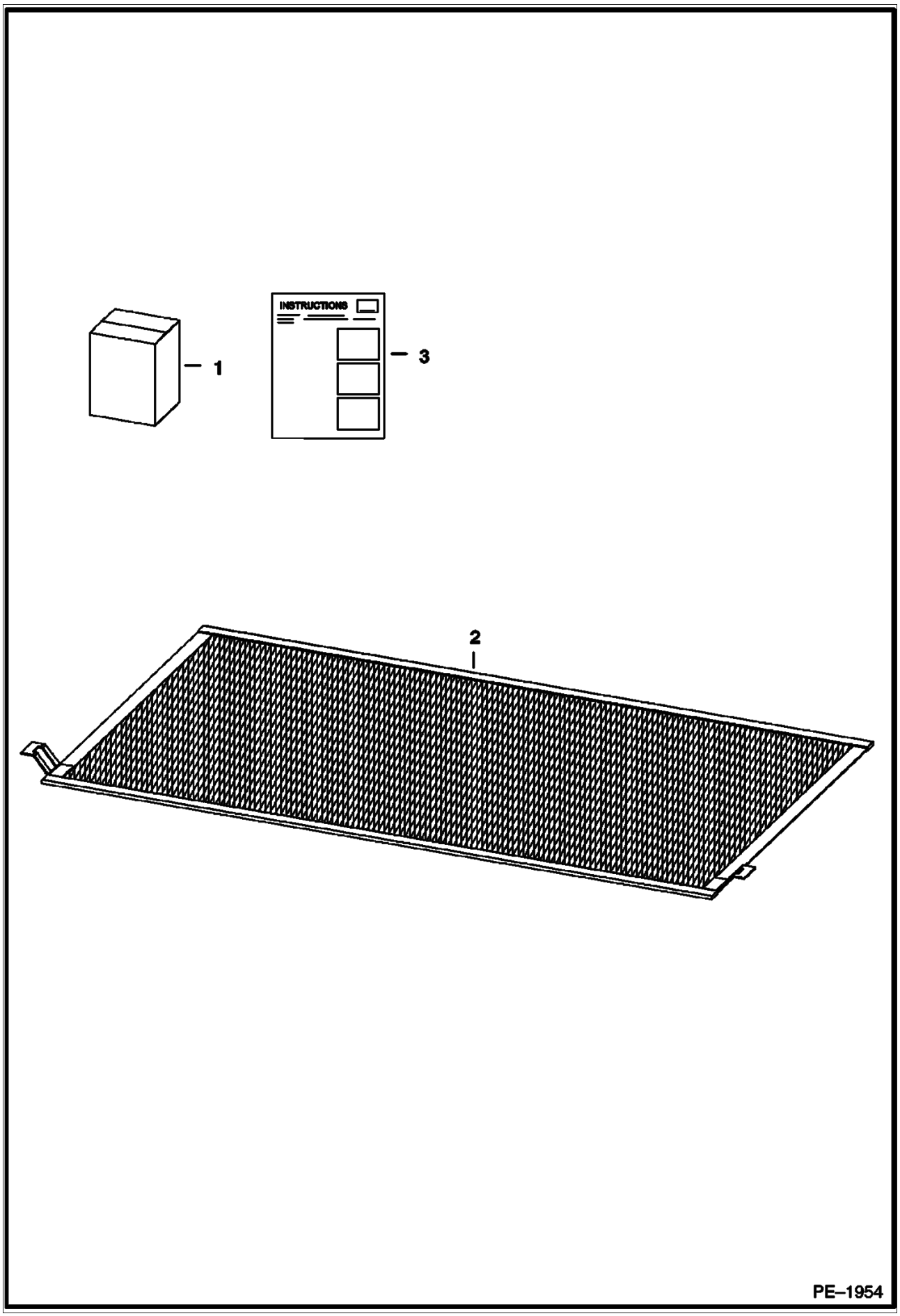

Ref No	Part Number	Description	Remarks	Serial Number	Qty
1	6734696	KIT	Ref. 2 & 3		1
2	6734697	SCREEN			1
3	6902288	INSTRUCTIONS			1

REAR AUXILIARY HYDRAULIC KIT

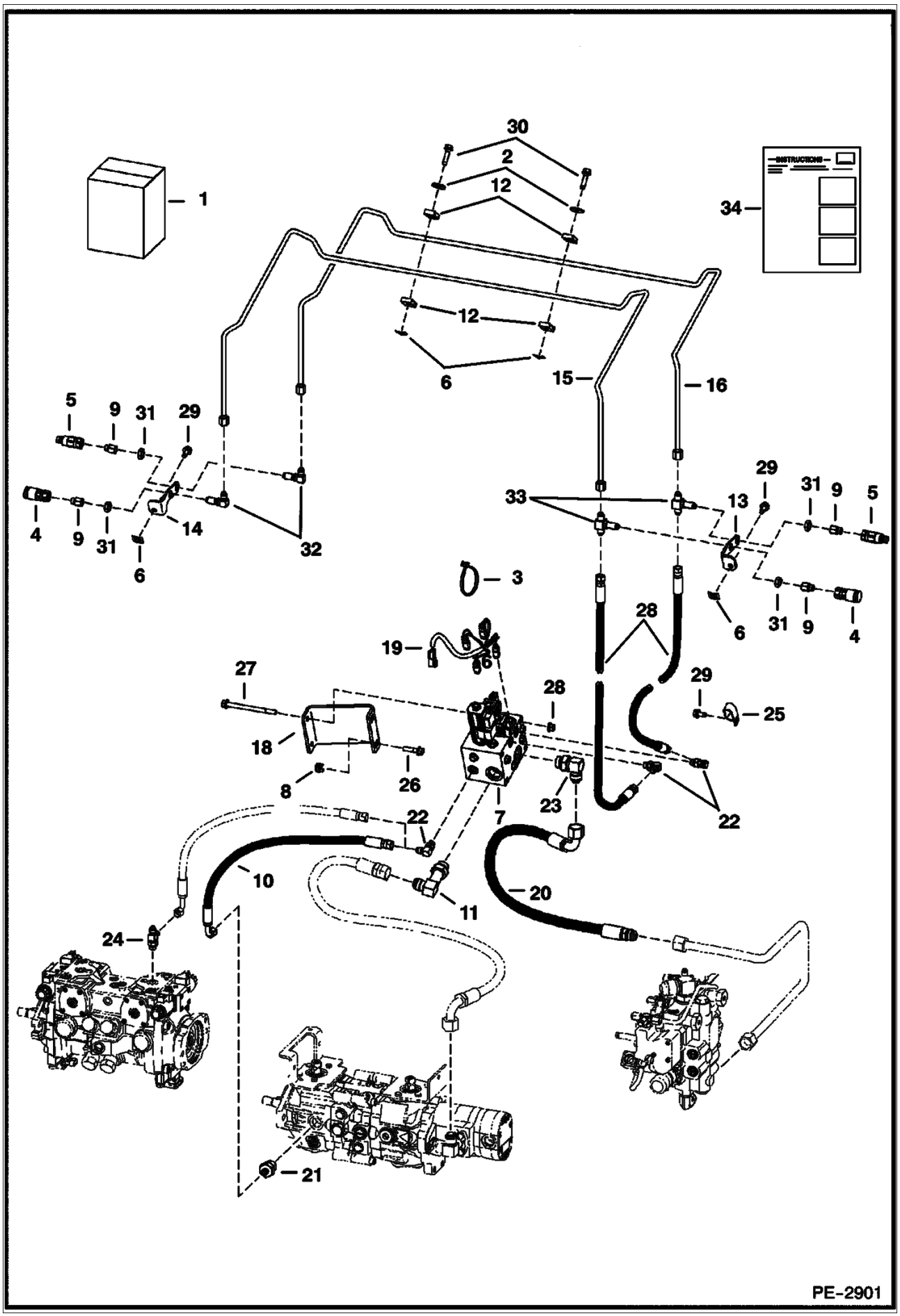

Ref No	Part Number	Description	Remarks	Serial Number	Qty
1	7116601	KIT, REAR AUX			1
2	619021	WASHER 5			2
3	6624289	STA STRAP			5
4	6667803	COUPLER			2
5	6667804	COUPLER			2
6	6684033	NUT			4
7	6685624	CONTROL VALVE			1
8	6685663	RETAINER			2
9	6706633	ADAPTER			4
10	6711166	HOSE			1
11	6716443	ELBOW			1
12	6726277	CLAMP			4
13	6735639	MOUNT			1
14	6735640	MOUNT			1
15	6735642	TUBELINE			1
16	6735643	TUBELINE			1
17	6735684	HOSE			2
18	6737201	MOUNT			1
19	7102338	HARNESS			1
20	7120956	HOSE			1
21	15KB00612B	ADAPTER			1
22	17KB00606B	ELBOW			1
23	17KB01212B	ELBOW			1
24	21KB00606B	TEE			1
25	31H000038B	CLAMP			1
26	35C000624B	BOLT			2
27	35C000680B	BOLT			2
28	83D000006B	NUT			2
29	84G003712B	BOLT			3
30	84G003724B	BOLT			2
31	86F000005B	NUT			4
32	88F000005B	ELBOW			2
33	90F000005B	TEE			2
34	6902409	INSTRUCTIONS			1

REAR AUXILIARY VALVE

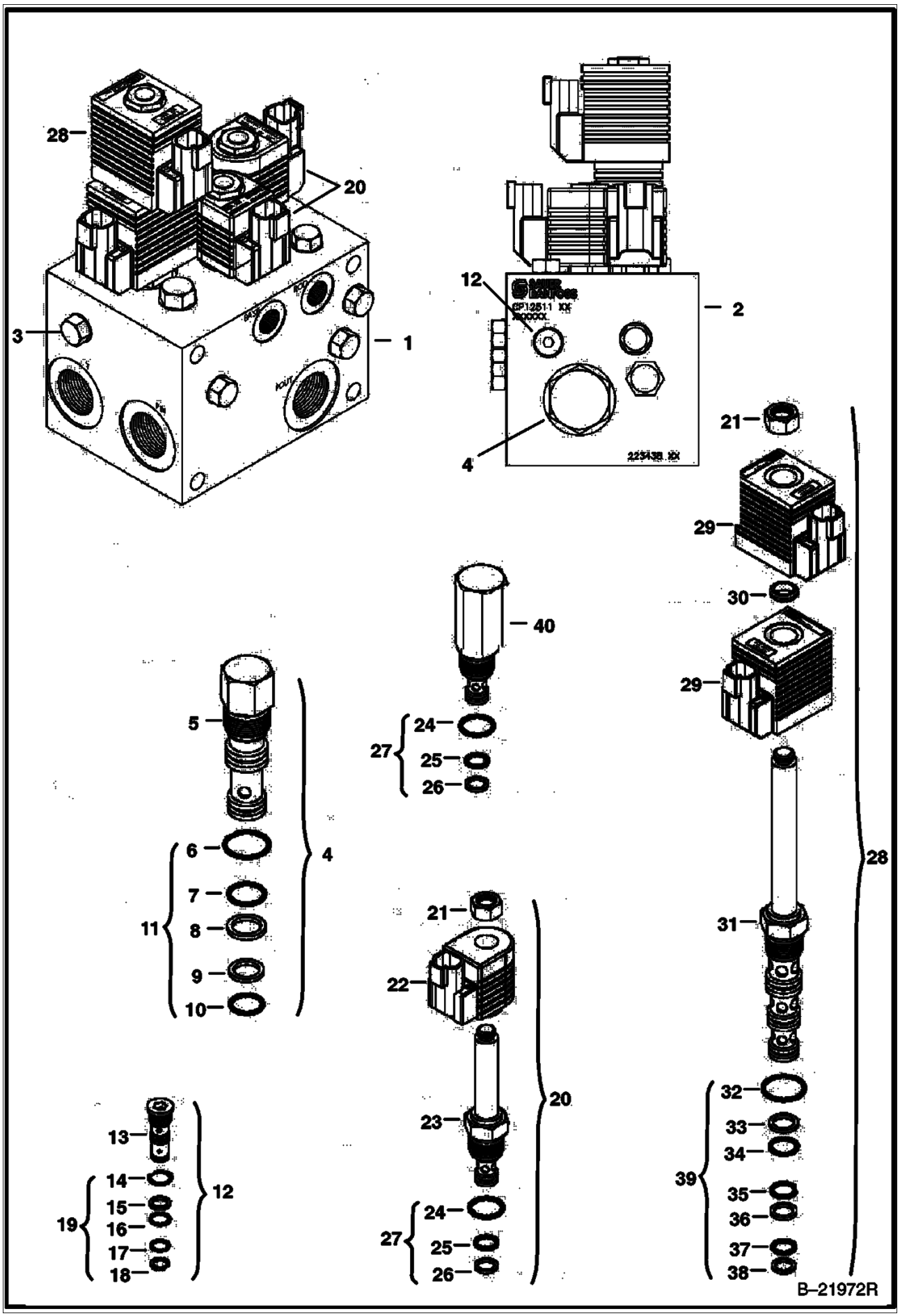

Ref No	Part Number	Description	Remarks	Serial Number	Qty
1		CONTROL VALVE	NAP - CP1254 - Order 6685624		1
1	6685624	CONTROL VALVE	CP12646		1
2		BLOCK	NSS		1
3		PLUG			x
4	6684044	VALVE	assy. - Ref. 5-10 - differential sensing		1
5		VALVE	NSS - Order Ref. 4		1
6	6684046	O-RING			1
7	6684048	O-RING			1
8	6684047	BACK-UP RING			1
9	6684050	BACK-UP RING			1
10	6684049	O-RING			1
11	6684045	SEAL KIT	Ref. 6-10		1
12	6684061	VALVE	shuttle - Ref. 13-18		1
13		VALVE	NSS - Order Ref. 12		1
14	6684063	O-RING			1
15	6684064	BACK-UP RING			1
16	6684065	O-RING			1
17	6684066	O-RING			1
18	6684067	BACK-UP RING			1
19	6684062	SEAL KIT	Ref. 14-18		1
20	6684542	VALVE	solenoid - Ref. 21-26		2
21	6684060	NUT			2
22	6684073	COIL	12 volt		2
23		VALVE	NSS - Order Ref. 20		2
24	6684070	O-RING			2
25	6684071	O-RING			2
26	6684072	BACK-UP RING			2
27	6684069	SEAL KIT	Ref. 24-26		2
28	6684051	VALVE	solenoid - Ref. 21 & 29-39 - For (NAP) 6683251		1
28	6688933	VALVE ASSY	solenoid - Ref. 21, 29 & 31 - For 6685624		1
29	6684058	COIL	For (NAP) 6683251		2
29	6688934	COIL	For 6685624		2
30	6684059	SPACER			1
31		VALVE	NSS - Order Ref. 28		1
32	6681489	O-RING			1
33	6684053	BACK-UP RING			1
34	6684054	O-RING			1
35	6684056	O-RING			1
36	6684055	BACK-UP RING			1
37	6681487	O-RING			1
38	6684057	BACK-UP RING			1
39	6684052	SEAL KIT	Ref. 32-38		1
40	6685328	RELIEF VALVE	W/Ref. 24-26		1

REAR DOOR LOCK

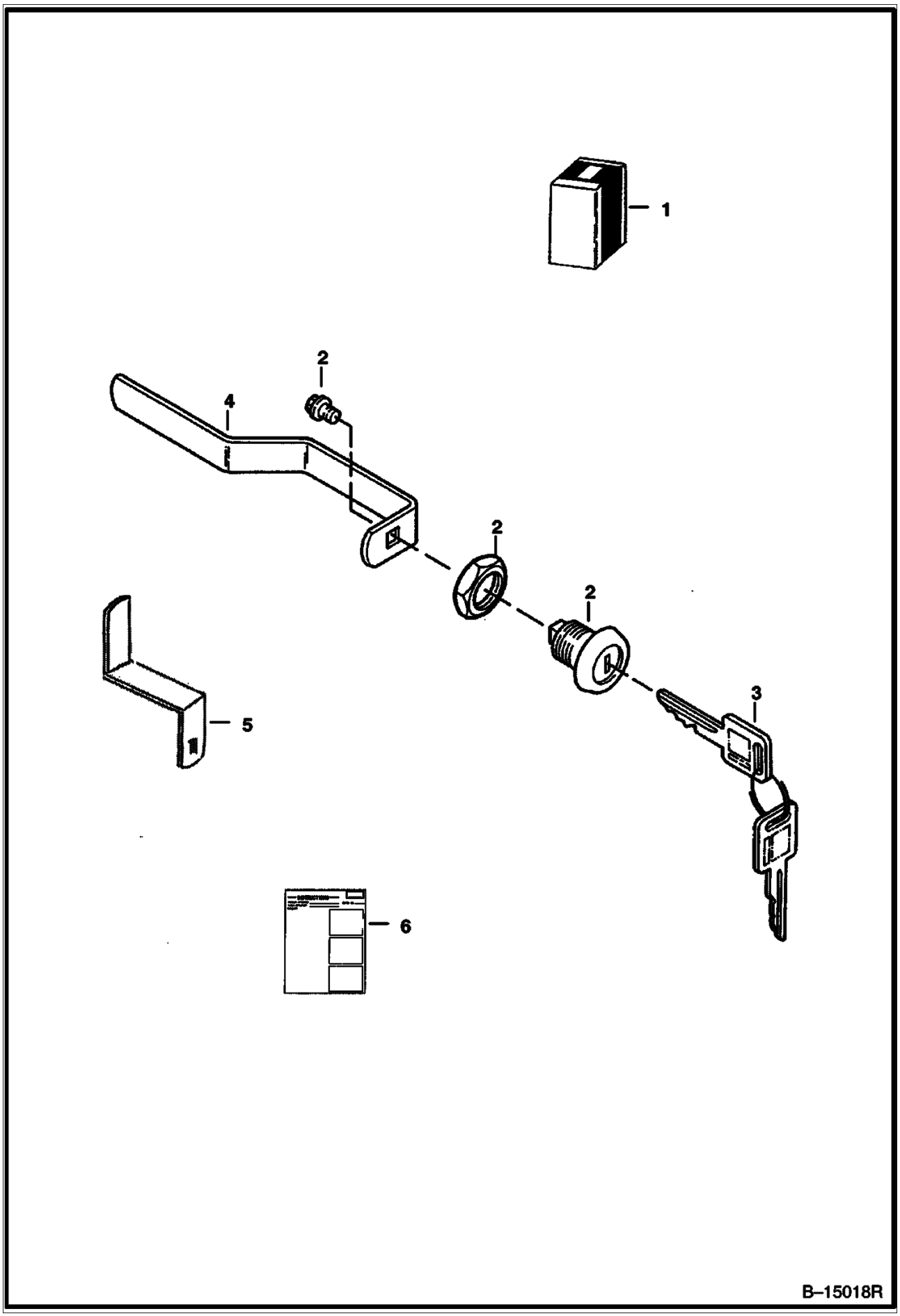

Ref No	Part Number	Description	Remarks	Serial Number	Qty
1	6732001	KIT	lock - Ref. 2-6		1
2	6670726	LOCK			1
3	6709527	KEY	ignition		1
4	6714037	LATCH			1
5	6729688	LATCH			1
6	6901656	INSTRUCTIONS			1

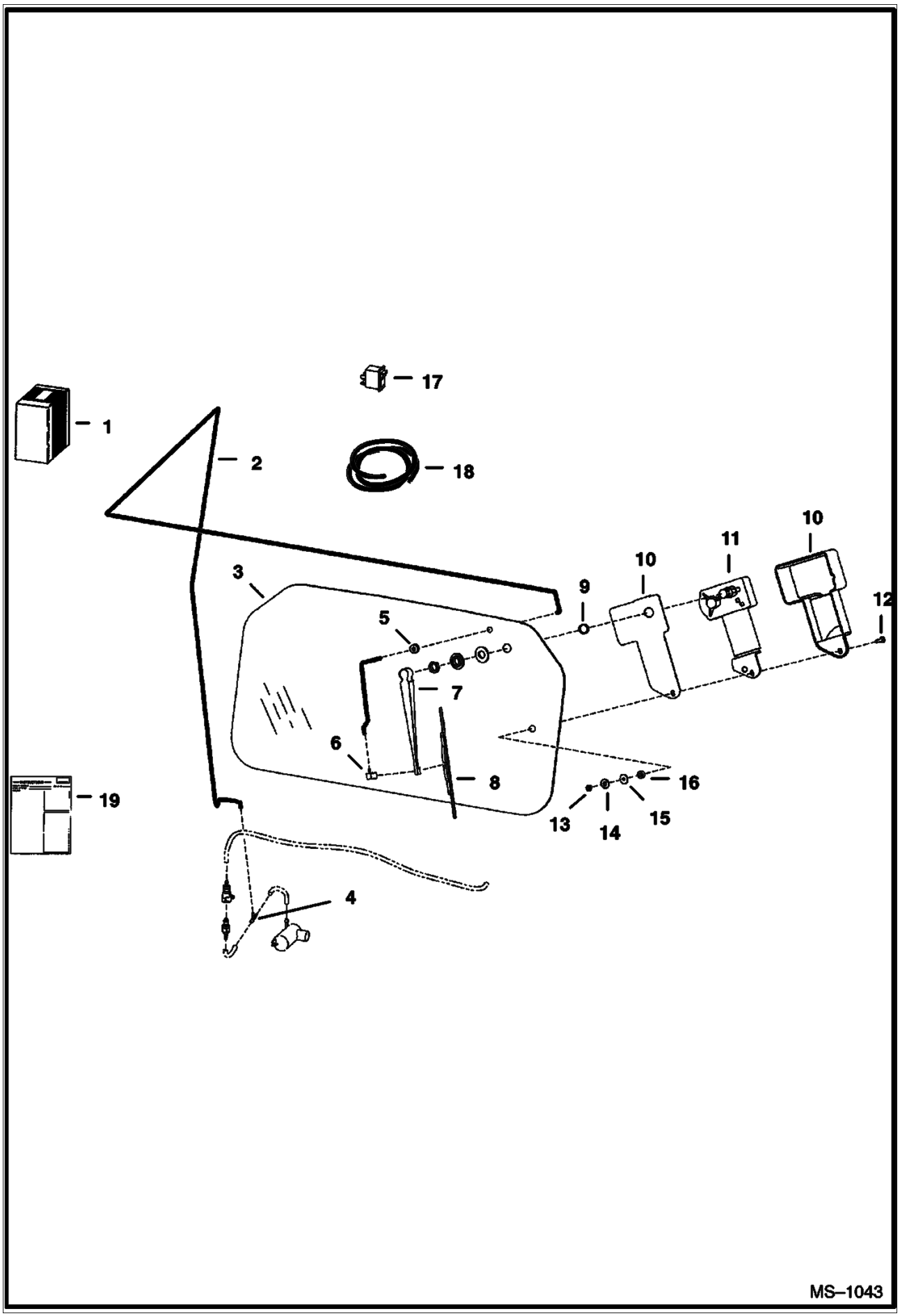
17
1
2
18
10
11
10
3
9
12
5
7
6
8
16
19
13
14
15
4
MS–1043

Ref No	Part Number	Description	Remarks	Serial Number	Qty
1	6726655	KIT	rear wiper		1
2		HOSE	NAP - 96"(2438,4 mm) long - Order Ref. 18		1
3	6719317	WINDOW			1
4	6676000	TEE			1
5	6557493	GROMMET			1
6	6676028	NOZZLE			1
7	6676001	ARM			1
8	6676002	BLADE			1
9	6667201	SPACER	nylon		1
10	6664097	COVER	wiper		1
11	6665602	MOTOR			1
12	6664566	BOLT			1
13	6664103	NUT			1
14	6664065	WASHER	nylon		1
15	6801059	WASHER	neoprene		1
16	6664085	BUSHING	nylon		1
17	6675999	SWITCH			1
18	6676003	HOSE	bulk - Sold Per Foot		x
19	6901061	INSTRUCTIONS			1

SEAT
(Suspension - Sears)

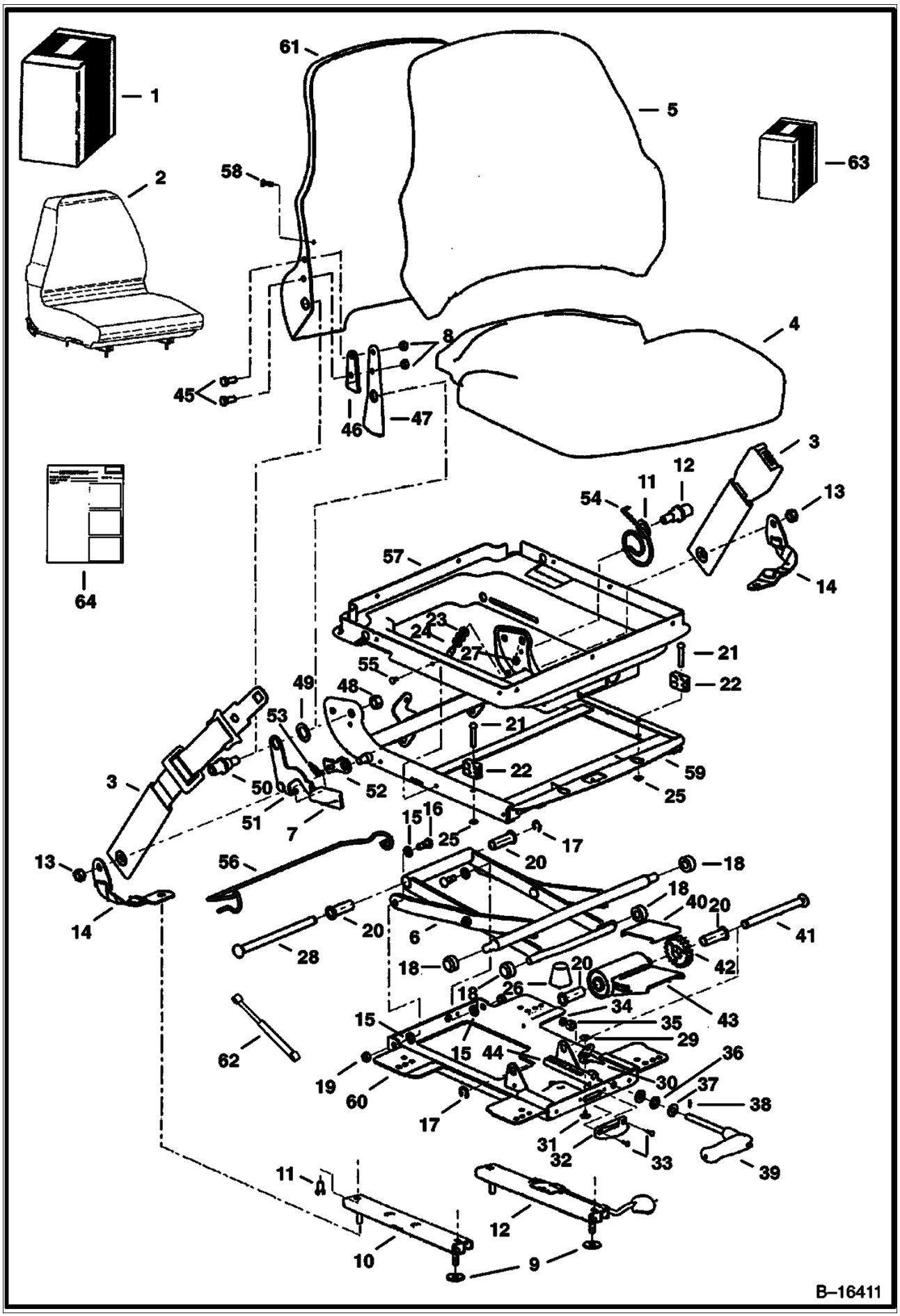

Ref No	Part Number	Description	Remarks	Serial Number	Qty
1		KIT	NAP - vinyl seat - Order Ref. 2, 3 & 64		1
1		KIT	NAP - fabric seat - Order Ref. 2, 3 & 64		1
2	6675595	SEAT	vinyl - L.H. recliner lever		1
2	6675596	SEAT	fabric - L.H. recliner lever		1
3	6675170	SEAT BELT	lap		1
4	6675320	SEAT	seat - fabric		1
4	6675322	SEAT	seat - vinyl		1
5	6675319	SEAT	backrest - fabric - W/Ref. 58		1
5	6675321	SEAT	backrest - vinyl - W/Ref. 58		1
6	6675317	SCISSORS			1
7	6675323	KNOB	recliner		1
8		NUT	NSS		6
9	619021B	WASHER			4
10		SLIDE	NSS - slave		1
11		BOLT	NSS		4
12		SLIDE	NSS - locking		1
13		NUT	NSS		2
14		BELT	NSS - tether		2
15		WASHER	NSS - cross pivot		4
16		BOLT	NSS - pivot		2
17		RING	NSS - retaining		2
18		ROLLER	NSS		4
19		NUT	NSS		2
20		BUSHING	NSS - wt adjustment		4
21		RIVET	NSS		2
22		BLOCK	NSS - up stop		2
23		WASHER	NSS		3
24		STOP	NSS - armrest		1
25		PUSHNUT	NSS		2
26		BUMPER	NSS		1
27		NUT	NSS		1
28		SHAFT	NSS - bearing		1
29		RIVET	NSS - female snap		1
30		INDICATOR	NSS - weight		1
31		RIVET	NSS - male snap		1
32		DIAL	NSS - weight indicator		1
33		POP RIVET	NSS		2
34		SPACER	NSS		1
35		NUT	NSS		1
36		BEARING	NSS - thrust		1
37		RACE	NSS - thrust		2
38		SHEAR PIN	NSS		1
39		HANDLE	NSS - weight adjustment		1
40		PLATE	NSS - wear		1
41		SHAFT	NSS - torsion		1
42		DRIVE GEAR	NSS		1
43		BUSHING	NSS - torsion		1
44		RACK	NSS - wt adjustment		1
45		BOLT	NSS		2
46		SPACER	NSS - recliner		1
47		BRACKET	NSS - back tilt		1
48		NUT	NSS		2
49		WASHER	NSS - plastic		2
50		BOSS	NSS - back pan pivot		2

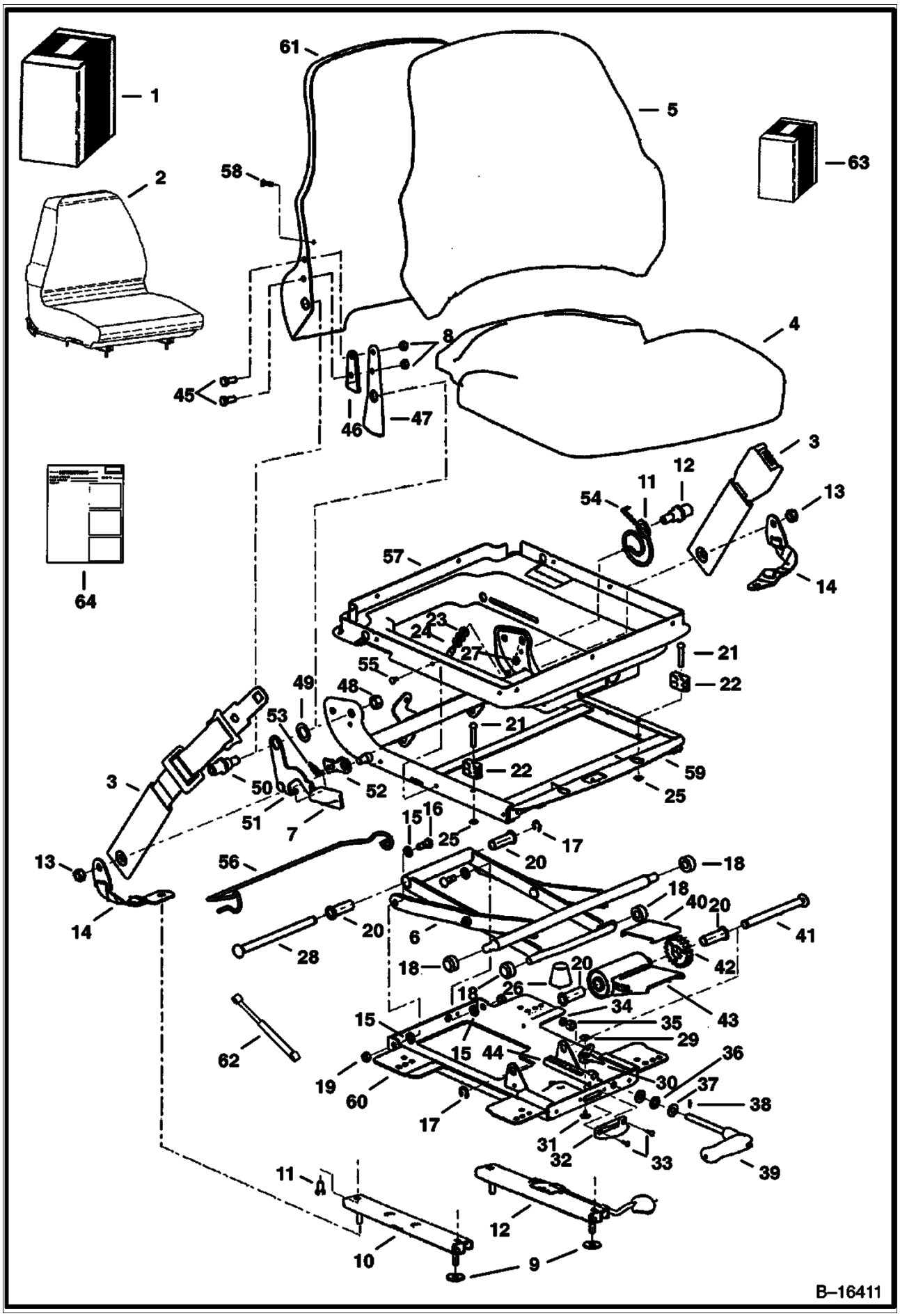
1
2
3
4
5
6
7
8
9
10
11
12
13
14
15
16
17
18
19
20
21
22
23
24
25
26
27
28
29
30
31
32
33
34
35
36
37
38
39
40
41
42
43
44
45
46
47
48
49
50
51
52
53
54
55
56
57
58
59
60
61
62
63
64
B–16411

Ref No	Part Number	Description	Remarks	Serial Number	Qty
51		HANDLE	NSS - recliner (RH)		1
52		LATCH	NSS - recliner		1
53		SPRING	NSS - extension		1
54		SPRING	NSS - tilt latch		1
55		CLIP	NSS		6
56		WIRE	NSS - boot support		1
57		SUSPENSION	NSS - boot		1
58		SCREW	NSS		2
59		HOUSING	NSS - upper		1
60		HOUSING	NSS - lower		1
61		BACK PAN	NSS		1
62	6676338	GAS SPRING			1
63	6675309	KIT	slides - W/Ref. 8-12		1
63	6675310	KIT	tether belt - W/Ref. 9, 13 & 14		1
63	6675311	KIT	suspension rollers & bearings - W/Ref. 15-20		1
63	6675312	KIT	suspension bumpers & stops - W/Ref. 21-27		1
63	6675313	KIT	rear tube - W/Ref. 17, 20 & 28		1
63	6675314	KIT	weight adj. indicator - W/Ref. 29-33		1
63	6675315	KIT	weight adj. handle - W/Ref. 34-39		1
63	6675316	KIT	weight adj. - W/Ref. 17, 20 & 40-44		1
63	6675318	KIT	R.H. recliner - W/Ref. 7,8 & 45-54		1
63	6676034	KIT	L.H. recliner - W/Ref. 7,8 & 45-54		1
63	6675308	KIT	susp. boot - W/Ref. 55-57		1
64	6900861	INSTRUCTIONS			1

SEAT BELT
(Three Point Retractable)

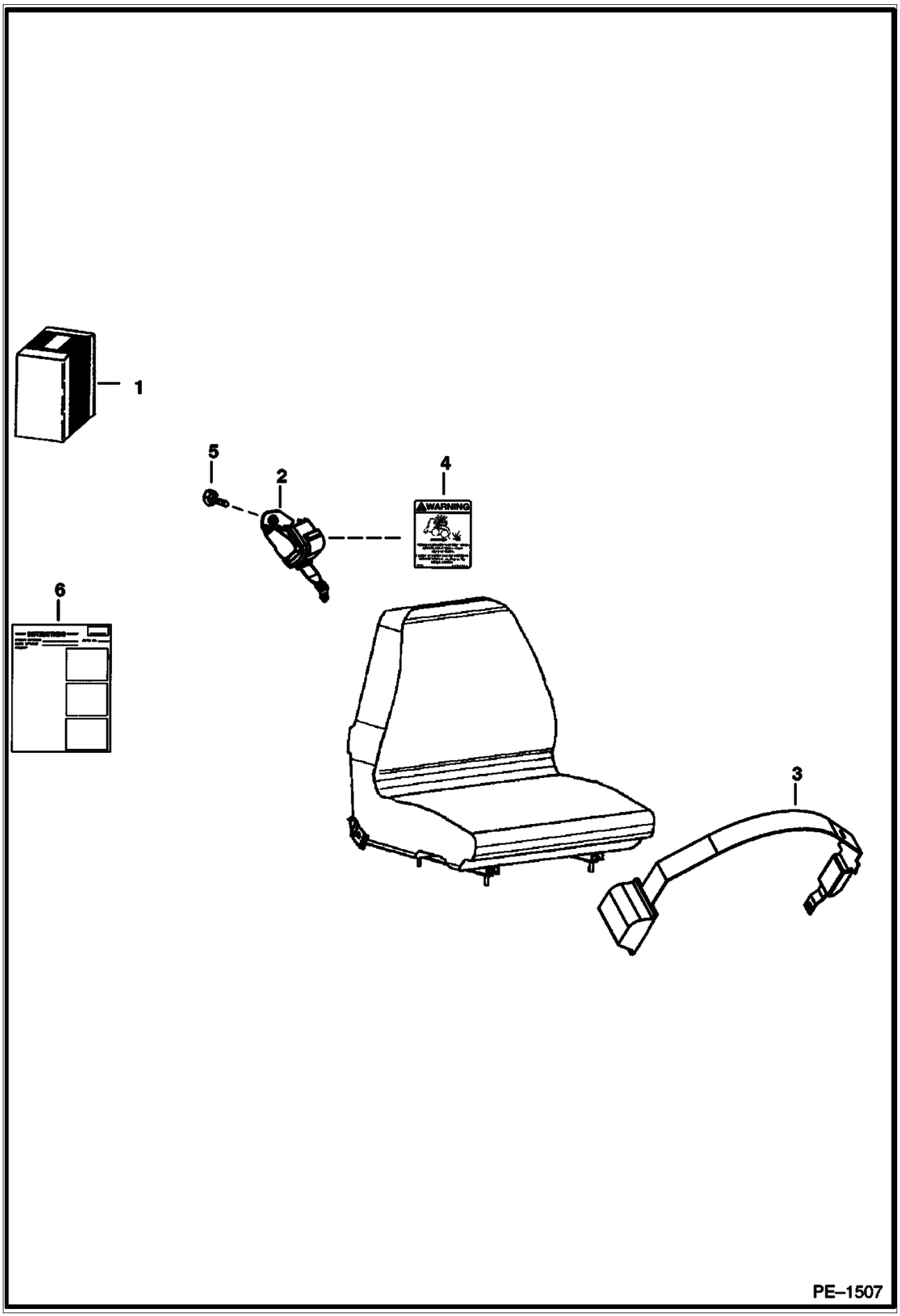

SEAT BELT (Cont'd)
(Three Point Retractable)

Ref No	Part Number	Description	Remarks	Serial Number	Qty
1	6732219	KIT	See Illustration SEAT/ B16411 three point retractable seat belt - Use with Sears brand Suspension Seats with a L.H. recliner lever		1
2	6674407	SHOULDER BELT			1
3	6679308	SEAT BELT			1
4	6725370	DECAL			1
5	35C000612B	BOLT			1
6	6901010	INSTRUCTIONS			1

SEAT BELT
(3" Wide Retractable)

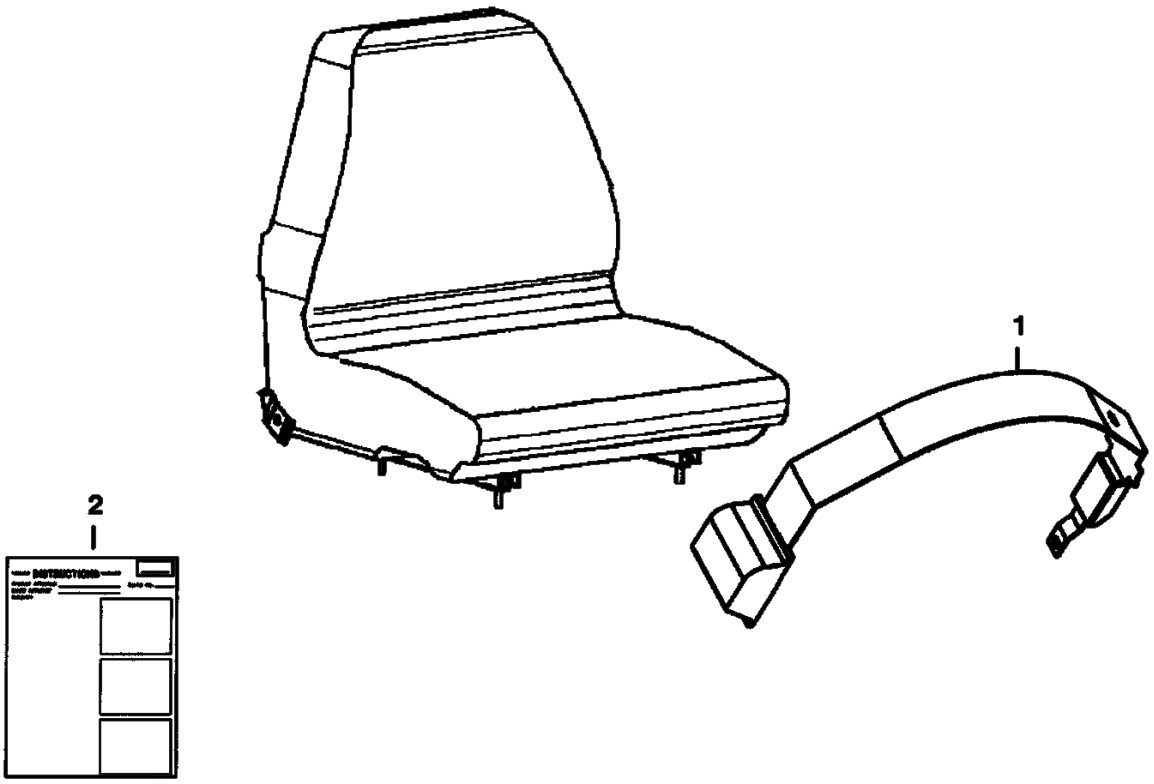

PE–1508

SEAT BELT (Cont'd)
(3" Wide Retractable)

Ref No	Part Number	Description	Remarks	Serial Number	Qty
1	6675562	SEAT BELT	See Illustration SEAT/ B16411 3" wide retractable seat belt - Use with Sears brand Suspension Seats with a L.H. recliner lever		1
2	6901011	INSTRUCTIONS			1

SEAT BELT
(3" Wide)

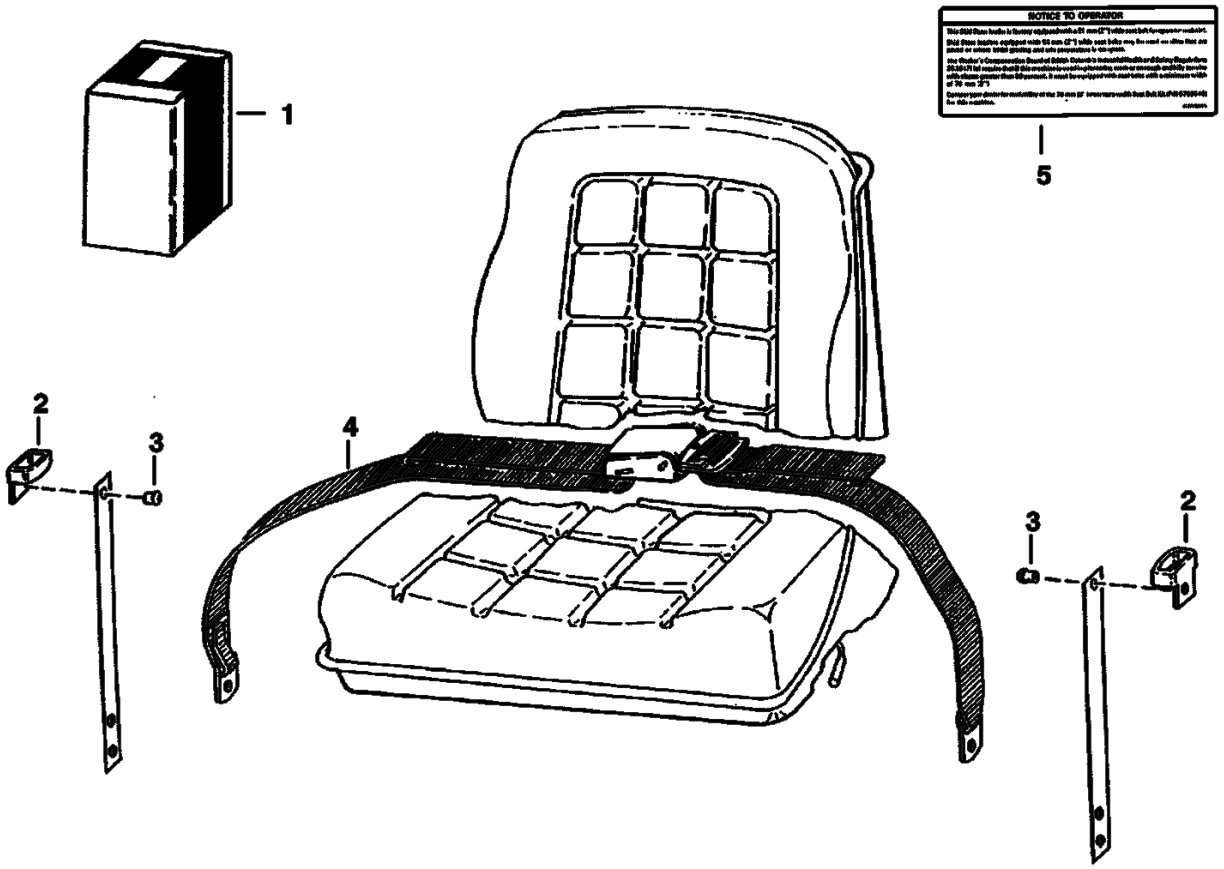

NOTE: Complies with British Columbia Industrial Health and Safety Regulations 26.16 (7) (a).

B–13601

SEAT BELT (Cont'd)
(3" Wide)

Ref No	Part Number	Description	Remarks	Serial Number	Qty
1	6703640	KIT	W/Ref. 2-5		1
2	6703703	GUIDE			2
3	6512797	RIVET			4
4	6659999	BELT			1
5	6703641	DECAL			1

STROBE LIGHT

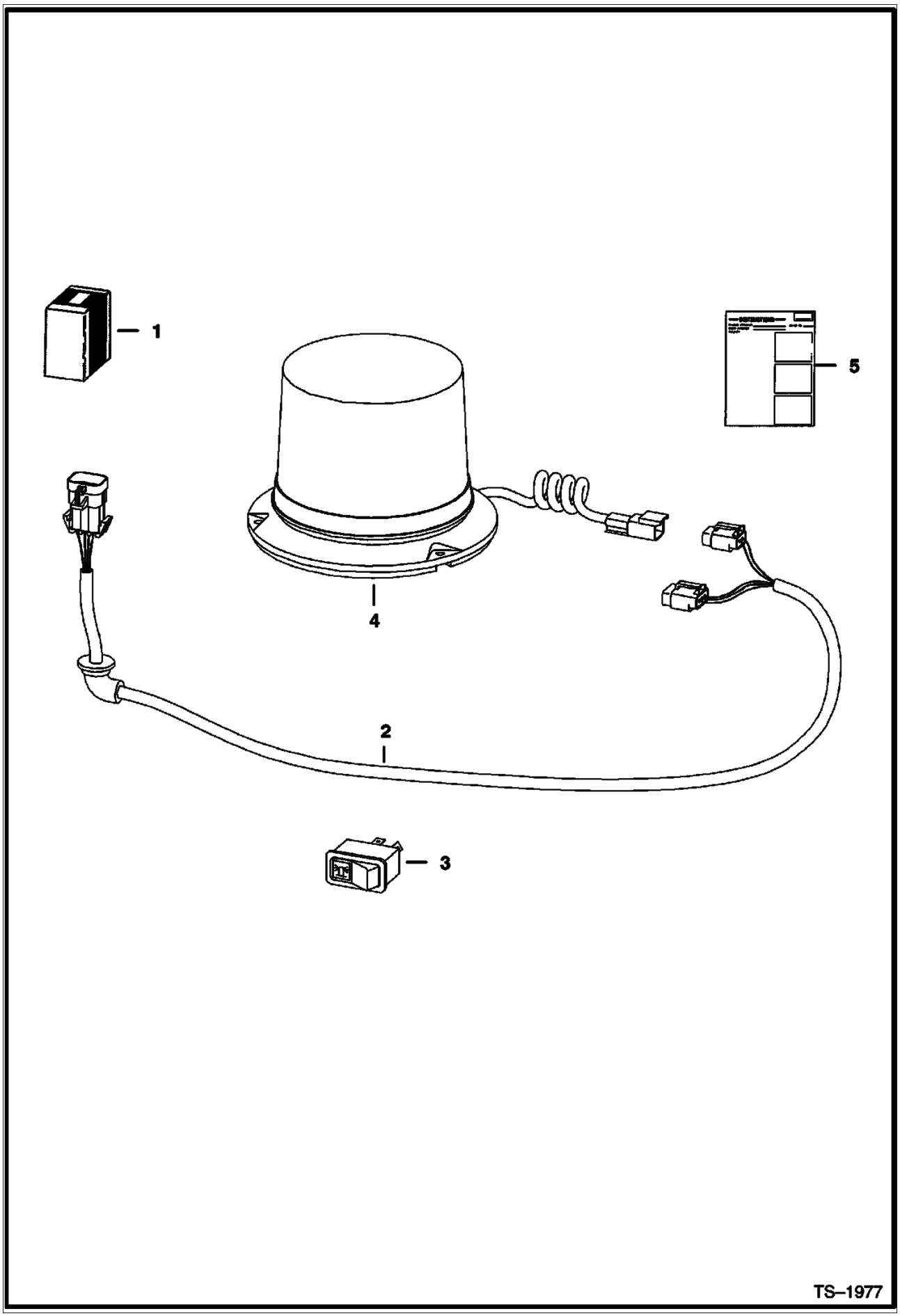

Ref No	Part Number	Description	Remarks	Serial Number	Qty
1	6719857	KIT	See Illustration CAB ELECTRICAL CIRCUITRY/ PE2111 strobe light - If loader is not equipped W/ heater, air conditioning, selectable joystick controls, advanced control system, power bob-tach, rotating beacon and/or non-power port plug-in 4 way flashers, also order 7116260 deluxe harness		1
2	6718872	HARNESS			1
3	6665317	SWITCH	horizontal		1
3	6668816	SWITCH	vertical		1
4	6675522	STROBE			1
4	6675858	FLASH TUBES			1
5	6900992	INSTRUCTIONS			1

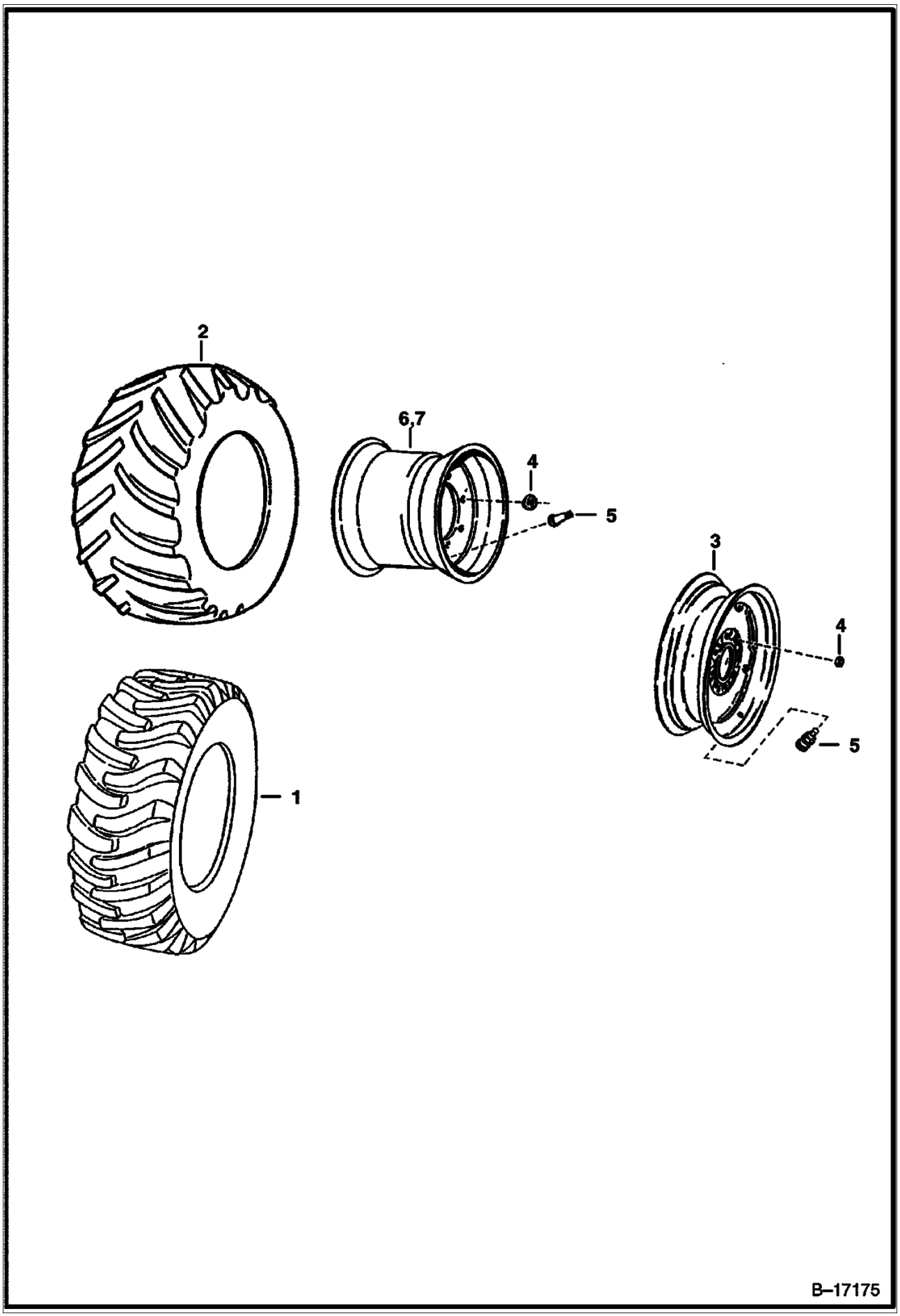
2
6,7
4
5
3
4
5
1
B–17175

Ref No	Part Number	Description	Remarks	Serial Number	Qty
1	6729901	TIRE	12 x 16.5 12 ply rating - Bobcat - heavy duty		4
1	6730108	TIRE	12 x 16.5 12 ply rating - Bobcat - severe duty		4
2	6730109	TIRE	33x15.5x16.5 12 ply - Hippo - Galaxy		4
3	6730772	RIM	Used W/Ref. 1 - 72" wide		4
4	6564669	NUT	wheel		32
5	1614765B	STEM	valve		4
6	6732847	RIM	used W/Ref. 2 - 74" wide		4
7	6733578	RIM	offset - 68" wide		4

DRAWING NOT AVAILABLE AT TIME OF PRINTING

PE-2852

Ref No	Part Number	Description	Remarks	Serial Number	Qty
1	6903773	31X6X10 SOLID FLEX TIRE AND WHEEL (LEFT)	L.H. - 12 x 16.5		2
1	6903774	31X6X10 SOLID FLEX TIRE AND WHEEL (RIGHT)	R.H. - 12 x 16.5		2

BULK ITEMS
(See Note)

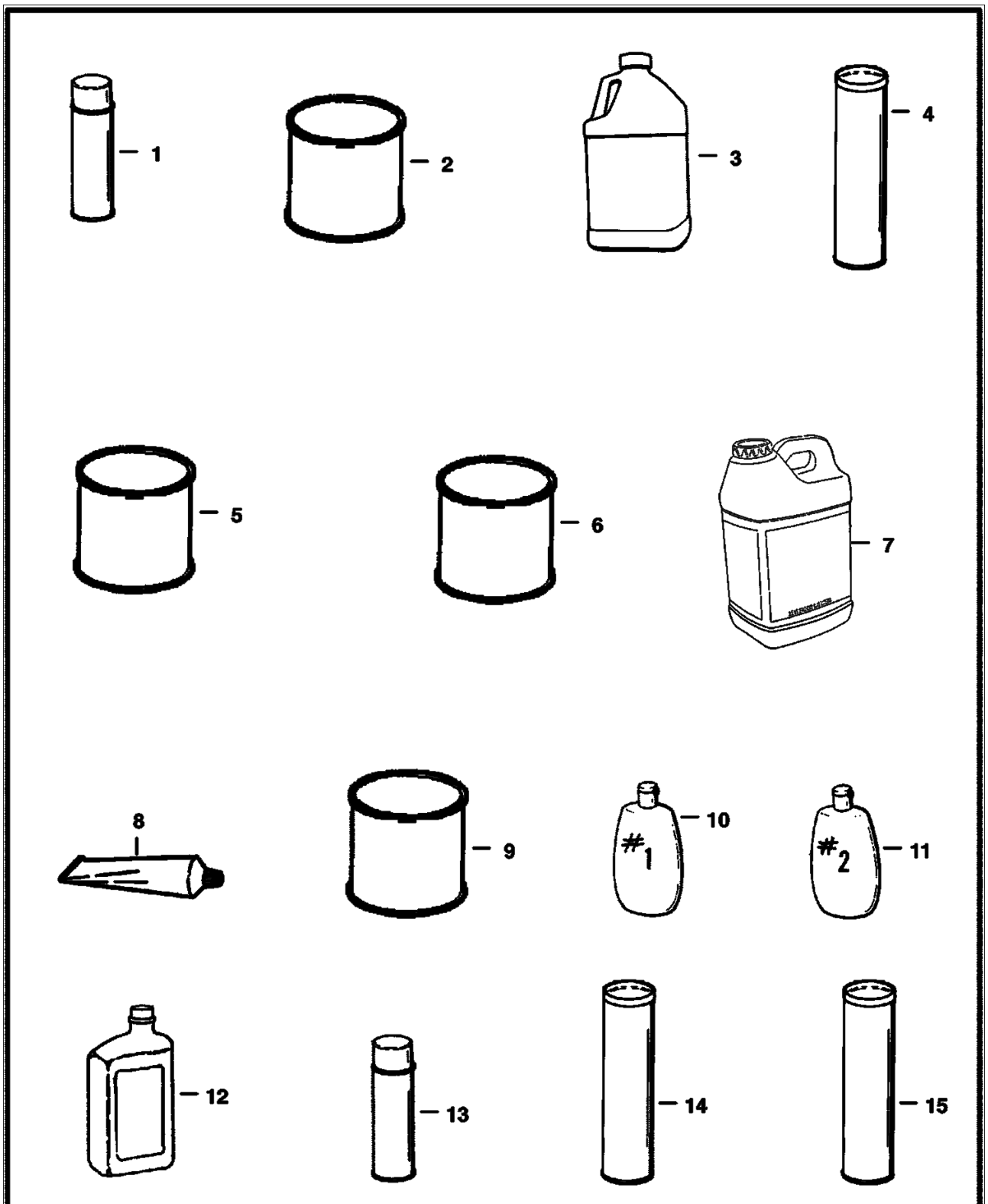

NOTE: Some of these bulk items may not be used on this particular model Bobcat.

NOTE: See Merchandising catalog for more products & information.

NOTE: Paint spray cans are packaged 6 per box.
Motor oil quarts are packaged 12 per box.
Motor oil 1 gal. jugs are packaged 6 per box.
Motor oil 2.5 gal. jugs are packaged 2 per box.

B–16462R

BULK ITEMS (Cont'd)
(See Note)

Ref No	Part Number	Description	Remarks	Serial Number	Qty
1	6902228	PAINT	orange - spray can - SEE NOTE		x
1	6902229	PAINT	charcoal - spray can - SEE NOTE		x
1	6902230	PAINT	white - spray can - SEE NOTE		x
2		PAINT	NAP - orange - gallon - also Order Ref. 5		x
2	6902233	PAINT	orange - Qt.		x
2		PAINT	NAP - charcoal - gallon - also Order Ref. 5		x
2	6902234	PAINT	charcoal - Qt.		x
2		PAINT	NAP - white - gallon - also Order Ref. 5		x
2	6902235	PAINT	white - Qt.		x
3	6724094	ANTI-FREEEZE	Gal. - Premixed PG		x
3	6724354	ANTI-FREEZE	Gal. - PG concentrate		x
4	6633583	SEALANT	chaincase covers		x
5		REDUCER	NAP - gallon		x
6		PRIMER	NAP - gallon		x
6	6653519	PRIMER	Qt.		x
7	6903117	HYD FLUID 2.5 GAL. 2			x
7	6903118	HYD. FLUID 5GAL			x
7		FLUID	NAP - 30 gallon drum		x
7	6903119	HYD. FLUID 55GAL			x
8	6599360	SEALANT	electrical - 3 oz. tube		x
9	6903121	GEAR LUBE 12			x
10	6630188	POLISH	window - #1 (8 oz.)		x
11	6630189	POLISH	window - #2 (8 oz.) - scratch remover		x
12	6903109	OIL 30W QT. 12	30W - 1 Qt. - SEE NOTE		x
12	6903107	OIL 10W30 QT. 12			x
12	6903105	OIL 15W40 QT. 12			x
12	6903108	OIL 10W30 GAL. 6			x
12	6903106	OIL 15W40 GAL. 6			x
12	6903110	OIL 30W GAL. 6			x
12	6903113	OIL 15W40 2.5 GAL. 2			x
12	6903112	OIL 10W30 2.5 GAL 2			x
12	6903111	OIL 30W 2.5 GAL 2			x
13	6675380	ADHESIVE	insulation - spray can		x
14	6903122	GREASE 10			x
15	6599719	GREASE	14.5 oz. cartridge - for fan idler bearing		x
16	6650407	ADHESIVE	1 oz. tube		x
17	6650388	SEALANT	flange		x
18	6736644	PAINT	orange - .5oz. spray can		x
18	6736641	PAINT	charcoal - .5oz. spray can		x
18	6736642	PAINT	white - .5oz. spray can		x
18	6736645	PAINT	red - .5oz. spray can		x

Part No.	Description	Was	Code	Page
10C000410B	BOLT			238
10C000416B	BOLT			238
10C000616B	BOLT			20
10H000025B	GREASE ZERK			26, 28, 54, 56
10H000035B	GREASE ZERK			28, 88
11H000015B	GREASE ZERK			26
12D000006B	NUT			256
12D000008B	NUT			256, 258
12D000010B	NUT			266
12H000015B	GREASE ZERK			26, 56
12H000025B	GREASE ZERK			318
1304227B	PIN			170
1306637B	PIN			60
1313116	BUSHING			160
1318565	COTTER PIN			84
1320075	COTTER PIN			306
1321607B	RACE			44
1321608B	BEARING			44
13K000008B	TEE			314
14D000010B	NUT			168, 258
14J003112B	PIN			160
14J005032B	PIN			28
15H000015B	GREASE ZERK			26
15KB00406B	ADAPTER			50
15KB00606B	ADAPTER			52
15KB00610B	ADAPTER			86
15KB00612B	ADAPTER			318, 326
15KB00808B	ADAPTER			80, 82
15KB00812B	ADAPTER			84
15KB01010B	ADAPTER			154
15KB01012B	ADAPTER			154
15KB01210B	ADAPTER			48, 220
15KB01212B	ADAPTER			318
15KB01612B	ADAPTER			80, 82
15KB01616B	CONNECTOR			52
15KN00003B	ADAPTER			86
15KV00005B	ADAPTER			86
1614765B	STEM			346
16F000002B	PLUG			182
16KN00005B	ADAPTER			86
17C000410B	BOLT			214, 256, 258, 300, 302
17C000412B	BOLT			41, 42
17C000428B	BOLT			50
17C000508B	BOLT			256, 258
17C000510B	BOLT			164
17C000512B	BOLT			168, 222, 228, 256, 258
17C000514B	BOLT			210
17C000516B	BOLT			262
17C000540B	BOLT			136, 220
17C000608B	BOLT			140, 210
17C000610B	BOLT			136
17C000612B	BOLT			30, 60, 88, 154, 160, 224, 228
17C000614B	BOLT			248
17C000616B	BOLT			140, 270, 304

Code for disposition of old part number

A -- Use up
B -- Use on other application (See PNI)
C -- File PDR Report with Bobcat Parts Sales
D -- Part Number Error

Part No.	Description	Was	Code	Page
17C000620B	BOLT			60, 78, 88, 154, 158
17C000624B	BOLT			50, 60, 228
17C000626B	BOLT			88
17C000628B	BOLT			228
17C000632B	BOLT			306
17C000636B	BOLT			86
17C000640B	BOLT			20, 26, 52, 240
17C000644B	BOLT			26, 78
17C000648B	BOLT			26
17C000652B	BOLT			304
17C000656B	BOLT			26, 290, 294
17C000660B	BOLT			28
17C000664B	BOLT			26
17C000672B	BOLT			26, 304
17C000680B	BOLT			88
17C000716B	BOLT			16
17C000728B	BOLT			80, 82
17C000816B	BOLT			160, 164
17C000820B	BOLT			24, 164
17C000824B	BOLT			164
17C000832B	BOLT			160
17C000872B	BOLT			160
17C000888B	BOLT			164
17C001024B	BOLT			44
17C001028B	BOLT			304
17C001056B	BOLT			14
17C006116B	BOLT			154
17C010112B	BOLT			26
17C010136B	BOLT			26
17KB00606B	ELBOW			52, 78, 154, 326
17KB01210B	ELBOW			48, 220
17KB01212B	ELBOW			326
17KV00003B	ELBOW			86
17KV00005B	ELBOW			86
18EM01224B	WASHER			222, 228
19F000012B	BUSHING			218
19J000012B	CLAMP			78
19KB00606B	TEE			272
19KV00005B	TEE			86
1CM00635B	SCREW			294, 298
1CM00640B	BOLT			222, 228
1CM00820B	BOLT			88
1CM08100B	BOLT			164
1DM00006B	NUT			204
20J000016B	CLAMP			80, 82
20JM01025B	PIN			164
21G000804B	BOLT			274
21JM00020B	PIN			196
21JM00814B	PIN			183, 184
21KB00606B	TEE			50, 326
21KB00610B	TEE			86
225855B	SEAL			26
24F000001B	BRACKET			136
24K000007B	PLUG			62, 66

Code for disposition of old part number

A -- Use up

B -- Use on other application (See PNI)

C -- File PDR Report with Bobcat Parts Sales

D -- Part Number Error

Part No.	Description	Was	Code	Page
25E000010B	WASHER			132
25E000011B	WASHER			168
25E000013B	WASHER			42, 142, 146, 210, 214, 300, 302
25E000014B	WASHER			238
25E000015B	WASHER			26, 136
25E000016B	WASHER			222, 228
25E000017B	WASHER			88
25E000018B	WASHER			170
25E000021B	WASHER			60, 160
25E000024B	WASHER			88, 140
25G000410B	BOLT			134
25G000512B	BOLT			22
25G000520B	BOLT			22
25G000612B	BOLT			254
25GM08010B	SET SCREW			180
25GT00410B	BOLT			142
25K020016B	O-RING			62, 66
25K020100B	O-RING			40
25K030118B	O-RING			78
25K030126B	O-RING			28
25K030218B	O-RING			56
25K030812B	O-RING			36
27E000010B	WASHER			26
29CM00820B	BOLT			158, 164
29G000416B	SCREW			62, 66
29G000444B	BOLT			62, 66
2C001626B	BOLT			43, 44
2F004051B	PIN			170
30H000021B	CLAMP			168, 268
30H000023B	CLAMP			300
30H000027B	CLIP			252
30H000031B	CLAMP			168
30H000034B	CLAMP			156
30H000035B	CLAMP			72, 74
30H000042B	CLAMP			308
30H000046B	CLAMP			134
30H000050B	CLAMP			254
30H000062B	CLAMP			210
30H000073B	CLAMP			164
30H000079B	CLAMP			80, 82
30H000091B	CLAMP			156
31C000410B	BOLT			266
31C000644B	BOLT			52
31C000820B	BOLT			160, 164
31C000824B	BOLT			12, 306
31C001036B	BOLT			306
31C001228B	BOLT			12
31H000038B	CLAMP			164, 326
31H000042B	CLIP			272, 318
31H000046B	CLAMP			290, 294
3291290B	WING NUT			206
35C000408B	BOLT			222
35C000410B	BOLT			212, 256, 258, 276, 290
35C000412B	BOLT			20, 40, 258, 268

Code for disposition of old part number

A -- Use up
B -- Use on other application (See PNI)
C -- File PDR Report with Bobcat Parts Sales
D -- Part Number Error

Part No.	Description	Was	Code	Page
35C000512B	BOLT			32, 300, 302
35C000514B	BOLT			140
35C000516B	BOLT			78, 156
35C000520B	BOLT			134
35C000536B	BOLT			256, 258
35C000612B	BOLT			84, 318, 338
35C000616B	BOLT			50
35C000620B	BOLT			136, 164
35C000624B	BOLT			88, 326
35C000632B	BOLT			78
35C000680B	BOLT			326
35C000820B	BOLT			50
35C000844B	BOLT			50
35C001020B	BOLT			242
36K000005B	CAP			50, 62, 64, 66, 78, 80, 82
36K000006B	CAP			164
36K000008B	CAP			46, 314
37C000412B	BOLT			268
37C000424B	BOLT			276, 290
37C000512B	BOLT			24, 42, 212, 214, 276, 290, 308
37C000612B	BOLT			24
37C000620B	BOLT			32, 60, 210
37C000628B	BOLT			24
38C000610B	BOLT			168, 170
38C000820B	BOLT			160
38C000824B	BOLT			24
38C000828B	BOLT			159, 160
38C000840B	BOLT			24
3966602B	O-RING			182
3974095B	GASKET			196, 204
3974226B	KEY			184
3974260B	BOLT			194
3974394B	PIN			196, 198
3974500B	JOINT			198
3974503B	STUD			196
3974916B	STUD			174, 178, 182
3974920B	SCREW			180
3974970B	SCREW			204
3974972B	GASKET			204
42H000052B	CLAMP			158
42HC00250B	CLAMP			158
42HC00375B	CLAMP			157, 158
42HL00250B	CLAMP			34, 78
42HS00004B	CLAMP			34
43C000408B	BOLT			146
43C000516B	BOLT			34
43C000616B	BOLT			133, 134, 148
43C000852B	BOLT			164
43C820	BOLT			98
43DM00008B	NUT			136, 264
44H000048B	CLAMP			290, 294
45C000616B	BOLT			158, 170
45C000620B	BOLT			88
45G001006B	BOLT			266

Code for disposition of old part number

A -- Use up
B -- Use on other application (See PNI)
C -- File PDR Report with Bobcat Parts Sales
D -- Part Number Error

Part No.	Description	Was	Code	Page
46D000005B	NUT			222, 228
47C000820B	BOLT			42
47K000008B	PLUG			100, 104
47K000010B	PLUG			78
4D000028B	NUT			304
4DM00008B	NUT			152
4DM00010B	NUT			136
4F006106B	PIN			20
51DM00012B	NUT			228
51DM12	NUT			222
5289686B	PLUG			18
53C000516B	BOLT			34
53CM00616B	BOLT			170
53CM00820B	BOLT			170
53D000006B	NUT			14, 20
53D000010B	NUT			14
53D000012B	NUT			12
53DM00008B	NUT			158, 164
54K020002B	O-RING			62, 68
54K020028B	O-RING			64, 66
54K030110B	O-RING			320
54K030218B	O-RING			54
54K040116B	O-RING			320
54K040224B	O-RING			54, 56
54K040300B	O-RING			54, 56
55D000005B	NUT			256, 258
55D000006B	NUT			24, 228
55K000204B	O-RING			62, 66
55K000214B	O-RING			78, 318
55K000219B	O-RING			80, 82
57D000006B	NUT			24, 32, 60, 88, 134, 210, 306
57D000008B	NUT			306
57D000010B	NUT			26, 242, 306
57G000608B	SCREW			276, 290
58K000013B	O-RING			64, 66
58K000016B	O-RING			64, 66
58K000017B	O-RING			62, 66
58K000022B	O-RING			64, 84
58K000116B	O-RING			70
58K000127B	O-RING			62, 66
58K000132B	O-RING			320
58K22	O RING 10			68
59D000004B	NUT			134, 238, 268, 290
59D000005B	NUT			14, 42, 136, 224, 228, 276, 290
59D000006B	NUT			24, 78
59D000008B	NUT			14
59D4	NUT 5			276
5CM01020B	BOLT			158, 292
5CM01025B	SCREW			294
5CM01080B	SCREW			292, 294
5HM00013B	CLAMP			34
5HM00014B	CLAMP			34, 156
5HM00015B	CLAMP			78
5HM00020B	CLAMP			278, 292

Code for disposition of old part number

A -- Use up

B -- Use on other application (See PNI)

C -- File PDR Report with Bobcat Parts Sales

D -- Part Number Error

Part No.	Description	Was	Code	Page
5HM00023B	CLAMP			156
5HM00024B	CLAMP			34, 72, 74
5HM00035B	CLAMP			72
5HM00042B	CLAMP			78, 84
5HM00055B	CLAMP			156
5HM00058B	CLAMP			34
5JM00020B	SNAP RING			196
614142B	SLEEVE			268
619021	WASHER 5			326
619021B	WASHER			14, 28, 60, 88, 170, 318, 334
61D000005B	NUT			23, 24, 154, 212, 214, 222, 228
61D000006B	NUT			160, 223, 224, 240, 248
62D000004B	NUT			168
62D000005B	NUT			264
6511855	SEAL			154
6512026	BUSHING			60
6512797	RIVET			342
6513152	SEAL			222, 228
6513471	CLAMP			156
6513495	COTTER PIN			60, 170
6515131	TERMINAL			268
6515817	WASHER			14
6517516	LIGHT			268
6518200	GREASE ZERK			88
6518955	SNAP RING			160
6519178	BUMPER			20
6531270	SLEEVE			62
6532127	BOOT			30, 142
6532347	SPACER			26
6532453	RING			320
6533898	DECAL			306
6538367	HEAD			54
6542731	SAFETY TREAD			222, 228
654299B	BEARING			100, 104
6553411	BUSHING			12, 42
6553709	WASHER			14
6553976	SAFETY TREAD			244
6554100	TREAD			170, 244, 318
6554149	CORD			18, 222, 230, 238
6555341	SAFETY TREAD			244
6555351	SEAL			238
6557224	DECAL			244
6557291	BALL JOINT			170
6557493	GROMMET			332
6557831	WASHER			88, 292, 294
6557904	FLASHER			256, 258, 268
6558305	WIRE ROPE			244
6558309	WIRE ROPE			244
6558310	SLEEVE			244
6559479	NUT			170
6560573	DECAL			246
6560633	DAMPENER			14
6561383	DECAL			244
6562018	SPRING			28

Code for disposition of old part number

A -- Use up
B -- Use on other application (See PNI)
C -- File PDR Report with Bobcat Parts Sales
D -- Part Number Error

Part No.	Description	Was	Code	Page
6562602	BUSHING			14
6562619	BUSHING			208
6563914	WASHER			60, 88
6564343	SPACER			170
6564452	GRIP			24, 167, 168, 169, 170
6564657	PIN			60, 210
6564669	NUT			44, 346
6565200	DECAL			246
6565947	WASHER			44
6565977	HOSE			278, 290
6565990	DECAL			244
6567743	PIN			14, 274
6567838	PIN			306
6567962	WASHER			168, 170
6568424	ADAPTER			160
6568425	ADAPTER			160
6569203	CLAMP			136
6569219	SCREEN			34, 78
6569498	SPRING ASSY			160
6570931	INSTRUCTIONS			208
6576033	WASHER			160
6576262	MOUNT			168, 170
6576280	BOLT			136
6577058	PIN			88
6577230	BRACKET			30
6577382	SPACER			154
6577545	GROMMET			212, 214, 300, 302
6577754	DECAL			246
6577821	HOSE			34
6577822	HOSE			34, 156
6577880	KIT			207, 208
6577954	PIN			26
6577961	GROMMET			30, 60, 170
6578169	HOSE			34
6578172	HOSE			34, 156
6578278	PAD			34, 78
6578368	DECAL			246
6578804	HOSE			154
6578857	HUB			44
6579167	HOSE			86
6579385	DECAL			244
6579528	DECAL			244
6579613	STOP			14, 154
6579989	BRACKET			136
658128B	SNAP RING			100, 104
6586251	HOSE			78
6586542	HEAD			320
6586543	PISTON			320
6586710	BOLT			160
6586918	SCREW			62
6587182	SWIVEL PIN			160
6587458	KEY			34
6587523	WASHER			62, 66
6587575	ADAPTER			62

Code for disposition of old part number

A -- Use up
B -- Use on other application (See PNI)
C -- File PDR Report with Bobcat Parts Sales
D -- Part Number Error

Part No.	Description	Was	Code	Page
6587580	SPRING			62, 67, 68
6587763	BOOT			62, 146
6587765	BUSHING			160
6589226	BONNET			62
6592098	WASHER			62
6592100	COLLAR			62, 68
6592105	BALL			62
6592107	SPRING			62
6592109	ADAPTER			66
6592117	SPRING			62, 66
6592506	CLAMP			46, 48, 78
6592507	PLATE			78
6592766	U-BOLT			170
6595663	BUSHING			62, 66
6596807	PLUG			62
6598112	CAP			174, 200
6598133	BRACKET			178
6598169	PLUG			178, 184
6599360	SEALANT			350
6599365	KIT			130
6599645	PLUG			12
6599719	GREASE			350
6599741	WASHER			88
6599744	BALL JOINT			88
6599931	ALARM			212, 214
6610510	TIE			18, 34, 156, 302
6624289	STA STRAP			46, 48, 52, 72, 74, 134, 136, 148, 210, 252, 254, 256, 258, 272, 278, 292, 294, 318, 326
6628613	HOSE			86
6628810	HOSE			84
6630188	POLISH			350
6630189	POLISH			350
6630207	RIVET			30
6630945	WASHER			168, 170
6631036	JOINT			170
6631046	SEAL			182
6631418	PIN			14, 20, 274
6631561	NUT			70
6631643	PLATE			98
6632279	SEAL KIT			64, 68
6633583	SEALANT			350
6634874	O-RING			70
6640690	PIN			138, 142, 300
6640692	CONNECTOR			138, 142
6640694	LOCK			138, 142
6640699	CONNECTOR			142, 276, 290, 300
6640700	LOCK			142, 300
6641174	CONNECTOR			276, 290
6641176	SEAL			138, 142, 300
6641179	CONNECTOR			70, 138, 142, 300
6641180	LOCK			70, 138, 142, 300
6644965	BALL JOINT			168
6645086	PLUG			100, 104
6646582	PLUG			142
6646705	SEAL			154

Code for disposition of old part number

A -- Use up

B -- Use on other application (See PNI)

C -- File PDR Report with Bobcat Parts Sales

D -- Part Number Error

Part No.	Description	Was	Code	Page
6646781	SWITCH			212
6647777	PIN			70
6647783	LOAD CHECK			70
6647784	PLUG			70
6647785	SPRING			70
6648293	SCREW			70
6648307	CONNECTOR			292
6648308	CONNECTOR			292
6648312	TERMINAL			282
6648320	SEAL			282
6648348	PLUG			30, 32
6649244	STUD			222, 228
6649245	RETAINER			222, 228
6649481	BULB			308
6649551	SHOCK			88
6649706	PIN			242
6649949	PLUG			18
6650107	SEAL			282
6650120	RACE			38, 40
6650388	SEALANT			350
6650407	ADHESIVE			350
6650627	PLATE			100, 104
6650629	PIN			100, 104
6650630	RETAINER			100, 104
6650634	GASKET			100, 104
6650635	BEARING			100, 104
6650636	PIN			100, 104
6650637	BOLT			100, 104
6650646	O-RING			100
6650647	O-RING			100
6650648	PLUG			100
6650652	POPPET			100
6650668	BOLT			100, 104
6650675	COUPLER			100
6652018	BOLT			104
6652373	VALVE			206
6652679	KEY			186
6652750	PLUG			184
6652751	GASKET			184
6652762	BOLT			176
6652918	NUT			164
6653519	PRIMER			350
6654139	MOULDING			140
6654806	FUSE			134
6655399	BUMPER			24, 154
6655781	BEARING			160
6657028	O-RING			100, 104
6657067	COVER			102
6657068	COVER			100, 104
6657072	RETAINER			100, 104
6657073	RETAINER			100, 104
6657719	PLUG			18, 238
6657734	PUMP			34
6658180	BREATHER			34

Code for disposition of old part number

A -- Use up
B -- Use on other application (See PNI)
C -- File PDR Report with Bobcat Parts Sales
D -- Part Number Error

Part No.	Description	Was	Code	Page
6659369	HEATER			218
6659543	PLUG			316
6659999	BELT			342
6660260	SWITCH			130
6660644	CAP			62
6660814	O-RING			100, 104
6660967	CAP			160
6660995	GREASE RING			160
6661022	FILTER			52, 80, 82, 127, 128
6661062	PLUG			158, 316
6661114	CAP			33, 34
6661150	SWITCH			256
6661229	BEARING			160
6661248	ELEMENT			2, 8, 84, 130
6661353	LIGHT ASSY			308
6661377	SEAL			160
6661481	O-RING			100
6661696	CAP			34
6661787	WASHER			164
6661807	KIT			9, 10, 128
6661808	KIT			128
6662298	SNAP RING			42
6662848	CAP			66
6662855	BELT			5, 6, 160
6662997	PULLEY			160
6664065	WASHER			332
6664085	BUSHING			18, 226, 238, 332
6664097	COVER			332
6664103	NUT			332
6664221	RETAINER			18
6664223	OUTLET			18
6664224	CAP			18
6664554	PUMP			222
6664566	BOLT			332
6664845	BEARING			38, 40
6664848	SNAP RING			38, 40
6665000	CLIP			142, 222, 228
6665017	CONNECTOR			282
6665018	LOCK			282
6665086	SEAL			54
6665222	RING GEAR			160
6665307	SEAL			160
6665308	SNAP RING			160
6665314	PLUG			18
6665316	SWITCH			268
6665317	SWITCH			216, 344
6665321	RIVET			142, 222, 228
6665322	RIVET			142, 222, 228
6665367	BULB			18
6665371	SWITCH			136
6665427	BATTERY			2, 136
6665568	EXTRUSION			222, 230
6665569	WASHER			62, 66
6665570	RING			62, 66

Code for disposition of old part number
A -- Use up
B -- Use on other application (See PNI)
C -- File PDR Report with Bobcat Parts Sales
D -- Part Number Error

Part No.	Description	Was	Code	Page
6665602	MOTOR			332
6665701	BUSHING			60
6665707	SWITCH			222
6665727	LIGHT			256, 258
6665728	LIGHT			256, 258
6665729	LIGHT			256, 258
6665755	SEAL			38, 40
6665860	KIT			256, 258
6665915	GAUGE			78
6666338	WASHER			100, 104
6666542	SEAL			320
6666571	BULB			216
6666766	GROMMET			222
6666881	RETAINER			100
6667144	CONNECTOR			138, 142
6667145	LOCK			138
6667176	PLUG			70
6667185	SEAL KIT			70
6667201	SPACER			332
6667323	SEAL			320
6667326	SEAL			54
6667352	FILTER FUEL			2, 6, 34
6667353	FILTER ASSY			34
6667461	PIN			180
6667676	COVER			70
6667677	O-RING			70
6667680	SNAP RING			70
6667687	STEM			64, 66
6667803	COUPLER			272, 326
6667804	COUPLER			272, 326
6667844	VALVE ASSY			50, 57, 58
6668104	MOUNT			164
6668742	SWITCH			18
6668765	VALVE			62, 66
6668815	SWITCH			256, 258, 268
6668816	SWITCH			216, 256, 258, 344
6668819	FILTER			130
6668820	NUT			64, 68, 126
6669085	VALVE			58
6669087	SEAL KIT			58, 126
6669089	TRACK			22
6669091	CLIP			18, 276, 290
6669135	SEAT			21, 22
6669224	BOLT			18, 276, 290
6669267	SEAL			56
6669268	SEAL			56
6669402	HOUSING			100
6669405	END CAP			104
6669406	END PLATE			100
6669409	WASHER			100
6669411	BEARING			100, 104
6669549	SOCKET			252
6669657	SEAL KIT			272
6669732	SEAL KIT			64, 66, 68

Code for disposition of old part number

A -- Use up
B -- Use on other application (See PNI)
C -- File PDR Report with Bobcat Parts Sales
D -- Part Number Error

Part No.	Description	Was	Code	Page
6669734	SEAL KIT			62, 64, 66, 68
6670160	CUSHION			22
6670284	LIGHT ASSY			308
6670287	COVER			24
6670312	SOLENOID			256, 258
6670347	GASKET			188
6670425	SCREW			204
6670426	NUT			204
6670427	CAP			200, 204
6670462	NUT			204
6670504	PLUG			188, 190
6670533	NUT			198
6670620	MOUNT			258
6670621	LENS			258
6670634	SEAL KIT			70
6670668	PIN			258
6670682	BEARING			160
6670706	CONNECTOR			142
6670707	CONNECTOR			142
6670710	LOCK			142
6670711	LOCK			142
6670715	PIN			142
6670726	LOCK			330
6670769	O-RING			194
6670774	PIN			202
6670782	GASKET			198
6671025	COIL			62, 66
6671106	HORN			256, 258
6671138	SEAL			44
6671512	BLOCK ASSY			104
6671516	SEAL KIT			102, 104
6671518	BOLT			100, 104
6671520	O-RING			98, 104
6671527	NUT			70
6671845	PLUG			92
6672272	WASHER			308
6672273	SCREW			308
6672274	SCREW			308
6672275	GASKET			308
6672276	LENS			308
6672277	BRACKET			308
6672279	MOUNT			308
6672354	PLUG			184
6672384	CAP			200
6672436	SEAL			180
6672471	VALVE			64, 66
6672715	SPACER			22
6672756	SEAL KIT			126
6672762	PLUG			126
6672863	SOLENOID			70
6673188	SEAL KIT			126
6673710	BEARING			88
6673789	BEARING			88
6673884	O-RING			100

Code for disposition of old part number

A -- Use up
B -- Use on other application (See PNI)
C -- File PDR Report with Bobcat Parts Sales
D -- Part Number Error

Part No.	Description	Was	Code	Page
6673954	HOSE			80
6674000	CLAMP			138
6674013	TRACK			22
6674029	SEAL			92
6674037	SPRING			92, 94
6674184	RING			92
6674192	BRAKE DISC			94
6674193	BRAKE DISC			94
6674202	NUT			132
6674219	BLOCK			92
6674228	PANEL			276, 290
6674231	VENT			276, 290
6674234	CONDENSER			289, 290, 294
6674235	RECEIVER DRIER			290, 294
6674315	SENSOR			136
6674316	SENSOR			134
6674331	COIL			70
6674335	HOUSING ASSY			92
6674337	SPOOL			92
6674338	WASHER			92
6674339	SPRING			92
6674340	PIN			92
6674341	HOUSING			92
6674343	SHIM			92, 94
6674344	SPRING			92, 94
6674345	PLUG			92, 94
6674400	HOUSING			308
6674401	HOUSING			308
6674402	MOUNT			308
6674403	COVER			16, 132
6674405	BUSHING			20
6674406	SENSOR			20
6674407	SHOULDER BELT			338
6674519	WINDOW			238
6674520	WINDOW			238
6674521	WINDOW			238
6674522	WINDOW			238
6674738	MOTOR			93, 94
6674798	REPAIR KIT			84
6674799	ADAPTER			252
6674802	CONNECTOR			250, 252
6674841	SPRING			94
6674894	NUT			20
6674895	RETAINER			18
6674907	NUT	6687925	A	112, 114
6674993	CAP			222
6675020	SCREW			92
6675021	BOLT			92, 94
6675026	CAP			250, 252
6675033	INSERT			14, 16, 132
6675064	TERMINAL			256, 258
6675074	SEAT BELT			16
6675075	HOSE			290, 294
6675076	HOSE			290, 294

Code for disposition of old part number

A -- Use up

B -- Use on other application (See PNI)

C -- File PDR Report with Bobcat Parts Sales

D -- Part Number Error

Part No.	Description	Was	Code	Page
6675091	CAM			92
6675099	ALARM			300, 302
6675135	GAS SPRING			14
6675137	GAS SPRING			14
6675139	GAS SPRING			14
6675140	SNAP RING			14
6675154	HOLDER			134
6675155	FUSE			134
6675170	SEAT BELT			334
6675171	CLAMP			132
6675172	BRACKET			276, 290
6675176	SWITCH			276, 290
6675177	KNOB			276, 290
6675179	FLANGE			276, 290
6675181	PLUG			276, 290
6675189	PIN			94
6675212	RETAINER			238
6675215	WINDOW			230
6675221	BOLT			164
6675227	SEAL			92
6675228	SEAL			92
6675258	CLEVIS			14
6675265	CHECK VALVE			126
6675273	WASHER			24
6675278	FILTER			134
6675298	COUPLER			224
6675299	COUPLER			224
6675308	KIT			336
6675309	KIT			336
6675310	KIT			336
6675311	KIT			336
6675312	KIT			336
6675313	KIT			336
6675314	KIT			336
6675315	KIT			336
6675316	KIT			336
6675317	SCISSORS			334
6675318	KIT			336
6675319	SEAT			334
6675320	SEAT			334
6675321	SEAT			334
6675322	SEAT			334
6675323	KNOB			334
6675336	BULB			308
6675338	COVER			104
6675341	BLOCK ASSY			101, 102
6675342	PIN			100, 104
6675378	CLIP			224, 228
6675380	ADHESIVE			350
6675387	EXTRUSION			17, 18, 238
6675497	BLOWER			280, 281, 282, 298
6675503	HOUSING			282
6675504	RING			282
6675505	BLOWER WHEEL			282

Code for disposition of old part number

A -- Use up

B -- Use on other application (See PNI)

C -- File PDR Report with Bobcat Parts Sales

D -- Part Number Error

Part No.	Description	Was	Code	Page
6675506	MOUNT			282
6675507	COVER			282
6675509	MOTOR			282
6675510	CLAMP			280, 298
6675511	DRAIN VALVE			280, 298
6675512	CLAMP			280, 298
6675522	STROBE			344
6675523	BEACON			216, 256, 258
6675524	CLIP			16
6675534	BLOCK VALVE			294, 298
6675538	O-RING			294, 298
6675544	CANVAS CAB			233, 234
6675545	GROMMET			18, 238
6675558	SEAL			222, 228
6675559	COIL			134
6675562	SEAT BELT			339, 340
6675581	EXTINGUISHER			266
6675590	DOOR			234
6675591	HINGE KIT			234
6675595	SEAT			334
6675596	SEAT			334
6675607	INSULATION			285, 286
6675608	INSULATION			286, 294
6675609	INSULATION			286, 294
6675610	INSULATION			286
6675611	SEAL			284, 286
6675612	INSULATION			286
6675613	INSULATION			286
6675614	INSULATION			286
6675618	CLAMP			182, 190
6675668	CABLE			168, 170
6675669	VALVE			69, 70, 220
6675685	HOSE			290, 294
6675779	PRESS. SWITCH			292, 294
6675824	O-RING			294
6675825	O-RING			294
6675833	SEAL			238
6675835	TURN SIGNAL			268
6675846	POTENTIOMETER			276, 290
6675858	FLASH TUBES			344
6675861	REAR HOUSING			94
6675862	BRAKE			96
6675863	QUAD RING			94
6675864	QUAD RING			94
6675866	SPOOL			94
6675867	WASHER			94
6675868	POPPET			92, 94
6675869	O-RING			92, 94
6675874	CAM			94
6675875	HOUSING			94
6675876	DISTRIBUTOR			94
6675877	SEAL			94
6675878	SEAL			94
6675879	SEAL			94

Code for disposition of old part number

A -- Use up
B -- Use on other application (See PNI)
C -- File PDR Report with Bobcat Parts Sales
D -- Part Number Error

Part No.	Description	Was	Code	Page
6675880	SEAL			94
6675881	SEAL			94
6675882	SPOOL			94
6675885	SNAP RING			94
6675886	QUAD RING			94
6675887	HOUSING			94
6675888	SHAFT			94
6675889	PISTON			94
6675890	COVER			96
6675892	GASKET			96
6675893	O-RING			94
6675894	SEAL			94
6675895	BOLT			96
6675896	BOLT			94
6675897	WASHER			94
6675898	BUSHING			94
6675982	PLUG			132
6675999	SWITCH			332
6676000	TEE			332
6676001	ARM			332
6676002	BLADE			332
6676003	HOSE			222, 226, 332
6676021	SEAL KIT			92
6676022	SEAL			92
6676023	O-RING			92
6676024	PLUG			92
6676028	NOZZLE			332
6676029	SOLENOID			140, 142, 146, 210
6676034	KIT			336
6676062	VALVE			294
6676063	KIT			296
6676147	VALVE PLATE			104
6676205	SEAL KIT			126
6676239	CARTRIDGE			126
6676242	COIL			126
6676243	COIL			126
6676244	COIL			126
6676247	NUT			126
6676338	GAS SPRING			336
6676399	VALVE CORE			294
6676417	VALVE			86
6676492	SENSOR			140
6676493	SENSOR			140
6676499	GROMMET			222
6676500	ELBOW			222
6676516	NUT			276
6676536	SWITCH			132
6676537	SWITCH			140, 210
6676538	INSULATION			288, 294
6676539	CLIP			280, 294, 298
6676542	CAP			70
6676543	PLUG			70
6676544	SPRING			70
6676545	CARTRIDGE			70

Code for disposition of old part number

A -- Use up

B -- Use on other application (See PNI)

C -- File PDR Report with Bobcat Parts Sales

D -- Part Number Error

Part No.	Description	Was	Code	Page
6676606	SPACER			280, 288, 298
6676618	CLIP			282
6676640	SEAL			143, 144
6676645	SPRING			94
6676647	WASHER			95, 96
6676648	WASHER			96
6676649	WASHER			96
6676650	WASHER			96
6676651	WASHER			96
6676652	WASHER			96
6676653	SCREW			280, 288, 298
6676732	SWITCH			318
6676870	CONNECTOR			142
6676872	TURN SIGNAL			256, 258, 268
6676917	ELBOW			222
6676927	FELT STRIP			238
6676984	MOUNT			294, 298
6677105	COVER			280, 294, 298
6677108	HOUSING			280, 298
6677111	SEAL			280, 284, 298
6677115	RECEPTACLE			280, 298
6677116	RETAINER			280, 298
6677117	SCREW			280, 298
6677118	SCREW			280, 298
6677119	SCREW			280, 298
6677120	COVER			280
6677121	CAP			294
6677122	CAP			290, 294
6677136	SOCKET			252
6677177	PLUG			126
6677181	SENSOR			40
6677192	MAGNET			222, 228
6677193	RIVET			222, 228
6677198	TAB			238
6677383	SOLENOID			62
6677485	SPACER			150
6677486	NUT			150
6677487	COVER			150
6677488	RECTIFIER			150
6677489	REGULATOR ASSY			150
6677490	BRACKET			150
6677491	BRACKET			150
6677492	ROTOR			150
6677493	STATOR			150
6677494	BOLT			150
6677495	SPACER			150
6677496	PULLEY			150
6677497	NUT			150
6677504	COVER			280, 288, 298
6677817	BOLT			150
6677818	BEARING			150
6677819	RETAINER			150
6677820	BEARING			150
6677833	ARM ASSY			225, 226

Code for disposition of old part number

A -- Use up
B -- Use on other application (See PNI)
C -- File PDR Report with Bobcat Parts Sales
D -- Part Number Error

Part No.	Description	Was	Code	Page
6677834	BLADE			226
6677836	COVER			226
6677837	BOLT			226
6677839	GASKET			226
6677840	SWIVEL			226
6677841	WASHER			226
6677842	NUT			226
6677843	NUT			226
6677844	NUT			226
6677845	ADAPTER			226
6677847	GROMMET			226
6677973	PLUG			238
6677980	NUT			126
6677982	CARTRIDGE			126
6677983	FILTER			4, 276, 292
6678066	AIR CLEANER			205, 206
6678067	BUSHING			88
6678076	BLOCK			52
6678151	COVER			280, 298
6678152	SEAL			280, 298
6678155	FILTER ASSY			84, 129, 130
6678156	COOLER			83, 84
6678198	BOLT			226
6678204	KIT			96
6678205	ALTERNATOR			149, 150
6678207	FILTER			276, 290
6678226	SEAL			104
6678233	OIL FILTER			1, 2, 4, 182
6678283	HANDLE			238
6678292	GAS SPRING			274
6678548	SOCKET			222, 228
6678666	TREE MOUNT			278, 292
6678667	MOUNT			134
6678668	TIE			134
6678675	CONTROLLER			254
6678739	WASHER			226
6678891	COIL			64, 68
6678893	SOLENOID			64, 68
6678920	NOZZLE			226
6678921	GUIDE			226
6678933	PISTON			56
6678960	SEAL			28
6678970	ELBOW			84
6678971	BOLT			36
6679034	MOUNT			134, 136, 294
6679102	VALVE			125, 126
6679141	HOSE			80
6679145	CLUTCH			292
6679308	SEAT BELT			338
6679476	MOTOR			226
6679820	RELAY			134
6679836	ADAPTER			52
6679837	COUPLER			52
6679838	COUPLER			52

Code for disposition of old part number

A -- Use up
B -- Use on other application (See PNI)
C -- File PDR Report with Bobcat Parts Sales
D -- Part Number Error

Part No.	Description	Was	Code	Page
6679839	COUPLER			52
6679840	SEAL			52
6679841	SEAL			52
6679842	SWITCH			132
6679845	CROSSMEMBER			132
6679855	BULB			132
6679856	ALARM			132
6679943	CHECK VALVE			72, 74
6679990	CLIP			14
6680018	KIT			52
6680020	SEAL KIT			52
6680120	CARTRIDGE			126
6680272	NUT			204
6680280	SEAL			191, 192
6680326	LIGHT			18
6680355	BOOT			152
6680356	BOLT			152
6680358	RING			152
6680359	STOP RING			152
6680360	STOP			152
6680361	SPRING			152
6680362	BALL			152
6680363	WASHER			152
6680365	SHAFT			152
6680366	GEAR			152
6680367	GEAR			152
6680368	STOP RING			152
6680369	SEAL			152
6680371	LEVER			152
6680372	BRACKET			152
6680373	YOKE			152
6680374	ARMATURE			152
6680375	SHAFT			152
6680376	SWITCH			152
6680377	HOLDER			152
6680378	WASHER			152
6680379	SEAL			152
6680380	SEAL			152
6680383	BOLT			152
6680384	BOLT			152
6680388	BRACKET			152
6680389	BRACKET			152
6680390	GEAR			152
6680410	CONTROLLER			139, 140
6680414	HANDLE ASSY.			300
6680415	HANDLE			138
6680417	HANDLE			142
6680418	HANDLE ASSY.			137, 138
6680419	HANDLE ASSY.			138
6680438	SENSOR			34, 134
6680441	BUSHING			20
6680447	DECAL			138
6680462	HANDLE			142
6680468	MOUNT			142, 210

Code for disposition of old part number

A -- Use up
B -- Use on other application (See PNI)
C -- File PDR Report with Bobcat Parts Sales
D -- Part Number Error

Part No.	Description	Was	Code	Page
6680469	SPACER			142, 210
6680470	SPRING			142, 210
6680471	COVER			142
6680477	STRAP			142, 210
6680478	SHIELD			146
6680479	SHIELD			146
6680480	CHANNEL			142
6680481	CHANNEL			142
6680499	NUT			204
6680564	STUD			176
6680636	PLUG			184
6680637	PLUG			184
6680638	PLUG			182, 184
6680639	PLUG			184
6680640	PLUG			184
6680642	PIN			164
6680643	PIN			184
6680644	PIN			184
6680645	BOLT			184
6680649	TUBE			176
6680654	BOLT			182, 200
6680655	PIN			182
6680656	OIL PAN			182
6680657	PLUG			182
6680658	BOLT			178, 200
6680659	BOLT			182
6680660	OIL SUMP			182
6680661	O-RING			182
6680662	BOLT			178, 182, 186, 190
6680663	NUT			174, 176, 178, 182, 194, 195, 196, 198
6680665	PLUG			178
6680666	PLUG			178
6680667	PLUG			178
6680668	BOLT			178
6680669	HEAD GASKET			178
6680670	HEAD GASKET			178
6680671	HEAD GASKET			178
6680673	SPRING			188
6680675	PLUG			188
6680676	ROTOR			188
6680677	COVER			188
6680678	SCREW			188, 196
6680679	PLUG			188
6680680	SEAL			188
6680681	O-RING			188
6680682	O-RING			188
6680685	BOLT			186, 188
6680686	BOLT			188
6680687	BOLT			164, 188
6680688	HEAD COVER			178
6680689	ADAPTER			178, 188
6680690	GASKET			178
6680691	O-RING			178
6680692	COVER			178

Code for disposition of old part number

A -- Use up

B -- Use on other application (See PNI)

C -- File PDR Report with Bobcat Parts Sales

D -- Part Number Error

Part No.	Description	Was	Code	Page
6680693	SCREW			178
6680694	PLUG			178
6680695	SEAL			178
6680696	BOLT			178
6680698	CLAMP			178
6680699	CLAMP			178
6680700	WASHER			178
6680702	TUBE			182
6680703	DIPSTICK			181, 182
6680704	COVER			188
6680705	SEAL			187, 188
6680706	BOLT			188, 192
6680707	TAPPET			186
6680708	PUSH ROD			186
6680709	CAMSHAFT			186
6680710	BALL			186
6680711	GEAR			186
6680712	FLANGE			186
6680714	SHAFT			186
6680715	PIN			186
6680716	COLLAR			186
6680717	COLLAR			186
6680720	BUSHING			186
6680723	PISTON RINGS			184
6680724	PISTON RINGS			184
6680725	PIN			184
6680726	SNAP RING			184
6680727	ROD			184
6680728	BUSHING			184
6680729	BOLT			184
6680730	BEARING			184
6680731	BEARING			184
6680732	BEARING			184
6680733	BEARING			184
6680734	CRANKSHAFT			184
6680735	SLEEVE			184
6680736	GEAR			184
6680737	GEAR			184
6680738	MAIN BEARING			184
6680739	MAIN BEARING			184
6680740	MAIN BEARING			184
6680741	THRUST WASHER			184
6680742	THRUST WASHER			184
6680743	THRUST WASHER			184
6680744	THRUST WASHER			184
6680745	THRUST WASHER			184
6680746	THRUST WASHER			184
6680747	BOLT			160, 184
6680748	BALANCER			185, 186
6680749	SOLENOID			202
6680750	SCREW			202
6680752	BOLT			197, 198
6680753	GASKET			198
6680755	BOLT			174, 190, 198

Code for disposition of old part number

A -- Use up
B -- Use on other application (See PNI)
C -- File PDR Report with Bobcat Parts Sales
D -- Part Number Error

Part No.	Description	Was	Code	Page
6680756	SCREW			198
6680757	COVER			201, 202
6680758	WEIGHT			202
6680759	NUT			202
6680761	SLEEVE			202
6680763	LEVER			202
6680764	LEVER			202
6680765	SNAP RING			202
6680766	WASHER			202
6680769	PIN			202
6680770	LEVER			202
6680771	SPRING			202
6680772	LEVER			202
6680773	PIN			202
6680775	PIN			202
6680777	NOZZLE			194
6680778	O-RING			194
6680779	GASKET			194
6680780	CLAMP			194
6680785	CLAMP			194
6680786	CLAMP			194
6680787	PIPE			194
6680788	BOLT			193, 194
6680790	FITTING			194
6680791	BOLT			176, 194
6680792	GASKET			176, 194, 204
6680795	CLAMP			194
6680796	VALVE			194
6680797	TEE			194
6680799	STUD			196
6680801	BOLT			174, 196
6680802	BOLT			176, 196
6680806	HOUSING			196
6680807	STUD			196, 198
6680808	PLUG			196
6680809	PIN			196
6680812	BEARING			196
6680813	KEY			196
6680814	FLANGE			196
6680815	BOLT			196
6680816	O-RING			196
6680818	NUT			196
6680820	WASHER			204
6680821	SNAP RING			204
6680822	SNAP RING			204
6680823	SNAP RING			204
6680824	SHAFT			204
6680825	SPRING			204
6680826	SPRING			204
6680827	SPRING			204
6680828	STUD			204
6680829	GASKET			204
6680830	BOLT			204
6680832	SCREW			204

Code for disposition of old part number

A -- Use up

B -- Use on other application (See PNI)

C -- File PDR Report with Bobcat Parts Sales

D -- Part Number Error

Part No.	Description	Was	Code	Page
6680833	SCREW			204
6680834	STOPPER			204
6680836	NUT			204
6680838	FUEL PUMP			198
6680839	BRACKET			164, 188
6680841	BOLT			188
6680842	HOSE			190
6680843	COVER			156
6680844	GASKET			156
6680845	BOLT			156
6680849	GASKET			190
6680850	THERMOSTAT			190
6680851	BOLT			173, 174, 190
6680852	PUMP			192
6680853	GASKET			192
6680855	O-RING			188
6680856	BOLT			192
6680857	PULLEY			190
6680858	WASHER			189, 190
6680861	VALVE			180
6680862	VALVE			180
6680863	VALVE SPRING			180
6680865	COLLET			180
6680866	SHAFT			180
6680867	STUD			180, 194
6680868	SHAFT			180
6680869	BRACKET			180
6680870	WASHER			180
6680871	SNAP RING			180
6680872	SPRING			180
6680873	ROCKER ARM			180
6680874	NUT			180
6680875	ROCKER ARM			180
6680877	PIN			180
6680878	BOLT			179, 180
6680879	ARM			180
6680880	SCREW			180
6680881	NUT			180
6680882	PAD			180
6680883	MANIFOLD			174
6680884	GASKET			174
6680885	BOLT			174
6680886	FLANGE			174
6680888	HEATER			174
6680890	MANIFOLD			174
6680891	GASKET			174
6680892	TURBOCHARGER			176
6680893	GASKET			176
6680894	HOSE			176
6680895	HOSE			176
6680896	HOSE			175, 176
6680897	CLAMP			176
6680898	CLAMP			176
6680899	TUBE			176

Code for disposition of old part number

A -- Use up
B -- Use on other application (See PNI)
C -- File PDR Report with Bobcat Parts Sales
D -- Part Number Error

Part No.	Description	Was	Code	Page
6680900	BOLT			176
6680903	CLAMP			176
6680905	TUBE			199, 200
6680906	BOLT			200
6680909	OIL COOLER			182
6680910	ADAPTER			182
6680970	BREATHER			42
6681474	CARTRIDGE			2, 4, 206
6681475	CARTRIDGE			2, 4, 206
6681476	CAP			206
6681477	COVER			206
6681487	O-RING			328
6681489	O-RING			328
6681492	NUT			76
6681501	SEAL KIT			84
6681512	SOLENOID			42
6681614	KNOB			18, 238, 276, 290
6682260	SHAFT			100
6682264	SHAFT			104
6682411	ADAPTER			46, 48
6682549	ELBOW			64, 66
6682586	GAS SPRING			222, 228
6683001	HVAC			297, 298
6683003	COIL			294, 298
6683004	THERMOSTAT			294, 298
6683023	O-RING			202
6683167	CYLINDER BLOCK			100, 104
6683168	PISTON ASSEMBLY			100, 104
6683169	KEY			100
6683206	SEAL KIT			76, 124
6683274	SEAL			62, 66
6683608	CONTROLLER			148
6683812	SWITCH			132
6684033	NUT			46, 48, 154, 326
6684036	BOLT KIT			92
6684037	SENSOR			136
6684038	SPRING			100
6684044	VALVE			328
6684045	SEAL KIT			328
6684046	O-RING			328
6684047	BACK-UP RING			328
6684048	O-RING			328
6684049	O-RING			328
6684050	BACK-UP RING			328
6684051	VALVE			328
6684052	SEAL KIT			328
6684053	BACK-UP RING			328
6684054	O-RING			328
6684055	BACK-UP RING			328
6684056	O-RING			328
6684057	BACK-UP RING			328
6684058	COIL			328
6684059	SPACER			328
6684060	NUT			328

Code for disposition of old part number

A -- Use up
B -- Use on other application (See PNI)
C -- File PDR Report with Bobcat Parts Sales
D -- Part Number Error

Part No.	Description	Was	Code	Page
6684061	VALVE			328
6684062	SEAL KIT			328
6684063	O-RING			328
6684064	BACK-UP RING			328
6684065	O-RING			328
6684066	O-RING			328
6684067	BACK-UP RING			328
6684069	SEAL KIT			328
6684070	O-RING			328
6684071	O-RING			328
6684072	BACK-UP RING			328
6684073	COIL			328
6684125	COUPLER			62, 66
6684367	RADIATOR			156
6684457	HOSE			84
6684474	INSERT FAN INLET			154
6684542	VALVE			328
6684576	ENGINE			171, 172
6684590	COIL			76
6684646	VALVE			62, 66
6684742	NUT			322
6684743	SOLENOID			322
6684744	SOLENOID			322
6684745	PISTON			322
6684746	CHECK VALVE			322
6684747	SEAL KIT			322
6684907	HOSE			291, 292, 294
6684908	HOSE			290, 294
6684910	SENSOR			142
6684911	SENSOR			146, 210
6684912	SENSOR			145, 146, 210
6684915	LEVER			140, 141, 142
6684916	LEVER			140, 142
6684923	BREATHER			34
6684932	KNOB			26
6685027	VALVE			76
6685060	BUSHING			60
6685190	STARTER			151, 152
6685198	CAP			292
6685199	CAP			290
6685265	SNAP RING			94
6685328	RELIEF VALVE			328
6685344	SWASH PLATE			100, 104
6685345	BRACKET			88, 102
6685346	BRACKET			88, 104
6685372	SEAL			42
6685498	GASKET			194
6685540	PISTON			322
6685541	POPPET			322
6685542	O-RING			322
6685543	CHECK VALVE			322
6685544	COMPENSATOR			322
6685545	PLUG			322
6685546	PLUG			322

Code for disposition of old part number

A -- Use up

B -- Use on other application (See PNI)

C -- File PDR Report with Bobcat Parts Sales

D -- Part Number Error

Part No.	Description	Was	Code	Page
6685603	SEAL KIT			64, 68
6685624	CONTROL VALVE			326, 328
6685663	RETAINER			326
6685847	FILTER ASSY			130
6685850	CORD			218
6685854	INJECTOR			194
6685917	CRANKCASE			184
6685918	PIN			184
6685919	STUD			184
6685920	ADAPTER			184, 190
6685921	CRANKCASE			182
6685922	FLANGE			182
6685923	GASKET			182
6685924	CAP			182
6685925	BOLT			182
6685926	BRACKET			178
6685927	HEAD			178
6685928	COVER			188
6685929	RELIEF VALVE			188
6685930	HOSE			177, 178
6685931	COVER			188
6685932	GEAR			186
6685933	PISTON			184
6685934	PISTON			184
6685935	INJECTION PUMP			196
6685936	PUMP			198
6685937	HOUSING			202
6685938	SPRING			202
6685939	LEVER			202
6685940	TUBE			194
6685941	TUBE			194
6685942	TUBE			194
6685943	TUBE			194
6685944	HOSE			194
6685945	HOSE			194
6685946	GEAR			196
6685947	COVER			196
6685948	GASKET			196
6685949	CAMSHAFT			196
6685950	BEARING			196
6685951	LEVER			203, 204
6685952	NUT			204
6685953	PULLEY			188
6685954	COVER			190
6685955	GASKET			190
6685956	HOUSING			190
6685957	GUIDE			180
6685958	GUIDE			180
6685959	RETAINER			180
6685960	GASKET			174
6685961	PLUG			174
6685962	GASKET			176, 200
6685963	PIPE			176
6685964	GASKET			176

Code for disposition of old part number

A -- Use up

B -- Use on other application (See PNI)

C -- File PDR Report with Bobcat Parts Sales

D -- Part Number Error

Part No.	Description	Was	Code	Page
6685965	HOSE			176
6685967	BRACKET			200
6685968	NUT			200
6685969	HOSE			182
6685970	HOSE			182
6685971	O-RING			182
6685972	HOSE			182
6686096	LENS			260
6686097	BULB			260
6686098	BULB			260
6686099	LENS			260
6686100	SCREW			260
6686220	O-RING			140
6686267	PUMP			105, 106
6686360	VALVE			62, 66
6686402	SEAL			182
6686655	BELT			164
6686693	SPOOL			94
6686885	GEAR PUMP			121, 122
6686926	ELEMENT FILTER			154
6686934	PIN			106
6686949	VALVE			321, 322
6687142	MOTOR			123, 124, 154
6687145	FLANGE			174
6687146	BOLT			174
6687147	GASKET			174
6687191	SEAL			100
6687266	FILTER ASSY			154
6687631	BEARING			152
6687774	PLATE			100
6687825	MOTOR			91, 92
6687832	PUMP			99, 100, 103, 104
6687866	SEAL KIT			122
6687886	MUFFLER PURIFIER			315, 316
6687887	MUFFLER			158
6687919	COLLAR			118
6687920	SPINDLE			116
6687921	COLLAR			116
6687922	NUT			116
6687923	PIN			116
6687924	VALVE			106, 115, 116
6687926	COLLAR			112, 114
6687927	COLLAR			112, 114
6687928	SPRING			112, 114
6687929	LEVER			120
6687930	WIRE			108, 110
6687931	BUSHING			120
6687932	PIN			106
6687933	SHIM			120
6687934	SHIM			120
6687935	SHIM			120
6687936	SHIM			120
6687937	SHIM			120
6687938	VALVE			106, 117, 118

Code for disposition of old part number

A -- Use up

B -- Use on other application (See PNI)

C -- File PDR Report with Bobcat Parts Sales

D -- Part Number Error

Part No.	Description	Was	Code	Page
6687939	SCREW			118
6687940	RING			108, 110
6687941	COUPLER			106
6687942	SPACER			112, 114
6687943	SHAFT			110
6687944	SHIM			120
6687945	PLATE			120
6687946	SPRING			120
6687947	PIN			120
6687948	SPACER			112, 114
6687949	SPACER			112, 114
6687950	GASKET			120
6687951	BRACKET			108, 110
6687953	PISTON			112, 114
6687954	GASKET			120
6687955	HOUSING			120
6687956	BEARING			108, 110
6687957	GROUP			106, 107, 108
6687958	GROUP			106, 109, 110
6687959	SHAFT			108
6687960	CONTROL			106, 111, 112
6687961	CONTROL			106, 113, 114
6687962	PISTON			112
6687963	PISTON			114
6687964	HOUSING			106
6687965	SHAFT			106
6687966	PISTON			120
6687967	SPRING			120
6687968	LEVER			120
6687969	COVER			120
6687970	MODULATOR			106, 119, 120
6687971	ROLLER			120
6687972	MODULE			120
6687973	FLANGE			106
6687974	FLANGE			106
6687975	PLATE			110
6687976	PLATE			108
6687977	GROUP			108
6687978	GROUP			110
6687979	GROUP			108, 110
6687981	SCREW			120
6687982	SPRING			120
6687983	RING			118
6687984	SENSOR			106
6687985	RING			112, 114
6687986	KIT			112, 114
6687987	BEARING			108, 110
6687988	FILTER			106
6687989	SOLENOID			120
6687990	RING			106
6687991	KEY			106
6687992	SCREW			106
6687993	COVER			106
6687994	SCREW			106

Code for disposition of old part number

A -- Use up

B -- Use on other application (See PNI)

C -- File PDR Report with Bobcat Parts Sales

D -- Part Number Error

Part No.	Description	Was	Code	Page
6687995	SCREW			112, 114
6687996	SCREW			120
6687997	SCREW			120
6687998	SHIM			106
6687999	RING			108, 110
6688000	SEAL			116
6688001	SEAL			120
6688002	RING			112, 114
6688003	SCREW			106
6688004	SEAL			120
6688005	SEAL			112, 114
6688006	SEAL			112, 114
6688007	SEAL			106
6688008	SCREW			106
6688009	SEAL			106
6688010	PIN			120
6688011	PIN			106
6688012	ROLLER			120
6688013	SEAL			118
6688014	PIN			106
6688015	SCREW			106
6688016	SCREW			106
6688017	SHIM			118
6688018	BEARING			108, 110
6688019	SEAL			98, 106
6688020	ORIFICE			106
6688021	SPRING			116
6688022	PISTON			118
6688023	SPRING			118
6688024	COVER			112, 114
6688025	RING			112, 114
6688026	RING			112, 114
6688027	RING			112, 114
6688028	RING			112, 114
6688029	RING			112, 114
6688030	RING			112, 114
6688031	ROD			112, 114
6688032	SPACER			112, 114
6688033	SPACER			112, 114
6688034	SCREW			116
6688035	RING			112, 114
6688036	RING			112, 114
6688037	RING			112, 114
6688038	RING			108
6688039	PIN			106
6688040	BEARING			106
6688041	RING			116
6688042	RING			108, 110
6688043	SPRING			116
6688069	HOSE			176
6688321	SEAL KIT			76
6688397	STEM			62, 66
6688403	PANEL			18, 132
6688404	PANEL			132

Code for disposition of old part number

A -- Use up
B -- Use on other application (See PNI)
C -- File PDR Report with Bobcat Parts Sales
D -- Part Number Error

Part No.	Description	Was	Code	Page
6688405	PANEL			132
6688439	CONTROLLER			134
6688449	LOCATING PIN			92, 96
6688523	SEAL KIT STC-16			72, 74
6688542	HVAC HEATER			290
6688543	HEATER			276, 279, 280
6688713	GEAR PUMP			75, 76
6688845	VALVE			64, 68
6688866	PLUG			92
6688924	MAGNET			40
6688933	VALVE ASSY			328
6688934	COIL			328
6689021	SEAL KIT			106
6689058	MOTOR			124
6689059	VALVE ASSY			124
6689060	COIL ASSY			124
6689179	INSULATION			294
6689180	INSULATION			294, 295, 296
6689601	VALVE			100, 104
6689602	HOUSING			104
6689635	BRACKET			276, 290
6689636	ACTUATOR			276, 290
6689637	VALVE			276, 290
669863B	SNAP RING			100, 104
6700115	SPRING			160
6700170	WASHER			170
6700182	COVER			12
6700631	GASKET			78
6700743	SPRING			170
6701097	WASHER			154
6701159	SHIM			160
6701160	CLIP			160
6701174	WASHER			14
6701187	BELLCRANK			170
6701449	FILLER TUBE			34
6701535	SPRING			20, 88
6701674	INSULATION			16, 30, 32
6701893	CLAMP			46, 48
6702301	DECAL			244
6702302	DECAL			244
6702402	SHIELD			270
6702444	FUSE			134
6702474	RETAINER			160
6702543	LEVER			87, 88
6702593	SPACER			212
6702621	GRIP			138
6702650	MOUNT			256, 258
6702716	BLOCK			88
6702903	LEVER			28
6702904	LEVER			28
6702958	BUSHING			28
6702971	BOLT			14
6702990	BUSHING			142
6703640	KIT			341, 342

Code for disposition of old part number

A -- Use up

B -- Use on other application (See PNI)

C -- File PDR Report with Bobcat Parts Sales

D -- Part Number Error

Part No.	Description	Was	Code	Page
6703641	DECAL			342
6703703	GUIDE			342
6703727	DECAL			300, 302
6703967	INSULATION			310, 312
6703968	INSULATION			310, 312
6704248	PIVOT			28
6704443	BUSHING			160
6704444	WASHER			160
6704453	SPRING			170
6704786	DECAL			306
6704820	O-RING			160
6704879	GASKET			36
6704892	RIVET			254
6705106	WASHER			164
6705452	LEVER			168
6705749	SHIELD			78
6706095	MOUNT			88
6706098	GUIDE			88
6706105	YOKE			60
6706349	MOUNT			14
6706485	HOOK			12
6706517	SCREW			34, 78, 154
6706572	SET SCREW			168, 170
6706633	ADAPTER			326
6706683	COVER			42
6706718	MOUNT			42
6706737	GASKET			42
6706805	SHAFT			42
6706817	SPACER			38, 40
6706857	BLOCK			12
6707040	ELBOW			136
6707101	SEAL			50, 58
6707654	SPINDLE			160
6707697	WASHER			160
6707698	WASHER			160
6707699	PIVOT			160
6707804	HOUSING			256, 258
6707852	DECAL			222
6707903	LEVER			170
6707904	ROD			170
6708009	LINK			60
6708016	GASKET			42
6708018	SPRING			42
6708043	BUSHING			60
6708189	TUBE			14
6708267	BOLT			42
6708310	HOSE			224
6708314	BUSHING			170
6708445	PULLEY			161, 162
6708941	DECAL			246
6708987	HINGE			12
6709022	LEVER			168
6709052	MOUNT			170
6709170	STUD			44

Code for disposition of old part number

A -- Use up

B -- Use on other application (See PNI)

C -- File PDR Report with Bobcat Parts Sales

D -- Part Number Error

Part No.	Description	Was	Code	Page
6709527	KEY			132, 222, 228, 330
6709757	AXLE			44
6710659	BUSHING			20
6711166	HOSE			326
6711526	HINGE			24
6711674	MOUNT			272
6711840	DECAL			244
6712365	STEP			140
6712536	PAN			136
6712912	DECAL			240
6713040	SPRING			28
6713043	SPACER			142
6713115	PEDAL			261, 262
6713116	BUSHING			262
6713150	MOUNT			256, 258
6713151	MOUNT			256, 258
6713507	DECAL			244, 246
6713589	CLEVIS			20
6713736	BRACKETS			256
6713840	DECAL			256
6713841	SHIELD			256, 258
6713842	SHIELD			258
6713887	BOLT			20
6713920	SHIM			170
6713990	PIN			259, 260
6713993	HARNESS			256, 258
6713994	HARNESS			256, 258
6714037	LATCH			330
6714126	DOOR STOP			24
6714278	GUIDE			42
6714362	WEIGHT			240
6714509	COVER			24
6714726	GROMMET			32, 140
6714820	SHIELD			256
6715131	BRACKET			136
6715132	RETAINER			136
6715142	FAN			154
6715163	BUSHING			88
6715164	SLEEVE			88
6715183	ELBOW			34
6715197	CLAMP			136
6715287	SPACER			164
6715318	TOOL HOLDER			24
6715365	HARNESS			132
6715630	BRAKE			42
6715659	HARNESS			212
6715860	SEAT BAR			20
6715863	BRACKET			20
6715864	BUSHING			20
6715865	BUSHING			20
6715866	BUSHING			20
6716061	TEE			46, 48
6716089	CONNECTOR			272
6716117	LINK			88

Code for disposition of old part number

A -- Use up
B -- Use on other application (See PNI)
C -- File PDR Report with Bobcat Parts Sales
D -- Part Number Error

Part No.	Description	Was	Code	Page
6716243	ADAPTER			80, 82
6716391	HOSE			86
6716408	SPACER			164
6716443	ELBOW			326
6716545	ROD			88
6716572	LOUVER			154
6716574	LOUVER			154
6716621	COVER			134
6716800	INSULATION			16, 30, 32
6716916	WASHER			88
6717232	DECAL			240
6717242	HOUSING			38
6717247	HARNESS			134
6717259	BUSHING			28
6717260	BUSHING			28
6717277	BUSHING			12
6717278	BUSHING			12
6717306	ADAPTER			80, 82
6717343	DECAL			244
6717393	LEVER			140
6717401	PLUG			34
6717402	BUSHING			34
6717517	INSULATION			18
6717518	INSULATION			18
6717519	INSULATION			18
6717520	INSULATION			18
6717579	GASKET			34, 134
6717593	HINGE			224, 228
6717706	COIL			134
6717806	BOLT			36
6717870	FRAME			238
6717871	FRAME			238
6717872	FRAME			238
6717873	FRAME			238
6717874	WINDOW			18, 238
6717885	ELBOW			72, 74
6718031	TEE			80, 82
6718034	FUSE			134
6718101	COVER			16
6718175	SCREEN			276, 290
6718283	RETAINING NUT			60
6718285	LEVER			60
6718326	MOUNT			268
6718329	BUSHING			28
6718376	HINGE			224, 228
6718411	KIT			267, 268
6718414	SENDER			136
6718417	SENDER			134
6718426	HARNESS			71, 72, 73, 74, 252
6718521	HANDLE			224, 228
6718579	DECAL			276, 290
6718580	PANEL			18
6718659	HOUSING			134
6718698	DECAL			244

Code for disposition of old part number

A -- Use up
B -- Use on other application (See PNI)
C -- File PDR Report with Bobcat Parts Sales
D -- Part Number Error

Part No.	Description	Was	Code	Page
6718704	DECAL			140
6718706	DECAL			140
6718750	MOUNT			252
6718796	PLUG			12, 24
6718805	KIT			237, 238
6718833	BRACKET			270
6718834	BRACKET			270
6718837	SPACER			276, 290
6718850	BRACKET			78
6718851	BRACKET			77, 78
6718872	HARNESS			216, 256, 258, 268, 344
6718873	HARNESS			268
6718881	BRACKET			50
6718887	PANEL			276, 290
6718924	KIT			269, 270
6718942	NUT			26
6718948	SNUBBER			84, 134
6719037	STRIKER			238
6719038	PLUG			132
6719056	BLOCK			42
6719057	BLOCK			42
6719063	STOP			238
6719064	MOUNT			14, 274
6719065	COVER TAB			238
6719141	CABLE			136
6719168	COVER			12
6719176	SWITCH			290, 294
6719184	MOUNT			306
6719185	MOUNT			306
6719201	COVER			12
6719317	WINDOW			332
6719332	INSULATION			309, 310, 311, 312
6719333	INSULATION			310, 312
6719413	WINDOW			238
6719448	MAGNET			254
6719459	MOUNT			290, 294
6719504	INSULATION			16
6719525	BAR			24
6719630	HARNESS			292, 294
6719672	OPERATOR CAB			13, 14, 15, 16
6719766	STOP			24
6719825	BOLT			158
6719828	BOLT			160, 164
6719829	BOLT			164
6719834	SPACER			142, 210
6719835	SLEEVE			142
6719854	KIT			215, 216
6719857	KIT			343, 344
6719888	DECAL			318
6720038	INSTRUCTIONS			218
6720592	INSTRUCTIONS			270
6720808	KIT			217, 218
6724094	ANTI-FREEEZE			350
6724354	ANTI-FREEZE			350

Code for disposition of old part number

A -- Use up
B -- Use on other application (See PNI)
C -- File PDR Report with Bobcat Parts Sales
D -- Part Number Error

Part No.	Description	Was	Code	Page
6724775	LEVER KIT			28
6724776	LEVER KIT			28
6725182	TEE			49, 50, 272
6725212	ARM			160
6725256	COUNTERWEIGHT			24
6725301	COVER			16
6725303	FRAME			16
6725370	DECAL			338
6725373	SPRING PLATE			16
6725421	HANDLE			236
6725496	COVER			42, 86
6725497	CROSS			80, 82
6725513	PACKAGE			276
6725898	KIT			265, 266
6725899	HOSE			86
6725900	HOSE			86
6725901	HOSE			86
6725906	BRACKET			266
6725907	DECAL			318
6725933	HARNESS			290
6725937	CLAMP			228
6725938	CLAMP			228
6725946	KIT			235, 236
6726218	GASKET			34
6726277	CLAMP			326
6726303	DECAL			236
6726386	KNOB			276
6726423	DECAL			304
6726427	KIT			229, 230
6726430	HARNESS			256, 258
6726573	BRACKET			140, 210
6726621	SCREW			284, 288, 294
6726655	KIT			331, 332
6726662	HARNESS			302
6726681	LINK			140, 210
6726908	LIFT EYE			304
6726965	LIFT ARM			26
6726966	FRAME LINK			25, 26
6726969	LINK ASSY			26
6726987	HOSE			318
6727064	TEE			72
6727065	BOLT			142, 210
6727176	KIT			249, 250
6727178	HARNESS			131, 132
6727299	INSULATION			18
6727313	ELBOW			78
6727326	MOUNT			290, 294
6727354	INLET			78
6727475	CAP			7, 8, 78
6727496	PIN			140, 210
6727498	HARNESS			300
6727525	BUSHING			26
6727595	DECAL			244, 246
6727786	KIT			287, 288

Code for disposition of old part number

A -- Use up
B -- Use on other application (See PNI)
C -- File PDR Report with Bobcat Parts Sales
D -- Part Number Error

Part No.	Description	Was	Code	Page
6727803	CABLE			136
6727832	BUSHING			26
6727847	COVER			276
6727848	COVER			292
6727926	DECAL			140, 210, 244
6727995	HORN KIT			299, 300
6728045	DECAL			210
6728328	DECAL			140
6728459	DOOR SENSOR			222, 228
6728473	BOLT			28
6728539	DECAL			140, 210
6728540	DECAL			210
6728567	KIT			283, 284
6728621	BRACKET			134
6728749	HOSE			156
6728800	BUSHING			26
6728819	PIN			26
6728820	PIN			26
6728971	PIN			26
6728972	BUSHING			26
6728999	BUSHING			26
6729005	BUSHING			26
6729006	BUSHING			26
6729007	PIN			26
6729009	SEAL			238
6729010	SEAL			238
6729011	SEAL			238
6729012	INSULATION			14
6729013	INSULATION			14
6729029	BOB-TACH			27, 28
6729077	DECAL			244, 246, 292, 296
6729078	DECAL			86, 244, 246
6729141	MOUNT			274
6729173	COVER			42
6729237	STEP			32
6729306	ELBOW			72, 84
6729320	CLAMP			46, 48, 52
6729358	PIN			26
6729401	BUSHING			12
6729402	BUSHING			12
6729423	BUSHING			26
6729467	SPACER			140, 210
6729468	LINK ASSY			26
6729491	PLUG			28
6729594	HANDLE			142
6729595	HANDLE			142
6729604	HOSE			46, 48
6729662	SHAFT			42
6729663	HOUSING			40
6729686	TEE			46, 48
6729688	LATCH			330
6729694	TEE			46, 48
6729721	HOSE			46, 48
6729746	HOSE			52

Code for disposition of old part number

A -- Use up

B -- Use on other application (See PNI)

C -- File PDR Report with Bobcat Parts Sales

D -- Part Number Error

Part No.	Description	Was	Code	Page
6729774	COVER			32
6729776	WINDOW			226
6729854	HOSE			34
6729888	STEP			26
6729901	TIRE			345, 346
6729939	LATCH PLATE			24
6729942	MOUNT			164
6729944	STOP			160
6729991	REAR DOOR			24
6730013	COVER			40
6730020	MOUNT			160
6730078	COVER			12
6730108	TIRE			346
6730109	TIRE			346
6730143	TEE			72, 74
6730265	MOUNT			290, 294
6730266	SPACER			290, 294
6730270	LEVER			170
6730345	HOSE			78
6730552	BRACKET			34
6730726	HOSE			158
6730753	MOUNT			158, 316
6730772	RIM			346
6730783	COVER			12
6730784	BUSHING			12
6730785	BUSHING			12
6730816	SHIELD			222, 228
6730819	BELT			6, 292, 294
6730822	KIT			221, 222
6730823	KIT			227, 228
6730858	TUBELINE			46, 48
6730887	PIN			26
6730894	BOLT			160
6730898	MOUNT			220
6730914	TEE			46, 48
6730995	BUSHING			26
6731078	GRILL			154
6731084	ADAPTER			278, 292
6731085	ELBOW			278, 292
6731100	SHIELD			160
6731109	SPACER			156, 164
6731119	PIVOT ASSY			28
6731121	PLUG			12
6731138	BUSHING			26
6731139	PIN			26
6731146	WASHER			164
6731151	KIT			209, 210
6731152	MOUNT			34
6731160	WASHER			26
6731179	COVER			26
6731198	BOLT			156, 164
6731209	TANK			78
6731222	PIN			256, 258
6731239	HARNESS			256

Code for disposition of old part number
A -- Use up
B -- Use on other application (See PNI)
C -- File PDR Report with Bobcat Parts Sales
D -- Part Number Error

Part No.	Description	Was	Code	Page
6731251	BAR			60
6731252	BAR			60
6731253	LINK			88
6731255	ELBOW		A	292, 296
6731255	ELBOW			292, 296
6731275	INSULATION			134
6731478	EXIT TAG			18, 238
6731527	TEE			84
6731569	STOP			26
6731638	HOSE			78
6731646	BOLT			26
6731647	BUSHING			26
6731757	DECAL			244
6731819	STRAP			256, 258
6731898	PEDAL			170
6731900	ROD			170
6731915	BRACKET			154
6731916	SHIELD			154
6731925	TEE			84
6731935	HOSE			84
6731970	BRACKET			154
6731973	HOLDER			256, 258
6731994	DECAL			244
6732001	KIT			329, 330
6732023	CONNECTOR			278, 292
6732032	GASKET			158
6732045	HARNESS			258
6732081	HARNESS			258
6732193	BRACKET			164
6732206	SPACER			164, 256, 258
6732219	KIT			337, 338
6732234	KIT			301, 302
6732235	KIT			213, 214
6732318	SPACER			154
6732322	SPACER			170
6732323	BRACKET			170
6732351	WINDOW			228
6732375	TANK			156
6732449	PLATE			170
6732450	BRACKET			32, 168
6732457	WASHER			154
6732483	HOSE			80, 82
6732484	HOSE			80, 82
6732485	HOSE			80, 82
6732575	SPACER			164
6732577	STEP			12
6732583	INSULATION			310, 312
6732585	SPACER			164
6732586	TEE			78, 84
6732678	KIT			303, 304
6732687	PIN			304
6732696	DECAL			244
6732715	LATCH			24
6732730	HARNESS			254

Code for disposition of old part number

A -- Use up
B -- Use on other application (See PNI)
C -- File PDR Report with Bobcat Parts Sales
D -- Part Number Error

Part No.	Description	Was	Code	Page
6732732	BUSHING			296
6732774	DECAL			246
6732847	RIM			346
6732870	MOUNT			156
6732928	KIT			273, 274
6732931	HOUSING			154
6732950	TUBELINE			46
6732952	TUBELINE			46, 48
6732953	TUBELINE			46, 48
6732954	TUBELINE			52
6732955	TUBELINE			52
6732991	TUBELINE			48, 220
6732992	TUBELINE			48, 220
6732993	TUBELINE			72, 74
6732997	U-BOLT			88
6733022	BRACKET			88
6733024	BRACKET			88
6733107	PLUG ASSY			14
6733136	KIT			253, 254
6733142	KIT			251, 252
6733144	MOUNT			254
6733164	HOSE			72, 74
6733219	HOSE			80, 81, 82
6733270	MOUNT			258
6733292	HARNESS			140
6733293	HARNESS			148
6733296	BRACKET			258
6733309	TUBELINE			72, 74
6733370	HARNESS			136
6733429	CAP			155, 156
6733578	RIM			346
6733629	HOSE			318
6733630	HOSE			318
6733655	COMPRESSOR			292, 294
6733851	HARNESS			258
6733873	SHIELD			164
6733886	BOLT			156
6733924	DECAL			244
6733970	MOUNT			212, 214, 300, 302
6733996	DECAL			156
6734090	ADAPTER			156
6734108	BRACKET			304
6734114	HOSE			158
6734201	TUBELINE			46, 48
6734208	TUBELINE			48, 220
6734416	LEVER			170
6734417	LEVER			170
6734436	SHIELD			164
6734446	SHIELD			248
6734447	SHIELD			248
6734461	KIT			247, 248
6734503	CLEVIS			170
6734520	COVER			168, 170
6734521	PANEL			29, 30, 31, 32

Code for disposition of old part number

A -- Use up
B -- Use on other application (See PNI)
C -- File PDR Report with Bobcat Parts Sales
D -- Part Number Error

Part No.	Description	Was	Code	Page
6734534	DECAL			246
6734560	BUSHING			306
6734561	WASHER			78
6734563	WASHER KIT			78
6734573	HOSE			164
6734627	MOUNT			306
6734628	MOUNT			306
6734646	DECAL			246
6734647	DECAL			246
6734657	ANGLE			306
6734666	ARM			306
6734667	ARM			306
6734696	KIT			323, 324
6734697	SCREEN			324
6734769	HOSE			52
6734772	MOUNT			168
6734803	DECAL			246
6735140	DECAL			244
6735245	DUCT			276, 290
6735246	DUCT			276, 290
6735279	KIT			305, 306
6735282	SCREW			306
6735346	MOUNT			164
6735475	HOSE			318
6735477	KIT			317, 318
6735614	TANK			34
6735639	MOUNT			326
6735640	MOUNT			326
6735642	TUBELINE			326
6735643	TUBELINE			326
6735684	HOSE			326
6735696	BUSHING			34
6735709	IDLER			160
6735727	BRACKET			164
6735729	SPACER			164
6735825	SPACER			256, 258
6735862	DECAL			244
6735901	DECAL			246
6735979	BRACKET			164
6735980	MOUNT			164
6736071	KIT			134
6736258	TEE			84
6736349	SPACER			164
6736515	HARNESS			136
6736566	HOSE			156
6736641	PAINT			350
6736642	PAINT			350
6736644	PAINT			350
6736645	PAINT			350
6736655	KIT			271, 272
6736664	HOSE			272
6736768	COVER			12
6736875	TANK			222
6737088	COVER			208

Code for disposition of old part number

A -- Use up
B -- Use on other application (See PNI)
C -- File PDR Report with Bobcat Parts Sales
D -- Part Number Error

Part No.	Description	Was	Code	Page
6737095	STEP			60
6737120	STEP			60
6737189	DECAL			212
6737191	WEDGE			28
6737201	MOUNT			326
6737248	DECAL			132, 244
6737388	WASHER			60
6737524	KNOB			50, 58
6737528	BRACKET			263, 264
6737649	BRACKET			156
6737704	INSULATION			18
6737783	KIT			2, 244
6801059	WASHER			226, 332
6801167	PLUG			68
6803092	BONNET			68
6803473	SEAL KIT			320
6804427	HEAD			56
6804920	BUSHING			62, 66
6805102	BUSHING			62, 66
6805453	BUSHING			54
6806403	HOSE			318
6808235	SPACER			56
6809511	DECAL			46, 48, 50
6809726	ROLLER			24
6809727	CHANNEL			24
6809734	BUSHING			24
6809845	BOLT			24
6810132	SPRING			24
6810141	SPRING			24
6810188	ROD			56
6810213	TUBELINE			54
6810233	CYLINDER			53, 54
6810234	CASE			54
6810235	ROD			54
6810237	PISTON			54
6810349	CASE			320
6810356	SPACER			320
6810539	NUT			54, 56
6810611	CYLINDER			319, 320
6810612	ROD			320
6811483	COUNTERWEIGHT			242
6811910	LATCH			24
6812170	PLUG			320
6812171	PLUG			54, 56
6813078	STEP			304
6813080	VALVE ASSY			61, 62
6813153	PLATE			62
6813964	ELBOW			64, 68, 84
6814021	BOLT			50
6814279	BLOCK			64, 68
6814600	CONTROL VALVE			65, 66
6814694	RETAINER			62, 66
6815014	CHECK VALVE			64, 66
6815032	TUBELINE			64, 66

Code for disposition of old part number

A -- Use up
B -- Use on other application (See PNI)
C -- File PDR Report with Bobcat Parts Sales
D -- Part Number Error

Part No.	Description	Was	Code	Page
6815152	SPOOL			62
6815887	HOSE			154
6816325	SEAL KIT			54
6816536	SEAL KIT			56
6816549	PLUG			62, 66
6817003	BODY			62
6817004	BODY			66
6817310	CYLINDER			55, 56
6817311	CASE			56
6817335	ELBOW			46, 48
6817707	PLUG			62, 66
6900366	INSTRUCTIONS			240
6900848	INSTRUCTIONS			268
6900852	INSTRUCTIONS INSTL			238
6900853	INSTRUCTIONS			238
6900854	INSTRUCTIONS INSTL			224
6900861	INSTRUCTIONS			336
6900888	INSTRUCTIONS			306
6900991	INSTRUCTIONS			216
6900992	INSTRUCTIONS			344
6901010	INSTRUCTIONS			338
6901011	INSTRUCTIONS			340
6901013	INSTRUCTIONS			228
6901025	INSTRUCTIONS			266
6901029	INSTRUCTIONS			236
6901036	INSTRUCTIONS			230
6901061	INSTRUCTIONS			332
6901076	INSTRUCTIONS			250
6901120	INSTRUCTIONS			288
6901146	INSTRUCTIONS			300
6901213	INSTRUCTIONS			284
6901492	INSTRUCTIONS			210
6901656	INSTRUCTIONS			330
6901663	INSTRUCTIONS			256
6901690	INSTRUCTIONS			214
6901691	INSTRUCTIONS			302
6901772	INSTRUCTIONS			304
6901816	INSTRUCTIONS			274
6901871	INSTRUCTIONS			252
6901872	INSTRUCTIONS			254
6901909	INSTRUCTIONS			258
6901916	INSTRUCTIONS			272
6902228	PAINT			349, 350
6902229	PAINT			350
6902230	PAINT			350
6902233	PAINT			350
6902234	PAINT			350
6902235	PAINT			350
6902252	INSTRUCTIONS			248
6902288	INSTRUCTIONS			324
6902361	INSTRUCTIONS			318
6902409	INSTRUCTIONS			326
6902600	MANUAL			244

Code for disposition of old part number

A -- Use up

B -- Use on other application (See PNI)

C -- File PDR Report with Bobcat Parts Sales

D -- Part Number Error

Part No.	Description	Was	Code	Page
6903105	OIL 15W40 QT. 12			2, 4, 350
6903106	OIL 15W40 GAL. 6			2, 4, 350
6903107	OIL 10W30 QT. 12			2, 3, 4, 350
6903108	OIL 10W30 GAL. 6			2, 4, 350
6903109	OIL 30W QT. 12			2, 4, 350
6903110	OIL 30W GAL. 6			2, 4, 350
6903111	OIL 30W 2.5 GAL 2			2, 4, 350
6903112	OIL 10W30 2.5 GAL 2			2, 4, 350
6903113	OIL 15W40 2.5 GAL. 2			2, 4, 350
6903117	HYD FLUID 2.5 GAL. 2			2, 4, 350
6903118	HYD. FLUID 5GAL			2, 4, 350
6903119	HYD. FLUID 55GAL			2, 4, 350
6903121	GEAR LUBE 12			350
6903122	GREASE 10			4, 350
6903132	INSTRUCTIONS			220
6903283	INSTRUCTIONS			242
6903293	INSTRUCTIONS			212
6903773	33X6X11 SOLID FLEX TIRE AND WHEEL (LEFT)			347, 348
6903774	33X6X11 SOLID FLEX TIRE AND WHEEL (RIGHT)			348
6904156	O/M S250 "K"			2
6904158	S/M S250/S300 "K"			2
6904244	P/M S250K,S300K			2
6904255	INSTRUCTIONS	6903305	B	276, 278
6904255	INSTRUCTIONS			276, 278
6904258	INSTRUCTIONS			296
69G000436B	BOLT			50, 66, 140
6CM01220B	BOLT			164
6E000004B	WASHER			136
6E000005B	WASHER			132, 165, 166, 268
6E000006B	WASHER			84, 136
6EM00080B	WASHER			152
6J001664B	WOODRUFF KEY			44
7100239	BEARING			38, 40
7100240	RACE			38, 40
7100462	CLAMP			78
7100699	WASHER			88
7100795	MOUNT			30, 88
7100859	FLYWHEEL ASSY			160
7101104	MOUNT			258
7101136	BUSHING			164
7101291	ELBOW			34
7101345	BONNET			66
7101373	BOLT			154
7101384	LIGHT			260
7101453	MAIN FRAME			11, 12
7101533	INSULATION			310, 312
7101534	INSULATION			312
7101535	INSULATION			310

Code for disposition of old part number

A -- Use up
B -- Use on other application (See PNI)
C -- File PDR Report with Bobcat Parts Sales
D -- Part Number Error

Part No.	Description	Was	Code	Page
7101536	INSULATION			310, 312
7101537	INSULATION			310
7101538	INSULATION			310, 312
7101539	INSULATION			312
7101672	ACTUATOR			50, 140, 148
7101705	ADAPTER			140
7101797	ELBOW			78
7101893	SPACER			136
7101928	VALVE			276, 290
7102018	TEE			66
7102019	FITTING			64
7102034	TAB			158
7102035	TAB			158
7102066	CROSS			62, 66
7102089	HOSE			46, 48
7102090	HOSE			46, 48
7102336	HOSE			46, 48
7102337	HOSE			46, 48
7102338	HARNESS			326
7102368	TUBE			158
7102399	TEE			72, 74
7102414	BRACKET			51, 52
7102652	SCREW			63, 64, 68
7102705	TEE			34
7102747	GASKET			158
7103075	SEAL			238
7103172	HOSE			50
7103271	WASHER			90
7103708	BRACKET			88
7103711	BOLT			88
7103749	ELBOW			72, 74
7103750	EXCHANGER			72, 74
7103751	HOSE			72, 74
7103903	MOUNT			84
7104465	DOOR SWITCH HARNESS			222, 228
7104829	KIT			219, 220
7105035	WINDOW			18, 238
7105192	BOLT			88
7105193	BOLT			88
7105194	BOLT			88
7105223	SPACER			89, 90
7105764	KIT			241, 242
7105818	MOUNT			242
7105827	ROD			242
7105856	SNAP RING			28
7105983	BOLT			132
7106040	ELBOW			78
7106212	HOSE			78
7106215	HOSE			52
7106707	SHIELD			30, 32
7106712	SEAT			62, 66
7106737	SPROCKET			35, 36, 44
7106738	SHAFT			38
7106739	SHAFT			40

Code for disposition of old part number

A -- Use up

B -- Use on other application (See PNI)

C -- File PDR Report with Bobcat Parts Sales

D -- Part Number Error

Part No.	Description	Was	Code	Page
7106862	CHAIN			36
7107153	HOSE			154
7107174	HOSE			154
7107175	INLET			154
7107271	WASHER			44
7107272	MOTOR CARRIER			37, 38
7107274	MOTOR CARRIER			39, 40
7107544	HARNESS			212
7107557	HOSE			82
7107558	HOSE			82
7107559	HOSE			82
7107560	HOSE			82
7107829	BACK UP ALARM KIT			211, 212
7108222	SAFETY TREAD			244
7108236	PIN			50, 140
7108241	LIFT SPOOL			66
7108242	TILT SPOOL			66
7108458	TUBELINE			48, 220
7108677	SEAL			314
7108685	TEE			154
7108716	SEAL			314
7108781	SPOOL			62
7109144	HOSE			72, 74
7109317	INSULATOR			313, 314
7109318	INSULATOR			314
7109319	INSULATOR			314
7109320	INSULATOR			314
7109403	HARNESS			308
7109661	DOOR LATCH			222, 228
7109662	HANDLE			222, 228
7109663	SPACER			222, 228
7109664	BOLT			222, 228
7109665	DOOR			222
7109881	ELBOW			318
7109882	ELBOW			318
7109934	MOUNT			50
7110159	HARNESS			134
7110160	HARNESS			134
7110205	HOSE			72
7110243	BRACKET			154
7110244	BRACKET			154
7110284	HOSE			50
7110286	HOSE			72
7110310	SCREW			136
7110316	DECAL			222, 228
7110339	HOSE			72
7110365	PINTLE ARM			88
7110367	HOSE			318
7110430	SPECIAL APPS DOOR			228
7110572	BELLCRANK			88
7110809	HOSE			154
7110914	TUBELINE			62, 66
7110942	HOSE			34

Code for disposition of old part number
A -- Use up
B -- Use on other application (See PNI)
C -- File PDR Report with Bobcat Parts Sales
D -- Part Number Error

Part No.	Description	Was	Code	Page
7111581	PULLEY			160
7111805	MOUNT			158
7111992	JOYSTICK ASMBLY RH			148
7111993	JOYSTICK ASMBLY LH			148
7112333	CHAINCASE			36
7112349	HOSE			314
7112383	AUX SPOOL			62, 66
7113208	HOSE			278
7113209	HOSE			278
7113340	CAP			34
7113355	TUBELINE			84
7113512	DECAL			72, 74
7114813	TUBELINE			46, 48
7114821	TUBELINE			46, 48
7114886	HOSE			84
7115066	TUBELINE			78
7115091	TUBELINE			84
7115185	HOSE			78
7115219	PEDAL			60, 210
7115220	MOUNT			60, 210
7115550	TUBELINE ASSY	6810741	A	56
7116257	HARNESS LF MFR			134, 135, 136
7116260	HARNESS			18, 132
7116261	HARNESS			18
7116601	KIT, REAR AUX			325, 326
7116870	DECAL			246
7116899	KIT HEATER CAB			275, 276
7116902	KIT			277, 278
7116904	AC KIT			293, 294
7117124	PANEL			30, 32
7117322	HARNESS			222, 228
7117407	DECAL			134
7120290AR	KIT, TRANSLATION			244, 246
7120290BR	KIT, TRANSLATION			244, 246
7120291AR	KIT, DECAL			244, 246
7120291BR	KIT, DECAL			244, 246
7120291JP	KIT, DECAL			244, 246
7120594	DECAL			244, 246
7120602	DECAL			72, 74, 244, 246
7120956	HOSE			326
7121223	CAP			34
7121399	SPRING			62, 66
7123963	SEAL KIT			64, 68
7123964	SEAL KIT, COMPLETE			64, 68
7123965	SEAL KIT			64, 68
72F000001B	DRAIN COCK			34, 164
73G000656B	BOLT			160, 318
73G000824B	BOLT			88
73K000013B	O-RING			64, 66
73K000016B	RING			64, 66
73K000222B	WASHER			320
73K000232B	WASHER			54, 56

Code for disposition of old part number

A -- Use up
B -- Use on other application (See PNI)
C -- File PDR Report with Bobcat Parts Sales
D -- Part Number Error

Part No.	Description	Was	Code	Page
74G000536B	BOLT			264
75K000003B	O-RING			320
75K000004B	O-RING			126
75K000006B	O-RING			54, 56
774220	NUT			212, 214
77F000008B	ELBOW			78
78HA01010B	ADAPTER			154
78HA01210B	ADAPTER			154
799119B	SNAP RING			62
79K000004B	O-RING			156, 318
79K000005B	O-RING			34
79K000006B	O-RING			50, 52, 64, 66, 78, 80, 82, 154, 272, 318
79K000007B	O-RING			322
79K000008B	O-RING			62, 66, 70, 72, 74, 80, 82, 100, 104, 164, 322
79K000010B	O-RING			46, 48, 62, 66, 72, 74, 84, 86, 100, 154, 220, 322
79K000012B	O-RING			78, 80, 82, 84, 100, 104, 154, 318
79K000016B	O-RING			52, 64, 72, 74, 78, 84
79K000020B	O-RING			78, 84
79K16	O RING 10			68
7D000004B	NUT			50, 58
83D000004B	NUT			20, 50, 214, 256, 258, 300, 302
83D000005B	NUT			78, 164, 220, 300, 302
83D000006B	NUT			50, 52, 88, 158, 254, 270, 290, 294, 326
83D000008B	NUT			12, 164
83D000010B	NUT			304
84G001320B	BOLT			212
84G003108B	BOLT			156
84G003110B	BOLT			168, 290
84G003112B	BOLT			14, 26, 72, 74, 134, 154, 244, 252, 254
84G003708B	BOLT			12
84G003710B	BOLT			32, 60, 84, 210, 290, 294
84G003712B	BOLT			12, 30, 32, 34, 132, 134, 136, 153, 154, 156, 158, 168, 170, 256, 258, 326
84G003716B	BOLT			30, 32, 42, 52, 154, 170, 220, 256, 258, 272, 290
84G003720B	BOLT			42, 170, 208
84G003724B	BOLT			168, 170, 326
84G003728B	BOLT			46, 48, 170
84G003732B	BOLT			46, 48
84G003736B	BOLT			52
84G003740B	BOLT			46, 48, 52
85D000004B	NUT			170, 256, 258
85D000005B	NUT			168, 170, 262, 308
85D000006B	NUT			24, 26, 28, 52, 158, 170, 304
85D000007B	NUT			16
85D000008B	NUT			14, 160
85G000616B	SCREW			256
85G000808B	BOLT			256, 258
85G001010B	BOLT			258
86D000004B	NUT			170
86F000005B	NUT			272, 326
86F000010B	NUT			84
872229B	WASHER			46, 48, 52
87D000006B	NUT			304

Code for disposition of old part number

A -- Use up
B -- Use on other application (See PNI)
C -- File PDR Report with Bobcat Parts Sales
D -- Part Number Error

Part No.	Description	Was	Code	Page
88F000005B	ELBOW			326
898731B	BULB			308
89D000005B	NUT			32
8D000004B	NUT			170
8D000006B	NUT			88
90F000005B	TEE			326
90KV00002B	PLUG			320
90KV00003B	PLUG			94
90KV00005B	PLUG			94
91G000416B	BOLT			238
91G000420B	BOLT			18, 238
92D000010B	NUT			320
92D000012B	NUT			162
947088B	SEAL			54, 56
95D000005B	NUT			136, 140, 168, 210
95D000006B	NUT			30, 32, 59, 60, 88, 140, 154, 228, 304
95K000003B	O-RING			320
95K000004B	O-RING			94
95K000006B	O-RING			54, 94
96D000006B	NUT			88
96D000008B	NUT			154
97D000004B	NUT			212
97D000005B	NUT			134
97D000008B	NUT			14, 274
97K000004B	O-RING			86
97K000006B	O-RING			86
98D000006B	NUT			88
98G000412B	BOLT			146
99K000004B	O-RING			86
99K000006B	O-RING			86
99K000010B	O-RING			86

Code for disposition of old part number

A -- Use up
B -- Use on other application (See PNI)
C -- File PDR Report with Bobcat Parts Sales
D -- Part Number Error