RUTHZIL TRATOR COMERCIAL DE PEÇAS LTDA 11 97083-6812 ROLANDO CITRANGULO

PARTS MANUAL

HYSTER

SPACESAVER

S25-35XM S40XMS (D010)

CUSTOMER EDITION

HYSTER

1492500
04/2004

©2004 Hyster Company

SECTIONS

1 FRAME
2 ENGINES
3 FUEL SYSTEM
4 ELECTRICAL SYSTEM
5 TRANSMISSION
6 STEERING SYSTEM
7 BRAKE SYSTEM
8 HYDRAULIC SYSTEM
9 MAST-TWO STAGE LIMITED FREE-LIFT
10 MAST-TWO STAGE FULL FREE-LIFT
11 MAST-THREE STAGE FULL FREE-LIFT
12 OPTIONS
13 NUMERICAL INDEX

This Parts Manual is divided into 13 major sections which are listed above. Quick reference to these sections can be made by placing the right thumb on the tab of the desired section, bending the book back and thumbing the pages to the corresponding tab.

TABLE OF CONTENTS

DESCRIPTION **PAGE**

A

AIR INTAKE AND FILTER
GASOLINE ... 3-13
LPG ... 3-16
ALTERNATOR
GASOLINE AND LPG ... 4-42
TYPE GS AND LPS ... 4-44
AUXILIARY TUBES
TWO AND THREE STAGE FULL FREE-LIFT
FOUR FUNCTION GROUP ... 12-18
TWO STAGE AND THREE STAGE FULL FREE-LIFT
THREE FUNCTION GROUP ... 12-16
TWO STAGE LIMITED FREE-LIFT
THREE FUNCTION GROUP ... 12-14

B

BACK-UP ALARM ... 12-24
BATTERY
GASOLINE AND LPG ... 4-12
BRAKE ASSEMBLY ... 7-6
BRAKE LINES ... 7-4
BRAKE MASTER CYLINDER ... 7-10
BRAKE PEDAL LINKAGE ... 7-2

C

CAMSHAFT AND VALVES
GASOLINE AND LPG ... 2-10
CARBURETOR
GASOLINE ... 3-10
LPG 2.0L OPEN LOOP ... 3-28
LPG CLOSED LOOP ... 3-32
CARRIAGE
THREE STAGE FULL FREE-LIFT ... 11-18
TWO STAGE FULL FREE-LIFT ... 10-20
TWO STAGE LIMITED FREE-LIFT ... 9-12
CONTROL VALVE ... 5-16
FOUR FUNCTION
SINGLE RELIEF ... 8-18
THREE FUNCTION
SINGLE RELIEF ... 8-12
COOLING SYSTEM ... 2-20
COUNTERWEIGHT ... 1-19
CRANKSHAFT AND PISTON
GASOLINE AND LPG ... 2-8
CYLINDER BLOCK
GASOLINE AND LPG ... 2-4
CYLINDER HEAD AND COVER
GASOLINE AND LPG ... 2-2

©2004 HYSTER COMPANY

TABLE OF CONTENTS (Continued)

DESCRIPTION	PAGE
D	
DIFFERENTIAL	5-18
DISTRIBUTOR	
GASOLINE AND LPG	4-38
DRIVE AXLE	5-20
DRIVE LIGHTS AND REAR LIGHTS	12-22
DRIVE TIRE AND WHEEL	12-20
E	
ELCTRICAL SYSTEM	
EPA COMPLIANT	
LPG	
S/N PENDING PER ECN 74449⇒	2-16
ELECTRICAL	
COWL	4-18
ELECTRICAL SYSTEM	
FRAME	
GASOLINE AND LPG	4-2
GASOLINE AND LPG	2-14
END PLATE	5-22
ENGINE COVER	1-6
ENGINE ELECTRICAL SYSTEM	
FRAME	
TYPE GS AND LPS	4-6
ENGINE FUEL SYSTEM	
LPG	
EPA COMPLIANT	
S/N PENDING PER ECN 74449⇒	2-24
ENGINE MOUNT	
GASOLINE AND LPG	2-30
EXHAUST	
GASOLINE AND LPG	
WITHOUT LOW EMISSIONS	2-32
TYPE GS AND LPS	2-36
WITH LOW EMISSIONS	2-34
F	
FORKS	1-21
FRAME AND FLOORPLATE	1-2
FREE LIFT	
THREE STAGE FULL FREE-LIFT	11-10
TWO STAGE FULL FREE-LIFT	10-8
FREE-LIFT CYLINDER	
THREE STAGE FULL FREE-LIFT	11-16
TWO STAGE FULL FREE-LIFT	10-18
FUEL SYSTEM	
GASOLINE ENGINE	2-26
LPG	
EPA COMPLIANT	
S/N PENDING PER ECN 74449⇒	3-24
LPG ENGINE	
LOW EMISSIONS	2-22

©2004 HYSTER COMPANY

TABLE OF CONTENTS (Continued)

DESCRIPTION **PAGE**

F (continued)

OPEN AND CLOSED LOOP 3-20
FUEL TANK AND LINES
GASOLINE 3-36

G

GEAR PUMP 5-4
GOVERNOR
GASOLINE AND LPG 3-12

H

HEADER HOSE
THREE STAGE FULL FREE-LIFT 11-20
TWO STAGE FULL FREE-LIFT 10-22
TWO STAGE LIMITED FREE-LIFT 9-14
HYDRAULIC CLUTCH 5-14
HYDRAULIC GEAR PUMP DRIVE 8-6
HYDRAULIC PUMP
GASOLINE AND LPG 8-5
HYDRAULICS 8-2

I

INNER MAST
THREE STAGE FULL FREE-LIFT 11-6
TWO STAGE FULL FREE-LIFT 10-4
TWO STAGE LIMITED FREE-LIFT 9-4
INSTRUMENT CLUSTER
⇒S/N D010H-02793A 4-14
S/N D010H-02794A⇒ 4-16
INTAKE AND EXHAUST MANIFOLD
GASOLINE AND LPG 2-12
INTEGRAL SIDE-SHIFT CARRIAGE
TWO AND THREE STAGE FULL FREE-LIFT 12-8
TWO STAGE LIMITED FREE-LIFT 12-6
INTEGRAL SIDE-SHIFT CYLINDER 12-10
INTEGRAL SIDE-SHIFT HOSES
TWO AND THREE STAGE FULL FREE-LIFT 12-12
TWO STAGE LIMITED FREE-LIFT 12-11
INTERMEDIATE MAST
THREE STAGE FULL FREE-LIFT 11-4

L

LABELS 1-17
LIFT
TWO STAGE LIMITED FREE-LIFT 9-6
LIFT CYLINDER
LEFT HAND
TWO STAGE LIMITED FREE-LIFT 9-8
RIGHT HAND
TWO STAGE LIMITED FREE-LIFT 9-10

©2004 HYSTER COMPANY

TABLE OF CONTENTS (Continued)

DESCRIPTION **PAGE**

L (continued)

LIGHTS, LED BACKUP AND BRAKE
S/N PENDING PER ECN 84909⇒ 4-10
LOAD BACKREST EXTENSION 1-22

M

MAIN CYLINDER
LEFT HAND
THREE STAGE FULL FREE-LIFT 11-12
TWO STAGE FULL FREE-LIFT
⇒S/N A558L-03214 10-10
S/N A558L-03215⇒ 10-12
RIGHT HAND
THREE STAGE FULL FREE-LIFT 11-14
TWO STAGE FULL FREE-LIFT
⇒S/N A558L-03214 10-14
S/N A558L-03215⇒ 10-16
MAIN LIFT
THREE STAGE FULL FREE-LIFT 11-8
TWO STAGE FULL FREE-LIFT 10-6
MAST INSTALLATION 8-22
MONOTROL PEDAL 3-4

O

OIL PUMP AND FILTER
GASOLINE AND LPG 2-18
OUTER MAST
THREE STAGE FULL FREE-LIFT 11-2
TWO STAGE FULL FREE-LIFT 10-2
TWO STAGE LIMITED FREE-LIFT 9-2
OVERHEAD GUARD 1-4

P

PARK BRAKE LEVER 7-8

R

RADIATOR AND HOSES
GASOLINE AND LPG 2-28
REGULATOR
CLOSED LOOP 3-34
OPEN LOOP 3-30

S

SEAT
FULL SUSPENSION
SHEET 1 OF 2 1-8
SHEET 2 OF 2 1-10
NON-SUSPENSION 1-12
SEMI-SUSPENSION SEAT
EUROPE 1-14

©2004 HYSTER COMPANY

TABLE OF CONTENTS (Continued)

DESCRIPTION **PAGE**

S (continued)

SHIFT LEVER 6-4
SIDE-SHIFT CARRIAGE 12-2
SIDE-SHIFT CYLINDER 12-4
SOLENOID VALVE
⇒S/N PENDING PER ECN 78418 5-5
STARTER
GASOLINE AND LPG 4-40
STEER TIRE AND WHEEL
15 X 5 X 11.25 12-21
STEERING AXLE 6-8
STEERING COLUMN 6-2
STEERING CYLINDER 6-10
STEERING PUMP 6-6

T

TAIL LIGHT
⇒S/N PENDING PER ECN 84909 4-8
TANK
LPG 3-18
THROTTLE ASSEMBLY 3-2
THROTTLE LINKAGE
GASOLINE 3-6
LPG 3-8
TILT CYLINDER 8-24
TIMING COVER AND OIL PAN
GASOLINE AND LPG 2-6
TORQUE CONVERTOR 5-2
TRANSMISSION GEARS 5-10
TRANSMISSION HOUSING 5-8
TRANSMISSION HYDRAULIC LINES 5-12

V

VALVE ATTACHING PARTS
FOUR FUNCTION 8-16
THREE FUNCTION 8-8

W

WIRE HARNESS
CLUSTER POWER 4-23
COWL 4-21
ENGINE
GASOLINE AND LPG 4-27
LPG WITH LOW EMISSIONS 4-28
LPS WITH LOW EMISSIONS 4-32
TYPE GS AND LPS 4-30
FORWARD AND REVERSE 4-24
INSTRUMENT PANEL 4-22
MONOTROL PEDAL 4-25
REAR LIGHTS

©2004 HYSTER COMPANY

TABLE OF CONTENTS (Continued)

DESCRIPTION **PAGE**

W (continued)

S/N PENDING PER ECN 84909⇒ 4-36
SEAT SWITCH 4-26
TAIL LIGHT
⇒S/N PENDING PER ECN 84909 4-34

©2004 HYSTER COMPANY

ABBREVIATIONS QUICK REFERENCE SHEET

Listed below are abbreviations used in parts manuals to denote the following expressions:

TERM	DEFINITION
Amp	Amperes
AR	As Required
BDI	Battery Discharge Indicators
BWI	Brush Wear Indicator
CE	Communicator End
CRE	Corrosive Environment
D/B	Date Break
dbA	Decibel "A" Scale
DE	Drive End
ECH	Empty Container Handler
ECH-3	Empty Container Handler - 3 High Stacking
ECH-4	Empty Container Handler - 4 High Stacking
ECH-5	Empty Container Handler - 5 High Stacking
ECH-6	Empty Container Handler - 6 High Stacking
ECH-7	Empty Container Handler - 7 High Stacking
ECM	Electronic Control Module
ECN	Engineering Change Notice
EEPROM	Electrically Erasable Programmable Read Only Memory
EPROM	Electrically Programmable Read Only Memory

TERM	DEFINITION
FRE	Freezer Environment
in.	inches
LPG	Liquefied Petroleum Gas
MAP	Manifold Absolute Pressure
mm	millimeters
MSTS	Microprocessor Spark Timing System
NPT	National Pipe Threads
O/S	Oversize
PTO	Power Take Off
RPM	Revolutions per Minute
S/N	Serial Number
TMM	Truck Management Module
UL Type D	Diesel-Powered Safety Rating
UL Type DS	Diesel-Powered Safety Rating
UL Type E	Battery-Powered Safety Rating
UL Type EE	Battery-Powered Safety Rating
UL Type ES	Battery-Powered Safety Rating
UL Type G	Gasoline-Powered Safety Rating
UL Type GS	Gasoline-Powered Safety Rating
UL Type LP	Gas-Powered Safety Rating
UL Type LPS	LP Gas-Powered Safety Rating
U/S	Undersize
UL	Underwriters Laboratory
V	Volts

©2004 HYSTER COMPANY

HOW TO USE THE ILLUSTRATED PARTS MANUAL

This parts manual describes and illustrates assemblies, subassemblies, and detail parts needed for service replacement.

The different constructions are indicated by keys and footnotes. The callouts correspond to descriptions found on the next page.

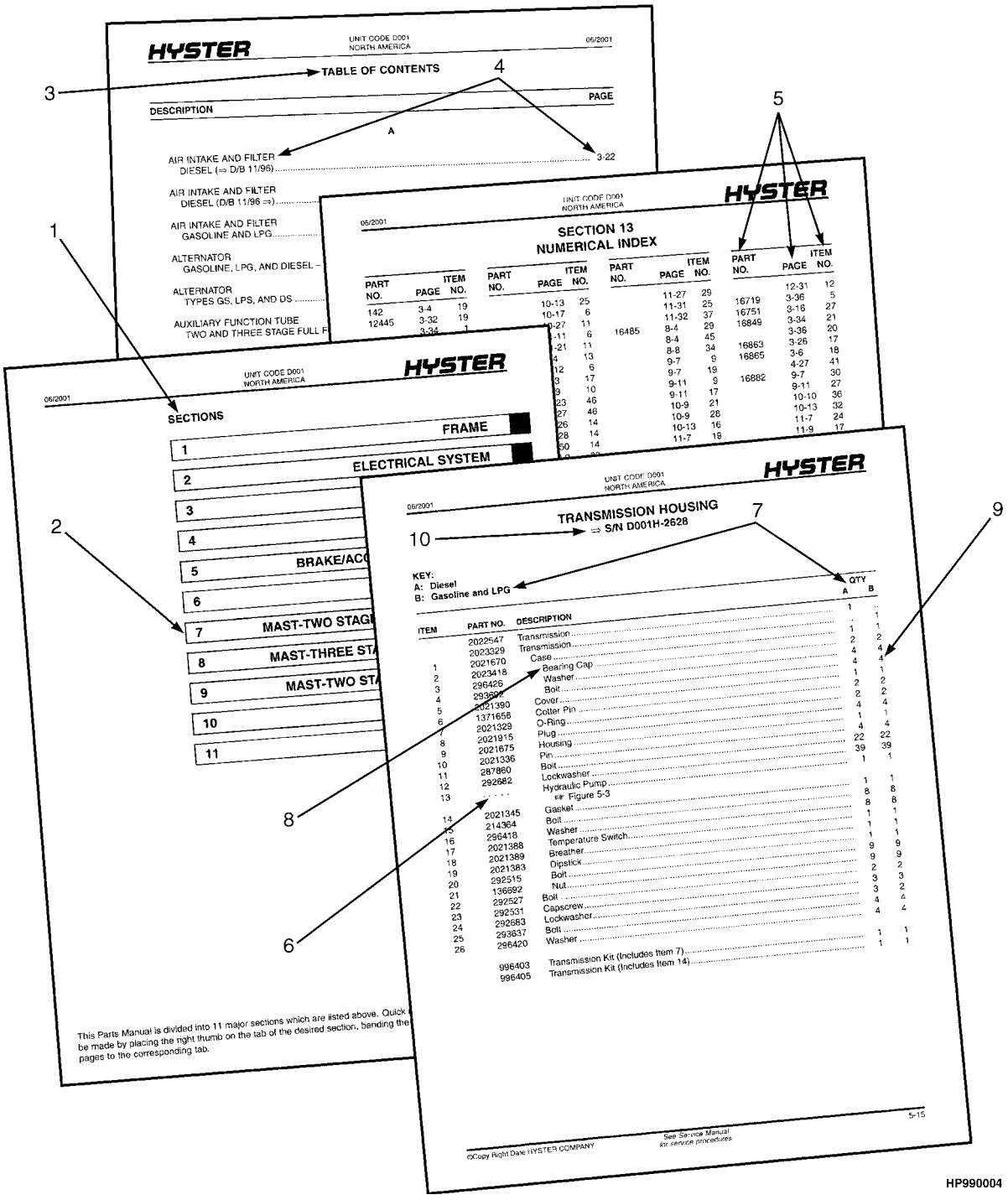

©2004 HYSTER COMPANY

HOW TO FIND THE DESIRED PART NUMBER

WHEN THE PART NUMBER AND THE NEXT HIGHER ASSEMBLY IS NOT KNOWN:

1. Determine the function and application of the part required. Turn to the Sections Page. Choose the general area of reference most likely to include the part.

2. Turn to the section you chose. Use the Section Table of Contents to determine the assembly which would normally contain the part required. Then locate the part on the assembly breakdown page.

WHEN THE PART NUMBER IS NOT KNOWN AND THE NEXT HIGHER ASSEMBLY IS KNOWN:

3. Determine the assembly the required part is used on. Turn to the Table of Contents on Page i.

4. Locate the assembly the required part is used on and turn to the page indicated for that assembly. Then locate the part on the assembly breakdown page.

WHEN THE PART NUMBER IS KNOWN:

5. Use the Numerical Index on Page 13-1 to find the part number. Turn to the page listed and locate the part as indicated by the item number.

GENERAL:

The assembly breakdowns include part numbers, descriptions, quantities required, keys and footnotes to help in selecting correct parts.

6. Five periods in the PART NO. column (. . . . .) indicate that the part is either *Not Serviced Separately* or there is a reference to another figure. A figure reference is denoted by a pointing hand followed by a figure number in the DESCRIPTION column (☞Figure 10)

7. Keys are used to show two or more similar assemblies, RH and LH assembly parts, etc. Select the appropriate key, "A", "B", "C", "D", or "E" and the corresponding quantity column to find the required parts. Two periods in the QTY column (..) indicate that the part is not used for that assembly.

8. Indented descriptions under the DESCRIPTION column are used to indicate assemblies and subparts of assemblies. In the example on the previous page, *BEARING CAP* (Item 2) is a subpart of the major assembly *CASE*.

9. Quantities shown are for one assembly. The quantities of the subpart *BEARING CAP* are indicated as two and two. This means two per *CASE* assembly.

10. Serial number breaks identify the most current parts information and are shown as follows:
    ⇒ S/N D001H-2628
    Indicates last serial number affected.
    S/N D001H-2629 ⇒
    Indicates the first serial number affected.
    S/N D001H-1553 ⇔ S/N D001H-3291
    Indicates a range of serial numbers affected.

    ECN numbers for pending serial numbers are shown to allow for the inclusion of the most current parts information and are identified as follows:
    ⇒ S/N Pending Per ECN 63243
    Indicates a pending serial number for last unit affected.
    S/N Pending Per ECN 63243 ⇒
    Indicates a pending serial number for first unit affected.

    Date breaks are used to indicate when a change occurred but a subsequent serial number break was not recorded. This is an arbitrary date usually based on the ECN release and are identified as follows:
    ⇒ D/B 3/00
    Indicates that a change occurred sometime within that month for the item affected.
    D/B 3/00 ⇒
    Indicates that a change occurred sometime within that month for the item affected.
    D/B 3/00 ⇔ D/B 4/00
    Indicates a range of production dates of the item affected.

    Contact your local dealer for Hyster lift trucks for serial number information for items with a ECN or a date break.

ORDERING PARTS:

When ordering replacement parts, give the unit serial number, part number, name of part and quantity required.

For any further information on parts, service, or ordering, consult your local dealer for Hyster lift trucks.

©2004 HYSTER COMPANY

IDENTIFICATION OF TRUCK SERIAL NUMBERS

X	OOO	X	OOOO	X
(1)	(2)	(3)	(4)	(5)

(1) and (2) The first letter and three numbers indicate the truck unit code.

(3) The second letter indicates the plant of manufacture.

(4) The four or five digit number indicates the production sequence number of the truck.

(5) The final letter indicates the year of manufacture starting with "A" in 1957 and 1980. The letters "I", "O", and "Q" will not be used.

For pending serial numbers contact your local dealer for Hyster lift trucks.

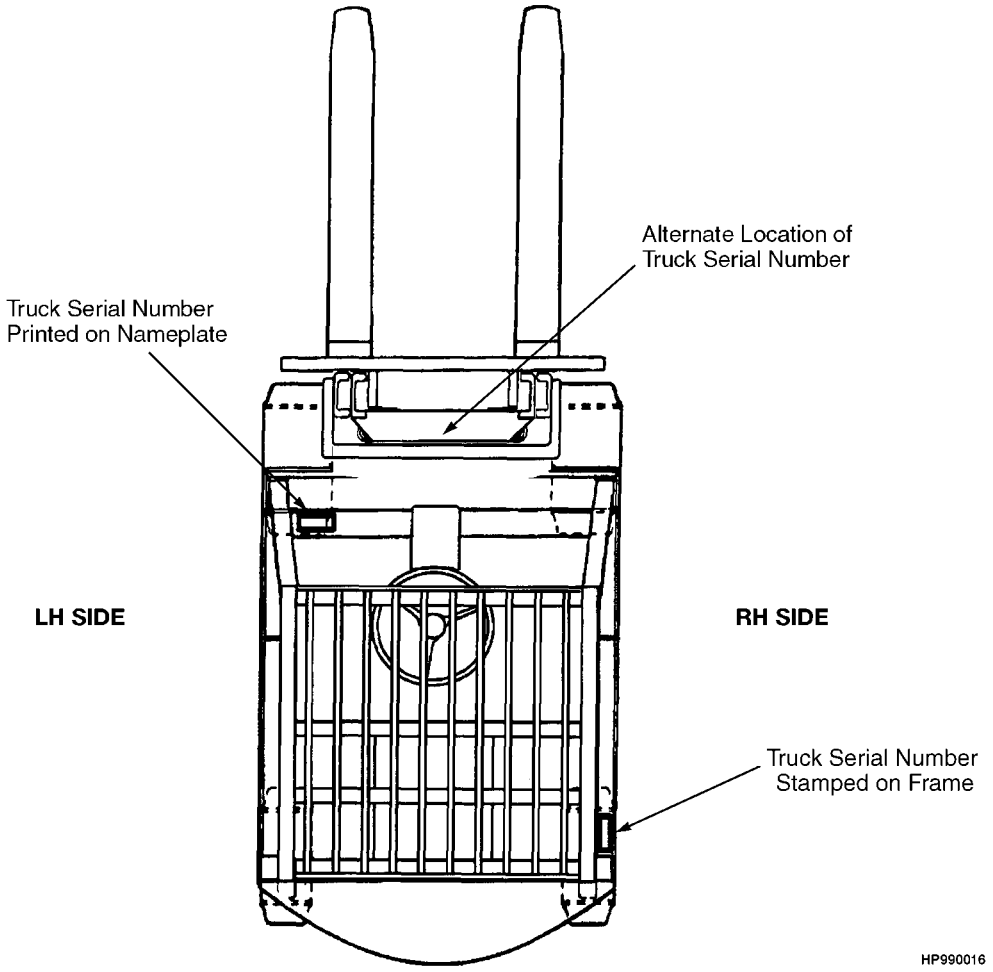

Parts referred to in this book as right or left hand parts are in accordance with the illustration above.

©2004 HYSTER COMPANY

IDENTIFICATION OF MAST SERIAL NUMBERS

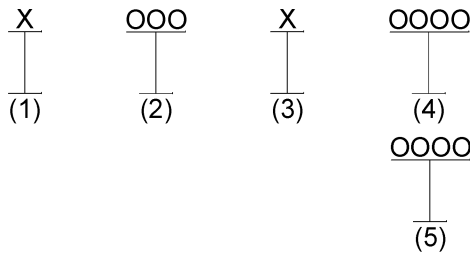

(1) and (2) The first letter and number indicates the mast unit code.

(3) The second letter indicates the plant of manufacture.

(4) The four or five digit number indicates the production sequence number of the mast.

(5) Carriage travel in millimeters stamped just below the serial number.

Mast Group identification consists of mast unit code (1) and (2) plus carriage travel (5).

For pending production sequence numbers contact your local dealer for Hyster lift trucks.

LIFT EQUIPMENT IDENTIFICATION

1. Fork part number, capacity rating, plant code letter, and date of manufacture are stamped approximately six inches below the top of most forks.

2. The carriage group number is stamped on the right hand side of the top crossmember (pin type) or on the back of the right hand end of the bottom crossmember (hook type). A date code has two letters in line with or below the carriage group number.

3. The mast identification number has a unit code, a letter indicating the plant of manufacture, and a serial number. Underneath the production sequence number is a four digit number that indicates the carriage travel in millimeters.

4. Tilt and lift cylinder group numbers are stamped on the cylinder shell.

   Always refer to the group, serial, or part number when ordering service parts.

   Modification of masts and carriages by SPED (Special Products Engineering Department) are identified by a model prefix code beginning with the letter "S". contact your dealer for Hyster lift trucks for information on these assemblies.

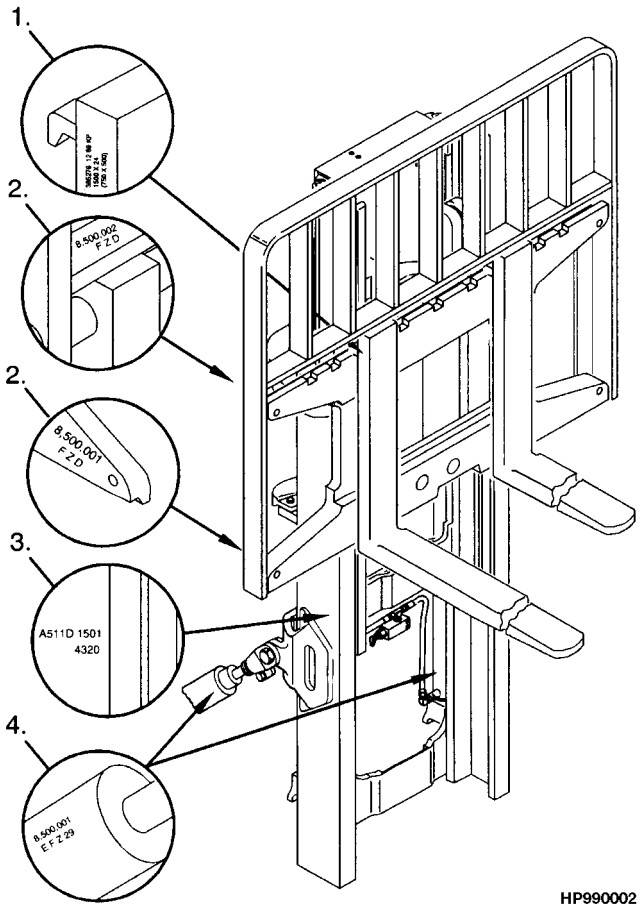

HP990002

IDENTIFICATION OF ATTACHMENT AND SIDE-SHIFT CARRIAGE SERIAL NUMBERS

X OOO X OOOO

(1) (2) (3) (4)

(1) and (2) The first letter and three numbers indicate the attachment unit code.

(3) The second letter indicates the plant of manufacture.

(4) The four or five digit number indicates the production sequence number.

For pending production sequence numbers contact your local dealer for Hyster lift trucks.

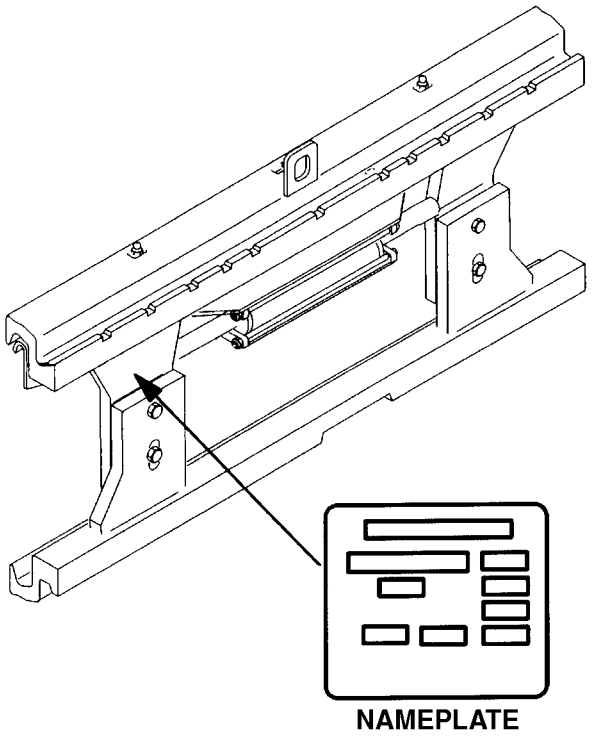

Side-shift carriages and attachments have nameplates. Use the serial number found on the nameplate to identify the attachment.

Always refer to the group, serial, or part number when ordering service parts.

Modifications of attachments and side-shift carriages by SPED (Special Products Engineering Department) are identified by a model prefix code beginning with the letter "S". Contact your dealer for Hyster lift trucks for information on these assemblies.

©2004 HYSTER COMPANY

PUBLICATIONS

Every new lift truck is provided with an OPERATING MANUAL. This manual has information that the operator must know for inspection and operation of the lift truck.

SERVICE MAINTENANCE MANUALS, which provide service and overhaul procedures, and PARTS MANUALS with complete replacement part identification, are available at a nominal fee from your Hyster dealer to assist users in effectively maintaining Hyster lift trucks in a safe, useful condition. See the list below for information on ordering specific publications for this model lift truck.

PUBLICATION	HYSTER PART NUMBER
Operating Manual	1497769
Service Manual (Complete)	1492514
Parts Manual	1492500

©2004 HYSTER COMPANY

NOTES

1 FRAME

SECTION 1
FRAME

DESCRIPTION	PAGE
COUNTERWEIGHT	1-19
ENGINE COVER	1-6
FORKS	1-21
FRAME AND FLOORPLATE	1-2
LABELS	1-17
LOAD BACKREST EXTENSION	1-22
OVERHEAD GUARD	1-4
SEAT	
FULL SUSPENSION	
SHEET 1 OF 2	1-8
SHEET 2 OF 2	1-10
NON-SUSPENSION	1-12
SEMI-SUSPENSION SEAT	
EUROPE	1-14

©2004 HYSTER COMPANY

FRAME AND FLOORPLATE (Figure 1-1)

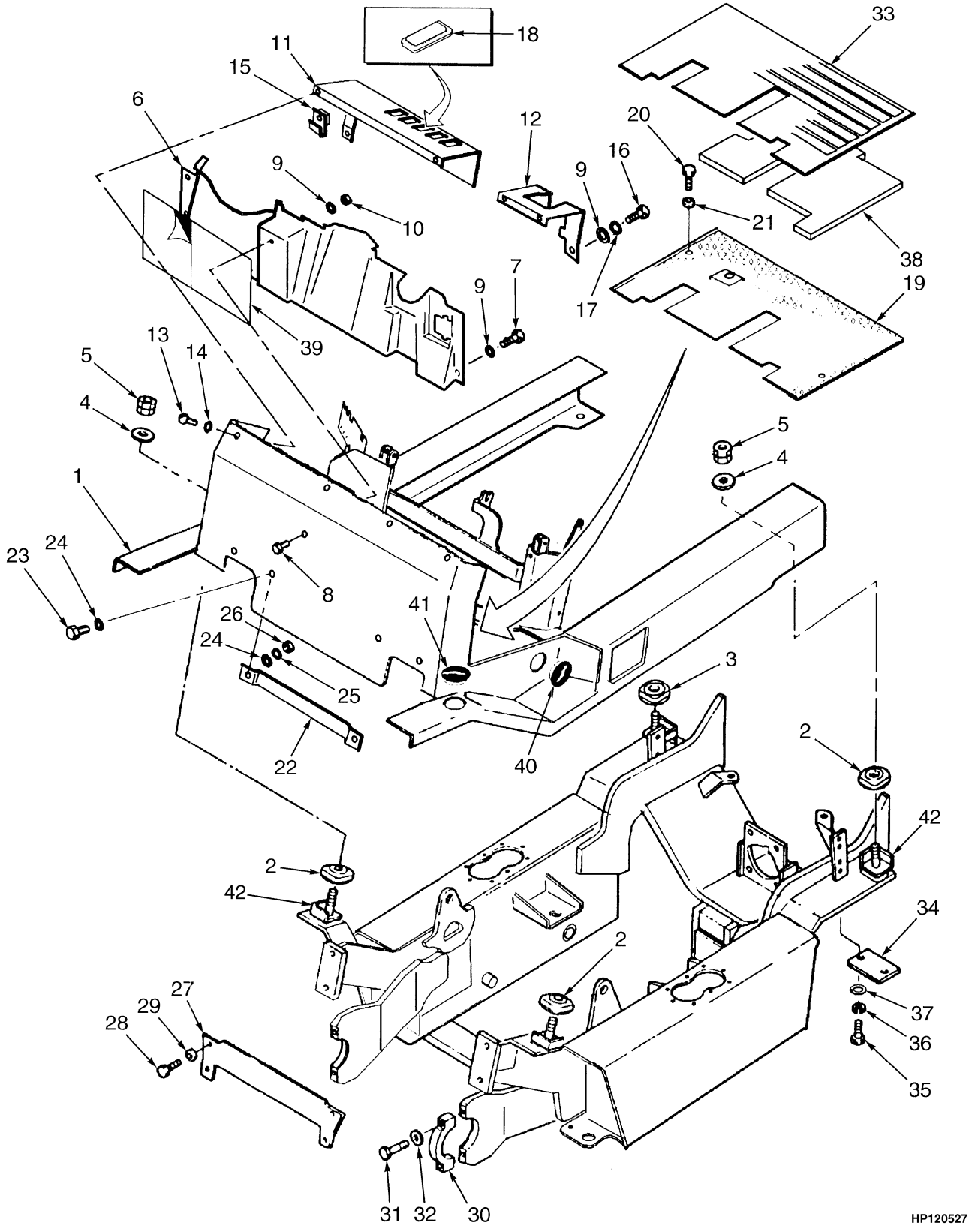

©2004 HYSTER COMPANY

FRAME AND FLOORPLATE

ITEM		PART NO.	DESCRIPTION	QTY
1	**b**	1477464	Operator Module (Standard)	1
1	**b**	1477467	Operator Module (Wide Tread)	1
1	**a**	2041656	Operator Module (Standard)	1
1	**a**	2041663	Operator Module (Wide Tread)	1
2		2021234	Isulator	3
3		2021235	Isulator	1
4		2021238	Washer	4
5		2021237	Nut	4
6		2021232	Cover	1
7		316678	Screw	4
8		292500	Capscrew	4
9		320156	Washer	1
10		136687	Nut	1
11	**c**	1385097	Panel (RH)	1
11		2021497	Panel (RH)	1
12		2021499	Panel (LH)	1
13		369242	Capscrew	4
14		292681	Lockwasher	4
15		1350282	Nut	4
16		316678	Screw	2
17		292681	Lockwasher	2
18		376949	Cover	AR
19		2023789	Floorplate	1
20		136681	Capscrew	2
21		15175	Washer	2
22		2021231	Bracket	1
23		176640	Capscrew	2
24		320157	Washer	4
25		292681	Lockwasher	2
26		239503	Nut	2
27		2022897	Plate	1
28		2022636	Capscrew	4
29		296426	Washer (Hardened)	4
30		2021833	Cap	2
31		292533	Capscrew	4
32		2021834	Washer	4
33		2022821	Floormat	1
34		2021900	Cover	2
35		136985	Capscrew	4
36		292682	Lockwasher	4
37		320159	Washer	4
38		2022822	Barrier	1
39		2022798	Label	1
40		2022803	Cap (Tilt Pin)	2
41		2021395	Cap	2
42		2047056	Support (Rubber) (Lower)	4

FOOTNOTES:
a Gasoline
b LPG
c Type GS/LPS

©2004 HYSTER COMPANY

OVERHEAD GUARD (Figure 1-2)

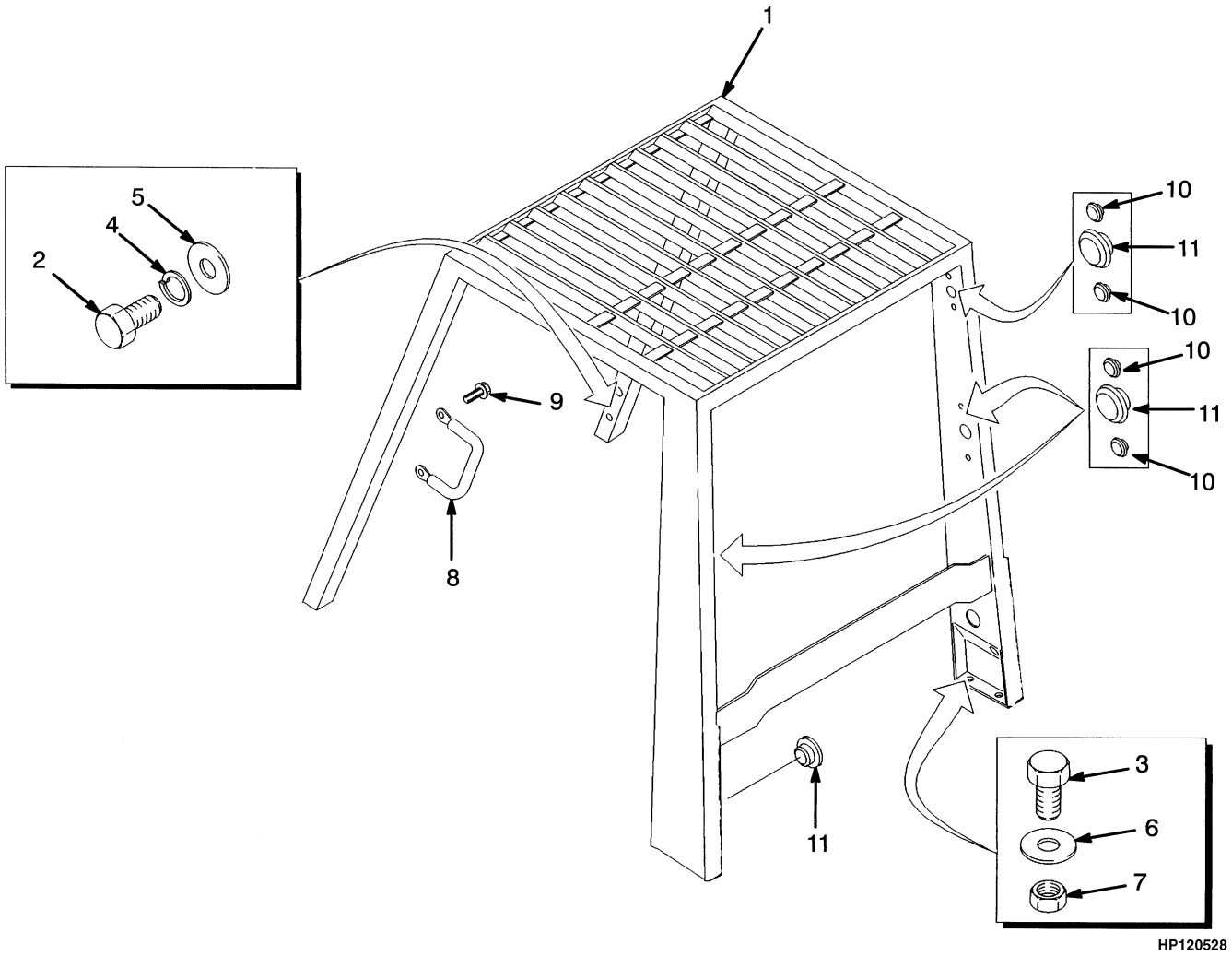

ITEM	PART NO.	DESCRIPTION	QTY
1	2026479	Overhead Guard (Lowered)	1
1	2042988	Overhead Guard (Raised)	1
2	132860	Capscrew	4
3	292528	Capscrew	2
4	292683	Lockwasher	4
5	15177	Washer	4
6	320161	Washer	2
7	300937	Nut	2
8	1343647	Handle	1
9	329067	Screw	2
10	1363916	Plug	12
11	1363917	Plug	4

©2004 HYSTER COMPANY

NOTES

ENGINE COVER (Figure 1-3)

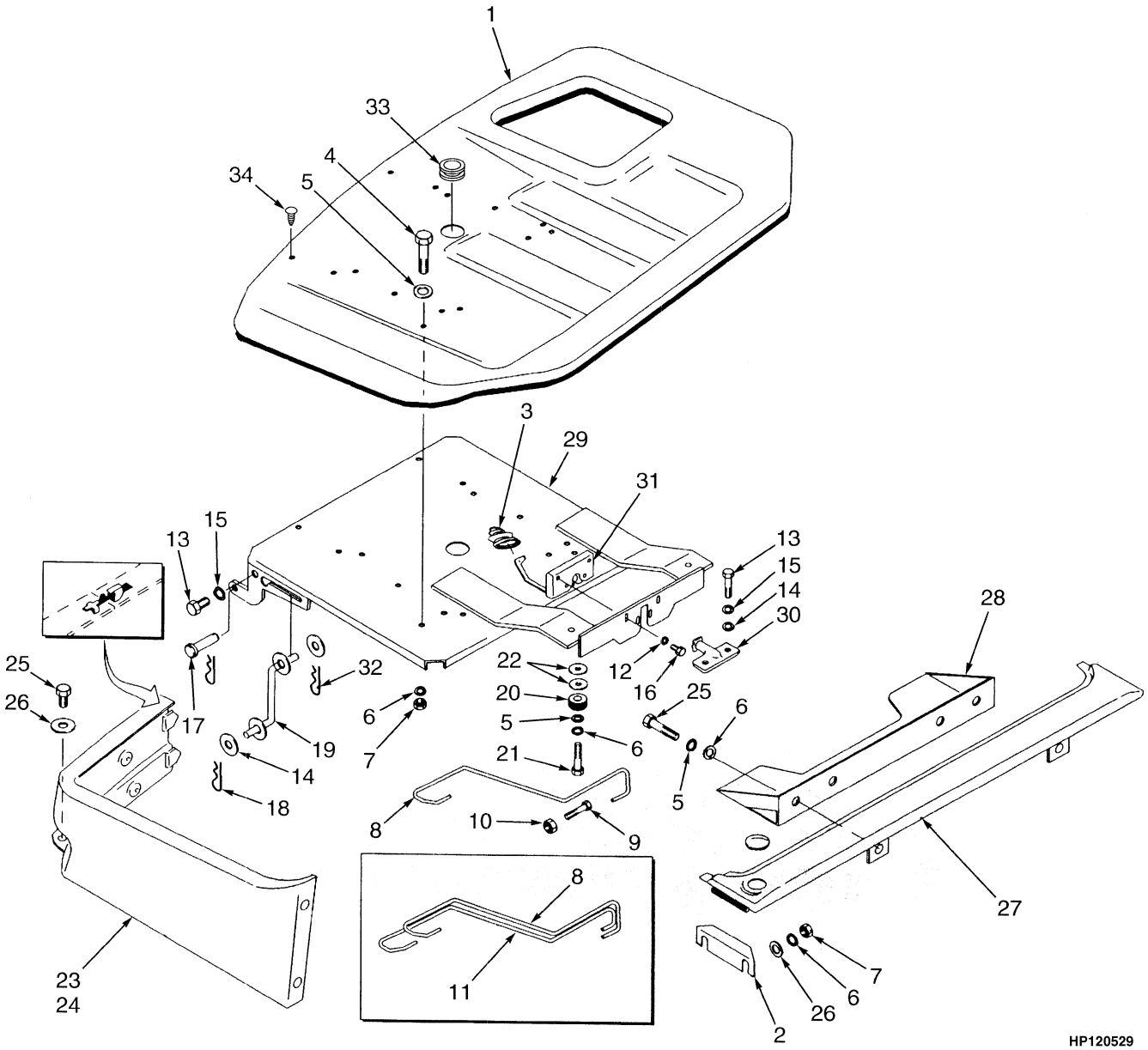

©2004 HYSTER COMPANY

ENGINE COVER

KEY:
A: Non Suspension Seat
B: Suspension Seat

ITEM		PART NO.	DESCRIPTION	QTY A	QTY B
1		2021197	Engine Cover	1	1
2		2022809	Support	2	2
3		1339786	Boot	1	1
4		176640	Capscrew	2	2
5		320157	Washer	6	6
6		292681	Lockwasher	12	12
7		239503	Nut	6	6
8		2026073	Spring	..	1
9		136749	Capscrew	2	2
10		239503	Nut	2	2
11		2026074	Spring	1	1
12		320156	Washer	4	4
13	**a**	287854	Capscrew	2	2
13	**b**	292514	Capscrew	2	2
14		320159	Washer	6	6
15		292682	Lockwasher	2	2
16		199563	Capscrew	4	4
17		2021207	Pin	2	2
18		1362714	Cotter Pin	2	2
19		2021208	Bracket	1	1
20		2021213	Cushion (Rubber)	2	2
21		296167	Capscrew	2	2
22		15177	Washer	AR	AR
23		2023466	Panel (RH)	1	1
24		2021216	Panel (LH)	1	1
25		329067	Screw	4	4
26		15175	Washer	10	10
27		2021218	Cover	1	1
28		2021219	Bracket	1	1
29	**c**	1498410	Seat Pan	1	1
29	**d**	1389607	Seat Pan	1	1
30		1337148	Striker Plate	1	1
31		2021222	Latch	1	1
32		15222	Cotter Pin	1	1
33		1359587	Grommet	1	1
34		1347045	Fastener	4	4

FOOTNOTES:
a ⇒ S/N D010H-02444Z
b S/N D010H-02445Z ⇒
c ⇒ D/B 05/2001
d D/B 05/2001 ⇒

©2004 HYSTER COMPANY

SEAT (Figure 1-4)
FULL SUSPENSION
SHEET 1 OF 2

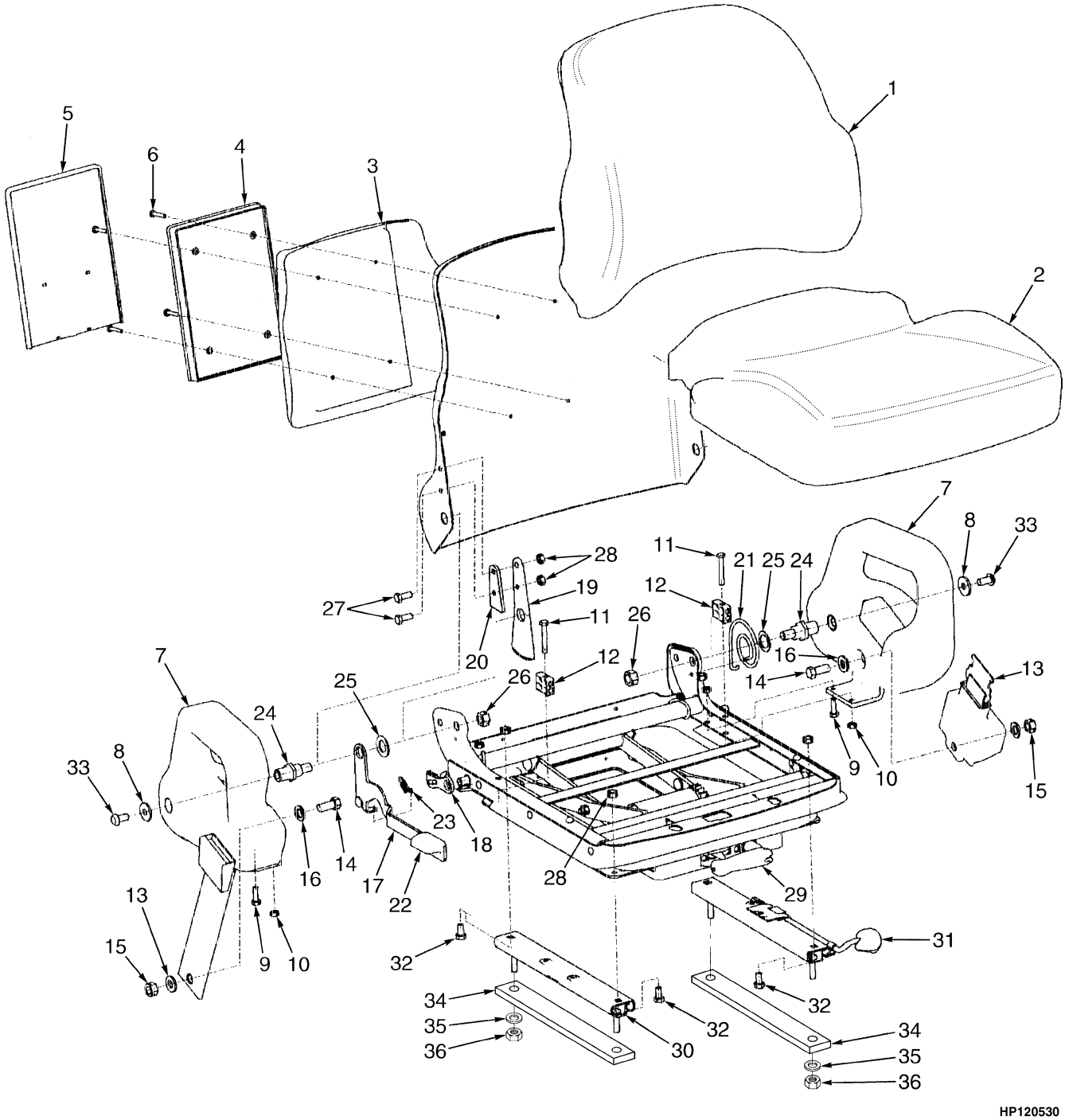

©2004 HYSTER COMPANY

SEAT
FULL SUSPENSION
SHEET 1 OF 2

ITEM	PART NO.	DESCRIPTION	QTY
	1476713	Suspension Seat (Vinyl)	1
	1476714	Suspension Seat (Fabric)	1
1	1470152	Back Cushion (Vinyl)	1
1	1470153	Back Cushion (Fabric)	1
2	1467534	Seat Cushion (Vinyl)	1
2	1470154	Seat Cushion (Fabric)	1
3	. . . . .	Riser	1
4	. . . . .	Box	1
5	. . . . .	Cover	1
6	. . . . .	Screw	4
7	. . . . .	Hip Restraint (RH)	1
7	. . . . .	Hip Restraint (LH)	1
8	. . . . .	Washer	2
9	. . . . .	Bolt	2
10	. . . . .	Nut	4
11	. . . . .	Bolt	2
12	. . . . .	Block	2
13	. . . . .	Seat Belt	1
14	. . . . .	Bolt	2
15	. . . . .	Nut	2
16	. . . . .	Washer	4
17	. . . . .	Handle	1
18	. . . . .	Latch	1
19	. . . . .	Bracket	1
20	. . . . .	Spacer	1
21	. . . . .	Spring	1
22	. . . . .	Knob	1
23	. . . . .	Spring Extension	1
24	. . . . .	Pivot	2
25	. . . . .	Washer	2
26	. . . . .	Nut	2
27	. . . . .	Bolt	2
28	. . . . .	Nut	6
29	1470163	Handle Kit	1
30	. . . . .	Slide (RH)	1
31	. . . . .	Slide (LH)	1
32	. . . . .	Bolt	4
33	. . . . .	Screw	2
34	2026092	Spacer	2
35	15175	Washer	4
36	145639	Nut	4
	1470155	Manual Holder Kit (Includes Items 3-6)	1
	1470156	Hip Restraint Kit (RH) (Includes Items 7-12, 33)	1
	1470157	Hip Restraint Kit (LH) (Includes Items 7-12, 33)	1
	1470158	Seat Belt Kit (Includes Items 13-16)	1
	1470164	Recliner Kit (Includes Items 17-28)	1
	1470161	Slide Kit (Includes Items 30-32)	1

©2004 HYSTER COMPANY

SEAT (Figure 1-5)
FULL SUSPENSION
SHEET 2 OF 2

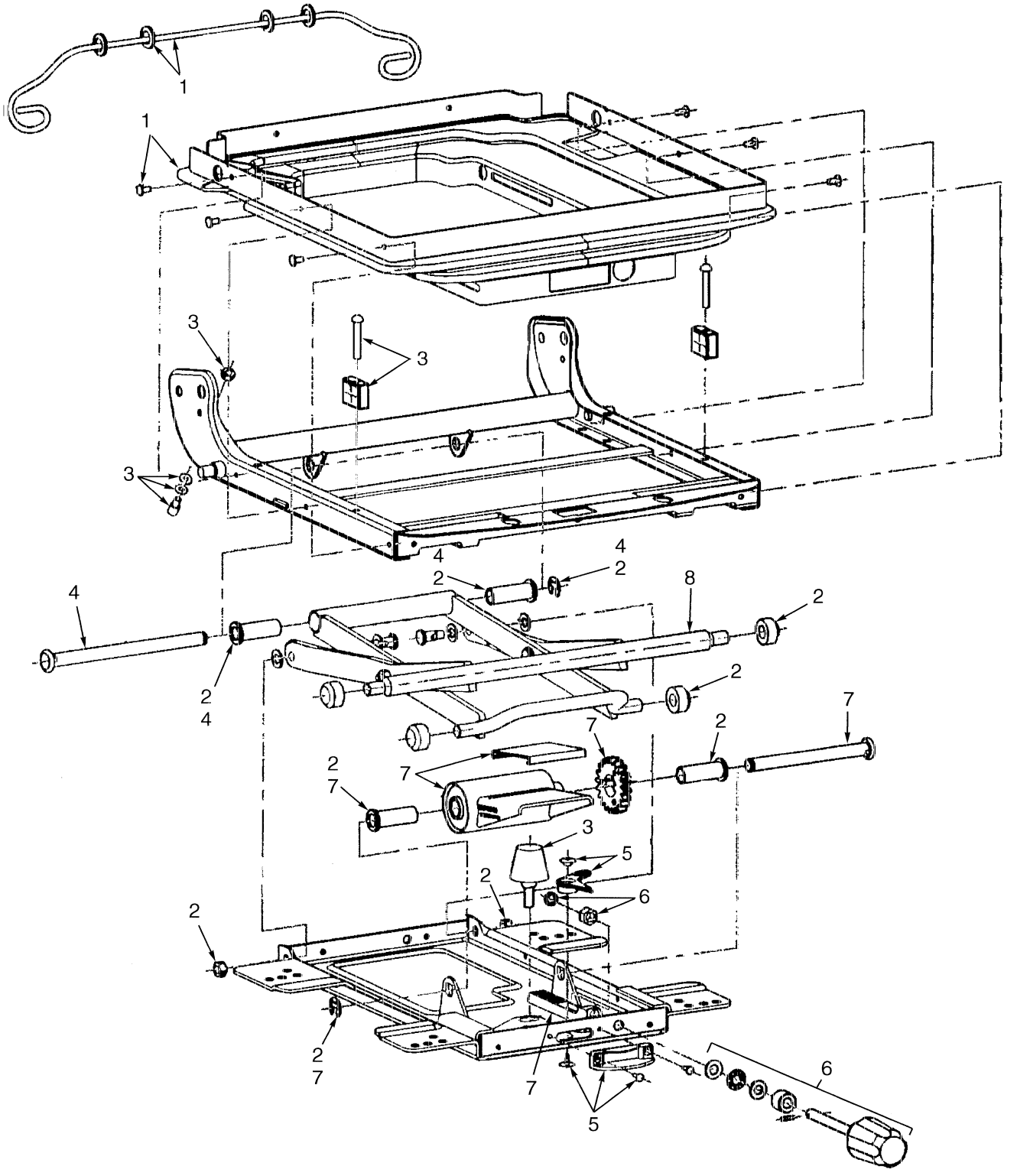

HP120531

©2004 HYSTER COMPANY

SEAT
FULL SUSPENSION
SHEET 2 OF 2

ITEM	PART NO.	DESCRIPTION	QTY
	1476712	Seat (Fabric)	1
	1476711	Seat (Vinyl)	1
1	1467523	Boot Kit	1
2	1467524	Roller and Bearing Kit	1
3	1467525	Bumper and Stop Kit	1
4	1467526	Bearing Shaft Kit	1
5	1467527	Weight Adjuster Indicator Kit	1
6	1467531	Recliner Knob	1
7	1467529	Suspension Spring Kit	1
8	1470160	Scissor Assembly	1

©2004 HYSTER COMPANY

SEAT (Figure 1-6)
NON-SUSPENSION

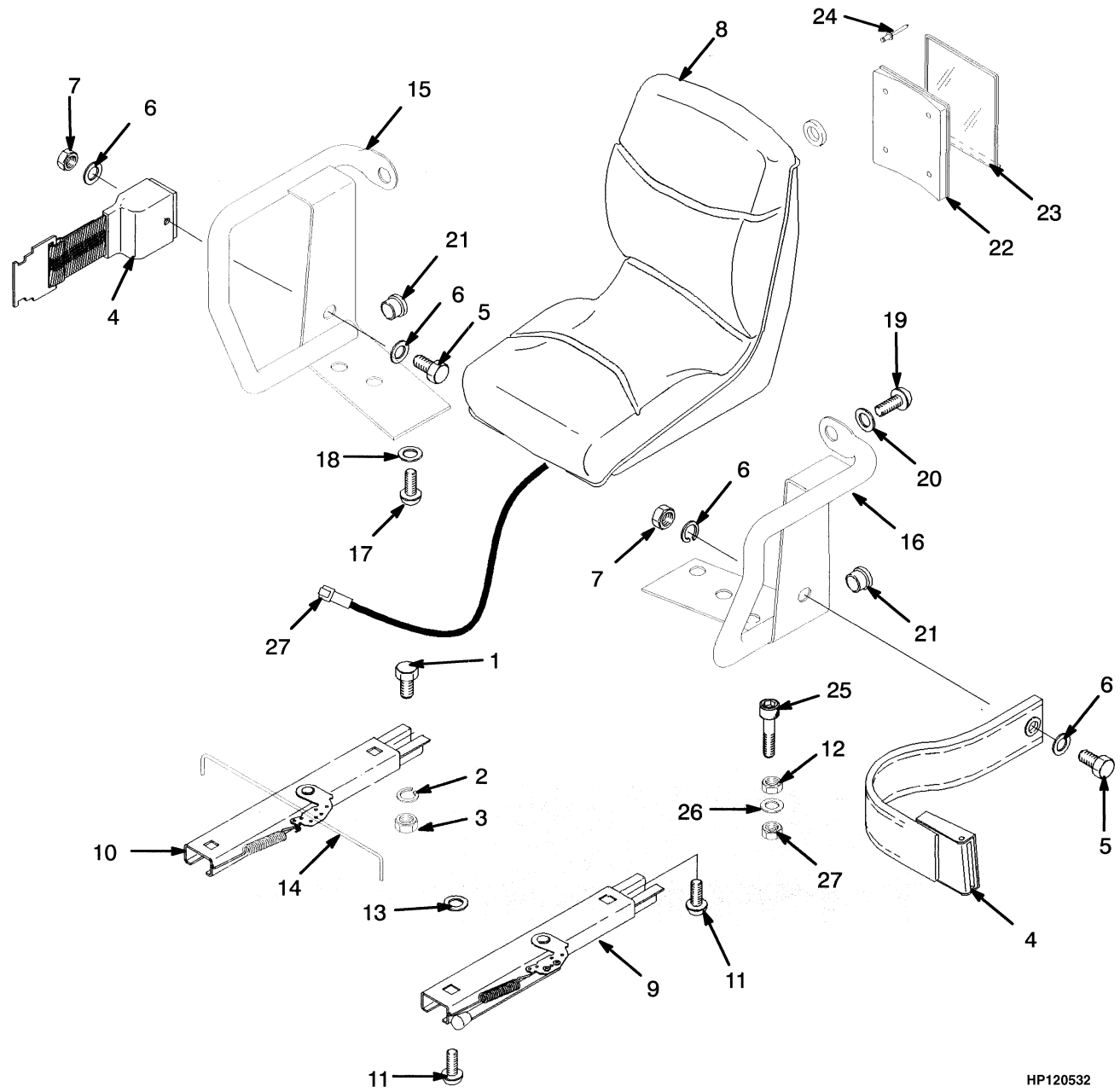

©2004 HYSTER COMPANY

SEAT
NON-SUSPENSION

ITEM	PART NO.	DESCRIPTION	QTY
	1351473	Seat	1
1	18496	Capscrew	4
2	15175	Washer	4
3	145639	Nut	4
4	1374750	Seat Belt	1
5	379199	Capscrew	2
6	379697	Washer	4
7	379698	Nut	2
8	1351431	Seat	1
9	335553	Seat Rail (LH)	1
10	383116	Seat Rail (RH) (RH)	1
11	364914	Capscrew	4
12	296128	Nut (LPG)	2
13	221733	Washer	2
14	1300107	Rod	1
15	364807	Hip Restraint (RH)	1
16	364808	Hip Restraint (LH)	1
17	18727	Capscrew	4
18	18515	Washer	4
19	379197	Capscrew	2
20	379198	Washer	2
21	364854	Plug	2
22	335988	Base (Information Case)	1
23	335991	Cover (Information Case)	1
24	222029	Rivet	4
25	296027	Capscrew (LPG)	1
26	15176	Washer (LPG)	1
27	1354140	Switch Assembly	1

©2004 HYSTER COMPANY

SEMI-SUSPENSION SEAT (Figure 1-7)
EUROPE

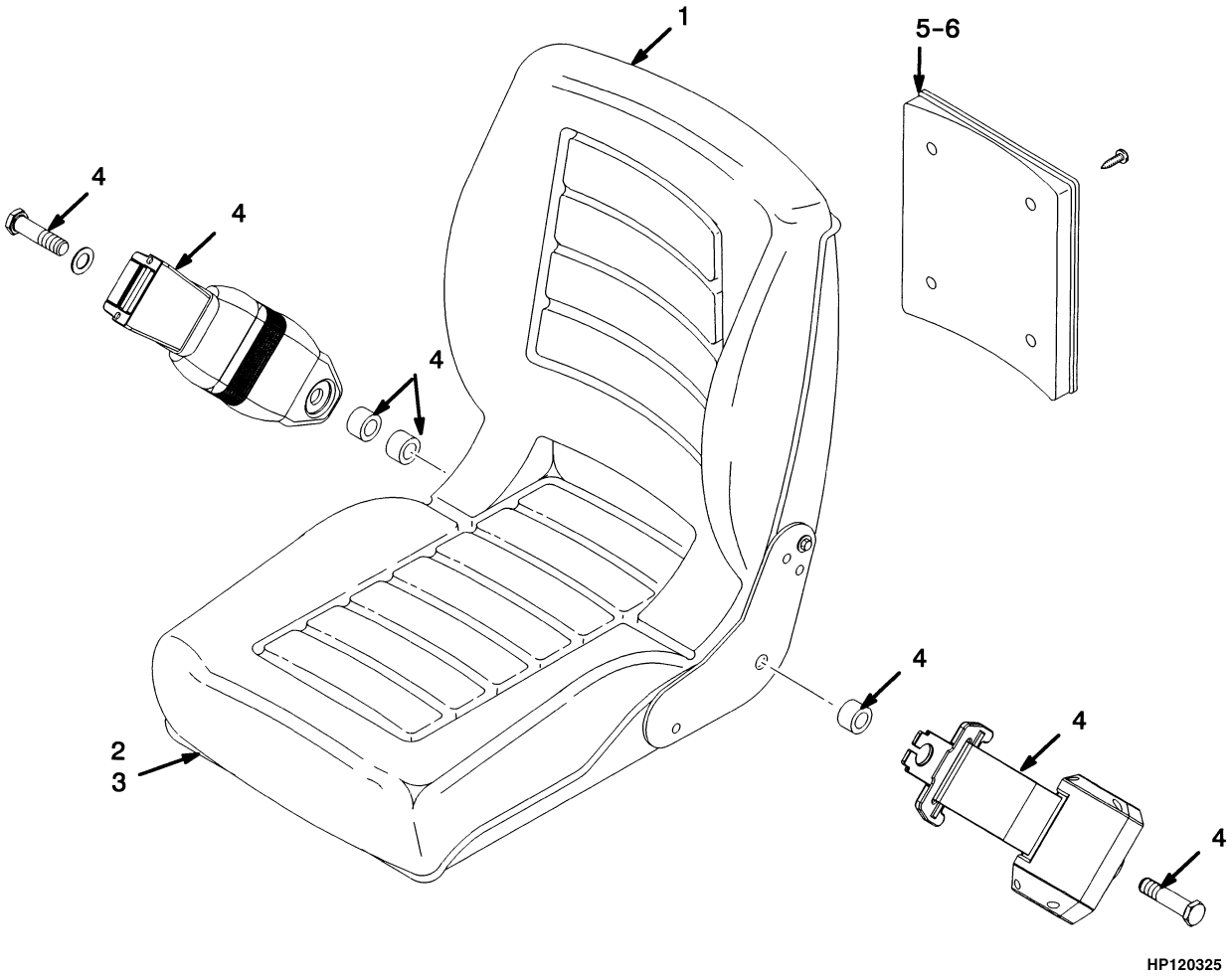

©2004 HYSTER COMPANY

SEMI-SUSPENSION SEAT
EUROPE

ITEM		PART NO.	DESCRIPTION	QTY
		2051298	Semi-Suspension Seat	1
1		1480403	Back Cushion	1
2		1480404	Seat Cushion (With Switch)	1
3	**a**	1480405	Slider Kit	1
4		1461081	Seat Belt Kit	1
5		335989	Base (Information Case)	1
6		335991	Cover (Information Case)	1

FOOTNOTES:
a Not Illustrated

©2004 HYSTER COMPANY

LABELS (Figure 1-8)

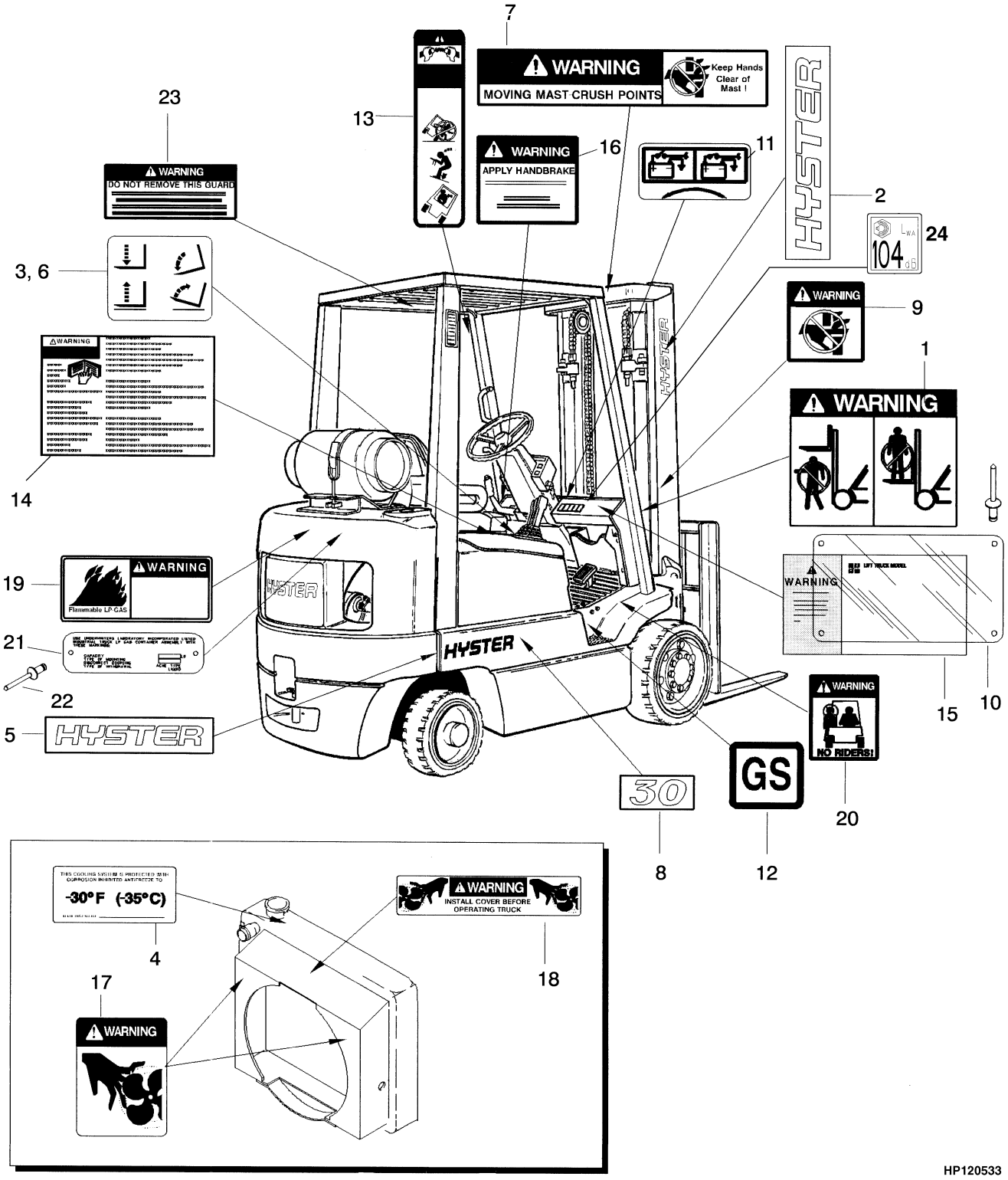

©2004 HYSTER COMPANY

LABELS

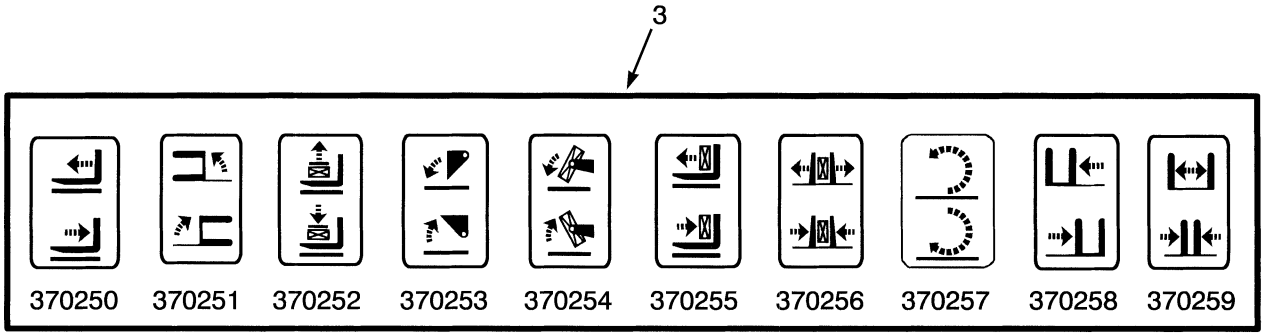

HP120534

ITEM		PART NO.	DESCRIPTION	QTY
1		1338178	Label (Mast Warning)	2
2		1339672	Label (Hyster) (Vertical)	2
3		370250	Label (Auxiliary Function - Reach)	AR
3		370251	Label (Auxiliary Function - Swing)	AR
3		370252	Label (Auxiliary Function - Stabilizer)	AR
3		370253	Label (Auxiliary Function - Dump/Scoop)	AR
3		370254	Label (Auxiliary Function - Upender)	AR
3		370255	Label (Auxiliary Function - Push/Pull)	AR
3		370256	Label (Auxiliary Function - Clamp)	AR
3		370257	Label (Auxiliary Function - Rotate)	AR
3		370258	Label (Auxiliary Function - Side-Shift)	AR
3		370259	Label (Auxiliary Function - Fork Spreader)	AR
4		1354165	Label (Antifreeze)	1
5		2020517	Label (Hyster)	2
6		1356137	Label (Lift and Tilt)	1
7		1330919	Label (Mast Warning)	1
8		2020513	Label (Model 25)	2
8		2020514	Label (Model 30)	2
8		2020515	Label (Model 35)	2
8		2020516	Label (Model 40)	2
9		1335129	Label (Pinch Point)	2
10		389688	Cover	1
11		1352190	Label (Battery Disconnect) (Type GS and LPS)	1
12		154065	Label (Type GS)	2
12		154066	Label (Type LPS)	2
13		1330917	Label (Operator Restraint)	2
14		1336605	Label (Operator Warning)	1
15	**a**	1381125	Label (Nameplate)	1
16		2309799	Label (Parking Brake)	1
17		1345939	Label (Fan Warning)	2
18		1325271	Label (Fan Warning)	1
19		1354171	Label (Flammable LPG)	1
20		1330920	Label (No Riders)	2
21		1501259	Label (LPG Tank)	1
22		170658	Rivet	6

©2004 HYSTER COMPANY

LABELS

ITEM		PART NO.	DESCRIPTION	QTY
23	**a**	. . . . .	Label (Overhead Guard)	1
24	**b**	1503878	Label (Noise Level) (Non U.S.)	1

FOOTNOTES:

a Contact Your Local Hyster Dealer

b Not Illustrated

©2004 HYSTER COMPANY

COUNTERWEIGHT (Figure 1-9)

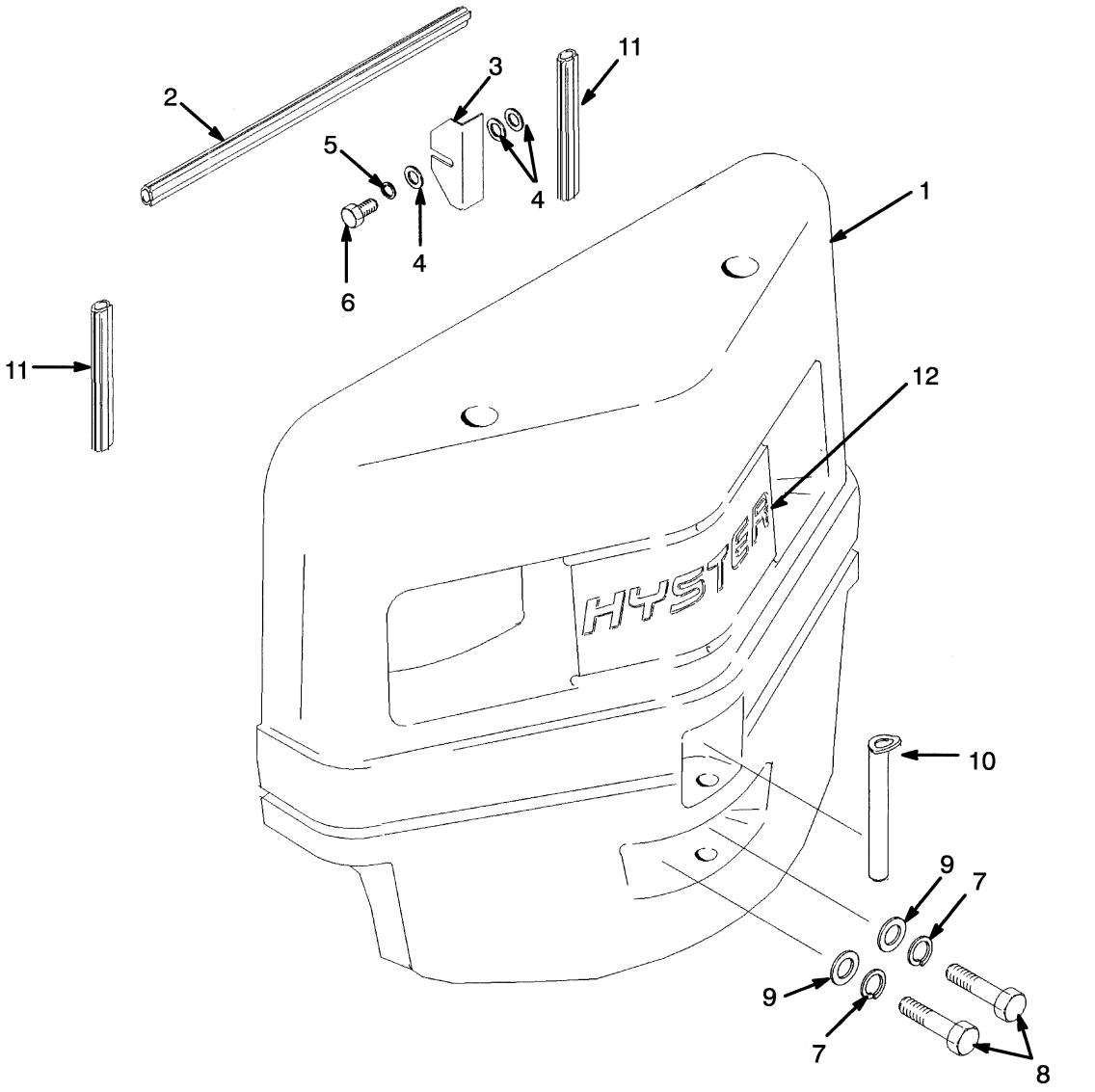

COUNTERWEIGHT

ITEM		PART NO.	DESCRIPTION	QTY
1		1469460	Counterweight (S30XM)	1
1		1469468	Counterweight (S35XM)	1
1		1469469	Counterweight (S40XMS)	1
1		1469594	Counterweight (S25XM)	1
2		2022800	Seal	1
3		2021563	Shim	4
4		320158	Washer	4
5		292681	Lockwasher	4
6		287851	Capscrew	4
7		292689	Lockwasher	2
8		292609	Capscrew	2
9		2021562	Washer	2
10		2022849	Pin	1
11		2022799	Seal	2
12	**a**	1450409	Label (Hyster)	1

FOOTNOTES:
a Counterweight Optional

See Service Manual for service procedures.
©2004 HYSTER COMPANY

FORKS (Figure 1-10)

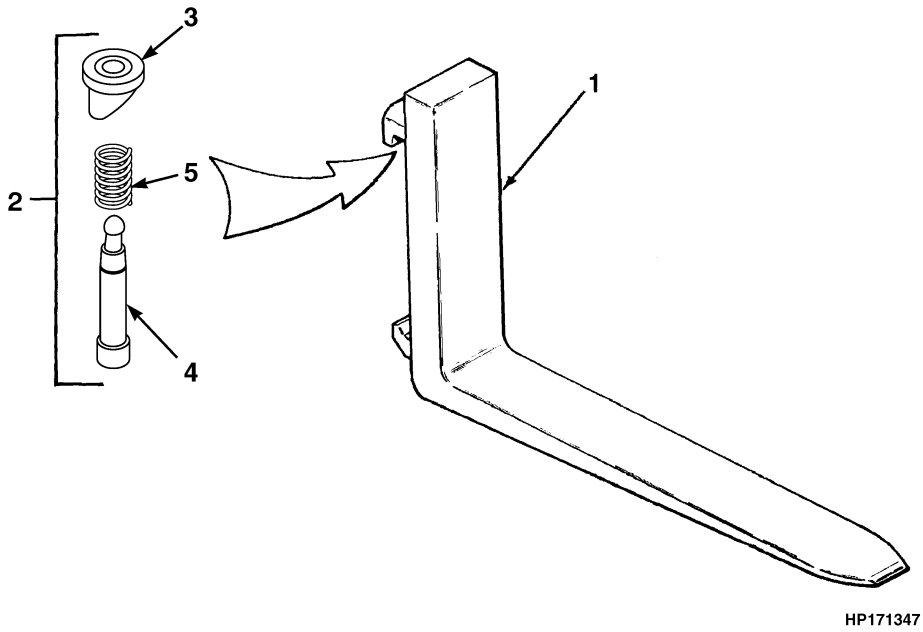

KEY:
A: Standard Taper (40 mm x 100 mm)
B: Full Bottom Taper (40 mm x 100 mm)

ITEM	PART NO.	DESCRIPTION	QTY A	QTY B
1	1338076	Fork (36 in.)	..	2
1	1338077	Fork (42 in.)	..	2
1	1338078	Fork (48 in.)	..	2
1	384211	Fork (36 in.)	2	..
1	384213	Fork (42 in.)	2	..
1	384214	Fork (48 in.)	2	..
1	384215	Fork (54 in.)	2	..
1	384216	Fork (60 in.)	2	..
2	1523735	Latch Kit (Class II)	2	2
3	1523732	Knob	1	1
4	1523733	Pin	1	1
5	1500782	Spring	1	1

©2004 HYSTER COMPANY

LOAD BACKREST EXTENSION (Figure 1-11)

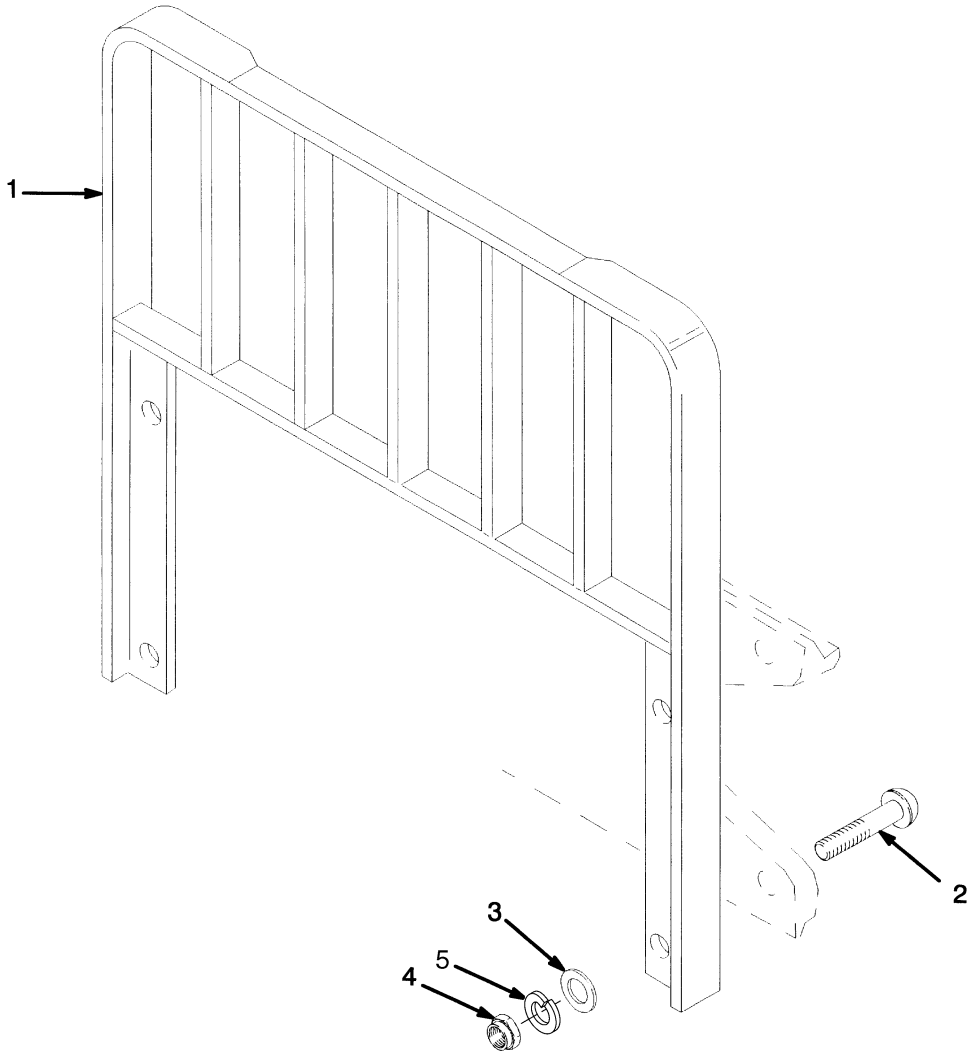

©2004 HYSTER COMPANY

LOAD BACKREST EXTENSION

ITEM	PART NO.	DESCRIPTION	QTY
1	1349440	Load Backrest Extension (35.7 in.)	1
2	1343990	Capscrew (With Side-Shift)	4
2	1353533	Capscrew (Without Side-Shift)	4
3	221771	Washer	4
3	296423	Washer (Optional)	4
4	292656	Nut	4
5	292683	Lockwasher	4

©2004 HYSTER COMPANY

NOTES

2 ENGINES

SECTION 2
ENGINES

DESCRIPTION	PAGE
CAMSHAFT AND VALVES	
GASOLINE AND LPG	2-10
COOLING SYSTEM	2-20
CRANKSHAFT AND PISTON	
GASOLINE AND LPG	2-8
CYLINDER BLOCK	
GASOLINE AND LPG	2-4
CYLINDER HEAD AND COVER	
GASOLINE AND LPG	2-2
ELCTRICAL SYSTEM	
EPA COMPLIANT	
LPG	
S/N PENDING PER ECN 74449⇒	2-16
ELECTRICAL SYSTEM	
GASOLINE AND LPG	2-14
ENGINE FUEL SYSTEM	
LPG	
EPA COMPLIANT	
S/N PENDING PER ECN 74449⇒	2-24
ENGINE MOUNT	
GASOLINE AND LPG	2-30
EXHAUST	
GASOLINE AND LPG	
WITHOUT LOW EMISSIONS	2-32
TYPE GS AND LPS	2-36
WITH LOW EMISSIONS	2-34
FUEL SYSTEM	
GASOLINE ENGINE	2-26
LPG ENGINE	
LOW EMISSIONS	2-22
INTAKE AND EXHAUST MANIFOLD	
GASOLINE AND LPG	2-12
OIL PUMP AND FILTER	
GASOLINE AND LPG	2-18
RADIATOR AND HOSES	
GASOLINE AND LPG	2-28
TIMING COVER AND OIL PAN	
GASOLINE AND LPG	2-6

©2004 HYSTER COMPANY

CYLINDER HEAD AND COVER (Figure 2-1)
GASOLINE AND LPG

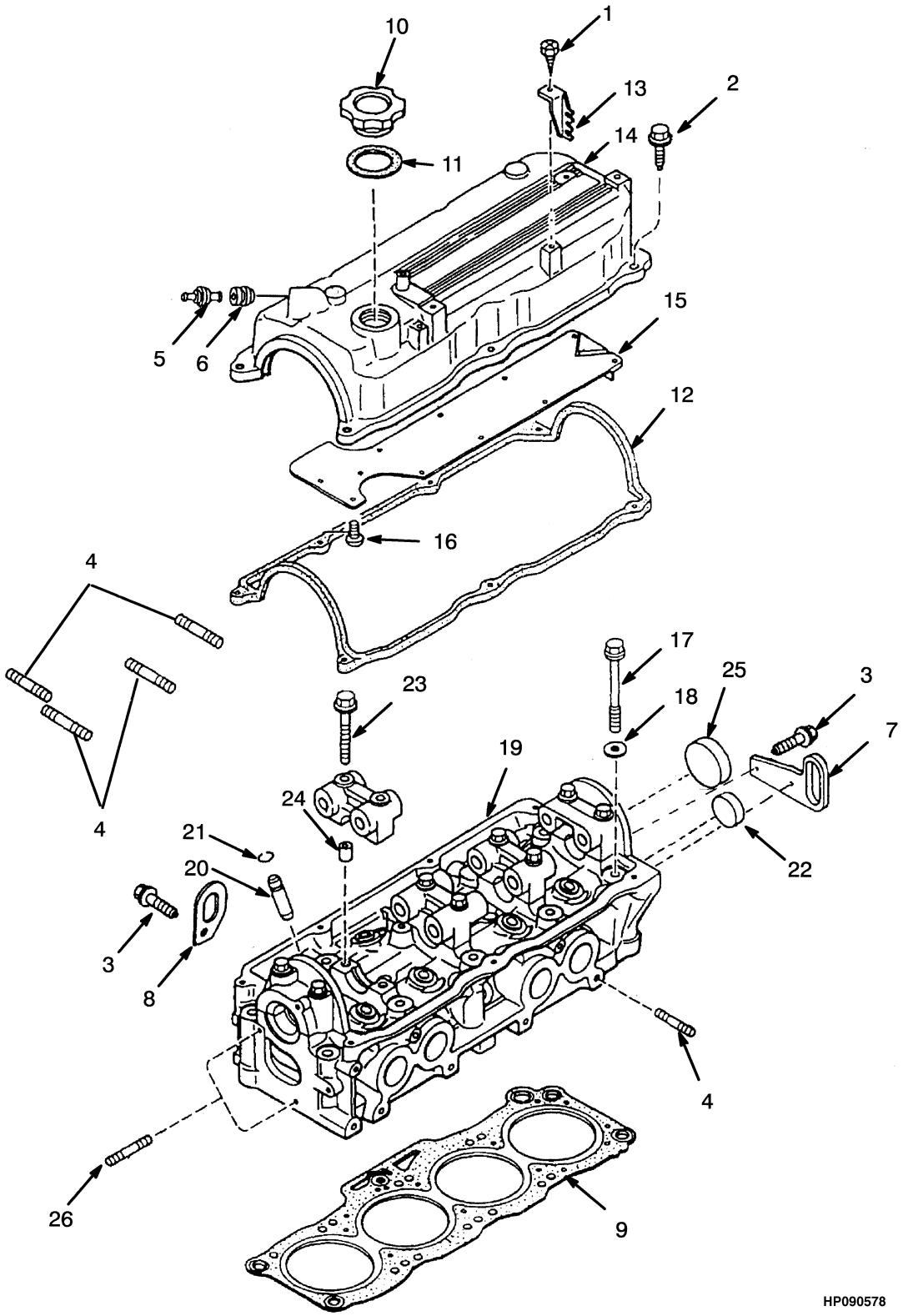

©2004 HYSTER COMPANY

CYLINDER HEAD AND COVER
GASOLINE AND LPG

ITEM	PART NO.	DESCRIPTION	QTY
	1477293	Engine (Gasoline)	1
	1467884	Engine (LPG)	1
	1480307	Engine (LPG With Low Emission)	1
	1546825	Engine (LPG with EPA Compliant)	1
1	1362000	Screw	1
2	1362001	Bolt	7
3	1361898	Bolt	1
4	1361897	Stud	24
5	1360893	Valve (PCV)	1
6	1360892	Seal	1
7	2314973	Hanger	1
8	1360890	Bracket	1
9	2022494	Gasket	1
10	1360887	Cap	1
11	1360888	Gasket	1
12	1360886	Gasket	1
13	1360885	Bracket	2
14	1360883	Cover	1
15	1360884	Plate	1
16	2022655	Screw	10
17	1360880	Bolt	10
18	1360881	Washer	10
19	1360878	Cylinder Head	1
20	1360895	Valve Guide	8
21	1360879	Clip	8
22	1362003	Plug	1
23	1361894	Capscrew	2
24	1362002	Pin	10
25	1360882	Cap	1
26	1361899	Stud	4
27	1500218	Label-Emission (Not Illustrated)	1

©2004 HYSTER COMPANY

CYLINDER BLOCK (Figure 2-2)
GASOLINE AND LPG

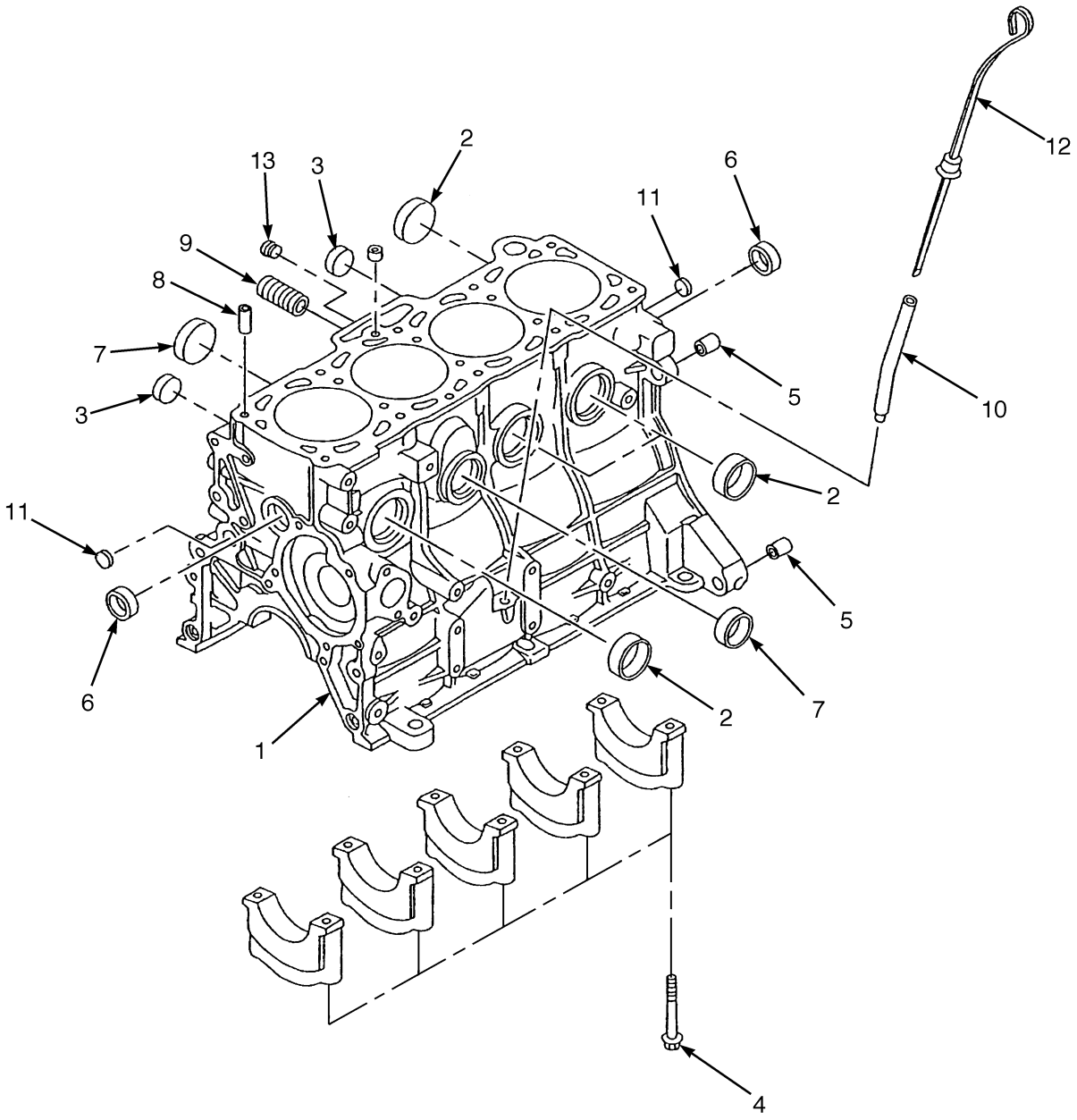

©2004 HYSTER COMPANY

CYLINDER BLOCK
GASOLINE AND LPG

ITEM	PART NO.	DESCRIPTION	QTY
	1467884	Engine (LPG)	1
	1477293	Engine (Gasoline)	1
	1480307	Engine (LPG With Low Emission)	1
	1546825	Engine (LPG With EPA Compliant)	1
1	1360897	Cylinder Block	1
2	1362003	Plug	4
3	1362005	Plug	2
4	1361676	Bolt	10
5	1362008	Pin	2
6	1362009	Plug	4
7	1362007	Plug	2
8	1360896	Pin	2
9	1360898	Gasket	1
10	1360899	Pipe	1
11	1361675	Plug	2
12	1361677	Dipstick	1
13	1553708	Plug	2
	1360877	Short Engine (Includes Item 1)	1

©2004 HYSTER COMPANY

TIMING COVER AND OIL PAN (Figure 2-3)
GASOLINE AND LPG

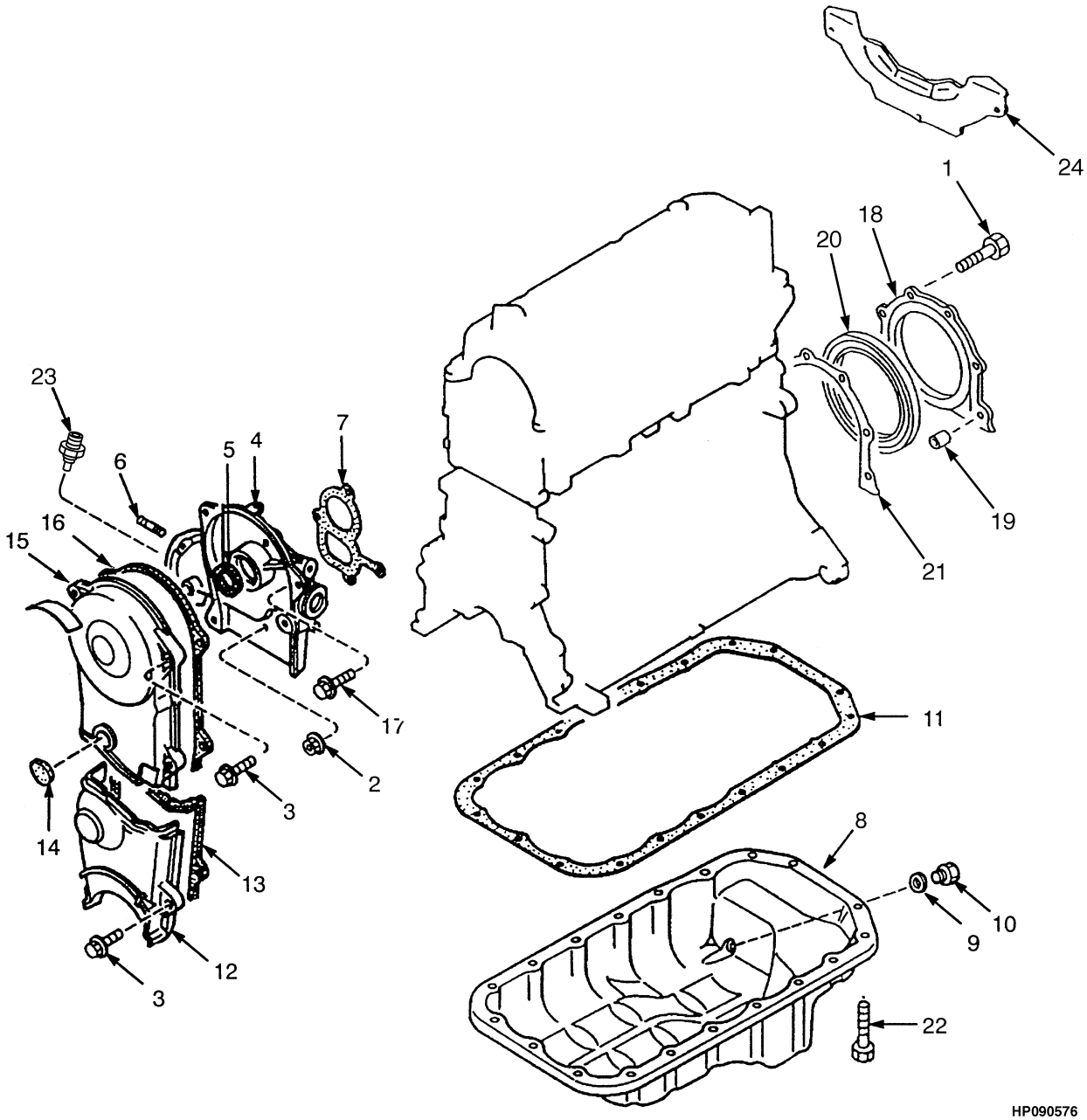

©2004 HYSTER COMPANY

TIMING COVER AND OIL PAN
GASOLINE AND LPG

ITEM	PART NO.	DESCRIPTION	QTY
	1467884	Engine (LPG)	1
	1477293	Engine (Gasoline)	1
	1480307	Engine (LPG With Low Emission)	1
	1546825	Engine (LPG With EPA Compliant)	1
1	1362011	Bolt	6
2	326504	Nut	2
3	1362001	Bolt	7
4	1369934	Housing (Front)	1
5	1361688	Oil Seal	1
6	1362012	Stud	2
7	1361679	Gasket	1
8	1361680	Oil Pan	1
9	1362015	Gasket	1
10	1361681	Drain Plug	1
11	1361682	Gasket	1
12	1361683	Cover	1
13	1361684	Gasket	1
14	1361685	Cap	1
15	1361686	Cover	1
16	1361687	Gasket	1
17	1361898	Bolt	2
18	1361689	Cover (Rear)	1
19	1362010	Pin	1
20	1361691	Oil Seal	1
21	1361690	Gasket	1
22	1370736	Capscrew	19
23	1499666	Gauge	1
	1360877	Short Engine (Includes Items 1, 18)	1
24	1371652	Cover	1

©2004 HYSTER COMPANY

CRANKSHAFT AND PISTON (Figure 2-4)
GASOLINE AND LPG

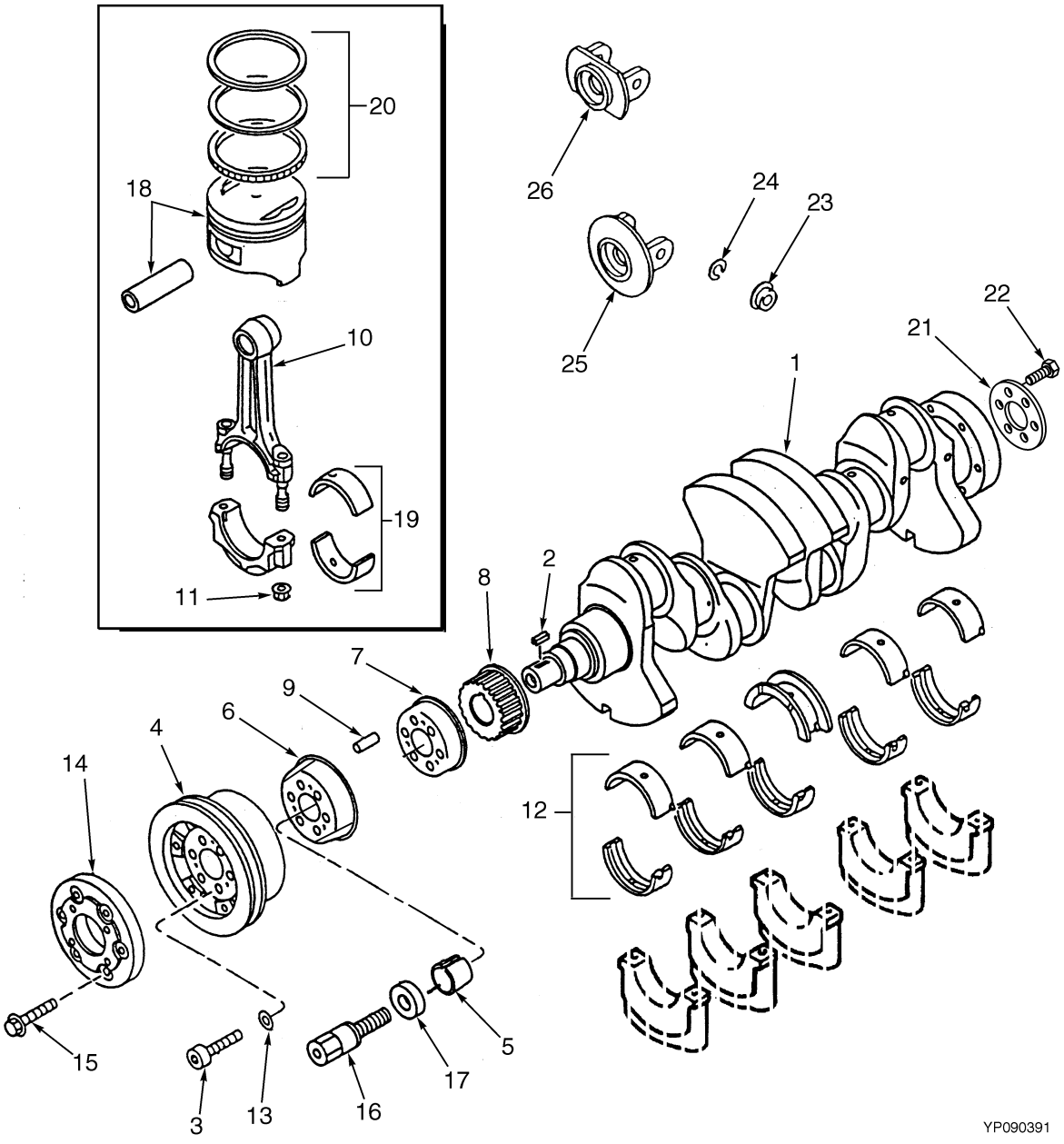

©2004 HYSTER COMPANY

CRANKSHAFT AND PISTON
GASOLINE AND LPG

ITEM	PART NO.	DESCRIPTION	QTY
	1467884	Engine (LPG)	1
	1477293	Engine (Gasoline)	1
	1480307	Engine (LPG With Low Emission)	1
	1546825	Engine (LPG With EPA Compliant)	1
1	1369963	Crankshaft	1
2	1369964	Key	1
3	1369965	Bolt	6
4	1369966	Pulley	1
5	1369967	Ring	1
6	1369968	Plate	1
7	1369969	Spacer	1
8	1369970	Pulley	1
9	2022634	Pin	1
10	1361694	Rod Assembly	4
11	1361695	Nut	8
12	1361710	Bearing Set (Standard)	1
12	1361711	Bearing Set (0,50 mm O/S)	AR
12	1361712	Bearing Set (0,75 mm O/S)	AR
12	1361713	Bearing Set (0,25 mm O/S)	AR
13	1369973	Washer	6
14	1369974	Plate	1
15	2021438	Bolt	6
16	1369975	Bolt	1
17	1369976	Washer	1
18	1361714	Piston (Standard)	4
18	1361715	Piston (0,25 mm)	4
18	1361716	Piston (0,50 mm)	AR
19	1361703	Bearing Set (Standard)	1
19	1361704	Bearing Set (0,25 mm O/S)	AR
19	1361705	Bearing Set (0,50 mm O/S)	AR
19	1361706	Bearing Set (0,75 mm O/S)	AR
20	1495473	Piston Ring (Standard)	1
20	1495474	Piston Ring (0,50 mm O/S)	AR
20	1495475	Piston Ring (0,25 mm O/S)	AR
21	2021442	Back Plate	1
22	2021438	Bolt	6
23	1558119	Dust Seal	8
24	2021243	Snap Ring	8
25	2021239	Yoke	3
26	2021240	Yoke	1
	1360877	Short Engine (Includes Item)	1

©2004 HYSTER COMPANY

CAMSHAFT AND VALVES (Figure 2-5)
GASOLINE AND LPG

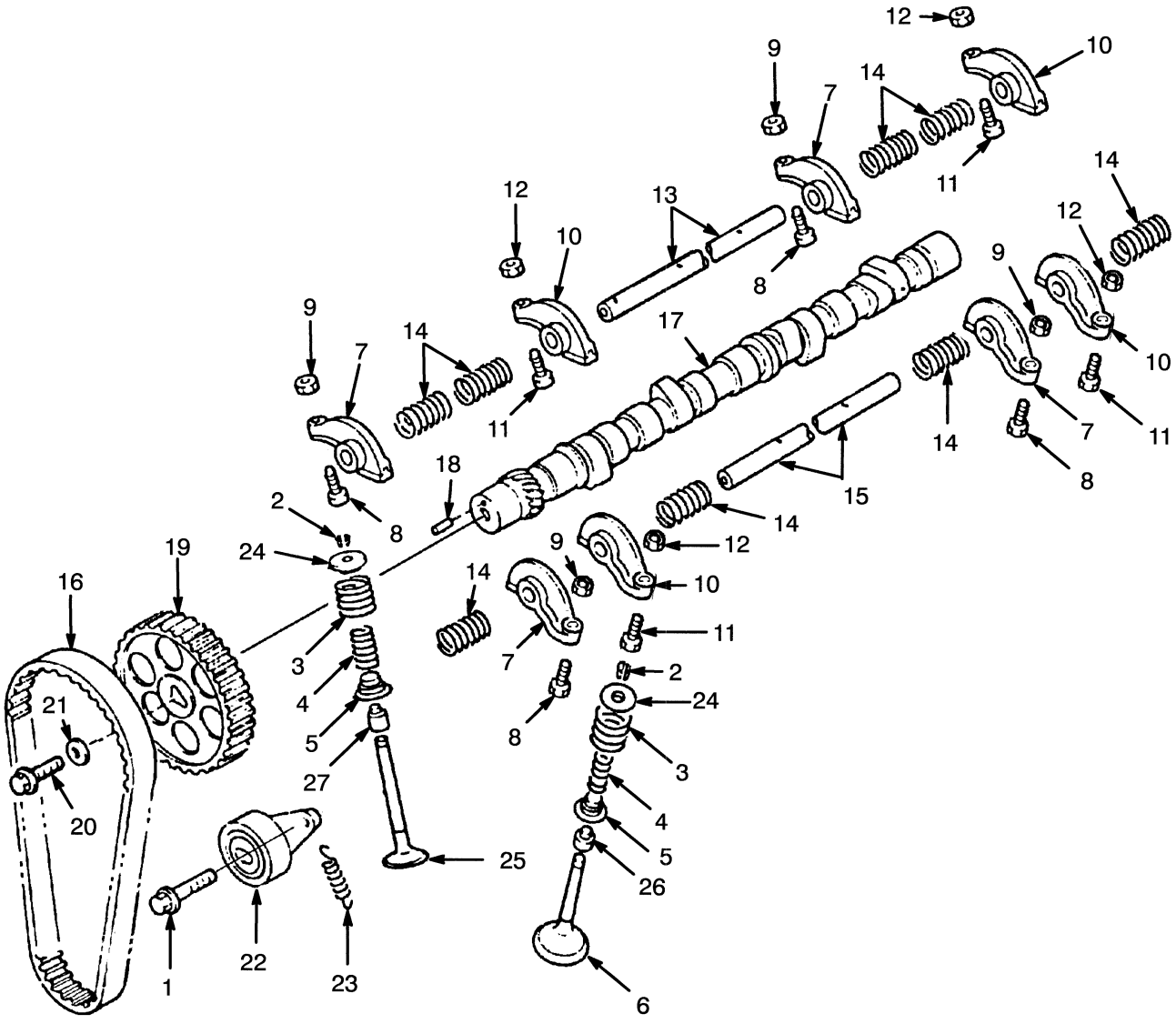

©2004 HYSTER COMPANY

CAMSHAFT AND VALVES
GASOLINE AND LPG

ITEM	PART NO.	DESCRIPTION	QTY
	1467884	Engine (LPG)	1
	1477293	Engine (Gasoline)	1
	1480307	Engine (LPG With Low Emission)	1
	1546825	Engine (LPG With EPA Compliant)	1
1	1362016	Bolt	1
2	326612	Retainer	16
3	1361722	Spring	8
4	1361723	Spring	8
5	1361724	Seat	8
6	1361725	Valve (Exhaust)	4
7	1361726	Rocker Arm	4
8	1361727	Screw	1
9	1361728	Nut	1
10	1361729	Rocker Arm	4
11	1361727	Screw	1
12	1361728	Nut	1
13	1361730	Shaft	1
14	1361731	Spring	8
15	1361732	Shaft	1
16	1361733	Timing Belt	1
17	1361734	Camshaft	1
18	1361717	Pin	1
19	1361735	Pulley	1
20	1361736	Bolt	1
21	1361737	Washer	1
22	1361738	Tensioner	1
23	1361739	Spring	1
24	1361721	Valve Seat	8
25	1361720	Valve (Intake)	4
26	1361719	Seal	4
27	1361718	Seal	4

©2004 HYSTER COMPANY

INTAKE AND EXHAUST MANIFOLD (Figure 2-6)
GASOLINE AND LPG

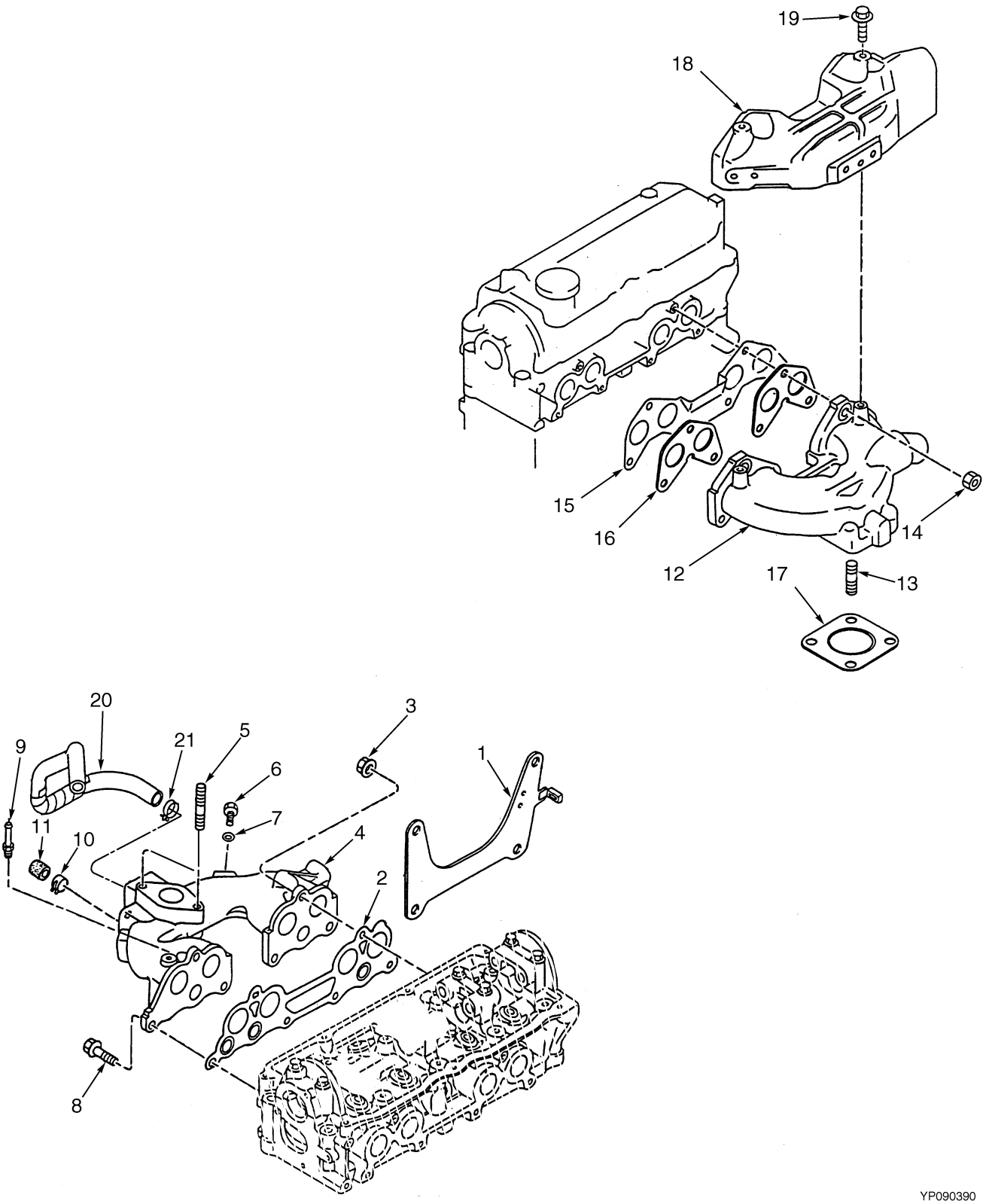

YP090390

©2004 HYSTER COMPANY

INTAKE AND EXHAUST MANIFOLD
GASOLINE AND LPG

ITEM	PART NO.	DESCRIPTION	QTY
	1467884	Engine (LPG Open Loop)	1
	1477293	Engine (Gasoline)	1
	1480307	Engine (LPG Low Emissions)	1
	1546825	Engine (LPG With EPA Compliant)	1
1	1370676	Support	1
2	1361742	Gasket	3
3	326504	Nut	4
4	2029949	Manifold (Intake)	1
4	1557304	Manifold (Intake) (With EPA Compliant)	1
5	1370682	Stud	2
6	326778	Plug (Gasoline)	1
7	324718	Gasket	1
8	1361885	Bolt	2
9	2029172	Connector	1
10	1361873	Clamp	1
11	2023551	Screw	1
12	1370688	Manifold (Exhaust)	1
13	1361745	Stud	4
14	1361746	Nut	6
15	1361747	Gasket	1
16	1370689	Gasket	2
17	1338308	Gasket	1
18	1370691	Cover	1
19	1361898	Bolt	2
20	1369997	Hose	1
20	2314232	Protector	1
21	1369996	Clamp	2

©2004 HYSTER COMPANY

ELECTRICAL SYSTEM (Figure 2-7)
GASOLINE AND LPG

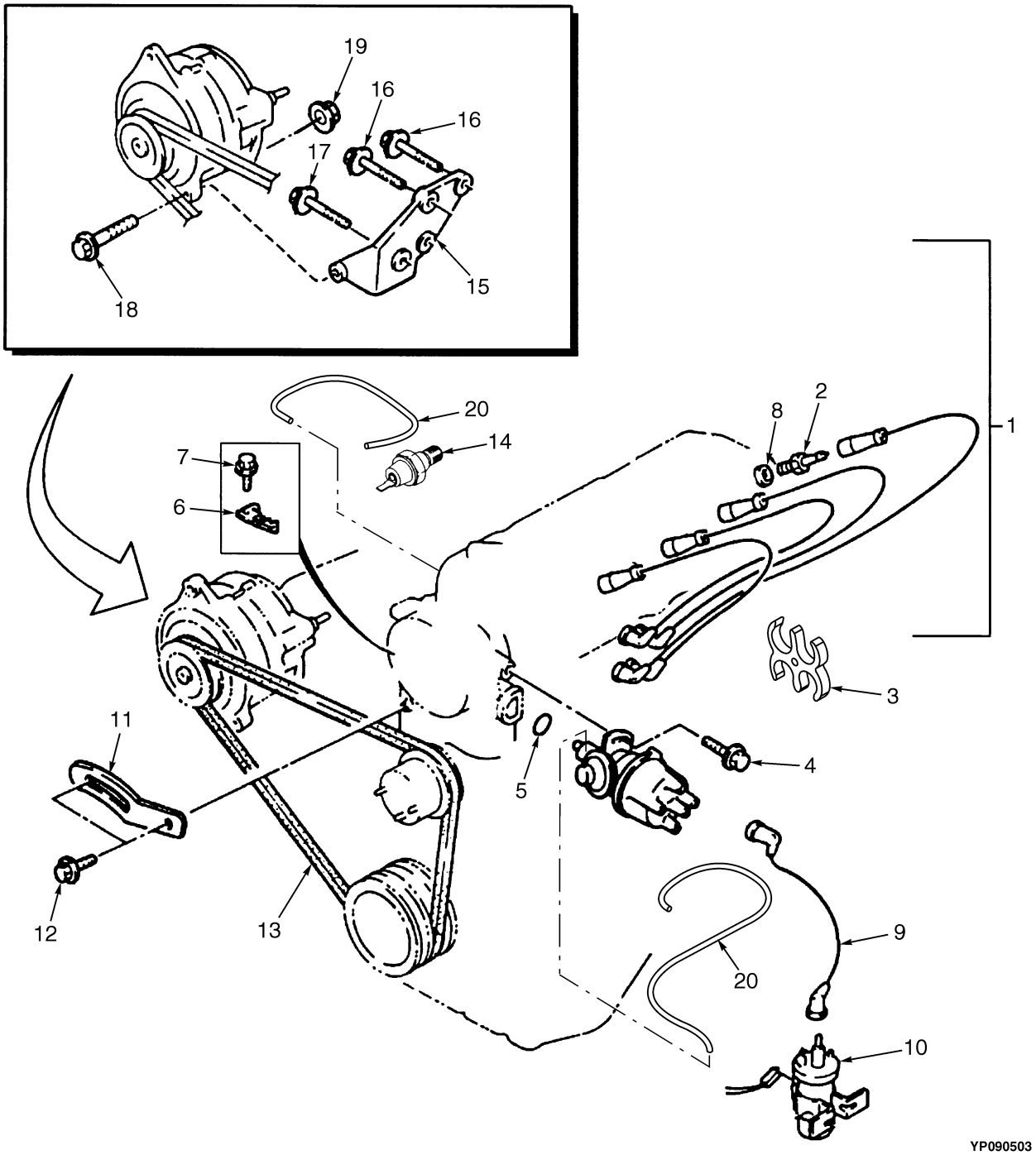

©2004 HYSTER COMPANY

ELECTRICAL SYSTEM
GASOLINE AND LPG

ITEM		PART NO.	DESCRIPTION	QTY
1		1362113	Ignition Cable Set	1
2		1361837	Spark Plug	4
3		1500196	Clip	1
4		1361895	Bolt	1
5		326850	O-Ring	1
6		1455678	Protector	1
7		1361893	Screw	1
8		1369895	Packing	4
9		1369896	Ignition Cable	1
10		2021440	Ignition Coil	1
11		1361845	Strap	1
12		1361881	Bolt	2
13	**a**	1368841	Belt	1
13	**b**	2022515	Belt	1
14		1499666	Gauge	1
15		1361846	Bracket	1
16		1361891	Bolt	3
17		1361888	Bolt	1
18		1368844	Bolt	1
19		1361350	Rod	1
20		1361796	Hose	2

FOOTNOTES:
a Standard
b Tube and Fin Radiator

ELCTRICAL SYSTEM (Figure 2-8)
EPA COMPLIANT
LPG
(S/N PENDING PER ECN 74449⇒)

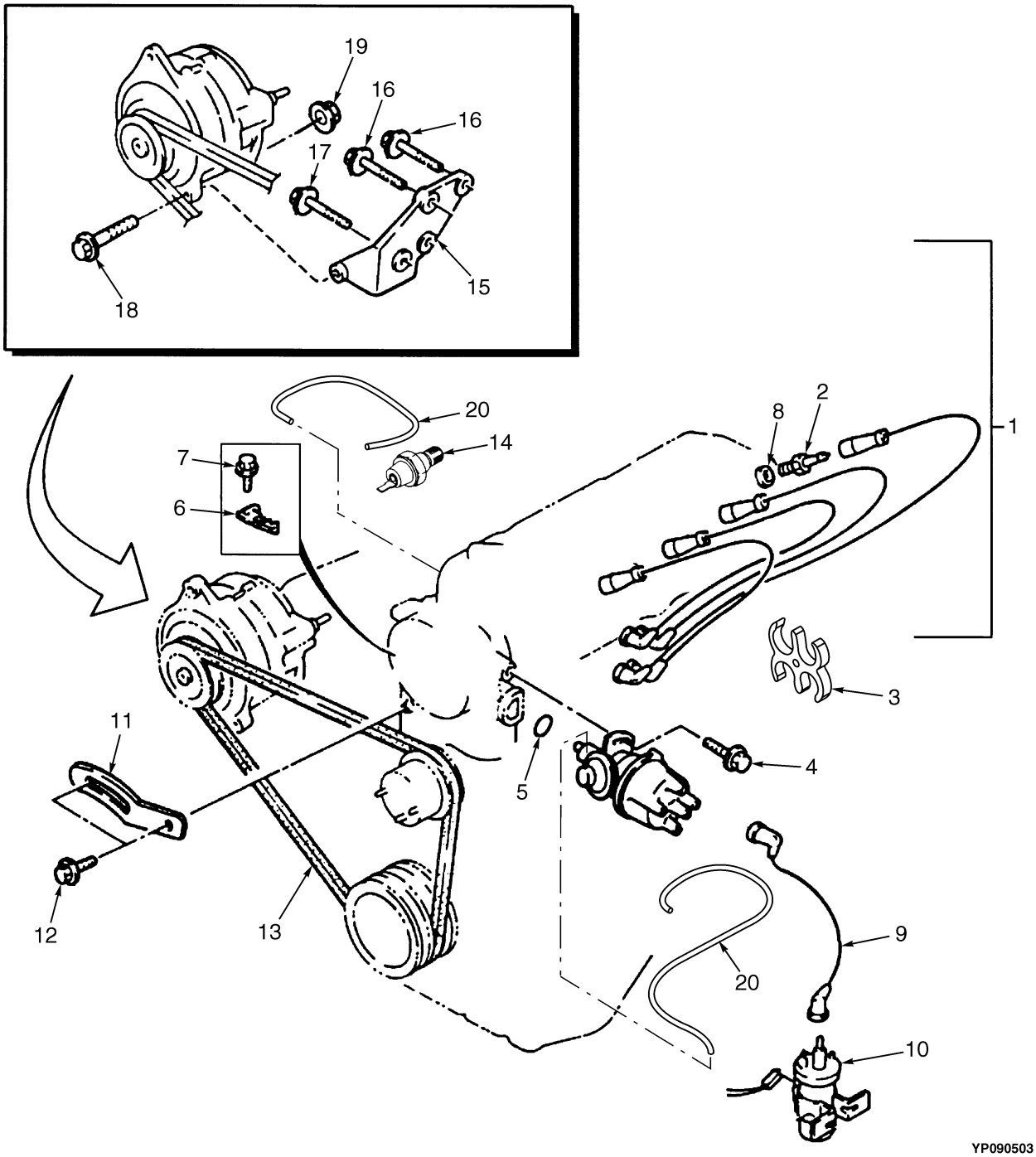

©2004 HYSTER COMPANY

ELCTRICAL SYSTEM
EPA COMPLIANT
LPG
(S/N PENDING PER ECN 74449⇒)

ITEM		PART NO.	DESCRIPTION	QTY
1		1369893	Ignition Cable Set	1
2		1361837	Spark Plug	4
3		1500196	Clip	1
4		1361895	Bolt	1
5		326850	O-Ring	1
6		1455678	Protector	1
7		1361893	Screw	1
8		1369895	Packing	4
9		1369896	Ignition Cable	1
10		2021440	Ignition Coil	1
11		1361845	Strap	1
12		1361881	Bolt	2
13	**a**	1368841	Belt	1
13	**b**	2022515	Belt	1
14		1361867	Temperature Sender	1
15		1361846	Bracket	1
16		1361891	Bolt	3
17		1361888	Bolt	1
18		1368844	Bolt	1
19		1368748	Nut	1
20		1361796	Hose	2

FOOTNOTES:
a Standard
b Tube and Fin Radiator

©2004 HYSTER COMPANY

OIL PUMP AND FILTER (Figure 2-9)
GASOLINE AND LPG

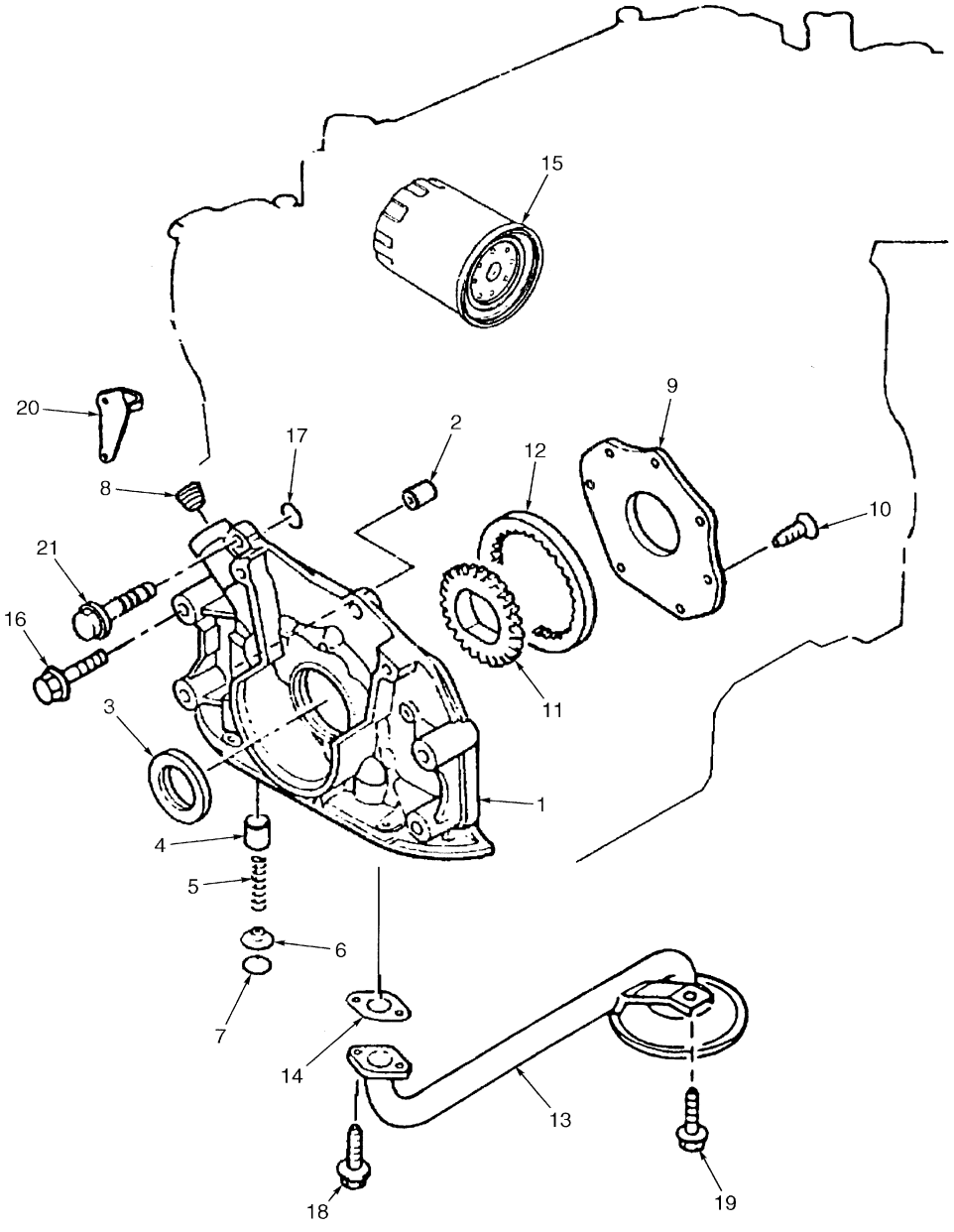

HP090585

©2004 HYSTER COMPANY

OIL PUMP AND FILTER
GASOLINE AND LPG

ITEM	PART NO.	DESCRIPTION	QTY
1	1455675	Oil Pump	1
2	1361798	Pin	2
3	1361688	Oil Seal	3
4	1455674	Plunger	1
5	326748	Spring	1
6	326749	Seat	1
7	1361879	Snap Ring	1
8	1495426	Plug	1
9	1361802	Cover	1
10	1361803	Screw	7
11	1361804	Gear (Inner)	1
12	1361805	Gear (Outer)	1
13	1361806	Strainer	1
14	1361807	Gasket	1
15	333642	Filter	2
16	1361894	Capscrew	2
17	1361801	O-Ring	1
18	1361878	Screw	2
19	1361868	Screw	1
20	1369913	Plate	1
21	1369914	Bolt	4

©2004 HYSTER COMPANY

COOLING SYSTEM (Figure 2-10)

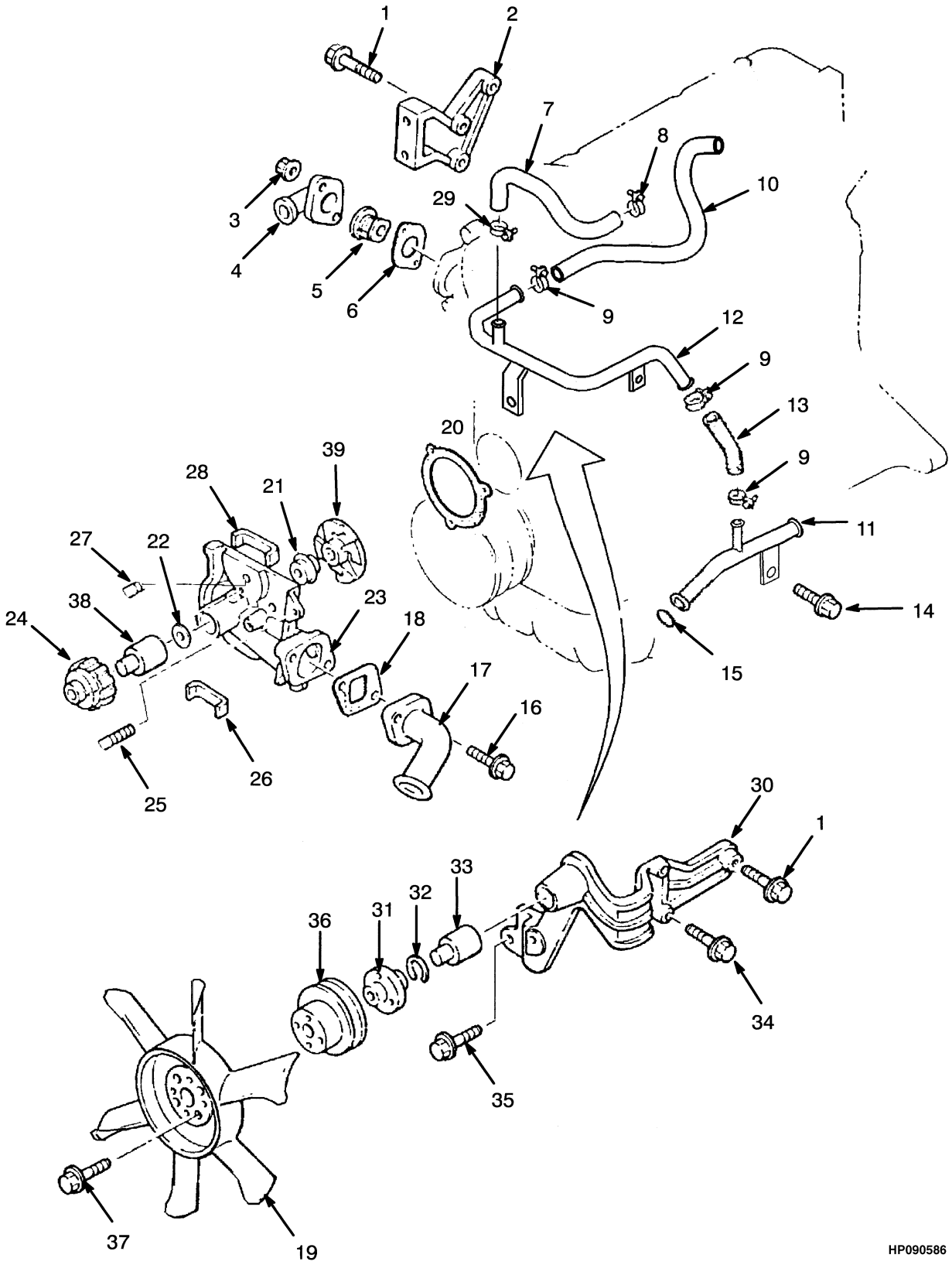

©2004 HYSTER COMPANY

COOLING SYSTEM

ITEM		PART NO.	DESCRIPTION	QTY
1		1361882	Bolt	4
2		1361829	Bracket	1
3		326504	Nut	2
4		1361821	Cover	1
5		1495428	Thermostat	1
6		1367191	Gasket	1
7	**c**	2022301	Hose	1
8		1361833	Clamp	1
9		1361873	Clamp	2
10	**d**	2022303	Hose	1
11		2022305	Pipe	1
12		2022302	Pipe	1
13		2026844	Hose	1
14		2022309	Bolt	1
15		1361827	O-Ring	1
16		1361881	Bolt	4
17		1361818	Pipe	1
18		1361819	Gasket	1
19		1361817	Fan	1
20		1361812	Gasket	1
21		1361814	Seal	1
22		1361815	Plate	1
23		1361811	Pump	1
24		1361816	Pulley	1
25		1361880	Stud	1
26		1361809	Seal	1
27		1361834	Pin	1
28		1361810	Seal (Lower)	1
29		1495429	Clamp	2
30		1361830	Bracket	1
31		1361813	Hub	1
32		1361835	Lock Ring	1
33		1361832	Shaft	1
34		1361884	Bolt	3
35		324707	Capscrew	2
36	**a**	2022318	Pulley	1
36	**b**	2022510	Pulley	1
37		1361878	Screw	4
38		. . . . .	Shaft	1
39		. . . . .	Impeller	1
		2022319	Repair Kit (Includes Items 20-22, 38-39)	1

FOOTNOTES:

a Standard Radiator
b Tube and Fin Radiator
c With EPA Compliant Engine
d Without EPA Compliant Engine

©2004 HYSTER COMPANY

FUEL SYSTEM (Figure 2-11)
LPG ENGINE
LOW EMISSIONS

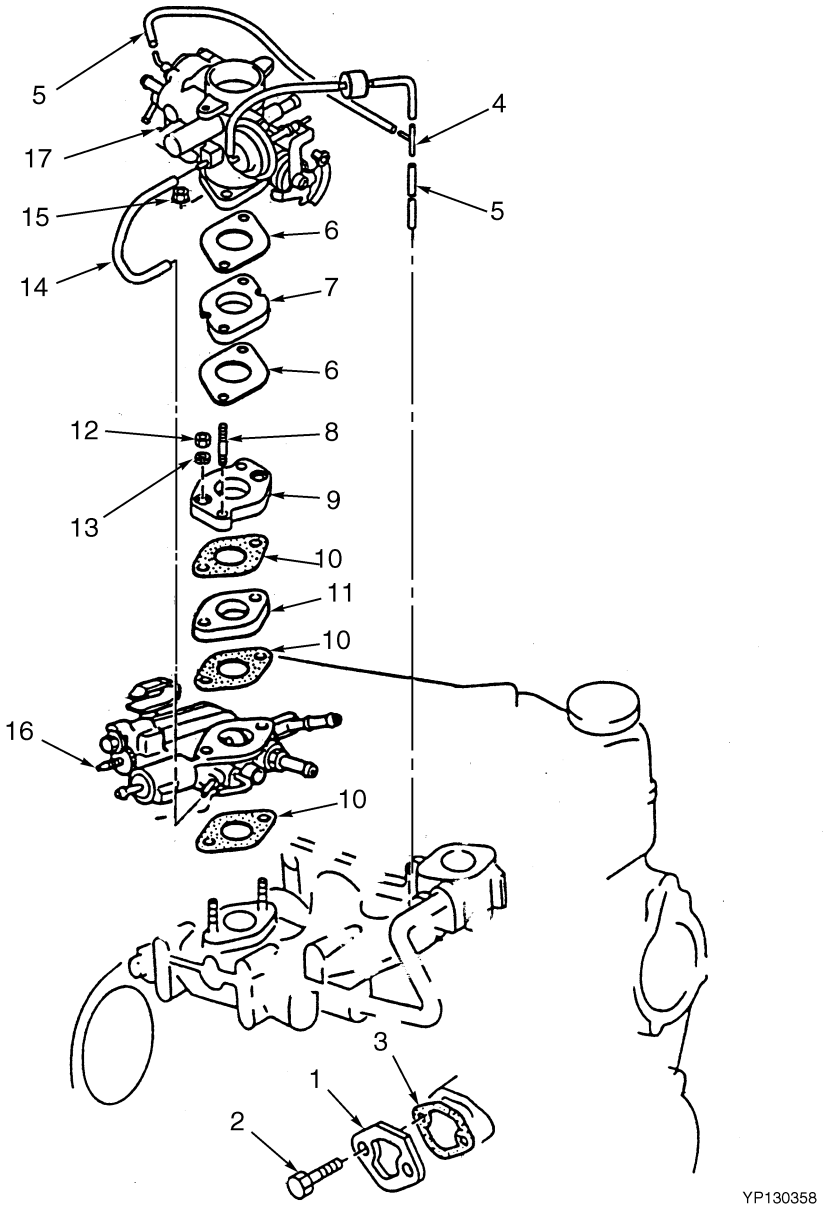

©2004 HYSTER COMPANY

FUEL SYSTEM
LPG ENGINE
LOW EMISSIONS

ITEM	PART NO.	DESCRIPTION	QTY
1	1361749	Cover	1
2	1361898	Bolt	2
3	1361756	Gasket (Fuel Pump)	1
4	1374789	Connector	1
5	1495413	Hose	1
6	1499647	Gasket	2
7	1499654	Spacer	1
8	1369863	Stud	2
9	1499653	Spacer	1
10	2022490	Gasket	3
11	1369981	Insulator	1
12	326653	Nut	2
13	326654	Lockwasher	2
14	1495413	Hose	1
15	326504	Nut	2
16	2045962	Governor (☞ Figure 3-6)	1
16	1499646	Governor (☞ Figure 3-6)	1
17	1500223	Carburetor (☞ Figure 3-14)	1

©2004 HYSTER COMPANY

ENGINE FUEL SYSTEM (Figure 2-12)
LPG
EPA COMPLIANT
(S/N PENDING PER ECN 74449⇒)

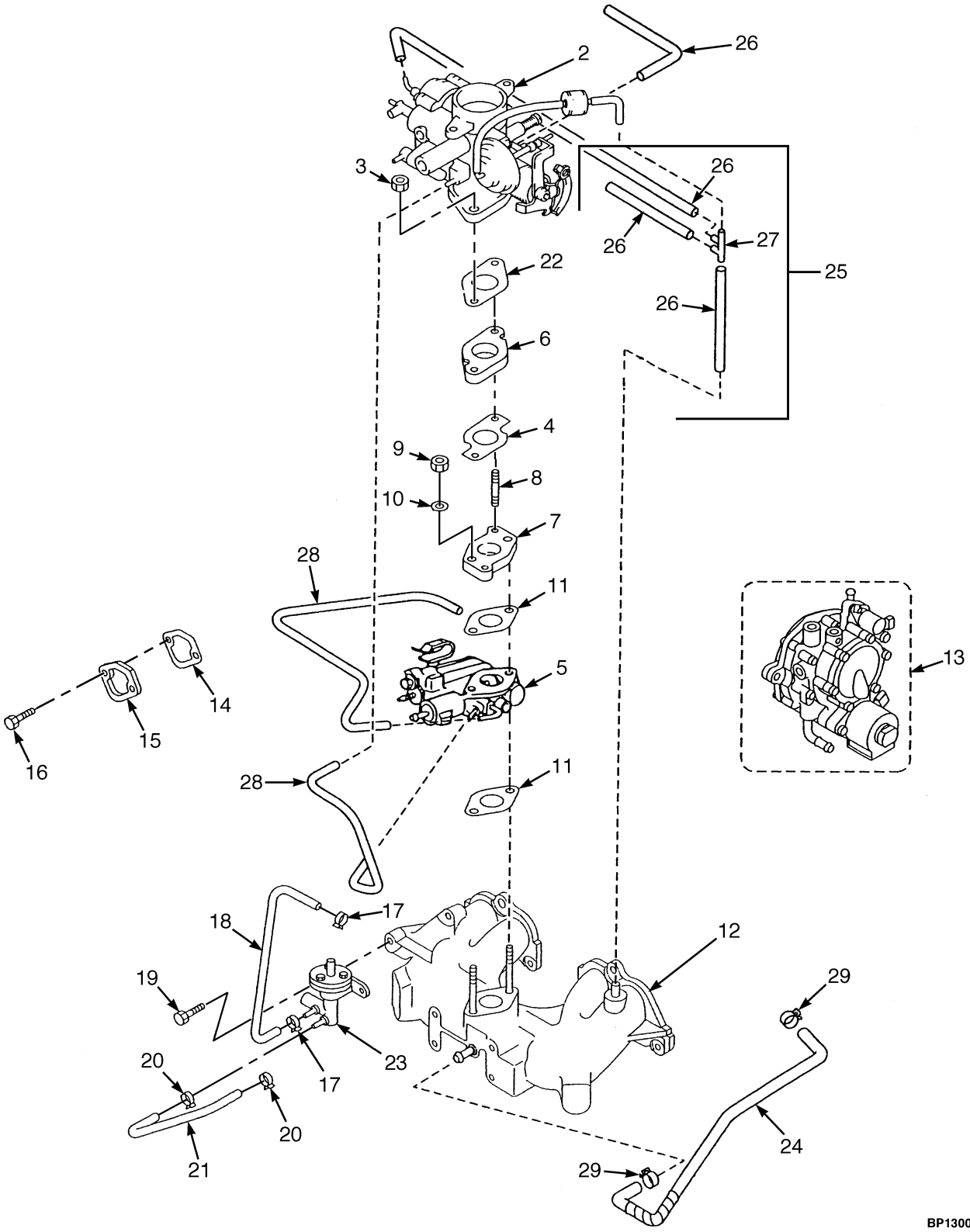

©2004 HYSTER COMPANY

ENGINE FUEL SYSTEM
LPG
EPA COMPLIANT
(S/N PENDING PER ECN 74449⇒)

ITEM	PART NO.	DESCRIPTION	QTY
	1546825	Engine	1
1	1471694	Resonator (☞ Figure 3-11)	1
2	1557314	Carburetor	1
3	326504	Nut	2
4	1499647	Gasket	1
5	1495422	Governor (2.0L) (2.0L) (☞ Figure 3-6)	1
6	1499654	Spacer	1
7	1557311	Spacer	1
8	1369863	Stud	2
9	326653	Nut	2
10	326654	Lockwasher	2
11	2022490	Gasket	2
12	1557304	Manifold (Intake)	1
13	1501952	Regulator (Lockout)	1
14	1361756	Gasket	1
15	1361749	Cover	1
16	1361898	Bolt	2
17	2068743	Clamp	2
18	1553795	Hose	1
19	1553798	Capscrew	2
20	1553799	Clamp	2
21	1553794	Hose	1
22	1361752	Gasket	1
23	1557313	Fuel Filter	1
24	1369997	Hose	1
25	1557318	Vacuume Tube Assembly	1
26	1495413	Hose	AR
27	1500220	Tube	AR
28	1361796	Hose	1
29	1369996	Clamp	2

©2004 HYSTER COMPANY

FUEL SYSTEM (Figure 2-13)
GASOLINE ENGINE

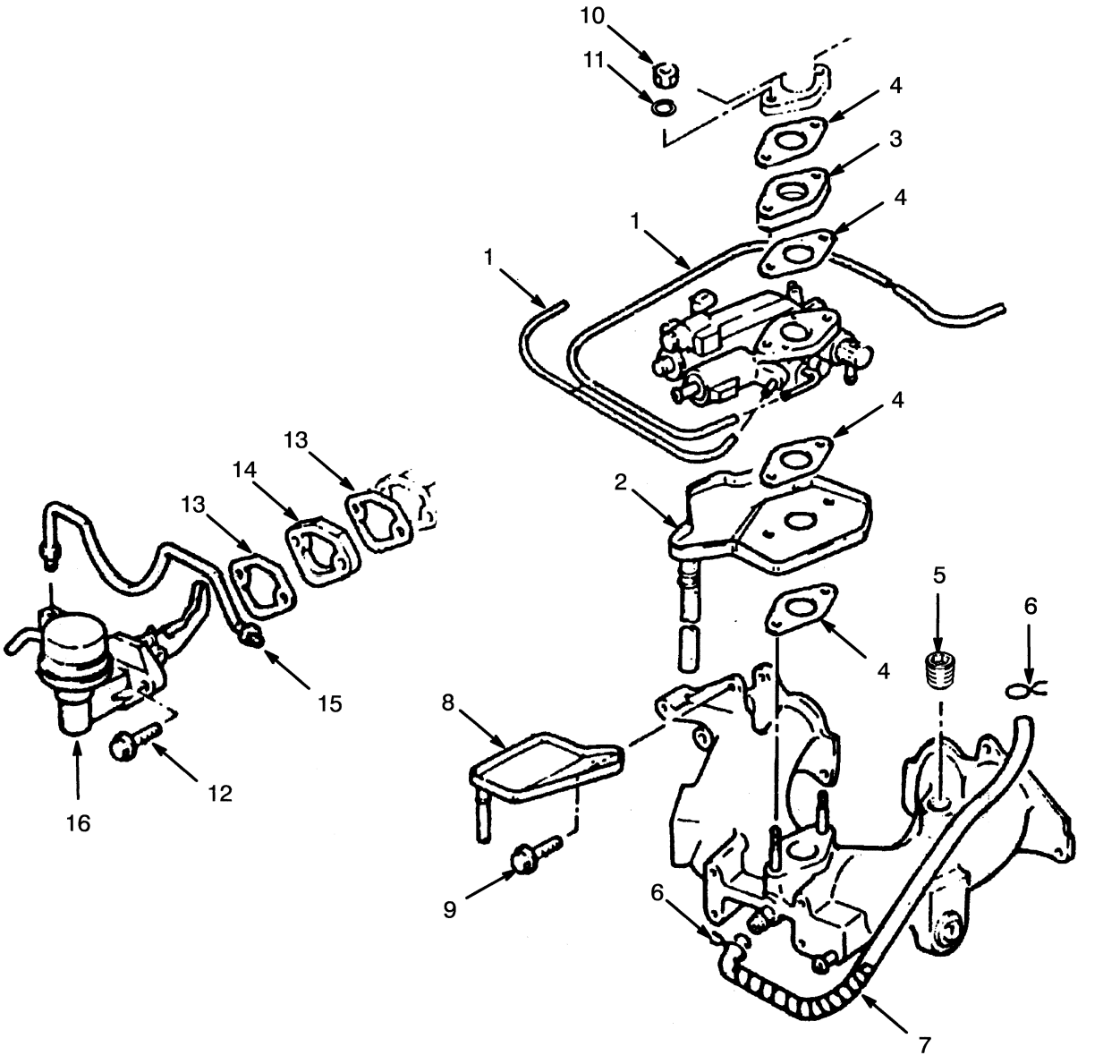

©2004 HYSTER COMPANY

FUEL SYSTEM
GASOLINE ENGINE

ITEM	PART NO.	DESCRIPTION	QTY
1	1361796	Hose	1
2	1361898	Bolt	1
3	2022490	Gasket	4
4	1369981	Insulator	1
5	1369995	Plug	1
6	1369996	Clamp	2
7	1369997	Hose	1
8	1361754	Deflector	1
9	1361868	Screw	2
10	326653	Nut	2
11	326654	Lockwasher	2
12	1361885	Bolt	2
13	1361756	Gasket	2
14	1361755	Insulator	1
15	1369998	Pipe	1
16	1361753	Fuel Pump	1

©2004 HYSTER COMPANY

RADIATOR AND HOSES (Figure 2-14)
GASOLINE AND LPG

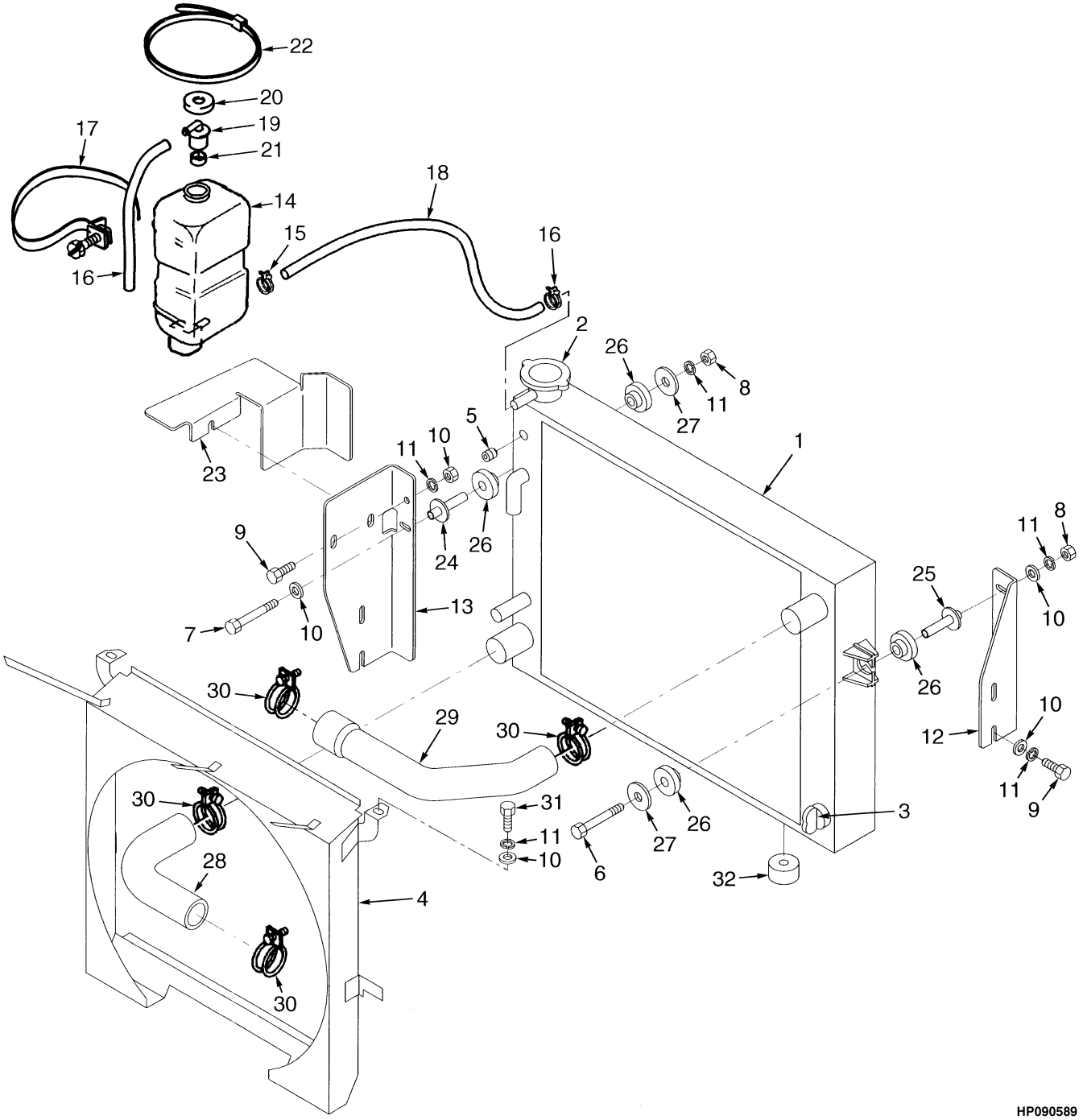

©2004 HYSTER COMPANY

RADIATOR AND HOSES
GASOLINE AND LPG

ITEM		PART NO.	DESCRIPTION	QTY
1	**b**	2043720	Radiator	1
1	**c**	2043721	Radiator	1
2		2022397	Cap	1
3		1367113	Drain Cock	1
4	**b**	1494475	Shroud	1
4	**c**	1494665	Shroud	1
5	**a**	1356105	Low Coolant Sender	1
5		15347	Fitting (without Sender)	1
6		292512	Capscrew	1
7		346656	Capscrew	1
8		239503	Nut	2
9		329067	Screw	4
10		320157	Washer	9
11		292681	Lockwasher	8
12		1485331	Bracket (LH)	1
13		1485322	Bracket (RH)	1
14		1347026	Reservoir	1
15		168718	Clamp	2
16		2022519	Tube	1
17		1345825	Strap	1
18		336573	Hose	1
19		345453	Outlet (Reservoir)	1
20		345454	Cap	1
21		336550	Bushing	1
22		397676	Strap Clamp	1
23		1485333	Shield	1
24		2029223	Spacer	1
25		2029227	Spacer	1
26		2021512	Isolator	4
27		1485805	Washer	3
28		2022842	Hose (Lower)	1
29		2022843	Hose (Upper)	1
30		369804	Clamp	4
31		136681	Capscrew	2
32		2029170	Cushion (Rubber)	2

FOOTNOTES:
a Optional
b Standard
c Tube and Fin

©2004 HYSTER COMPANY

ENGINE MOUNT (Figure 2-15)
GASOLINE AND LPG

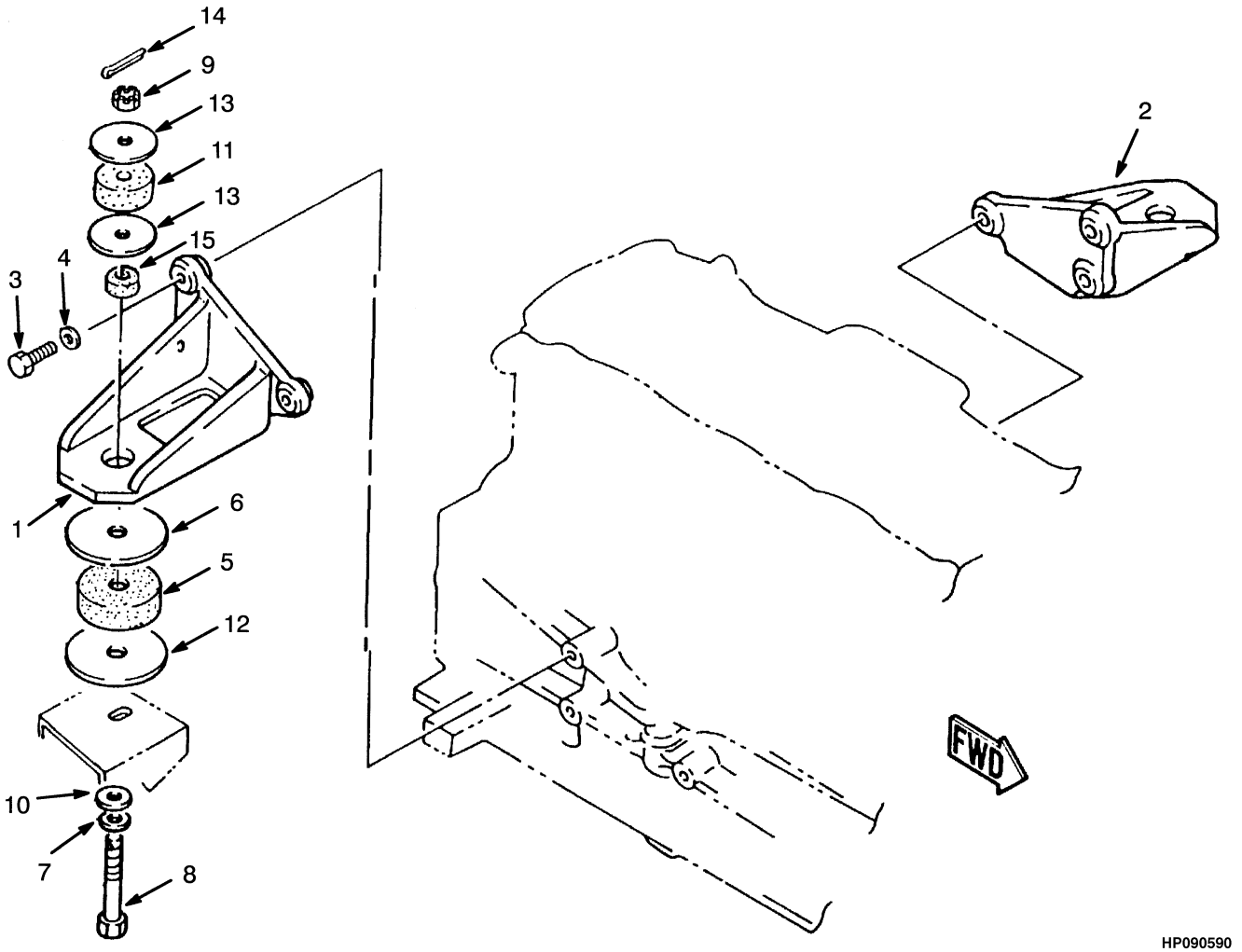

©2004 HYSTER COMPANY

ENGINE MOUNT
GASOLINE AND LPG

ITEM	PART NO.	DESCRIPTION	QTY
1	2021505	Bracket (RH)	1
2	2021506	Bracket (LH)	1
3	2022551	Capscrew	6
4	296420	Washer	6
5	2026054	Isulator	2
6	2021516	Isulator	2
7	296422	Washer	2
8	2021511	Bolt	2
9	302328	Nut	2
10	15177	Washer	2
11	2021512	Isolator	2
12	2021517	Isulator	2
13	2021515	Isulator	4
14	15223	Cotter Pin	2
15	2026055	Isulator	2

©2004 HYSTER COMPANY

EXHAUST (Figure 2-16)
GASOLINE AND LPG
WITHOUT LOW EMISSIONS

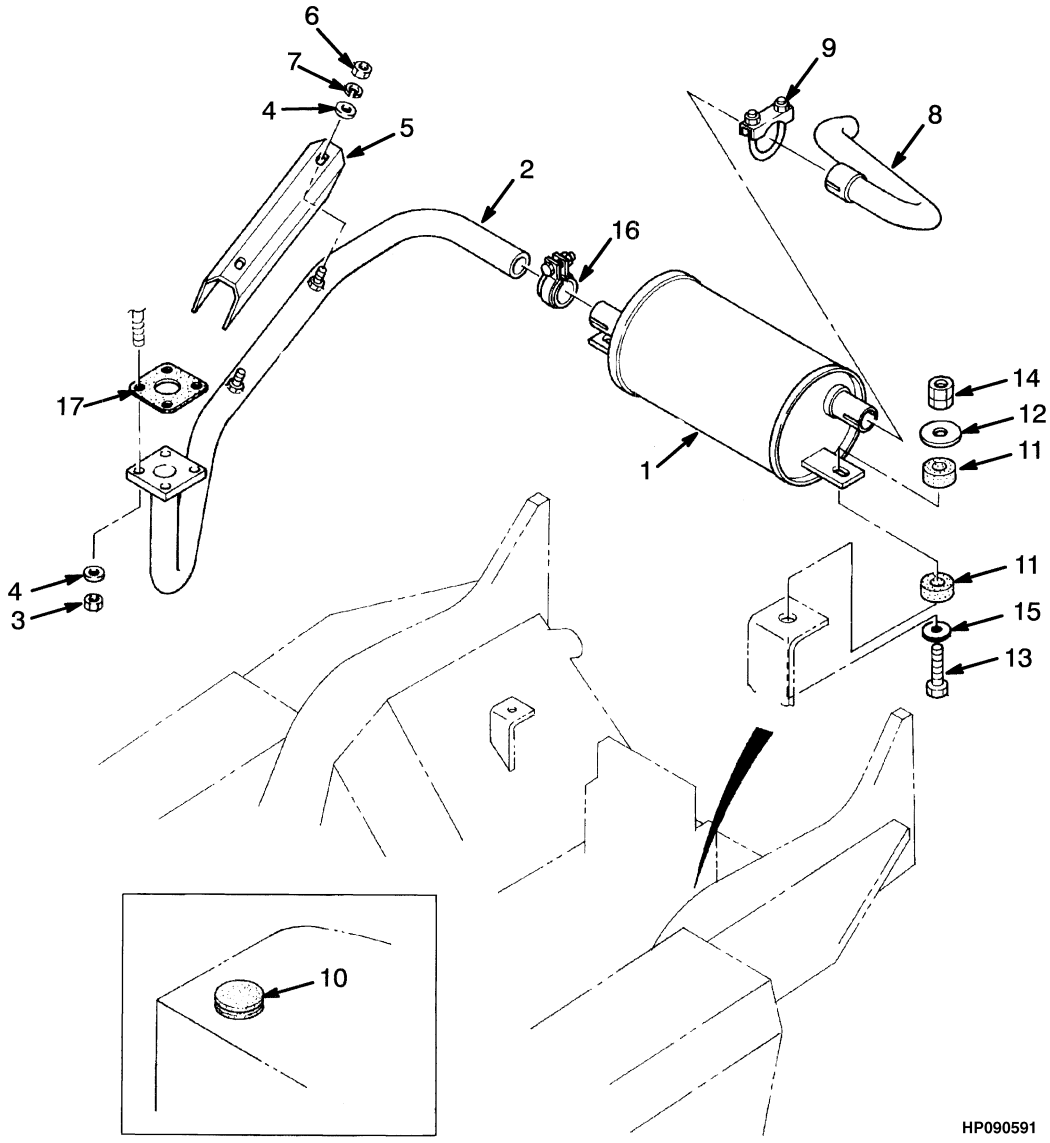

©2004 HYSTER COMPANY

EXHAUST
GASOLINE AND LPG
WITHOUT LOW EMISSIONS

ITEM	PART NO.	DESCRIPTION	QTY
1	2021354	Muffler (Standard)	1
1	2023445	Catalytic Exhaust Muffler	1
2	1382679	Pipe	1
3	2037403	Nut	4
4	320157	Washer	8
5	2022807	Cover	1
6	239503	Nut	2
7	292681	Lockwasher	2
8	2022808	Tail Pipe	1
9	63117	Clamp	1
10	2021395	Cap	1
11	1351177	Rubber Cushion	4
12	1351176	Washer	2
13	292517	Capscrew	2
14	2021359	Nut	2
15	15177	Washer	2
16	2021370	Clamp	1
17	1338308	Gasket	1

©2004 HYSTER COMPANY

EXHAUST (Figure 2-17)
WITH LOW EMISSIONS

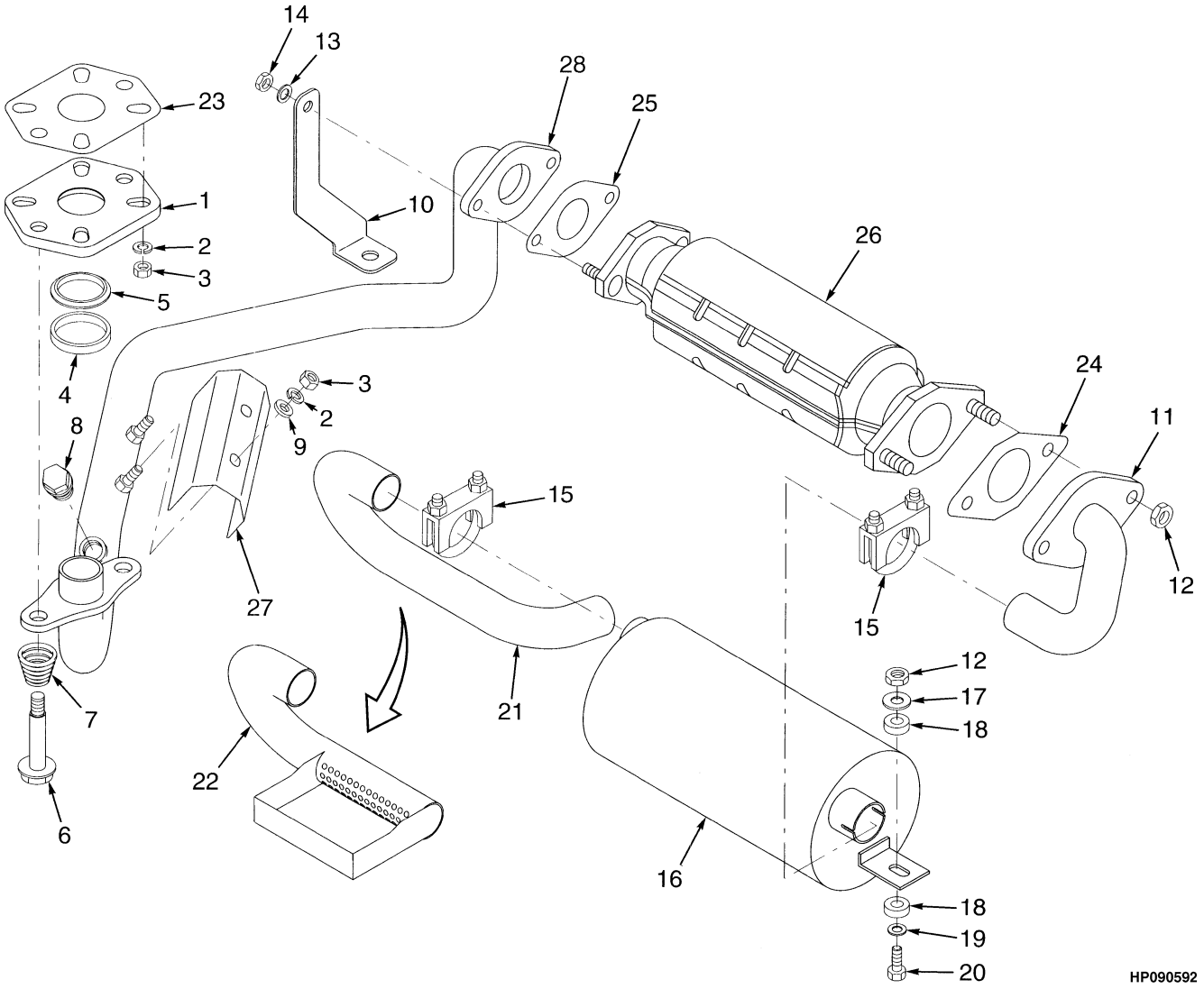

©2004 HYSTER COMPANY

EXHAUST
WITH LOW EMISSIONS

ITEM	PART NO.	DESCRIPTION	QTY
1	1488874	Adapter	1
2	292681	Lockwasher	6
3	239503	Nut	6
4	1338264	Spacer	1
5	1338268	Seal	1
6	1337118	Bolt	2
7	1335898	Spring	2
8	1396518	Plug	1
9	320157	Washer	AR
10	1485288	Bracket	1
11	1485284	Pipe	1
12	316826	Nut	4
13	292683	Lockwasher	2
14	1469405	Nut	2
15	68968	Clamp	2
16	2042972	Muffler	1
17	1351176	Washer	2
18	1351177	Rubber Cushion	4
19	15177	Washer	2
20	292517	Capscrew	2
21	1485283	Tail Pipe	1
22	1490047	Tail Pipe (Type "S")	1
23	1338308	Gasket	1
24	1487172	Gasket	1
25	1487189	Gasket	1
26	1469342	Catalytic Converter	1
27	2022807	Cover	1
28	1485286	Pipe	1

©2004 HYSTER COMPANY

EXHAUST (Figure 2-18)
TYPE GS AND LPS

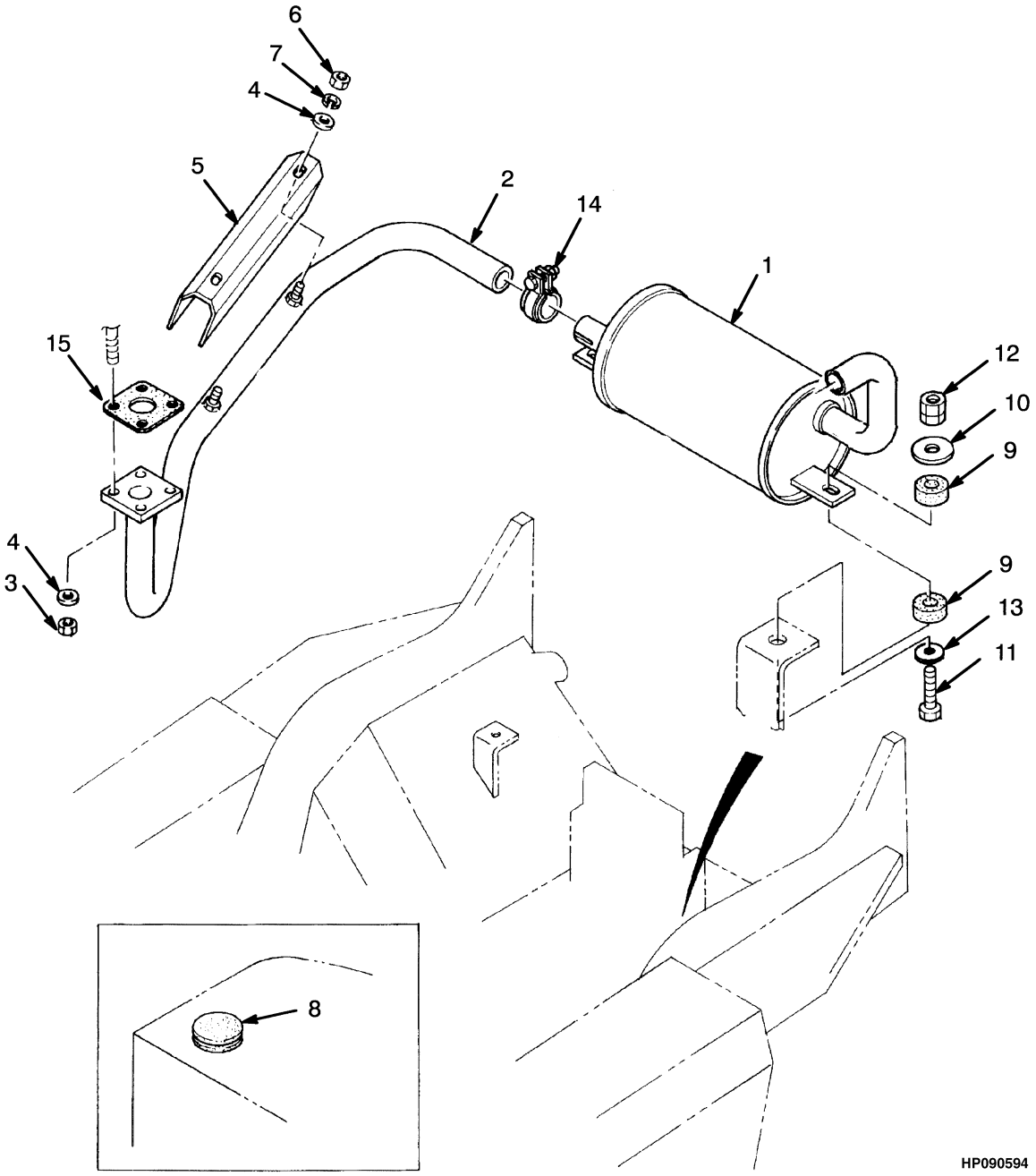

©2004 HYSTER COMPANY

EXHAUST
TYPE GS AND LPS

ITEM	PART NO.	DESCRIPTION	QTY
1	2021355	Muffler	1
2	1382679	Pipe	1
3	2037403	Nut	4
4	320157	Washer	6
5	2022807	Cover	1
6	239503	Nut	2
7	292681	Lockwasher	2
8	2021395	Cap	1
9	1351177	Rubber Cushion	4
10	1351176	Washer	2
11	292517	Capscrew	2
12	2021359	Nut	2
13	15177	Washer	2
14	2021370	Clamp	1
15	1338308	Gasket	1

©2004 HYSTER COMPANY

NOTES

3 FUEL SYSTEM

SECTION 3
FUEL SYSTEM

DESCRIPTION	PAGE
AIR INTAKE AND FILTER	
GASOLINE	3-13
LPG	3-16
CARBURETOR	
GASOLINE	3-10
LPG 2.0L OPEN LOOP	3-28
LPG CLOSED LOOP	3-32
FUEL SYSTEM	
LPG	
EPA COMPLIANT	
S/N PENDING PER ECN 74449⇒	3-24
OPEN AND CLOSED LOOP	3-20
FUEL TANK AND LINES	
GASOLINE	3-36
GOVERNOR	
GASOLINE AND LPG	3-12
MONOTROL PEDAL	3-4
REGULATOR	
CLOSED LOOP	3-34
OPEN LOOP	3-30
TANK	
LPG	3-18
THROTTLE ASSEMBLY	3-2
THROTTLE LINKAGE	
GASOLINE	3-6
LPG	3-8

©2004 HYSTER COMPANY

THROTTLE ASSEMBLY (Figure 3-1)

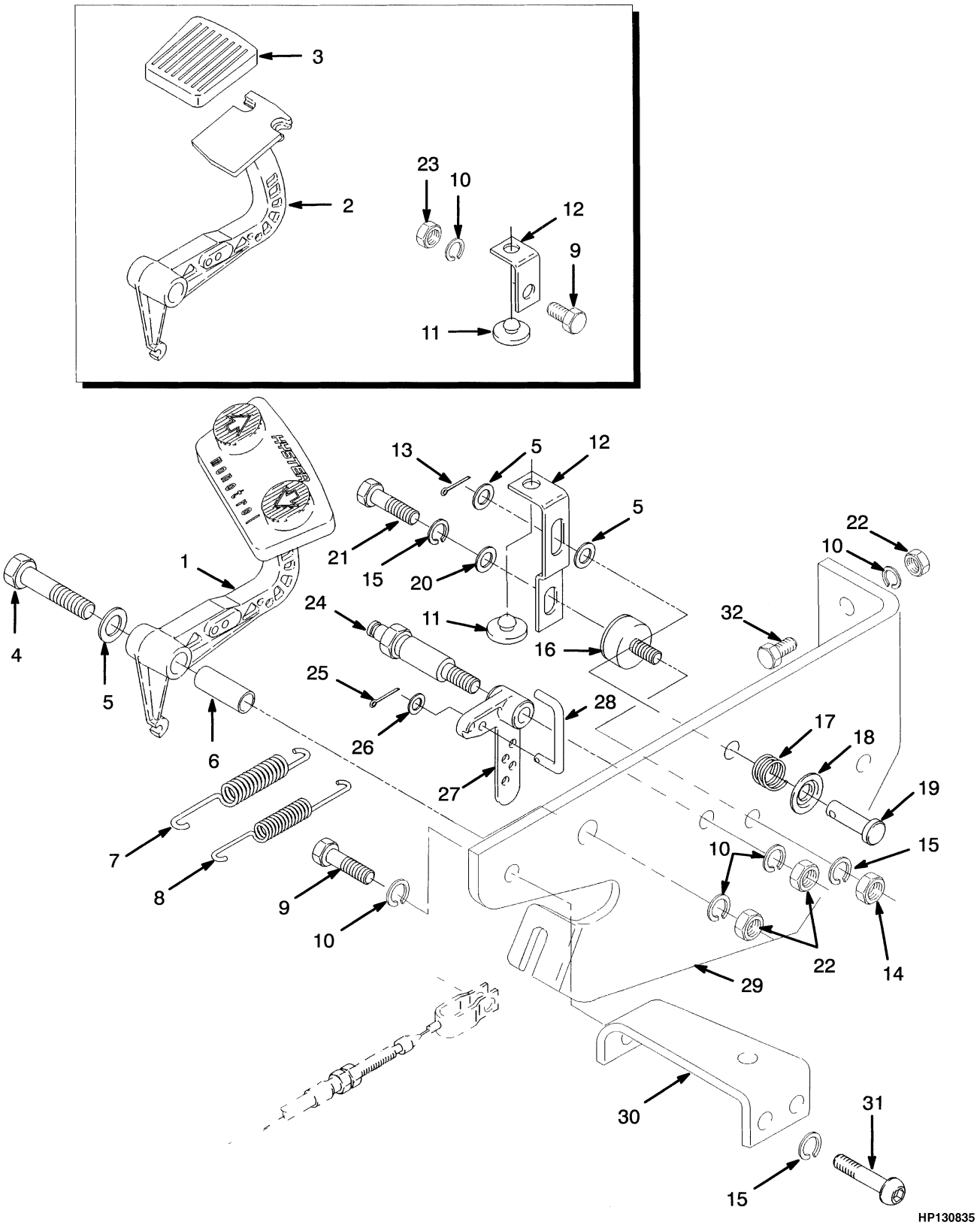

©2004 HYSTER COMPANY

THROTTLE ASSEMBLY

KEY:
A: Monotrol Pedal
B: Forward/Reverse Lever

ITEM	PART NO.	DESCRIPTION	QTY A	QTY B
1	2027328	Pedal (☞ Figure 3-2)	1	..
2	352499	Pedal (Optional)	..	1
3	352885	Pad	..	1
4	292521	Capscrew	..	1
4	292523	Capscrew	1	..
5	320160	Washer	1	1
6	325708	Bushing	..	1
6	353141	Bushing	1	..
7	353143	Spring	1	1
8	353142	Spring	1	1
9	136985	Capscrew	1	2
10	292682	Lockwasher	4	4
11	353195	Bumper	1	1
12	352950	Bracket	1	..
12	353159	Bracket	..	1
13	15212	Cotter Pin	1	..
14	239503	Nut	1	..
15	292681	Lockwasher	2	..
16	353453	Mount	1	..
17	353172	Spring	1	..
18	353230	Cap	1	..
19	142	Pin	1	..
20	320158	Washer	1	..
21	287851	Capscrew	1	..
22	136692	Nut	2	2
23	296128	Nut	..	1
24	352485	Shaft	1	1
25	15211	Cotter Pin	1	1
26	320156	Washer	1	1
27	353164	Crank	1	1
28	353129	Rod	1	1
29	2027326	Bracket	1	1
30	2021426	Bracket	1	1
31	296166	Capscrew	2	2
32	292514	Capscrew	2	2

©2004 HYSTER COMPANY

MONOTROL PEDAL (Figure 3-2)

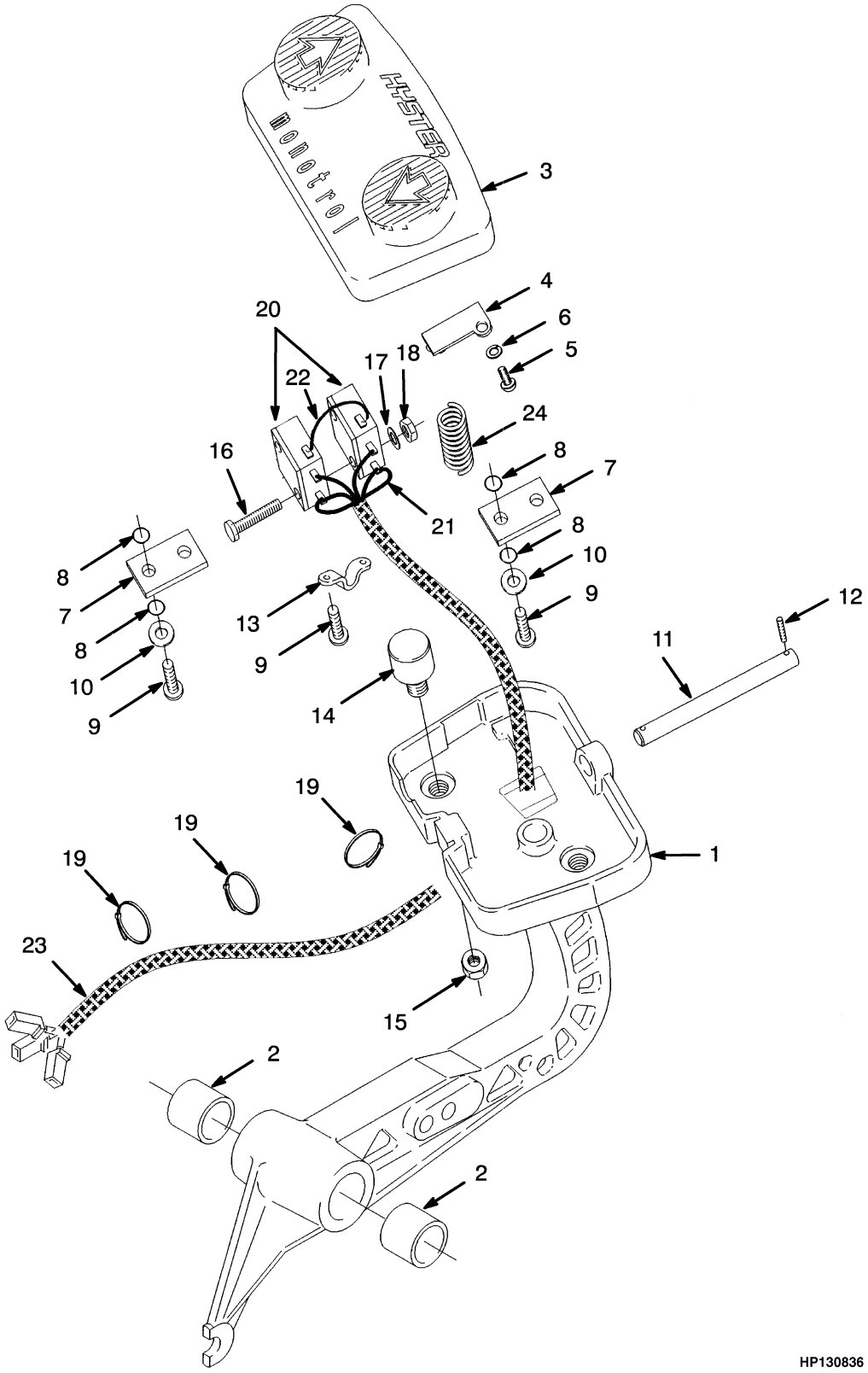

©2004 HYSTER COMPANY

MONOTROL PEDAL

ITEM	PART NO.	DESCRIPTION	QTY
	2027328	Pedal	..
1	353397	Pedal	1
2	135685	Bushing	2
3	353175	Pad	1
3	. . . . .	Pad	1
4	. . . . .	Plate	1
4	352990	Adhesive	AR
5	186493	Screw	1
6	15152	Lockwasher	1
7	359207	Plate	2
8	57568	O-Ring	8
9	352969	Screw	6
10	353448	Washer	4
11	353154	Pin	1
12	220932	Screw	2
12	360387	Sealant	AR
13	353165	Retainer	1
14	353441	Magnet and Nut Assembly	2
14	353422	Magnet	1
15	353432	Nut	1
16	220434	Capscrew	2
17	53162	Lockwasher	2
18	16865	Nut	2
19	114312	Strap Clamp	3
20	1352090	Switch Assembly	1
20	353128	Switch	2
21	. . . . .	Jumper Wire	1
22	. . . . .	Jumper Wire	1
23	1352089	Wire Harness	1
24	353168	Spring	1

©2004 HYSTER COMPANY

THROTTLE LINKAGE (Figure 3-3)
GASOLINE

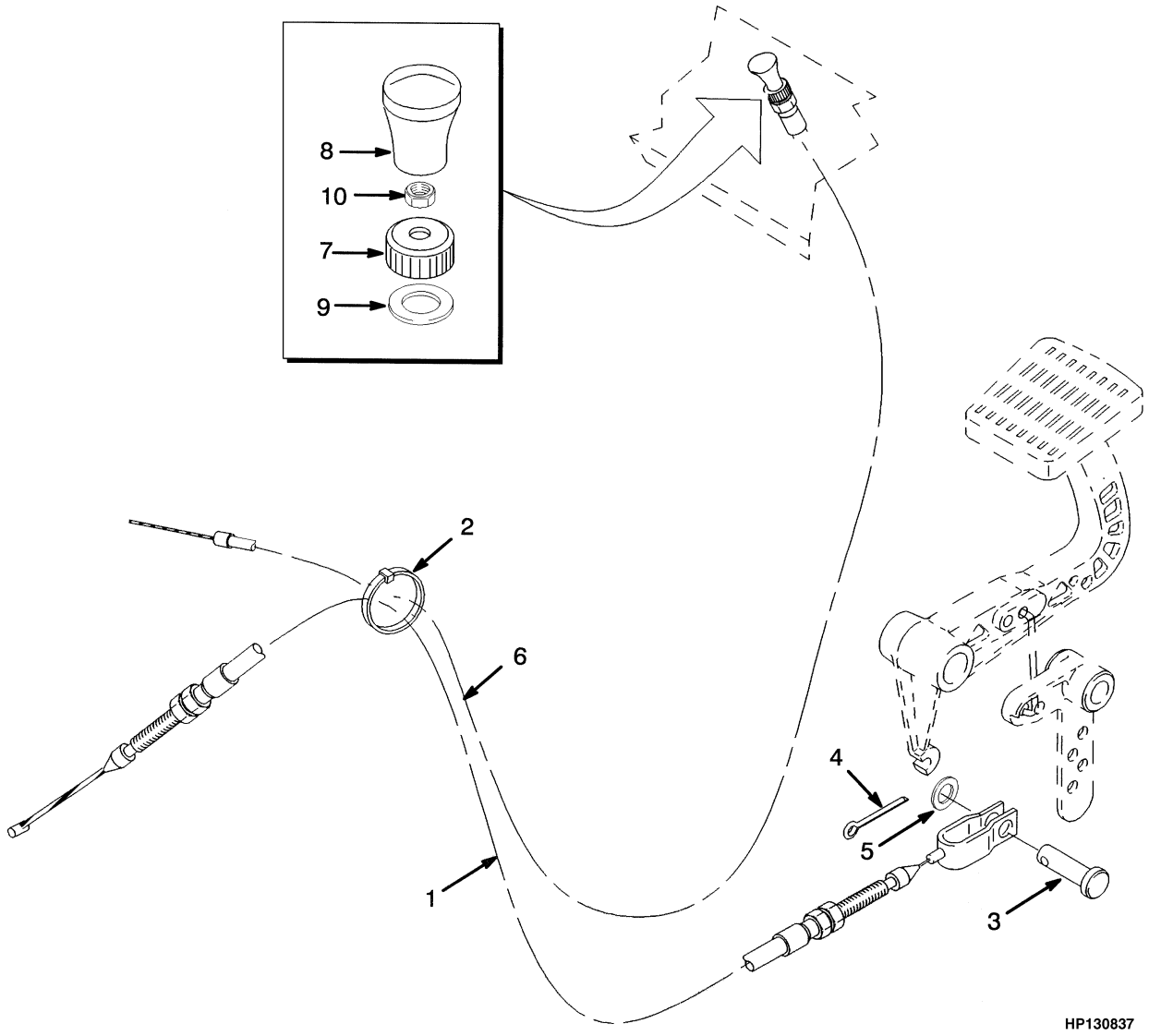

©2004 HYSTER COMPANY

THROTTLE LINKAGE
GASOLINE

ITEM	PART NO.	DESCRIPTION	QTY
1	2021427	Cable	1
2	137852	Strap Clamp	2
3	309109	Rod End Pin	1
4	15200	Cotter Pin	1
5	320155	Washer	1
6	2021458	Choke Cable	1
7	1367116	Nut	1
8	1367117	Knob	1
9	320159	Washer	1
10	292668	Nut	1

©2004 HYSTER COMPANY

THROTTLE LINKAGE (Figure 3-4)
LPG

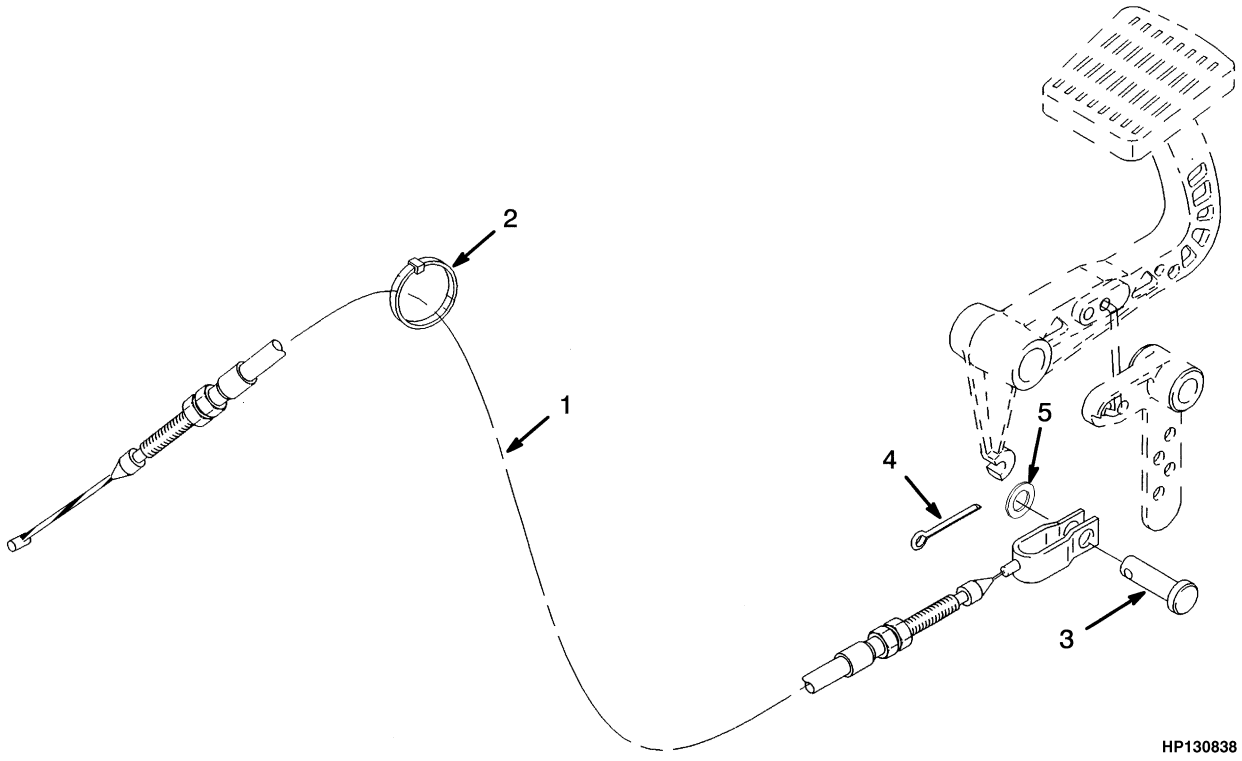

ITEM	PART NO.	DESCRIPTION	QTY
1	1496021	Throttle Cable	1
2	137852	Strap Clamp	1
3	162836	Rod End Pin	1
4	15212	Cotter Pin	1
5	320155	Washer	1

©2004 HYSTER COMPANY

NOTES

CARBURETOR (Figure 3-5)
GASOLINE

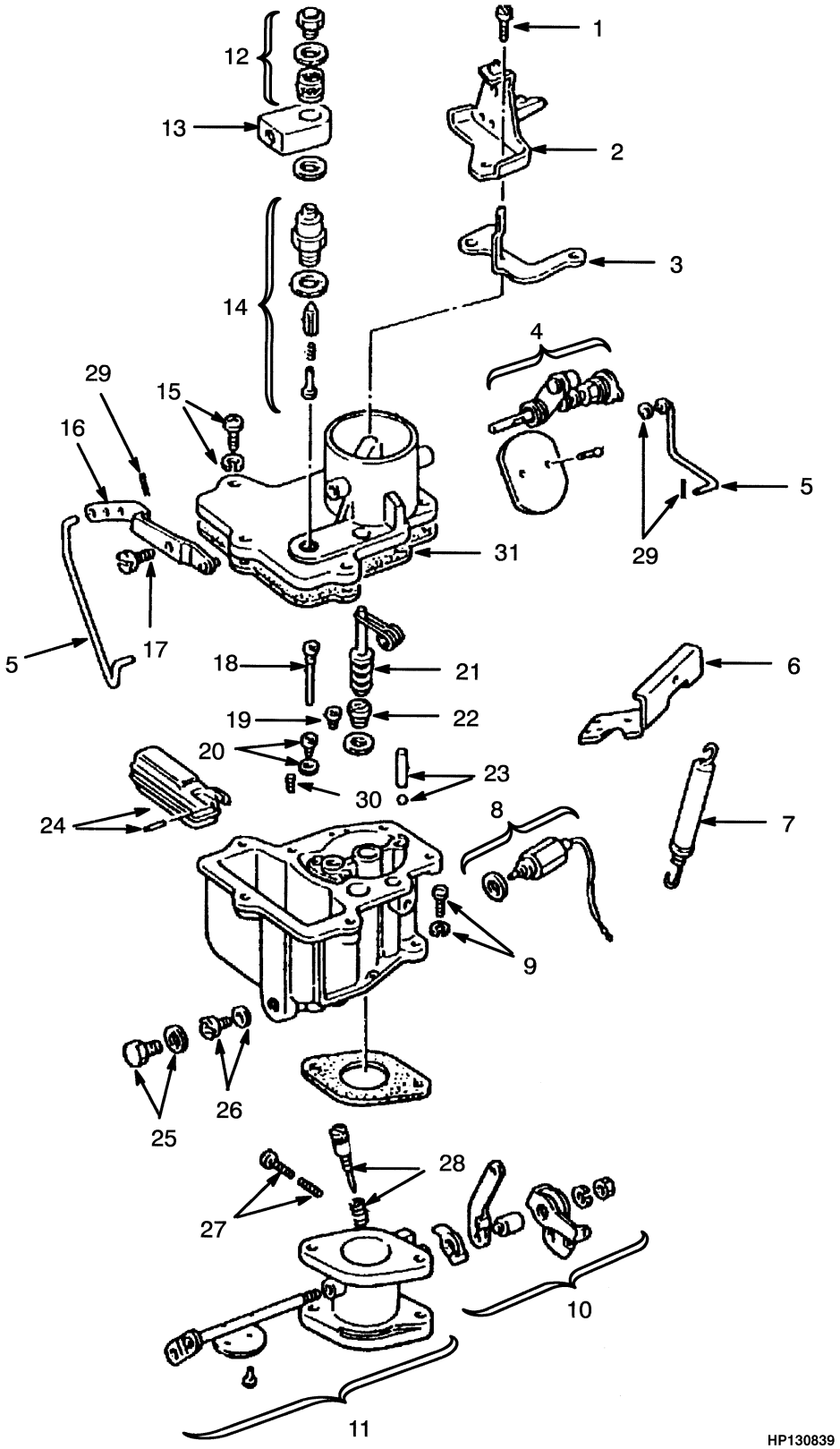

©2004 HYSTER COMPANY

CARBURETOR
GASOLINE

ITEM	PART NO.	DESCRIPTION	QTY
	2022908	Carburetor	1
1	1369815	Bolt	2
2	1369816	Holder	1
3	326742	Clamp	1
4	1369817	Air Horn	1
5	1369818	Rod	1
6	1369819	Hanger	1
7	1369820	Spring	1
8	326721	Solenoid	1
9	326716	Screw	2
10	1369822	Lever Set	1
11	1369823	Throttle Body Assembly	1
12	1369824	Strainer Set	1
13	326741	Connector	1
14	326733	Valve Seat (Float)	1
15	326744	Screw (With Washer)	5
16	326719	Lever	1
17	326720	Screw	1
18	326718	Jet (Main Air)	1
19	1369825	Jet (Slow Fuel)	1
20	326726	Jet and Seat Assembly (Slow Speed)	1
21	326730	Accelerator Pump Assembly	1
22	1369826	Valve (Power)	1
23	326732	Weight Set	1
24	326731	Float	1
25	326729	Plug	1
26	1369827	Jet (Main)	1
27	1369828	Screw	1
28	1369829	Idle Adjust Kit	1
29	326739	Clip	1
30	326725	Jet Assembly (Slow)	1
31	2022492	Gasket Set	1
32	326735	Gasket	1

©2004 HYSTER COMPANY

GOVERNOR (Figure 3-6)
GASOLINE AND LPG

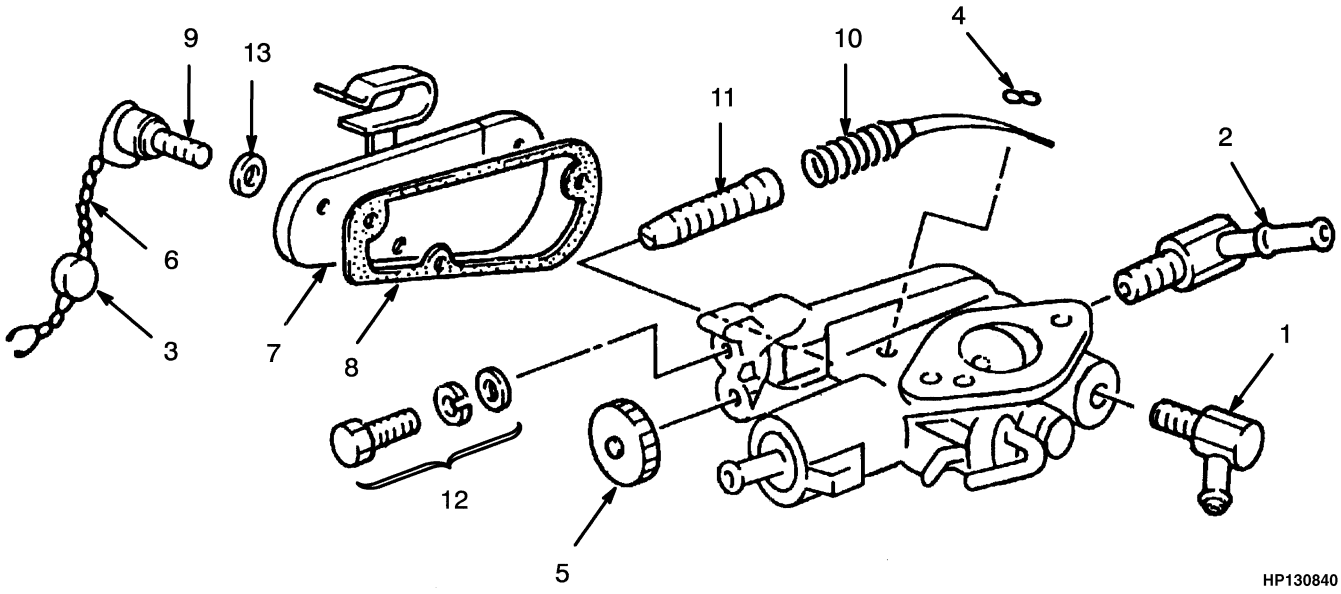

ITEM		PART NO.	DESCRIPTION	QTY
	b	1499646	Governor	1
	a	2045962	Governor	1
1	**a**	1369842	Connector	1
2	**a**	1369835	Connector	1
3		1367518	Seal	1
4		1367519	Snap Ring	1
5		1367520	Bushing	1
6		1367521	Wire	1
7	**a**	1369836	Cover	1
7	**b**	1499657	Cover	1
8		1369837	Gasket	1
9		1369838	Screw	3
10		1369839	Spring Assembly	1
11		1367526	Screw	1
12		1369840	Bolt	1
13		1369841	Washer	3

FOOTNOTES:
a Gasoline
b LPG

©2004 HYSTER COMPANY

AIR INTAKE AND FILTER (Figure 3-7)
GASOLINE

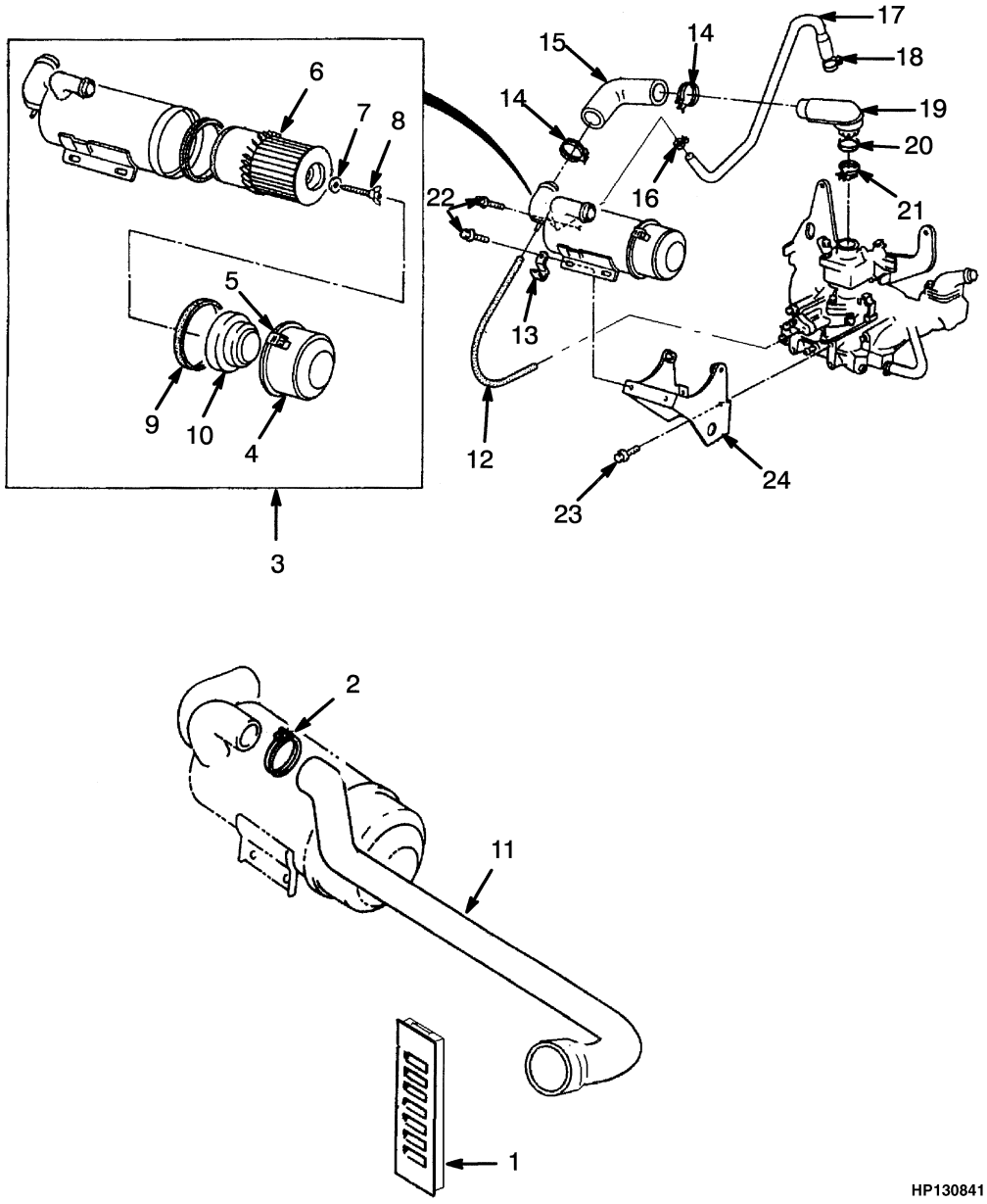

AIR INTAKE AND FILTER
GASOLINE

ITEM	PART NO.	DESCRIPTION	QTY
1	1339265	Grill	2
2	119236	Clamp	1
3	1369807	Air Cleaner	1
4	1369808	Dust Pan	1
5	324403	Clip	1
6	1369809	Element	1
7	324406	Washer	1
8	2037408	Bolt	1
9	329822	Bracket	1
10	1300916	Support	1
11	1475133	Hose	1
12	1361797	Hose	1
13	1369887	Clamp	1
14	326512	Clamp	2
15	2037407	Hose (Air)	1
16	326513	Clip	1
17	1369878	Hose	1
18	324709	Clip	1
19	314787	Funnel	1
20	314797	Seal	1
21	326511	Clamp	1
22	324721	Bolt	4
23	1366874	Bolt	4
24	1369813	Bracket	1

See Service Manual for service procedures.
©2004 HYSTER COMPANY

NOTES

AIR INTAKE AND FILTER (Figure 3-8)
LPG

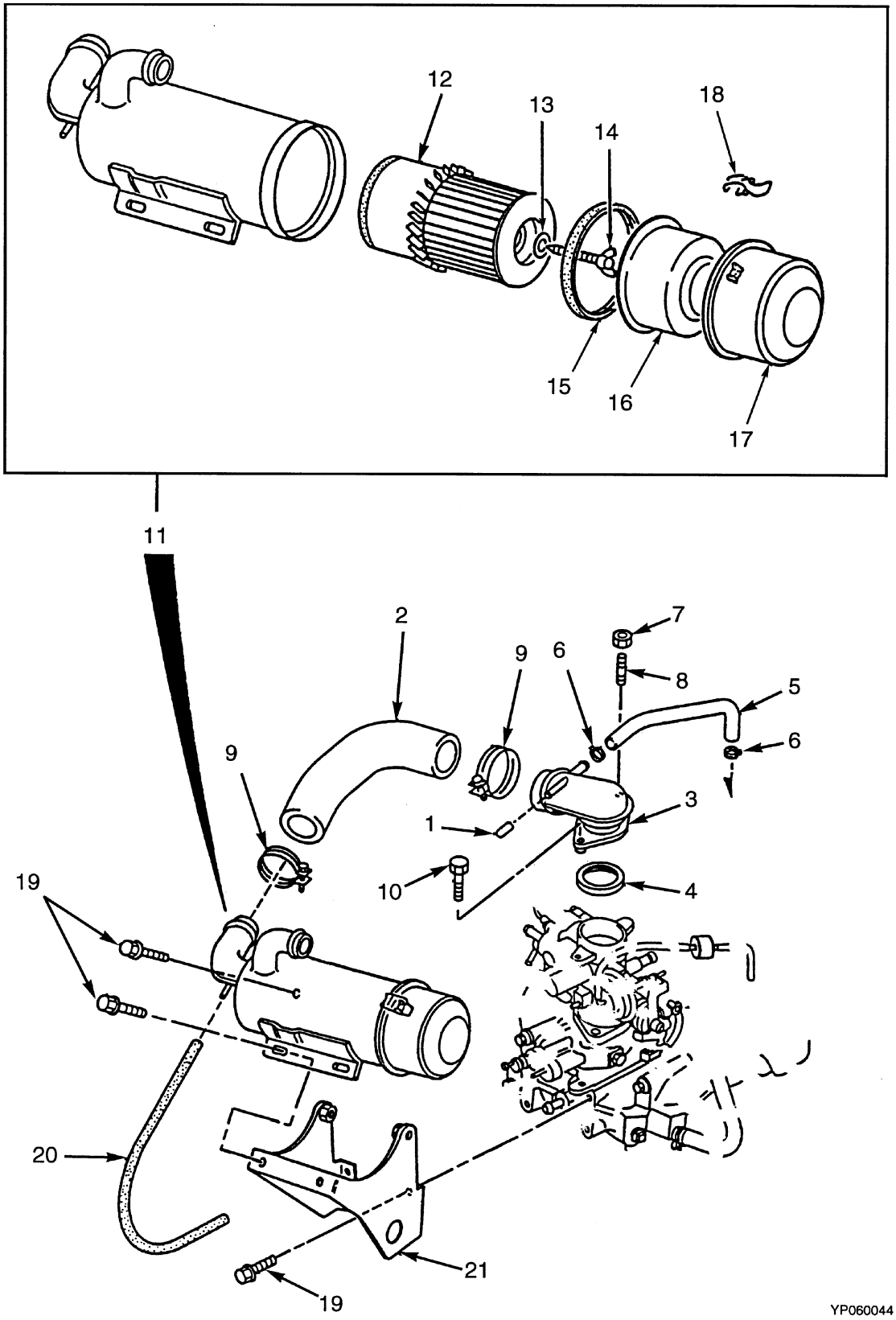

©2004 HYSTER COMPANY

AIR INTAKE AND FILTER
LPG

ITEM	PART NO.	DESCRIPTION	QTY
1	1499619	Cap	1
2	1499618	Hose	1
3	1499622	Funnel	1
4	1475156	Seal	1
5	1499623	Hose (Ventilation)	1
6	1499617	Clamp	4
7	1361869	Nut	1
8	1361870	Stud	1
9	326512	Clamp	2
10	1495500	Bolt	1
11	1369807	Air Cleaner	1
12	326483	Element	1
13	326406	Plate	1
14	2037408	Bolt	1
15	389822	Gasket	1
16	1300916	Support	1
17	1369808	Dust Pan	1
18	324403	Clip	1
19	1366874	Bolt	4
20	1361797	Hose	1
21	1502989	Bracket	1

©2004 HYSTER COMPANY

TANK (Figure 3-9)
LPG

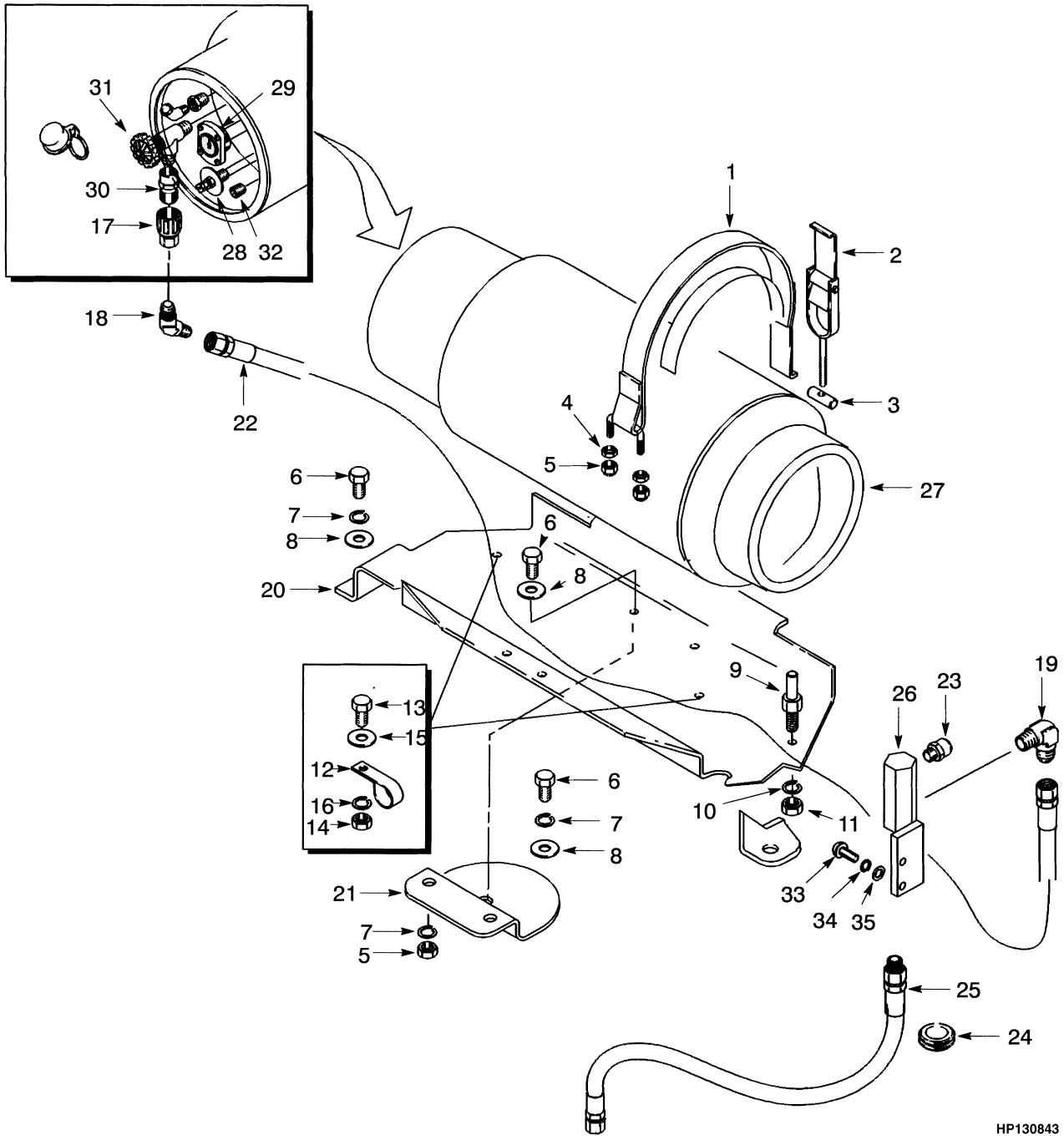

©2004 HYSTER COMPANY

TANK
LPG

ITEM	PART NO.	DESCRIPTION	QTY
1	1339769	Strap	1
2	196297	Latch	1
3	147294	Nut	1
4	136692	Nut	2
5	316826	Nut	4
6	287854	Capscrew	5
7	292682	Lockwasher	5
8	320159	Washer	5
9	2022566	Pin	1
10	292683	Lockwasher	1
11	296130	Nut	1
12	1347202	Clamp	1
13	136681	Capscrew	1
14	239503	Nut	1
15	320157	Washer	1
16	292681	Lockwasher	1
17	97999	Disconnect	1
18	16863	Fitting	1
19	14358	Fitting	2
20	2022852	Bracket	1
21	2022853	Bracket	1
22	101804	Hose	1
23	101809	Relief Valve	1
24	2021719	Grommet	1
25	1482736	Hose	1
26	2023721	Adapter (Bracket)	1
27	1328890	Tank	1
28	1337641	Gauge	1
29	1337642	Gauge	1
30	1337643	Valve	1
31	1337644	Valve	1
32	1337645	Valve	1
33	316678	Screw	2
34	292681	Lockwasher	4
35	15175	Washer	2

©2004 HYSTER COMPANY

FUEL SYSTEM (Figure 3-10)
OPEN AND CLOSED LOOP

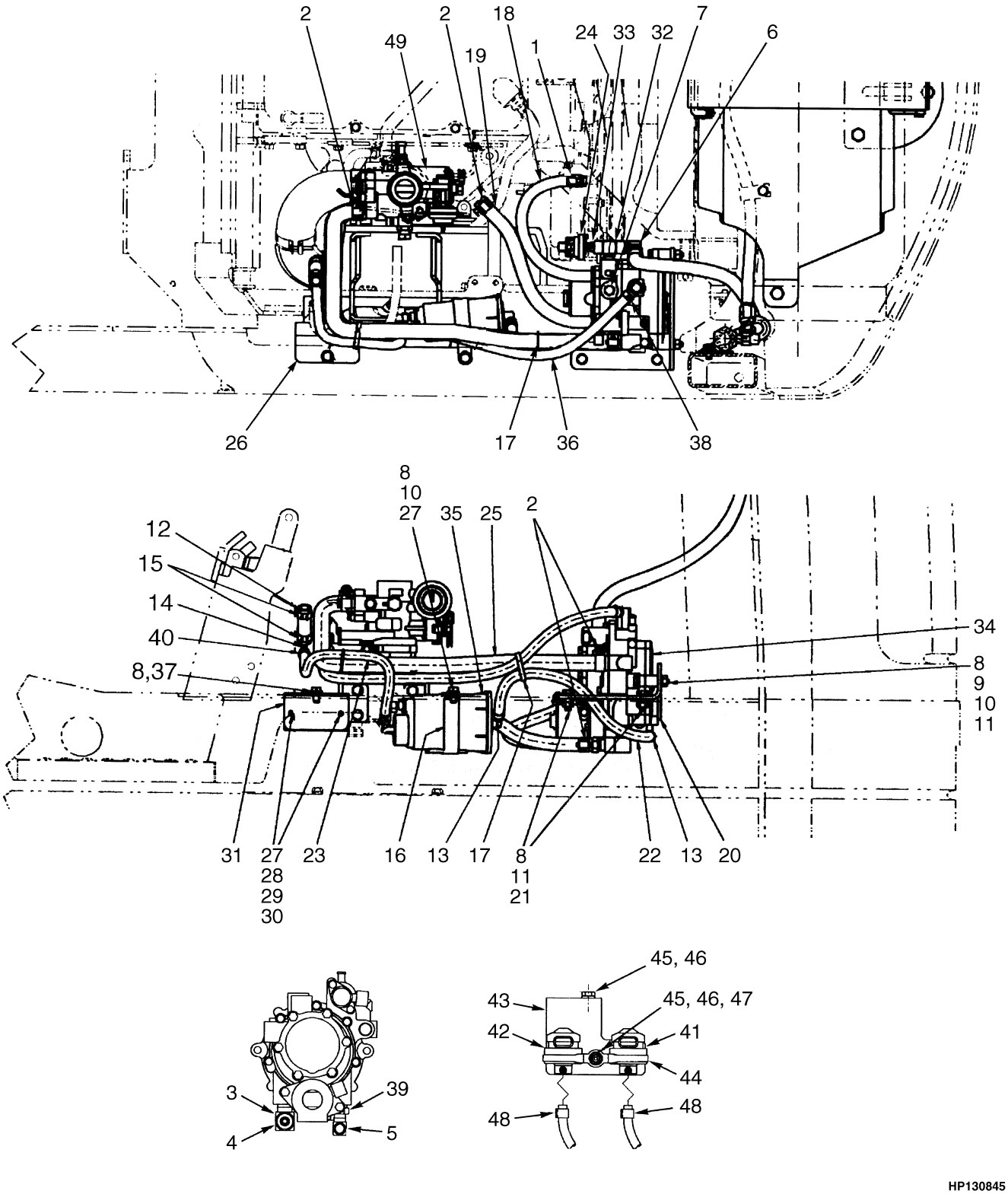

©2004 HYSTER COMPANY

FUEL SYSTEM
OPEN AND CLOSED LOOP

ITEM		PART NO.	DESCRIPTION	QTY
1		166857	Clamp	2
2		130845	Clamp	4
3		16143	Fitting	2
4		141776	Fitting	1
5		16788	Fitting	1
6		14358	Fitting	1
7		14385	Fitting	1
8		292681	Lockwasher	5
9		214364	Capscrew	2
10		320157	Washer	3
11		239503	Nut	4
12		182005	Hose	1
13		353311	Clamp	4
14		1471701	Fitting	1
15		379405	Clamp	2
16		1475409	Clamp	1
17		137852	Strap Clamp	2
18		2042790	Hose	1
19		985338	Hose	1
20		1482482	Bracket	1
21		136749	Capscrew	2
22		1482734	Hose	1
23		117989	Hose	1
24		1351133	Low Pressure Switch	1
25		1482731	Hose	1
26		2039306	Switch Assembly (Revolution)	1
27		302026	Screw	2
28		320154	Washer	2
29		292678	Lockwasher	2
30		292687	Lockwasher	2
31		1482481	Bracket	1
32		17314	Fitting	1
33		16187	Fitting	1
34		1469346	Regulator (☞ Figure 3-13)	1
34	**a**	1500222	Regulator (☞ Figure 3-15)	1
35		1471694	Resonator	1
36	**a**	243147	Hose	1
37		316678	Screw	3
38	**a**	1328878	Clamp	2
39		63108	Fitting	1
40		369815	Clamp	1
41	**a**	1487190	Switch (Idle)	1
42	**a**	1487192	Switch (W.O.T.)	1
43	**a**	1469531	Bracket	1
44	**a**	1487969	Clamp	1
45	**a**	287817	Capscrew	2
46	**a**	292680	Lockwasher	2
47	**a**	136687	Nut	1
48	**a**	2022013	Clamp	2
49		1494236	Carburetor (☞ Figure 3-12)	1

©2004 HYSTER COMPANY

FUEL SYSTEM
OPEN AND CLOSED LOOP

ITEM		PART NO.	DESCRIPTION	QTY
49	**a**	1493299	Carburetor (☞ Figure 3-14)	1
50		2022013	Clamp (LPG Vapor Hose) (Not Illustrated)	1

FOOTNOTES:
a With Low Emissions

©2004 HYSTER COMPANY

NOTES

FUEL SYSTEM (Figure 3-11)
LPG
EPA COMPLIANT
(S/N PENDING PER ECN 74449⇒)

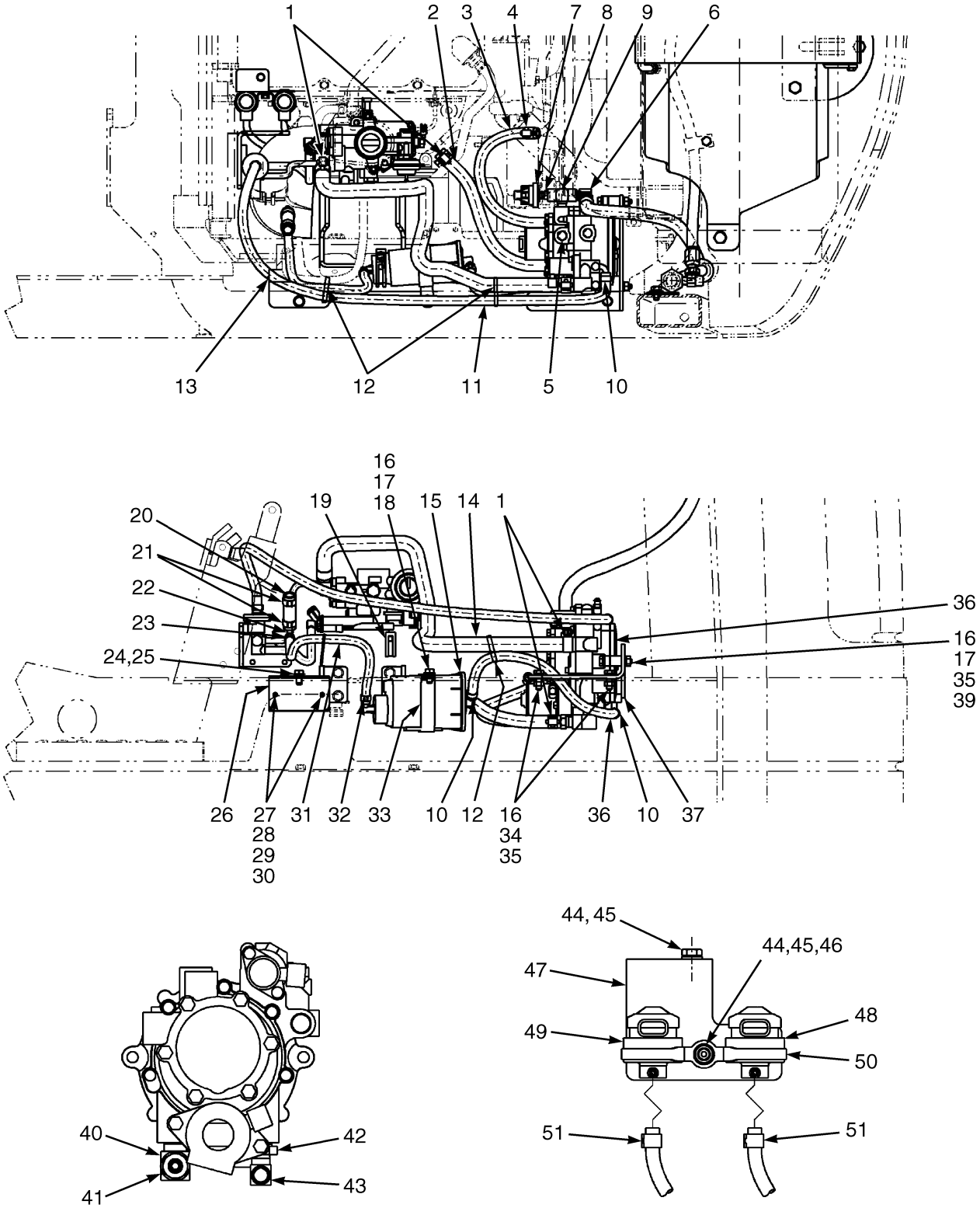

HP130331

©2004 HYSTER COMPANY

FUEL SYSTEM
LPG
EPA COMPLIANT
(S/N PENDING PER ECN 74449⇒)

ITEM	PART NO.	DESCRIPTION	QTY
1	130845	Clamp	4
2	985338	Hose	1
3	2042790	Hose	1
4	166857	Clamp	2
5	14385	Fitting	1
6	14358	Fitting	1
7	1351133	Low Pressure Switch	1
8	16187	Fitting	1
9	17314	Fitting	1
10	353311	Clamp	4
11	1554688	Hose	1
12	137852	Strap Clamp	AR
13	2039306	Switch Assembly (Revolution)	1
14	1554689	Hose	1
15	1471694	Resonator	1
16	292681	Lockwasher	5
17	320157	Washer	3
18	316678	Screw	3
19	2022013	Clamp	1
20	182005	Hose	1
21	379405	Clamp	2
22	1471701	Fitting	1
23	369815	Clamp	2
24	316678	Screw	1
25	292681	Lockwasher	1
26	1482481	Bracket	1
27	302026	Screw	2
28	320154	Washer	2
29	292678	Lockwasher	2
30	292667	Nut	2
31	117989	Hose	1
32	369815	Clamp	2
33	1475409	Clamp	1
34	136749	Capscrew	2
35	239503	Nut	4
36	1482734	Hose	1
37	1482482	Bracket	1
38	1501952	Regulator (Lockout)	1
39	214364	Capscrew	2
40	16143	Fitting	1
41	141776	Fitting	1
42	63108	Fitting	1
43	16788	Fitting	1
44	287817	Capscrew	2
45	292680	Lockwasher	2
46	136687	Nut	1
47	1469531	Bracket	1
48	1487190	Switch (Idle)	1
49	1487192	Switch (W.O.T.)	1

©2004 HYSTER COMPANY

FUEL SYSTEM
LPG
EPA COMPLIANT
(S/N PENDING PER ECN 74449⇒)

ITEM	PART NO.	DESCRIPTION	QTY
50	1487969	Clamp	1
51	366473	Clamp	2

©2004 HYSTER COMPANY

NOTES

CARBURETOR (Figure 3-12)
LPG 2.0L OPEN LOOP

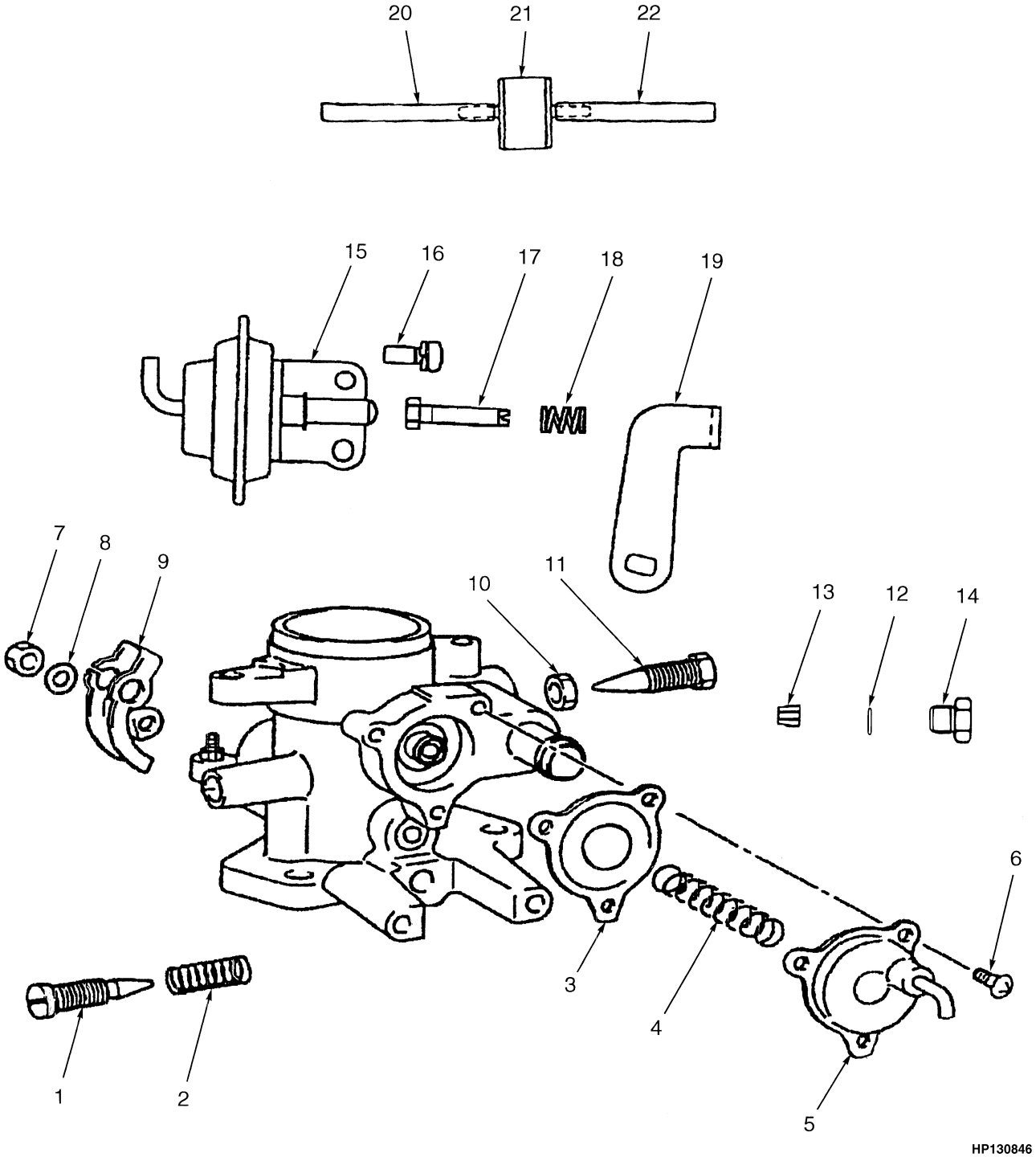

©2004 HYSTER COMPANY

CARBURETOR
LPG 2.0L OPEN LOOP

ITEM	PART NO.	DESCRIPTION	QTY
	1494236	Carburetor	1
1	1493247	Screw	1
2	1493248	Spring	1
3	1493249	Diaphragm	1
4	1493250	Spring	1
5	1493251	Cover	1
6	1493252	Screw	3
7	1493253	Nut	1
8	1493254	Washer	1
9	1493255	Lever	1
10	1493256	Nut	1
11	1493257	Screw	1
12	1493258	Gasket	1
13	1493259	Plug	1
14	1493260	Jet	1
15	1493261	Diaphragm	1
16	1493262	Screw	2
17	1493263	Bolt	1
18	1493264	Spring	1
19	1493265	Lever	1
20	1493266	Hose	1
21	1350400	Valve	1
22	1494279	Hose (Vacuum)	1

©2004 HYSTER COMPANY

REGULATOR (Figure 3-13)
OPEN LOOP

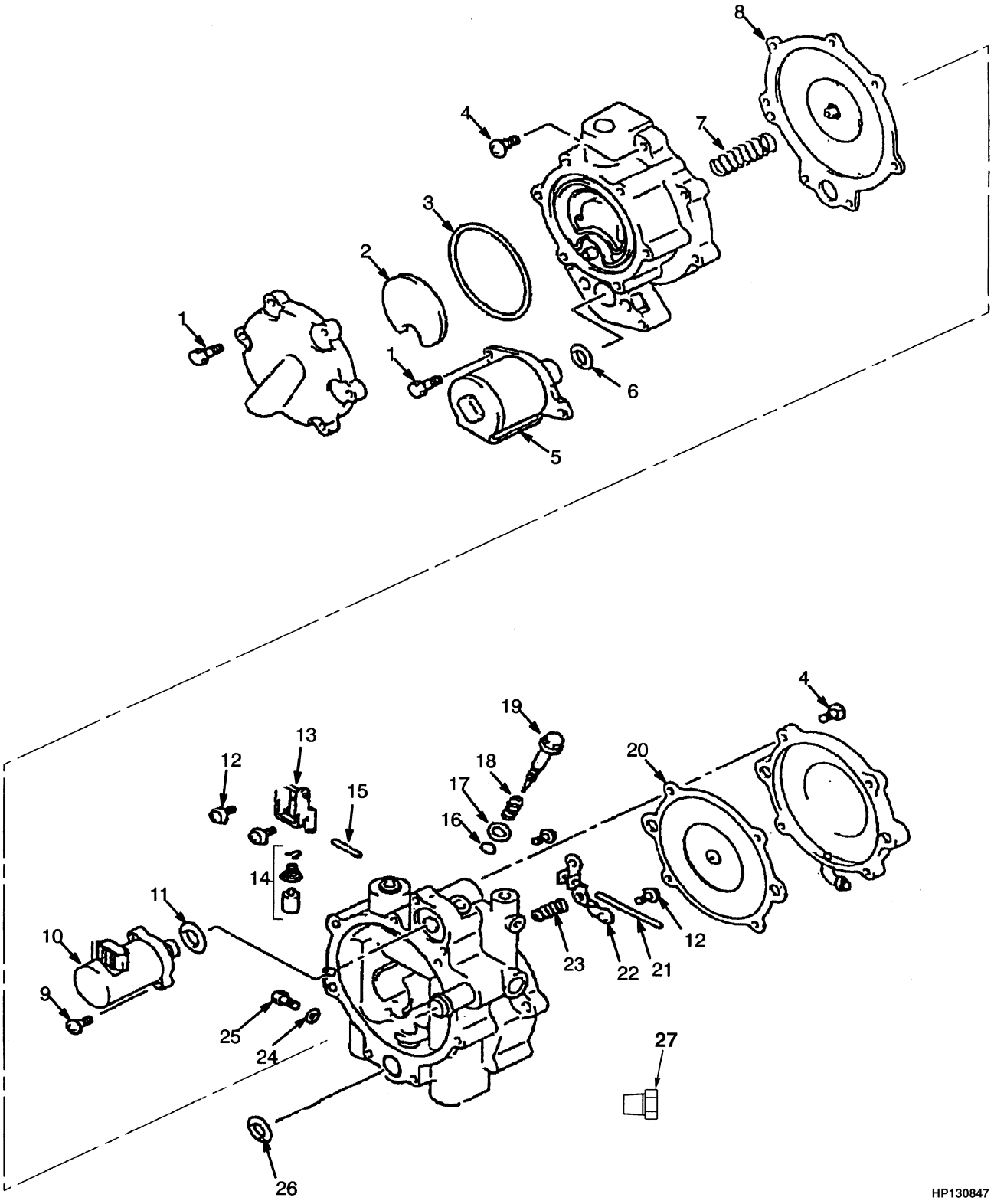

©2004 HYSTER COMPANY

REGULATOR
OPEN LOOP

ITEM	PART NO.	DESCRIPTION	QTY
	1469346	Regulator (Open Loop)	1
1	1479503	Bolt	8
2	1479504	Filter	1
3	1479505	O-Ring	1
4	1479507	Screw	11
5	1479508	Valve	1
6	1479509	O-Ring	1
7	1479510	Spring (First Regulator)	1
8	1479511	Diaphragm (First Regulator)	1
9	1479513	Screw	2
10	1496172	Valve (Solenoid)	1
11	1479514	O-Ring	1
12	1479515	Screw	4
13	1479516	Lever	1
14	1479517	Valve	1
15	1479518	Pin	1
16	1479522	O-Ring	1
17	1479523	Washer	1
18	1479524	Spring (Idle Adjust)	1
19	1479525	Screw (Idle Adjust)	1
20	1479529	Diaphragm (Second Regulator)	1
21	1479528	Pin	1
22	1479527	Valve	1
23	1479526	Spring (Second Regulator)	1
24	1479520	Gasket	1
25	1479519	Plug	1
26	1479521	O-Ring	1
27	1493624	Plug	1
	1479530	Valve Kit (Includes Items 14-15, 21-22)	1
	1479531	Diaphragm Kit (Includes Items 2-3, 6, 8, 11, 16, 20, 26)	1

©2004 HYSTER COMPANY

CARBURETOR (Figure 3-14)
LPG CLOSED LOOP

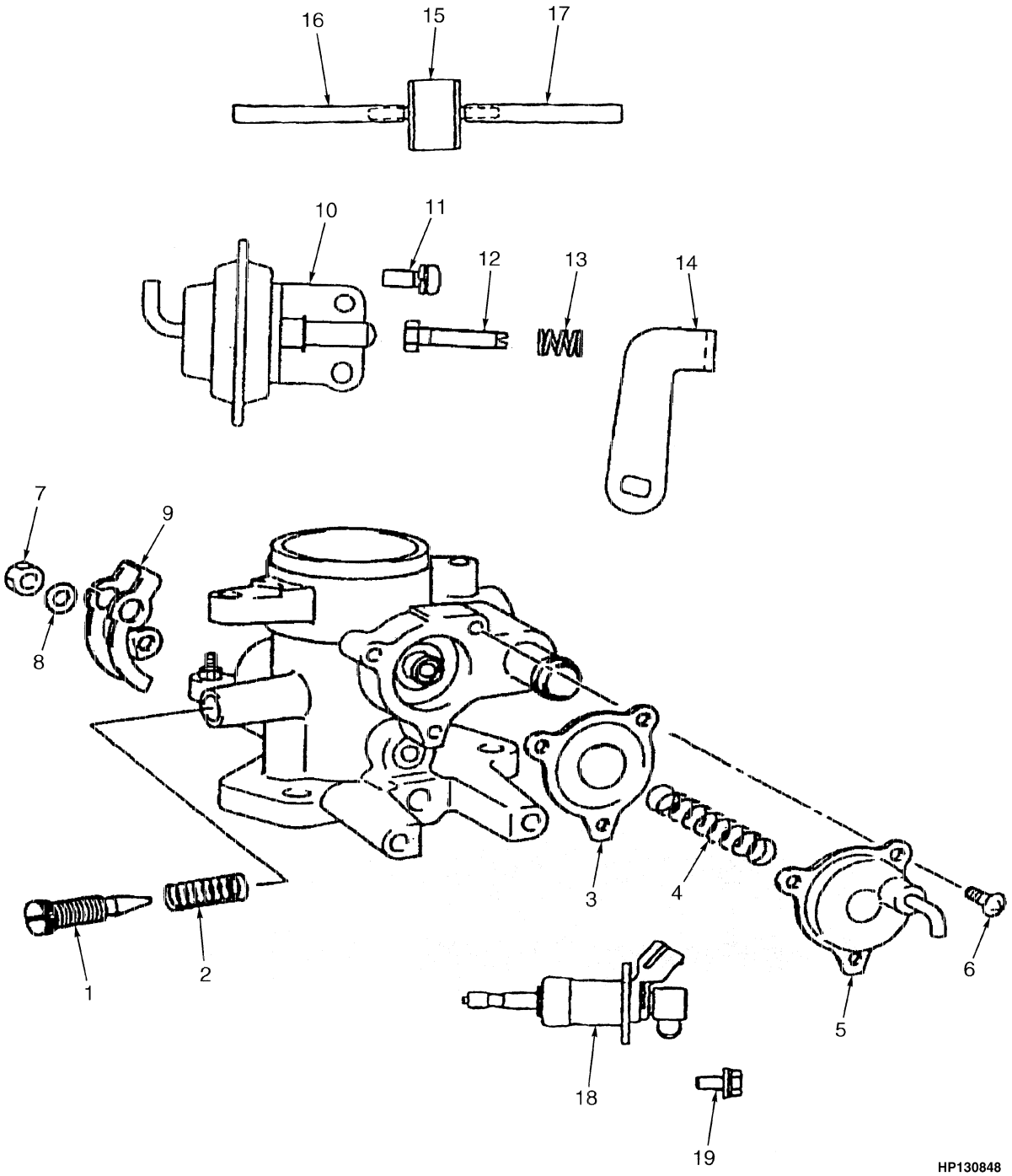

©2004 HYSTER COMPANY

CARBURETOR
LPG CLOSED LOOP

ITEM	PART NO.	DESCRIPTION	QTY
	1500223	Carburetor	1
1	1493247	Screw	1
2	1493248	Spring	1
3	1493249	Diaphragm	1
4	1493250	Spring	1
5	1493251	Cover	1
6	1493252	Screw	3
7	1493253	Nut	1
8	1493254	Washer	1
9	1493255	Lever	1
10	1493261	Diaphragm	1
11	1493262	Screw	2
12	1493263	Bolt	1
13	1493264	Spring	1
14	1493265	Lever	1
15	1350400	Valve	1
16	1493266	Hose	1
17	1493267	Hose	1
18	1495124	Injector Assembly	1
19	1495125	Bolt	1

©2004 HYSTER COMPANY

REGULATOR (Figure 3-15)
CLOSED LOOP

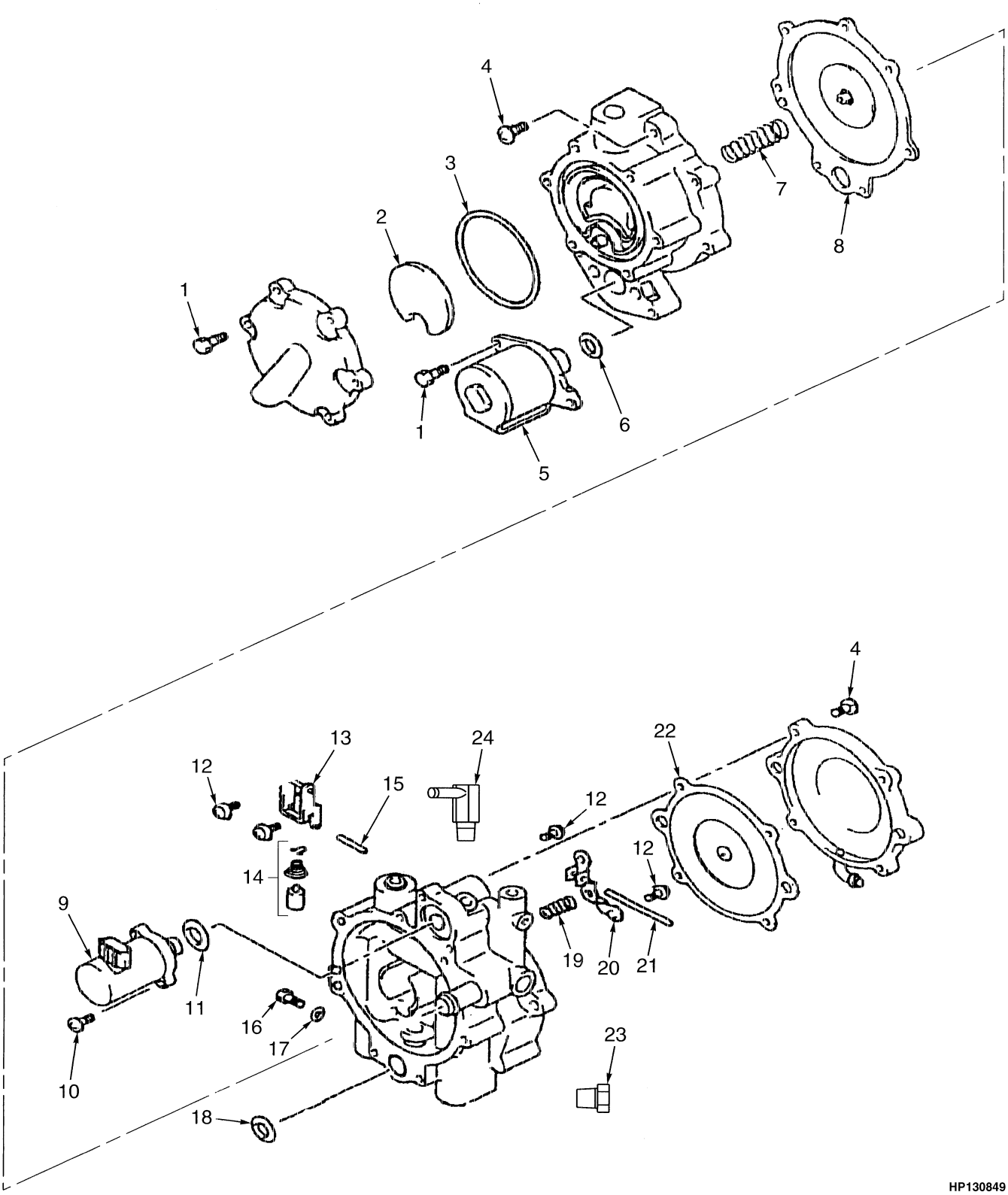

©2004 HYSTER COMPANY

REGULATOR
CLOSED LOOP

ITEM	PART NO.	DESCRIPTION	QTY
	1487199	Regulator	1
1	1479503	Bolt (With Washer)	8
2	1479504	Filter	1
3	1479505	O-Ring	1
4	1479507	Screw	11
5	1479508	Valve	1
6	1479509	O-Ring	1
7	1479510	Spring (First Regulator)	1
8	1479511	Diaphragm (First Regulator)	1
9	1496172	Valve (Solenoid)	1
10	1479513	Screw	2
11	1479514	O-Ring	1
12	1479515	Screw	4
13	1479516	Lever	1
14	1479517	Valve	1
15	1479518	Pin	1
16	1479519	Plug	1
17	1479520	Gasket	1
18	1479521	O-Ring	1
19	1479526	Spring (Second Regulator)	1
20	1479527	Valve	1
21	1479528	Pin	1
22	1479529	Diaphragm (Second Regulator)	1
23	1493624	Plug	1
24	1495121	Fitting	1
	1479530	Valve Kit (Includes Items 14-15, 20)	1
	1479531	Diaphragm Kit (Includes Items 2-3, 6, 8, 11, 18, 22)	1

©2004 HYSTER COMPANY

FUEL TANK AND LINES (Figure 3-16)
GASOLINE

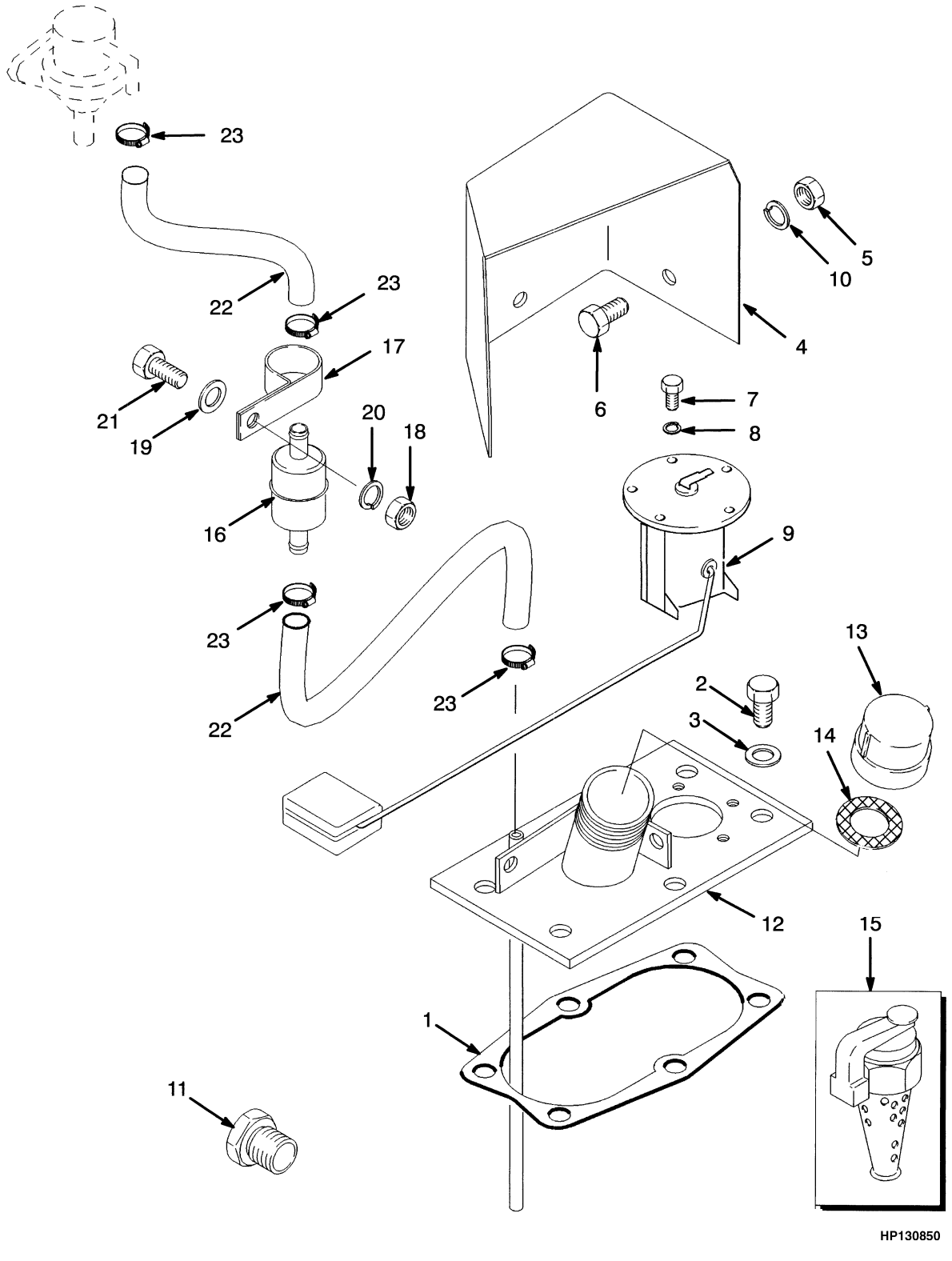

©2004 HYSTER COMPANY

FUEL TANK AND LINES
GASOLINE

ITEM	PART NO.	DESCRIPTION	QTY
1	2021672	Gasket	1
2	2021233	Capscrew	6
3	2021673	Washer	6
4	2022899	Splash Guard	1
5	136687	Nut	2
6	292500	Capscrew	2
7	2021687	Bolt	2
8	320155	Washer	5
9	2021686	Fuel Sender	1
9	1367108	Gasket	1
10	197068	Washer	4
11	17636	Fitting	1
12	2039230	Cover	1
13	2021679	Cap	1
14	2021683	Gasket	1
15	120299	Fuel Cap (Type GS)	1
15	2021685	Gasket (Type GS)	1
16	1304950	Fuel Filter	1
17	335047	Clamp	1
18	239503	Nut	1
19	320157	Washer	1
20	292681	Lockwasher	1
21	136749	Capscrew	1
22	271862	Hose	1
23	166857	Clamp	4

©2004 HYSTER COMPANY

NOTES

4 ELECTRICAL SYSTEM

SECTION 4
ELECTRICAL SYSTEM

DESCRIPTION	PAGE
ALTERNATOR	
GASOLINE AND LPG	4-42
TYPE GS AND LPS	4-44
BATTERY	
GASOLINE AND LPG	4-12
DISTRIBUTOR	
GASOLINE AND LPG	4-38
ELECTRICAL	
COWL	4-18
ELECTRICAL SYSTEM	
FRAME	
GASOLINE AND LPG	4-2
ENGINE ELECTRICAL SYSTEM	
FRAME	
TYPE GS AND LPS	4-6
INSTRUMENT CLUSTER	
⇒S/N D010H-02793A	4-14
S/N D010H-02794A⇒	4-16
LIGHTS, LED BACKUP AND BRAKE	
S/N PENDING PER ECN 84909⇒	4-10
STARTER	
GASOLINE AND LPG	4-40
TAIL LIGHT	
⇒S/N PENDING PER ECN 84909	4-8
WIRE HARNESS	
CLUSTER POWER	4-23
COWL	4-21
ENGINE	
GASOLINE AND LPG	4-27
LPG WITH LOW EMISSIONS	4-28
LPS WITH LOW EMISSIONS	4-32
TYPE GS AND LPS	4-30
FORWARD AND REVERSE	4-24
INSTRUMENT PANEL	4-22
MONOTROL PEDAL	4-25
REAR LIGHTS	
S/N PENDING PER ECN 84909⇒	4-36
SEAT SWITCH	4-26
TAIL LIGHT	
⇒S/N PENDING PER ECN 84909	4-34

©2004 HYSTER COMPANY

ELECTRICAL SYSTEM (Figure 4-1)
FRAME
GASOLINE AND LPG

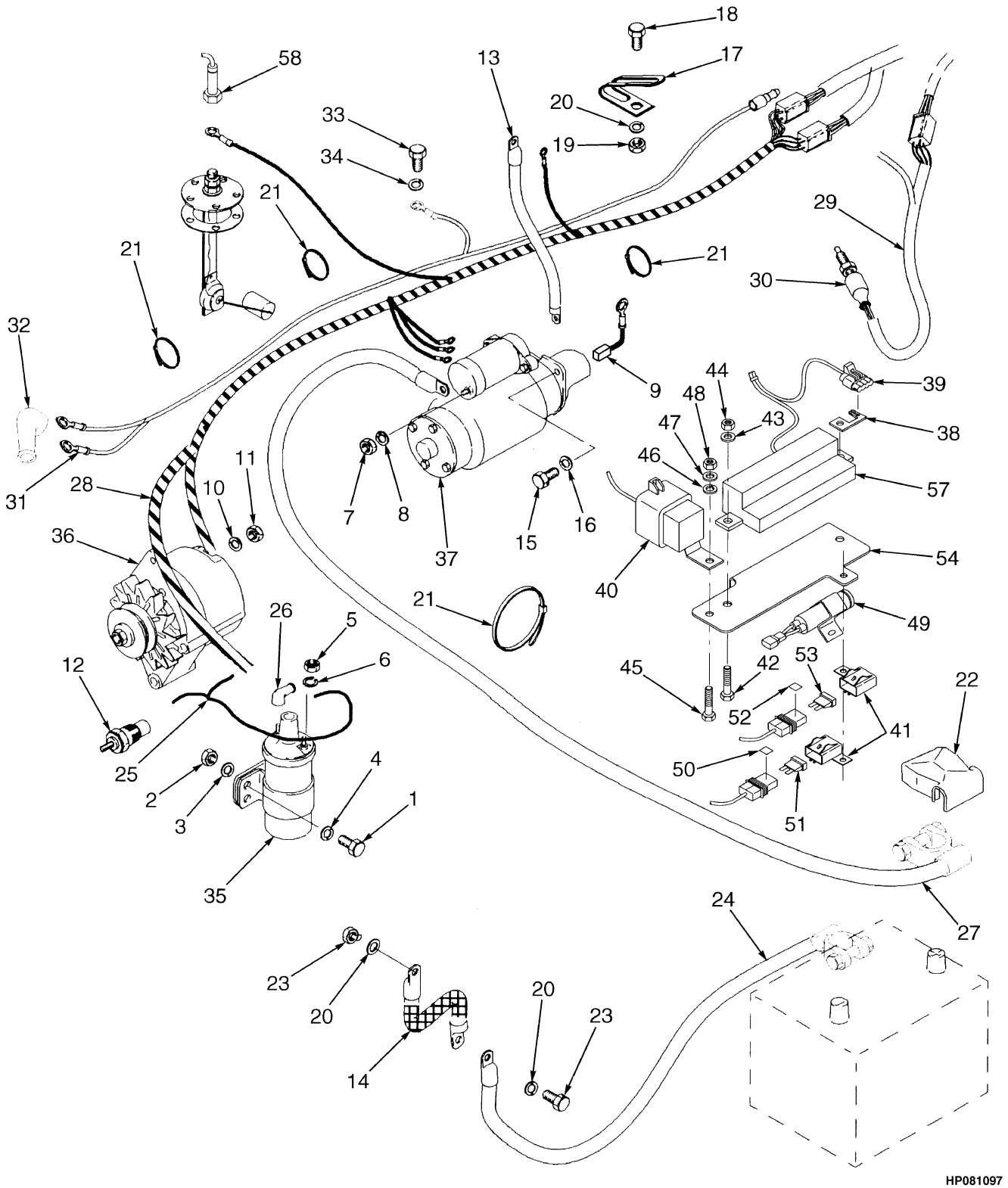

©2004 HYSTER COMPANY

ELECTRICAL SYSTEM
FRAME
GASOLINE AND LPG

KEY:
A: Gasoline
B: LPG

ITEM		PART NO.	DESCRIPTION	QTY A	QTY B
1		292500	Capscrew	2	2
2		136687	Nut	2	2
3		292680	Lockwasher	2	2
4		320156	Washer	2	2
5		292668	Nut	1	1
6		292679	Lockwasher	1	1
7		239503	Nut	1	1
8		292681	Lockwasher	1	1
9		2026637	Fusible Link	1	1
10		292680	Lockwasher	1	1
11		2022614	Nut	1	1
12		1367633	Temperature Sender	1	1
13		2021986	Battery Cable	1	1
14		2021996	Wire Harness	1	1
15		302285	Capscrew	1	1
16		292682	Lockwasher	1	1
17		2022013	Clamp	5	5
18		136681	Capscrew	1	1
19		239503	Nut	1	1
20		292681	Lockwasher	3	3
21		137852	Strap Clamp	AR	AR
22		257241	Boot	1	1
23		316678	Screw	1	1
24		2021985	Battery Cable	1	1
25		1483318	Wire Harness (Speed Limiter)	..	1
26		2022502	Boot	1	1
27		2021987	Battery Cable	1	1
28		2026640	Wire Harness (Engine) (☞ Figure 4-15)	1	1
28		1469411	Wire Harness (Engine) (☞ Figure 4-16)	1	1
29		2021996	Wire Harness (Seat Switch) (☞ Figure 4-14)	1	1
30	**a**	2021434	Brake Switch	1	1
31		2022003	Wire Harness (LPG)	..	1
32		190383	Boot	..	1
33		316678	Screw	..	1
34		292681	Lockwasher	..	1
35		2021440	Ignition Coil	1	1
36		1450928	Alternator (☞ Figure 4-23)	1	1
37		2314322	Starter (☞ Figure 4-22)	1	1
38		1482699	Clip	..	1
39	**c**	1482662	Connector	..	1
40	**c**	1375794	Relay	..	1
41	**c**	1330293	Cover (Fuse)	..	2
42	**c**	292501	Capscrew	..	3
43	**c**	292680	Lockwasher	..	3
44	**c**	136687	Nut	..	3

©2004 HYSTER COMPANY

ELECTRICAL SYSTEM
FRAME
GASOLINE AND LPG

ITEM		PART NO.	DESCRIPTION	QTY A	QTY B
45	**c**	302246	Screw	..	2
46	**c**	320155	Washer	..	2
47	**c**	292679	Lockwasher	..	2
48	**c**	292668	Nut	..	2
49	**c**	1482460	Resistor	..	1
50	**c**	1469529	Label (1A)	..	1
51	**c**	1378661	Fuse (1 Amp)	..	1
52	**c**	1469530	Label (15A)	..	1
53	**c**	1310630	Fuse (15 Amp)	..	1
54	**c**	1486605	Bracket	..	1
55	**c**	292681	Lockwasher	..	1
56	**c**	316678	Screw	..	1
57	**c**	1482459	Controller	..	1
57	**bd**	1553980	Controller	..	1
58	**c**	1487191	Oxygen Sensor	..	1
60		1482668	Plug	..	1

FOOTNOTES:
a Monotrol Pedal
b With EPA Compliant
c With Low Emissions
d S/N PENDING PER ECN 74449 ⇒

©2004 HYSTER COMPANY

NOTES

ENGINE ELECTRICAL SYSTEM (Figure 4-2)
FRAME
TYPE GS AND LPS

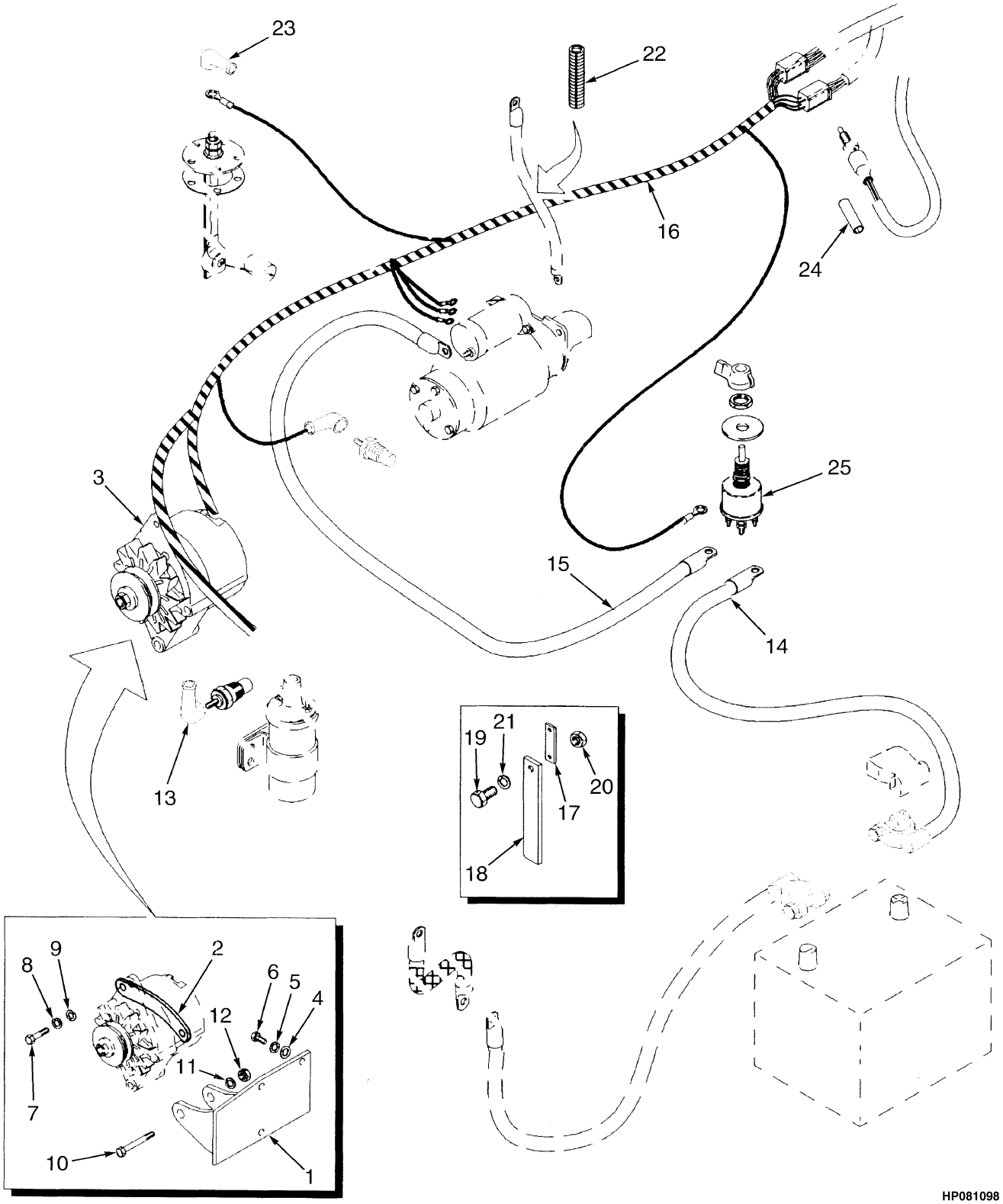

©2004 HYSTER COMPANY

ENGINE ELECTRICAL SYSTEM
FRAME
TYPE GS AND LPS

ITEM	PART NO.	DESCRIPTION	QTY
1	2021966	Bracket	1
2	2021968	Strap	1
3	2021963	Alternator (☞ Figure 4-24)	1
3	2022525	Alternator (☞ Figure 4-24)	1
4	320159	Washer	3
5	292682	Lockwasher	3
6	1368979	Capscrew	3
7	18497	Capscrew	1
8	292681	Lockwasher	1
9	320157	Washer	1
10	292532	Capscrew	1
11	320161	Washer	1
12	2021237	Nut	1
13	2022502	Boot	1
14	2021988	Battery Cable	1
15	2021989	Battery Cable	1
16	1469412	Wire Harness (Engine) (☞ Figure 4-17)	1
17	2022008	Plate	1
18	2022009	Strap	1
19	136681	Capscrew	1
20	239503	Nut	1
21	320157	Washer	1
22	2022010	Protective Sleeve	1
23	2022503	Cap	1
24	2022011	Protective Sleeve	1
25	1324517	Switch (Disconnect)	1

©2004 HYSTER COMPANY

TAIL LIGHT (Figure 4-3)
(⇒S/N PENDING PER ECN 84909)

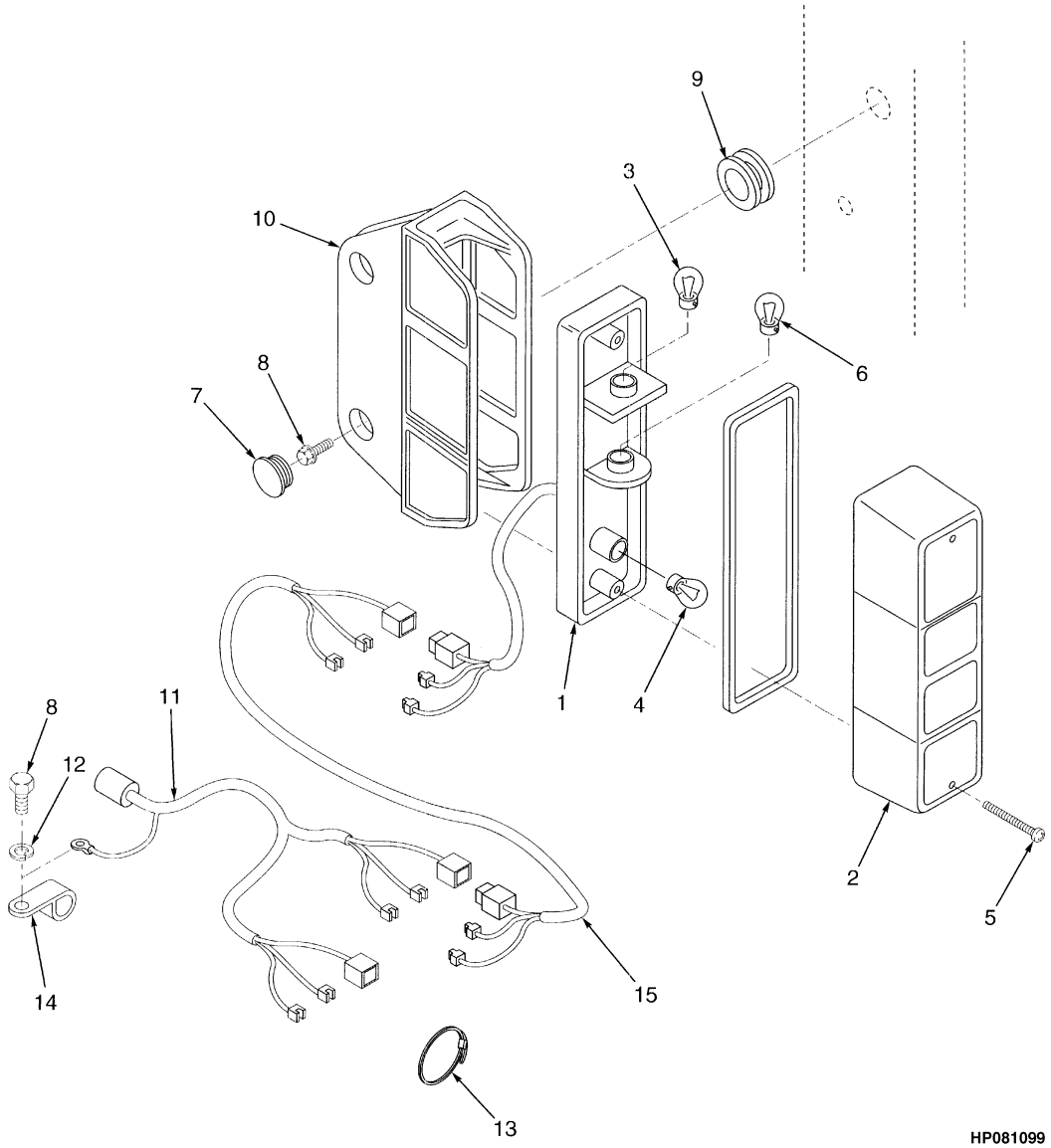

©2004 HYSTER COMPANY

TAIL LIGHT
(⇒S/N PENDING PER ECN 84909)

ITEM		PART NO.	DESCRIPTION	QTY
1	**a**	1343887	Light Assembly	2
1	**b**	2048268	Light Assembly	2
2	**a**	1344798	Lens	1
2	**b**	2048368	Lens	1
3		207495	Bulb (12 Volt)	1
4		1344799	Bulb	1
5		1339127	Screw	2
6		177521	Bulb (12 Volt)	1
7		1450356	Plug	4
8		329067	Screw	5
9		1367639	Grommet	2
10		1450293	Bracket	2
11		2021997	Wire Harness (☞ Figure 4-19)	1
12		296360	Washer	1
13		137852	Strap Clamp	AR
14		2022013	Clamp	1
15		2022835	Wire Harness	1

FOOTNOTES:
a ⇒ S/N D010H-02143Z
b S/N D010H-02144Z ⇒

LIGHTS, LED BACKUP AND BRAKE (Figure 4-4)
(S/N PENDING PER ECN 84909⇒)

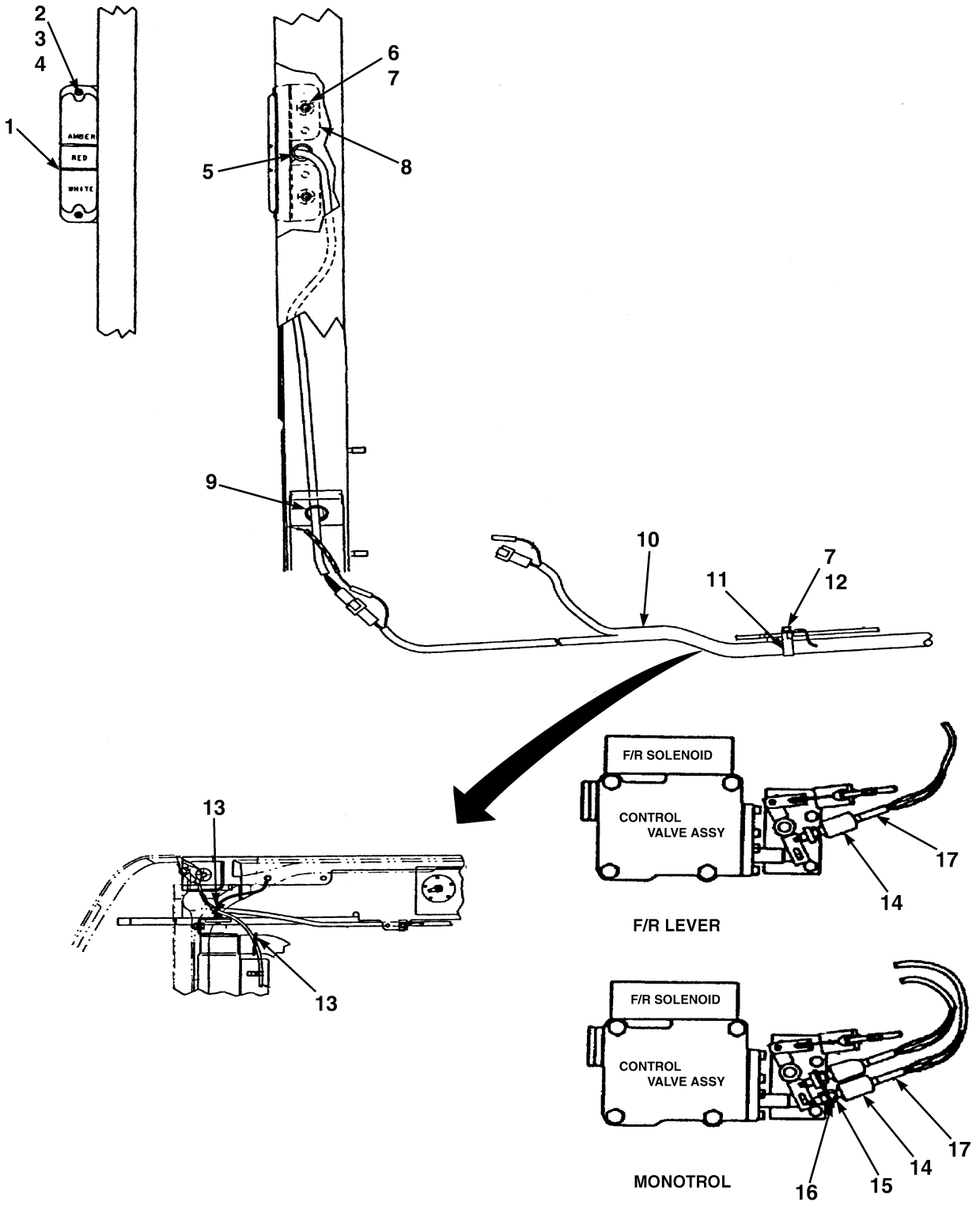

HP081451

©2004 HYSTER COMPANY

LIGHTS, LED BACKUP AND BRAKE
(S/N PENDING PER ECN 84909⇒)

ITEM		PART NO.	DESCRIPTION	QTY
1		1552702	Light (LED)	2
2		302037	Screw	4
3		320155	Washer	4
4		302398	Locknut	4
5		2062461	Grommet	2
6		1450356	Plug	4
7		329067	Screw	5
8		1555680	Bracket (LED Light)	2
9		1367639	Grommet	2
10		1559737	Wire Harness (Rear Lights) (☞ Figure 4-20)	1
11		2022013	Clamp	1
12		292681	Lockwasher	1
13		137852	Strap Clamp	3
14		2021434	Brake Switch	1
15	**a**	2021981	Bracket	1
16	**a**	296129	Nut	1
17	**b**	373885	Conduit	AR

FOOTNOTES:
a Monotrol
b U.L. Safety

BATTERY (Figure 4-5)
GASOLINE AND LPG

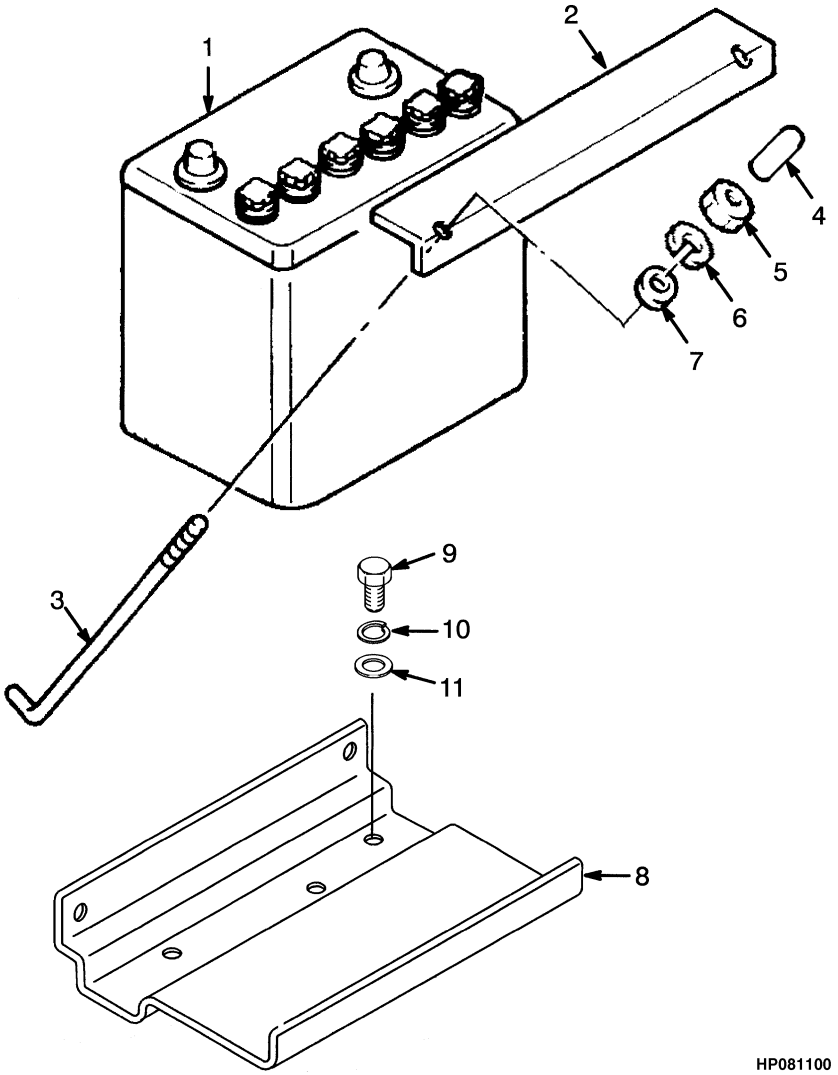

ITEM	PART NO.	DESCRIPTION	QTY
1	2314251	Battery	1
2	2021943	Clamp	1
3	309124	Link (Battery Holddown)	2
4	1326939	Cap	2
5	136687	Nut	2
6	292680	Lockwasher	2
7	320156	Washer	2
8	2021947	Battery Tray	1
9	316678	Screw	3
10	292681	Lockwasher	3
11	320157	Washer	3

©2004 HYSTER COMPANY

NOTES

INSTRUMENT CLUSTER (Figure 4-6)
(⇒S/N D010H-02793A)

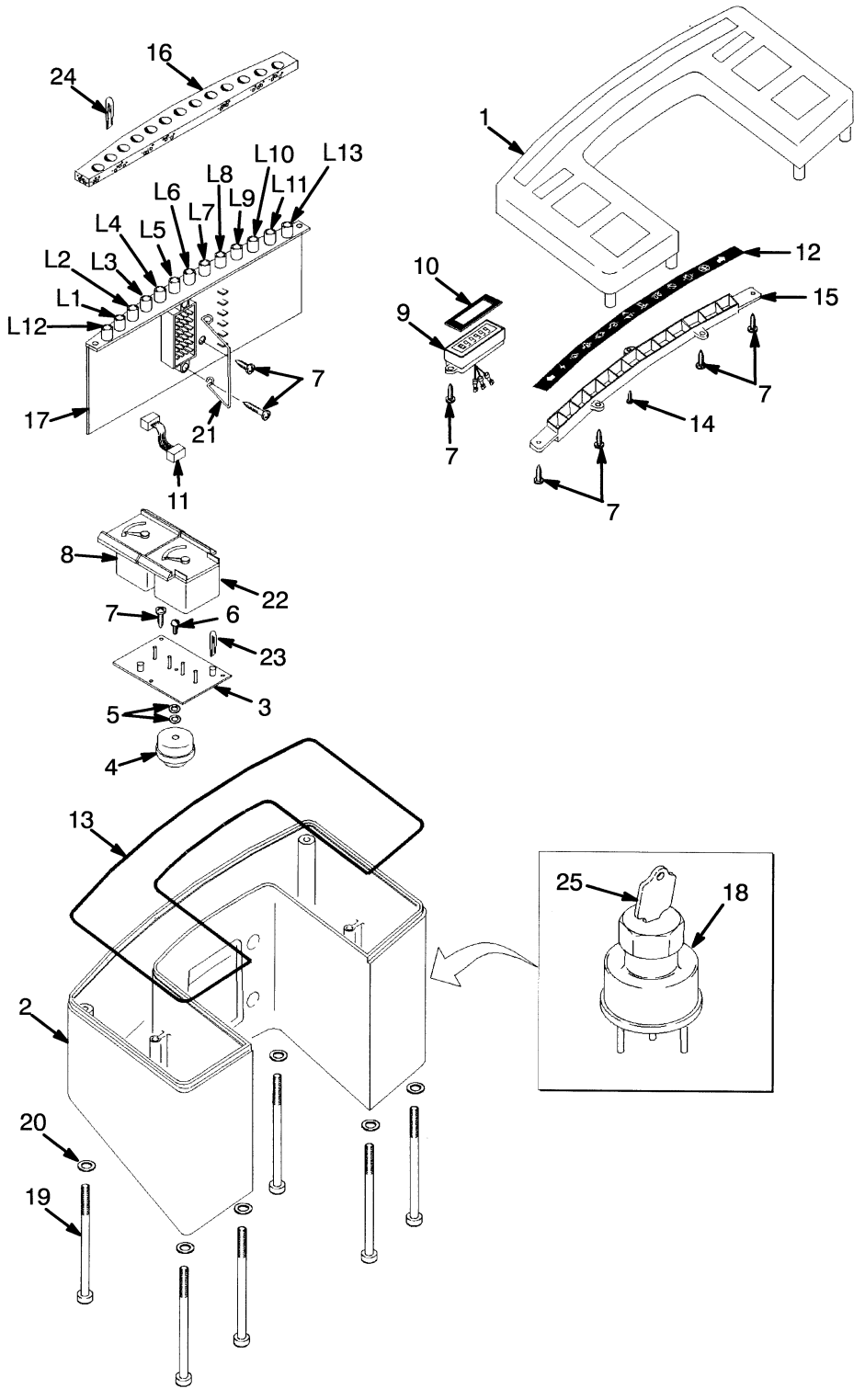

HP081150

©2004 HYSTER COMPANY

INSTRUMENT CLUSTER
(⇒S/N D010H-02793A)

ITEM	PART NO.	DESCRIPTION	QTY
	1335975	Instrument Cluster (Gasoline)	1
	1335976	Instrument Cluster (LPG)	1
	1482741	Instrument Cluster (LPG with California Emissions)	1
1	1354775	Cover (Top)	1
2	1354776	Case	1
3	1354049	Circuit Board (LH)	1
4	1354804	Alarm	1
5	1354780	Washer	1
6	1371203	Screw	1
7	227131	Screw	17
8	1354778	Temperature Gauge (Water)	1
9	1354783	Hourmeter	1
9	1367574	Cable Assembly	1
10	1354782	Gasket	1
11	1354805	Wire Harness (Jumper)	2
12	1354784	Filter	1
13	1354785	Gasket	1
14	1354786	Screw	1
15	1354787	Housing	1
16	1354788	Gasket (Foam)	1
17	1354806	Circuit Board	1
18	1337114	Ignition Switch	1
19	1453153	Screw Kit	1
20	320154	Washer	8
21	1358858	Spring	1
22	1354777	Fuel Gauge	1
23	1354796	Lamp	1
24	1357367	Lamp	8
25	1337197	Key Set	1
26	1354791	Panel (Upper Window)	1
26	1354800	Adhesive	1
27	1354798	Adhesive	1
27	1354799	Panel (Lower Window)	1

©2004 HYSTER COMPANY

INSTRUMENT CLUSTER (Figure 4-7)
(S/N D010H-02794A⇒)

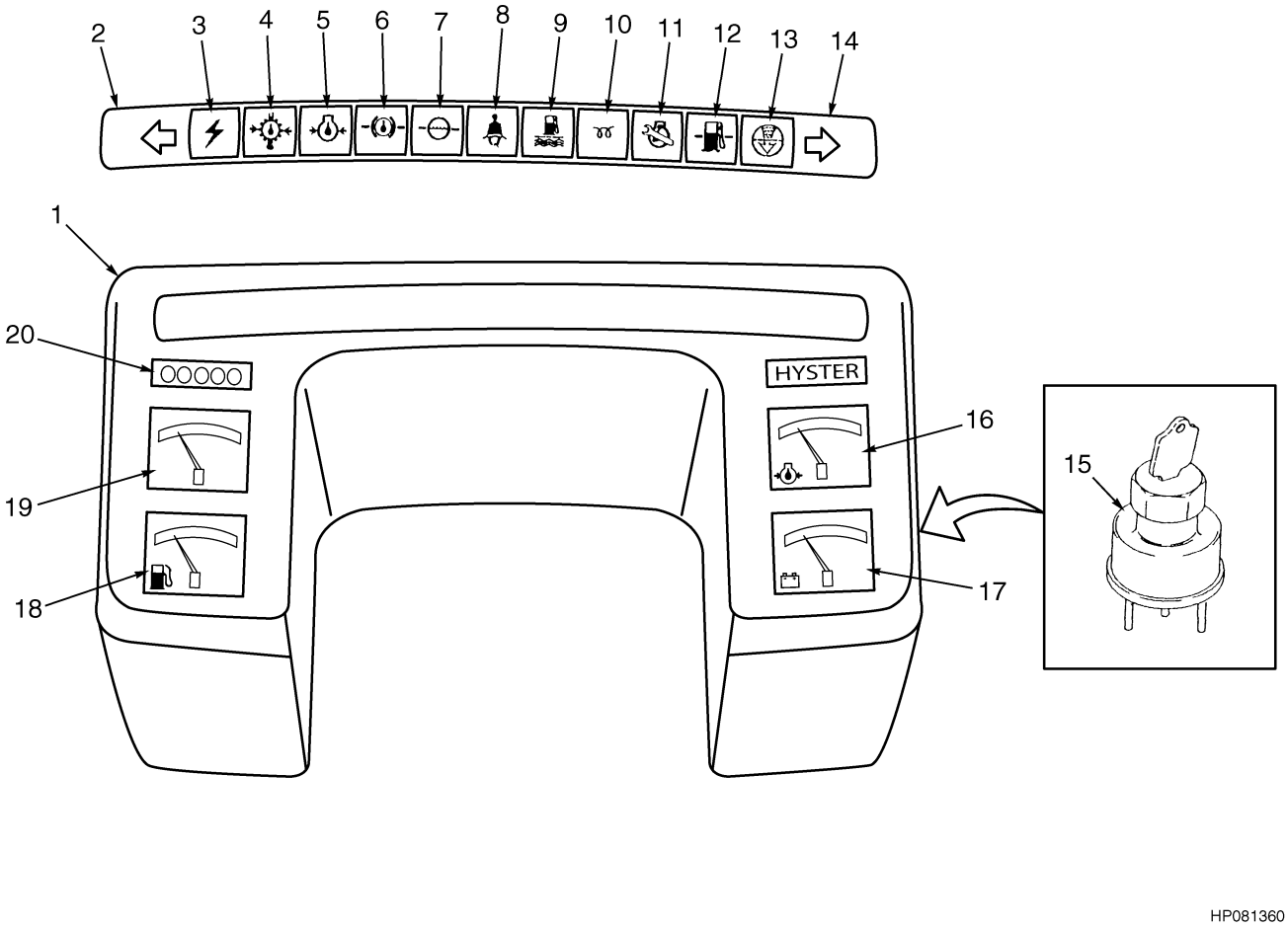

HP081360

©2004 HYSTER COMPANY

INSTRUMENT CLUSTER
(S/N D010H-02794A⇒)

ITEM		PART NO.	DESCRIPTION	QTY
1		1510314	Instrument Cluster (Gasoline)	1
1	**d**	1510315	Instrument Cluster (LPG)	1
1	**c**	1510317	Instrument Cluster (LPG)	1
2		. . . . .	Circuit (LH Turn Signal)	1
3		. . . . .	Circuit (Charge)	1
4		. . . . .	Circuit (Transmission Oil Temperature/Pressure)	1
5		. . . . .	Circuit (Engine Oil Pressure)	1
6		. . . . .	Circuit (Brake Fluid Level)	1
7		. . . . .	Circuit (Radiator Coolant Level)	1
8		. . . . .	Circuit (Fasten Seat Belt)	1
9	**a**	. . . . .	Circuit (Water Seperator)	1
10	**a**	. . . . .	Circuit (Glow Plug Indicator)	1
11		. . . . .	Circuit (Service Engine)	1
12	**b**	. . . . .	Circuit (Low Fuel Level)	1
13		. . . . .	Circuit (Air Cleaner Restriction)	1
14		. . . . .	Circuit (RH Turn Signal)	1
15		1530583	Ignition Switch	1
15		1337197	Key Set	1
16		. . . . .	Gauge (Engine Oil Pressure)	1
17		. . . . .	Gauge (Voltmeter)	1
18		. . . . .	Gauge (Fuel Level)	1
19		. . . . .	Gauge (Coolant Temperature)	1
20		. . . . .	Hourmeter	1

FOOTNOTES:
a Diesel
b LPG
c Premium
d Standard

©2004 HYSTER COMPANY

ELECTRICAL (Figure 4-8)
COWL

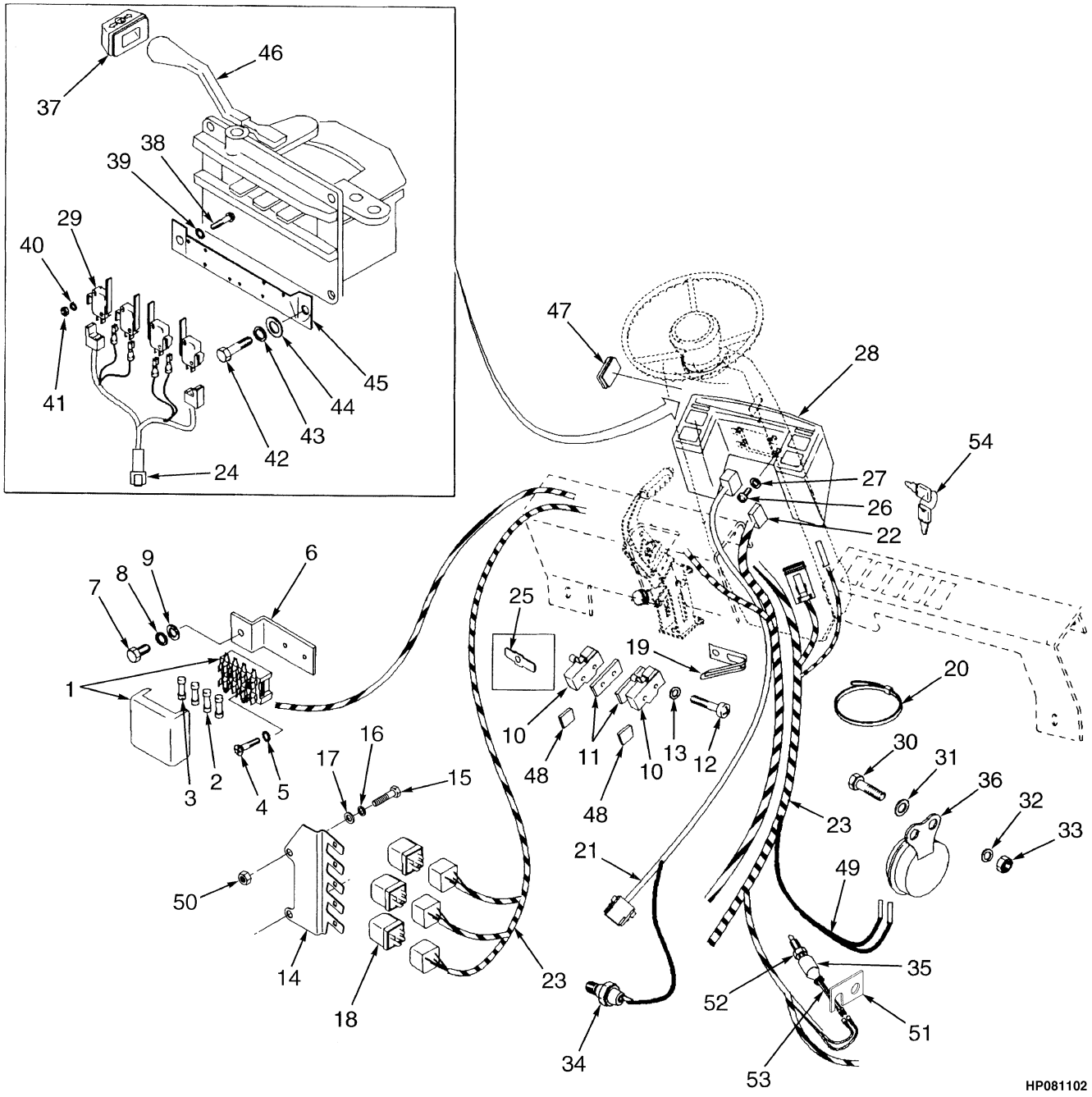

©2004 HYSTER COMPANY

ELECTRICAL
COWL

KEY:
A: Type G and LP
B: Type GS and LPS

ITEM		PART NO.	DESCRIPTION	QTY A	QTY B
1		2021952	Fuse Box	1	1
2		2021953	Fuse (10 Amp)	3	3
3		21778	Fuse (20 Amp)	1	1
4		302035	Capscrew	2	2
5		292679	Lockwasher	2	2
6		2021954	Bracket	1	1
7		287817	Capscrew	1	1
8		292680	Lockwasher	1	1
9		320156	Washer	1	1
10		370868	Switch (Two-Way)	2	2
11		316132	Spacer	2	2
12		86510	Screw	4	4
13		138573	Lockwasher	4	4
14		2041638	Bracket	1	1
15		287851	Capscrew	2	2
16		292681	Lockwasher	2	2
17		320157	Washer	2	2
18		2314806	Relay	3	3
19		2022013	Clamp	1	1
20		137852	Strap Clamp	AR	AR
21		1469425	Wire Harness (Instrument Panel) (☞ Figure 4-10)	1	1
22		2030219	Wire Harness (Power Cluster) (☞ Figure 4-11)	1	1
23		2041642	Wire Harness (Cowl) (☞ Figure 4-9)	1	..
23		2041643	Wire Harness (Cowl) (☞ Figure 4-9)	1	..
24	**a**	1352088	Wire Harness (Forward/Reverse) (☞ Figure 4-12)	1	1
25	**a**	1361121	Connector	1	1
26		292500	Capscrew	4	4
27		292680	Lockwasher	4	4
28		. . . . .	Instrument Panel (☞ Figure 4-6)	1	1
29	**a**	1343636	Switch	4	4
30		148962	Capscrew	2	2
31		292680	Lockwasher	2	2
32		292680	Lockwasher	2	2
33		292668	Nut	2	2
34		1367633	Temperature Sender	1	1
35	**ac**	2021434	Brake Switch	1	1
35	**bc**	2021434	Brake Switch (Neutral Start)	2	2
36		1495185	Horn	1	..
36		1495936	Horn (GS, LPS)	..	1
37		1343596	Bracket	1	1
38		220426	Screw	8	8
39		18419	Lockwasher	8	8
40		53162	Lockwasher	8	8
41		16865	Nut	8	8
42		292500	Capscrew	4	4
43		292680	Lockwasher	4	4

©2004 HYSTER COMPANY

ELECTRICAL
COWL

ITEM		PART NO.	DESCRIPTION	QTY A	QTY B
44		320156	Washer	4	4
45		1343595	Plate	1	1
46		1347004	Shift Lever Assembly (☞ Figure 6-2)	1	1
47	**b**	1343597	Plug	1	1
48		387869	Boot	..	2
49		1478836	Wire Harness	1	1
50		239503	Nut	1	1
51		2021981	Bracket	1	1
52		296129	Nut	2	2
53	**bc**	373885	Conduit	..	1
53	**ab**	373885	Conduit	..	2
54		1337197	Key Set	1	1

FOOTNOTES:
a Forward and Reverse Lever
b With Monotrol Pedal
c With Rear Lights

©2004 HYSTER COMPANY

WIRE HARNESS (Figure 4-9)
COWL

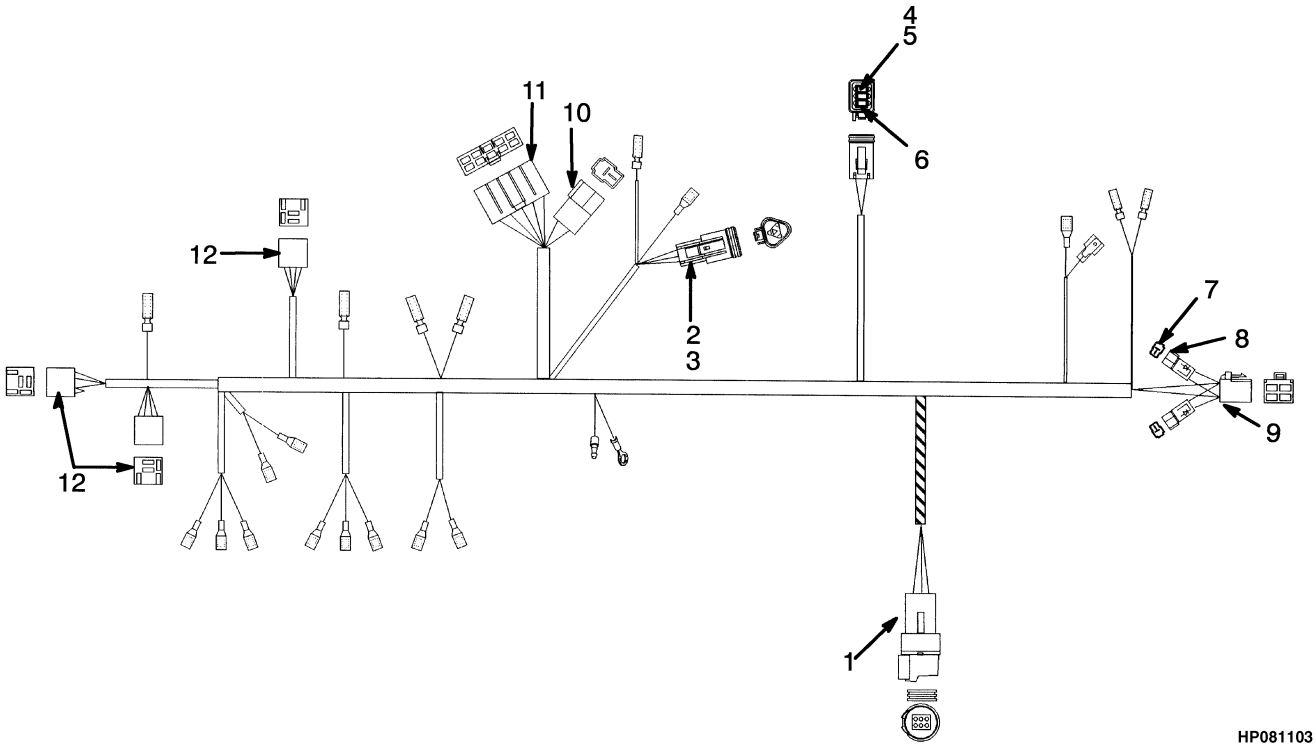

ITEM	PART NO.	DESCRIPTION	QTY
	2041642	Wire Harness (Cowl) (Type G and LP)	1
	2041643	Wire Harness (Cowl) (Type GS and LPS)	1
1	2022622	Connector	1
2	1330426	Secondary Lock	1
3	1330420	Connector	1
4	1330422	Connector (Monotrol Pedal)	1
5	1330428	Lock	1
6	1330439	Plug	1
7	2022629	Diode	1
8	1361304	Connector	1
9	2314777	Connector	1
10	2039248	Connector	1
11	2044300	Connector	1
12	2044297	Connector	3

WIRE HARNESS (Figure 4-10)
INSTRUMENT PANEL

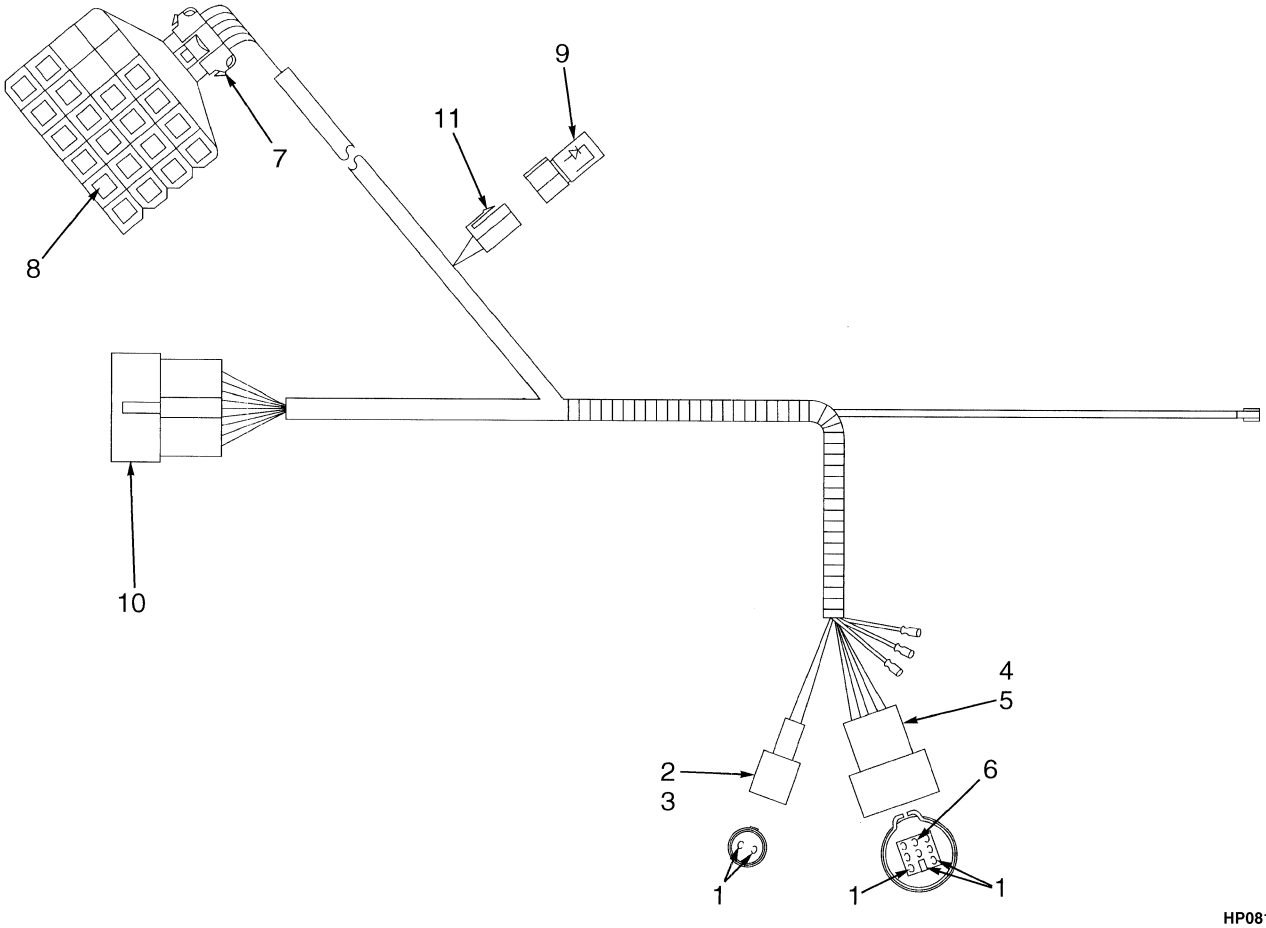

ITEM	PART NO.	DESCRIPTION	QTY
	1469425	Wire Harness (Instrument Panel)	1
1	2022623	Connector	10
2	1351070	Connector (Frame)	1
3	1351076	Seal	1
4	2022626	Connector (Frame)	1
5	2022627	Seal	1
6	2022628	Plug	1
7	1352599	Housing (Instrument Panel)	1
8	1340958	Connector	19
9	2022629	Diode	1
10	2044301	Connector	1
11	1308269	Decal	1

©2004 HYSTER COMPANY

WIRE HARNESS (Figure 4-11)
CLUSTER POWER

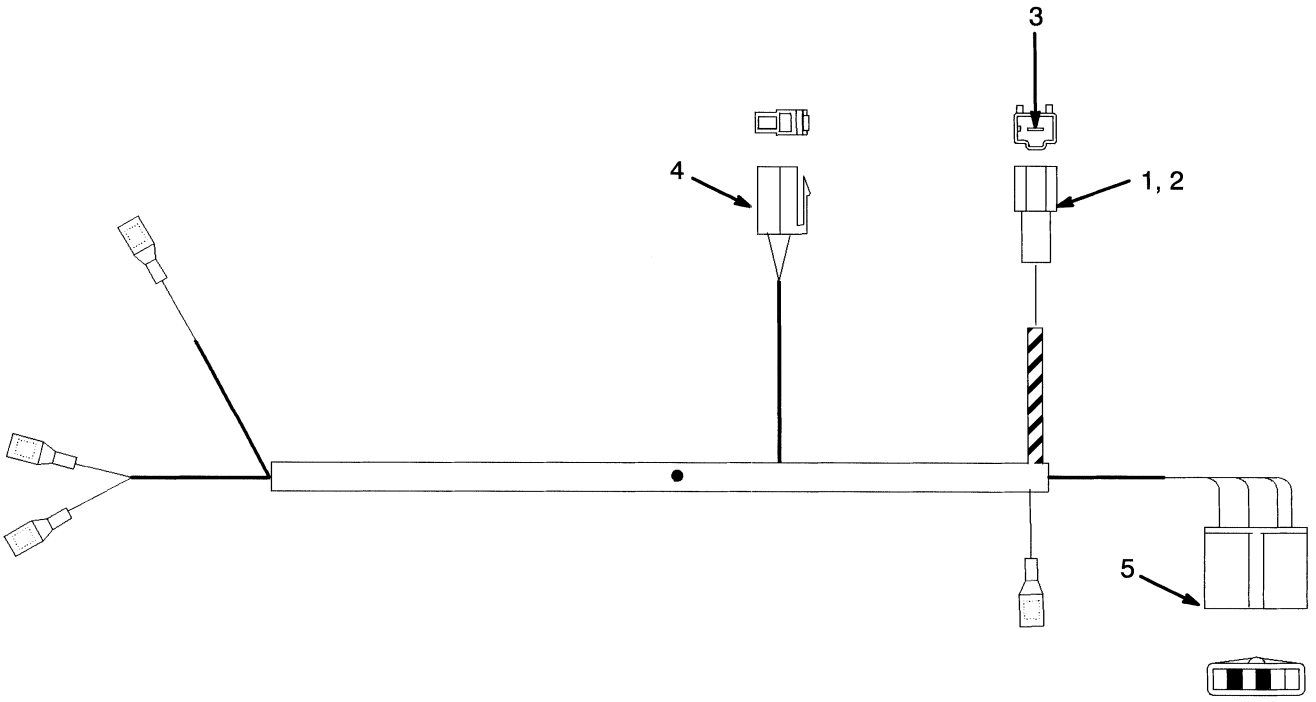

HP081105

ITEM	PART NO.	DESCRIPTION	QTY
	2030219	Wire Harness	1
1	2022619	Connector (Frame)	1
2	2022621	Seal	1
3	2022618	Terminal	1
4	1308259	Connector Body	1
5	154475	Connector	1

WIRE HARNESS (Figure 4-12)
FORWARD AND REVERSE

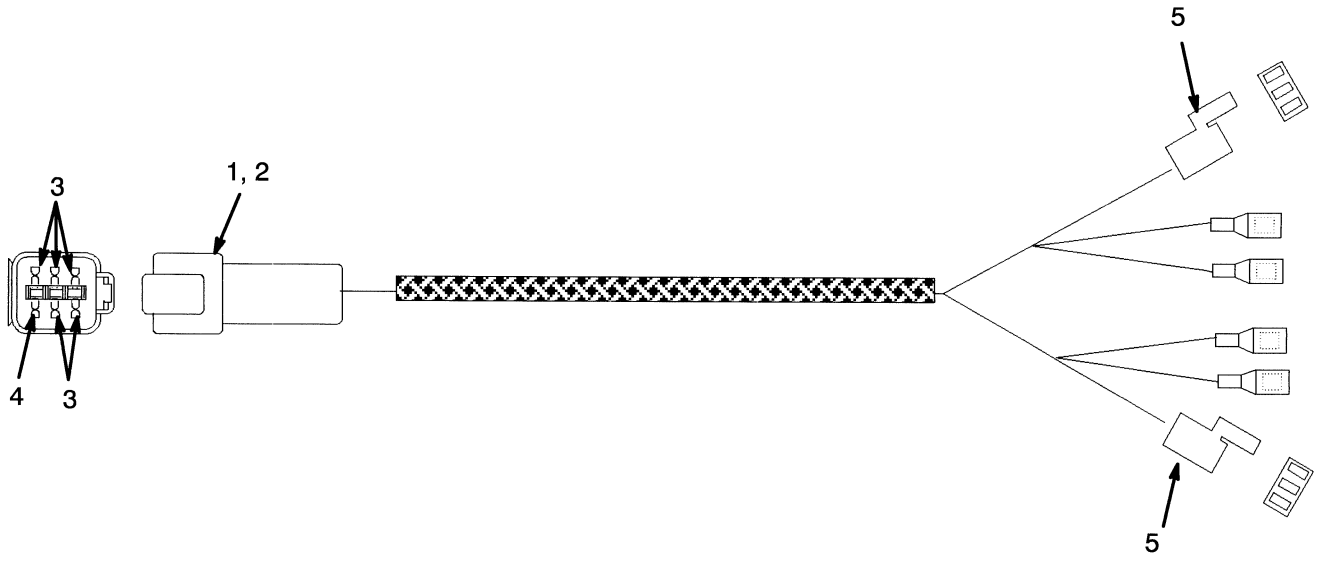

HP081106

ITEM	PART NO.	DESCRIPTION	QTY
	1352088	Wire Harness	1
1	1330412	Connector (Cowl)	1
2	1330417	Lock	1
3	1363885	Pin	5
4	1330439	Plug	1
5	1352563	Connector	2

©2004 HYSTER COMPANY

WIRE HARNESS (Figure 4-13)
MONOTROL PEDAL

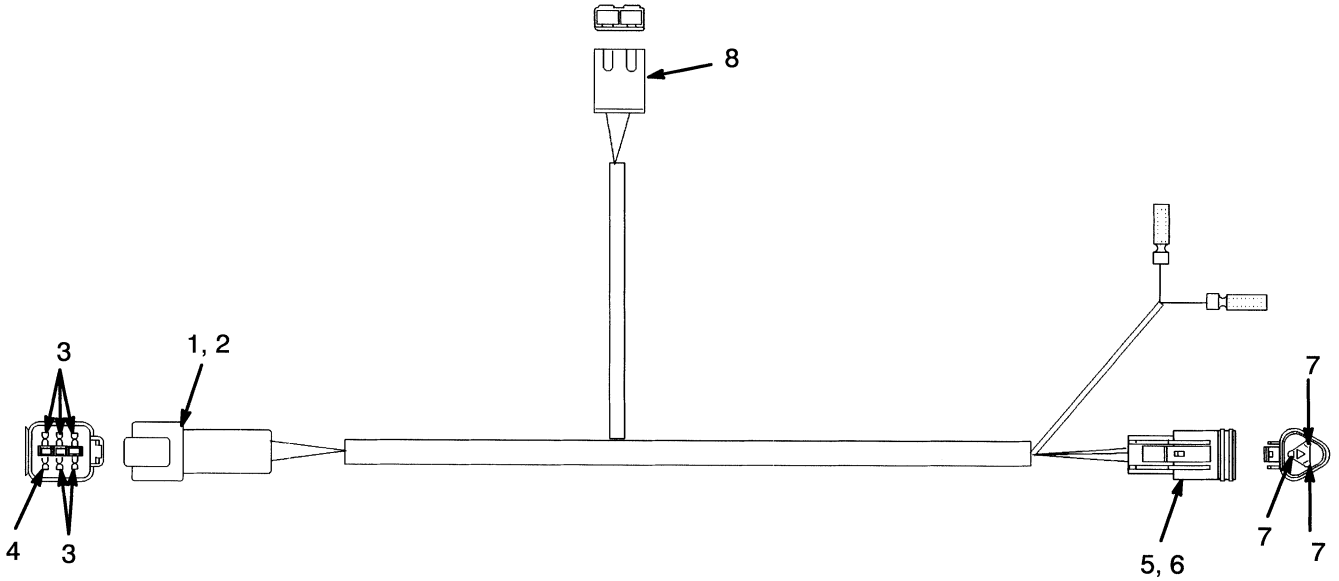

HP081107

ITEM	PART NO.	DESCRIPTION	QTY
	2030223	Wire Harness	1
1	1330412	Connector (Cowl)	1
2	1330417	Lock	1
3	1363885	Pin	5
4	1330439	Plug	1
5	1330420	Connector (Solenoid)	1
6	1330426	Secondary Lock	1
7	1363886	Socket	3
8	346330	Connector	1

©2004 HYSTER COMPANY

WIRE HARNESS (Figure 4-14)
SEAT SWITCH

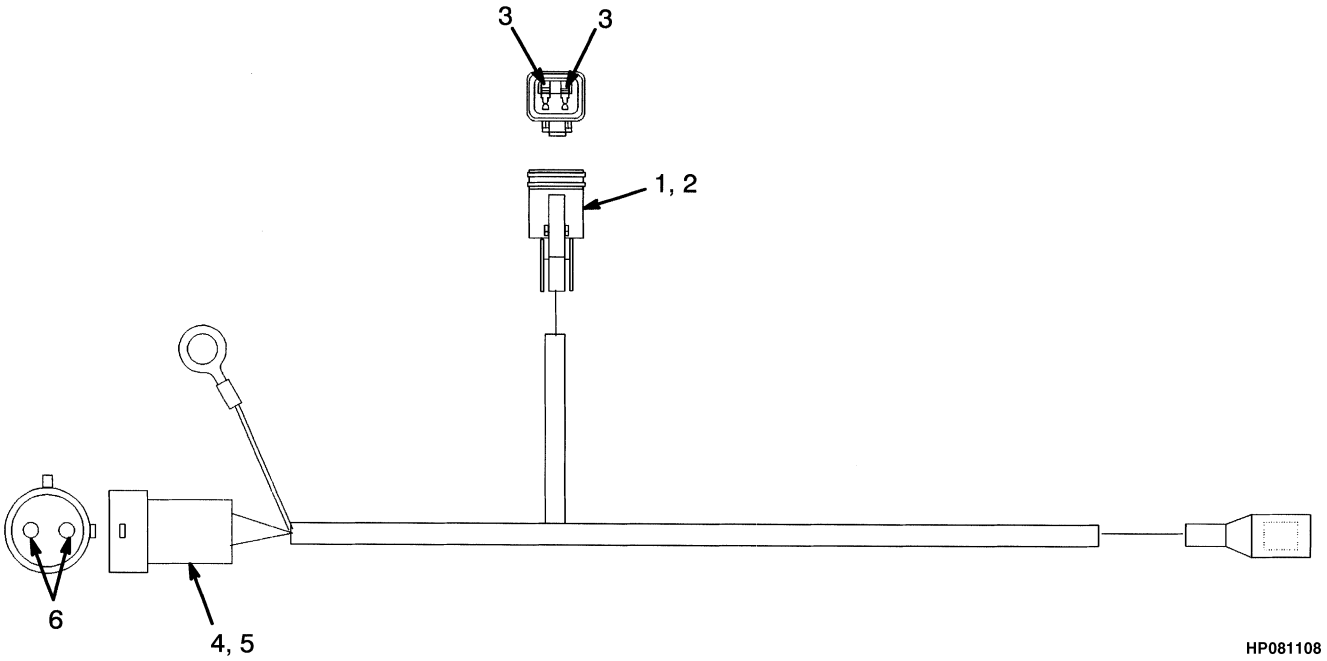

ITEM	PART NO.	DESCRIPTION	QTY
	2021994	Wire Harness (Seat Switch)	1
1	1330419	Connector (Switch Lead)	1
2	1330424	Secondary Lock	1
3	1363886	Socket	2
4	2022738	Connector (Cowl)	1
5	1351076	Seal	1
6	2022737	Terminal	2

©2004 HYSTER COMPANY

WIRE HARNESS (Figure 4-15)
ENGINE
GASOLINE AND LPG

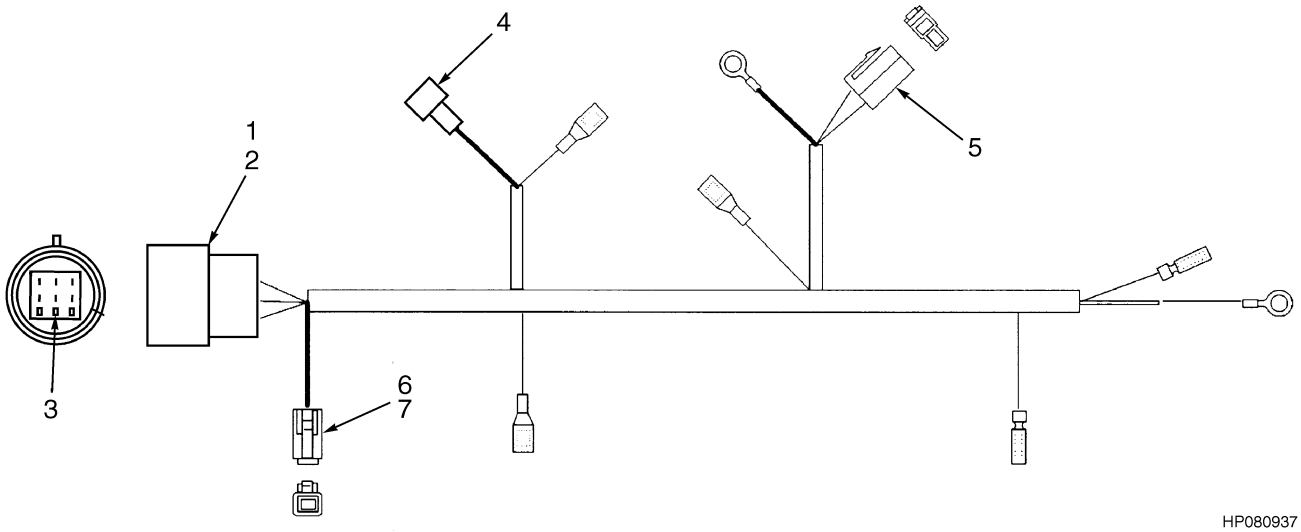

ITEM	PART NO.	DESCRIPTION	QTY
	2026640	Wire Harness	1
1	2022739	Connector (Cowl)	1
2	2022627	Seal	1
3	2022628	Plug	3
4	2045133	Housing	1
5	1361304	Connector (Horn Fuse)	1
6	2022736	Connector	1
7	2022621	Seal	1

WIRE HARNESS (Figure 4-16)
ENGINE
LPG WITH LOW EMISSIONS

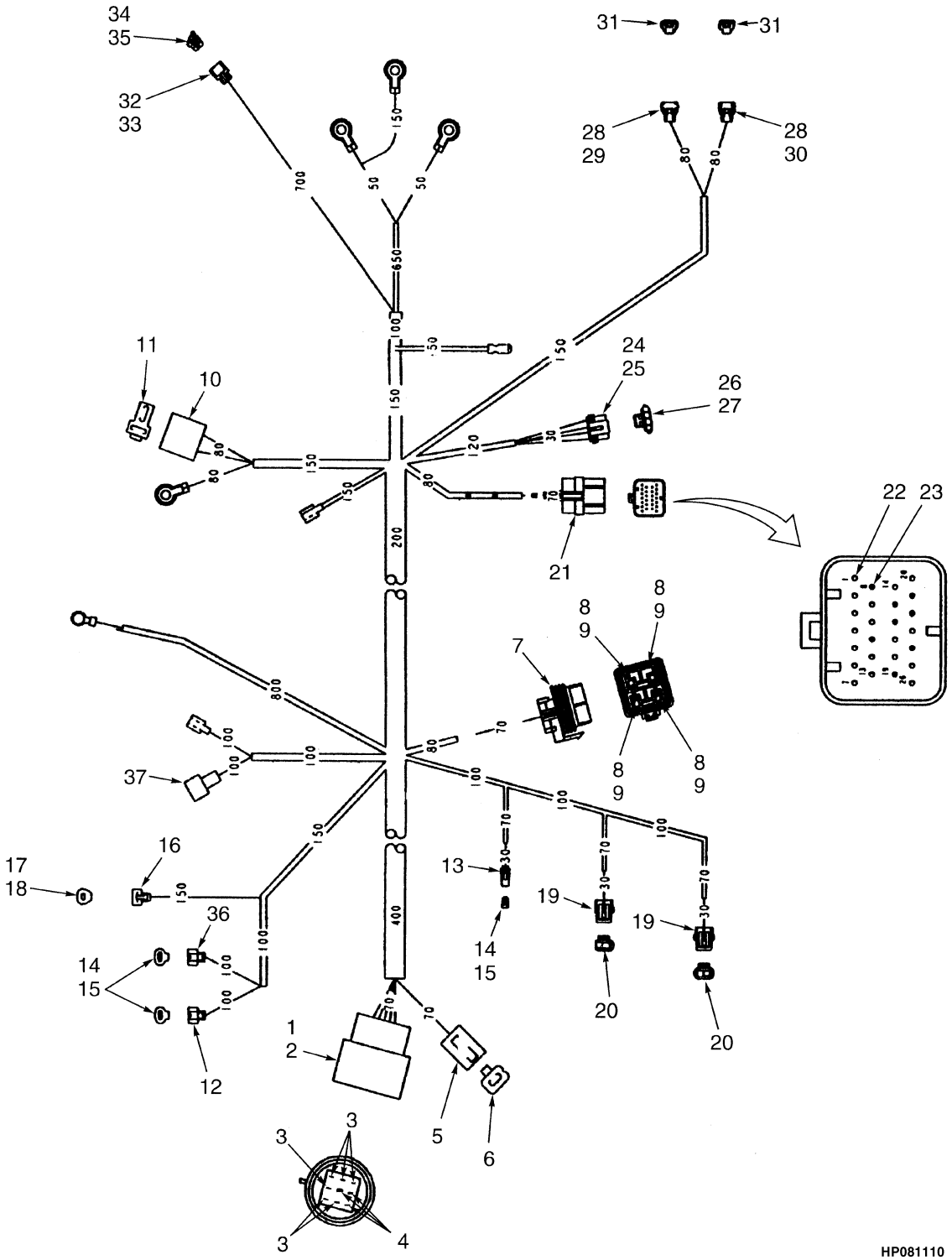

©2004 HYSTER COMPANY

WIRE HARNESS
ENGINE
LPG WITH LOW EMISSIONS

ITEM	PART NO.	DESCRIPTION	QTY
	1469411	Wire Harness (Engine)	1
1	2022739	Connector (Cowl)	1
2	2022627	Seal	1
3	2022737	Terminal	6
4	2022628	Plug	3
5	2022736	Connector (Horn Fuse)	1
6	2022621	Seal	1
7	1375795	Connector	1
8	1375797	Terminal	4
9	1329147	Seal	4
10	1361304	Connector	1
11	1361303	Terminal	2
12	1482660	Connector	1
13	1482657	Connector	1
14	1482658	Terminal	6
15	1482659	Seal (Rubber)	6
16	1482654	Connector	1
17	1482655	Terminal	2
18	1482656	Seal (Rubber)	2
19	1330292	Connector	2
20	1354204	Terminal	4
21	1482648	Connector	1
22	1482649	Terminal	18
23	1484153	Plug	8
24	1482662	Connector	1
25	1482663	Lock	1
26	1482665	Seal	4
27	1482664	Terminal	4
28	1476599	Seal	2
29	1474763	Connector	1
30	1474764	Connector	1
31	1476598	Socket	4
32	1482651	Connector	1
33	1484154	Lock Plate	1
34	1482652	Terminal	2
35	1482653	Seal	2
36	1488776	Connector	1
37	2045133	Housing	1

©2004 HYSTER COMPANY

WIRE HARNESS (Figure 4-17)
ENGINE
TYPE GS AND LPS

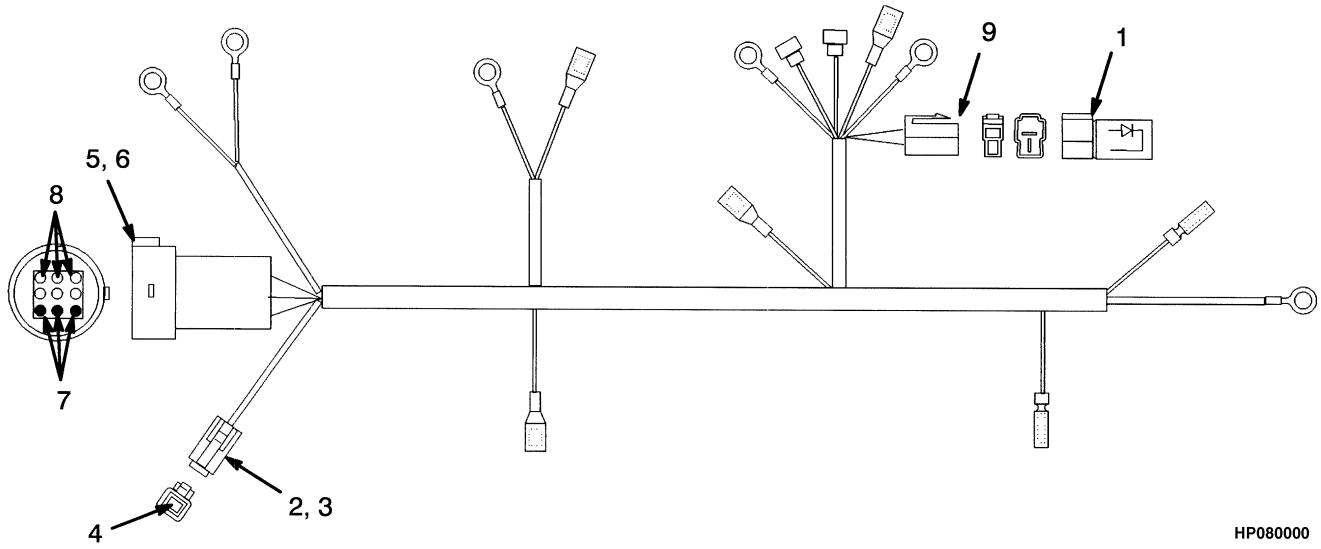

ITEM	PART NO.	DESCRIPTION	QTY
	2026641	Wire Harness	1
1	2022629	Diode	1
2	2022736	Connector (Horn Fuse)	1
3	2022621	Seal	1
4	2022735	Terminal	1
5	2022739	Connector (Cowl)	1
6	2022627	Seal	1
7	2022628	Plug	3
8	2022737	Terminal	6
9	1361304	Connector	1

©2004 HYSTER COMPANY

NOTES

WIRE HARNESS (Figure 4-18)
ENGINE
LPS WITH LOW EMISSIONS

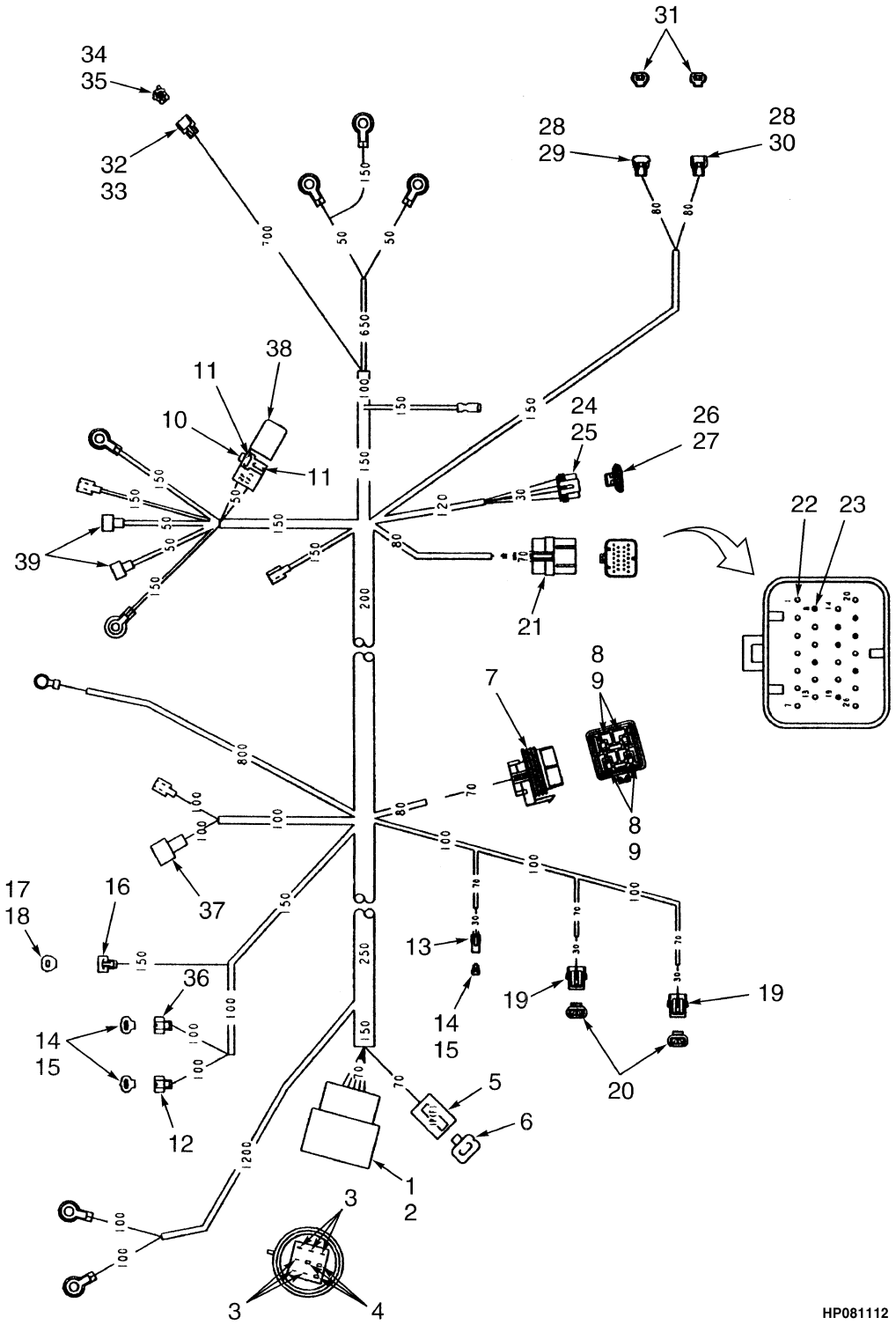

©2004 HYSTER COMPANY

WIRE HARNESS
ENGINE
LPS WITH LOW EMISSIONS

ITEM	PART NO.	DESCRIPTION	QTY
	1469412	Wire Harness (Engine)	1
1	2022739	Connector (Cowl)	1
2	2022627	Seal	1
3	2022737	Terminal	6
4	2022628	Plug	3
5	2022736	Connector (Horn Fuse)	1
6	2022735	Terminal	1
6	2022621	Seal	1
7	1375795	Connector	1
8	1375797	Terminal	4
9	1329147	Seal	4
10	1361304	Connector	1
11	1361303	Terminal	2
12	1482660	Connector	1
13	1482657	Connector	1
14	1482658	Terminal	6
15	1482659	Seal (Rubber)	6
16	1482654	Connector	1
17	1482655	Terminal	2
18	1482656	Seal (Rubber)	2
19	1330292	Connector	2
20	1354204	Terminal	4
21	1482648	Connector	1
22	1482649	Terminal	18
23	1484153	Plug	8
24	1482662	Connector	1
25	1482663	Lock	1
26	1482665	Seal	4
27	1482664	Terminal	4
28	1476599	Seal	2
29	1474763	Connector	1
30	1474764	Connector	1
31	1476598	Socket	4
32	1482651	Connector	1
33	1484154	Lock Plate	1
34	1482652	Terminal	2
35	1482653	Seal	2
36	1488776	Connector	1
37	2045133	Housing	1
38	2022629	Diode	1
39	2314795	Connector	1

©2004 HYSTER COMPANY

WIRE HARNESS (Figure 4-19)
TAIL LIGHT
(⇒S/N PENDING PER ECN 84909)

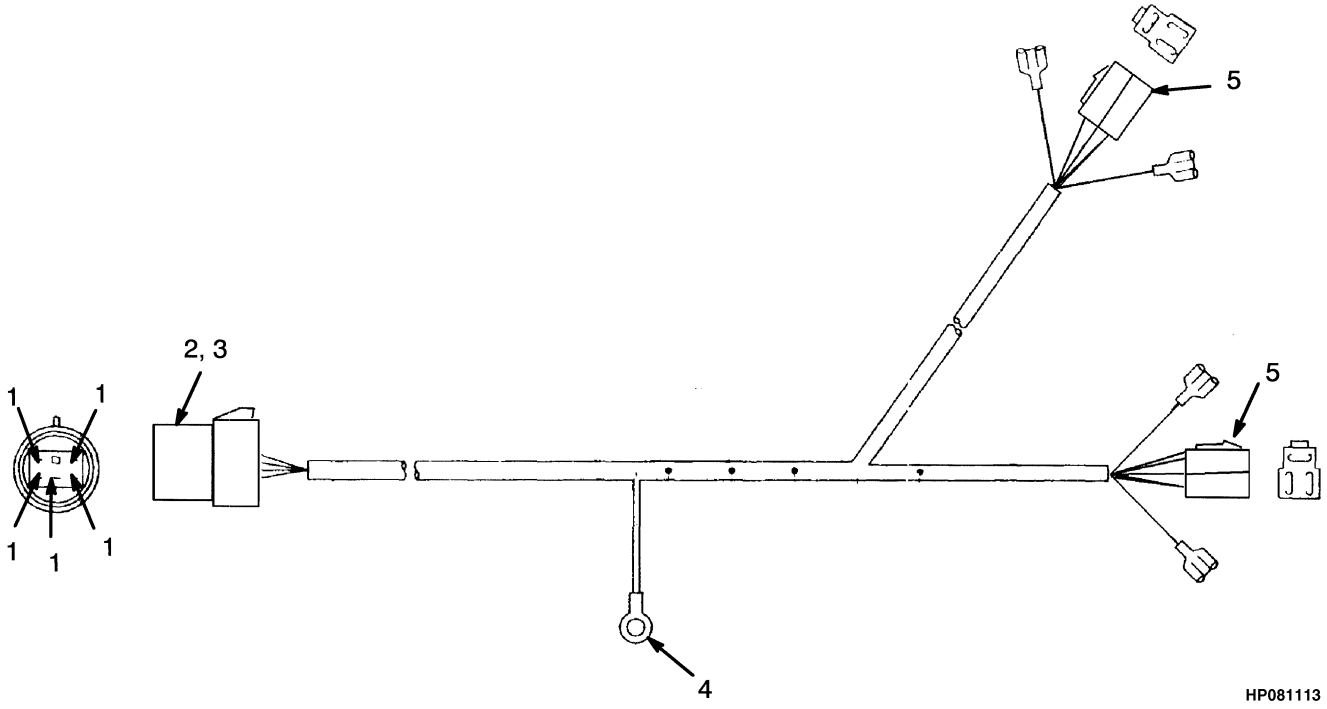

©2004 HYSTER COMPANY

WIRE HARNESS
TAIL LIGHT
(⇒S/N PENDING PER ECN 84909)

ITEM	PART NO.	DESCRIPTION	QTY
	2021997	Wire Harness	1
1	2022737	Terminal	5
2	2022823	Connector (Cowl)	1
3	2022827	Seal	1
4	1361303	Terminal	6
5	2022901	Connector	2

©2004 HYSTER COMPANY

WIRE HARNESS (Figure 4-20)
REAR LIGHTS
(S/N PENDING PER ECN 84909⇒)

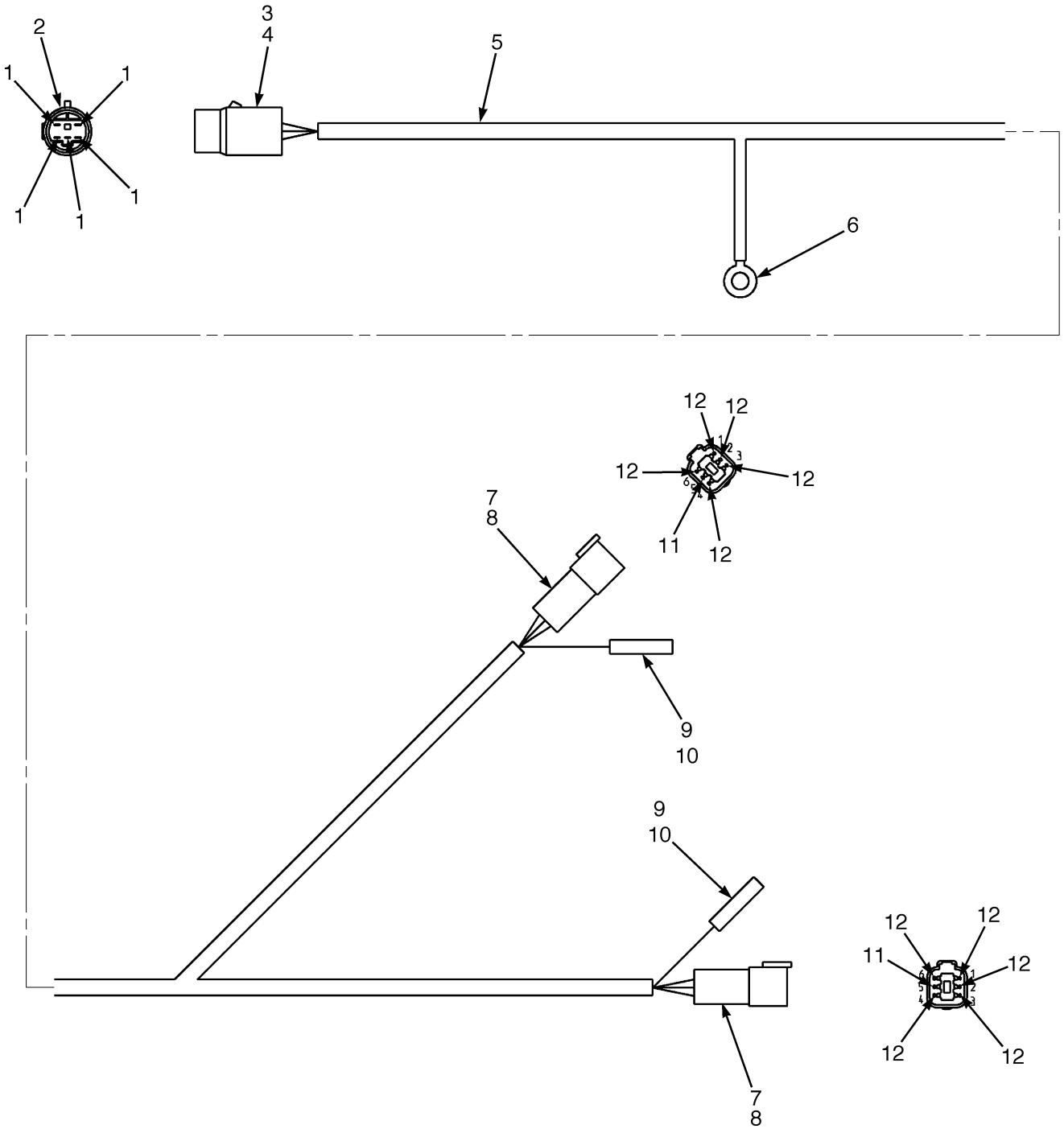

©2004 HYSTER COMPANY

WIRE HARNESS
REAR LIGHTS
(S/N PENDING PER ECN 84909⇒)

ITEM	PART NO.	DESCRIPTION	QTY
	1559737	Wire Harness (Rear Lights)	1
1	2022737	Terminal	5
2	2022628	Plug	1
3	2022823	Connector	1
4	2022827	Seal	4
5	381919	Conduit	AR
6	. . . . .	Terminal	1
7	1330417	Lock	2
8	1330412	Connector	2
9	1324309	Sleeve	2
10	1324310	Terminal	2
11	1330439	Plug	2
12	1330437	Pin	10

©2004 HYSTER COMPANY

DISTRIBUTOR (Figure 4-21)
GASOLINE AND LPG

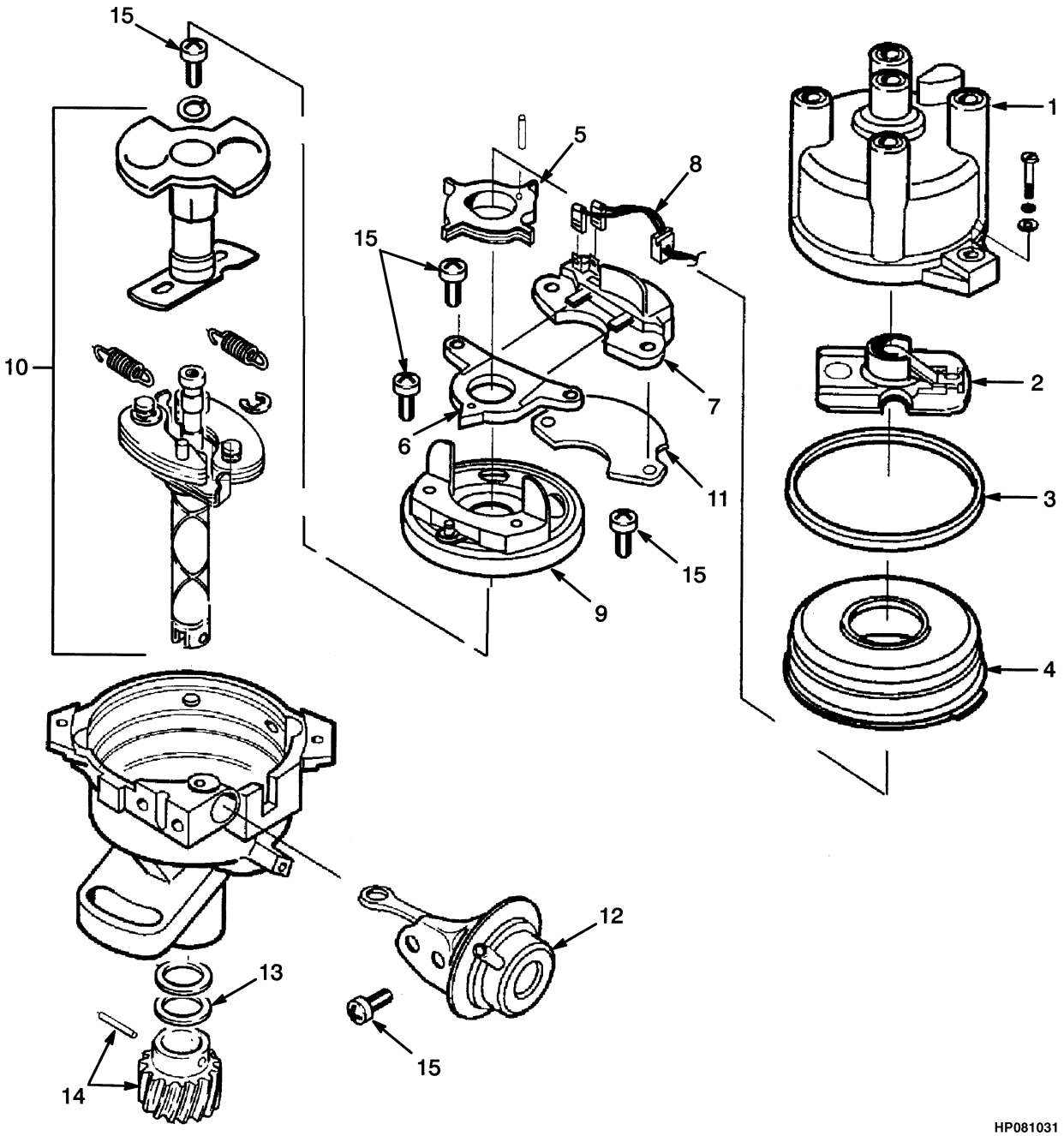

©2004 HYSTER COMPANY

DISTRIBUTOR
GASOLINE AND LPG

ITEM	PART NO.	DESCRIPTION	QTY
	1453562	Distributor	1
1	1326394	Cap	1
2	1326395	Rotor	1
3	1326396	Packing	1
4	1326397	Cover	1
5	1326398	Rotor	1
6	1326399	Pick-Up Set	1
7	1326536	Igniter	1
8	1370724	Wire	1
9	1326537	Breaker	1
10	1362036	Governor Set	1
11	1326538	Heatsink	1
12	2026798	Vacuum Set	1
13	1362039	Oil Seal	1
14	1362042	Coupling	1
15	1362040	Screw	1

©2004 HYSTER COMPANY

STARTER (Figure 4-22)
GASOLINE AND LPG

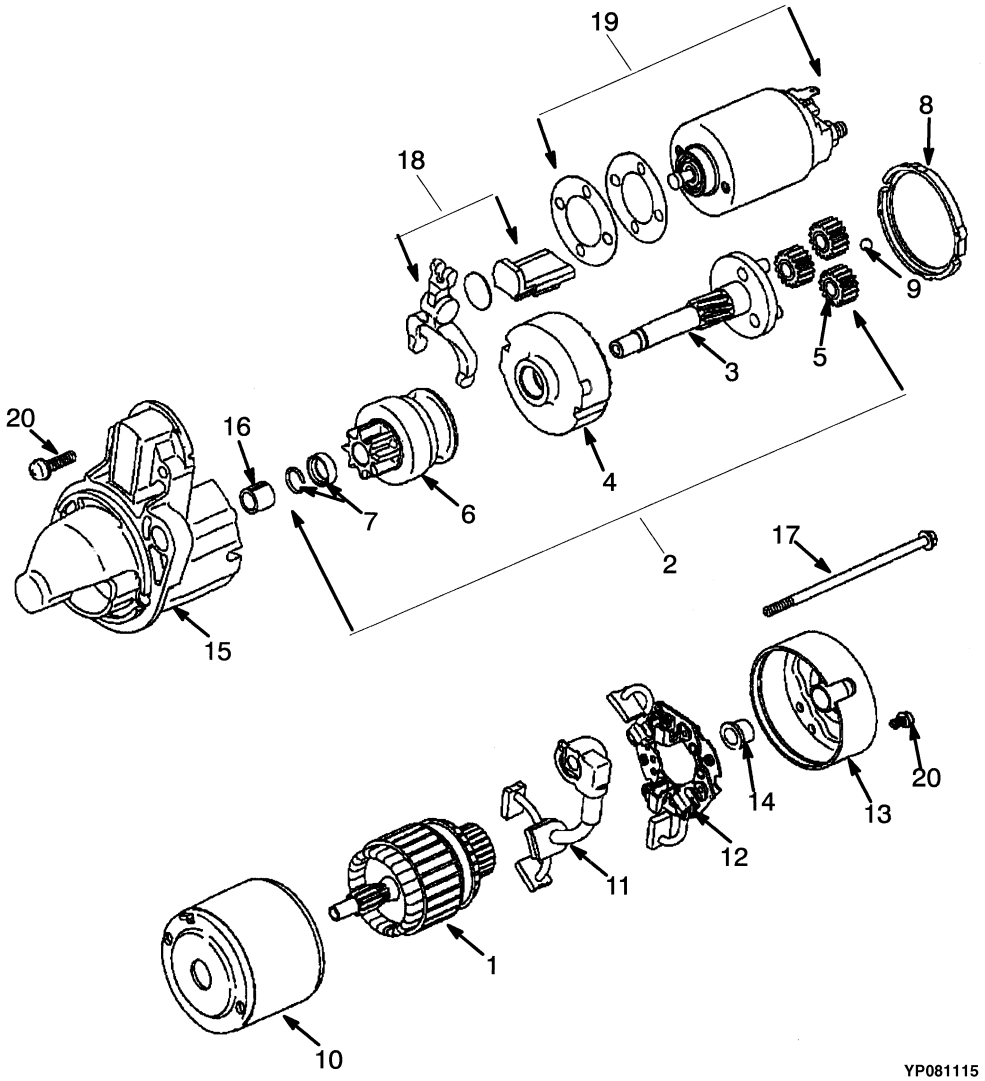

©2004 HYSTER COMPANY

STARTER
GASOLINE AND LPG

ITEM	PART NO.	DESCRIPTION	QTY
	2314322	Starter	1
1	2314323	Armature	1
2	2314324	Shaft	1
3	2314325	Shaft	1
4	2314326	Gear	1
5	2314327	Gear	3
6	2314328	Pinion Set	1
7	2314329	Stopper Set	1
8	2314330	Packing	1
9	2314331	Ball	1
10	2314332	Yoke	1
11	2314333	Brush	1
12	2314334	Brush Holder	1
12	2314335	Spring	1
12	2314336	Spring	1
13	2314337	Bracket (Rear)	1
14	2314338	Bearing	1
15	2314339	Bearing (Front)	1
16	1368858	Sleeve	1
17	2314340	Bolt	2
18	2314341	Lever	1
19	2314342	Switch	1
20	1368853	Screw Set	1

©2004 HYSTER COMPANY

ALTERNATOR (Figure 4-23)
GASOLINE AND LPG

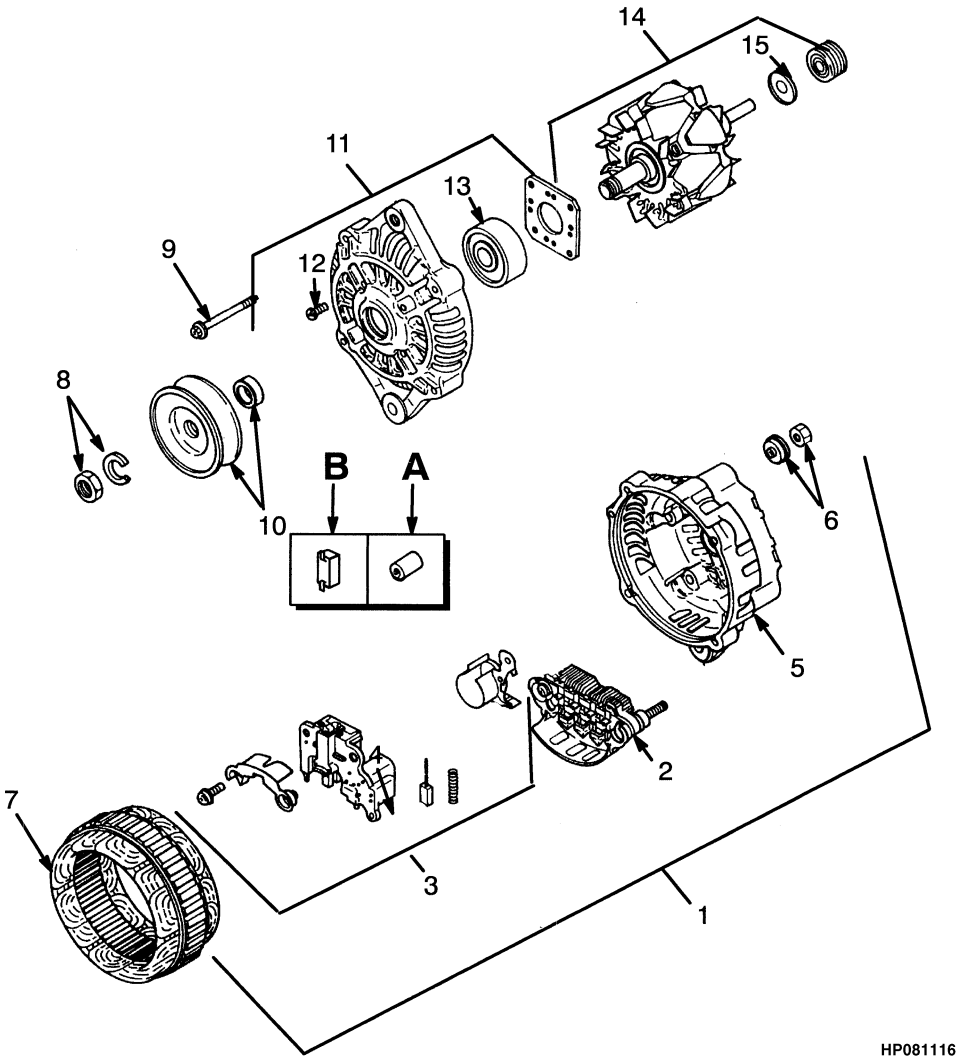

©2004 HYSTER COMPANY

ALTERNATOR
GASOLINE AND LPG

ITEM	PART NO.	DESCRIPTION	QTY
	1450928	Alternator	1
1	1450929	Cover Assembly (Rear)	1
2	1450930	Rectifier	1
3	1450931	Regulator	1
4	1361859	Brush	2
5	1361852	Cover	1
6	1361862	Nut	1
7	1361854	Stator	1
8	1361863	Nut	1
9	1361864	Screw	1
10	1361861	Pulley	1
11	1361850	Cover	1
12	1361860	Screw	1
13	1361857	Bearing	1
14	1361865	Rotor	1
15	1361855	Bearing	1

©2004 HYSTER COMPANY

ALTERNATOR (Figure 4-24)
TYPE GS AND LPS

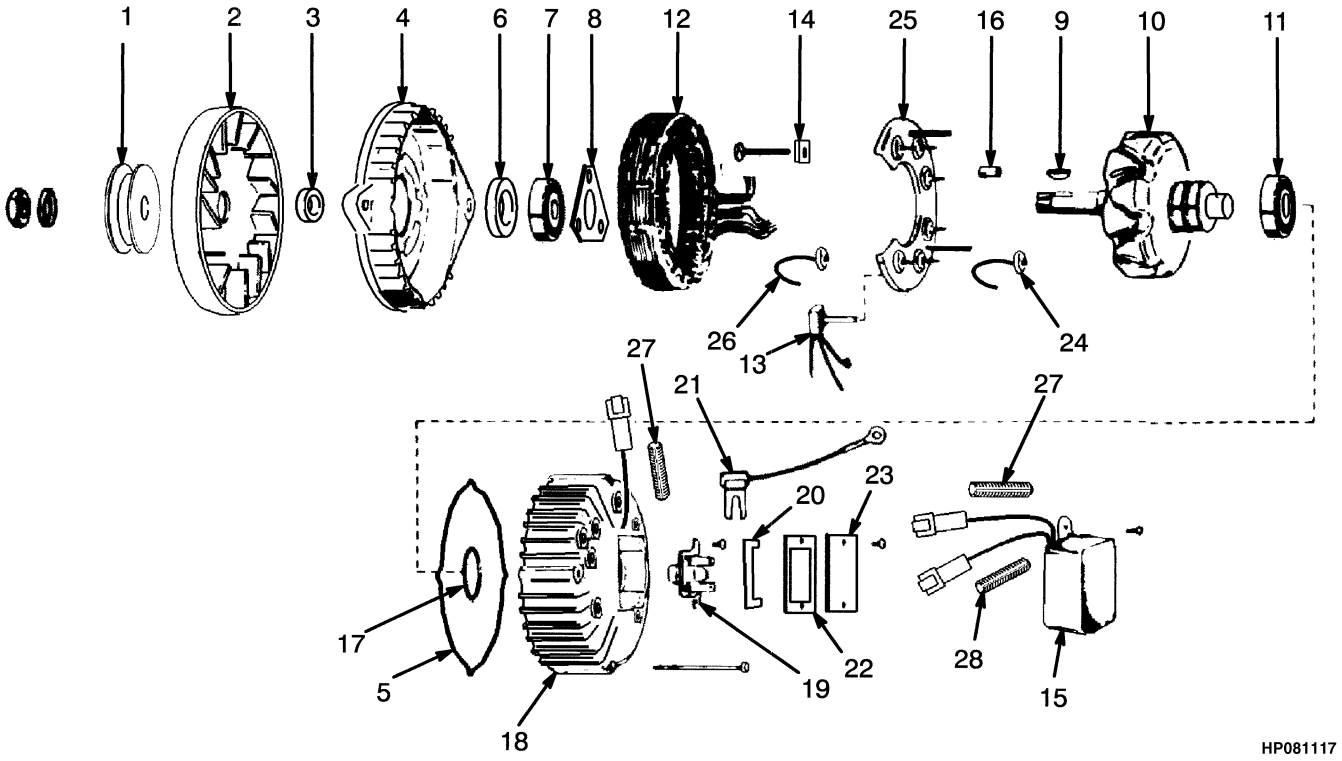

©2004 HYSTER COMPANY

ALTERNATOR
TYPE GS AND LPS

ITEM	PART NO.	DESCRIPTION	QTY
	2021963	Alternator	1
1	2022526	Pulley	1
2	1371210	Fan	1
3	1371213	Spacer	1
4	1371207	Housing (Front)	1
5	226582	Gasket	1
6	2022528	Seal	1
7	248128	Bearing	1
8	226576	Retainer	1
9	246944	Key	1
10	1371208	Rotor	1
11	386071	Bearing	1
12	1371209	Stator	1
13	2022532	Diode	1
14	1371214	Insulator	1
15	2022533	Voltage Regulator	1
16	1371212	Sleeve	1
17	1371211	Retainer	1
18	295802	Housing (Rear)	1
19	2022534	Brush Assembly	1
20	2022535	Insulation	1
21	382747	Capacitor	1
22	226588	Gasket	1
23	2022538	Brush Cover	1
24	226583	Diode (Negative)	1
25	226578	Heat Sink	1
26	226584	Diode (Positive)	1
27	2021964	Sleeve	2
28	2021965	Sleeve	1

©2004 HYSTER COMPANY

NOTES

5 TRANSMISSION

SECTION 5
TRANSMISSION

DESCRIPTION	PAGE
CONTROL VALVE	5-16
DIFFERENTIAL	5-18
DRIVE AXLE	5-20
END PLATE	5-22
GEAR PUMP	5-4
HYDRAULIC CLUTCH	5-14
SOLENOID VALVE	
⇒S/N PENDING PER ECN 78418	5-5
TORQUE CONVERTOR	5-2
TRANSMISSION GEARS	5-10
TRANSMISSION HOUSING	5-8
TRANSMISSION HYDRAULIC LINES	5-12

©2004 HYSTER COMPANY

TORQUE CONVERTOR (Figure 5-1)

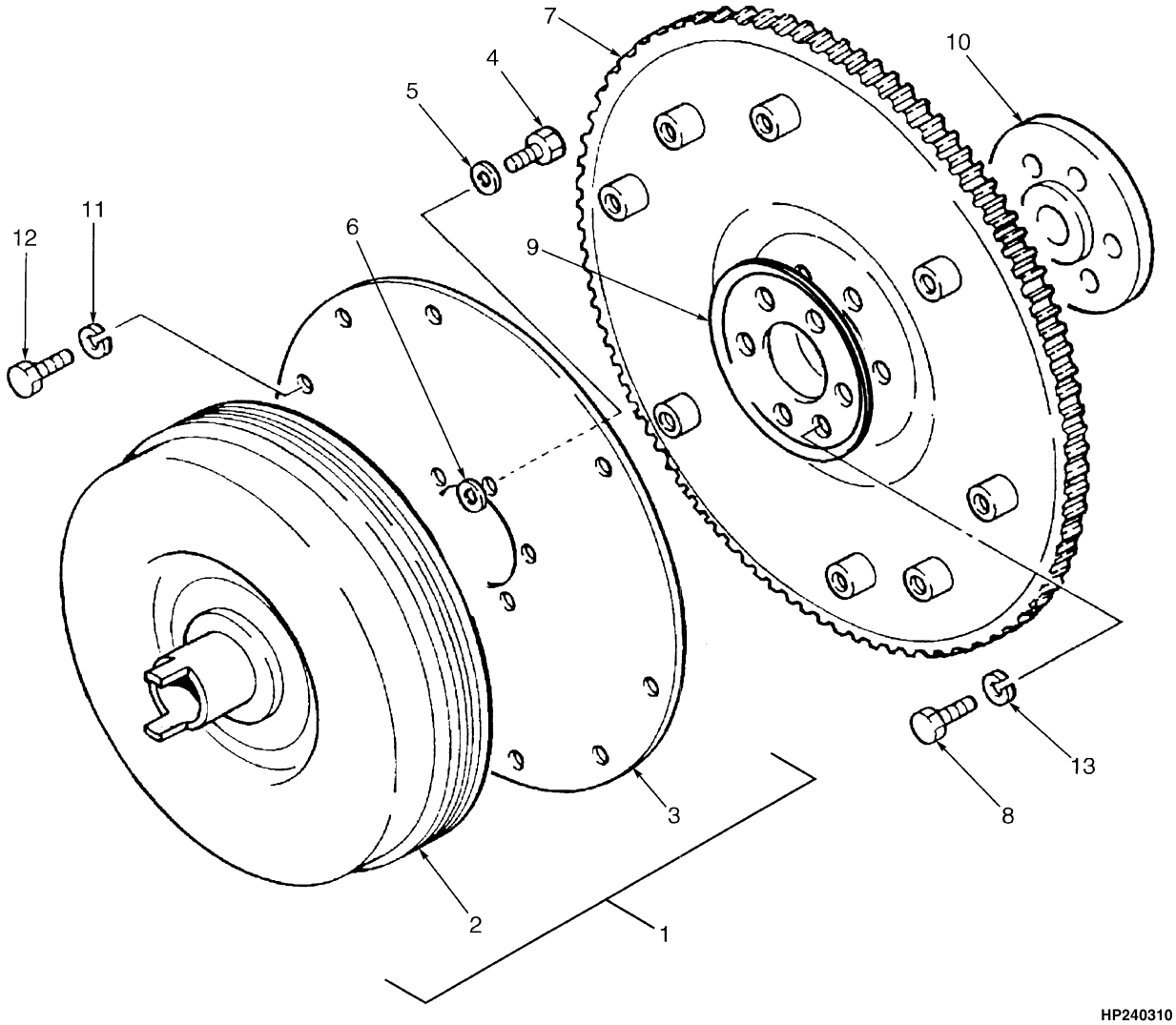

©2004 HYSTER COMPANY

TORQUE CONVERTOR

ITEM	PART NO.	DESCRIPTION	QTY
1	2043273	Torque Converter	1
2	. . . . .	Convertor	1
3	2043437	Plate (Input)	6
4	293626	Capscrew	6
5	296420	Washer	6
6	2026873	Washer	6
7	2030242	Flywheel	1
7	2030240	Ring Gear	1
8	2021438	Bolt	6
9	2021442	Back Plate	1
10	2021378	Flange	1
11	292682	Lockwasher	4
12	292514	Capscrew	4
13	2021834	Washer	6

©2004 HYSTER COMPANY

GEAR PUMP (Figure 5-2)

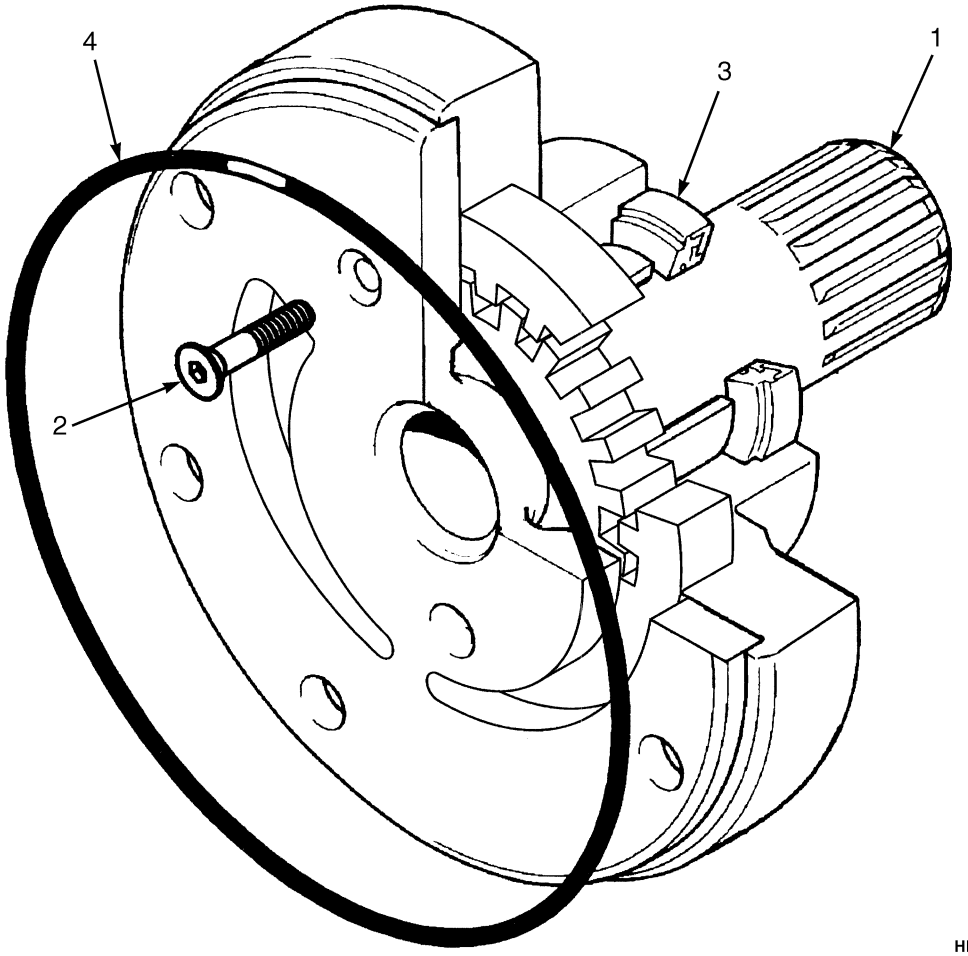

ITEM	PART NO.	DESCRIPTION	QTY
	2043272	Gear Pump	1
1	. . . . .	Shaft	1
2	296462	Capscrew	1
3	2023995	Oil Seal	1
4	2043438	O-Ring	1

©2004 HYSTER COMPANY

SOLENOID VALVE (Figure 5-3)
(⇒S/N PENDING PER ECN 78418)

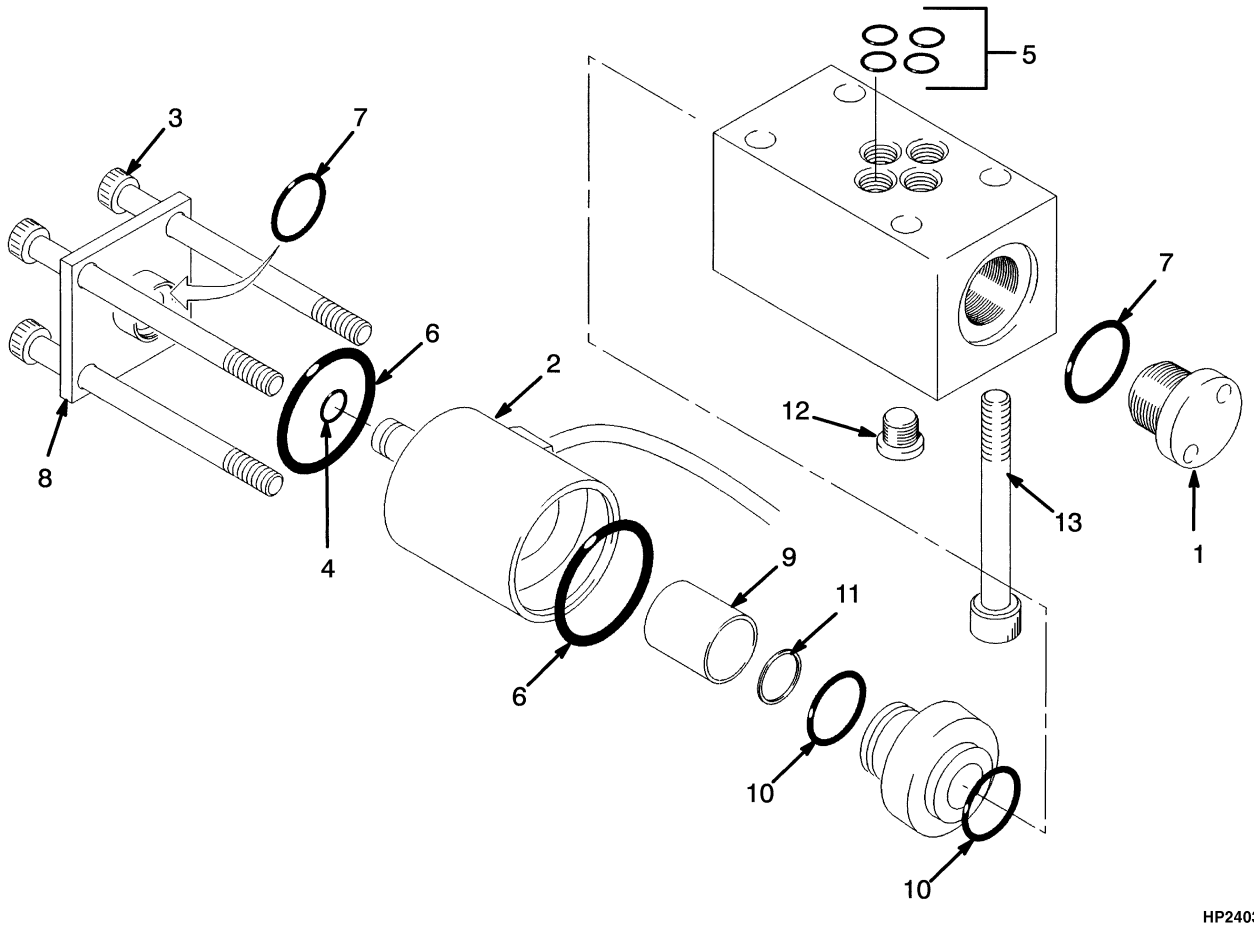

SOLENOID VALVE
(⇒S/N PENDING PER ECN 78418)

ITEM	PART NO.	DESCRIPTION	QTY
	2021325	Solenoid Valve	1
1	. . . . .	Plug	2
2	1367603	Coil	1
3	1367604	Bolt	4
4	. . . . .	O-Ring	1
5	. . . . .	O-Ring	4
6	. . . . .	O-Ring	2
7	. . . . .	O-Ring	2
8	. . . . .	Plug	2
9	1367607	Tube	1
10	. . . . .	O-Ring	2
11	. . . . .	Retaining Ring	1
12	1367605	Plug	1
13	2021328	Capscrew	4
	1367609	Seal Kit (Includes Items 4-7, 10)	1
	996405	Transmission Kit (Includes Items 4-7, 10)	1

©2004 HYSTER COMPANY

NOTES

TRANSMISSION HOUSING (Figure 5-4)

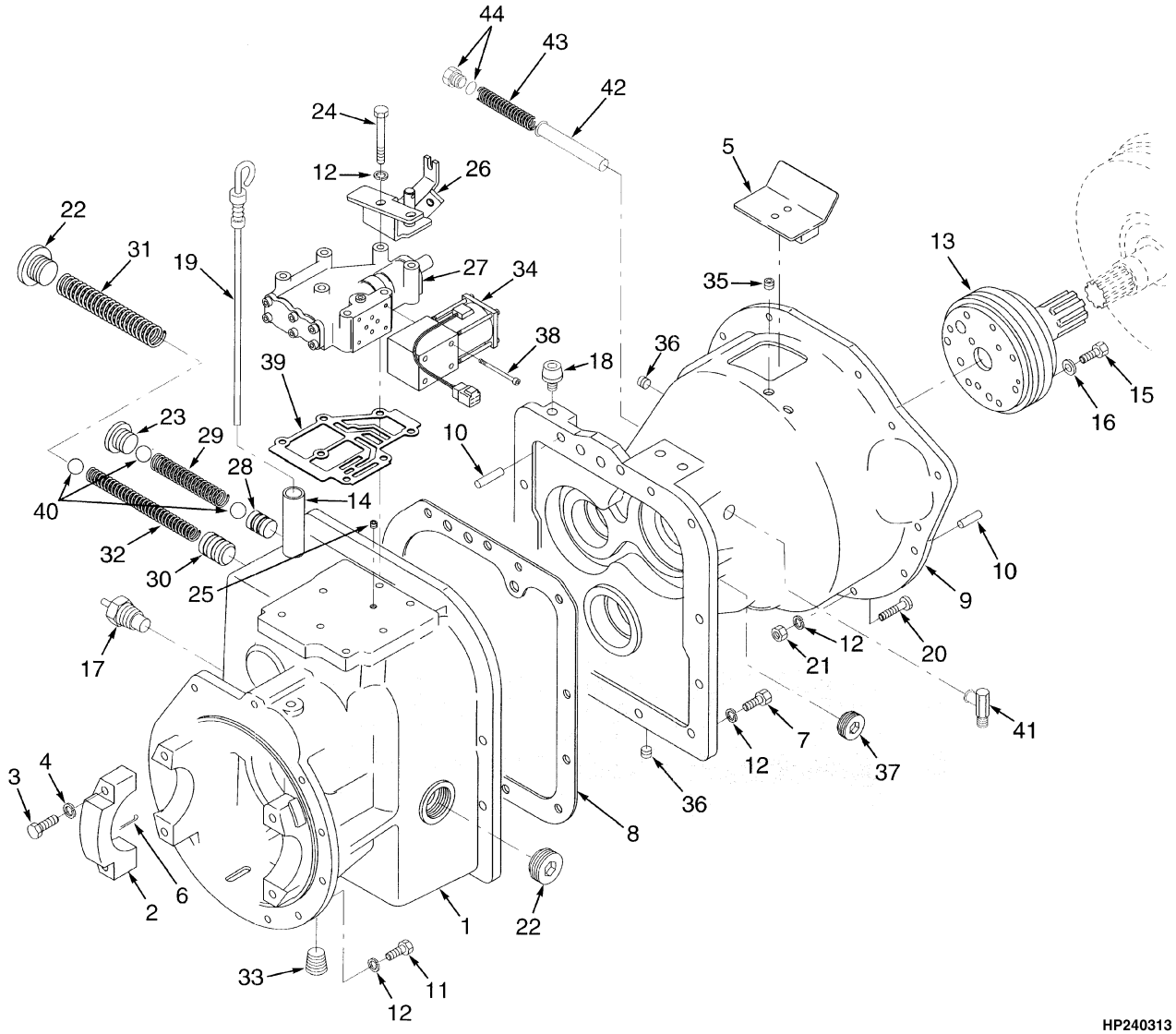

©2004 HYSTER COMPANY

TRANSMISSION HOUSING

ITEM		PART NO.	DESCRIPTION	QTY
		2045284	Transmission	1
1		2043269	Case Assembly	1
2		2023418	Bearing Cap	2
3		293692	Capscrew	4
4		296426	Washer (Hardened)	4
5		2021390	Cover	1
6		1371656	Cotter Pin	2
7		292515	Capscrew	11
8		2043275	Gasket	1
9		2043270	Housing	1
10		2021336	Pin	4
11		287860	Capscrew	10
12		292681	Lockwasher	38
13		2043272	Gear Pump (☞ Figure 5-2)	1
14		2056368	Pipe	1
15		214364	Capscrew	5
16		296418	Washer	5
17		2021388	Temperature Switch	1
18		2021389	Breather	1
19		2028315	Gauge	1
20		292515	Capscrew	11
21		136692	Nut	9
22		2023976	Plug	2
23		2029432	Plug	1
24		292511	Capscrew	7
25		2043276	Choke	1
26		. . . . .	Bellcrank Assembly (☞ Figure 7-1)	1
27		2045646	Control Valve Assembly (☞ Figure 5-8)	1
28		2029600	Piston	1
29		2029601	Spring	1
30		2043274	Piston	1
31		2029598	Spring	1
32		2029599	Spring	1
33		2045300	Plug	4
34	**a**	2021325	Solenoid Valve (☞ Figure 5-3)	1
34	**b**	2060041	Solenoid Valve	1
35		2021915	Plug	3
36		2043279	Plug	2
37		2045301	Plug	1
38		2021328	Capscrew	4
39		2045647	Gasket	1
40		2045300	Plug	4
41		2023719	Fitting	1
42		334450	Screen	1
43		334452	Spring	1
44		14604	Fitting	1
44		16487	O-Ring	1

FOOTNOTES:

a ⇒ S/N PENDING PER ECN 78418

b S/N PENDING PER ECN 78418 ⇒

©2004 HYSTER COMPANY

TRANSMISSION GEARS (Figure 5-5)

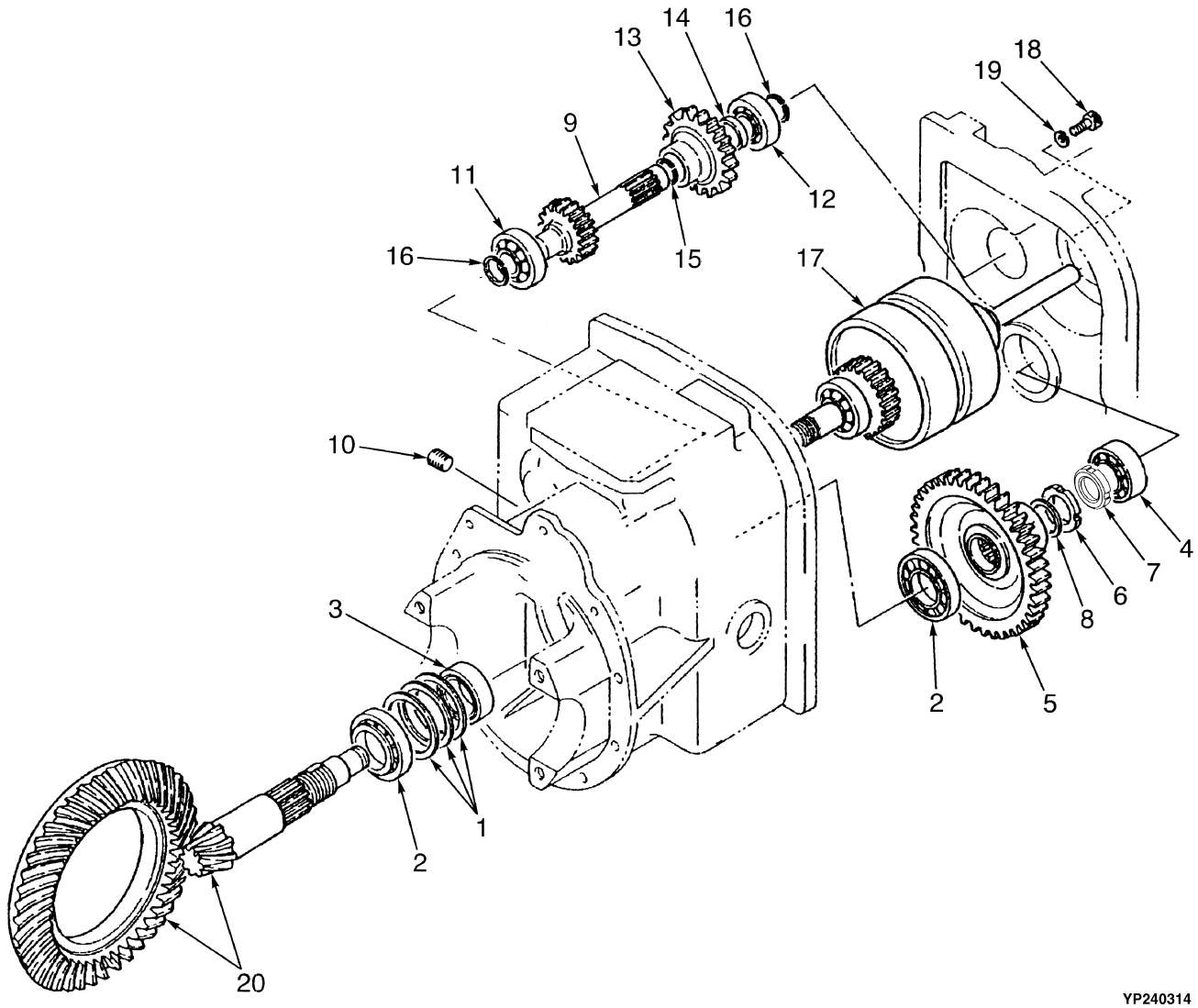

©2004 HYSTER COMPANY

TRANSMISSION GEARS

ITEM	PART NO.	DESCRIPTION	QTY
	1467388	Transmission	1
1	2021293	Shim (0.003 in.)	AR
1	2021294	Shim (0.007 in.)	AR
1	2021295	Shim (0.011 in.)	AR
1	2021296	Shim (0.015 in.)	AR
1	2021298	Shim (0.019 in.)	AR
2	2022352	Roller Bearing	2
3	2021299	Oil Seal	1
4	2021300	Bearing	1
5	2023923	Gear	1
6	2026862	Nut	1
7	2026861	Nut	1
8	2021914	Washer	1
9	2045286	Shaft	1
10	2021915	Plug	1
11	2023975	Bearing	1
12	2021318	Bearing	1
13	2023941	Gear	1
14	2021320	Washer	1
15	2021321	Snap Ring	1
16	1374796	Snap Ring	2
17	2043271	Hydraulic Clutch Assembly (☞ Figure 5-7)	1
18	292515	Capscrew	2
19	292682	Lockwasher	2
20	2026860	Gear Set	1

©2004 HYSTER COMPANY

TRANSMISSION HYDRAULIC LINES (Figure 5-6)

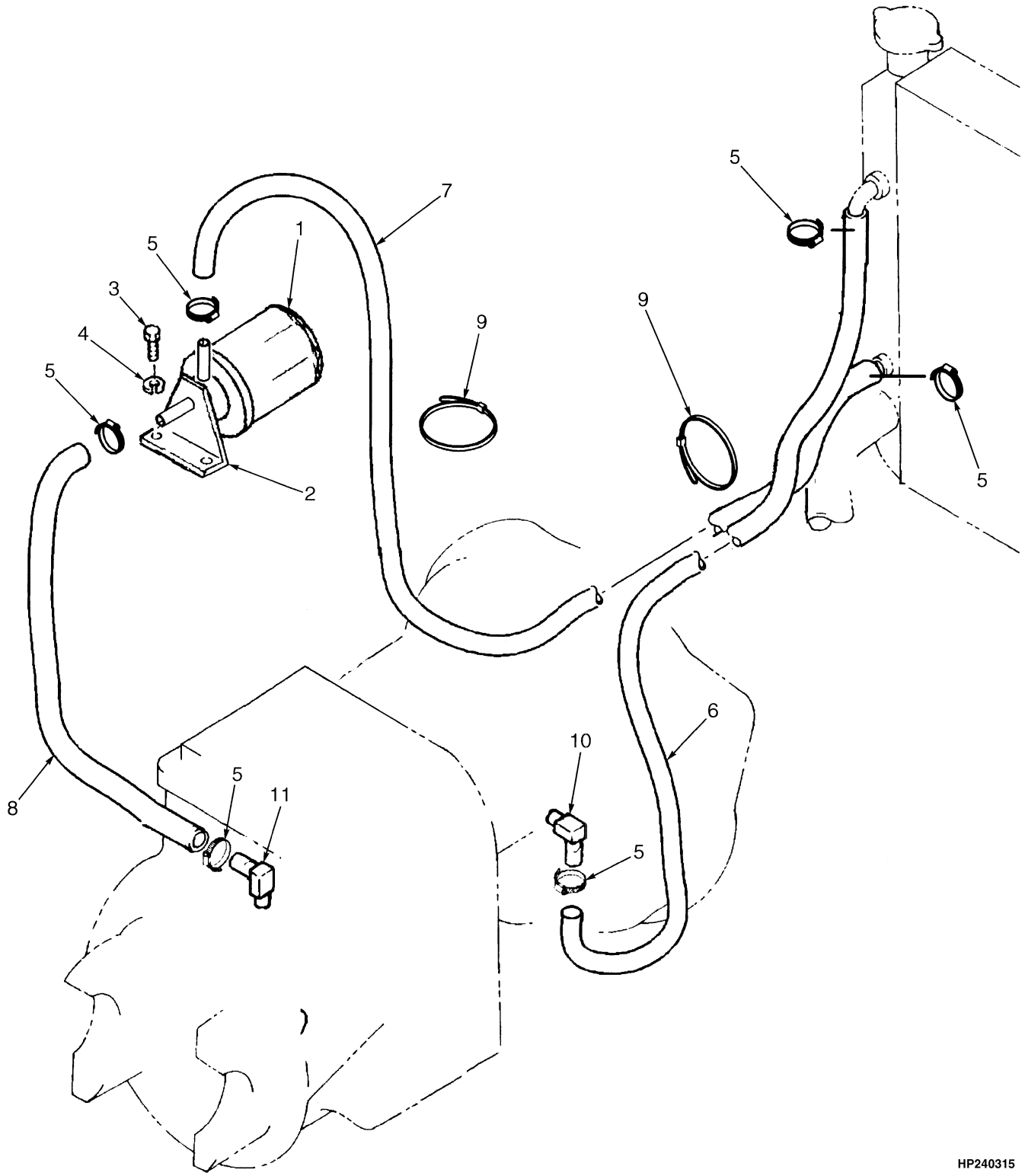

©2004 HYSTER COMPANY

TRANSMISSION HYDRAULIC LINES

ITEM	PART NO.	DESCRIPTION	QTY
1	2314259	Filter	1
2	2022883	Bracket	1
3	287805	Capscrew	2
4	292681	Lockwasher	2
5	130845	Clamp	6
6	1399095	Hose	1
7	1474604	Hose	1
8	1474607	Hose	1
9	137852	Strap Clamp	2
10	2023719	Fitting	1
11	2026583	Fitting	2

©2004 HYSTER COMPANY

HYDRAULIC CLUTCH (Figure 5-7)

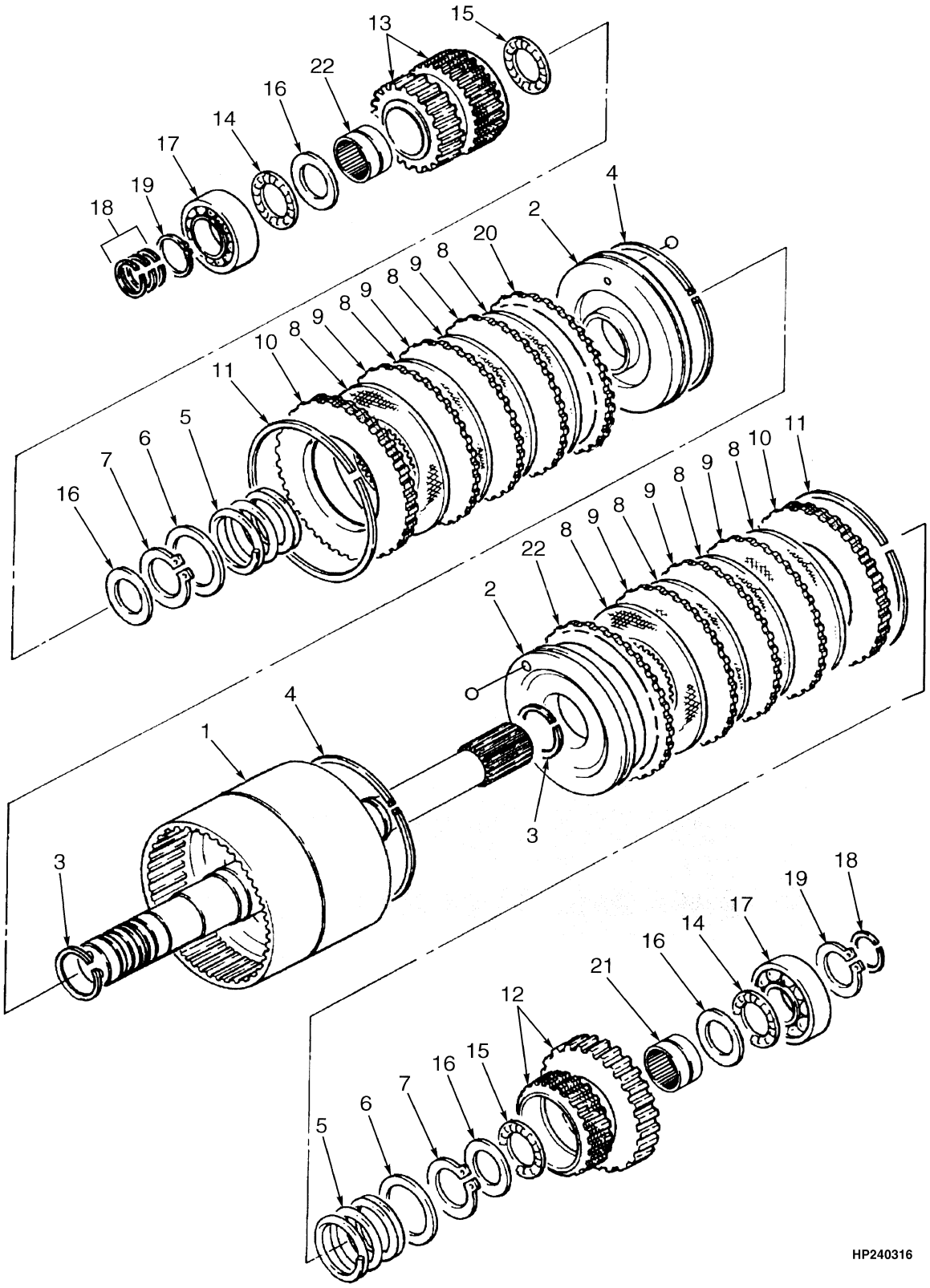

©2004 HYSTER COMPANY

HYDRAULIC CLUTCH

ITEM	PART NO.	DESCRIPTION	QTY
	2043271	Hydraulic Clutch Assembly	1
1	. . . . .	Shaft Assembly	1
2	2026008	Piston	2
3	. . . . .	Seal Ring	2
4	. . . . .	Seal Ring	2
5	1367407	Spring	2
6	2026009	Guide	2
7	386422	Snap Ring	2
8	. . . . .	Disk Assembly	8
9	. . . . .	Plate (Drive)	6
10	. . . . .	Plate (Back)	2
11	1367422	Snap Ring	2
12	2026323	Gear (Reverse)	1
13	2026324	Gear (Forward)	1
14	. . . . .	Bearing (Thrust)	2
15	. . . . .	Bearing (Thrust)	2
16	. . . . .	Washer (Thrust)	4
17	1367579	Bearing	2
18	. . . . .	Seal Ring	4
19	1374796	Snap Ring	2
20	. . . . .	Drive Plate (Conical)	2
21	2043439	Bearing	1
22	2043440	Bearing (Needle)	1
	2043442	Seal Ring Kit (Includes Items 3-4, 18)	1
	2043441	Drive Plate Kit (Includes Items 8-10, 20)	1
	2026326	Repair Kit (Includes Items 14-16)	1
	2043443	Repair Kit (Includes Items 3-4, 8-10, 18, 20)	1

©2004 HYSTER COMPANY

CONTROL VALVE (Figure 5-8)

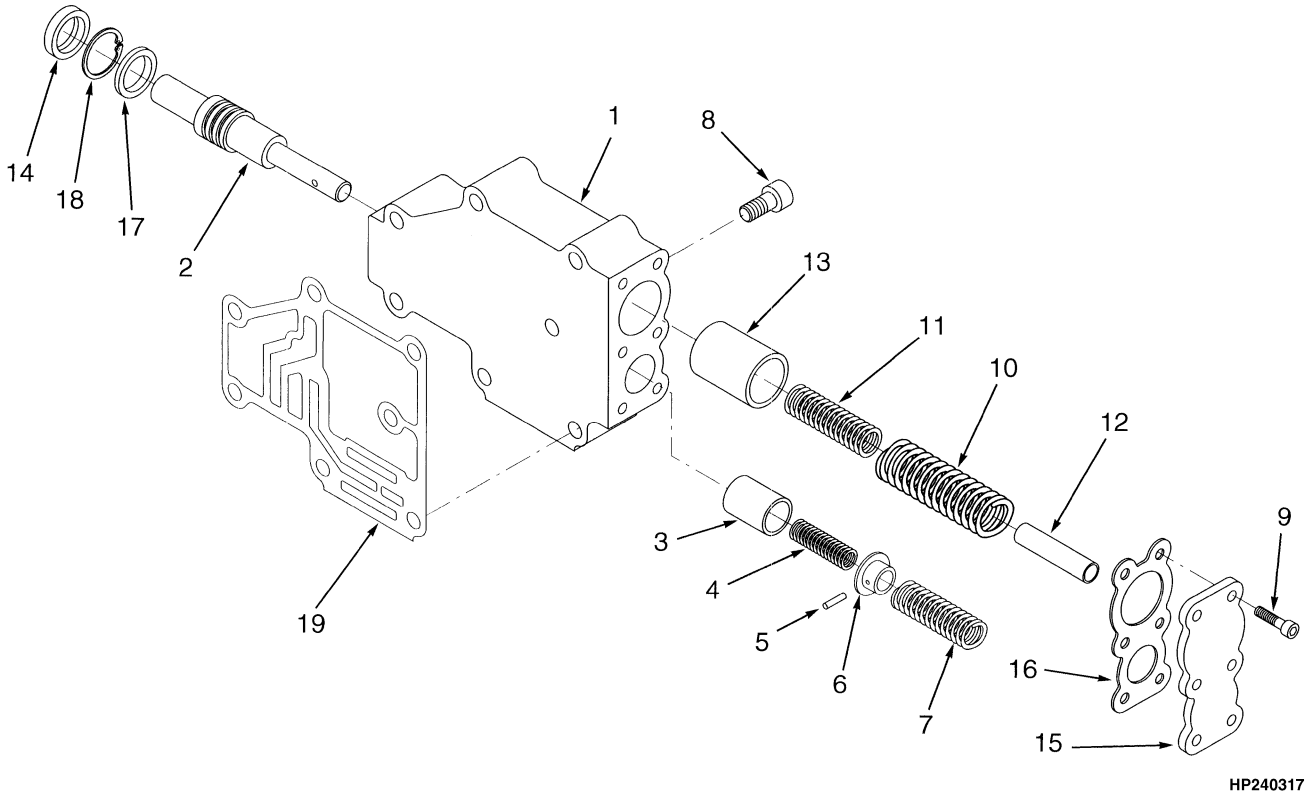

©2004 HYSTER COMPANY

CONTROL VALVE

ITEM	PART NO.	DESCRIPTION	QTY
	2045646	Control Valve Assembly	1
1	. . . . .	Valve Body	1
2	2023997	Inching Spool	1
3	2045648	Piston	1
4	. . . . .	Pressure Spring	1
5	1367402	Pin	1
6	1367403	Stop	1
7	. . . . .	Pressure Spring	1
8	2029349	Plug (Oil Pressure Check Port)	1
9	2029338	Bolt	6
10	. . . . .	Pressure Spring	1
11	. . . . .	Pressure Spring	1
12	2026006	Stop	1
13	1367412	Piston	1
14	. . . . .	Oil Seal	1
15	2029350	Cover	1
16	. . . . .	Gasket	1
17	2029351	Stopper	1
18	2029261	Snap Ring	1
19	2045647	Gasket	1
	2045649	Repair kit (Includes Items 14, 16)	1
	2029352	Spring Kit (Includes Items 4, 7, 10-11)	1

©2004 HYSTER COMPANY

DIFFERENTIAL (Figure 5-9)

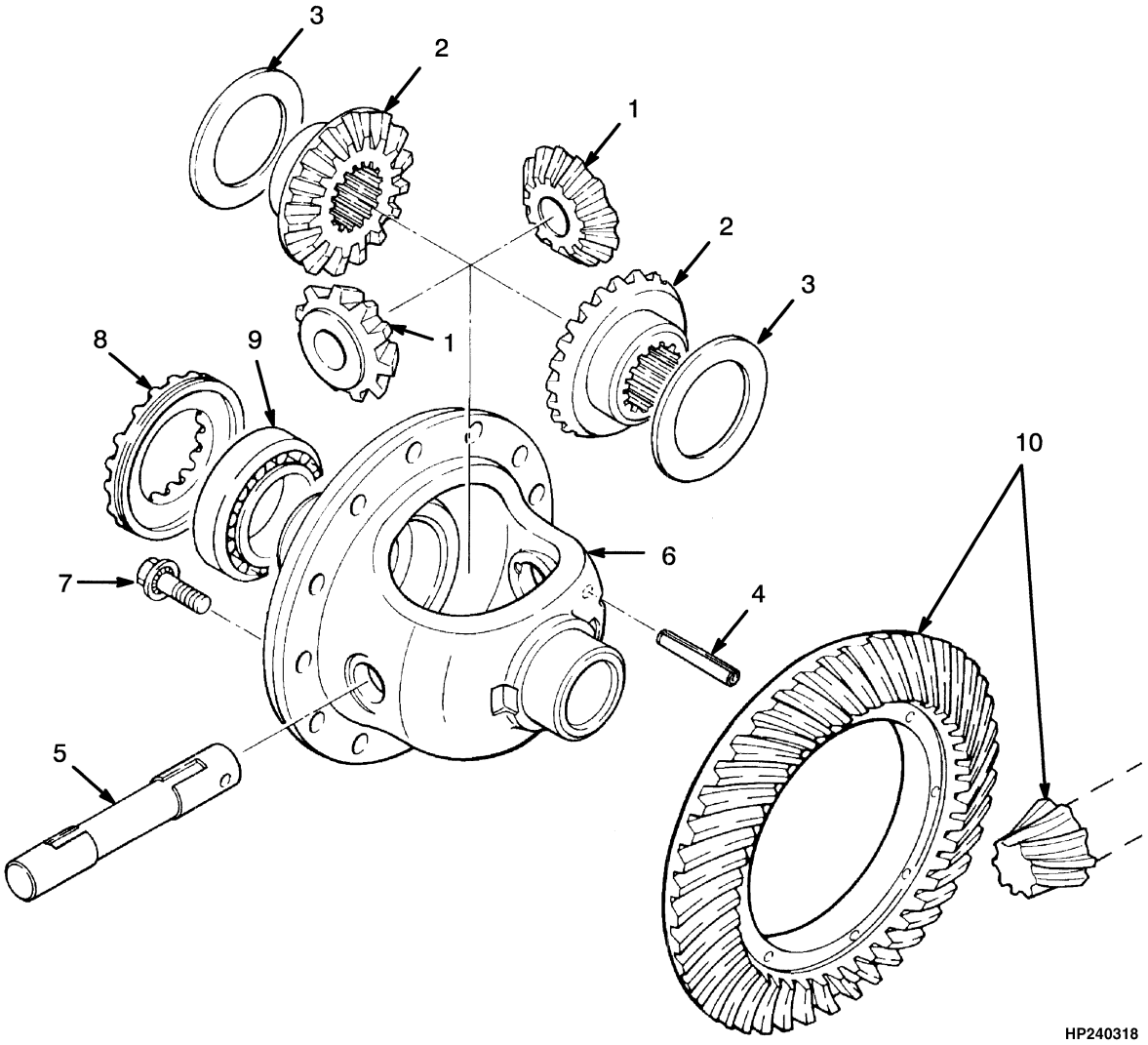

©2004 HYSTER COMPANY

DIFFERENTIAL

ITEM	PART NO.	DESCRIPTION	QTY
	2021282	Differential Assembly	1
1	1367617	Pinion	2
2	1367616	Gear	2
3	1367619	Spacer	2
4	302470	Pin	1
5	1367618	Shaft	1
6	1367615	Case	1
7	2021286	Bolt	12
8	2021287	Bearing	2
9	2021288	Bearing	2
10	2026860	Gear Set	1
	996403	Transmission Kit (Includes Item 9)	1
	996405	Transmission Kit (Includes Item 9)	1

©2004 HYSTER COMPANY

DRIVE AXLE (Figure 5-10)

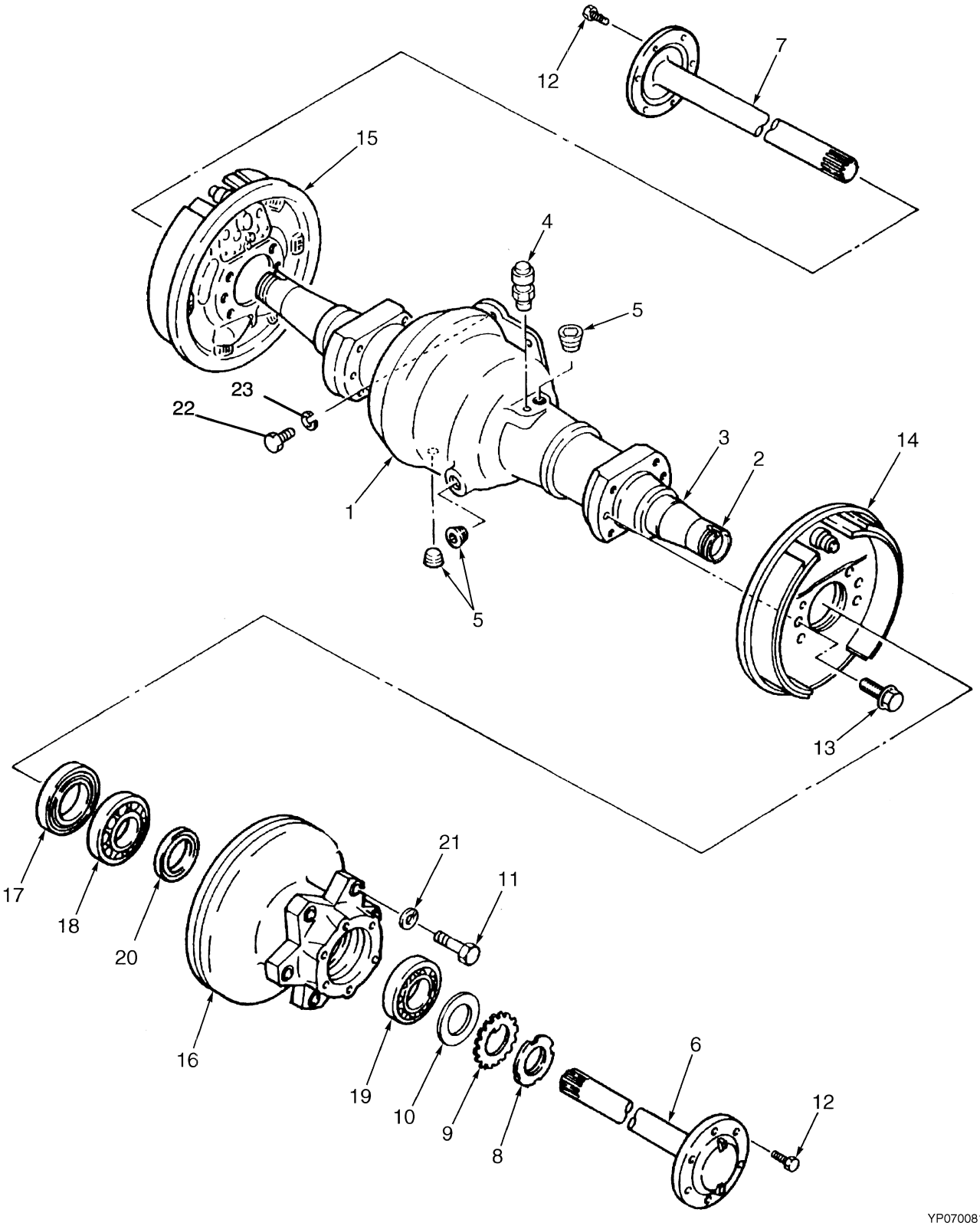

©2004 HYSTER COMPANY

DRIVE AXLE

ITEM	PART NO.	DESCRIPTION	QTY
	2022839	Drive Axle	1
1	2022825	Housing	1
2	2021491	Sleeve	2
3	2044302	Sleeve	2
4	2021510	Breather	1
5	2023421	Plug	3
6	2026452	Shaft (RH)	1
7	2026453	Shaft (LH)	1
8	2021918	Nut	2
9	2021588	Lockwasher	2
10	2021592	Washer	2
11	292544	Capscrew	12
12	293630	Capscrew	12
13	2021286	Bolt	12
14	2026760	Brake Assembly (RH) (☞ Figure 7-3)	1
15	2026759	Brake Assembly (LH) (☞ Figure 7-3)	1
16	2021558	Hub Assembly	2
17	2021554	Oil Seal	2
18	2021555	Bearing	2
19	2021288	Bearing	2
20	2021557	Oil Seal	2
21	292684	Lockwasher	12
22	287860	Capscrew	10
23	292682	Lockwasher	10

©2004 HYSTER COMPANY

END PLATE (Figure 5-11)

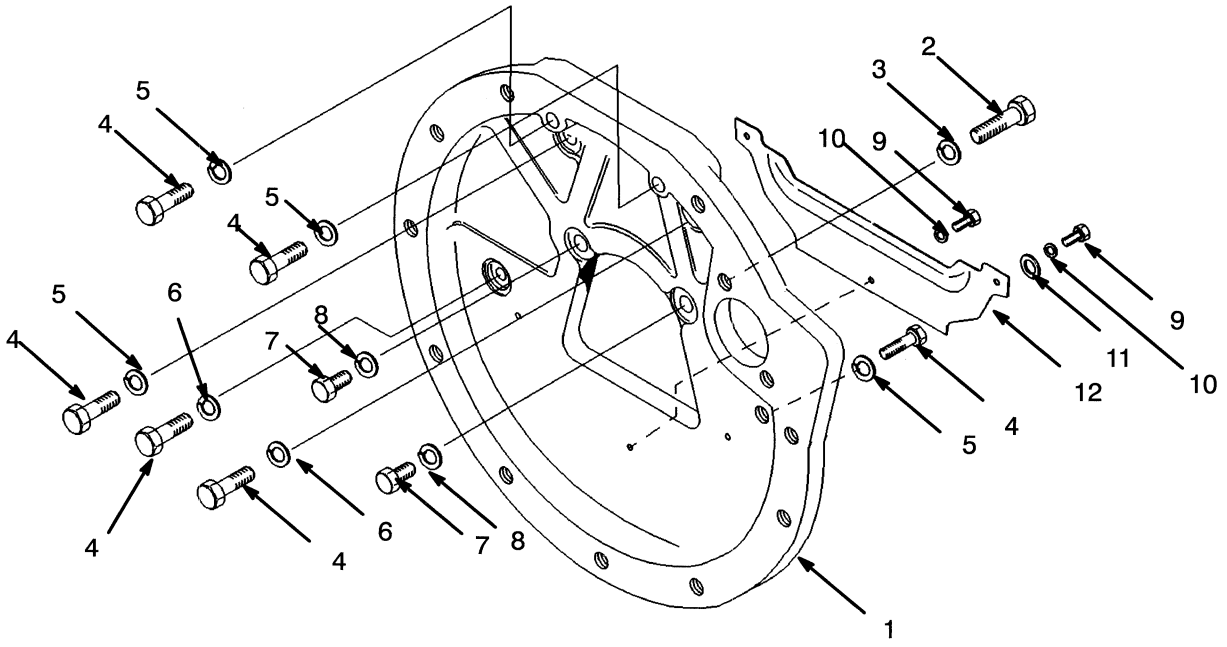

ITEM	PART NO.	DESCRIPTION	QTY
1	2023500	Plate	1
2	2022718	Capscrew	2
3	292682	Lockwasher	2
4	2021646	Bolt	6
5	292684	Lockwasher	4
6	296424	Washer	2
7	136749	Capscrew	2
8	292681	Lockwasher	2
9	148962	Capscrew (Optional)	3
9	302256	Screw	3
10	292680	Lockwasher	3
11	2021432	Washer	2
12	1371652	Cover	1

©2004 HYSTER COMPANY

6 STEERING SYSTEM

SECTION 6
STEERING SYSTEM

DESCRIPTION	PAGE
SHIFT LEVER	6-4
STEERING AXLE	6-8
STEERING COLUMN	6-2
STEERING CYLINDER	6-10
STEERING PUMP	6-6

©2004 HYSTER COMPANY

STEERING COLUMN (Figure 6-1)

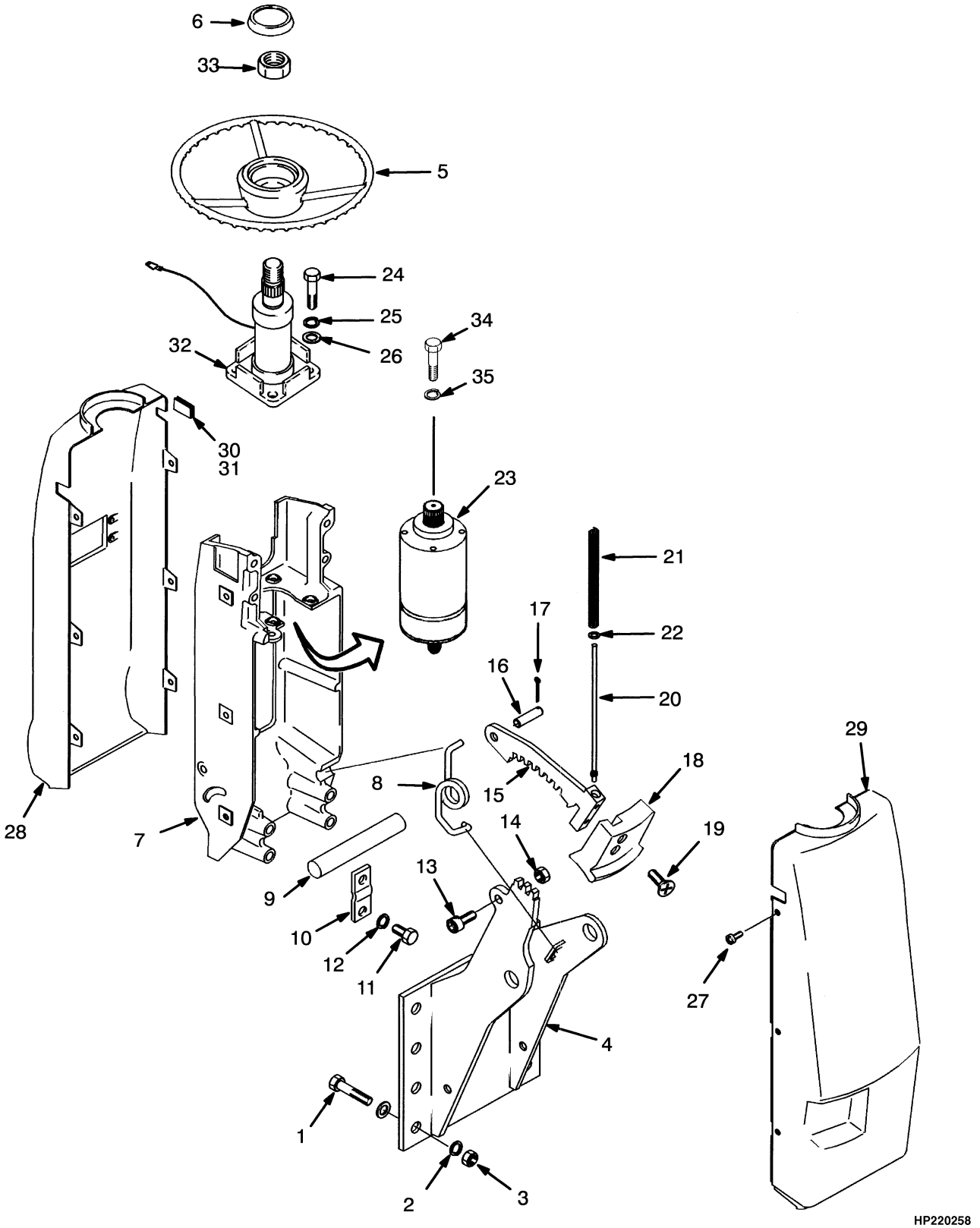

©2004 HYSTER COMPANY

STEERING COLUMN

ITEM		PART NO.	DESCRIPTION	QTY
1		136985	Capscrew	4
2		292682	Lockwasher	4
3		136692	Nut	4
4		1337043	Bracket	1
5		1329250	Steering Wheel	1
6		1347135	Horn Button	1
7		1343573	Bracket	1
8		1378600	Spring	1
9		1335987	Shaft	1
10		1335967	Plate	2
11		136749	Capscrew	4
12		292681	Lockwasher	4
13		296010	Capscrew	1
14		302400	Locknut	1
15		1364271	Latch	1
16		1343607	Pin	1
17		15212	Cotter Pin	1
18		1343574	Latch Knob	1
19		296472	Screw	2
20		1343572	Rod	1
21		1343537	Spring	1
22		320155	Washer	1
23		1471330	Pump (☞ Figure 6-3)	1
24		16815	Capscrew	4
25		15156	Lockwasher	4
26		15134	Washer	8
27		1337196	Screw	6
27		1507923	Screw (Optional)	6
28		1376744	Cover (Upper)	1
29		1376745	Cover (Lower)	1
30		1343597	Plug (With Turn Signal)	1
31	**a**	1376743	Plug	1
32		1453687	Steering Column	1
32		1382556	Terminal Kit (Horn)	1
33		345423	Nut	1
34		293762	Capscrew	4
35		293779	Lockwasher	4

FOOTNOTES:

a Forward and Reverse without Turn Signal

©2004 HYSTER COMPANY

SHIFT LEVER (Figure 6-2)

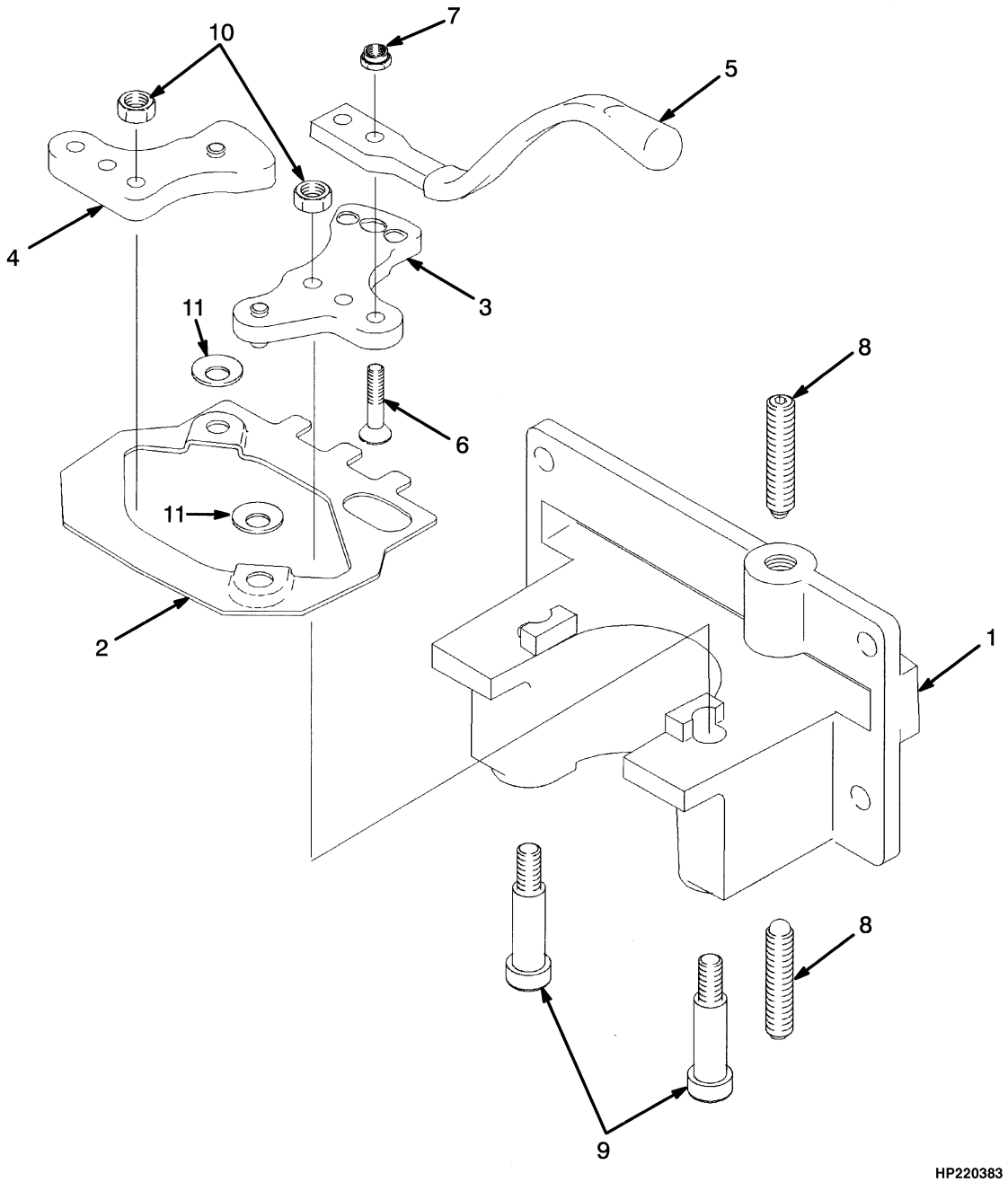

©2004 HYSTER COMPANY

SHIFT LEVER

ITEM	PART NO.	DESCRIPTION	QTY
	1347004	Shift Lever Assembly	1
1	1343577	Base	1
2	1343578	Link	1
3	1343579	Crank	1
4	1343598	Crank	1
5	1343593	Shift Lever	1
6	296205	Capscrew	2
7	302398	Locknut	2
8	1338291	Spring Plunger	2
9	1343594	Bolt	2
10	136687	Nut	2
11	1354300	Washer	4

©2004 HYSTER COMPANY

STEERING PUMP (Figure 6-3)

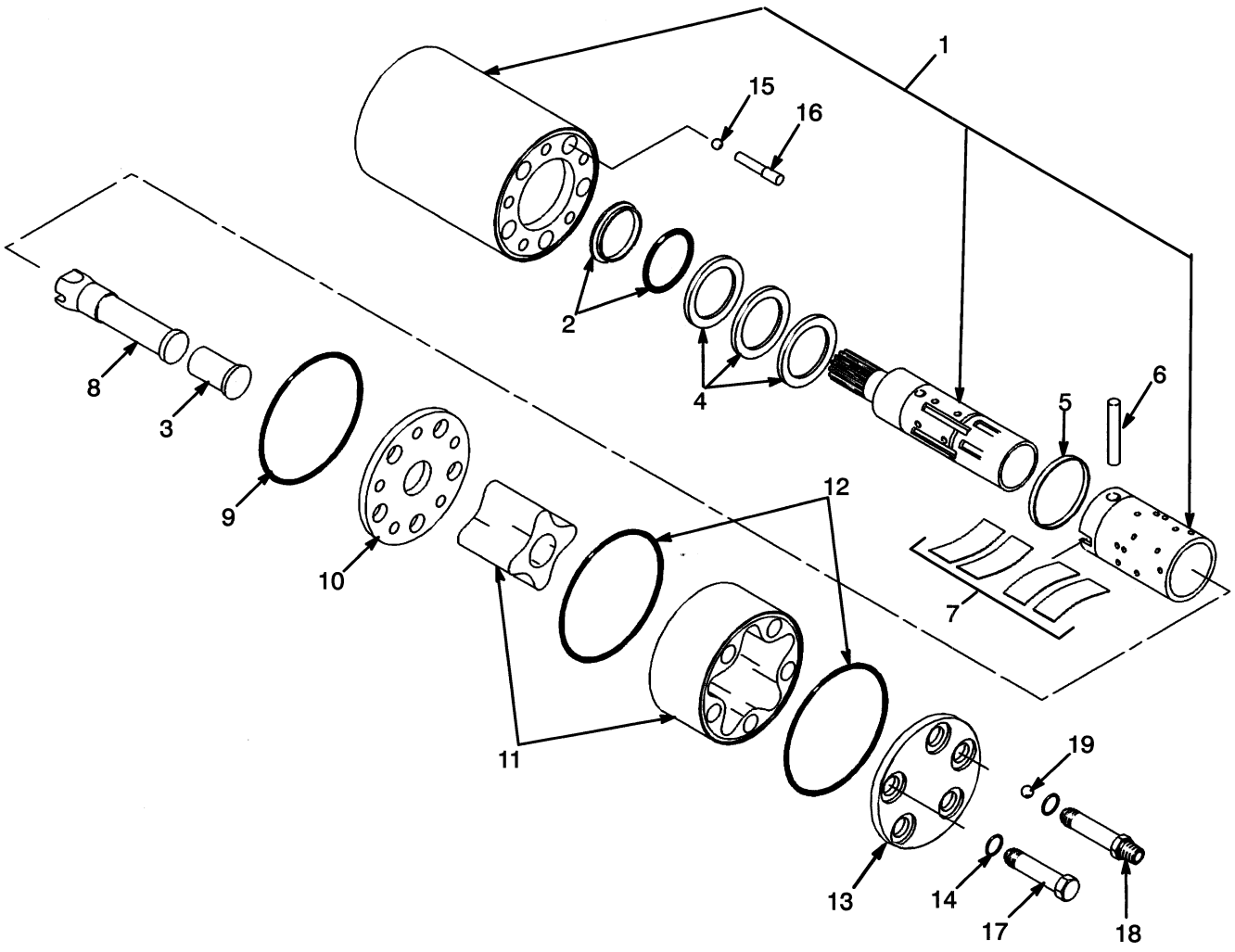

HP220251

©2004 HYSTER COMPANY

STEERING PUMP

ITEM	PART NO.	DESCRIPTION	QTY
	1471330	Pump	1
1	. . . . .	Housing	1
1	. . . . .	Spool	1
1	. . . . .	Sleeve	1
2	. . . . .	Seal	2
3	1455772	Spacer	1
4	1451697	Bearing Assembly	1
5	1455770	Ring	1
6	1451698	Pin	1
7	1455771	Spring Set	1
8	1451700	Shaft	1
9	. . . . .	O-Ring	1
10	1451703	Plate	1
11	1490747	Gear Set	1
12	. . . . .	O-Ring	2
13	1455773	Cover	1
14	. . . . .	O-Ring	5
15	1355335	Ball	1
16	1451696	Stop	1
17	1455774	Screw	1
17	. . . . .	O-Ring	1
18	1455775	Screw	4
18	. . . . .	O-Ring	1
19	1451707	Ball	1
	1455778	Seal Kit (Includes Items 2, 9, 12, 14)	1

©2004 HYSTER COMPANY

STEERING AXLE (Figure 6-4)

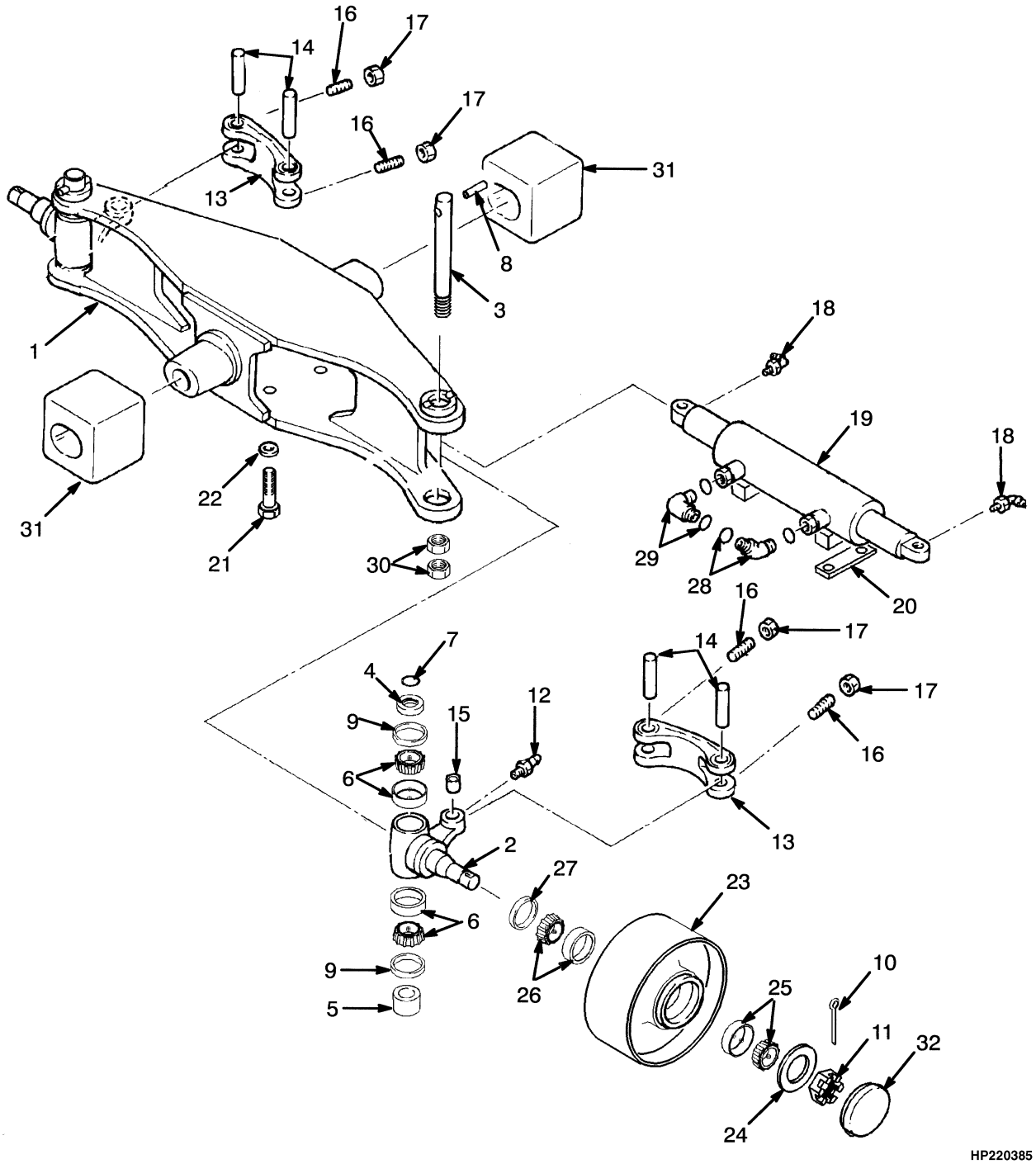

©2004 HYSTER COMPANY

STEERING AXLE

ITEM	PART NO.	DESCRIPTION	QTY
1	2022775	Steer Axle Frame	1
2	2022776	Spindle	2
3	2021781	King Pin	2
4	2021783	Sleeve (Upper)	2
5	2021784	Sleeve (Lower)	2
6	2021785	Bearing	4
7	2021882	O-Ring	2
8	2021786	Pin	2
9	2021883	Oil Seal	4
10	2021885	Cotter Pin	2
11	2021889	Nut	2
12	2305757	Lube Fitting	2
13	2022777	Link	2
14	2021793	Pin	4
15	2021794	Bushing	2
16	302146	Screw	4
17	2021892	Nut	4
18	2021895	Lube Fitting	2
19	2035116	Steer Cylinder (☞ Figure 6-5)	1
20	2021796	Spacer	2
21	293686	Capscrew	4
22	296426	Washer (Hardened)	4
23	2023636	Wheel and Tire (☞ Figure 12-12)	2
23	2044298	Wheel and Tire (☞ Figure 12-12)	2
24	2021801	Washer	2
25	2021802	Bearing	2
26	2021803	Bearing	2
27	2021898	Oil Seal	2
28	16567	Fitting	1
28	16483	O-Ring	1
29	16558	Fitting	1
29	16483	O-Ring	1
30	2021790	Nut	2
31	2021804	Cushion	2
32	2021800	Cap	2
	996404	Steer Axle Kit (Includes Items 3-10, 14-17, 25-27, 30)	1

©2004 HYSTER COMPANY

STEERING CYLINDER (Figure 6-5)

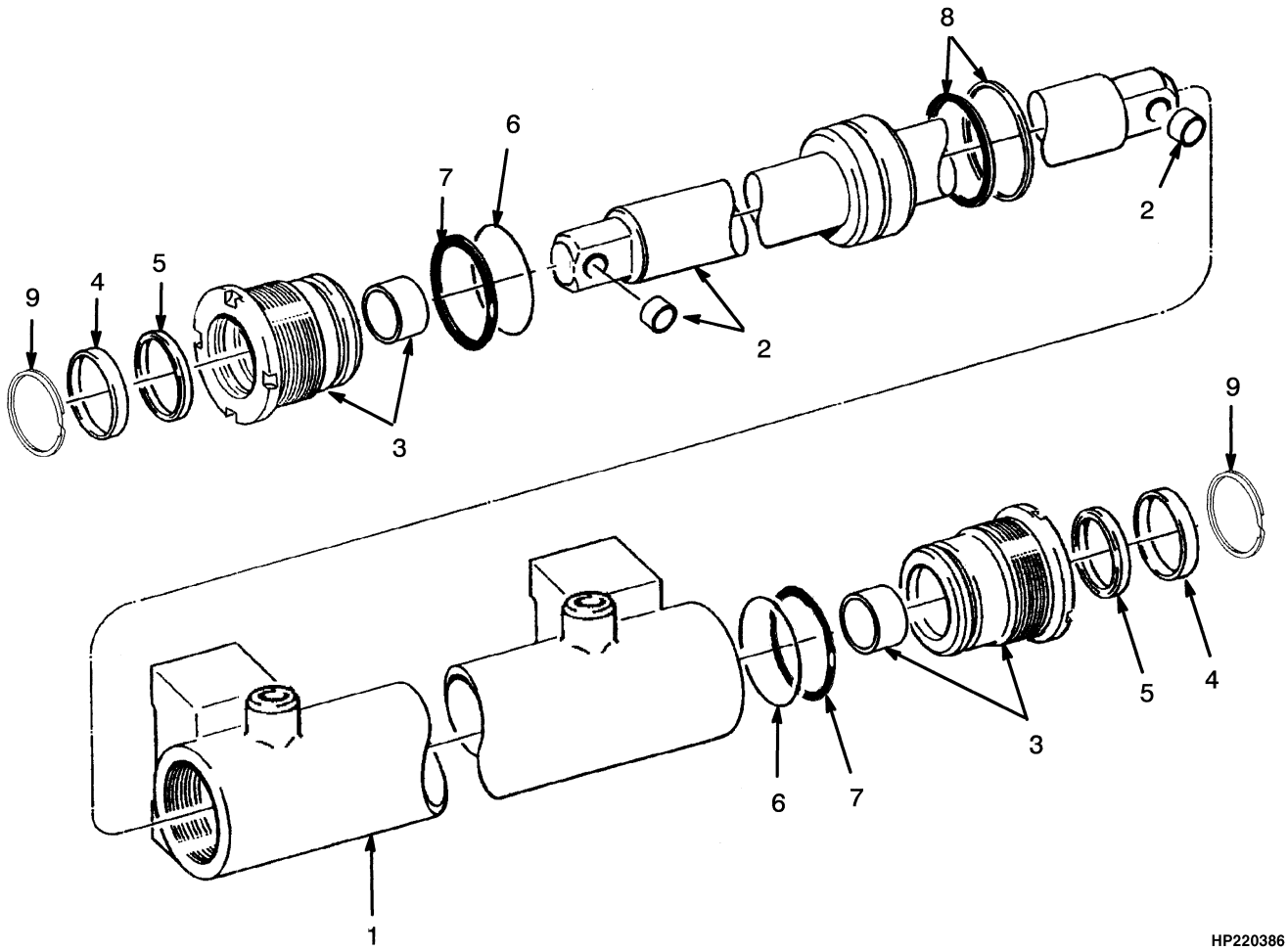

ITEM	PART NO.	DESCRIPTION	QTY
	2035116	Steer Cylinder	1
1	1367169	Shell	1
2	2026820	Rod	1
2	2022923	Bushing	2
3	1367171	Guide	2
3	. . . . .	Bushing	2
4	. . . . .	Dust Seal	2
5	. . . . .	U-Packing	2
6	. . . . .	O-Ring	2
7	. . . . .	O-Ring	2
8	. . . . .	Seal	1
9	. . . . .	Snap Ring	2
	2026822	Seal Kit (Includes Items 4-9)	1

©2004 HYSTER COMPANY

7 BRAKE SYSTEM

SECTION 7
BRAKE SYSTEM

DESCRIPTION	PAGE
BRAKE ASSEMBLY	7-6
BRAKE LINES	7-4
BRAKE MASTER CYLINDER	7-10
BRAKE PEDAL LINKAGE	7-2
PARK BRAKE LEVER	7-8

©2004 HYSTER COMPANY

BRAKE PEDAL LINKAGE (Figure 7-1)

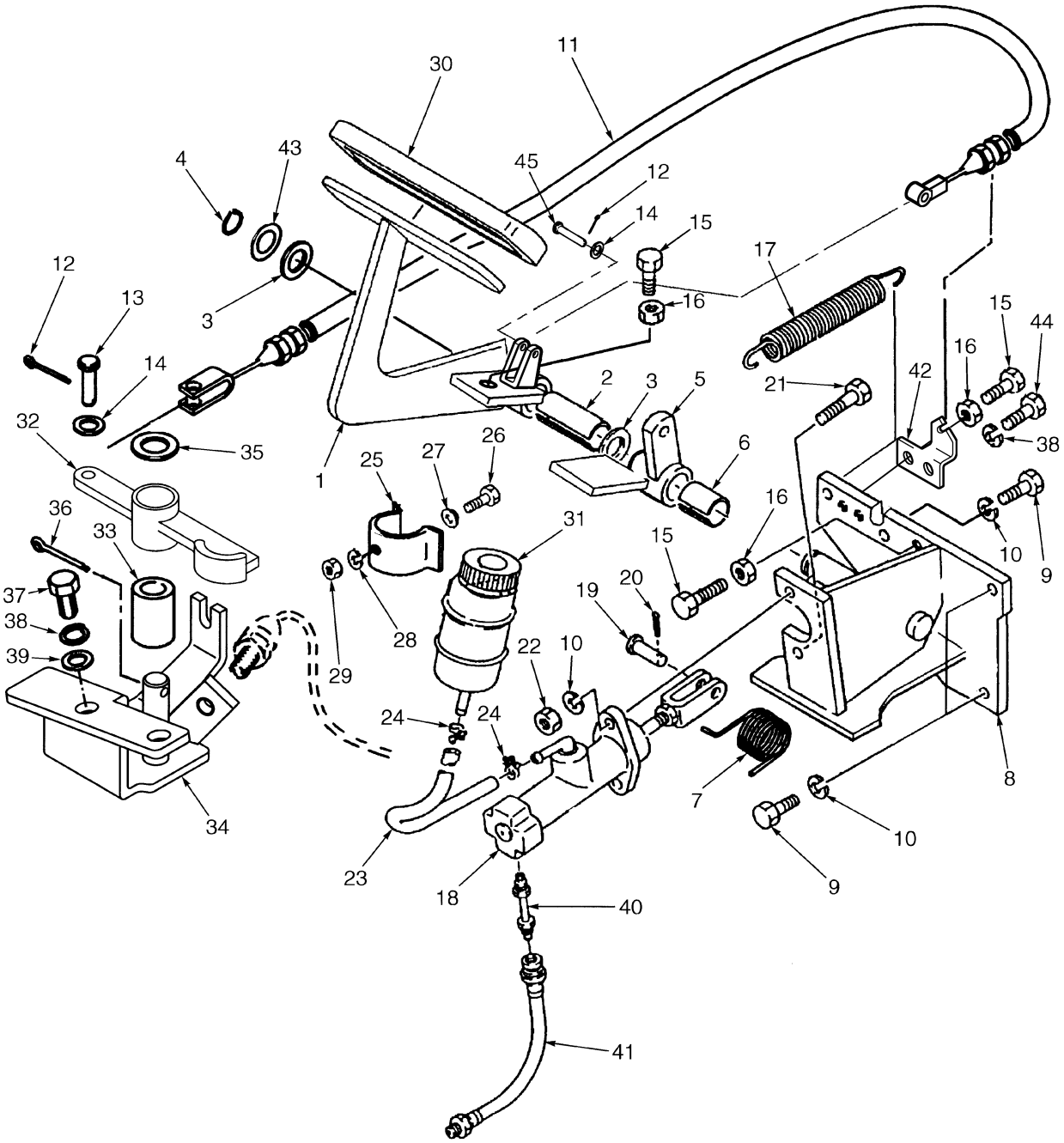

©2004 HYSTER COMPANY

BRAKE PEDAL LINKAGE

ITEM	PART NO.	DESCRIPTION	QTY
1	2046564	Brake Pedal	1
2	2021310	Bushing	1
3	320169	Washer	2
4	3044119	Snap Ring	1
5	2026497	Bellcrank	1
6	2021315	Bushing	1
7	2021316	Spring	1
8	2046366	Bracket	1
9	287854	Capscrew	3
10	292682	Lockwasher	5
11	2051978	Cable	1
12	2022509	Pin	2
13	2021907	Cotter Pin	1
14	320155	Washer	2
15	2021335	Bolt	3
16	2304281	Nut	3
17	2021337	Spring	1
18	2021338	Master Cylinder (☞ Figure 7-5)	1
19	2021339	Pin (Clevis)	1
20	2037317	Cotter Pin (Cotter)	1
21	287860	Capscrew	2
22	136692	Nut	2
23	2026586	Hose	1
24	168718	Clamp	2
25	2021353	Bracket	1
26	2022617	Bolt	1
27	320156	Washer	1
28	292680	Lockwasher	1
29	2021892	Nut	1
30	1343630	Pad	1
31	2021341	Cap	1
31	2314220	Reservoir	1
32	2023940	Bellcrank Assembly	1
33	2021326	Bushing	1
34	2021327	Bracket	1
35	320161	Washer	1
36	2022553	Cotter Pin	1
37	292511	Capscrew	2
38	292681	Lockwasher	2
39	320157	Washer	2
40	2021347	Pipe	1
41	2021349	Hose	1
42	2046561	Support	1
43	2034112	Shim (0.023 in.)	1
44	136681	Capscrew	1
45	2046565	Pin	1
	292681	Lockwasher	1

©2004 HYSTER COMPANY

BRAKE LINES (Figure 7-2)

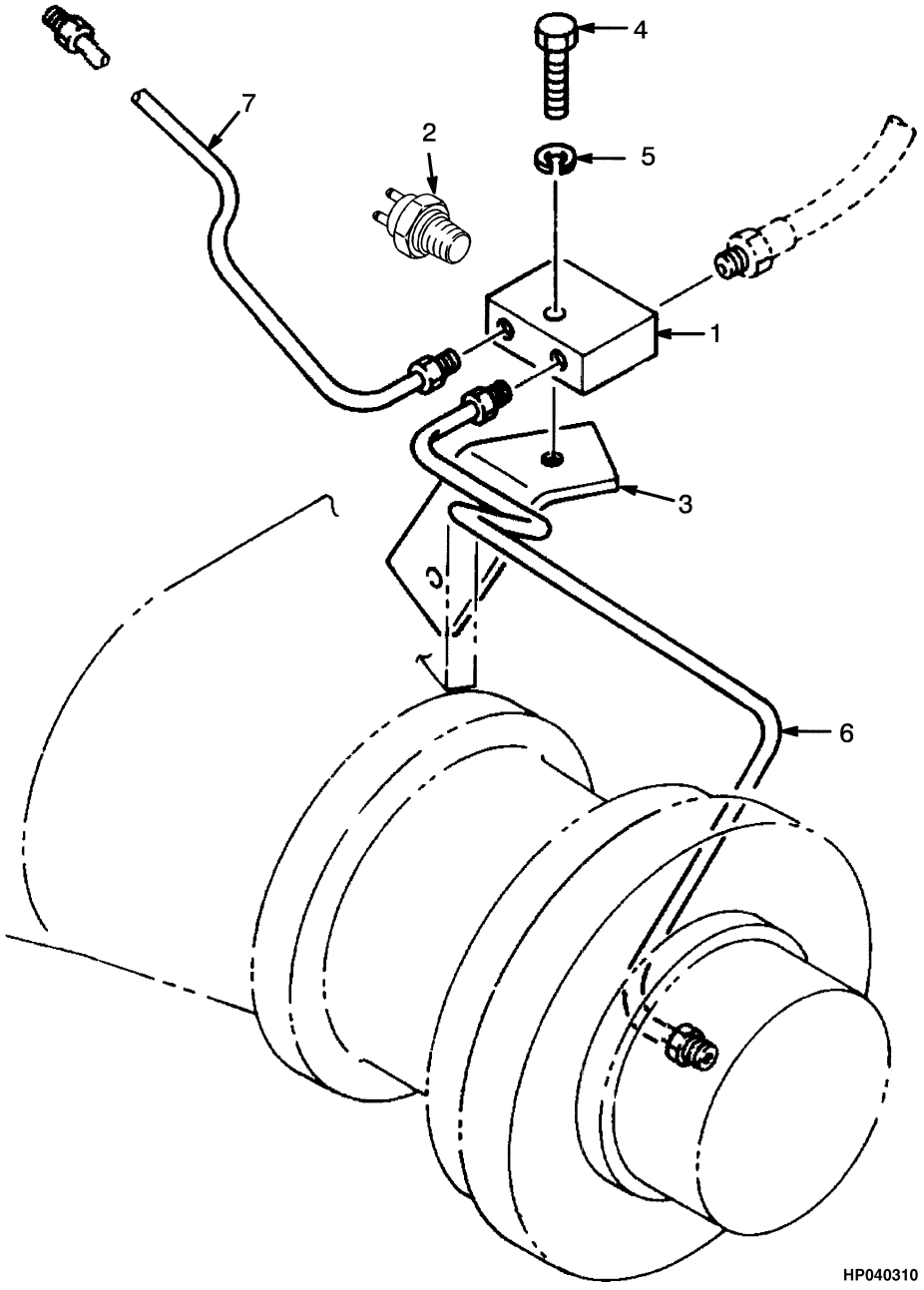

©2004 HYSTER COMPANY

BRAKE LINES

ITEM	PART NO.	DESCRIPTION	QTY
1	2021470	Manifold	1
2	387867	Pressure Switch	1
3	2021471	Bracket	1
4	302262	Screw	1
5	292680	Lockwasher	1
6	2026790	Pipe (LH)	1
7	2026791	Pipe (RH)	1

©2004 HYSTER COMPANY

BRAKE ASSEMBLY (Figure 7-3)

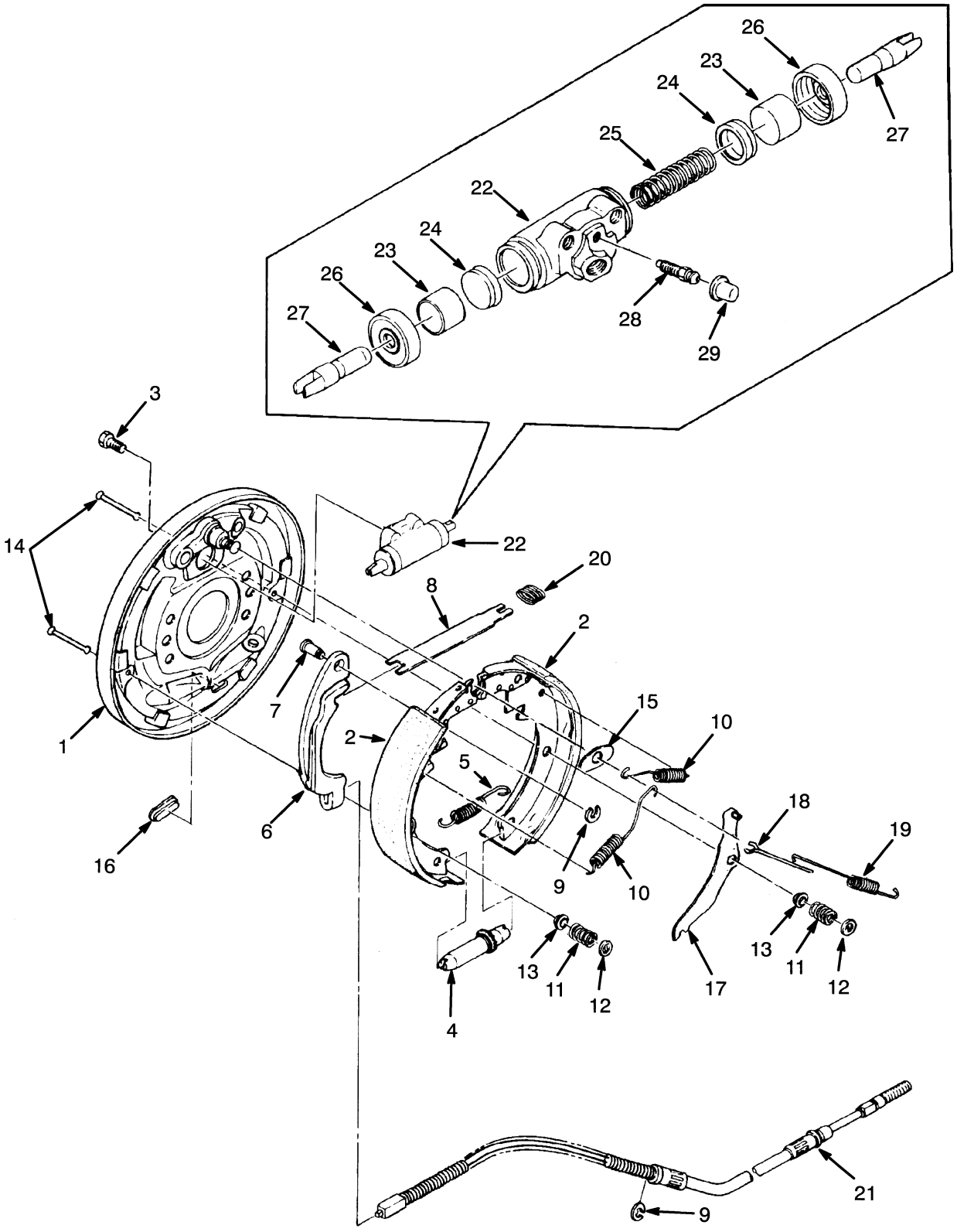

HP040311

©2004 HYSTER COMPANY

BRAKE ASSEMBLY

KEY:
A: Left Hand
B: Right Hand

ITEM	PART NO.	DESCRIPTION	QTY A	QTY B
	2026759	Brake Assembly	1	..
	2026760	Brake Assembly	..	1
1	2026773	Plate (Back)	..	1
1	2026774	Plate (Back)	1	..
2	. . . . .	Brake Shoe	2	2
3	2026776	Bolt	2	2
4	. . . . .	Adjuster Assembly	..	1
4	. . . . .	Adjuster Assembly	1	..
5	. . . . .	Spring (Adjuster)	1	1
6	2026777	Lever	..	1
6	2026778	Lever	1	..
7	2026779	Pin	1	1
8	2026780	Strut	1	1
9	2026781	Snap Ring	2	..
10	2026782	Spring	2	2
11	. . . . .	Spring (Shoe Hold Down)	2	2
12	. . . . .	Washer	2	2
13	. . . . .	Washer (Lower)	1	1
14	. . . . .	Pin	2	2
15	1367854	Plate	1	1
16	1367855	Plug	1	1
17	. . . . .	Lever	..	1
17	. . . . .	Lever	1	..
18	. . . . .	Stop (Lever)	1	1
19	. . . . .	Spring	1	1
20	2026783	Spring	1	1
21	2026767	Cable	1	..
21	2026768	Cable	..	1
22	2026775	Wheel Cylinder	1	1
23	. . . . .	Piston	2	2
24	. . . . .	Cup	2	2
25	. . . . .	Spring	1	1
26	. . . . .	Cover (Dust)	2	2
27	2045884	Piston Rod	2	2
28	1367870	Screw (Bleed)	1	1
29	1367871	Cup	1	1
	2026787	Brake Shoe Kit (Includes Items 2, 7, 9)	1	1
	2026784	Adjuster Kit (LH) (Includes Items 4-5, 17-19)	1	1
	2026785	Adjuster Kit (RH) (Includes Items 4-5, 17-19)	1	1
	2026786	Shoe Hold-Down Kit (Includes Items 11-14)	1	1
	1367876	Wheel Cylinder Kit (Includes Items 23-26)	1	1

©2004 HYSTER COMPANY

PARK BRAKE LEVER (Figure 7-4)

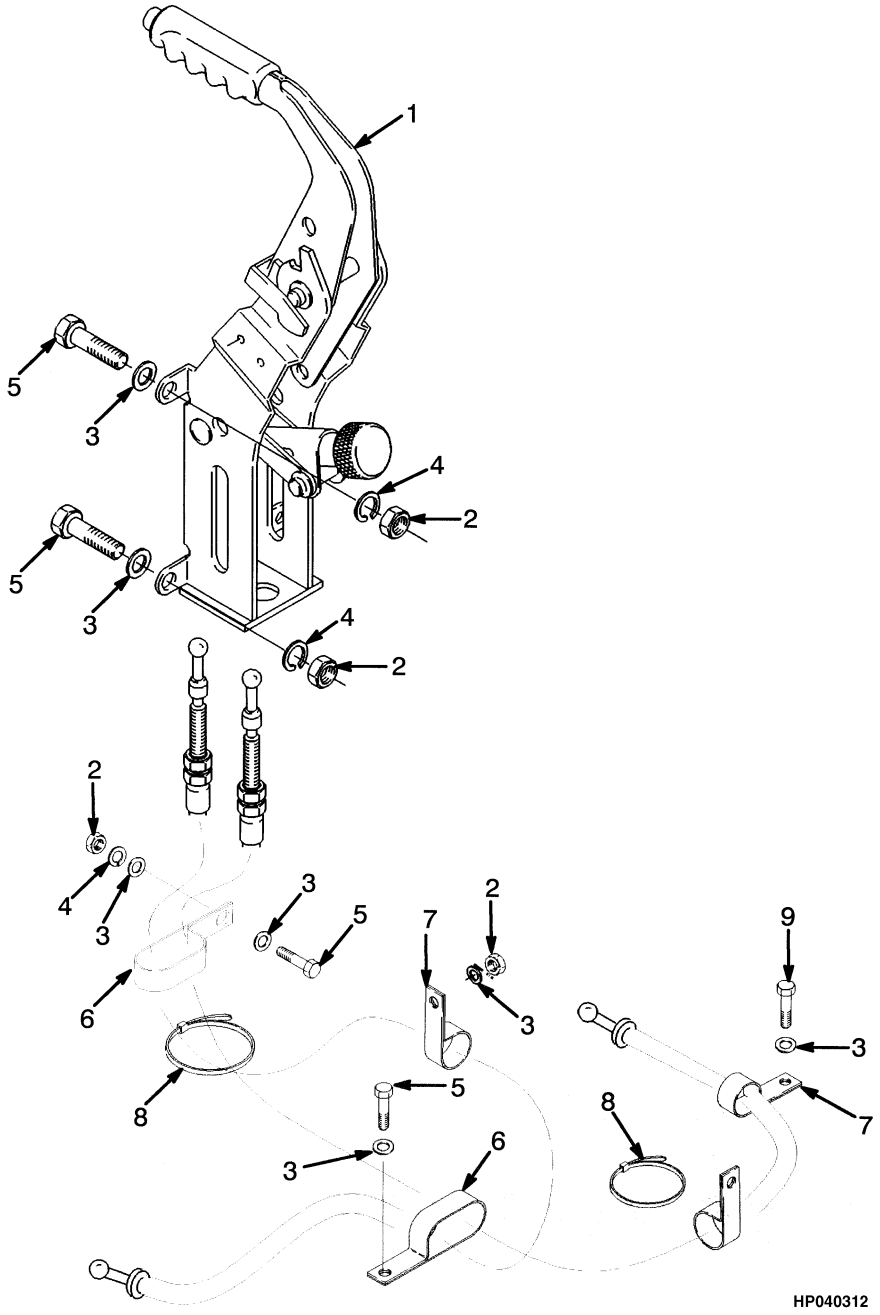

©2004 HYSTER COMPANY

PARK BRAKE LEVER

ITEM	PART NO.	DESCRIPTION	QTY
1	1376557	Lever Assembly (Park Brake)	1
2	239503	Nut	5
3	320157	Washer	8
4	292681	Lockwasher	4
5	136749	Capscrew	4
6	176910	Clamp	2
7	124297	Clamp	2
8	137852	Strap Clamp	2
9	287851	Capscrew	1

©2004 HYSTER COMPANY

BRAKE MASTER CYLINDER (Figure 7-5)

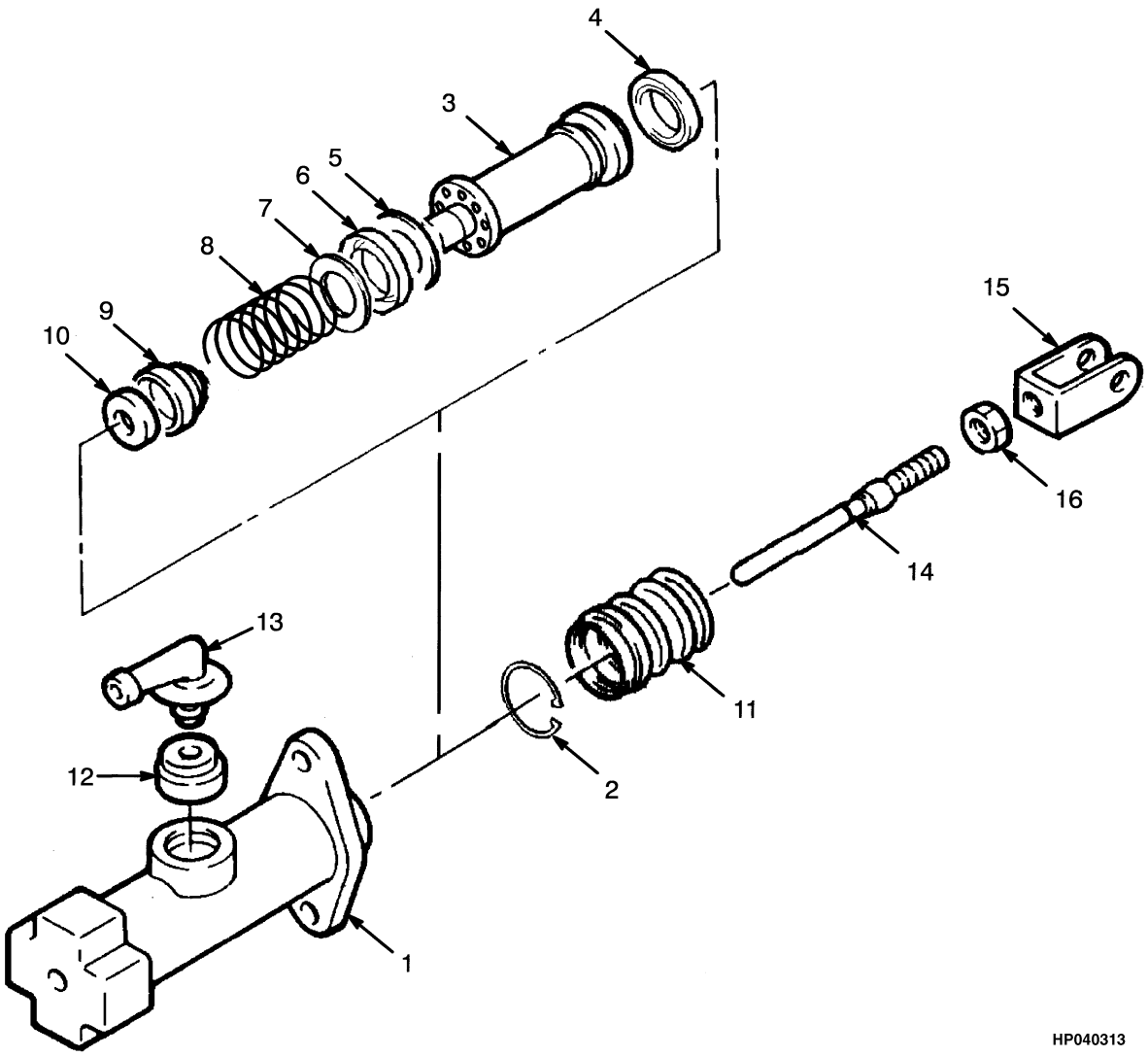

©2004 HYSTER COMPANY

BRAKE MASTER CYLINDER

ITEM	PART NO.	DESCRIPTION	QTY
	2021338	Master Cylinder	1
1	. . . . .	Cylinder Assembly	1
2	. . . . .	Snap Ring	1
3	. . . . .	Piston	1
4	. . . . .	Cup	1
5	. . . . .	Cup	1
6	. . . . .	Cup	1
7	. . . . .	Retainer	1
8	. . . . .	Spring	1
9	. . . . .	Check Valve	1
10	. . . . .	Valve Seat	1
11	. . . . .	Boot	1
12	. . . . .	Fitting	1
13	. . . . .	Fitting	1
14	. . . . .	Push Rod	1
15	1367194	Yoke	1
16	2304281	Nut	1
	1367193	Repair Kit (Includes Items 2-11)	1

©2004 HYSTER COMPANY

NOTES

8 HYDRAULIC SYSTEM

SECTION 8
HYDRAULIC SYSTEM

DESCRIPTION	PAGE
CONTROL VALVE	
FOUR FUNCTION	
SINGLE RELIEF	8-18
THREE FUNCTION	
SINGLE RELIEF	8-12
HYDRAULIC GEAR PUMP DRIVE	8-6
HYDRAULIC PUMP	
GASOLINE AND LPG	8-5
HYDRAULICS	8-2
MAST INSTALLATION	8-22
TILT CYLINDER	8-24
VALVE ATTACHING PARTS	
FOUR FUNCTION	8-16
THREE FUNCTION	8-8

©2004 HYSTER COMPANY

HYDRAULICS (Figure 8-1)

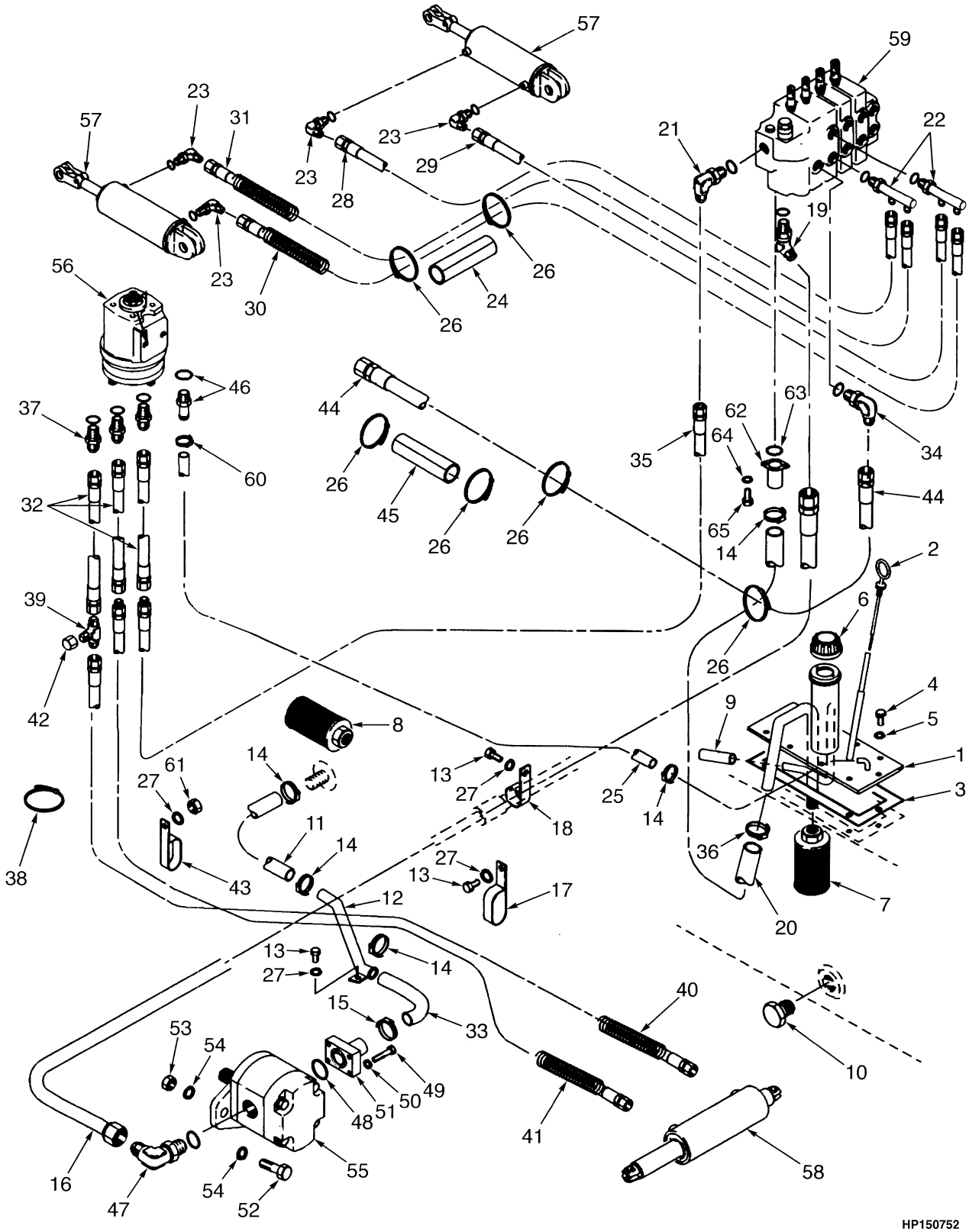

©2004 HYSTER COMPANY

HYDRAULICS

ITEM	PART NO.	DESCRIPTION	QTY
1	2023461	Cover	1
2	2023462	Dipstick	1
3	2021672	Gasket	1
4	2021233	Capscrew	6
5	2021673	Washer	6
6	2021908	Cap	1
7	2021933	Filter (Return)	1
8	2021935	Filter (Suction)	1
9	164798	Hose	1
10	17636	Fitting	1
11	1474614	Hose (Suction)	1
12	2022888	Pipe	1
13	287851	Capscrew	5
14	127045	Clamp	5
15	119236	Clamp	1
16	2023718	Hose	1
17	251994	Clamp	1
18	166112	Clamp	1
19	2021887	Fitting	1
20	1474615	Hose	1
21	16558	Fitting	1
21	16483	O-Ring	1
22	1486699	Fitting	2
23	16556	Fitting	4
23	16481	O-Ring	1
24	1379457	Tube	1
25	340609	Hose	1
26	137852	Strap Clamp	11
27	292681	Lockwasher	8
28	1486675	Hose	1
29	1486675	Hose	1
30	1486681	Hose	1
31	1486680	Hose	1
32	278510	Hose	3
33	1474617	Hose (Suction)	1
34	16560	Fitting	1
34	16485	O-Ring (Face Seal)	1
35	348025	Hose	1
36	166857	Clamp	1
37	16540	Fitting	3
37	16483	O-Ring	1
38	2021652	Strap Clamp	1
39	1347212	Fitting	1
40	89366	Hose	1
41	2023764	Hose	1
42	16923	Fitting	1
43	129684	Clamp	2
44	107471	Hose	1
45	2026096	Hose	1
46	222492	Fitting	1
46	16483	O-Ring	1

©2004 HYSTER COMPANY

HYDRAULICS

ITEM	PART NO.	DESCRIPTION	QTY
47	2021271	Fitting	1
48	2021882	O-Ring	1
49	296010	Capscrew	4
50	2021272	Lockwasher	4
51	2021273	Connector	1
52	287860	Capscrew	2
53	136692	Nut	2
54	296420	Washer	1
55	2026484	Hydraulic Pump (Hydraulic) (☞ Figure 8-2)	1
56	. . . . .	Valve (Steering Control) (☞ Figure 6-3)	1
57	2309269	Tilt Cylinder (☞ Figure 8-9)	2
57	2308157	Tilt Cylinder (☞ Figure 8-9)	2
58	2035116	Steer Cylinder (☞ Figure 6-5)	1
59	2026063	Control Valve (Control) (Three Function) (☞ Figure 8-5)	1
59	2026065	Control Valve (Control) (Four Function) (☞ Figure 8-7)	1
60	2023396	Clamp	1
61	239503	Nut	1
62	2026066	Flange	1
63	2021882	O-Ring	1
64	292680	Lockwasher	2
65	1383682	Capscrew	2

©2004 HYSTER COMPANY

HYDRAULIC PUMP (Figure 8-2)
GASOLINE AND LPG

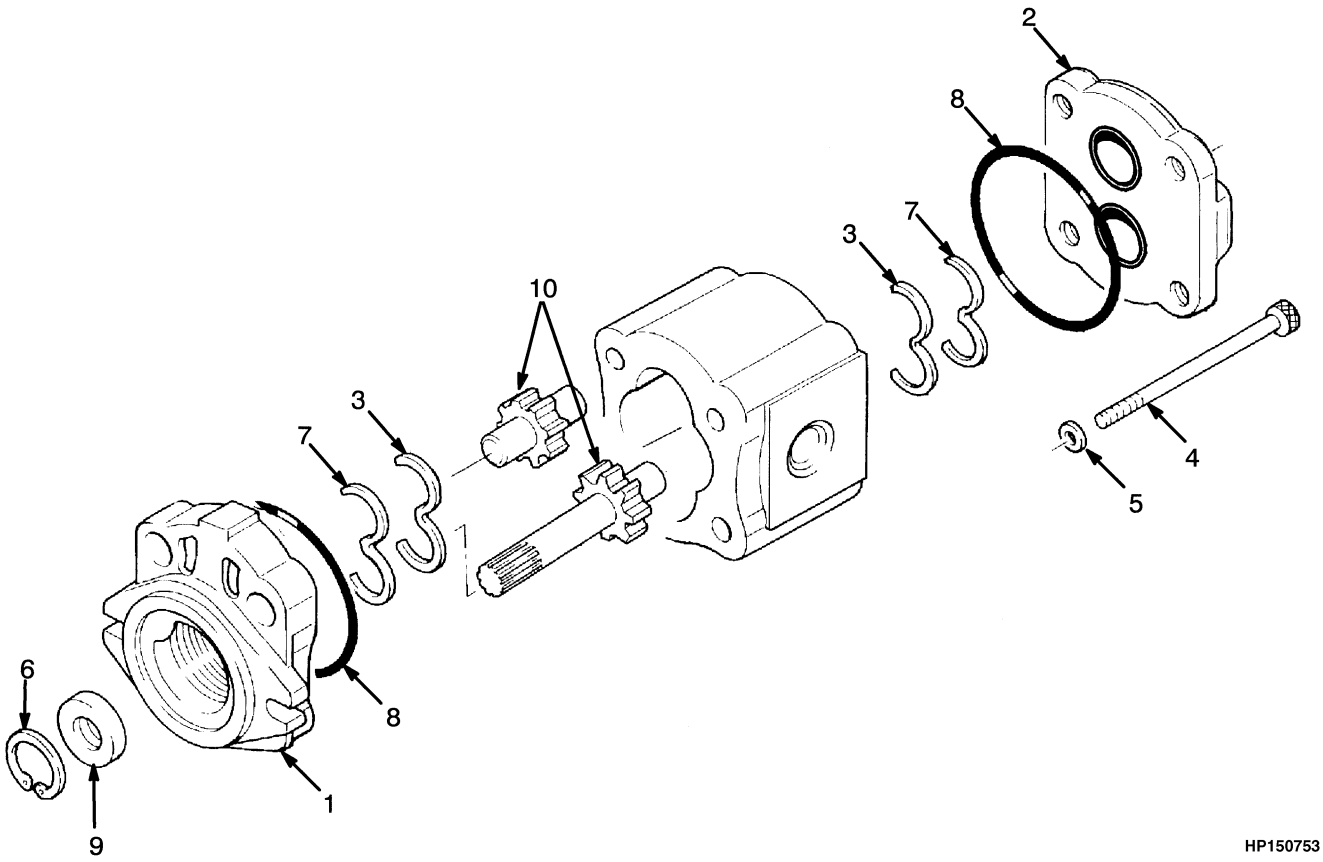

ITEM	PART NO.	DESCRIPTION	QTY
	2026484	Hydraulic Pump (Hydraulic)	1
1	1385135	Cover (Front)	1
2	1385136	Cover (Rear)	1
3	1385137	Plate	2
4	1385138	Capscrew	4
5	1385147	Washer	4
6	1385148	Snap Ring	1
7	1385140	Gasket	2
8	2026895	Gasket	2
9	1389577	Oil Seal	1
10	1385142	Drive Gear Kit (Drive)	1
	1385139	Seal Kit (Includes Items 7-9)	1

HYDRAULIC GEAR PUMP DRIVE (Figure 8-3)

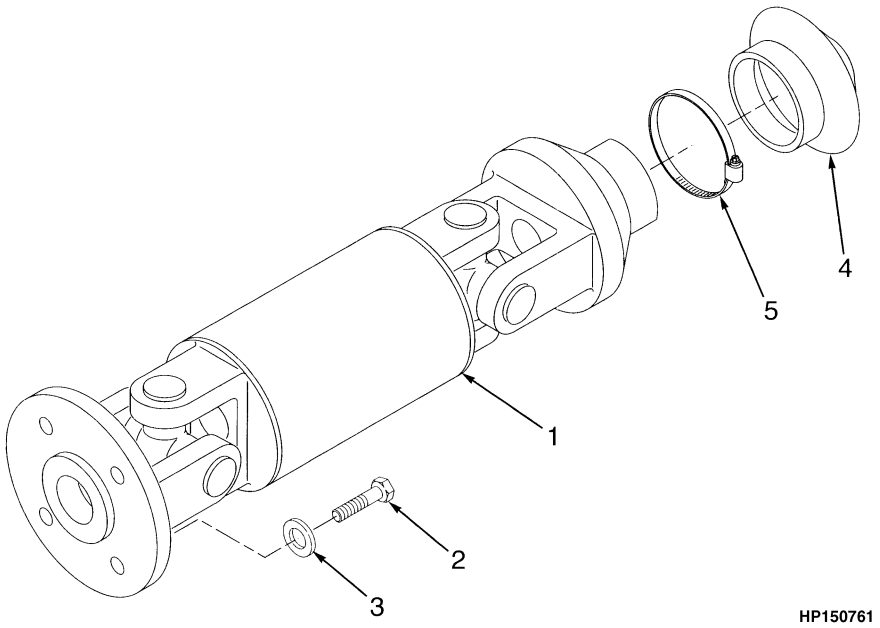

ITEM	PART NO.	DESCRIPTION	QTY
1	1467824	Drive Shaft	1
2	2022550	Bolt	4
3	292681	Lockwasher	4
4	2026632	Boot	1
5	2004005	Strap Clamp	1

©2004 HYSTER COMPANY

NOTES

VALVE ATTACHING PARTS (Figure 8-4)
THREE FUNCTION

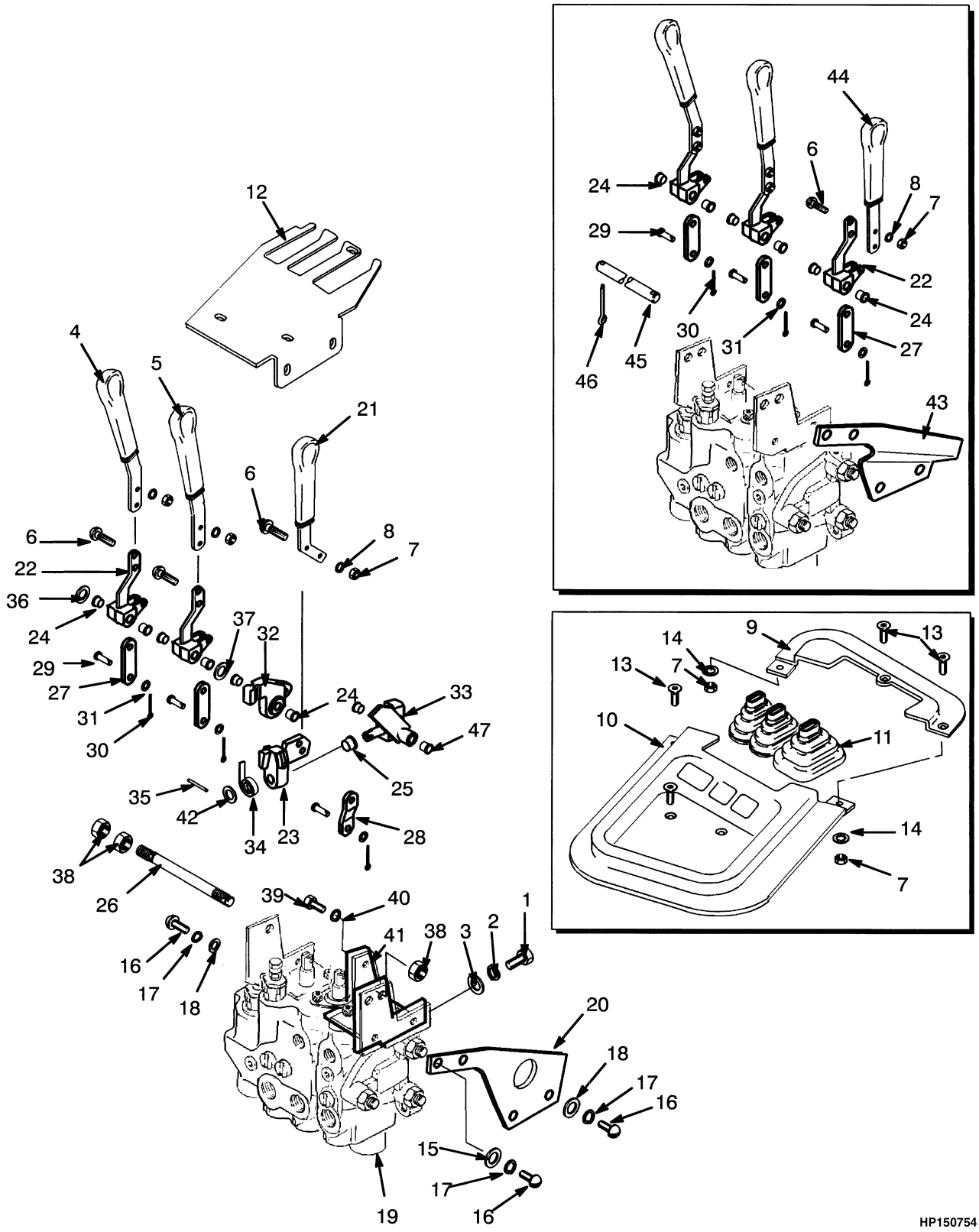

©2004 HYSTER COMPANY

VALVE ATTACHING PARTS
THREE FUNCTION

KEY:
A: Detented Lever
B: Standard Lever

ITEM		PART NO.	DESCRIPTION	QTY A	QTY B
1		287503	Capscrew	3	3
2		292682	Lockwasher	3	3
3		15177	Washer	3	3
4		2020500	Lever	1	1
5		2020501	Lever	1	1
6		296160	Capscrew	6	6
7		313805	Nut	11	11
8		292680	Lockwasher	6	6
9		2021862	Cover (Front)	1	1
10		2021863	Cover (Rear)	1	1
11		2021864	Boot	1	1
12		2021865	Plate	1	1
13		2022702	Screw	5	5
14		320156	Washer	5	5
15		320157	Washer	2	2
16		296165	Capscrew	5	5
17		292681	Lockwasher	5	5
18		15175	Washer	3	3
19		2026063	Control Valve (Control) (☞ Figure 8-5)	1	1
20		2021867	Bracket	1	..
21		2020503	Lever	1	..
22		2021823	Yoke	2	3
23		2022912	Pivot	1	..
24		2022796	Bushing	6	6
25		2021810	Bushing	1	..
26		2021813	Pin	1	..
27		2021815	Link	2	3
28		2021816	Link	1	..
29		2021817	Pin	6	6
30		2021818	Cotter Pin	6	6
31		320155	Washer	6	6
32		2022911	Yoke	1	..
33		2021852	Pin Selector	1	..
34		175861	Spring	1	..
35		302427	Pin	1	..
36		2021860	Shim	AR	..
37		296417	Lockwasher	1	..
38		296128	Nut	3	..
39		287817	Capscrew	1	..
40	**a**	296417	Lockwasher	1	..
41	**a**	2021856	Bracket	1	..
42	**a**	2311502	Shim (0.015 in.)	AR	..
43	**a**	2021866	Bracket	..	1
44	**a**	2020502	Lever	..	1
45		2021812	Pin	..	1

©2004 HYSTER COMPANY

VALVE ATTACHING PARTS
THREE FUNCTION

ITEM	PART NO.	DESCRIPTION	QTY A	QTY B
46	15222	Cotter Pin	..	2
47	2021809	Bushing	2	1

FOOTNOTES:
a Optional

©2004 HYSTER COMPANY

NOTES

CONTROL VALVE (Figure 8-5)
THREE FUNCTION
SINGLE RELIEF

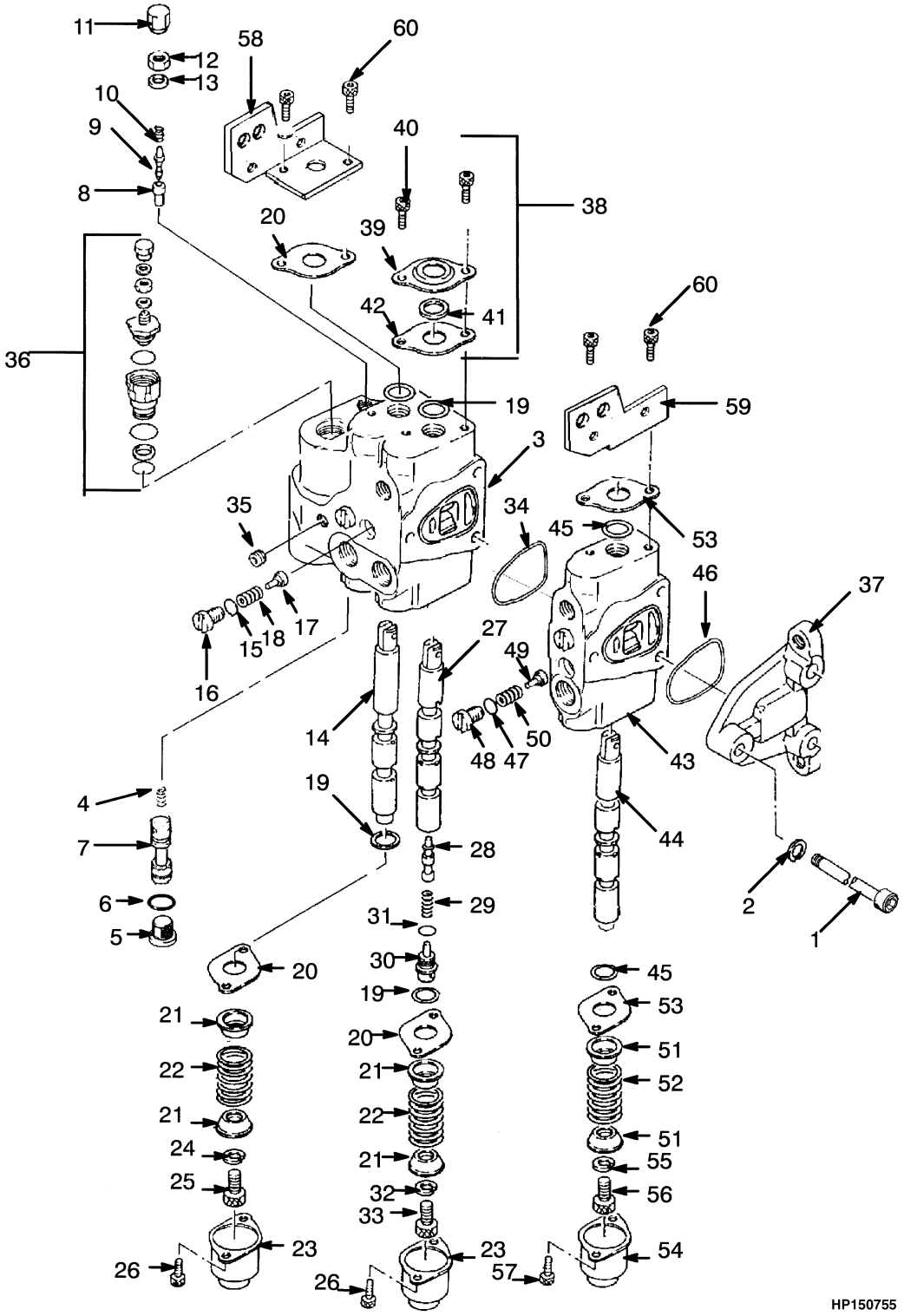

©2004 HYSTER COMPANY

CONTROL VALVE
THREE FUNCTION
SINGLE RELIEF

ITEM	PART NO.	DESCRIPTION	QTY
	2026063	Control Valve (Control)	1
1	296036	Capscrew	3
2	292682	Lockwasher	3
3	1389580	Valve Section	1
4	. . . . .	Spring	1
5	1345707	Plug	1
6	1345708	O-Ring	1
7	. . . . .	Piston	1
8	. . . . .	Valve Seat	1
9	. . . . .	Poppet	1
10	1368016	Spring	1
11	1345709	Screw	1
12	1368014	Nut	1
13	1345710	O-Ring	1
14	. . . . .	Spool (Lift)	1
15	2022192	O-Ring	2
16	1368019	Plug	2
17	1368020	Valve (Check)	2
18	1368021	Spring	2
19	1368018	O-Ring	6
20	1383683	Retainer	2
21	1368022	Collar	4
22	1368023	Spring	2
23	1368024	Cap	2
24	1368025	Washer	1
25	296009	Capscrew	1
26	1345711	Bolt	4
27	. . . . .	Spool (Tilt)	1
28	. . . . .	Valve (Tilt)	1
29	1368031	Spring	1
30	1368030	Plug	1
31	2022210	O-Ring	1
32	1368029	Washer	1
33	1383682	Capscrew	1
34	2022191	O-Ring	1
35	1368017	Plug	1
36	2022205	Valve (Relief)	1
36	2022569	Seal Kit	1
36	2037369	Back-Up Ring	1
36	2037370	O-Ring	1
36	2037371	O-Ring	1
36	2037372	O-Ring	1
37	1368049	Cover	1
38	1368038	Block Assembly	1
39	. . . . .	Seal Case	1
40	. . . . .	Bolt	2
41	. . . . .	Scrapper	1
42	. . . . .	Retainer	1
43	1368043	Spool Section (Auxiliary)	1
44	. . . . .	Spool	1

©2004 HYSTER COMPANY

CONTROL VALVE
THREE FUNCTION
SINGLE RELIEF

ITEM	PART NO.	DESCRIPTION	QTY
45	1368018	O-Ring	2
46	2022191	O-Ring	1
47	2022192	O-Ring	1
48	1368019	Plug	1
49	1368020	Valve (Check)	1
50	1368021	Spring	1
51	1368022	Collar	2
52	1368023	Spring	1
53	1383683	Retainer	1
54	1368024	Cap	1
55	1368025	Washer	1
56	296009	Capscrew	1
57	1345711	Bolt	2
58	1368040	Bracket	1
59	2021331	Bracket	1
60	1383682	Capscrew	2
	2026069	Seal Kit (Includes Items 6, 13, 15, 19, 31, 34, 47)	1

©2004 HYSTER COMPANY

NOTES

VALVE ATTACHING PARTS (Figure 8-6)
FOUR FUNCTION

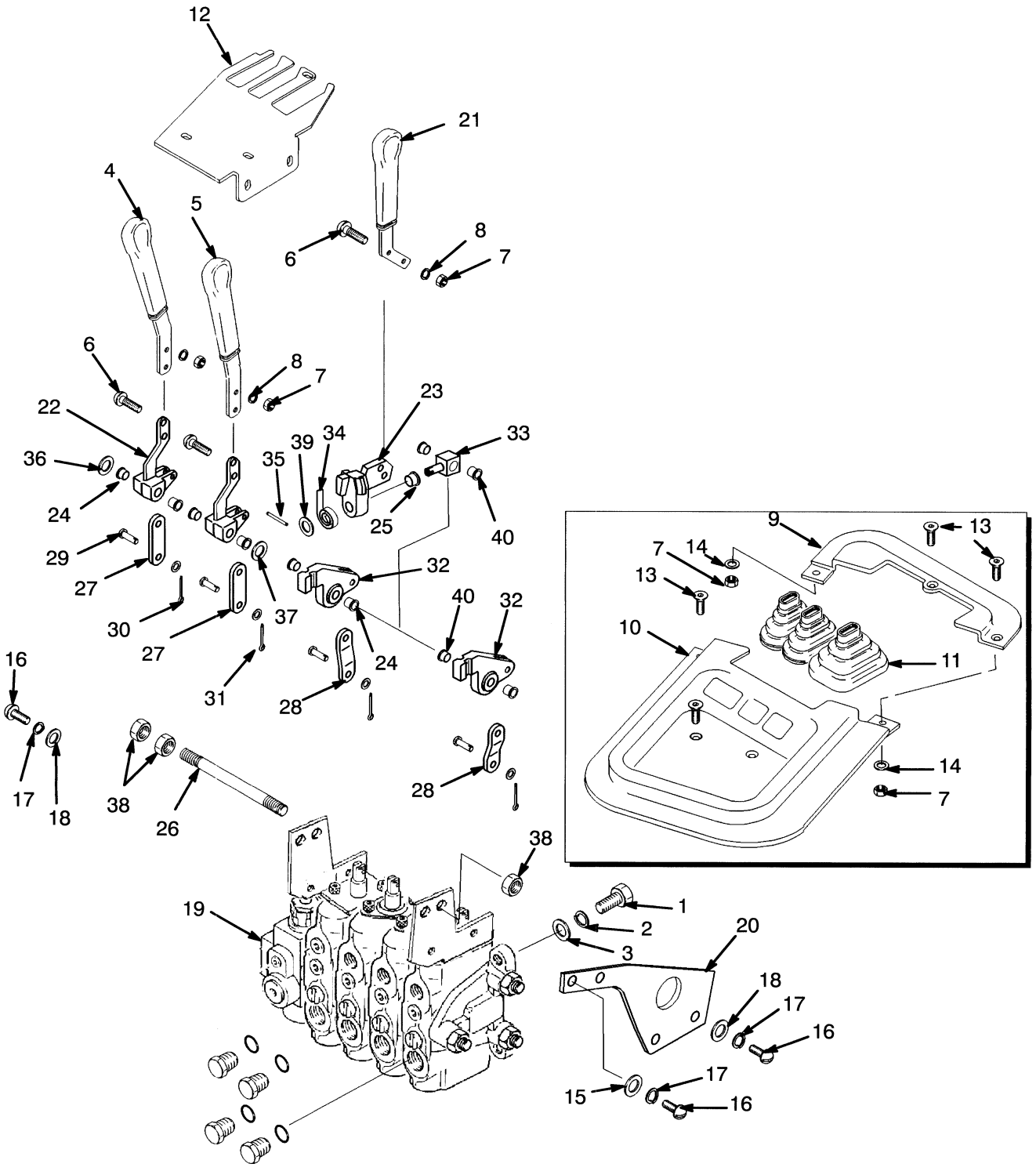

©2004 HYSTER COMPANY

VALVE ATTACHING PARTS
FOUR FUNCTION

ITEM	PART NO.	DESCRIPTION	QTY
1	287503	Capscrew	3
2	292682	Lockwasher	3
3	15177	Washer	3
4	2020500	Lever	1
5	2020501	Lever	1
6	296160	Capscrew	6
7	313805	Nut	11
8	292680	Lockwasher	6
9	2021862	Cover (Front)	1
10	2021863	Cover (Rear)	1
11	2021864	Boot	1
12	2021865	Plate	1
13	2022702	Screw	5
14	320156	Washer	5
15	320157	Washer	2
16	296165	Capscrew	5
17	292681	Lockwasher	5
18	15175	Washer	3
19	2026065	Control Valve (Control) (☞ Figure 8-7)	1
20	2021867	Bracket	1
21	2020503	Lever	1
22	2021823	Yoke	2
23	2022912	Pivot	1
24	2021809	Bushing	6
25	2021810	Bushing	1
26	2021813	Pin	1
27	2021815	Link	2
28	2021816	Link	2
29	2021817	Pin	8
30	2021818	Cotter Pin	8
31	320155	Washer	8
32	2022910	Yoke	1
33	2021851	Pin	1
34	175861	Spring	1
35	302427	Pin	1
36	2021860	Shim	AR
37	320159	Washer	1
38	296128	Nut	3
39	2311502	Shim (0.015 in.)	AR
40	2022796	Bushing	4

©2004 HYSTER COMPANY

CONTROL VALVE (Figure 8-7)
FOUR FUNCTION
SINGLE RELIEF

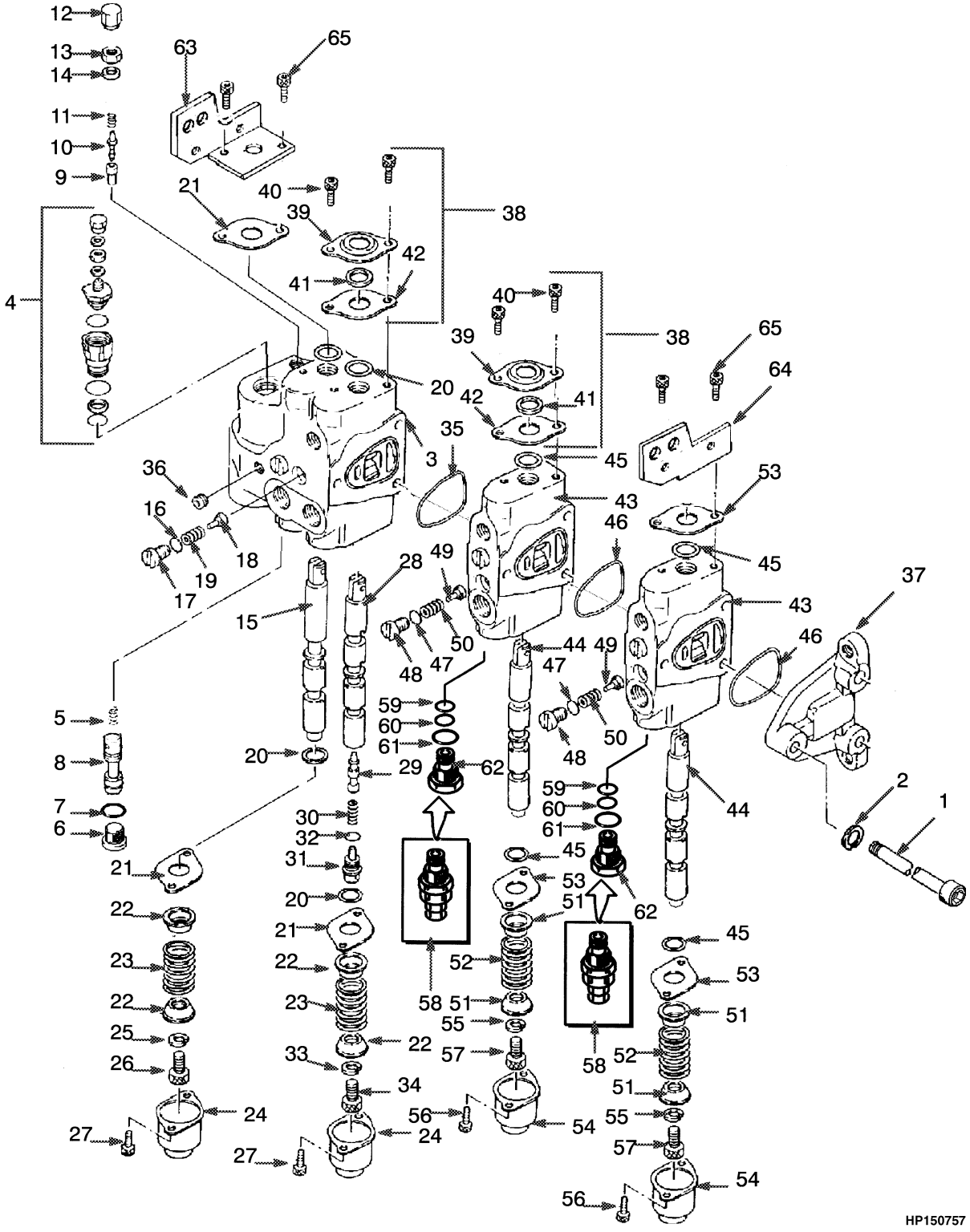

©2004 HYSTER COMPANY

CONTROL VALVE
FOUR FUNCTION
SINGLE RELIEF

ITEM	PART NO.	DESCRIPTION	QTY
	2026065	Control Valve (Control)	1
1	2026471	Capscrew	3
2	292682	Lockwasher	3
3	1389580	Valve Section	1
4	2022205	Valve (Relief)	1
4	2022569	Seal Kit	1
4	2037369	Back-Up Ring	1
4	2037370	O-Ring	1
4	2037371	O-Ring	1
4	2037372	O-Ring	1
5	. . . . .	Spring	1
6	1345707	Plug	1
7	1345708	O-Ring	1
8	. . . . .	Piston	1
9	. . . . .	Valve Seat	1
10	. . . . .	Poppet	1
11	1368016	Spring	1
12	1345709	Screw	1
13	1368014	Nut	1
14	1345710	O-Ring	1
15	. . . . .	Spool (Lift)	1
16	2022192	O-Ring	2
17	1368019	Plug	2
18	1368020	Valve (Check)	2
19	1368021	Spring	2
20	1368018	O-Ring	4
21	1383683	Retainer	2
22	1368022	Collar	4
23	1368023	Spring	2
24	1368024	Cap	2
25	1368025	Washer	1
26	296009	Capscrew	1
27	1345711	Bolt	4
28	. . . . .	Spool (Tilt)	1
29	. . . . .	Valve (Tilt)	1
30	1368031	Spring	1
31	1368030	Plug	1
32	2022210	O-Ring	1
33	1368029	Washer	1
34	1383682	Capscrew	1
35	2022191	O-Ring	1
36	1368017	Plug	1
37	1368049	Cover	1
38	1368038	Block Assembly	2
39	. . . . .	Seal Case	1
40	. . . . .	Bolt	2
41	. . . . .	Scraper	1
42	. . . . .	Retainer	1
43	1368045	Spool Section (Auxiliary)	2
44	. . . . .	Spool	2

©2004 HYSTER COMPANY

CONTROL VALVE
FOUR FUNCTION
SINGLE RELIEF

ITEM	PART NO.	DESCRIPTION	QTY
45	1368018	O-Ring	4
46	2022191	O-Ring	2
47	2022192	O-Ring	2
48	1368019	Plug	2
49	1368020	Valve (Check)	2
50	1368021	Spring	2
51	1368022	Collar	4
52	1368023	Spring	2
53	1383683	Retainer	2
54	1368024	Cap	2
55	1368025	Washer	2
56	1345711	Bolt	4
57	296009	Capscrew	2
58	2022205	Valve (Relief)	2
58	2022569	Seal Kit	1
58	2037369	Back-Up Ring	1
58	2037370	O-Ring	1
58	2037371	O-Ring	1
58	2037372	O-Ring	1
59	1368032	O-Ring	2
60	1368033	Back-Up Ring	2
61	2022217	O-Ring	2
62	1368034	Plug	2
63	1368040	Bracket	1
64	2021331	Bracket	1
65	1383682	Capscrew	4
	2026070	Seal Kit (Includes Items 7, 14, 16, 20, 32, 35, 59-61)	1
	1368028	Plug Kit (Includes Items 16-19, 47-50)	1
	1368035	Plug Kit (Includes Items 59-62)	1

©2004 HYSTER COMPANY

NOTES

MAST INSTALLATION (Figure 8-8)

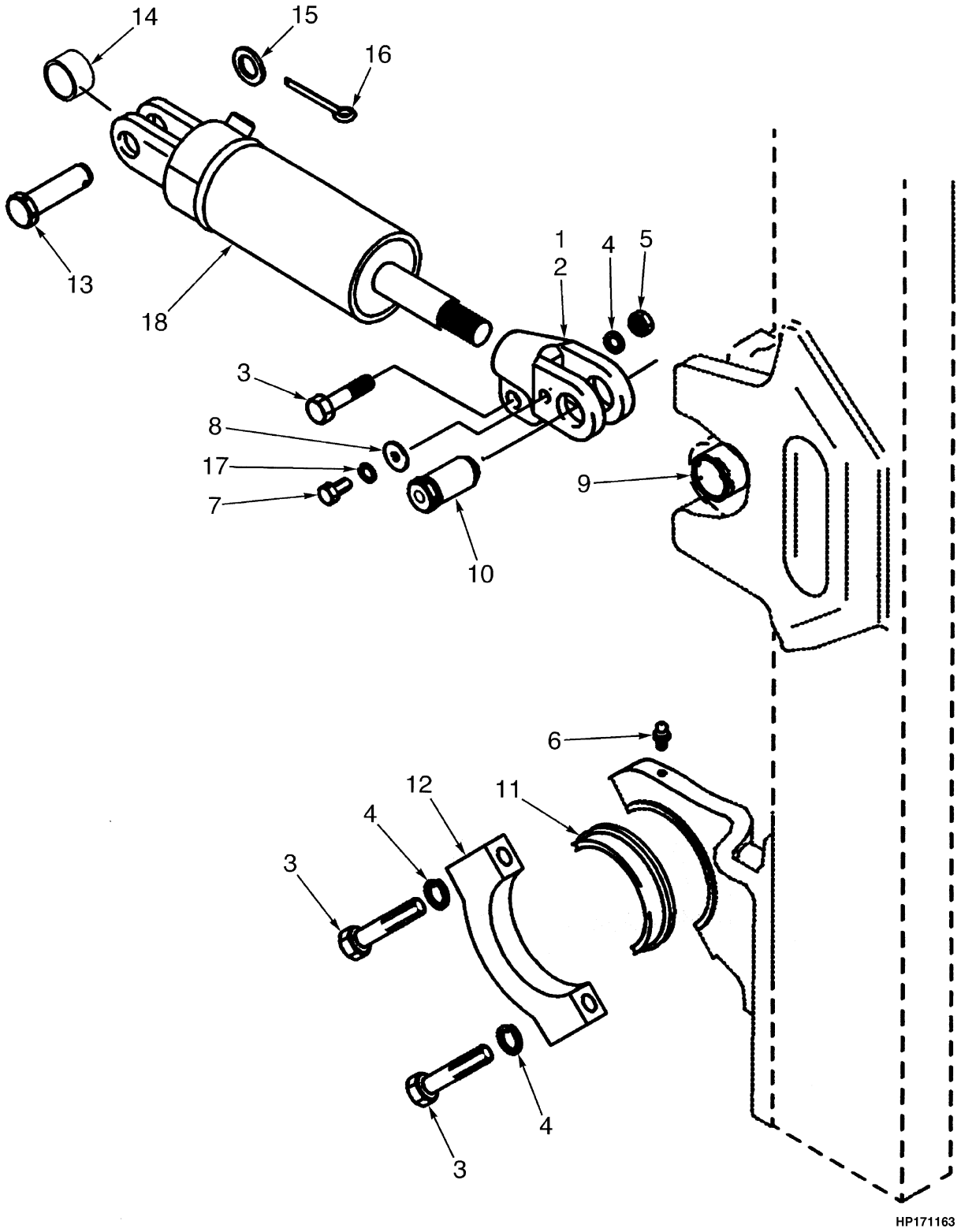

©2004 HYSTER COMPANY

MAST INSTALLATION

ITEM	PART NO.	DESCRIPTION	QTY
1	1363260	Rod End	1
2	1363261	Rod End (LH)	1
3	293651	Capscrew	6
4	292683	Lockwasher	6
5	292656	Nut	2
6	16001	Lube Fitting	2
7	292514	Capscrew	2
8	1371287	Washer	2
9	1348185	Bushing	2
10	1348188	Rod End Pin (Without Lube)	2
11	2053761	Bushing (Trunnion)	2
12	1370722	Cap	2
13	1345354	Rod End Pin	2
14	300982	Bushing	2
15	1495881	Washer	2
16	15236	Cotter Pin	2
17	292682	Lockwasher	2
18	2309269	Tilt Cylinder (☞ Figure 8-9)	2
18	2308157	Tilt Cylinder (☞ Figure 8-9)	2

©2004 HYSTER COMPANY

TILT CYLINDER (Figure 8-9)

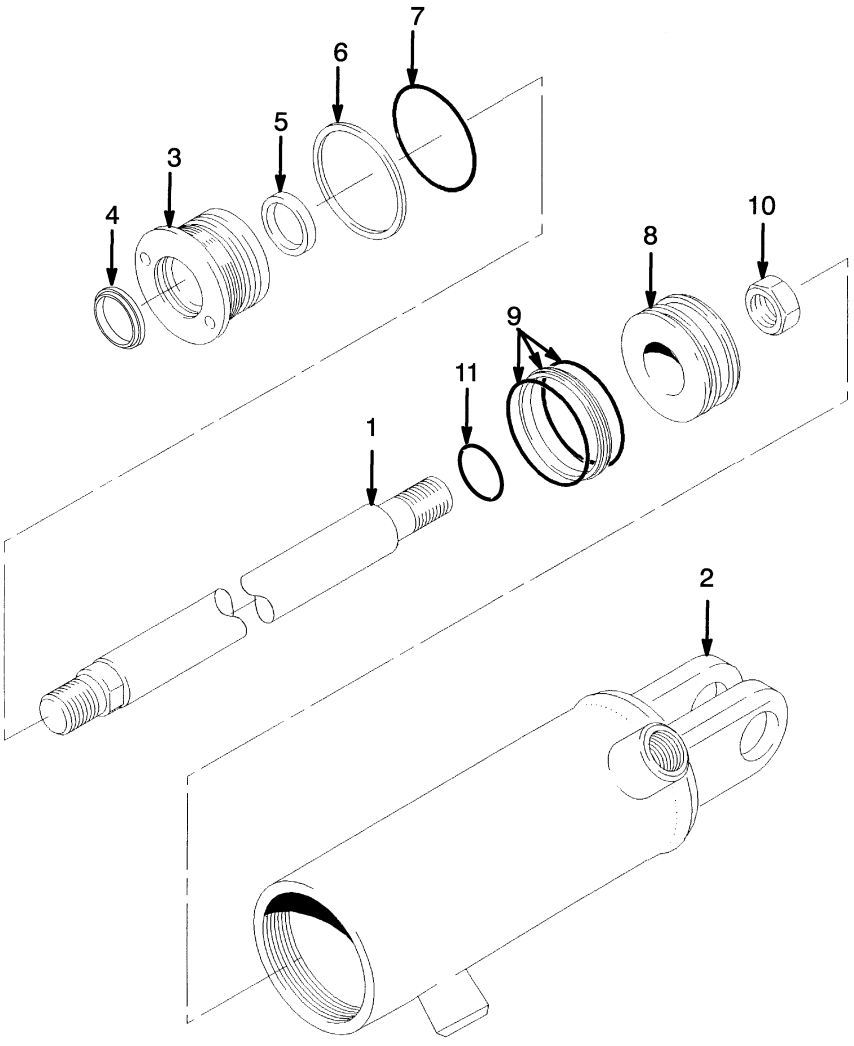

HP150767

©2004 HYSTER COMPANY

TILT CYLINDER

ITEM		PART NO.	DESCRIPTION	QTY
	a	2308157	Tilt Cylinder	2
	b	2309269	Tilt Cylinder	2
1	**a**	2303267	Rod	1
1	**b**	2309536	Rod	1
2		1371668	Shell	1
3		2308169	Gland	1
4		1383061	Wiper Rod	1
5		1381094	Seal	1
6		276627	Back-Up Ring	1
7		57664	O-Ring	1
8		2304677	Piston	1
9		2044379	Seal	1
10		2302899	Nut	1
11		39374	O-Ring	1
		1494719	Seal Kit (Includes Items 4-7, 11)	1

FOOTNOTES:
a 10° Forward/5° Back Tilt
b 5° Forward/5° Back Tilt

©2004 HYSTER COMPANY

NOTES

9 MAST-TWO STAGE LIMITED FREE-LIFT

SECTION 9
MAST-TWO STAGE LIMITED FREE-LIFT

DESCRIPTION **PAGE**

CARRIAGE
TWO STAGE LIMITED FREE-LIFT 9-12
HEADER HOSE
TWO STAGE LIMITED FREE-LIFT 9-14
INNER MAST
TWO STAGE LIMITED FREE-LIFT 9-4
LIFT
TWO STAGE LIMITED FREE-LIFT 9-6
LIFT CYLINDER
LEFT HAND
TWO STAGE LIMITED FREE-LIFT 9-8
RIGHT HAND
TWO STAGE LIMITED FREE-LIFT 9-10
OUTER MAST
TWO STAGE LIMITED FREE-LIFT 9-2

©2004 HYSTER COMPANY

OUTER MAST (Figure 9-1)
TWO STAGE LIMITED FREE-LIFT

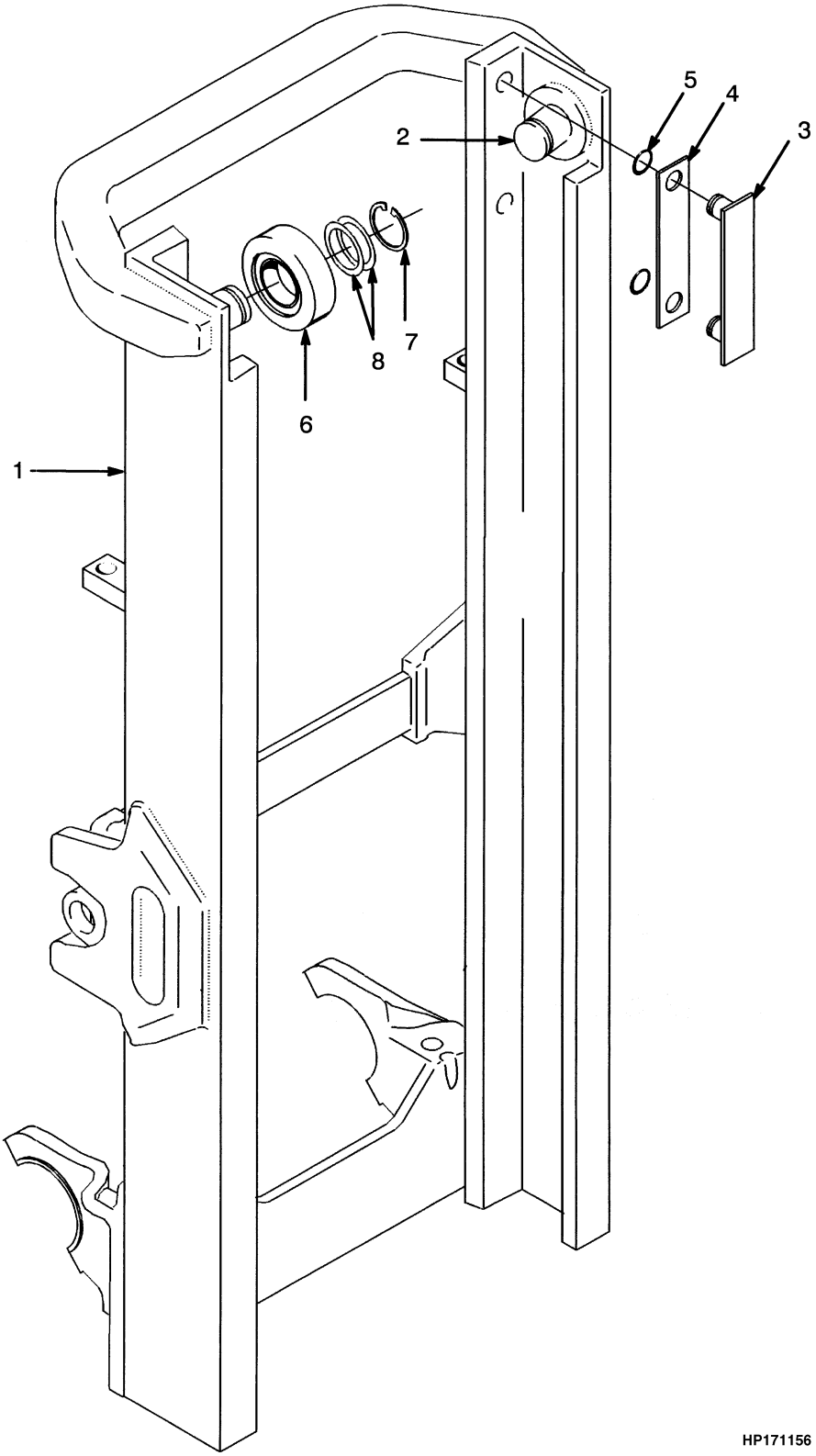

©2004 HYSTER COMPANY

OUTER MASS
TWO STAGE LIMITED FREE-LIFT

ITEM	DESCRIPTION 1 2 3 4	LIFT HEIGHT TO BOTTOM OF FORKS			
		2092 mm (82.4 in.)	2692 mm (106.0 in.)	2892 mm (113.9 in.)	3192 mm (125.7 in.)
	Mast Group Number	A551 2092	A551 2692	A551 2892	A551 3192
1	Outer Mast	1381600	1348003	1348005	1348008

ITEM		PART NO.	DESCRIPTION	QTY
1	**a**	. . . . .	Outer Mast	1
2		1345216	Stubshaft	2
3		215212	Bearing Strip	2
4		131716	Shim (0.020 in.)	4
5		104506	O-Ring	4
6		1333394	Load Roller (Optional)	2
6		1353192	Load Roller (Standard)	2
6		1393130	Load Roller (Optional)	2
7		58901	Snap Ring	2
8		129387	Shim (0.020 in.)	AR

FOOTNOTES:
a Refer to Table

©2004 HYSTER COMPANY

INNER MAST (Figure 9-2)
TWO STAGE LIMITED FREE-LIFT

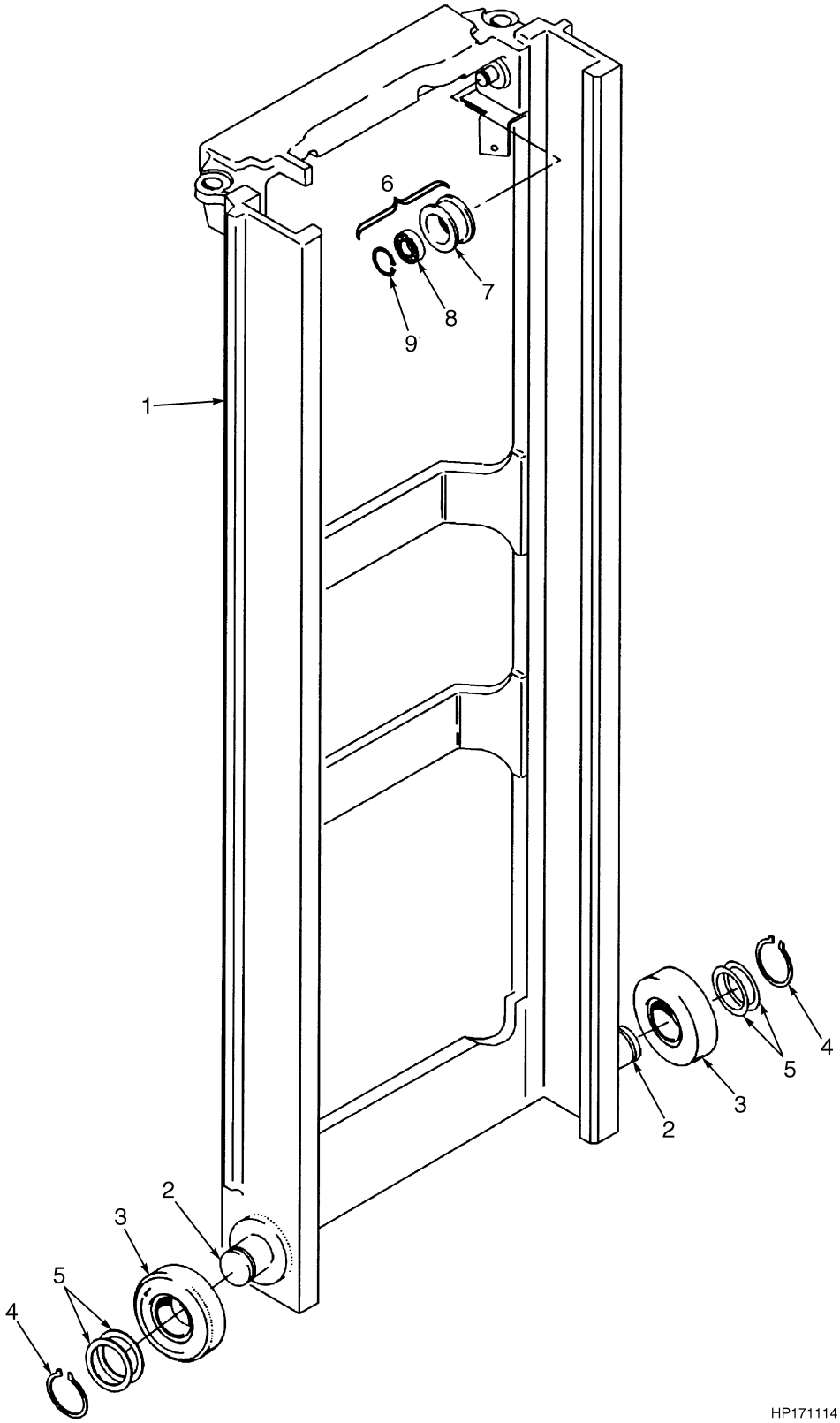

©2004 HYSTER COMPANY

INNER MAST
TWO STAGE LIMITED FREE-LIFT

ITEM	DESCRIPTION 1 2 3 4	LIFT HEIGHT TO BOTTOM OF FORKS			
		2092 mm (82.4 in.)	2692 mm (106.0 in.)	2892 mm (113.9 in.)	3192 mm (125.7 in.)
	Mast Group Number	A551 2092	A551 2692	A551 2892	A551 3192
1	Inner Mast	1381605	1348453	1348455	1348458

ITEM		PART NO.	DESCRIPTION	QTY
1	**a**	. . . . .	Inner Mast	1
2		1345216	Stubshaft	2
3		1333394	Load Roller (Optional)	2
3		1353192	Load Roller (Standard)	2
3		1393130	Load Roller (Optional)	2
4		58901	Snap Ring	2
5		129387	Shim (0.020 in.)	AR
6		1379685	Chain Sheave Assembly	2
7		1378698	Sheave	1
8		1378699	Bearing	1
9		37752	Snap Ring	1

FOOTNOTES:
a Refer to Table

©2004 HYSTER COMPANY

LIFT (Figure 9-3)
TWO STAGE LIMITED FREE-LIFT

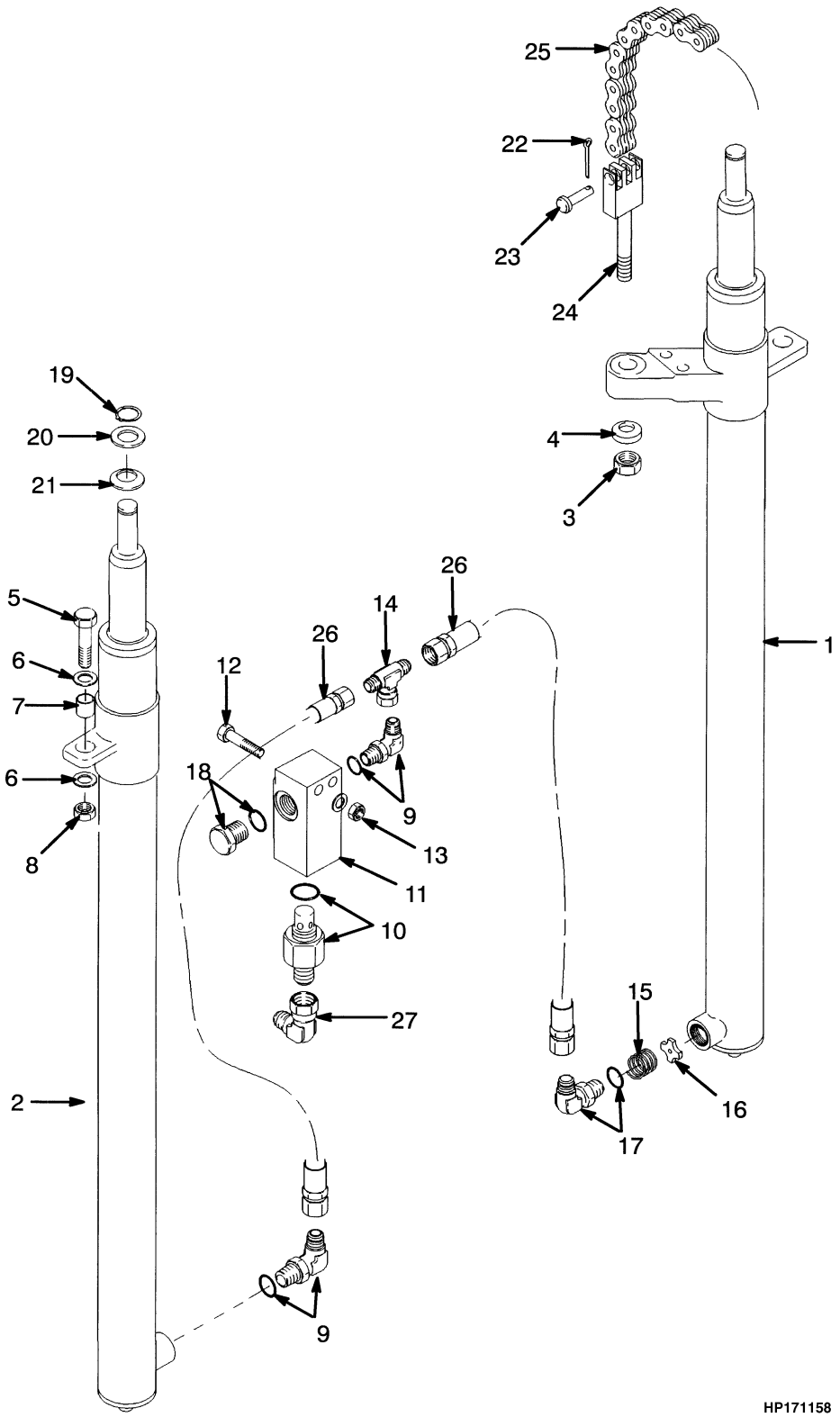

©2004 HYSTER COMPANY

LIFT
TWO STAGE LIMITED FREE-LIFT

ITEM	DESCRIPTION 1 2 3 4	LIFT HEIGHT TO BOTTOM OF FORKS			
		2092 mm (82.4 in.)	2692 mm (106.0 in.)	2892 mm (113.9 in.)	3192 mm (125.7 in.)
	Mast Group Number	A551 2092	A551 2692	A551 2892	A551 3192
25	Chain	180074	135619	88436	88441

ITEM		PART NO.	DESCRIPTION	QTY
1		. . . . .	Lift Cylinder (LH) (☞ Figure 9-4)	1
2		. . . . .	Lift Cylinder (RH) (☞ Figure 9-5)	1
3		60137	Nut	2
4		296426	Washer (Hardened)	2
5		292532	Capscrew	2
6		296422	Washer	4
7		323090	Spacer	2
8		300937	Nut	2
9		16560	Fitting	2
9		16485	O-Ring (Face Seal)	2
10		323061	Control Valve	1
10		16982	O-Ring	1
11		1333392	Housing (Optional)	1
11		1379687	Housing	1
12		292509	Capscrew	2
13		313828	Nut	2
14		17051	Fitting	1
15		120938	Spring	1
16		323160	Washer	1
17		189595	Fitting	1
17		16485	O-Ring (Face Seal)	1
18		16403	Fitting (Optional)	1
18		16486	O-Ring (Face Seal)	1
19		131358	Snap Ring	2
20		1333382	Washer	2
21		1354915	Washer (0.010 in.)	AR
21		1354916	Washer (0.030 in.)	AR
21		1354917	Washer (0.060 in.)	AR
22		323161	Pin	2
23		15211	Cotter Pin	2
24		1369357	Chain Anchor	2
25	**a**	. . . . .	Chain	2
26		1376100	Hose	2
27		16882	Fitting	1

FOOTNOTES:
a Refer to Table

©2004 HYSTER COMPANY

LIFT CYLINDER (Figure 9-4)
LEFT HAND
TWO STAGE LIMITED FREE-LIFT

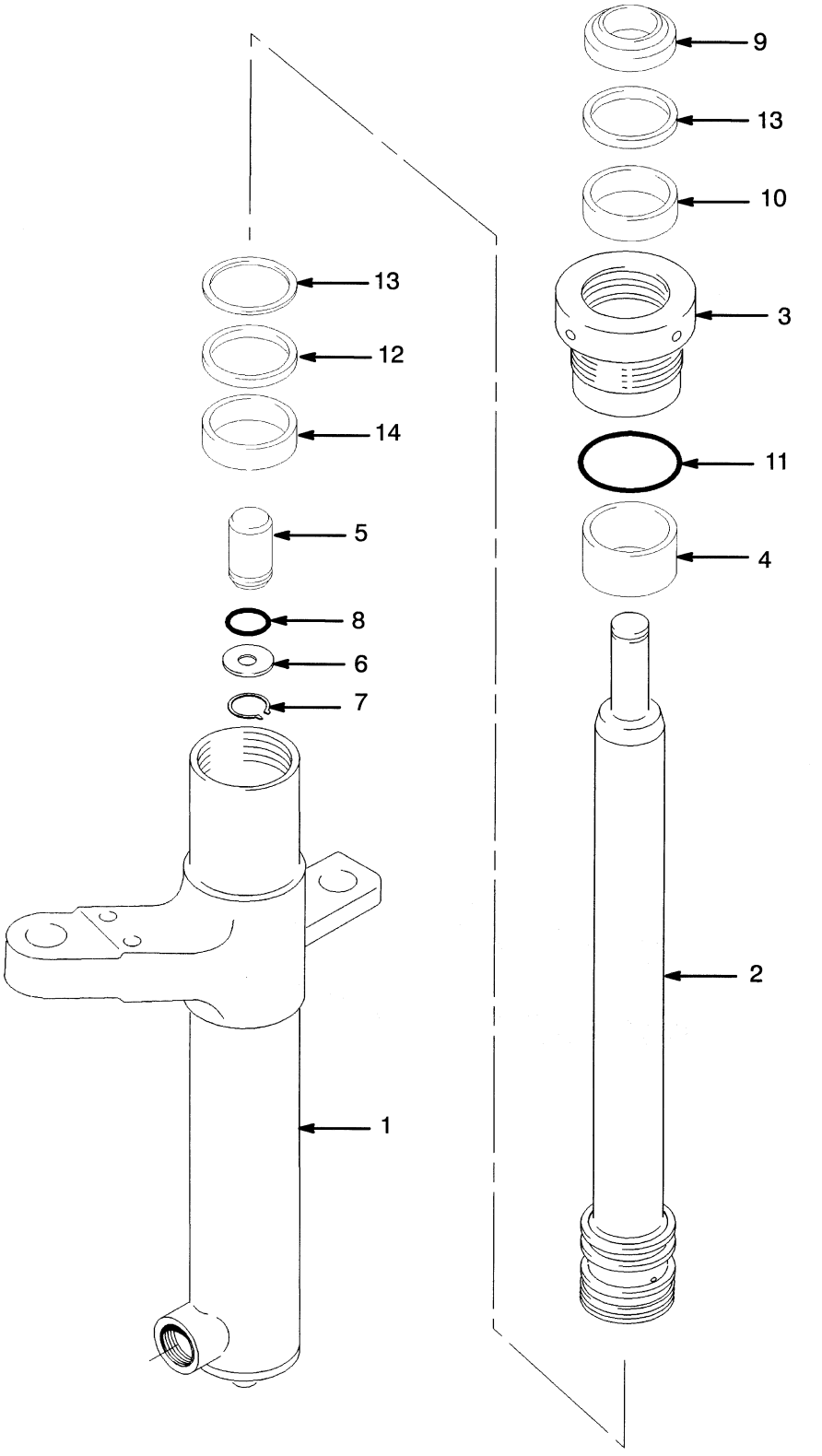

©2004 HYSTER COMPANY

LIFT CYLINDER
LEFT HAND
TWO STAGE LIMITED FREE-LIFT

ITEM	DESCRIPTION 1 2 3 4	LIFT HEIGHT TO BOTTOM OF FORKS			
		2092 mm (82.4 in.)	2692 mm (106.0 in.)	2892 mm (113.9 in.)	3192 mm (125.7 in.)
	Mast Group Number	**A551 2092**	**A551 2692**	**A551 2892**	**A551 3192**
	Cylinder Group Number	**8601638**	**8601603**	**8601605**	**8601608**
	Lift Cylinder	2303325	1361336	1361348	1361366
1	Shell	2304117	1361337	1361349	1361367
2	Rod	2308924	1361338	1361350	1361368

ITEM		PART NO.	DESCRIPTION	QTY
	a	. . . . .	Lift Cylinder	1
1	**a**	. . . . .	Shell	1
2	**a**	. . . . .	Rod	1
3		1371653	Gland	1
4		322902	Wear Ring	1
5		257913	Check Valve	1
6		297531	Washer	1
7		187388	Snap Ring	1
8		39348	O-Ring	1
9		1319668	Wiper Ring	1
10		1381095	Rod Seal	1
11		55407	O-Ring	1
12		330692	Seal	1
13		322824	Back-Up Ring	2
14		1362871	Wear Ring	1
		1360140	Seal Kit (Includes Items 3, 9-14)	1

FOOTNOTES:
a Refer to Table

LIFT CYLINDER (Figure 9-5)
RIGHT HAND
TWO STAGE LIMITED FREE-LIFT

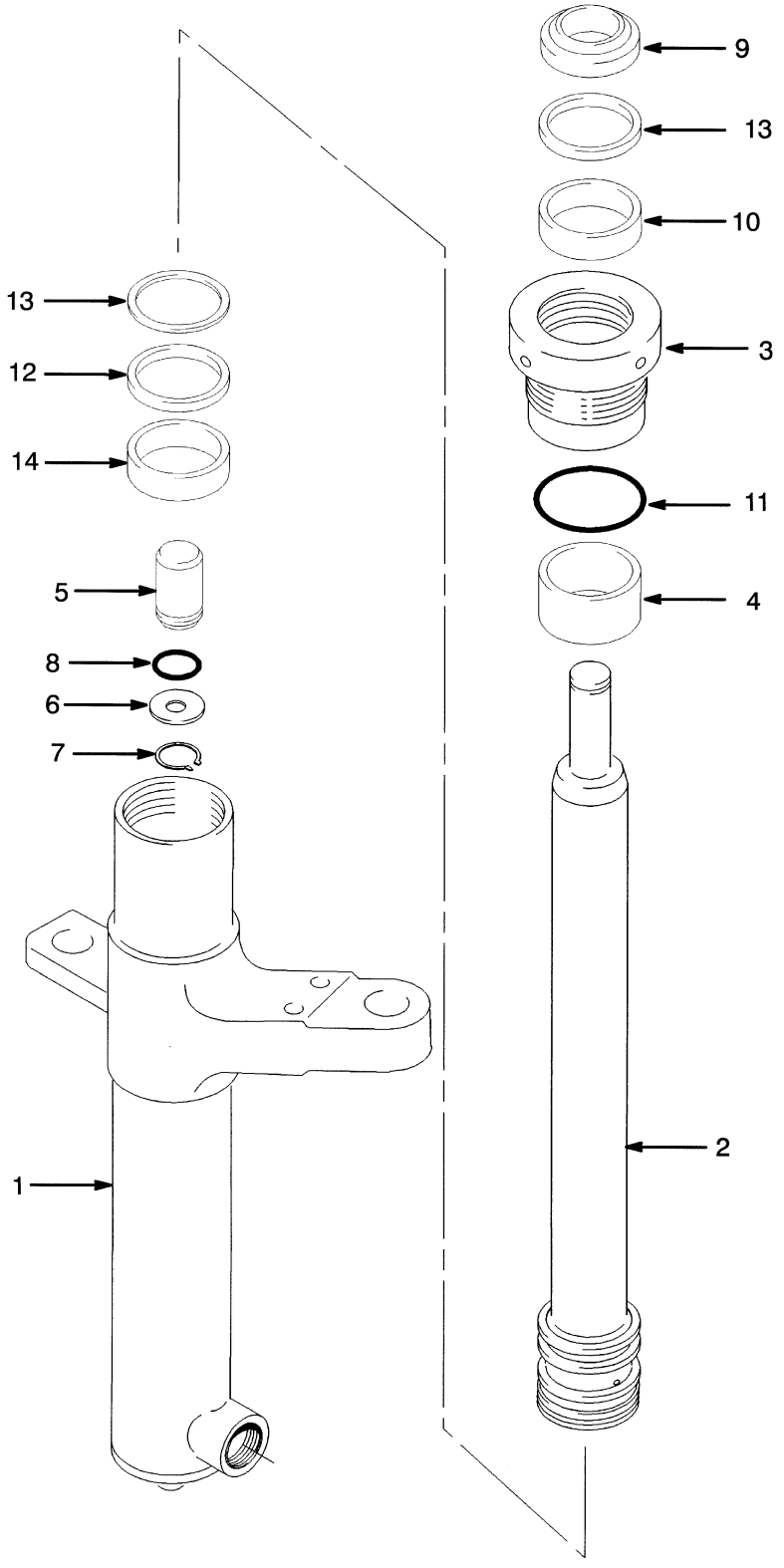

©2004 HYSTER COMPANY

LIFT CYLINDER
RIGHT HAND
TWO STAGE LIMITED FREE-LIFT

ITEM	DESCRIPTION 1 2 3 4	LIFT HEIGHT TO BOTTOM OF FORKS			
		2092 mm (82.4 in.)	2692 mm (106.0 in.)	2892 mm (113.9 in.)	3192 mm (125.7 in.)
	Mast Group Number	**A551 2092**	**A551 2692**	**A551 2892**	**A551 3192**
	Cylinder Group Number	**8601688**	**8601653**	**8601655**	**8601658**
	Lift Cylinder (RH)	2309117	1361340	1361352	1361370
1	Shell	2308856	1361329	1361353	1361371
2	Rod	2308924	1361338	1361350	1361368

ITEM	PART NO.	DESCRIPTION	QTY
	a	Lift Cylinder (RH)	1
1	**a**	Shell	1
2	**a**	Rod	1
3	1371653	Gland	1
4	322902	Wear Ring	1
5	257913	Check Valve	1
6	297531	Washer	1
7	187388	Snap Ring	1
8	39348	O-Ring	1
9	1319668	Wiper Ring	1
10	1381095	Rod Seal	1
11	55407	O-Ring	1
12	330692	Seal	1
13	322824	Back-Up Ring	2
14	1362871	Wear Ring	1
	1360140	Seal Kit (Includes Items 4, 9-14)	1

FOOTNOTES:
a Refer to Table

CARRIAGE (Figure 9-6)
TWO STAGE LIMITED FREE-LIFT

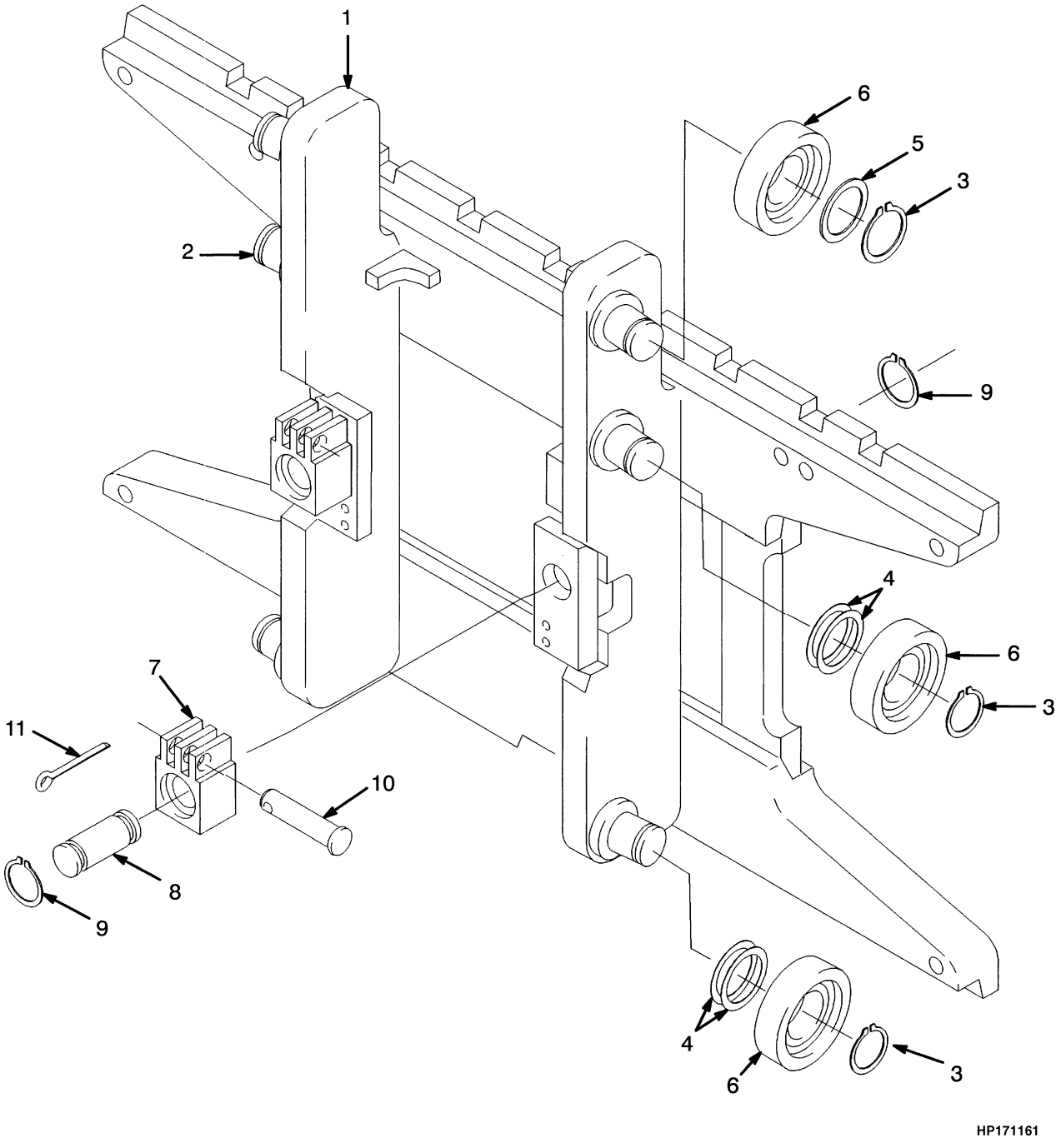

©2004 HYSTER COMPANY

CARRIAGE
TWO STAGE LIMITED FREE-LIFT

ITEM	PART NO.	DESCRIPTION	QTY
	1353326	Carriage	1
1	1353321	Frame	1
2	1345216	Stubshaft	6
3	58901	Snap Ring	6
4	129387	Shim (0.020 in.)	AR
5	366115	Spacer	2
6	1333399	Load Roller (Optional)	6
6	1353192	Load Roller (Standard)	6
6	1393132	Load Roller (Optional)	6
7	1369345	Chain Anchor (Dual Hole)	2
7	1504010	Chain Anchor (Single Hole) (Optional)	2
8	1353408	Pin	2
9	131358	Snap Ring	4
10	1514866	Pin	2
11	15211	Cotter Pin	2

©2004 HYSTER COMPANY

HEADER HOSE (Figure 9-7)
TWO STAGE LIMITED FREE-LIFT

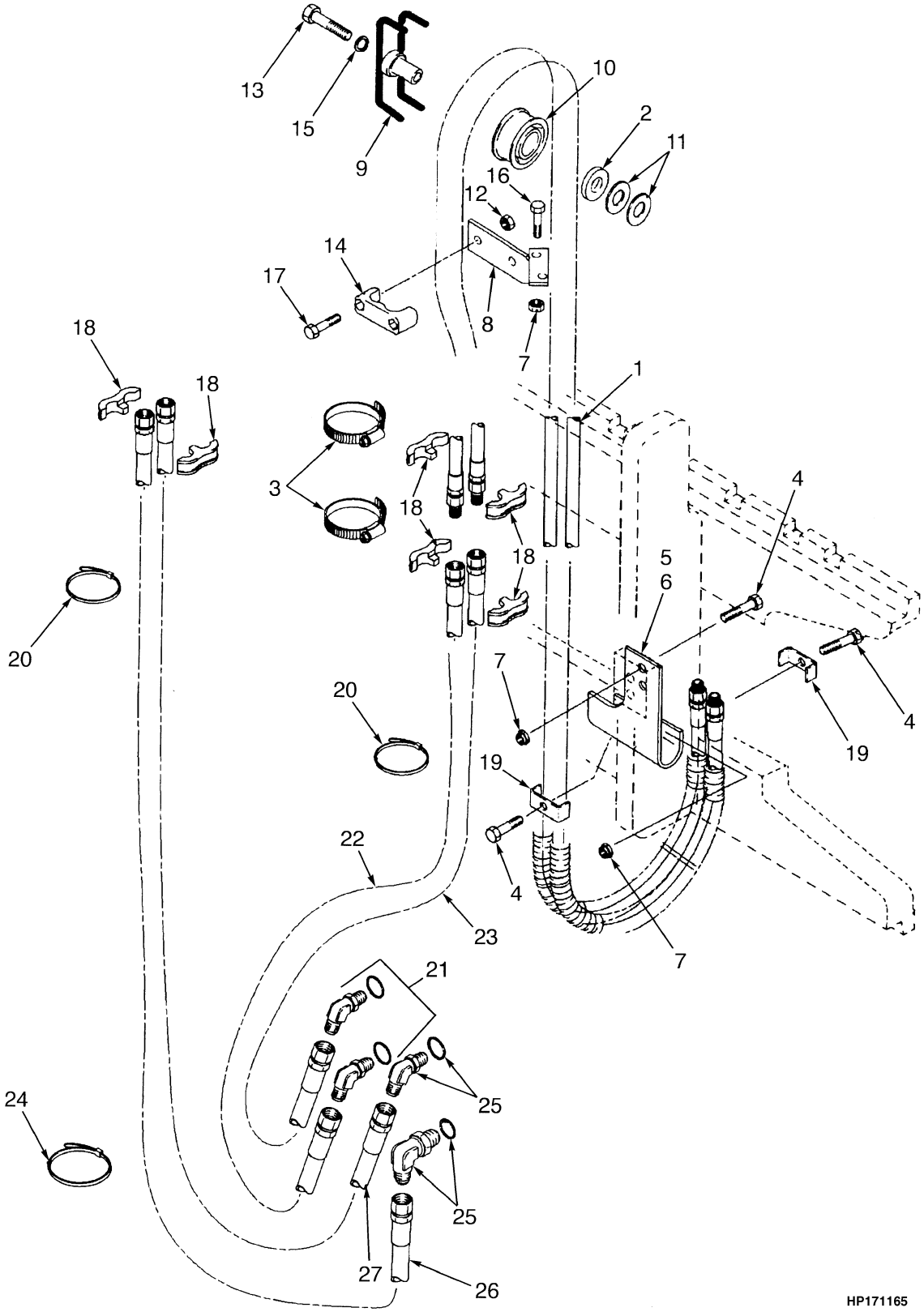

©2004 HYSTER COMPANY

HEADER HOSE
TWO STAGE LIMITED FREE-LIFT

ITEM	DESCRIPTION 1 2 3 4	LIFT HEIGHT TO BOTTOM OF FORKS			
		2092 mm (82.4 in.)	2692 mm (106.0 in.)	2892 mm (113.9 in.)	3192 mm (125.7 in.)
	Mast Group Number	A551 2092	A551 2692	A551 2892	A551 3192
1	Hose	1345491	1398476	1366433	1398479

KEY:
A: Four Function
B: Three Function

ITEM		PART NO.	DESCRIPTION	QTY A	QTY B
1	a	. . . . .	Hose	4	2
2		1360549	Spacer	2	1
3		1360507	Clamp	4	2
4		292508	Capscrew	7	4
5		1345412	Bracket (RH)	1	1
6		1345413	Bracket (LH)	1	..
7		313828	Nut	12	6
8		1363486	Bracket	2	1
9		1360548	Stubshaft	2	1
10		1494017	Sheave	2	1
11		1345190	Washer	4	2
12		313805	Nut	4	2
13		292533	Capscrew	2	1
14		1360386	Clamp	2	1
15		292683	Lockwasher	2	1
16		136704	Capscrew	4	2
17		292502	Capscrew	4	2
18		1353530	Clamp	8	4
19		1345348	Clamp	4	2
20		1375574	Strap	2	1
21		16558	Fitting	2	1
21		16483	O-Ring	1	1
22		1377371	Hose	2	2
23		1381618	Hose	2	..
24		137852	Strap Clamp	4	2
25		17222	Fitting	2	1
25		16484	O-Ring	1	1

FOOTNOTES:
a Refer to Table

NOTES

10 MAST-TWO STAGE FULL FREE-LIFT

SECTION 10
MAST-TWO STAGE FULL FREE-LIFT

DESCRIPTION	PAGE
CARRIAGE	
TWO STAGE FULL FREE-LIFT	10-20
FREE LIFT	
TWO STAGE FULL FREE-LIFT	10-8
FREE-LIFT CYLINDER	
TWO STAGE FULL FREE-LIFT	10-18
HEADER HOSE	
TWO STAGE FULL FREE-LIFT	10-22
INNER MAST	
TWO STAGE FULL FREE-LIFT	10-4
MAIN CYLINDER	
LEFT HAND	
TWO STAGE FULL FREE-LIFT	
⇒S/N A558L-03214	10-10
S/N A558L-03215⇒	10-12
RIGHT HAND	
TWO STAGE FULL FREE-LIFT	
⇒S/N A558L-03214	10-14
S/N A558L-03215⇒	10-16
MAIN LIFT	
TWO STAGE FULL FREE-LIFT	10-6
OUTER MAST	
TWO STAGE FULL FREE-LIFT	10-2

©2004 HYSTER COMPANY

OUTER MAST (Figure 10-1)
TWO STAGE FULL FREE-LIFT

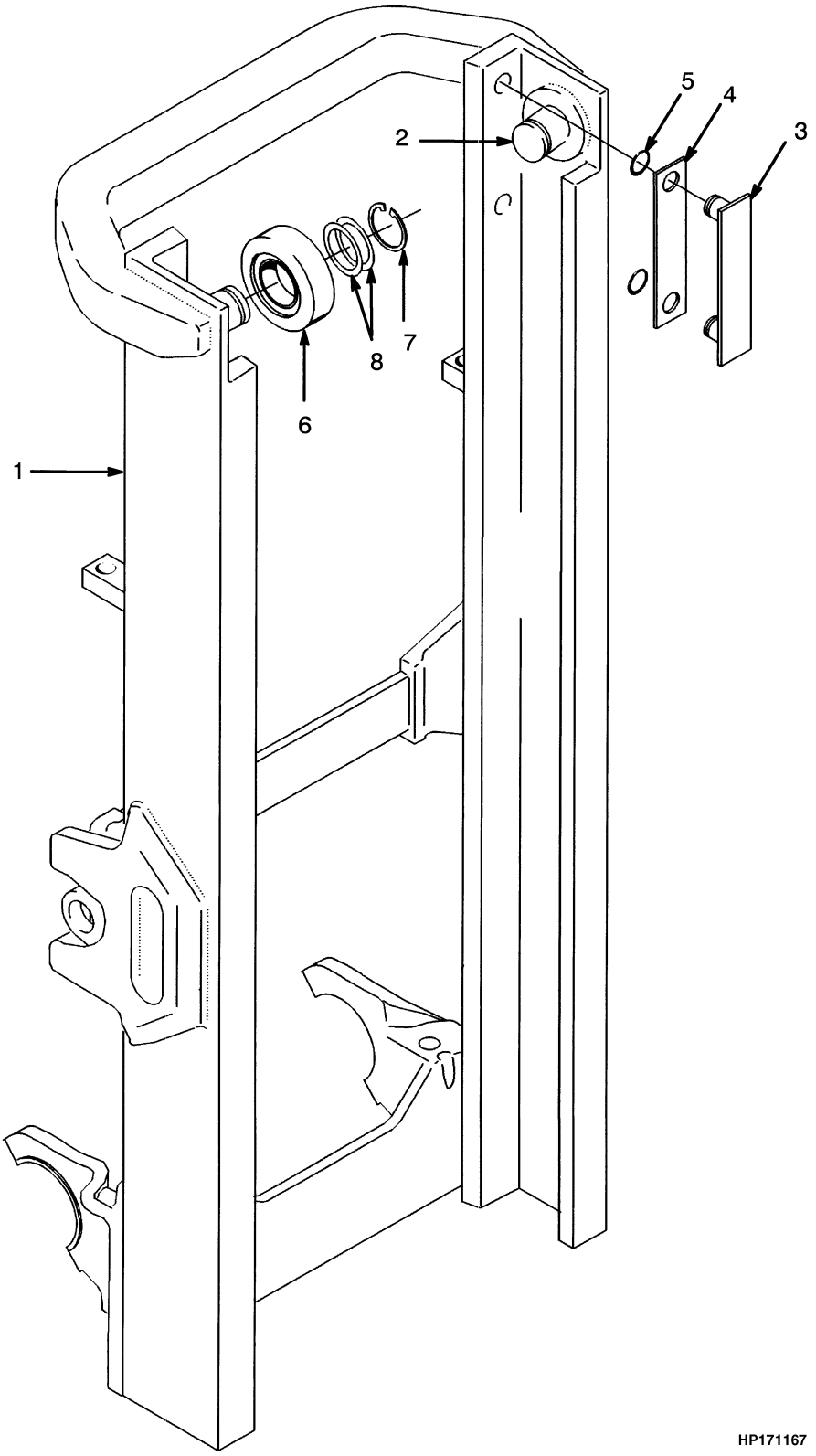

©2004 HYSTER COMPANY

OUTER MASS
TWO STAGE FULL FREE-LIFT

ITEM	DESCRIPTION 1 2 3 4	LIFT HEIGHT TO BOTTOM OF FORKS		
		2648 mm (104.3 in.)	2948 mm (116.1 in.)	3248 mm (127.9 in.)
	Mast Group Number	A559 2648	A559 2948	A559 3248
1	Outer Mast	1348002	1348005	1348008

ITEM		PART NO.	DESCRIPTION	QTY
1	**a**	. . . . .	Outer Mast	1
2		1345216	Stubshaft	2
3		215212	Bearing Strip	2
4		131716	Shim (0.020 in.)	4
5		104506	O-Ring	4
6		1333399	Load Roller (Optional)	2
6		1353192	Load Roller (Standard)	2
6		1393132	Load Roller (Optional)	2
7		58901	Snap Ring	2
8		129387	Shim (0.020 in.)	AR

FOOTNOTES:
a Refer to Table

INNER MAST (Figure 10-2)
TWO STAGE FULL FREE-LIFT

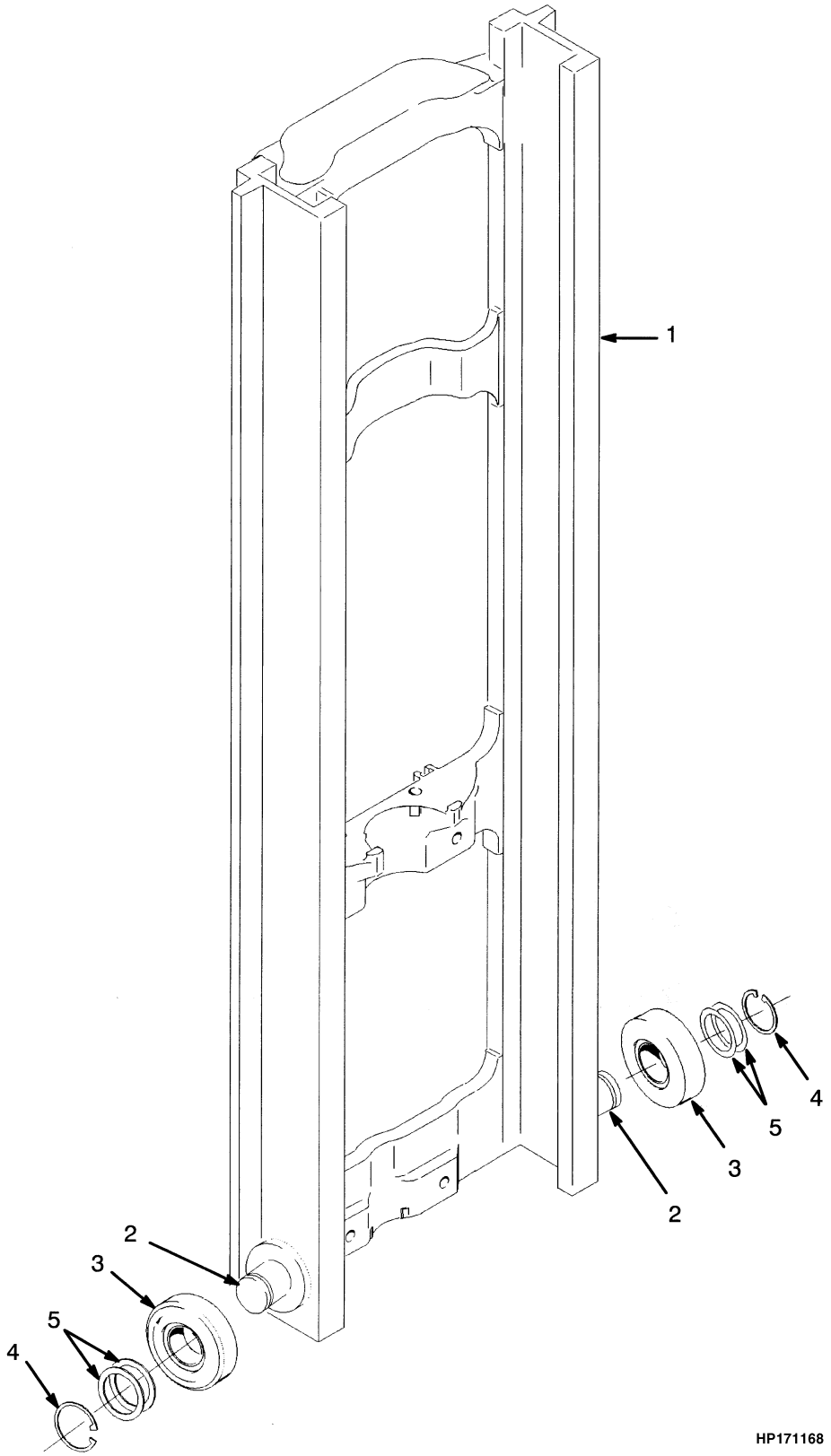

©2004 HYSTER COMPANY

INNER MAST
TWO STAGE FULL FREE-LIFT

ITEM	DESCRIPTION 1 2 3 4	LIFT HEIGHT TO BOTTOM OF FORKS		
		2648 mm (104.3 in.)	2948 mm (116.1 in.)	3248 mm (127.9 in.)
	Mast Group Number	A559 2648	A559 2948	A559 3248
1	Inner Mast	1352902	1352905	1352908

ITEM		PART NO.	DESCRIPTION	QTY
1	**a**	. . . . .	Inner Mast	1
2		1345216	Stubshaft	2
3		1333399	Load Roller (Optional)	2
3		1353192	Load Roller (Standard)	2
3		1393132	Load Roller (Optional)	2
4		58901	Snap Ring	2
5		129387	Shim (0.020 in.)	AR

FOOTNOTES:
a Refer to Table

MAIN LIFT (Figure 10-3)
TWO STAGE FULL FREE-LIFT

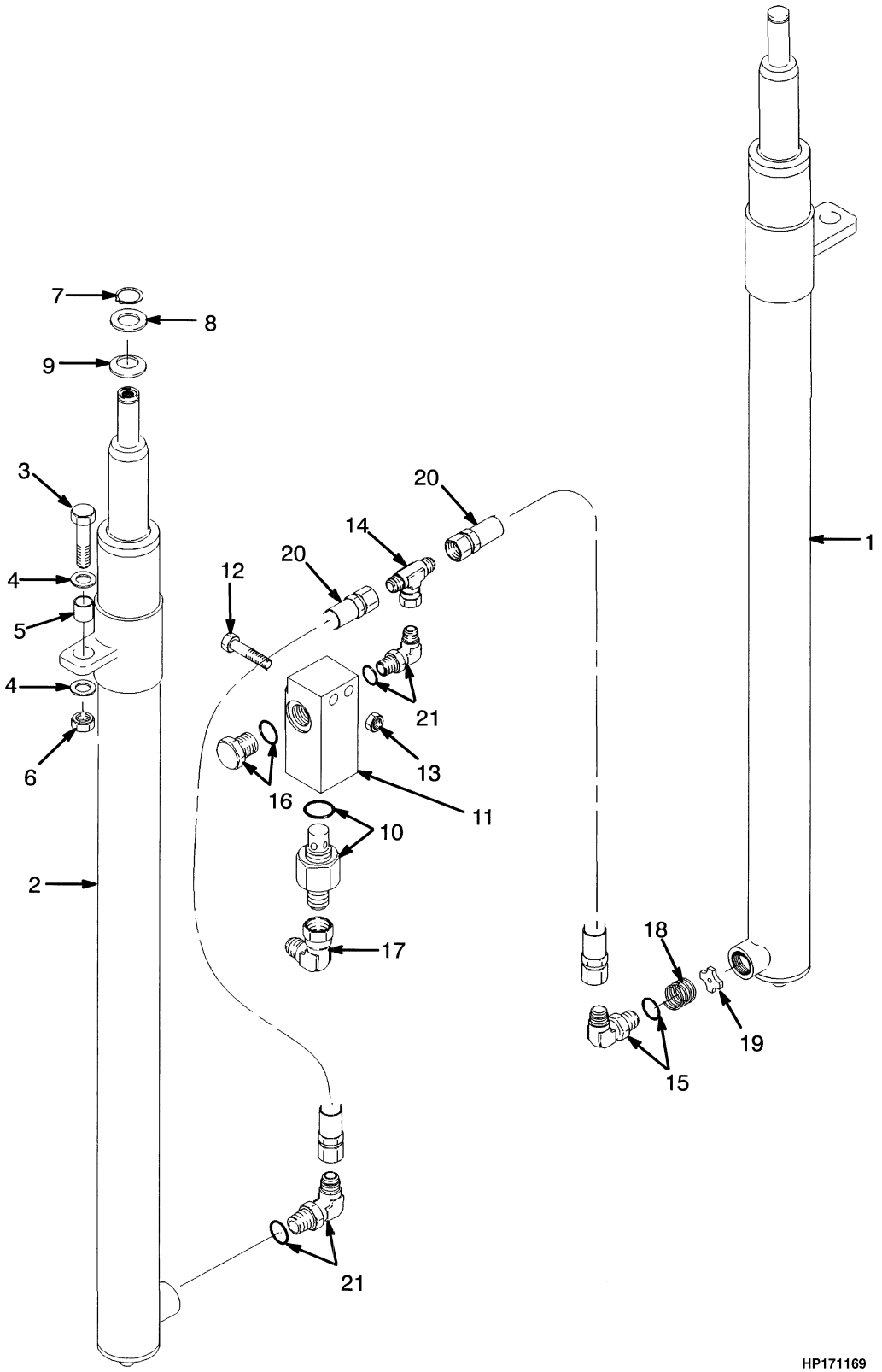

©2004 HYSTER COMPANY

MAIN LIFT
TWO STAGE FULL FREE-LIFT

ITEM	PART NO.	DESCRIPTION	QTY
1	. . . . .	Lift Cylinder (LH) (☞ Figure 10-6)	1
2	. . . . .	Lift Cylinder (RH) (☞ Figure 10-7)	1
3	292532	Capscrew	2
4	296422	Washer	4
5	323090	Spacer	2
6	300937	Nut	2
7	131358	Snap Ring	3
8	1333382	Washer	2
9	1354915	Washer (0.010 in.)	AR
9	1354916	Washer (0.030 in.)	AR
9	1354917	Washer (0.060 in.)	AR
10	323061	Control Valve	1
11	1333392	Housing (Optional)	1
11	1379687	Housing	1
12	292509	Capscrew	2
13	313828	Nut	2
14	17051	Fitting	1
15	189595	Fitting	1
16	14603	Fitting (Optional)	1
16	16486	O-Ring (Face Seal)	1
17	16882	Fitting	1
18	120938	Spring	1
19	323160	Washer	1
20	1376100	Hose	2
21	16560	Fitting	2
21	16485	O-Ring (Face Seal)	2

©2004 HYSTER COMPANY

FREE LIFT (Figure 10-4)
TWO STAGE FULL FREE-LIFT

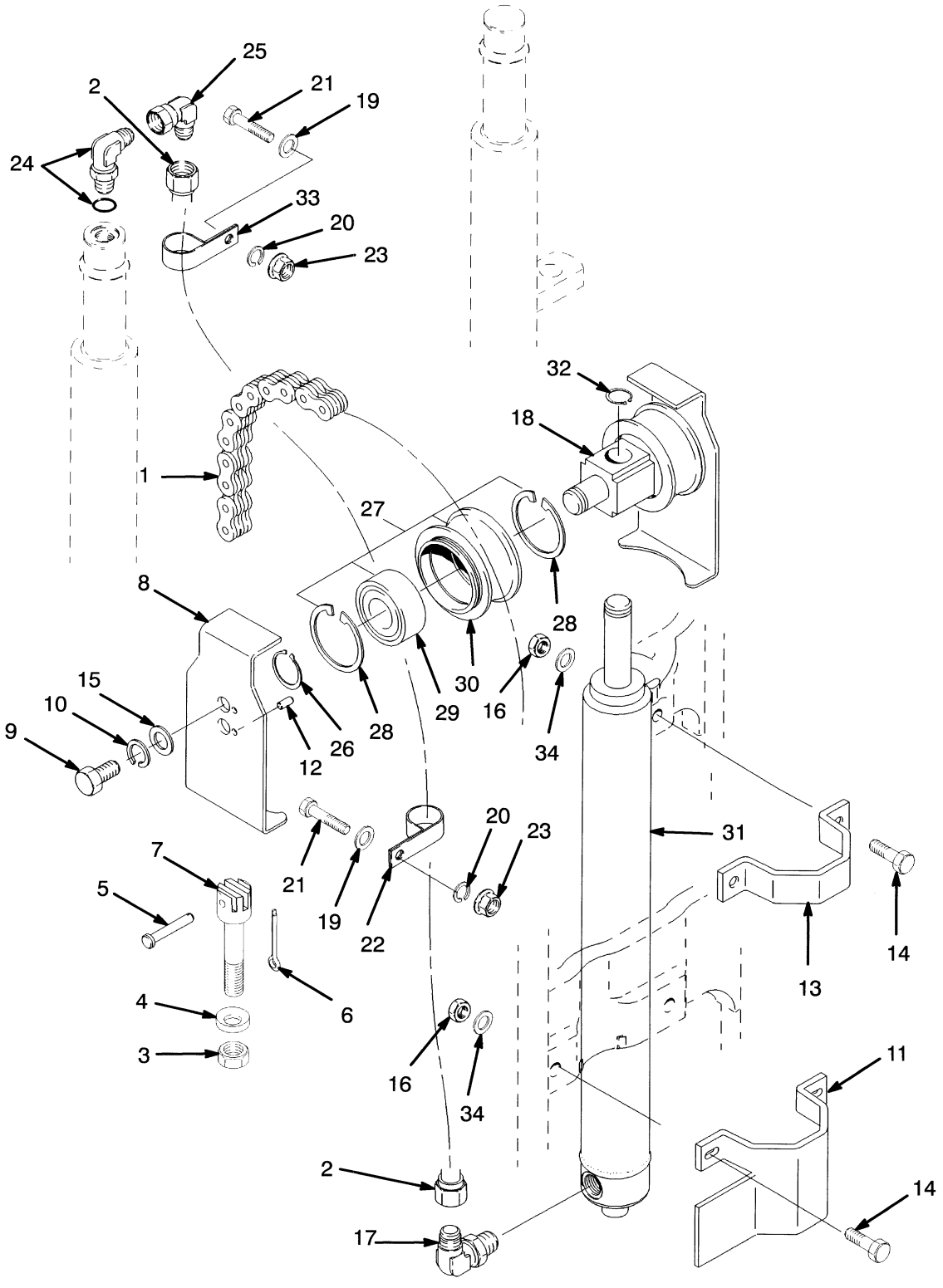

©2004 HYSTER COMPANY

FREE LIFT
TWO STAGE FULL FREE-LIFT

ITEM	DESCRIPTION 1 2 3 4	LIFT HEIGHT TO BOTTOM OF FORKS		
		2648 mm (104.3 in.)	2948 mm (116.1 in.)	3248 mm (127.9 in.)
	Mast Group Number	A559 2648	A559 2948	A559 3248
1	Chain	182333	180058	231083
2	Hose	1365302	1365305	1365308

ITEM		PART NO.	DESCRIPTION	QTY
1	**a**	. . . . .	Chain	2
2	**a**	. . . . .	Hose	1
3		60137	Nut	2
4		296426	Washer (Hardened)	2
5		323161	Pin	2
6		15211	Cotter Pin	2
7		1369357	Chain Anchor	2
8		1395285	Chain Guard	2
9		132860	Capscrew	2
10		292683	Lockwasher	2
11		1353546	Bracket	1
12		302461	Pin	2
13		1489972	Bracket	1
14		296422	Washer	4
15		320161	Washer	2
16		300937	Nut	4
17		1379496	Valve	1
17		16485	O-Ring (Face Seal)	1
18		1378690	Crosshead	1
19		320158	Washer	2
20		292681	Lockwasher	2
21		132861	Capscrew	2
22		178119	Clamp	1
23		239503	Nut	2
24		1380035	Fitting	1
25		16882	Fitting	1
26		304526	Snap Ring	2
27		1379682	Chain Sheave Assembly	2
28		37752	Snap Ring	1
29		1378699	Bearing	1
30		1378692	Sheave	1
31		. . . . .	Free-Lift Cylinder (☞ Figure 10-9)	1
32		131358	Snap Ring	1
33		166112	Clamp	1
34		296422	Washer	4

FOOTNOTES:
a Refer to Table

©2004 HYSTER COMPANY

MAIN CYLINDER (Figure 10-5)
LEFT HAND
TWO STAGE FULL FREE-LIFT
(⇒S/N A558L-03214)

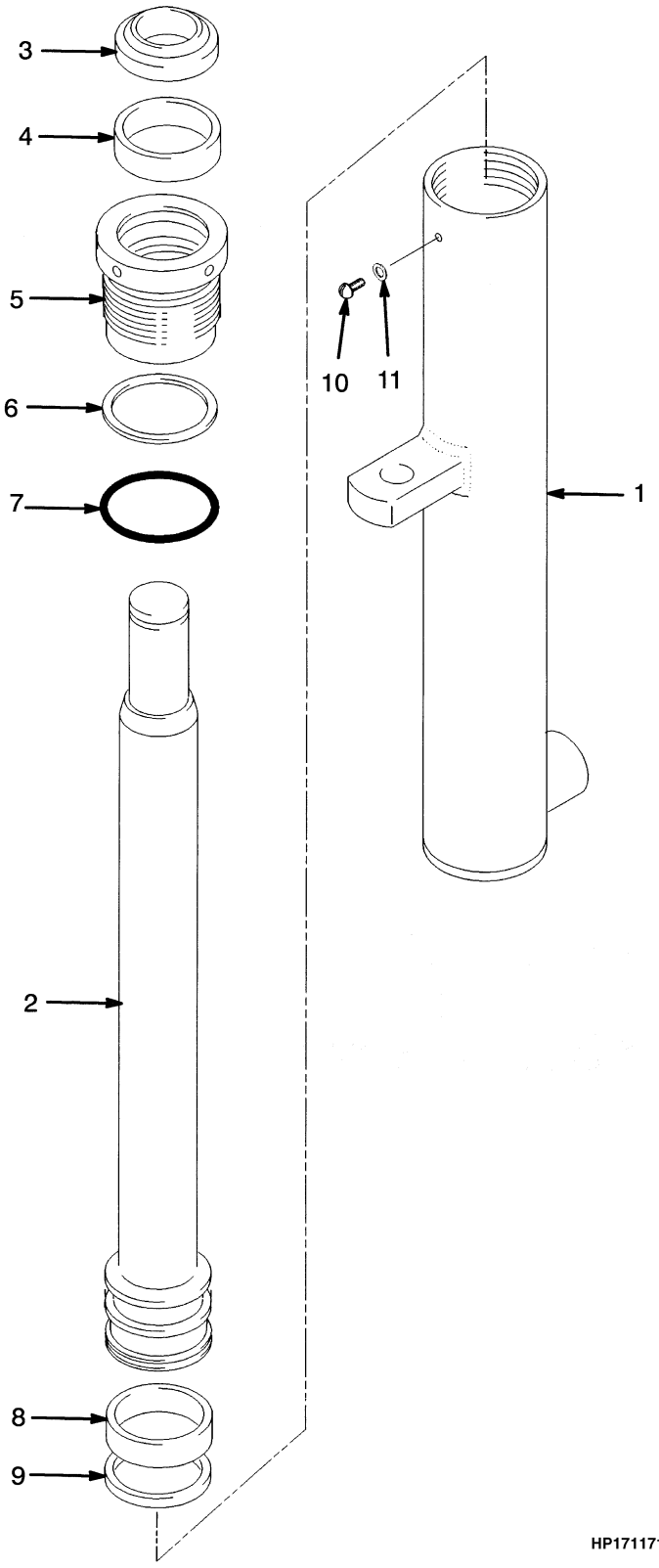

©2004 HYSTER COMPANY

MAIN CYLINDER
LEFT HAND
TWO STAGE FULL FREE-LIFT
(⇒S/N A558L-03214)

ITEM	DESCRIPTION 1 2 3 4	LIFT HEIGHT TO BOTTOM OF FORKS		
		2648 mm (104.3 in.)	2948 mm (116.1 in.)	3248 mm (127.9 in.)
	Mast Group Number	**A558 2648**	**A558 2948**	**A558 3248**
	Cylinder Group Number	**8601852**	**8601855**	**8601858**
	Lift Cylinder	1365572	1365575	1365578
1	Shell	1365601	1365604	1365607
2	Rod	1365660	1365663	1365666

ITEM	PART NO.	DESCRIPTION	QTY
	a	Lift Cylinder	1
1	**a**	Shell	1
2	**a**	Rod	1
3	1310369	Wiper Ring	1
4	1371654	Seal	1
5	1365689	Gland	1
6	132834	Back-Up Ring	1
7	55407	O-Ring	1
8	1374802	Wear Ring	1
9	1362875	Piston Ring	1
10	295649	Screw	1
11	190887	Seal	1
	1360138	Seal Kit (Includes Items 3-4, 6-9)	1

FOOTNOTES:
a Refer to Table

MAIN CYLINDER (Figure 10-6)
LEFT HAND
TWO STAGE FULL FREE-LIFT
(S/N A558L-03215⇒)

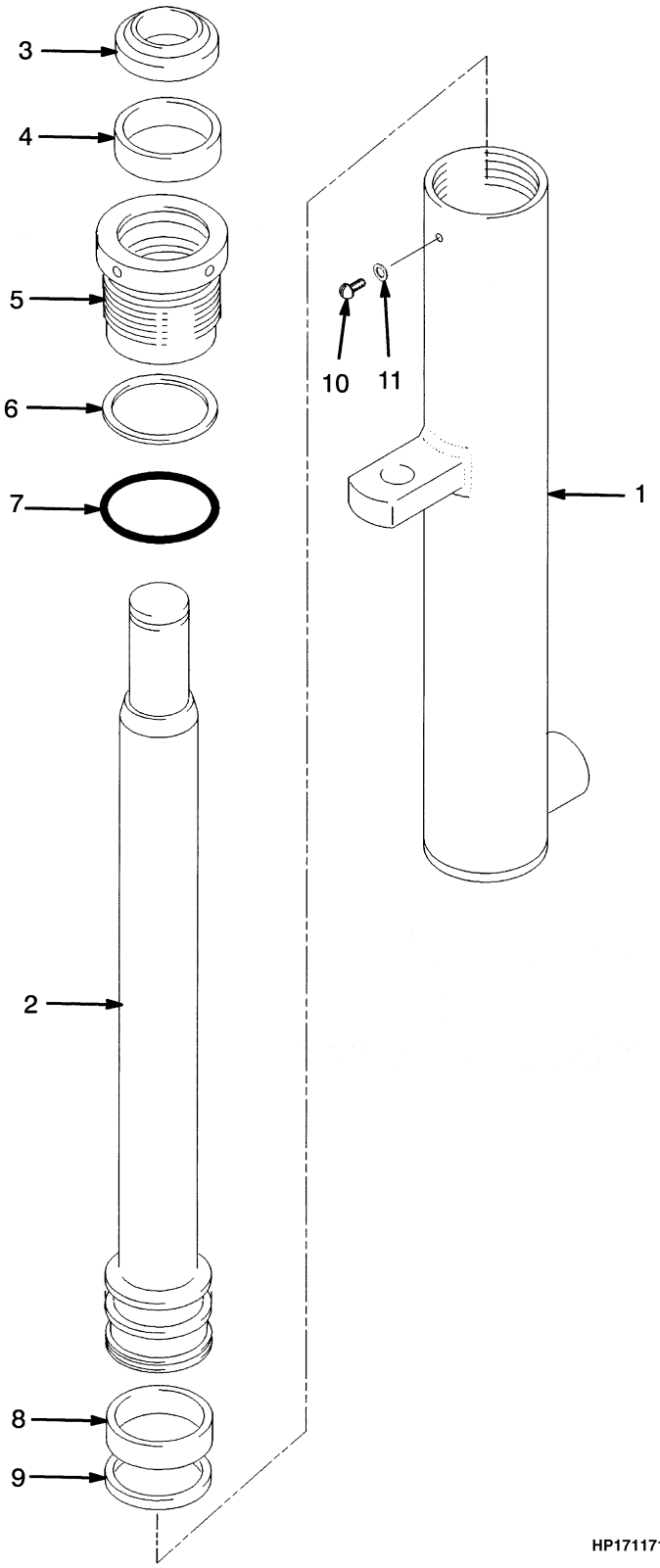

©2004 HYSTER COMPANY

MAIN CYLINDER
LEFT HAND
TWO STAGE FULL FREE-LIFT
(S/N A558L-03215⇒)

ITEM	DESCRIPTION 1 2 3 4	LIFT HEIGHT TO BOTTOM OF FORKS		
		2648 mm (104.3 in.)	2948 mm (116.1 in.)	3248 mm (127.9 in.)
	Mast Group Number	**A558 2648**	**A558 2948**	**A558 3248**
	Cylinder Group Number	**8510252**	**8510255**	**8510258**
	Lift Cylinder	2046361	2046364	2046367
1	Shell	1365601	1365604	1365607
2	Rod	1365660	1365663	1365666

ITEM	PART NO.	DESCRIPTION	QTY
	a	Lift Cylinder	1
1	**a**	Shell	1
2	**a**	Rod	1
3	1310369	Wiper Ring	1
4	1381082	Seal	1
5	1498116	Gland	1
6	132834	Back-Up Ring	1
7	55407	O-Ring	1
8	1374802	Wear Ring	1
9	1362875	Piston Ring	1
10	295649	Screw	1
11	190887	Seal	1
	1498115	Seal Kit (Includes Items 3-4, 6-8, 11)	1

FOOTNOTES:
a Refer to Table

MAIN CYLINDER (Figure 10-7)
RIGHT HAND
TWO STAGE FULL FREE-LIFT
(⇒S/N A558L-03214)

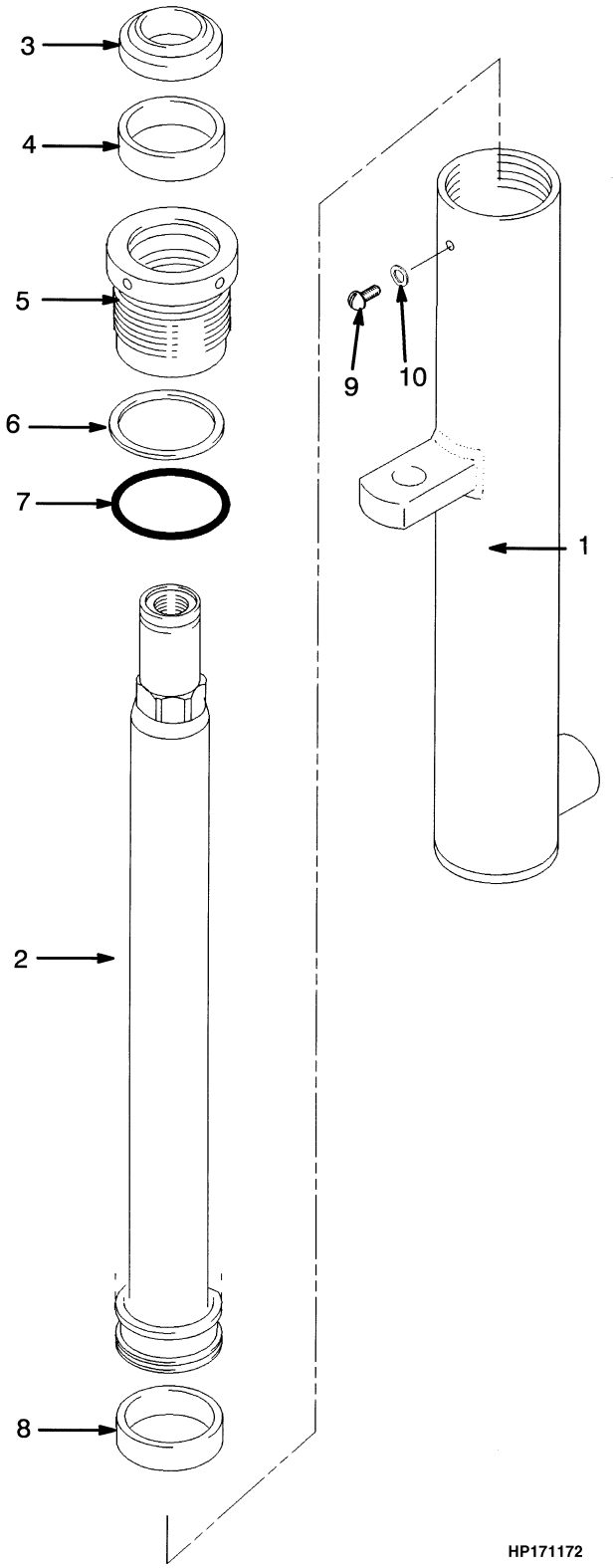

©2004 HYSTER COMPANY

MAIN CYLINDER
RIGHT HAND
TWO STAGE FULL FREE-LIFT
(⇒S/N A558L-03214)

ITEM	DESCRIPTION 1 2 3 4	LIFT HEIGHT TO BOTTOM OF FORKS		
		2648 mm (104.3 in.)	2948 mm (116.1 in.)	3248 mm (127.9 in.)
	Mast Group Number	**A559 2648**	**A559 2948**	**A559 3248**
	Cylinder Group Number	**8601802**	**8601805**	**8601808**
	Lift Cylinder	1362993	1362996	1362999
1	Shell	1365601	1365604	1365607
2	Rod	1365631	1365634	1365637

ITEM		PART NO.	DESCRIPTION	QTY
	a	. . . . .	Lift Cylinder	1
1	**a**	. . . . .	Shell	1
2	**a**	. . . . .	Rod	1
3		1310369	Wiper Ring	1
4		1371654	Seal	1
5		1365689	Gland	1
6		132834	Back-Up Ring	1
7		55407	O-Ring	1
8		1362871	Wear Ring	1
9		295649	Screw	1
10		190887	Seal	1
		2307196	Seal Kit (Includes Items 3-4, 6-8)	1

FOOTNOTES:
a Refer to Table

MAIN CYLINDER (Figure 10-8)
RIGHT HAND
TWO STAGE FULL FREE-LIFT
(S/N A558L-03215⇒)

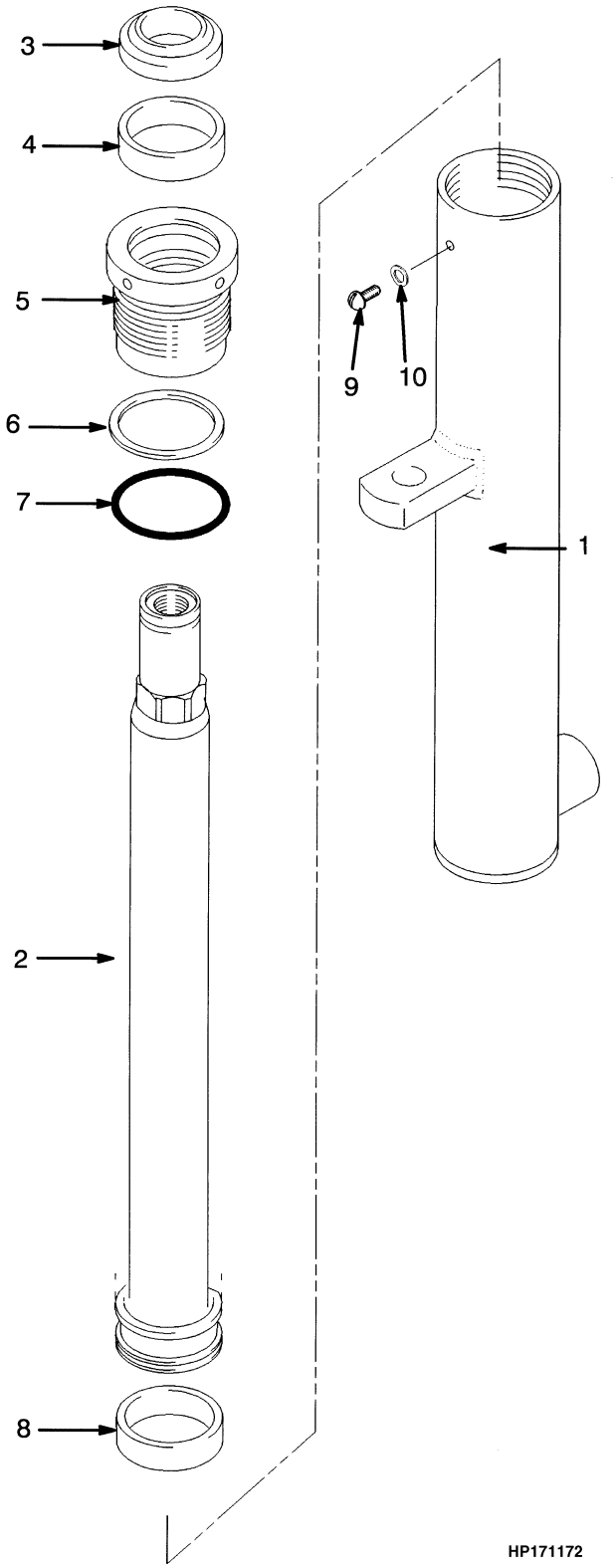

©2004 HYSTER COMPANY

MAIN CYLINDER
RIGHT HAND
TWO STAGE FULL FREE-LIFT
(S/N A558L-03215⇒)

ITEM	DESCRIPTION 1 2 3 4	LIFT HEIGHT TO BOTTOM OF FORKS		
		2648 mm (104.3 in.)	2948 mm (116.1 in.)	3248 mm (127.9 in.)
	Mast Group Number	**A558 2648**	**A558 2948**	**A558 3248**
	Cylinder Group Number	**8510202**	**8510205**	**8510208**
	Lift Cylinder	2046330	2046333	2046336
1	Shell	1365601	1365604	1365607
2	Rod	1365631	1365634	1365637

ITEM		PART NO.	DESCRIPTION	QTY
	a	. . . . .	Lift Cylinder	1
1	**a**	. . . . .	Shell	1
2	**a**	. . . . .	Rod	1
3		1310369	Wiper Ring	1
4		1381082	Seal	1
5		1498116	Gland	1
6		132834	Back-Up Ring	1
7		55407	O-Ring	1
8		1374802	Wear Ring	1
9		295649	Screw	1
10		190887	Seal	1
		1498115	Seal Kit (Includes Items 3-4, 6-8, 10)	1

FOOTNOTES:
a Refer to Table

FREE-LIFT CYLINDER (Figure 10-9)
TWO STAGE FULL FREE-LIFT

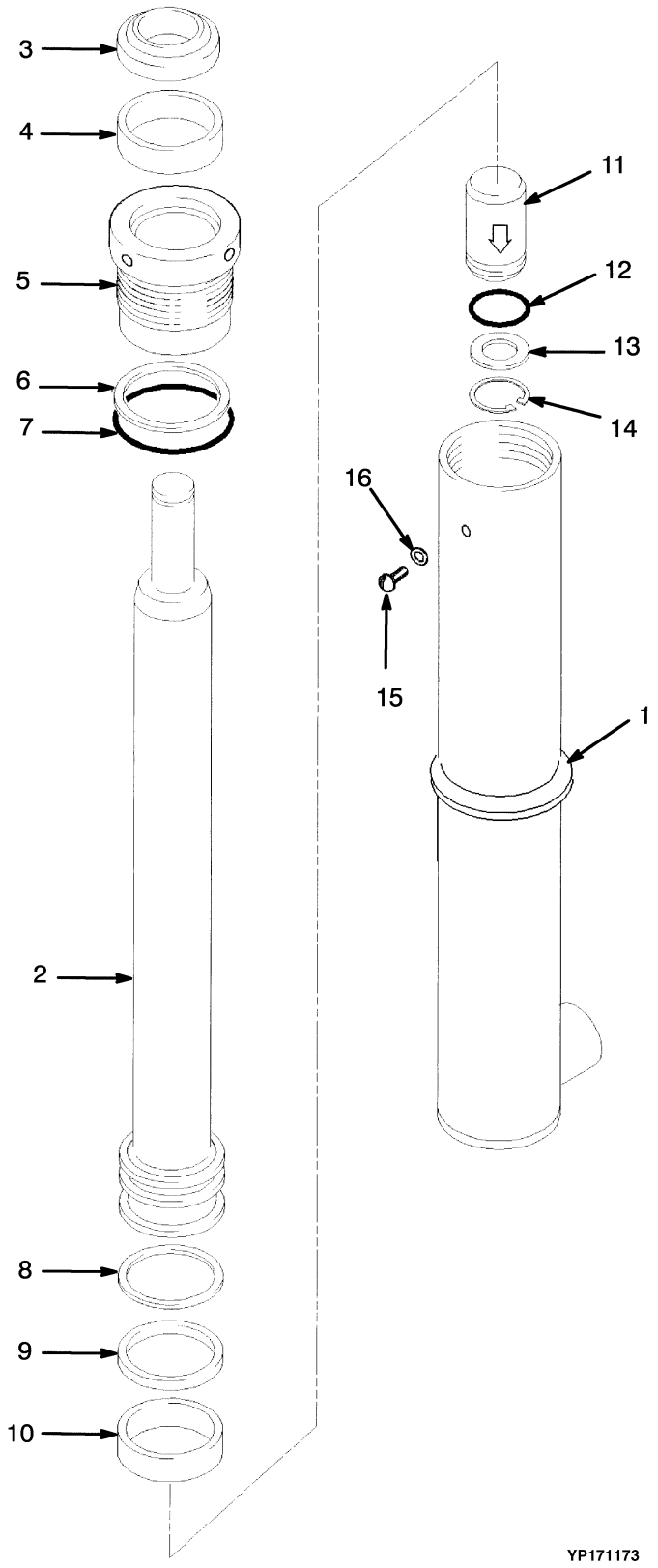

©2004 HYSTER COMPANY

FREE-LIFT CYLINDER
TWO STAGE FULL FREE-LIFT

ITEM	DESCRIPTION 1 2 3 4	LIFT HEIGHT TO BOTTOM OF FORKS		
		2648 mm (104.3 in.)	2948 mm (116.1 in.)	3248 mm (127.9 in.)
	Mast Group Number	**A559 2648**	**A559 2948**	**A559 3248**
	Cylinder Group Number	**8601902**	**8601905**	**8601908**
	Lift Cylinder	1362883	1362885	1362888
1	Shell	1362919	1362922	1362925
2	Rod	1362956	1362959	1362962

ITEM	PART NO.	DESCRIPTION	QTY
	a	Lift Cylinder	1
1	**a**	Shell	1
2	**a**	Rod	1
3	2013099	Wiper	1
4	1358970	Seal	1
5	1362880	Gland	1
6	615135	Back-Up Ring	1
7	55146	O-Ring	1
8	638250	Back-Up Ring	1
9	201829	Rod Seal	1
10	1362881	Wear Ring	1
11	257913	Check Valve	1
12	39348	O-Ring	1
13	297531	Washer	1
14	187388	Snap Ring	1
15	1361302	Screw	1
16	190887	Seal	1
	1360141	Seal Kit (Includes Items 3-4, 6-10, 12, 16)	1

FOOTNOTES:
a Refer to Table

©2004 HYSTER COMPANY

CARRIAGE (Figure 10-10)
TWO STAGE FULL FREE-LIFT

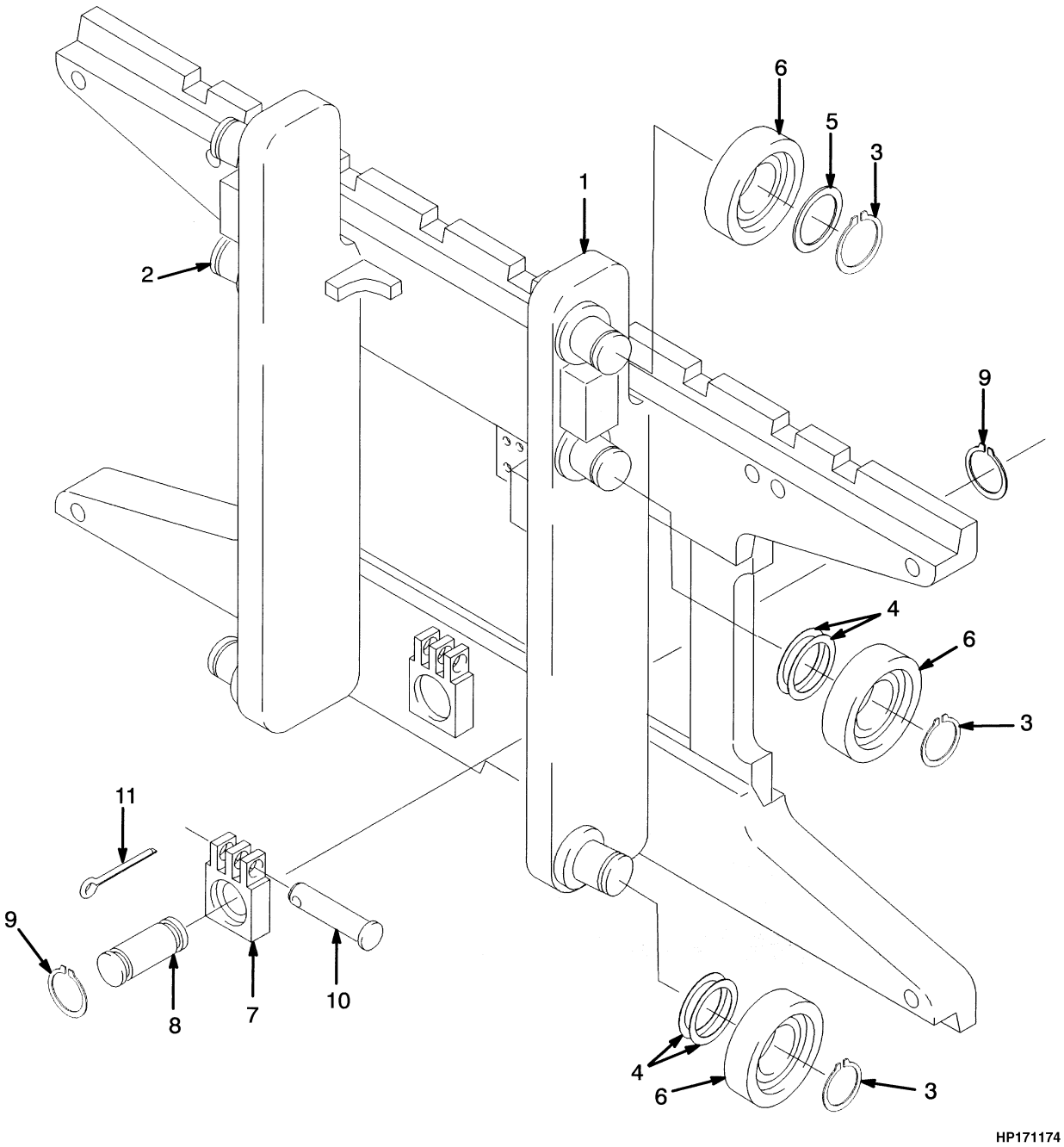

©2004 HYSTER COMPANY

CARRIAGE
TWO STAGE FULL FREE-LIFT

ITEM	PART NO.	DESCRIPTION	QTY
	1353388	Carriage	1
1	1353373	Frame	1
2	1345216	Stubshaft	6
3	58901	Snap Ring	6
4	129387	Shim (0.020 in.)	AR
5	366115	Spacer	2
6	1333399	Load Roller (Optional)	AR
6	1353192	Load Roller (Standard)	6
6	1393130	Load Roller (Optional)	AR
7	1369345	Chain Anchor (Dual Hole)	2
7	1504010	Chain Anchor (Single Hole) (Optional)	2
8	1353408	Pin	2
9	131358	Snap Ring	4
10	1514866	Pin	2
11	15211	Cotter Pin	2

©2004 HYSTER COMPANY

HEADER HOSE (Figure 10-11)
TWO STAGE FULL FREE-LIFT

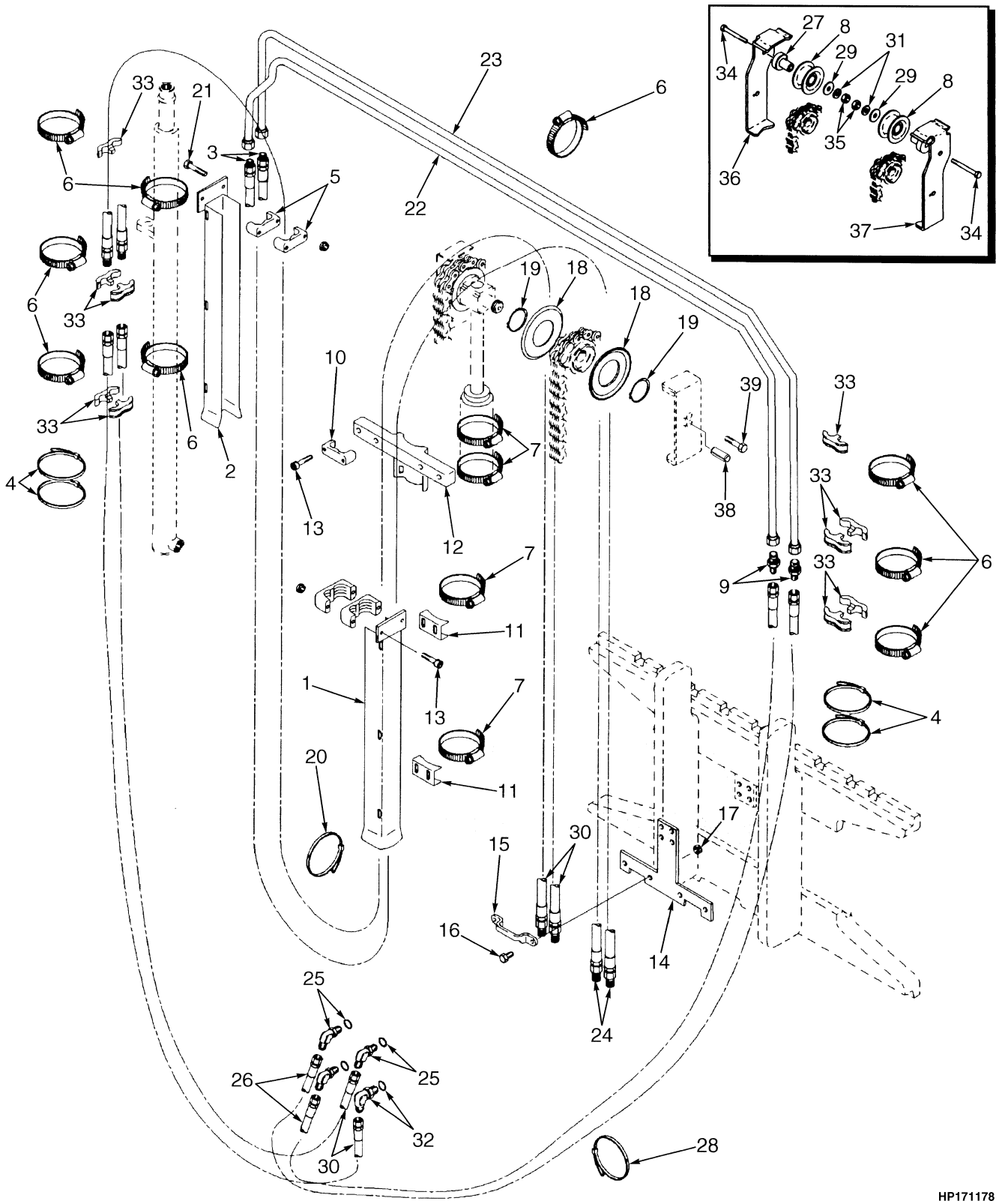

©2004 HYSTER COMPANY

HEADER HOSE
TWO STAGE FULL FREE-LIFT

ITEM	DESCRIPTION 1 2 3 4	LIFT HEIGHT TO BOTTOM OF FORKS		
		2648 mm (104.3 in.)	2948 mm (116.1 in.)	3248 mm (127.9 in.)
	Mast Group Number	A559 2648	A559 2948	A559 3248
1	Channel	1365501	1365501	1365504
2	Channel	1365506	1365512	1365516
3	Hose	1345569	1376111	1345573
22	Tube	1353632	1353635	1353638
23	Tube	1353662	1353665	1353668
24	Hose	1376144	1376147	1376150

KEY:
A: Four Function
B: Three Function

ITEM		PART NO.	DESCRIPTION	QTY A	QTY B
1	**a**	. . . . .	Channel	1	1
2	**a**	. . . . .	Channel	1	1
3	**a**	. . . . .	Hose	4	2
4		1375574	Strap	4	2
5		1360386	Clamp	2	1
6		1360507	Clamp	4	4
7		1360508	Clamp	8	8
8		1494017	Sheave	2	1
9		14692	Fitting	2	
10		1360386	Clamp	6	2
11		1345423	Clamp	2	2
12		1354918	Bracket	1	2
13		293796	Capscrew	6	6
14		1381771	Bracket	1	1
15		1369333	Clamp	2	1
16		136749	Capscrew	8	6
17		313828	Nut	8	6
18		1345199	Hose Guide	4	2
19		1345204	Snap Ring	4	2
20		137852	Strap Clamp	2	2
21		293795	Capscrew	2	..
22	**a**	. . . . .	Tube	1	1
23	**a**	. . . . .	Tube	1	1
24	**a**	. . . . .	Hose	2	..
25		17222	Fitting	2	1
25		16483	O-Ring	1	1
26		1377371	Hose	2	2
27		1396406	Stubshaft	2	1
28		137852	Strap Clamp	4	2
29		320171	Washer	2	1
30		1377372	Hose	2	..

©2004 HYSTER COMPANY

HEADER HOSE
TWO STAGE FULL FREE-LIFT

ITEM	PART NO.	DESCRIPTION	QTY A	QTY B
31	1345190	Washer	2	1
32	16558	Fitting	2	1
32	16483	O-Ring	1	1
33	1353530	Clamp	10	5
34	292533	Capscrew	2	1
35	300937	Nut	2	1
36	1395291	Bracket (RH) (RH)	1	1
37	1395292	Bracket (LH) (LH)	1	..
38	302461	Pin	1	1
39	132680	Capscrew	2	2

FOOTNOTES:
a Refer to Table

©2004 HYSTER COMPANY

11 MAST-THREE STAGE FULL FREE-LIFT

SECTION 11
MAST-THREE STAGE FULL FREE-LIFT

DESCRIPTION **PAGE**

CARRIAGE
THREE STAGE FULL FREE-LIFT 11-18
FREE LIFT
THREE STAGE FULL FREE-LIFT 11-10
FREE-LIFT CYLINDER
THREE STAGE FULL FREE-LIFT 11-16
HEADER HOSE
THREE STAGE FULL FREE-LIFT 11-20
INNER MAST
THREE STAGE FULL FREE-LIFT 11-6
INTERMEDIATE MAST
THREE STAGE FULL FREE-LIFT 11-4
MAIN CYLINDER
LEFT HAND
THREE STAGE FULL FREE-LIFT 11-12
RIGHT HAND
THREE STAGE FULL FREE-LIFT 11-14
MAIN LIFT
THREE STAGE FULL FREE-LIFT 11-8
OUTER MAST
THREE STAGE FULL FREE-LIFT 11-2

©2004 HYSTER COMPANY

OUTER MAST (Figure 11-1)
THREE STAGE FULL FREE-LIFT

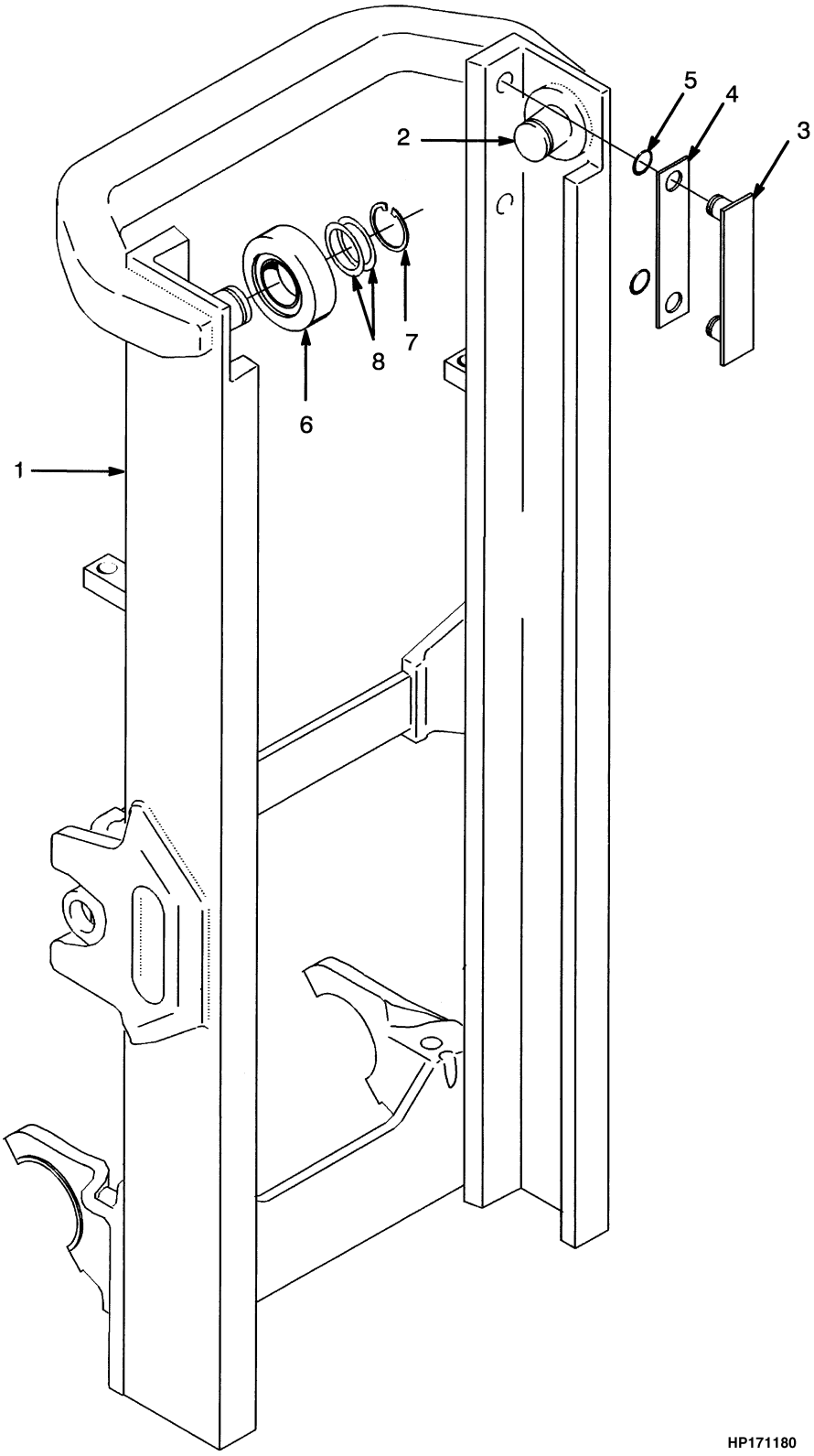

©2004 HYSTER COMPANY

OUTER MASS
THREE STAGE FULL FREE-LIFT

ITEM	DESCRIPTION 1 2 3 4	LIFT HEIGHT TO BOTTOM OF FORKS			
		4010 mm (157.9 in.)	4310 mm (169.7 in.)	4760 mm (187.4 in.)	5360 mm (211.0 in.)
	Mast Group Number	A555 4010	A555 4310	A555 4760	A555 5360
1	Outer Mast	1348003	1348005	1348008	1348013

ITEM		PART NO.	DESCRIPTION	QTY
1	**a**	. . . . .	Outer Mast	1
2		1345216	Stubshaft	2
3		215212	Bearing Strip	2
4		131716	Shim (0.020 in.)	4
5		104506	O-Ring	4
6		1333399	Load Roller (Optional)	2
6		1353192	Load Roller (Standard)	2
6		1393132	Load Roller (Optional)	2
7		58901	Snap Ring	2
8		129387	Shim (0.020 in.)	AR

FOOTNOTES:
a Refer to Table

INTERMEDIATE MAST (Figure 11-2)
THREE STAGE FULL FREE-LIFT

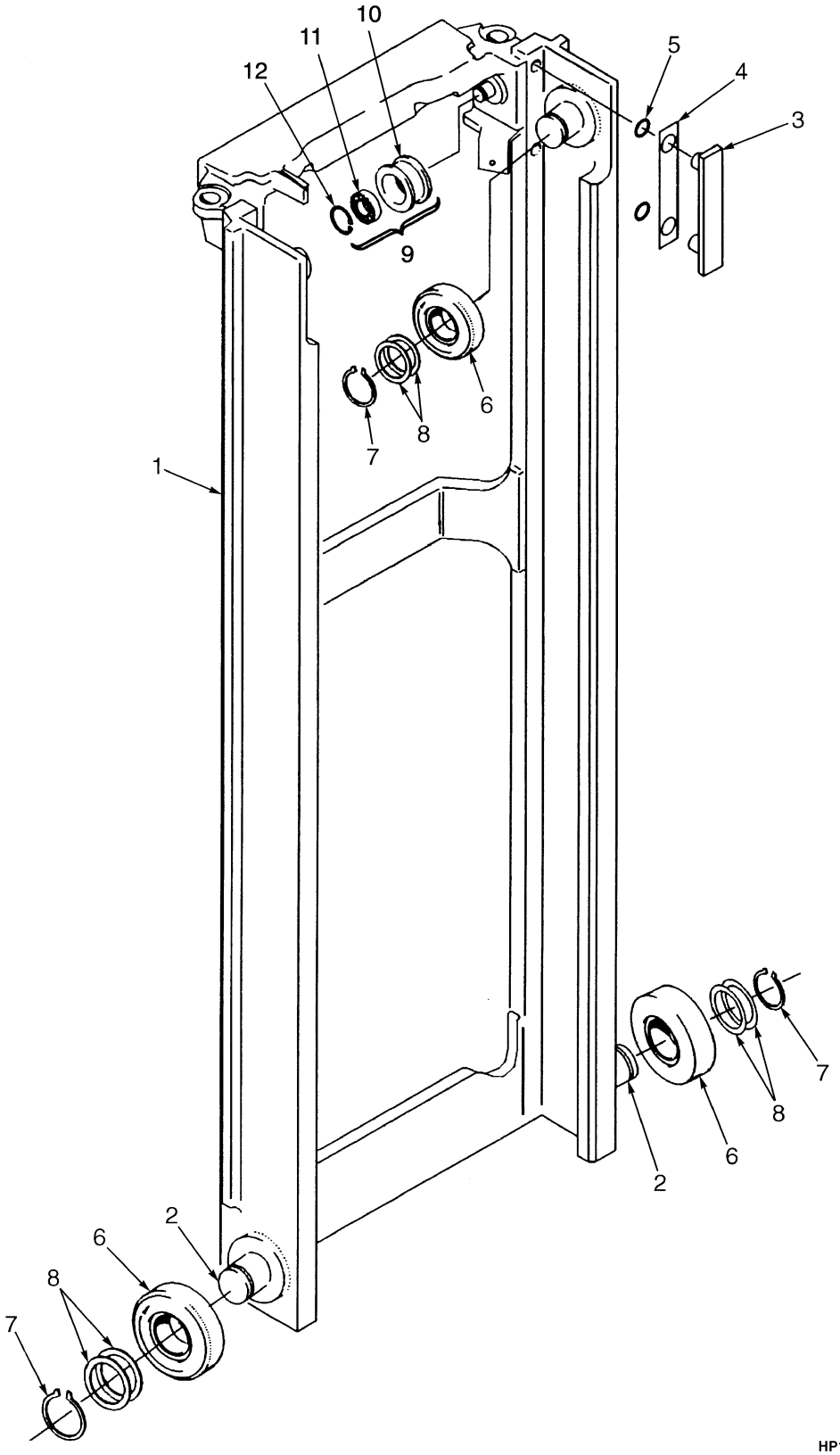

©2004 HYSTER COMPANY

INTERMEDIATE MAST
THREE STAGE FULL FREE-LIFT

ITEM	DESCRIPTION 1 2 3 4	LIFT HEIGHT TO BOTTOM OF FORKS			
		4010 mm (157.9 in.)	4310 mm (169.7 in.)	4760 mm (187.4 in.)	5360 mm (211.0 in.)
	Mast Group Number	A555 4010	A555 4310	A555 4760	A555 5360
1	Intermediate Mast	1353003	1353005	1353008	1353012

ITEM		PART NO.	DESCRIPTION	QTY
1	**a**	. . . . .	Intermediate Mast	1
2		1345216	Stubshaft	4
3		215212	Bearing Strip	2
4		131716	Shim (0.020 in.)	4
5		104506	O-Ring	4
6		1333399	Load Roller (Optional)	2
6		1353192	Load Roller (Standard)	4
6		1393132	Load Roller (Optional)	2
7		58901	Snap Ring	4
8		129387	Shim (0.020 in.)	AR
9		1379685	Chain Sheave Assembly	2
10		1378698	Sheave	1
11		1378699	Bearing	1
12		37752	Snap Ring	1

FOOTNOTES:
a Refer to Table

©2004 HYSTER COMPANY

INNER MAST (Figure 11-3)
THREE STAGE FULL FREE-LIFT

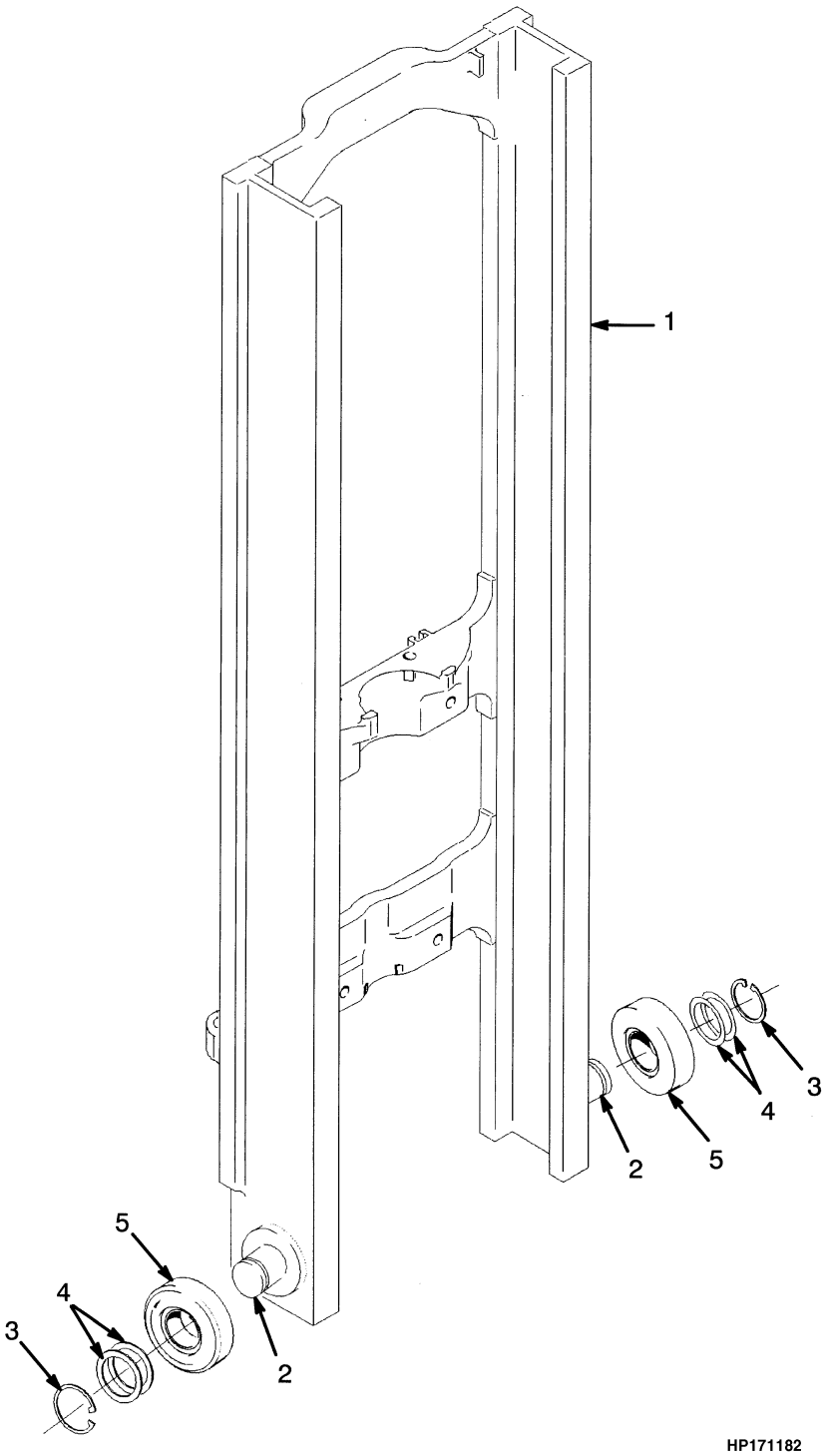

©2004 HYSTER COMPANY

INNER MAST
THREE STAGE FULL FREE-LIFT

ITEM	DESCRIPTION 1 2 3 4	LIFT HEIGHT TO BOTTOM OF FORKS			
		4010 mm (157.9 in.)	4310 mm (169.7 in.)	4760 mm (187.4 in.)	5360 mm (211.0 in.)
	Mast Group Number	A555 4010	A555 4310	A555 4760	A555 5360
1	Inner Mast	1352803	1352805	1352808	1352812

ITEM		PART NO.	DESCRIPTION	QTY
1	**a**	. . . . .	Inner Mast	1
2		1345216	Stubshaft	2
3		58901	Snap Ring	2
4		129387	Shim (0.020 in.)	AR
5		1333399	Load Roller (Optional)	2
5		1353192	Load Roller (Standard)	2
5		1393132	Load Roller (Optional)	2

FOOTNOTES:
a Refer to Table

MAIN LIFT (Figure 11-4)
THREE STAGE FULL FREE-LIFT

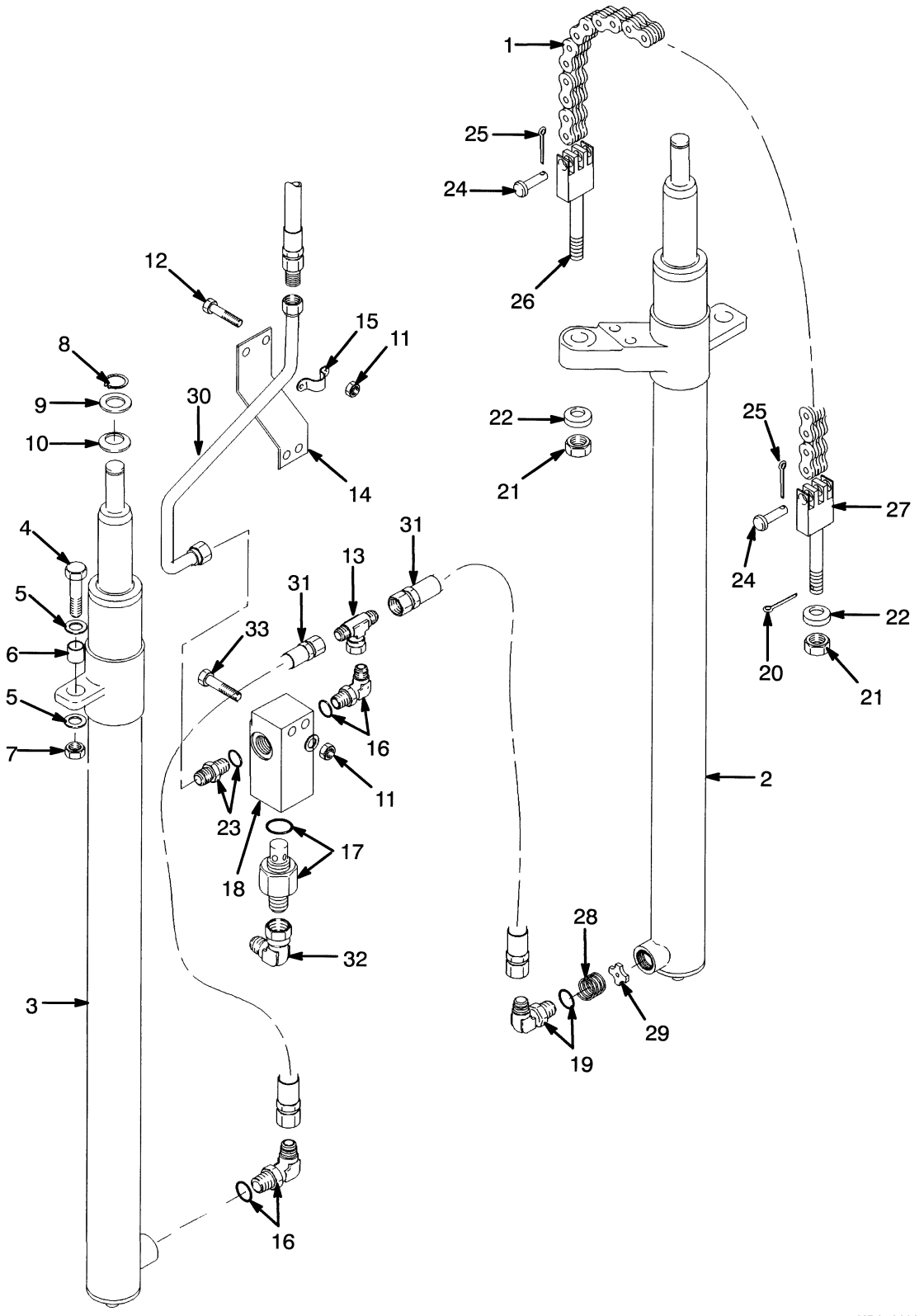

©2004 HYSTER COMPANY

MAIN LIFT
THREE STAGE FULL FREE-LIFT

ITEM	DESCRIPTION 1 2 3 4	LIFT HEIGHT TO BOTTOM OF FORKS			
		4010 mm (157.9 in.)	4310 mm (169.7 in.)	4760 mm (187.4 in.)	5360 mm (211.0 in.)
	Mast Group Number	A555 4010	A555 4310	A555 4760	A555 5360
1	Chain	161029	88436	88441	88446

ITEM		PART NO.	DESCRIPTION	QTY
1	**a**	. . . . .	Chain	2
2		. . . . .	Cylinder (LH) (☞ Figure 11-6)	1
3		. . . . .	Cylinder (RH) (☞ Figure 11-7)	1
4		292532	Capscrew	2
5		296422	Washer	4
6		323090	Spacer	2
7		300937	Nut	2
8		131358	Snap Ring	3
9		1333382	Washer	2
10		1354915	Washer (0.010 in.)	AR
10		1354916	Washer (0.030 in.)	AR
10		1354917	Washer (0.060 in.)	AR
11		313828	Nut	4
12		136681	Capscrew	4
13		17051	Fitting	1
14		1363250	Plate	1
15		1363251	Clamp	1
16		16560	Fitting	2
16		16485	O-Ring (Face Seal)	2
17		323061	Control Valve	1
18		1333392	Housing	1
19		189595	Fitting	1
20		15223	Cotter Pin	2
21		60137	Nut	4
22		296426	Washer (Hardened)	4
23		16543	Fitting	1
23		16486	O-Ring (Face Seal)	1
24		323161	Pin	4
25		15211	Cotter Pin	4
26		1369357	Chain Anchor	2
27		1365140	Chain Anchor	2
28		120938	Spring	1
29		323160	Washer	1
30		1376323	Tube	1
31		1376100	Hose	2
32		16882	Fitting	1
33		292509	Capscrew	2

FOOTNOTES:
a Refer to Table

©2004 HYSTER COMPANY

FREE LIFT (Figure 11-5)
THREE STAGE FULL FREE-LIFT

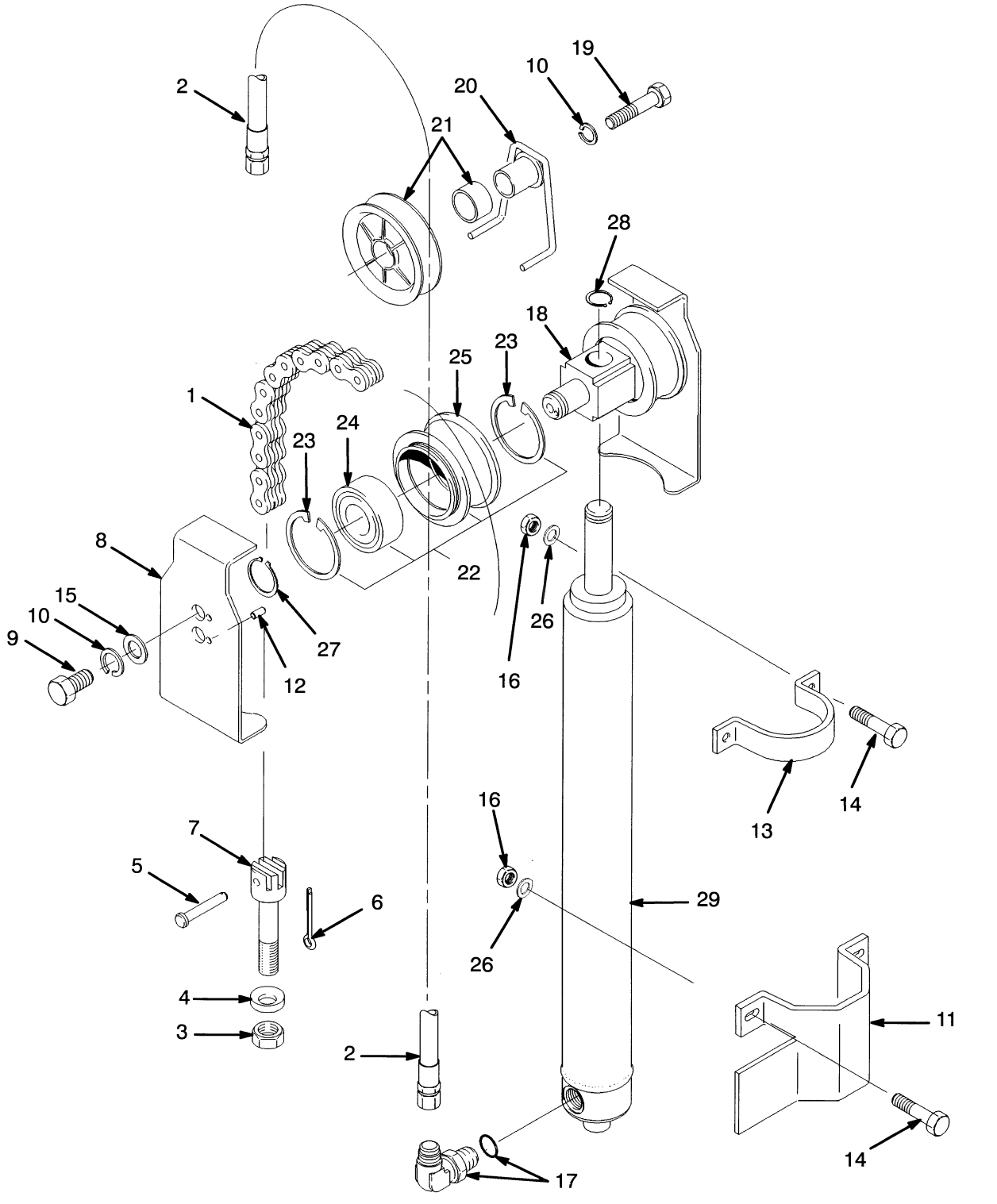

©2004 HYSTER COMPANY

FREE LIFT
THREE STAGE FULL FREE-LIFT

ITEM	DESCRIPTION 1 2 3 4	LIFT HEIGHT TO BOTTOM OF FORKS			
		4010 mm (157.9 in.)	4310 mm (169.7 in.)	4760 mm (187.4 in.)	5360 mm (211.0 in.)
	Mast Group Number	A555 4010	A555 4310	A555 4760	A555 5360
1	Chain	180030	180058	231083	180029
2	Hose	1363303	1363305	1363308	1363312

ITEM		PART NO.	DESCRIPTION	QTY
1	**a**	. . . . .	Chain	2
2	**a**	. . . . .	Hose	1
3		60137	Nut	2
4		296426	Washer (Hardened)	2
5		323161	Pin	2
6		15200	Cotter Pin	2
7		1369357	Chain Anchor	2
8		1395285	Chain Guard	2
9		132860	Capscrew	2
10		292683	Lockwasher	3
11		1353547	Bracket	1
12		302461	Pin	2
13		1489972	Bracket	1
14		292528	Capscrew	4
15		320161	Washer	6
16		300937	Nut	4
17		1379496	Valve	1
18		1378690	Crosshead	1
19		292532	Capscrew	1
20		1360534	Stubshaft	1
21		1343989	Hose Sheave	1
21		1354901	Bushing	1
22		1379682	Chain Sheave Assembly	2
23		37752	Snap Ring	1
24		1378699	Bearing	1
25		1378692	Sheave	1
26		296422	Washer	4
27		304526	Snap Ring	2
28		131358	Snap Ring	1
29		. . . . .	Free-Lift Cylinder (☞ Figure 11-8)	1

FOOTNOTES:
a Refer to Table

MAIN CYLINDER (Figure 11-6)
LEFT HAND
THREE STAGE FULL FREE-LIFT

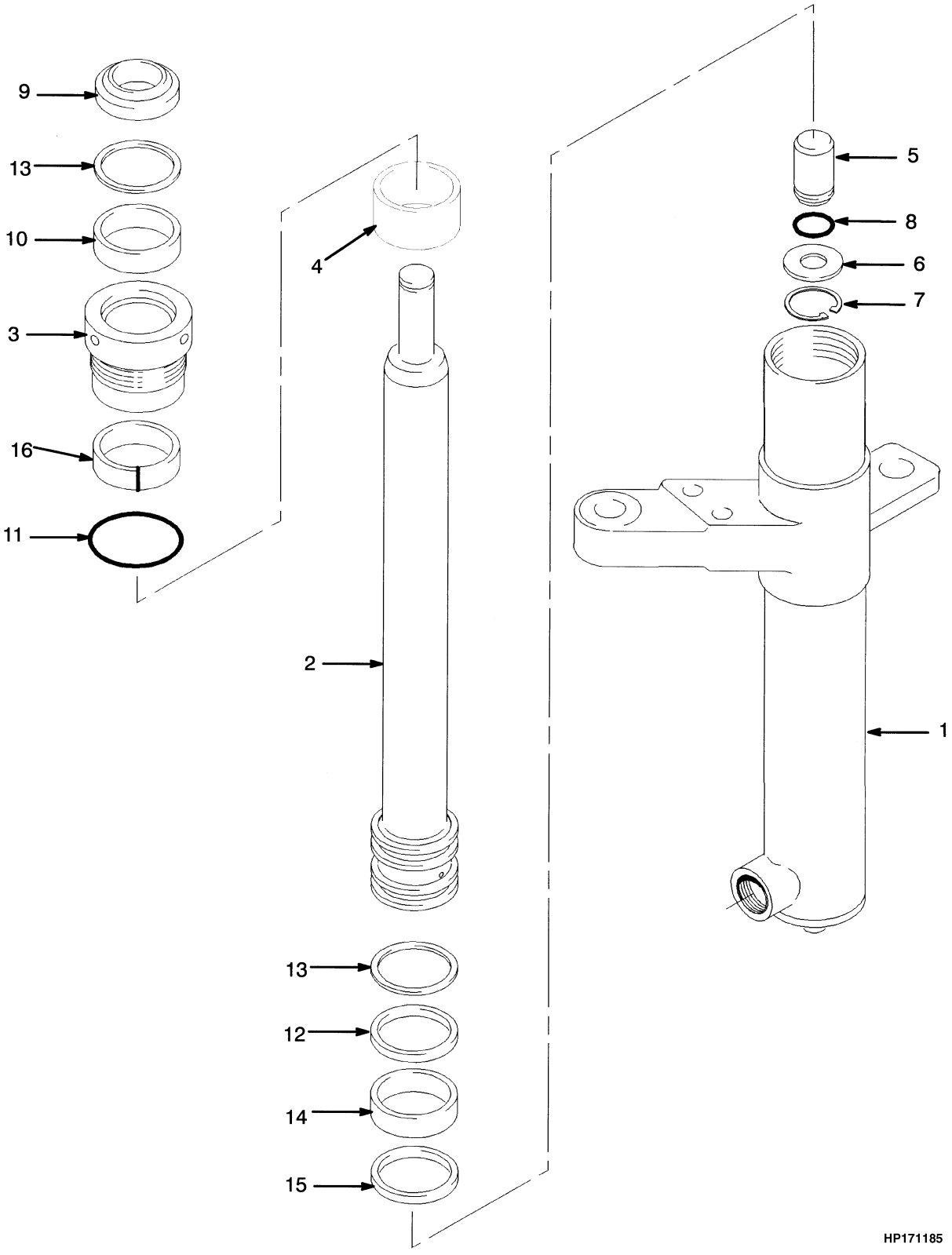

©2004 HYSTER COMPANY

MAIN CYLINDER
LEFT HAND
THREE STAGE FULL FREE-LIFT

ITEM	DESCRIPTION 1 2 3 4	LIFT HEIGHT TO BOTTOM OF FORKS			
		4010 mm (157.9 in.)	4310 mm (169.7 in.)	4760 mm (187.4 in.)	5360 mm (211.0 in.)
	Mast Group Number	**A555 4010**	**A555 4310**	**A555 4760**	**A555 5360**
	Cylinder Group Number	**8601703**	**8601705**	**8601708**	**8601712**
	Lift Cylinder	1362684	1362696	1362715	1362739
1	Shell	1362685	1362697	1362716	1362740
2	Rod	1362686	1362698	1362717	1362741
4	Spacer	----	----	----	1355610

ITEM		PART NO.	DESCRIPTION	QTY
	a	. . . . .	Lift Cylinder	1
1	**a**	. . . . .	Shell	1
2	**a**	. . . . .	Rod	1
3		1371653	Gland	1
4	**a**	. . . . .	Spacer	1
5		257913	Check Valve	1
6		297531	Washer	1
7		187388	Snap Ring	1
8		39348	O-Ring	1
9		1319668	Wiper Ring	1
10		1381095	Rod Seal	1
11		55407	O-Ring	1
12		330692	Seal	1
13		322824	Back-Up Ring	2
14		1362871	Wear Ring	1
15		1362875	Piston Ring	1
16		322902	Wear Ring	1
		1360139	Seal Kit (Includes Items 8-15)	1

FOOTNOTES:
a Refer to Table

MAIN CYLINDER (Figure 11-7)
RIGHT HAND
THREE STAGE FULL FREE-LIFT

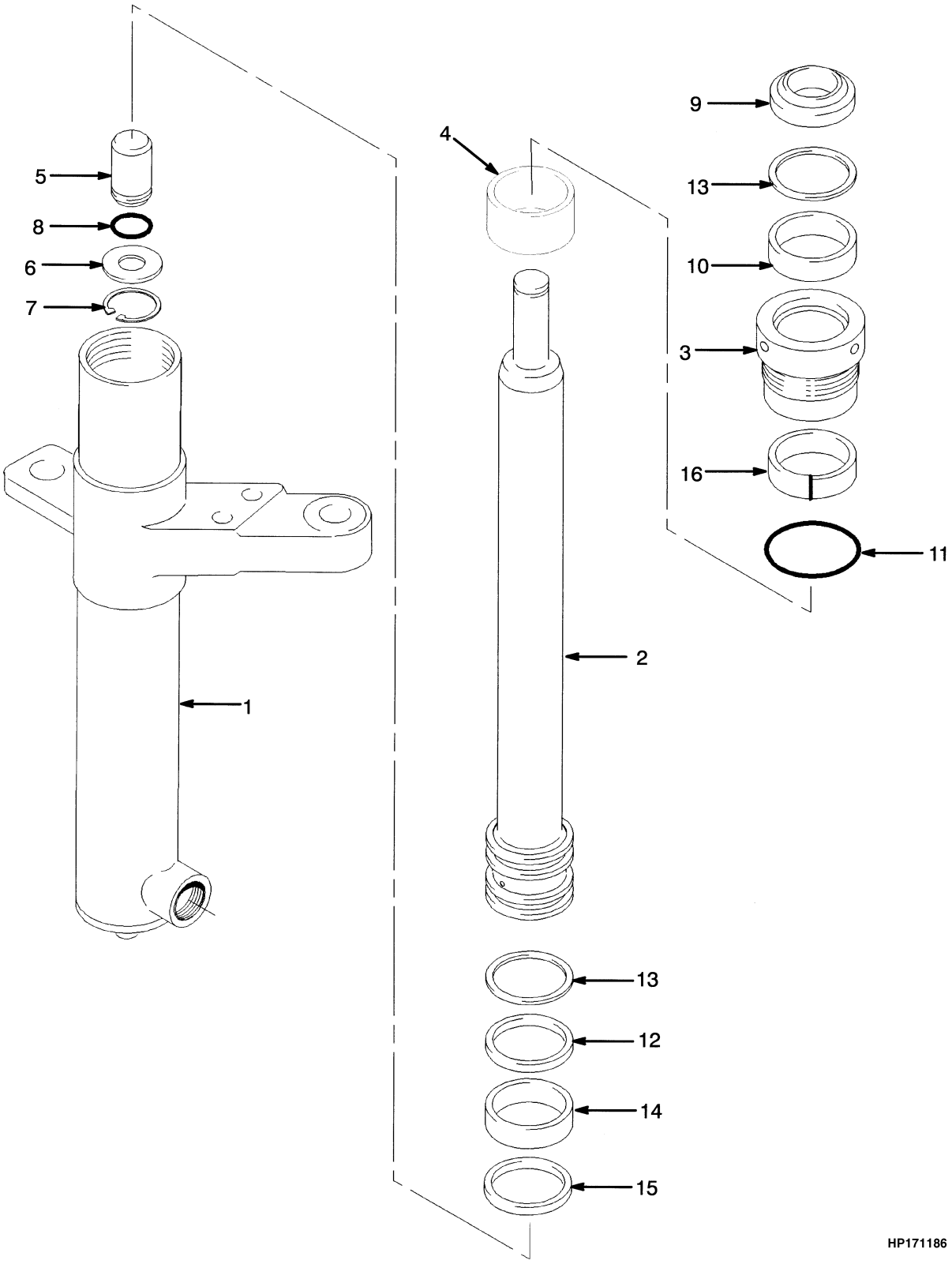

©2004 HYSTER COMPANY

MAIN CYLINDER
RIGHT HAND
THREE STAGE FULL FREE-LIFT

ITEM	DESCRIPTION 1 2 3 4	LIFT HEIGHT TO BOTTOM OF FORKS			
		4010 mm (157.9 in.)	4310 mm (169.7 in.)	4760 mm (187.4 in.)	5360 mm (211.0 in.)
	Mast Group Number	**A555 4010**	**A555 4310**	**A555 4760**	**A555 5360**
	Cylinder Group Number	**8601753**	**8601755**	**8601758**	**8601762**
	Lift Cylinder	1362688	1362700	1362719	1362743
1	Shell	1362689	1362707	1362726	1362677
2	Rod	1362686	1362698	1362717	1362741
4	Spacer	----	----	----	1355610

ITEM		PART NO.	DESCRIPTION	QTY
	a	. . . . .	Lift Cylinder	1
1	**a**	. . . . .	Shell	1
2	**a**	. . . . .	Rod	1
3		1371653	Gland	1
4	**a**	. . . . .	Spacer	1
5		257913	Check Valve	1
6		297531	Washer	1
7		187388	Snap Ring	1
8		39348	O-Ring	1
9		1319668	Wiper Ring	1
10		1381095	Rod Seal	1
11		55407	O-Ring	1
12		330692	Seal	1
13		322824	Back-Up Ring	2
14		1362871	Wear Ring	1
15		1362875	Piston Ring	1
16		322902	Wear Ring	1
		1360139	Seal Kit (Includes Items 8-15)	1

FOOTNOTES:
a Refer to Table

©2004 HYSTER COMPANY

FREE-LIFT CYLINDER (Figure 11-8)
THREE STAGE FULL FREE-LIFT

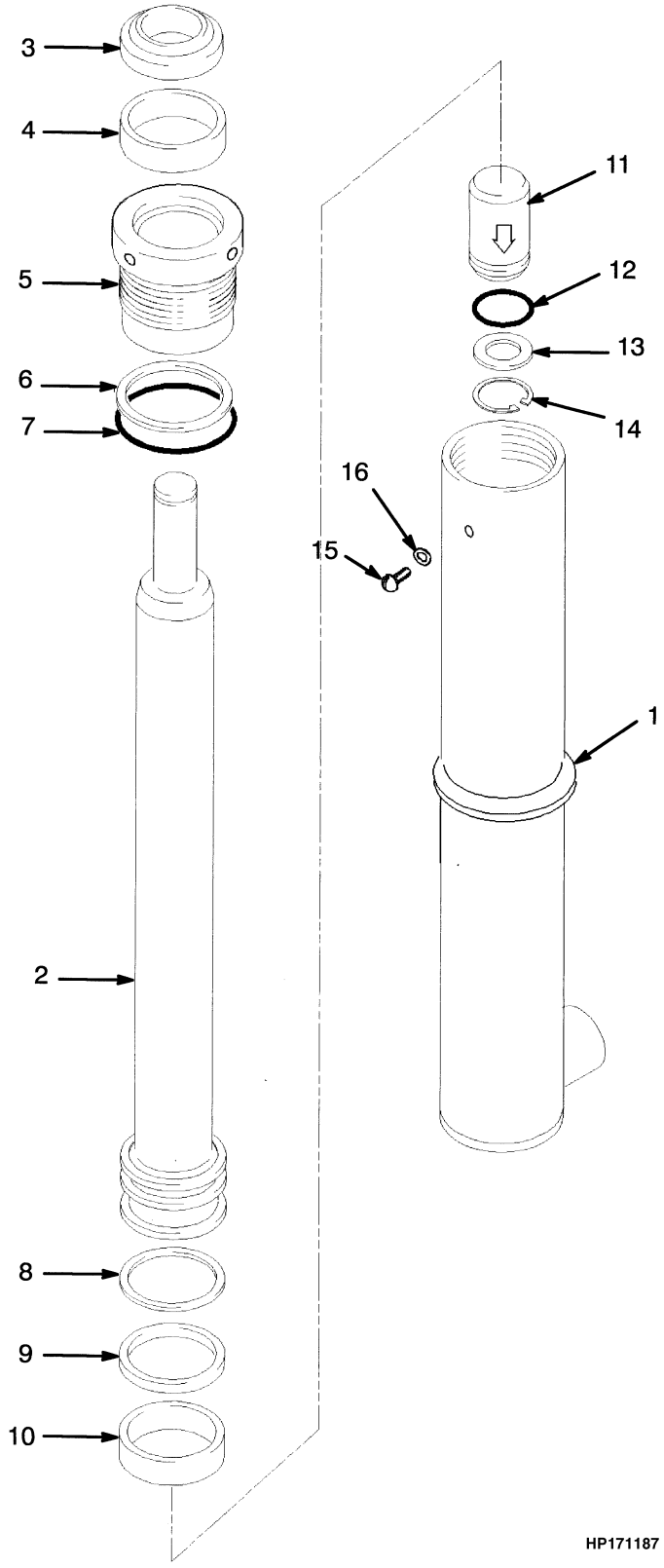

©2004 HYSTER COMPANY

FREE-LIFT CYLINDER
THREE STAGE FULL FREE-LIFT

ITEM	DESCRIPTION 1 2 3 4	LIFT HEIGHT TO BOTTOM OF FORKS			
		4010 mm (157.9 in.)	4310 mm (169.7 in.)	4760 mm (187.4 in.)	5360 mm (211.0 in.)
	Mast Group Number	**A555 4010**	**A555 4310**	**A555 4760**	**A555 5360**
	Cylinder Group Number	**8601903**	**8601905**	**8601908**	**8601913**
	Lift Cylinder	1362884	1362885	1362888	1362893
1	Shell	1362920	1362922	1362925	1362930
2	Rod	1362957	1362959	1362962	1362967

ITEM	PART NO.	DESCRIPTION	QTY
	a	Lift Cylinder	1
1	**a**	Shell	1
2	**a**	Rod	1
3	2013099	Wiper	1
4	1358970	Seal	1
5	1362880	Gland	1
6	615135	Back-Up Ring	1
7	55146	O-Ring	1
8	638250	Back-Up Ring	1
9	201829	Rod Seal	1
10	1362881	Wear Ring	1
11	257913	Check Valve	1
12	39348	O-Ring	1
13	297531	Washer	1
14	187388	Snap Ring	1
15	1361302	Screw	1
16	190887	Seal	1
	1360141	Seal Kit (Includes Items 3-4, 6-10, 12, 16)	1

FOOTNOTES:
a Refer to Table

©2004 HYSTER COMPANY

CARRIAGE (Figure 11-9)
THREE STAGE FULL FREE-LIFT

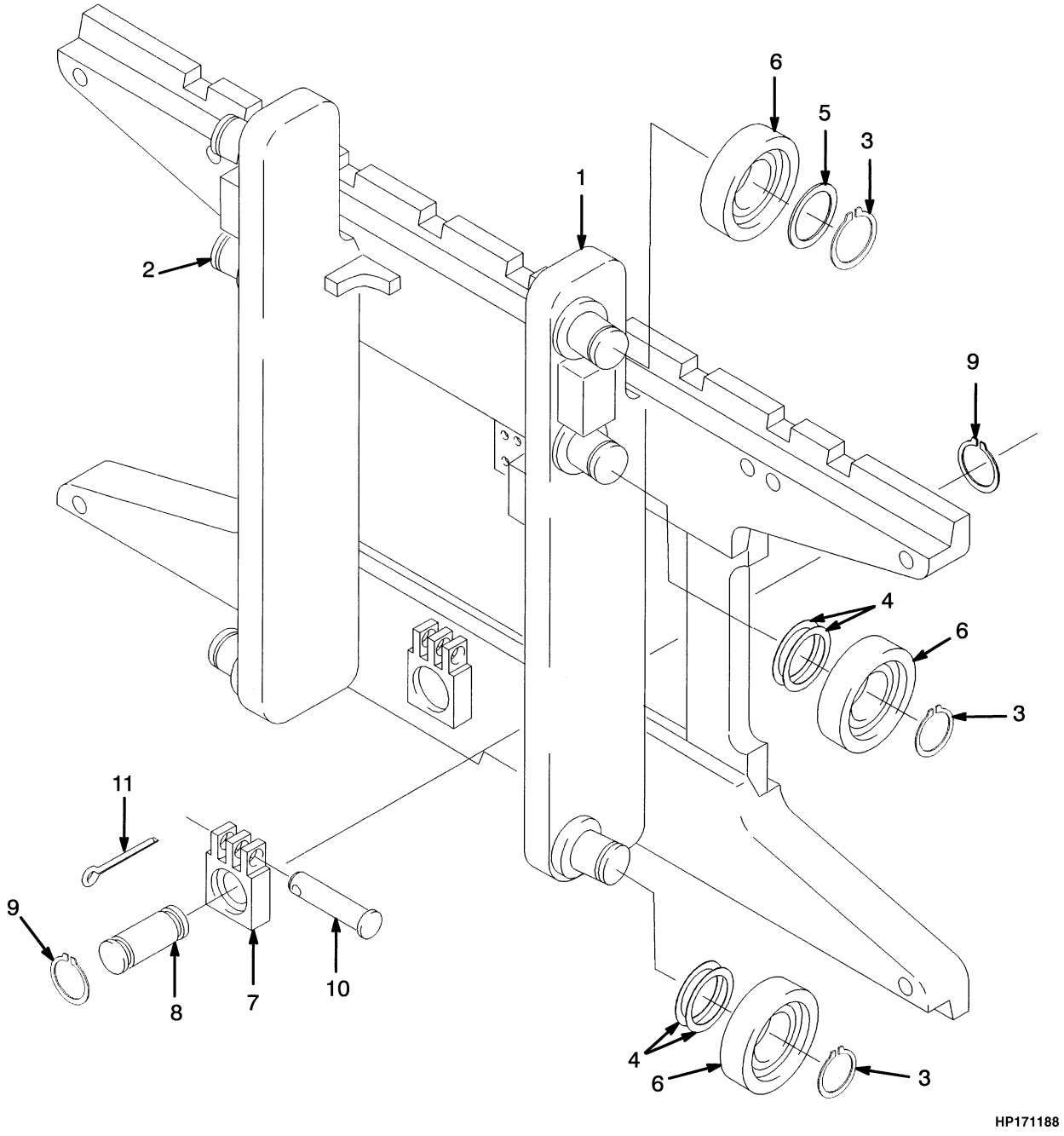

©2004 HYSTER COMPANY

CARRIAGE
THREE STAGE FULL FREE-LIFT

ITEM	PART NO.	DESCRIPTION	QTY
	1353386	Carriage	1
1	1353371	Frame	1
2	1345216	Stubshaft	6
3	58901	Snap Ring	6
4	129387	Shim (0.020 in.)	AR
5	366115	Spacer	2
6	1363272	Load Roller (Standard)	AR
6	1393142	Load Roller (Optional)	AR
7	1369345	Chain Anchor (Dual Hole)	2
7	1504010	Chain Anchor (Single Hole) (Optional)	2
8	1353408	Pin	2
9	131358	Snap Ring	4
10	1514866	Pin	2
11	15211	Cotter Pin	2

©2004 HYSTER COMPANY

HEADER HOSE (Figure 11-10)
THREE STAGE FULL FREE-LIFT

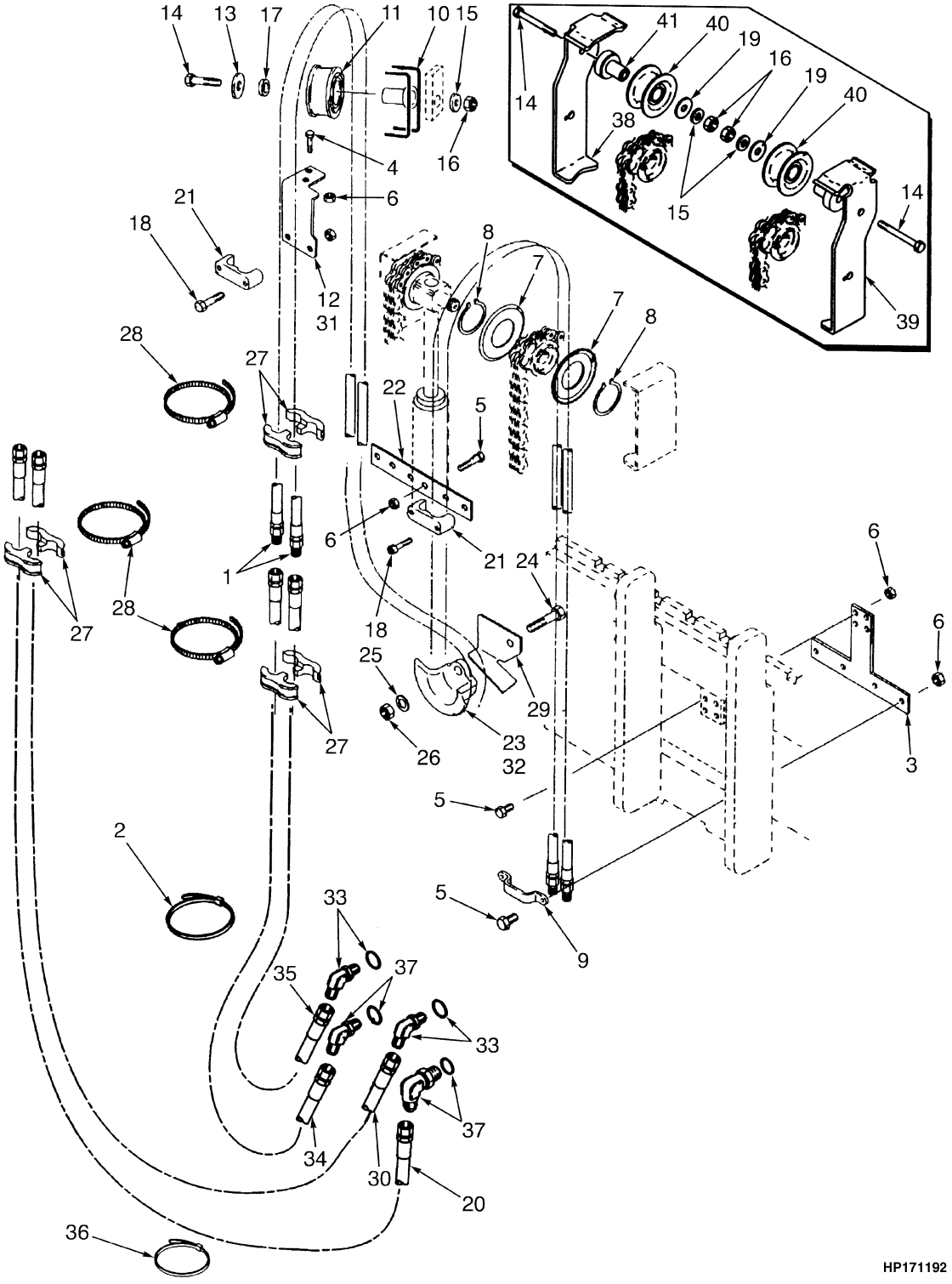

©2004 HYSTER COMPANY

HEADER HOSE
THREE STAGE FULL FREE-LIFT

ITEM	DESCRIPTION 1 2 3 4	LIFT HEIGHT TO BOTTOM OF FORKS			
		4010 mm (157.9 in.)	4310 mm (169.7 in.)	4760 mm (187.4 in.)	5360 mm (211.0 in.)
	Mast Group Number	A555 4010	A555 4310	A555 4760	A555 5360
1	Hose	1369623	1369624	1358354	1369627

KEY:
A: Four Function
B: Three Function

ITEM		PART NO.	DESCRIPTION	QTY A	QTY B
1	a	. . . . .	Hose	4	2
2		1375574	Strap	2	2
3		1381771	Bracket	1	1
4		136704	Capscrew	4	2
5		136749	Capscrew	10	8
6		313828	Nut	14	10
7		1345199	Hose Guide	4	2
8		1345204	Snap Ring	4	2
9		1369333	Clamp	2	1
10		1381641	Stubshaft (LH)	2	..
10		1381642	Stubshaft (RH)	2	1
11		1494017	Sheave	2	1
12		1381598	Bracket (RH)	1	1
13		1345190	Washer	2	1
14		292533	Capscrew	2	1
15		320161	Washer	2	1
16		300937	Nut	2	1
17		1360549	Spacer	2	1
18		293795	Capscrew	8	4
19		320171	Washer	1	1
20		1381618	Hose	1	..
21		1360386	Clamp	4	2
22		1353464	Plate	1	1
23		1348246	Hose Guide (LH)	1	..
23		1348247	Hose Guide (RH)	1	1
24		292521	Capscrew	2	1
25		320160	Washer	2	1
26		316826	Nut	2	1
27		1353530	Clamp	8	4
28		1360507	Clamp	4	2
29		1363255	Bracket (RH)	1	1
29		1363256	Bracket (LH)	1	..
30		1381618	Hose	1	..
31		1381599	Bracket (LH)	1	..
32		1348247	Hose Guide (LH)	1	..
33		17222	Fitting	2	1
33		16483	O-Ring	1	1

©2004 HYSTER COMPANY

HEADER HOSE
THREE STAGE FULL FREE-LIFT

ITEM	PART NO.	DESCRIPTION	QTY A	QTY B
34	1377371	Hose	1	1
35	1377371	Hose	1	1
36	137852	Strap Clamp	4	2
37	16558	Fitting	2	1
37	16483	O-Ring	1	1
38	1395291	Bracket (RH) (RH)	1	1
39	1395292	Bracket (LH) (LH)	1	..
40	1494017	Sheave	2	1
41	1396406	Stubshaft	2	1

FOOTNOTES:
a Refer to Table

©2004 HYSTER COMPANY

12 OPTIONS

SECTION 12
OPTIONS

DESCRIPTION	PAGE
AUXILIARY TUBES	
TWO AND THREE STAGE FULL FREE-LIFT	
FOUR FUNCTION GROUP	12-18
TWO STAGE AND THREE STAGE FULL FREE-LIFT	
THREE FUNCTION GROUP	12-16
TWO STAGE LIMITED FREE-LIFT	
THREE FUNCTION GROUP	12-14
BACK-UP ALARM	12-24
DRIVE LIGHTS AND REAR LIGHTS	12-22
DRIVE TIRE AND WHEEL	12-20
INTEGRAL SIDE-SHIFT CARRIAGE	
TWO AND THREE STAGE FULL FREE-LIFT	12-8
TWO STAGE LIMITED FREE-LIFT	12-6
INTEGRAL SIDE-SHIFT CYLINDER	12-10
INTEGRAL SIDE-SHIFT HOSES	
TWO AND THREE STAGE FULL FREE-LIFT	12-12
TWO STAGE LIMITED FREE-LIFT	12-11
SIDE-SHIFT CARRIAGE	12-2
SIDE-SHIFT CYLINDER	12-4
STEER TIRE AND WHEEL	
15 X 5 X 11.25	12-21

©2004 HYSTER COMPANY

SIDE-SHIFT CARRIAGE (Figure 12-1)

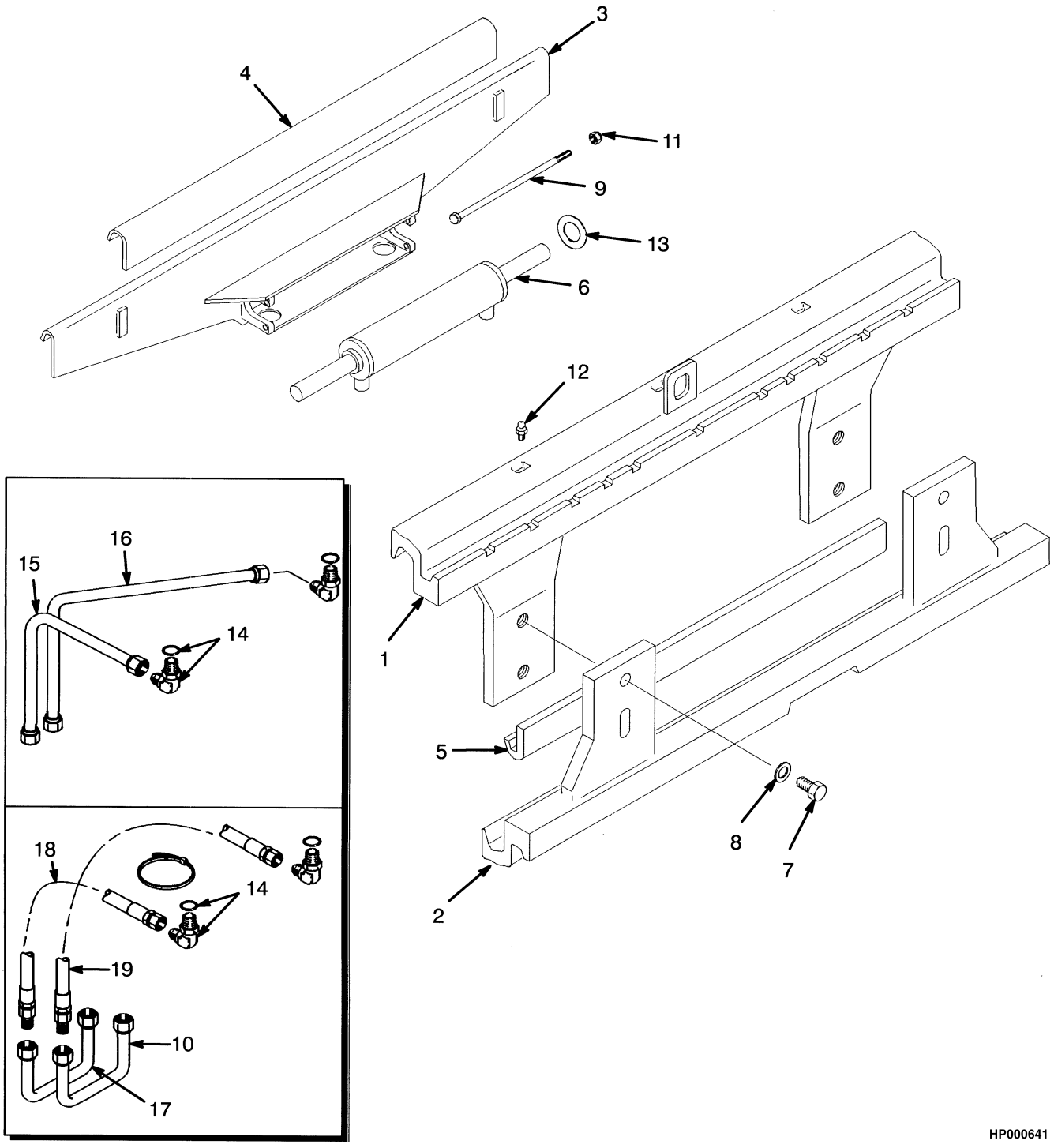

©2004 HYSTER COMPANY

SIDE-SHIFT CARRIAGE

ITEM		PART NO.	DESCRIPTION	QTY
		1399037	Carriage (36 in.)	1
1		1355524	Apron (36 in.) (Upper)	1
2		1378051	Apron (36 in.) (Lower)	1
2		1396427	Shim	6
3		1399002	Support (36 in.)	1
4		1396456	Bearing (Upper)	1
5		1378061	Bearing (Lower)	1
6		1360125	Side-Shift Cylinder (☞ Figure 12-2)	1
7		293704	Capscrew	4
8		296431	Washer	4
9		1358809	Rod (Optional)	2
9		1371289	Capscrew	2
10	**a**	1381766	Tube Assembly	1
11		313828	Nut	2
11		313828	Nut (Optional)	4
12		16041	Lube Fitting	3
13		1358821	Shim (0.020 in.)	4
14		239784	Fitting	2
14		16481	O-Ring	1
15	**b**	1360263	Tube	1
16	**b**	1360264	Tube	1
17	**a**	1381765	Tube Assembly	1
18	**a**	1390365	Hose	1
19	**a**	1390366	Hose	1

FOOTNOTES:

a Two Stage and Three Stage Full Free-Lift

b Two Stage Limited Free-Lift

©2004 HYSTER COMPANY

SIDE-SHIFT CYLINDER (Figure 12-2)

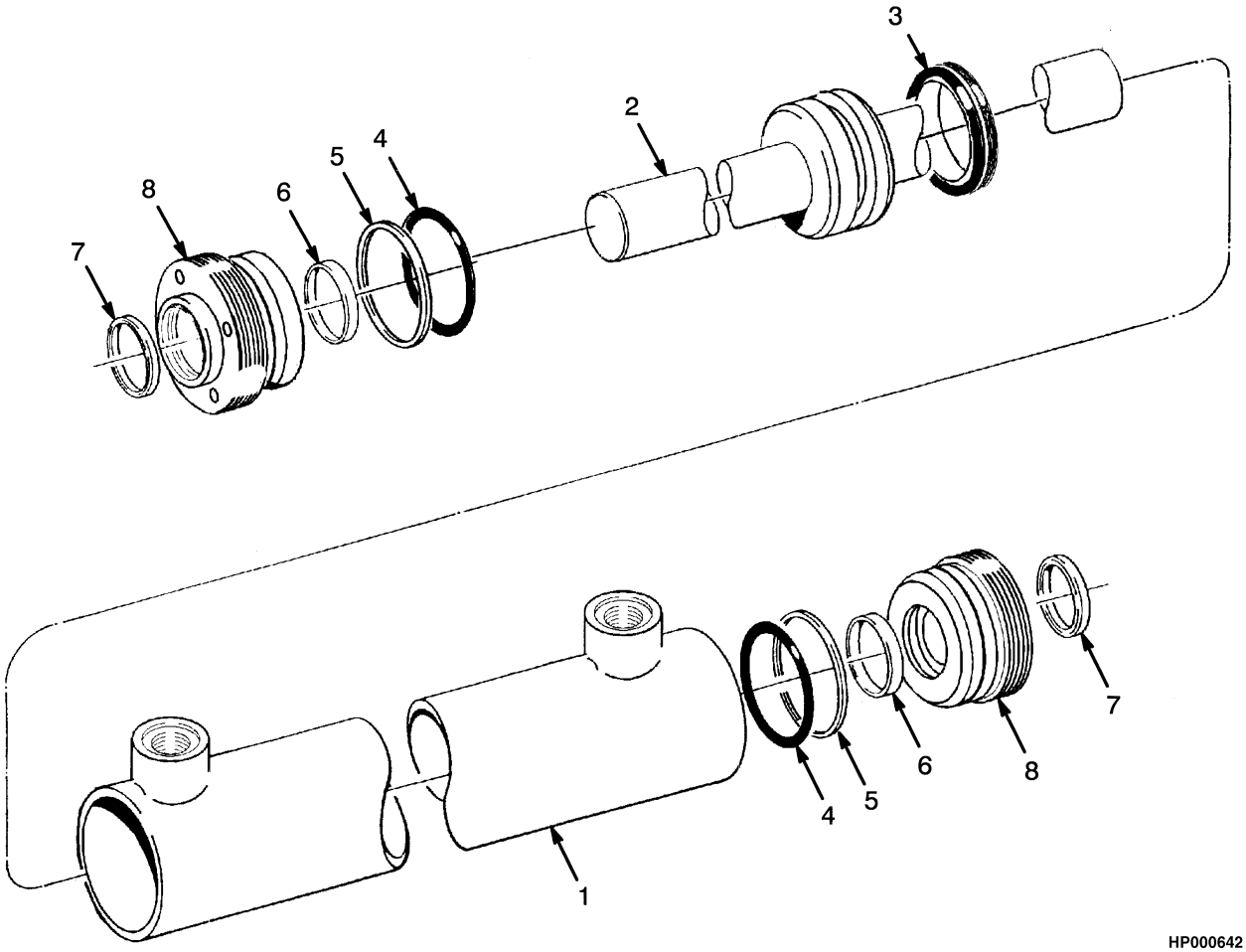

ITEM	PART NO.	DESCRIPTION	QTY
	1360125	Side-Shift Cylinder (Group No. 8601301)	1
1	2311471	Tube	1
2	2309719	Rod	1
3	2306755	Seal	1
4	55407	O-Ring	2
5	153919	Back-Up Ring	2
6	294643	Seal	2
7	636851	Wiper Ring	2
8	2310768	Gland	2
	2311624	Seal Kit (Includes Items 4-7)	1

©2004 HYSTER COMPANY

NOTES

INTEGRAL SIDE-SHIFT CARRIAGE (Figure 12-3)
TWO STAGE LIMITED FREE-LIFT

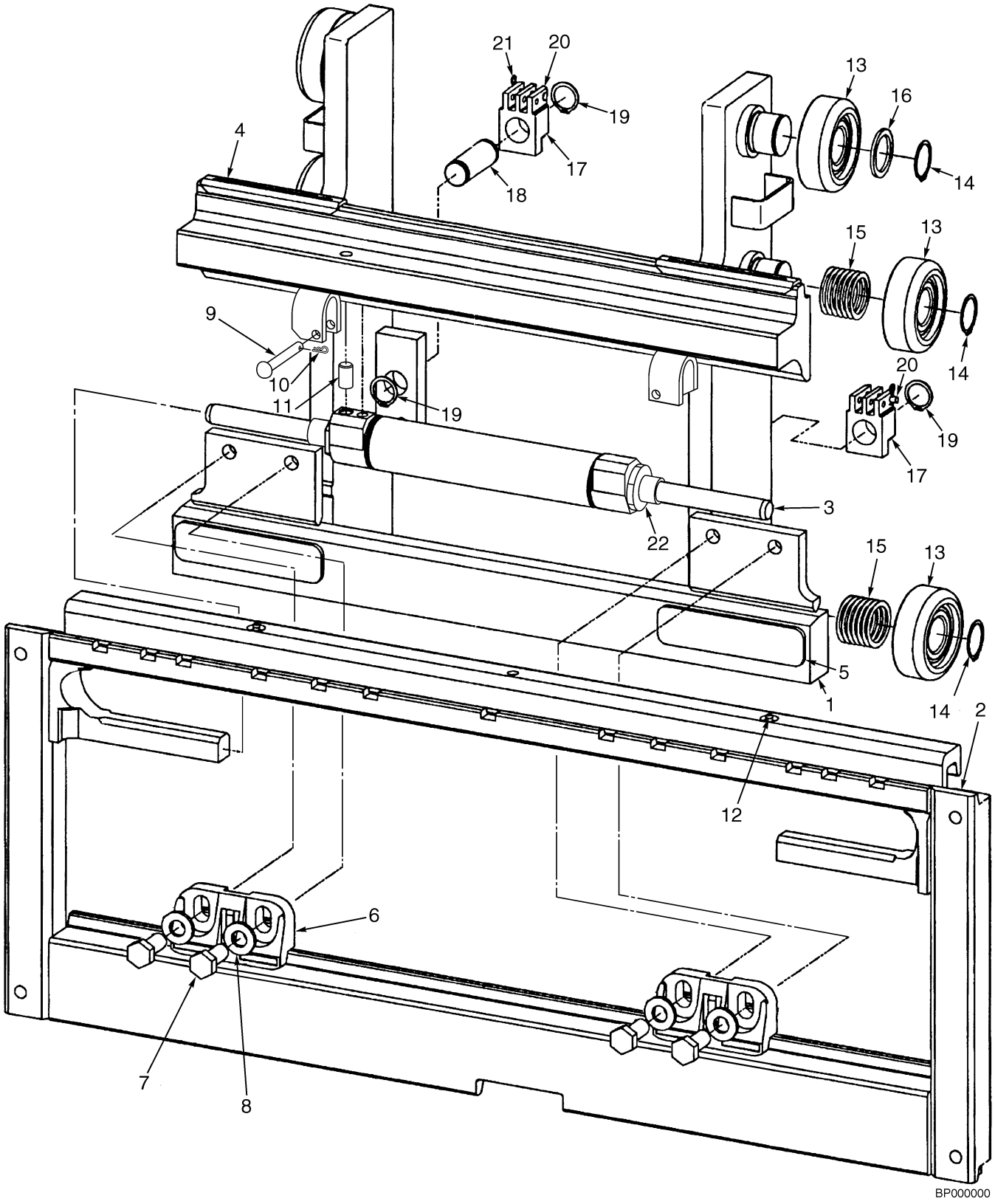

©2004 HYSTER COMPANY

INTEGRAL SIDE-SHIFT CARRIAGE
TWO STAGE LIMITED FREE-LIFT

ITEM	PART NO.	DESCRIPTION	QTY
	1486172	Side-Shift Carriage (36 in.)	1
1	1488992	Carriage (36 in.) (Inner)	1
2	1489009	Frame (36 in.) (Outer)	1
3	1360125	Side-Shift Cylinder (☞ Figure 12-2)	1
4	2043531	Bearing (Upper)	2
4	2046243	Bearing (Upper) (Bronze) (Service Option)	2
5	2043533	Bearing (Lower)	2
5	2046244	Bearing (Lower) (Bronze) (Service Option)	2
6	2043530	Hook (Lower)	2
7	226458	Capscrew	4
8	296426	Washer (Hardened)	4
9	1401746	Pin	2
10	18832	Cotter Pin	2
11	302397	Pin	1
12	16041	Lube Fitting	2
13	1353192	Load Roller	6
14	58901	Snap Ring	6
15	129387	Shim (0.020 in.)	28
16	366115	Spacer	6
17	1369345	Chain Anchor (Dual Hole)	2
17	1504010	Chain Anchor (Single Hole)	2
18	1353408	Pin	2
19	131358	Snap Ring	4
20	1514866	Pin	2
21	15211	Cotter Pin	2
22	1498326	Shim	AR

©2004 HYSTER COMPANY

INTEGRAL SIDE-SHIFT CARRIAGE (Figure 12-4)
TWO AND THREE STAGE FULL FREE-LIFT

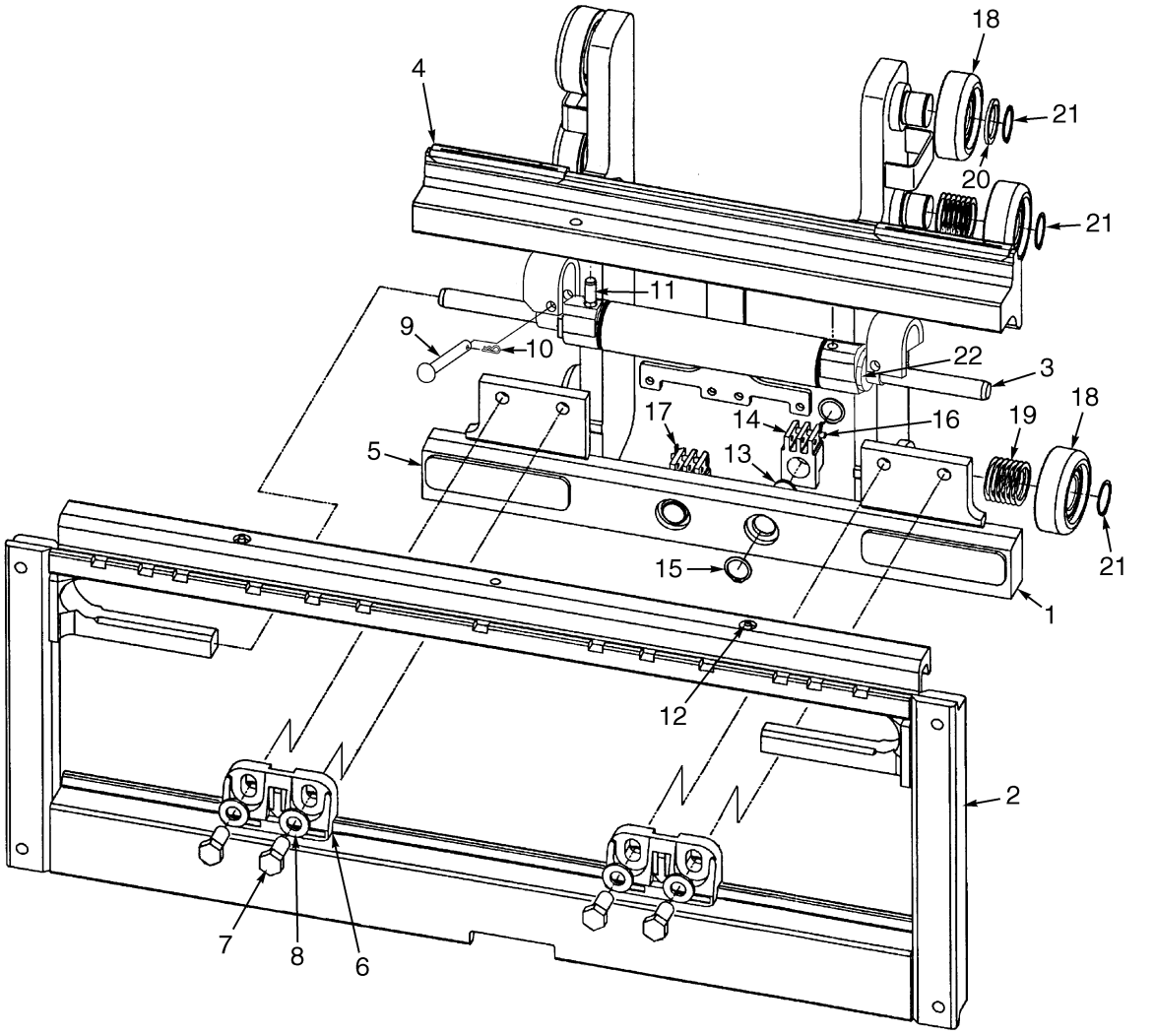

BP000001

©2004 HYSTER COMPANY

INTEGRAL SIDE-SHIFT CARRIAGE
TWO AND THREE STAGE FULL FREE-LIFT

KEY:
A: Two Stage Full Free-Lift
B: Three Stage Full Free-Lift

ITEM	PART NO.	DESCRIPTION	QTY A	QTY B
	1486174	Side-Shift Carriage (36 in.)	..	1
	1486173	Side-Shift Carriage (36 in.)	1	..
1	1488993	Carriage (36 in.) (Inner)	1	..
1	1488994	Carriage (36 in.) (Inner)	..	1
2	1489009	Frame (36 in.) (Outer)	1	1
3	1360125	Side-Shift Cylinder (☞ Figure 12-2)	1	1
4	2043531	Bearing (Upper)	2	2
4	2046243	Bearing (Upper) (Bronze) (Service Option)	2	2
5	2043533	Bearing (Lower)	2	2
5	2046244	Bearing (Lower) (Bronze) (Service Option)	2	2
6	2043530	Hook (Lower)	2	2
7	226458	Capscrew	4	2
8	296426	Washer (Hardened)	4	4
9	1401746	Pin	2	2
10	18832	Cotter Pin	2	2
11	302397	Pin	1	1
12	16041	Lube Fitting	2	2
13	317735	Pin	2	2
14	1369345	Chain Anchor (Dual Hole)	2	2
14	1504010	Chain Anchor (Single Hole)	2	2
15	131358	Snap Ring	4	4
16	1514866	Pin	2	2
17	15211	Cotter Pin	2	2
18	1353192	Load Roller	6	..
18	1363272	Load Roller	..	6
19	129387	Shim (0.020 in.)	28	28
20	366115	Spacer	6	6
21	58901	Snap Ring	6	6
22	1498326	Shim	AR	AR

©2004 HYSTER COMPANY

INTEGRAL SIDE-SHIFT CYLINDER (Figure 12-5)

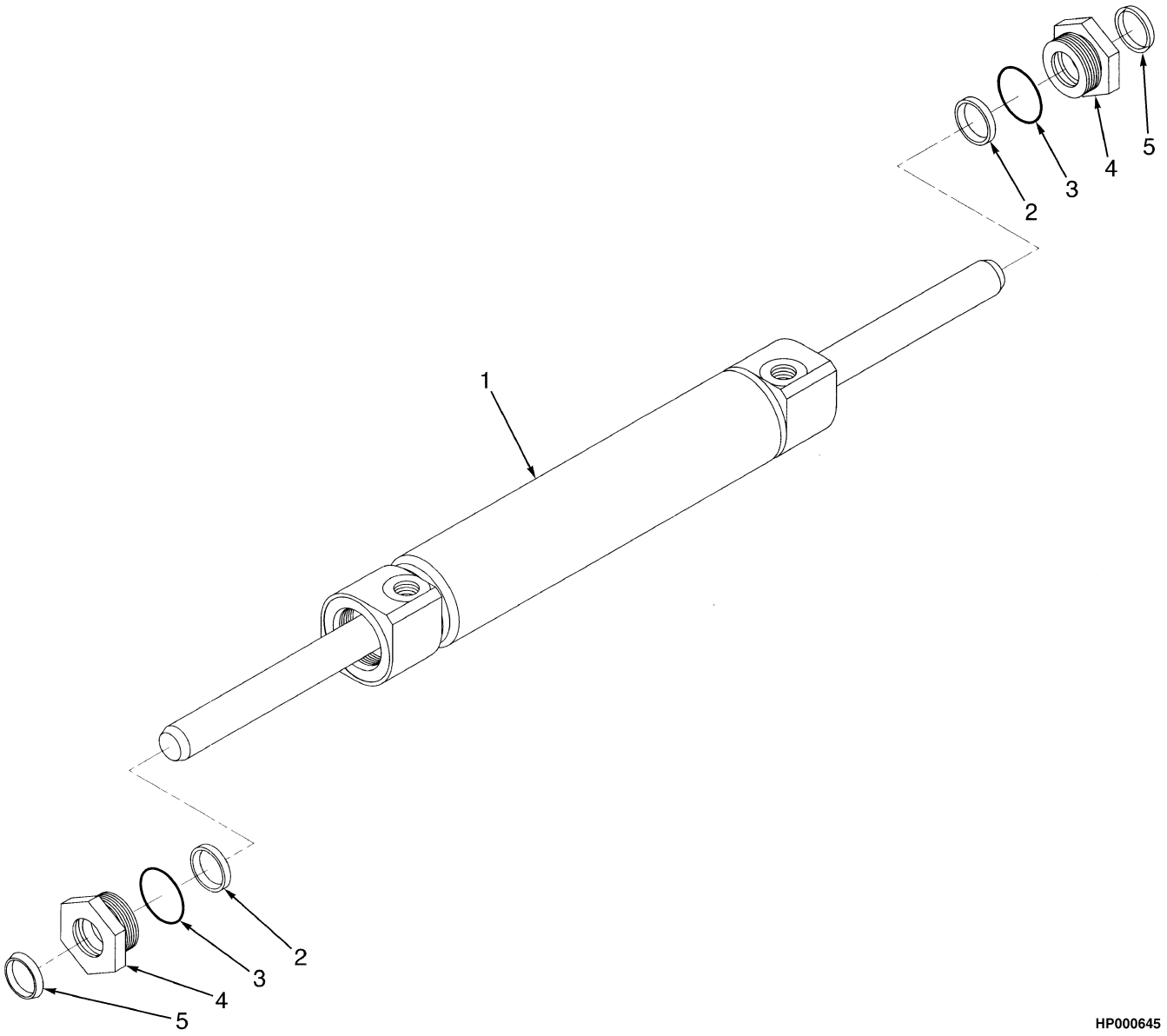

HP000645

ITEM	PART NO.	DESCRIPTION	QTY
	2043528	Cylinder Assembly	1
1	1489016	Cylinder	1
2	1489037	Rod Seal	2
3	1489035	O-Ring	2
4	1498325	Retainer	2
5	1489039	Rod Wiper	2
	1503096	Seal Kit (Includes Items 2-3, 5)	1

©2004 HYSTER COMPANY

INTEGRAL SIDE-SHIFT HOSES (Figure 12-6)
TWO STAGE LIMITED FREE-LIFT

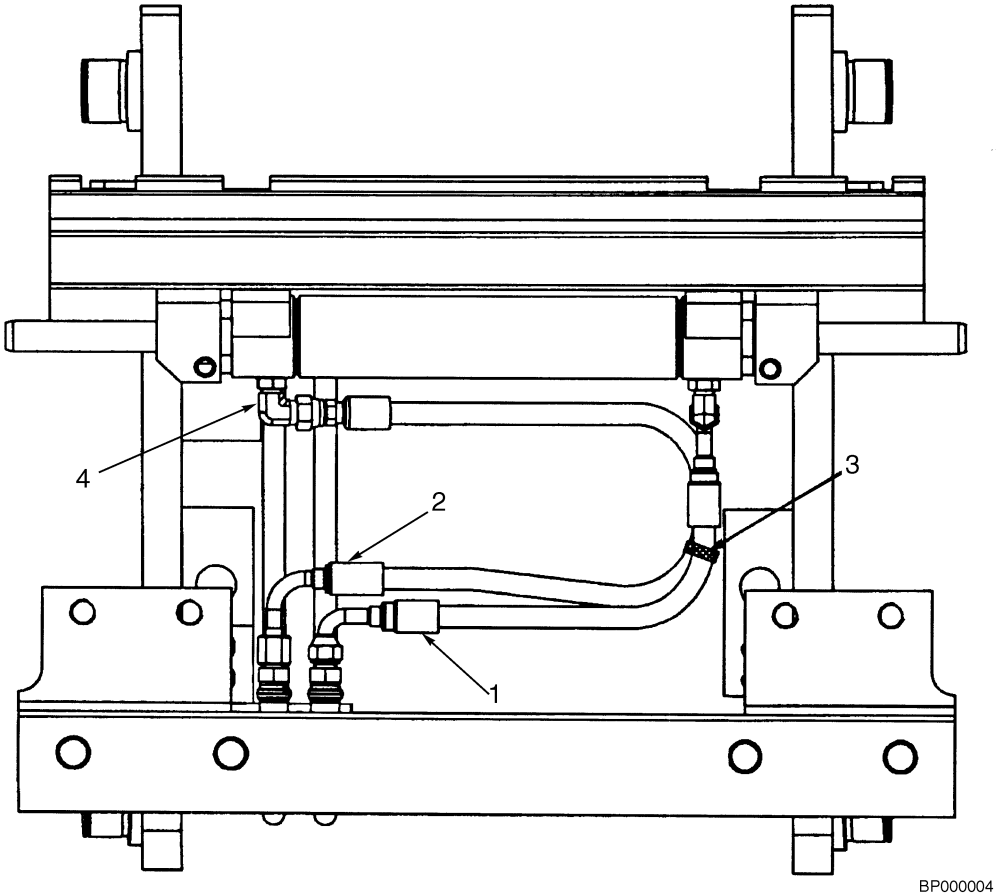

ITEM	PART NO.	DESCRIPTION	QTY
1	1503477	Hose (36 in.)	1
2	1489050	Hose (36 in.)	1
3	114312	Strap Clamp	1
4	16558	Fitting	2
4	16483	O-Ring	1

INTEGRAL SIDE-SHIFT HOSES (Figure 12-7)
TWO AND THREE STAGE FULL FREE-LIFT

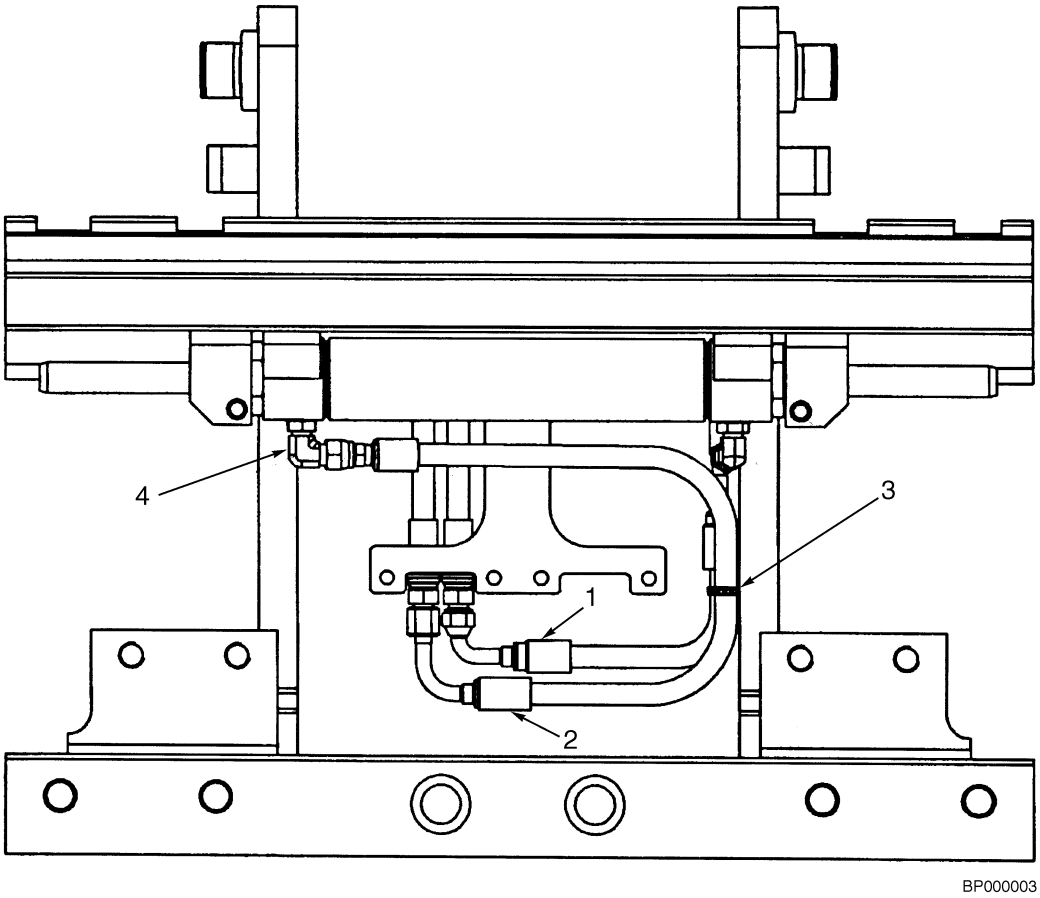

KEY:
A: Two Stage Full Free-Lift
B: Three Stage Full Free-Lift

ITEM	PART NO.	DESCRIPTION	QTY A	QTY B
1	1503481	Hose (36 in.)	1	..
1	1503480	Hose (36 in.)	..	1
2	1489050	Hose (36 in.)	1	..
2	1503474	Hose (36 in.)	..	1
3	114312	Strap Clamp	1	1
4	16558	Fitting	2	2
4	16483	O-Ring	1	1

©2004 HYSTER COMPANY

NOTES

AUXILIARY TUBES (Figure 12-8)
TWO STAGE LIMITED FREE-LIFT
THREE FUNCTION GROUP

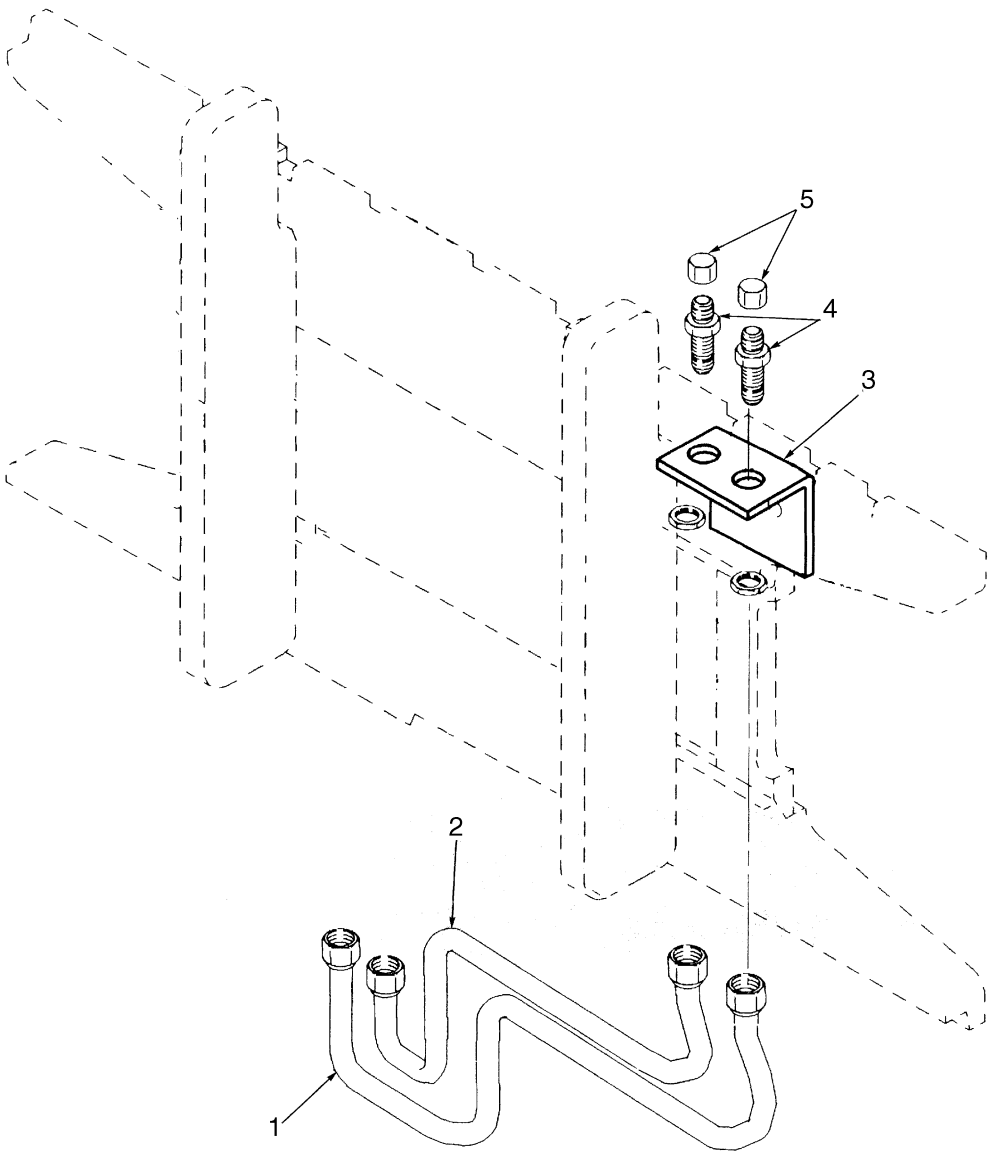

BP000074

©2004 HYSTER COMPANY

AUXILIARY TUBES
TWO STAGE LIMITED FREE-LIFT
THREE FUNCTION GROUP

ITEM	PART NO.	DESCRIPTION	QTY
	1362410	Kit	1
1	1370497	Tube	1
2	1370496	Tube	1
3	1462411	Bracket	1
4	16447	Fitting	2
5	16693	Fitting	2

©2004 HYSTER COMPANY

AUXILIARY TUBES (Figure 12-9)
TWO STAGE AND THREE STAGE FULL FREE-LIFT
THREE FUNCTION GROUP

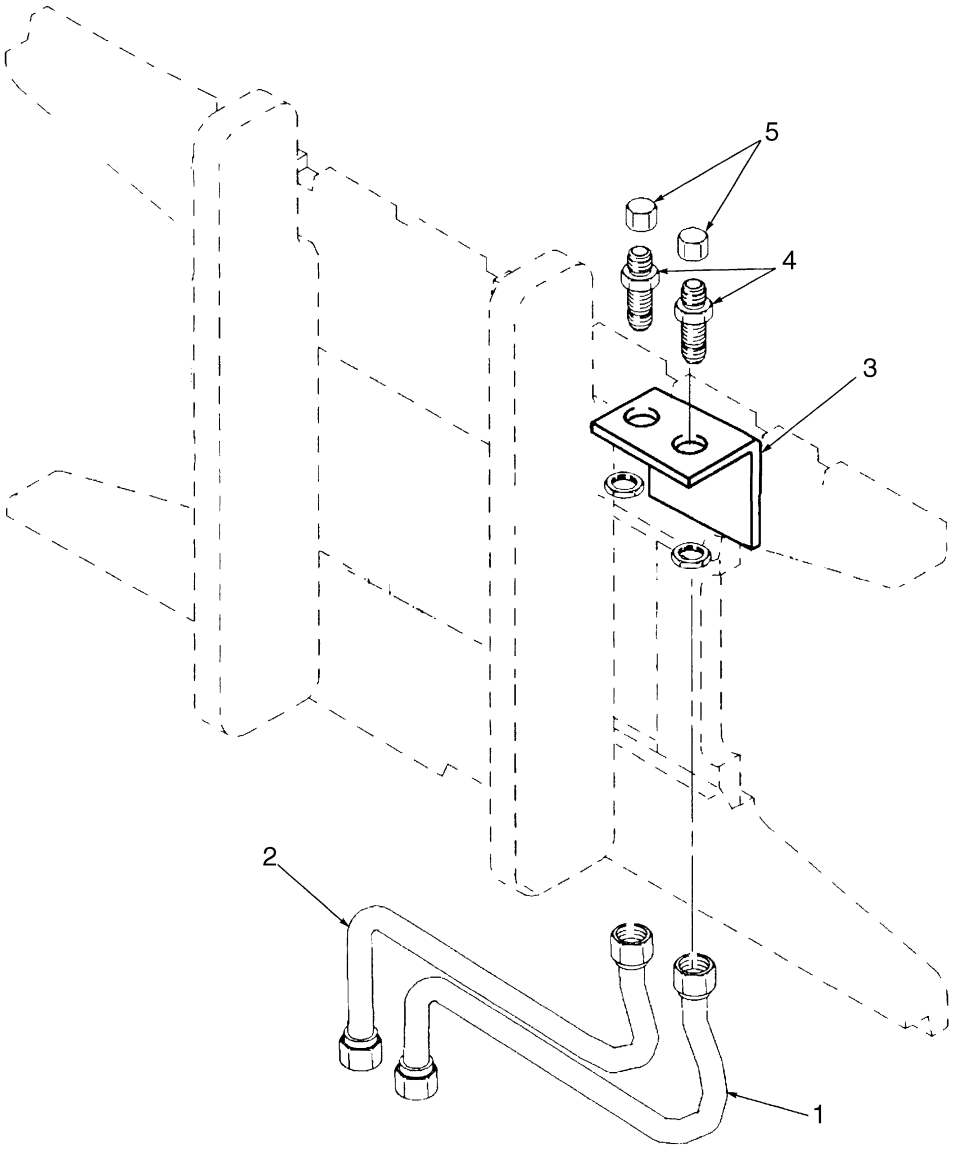

BP000075

©2004 HYSTER COMPANY

AUXILIARY TUBES
TWO STAGE AND THREE STAGE FULL FREE-LIFT
THREE FUNCTION GROUP

ITEM	PART NO.	DESCRIPTION	QTY
	1362410	Kit	1
1	1370497	Tube	1
2	1370496	Tube	1
3	1462411	Bracket	1
4	16447	Fitting	2
5	16693	Fitting	2

©2004 HYSTER COMPANY

AUXILIARY TUBES (Figure 12-10)
TWO AND THREE STAGE FULL FREE-LIFT
FOUR FUNCTION GROUP

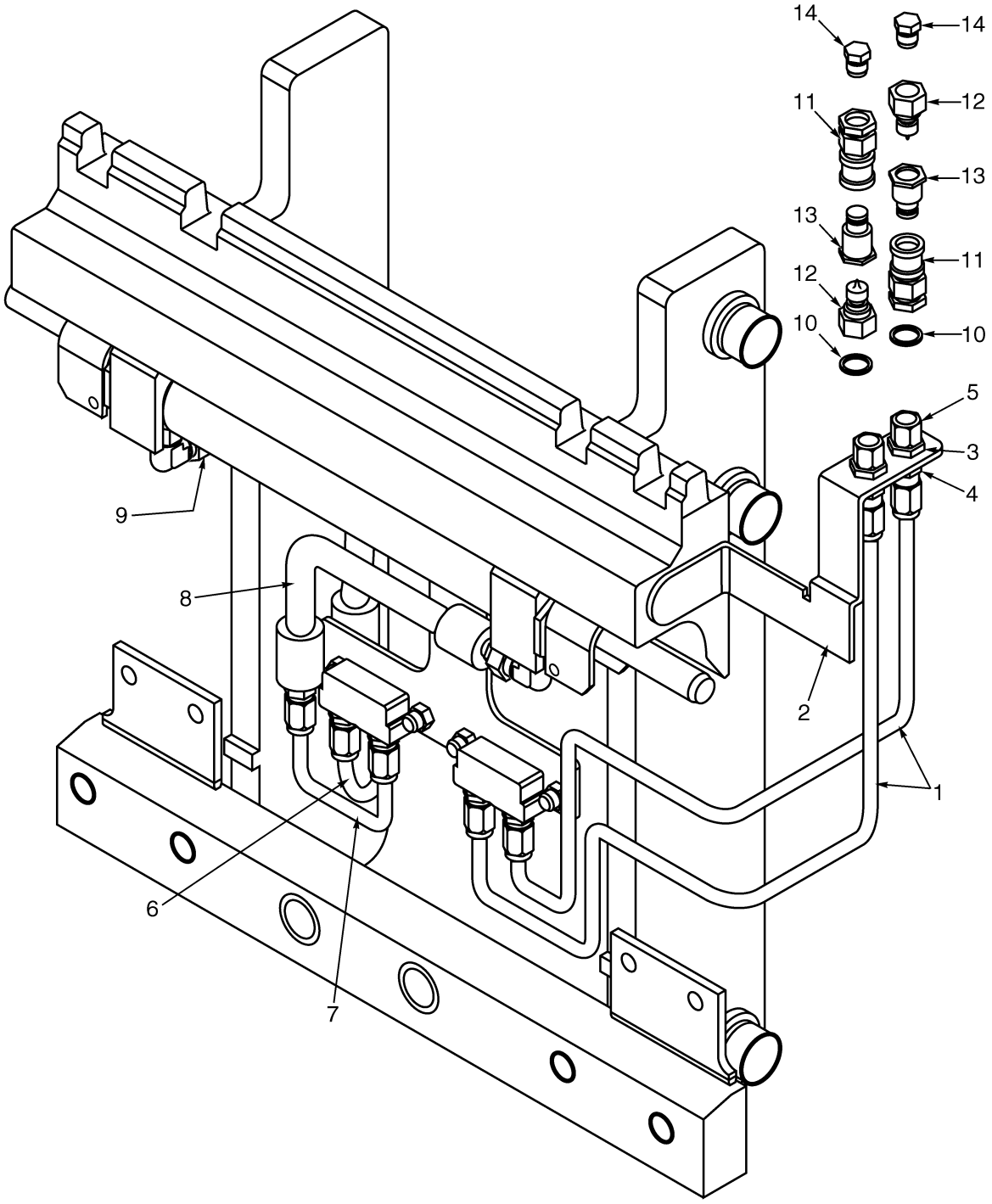

BP000076

©2004 HYSTER COMPANY

AUXILIARY TUBES
TWO AND THREE STAGE FULL FREE-LIFT
FOUR FUNCTION GROUP

ITEM	PART NO.	DESCRIPTION	QTY
	1518229	Kit	1
	1518230	Kit	1
1	1517448	Tube Assembly	1
1	1517449	Tube Assembly	1
2	1517441	Tube Extension Bracket	1
3	16447	Fitting	2
4	14760	Nut	2
5	16693	Fitting	2
6	1381765	Tube Assembly	1
7	1381766	Tube Assembly	1
8	1390365	Hose	1
9	1390366	Hose	2
10	16483	O-Ring	2
11	1483663	Quick Disconnect	2
12	1483664	Quick Disconnect Nipple	2
13	1483661	Dust Cap	2
14	16933	Fitting	2
	1518219	Quick Disconnect Kit (Includes Items 10-14)	2

©2004 HYSTER COMPANY

DRIVE TIRE AND WHEEL (Figure 12-11)

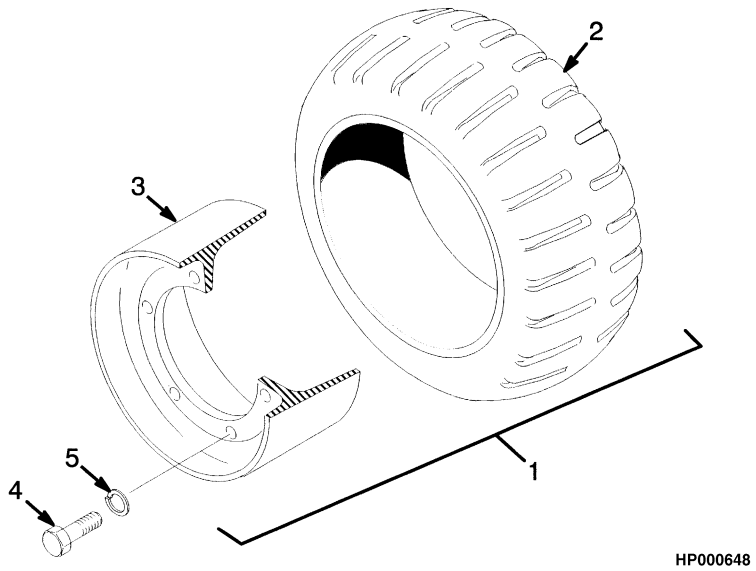

KEY:
A: 18 x 6 x 12 Smooth (25-30XM)
B: 18 x 7 x 12 Smooth (35-40 XM)
C: 18 x 7 x 12 Smooth (25-40XM)
D: 18 x 7 x 12 Wide Tread Smooth (25-40XM)

ITEM		PART NO.	DESCRIPTION	QTY A	B	C	D
1	**c**	2023624	Wheel and Tire	2	..	..	..
1	**c**	2023628	Wheel and Tire	..	2	..	..
1	**b**	2044305	Wheel and Tire	2	..	..	..
1	**a**	2022669	Wheel and Tire	2	..	..	..
1	**b**	2044304	Wheel and Tire	..	..	2	..
1	**a**	2022672	Wheel and Tire	..	..	2	..
1	**f**	2023632	Wheel and Tire	..	..	..	2
1	**e**	2044299	Wheel and Tire	..	..	..	2
1	**d**	2023443	Wheel and Tire	..	..	..	2
2	**c**	181480	Tire	1	..	..	..
2	**b**	237209	Tire	1	..	..	..
2	**c**	2022670	Tire	1	..	..	..
2	**c**	181481	Tire	..	1	..	1
2	**b**	237210	Tire	..	..	1	1
2	**a**	2022673	Tire	..	..	1	1
3		2022671	Wheel	1	..	..	..
3		2022668	Wheel	..	1	1	1
4		292544	Capscrew	6	6	6	6
5		292684	Lockwasher	6	6	6	6

FOOTNOTES:
a Lug
b Non-Marking
c Smooth
d Wide Tread Lug
e Wide Tread Non-Marking
f Wide Tread Smooth

©2004 HYSTER COMPANY

STEER TIRE AND WHEEL (Figure 12-12)
15 X 5 X 11.25

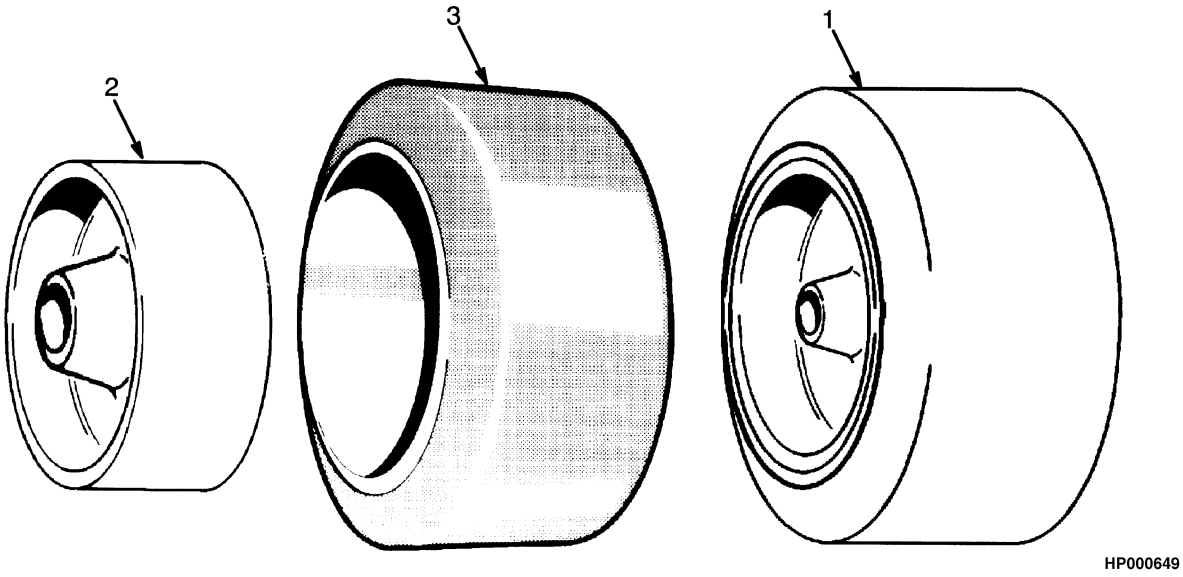

ITEM		PART NO.	DESCRIPTION	QTY
1	**b**	2023636	Wheel and Tire	2
1	**a**	2044298	Wheel and Tire	2
2		2022774	Wheel	1
3	**a**	2023589	Tire	1
3	**b**	2023909	Tire	1

FOOTNOTES:
a Non-Marking
b Smooth

DRIVE LIGHTS AND REAR LIGHTS (Figure 12-13)

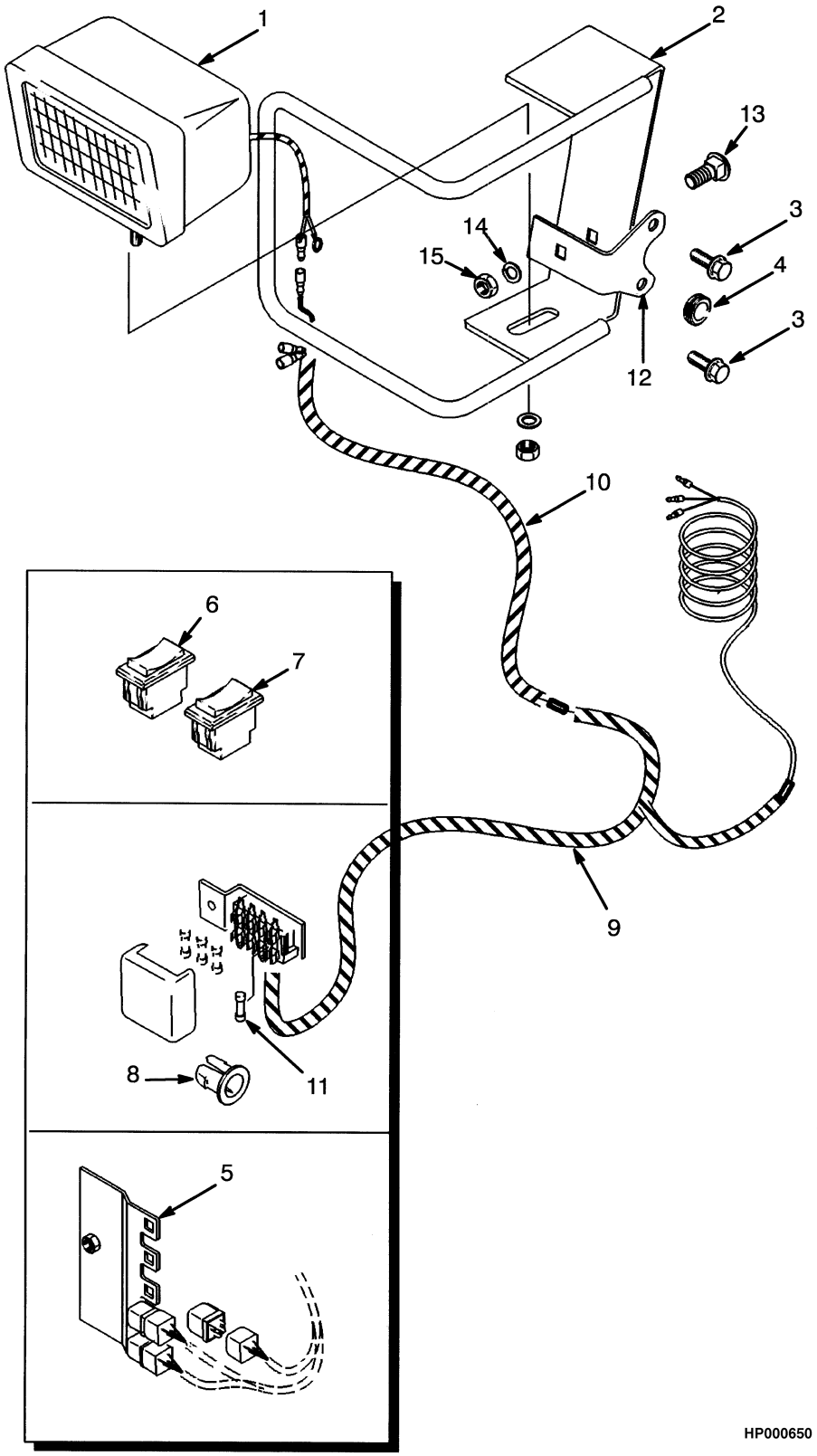

©2004 HYSTER COMPANY

DRIVE LIGHTS AND REAR LIGHTS

ITEM		PART NO.	DESCRIPTION	QTY
1	**a**	1356332	Head Light Assembly	3
1	**a**	1354119	Headlight	1
1	**a**	1379799	Bulb	1
1	**b**	1531983	Head Light Assembly	3
1	**b**	1544764	Bulb	3
1		1565841	Wire Harness	1
2		1375171	Bracket (RH) (Front)	1
2		1375172	Bracket (LH Front)	1
2		1376579	Bracket (Rear)	1
3		316678	Screw (Rear)	2
3		316678	Screw (Front)	4
4		1367645	Grommet	4
5		2314806	Relay	1
6		1331245	Switch (Front)	1
6		1301156	Lens (Front)	1
7		1331245	Switch (Rear)	1
7		1301156	Lens (Rear)	1
8		1356355	Bushing	2
9		2041637	Wire Harness	1
10		2022705	Wire Harness	3
11		2021953	Fuse (10 Amp)	1
12		1375169	Bracket	3
13		1375168	Bolt	3
14		296418	Washer	3
15		316835	Nut	3

FOOTNOTES:

a ⇒ S/N D010H-02743A

b S/N D010H-02744A ⇒

BACK-UP ALARM (Figure 12-14)

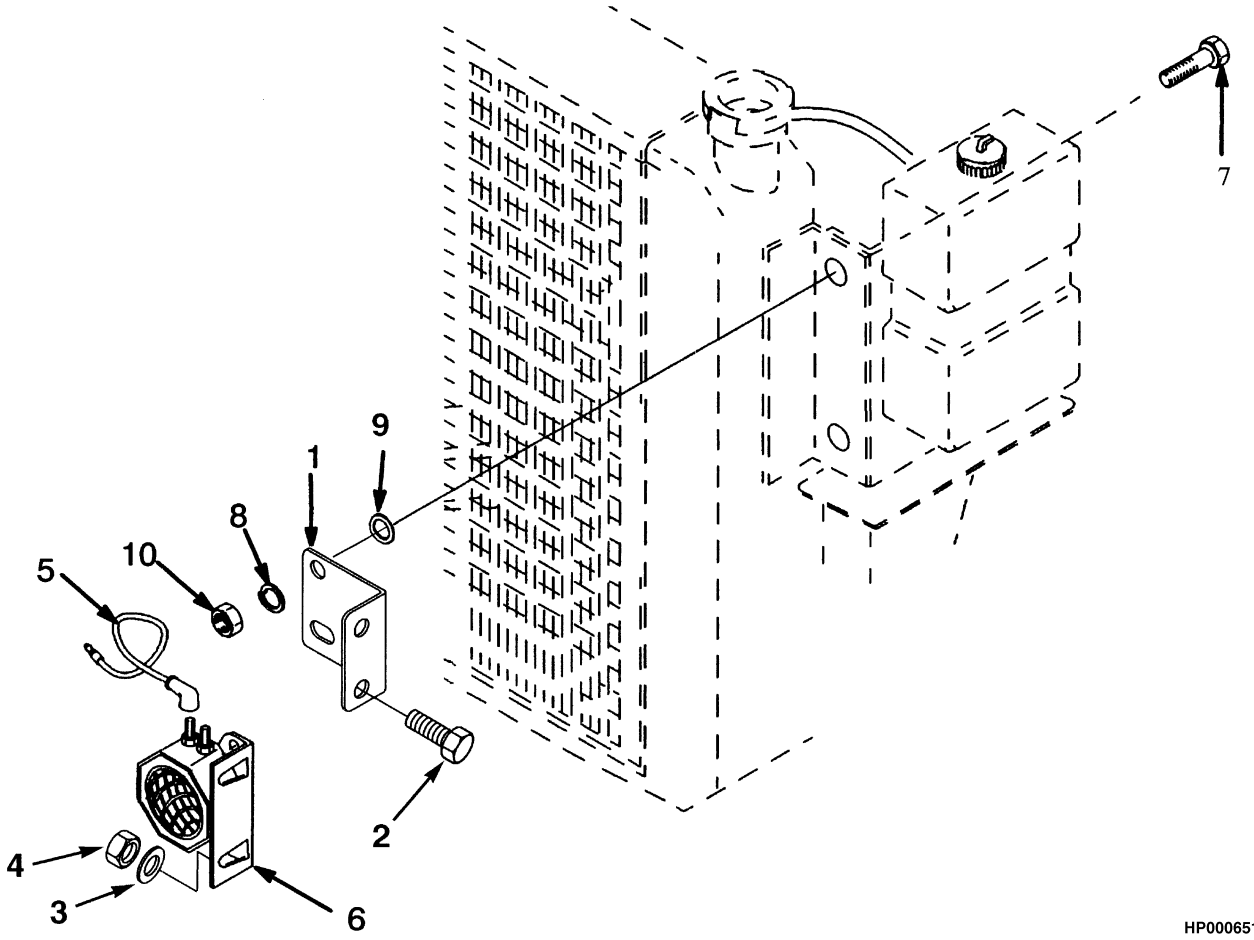

ITEM	PART NO.	DESCRIPTION	QTY
1	1491379	Bracket	1
2	292500	Capscrew	2
3	296417	Lockwasher	2
4	302399	Nut	2
5	1361552	Wire Harness	1
6	1339947	Alarm (82-102 dbA)	1
7	136681	Capscrew	1
8	296360	Washer	1
9	15932	Washer	1
10	239503	Nut	1

©2004 HYSTER COMPANY

13 NUMERICAL INDEX

SECTION 13
NUMERICAL INDEX

PART NO.	PG	ITEM
142	3-3	19
14358	3-19	19
	3-21	6
	3-25	6
14385	3-21	7
	3-25	5
14603	10-7	16
14604	5-9	44
14692	10-23	9
14760	12-19	4
15134	6-3	26
15152	3-5	6
15156	6-3	25
15175	1-3	21
	1-7	26
	1-9	35
	1-13	2
	3-19	35
	8-9	18
	8-17	18
15176	1-13	26
15177	1-4	5
	1-7	22
	2-31	10
	2-33	15
	2-35	19
	2-37	13
	8-9	3
	8-17	3
15200	3-7	4
	11-11	6
15211	3-3	25
	9-7	23
	9-13	11
	10-9	6
	10-21	11
	11-9	25
	11-19	11
	12-7	21
	12-9	17
15212	3-3	13
	3-8	4
	6-3	17
15222	1-7	32
	8-9	46
15223	2-31	14
	11-9	20
15236	8-23	16
15347	2-29	5
15932	12-24	9
16001	8-23	6
16041	12-3	12
	12-7	12
	12-9	12
16143	3-21	3
	3-25	40
16187	3-21	33
	3-25	8
16403	9-7	18
16447	12-15	4
	12-17	4
	12-19	3
16481	8-3	23
	12-3	14
16483	6-9	28
	6-9	29
	8-3	21
	8-3	37
	8-3	46
	9-15	21
	10-23	25
	10-24	32
	11-21	33
	11-22	37
	12-11	4
	12-12	4
	12-19	10
16484	9-15	25
16485	8-3	34
	9-7	9
	9-7	17
	10-7	21
	10-9	17
	11-9	16
16486	9-7	18
	10-7	16
	11-9	23
16487	5-9	44
16540	8-3	37
16543	11-9	23
16556	8-3	23
16558	6-9	29
	8-3	21
	9-15	21
	10-24	32
	11-22	37
	12-11	4
	12-12	4
16560	8-3	34
	9-7	9
	10-7	21
	11-9	16
16567	6-9	28
16693	12-15	5
	12-17	5
	12-19	5
16788	3-21	5
	3-25	43
16815	6-3	24
16863	3-19	18
16865	3-5	18
	4-19	41
16882	9-7	27
	10-7	17
	10-9	25
	11-9	32
16923	8-3	42
16933	12-19	14
16982	9-7	10
17051	9-7	14
	10-7	14
	11-9	13
17222	9-15	25
	10-23	25
	11-21	33
17314	3-21	32
	3-25	9
17636	3-37	11
	8-3	10
18419	4-19	39
18496	1-13	1
18497	4-7	7
18515	1-13	18
18727	1-13	17
18832	12-7	10
	12-9	10
21778	4-19	3
37752	9-5	9
	10-9	28
	11-5	12
	11-11	23
39348	9-9	8
	9-11	8
	10-19	12
	11-13	8
	11-15	8
	11-17	12
39374	8-25	11
53162	3-5	17
	4-19	40
55146	10-19	7
	11-17	7
55407	9-9	11
	9-11	11
	10-11	7
	10-13	7
	10-15	7
	10-17	7
	11-13	11
	11-15	11
	12-4	4
57568	3-5	8
57664	8-25	7
58901	9-3	7
	9-5	4
	9-13	3
	10-3	7
	10-5	4
	10-21	3
	11-3	7
	11-5	7
	11-7	3
	11-19	3
	12-7	14
	12-9	21
60137	9-7	3
	10-9	3
	11-9	21
	11-11	3
63108	3-21	39
	3-25	42
63117	2-33	9
68968	2-35	15
86510	4-19	12
88436	9-7	25
	11-9	1
88441	9-7	25
	11-9	1
88446	11-9	1
89366	8-3	40
97999	3-19	17
101804	3-19	22
101809	3-19	23
104506	9-3	5
	10-3	5
	11-3	5
	11-5	5
107471	8-3	44
114312	3-5	19
	12-11	3
	12-12	3
117989	3-21	23
	3-25	31
119236	3-14	2
	8-3	15
120299	3-37	15
120938	9-7	15
	10-7	18

©2004 HYSTER COMPANY

NUMERICAL INDEX (Continued)

PART NO.	PG	ITEM
	11-9	28
124297	7-9	7
127045	8-3	14
129387	9-3	8
	9-5	5
	9-13	4
	10-3	8
	10-5	5
	10-21	4
	11-3	8
	11-5	8
	11-7	4
	11-19	4
	12-7	15
	12-9	19
129684	8-3	43
130845	3-21	2
	3-25	1
	5-13	5
131358	9-7	19
	9-13	9
	10-7	7
	10-9	32
	10-21	9
	11-9	8
	11-11	28
	11-19	9
	12-7	19
	12-9	15
131716	9-3	4
	10-3	4
	11-3	4
	11-5	4
132680	10-24	39
132834	10-11	6
	10-13	6
	10-15	6
	10-17	6
132860	1-4	2
	10-9	9
	11-11	9
132861	10-9	21
135619	9-7	25
135685	3-5	2
136681	1-3	20
	2-29	31
	3-19	13
	4-3	18
	4-7	19
	7-3	44
	11-9	12
	12-24	7
136687	1-3	10
	3-21	47
	3-25	46
	3-37	5
	4-3	2
	4-3	44
	4-12	5
	6-5	10
136692	3-3	22
	3-19	4
	5-9	21
	6-3	3
	7-3	22
	8-4	53
136704	9-15	16
	11-21	4
136749	1-7	9
	3-21	21
	3-25	34
	3-37	21
	5-22	7
	6-3	11
	7-9	5
	10-23	16
	11-21	5
136985	1-3	35
	3-3	9
	6-3	1
137852	3-7	2
	3-8	2
	3-21	17
	3-25	12
	4-3	21
	4-9	13
	4-11	13
	4-19	20
	5-13	9
	7-9	8
	8-3	26
	9-15	24
	10-23	20
	10-23	28
	11-22	36
138573	4-19	13
141776	3-21	4
	3-25	41
145639	1-9	36
	1-13	3
147294	3-19	3
148962	4-19	30
	5-22	9
153919	12-4	5
154065	1-17	12
154066	1-17	12
154475	4-23	5
161029	11-9	1
162836	3-8	3
164798	8-3	9
166112	8-3	18
	10-9	33
166857	3-21	1
	3-25	4
	3-37	23
	8-3	36
168718	2-29	15
	7-3	24
170658	1-17	22
175861	8-9	34
	8-17	34
176640	1-3	23
	1-7	4
176910	7-9	6
177521	4-9	6
178119	10-9	22
180029	11-11	1
180030	11-11	1
180058	10-9	1
	11-11	1
180074	9-7	25
181480	12-20	2
181481	12-20	2
182005	3-21	12
	3-25	20
182333	10-9	1
186493	3-5	5
187388	9-9	7
	9-11	7
	10-19	14
	11-13	7
	11-15	7
	11-17	14
189595	9-7	17
	10-7	15
	11-9	19
190383	4-3	32
190887	10-11	11
	10-13	11
	10-15	10
	10-17	10
	10-19	16
	11-17	16
196297	3-19	2
197068	3-37	10
199563	1-7	16
201829	10-19	9
	11-17	9
207495	4-9	3
214364	3-21	9
	3-25	39
	5-9	15
215212	9-3	3
	10-3	3
	11-3	3
	11-5	3
220426	4-19	38
220434	3-5	16
220932	3-5	12
221733	1-13	13
221771	1-23	3
222029	1-13	24
222492	8-3	46
226458	12-7	7
	12-9	7
226576	4-45	8
226578	4-45	25
226582	4-45	5
226583	4-45	24
226584	4-45	26
226588	4-45	22
227131	4-15	7
231083	10-9	1
	11-11	1
237209	12-20	2
237210	12-20	2
239503	1-3	26
	1-7	7
	1-7	10
	2-29	8
	2-33	6
	2-35	3
	2-37	6
	3-3	14
	3-19	14
	3-21	11
	3-25	35
	3-37	18
	4-3	7
	4-3	19
	4-7	20
	4-20	50
	7-9	2
	8-4	61
	10-9	23
	12-24	10
239784	12-3	14
243147	3-21	36

See Service Manual for service procedures.
©2004 HYSTER COMPANY

NUMERICAL INDEX (Continued)

PART NO.	PG	ITEM
246944	4-45	9
248128	4-45	7
251994	8-3	17
257241	4-3	22
257913	9-9	5
	9-11	5
	10-19	11
	11-13	5
	11-15	5
	11-17	11
271862	3-37	22
276627	8-25	6
278510	8-3	32
287503	8-9	1
	8-17	1
287805	5-13	3
287817	3-21	45
	3-25	44
	4-19	7
	8-9	39
287851	1-20	6
	3-3	21
	4-19	15
	7-9	9
	8-3	13
287854	1-7	13
	3-19	6
	7-3	9
287860	5-9	11
	5-21	22
	7-3	21
	8-4	52
292500	1-3	8
	3-37	6
	4-3	1
	4-19	26
	4-19	42
	12-24	2
292501	4-3	42
292502	9-15	17
292508	9-15	4
292509	9-7	12
	10-7	12
	11-9	33
292511	5-9	24
	7-3	37
292512	2-29	6
292514	1-7	13
	3-3	32
	5-3	12
	8-23	7
292515	5-9	7
	5-9	20
	5-11	18
292517	2-33	13
	2-35	20
	2-37	11
292521	3-3	4
	11-21	24
292523	3-3	4
292528	1-4	3
	11-11	14
292532	4-7	10
	9-7	5
	10-7	3
	11-9	4
	11-11	19
292533	1-3	31
	9-15	13
	10-24	34
	11-21	14
292544	5-21	11
	12-20	4
292609	1-20	8
292656	1-23	4
	8-23	5
292667	3-25	30
292668	3-7	10
	4-3	5
	4-4	48
	4-19	33
292678	3-21	29
	3-25	29
292679	4-3	6
	4-4	47
	4-19	5
292680	3-21	46
	3-25	45
	4-3	3
	4-3	10
	4-3	43
	4-12	6
	4-19	8
	4-19	27
	4-19	31
	4-19	32
	4-19	43
	5-22	10
	7-3	28
	7-5	5
	8-4	64
	8-9	8
	8-17	8
292681	1-3	14
	1-3	17
	1-3	25
	1-7	6
	1-20	5
	2-29	11
	2-33	7
	2-35	2
	2-37	7
	3-3	15
	3-19	16
	3-19	34
	3-21	8
	3-25	16
	3-25	25
	3-37	20
	4-3	8
	4-3	20
	4-3	34
	4-4	55
	4-7	8
	4-11	12
	4-12	10
	4-19	16
	5-9	12
	5-13	4
	5-22	8
	6-3	12
	7-3	38
	7-3	46
	7-9	4
	8-3	27
	8-6	3
	8-9	17
	8-17	17
	10-9	20
292682	1-3	36
	1-7	15
	3-3	10
	3-19	7
	4-3	16
	4-7	5
	5-3	11
	5-11	19
	5-21	23
	5-22	3
	6-3	2
	7-3	10
	8-9	2
	8-13	2
	8-17	2
	8-19	2
	8-23	17
292683	1-4	4
	1-23	5
	2-35	13
	3-19	10
	8-23	4
	9-15	15
	10-9	10
	11-11	10
292684	5-21	21
	5-22	5
	12-20	5
292687	3-21	30
292689	1-20	7
293626	5-3	4
293630	5-21	12
293651	8-23	3
293686	6-9	21
293692	5-9	3
293704	12-3	7
293762	6-3	34
293779	6-3	35
293795	10-23	21
	11-21	18
293796	10-23	13
294643	12-4	6
295649	10-11	10
	10-13	10
	10-15	9
	10-17	9
295802	4-45	18
296009	8-13	25
	8-14	56
	8-19	26
	8-20	57
296010	6-3	13
	8-4	49
296027	1-13	25
296036	8-13	1
296128	1-13	12
	3-3	23
	8-9	38
	8-17	38
296129	4-11	16
	4-20	52
296130	3-19	11
296160	8-9	6
	8-17	6
296165	8-9	16
	8-17	16
296166	3-3	31
296167	1-7	21
296205	6-5	6

©2004 HYSTER COMPANY

NUMERICAL INDEX (Continued)

PART NO.	PG	ITEM
296360	4-9	12
	12-24	8
296417	8-9	37
	8-9	40
	12-24	3
296418	5-9	16
	12-23	14
296420	2-31	4
	5-3	5
	8-4	54
296422	2-31	7
	9-7	6
	10-7	4
	10-9	14
	10-9	34
	11-9	5
	11-11	26
296423	1-23	3
296424	5-22	6
296426	1-3	29
	5-9	4
	6-9	22
	9-7	4
	10-9	4
	11-9	22
	11-11	4
	12-7	8
	12-9	8
296431	12-3	8
296462	5-4	2
296472	6-3	19
297531	9-9	6
	9-11	6
	10-19	13
	11-13	6
	11-15	6
	11-17	13
300937	1-4	7
	9-7	8
	10-7	6
	10-9	16
	10-24	35
	11-9	7
	11-11	16
	11-21	16
300982	8-23	14
302026	3-21	27
	3-25	27
302035	4-19	4
302037	4-11	2
302146	6-9	16
302246	4-3	45
302256	5-22	9
302262	7-5	4
302285	4-3	15
302328	2-31	9
302397	12-7	11
	12-9	11
302398	4-11	4
	6-5	7
302399	12-24	4
302400	6-3	14
302427	8-9	35
	8-17	35
302461	10-9	12
	10-24	38
	11-11	12
302470	5-19	4
304526	10-9	26
	11-11	27
309109	3-7	3
309124	4-12	3
313805	8-9	7
	8-17	7
	9-15	12
313828	9-7	13
	9-15	7
	10-7	13
	10-23	17
	11-9	11
	11-21	6
	12-3	11
	12-3	11
314787	3-14	19
314797	3-14	20
316132	4-19	11
316678	1-3	7
	1-3	16
	3-19	33
	3-21	37
	3-25	18
	3-25	24
	4-3	23
	4-3	33
	4-4	56
	4-12	9
	12-23	3
	12-23	3
316826	2-35	12
	3-19	5
	11-21	26
316835	12-23	15
317735	12-9	13
320154	3-21	28
	3-25	28
	4-15	20
320155	3-7	5
	3-8	5
	3-37	8
	4-4	46
	4-11	3
	6-3	22
	7-3	14
	8-9	31
	8-17	31
320156	1-3	9
	1-7	12
	3-3	26
	4-3	4
	4-12	7
	4-19	9
	4-19	44
	7-3	27
	8-9	14
	8-17	14
320157	1-3	24
	1-7	5
	2-29	10
	2-33	4
	2-35	9
	2-37	4
	3-19	15
	3-21	10
	3-25	17
	3-37	19
	4-7	9
	4-7	21
	4-12	11
	4-19	17
	7-3	39
	7-9	3
	8-9	15
	8-17	15
320158	1-20	4
	3-3	20
	10-9	19
320159	1-3	37
	1-7	14
	3-7	9
	3-19	8
	4-7	4
	8-17	37
320160	3-3	5
	11-21	25
320161	1-4	6
	4-7	11
	7-3	35
	10-9	15
	11-11	15
	11-21	15
320169	7-3	3
320171	10-23	29
	11-21	19
322824	9-9	13
	9-11	13
	11-13	13
	11-15	13
322902	9-9	4
	9-11	4
	11-13	16
	11-15	16
323061	9-7	10
	10-7	10
	11-9	17
323090	9-7	7
	10-7	5
	11-9	6
323160	9-7	16
	10-7	19
	11-9	29
323161	9-7	22
	10-9	5
	11-9	24
	11-11	5
324403	3-14	5
	3-17	18
324406	3-14	7
324707	2-21	35
324709	3-14	18
324718	2-13	7
324721	3-14	22
325708	3-3	6
326406	3-17	13
326483	3-17	12
326504	2-7	2
	2-13	3
	2-21	3
	2-23	15
	2-25	3
326511	3-14	21
326512	3-14	14
	3-17	9
326513	3-14	16
326612	2-11	2
326653	2-23	12
	2-25	9
	2-27	10
326654	2-23	13

See Service Manual for service procedures.
©2004 HYSTER COMPANY

NUMERICAL INDEX (Continued)

PART NO.	PG	ITEM
	2-25	10
	2-27	11
326716	3-11	9
326718	3-11	18
326719	3-11	16
326720	3-11	17
326721	3-11	8
326725	3-11	30
326726	3-11	20
326729	3-11	25
326730	3-11	21
326731	3-11	24
326732	3-11	23
326733	3-11	14
326735	3-11	32
326739	3-11	29
326741	3-11	13
326742	3-11	3
326744	3-11	15
326748	2-19	5
326749	2-19	6
326778	2-13	6
326850	2-15	5
	2-17	5
329067	1-4	9
	1-7	25
	2-29	9
	4-9	8
	4-11	7
329822	3-14	9
330692	9-9	12
	9-11	12
	11-13	12
	11-15	12
333642	2-19	15
334450	5-9	42
334452	5-9	43
335047	3-37	17
335553	1-13	9
335988	1-13	22
335989	1-15	5
335991	1-13	23
	1-15	6
336550	2-29	21
336573	2-29	18
340609	8-3	25
345423	6-3	33
345453	2-29	19
345454	2-29	20
346330	4-25	8
346656	2-29	7
348025	8-3	35
352485	3-3	24
352499	3-3	2
352885	3-3	3
352950	3-3	12
352969	3-5	9
352990	3-5	4
353128	3-5	20
353129	3-3	28
353141	3-3	6
353142	3-3	8
353143	3-3	7
353154	3-5	11
353159	3-3	12
353164	3-3	27
353165	3-5	13
353168	3-5	24
353172	3-3	17
353175	3-5	3
353195	3-3	11
353230	3-3	18
353311	3-21	13
	3-25	10
353397	3-5	1
353422	3-5	14
353432	3-5	15
353441	3-5	14
353448	3-5	10
353453	3-3	16
359207	3-5	7
360387	3-5	12
364807	1-13	15
364808	1-13	16
364854	1-13	21
364914	1-13	11
366115	9-13	5
	10-21	5
	11-19	5
	12-7	16
	12-9	20
366473	3-26	51
369242	1-3	13
369804	2-29	30
369815	3-21	40
	3-25	23
	3-25	32
370250	1-17	3
370251	1-17	3
370252	1-17	3
370253	1-17	3
370254	1-17	3
370255	1-17	3
370256	1-17	3
370257	1-17	3
370258	1-17	3
370259	1-17	3
370868	4-19	10
373885	4-11	17
	4-20	53
	4-20	53
376949	1-3	18
379197	1-13	19
379198	1-13	20
379199	1-13	5
379405	3-21	15
	3-25	21
379697	1-13	6
379698	1-13	7
381919	4-37	5
382747	4-45	21
383116	1-13	10
384211	1-21	1
384213	1-21	1
384214	1-21	1
384215	1-21	1
384216	1-21	1
386071	4-45	11
386422	5-15	7
387867	7-5	2
387869	4-20	48
389688	1-17	10
389822	3-17	15
397676	2-29	22
615135	10-19	6
	11-17	6
636851	12-4	7
638250	10-19	8
	11-17	8
985338	3-21	19
	3-25	2
996403	5-19	11
996404	6-9	33
996405	5-6	15
	5-19	12
1300107	1-13	14
1300916	3-14	10
	3-17	16
1301156	12-23	6
	12-23	7
1304950	3-37	16
1308259	4-23	4
1308269	4-22	11
1310369	10-11	3
	10-13	3
	10-15	3
	10-17	3
1310630	4-4	53
1319668	9-9	9
	9-11	9
	11-13	9
	11-15	9
1324309	4-37	9
1324310	4-37	10
1324517	4-7	25
1325271	1-17	18
1326394	4-39	1
1326395	4-39	2
1326396	4-39	3
1326397	4-39	4
1326398	4-39	5
1326399	4-39	6
1326536	4-39	7
1326537	4-39	9
1326538	4-39	11
1326939	4-12	4
1328878	3-21	38
1328890	3-19	27
1329147	4-29	9
	4-33	9
1329250	6-3	5
1330292	4-29	19
	4-33	19
1330293	4-3	41
1330412	4-24	1
	4-25	1
	4-37	8
1330417	4-24	2
	4-25	2
	4-37	7
1330419	4-26	1
1330420	4-21	3
	4-25	5
1330422	4-21	4
1330424	4-26	2
1330426	4-21	2
	4-25	6
1330428	4-21	5
1330437	4-37	12
1330439	4-21	6
	4-24	4
	4-25	4
	4-37	11
1330917	1-17	13
1330919	1-17	7
1330920	1-17	20
1331245	12-23	6
	12-23	7

NUMERICAL INDEX (Continued)

PART NO.	PG	ITEM
1333382	9-7	20
	10-7	8
	11-9	9
1333392	9-7	11
	10-7	11
	11-9	18
1333394	9-3	6
	9-5	3
1333399	9-13	6
	10-3	6
	10-5	3
	10-21	6
	11-3	6
	11-5	6
	11-7	5
1335129	1-17	9
1335898	2-35	7
1335967	6-3	10
1335975	4-15	
1335976	4-15	
1335987	6-3	9
1336605	1-17	14
1337043	6-3	4
1337114	4-15	18
1337118	2-35	6
1337148	1-7	30
1337196	6-3	27
1337197	4-15	25
	4-17	15
	4-20	54
1337641	3-19	28
1337642	3-19	29
1337643	3-19	30
1337644	3-19	31
1337645	3-19	32
1338076	1-21	1
1338077	1-21	1
1338078	1-21	1
1338178	1-17	1
1338264	2-35	4
1338268	2-35	5
1338291	6-5	8
1338308	2-13	17
	2-33	17
	2-35	23
	2-37	15
1339127	4-9	5
1339265	3-14	1
1339672	1-17	2
1339769	3-19	1
1339786	1-7	3
1339947	12-24	6
1340958	4-22	8
1343537	6-3	21
1343572	6-3	20
1343573	6-3	7
1343574	6-3	18
1343577	6-5	1
1343578	6-5	2
1343579	6-5	3
1343593	6-5	5
1343594	6-5	9
1343595	4-20	45
1343596	4-19	37
1343597	4-20	47
	6-3	30
1343598	6-5	4
1343607	6-3	16
1343630	7-3	30
1343636	4-19	29
1343647	1-4	8
1343887	4-9	1
1343989	11-11	21
1343990	1-23	2
1344798	4-9	2
1344799	4-9	4
1345190	9-15	11
	10-23	31
	11-21	13
1345199	10-23	18
	11-21	7
1345204	10-23	19
	11-21	8
1345216	9-3	2
	9-5	2
	9-13	2
	10-3	2
	10-5	2
	10-21	2
	11-3	2
	11-5	2
	11-7	2
	11-19	2
1345348	9-15	19
1345354	8-23	13
1345412	9-15	5
1345413	9-15	6
1345423	10-23	11
1345491	9-15	1
1345569	10-23	3
1345573	10-23	3
1345707	8-13	5
	8-19	6
1345708	8-13	6
	8-19	7
1345709	8-13	11
	8-19	12
1345710	8-13	13
	8-19	14
1345711	8-13	26
	8-14	57
	8-19	27
	8-20	56
1345825	2-29	17
1345939	1-17	17
1347004	4-20	46
	6-5	
1347026	2-29	14
1347045	1-7	34
1347135	6-3	6
1347202	3-19	12
1347212	8-3	39
1348002	10-3	1
1348003	9-3	1
	11-3	1
1348005	9-3	1
	10-3	1
	11-3	1
1348008	9-3	1
	10-3	1
	11-3	1
1348013	11-3	1
1348185	8-23	9
1348188	8-23	10
1348246	11-21	23
1348247	11-21	23
	11-21	32
1348453	9-5	1
1348455	9-5	1
1348458	9-5	1
1349440	1-23	1
1350282	1-3	15
1350400	3-29	21
	3-33	15
1351070	4-22	2
1351076	4-22	3
	4-26	5
1351133	3-21	24
	3-25	7
1351176	2-33	12
	2-35	17
	2-37	10
1351177	2-33	11
	2-35	18
	2-37	9
1351431	1-13	8
1351473	1-13	
1352088	4-19	24
	4-24	
1352089	3-5	23
1352090	3-5	20
1352190	1-17	11
1352563	4-24	5
1352599	4-22	7
1352803	11-7	1
1352805	11-7	1
1352808	11-7	1
1352812	11-7	1
1352902	10-5	1
1352905	10-5	1
1352908	10-5	1
1353003	11-5	1
1353005	11-5	1
1353008	11-5	1
1353012	11-5	1
1353192	9-3	6
	9-5	3
	9-13	6
	10-3	6
	10-5	3
	10-21	6
	11-3	6
	11-5	6
	11-7	5
	12-7	13
	12-9	18
1353321	9-13	1
1353326	9-13	
1353371	11-19	1
1353373	10-21	1
1353386	11-19	
1353388	10-21	
1353408	9-13	8
	10-21	8
	11-19	8
	12-7	18
1353464	11-21	22
1353530	9-15	18
	10-24	33
	11-21	27
1353533	1-23	2
1353546	10-9	11
1353547	11-11	11
1353632	10-23	22
1353635	10-23	22
1353638	10-23	22
1353662	10-23	23
1353665	10-23	23

©2004 HYSTER COMPANY

NUMERICAL INDEX (Continued)

PART NO.	PG	ITEM
1353668	10-23	23
1354049	4-15	3
1354119	12-23	1
1354140	1-13	27
1354165	1-17	4
1354171	1-17	19
1354204	4-29	20
	4-33	20
1354300	6-5	11
1354775	4-15	1
1354776	4-15	2
1354777	4-15	22
1354778	4-15	8
1354780	4-15	5
1354782	4-15	10
1354783	4-15	9
1354784	4-15	12
1354785	4-15	13
1354786	4-15	14
1354787	4-15	15
1354788	4-15	16
1354791	4-15	26
1354796	4-15	23
1354798	4-15	27
1354799	4-15	27
1354800	4-15	26
1354804	4-15	4
1354805	4-15	11
1354806	4-15	17
1354901	11-11	21
1354915	9-7	21
	10-7	9
	11-9	10
1354916	9-7	21
	10-7	9
	11-9	10
1354917	9-7	21
	10-7	9
	11-9	10
1354918	10-23	12
1355335	6-7	15
1355524	12-3	1
1355610	11-13	4
	11-15	4
1356105	2-29	5
1356137	1-17	6
1356332	12-23	1
1356355	12-23	8
1357367	4-15	24
1358354	11-21	1
1358809	12-3	9
1358821	12-3	13
1358858	4-15	21
1358970	10-19	4
	11-17	4
1359587	1-7	33
1360125	12-3	6
	12-4	
	12-7	3
	12-9	3
1360138	10-11	12
1360139	11-13	17
	11-15	17
1360140	9-9	15
	9-11	15
1360141	10-19	17
	11-17	17
1360263	12-3	15
1360264	12-3	16
1360386	9-15	14
	10-23	5
	10-23	10
	11-21	21
1360507	9-15	3
	10-23	6
	11-21	28
1360508	10-23	7
1360534	11-11	20
1360548	9-15	9
1360549	9-15	2
	11-21	17
1360877	2-5	14
	2-7	24
	2-9	27
1360878	2-3	19
1360879	2-3	21
1360880	2-3	17
1360881	2-3	18
1360882	2-3	25
1360883	2-3	14
1360884	2-3	15
1360885	2-3	13
1360886	2-3	12
1360887	2-3	10
1360888	2-3	11
1360890	2-3	8
1360892	2-3	6
1360893	2-3	5
1360895	2-3	20
1360896	2-5	8
1360897	2-5	1
1360898	2-5	9
1360899	2-5	10
1361121	4-19	25
1361302	10-19	15
	11-17	15
1361303	4-29	11
	4-33	11
	4-35	4
1361304	4-21	8
	4-27	5
	4-29	10
	4-30	9
	4-33	10
1361329	9-11	1
1361336	9-9	
1361337	9-9	1
1361338	9-9	2
	9-11	2
1361340	9-11	
1361348	9-9	
1361349	9-9	1
1361350	2-15	19
	9-9	2
	9-11	2
1361352	9-11	
1361353	9-11	1
1361366	9-9	
1361367	9-9	1
1361368	9-9	2
	9-11	2
1361370	9-11	
1361371	9-11	1
1361552	12-24	5
1361675	2-5	11
1361676	2-5	4
1361677	2-5	12
1361679	2-7	7
1361680	2-7	8
1361681	2-7	10
1361682	2-7	11
1361683	2-7	12
1361684	2-7	13
1361685	2-7	14
1361686	2-7	15
1361687	2-7	16
1361688	2-7	5
	2-19	3
1361689	2-7	18
1361690	2-7	21
1361691	2-7	20
1361694	2-9	10
1361695	2-9	11
1361703	2-9	19
1361704	2-9	19
1361705	2-9	19
1361706	2-9	19
1361710	2-9	12
1361711	2-9	12
1361712	2-9	12
1361713	2-9	12
1361714	2-9	18
1361715	2-9	18
1361716	2-9	18
1361717	2-11	18
1361718	2-11	27
1361719	2-11	26
1361720	2-11	25
1361721	2-11	24
1361722	2-11	3
1361723	2-11	4
1361724	2-11	5
1361725	2-11	6
1361726	2-11	7
1361727	2-11	8
	2-11	11
1361728	2-11	9
	2-11	12
1361729	2-11	10
1361730	2-11	13
1361731	2-11	14
1361732	2-11	15
1361733	2-11	16
1361734	2-11	17
1361735	2-11	19
1361736	2-11	20
1361737	2-11	21
1361738	2-11	22
1361739	2-11	23
1361742	2-13	2
1361745	2-13	13
1361746	2-13	14
1361747	2-13	15
1361749	2-23	1
	2-25	15
1361752	2-25	22
1361753	2-27	16
1361754	2-27	8
1361755	2-27	14
1361756	2-23	3
	2-25	14
	2-27	13
1361796	2-15	20
	2-17	20
	2-25	28
	2-27	1
1361797	3-14	12
	3-17	20

NUMERICAL INDEX (Continued)

PART NO.	PG	ITEM
1361798	2-19	2
1361801	2-19	17
1361802	2-19	9
1361803	2-19	10
1361804	2-19	11
1361805	2-19	12
1361806	2-19	13
1361807	2-19	14
1361809	2-21	26
1361810	2-21	28
1361811	2-21	23
1361812	2-21	20
1361813	2-21	31
1361814	2-21	21
1361815	2-21	22
1361816	2-21	24
1361817	2-21	19
1361818	2-21	17
1361819	2-21	18
1361821	2-21	4
1361827	2-21	15
1361829	2-21	2
1361830	2-21	30
1361832	2-21	33
1361833	2-21	8
1361834	2-21	27
1361835	2-21	32
1361837	2-15	2
	2-17	2
1361845	2-15	11
	2-17	11
1361846	2-15	15
	2-17	15
1361850	4-43	11
1361852	4-43	5
1361854	4-43	7
1361855	4-43	15
1361857	4-43	13
1361859	4-43	4
1361860	4-43	12
1361861	4-43	10
1361862	4-43	6
1361863	4-43	8
1361864	4-43	9
1361865	4-43	14
1361867	2-17	14
1361868	2-19	19
	2-27	9
1361869	3-17	7
1361870	3-17	8
1361873	2-13	10
	2-21	9
1361878	2-19	18
	2-21	37
1361879	2-19	7
1361880	2-21	25
1361881	2-15	12
	2-17	12
	2-21	16
1361882	2-21	1
1361884	2-21	34
1361885	2-13	8
	2-27	12
1361888	2-15	17
	2-17	17
1361891	2-15	16
	2-17	16
1361893	2-15	7
	2-17	7
1361894	2-3	23
	2-19	16
1361895	2-15	4
	2-17	4
1361897	2-3	4
1361898	2-3	3
	2-7	17
	2-13	19
	2-23	2
	2-25	16
	2-27	2
1361899	2-3	26
1362000	2-3	1
1362001	2-3	2
	2-7	3
1362002	2-3	24
1362003	2-3	22
	2-5	2
1362005	2-5	3
1362007	2-5	7
1362008	2-5	5
1362009	2-5	6
1362010	2-7	19
1362011	2-7	1
1362012	2-7	6
1362015	2-7	9
1362016	2-11	1
1362036	4-39	10
1362039	4-39	13
1362040	4-39	15
1362042	4-39	14
1362113	2-15	1
1362410	12-15	
	12-17	
1362677	11-15	1
1362684	11-13	
1362685	11-13	1
1362686	11-13	2
	11-15	2
1362688	11-15	
1362689	11-15	1
1362696	11-13	
1362697	11-13	1
1362698	11-13	2
	11-15	2
1362700	11-15	
1362707	11-15	1
1362714	1-7	18
1362715	11-13	
1362716	11-13	1
1362717	11-13	2
	11-15	2
1362719	11-15	
1362726	11-15	1
1362739	11-13	
1362740	11-13	1
1362741	11-13	2
	11-15	2
1362743	11-15	
1362871	9-9	14
	9-11	14
	10-15	8
	11-13	14
	11-15	14
1362875	10-11	9
	10-13	9
	11-13	15
	11-15	15
1362880	10-19	5
	11-17	5
1362881	10-19	10
	11-17	10
1362883	10-19	
1362884	11-17	
1362885	10-19	
	11-17	
1362888	10-19	
	11-17	
1362893	11-17	
1362919	10-19	1
1362920	11-17	1
1362922	10-19	1
	11-17	1
1362925	10-19	1
	11-17	1
1362930	11-17	1
1362956	10-19	2
1362957	11-17	2
1362959	10-19	2
	11-17	2
1362962	10-19	2
	11-17	2
1362967	11-17	2
1362993	10-15	
1362996	10-15	
1362999	10-15	
1363250	11-9	14
1363251	11-9	15
1363255	11-21	29
1363256	11-21	29
1363260	8-23	1
1363261	8-23	2
1363272	11-19	6
	12-9	18
1363303	11-11	2
1363305	11-11	2
1363308	11-11	2
1363312	11-11	2
1363486	9-15	8
1363885	4-24	3
	4-25	3
1363886	4-25	7
	4-26	3
1363916	1-4	10
1363917	1-4	11
1364271	6-3	15
1365140	11-9	27
1365302	10-9	2
1365305	10-9	2
1365308	10-9	2
1365501	10-23	1
1365504	10-23	1
1365506	10-23	2
1365512	10-23	2
1365516	10-23	2
1365572	10-11	
1365575	10-11	
1365578	10-11	
1365601	10-11	1
	10-13	1
	10-15	1
	10-17	1
1365604	10-11	1
	10-13	1
	10-15	1
	10-17	1
1365607	10-11	1
	10-13	1
	10-15	1

©2004 HYSTER COMPANY

NUMERICAL INDEX (Continued)

PART NO.	PG	ITEM
	10-17	1
1365631	10-15	2
	10-17	2
1365634	10-15	2
	10-17	2
1365637	10-15	2
	10-17	2
1365660	10-11	2
	10-13	2
1365663	10-11	2
	10-13	2
1365666	10-11	2
	10-13	2
1365689	10-11	5
	10-15	5
1366433	9-15	1
1366874	3-14	23
	3-17	19
1367108	3-37	9
1367113	2-29	3
1367116	3-7	7
1367117	3-7	8
1367169	6-10	1
1367171	6-10	3
1367191	2-21	6
1367193	7-11	17
1367194	7-11	15
1367402	5-17	5
1367403	5-17	6
1367407	5-15	5
1367412	5-17	13
1367422	5-15	11
1367518	3-12	3
1367519	3-12	4
1367520	3-12	5
1367521	3-12	6
1367526	3-12	11
1367574	4-15	9
1367579	5-15	17
1367603	5-6	2
1367604	5-6	3
1367605	5-6	12
1367607	5-6	9
1367609	5-6	14
1367615	5-19	6
1367616	5-19	2
1367617	5-19	1
1367618	5-19	5
1367619	5-19	3
1367633	4-3	12
	4-19	34
1367639	4-9	9
	4-11	9
1367645	12-23	4
1367854	7-7	15
1367855	7-7	16
1367870	7-7	28
1367871	7-7	29
1367876	7-7	34
1368014	8-13	12
	8-19	13
1368016	8-13	10
	8-19	11
1368017	8-13	35
	8-19	36
1368018	8-13	19
	8-13	45
	8-19	20
	8-19	45
1368019	8-13	16
	8-14	48
	8-19	17
	8-20	48
1368020	8-13	17
	8-14	49
	8-19	18
	8-20	49
1368021	8-13	18
	8-14	50
	8-19	19
	8-20	50
1368022	8-13	21
	8-14	51
	8-19	22
	8-20	51
1368023	8-13	22
	8-14	52
	8-19	23
	8-20	52
1368024	8-13	23
	8-14	54
	8-19	24
	8-20	54
1368025	8-13	24
	8-14	55
	8-19	25
	8-20	55
1368028	8-20	67
1368029	8-13	32
	8-19	33
1368030	8-13	30
	8-19	31
1368031	8-13	29
	8-19	30
1368032	8-20	59
1368033	8-20	60
1368034	8-20	62
1368035	8-20	68
1368038	8-13	38
	8-19	38
1368040	8-14	58
	8-20	63
1368043	8-13	43
1368045	8-19	43
1368049	8-13	37
	8-19	37
1368748	2-17	19
1368841	2-15	13
	2-17	13
1368844	2-15	18
	2-17	18
1368853	4-41	20
1368858	4-41	16
1368979	4-7	6
1369333	10-23	15
	11-21	9
1369345	9-13	7
	10-21	7
	11-19	7
	12-7	17
	12-9	14
1369357	9-7	24
	10-9	7
	11-9	26
	11-11	7
1369623	11-21	1
1369624	11-21	1
1369627	11-21	1
1369807	3-14	3
	3-17	11
1369808	3-14	4
	3-17	17
1369809	3-14	6
1369813	3-14	24
1369815	3-11	1
1369816	3-11	2
1369817	3-11	4
1369818	3-11	5
1369819	3-11	6
1369820	3-11	7
1369822	3-11	10
1369823	3-11	11
1369824	3-11	12
1369825	3-11	19
1369826	3-11	22
1369827	3-11	26
1369828	3-11	27
1369829	3-11	28
1369835	3-12	2
1369836	3-12	7
1369837	3-12	8
1369838	3-12	9
1369839	3-12	10
1369840	3-12	12
1369841	3-12	13
1369842	3-12	1
1369863	2-23	8
	2-25	8
1369878	3-14	17
1369887	3-14	13
1369893	2-17	1
1369895	2-15	8
	2-17	8
1369896	2-15	9
	2-17	9
1369913	2-19	20
1369914	2-19	21
1369934	2-7	4
1369963	2-9	1
1369964	2-9	2
1369965	2-9	3
1369966	2-9	4
1369967	2-9	5
1369968	2-9	6
1369969	2-9	7
1369970	2-9	8
1369973	2-9	13
1369974	2-9	14
1369975	2-9	16
1369976	2-9	17
1369981	2-23	11
	2-27	4
1369995	2-27	5
1369996	2-13	21
	2-25	29
	2-27	6
1369997	2-13	20
	2-25	24
	2-27	7
1369998	2-27	15
1370496	12-15	2
	12-17	2
1370497	12-15	1
	12-17	1
1370676	2-13	1
1370682	2-13	5
1370688	2-13	12
1370689	2-13	16

NUMERICAL INDEX (Continued)

PART NO.	PG	ITEM
1370691	2-13	18
1370722	8-23	12
1370724	4-39	8
1370736	2-7	22
1371203	4-15	6
1371207	4-45	4
1371208	4-45	10
1371209	4-45	12
1371210	4-45	2
1371211	4-45	17
1371212	4-45	16
1371213	4-45	3
1371214	4-45	14
1371287	8-23	8
1371289	12-3	9
1371652	2-7	24
	5-22	12
1371653	9-9	3
	9-11	3
	11-13	3
	11-15	3
1371654	10-11	4
	10-15	4
1371656	5-9	6
1371668	8-25	2
1374750	1-13	4
1374789	2-23	4
1374796	5-11	16
	5-15	19
1374802	10-11	8
	10-13	8
	10-17	8
1375168	12-23	13
1375169	12-23	12
1375171	12-23	2
1375172	12-23	2
1375574	9-15	20
	10-23	4
	11-21	2
1375794	4-3	40
1375795	4-29	7
	4-33	7
1375797	4-29	8
	4-33	8
1376100	9-7	26
	10-7	20
	11-9	31
1376111	10-23	3
1376144	10-23	24
1376147	10-23	24
1376150	10-23	24
1376323	11-9	30
1376557	7-9	1
1376579	12-23	2
1376743	6-3	31
1376744	6-3	28
1376745	6-3	29
1377371	9-15	22
	10-23	26
	11-21	34
	11-22	35
1377372	10-23	30
1378051	12-3	2
1378061	12-3	5
1378600	6-3	8
1378661	4-4	51
1378690	10-9	18
	11-11	18
1378692	10-9	30
	11-11	25
1378698	9-5	7
	11-5	10
1378699	9-5	8
	10-9	29
	11-5	11
	11-11	24
1379457	8-3	24
1379496	10-9	17
	11-11	17
1379682	10-9	27
	11-11	22
1379685	9-5	6
	11-5	9
1379687	9-7	11
	10-7	11
1379799	12-23	1
1380035	10-9	24
1381082	10-13	4
	10-17	4
1381094	8-25	5
1381095	9-9	10
	9-11	10
	11-13	10
	11-15	10
1381125	1-17	15
1381598	11-21	12
1381599	11-21	31
1381600	9-3	1
1381605	9-5	1
1381618	9-15	23
	11-21	20
	11-21	30
1381641	11-21	10
1381642	11-21	10
1381765	12-3	17
	12-19	6
1381766	12-3	10
	12-19	7
1381771	10-23	14
	11-21	3
1382556	6-3	32
1382679	2-33	2
	2-37	2
1383061	8-25	4
1383682	8-4	65
	8-13	33
	8-14	60
	8-19	34
	8-20	65
1383683	8-13	20
	8-14	53
	8-19	21
	8-20	53
1385097	1-3	11
1385135	8-5	1
1385136	8-5	2
1385137	8-5	3
1385138	8-5	4
1385139	8-5	11
1385140	8-5	7
1385142	8-5	10
1385147	8-5	5
1385148	8-5	6
1389577	8-5	9
1389580	8-13	3
	8-19	3
1389607	1-7	29
1390365	12-3	18
	12-19	8
1390366	12-3	19
	12-19	9
1393130	9-3	6
	9-5	3
	10-21	6
1393132	9-13	6
	10-3	6
	10-5	3
	11-3	6
	11-5	6
	11-7	5
1393142	11-19	6
1395285	10-9	8
	11-11	8
1395291	10-24	36
	11-22	38
1395292	10-24	37
	11-22	39
1396406	10-23	27
	11-22	41
1396427	12-3	2
1396456	12-3	4
1396518	2-35	8
1398476	9-15	1
1398479	9-15	1
1399002	12-3	3
1399037	12-3	
1399095	5-13	6
1401746	12-7	9
	12-9	9
1450293	4-9	10
1450356	4-9	7
	4-11	6
1450409	1-20	12
1450928	4-3	36
	4-43	
1450929	4-43	1
1450930	4-43	2
1450931	4-43	3
1451696	6-7	16
1451697	6-7	4
1451698	6-7	6
1451700	6-7	8
1451703	6-7	10
1451707	6-7	19
1453153	4-15	19
1453562	4-39	
1453687	6-3	32
1455674	2-19	4
1455675	2-19	1
1455678	2-15	6
	2-17	6
1455770	6-7	5
1455771	6-7	7
1455772	6-7	3
1455773	6-7	13
1455774	6-7	17
1455775	6-7	18
1455778	6-7	20
1461081	1-15	4
1462411	12-15	3
	12-17	3
1467388	5-11	
1467523	1-11	1
1467524	1-11	2
1467525	1-11	3
1467526	1-11	4
1467527	1-11	5
1467529	1-11	7

©2004 HYSTER COMPANY

NUMERICAL INDEX (Continued)

PART NO.	PG	ITEM
1467531	1-11	6
1467534	1-9	2
1467824	8-6	1
1467884	2-3	
	2-5	
	2-7	
	2-9	
	2-11	
	2-13	
1469342	2-35	26
1469346	3-21	34
	3-31	
1469405	2-35	14
1469411	4-3	28
	4-29	
1469412	4-7	16
	4-33	
1469425	4-19	21
	4-22	
1469460	1-20	1
1469468	1-20	1
1469469	1-20	1
1469529	4-4	50
1469530	4-4	52
1469531	3-21	43
	3-25	47
1469594	1-20	1
1470152	1-9	1
1470153	1-9	1
1470154	1-9	2
1470155	1-9	37
1470156	1-9	38
1470157	1-9	39
1470158	1-9	40
1470160	1-11	8
1470161	1-9	42
1470163	1-9	29
1470164	1-9	41
1471330	6-3	23
	6-7	
1471694	2-25	1
	3-21	35
	3-25	15
1471701	3-21	14
	3-25	22
1474604	5-13	7
1474607	5-13	8
1474614	8-3	11
1474615	8-3	20
1474617	8-3	33
1474763	4-29	29
	4-33	29
1474764	4-29	30
	4-33	30
1475133	3-14	11
1475156	3-17	4
1475409	3-21	16
	3-25	33
1476598	4-29	31
	4-33	31
1476599	4-29	28
	4-33	28
1476711	1-11	
1476712	1-11	
1476713	1-9	
1476714	1-9	
1477293	2-3	
	2-5	
	2-7	
	2-9	
	2-11	
	2-13	
1477464	1-3	1
1477467	1-3	1
1478836	4-20	49
1479503	3-31	1
	3-35	1
1479504	3-31	2
	3-35	2
1479505	3-31	3
	3-35	3
1479507	3-31	4
	3-35	4
1479508	3-31	5
	3-35	5
1479509	3-31	6
	3-35	6
1479510	3-31	7
	3-35	7
1479511	3-31	8
	3-35	8
1479513	3-31	9
	3-35	10
1479514	3-31	11
	3-35	11
1479515	3-31	12
	3-35	12
1479516	3-31	13
	3-35	13
1479517	3-31	14
	3-35	14
1479518	3-31	15
	3-35	15
1479519	3-31	25
	3-35	16
1479520	3-31	24
	3-35	17
1479521	3-31	26
	3-35	18
1479522	3-31	16
1479523	3-31	17
1479524	3-31	18
1479525	3-31	19
1479526	3-31	23
	3-35	19
1479527	3-31	22
	3-35	20
1479528	3-31	21
	3-35	21
1479529	3-31	20
	3-35	22
1479530	3-31	28
	3-35	25
1479531	3-31	29
	3-35	26
1480307	2-3	
	2-5	
	2-7	
	2-9	
	2-11	
	2-13	
1480403	1-15	1
1480404	1-15	2
1480405	1-15	3
1482459	4-4	57
1482460	4-4	49
1482481	3-21	31
	3-25	26
1482482	3-21	20
	3-25	37
1482648	4-29	21
	4-33	21
1482649	4-29	22
	4-33	22
1482651	4-29	32
	4-33	32
1482652	4-29	34
	4-33	34
1482653	4-29	35
	4-33	35
1482654	4-29	16
	4-33	16
1482655	4-29	17
	4-33	17
1482656	4-29	18
	4-33	18
1482657	4-29	13
	4-33	13
1482658	4-29	14
	4-33	14
1482659	4-29	15
	4-33	15
1482660	4-29	12
	4-33	12
1482662	4-3	39
	4-29	24
	4-33	24
1482663	4-29	25
	4-33	25
1482664	4-29	27
	4-33	27
1482665	4-29	26
	4-33	26
1482668	4-4	60
1482699	4-3	38
1482731	3-21	25
1482734	3-21	22
	3-25	36
1482736	3-19	25
1482741	4-15	
1483318	4-3	25
1483661	12-19	13
1483663	12-19	11
1483664	12-19	12
1484153	4-29	23
	4-33	23
1484154	4-29	33
	4-33	33
1485283	2-35	21
1485284	2-35	11
1485286	2-35	28
1485288	2-35	10
1485322	2-29	13
1485331	2-29	12
1485333	2-29	23
1485805	2-29	27
1486172	12-7	
1486173	12-9	
1486174	12-9	
1486605	4-4	54
1486675	8-3	28
	8-3	29
1486680	8-3	31
1486681	8-3	30
1486699	8-3	22
1487172	2-35	24
1487189	2-35	25
1487190	3-21	41

©2004 HYSTER COMPANY

NUMERICAL INDEX (Continued)

PART NO.	PG	ITEM
	3-25	48
1487191	4-4	58
1487192	3-21	42
	3-25	49
1487199	3-35	
1487969	3-21	44
	3-25	50
1488776	4-29	36
	4-33	36
1488874	2-35	1
1488992	12-7	1
1488993	12-9	1
1488994	12-9	1
1489009	12-7	2
	12-9	2
1489016	12-10	1
1489035	12-10	3
1489037	12-10	2
1489039	12-10	5
1489050	12-11	2
	12-12	2
1489972	10-9	13
	11-11	13
1490047	2-35	22
1490747	6-7	11
1491379	12-24	1
1493247	3-29	1
	3-33	1
1493248	3-29	2
	3-33	2
1493249	3-29	3
	3-33	3
1493250	3-29	4
	3-33	4
1493251	3-29	5
	3-33	5
1493252	3-29	6
	3-33	6
1493253	3-29	7
	3-33	7
1493254	3-29	8
	3-33	8
1493255	3-29	9
	3-33	9
1493256	3-29	10
1493257	3-29	11
1493258	3-29	12
1493259	3-29	13
1493260	3-29	14
1493261	3-29	15
	3-33	10
1493262	3-29	16
	3-33	11
1493263	3-29	17
	3-33	12
1493264	3-29	18
	3-33	13
1493265	3-29	19
	3-33	14
1493266	3-29	20
	3-33	16
1493267	3-33	17
1493299	3-21	49
1493624	3-31	27
	3-35	23
1494017	9-15	10
	10-23	8
	11-21	11
	11-22	40
1494236	3-21	49
	3-29	
1494279	3-29	22
1494475	2-29	4
1494665	2-29	4
1494719	8-25	12
1495121	3-35	24
1495124	3-33	18
1495125	3-33	19
1495185	4-19	36
1495413	2-23	5
	2-23	14
	2-25	26
1495422	2-25	5
1495426	2-19	8
1495428	2-21	5
1495429	2-21	29
1495473	2-9	20
1495474	2-9	20
1495475	2-9	20
1495500	3-17	10
1495881	8-23	15
1495936	4-19	36
1496021	3-8	1
1496172	3-31	10
	3-35	9
1498115	10-13	12
	10-17	11
1498116	10-13	5
	10-17	5
1498325	12-10	4
1498326	12-7	22
	12-9	22
1498410	1-7	29
1499617	3-17	6
1499618	3-17	2
1499619	3-17	1
1499622	3-17	3
1499623	3-17	5
1499646	2-23	16
	3-12	
1499647	2-23	6
	2-25	4
1499653	2-23	9
1499654	2-23	7
	2-25	6
1499657	3-12	7
1499666	2-7	23
	2-15	14
1500196	2-15	3
	2-17	3
1500218	2-3	27
1500220	2-25	27
1500222	3-21	34
1500223	2-23	17
	3-33	
1500782	1-21	5
1501259	1-17	21
1501952	2-25	13
	3-25	38
1502989	3-17	21
1503096	12-10	6
1503474	12-12	2
1503477	12-11	1
1503480	12-12	1
1503481	12-12	1
1503878	1-18	24
1504010	9-13	7
	10-21	7
	11-19	7
	12-7	17
	12-9	14
1507923	6-3	27
1510314	4-17	1
1510315	4-17	1
1510317	4-17	1
1514866	9-13	10
	10-21	10
	11-19	10
	12-7	20
	12-9	16
1517441	12-19	2
1517448	12-19	1
1517449	12-19	1
1518219	12-19	15
1518229	12-19	
1518230	12-19	
1523732	1-21	3
1523733	1-21	4
1523735	1-21	2
1530583	4-17	15
1531983	12-23	1
1544764	12-23	1
1546825	2-3	
	2-5	
	2-7	
	2-9	
	2-11	
	2-13	
	2-25	
1552702	4-11	1
1553708	2-5	13
1553794	2-25	21
1553795	2-25	18
1553798	2-25	19
1553799	2-25	20
1553980	4-4	57
1554688	3-25	11
1554689	3-25	14
1555680	4-11	8
1557304	2-13	4
	2-25	12
1557311	2-25	7
1557313	2-25	23
1557314	2-25	2
1557318	2-25	25
1558119	2-9	23
1559737	4-11	10
	4-37	
1565841	12-23	1
2004005	8-6	5
2013099	10-19	3
	11-17	3
2020500	8-9	4
	8-17	4
2020501	8-9	5
	8-17	5
2020502	8-9	44
2020503	8-9	21
	8-17	21
2020513	1-17	8
2020514	1-17	8
2020515	1-17	8
2020516	1-17	8
2020517	1-17	5
2021197	1-7	1
2021207	1-7	17
2021208	1-7	19
2021213	1-7	20

See Service Manual for service procedures.
©2004 HYSTER COMPANY

NUMERICAL INDEX (Continued)

PART NO.	PG	ITEM
2021216	1-7	24
2021218	1-7	27
2021219	1-7	28
2021222	1-7	31
2021231	1-3	22
2021232	1-3	6
2021233	3-37	2
	8-3	4
2021234	1-3	2
2021235	1-3	3
2021237	1-3	5
	4-7	12
2021238	1-3	4
2021239	2-9	25
2021240	2-9	26
2021243	2-9	24
2021271	8-3	47
2021272	8-4	50
2021273	8-4	51
2021282	5-19	
2021286	5-19	7
	5-21	13
2021287	5-19	8
2021288	5-19	9
	5-21	19
2021293	5-11	1
2021294	5-11	1
2021295	5-11	1
2021296	5-11	1
2021298	5-11	1
2021299	5-11	3
2021300	5-11	4
2021310	7-3	2
2021315	7-3	6
2021316	7-3	7
2021318	5-11	12
2021320	5-11	14
2021321	5-11	15
2021325	5-6	
	5-9	34
2021326	7-3	33
2021327	7-3	34
2021328	5-6	13
	5-9	38
2021331	8-14	59
	8-20	64
2021335	7-3	15
2021336	5-9	10
2021337	7-3	17
2021338	7-3	18
	7-11	
2021339	7-3	19
2021341	7-3	31
2021347	7-3	40
2021349	7-3	41
2021353	7-3	25
2021354	2-33	1
2021355	2-37	1
2021359	2-33	14
	2-37	12
2021370	2-33	16
	2-37	14
2021378	5-3	10
2021388	5-9	17
2021389	5-9	18
2021390	5-9	5
2021395	1-3	41
	2-33	10
	2-37	8
2021426	3-3	30
2021427	3-7	1
2021432	5-22	11
2021434	4-3	30
	4-11	14
	4-19	35
	4-19	35
2021438	2-9	15
	2-9	22
	5-3	8
2021440	2-15	10
	2-17	10
	4-3	35
2021442	2-9	21
	5-3	9
2021458	3-7	6
2021470	7-5	1
2021471	7-5	3
2021491	5-21	2
2021497	1-3	11
2021499	1-3	12
2021505	2-31	1
2021506	2-31	2
2021510	5-21	4
2021511	2-31	8
2021512	2-29	26
	2-31	11
2021515	2-31	13
2021516	2-31	6
2021517	2-31	12
2021554	5-21	17
2021555	5-21	18
2021557	5-21	20
2021558	5-21	16
2021562	1-20	9
2021563	1-20	3
2021588	5-21	9
2021592	5-21	10
2021646	5-22	4
2021652	8-3	38
2021672	3-37	1
	8-3	3
2021673	3-37	3
	8-3	5
2021679	3-37	13
2021683	3-37	14
2021685	3-37	15
2021686	3-37	9
2021687	3-37	7
2021719	3-19	24
2021781	6-9	3
2021783	6-9	4
2021784	6-9	5
2021785	6-9	6
2021786	6-9	8
2021790	6-9	30
2021793	6-9	14
2021794	6-9	15
2021796	6-9	20
2021800	6-9	32
2021801	6-9	24
2021802	6-9	25
2021803	6-9	26
2021804	6-9	31
2021809	8-10	47
	8-17	24
2021810	8-9	25
	8-17	25
2021812	8-9	45
2021813	8-9	26
	8-17	26
2021815	8-9	27
	8-17	27
2021816	8-9	28
	8-17	28
2021817	8-9	29
	8-17	29
2021818	8-9	30
	8-17	30
2021823	8-9	22
	8-17	22
2021833	1-3	30
2021834	1-3	32
	5-3	13
2021851	8-17	33
2021852	8-9	33
2021856	8-9	41
2021860	8-9	36
	8-17	36
2021862	8-9	9
	8-17	9
2021863	8-9	10
	8-17	10
2021864	8-9	11
	8-17	11
2021865	8-9	12
	8-17	12
2021866	8-9	43
2021867	8-9	20
	8-17	20
2021882	6-9	7
	8-4	48
	8-4	63
2021883	6-9	9
2021885	6-9	10
2021887	8-3	19
2021889	6-9	11
2021892	6-9	17
	7-3	29
2021895	6-9	18
2021898	6-9	27
2021900	1-3	34
2021907	7-3	13
2021908	8-3	6
2021914	5-11	8
2021915	5-9	35
	5-11	10
2021918	5-21	8
2021933	8-3	7
2021935	8-3	8
2021943	4-12	2
2021947	4-12	8
2021952	4-19	1
2021953	4-19	2
	12-23	11
2021954	4-19	6
2021963	4-7	3
	4-45	
2021964	4-45	27
2021965	4-45	28
2021966	4-7	1
2021968	4-7	2
2021981	4-11	15
	4-20	51
2021985	4-3	24
2021986	4-3	13
2021987	4-3	27
2021988	4-7	14
2021989	4-7	15

©2004 HYSTER COMPANY

NUMERICAL INDEX (Continued)

PART NO.	PG	ITEM
2021994	4-26	
2021996	4-3	14
	4-3	29
2021997	4-9	11
	4-35	
2022003	4-3	31
2022008	4-7	17
2022009	4-7	18
2022010	4-7	22
2022011	4-7	24
2022013	3-21	48
	3-22	50
	3-25	19
	4-3	17
	4-9	14
	4-11	11
	4-19	19
2022191	8-13	34
	8-14	46
	8-19	35
	8-20	46
2022192	8-13	15
	8-14	47
	8-19	16
	8-20	47
2022205	8-13	36
	8-19	4
	8-20	58
2022210	8-13	31
	8-19	32
2022217	8-20	61
2022301	2-21	7
2022302	2-21	12
2022303	2-21	10
2022305	2-21	11
2022309	2-21	14
2022318	2-21	36
2022319	2-21	40
2022352	5-11	2
2022397	2-29	2
2022490	2-23	10
	2-25	11
	2-27	3
2022492	3-11	31
2022494	2-3	9
2022502	4-3	26
	4-7	13
2022503	4-7	23
2022509	7-3	12
2022510	2-21	36
2022515	2-15	13
	2-17	13
2022519	2-29	16
2022525	4-7	3
2022526	4-45	1
2022528	4-45	6
2022532	4-45	13
2022533	4-45	15
2022534	4-45	19
2022535	4-45	20
2022538	4-45	23
2022550	8-6	2
2022551	2-31	3
2022553	7-3	36
2022566	3-19	9
2022569	8-13	36
	8-19	4
	8-20	58
2022614	4-3	11
2022617	7-3	26
2022618	4-23	3
2022619	4-23	1
2022621	4-23	2
	4-27	7
	4-29	6
	4-30	3
	4-33	6
2022622	4-21	1
2022623	4-22	1
2022626	4-22	4
2022627	4-22	5
	4-27	2
	4-29	2
	4-30	6
	4-33	2
2022628	4-22	6
	4-27	3
	4-29	4
	4-30	7
	4-33	4
	4-37	2
2022629	4-21	7
	4-22	9
	4-30	1
	4-33	38
2022634	2-9	9
2022636	1-3	28
2022655	2-3	16
2022668	12-20	3
2022669	12-20	1
2022670	12-20	2
2022671	12-20	3
2022672	12-20	1
2022673	12-20	2
2022702	8-9	13
	8-17	13
2022705	12-23	10
2022718	5-22	2
2022735	4-30	4
	4-33	6
2022736	4-27	6
	4-29	5
	4-30	2
	4-33	5
2022737	4-26	6
	4-29	3
	4-30	8
	4-33	3
	4-35	1
	4-37	1
2022738	4-26	4
2022739	4-27	1
	4-29	1
	4-30	5
	4-33	1
2022774	12-21	2
2022775	6-9	1
2022776	6-9	2
2022777	6-9	13
2022796	8-9	24
	8-17	40
2022798	1-3	39
2022799	1-20	11
2022800	1-20	2
2022803	1-3	40
2022807	2-33	5
	2-35	27
	2-37	5
2022808	2-33	8
2022809	1-7	2
2022821	1-3	33
2022822	1-3	38
2022823	4-35	2
	4-37	3
2022825	5-21	1
2022827	4-35	3
	4-37	4
2022835	4-9	15
2022839	5-21	
2022842	2-29	28
2022843	2-29	29
2022849	1-20	10
2022852	3-19	20
2022853	3-19	21
2022883	5-13	2
2022888	8-3	12
2022897	1-3	27
2022899	3-37	4
2022901	4-35	5
2022908	3-11	
2022910	8-17	32
2022911	8-9	32
2022912	8-9	23
	8-17	23
2022923	6-10	2
2023396	8-4	60
2023418	5-9	2
2023421	5-21	5
2023443	12-20	1
2023445	2-33	1
2023461	8-3	1
2023462	8-3	2
2023466	1-7	23
2023500	5-22	1
2023551	2-13	11
2023589	12-21	3
2023624	12-20	1
2023628	12-20	1
2023632	12-20	1
2023636	6-9	23
	12-21	1
2023718	8-3	16
2023719	5-9	41
	5-13	10
2023721	3-19	26
2023764	8-3	41
2023789	1-3	19
2023909	12-21	3
2023923	5-11	5
2023940	7-3	32
2023941	5-11	13
2023975	5-11	11
2023976	5-9	22
2023995	5-4	3
2023997	5-17	2
2026006	5-17	12
2026008	5-15	2
2026009	5-15	6
2026054	2-31	5
2026055	2-31	15
2026063	8-4	59
	8-9	19
	8-13	
2026065	8-4	59
	8-17	19
	8-19	
2026066	8-4	62
2026069	8-14	61

See Service Manual for service procedures.
©2004 HYSTER COMPANY

NUMERICAL INDEX (Continued)

PART NO.	PG	ITEM
2026070	8-20	66
2026073	1-7	8
2026074	1-7	11
2026092	1-9	34
2026096	8-3	45
2026323	5-15	12
2026324	5-15	13
2026326	5-15	25
2026452	5-21	6
2026453	5-21	7
2026471	8-19	1
2026479	1-4	1
2026484	8-4	55
	8-5	
2026497	7-3	5
2026583	5-13	11
2026586	7-3	23
2026632	8-6	4
2026637	4-3	9
2026640	4-3	28
	4-27	
2026641	4-30	
2026759	5-21	15
	7-7	
2026760	5-21	14
	7-7	
2026767	7-7	21
2026768	7-7	21
2026773	7-7	1
2026774	7-7	1
2026775	7-7	22
2026776	7-7	3
2026777	7-7	6
2026778	7-7	6
2026779	7-7	7
2026780	7-7	8
2026781	7-7	9
2026782	7-7	10
2026783	7-7	20
2026784	7-7	31
2026785	7-7	32
2026786	7-7	33
2026787	7-7	30
2026790	7-5	6
2026791	7-5	7
2026798	4-39	12
2026820	6-10	2
2026822	6-10	10
2026844	2-21	13
2026860	5-11	20
	5-19	10
2026861	5-11	7
2026862	5-11	6
2026873	5-3	6
2026895	8-5	8
2027326	3-3	29
2027328	3-3	1
	3-5	
2028315	5-9	19
2029170	2-29	32
2029172	2-13	9
2029223	2-29	24
2029227	2-29	25
2029261	5-17	18
2029338	5-17	9
2029349	5-17	8
2029350	5-17	15
2029351	5-17	17
2029352	5-17	21
2029432	5-9	23
2029598	5-9	31
2029599	5-9	32
2029600	5-9	28
2029601	5-9	29
2029949	2-13	4
2030219	4-19	22
	4-23	
2030223	4-25	
2030240	5-3	7
2030242	5-3	7
2034112	7-3	43
2035116	6-9	19
	6-10	
	8-4	58
2037317	7-3	20
2037369	8-13	36
	8-19	4
	8-20	58
2037370	8-13	36
	8-19	4
	8-20	58
2037371	8-13	36
	8-19	4
	8-20	58
2037372	8-13	36
	8-19	4
	8-20	58
2037403	2-33	3
	2-37	3
2037407	3-14	15
2037408	3-14	8
	3-17	14
2039230	3-37	12
2039248	4-21	10
2039306	3-21	26
	3-25	13
2041637	12-23	9
2041638	4-19	14
2041642	4-19	23
	4-21	
2041643	4-19	23
	4-21	
2041656	1-3	1
2041663	1-3	1
2042790	3-21	18
	3-25	3
2042972	2-35	16
2042988	1-4	1
2043269	5-9	1
2043270	5-9	9
2043271	5-11	17
	5-15	
2043272	5-4	
	5-9	13
2043273	5-3	1
2043274	5-9	30
2043275	5-9	8
2043276	5-9	25
2043279	5-9	36
2043437	5-3	3
2043438	5-4	4
2043439	5-15	21
2043440	5-15	22
2043441	5-15	24
2043442	5-15	23
2043443	5-15	26
2043528	12-10	
2043530	12-7	6
	12-9	6
2043531	12-7	4
	12-9	4
2043533	12-7	5
	12-9	5
2043720	2-29	1
2043721	2-29	1
2044297	4-21	12
2044298	6-9	23
	12-21	1
2044299	12-20	1
2044300	4-21	11
2044301	4-22	10
2044302	5-21	3
2044304	12-20	1
2044305	12-20	1
2044379	8-25	9
2045133	4-27	4
	4-29	37
	4-33	37
2045284	5-9	
2045286	5-11	9
2045300	5-9	33
	5-9	40
2045301	5-9	37
2045646	5-9	27
	5-17	
2045647	5-9	39
	5-17	19
2045648	5-17	3
2045649	5-17	20
2045884	7-7	27
2045962	2-23	16
	3-12	
2046243	12-7	4
	12-9	4
2046244	12-7	5
	12-9	5
2046330	10-17	
2046333	10-17	
2046336	10-17	
2046361	10-13	
2046364	10-13	
2046366	7-3	8
2046367	10-13	
2046561	7-3	42
2046564	7-3	1
2046565	7-3	45
2047056	1-3	42
2048268	4-9	1
2048368	4-9	2
2051298	1-15	
2051978	7-3	11
2053761	8-23	11
2056368	5-9	14
2060041	5-9	34
2062461	4-11	5
2068743	2-25	17
2302899	8-25	10
2303267	8-25	1
2303325	9-9	
2304117	9-9	1
2304281	7-3	16
	7-11	16
2304677	8-25	8
2305757	6-9	12
2306755	12-4	3
2307196	10-15	11
2308157	8-4	57
	8-23	18

©2004 HYSTER COMPANY

NUMERICAL INDEX (Continued)

PART NO.	PG	ITEM
	8-25	
2308169	8-25	3
2308856	9-11	1
2308924	9-9	2
	9-11	2
2309117	9-11	
2309269	8-4	57
	8-23	18
	8-25	
2309536	8-25	1
2309719	12-4	2
2309799	1-17	16
2310768	12-4	8
2311471	12-4	1
2311502	8-9	42
	8-17	39
2311624	12-4	9
2314220	7-3	31
2314232	2-13	20
2314251	4-12	1
2314259	5-13	1
2314322	4-3	37
	4-41	
2314323	4-41	1
2314324	4-41	2
2314325	4-41	3
2314326	4-41	4
2314327	4-41	5
2314328	4-41	6
2314329	4-41	7
2314330	4-41	8
2314331	4-41	9
2314332	4-41	10
2314333	4-41	11
2314334	4-41	12
2314335	4-41	12
2314336	4-41	12
2314337	4-41	13
2314338	4-41	14
2314339	4-41	15
2314340	4-41	17
2314341	4-41	18
2314342	4-41	19
2314777	4-21	9
2314795	4-33	39
2314806	4-19	18
	12-23	5
2314973	2-3	7
3044119	7-3	4

©2004 HYSTER COMPANY

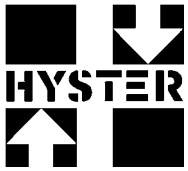
HYSTER