RUTHZIL TRATOR COMERCIAL DE PEÇAS LTDA 11 97083-6812 ROLANDO

S300

Bobcat®

Parts Manual

S/N 5311 11001 & Above
S/N 5312 11001 & Above

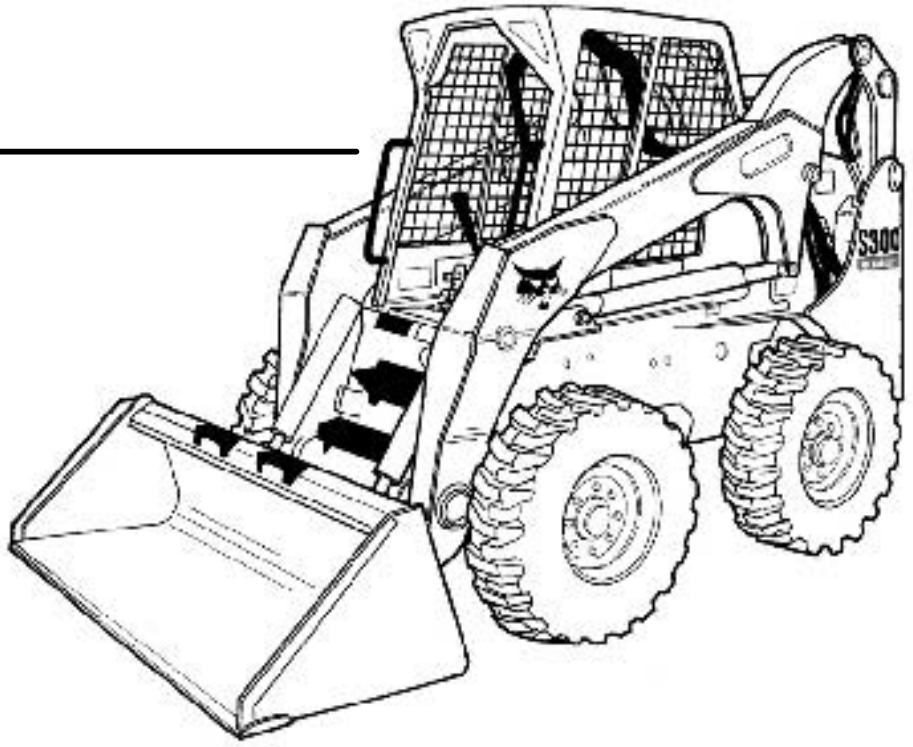

EQUIPPED WITH BOBCAT INTERLOCK CONTROL SYSTEM (BICS™)

An Ingersoll-Rand business

6904717 (11-05)

Printed in U.S.A.

© Bobcat Company 2005

GENERAL INFORMATION

Before ordering parts, ALWAYS provide dealer with your product model number and complete serial number information. Before ordering parts, verify correct part numbers and/or serial numbers with your dealer. When using the machine serial number, use the complete number.

Some Serial Number breaks are not available at time of printing.
These are listed as & Bel or & Abv or - (thru)

The number shown in the quantity column in this manual is the number of parts needed for the illustration on the page. For some parts an "x" will be shown in the quantity column. This "x" indicates that the quantity to be used is "As Needed".

When references L.H. (Left Hand) and R.H. (Right Hand) are used in this manual, it is done from the operator's seat in the forward operating position.

When "See Illustration...." appears in the remarks column, refer to the contents page for the illustration title to find page number location.

Some of the illustrations and information found in this parts manual were supplied to Bobcat by machine component companies.

For additional information on the Bobcat website visit www.bobcat.com

ABBREVIATIONS

SALES	=	Order from Gwinner Sales Department	W/	=	With
NSS	=	Not Serviced Seperately	W/O	=	Without
NAP	=	Not Available as Parts	I.D.	=	Inside Diameter
BTI	=	Bobcat Technical Information Bulletin	O.D.	=	Outside Diameter
P/M	=	Parts Manual	"	=	Inches
O/M	=	Operation & Maintenance Manual	'	=	Feet
S/M	=	Service Manual	mm	=	Millimeters
S/L	=	Service Letter			

DISPOSITION CODE DEFINITIONS

(Found in Remarks Column)

[A]	=	Use Up
[B]	=	Use Up on Other Application
[C]	=	File PDR Report with Bobcat Parts Sales
[D]	=	Part Number Error

NOTE D'INFORMATION

Pour toute référence au numéro de série de l'engin, toujours donner le numéro complet.

Le chiffré apparaissant dans la colonne des quantités de ce manuel représentent le nombre de pièces nécessaires pour l'illustration reprise sur la page. Dans certains cas, on lira un "x" dans la colonne des quantités. Cet "x" indique que la quantité nécessaire est "selon besoin".

Pour toute référence vers la GAUCHE ou la DROITE dans ce manuel, considérer que la personne se trouve assise dans le siège de l'opérateur, en position de fonctionnement en marche avant.

Certaines illustrations et informations reprises dans ce manuel de pièces de rechange ont été fournies à Bobcat/Ingersoll–Rand par des fabricants de composants.

ABREVIATIONS & SYMBOLES

SALES	= Commander au Service Ventes à Bruxelles
NSS	= Pas vendu séparément
NAP	= Non disponible comme pièce de rechange
*****	= Chapitre, page ou numéro de pièce modifié ou supplémentaire
BTI	= Bobcat Technical Information Bulletin : voir à la fin de la microfiché du modèle concerné ou la microfiche générale reprenant l' ensemble des "BTI".
was 6535403	= était avant 6535403
adj. (adjustment)	= réglage
Assembly	= ensemble
available W/Ref.	= disponible avec réf.
bulk/sold per foot	= en vrac/vendu par pied
does not include	= ne comprend pas
included with	= compris dans
I.D.	= D.I. (diamètre intérieur)
O.D.	= D.E. (diamètre extérieur)
not in kit	= pas en kit
W/ – WO/	= inclus/ – non inclus/
Qty	= quantité requise
see page/ref.	= voir page/réf.
used with ref/	= utilisé avec réf.
0,05 inch thickness	= 0,05 pouce d'épaisseur (un pouce = 25.4 mm)
weld on	= à souder

ALLGEMEINE INFORMATIONEN

Bei Angabe der Maschinen-Seriennummer stets die komplette Nummer angeben.

Bei der in der Mengenspalte (Anzahl) in diesem Handbuch angegebenen Zahl handelt es sich um die Anzahl von Teilen, die für die Abbildung auf der betreffenden Seite benötigt werden. Bei manchen Teilen in der Mengenspalte ist ein “x” angegeben. Dieses “x” weist darauf hin, dass sich die Anzahl der verwendeten Teile auf den “Bedarf” bezieht.

Bei Verwendung der Seitenangaben links und rechts in diesem Handbuch gelten diese für die Blickrichtung vom Fahrersitz aus, und zwar in Vorwärts-Betriebsrichtung.

Einige der in diesem Ersatzteilhandbuch aufgeführten Abbildungen und Informationen wurden der Bobcat/Ingersoll-Rand von den Herstellern von Maschinenbauteilen zur Verfügung gestellt.

ABKÜRZUNGEN UND SYMBOLE

SALES	= Bestellung bei der Verkaufsabteilung in Brüssel
NSS	= Nicht einzeln erhältlich
NAP	= Nicht als Ersatzteil erhältlich
*****	= Geänderte oder hinzugefügte Abschnitte, Seiten oder Teilenummern
BTI	= Bobcat Technical Information Bulletin : Siehe am Ende der Mikrokarte des jeweiligen Modells oder der allgemeinen Mikrokarte der BTI.
was 6535403	= War 6535403
adj.	= Einstellung
Assembly	= Baugruppe
available W/Ref.	= erhältlich mit der Referenz
bulk/sold per foot	= Mengenabnahme / Verkauf pro Fuss
does not include	= beinhaltet nicht
included with	= enthalten in
I.D.	= Innendurchmesser
O.D.	= Aussendurchmesser
not in kit	= nicht in Bausatz
W/ - WO/	= mit/ - ohne/
Qty	= Anzahl
see page/ref.	= Siehe Seite / Referenz
used with ref.	= verwendet mit Referenz
0.05 inch thickness	= Dicke : 0.05 Zoll (ein Zoll = 25.4 mm)
weld on	= anschweissen

INFORMAZIONI GENERALI

Quando si usa il numero di serie della macchina usare il numero completo.

Il numero mostrato nella colonna della quantità di questo manuale corrisponde al numero di componenti necessari per l'illustrazione della pagina. Per alcuni componenti appare "X" nella colonna delle quantità. Questa "X" indica che la quantità da usare è "come necessario".

See in questo manuale si fa riferimento alla parte destra o sinistra, si intende dal sedile dell'operatore nella posizione in avanti di funzionamento.

Alcune delle illustrazioni e informazioni trovate in questo manuale di componenti sono state fornite alla Bobcat/Ingersoll–Rand da società di componenti di macchine.

SIMBOLI E ABBREVIAZIONI

SALES	= Ordinare al servizio vendite di Bruxelles
NSS	= Non vendute separatamente
NAP	= Non disponibile come componente
*****	= Sezioni, pagine o numeri di componente cambiati o aggiunti
BTI	= (Bobcat Technical information) Ved. al termine del microfiche del modello relativo oppure microfiche generale
was 6535403	= era 6535403
adj. (adjustment)	= regol. (regolazione)
Assembly	= Complessivo
available W/Ref.	= disponibile con rif.
bulk/sold per foot	= alla rinfusa/venduto al piede
does not include	= non comprende
Included with	= compreso con
I.D.	= d. i.
O.D.	= d. e.
not in kit	= non fa parte del kit
W/ – WO/	= con – senza
Qty	= Qtà
see page/ref	= ved. pagina/rif.
used with ref.	= usato con il rif.
0,05 inch thickness	= spessore 0,05 pollici (un pollice = 25,4 mm)
weld on	= a saldare

INFORMACION GENERAL

Al utilizar el número de serie de la máquina, debe emplearse el número completo.

El número que figura en la columna de “Unidades” en este manual es el número de piezas que se necesitan para la ilustración que consta en la página. En algunas piezas aparece una “x” en la columna de “Unidades”. Esta “x” indica que las unidades a utilizar son “según sea necesario”.

Cuando se empleen las referencias izq. y dcha., éstas se entienden mirando desde el asiento del conductor, en posición de marcha adelante.

Algunas de las ilustraciones y la información que figuran en este manual de piezas han sido facilitadas a Bobcat/Ingersoll–Rand por empresas de componentes de máquinas.

ABREVIATURAS Y SIMBOLOS

VENTAS	= Pedido al Departamento de Ventas de Bruselas
NSS	= No se vende por separado
NAP	= No disponible como pieza de repuesto
*****	= Secciones, páginas o referencias modificadas o añadidas
BTI	= (Bobcat Tecnical Information) Ver al final de la microficha del modelo afectado o en la microficha general “Boletín de Información Técnica Bobcat”.
was 6535403	= era anteriormente el 6535403
adj. (adjustment)	= ajuste
assembly	= conjunto
available W/Ref.	= disponible con la ref.
bulk/sold per foot	= a granel/vendido por pies
does not include	= no incluye
included with	= incluido en
I.D.	= diámetro interior
O.D.	= diámetro exterior
not in kit	= no en el kit
W/ – WO/	= con/ – sin
Qty	= Unidades
see page /ref.	= ver página/ref.
used with ref.	= empleado con la ref.
0,05 inch thickness	= 0,05 pulgadas de espesor (1 pulgada = 25,4 mm)
weld on	= debe ser soldado

ALGEMENE INFORMATIE

Als u het serienummer van de machine gebruikt, geef dan het gehele serienummer.

Het cijfer dat voorkomt in de kolom “Aantal”, in deze handleiding, is het aantal onderdelen dat nodig is van de illustratie op de pagina. Voor sommige onderdelen staat er een “x” in de kolom “Aantal”. Deze “x” betekent dat er een aantal “zoals nodig” vereist is.

Wanneer er in deze handleiding naar “links” en naar “rechts” gerefereerd wordt, moet dit verstaan worden voor een bestuurder die in de bestuurdersstoel zit in de voorwaartse bedrijfsstand.

Sommige van de illustraties en informatie in deze onderdelen–handleiding werden door firma’s van machine–componenten geleverd aan Bobcat/Ingersoll–Rand.

AFKORTINGEN EN SYMBOLEN

SALES	= Bestellen bij de Verkoopafdeling te Brussel
NSS	= Niet afzonderlijk te verkrijgen
NAP	= Niet beschikbaar als onderdeel
*****	= Gewijzigde of toegevoegde paragrafen, pagina’s of onderdeelnummers
BTI	= Bobcat Technical Information Bulletin : Zie einde van de microfiche van het desbetreffende model of einde van de algemene microfiche die het geheel van alle “BTI” herneemt.
was 6535403	= was vroeger 6535403
adj. (adjustment)	= afstelling
Assembly	= geheel
available W/Ref.	= beschikbaar met ref.
bulk/sold per foot	= bulk/aan de meter verkocht
does not include	= bevat niet
includes with	= is bevat in
I.D.	= ϕ inw. (inwendige diameter)
O.D.	= ϕ uitw. (uitwendige diameter)
not in kit	= niet in de kit
W/ – WO/	= met/ – zonder/
Qty	= vereiste aantal
see page/ref.	= zie pagina/ref.
used with ref/	= gebruikt met ref.
0,05 inch thickness	= 0.05 inch dik (een inch = 25.4 mm)
weld on	= te lassen

Use only Bobcat belts and hoses to maintain maximum service life.

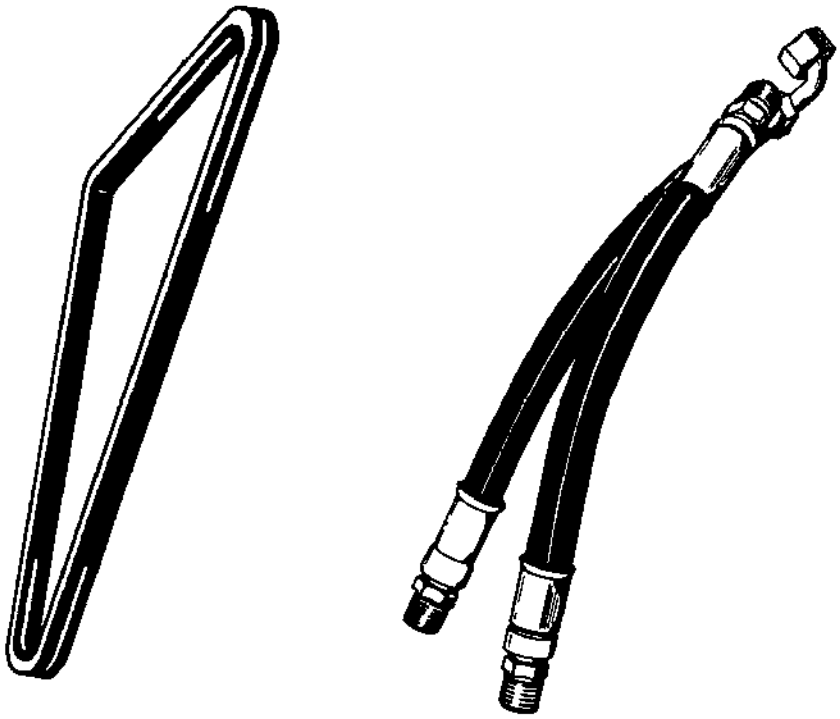

Available from Bobcat Parts.

Bobcat

CONTENTS

MAINTENANCE ITEMS 1-10
MAINTENANCE ITEMS 1
SCHEDULED MAINTENANCE ITEMS 3-10

MAIN FRAME 11-34
MAIN FRAME 11
OPERATOR CAB 13-18
SEAT & SEAT BAR 19
SEAT 21
REAR DOOR 23
LIFT ARMS & BOBTACH 25
BOB-TACH 27
PANELS 29-32
FUEL SYSTEM 33

DRIVE TRAIN 35-44
DRIVE TRAIN 35
MOTOR CARRIER 37-40
DISC BRAKE 41
AXLE 43

HYDRAULIC SYSTEM 45-70
HYDRAULIC CIRCUITRY 45-48
LIFT & TILT CONTROL CIRCUITRY 49
AUXILIARY HYDRAULICS 51
TILT CYLINDER 53
LIFT CYLINDER 55
MANUAL LIFT RELEASE VALVE 57
CONTROL PEDALS 59
HYDRAULIC CONTROL VALVE 61-68
BUCKET POSITIONING VALVE 69

HIGH FLOW HYDRAULICS 71-76
HIGH FLOW HYDRAULICS 71-74
HIGH FLOW GEAR PUMP 75

HYDROSTATIC SYSTEM 77-126
HYDROSTATIC PUMP/GEAR PUMP 111
GEAR PUMP 113
MOTOR 115
2-SPEED VALVE 117
HYDROSTATIC OIL FILTER 119-122
HYDROSTATIC CIRCUITRY 77-84
HAND CONTROLS 85-126
HYDROSTATIC MOTOR 87
HYDROSTATIC MOTOR & BRAKE 89-92
HYDROSTATIC PUMP 93-110

ELECTRICAL SYSTEM 127-148
CONTROLS ELECTRICAL 127-144
ALTERNATOR 137
STARTER 139
CAB ELECTRICAL CIRCUITRY 141
ENGINE ELECTRICAL 145-148

POWER UNIT 149-202
COOLING SYSTEM 149-152
ENGINE & ATTACHING PARTS 153-162
ENGINE SPEED CONTROL 163-166

CONTENTS (Cont'd)

POWER UNIT

ENGINE 167
MANIFOLDS 169
TURBOCHARGER 171
CYLINDER HEAD & COVER 173
CYLINDER HEAD 175
OIL PAN 177
PISTON & CRANKSHAFT 179
CAMSHAFT 181
FRONT COVER 183
WATER PUMP & THERMOSTAT 185
WATER PUMP 187
FUEL INJECTION SYSTEM 189-192
FUEL INJECTION PUMP 193
GOVERNOR 195-200
AIR CLEANER 201

ACCESSORIES & OPTIONS 203-342

ACCESS COVER 203
ACS CONVERSION KIT 205
BACK-UP ALARM KIT 207-342
BEACON 209
BLOCK HEATER 211
BUCKET POSITIONING KIT 213
CAB DOOR 215-224
CAB ENCLOSURE 225-340
CAB WINDOWS 227-230
COUNTERWEIGHT KIT 231-234
DECALS 235-238
DEBRIS SHIELD KIT 239
ELECTRICAL CONNECTOR KIT 241
ELECTRICAL CONTROLS KIT 243-246
EXPORT ACCESSORIES 247
EUROPEAN ACCESSORIES 249-256
FIRE EXTINGUISHER 257
FLASHER LIGHTS 259
F.O.P.S. KIT 261
FRONT AUXILIARY 263
GAS SPRING KIT 265
HEATER & A/C 267-290
HEATER & AC 269
HEATER 271
HORN KIT 291-294
LIFT KIT 295-298
LIGHT KIT 299
OPERATOR EAR NOISE REDUCTION 301-304
PURIFIER 305
POWER BOB-TACH KIT 307
POWER BOB-TACH CYLINDER 309
POWER BOB-TACH 311
RADIATOR SCREEN KIT 313
REAR AUXILIARY HYDRAULICS 315
REAR AUXILIARY VALVE 317

CONTENTS (Cont'd)

ACCESSORIES & OPTIONS
REAR DOOR LOCK 319
REAR WIPER 321
SEAT 323-326
SEAT BELT 327-332
STROBE LIGHT 333
TIRES & RIMS 335
BULK ITEMS 337
NUMERICAL INDEX 344-390

MAINTENANCE ITEMS

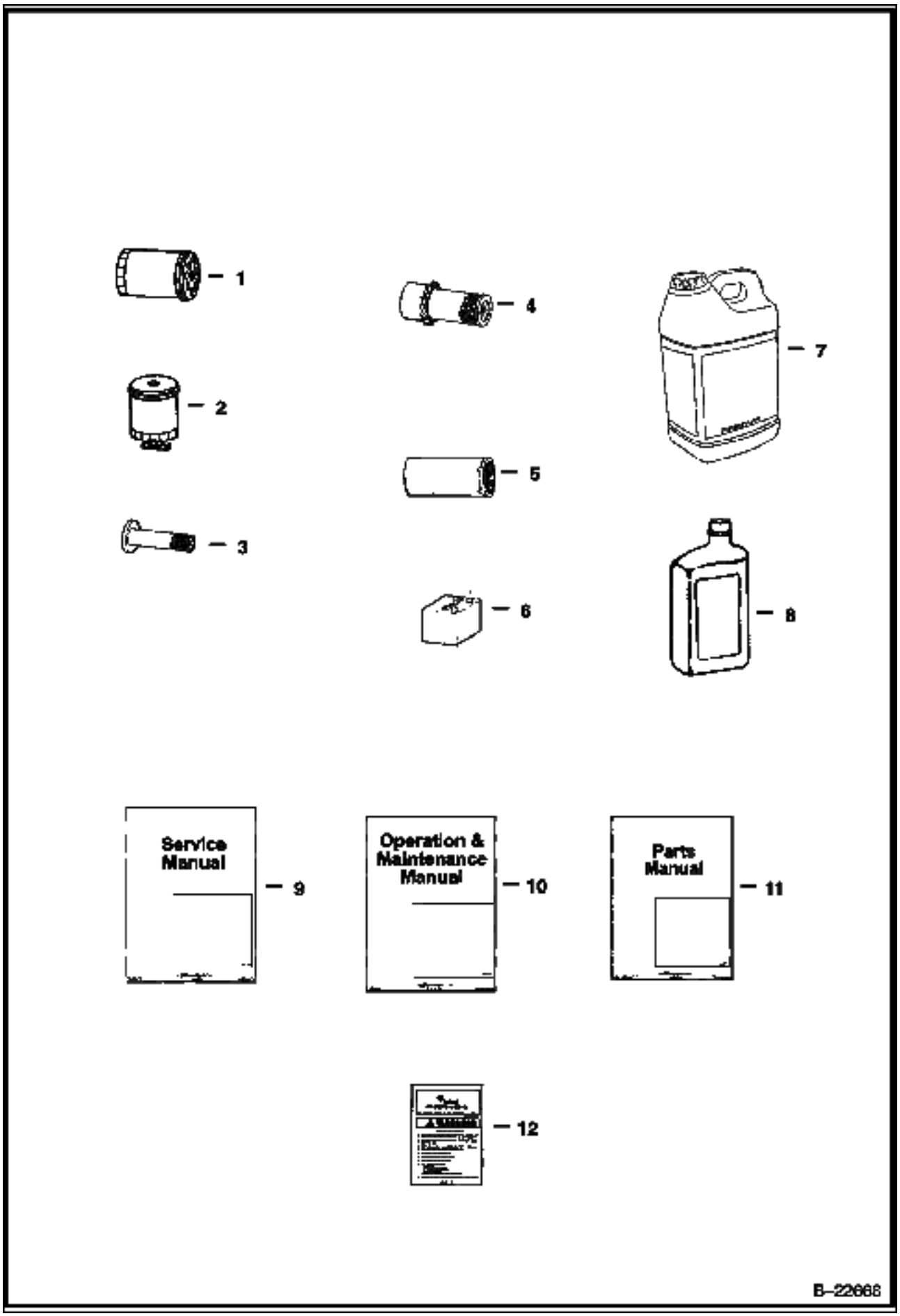

MAINTENANCE ITEMS (Cont'd)

Ref No	Part Number	Description	Remarks	Serial Number	Qty
1	6678233	OIL FILTER	See Illustration OIL PAN/ B22921 Engine Oil (6 Pack)		1
2	6667352	FILTER FUEL	See Illustration FUEL SYSTEM/ PE1701 Fuel		1
3	6681475	CARTRIDGE	See Illustration AIR CLEANER/ MS1516A Inner Air Cleaner		1
4	6681474	CARTRIDGE	See Illustration AIR CLEANER/ MS1516A Outer Air Cleaner		1
5	6661248	ELEMENT	See Illustration HYDROSTATIC OIL FILTER/ C2818 Hydrostatic # 3 Media		1
6	6665427	BATTERY	950 AMP		1
7	6903117	HYD FLUID 2.5 GAL. 2			x
7	6903118	HYD. FLUID 5GAL			x
7	6903119	HYD. FLUID 55GAL			x
8	6903107	OIL 10W30 QT. 12			x
8	6903105	OIL 15W40 QT. 12			x
8	6903109	OIL 30W QT. 12			x
8	6903106	OIL 15W40 GAL. 6			x
8	6903108	OIL 10W30 GAL. 6			x
8	6903110	OIL 30W GAL. 6			x
8	6903112	OIL 10W30 2.5 GAL 2			x
8	6903113	OIL 15W40 2.5 GAL. 2			x
8	6903111	OIL 30W 2.5 GAL 2			x
9	6904158	MANUAL	Service - S250 & S300 - Tier II		1
10	6904160	MANUAL	Operation & Maintenance		1
11	6904717	MANUAL	Parts - S250/S300		1
12	6737783	KIT	See Illustration DECALS/ B26134 Operator		1

SCHEDULED MAINTENANCE ITEMS
(50 Hour)

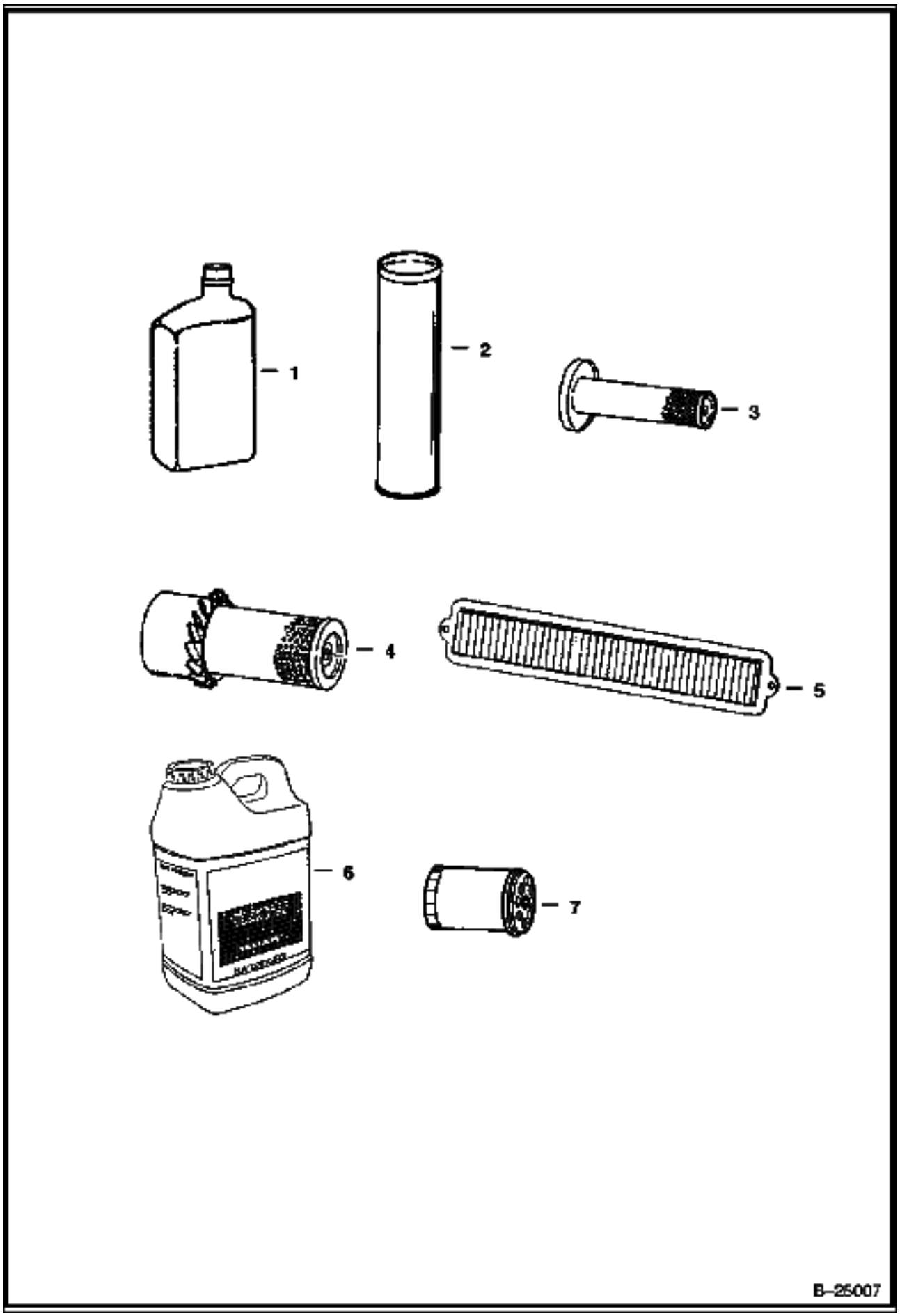

SCHEDULED MAINTENANCE ITEMS (Cont'd)
(50 Hour)

Ref No	Part Number	Description	Remarks	Serial Number	Qty
1	6903107	OIL 10W30 QT. 12			x
1	6903105	OIL 15W40 QT. 12			x
1	6903109	OIL 30W QT. 12			x
1	6903106	OIL 15W40 GAL. 6			x
1	6903108	OIL 10W30 GAL. 6			x
1	6903110	OIL 30W GAL. 6			x
1	6903112	OIL 10W30 2.5 GAL 2			x
1	6903113	OIL 15W40 2.5 GAL. 2			x
1	6903111	OIL 30W 2.5 GAL 2			x
2	6903122	GREASE 10			x
3	6681475	CARTRIDGE	Inner Air Cleaner		x
4	6681474	CARTRIDGE	Outer Air Cleaner		x
5	6677983	FILTER	HVAC		x
6	6903117	HYD FLUID 2.5 GAL. 2			x
6	6903118	HYD. FLUID 5GAL			x
6	6903119	HYD. FLUID 55GAL			x
7	6678233	OIL FILTER	Engine Oil (6 Pack)		x

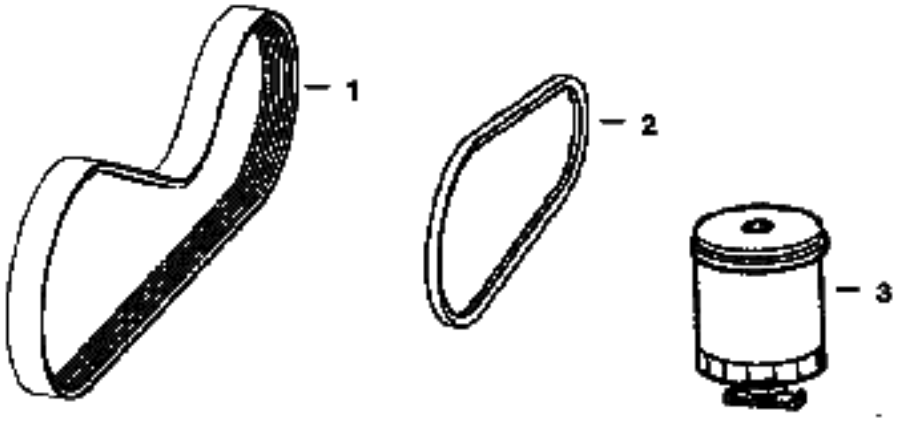

B–25008

SCHEDULED MAINTENANCE ITEMS (Cont'd)
(250 Hour)

Ref No	Part Number	Description	Remarks	Serial Number	Qty
1	6662855	BELT	drive		x
2	6730819	BELT	air conditioner		x
3	6667352	FILTER FUEL			x

SCHEDULED MAINTENANCE ITEMS
(500 HOUR)



SCHEDULED MAINTENANCE ITEMS (Cont'd)
(500 HOUR)

Ref No	Part Number	Description	Remarks	Serial Number	Qty
1	6727475	CAP	HYD. RESERVOIR BREATHER		x
2	6661248	ELEMENT	HYD./HYDRO.		x

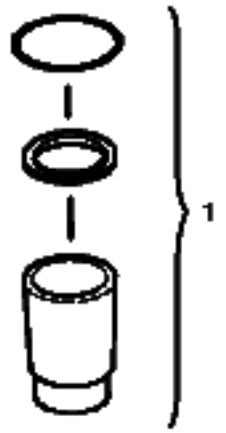

B–25009

SCHEDULED MAINTENANCE ITEMS (Cont'd)
(1000 Hour)

Ref No	Part Number	Description	Remarks	Serial Number	Qty
1	6661807	KIT	in-line filter		x

MAIN FRAME

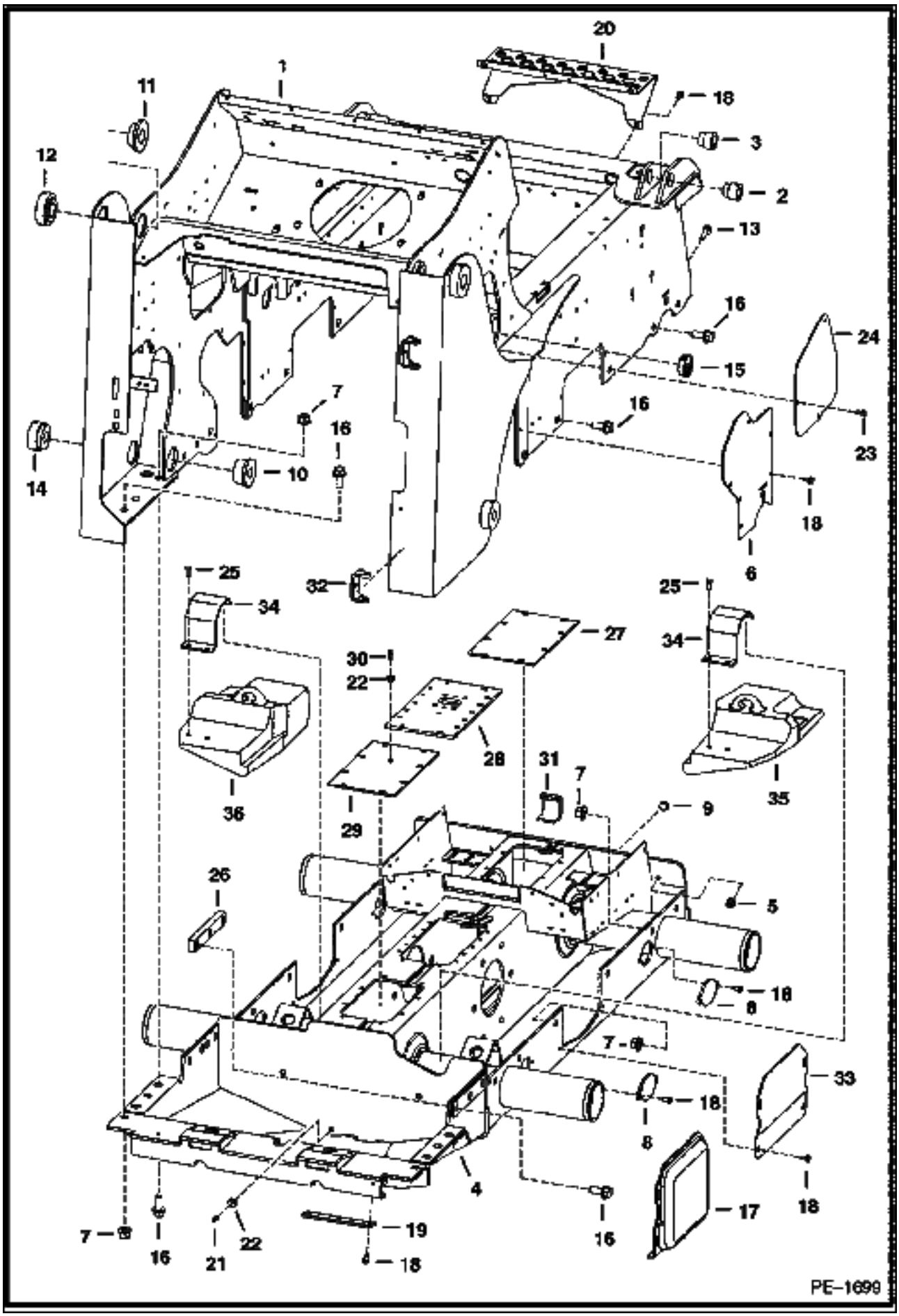

Ref No	Part Number	Description	Remarks	Serial Number	Qty
1		MAIN FRAME	NAP - Order 7101453 - modify the crossmember		1
1	7101453	MAIN FRAME			1
2	6717277	BUSHING	weld-on		2
3	6717278	BUSHING	weld-on		2
4		CHAINCASE	See Illustration DRIVE TRAIN/ PE1537 FRAME ONLY		1
5	83D000008B	NUT			4
6	6736768	COVER			2
7	53D000012B	NUT			19
8	6730078	COVER			4
9	6731121	PLUG	chaincase fill		1
10	6730785	BUSHING	inside upright weld-on		2
11	6729401	BUSHING	inside upright weld-on		2
12	6729402	BUSHING	outside upright weld-on		2
13	31C000824B	BOLT			4
14	6730784	BUSHING	outside upright weld-on		2
15	6718796	PLUG	Bobcat head		1
16	31C001228B	BOLT			22
17	6719168	COVER	2-speed		2
18	84G003712B	BOLT			8
19	6700182	COVER	drain		1
20	6732577	STEP			1
21	6599645	PLUG	chaincase drain		1
22	6553411	BUSHING			2
23	84G003708B	BOLT			4
24	6730783	COVER			2
25	45C000616B	BOLT			4
26	6706857	BLOCK	threaded		2
27		COVER	See Illustration DISC BRAKE/ PE1542		1
28		COVER	See Illustration DISC BRAKE/ PE1542		1
29		COVER	See Illustration DISC BRAKE/ PE1542		1
30		BREATHER	See Illustration DISC BRAKE/ PE1542		1
31	6706485	HOOK	tie down - weld-on		2
32	6708987	HINGE	weld-on		2
33	6719201	COVER	single speed		2
34	6733774	BRACKET			2
35	6733775	COUNTERWEIGHT	R.H.		1
36	6733780	COUNTERWEIGHT	L.H.		1

OPERATOR CAB

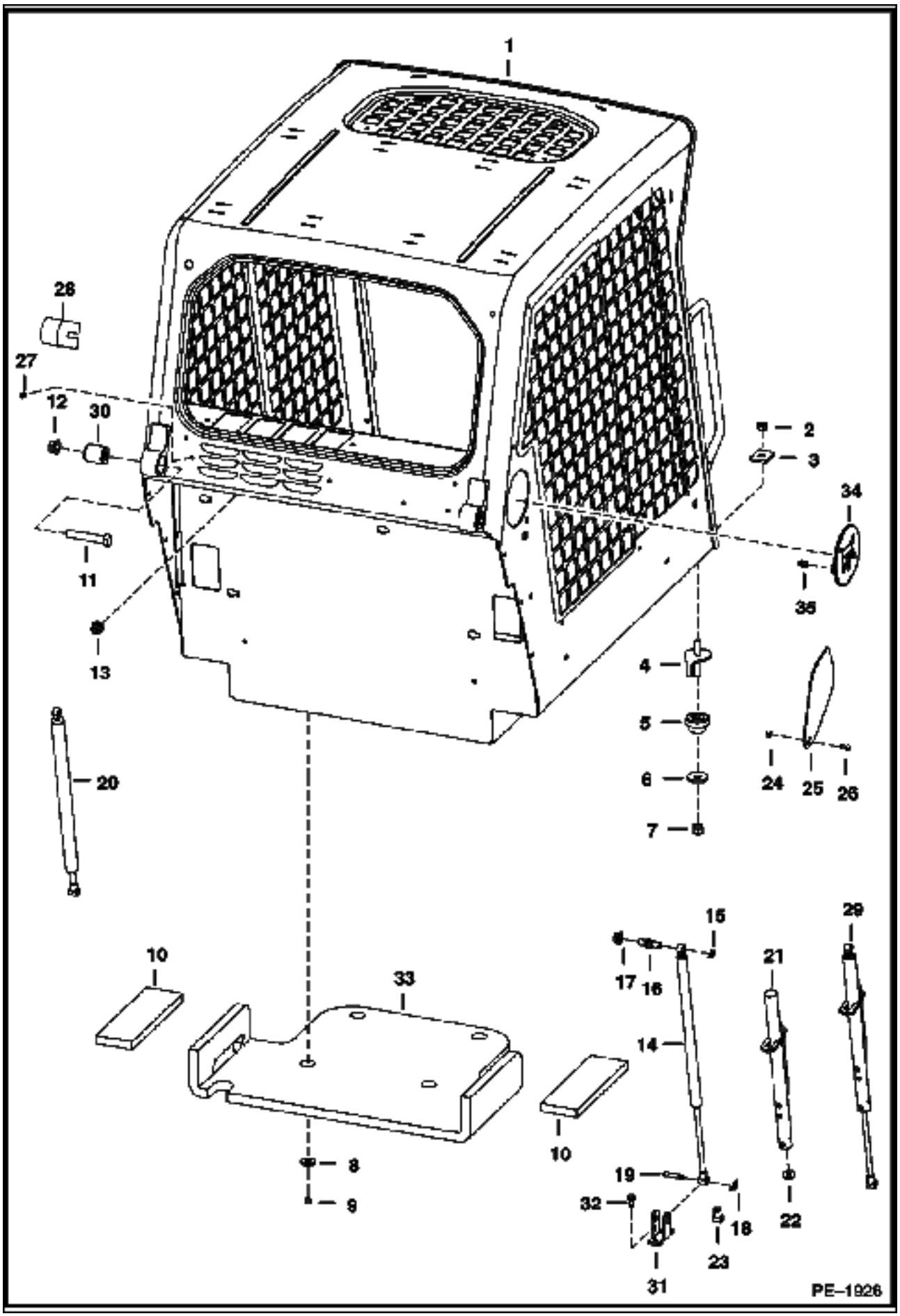

Ref No	Part Number	Description	Remarks	Serial Number	Qty
1	6719672	OPERATOR CAB	Does not include cab decals		1
2	59D000008B	NUT			2
3	6553709	WASHER	rectangular		2
4	6702971	BOLT			2
5	6560633	DAMPENER			2
6	6515817	WASHER			2
7	85D000008B	NUT			2
8	619021B	WASHER			4
9	59D000005B	NUT			4
10	6729012	INSULATION	seat pan		2
11	17C001056B	BOLT			2
12	53D000010B	NUT			2
13	53D000006B	NUT			4
14	6675135	GAS SPRING	R.H.		1
15	6675140	SNAP RING			2
16	6719064	MOUNT			2
17	97D000008B	NUT			2
18	6631418	PIN	ring		2
19	6567743	PIN			2
20	6675137	GAS SPRING	L.H.		1
20	6675139	GAS SPRING	L.H. - for cab W/ enclosure		1
21	6708189	TUBE	stop - R.H.		1
22	6701174	WASHER			1
23	6675258	CLEVIS			1
24	95D000005B	NUT			2
25	6718784	COVER			2
26	25G000512B	BOLT			2
27	6675033	INSERT			x
28	6579613	STOP			2
29		GAS SPRING	NAP - R.H. - W/ latch - ORDER REF. 14 & 21-23		1
30	6562602	BUSHING			2
31	6706349	MOUNT	gas spring		2
32	84G003112B	BOLT			4
33	6729013	INSULATION	seat pan		1
34		PLUG ASSY	NAP - W/ Bobcat head - W/Ref. 35		2
35	6679990	CLIP			6

OPERATOR CAB

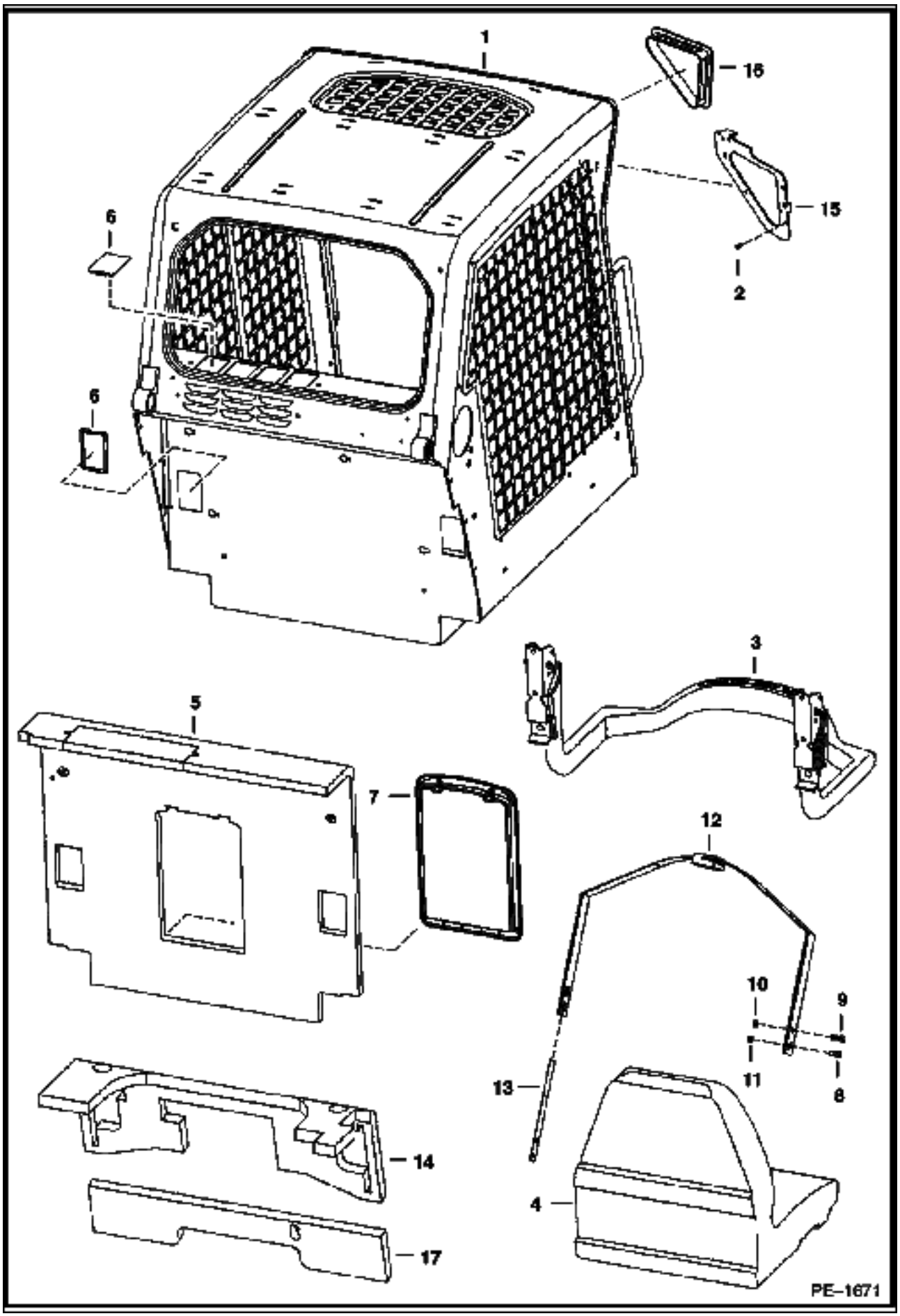

Ref No	Part Number	Description	Remarks	Serial Number	Qty
1	6719672	OPERATOR CAB	Does not include cab decals		1
2	6675033	INSERT			6
3		SEAT BAR	See Illustration SEAT & SEAT BAR/ PE1051		1
4		SEAT	See Illustration SEAT/ B14720 See Illustration SEAT/ B16411		1
5	6719504	INSULATION			1
6	6718101	COVER			6
7		CONTAINER	NAP - manuals		1
7	6675524	CLIP			2
7	6725301	COVER			1
7	6725303	FRAME			1
8	17C000716B	BOLT			4
9	85D000007B	NUT			4
10	6675074	SEAT BELT			1
11	6725373	SPRING PLATE			2
12	6716800	INSULATION			1
13		FRAME	NSS - L.H. - weld-on		1
13		FRAME	NSS - R.H. - weld-on		1
14	6674403	COVER	no lights		2
15	6701674	INSULATION			1

DRAWING NOT AVAILABLE AT TIME OF PRINTING

PE-2820

OPERATOR CAB (Cont'd)
(Deluxe)

Ref No	Part Number	Description	Remarks	Serial Number	Qty
1	6675387	EXTRUSION	bulk - Sold Per Foot		x
1	6554149	CORD	bulk - Sold Per Foot		x
2	91G000420B	BOLT			4
3	6664085	BUSHING	nylon		4
4	6681614	KNOB	11/16" deep thread		4
5	6675545	GROMMET			4
6	7105035	WINDOW	assy. - W/ Ref. 2, 3, 5 & 7		1
7		SEAL	NAP - Order Ref. 6		1
8	6731478	EXIT TAG			1
9	7116260	HARNESS	deluxe		1
9	7116261	HARNESS	standard		1
10	6674895	RETAINER	snap in		4
11	6737704	INSULATION	headliner		1
12	6688403	PANEL	R.H. - deluxe - keyless - export		1
13	6664221	RETAINER	snap in		2
14	6680326	LIGHT	dome		1
14	6665367	BULB			1
15	6669091	CLIP			4
16	6718580	PANEL			1
17	6669224	BOLT			4
18	6665314	PLUG	switch		5
19	6668742	SWITCH	travel control - export		1
20	6664224	CAP			1
21	6664223	OUTLET			1
22	6717519	INSULATION			1
23	6610510	TIE			6
24	5289686B	PLUG	black - .375" hole		1
25	6649949	PLUG	.5" hole		2
26	6657719	PLUG	.75" hole		1
27	6717520	INSULATION			1
28	6727299	INSULATION	cab back		1
29		EXTRUSION	NAP - 75.75" (1924mm) long - Order Ref. 1		x
29		CORD	NAP - 75.75" (1924mm) long - Order Ref. 1		x
30	6717517	INSULATION			1
31	6717518	INSULATION			1
32	6717874	WINDOW	rear		1

SEAT & SEAT BAR

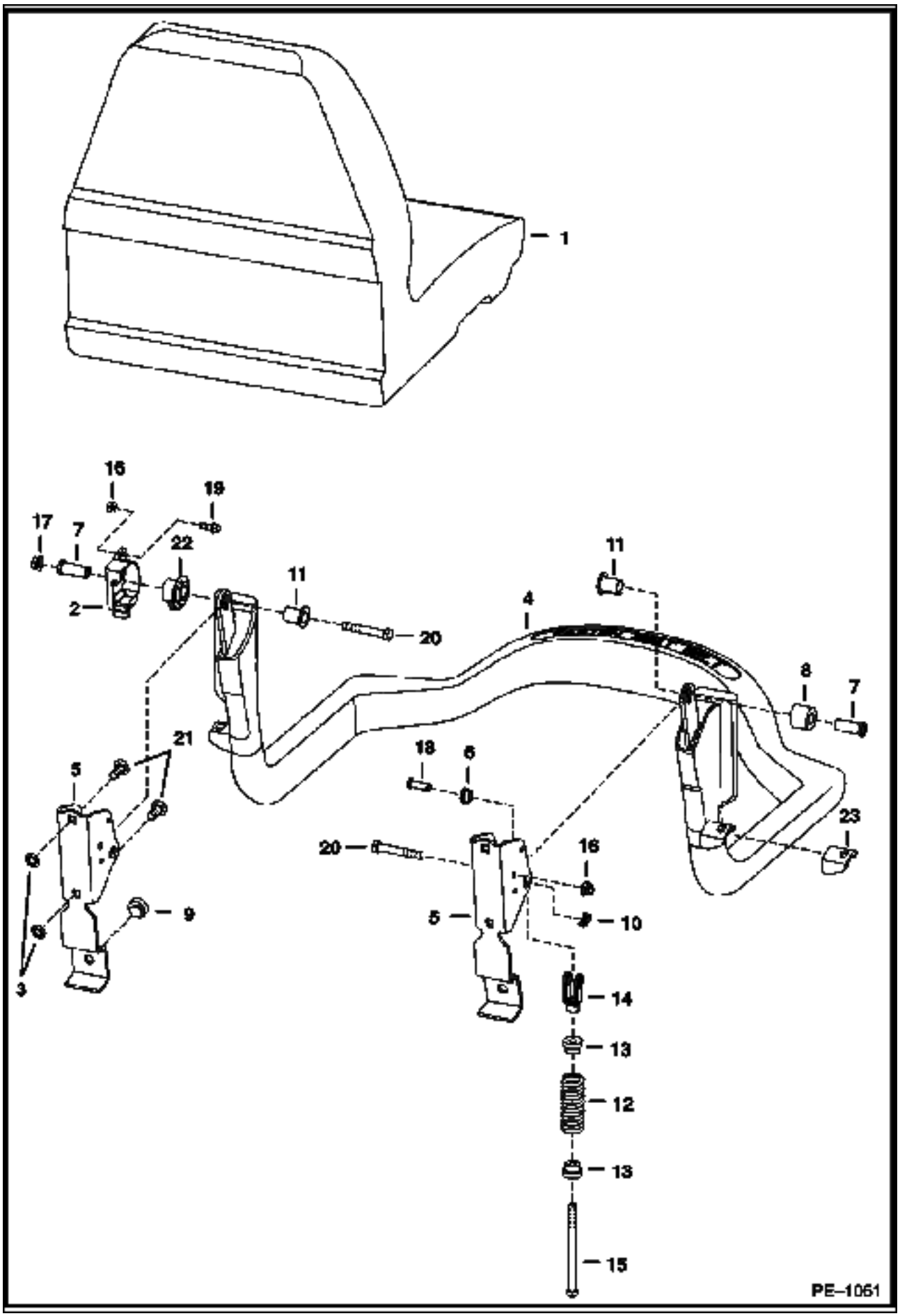

Ref No	Part Number	Description	Remarks	Serial Number	Qty
1		SEAT	See Illustration SEAT/ B14720 See Illustration SEAT/ B16411		1
2	6674406	SENSOR			1
3	6674894	NUT			4
4	6715860	SEAT BAR			1
5	6715863	BRACKET			1
6	6715864	BUSHING			2
7	6715865	BUSHING			2
8	6715866	BUSHING			1
9	6519178	BUMPER			2
10	6631418	PIN	ring		2
11	6680441	BUSHING	keyed		2
12	6701535	SPRING			2
13	6710659	BUSHING			2
14	6713589	CLEVIS			2
15	6713887	BOLT			2
16	83D000004B	NUT			1
17	53D000006B	NUT			2
18	4F006106B	PIN			2
19	35C000412B	BOLT			1
20	17C000640B	BOLT			2
21	10C000616B	BOLT			4
22	6674405	BUSHING			1
23		MOUNT	NAP - ORDER REF. 4		2

SEAT
(Michigan)

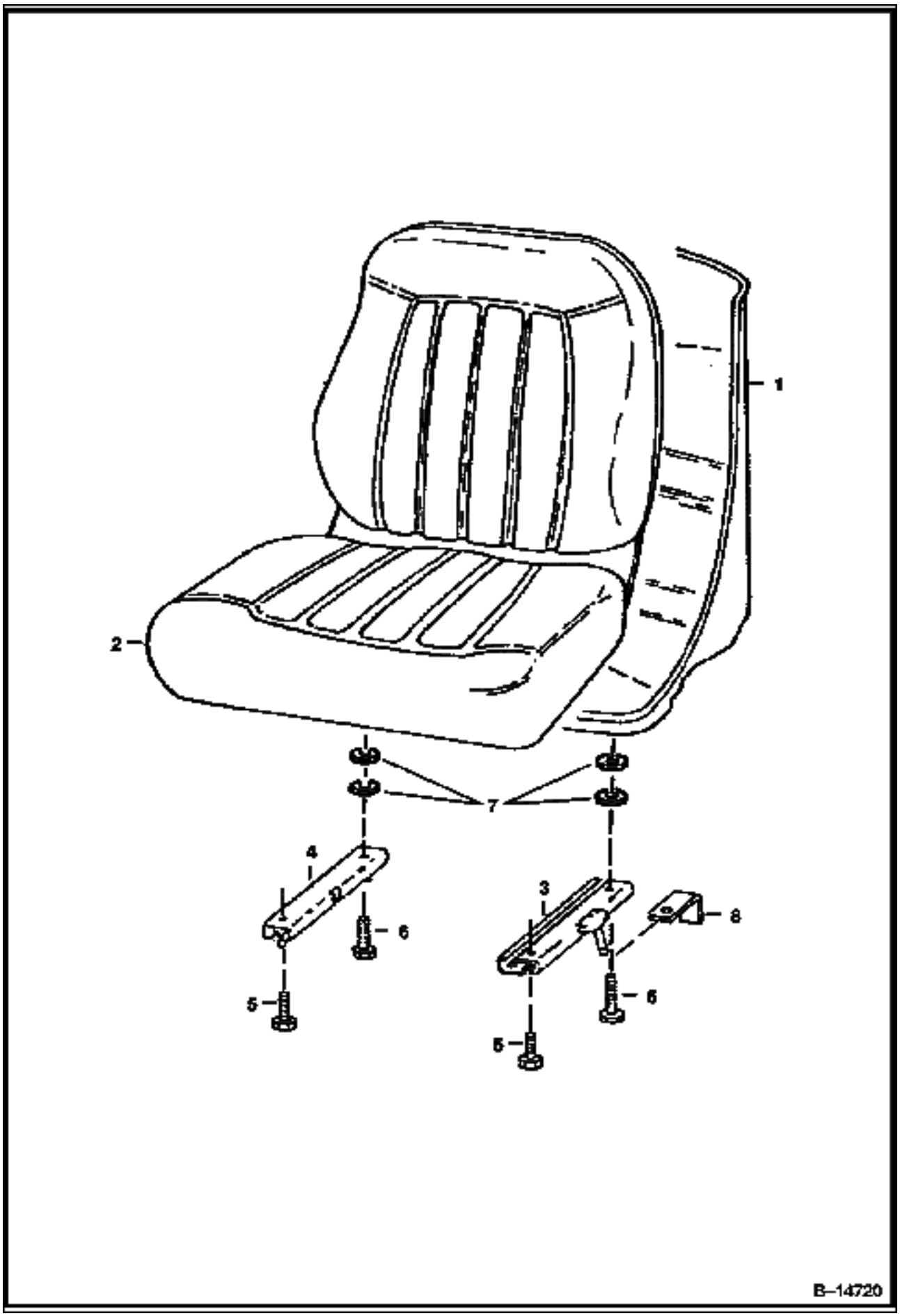

SEAT (Cont'd)
(Michigan)

Ref No	Part Number	Description	Remarks	Serial Number	Qty
1	6669135	SEAT	W/Ref. 2-7		1
2	6670160	CUSHION	W/ edging, clip & (2) grommets		1
2		EDGING	NSS		1
2		CLIP	NSS		1
3	6674013	TRACK	L.H. - W/ 8" (203mm) latch		1
4	6669089	TRACK	R.H. - W/O latch		1
5	25G000512B	BOLT			4
6	25G000520B	BOLT			2
7	6672715	SPACER			4

REAR DOOR

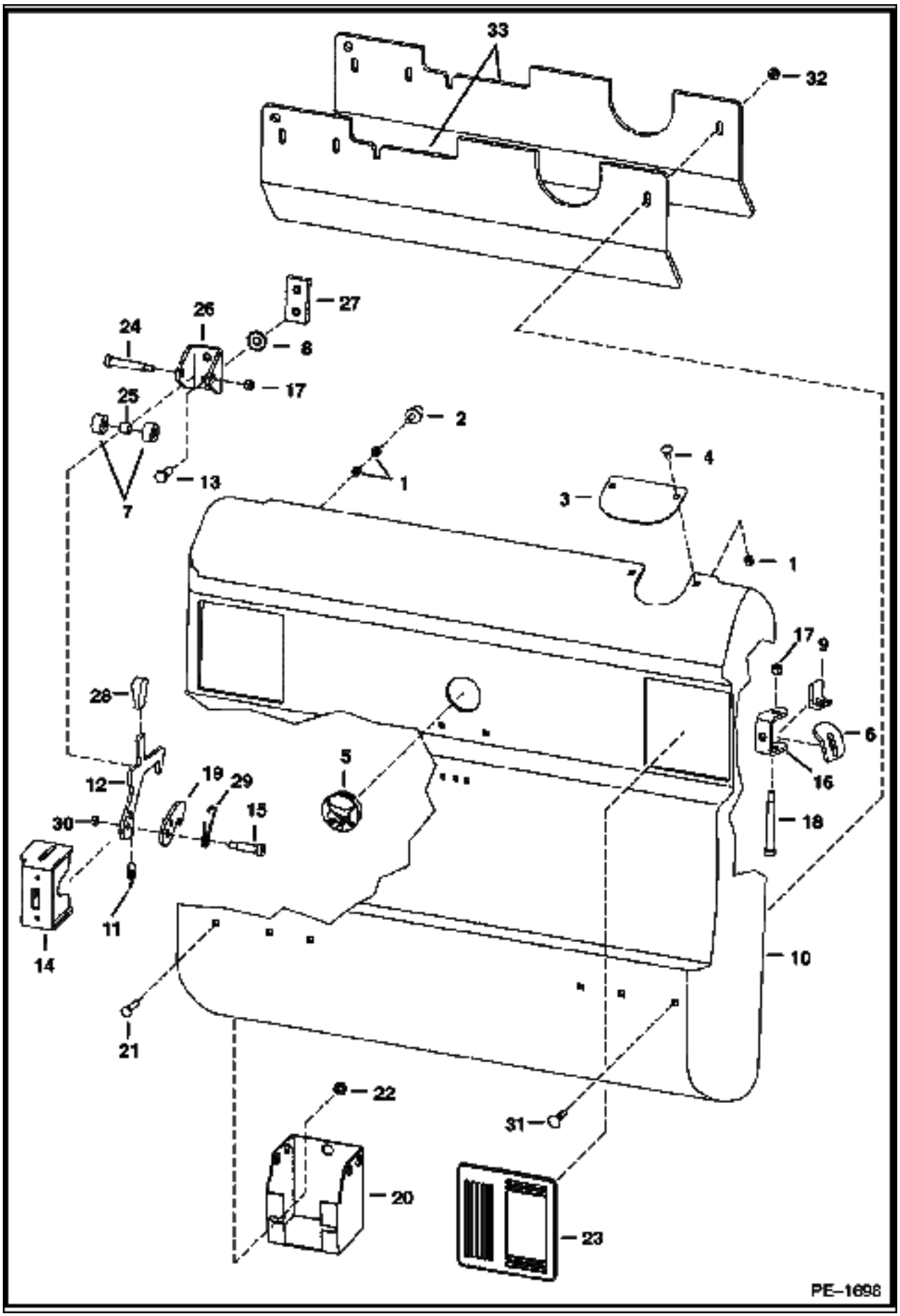
33
32
9
27
26
24
8
17
25
2
1
13
7
4
3
1
17
9
28
6
5
16
12
19
29
18
30
15
11
10
14
21
22
31
20
23
PE–1698

REAR DOOR (Cont'd)

Ref No	Part Number	Description	Remarks	Serial Number	Qty
1	61D000005B	NUT			4
2	6655399	BUMPER			2
3	6714509	COVER	exhaust		1
4	37C000512B	BOLT			2
5	6718796	PLUG	back-up alarm		1
6	6714126	DOOR STOP			1
7	6809726	ROLLER			2
8	6675273	WASHER	lock		2
9	6719766	STOP			1
10	6729991	REAR DOOR			1
11	6810141	SPRING			1
12	6732715	LATCH			1
13	17C000820B	BOLT			2
14	6729939	LATCH PLATE	weld-on		1
15	38C000824B	BOLT			1
16	6711526	HINGE	weld-on		2
17	59D000006B	NUT			3
18	6809845	BOLT			2
19	6811910	LATCH			1
20	6715318	TOOL HOLDER	Europe		1
21	37C000612B	BOLT			2
22	55D000006B	NUT			2
23	6670287	COVER			2
24	38C000840B	BOLT	carriage		1
25	6809734	BUSHING	striker		1
26	6809727	CHANNEL			1
27	6719525	BAR	threaded striker		1
28	6564452	GRIP			1
29	6810132	SPRING			1
30	85D000006B	NUT			1
31	37C000628B	BOLT			2
32	57D000006B	NUT			2
33	6725256	COUNTERWEIGHT			2

LIFT ARMS & BOBTACH

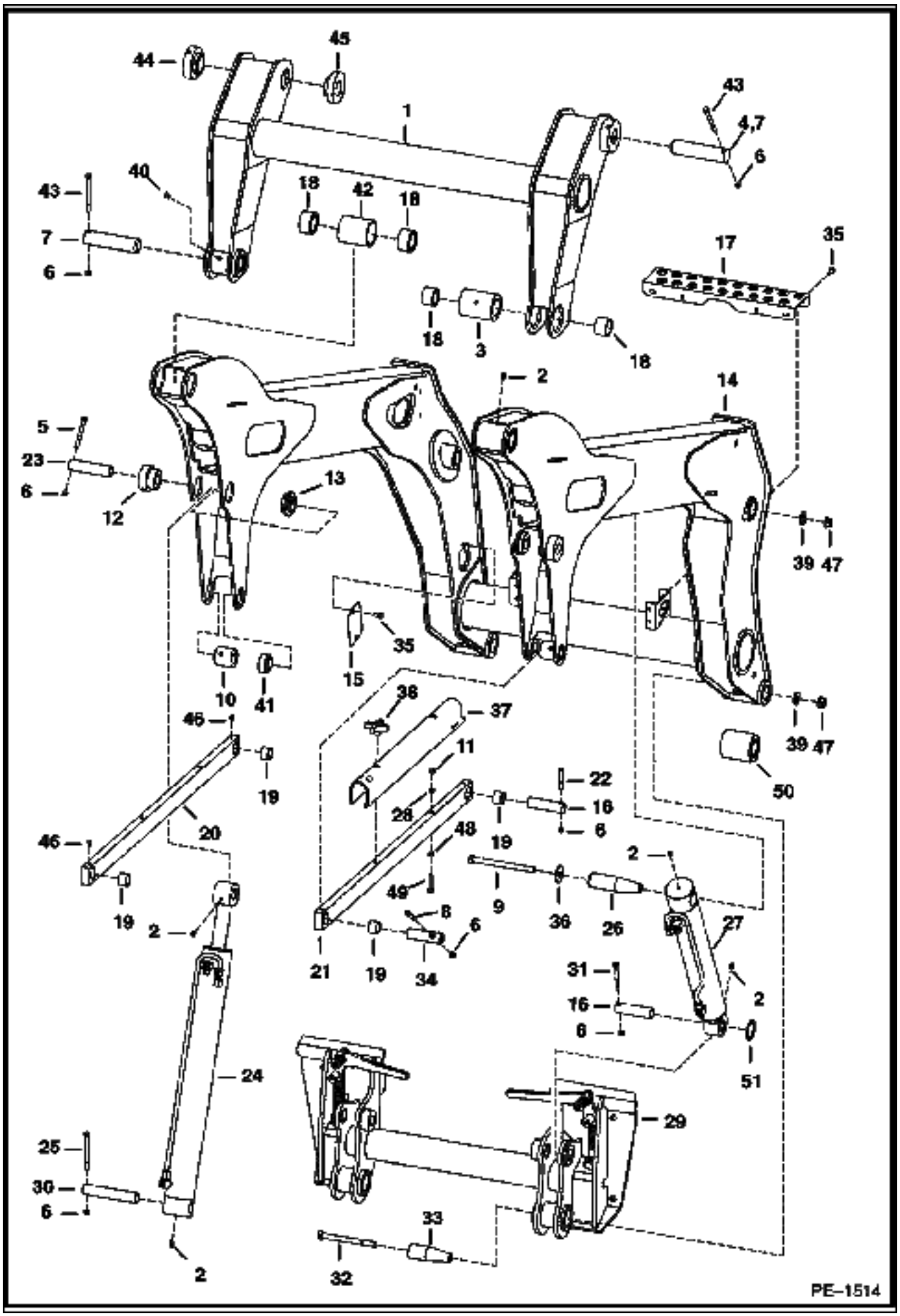

Ref No	Part Number	Description	Remarks	Serial Number	Qty
1	6726966	FRAME LINK	H-Frame		1
2	10H000025B	GREASE ZERK			8
2	15H000015B	GREASE ZERK	60 degree		2
3	6728800	BUSHING			4
4	6728820	PIN	7.118" long		2
5	17C000656B	BOLT			4
6	85D000006B	NUT			16
7	6728819	PIN	6.9" long		2
8	17C000644B	BOLT			2
9	17C010136B	BOLT			2
10	6729423	BUSHING	weld-on		4
11	6718942	NUT			2
12	6729005	BUSHING	weld-on		2
13	6729006	BUSHING	weld-on		2
14	6726965	LIFT ARM			1
15	6731179	COVER			1
16	6577954	PIN			2
17	6729888	STEP			1
18	6730995	BUSHING	wear		8
19	6731647	BUSHING	wear		x
20	6729468	LINK ASSY	L.H. - W/Ref. 19		1
21	6726969	LINK ASSY	R.H. - W/Ref. 19, 28, 48 & 49		1
22	17C000640B	BOLT			4
23	6729007	PIN			2
24		CYLINDER	LIFT		2
25	17C000664B	BOLT			2
26	6728971	PIN			2
27		CYLINDER	See Illustration TILT CYLINDER/ PE1520 TILT		1
28	6532347	SPACER			2
29		BOB-TACH	See Illustration BOB-TACH/ PE1513		1
30	6730887	PIN			2
31	17C000648B	BOLT			2
32	17C010112B	BOLT			2
33	6729358	PIN			2
34	6731139	PIN			2
35	84G003112B	BOLT			5
36	6731160	WASHER			2
37	6731569	STOP	lift arm		1
38	6684932	KNOB			2
39	27E000010B	WASHER			4
40	11H000015B	GREASE ZERK	45 degree		2
41	6731138	BUSHING			4
42	6728972	BUSHING	weld-on		2
43	17C000672B	BOLT			2
44	6727525	BUSHING	weld-on		2
45	6727832	BUSHING	weld-on		2
46	12H000015B	GREASE ZERK	90 degree		4
47	57D000010B	NUT			4
48	25E000015B	WASHER			2
49	6731646	BOLT	stainless steel		2
50	6728999	BUSHING	weld-in		2
51	225855B	SEAL	grease		4

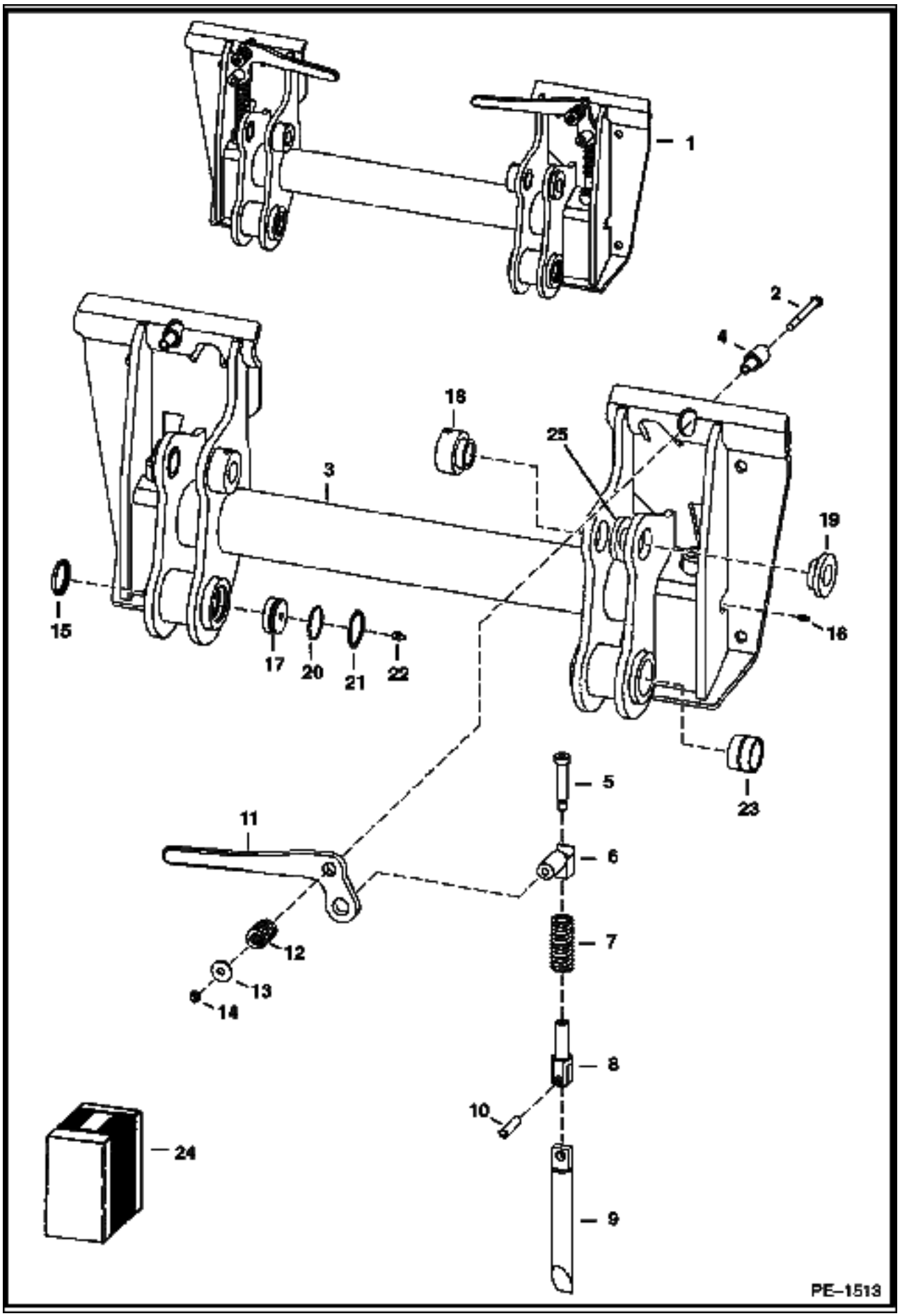
1
2
4
18
25
3
19
15
16
17
20
21
22
23
5
11
6
12
7
13
14
8
10
24
9
PE–1513

Ref No	Part Number	Description	Remarks	Serial Number	Qty
1	6729029	BOB-TACH	See Illustration DECALS/ B26134 REF. 2-22 - ALSO ORDER 6561383 DECAL		1
2	17C000660B	BOLT			2
3		FRAME	NAP		1
4	6702958	BUSHING	weld-on		2
5	6728473	BOLT	shoulder		2
6	6731119	PIVOT ASSY			2
7	6562018	SPRING			2
8	6704248	PIVOT	wedge		2
9	6737191	WEDGE			2
10	14J005032B	PIN			2
11	6702904	LEVER	R.H.		1
11	6702903	LEVER	L.H.		1
12	6713040	SPRING			2
13	619021B	WASHER			2
14	85D000006B	NUT			2
15	6678960	SEAL			2
16	10H000035B	GREASE ZERK			2
17	6729491	PLUG			2
18	6717260	BUSHING	weld-on		2
19	6717259	BUSHING	weld-on		2
20	25K030126B	O-RING			2
21	7105856	SNAP RING			2
22	10H000025B	GREASE ZERK			2
23	6718329	BUSHING	wear		2
24	6724775	LEVER KIT	R.H. Bob-tach - Ref. 2 & 5 - 14		1
24	6724776	LEVER KIT	L.H. Bob-tach - Ref. 2 & 5 - 14		1

PANELS
(W/Joystick Controls)

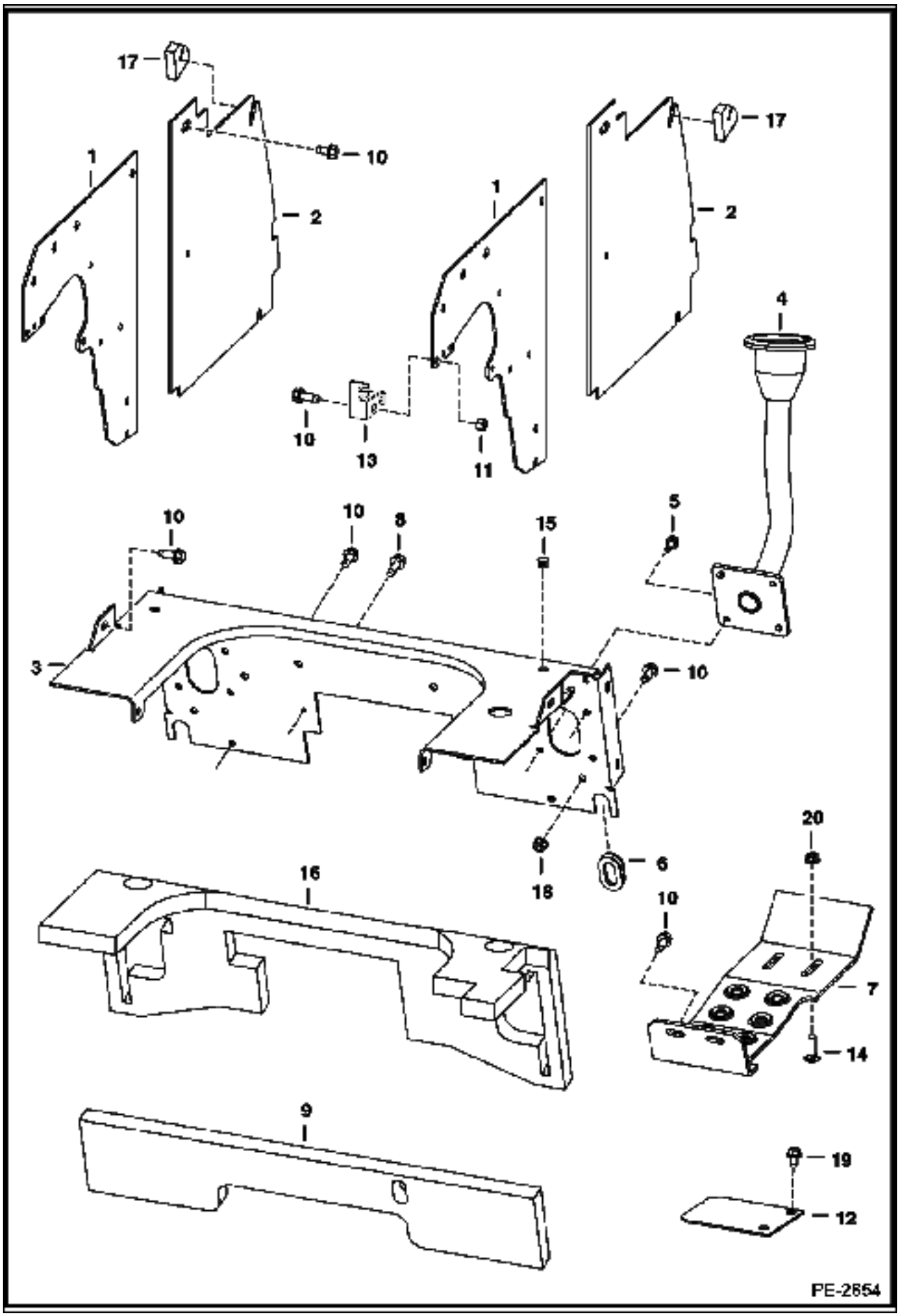

PANELS (Cont'd)
(W/Joystick Controls)

Ref No	Part Number	Description	Remarks	Serial Number	Qty
1	6734521	PANEL			2
2	7101804	PANEL			2
3	6729899	PANEL			1
4	6729791	HANDLE	See Illustration CONTROLS ELECTRICAL/ PE2024 R.H. JOYSTICK		1
4	6729792	HANDLE	See Illustration CONTROLS ELECTRICAL/ PE2024 L.H. JOYSTICK		1
5	35C000512B	BOLT			4
6	6714726	GROMMET			1
7	6729237	STEP			2
8	84G003716B	BOLT			2
9	6701674	INSULATION			1
10	84G003712B	BOLT			28
11	95D000006B	NUT			2
12	6729774	COVER	cylinder access		2
13	6732450	BRACKET	cable		1
14	37C000620B	BOLT			4
15	6649949	PLUG			2
16	6716800	INSULATION			1
17	6733529	SEAL	panel		2
18	89D000005B	NUT			4
19	84G003710B	BOLT			4
20	57D000006B	NUT			4

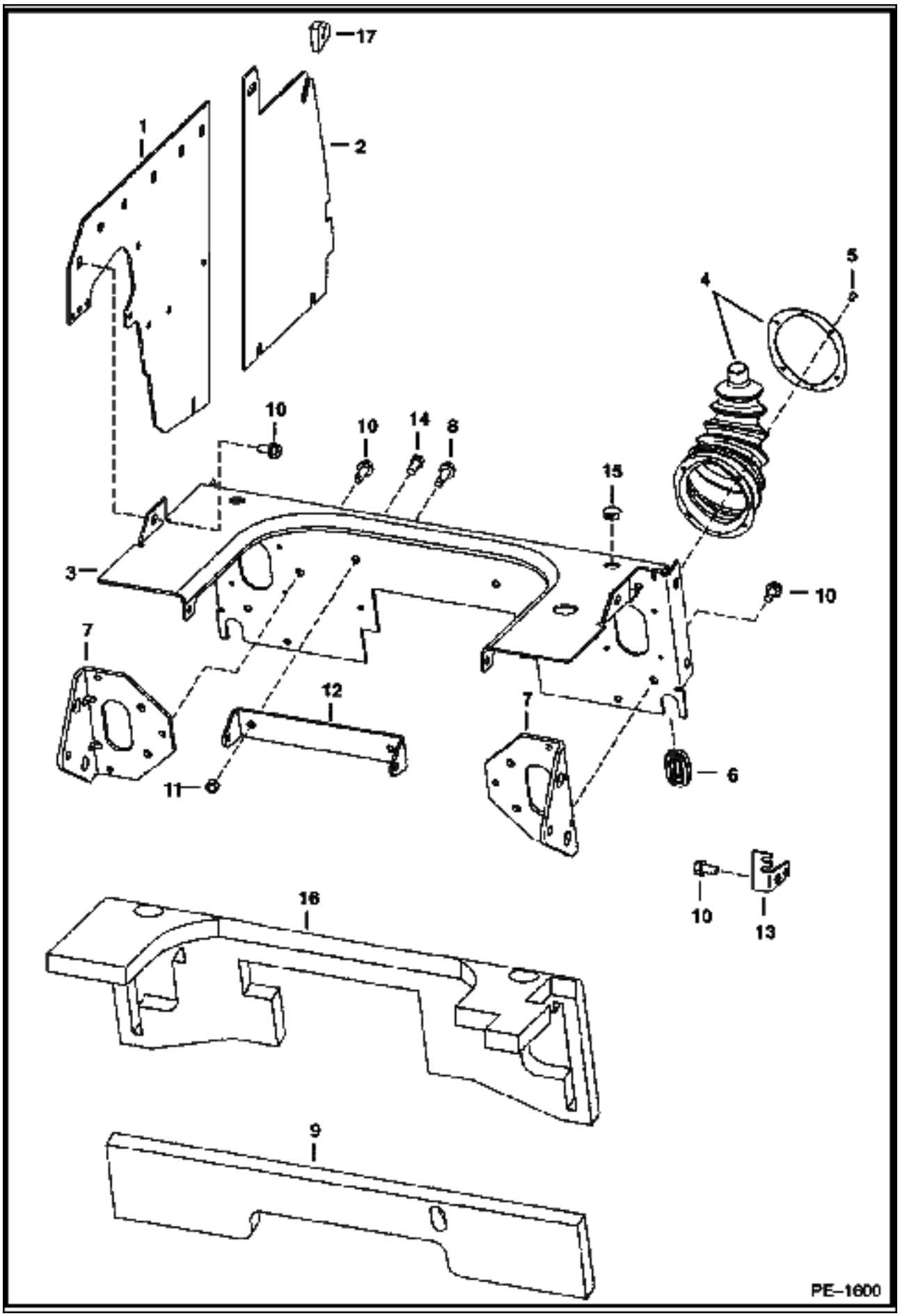
17
1
2
5
4
10
10
14
8
15
3
10
7
12
7
11
6
10
13
16
9
PE–1600

Ref No	Part Number	Description	Remarks	Serial Number	Qty
1	6734521	PANEL	15.25" long x 16.33" tall		2
2	7101804	PANEL	12.13" Tall		2
3	6718305	PANEL			1
4	6532127	BOOT			2
5	6630207	RIVET			8
6	6577961	GROMMET			2
7	6577230	BRACKET	steering		2
8	84G003716B	BOLT			2
9	6701674	INSULATION			1
10	84G003712B	BOLT			32
11	6706106	MOUNT	damper		1
12	6732450	BRACKET	cable		1
13	17C000612B	BOLT			1
14	6657719	PLUG	for .75" dia. hole		2
14	6648348	PLUG	for .812" dia. hole		2
15	6716800	INSULATION			1
16	6733529	SEAL	panel		2

DRAWING NOT AVAILABLE AT TIME OF PRINTING

PE-1701

Ref No	Part Number	Description	Remarks	Serial Number	Qty
1	6661114	CAP	green fuel fill		1
1	6661696	CAP	locking - W/REF. 2 - Code PK510		1
2	6587458	KEY	Code PK510		1
3	6706517	SCREW			3
4	6701449	FILLER TUBE			1
5	42HL00250B	CLAMP			1
6	7110942	HOSE			1
7	5HM00024B	CLAMP			6
8		HOSE	NAP - 32.4" (823mm) long - ORDER REF. 36		1
9	6578169	HOSE	Bulk - sold per foot		x
10		HOSE	NAP - 29.5" (749mm) long - ORDER REF. 38		1
11	6735696	BUSHING	.37" (9,4mm) ID - brown		2
12	6717402	BUSHING	.54" (13,7mm) ID		1
13	6729854	HOSE	12" (305mm) long		1
14	5HM00013B	CLAMP			3
15	6578278	PAD	self adhesive one side		2
16	6680438	SENSOR	fuel - W/REF. 17		1
17	6717579	GASKET			1
18	6569219	SCREEN			1
19	6735614	TANK			1
20	6717401	PLUG	.75" shoulder		1
21		HOSE	NAP - 50" (1270mm) long - ORDER REF. 9		1
22	6731152	MOUNT			1
23	43C000516B	BOLT			2
24	6715183	ELBOW	W/REF. 25 - check boss face to determine correct replacement o-ring		2
25	79K000005B	O-RING			x
26	53C000516B	BOLT			2
27	6667353	FILTER ASSY			1
27	6667352	FILTER FUEL			1
27	72F000001B	DRAIN COCK			1
28	6658180	BREATHER	plug		1
29		HOSE	NAP - 13" (330mm) long - ORDER REF. 37		1
30		HOSE	NAP - 9.25" (235mm) long - ORDER REF. 38		1
31		FUEL PUMP			1
32	6657734	PUMP	hand primer		1
33		HOSE	NAP - 16" (406 mm) long - Order Ref 37		1
34	7101291	ELBOW			2
35	6726218	GASKET			1
36	6578172	HOSE	bulk - Sold Per Foot		x
37	6577822	HOSE	.375 I.D. - bulk - Sold Per Foot		x
38	6577821	HOSE	.25'' I.D. - bulk - Sold Per Foot		x
39	84G003712B	BOLT			1
40	6610510	TIE			1
41	5HM00014B	CLAMP			5
42	5HM00058B	CLAMP			1
43	6730552	BRACKET			1
44	42HS00004B	CLAMP			2
45		HOSE	NAP - 2" (51mm) long - ORDER REF. 36		2
46	6684923	BREATHER	vent		1
47	7102705	TEE			1

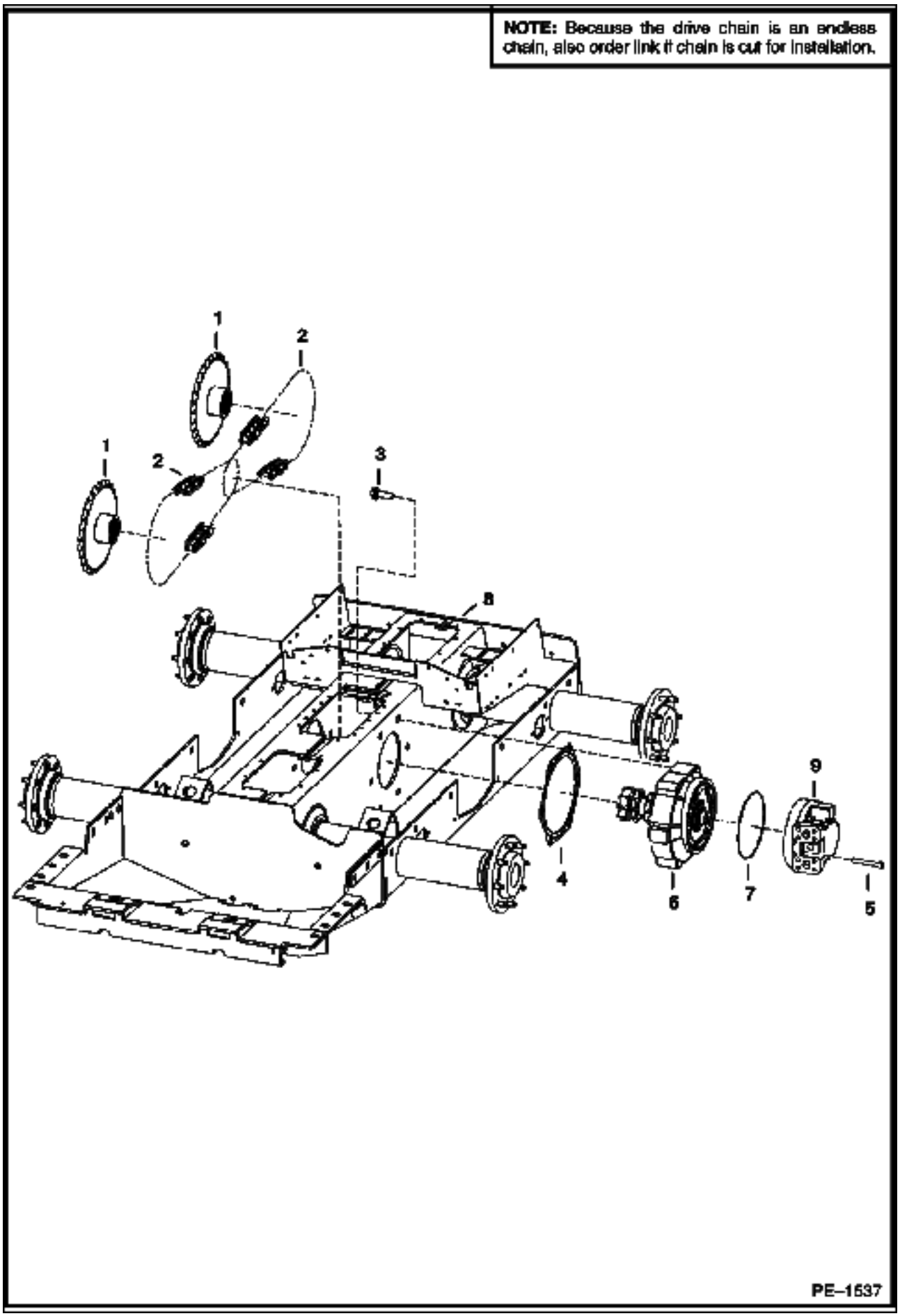
NOTE: Because the drive chain is an endless chain, also order link if chain is cut for installation.
1
2
1
2
3
8
9
4
6
7
5
PE–1537

Ref No	Part Number	Description	Remarks	Serial Number	Qty
1	7106737	SPROCKET	See Illustration AXLE/ PE1544		4
2	7106862	CHAIN	endless - 48 pitches		4
3	6678971	BOLT			12
4	6704879	GASKET			2
5	6717806	BOLT			20
6	6717296	MOUNT ASSY	See Illustration MOTOR CARRIER/ PE1543 DRIVE MOTOR		2
7	25K030812B	O-RING			2
8	7112333	HOUSING	frame only		1
9		MOTOR	See Illustration HYDROSTATIC MOTOR/ B17125 See Illustration HYDROSTATIC MOTOR & BRAKE/ B16392		2

MOTOR CARRIER
(Drive Motor Mount Assy) (Manual Controls)

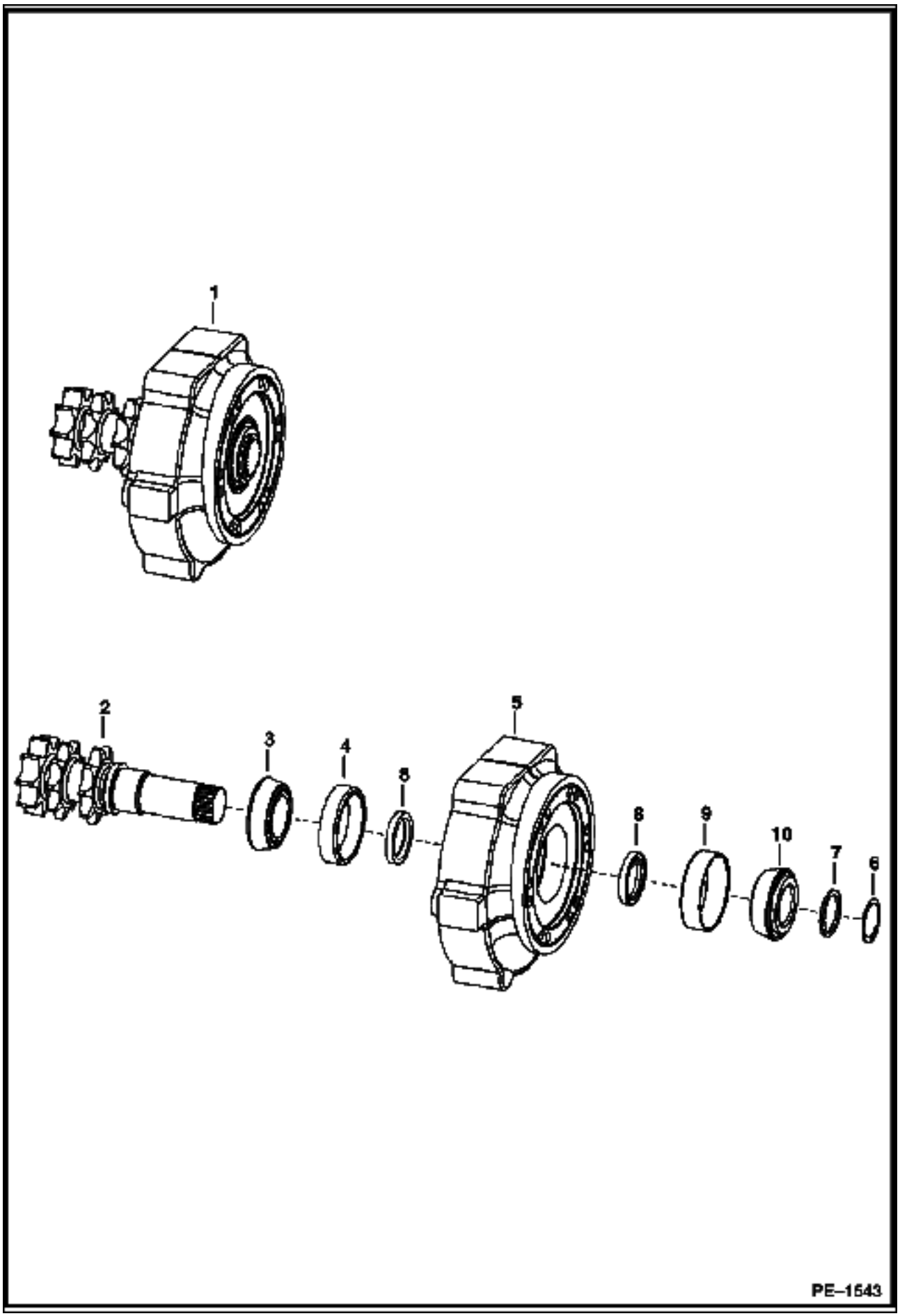

MOTOR CARRIER (Cont'd)
(Drive Motor Mount Assy) (Manual Controls)

Ref No	Part Number	Description	Remarks	Serial Number	Qty
1	6717296	MOUNT ASSY	drive motor - Ref. 2-10		1
2	6706805	SHAFT	W/snap ring groove		1
3	6664845	BEARING			2
4	6650120	RACE			2
5	6717242	HOUSING			1
6	6664848	SNAP RING	.118" (3,0mm) thickness		1
7	6706817	SPACER	.152" (3,86mm) thickness		1
8	6665755	SEAL			2
9	7100240	RACE			1
10	7100239	BEARING			1

MOTOR CARRIER
(Drive Motor Mount Assy.) (Joystick Controls)

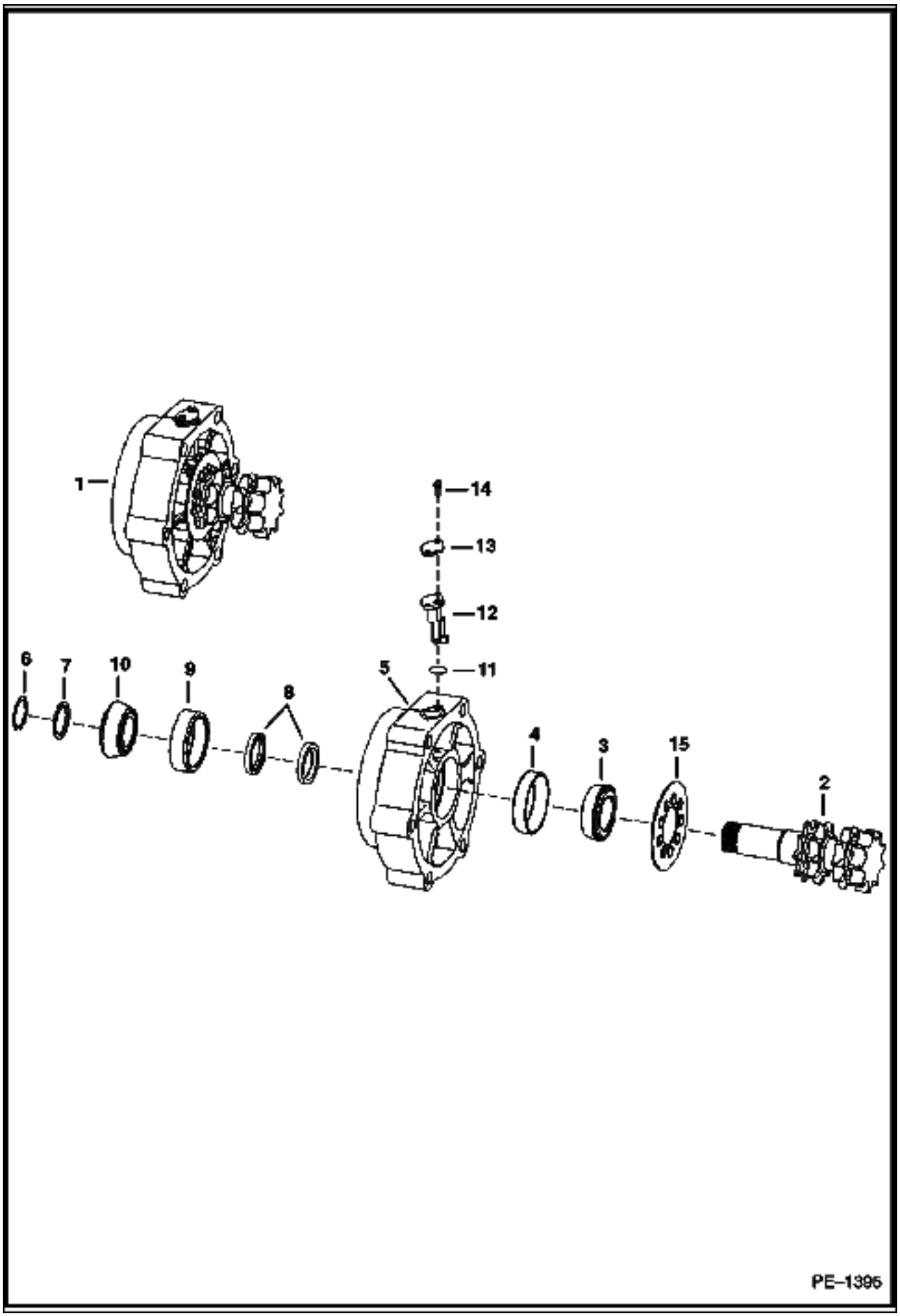

MOTOR CARRIER (Cont'd)
(Drive Motor Mount Assy.) (Joystick Controls)

Ref No	Part Number	Description	Remarks	Serial Number	Qty
1	6729719	MOUNT ASSY.	drive motor - Ref. 2-10		1
2	6729662	SHAFT	W/ snap ring groove		1
3	6664845	BEARING			2
4	6650120	RACE			1
5	6729663	HOUSING			1
6	6664848	SNAP RING	.118" (3,0mm) thickness		1
7	6706817	SPACER	.152" (3,86mm) thickness		1
8	6665755	SEAL			2
9	7100240	RACE			1
10	7100239	BEARING			1
11	25K020100B	O-RING			1
12	6677181	SENSOR	wheel speed		1
13	6730013	COVER			1
14	35C000412B	BOLT			2
15	6680634	MAGNET DISK	speed sensor		1

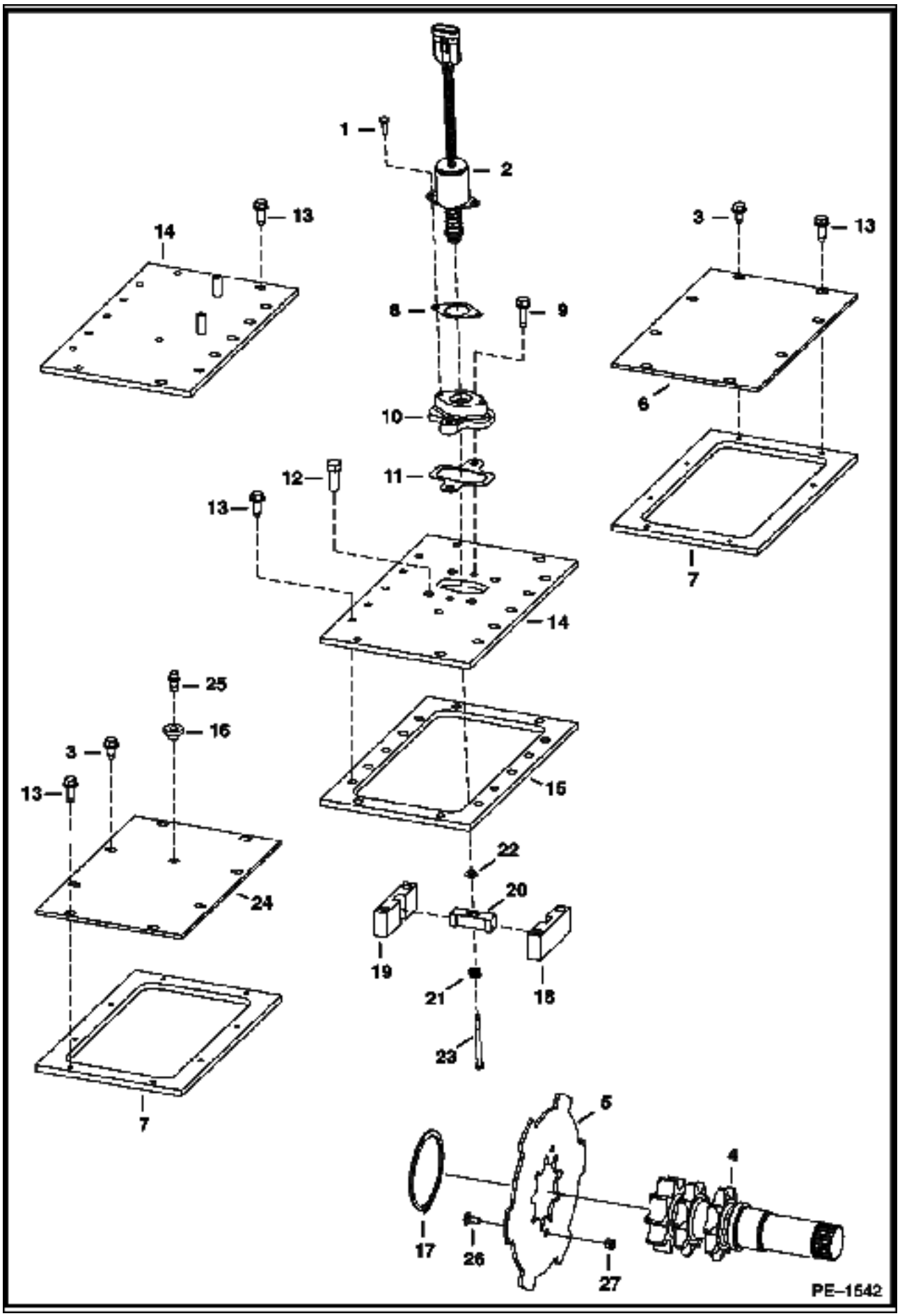
1
2
13
14
3
13
8
9
6
10
12
11
13
14
7
25
16
3
13
15
24
22
20
19
21
18
23
7
5
4
17
26
27
PE–1542

Ref No	Part Number	Description	Remarks	Serial Number	Qty
1	17C000412B	BOLT			2
2	6681512	SOLENOID			1
3					12
4	6706805	SHAFT	See Illustration MOTOR CARRIER/ PE1543 MANUAL CONTROLS		2
4	6729662	SHAFT	See Illustration MOTOR CARRIER/ PE1395 JOYSTICK CONTROLS		2
5	6715630	BRAKE	disc		2
6	6729173	COVER			1
7					2
8	6706737	GASKET			1
9	84G003720B	BOLT			2
10	6706718	MOUNT			1
11	6708016	GASKET			1
12	47C000820B	BOLT			4
13	84G003716B	BOLT			36
14	6706683	COVER			1
14	6725496	COVER	2-speed		1
15					1
16	6553411	BUSHING			1
17	6662298	SNAP RING			2
18	6719057	BLOCK	guide - R.H.		1
19	6719056	BLOCK	guide - L.H.		1
20	6714278	GUIDE	for brake disc		1
21	6708018	SPRING			1
22	25E000013B	WASHER			2
23	6708267	BOLT			2
24					1
25	6680970	BREATHER			1
26	37C000512B	BOLT	carriage		4
27	59D000005B	NUT			4
28	6685372	SEAL	liquid gasket - 20 oz.		x

AXLE

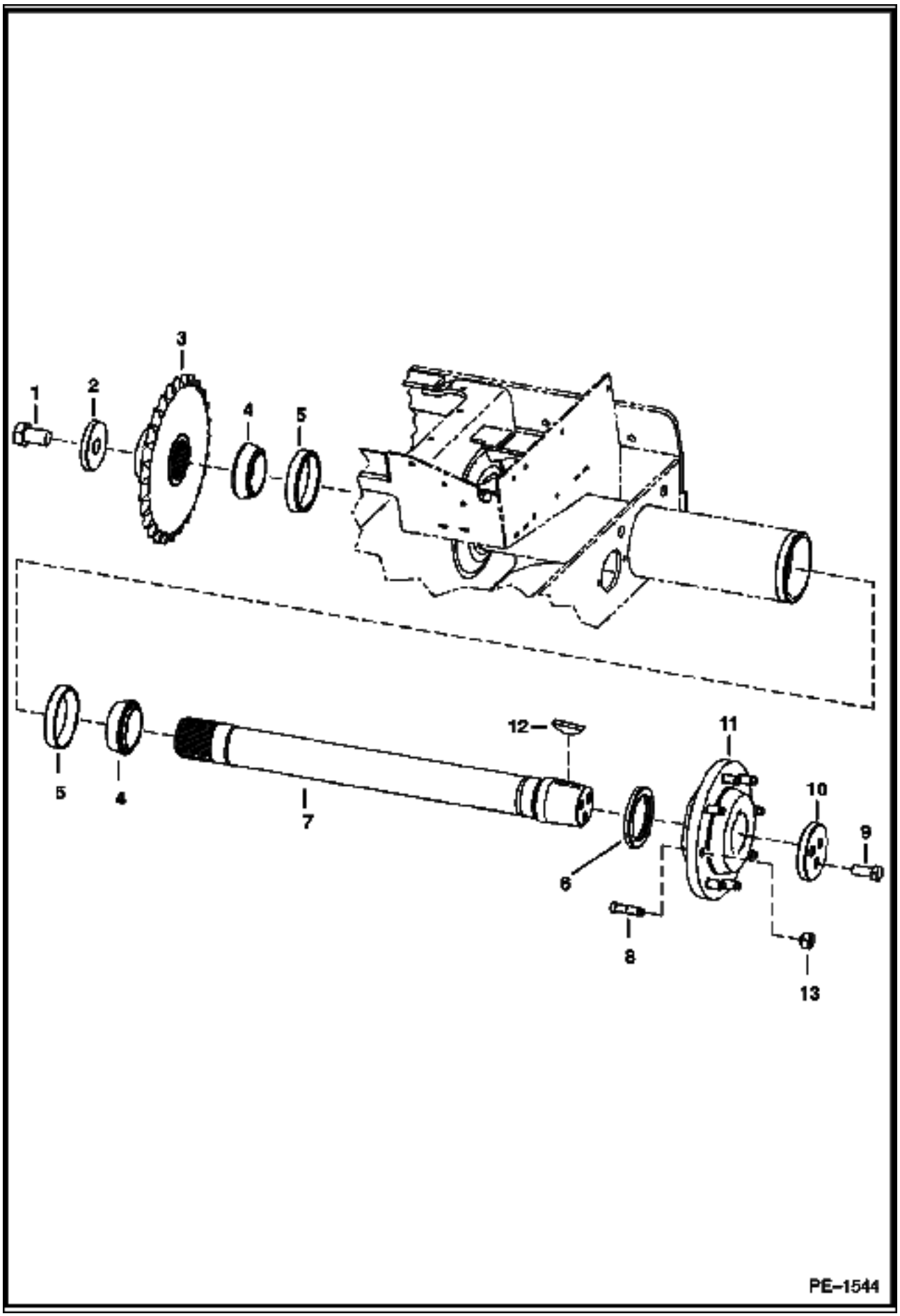

Ref No	Part Number	Description	Remarks	Serial Number	Qty
1	2C001626B	BOLT			1
2	7107271	WASHER			1
3	7106737	SPROCKET			1
4	1321608B	BEARING			2
5	1321607B	RACE			2
6	6671138	SEAL			1
7	6709757	AXLE	W/O wear ring		1
8	6709170	STUD	wheel		8
9	17C001024B	BOLT			3
10	6565947	WASHER	recessed		1
11	6578857	HUB	W/Ref. 8		1
12	6J001664B	WOODRUFF KEY			1
13	6564669	NUT	wheel		8

HYDRAULIC CIRCUITRY
(W/O Bucket Positioning Valve)

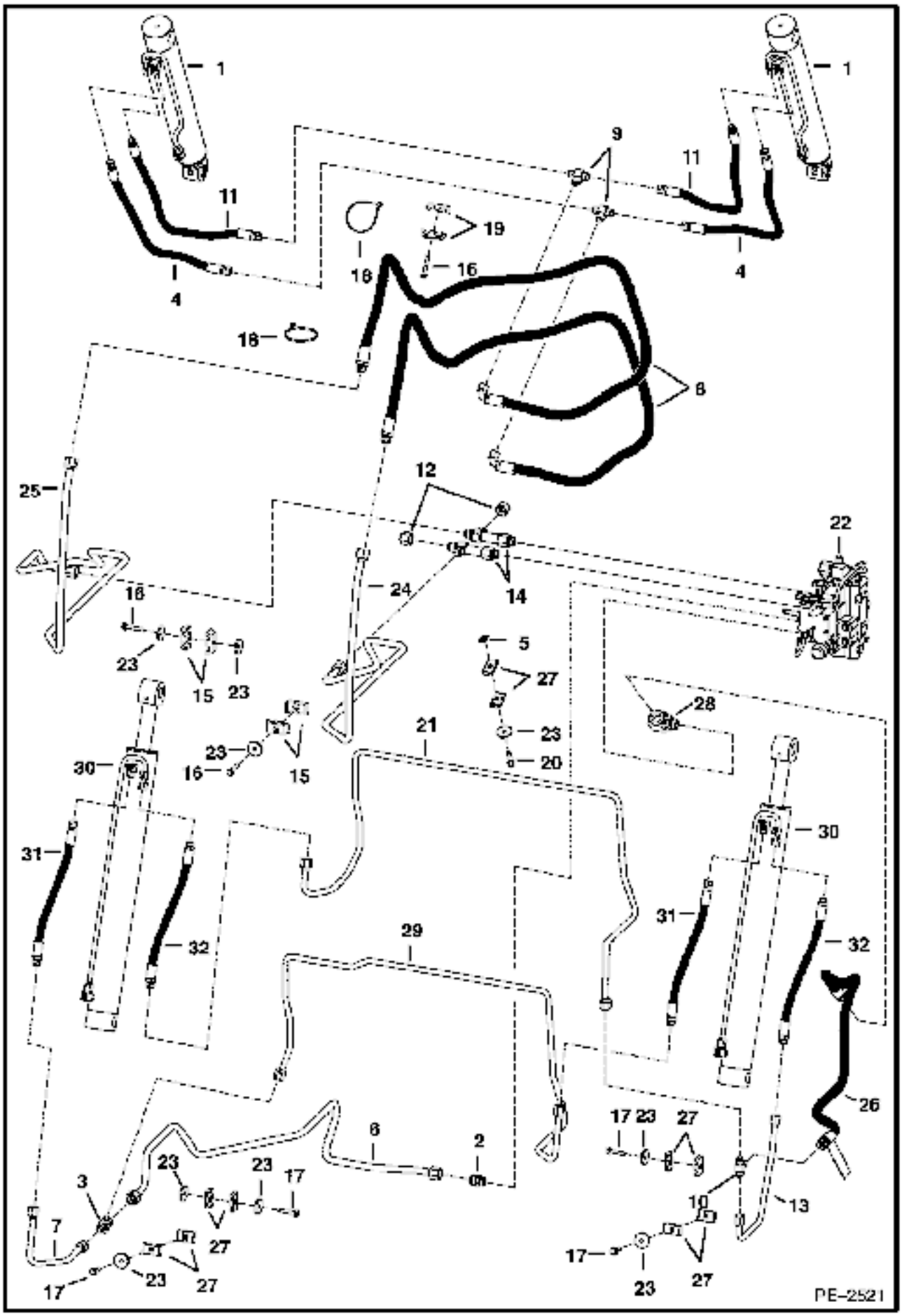

HYDRAULIC CIRCUITRY (Cont'd)
(W/O Bucket Positioning Valve)

Ref No	Part Number	Description	Remarks	Serial Number	Qty
1		CYLINDER	See Illustration TILT CYLINDER/ PE1520 tilt		2
2	6682411	ADAPTER			1
2	79K000010B	O-RING			x
3	6729686	TEE			1
4	7102090	HOSE			2
5	6684033	NUT			2
6	6732950	TUBELINE			1
7	6734201	TUBELINE			1
8	6729721	HOSE			2
9	6716061	TEE			2
10	6729694	TEE			1
11	7102089	HOSE			2
12	36K000008B	CAP			2
13	6730858	TUBELINE			1
14	6730914	TEE			2
14	79K000010B	O-RING			x
15	6592506	CLAMP			4
16	84G003740B	BOLT			3
17	84G003732B	BOLT			4
18	6624289	STA STRAP			3
19	6729320	CLAMP			2
20	84G003728B	BOLT			4
21	7114821	TUBELINE			1
22		VALVE	See Illustration HYDRAULIC CONTROL VALVE/ PE2379 See Illustration HYDRAULIC CONTROL VALVE/ PE2378		1
23	872229B	WASHER			10
24	6732953	TUBELINE	tilt		1
25	6732952	TUBELINE	tilt		1
26	6729604	HOSE			1
26	79K000010B	O-RING			x
26	6809511	DECAL	danger		2
27	6701893	CLAMP			8
28	6817335	ELBOW			1
28	79K000010B	O-RING			x
29	7114813	TUBELINE	lift		1
30		CYLINDER	lift		2
31	7102337	HOSE			2
32	7102336	HOSE			2

HYDRAULIC CIRCUITRY
(W/Bucket Positioning Valve)

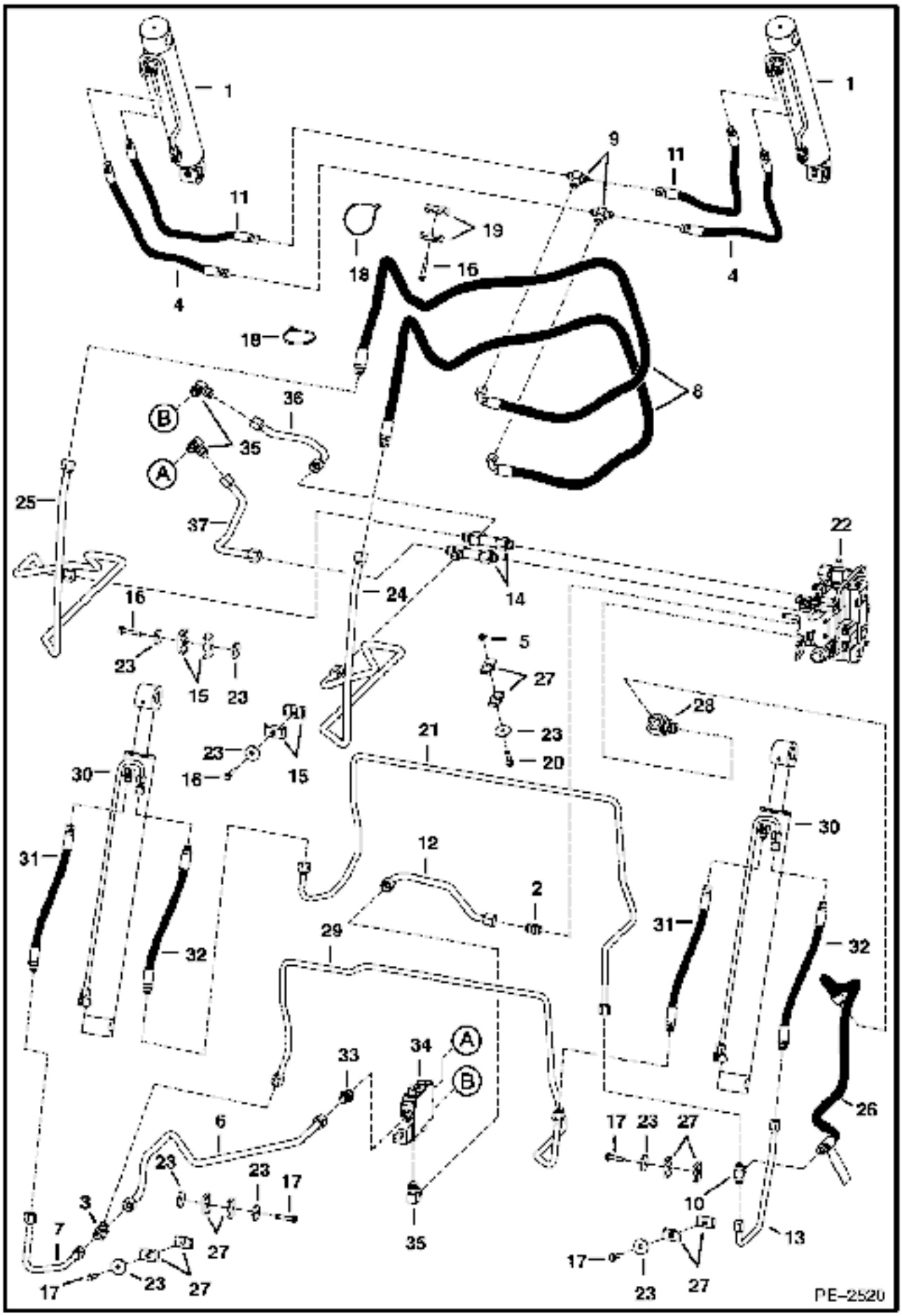

HYDRAULIC CIRCUITRY (Cont'd)
(W/Bucket Positioning Valve)

Ref No	Part Number	Description	Remarks	Serial Number	Qty
1		CYLINDER	tilt		2
2	6682411	ADAPTER			1
2	79K000010B	O-RING			x
3	6729686	TEE			1
4	7102090	HOSE			2
5	6684033	NUT			2
6	6734208	TUBELINE			1
7	6734201	TUBELINE			1
8	6729721	HOSE			2
9	6716061	TEE			2
10	6729694	TEE			1
11	7102089	HOSE			2
12	6732992	TUBELINE			1
13	6730858	TUBELINE			1
14	6730914	TEE			1
14	79K000010B	O-RING			x
15	6592506	CLAMP			4
16	84G003740B	BOLT			3
17	84G003732B	BOLT			4
18	6624289	STA STRAP			3
19	6729320	CLAMP			2
20	84G003728B	BOLT			4
21	7114821	TUBELINE			1
22		VALVE	See Illustration HYDRAULIC CONTROL VALVE/ PE2379 See Illustration HYDRAULIC CONTROL VALVE/ PE2378		1
23	872229B	WASHER			10
24	6732953	TUBELINE	tilt		1
25	6732952	TUBELINE	tilt		1
26	6729604	HOSE			1
26	79K000010B	O-RING			x
26	6809511	DECAL	danger		2
27	6701893	CLAMP			8
28	6817335	ELBOW			1
28	79K000010B	O-RING			x
29	7114813	TUBELINE			1
30		CYLINDER	lift		2
31	7102337	HOSE			2
32	7102336	HOSE			2
33	15KB01210B	ADAPTER			1
33	79K000010B	O-RING			x
34		VALVE	BPV		1
35	17KB01210B	ELBOW			3
35	79K000010B	O-RING			x
36	6734200	TUBELINE			1
37	6732991	TUBELINE			1

LIFT & TILT CONTROL CIRCUITRY

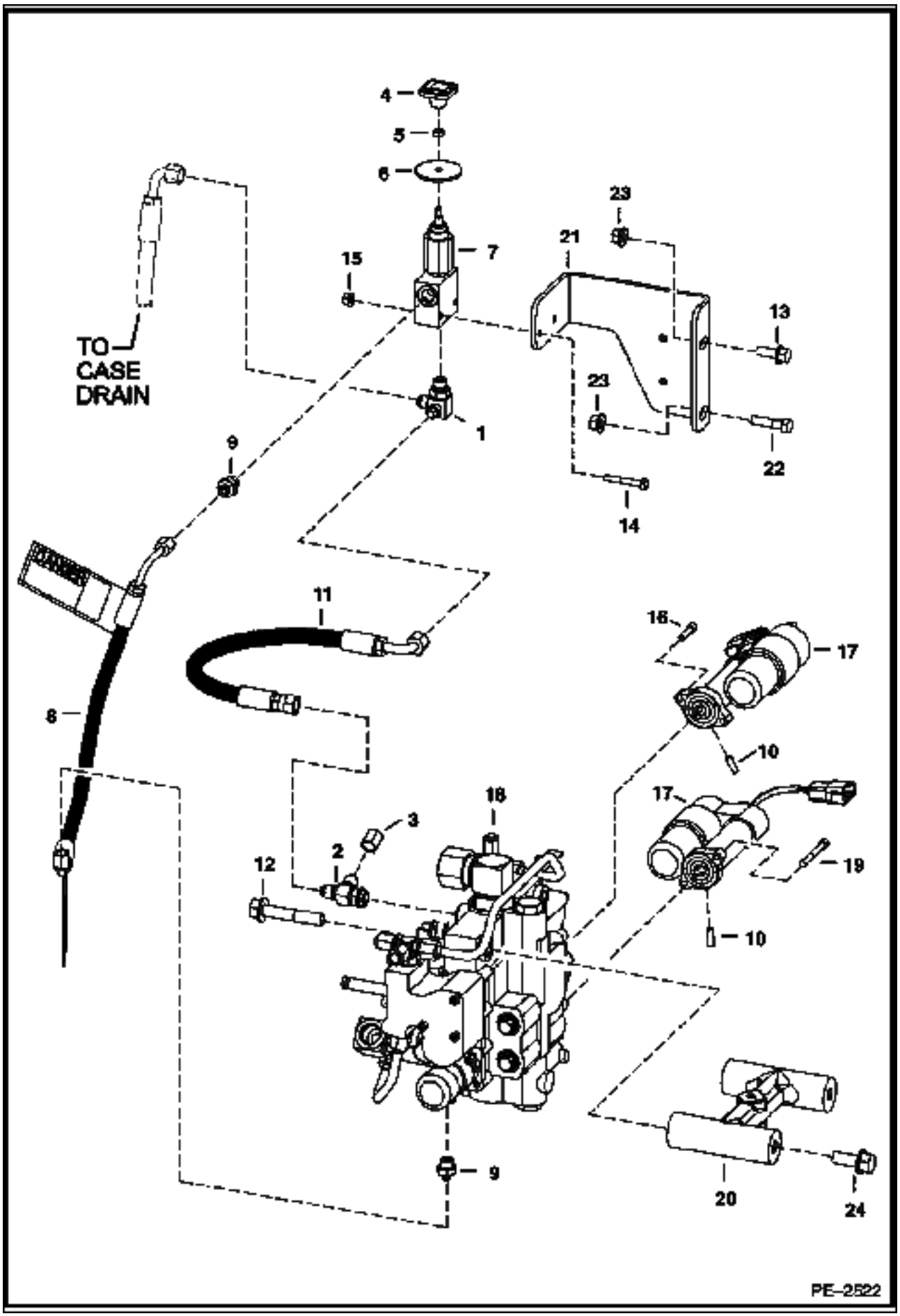

Ref No	Part Number	Description	Remarks	Serial Number	Qty
1	6725182	TEE			1
1	79K000006B	O-RING			x
2	21KB00606B	TEE			1
2	79K000006B	O-RING			x
3	36K000005B	CAP			1
4	6737524	KNOB			1
5	7D000004B	NUT			1
6	6707101	SEAL	noeprene		1
7	6667844	VALVE ASSY	manual lift		1
8	7103172	HOSE			1
8	6809511	DECAL	danger		2
9	15KB00406B	ADAPTER			2
9	79K000006B	O-RING			x
10	7108236	PIN	selectable joystick controls		2
11	7110284	HOSE			1
12	35C000844B	BOLT			2
13	35C000616B	BOLT			3
14	17C000428B	BOLT			2
15	83D000004B	NUT			2
16	6814021	BOLT	selectable joystick controls		2
17	7101672	ACTUATOR	selectable joystick controls		2
18		VALVE	control		1
19	69G000436B	BOLT	selectable joystick controls		2
20	7109934	MOUNT			1
21	6718881	BRACKET			1
22	17C000624B	BOLT			1
23	83D000006B	NUT			2
24	35C000820B	BOLT			2

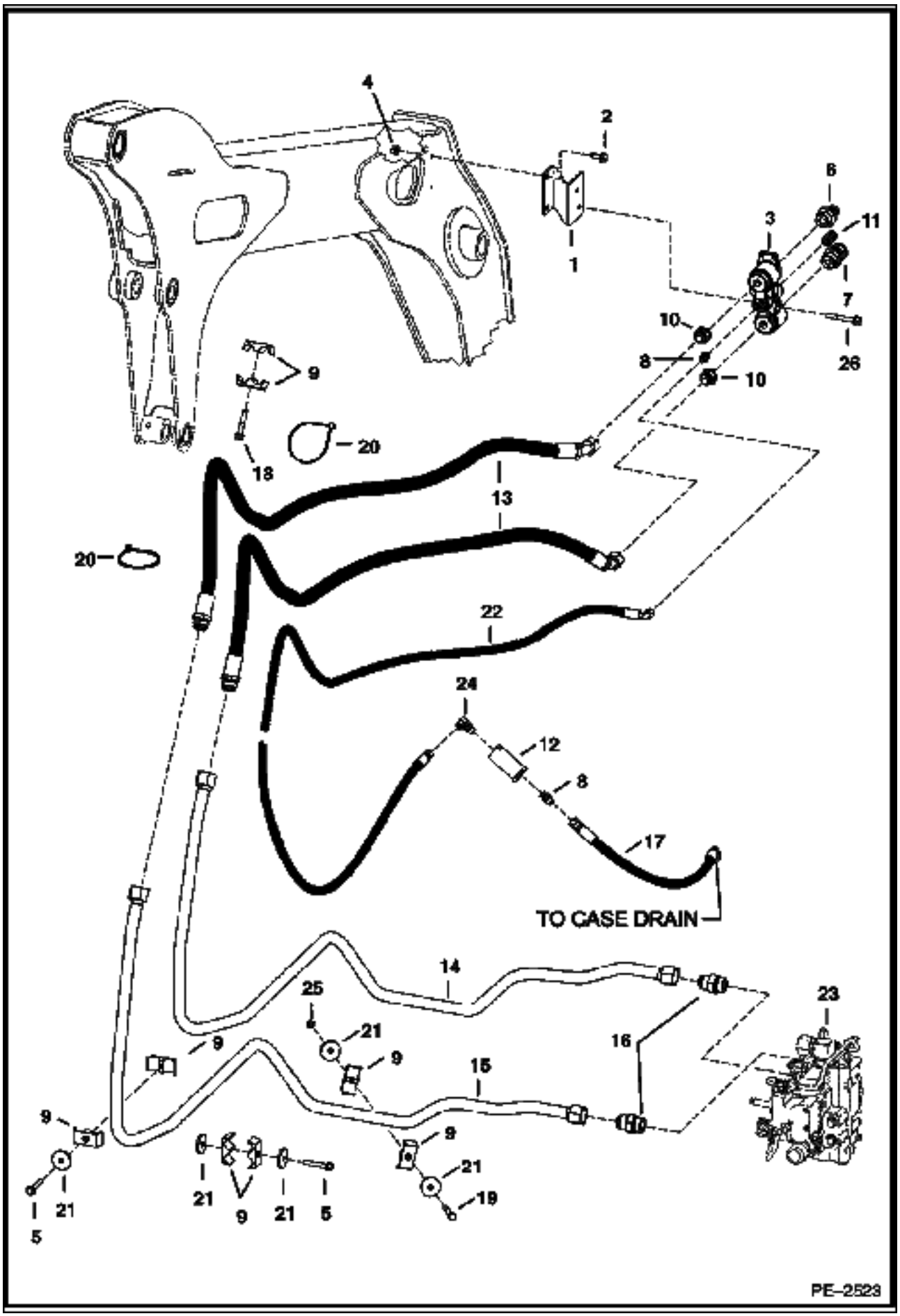
4
2
1
6
11
3
7
26
10
8
10
9
18
20
13
20
22
24
12
8
17
TO CASE DRAIN
14
25
21
9
16
23
15
9
9
21
5
21
9
21
5
9
21
19
PE-2523

Ref No	Part Number	Description	Remarks	Serial Number	Qty
1	7102414	BRACKET			1
2	84G003716B	BOLT			2
3	6678076	BLOCK	Ref. 6, 7 & 11		1
4	83D000006B	NUT			2
5	84G003740B	BOLT			2
6	6679837	COUPLER	male		1
6	6679841	SEAL	blue - front		1
6	6680020	SEAL KIT	3 o-rings & back-up washers		1
7	6679839	COUPLER	female		1
7	6680020	SEAL KIT	3 o-rings & back-up washers		1
8	15KB00606B	ADAPTER			2
8	79K000006B	O-RING			x
9	6729320	CLAMP			8
10	6679836	ADAPTER	W/spring,& Ref. 5		2
11	6679838	COUPLER	male - casedrain - W/spring, valve, seat & o-ring		1
11	6679840	SEAL	blue - front		1
12	6661022	FILTER			1
13	6734769	HOSE			2
14	6732954	TUBELINE			1
15	6732955	TUBELINE			1
16	15KB01616B	CONNECTOR			2
16	79K000016B	O-RING			x
17	7106215	HOSE			2
18	84G003736B	BOLT			3
19	17C000640B	BOLT			1
20	6624289	STA STRAP			2
21	872229B	WASHER			5
22	6729746	HOSE			1
23		VALVE	control		1
24	17KB00606B	ELBOW			1
24	79K000006B	O-RING			x
25	85D000006B	NUT			1
26	31C000644B	BOLT			2

TILT CYLINDER

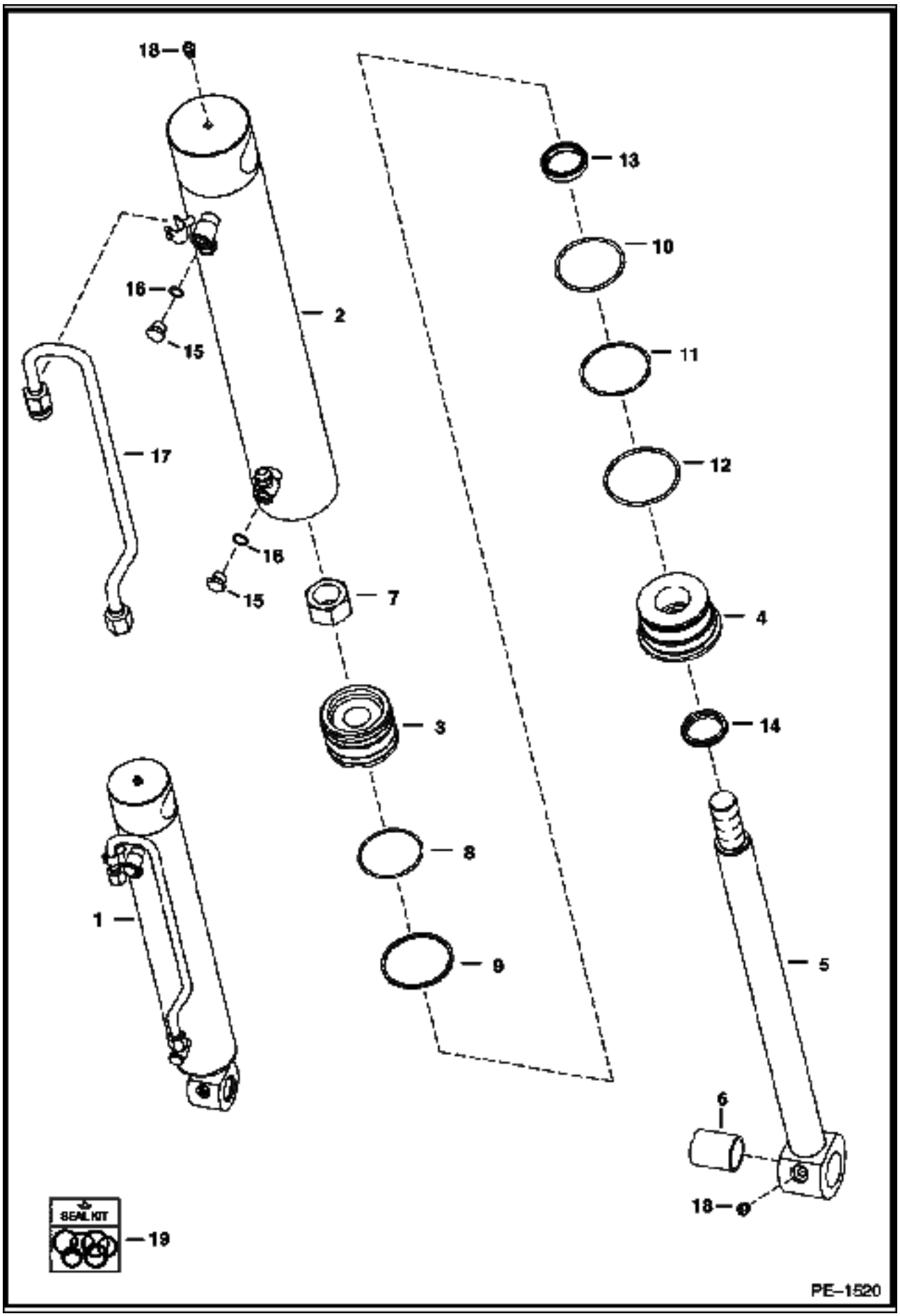

TILT CYLINDER (Cont'd)

Ref No	Part Number	Description	Remarks	Serial Number	Qty
1	6810233	CYLINDER	tilt - Ref. 2-18		1
2	6810234	CASE	3" (76,2mm) I.D.		1
3	6810237	PISTON			1
4	6538367	HEAD			1
5	6810235	ROD	W/Ref. 6 - 1.5" (38,1mm) O.D.		1
6	6805453	BUSHING			1
7	6810539	NUT			1
8	54K030218B	O-RING			1
9	947088B	SEAL			1
10	54K040224B	O-RING			1
11	73K000232B	WASHER	back-up		1
12	54K040300B	O-RING			1
13	6667326	SEAL	1.5" (38,1mm)		1
14	6665086	SEAL	wiper		1
15		PLUG	NAP - W/Ref. 16 - tapered boss face - allen socket head		2
15	6812171	PLUG	W/Ref. 16 - flat boss face - hex head		2
16	95K000006B	O-RING	tapered boss face		x
16	75K000006B	O-RING	flat boss face		x
17	6810213	TUBELINE			1
18	10H000025B	GREASE ZERK	grease		2
19	6816325	SEAL KIT	Ref. 7-14		1

LIFT CYLINDER

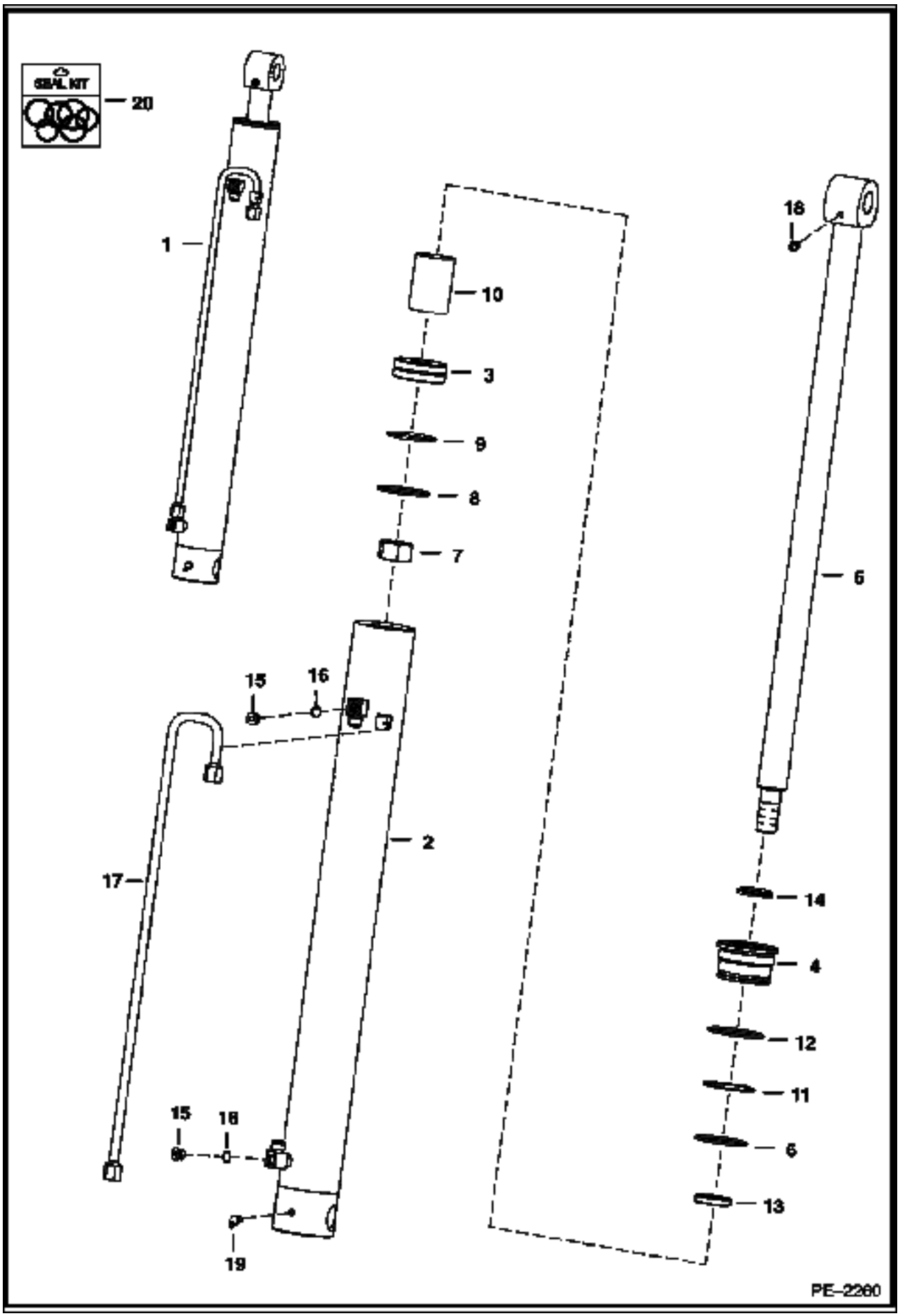

Ref No	Part Number	Description	Remarks	Serial Number	Qty
1	6817310	CYLINDER	lift - Ref. 2-16		1
2	6817311	CASE			1
3	6678933	PISTON			1
4	6804427	HEAD			1
5	6810188	ROD	W/Ref. 6		1
6	54K040224B	O-RING			1
7	6810539	NUT			1
8	947088B	SEAL			1
9	25K030218B	O-RING			1
10	6808235	SPACER			1
11	73K000232B	WASHER	back-up		1
12	54K040300B	O-RING			1
13	6669267	SEAL	rod		1
14	6669268	SEAL	wiper		1
15	6812171	PLUG	W/Ref. 16 - hex head		2
16	75K000006B	O-RING			x
17	6810741	TUBELINE			1
18	10H000025B	GREASE ZERK			1
19	12H000015B	GREASE ZERK	90 degrees		1
20	6816536	SEAL KIT	Ref. 7-14		1

MANUAL LIFT RELEASE VALVE

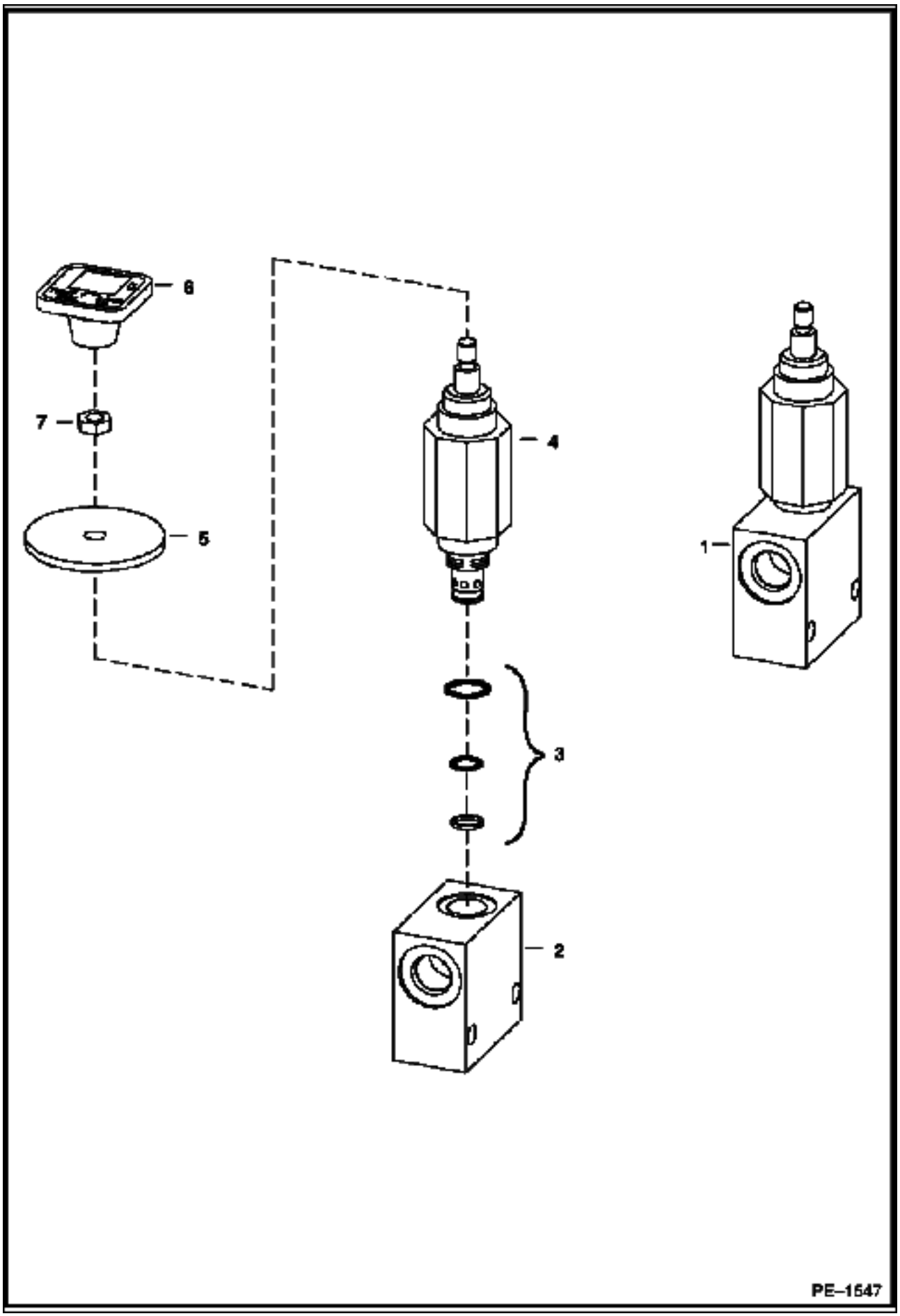

MANUAL LIFT RELEASE VALVE (Cont'd)

Ref No	Part Number	Description	Remarks	Serial Number	Qty
1	6667844	VALVE ASSY	Ref. 2-4		1
2		BLOCK	NSS		1
3	6669087	SEAL KIT			1
4	6669085	VALVE			1
5	6707101	SEAL	neoprene		1
6	6737524	KNOB	red square		1
7	7D000004B	NUT			1

CONTROL PEDALS

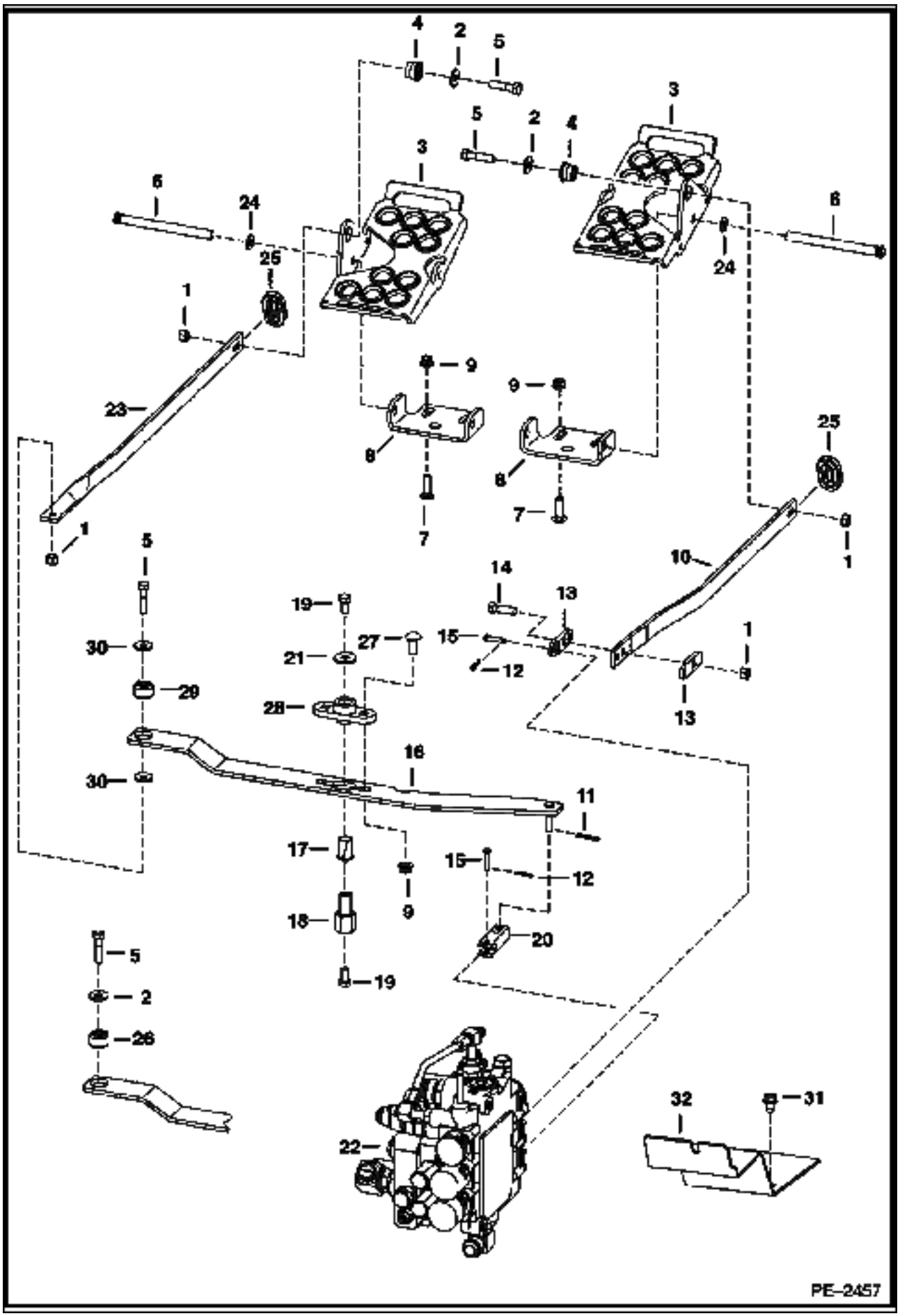

CONTROL PEDALS (Cont'd)

Ref No	Part Number	Description	Remarks	Serial Number	Qty
1	95D000006B	NUT			5
2	6563914	WASHER			3
2	6563914	WASHER			2
3	6726680	PEDAL			2
4	6665701	BUSHING			3
5	17C000624B	BOLT			3
6	6564657	PIN			2
7	37C000620B	BOLT			4
8	6726679	MOUNT			2
9	57D000006B	NUT			4
10	6731251	BAR			1
11	1306637B	PIN			2
12	6513495	COTTER PIN			2
13	6708009	LINK			2
14	17C000620B	BOLT			1
15		PIN	NAP		2
16	6718285	LEVER			1
17	6512026	BUSHING			1
18	6718283	RETAINING NUT			1
19	17C000612B	BOLT			2
20	6706105	YOKE			1
21	619021B	WASHER			1
22		VALVE	CONTROL		1
23	6731252	BAR			1
24	25E000021B	WASHER	Used if serrations on pins are too long		2
25	6577961	GROMMET			2
26	6678067	BUSHING			1
27	37C000616B	BOLT			2
28	6708043	BUSHING			1
29	6685060	BUSHING			1
30	6737388	WASHER			2
31	84G003710B	BOLT			4
32	6737095	STEP	rest - R.H.		1
32	6737120	STEP	rest - L.H.		1

HYDRAULIC CONTROL VALVE
(Spool Lock) (D Series)

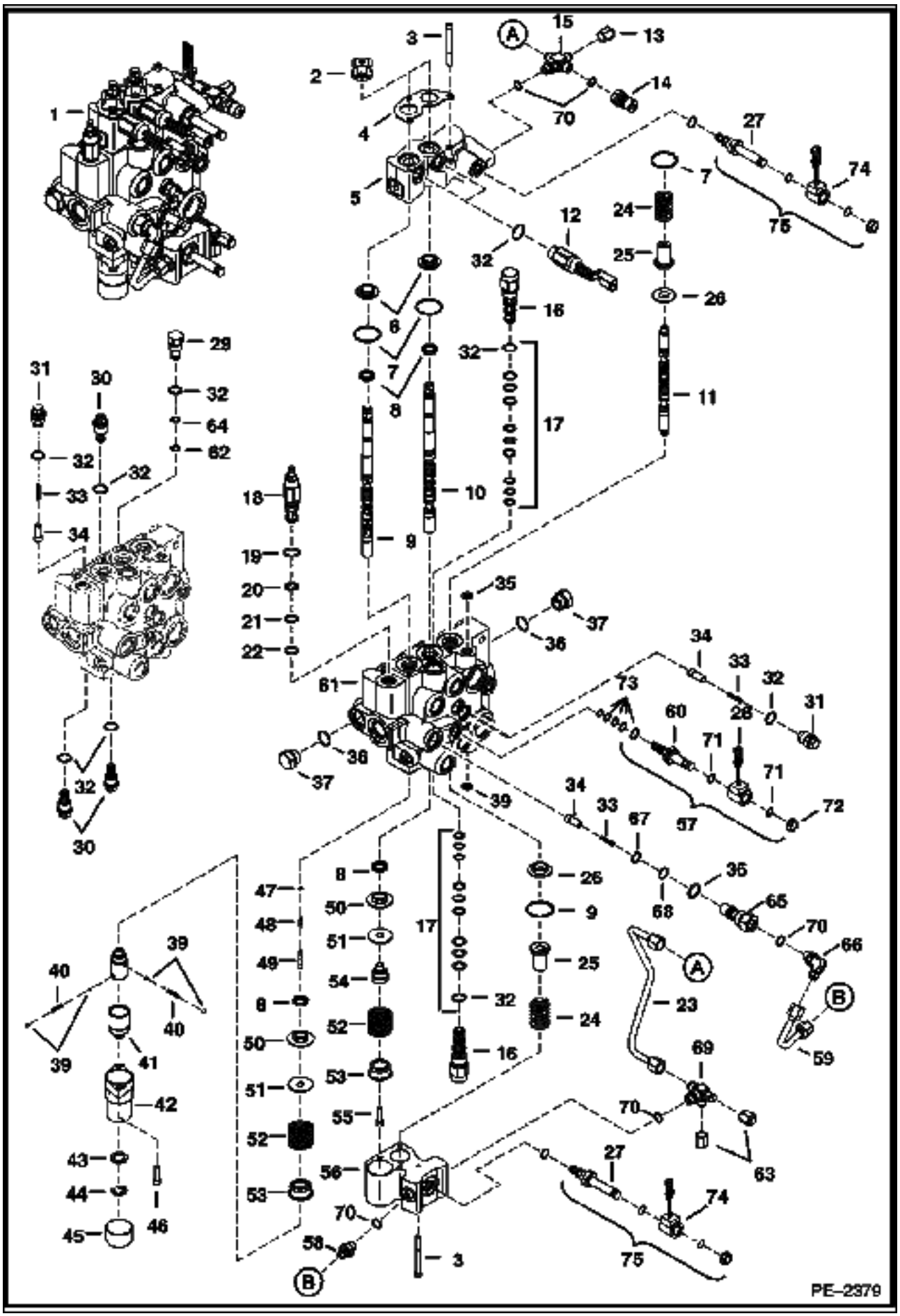

HYDRAULIC CONTROL VALVE (Cont'd)
(Spool Lock) (D Series)

Ref No	Part Number	Description	Remarks	Serial Number	Qty
1	6813080	VALVE ASSY			1
2	6587763	BOOT			2
3	29G000444B	BOLT			7
4	6813153	PLATE	retainer		1
5	6817003	BODY			1
6	6805102	BUSHING			2
7	58K000127B	O-RING			x
8	6683274	SEAL			4
9	7108781	SPOOL	lift		1
10	6815152	SPOOL			1
11	6814323	SPOOL			1
12	6677383	SOLENOID	W/Ref. 32		2
13	36K000005B	CAP			1
14	6684125	COUPLER	male		1
15	7102066	CROSS	W/Ref. 70		1
16	6668765	VALVE	W/Ref. 36		2
17	6669734	SEAL KIT			1
18	6686360	VALVE	W/Ref. 19-22		1
19	58K000017B	O-RING			x
20	6665569	WASHER	back-up		x
21	25K020016B	O-RING			x
22	6665570	RING	guide		x
23	6815031	TUBELINE			1
24	6810950	SPRING			2
25	6814694	RETAINER			2
26	6804920	BUSHING			2
27	6688397	STEM			2
28	6671025	COIL			1
29	6816549	PLUG	port relief - W/Ref. 32, 62, 64		1
30	6684646	VALVE	anti-cav - W/Ref. 32		3
31	6817707	PLUG	check valve - W/Ref. 32		3
32	79K000008B	O-RING			x
33	6592117	SPRING			4
34	7106712	SEAT			4
35	55K000204B	O-RING			x
36	79K000010B	O-RING			x
37	24K000007B	PLUG	W/Ref. 36		2
38	6587575	ADAPTER			1
39	6592105	BALL			4
40	6592107	SPRING			2
41	6531270	SLEEVE			1
42	6589226	BONNET			1
43	6592098	WASHER			1
44	799119B	SNAP RING			1
45	6660644	CAP			1
46	29G000416B	SCREW			2
47	54K020002B	O-RING			x
48	6596807	PLUG			1
49	6586918	SCREW			1
50	6595663	BUSHING			2
51	6587523	WASHER			2
52	6587580	SPRING			2
53	6592100	COLLAR			2
54	6592100	COLLAR			1

HYDRAULIC CONTROL VALVE (Cont'd)
(Spool Lock) (D Series)

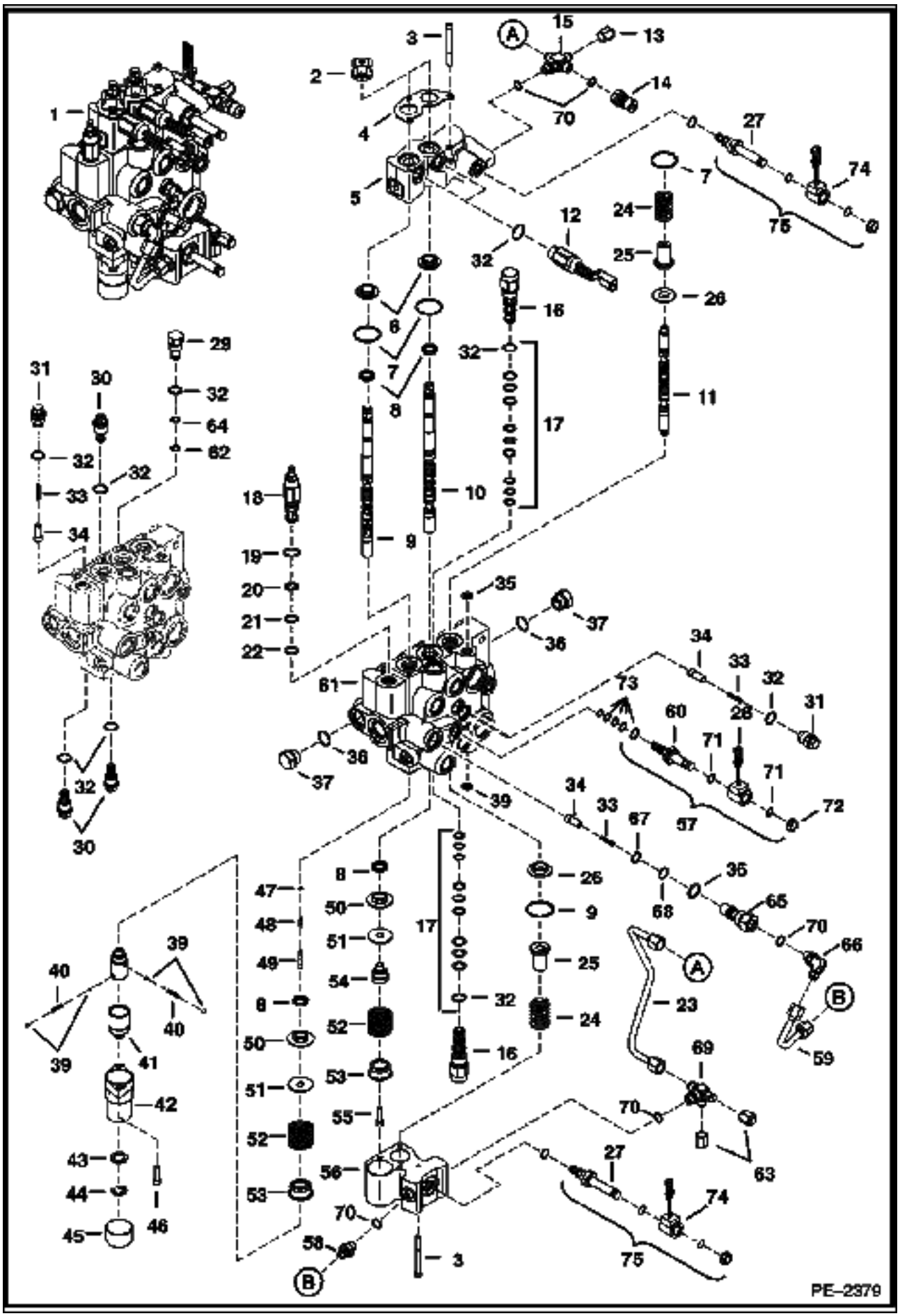

HYDRAULIC CONTROL VALVE (Cont'd)
(Spool Lock) (D Series)

Ref No	Part Number	Description	Remarks	Serial Number	Qty
55	30G000416B	BOLT			1
56	6814279	BLOCK			1
57	6672471	VALVE	W/Ref. 28, 60 & 70-73		1
58	15KB00606B	ADAPTER	W/Ref. 70		1
59	6815032	TUBELINE			1
60	6667687	STEM			1
61		VALVE BODY	NSS		1
62	73K000013B	O-RING			x
63	36K000005B	CAP			2
64	58K000013B	O-RING			x
65	6815014	CHECK VALVE	W/Ref. 36, 67 & 68		1
66	6682549	ELBOW	W/Ref. 70		1
67	58K000016B	O-RING			x
68	73K000016B	RING	back-up		x
69	7102019	FITTING	W/Ref. 70		1
70	79K000006B	O-RING			x
71	54K020028B	O-RING			x
72	6668820	NUT			1
73	6669732	SEAL KIT			1
74	6678891	COIL			2
75	6678893	SOLENOID	W/Ref 27 & 74		2

HYDRAULIC CONTROL VALVE
(ACS & selectable joystick controls) (D-Series)

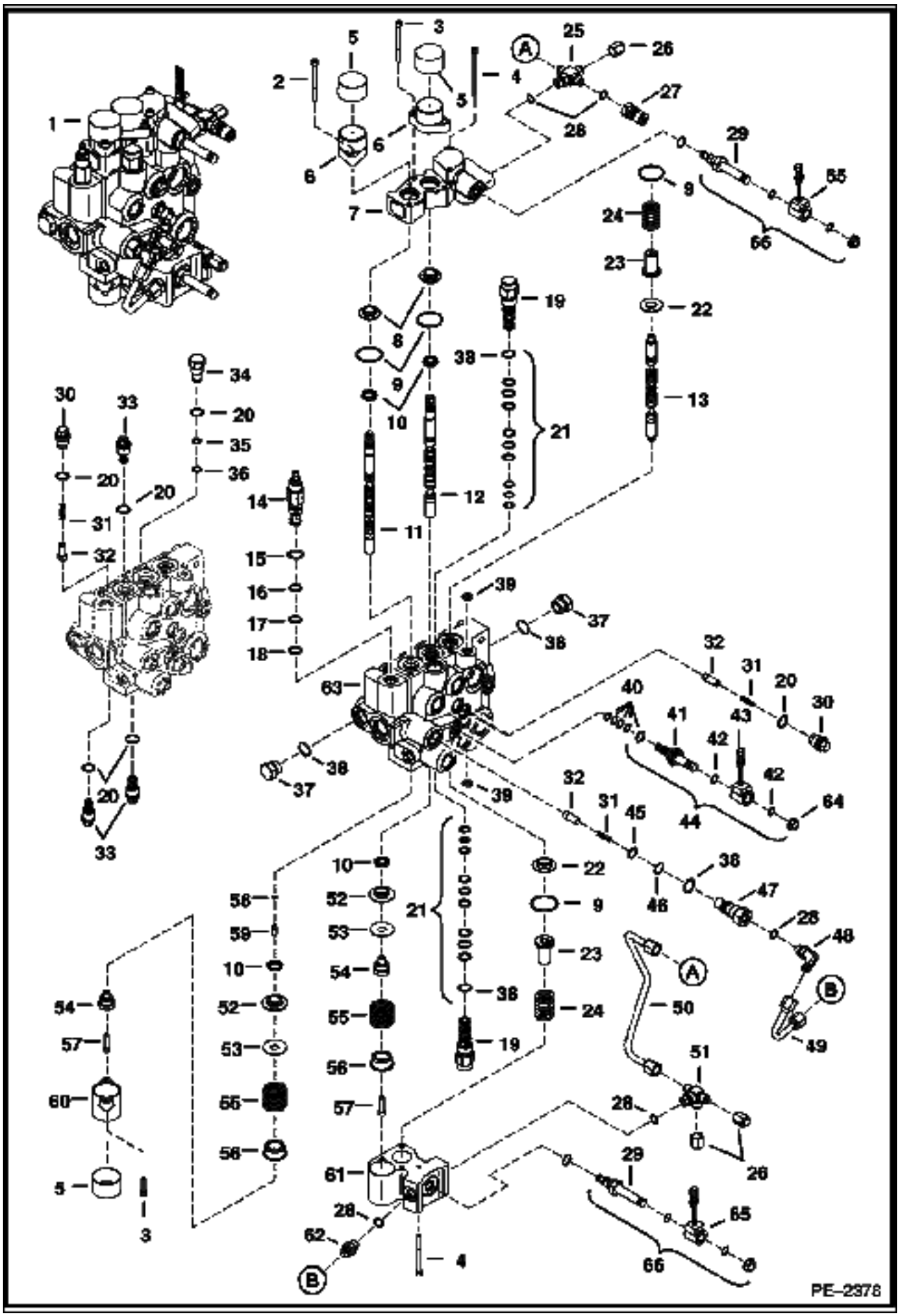

HYDRAULIC CONTROL VALVE (Cont'd)
(ACS & selectable joystick controls) (D-Series)

Ref No	Part Number	Description	Remarks	Serial Number	Qty
1	6814600	VALVE			1
2	69G000436B	BOLT			2
3	29G000416B	SCREW			4
4	29G000444B	BOLT			5
5	6662848	CAP			3
6	7101345	BONNET			2
7	6817004	BODY			1
8	6805102	BUSHING			2
9	58K000127B	O-RING			4
10	6683274	SEAL			4
11	7108241	SPOOL	lift		1
12	7108242	SPOOL	tilt		1
13	6814323	SPOOL			1
14	6686360	VALVE	W/Ref. 15-18		1
15	58K000017B	O-RING			x
16	6665569	WASHER	back-up		x
17	25K020016B	O-RING			x
18	6665570	RING	guide		x
19	6668765	VALVE	W/Ref. 38		2
20	79K000008B	O-RING			x
21	6669734	SEAL KIT			1
22	6804920	BUSHING			2
23	6814694	RETAINER			2
24	6810950	SPRING			2
25	7102066	CROSS	W/Ref. 28		1
26	36K000005B	CAP			2
27	6684125	COUPLER	male		1
28	79K000006B	O-RING			x
29	6688397	STEM			2
30	6817707	PLUG	check valve - W/Ref. 20		3
31	6592117	SPRING			4
32	7106712	SEAT			4
33	6684646	VALVE	W/Ref. 20		3
34	6816549	PLUG	W/Ref. 20, 35 & 36		1
35	58K000013B	O-RING			x
36	73K000013B	O-RING			x
37	24K000007B	PLUG	W/Ref. 38		2
38	79K000010B	O-RING			x
39	55K000204B	O-RING			x
40	6669732	SEAL KIT			1
41	6667687	STEM			1
42	54K020028B	O-RING			x
43	6671025	COIL			1
44	6672471	VALVE	W/Ref. 40-43 & 64		1
45	58K000016B	O-RING			x
46	73K000016B	RING	back-up		x
47	6815014	CHECK VALVE	W/Ref. 38, 45 & 46		1
48	6682549	ELBOW	W/Ref. 28		1
49	6815032	TUBELINE			1
50	7110914	TUBELINE			1
51	7102018	TEE	W/Ref. 28		1
52	6595663	BUSHING			2
53	6587523	WASHER			2
54	6592109	ADAPTER			2

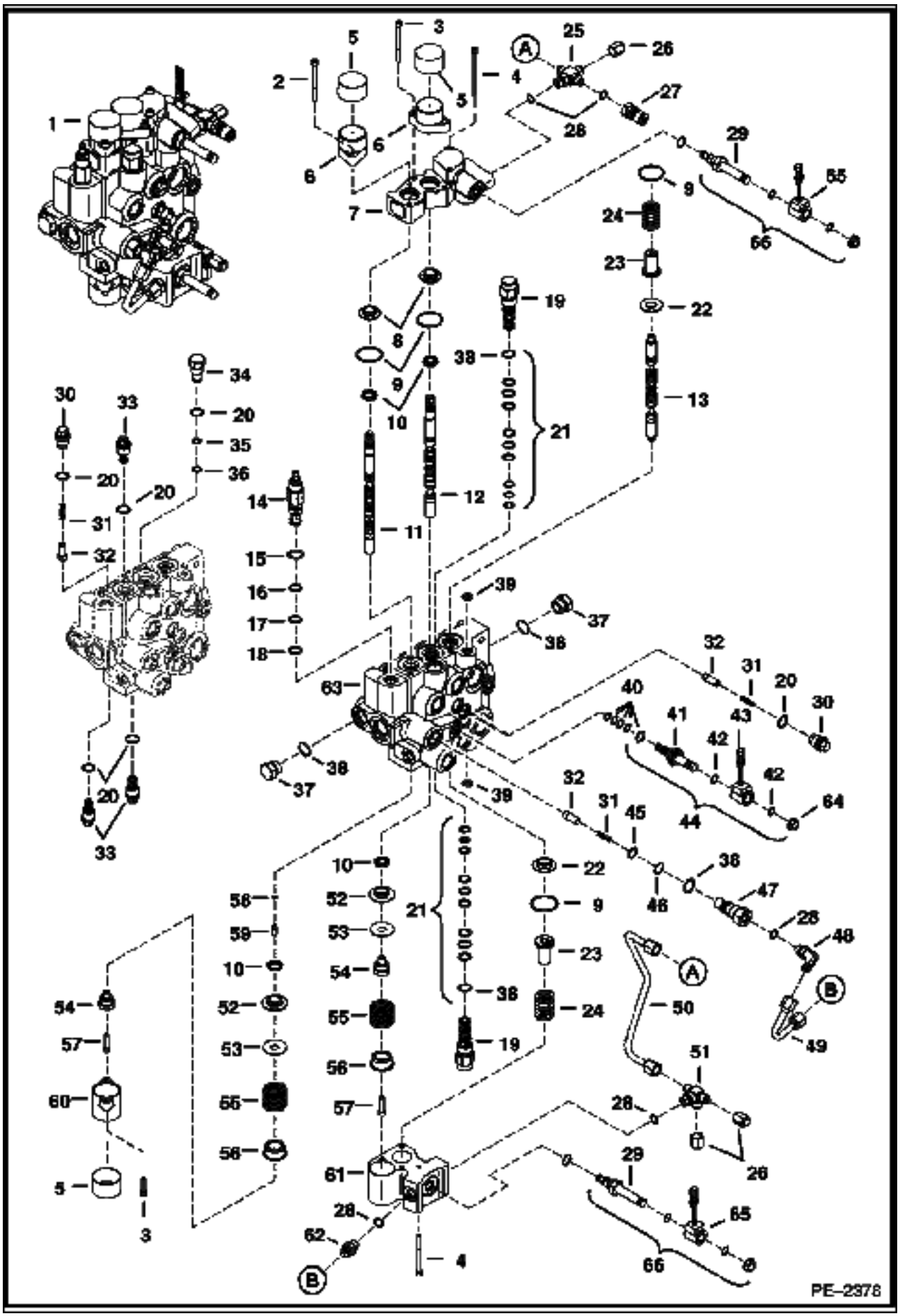
PE-2378

HYDRAULIC CONTROL VALVE (Cont'd)
(ACS & selectable joystick controls) (D-Series)

Ref No	Part Number	Description	Remarks	Serial Number	Qty
55	6587580	SPRING			2
56	6592100	COLLAR			2
57	7102652	SCREW			2
58	54K020002B	O-RING			x
59	6801167	PLUG			1
60	6803092	BONNET			1
61	6814279	BLOCK			1
62	15KB00606B	ADAPTER	W/Ref. 28		1
63		BODY	NSS		1
64	6668820	NUT			1
65	6678891	COIL			2
66	6678893	SOLENOID	W/Ref 29 & 65		2

BUCKET POSITIONING VALVE

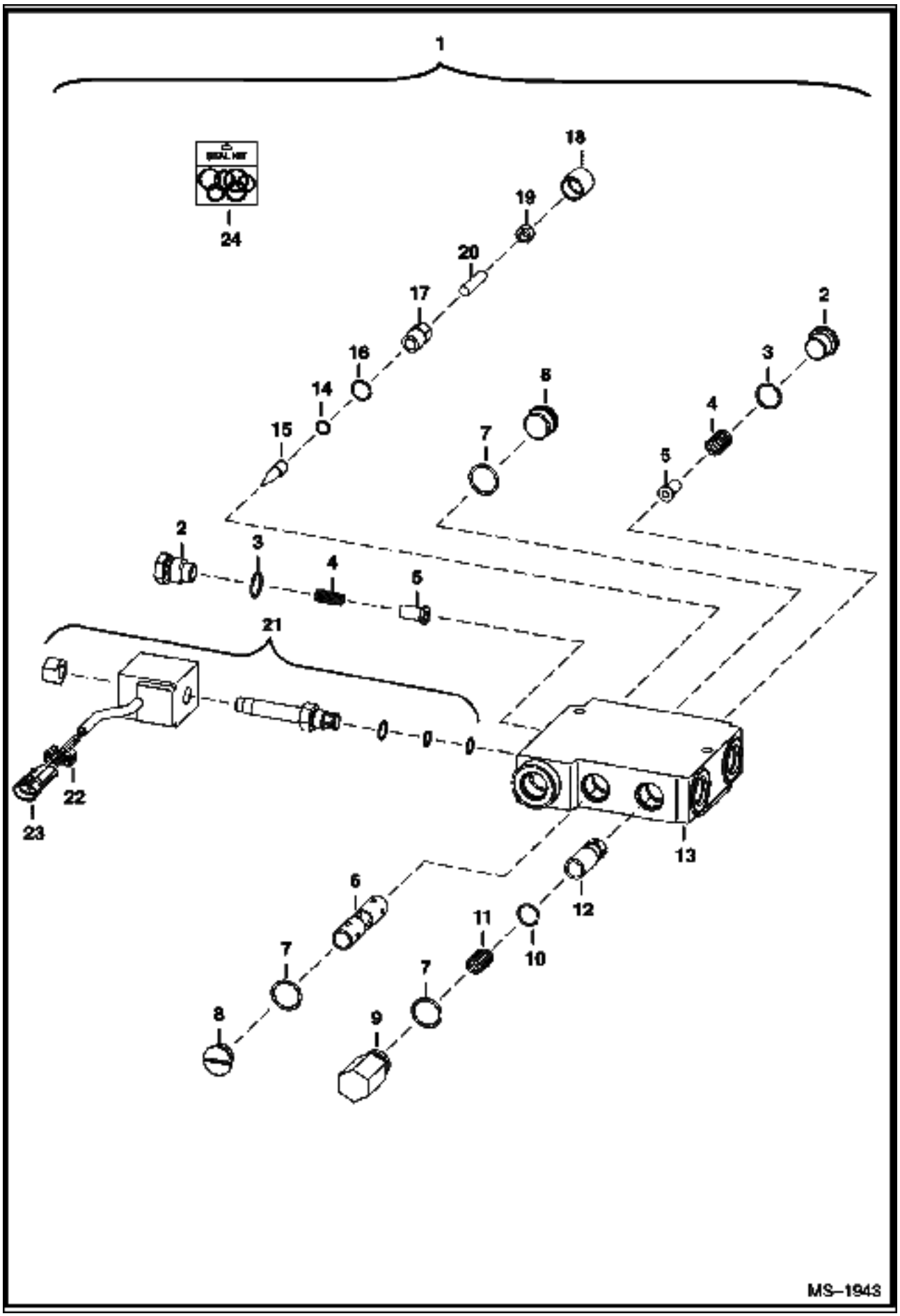

BUCKET POSITIONING VALVE (Cont'd)

Ref No	Part Number	Description	Remarks	Serial Number	Qty
1	6675669	VALVE	primer red - Ref. 2-21		1
2	6647784	PLUG	W/Ref. 3		2
3	79K000008B	O-RING			2
4	6647785	SPRING			2
5	6647783	LOAD CHECK			2
6		SPOOL	NSS		1
7	58K000116B	O-RING			3
8	6676543	PLUG	W/Ref. 7		2
9	6667176	PLUG	W/Ref. 7		1
10	6667680	SNAP RING			1
11	6676544	SPRING			1
12		SPOOL	NSS		1
13		BODY	NSS		1
14	6667677	O-RING			1
15	6647777	PIN			1
16	6634874	O-RING			1
17	6676542	CAP			1
18	6667676	COVER			1
19	6631561	NUT			1
20	6648293	SCREW			1
21	6672863	SOLENOID			1
21	6671527	NUT			1
21	6670634	SEAL KIT			1
21	6674331	COIL	W/Ref. 22 & 23		1
21	6676545	CARTRIDGE			1
22	6641180	LOCK	2-pin		1
23	6641179	CONNECTOR	2-pin		1
24	6667185	SEAL KIT	Ref. 3, 7, 14, 16 & 18		1

HIGH FLOW HYDRAULICS
(40 GPM) (Non - Selectable Joystick Controlled)

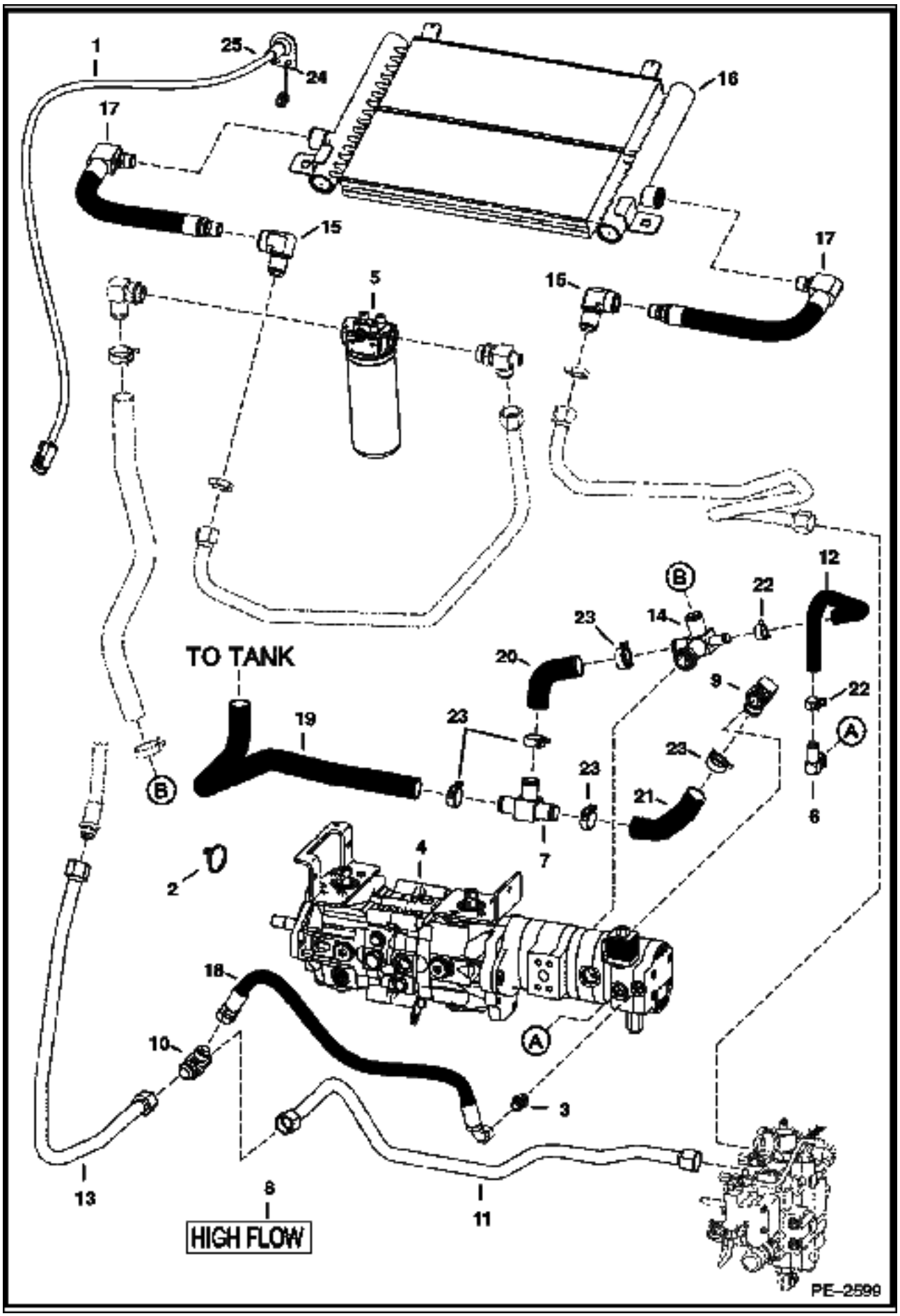

HIGH FLOW HYDRAULICS (Cont'd)
(40 GPM) (Non - Selectable Joystick Controlled)

Ref No	Part Number	Description	Remarks	Serial Number	Qty
1	6718426	HARNESS	attachment control		1
2	6624289	STA STRAP			14
3	6679943	VALVE			1
3	79K000008B	O-RING			x
4		PUMP	See Illustration HYDROSTATIC PUMP/ MS1452 See Illustration HIGH FLOW GEAR PUMP/ MS1456		1
5		FILTER	See Illustration HYDROSTATIC OIL FILTER/ C2818		1
6	6717885	ELBOW			1
6	79K000010B	O-RING			x
7	6727064	TEE			1
8	7120602	DECAL	high flow		2
9	6729306	ELBOW			1
9	79K000016B	O-RING			x
10	6730143	TEE			1
11	6732993	TUBELINE			1
12	6733164	HOSE			1
13	6733309	TUBELINE			1
14	7102399	TEE			1
14	79K000016B	O-RING			x
15	7103749	ELBOW			2
15	6688523	SEAL KIT			x
16	7103750	EXCHANGER			1
16	6688523	SEAL KIT			x
17	7103751	HOSE			2
17	6688523	SEAL KIT			x
18	7109144	hose			1
18	6688523	SEAL KIT			x
19	7110205	HOSE			1
20	7110286	HOSE			1
21	7110339	HOSE			1
22	5HM00024B	CLAMP			2
23	5HM00035B	CLAMP			4
24	84G003112B	BOLT			2
25	30H000035B	CLAMP			1
26	7113512	DECAL	approved attachments only		1

HIGH FLOW HYDRAULICS
(40 GPM) (Selectable Joystick Controlled)

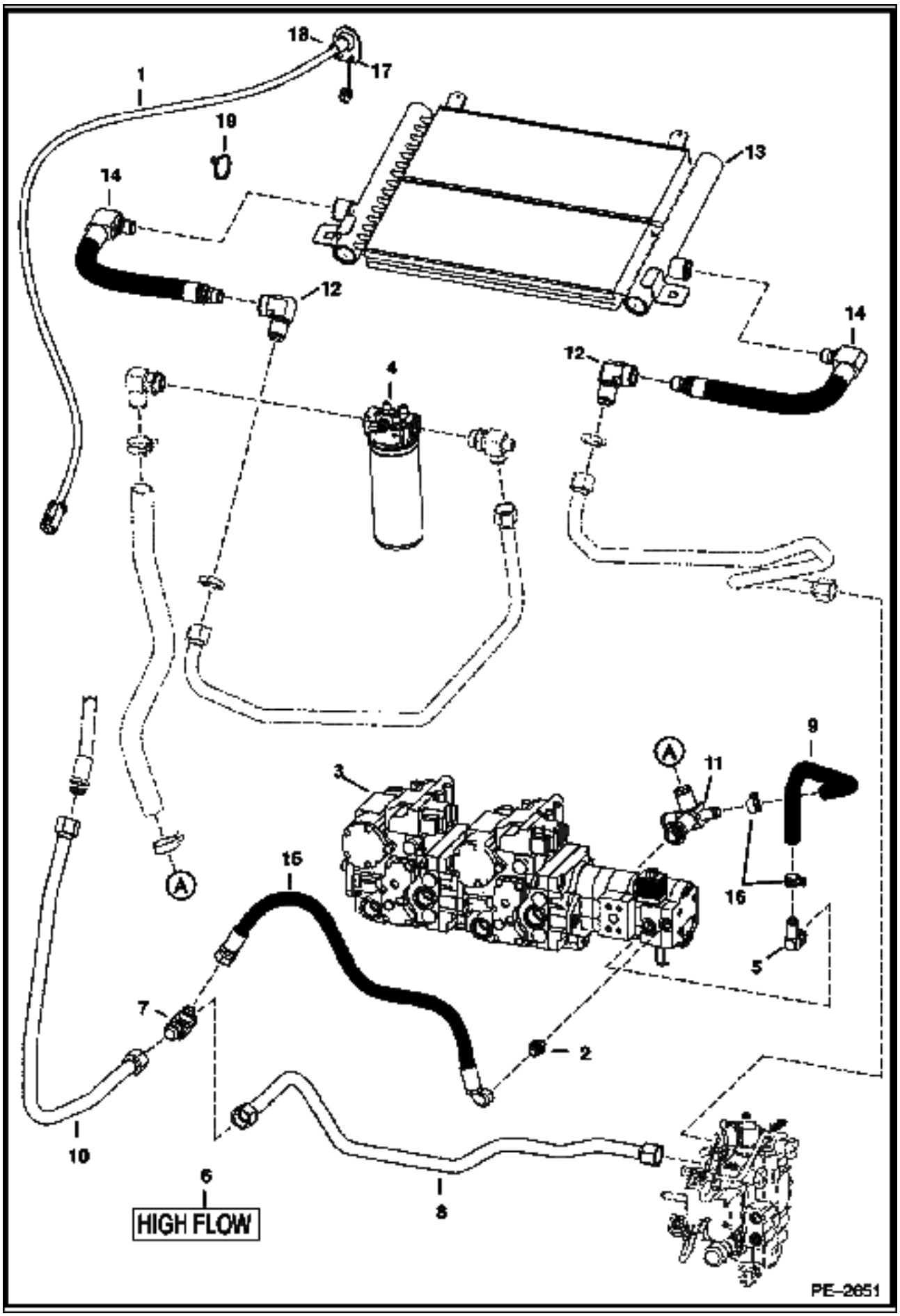

HIGH FLOW HYDRAULICS (Cont'd)
(40 GPM) (Selectable Joystick Controlled)

Ref No	Part Number	Description	Remarks	Serial Number	Qty
1	6718426	HARNESS	attachment control		1
2	6679943	VALVE			1
2	79K000008B	O-RING			x
3		PUMP	See Illustration HYDROSTATIC PUMP/ B25010 See Illustration HIGH FLOW GEAR PUMP/ MS1456		1
4		FILTER	See Illustration HYDROSTATIC OIL FILTER/ C2818		1
5	6717885	ELBOW			1
5	79K000010B	O-RING			x
6	7120602	DECAL	high flow		2
7	6730143	TEE			1
8	6732993	TUBELINE			1
9	6733164	HOSE			1
10	6733309	TUBELINE			1
11	7102399	TEE			1
11	79K000016B	O-RING			x
12	7103749	ELBOW	STC		2
12	6688523	SEAL KIT			x
13	7103750	EXCHANGER			1
13	6688523	SEAL KIT			x
14	7103751	HOSE			2
14	6688523	SEAL KIT			x
15	7109144	hose			1
16	5HM00024B	CLAMP			2
17	84G003112B	BOLT			2
18	30H000035B	CLAMP			1
19	6624289	STA STRAP			7
20	7113512	DECAL	approved attachments only		1

DRAWING NOT AVAILABLE AT TIME OF PRINTING

MS-1456

HIGH FLOW GEAR PUMP (Cont'd)

Ref No	Part Number	Description	Remarks	Serial Number	Qty
1	6688713	GEAR PUMP	model 163D72022		1

HYDROSTATIC CIRCUITRY
(W/Tank) (Manual Controls) (D-Series Valve)

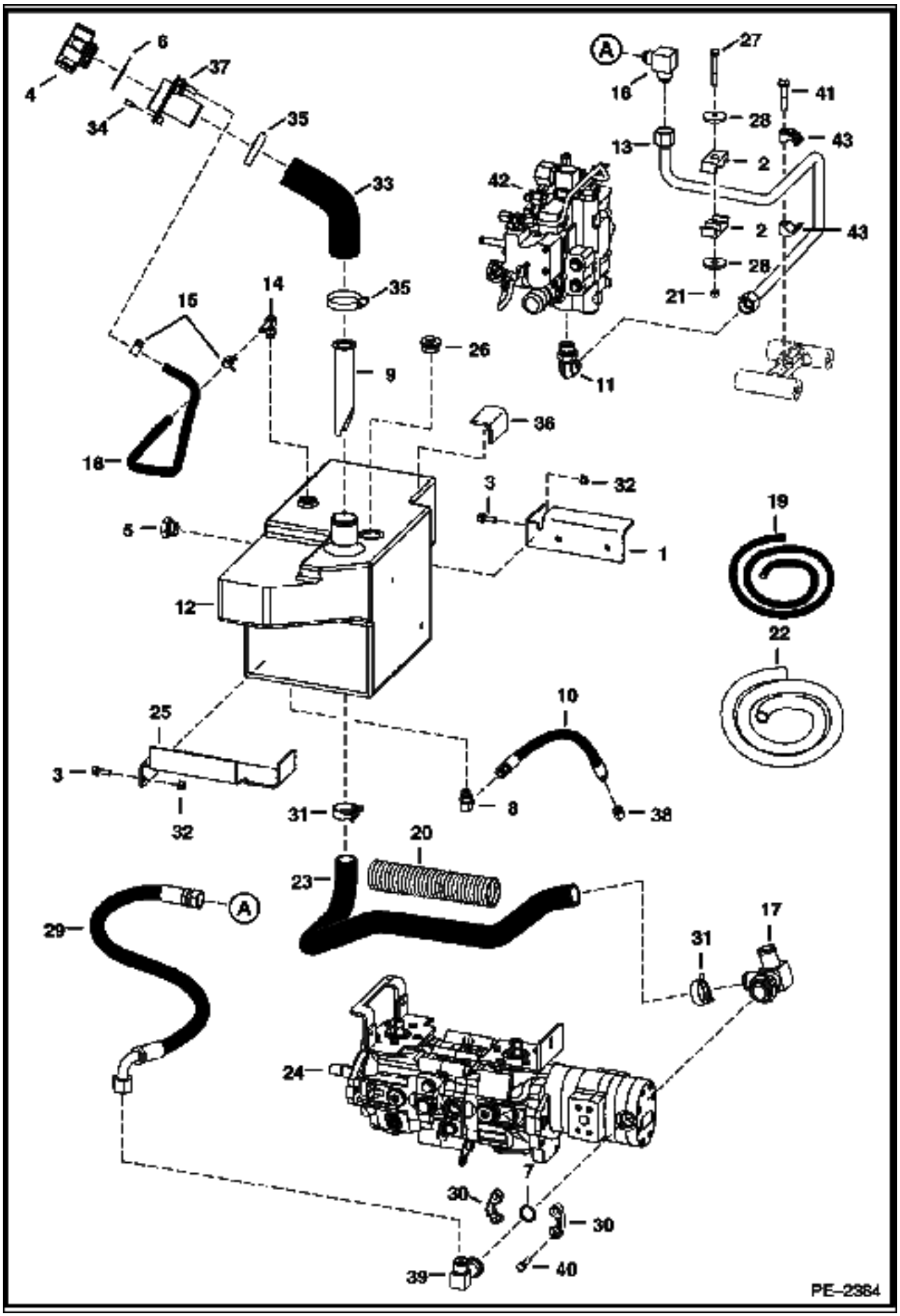

HYDROSTATIC CIRCUITRY (Cont'd)
(W/Tank) (Manual Controls) (D-Series Valve)

Ref No	Part Number	Description	Remarks	Serial Number	Qty
1	6718851	BRACKET			1
2	6592506	CLAMP			2
3	35C000516B	BOLT			4
4	6727475	CAP	breather & fill - also Order Ref. 6		1
5	6665915	GAUGE	sight		1
5	79K000006B	O-RING			x
5	6734563	WASHER KIT	washer & o-ring		1
5	6734561	WASHER			1
5	25K030118B	O-RING			1
6	6700631	GASKET			2
7	55K000214B	O-RING			1
8	17KB00606B	ELBOW			1
8	79K000006B	O-RING			x
9	6569219	SCREEN			1
10	7106212	HOSE			1
11	7101797	ELBOW			1
11	79K000012B	O-RING			x
12	6731209	TANK	hydraulic		1
13	6736656	TUBELINE			1
14	6727313	ELBOW			1
14	79K000006B	O-RING			x
15	5HM00015B	CLAMP			2
16	77F000008B	ELBOW			1
17	6732586	TEE			1
17	79K000020B	O-RING			x
18		HOSE	NAP - 23" (584mm long) - Order Ref. 19		1
19	6586251	HOSE	bulk - sold per foot		x
20		SHIELD	NAP - 10" (254mm) long - Order Ref. 22		1
21	85D000006B	NUT			1
22	6705749	SHIELD	bulk - sold by the foot		x
23	6730345	HOSE			1
24		PUMP	See Illustration HYDROSTATIC PUMP/ MS1452 See Illustration GEAR PUMP/ MS1454 hydrostatic		1
25	6718850	BRACKET			1
26	47K000010B	PLUG	tank flushing hole		1
26	79K000016B	O-RING			x
27	17C000640B	BOLT			1
28	872229B	WASHER			2
29	6736649	HOSE			1
30	19J000012B	CLAMP			2
31	5HM00042B	CLAMP			2
32	83D000005B	NUT			4
33	6731638	HOSE			1
34	6706517	SCREW			3
35	42HL00250B	CLAMP			2
36	6578278	PAD			1
37	6727354	INLET			1
38	36K000005B	CAP			1
39	7106040	TEE	split flange		1
40	17C000620B	BOLT			4
41	35C000632B	BOLT			1
42		VALVE	control		1
43	7100462	CLAMP			2

HYDROSTATIC CIRCUITRY
(W/Cooler) (Manual Controls) (D-Series Valve)

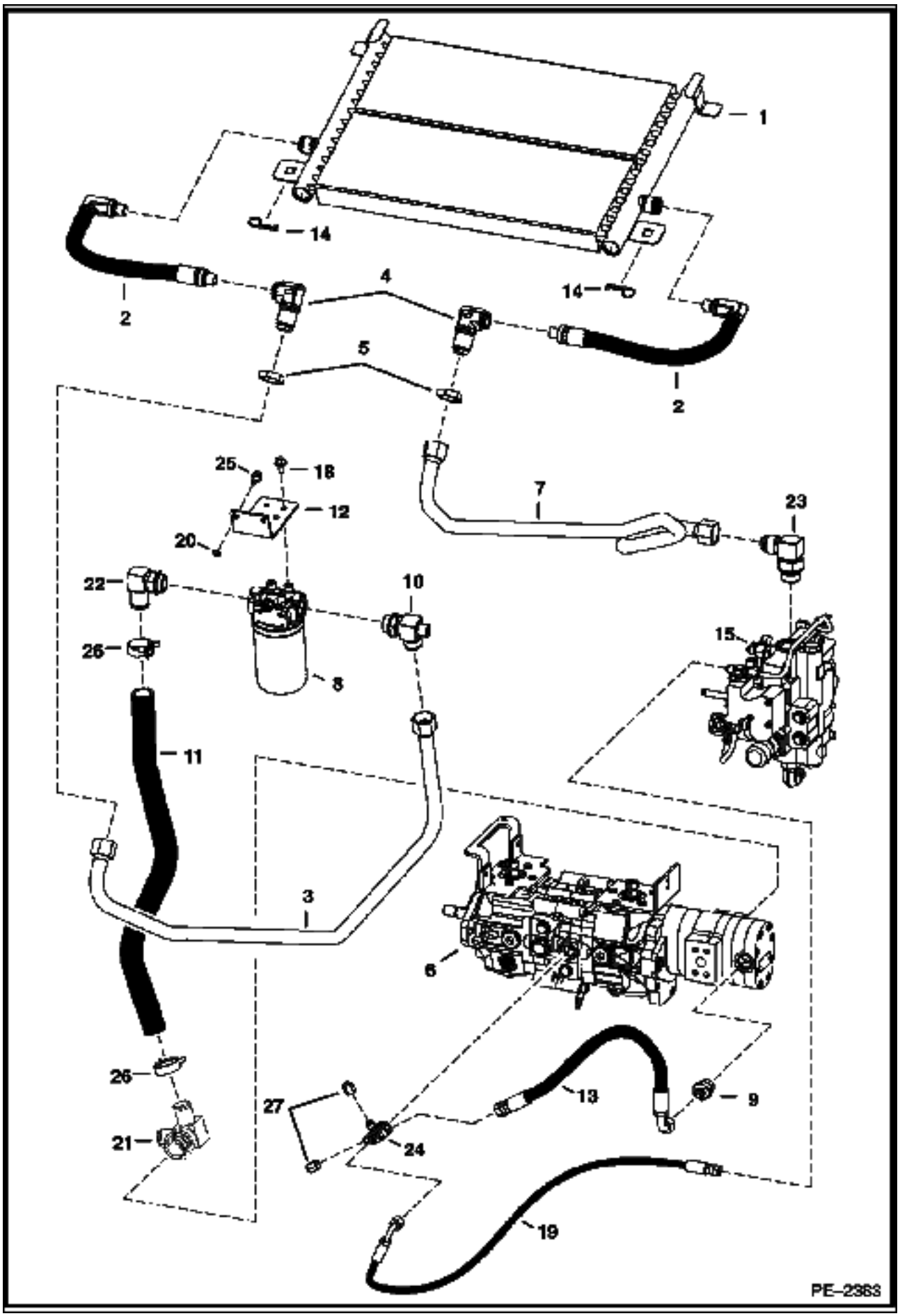

HYDROSTATIC CIRCUITRY (Cont'd)
(W/Cooler) (Manual Controls) (D-Series Valve)

Ref No	Part Number	Description	Remarks	Serial Number	Qty
1	6678156	COOLER	oil		1
1	6681501	SEAL KIT			1
2	6684457	HOSE			2
2	6681501	SEAL KIT			x
3	7103170	TUBELINE			1
4	6678970	ELBOW			2
5	86F000010B	NUT			2
6		PUMP	See Illustration HYDROSTATIC PUMP/ MS1452 See Illustration HYDROSTATIC PUMP/ B25010		1
7	6735861	TUBELINE			1
8	6678155	FILTER ASSY			1
8	6661248	ELEMENT			x
9	15KB00812B	ADAPTER			1
9	79K000012B	O-RING			x
10	6731527	TEE			1
10	79K000012B	O-RING			x
10	6674798	REPAIR KIT	internal retaining ring, back-up washer & o-ring		1
11	6731923	HOSE			1
12	7103903	MOUNT	filter		1
13	6731935	HOSE			1
14	1318565	COTTER PIN			2
15		VALVE	control		1
16	6736258	TEE			1
17	6718948	SNUBBER			1
18	35C000612B	BOLT			4
19	6628810	HOSE			1
20	6E000006B	WASHER			2
21	6732586	TEE			1
21	79K000020B	O-RING			x
22	6729306	ELBOW			1
22	79K000012B	O-RING			x
23	6813964	ELBOW	90 degree		1
23	79K000016B	O-RING			x
23	58K000022B	O-RING			x
24	6731925	TEE			1
24	79K000010B	O-RING			x
25	84G003710B	BOLT			2
26	5HM00042B	CLAMP			4

HYDROSTATIC CIRCUITRY
(W/Motors) (D-Series Valve)

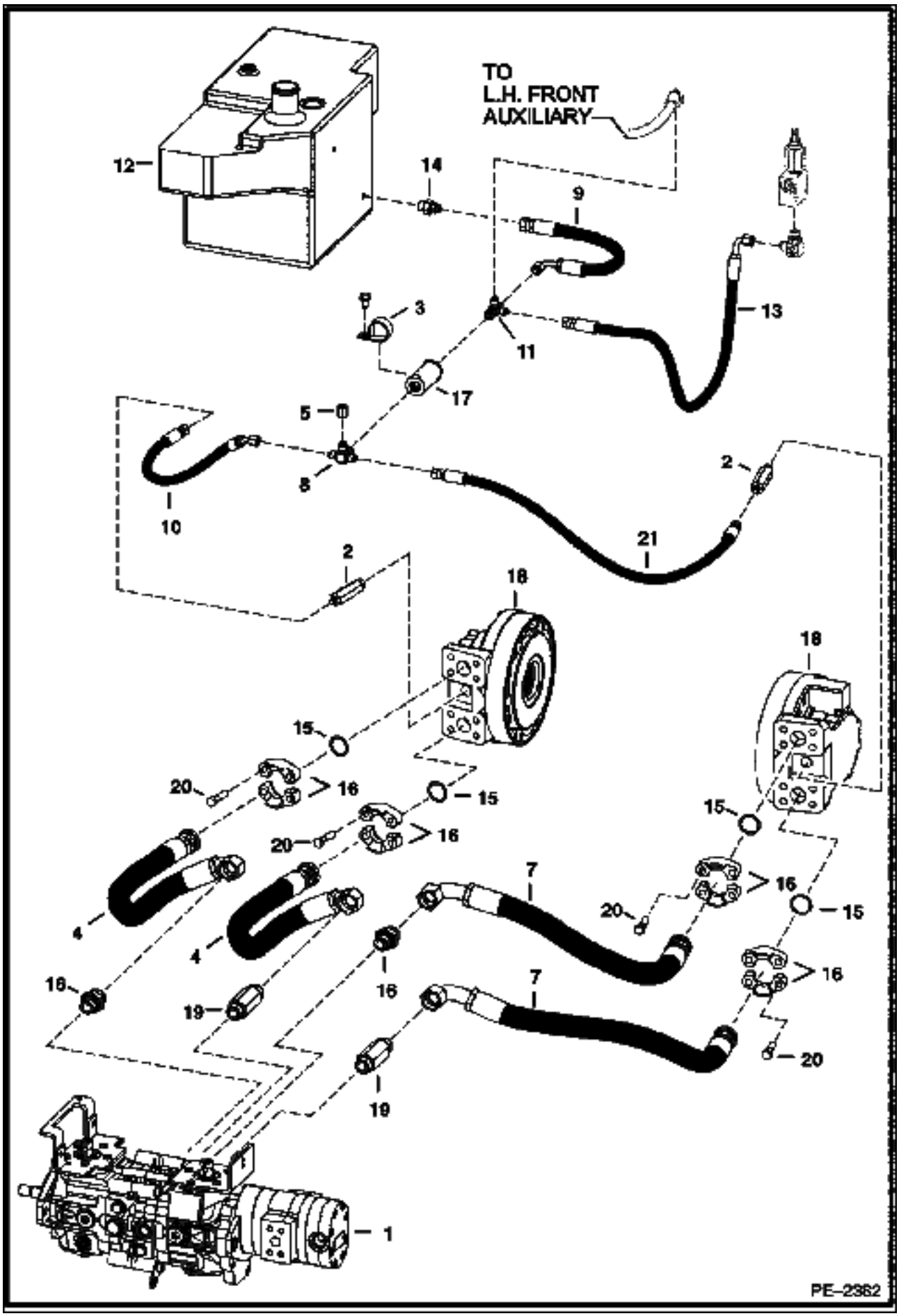

HYDROSTATIC CIRCUITRY (Cont'd)
(W/Motors) (D-Series Valve)

Ref No	Part Number	Description	Remarks	Serial Number	Qty
1		PUMP	See Illustration HYDROSTATIC PUMP/ MS1452 See Illustration HYDROSTATIC PUMP/ B25010		1
2	6717306	ADAPTER			2
2	79K000006B	O-RING			x
3	30H000079B	CLAMP			1
4	6673954	HOSE	mega seal - SEE NOTE - manual controls		2
5	36K000005B	CAP			1
6	20J000016B	CLAMP			8
7	6679141	HOSE	mega seal - SEE NOTE - manual controls		2
8	6725497	CROSS			1
8	79K000006B	O-RING			x
9	6733219	HOSE			1
10	6732484	HOSE			1
11	6718031	TEE			1
11	79K000006B	O-RING			x
12		TANK	hydraulic		1
13	6732483	HOSE			1
14	15KB00808B	ADAPTER			1
14	79K000008B	O-RING			x
15	55K000219B	O-RING			4
16	15KB01612B	ADAPTER			2
16	79K000012B	O-RING			x
17	6661022	FILTER	in-line - 90 micron		1
18		MOTOR	drive		2
19	6716243	ADAPTER			2
19	79K000012B	O-RING			x
20	17C000728B	BOLT			16
21	6732485	HOSE			1

HYDROSTATIC CIRCUITRY
(2-Speed Option)

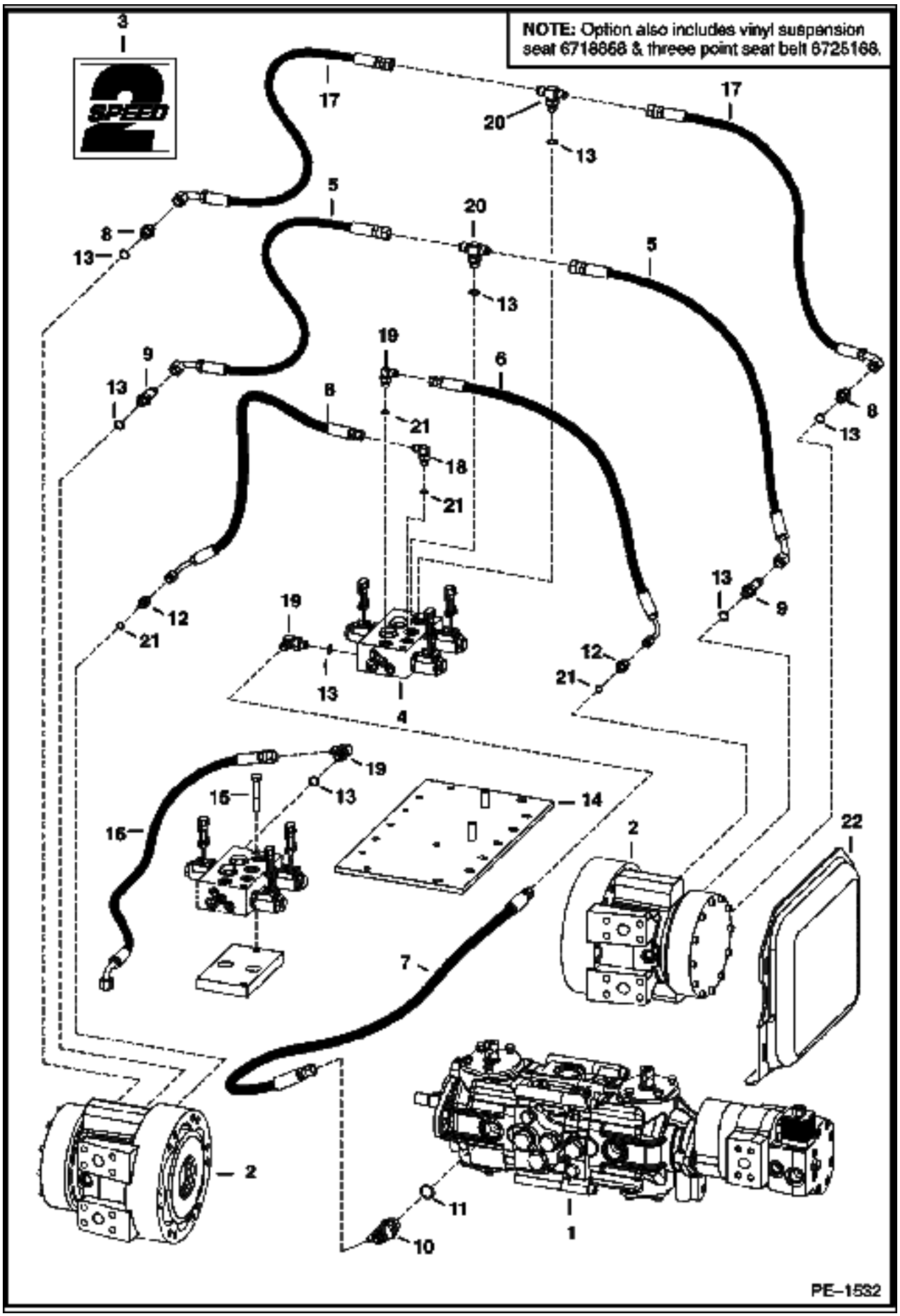

HYDROSTATIC CIRCUITRY (Cont'd)
(2-Speed Option)

Ref No	Part Number	Description	Remarks	Serial Number	Qty
1		PUMP	See Illustration HYDROSTATIC PUMP/ MS1452 See Illustration HYDROSTATIC PUMP/ B25010		1
2		MOTOR	See Illustration HYDROSTATIC MOTOR & BRAKE/ B16392		2
3	6729078	DECAL	2-speed		2
4	6676417	VALVE	See Illustration 2-SPEED VALVE/ MS1385 2-speed		1
5	6725899	HOSE	2-speed port		2
6	6725900	HOSE	make-up		2
7	6725901	HOSE			1
7	6579167	HOSE	for joystick controls		1
8	15KV00005B	ADAPTER	W/Ref. 13		2
8	97K000006B	O-RING	flared end		x
9	16KN00005B	ADAPTER	W/Ref. 13		2
9	97K000006B	O-RING	flared end		x
10		TEE	NAP - W/Ref. 11 - tapered boss face		1
10	97K000006B	O-RING	flared end		x
10	21KB00610B	TEE	W/Ref. 11 - flat boss face		1
10	15KB00610B	ADAPTER	W/Ref. 11 - flat boss face		1
11	99K000010B	O-RING	tapered boss face		x
11	79K000010B	O-RING	flat boss face		x
12	15KN00003B	ADAPTER	W/Ref. 21		2
12	97K000004B	O-RING	flared end		x
13	99K000006B	O-RING			x
14	6725496	COVER	chaincase		1
15	17C000636B	BOLT			2
16	6628613	HOSE			1
17	6716391	HOSE	brake		2
18	17KV00003B	ELBOW	W/Ref. 21		2
18	97K000004B	O-RING	flared end		x
19	17KV00005B	ELBOW	W/Ref. 13		3
19	97K000006B	O-RING	flared end		x
20	19KV00005B	TEE	W/Ref. 13		2
20	97K000006B	O-RING	flared end		x
21	99K000004B	O-RING			x

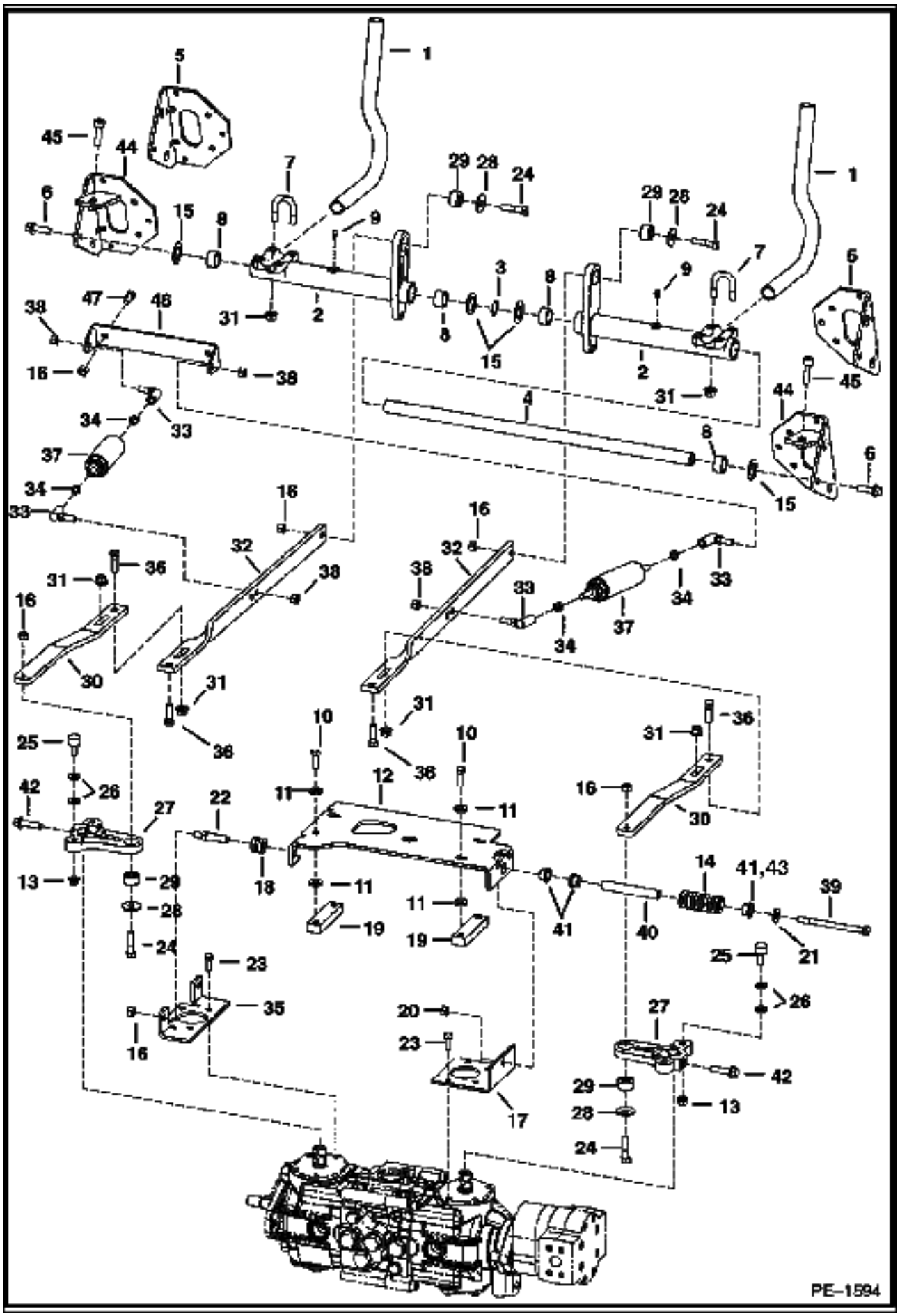
PE–1594

Ref No	Part Number	Description	Remarks	Serial Number	Qty
1	6702543	LEVER			2
2		BELLCRANK	NAP - 1.0475 in. (26,2 mm) I.D. Hole For Ref. 29 (6678067 Bushing) - Use W/Ref. 9 (6518200 Grease Zerk) - Order 7110572 Bellcrank & Ref. 9 (10H000035B Grease Zerk)		2
2	7110572	BELLCRANK	Use W/Ref. 9 (10H000035B Grease Zerk)		2
3	6599741	WASHER	wave		1
4	6716545	ROD			1
5	45C000620B	BOLT			2
6	6732997	U-BOLT			4
7	6673710	BEARING			4
8	6518200	GREASE ZERK	press fit		2
8	10H000035B	GREASE ZERK	threaded		2
9	8C000616B	BOLT			4
10	6557831	WASHER			8
11	6706095	MOUNT			1
12	98D000006B	NUT			4
13	6701535	SPRING			1
14	6716916	WASHER			4
15	95D000006B	NUT			12
16	6576196	MOUNT			1
17	6706098	GUIDE			2
18	6702716	BLOCK			2
19	57D000006B	NUT			1
20	6563914	WASHER			1
21	6577058	PIN			2
22	1CM00820B	BOLT			8
23	17C000626B	BOLT			4
24	6673789	BEARING			4
25	25E000017B	WASHER			8
26	6729956	LEVER			2
27	619021B	WASHER			4
28	6678067	BUSHING	torsion - 1.055" (26,8mm) O.D.		4
29	6731253	LINK			2
30	83D000006B	NUT			4
31	6716117	LINK			2
32	6599744	BALL JOINT			4
33	8D000006B	NUT			4
34	6706096	MOUNT			1
35	17C000620B	BOLT			4
36	6649551	SHOCK			2
37	96D000006B	NUT			4
38	17C000680B	BOLT			1
39	6715164	SLEEVE			1
40	6715163	BUSHING			3
41	35C000624B	BOLT			2
42	25E000024B	WASHER	for AHC		1
43	6733022	BRACKET	R.H.		1
43	6733024	BRACKET	L.H.		1
44	73G000824B	BOLT			2
45	6706106	MOUNT	damper		1
46	17C000612B	BOLT			2

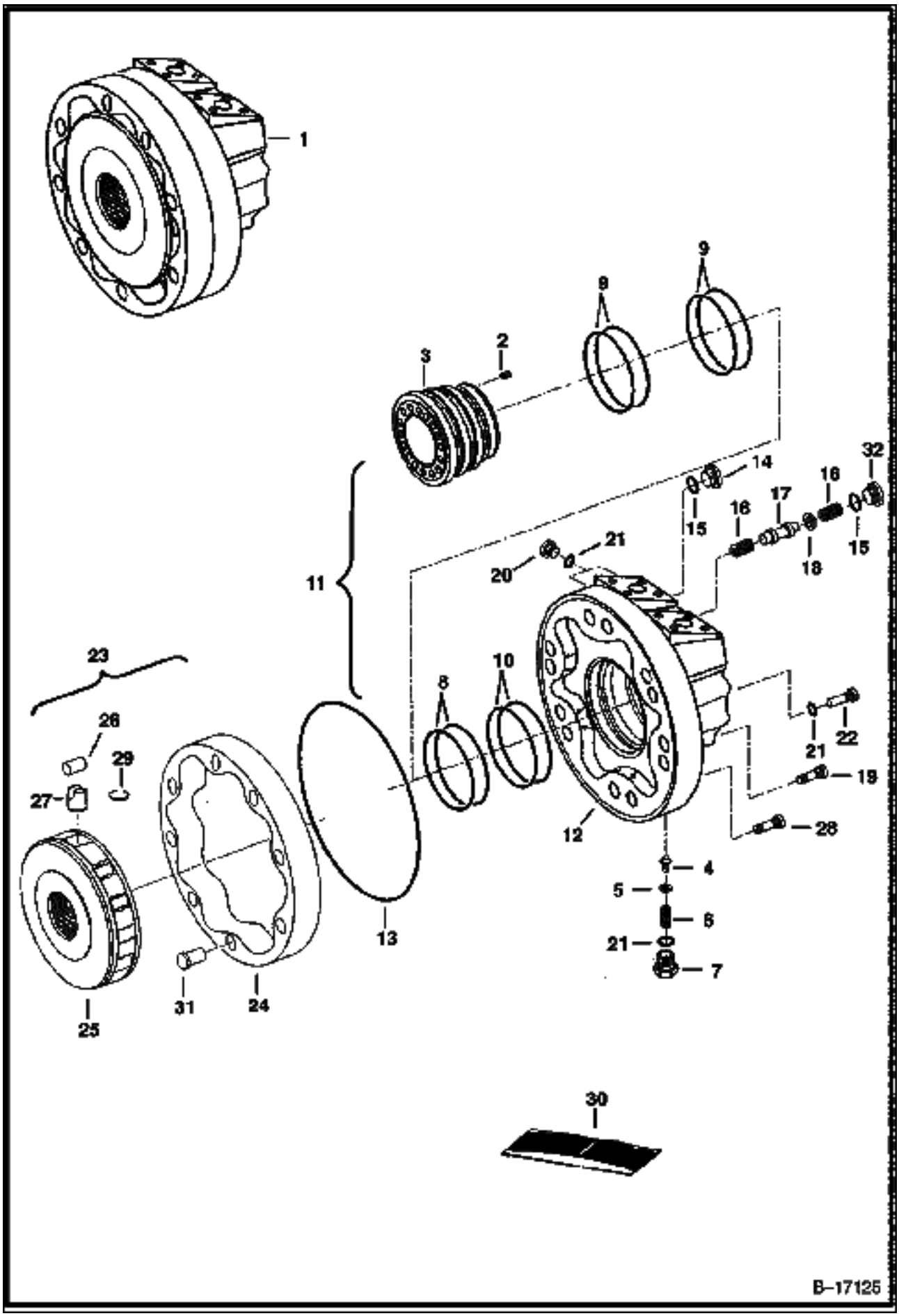
1
9
8
2
3
14
32
16
17
15
16
18
15
21
20
11
23
10
8
26
29
27
22
21
19
28
12
4
5
6
21
7
13
31
24
25
30
B–17125

Ref No	Part Number	Description	Remarks	Serial Number	Qty
1	6672825	MOTOR	Ref. 2-28		1
2	6674037	SPRING			9
3	6674184	RING			1
4	6675868	POPPET			1
5	6674343	SHIM			1
6	6674344	SPRING			1
7	6674345	PLUG			1
8	6675227	SEAL	W/ O-ring		1
9	6675228	SEAL	W/ O-ring		2
10	6676022	SEAL	W/ O-ring - 86,4mm I.D.		1
11	6674335	HOUSING ASSY	rear - Ref. 2-10, 14-18 & 20-22		1
12	6674341	HOUSING	rear		1
13	6674029	SEAL			1
14	6671845	PLUG	W/Ref. 15		1
15	6676023	O-RING			1
16	6674339	SPRING			2
17	6674337	SPOOL			1
18	6674338	WASHER			1
19	6675021	BOLT			2
20	6676024	PLUG	W/Ref. 21		3
21	6675869	O-RING			3
22	6674340	PIN	locating		1
23		ROTARY GROUP	NAP - Ref. 24-27 - Order 6686719 rotary group, also Order 6677850 cam		1
23	6684036	BOLT KIT	W/ (6) bolts & (2) bushings		1
24	6675091	CAM			1
25	6674219	BLOCK			1
26		ROLLER	NSS - Order Ref. 23		8
27		PISTON	NSS - Order Ref. 23		8
28	6675020	SCREW			3
29		RING	NSS - keeper		8
30	6676021	SEAL KIT	Ref. 8-10, 13, 15 & 21		1
31	6688449	LOCATING PIN			2
32	6688866	PLUG	recessed		1

HYDROSTATIC MOTOR & BRAKE
(2-Speed Option & Joystick Controls)

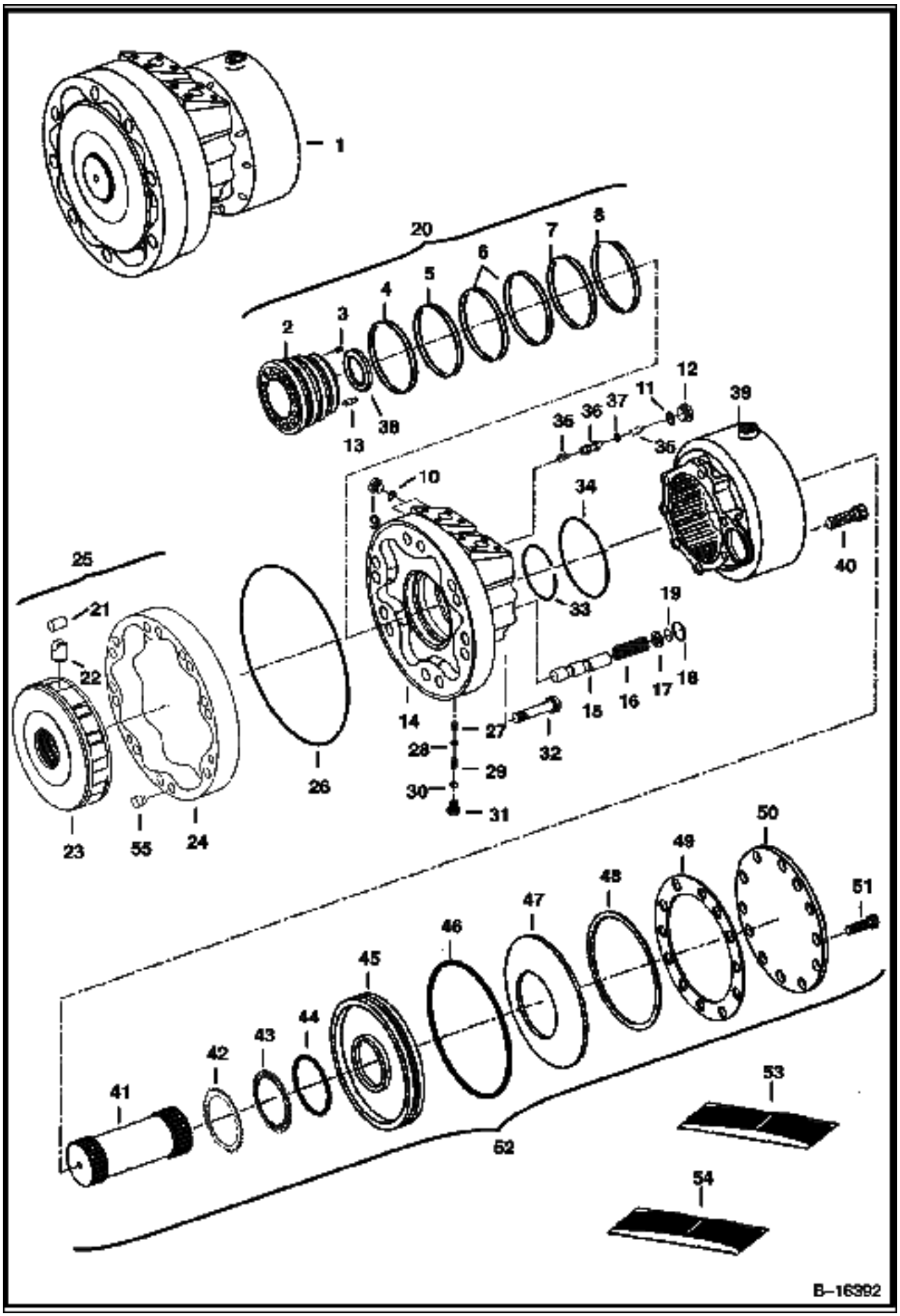

HYDROSTATIC MOTOR & BRAKE (Cont'd)
(2-Speed Option & Joystick Controls)

Ref No	Part Number	Description	Remarks	Serial Number	Qty
1	6674738	MOTOR	5830-003-138 - Ref. 2-52		1
2	6675876	DISTRIBUTOR			1
3	6674037	SPRING			12
4	6675877	SEAL	W/ O-ring		1
5	6675878	SEAL	W/ O-ring		1
6	6675879	SEAL	W/ O-ring		2
7	6675880	SEAL	W/ O-ring		1
8	6675881	SEAL	W/ O-ring		1
9	90KV00003B	PLUG	W/Ref. 10		2
10	95K000004B	O-RING			2
11	95K000006B	O-RING			1
12	90KV00005B	PLUG	W/Ref. 11		1
13	6675189	PIN			1
14	6675875	HOUSING	rear		1
15	6675882	SPOOL	stamped "B"		1
15	6686693	SPOOL	stamped "A"		1
16		SPRING	NAP - red - Order Ref. 53		1
16		SPRING	NAP - yellow- Order Ref. 53		1
16	6676645	SPRING	green		1
16		SPRING	NAP - blue- Order Ref. 53		1
17		WASHER	NAP - 2,14mm - for red spring - Order Ref. 53		1
17		WASHER	NAP - 2,38mm - for yellow spring - Order Ref. 53		1
17		WASHER	NAP - 2,62mm - for green spring - Order Ref. 53		1
17		WASHER	NAP - 2,86mm - for blue spring - Order Ref. 53		1
18	6675886	QUAD RING			1
19	6675885	SNAP RING			1
20	6675861	REAR HOUSING	assy. - Ref. 2-19		1
21		ROLLER	NSS - Order Ref. 25		8
22		PISTON	NSS - Order Ref. 25		8
23		BLOCK	NSS - Order Ref. 25		1
24	6675874	CAM			1
25		ROTARY GROUP	NAP - Ref. 21-24		1
26	6675864	QUAD RING			1
27	6675868	POPPET	1,5mm orifice		1
28	6674343	SHIM	0,6mm		1
29	6674344	SPRING			1
30	6675869	O-RING			1
31	6674345	PLUG			1
32	6675021	BOLT	holds rotary group to the brake		2
33	6685265	SNAP RING			1
34	6675863	QUAD RING			1
35	6674841	SPRING			2
36	6675866	SPOOL			1
37	6675867	WASHER			1
38	6675898	BUSHING			1
39	6675887	HOUSING			1
40	6675896	BOLT			8
41	6675888	SHAFT			1
42	6674192	BRAKE DISC	outer		14
43	6674193	BRAKE DISC	inner		13
44	6675894	SEAL	75,4 x 85,6 x 6 mm		1
45	6675889	PISTON	brake		1
46	6675893	O-RING			1
47	6675897	WASHER			1

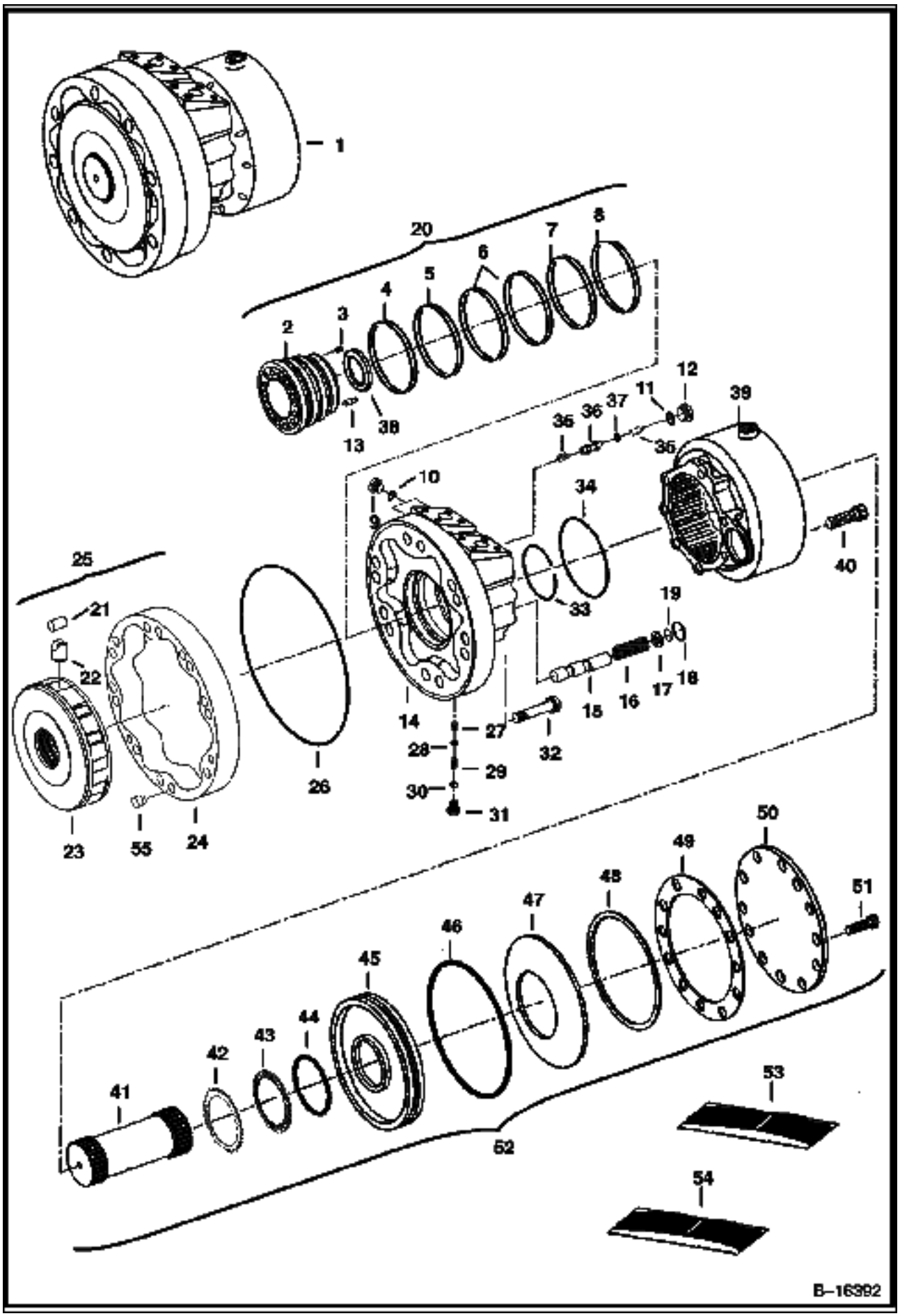
1
20
7
8
6
5
4
3
2
38
13
12
11
37
36
35
39
10
9
34
40
33
19
18
17
16
15
25
21
22
14
27
28
29
30
31
32
26
23
55
24
50
49
51
48
47
46
45
44
43
42
41
53
52
54
B–16392

HYDROSTATIC MOTOR & BRAKE (Cont'd)
(2-Speed Option & Joystick Controls)

Ref No	Part Number	Description	Remarks	Serial Number	Qty
48	6676647	WASHER	0,8mm thick		1
48	6676648	WASHER	1,05mm thick		1
48	6676649	WASHER	1,9mm thick		1
48	6676650	WASHER	2,3mm thick		1
48	6676651	WASHER	2,5mm thick		1
48	6676652	WASHER	2,9mm thick		1
49	6675892	GASKET			1
50	6675890	COVER			1
51	6675895	BOLT			12
52	6675862	BRAKE	Ref. 38-51		1
53	6678204	KIT			1
54	6675870	SEAL KIT	Ref. 4-8, 18, 26, 30, 34, 44 & 49		1
55	6688449	LOCATING PIN			2

DRAWING NOT AVAILABLE AT TIME OF PRINTING

MS-1452

HYDROSTATIC PUMP (Cont'd)
Manual Control

Ref No	Part Number	Description	Remarks	Serial Number	Qty
1	6687832	PUMP	For manual control - model 4445208		1

HYDROSTATIC PUMP
(Selectable Joystick Controls)

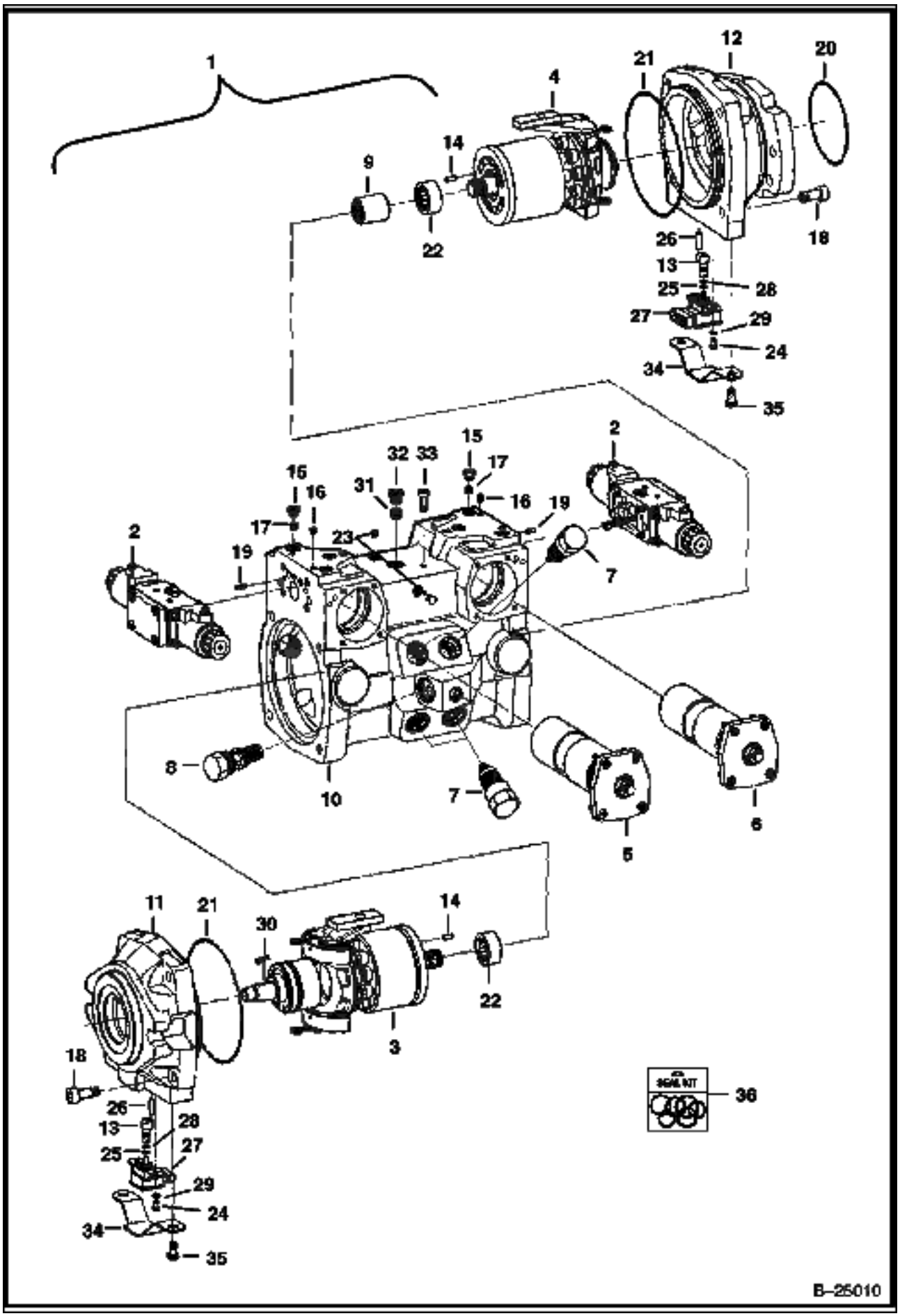

HYDROSTATIC PUMP (Cont'd)
(Selectable Joystick Controls)

Ref No	Part Number	Description	Remarks	Serial Number	Qty
1	6686267	PUMP			1
2	6687970	MODULATOR	See Illustration HYDROSTATIC PUMP/ B25016		2
3	6687957	GROUP	See Illustration HYDROSTATIC PUMP/ B25011 L.H. rotation		1
4	6687958	GROUP	See Illustration HYDROSTATIC PUMP/ B25012 R.H. rotation		1
5	6687960	CONTROL	See Illustration HYDROSTATIC PUMP/ B25013		1
6	6687961	CONTROL	See Illustration HYDROSTATIC PUMP/ B25013A		1
7	6687924	VALVE	See Illustration HYDROSTATIC PUMP/ B25014		4
8	6687938	VALVE	See Illustration HYDROSTATIC PUMP/ B25015		1
9	6687941	COUPLER			1
10	6687964	HOUSING			1
11	6687973	FLANGE			1
12	6687974	FLANGE			1
13	6687965	SHAFT			2
14	6688011	PIN			2
15	6688016	SCREW			11
16	6688039	PIN			3
17	6688020	ORIFICE			4
18	6688008	SCREW			8
19	6686934	PIN			2
20	6688019	SEAL			1
21	6688009	SEAL			2
22	6688040	BEARING			2
23	6687932	PIN			2
24	6687994	SCREW			4
25	6687990	RING			2
26	6688014	PIN			2
27	6687984	SENSOR			2
28	6688007	SEAL			2
29	6687998	SHIM			4
30	6687991	KEY			1
31	6687988	FILTER			1
32	6688015	SCREW			1
33	6687992	SCREW			1
34	6687993	COVER			2
35	6688003	SCREW			4
36	6689021	SEAL KIT	complete		1

HYDROSTATIC PUMP
(Rotary Group - L.H.)
(Selectable Joystick Controls)

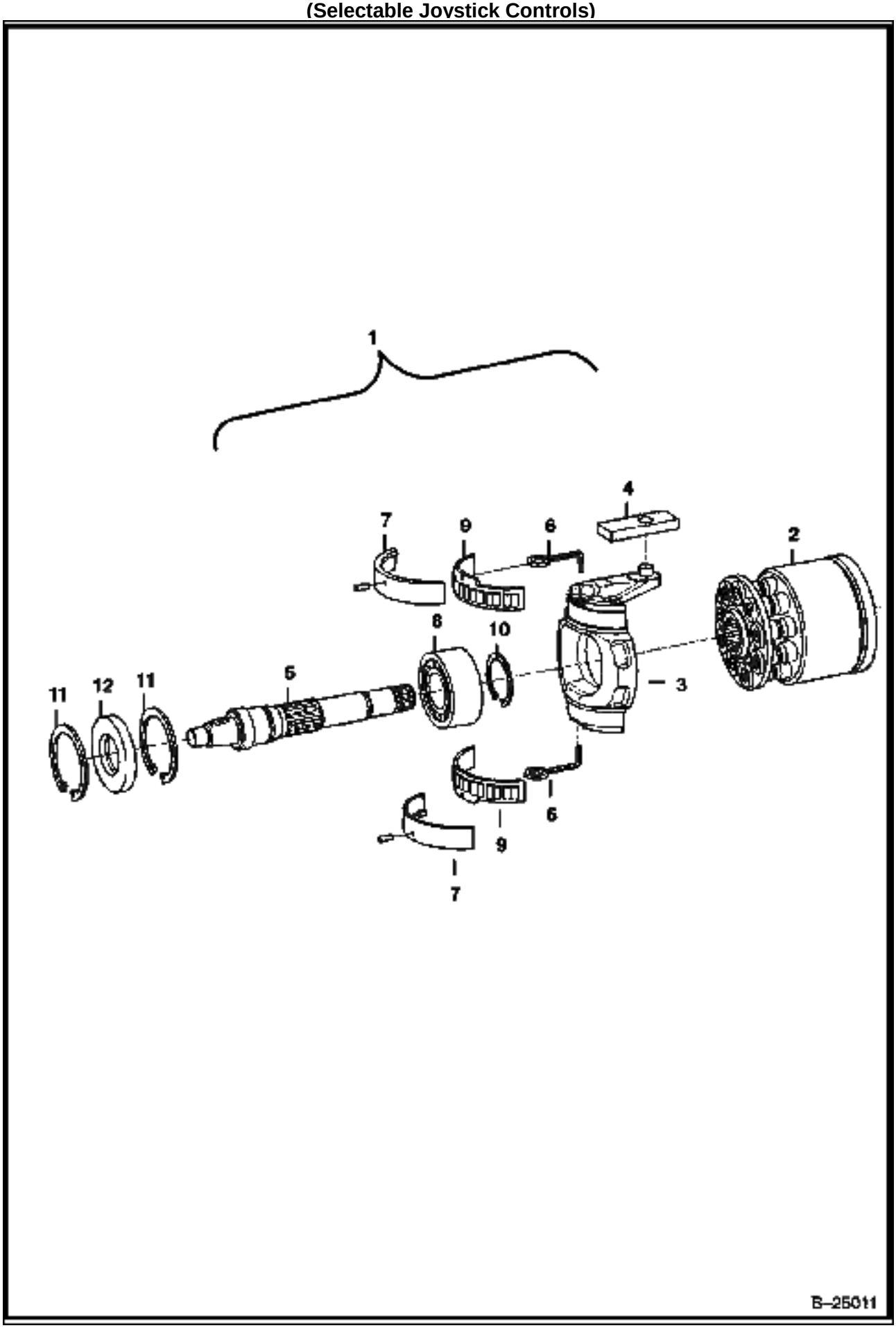

HYDROSTATIC PUMP (Cont'd)
(Rotary Group - L.H.)
(Selectable Jovstick Controls)

Ref No	Part Number	Description	Remarks	Serial Number	Qty
1	6687957	GROUP	L.H. rotation		1
2	6687977	GROUP			1
2	6687979	GROUP			1
2	6687976	PLATE			1
3	6687951	BRACKET			1
4	6687940	RING			1
5	6687959	SHAFT			1
6	6687930	WIRE			2
7	6687956	BEARING			1
8	6688018	BEARING			1
9	6687987	BEARING			1
10	6687999	RING			1
11	6688042	RING			2
12	6688038	RING			1

HYDROSTATIC PUMP
(Rotary Group - R.H.)
(Selectable Joystick Controls)

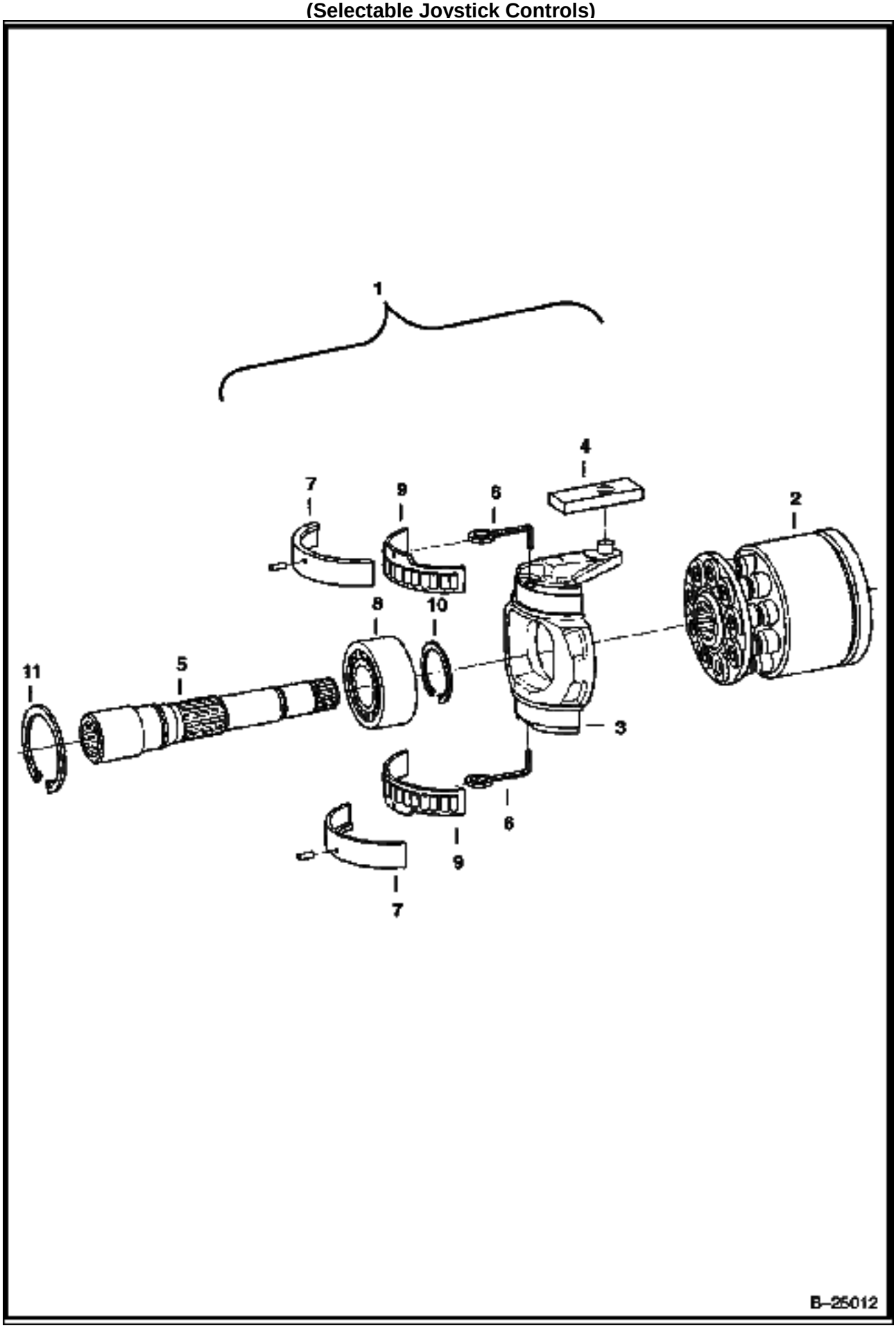

HYDROSTATIC PUMP (Cont'd)
(Rotary Group - R.H.)
(Selectable Jovstick Controls)

Ref No	Part Number	Description	Remarks	Serial Number	Qty
1	6687958	GROUP	R.H. rotation		1
2	6687978	GROUP			1
2	6687979	GROUP			1
2	6687975	PLATE			1
3	6687951	BRACKET			1
4	6687940	RING			1
5	6687943	SHAFT			1
6	6687930	WIRE			2
7	6687956	BEARING			1
8	6688018	BEARING			1
9	6687987	BEARING			1
10	6687999	RING			1
11	6688042	RING			2

HYDROSTATIC PUMP
(Control)
(Selectable Joystick Controls)

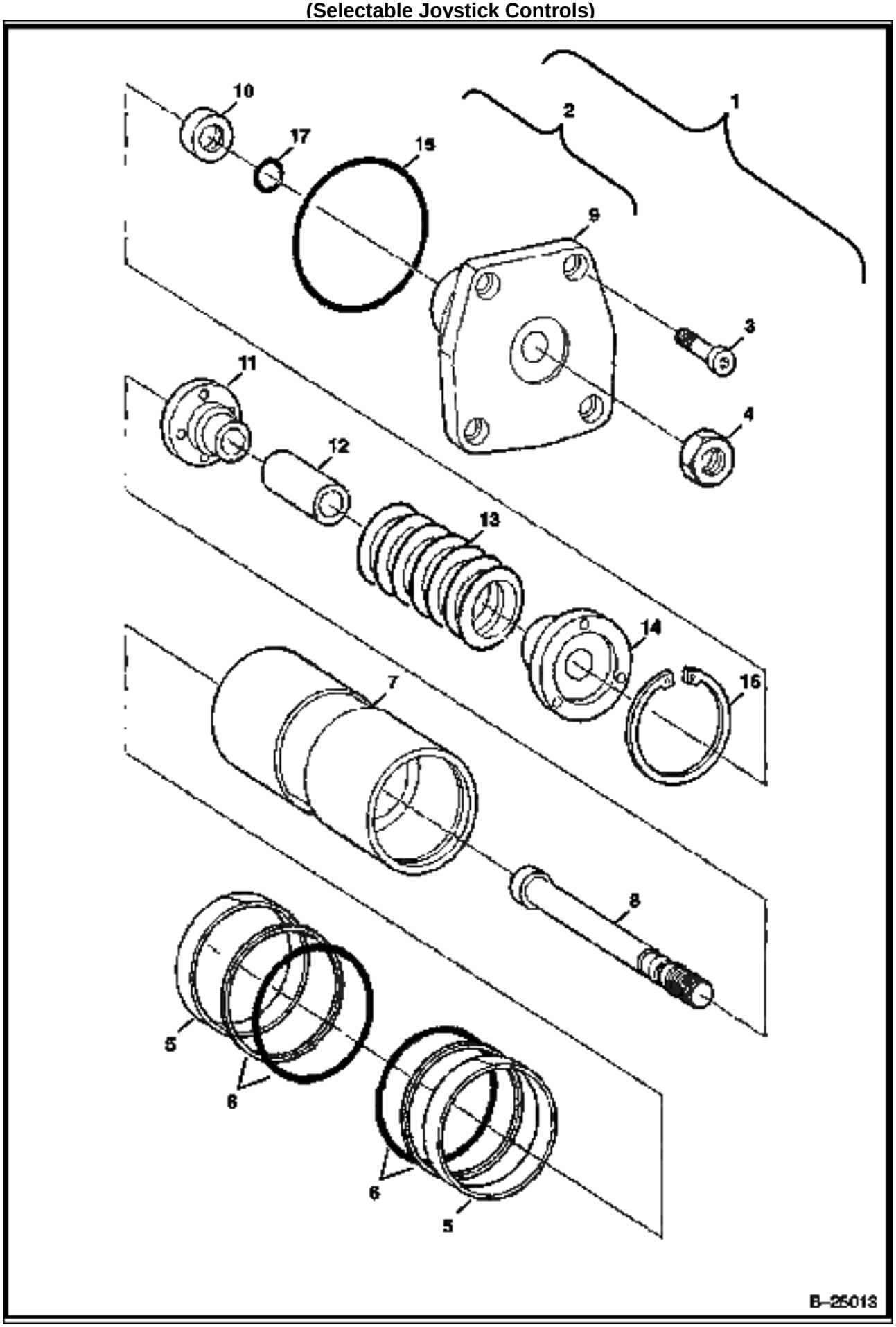

HYDROSTATIC PUMP (Cont'd)
(Control)
(Selectable Jovstick Controls)

Ref No	Part Number	Description	Remarks	Serial Number	Qty
1	6687960	CONTROL			1
2	6687962	PISTON			1
3	6687995	SCREW			4
4	6674907	NUT	Was 6687925 [A]		1
5	6687985	RING			2
6	6687986	KIT			2
7	6687953	PISTON			1
8	6688031	ROD			1
9	6688024	COVER			1
10	6688037	RING	6,70 mm		1
10	6688036	RING	6,75 mm		1
10	6688035	RING	6,80 mm		1
10	6688025	RING	6,85 mm		1
10	6688026	RING	6,90 mm		1
10	6688027	RING	6,95 mm		1
10	6688028	RING	7,00 mm		1
10	6688029	RING	7,05 mm		1
10	6688030	RING	7,10 mm		1
11	6687926	COLLAR			1
12	6688033	SPACER	54,60 cm		1
12	6687942	SPACER	54,65 cm		1
12	6688032	SPACER	54,70 cm		1
12	6687948	SPACER	54,75 cm		1
12	6687949	SPACER	54,80 cm		1
13	6687928	SPRING			1
14	6687927	COLLAR			1
15	6688005	SEAL			1
16	6688002	RING			1
17	6688006	SEAL			1

HYDROSTATIC PUMP
(Control)

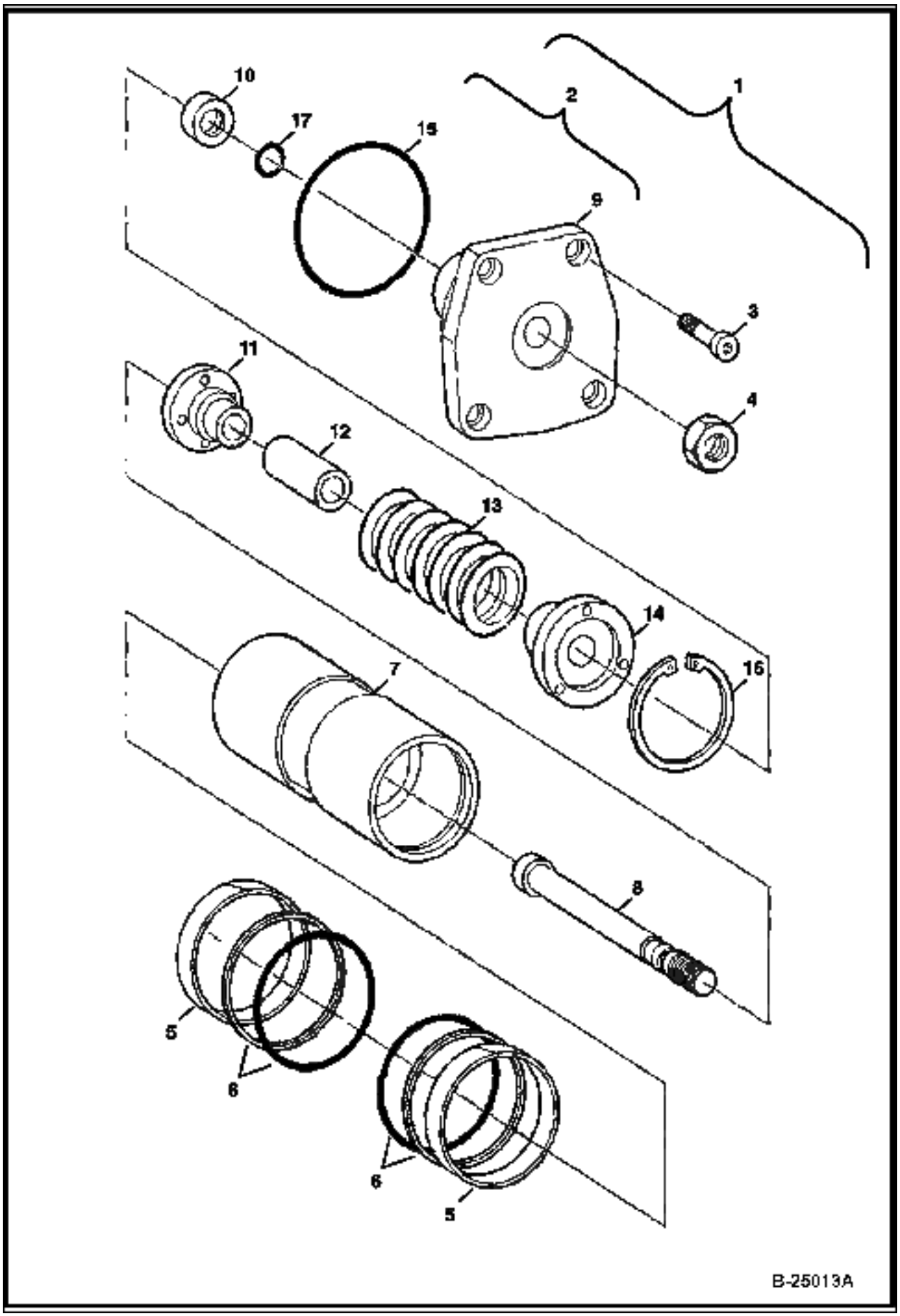

HYDROSTATIC PUMP (Cont'd)
(Control)

Ref No	Part Number	Description	Remarks	Serial Number	Qty
1	6687961	CONTROL			1
2	6687963	PISTON			1
3	6687995	SCREW			4
4	6674907	NUT	Was 6687925 [A]		1
5	6687985	RING			2
6	6687986	KIT			2
7	6687953	PISTON			1
8	6688031	ROD			1
9	6688024	COVER			1
10	6688037	RING	6,70 mm		1
10	6688036	RING	6,75 mm		1
10	6688035	RING	6,80 mm		1
10	6688025	RING	6,85 mm		1
10	6688026	RING	6,90 mm		1
10	6688027	RING	6,95 mm		1
10	6688028	RING	7,00 mm		1
10	6688029	RING	7,05 mm		1
10	6688030	RING	7,10 mm		1
11	6687926	COLLAR			1
12	6688033	SPACER	54,60 cm		1
12	6687942	SPACER	54,65 cm		1
12	6688032	SPACER	54,70 cm		1
12	6687948	SPACER	54,75 cm		1
12	6687949	SPACER	54,80 cm		1
13	6687928	SPRING			1
14	6687927	COLLAR			1
15	6688005	SEAL			1
16	6688002	RING			1
17	6688006	SEAL			1

HYDROSTATIC PUMP
(Pressure Relief Valve)
(Selectable Joystick Controls)

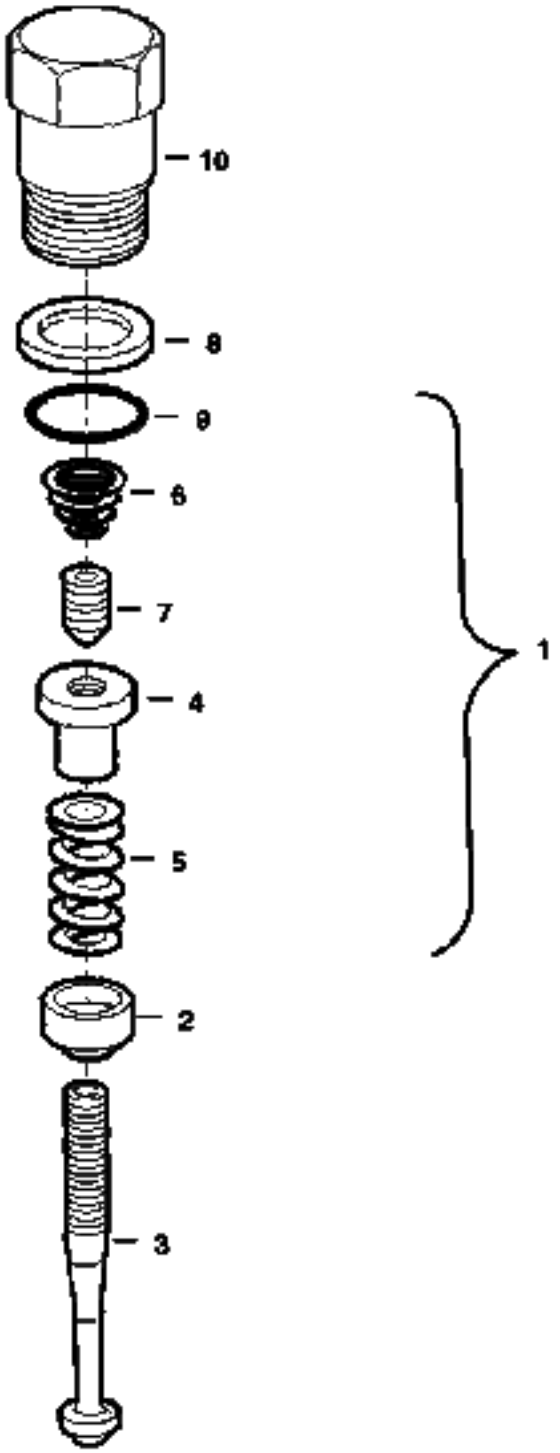

HYDROSTATIC PUMP (Cont'd)
(Pressure Relief Valve)
(Selectable Jovstick Controls)

Ref No	Part Number	Description	Remarks	Serial Number	Qty
1	6687924	VALVE			1
2	6687921	COLLAR			1
3	6687920	SPINDLE			1
4	6687922	NUT			1
5	6688043	SPRING			1
6	6688021	SPRING			1
7	6687923	PIN			1
8	6688041	RING			1
9	6688000	SEAL			1
10	6688034	SCREW			1

HYDROSTATIC PUMP
(Pressure Relief Valve)
(Selectable Joystick Controls)

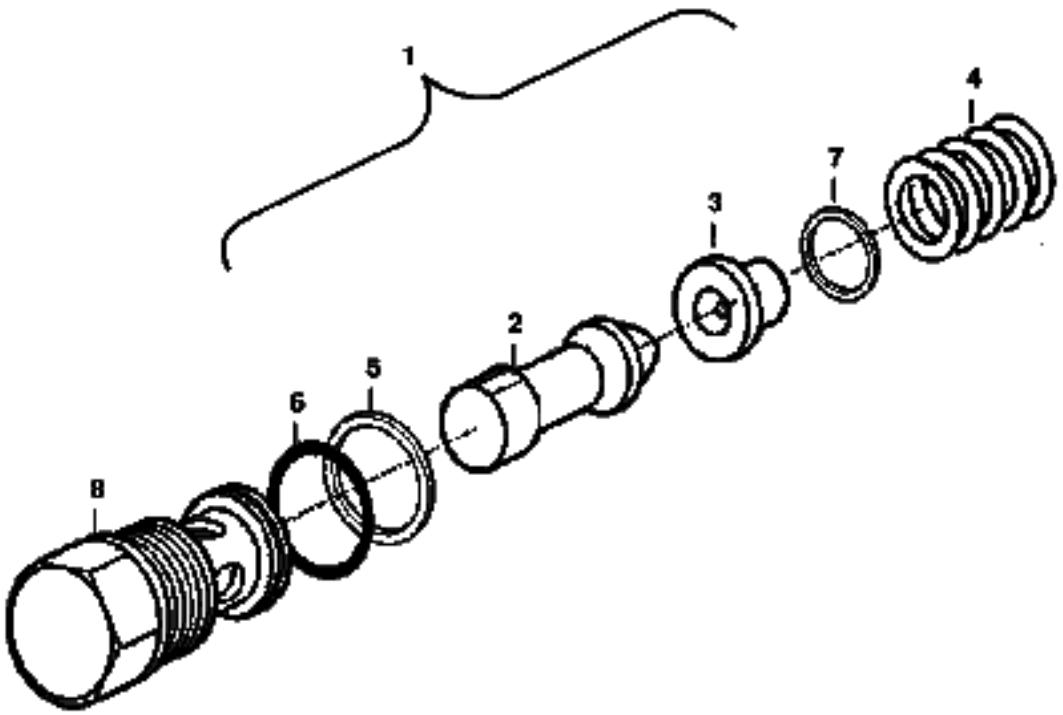

B–25015

HYDROSTATIC PUMP (Cont'd)
(Pressure Relief Valve)
(Selectable Jovstick Controls)

Ref No	Part Number	Description	Remarks	Serial Number	Qty
1	6687938	VALVE			1
2	6688022	PISTON			1
3	6687919	COLLAR			1
4	6688023	SPRING			1
5	6687983	RING			1
6	6688013	SEAL			1
7	6688017	SHIM			1
8	6687939	SCREW			1

HYDROSTATIC PUMP
(Control Module)
(Selectable Joystick Controls)

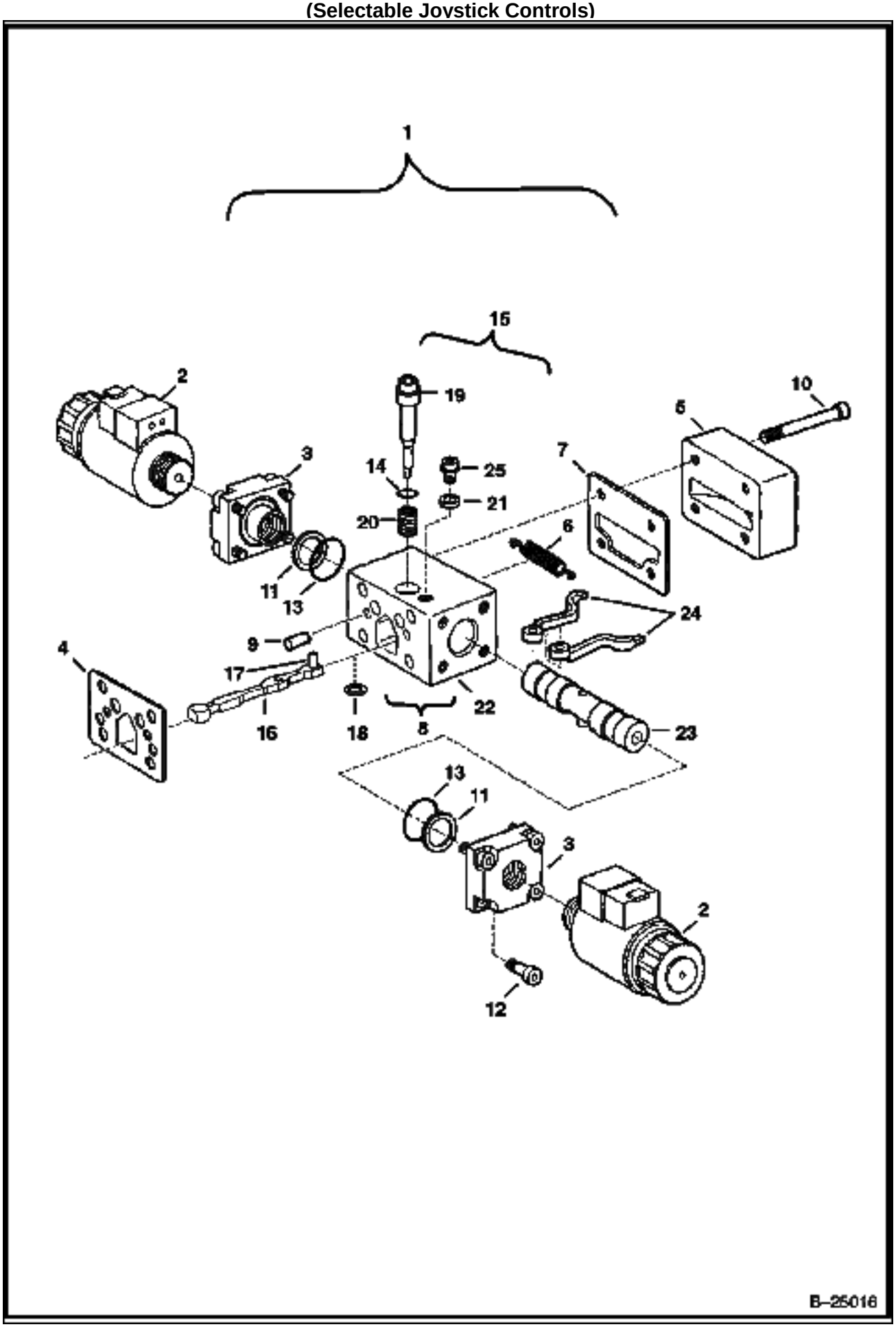

HYDROSTATIC PUMP (Cont'd)
(Control Module)
(Selectable Jovstick Controls)

Ref No	Part Number	Description	Remarks	Serial Number	Qty
1	6687970	MODULATOR			2
2	6687989	SOLENOID			2
3	6687931	BUSHING			2
4	6687954	GASKET			1
5	6687969	COVER			1
6	6687967	SPRING			1
7	6687950	GASKET			1
8	6687972	MODULE	Ref. 15-18		1
9	6688010	PIN			2
10	6687996	SCREW			4
11	6687982	SPRING			2
12	6687997	SCREW			8
13	6688001	SEAL			2
14	6688004	SEAL			1
15	6687971	ROLLER	Ref. 14 & 19-25		1
16	6687929	LEVER			1
17	6688012	ROLLER			1
18	6687944	SHIM	0,60 mm		1
18	6687933	SHIM	0,80 mm		1
18	6687934	SHIM	1,00 mm		1
18	6687935	SHIM	1,20 mm		1
18	6687936	SHIM	1,40 mm		1
18	6687937	SHIM	1,60 mm		1
19	6687947	PIN			1
20	6687946	SPRING			1
21	6687945	PLATE			1
22	6687955	HOUSING			1
23	6687966	PISTON			1
24	6687968	LEVER			2
25	6687981	SCREW			1

HYDROSTATIC PUMP/GEAR PUMP (Cont'd)
Identification

Ref No	Part Number	Description	Remarks	Serial Number	Qty
1		PUMP ASSY	NAP		1
2		HYDROSTATIC PUMP	See Illustration HYDROSTATIC PUMP/ MS1452 manual hand controls		1
2		HYDROSTATIC PUMP	See Illustration HYDROSTATIC PUMP/ B25010 selectable joystick controls		1
3		GEAR PUMP	See Illustration GEAR PUMP/ MS1454 manual hand controls or selectable joystick controls		1
3		GEAR PUMP	See Illustration HIGH FLOW GEAR PUMP/ MS1456 high flow - manual hand or selectvie joystick controls		1
4	6671520	O-RING	manual hand controls		1
4	6688019	O-RING	selectable joystick controls		1
5	43C820	BOLT			2
6	6631643	PLATE			2

DRAWING NOT AVAILABLE AT TIME OF PRINTING

MS-1454

Ref No	Part Number	Description	Remarks	Serial Number	Qty
1	6686885	GEAR PUMP	model 163D71021		1

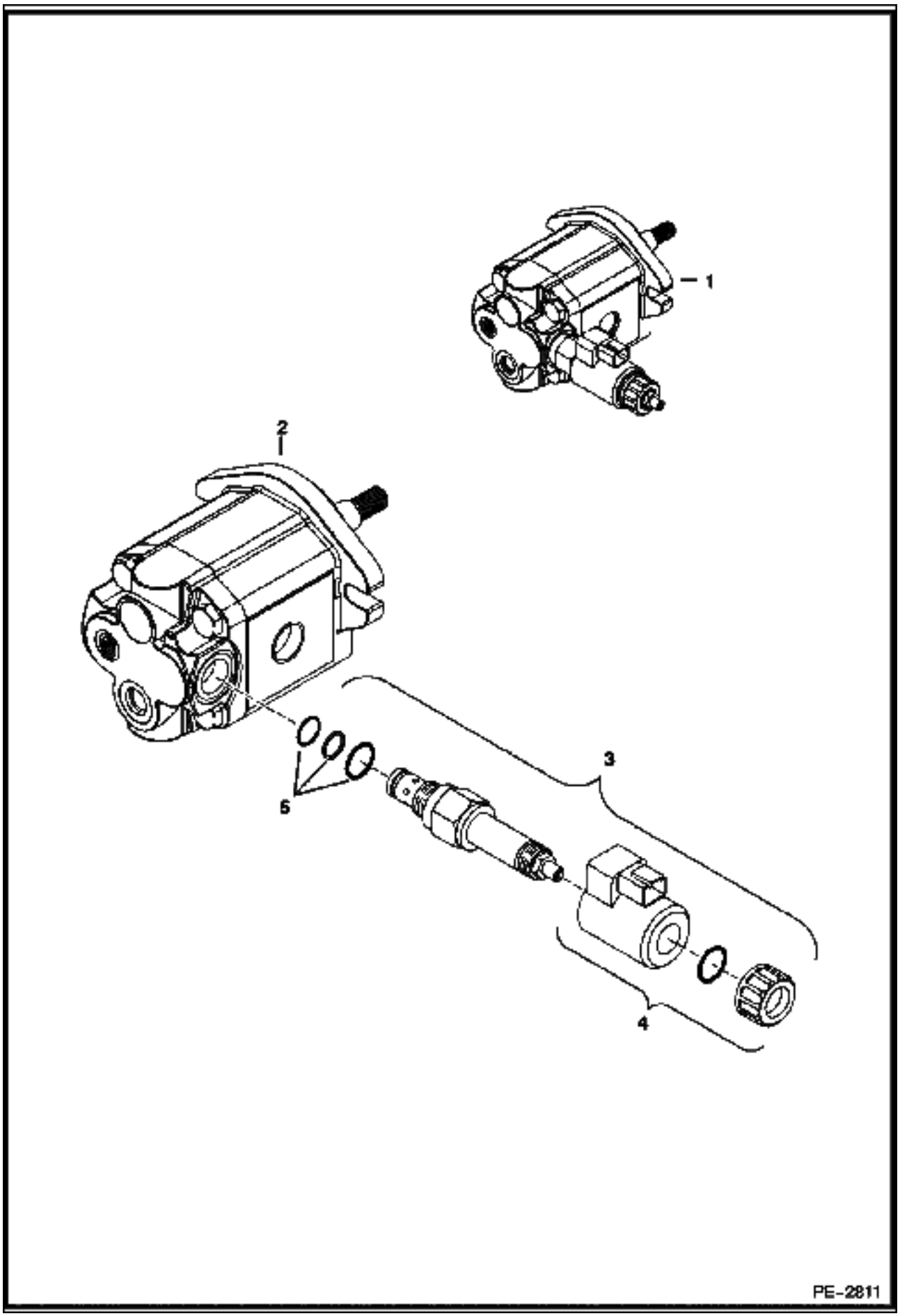
1
2
3
4
5
PE-2811

MOTOR (Cont'd)
Cooling Fan

Ref No	Part Number	Description	Remarks	Serial Number	Qty
1	6687142	MOTOR			1
2	6689058	MOTOR	W/O proportional valve		1
3	6689059	VALVE ASSY			1
4	6689060	COIL ASSY			1
5	6683206	SEAL KIT			1

2-SPEED VALVE

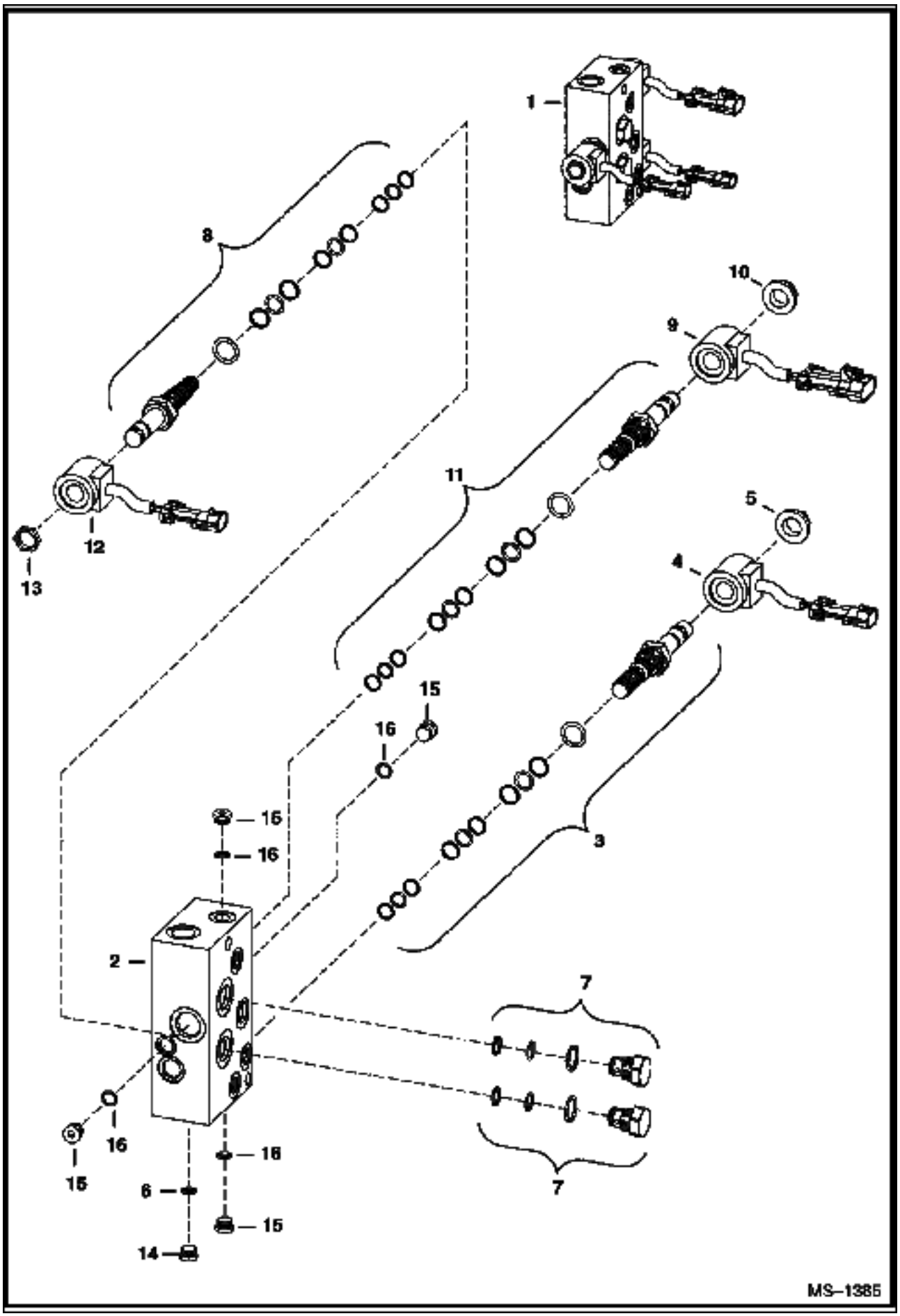

2-SPEED VALVE (Cont'd)

Ref No	Part Number	Description	Remarks	Serial Number	Qty
1	6679102	VALVE	assy.		1
2		BLOCK	NSS - Order Ref. 1		1
3	6677982	CARTRIDGE	make up valve - W/Ref. 5		1
3	6672756	SEAL KIT			x
4	6676243	COIL			1
5	6668820	NUT			1
6	75K000004B	O-RING			x
7	6675265	CHECK VALVE			2
7	6669087	SEAL KIT			x
8	6676239	CARTRIDGE	two speed valve - W/Ref. 10		1
8	6673188	SEAL KIT			x
9	6676242	COIL			1
10	6677980	NUT			1
11	6680120	CARTRIDGE	brake valve - W/Ref. 13		1
11	6676205	SEAL KIT			x
12	6676244	COIL			1
13	6676247	NUT			1
14	6672762	PLUG	W/Ref. 6		1
15	6677177	PLUG	W/Ref. 16		5
16		O-RING			x

HYDROSTATIC OIL FILTER
(In-Line)

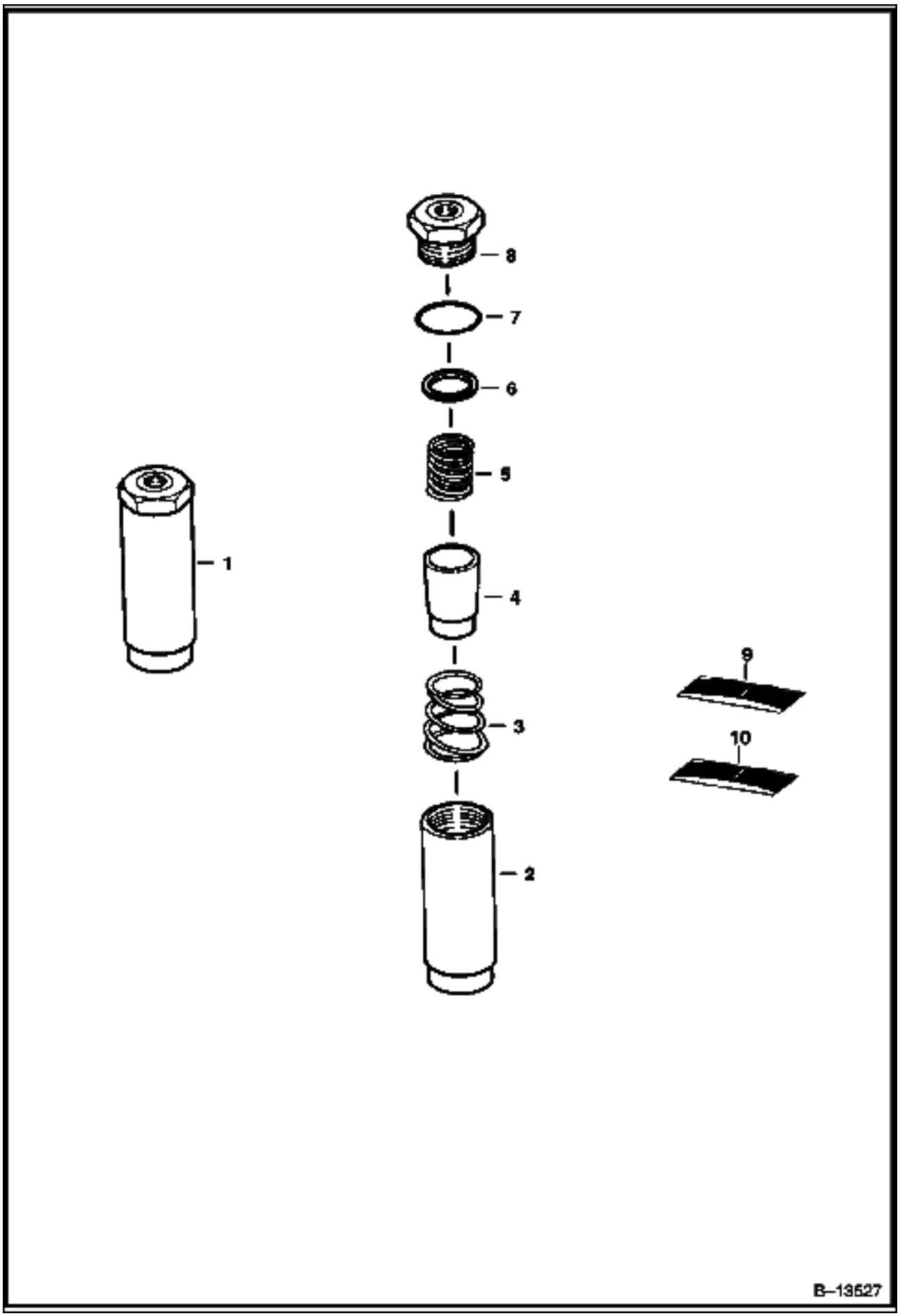

HYDROSTATIC OIL FILTER (Cont'd)
(In-Line)

Ref No	Part Number	Description	Remarks	Serial Number	Qty
1	6661022	FILTER	Ref. 2-8		1
2		HOUSING	NSS		1
3		SPRING	NSS		1
4		ELEMENT	NSS		1
5		SPRING	NSS		1
6		GASKET	NSS		1
7		O-RING	NSS		1
8		PLUG	NSS		1
9	6661807	KIT	element - Ref. 4, 6 & 7		1
10	6661808	KIT	spring - Ref. 3 & 5		1

HYDROSTATIC OIL FILTER

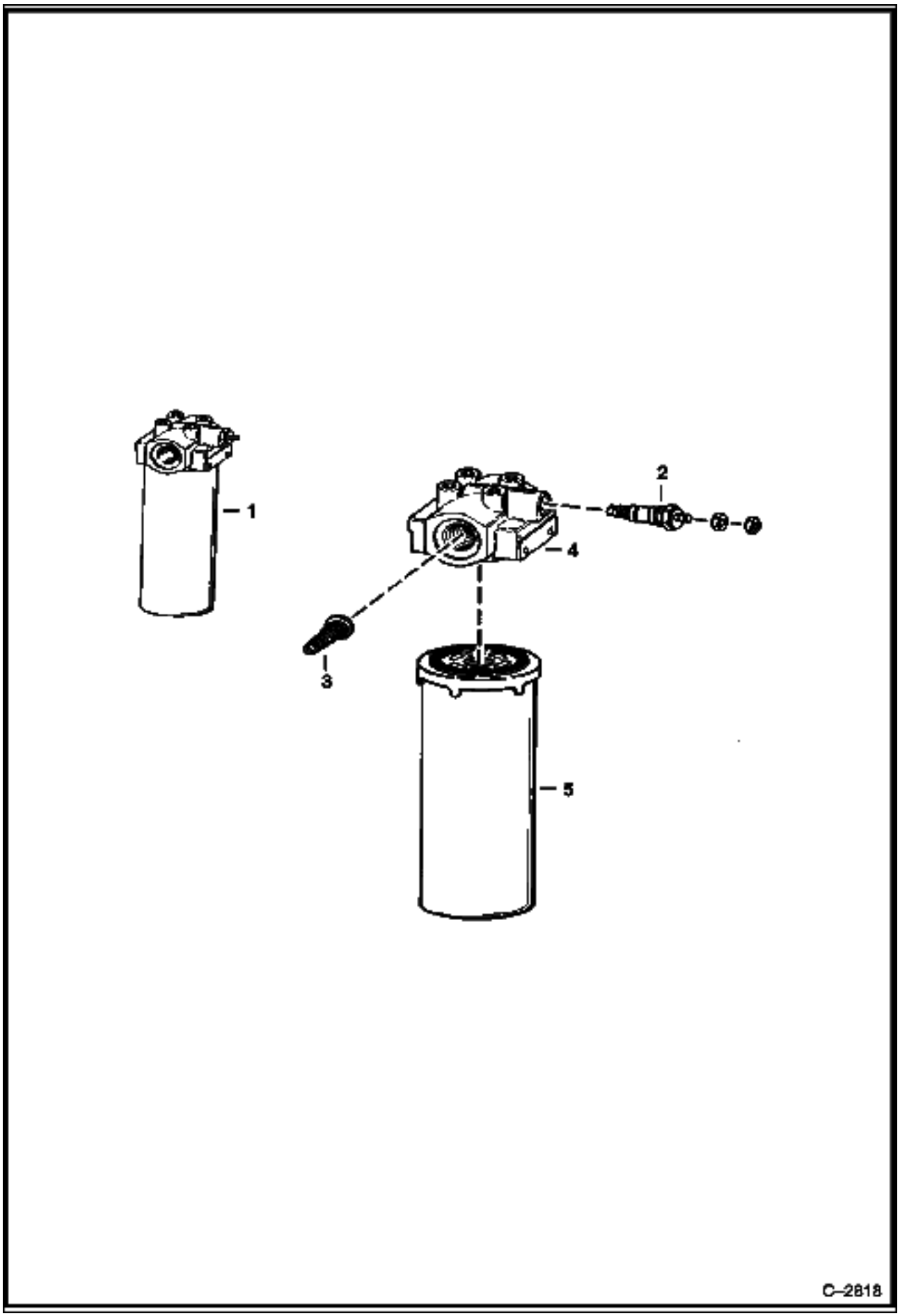

HYDROSTATIC OIL FILTER (Cont'd)

Ref No	Part Number	Description	Remarks	Serial Number	Qty
1	6678155	FILTER ASSY	W/Ref. 2-5 - 50 PSI by-pass & switch		1
2	6660260	SWITCH	pressure - normally closed		1
2	6599365	KIT	nut, washer & O-rings for switch		1
3		VALVE	NAP - by-pass - 50 PSI - Order Ref. 1		1
4		HEAD	NSS - Order Ref. 1 filter assy.		1
5	6661248	ELEMENT			1

DRAWING NOT AVAILABLE AT TIME OF PRINTING

PE-2397

Ref No	Part Number	Description	Remarks	Serial Number	Qty
1	6702543	LEVER			2
2		BELLCRANK	NAP - 1.0475 in. (26,2 mm) I.D. Hole For Ref. 29 (6678067 Bushing) - Use W/Ref. 9 (6518200 Grease Zerk) - Order 7110572 Bellcrank & Ref. 9 (10H000035B Grease Zerk) - Was 7101048 [A]		2
2	7110572	BELLCRANK	Use W/Ref. 9 (10H000035B Grease Zerk)		2
3	6599741	WASHER	wave		1
4	6716545	ROD			1
5	6577230	BRACKET		& Bel.	2
6	45C000620B	BOLT			2
7	6732997	U-BOLT			4
8	6673710	BEARING			4
9	6518200	GREASE ZERK	press fit		2
9	10H000035B	GREASE ZERK	threaded		2
10	7105192	BOLT	Was 8C000616B [B]		4
11	6557831	WASHER	.15" thick		8
12	6706095	MOUNT	Was 6716116 [B]		1
13	98D000006B	NUT			4
14	6701535	SPRING			1
15	6716916	WASHER			4
16	95D000006B	NUT			12
17	6685346	BRACKET			1
18	6706098	GUIDE			2
19	6702716	BLOCK			2
20	57D000006B	NUT			1
21	6563914	WASHER			1
22	6577058	PIN			2
23	1CM00820B	BOLT			8
24	17C000626B	BOLT			4
25	6673789	BEARING			4
26	25E000017B	WASHER			8
26	7100699	WASHER	.24" thick		4
27	7110365	PINTLE ARM	Was 7103710 [A]		2
28	619021B	WASHER			4
29	6678067	BUSHING	torsion - 1.055" (26,8mm) O.D.		4
30	6731253	LINK			2
31	83D000006B	NUT			4
32	6716117	LINK			2
33	6599744	BALL JOINT			4
34	8D000006B	NUT			4
35	6685345	BRACKET			1
36	17C000620B	BOLT			4
37	6649551	SHOCK			2
38	96D000006B	NUT			4
39	17C000680B	BOLT			1
40	6715164	SLEEVE			1
41	6715163	BUSHING			3
42	35C000624B	BOLT			2
43	25E000024B	WASHER	for AHC		1
44	6733022	BRACKET	R.H.	& Abv	1
44	6733024	BRACKET	L.H.	& Abv	1
45	73G000824B	BOLT		& Abv	2
46	6706106	MOUNT	damper	& BEL	1
46	7100795	MOUNT	damper	& ABV	1
47	17C000612B	BOLT			2
48	7105193	BOLT			4
49	7103708	BRACKET	Centering		2

DRAWING NOT AVAILABLE AT TIME OF PRINTING

PE-2397

Ref No	Part Number	Description	Remarks	Serial Number	Qty
50	7103711	BOLT			2
51	73G624	BOLT	Was 7105194 [A]		2
52	7105223	SPACER			2
53	7103271	WASHER	.065" thick		8

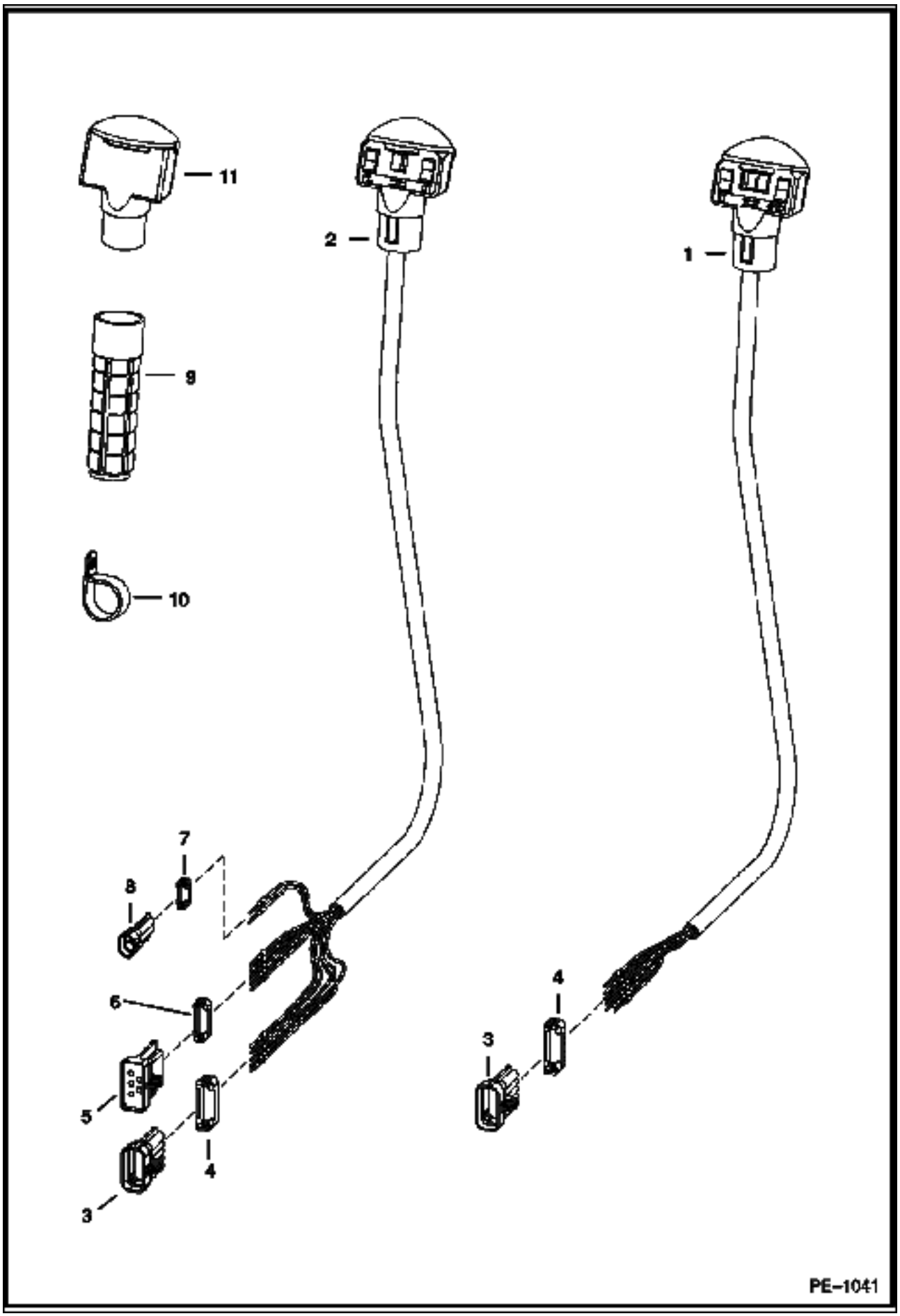
11
2
1
9
10
7
8
6
5
4
3
4
3
PE–1041

Ref No	Part Number	Description	Remarks	Serial Number	Qty
1	6680418	HANDLE ASSY.	R.H. - Also Order Ref. 3 & 4		1
1	6640690	PIN			9
1	6641176	SEAL			9
2	6680419	HANDLE ASSY.	L.H. - Also Order Ref. 3-8		1
2	6640690	PIN			10
2	6641176	SEAL			10
2	6680447	DECAL			1
3	6640692	CONNECTOR	10-pin		1
4	6640694	LOCK	10-pin		1
5	6667144	CONNECTOR	5 - way		1
6	6667145	LOCK	5 - way		1
7	6641180	LOCK	2 - pin		1
8	6641179	CONNECTOR	2 - pin		2
9	6702621	GRIP			2
10	6674000	CLAMP			2
11	6680415	HANDLE	L.H. - blank		2

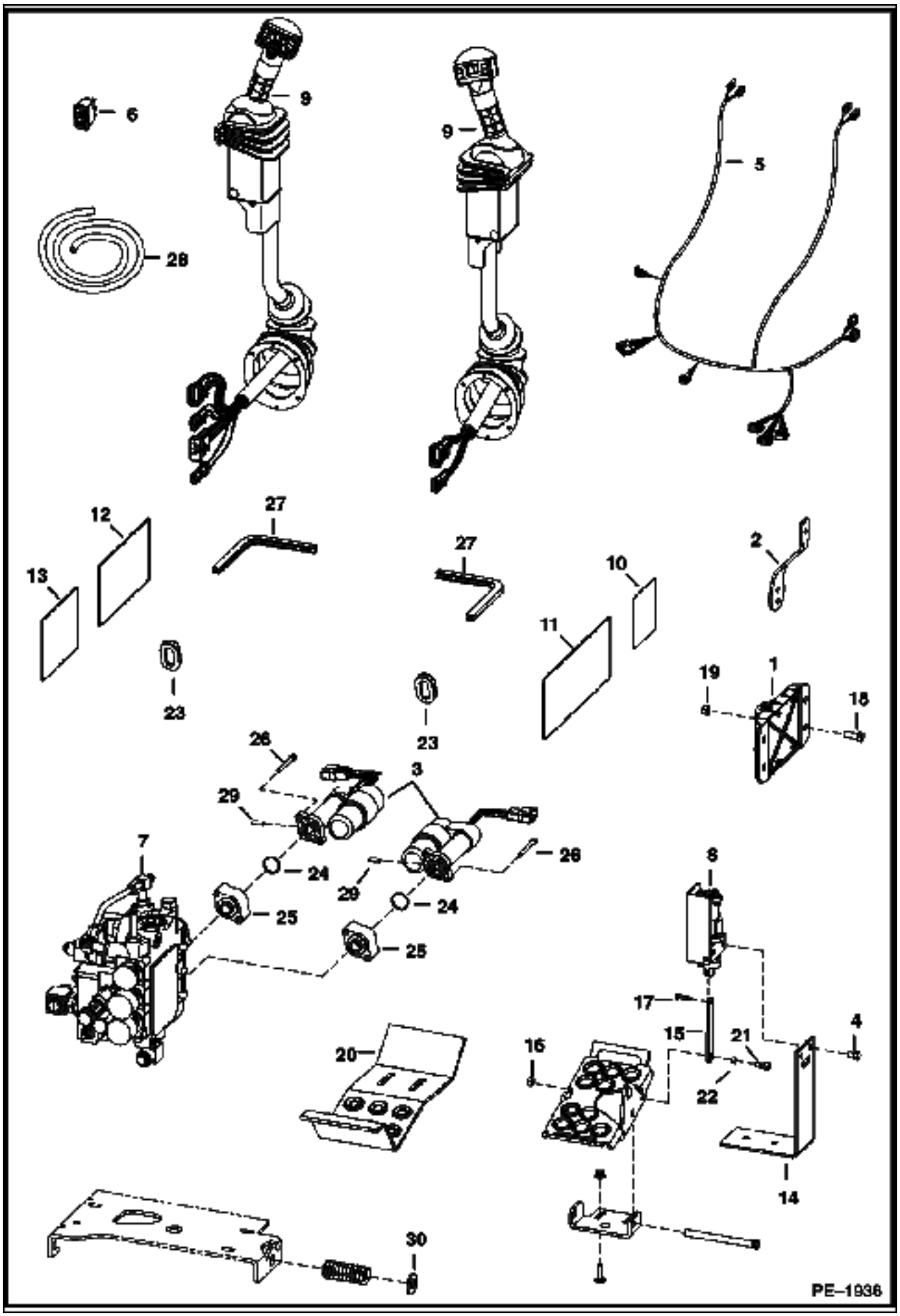
6
9
9
5
28
12
27
27
2
13
10
11
23
23
19
1
18
26
3
29
26
7
24
29
24
25
25
8
17
15
21
4
16
22
20
14
30
PE–1936

CONTROLS ELECTRICAL (Cont'd)
(ACS)

Ref No	Part Number	Description	Remarks	Serial Number	Qty
1	6680410	CONTROLLER	plastic		1
2	6717393	LEVER	throttle		1
3	7101672	ACTUATOR	W/Ref. 24		2
4	17C000608B	BOLT			4
5	6733292	HARNESS			1
6	6676537	SWITCH			1
7		VALVE	ACS control		1
8	6676493	SENSOR	See Illustration CONTROLS ELECTRICAL/ PE1553 foot pedal - R.H.		1
8	6676029	SOLENOID			1
8	6676492	SENSOR	See Illustration CONTROLS ELECTRICAL/ PE1553 foot pedal - L.H.		1
8	6676029	SOLENOID			1
9	6684915	LEVER	See Illustration CONTROLS ELECTRICAL/ PE1365 ACS - tilt - R.H.		1
9	6684916	LEVER	See Illustration CONTROLS ELECTRICAL/ PE1365 ACS - lift - L.H.		1
10	6718706	DECAL	ACS		1
11	6728539	DECAL	ACS		1
12	6727926	DECAL	operations AHC		1
13	6728328	DECAL	operations AHC		1
13	6718704	DECAL	operations AHC		1
14	6726573	BRACKET			2
15	6726681	LINK			2
16	95D000005B	NUT			2
17	6727496	PIN			2
18	17C000616B	BOLT			2
19	95D000006B	NUT			2
20	6712365	STEP	AHC		2
21	35C000514B	BOLT			2
22	6729467	SPACER			2
23	6714726	GROMMET			2
24	6686220	O-RING			2
25	7101705	ADAPTER			2
26	69G000436B	BOLT			4
27		MOULDING	NAP - 10.5" (267mm) long - Order Ref. 28		1
28	6654139	MOULDING	bulk - Sold Per Foot		x
29	7108236	PIN			2
30	25E000024B	WASHER			1

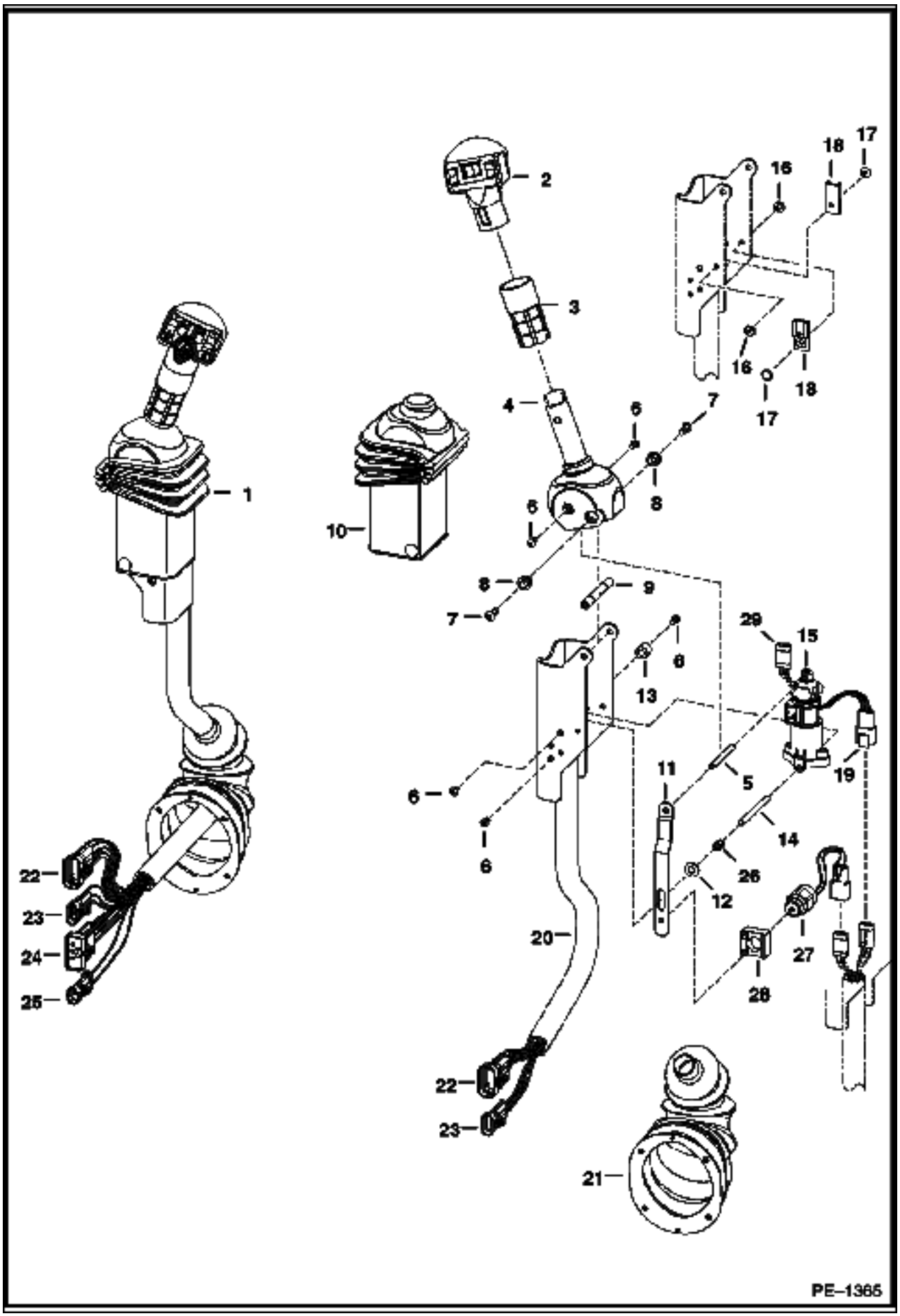
1
2
3
4
5
6
7
8
9
10
11
12
13
14
15
16
17
18
19
20
21
22
23
24
25
26
27
28
29
PE–1365

Ref No	Part Number	Description	Remarks	Serial Number	Qty
1	6684915	LEVER	tilt - R.H.		1
1	6684916	LEVER	lift - L.H.		1
2	6680462	HANDLE	tilt - R.H.		1
2	6680417	HANDLE	lift - L.H.		1
3		GRIP	NAP - Order 6702621 grip & cut to 2.8" (71,1mm) long		2
4	6729594	HANDLE	R.H.		1
4	6729595	HANDLE	L.H.		1
5	6680469	SPACER	threaded		1
6	6727065	BOLT			6
7	25GT00410B	BOLT			8
8	6702990	BUSHING			4
9	6713043	SPACER			4
10	6680471	COVER			2
11	6680477	STRAP	stop		1
12	25E000013B	WASHER			1
13	6719835	SLEEVE			4
14	6719834	SPACER	threaded		2
15	6684910	SENSOR			2
15	6670706	CONNECTOR			1
15	6670715	PIN			3
15	6670710	LOCK			1
16	6665322	RIVET	female		2
17	6665321	RIVET	male		2
18	6665000	CLIP			2
19	6670707	CONNECTOR			1
19	6670715	PIN			3
19	6670711	LOCK			1
20	6680481	CHANNEL	R.H.		1
20	6680480	CHANNEL	L.H.		1
21	6532127	BOOT			2
22	6640692	CONNECTOR	10-pin		1
22	6640690	PIN			8
22	6640694	LOCK			1
22	6641176	SEAL			8
22	6646582	PLUG	cavity		1
23	6640699	CONNECTOR	3-pin		2
23	6640690	PIN			3
23	6641176	SEAL			3
23	6640700	LOCK			3
24	6667144	CONNECTOR	5-pin		2
24	6640690	PIN			3
24	6641176	SEAL			3
24	6646582	PLUG	cavity		1
24	6641180	LOCK			1
25	6641179	CONNECTOR	2-pin		1
25	6640690	PIN			2
25	6641176	SEAL			2
25	6641180	LOCK			1
26	6680470	SPRING			1
27	6676029	SOLENOID			1
28	6680468	MOUNT			1
29	6676870	CONNECTOR	3-pin		1
29	6670711	LOCK			1
29	6670715	PIN			1

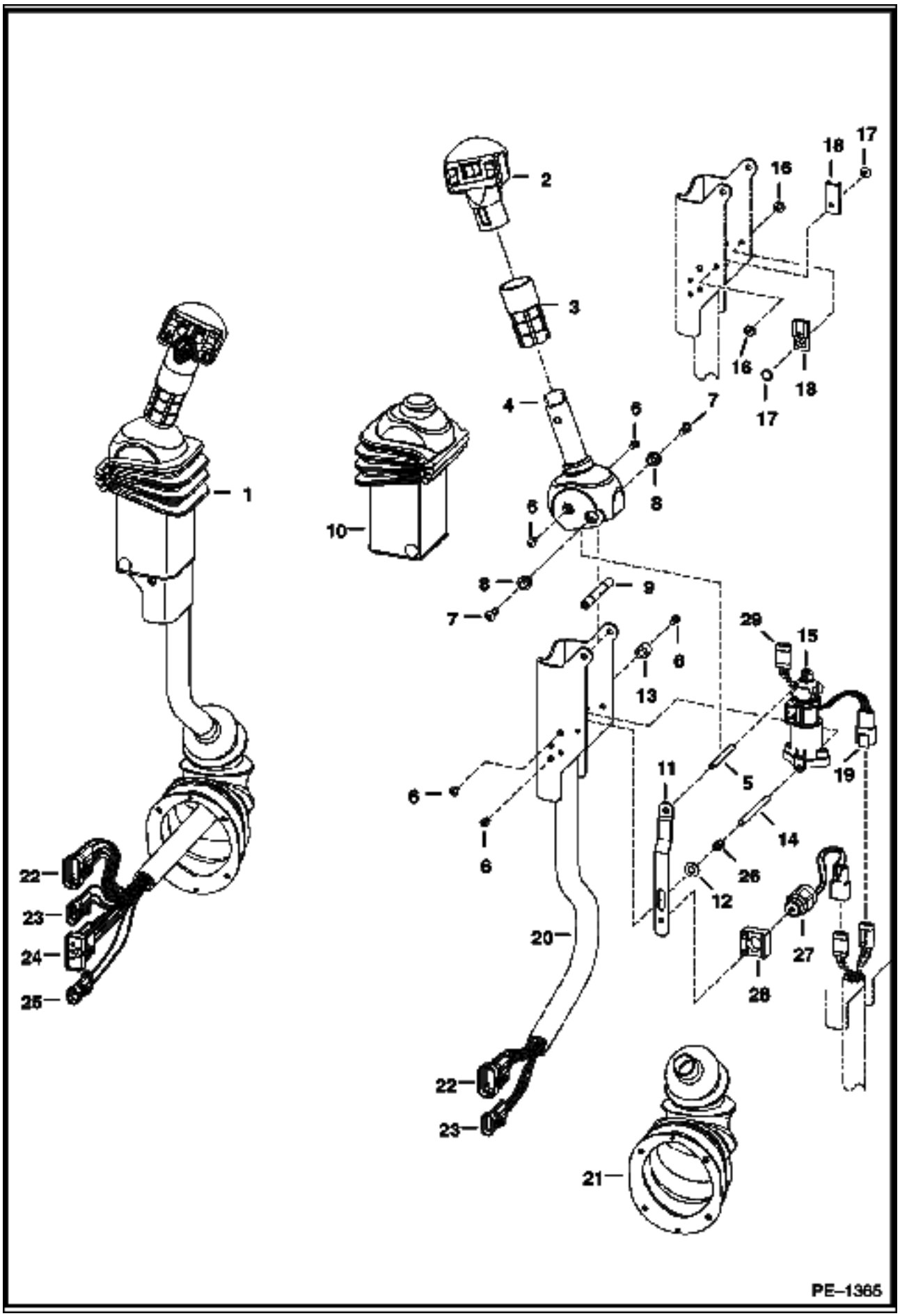
1
2
3
4
5
6
7
8
9
10
11
12
13
14
15
16
17
18
19
20
21
22
23
24
25
26
27
28
29
PE–1365

Ref No	Part Number	Description	Remarks	Serial Number	Qty
29	6676640	SEAL			5

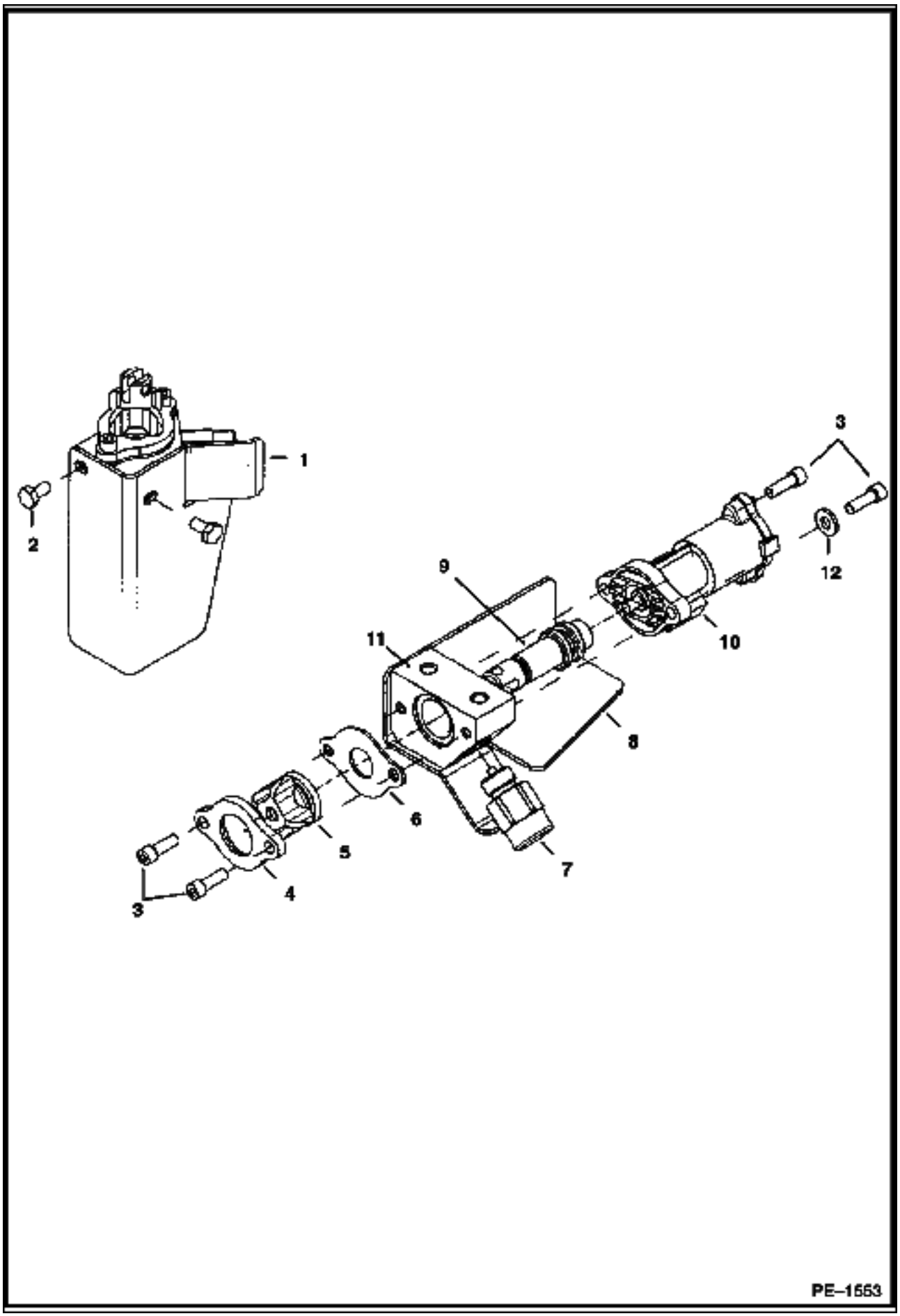
1
2
3
4
5
6
7
8
9
10
11
12
3
PE–1553

CONTROLS ELECTRICAL (Cont'd)
(ACS) (Foot Pedal Assemblies)

Ref No	Part Number	Description	Remarks	Serial Number	Qty
1	6684912	SENSOR	foot pedal - R.H.		1
1	6684911	SENSOR	foot pedal - L.H.		1
2	43C000408B	BOLT			2
3	98G000412B	BOLT			4
4		RETAINER	NAP - boot		1
5	6587763	BOOT			1
6		STOP PLATE	NAP		1
7	6676029	SOLENOID			1
8	6680478	SHIELD	R.H.		1
8	6680479	SHIELD	L.H.		1
9		SPOOL	NSS		1
10		SENSOR	NSS		1
11		BLOCK	NSS		1
12	25E000013B	WASHER			2

ALTERNATOR
(90 Amp)

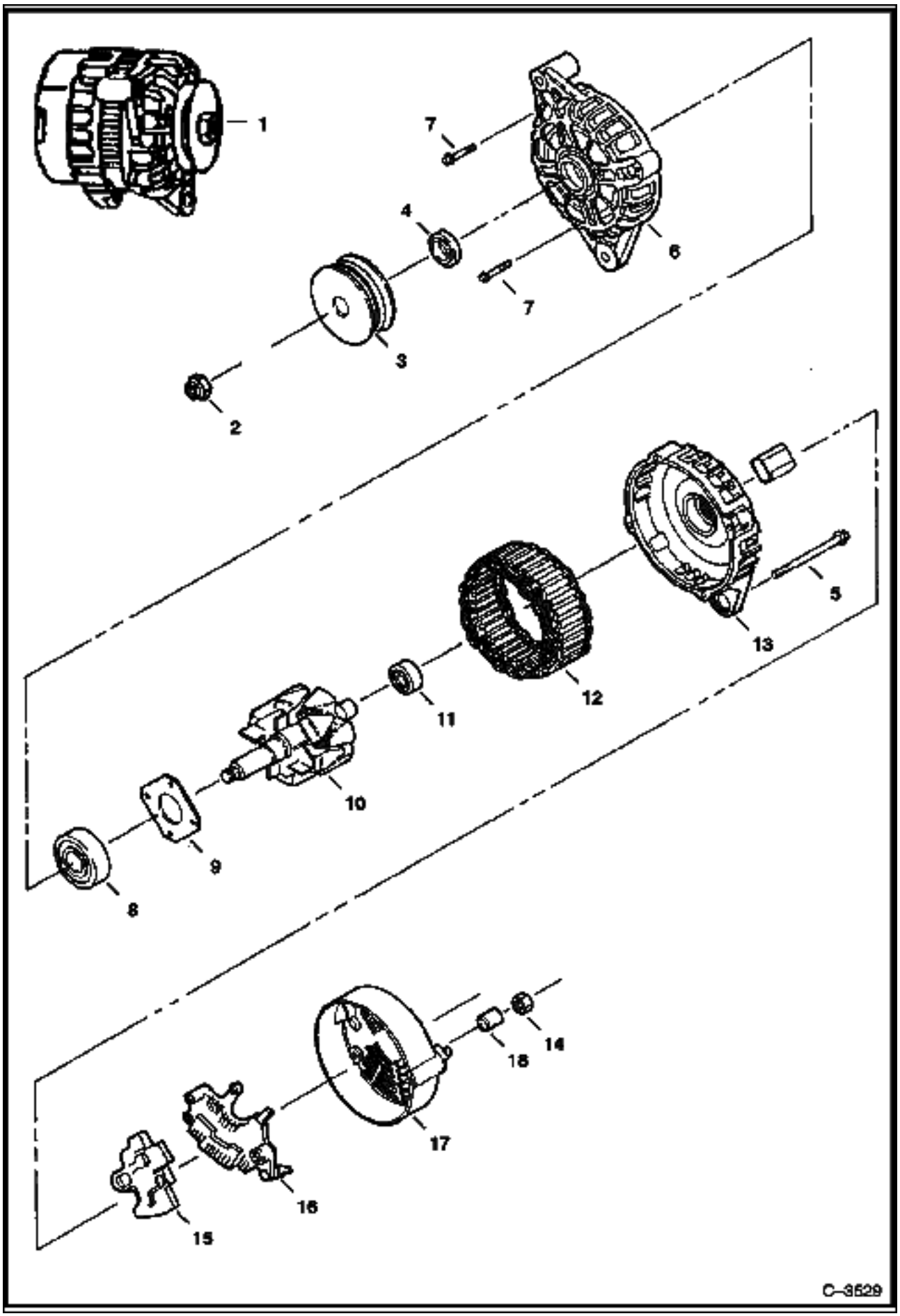

ALTERNATOR (Cont'd)
(90 Amp)

Ref No	Part Number	Description	Remarks	Serial Number	Qty
1	6678205	ALTERNATOR	90 amp - Ref. 2-14		1
2	6677497	NUT			1
3	6677496	PULLEY			1
4	6677495	SPACER			1
5	6677494	BOLT			4
6	6677491	BRACKET	front		1
7	6677817	BOLT			4
8	6677818	BEARING			1
9	6677819	RETAINER			1
10	6677492	ROTOR			1
11	6677820	BEARING			1
12	6677493	STATOR			1
13	6677490	BRACKET			1
14	6677486	NUT			1
15	6677489	REGULATOR ASSY	Order Ref. 1		1
16	6677488	RECTIFIER			1
17	6677487	COVER			1
18	6677485	SPACER			1

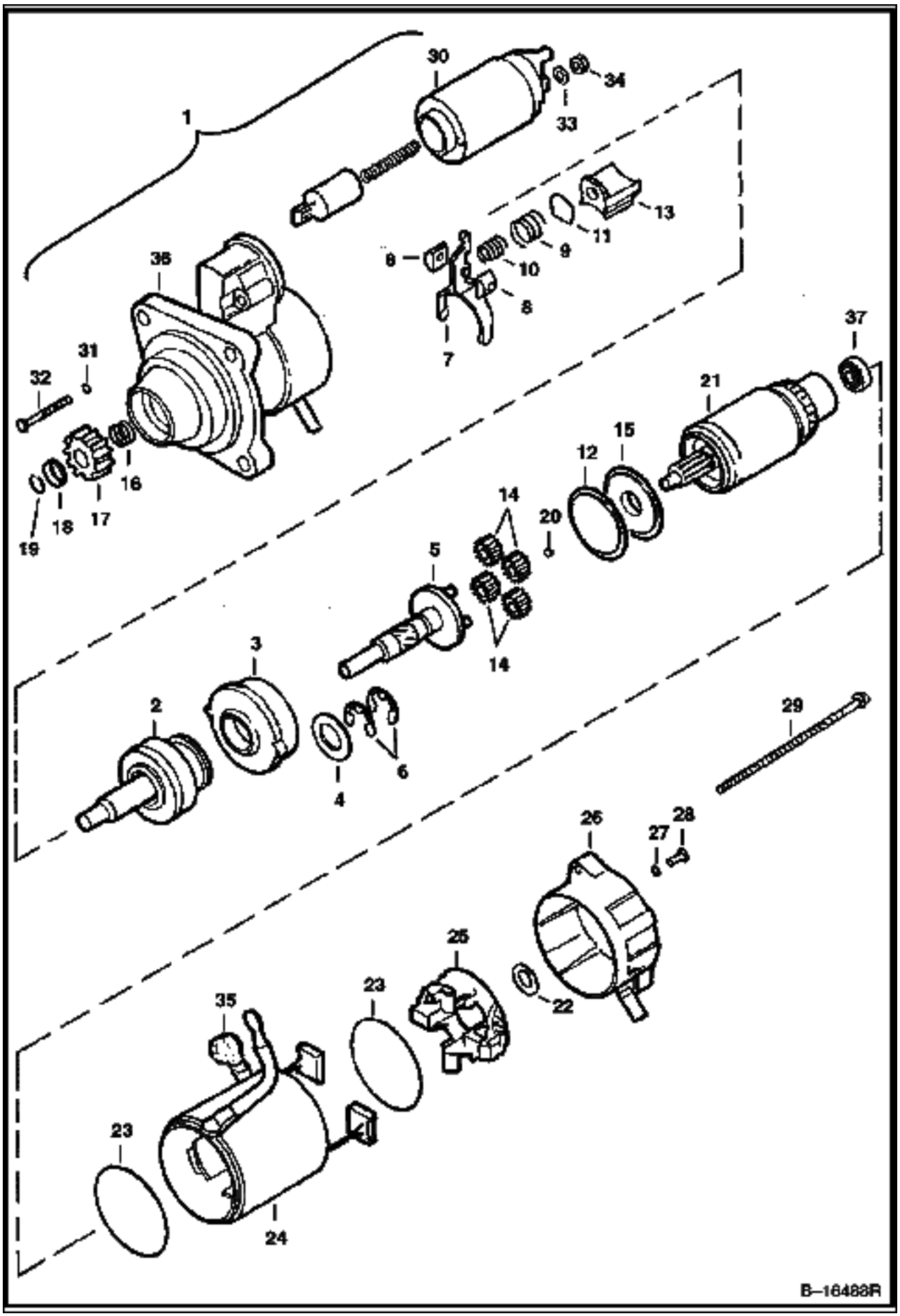
1
30
34
33
13
11
9
10
8
6
7
35
31
32
16
17
18
19
37
21
15
12
14
20
5
14
3
2
4
6
29
26
27
28
25
22
23
35
23
24
B–16483R

STARTER (Cont'd)
(Valeo)

Ref No	Part Number	Description	Remarks	Serial Number	Qty
1	6685190	STARTER			1
2	6680375	SHAFT	O.R.C. assy.		1
3	6680367	GEAR			1
4	6680378	WASHER			1
5	6680365	SHAFT			1
6	6680368	STOP RING			2
7		LEVER	NSS - Order Ref. 36		1
8		HOLDER	NSS - Order Ref. 36		2
9		SPRING	NSS - Order Ref. 36		1
10		SPRING	NSS - Order Ref. 36		1
11		PLATE	NSS - Order Ref. 36		1
12	6680369	SEAL			1
13	6680371	LEVER			1
14	6680366	GEAR			4
15	6680372	BRACKET			1
16	6680361	SPRING			1
17	6680390	GEAR			1
18	6680360	STOP			1
19	6680359	STOP RING			1
20	6680362	BALL			1
21	6680374	ARMATURE	W/Ref. 37		1
22	6680363	WASHER			1
23	6680380	SEAL			2
24	6680373	YOKE			1
25	6680377	HOLDER			1
26	6680389	BRACKET			1
27	6680358	RING	rubber		2
28	6680384	BOLT			2
29	6680356	BOLT			2
30	6680376	SWITCH			1
31	6680379	SEAL			2
32	6680383	BOLT			2
33	6EM00080B	WASHER			1
34	4DM00008B	NUT			1
35	6680355	BOOT			1
36	6680388	BRACKET	W/Ref. 7-11		1
37	6687631	BEARING			1

CAB ELECTRICAL CIRCUITRY

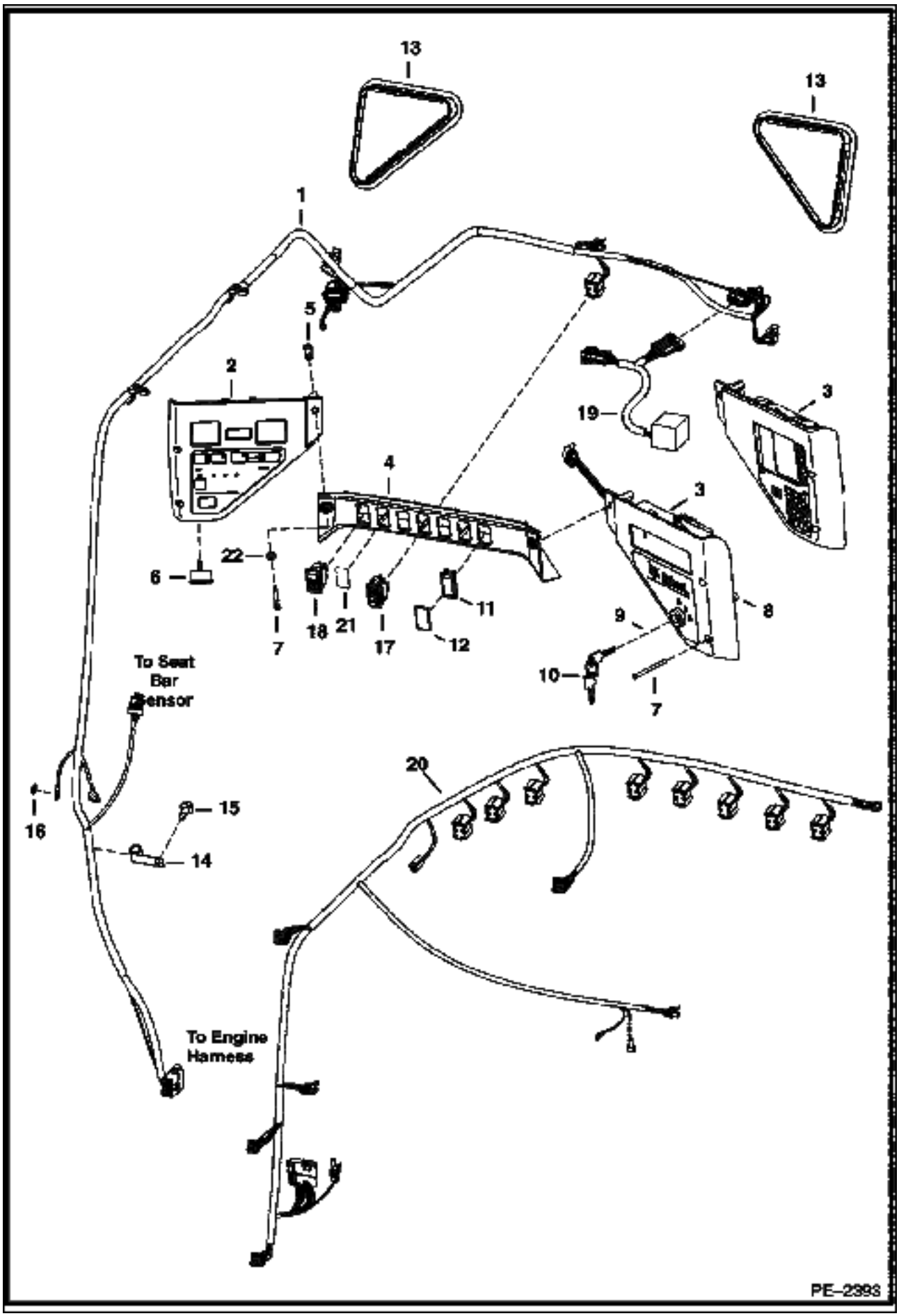

Ref No	Part Number	Description	Remarks	Serial Number	Qty
1	6727178	HARNESS			1
2	6688405	PANEL	L.H. - Was 6678680 [A]		1
2	6675982	PLUG	service part - covers the backlighting service hole		1
2	6679855	BULB			2
3	6688404	PANEL	R.H. - keyed - Was 6678681 [A]		1
3	6688403	PANEL	R.H. - deluxe - keyless - Was 6686510 [A]		1
4	6679845	CROSSMEMBER			1
5	6675033	INSERT	threaded		6
6	6679856	ALARM	W/nut		1
7	7105983	BOLT			6
8	6679842	SWITCH	ignition - W/Ref. 9 & 10		1
9	6674202	NUT			2
10	6709527	KEY	ignition		1
11	6665314	PLUG			1
12	6719038	PLUG			x
13	6674403	COVER			2
14	6675171	CLAMP			1
15	84G003712B	BOLT			1
16	6E000005B	WASHER			1
17	6676536	SWITCH	park brake		1
18	6683812	SWITCH	selectable joystick controls		1
19	6683171	CONTROLLER	boost - for Ref. 3 (6685018 panel)		1
20	6727190	HARNESS	accessories		1
20	6715365	HARNESS	accessories - export		1
21	6737248	DECAL	H pattern/ISO - selectable joystick controls		1
22	25E000010B	WASHER			2

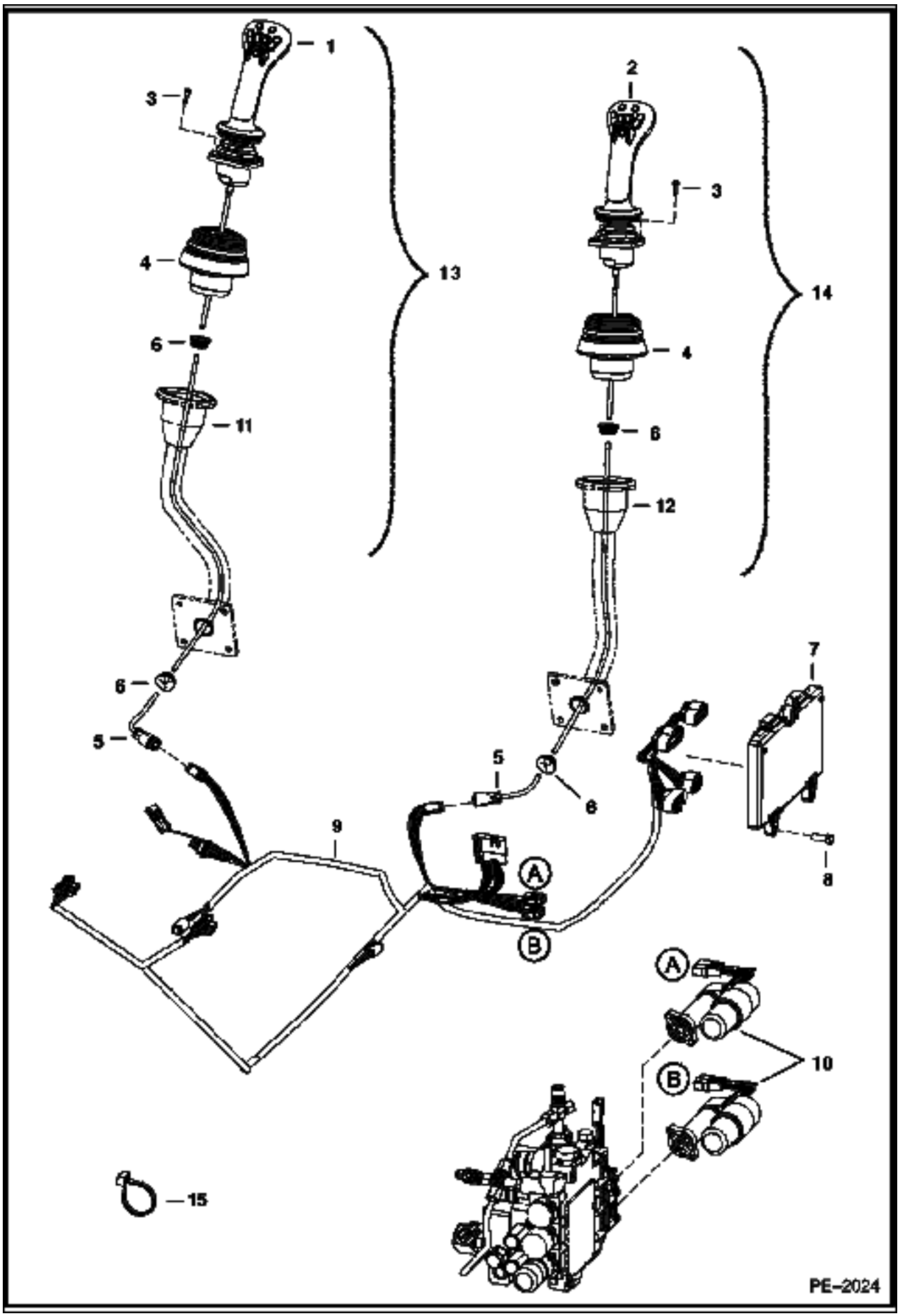
1
2
3
3
4
4
6
6
6
11
12
13
14
5
5
6
7
8
9
A
B
A
B
10
15
PE–2024

CONTROLS ELECTRICAL (Cont'd)
(Selectable Joystick Controls)

Ref No	Part Number	Description	Remarks	Serial Number	Qty
1	6687883	JOYSTICK LH			1
2	6687882	JOYSTICK RH			1
3	6678659	BOLT			8
4	6678903	BOOT	joystick		2
5	6729397	HARNESS	joystick		2
6	6684294	GROMMET	joystick		4
7	6683608	CONTROLLER	joystick		1
8	43C000616B	BOLT			3
9	6733293	HARNESS	joystick control		1
10	7101672	ACTUATOR			2
11	6729792	HANDLE	L.H.		1
12	6729791	HANDLE	R.H.		1
13	7111993	JOYSTICK ASMBLY LH	L.H. - Ref. 1, 3-6 & 11		1
14	7111992	JOYSTICK ASMBLY RH	R.H. - Ref. 2-6 & 12		1
15	6624289	STA STRAP			21

ENGINE ELECTRICAL
(W/Controller) (Tier II)

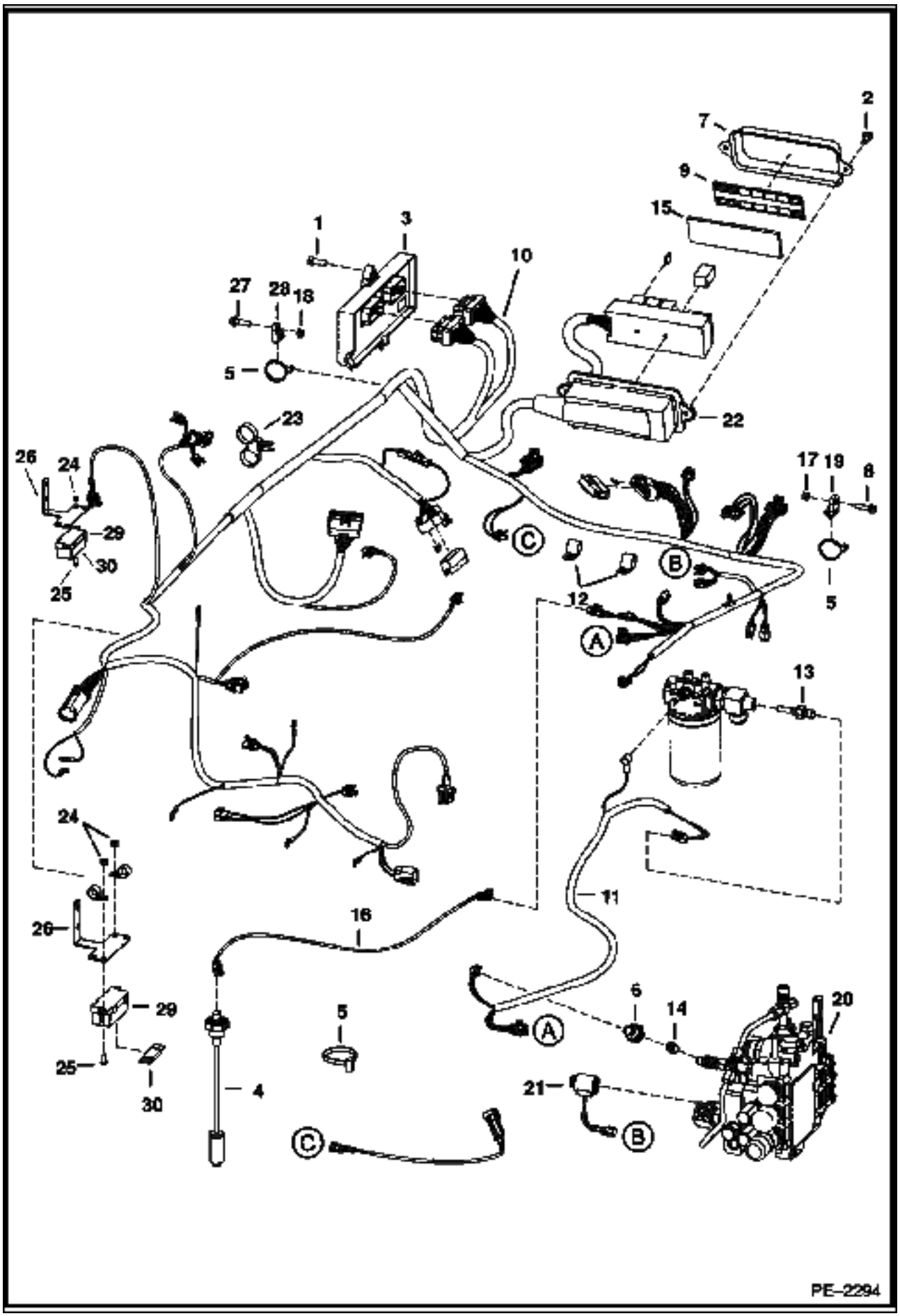

ENGINE ELECTRICAL (Cont'd)
(W/Controller) (Tier II)

Ref No	Part Number	Description	Remarks	Serial Number	Qty
1	43C000616B	BOLT			3
2	84G003112B	BOLT			2
3	6688439	CONTROLLER			1
4	6680438	SENSOR	fuel - w/gasket		1
4	6717579	GASKET			1
5	6624289	STA STRAP			17
6	6674316	SENSOR	hyd pressure		1
7	6716621	COVER	fuse box		1
7	6736071	KIT	extreme aplications - w/decal & insulation		1
8	84G003712B	BOLT			3
9	7117407	DECAL	fuse/relay - 2" x 7" (50,8 mm x 177,8 mm)		1
10	6730292	HARNESS	main frame		2
11	6717247	HARNESS	filter		1
12	30H000046B	CLAMP			2
13	6718417	SENDER	hyd temp		1
14	6718948	SNUBBER			1
14	6675278	FILTER			1
15	6731275	INSULATION			1
16	6719422	HARNESS	fuel sender		1
17	57D000006B	NUT			1
18	97D000005B	NUT			2
19	6679034	MOUNT			1
20	6717706	COIL	10 volt		2
21	6675559	COIL	W/ diode		1
22	6718659	HOUSING	fuse		1
22	6654806	FUSE	15 amp (2)		x
22	6702444	FUSE	25 amp (6)		x
22	6718034	FUSE	30 amp (2)		x
22	6679820	RELAY	switch (7)		x
23	6678668	TIE			2
24	59D000004B	NUT			3
25	25G000410B	BOLT			2
26	6728621	BRACKET			1
27	35C000520B	BOLT			1
28	6678667	MOUNT			1
29	6675154	HOLDER	fuse		1
30	6675155	FUSE	100 amp		1

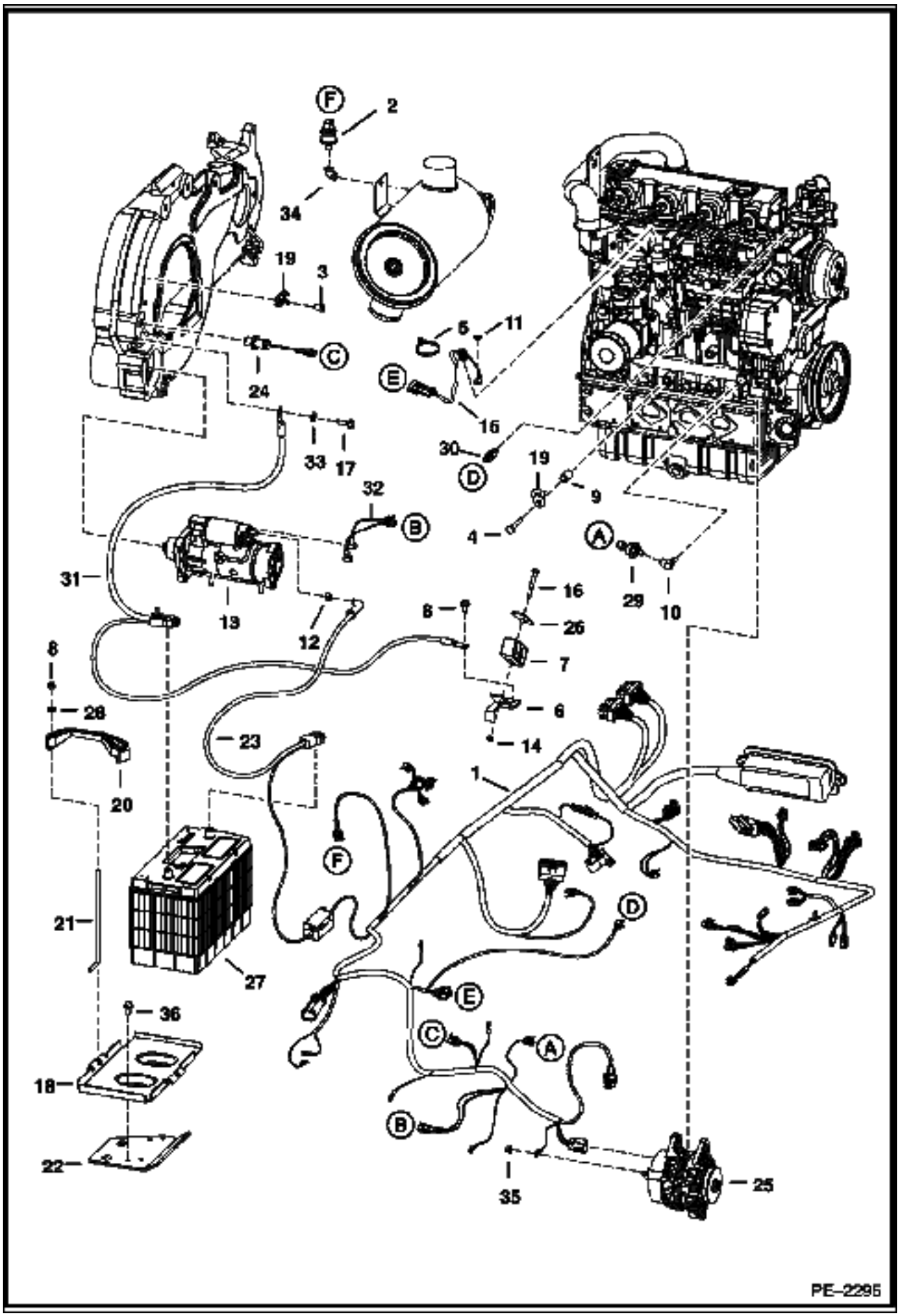
F
2
34
19
3
C
24
33
17
E
5
11
16
30
D
19
9
4
A
29
10
32
B
31
13
12
8
16
26
7
6
14
8
28
20
23
1
F
21
27
D
E
C
A
B
36
18
22
35
25
PE-2295

Ref No	Part Number	Description	Remarks	Serial Number	Qty
1	6730292	HARNESS	Loader		1
2	6665371	SWITCH	vacuum		1
3	17C000610B	BOLT			2
4	7101892	BOLT			1
5	6624289	STA STRAP			17
6	6715131	BRACKET			1
7	6715197	CLAMP			1
8	59D000005B	NUT			2
9	7101893	SPACER			1
10	6707040	ELBOW			1
11	6E000004B	WASHER			1
12	4DM00010B	NUT	starter		1
13		STARTER	See Illustration STARTER/ B16488R		1
14	95D000005B	NUT			1
15	6736515	HARNESS	fuel shut off solenoid		1
16	17C000540B	BOLT			1
17	35C000620B	BOLT	negative cable ground		1
18	6712536	PAN	battery		1
19	6679034	MOUNT			1
20	6569203	CLAMP	battery		1
21	6576280	BOLT	battery hold down		2
22	6579989	BRACKET			1
23	6719141	CABLE	positive		1
24	6684037	SENSOR	rpm		1
25		ALTERNATOR	See Illustration ENGINE & ATTACHING PARTS/ PE1668		1
26	6715132	RETAINER			1
27	6665427	BATTERY			1
28	25E000015B	WASHER			2
29	6674315	SENSOR	engine pressure		1
30	6718414	SENDER	engine temp		1
31	6727803	CABLE	negative		1
32	6733370	HARNESS			1
33	6E000006B	WASHER			1
34	24F000001B	BRACKET	cable		1
35	43DM00008B	NUT			1
36	84G003712B	BOLT			2

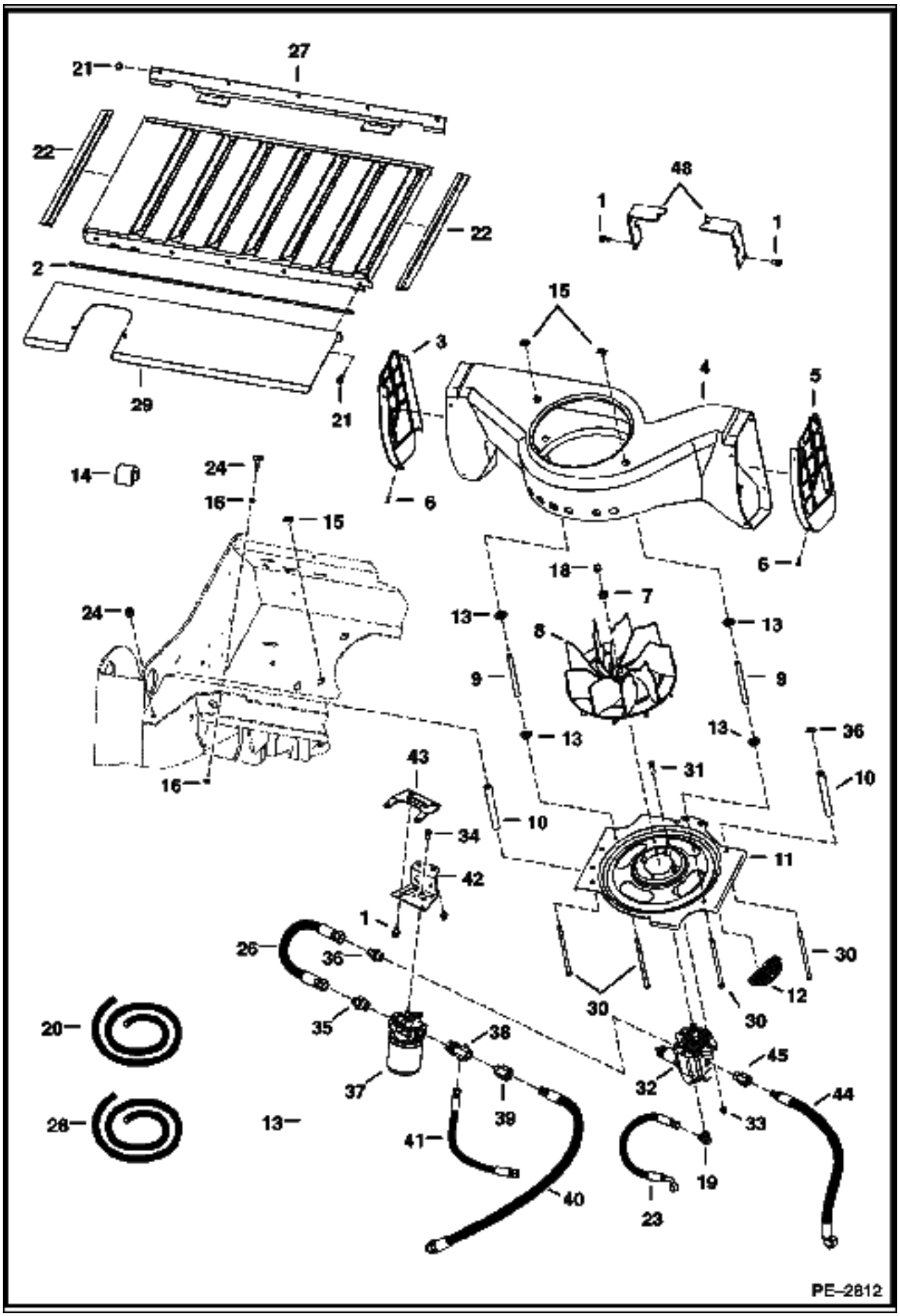
27
21
22
22
48
1
1
2
15
3
4
5
29
21
14
24
16
6
6
15
18
7
24
13
8
13
9
9
13
13
36
16
43
31
10
10
34
11
42
1
26
36
30
12
30
30
35
38
20
45
37
32
44
39
33
28
13
41
19
40
23
PE-2812

Ref No	Part Number	Description	Remarks	Serial Number	Qty
1	84G003712B	BOLT			8
2		SEAL	34.5" (900 mm) long - Order Ref 28		2
3	6716574	LOUVER	L.H. - plastic		1
4	6732931	HOUSING			1
5	6716572	LOUVER	R.H. - plastic		1
6	6706517	SCREW			8
7	6701097	WASHER			1
8	6715142	FAN			1
9	6577382	SPACER			2
10	6732318	SPACER			2
11	7107175	INLET	4 slot		1
12	6684474	INSERT FAN INLET	inlet		4
13	6732457	WASHER	step		4
14	6579613	STOP	cab tilt		2
15	6684033	NUT	spring		4
16	61D000005B	NUT			4
17	17C006116B	BOLT			4
18	96D000008B	NUT			1
19	17KB00606B	ELBOW			1
19	79K000006B	O-RING			x
20	6646705	SEAL	bulk - Order per foot		x
21	84G003112B	BOLT			8
22		SEAL	NAP - 19" (483mm) long - Order Ref. 20		2
23	6578804	HOSE			1
24	6655399	BUMPER			4
25	6731078	GRILL			1
26	7110809	HOSE			1
27	6731915	BRACKET			1
28	6511855	SEAL	bulk - Sold Per Foot		x
29	6731916	SHIELD			1
30	7101373	BOLT			4
31	17C000620B	BOLT			2
32	6687142	MOTOR	See Illustration MOTOR/ PE2811		1
33	95D000006B	NUT			10
34	17C000612B	BOLT			4
35	15KB01010B	ADAPTER			1
35	79K000010B	O-RING			x
36	15KB01012B	ADAPTER			1
36	79K000012B	O-RING			x
37	6687266	FILTER ASSY			1
37	6686926	ELEMENT FILTER			1
38	7108685	HOSE			1
38	79K000012B	O-RING			x
39	78HA01210B	ADAPTER			1
39	79K000010B	O-RING			x
40	7107174	HOSE			1
41	6815887	HOSE			1
42	7110243	SEAL			1
43	7110244	BRACKET			1
44	7107153	HOSE			1
45	78HA01010B	ADAPTER			1
45	79K000010B	O-RING			x
46	84G003716B	BOLT			4
47	6731970	BRACKET			2

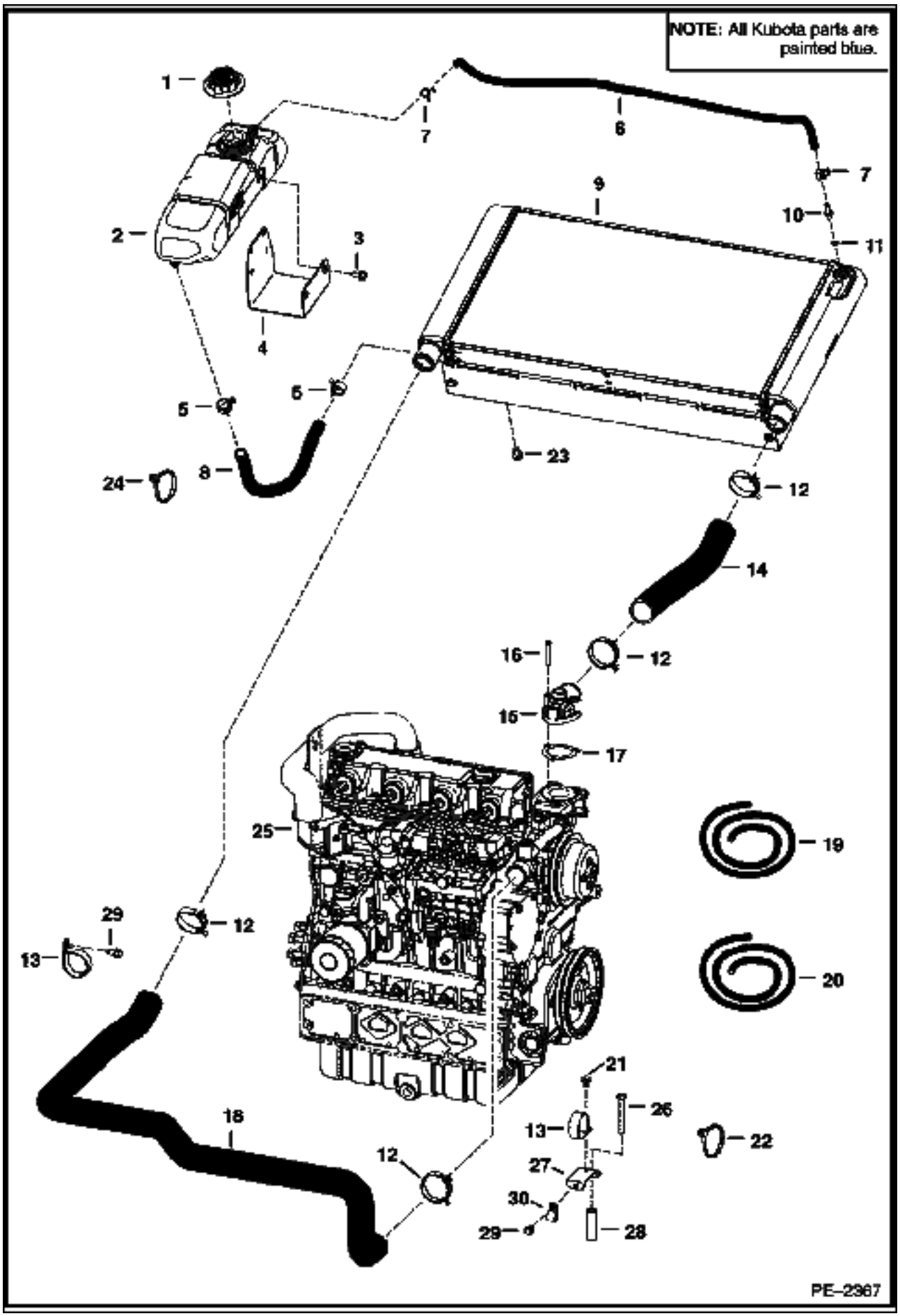
NOTE: All Kubota parts are painted blue.
1
2
3
4
5
6
7
8
9
10
11
12
13
14
15
16
17
18
19
20
21
22
23
24
25
26
27
28
29
30
PE-2367

Ref No	Part Number	Description	Remarks	Serial Number	Qty
1	6733429	CAP			1
1	6733996	DECAL	14 psi		1
2	6732375	TANK			1
3	6733886	BOLT			2
4	6732870	MOUNT			1
5	5HM00023B	CLAMP			2
6		HOSE	NAP - Order Ref. 19 - .25" I.D. - 36" (914mm) long		1
7	5HM00014B	CLAMP			2
8		HOSE	NAP - Order Ref. 20 - .63" I.D. - 20" (508mm) long		1
9	6684367	RADIATOR			1
10	6734090	ADAPTER			1
11	79K000004B	O-RING			x
12	5HM00055B	CLAMP			4
13	30H000091B	CLAMP			2
14	6728749	HOSE			1
15	6680843	COVER	See Illustration WATER PUMP & THERMOSTAT/ B22925 thermostat		1
16	6680845	BOLT	See Illustration WATER PUMP & THERMOSTAT/ B22925		3
17	6680844	GASKET	See Illustration WATER PUMP & THERMOSTAT/ B22925		1
18	6736566	HOSE			1
19	6577822	HOSE	bulk - sold per foot		x
20	6578172	HOSE	bulk - sold per foot		x
21	84G003712B	BOLT			2
22	6610510	TIE			1
23	35C000516B	BOLT			4
24	6513471	CLAMP			1
25		ENGINE	See Illustration ENGINE/ B18620A		1
26	6731198	BOLT			1
27	6737649	BRACKET			1
28	6731109	SPACER			1
29	84G003108B	BOLT			2
30	30H000034B	CLAMP			1

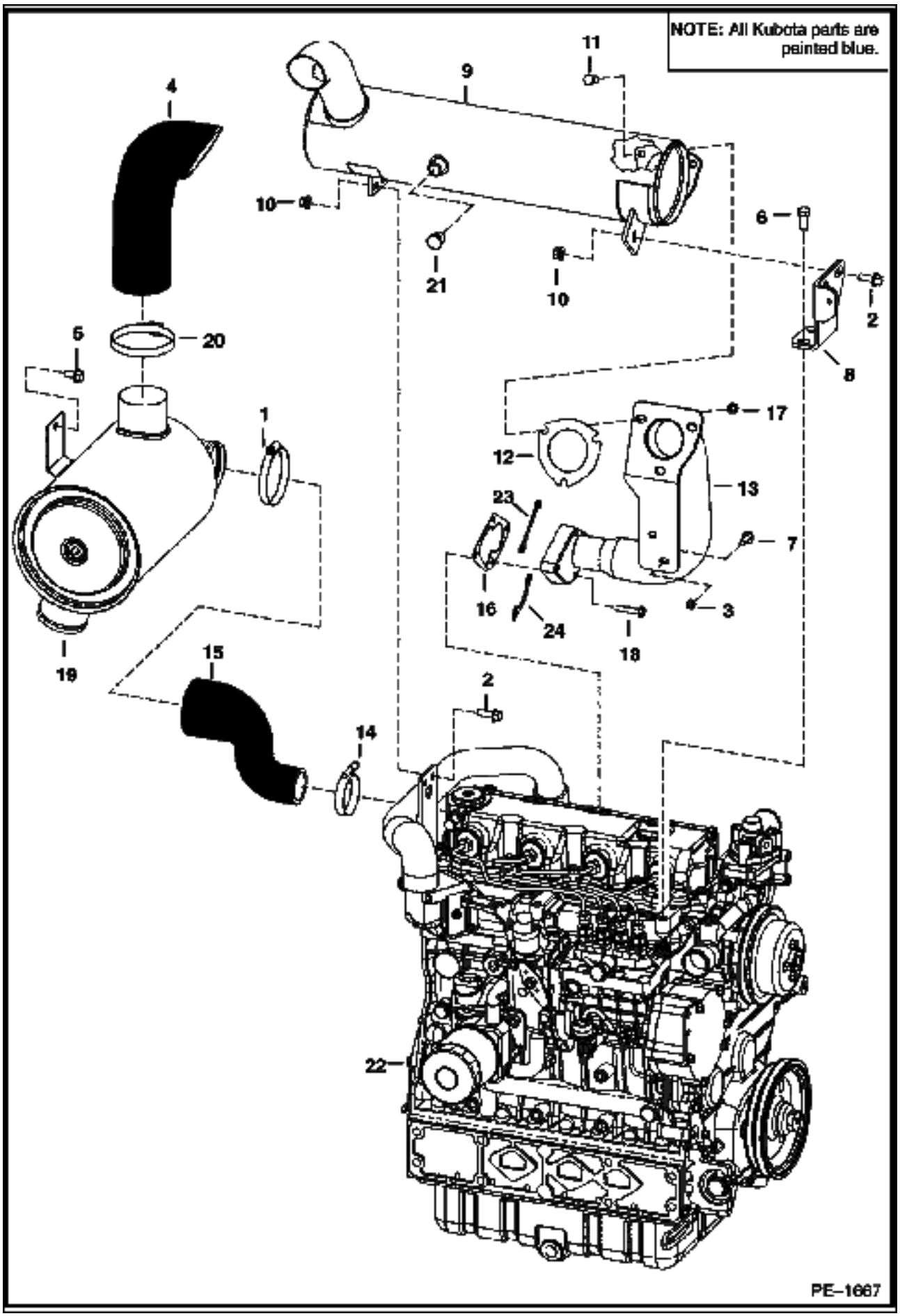
NOTE: All Kubota parts are painted blue.
PE–1667

ENGINE & ATTACHING PARTS (Cont'd)
(Air Cleaner, Muffler)

Ref No	Part Number	Description	Remarks	Serial Number	Qty
1	42HC00375B	CLAMP			1
2	45C000616B	BOLT			2
3	53DM00008B	NUT			1
4	6730726	HOSE	air intake		1
5	84G003712B	BOLT			2
6	6719825	BOLT			2
7	29CM00820B	BOLT			1
8	7111805	MOUNT	muffler		1
8	6730753	MOUNT	purifier		1
9	6687887	MUFFLER	double insulated		1
10	83D000006B	NUT			3
11	17C000616B	BOLT			3
12	6732032	GASKET	exhaust		1
13	7102368	TUBE	exhaust - square bolt pattern		1
14	42HC00250B	CLAMP			1
15	6734114	HOSE			1
16	7102747	GASKET	square bolt pattern		1
17	85D000006B	NUT			3
18	5CM01020B	BOLT			4
19		AIR CLEANER	See Illustration AIR CLEANER/ MS1516A		1
20	42H000052B	CLAMP			1
21	6661062	PLUG	brass - 3/8" straight pipe thread		1
22		ENGINE	See Illustration ENGINE/ B18620A		1
23	7102034	TAB			1
24	7102035	TAB			1

ENGINE & ATTACHING PARTS
(Belt Drive System)

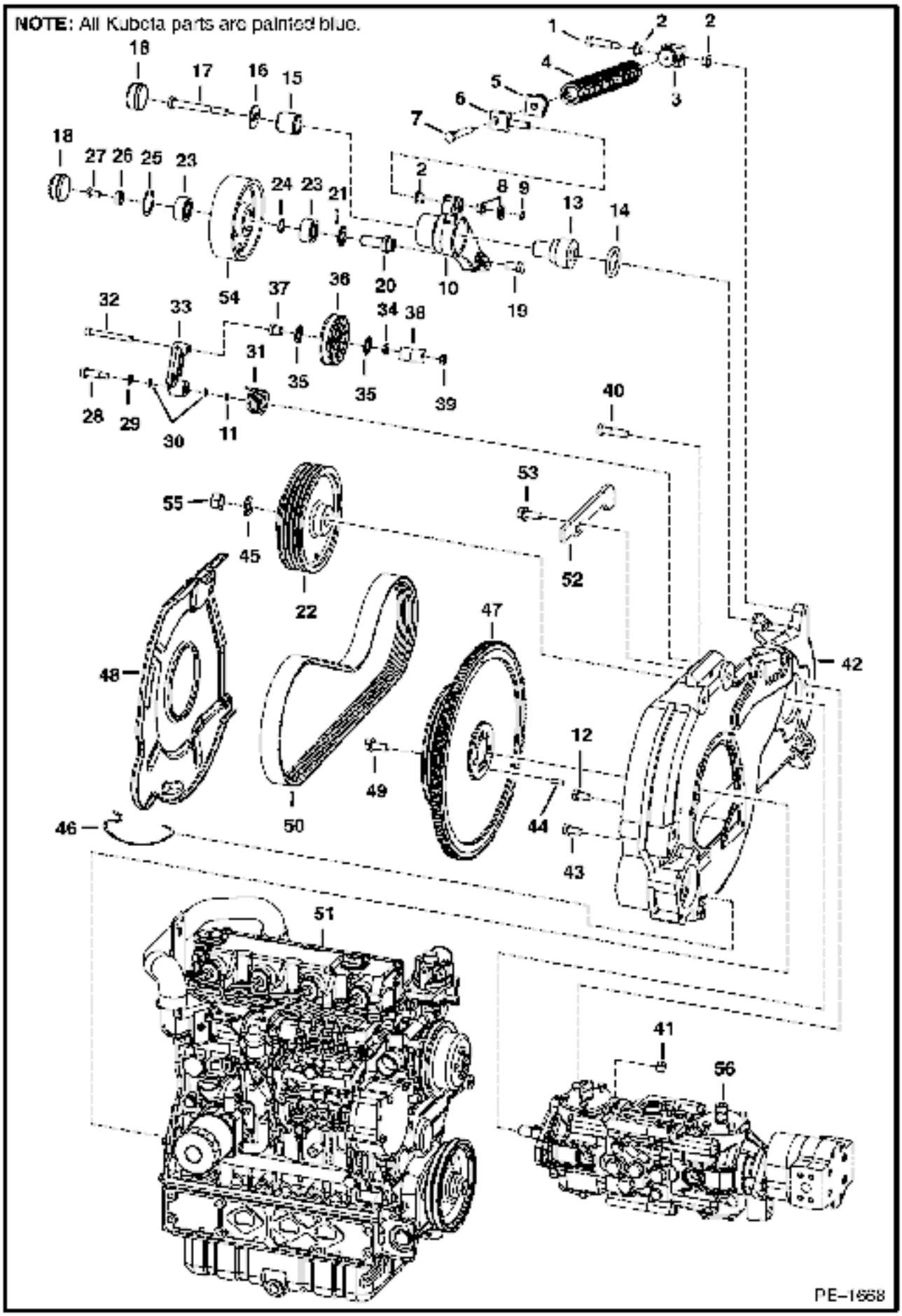

ENGINE & ATTACHING PARTS (Cont'd)
(Belt Drive System)

Ref No	Part Number	Description	Remarks	Serial Number	Qty
1	38C000828B	BOLT	shoulder		1
2	1313116	BUSHING			3
3	6568424	ADAPTER			1
4	6569498	SPRING ASSY			1
5	6568425	ADAPTER			1
6	6587182	SWIVEL PIN			1
7	6586710	BOLT			1
8	25E000021B	WASHER			2
9	6518955	SNAP RING			1
10	6735709	IDLER			1
11	6670682	BEARING	nylon		1
12	6730894	BOLT			2
13	6707699	PIVOT			1
14	6661377	SEAL			1
15	6587765	BUSHING			1
16	6707698	WASHER			1
17	17C000872B	BOLT			1
18	6660967	CAP	grease		2
19	17C000816B	BOLT			1
20	6707654	SPINDLE			1
21	6665307	SEAL			1
22	6713287	PULLEY	pump		1
23	6661229	BEARING			2
24	6701159	SHIM			1
25	6665308	SNAP RING			1
26	6707697	WASHER			1
27	17C000612B	BOLT			1
28	38C000820B	BOLT			1
29	6655781	BEARING	thrust		1
30	6704820	O-RING			2
31	6700115	SPRING			1
32	73G000656B	BOLT			1
33	6725212	ARM	W/Ref. 11		1
34	6704444	WASHER			1
35	6660995	GREASE RING			2
36	6662997	PULLEY			1
37	6704443	BUSHING			1
38	6702474	RETAINER			1
39	61D000006B	NUT			1
40	17C000832B	BOLT	hydrostatic pump mount		2
41	85D000008B	NUT			2
42	6730020	MOUNT	See Illustration ENGINE & ATTACHING PARTS/ PE1725R		1
43	6719828	BOLT			10
44	14J003112B	PIN			2
45	6576033	WASHER			1
46	6701160	CLIP			3
47	7100859	FLYWHEEL ASSY	W/ ring gear		1
47	6665222	RING GEAR			1
48	6731100	SHIELD			1
49	6680747	BOLT			6
50	6662855	BELT	pump drive		1
51		ENGINE	See Illustration ENGINE/ B18620A		1
52	6729944	STOP	idler		1
53	31C000820B	BOLT			1

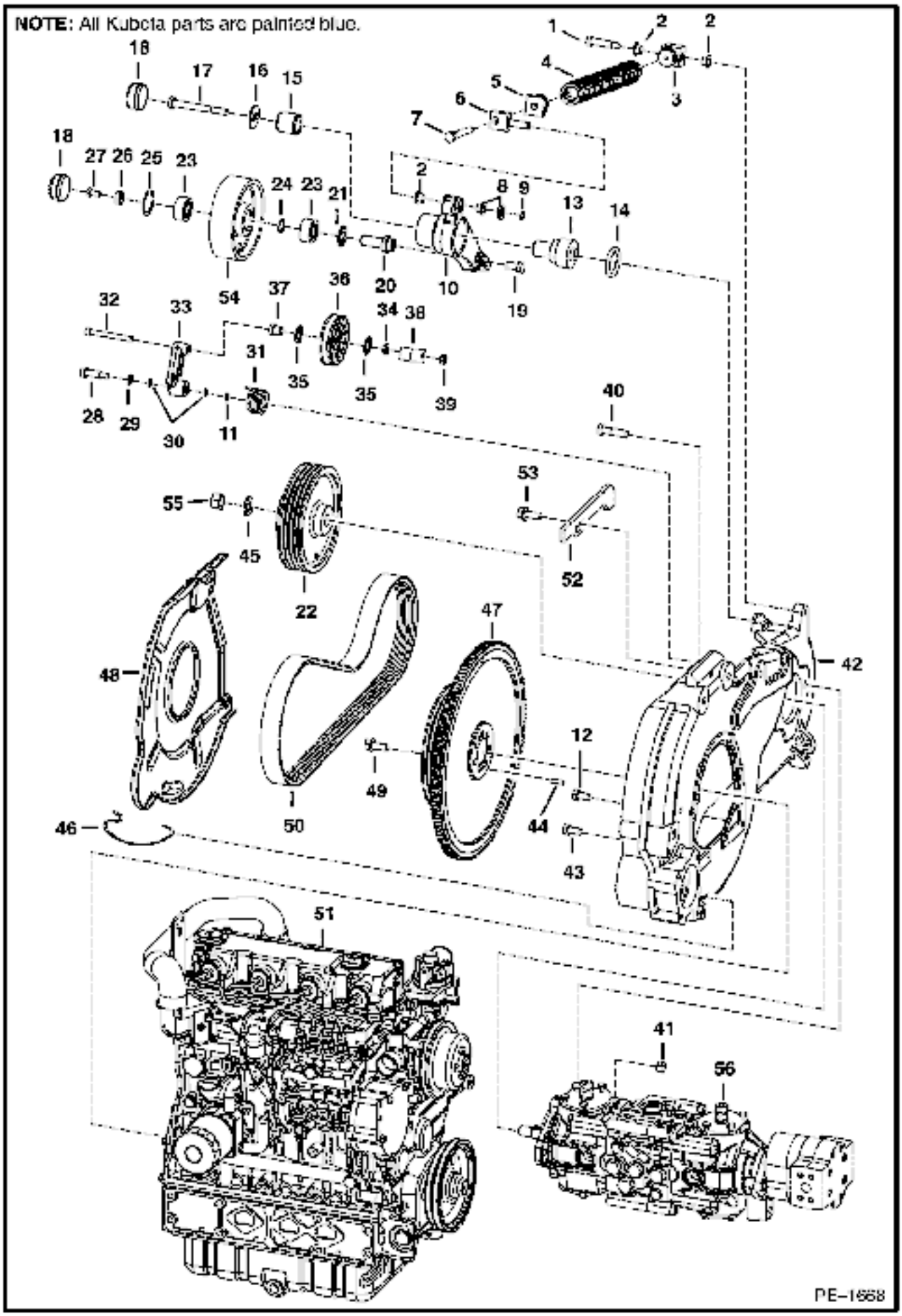
NOTE: All Kubota parts are painted blue.
PE-1668

Ref No	Part Number	Description	Remarks	Serial Number	Qty
54	6708445	PULLEY	drive idler		1
55	92D000012B	NUT			1
56		PUMP	See Illustration HYDROSTATIC PUMP/ B17765		1

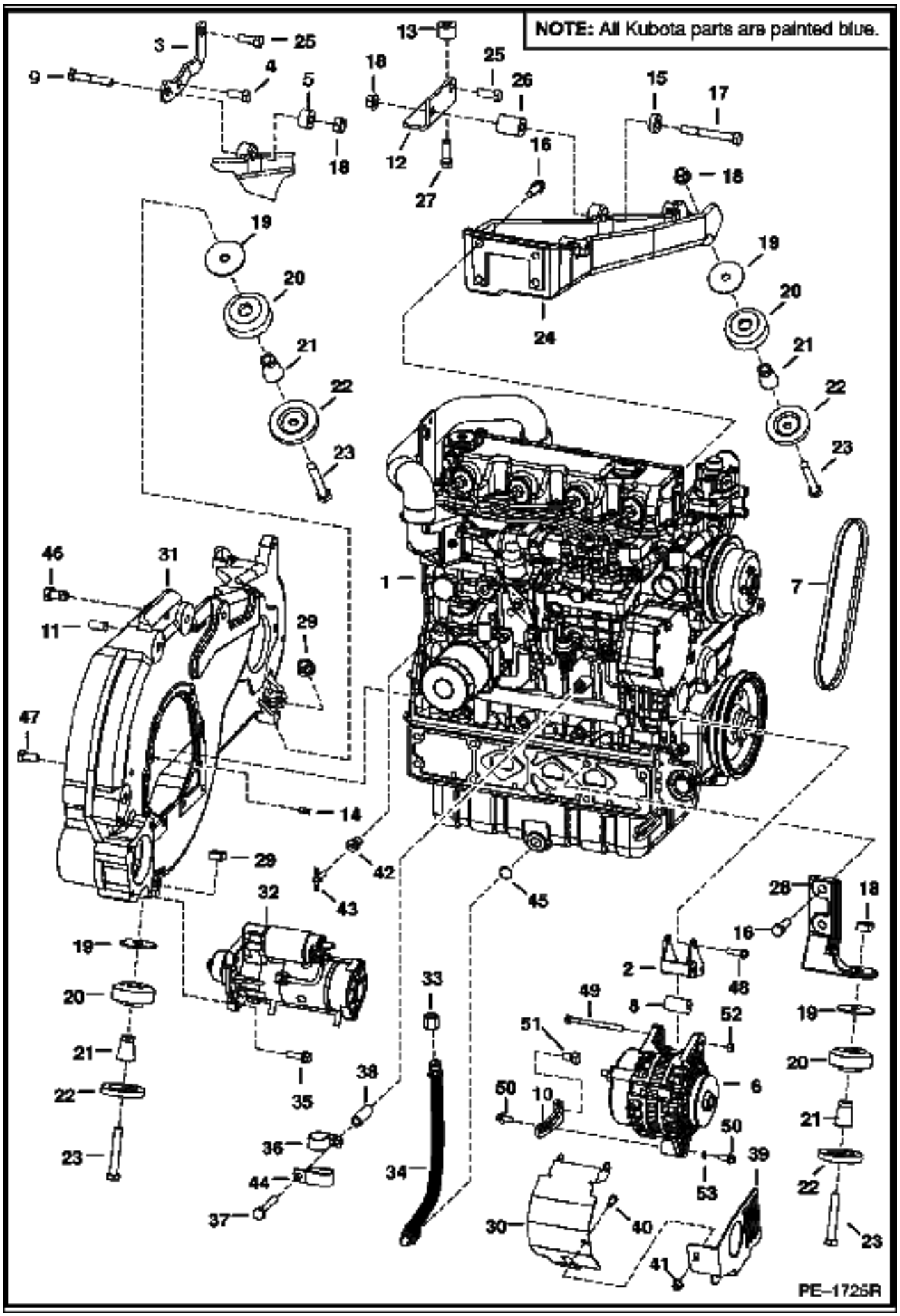
NOTE: All Kubota parts are painted blue.
PE-1725R

ENGINE & ATTACHING PARTS (Cont'd)
(Engine Mounts)

Ref No	Part Number	Description	Remarks	Serial Number	Qty
1		ENGINE	See Illustration ENGINE/ B18620A		1
2	6680839	BRACKET	alternator		2
3	6735979	BRACKET	pump - for selectable joystick control		1
4	17C000816B	BOLT	for selectable joystick control		1
5	6736349	SPACER	for selectable joystick control		1
6		ALTERNATOR	See Illustration ALTERNATOR/ C3529		1
7	6686655	BELT	alternator / water pump		1
8	6732206	SPACER	alternator		1
9	6675221	BOLT	for selectable joystick control		1
10	6732193	BRACKET			1
11	20JM01025B	PIN			2
12		BRACKET	NAP - W/ 3 holes - Order 6735727 & 6735729 spacer		1
12	6735727	BRACKET	W/ 4 holes		1
13	6732575	SPACER			1
14	6680642	PIN	align Ref. 30 to the engine		1
15	6716408	SPACER			1
16	6719829	BOLT			6
17	43C000852B	BOLT			4
18	83D000008B	NUT			3
19	6731146	WASHER	2.5" (63,5mm) O.D.		4
19	6705106	WASHER	3" (76,2mm) O.D.		4
20	6668104	MOUNT			4
21	6715287	SPACER			4
22	6661787	WASHER			4
23	17C000888B	BOLT			1
24	6729942	MOUNT			1
25	17C000820B	BOLT			1
26	6732585	SPACER	3" (76,2mm) long		1
26	6735729	SPACER	2.94" (74,7mm) long		1
27	17C000824B	BOLT			1
28	6735346	MOUNT	cast - used W/ 6735106 washer		2
29	6652918	NUT			2
30	6733873	SHIELD	alternator		1
31	6735980	MOUNT			1
32		STARTER	See Illustration STARTER/ B16488R		1
33	36K000006B	CAP			1
34	6734573	HOSE	12.5" (318mm) long - tier II		1
35	35C000620B	BOLT			3
36	30H000073B	CLAMP			1
37	6731198	BOLT			1
38	6731109	SPACER			1
39	6734436	SHIELD	alternator belt		1
40	17C000510B	BOLT			1
41	83D000005B	NUT			1
42	7101136	BUSHING			1
43	72F000001B	DRAIN COCK			1
44	31H000038B	CLAMP			1
45	79K000008B	O-RING			1
46	31C000820B	BOLT			1
47	6719828	BOLT			10
48	6680687	BOLT			2
49	1CM08100B	BOLT			1
50	29CM00820B	BOLT			2
51	6CM01220B	BOLT			1

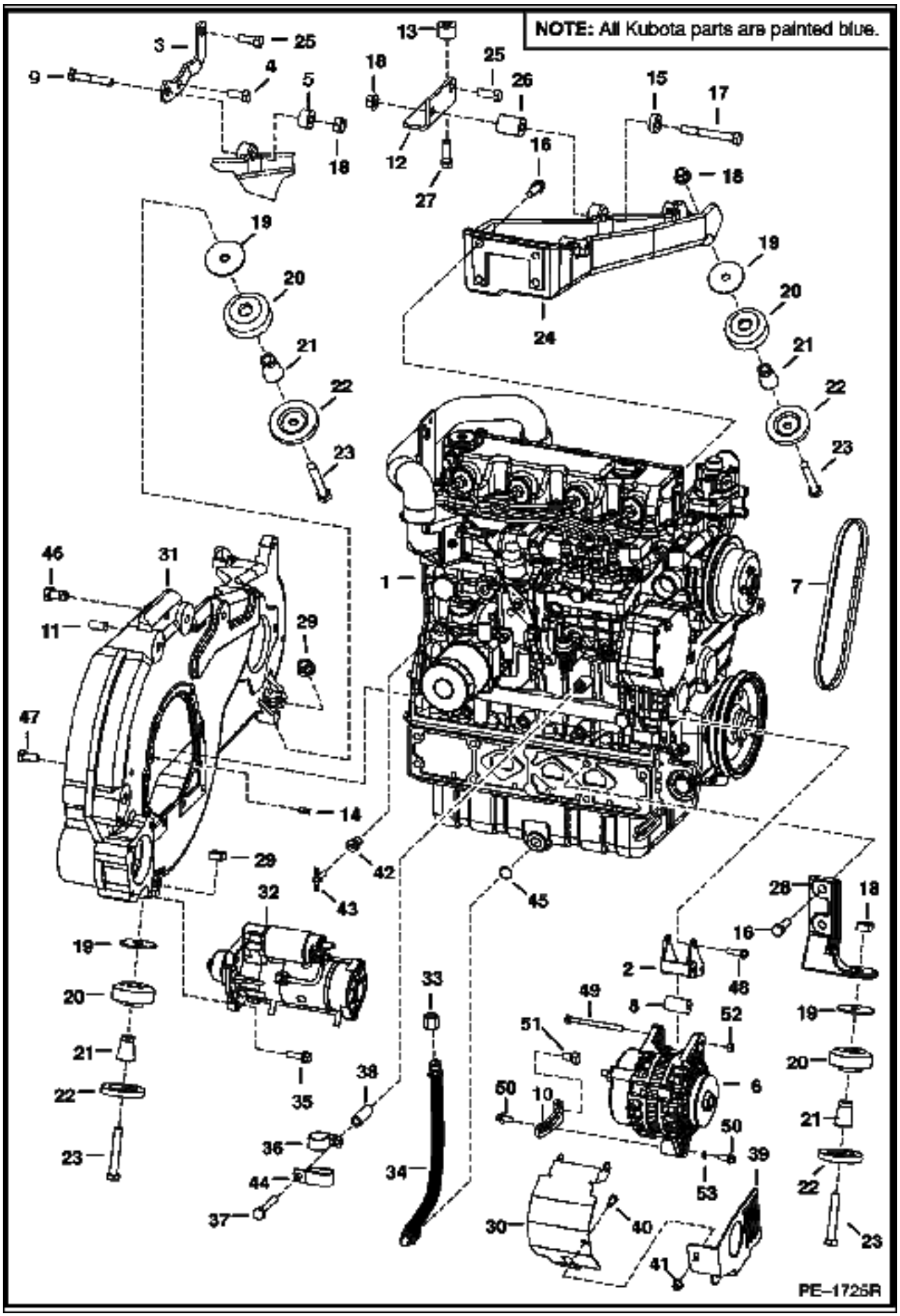
NOTE: All Kubota parts are painted blue.
PE-1725R

Ref No	Part Number	Description	Remarks	Serial Number	Qty
52	53DM00008B	NUT			1
53	6E000005B	ENGINE			1

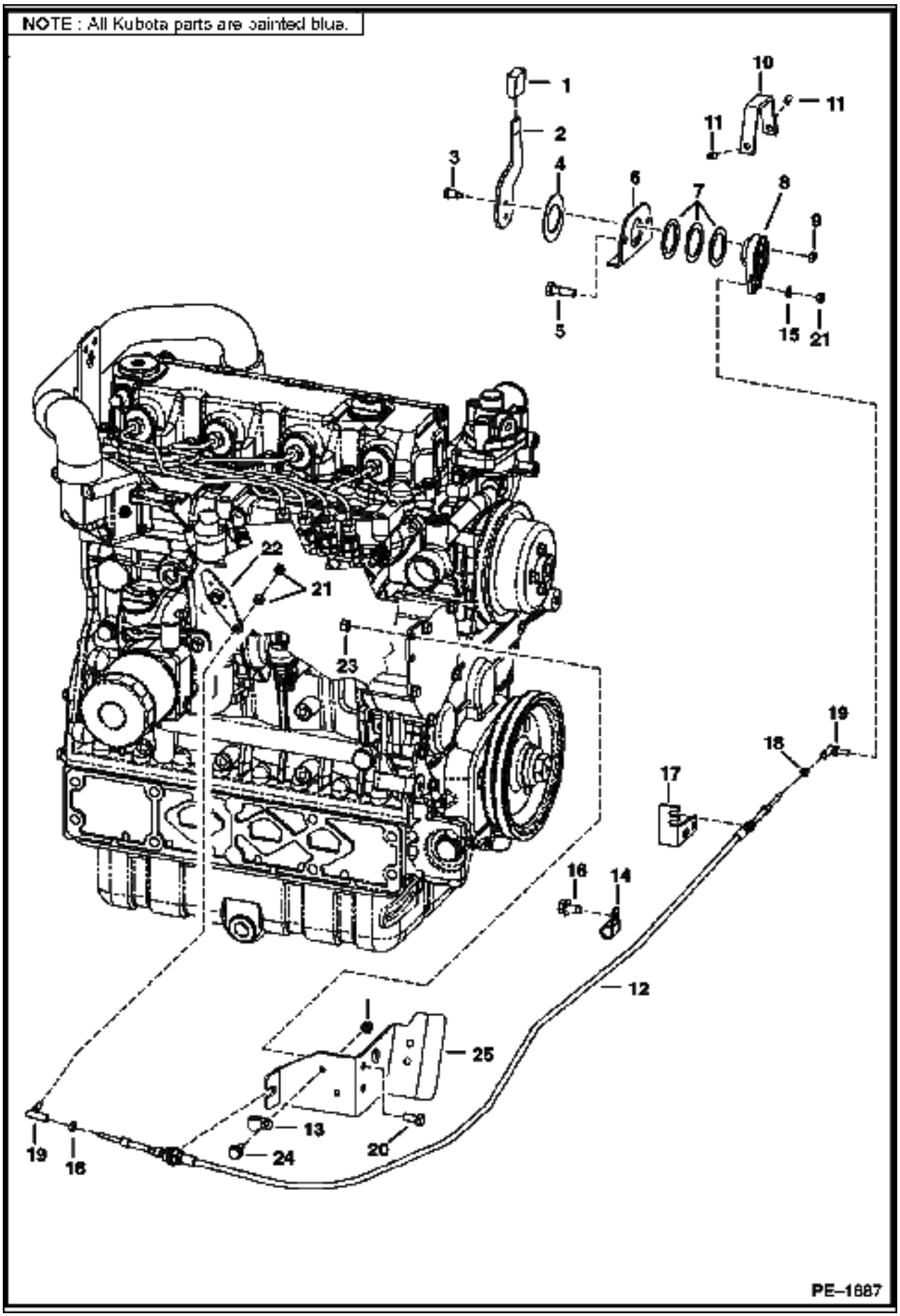
NOTE : All Kubota parts are painted blue.
1
2
3
4
5
6
7
8
9
10
11
11
15
21
22
21
23
19
18
17
16
14
12
25
13
24
20
19
18
PE-1687

Ref No	Part Number	Description	Remarks	Serial Number	Qty
1	6564452	GRIP			1
2	6705452	LEVER			1
3	38C000610B	BOLT	shoulder		2
4	6567962	WASHER			1
5	84G003724B	BOLT			2
6	6576262	MOUNT			1
7	6630945	WASHER			3
8	6709022	LEVER			1
9	85D000005B	NUT			6
10	6576261	COVER			1
11	6706572	SET SCREW			2
12	6675668	CABLE			1
13	30H000021B	CLAMP			1
14	30H000031B	CLAMP			1
15	25E000011B	WASHER			1
16	84G003712B	BOLT			1
17	6732450	BRACKET			1
18	14D000010B	NUT			2
19	6644965	BALL JOINT			1
20	17C000512B	BOLT			2
21	62D000004B	NUT			3
22		LEVER	See B-17615/GOVERNOR Ref. 3 & B-22930/* GOVERNOR Ref. 12		1
23	95D000005B	NUT			2
24	84G003110B	BOLT			1
25	6734772	MOUNT	tier II		1

ENGINE SPEED CONTROL
(W/ Joystick Controls)

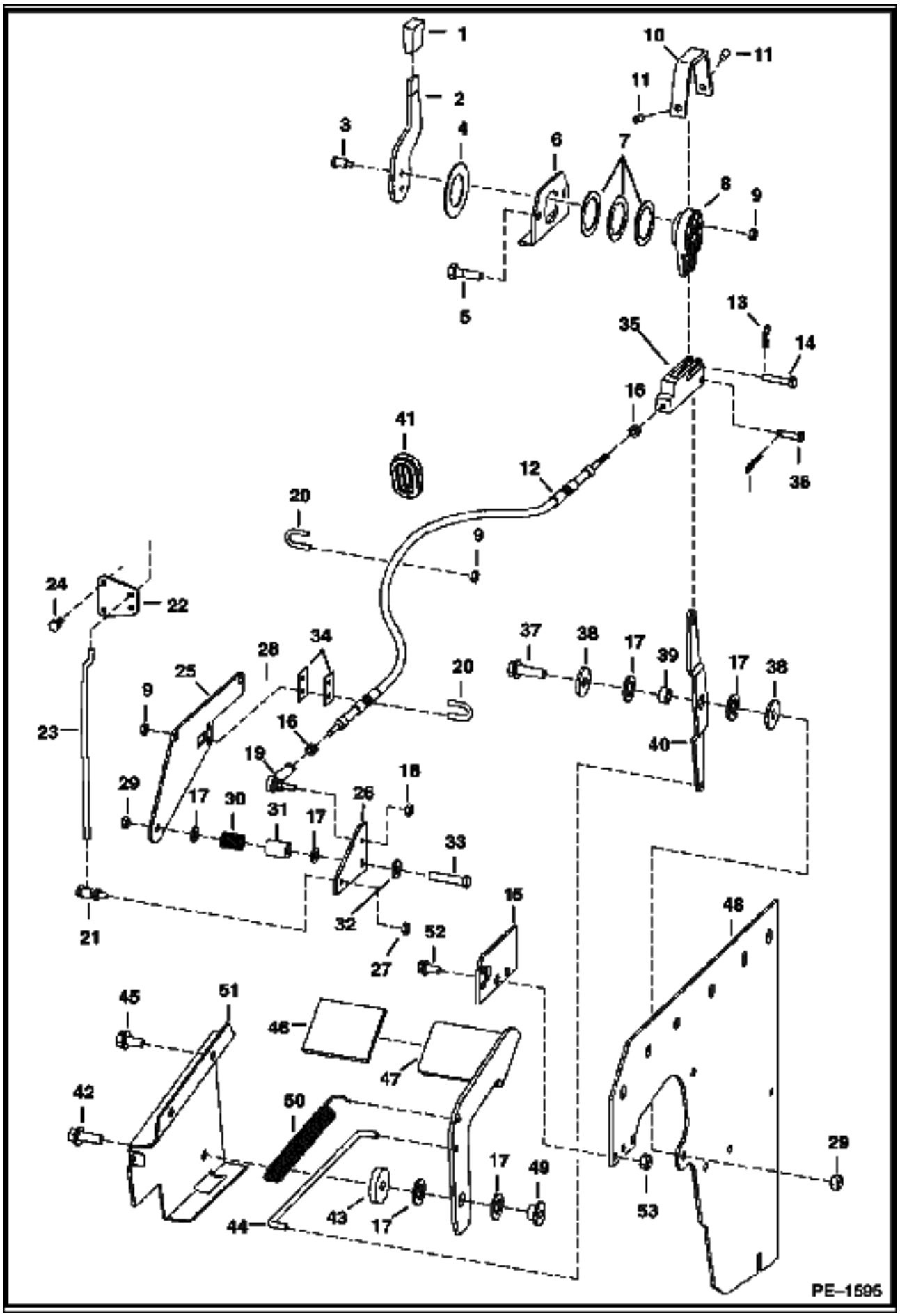

ENGINE SPEED CONTROL (Cont'd)
(W/ Joystick Controls)

Ref No	Part Number	Description	Remarks	Serial Number	Qty
1	6564452	GRIP			1
2	6730270	LEVER			1
3	38C000610B	BOLT	shoulder		2
4	6567962	WASHER			1
5	84G003724B	BOLT			2
6	6576262	MOUNT			1
7	6630945	WASHER			3
8	6734416	LEVER			1
9	85D000005B	NUT			6
10	6734520	COVER			1
11	6706572	SET SCREW			2
12	6675668	CABLE			1
13	6513495	COTTER PIN			1
14	2F004051B	PIN			1
15	6732449	PLATE	cable		1
16	8D000004B	NUT			2
17	6700170	WASHER	plastic		4
18	86D000004B	NUT			1
19	6631036	JOINT			1
20	6592766	U-BOLT			2
21	6557291	BALL JOINT			1
22	6707903	LEVER			1
23	6707904	ROD			1
24	53CM00616B	BOLT			2
25	6709052	MOUNT			1
26	6701187	BELLCRANK			1
27	85D000004B	NUT			1
28	53CM00820B	BOLT			2
29	85D000006B	NUT			1
30	6704453	SPRING			1
31	6708314	BUSHING			1
32	25E000018B	WASHER			1
33	84G003728B	BOLT			1
34	6713920	SHIM	.0528" (1,34mm) thick		2
35	6731901	CLEVIS			1
36	1304227B	PIN			1
37	84G003720B	BOLT			1
38	619021B	WASHER			2
39	6564343	SPACER			1
40	6734417	LEVER			1
41	6577961	GROMMET			1
42	45C000616B	BOLT			1
43	6732322	SPACER			1
44	6731900	ROD			1
45	84G003712B	BOLT			2
46	6554100	TREAD	safety		1
47	6731898	PEDAL			1
48		PANEL	See Illustration PANELS/ PE2654		1
49	6559479	NUT	retaining		1
50	6700743	SPRING			1
51	6732323	BRACKET			1
52	84G003716B	BOLT			2

NOTE: All Kubota parts are painted blue.

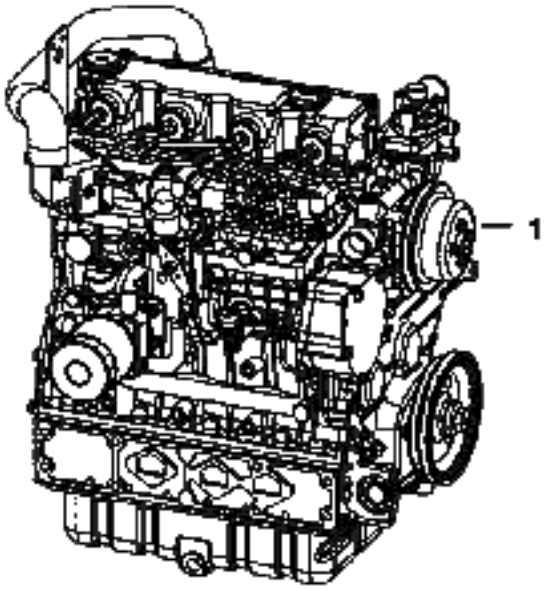

B–18620A

Ref No	Part Number	Description	Remarks	Serial Number	Qty
1	6684576	ENGINE	74.9 HP - S250 - 1G-578-00000		1
1	6684577	ENGINE	80.8 HP - S300 - 1G-577-00000		1

MANIFOLDS
(V3300 DI T Kubota) (Tier II)

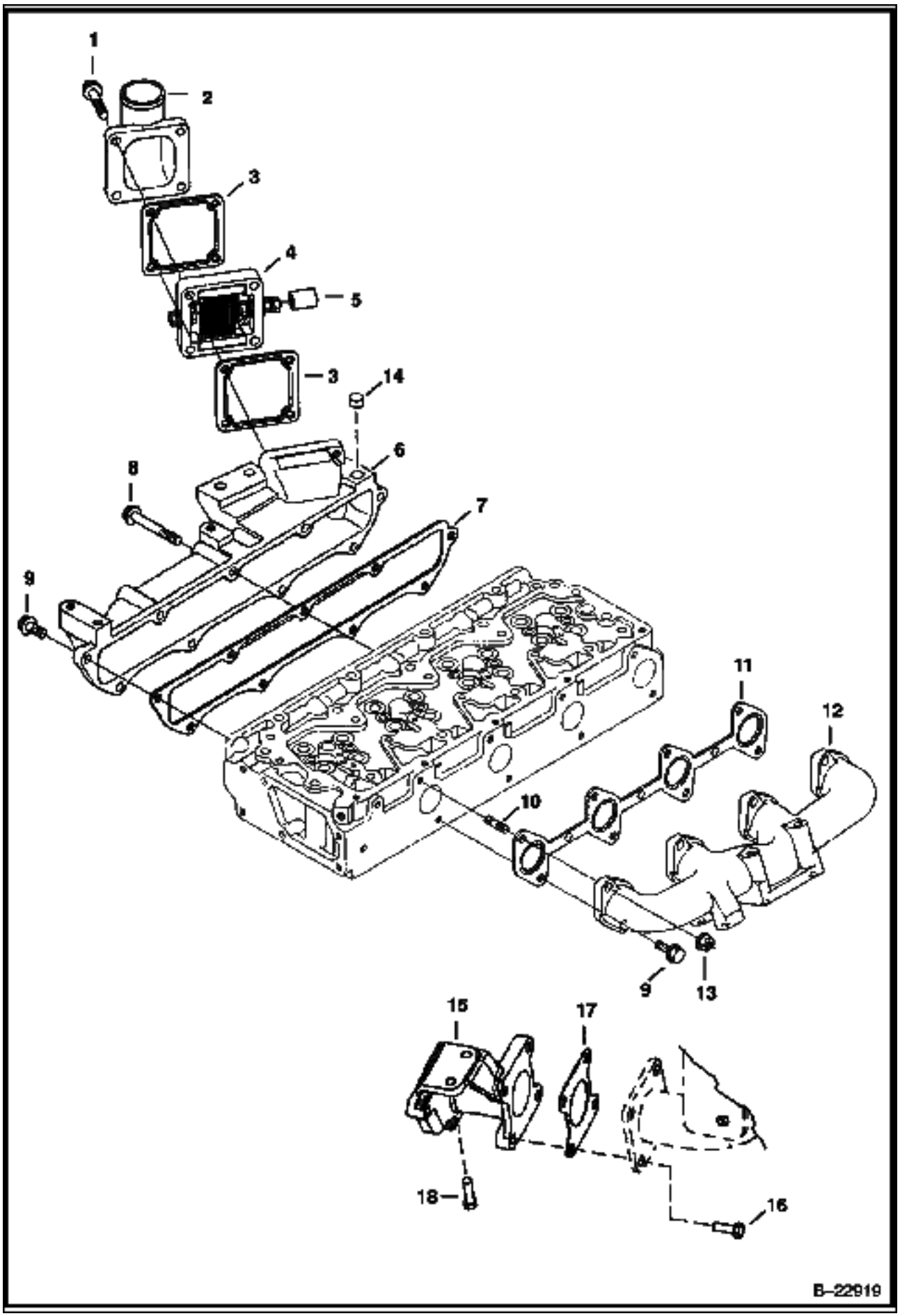

MANIFOLDS (Cont'd)
(V3300 DI T Kubota) (Tier II)

Ref No	Part Number	Description	Remarks	Serial Number	Qty
1	6680851	BOLT			4
2	6680886	FLANGE			1
3	6685960	GASKET			1
4	6680888	HEATER			1
5	6598112	CAP			1
6	6680883	MANIFOLD	intake		1
7	6680884	GASKET	manifold		1
8	6680885	BOLT			3
9	6680801	BOLT			10
10	3974916B	STUD			4
11	6680891	GASKET	manifold		1
12	6680890	MANIFOLD	exhaust		1
13	6680663	NUT			1
14	6685961	PLUG			1
15	6687145	FLANGE	muffler		1
16	6687146	BOLT			4
17	6687147	GASKET			2
18	6680755	BOLT			2

TURBOCHARGER
(V3300 DI T Kubota) (Tier II)

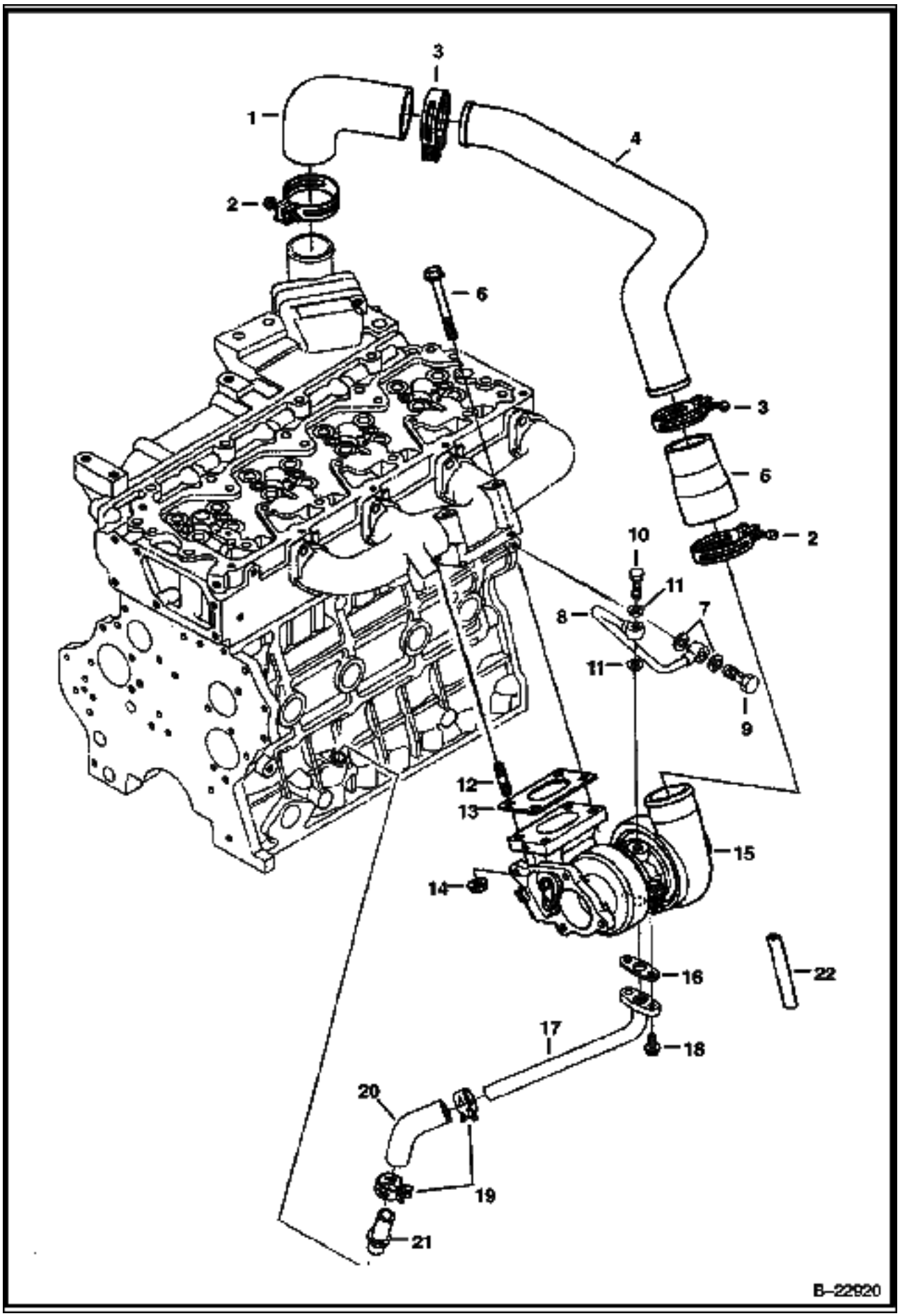

TURBOCHARGER (Cont'd)
(V3300 DI T Kubota) (Tier II)

Ref No	Part Number	Description	Remarks	Serial Number	Qty
1	6680896	HOSE			1
2	6680897	CLAMP			2
3	6680898	CLAMP			2
4	6680895	HOSE			1
5	6680894	HOSE			1
6	6680802	BOLT			2
7	6680792	GASKET			2
8	6680899	TUBE			1
9	6680791	BOLT	hollow		1
10	6680900	BOLT	hollow		1
11	6685962	GASKET			2
12	6680564	STUD			2
13	6680893	GASKET			1
14	6680663	NUT			2
15	6680892	TURBOCHARGER	W/Ref. 22		1
16	6685964	GASKET			1
17	6685963	PIPE			1
18	6652762	BOLT			2
19	6680903	CLAMP			2
20	6685965	HOSE			1
21	6680649	TUBE			1
22	6688069	HOSE	turbo		1

CYLINDER HEAD & COVER
(V3300 DI T Kubota) (Tier II)

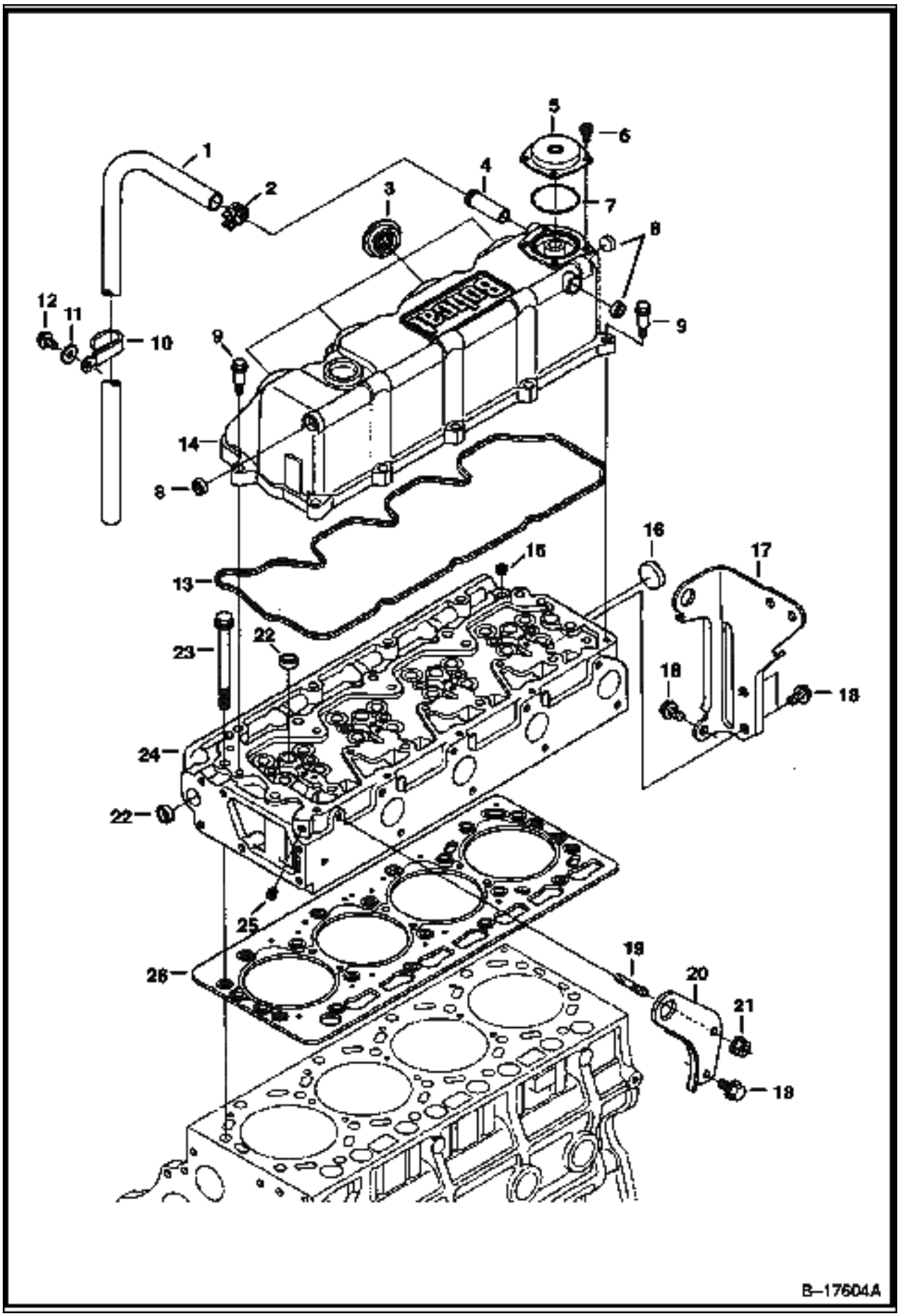

CYLINDER HEAD & COVER (Cont'd)
(V3300 DI T Kubota) (Tier II)

Ref No	Part Number	Description	Remarks	Serial Number	Qty
1	6685930	HOSE			1
2	6680698	CLAMP			1
3	6680695	SEAL	injection tube		4
4	6680689	ADAPTER			1
5	6680692	COVER	breather		1
6	6680693	SCREW			4
7	6680691	O-RING			1
8	6680694	PLUG			3
9	6680696	BOLT			10
10	6680699	CLAMP			1
11	6680700	WASHER			1
12	6680658	BOLT			1
13	6680690	GASKET			1
14	6680688	HEAD COVER	W/Ref. 3-8 & 13		1
15	6598169	PLUG			1
16	6680666	PLUG			1
17	6685926	BRACKET			1
18	6680662	BOLT			4
19	3974916B	STUD			1
20	6598133	BRACKET			1
21	6680663	NUT			1
22	6680665	PLUG			5
23	6680668	BOLT			18
24	6685927	HEAD	W/Ref. 15, 16, 22 & B17605A/ CYLINDER HEAD Ref. 15-21, 25 & 26		1
25	6680667	PLUG			1
26	6680669	HEAD GASKET	0.80mm - .0315" thick tightened - 2 notch		1
26	6680670	HEAD GASKET	0.90mm - .0354" thick tightened - 1 notch		1
26	6680671	HEAD GASKET	0.95mm - .0374" thick tightened - 0 notch		1

CYLINDER HEAD
(V3300 DI T Kubota) (Tier II)

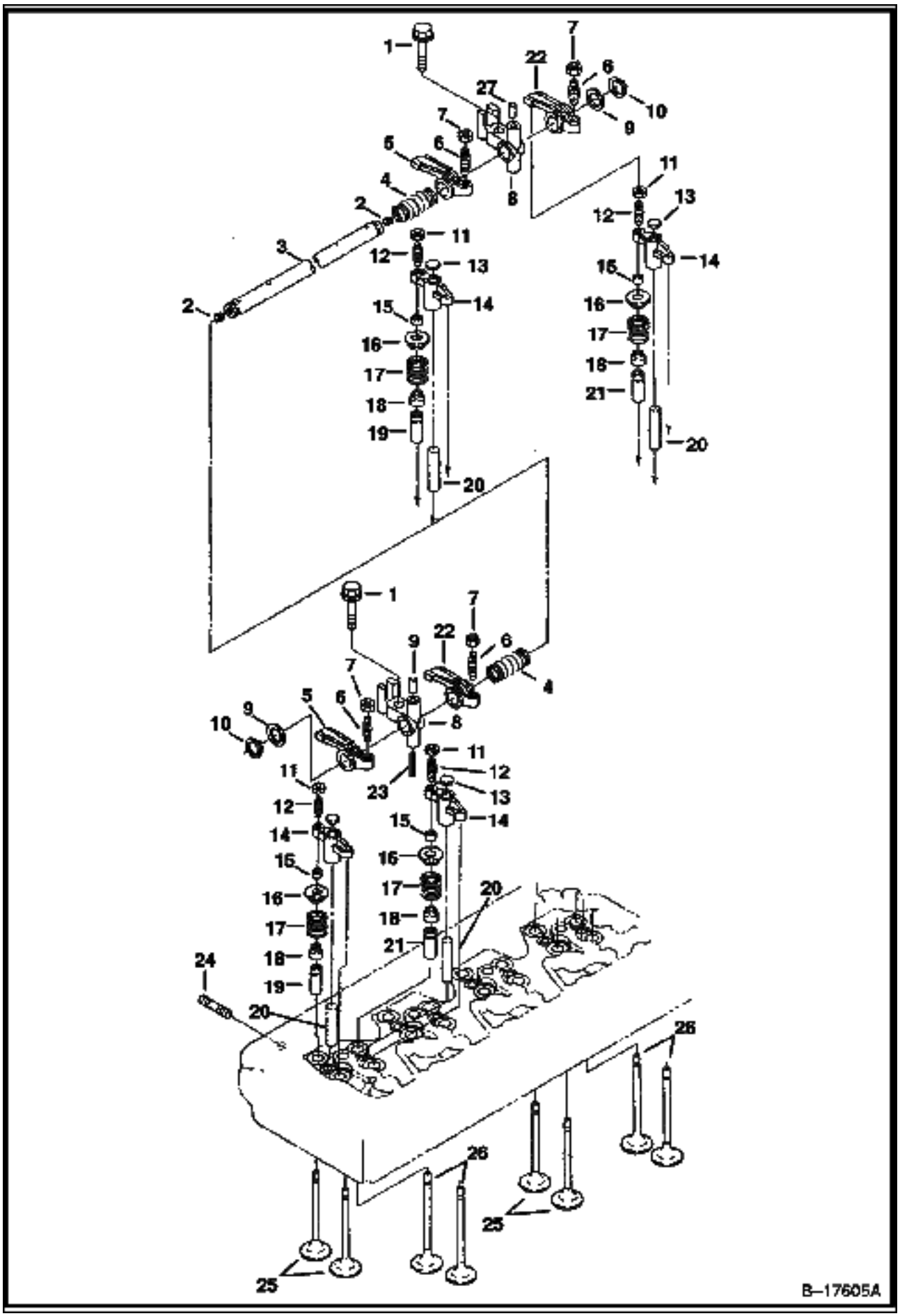

CYLINDER HEAD (Cont'd)
(V3300 DI T Kubota) (Tier II)

Ref No	Part Number	Description	Remarks	Serial Number	Qty
1	6680878	BOLT			4
2	25GM08010B	SET SCREW			2
3	6680868	SHAFT	W/Ref. 2		1
4	6680872	SPRING			3
5	6680873	ROCKER ARM	intake - W/Ref. 6 & 7		4
6	3974920B	SCREW	adjusting		4
7	6680874	NUT			4
8	6680869	BRACKET	rocker arm		4
9	6680870	WASHER			2
10	6680871	SNAP RING			2
11	6680881	NUT			8
12	6680880	SCREW	adjusting		8
13	6680882	PAD			8
14	6680879	ARM	valve bridge - W/Ref. 11 & 12		8
15	6680865	COLLET	valve spring - set		16
16	6685959	RETAINER	valve spring		16
17	6680863	VALVE SPRING			16
18	6672436	SEAL	valve stem		16
19	6685957	GUIDE	inlet valve		8
20	6680866	SHAFT	valve		8
21	6685958	GUIDE	exhaust valve		8
22	6680875	ROCKER ARM	exhaust - W/Ref. 6 & 7		4
23	6667461	PIN			1
24	6680867	STUD			4
25	6680861	VALVE	inlet		8
26	6680862	VALVE	exhaust		8
27	6680877	PIN			4

OIL PAN
(V3300 DI T Kubota) (Tier II)

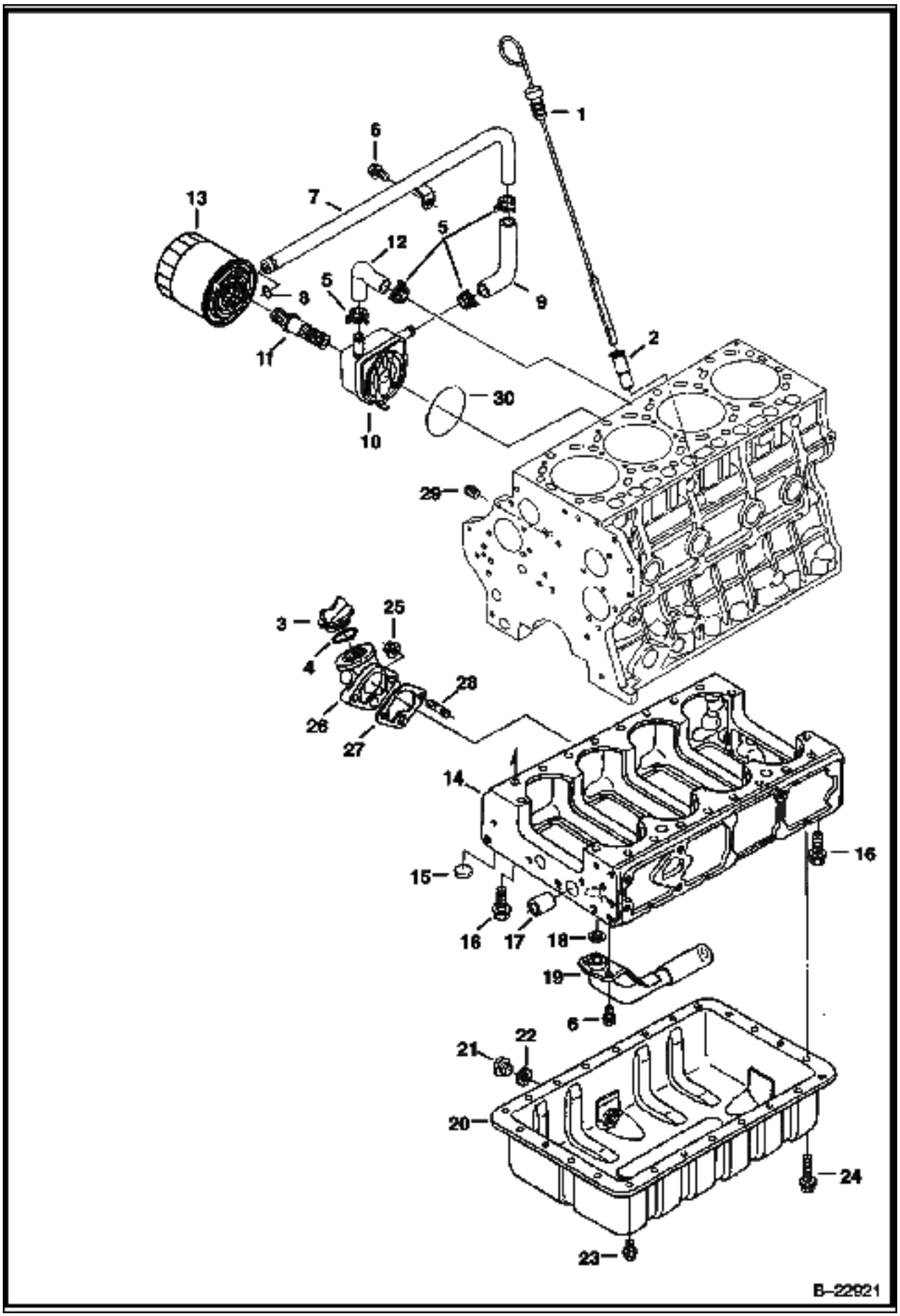

OIL PAN (Cont'd)
(V3300 DI T Kubota) (Tier II)

Ref No	Part Number	Description	Remarks	Serial Number	Qty
1	6680703	DIPSTICK			1
2	6680702	TUBE	dipstick		1
3	6685924	CAP			1
4	3966602B	O-RING			1
5	6675618	CLAMP			4
6	6680662	BOLT			3
7	6685970	HOSE			1
8	6685971	O-RING			1
9	6685972	HOSE			1
10	6680909	OIL COOLER			1
11	6680910	ADAPTER			1
12	6685969	HOSE			1
13	6678233	OIL FILTER			1
14	6685921	CRANKCASE			1
15	6680638	PLUG			10
16	6680654	BOLT			16
17	6680655	PIN	gear case		1
18	6680661	O-RING			1
19	6680660	OIL SUMP			1
20	6680656	OIL PAN	W/Ref. 21 & 22		1
21	6680657	PLUG	oil		1
22	6631046	SEAL	rubber		1
23	6685925	BOLT			20
24	6680659	BOLT			4
25	6680663	NUT			2
26	6685922	FLANGE	oil fill		1
27	6685923	GASKET			1
28	3974916B	STUD			2
29	16F000002B	PLUG			1
30	6686402	SEAL			1

PISTON & CRANKSHAFT
(V3300 DI T Kubota) (Tier II)

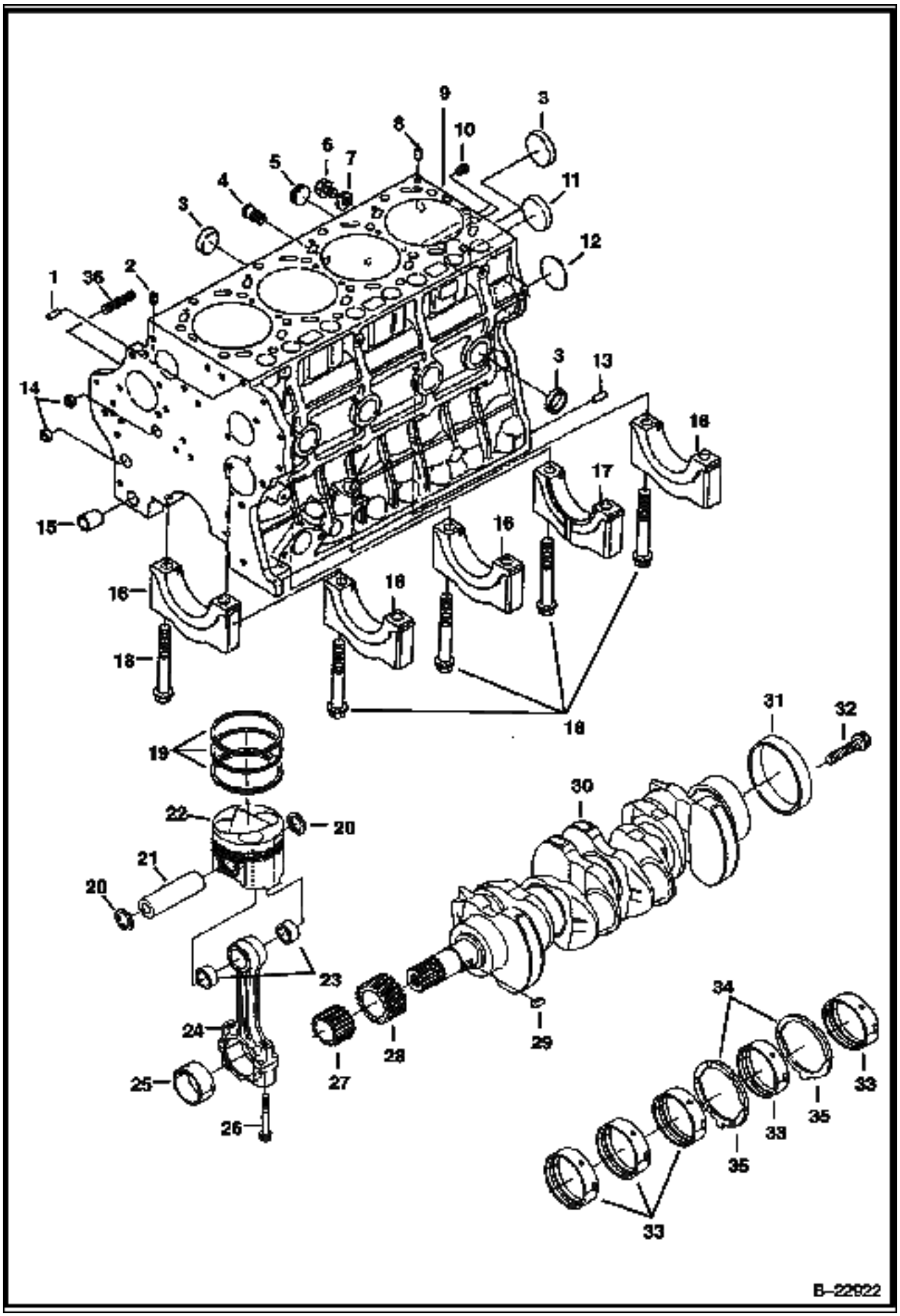

Ref No	Part Number	Description	Remarks	Serial Number	Qty
1	21JM00814B	PIN			1
2	6598169	PLUG			3
3	6680638	PLUG			7
4	6685920	ADAPTER			1
5	6672354	PLUG			1
6	6652750	PLUG			1
7	6652751	GASKET			1
8	6680643	PIN			2
9	6685917	CRANKCASE	W/Ref. 1-3, 5, 8, 10-18 & 36		1
10	6680636	PLUG			1
11	6680639	PLUG			1
12	6680640	PLUG			1
13	6685918	PIN			2
14	6680637	PLUG			2
15	6680644	PIN			1
16		CAP	NSS - main bearing - Order Ref. 9		4
17		CAP	NSS - main bearing - Order Ref. 9		1
18	6680645	BOLT			10
19	6680723	PISTON RINGS	standard		4
19	6680724	PISTON RINGS	0.50mm oversized		4
20	6680726	SNAP RING	internal		8
21	6680725	PIN			4
22	6685933	PISTON	standard		4
22	6685934	PISTON	0.50mm oversized		4
23	6680728	BUSHING			8
24	6680727	ROD	connecting - W/Ref. 23 & 25 - marked blue, yellow or w/o color		4
25	6680730	BEARING	rod - set - blue		4
25	6680731	BEARING	rod - set - yellow or w/o color		4
25	6680732	BEARING	rod - set - 0.20 mm		4
25	6680733	BEARING	rod - set - 0.40 mm		4
26	6680729	BOLT			8
27	6680737	GEAR	oil pump		1
28	6680736	GEAR	crankshaft		1
29	3974226B	KEY			1
30	6680734	CRANKSHAFT	W/Ref. 27-29 & 31		1
31	6680735	SLEEVE	crankshaft		1
32	6680747	BOLT	flywheel		7
33	6680738	MAIN BEARING	standard - set		5
33	6680739	MAIN BEARING	0.20mm undersized - set		5
33	6680740	MAIN BEARING	0.40mm undersized - set		5
34	6680741	THRUST WASHER	standard		2
34	6680742	THRUST WASHER	0.20mm oversized		2
34	6680743	THRUST WASHER	0.40mm oversized		2
35	6680744	THRUST WASHER	standard		2
35	6680745	THRUST WASHER	0.20mm oversized		2
35	6680746	THRUST WASHER	0.40mm oversized		2
36	6685919	STUD			3

CAMSHAFT
(V3300 DI T Kubota) (Tier II)

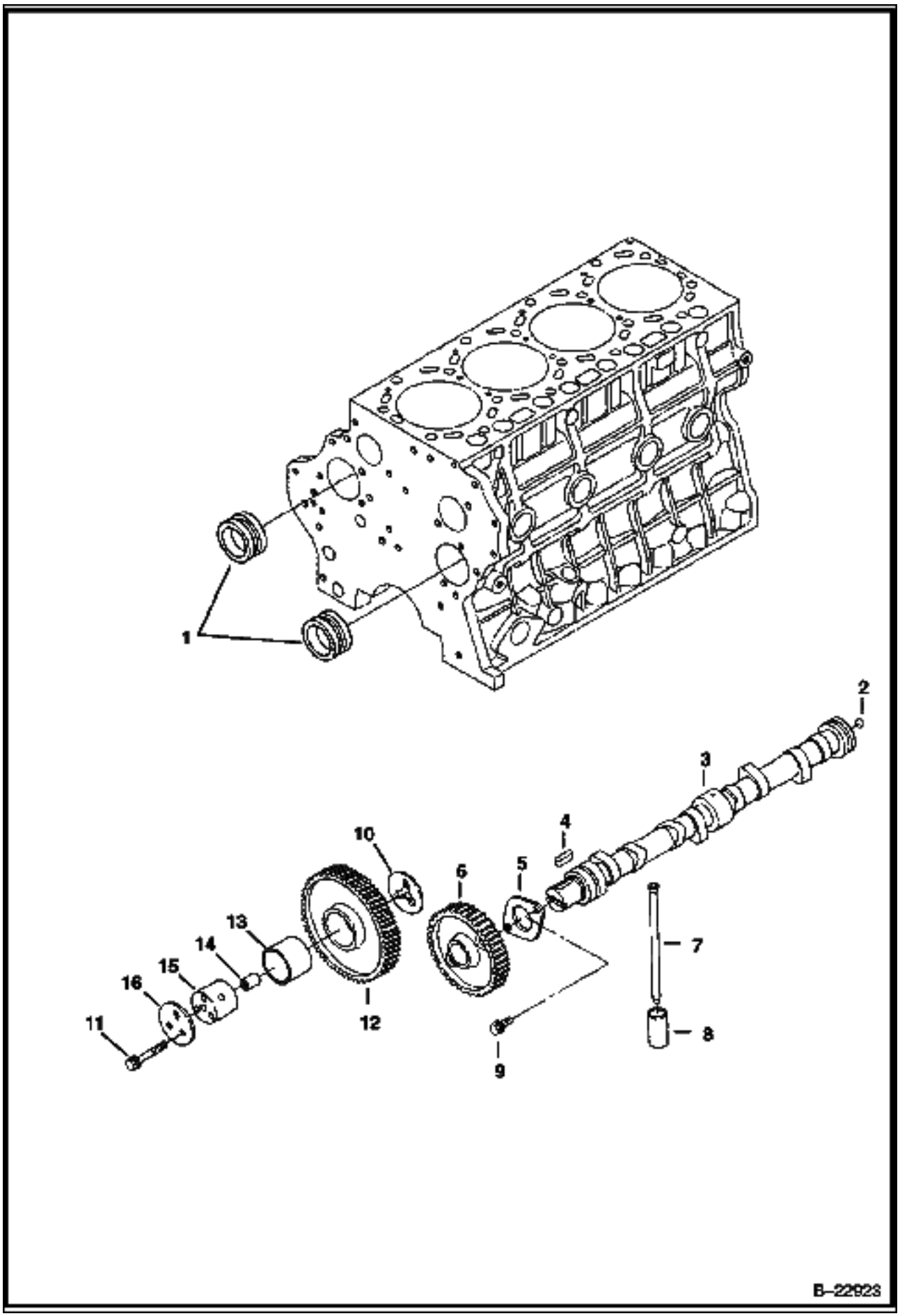

CAMSHAFT (Cont'd)
(V3300 DI T Kubota) (Tier II)

Ref No	Part Number	Description	Remarks	Serial Number	Qty
1	6680748	BALANCER			2
2	6680710	BALL			1
3	6680709	CAMSHAFT	W/Ref. 2 & 4-6		1
4	6652679	KEY			1
5	6680712	FLANGE			1
6	6680711	GEAR	cam		1
7	6680708	PUSH ROD			8
8	6680707	TAPPET			8
9	6680662	BOLT			2
10	6680716	COLLAR			1
11	6680685	BOLT			6
12	6685932	GEAR	W/Ref. 13		1
13	6680720	BUSHING			2
14	6680715	PIN			2
15	6680714	SHAFT	idler gear		2
16	6680717	COLLAR			2

FRONT COVER
(V3300 DI T Kubota) (Tier II)

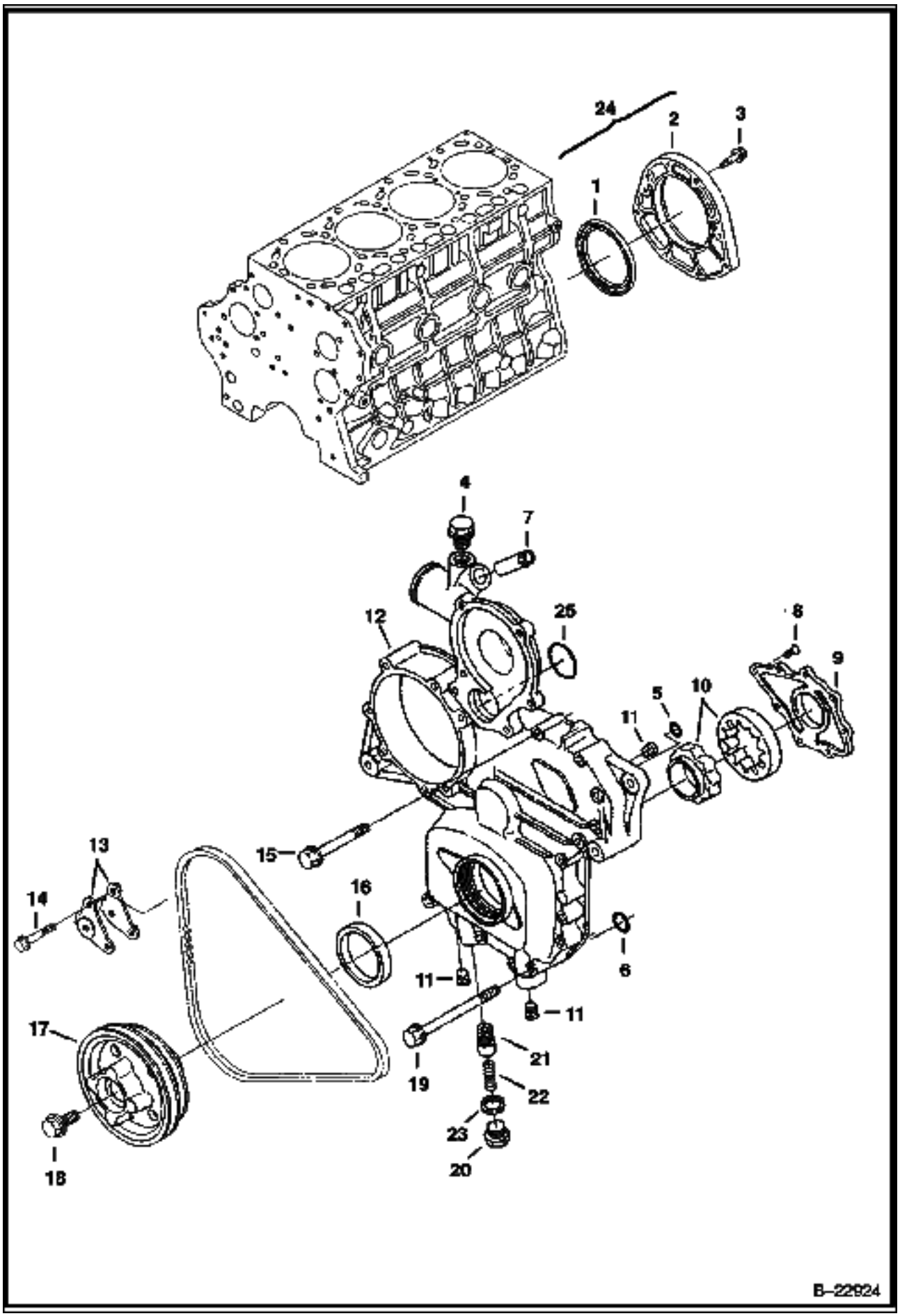

FRONT COVER (Cont'd)
(V3300 DI T Kubota) (Tier II)

Ref No	Part Number	Description	Remarks	Serial Number	Qty
1	6680705	SEAL	rear		1
2	6685931	COVER	W/Ref. 1		1
3	6680706	BOLT			8
4	6670504	PLUG			1
5	6680681	O-RING			1
6	6680682	O-RING			1
7	6680689	ADAPTER			1
8	6680678	SCREW			8
9	6680677	COVER	oil pump		1
10	6680676	ROTOR	oil pump		1
11	6680679	PLUG			3
12	6685928	COVER	front - W/Ref. 4, 7-11 & 20-23		1
13	6680839	BRACKET	alternator		2
14	6680687	BOLT			2
15	6680685	BOLT			13
16	6680680	SEAL			1
17	6685953	PULLEY	fan		1
18	6680841	BOLT			1
19	6680686	BOLT			2
20	6680675	PLUG			1
21	6685929	RELIEF VALVE			1
22	6680673	SPRING			1
23	6670347	GASKET			1
24	6680704	COVER	Ref. 1 & 2		1
25	6680855	O-RING			1

WATER PUMP & THERMOSTAT
(V3300 DI T Kubota) (Tier II)

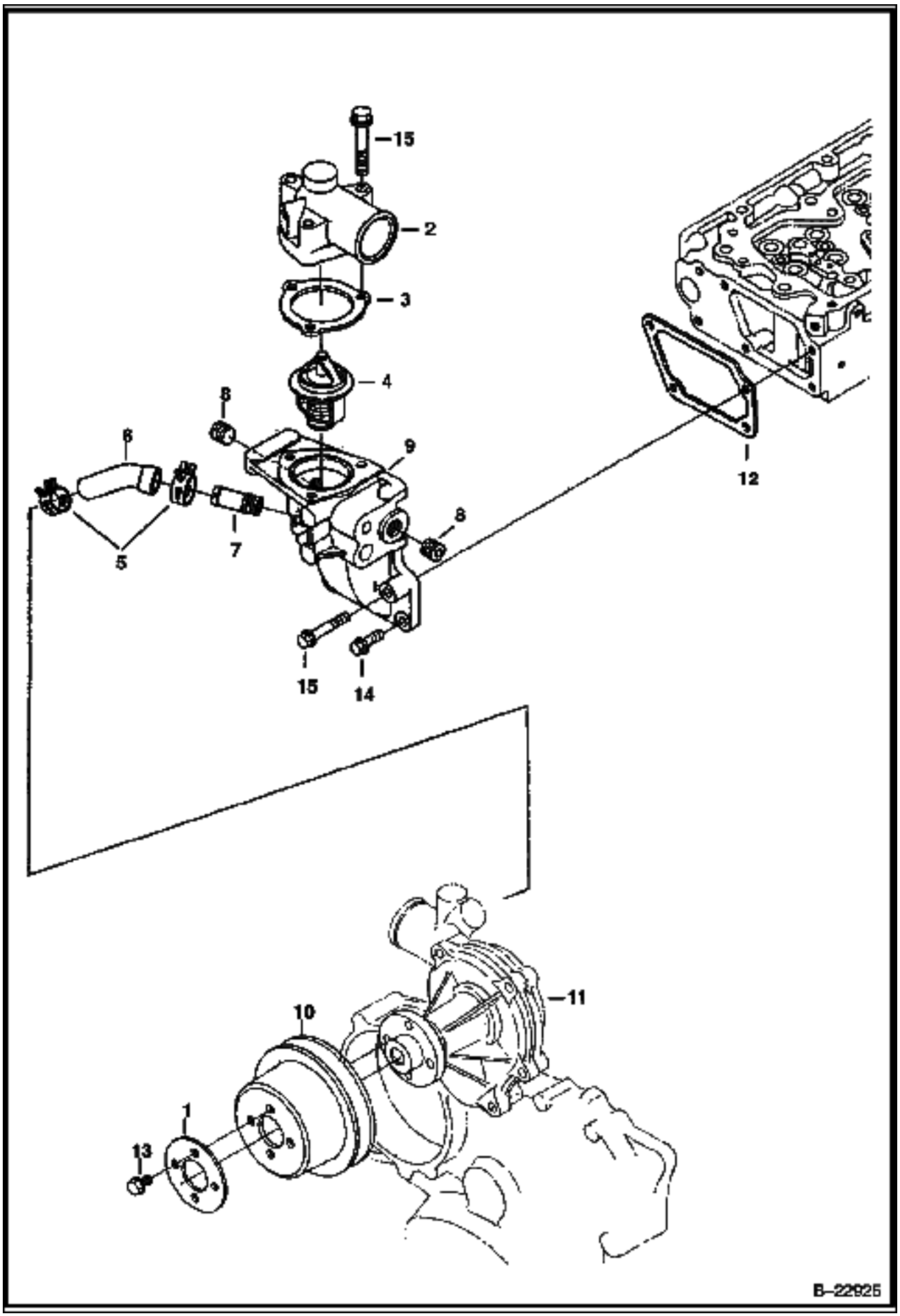

WATER PUMP & THERMOSTAT (Cont'd)
(V3300 DI T Kubota) (Tier II)

Ref No	Part Number	Description	Remarks	Serial Number	Qty
1	6680858	WASHER			1
2	6685954	COVER	thermostat		1
3	6685955	GASKET			1
4	6680850	THERMOSTAT			1
5	6675618	CLAMP			2
6	6680842	HOSE			1
7	6685920	ADAPTER			1
8	6670504	PLUG			2
9	6685956	HOUSING	thermostat - W/Ref. 7 & 8		1
10	6680857	PULLEY	fan		1
11		WATER PUMP	See Illustration WATER PUMP/ B22926		1
12	6680849	GASKET			1
13	6680662	BOLT			4
14	6680755	BOLT			3
15	6680851	BOLT			4

WATER PUMP
(V3300 DI T Kubota) (Tier II)

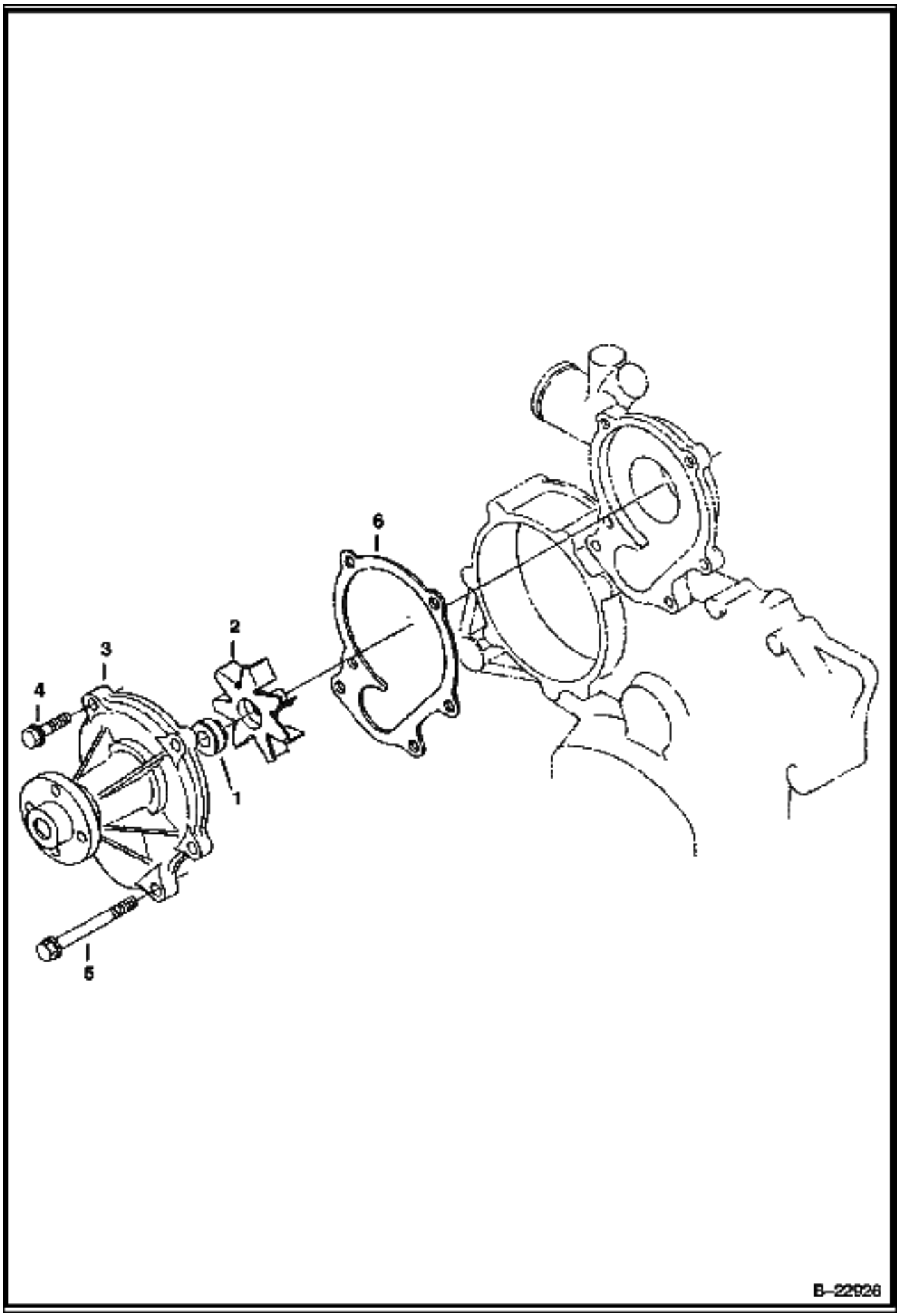

WATER PUMP (Cont'd)
(V3300 DI T Kubota) (Tier II)

Ref No	Part Number	Description	Remarks	Serial Number	Qty
1	6680280	SEAL			1
2		IMPELLER	NSS - Order Ref. 3		1
3	6680852	PUMP	water - W/Ref. 1 & 2		1
4	6680706	BOLT			2
5	6680856	BOLT			4
6	6680853	GASKET			1

FUEL INJECTION SYSTEM
(V3300 DI T Kubota) (Tier II)

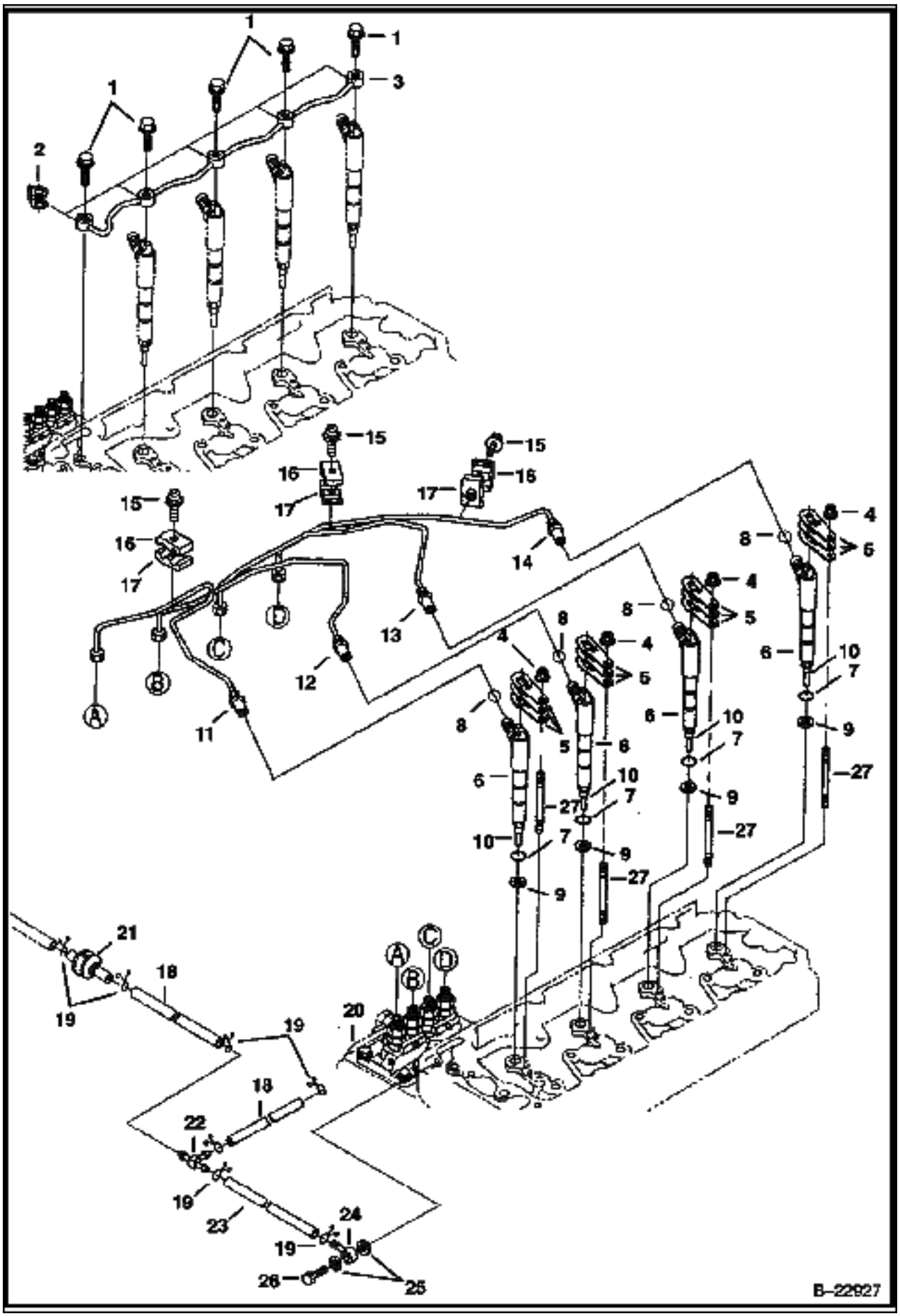

Ref No	Part Number	Description	Remarks	Serial Number	Qty
1	6680788	BOLT			5
2	6685498	GASKET			5
3	6680787	PIPE			1
4	6680663	NUT			4
5	6680780	CLAMP	hold down		12
6	6685854	INJECTOR	W/Ref. 10		4
7	6670769	O-RING			4
8	6680778	O-RING			4
9	6680779	GASKET			4
10	6680777	NOZZLE			4
11	6685940	TUBE			1
12	6685941	TUBE			1
13	6685942	TUBE			1
14	6685943	TUBE			1
15	3974260B	BOLT			3
16	6680786	CLAMP			3
17	6680785	CLAMP			3
18	6685945	HOSE			2
19	6680795	CLAMP			6
20		PUMP	See Illustration FUEL INJECTION PUMP/ B17614A injection		1
21	6680796	VALVE	check		1
22	6680797	TEE			1
23	6685944	HOSE			1
24	6680790	FITTING			1
25	6680792	GASKET			2
26	6680791	BOLT	hollow		1
27	6680867	STUD			4

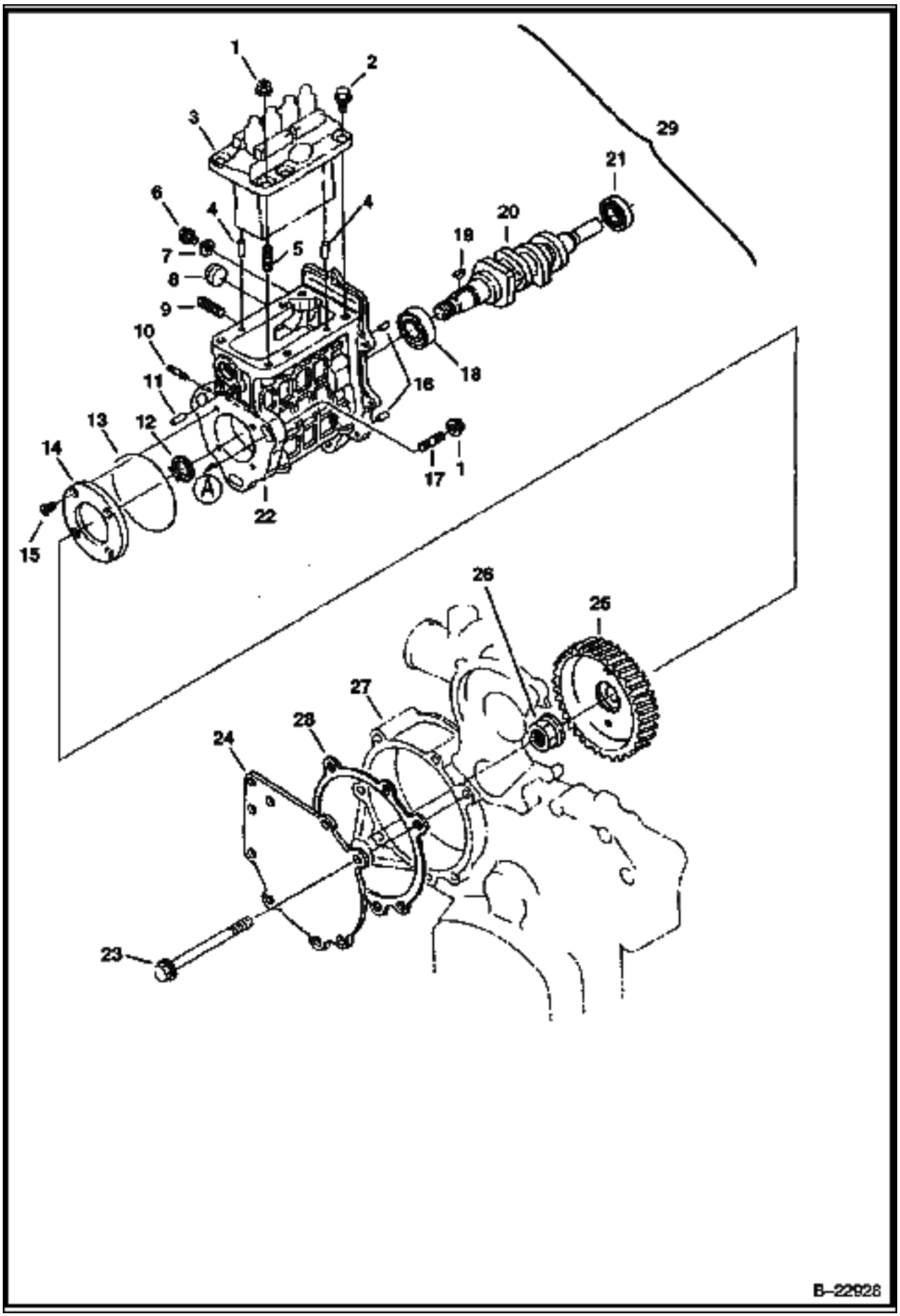
1
2
3
29
21
6
4
4
20
19
7
5
8
9
10
11
13
12
14
16
18
17
1
22
15
26
25
27
28
24
23
B–22928

Ref No	Part Number	Description	Remarks	Serial Number	Qty
1	6680663	NUT			6
2	6680801	BOLT			5
3		INJECTION PUMP	See Illustration FUEL INJECTION PUMP/ B17614A		1
4	3974394B	PIN			2
5	6680807	STUD			3
6	6680815	BOLT			2
7	3974095B	GASKET			2
8	6680808	PLUG			1
9	6680815	BOLT			2
10	3974503B	STUD			2
11	21JM00020B	PIN			2
12	5JM00020B	SNAP RING			1
13	6680816	O-RING			1
14	6680814	FLANGE			1
15	6680678	SCREW			4
16	6680809	PIN			2
17	6680799	STUD			3
18	6685950	BEARING			1
19	6680813	KEY	woodruff		1
20	6685949	CAMSHAFT	fuel		1
21	6680812	BEARING			1
22	6680806	HOUSING	W/Ref. 4, 5, 8, 10 & 16		1
23	6680802	BOLT			7
24	6685947	COVER			1
25	6685946	GEAR			1
26	6680818	NUT			1
27		FRONT COVER	See Illustration FRONT COVER/ B22924		1
28	6685948	GASKET			1
29	6685935	INJECTION PUMP	complete w/housing, fuel pump, camshaft, injection pump & governor		1

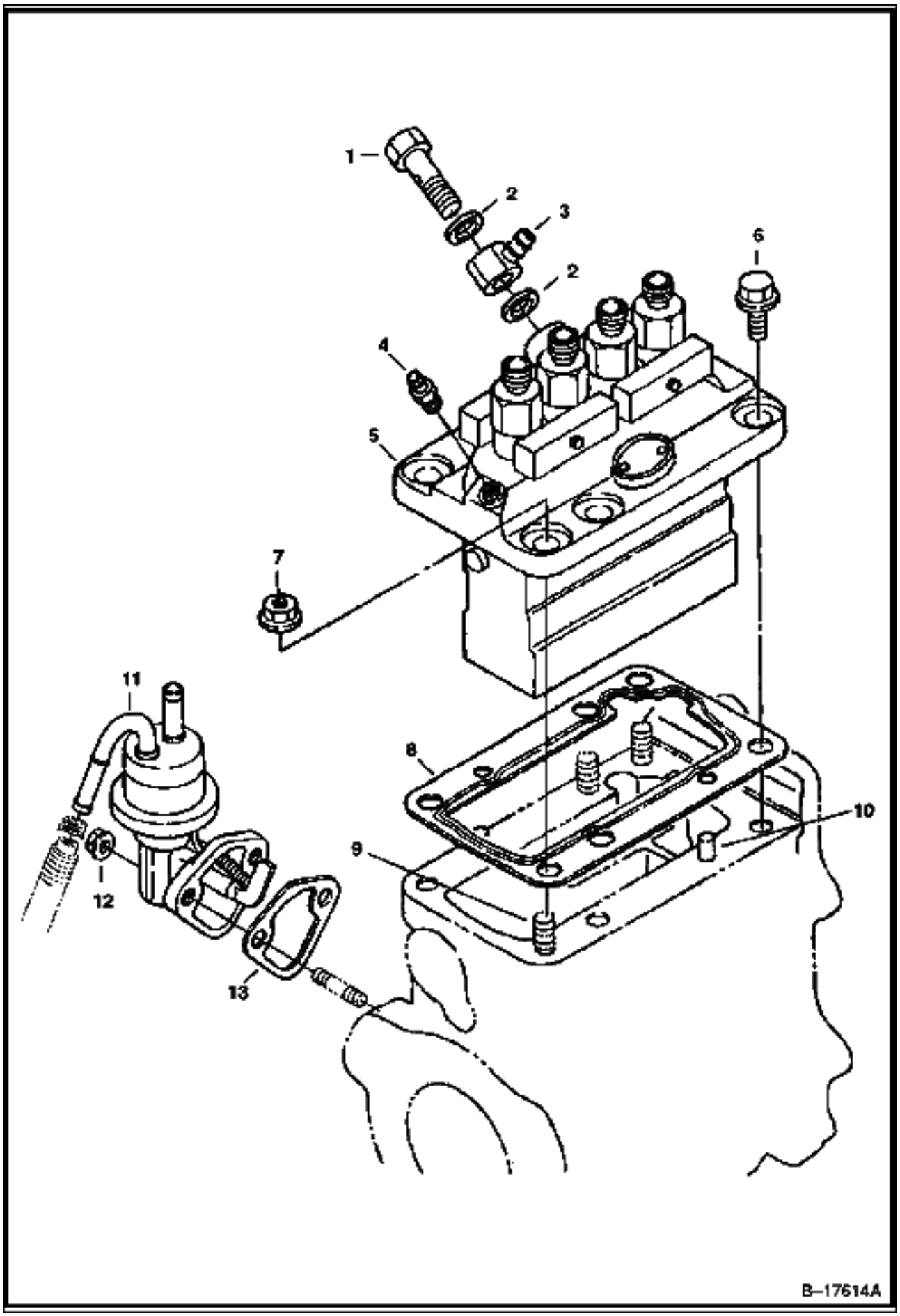
1
2
3
2
6
4
5
7
11
8
10
9
12
13
B–17614A

FUEL INJECTION PUMP (Cont'd)
(V3300 DI T Kubota) (Tier II)

Ref No	Part Number	Description	Remarks	Serial Number	Qty
1	6680752	BOLT			1
2	6680753	GASKET			2
3	3974500B	JOINT	eye		1
4	6680756	SCREW	air		1
5	6685936	PUMP	injection - W/Ref. 1 & 2		1
6	6680755	BOLT			5
7	6680663	NUT			3
8		SHIM	See Illustration FUEL INJECTION SYSTEM/ B22928 NSS - Order Ref. 29 (6685935) or see authorized Kubota pump shop		1
9	6680807	STUD			3
10	3974394B	PIN			2
11	6680838	FUEL PUMP			1
12	6670533	NUT			2
13	6670782	GASKET			1

GOVERNOR
(V3300 DI T Kubota) (Tier II)

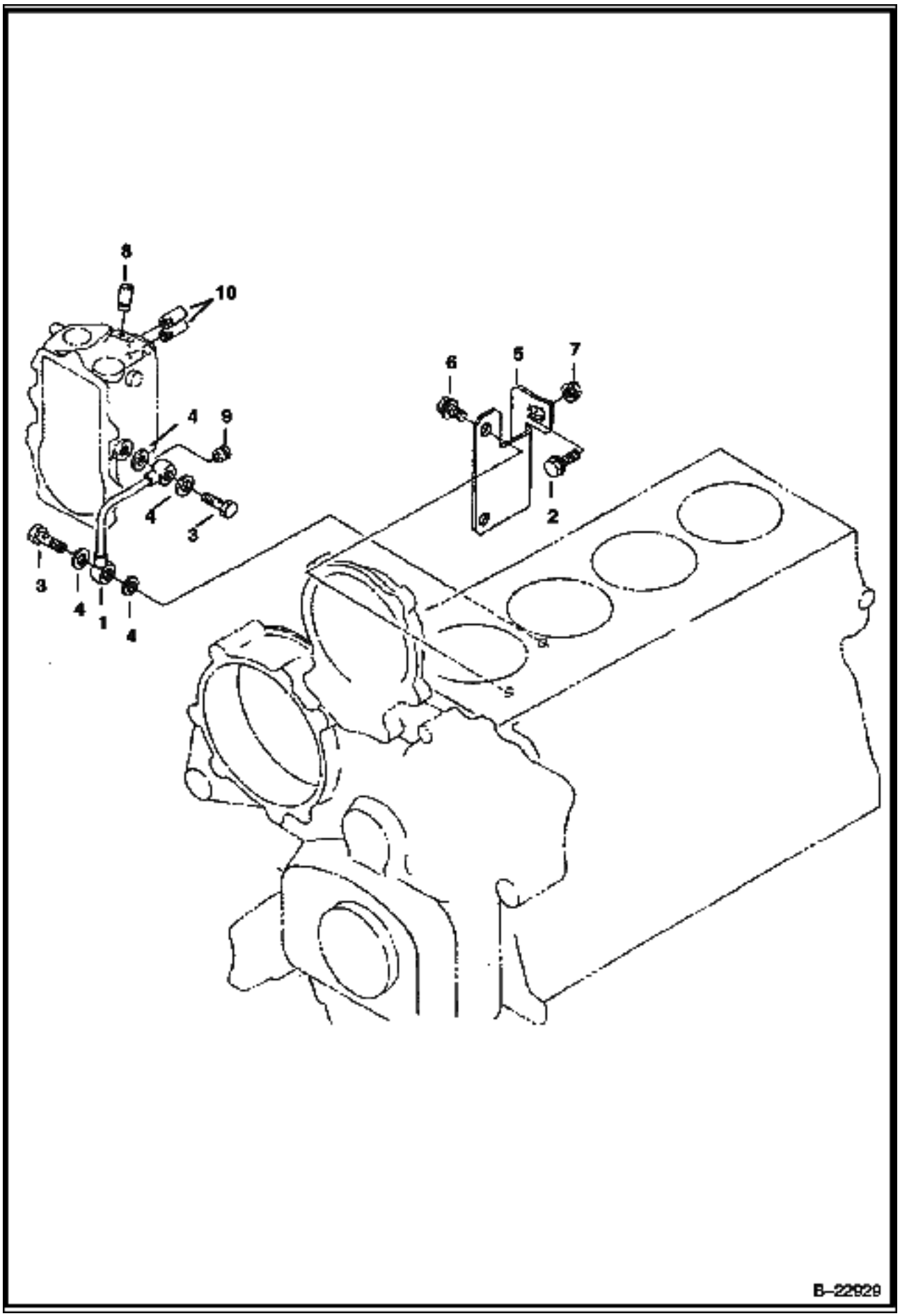

GOVERNOR (Cont'd)
(V3300 DI T Kubota) (Tier II)

Ref No	Part Number	Description	Remarks	Serial Number	Qty
1	6680905	TUBE			1
2	6680654	BOLT			1
3	6680906	BOLT			1
4	6685962	GASKET			2
5	6685967	BRACKET	injection pump		1
6	6680658	BOLT			2
7	6685968	NUT			1
8	6672384	CAP			1
9	6670427	CAP			1
10	6598112	CAP			2

GOVERNOR
(V3300 DI T Kubota) (Tier II)

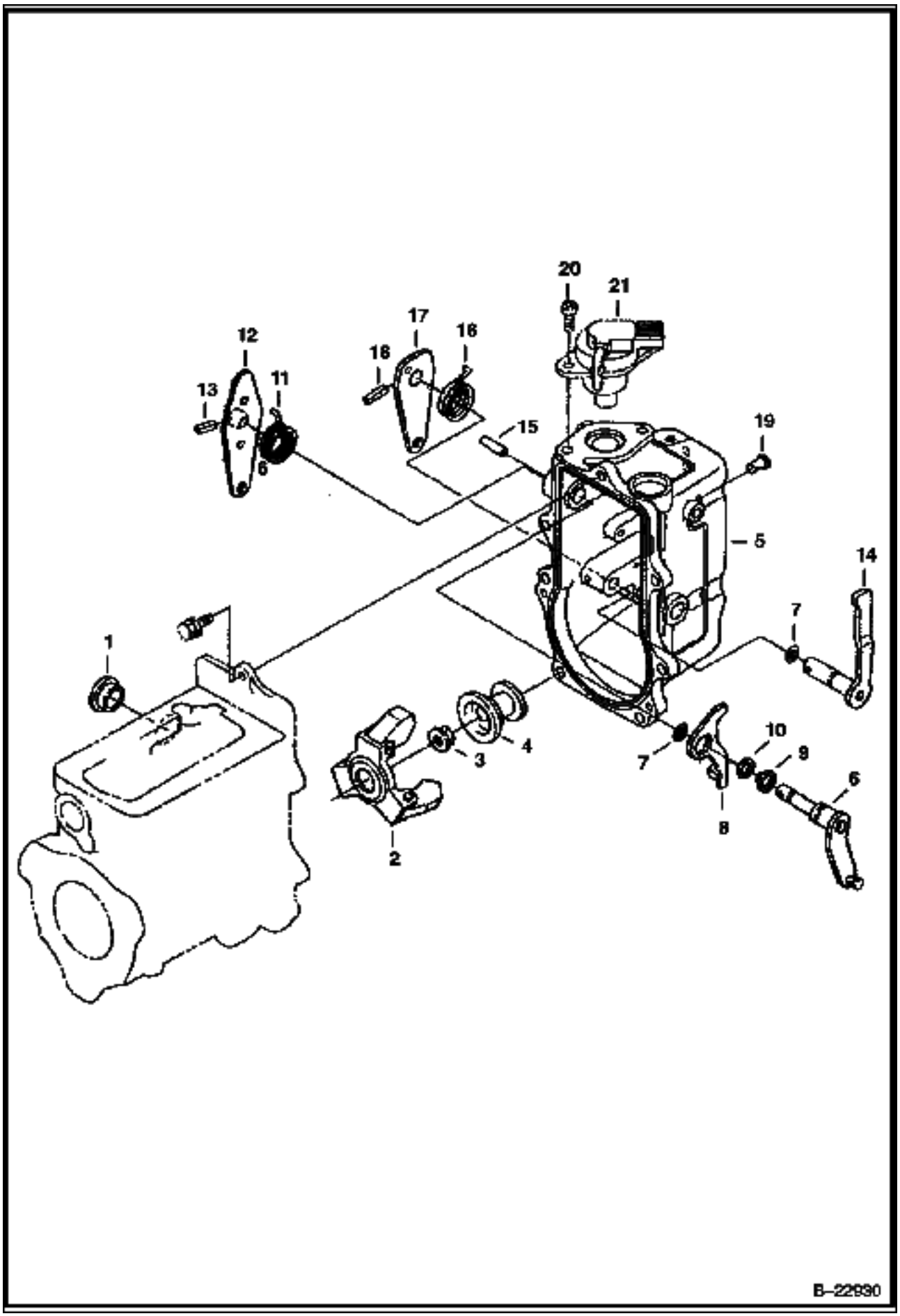

GOVERNOR (Cont'd)
(V3300 DI T Kubota) (Tier II)

Ref No	Part Number	Description	Remarks	Serial Number	Qty
1	6680757	COVER			1
2	6680759	NUT			1
3	6680758	WEIGHT			1
4	6680761	SLEEVE	governor		1
5	6685937	HOUSING			1
6	6680763	LEVER			1
7	6683023	O-RING			3
8	6680764	LEVER	stop		1
9	6680765	SNAP RING			1
10	6680766	WASHER			1
11	6685938	SPRING			1
12	6685939	LEVER	speed control		1
13	6680769	PIN			1
14	6680770	LEVER	engine stop		1
15	6680775	PIN			1
16	6680771	SPRING			1
17	6680772	LEVER	engine stop		1
18	6680773	PIN			1
19	6670774	PIN			1
20	6680750	SCREW			2
21	6680749	SOLENOID	fuel shut-off		1

GOVERNOR
(V3300 DI T Kubota) (Tier II)

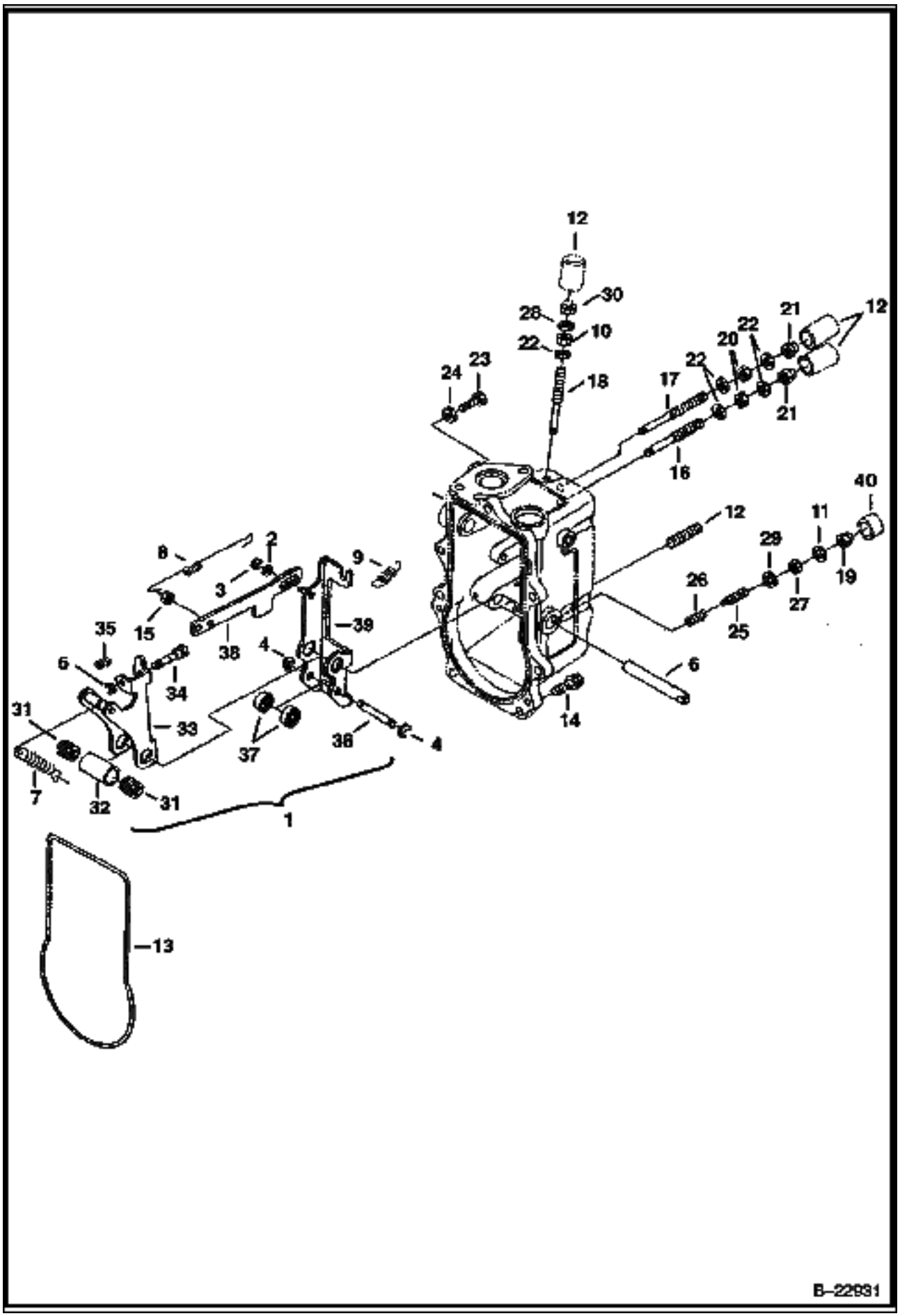

GOVERNOR (Cont'd)
(V3300 DI T Kubota) (Tier II)

Ref No	Part Number	Description	Remarks	Serial Number	Qty
1	6685951	LEVER	assy. - Ref. 2-5, 65-9, 15 & 31-39		1
2	6680820	WASHER			1
3	6680821	SNAP RING			1
4	6680822	SNAP RING			2
5	6680823	SNAP RING			1
6	6680824	SHAFT			1
7	6680825	SPRING			1
8	6680826	SPRING			1
9	6680827	SPRING			1
10	6680272	NUT			2
11	6680792	GASKET			1
12	6680828	STUD			2
13	6680829	GASKET			1
14	6680830	BOLT			7
15	6685952	NUT			1
16	6680832	SCREW	adjusting		1
17	3974970B	SCREW	adjusting		1
18	6680833	SCREW	adjusting		1
19	6670426	NUT			1
20	6680499	NUT			1
21	6670462	NUT			2
22	3974972B	GASKET			1
23	6680834	STOPPER			1
24	1DM00006B	NUT			1
25	6670425	SCREW	adjusting - W/Ref. 27		1
26		SPRING	NAP		1
27	6680836	NUT			1
28	3974972B	GASKET			5
29	3974095B	GASKET			1
30	6670462	NUT			1
31		BUSHING	NSS		2
32		TUBE	NSS		1
33		LEVER	NSS		1
34		BOLT	NSS		1
35		SPRING	NSS		1
36		ROD	NSS		1
37		BEARING	NSS		2
38		BRACKET	NSS		1
39		LEVER	NSS		1
40	6670427	CAP			1

AIR CLEANER
(V3300 DI T Kubota) (Tier II)

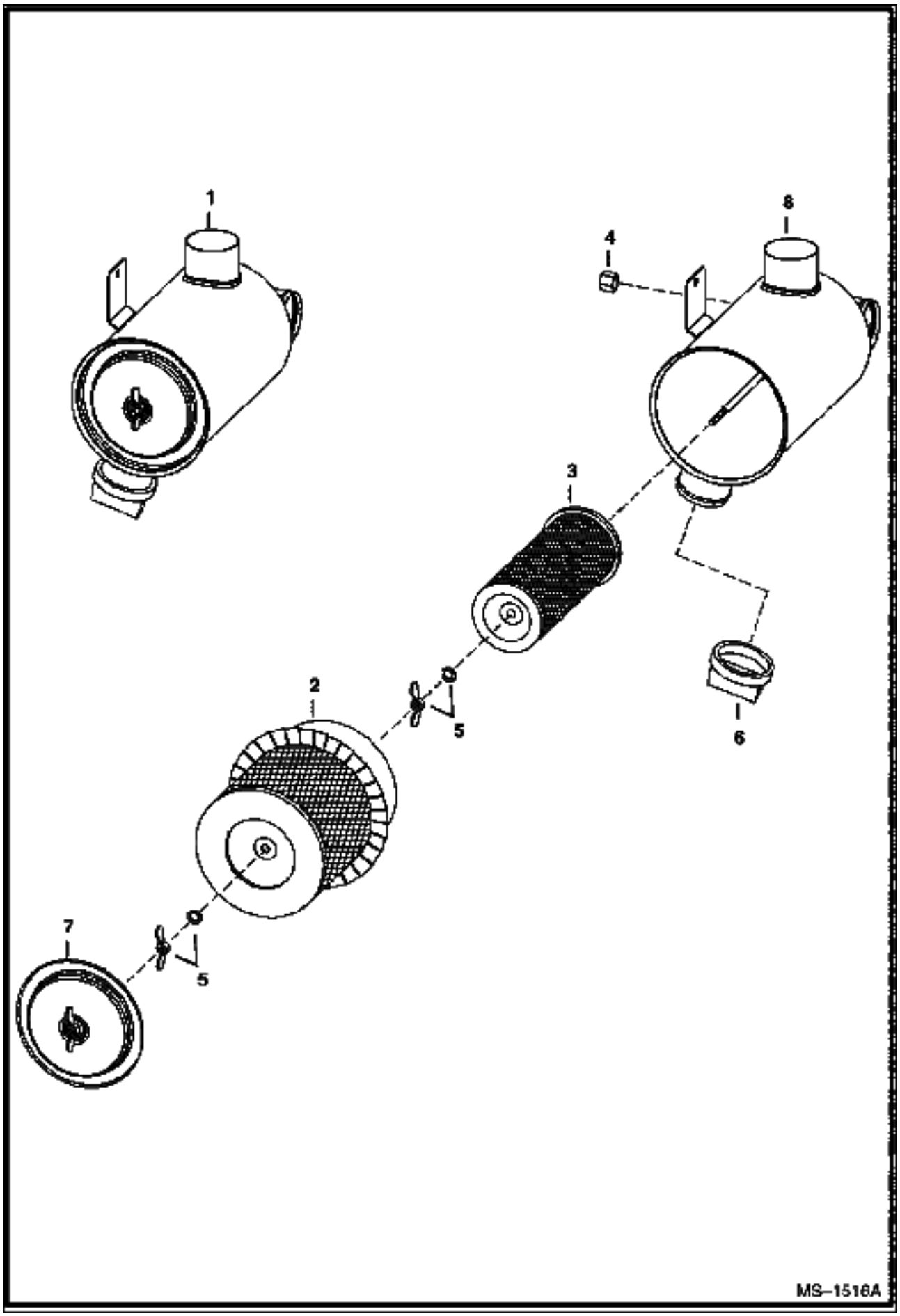

AIR CLEANER (Cont'd)
(V3300 DI T Kubota) (Tier II)

Ref No	Part Number	Description	Remarks	Serial Number	Qty
1	6678066	AIR CLEANER	W/Ref. 2-8		1
2	6681474	CARTRIDGE	outer		1
3	6681475	CARTRIDGE	inner		1
4	6681476	CAP			1
5	3291290B	WING NUT	W/ washer		2
6	6652373	VALVE	dust unloader		1
7	6681477	COVER			1
8		TANK	NSS		1

ACCESS COVER
(Cleanout - Lower Front of Chaincase)

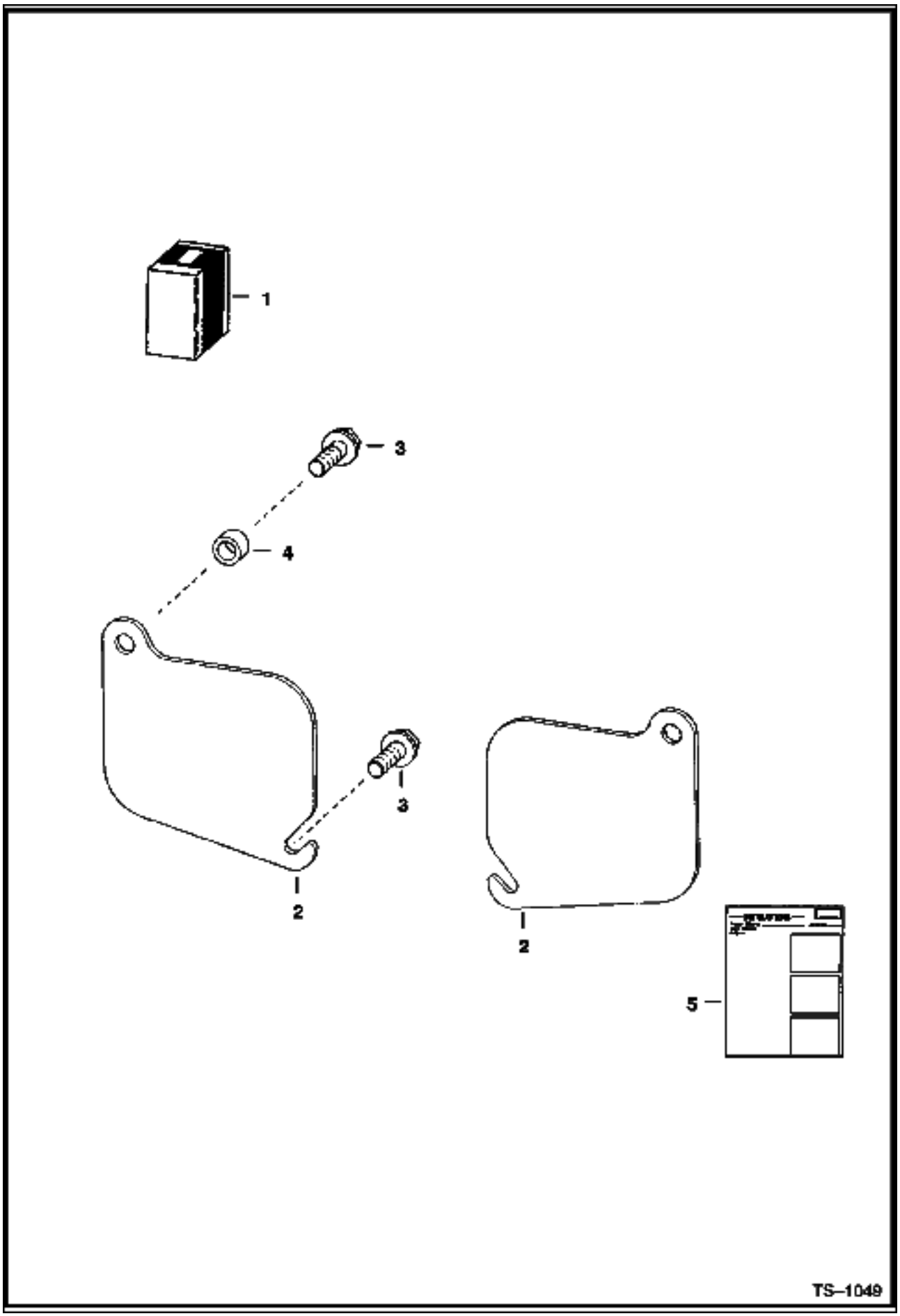

ACCESS COVER (Cont'd)
(Cleanout - Lower Front of Chaincase)

Ref No	Part Number	Description	Remarks	Serial Number	Qty
1	6577880	KIT	Ref. 2-5		1
2	6737088	COVER			2
3	84G003720B	BOLT			4
4	6562619	BUSHING	not in kit		2
5	6570931	INSTRUCTIONS			1

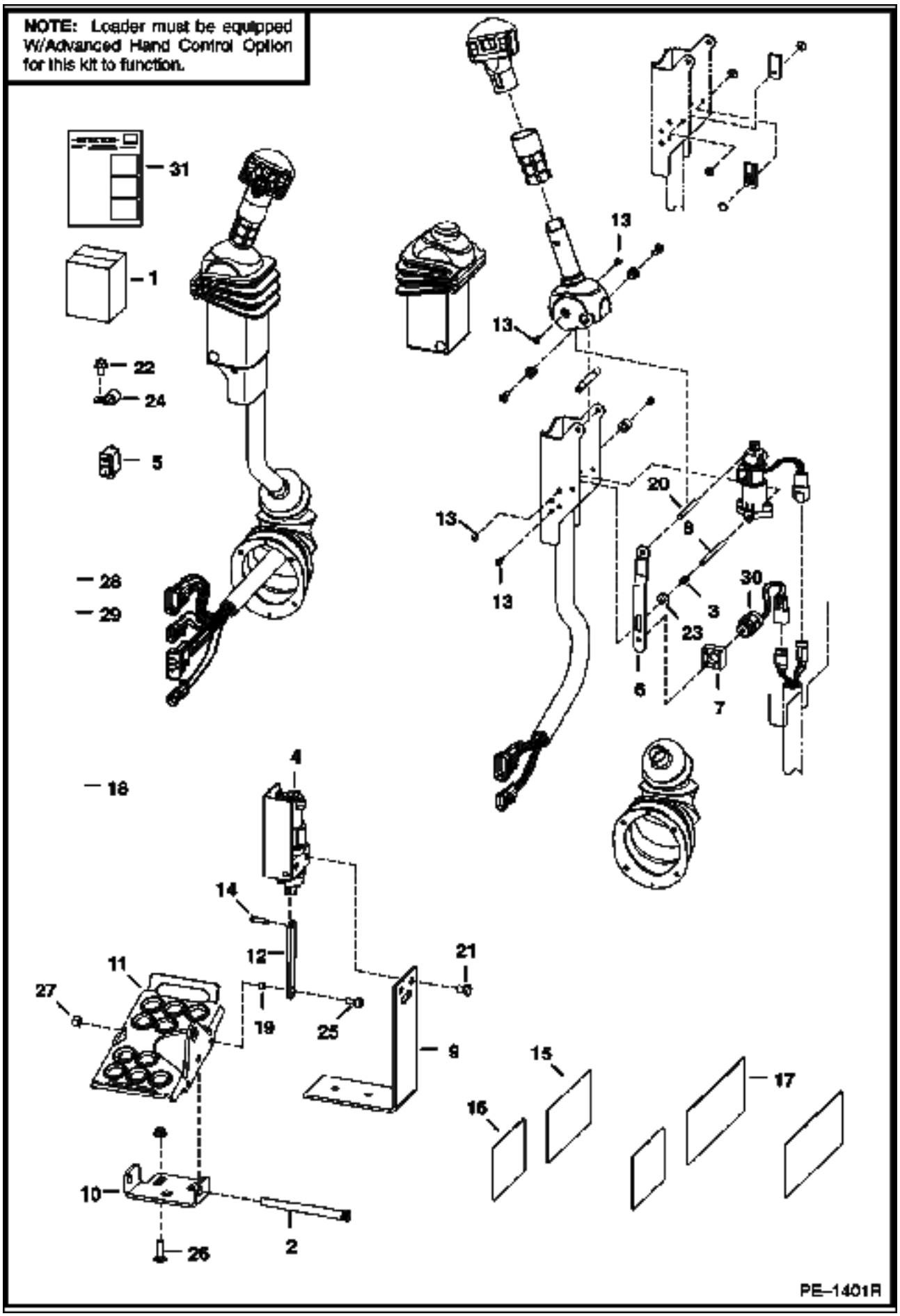
NOTE: Loader must be equipped W/Advanced Hand Control Option for this kit to function.
31
1
22
24
5
28
29
13
13
13
20
8
3
23
30
6
7
18
4
14
12
11
27
19
25
21
9
15
16
17
10
26
2
PE–1401R

Ref No	Part Number	Description	Remarks	Serial Number	Qty
1	6731151	KIT	foot control - Ref. 2-14 & 17-30 SEE NOTE		1
2	6564657	PIN			2
3	6680470	SPRING	Was 6675745 [A]		2
4	6684912	SENSOR	foot pedal - R.H.		1
4	6676029	SOLENOID			1
4	6684911	SENSOR	foot pedal - L.H.		1
4	6676029	SOLENOID			1
5	6676537	SWITCH			2
6	6680477	STRAP			2
7	6680468	MOUNT	solenoid		2
8		SLEEVE	NAP		2
8	6719834	SPACER			2
9	6726573	BRACKET			2
10	6726679	MOUNT	pedal		2
11	6726680	PEDAL			2
12	6726681	LINK			2
13	6727065	BOLT			12
14	6727496	PIN			2
15	6727926	DECAL	operations - 773G, 863G, 873G, 883, 963G		1
15	6728045	DECAL	operations - T190, T200		1
16		DECAL	NAP - ACS operations - not in kit - Order 6727926 decal		1
17	6728539	DECAL	warning - 773G, 863G, 873G, 883, 963G		1
17	6728540	DECAL	warning - T190, T200		1
18	6624289	STA STRAP			2
19	6729467	SPACER			2
20	6680469	SPACER	threaded		2
21	17C000608B	BOLT			4
22	84G003710B	BOLT			2
23	25E000013B	WASHER			2
24	30H000062B	CLAMP			2
25	17C000514B	BOLT			2
26	37C000620B	BOLT			4
27	95D000005B	NUT			2
28	6676029	SOLENOID			2
29	57D000006B	NUT			4
30	6901492	INSTRUCTIONS			1

BACK-UP ALARM KIT
(W/ Selectable Joystick Controls)

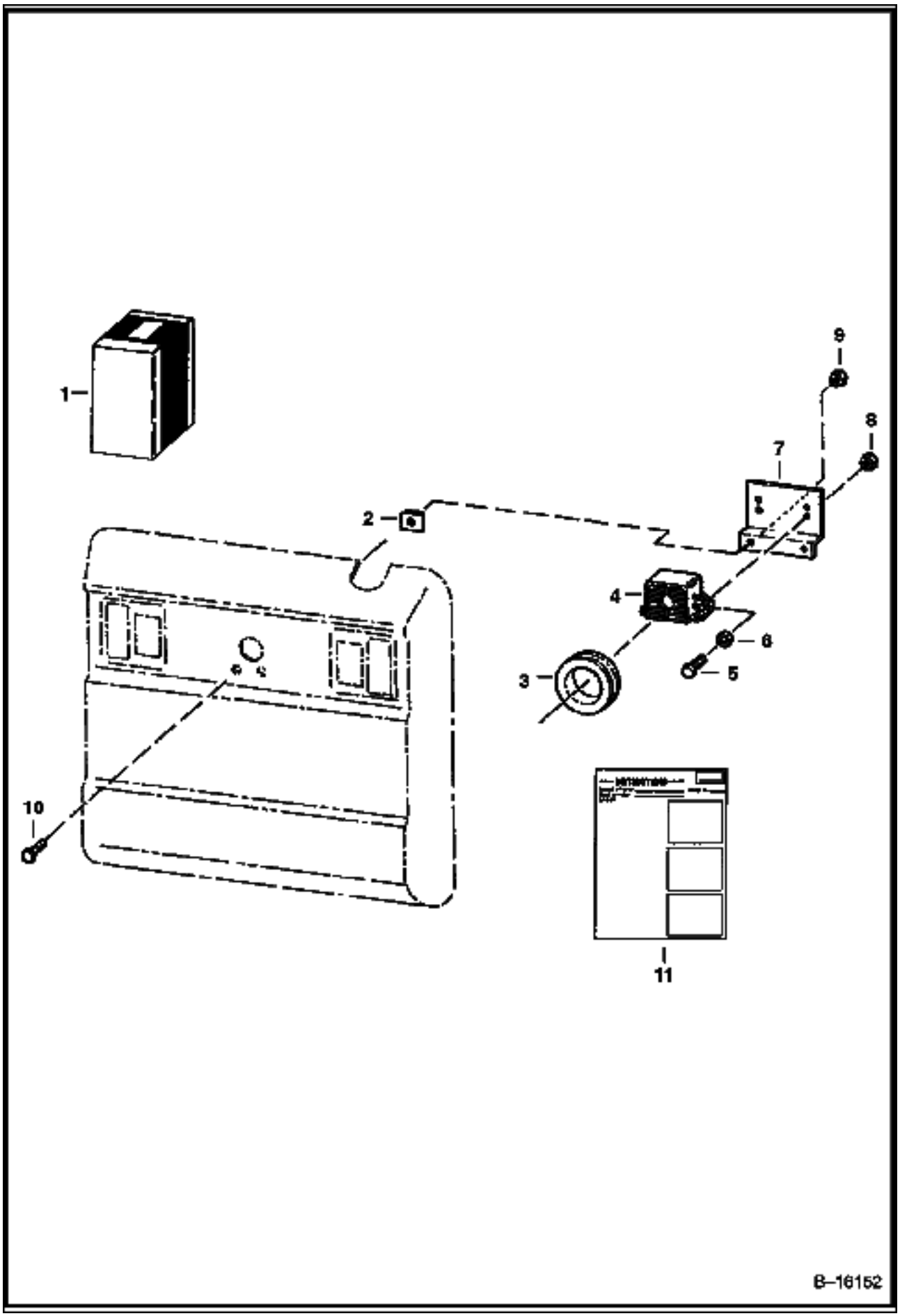

BACK-UP ALARM KIT (Cont'd)
(W/ Selectable Joystick Controls)

Ref No	Part Number	Description	Remarks	Serial Number	Qty
1	6732235	KIT	Ref. 2-11		1
2	774220	NUT	spring		2
3	6577545	GROMMET			1
4	6599931	ALARM			1
5	17C000410B	BOLT			2
6	25E000013B	WASHER			2
7	6733970	MOUNT			1
8	83D000004B	NUT			2
9	61D000005B	NUT			2
10	37C000512B	BOLT			2
11	6901690	INSTRUCTIONS			1

BEACON

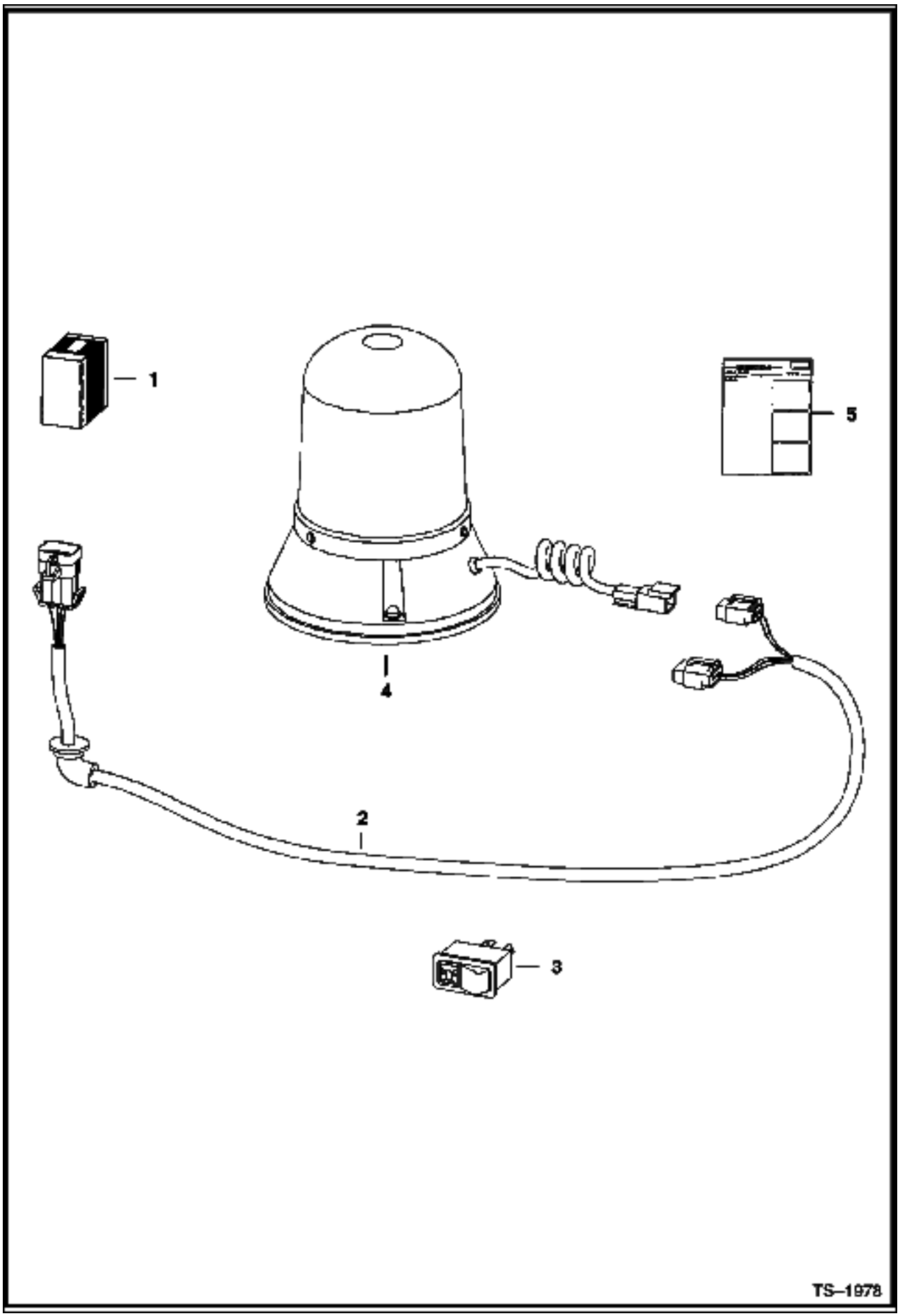

Ref No	Part Number	Description	Remarks	Serial Number	Qty
1	6719854	KIT	rotating beacon		1
2	6718872	HARNESS			1
3	6665317	SWITCH	horizontal		1
3	6668816	SWITCH	vertical		1
4	6675523	BEACON			1
4	6666571	BULB			1
5	6900991	INSTRUCTIONS			1

BLOCK HEATER
(Engine)

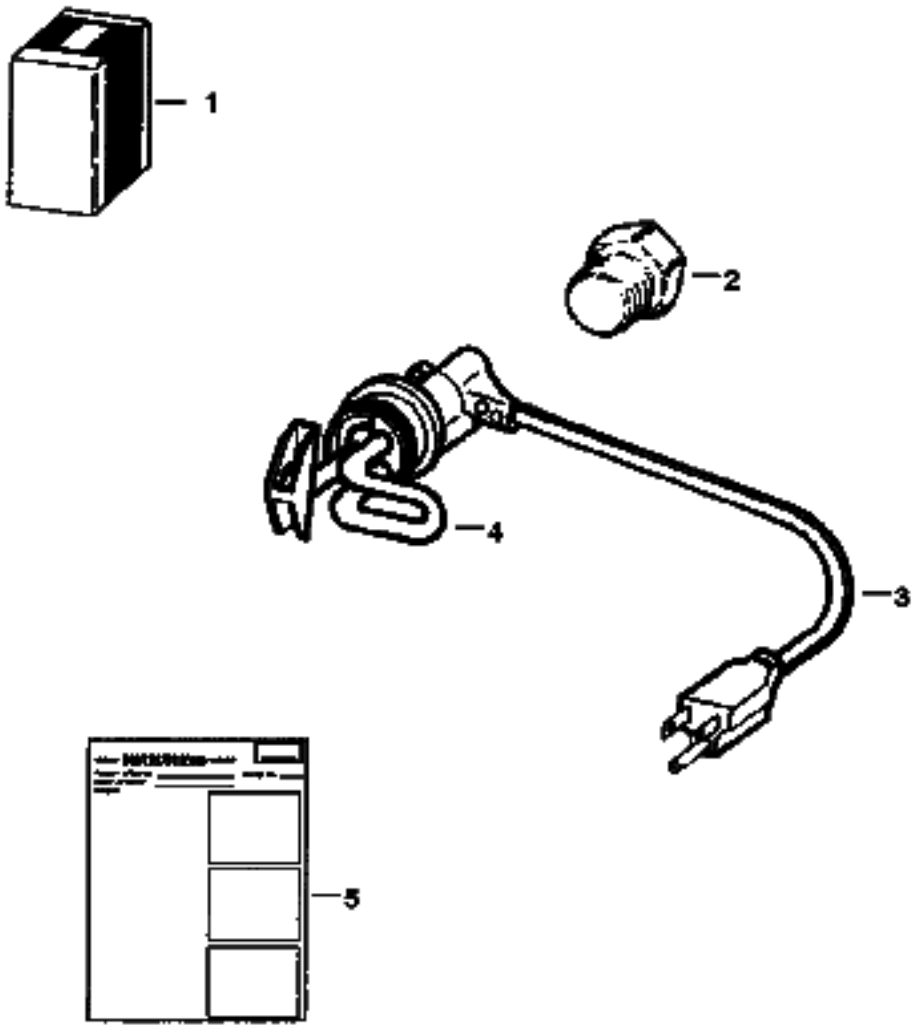

BLOCK HEATER (Cont'd)
(Engine)

Ref No	Part Number	Description	Remarks	Serial Number	Qty
1	6720808	KIT	W/Ref. 2, 4 & 5		1
2	19F000012B	BUSHING			1
3	6685850	CORD			1
4	6659369	HEATER	W/Ref. 3		1
5	6720038	INSTRUCTIONS			1

BUCKET POSITIONING KIT

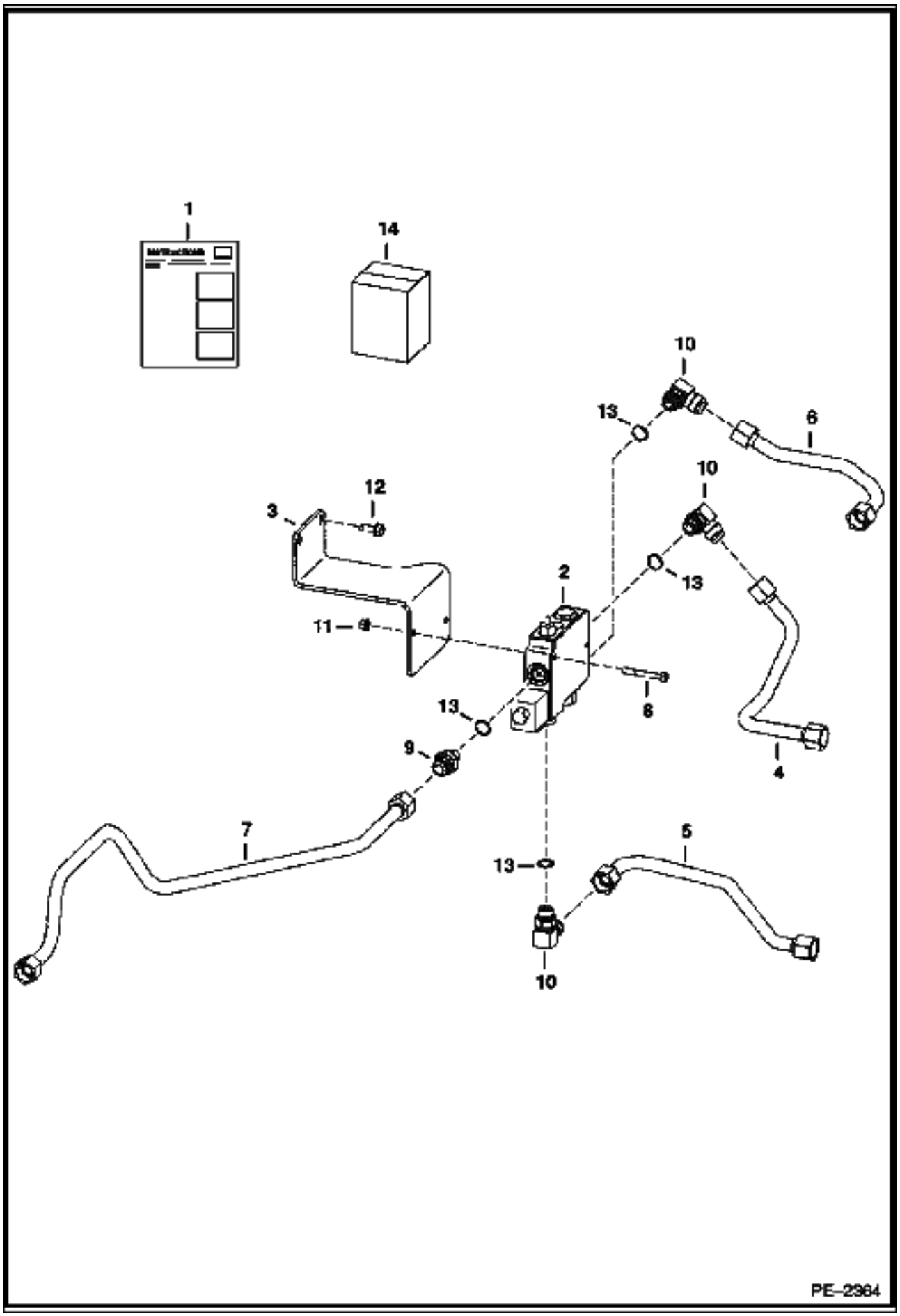

BUCKET POSITIONING KIT (Cont'd)

Ref No	Part Number	Description	Remarks	Serial Number	Qty
1	7104829	KIT	Ref. 2-13		1
2	6675669	VALVE	See Illustration BUCKET POSITIONING VALVE/ MS1943 painted primer red		1
3	6730898	MOUNT	BPV		1
4	6732991	TUBELINE			1
5	6732992	TUBELINE			1
6	6734200	TUBELINE			1
7	6734208	TUBELINE			1
8	17C000540B	BOLT			2
9	15KB01210B	ADAPTER	W/Ref. 13		1
10	17KB01210B	ELBOW	W/Ref. 13		3
11	83D000005B	NUT			2
12	84G003716B	BOLT			2
13	79K000010B	O-RING			x
14	6903132	INSTRUCTIONS			1

CAB DOOR

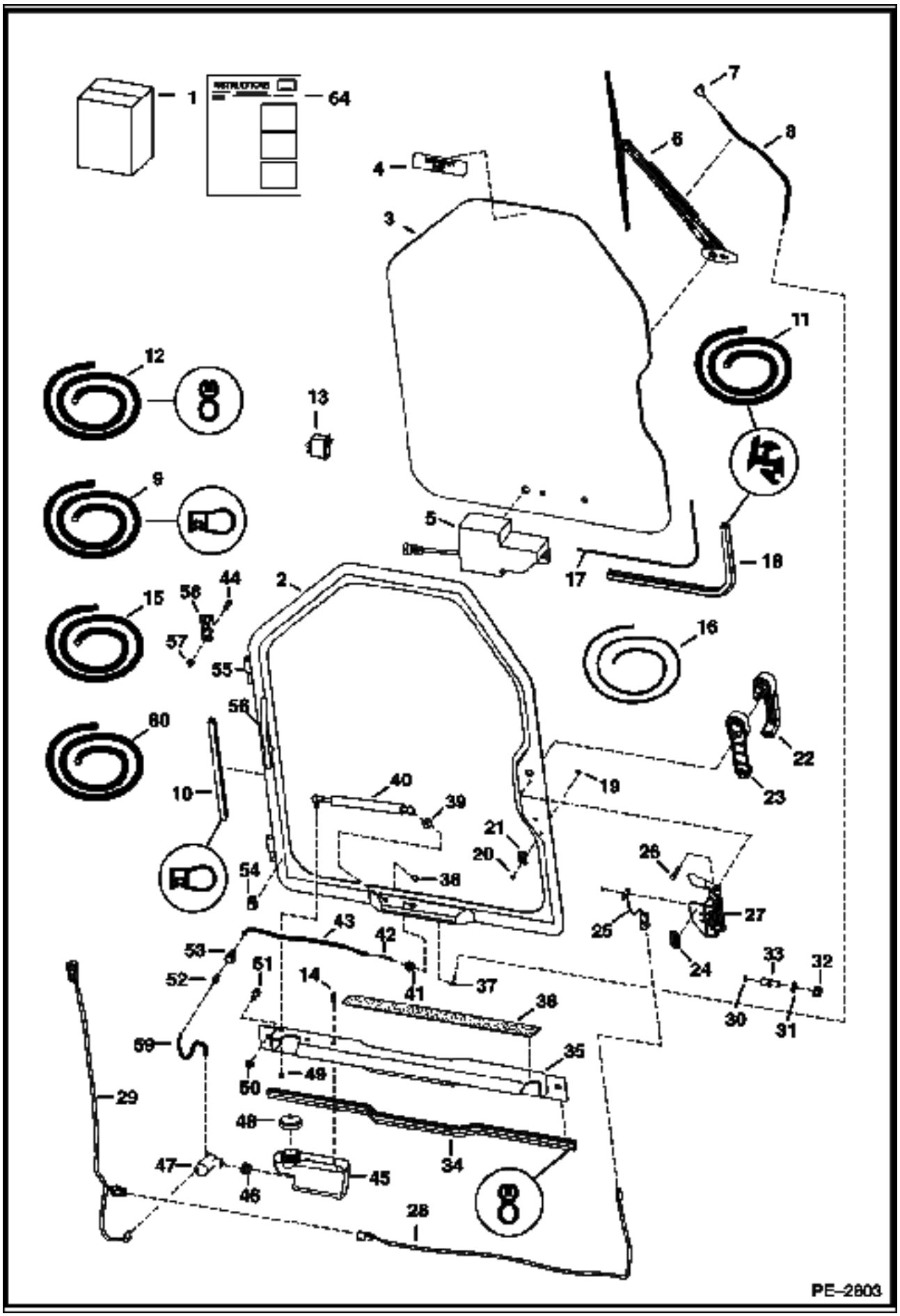

Ref No	Part Number	Description	Remarks	Serial Number	Qty
1	6730822	KIT	door - Ref. 2-61 & Ref. 1-21 on ILL. MS1355		1
2	7109665	DOOR	W/Ref. 55 & 56		1
3		WINDOW	See Illustration CAB DOOR/ MS1355 - .25" thick glass		1
4	6707852	DECAL	exit		1
5		MOTOR	See Illustration CAB DOOR/ MS1355 - wiper		1
6		ARM ASSY	See Illustration CAB DOOR/ MS1355 - wiper		1
7		NOZZLE	See Illustration CAB DOOR/ MS1355 - wiper arm mounted		1
8		HOSE	See Illustration CAB DOOR/ MS1355		1
9	6675558	SEAL	bulk - sold per foot		x
10		SEAL	NAP - 127.3" (3233mm) - Order Ref. 9		1
11	6665568	EXTRUSION	bulk - sold per foot		x
12	6513152	SEAL	bulk - sold per foot		x
13	6665707	SWITCH	front wiper		1
14	35C000408B	BOLT			2
15	6676003	HOSE	bulk - sold per foot - .109" I.D. - black		x
16	6554149	CORD	bulk - sold per foot		x
17		CORD	NAP - window - 113" (2878mm) - Order Ref. 16		1
18		SEAL	NAP - window - 113" (2878mm) - Order Ref. 11		1
19	6665321	RIVET	male - plastic		1
20	6665322	RIVET	female - plastic		1
21	6665000	CLIP			1
22	7109662	HANDLE			1
22	6709527	KEY	ignition/rear door		1
23	7109663	SPACER			1
24	7110316	DECAL	door switch		1
25	6728459	DOOR SENSOR			1
25	6677193	RIVET	plastic		2
26	1CM00640B	BOLT			2
27	7109661	DOOR LATCH			1
28	7104465	DOOR SWITCH HARNESS			1
29	7106277	WIPER HARNESS			1
30	6677192	MAGNET			1
31	18EM01224B	WASHER			1
32	51DM12	NUT	12 mm thread		1
33	7109664	BOLT	striker - 12 mm thread		1
34		SEAL	NAP - threshold - 36" (914mm) - Order Ref. 12		1
35	6730816	SHIELD			1
36	6542731	SAFETY TREAD			1
37	6676500	ELBOW			1
38	46D000005B	NUT	acorn		1
39	25E000016B	WASHER			1
40	6682586	GAS SPRING			1
40	6678548	SOCKET	ball		2
40	6649244	STUD			2
40	6649245	RETAINER	spring		2
41	6676499	GROMMET	wiper		1
42	6676917	ELBOW			1
43		HOSE	NAP - 18.25" (464mm) - Order Ref. 15		1
44	17C000512B	BOLT			4
45	6736875	TANK	washer		1
46	6666766	GROMMET			1
47	6664554	PUMP	washer bottle		1
48	6674993	CAP	vented		1
49	61D000005B	NUT			1

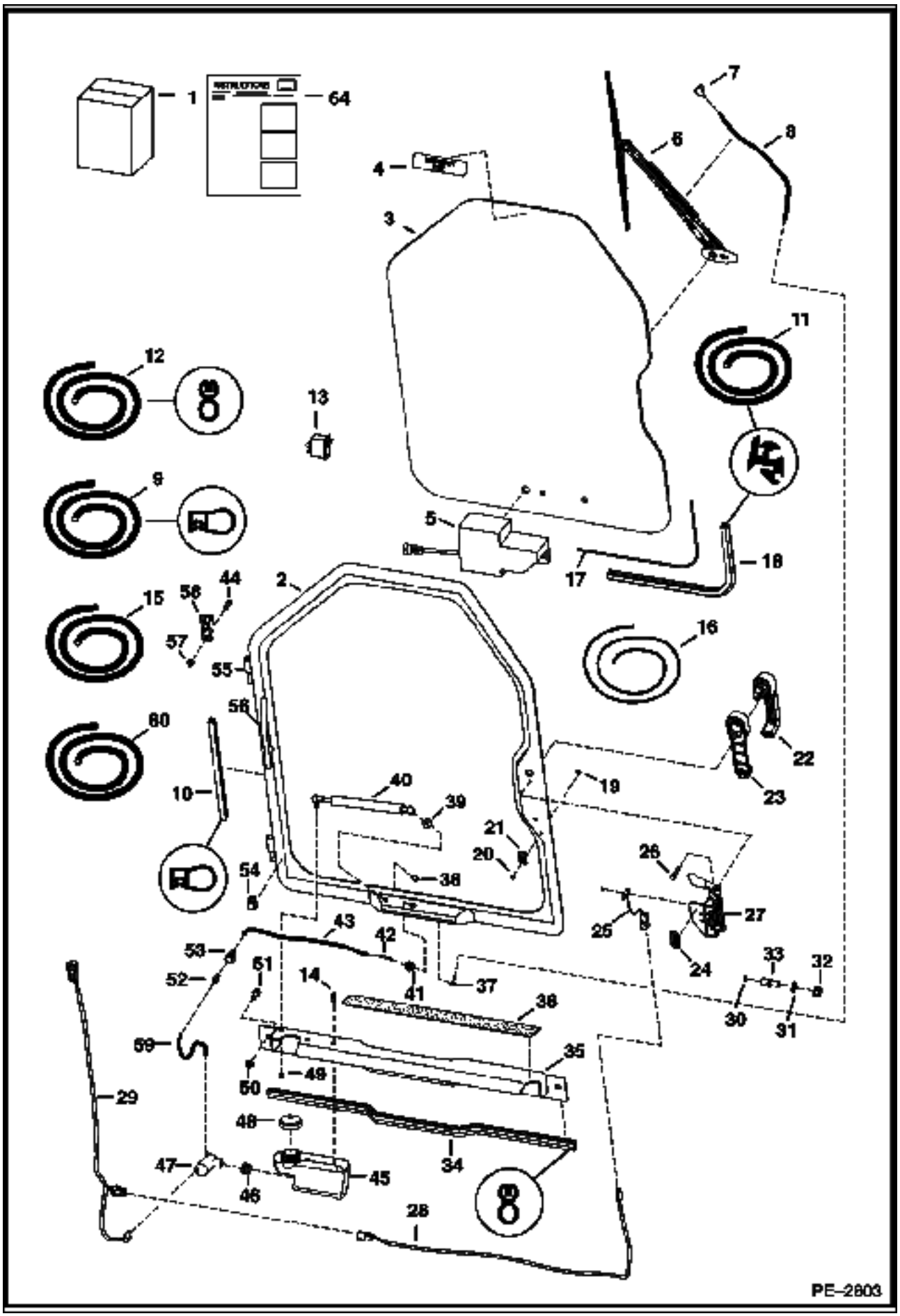
1
64
7
6
8
4
3
11
12
13
9
5
18
17
2
44
56
15
57
55
16
60
56
22
10
40
39
19
23
21
20
26
54
38
27
25
43
42
24
33
32
53
51
52
14
41
37
38
30
31
59
35
50
49
29
48
34
47
46
45
28
PE-2803

Ref No	Part Number	Description	Remarks	Serial Number	Qty
50	61D000006B	NUT			2
51	17C000612B	BOLT			2
52	6675299	COUPLER	insert		1
53	6675298	COUPLER	body		1
54	6675378	CLIP			3
55	6718376	HINGE	door		2
56	6718521	HANDLE	grab		1
57	59D000005B	NUT			4
58	6717593	HINGE	base		2
59		HOSE	NAP - 4.25" (108mm) long - Order Ref. 60		1
60	6708310	HOSE	bulk - sold per foot - .149 I.D. - clear		x
61	6900854	INSTRUCTIONS INSTL	INSTRUCTIONS INSTL		1

CAB DOOR
(Window & Wiper)

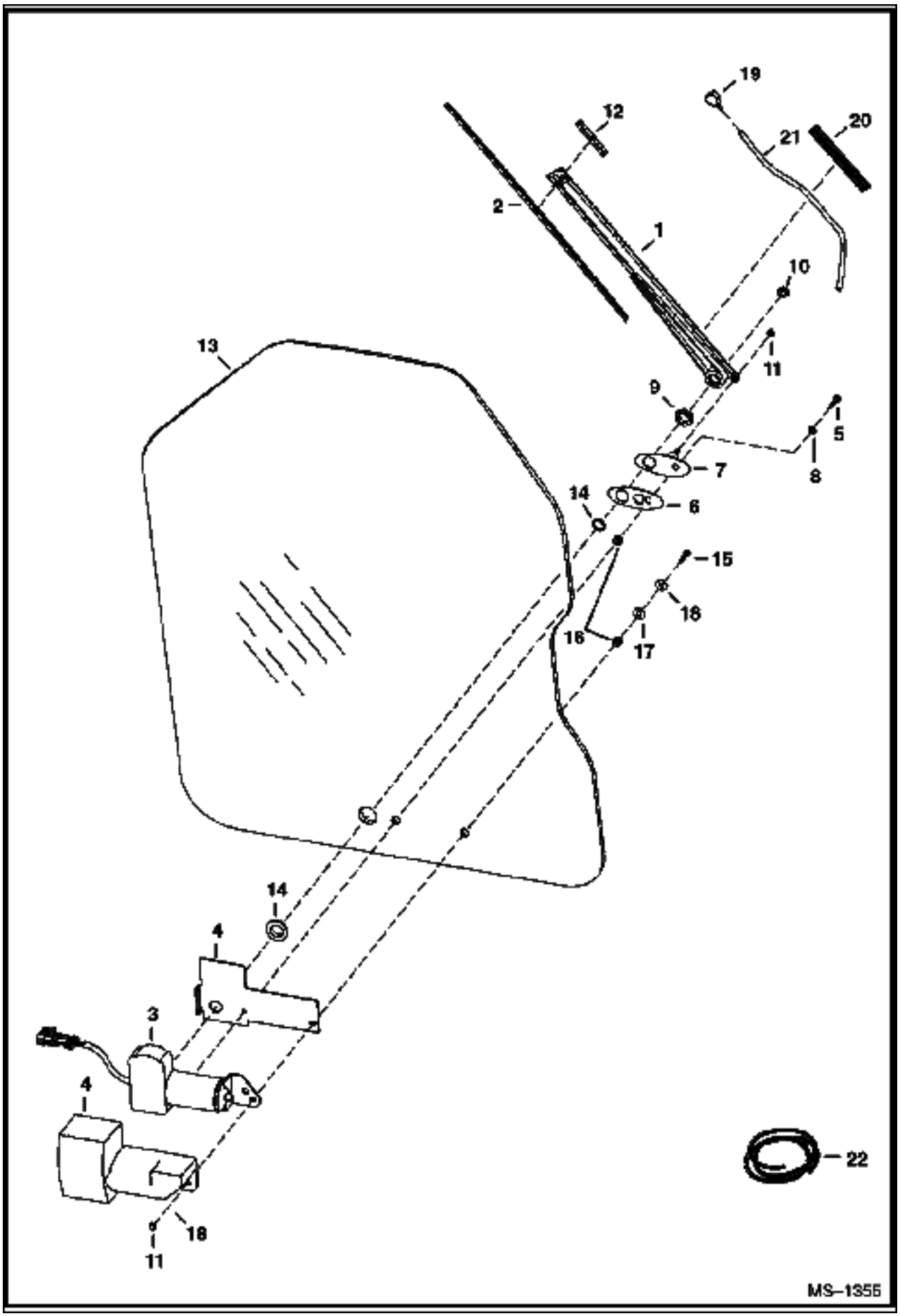

CAB DOOR (Cont'd)
(Window & Wiper)

Ref No	Part Number	Description	Remarks	Serial Number	Qty
1	6677833	ARM ASSY	W/Ref. 19-21		1
2	6677834	BLADE	also Order Ref. 12		1
3	6679476	MOTOR	W/threaded shaft end & built in fuse		1
4	6677836	COVER			1
5	6677837	BOLT			1
6	6677839	GASKET			1
7	6677840	SWIVEL			1
8	6677841	WASHER	tooth lock		1
9	6677842	NUT			1
10	6677843	NUT			1
11	6677844	NUT			2
12	6677845	ADAPTER	arm		1
13	6729776	WINDOW	.25" thick glass W/1.00" dia. wiper motor shaft hole		1
14	6677847	GROMMET	rubber		1
15	6678198	BOLT			1
16	6664085	BUSHING	nylon		2
17	6801059	WASHER	neoprene		1
18	6678739	WASHER	steel		2
19	6678920	NOZZLE	For Ref. 1		1
20	6678921	GUIDE	hose		1
21		HOSE	NAP - 18" (457mm) long - Order Ref. 22		x
22	6676003	HOSE	bulk - Sold Per Foot - .109" I.D. - black		x

CAB DOOR
(Special Applications)

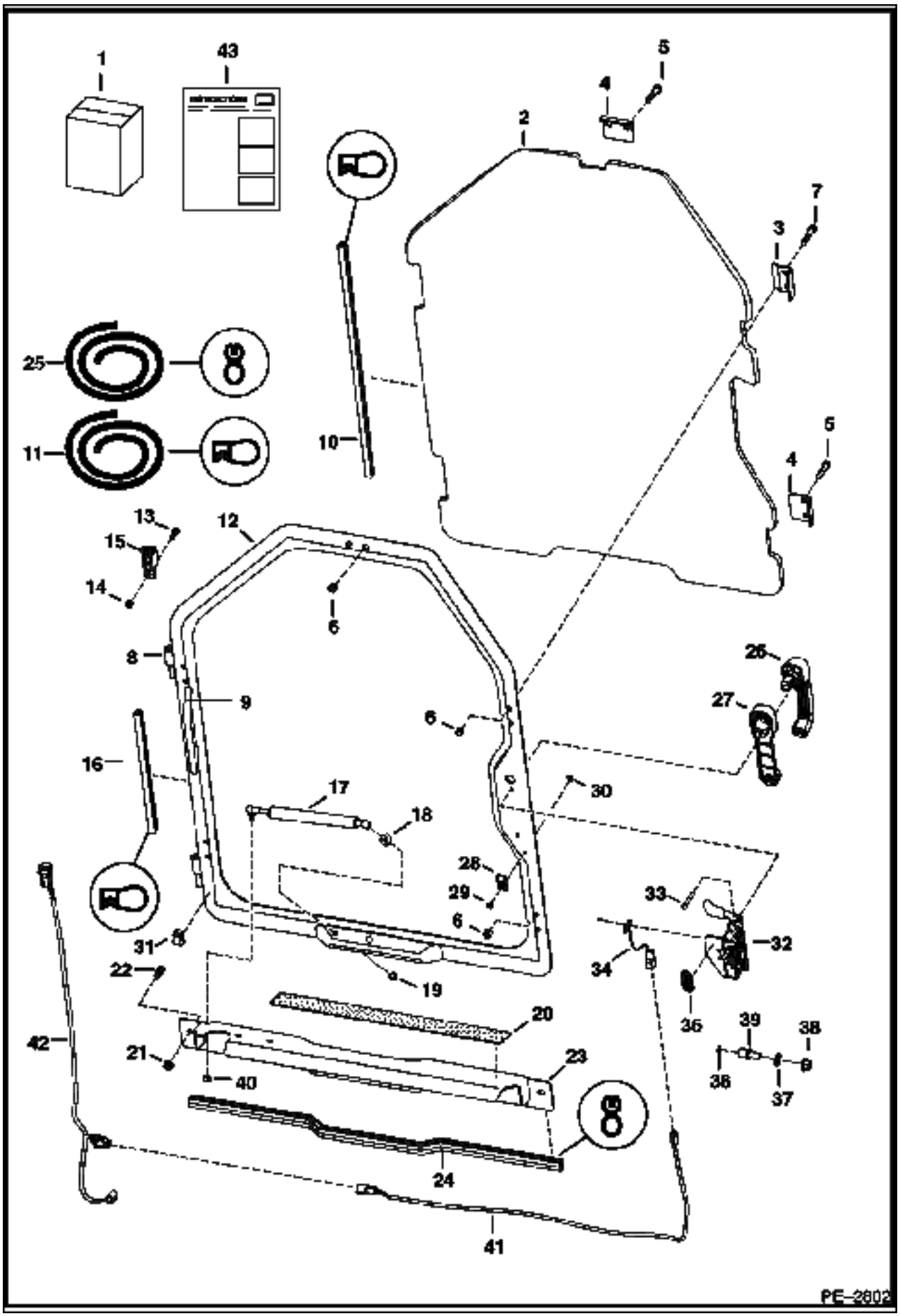

CAB DOOR (Cont'd)
(Special Applications)

Ref No	Part Number	Description	Remarks	Serial Number	Qty
1	6730823	KIT	door - Ref. 2-43		1
2	6732351	WINDOW	.5" thick polycarbonate		1
3	6725938	CLAMP			2
4	6725937	CLAMP			3
5	17C000628B	BOLT			6
6	95D000006B	NUT			10
7	17C000624B	BOLT			4
8	6718376	HINGE	door		2
9	6718521	HANDLE	grab		1
10		SEAL	NAP - 115" (2921 mm) long - Order Ref. 11		1
11	6675558	SEAL	bulk - sold per foot		x
12	7110430	SPECIAL APPS DOOR	W/Ref. 8 & 9		1
13	59D000005B	NUT			4
14	17C000512B	BOLT			4
15	6717593	HINGE	base		2
16		SEAL	NAP - 127.3" (3233,4 mm) long - Order Ref. 11		1
17	6682586	GAS SPRING			1
17	6678548	SOCKET	ball		2
17	6649244	STUD	ball		2
17	6649245	RETAINER	spring		2
18	25E000016B	WASHER			1
19	46D000005B	NUT	acorn		1
20	6542731	SAFETY TREAD			1
21	55D000006B	NUT			2
22	17C000612B	BOLT			2
23	6730816	SHIELD			1
24		SEAL	NAP - 36" (914,4 mm) long - Order Ref 25		1
25	6513152	SEAL	bulk - sold per foot		x
26	7109662	HANDLE			1
26	6709527	KEY	ign. & rear door		1
27	7109663	SPACER			1
28	6665000	CLIP			1
29	6665321	RIVET	male - plastic		1
30	6665322	RIVET	female - plastic		1
31	6675378	CLIP			3
32	7109661	DOOR LATCH			1
33	1CM00640B	BOLT			2
34	6728459	DOOR SENSOR			1
34	6677193	RIVET	plastic		2
35	7110316	DECAL			1
36	6677192	MAGNET			1
37	18EM01224B	WASHER			1
38	51DM00012B	NUT	12 mm thread		1
39	7109664	BOLT	striker - 12 mm thread		1
40	61D000005B	NUT			1
41	7104465	DOOR SWITCH HARNESS	door sensor		1
42	7106277	WIPER HARNESS	wiper		1
43	6901013	INSTRUCTIONS			1

CAB DOOR
(Lexan Window)

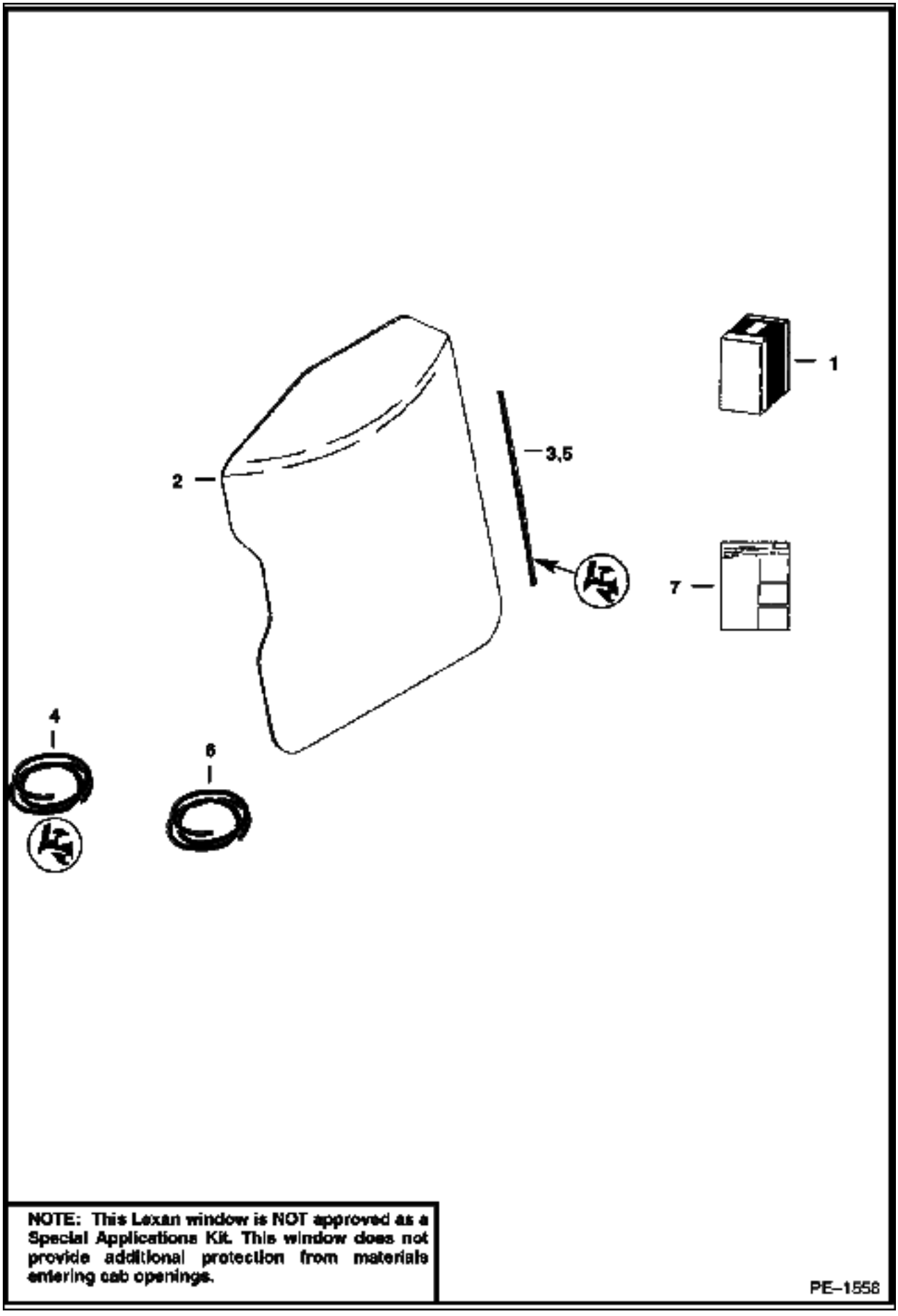

CAB DOOR (Cont'd)
(Lexan Window)

Ref No	Part Number	Description	Remarks	Serial Number	Qty
1	6726427	KIT	Ref. 2-7		1
2	6675215	WINDOW	lexan		1
3		SEAL	NAP - 113.3" (2878mm) long - Order Ref. 4		1
4	6665568	EXTRUSION	bulk - Sold Per Foot		x
5		CORD	NAP - 113.3" (2878mm) long - Order Ref. 6		1
6	6554149	CORD	bulk - Sold Per Foot		x
7	6901036	INSTRUCTIONS			1

CAB ENCLOSURE
(Envelope)

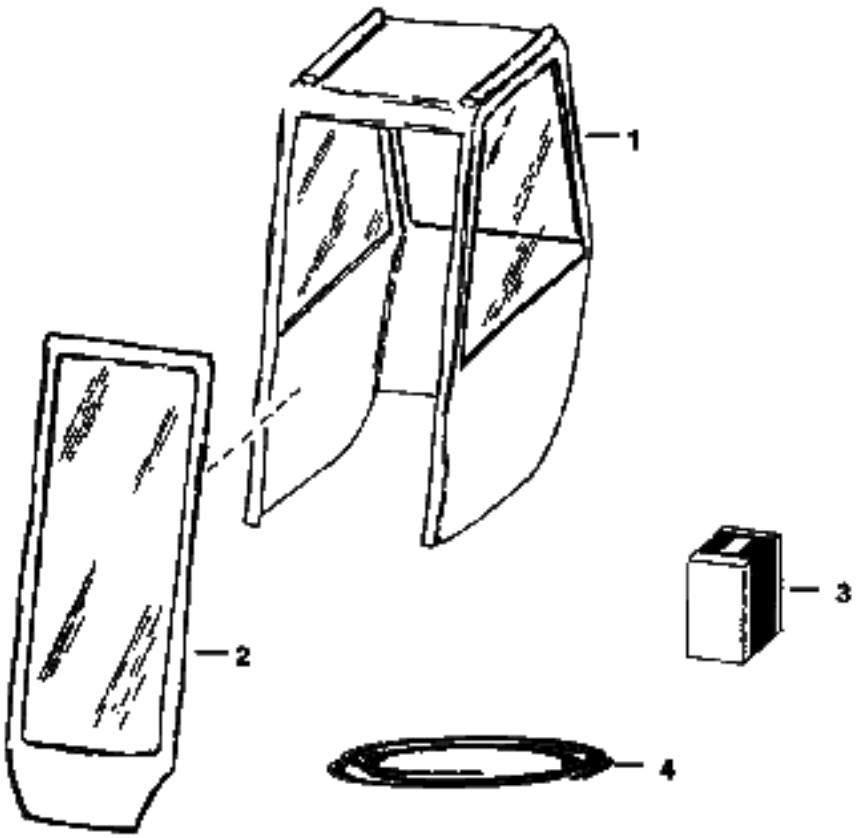

CAB ENCLOSURE (Cont'd)
(Envelope)

Ref No	Part Number	Description	Remarks	Serial Number	Qty
1	6675544	CANVAS CAB	fits over cab - W/Ref. 2 & 3		1
2	6675590	DOOR	vinyl		1
3	6675591	HINGE KIT			1

CAB WINDOWS
(Rear Window Removal Kit)

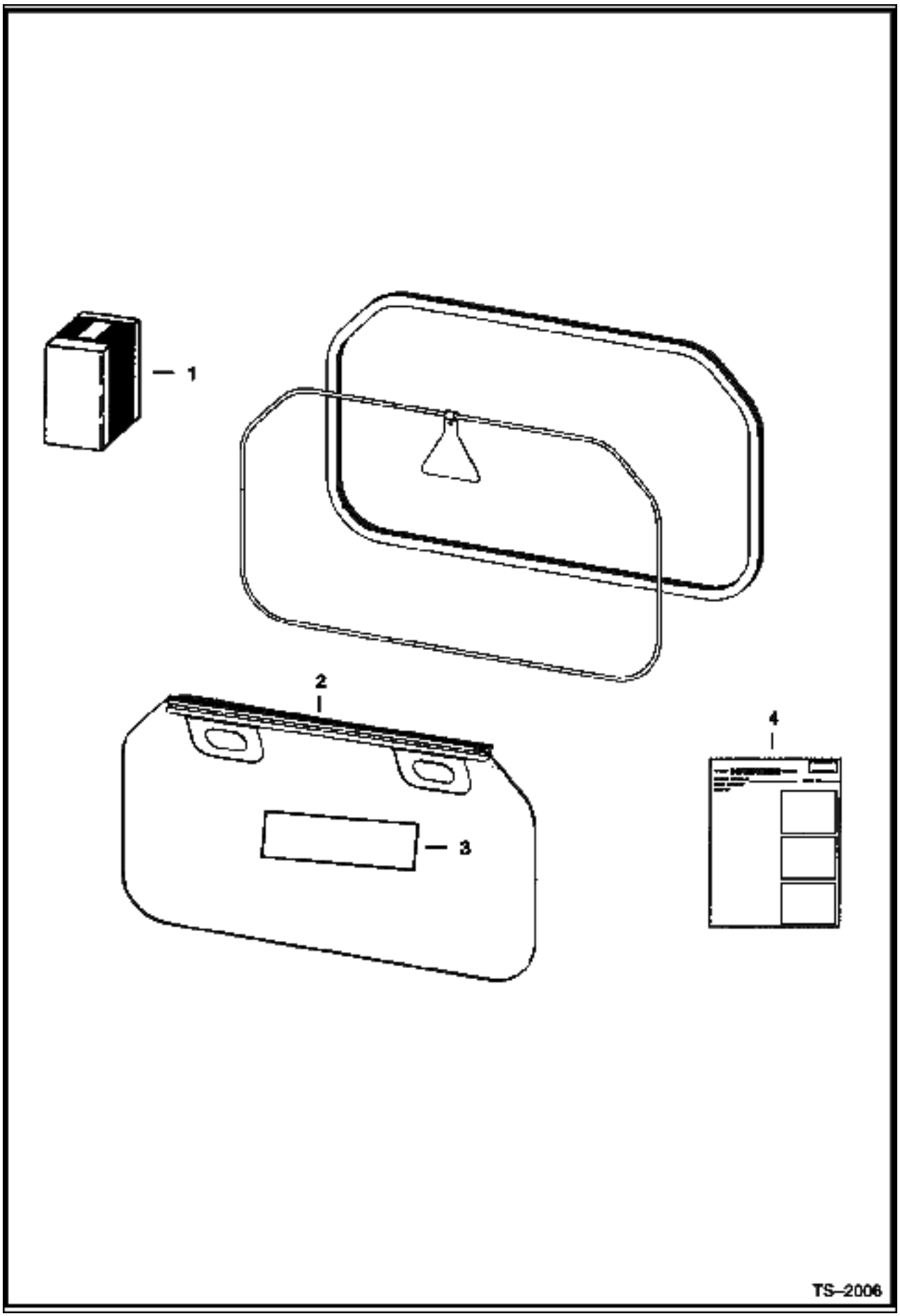

CAB WINDOWS (Cont'd)
(Rear Window Removal Kit)

Ref No	Part Number	Description	Remarks	Serial Number	Qty
1	6725946	KIT	Ref. 2-4		1
2	6725421	HANDLE			1
3	6726303	DECAL			1
4	6901029	INSTRUCTIONS			1

CAB WINDOWS
(Top, Rear & Side)

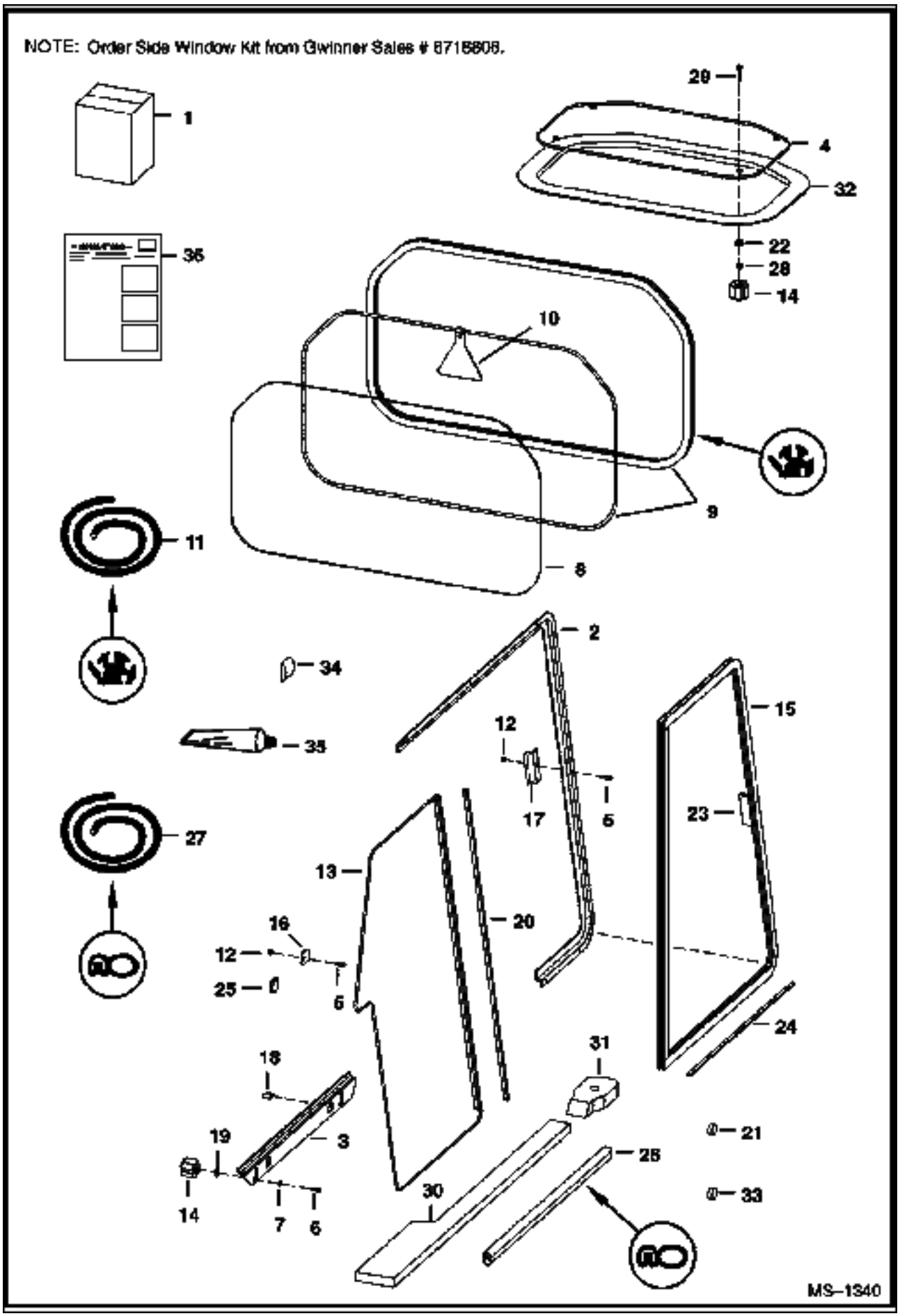

CAB WINDOWS (Cont'd)
(Top, Rear & Side)

Ref No	Part Number	Description	Remarks	Serial Number	Qty
1	6718805	KIT	Top & Rear Window - Ref. 4, 8-10, 14 & 36		1
1		KIT	SALES - side windows - SEE NOTE		1
2	6717870	FRAME	L.H. side		1
2	6717872	FRAME	R.H. side		1
3	6717871	FRAME	L.H. bottom		1
3	6717873	FRAME	R.H. bottom		1
4	7105035	WINDOW	assy. - lexan - W/Ref. 22, 28, 29 & 32		1
5	10C000410B	BOLT	carriage		18
6	10C000416B	BOLT	carriage		4
7	25E000014B	WASHER			4
8	6717874	WINDOW	rear - 3/16" thick		1
8	6719413	WINDOW	rear - lexan		1
9		EXTRUSION	NAP - 75.75" (1924mm) long - Order Ref. 11		1
9		CORD	NAP - 75.75" (1924mm) long - Order Ref. 11		1
10	6731478	EXIT TAG			1
11	6675387	EXTRUSION	Bulk - Sold Per Foot		x
11	6554149	CORD	Bulk - Sold Per Foot		x
12	59D000004B	NUT			18
13	6674520	WINDOW	L.H. rear - W/Ref. 20		1
13	6674522	WINDOW	R.H. rear - W/Ref. 20		1
14		KNOB	NAP - .625" (15,9mm) deep threads		8
14	6681614	KNOB	.69" (17,5mm) deep threads		8
15	6674519	WINDOW	L.H. front - W/Ref. 23		1
15	6674521	WINDOW	R.H. front - W/Ref. 23		1
16	6719063	STOP	window		2
17	6719037	STRIKER			2
18	6719065	COVER TAB			4
19	6675212	RETAINER	tab bolt		4
20	6675833	SEAL	rear window - dual wiper w/tape		2
21	6657719	PLUG	for .75" dia. hole		2
22	6675545	GROMMET			4
23	6678283	HANDLE	side window - W/ tape & vendor instructions		2
24	6676927	FELT STRIP	20.38" (518mm) long		2
25	6677198	TAB	cab		2
26		SEAL	NAP - 24" (609mm) long - Order Ref. 27		2
27	6555351	SEAL	bulk - sold per foot		x
28	6664085	BUSHING	nylon		4
29	91G000416B	BOLT	used W/ 6674741 knob		4
29	91G000420B	BOLT	used W/ 6681614 knob		4
30	6729010	SEAL	cab - main frame - L.H. - foam		1
30	6729009	SEAL	cab - main frame - R.H. - foam		1
31	6729011	SEAL	cab mount		2
32		SEAL	NAP - Order Ref. 4		1
33	6677973	PLUG	for .22" dia. hole		2
34	7103075	SEAL			2
35		ADHESIVE	NAP - 1 oz. - for top window seal Ref. 1		1
36	6900852	INSTRUCTIONS INSTL	top & rear window		1
36	6900853	INSTRUCTIONS	side windows		1

COUNTERWEIGHT KIT
(2000/2500 lb. Rear Axle)

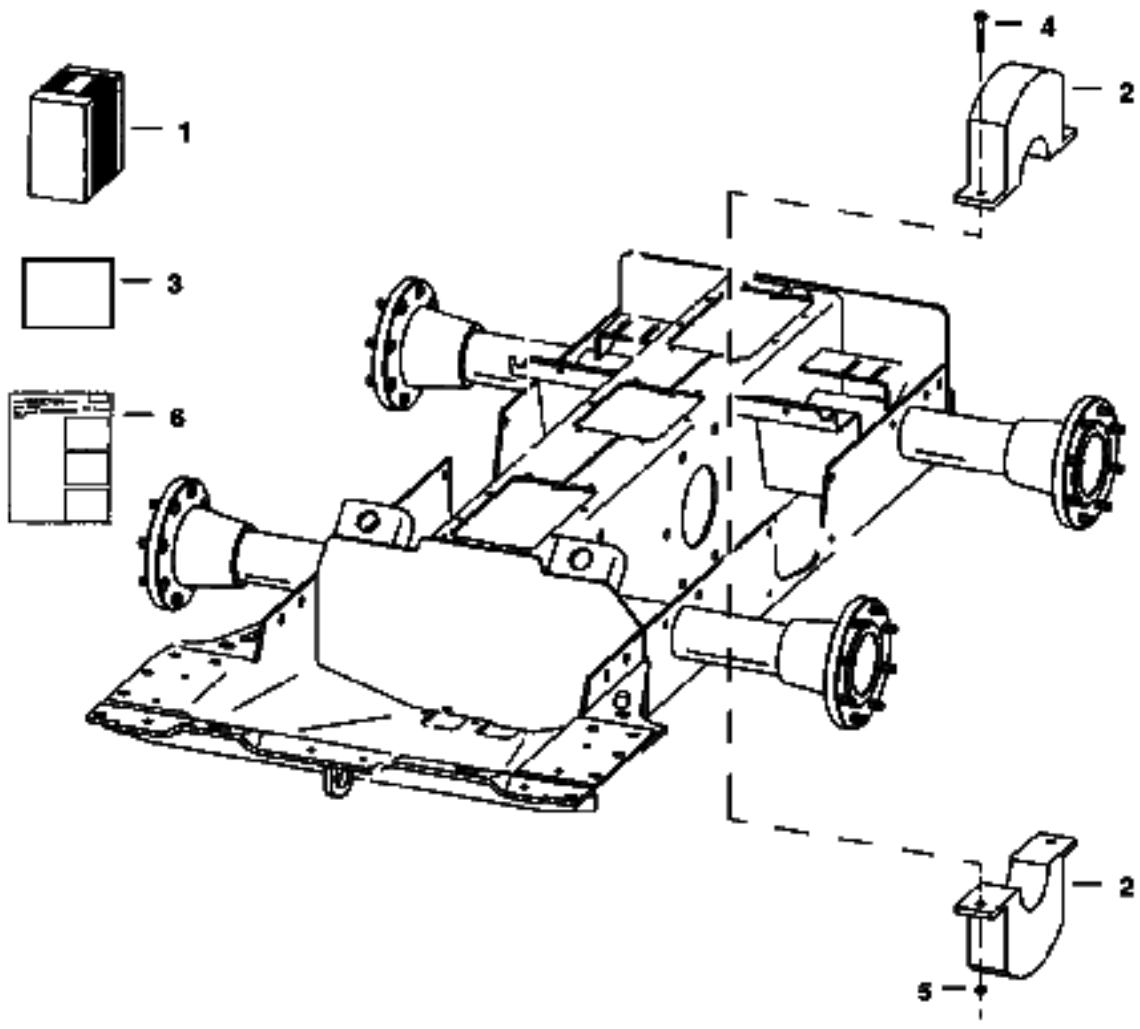

NOTE: Order Counterweight Kit from Gwinner Sales #6712911

TS–1295

COUNTERWEIGHT KIT (Cont'd)
(2000/2500 lb. Rear Axle)

Ref No	Part Number	Description	Remarks	Serial Number	Qty
1		KIT	SALES - counterweight - SEE NOTE		1
2	6714362	WEIGHT	rear axle - 42.8 lbs (19,4 kg) - 4.5" (114,3 mm) wide		4
3	6717232	DECAL	2500 lb load - 873		1
3	6712912	DECAL	2000 lb load - 863		1
4	17C000640B	BOLT			4
5	61D000006B	NUT			4
6	6900366	INSTRUCTIONS			1

COUNTERWEIGHT KIT
(400 lb. Rear Axle)

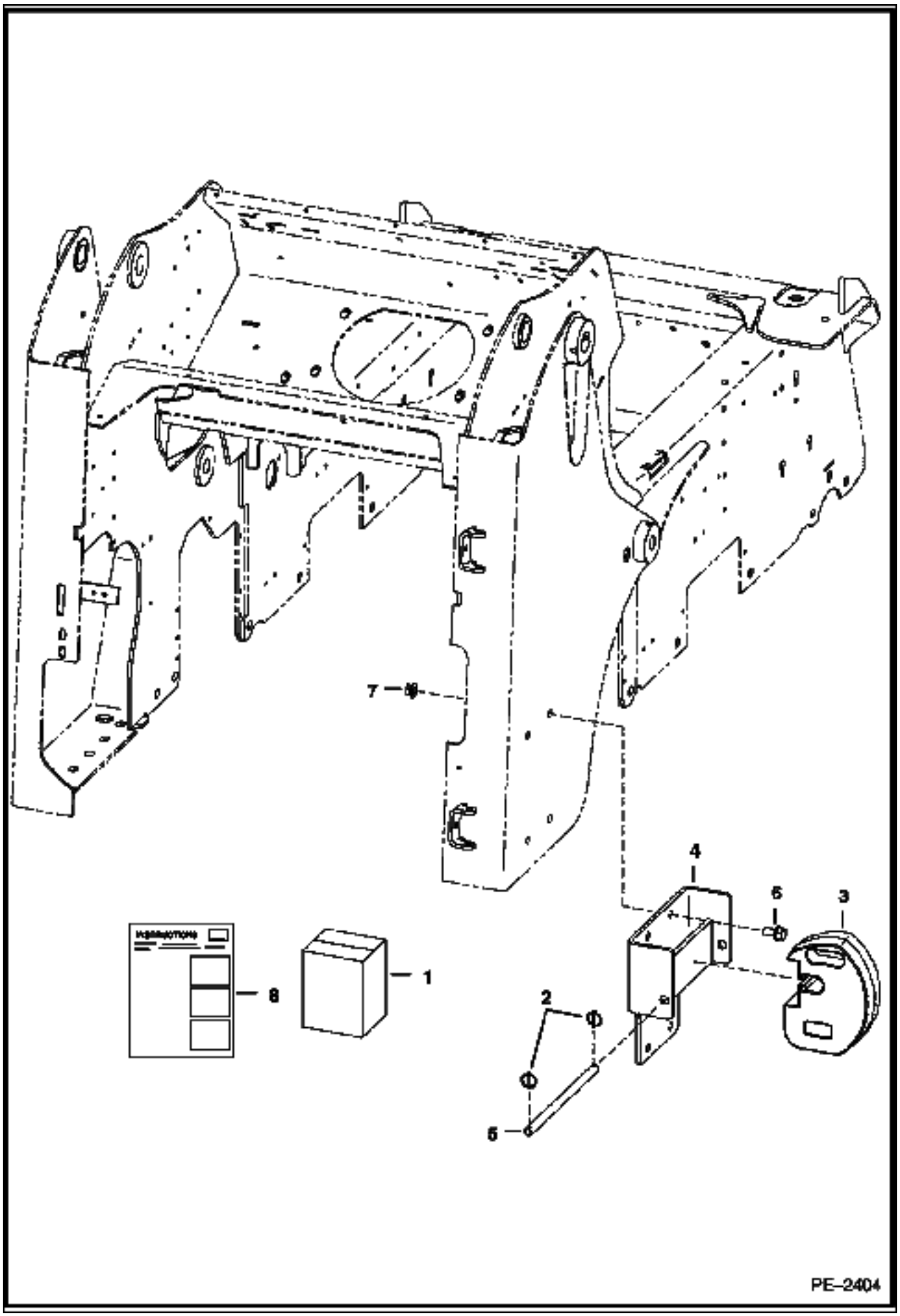

COUNTERWEIGHT KIT (Cont'd)
(400 lb. Rear Axle)

Ref No	Part Number	Description	Remarks	Serial Number	Qty
1	7105764	KIT	Ref. 2-8		1
2	6649706	PIN			4
3	6811483	COUNTERWEIGHT	49 lb (20.142 kg)		8
4	7105818	MOUNT	assy		2
5	7105827	ROD			2
6	35C001020B	BOLT			8
7	57D000010B	NUT			8
8	6903283	INSTRUCTIONS			1

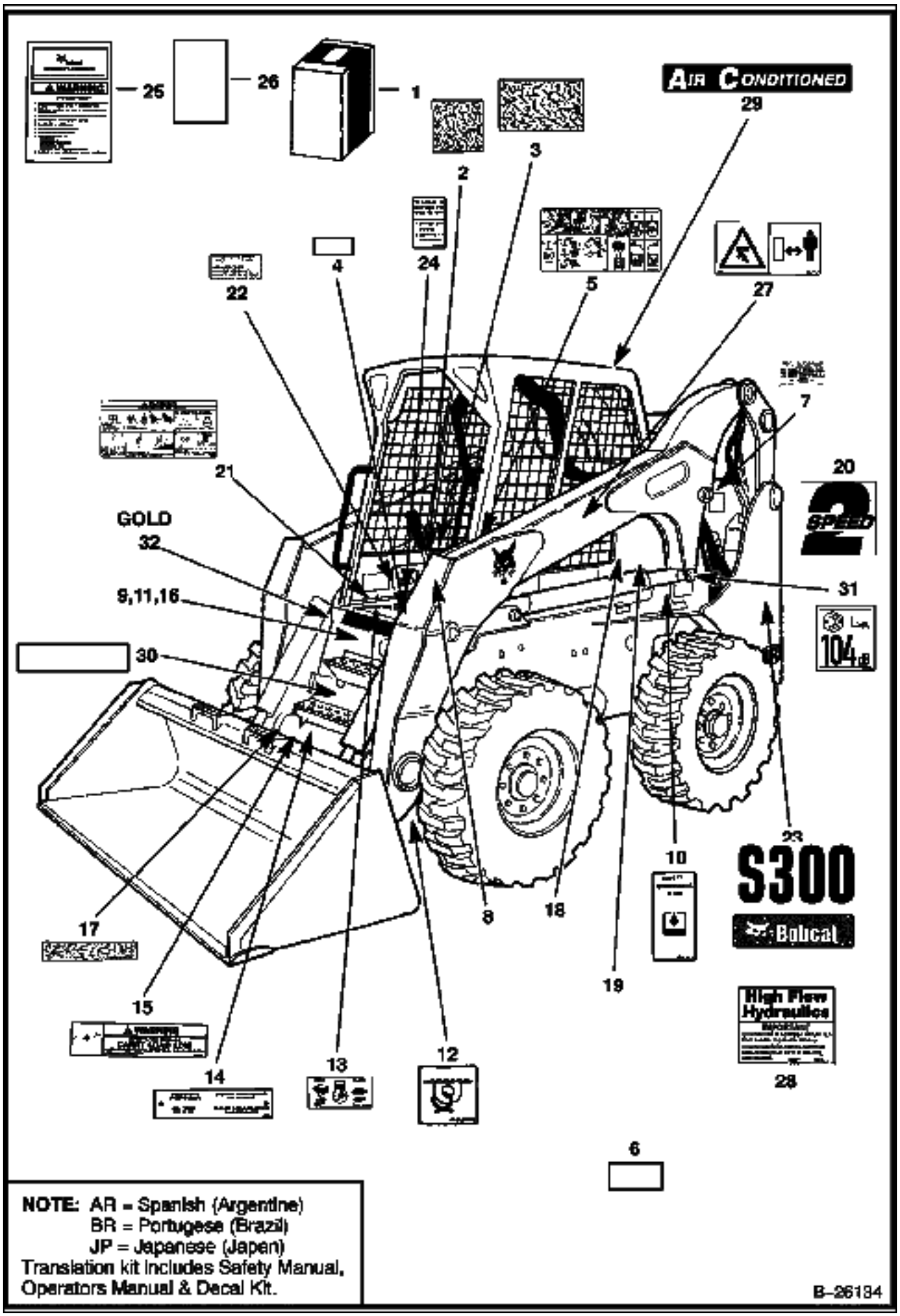
AIR CONDITIONED
GOLD
2 SPEED
104dB
S300
Bobcat
High Flow Hydraulics
NOTE: AR = Spanish (Argentine)
BR = Portugese (Brazil)
JP = Japanese (Japan)
Translation kit includes Safety Manual, Operators Manual & Decal Kit.
B-26184

Ref No	Part Number	Description	Remarks	Serial Number	Qty
1		KIT			1
1	7120295AR	KIT, DECAL	decal - SEE NOTE		1
1	7120295BR	KIT, DECAL	decal - SEE NOTE		1
1	7120295JP	KIT, DECAL	decal - SEE NOTE		1
1	7120294AR	KIT, TRANSLATION	translation - SEE NOTE		1
1	7120294BR	KIT, TRANSLATION	translation - SEE NOTE		1
2	6553976	SAFETY TREAD	5"x8" (127mm x 203mm)		1
3	6554100	TREAD	6" x 6" (153mm x 153mm)		3
4	6717343	DECAL	danger		2
5	6727926	DECAL	operation - not in kit		1
6	6737248	DECAL	warning - selectable joystick control		1
7	6557224	DECAL	patent		1
8	6731757	DECAL	front aux. coupler block		1
9	6702301	DECAL	danger		1
10	6565990	DECAL	hyd. fill		1
11	6732696	DECAL	warning		1
12	6727595	DECAL	See Illustration DECALS/ B26135 tie down		1
13	6735140	DECAL	throttle		1
14	6561383	DECAL	Bob-tach - not in kit		1
15	6579528	DECAL	carry load low		1
16	6702302	DECAL	danger		1
17	7108222	SAFETY TREAD	22" X 9.5" (558,8 mm X 241,3 mm)		1
18	6579385	DECAL	noise warning - Europe only		1
19	6731994	DECAL	sound power - Europe only		1
20	6729078	DECAL	2-speed - not in kit		2
21	6718698	DECAL	warning - not in kit		1
22	6732698	DECAL	ROC - 3000 lbs. - S300		1
23	7120593	DECAL	model S300		2
24	6711840	DECAL	manual lift release - not in kit		1
25	6737783	KIT	handbook		1
25	6558305	WIRE ROPE			1
25	6558309	WIRE ROPE	33" (838mm) long - bulk - sold per foot - also Order 6558310 (2)		x
25	6558310	SLEEVE	wire rope		2
25	84G003112B	BOLT			1
26	6902600	MANUAL			1
27	6713507	DECAL	stay clear - Europe only		2
28	7120602	DECAL	high flow - not in kit		2
29	6729077	DECAL	air conditioned - not in kit		2
30	6555341	SAFETY TREAD	3" x 12" (76mm x 305mm)		1
31	6731994	DECAL	sound - 104 db - Europe only		1
32	6735862	DECAL	gold package		1

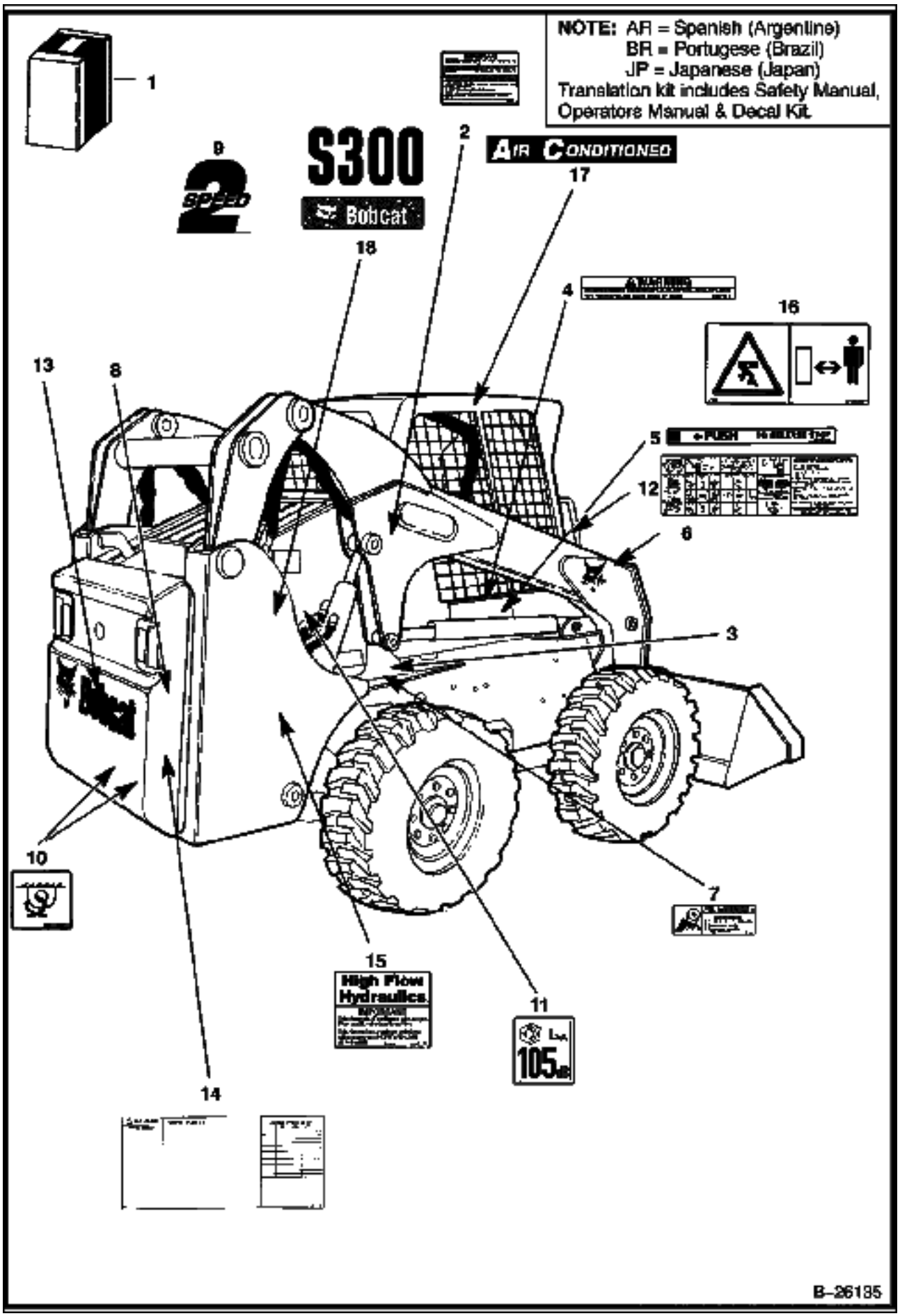
NOTE: AR = Spanish (Argentine)
BR = Portugese (Brazil)
JP = Japanese (Japan)
Translation kit includes Safety Manual, Operators Manual & Decal Kit.
S300
Bobcat
AIR CONDITIONED
2 SPEED
High Flow Hydraulics
105
B-26185

Ref No	Part Number	Description	Remarks	Serial Number	Qty
1		KIT			1
1	7120295AR	KIT, DECAL	decal - SEE NOTE		1
1	7120295BR	KIT, DECAL	decal - SEE NOTE		1
1	7120295JP	KIT, DECAL	decal - SEE NOTE		1
1	7120294AR	KIT, TRANSLATION	translation - SEE NOTE		1
1	7120294BR	KIT, TRANSLATION	translation - SEE NOTE		1
2	6560573	DECAL	spark arrestor		1
3	6732774	DECAL	lift arm stop		1
4	6577754	DECAL	warning		2
5	6578368	DECAL	push		1
6	7116870	DECAL	Bobcat head		1
7	6708941	DECAL	keep shield		2
8	6565200	DECAL	oil filter		1
9	6729078	DECAL	2-speed - not in kit		2
10	6727595	DECAL	tie down		2
11	6734803	DECAL	sound - 104db - Europe only		2
12		DECAL	NAP - Bobcat - rear door - Order Ref. 13		1
12	6734646	DECAL	W/selectable joystick controls - operation/warning		1
12	6734647	DECAL	W/selectable joystick controls - operation/warning - Europe only		1
13	6735901	DECAL	Bobcat W/head - white		2
14	6734534	DECAL	service/warning/filters		1
15	7120602	DECAL	high flow - not in kit		1
16	6713507	DECAL	stay clear - Europe only - not in kit		1
17	6729077	DECAL	air conditioned - not in kit		2
18	7120593	DECAL	model S300		2

DEBRIS SHIELD KIT

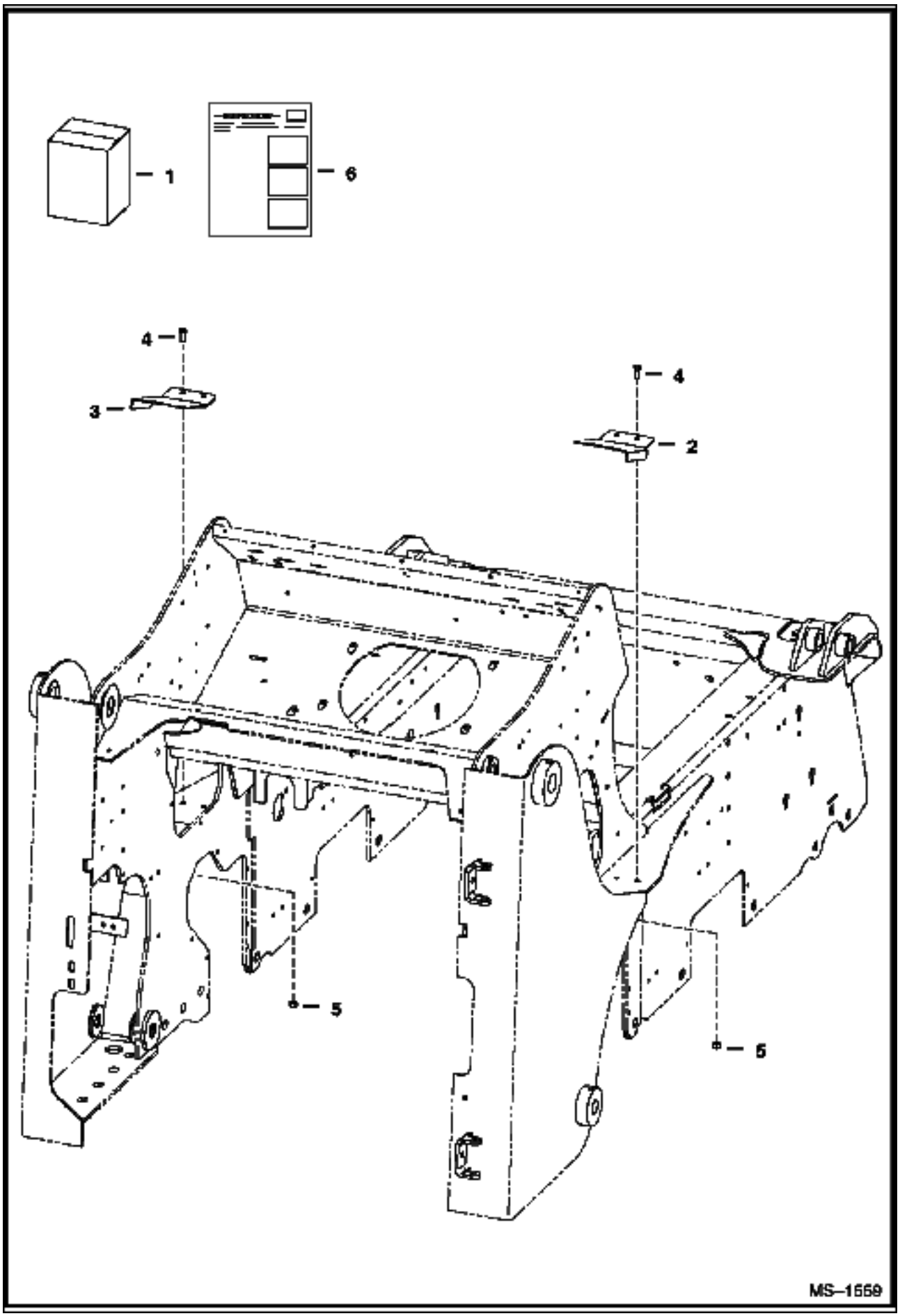

DEBRIS SHIELD KIT (Cont'd)

Ref No	Part Number	Description	Remarks	Serial Number	Qty
1	6734461	KIT	Ref. 2-6		1
2	6734447	SHIELD	R.H.		1
3	6734446	SHIELD	L.H.		1
4	17C000614B	BOLT			4
5	61D000006B	NUT			4
6	6902252	INSTRUCTIONS			1

ELECTRICAL CONNECTOR KIT
(7-Pin)

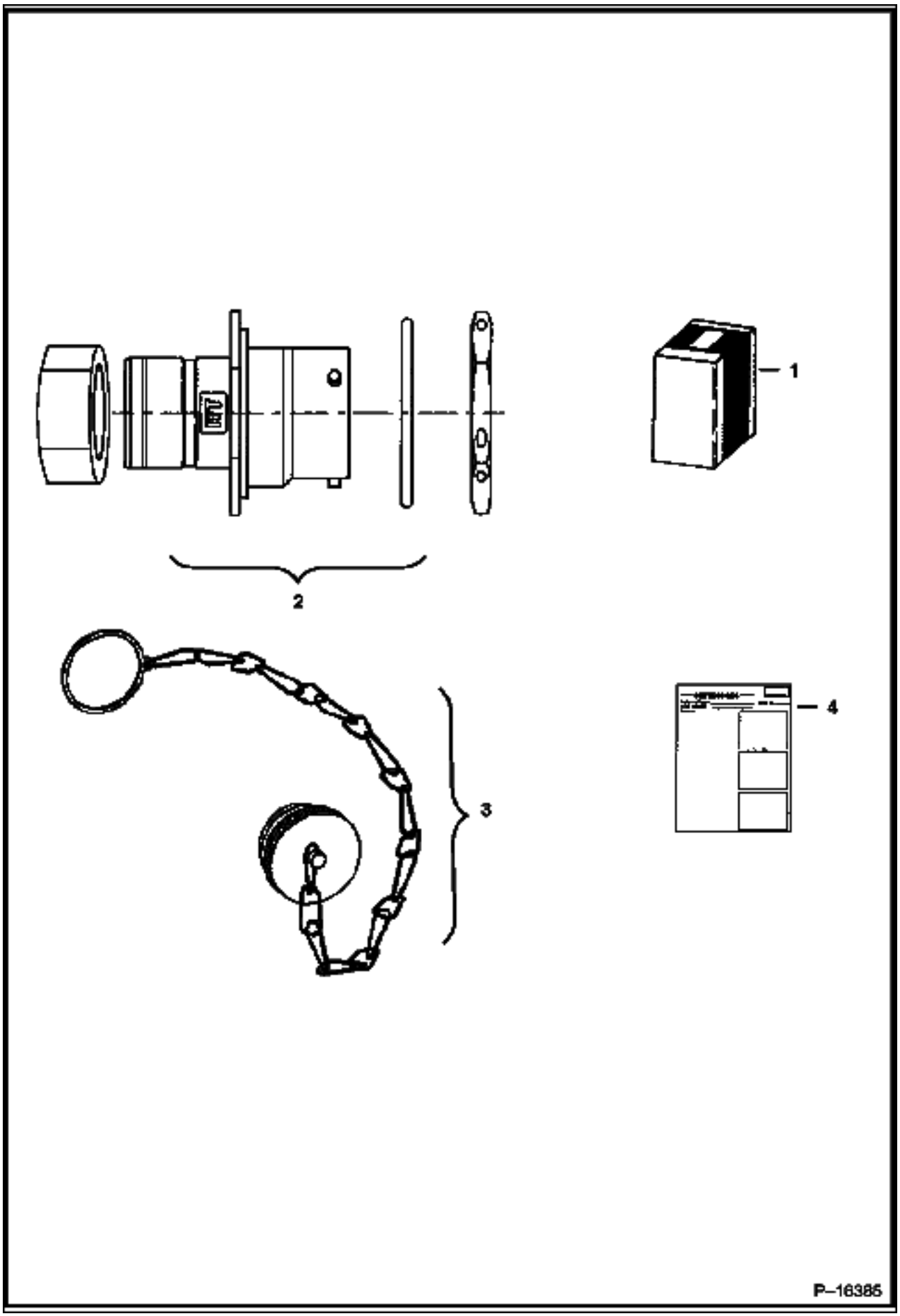

ELECTRICAL CONNECTOR KIT (Cont'd)
(7-Pin)

Ref No	Part Number	Description	Remarks	Serial Number	Qty
1	6727176	KIT	Ref. 2-4		1
2	6674802	CONNECTOR	7-pin		1
3	6675026	CAP			1
4	6901076	INSTRUCTIONS			1

ELECTRICAL CONTROLS KIT
(7 Pin Attachments)

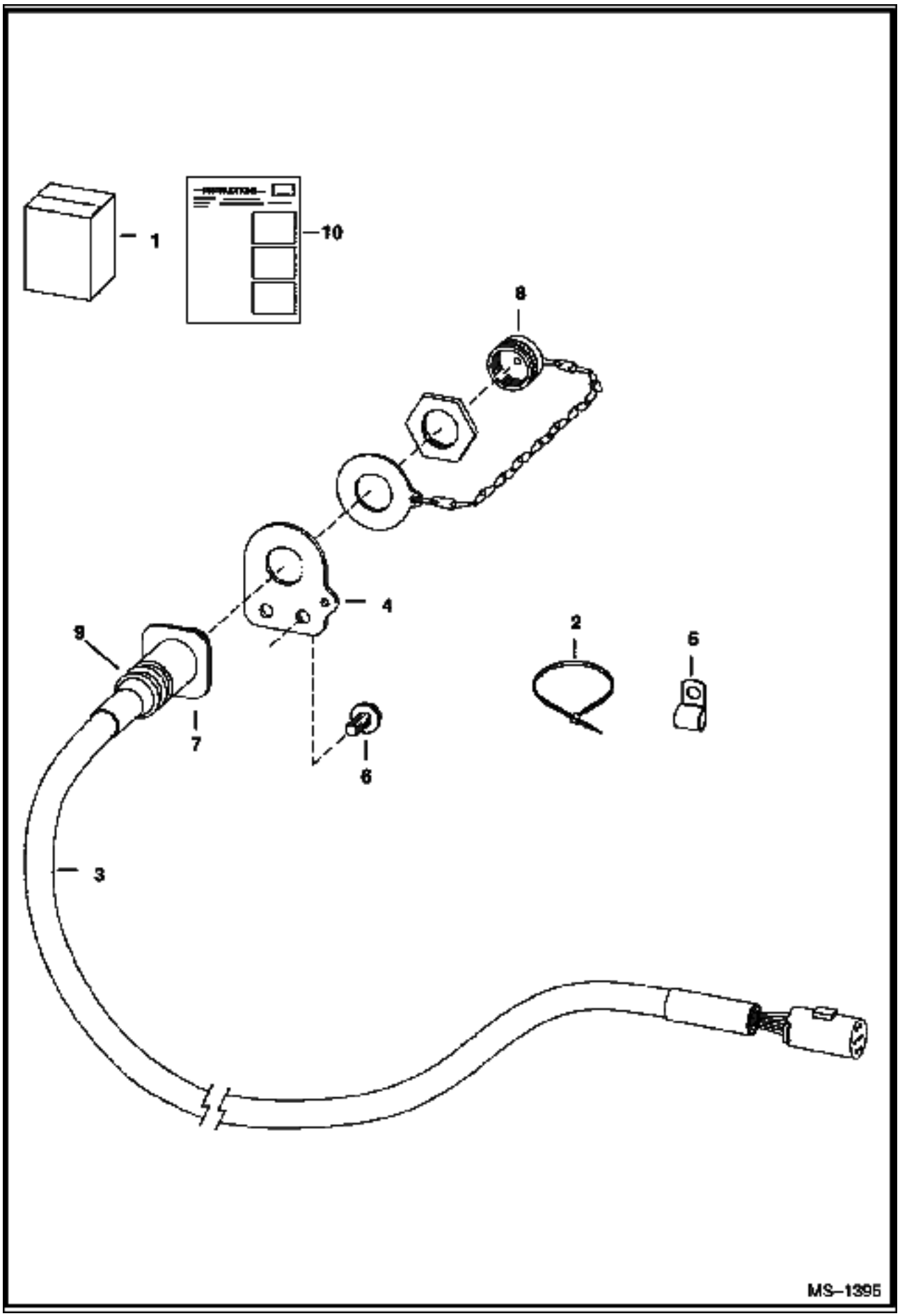

ELECTRICAL CONTROLS KIT (Cont'd)
(7 Pin Attachments)

Ref No	Part Number	Description	Remarks	Serial Number	Qty
1	6733142	KIT	Ref. 3-10		1
2	6624289	STA STRAP			4
3	6718426	HARNESS	W/Ref. 4		1
4	6718750	MOUNT			1
5	30H000027B	CLIP			6
6	84G003112B	BOLT			8
7	6674802	CONNECTOR	See Illustration ELECTRICAL CONNECTOR KIT/ P16385 7-pin		1
7	6669549	SOCKET	small		4
7	6677136	SOCKET	large - 12 ga.		3
8	6675026	CAP			1
9	6674799	ADAPTER	heat shrink		1
10	6901871	INSTRUCTIONS			1

ELECTRICAL CONTROLS KIT
(14 Pin Attachments)

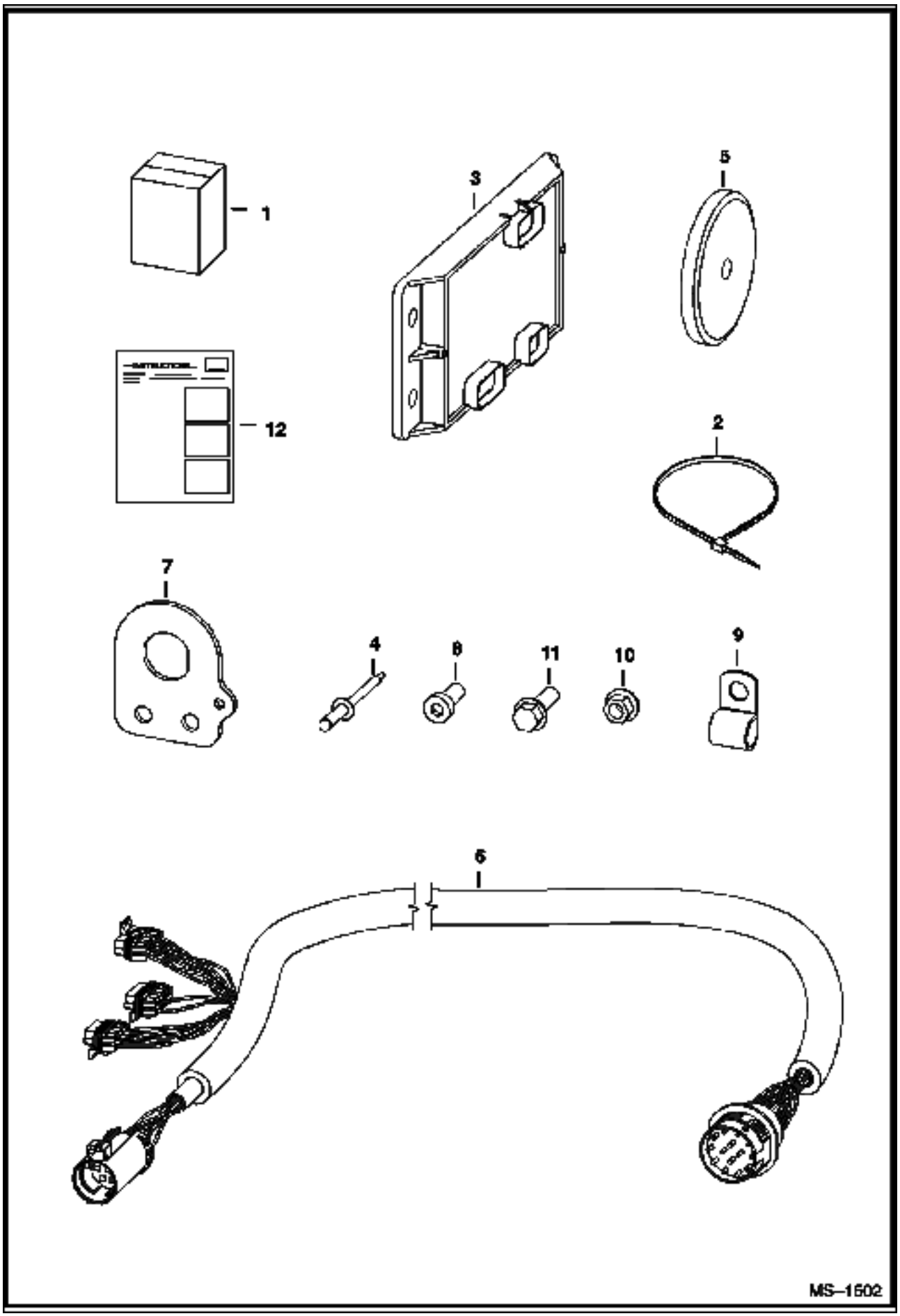

ELECTRICAL CONTROLS KIT (Cont'd)
(14 Pin Attachments)

Ref No	Part Number	Description	Remarks	Serial Number	Qty
1	6733136	KIT			1
2	6624289	STA STRAP			4
3	6678675	CONTROLLER			1
4	6704892	RIVET			1
5	6719448	MAGNET			2
6	6732730	HARNESS			1
7	6733144	MOUNT			1
8	25G000612B	BOLT			2
9	30H000050B	CLAMP			6
10	83D000006B	NUT			2
11	84G003112B	BOLT			8
12	6901872	INSTRUCTIONS			1

EXPORT ACCESSORIES
(Road Kit)

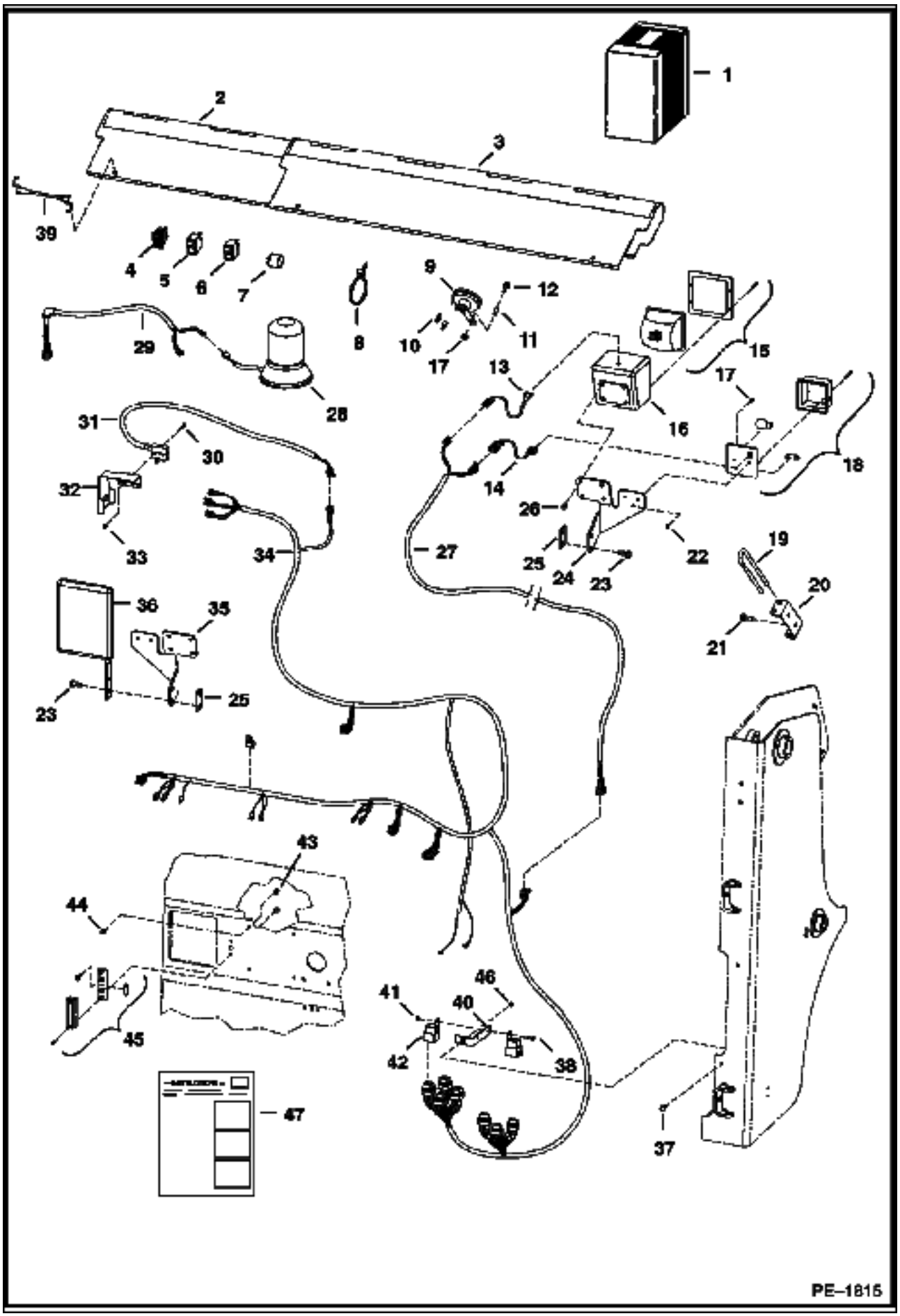

EXPORT ACCESSORIES (Cont'd)
(Road Kit)

Ref No	Part Number	Description	Remarks	Serial Number	Qty
1		KIT	SALES - Order 6731237 from SALES		1
2	6713841	SHIELD	bucket		1
3	6714820	SHIELD	bucket		1
3	6713840	DECAL			1
4	6676872	TURN SIGNAL			1
5	6668815	SWITCH	hazard		1
6	6668816	SWITCH	beacon		1
7	6557904	FLASHER			1
8	6624289	STA STRAP			26
9	6671106	HORN			1
10	6675064	TERMINAL			2
11	6732206	SPACER			1
12	35C000536B	BOLT			1
13	6713994	HARNESS	adapter - headlight		2
14	6713993	HARNESS	adapter - light		2
15	6665728	LIGHT	front		2
16	6707804	HOUSING			2
17	85G000808B	BOLT			4
18	6665727	LIGHT	front turn		2
19	6731222	PIN	Bob-tach		1
20	6731973	HOLDER	pin		1
21	84G003712B	BOLT			2
22	12D000008B	NUT			4
23	84G003716B	BOLT			4
24	6713151	MOUNT	light - R.H.		1
25	6735825	SPACER			2
26	17C000508B	BOLT			8
27	6731239	HARNESS	boom light		2
28	6675523	BEACON	light		1
29	6718872	HARNESS	cab exterior		1
30	85G000616B	SCREW			2
31	6661150	SWITCH			1
32	6713736	BRACKETS			1
33	12D000006B	NUT			2
34	6726430	HARNESS	engine/tail - Italian		1
35	6713150	MOUNT	light - L.H.		1
36	6665860	KIT	side mirror		1
37	17C000512B	BOLT			1
38	17C000410B	BOLT			2
39	6731819	STRAP	rubber		3
40	6702650	MOUNT	fuse		1
41	85D000004B	NUT			2
42	6670312	SOLENOID	magnetic		4
43	83D000004B	NUT			4
44	35C000410B	BOLT			4
45	6665729	LIGHT	license plate		1
46	55D000005B	NUT			2
47	6901663	INSTRUCTIONS			1

EUROPEAN ACCESSORIES
(Road Kit) (Selectable Joystick Controls)

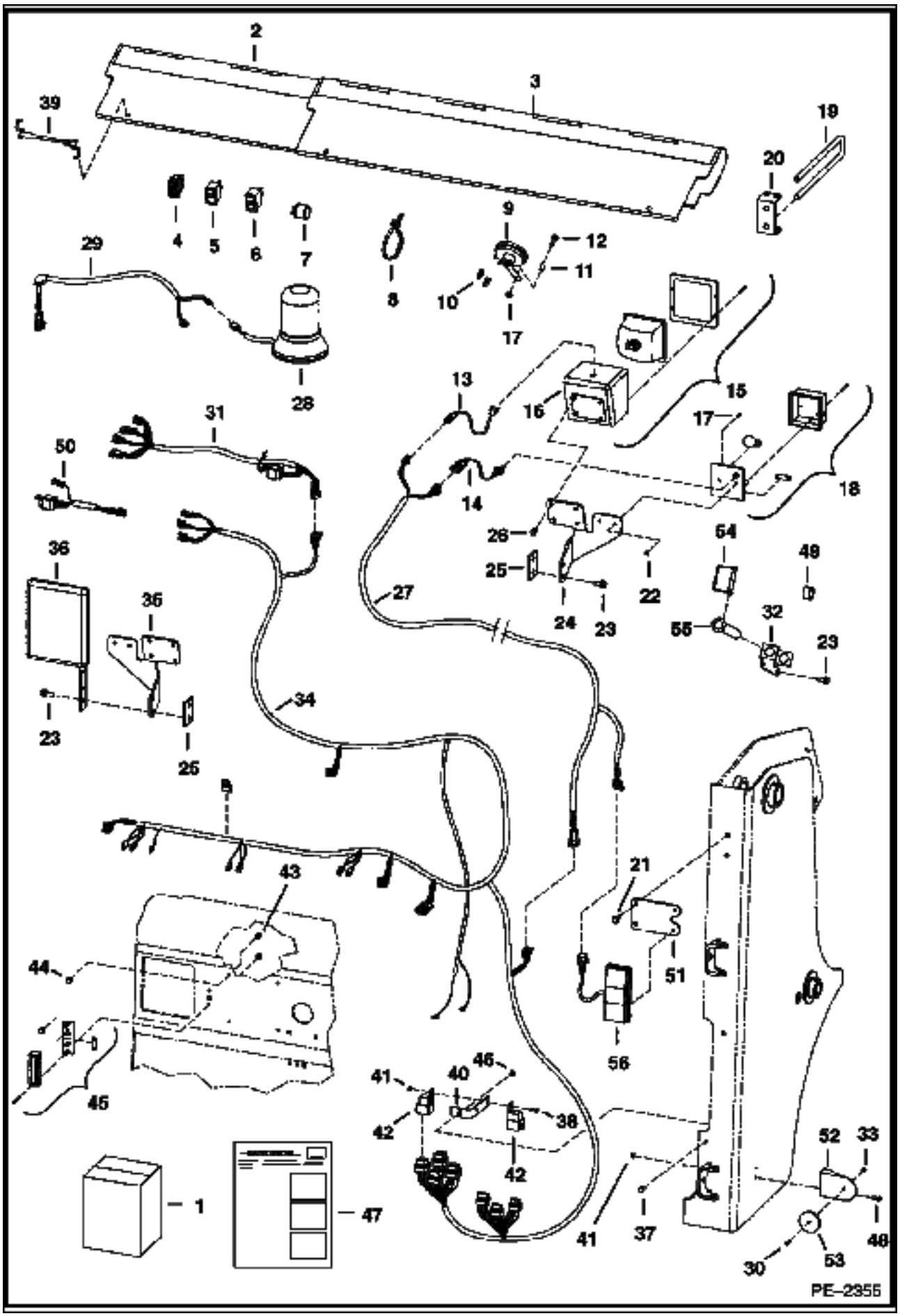

EUROPEAN ACCESSORIES (Cont'd)
(Road Kit) (Selectable Joystick Controls)

Ref No	Part Number	Description	Remarks	Serial Number	Qty
1		KIT	SALES - Order 6732387 from SALES		1
2	6713841	SHIELD	bucket		1
3	6713842	SHIELD	bucket		1
4	6676872	TURN SIGNAL			1
5	6668815	SWITCH	hazard		1
6	6668816	SWITCH	beacon		1
7	6557904	FLASHER			1
8	6624289	STA STRAP			20
9	6671106	HORN			1
10	6675064	TERMINAL			2
11	6732206	SPACER			1
12	35C000536B	BOLT			1
13	6713994	HARNESS	adapter - headlight		2
14	6713993	HARNESS	adapter - light		2
15	6665728	LIGHT	front		2
16	6707804	HOUSING			2
17	85G000808B	BOLT			4
18	6665727	LIGHT	front turn		2
19	6731222	PIN	Bob-tach		1
20	6731973	HOLDER	pin		1
21	84G003712B	BOLT			4
22	12D000008B	NUT			4
23	84G003716B	BOLT			6
24	6713151	MOUNT	light - R.H.		1
25	6735825	SPACER			2
26	17C000508B	BOLT			8
27	6732081	HARNESS	boom light		2
28	6675523	BEACON	light		1
29	6718872	HARNESS	cab exterior		1
30	85G001010B	BOLT			2
31	6732045	HARNESS	AWS stop lights		1
32	6733296	BRACKET	pin holder		1
33	14D000010B	NUT			2
34	6726430	HARNESS	engine/tail - Italian		1
35	6713150	MOUNT	light - L.H.		1
36	6665860	KIT	side mirror		1
37	17C000512B	BOLT			1
38	17C000410B	BOLT			2
39	6731819	STRAP	rubber		3
40	6702650	MOUNT	fuse		1
41	85D000004B	NUT			6
42	6670312	SOLENOID	magnetic		4
43	83D000004B	NUT			4
44	35C000410B	BOLT			4
45	6665729	LIGHT	license plate		1
46	55D000005B	NUT			2
47	6901909	INSTRUCTIONS			1
48	35C000412B	BOLT			4
49	6733270	MOUNT			1
50	6733851	HARNESS	SJC stop lights		1
51	7101104	MOUNT	rear lights		2
52	6670620	MOUNT	reflector		2
53	6670621	LENS	reflector		2
54	6670668	PIN			1

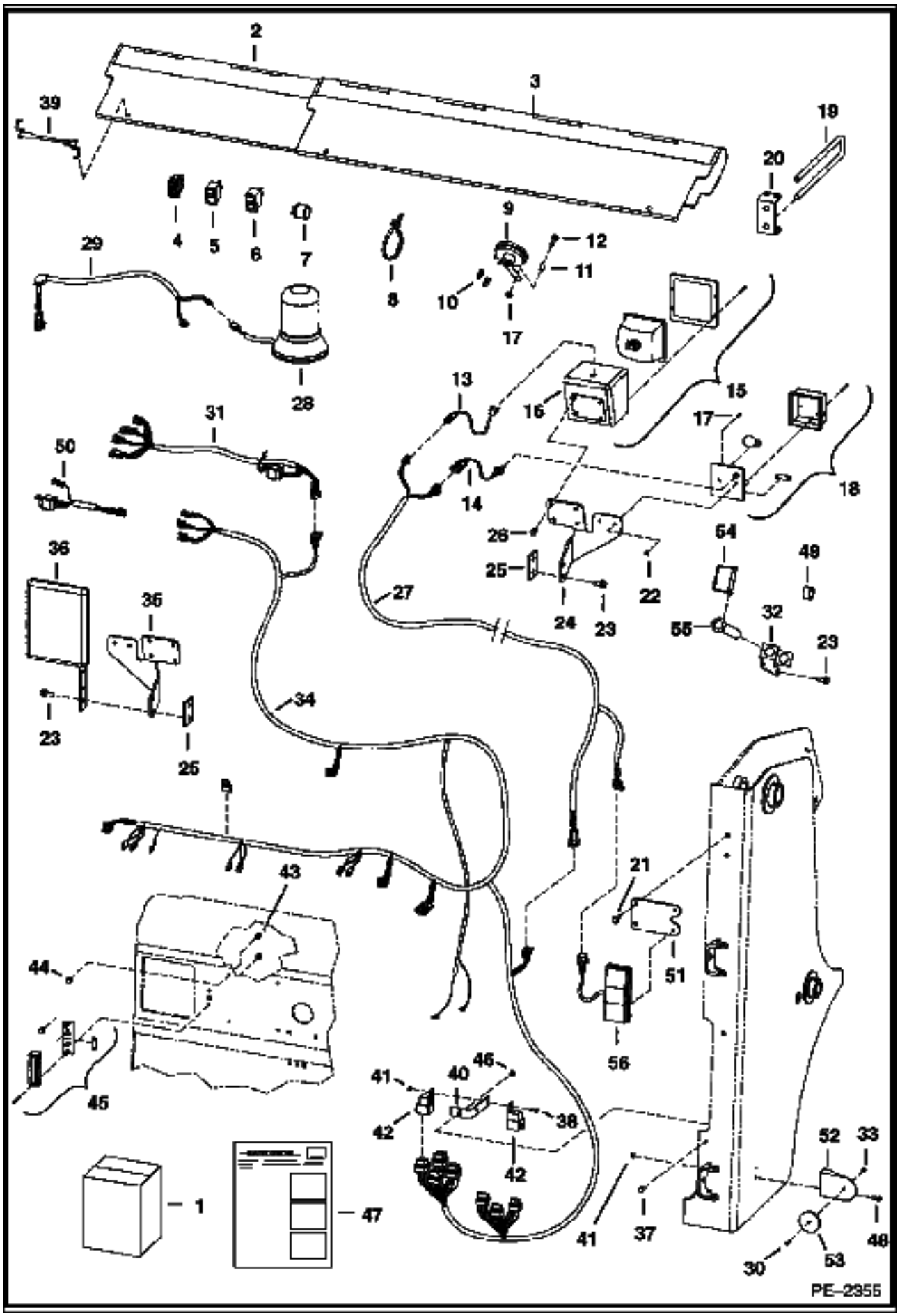
PE-2355

Ref No	Part Number	Description	Remarks	Serial Number	Qty
55	6713990	PIN	B/T lock		1
56	7101384	LIGHT	rear		2
56	6686096	LENS	amber - turn		1
56	6686097	BULB	turn		1
56	6686098	BULB	stop		1
56	6686099	LENS	red - stop		1
56	6686100	SCREW			2

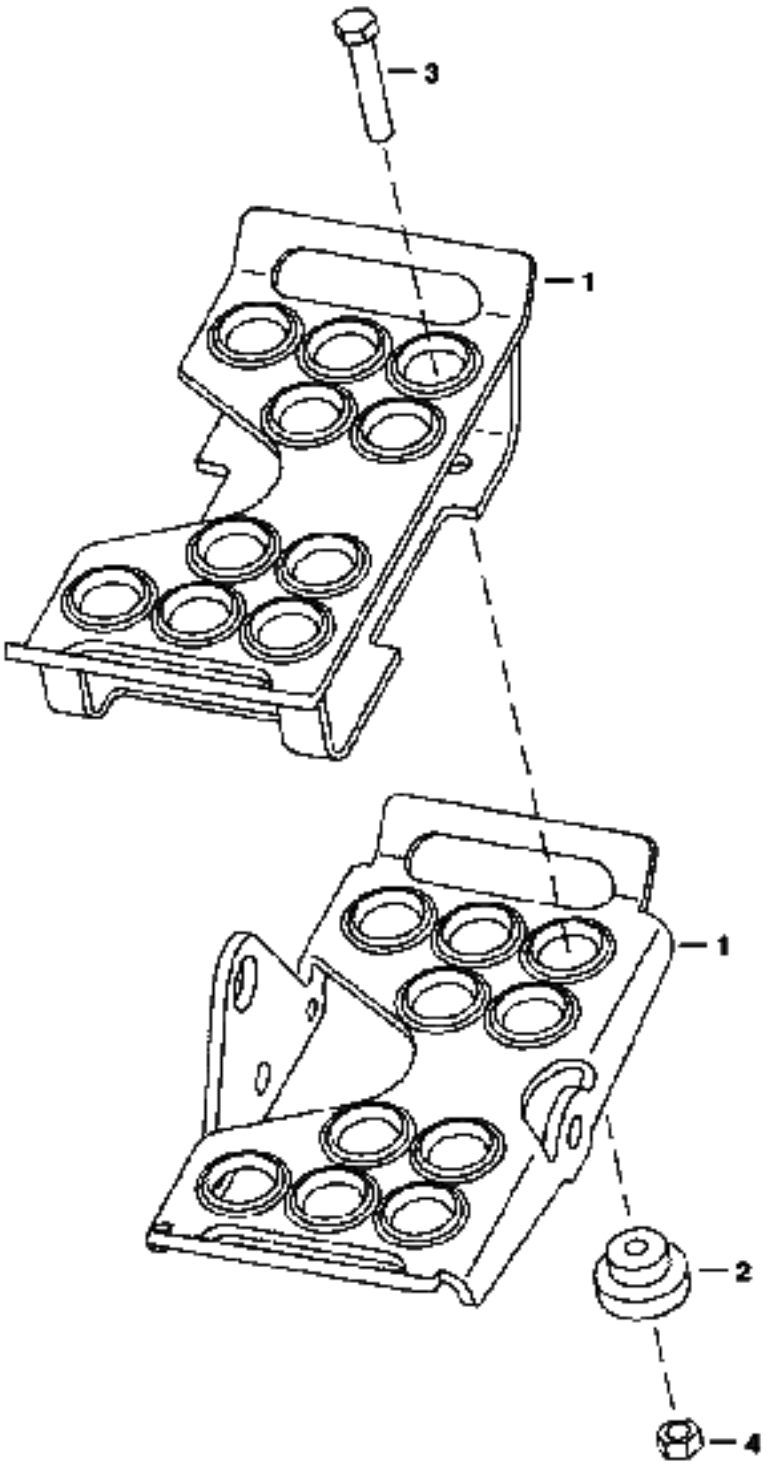
3
1
1
2
4
PE-2455

EUROPEAN ACCESSORIES (Cont'd)
(Pedal Extenders)

Ref No	Part Number	Description	Remarks	Serial Number	Qty
1	6713115	PEDAL	extender		2
2	6713116	BUSHING			8
3	17C000516B	BOLT			8
4	85D000005B	NUT			8

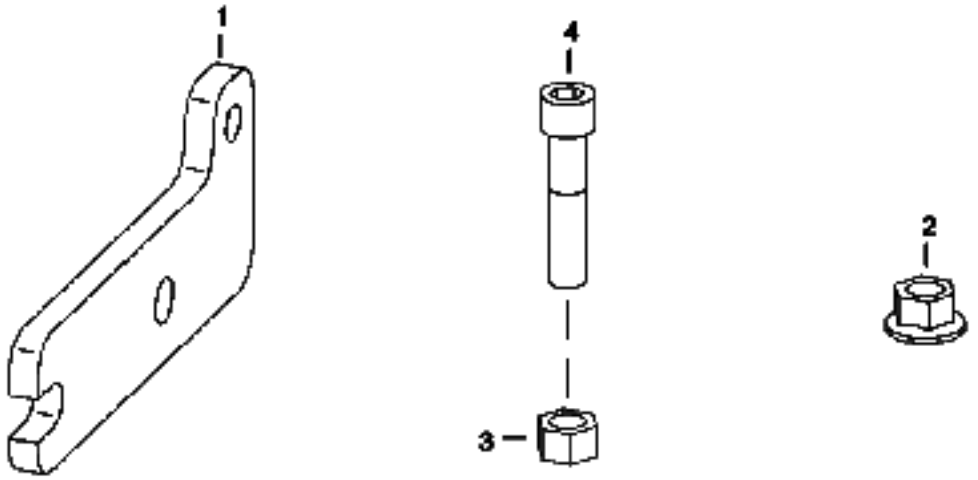

PE–2361

Ref No	Part Number	Description	Remarks	Serial Number	Qty
1	6737528	BRACKET	idle stop		1
2	43DM00008B	NUT			2
3	62D000005B	NUT			1
4	74G000536B	BOLT			1

FIRE EXTINGUISHER

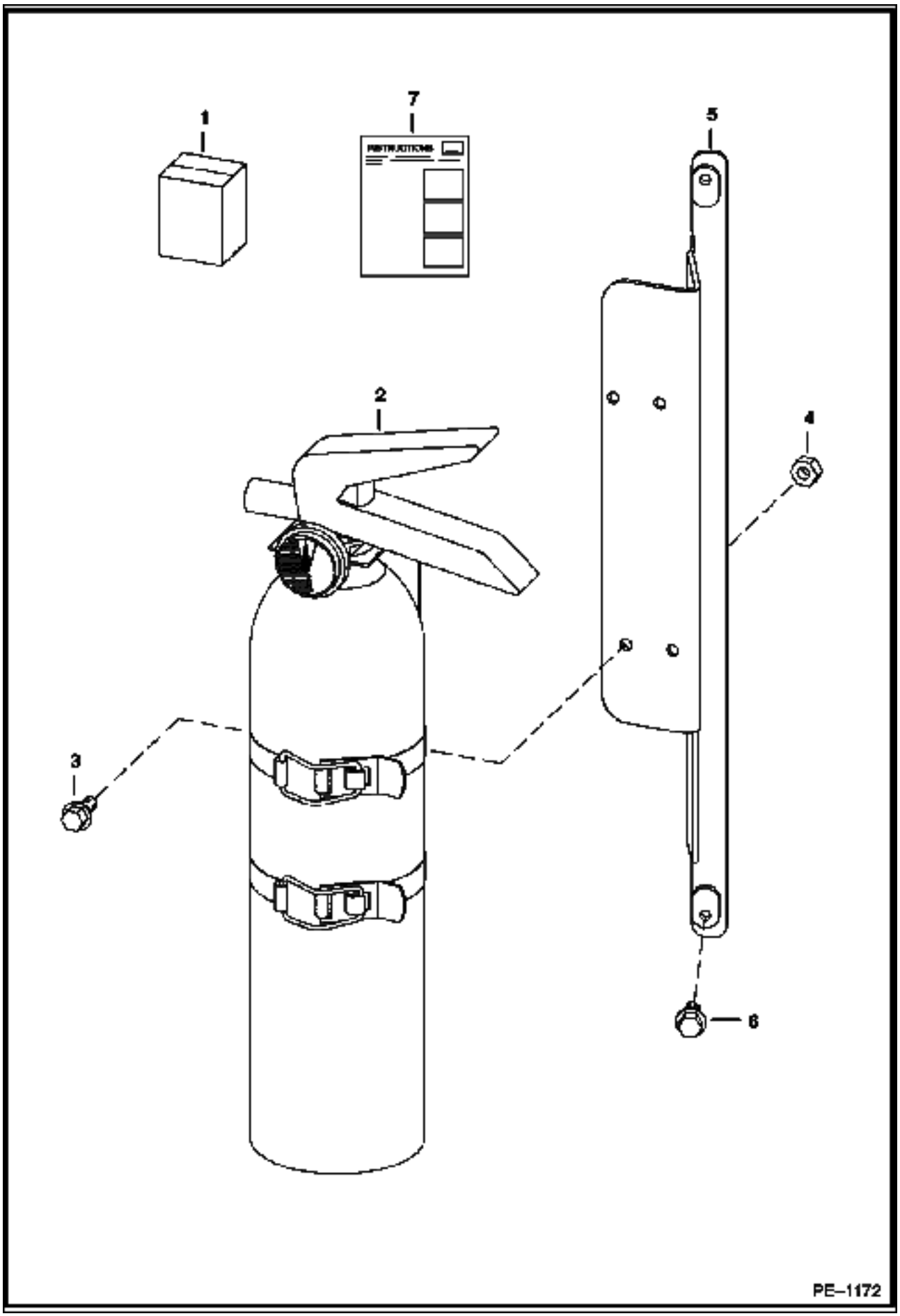

Ref No	Part Number	Description	Remarks	Serial Number	Qty
1	6725898	KIT	fire extinguisher - Ref. 2-7		1
2	6675581	EXTINGUISHER			1
3	45G001006B	BOLT			4
4	12D000010B	NUT			4
5	6725906	BRACKET			1
6	31C000410B	BOLT			2
7	6901025	INSTRUCTIONS			1

FLASHER LIGHTS
(4-Way) (Turn Indicators)

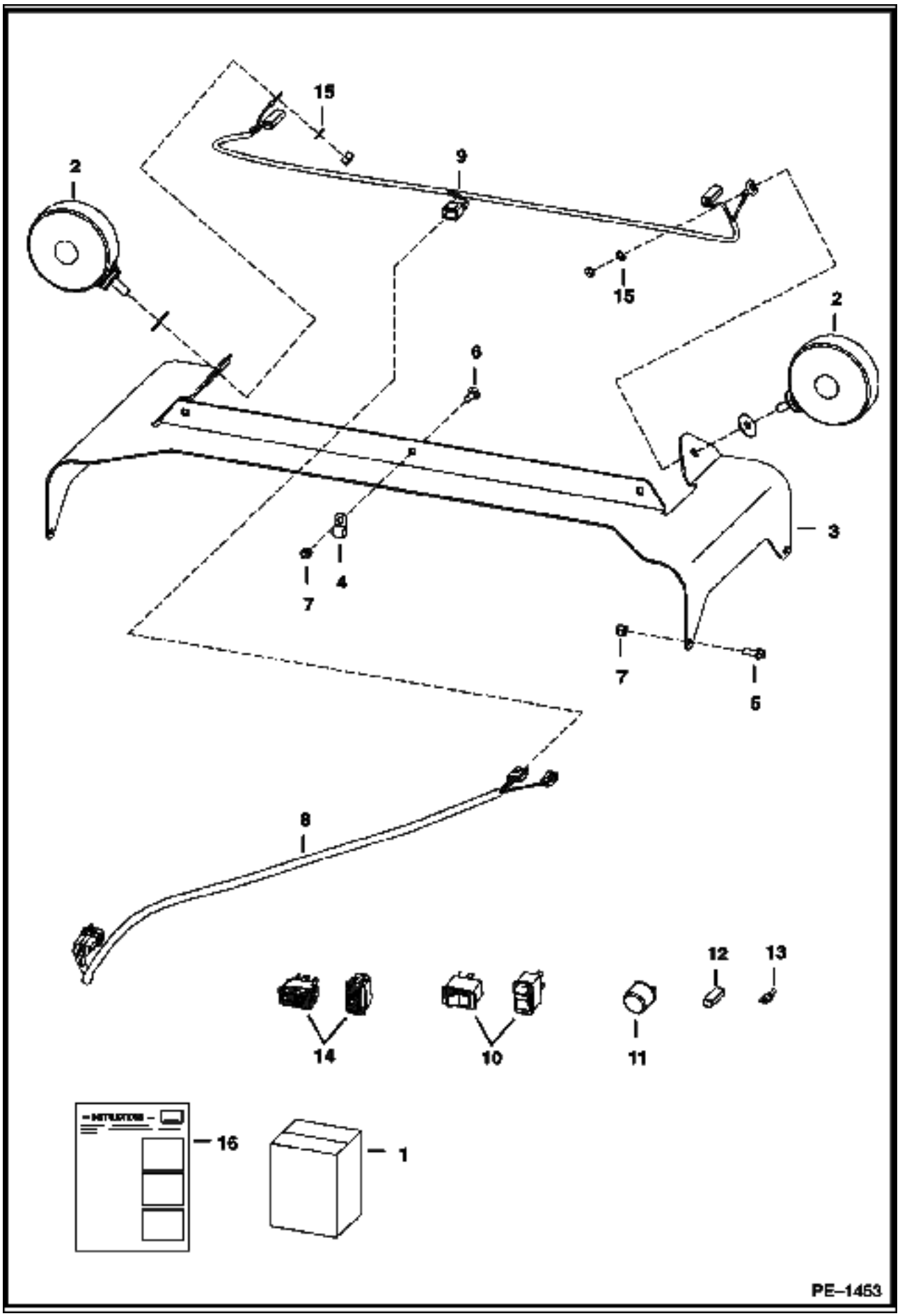

FLASHER LIGHTS (Cont'd)
(4-Way) (Turn Indicators)

Ref No	Part Number	Description	Remarks	Serial Number	Qty
1	6718411	KIT	Ref. 2, 3 & 5-16		1
2	6517516	LIGHT			2
3	6718326	MOUNT			1
4	30H000021B	CLAMP	not in kit		3
5	35C000412B	BOLT			4
6	37C000412B	BOLT			3
7	59D000004B	NUT			7
8	6718872	HARNESS	ext. cab		1
9	6718873	HARNESS	4-way flasher		1
10	6665316	SWITCH	horizontal		1
10	6668815	SWITCH	vertical		1
11	6557904	FLASHER			1
12	614142B	SLEEVE			1
13	6515131	TERMINAL			1
14	6675835	TURN SIGNAL	horizontal		1
14	6676872	TURN SIGNAL	vertical		1
15	6E000005B	WASHER	lock		2
16	6900848	INSTRUCTIONS			1

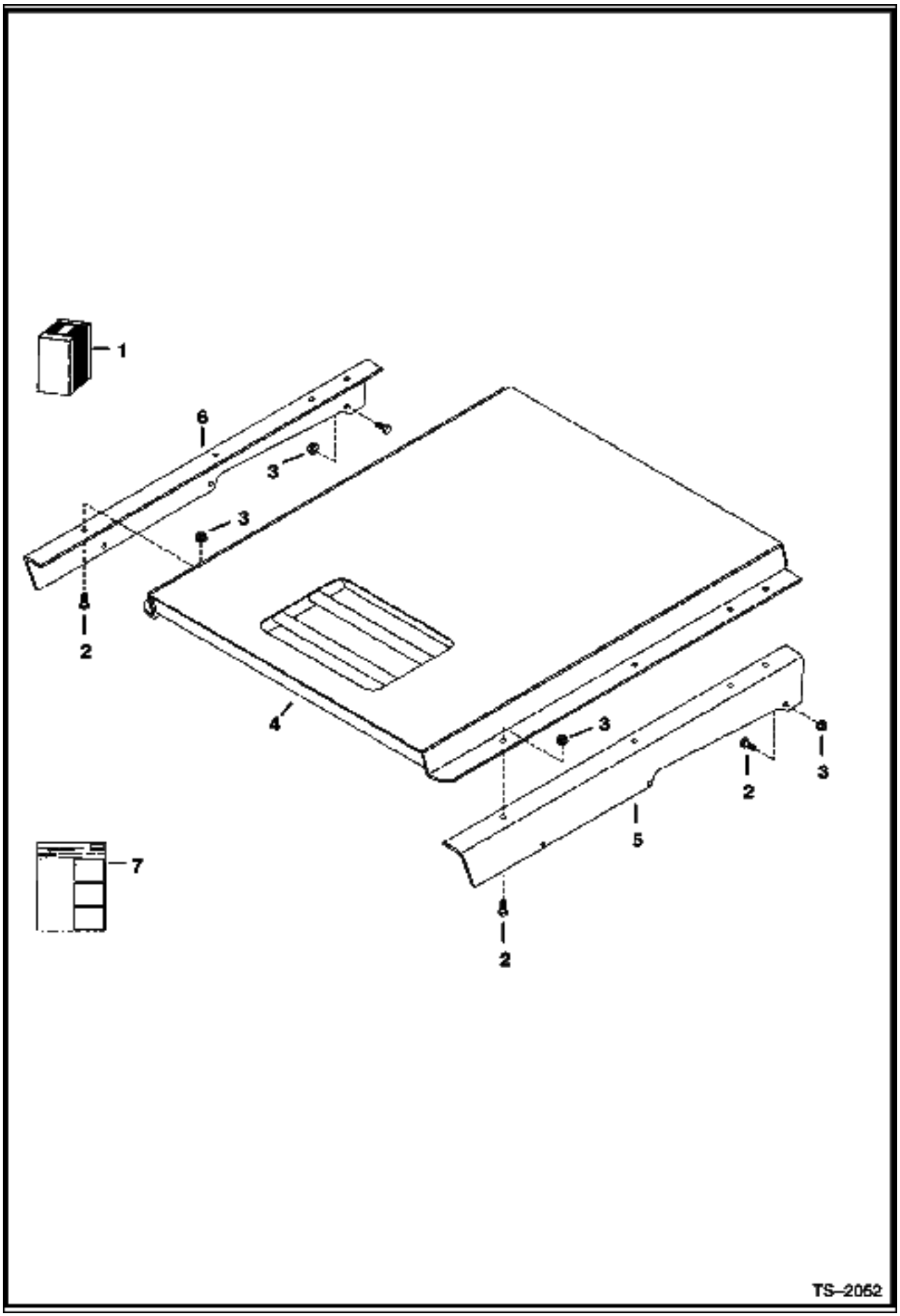
1
6
3
3
2
4
3
2
3
5
7
2
TS–2052

Ref No	Part Number	Description	Remarks	Serial Number	Qty
1	6718924	KIT	Ref. 2-7		1
2	17C000616B	BOLT			14
3	83D000006B	NUT			14
4	6702402	SHIELD			1
5	6718833	BRACKET	L.H.		1
6	6718834	BRACKET	R.H.		1
7	6720592	INSTRUCTIONS			1

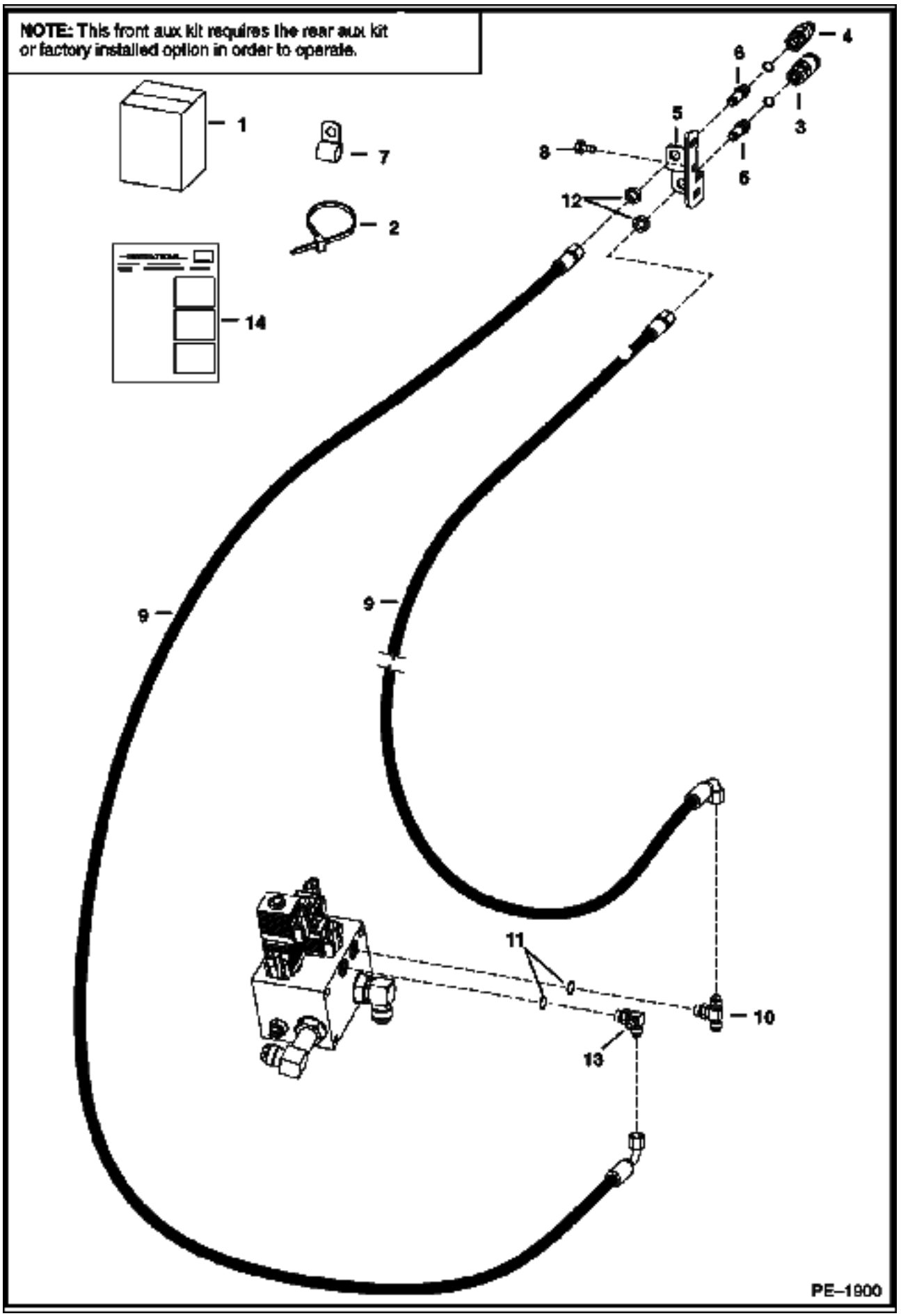
NOTE: This front aux kit requires the rear aux kit or factory installed option in order to operate.
1
7
2
14
4
6
3
5
8
6
12
9
9
11
10
13
PE–1900

FRONT AUXILIARY (Cont'd)
(R.H. Kit)

Ref No	Part Number	Description	Remarks	Serial Number	Qty
1	6736655	KIT	this front aux kit requires the rear aux kit (6735919) or factory installed option in order to operate		1
2	6624289	STA STRAP			10
3	6667803	COUPLER	female		1
4	6667804	COUPLER	male		1
4	6669657	SEAL KIT			x
5	6711674	MOUNT	quick coupler		1
6	6716089	CONNECTOR	bulkhead		2
7	31H000042B	CLIP			4
8	84G003716B	BOLT			6
9	6736664	HOSE			2
10	19KB00606B	TEE	W/Ref. 11		2
11	79K000006B	O-RING			x
12	86F000005B	NUT			2
13	6725182	TEE	W/Ref. 11		1
14	6901916	INSTRUCTIONS			1

GAS SPRING KIT

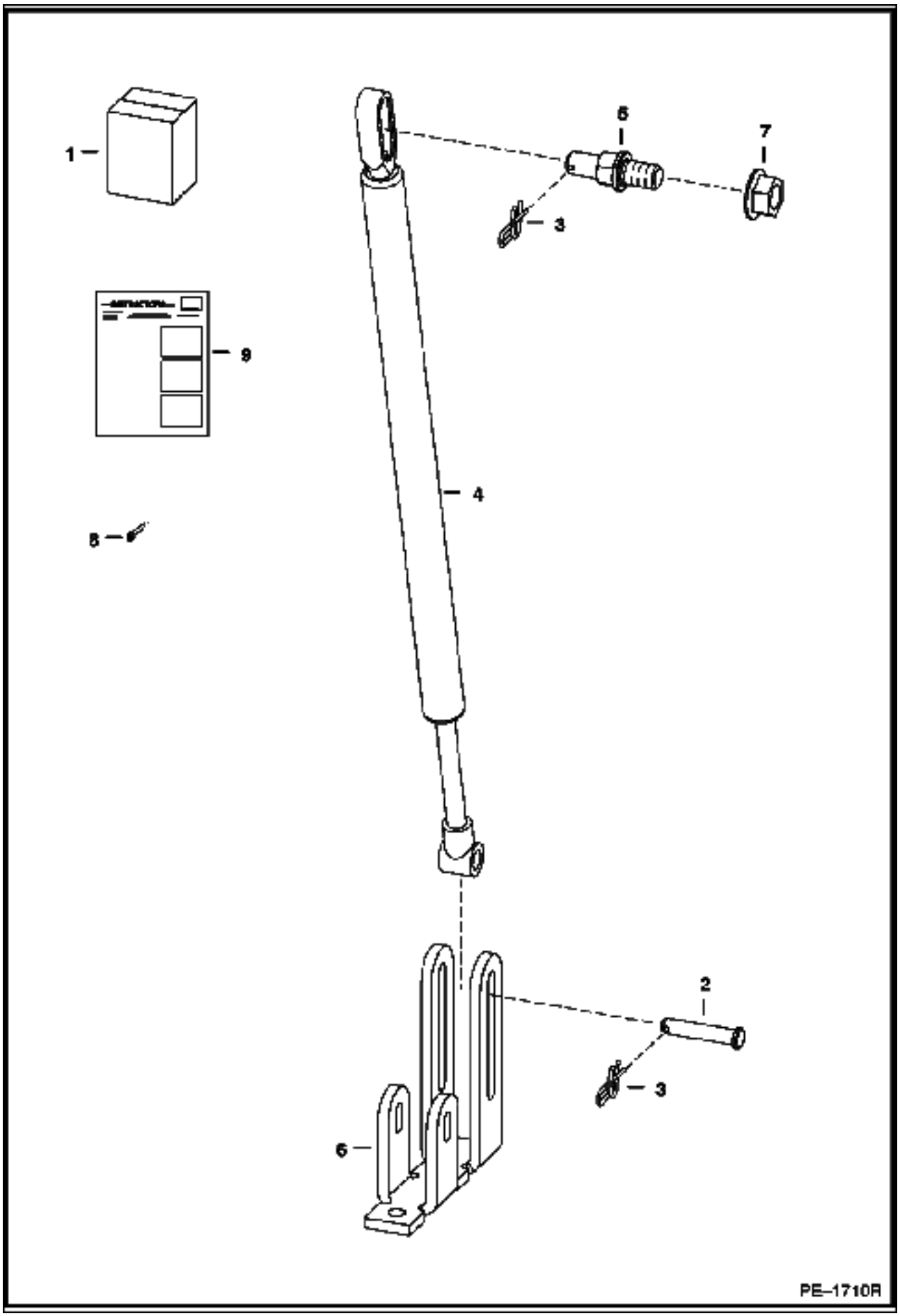

GAS SPRING KIT (Cont'd)

Ref No	Part Number	Description	Remarks	Serial Number	Qty
1	6732928	KIT			1
2	6567743	PIN			1
3	6631418	PIN			2
4	6678292	GAS SPRING			1
5	6719064	MOUNT			1
6	6729141	MOUNT			1
7	97D000008B	NUT			1
8	21G000804B	BOLT			1
9	6901816	INSTRUCTIONS			1

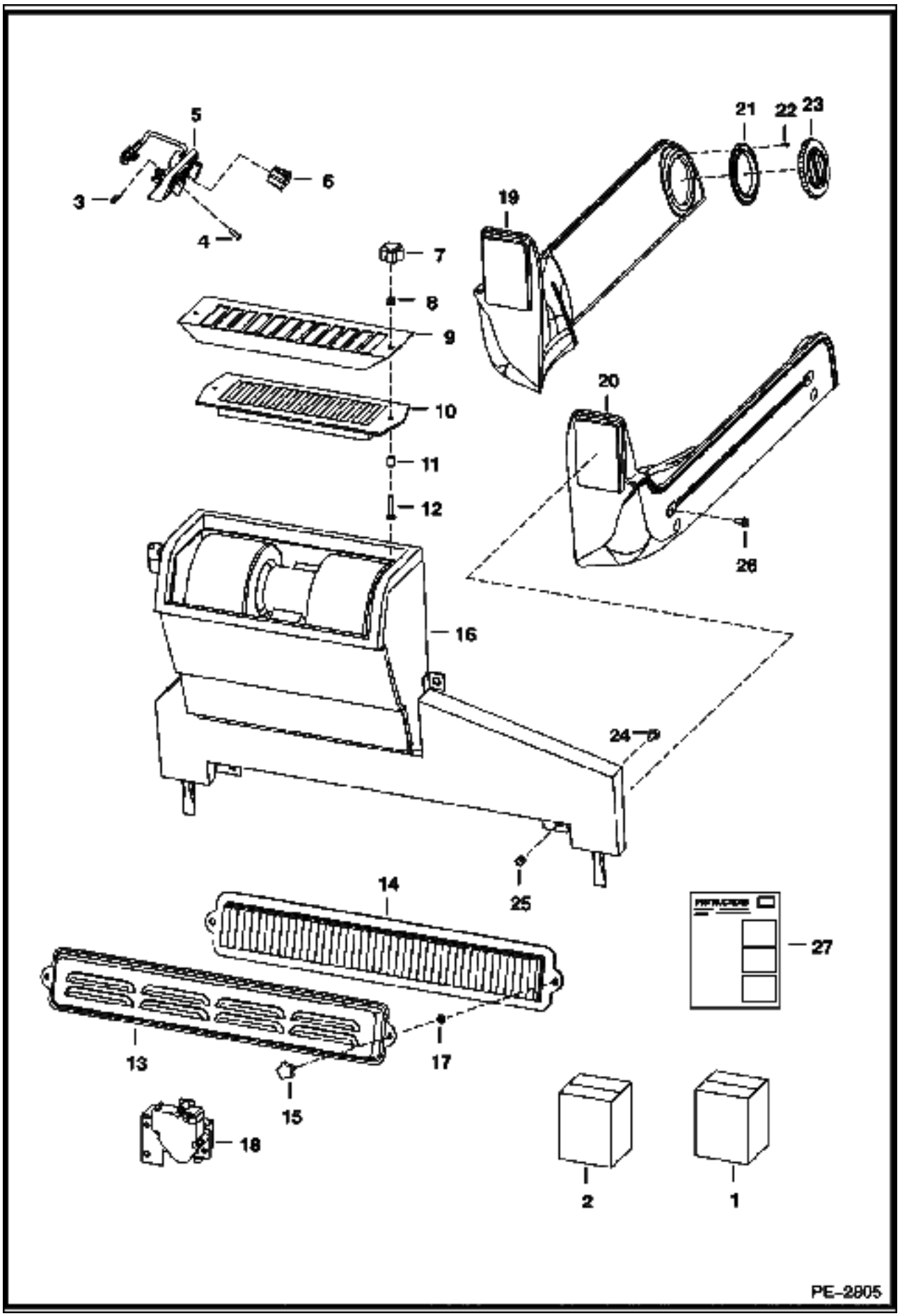
5
6
3
4
7
8
9
10
11
12
16
21
22
23
19
20
26
24
25
14
13
17
15
18
27
2
1
PE-2805

Ref No	Part Number	Description	Remarks	Serial Number	Qty
1	7116899	KIT			1
2	6725513	PACKAGE	Decal		1
3	6669091	CLIP	retainer		3
4	6669224	BOLT			3
5	6674228	PANEL	control		1
5	6640699	CONNECTOR			1
5	6718579	DECAL			1
5	6718887	PANEL			1
5	6675176	SWITCH	blower		1
5	6675177	KNOB			1
5	6675846	POTENTIOMETER			1
6	6675181	PLUG	switch hole - AC		1
7	6681614	KNOB			2
8	83D000004B	NUT			2
9	6718175	SCREEN	filter		1
10	6678207	FILTER	recirculation		1
11	6718837	SPACER			2
12	37C000424B	BOLT			2
13	6727847	COVER			1
14	6677983	FILTER			1
15	6726386	KNOB			2
16	6688543	HEATER	See Illustration HEATER/ PE1143		1
17	6676516	NUT	Push		2
18	7101928	VALVE	barbed connectors		1
18	6641174	CONNECTOR	male		1
18	6689635	BRACKET	actuator mounting		1
18	6675172	BRACKET	valve mounting		1
18	6689636	ACTUATOR			1
18	6689637	VALVE			1
19	6735246	DUCT	L.H.		1
20	6735245	DUCT	R.H.		1
21	6675179	FLANGE	round		4
22	57G000608B	SCREW			16
23	6674231	VENT	round		4
24	37C000512B	BOLT			4
25	59D000005B	NUT			4
26	35C000410B	BOLT			4
27	6904255	INSTRUCTIONS			1

DRAWING NOT AVAILABLE AT TIME OF PRINTING

PE-2908

HEATER & AC (Cont'd)
(Heater Plumbing Kit)

Ref No	Part Number	Description	Remarks	Serial Number	Qty
1	7116902	KIT	Ref. 2-9 & 11		1
2		HOSE	NAP - 72 in. (1828,8 mm) long - order Ref. 8 - Was 6733432 [A]		1
3		HOSE	NAP - 84 in. (2133,6 mm) long - order Ref.8 - Was 6732817 [A]		1
4	5HM00020B	CLAMP			7
5	6624289	STA STRAP			8
6	7113208	HOSE			1
7	7113209	HOSE			1
8	6565977	HOSE	bulk - sold per foot		x
9	6678666	TREE MOUNT	tree		2
10	6731084	ADAPTER			1
11		VALVE	See Illustration HEATER & A/C/ PE2805 heater - not in kit		1
12	6732023	CONNECTOR			2
13	6731085	ELBOW			1
14	6904255	INSTRUCTIONS	Not in Kit - part of heater kit - Was 6903305 [B]		1

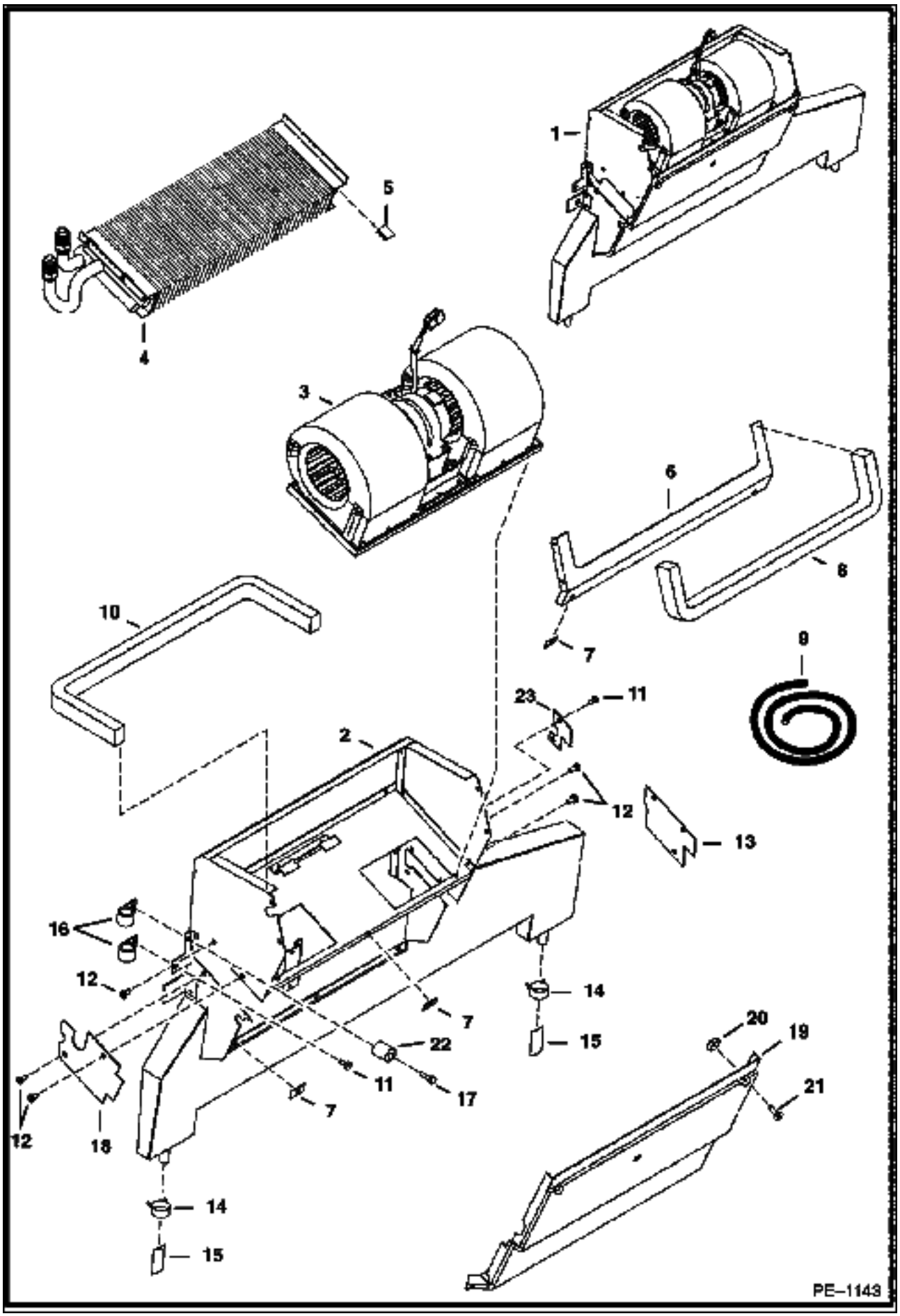
1
2
3
4
5
6
7
8
9
10
11
12
13
14
15
16
17
18
19
20
21
22
23
PE–1143

Ref No	Part Number	Description	Remarks	Serial Number	Qty
1	6688543	HEATER	Ref. 2-23		1
2	6677108	HOUSING			1
3	6675497	BLOWER	See Illustration HEATER & A/C/ B16401 assy		1
4		COIL	See Illustration HEATER & A/C/ PE1228 NAP		1
5	6676539	CLIP			3
6	6678152	SEAL			1
7	6677115	RECEPTACLE			6
8		SEAL	NAP - 22.6"(575mm) long - Order Ref. 9		1
9	6677111	SEAL	bulk - Sold Per Foot		x
10		SEAL	NAP - 25"(635mm) long - Order Ref. 9		1
11	6677119	SCREW	sheetmetal		7
12	6677118	SCREW	w/washer		4
13	6677120	COVER			1
14	6675510	CLAMP	drain hose		2
15	6675511	DRAIN VALVE			2
16	6675512	CLAMP	hose		2
17	6676653	SCREW			1
18	6677504	COVER			1
19	6678151	COVER			1
20	6677116	RETAINER			6
21	6677117	SCREW	captive		6
22	6676606	SPACER			1
23	6677105	COVER			1

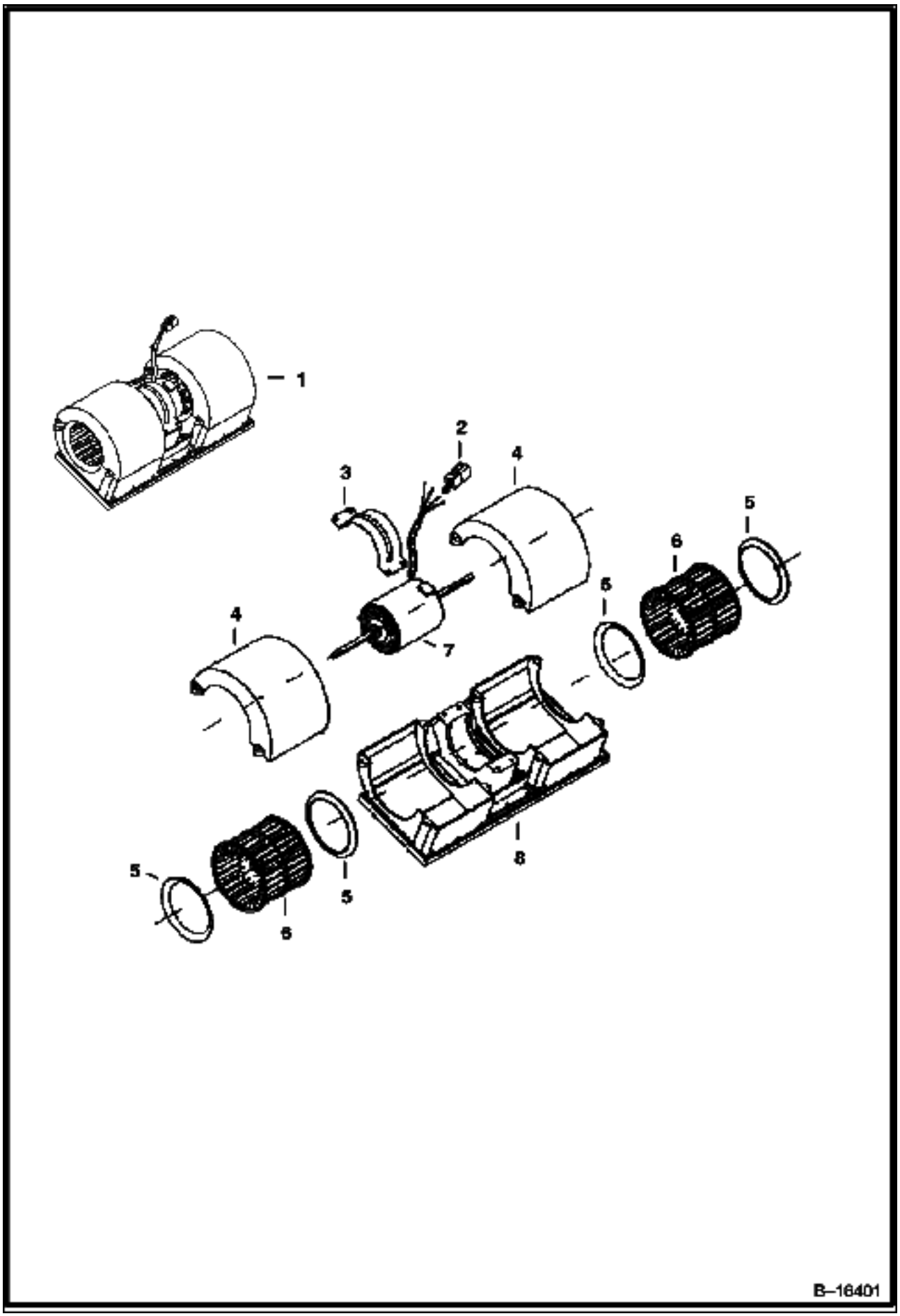
1
2
3
4
4
5
6
5
6
7
5
6
8
B–16401

HEATER & A/C (Cont'd)
(Blower Assembly)

Ref No	Part Number	Description	Remarks	Serial Number	Qty
1	6675497	BLOWER	Ref. 2-8		1
2	6662246	CONNECTOR	6-pin		1
2	6662252	LOCK	6-pin		1
2	6662257	PIN			4
2	6665370	PLUG			2
3	6675506	MOUNT			1
4	6675507	COVER			2
5	6675504	RING			4
6	6675505	BLOWER WHEEL			2
6	6676618	CLIP			2
7	6675509	MOTOR	W/Ref. 2		1
8	6675503	HOUSING			1

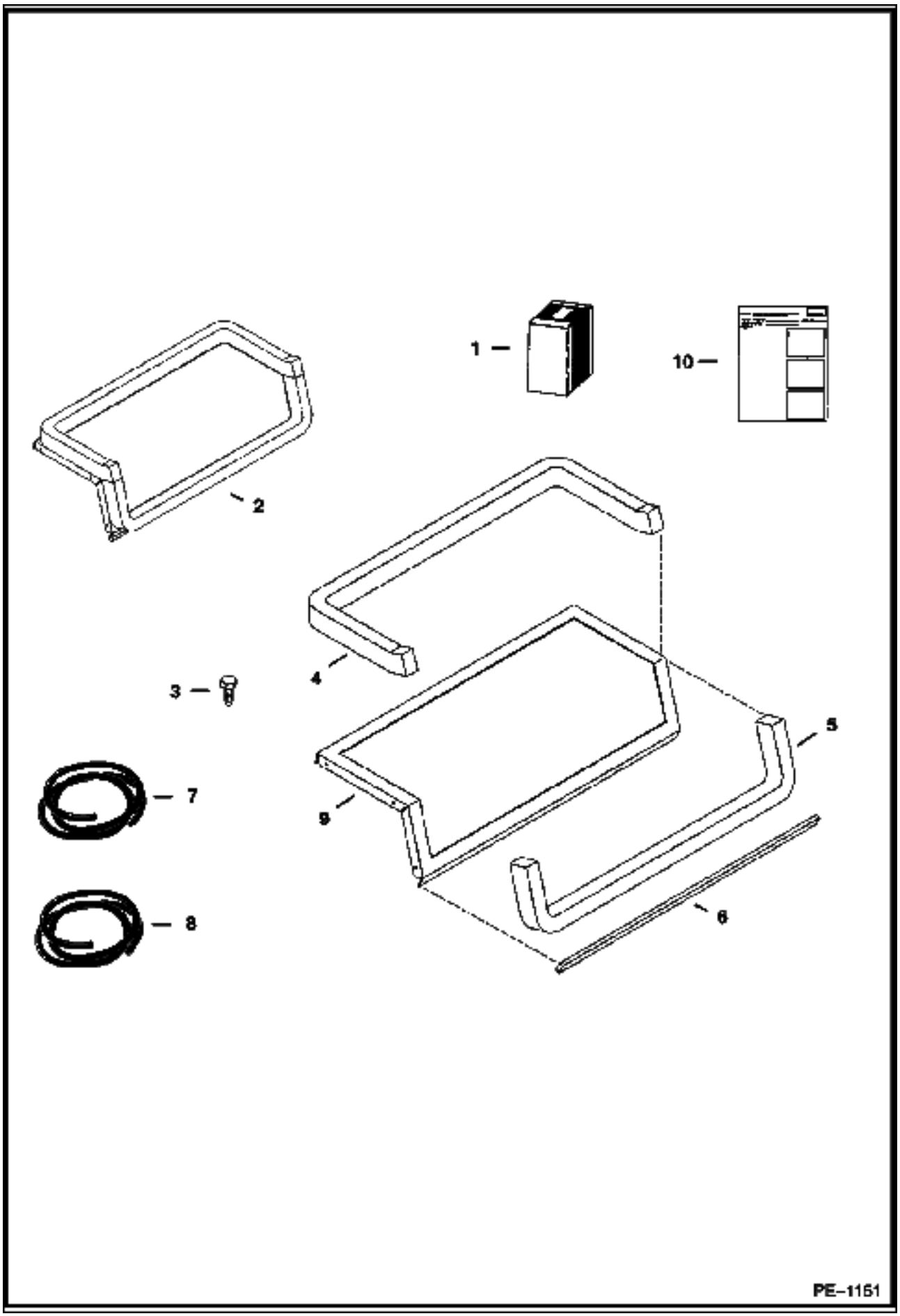
1
10
2
4
3
5
7
9
8
6
PE-1161

HEATER & A/C (Cont'd)
(Blower Seal Kit)

Ref No	Part Number	Description	Remarks	Serial Number	Qty
1	6728567	KIT	blower seal - W/Ref. 2, 3 & 10		1
2		FLANGE SEAL	NSS - assy - Ref. 4, 5, 6 & 9 - Order Ref. 1		1
3	6726621	SCREW			7
4		SEAL	NAP - 27" (686mm) long - Order Ref. 8		1
5		SEAL	NAP - 21" (534mm) long - Order Ref. 8		1
6		SEAL	NAP - 15" (384mm) long - Order Ref. 7		1
7	6675611	SEAL	bulk - Sold Per Foot		x
8	6677111	SEAL	bulk - Sold Per Foot		x
9		FLANGE	NSS - Order Ref. 1		1
10	6901213	INSTRUCTIONS			1

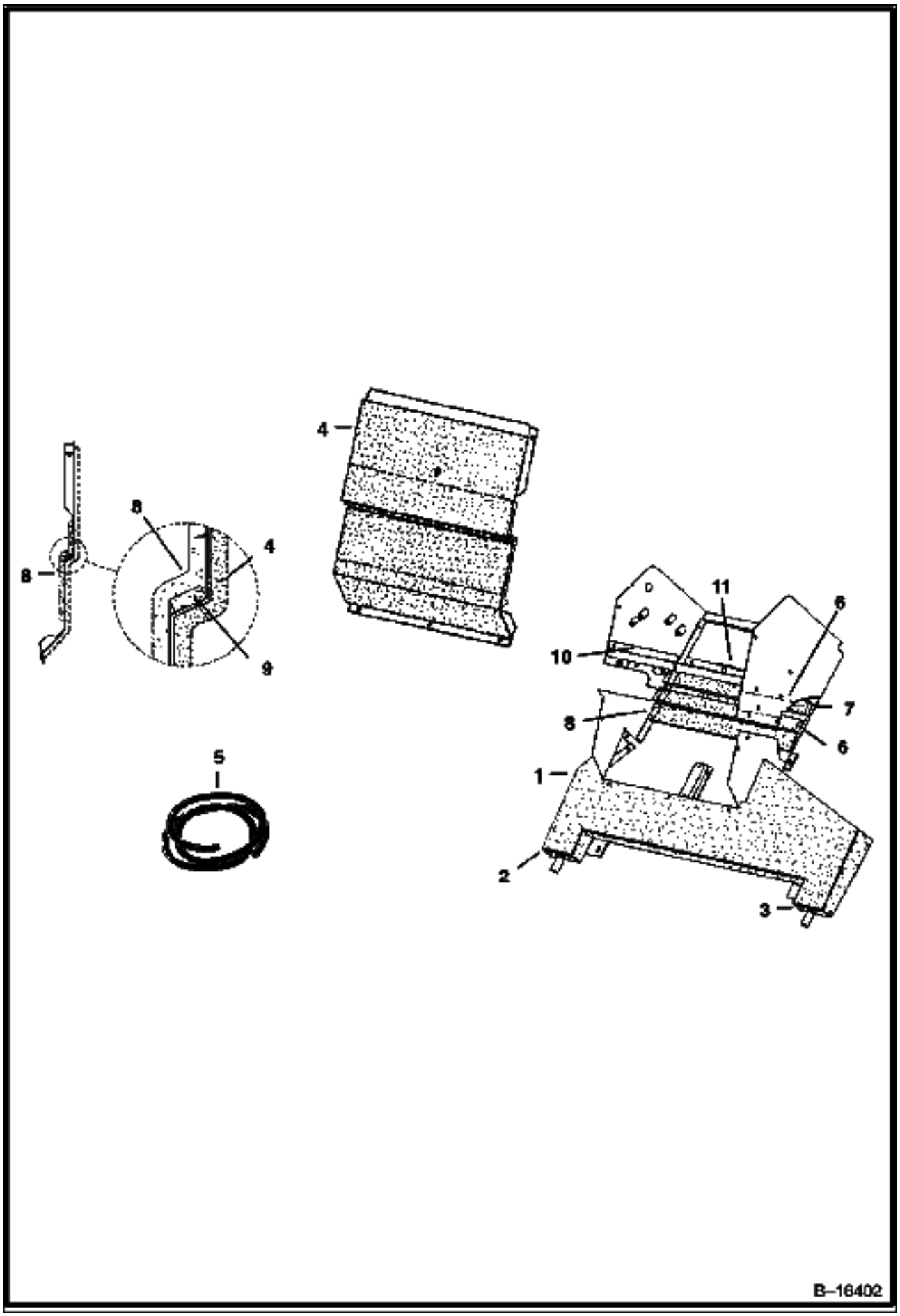
4
8
8
4
9
5
11
6
10
7
8
6
1
2
3
B–16402

HEATER & A/C (Cont'd)
(Insulation)

Ref No	Part Number	Description	Remarks	Serial Number	Qty
1	6675607	INSULATION			1
2	6675608	INSULATION			1
3	6675609	INSULATION			1
4	6675610	INSULATION			1
5	6675611	SEAL	bulk - Sold Per Foot		x
6	6675612	INSULATION			2
7	6675613	INSULATION			1
8	6675614	INSULATION			2
9		SEAL	NAP - 15" (381mm) long - Order Ref. 5		1
10		SEAL	NAP - 5.5" (140mm) long - Order Ref. 5		1
11		SEAL	NAP - 4" (102mm) long - Order Ref. 5		1

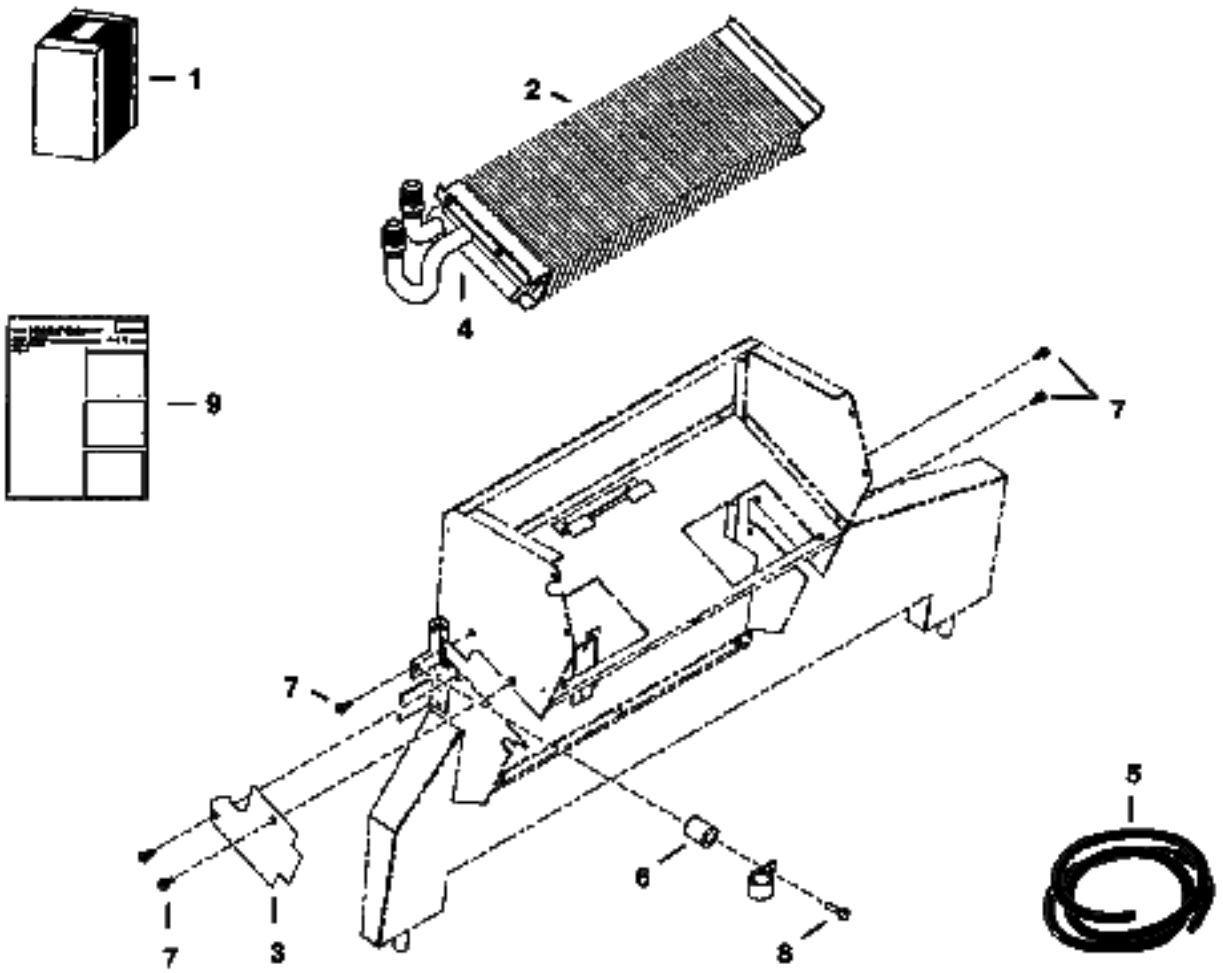
1
2
4
9
7
7
5
6
7
3
8
PE–1228

HEATER & A/C (Cont'd)
(Heater Coil Kit)

Ref No	Part Number	Description	Remarks	Serial Number	Qty
1	6727786	KIT	heater coil - W/Ref. 2-9		1
2		HEATER COIL	NSS- Order Ref. 1		1
3	6677504	COVER	.279" (7,1 mm) thick		1
4		INSULATION	NAP - 6" (152mm) long - Order Ref. 5		1
5	6676538	INSULATION	bulk - Sold Per Foot		x
6	6676606	SPACER			1
7	6726621	SCREW			2
8	6676653	SCREW			1
9	6901120	INSTRUCTIONS			1

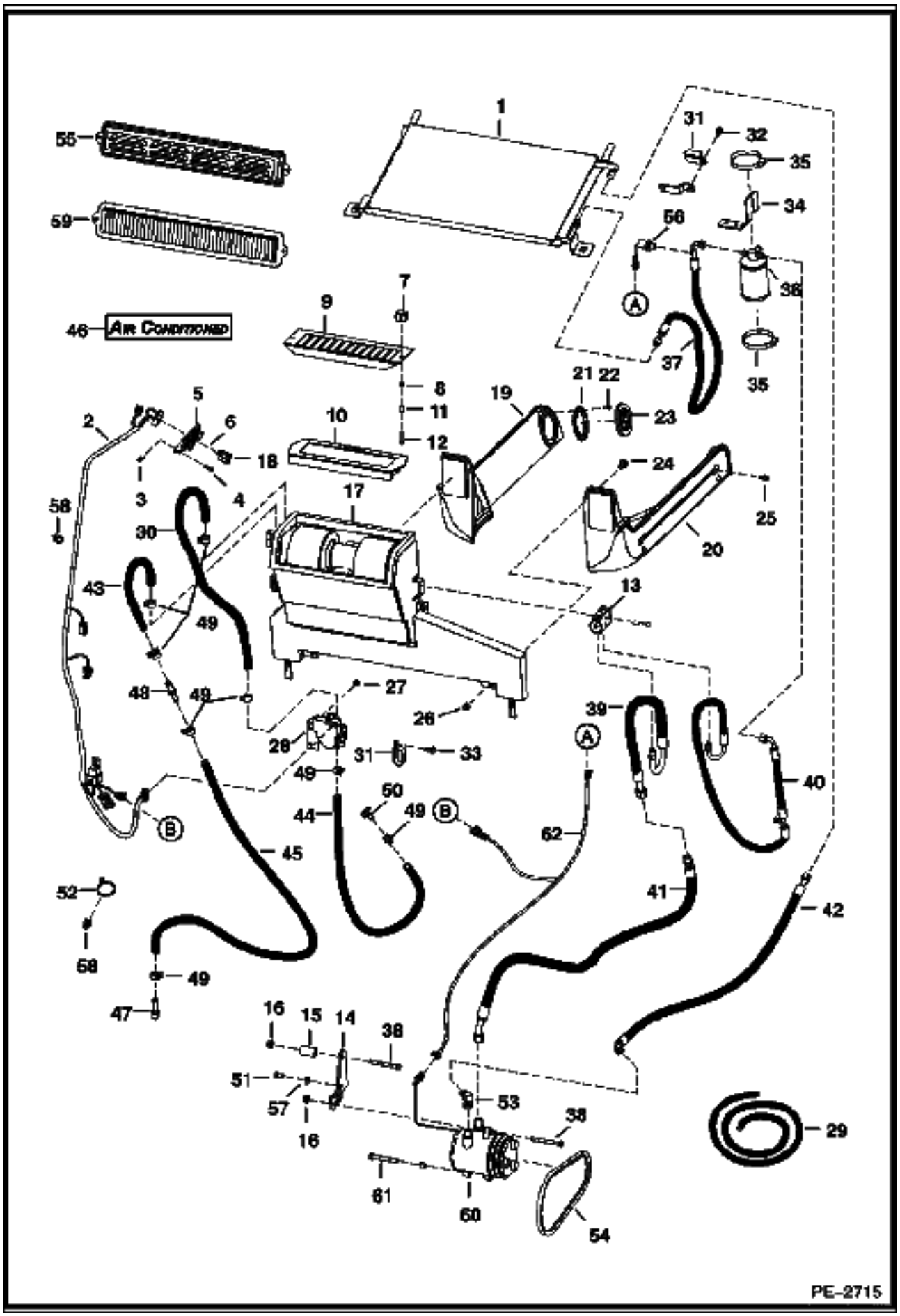
AIR CONDITIONED
PE-2715

Ref No	Part Number	Description	Remarks	Serial Number	Qty
1	6674234	CONDENSER	A/C		1
2	6725933	HARNESS	hvac		1
3	6669091	CLIP	retainer		3
4	6669224	BOLT			3
5	6674228	PANEL	control		1
5	6640699	CONNECTOR			1
5	6718579	DECAL			1
5	6718887	PANEL	A/C		1
5	6675176	SWITCH	blower		1
5	6675177	KNOB			1
5	6675846	POTENTIOMETER			1
6	6675181	PLUG	switch hole		1
7	6681614	KNOB			2
8	59D000004B	NUT			2
9	6718175	SCREEN	filter		1
10	6678207	FILTER	recirculation		1
11	6718837	SPACER			2
12	37C000424B	BOLT			2
13	6727326	MOUNT			1
14	6730265	MOUNT	compressor		1
15	6730266	SPACER			1
16	83D000006B	NUT			2
17	6688542	HVAC ASSY			1
18	6719176	SWITCH			1
19	6735246	DUCT	L.H.		1
20	6735245	DUCT	R.H.		1
21	6675179	FLANGE			4
22	57G000608B	SCREW			16
23	6674231	VENT	round		4
24	37C000512B	BOLT			4
25	35C000410B	BOLT			4
26	59D000005B	NUT			4
27	84G003110B	BOLT			2
28	7101928	VALVE			1
28	6641174	CONNECTOR	male		1
28	6675172	BRACKET	valve mounting		1
28	6689635	BRACKET	actuator mounting		1
28	6689636	ACTUATOR			1
28	6689637	VALVE			1
29	6565977	HOSE	bulk - Sold Per Foot		x
30		HOSE	NAP - 16" (406,4mm) long - Order Ref. 29		1
31	31H000046B	CLAMP			2
32	84G003710B	BOLT			2
33	84G003716B	BOLT			1
34	6719459	MOUNT			1
35	44H000048B	CLAMP			2
36	6674235	RECEIVER DRIER			1
37	6675685	HOSE	W/Ref. 69		1
38	17C000656B	BOLT			2
39	6675076	HOSE			1
40	6675075	HOSE			1
40	6677122	CAP			1
41	6684908	HOSE			1
41	6685199	CAP			1

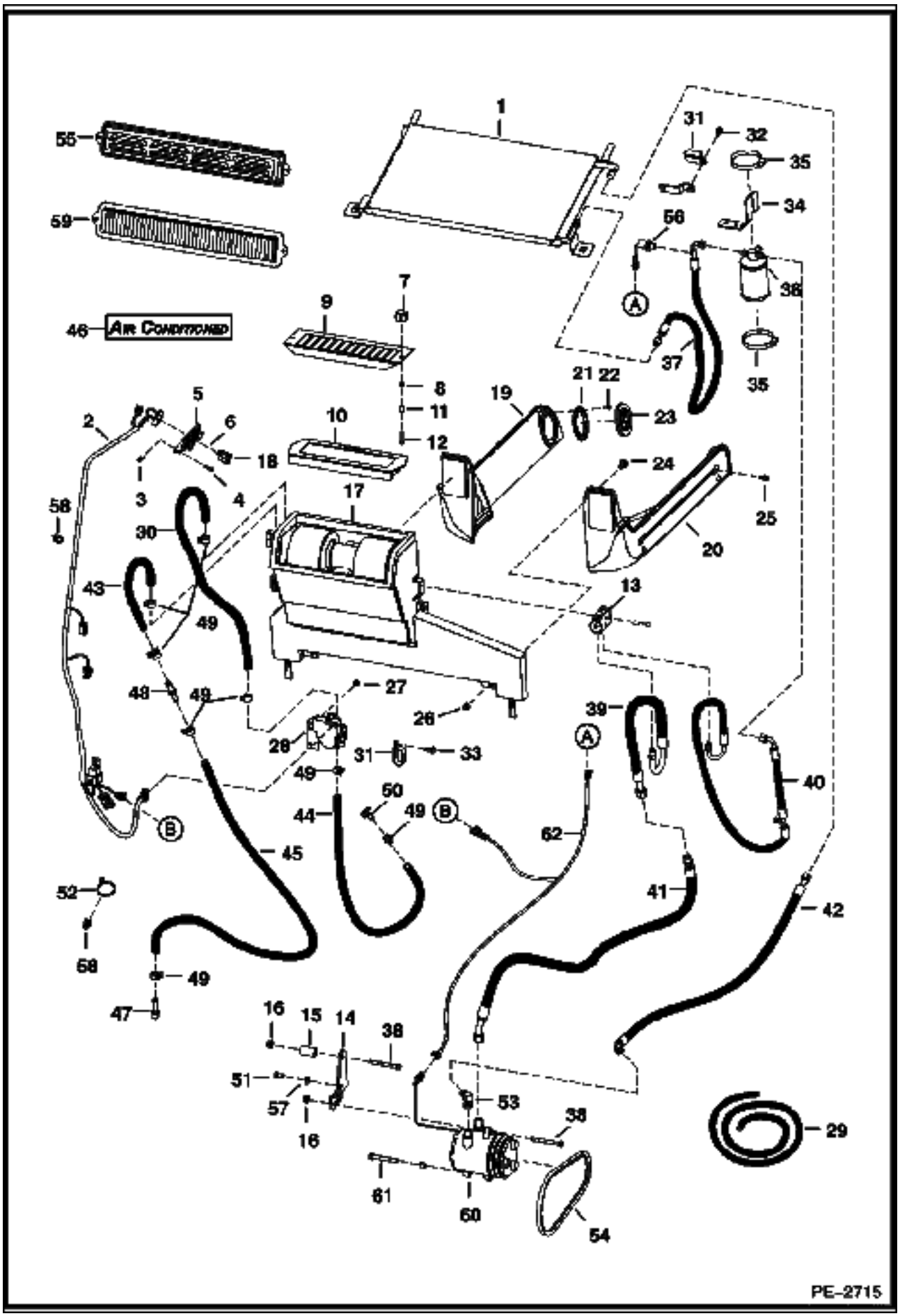
AIR CONDITIONED
PE-2715

Ref No	Part Number	Description	Remarks	Serial Number	Qty
42	6684907	HOSE			1
42	6685198	CAP			1
43		HOSE	NAP - 32" (812,8mm) long - Order Ref. 29		1
44		HOSE	NAP - 84" (2133,6 mm) long - Order Ref. 29		1
45		HOSE	NAP - 54" (1371,6 mm) long - Order Ref. 29		1
46	6729077	DECAL			2
47	6731085	ELBOW			1
48	6732023	CONNECTOR			1
49	5HM00020B	CLAMP			8
50	6731084	ADAPTER			1
51	5CM01020B	BOLT			1
52	6624289	STA STRAP			5
53	6731255	ELBOW	A]		1
54	6730819	BELT	compressor		1
55	6727848	COVER			1
56	6675779	PRESS. SWITCH	W/harness		1
57	6557831	WASHER			1
58	6678666	TREE MOUNT	tree		2
59	6677983	FILTER			1
60	6733655	COMPRESSOR	W/Ref. 68		1
60	6679145	CLUTCH			1
60	6648307	CONNECTOR	2-pin		1
60	6648308	CONNECTOR			1
61	5CM01080B	SCREW			1
62	6719630	HARNESS	ACS		1

DRAWING NOT AVAILABLE AT TIME OF PRINTING

PE-2810

Ref No	Part Number	Description	Remarks	Serial Number	Qty
1	7116904	KIT	Ref. 2-41 & 44		1
2	6557831	WASHER			1
3	6624289	STA STRAP			2
4	6684907	HOSE	AC		1
4	6675538	O-RING	#8		x
5	6674234	CONDENSER			1
6	6674235	RECEIVER DRIER			1
6	6676062	VALVE	relief		1
7	6675075	HOSE	AC		1
7	6677122	CAP			1
7	6675824	O-RING	#6		x
8	6675076	HOSE	AC		1
8	6677121	CAP			1
8	6675825	O-RING	#10		x
9	6684908	HOSE	AC		1
9	6675825	O-RING	#10		x
10	6676984	MOUNT	valve		1
11	6677105	COVER	plate		1
12	6733655	COMPRESSOR	W/Ref. 43		1
12		CLUTCH			1
13	6675685	HOSE	AC		1
13	6675779	PRESS. SWITCH	W/harness		1
13	6676399	VALVE CORE			1
13	6675824	O-RING	#6		x
14	6683004	THERMOSTAT			1
15	6683003	COIL	evaporator		1
16	6730265	MOUNT	compressor		1
17	83D000006B	NUT			2
18	6719176	SWITCH	rocker		1
19	6719459	MOUNT	receiver drier		1
20	6719630	HARNESS	AC - Not in kit		1
21	6730819	BELT	compressor		1
22	6726621	SCREW			2
23	1CM00635B	SCREW			2
24	17C000656B	BOLT			2
25	5CM01025B	SCREW			1
26	5CM01080B	SCREW			1
27	31H000046B	CLAMP			1
28	84G003710B	BOLT			2
29	44H000048B	CLAMP			2
30	6675534	BLOCK VALVE			1
31	6727326	MOUNT	clamp		1
32	6676539	CLIP			2
33	6679034	INSULATION			1
34	6676538	INSULATION	bulk - sold per foot		x
35	6675608	INSULATION			1
36	6730266	SPACER			1
37	6675609	INSULATION			1
38	6689179	INSULATION			1
39	6689180	INSULATION			1
40	6731255	ELBOW			1
41	6729077	DECAL	air conditioned		2
42	6676063	KIT	fitting caps - not in kit		1
43	6732732	BUSHING	not in kit		1

DRAWING NOT AVAILABLE AT TIME OF PRINTING

PE-2810

Ref No	Part Number	Description	Remarks	Serial Number	Qty
44	6904258	INSTRUCTIONS			1

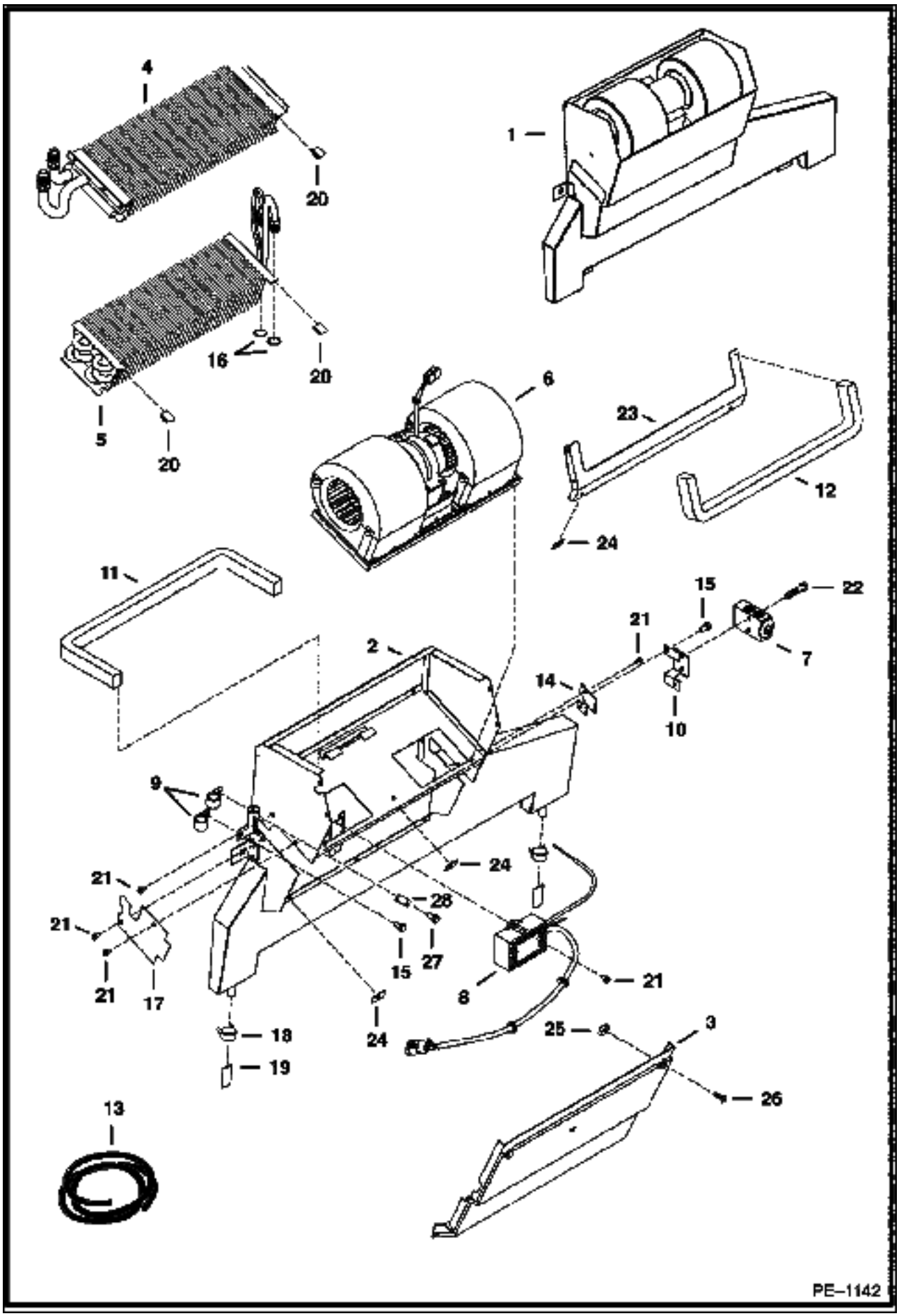
4
20
1
16
20
5
20
6
23
12
24
11
15
22
21
2
7
14
10
9
24
21
28
21
15
27
21
17
8
21
18
24
25
3
19
26
13
PE–1142

Ref No	Part Number	Description	Remarks	Serial Number	Qty
1	6683001	HVAC	assy - Ref. 2-28		1
2	6677108	HOUSING			1
3		COVER	NAP - Order 6678151, Also Order Ref. 23 (6678152)		1
3	6678151	COVER			1
4		COIL	See Illustration HEATER & A/C/ PE1228 NSS - heater - Order 6727786 Heater Coil Kit		1
5	6683003	COIL	evaporator		1
6	6675497	BLOWER	See Illustration HEATER & A/C/ B16401 assy		1
7	6675534	BLOCK VALVE			1
8	6683004	THERMOSTAT			1
9	6675512	CLAMP	hose		2
10	6676984	MOUNT	valve		1
11		SEAL	NAP - 25" (635mm) long - Order Ref. 13		1
12		SEAL	NAP - 22.6" (575mm) long - Order Ref. 13		1
13	6677111	SEAL	bulk - Sold Per Foot		x
14	6677105	COVER			1
15	6677118	SCREW	w/washer		3
16	6675538	O-RING			2
17	6677504	COVER	cover		1
18	6675510	CLAMP	drain hose		2
19	6675511	DRAIN VALVE			2
20	6676539	CLIP			2
21	6677119	SCREW	sheet metal		7
22	1CM00635B	SCREW			2
23		FLANGE	NAP - Order 6678152, Also Order Ref. 3 (6678151)		1
23	6678152	SEAL	flange		1
24	6677115	RECEPTACLE			6
25	6677116	RETAINER			6
26	6677117	SCREW	captive		6
27	6676653	SCREW			1
28	6676606	SPACER			1

HORN KIT

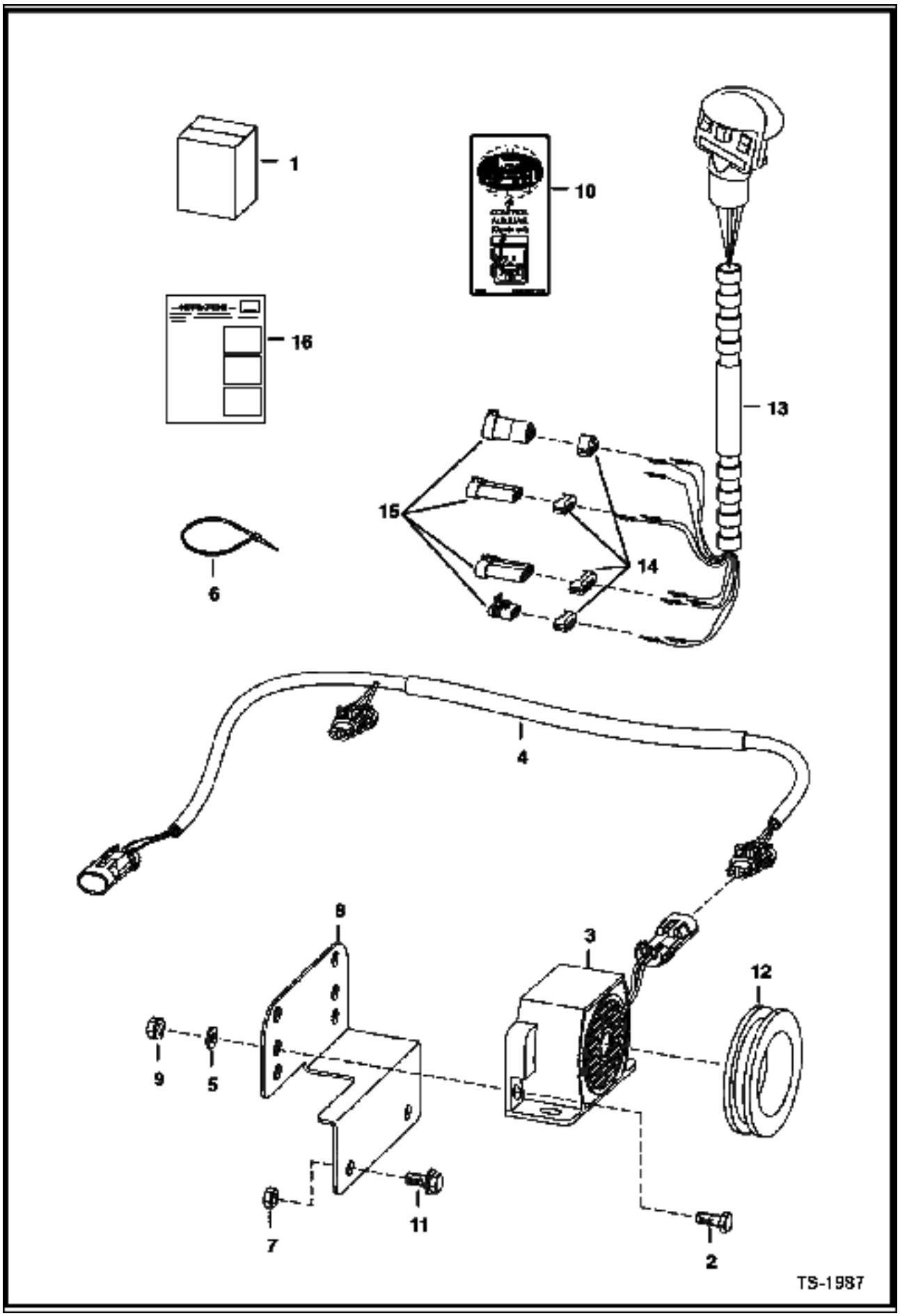

Ref No	Part Number	Description	Remarks	Serial Number	Qty
1	6727995	HORN KIT	Ref. 2-16 - Requires multi-switch handle		1
2	17C000410B	BOLT			2
3	6675099	ALARM			1
4	6727498	HARNESS	W/ metal tube		1
5	25E000013B	WASHER			1
6	30H000023B	CLAMP			1
7	83D000005B	NUT			2
8	6733970	MOUNT			1
9	6641180	LOCK	2-pin		2
9	6640700	LOCK	3-pin		2
10	6641179	CONNECTOR	2-pin		2
10	6640699	CONNECTOR	3-pin		2
11	35C000512B	BOLT			2
12	6680414	HANDLE ASSY.			1
12	6640690	PIN			5
12	6641176	SEAL	SEAL		5
13	83D000004B	NUT			2
14	6703727	DECAL			1
15	6577545	GROMMET			1
16	6901146	INSTRUCTIONS			1

HORN KIT
(Selectable Joystick Controls)

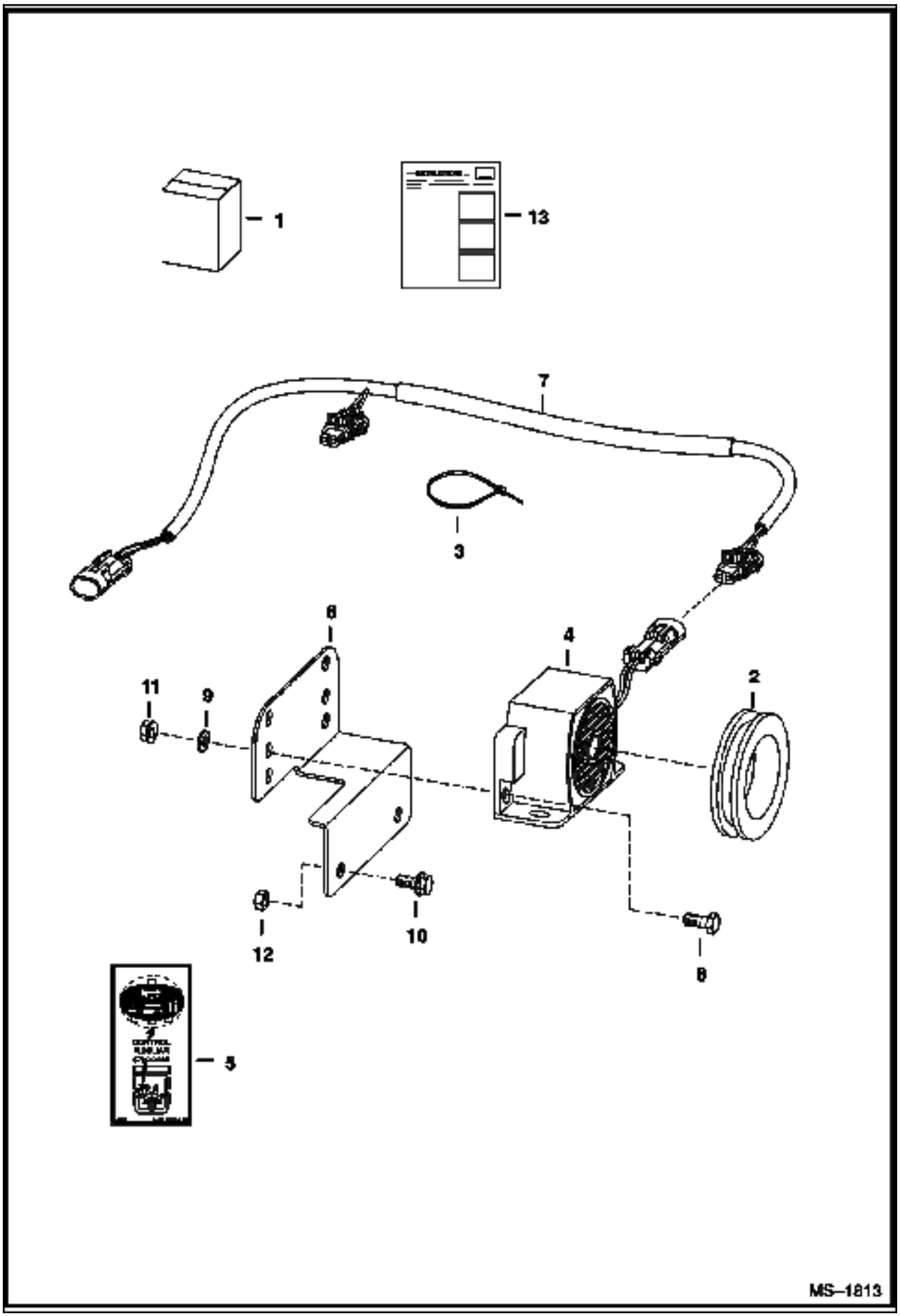

HORN KIT (Cont'd)
(Selectable Joystick Controls)

Ref No	Part Number	Description	Remarks	Serial Number	Qty
1	6732234	KIT	horn - Ref. 2-13		1
2	6577545	GROMMET			1
3	6610510	TIE			3
4	6675099	ALARM	alarm		1
5	6703727	DECAL	horn/aux.		1
6	6733970	MOUNT	alarm		1
7	6726662	HARNESS			1
8	17C000410B	BOLT			2
9	25E000013B	WASHER			2
10	35C000512B	BOLT			2
11	83D000004B	NUT			2
12	83D000005B	NUT			2
13	6901691	INSTRUCTIONS			1

LIFT KIT
(Four Point)

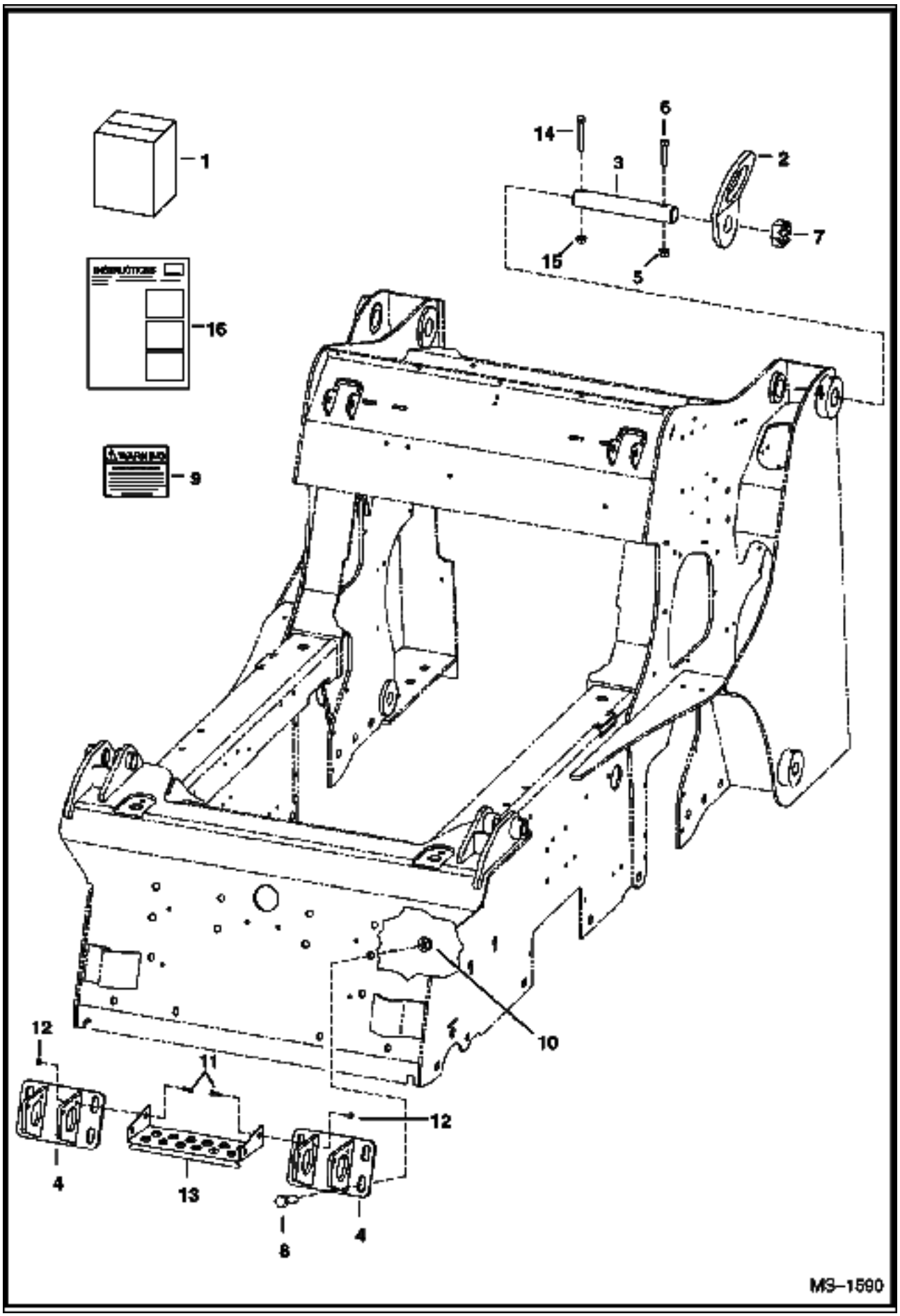

LIFT KIT (Cont'd)
(Four Point)

Ref No	Part Number	Description	Remarks	Serial Number	Qty
1	6732678	KIT	lift - Ref. 4 - 16		1
2	6726908	LIFT EYE			2
3	6732687	PIN			2
4	6734108	BRACKET			2
5	87D000006B	NUT			2
6	17C000652B	BOLT			2
7	4D000028B	NUT			2
8	17C001028B	BOLT			8
9	6726423	DECAL			1
10	83D000010B	NUT			8
11	17C000616B	BOLT			4
12	95D000006B	NUT			4
13	6813078	STEP			1
14	17C000672B	BOLT	not in kit		2
15	85D000006B	NUT	not in kit		2
16	6901772	INSTRUCTIONS			1

LIFT KIT
(Single Point)

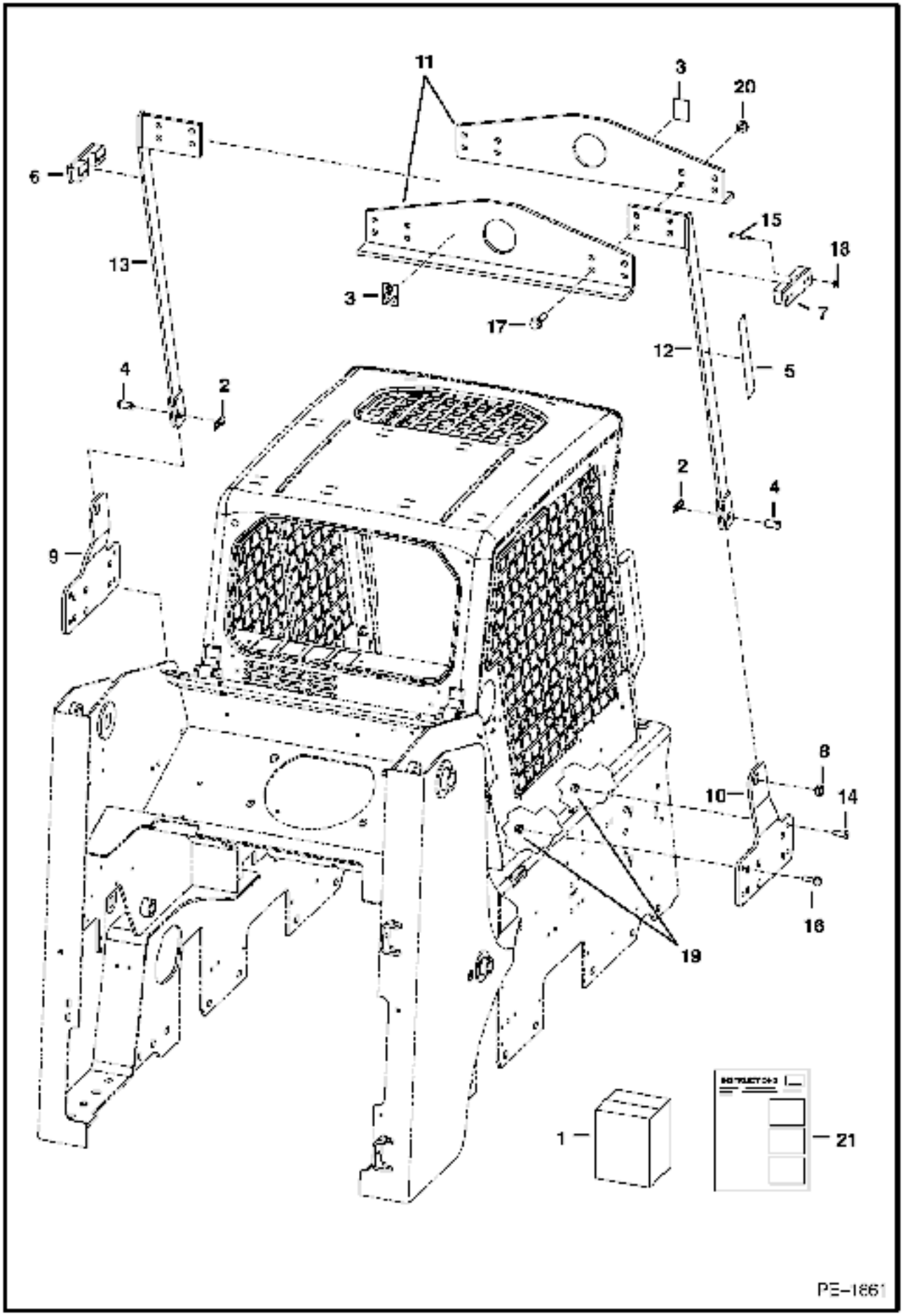

LIFT KIT (Cont'd)
(Single Point)

Ref No	Part Number	Description	Remarks	Serial Number	Qty
1	6735279	KIT	Ref. 2-21		1
2	1320075	COTTER PIN			2
3	6533898	DECAL	hook		2
4	6567838	PIN			2
5	6704786	DECAL	safety		2
6	6719184	MOUNT	L.H.		1
7	6719185	MOUNT	R.H.		1
8	6734560	BUSHING			2
9	6734627	MOUNT	L.H.		1
10	6734628	MOUNT	R.H.		1
11	6734657	ANGLE			2
12	6734666	ARM	R.H.		1
13	6734667	ARM	L.H.		1
14	6735282	SCREW	socket head		2
15	17C000632B	BOLT			8
16	31C000824B	BOLT			6
17	31C001036B	BOLT			8
18	57D000006B	NUT			8
19	57D000008B	NUT			8
20	57D000010B	NUT			8
21	6900888	INSTRUCTIONS			1

LIGHT KIT

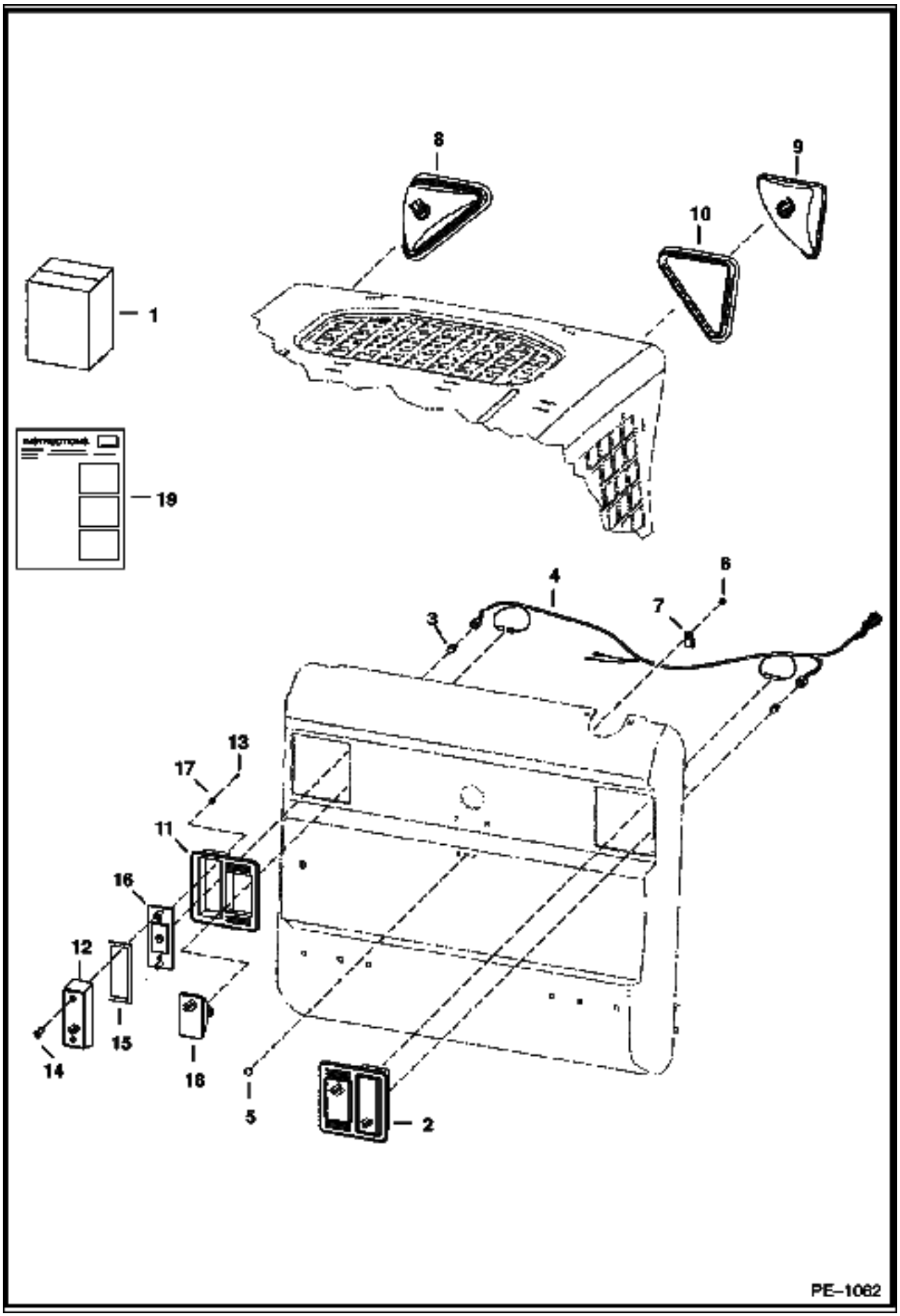

LIGHT KIT (Cont'd)

Ref No	Part Number	Description	Remarks	Serial Number	Qty
1		KIT	NAP - Order components		1
2	6670284	LIGHT ASSY	rear		2
3	6649481	BULB			2
4	7109403	HARNESS	standard		1
5	37C000512B	BOLT			1
6	85D000005B	NUT			1
7	30H000042B	CLAMP			1
8		LIGHT ASSY	NAP - R.H. - Ref. 9 & 10		1
8		LIGHT ASSY	NAP - L.H. - Ref. 9 & 10		1
9	6674401	HOUSING	R.H.		1
9	6675336	BULB	55 watt		1
9	6674400	HOUSING	L.H.		1
9	6675336	BULB	55 watt		1
10	6674402	MOUNT			1
11	6672279	MOUNT	rubber		2
12	6672276	LENS	red		2
13	6672274	SCREW			4
14	6672273	SCREW			2
15	6672275	GASKET			2
16	6672277	BRACKET			2
17	6672272	WASHER			4
18	6661353	LIGHT ASSY	W/bulb - white		2
18	898731B	BULB			2
19		INSTRUCTIONS	NAP		1

OPERATOR EAR NOISE REDUCTION (Cont'd)
Manual Control

Ref No	Part Number	Description	Remarks	Serial Number	Qty
1	6719332	INSULATION	blower housing		1
2	6719333	INSULATION	blower housing		1
3	7101538	INSULATION	crossmember		1
4	7101536	INSULATION	panel shield - L.H.		1
5	7101537	INSULATION	panel shield - R.H.		1
6	7101533	INSULATION	transmission		1
7	6732583	INSULATION	pedal shield		2
8	7101535	INSULATION	steering panel		1
9	6703967	INSULATION	fender		2
10	6703968	INSULATION	transmission		2

OPERATOR EAR NOISE REDUCTION (Cont'd)
Selectable Joystick Control

Ref No	Part Number	Description	Remarks	Serial Number	Qty
1	6719332	INSULATION	blower housing		1
2	6719333	INSULATION	blower housing		1
3	7101538	INSULATION	crossmember		1
4	7101536	INSULATION	panel shield - L.H.		1
5	7101539	INSULATION	panel shield - R.H.		1
6	7101533	INSULATION	transmission		1
7	6732583	INSULATION	pedal shield		2
8	7101534	INSULATION	steering panel		1
9	6703967	INSULATION	fender		2
10	6703968	INSULATION	transmission		2

DRAWING NOT AVAILABLE AT TIME OF PRINTING

PE-2827

Ref No	Part Number	Description	Remarks	Serial Number	Qty
1	6687886	MUFFLER PURIFIER	purifier		1
2	6661062	PLUG	3/8" - brass		1
3	6659543	PLUG	1/8" - brass		1
4	6730753	MOUNT			1

POWER BOB-TACH KIT
(Hydraulic Assisted)

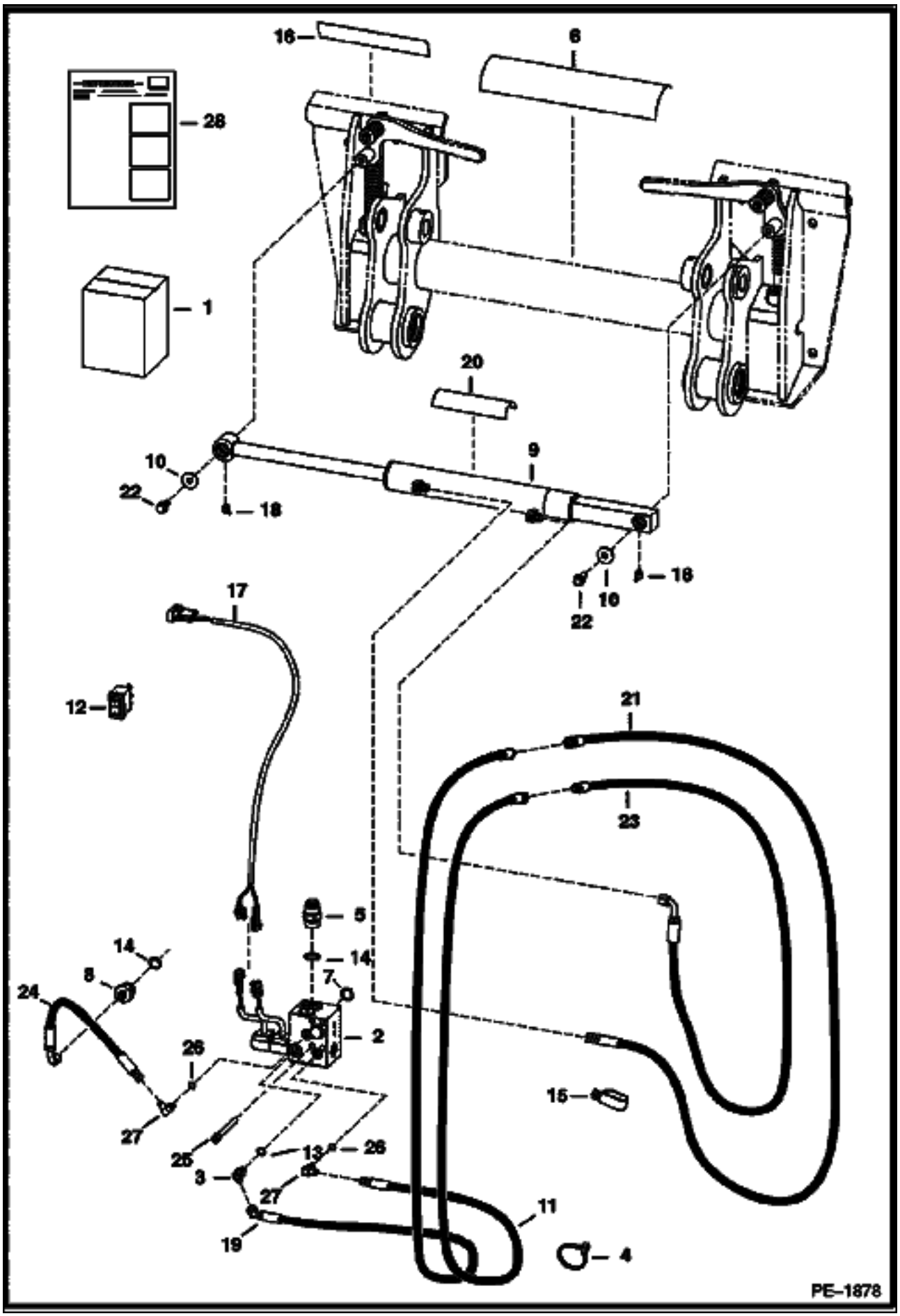

POWER BOB-TACH KIT (Cont'd)
(Hydraulic Assisted)

Ref No	Part Number	Description	Remarks	Serial Number	Qty
1	6735477	KIT	Ref. 2-28		1
2		MANIFOLD	See Illustration POWER BOB-TACH/ MS1835R		1
3	7109881	ELBOW			1
4	6624289	STA STRAP			1
5	15KB01212B	ADAPTER	W/Ref. 14		1
6	6725907	DECAL			1
7	55K000214B	O-RING			1
8	15KB00612B	ADAPTER	W/Ref. 14		1
9		CYLINDER	See Illustration POWER BOB-TACH CYLINDER/ PE1064A		1
10	619021B	WASHER			2
11	6726987	HOSE	59" (1498mm) long - (2) female ends		1
12	6676732	SWITCH	vertical		1
13	79K000006B	O-RING			x
14	79K000012B	O-RING			x
15	31H000042B	CLIP			1
16	6719888	DECAL			1
17	6730770	HARNESS			3
18	12H000025B	GREASE ZERK			2
19	6735475	HOSE	(1) male end & (1) 45 degree female end		1
20	6554100	TREAD	safety		1
21	6733630	HOSE	150" (3810mm) long - (2) female ends		1
22	35C000612B	BOLT			2
23	6733629	HOSE	141" (3581mm) long - (1) male end & (1) 90 degree female end		1
24	6806403	HOSE	For loaders equipped W/Manual Controls - 16 in. (406,4 mm) Long		1
24	7110367	HOSE	For loaders equipped W/Selectable Joystick Controls - 45"(1143 mm) long		1
25	73G000656B	BOLT			4
26	79K000004B	O-RING			x
27	7109882	ELBOW	W/Ref. 26		2
28	6902361	INSTRUCTIONS			1

POWER BOB-TACH CYLINDER

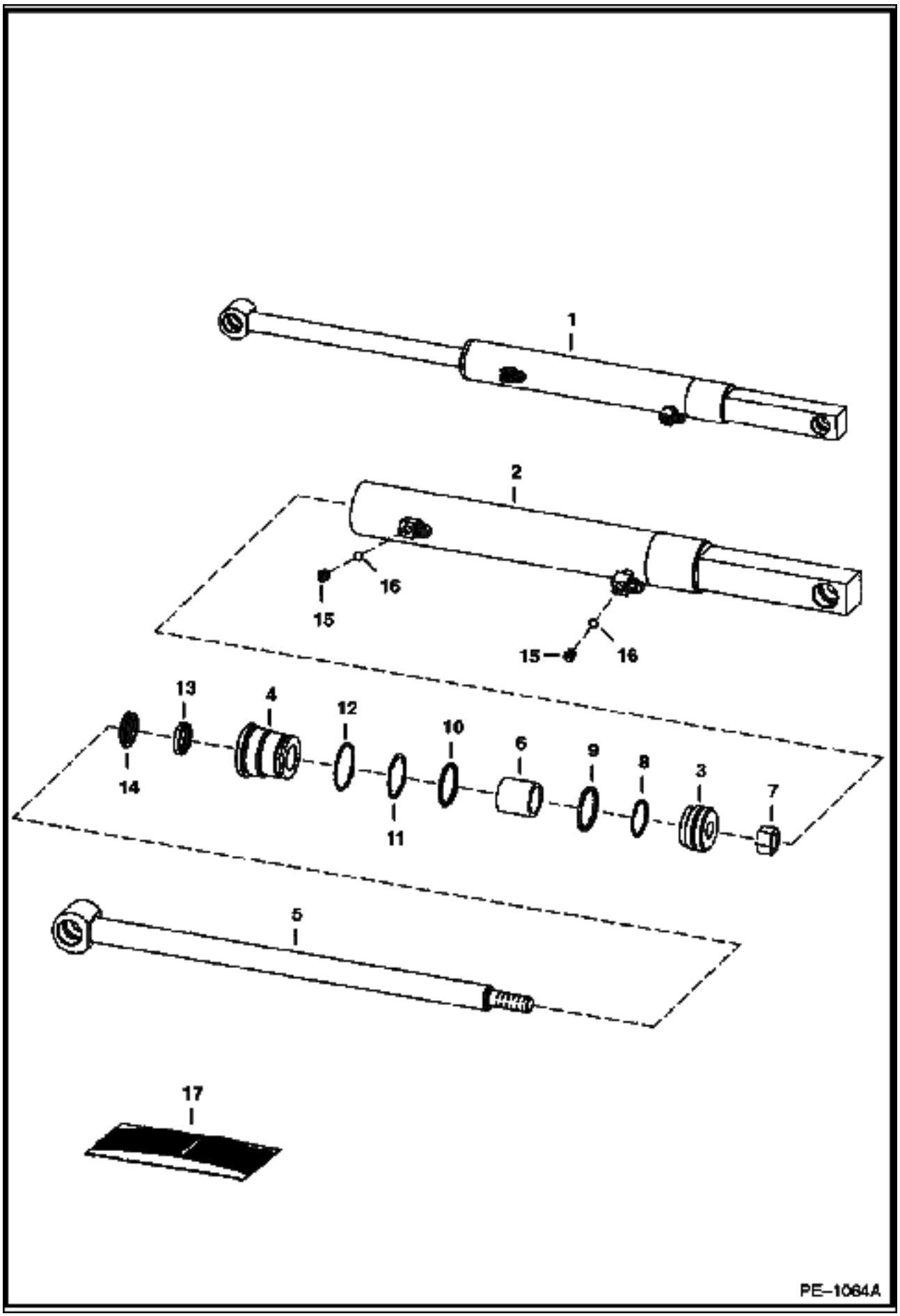

POWER BOB-TACH CYLINDER (Cont'd)

Ref No	Part Number	Description	Remarks	Serial Number	Qty
1	6810611	CYLINDER	Ref. 2-16		1
2	6810349	CASE	1.75" (45mm) I.D.		1
3	6586543	PISTON			1
4	6586542	HEAD			1
5	6810612	ROD	W/ .25" grease zerk hole		1
6	6810356	SPACER			1
7	92D000010B	NUT			1
8	54K030110B	O-RING			1
9	6532453	RING			1
10	54K040116B	O-RING			1
11	73K000222B	WASHER	back-up		1
12	58K000132B	O-RING			1
13	6667323	SEAL	rod		1
14	6666542	SEAL	wiper		1
15	90KV00002B	PLUG	W/Ref. 16 - tapered boss face - allen socket head		2
15	6812170	PLUG	W/Ref. 16 - flat boss face - hex head		2
16	95K000003B	O-RING	tapered boss face		x
16	75K000003B	O-RING	flat boss face		x
17	6803473	SEAL KIT	Ref. 7-14		1

POWER BOB-TACH
(Valve Assembly)

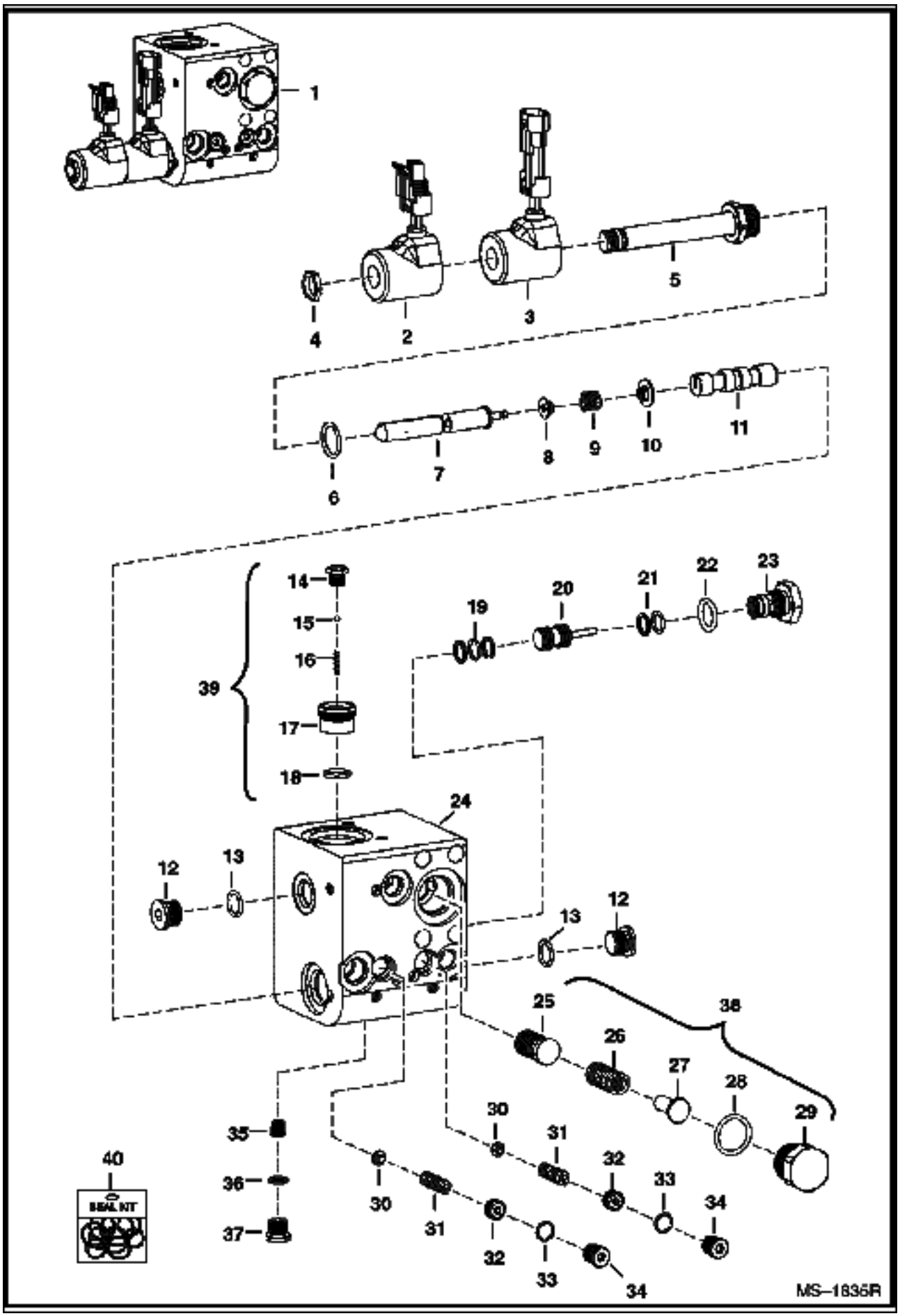

POWER BOB-TACH (Cont'd)
(Valve Assembly)

Ref No	Part Number	Description	Remarks	Serial Number	Qty
1	6686949	VALVE			1
2	6684743	SOLENOID	W/male connector		1
3	6684744	SOLENOID	W/female connector		1
4	6684742	NUT			1
5		STEM	NSS		x
6	79K000008B	O-RING			x
7		STEM	NSS		x
8		RETAINER	NSS		x
9		SPRING	NSS		x
10		WASHER	NSS		x
11	6685540	PISTON			x
12	6685545	PLUG	W/Ref. 13		x
13		O-RING	NSS		x
14		PLUG	NSS		x
15		BALL	NSS		x
16		SPRING	NSS		x
17		VALVE	NSS		x
18	6685542	O-RING			x
19		RINGS	NSS		x
20	6684745	PISTON			1
21		RINGS	NSS		x
22	79K000007B	O-RING			x
23	6684746	CHECK VALVE	W/Ref. 22		1
24		BLOCK	NSS		x
25		STEM	NSS		x
26		SPRING	NSS		x
27		POPPET	NSS		x
28	79K000010B	O-RING			x
29		PLUG	NSS		x
30		POPPET	NSS		x
31		SPRING	NSS		x
32		PLUG	NSS		x
33		O-RING	NSS		x
34		PLUG	NSS		x
35	6685541	POPPET			x
36		O-RING	NSS		x
37	6685546	PLUG			x
38	6685544	COMPENSATOR	assy. - Ref. 25-29		1
39	6685543	CHECK VALVE	assy. - Ref. 14-18		1
40	6684747	SEAL KIT	complete		1

RADIATOR SCREEN KIT

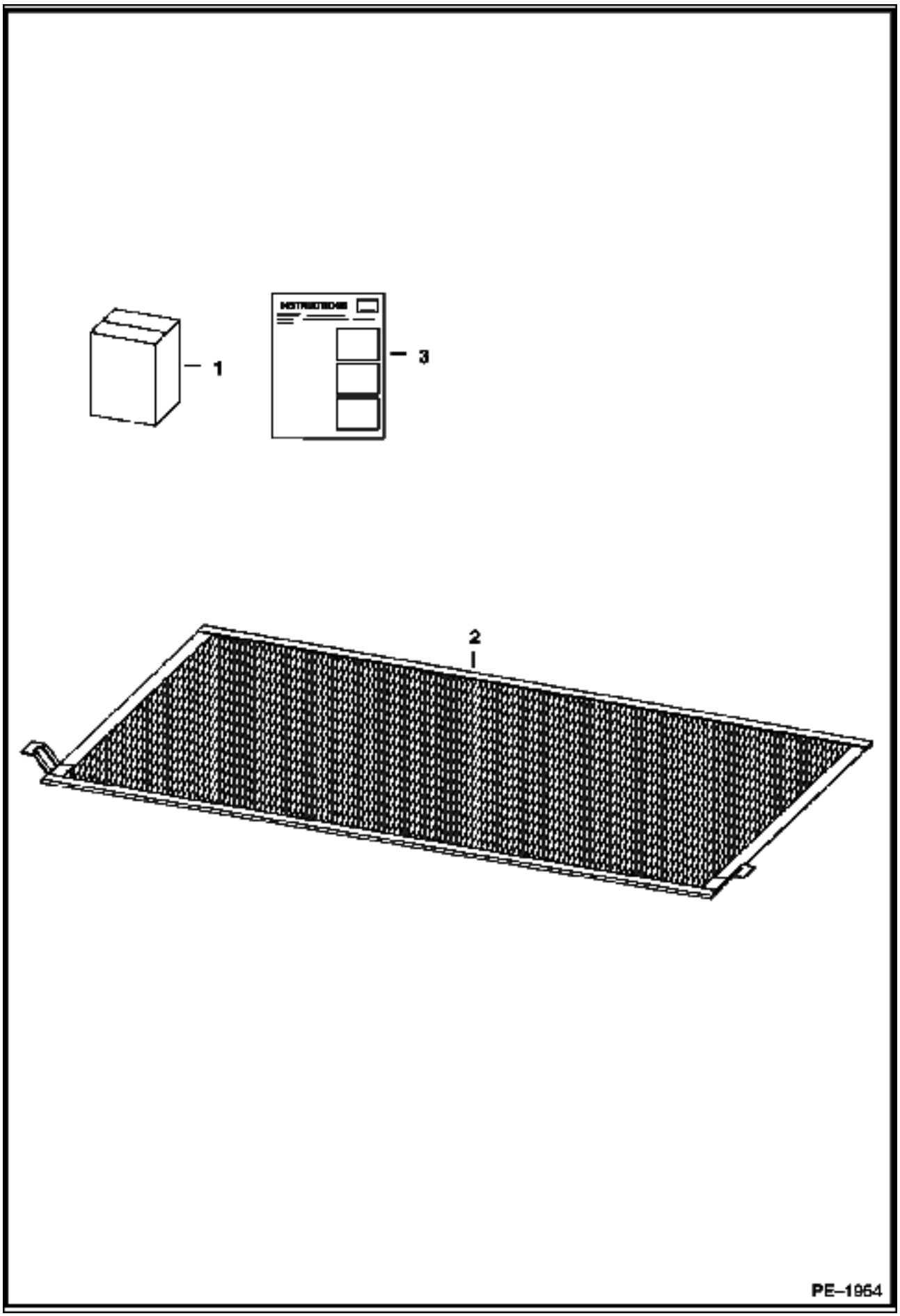

RADIATOR SCREEN KIT (Cont'd)

Ref No	Part Number	Description	Remarks	Serial Number	Qty
1	6734696	KIT	Ref. 2 & 3		1
2	6734697	SCREEN			1
3	6902288	INSTRUCTIONS			1

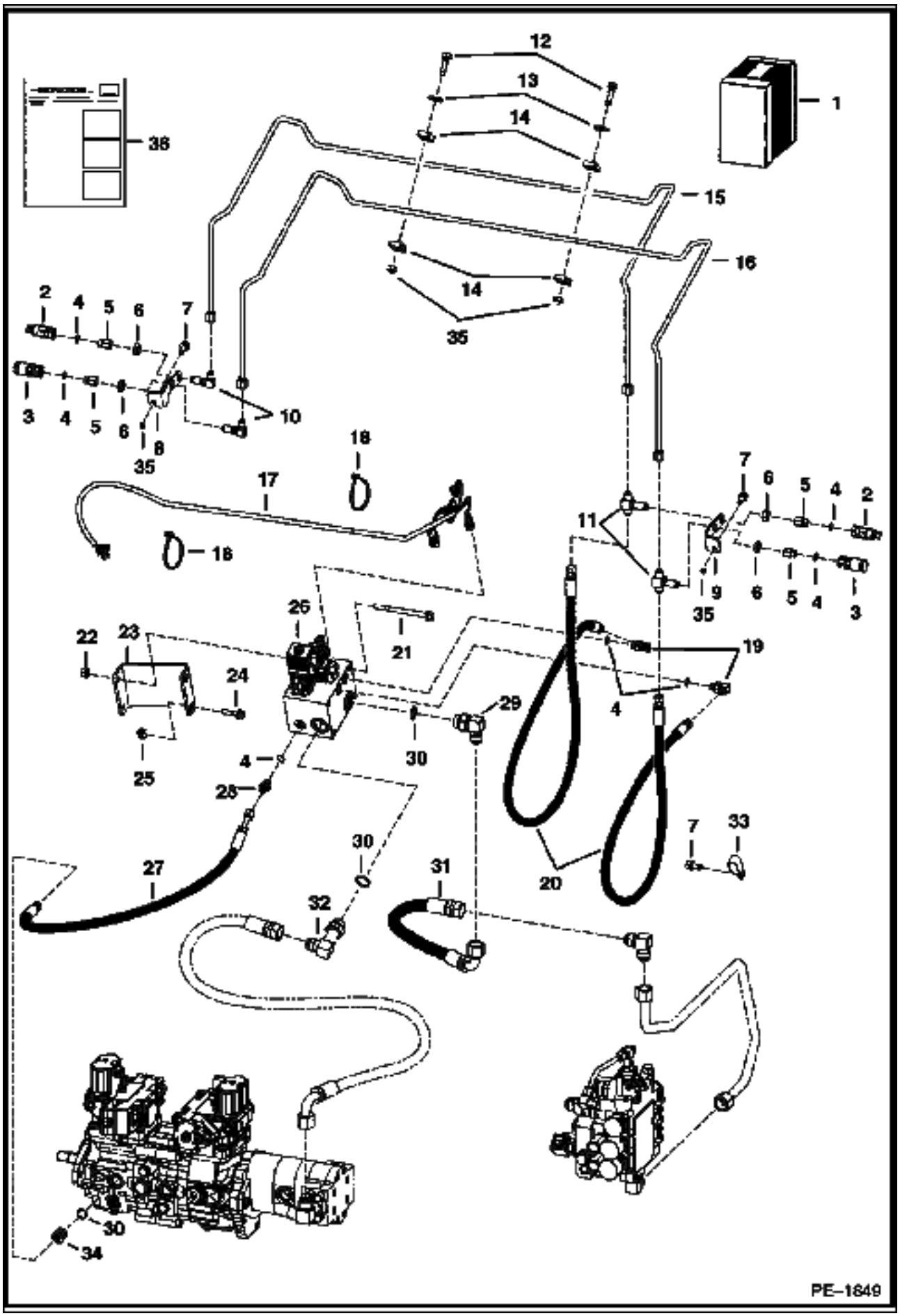
PE–1849

Ref No	Part Number	Description	Remarks	Serial Number	Qty
1	6735919	KIT	Ref. 2-36		1
2	6667804	COUPLER	male		2
3	6667803	COUPLER	female		2
4	79K000006B	O-RING			x
5	6706633	ADAPTER	W/Ref. 4		4
6	86F000005B	NUT			4
7	84G003712B	BOLT			3
8	6735640	MOUNT	L.H.		1
9	6735639	MOUNT	R.H.		1
10	88F000005B	ELBOW	bulkhead		2
11	90F000005B	TEE	bulkhead		2
12	84G003724B	BOLT			2
13	619021B	WASHER			2
14	6726277	CLAMP			4
15	6735643	TUBELINE			1
16	6735642	TUBELINE			1
17	6736011	HARNESS			1
18	6624289	STA STRAP			5
19	17KB00606B	ELBOW	W/Ref. 4		3
20	6735684	HOSE			2
21	35C000680B	BOLT			2
22	83D000006B	NUT			2
23	6735641	MOUNT			1
24	35C000624B	BOLT			2
25	6685663	RETAINER			2
26		VALVE	See Illustration REAR AUXILIARY VALVE/ B21972R rear aux.		1
27	6735685	HOSE	(1) 45 degree end & (1) straight end - 28" (711mm) long - not in kit		1
27	6711166	HOSE	(1) 90 degree end & (1) straight end - 26" (660mm) long		1
28	15KB00606B	ADAPTER	W/Ref. 4 - not in kit - used W/Ref. 27 (6735685)		1
29	17KB01212B	ELBOW	W/Ref. 30		1
30	79K000012B	O-RING			x
31	6735683	HOSE			1
32	6716443	ELBOW	W/Ref. 30		1
33	31H000038B	CLAMP			1
34	15KB00612B	ADAPTER	W/Ref. 30		1
35	6684033	NUT	retaining		4
36	6902409	INSTRUCTIONS			1

REAR AUXILIARY VALVE

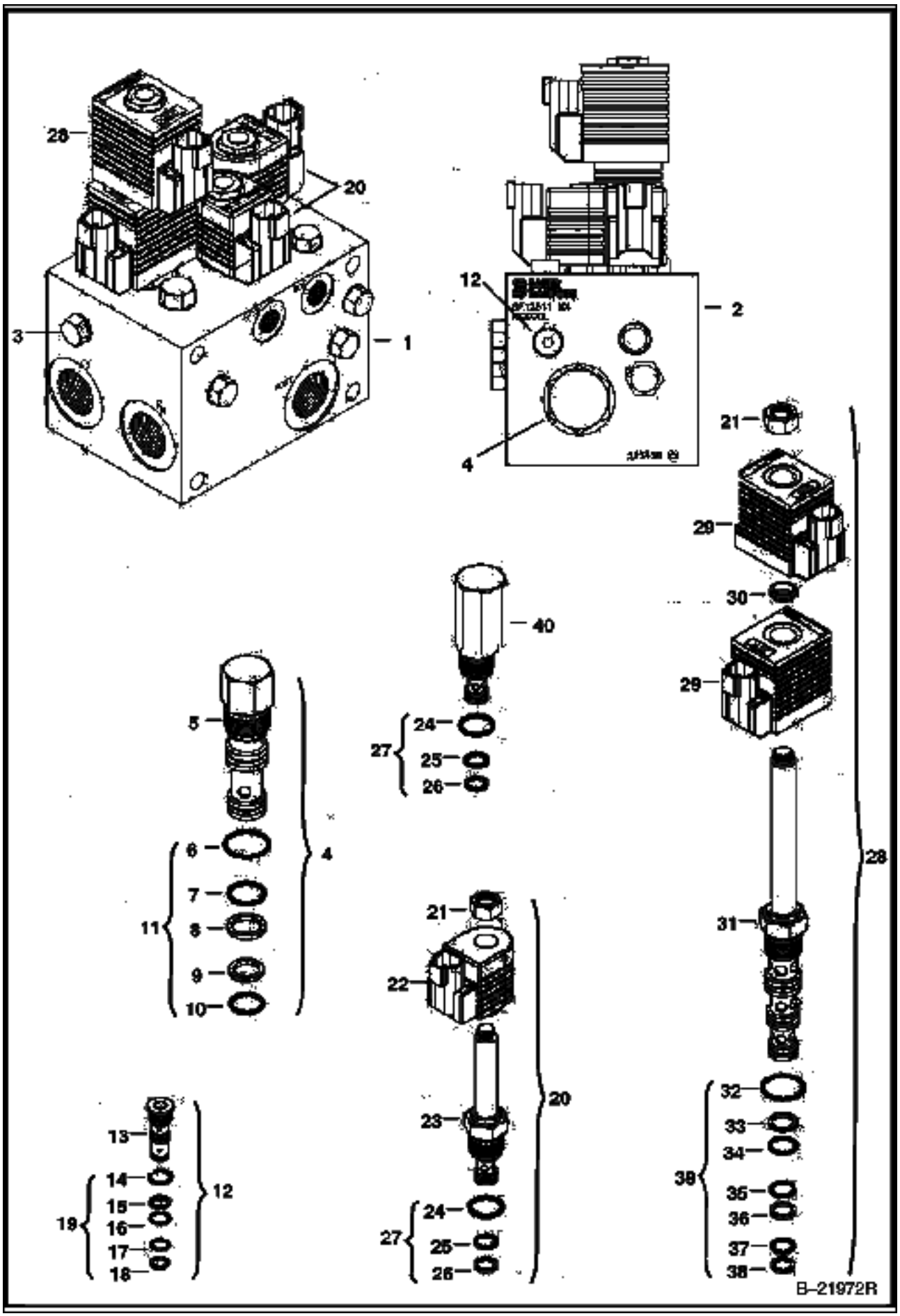

Ref No	Part Number	Description	Remarks	Serial Number	Qty
1		CONTROL VALVE	NAP - CP1254 - Order 6685624		1
1	6685624	CONTROL VALVE	CP12646		1
2		BLOCK	NSS		1
3		PLUG			x
4	6684044	VALVE	assy. - Ref. 5-10 - differential sensing		1
5		VALVE	NSS - Order Ref. 4		1
6	6684046	O-RING			1
7	6684048	O-RING			1
8	6684047	BACK-UP RING			1
9	6684050	BACK-UP RING			1
10	6684049	O-RING			1
11	6684045	SEAL KIT	Ref. 6-10		1
12	6684061	VALVE	shuttle - Ref. 13-18		1
13		VALVE	NSS - Order Ref. 12		1
14	6684063	O-RING			1
15	6684064	BACK-UP RING			1
16	6684065	O-RING			1
17	6684066	O-RING			1
18	6684067	BACK-UP RING			1
19	6684062	SEAL KIT	Ref. 14-18		1
20	6684542	VALVE	solenoid - Ref. 21-26		2
21	6684060	NUT			2
22	6684073	COIL	12 volt		2
23		VALVE	NSS - Order Ref. 20		2
24	6684070	O-RING			2
25	6684071	O-RING			2
26	6684072	BACK-UP RING			2
27	6684069	SEAL KIT	Ref. 24-26		2
28	6684051	VALVE	solenoid - Ref. 21 & 29-39 - For (NAP) 6683251		1
28	6688933	VALVE ASSY	solenoid - Ref. 21, 29 & 31 - For 6685624		1
29	6684058	COIL	For (NAP) 6683251		2
29	6688934	COIL	For 6685624		2
30	6684059	SPACER			1
31		VALVE	NSS - Order Ref. 28		1
32	6681489	O-RING			1
33	6684053	BACK-UP RING			1
34	6684054	O-RING			1
35	6684056	O-RING			1
36	6684055	BACK-UP RING			1
37	6681487	O-RING			1
38	6684057	BACK-UP RING			1
39	6684052	SEAL KIT	Ref. 32-38		1
40	6685328	RELIEF VALVE	W/Ref. 24-26		1

REAR DOOR LOCK

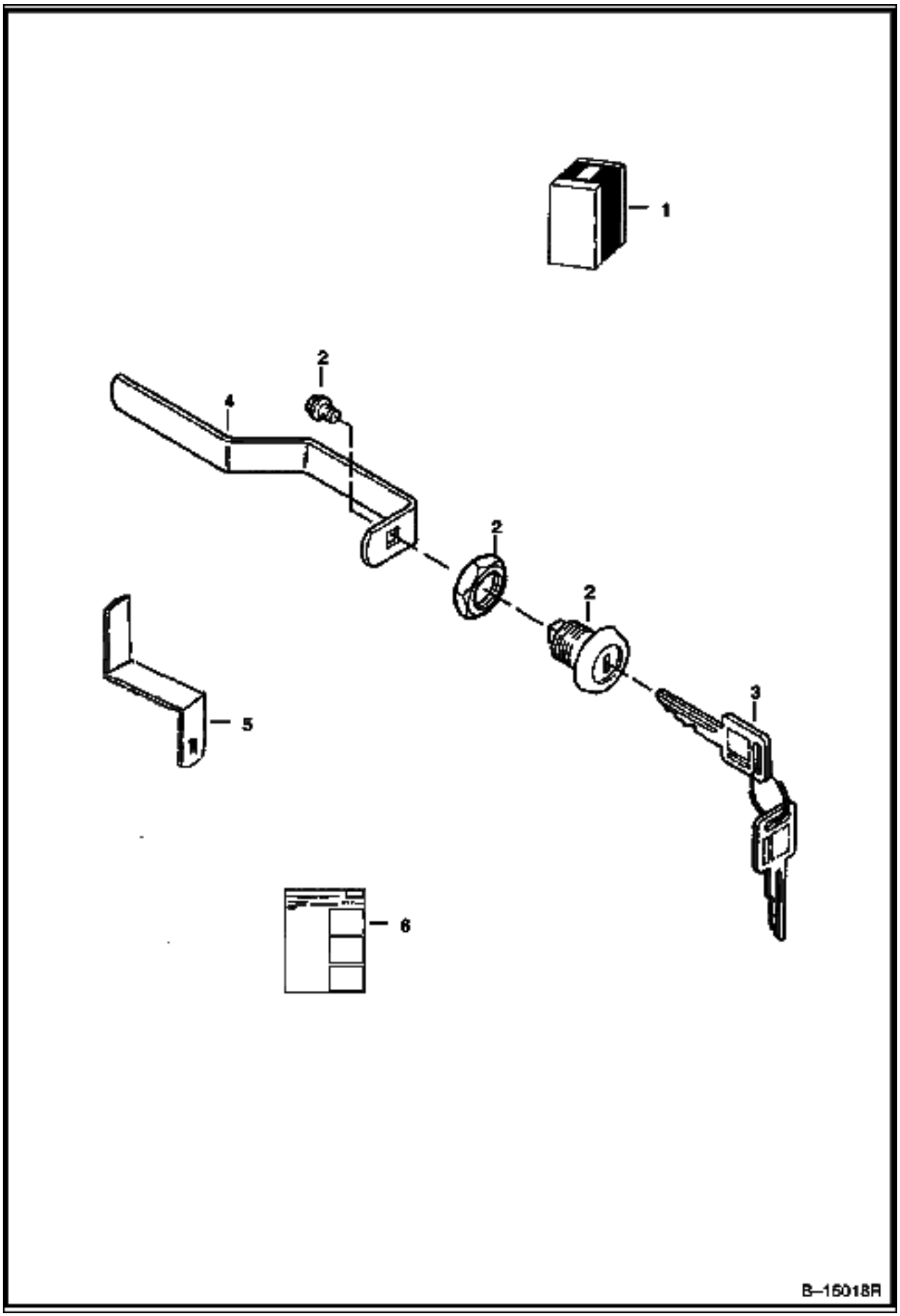

Ref No	Part Number	Description	Remarks	Serial Number	Qty
1	6732001	KIT	lock - Ref. 2-6		1
2	6670726	LOCK			1
3	6709527	KEY	ignition		1
4	6714037	LATCH			1
5	6729688	LATCH			1
6	6901656	INSTRUCTIONS			1

REAR WIPER

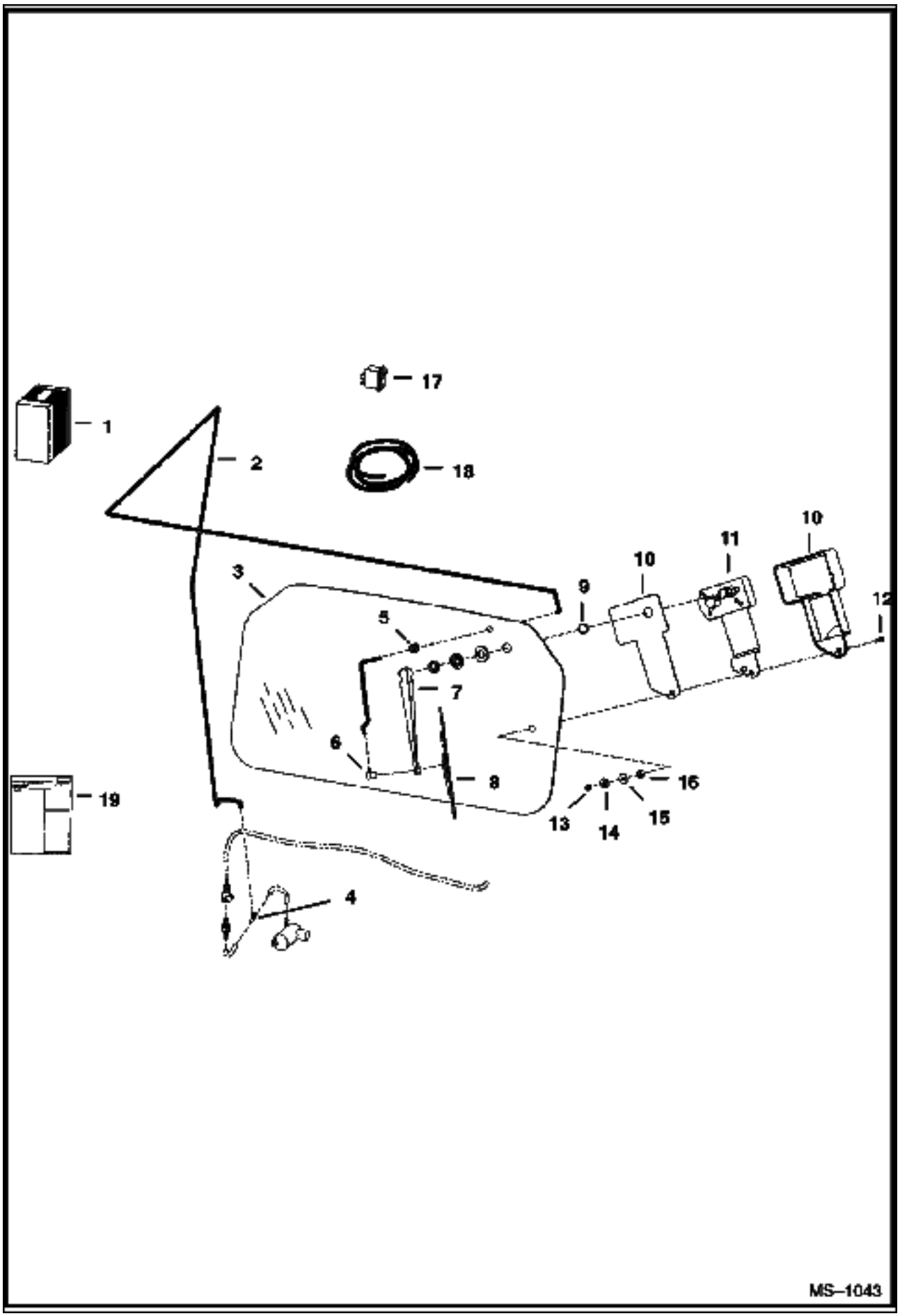

Ref No	Part Number	Description	Remarks	Serial Number	Qty
1	6726655	KIT	rear wiper		1
2		HOSE	NAP - 96"(2438,4 mm) long - Order Ref. 18		1
3	6719317	WINDOW			1
4	6676000	TEE			1
5	6557493	GROMMET			1
6	6676028	NOZZLE			1
7	6676001	ARM			1
8	6676002	BLADE			1
9	6667201	SPACER	nylon		1
10	6664097	COVER	wiper		1
11	6665602	MOTOR			1
12	6664566	BOLT			1
13	6664103	NUT			1
14	6664065	WASHER	nylon		1
15	6801059	WASHER	neoprene		1
16	6664085	BUSHING	nylon		1
17	6675999	SWITCH			1
18	6676003	HOSE	bulk - Sold Per Foot		x
19	6901061	INSTRUCTIONS			1

SEAT
(Suspension - Sears)

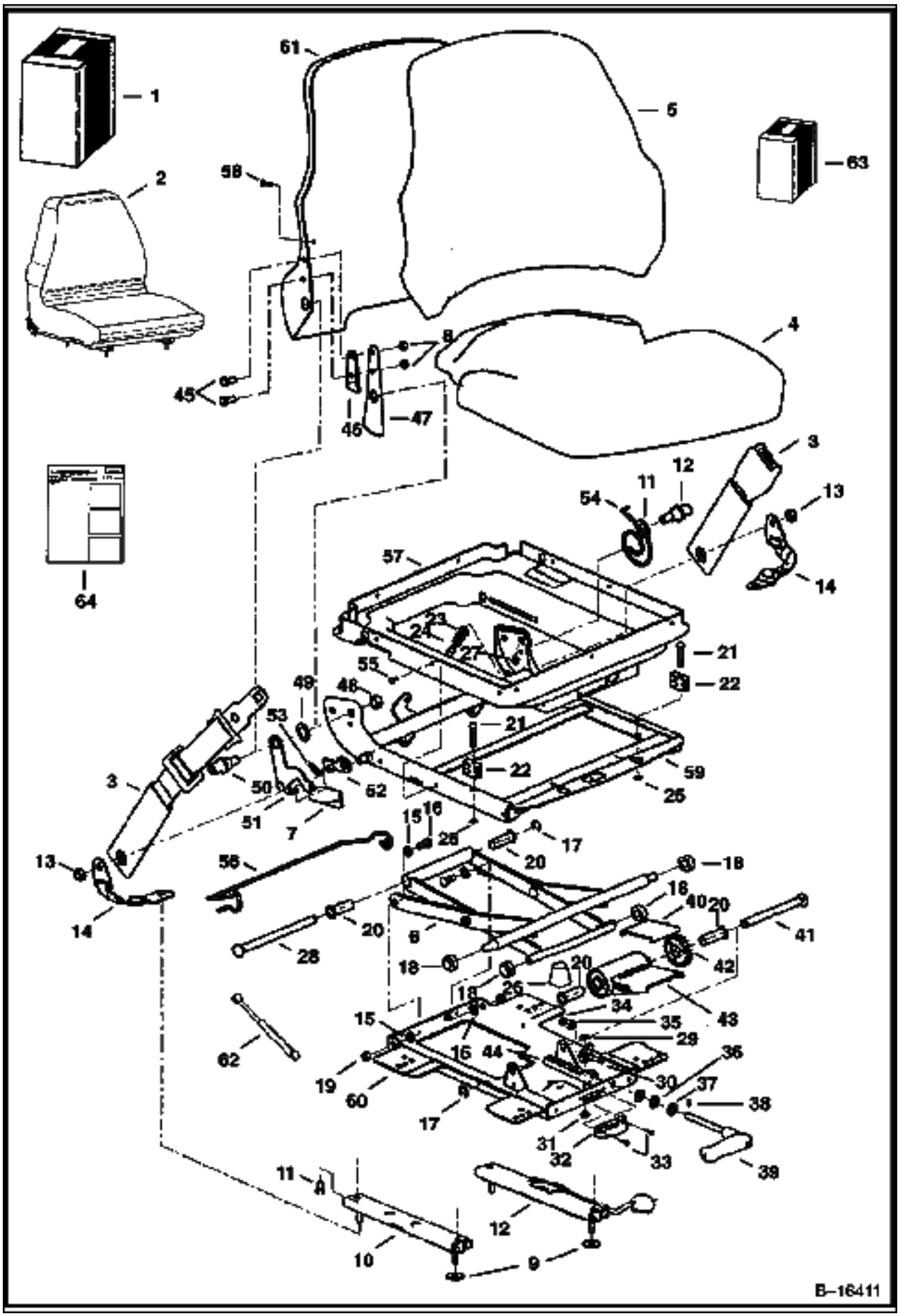

SEAT (Cont'd)
(Suspension - Sears)

Ref No	Part Number	Description	Remarks	Serial Number	Qty
1		KIT	NAP - vinyl seat - Order Ref. 2, 3 & 64		1
1		KIT	NAP - fabric seat - Order Ref. 2, 3 & 64		1
2	6675595	SEAT	vinyl - L.H. recliner lever		1
2	6675596	SEAT	fabric - L.H. recliner lever		1
3	6675170	SEAT BELT	lap		1
4	6675320	SEAT	seat - fabric		1
4	6675322	SEAT	seat - vinyl		1
5	6675319	SEAT	backrest - fabric - W/Ref. 58		1
5	6675321	SEAT	backrest - vinyl - W/Ref. 58		1
6	6675317	SCISSORS			1
7	6675323	KNOB	recliner		1
8		NUT	NSS		6
9	619021B	WASHER			4
10		SLIDE	NSS - slave		1
11		BOLT	NSS		4
12		SLIDE	NSS - locking		1
13		NUT	NSS		2
14		BELT	NSS - tether		2
15		WASHER	NSS - cross pivot		4
16		BOLT	NSS - pivot		2
17		RING	NSS - retaining		2
18		ROLLER	NSS		4
19		NUT	NSS		2
20		BUSHING	NSS - wt adjustment		4
21		RIVET	NSS		2
22		BLOCK	NSS - up stop		2
23		WASHER	NSS		3
24		STOP	NSS - armrest		1
25		PUSHNUT	NSS		2
26		BUMPER	NSS		1
27		NUT	NSS		1
28		SHAFT	NSS - bearing		1
29		RIVET	NSS - female snap		1
30		INDICATOR	NSS - weight		1
31		RIVET	NSS - male snap		1
32		DIAL	NSS - weight indicator		1
33		POP RIVET	NSS		2
34		SPACER	NSS		1
35		NUT	NSS		1
36		BEARING	NSS - thrust		1
37		RACE	NSS - thrust		2
38		SHEAR PIN	NSS		1
39		HANDLE	NSS - weight adjustment		1
40		PLATE	NSS - wear		1
41		SHAFT	NSS - torsion		1
42		DRIVE GEAR	NSS		1
43		BUSHING	NSS - torsion		1
44		RACK	NSS - wt adjustment		1
45		BOLT	NSS		2
46		SPACER	NSS - recliner		1
47		BRACKET	NSS - back tilt		1
48		NUT	NSS		2
49		WASHER	NSS - plastic		2
50		BOSS	NSS - back pan pivot		2

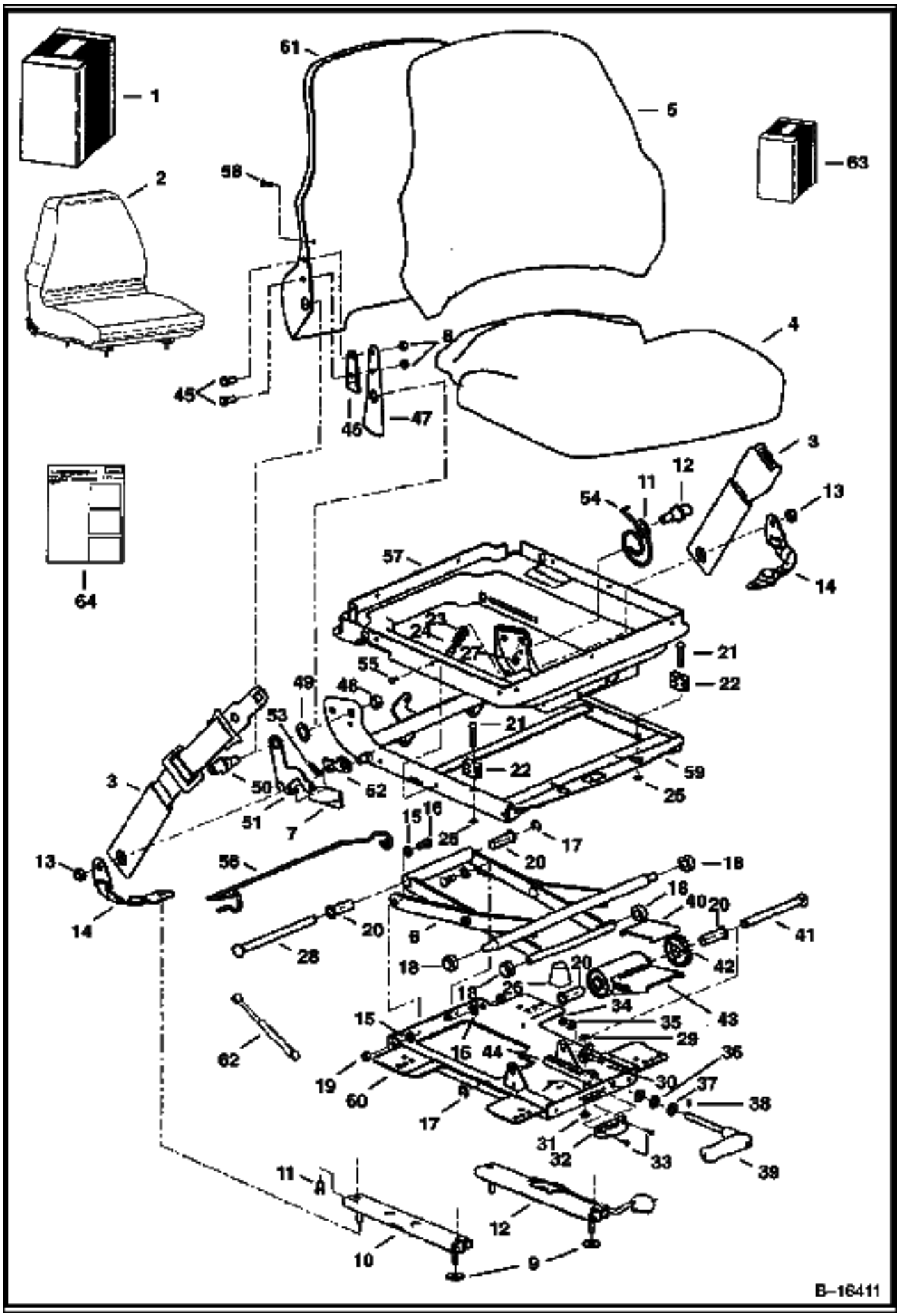
1
2
3
4
5
6
7
8
9
10
11
12
13
14
15
16
17
18
19
20
21
22
23
24
25
26
27
28
29
30
31
32
33
34
35
36
37
38
39
40
41
42
43
44
45
46
47
48
49
50
51
52
53
54
55
56
57
58
59
60
61
62
63
64
B-16411

SEAT (Cont'd)
(Suspension - Sears)

Ref No	Part Number	Description	Remarks	Serial Number	Qty
51		HANDLE	NSS - recliner (RH)		1
52		LATCH	NSS - recliner		1
53		SPRING	NSS - extension		1
54		SPRING	NSS - tilt latch		1
55		CLIP	NSS		6
56		WIRE	NSS - boot support		1
57		SUSPENSION	NSS - boot		1
58		SCREW	NSS		2
59		HOUSING	NSS - upper		1
60		HOUSING	NSS - lower		1
61		BACK PAN	NSS		1
62	6676338	GAS SPRING			1
63	6675309	KIT	slides - W/Ref. 8-12		1
63	6675310	KIT	tether belt - W/Ref. 9, 13 & 14		1
63	6675311	KIT	suspension rollers & bearings - W/Ref. 15-20		1
63	6675312	KIT	suspension bumpers & stops - W/Ref. 21-27		1
63	6675313	KIT	rear tube - W/Ref. 17, 20 & 28		1
63	6675314	KIT	weight adj. indicator - W/Ref. 29-33		1
63	6675315	KIT	weight adj. handle - W/Ref. 34-39		1
63	6675316	KIT	weight adj. - W/Ref. 17, 20 & 40-44		1
63	6675318	KIT	R.H. recliner - W/Ref. 7,8 & 45-54		1
63	6676034	KIT	L.H. recliner - W/Ref. 7,8 & 45-54		1
63	6675308	KIT	susp. boot - W/Ref. 55-57		1
64	6900861	INSTRUCTIONS			1

SEAT BELT
(Three Point Retractable)

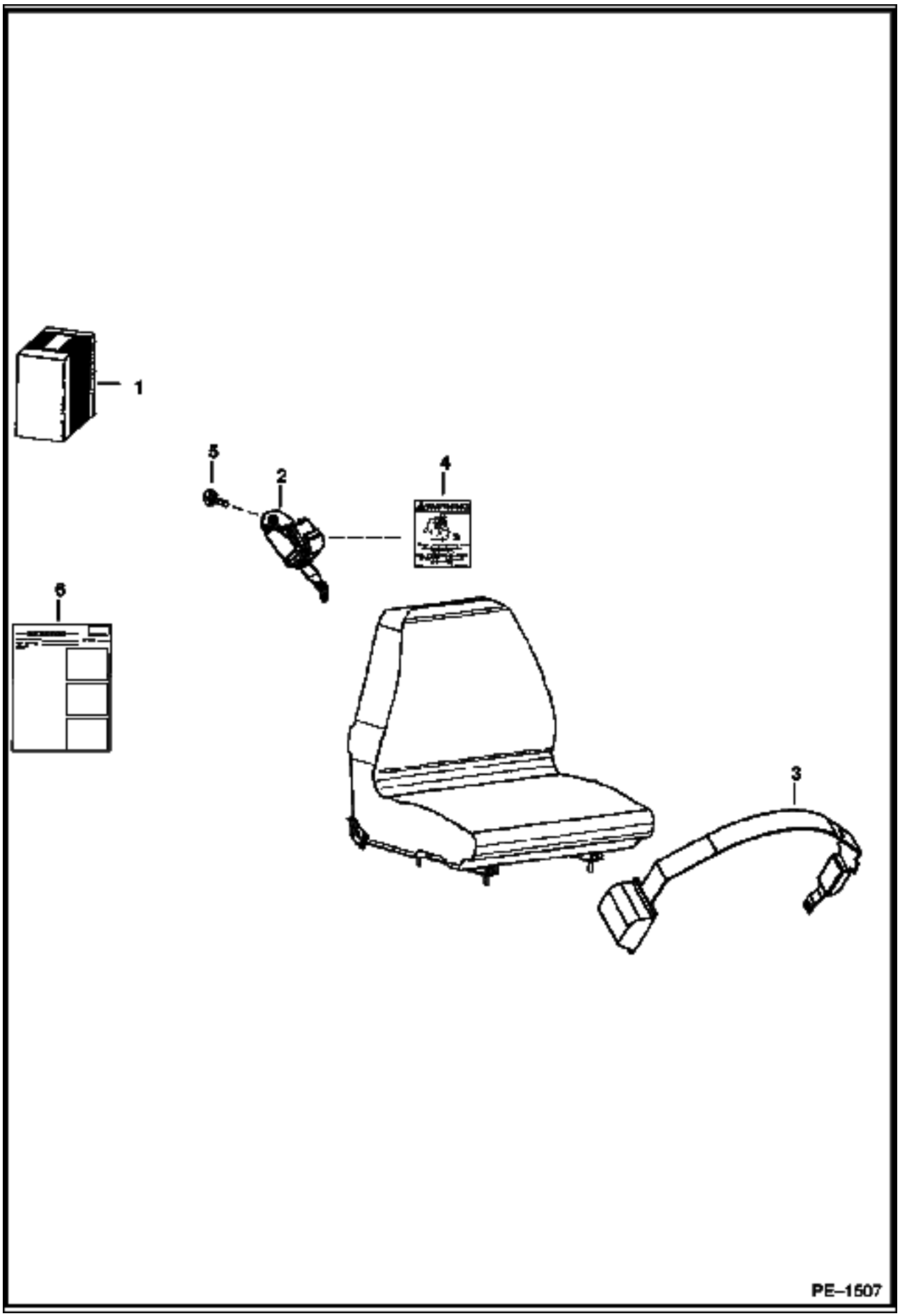

SEAT BELT (Cont'd)
(Three Point Retractable)

Ref No	Part Number	Description	Remarks	Serial Number	Qty
1	6732219	KIT	See Illustration SEAT/ B16411 three point retractable seat belt - Use with Sears brand Suspension Seats with a L.H. recliner lever		1
2	6674407	SHOULDER BELT			1
3	6679308	SEAT BELT			1
4	6725370	DECAL			1
5	35C000612B	BOLT			1
6	6901010	INSTRUCTIONS			1

SEAT BELT
(3" Wide Retractable)

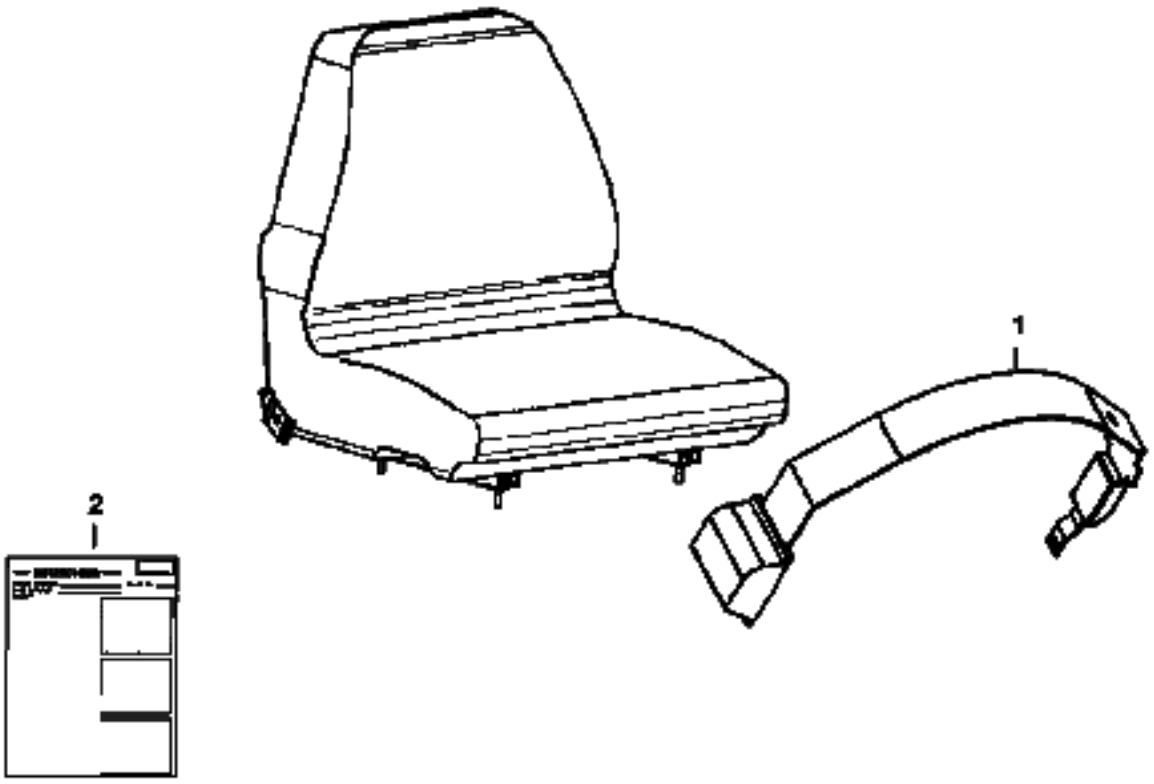

SEAT BELT (Cont'd)
(3" Wide Retractable)

Ref No	Part Number	Description	Remarks	Serial Number	Qty
1	6675562	SEAT BELT	See Illustration SEAT/ B16411 3" wide retractable seat belt - Use with Sears brand Suspension Seats with a L.H. recliner lever		1
2	6901011	INSTRUCTIONS			1

SEAT BELT
(3" Wide)

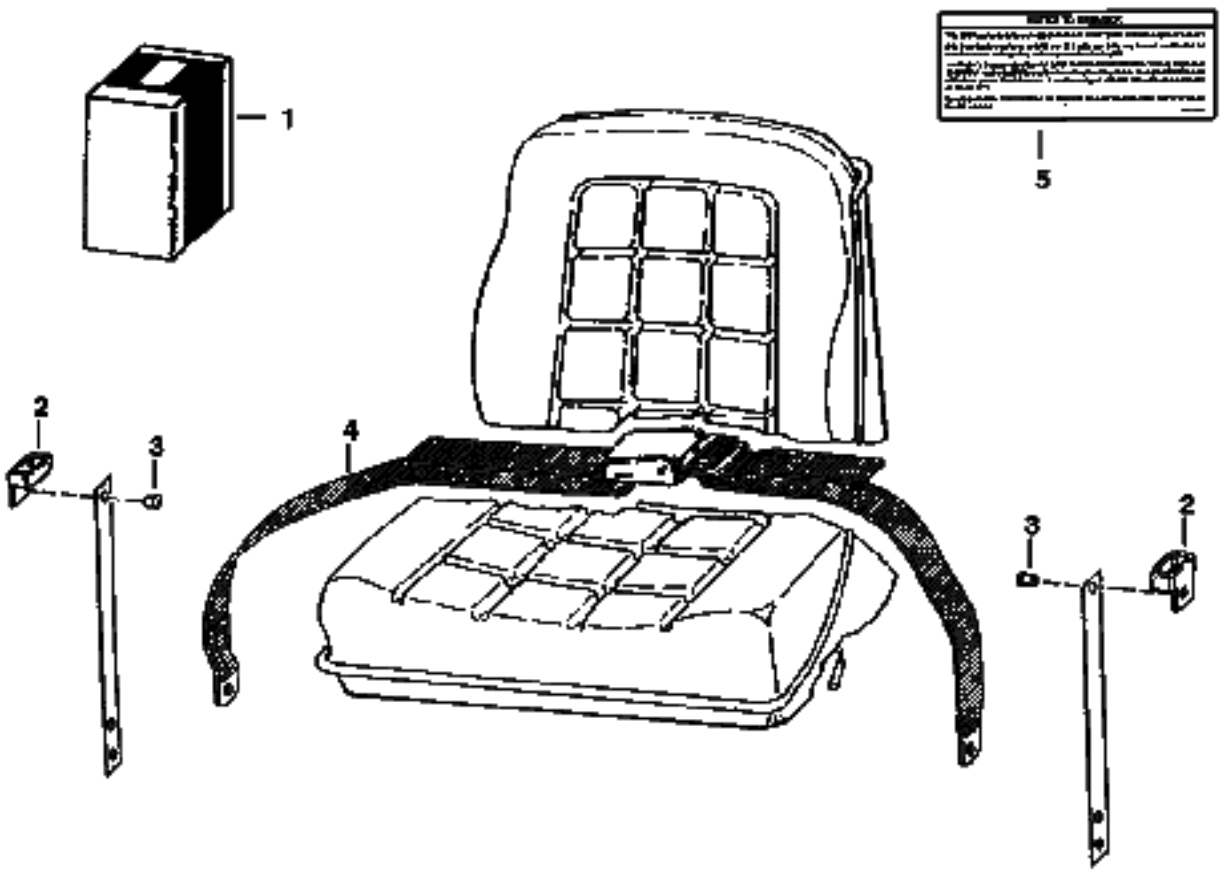

NOTE: Complies with British Columbia Industrial Health and Safety Regulations 26.16 (7) (a).

B–13601

SEAT BELT (Cont'd)
(3" Wide)

Ref No	Part Number	Description	Remarks	Serial Number	Qty
1	6703640	KIT	W/Ref. 2-5		1
2	6703703	GUIDE			2
3	6512797	RIVET			4
4	6659999	BELT			1
5	6703641	DECAL			1

STROBE LIGHT

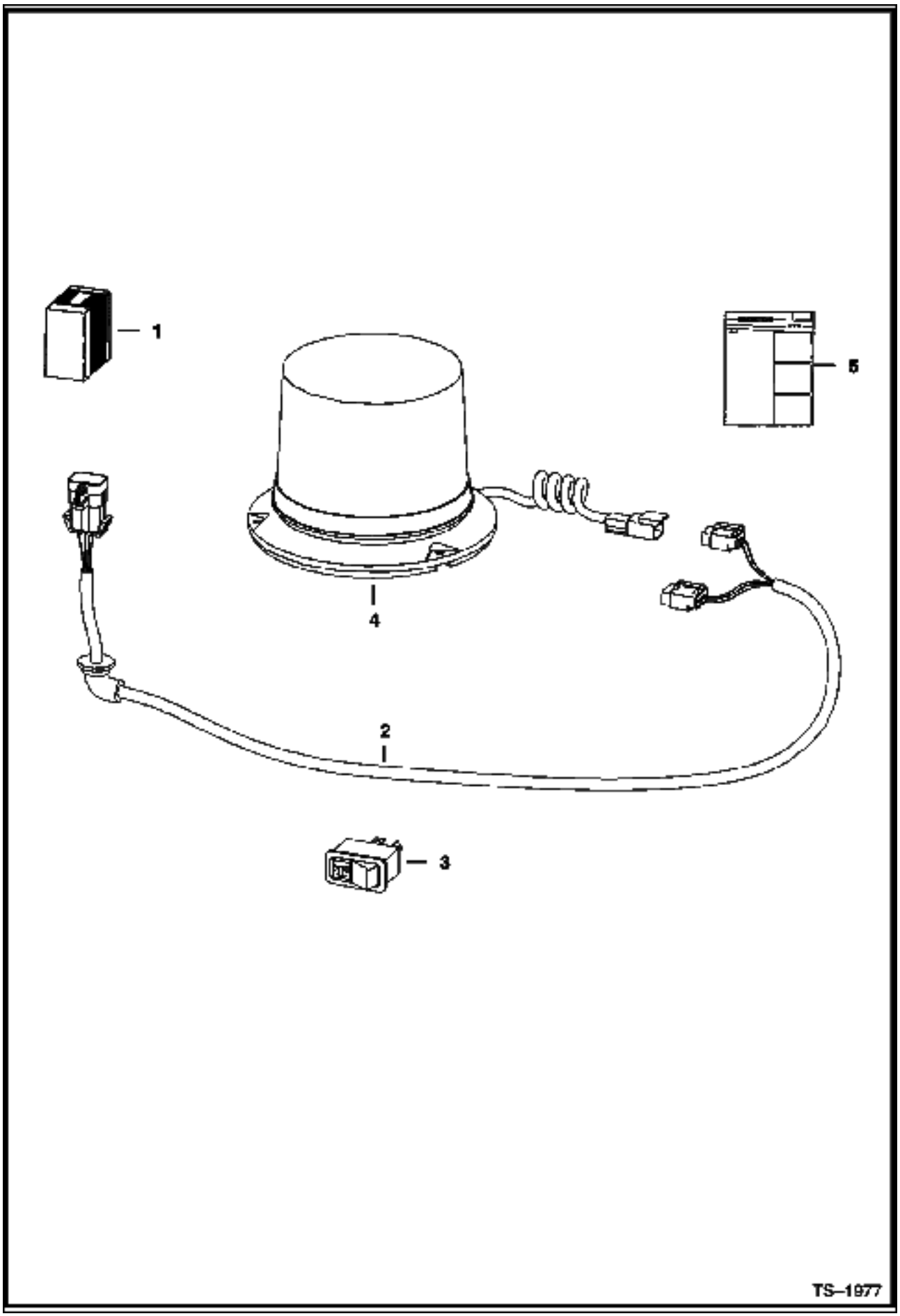

Ref No	Part Number	Description	Remarks	Serial Number	Qty
1	6719857	KIT	See Illustration CAB ELECTRICAL CIRCUITRY/ PE2393 strobe light - If loader is not equipped with Deluxe Cab Option, also Order 6727468 Harness		1
2	6718872	HARNESS			1
3	6665317	SWITCH	horizontal		1
3	6668816	SWITCH	vertical		1
4	6675522	STROBE			1
4	6675858	FLASH TUBES			1
5	6900992	INSTRUCTIONS			1

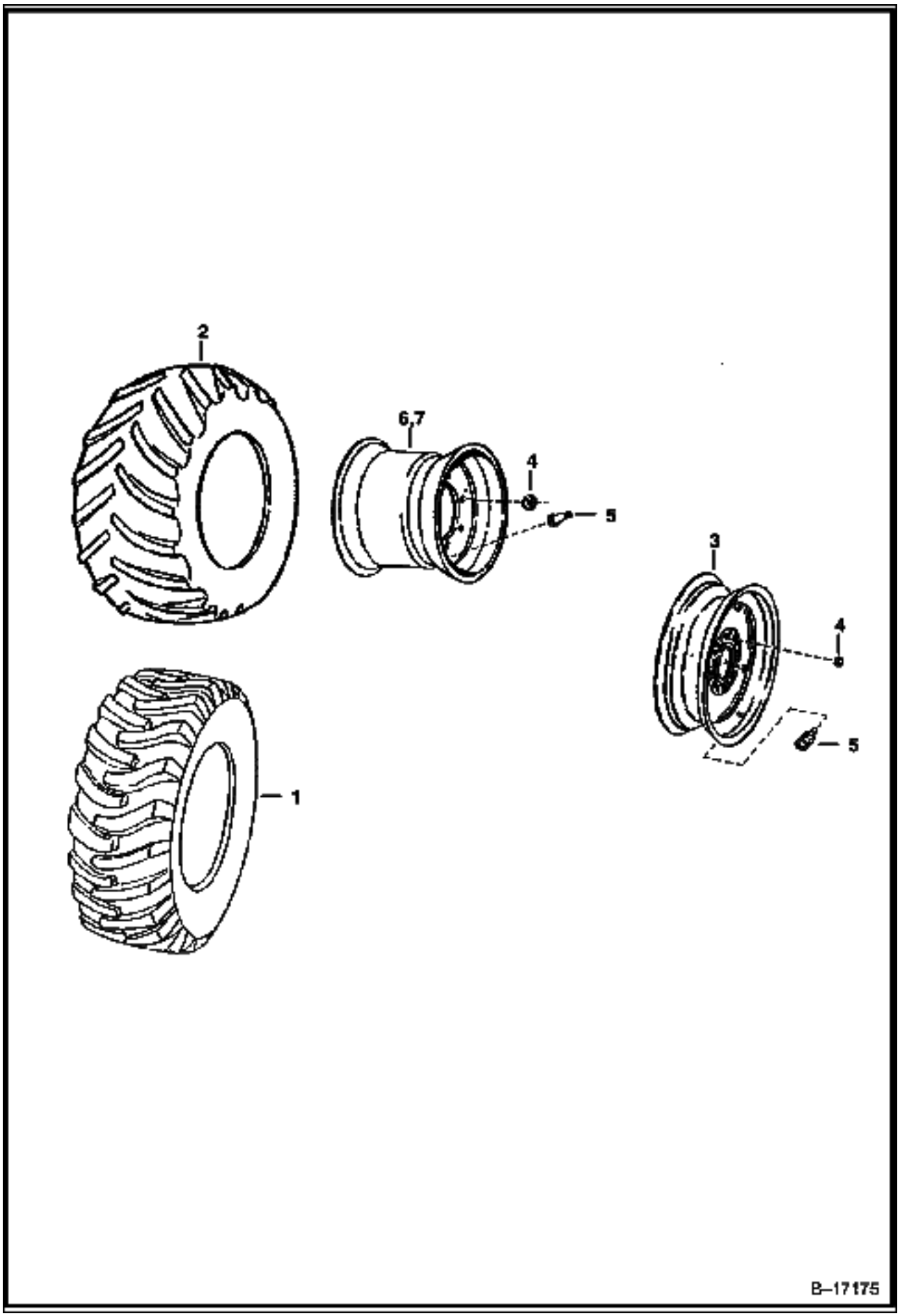
2
6,7
4
5
3
4
5
1
B–17175

Ref No	Part Number	Description	Remarks	Serial Number	Qty
1	6729901	TIRE	12 x 16.5 12 ply rating - Bobcat - heavy duty		4
1	6730108	TIRE	12 x 16.5 12 ply rating - Bobcat - severe duty		4
1	6729897	TIRE	12 x 16.5 10 ply rating - Bobcat - standard duty		4
2	6730109	TIRE	33x15.5x16.5 12 ply - Hippo - Galaxy		4
3	6730772	RIM	Used W/Ref. 1 - 72" wide		4
4	6564669	NUT	wheel		32
5	1614765B	STEM	valve		4
6	6732847	RIM	used W/Ref. 2 - 74" wide		4
7	6733578	RIM	offset - 68" wide		4

BULK ITEMS
(See Note)

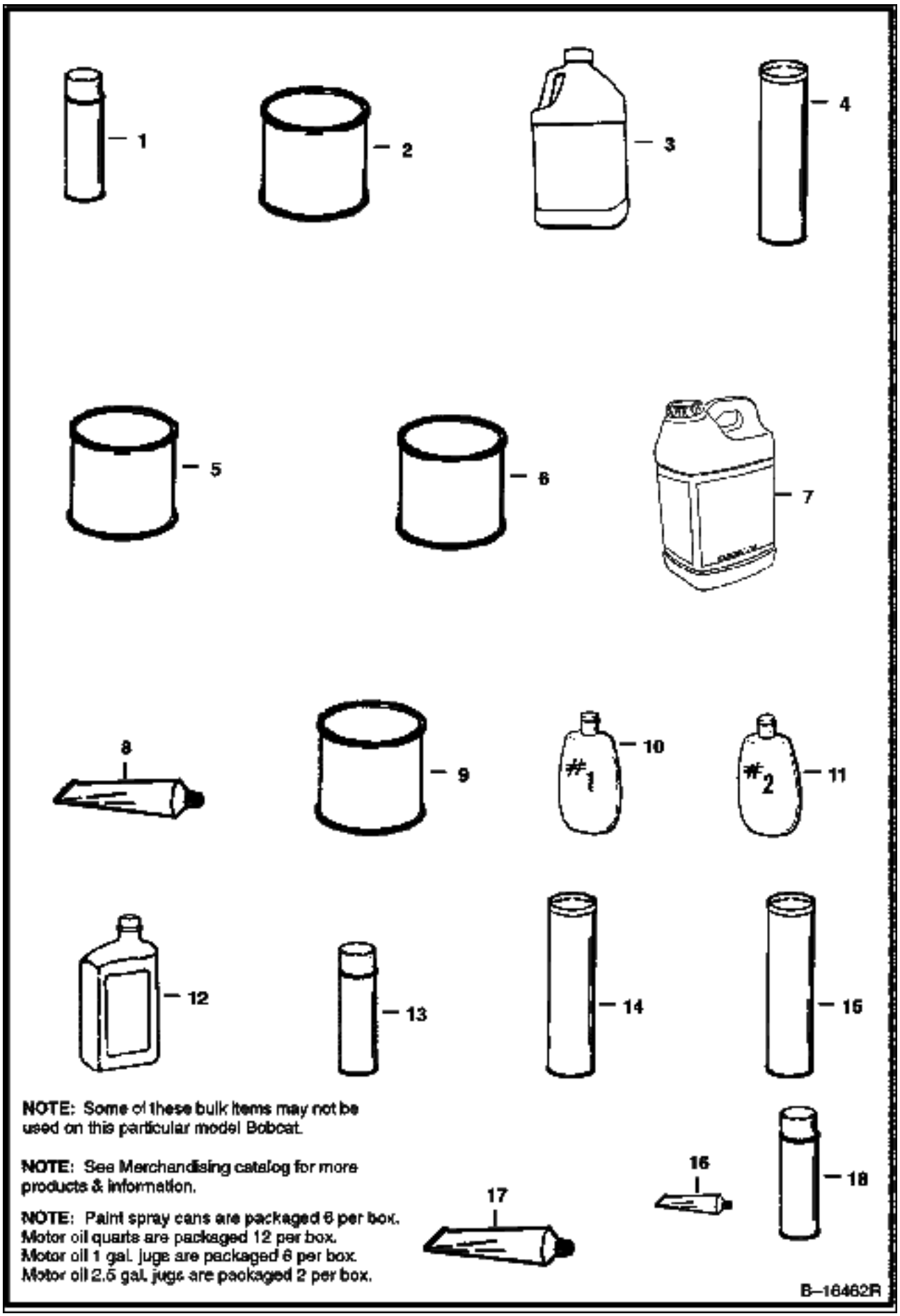

NOTE: Some of these bulk items may not be used on this particular model Bobcat.

NOTE: See Merchandising catalog for more products & information.

NOTE: Paint spray cans are packaged 6 per box.
Motor oil quarts are packaged 12 per box.
Motor oil 1 gal. jugs are packaged 6 per box.
Motor oil 2.5 gal. jugs are packaged 2 per box.

BULK ITEMS (Cont'd)
(See Note)

Ref No	Part Number	Description	Remarks	Serial Number	Qty
1	6902228	PAINT	orange - spray can - SEE NOTE		x
1	6902229	PAINT	charcoal - spray can - SEE NOTE		x
1	6902230	PAINT	white - spray can - SEE NOTE		x
2		PAINT	NAP - orange - gallon - also Order Ref. 5		x
2	6902233	PAINT	orange - Qt.		x
2		PAINT	NAP - charcoal - gallon - also Order Ref. 5		x
2	6902234	PAINT	charcoal - Qt.		x
2		PAINT	NAP - white - gallon - also Order Ref. 5		x
2	6902235	PAINT	white - Qt.		x
3	6724094	ANTI-FREEEZE	Gal. - Premixed PG		x
3	6724354	ANTI-FREEZE	Gal. - PG concentrate		x
4	6633583	SEALANT	chaincase covers		x
5		REDUCER	NAP - gallon		x
6		PRIMER	NAP - gallon		x
6	6653519	PRIMER	Qt.		x
7	6903117	HYD FLUID 2.5 GAL. 2			x
7	6903118	HYD. FLUID 5GAL			x
7		FLUID	NAP - 30 gallon drum		x
7	6903119	HYD. FLUID 55GAL			x
8	6599360	SEALANT	electrical - 3 oz. tube		x
9	6903121	GEAR LUBE 12			x
10	6630188	POLISH	window - #1 (8 oz.)		x
11	6630189	POLISH	window - #2 (8 oz.) - scratch remover		x
12	6903109	OIL 30W QT. 12			x
12	6903107	OIL 10W30 QT. 12			x
12	6903105	OIL 15W40 QT. 12			x
12	6903108	OIL 10W30 GAL. 6			x
12	6903106	OIL 15W40 GAL. 6			x
12	6903110	OIL 30W GAL. 6			x
12	6903113	OIL 15W40 2.5 GAL. 2			x
12	6903112	OIL 10W30 2.5 GAL 2			x
12	6903111	OIL 30W 2.5 GAL 2			x
13	6675380	ADHESIVE	insulation - spray can		x
14	6903122	GREASE 10			x
15	6599719	GREASE	14.5 oz. cartridge - for fan idler bearing		x
16	6650407	ADHESIVE	1 oz. tube		x
17	6650388	SEALANT	flange		x
18	6736644	PAINT	orange - .5oz. spray can		x
18	6736641	PAINT	charcoal - .5oz. spray can		x
18	6736642	PAINT	white - .5oz. spray can		x
18	6736645	PAINT	red - .5oz. spray can		x



B–17100

Ref No	Part Number	Description	Remarks	Serial Number	Qty
1		KIT	See Illustration CAB WINDOWS/ MS1340 See Illustration CAB DOOR/ PE1566 cab enclosure - SALES Kit #6731938		1
1		KIT	See Illustration CAB WINDOWS/ MS1340 See Illustration CAB DOOR/ PE1703 special cab enclosure - SALES Kit #6731937		1

BACK-UP ALARM KIT

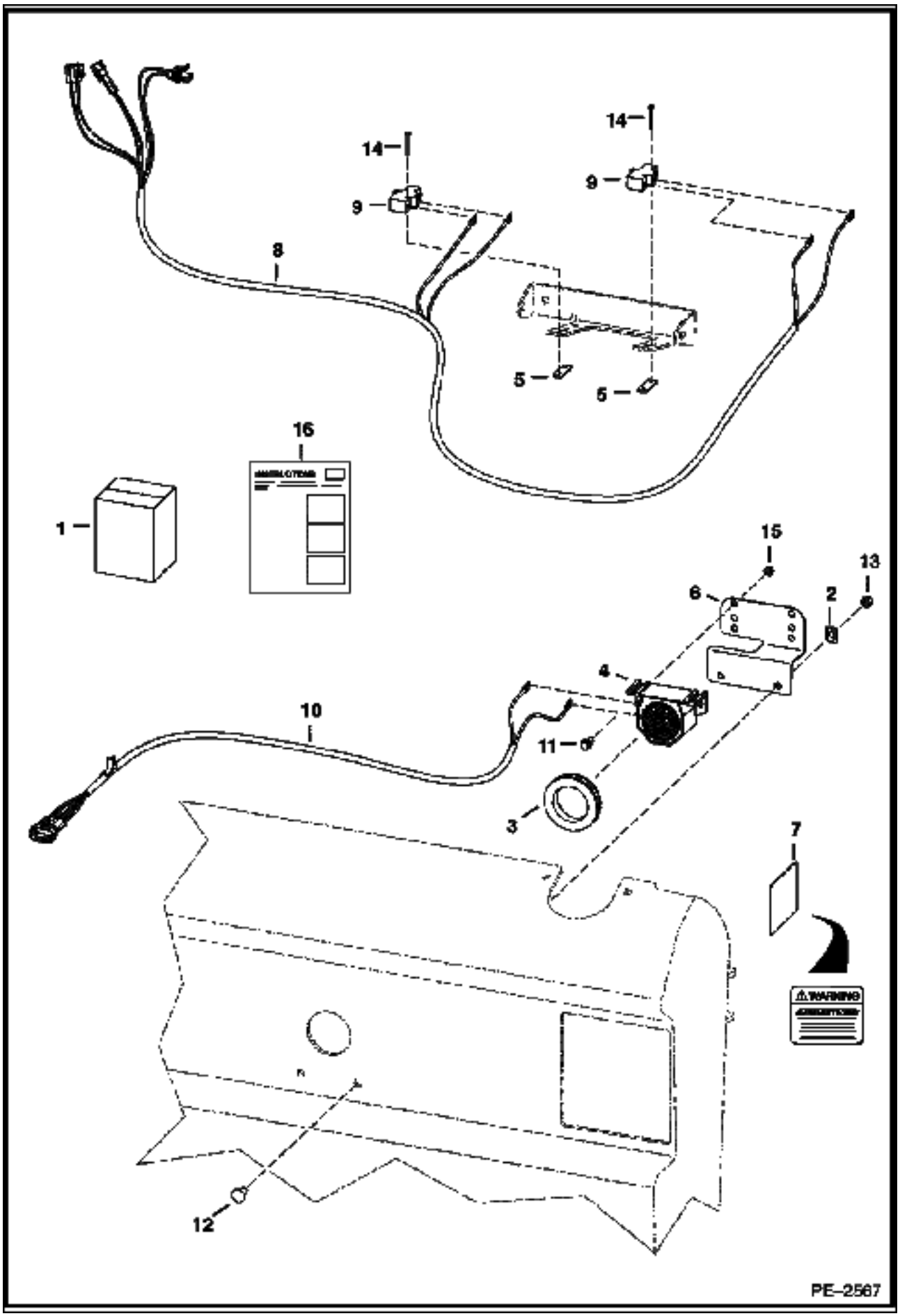

BACK-UP ALARM KIT (Cont'd)

Ref No	Part Number	Description	Remarks	Serial Number	Qty
1	7107829	BACK UP ALARM KIT			1
2	774220	NUT			2
3	6577545	GROMMET			1
4	6599931	ALARM			1
5	6702593	SPACER			2
6	6733970	MOUNT			1
7	6737189	DECAL			1
8	7107544	HARNESS			1
9	6646781	SWITCH			2
10	6715659	HARNESS			1
11	35C000410B	BOLT			2
12	37C000512B	BOLT			2
13	61D000005B	NUT			2
14	84G001320B	BOLT			4
15	97D000004B	NUT			2
16	6903293	INSTRUCTIONS			1

Part No.	Description	Was	Code	Page
10C000410B	BOLT			230
10C000416B	BOLT			230
10C000616B	BOLT			20
10H000025B	GREASE ZERK			26, 28, 54, 56
10H000035B	GREASE ZERK			28, 86, 124
11H000015B	GREASE ZERK			26
12D000006B	NUT			248
12D000008B	NUT			248, 250
12D000010B	NUT			258
12H000015B	GREASE ZERK			26, 56
12H000025B	GREASE ZERK			308
1304227B	PIN			166
1306637B	PIN			60
1313116	BUSHING			156
1318565	COTTER PIN			80
1320075	COTTER PIN			298
1321607B	RACE			44
1321608B	BEARING			44
14D000010B	NUT			164, 250
14J003112B	PIN			156
14J005032B	PIN			28
15H000015B	GREASE ZERK			26
15KB00406B	ADAPTER			50
15KB00606B	ADAPTER			52, 64, 68, 316
15KB00610B	ADAPTER			84
15KB00612B	ADAPTER			308, 316
15KB00808B	ADAPTER			82
15KB00812B	ADAPTER			80
15KB01010B	ADAPTER			150
15KB01012B	ADAPTER			150
15KB01210B	ADAPTER			48, 214
15KB01212B	ADAPTER			308
15KB01612B	ADAPTER			82
15KB01616B	CONNECTOR			52
15KN00003B	ADAPTER			84
15KV00005B	ADAPTER			84
1614765B	STEM			336
16F000002B	PLUG			178
16KN00005B	ADAPTER			84
17C000410B	BOLT			208, 248, 250, 292, 294
17C000412B	BOLT			41, 42
17C000428B	BOLT			50
17C000508B	BOLT			248, 250
17C000510B	BOLT			160
17C000512B	BOLT			164, 216, 222, 248, 250
17C000514B	BOLT			206
17C000516B	BOLT			254
17C000540B	BOLT			148, 214
17C000608B	BOLT			130, 206
17C000610B	BOLT			148
17C000612B	BOLT			32, 60, 86, 124, 150, 156, 218, 222
17C000614B	BOLT			240
17C000616B	BOLT			130, 154, 262, 296
17C000620B	BOLT			60, 78, 86, 124, 150

Code for disposition of old part number

A -- Use up
B -- Use on other application (See PNI)
C -- File PDR Report with Bobcat Parts Sales
D -- Part Number Error

Part No.	Description	Was	Code	Page
17C000624B	BOLT			50, 60, 222
17C000626B	BOLT			86, 124
17C000628B	BOLT			222
17C000632B	BOLT			298
17C000636B	BOLT			84
17C000640B	BOLT			20, 26, 52, 78, 232
17C000644B	BOLT			26
17C000648B	BOLT			26
17C000652B	BOLT			296
17C000656B	BOLT			26, 282, 286
17C000660B	BOLT			28
17C000664B	BOLT			26
17C000672B	BOLT			26, 296
17C000680B	BOLT			86, 124
17C000716B	BOLT			16
17C000728B	BOLT			82
17C000816B	BOLT			156, 160
17C000820B	BOLT			24, 160
17C000824B	BOLT			160
17C000832B	BOLT			156
17C000872B	BOLT			156
17C000888B	BOLT			160
17C001024B	BOLT			44
17C001028B	BOLT			296
17C001056B	BOLT			14
17C006116B	BOLT			150
17C010112B	BOLT			26
17C010136B	BOLT			26
17KB00606B	ELBOW			52, 78, 150, 316
17KB01210B	ELBOW			48, 214
17KB01212B	ELBOW			316
17KV00003B	ELBOW			84
17KV00005B	ELBOW			84
18EM01224B	WASHER			216, 222
19F000012B	BUSHING			212
19J000012B	CLAMP			78
19KB00606B	TEE			264
19KV00005B	TEE			84
1CM00635B	SCREW			286, 290
1CM00640B	BOLT			216, 222
1CM00820B	BOLT			86, 124
1CM08100B	BOLT			160
1DM00006B	NUT			200
20J000016B	CLAMP			82
20JM01025B	PIN			160
21G000804B	BOLT			266
21JM00020B	PIN			192
21JM00814B	PIN			179, 180
21KB00606B	TEE			50
21KB00610B	TEE			84
225855B	SEAL			26
24F000001B	BRACKET			148
24K000007B	PLUG			62, 66
25E000010B	WASHER			142

Code for disposition of old part number

A -- Use up

B -- Use on other application (See PNI)

C -- File PDR Report with Bobcat Parts Sales

D -- Part Number Error

Part No.	Description	Was	Code	Page
25E000011B	WASHER			164
25E000013B	WASHER			42, 132, 136, 206, 208, 292, 294
25E000014B	WASHER			230
25E000015B	WASHER			26, 148
25E000016B	WASHER			216, 222
25E000017B	WASHER			86, 124
25E000018B	WASHER			166
25E000021B	WASHER			60, 156
25E000024B	WASHER			86, 124, 130
25G000410B	BOLT			146
25G000512B	BOLT			14, 22
25G000520B	BOLT			22
25G000612B	BOLT			246
25GM08010B	SET SCREW			176
25GT00410B	BOLT			132
25K020016B	O-RING			62, 66
25K020100B	O-RING			40
25K030118B	O-RING			78
25K030126B	O-RING			28
25K030218B	O-RING			56
25K030812B	O-RING			36
27E000010B	WASHER			26
29CM00820B	BOLT			154, 160
29G000416B	SCREW			62, 66
29G000444B	BOLT			62, 66
2C001626B	BOLT			43, 44
2F004051B	PIN			166
30G000416B	BOLT			63, 64
30H000021B	CLAMP			164, 260
30H000023B	CLAMP			292
30H000027B	CLIP			244
30H000031B	CLAMP			164
30H000034B	CLAMP			152
30H000035B	CLAMP			72, 74
30H000042B	CLAMP			300
30H000046B	CLAMP			146
30H000050B	CLAMP			246
30H000062B	CLAMP			206
30H000073B	CLAMP			160
30H000079B	CLAMP			82
30H000091B	CLAMP			152
31C000410B	BOLT			258
31C000644B	BOLT			52
31C000820B	BOLT			156, 160
31C000824B	BOLT			12, 298
31C001036B	BOLT			298
31C001228B	BOLT			12
31H000038B	CLAMP			160, 316
31H000042B	CLIP			264, 308
31H000046B	CLAMP			282, 286
3291290B	WING NUT			202
35C000408B	BOLT			216
35C000410B	BOLT			248, 250, 268, 282, 342
35C000412B	BOLT			20, 40, 250, 260

Code for disposition of old part number

A -- Use up
B -- Use on other application (See PNI)
C -- File PDR Report with Bobcat Parts Sales
D -- Part Number Error

Part No.	Description	Was	Code	Page
35C000512B	BOLT			30, 292, 294
35C000514B	BOLT			130
35C000516B	BOLT			78, 152
35C000520B	BOLT			146
35C000536B	BOLT			248, 250
35C000612B	BOLT			80, 308, 328
35C000616B	BOLT			50
35C000620B	BOLT			148, 160
35C000624B	BOLT			86, 124, 316
35C000632B	BOLT			78
35C000680B	BOLT			316
35C000820B	BOLT			50
35C000844B	BOLT			50
35C001020B	BOLT			234
36K000005B	CAP			50, 62, 64, 66, 78, 82
36K000006B	CAP			160
36K000008B	CAP			46
37C000412B	BOLT			260
37C000424B	BOLT			268, 282
37C000512B	BOLT			24, 42, 208, 268, 282, 300, 342
37C000612B	BOLT			24
37C000616B	BOLT			60
37C000620B	BOLT			30, 60, 206
37C000628B	BOLT			24
38C000610B	BOLT			164, 166
38C000820B	BOLT			156
38C000824B	BOLT			24
38C000828B	BOLT			155, 156
38C000840B	BOLT			24
3966602B	O-RING			178
3974095B	GASKET			192, 200
3974226B	KEY			180
3974260B	BOLT			190
3974394B	PIN			192, 194
3974500B	JOINT			194
3974503B	STUD			192
3974916B	STUD			170, 174, 178
3974920B	SCREW			176
3974970B	SCREW			200
3974972B	GASKET			200
42H000052B	CLAMP			154
42HC00250B	CLAMP			154
42HC00375B	CLAMP			153, 154
42HL00250B	CLAMP			34, 78
42HS00004B	CLAMP			34
43C000408B	BOLT			136
43C000516B	BOLT			34
43C000616B	BOLT			144, 145, 146
43C000852B	BOLT			160
43C820	BOLT			112
43DM00008B	NUT			148, 256
44H000048B	CLAMP			282, 286
45C000616B	BOLT			12, 154, 166
45C000620B	BOLT			86, 124

Code for disposition of old part number

A -- Use up
B -- Use on other application (See PNI)
C -- File PDR Report with Bobcat Parts Sales
D -- Part Number Error

Part No.	Description	Was	Code	Page
45G001006B	BOLT			258
46D000005B	NUT			216, 222
47C000820B	BOLT			42
47K000010B	PLUG			78
4D000028B	NUT			296
4DM00008B	NUT			140
4DM00010B	NUT			148
4F006106B	PIN			20
51DM00012B	NUT			222
51DM12	NUT			216
5289686B	PLUG			18
53C000516B	BOLT			34
53CM00616B	BOLT			166
53CM00820B	BOLT			166
53D000006B	NUT			14, 20
53D000010B	NUT			14
53D000012B	NUT			12
53DM00008B	NUT			154, 161, 162
54K020002B	O-RING			62, 68
54K020028B	O-RING			64, 66
54K030110B	O-RING			310
54K030218B	O-RING			54
54K040116B	O-RING			310
54K040224B	O-RING			54, 56
54K040300B	O-RING			54, 56
55D000005B	NUT			248, 250
55D000006B	NUT			24, 222
55K000204B	O-RING			62, 66
55K000214B	O-RING			78, 308
55K000219B	O-RING			82
57D000006B	NUT			24, 30, 60, 86, 124, 146, 206, 298
57D000008B	NUT			298
57D000010B	NUT			26, 234, 298
57G000608B	SCREW			268, 282
58K000013B	O-RING			64, 66
58K000016B	O-RING			64, 66
58K000017B	O-RING			62, 66
58K000022B	O-RING			80
58K000116B	O-RING			70
58K000127B	O-RING			62, 66
58K000132B	O-RING			310
59D000004B	NUT			146, 230, 260, 282
59D000005B	NUT			14, 42, 148, 218, 222, 268, 282
59D000006B	NUT			24
59D000008B	NUT			14
5CM01020B	BOLT			154, 284
5CM01025B	SCREW			286
5CM01080B	SCREW			284, 286
5HM00013B	CLAMP			34
5HM00014B	CLAMP			34, 152
5HM00015B	CLAMP			78
5HM00020B	CLAMP			270, 284
5HM00023B	CLAMP			152
5HM00024B	CLAMP			34, 72, 74

Code for disposition of old part number

A -- Use up

B -- Use on other application (See PNI)

C -- File PDR Report with Bobcat Parts Sales

D -- Part Number Error

Part No.	Description	Was	Code	Page
5HM00035B	CLAMP			72
5HM00042B	CLAMP			78, 80
5HM00055B	CLAMP			152
5HM00058B	CLAMP			34
5JM00020B	SNAP RING			192
614142B	SLEEVE			260
619021B	WASHER			14, 28, 60, 86, 124, 166, 308, 316, 324
61D000005B	NUT			23, 24, 150, 208, 216, 222, 342
61D000006B	NUT			156, 217, 218, 232, 240
62D000004B	NUT			164
62D000005B	NUT			256
6511855	SEAL			150
6512026	BUSHING			60
6512797	RIVET			332
6513152	SEAL			216, 222
6513471	CLAMP			152
6513495	COTTER PIN			60, 166
6515131	TERMINAL			260
6515817	WASHER			14
6517516	LIGHT			260
6518200	GREASE ZERK			86, 124
6518955	SNAP RING			156
6519178	BUMPER			20
6531270	SLEEVE			62
6532127	BOOT			32, 132
6532347	SPACER			26
6532453	RING			310
6533898	DECAL			298
6538367	HEAD			54
6542731	SAFETY TREAD			216, 222
6553411	BUSHING			12, 42
6553709	WASHER			14
6553976	SAFETY TREAD			236
6554100	TREAD			166, 236, 308
6554149	CORD			18, 216, 224, 230
6555341	SAFETY TREAD			236
6555351	SEAL			230
6557224	DECAL			236
6557291	BALL JOINT			166
6557493	GROMMET			322
6557831	WASHER			86, 124, 284, 286
6557904	FLASHER			248, 250, 260
6558305	WIRE ROPE			236
6558309	WIRE ROPE			236
6558310	SLEEVE			236
6559479	NUT			166
6560573	DECAL			238
6560633	DAMPENER			14
6561383	DECAL			236
6562018	SPRING			28
6562602	BUSHING			14
6562619	BUSHING			204
6563914	WASHER			60, 86, 124
6564343	SPACER			166

Code for disposition of old part number

A -- Use up

B -- Use on other application (See PNI)

C -- File PDR Report with Bobcat Parts Sales

D -- Part Number Error

Part No.	Description	Was	Code	Page
6564452	GRIP			24, 163, 164, 165, 166
6564657	PIN			60, 206
6564669	NUT			44, 336
6565200	DECAL			238
6565947	WASHER			44
6565977	HOSE			270, 282
6565990	DECAL			236
6567743	PIN			14, 266
6567838	PIN			298
6567962	WASHER			164, 166
6568424	ADAPTER			156
6568425	ADAPTER			156
6569203	CLAMP			148
6569219	SCREEN			34, 78
6569498	SPRING ASSY			156
6570931	INSTRUCTIONS			204
6576033	WASHER			156
6576196	MOUNT			86
6576261	COVER			164
6576262	MOUNT			164, 166
6576280	BOLT			148
6577058	PIN			86, 124
6577230	BRACKET			32, 124
6577382	SPACER			150
6577545	GROMMET			208, 292, 294, 342
6577754	DECAL			238
6577821	HOSE			34
6577822	HOSE			34, 152
6577880	KIT			203, 204
6577954	PIN			26
6577961	GROMMET			32, 60, 166
6578169	HOSE			34
6578172	HOSE			34, 152
6578278	PAD			34, 78
6578368	DECAL			238
6578804	HOSE			150
6578857	HUB			44
6579167	HOSE			84
6579385	DECAL			236
6579528	DECAL			236
6579613	STOP			14, 150
6579989	BRACKET			148
6586251	HOSE			78
6586542	HEAD			310
6586543	PISTON			310
6586710	BOLT			156
6586918	SCREW			62
6587182	SWIVEL PIN			156
6587458	KEY			34
6587523	WASHER			62, 66
6587575	ADAPTER			62
6587580	SPRING			62, 67, 68
6587763	BOOT			62, 136
6587765	BUSHING			156

Code for disposition of old part number

A -- Use up
B -- Use on other application (See PNI)
C -- File PDR Report with Bobcat Parts Sales
D -- Part Number Error

Part No.	Description	Was	Code	Page
6589226	BONNET			62
6592098	WASHER			62
6592100	COLLAR			62, 68
6592105	BALL			62
6592107	SPRING			62
6592109	ADAPTER			66
6592117	SPRING			62, 66
6592506	CLAMP			46, 48, 78
6592766	U-BOLT			166
6595663	BUSHING			62, 66
6596807	PLUG			62
6598112	CAP			170, 196
6598133	BRACKET			174
6598169	PLUG			174, 180
6599360	SEALANT			338
6599365	KIT			122
6599645	PLUG			12
6599719	GREASE			338
6599741	WASHER			86, 124
6599744	BALL JOINT			86, 124
6599931	ALARM			208, 342
6610510	TIE			18, 34, 152, 294
6624289	STA STRAP			46, 48, 52, 72, 74, 144, 146, 148, 206, 244, 246, 248, 250, 264, 270, 284, 286, 308, 316
6628613	HOSE			84
6628810	HOSE			80
6630188	POLISH			338
6630189	POLISH			338
6630207	RIVET			32
6630945	WASHER			164, 166
6631036	JOINT			166
6631046	SEAL			178
6631418	PIN			14, 20, 266
6631561	NUT			70
6631643	PLATE			112
6633583	SEALANT			338
6634874	O-RING			70
6640690	PIN			128, 132, 292
6640692	CONNECTOR			128, 132
6640694	LOCK			128, 132
6640699	CONNECTOR			132, 268, 282, 292
6640700	LOCK			132, 292
6641174	CONNECTOR			268, 282
6641176	SEAL			128, 132, 292
6641179	CONNECTOR			70, 128, 132, 292
6641180	LOCK			70, 128, 132, 292
6644965	BALL JOINT			164
6646582	PLUG			132
6646705	SEAL			150
6646781	SWITCH			342
6647777	PIN			70
6647783	LOAD CHECK			70
6647784	PLUG			70
6647785	SPRING			70
6648293	SCREW			70

Code for disposition of old part number

A -- Use up

B -- Use on other application (See PNI)

C -- File PDR Report with Bobcat Parts Sales

D -- Part Number Error

Part No.	Description	Was	Code	Page
6648307	CONNECTOR			284
6648308	CONNECTOR			284
6648348	PLUG			32
6649244	STUD			216, 222
6649245	RETAINER			216, 222
6649481	BULB			300
6649551	SHOCK			86, 124
6649706	PIN			234
6649949	PLUG			18, 30
6650120	RACE			38, 40
6650388	SEALANT			338
6650407	ADHESIVE			338
6652373	VALVE			202
6652679	KEY			182
6652750	PLUG			180
6652751	GASKET			180
6652762	BOLT			172
6652918	NUT			160
6653519	PRIMER			338
6654139	MOULDING			130
6654806	FUSE			146
6655399	BUMPER			24, 150
6655781	BEARING			156
6657719	PLUG			18, 32, 230
6657734	PUMP			34
6658180	BREATHER			34
6659369	HEATER			212
6659543	PLUG			306
6659999	BELT			332
6660260	SWITCH			122
6660644	CAP			62
6660967	CAP			156
6660995	GREASE RING			156
6661022	FILTER			52, 82, 119, 120
6661062	PLUG			154, 306
6661114	CAP			33, 34
6661150	SWITCH			248
6661229	BEARING			156
6661248	ELEMENT			2, 8, 80, 122
6661353	LIGHT ASSY			300
6661377	SEAL			156
6661696	CAP			34
6661787	WASHER			160
6661807	KIT			9, 10, 120
6661808	KIT			120
6662246	CONNECTOR			274
6662252	LOCK			274
6662257	PIN			274
6662298	SNAP RING			42
6662848	CAP			66
6662855	BELT			5, 6, 156
6662997	PULLEY			156
6664065	WASHER			322
6664085	BUSHING			18, 220, 230, 322

Code for disposition of old part number

A -- Use up
B -- Use on other application (See PNI)
C -- File PDR Report with Bobcat Parts Sales
D -- Part Number Error

Part No.	Description	Was	Code	Page
6664097	COVER			322
6664103	NUT			322
6664221	RETAINER			18
6664223	OUTLET			18
6664224	CAP			18
6664554	PUMP			216
6664566	BOLT			322
6664845	BEARING			38, 40
6664848	SNAP RING			38, 40
6665000	CLIP			132, 216, 222
6665086	SEAL			54
6665222	RING GEAR			156
6665307	SEAL			156
6665308	SNAP RING			156
6665314	PLUG			18, 142
6665316	SWITCH			260
6665317	SWITCH			210, 334
6665321	RIVET			132, 216, 222
6665322	RIVET			132, 216, 222
6665367	BULB			18
6665370	PLUG			274
6665371	SWITCH			148
6665427	BATTERY			2, 148
6665568	EXTRUSION			216, 224
6665569	WASHER			62, 66
6665570	RING			62, 66
6665602	MOTOR			322
6665701	BUSHING			60
6665707	SWITCH			216
6665727	LIGHT			248, 250
6665728	LIGHT			248, 250
6665729	LIGHT			248, 250
6665755	SEAL			38, 40
6665860	KIT			248, 250
6665915	GAUGE			78
6666542	SEAL			310
6666571	BULB			210
6666766	GROMMET			216
6667144	CONNECTOR			128, 132
6667145	LOCK			128
6667176	PLUG			70
6667185	SEAL KIT			70
6667201	SPACER			322
6667323	SEAL			310
6667326	SEAL			54
6667352	FILTER FUEL			2, 6, 34
6667353	FILTER ASSY			34
6667461	PIN			176
6667676	COVER			70
6667677	O-RING			70
6667680	SNAP RING			70
6667687	STEM			64, 66
6667803	COUPLER			264, 316
6667804	COUPLER			264, 316

Code for disposition of old part number

A -- Use up

B -- Use on other application (See PNI)

C -- File PDR Report with Bobcat Parts Sales

D -- Part Number Error

Part No.	Description	Was	Code	Page
6667844	VALVE ASSY			50, 57, 58
6668104	MOUNT			160
6668742	SWITCH			18
6668765	VALVE			62, 66
6668815	SWITCH			248, 250, 260
6668816	SWITCH			210, 248, 250, 334
6668820	NUT			64, 68, 118
6669085	VALVE			58
6669087	SEAL KIT			58, 118
6669089	TRACK			22
6669091	CLIP			18, 268, 282
6669135	SEAT			21, 22
6669224	BOLT			18, 268, 282
6669267	SEAL			56
6669268	SEAL			56
6669549	SOCKET			244
6669657	SEAL KIT			264
6669732	SEAL KIT			64, 66
6669734	SEAL KIT			62, 66
6670160	CUSHION			22
6670284	LIGHT ASSY			300
6670287	COVER			24
6670312	SOLENOID			248, 250
6670347	GASKET			184
6670425	SCREW			200
6670426	NUT			200
6670427	CAP			196, 200
6670462	NUT			200
6670504	PLUG			184, 186
6670533	NUT			194
6670620	MOUNT			250
6670621	LENS			250
6670634	SEAL KIT			70
6670668	PIN			250
6670682	BEARING			156
6670706	CONNECTOR			132
6670707	CONNECTOR			132
6670710	LOCK			132
6670711	LOCK			132
6670715	PIN			132
6670726	LOCK			320
6670769	O-RING			190
6670774	PIN			198
6670782	GASKET			194
6671025	COIL			62, 66
6671106	HORN			248, 250
6671138	SEAL			44
6671520	O-RING			112
6671527	NUT			70
6671845	PLUG			88
6672272	WASHER			300
6672273	SCREW			300
6672274	SCREW			300
6672275	GASKET			300

Code for disposition of old part number

A -- Use up

B -- Use on other application (See PNI)

C -- File PDR Report with Bobcat Parts Sales

D -- Part Number Error

Part No.	Description	Was	Code	Page
6672276	LENS			300
6672277	BRACKET			300
6672279	MOUNT			300
6672354	PLUG			180
6672384	CAP			196
6672436	SEAL			176
6672471	VALVE			64, 66
6672715	SPACER			22
6672756	SEAL KIT			118
6672762	PLUG			118
6672825	MOTOR			87, 88
6672863	SOLENOID			70
6673188	SEAL KIT			118
6673710	BEARING			86, 124
6673789	BEARING			86, 124
6673954	HOSE			82
6674000	CLAMP			128
6674013	TRACK			22
6674029	SEAL			88
6674037	SPRING			88, 90
6674184	RING			88
6674192	BRAKE DISC			90
6674193	BRAKE DISC			90
6674202	NUT			142
6674219	BLOCK			88
6674228	PANEL			268, 282
6674231	VENT			268, 282
6674234	CONDENSER			281, 282, 286
6674235	RECEIVER DRIER			282, 286
6674315	SENSOR			148
6674316	SENSOR			146
6674331	COIL			70
6674335	HOUSING ASSY			88
6674337	SPOOL			88
6674338	WASHER			88
6674339	SPRING			88
6674340	PIN			88
6674341	HOUSING			88
6674343	SHIM			88, 90
6674344	SPRING			88, 90
6674345	PLUG			88, 90
6674400	HOUSING			300
6674401	HOUSING			300
6674402	MOUNT			300
6674403	COVER			16, 142
6674405	BUSHING			20
6674406	SENSOR			20
6674407	SHOULDER BELT			328
6674519	WINDOW			230
6674520	WINDOW			230
6674521	WINDOW			230
6674522	WINDOW			230
6674738	MOTOR			89, 90
6674798	REPAIR KIT			80

Code for disposition of old part number

A -- Use up
B -- Use on other application (See PNI)
C -- File PDR Report with Bobcat Parts Sales
D -- Part Number Error

Part No.	Description	Was	Code	Page
6674799	ADAPTER			244
6674802	CONNECTOR			242, 244
6674841	SPRING			90
6674894	NUT			20
6674895	RETAINER			18
6674907	NUT	6687925	A	102, 104
6674993	CAP			216
6675020	SCREW			88
6675021	BOLT			88, 90
6675026	CAP			242, 244
6675033	INSERT			14, 16, 142
6675064	TERMINAL			248, 250
6675074	SEAT BELT			16
6675075	HOSE			282, 286
6675076	HOSE			282, 286
6675091	CAM			88
6675099	ALARM			292, 294
6675135	GAS SPRING			14
6675137	GAS SPRING			14
6675139	GAS SPRING			14
6675140	SNAP RING			14
6675154	HOLDER			146
6675155	FUSE			146
6675170	SEAT BELT			324
6675171	CLAMP			142
6675172	BRACKET			268, 282
6675176	SWITCH			268, 282
6675177	KNOB			268, 282
6675179	FLANGE			268, 282
6675181	PLUG			268, 282
6675189	PIN			90
6675212	RETAINER			230
6675215	WINDOW			224
6675221	BOLT			160
6675227	SEAL			88
6675228	SEAL			88
6675258	CLEVIS			14
6675265	CHECK VALVE			118
6675273	WASHER			24
6675278	FILTER			146
6675298	COUPLER			218
6675299	COUPLER			218
6675308	KIT			326
6675309	KIT			326
6675310	KIT			326
6675311	KIT			326
6675312	KIT			326
6675313	KIT			326
6675314	KIT			326
6675315	KIT			326
6675316	KIT			326
6675317	SCISSORS			324
6675318	KIT			326
6675319	SEAT			324

Code for disposition of old part number

A -- Use up

B -- Use on other application (See PNI)

C -- File PDR Report with Bobcat Parts Sales

D -- Part Number Error

Part No.	Description	Was	Code	Page
6675320	SEAT			324
6675321	SEAT			324
6675322	SEAT			324
6675323	KNOB			324
6675336	BULB			300
6675378	CLIP			218, 222
6675380	ADHESIVE			338
6675387	EXTRUSION			17, 18, 230
6675497	BLOWER			272, 273, 274, 290
6675503	HOUSING			274
6675504	RING			274
6675505	BLOWER WHEEL			274
6675506	MOUNT			274
6675507	COVER			274
6675509	MOTOR			274
6675510	CLAMP			272, 290
6675511	DRAIN VALVE			272, 290
6675512	CLAMP			272, 290
6675522	STROBE			334
6675523	BEACON			210, 248, 250
6675524	CLIP			16
6675534	BLOCK VALVE			286, 290
6675538	O-RING			286, 290
6675544	CANVAS CAB			225, 226
6675545	GROMMET			18, 230
6675558	SEAL			216, 222
6675559	COIL			146
6675562	SEAT BELT			329, 330
6675581	EXTINGUISHER			258
6675590	DOOR			226
6675591	HINGE KIT			226
6675595	SEAT			324
6675596	SEAT			324
6675607	INSULATION			277, 278
6675608	INSULATION			278, 286
6675609	INSULATION			278, 286
6675610	INSULATION			278
6675611	SEAL			276, 278
6675612	INSULATION			278
6675613	INSULATION			278
6675614	INSULATION			278
6675618	CLAMP			178, 186
6675668	CABLE			164, 166
6675669	VALVE			69, 70, 214
6675685	HOSE			282, 286
6675779	PRESS. SWITCH			284, 286
6675824	O-RING			286
6675825	O-RING			286
6675833	SEAL			230
6675835	TURN SIGNAL			260
6675846	POTENTIOMETER			268, 282
6675858	FLASH TUBES			334
6675861	REAR HOUSING			90
6675862	BRAKE			92

Code for disposition of old part number

A -- Use up
B -- Use on other application (See PNI)
C -- File PDR Report with Bobcat Parts Sales
D -- Part Number Error

Part No.	Description	Was	Code	Page
6675863	QUAD RING			90
6675864	QUAD RING			90
6675866	SPOOL			90
6675867	WASHER			90
6675868	POPPET			88, 90
6675869	O-RING			88, 90
6675870	SEAL KIT			92
6675874	CAM			90
6675875	HOUSING			90
6675876	DISTRIBUTOR			90
6675877	SEAL			90
6675878	SEAL			90
6675879	SEAL			90
6675880	SEAL			90
6675881	SEAL			90
6675882	SPOOL			90
6675885	SNAP RING			90
6675886	QUAD RING			90
6675887	HOUSING			90
6675888	SHAFT			90
6675889	PISTON			90
6675890	COVER			92
6675892	GASKET			92
6675893	O-RING			90
6675894	SEAL			90
6675895	BOLT			92
6675896	BOLT			90
6675897	WASHER			90
6675898	BUSHING			90
6675982	PLUG			142
6675999	SWITCH			322
6676000	TEE			322
6676001	ARM			322
6676002	BLADE			322
6676003	HOSE			216, 220, 322
6676021	SEAL KIT			88
6676022	SEAL			88
6676023	O-RING			88
6676024	PLUG			88
6676028	NOZZLE			322
6676029	SOLENOID			130, 132, 136, 206
6676034	KIT			326
6676062	VALVE			286
6676063	KIT			286
6676205	SEAL KIT			118
6676239	CARTRIDGE			118
6676242	COIL			118
6676243	COIL			118
6676244	COIL			118
6676247	NUT			118
6676338	GAS SPRING			326
6676399	VALVE CORE			286
6676417	VALVE			84
6676492	SENSOR			130

Code for disposition of old part number

A -- Use up
B -- Use on other application (See PNI)
C -- File PDR Report with Bobcat Parts Sales
D -- Part Number Error

Part No.	Description	Was	Code	Page
6676493	SENSOR			130
6676499	GROMMET			216
6676500	ELBOW			216
6676516	NUT			268
6676536	SWITCH			142
6676537	SWITCH			130, 206
6676538	INSULATION			280, 286
6676539	CLIP			272, 286, 290
6676542	CAP			70
6676543	PLUG			70
6676544	SPRING			70
6676545	CARTRIDGE			70
6676606	SPACER			272, 280, 290
6676618	CLIP			274
6676640	SEAL			133, 134
6676645	SPRING			90
6676647	WASHER			91, 92
6676648	WASHER			92
6676649	WASHER			92
6676650	WASHER			92
6676651	WASHER			92
6676652	WASHER			92
6676653	SCREW			272, 280, 290
6676732	SWITCH			308
6676870	CONNECTOR			132
6676872	TURN SIGNAL			248, 250, 260
6676917	ELBOW			216
6676927	FELT STRIP			230
6676984	MOUNT			286, 290
6677105	COVER			272, 286, 290
6677108	HOUSING			272, 290
6677111	SEAL			272, 276, 290
6677115	RECEPTACLE			272, 290
6677116	RETAINER			272, 290
6677117	SCREW			272, 290
6677118	SCREW			272, 290
6677119	SCREW			272, 290
6677120	COVER			272
6677121	CAP			286
6677122	CAP			282, 286
6677136	SOCKET			244
6677177	PLUG			118
6677181	SENSOR			40
6677192	MAGNET			216, 222
6677193	RIVET			216, 222
6677198	TAB			230
6677383	SOLENOID			62
6677485	SPACER			138
6677486	NUT			138
6677487	COVER			138
6677488	RECTIFIER			138
6677489	REGULATOR ASSY			138
6677490	BRACKET			138
6677491	BRACKET			138

Code for disposition of old part number

A -- Use up

B -- Use on other application (See PNI)

C -- File PDR Report with Bobcat Parts Sales

D -- Part Number Error

Part No.	Description	Was	Code	Page
6677492	ROTOR			138
6677493	STATOR			138
6677494	BOLT			138
6677495	SPACER			138
6677496	PULLEY			138
6677497	NUT			138
6677504	COVER			272, 280, 290
6677817	BOLT			138
6677818	BEARING			138
6677819	RETAINER			138
6677820	BEARING			138
6677833	ARM ASSY			219, 220
6677834	BLADE			220
6677836	COVER			220
6677837	BOLT			220
6677839	GASKET			220
6677840	SWIVEL			220
6677841	WASHER			220
6677842	NUT			220
6677843	NUT			220
6677844	NUT			220
6677845	ADAPTER			220
6677847	GROMMET			220
6677973	PLUG			230
6677980	NUT			118
6677982	CARTRIDGE			118
6677983	FILTER			4, 268, 284
6678066	AIR CLEANER			201, 202
6678067	BUSHING			60, 86, 124
6678076	BLOCK			52
6678151	COVER			272, 290
6678152	SEAL			272, 290
6678155	FILTER ASSY			80, 121, 122
6678156	COOLER			79, 80
6678198	BOLT			220
6678204	KIT			92
6678205	ALTERNATOR			137, 138
6678207	FILTER			268, 282
6678233	OIL FILTER			1, 2, 4, 178
6678283	HANDLE			230
6678292	GAS SPRING			266
6678548	SOCKET			216, 222
6678659	BOLT			144
6678666	TREE MOUNT			270, 284
6678667	MOUNT			146
6678668	TIE			146
6678675	CONTROLLER			246
6678739	WASHER			220
6678891	COIL			64, 68
6678893	SOLENOID			64, 68
6678903	BOOT			144
6678920	NOZZLE			220
6678921	GUIDE			220
6678933	PISTON			56

Code for disposition of old part number

A -- Use up
B -- Use on other application (See PNI)
C -- File PDR Report with Bobcat Parts Sales
D -- Part Number Error

Part No.	Description	Was	Code	Page
6678960	SEAL			28
6678970	ELBOW			80
6678971	BOLT			36
6679034	MOUNT			146, 148, 286
6679102	VALVE			117, 118
6679141	HOSE			82
6679145	CLUTCH			284
6679308	SEAT BELT			328
6679476	MOTOR			220
6679820	RELAY			146
6679836	ADAPTER			52
6679837	COUPLER			52
6679838	COUPLER			52
6679839	COUPLER			52
6679840	SEAL			52
6679841	SEAL			52
6679842	SWITCH			142
6679845	CROSSMEMBER			142
6679855	BULB			142
6679856	ALARM			142
6679943	CHECK VALVE			72, 74
6679990	CLIP			14
6680020	SEAL KIT			52
6680120	CARTRIDGE			118
6680272	NUT			200
6680280	SEAL			187, 188
6680326	LIGHT			18
6680355	BOOT			140
6680356	BOLT			140
6680358	RING			140
6680359	STOP RING			140
6680360	STOP			140
6680361	SPRING			140
6680362	BALL			140
6680363	WASHER			140
6680365	SHAFT			140
6680366	GEAR			140
6680367	GEAR			140
6680368	STOP RING			140
6680369	SEAL			140
6680371	LEVER			140
6680372	BRACKET			140
6680373	YOKE			140
6680374	ARMATURE			140
6680375	SHAFT			140
6680376	SWITCH			140
6680377	HOLDER			140
6680378	WASHER			140
6680379	SEAL			140
6680380	SEAL			140
6680383	BOLT			140
6680384	BOLT			140
6680388	BRACKET			140
6680389	BRACKET			140

Code for disposition of old part number

A -- Use up
B -- Use on other application (See PNI)
C -- File PDR Report with Bobcat Parts Sales
D -- Part Number Error

Part No.	Description	Was	Code	Page
6680390	GEAR			140
6680410	CONTROLLER			129, 130
6680414	HANDLE ASSY.			292
6680415	HANDLE			128
6680417	HANDLE			132
6680418	HANDLE ASSY.			127, 128
6680419	HANDLE ASSY.			128
6680438	SENSOR			34, 146
6680441	BUSHING			20
6680447	DECAL			128
6680462	HANDLE			132
6680468	MOUNT			132, 206
6680469	SPACER			132, 206
6680470	SPRING	6675745	A	132, 206
6680470	SPRING			132, 206
6680471	COVER			132
6680477	STRAP			132, 206
6680478	SHIELD			136
6680479	SHIELD			136
6680480	CHANNEL			132
6680481	CHANNEL			132
6680499	NUT			200
6680564	STUD			172
6680634	MAGNET DISK			40
6680636	PLUG			180
6680637	PLUG			180
6680638	PLUG			178, 180
6680639	PLUG			180
6680640	PLUG			180
6680642	PIN			160
6680643	PIN			180
6680644	PIN			180
6680645	BOLT			180
6680649	TUBE			172
6680654	BOLT			178, 196
6680655	PIN			178
6680656	OIL PAN			178
6680657	PLUG			178
6680658	BOLT			174, 196
6680659	BOLT			178
6680660	OIL SUMP			178
6680661	O-RING			178
6680662	BOLT			174, 178, 182, 186
6680663	NUT			170, 172, 174, 178, 190, 191, 192, 194
6680665	PLUG			174
6680666	PLUG			174
6680667	PLUG			174
6680668	BOLT			174
6680669	HEAD GASKET			174
6680670	HEAD GASKET			174
6680671	HEAD GASKET			174
6680673	SPRING			184
6680675	PLUG			184
6680676	ROTOR			184

Code for disposition of old part number

A -- Use up
B -- Use on other application (See PNI)
C -- File PDR Report with Bobcat Parts Sales
D -- Part Number Error

Part No.	Description	Was	Code	Page
6680677	COVER			184
6680678	SCREW			184, 192
6680679	PLUG			184
6680680	SEAL			184
6680681	O-RING			184
6680682	O-RING			184
6680685	BOLT			182, 184
6680686	BOLT			184
6680687	BOLT			160, 184
6680688	HEAD COVER			174
6680689	ADAPTER			174, 184
6680690	GASKET			174
6680691	O-RING			174
6680692	COVER			174
6680693	SCREW			174
6680694	PLUG			174
6680695	SEAL			174
6680696	BOLT			174
6680698	CLAMP			174
6680699	CLAMP			174
6680700	WASHER			174
6680702	TUBE			178
6680703	DIPSTICK			177, 178
6680704	COVER			184
6680705	SEAL			183, 184
6680706	BOLT			184, 188
6680707	TAPPET			182
6680708	PUSH ROD			182
6680709	CAMSHAFT			182
6680710	BALL			182
6680711	GEAR			182
6680712	FLANGE			182
6680714	SHAFT			182
6680715	PIN			182
6680716	COLLAR			182
6680717	COLLAR			182
6680720	BUSHING			182
6680723	PISTON RINGS			180
6680724	PISTON RINGS			180
6680725	PIN			180
6680726	SNAP RING			180
6680727	ROD			180
6680728	BUSHING			180
6680729	BOLT			180
6680730	BEARING			180
6680731	BEARING			180
6680732	BEARING			180
6680733	BEARING			180
6680734	CRANKSHAFT			180
6680735	SLEEVE			180
6680736	GEAR			180
6680737	GEAR			180
6680738	MAIN BEARING			180
6680739	MAIN BEARING			180

Code for disposition of old part number

A -- Use up
B -- Use on other application (See PNI)
C -- File PDR Report with Bobcat Parts Sales
D -- Part Number Error

Part No.	Description	Was	Code	Page
6680740	MAIN BEARING			180
6680741	THRUST WASHER			180
6680742	THRUST WASHER			180
6680743	THRUST WASHER			180
6680744	THRUST WASHER			180
6680745	THRUST WASHER			180
6680746	THRUST WASHER			180
6680747	BOLT			156, 180
6680748	BALANCER			181, 182
6680749	SOLENOID			198
6680750	SCREW			198
6680752	BOLT			193, 194
6680753	GASKET			194
6680755	BOLT			170, 186, 194
6680756	SCREW			194
6680757	COVER			197, 198
6680758	WEIGHT			198
6680759	NUT			198
6680761	SLEEVE			198
6680763	LEVER			198
6680764	LEVER			198
6680765	SNAP RING			198
6680766	WASHER			198
6680769	PIN			198
6680770	LEVER			198
6680771	SPRING			198
6680772	LEVER			198
6680773	PIN			198
6680775	PIN			198
6680777	NOZZLE			190
6680778	O-RING			190
6680779	GASKET			190
6680780	CLAMP			190
6680785	CLAMP			190
6680786	CLAMP			190
6680787	PIPE			190
6680788	BOLT			189, 190
6680790	FITTING			190
6680791	BOLT			172, 190
6680792	GASKET			172, 190, 200
6680795	CLAMP			190
6680796	VALVE			190
6680797	TEE			190
6680799	STUD			192
6680801	BOLT			170, 192
6680802	BOLT			172, 192
6680806	HOUSING			192
6680807	STUD			192, 194
6680808	PLUG			192
6680809	PIN			192
6680812	BEARING			192
6680813	KEY			192
6680814	FLANGE			192
6680815	BOLT			192

Code for disposition of old part number

A -- Use up

B -- Use on other application (See PNI)

C -- File PDR Report with Bobcat Parts Sales

D -- Part Number Error

Part No.	Description	Was	Code	Page
6680816	O-RING			192
6680818	NUT			192
6680820	WASHER			200
6680821	SNAP RING			200
6680822	SNAP RING			200
6680823	SNAP RING			200
6680824	SHAFT			200
6680825	SPRING			200
6680826	SPRING			200
6680827	SPRING			200
6680828	STUD			200
6680829	GASKET			200
6680830	BOLT			200
6680832	SCREW			200
6680833	SCREW			200
6680834	STOPPER			200
6680836	NUT			200
6680838	FUEL PUMP			194
6680839	BRACKET			160, 184
6680841	BOLT			184
6680842	HOSE			186
6680843	COVER			152
6680844	GASKET			152
6680845	BOLT			152
6680849	GASKET			186
6680850	THERMOSTAT			186
6680851	BOLT			169, 170, 186
6680852	PUMP			188
6680853	GASKET			188
6680855	O-RING			184
6680856	BOLT			188
6680857	PULLEY			186
6680858	WASHER			185, 186
6680861	VALVE			176
6680862	VALVE			176
6680863	VALVE SPRING			176
6680865	COLLET			176
6680866	SHAFT			176
6680867	STUD			176, 190
6680868	SHAFT			176
6680869	BRACKET			176
6680870	WASHER			176
6680871	SNAP RING			176
6680872	SPRING			176
6680873	ROCKER ARM			176
6680874	NUT			176
6680875	ROCKER ARM			176
6680877	PIN			176
6680878	BOLT			175, 176
6680879	ARM			176
6680880	SCREW			176
6680881	NUT			176
6680882	PAD			176
6680883	MANIFOLD			170

Code for disposition of old part number

A -- Use up

B -- Use on other application (See PNI)

C -- File PDR Report with Bobcat Parts Sales

D -- Part Number Error

Part No.	Description	Was	Code	Page
6680884	GASKET			170
6680885	BOLT			170
6680886	FLANGE			170
6680888	HEATER			170
6680890	MANIFOLD			170
6680891	GASKET			170
6680892	TURBOCHARGER			172
6680893	GASKET			172
6680894	HOSE			172
6680895	HOSE			172
6680896	HOSE			171, 172
6680897	CLAMP			172
6680898	CLAMP			172
6680899	TUBE			172
6680900	BOLT			172
6680903	CLAMP			172
6680905	TUBE			195, 196
6680906	BOLT			196
6680909	OIL COOLER			178
6680910	ADAPTER			178
6680970	BREATHER			42
6681474	CARTRIDGE			2, 4, 202
6681475	CARTRIDGE			2, 4, 202
6681476	CAP			202
6681477	COVER			202
6681487	O-RING			318
6681489	O-RING			318
6681501	SEAL KIT			80
6681512	SOLENOID			42
6681614	KNOB			18, 230, 268, 282
6682411	ADAPTER			46, 48
6682549	ELBOW			64, 66
6682586	GAS SPRING			216, 222
6683001	HVAC			289, 290
6683003	COIL			286, 290
6683004	THERMOSTAT			286, 290
6683023	O-RING			198
6683171	CONTROLLER			142
6683206	SEAL KIT			116
6683274	SEAL			62, 66
6683608	CONTROLLER			144
6683812	SWITCH			142
6684033	NUT			46, 48, 150, 316
6684036	BOLT KIT			88
6684037	SENSOR			148
6684044	VALVE			318
6684045	SEAL KIT			318
6684046	O-RING			318
6684047	BACK-UP RING			318
6684048	O-RING			318
6684049	O-RING			318
6684050	BACK-UP RING			318
6684051	VALVE			318
6684052	SEAL KIT			318

Code for disposition of old part number

A -- Use up

B -- Use on other application (See PNI)

C -- File PDR Report with Bobcat Parts Sales

D -- Part Number Error

Part No.	Description	Was	Code	Page
6684053	BACK-UP RING			318
6684054	O-RING			318
6684055	BACK-UP RING			318
6684056	O-RING			318
6684057	BACK-UP RING			318
6684058	COIL			318
6684059	SPACER			318
6684060	NUT			318
6684061	VALVE			318
6684062	SEAL KIT			318
6684063	O-RING			318
6684064	BACK-UP RING			318
6684065	O-RING			318
6684066	O-RING			318
6684067	BACK-UP RING			318
6684069	SEAL KIT			318
6684070	O-RING			318
6684071	O-RING			318
6684072	BACK-UP RING			318
6684073	COIL			318
6684125	COUPLER			62, 66
6684294	GROMMET			144
6684367	RADIATOR			152
6684457	HOSE			80
6684474	INSERT FAN INLET			150
6684542	VALVE			318
6684576	ENGINE			167, 168
6684577	ENGINE			168
6684646	VALVE			62, 66
6684742	NUT			312
6684743	SOLENOID			312
6684744	SOLENOID			312
6684745	PISTON			312
6684746	CHECK VALVE			312
6684747	SEAL KIT			312
6684907	HOSE			283, 284, 286
6684908	HOSE			282, 286
6684910	SENSOR			132
6684911	SENSOR			136, 206
6684912	SENSOR			135, 136, 206
6684915	LEVER			130, 131, 132
6684916	LEVER			130, 132
6684923	BREATHER			34
6684932	KNOB			26
6685060	BUSHING			60
6685190	STARTER			139, 140
6685198	CAP			284
6685199	CAP			282
6685265	SNAP RING			90
6685328	RELIEF VALVE			318
6685345	BRACKET			124
6685346	BRACKET			124
6685372	SEAL			42
6685498	GASKET			190

Code for disposition of old part number

A -- Use up
B -- Use on other application (See PNI)
C -- File PDR Report with Bobcat Parts Sales
D -- Part Number Error

Part No.	Description	Was	Code	Page
6685540	PISTON			312
6685541	POPPET			312
6685542	O-RING			312
6685543	CHECK VALVE			312
6685544	COMPENSATOR			312
6685545	PLUG			312
6685546	PLUG			312
6685624	CONTROL VALVE			318
6685663	RETAINER			316
6685850	CORD			212
6685854	INJECTOR			190
6685917	CRANKCASE			180
6685918	PIN			180
6685919	STUD			180
6685920	ADAPTER			180, 186
6685921	CRANKCASE			178
6685922	FLANGE			178
6685923	GASKET			178
6685924	CAP			178
6685925	BOLT			178
6685926	BRACKET			174
6685927	HEAD			174
6685928	COVER			184
6685929	RELIEF VALVE			184
6685930	HOSE			173, 174
6685931	COVER			184
6685932	GEAR			182
6685933	PISTON			180
6685934	PISTON			180
6685935	INJECTION PUMP			192
6685936	PUMP			194
6685937	HOUSING			198
6685938	SPRING			198
6685939	LEVER			198
6685940	TUBE			190
6685941	TUBE			190
6685942	TUBE			190
6685943	TUBE			190
6685944	HOSE			190
6685945	HOSE			190
6685946	GEAR			192
6685947	COVER			192
6685948	GASKET			192
6685949	CAMSHAFT			192
6685950	BEARING			192
6685951	LEVER			199, 200
6685952	NUT			200
6685953	PULLEY			184
6685954	COVER			186
6685955	GASKET			186
6685956	HOUSING			186
6685957	GUIDE			176
6685958	GUIDE			176
6685959	RETAINER			176

Code for disposition of old part number

A -- Use up
B -- Use on other application (See PNI)
C -- File PDR Report with Bobcat Parts Sales
D -- Part Number Error

Part No.	Description	Was	Code	Page
6685960	GASKET			170
6685961	PLUG			170
6685962	GASKET			172, 196
6685963	PIPE			172
6685964	GASKET			172
6685965	HOSE			172
6685967	BRACKET			196
6685968	NUT			196
6685969	HOSE			178
6685970	HOSE			178
6685971	O-RING			178
6685972	HOSE			178
6686096	LENS			252
6686097	BULB			252
6686098	BULB			252
6686099	LENS			252
6686100	SCREW			252
6686220	O-RING			130
6686267	PUMP			95, 96
6686360	VALVE			62, 66
6686402	SEAL			178
6686655	BELT			160
6686693	SPOOL			90
6686885	GEAR PUMP			113, 114
6686926	ELEMENT FILTER			150
6686934	PIN			96
6686949	VALVE			311, 312
6687142	MOTOR			115, 116, 150
6687145	FLANGE			170
6687146	BOLT			170
6687147	GASKET			170
6687266	FILTER ASSY			150
6687631	BEARING			140
6687832	PUMP			93, 94
6687882	JOYSTICK RH			144
6687883	JOYSTICK LH			143, 144
6687886	MUFFLER PURIFIER			305, 306
6687887	MUFFLER			154
6687919	COLLAR			108
6687920	SPINDLE			106
6687921	COLLAR			106
6687922	NUT			106
6687923	PIN			106
6687924	VALVE			96, 105, 106
6687926	COLLAR			102, 104
6687927	COLLAR			102, 104
6687928	SPRING			102, 104
6687929	LEVER			110
6687930	WIRE			98, 100
6687931	BUSHING			110
6687932	PIN			96
6687933	SHIM			110
6687934	SHIM			110
6687935	SHIM			110

Code for disposition of old part number

A -- Use up

B -- Use on other application (See PNI)

C -- File PDR Report with Bobcat Parts Sales

D -- Part Number Error

Part No.	Description	Was	Code	Page
6687936	SHIM			110
6687937	SHIM			110
6687938	VALVE			96, 107, 108
6687939	SCREW			108
6687940	RING			98, 100
6687941	COUPLER			96
6687942	SPACER			102, 104
6687943	SHAFT			100
6687944	SHIM			110
6687945	PLATE			110
6687946	SPRING			110
6687947	PIN			110
6687948	SPACER			102, 104
6687949	SPACER			102, 104
6687950	GASKET			110
6687951	BRACKET			98, 100
6687953	PISTON			102, 104
6687954	GASKET			110
6687955	HOUSING			110
6687956	BEARING			98, 100
6687957	GROUP			96, 97, 98
6687958	GROUP			96, 99, 100
6687959	SHAFT			98
6687960	CONTROL			96, 101, 102
6687961	CONTROL			96, 103, 104
6687962	PISTON			102
6687963	PISTON			104
6687964	HOUSING			96
6687965	SHAFT			96
6687966	PISTON			110
6687967	SPRING			110
6687968	LEVER			110
6687969	COVER			110
6687970	MODULATOR			96, 109, 110
6687971	ROLLER			110
6687972	MODULE			110
6687973	FLANGE			96
6687974	FLANGE			96
6687975	PLATE			100
6687976	PLATE			98
6687977	GROUP			98
6687978	GROUP			100
6687979	GROUP			98, 100
6687981	SCREW			110
6687982	SPRING			110
6687983	RING			108
6687984	SENSOR			96
6687985	RING			102, 104
6687986	KIT			102, 104
6687987	BEARING			98, 100
6687988	FILTER			96
6687989	SOLENOID			110
6687990	RING			96
6687991	KEY			96

Code for disposition of old part number

A -- Use up

B -- Use on other application (See PNI)

C -- File PDR Report with Bobcat Parts Sales

D -- Part Number Error

Part No.	Description	Was	Code	Page
6687992	SCREW			96
6687993	COVER			96
6687994	SCREW			96
6687995	SCREW			102, 104
6687996	SCREW			110
6687997	SCREW			110
6687998	SHIM			96
6687999	RING			98, 100
6688000	SEAL			106
6688001	SEAL			110
6688002	RING			102, 104
6688003	SCREW			96
6688004	SEAL			110
6688005	SEAL			102, 104
6688006	SEAL			102, 104
6688007	SEAL			96
6688008	SCREW			96
6688009	SEAL			96
6688010	PIN			110
6688011	PIN			96
6688012	ROLLER			110
6688013	SEAL			108
6688014	PIN			96
6688015	SCREW			96
6688016	SCREW			96
6688017	SHIM			108
6688018	BEARING			98, 100
6688019	SEAL			96, 112
6688020	ORIFICE			96
6688021	SPRING			106
6688022	PISTON			108
6688023	SPRING			108
6688024	COVER			102, 104
6688025	RING			102, 104
6688026	RING			102, 104
6688027	RING			102, 104
6688028	RING			102, 104
6688029	RING			102, 104
6688030	RING			102, 104
6688031	ROD			102, 104
6688032	SPACER			102, 104
6688033	SPACER			102, 104
6688034	SCREW			106
6688035	RING			102, 104
6688036	RING			102, 104
6688037	RING			102, 104
6688038	RING			98
6688039	PIN			96
6688040	BEARING			96
6688041	RING			106
6688042	RING			98, 100
6688043	SPRING			106
6688069	HOSE			172
6688397	STEM			62, 66

Code for disposition of old part number

A -- Use up
B -- Use on other application (See PNI)
C -- File PDR Report with Bobcat Parts Sales
D -- Part Number Error

Part No.	Description	Was	Code	Page
6688403	PANEL	6686510	A	18, 142
6688403	PANEL			18, 142
6688404	PANEL	6678681	A	142
6688405	PANEL	6678680	A	142
6688439	CONTROLLER			146
6688449	LOCATING PIN			88, 92
6688523	SEAL KIT			72, 74
6688542	HVAC HEATER			282
6688543	HEATER			268, 271, 272
6688713	GEAR PUMP			75, 76
6688866	PLUG			88
6688933	VALVE ASSY			318
6688934	COIL			318
6689021	SEAL KIT			96
6689058	MOTOR			116
6689059	VALVE ASSY			116
6689060	COIL ASSY			116
6689179	INSULATION			286
6689180	INSULATION			286
6689635	BRACKET			268, 282
6689636	ACTUATOR			268, 282
6689637	VALVE			268, 282
6700115	SPRING			156
6700170	WASHER			166
6700182	COVER			12
6700631	GASKET			78
6700743	SPRING			166
6701097	WASHER			150
6701159	SHIM			156
6701160	CLIP			156
6701174	WASHER			14
6701187	BELLCRANK			166
6701449	FILLER TUBE			34
6701535	SPRING			20, 86, 124
6701674	INSULATION			16, 30, 32
6701893	CLAMP			46, 48
6702301	DECAL			236
6702302	DECAL			236
6702402	SHIELD			262
6702444	FUSE			146
6702474	RETAINER			156
6702543	LEVER			85, 86, 123, 124
6702593	SPACER			342
6702621	GRIP			128
6702650	MOUNT			248, 250
6702716	BLOCK			86, 124
6702903	LEVER			28
6702904	LEVER			28
6702958	BUSHING			28
6702971	BOLT			14
6702990	BUSHING			132
6703640	KIT			331, 332
6703641	DECAL			332
6703703	GUIDE			332

Code for disposition of old part number

A -- Use up
B -- Use on other application (See PNI)
C -- File PDR Report with Bobcat Parts Sales
D -- Part Number Error

Part No.	Description	Was	Code	Page
6703727	DECAL			292, 294
6703967	INSULATION			302, 304
6703968	INSULATION			302, 304
6704248	PIVOT			28
6704443	BUSHING			156
6704444	WASHER			156
6704453	SPRING			166
6704786	DECAL			298
6704820	O-RING			156
6704879	GASKET			36
6704892	RIVET			246
6705106	WASHER			160
6705452	LEVER			164
6705749	SHIELD			78
6706095	MOUNT	6716116	B	86, 124
6706095	MOUNT			86, 124
6706096	MOUNT			86
6706098	GUIDE			86, 124
6706105	YOKE			60
6706106	MOUNT			32, 86, 124
6706349	MOUNT			14
6706485	HOOK			12
6706517	SCREW			34, 78, 150
6706572	SET SCREW			164, 166
6706633	ADAPTER			316
6706683	COVER			42
6706718	MOUNT			42
6706737	GASKET			42
6706805	SHAFT			38, 42
6706817	SPACER			38, 40
6706857	BLOCK			12
6707040	ELBOW			148
6707101	SEAL			50, 58
6707654	SPINDLE			156
6707697	WASHER			156
6707698	WASHER			156
6707699	PIVOT			156
6707804	HOUSING			248, 250
6707852	DECAL			216
6707903	LEVER			166
6707904	ROD			166
6708009	LINK			60
6708016	GASKET			42
6708018	SPRING			42
6708043	BUSHING			60
6708189	TUBE			14
6708267	BOLT			42
6708310	HOSE			218
6708314	BUSHING			166
6708445	PULLEY			157, 158
6708941	DECAL			238
6708987	HINGE			12
6709022	LEVER			164
6709052	MOUNT			166

Code for disposition of old part number

A -- Use up
B -- Use on other application (See PNI)
C -- File PDR Report with Bobcat Parts Sales
D -- Part Number Error

Part No.	Description	Was	Code	Page
6709170	STUD			44
6709527	KEY			142, 216, 222, 320
6709757	AXLE			44
6710659	BUSHING			20
6711166	HOSE			316
6711526	HINGE			24
6711674	MOUNT			264
6711840	DECAL			236
6712365	STEP			130
6712536	PAN			148
6712912	DECAL			232
6713040	SPRING			28
6713043	SPACER			132
6713115	PEDAL			253, 254
6713116	BUSHING			254
6713150	MOUNT			248, 250
6713151	MOUNT			248, 250
6713287	PULLEY			156
6713507	DECAL			236, 238
6713589	CLEVIS			20
6713736	BRACKETS			248
6713840	DECAL			248
6713841	SHIELD			248, 250
6713842	SHIELD			250
6713887	BOLT			20
6713920	SHIM			166
6713990	PIN			251, 252
6713993	HARNESS			248, 250
6713994	HARNESS			248, 250
6714037	LATCH			320
6714126	DOOR STOP			24
6714278	GUIDE			42
6714362	WEIGHT			232
6714509	COVER			24
6714726	GROMMET			30, 130
6714820	SHIELD			248
6715131	BRACKET			148
6715132	RETAINER			148
6715142	FAN			150
6715163	BUSHING			86, 124
6715164	SLEEVE			86, 124
6715183	ELBOW			34
6715197	CLAMP			148
6715287	SPACER			160
6715318	TOOL HOLDER			24
6715365	HARNESS			142
6715630	BRAKE			42
6715659	HARNESS			342
6715860	SEAT BAR			20
6715863	BRACKET			20
6715864	BUSHING			20
6715865	BUSHING			20
6715866	BUSHING			20
6716061	TEE			46, 48

Code for disposition of old part number

A -- Use up

B -- Use on other application (See PNI)

C -- File PDR Report with Bobcat Parts Sales

D -- Part Number Error

Part No.	Description	Was	Code	Page
6716089	CONNECTOR			264
6716117	LINK			86, 124
6716243	ADAPTER			82
6716391	HOSE			84
6716408	SPACER			160
6716443	ELBOW			316
6716545	ROD			86, 124
6716572	LOUVER			150
6716574	LOUVER			150
6716621	COVER			146
6716800	INSULATION			16, 30, 32
6716916	WASHER			86, 124
6717232	DECAL			232
6717242	HOUSING			38
6717247	HARNESS			146
6717259	BUSHING			28
6717260	BUSHING			28
6717277	BUSHING			12
6717278	BUSHING			12
6717296	MOUNT ASSY			36, 37, 38
6717306	ADAPTER			82
6717343	DECAL			236
6717393	LEVER			130
6717401	PLUG			34
6717402	BUSHING			34
6717517	INSULATION			18
6717518	INSULATION			18
6717519	INSULATION			18
6717520	INSULATION			18
6717579	GASKET			34, 146
6717593	HINGE			218, 222
6717706	COIL			146
6717806	BOLT			36
6717870	FRAME			230
6717871	FRAME			230
6717872	FRAME			230
6717873	FRAME			230
6717874	WINDOW			18, 230
6717885	ELBOW			72, 74
6718031	TEE			82
6718034	FUSE			146
6718101	COVER			16
6718175	SCREEN			268, 282
6718283	RETAINING NUT			60
6718285	LEVER			60
6718305	PANEL			32
6718326	MOUNT			260
6718329	BUSHING			28
6718376	HINGE			218, 222
6718411	KIT			259, 260
6718414	SENDER			148
6718417	SENDER			146
6718426	HARNESS			71, 72, 73, 74, 244
6718521	HANDLE			218, 222

Code for disposition of old part number

A -- Use up
B -- Use on other application (See PNI)
C -- File PDR Report with Bobcat Parts Sales
D -- Part Number Error

Part No.	Description	Was	Code	Page
6718579	DECAL			268, 282
6718580	PANEL			18
6718659	HOUSING			146
6718698	DECAL			236
6718704	DECAL			130
6718706	DECAL			130
6718750	MOUNT			244
6718784	COVER			14
6718796	PLUG			12, 24
6718805	KIT			229, 230
6718833	BRACKET			262
6718834	BRACKET			262
6718837	SPACER			268, 282
6718850	BRACKET			78
6718851	BRACKET			77, 78
6718872	HARNESS			210, 248, 250, 260, 334
6718873	HARNESS			260
6718881	BRACKET			50
6718887	PANEL			268, 282
6718924	KIT			261, 262
6718942	NUT			26
6718948	SNUBBER			80, 146
6719037	STRIKER			230
6719038	PLUG			142
6719056	BLOCK			42
6719057	BLOCK			42
6719063	STOP			230
6719064	MOUNT			14, 266
6719065	COVER TAB			230
6719141	CABLE			148
6719168	COVER			12
6719176	SWITCH			282, 286
6719184	MOUNT			298
6719185	MOUNT			298
6719201	COVER			12
6719317	WINDOW			322
6719332	INSULATION			301, 302, 303, 304
6719333	INSULATION			302, 304
6719413	WINDOW			230
6719422	HARNESS			146
6719448	MAGNET			246
6719459	MOUNT			282, 286
6719504	INSULATION			16
6719525	BAR			24
6719630	HARNESS			284, 286
6719672	OPERATOR CAB			13, 14, 15, 16
6719766	STOP			24
6719825	BOLT			154
6719828	BOLT			156, 160
6719829	BOLT			160
6719834	SPACER			132, 206
6719835	SLEEVE			132
6719854	KIT			209, 210
6719857	KIT			333, 334

Code for disposition of old part number
A -- Use up
B -- Use on other application (See PNI)
C -- File PDR Report with Bobcat Parts Sales
D -- Part Number Error

Part No.	Description	Was	Code	Page
6719888	DECAL			308
6720038	INSTRUCTIONS			212
6720592	INSTRUCTIONS			262
6720808	KIT			211, 212
6724094	ANTI-FREEEZE			338
6724354	ANTI-FREEZE			338
6724775	LEVER KIT			28
6724776	LEVER KIT			28
6725182	TEE			49, 50, 264
6725212	ARM			156
6725256	COUNTERWEIGHT			24
6725301	COVER			16
6725303	FRAME			16
6725370	DECAL			328
6725373	SPRING PLATE			16
6725421	HANDLE			228
6725496	COVER			42, 84
6725497	CROSS			82
6725513	PACKAGE			268
6725898	KIT			257, 258
6725899	HOSE			84
6725900	HOSE			84
6725901	HOSE			84
6725906	BRACKET			258
6725907	DECAL			308
6725933	HARNESS			282
6725937	CLAMP			222
6725938	CLAMP			222
6725946	KIT			227, 228
6726218	GASKET			34
6726277	CLAMP			316
6726303	DECAL			228
6726386	KNOB			268
6726423	DECAL			296
6726427	KIT			223, 224
6726430	HARNESS			248, 250
6726573	BRACKET			130, 206
6726621	SCREW			276, 280, 286
6726655	KIT			321, 322
6726662	HARNESS			294
6726679	MOUNT			60, 206
6726680	PEDAL			60, 206
6726681	LINK			130, 206
6726908	LIFT EYE			296
6726965	LIFT ARM			26
6726966	FRAME LINK			25, 26
6726969	LINK ASSY			26
6726987	HOSE			308
6727064	TEE			72
6727065	BOLT			132, 206
6727176	KIT			241, 242
6727178	HARNESS			141, 142
6727190	HARNESS			142
6727299	INSULATION			18

Code for disposition of old part number

A -- Use up

B -- Use on other application (See PNI)

C -- File PDR Report with Bobcat Parts Sales

D -- Part Number Error

Part No.	Description	Was	Code	Page
6727313	ELBOW			78
6727326	MOUNT			282, 286
6727354	INLET			78
6727475	CAP			7, 8, 78
6727496	PIN			130, 206
6727498	HARNESS			292
6727525	BUSHING			26
6727595	DECAL			236, 238
6727786	KIT			279, 280
6727803	CABLE			148
6727832	BUSHING			26
6727847	COVER			268
6727848	COVER			284
6727926	DECAL			130, 206, 236
6727995	HORN KIT			291, 292
6728045	DECAL			206
6728328	DECAL			130
6728459	DOOR SENSOR			216, 222
6728473	BOLT			28
6728539	DECAL			130, 206
6728540	DECAL			206
6728567	KIT			275, 276
6728621	BRACKET			146
6728749	HOSE			152
6728800	BUSHING			26
6728819	PIN			26
6728820	PIN			26
6728971	PIN			26
6728972	BUSHING			26
6728999	BUSHING			26
6729005	BUSHING			26
6729006	BUSHING			26
6729007	PIN			26
6729009	SEAL			230
6729010	SEAL			230
6729011	SEAL			230
6729012	INSULATION			14
6729013	INSULATION			14
6729029	BOB-TACH			27, 28
6729077	DECAL			236, 238, 284, 286
6729078	DECAL			84, 236, 238
6729141	MOUNT			266
6729173	COVER			42
6729237	STEP			30
6729306	ELBOW			72, 80
6729320	CLAMP			46, 48, 52
6729358	PIN			26
6729397	HARNESS			144
6729401	BUSHING			12
6729402	BUSHING			12
6729423	BUSHING			26
6729467	SPACER			130, 206
6729468	LINK ASSY			26
6729491	PLUG			28

Code for disposition of old part number

A -- Use up
B -- Use on other application (See PNI)
C -- File PDR Report with Bobcat Parts Sales
D -- Part Number Error

Part No.	Description	Was	Code	Page
6729594	HANDLE			132
6729595	HANDLE			132
6729604	HOSE			46, 48
6729662	SHAFT			40, 42
6729663	HOUSING			40
6729686	TEE			46, 48
6729688	LATCH			320
6729694	TEE			46, 48
6729719	MOUNT ASSY.			39, 40
6729721	HOSE			46, 48
6729746	HOSE			52
6729774	COVER			30
6729776	WINDOW			220
6729791	HANDLE			30, 144
6729792	HANDLE			30, 144
6729854	HOSE			34
6729888	STEP			26
6729897	TIRE			336
6729899	PANEL			30
6729901	TIRE			335, 336
6729939	LATCH PLATE			24
6729942	MOUNT			160
6729944	STOP			156
6729956	LEVER			86
6729991	REAR DOOR			24
6730013	COVER			40
6730020	MOUNT			156
6730078	COVER			12
6730108	TIRE			336
6730109	TIRE			336
6730143	TEE			72, 74
6730265	MOUNT			282, 286
6730266	SPACER			282, 286
6730270	LEVER			166
6730292	HARNESS			146, 147, 148
6730345	HOSE			78
6730552	BRACKET			34
6730726	HOSE			154
6730753	MOUNT			154, 306
6730770	HARNESS			308
6730772	RIM			336
6730783	COVER			12
6730784	BUSHING			12
6730785	BUSHING			12
6730816	SHIELD			216, 222
6730819	BELT			6, 284, 286
6730822	KIT			215, 216
6730823	KIT			221, 222
6730858	TUBELINE			46, 48
6730887	PIN			26
6730894	BOLT			156
6730898	MOUNT			214
6730914	TEE			46, 48
6730995	BUSHING			26

Code for disposition of old part number

A -- Use up
B -- Use on other application (See PNI)
C -- File PDR Report with Bobcat Parts Sales
D -- Part Number Error

Part No.	Description	Was	Code	Page
6731078	GRILL			150
6731084	ADAPTER			270, 284
6731085	ELBOW			270, 284
6731100	SHIELD			156
6731109	SPACER			152, 160
6731119	PIVOT ASSY			28
6731121	PLUG			12
6731138	BUSHING			26
6731139	PIN			26
6731146	WASHER			160
6731151	KIT			205, 206
6731152	MOUNT			34
6731160	WASHER			26
6731179	COVER			26
6731198	BOLT			152, 160
6731209	TANK			78
6731222	PIN			248, 250
6731239	HARNESS			248
6731251	BAR			60
6731252	BAR			60
6731253	LINK			86, 124
6731255	ELBOW		A	284, 286
6731255	ELBOW			284, 286
6731275	INSULATION			146
6731478	EXIT TAG			18, 230
6731527	TEE			80
6731569	STOP			26
6731638	HOSE			78
6731646	BOLT			26
6731647	BUSHING			26
6731757	DECAL			236
6731819	STRAP			248, 250
6731898	PEDAL			166
6731900	ROD			166
6731901	CLEVIS			166
6731915	BRACKET			150
6731916	SHIELD			150
6731923	HOSE			80
6731925	TEE			80
6731935	HOSE			80
6731970	BRACKET			150
6731973	HOLDER			248, 250
6731994	DECAL			236
6732001	KIT			319, 320
6732023	CONNECTOR			270, 284
6732032	GASKET			154
6732045	HARNESS			250
6732081	HARNESS			250
6732193	BRACKET			160
6732206	SPACER			160, 248, 250
6732219	KIT			327, 328
6732234	KIT			293, 294
6732235	KIT			207, 208
6732318	SPACER			150

Code for disposition of old part number

A -- Use up

B -- Use on other application (See PNI)

C -- File PDR Report with Bobcat Parts Sales

D -- Part Number Error

Part No.	Description	Was	Code	Page
6732322	SPACER			166
6732323	BRACKET			166
6732351	WINDOW			222
6732375	TANK			152
6732449	PLATE			166
6732450	BRACKET			30, 32, 164
6732457	WASHER			150
6732483	HOSE			82
6732484	HOSE			82
6732485	HOSE			82
6732575	SPACER			160
6732577	STEP			12
6732583	INSULATION			302, 304
6732585	SPACER			160
6732586	TEE			78, 80
6732678	KIT			295, 296
6732687	PIN			296
6732696	DECAL			236
6732698	DECAL			236
6732715	LATCH			24
6732730	HARNESS			246
6732732	BUSHING			286
6732774	DECAL			238
6732847	RIM			336
6732870	MOUNT			152
6732928	KIT			265, 266
6732931	HOUSING			150
6732950	TUBELINE			46
6732952	TUBELINE			46, 48
6732953	TUBELINE			46, 48
6732954	TUBELINE			52
6732955	TUBELINE			52
6732991	TUBELINE			48, 214
6732992	TUBELINE			48, 214
6732993	TUBELINE			72, 74
6732997	U-BOLT			86, 124
6733022	BRACKET			86, 124
6733024	BRACKET			86, 124
6733136	KIT			245, 246
6733142	KIT			243, 244
6733144	MOUNT			246
6733164	HOSE			72, 74
6733219	HOSE			82
6733270	MOUNT			250
6733292	HARNESS			130
6733293	HARNESS			144
6733296	BRACKET			250
6733309	TUBELINE			72, 74
6733370	HARNESS			148
6733429	CAP			151, 152
6733529	SEAL			30, 32
6733578	RIM			336
6733629	HOSE			308
6733630	HOSE			308

Code for disposition of old part number

A -- Use up
B -- Use on other application (See PNI)
C -- File PDR Report with Bobcat Parts Sales
D -- Part Number Error

Part No.	Description	Was	Code	Page
6733655	COMPRESSOR			284, 286
6733774	BRACKET			12
6733775	COUNTERWEIGHT			12
6733780	COUNTERWEIGHT			12
6733851	HARNESS			250
6733873	SHIELD			160
6733886	BOLT			152
6733970	MOUNT			208, 292, 294, 342
6733996	DECAL			152
6734090	ADAPTER			152
6734108	BRACKET			296
6734114	HOSE			154
6734200	TUBELINE			48, 214
6734201	TUBELINE			46, 48
6734208	TUBELINE			48, 214
6734416	LEVER			166
6734417	LEVER			166
6734436	SHIELD			160
6734446	SHIELD			240
6734447	SHIELD			240
6734461	KIT			239, 240
6734520	COVER			166
6734521	PANEL			29, 30, 31, 32
6734534	DECAL			238
6734560	BUSHING			298
6734561	WASHER			78
6734563	WASHER KIT			78
6734573	HOSE			160
6734627	MOUNT			298
6734628	MOUNT			298
6734646	DECAL			238
6734647	DECAL			238
6734657	ANGLE			298
6734666	ARM			298
6734667	ARM			298
6734696	KIT			313, 314
6734697	SCREEN			314
6734769	HOSE			52
6734772	MOUNT			164
6734803	DECAL			238
6735140	DECAL			236
6735245	DUCT			268, 282
6735246	DUCT			268, 282
6735279	KIT			297, 298
6735282	SCREW			298
6735346	MOUNT			160
6735475	HOSE			308
6735477	KIT			307, 308
6735614	TANK			34
6735639	MOUNT			316
6735640	MOUNT			316
6735641	MOUNT			316
6735642	TUBELINE			316
6735643	TUBELINE			316

Code for disposition of old part number

A -- Use up
B -- Use on other application (See PNI)
C -- File PDR Report with Bobcat Parts Sales
D -- Part Number Error

Part No.	Description	Was	Code	Page
6735683	HOSE			316
6735684	HOSE			316
6735685	HOSE			316
6735696	BUSHING			34
6735709	IDLER			156
6735727	BRACKET			160
6735729	SPACER			160
6735825	SPACER			248, 250
6735861	TUBELINE			80
6735862	DECAL			236
6735901	DECAL			238
6735919	KIT			315, 316
6735979	BRACKET			160
6735980	MOUNT			160
6736011	HARNESS			316
6736071	KIT			146
6736258	TEE			80
6736349	SPACER			160
6736515	HARNESS			148
6736566	HOSE			152
6736641	PAINT			338
6736642	PAINT			338
6736644	PAINT			338
6736645	PAINT			338
6736649	HOSE			78
6736655	KIT			263, 264
6736656	TUBELINE			78
6736664	HOSE			264
6736768	COVER			12
6736875	TANK			216
6737088	COVER			204
6737095	STEP			60
6737120	STEP			60
6737189	DECAL			342
6737191	WEDGE			28
6737248	DECAL			142, 236
6737388	WASHER			60
6737524	KNOB			50, 58
6737528	BRACKET			255, 256
6737649	BRACKET			152
6737704	INSULATION			18
6737783	KIT			2, 236
6801059	WASHER			220, 322
6801167	PLUG			68
6803092	BONNET			68
6803473	SEAL KIT			310
6804427	HEAD			56
6804920	BUSHING			62, 66
6805102	BUSHING			62, 66
6805453	BUSHING			54
6806403	HOSE			308
6808235	SPACER			56
6809511	DECAL			46, 48, 50
6809726	ROLLER			24

Code for disposition of old part number

A -- Use up
B -- Use on other application (See PNI)
C -- File PDR Report with Bobcat Parts Sales
D -- Part Number Error

Part No.	Description	Was	Code	Page
6809727	CHANNEL			24
6809734	BUSHING			24
6809845	BOLT			24
6810132	SPRING			24
6810141	SPRING			24
6810188	ROD			56
6810213	TUBELINE			54
6810233	CYLINDER			53, 54
6810234	CASE			54
6810235	ROD			54
6810237	PISTON			54
6810349	CASE			310
6810356	SPACER			310
6810539	NUT			54, 56
6810611	CYLINDER			309, 310
6810612	ROD			310
6810741	TUBELINE			56
6810950	SPRING			62, 66
6811483	COUNTERWEIGHT			234
6811910	LATCH			24
6812170	PLUG			310
6812171	PLUG			54, 56
6813078	STEP			296
6813080	VALVE ASSY			61, 62
6813153	PLATE			62
6813964	ELBOW			80
6814021	BOLT			50
6814279	BLOCK			64, 68
6814323	SPOOL			62, 66
6814600	CONTROL VALVE			65, 66
6814694	RETAINER			62, 66
6815014	CHECK VALVE			64, 66
6815031	TUBELINE			62
6815032	TUBELINE			64, 66
6815152	SPOOL			62
6815887	HOSE			150
6816325	SEAL KIT			54
6816536	SEAL KIT			56
6816549	PLUG			62, 66
6817003	BODY			62
6817004	BODY			66
6817310	CYLINDER			55, 56
6817311	CASE			56
6817335	ELBOW			46, 48
6817707	PLUG			62, 66
6900366	INSTRUCTIONS			232
6900848	INSTRUCTIONS			260
6900852	INSTRUCTIONS INSTL			230
6900853	INSTRUCTIONS			230
6900854	INSTRUCTIONS INSTL			218
6900861	INSTRUCTIONS			326
6900888	INSTRUCTIONS			298
6900991	INSTRUCTIONS			210

Code for disposition of old part number

A -- Use up

B -- Use on other application (See PNI)

C -- File PDR Report with Bobcat Parts Sales

D -- Part Number Error

Part No.	Description	Was	Code	Page
6900992	INSTRUCTIONS			334
6901010	INSTRUCTIONS			328
6901011	INSTRUCTIONS			330
6901013	INSTRUCTIONS			222
6901025	INSTRUCTIONS			258
6901029	INSTRUCTIONS			228
6901036	INSTRUCTIONS			224
6901061	INSTRUCTIONS			322
6901076	INSTRUCTIONS			242
6901120	INSTRUCTIONS			280
6901146	INSTRUCTIONS			292
6901213	INSTRUCTIONS			276
6901492	INSTRUCTIONS			206
6901656	INSTRUCTIONS			320
6901663	INSTRUCTIONS			248
6901690	INSTRUCTIONS			208
6901691	INSTRUCTIONS			294
6901772	INSTRUCTIONS			296
6901816	INSTRUCTIONS			266
6901871	INSTRUCTIONS			244
6901872	INSTRUCTIONS			246
6901909	INSTRUCTIONS			250
6901916	INSTRUCTIONS			264
6902228	PAINT			337, 338
6902229	PAINT			338
6902230	PAINT			338
6902233	PAINT			338
6902234	PAINT			338
6902235	PAINT			338
6902252	INSTRUCTIONS			240
6902288	INSTRUCTIONS			314
6902361	INSTRUCTIONS			308
6902409	INSTRUCTIONS			316
6902600	MANUAL			236
6903105	OIL 15W40 QT. 12			2, 4, 338
6903106	OIL 15W40 GAL. 6			2, 4, 338
6903107	OIL 10W30 QT. 12			2, 3, 4, 338
6903108	OIL 10W30 GAL. 6			2, 4, 338
6903109	OIL 30W QT. 12			2, 4, 338
6903110	OIL 30W GAL. 6			2, 4, 338
6903111	OIL 30W 2.5 GAL 2			2, 4, 338
6903112	OIL 10W30 2.5 GAL 2			2, 4, 338
6903113	OIL 15W40 2.5 GAL. 2			2, 4, 338
6903117	HYD FLUID 2.5 GAL. 2			2, 4, 338
6903118	HYD. FLUID 5GAL			2, 4, 338
6903119	HYD. FLUID 55GAL			2, 4, 338
6903121	GEAR LUBE 12			338
6903122	GREASE 10			4, 338
6903132	INSTRUCTIONS			214
6903283	INSTRUCTIONS			234
6903293	INSTRUCTIONS			342
6904158	MANUAL			2

Code for disposition of old part number

A -- Use up

B -- Use on other application (See PNI)

C -- File PDR Report with Bobcat Parts Sales

D -- Part Number Error

Part No.	Description	Was	Code	Page
6904160	MANUAL			2
6904255	INSTRUCTIONS	6903305	B	268, 270
6904255	INSTRUCTIONS			268, 270
6904258	INSTRUCTIONS			287, 288
6904717	MANUAL			2
69G000436B	BOLT			50, 66, 130
6CM01220B	BOLT			160
6E000004B	WASHER			148
6E000005B	WASHER			142, 162, 260
6E000006B	WASHER			80, 148
6EM00080B	WASHER			140
6J001664B	WOODRUFF KEY			44
7100239	BEARING			38, 40
7100240	RACE			38, 40
7100462	CLAMP			78
7100699	WASHER			124
7100795	MOUNT			124
7100859	FLYWHEEL ASSY			156
7101104	MOUNT			250
7101136	BUSHING			160
7101291	ELBOW			34
7101345	BONNET			66
7101373	BOLT			150
7101384	LIGHT			252
7101453	MAIN FRAME			12
7101533	INSULATION			302, 304
7101534	INSULATION			304
7101535	INSULATION			302
7101536	INSULATION			302, 304
7101537	INSULATION			302
7101538	INSULATION			302, 304
7101539	INSULATION			304
7101672	ACTUATOR			50, 130, 144
7101705	ADAPTER			130
7101797	ELBOW			78
7101804	PANEL			30, 32
7101892	BOLT			148
7101893	SPACER			148
7101928	VALVE			268, 282
7102018	TEE			66
7102019	FITTING			64
7102034	TAB			154
7102035	TAB			154
7102066	CROSS			62, 66
7102089	HOSE			46, 48
7102090	HOSE			46, 48
7102336	HOSE			46, 48
7102337	HOSE			46, 48
7102368	TUBE			154
7102399	TEE			72, 74
7102414	BRACKET			51, 52
7102652	SCREW			68
7102705	TEE			34
7102747	GASKET			154

Code for disposition of old part number

A -- Use up
B -- Use on other application (See PNI)
C -- File PDR Report with Bobcat Parts Sales
D -- Part Number Error

Part No.	Description	Was	Code	Page
7103075	SEAL			230
7103170	TUBELINE			80
7103172	HOSE			50
7103271	WASHER			126
7103708	BRACKET			124
7103711	BOLT			125, 126
7103749	ELBOW			72, 74
7103750	EXCHANGER			72, 74
7103751	HOSE			72, 74
7103903	MOUNT			80
7104465	DOOR SWITCH HARNESS			216, 222
7104829	KIT			213, 214
7105035	WINDOW			18, 230
7105192	BOLT	8C000616B	B	124
7105193	BOLT			124
7105223	SPACER			126
7105764	KIT			233, 234
7105818	MOUNT			234
7105827	ROD			234
7105856	SNAP RING			28
7105983	BOLT			142
7106040	ELBOW			78
7106212	HOSE			78
7106215	HOSE			52
7106277	WIPER HARNESS			216, 222
7106712	SEAT			62, 66
7106737	SPROCKET			35, 36, 44
7106862	CHAIN			36
7107153	HOSE			150
7107174	HOSE			150
7107175	INLET			150
7107271	WASHER			44
7107544	HARNESS			342
7107829	BACK UP ALARM KIT			341, 342
7108222	SAFETY TREAD			236
7108236	PIN			50, 130
7108241	LIFT SPOOL			66
7108242	TILT SPOOL			66
7108685	TEE			150
7108781	SPOOL			62
7109144	HOSE			72, 74
7109403	HARNESS			300
7109661	DOOR LATCH			216, 222
7109662	HANDLE			216, 222
7109663	SPACER			216, 222
7109664	BOLT			216, 222
7109665	DOOR			216
7109881	ELBOW			308
7109882	ELBOW			308
7109934	MOUNT			50
7110205	HOSE			72
7110243	BRACKET			150
7110244	BRACKET			150

Code for disposition of old part number

A -- Use up

B -- Use on other application (See PNI)

C -- File PDR Report with Bobcat Parts Sales

D -- Part Number Error

Part No.	Description	Was	Code	Page
7110284	HOSE			50
7110286	HOSE			72
7110316	DECAL			216, 222
7110339	HOSE			72
7110365	PINTLE ARM	7103710	A	124
7110367	HOSE			308
7110430	SPECIAL APPS DOOR			222
7110572	BELLCRANK			86, 124
7110809	HOSE			150
7110914	TUBELINE			66
7110942	HOSE			34
7111805	MOUNT			154
7111992	JOYSTICK ASMBLY RH			144
7111993	JOYSTICK ASMBLY LH			144
7112333	HOUSING			36
7113208	HOSE			270
7113209	HOSE			270
7113512	DECAL			72, 74
7114813	TUBELINE			46, 48
7114821	TUBELINE			46, 48
7116260	HARNESS			18
7116261	HARNESS			18
7116870	DECAL			238
7116899	KIT			267, 268
7116902	KIT			269, 270
7116904	KIT			285, 286
7117407	DECAL			146
7120294AR	KIT, TRANSLATION			236, 238
7120294BR	KIT, TRANSLATION			236, 238
7120295AR	KIT, DECAL			236, 238
7120295BR	KIT, DECAL			236, 238
7120295JP	KIT, DECAL			236, 238
7120593	DECAL			236, 238
7120602	DECAL			72, 74, 236, 238
72F000001B	DRAIN COCK			34, 160
73G000656B	BOLT			156, 308
73G000824B	BOLT			86, 124
73G624	BOLT	7105194	A	126
73K000013B	O-RING			64, 66
73K000016B	RING			64, 66
73K000222B	WASHER			310
73K000232B	WASHER			54, 56
74G000536B	BOLT			256
75K000003B	O-RING			310
75K000004B	O-RING			118
75K000006B	O-RING			54, 56
774220	NUT			208, 342
77F000008B	ELBOW			78
78HA01010B	ADAPTER			150
78HA01210B	ADAPTER			150
799119B	SNAP RING			62
79K000004B	O-RING			152, 308

Code for disposition of old part number

A -- Use up

B -- Use on other application (See PNI)

C -- File PDR Report with Bobcat Parts Sales

D -- Part Number Error

Part No.	Description	Was	Code	Page
79K000005B	O-RING			34
79K000006B	O-RING			50, 52, 64, 66, 78, 82, 150, 264, 308, 316
79K000007B	O-RING			312
79K000008B	O-RING			62, 66, 70, 72, 74, 82, 160, 312
79K000010B	O-RING			46, 48, 62, 66, 72, 74, 80, 84, 150, 214, 312
79K000012B	O-RING			78, 80, 82, 150, 308, 316
79K000016B	O-RING			52, 72, 74, 78, 80
79K000020B	O-RING			78, 80
7D000004B	NUT			50, 58
83D000004B	NUT			20, 50, 208, 248, 250, 268, 292, 294
83D000005B	NUT			78, 160, 214, 292, 294
83D000006B	NUT			50, 52, 86, 124, 154, 246, 262, 282, 286, 316
83D000008B	NUT			12, 160
83D000010B	NUT			296
84G001320B	BOLT			342
84G003108B	BOLT			152
84G003110B	BOLT			164, 282
84G003112B	BOLT			14, 26, 72, 74, 146, 150, 236, 244, 246
84G003708B	BOLT			12
84G003710B	BOLT			30, 60, 80, 206, 282, 286
84G003712B	BOLT			12, 30, 32, 34, 142, 146, 148, 149, 150, 152, 154, 164, 166, 248, 250, 316
84G003716B	BOLT			30, 32, 42, 52, 150, 166, 214, 248, 250, 264, 282
84G003720B	BOLT			42, 166, 204
84G003724B	BOLT			164, 166, 316
84G003728B	BOLT			46, 48, 166
84G003732B	BOLT			46, 48
84G003736B	BOLT			52
84G003740B	BOLT			46, 48, 52
85D000004B	NUT			166, 248, 250
85D000005B	NUT			164, 166, 254, 300
85D000006B	NUT			24, 26, 28, 52, 78, 154, 166, 296
85D000007B	NUT			16
85D000008B	NUT			14, 156
85G000616B	SCREW			248
85G000808B	BOLT			248, 250
85G001010B	BOLT			250
86D000004B	NUT			166
86F000005B	NUT			264, 316
86F000010B	NUT			80
872229B	WASHER			46, 48, 52, 78
87D000006B	NUT			296
88F000005B	ELBOW			316
898731B	BULB			300
89D000005B	NUT			30
8C000616B	BOLT			86
8D000004B	NUT			166
8D000006B	NUT			86, 124
90F000005B	TEE			316
90KV00002B	PLUG			310
90KV00003B	PLUG			90
90KV00005B	PLUG			90
91G000416B	BOLT			230
91G000420B	BOLT			18, 230

Code for disposition of old part number

A -- Use up

B -- Use on other application (See PNI)

C -- File PDR Report with Bobcat Parts Sales

D -- Part Number Error

Part No.	Description	Was	Code	Page
92D000010B	NUT			310
92D000012B	NUT			158
947088B	SEAL			54, 56
95D000005B	NUT			14, 130, 148, 164, 206
95D000006B	NUT			30, 59, 60, 86, 124, 130, 150, 222, 296
95K000003B	O-RING			310
95K000004B	O-RING			90
95K000006B	O-RING			54, 90
96D000006B	NUT			86, 124
96D000008B	NUT			150
97D000004B	NUT			342
97D000005B	NUT			146
97D000008B	NUT			14, 266
97K000004B	O-RING			84
97K000006B	O-RING			84
98D000006B	NUT			86, 124
98G000412B	BOLT			136
99K000004B	O-RING			84
99K000006B	O-RING			84
99K000010B	O-RING			84

Code for disposition of old part number

A -- Use up

B -- Use on other application (See PNI)

C -- File PDR Report with Bobcat Parts Sales

D -- Part Number Error