S300LC-V Fig. 110 CYLINDER BLOCK DOOSAN

Key No	Part No	Description	Qty	S.C	Serial No	ICA	Replacable	Qty
1	65.01101-6040F	CYLINDER BLOCK ASS'Y	1		~030730	Y	65.01101-6040G	1
1	65.01101-6040G	CYLINDER BLOCK ASS'Y	1		~040209	Y	65.01101-6040H	1
1	65.01101-6040H	CYLINDER BLOCK ASS'Y	1		~040726	Y	65.01101-6040I	1
1	65.01101-6040I	CYLINDER BLOCK ASS'Y(T/C)	1		~050907	Y	65.01101-6040J	1
1	65.01101-6040J	CYLINDER BLOCK ASS'Y(T/C)	1		~060906	Y	65.01101-6040K	1
1	65.01101-6040K	CYLINDER BLOCK ASS'Y(T/C)	1		~070213	Y	65.01101-6040M	1
1	65.01101-6040M	CYLINDER BLOCK ASS`Y(T/C)	1		~080529	Y	65.01101-6040N	1
1	65.01101-6040N	CYLINDER BLOCK ASS'Y	1		080530~			
1A	65.01101-0040M	BLOCK;CYLINDER	1	D	~040726			
1A	65.01101-0040N	BLOCK;CYLINDER(T/C)	1	D	~050907			
1A	65.01101-0040O	BLOCK;CYLINDER(T/C)	1	D	~060906			
1A	65.01101-0040P	BLOCK;CYLINDER(T/C)	1	D	~070213			
1A	65.01101-0040G	BLOCK;CYLINDER	1	D	~080529			
1A	65.01101-0040R	BLOCK;CYLINDER	1	D	080530~			
1B	06.15091-0326	PLUG;CORE	9		~040209	I	65.91606-0037	9
1B	65.91606-0037	PLUG;CORE	9		040210~			
1C	65.91606-0041	PLUG;CORE	2					
1D	65.04410-0017	BUSH;CAM SHAFT	4	B				
1E	65.01105-1164D	CAP;BEARING NO.7	1	D	~030730			
1E	65.01105-1164E	BEARING;CAP NO7	1	D	~050907			
1E	65.01105-1175C	BEARING;CAP NO7	1	D	050908~			
1F	65.01105-1160E	CAP;BEARING NO.3.5	2	D	~030730			
1F	65.01105-1160F	BEARING;CAP NO.3.5	2	D	030731~			
1G	65.01105-1156C	CAP;BEARING THRUST	1	D	~030730			
1G	65.01105-1156D	CAP BEARING;THRUST	1	D	030731~			
1H	65.01105-1172A	CAP;BEARING NO.1.2.6	3	D	~030730			
1H	65.01105-1172B	BEARING;CAP NO.1.2.6	3	D	030731~			
1I	65.91710-0035	RING;LOCATING	14		~030428	Y	65.91710-0035B	14
1I	65.91710-0035B	RING;LOCATING	14		030429~			
1J	65.90020-0035	BOLT;BEARING 12.9T	14		~030428	Y	65.90020-0035B	14
1J	65.90020-0035B	BOLT;BEARING CAP	14		030429~			
2	65.91001-0002	PLUG	2		~050908	I	65.91001-0013	2
2	65.91001-0013	AVSEAL	2		~060223	Y	65.91001-0013A	2
2	65.91001-0013A	PIN;CORE	2		060224~			
3	65.91020-0013	PLUG;CORE	1					
4	65.01201-0050	LINER;CYLINDER	6					

Key No	Part No	Description	Qty	S.C	Serial No	ICA	Replacable	Qty
5	65.90310-0048	SCREW;PLUG M10X1.5	6					
6	06.56180-0714	RING;SEAL	6					
7	65.90310-0091	SCREW;PLUG M12X1.5X20	1					
8	06.56190-0704	RING;SEAL	1					
9	06.22022-0907	PIN;DOWEL	6		~050224			
9	06.22022-0911	PIN;DOWEL	6		050225~			
10	65.96601A0042	GASKET;END COVER	1					
11	65.91605-0006B	COVER;END	1					
12	06.01913-3114	BOLT ASS'Y M8X22	1					
13	06.06225-0704	BOLT;STUD M8X20	1					
14	65.90201-0075	BOLT;SPACER	1		~100616	I	120122-00014	1
14	120122-00014	BOLT,SPACER;M8	1		100617~			
15	06.16731-2107	WASHER	2					
16	06.11063-8214	NUT	1					
17	06.22022-1013	PIN;DOWEL	2					
18	06.01013-9517	BOLT;HEX M16X60	1					
19	65.91701-0148	SPACER	1					
20	65.27441-7007	SWITCH;OIL PRESSURE	1					
21	65.98130-0194	ADAPTER	1					
22	06.56180-0714	RING;SEAL	1					
23	65.91701-0273	RING;SPACER	1					
24	65.91701-0088	SPACER	1					
25	06.01283-7524	BOLT;HEX. M16X65	1					
26	65.01601-6003	OIL SPRAY NOZZLE ASS'Y	6		~071122	Y	65.01601-6003C	6
26	65.01601-6003C	OIL SPRAY NOZZLE ASS`Y	6		071123~			
27	65.05405-6001	RELIEF VALVE ASS`Y	6					

Fig. 110 CYLINDER BLOCK

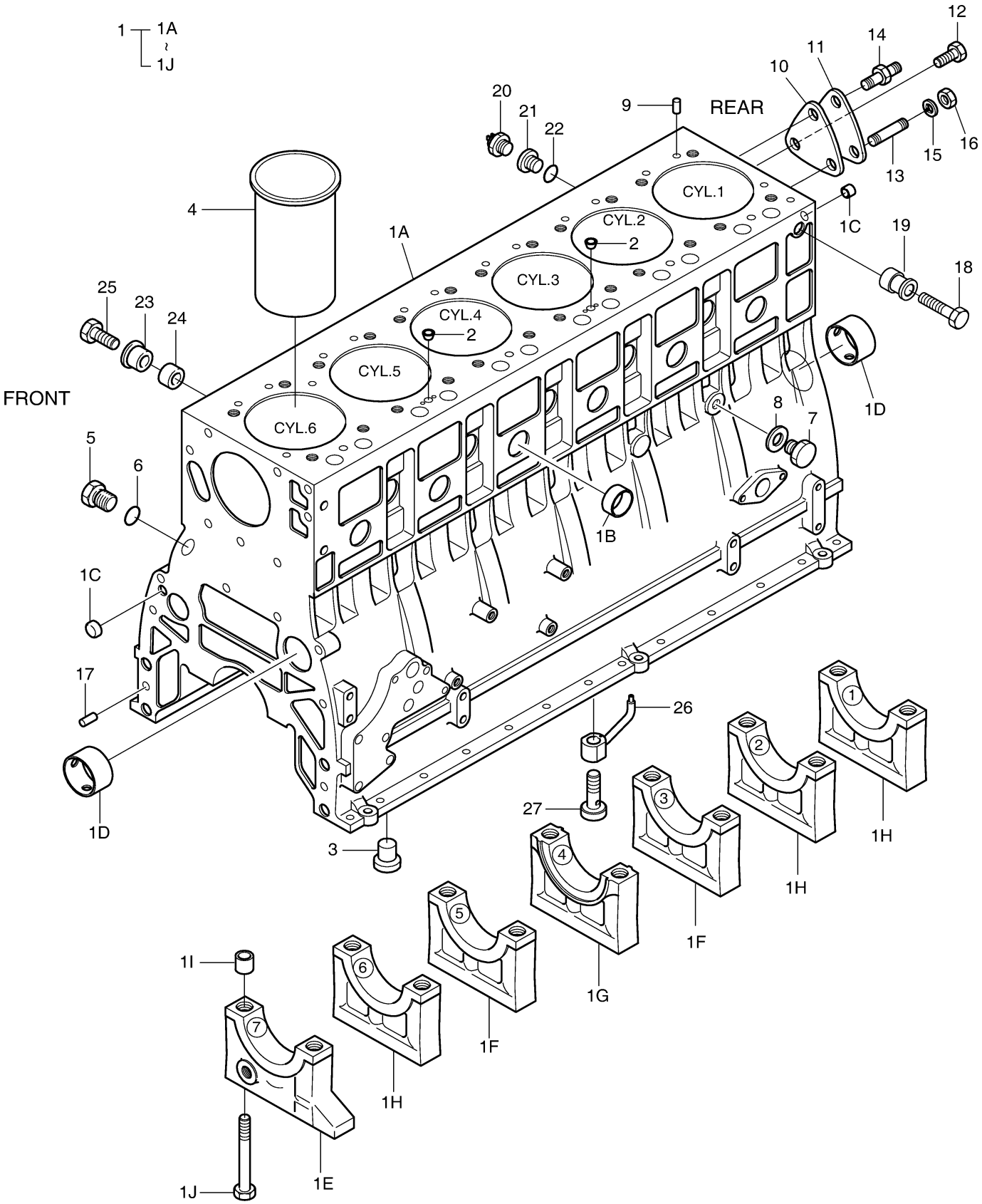

DOOSAN Doosan Infracore

Fig. 120 TIMING GEAR CASE

Key No	Part No	Description	Qty	S.C	Serial No	ICA	Replacable	Qty
1	65.01903C0021	GASKET;TIMING GEAR CASE	1					
2	65.01304-0010N	CASE;TIMING GEAR	1		~090327	I	130405-00007	1
2	130405-00007	CASE;TIMING GEAR	1		090328~			
3	06.22022-1013	PIN;DOWEL	2		~090318	Y	65.91010-0018	2
3	65.91010-0018	PIN;DOWEL	2		090319~			
5	06.16731-2107	WASHER	1					
6	06.01913-3113	BOLT ASS'Y M8X20	5					
7	06.06225-0704	BOLT;STUD M8X20	1					
7A	06.11063-8214	NUT	1					
8	06.01943-3317	BOLT ASS`Y M12X1.5X30	4					
9	65.90201-0048	BOLT;STUD	1					
10	06.06225-0809	BOLT;STUD M10X35	6					
12	65.01903B0113	GASKET;T.G.C COVER	1					
13	65.01305-5028C	COVER;TIMING GEAR CASE	1					
16	06.01923-2914	BOLT ASS`Y M6X22	13					
18	65.01903B0029	GASKET;COVER	1					
19	65.01307-5009	TIMING GEAR CASE COVER	1		~051005	I	65.01307-5002	1
19	65.01307-5002	COVER;TIMING GEAR CASE	1		051006~			
20	06.15010-2309	WASHER;PLAIN	2					
21	06.16731-2105	WASHER	2					
22	06.01923-2918	BOLT ASS`Y M6X35	9					
23	06.06225-0502	BOLT;STUD M6X16	2		~051005	I	65.90201-0146	2
23	65.90201-0146	BOLT;STUD M6X16	2		051006~			
24	06.11063-8212	NUT	2					
25	06.22022-0907	PIN;DOWEL	2					
26	65.01510-0157	SEAL;OIL(FRONT)	1					
27	65.54903A0013	GASKET	1					
28	65.54302-0006A	BRACKET;AIRCON	1		~050113	Y	65.54302-0006B	1
28	65.54302-0006B	BRACKET;AIRCOMP	1		050114~			
29	06.02090-0511	BOLT;SOCKET M10X22	2					
31	65.54306-0003	ANGLE;BRACKET	1					
32	06.01913-3215	BOLT ASS'Y M10X25	2					
34	65.95840-0033	BRACKET;IDLE PULLEY	1					
36	06.01913-3215	BOLT ASS'Y M10X25	3					
38	65.11401-0040	MOUNTING FLANGE ASS'Y	1					
39	65.11902-0018A	GASKET;MOUNTING FLANGE	1					

Key No	Part No	Description	Qty	S.C	Serial No	ICA	Replacable	Qty
40	06.22220-1110	PIN;SPRING	1					
41	06.15010-2312	WASHER;PLAIN	7					
42	06.16731-2108	WASHER;SPRING	7					
43	06.11063-8215	NUT;HEX. M10	7					
44	65.90201-0059	BOLT;STUD M10X35	4					
47	65.93410-0036	BEARING;BALL	1					
48	06.02090-0513	BOLT;SOCKET	2					
49	06.16731-2108	WASHER;SPRING	4					
50	65.27901-0005B	GASKET	1		~051005			
51	65.91605-0009	COVER;END	1		~051005			
52	06.01913-2911	BOLT ASS'Y M6X16	4		~051005			

Fig. 120 TIMING GEAR CASE

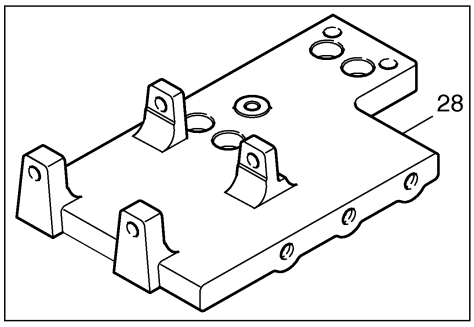

Serial No. ~ 050113

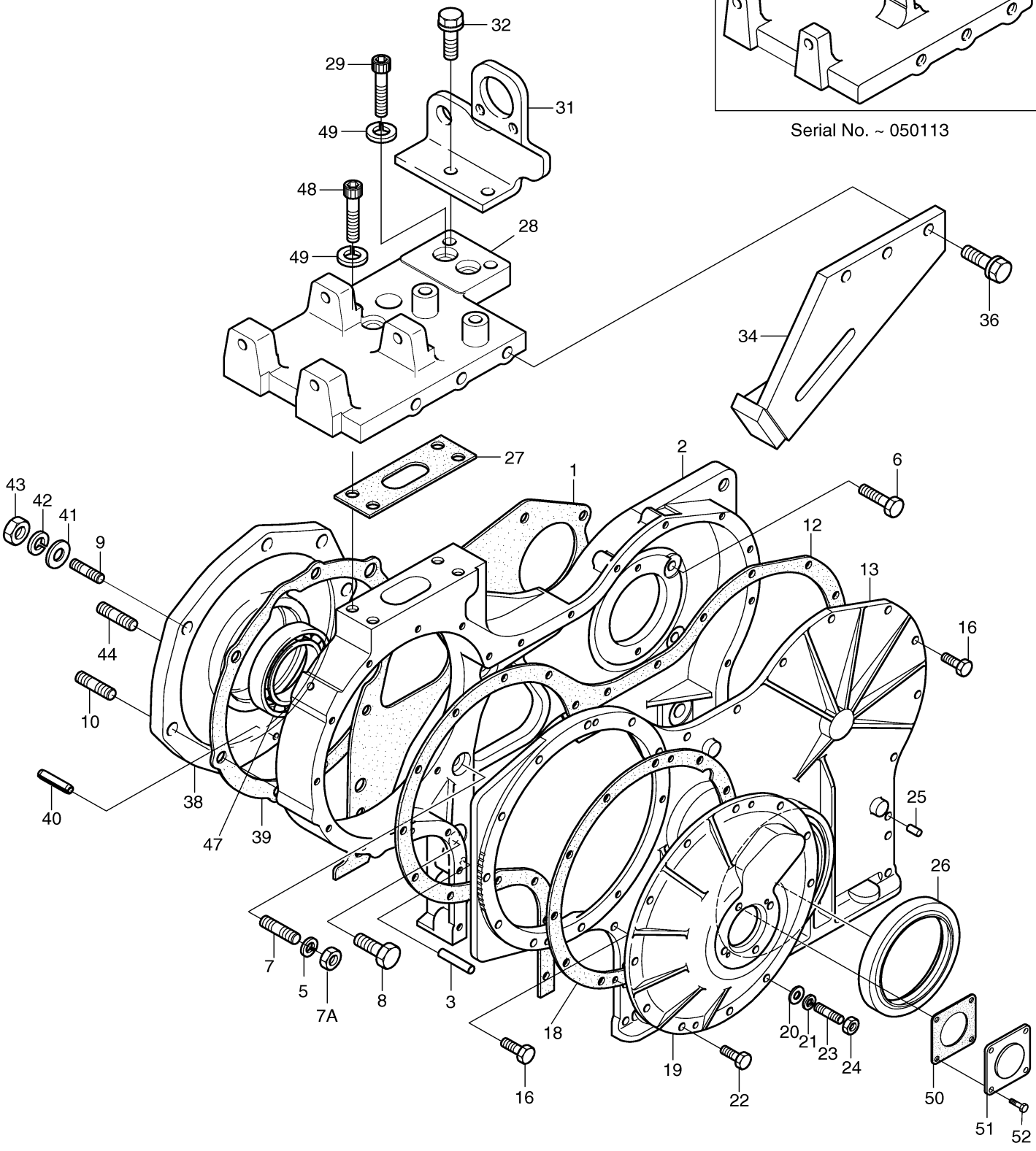

DOOSAN Doosan Infracore

Fig. 130 FLYWHEEL HOUSING

Key No	Part No	Description	Qty	S.C	Serial No	ICA	Replacable	Qty
1	65.01401-0177	HOUSING;FLYWHEEL	1		~031024	Y	65.01401-0177B	1
1	65.01401-0177B	HOUSING;FLYWHEEL	1		~040304	Y	65.01401-0177C	1
1	65.01401-0177C	HOUSING;FLY WHEEL	1		~060508	Y	65.01401-0177D	1
1	65.01401-0177D	HOUSING;FLY WHEEL	1		060509~			
2	65.01903A0178	GASKET;FLYWHEEL HOUSING	1					
3	65.96002-0003	PLUG;RUBBER	2					
4	06.06176-8309	BOLT,STUD	1					
5	06.16731-2109	WASHER;SPRING	1					
6	06.11063-9216	NUT;HEX. M12X1.5	1					
7	06.01943-3319	BOLT ASS'Y M12X1.5X40	9		~101111			
7	06.01943-3319	BOLT ASS'Y M12X1.5X40	7		101112~			
8	65.91710-0023	RING;INTERMEDIATE	2		~050128	I	65.91710-0016	2
8	65.91710-0016	RING;STOPPER	2		050129~			
9	06.01943-3320	BOLT ASS'Y M12X1.5X45	2		101112~			
10	65.01510-0037	SEAL;OIL REAR	1					

Fig. 130 FLYWHEEL HOUSING

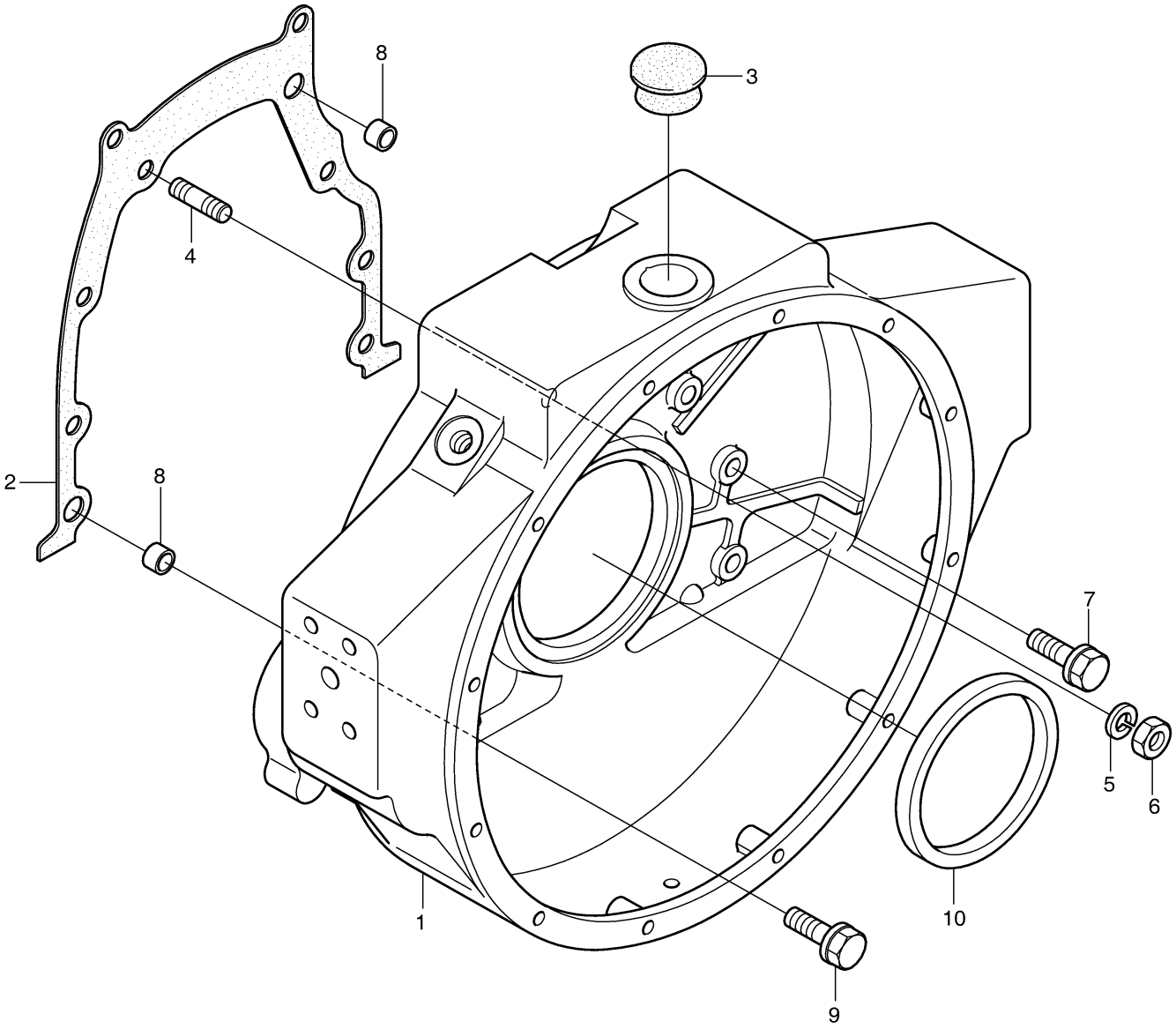

Fig. 140 CRANK SHAFT

Key No	Part No	Description	Qty	S.C	Serial No	ICA	Replacable	Qty
1	65.02101-7540A	CRANKSHAFT ASS'Y	1	D				
1A	65.02101-7024C	CRANKSHAFT ASS'Y	1					
1AA	65.02101-0024N	SHAFT;CRANK	1	D				
1AB	65.02110-0011	WEIGHT;BALANCE	6	D				
1AC	65.90430-0014B	BOLT;CRANK SHAFT	12	D				
1B	65.02101-0056A	SHAFT;CRANK	1		~071001	Y	65.02101-0056B	1
1B	65.02101-0056B	SHAFT;CRANK	1		~090713	I	150107-00183	1
1B	150107-00183	CRANK SHAFT	1		090714~			
2	65.02115-0040K	GEAR;CRANK SHAFT	1					
3	06.22022-0912	PIN;DOWEL	1					
4	65.01110-6351	METAL;MAIN STD	7					
4	65.01110-6352	METAL;MAIN 0.25	7	US				
4	65.01110-6353	METAL;MAIN 0.50	7	US				
4	65.01110-6354	METAL;MAIN 0.75	7	US				
4	65.01110-6355	METAL;MAIN 1.00mm	7	US				
5	65.01150-0015	WASHER;THRUST(UPPER)	2					
5	65.01150-0019	WASHER;THRUST(0.25)	2	OS				
5	65.01150-0020	WASHER;THRUST(0.50)	2	OS				
5	65.01150-0021	WASHER;THRUST(UPP) 0.75mm	2	OS				
5	65.01150-0022	WASHER;THRUST(UPP) 1.00mm	2	OS				
6	65.01150-0016A	WASHER;THRUST(LOWER)	2					
6	65.01150-0023A	WASHER;THRUST(0.25)	2	OS				
6	65.01150-0024A	WASHER;THRUST(0.50)	2	OS				
6	65.01150-0025A	WASHER;THRUST(LOW) 0.75mm	2	OS				
6	65.01150-0026A	WASHER;THRUST(LOW) 1.00mm	2	OS				
7	65.02201-7032	DAMPER;VIBRATION	1			Y	65.02201-7033	1
7	65.02201-7033	DAMPER;VISCOUS	1					
8	06.01913-3215	BOLT ASS'Y M10X25	6		~040701	I	65.90020-0062B	6
8	65.90020-0062B	BOLT;HEX M10X20	6		~150427			
9	65.02601-0168	PULLEY;V-BELT	1					
10	65.90701-0088	WASHER	1					
11	06.02106-0619	BOLT;SOCKET HEAD	8					
12	65.02301-5118	FLYWHEEL ASS`Y	1		~101105			
12	150111-00080	FLYWHEEL ASSY	1		101106~			
12A	65.02301-0262	FLYWHEEL	1					
12B	65.02310-0010A	GEAR;STARTER RING	1		~101105			

Key No	Part No	Description	Qty	S.C	Serial No	ICA	Replacable	Qty
12B	130422-00034	GEAR,RING	1		101106~			
13	06.22220-1208	PIN;SPIRAL LOCK 8X16	1					
14	65.90001-0084	BOLT;HEX. M14X1.5X40	6					
15	06.16731-2110	WASHER;SPRING	6					
51	120121-00071	BOLT,COLLARD HEX	6		150428~			
52	120808-00786	WASHER,SPACER	1		150428~			

Fig. 140 CRANK SHAFT

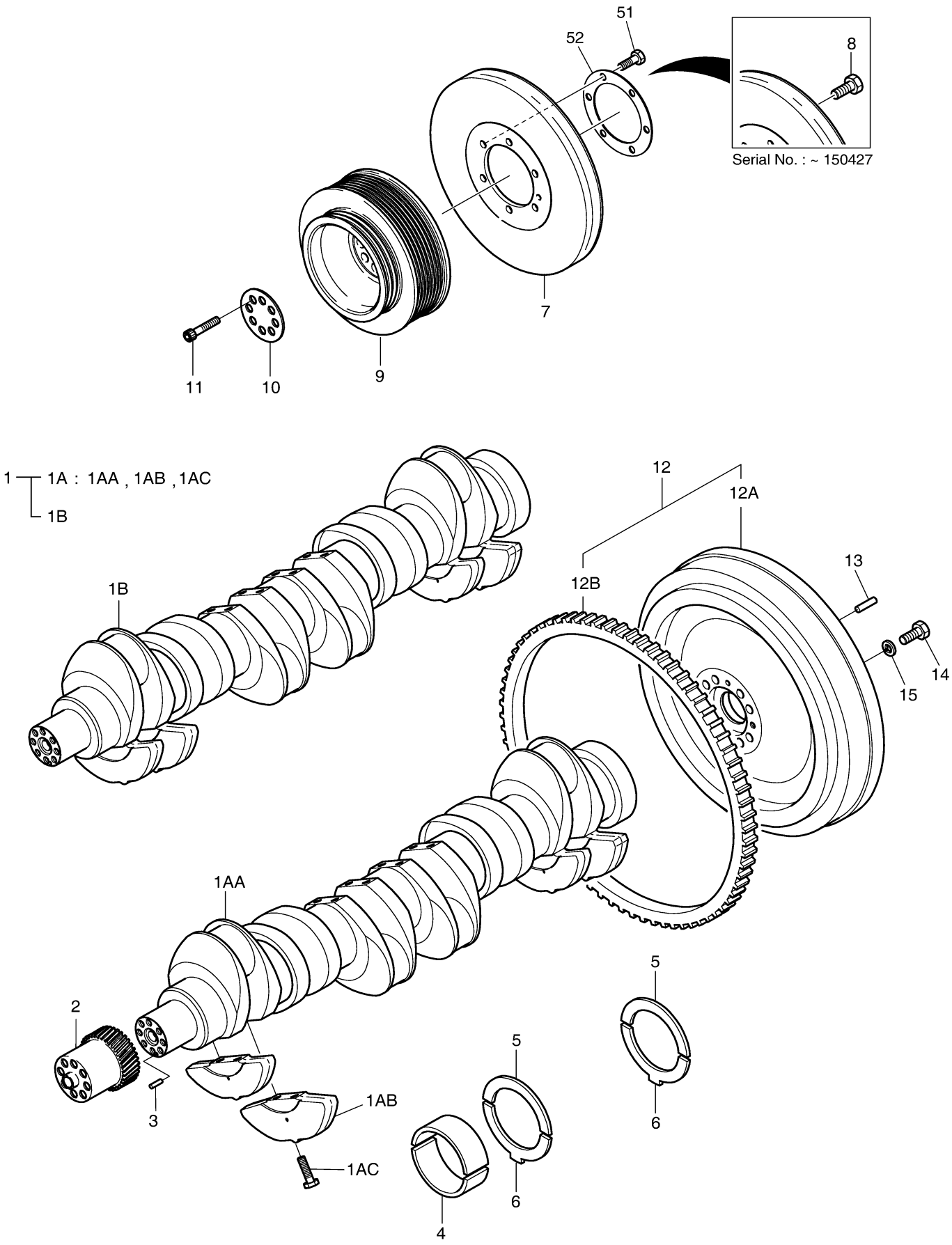

DOOSAN Doosan Infracore

Fig. 150 PISTON

Key No	Part No	Description	Qty	S.C	Serial No	ICA	Replacable	Qty
1	65.02501-0785	PISTON	6		~061011	Y	65.02501-0785A	6
1	65.02501-0785A	PISTON	6		~071031	I	65.02501-0507	6
1	65.02501-0507	PISTON	6		071032~			
2	65.02503-8146	PISTON RING KIT	1					
2A	-	RING;TOP 111X3.5	6	K				
2B	-	RING;SECOND 111X3.5	6	K				
2C	-	RING;OIL 111X4	6	K				
5	65.02502-0010	PIN;PISTON 42X20X95	6					
6	06.29020-0126	RING;SNAP 42X1.75	12					
7	65.02401-6101E	CONNECTING ROD ASS'Y	6		~090202	Y	65.02401-6101G	6
7	65.02401-6101G	CONNECTING ROD ASS'Y	6		090203~			
7A	65.02401-0030	ROD;CONNECTING	6	D	~090202			
7A	65.02401-0030G	ROD;CONNECTING	6	D	090203~			
7B	65.90020-0009D	BOLT;CONNECTING ROD	2					
7C	65.91301-0010	PIN;DOWEL	2					
7D	65.02405-0015C	BUSH;SMALL END	1	B				
8	65.02410-0010	METAL;CONNECTING ROD(STD)	6					
8	65.02410-0011	METAL;CONNECTING ROD 0.25	6	US				
8	65.02410-0012	METAL;CONNECTING ROD 0.5	6	US				

Fig. 150 PISTON

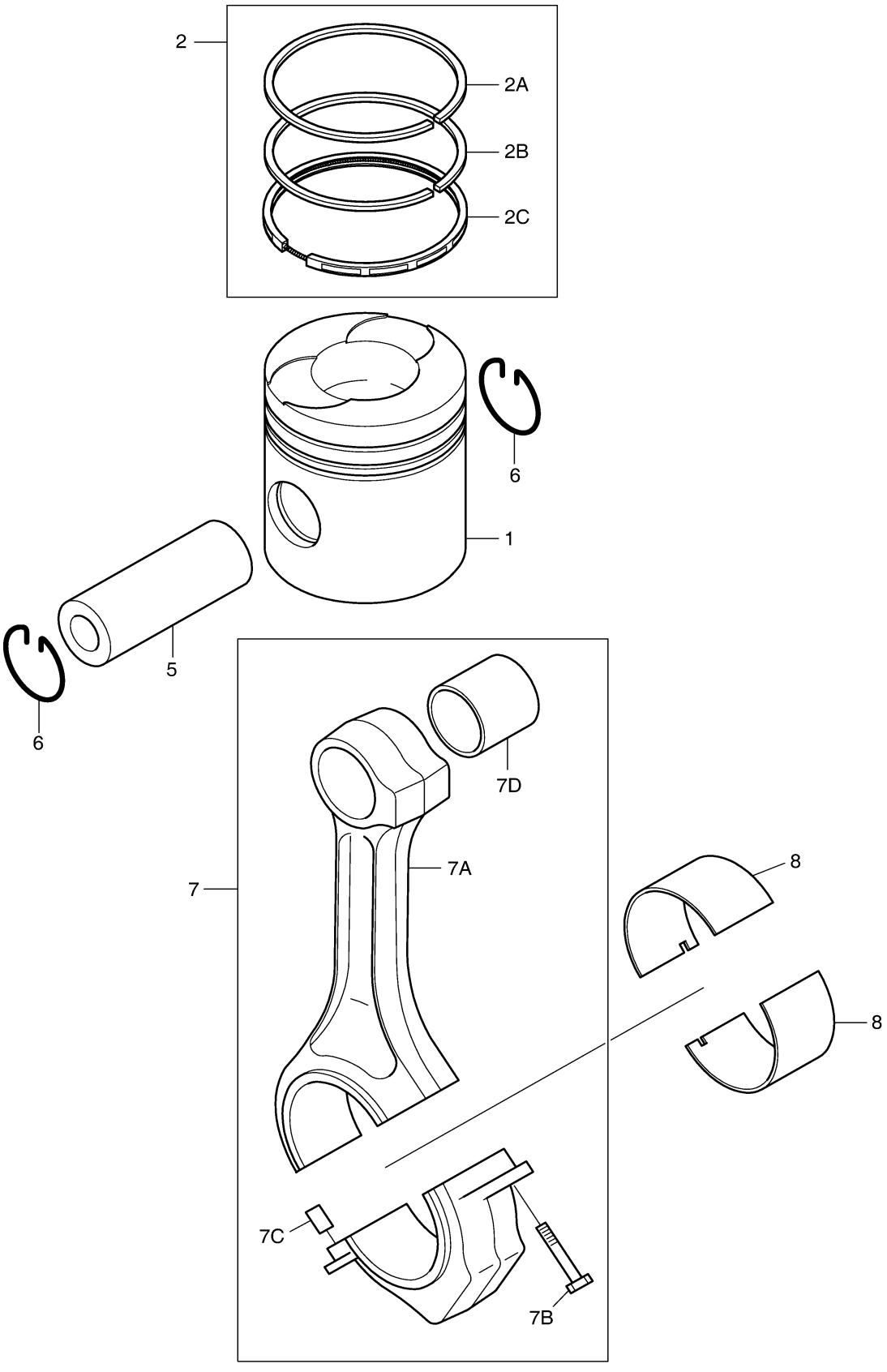

Fig. 160 CYLINDER HEAD

Key No	Part No	Description	Qty	S.C	Serial No	ICA	Replacable	Qty
1	65.03101-6495M	CYLINDER HEAD ASS`Y	3		~011211	Y	65.03101-6495N	3
1	65.03101-6495N	CYLINDER HEAD ASS`Y	3		~030409	Y	65.03101-6495O	3
1	65.03101-6495O	CYLINDER HEAD ASS`Y	3		~040924	Y	65.03101-6495P	3
1	65.03101-6495P	CYLINDER HEAD ASS`Y	3		~050629	T	65.03101-6087	3
1			-				65.03901-0070	3
1			-				65.90021-0007	24
1			-				06.22022-0911	6
1	65.03101-6087	CYLINDER HEAD ASS`Y	3		~060411	Y	65.03101-6087B	3
1	65.03101-6087B	CYLINDER HEAD ASS`Y	3		~090122	Y	65.03101-6087C	3
1	65.03101-6087C	CYLINDER HEAD ASS`Y(2~7)	3		~090829	I	150113-00036	3
1	150113-00036	HEAD ASSY,CYLINDER	3		090830~			
1A	65.03101-0295R	HEAD;CYLINDER	1	D	~011211			
1A	65.03101-0295S	HEAD;CYLINDER	1	D	~030409			
1A	65.03101-0295T	HEAD;CYLINDER	1	D	~050629			
1A	65.03101-1087	HEAD;CYLINDER	1	D	~060411			
1A	65.03101-1087A	HEAD;CYLINDER	1	D	~090122			
1A	65.03101-1087B	HEAD;CYLINDER	1	D	090123~			
1B	65.03201-1011	GUIDE;VALVE	4	B	~040924	Y	65.03201-1011A	4
1B	65.03201-1011A	GUIDE;VALVE	4	B	~090829	I	65.03201-1061	4
1B	65.03201-1061	GUIDE,VALVE	4	B	090830~			
1C	65.03203-1028D	RING;VALVE SEAT EXHAUST	2	B				
1D	65.03203-1029G	RING;VALVE SEAT INTAKE	2	B				
1E	06.15091-0319	PLUG;CORE	7					
1F	65.91001-0013	AVSEAL	6		~060411	Y	65.91001-0013A	6
1F	65.91001-0013A	PIN;CORE	6		060412~			
2	65.91001-0013	AVSEAL	6		~060411	Y	65.91001-0013A	6
2	65.91001-0013A	PIN;CORE	6		060412~			
3	06.22022-0907	PIN;DOWEL	6		~050629			
3	06.22022-0909	PIN;DOWEL 6M6X14	6		050630~			
4	65.03901-0058	GASKET;CYLINDER HEAD	3		~030929	Y	65.03901-0058A	3
4	65.03901-0058A	GASKET;CYLINDER HEAD	3		030930~050629			
4	65.03901-0070	GASKET;CYLINDER HEAD	3		050630~060519	Y	65.03901-0070A	3
4	65.03901-0070A	GASKET;CYLINDER HEAD	3		060520~			
5	65.90020-0070	BOLT;CYLINDER HEAD	24		~050629	I	65.90021-0007	24
5	65.90021-0007	BOLT;CYLINDER HEAD	24		050630~			
6	06.06226-0808	BOLT;STUD M10X30	6		~100707	I	120117-00053	6

Key No	Part No	Description	Qty	S.C	Serial No	ICA	Replacable	Qty
6	120117-00053	BOLT,STUD	6		100708~			
7	65.90201-0049	BOLT;STUD M12X1.5X35	6		~100707	I	120117-00046	6
7	120117-00046	BOLT,STUD	6		100708~			
8	06.06225-0809	BOLT;STUD M10X35	2					
9	65.03401-0021H	COVER;CYLINDER HEAD	1		~080627	Y	65.03401-0021I	1
9	65.03401-0021I	COVER;CYLINDER HEAD	1		080628~			
10	65.03401-0056A	COVER;CYLINDER HEAD	1					
11	65.03401-6044B	COVER;CYLINDER HEAD	1					
12	65.03905-0022	GASKET;CYLINDER HEAD COVER	3					
13	65.90020-0073	BOLT;COLLARED HEX.	6					
14	65.90701-0202	WASHER;PLATE	6					
15	65.03905-0023	GASKET;CYL. HEAD COVER	6		~020416	Y	65.03905-0023A	6
15	65.03905-0023A	GASKET;CYLINDER HEAD COVER	6		020417~			
16	65.01810-5007	CAP;OIL FILLER	1		~050502	Y	65.01810-5011	1
16	65.01810-5011	CAP;OIL FILLER	1		050503~			
17	65.01801-5099A	HOUSING;BREATHER	1		~020507	Y	65.01801-5099B	1
17	65.01801-5099B	HOUSING;BREATHER	1		~050704	Y	65.01801-5099C	1
17	65.01801-5099C	BREATHER HOUSING ASS'Y	1		050705~			
18	65.96501-0033B	O-RING	1					
19	06.01923-3113	BOLT ASS'Y M8X20	3					
20	06.67020-0105	CLAMP	1					
21	65.97401-0142	CLIP;HOSE	1		~101114			
21	65.97401-0188	CLIP;PIPE	1		101115~			
22	65.96301-0294	HOSE;RUBBER	1		~101114	I	420101-00361	1
22	420101-00361	HOSE,AIR;BRETHER	1		101115~			
23	06.11063-8214	NUT	1					
24	06.16731-2107	WASHER	1					
25	06.15010-2311	WASHER	1					
26	65.97460-0002	CABLE TIE	1					

Fig. 160 CYLINDER HEAD

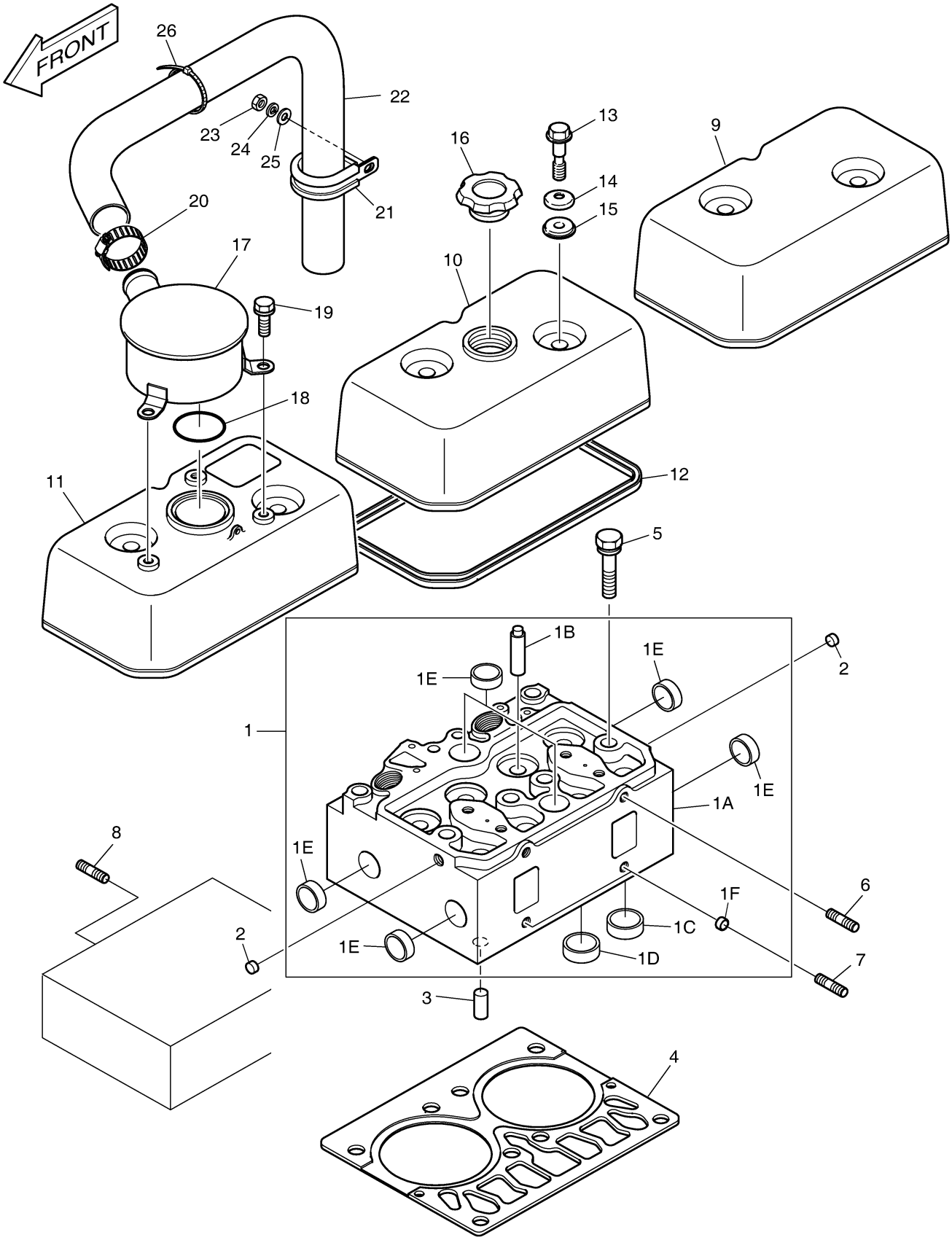

DOOSAN Doosan Infracore

Fig. 170 CAM SHAFT

Key No	Part No	Description	Qty	S.C	Serial No	ICA	Replacable	Qty
1	65.04401-0014C	SHAFT;CAM	1		~040827	Y	65.04401-0014D	1
1	65.04401-0014D	SHAFT;CAM	1		~061127	Y	65.04401-0014E	1
1	65.04401-0014E	SHAFT;CAM	1		061128~			
2	65.90720-0099	WASHER;THRUST	1					
3	65.98112-0038	FLANGE	1					
4	65.90001-6003	BOLT ASS`Y M6X14	2					
5	65.04501-0057	GEAR;CAM SHAFT	1					
6	06.22022-1016	PIN;DOWEL	1					
7	06.01913-3120	BOLT ASS'Y M8X45	4					
8	65.04506-0008	PIN;IDLE GEAR	1					
9	65.04505-5008A	IDLE GEAR ASS`Y	1					
10	65.90720-0019	WASHER;THRUST	1					
11	06.01914-3126	BOLT;HEX. M8X75	2					
12	65.04101-0041	VALVE;INTAKE	6					
13	65.04101-0042	VALVE;EXHAUST	6					
14	65.04902-0013	SEAL;VALVE STEAM	12					
15	65.04103-0009	SEAT;VALVE SPRING	12					
16	65.04102-0007	SPRING;VALVE(INTAKE)	6					
17	65.04102-6002	SPRING;VALVE(EXHAUST)	6					
17A	65.04102-0003	SPRING;VALVE(EXHAUST OUTER)	6	D				
17B	65.04102-0004	SPRING;VALVE(EXHAUST INNER)	6	D				
18	65.04103-0013	RETAINER;VALVE SPRING	12					
19	65.04104-0006	COTTER;VALVE	24					
20	65.04200-6025D	ROCKER ARM SHAFT ASS'Y	3		~060621	Y	65.04200-6025E	3
20	65.04200-6025E	ROCKER ARM ASS'Y	3		060622~			
20A	65.04201-5013E	ROCKER ARM	4					
20A	65.04201-0006K	ARM;ROCKER	1					
20A	65.93020-0032C	BUSH	1					
20B	65.04205-0003	BOLT;ADJUSTING M10X1.0	4		~060621	Y	65.04205-0003A	4
20B	65.04205-0003A	BOLT;ADJUSTING	4		060622~			
20C	65.90501-0003	NUT	4					
20D	65.04203-5009	ROCKER ARM SHAFT ASS`Y	1					
20DA	65.04203-0009A	SHAFT;ROCKER ARM	1	D				
20DB	65.90302-0012	PLUG	2	D				
20E	65.04202-0017	BRACKET;ROCKER ARM	2					
20E	65.04202-0017A	BRACKET;ROCKER ARM	2					

Key No	Part No	Description	Qty	S.C	Serial No	ICA	Replacable	Qty
20F	65.97601-0055	SPRING;ROCKER ARM SHAFT	1					
20G	65.90710-0039	WASHER;ROCKER ARM	2					
20H	06.29010-0120	RING;SNAP	2					
20I	65.90020-0056	BOLT;HEX. M12X1.5X80	2					
20J	06.01013-9221	BOLT;HEX. M10X80	2					
20K	06.16731-2108	WASHER;SPRING	2					
20L	06.15030-0514	WASHER;PLAIN	2					
21	65.04301-0005	TAPPET	12					
22	65.04302-5010	PUSH ROD	12					

Fig. 170 CAM SHAFT

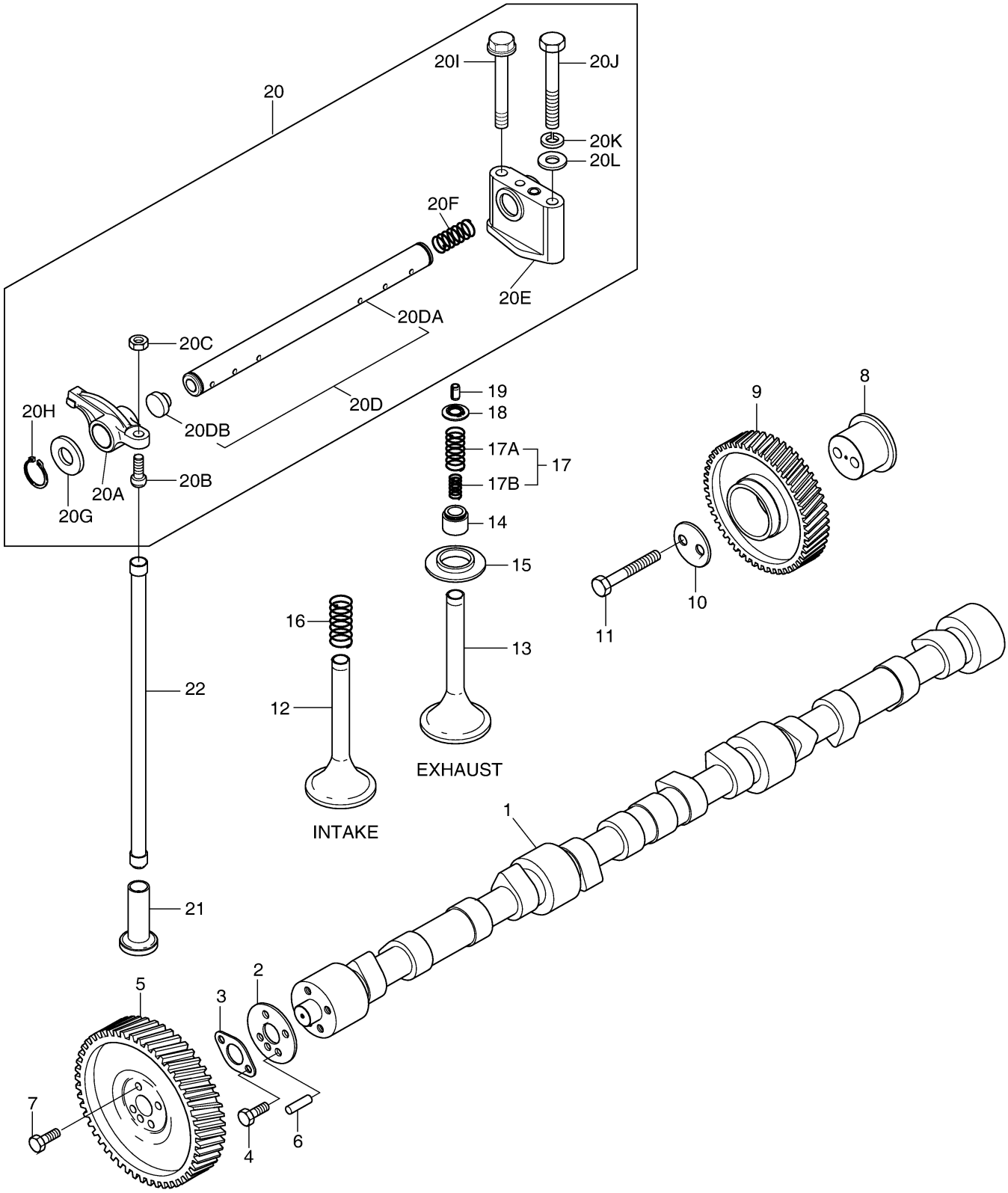

DOOSAN Doosan Infracore

Fig. 180 INTERMEDIATE GEAR

Key No	Part No	Description	Qty	S.C	Serial No	ICA	Replacable	Qty
A	65.05200-6034	IDLE GEAR ASS`Y	1	D				
1	65.05204-0036	GEAR;IDLE	1					
2	06.31420-0314	BEARING;BALL	2					
3	06.29020-0132	SNAP RING	2					
4	65.05205-0018	PIN;IDLE GEAR	1					
5	06.29010-0125	RING;SNAP 30X2	1					
6	65.90030-0009	BOLT;SOCKET HEAD M10X60	1					
7	65.05100-6048	OIL PUMP ASS'Y	1		~020426	Y	65.05100-6022	1
7A	65.05102-0014	HOUSING;OIL PUMP	1					
7B	65.05103-0028	OIL PUMP COVER(FRONT)	1					
7C	65.05103-0029	OIL PUMP COVER(REAR)	1					
7D	65.05410-0007	PLUNGER;VALVE	1					
7E	65.97601-0105	SPRING;COMP.	1					
7F	65.90310-0104	SCREW;PLUG	1					
7G	65.05104-5008	GEAR	2					
7H	06.01013-9118	BOLT;HEX. M8X65	4					
7I	06.22022-0909	PIN;DOWEL 6M6X14	4					
7J	65.90510-0012	NUT	4					
7K	65.05201-0037	GEAR;OIL PUMP DRIVE	1					
10	65.05100-6022	OIL PUMP ASS'Y	1		020427~			
10A	65.05102-0014	HOUSING;OIL PUMP	1					
10B	65.05103-5015	OIL PUMP COVER(FRONT)	1					
10C	65.05103-5012	OIL PUMP COVER(REAR)	1					
10D	65.05410-0025	PLUNGER;VALVE	1					
10E	65.97601-0110	SPRING;COMPRESSION	1					
10F	65.90310-0104	SCREW;PLUG	1					
10G	65.05104-5004	GEAR;PUMP	1					
10H	65.05104-5003	GEAR	1					
10I	06.01013-9118	BOLT;HEX. M8X65	4					
10J	65.90510-0012	NUT	4					
10K	65.05201-0037	GEAR;OIL PUMP DRIVE	1					
10L	06.29141-0207	KEY;WOODRUFF	1					
10M	06.22022-0909	PIN;DOWEL 6M6X14	4					
10N	06.11053-9217	NUT;HEX.	1					
10O	06.16050-0311	WASHER;LOCK	1					
22	06.22022-0907	PIN;DOWEL	2					

Key No	Part No	Description	Qty	S.C	Serial No	ICA	Replacable	Qty
23	06.01013-9215	BOLT;HEX. M10X50	2					
24	65.90801-0038	WASHER;LOCK	2		~010724	I	65.90801-0018	2
24	65.90801-0018	WASHER;LOCK	2		010725~			

Fig. 180 INTERMEDIATE GEAR

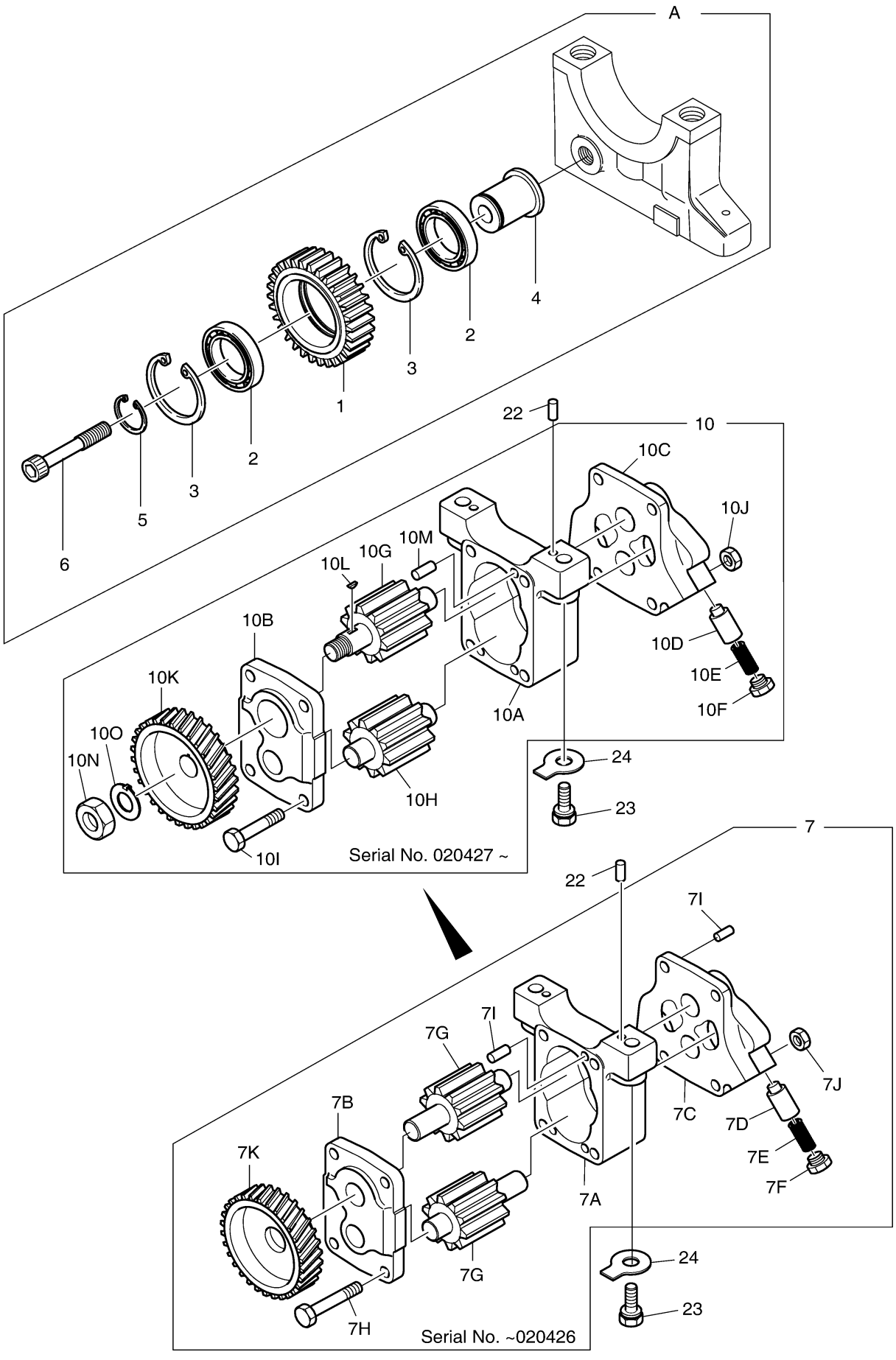

DOOSAN Doosan Infracore

Fig. 190 OIL PIPE & OIL PAN

Key No	Part No	Description	Qty	S.C	Serial No	ICA	Replacable	Qty
1	65.05801-5194A	OIL PAN ASS'Y	1		~061220			
1	65.05801-5253	PAN;OIL	1		~070410	Y	65.05801-5253A	1
1	65.05801-5253A	PAN;OIL	1		~081203	Y	65.05801-5253B	1
1	65.05801-5253B	OIL PAN ASS`Y	1		081204~			
2	65.98125-5019	JOINT;DRAIN	1		~030629	Y	65.98125-5022	1
2	65.98125-5022	JOINT;DRAIN	1		~060707	Y	65.98125-5022A	1
2	65.98125-5022A	JOINT;DRAIN	1		060708~			
3	06.56190-0732	SEAL;RING	1					
4	65.05809-0012	WASHER;OIL PAN(SIDE)	9		~061220			
5	65.05809-0013	WASHER;OIL PAN(REAR)	2		~061220			
6	65.05809-0014	WASHER;OIL PAN(FRONT)	2		~061220			
7	65.05809-0037	WASHER;OIL PAN(REAR)	1		~061220			
8	65.90001-6005	BOLT;SOCKET	2		~061220			
8	06.01923-3126	BOLT;HEX. M8X75	4		061221~			
9	06.01913-3115	BOLT ASS'Y M8X25	25		~061220			
9	06.01923-3121	BOLT;HEX. M8X50	18		061221~			
10	65.90201-0105	STUD;BOLT	1		061221~			
11	65.90001-6006	BOLT;SOCKET HEAD M8X25	10		~061220			
12	06.16731-2107	WASHER	1		061221~			
13	06.15010-2311	WASHER	1		061221~			
14	65.05904A0016	GASKET;OIL PAN	1					
15	65.05806-5096	TUBE;GUIDE	1					
15	65.05806-5096A	TUBE;GUIDE	1		~070911	Y	65.05806-5096B	1
15	65.05806-5096B	TUBE;GUIDE	1		070912~			
18	65.05805-5211	GAUGE;OIL LEVEL	1		~050630	I	65.05805-5211A	1
18	65.05805-5211A	GAUGE;OIL LEVEL	1		~061220			
18	65.05805-5240	OIL LEVEL GAUGE ASS'Y	1		~070101	Y	65.05805-5240A	1
18	65.05805-5240A	OIL LEVEL GAUGE ASS'Y	1		~090121	I	65.05805-5309	1
18	65.05805-5309	GAUGE;OIL LEVEL	1		090122~			
19	65.05701-6039B	OIL SUCTION PIPE ASS`Y	1					
19A	65.05701-5203B	OIL SUCTION PIPE ASS`Y	1					
19B	65.05740-0015	HOLDER;OIL SUCTION PIPE	1					
19E	06.15010-2311	WASHER	2					
19D	06.01283-7114	BOLT;HEX. M8X22	1					
19C	65.90510-0012	NUT	1					
20	06.01923-3114	BOLT ASS'Y M8X22	2					

Key No	Part No	Description	Qty	S.C	Serial No	ICA	Replacable	Qty
21	06.01923-3111	BOLT, M8X16	1					
22	65.96601B0019	GASKET;OIL SUCTION PIPE	1					
23	65.05903B0003	GASKET;CONNECTING FLANGE	1					
24	65.05715-5001	CONNECTING FLANGE ASS`Y	1					
25	06.02090-0422	BOLT;SOCKET HEAD	2					
26	06.16731-2107	WASHER	2					
27	06.15010-2311	WASHER	2					
28	65.96601-0050	GASKET;OIL PIPE	4					
29	65.05701-5153	OIL PIPE ASS'Y	1		~71213	T	65.05701-0030A	1
29			-				06.01923-3121	2
29			-				06.01923-3118	1
29			-				06.01923-3124	1
29			-				65.96601-0050	2
29	65.05701-0030A	OIL PIPE ASS`Y(O/P->C/F)	1		71214~			
30	06.01923-3118	BOLT ASS'Y M8X35	1		71214~			
31	06.01923-3124	BOLT ASS'Y M8X65	1		71214~			
32	65.05701-5230	OIL PIPE ASS'Y	1					
33	65.90001-6006	BOLT;SOCKET HEAD M8X25	2					
34	06.01923-3113	BOLT ASS'Y M8X20	2					
35	06.01283-7113	BOLT;HEX. M8X1.25X20	4		~71213			
35	06.01923-3121	BOLT;HEX. M8X50	2		71214~			

Fig. 190 OIL PIPE & OIL PAN

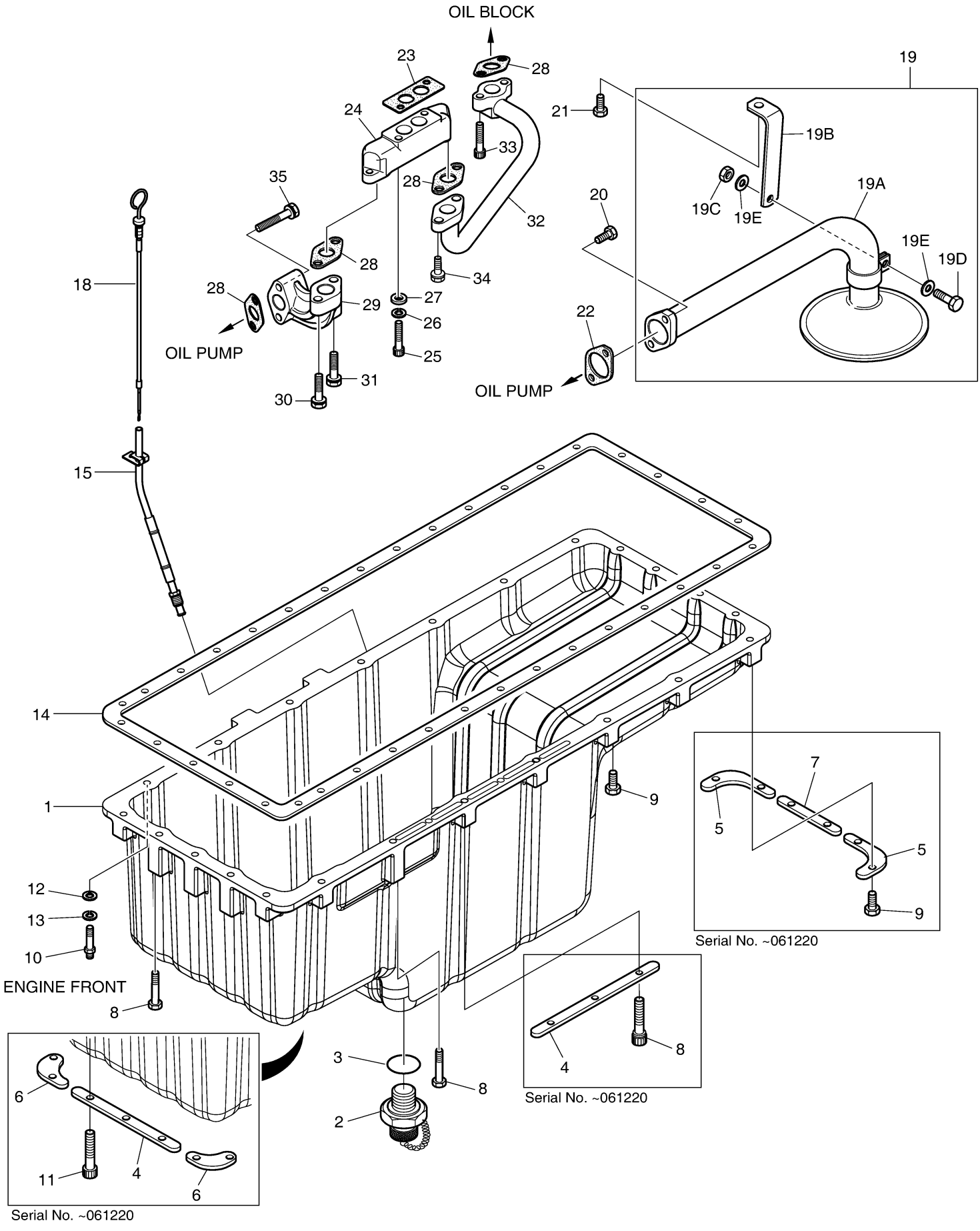

DOOSAN Doosan Infracore

Fig. 200 OIL FILTER

Key No	Part No	Description	Qty	S.C	Serial No	ICA	Replacable	Qty
1	65.05501-7071	OIL FILTER ASSY	1		~040412	Y	65.05501-7064A	1
1	65.05501-7064A	OIL FILTER ASS'Y	1		~050714	Y	65.05501-7064B	1
1	65.05501-7064B	OIL FILTER ASS'Y	1		050715~			
1A	65.05510-5026	CARTRIDGE;OIL FILTER	1		~040412			
1A	65.05510-5022A	CARTRIDGE;OIL FILTER	1		~050714	Y	65.05510-5022B	1
1A	65.05510-5022B	CARTRIDGE;OIL FILTER	1		050715~			
1B	65.05503-5042	HEAD;FILTER	1					
1C	65.05518-0003	VALVE;PLUNGER	1	D				
1D	65.97601-0065	SPRING	1	D				
1E	65.90310-0057	SCREW;PLUG	1					
1F	06.56190-0716	RING;SEAL	1					
1G	65.05518-0006	VALVE	1	D				
1H	65.97601-0075	SPRING	1	D				
1I	65.90310-0065	SCREW;PLUG	1					
1J	06.56190-0726	SEAL;RING	1					
2	65.05901A0052	GASKET;OIL FILTER	1					
3	06.01913-3122	BOLT ASS'Y M8X55	2					
4	06.01913-3118	BOLT ASS'Y M8X35	2					

Fig. 200 OIL FILTER

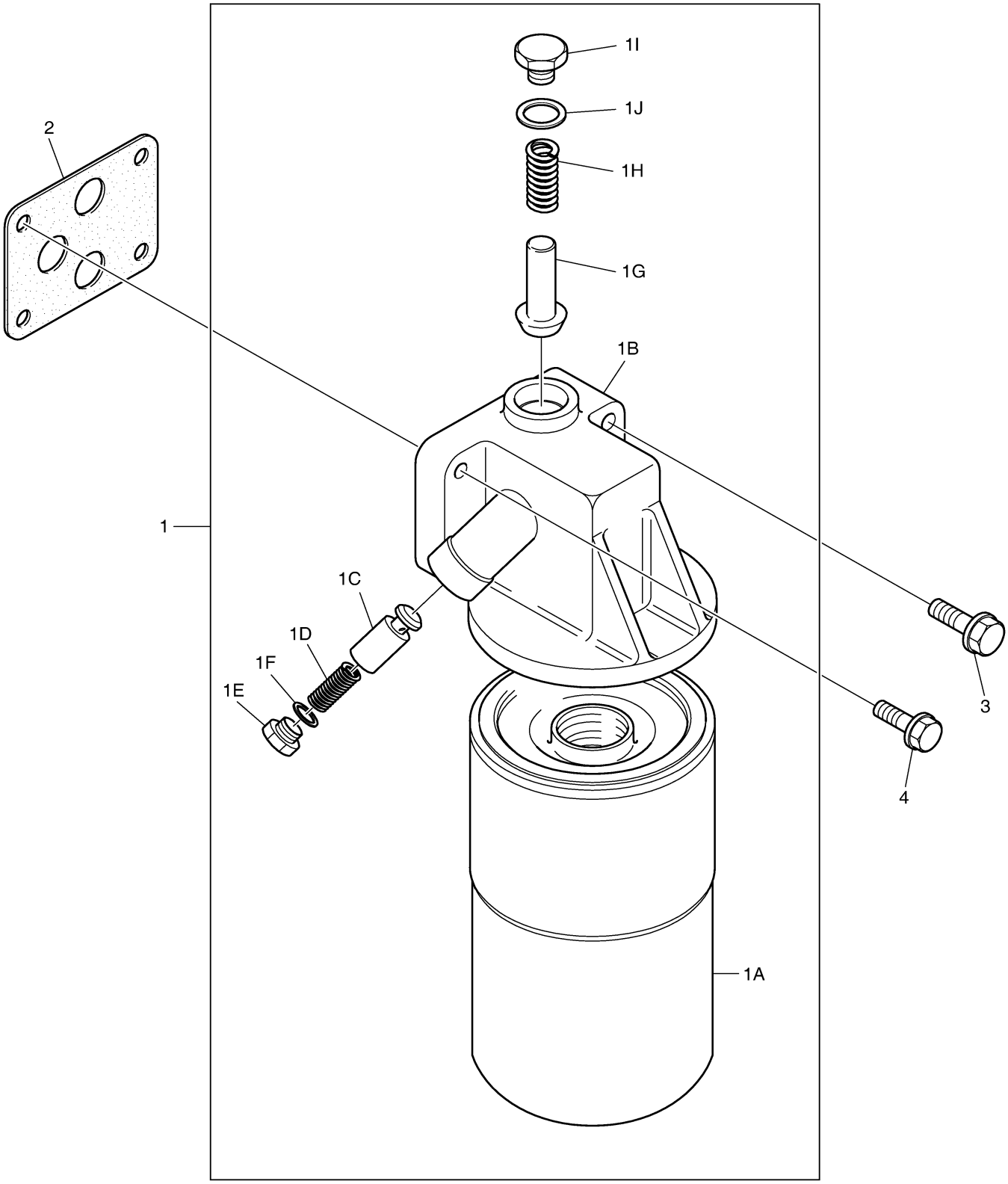

Fig. 210 OIL COOLER

Key No	Part No	Description	Qty	S.C	Serial No	ICA	Replacable	Qty
1	65.05601-7138A	OIL COOLER ASS'Y	1		~031009	Y	65.05601-7138B	1
1	65.05601-7138B	OIL COOLER ASS'Y	1		~050714	Y	65.05601-7138C	1
1	65.05601-7138C	OIL COOLER ASS'Y	1		050715~			
1A	65.05604-5030	HOUSING;OIL COOLER	1					
1B	65.90310-0136	SCREW;PLUG	1		~040302	Y	65.90310-0136A	1
1B	65.90310-0136A	SCREW;PLUG	1		040303~			
1C	06.56190-0718	RING;SEAL	1					
1D	06.31641-0429	BALL;BY-PASS	1					
1E	65.97601-0004	SPRING	1					
1F	65.90310-0003	SCREW;PLUG M26X1.5	1					
1G	65.05611-0001	PIN	1					
1H	65.05606-5020	ELEMENT;OIL COOLER	1					
1I	65.96601A0018	GASKET;OIL COOLER	2		~031009	Y	65.96601-0018A	2
1I	65.96601-0018A	GASKET;OIL COOLER	2		031010~			
1J	06.15030-0513	WASHER;PLAIN	4					
1K	06.16110-0106	WASHER	4					
1L	65.05605-0028	HEAD;OIL	1		~050714	Y	65.05605-0028A	1
1L	65.05605-0028A	COVER;OIL COOLER	1		050715~			
1M	65.06301-0160	PIPE;COOLING WATER	1					
1N	65.96601-0029	GASKET;FLANGE	1					
1O	06.01923-3112	BOLT ASS'Y M8X18	4					
1P	65.05902A0008	GASKET;OIL COOLER COVER	1		~031009	Y	65.05902-0008A	1
1P	65.05902-0008A	GASKET;OIL COOLER COVER	1		031010~			
1Q	06.01923-3126	BOLT;HEX. M8X75	8					
1R	06.56190-0728	RING;SEAL	1					
1S	06.02090-0418	BOLT;SOCKET HEAD M8X45	4					
2	65.90001-6011	BOLT ASS'Y M10X70	2					
3	06.01924-3225	BOLT ASS'Y M10X70	2					
4	65.05902A0011	GASKET;OIL COOLER COVER	1					
5	65.91605-0110	COVER;BLIND	1					
6	65.96601-0347	GASKET;OIL COOLER ASS`Y	1					
7	06.01913-3112	BOLT ASS'Y M8X18	4					

Fig. 210 OIL COOLER

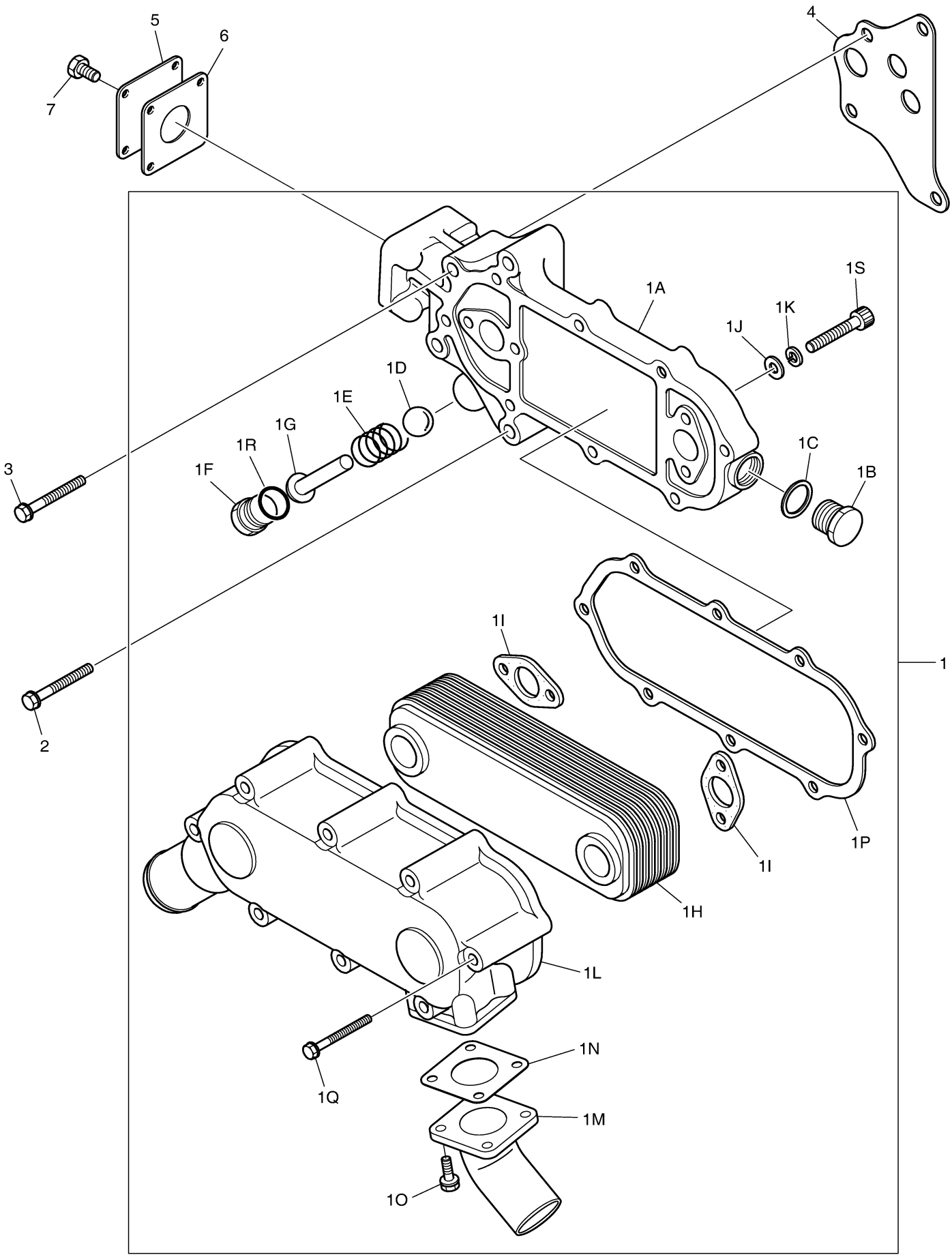

DOOSAN Doosan Infracore

Fig. 220 COOLING WATER PUMP

Key No	Part No	Description	Qty	S.C	Serial No	ICA	Replacable	Qty
1	65.06500-6145B	WATER PUMP ASS'Y	1		~030515	Y	65.06500-6145C	1
1	65.06500-6145C	WATER PUMP ASS'Y	1		~090324	Y	65.06500-6145D	1
1	65.06500-6145D	WATER PUMP ASS`Y	1		90325~			
1A	65.06501-0076B	HOUSING;WATER PUMP	1	D	~030515			
1A	65.06501-0076C	HOUSING;WATER PUMP	1	D	030516~			
1B	65.06520-6007	SEAL;MECHANICAL	1					
1C	65.06506-0023	IMPELLAR	1					
1D	65.93410-0027	BEARING	1		~090324	Y	65.93410-0087	1
1D	65.93410-0087	BEARING	1		090325~			
1E	06.29020-0132	SNAP RING	1					
1F	65.06504-0030	HUB	1		~030515	Y	65.06504-0030A	1
1F	65.06504-0030A	HUB	1		030516~			
1G	65.06901A0019	GASKET;WATER PUMP INNER	1					
1H	65.06512-0010	COVER;WATER PUMP	1					
1I	06.04201-8907	BOLT;SLOTTED HEAD M6X14	3					
11	65.06901A0020	GASKET;WATER PUMP	1					
12	06.01913-3121	BOLT ASS'Y M8X50	3					
13	06.01913-3125	BOLT ASS`Y M8X70	1					
14	06.01913-3126	BOLT ASS'Y M8X75	1		~031211			
14	06.01013-9121	BOLT ASS`Y M8X80	1		031212~			
15	06.01914-3225	BOLT;HEX. M10X70	1					
20	65.06611-0123	FLANGE	1		~030217	Y	65.06611-0123A	1
20	65.06611-0123A	FLANGE;FAN	1		~070913	Y	65.06611-0148	1
20	65.06611-0148	FLANGE	1		~080726	Y	65.06611-0160	1
20	65.06611-0160	FLANGE	1		080727~			
21	65.06606-0055	PULLEY;FAN	1					
22	65.06601-5046	FAN;COOLING	1					
23	06.01013-9218	BOLT;HEX. M10X65	6					
24	06.16731-2107	WASHER	6					

Fig. 220 COOLING WATER PUMP

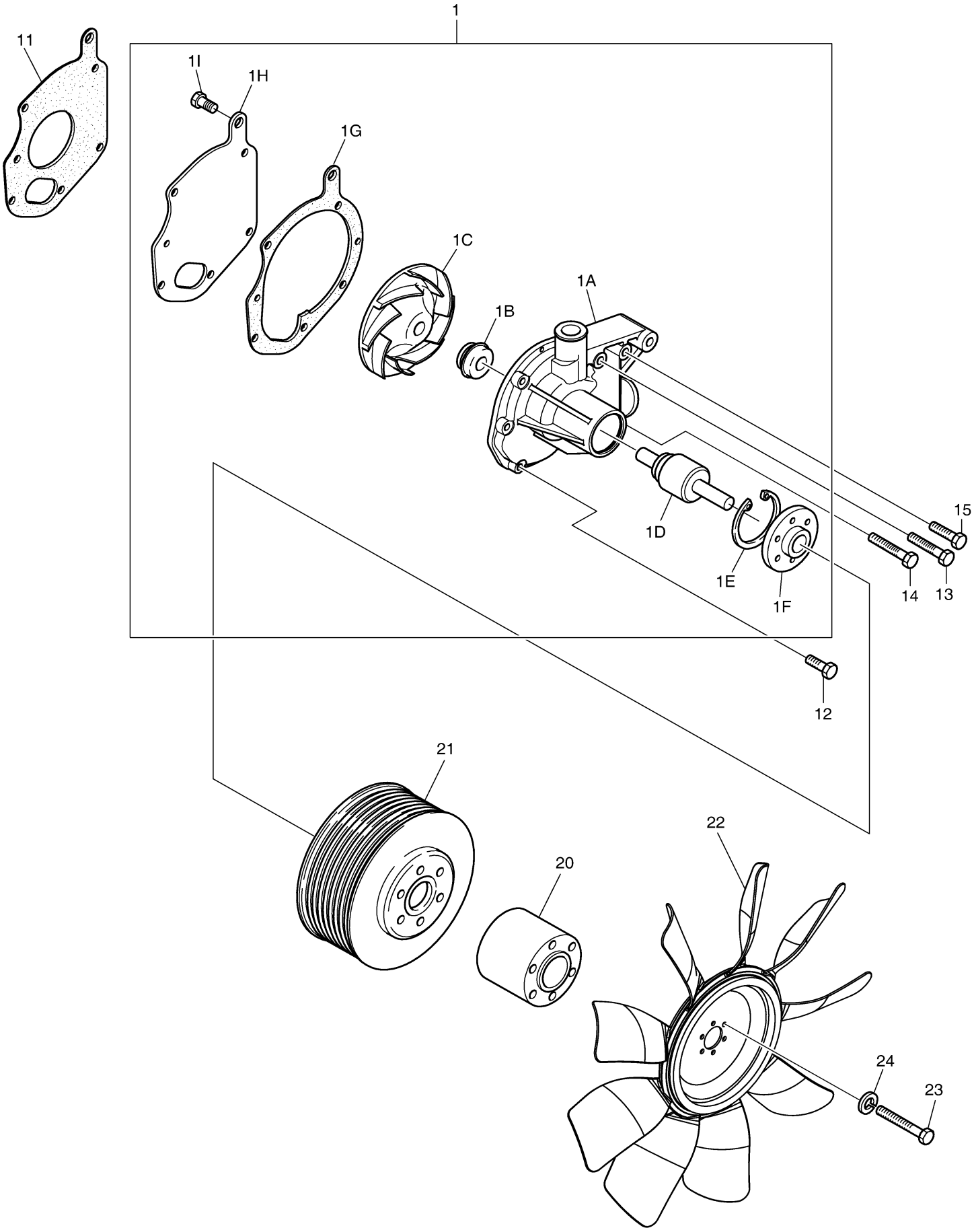

DOOSAN Doosan Infracore

Fig. 230 COOLING SYSTEM

Key No	Part No	Description	Qty	S.C	Serial No	ICA	Replacable	Qty
1	65.01705-0002	COVER;WATER CHAMBER	1		~040909	Y	65.01705-0002B	1
1	65.01705-0002B	COVER;WATER CHAMBER	1		040910~			
2	65.01907A0002	GASKET;WATER CHAMBER	1					
3	06.15010-2311	WASHER	12					
4	06.16731-2107	WASHER	12					
5	06.01923-3115	BOLT ASS'Y M8X25	14					
6	65.90201-0149	BOLT;STUD M8X25	11		~040909			
6	65.90201-0149	BOLT;STUD M8X25	10		040910~			
7	65.90201-0037	BOLT;SPACER	1		~040909			
7	65.90201-0075	BOLT;SPACER	2		~100616	I	120122-00014	2
7	120122-00014	BOLT,SPACER;M8	2		100617~			
8	06.11063-8214	NUT	11					
9	65.06301-0134B	PIPE;COOLING WATER	1		~080306	Y	65.06301-0134C	1
9	65.06301-0134C	PIPE;COOLING WATER	1		~101114	Y	420211-00191	1
9	420211-00191	PIPE,COOLING WATER	1		101115~			
10	65.06903A0011	GASKET;COOLING WATER PIPE	3					
11	06.01923-3122	BOLT ASS`Y M8X55	3					
12	06.01923-3124	BOLT ASS'Y M8X65	3					
13	65.27435-6003	SWITCH;WATER TEMP	1		~020123			
13	65.90320-0019	PLUG SCREW PT3/8	1		020124~			
14	65.90310-0149A	SCREW;PLUG M26X1.5	1		~101114			
15	06.56190-0728	RING;SEAL	1		~101114			
16	65.96301-0257	HOSE;RUBBER	1					
17	06.67020-0110	CLAMP;HOSE	2		~030113			
17	06.67020-0109	CLAMP;HOSE	2		030114~			
18	65.06301-0083	PIPE;COOLING WATER	1					
19	04.27405-1908A	HOSE;RUBBER M50X62X80	2					
20	06.67020-0109	CLAMP;HOSE	4					
21	65.96301-0258	HOSE;RUBBER	1					
22	06.67020-0106	CLAMP;HOSE	2					
23	65.06401-6044	THERMOSTAT ASS`Y	1					

Fig. 230 COOLING SYSTEM

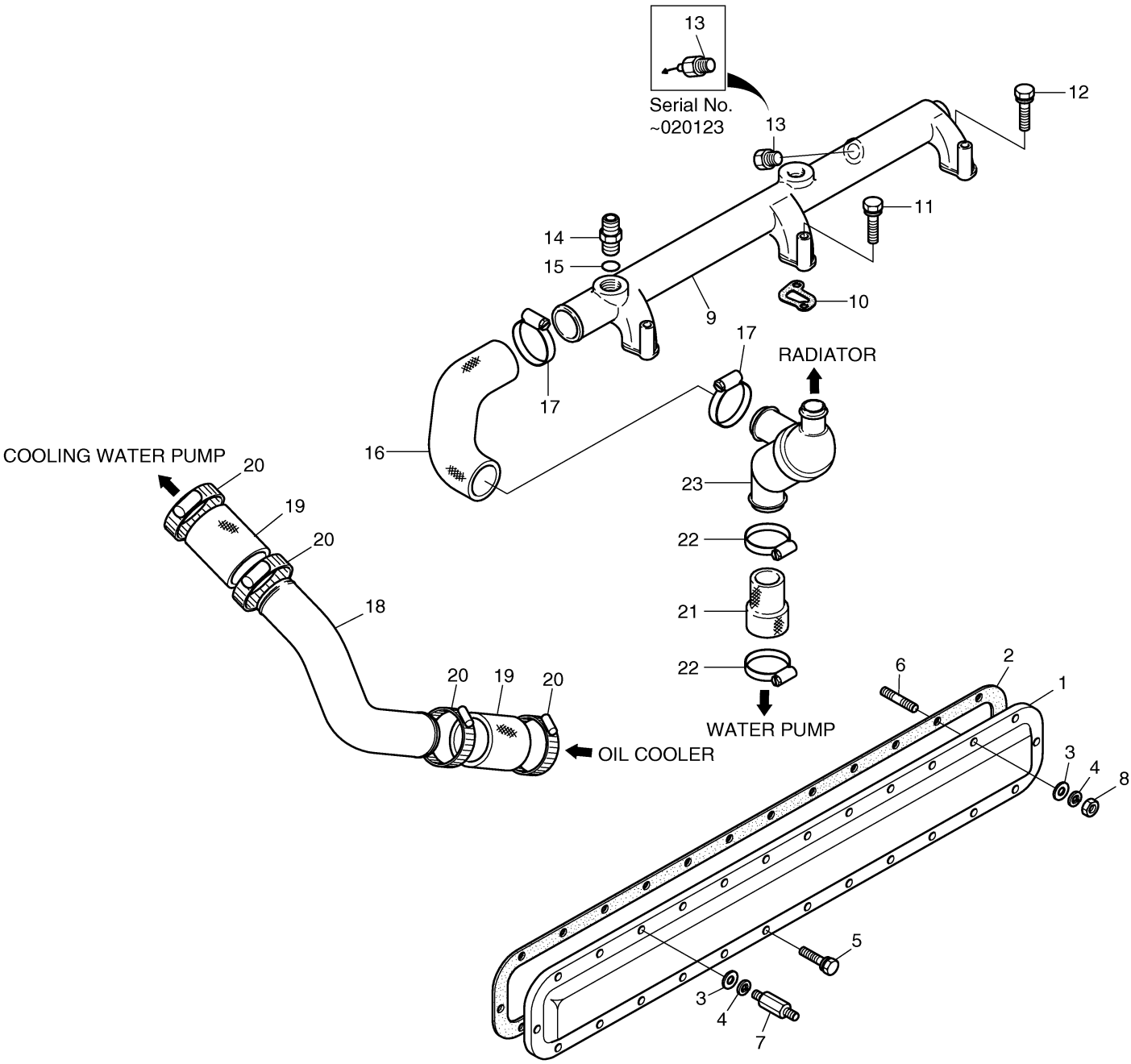

Fig. 240 INTAKE & EXHAUST MANIFOLD

Key No	Part No	Description	Qty	S.C	Serial No	ICA	Replacable	Qty
1	65.08100-6056	EXHAUST MANIFOLD ASS'Y	1		~050107	Y	65.08100-6056A	1
1	65.08100-6056A	EXHAUST MANIFOLD ASS`Y	1		050108~			
1A	65.08101-0193	MANIFOLD;EXHAUST(L.H.)	1		~050107	Y	65.08101-0193A	1
1A	65.08101-0193A	MANIFOLD;EXHAUST(L.H.)	1		050108~			
1B	65.08101-0195	MANIFOLD;EXHAUST(MIDDLE)	1		~050107	Y	65.08101-0195A	1
1B	65.08101-0195A	MANIFOLD;EXHAUST(M)	1		050108~			
1C	65.08101-0194	MANIFOLD;EXHAUST(R.H.)	1		~050107	Y	65.08101-0194A	1
1C	65.08101-0194A	MANIFOLD;EXHAUST(R.H.)	1		050108~			
1D	65.96501-0007	RING;SEAL	4					
2	65.08901A0013	GASKET;EXHAUST MANIFOLD	6					
3	65.08120-0017	SCREEN;HEAT	1					
4	06.11063-8215	NUT;HEX. M10	12		~100707	I	65.90535-0001	12
4	65.90535-0001	NUT	12		100708~			
5	06.15010-2312	WASHER;PLAIN	12		~100707			
6	65.08120-5018B	HEAT;SCREEN	1		~090211	I	111002-00001	1
6	111002-00001	SCREEN;HEAT	1		090212~			
7	65.08201-5061	MANIFOLD;INTAKE	1					
8	65.08902A0024	GASKET;INTAKE MANIFOLD	1					
9	06.01923-3218	BOLT ASS'Y M10X35	8					
10	06.11063-8215	NUT;HEX. M10	2					
11	06.16731-2108	WASHER;SPRING	2					
12	06.15030-0514	WASHER;PLAIN	2					
13	65.08202-5058	STAKE;INTAKE	1					
14	65.26803-7028	HEATER;AIR	1		~040303	Y	65.26803-7028A	1
14	65.26803-7028A	HEATER;AIR	1		~041213	Y	65.26803-7028B	1
14	65.26803-7028B	AIR HEATER	1		041214~			
15	65.09904-0008	GASKET;AIR HEATER	2					
16	06.01013-9128	BOLT;HEX. M8X130	4					
17	06.16731-2107	WASHER	4					
18	06.15010-2311	WASHER	4					
20	06.06226-0808	BOLT;STUD M10X30	6					
21	65.90201-0049	BOLT;STUD M12X1.5X35	6					
22	06.06225-0809	BOLT;STUD M10X35	2					

Fig. 240 INTAKE & EXHAUST MANIFOLD

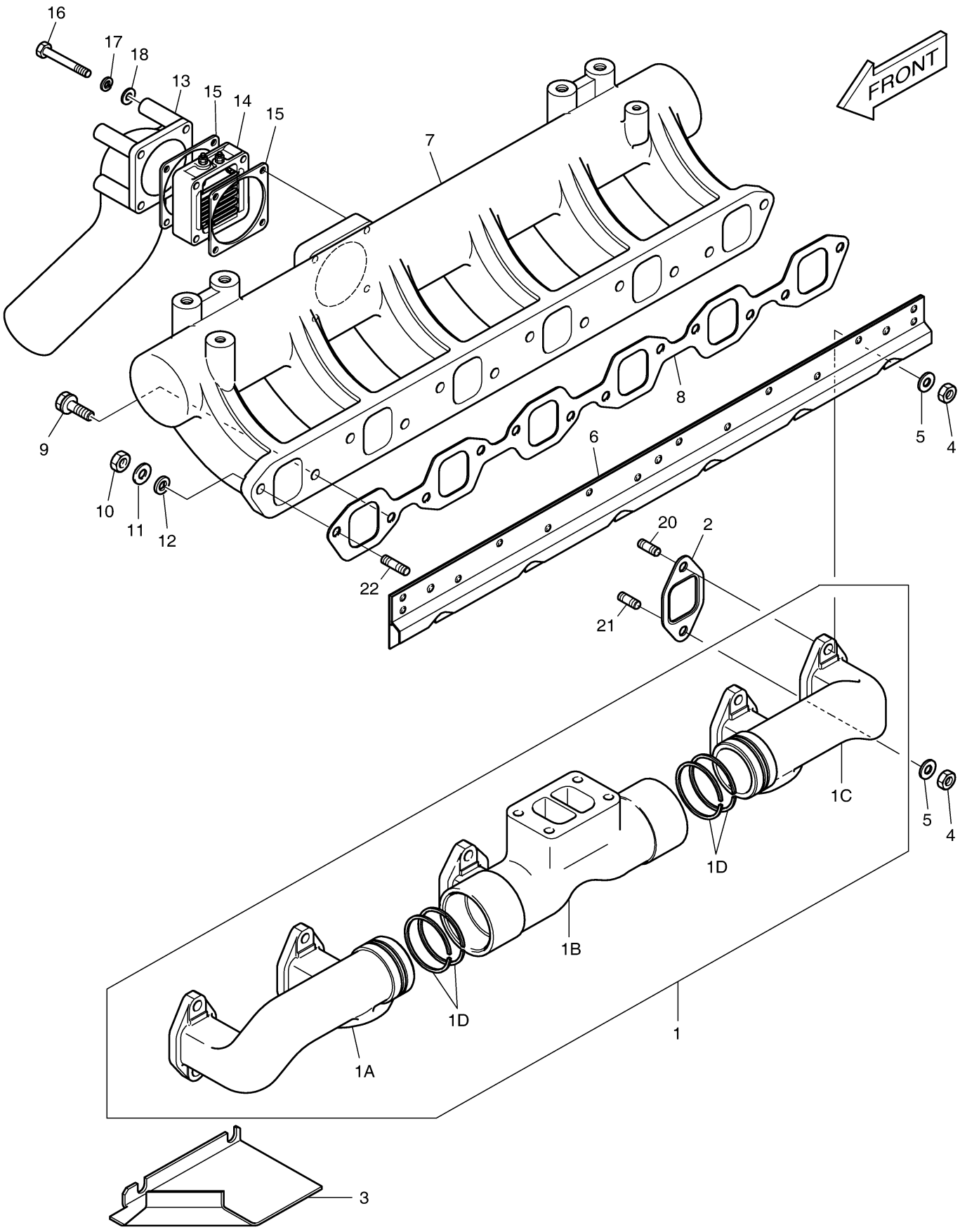

DOOSAN Doosan Infracore

Fig. 250 NOZZLE HOLDER

Key No	Part No	Description	Qty	S.C	Serial No	ICA	Replacable	Qty
1	65.10101-7080A	NOZZLE ASS'Y	6					
2	65.10101-6024	HOLDER;NOZZLE	1	D				
7	65.10102-6040A	NOZZLE	1					
8	65.96501-0057	RING;SEAL	6					

Fig. 250 NOZZLE HOLDER

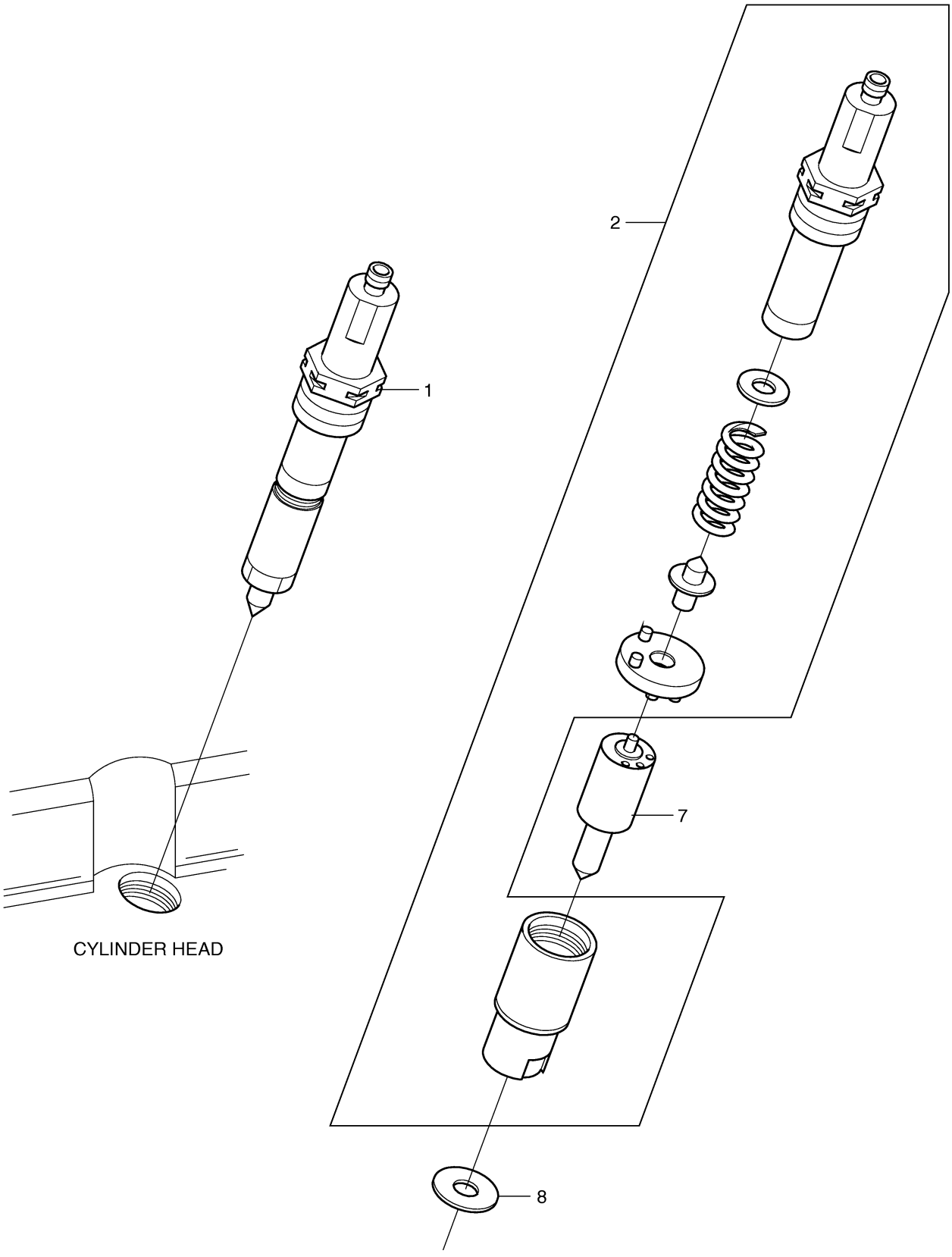

Fig. 260 INJECTION PIPE

Key No	Part No	Description	Qty	S.C	Serial No	ICA	Replacable	Qty
1	65.10301-6048C	INJECTION PIPE ASS'Y	1					
2	06.01923-3214	BOLT;HEX. M10X22	2					
3	65.96330-0129	TUBE;FUEL OVER FLOW	1					
4	65.97445-0001	CLAMP;SPRING	2					
5	65.12301-5811A	OVER FLOW PIPE ASS'Y	1					
6	65.98150-0042A	SCREW;HOLLOW	6					
7	06.56180-0712	RING;SEAL	12					

Fig. 260 INJECTION PIPE

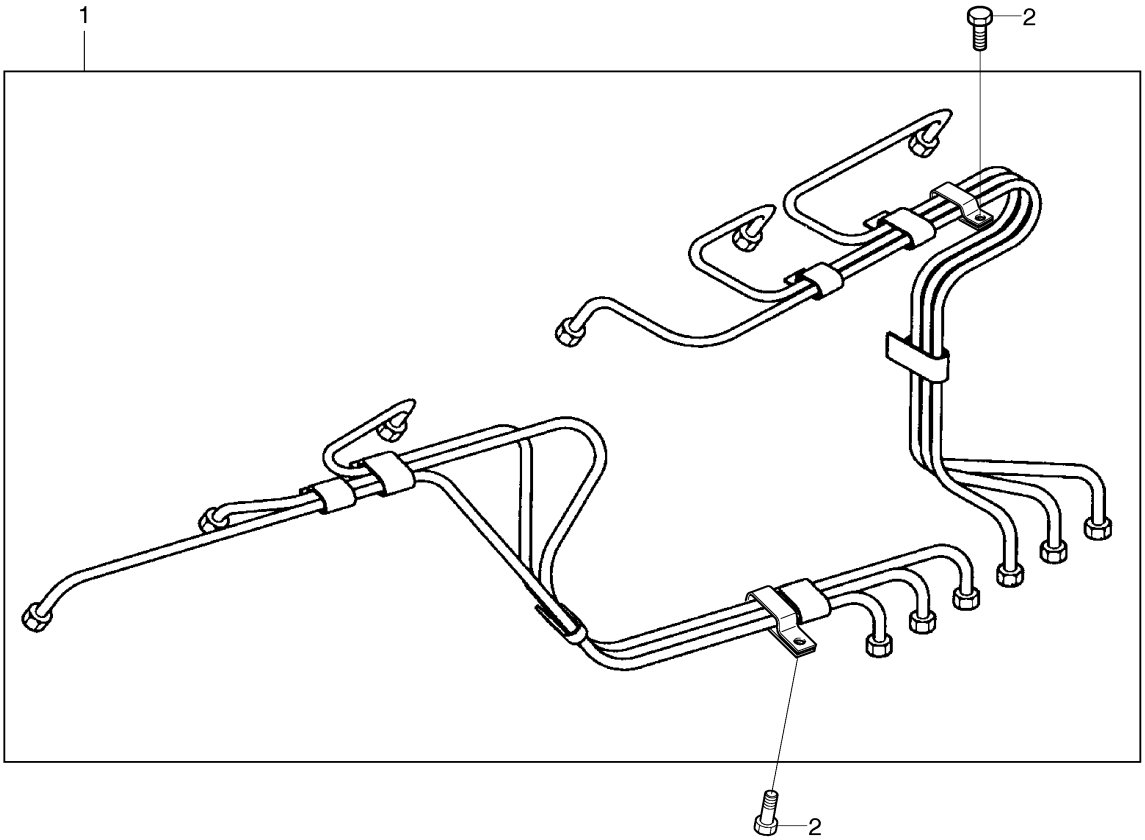

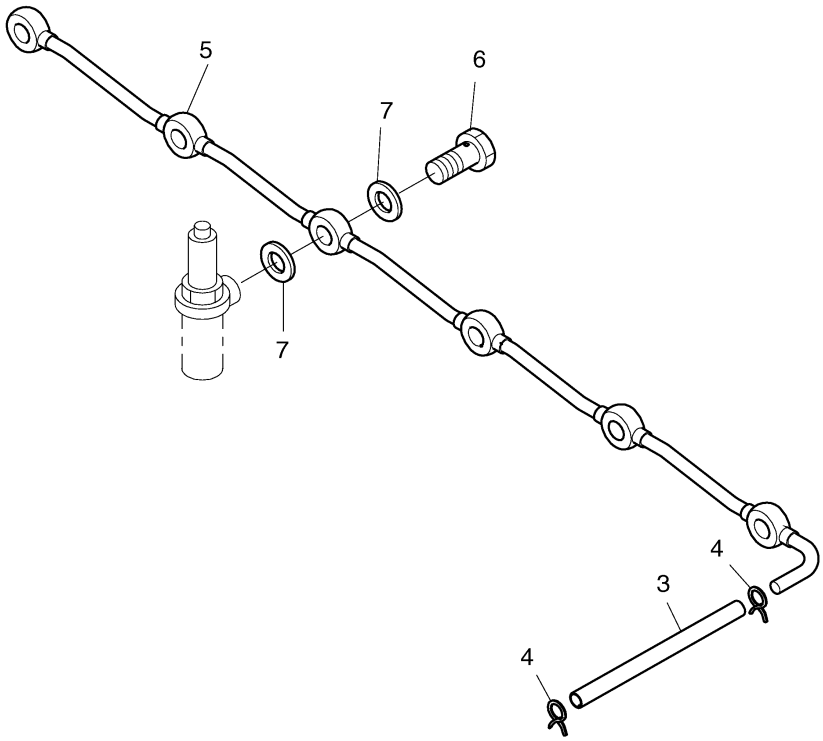

Fig. 270 INJECTION PUMP

Key No	Part No	Description	Qty	S.C	Serial No	ICA	Replacable	Qty
1	65.11101-7387	PUMP;INJECTION	1		~071010	Y	65.11101-7387A	1
1	65.11101-7387A	PUMP;INJECTION	1		~100226	I	400912-00068	1
1	400912-00068	PUMP ASSY,INJECTION	1		100227~			
1A	105210-561A	FEED PUMP	1					
1AA	400908-00004	HAND PRIMING PUMP	1					
1B	131150-2420	PLUNGER	1					
1C	131110-5120	VALVE; DELIVERY	1					
1D	131424-4420	VALVE;OVER FLOW	1					
2	65.12501-7019	FUEL STRAINER ASS'Y	1					
3	06.78140-2404	SCREW;HOLLOW M14X1.5	1					
4	06.56190-0706	SEAL RING	2					
5	65.98101-0008	DOUBLE BANJO UNION	1					
6	06.15010-2312	WASHER;PLAIN	5					
7	06.01913-3212	BOLT ASS'Y M10X18	2					
8	06.16731-2108	WASHER;SPRING	5					
9	06.11063-9215	NUT M10X1.25	1					
10	65.11401-0041	BRACKET	1					
12	06.01913-3116	BOLT;HEX. M8X28	6					
13	65.90710-0015	WASHER;PLAIN	6					
14	65.11301-0063	GEAR;DRIVE	1					
15	65.11106-0008	COUPLING;INJECTION PUMP	1					
17	06.11063-8215	NUT;HEX. M10	4					
18	65.05701-5329	HOSE;OIL	1					
19	65.98130-0029	ADAPTER	1					
20	65.98150-0028	SCREW;HOLLOW	1					
21	06.56180-0714	RING;SEAL	3					
27	65.08301-6012	AIR HOSE ASS'Y	1					
28	65.98150-0053B	SCREW;HOLLOW	1					
29	06.56180-0716	RING;SEAL	2					

Fig. 270 INJECTION PUMP

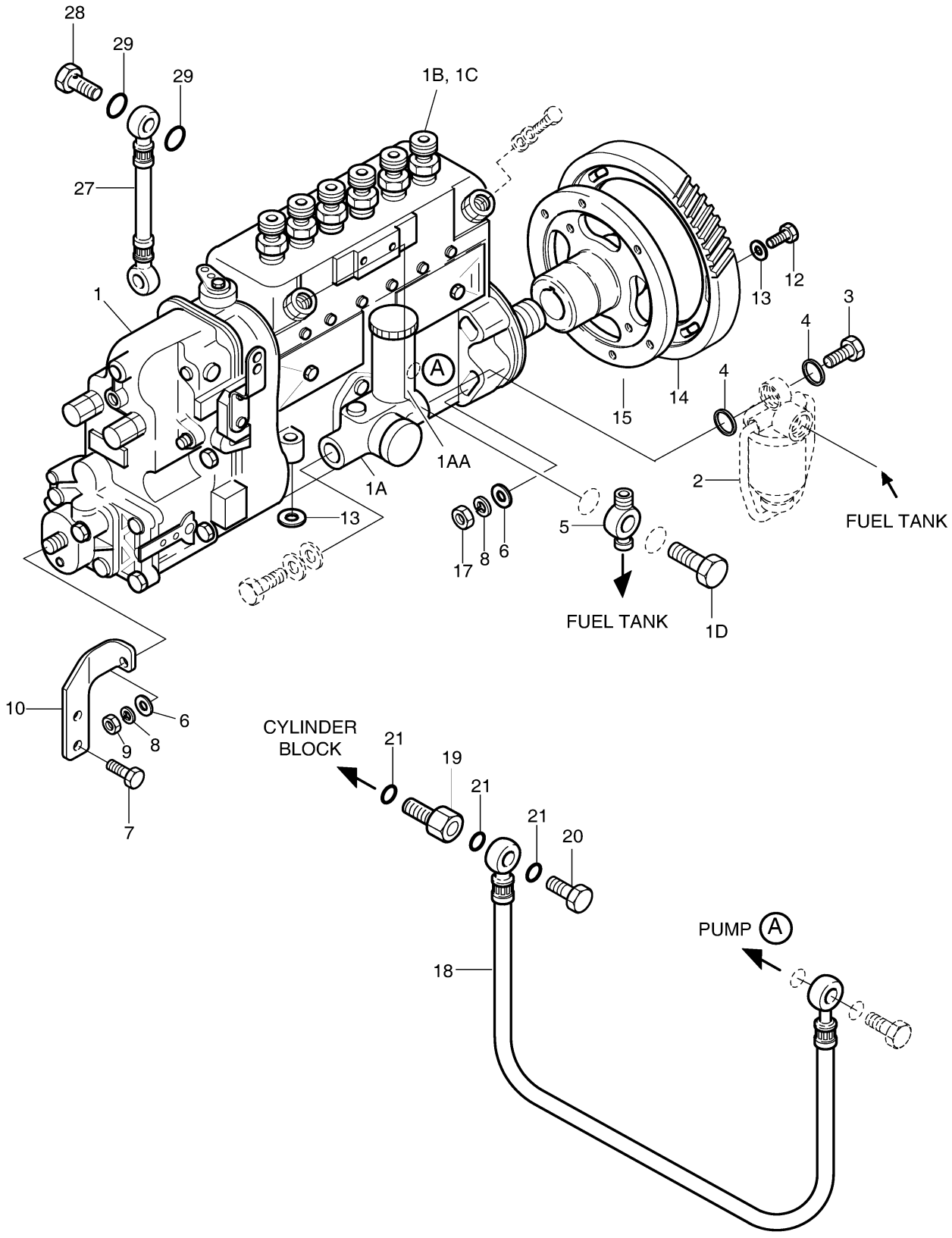

Fig. 280 FUEL FILTER

Key No	Part No	Description	Qty	S.C	Serial No	ICA	Replacable	Qty
1	65.12501-7023	FUEL FILTER ASS'Y	1		~050522	Y	65.12501-7023A	1
1	65.12501-7023A	FUEL FILTER ASS'Y	1		~070911	Y	65.12501-7023B	1
1	65.12501-7023B	FUEL FILTER ASS`Y	1		070912~			
1A	65.12504-5013	COVER;FUEL FILTER	1		~050523	Y	65.12504-5013B	1
1A	65.12504-5013B	HEAD;FUEL FILTER	1		050524~			
1B	65.12503-5016	FILTER;FUEL	1		~050522	Y	65.12503-5016A	1
1B	65.12503-5016A	FILTER;FUEL	1		~070911	Y	65.12503-5016B	1
1B	65.12503-5016B	ELEMENT;E/G FUEL FILTER	1		070912~			
1C	65.90310-0143	SCREW;PLUG	1					
1D	06.56180-0716	RING;SEAL	1					
2	06.01953-3318	BOLT ASS'Y M12X1.5X35	2		~101116			
2	06.01953-3217	BOLT ASS'Y M10X1.25X30	2		101117~			
3	65.96341-0100	HOSE;FUEL	2		~081030	Y	65.96341-0140	2
3	65.96341-0140	HOSE,FUEL	2		081031~			
4	65.90420-0004A	SCREW;HOLLOW	2		~060530	I	06.78144-2204	2
4	06.78144-2204	SCREW;HOLLOW	2		060531~			
5	06.56190-0706	SEAL RING	4		~101103	I	65.96507-0043	4
5	65.96507-0043	RING;SEAL	4		101104~			
6	65.97460-0001	BAND;TENSION	1					

Fig. 280 FUEL FILTER

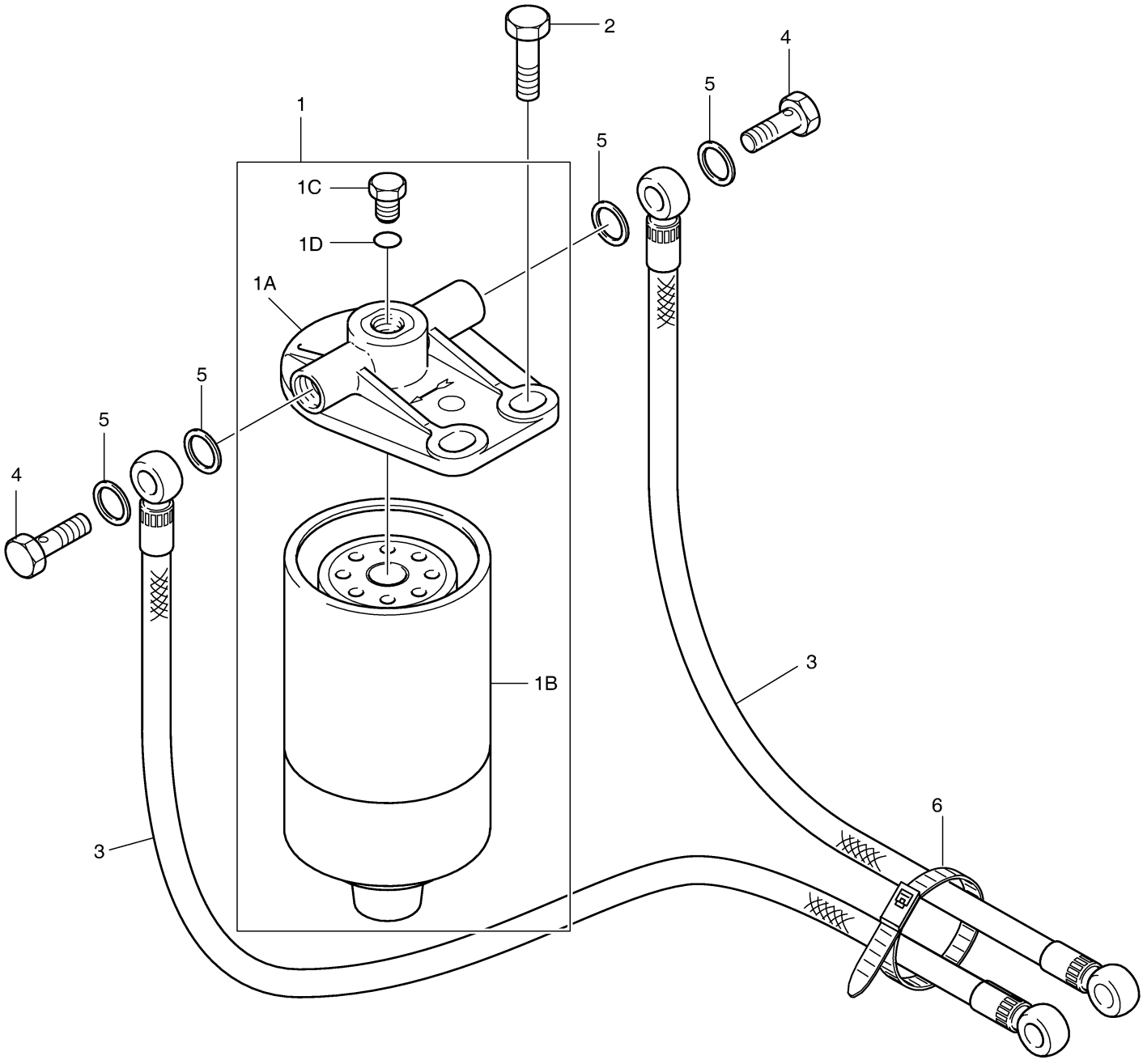

Fig. 290 ALTERNATOR & STARTER

Key No	Part No	Description	Qty	S.C	Serial No	ICA	Replacable	Qty
1	65.19102-5051	BRACKET;ALTERNATOR	1		~030319	T	65.19102-00084	1
1			-				06.01914-3320	1
1			-				06.01914-3219	2
1	65.19102-0084	BRACKET;ALTERNATOR	1		~040227	Y	65.19102-0084A	1
1	65.19102-0084A	BRACKET;ALTERNATOR	1		040228~			
2	06.06115-8306	BOLT;STUD M12X1.5	1		~030319			
2	06.01914-3320	BOLT ASS'Y M12X45	1		030320~			
3	06.11063-9216	NUT;HEX. M12X1.5	1		~030319			
4	06.16731-2109	WASHER;SPRING	1		~030319			
5	06.01914-3215	BOLT ASS'Y M10X25	2		~030319			
5	06.01914-3219	BOLT ASS`Y M10	2		030320~			
6	65.19103-6012	EYE BOLT ASS`Y	1		~060720	Y	65.19103-6012A	1
6	65.19103-6012A	EYE BOLT ASS`Y	1		~100506	I	65.19103-6010A	1
6	65.19103-6010A	EYE BOLT ASS'Y	1		100507~			
11	06.01943-3319	BOLT ASS'Y M12X1.5X40	1					
12	65.96801-0128	V-BELT;POLY	1		~040401	Y	65.96801-0128A	1
12	65.96801-0128A	V-BELT;POLY	1		040402~			
13	65.19103-5040	SUPPORT;ALTERNATOR	1					
14	06.01913-3222	BOLT;HEX. M10X1.5X55	2					
15	65.26201-7049A	STARTER	1		~071230			
15	65.26201-7070D	STARTER	1		~101105			
15	65.26201-7088A	STARTER	1		~130806	I	300516-00057A	1
15	300516-00057A	STARTER ASSY	1		~150421	Y	300516-00057B	1
15	300516-00057B	STARTER ASSY	1		150422~			
15A	301206-00011	RELAY,STARTER	1					
16	06.06225-0808	BOLT;STUD M10X30	3					
17	06.11063-8215	NUT;HEX. M10	3					
18	06.16731-2108	WASHER;SPRING	3					

Fig. 290 ALTERNATOR & STARTER

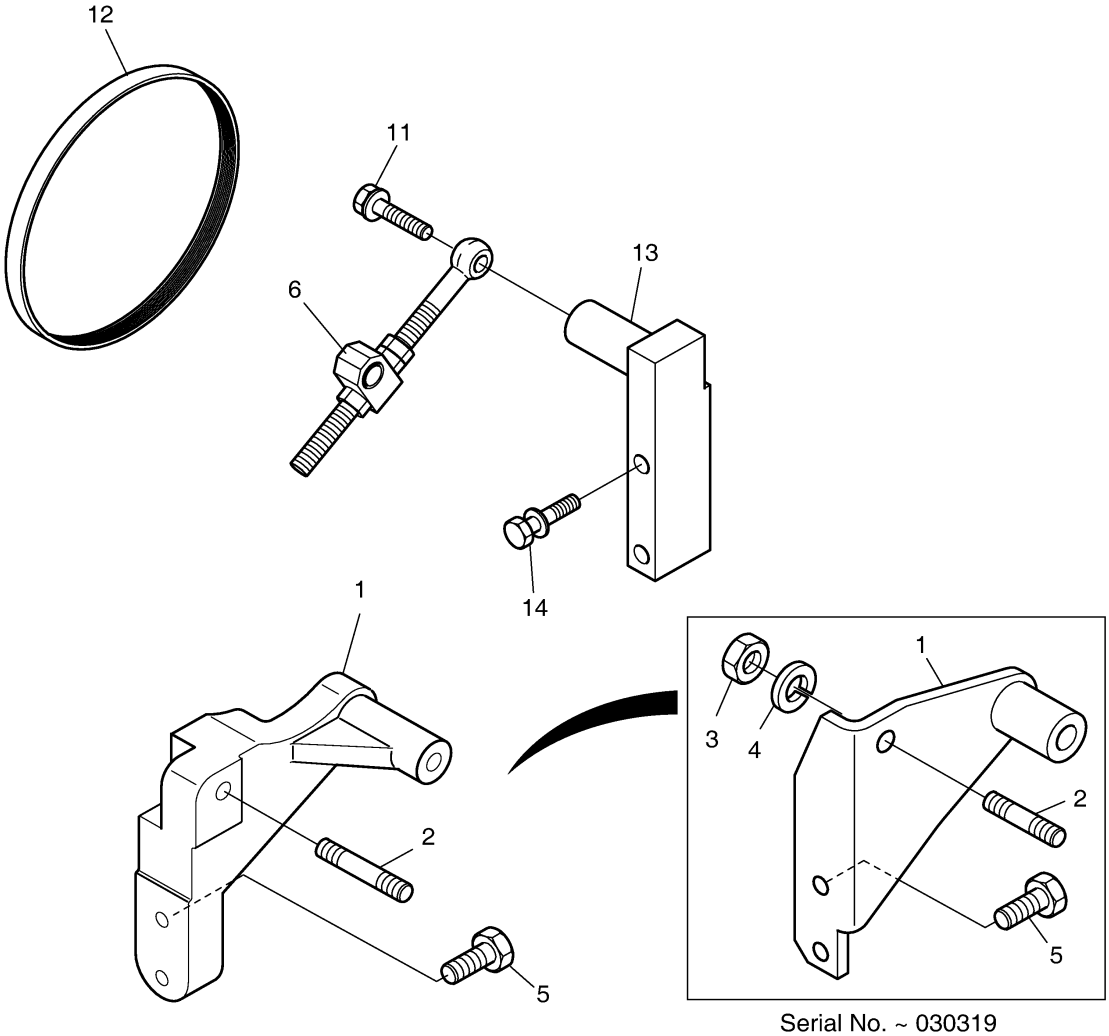

Serial No. ~ 030319

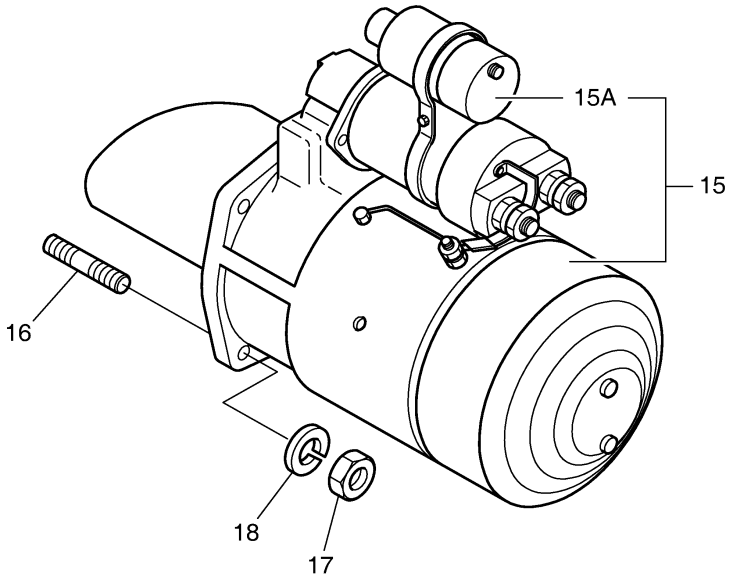

Fig. 300 ENGINE MOUNTING

Key No	Part No	Description	Qty	S.C	Serial No	ICA	Replacable	Qty
1	65.41530-0159	BRACKET;FRONT MOUNTING	1					
2	06.06175-8309	BOLT;STUD M12X1.5X35	1					
3	06.16731-2109	WASHER;SPRING	1					
4	06.11064-9216	NUT;HEX. M12X1.5	1					
5	06.01944-3318	BOLT;HEX	2		~010906	I	65.90001-0088	2
5	65.90001-0088	BOLT;HEX.	2		~060428	I	65.90001-0096	2
5	65.90001-0096	BOLT;HEX.	2		060429~			
6	65.41530-0160	BRACKET;FRONT MOUNTING	1					
7	06.01944-3318	BOLT;HEX	3		~010906	I	65.90001-0088	3
7	65.90001-0088	BOLT;HEX.	3		~060428	I	65.90001-0096	3
7	65.90001-0096	BOLT;HEX.	3		060429~			

Fig. 300 ENGINE MOUNTING

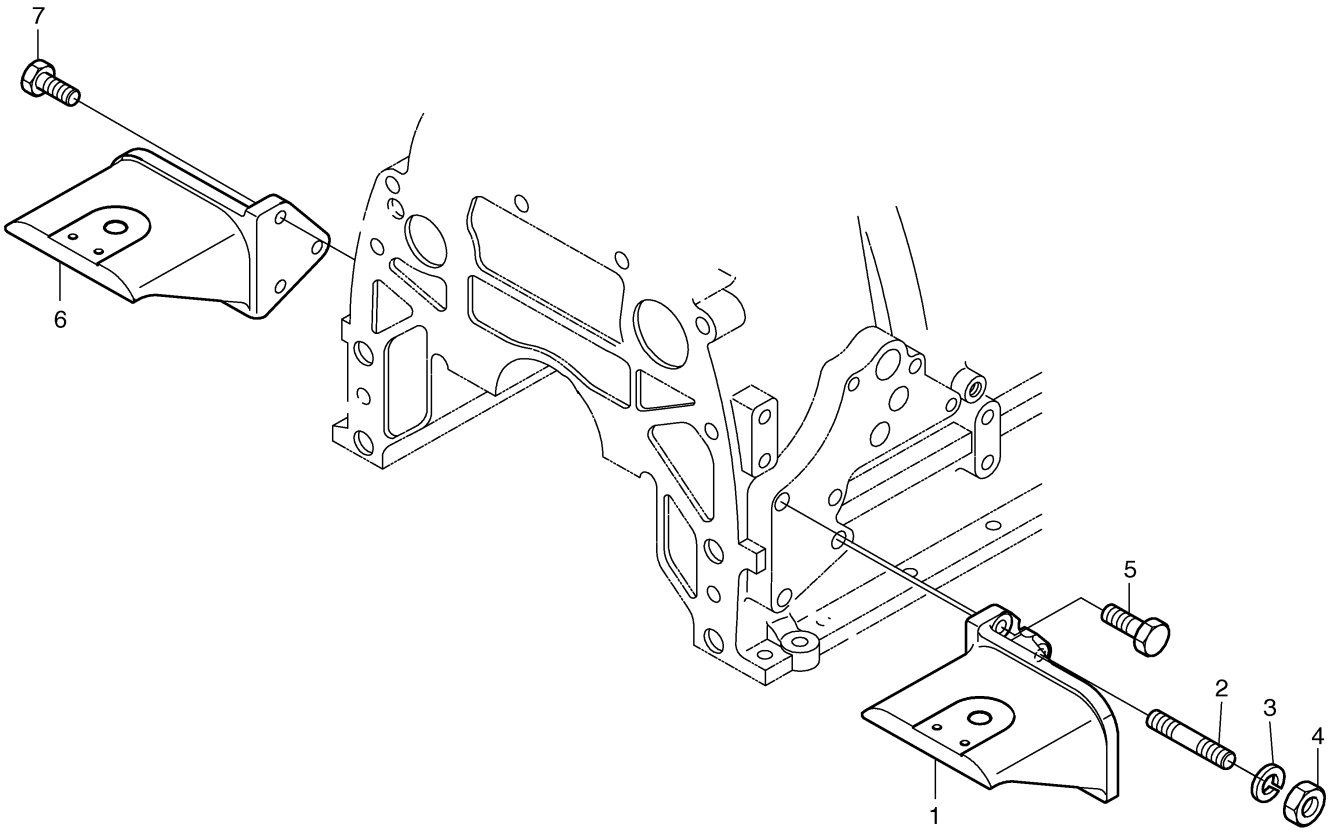

Fig. 310 TURBO CHARGER & OIL PIPE

Key No	Part No	Description	Qty	S.C	Serial No	ICA	Replacable	Qty
1	65.09100-7082	TURBOCHARGER ASS`Y	1		020109~			
2	65.90201-0073	BOLT;STUD	4					
3	65.09901-0018A	GASKET	1					
5	06.11024-9202	NUT M10X1.25	4		~021229	I	65.90535-0001	4
5	65.90535-0001	NUT	4		021230~			
6	65.90201-0072	BOLT;STUD M10X1.5X30	6					
7	65.09901-0012	GASKET	1					
8	06.16731-2108	WASHER;SPRING	6					
9	06.11063-8214	NUT	6					
10	65.05701-5453	PIPE;OIL	1		020109~			
11	06.15010-2311	WASHER	2					
12	06.16731-2107	WASHER	2					
13	06.11063-8214	NUT	2					
14	06.78144-2403	HOLLOW SCREW M12X1.5	1		020109~			
15	06.56190-0704	RING;SEAL	4					
16	65.98131-5003	ADAPTER FLANGE ASS`Y	1					
17	65.96601-0046A	GASKET;OIL PIPE ADAPTER	1		~060613	Y	65.96601-0046B	1
17	65.96601-0046B	GASKET;OIL PIPE ADAPTER	1		060614~			
18	06.01913-3114	BOLT ASS'Y M8X22	2					
19	65.05701-5335	PIPE;OIL	1					
20	65.96601-0045A	GASKET	2		~060530	Y	65.96601-0067	2
20	65.96601-0067	GASKET;T/C OIL RETURN	2		060531~			
21	65.05740-5001A	BRACKET	1					
22	06.01923-3111	BOLT, M8X16	1		~010922	I	65.90020-0068	1
22	65.90020-0068	BOLT ASS'Y M8X16	1		010923~			
23	06.01923-3217	BOLT ASS'Y M10X30	1					
24	65.05701-5336A	OIL PIPE ASS`Y(T/C-C/B)	1					
26	06.01913-3112	BOLT ASS'Y M8X18	2		~060530			
26	06.01913-3114	BOLT ASS'Y M8X22	2		060531~			
27	06.01913-3113	BOLT ASS'Y M8X20	1					
28	65.90201-0075	BOLT;SPACER	1					
29	06.16731-2107	WASHER	1					
30	06.15010-2311	WASHER	1					
31	65.96301-0327	HOSE;RUBBER	1		~040303	Y	65.96301-0327A	1
31	65.96301-0327A	HOSE;RUBBER	1		040304~			
32	06.67020-0105	CLAMP	2					

Key No	Part No	Description	Qty	S.C	Serial No	ICA	Replacable	Qty
33	65.09411-5053	INLET	1					
34	65.96301-0279	HOSE;RUBBER	1					
35	06.67020-0109	CLAMP;HOSE	2					
36	65.09440-0010	BRACKET	1					
37	06.01923-3215	BOLT ASS'Y M10X25	2					
38	65.98150-0002	ADAPTER	1					
39	65.90320-0022	PLUG SCREW	1					

Fig. 310 TURBO CHARGER & OIL PIPE

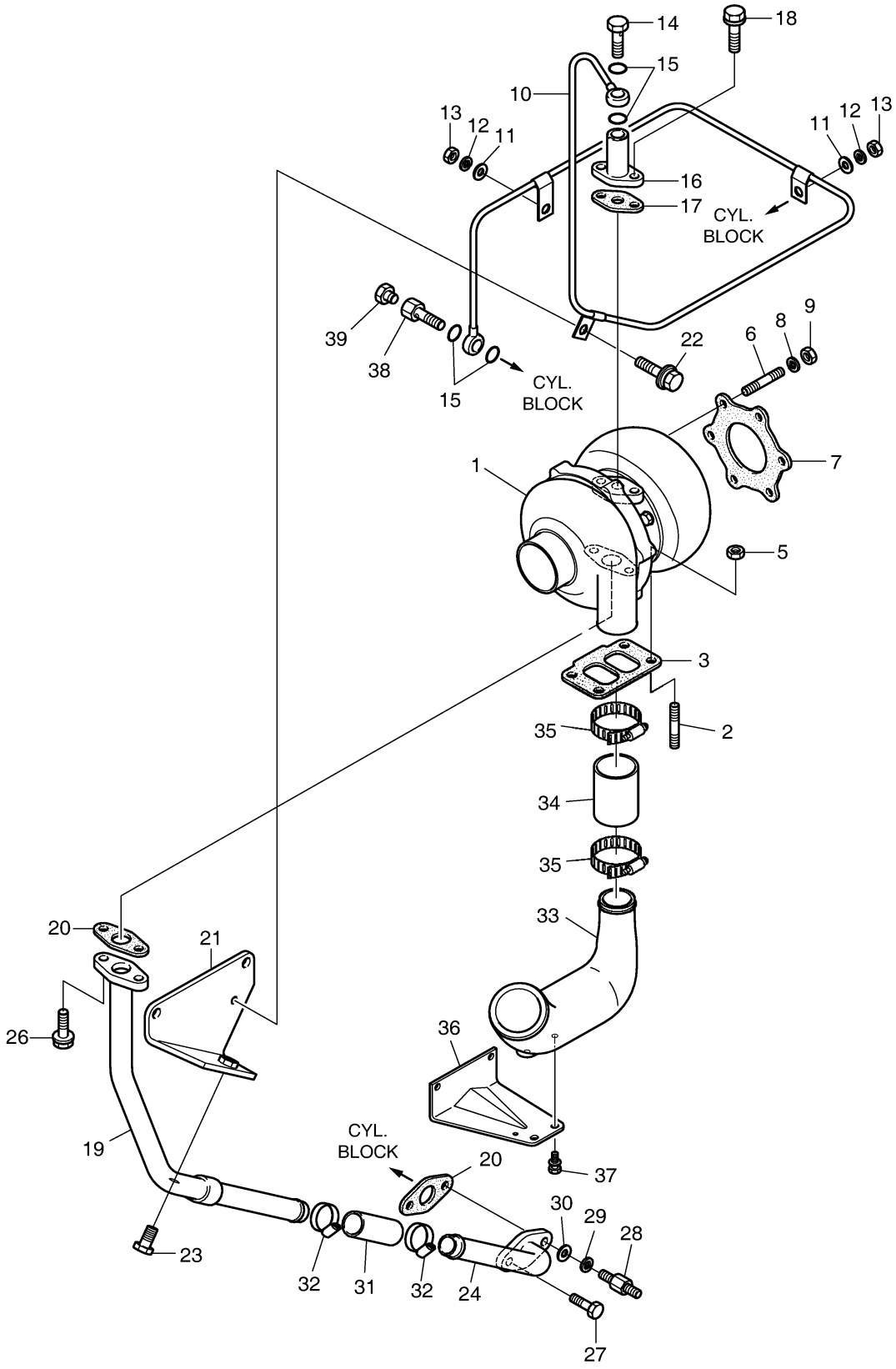

DOOSAN Doosan Infracore

Fig. 320 OVER HAUL GASKET KIT-TOP

Key No	Part No	Description	Qty	S.C	Serial No	ICA	Replacable	Qty
-	65.99605-8025	OVER HAUL GASKET KIT-TOP	1					
1	65.03901-0058	GASKET;CYLINDER HEAD	3		~050629			
1	65.03901-0070A	GASKET;CYLINDER HEAD	3		050630~			
2	65.03905-0022	GASKET;CYLINDER HEAD COVER	3					
3	65.03905-0023A	GASKET;CYLINDER HEAD COVER	6					
4	65.96501-0033B	O-RING	1					
5	65.04902-0013	SEAL;VALVE STEAM	12					
6	65.06903A0011	GASKET;COOLING WATER PIPE	3					
7	65.08901A0013	GASKET;EXHAUST MANIFOLD	6					
8	65.08902A0024	GASKET;INTAKE MANIFOLD	1					
9	65.09904-0008	GASKET;AIR HEATER	2					
10	65.96501-0057	RING;SEAL	6					
11	06.56180-0712	RING;SEAL	12					
13	65.09901-0018A	GASKET	1					
14	65.09901-0012	GASKET	1					
15	65.96601-0046B	GASKET;OIL PIPE ADAPTER	1					
16	65.96601-0045A	GASKET	1		~060530	Y	65.96601-0067	1
16	65.96601-0067	GASKET;T/C OIL RETURN	1		060531~			

Fig. 320 OVER HAUL GASKET KIT-TOP

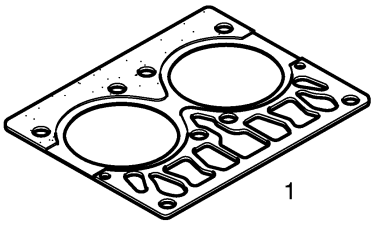
1

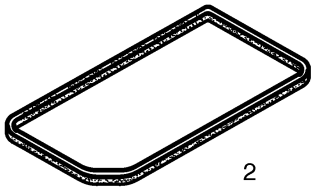
2


3


4


5


6


7

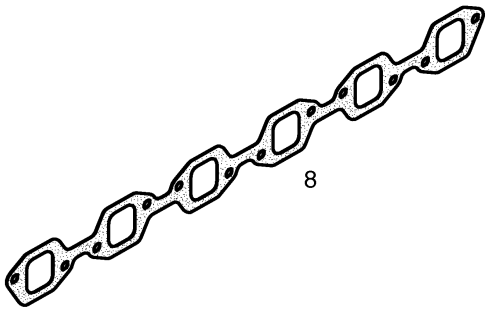
8

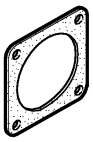
9


10


11


13

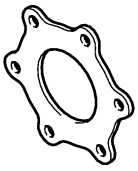
14


15


16

Fig. 330 OVER HAUL GASKET KIT-ALL

Key No	Part No	Description	Qty	S.C	Serial No	ICA	Replacable	Qty
-	65.99601-8034	OVER HAUL GASKET KIT-ALL	1					
1	65.96601A0042	GASKET;END COVER	1					
2	65.01903C0021	GASKET;TIMING GEAR CASE	1					
3	65.01903B0113	GASKET;T.G.C COVER	1					
4	65.01510-0157	SEAL;OIL(FRONT)	1					
5	65.01903B0029	GASKET;COVER	1					
6	65.27901-0005B	GASKET	1					
7	65.01510-0037	SEAL;OIL REAR	1					
8	65.01903A0178	GASKET;FLYWHEEL HOUSING	1					
9	65.01907A0002	GASKET;WATER CHAMBER	1					
10	65.03901-0058	GASKET;CYLINDER HEAD	3		~050629			
10	65.03901-0070A	GASKET;CYLINDER HEAD	3		050630~			
11	65.03905-0022	GASKET;CYLINDER HEAD COVER	3					
12	65.03905-0023A	GASKET;CYLINDER HEAD COVER	6					
13	65.96501-0032B	O-RING;BREATHER	1					
14	65.04902-0013	SEAL;VALVE STEAM	12					
15	65.05901A0052	GASKET;OIL FILTER	1					
16	65.05902A0011	GASKET;OIL COOLER COVER	1					
17	65.96601-0347	GASKET;OIL COOLER ASS`Y	1					
18	65.05904A0016	GASKET;OIL PAN	1					
19	65.96601-0050	GASKET;OIL PIPE	2					
20	65.05903B0003	GASKET;CONNECTING FLANGE	1					
21	65.96601-0050	GASKET;OIL PIPE	2					
22	65.96601B0019	GASKET;OIL SUCTION PIPE	1					
23	65.06903A0011	GASKET;COOLING WATER PIPE	3					
24	65.06901A0020	GASKET;WATER PUMP	1					
25	65.08901A0013	GASKET;EXHAUST MANIFOLD	6					
26	65.08902A0024	GASKET;INTAKE MANIFOLD	1					
27	65.09904-0008	GASKET;AIR HEATER	2					
28	65.96501-0057	RING;SEAL	6					
29	65.11902-0018A	GASKET;MOUNTING FLANGE	1					
30	06.56180-0712	RING;SEAL	12					
31	65.54903A0013	GASKET	1					
34	65.09901-0018A	GASKET	1					
35	65.09901-0012	GASKET	1					
36	65.96601-0046B	GASKET;OIL PIPE ADAPTER	1					

Key No	Part No	Description	Qty	S.C	Serial No	ICA	Replacable	Qty
37	65.96601-0045A	GASKET	1		~060530	Y	65.96601-0067	1
37	65.96601-0067	GASKET;T/C OIL RETURN	1		060531~			

Fig. 330 OVER HAUL GASKET KIT-ALL

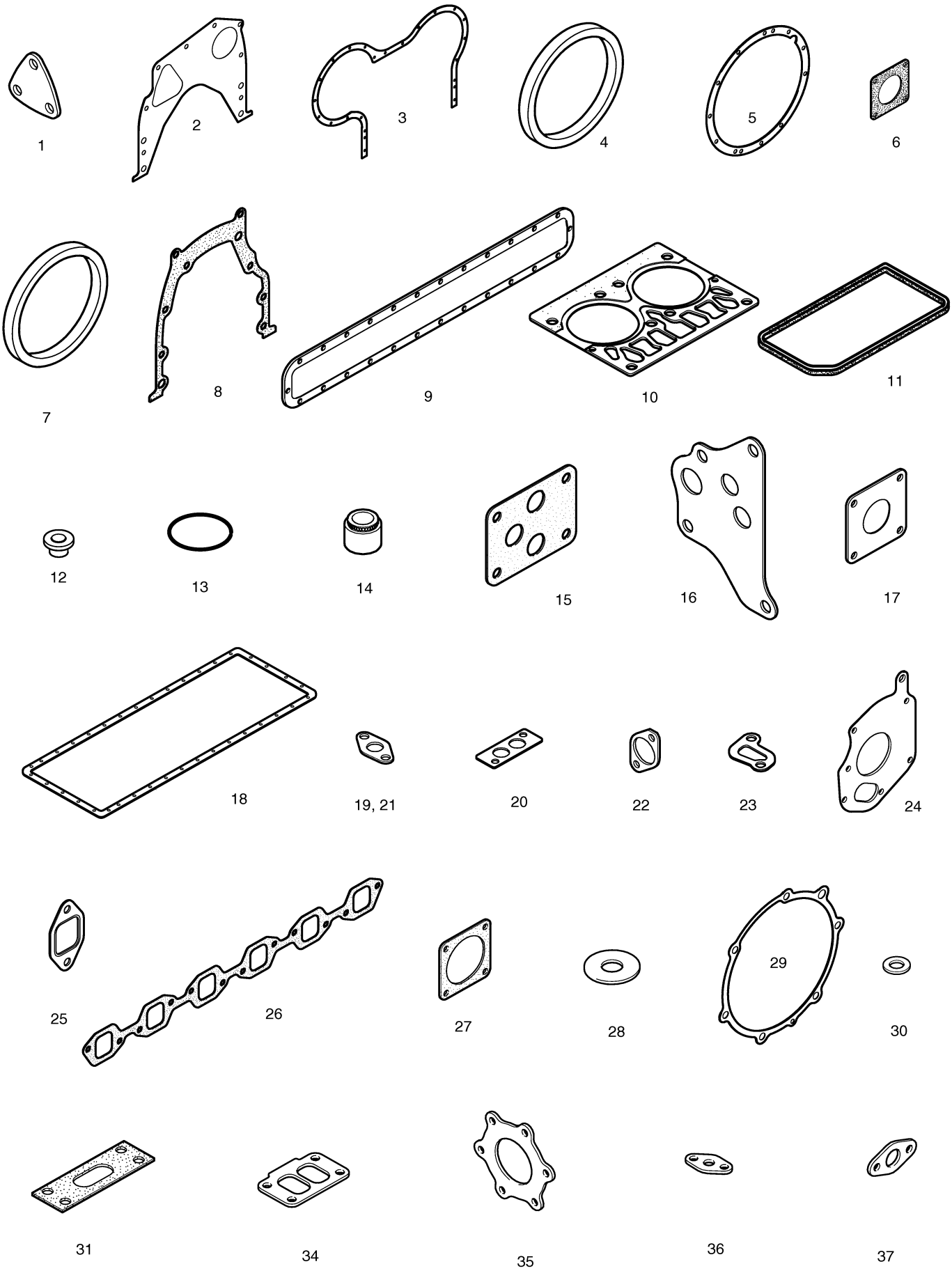

Fig. 011 CYLINDER BLOCK

Key No	Part No	Description	Qty	S.C	Serial No	ICA	Replacable	Qty
1	65.01101-6040E	CYLINDER BLOCK ASS'Y	1		~010816	Y	65.01101-6040F	1
1	65.01101-6040E	CYLINDER BLOCK ASS'Y	1		~030730	Y	65.01101-6040G	1
1	65.01101-6040G	CYLINDER BLOCK ASS'Y	1		~040209	Y	65.01101-6040H	1
1	65.01101-6040H	CYLINDER BLOCK ASS'Y	1		~040726	Y	65.01101-6040I	1
1	65.01101-6040I	CYLINDER BLOCK ASS'Y(T/C)	1		~050907	Y	65.01101-6040J	1
1	65.01101-6040J	CYLINDER BLOCK ASS'Y(T/C)	1		~060906	Y	65.01101-6040K	1
1	65.01101-6040K	CYLINDER BLOCK ASS'Y(T/C)	1		~070213	Y	65.01101-6040M	1
1	65.01101-6040M	CYLINDER BLOCK ASS`Y(T/C)	1		~080529	Y	65.01101-6040N	1
1	65.01101-6040N	CYLINDER BLOCK ASS'Y	1		080530~			
1A	65.01101-0040L	BLOCK;CYLINDER	1	D	~010816			
1A	65.01101-0040M	BLOCK;CYLINDER	1	D	~040726			
1A	65.01101-0040N	BLOCK;CYLINDER(T/C)	1	D	~050907			
1A	65.01101-0040O	BLOCK;CYLINDER(T/C)	1	D	~060906			
1A	65.01101-0040P	BLOCK;CYLINDER(T/C)	1	D	~070213			
1A	65.01101-0040Q	BLOCK;CYLINDER(T/C)	1	D	~080529			
1A	65.01101-0040R	BLOCK;CYLINDER	1	D	080530~			
1B	06.15091-0326	PLUG;CORE	9		~040209	I	65.91606-0037	9
1B	65.91606-0037	PLUG;CORE	9		040210~			
1C	65.91606-0041	PLUG;CORE	2					
1D	65.04410-0017	BUSH;CAM SHAFT	4	B				
1E	65.01105-1172A	CAP;BEARING NO.1.2.6	3	D	~030730			
1E	65.01105-1172B	BEARING;CAP NO.1.2.6	3	D	030731~			
1F	65.01105-1160E	CAP;BEARING NO.3.5	2	D	~030730			
1F	65.01105-1160F	BEARING;CAP NO.3.5	2	D	030731~			
1G	65.01105-1156C	CAP;BEARING THRUST	1	D	~030730			
1G	65.01105-1156D	CAP BEARING;THRUST	1	D	030731~			
1H	65.01105-1164D	CAP;BEARING NO.7	1	D	~030730			
1H	65.01105-1164E	BEARING;CAP NO7	1	D	~060906			
1H	65.01105-1175C	BEARING;CAP NO7	1	D	060907~			
1I	65.91710-0035	RING;LOCATING	14					
1I	65.91710-0035B	RING;LOCATING	14					
1J	65.90020-0035B	BOLT;BEARING CAP	14					
2	65.91001-0002	PLUG	2		~050908	I	65.91001-0013	2
2	65.91001-0013	AVSEAL	2		~060223	Y	65.91001-0013A	2
2	65.91001-0013A	PIN;CORE	2		060224~			
3	65.91020-0013	PLUG;CORE	1					

Key No	Part No	Description	Qty	S.C	Serial No	ICA	Replacable	Qty
4	65.90310-0048	SCREW;PLUG M10X1.5	6					
5	06.56180-0714	RING;SEAL	6					
6	65.01201-0050	LINER;CYLINDER	6		~111210			
6	150117-00028	LINER,CYLINDER	6		111211~			
7	65.90310-0091	SCREW;PLUG M12X1.5X20	1					
8	06.56190-0704	RING;SEAL	1					
9	65.96601A0042	GASKET;END COVER	1					
10	65.91605-0006B	COVER;END	1					
11	06.01913-3114	BOLT ASS'Y M8X22	1					
12	06.06225-0704	BOLT;STUD M8X20	1					
13	65.90201-0075	BOLT;SPACER	1		~100616	I	120122-00014	1
13	120122-00014	BOLT,SPACER;M8	1		100617~			
14	06.16731-2107	WASHER	2					
15	06.11063-8214	NUT	1					
16	65.98130-0194	ADAPTER	1					
17	06.56180-0714	RING;SEAL	1					
18	65.27441-7007	SWITCH;OIL PRESSURE	1					
19	65.01601-6003	OIL SPRAY NOZZLE ASS'Y	6		~071122	Y	65.01601-6003C	6
19	65.01601-6003C	OIL SPRAY NOZZLE ASS`Y	6		071123~			
20	65.05405-6001	RELIEF VALVE ASS`Y	6					
21	65.91701-0148	SPACER	1					
22	06.01283-7524	BOLT;HEX. M16X65	1					

Fig. 011 CYLINDER BLOCK

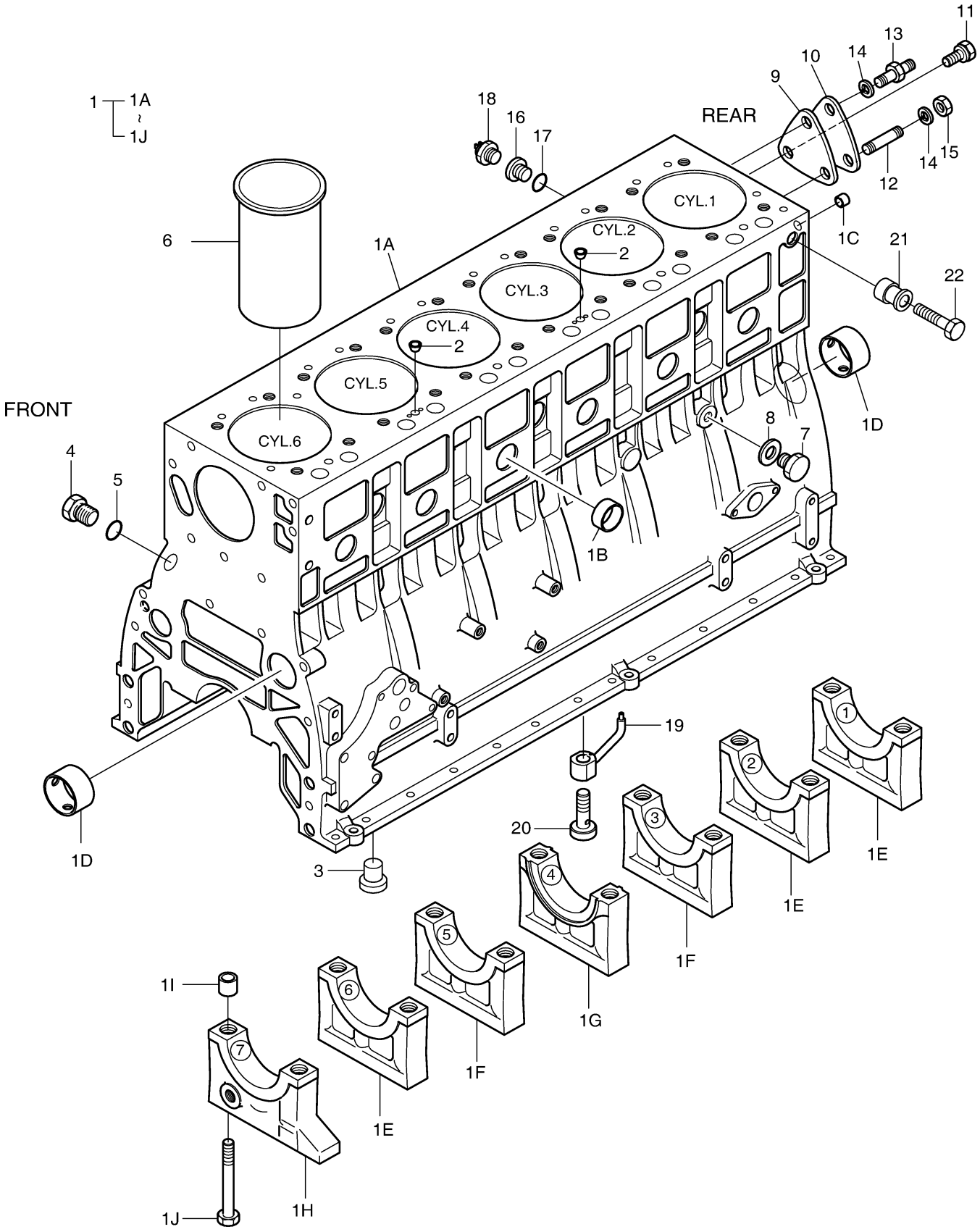

DOOSAN Doosan Infracore

Fig. 012 TIMING GEAR CASE

Key No	Part No	Description	Qty	S.C	Serial No	ICA	Replacable	Qty
1	65.01304-0010N	CASE;TIMING GEAR	1		~090327	I	130405-00007	1
1	130405-00007	CASE;TIMING GEAR	1		090328~			
2	06.22022-1013	PIN;DOWEL	2		~090318	Y	65.91010-0018	2
2	65.91010-0018	PIN;DOWEL	2		090319~			
3	65.01903C0021	GASKET;TIMING GEAR CASE	1					
4	06.01913-3113	BOLT ASS'Y M8X20	5					
5	06.06225-0704	BOLT;STUD M8X20	1					
6	06.16731-2107	WASHER	1					
7	06.11063-8214	NUT	1					
8	06.01943-3317	BOLT ASS`Y M12X1.5X30	4					
9	65.90201-0048	BOLT;STUD	1					
10	06.06225-0809	BOLT;STUD M10X35	6					
11	65.01903B0113	GASKET;T.G.C COVER	1					
12	06.22022-0907	PIN;DOWEL	2					
13	65.01305-5028C	COVER;TIMING GEAR CASE	1					
14	06.01923-2914	BOLT ASS`Y M6X22	13					
15	65.01510-0157	SEAL;OIL(FRONT)	1					
16	65.01903B0029	GASKET;COVER	1					
17	65.01307-5009	TIMING GEAR CASE COVER	1		~051005	I	65.01307-5002	1
17	65.01307-5002	COVER;TIMING GEAR CASE	1		051006~			
18	06.01923-2918	BOLT ASS`Y M6X35	9					
19	65.90201-0146	BOLT;STUD M6X16	2					
20	06.15010-2309	WASHER;PLAIN	2					
21	06.16731-2105	WASHER	2					
22	06.11063-8212	NUT	2					
23	65.27901-0005B	GASKET	1		~051005			
24	65.91605-0009	COVER;END	1		~051005			
25	06.01913-2911	BOLT ASS'Y M6X16	4		~051005			
26	65.54302-0021	PLATE;AIR COMPRESSOR	1		~050113	I	65.54302-0021A	1
26	65.54302-0021A	PLATE;AIR COMPRESSOR	1		050114~			
27	65.95840-0033	BRACKET;IDLE PULLEY	1					
28	06.01913-3215	BOLT ASS'Y M10X25	3					
29	65.54903A0013	GASKET	1					
30	06.02090-0511	BOLT;SOCKET M10X22	2					
31	06.02090-0513	BOLT;SOCKET	2					
32	06.16731-2108	WASHER;SPRING	4					

Key No	Part No	Description	Qty	S.C	Serial No	ICA	Replacable	Qty
33	65.05701-5266	OIL PIPE ASS'Y	1		~011008	I	65.05701-5456	1
33	65.05701-5456	OIL PIPE ASS'Y	1		011009~			
34	65.98150-0056	SCREW;HOLLOW	1					
35	06.56180-0712	RING;SEAL	2					
36	65.54306-0003	ANGLE;BRACKET	1					
37	65.91701-0273	RING;SPACER	1					
38	06.01013-9517	BOLT;HEX M16X60	1					
39	06.01913-3215	BOLT ASS'Y M10X25	2					

Fig. 012 TIMING GEAR CASE

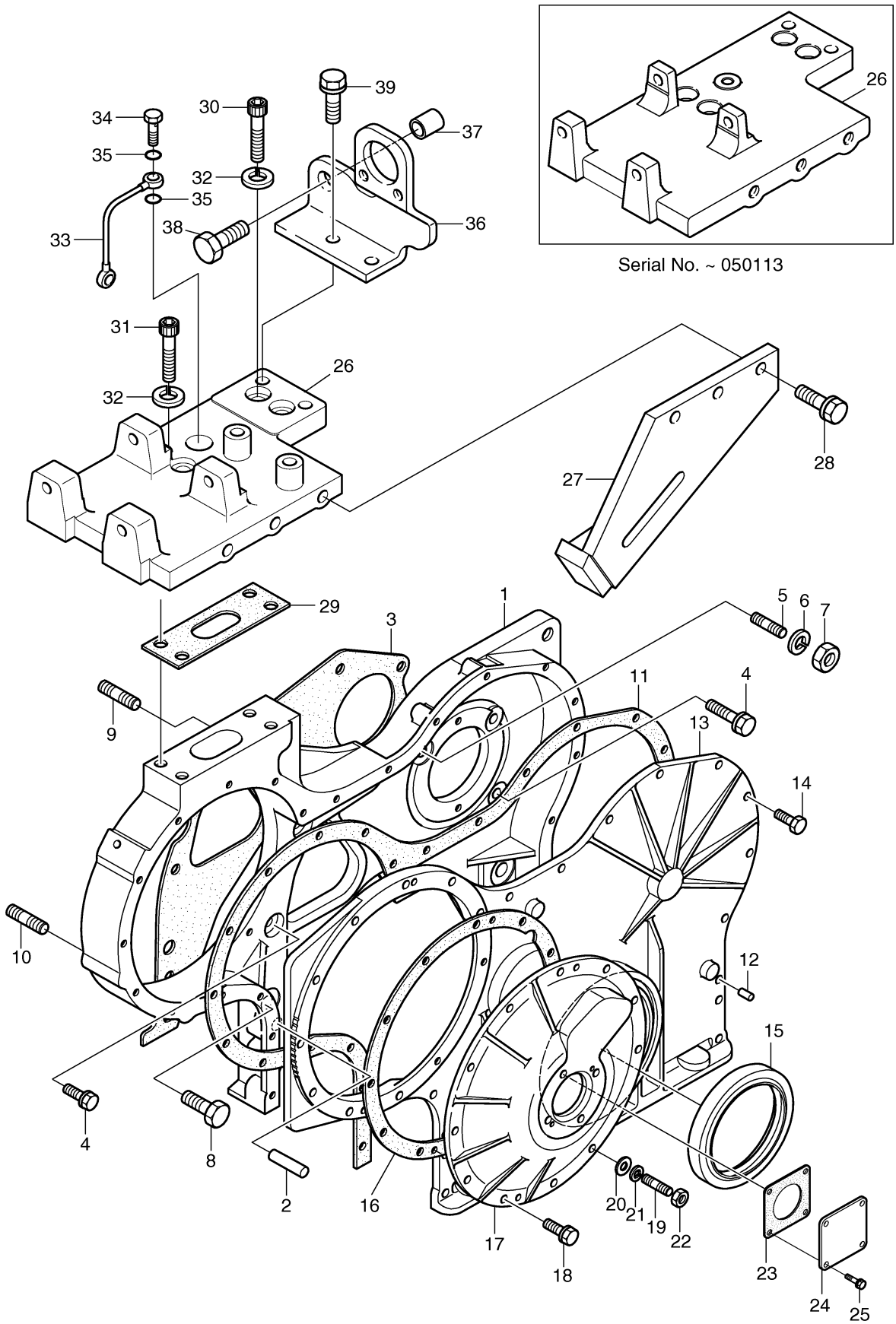

Fig. 013 FLYWHEEL HOUSING

Key No	Part No	Description	Qty	S.C	Serial No	ICA	Replacable	Qty
1	65.01401-0177	HOUSING;FLYWHEEL	1		~040304	Y	65.01401-0177C	1
1	65.01401-0177C	HOUSING;FLY WHEEL	1		~060508	Y	65.01401-0177D	1
1	65.01401-0177D	HOUSING;FLY WHEEL	1		060509~			
2	65.01903A0178	GASKET;FLYWHEEL HOUSING	1					
3	65.96002-0003	PLUG;RUBBER	1					
4	06.06176-8309	BOLT,STUD	1					
5	06.16731-2109	WASHER;SPRING	1					
6	06.11063-9216	NUT;HEX. M12X1.5	1					
7	06.01943-3319	BOLT ASS'Y M12X1.5X40	9		~101111			
7	06.01943-3319	BOLT ASS'Y M12X1.5X40	7		101112~			
8	65.91710-0023	RING;INTERMEDIATE	2		~050128	I	65.91710-0016	2
8	65.91710-0016	RING;STOPPER	2		050129~			
9	06.01943-3320	BOLT ASS'Y M12X1.5X45	2		101112~			
10	65.01510-0037	SEAL;OIL REAR	1					

Fig. 013 FLYWHEEL HOUSING

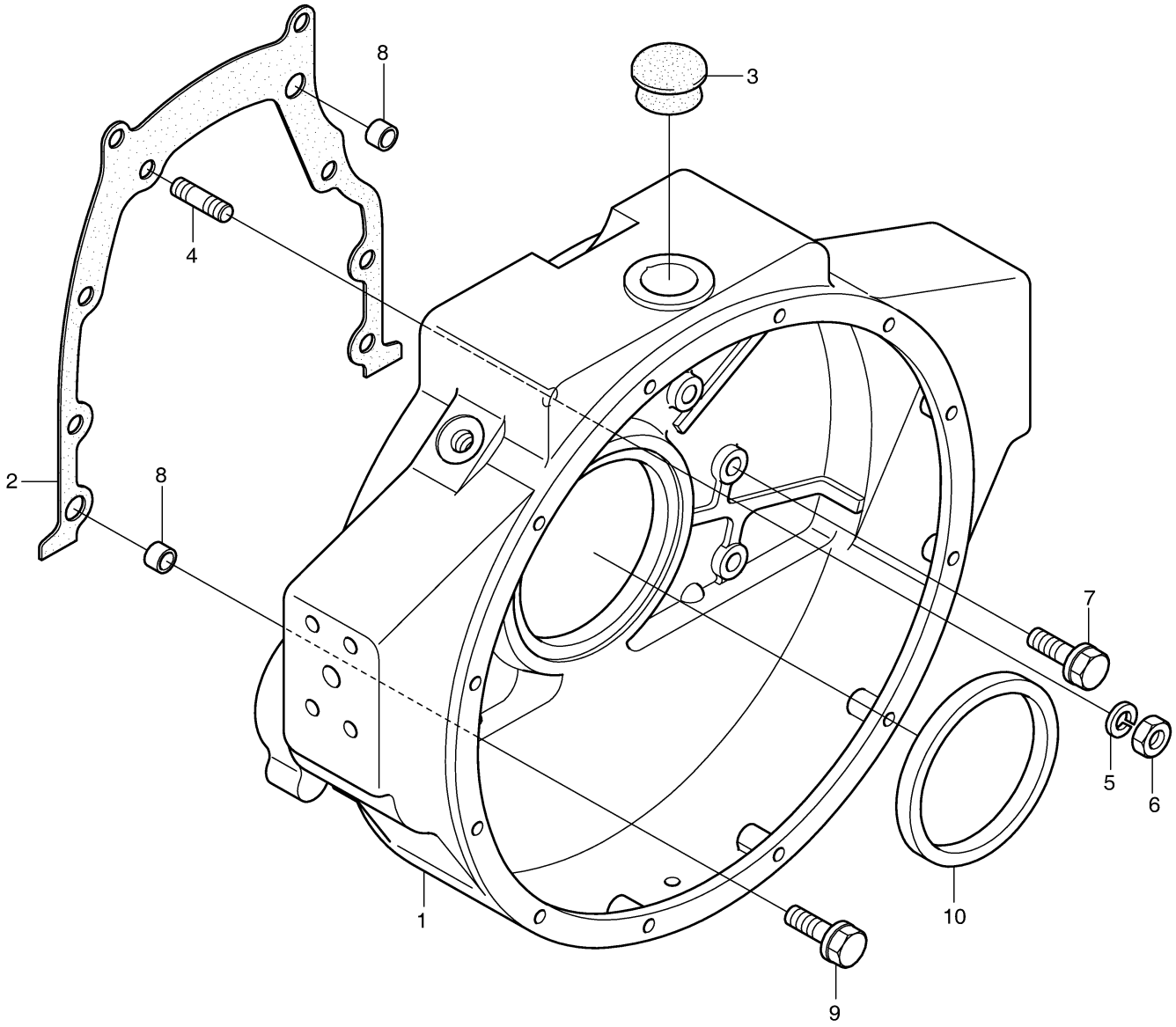

Fig. 014 CRANK SHAFT

Key No	Part No	Description	Qty	S.C	Serial No	ICA	Replacable	Qty
1	65.02101-7540	CRANK SHAFT ASS'Y	1	D	~020830	Y	65.02101-7540A	1
1	65.02101-7540A	CRANKSHAFT ASS'Y	1	D	020831~			
1A	65.02101-7024	CRANK SHAFT ASS'Y	1		~020830	Y	65.02101-7024C	1
1A	65.02101-7024C	CRANKSHAFT ASS'Y	1		020831~			
1AA	65.02101-0024	SHAFT;CRANK	1	D	~020830			
1AA	65.02101-0024N	SHAFT;CRANK	1	D	020831~			
1AB	65.02110-0011	WEIGHT;BALANCE	6	D				
1AC	65.90430-0014B	BOLT;CRANK SHAFT	12					
1B	65.02101-0056	CRANK SHAFT ASS'Y	1		~020830	Y	65.02101-0056A	1
1B	65.02101-0056A	SHAFT;CRANK	1		~071001	Y	65.02101-0056B	1
1B	65.02101-0056B	SHAFT;CRANK	1		~090713	I	150107-00183	1
1B	150107-00183	CRANK SHAFT	1		090714~			
2	65.02115-0040K	GEAR;CRANK SHAFT	1					
3	06.22022-0912	PIN;DOWEL	1					
4	65.01110-6351	METAL;MAIN STD	7					
4	65.01110-6352	METAL;MAIN 0.25	7	US				
4	65.01110-6353	METAL;MAIN 0.50	7	US				
5	65.01150-0015	WASHER;THRUST(UPPER)	2					
5	65.01150-0019	WASHER;THRUST(0.25)	2	OS				
5	65.01150-0020	WASHER;THRUST(0.50)	2	OS				
6	65.01150-0016A	WASHER;THRUST(LOWER)	2					
6	65.01150-0023A	WASHER;THRUST(0.25)	2	OS				
6	65.01150-0024A	WASHER;THRUST(0.50)	2	OS				
7	65.02201-7032	DAMPER;VIBRATION	1			Y	65.02201-7033	1
7	65.02201-7033	DAMPER;VISCOUS	1					
8	06.01914-3215	BOLT ASS'Y M10X25	6		~040701	I	65.90020-0062B	6
8	65.90020-0062B	BOLT;HEX M10X20	6		~150427			
9	65.02601-0168	PULLEY;V-BELT	1					
10	65.90701-0088	WASHER	1					
11	06.02106-0619	BOLT;SOCKET HEAD	8					
12	65.02301-5118	FLYWHEEL ASS`Y	1		~101105			
12	150111-00080	FLYWHEEL ASSY	1		101106~			
12A	65.02301-0262	FLYWHEEL	1					
12B	65.02310-0010A	GEAR;STARTER RING	1		~10115			
12B	130422-00034	GEAR,RING	1		101106~			
13	06.22022-1010	PIN,DOWEL	1					

Key No	Part No	Description	Qty	S.C	Serial No	ICA	Replacable	Qty
14	65.90001-0084	BOLT;HEX. M14X1.5X40	6					
15	06.16731-2110	WASHER;SPRING	6					
51	120121-00071	BOLT,COLLARD HEX	6		150428~			
52	120808-00786	WASHER,SPACER	1		150428~			

Fig. 014 CRANK SHAFT

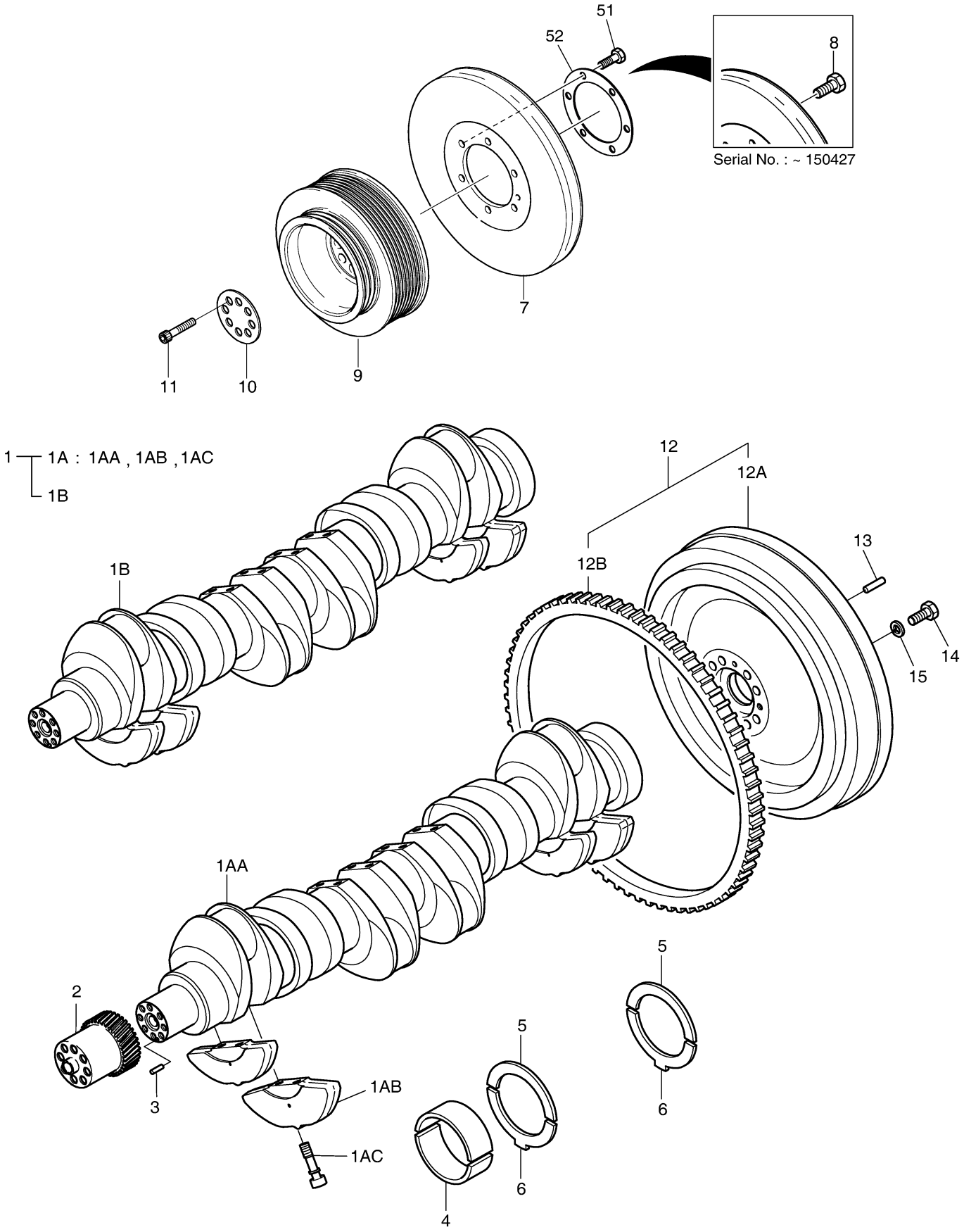

Fig. 015 PISTON

Key No	Part No	Description	Qty	S.C	Serial No	ICA	Replacable	Qty
1	65.02501-0228	PISTON	6		~061011	Y	65.02501-0228B	6
1	65.02501-0228B	PISTON	6		~111210			
1	130602-00804	PISTON	6		111211~			
2	65.02503-8146	PISTON RING KIT	1		~111210			
2	401004-00101	RING KIT,PISTON	1		111211~			
2A	-	RING;TOP 111X3.5	6	K				
2B	-	RING;SECOND 111X3.5	6	K				
2C	-	RING;OIL 111X4	6	K				
5	65.02502-0010	PIN;PISTON 42X20X95	6					
6	06.29020-0126	RING;SNAP 42X1.75	12					
7	65.02401-6018	CONNECTING ROD ASS'Y	6		~060821	Y	65.02401-6018A	6
7	65.02401-6018A	CONNECTING ROD ASS'Y	6		~090202	Y	65.02401-6018C	6
7	65.02401-6018C	CONNECTING ROD ASS`Y	6		090203~			
7A	65.02401-0005	ROD;CONNECTING	1	D	~090202			
7A	65.02401-0005A	ROD;CONNECTING	1	D	090203~			
7B	65.90020-0009D	BOLT;CONNECTING ROD	2					
7C	65.02405-0010	BUSH;CONNECTING ROD	1	B				
7D	65.91301-0010	PIN;DOWEL	2					
8	65.02410-0010	METAL;CONNECTING ROD(STD)	6					
8	65.02410-0011	METAL;CONNECTING ROD 0.25	6	US				
8	65.02410-0012	METAL;CONNECTING ROD 0.5	6	US				

Fig. 015 PISTON

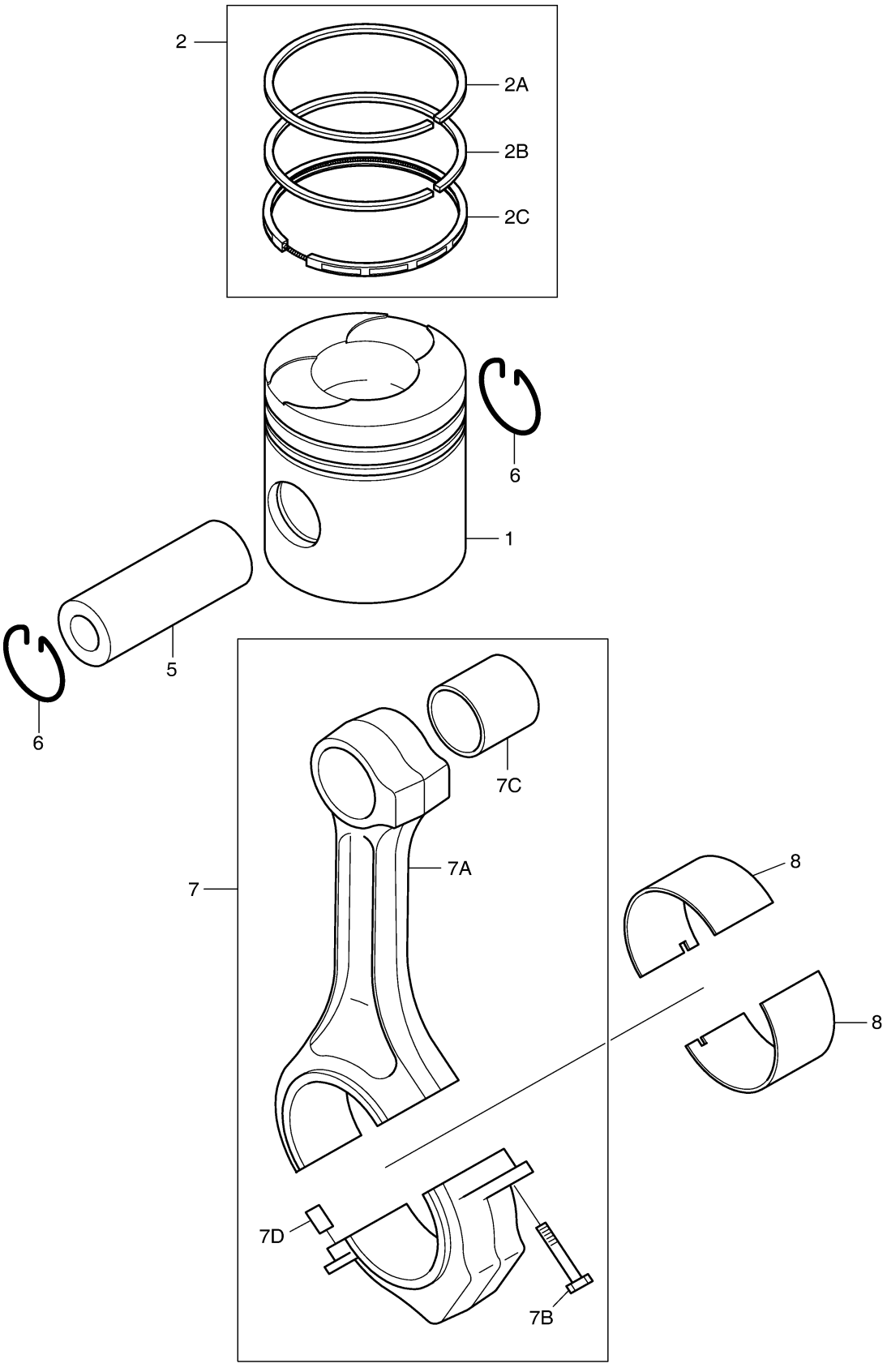

Fig. 016 CYLINDER HEAD [111210]

Key No	Part No	Description	Qty	S.C	Serial No	ICA	Replacable	Qty
1	65.03101-6495M	CYLINDER HEAD ASS`Y	3		~011211	Y	65.03101-6495N	3
1	65.03101-6495N	CYLINDER HEAD ASS`Y	3		~030409	Y	65.03101-6495O	3
1	65.03101-6495O	CYLINDER HEAD ASS`Y	3		~040924	Y	65.03101-6495P	3
1	65.03101-6495P	CYLINDER HEAD ASS`Y	3		~050629	T	65.03101-6087	3
1			-				65.03901-0070	3
1			-				65.90021-0007	24
1			-				06.22022-0911	6
1	65.03101-6087	CYLINDER HEAD ASS`Y	3		~060411	Y	65.03101-6087B	3
1	65.03101-6087B	CYLINDER HEAD ASS`Y	3		~090122	Y	65.03101-6087C	3
1	65.03101-6087C	CYLINDER HEAD ASS`Y(2~7)	3		~090829	I	150113-00036	3
1	150113-00036	HEAD ASSY,CYLINDER	3		~101120	Y	150113-00036A	3
1	150113-00036A	CYLINDER HEAD ASS'Y	3		101121~			
1A	65.03101-0295R	HEAD;CYLINDER	1	D	~011211			
1A	65.03101-0295S	HEAD;CYLINDER	1	D	~030409			
1A	65.03101-0295T	HEAD;CYLINDER	1	D	~050629			
1A	65.03101-1087	HEAD;CYLINDER	1	D	~060411			
1A	65.03101-1087A	HEAD;CYLINDER	1	D	~090122			
1A	65.03101-1087B	HEAD;CYLINDER	1	D	~101120			
1A	150113-00200	HEAD,CYLINDER	1	D	101121~			
1B	65.03201-1011	GUIDE;VALVE	4	B	~040924	Y	65.03201-1011A	4
1B	65.03201-1011A	GUIDE;VALVE	4	B	~090829	I	65.03201-1061	4
1B	65.03201-1061	GUIDE,VALVE	4	B	090830~			
1C	65.03203-1028D	RING;VALVE SEAT EXHAUST	2	B				
1D	65.03203-1029G	RING;VALVE SEAT INTAKE	2	B				
1E	06.15091-0319	PLUG;CORE	7					
1F	65.91001-0013	AVSEAL	6		~060411	Y	65.91001-0013A	6
1F	65.91001-0013A	PIN;CORE	6		060412~			
2	65.91001-0013	AVSEAL	6		~060411	Y	65.91001-0013A	6
2	65.91001-0013A	PIN;CORE	6		060412~			
3	06.22022-0907	PIN;DOWEL	6		~050629			
3	06.22022-0909	PIN;DOWEL 6M6X14	6		050630~			
4	65.03901-0058	GASKET;CYLINDER HEAD	3		~030929	Y	65.03901-0058A	3
4	65.03901-0058A	GASKET;CYLINDER HEAD	3		~050629			
4	65.03901-0070	GASKET;CYLINDER HEAD	3		~060519	Y	65.03901-0070A	3
4	65.03901-0070A	GASKET;CYLINDER HEAD	3		060520~			
5	65.90020-0070	BOLT;CYLINDER HEAD	24		~050629	I	65.90021-0007	24

Key No	Part No	Description	Qty	S.C	Serial No	ICA	Replacable	Qty
5	65.90021-0007	BOLT;CYLINDER HEAD	24		050630~			
6	06.06226-0808	BOLT;STUD M10X30	6		~100707			
6	120117-00053	BOLT,STUD	6		100708~			
7	65.90201-0049	BOLT;STUD M12X1.5X35	6		~100707			
7	120117-00046	BOLT,STUD	6		100708~			
8	06.06225-0809	BOLT;STUD M10X35	2					
9	65.03401-0021H	COVER;CYLINDER HEAD	1		~080627	Y	65.03401-0021I	1
9	65.03401-0021I	COVER;CYLINDER HEAD	1		080628~			
10	65.03401-0056A	COVER;CYLINDER HEAD	1					
11	65.03401-6044B	COVER;CYLINDER HEAD	1					
12	65.03905-0022	GASKET;CYLINDER HEAD COVER	3					
13	65.90020-0073	BOLT;COLLARED HEX.	6					
14	65.90701-0202	WASHER;PLATE	6		~101230			
15	65.03905-0023	GASKET;CYL. HEAD COVER	6		~020416	Y	65.03905-0023A	6
15	65.03905-0023A	GASKET;CYLINDER HEAD COVER	6		~101230	I	400603-00049	6
15	400603-00049	GASKET;CYL. HEAD COVER	6		101231~			
16	65.01810-5007	CAP;OIL FILLER	1		~050502	Y	65.01810-5011	1
16	65.01810-5011	CAP;OIL FILLER	1		050503~			
17	65.01801-5099A	HOUSING;BREATHER	1		~020507	Y	65.01801-5099B	1
17	65.01801-5099B	HOUSING;BREATHER	1		~050704	Y	65.01801-5099C	1
17	65.01801-5099C	BREATHER HOUSING ASS'Y	1		050705~			
18	65.96501-0033B	O-RING	1					
19	06.01923-3113	BOLT ASS'Y M8X20	3					
20	06.67020-0105	CLAMP	1					
21	65.97401-0142	CLIP;HOSE	1		~101114			
21	65.97401-0188	CLIP;PIPE	1		101115~			
22	65.96301-0294	HOSE;RUBBER	1		~101114	I	420101-00361	1
22	420101-00361	HOSE,AIR;BRETHER	1		101115~			
23	06.11063-8214	NUT	1					
24	06.16731-2107	WASHER	1					
25	06.15010-2311	WASHER	1					
26	65.97460-0002	CABLE TIE	1					

Fig. 016 CYLINDER HEAD [111210]

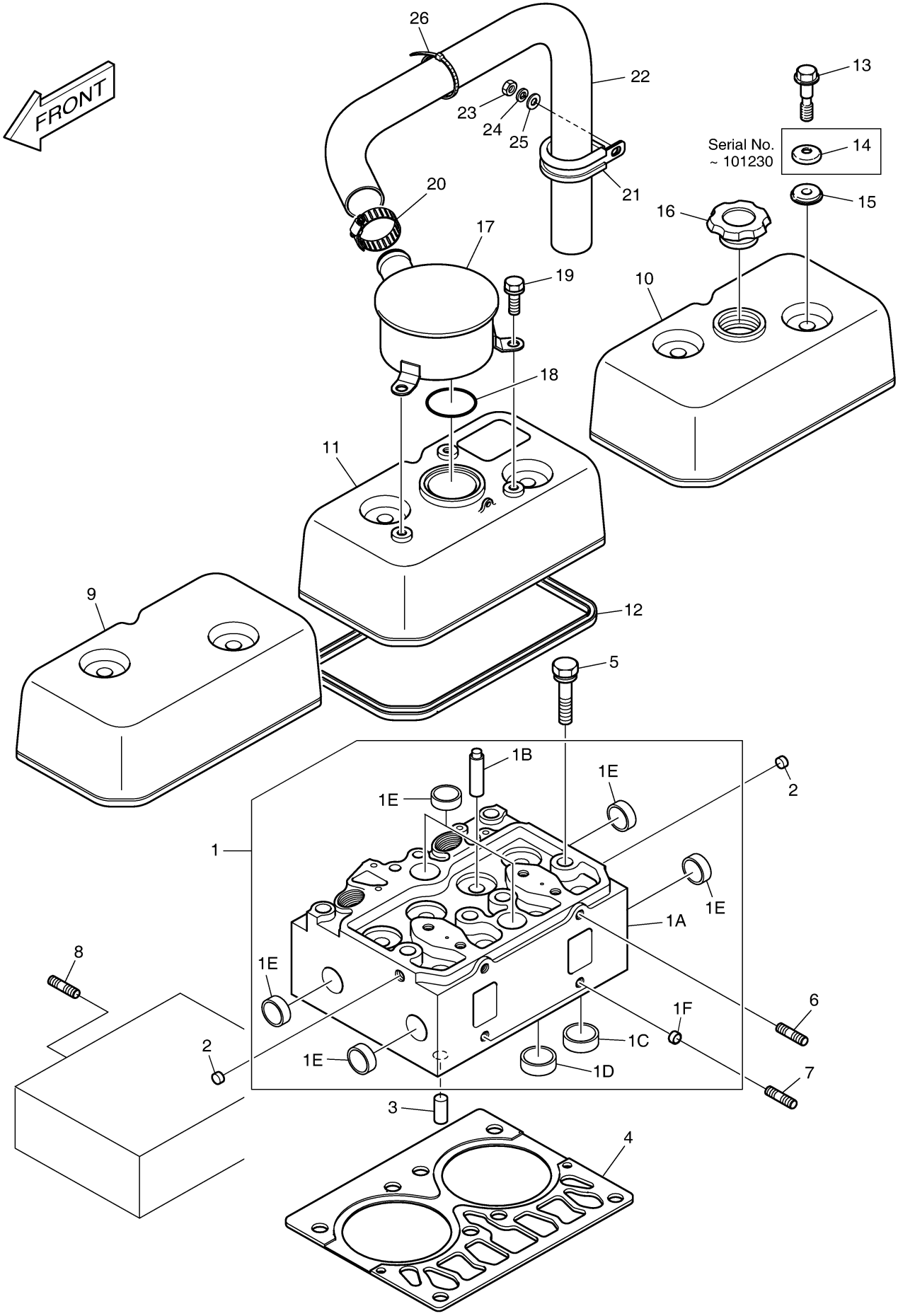

DOOSAN Doosan Infracore

Fig. 016A CYLINDER HEAD [111211 ~]

Key No	Part No	Description	Qty	S.C	Serial No	ICA	Replacable	Qty
1	150113-00036A	CYLINDER HEAD ASS'Y	3					
1A	150113-00200	HEAD,CYLINDER	1	D				
1B	65.03201-1061	GUIDE,VALVE	4	B				
1C	65.03203-1028D	RING;VALVE SEAT EXHAUST	2	B				
1D	65.03203-1029G	RING;VALVE SEAT INTAKE	2	B				
1E	06.15091-0319	PLUG;CORE	7					
1F	65.91001-0013A	PIN;CORE	6					
2	65.91001-0013A	PIN;CORE	6					
3	06.22022-0909	PIN;DOWEL 6M6X14	6					
4	65.03901-0070A	GASKET;CYLINDER HEAD	3					
5	65.90021-0007	BOLT;CYLINDER HEAD	24					
6	120117-00053	BOLT,STUD	6					
7	120117-00046	BOLT,STUD	6					
8	06.06225-0809	BOLT;STUD M10X35	2					
10	65.03401-0056A	COVER;CYLINDER HEAD	1					
11	65.03401-6044B	COVER;CYLINDER HEAD	2					
12	65.03905-0022	GASKET;CYLINDER HEAD COVER	3					
13	65.90020-0073	BOLT;COLLARED HEX.	6					
15	400603-00049	GASKET;CYL. HEAD COVER	6					
16	65.01810-5011	CAP;OIL FILLER	1					
17	65.01801-5099C	BREATHER HOUSING ASS'Y	2					
18	65.96501-0033B	O-RING	2					
19	06.01923-3113	BOLT ASS'Y M8X20	6					
20	420101-00596	HOSE,AIR	1					
21	420101-00597	HOSE,AIR	1					
22	06.67020-0105	CLAMP	5					
23	65.97401-0179	CLIP;WATER HOSE	1					
24	65.97401-0188	CLIP;PIPE	1					
25	65.91701-0205	SPACER	1					
26	06.01923-3123	BOLT ASS'Y M8X60	1					
27	06.11063-8214	NUT	1					
28	06.16731-2107	WASHER	1					
29	65.97460-0002	CABLE TIE	5					
30	65.91701-0208	SPACER	1					
31	420210-00919	PIPE,BREATHER	1					
32	65.91701-0067	SPCER	2					

Key No	Part No	Description	Qty	S.C	Serial No	ICA	Replacable	Qty
33	06.01953-3320	BOLT ASS'Y	2					
34	420101-00598	HOSE,AIR	1					

Fig. 016A CYLINDER HEAD [111211 ~]

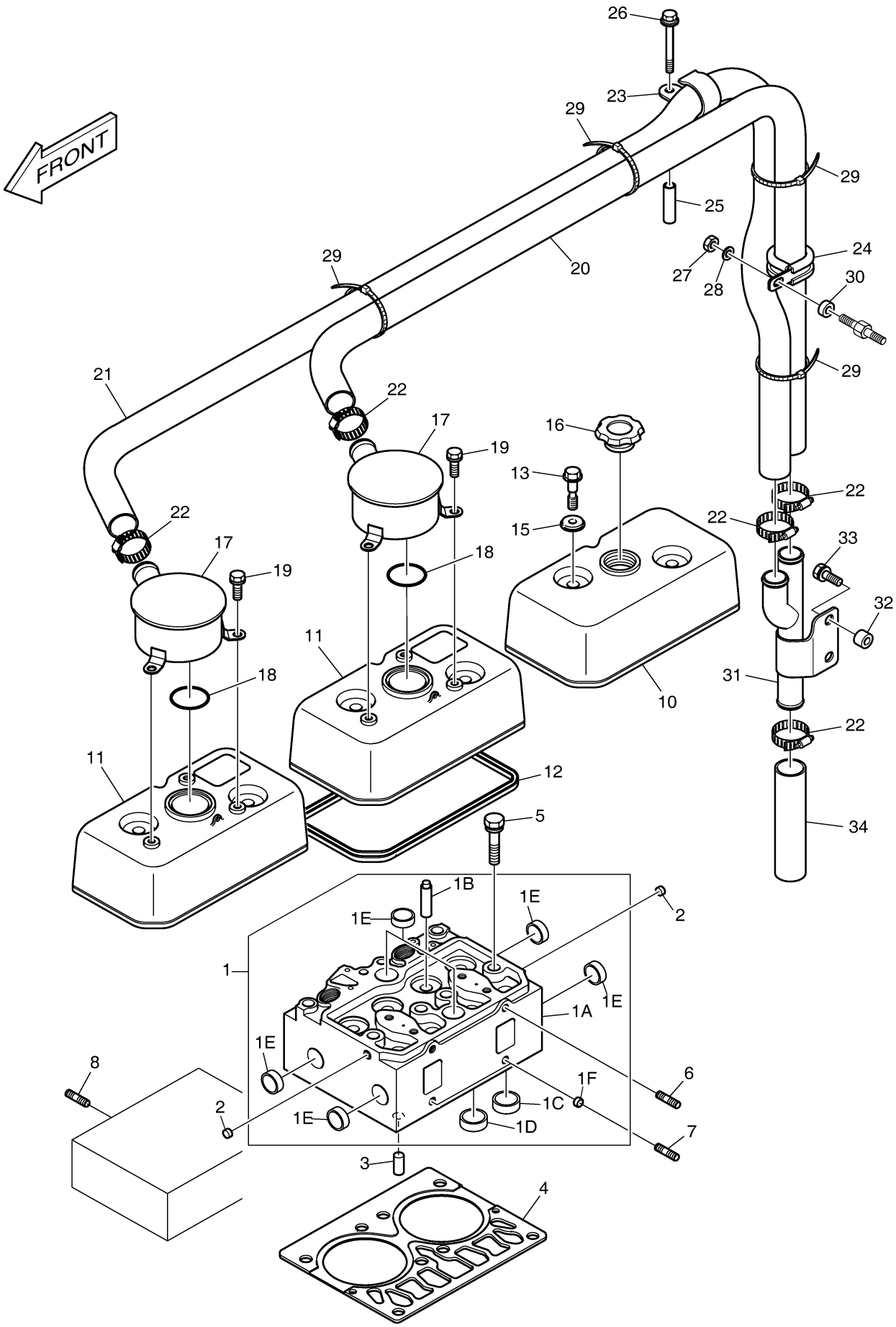

DOOSAN Doosan Infracore

Fig. 017 CAM SHAFT

Key No	Part No	Description	Qty	S.C	Serial No	ICA	Replacable	Qty
1	65.04401-0027	SHAFT;CAM	1		~000623	Y	65.04401-0027A	1
1	65.04401-0027A	SHAFT;CAM	1		~030801	Y	65.04401-0027B	1
1	65.04401-0027B	SHAFT;CAM	1		~040827	Y	65.04401-0027C	1
1	65.04401-0027C	SHAFT;CAM	1		~061127	Y	65.04401-0027D	1
1	65.04401-0027D	SHAFT;CAM	1		~101115	Y	150103-00054	1
1	150103-00054	CAMSHAFT	1		101116~			
2	65.90720-0099	WASHER;THRUST	1					
3	65.98112-0038	FLANGE	1					
4	65.90001-6003	BOLT ASS`Y M6X14	2					
5	06.22022-1016	PIN;DOWEL	1					
6	65.04501-0057	GEAR;CAM SHAFT	1					
7	06.01913-3120	BOLT ASS'Y M8X45	4					
8	65.04505-5008A	IDLE GEAR ASS`Y	1					
11	65.04506-0008	PIN;IDLE GEAR	1					
12	65.90720-0019	WASHER;THRUST	1					
13	06.01914-3126	BOLT;HEX. M8X75	2					
14	65.04301-0005	TAPPET	12					
15	65.04302-5010	PUSH ROD	12					
16	65.04101-0041	VALVE;INTAKE	6					
17	65.04101-0042	VALVE;EXHAUST	6					
18	65.04102-6002	SPRING;VALVE(EXHAUST)	6					
18A	65.04102-0003	SPRING;VALVE(EXHAUST OUTER)	1					
18B	65.04102-0004	SPRING;VALVE(EXHAUST INNER)	1					
19	65.04102-0007	SPRING;VALVE(INTAKE)	6					
20	65.04103-0013	RETAINER;VALVE SPRING	12					
21	65.04103-0009	SEAT;VALVE SPRING	12					
22	65.04104-0006	COTTER;VALVE	24					
23	65.04902-0013	SEAL;VALVE STEAM	12					
24	65.04200-6025D	ROCKER ARM SHAFT ASS'Y	3		~060621	Y	65.04200-6025E	3
24	65.04200-6025E	ROCKER ARM ASS'Y	3		060622~			
24A	65.04201-5013E	ROCKER ARM	4					
24B	65.04205-0003	BOLT;ADJUSTING M10X1.0	4		~060621	Y	65.04205-0003A	4
24B	65.04205-0003A	BOLT;ADJUSTING	4		060622~			
24C	65.90501-0003	NUT	4					
24D	65.04203-5009	ROCKER ARM SHAFT ASS`Y	1					
24DA	65.04203-0009A	SHAFT;ROCKER ARM	1	D				

Key No	Part No	Description	Qty	S.C	Serial No	ICA	Replacable	Qty
24DB	65.90302-0012	PLUG	2	D				
24E	65.04202-0017A	BRACKET;ROCKER ARM	2					
24F	65.97601-0055	SPRING;ROCKER ARM SHAFT	1					
24G	65.90710-0039	WASHER;ROCKER ARM	2					
24H	06.29010-0120	RING;SNAP	2					
24I	65.90020-0056	BOLT;HEX. M12X1.5X80	2					
24J	06.01013-9221	BOLT;HEX. M10X80	2					
24K	06.16731-2108	WASHER;SPRING	2					
24L	06.15030-0514	WASHER;PLAIN	2					

Fig. 017 CAM SHAFT

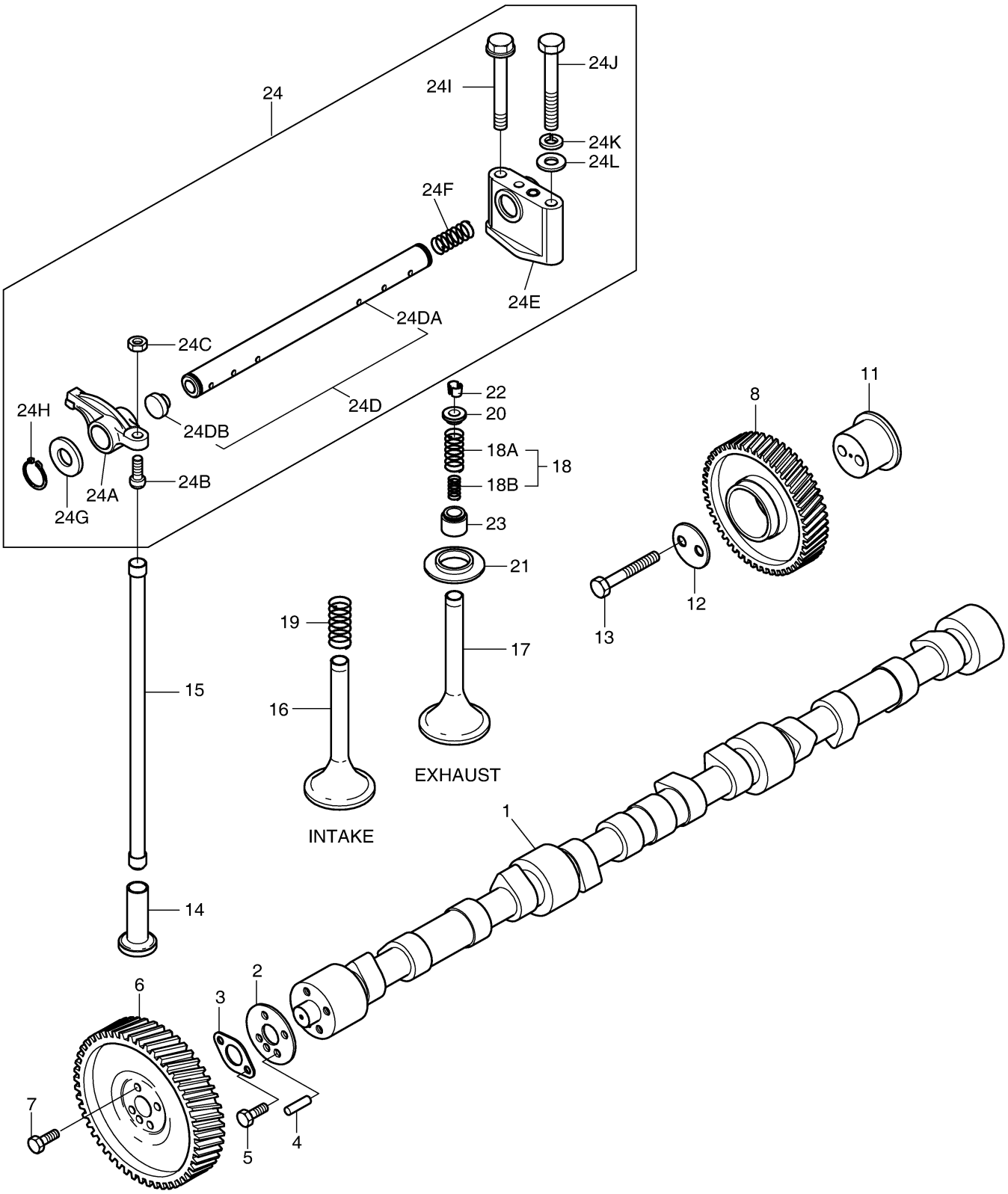

DOOSAN Doosan Infracore

Fig. 018 INTERMEDIATE GEAR

Key No	Part No	Description	Qty	S.C	Serial No	ICA	Replacable	Qty
A	65.05200-6034	IDLE GEAR ASS`Y	1	D				
1	65.05204-0036	GEAR;IDLE	1					
2	06.31420-0314	BEARING;BALL	2					
3	06.29020-0132	SNAP RING	2					
4	65.05205-0018	PIN;IDLE GEAR	1					
5	06.29010-0125	RING;SNAP 30X2	1					
6	65.90030-0009	BOLT;SOCKET HEAD M10X60	1					
7	65.05100-6048	OIL PUMP ASS'Y	1		~020426	Y	65.05100-6022	1
7A	65.05102-0014	HOUSING;OIL PUMP	1					
7B	65.05103-0028	OIL PUMP COVER(FRONT)	1					
7C	65.05103-0029	OIL PUMP COVER(REAR)	1					
7D	65.05410-0007	PLUNGER;VALVE	1					
7E	65.97601-0105	SPRING;COMP.	1					
7F	65.90310-0104	SCREW;PLUG	1					
7G	65.05104-5008	GEAR	2					
7H	06.01013-9118	BOLT;HEX. M8X65	4					
7I	06.22022-0909	PIN;DOWEL 6M6X14	4					
7J	65.90510-0012	NUT	4					
7K	65.05201-0037	GEAR;OIL PUMP DRIVE	1					
10	65.05100-6022	OIL PUMP ASS'Y	1		020427~			
10A	65.05102-0014	HOUSING;OIL PUMP	1					
10B	65.05103-5015	OIL PUMP COVER(FRONT)	1					
10C	65.05103-5012	OIL PUMP COVER(REAR)	1					
10D	65.05410-0025	PLUNGER;VALVE	1					
10E	65.97601-0110	SPRING;COMPRESSION	1					
10F	65.90310-0104	SCREW;PLUG	1					
10G	65.05104-5004	GEAR;PUMP	1					
10H	65.05104-5003	GEAR	1					
10I	06.01013-9118	BOLT;HEX. M8X65	4					
10J	65.90510-0012	NUT	4					
10K	65.05201-0037	GEAR;OIL PUMP DRIVE	1					
10L	06.29141-0207	KEY;WOODRUFF	1					
10M	06.22022-0909	PIN;DOWEL 6M6X14	4					
10N	06.11053-9217	NUT;HEX.	1					
10O	06.16050-0311	WASHER;LOCK	1					
22	06.22022-0907	PIN;DOWEL	2					

Key No	Part No	Description	Qty	S.C	Serial No	ICA	Replacable	Qty
23	06.01013-9215	BOLT;HEX. M10X50	2					
24	65.90801-0038	WASHER;LOCK	2		~030316	I	65.90801-0018	2
24	65.90801-0018	WASHER;LOCK	2		030317~			

Fig. 018 INTERMEDIATE GEAR

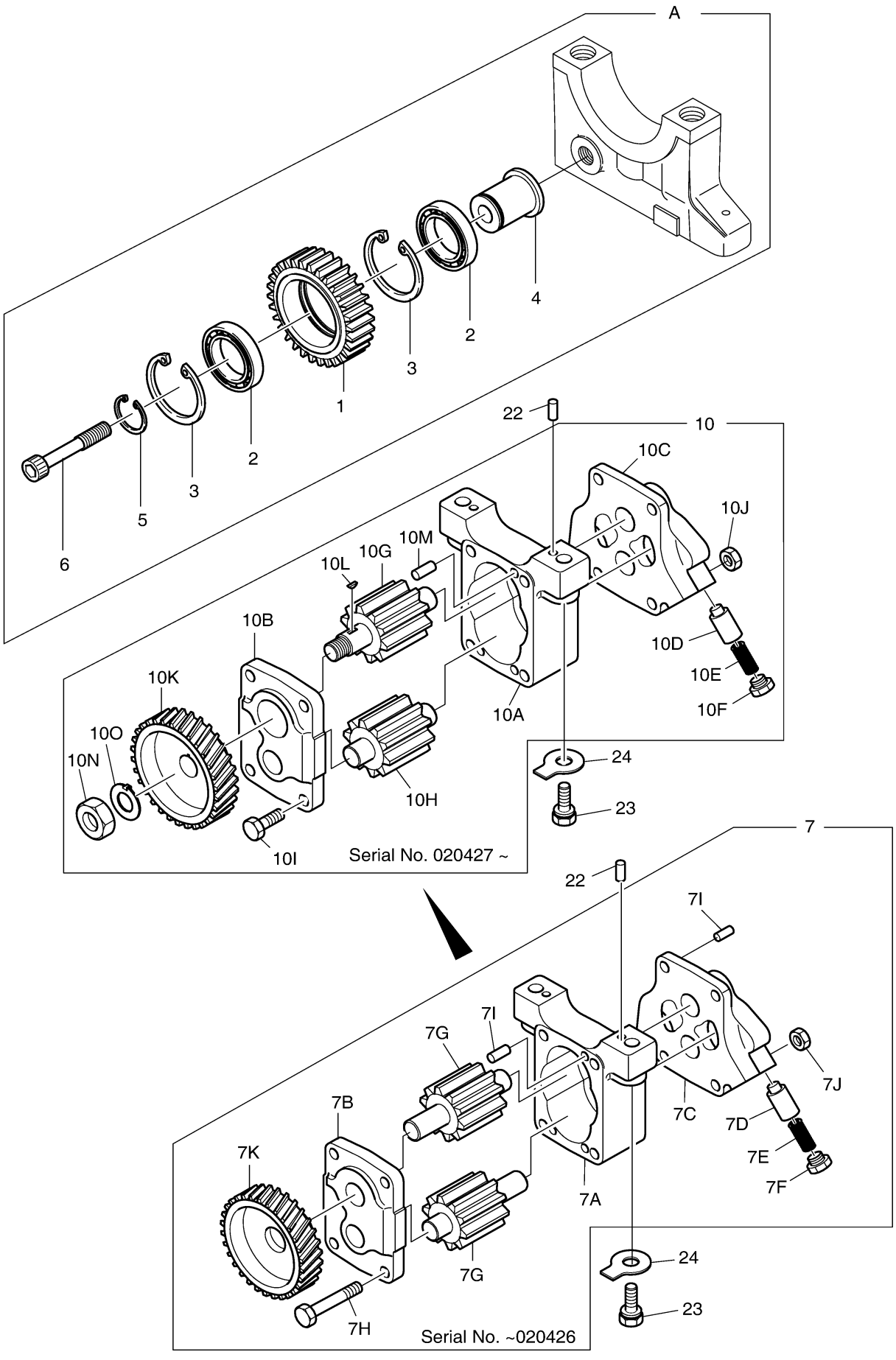

DOOSAN Doosan Infracore

Fig. 019 OIL FILTER

Key No	Part No	Description	Qty	S.C	Serial No	ICA	Replacable	Qty
1	65.05501-7071	OIL FILTER ASSY	1		~040412	Y	65.05501-7064A	1
1	65.05501-7064A	OIL FILTER ASS'Y	1		~050714	Y	65.05501-7064B	1
1	65.05501-7064B	OIL FILTER ASS'Y	1		050715~			
1A	65.05510-5026	CARTRIDGE;OIL FILTER	1		~040412			
1A	65.05510-5022A	CARTRIDGE;OIL FILTER	1		~050714	Y	65.05510-5022B	1
1A	65.05510-5022B	CARTRIDGE;OIL FILTER	1		050715~			
1B	65.05503-5042	HEAD;FILTER	1					
1C	65.05518-0003	VALVE;PLUNGER	1					
1D	65.97601-0065	SPRING	1					
1E	65.90310-0057	SCREW;PLUG	1					
1F	06.56190-0716	RING;SEAL	1					
1G	65.05518-0006	VALVE	1					
1H	65.97601-0075	SPRING	1					
1I	65.90310-0065	SCREW;PLUG	1					
1J	06.56190-0726	SEAL;RING	1					
2	65.05901A0052	GASKET;OIL FILTER	1					
3	06.01913-3122	BOLT ASS'Y M8X55	2					
4	06.01913-3118	BOLT ASS'Y M8X35	2					

Fig. 019 OIL FILTER

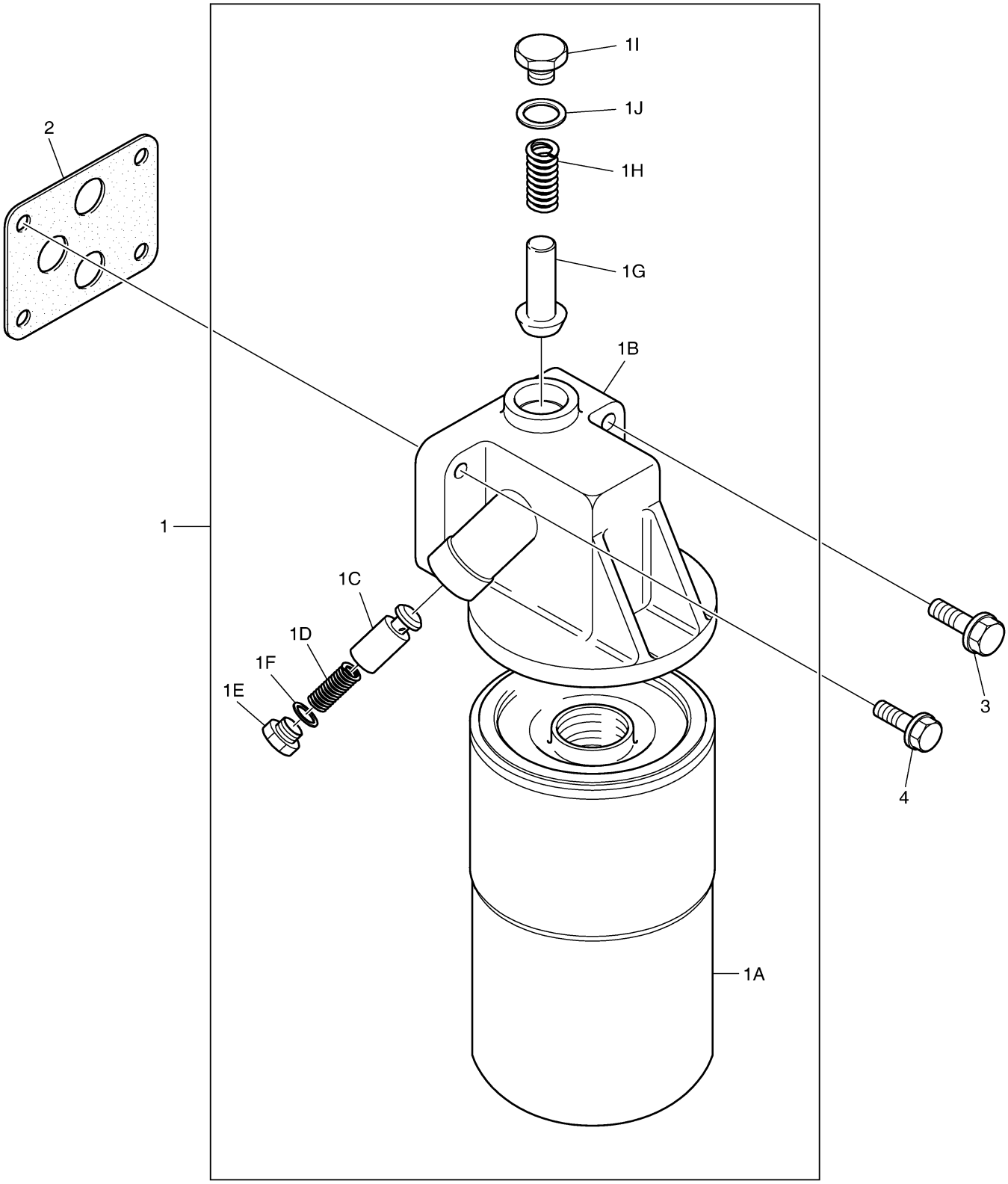

Fig. 020 OIL COOLER

Key No	Part No	Description	Qty	S.C	Serial No	ICA	Replacable	Qty
1	65.05601-7138A	OIL COOLER ASS'Y	1		~031009	Y	65.05601-7138B	1
1	65.05601-7138B	OIL COOLER ASS'Y	1		~050714	Y	65.05601-7138C	1
1	65.05601-7138C	OIL COOLER ASS'Y	1		050715~			
1A	65.05604-5030	HOUSING;OIL COOLER	1					
1B	65.90310-0136	SCREW;PLUG	1		~040302	Y	65.90310-0136A	1
1B	65.90310-0136A	SCREW;PLUG	1		040303~			
1C	06.56190-0718	RING;SEAL	1					
1D	06.31641-0429	BALL;BY-PASS	1					
1E	65.97601-0004	SPRING	1					
1F	65.90310-0003	SCREW;PLUG M26X1.5	1					
1G	65.05611-0001	PIN	1					
1H	65.05606-5020	ELEMENT;OIL COOLER	1					
1I	65.96601A0018	GASKET;OIL COOLER	2		~031009	Y	65.96601-0018A	2
1I	65.96601-0018A	GASKET;OIL COOLER	2		031010~			
1J	06.15030-0513	WASHER;PLAIN	4					
1K	06.16110-0106	WASHER	4					
1L	65.05605-0028	HEAD;OIL	1		~050714	Y	65.05605-0028A	1
1L	65.05605-0028A	COVER;OIL COOLER	1		050715~			
1M	65.06301-0160	PIPE;COOLING WATER	1					
1N	65.96601-0029	GASKET;FLANGE	1					
1O	06.01923-3112	BOLT ASS'Y M8X18	4					
1P	65.05902A0008	GASKET;OIL COOLER COVER	1		~031009	Y	65.05902-0008A	1
1P	65.05902-0008A	GASKET;OIL COOLER COVER	1		031010~			
1Q	06.01923-3126	BOLT;HEX. M8X75	8					
1R	06.56190-0728	RING;SEAL	1					
1S	06.02090-0418	BOLT;SOCKET HEAD M8X45	4					
2	65.90001-6011	BOLT ASS'Y M10X70	2					
3	06.01924-3225	BOLT ASS'Y M10X70	2					
4	65.05902A0011	GASKET;OIL COOLER COVER	1					
5	65.91605-0110	COVER;BLIND	1					
6	65.96601-0347	GASKET;OIL COOLER ASS`Y	1					
7	06.01913-3112	BOLT ASS'Y M8X18	4					

Fig. 020 OIL COOLER

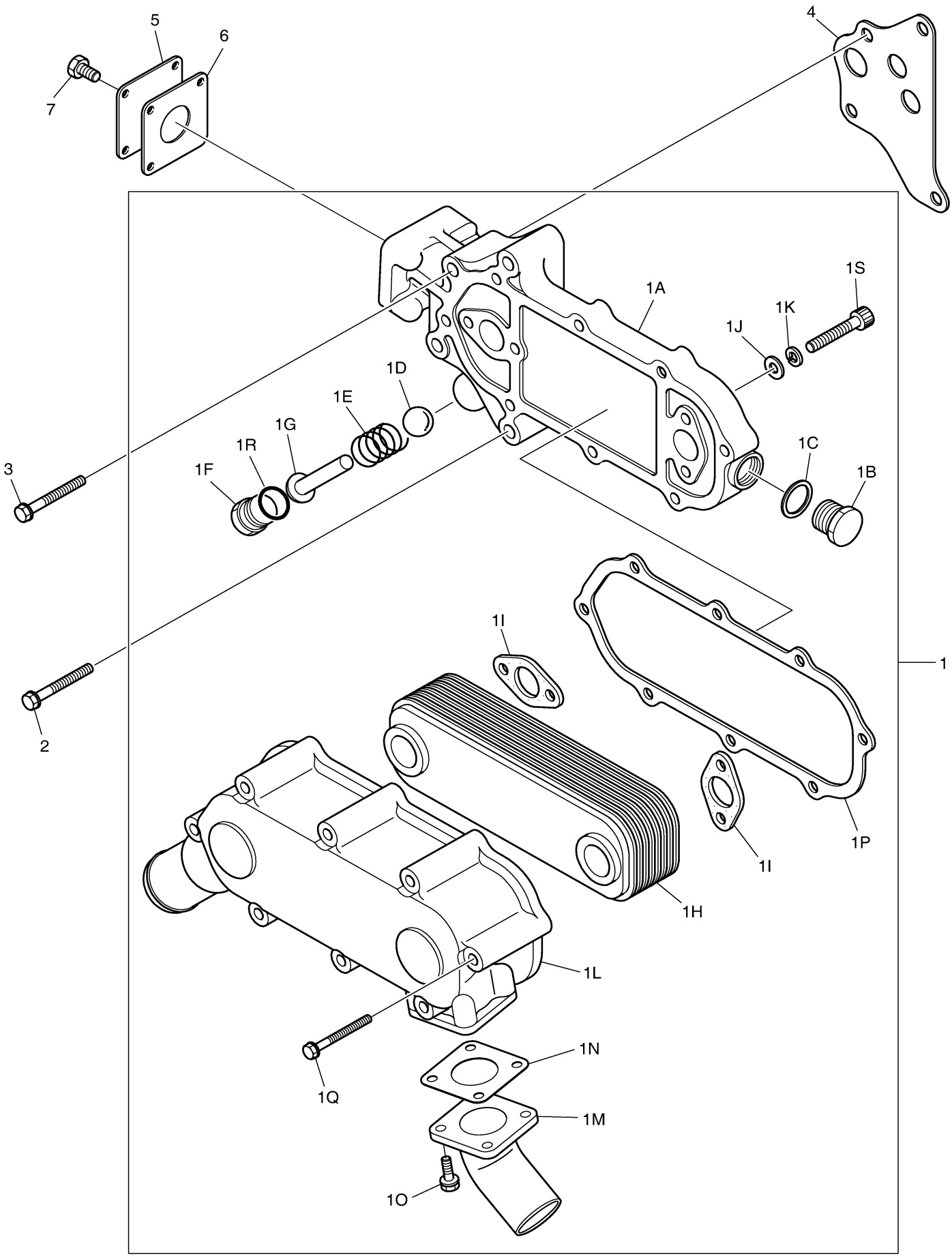

DOOSAN Doosan Infracore

Fig. 021 OIL PAN

Key No	Part No	Description	Qty	S.C	Serial No	ICA	Replacable	Qty
1	65.05801-5194A	OIL PAN ASS'Y	1		~061220			
1	65.05801-5253	PAN;OIL	1		~070410	Y	65.05801-5253A	1
1	65.05801-5253A	PAN;OIL	1		~081203	Y	65.05801-5253B	1
1	65.05801-5253B	OIL PAN ASS`Y	1		081204~			18
2	65.98125-5019	JOINT;DRAIN	1		~030629	Y	65.98125-5022	1
2	65.98125-5022	JOINT;DRAIN	1		~060707	Y	65.98125-5022A	1
2	65.98125-5022A	JOINT;DRAIN	1		060708~			
3	06.56190-0732	SEAL;RING	1					
4	65.05809-0012	WASHER;OIL PAN(SIDE)	9		~061220			
5	65.05809-0013	WASHER;OIL PAN(REAR)	2		~061220			
6	65.05809-0014	WASHER;OIL PAN(FRONT)	2		~061220			
7	65.05809-0037	WASHER;OIL PAN(REAR)	1		~061220			
8	65.90001-6005	BOLT;SOCKET	2		~061220			
8	06.01923-3126	BOLT;HEX. M8X75	4		061221~			
9	06.01913-3115	BOLT ASS'Y M8X25	24		~061220			
9	06.01923-3121	BOLT;HEX. M8X50	18		061221~			
10	65.90201-0037	BOLT;SPACER	1		~061220			
10	65.90201-0105	STUD;BOLT	1		061221~			
11	65.90001-6006	BOLT;SOCKET HEAD M8X25	10		~061220			
12	06.16731-2107	WASHER	1					
13	06.15010-2311	WASHER	1		061221~			
14	65.05904A0016	GASKET;OIL PAN	1					
15	65.05806-5096A	TUBE;GUIDE	1		~070911	Y	65.05806-5096B	1
15	65.05806-5096B	TUBE;GUIDE	1		070912~			
16	65.05807-0001	CLIP;GUIDE TUBE	1					
17	06.01913-3113	BOLT ASS'Y M8X20	1					
18	65.05805-5186A	GAUGE;OIL LEVEL	1		~030829	I	65.05805-5211	1
18	65.05805-5211	GAUGE;OIL LEVEL	1		~050630	I	65.05805-5211A	1
18	65.05805-5211A	GAUGE;OIL LEVEL	1		~061221			
18	65.05805-5240	OIL LEVEL GAUGE ASS'Y	1		~070101	Y	65.05805-5240A	
18	65.05805-5240A	OIL LEVEL GAUGE ASS'Y	1		~090121	I	65.05805-5309	1
18	65.05805-5309	GAUGE;OIL LEVEL	1		090122~			
19	65.05701-6039B	OIL SUCTION PIPE ASS`Y	1					
19A	65.05701-5203B	OIL SUCTION PIPE ASS`Y	1					
19B	65.05740-0015	HOLDER;OIL SUCTION PIPE	1					
19C	65.90510-0012	NUT	1					

Key No	Part No	Description	Qty	S.C	Serial No	ICA	Replacable	Qty
19D	06.01283-7114	BOLT;HEX. M8X22	1					
19E	06.15010-2311	WASHER	2					
20	06.01913-3114	BOLT ASS'Y M8X22	2					
21	06.01913-3111	BOLT ASS'Y M8X16	1					
22	65.96601B0019	GASKET;OIL SUCTION PIPE	1					
23	65.05903B0003	GASKET;CONNECTING FLANGE	1					
24	65.05715-5001	CONNECTING FLANGE ASS`Y	1					
25	06.02090-0422	BOLT;SOCKET HEAD	2					
26	06.16731-2107	WASHER	2					
27	06.15010-2311	WASHER	2					
28	06.56250-2002	GASKET(OIL PIPE FLANGE)	4		~061220	I	65.96601-0050	4
28	65.96601-0050	GASKET;OIL PIPE	4		061221~			
29	65.05701-5153	OIL PIPE ASS'Y	1		~071213	T	65.05701-0030A	1
29			-				06.01923-3121	2
29			-				06.01923-3118	1
29			-				06.01923-3124	1
29			-				65.96601-0050	2
29	65.05701-0030A	OIL PIPE ASS`Y(O/P->C/F)	1		071214~			
30	06.01923-3118	BOLT ASS'Y M8X35	1		071214~			
31	06.01923-3124	BOLT ASS'Y M8X65	1		071214~			
32	65.05701-5230	OIL PIPE ASS'Y	1					
33	65.90001-6006	BOLT;SOCKET HEAD M8X25	2					
34	06.01923-3113	BOLT ASS'Y M8X20	2					
35	06.01283-7113	BOLT;HEX. M8X1.25X20	4		~071213			
35	06.01923-3121	BOLT;HEX. M8X50	2		071214~			

Fig. 021 OIL PAN

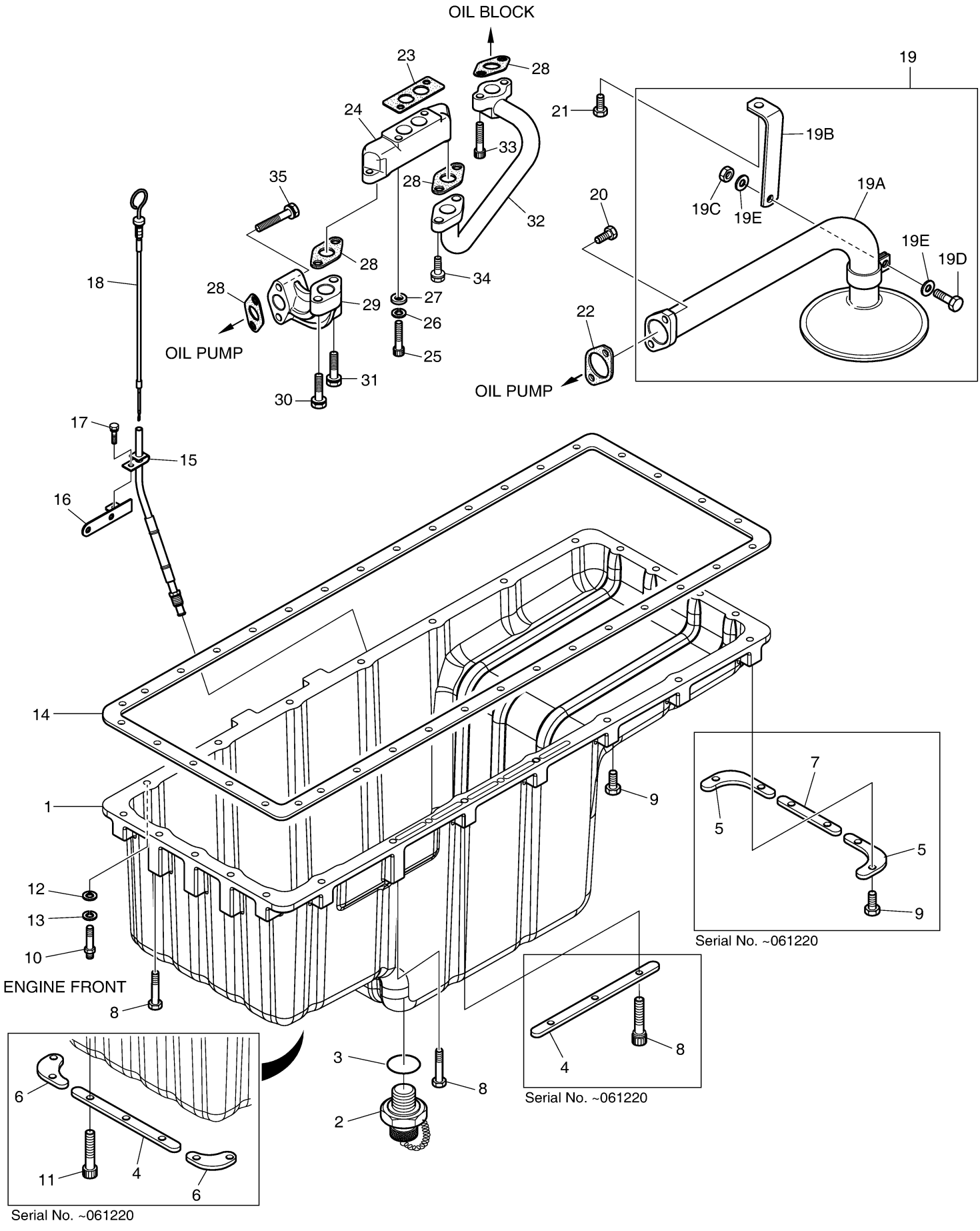

Fig. 022 COOLING WATER PUMP

Key No	Part No	Description	Qty	S.C	Serial No	ICA	Replacable	Qty
1	65.06500-6145A	WATER PUMP ASS'Y	1		~011228	Y	65.06500-6145B	1
1	65.06500-6145B	WATER PUMP ASS'Y	1		~030515	Y	65.06500-6145C	1
1	65.06500-6145C	WATER PUMP ASS'Y	1		~090324	Y	65.06500-6145D	1
1	65.06500-6145D	WATER PUMP ASS`Y	1		090325~			
1A	65.06501-0076A	HOUSING;WATER PUMP	1	D	~011228			
1A	65.06501-0076B	HOUSING;WATER PUMP	1	D	~030515			
1A	65.06501-0076C	HOUSING;WATER PUMP	1	D	030516~			
1B	65.06520-6007	SEAL;MECHANICAL	1					
1C	65.06506-0023	IMPELLAR	1					
1D	65.93410-0027	BEARING	1		~090324	Y	65.93410-0087	1
1D	65.93410-0087	BEARING	1		090325~			
1E	06.29020-0132	SNAP RING	1					
1F	65.06504-0030	HUB	1		~030515	Y	65.06504-0030A	1
1F	65.06504-0030A	HUB	1		030516~			
1G	65.06901A0019	GASKET;WATER PUMP INNER	1					
1H	65.06512-0010	COVER;WATER PUMP	1					
1I	06.04201-8907	BOLT;SLOTTED HEAD M6X14	3					
11	65.06901A0020	GASKET;WATER PUMP	1					
12	06.01913-3121	BOLT ASS'Y M8X50	3					
13	06.01913-3125	BOLT ASS`Y M8X70	1					
14	06.01913-3126	BOLT ASS'Y M8X75	1		~031211			
14	06.01013-9121	BOLT ASS`Y M8X80	1		031212~			
15	06.01914-3225	BOLT;HEX. M10X70	1					
20	65.06611-0123	FLANGE	1		~030515	Y	65.06611-0123A	1
20	65.06611-0123A	FLANGE;FAN	1		~070913	Y	65.06611-0148	1
20	65.06611-0148	FLANGE	1		~080726	Y	65.06611-0160	1
20	65.06611-0160	FLANGE	1		080727~			
21	65.06606-0055	PULLEY;FAN	1					
22	65.06601-5064	FAN;COOLING	1					
23	06.01013-9128	BOLT;HEX. M8X130	6					
24	06.16731-2107	WASHER	6					

Fig. 022 COOLING WATER PUMP

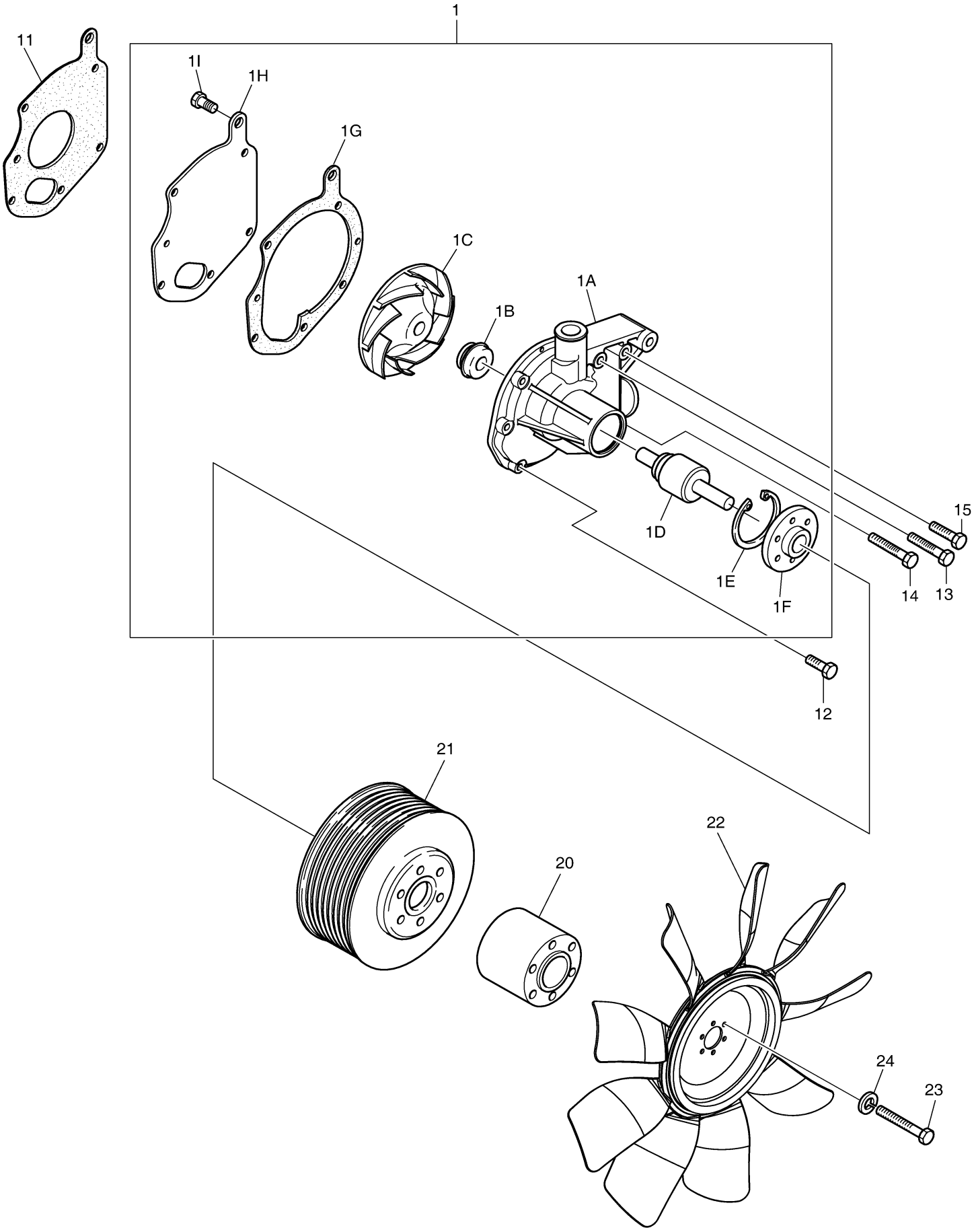

Fig. 023 COOLING SYSTEM

Key No	Part No	Description	Qty	S.C	Serial No	ICA	Replacable	Qty
1	65.01705-0002	COVER;WATER CHAMBER	1		~040909	Y	65.01705-0002B	1
1	65.01705-0002B	COVER;WATER CHAMBER	1		040910~			
2	65.01907A0002	GASKET;WATER CHAMBER	1					
3	06.15010-2311	WASHER	12					
4	06.16731-2107	WASHER	12					
5	06.01923-3115	BOLT ASS'Y M8X25	14					
6	65.90201-0149	BOLT;STUD M8X25	11		~030714			
6	65.90201-0149	BOLT;STUD M8X25	10		030715~			
7	65.90201-0037	BOLT;SPACER	1		~030714			
7	65.90201-0075	BOLT;SPACER	2		~100616	I	120122-00014	2
7	120122-00014	BOLT,SPACER;M8	2		100617~			
8	06.11063-8214	NUT	11					
9	65.06301-0134B	PIPE;COOLING WATER	1		~080306	Y	65.06301-0134C	1
9	65.06301-0134C	PIPE;COOLING WATER	1		~101114	Y	420211-00191	1
9	420211-00191	PIPE,COOLING WATER	1		101115~			
10	65.06903A0011	GASKET;COOLING WATER PIPE	3					
11	06.01923-3122	BOLT ASS`Y M8X55	3					
12	06.01923-3124	BOLT ASS'Y M8X65	3					
13	65.27435-6003	SWITCH;WATER TEMP	1		~020123			
13	65.90320-0019	PLUG SCREW PT3/8	1		020124~			
14	65.90310-0149A	SCREW;PLUG M26X1.5	1		~101114			
15	06.56190-0728	RING;SEAL	1		~101114			
16	65.96301-0257	HOSE;RUBBER	1					
17	06.67020-0110	CLAMP;HOSE	2		~030113			
17	06.67020-0109	CLAMP;HOSE	2		030114~			
18	65.06301-0083	PIPE;COOLING WATER	1					
19	04.27405-1908A	HOSE;RUBBER M50X62X80	2					
20	06.67020-0109	CLAMP;HOSE	4					
21	65.96301-0258	HOSE;RUBBER	1					
22	06.67020-0106	CLAMP;HOSE	2					
23	65.06401-6044	THERMOSTAT ASS`Y	1					

Fig. 023 COOLING SYSTEM

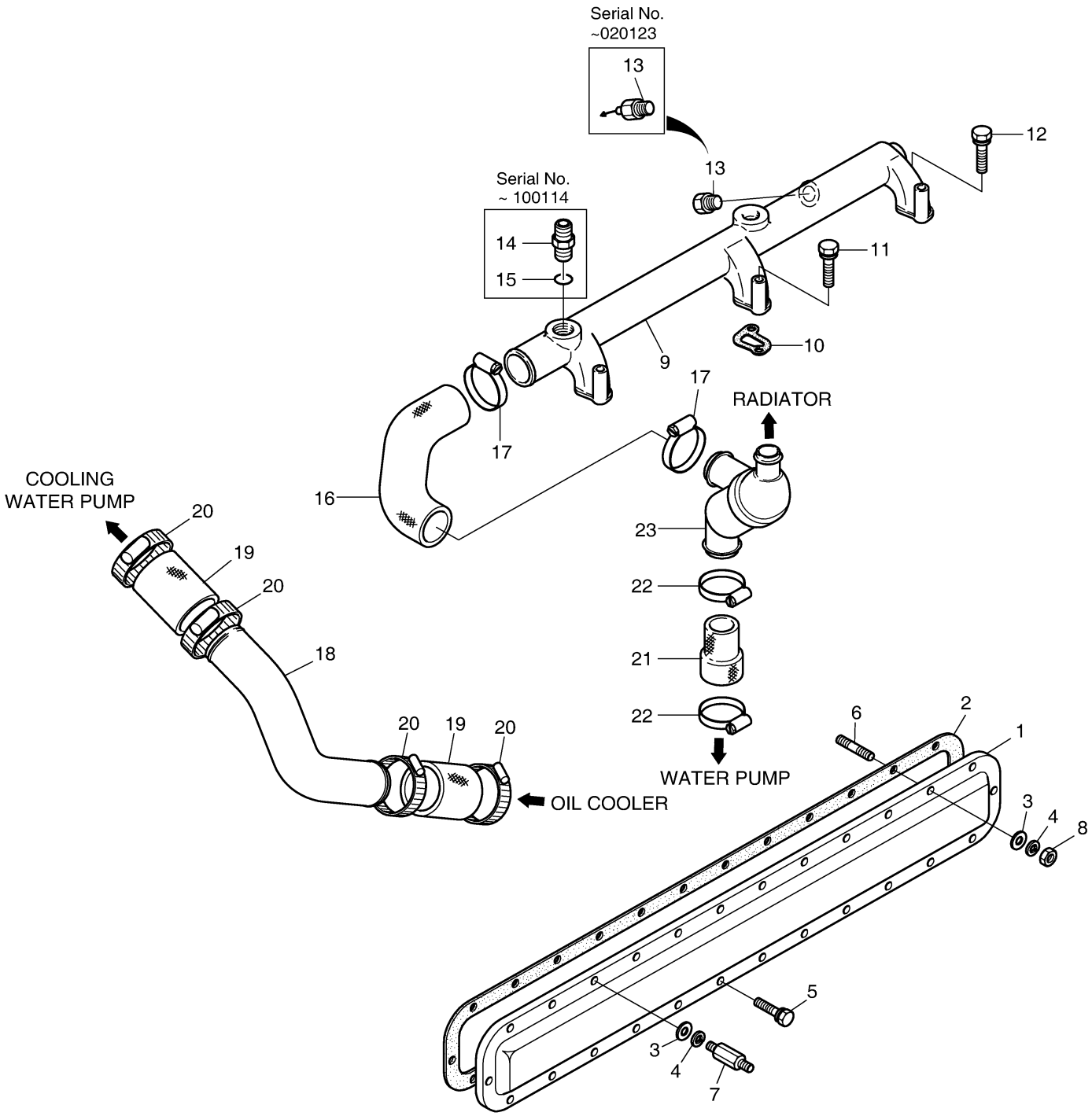

Fig. 024 INTAKE & EXHAUST MANIFOLD

Key No	Part No	Description	Qty	S.C	Serial No	ICA	Replacable	Qty
1	65.08100-6056	EXHAUST MANIFOLD ASS'Y	1		~050107	Y	65.08100-6056A	1
1	65.08100-6056A	EXHAUST MANIFOLD ASS`Y	1		050108~			
1A	65.08101-0193	MANIFOLD;EXHAUST(L.H.)	1		~050107	Y	65.08101-0193A	1
1A	65.08101-0193A	MANIFOLD;EXHAUST(L.H.)	1		050108~			
1B	65.08101-0195	MANIFOLD;EXHAUST(MIDDLE)	1		~050107	Y	65.08101-0195A	1
1B	65.08101-0195A	MANIFOLD;EXHAUST(M)	1		050108~			
1C	65.08101-0194	MANIFOLD;EXHAUST(R.H.)	1		~050107	Y	65.08101-0194A	1
1C	65.08101-0194A	MANIFOLD;EXHAUST(R.H.)	1		050108~			
1D	65.96501-0007	RING;SEAL	4					
2	65.08901A0013	GASKET;EXHAUST MANIFOLD	6					
3	65.08120-0017	SCREEN;HEAT	1					
4	06.11063-8215	NUT;HEX. M10	12		~100707	I	65.90535-0001	12
4	65.90535-0001	NUT	12		100708~			
5	06.15010-2312	WASHER;PLAIN	12		~100707			
6	65.08120-5018B	HEAT;SCREEN	1		~090211	I	111002-00001	1
6	111002-00001	SCREEN;HEAT	1		090212~			
7	65.08201-5059	MANIFOLD;INTAKE	1		~101116	I	240203-00057	1
7	240203-00051	MANIFOLD,INTAKE	1		101117~			
8	65.08902A0024	GASKET;INTAKE MANIFOLD	1					
9	06.01923-3218	BOLT ASS'Y M10X35	8					
10	06.11063-8215	NUT;HEX. M10	2					
11	06.16731-2108	WASHER;SPRING	2					
12	06.15030-0514	WASHER;PLAIN	2					
13	65.08202-5257	STAKE;INTAKE	1					
14	65.26803-7028	HEATER;AIR	1		~040303	Y	65.26803-7028A	1
14	65.26803-7028A	HEATER;AIR	1		~041213	Y	65.26803-7028B	1
14	65.26803-7028B	AIR HEATER	1		041214~			
15	65.09904-0008	GASKET;AIR HEATER	2					
16	06.01013-9128	BOLT;HEX. M8X130	4					
17	06.16731-2107	WASHER	4					
18	06.15010-2311	WASHER	4					

Fig. 024 INTAKE & EXHAUST MANIFOLD

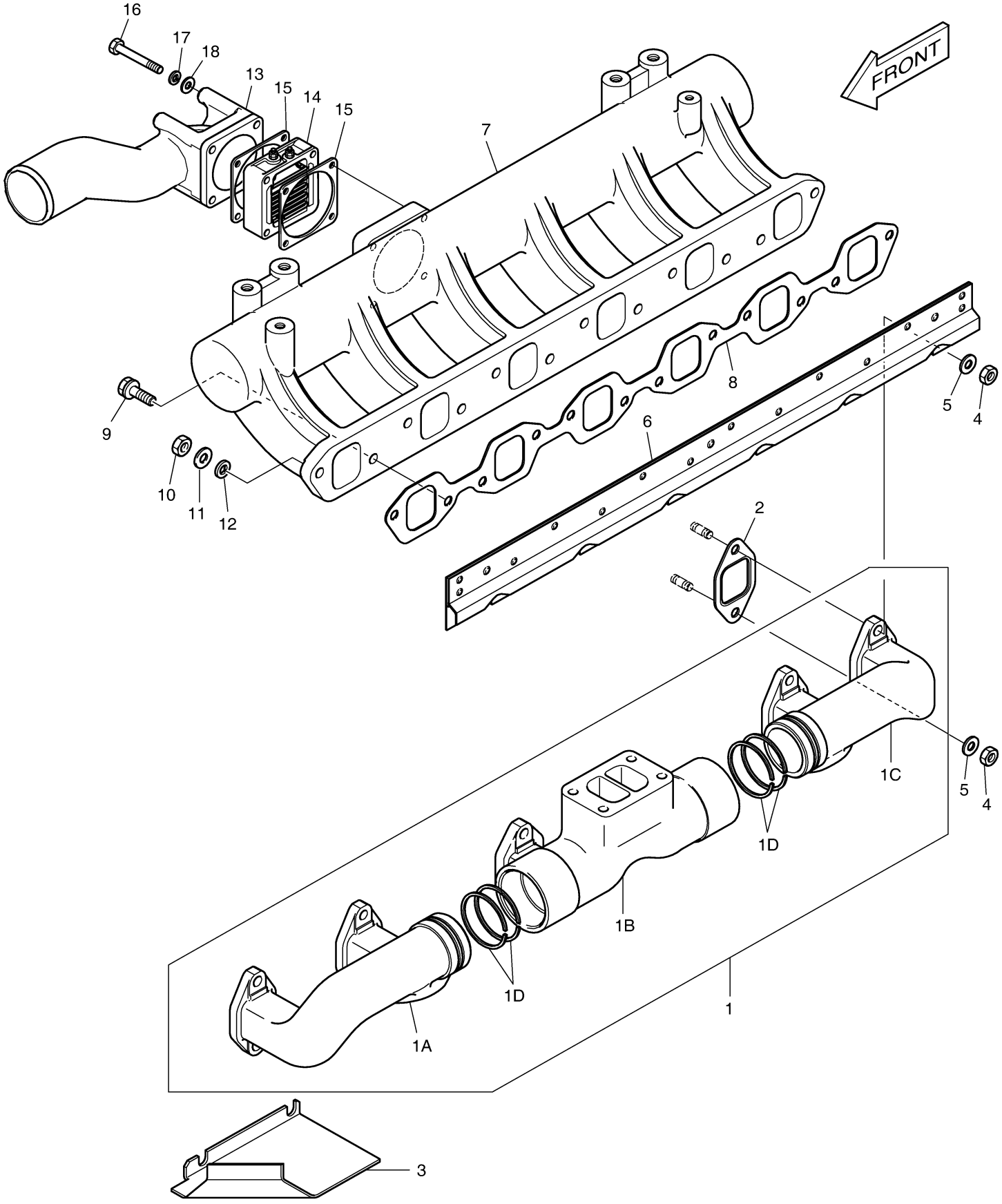

DOOSAN Doosan Infracore

Fig. 025 NOZZLE & FUEL INJECTION PIPE

Key No	Part No	Description	Qty	S.C	Serial No	ICA	Replacable	Qty
1	65.10101-7088	NOZZLE & HOLDER ASS`Y	6					
1A	65.10102-6058	NOZZLE	6					
3	65.96501-0057	RING;SEAL	6					
4	65.10301-6049B	PIPE;INJECTION	1		~090116	I	420208-00002	1
4	420208-00002	PIPE;INJECTION	1		090117~			
5	65.10301-6052B	PIPE;INJECTION	1					
6	06.01013-9221	BOLT;HEX. M10X80	2					
7	06.16731-2108	WASHER;SPRING	2					
8	06.15010-2312	WASHER;PLAIN	2					
9	65.91701-0165	SPACER	2					

Fig. 025 NOZZLE & FUEL INJECTION PIPE

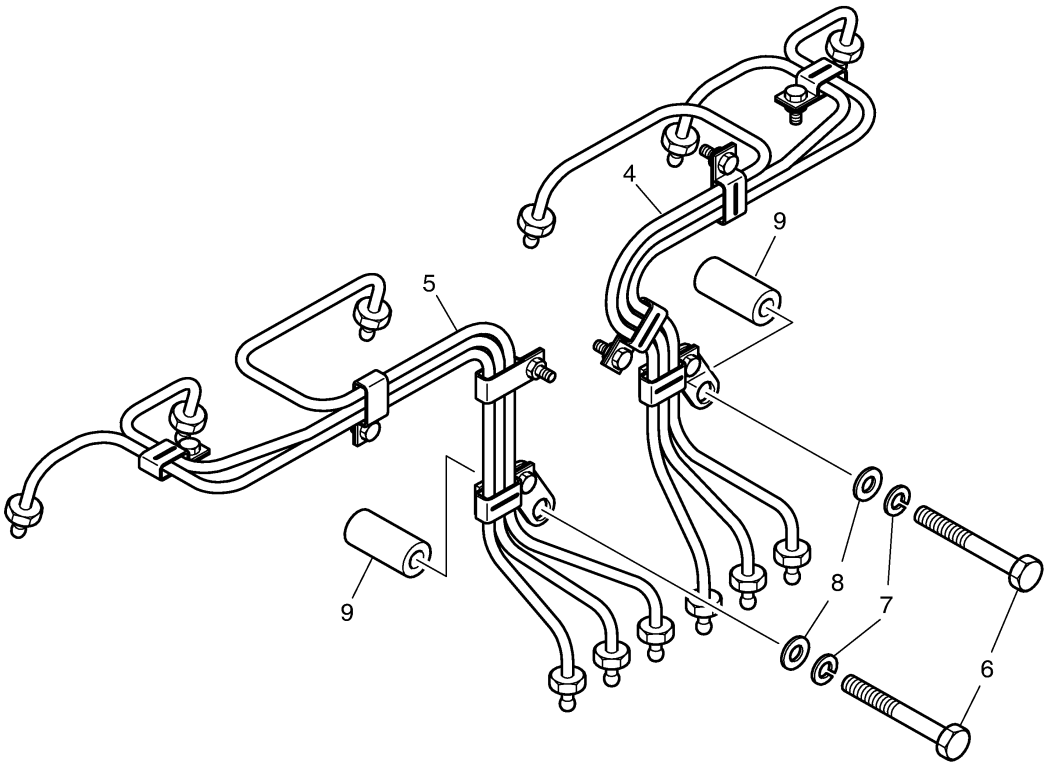

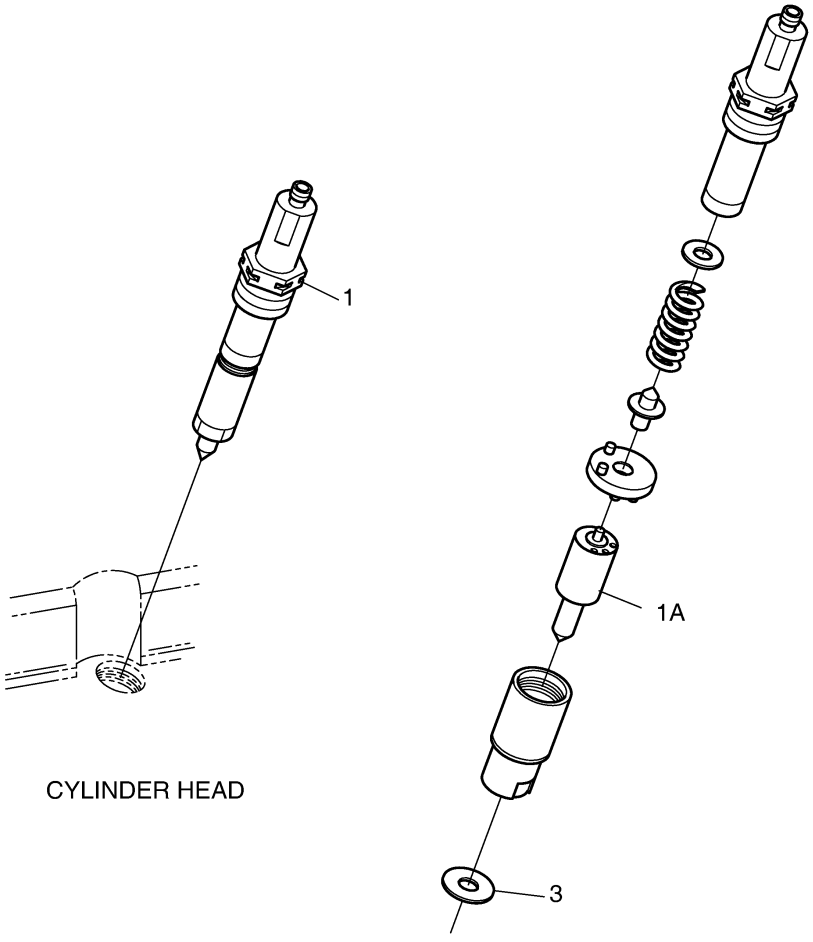

CYLINDER HEAD

Fig. 026 FUEL INJECTION PUMP

Key No	Part No	Description	Qty	S.C	Serial No	ICA	Replacable	Qty
1	65.11101-7356	PUMP;INJECTION	1		~11228	Y	65.11101-7356A	1
1	65.11101-7356A	PUMP;INJECTION	1		~070914	Y	65.11101-7356B	1
1	65.11101-7356B	PUMP;INJECTION	1		~100226	I	400912-00062	1
1	400912-00062	PUMP ASSY,INJECTION	1		100227~			
1A	105207-154A	PUMP,FEED	1					
1AA	400908-00004	HAND PRIMING PUMP	1					
1B	134153-1420	PLUNGER ASSY	6					
1C	134110-1420	VALVE;DELIVERY	6					
1D	131424-4420	VALVE;OVER FLOW	1					
1E	105663-074B	COUPLING	1					
2	06.29141-0215	KEY;WOODRUFF	1					
3	06.01923-3228	BOLT ASS'Y M10X85	4					
4	65.08301-6010A	HOSE;AIR	1					
5	65.98150-0053B	SCREW;HOLLOW	1					
6	06.56180-0716	RING;SEAL	2					
7	65.05701-5356	PIPE;OIL DELIVERY(I/P)	1					
8	06.01913-2910	BOLT;HEX M6X12	1					
9	65.98130-0029	ADAPTER	1					
10	65.98150-0027	SCREW;HOLLOW	1					
11	06.56180-0714	RING;SEAL	3					
12	65.05701-5358	OIL RETURN PIPE ASS`Y(I/P)	1					
13	65.90420-0012A	SCREW;HOLLOW M16X2	1					
14	06.56190-0708	RING;SEAL	2					
15	65.11401-0046	BRACKET	1		~030314	Y	65.11401-0046A	1
15	65.11401-0046A	BRACKET	1		030315~			
16	06.22022-1112	PIN;DOWEL	2					
17	65.11405-0001	SHIM T=0.10	1					
17	65.11405-0002	SHIM T=0.15	1					
17	65.11405-0003	SHIM T=0.20	1					
17	65.11405-0004	SHIM T=0.50	1					
18	65.11405-0011	SHIM T=0.10	4		~030328	Y	65.11405-0009	4
18	65.11405-0009	SHIM T=0.10mm	4		030329~			
18	65.11405-0012	SHIM T=0.30	4		~030328	Y	65.11405-0010	4
18	65.11405-0010	SHIM T=0.30mm	4		030329~			
19	06.01913-3234	BOLT ASS`Y M10X130	3					
20	06.01013-9226	BOLT;HEX. M10X1.5X110	1					

Key No	Part No	Description	Qty	S.C	Serial No	ICA	Replacable	Qty
21	06.16731-2108	WASHER;SPRING	1					
22	06.01913-3229	BOLT ASS`Y M10X90	1					

Fig. 026 FUEL INJECTION PUMP

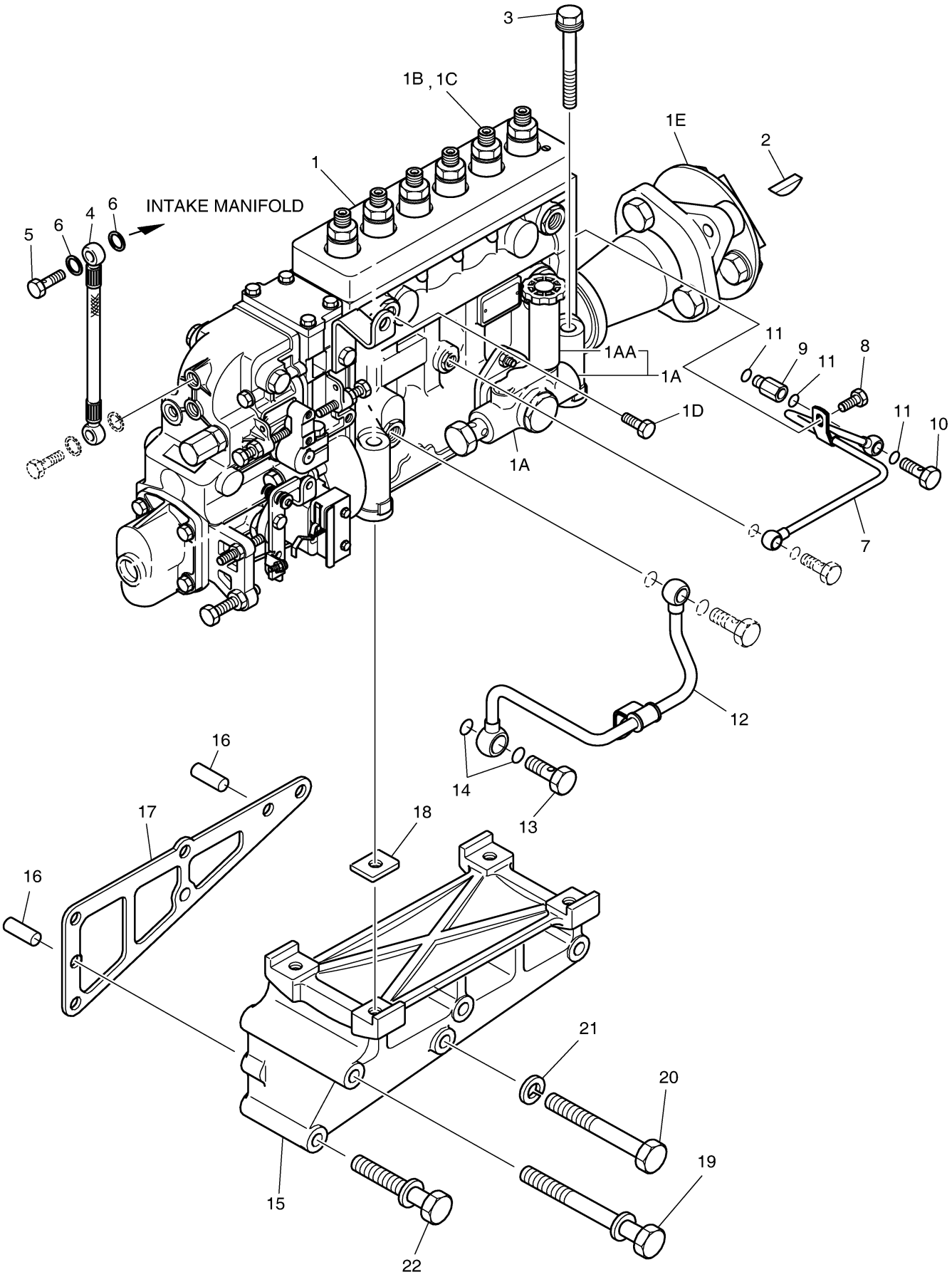

DOOSAN Doosan Infracore

Fig. 027 FUEL INJECTION PUMP DRIVE

Key No	Part No	Description	Qty	S.C	Serial No	ICA	Replacable	Qty
1	65.11301-7008A	INJECTION PUMP DRIVE ASS	1		~011213	Y	65.11301-7008B	1
1	65.11301-7008B	INJECTION PUMP DRIVE ASS	1		~030526	Y	65.11301-7008C	1
1	65.11301-7008C	INJECTION PUMP DRIVE ASS'Y	1		~070921	Y	65.11301-7008D	1
1	65.11301-7008D	INJECTION PUMP DRIVE ASSY	1		070922~			
1A	65.11309-0005A	HOUSING;INJECTION PUMP	1		~011213			
1A	65.11309-0005B	HOUSING;INJECTION PUMP	1		~030526			
1A	65.11309-0005C	HOUSING;INJ PUMP DRIVE	1		030527~			
1B	06.32092-0307	BEARING;TAPER ROLLER	2					
1C	65.01510-0039	SEAL;OIL	1					
1D	65.11308-0001	SHIM 0.50mm	1	R				
1D	65.11308-0002	SHIM 0.20mm	1	R				
1D	65.11308-0003	SHIM 0.15mm	1	R				
1D	65.11308-0004	SHIM 0.10mm	1	R				
1E	65.11312-0006A	COVER	1	D				
1F	06.01913-3114	BOLT ASS'Y M8X22	3					
1G	65.11302-0010A	SHAFT;INJECTION PUMP DRIVE	1					
1H	06.29141-0215	KEY;WOODRUFF	1					
1I	65.11301-0009	GEAR;INJECTION PUMP DRIVE	1					
1J	06.11250-4329	NUT;HEX M24X1.5	1					
1K	06.16050-0316	WASHER;LOCK	1					
1L	65.98112-0027	FLANGE	1					
1M	06.01913-2910	BOLT;HEX M6X12	2					
2	65.11902-0018A	GASKET;MOUNTING FLANGE	1					
3	06.22220-1110	PIN;SPRING	1					
4	06.15010-2312	WASHER;PLAIN	7					
5	06.16731-2108	WASHER;SPRING	7					
6	06.11063-8215	NUT;HEX. M10	7					

Fig. 027 FUEL INJECTION PUMP DRIVE

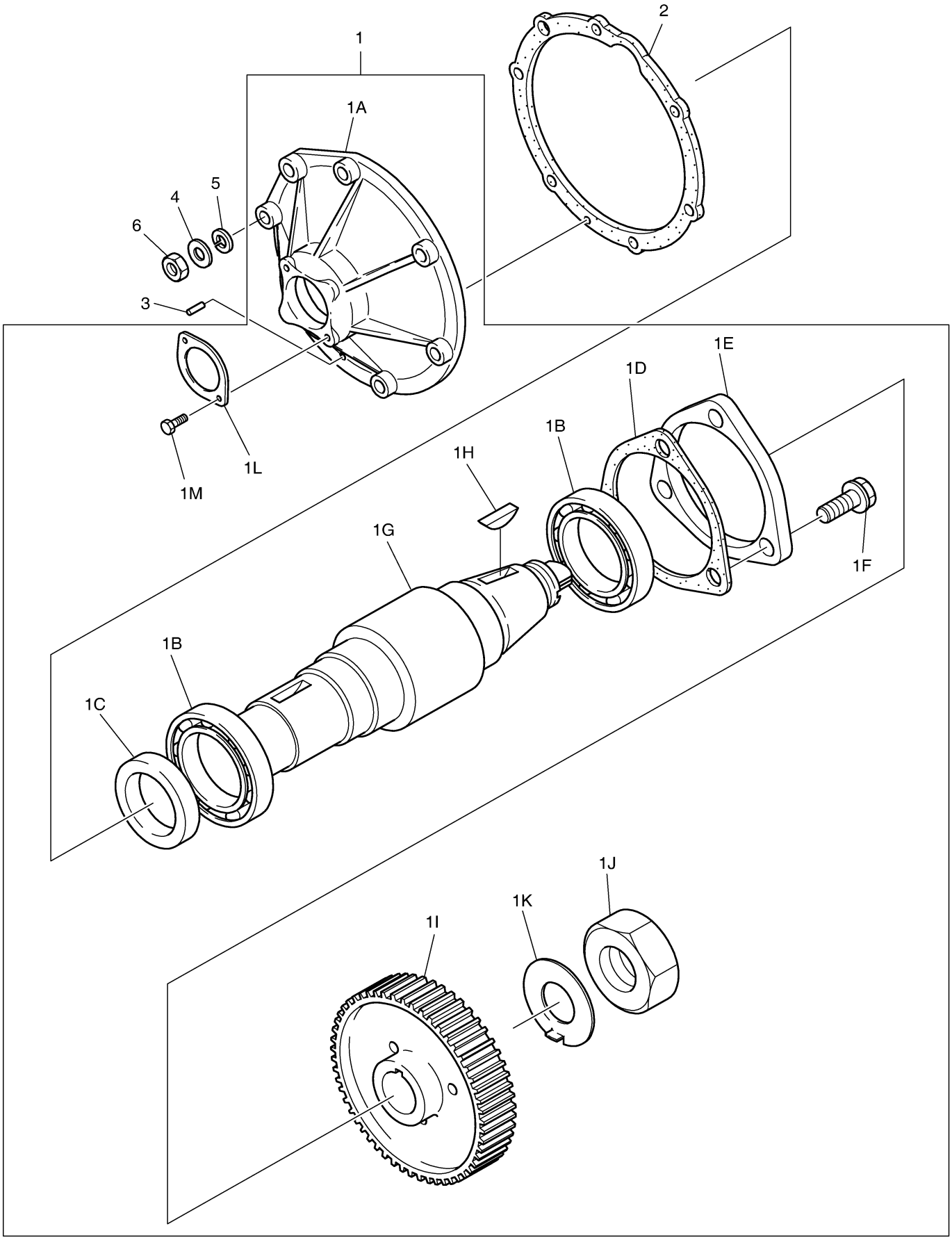

Fig. 028 FUEL FILTER

Key No	Part No	Description	Qty	S.C	Serial No	ICA	Replacable	Qty
1	65.96341-0100	HOSE;FUEL	1		~081030	Y	65.96341-0140	1
1	65.96341-0140	HOSE,FUEL	1		~101129			
1	420103-00108	HOSE ASSY,FUEL;DE08TIS	1		101130~			
2	65.96341-0100	HOSE;FUEL	1		~081030	Y	65.96341-0140	1
2	65.96341-0140	HOSE,FUEL	1		~101129			
2	420103-00109	HOSE ASSY,FUEL;DE08TIS	1		101130~			
3	65.90420-0004A	SCREW;HOLLOW	2		~060530	Y	06.78144-2204	2
3	06.78144-2204	SCREW;HOLLOW	2		~101129			
3	65.98130-0229	ADAPTER	2		101130~			
4	06.56190-0706	SEAL RING	4		~101129	I	65.96507-0043	4
4	65.96507-0043	RING;SEAL	4		101130~			
5	65.97460-0001	BAND;TENSION	1					
6	65.12301-5095D	PIPE;FUEL	1					
7	65.98150-0042A	SCREW;HOLLOW	6					
8	06.56180-0712	RING;SEAL	12					
9	65.96330-0129	TUBE;FUEL OVER FLOW	1					
10	65.98101-0008	DOUBLE BANJO UNION	1					
11	65.97445-0001	CLAMP;SPRING	2					
12	65.12301-5022	PIPE;FUEL(RETURN)	1					
13	65.12501-7071D	FUEL FILTER ASS'Y	1		~010903	Y	65.12501-7023	1
13	65.12501-7023	FUEL FILTER ASS'Y	1		~050522	Y	65.12501-7023A	1
13	65.12501-7023A	FUEL FILTER ASS'Y	1		~070911	Y	65.12501-7023B	1
13	65.12501-7023B	FUEL FILTER ASS`Y	1		070912~			
13A	65.12504-5013A	HEAD;FUEL FILTER	1		~050522	Y	65.12504-5013B	1
13A	65.12504-5013B	HEAD;FUEL FILTER	1		050523~			
13B	65.12503-5011D	CARTRIDGE;FUEL FILTER	1		~010903	Y	65.12503-5016	1
13B	65.12503-5016	FILTER;FUEL	1		~050522	Y	65.12503-5016A	1
13B	65.12503-5016A	FILTER;FUEL	1		~070911	Y	65.12503-5016B	1
13B	65.12503-5016B	ELEMENT;E/G FUEL FILTER	1		070912~			
13C	65.90310-0143	SCREW;PLUG	1					
13D	06.56180-0716	RING;SEAL	1					
14	06.01953-3318	BOLT ASS'Y M12X1.5X35	2		~101116			
14	06.01953-3217	BOLT ASS'Y M10X1.25X30	2		101117~			

Fig. 028 FUEL FILTER

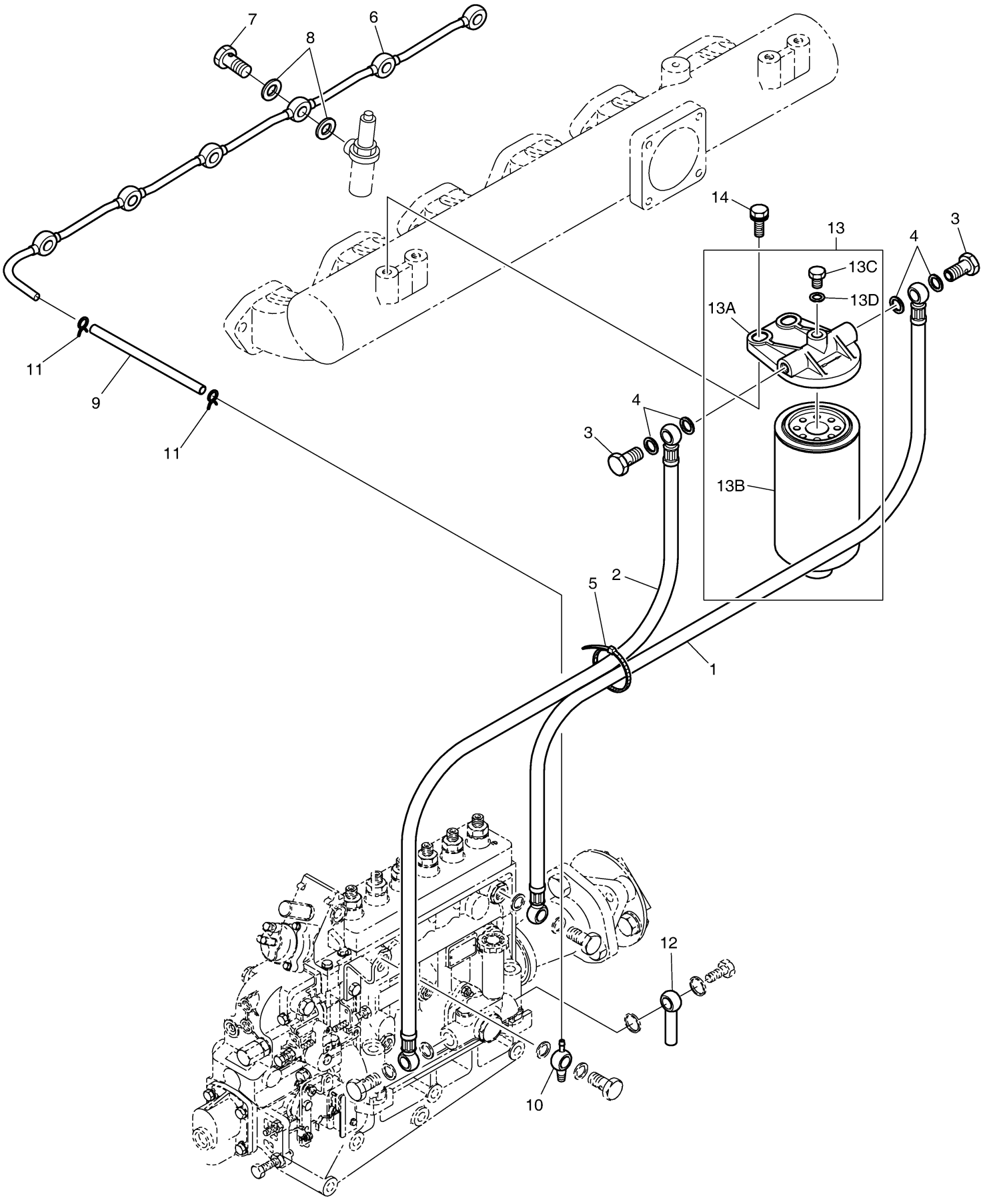

DOOSAN Doosan Infracore

Fig. 029 ALTERNATOR & STARTER

Key No	Part No	Description	Qty	S.C	Serial No	ICA	Replacable	Qty
1	65.19102-5051	BRACKET;ALTERNATOR	1		~030319	T	65.19102-00084	1
1			-				06.01914-3320	1
1			-				06.01914-3219	2
1	65.19102-0084	BRACKET;ALTERNATOR	1		~040227	Y	65.19102-0084A	1
1	65.19102-0084A	BRACKET;ALTERNATOR	1		040228~			
2	06.06115-8306	BOLT;STUD M12X1.5	1		~030319			
2	06.01914-3320	BOLT ASS'Y M12X45	1		030320~			
3	06.11063-9216	NUT;HEX. M12X1.5	1		~030319			
4	06.16731-2109	WASHER;SPRING	1		~030319			
5	06.01914-3215	BOLT ASS'Y M10X25	2		~030319			
5	06.01914-3219	BOLT ASS`Y M10	2		030320~			
6	65.19103-6012	EYE BOLT ASS`Y	1		~060720	Y	65.19103-6012A	1
6	65.19103-6012A	EYE BOLT ASS`Y	1		~100506	I	65.19103-6010A	1
6	65.19103-6010A	EYE BOLT ASS'Y	1		100507~			
11	06.01943-3319	BOLT ASS'Y M12X1.5X40	1					
12	65.96801-0128	V-BELT;POLY	1		~040401	Y	65.96801-0128A	1
12	65.96801-0128A	V-BELT;POLY	1		040402~			
13	65.19103-5040	SUPPORT;ALTERNATOR	1					
14	06.01913-3222	BOLT;HEX. M10X1.5X55	2					
15	65.26201-7049A	STARTER	1		~071230			
15	65.26201-7070D	STARTER	1		~101105			
15	65.26201-7088A	STARTER	1		~130806	I	300516-00057A	1
15	300516-00057A	STARTER ASSY	1		~150421	Y	300516-00057B	1
15	300516-00057B	STARTER ASSY	1		150422~			
15A	301206-00011	RELAY,STARTER	1					
16	06.06225-0808	BOLT;STUD M10X30	3					
17	06.11063-8215	NUT;HEX. M10	3					
18	06.16731-2108	WASHER;SPRING	3					

Fig. 029 ALTERNATOR & STARTER

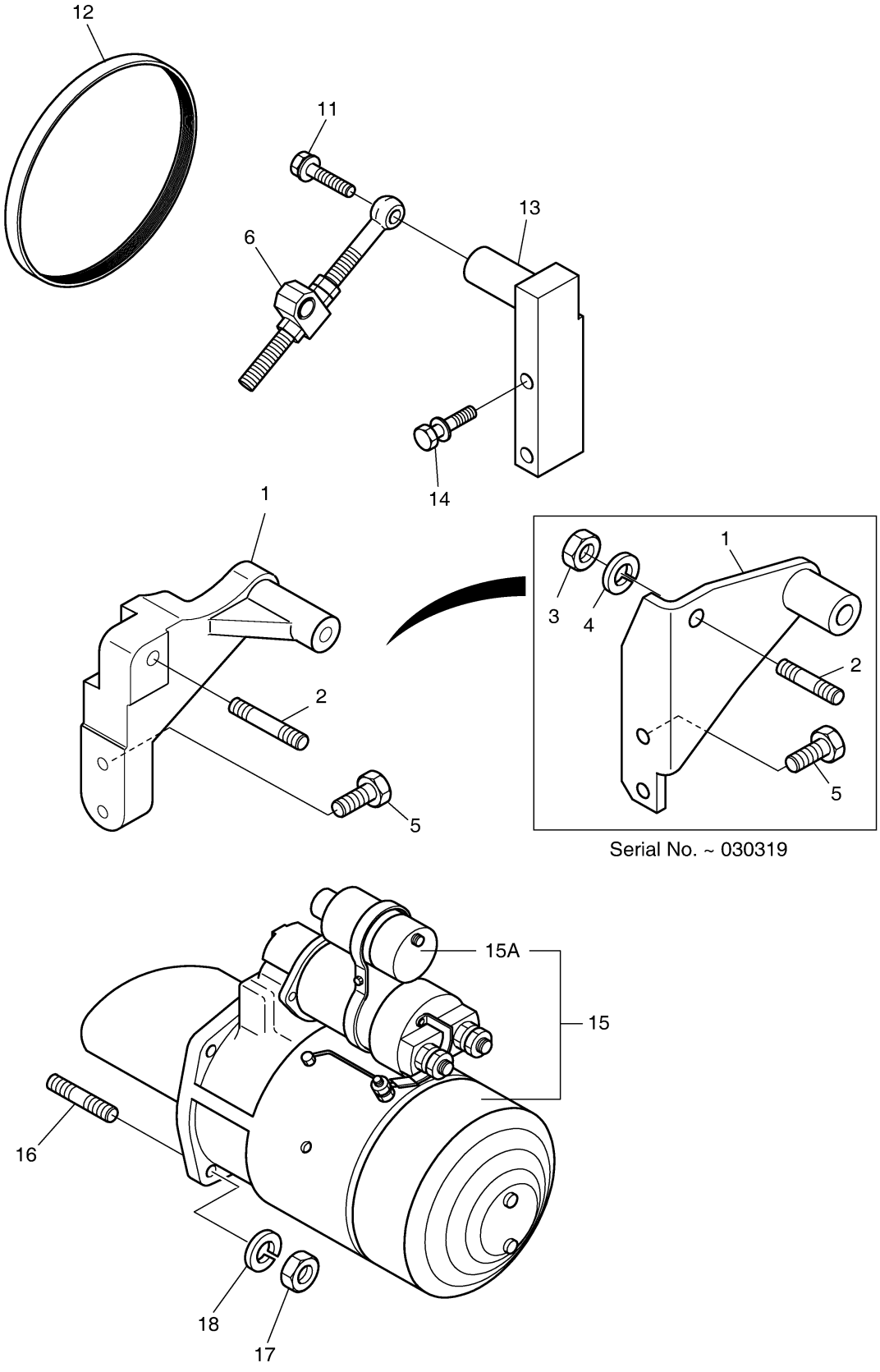

Serial No. ~ 030319

Fig. 030 ENGINE MOUNTING

Key No	Part No	Description	Qty	S.C	Serial No	ICA	Replacable	Qty
1	65.41530-0159	BRACKET;FRONT MOUNTING	1					
2	06.06175-8309	BOLT;STUD M12X1.5X35	1					
3	06.16731-2109	WASHER;SPRING	1					
4	06.11064-9216	NUT;HEX. M12X1.5	1					
5	06.01944-3318	BOLT;HEX	2		~060428	I	65.90001-0096	2
5	65.90001-0096	BOLT;HEX.	2		060429~			
6	65.41530-0160	BRACKET;FRONT MOUNTING	1					
7	06.01944-3318	BOLT;HEX	3		~060428	I	65.90001-0096	3
7	65.90001-0096	BOLT;HEX.	3		060429~			

Fig. 030 ENGINE MOUNTING

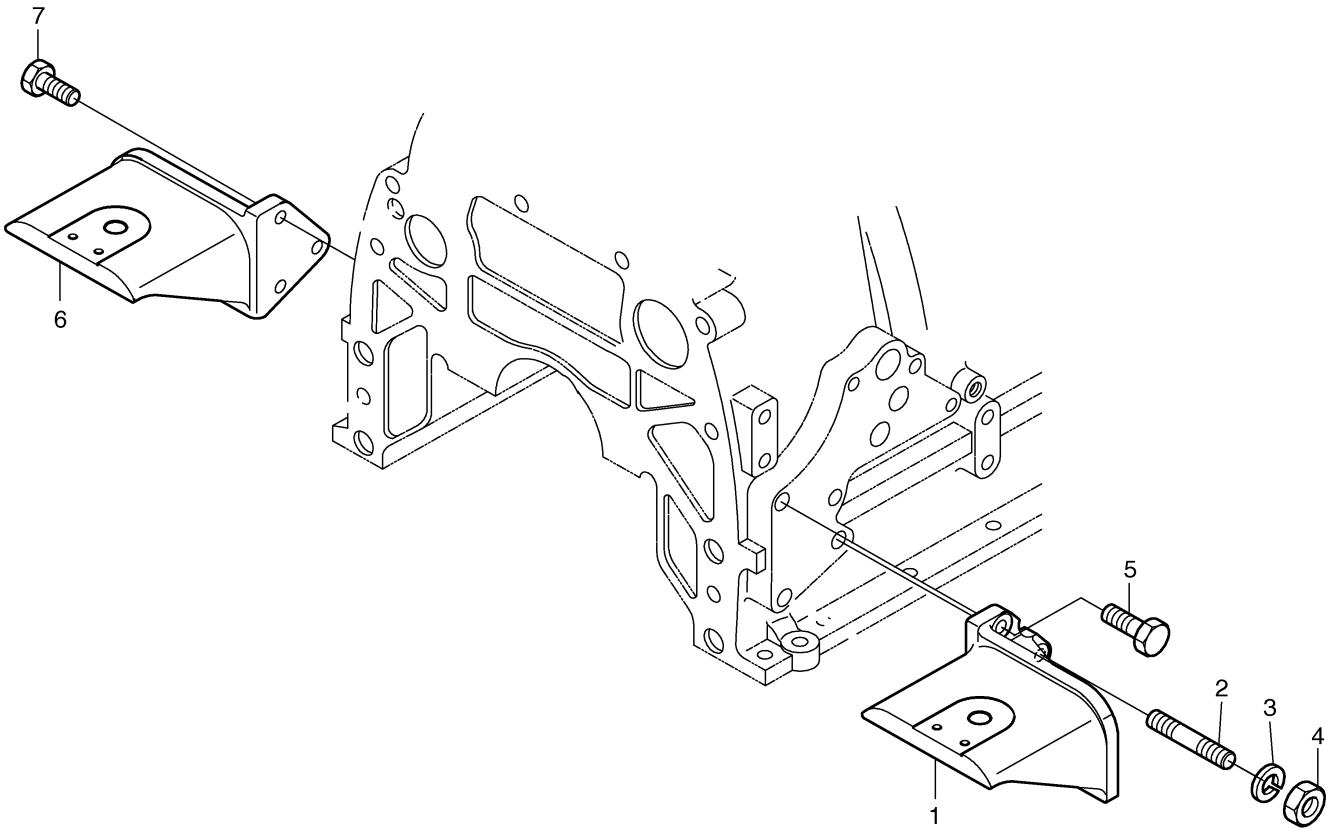

Fig. 031 TURBO CHARGER & OIL PIPE

Key No	Part No	Description	Qty	S.C	Serial No	ICA	Replacable	Qty
1	65.09100-7072	TURBOCHARGER ASS'Y	1		~020108			
1	65.09100-7082	TURBOCHARGER ASS`Y	1		020109~			
2	65.90201-0073	BOLT;STUD	4					
3	65.09901-0018A	GASKET	1					
5	06.11024-9202	NUT M10X1.25	4		~021229	I	65.90535-0001	4
5	65.90535-0001	NUT	4		021230~			
6	65.90201-0072	BOLT;STUD M10X1.5X30	6					
7	65.09901-0012	GASKET	1					
8	06.16731-2108	WASHER;SPRING	6					
9	06.11063-8215	NUT;HEX. M10	6					
10	65.05701-5345	PIPE;OIL	1		~020108			
10	65.05701-5453	PIPE;OIL	1		020109~			
11	06.15010-2311	WASHER	2					
12	06.16731-2107	WASHER	2					
13	06.11063-8214	NUT	2					
14	06.78144-2403	HOLLOW SCREW M12X1.5	2		~020108			
14	06.78144-2403	HOLLOW SCREW M12X1.5	1		020109~			
15	06.56190-0704	RING;SEAL	4					
16	65.98131-5003	ADAPTER FLANGE ASS`Y	1					
17	65.96601-0046A	GASKET;OIL PIPE ADAPTER	1		~060613	Y	65.96601-0046B	1
17	65.96601-0046B	GASKET;OIL PIPE ADAPTER	1		060614~			
18	06.01913-3114	BOLT ASS'Y M8X22	2					
19	65.05701-5335	PIPE;OIL	1					
20	65.96601-0045A	GASKET	2		~060530	Y	65.96601-0067	2
20	65.96601-0067	GASKET;T/C OIL RETURN	2		060531~			
21	65.05740-5001A	BRACKET	1					
22	06.01923-3111	BOLT, M8X16	1		~010922	I	65.90020-0068	1
22	65.90020-0068	BOLT ASS'Y M8X16	1		010923~			
23	06.01923-3217	BOLT ASS'Y M10X30	1					
24	65.05701-5336A	OIL PIPE ASS`Y(T/C-C/B)	1					
26	06.01913-3112	BOLT ASS'Y M8X18	2		~010922			
26	06.01913-3114	BOLT ASS'Y M8X22	2		010923~			
27	06.01913-3113	BOLT ASS'Y M8X20	1					
28	65.90201-0075	BOLT;SPACER	1					
29	06.16731-2107	WASHER	1					
30	06.15010-2311	WASHER	1					

Key No	Part No	Description	Qty	S.C	Serial No	ICA	Replacable	Qty
31	65.96301-0327	HOSE;RUBBER	1		~040216	Y	65.96301-0327A	1
31	65.96301-0327A	HOSE;RUBBER	1		040217~			
32	06.67020-0105	CLAMP	2					
33	65.09411-5041	INLET	1		~020108			
33	65.09411-5053	INLET	1		020109~			
34	65.08220-0002A	PIPE;CONNECTION	1		~020108			
34	65.96301-0279	HOSE;RUBBER	1		020109~			
35	65.96501-0058	O-RING	2		~020108			
35	06.67020-0109	CLAMP;HOSE	2		020109~			
36	65.09440-0010	BRACKET	1					
37	06.01923-3215	BOLT ASS'Y M10X25	2					
38	65.98150-0002	ADAPTER	1		020109~			
39	65.90320-0022	PLUG SCREW	1		020109~			

Fig. 031 TURBO CHARGER & OIL PIPE

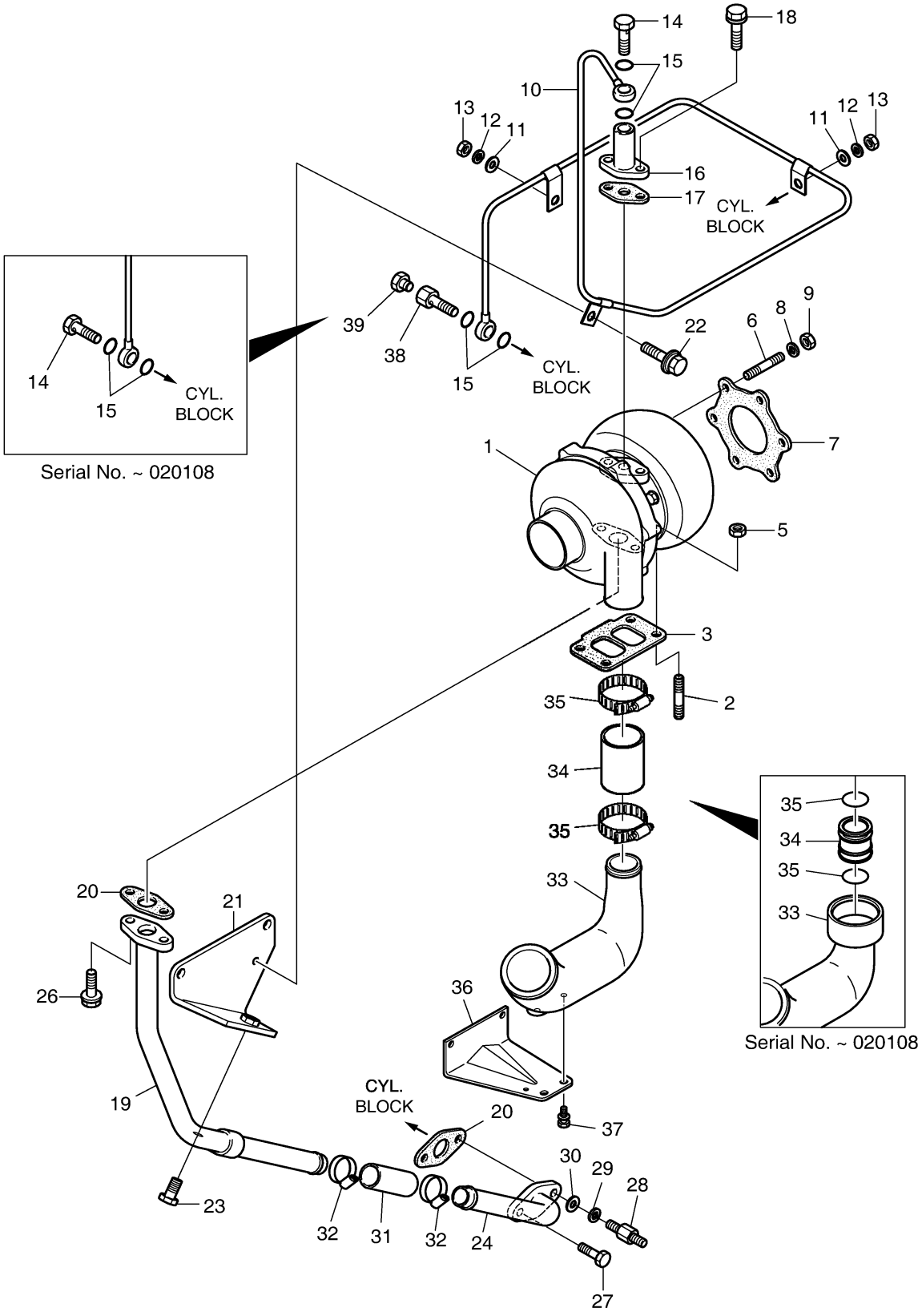

Fig. 032 OVER HAUL GASKET KIT-TOP

Key No	Part No	Description	Qty	S.C	Serial No	ICA	Replacable	Qty
-	65.99605-8025	OVER HAUL GASKET KIT-TOP	1					
1	65.03901-0058	GASKET;CYLINDER HEAD	3		~050629			
1	65.03901-0070A	GASKET;CYLINDER HEAD	3		050630~			
2	65.03905-0022	GASKET;CYLINDER HEAD COVER	3					
3	65.03905-0023A	GASKET;CYLINDER HEAD COVER	6					
4	65.96501-0033B	O-RING	1					
5	65.04902-0013	SEAL;VALVE STEAM	12					
6	65.06903A0011	GASKET;COOLING WATER PIPE	3					
7	65.08901A0013	GASKET;EXHAUST MANIFOLD	6					
8	65.08902A0024	GASKET;INTAKE MANIFOLD	1					
9	65.09904-0008	GASKET;AIR HEATER	2					
10	65.96501-0057	RING;SEAL	6					
11	06.56180-0712	RING;SEAL	12					
13	65.09901-0018A	GASKET	1					
14	65.09901-0012	GASKET	1					
15	65.96601-0046B	GASKET;OIL PIPE ADAPTER	1					
16	65.96601-0045A	GASKET	1		~060530	Y	65.96601-0067	1
16	65.96601-0067	GASKET;T/C OIL RETURN	1		060531~			

Fig. 032 OVER HAUL GASKET KIT-TOP

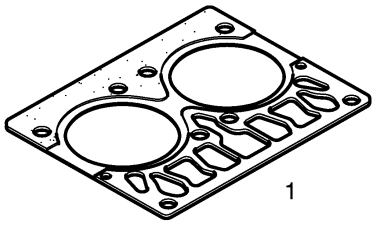
1

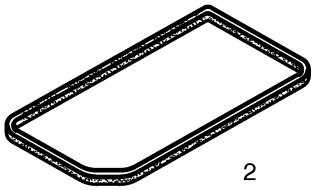
2


3


4


5


6


7

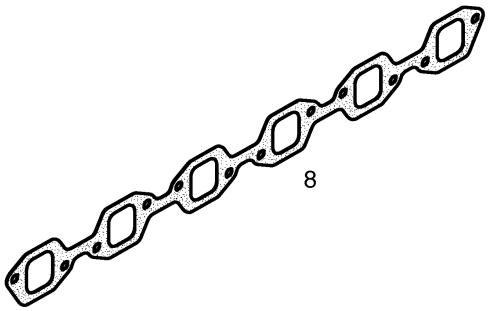
8

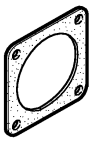
9


10


11


13

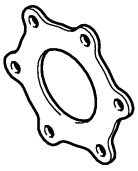
14


15


16

Fig. 033 OVER HAUL GASKET KIT-ALL

Key No	Part No	Description	Qty	S.C	Serial No	ICA	Replacable	Qty
-	65.99601-8034	OVER HAUL GASKET KIT-ALL	1					
1	65.96601A0042	GASKET;END COVER	1					
2	65.01903C0021	GASKET;TIMING GEAR CASE	1					
3	65.01903B0113	GASKET;T.G.C COVER	1					
4	65.01510-0157	SEAL;OIL(FRONT)	1					
5	65.01903B0029	GASKET;COVER	1					
6	65.27901-0005B	GASKET	1					
7	65.01510-0037	SEAL;OIL REAR	1					
8	65.01903A0178	GASKET;FLYWHEEL HOUSING	1					
9	65.01907A0002	GASKET;WATER CHAMBER	1					
10	65.03901-0058	GASKET;CYLINDER HEAD	3		~050629			
10	65.03901-0070A	GASKET;CYLINDER HEAD	3		050630~			
11	65.03905-0022	GASKET;CYLINDER HEAD COVER	3					
12	65.03905-0023A	GASKET;CYLINDER HEAD COVER	6					
13	65.96501-0032B	O-RING;BREATHER	1					
14	65.04902-0013	SEAL;VALVE STEAM	12					
15	65.05901A0052	GASKET;OIL FILTER	1					
16	65.05902A0011	GASKET;OIL COOLER COVER	1					
17	65.96601-0347	GASKET;OIL COOLER ASS`Y	1					
18	65.05904A0016	GASKET;OIL PAN	1					
19	65.96601-0050	GASKET;OIL PIPE	2					
20	65.05903B0003	GASKET;CONNECTING FLANGE	1					
21	65.96601-0050	GASKET;OIL PIPE	2					
22	65.96601B0019	GASKET;OIL SUCTION PIPE	1					
23	65.06903A0011	GASKET;COOLING WATER PIPE	3					
24	65.06901A0020	GASKET;WATER PUMP	1					
25	65.08901A0013	GASKET;EXHAUST MANIFOLD	6					
26	65.08902A0024	GASKET;INTAKE MANIFOLD	1					
27	65.09904-0008	GASKET;AIR HEATER	2					
28	65.96501-0057	RING;SEAL	6					
29	65.11902-0018A	GASKET;MOUNTING FLANGE	1					
30	06.56180-0712	RING;SEAL	12					
31	65.54903A0013	GASKET	1					
34	65.09901-0018A	GASKET	1					
35	65.09901-0012	GASKET	1					
36	65.96601-0046B	GASKET;OIL PIPE ADAPTER	1					

Key No	Part No	Description	Qty	S.C	Serial No	ICA	Replacable	Qty
37	65.96601-0045A	GASKET	1		~060530	Y	65.96601-0067	1
37	65.96601-0067	GASKET;T/C OIL RETURN	1		060531~			

Fig. 033 OVER HAUL GASKET KIT-ALL

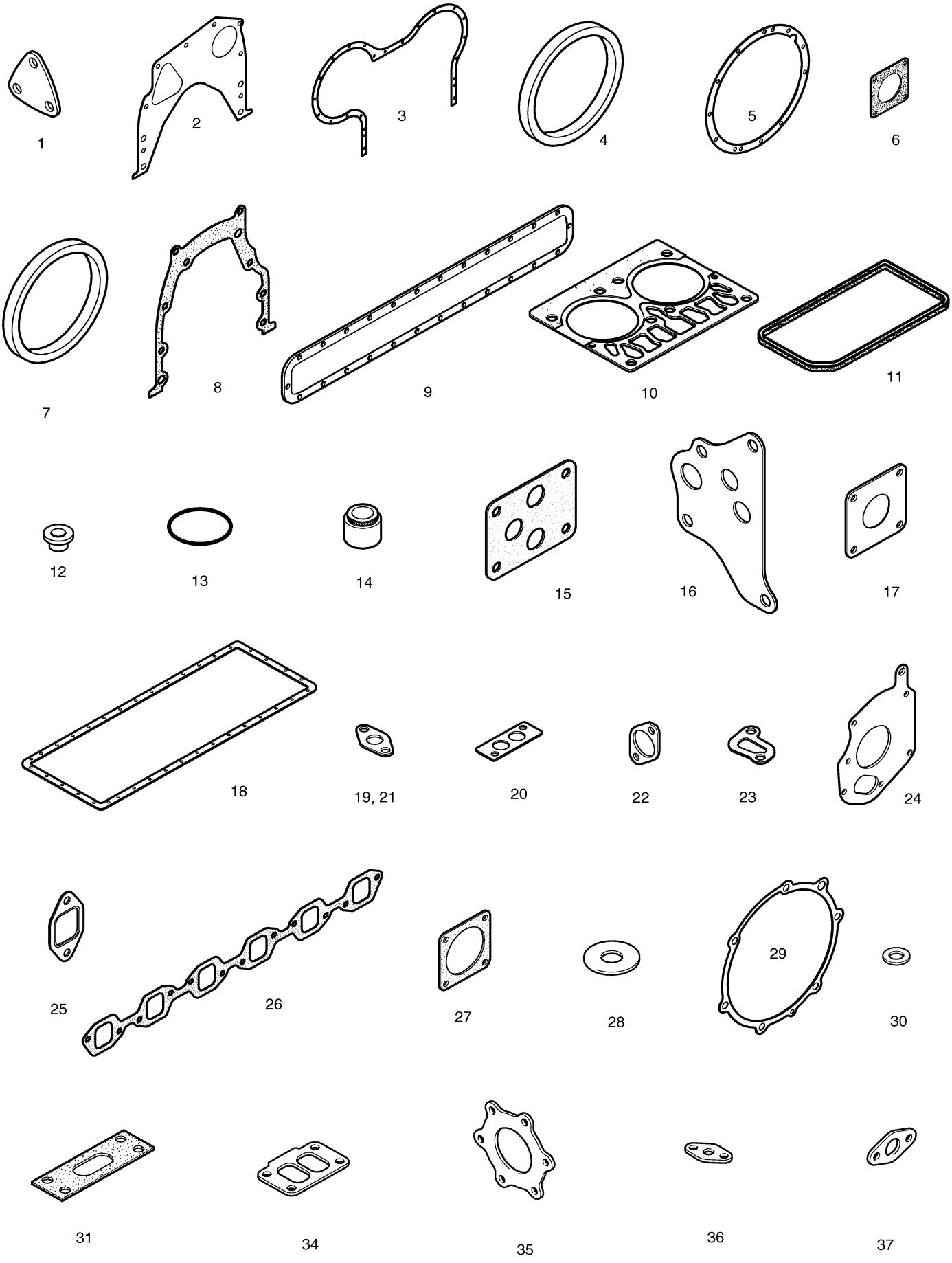

DOOSAN Doosan Infracore

Fig. 1100 MAIN FRAME

Key No	Part No	Description	Qty	S.C	Serial No	ICA	Replacable	Qty
-	600-00068E	MAIN FRAME ASS'Y	-	D	1001~4940			
-	160609-00017	FRAME ASSY;MAIN	-	D	4941~			
1	603-00121A	FRAME;MAIN	1		1001~3784	I	603-00121B	1
1	603-00121B	FRAME;MAIN	1		3785~4076	I	603-00121C	1
1	603-00121C	FRAME;MAIN	1		4077~4166	I	603-00121E	1
1	603-00121E	FRAME;MAIN	1		4167~4529	I	603-00121G	1
1	603-00121G	FRAME;MAIN	1		4530~			
2	624-00032H	WEIGHT;COUNTER	1		1001~4940	Y	160702-00041	1
2	160702-00041	WEIGHT,COUNTER;4.9TON	1		4941~			
3	2120-4010	BOLT	4		1001~2309	I	2120-4010A	4
3	2120-4010A	BOLT	4		2310~			
4	114-00055	WASHER	4					
5	S0775861	BOLT M24X2.0X125	35		1001~2309	I	S0775866	35
5	S0775866	BOLT	35		2310~			
6	2123-1107D4	PIN;KNOCK	2					
7	2160-9010	COVER;RUBBER	1					
8	2195-2786A	BRACKET	1					
9	S0515253	BOLT	3					
10	S5102703	WASHER	3					
11	2403-1002	PLATE	1					
12	2180-1017A	PACKING	1					
13	S0511853	BOLT	2					
14	S5102603	WASHER	2					
15	2160-1201D24	BUSHING;RUBBER	1					
16	2160-1201D7	BUSHING,RUBBER	1					
17	2160-1004D34	BUSHING,RUBBER	1					
18	2160-1004D42	BUSHING,RUBBER	1					
19	621-01579A	COVER;LAMP	1					
20	2114-1831A	WASHER	35					
21	S0521961	BOLT M16X2.0X65	2					
22	S4012933	NUT	2					
23	2160-9034	CAP	2					
24	621-01527A	COVER;LAMP	1					
25	S0508853	BOLT	8					
26	S5010513	WASHER	8					

Fig. 1100 MAIN FRAME

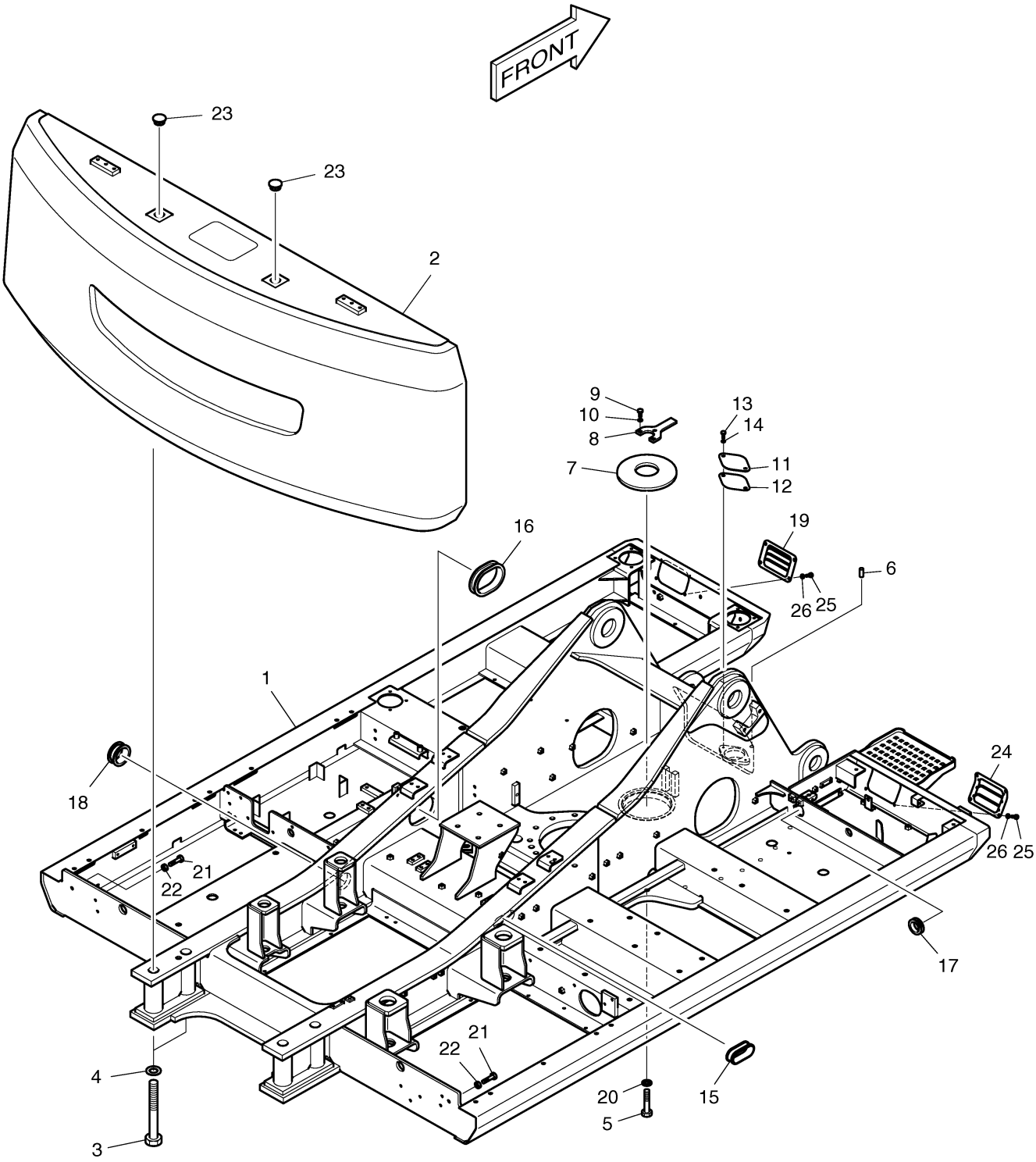

Fig. 1110 ENGINE MOUNTING

Key No	Part No	Description	Qty	S.C	Serial No	ICA	Replacable	Qty
-	201-00080B	ENGINE ASS'Y	-	D				
1	201-00079	ENGINE ASS'Y(TIER-II)	1					
1	201-00149	ENGINE ASS'Y(TIER-I)	1					
5	2114-9012A	WASHER	4					
10	2114-1816A	WASHER	4					
28	S5010713	WASHER	2					
29	195-01415A	BRACKET	2		1001~3273	I	K1008719	2
29	K1008719	BRACKET	2		3274~3877	I	K1008719A	2
29	K1008719A	BRACKET	2		3878~			
31	S0515253	BOLT	8					
32	S5102703	WASHER	10					
33	161-00299	MOUNT:E/G	4		1001~3768	I	161-00553	4
33	161-00553	RUBBER	4		3769~			
34	161-00298	RUBBER:E/G MOUNTING	4					
36	2114-1929	WASHER	2					
37	S0771461	BOLT M20X1.5X130	2		1001~1091			
37	S0771466	BOLT	2		1092~			
38	121-00066	NUT:LOCK	2					
40	S0766261	BOLT M16X1.5X100	2		1001~1091			
40	S0766266	BOLT M16X1.5X100	2		1092~			
41	121-00035	NUT:LOCK M16X1.5	2					
42	S0560553	BOLT M12X1.75X40	2					
43	195-01494	BRACKET:FUEL FILTER	1					
44	114-00417	WASHER:BUMP	2					
51	2120-2196D10	BOLT:SET M12X1.75X25	2					
56	2123-1066A	PIN	2		3878~			

Fig. 1110 ENGINE MOUNTING

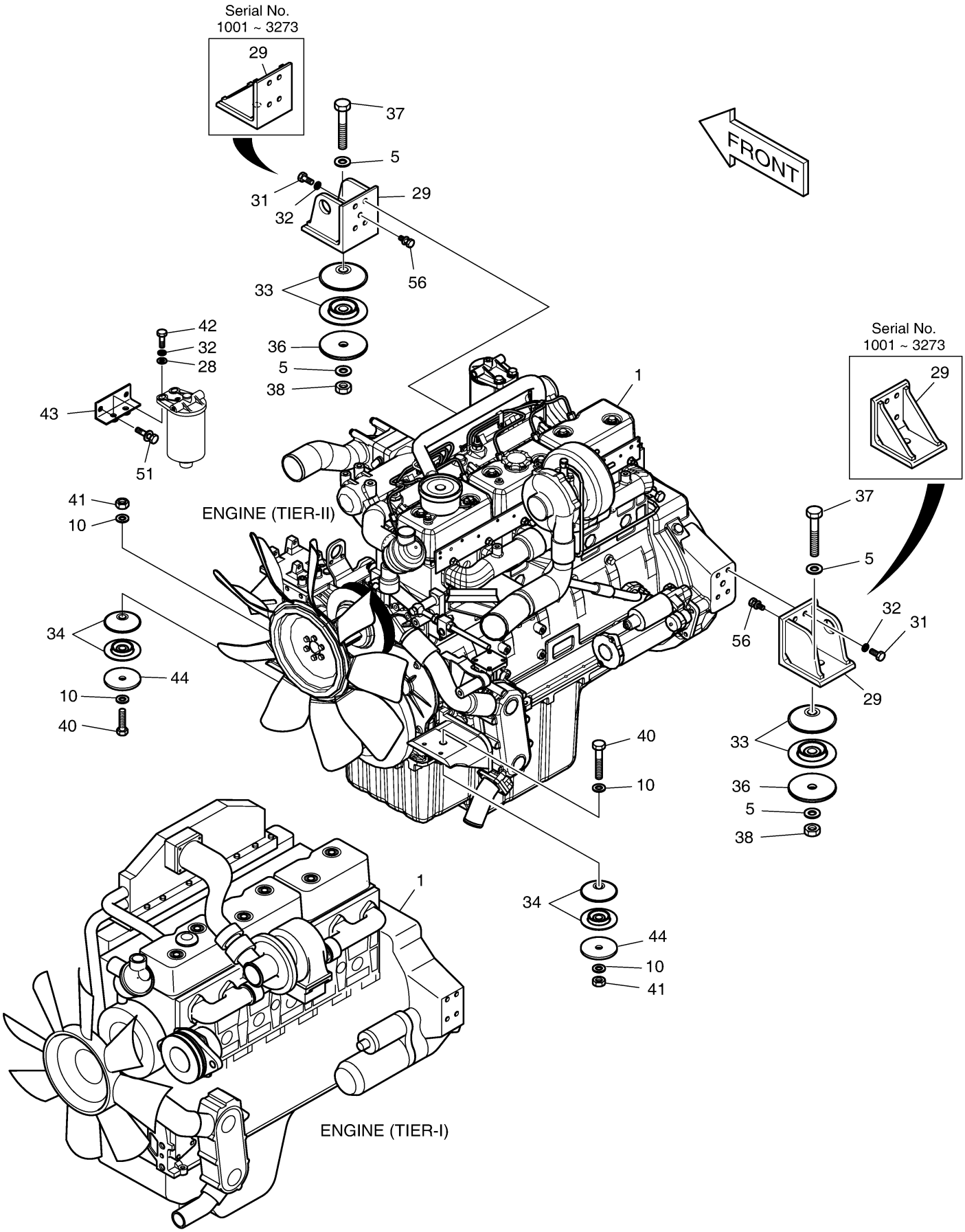

DOOSAN Doosan Infracore

Fig. 1120 RADIATOR

Key No	Part No	Description	Qty	S.C	Serial No	ICA	Replacable	Qty
-	201-00080	ENGINE ASS'Y	-	D	1001~4838			
-	150109-00073	ENGINE ASSY	-	D	4839~			
2	202-00071B	RADIATOR	1		1001~1009	I	202-00071C	1
2	202-00071C	RADIATOR	1		1010~3143	I	202-00071E	1
2	202-00071E	RADIATOR	1		3144~4866			
2	440211-00012	RADIATOR ASS'Y	1		4867~			
2A	13F11000	RADIATOR ASS'Y	1					
2B	13F12000	OIL COOLER ASS'Y	1		1001~3143	I	13F12000A	1
2B	13F12000A	OIL COOLER ASS'Y	1		3144~4866			
2B	400206-00097	COOLER,OIL	1		4867~			
2C	13F13000	C/H AIR COOLER ASS'Y	1					
2D	13F14000	FRAME ASS'Y	1					
2E	13F15000	SHROUD ASS'Y	1					
2F	13F16000	FAN GUARD ASS'Y	2					
2G	13F17000	PLATE	1					
2H	13F18000	WIRE NET ASS'Y	2					
2I	P06A	CAP ASS'Y	1					
2J	P04	DRAIN COCK ASS'Y	1					
2K	P03	HOSE;DRAIN	1					
2L	P1106	BOLT;WING M6X1.0X15	6					
2M	P1306	WASHER;PLAIN	6					
2N	P1406	WASHER;SPRING	6					
2O	P1108	BOLT M8X1.25X20	8					
2P	P1110A	BOLT M10X1.25X20	26					
2Q	P1110B	BOLT M10X1.25X25	6					
2R	P1112	NUT;FLANGE	6					
2S	P1110	BOLT M10X1.25X25	4					
2T	P1210	WASHER;SPRING	4					
2U	P1210	WASHER;SPRING	4					
3	S0521461	BOLT M16X2.0X40	4		1001~1091			
3	S0521466	BOLT	4		1092~			
4	S5102903	WASHER	4					
5	2114-9012A	WASHER	4					
6	145-00056A	STAY	2					
7	S0569861	BOLT M20X2.5X50	4		1001~1091			
7	S0569866	BOLT M20X2.5X50	4		1092~			

Key No	Part No	Description	Qty	S.C	Serial No	ICA	Replacable	Qty
15	185-00244	HOSE;WATER	1					
16	S8470065	CLAMP;HOSE	4					
19	185-00243	HOSE;WATER	1					
45	S5010913	WASHER	4					

Fig. 1120 RADIATOR

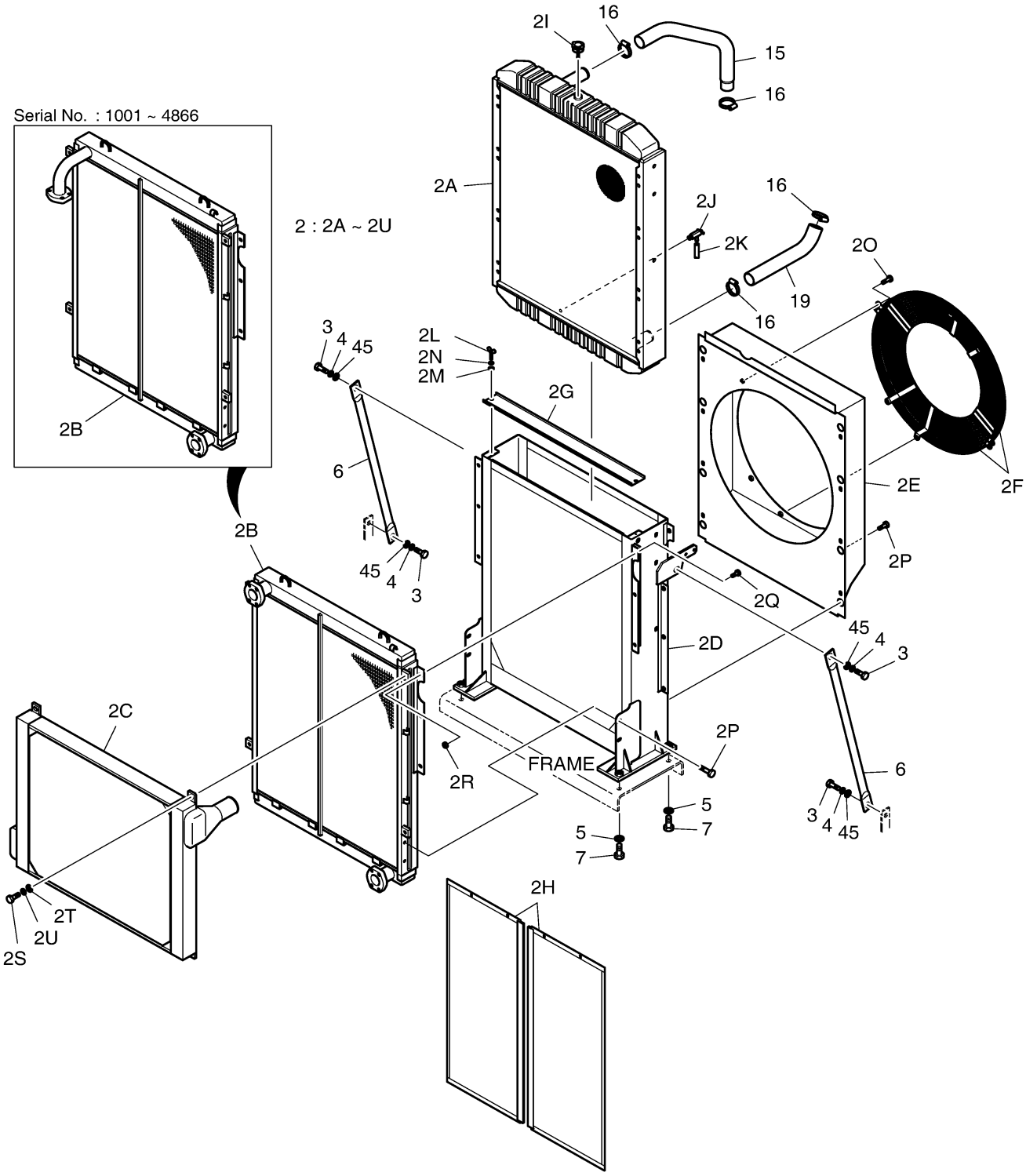

DOOSAN Doosan Infracore

Fig. 1130 RESERVE TANK

Key No	Part No	Description	Qty	S.C	Serial No	ICA	Replacable	Qty
-	201-00080	ENGINE ASS'Y	-	D				
8	2470-9017	TANK;RESERVE	1		1001~3407	I	K1003354	1
8	K1003354	TANK;RESERVE	1		3408~3544	I	K1003354A	1
8	K1003354A	TANK;RESERVE	1		3545~			
9	2124-1690	CLAMP	1					
12	185-00298	HOSE	1					
13	S8450006	CLAMP	3					
14	185-00320	HOSE	1					
52	124-00208D2	CLAMP	2					
53	120-00276	BOLT	2					
54	2120-2196D1	BOLT;SET M10X1.5X20	2					

Fig. 1130 RESERVE TANK

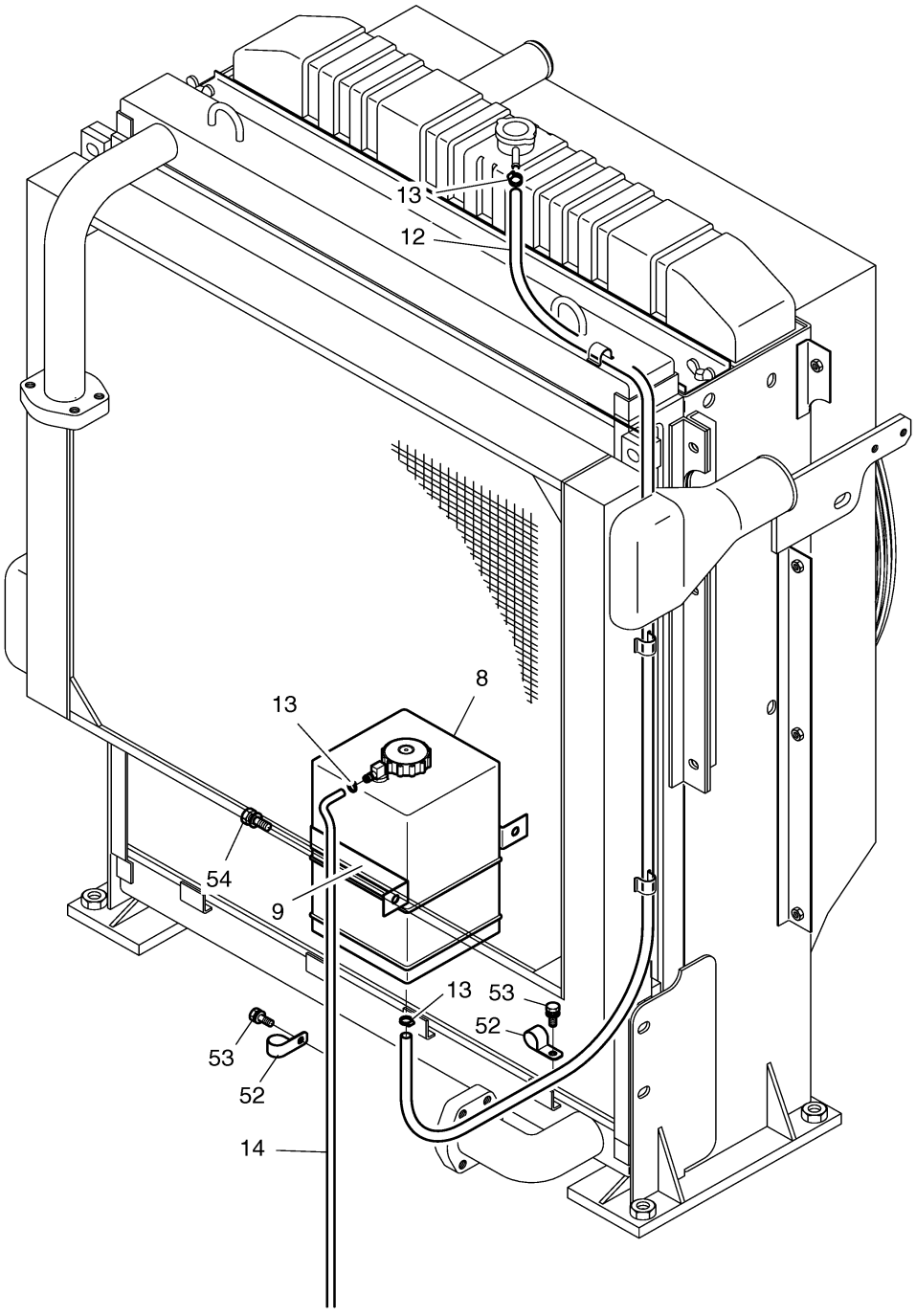

Fig. 1140 MUFFLER

Key No	Part No	Description	Qty	S.C	Serial No	ICA	Replacable	Qty
-	201-00080	ENGINE ASS'Y	-	D				
20	203-00049C	MUFFLER;SUB ASS'Y	1		1001~1818	I	203-00049E	1
20	203-00049E	MUFFLER;SUB ASS'Y	1		1819~2724	I	203-00049G	1
20	203-00049G	MUFFLER;SUB ASS'Y	1		2725~			
20A	203-00048A	MUFFLER	1					
20B	195-01339C	BRACKET;MUFFLER	1		1001~2724	I	195-01339E	1
20B	195-01339E	BRACKET;MUFFLER	1		2725~			
20C	120-00251	BOLT;U	2		1001~1818	I	120-00251A	2
20C	120-00251A	BOLT;U	2		1819~			
20D	S4012633	NUT	8					
20E	S5010613	WASHER	4					
21	2120-2196D11	BOLT;SET M12X1.75X35	2					
22	S0565661	BOLT M16X2.0X70	1		1001~1091			
22	S0565666	BOLT	1		1092~			
23	195-01744	BRACKET	1		1001~3262	I	K1008720	1
23	K1008720	BRACKET	1		3263~			
24	2182-1576A	PIPE;EXHAUST	1		1001~3544	I	2182-1576B	1
24	2182-1576B	PIPE;EXHAUST	1		3545~			
25	2124-1591A	CLAMP	1					
26	S0515553	BOLT M12X1.75X45	2					
27	S4012733	NUT	2					
28	S5010713	WASHER	2					
35	2120-2196D2	BOLT;SET M10X1.5X25	4		1001~1062			
35	120-00276	BOLT	6		1063~			
46	2114-1925	SPACER	1		1001~1818			
47	195-01431A	BRACKET	1		1001~1062			
47	195-02183A	BRACKET	1		1063~			
48	627-00046	COVER	1		1001~1062			
48	621-02363	COVER	1		1063~			
55	621-02364	COVER	1		1063~			

Fig. 1140 MUFFLER

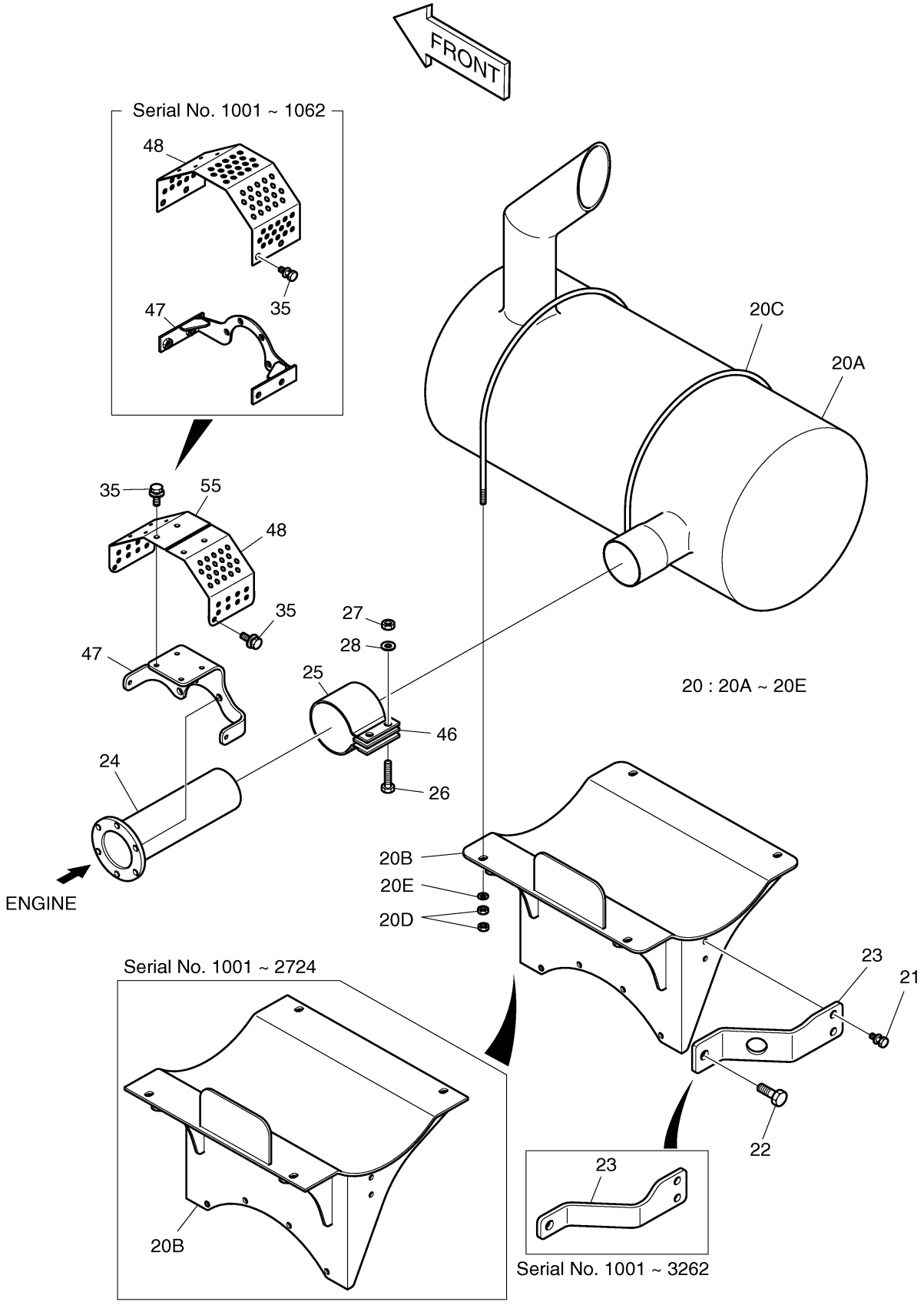

Fig. 1150 CAC PIPING

Key No	Part No	Description	Qty	S.C	Serial No	ICA	Replacable	Qty
-	400-00672A	CAC PIPING ASSY	-	D				
1	193-00673A	PIPE;AIR	1					
2	140-00808E	PIPE;CAC	1					
3	185-00245A	HOSE;CAC	3					
4	195-01760	BRACKET	1					
5	185-00248A	HOSE;CAC	1					
6	124-00194	CLAMP	8					
7	2120-2196D2	BOLT;SET M10X1.5X25	6					

Fig. 1150 CAC PIPING

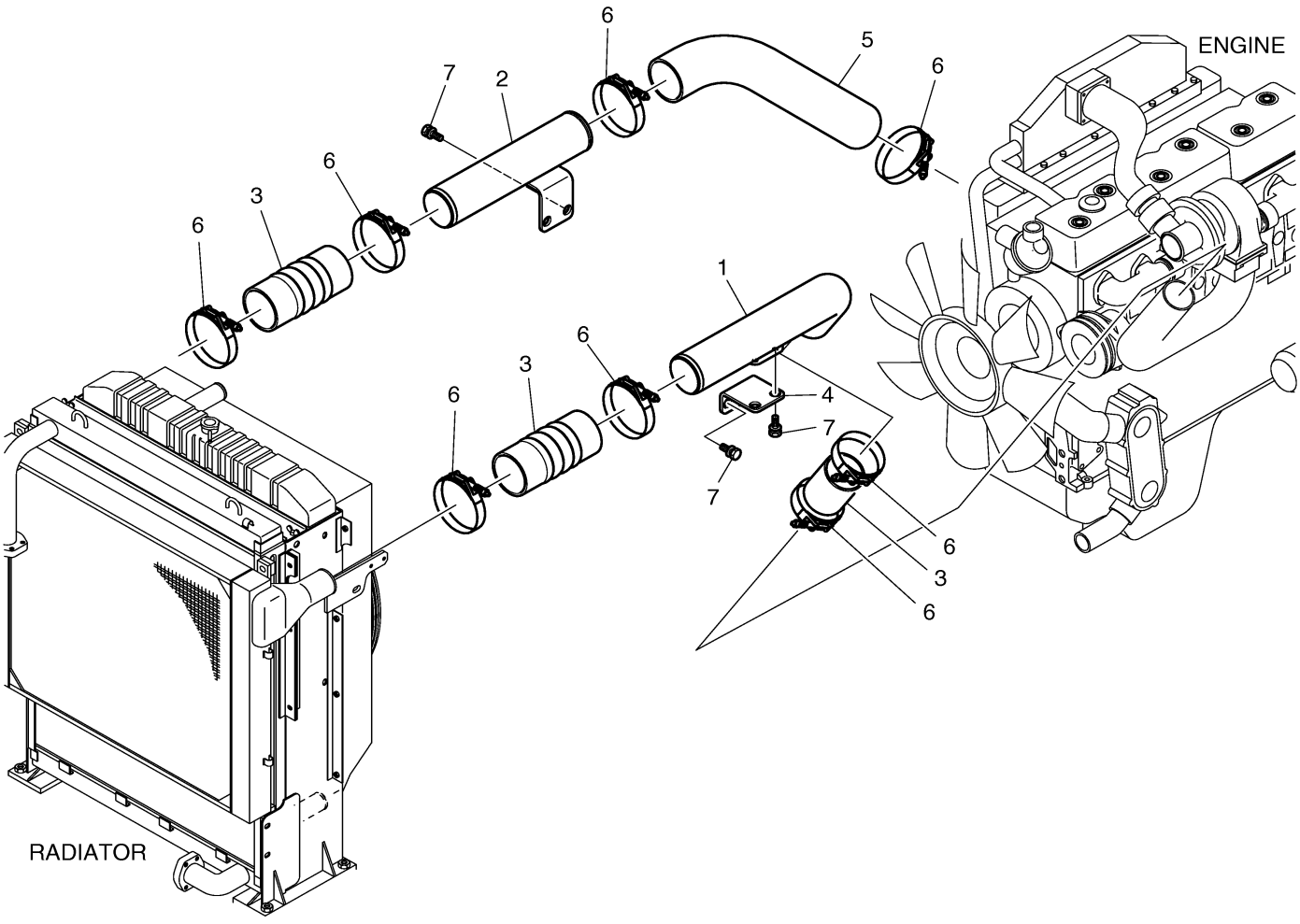

Fig. 1160 AIR CLEANER ASS'Y

Key No	Part No	Description	Qty	S.C	Serial No	ICA	Replacable	Qty
-	204-00029B	AIR CLEANER ASS'Y	-	D				
1	2204-2012A	AIR CLEANER	1					
2	2124-1552A	BAND;AIR CLEANER	2					
3	2120-2196D2	BOLT;SET M10X1.5X25	4					
4	2204-9032A	PRE-CLEANER	1		1001~2939	Y	2204-9032	1
4	2204-9032	PRE-CLEANER	1		2940~3746	I	K1017883	1
4	K1017883	PRE-CLEANER	1		3747~4410			
4	K1043471	PRE CLEANER	1		4411~			
5	185-00235	HOSE;AIR	1					
6	193-00584	PIPE;AIR	1					
7	185-00236	HOSE;AIR	1					
8	2193-1385B	PIPE;AIR	1					
9	2185-1658	HOSE;AIR	1					
10	621-01345C	COVER	1		1001~1004			
10	621-01345E	COVER	1		1005~2290	I	621-01345G	1
10	621-01345G	COVER	1		2291~3449	I	621-01345H	1
10	621-01345H	COVER	1		3450~4410			
10	621-01345J	COVER	1		4411~			
11	170-00004	INDICATOR;DUST	1					
12	2181-2690	ADAPTER;FILTER	1					
13	2185-1792A	HOSE;AIR	1					
14	S8510143	CLAMP	5					
15	S8510092	CLAMP	1					
16	S8510168	CLAMP	2					
17	S0512053	BOLT	2					
18	S5010613	WASHER	2					
19	S5102603	WASHER	2					
20	2120-2196D7	BOLT;SET M12X1.75X30	13					

Fig. 1160 AIR CLEANER ASS'Y

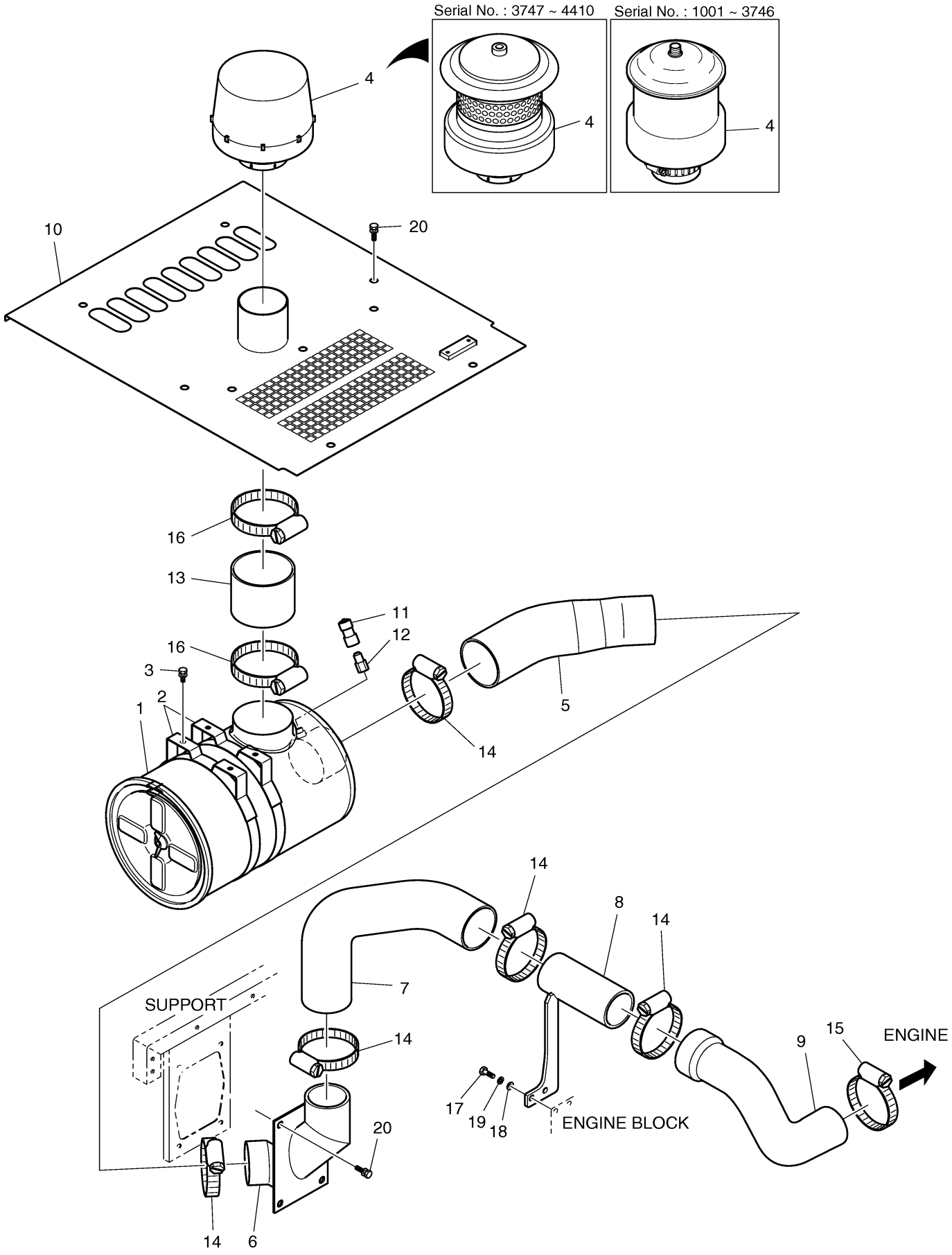

Fig. 1165 AIR CLEANER

Key No	Part No	Description	Qty	S.C	Serial No	ICA	Replacable	Qty
-	2204-2012A	AIR CLEANER	1					
1	-	BODY	1	D				
2	2474-9057	ELEMENT;INNER	1					
3	2474-9051	ELEMENT;OUTER	1					
4	2621-6012	COVER;FRONT	1					
5	2180-6085	PACKING	1					
6	121-00041	NUT;WING(OUTER)	1					
7	121-00078	NUT;WING(INNER)	2					
8	2422-6021	VALVE;VACUATOR	1					

Fig. 1165 AIR CLEANER

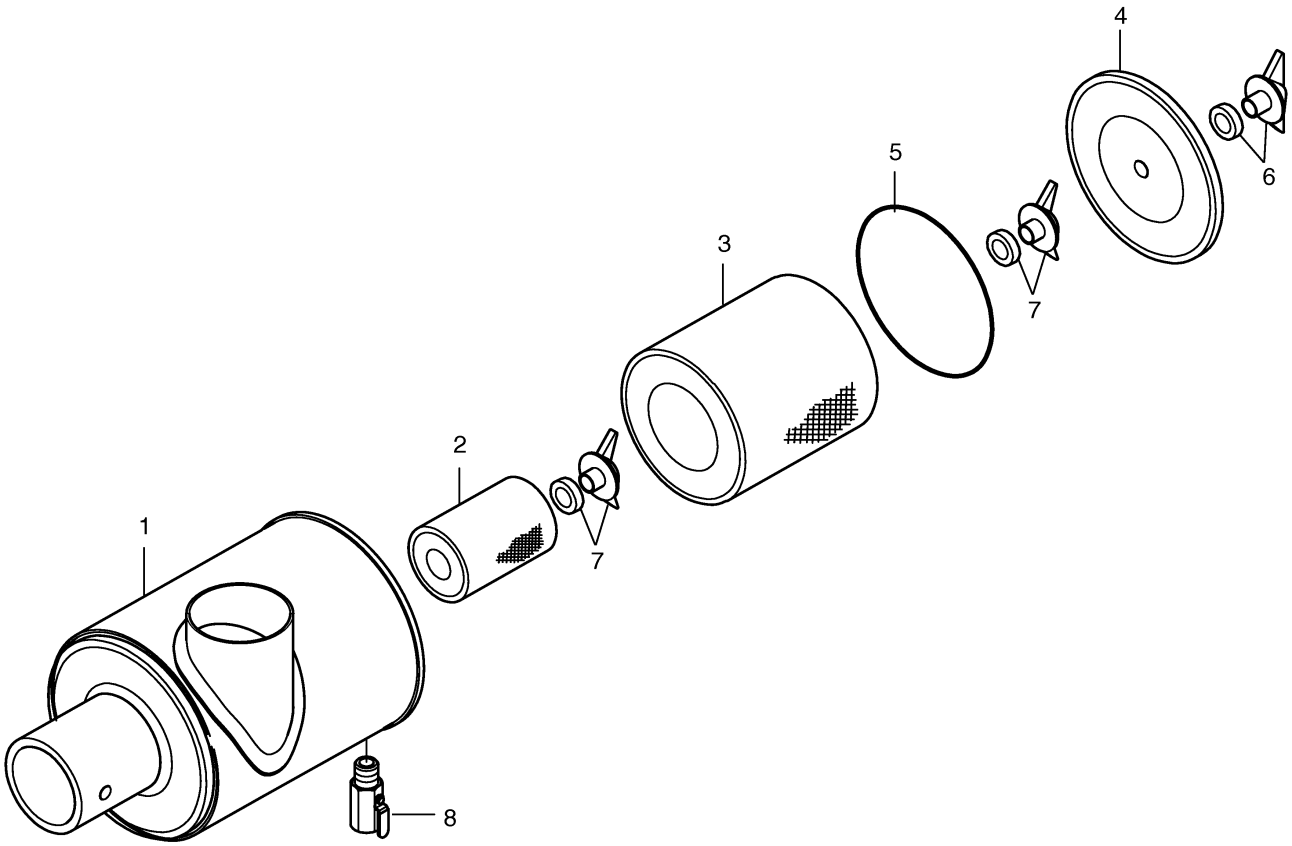

Fig. 1170 PUMP MOUNTING

Key No	Part No	Description	Qty	S.C	Serial No	ICA	Replacable	Qty
-	401-00226B	PUMP MOUNTING	-	D				
1	401-00225A	PUMP	1		1001~2578	I	401-00424	1
1	401-00424	PUMP	1		2579~2835	I	401-00424A	1
1	401-00424A	PUMP	1		2836~4216	I	401-00424B	1
1	401-00424B	PUMP	1		4217~4410	I	401-00424C	1
1	401-00424C	PUMP;MAIN	1		4411~			
2	229-00011	COVER	1					
3	414-00040	COUPLING	1		1001~2964	I	414-00040A	1
3	414-00040A	COUPLING	1		2965~			
3A	-	HUB	1	D				
3B	K9000426	ELEMENT	1		1001~2964			
3B	K9000994	ELEMENT	1		2965~			
3C	-	INSERT(A)	4	D				
3D	-	INSERT(R)	4	D				
3E	K9000425	SOCKET BOLT SET(8EA)	1					
3F	-	BOLT	2	D				
3G	-	PIN;SPRING D8X16	12	D				
3H	K9000427	ELEMENT KIT	1		1001~2964	I	K9000995	1
3H	K9000995	ELEMENT KIT	1		2965~			
4	S2227866	BOLT	4					
5	S5111102	WASHER;SPRING M20	4					
6	S0558453	BOLT	8					
7	S5102603	WASHER	12					
8	S0558553	BOLT;HEX.	4					

Fig. 1170 PUMP MOUNTING

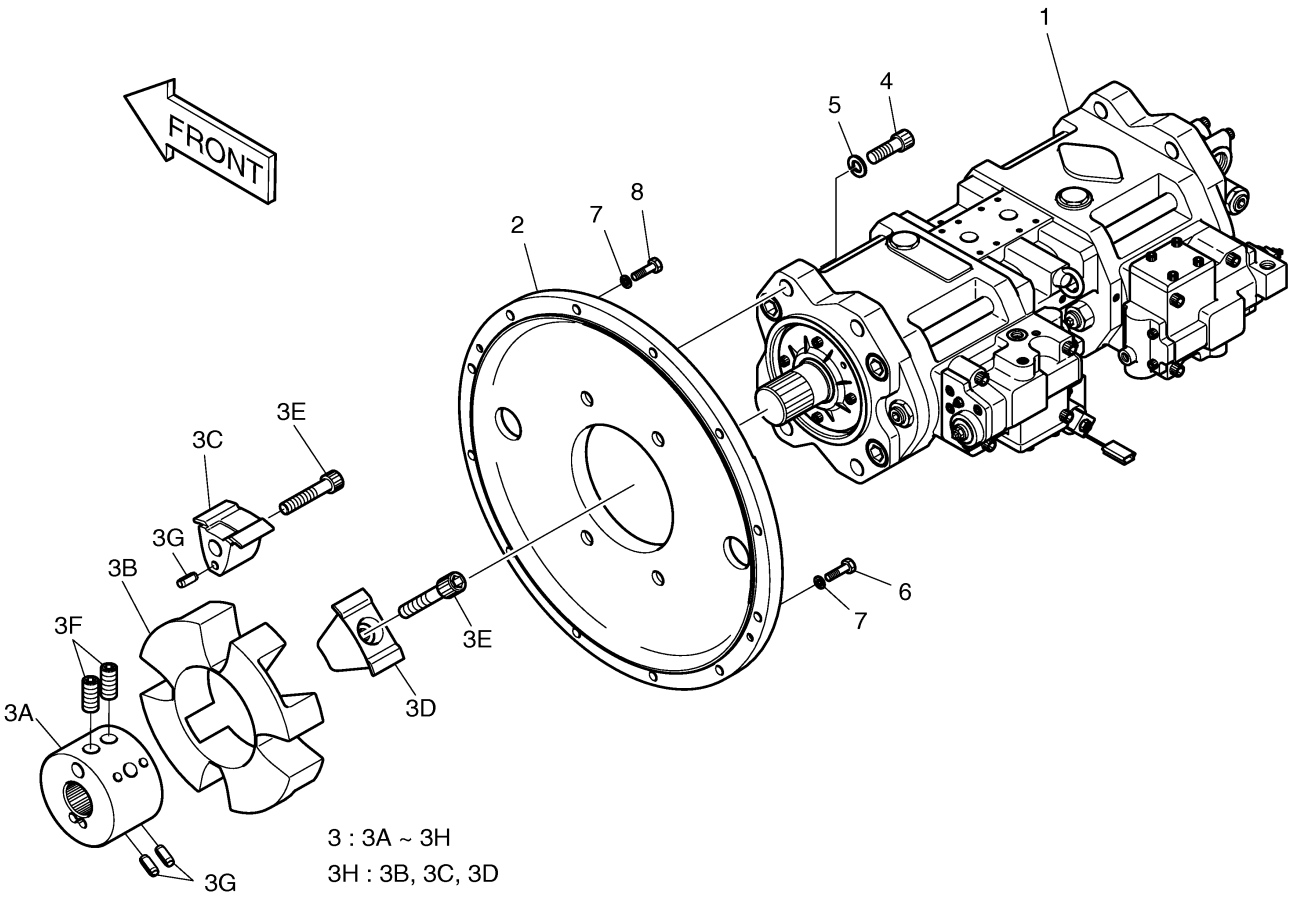

Fig. 1180 FUEL PIPING [1001 ~ 1586]

Key No	Part No	Description	Qty	S.C	Serial No	ICA	Replacable	Qty
-	470-00070	FUEL TANK ASS'Y	1	D	1001~1586			
15	S8450012	CLAMP	6					
17	2185-1247D132	HOSE 2700L	1					
21	2124-1509D2	CLIP	1					
26	2185-1247D147	HOSE 2400L	1					
28	471-00082	SEPARATOR;WATER	1					
29	2185-1247D25	HOSE;FUEL	1					
30	124-00209D1	CLIP	2					
31	S0508853	BOLT	2					
32	S5010513	WASHER	2					
33	120-00276	BOLT	3					

Fig. 1180 FUEL PIPING [1001 ~ 1586]

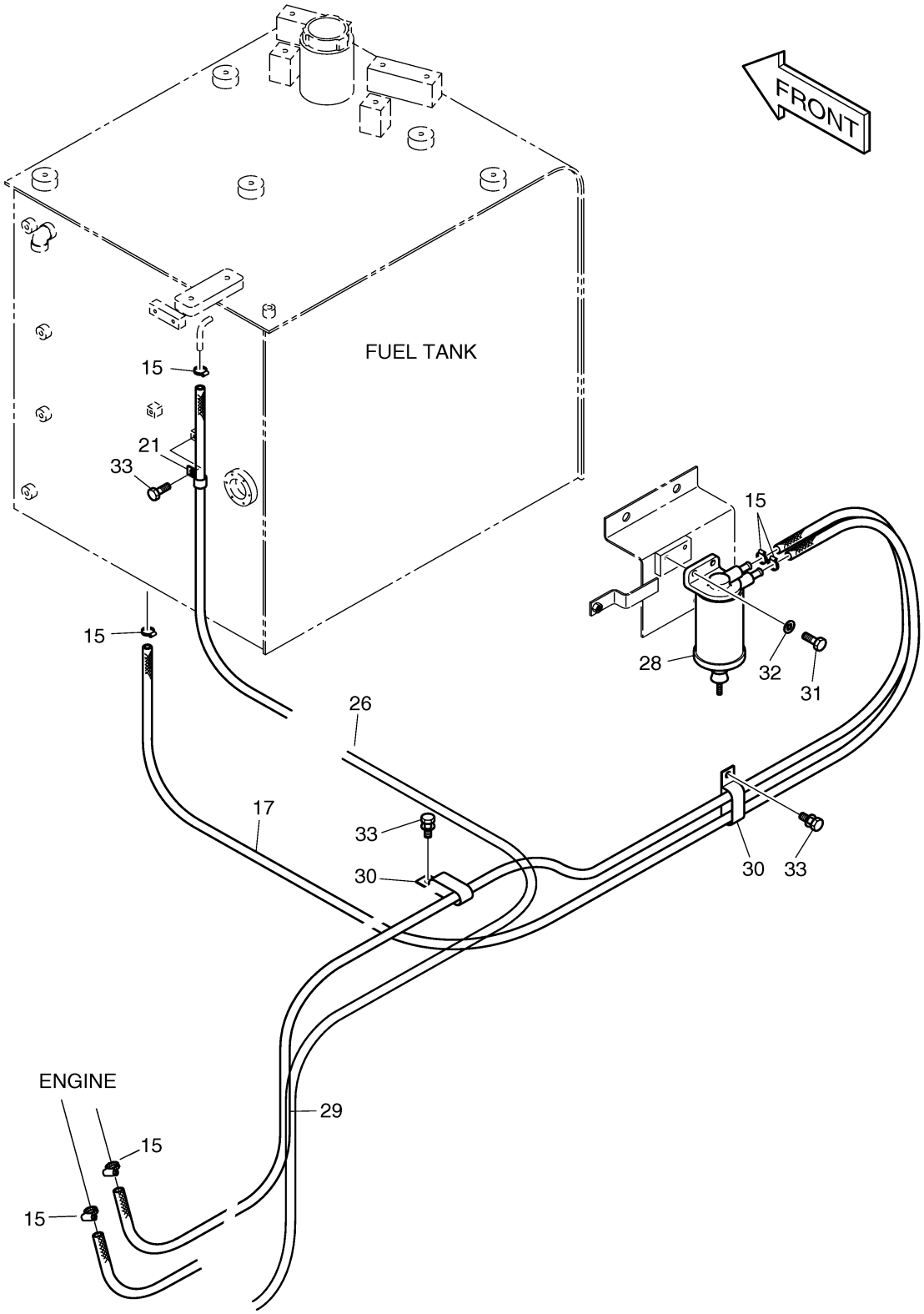

Fig. 1181 FUEL PIPING [1587 ~]

Key No	Part No	Description	Qty	S.C	Serial No	ICA	Replacable	Qty
-	470-00070A	FUEL TANK ASS'Y	1	D	1587~			
15	S8450012	CLAMP	6					
17	2185-1247D132	HOSE 2700L	1					
21	2124-1509D2	CLIP	1					
26	2185-1247D147	HOSE 2400L	1					
28	471-00082	SEPARATOR;WATER	1		1587~3079	I	471-00082A	1
28	471-00082A	SEPARATOR;WATER	1		3080~			
29	2185-1247D31	HOSE 1200L	1					
30	124-00209D1	CLIP	2					
31	S0508853	BOLT	2					
32	S5010513	WASHER	2					
33	120-00276	BOLT	3					

Fig. 1181 FUEL PIPING [1587 ~]

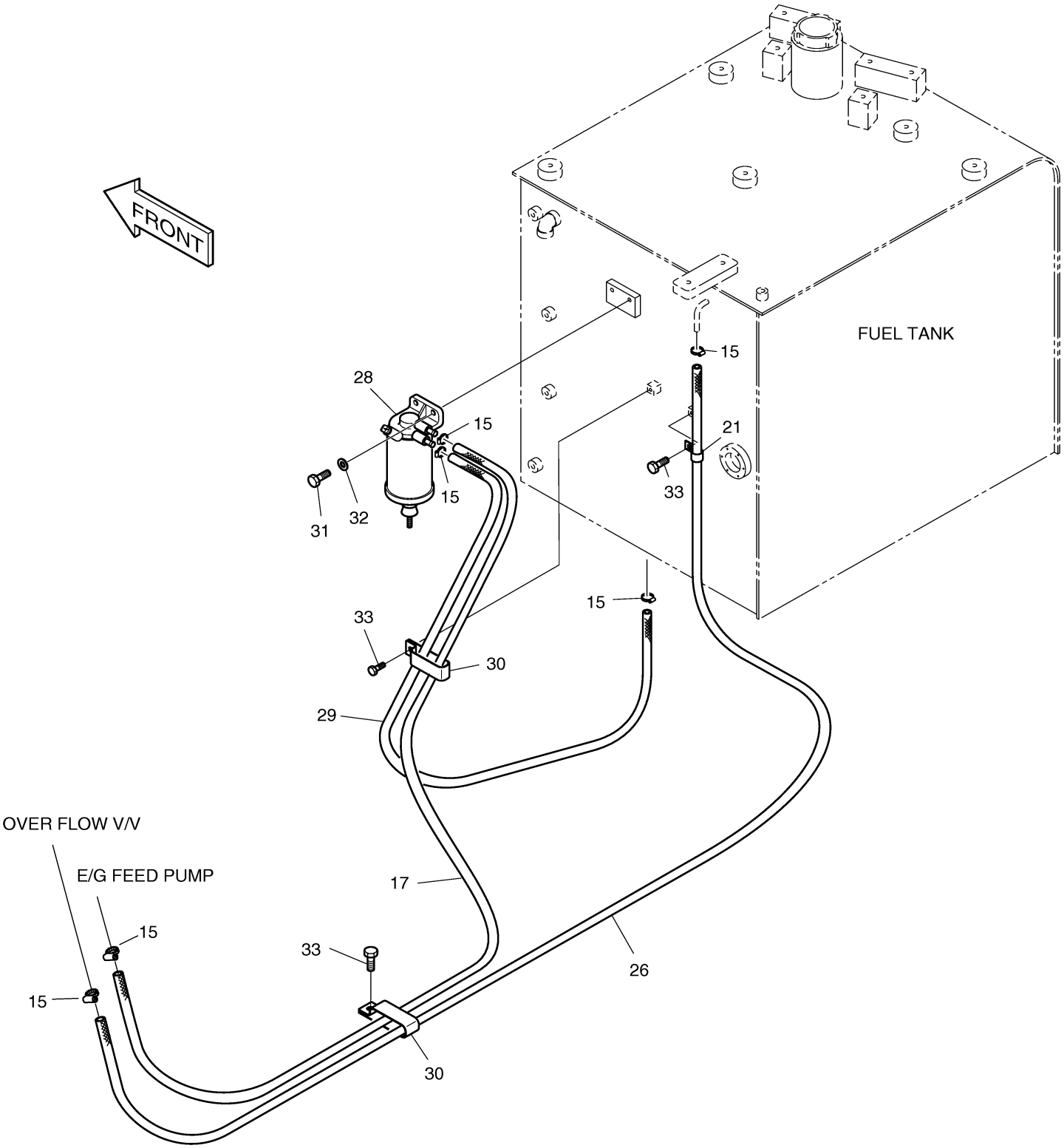

Fig. 1200 SWING DEVICE ASS'Y [1001 ~

Key No	Part No	Description	Qty	S.C	Serial No	ICA	Replacable	Qty
-	401-00229	SWING DEVICE INSTALLATIO	-	D				
1	401-00224B	SWING DEVICE	1		1001~1170	I	401-00224C	1
1	401-00224C	SWING DEVICE	1		1171~2273	I	401-00224E	1
1	401-00224E	SWING DEVICE SUB ASS'Y	1		2274~2755	I	401-00224G	1
1	401-00224G	SWING DEVICE SUB ASS'Y	1		2756~			
1A	404-00089B	REDUCTION GEAR:SWING	1		1101~1170	I	404-00096	1
1A	404-00096	REDUCTION GEAR:SWING	1		1171~2273	I	404-00096A	1
1A	404-00096A	REDUCTION GEAR:SWING	1		2274~2755	I	404-00096B	1
1A	404-00096B	REDUCTION GEAR:SWING	1		2756~			
1B	401-00230	MOTOR:SWING	1					
1D	DS2059373	HOSE PF1/2-420L	1					
1E	2181-1950D3	PLUG	1					
1F	S8000181	O-RING	1					
1G	2181-1110D3	ADAPTER	2					
1H	140-00805	PIPE	1					
1I	2119-1063A	CAP	1					
1J	121-00010D3	NUT	1					
1K	181-00698	REDUCER	1					
1L	S5011113	WASHER	1					
2	S0774766	BOLT	12					
3	2114-1831A	WASHER	12					
4	2123-1717A	PIN:KNOCK	2		1001~1019	I	2123-1717B	2
4	2123-1717B	PIN,KNOCK	2		1020~			
5	198-00028	CAP	2					
6	2184-1046D169	HOSE PF1/4-1600L	1					
7	181-00103	REDUCER	1					
8	121-00006	NUT	1					
9	S6710041	NIPPLE,GREASE	1					
10	160-00020	CAP	1					
11	124-00208D2	CLAMP	1					
12	120-00276	BOLT	1					
13	2181-4112	ADAPTER	1					

Fig. 1200 SWING DEVICE ASS'Y [1001 ~

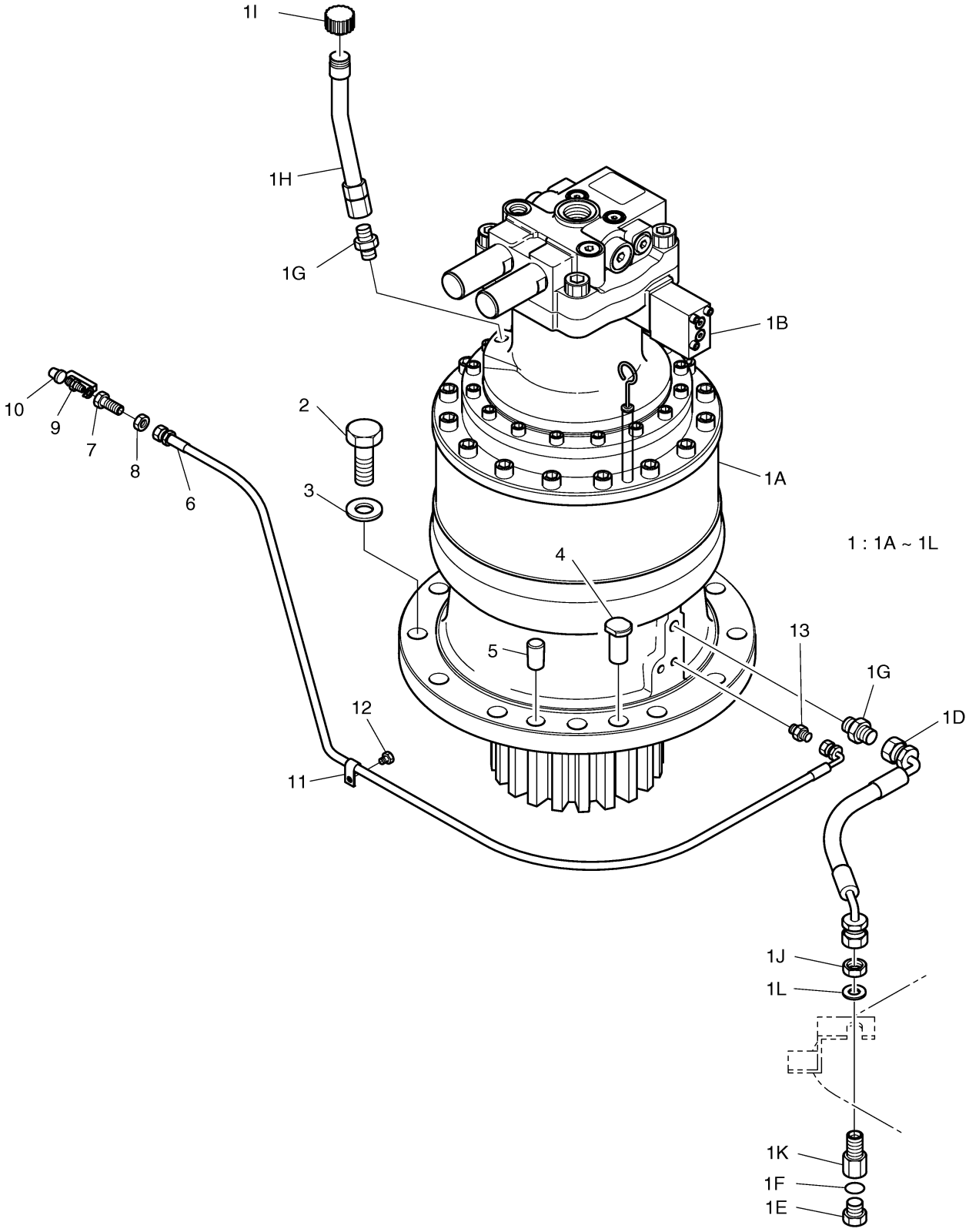

Fig. 1201 SWING DEVICE ASS'Y [3555 ~]

Key No	Part No	Description	Qty	S.C	Serial No	ICA	Replacable	Qty
-	401-00229C	SWING DEVICE	-	D	3555~			
1	K1004449	SWING DEVICE SUB ASS'Y	1		3555~4444	I	K1004449A	1
1	K1004449A	SWING DEVICE SUB ASS'Y	1		4445~4628	I	K1004449B	1
1	K1004449B	SWING DEVICE SUB ASS'Y	1		4629~5003	I	170301-00051	1
1	170301-00051	DEVICE ASSY,SWING	1		5004~			
1A	404-00096B	REDUCTION GEAR:SWING	1		3555~4444	I	404-00096C	1
1A	404-00096C	REDUCTION GEAR:SWING	1		4445~4628	I	404-00096E	1
1A	404-00096E	REDUCTION GEAR:SWING	1		4629~			
1B	401-00457B	MOTOR,SWING	1					
1D	DS2059373	HOSE PF1/2-420L	1					
1E	2181-1950D3	PLUG	1					
1F	S8000181	O-RING	1					
1G	2181-1110D3	ADAPTER	2					
1H	140-00805	PIPE	1					
1I	2119-1063A	CAP	1		3555~5003	I	2119-1063B	1
1I	2119-1063B	CAP	1		5004~			
1J	121-00010D3	NUT	1					
1K	181-00698	REDUCER	1					
1L	S5011113	WASHER	1					
2	S0774766	BOLT	12					
3	2114-1831A	WASHER	12					
4	2123-1717B	PIN,KNOCK	2					
5	198-00028	CAP	2					
6	2184-1046D169	HOSE PF1/4-1600L	1					
7	181-00103	REDUCER	1					
8	121-00006	NUT	1					
9	S6710041	NIPPLE,GREASE	1					
10	160-00020	CAP	1					
11	124-00208D2	CLAMP	1					
12	120-00276	BOLT	1					
13	2181-4112	ADAPTER	1					

Fig. 1201 SWING DEVICE ASS'Y [3555 ~]

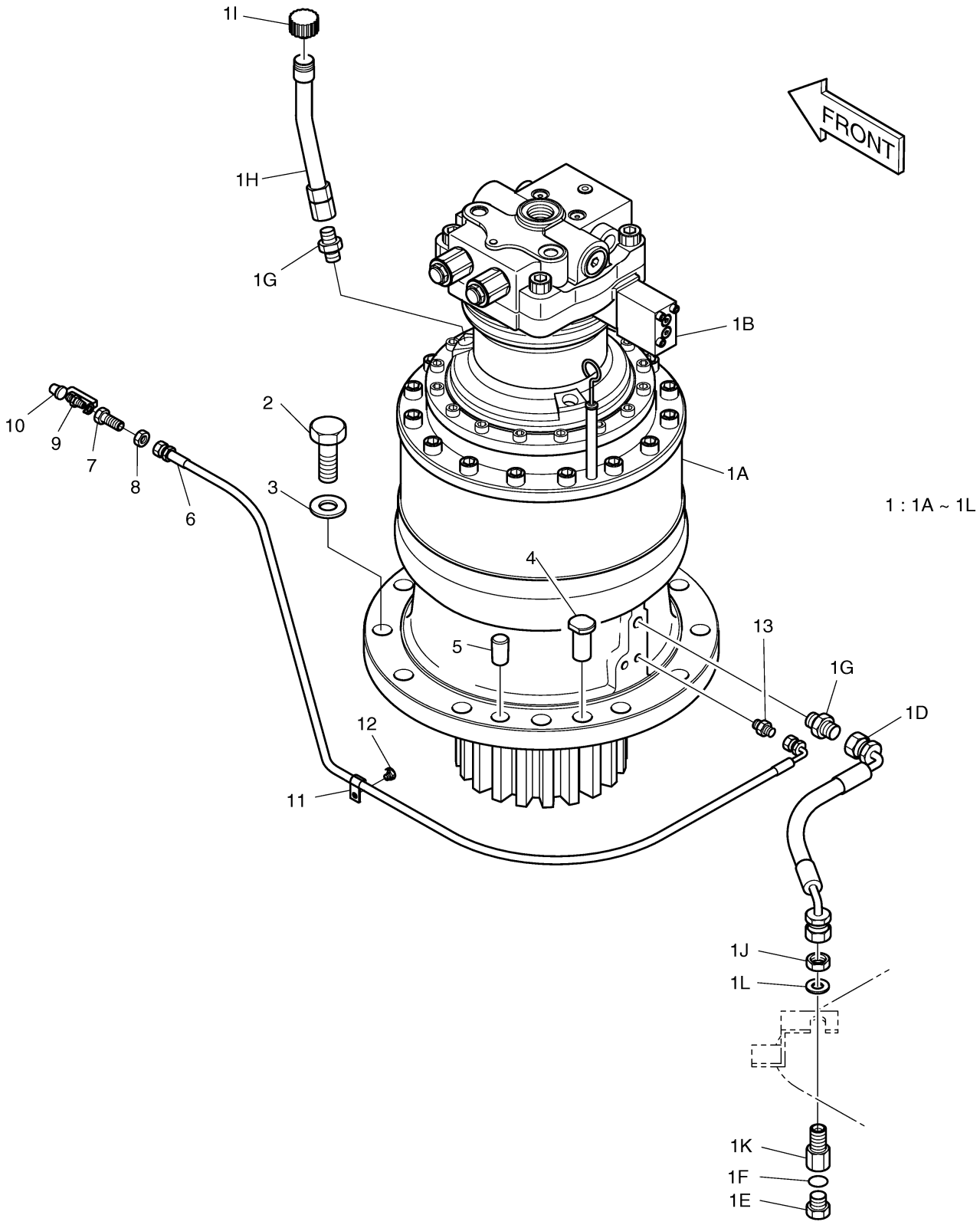

Fig. 1210 OIL TANK

Key No	Part No	Description	Qty	S.C	Serial No	ICA	Replacable	Qty
-	470-00072C	OIL TANK ASS'Y	-	D				
1	470-00071E	TANK;OIL	1		1001~1004			
1	470-00071G	TANK;OIL	1		1005~1056	I	470-00071H	1
1	470-00071H	TANK;OIL	1		1057~2284			
1	470-00071J	TANK;OIL	1		2285~3818	I	470-00071K	1
1	470-00071K	TANK;OIL	1		3819~4528	I	470-00071L	1
1	470-00071L	TANK;OIL	1		4529~			
2	S0565461	BOLT M16X2.0X60	6					
3	2114-1813	SHIM,0.8T	3		1001~1056			
3	114-00522	SHIM	3		1057~			
4	2114-1814	SHIM,1.6T	3		1001~1056			
4	114-00523	SHIM	3		1057~			
5	473-00028A	COVER	1					
6	S8012000	O-RING	1					
7	2129-1393	SPRING	1					
8	2426-1175	VALVE;BY-PASS	1					
9	2471-9051B	ELEMENT;FILTER	1					
10	S0512053	BOLT	18					
11	S5102603	WASHER	18					
12	473-00029A	COVER	1					
13	S8012200	O-RING	1					
14	136-00044	ROD	1					
15	2129-1008	SPRING,COMPRESS	1					
16	140-00854	PIPE	1					
17	2471-9401A	FILTER,SUCTION	1					
18	2181-1950D7	PLUG	1		1001~1056			
18	2181-1950D7	PLUG	2		1057~			
19	S8000181	O-RING	1		1001~1056			
19	S8000181	O-RING	2		1057~			
20	2119-1007	GAUGE;LEVEL	1					
21	422-00027A	BREATHER;AIR	1		1001~4279	I	K1012685A	1
21A	180-00200	PACKING	1		1001~4279			
21	K1012685A	BREATHER;AIR	1		4280~			
21A	K1029257	ELEMENT,AIR BREATHER	1		4280~			
21B	K9005662	GASKET	1		4280~			
22	S8011650	O-RING	1					

Key No	Part No	Description	Qty	S.C	Serial No	ICA	Replacable	Qty
23	2181-1890D2	PLUG	2		1001~1056			
23	2181-1890D2	PLUG	3		1057~4695			
23	2181-1950D1	PLUG	3		4696~			
24	S8000111	O-RING	2		1001~1056			
24	S8000111	O-RING	3		1057~			
27	114-00425	SPACER	6					
29	2120-2166D41	BOLT	6					
32	2181-2667	PLUG	1					
33	S8180221	RING;SEAL	1					

Fig. 1210 OIL TANK

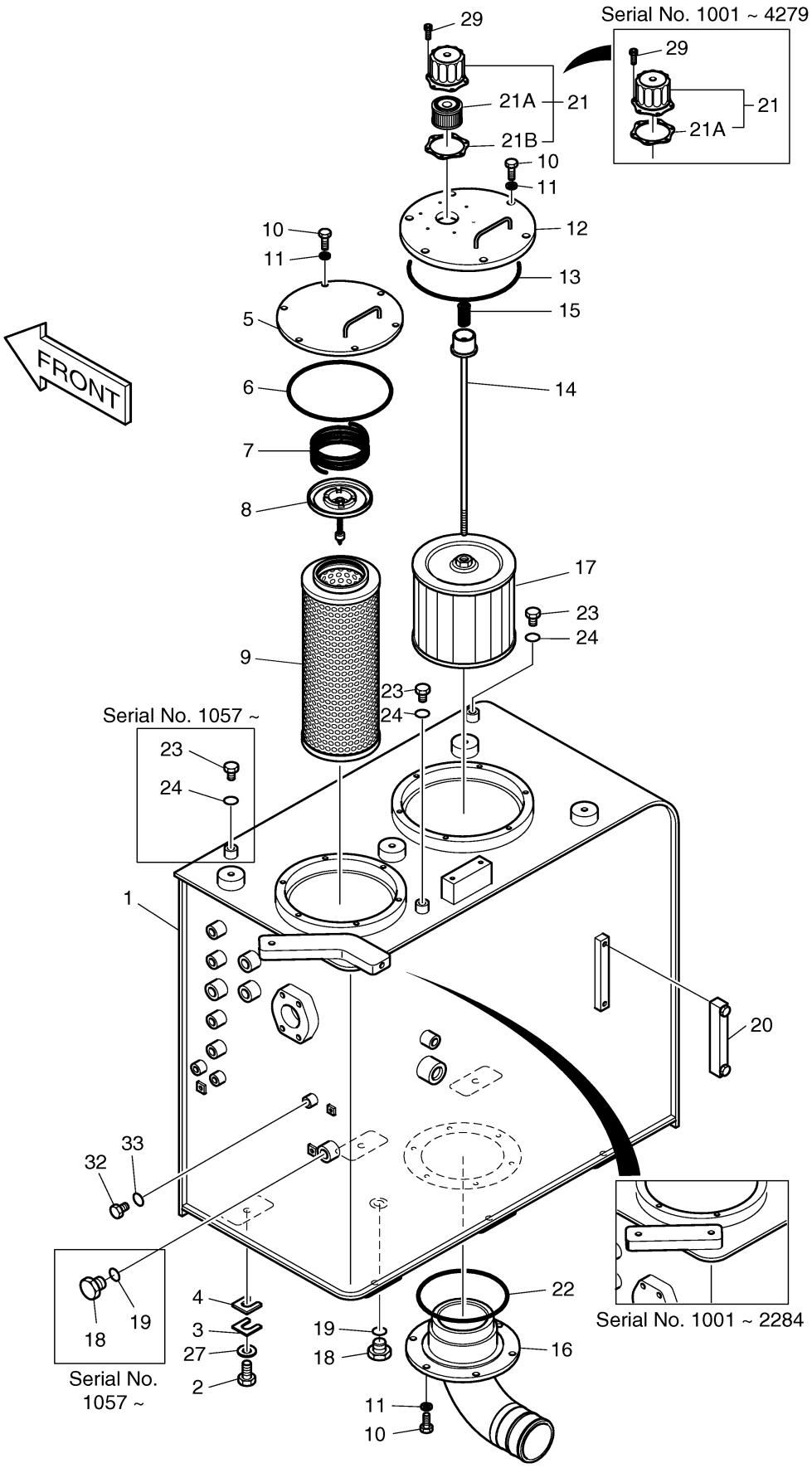

Fig. 1220 OIL COOLER PIPING(1)

Key No	Part No	Description	Qty	S.C	Serial No	ICA	Replacable	Qty
-	400-00355	OIL COOLER PIPING	-	D				
1	140-00853A	PIPE;SUCTION	1					
6	2185-1737D7	HOSE	1					
7	S8470112	CLAMP	4					
13	2184-1212D11	HOSE	1					
14	2184-1212D10	HOSE	1		1001~1136	I	2184-1197D104	1
14	2184-1197D104	HOSE	1		1137~			
20	S8030121	O-RING	4					
22	2180-1026D31	O-RING	1					
26	S8000241	O-RING	2					
27	S8000231	O-RING	1					
30	2181-4133D5	ADAPTER	1					
31	2181-2627D1	ADAPTER	1					
34	2181-2294D2	ELBOW	1					
39	S2215466	BOLT	4					
41	S5110703	WASHER	4					
50	S8000141	O-RING	2					
51	2181-1126D7	ADAPTER	1		1001~1019			
51	2181-1702D36	ELBOW	1		1020~			
52	2181-1702D5	ELBOW	1		1001~1019			
52	2181-1702D13	ELBOW	1		1020~			
53	2184-1036D244	HOSE PF3/8-1130L	1		1001~1019			
53	2184-1026D32	HOSE	1		1020~			

Fig. 1220 OIL COOLER PIPING(1)

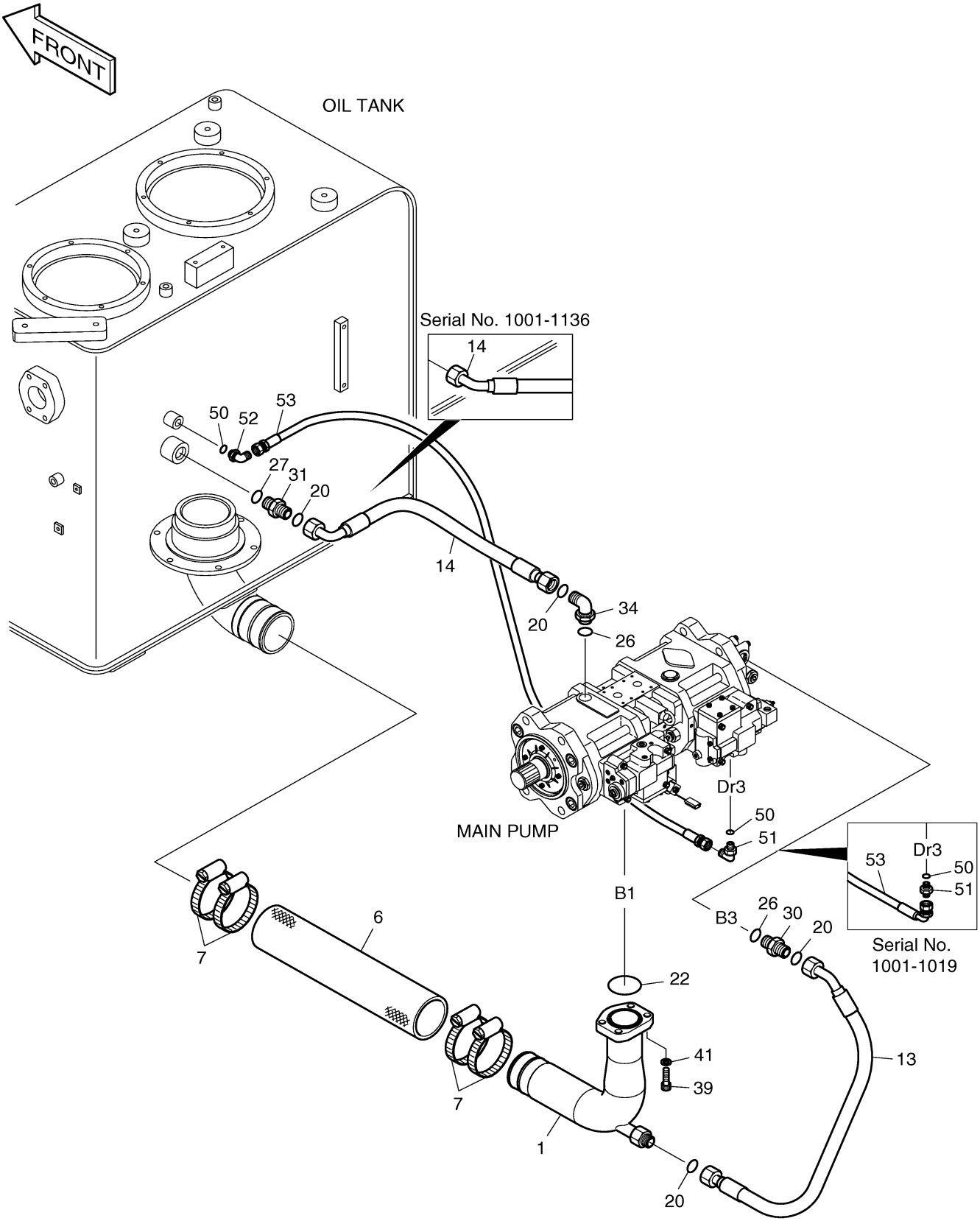

DOOSAN Doosan Infracore

Fig. 1230 OIL COOLER PIPING(2)

Key No	Part No	Description	Qty	S.C	Serial No	ICA	Replacable	Qty
-	400-00355	OIL COOLER PIPING	-	D	1001~4866			
-	420212-00678	PIPING,OIL COOLER	-	D	4867~			
2	140-00811B	PIPE	1					
3	140-00812B	PIPE	1		1001~2174	I	140-00812C	1
3	140-00812C	PIPE	1		2175~3014			
3	140-00812E	PIPE	1		3015~			
4	140-00813	PIPE	1					
5	140-00814A	PIPE	1		1001~2174	I	140-00814B	1
5	140-00814B	PIPE	1		2175~3014			
5	140-00814C	PIPE	1		3015~4876			
5	420207-00418	PIPE,RETURN	1		4877~			
8	2185-1776D1	HOSE	1					
9	S8470085	CLAMP	4					
10	2184-1100D188	HOSE PF2-820L	1					
11	DS2040296	HOSE PF2-910L	1		1001~4866			
11	DS2045551	HOSE(90-90)	1		4867~4876			
11	DS2040833	HOSE	1		4877~			
17	423-00114A	BLOCK	1					
18	422-00041	VALVE:BY-PASS	1		1001~2212	I	420-00261B	1
18	420-00261B	VALVE:BYPASS(2.5K)	1		2213~			
19	420-00304	VALVE:BY-PASS	1					
21	2180-1026D32	O-RING	1					
22	2180-1026D31	O-RING	1					
23	2180-1026D27	O-RING	6					
24	2180-1026D24	O-RING	1					
25	S8000291	O-RING	1					
36	2181-1950D9	PLUG	1					
37	2181-2047A	PLUG	2					
38	4215-1003D6	FLANGE,SPLIT	8					
39	S2215466	BOLT	32					
40	S2221566	BOLT	4					
41	S5110703	WASHER	32					
42	S5110903	WASHER	4					
43	195-01707	PLATE	1					
44	195-01488	BRACKET	1					
45	2120-2196D8	BOLT	4					

Key No	Part No	Description	Qty	S.C	Serial No	ICA	Replacable	Qty
46	120-00258	BOLT;U	3					
47	2114-1058D30	WASHER	6					
48	S5102703	WASHER	6					
49	S4012733	NUT	6					

Fig. 1230 OIL COOLER PIPING(2)

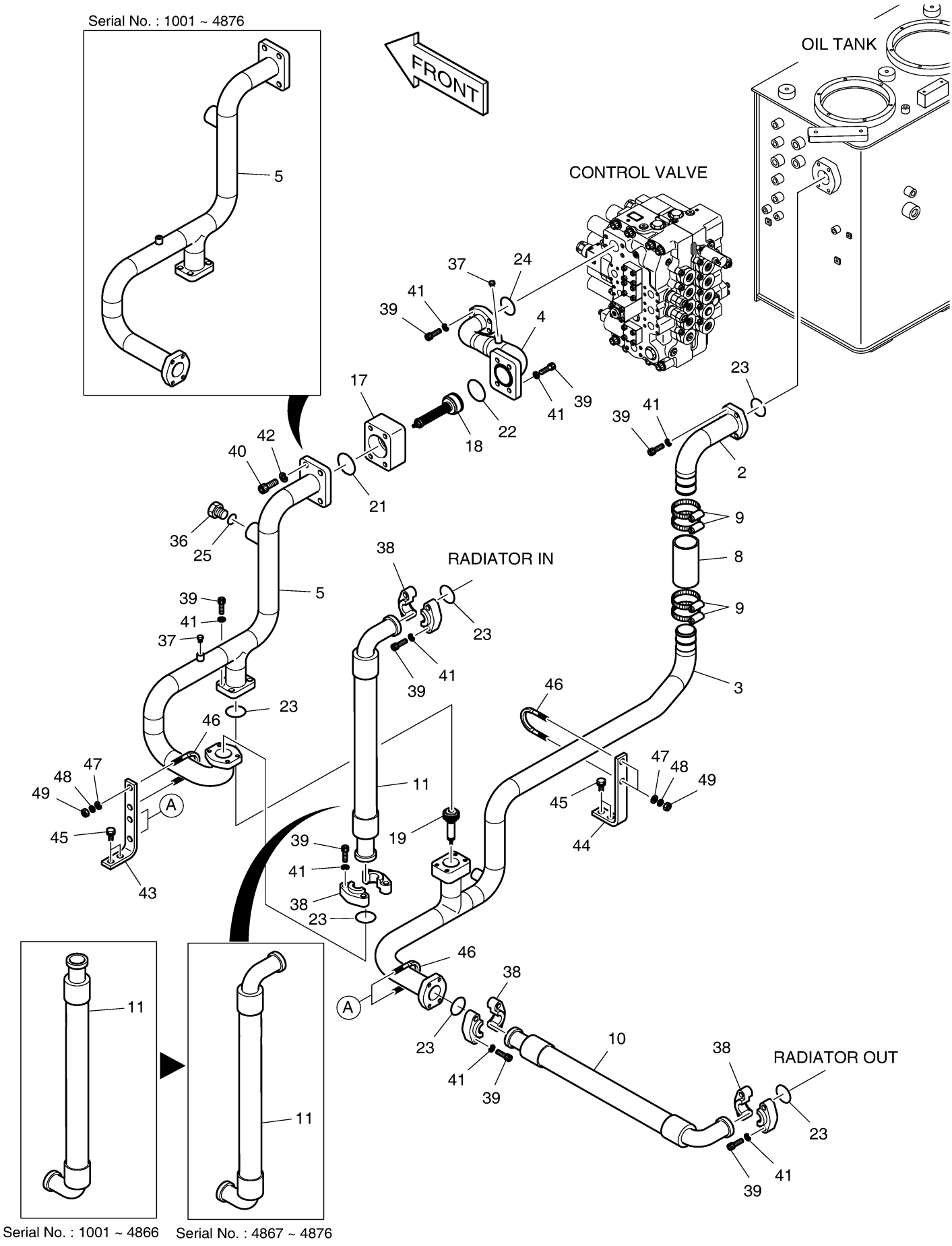

Fig. 1240 OIL COOLER PIPING(3)

Key No	Part No	Description	Qty	S.C	Serial No	ICA	Replacable	Qty
-	400-00355	OIL COOLER PIPING	-	D				
12	2184-1036D304	HOSE	1					
15	2184-1036D147	HOSE PF1/2-1000L	1					
16	2184-1036D187	HOSE PF1/2-1800L	1		1001~2212			
16	DS2053748	HOSE PF1/2-1800L	1		2213~			
25	S8000291	O-RING	2					
28	S8000181	O-RING	4					
29	2181-1126D25	ADAPTER	2					
32	2181-1126D6	ADAPTER	2		1001~2212			
32	2181-1126D6	ADAPTER	1		2213~			
33	2181-1126D83	ADAPTER	1					
35	2181-1702D2	ELBOW	1		1001~2212			
35	2181-1702D2	ELBOW	2		2213~			

Fig. 1240 OIL COOLER PIPING(3)

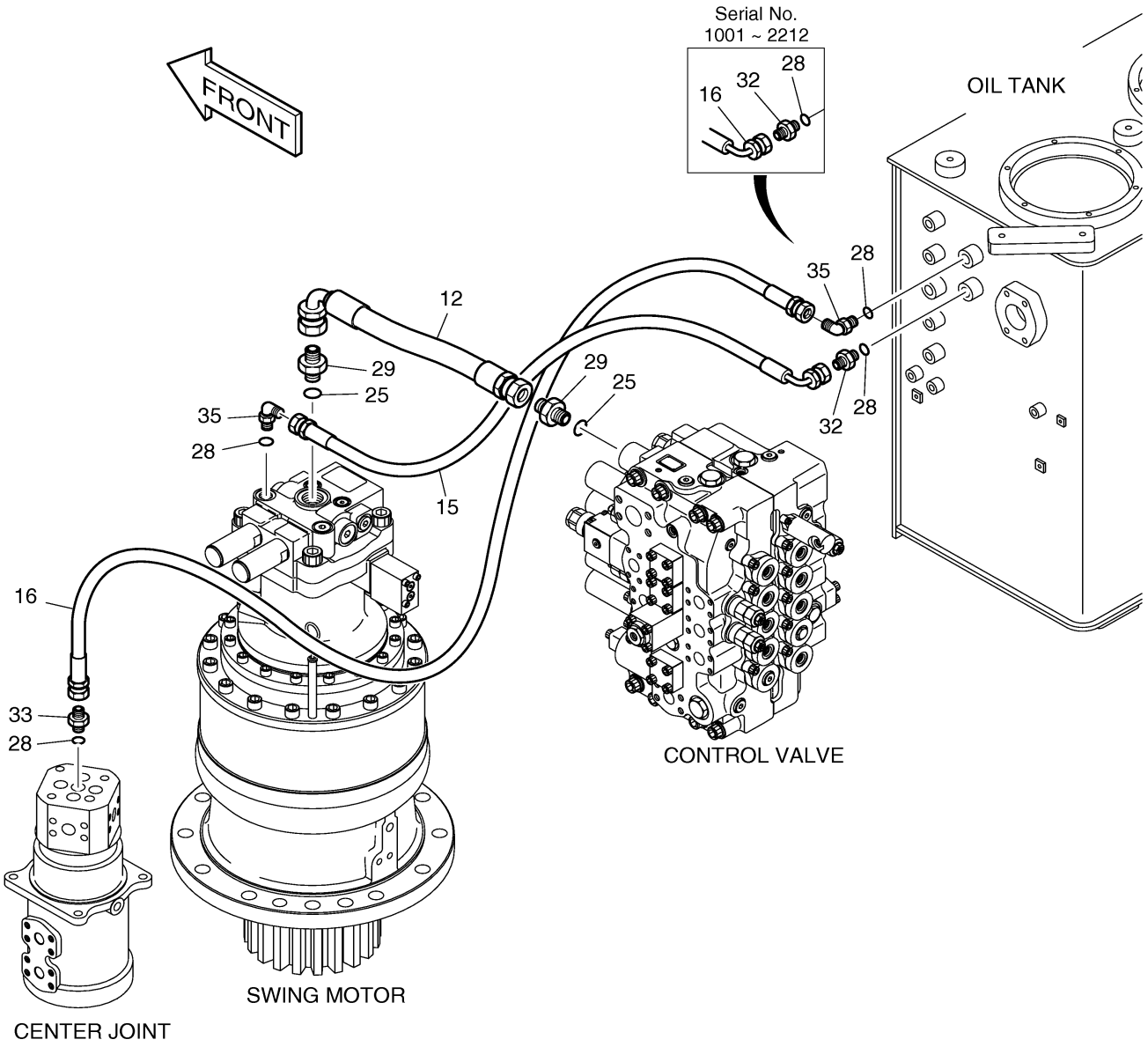

Fig. 1250 MAIN PIPING(1)

Key No	Part No	Description	Qty	S.C	Serial No	ICA	Replacable	Qty
-	400-00354	MAIN PIPING	-	D	1001~4852			
-	420212-00511	PIPING,MAIN	-	D	4853~			
1	420-00227	VALVE:CONTROL	1		1001~4852	I	410105-00056	1
1	410105-00056	VALVE,CONTROL	1		4853~			
2	S0565461	BOLT M16X2.0X60	4		1001~1099			
2	S0565466	BOLT	4		1100~			
3	114-00425	SPACER	4					
4	140-00798A	PIPE	1					
5	140-00795A	PIPE	1					
11	423-00143	BLOCK	2					
12	2180-1026D2	O-RING	8					
13	2180-1026D19	O-RING	4					
15	2181-9079	FLANGE	8					
16	2181-9080	FLANGE	4					
17	2181-9078	FLANGE	4					
21	S2212066	BOLT	8					
22	S2212266	BOLT	4					
23	S2212366	BOLT	8					
24	S2212466	BOLT	4					
26	S2215466	BOLT	8					
28	DS2040311	HOSE	1					
29	DS2040298	HOSE	1					
42	195-01490	BRACKET	1					
43	195-01491A	BRACKET	1					
47	195-01781	BRACKET	1					
48	2120-2196D11	BOLT;SET M12X1.75X35	6					
49	2124-1026D3	CLAMP;PIPE	3					
51	S5102703	WASHER	3					
52	S0561053	BOLT	3					
59	2547-9045	SENSOR;PRESSURE	2					
60	DS2242015	REDUCER	2					
61	S8000141	O-RING	2					
62	S2213766	BOLT;SOCKET M10X1.5X105	8					
63	195-01862	BRACKET	1		1001~1004			
63	195-01862A	BRACKET	1		1005~			
64	S2227866	BOLT	2					

Key No	Part No	Description	Qty	S.C	Serial No	ICA	Replacable	Qty
65	S5111103	WASHER;SPRING	2					
66	2181-1950D1	PLUG	2		1001~1004			
66	2181-2047A	PLUG	2		1005~			
67	S8000111	O-RING	2		1001~1004			
68	DS2045279	HOSE	1					
69	DS2043061	HOSE	1					

Fig. 1250 MAIN PIPING(1)

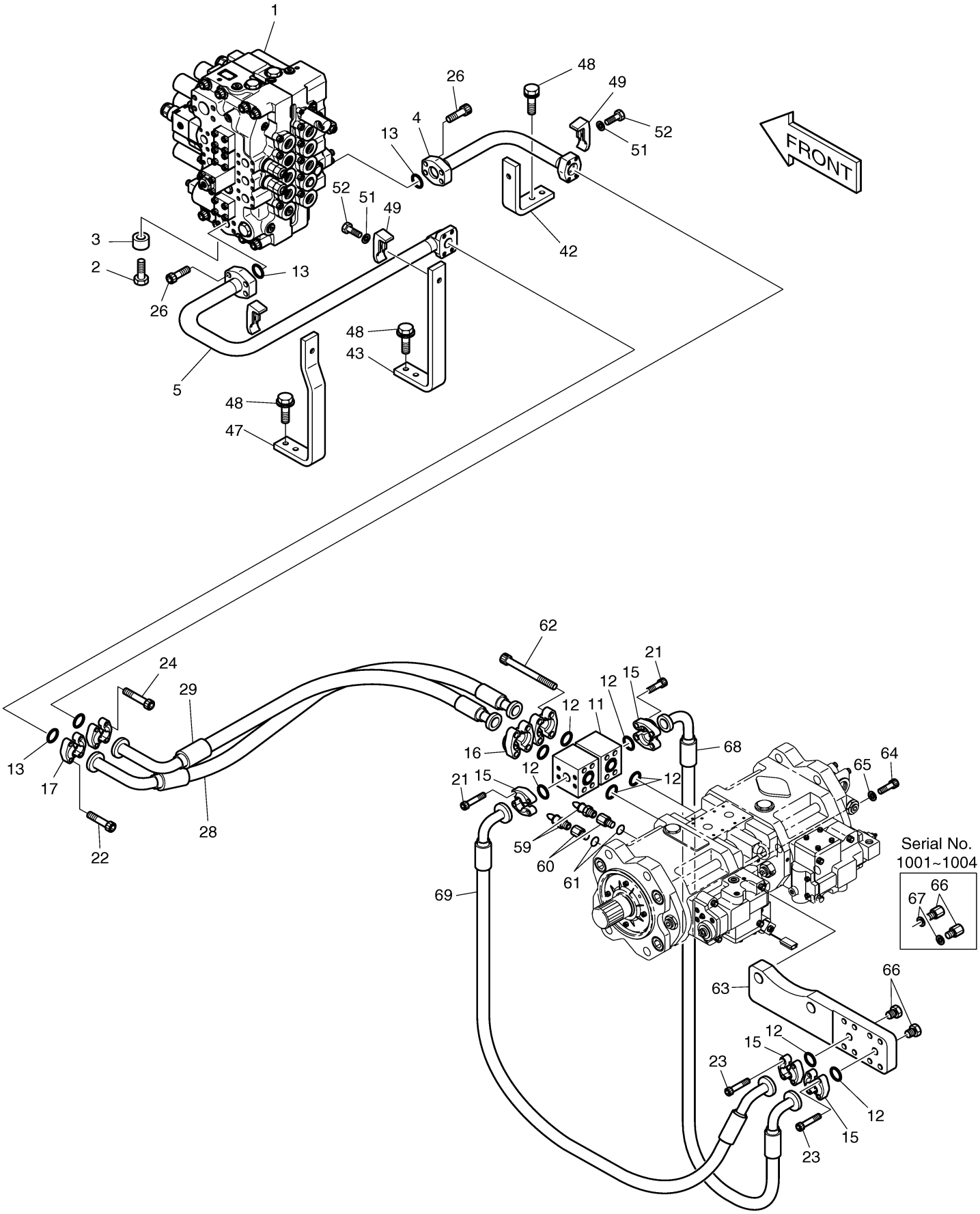

DOOSAN Doosan Infracore

Fig. 1260 MAIN PIPING(2)

Key No	Part No	Description	Qty	S.C	Serial No	ICA	Replacable	Qty
-	400-00354	MAIN PIPING	-	D	1001~4852			
-	420212-00511	PIPING,MAIN	-	D	4853~			
8	140-00801	PIPE	1					
9	140-00802A	PIPE	1					
13	2180-1026D19	O-RING	10					
17	2181-9078	FLANGE	16					
22	S2212266	BOLT	16					
23	S2212366	BOLT	8		1001~1019			
24	S2212466	BOLT	16		1001~1019			
24	S2212466	BOLT	24		1020~			
32	DS2038130	HOSE PF1-990L	4		1001~1832			
32	DS2038142	HOSE PF1-830L	4		1833~			
41	2891-1385A	PLATE	1					
46	195-01681	BRACKET	1					
48	2120-2196D11	BOLT;SET M12X1.75X35	4					
50	2124-1025D5	CLAMP	2					
51	S5102703	WASHER	2					
52	S0561053	BOLT	2					

Fig. 1260 MAIN PIPING(2)

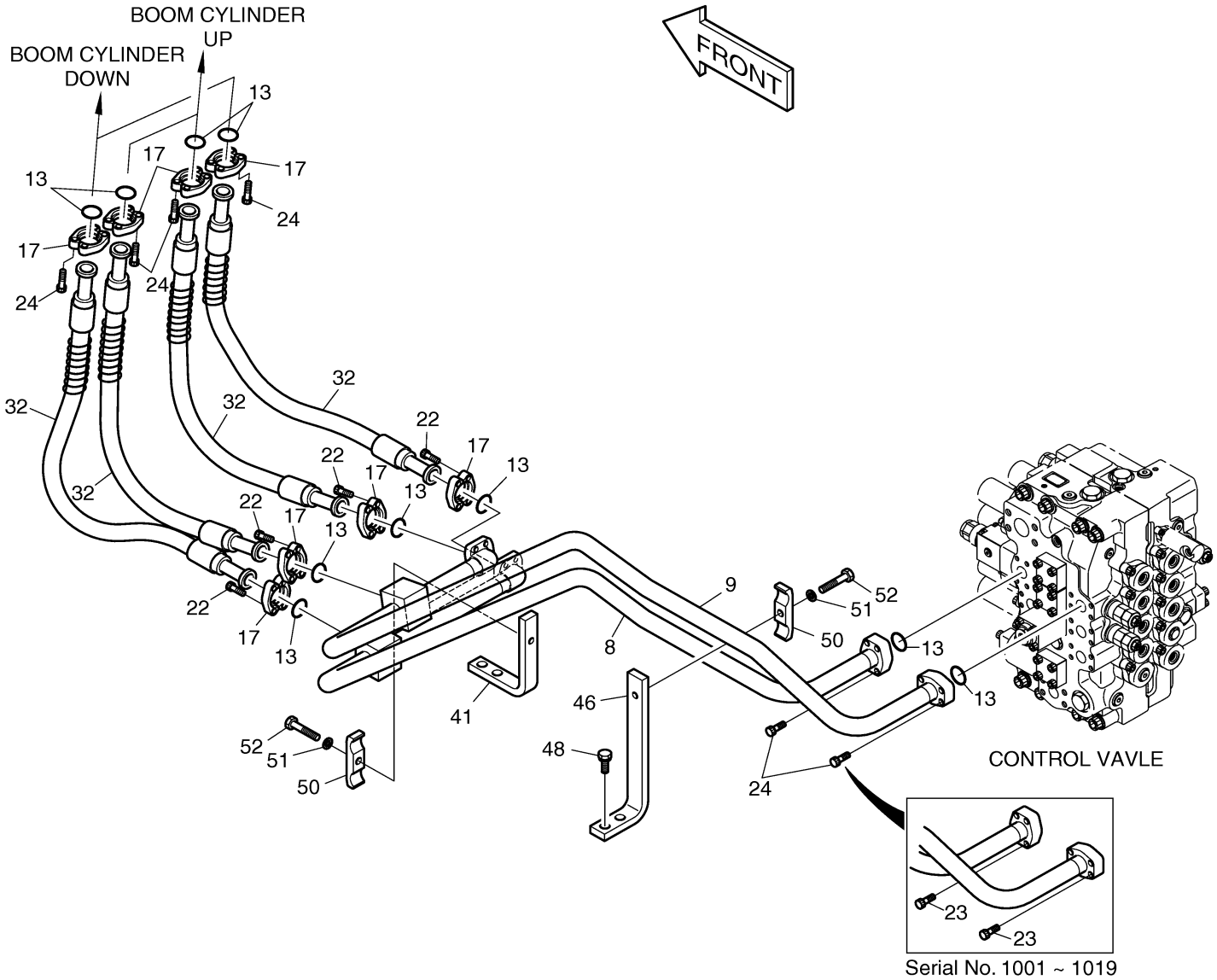

Fig. 1270 MAIN PIPING(3)

Key No	Part No	Description	Qty	S.C	Serial No	ICA	Replacable	Qty
-	400-00354	MAIN PIPING	-	D	1001~4852			
-	420212-00511	PIPING,MAIN	-	D	4853~			
6	140-00796A	PIPE	1					
7	140-00797A	PIPE	1					
10	2181-2170	BLOCK,SPACER	2					
13	2180-1026D19	O-RING	8					
17	2181-9078	FLANGE	8					
23	S2212366	BOLT	8		1001~1019			
24	S2212466	BOLT	8		1001~1019			
24	S2212466	BOLT	16		1020~			
25	S2213466	BOLT	8					
33	DS2038107	HOSE	1		1001~1057	I	DS2038141	1
33	DS2038141	HOSE-1700L	1		1058~			
34	DS2040302	HOSE	1		1001~1057	I	DS2040356	1
34	DS2040356	HOSE	1		1058~			
35	DS2040302	HOSE	1		1001~1057	I	DS2040356	1
35	DS2040356	HOSE	1		1058~			
36	DS2038107	HOSE	1		1001~1057	I	DS2038141	1
36	DS2038141	HOSE-1700L	1		1058~			
44	195-01492	BRACKET	1					
45	195-01493	BRACKET	1					
48	2120-2196D11	BOLT;SET M12X1.75X35	4					
49	2124-1026D3	CLAMP;PIPE	2					
51	S5102703	WASHER	2					
52	S0561053	BOLT	2					

Fig. 1270 MAIN PIPING(3)

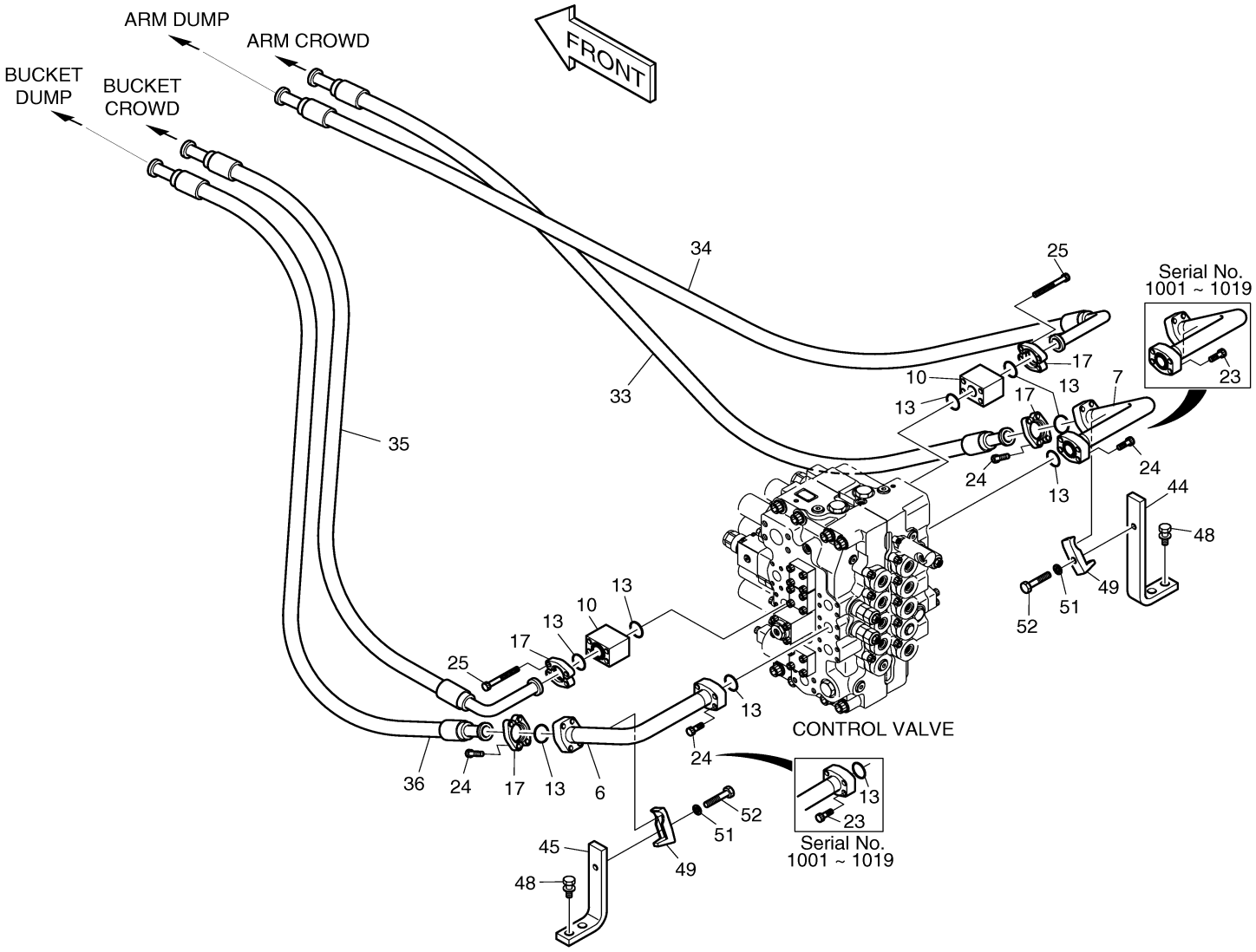

Fig. 1280 MAIN PIPING(4)

Key No	Part No	Description	Qty	S.C	Serial No	ICA	Replacable	Qty
-	400-00354	MAIN PIPING	-	D	1001~4852			
-	420212-00511	PIPING,MAIN	-	D	4853~			
13	2180-1026D19	O-RING	4					
14	2180-1026D24	O-RING	1					
17	2181-9078	FLANGE	7					
18	2181-9083	FLANGE	1					
20	2181-2157D6	FLANGE,COVER	1					
21	S2212066	BOLT	8					
22	S2212266	BOLT	8					
26	S2215466	BOLT	4					
30	DS2045221	HOSE	1					
31	DS2045252	HOSE	1					

Fig. 1280 MAIN PIPING(4)

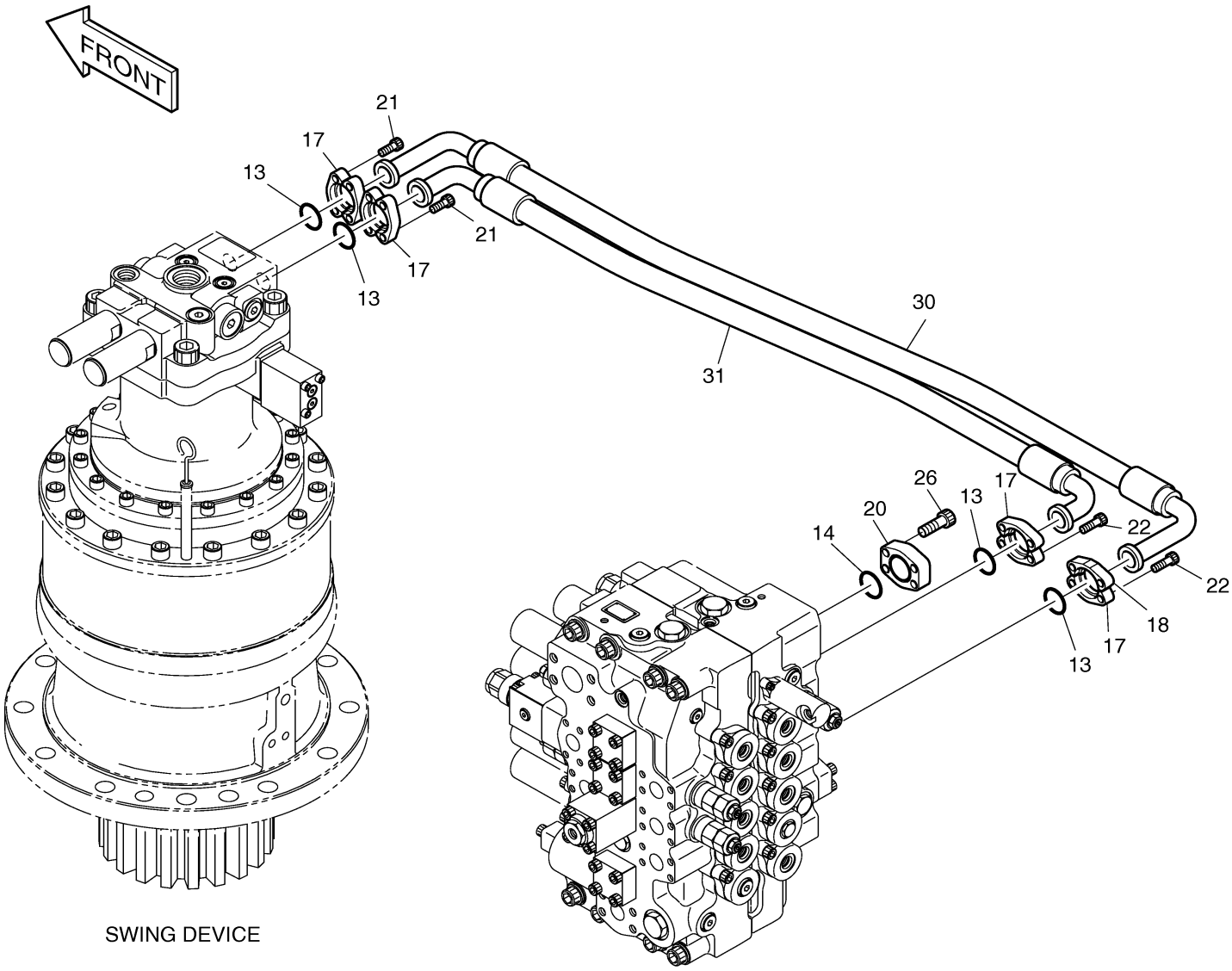

Fig. 1290 MAIN PIPING(5)

Key No	Part No	Description	Qty	S.C	Serial No	ICA	Replacable	Qty
-	400-00354A	MAIN PIPING	-	D	1001~4852			
-	420212-00511	PIPING,MAIN	-	D	4853~			
12	2180-1026D2	O-RING	4					
13	2180-1026D19	O-RING	4					
15	2181-9079	FLANGE	8					
17	2181-9078	FLANGE	8					
21	S2212066	BOLT	16					
22	S2212266	BOLT	16					
37	DS2045282	HOSE	1		1001~4076			
37	DS2045459	HOSE	1		4077~			
38	DS2040316	HOSE	1		1001~4076			
38	DS2040472	HOSE ASSY,HYDRAULIC	1		4077~			
39	DS2045283	HOSE	1		1001~4076			
39	DS2045460	HOSE	1		4077~			
40	DS2040317	HOSE	1		1001~4076			
40	DS2040347	HOSE PF3/4-1650L	1		4077~			
53	124-00192	CLAMP;HOSE	4		1001~4076			
54	621-01811	PLATE;CLAMP	2		1001~4076			
55	2114-1737	SPACER	2		1001~4076			
56	S0566053	BOLT M16X2.0X90	2		1001~4076			
57	S5010813	WASHER;PLAIN	2		1001~4076			
58	S5102903	WASHER	2		1001~4076			

Fig. 1290 MAIN PIPING(5)

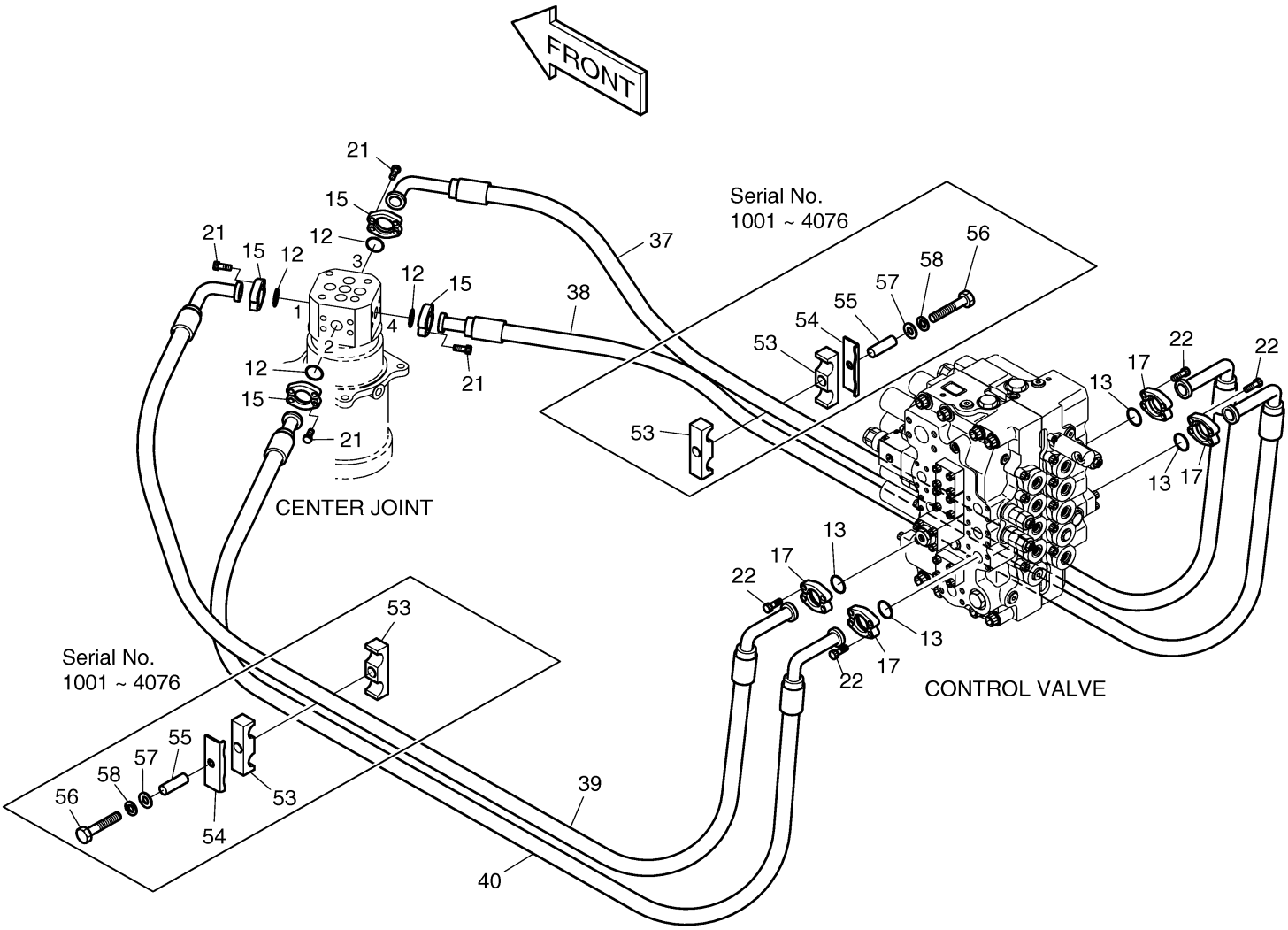

DOOSAN Doosan Infracore

Fig. 1300 ENGINE CONTROL ASS'Y (TIER-II)

Key No	Part No	Description	Qty	S.C	Serial No	ICA	Replacable	Qty
-	201-00081	ENGINE CONTROL ASS'Y	-	D				
1	195-01512A	BRACKET	1					
2	S5010713	WASHER	4					
3	S5102603	WASHER	2					
4	S0504553	BOLT	3					
5	S5102303	WASHER	3					
6	150-00009A	HOOK:CABLE	1					
7	S5102703	WASHER	4					
8	S4012533	NUT	1					
9	S5102503	WASHER	7					
10	195-01509	BRACKET	1		1001~3011	I	195-01509A	1
10	195-01509A	BRACKET	1		3012~			
11	2138-9006B	JOINT,BALL	1					
12	195-01503B	BRACKET	1					
13	2120-2196D8	BOLT	2					
14	S0556053	BOLT M8X1.25X35	2					
15	523-00006	MOTOR,E/G CONTROL	1					
16	2523-9016	MOTOR,E/G STOP	1					
17	621-01909	COVER	1					
18	S0508953	BOLT M8X1.25X22	6		1001~3011			
18	S0508953	BOLT M8X1.25X22	7		3012~			
19	S5010513	WASHER	6		1001~3011			
19	S5010513	WASHER	7		3012~			
20	S0511853	BOLT	2					
21	S5010613	WASHER	2					
22	195-01848A	BRACKET	1					
23	120-00276	BOLT	3					
24	2124-1509D10	CLIP	2					
25	133-00145A	LEVER	1					
26	S0786253	BOLT M12X1.5X30	4					
27	2139-6055D8	CABLE:CONTROL	1		1001~1019			
27	2139-6055D14	CABLE:CONTROL	1		1020~			
28	2124-1509D1	CLIP	1					
29	S4012233	NUT	1					
30	S5102203	WASHER	1					
31	124-00209D2	CLIP	1		3012~			

Fig. 1300 ENGINE CONTROL ASS'Y (TIER-II)

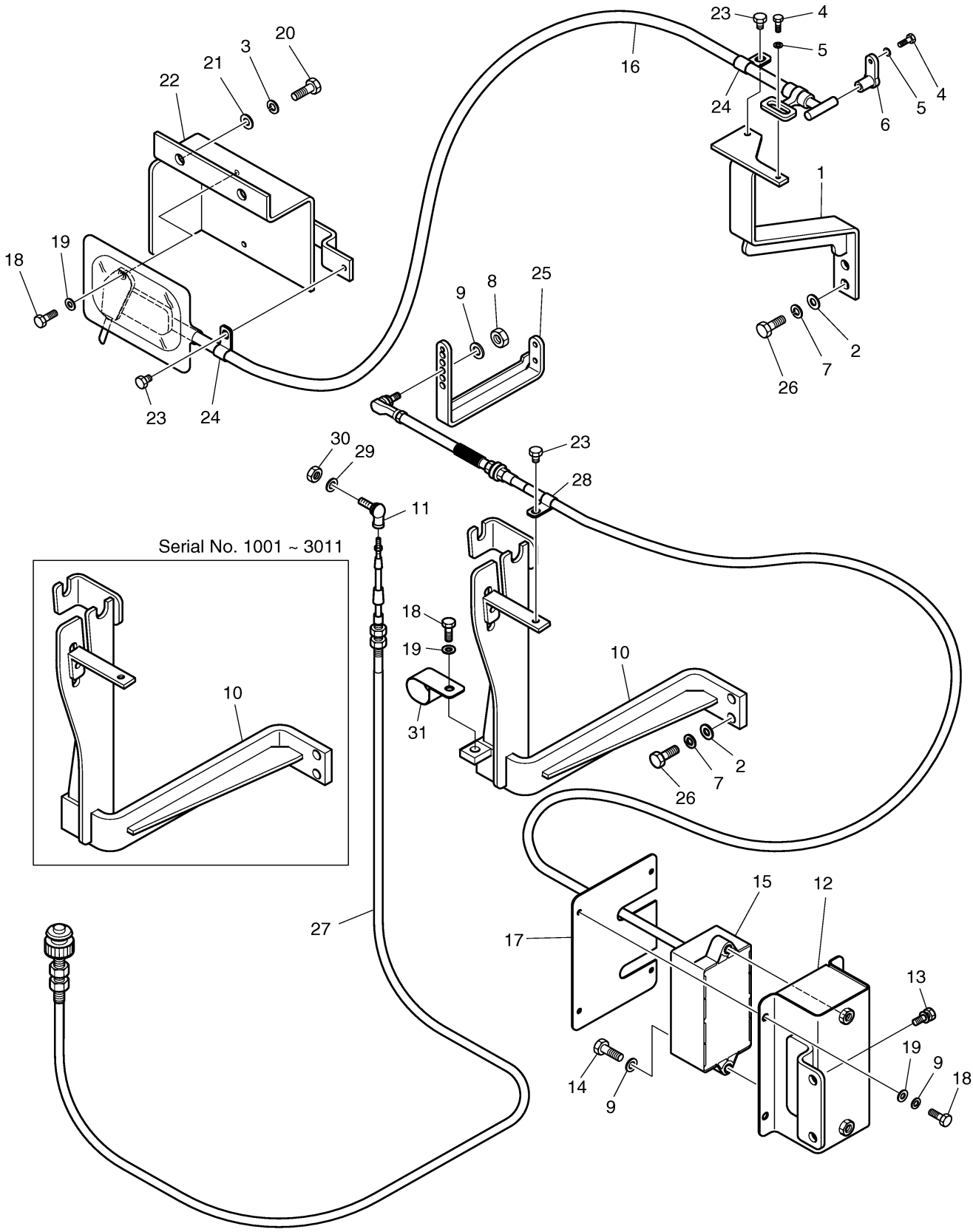

Fig. 1305 ENGINE CONTROL ASS'Y (TIER-I)

Key No	Part No	Description	Qty	S.C	Serial No	ICA	Replacable	Qty
-	133-00185	ENGINE CONTROL ASS'Y	-	D	1020~			
1	2197-1836A	BRACKET	1		1020~2284	I	K1000110	1
1	K1000110	BRACKET	1		2285~			
2	S0512053	BOLT	2					
3	S5102603	WASHER	4					
4	S0504553	BOLT	3					
5	S5102303	WASHER	3					
6	2150-1135A	HOOK;CABLE	1					
7	2120-2196D4	BOLT;SET M10X1.5X30	2					
8	S4012533	NUT	1					
9	S5102503	WASHER	7					
10	195-02221	BRACKET	1					
11	2138-9006B	JOINT,BALL	1					
12	195-01503B	BRACKET	1					
13	2120-2196D8	BOLT	2					
14	S0556053	BOLT M8X1.25X35	2					
15	523-00006	MOTOR,E/G CONTROL	1					
16	2523-9016	MOTOR,E/G STOP	1					
17	621-01909	COVER	1					
18	S0508953	BOLT M8X1.25X22	6					
19	S5010513	WASHER	6					
20	S0511853	BOLT	2					
21	S5010613	WASHER	2					
22	195-01848A	BRACKET	1					
23	120-00276	BOLT	3					
24	2124-1509D10	CLIP	2					
25	133-00184	LEVER	1					
26	195-02222	BRACKET	1					
27	2139-6055D14	CABLE:CONTROL	1					
28	2124-1509D1	CLIP	1					
29	S4012233	NUT	1					
30	S5102203	WASHER	1					

Fig. 1305 ENGINE CONTROL ASS'Y (TIER-I)

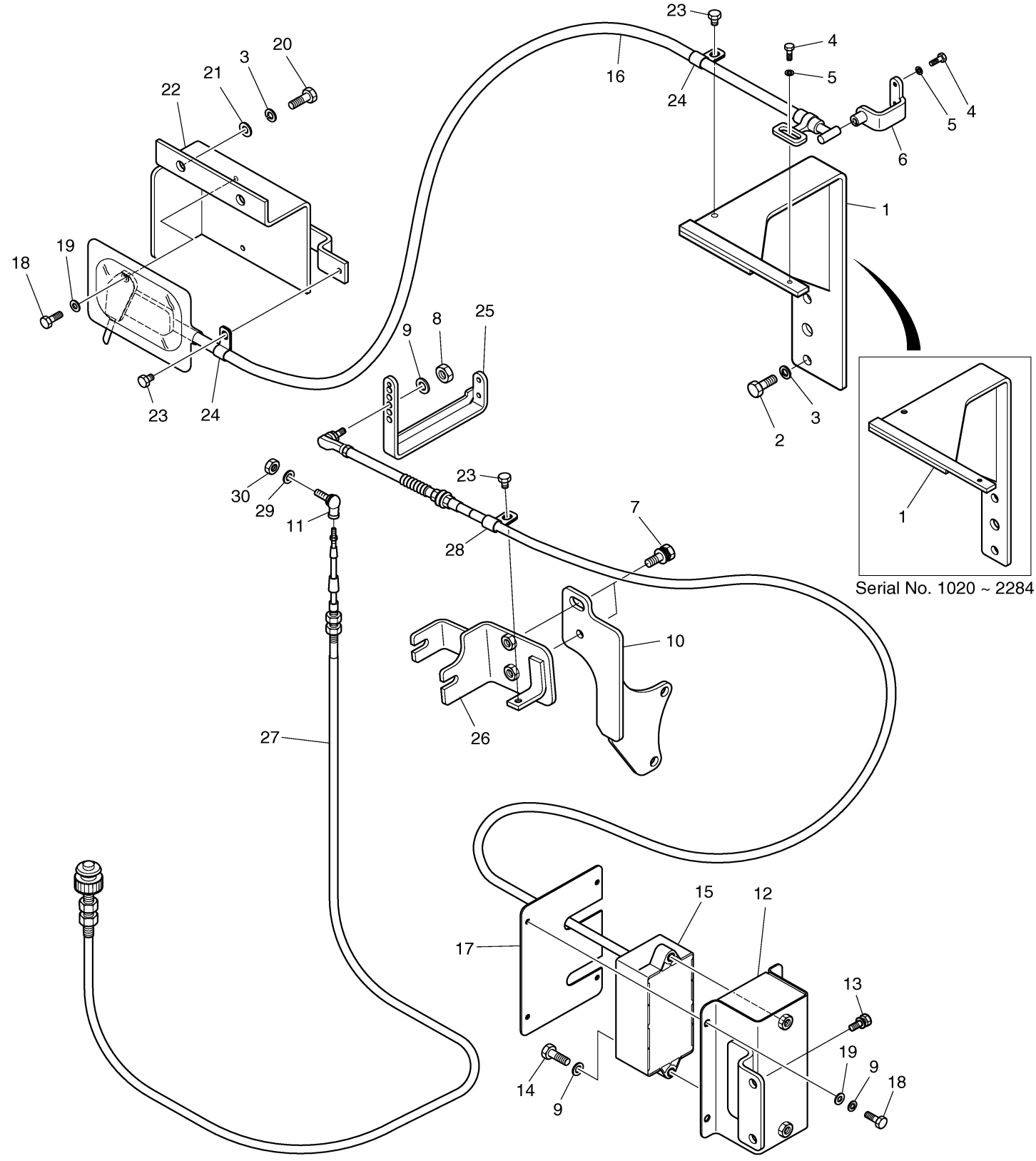

DOOSAN Doosan Infracore

Fig. 1310 PILOT PIPING(1)

Key No	Part No	Description	Qty	S.C	Serial No	ICA	Replacable	Qty
-	400-00813	PILOT PIPING(1)	-	D				
1	195-01601	BRACKET	1					
2	198-00016	RUBBER	2					
3	2114-1058D10	WASHER	2					
4	S0512253	BOLT M10X1.5X30	2					
5	471-00075	FILTER;PILOT	1		1001~1063	I	471-00075A	1
5	471-00075A	FILTER;PILOT	1		1064~			
5A	-	HEAD	1	D				
5B	2472-7003	CASE	1					
5C	2471-1154	ELEMENT;FILTER(PILOT)	1					
5D	2426-1237	VALVE;BY-PASS	1					
5E	2471-1155	INDICATOR	1		1001~1063			
5E	2471-1155A	INDICATOR	1		1064~			
5F	Y-3738-04	O-RING	1					
5G	Y-3738-05	RING;BACK UP	1					
5H	530-00236	HARNESS;PILOT FILTER	1					
5I	2197-1661	BRACKET	1					
5J	S0508653	BOLT	1		1064~			
5K	S5102503	WASHER	1		1064~			
6	S0553753	BOLT	2					
7	S5102303	WASHER	2					
28	S8000111	O-RING	6					
30	S8000181	O-RING	4					
34	2181-1126D14	ADAPTER	1					
36	2181-1126D6	ADAPTER	2					
37	2181-1702D4	ELBOW	4					
39	2181-1702D2	ELBOW	2					
40	2181-1702D56	ELBOW	1					
42	120-00276	BOLT	1		1170~			
56	DS2054240	HOSE	1					
57	2184-1026D388	HOSE PF1/2-2200L	1					
61	2184-1045D152	HOSE	1					
62	2184-1045D104	HOSE ASSY,HYDRAULIC	1					
88	2184-1046D63	HOSE PF1/4-500L	1		1001~2133			
88	2184-1046D81	HOSE PF1/4-650L	1		2134~			
92	124-00208D7	CLIP	1		1170~			

Fig. 1310 PILOT PIPING(1)

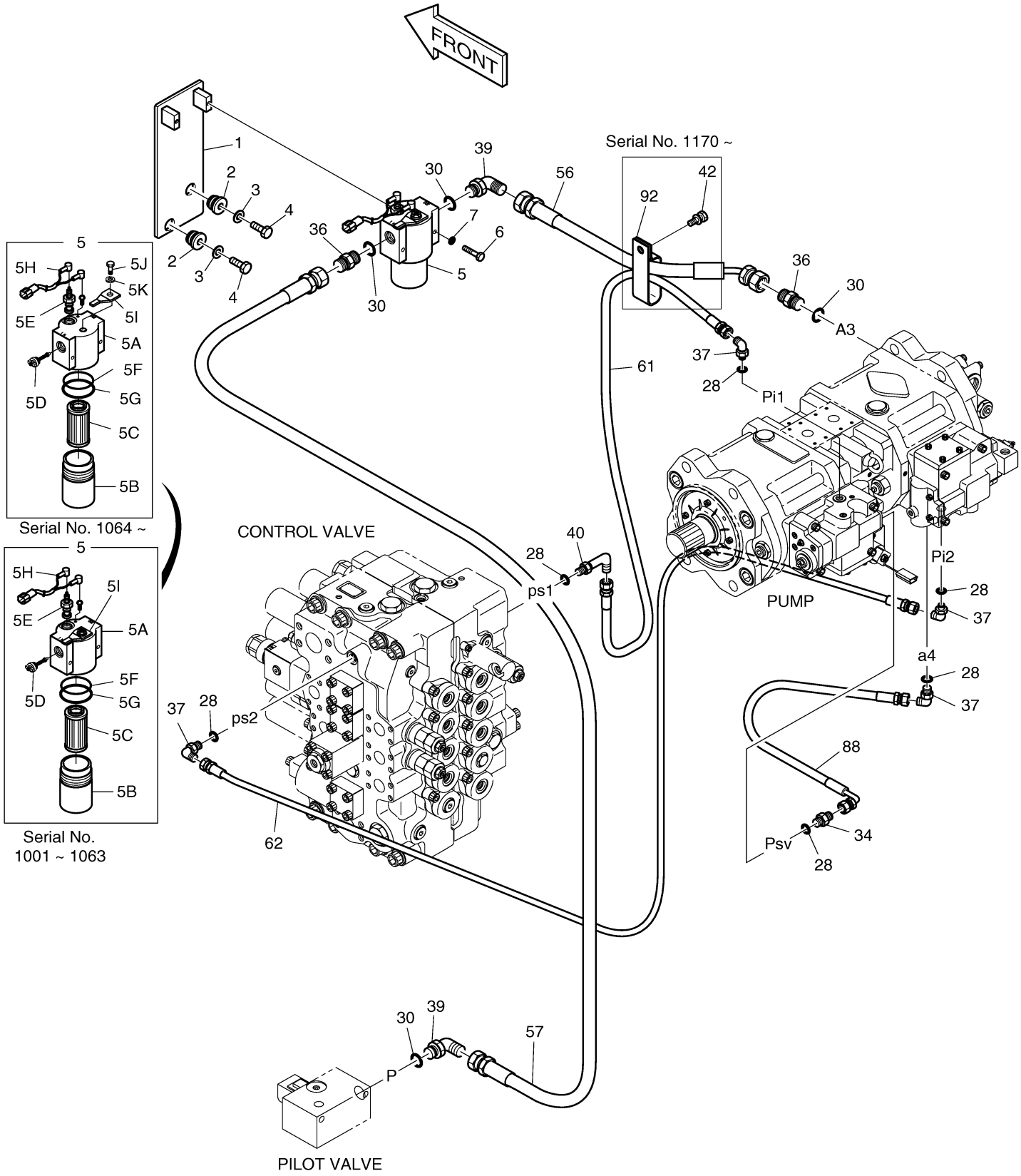

DOOSAN Doosan Infracore

Fig. 1320 PILOT PIPING(2)

Key No	Part No	Description	Qty	S.C	Serial No	ICA	Replacable	Qty
-	400-00813A	PILOT PIPING(2)	-	D				
9	2120-2196D8	BOLT	2					
19	195-01728A	BRACKET	1		1001~1019			
19	195-01993	BRACKET	1		1020~			
20	426-00163	SOLENOID VALVE	1		1001~2654	I	426-00163A	1
20	426-00163A	SOLENOID VALVE	1		2655~			
21	S0558953	BOLT	2					
22	S5102603	WASHER	4					
23	195-01583A	BRACKET	1		1001~1020	I	195-01583B	1
23	195-01583B	BRACKET	1		1021~			
24	2120-2196D4	BOLT;SET M10X1.5X30	2					
25	2426-9039B	VALVE;PILOT	1		1001~2654	I	2426-9039C	1
25	2426-9039C	VALVE;PILOT	1		2655~			
26	S0512053	BOLT	2					
27	2460-9057A	ACCUMULATOR	1		1001~1099			
27	2460-9060	ACCUMULATOR;PILOT	1		1100~			
28	S8000111	O-RING	10		1001~3665			
28	S8000111	O-RING	11		3666~			
30	S8000181	O-RING	4					
34	2181-1126D14	ADAPTER	4		1001~1099			
34	2181-1126D14	ADAPTER	3		1100~			
36	2181-1126D6	ADAPTER	2					
37	2181-1702D4	ELBOW	5		1001~1099			
37	2181-1702D4	ELBOW	6		1100~			
41	124-00209D1	CLIP	3					
42	120-00276	BOLT	3					
47	2181-1951D19	TEE	1					
48	2181-1951D1	TEE	1					
58	2184-1036D70	HOSE PF1/2-450L	1					
59	2184-1045D69	HOSE PF1/4-600L	1					
78	2184-1046D148	HOSE PF1/4-1450L	1		1001~1099			
78	2184-1045D102	HOSE PF1/4-1450L	1		1100~			
79	2184-1046D198	HOSE PF1/4-400L	1					
80	2184-1045D117	HOSE	1					
81	2184-1046D84	HOSE PF1/4-1050L	1					
82	2184-1046D149	HOSE PF1/4-1800L	1					

Key No	Part No	Description	Qty	S.C	Serial No	ICA	Replacable	Qty
94	471-00118	FILTER;REDUCER	1		3666~			

Fig. 1320 PILOT PIPING(2)

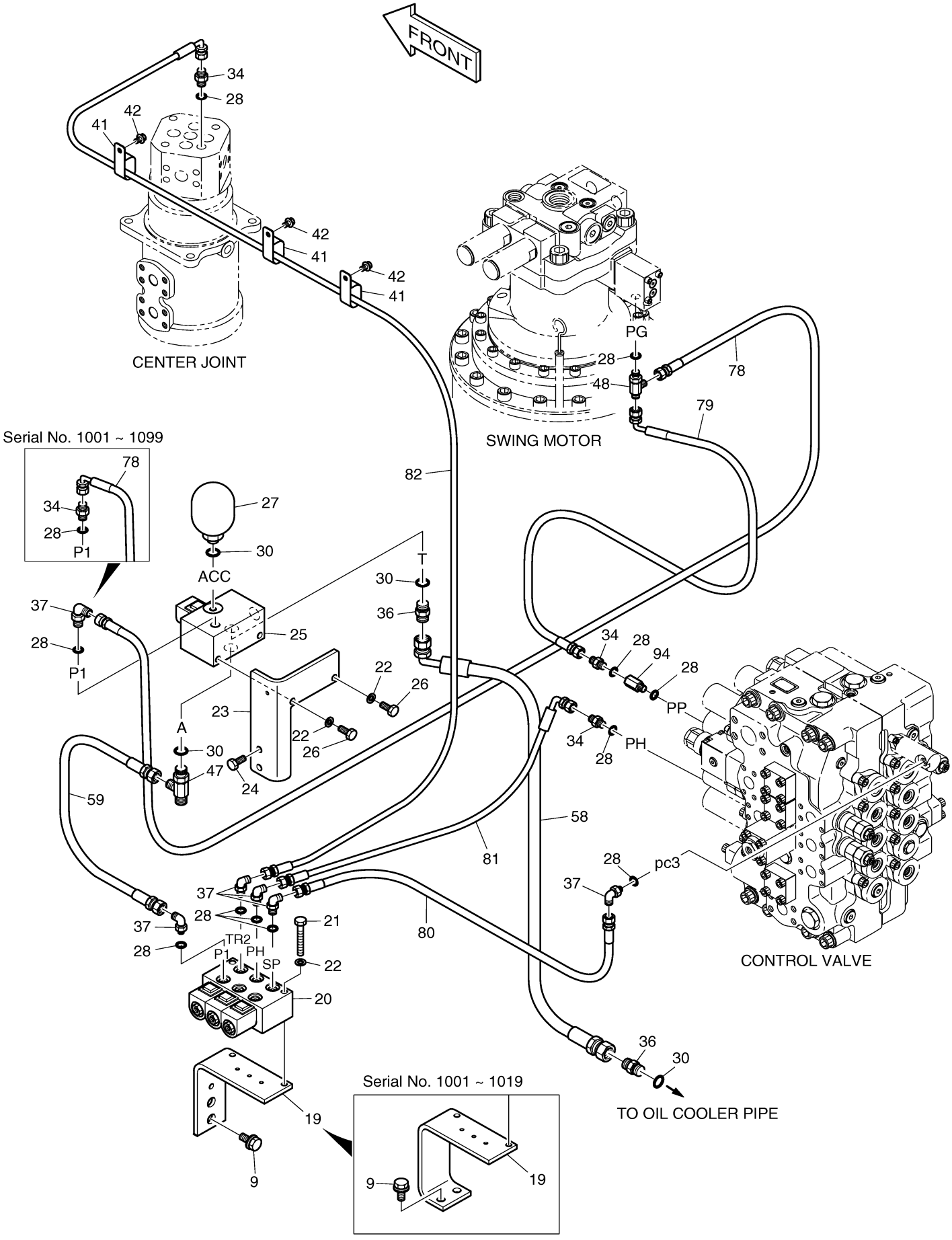

DOOSAN Doosan Infracore

Fig. 1330 PILOT PIPING(3)

Key No	Part No	Description	Qty	S.C	Serial No	ICA	Replacable	Qty
-	400-00813	PILOT PIPING(1)	-	D				
8	195-01469A	BRACKET	1					
9	2120-2196D8	BOLT	2					
10	420-00307	VALVE;SHUTTLE	1					
11	121-00010D1	NUT	4					
12	181-00086D2	TEE	1					
16	124-00187A	CLAMP	1					
18	124-00209D4	CLIP	1					
28	S8000111	O-RING	4					
29	S8000141	O-RING	6					
34	2181-1126D14	ADAPTER	1					
35	2181-1126D7	ADAPTER	4		1001~2758			
35	2181-1126D7	ADAPTER	2		2759~			
37	2181-1702D4	ELBOW	1					
42	120-00276	BOLT	2					
45	2181-1702D3	ELBOW	1					
51	2181-1951D16	TEE	2					
54	2181-2635	TEE	1					
55	2549-9112	SWITCH;PRESSURE	2					
63	2184-1046D291	HOSE PF3/8-1550L	1					
64	2184-1046D275	HOSE PF3/8-1650L	1					
65	2184-1046D35	HOSE PF1/4-680L	1					
66	2184-1046D275	HOSE PF3/8-1650L	1					
67	2184-1046D213	HOSE PF3/8-1050L	1					
68	DS2055676	HOSE PF3/8-1600L	1					
69	2184-1046D247	HOSE PF3/8-1000L	1					
70	2184-1046D284	HOSE PF3/8-1800L	1					
83	2184-1061D297	HOSE PF1/4-450L	1					
91	420-00352D1	VALVE,SHOCKLESS	1					
93	181-00144D6	ADAPTER	2		2759~			

Fig. 1330 PILOT PIPING(3)

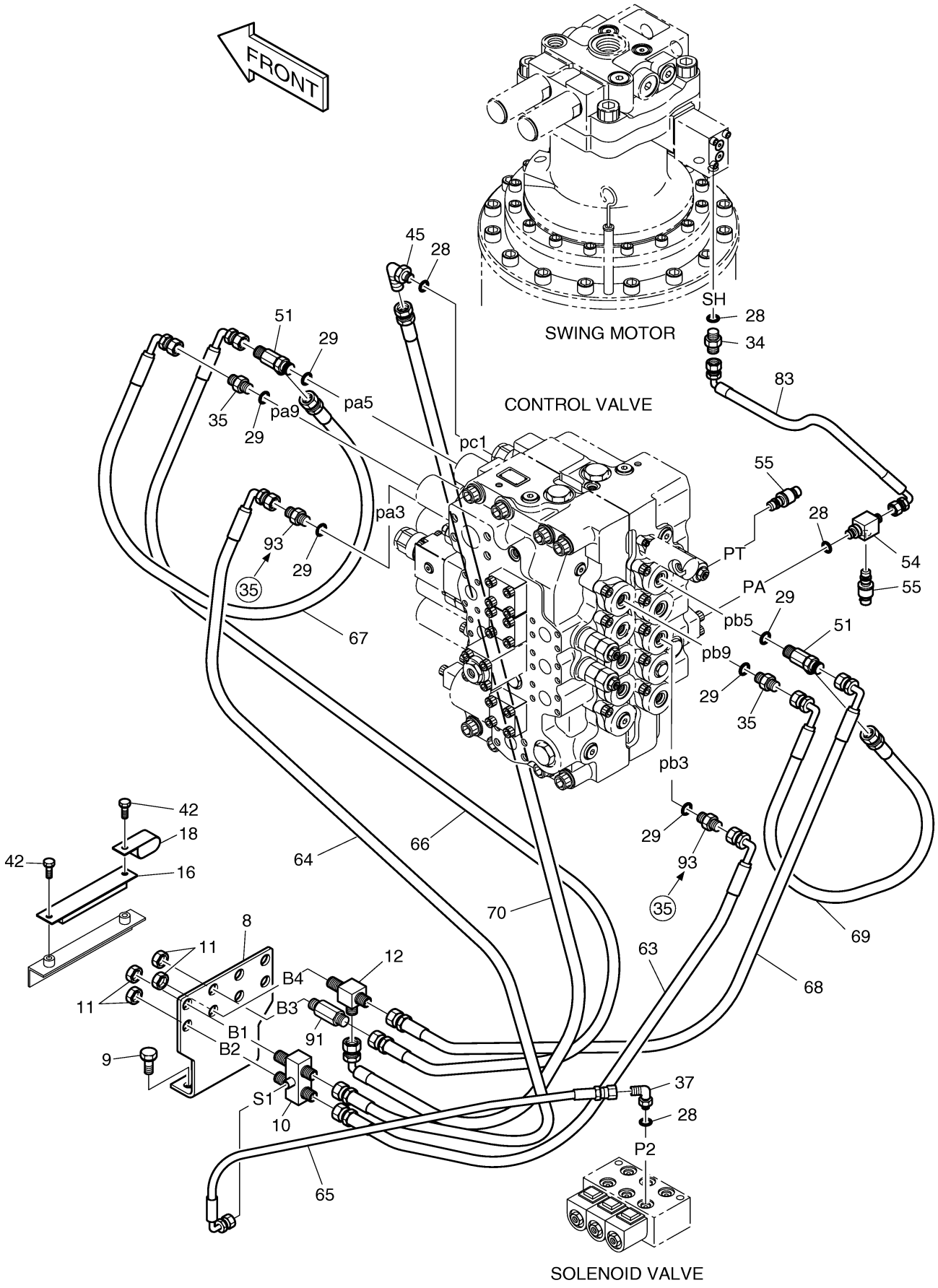

DOOSAN Doosan Infracore

Fig. 1340 PILOT PIPING(4)

Key No	Part No	Description	Qty	S.C	Serial No	ICA	Replacable	Qty
-	400-00813	PILOT PIPING(1)	-	D				
11	121-00010D1	NUT	4					
12	181-00086D2	TEE	1					
13	181-00086D1	TEE	1					
15	181-00078D1	ADAPTER	2					
28	S8000111	O-RING	2					
29	S8000141	O-RING	9					
35	2181-1126D7	ADAPTER	4					
37	2181-1702D4	ELBOW	1					
38	2181-1702D10	ELBOW	4					
45	2181-1702D3	ELBOW	1					
51	2181-1951D16	TEE	1					
71	2184-1046D123	HOSE PF3/8-1500L	1					
72	2184-1046D212	HOSE PF3/8-1200L	1					
73	2184-1046D108	HOSE PF1/4-1300L	1					
74	2184-1046D295	HOSE PF3/8-1450L	1					
75	2184-1046D123	HOSE PF3/8-1500L	1					
76	2184-1046D295	HOSE PF3/8-1450L	1					
77	DS2055677	HOSE PF3/8-1350L	1					

Fig. 1340 PILOT PIPING(4)

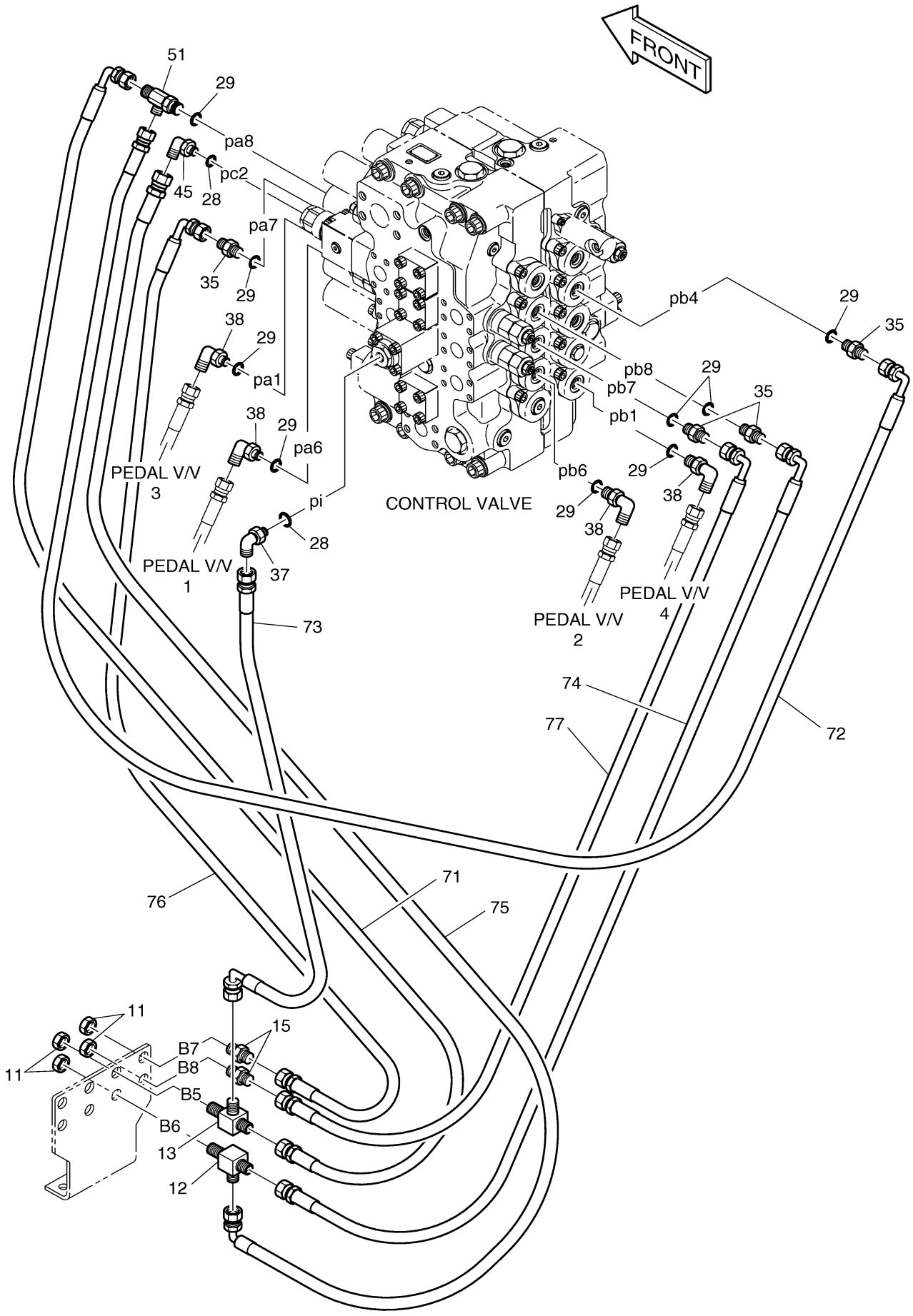

DOOSAN Doosan Infracore

Fig. 1350 PILOT PIPING(5)

Key No	Part No	Description	Qty	S.C	Serial No	ICA	Replacable	Qty
-	400-00813	PILOT PIPING(1)	-	D				
28	S8000111	O-RING	3					
29	S8000141	O-RING	8					
30	S8000181	O-RING	1					
31	2181-1950D1	PLUG	1					
32	2181-1950D3	PLUG	3					
33	2181-1702D5	ELBOW	1					
35	2181-1126D7	ADAPTER	1					
39	2181-1702D2	ELBOW	1					
46	DS2349012	TEE	1					
49	2181-2281D21	TEE	1					
51	2181-1951D16	TEE	1					
60	2184-1026D388	HOSE PF1/2-2200L	1					
84	2184-1046D157	HOSE PF1/4-800L	1					
85	DS2053741	HOSE PF3/8-1000L	1					
86	2184-1046D247	HOSE PF3/8-1000L	1					
87	2184-1046D211	HOSE PF3/8-650L	1					
89	2181-2419D1	ELBOW	1					
90	2181-1126D27	ADAPTER	1					

Fig. 1350 PILOT PIPING(5)

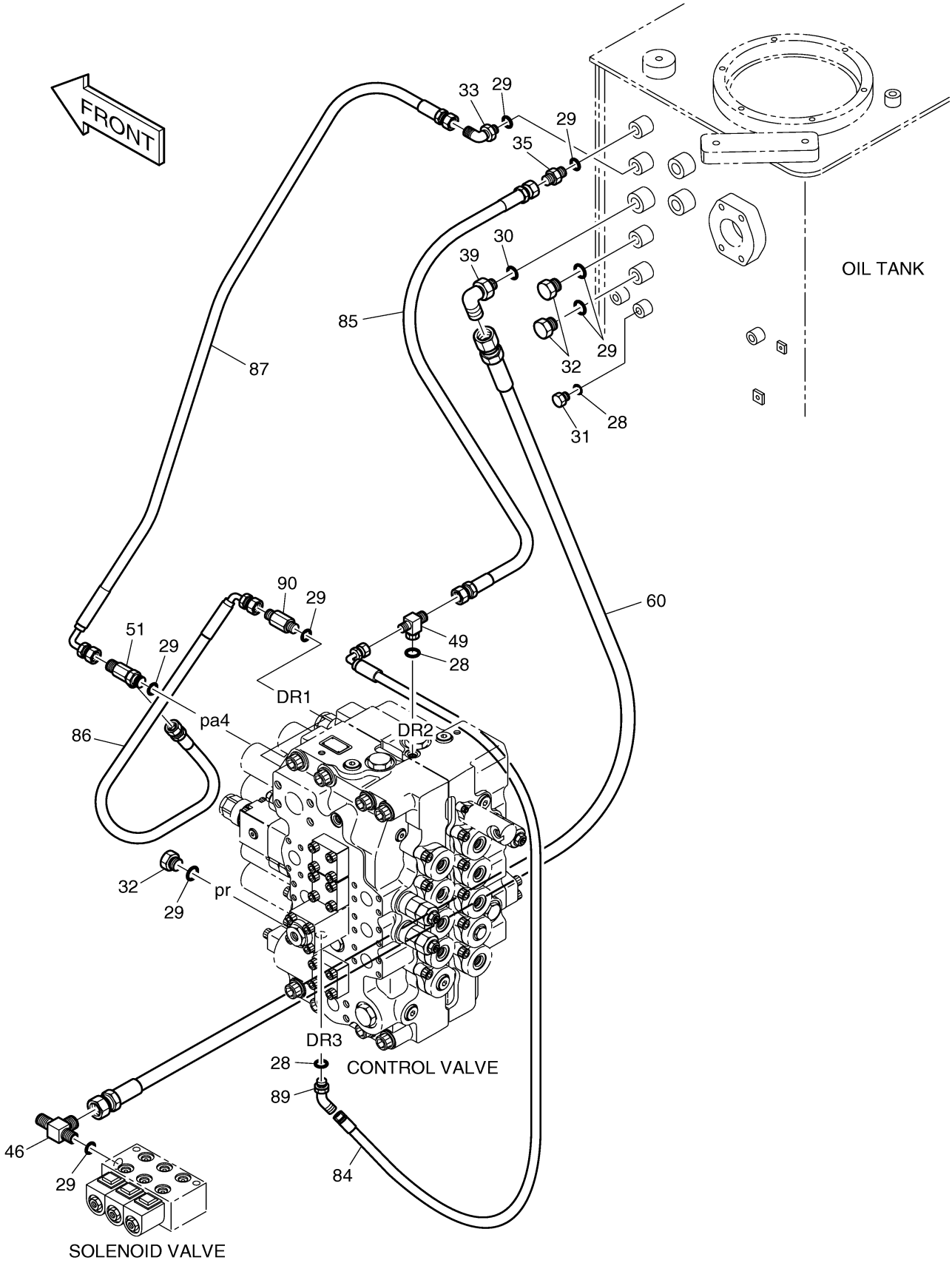

DOOSAN Doosan Infracore

Fig. 1360 PILOT PIPING(6)

Key No	Part No	Description	Qty	S.C	Serial No	ICA	Replacable	Qty
-	400-00648C	PILOT PIPING(8)	-	D				
1	420-00342A	REMOTE CONTROL VALVE(L.H)	1		1001~3728	I	420-00342B	1
1	420-00342B	REMOTE CONTROL VALVE(L.H)	1		3729~			
3	S2205066	BOLT	4					
11	S8000111	O-RING	6					
12	S8000141	O-RING	2					
15	2181-1126D7	ADAPTER	1					
17	2181-1126D89	ADAPTER	3					
18	2181-1126D120	ADAPTER	3					
21	2181-1702D5	ELBOW	1					
22	2621-2752	PLATE	1					
23	124-00226A	CLAMP;HOSE	1					
25	2184-1267D9	HOSE PF3/8-1950L	1					
26	2184-1267D10	HOSE PF3/8-2050L	1					
27	DS2062020	HOSE PF3/8-2350L	1					
28	DS2062020	HOSE PF3/8-2350L	1					
29	DS2062020	HOSE PF3/8-2350L	1					
30	DS2062020	HOSE PF3/8-2350L	1					
45	120-00276	BOLT	2					

Fig. 1360 PILOT PIPING(6)

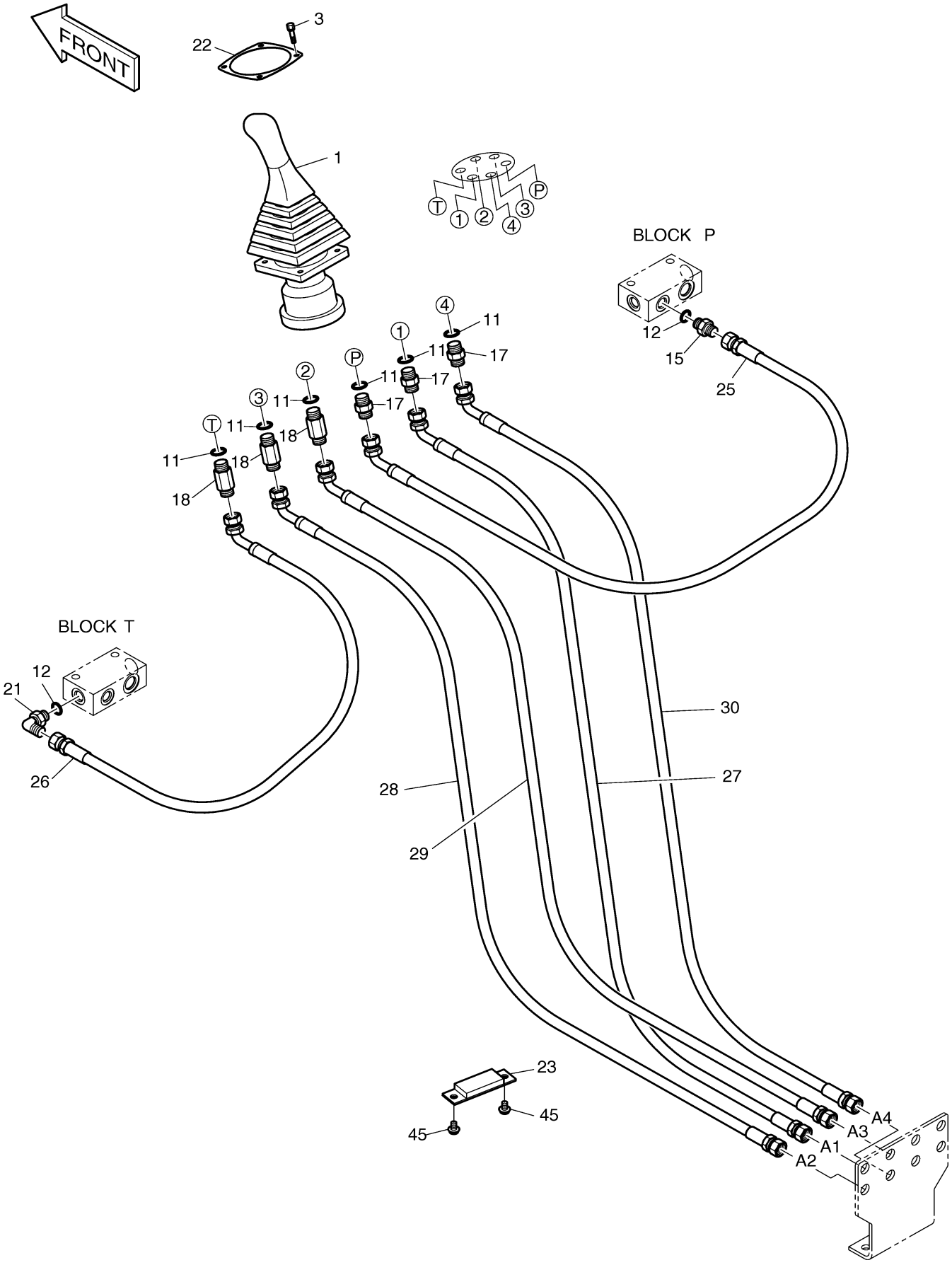

DOOSAN Doosan Infracore

Fig. 1370 PILOT PIPING(7)

Key No	Part No	Description	Qty	S.C	Serial No	ICA	Replacable	Qty
-	400-00648C	PILOT PIPING(8)	-	D				
2	420-00343A	REMOTE CONTROL VALVE(R.H)	1		1001~3728	I	420-00343B	1
2	420-00343B	REMOTE CONTROL VALVE(R.H)	1		3729~			
3	S2205066	BOLT	4					
11	S8000111	O-RING	6					
12	S8000141	O-RING	2					
15	2181-1126D7	ADAPTER	1					
17	2181-1126D89	ADAPTER	6					
21	2181-1702D5	ELBOW	1					
22	2621-2752	PLATE	1					
23	124-00226A	CLAMP;HOSE	1					
31	2184-1060D151	HOSE PF3/8-1950L	1					
32	2184-1060D151	HOSE PF3/8-1950L	1					
33	2184-1060D147	HOSE PF3/8-2200L	1					
34	2184-1060D147	HOSE PF3/8-2200L	1					
35	2184-1060D147	HOSE PF3/8-2200L	1					
36	2184-1060D147	HOSE PF3/8-2200L	1					
45	120-00276	BOLT	2					

Fig. 1370 PILOT PIPING(7)

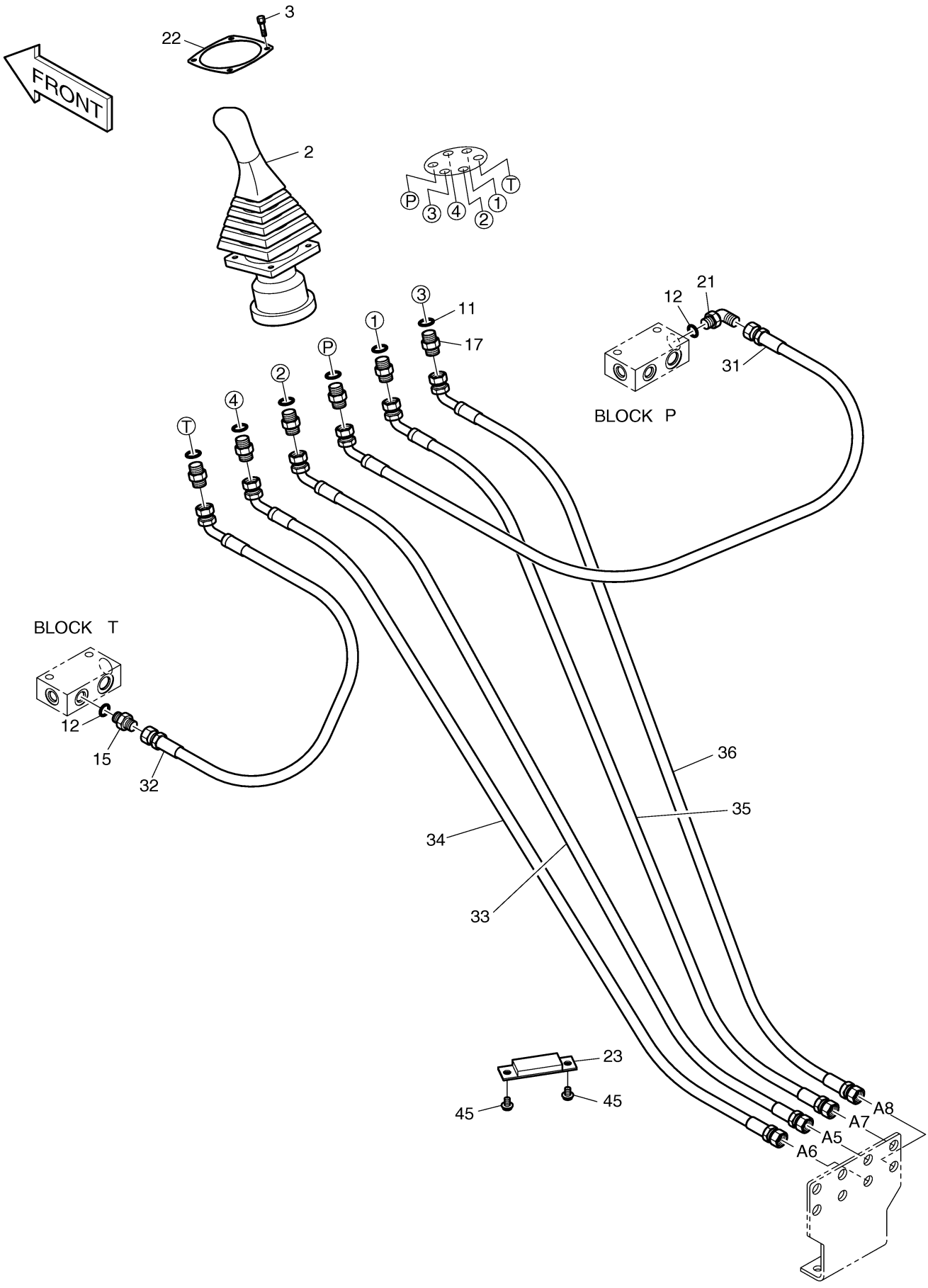

DOOSAN Doosan Infracore

Fig. 1380 PILOT PIPING(8)

Key No	Part No	Description	Qty	S.C	Serial No	ICA	Replacable	Qty
-	400-00648C	PILOT PIPING(8)	-	D				
4	420-00030	PEDAL VALVE	1					
5	S2212266	BOLT	4					
6	S5110603	WASHER	4					
7	S5010613	WASHER	4					
8	2423-1470	BLOCK	2					
9	S5102603	WASHER	4					
10	S0558653	BOLT M10X1.5X55	2					
11	S8000111	O-RING	6					
12	S8000141	O-RING	2					
13	S8000181	O-RING	2					
14	2181-1126D14	ADAPTER	6					
16	2181-1126D36	ADAPTER	2					
19	2181-1126D6	ADAPTER	1					
20	2471-1135	FILTER	1					
24	124-00209D4	CLIP	1					
37	2184-1045D42	HOSE PF1/4-420L	1					
38	2184-1045D42	HOSE PF1/4-420L	1					
39	DS2055675	HOSE PF1/4-3550L	1					
40	2184-1046D67	HOSE PF1/4-3500L	1					
41	DS2055650	HOSE PF1/4-3400L	1					
42	DS2055651	HOSE PF1/4-3650L	1					
43	2184-1036D187	HOSE PF1/2-1800L	1					
44	DS2054238	HOSE PF1/2-2050L	1					
45	120-00276	BOLT	2					
46	124-00209D3	CLIP	1					
47	S0558753	BOLT M10X1.5X60	2					
48	621-02151	PLATE	1					
49	198-00016	RUBBER	2					
50	2114-1058D10	WASHER	2					
51	S0512253	BOLT M10X1.5X30	2					

Fig. 1380 PILOT PIPING(8)

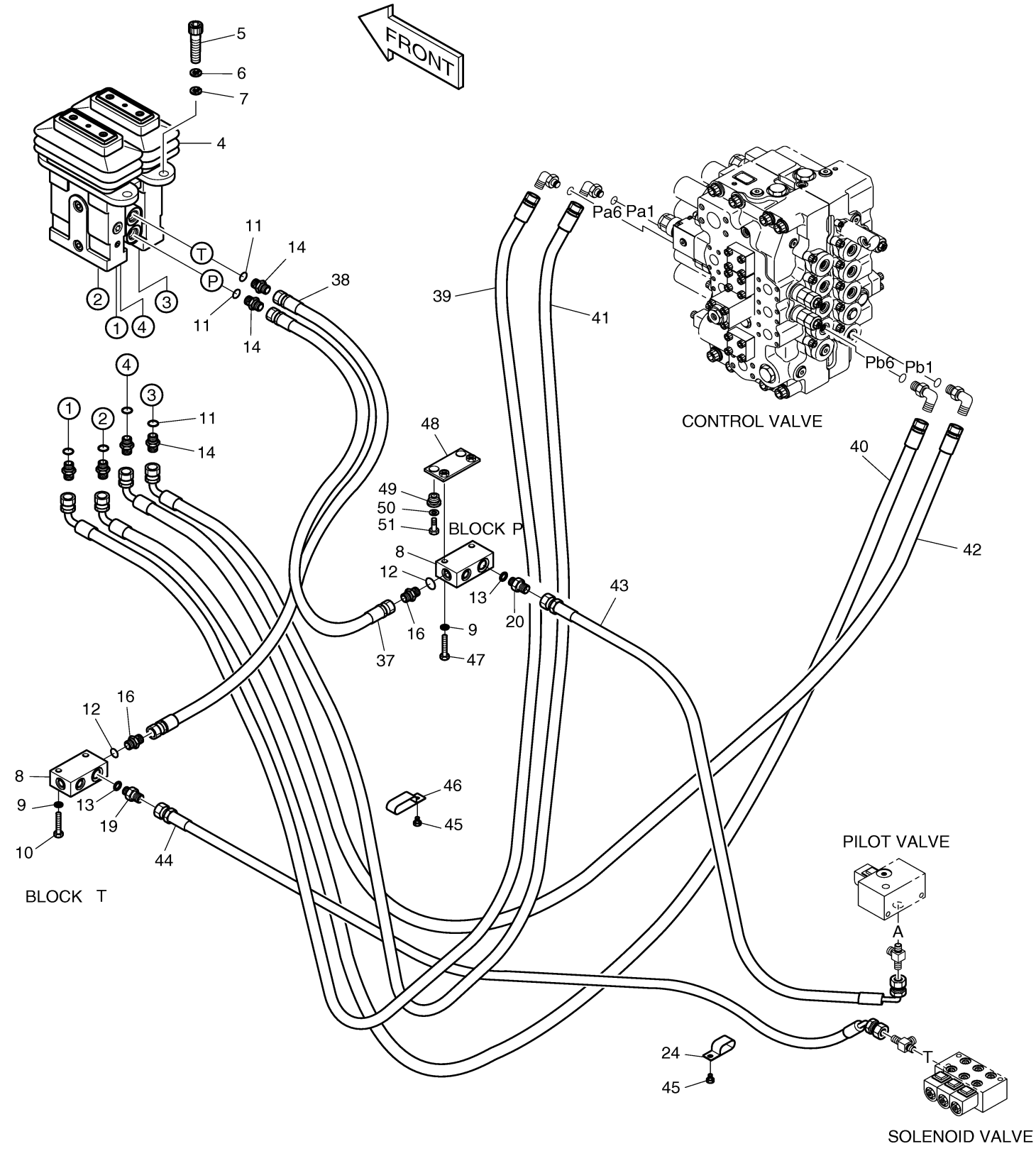

DOOSAN Doosan Infracore

Fig. 1390 CONTROL STAND-L.H

Key No	Part No	Description	Qty	S.C	Serial No	ICA	Replacable	Qty
-	195-01710A	STAND ASS'Y	-	D	1001~1019			
-	195-01710C	STAND ASS'Y	-	D	1020~1234			
-	195-01710E	STAND ASS'Y	-	D	1235~1319			
-	195-01710G	STAND ASS'Y	-	D	1320~2940			
-	195-01710H	STAND ASS'Y	-	D	2941~3322			
-	195-01710K	STAND ASS'Y	-	D	3323~			
6	195-01617B	BRACKET;STAND(L.H)	1					
6-12	2110-1184D37	BUSH;DU	2					
7	621-01822	CASE;STAND	1					
8	621-01823	CASE;STAND	1					
9	621-01827	PLATE;SWITCH	1					
11	2158-1021	PROTECTOR	1					
12	S8450066	CLAMP;HOSE	2					
13	195-01730A	BRACKET	1					
14	2120-2166D6	BOLT	4					
15	2114-1898D3	WASHER	8					
16	2114-1898D4	WASHER	12					
17	2120-2166D8	BOLT	9					
18	2123-2240	PIN	1					
19	S6541900	RING;RETAINER	1					
20	2114-4129	WASHER	1					
21	2114-1059D31	SHIM	3					
22	2120-2166D5	BOLT	6					
23	2114-1898D2	WASHER	8		1001~4009			
23	2114-1898D2	WASHER	7		4010~			
24	621-01850	COVER;HOLE	1					
25	S2202863	BOLT;SOCKET M5X0.8X10	3		1001~1019			
25	S2202866	BOLT	3		1020~			
26	2121-1311D2	NUT	1		1001~4009			
26	2121-1311D2	NUT	2		4010~			
27	142-00052	STRIKER	1					
28	159-00114	PLATE,MICRO	1					
29	DS1001039	SPRING;GAS	1		1001~1019			
29	DS1001045	GAS SPRING	1		1020~			
30	133-00163A	LEVER;SAFETY	1		1001~1019	I	133-00163B	1
30	133-00163B	LEVER;SAFETY	1		1020~1234	I	133-00163C	1

Key No	Part No	Description	Qty	S.C	Serial No	ICA	Replacable	Qty
30	133-00163C	LEVER;SAFETY	1		1235~2940	I	133-00163E	1
30	133-00163E	LEVER;SAFETY	1		2941~3322	I	133-00163G	1
30	133-00163G	LEVER;SAFETY	1		3323~4009			
30	133-00163H	LEVER;SAFETY	1		4010~			
30-1	159-00223A	PLATE	1		1001~2940			
30-1	159-00223B	PLATE	1		2941~4009			
30-1	159-00223C	PLATE	1		4010~			
30-2	133-00130A	LEVER	1		1001~2940	I	133-00130B	1
30-2	133-00130B	LEVER	1		2941~3322	I	K1008200	1
30-2	K1008200	LEVER	1		3323~			
30-3	213-00022	COVER	1		1001~2940			
30-4	123-00429	PIN	1		1001~1019			
30-4	123-00456	PIN	1		1020~1234	I	123-00456A	1
30-4	123-00456A	PIN	1		1235~			
30-5	161-00297	STOPPER;RUBBER	1					
30-6	2114-1059D37	SHIM	2					
30-7	2129-1432	SPRING	1					
30-8	S3450583	SCREW	2					
30-9	125-00021	CATCH	1		1001~2940			
30-9	K1003998	CATCH	1		2941~			
30-1	S5000113	WASHER	2					
30-1	2110-1184D29	BUSH;DU	1					
30-1	S6541200	RING;RETAINER	1					
30-1	2132-1132A	GRIP	1					
30-1	S0503353	BOLT M5X0.8X20	2		1001~2940			
30-1	2120-2166D19	BOLT	2		2941~			
30-1	S5000213	WASHER	3		1001~2940			
30-1	2114-1898D3	WASHER	4		2941~			
30-1	S0503553	BOLT M5X0.8X25	1		1001~2940			
30-1	S0505063	BOLT M6X1.0X25	2		2941~			
30-1	2120-2166D18	SCREW	2		1001~2940			
30-1	2114-1898D4	WASHER	2		1001~2940			
30-1	S3452833	SCREW M5X0.8X12	2					
30-2	S6541500	RING;RETAINING	1					
32	621-01951	COVER;MICRO S/W	1					
33	549-00046	SWITCH;PILOT CUT OFF	1					
34	161-00297	STOPPER;RUBBER	1		1001~1234			
34	161-00524	RUBBER;STOPPER	1		1235~			

Key No	Part No	Description	Qty	S.C	Serial No	ICA	Replacable	Qty
35	S3452853	SCREW	2					
36	2161-2367	STOPPER	1		1001~1319			
36	161-00195	STOPPER	1		1320~			
40	160-00030	BOOT	1					
42	2114-2031D4	WASHER	2		4010~			
45	2120-2166D36	BOLT	4					
47	S8450053	CLAMP;HOSE	1					
48	S3450823	SCREW	4					
49	S5000203	WASHER	4					
50	2114-1898D16	WASHER	1		1320~2940			
50	2121-1311D4	NUT	1		2941~			
51	2114-1898D8	WASHER	1		4010~			

Fig. 1390 CONTROL STAND-L.H

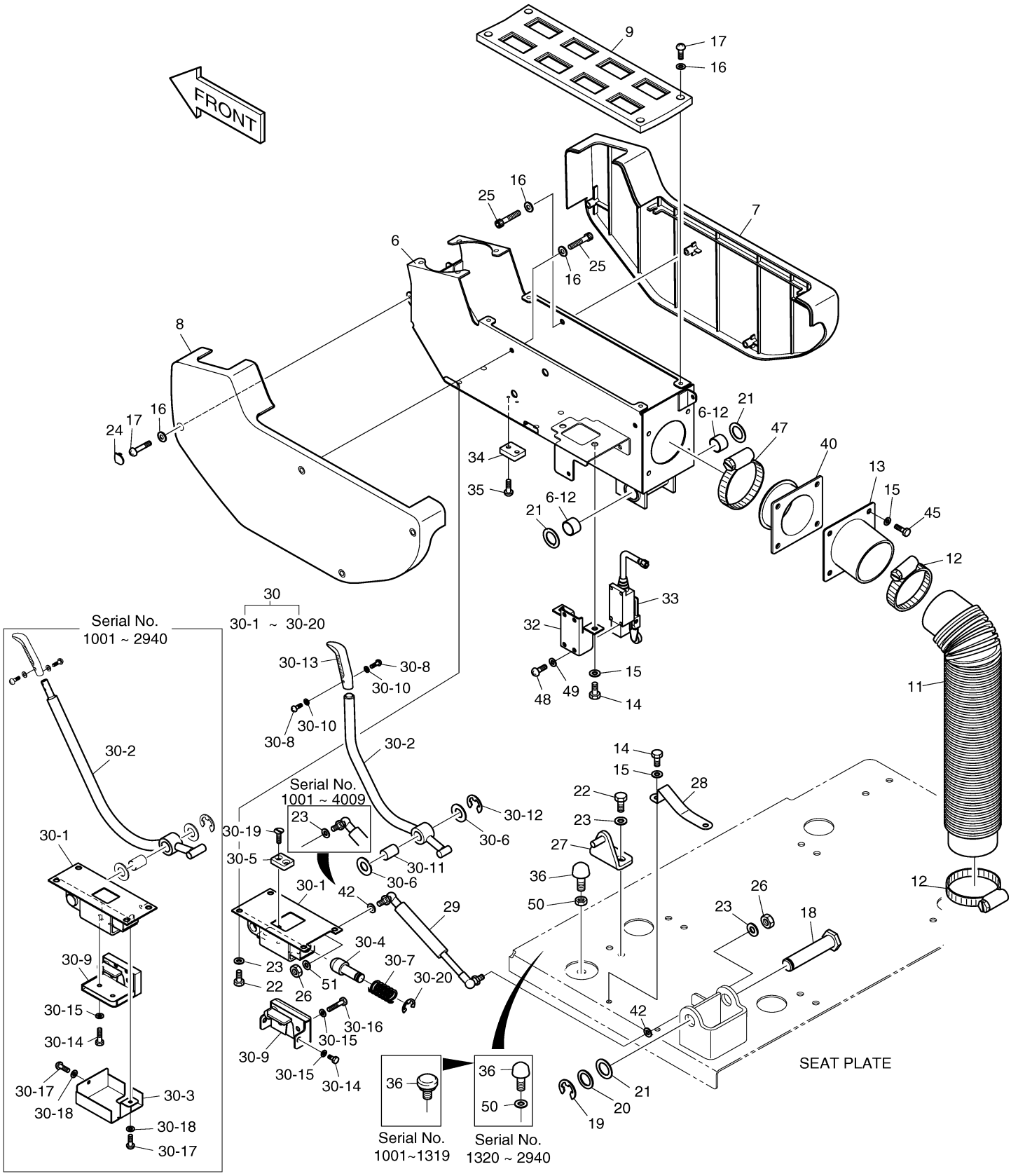

DOOSAN Doosan Infracore

Fig. 1400 CONTROL STAND-R.H

Key No	Part No	Description	Qty	S.C	Serial No	ICA	Replacable	Qty
-	195-01710A	STAND ASS'Y	-	D	1001~1019			
-	195-01710C	STAND ASS'Y	-	D	1020~1234			
-	195-01710E	STAND ASS'Y	-	D	1235~1319			
-	195-01710G	STAND ASS'Y	-	D	1320~2940			
-	195-01710H	STAND ASS'Y	-	D	2941~3322			
-	195-01710J	STAND ASS'Y	-	D	3323~			
5	195-01616A	BRACKET;STAND	1					
7	621-01822	CASE;STAND	1					
8	621-01823	CASE;STAND	1					
10	621-01826	PLATE;SWITCH	1					
11	2158-1021	PROTECTOR	1					
12	S8450066	CLAMP;HOSE	2					
15	2114-1898D3	WASHER	4					
16	2114-1898D4	WASHER	11					
17	2120-2166D8	BOLT	10					
22	2120-2166D5	BOLT	4					
23	2114-1898D2	WASHER	5					
24	621-01850	COVER;HOLE	1					
25	S2202863	BOLT;SOCKET M5X0.8X10	4		1001~1019			
25	S2202866	BOLT	4		1020~			
31	120-00274	BOLT	1					
40	160-00030	BOOT	1					
42	2114-2031D4	WASHER	1					
45	2120-2166D36	BOLT	4					
46	195-01765B	BRACKET	1					
47	S8450053	CLAMP;HOSE	1					

Fig. 1400 CONTROL STAND-R.H

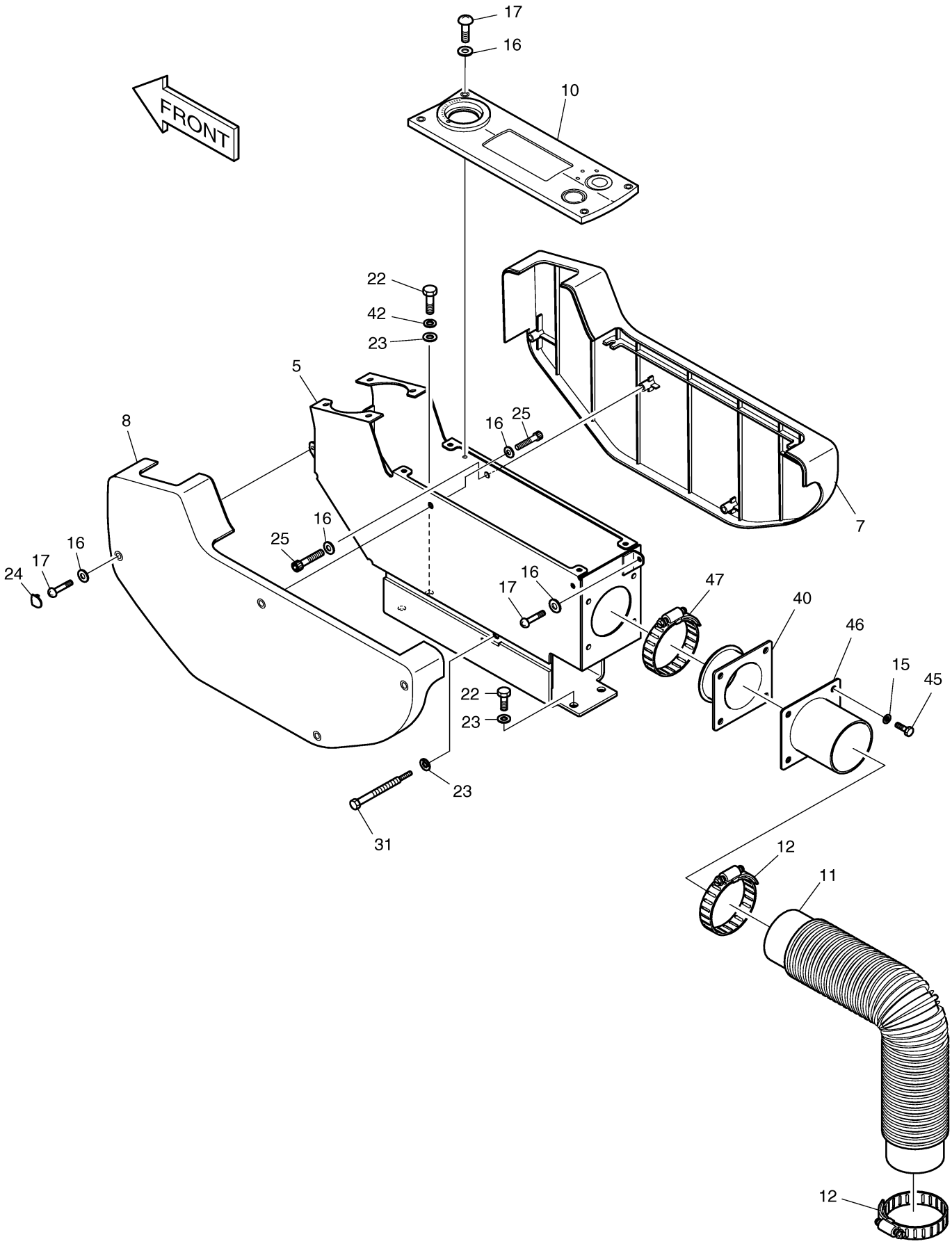

Fig. 1410 SEAT & ELECTRIC BOX

Key No	Part No	Description	Qty	S.C	Serial No	ICA	Replacable	Qty
-	195-01710A	STAND ASS'Y	-	D	1001~1019			
-	195-01710C	STAND ASS'Y	-	D	1020~1234			
-	195-01710E	STAND ASS'Y	-	D	1235~1319			
-	195-01710G	STAND ASS'Y	-	D	1320~2940			
-	195-01710H	STAND ASS'Y	-	D	2941~3322			
-	195-01710J	STAND ASS'Y	-	D	3323~			
3	901-00024B	PLATE;SEAT	1		1001~1234	I	901-00024C	1
3	901-00024C	PLATE;SEAT	1		1235~1319			
3	901-00024E	PLATE;SEAT	1		1320~			
4	194-00024	RAIL;SEAT	1					
15	2114-1898D3	WASHER	6					
16	2114-1898D4	WASHER	2					
22	2120-2166D5	BOLT	4					
23	2114-1898D2	WASHER	8					
26	2121-1311D2	NUT	8					
37	2120-2166D46	BOLT M8X1.25X25	4					
38	621-01824	COVER;ELEC. BOX(FRONT)	1					
39	2120-2166D7	SCREW	6					
41	621-01825	COVER;ELEC. BOX(L.H)	1					
42	2114-2031D4	WASHER	4					
43	S0514853	BOLT	4					
44	2114-1058D46	WASHER	4					

Fig. 1410 SEAT & ELECTRIC BOX

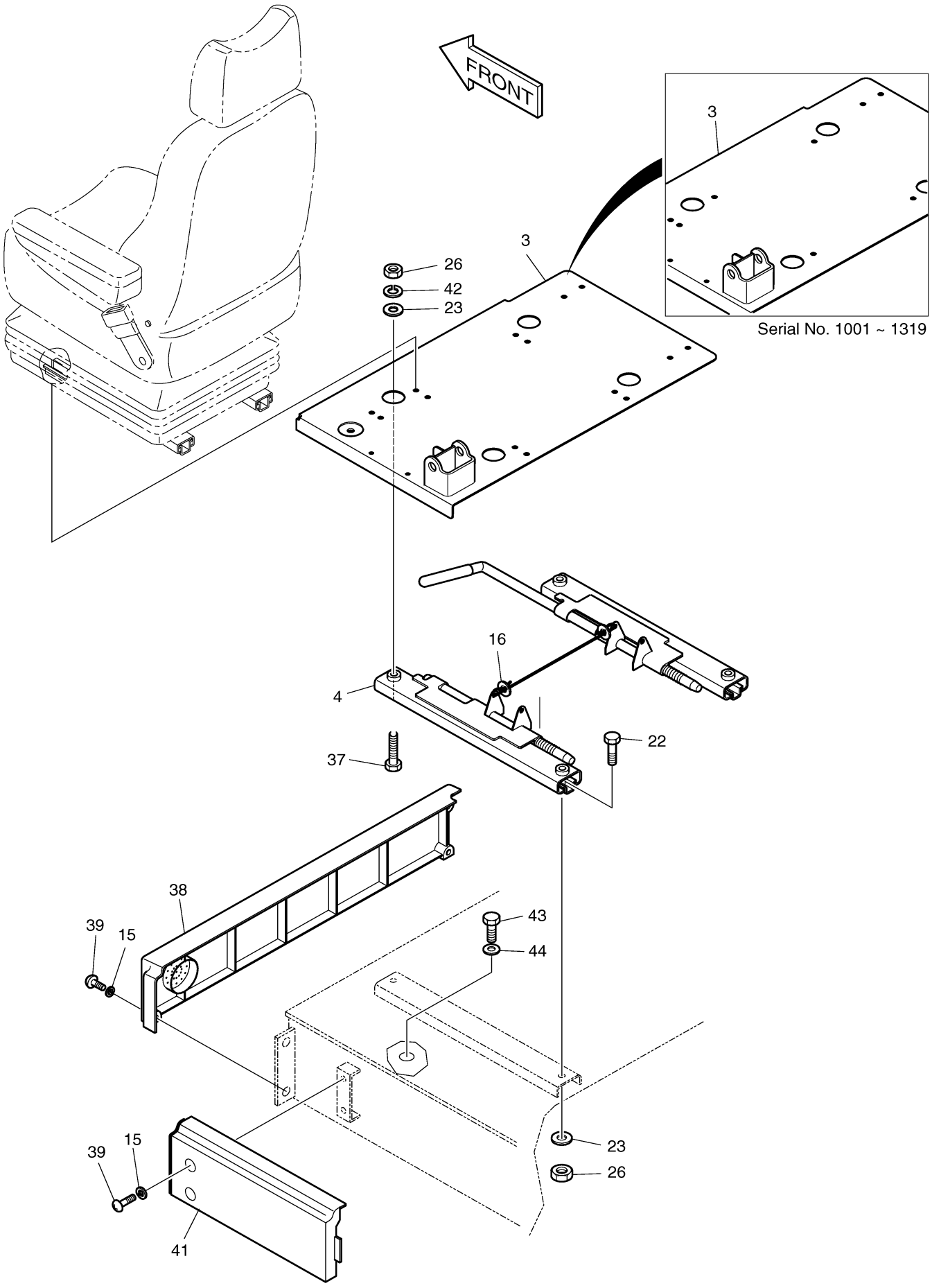

Fig. 1420 SEAT MOUNTING-EUROPE &

Key No	Part No	Description	Qty	S.C	Serial No	ICA	Replacable	Qty
-	901-00031	SEAT MOUNTING	-	D	1001~3116			
-	901-00031A	SEAT MOUNTING	-	D	3117~			
1	901-00029	SEAT	1		1001~3116	I	901-00029A	1
1	901-00029A	SEAT	1		3117~			
2	S2208761	BOLT;SOCKET M8X1.25X18	4					

Fig. 1420 SEAT MOUNTING-EUROPE &

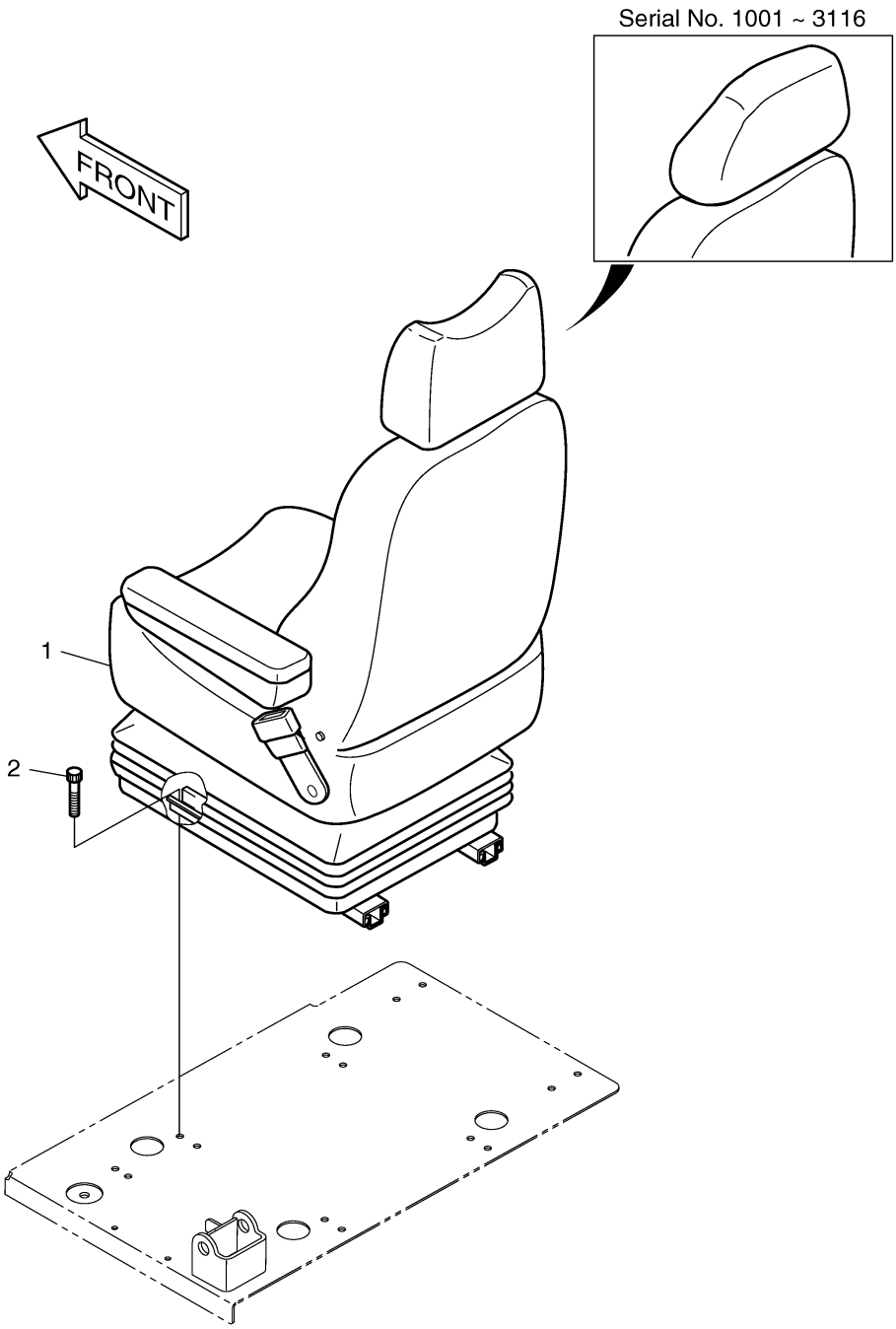

Fig. 1425 SEAT-EUROPE & U.S.A

Key No	Part No	Description	Qty	S.C	Serial No	ICA	Replacable	Qty
-	901-00029	SEAT	1		1001~3116	I	901-00029A	1
-	901-00029A	SEAT	1		3117~			
1	185184	UPPER ASS'Y	1					
2	185183	COVER;BACK	1					
3	183708	FOAM;BACK	1					
4	161395	COVER;SEAT	1					
5	183709	FOAM;SEAT	1					
6	-	FRAME ASS'Y	1	D				
7	179981	CABLE;ADJUSTMENT	1					
8	162056	SPRING;HEIGHT RISER	1					
9	172561	SEAT BELT	1					
10	158116	DAMPER ASS'Y	1					
11	157230	SUSPENSION ASS'Y	1					
12	162035	FORE & AFT ADJUSTER	1					
13	156737	WEIGHT ADJUSTER KIT	1					
14	156717	UPSTOP/BUMPSTOP KIT	1					
15	185193	KNOB KIT	1					
16	163369	HEIGHT RISER KIT	1					
17	162047	COVER;SUSPENSION	1					
18	161796	SLIDE RAIL HANDLE	1					
19	172526	HEAD REST	1		1001~3116	I	161392	1
19	161392	HEADREST KIT	1		3117~			
20	156738	BEARING KIT	1					
21	162666	ARM REST-R.H.	1		1001~3116			
21	191723	ARM REST-R.H	1		3117~			
22	162665	ARM REST-L.H.	1		1001~3116			
22	191722	ARM REST-L.H	1		3117~			

Fig. 1425 SEAT-EUROPE & U.S.A

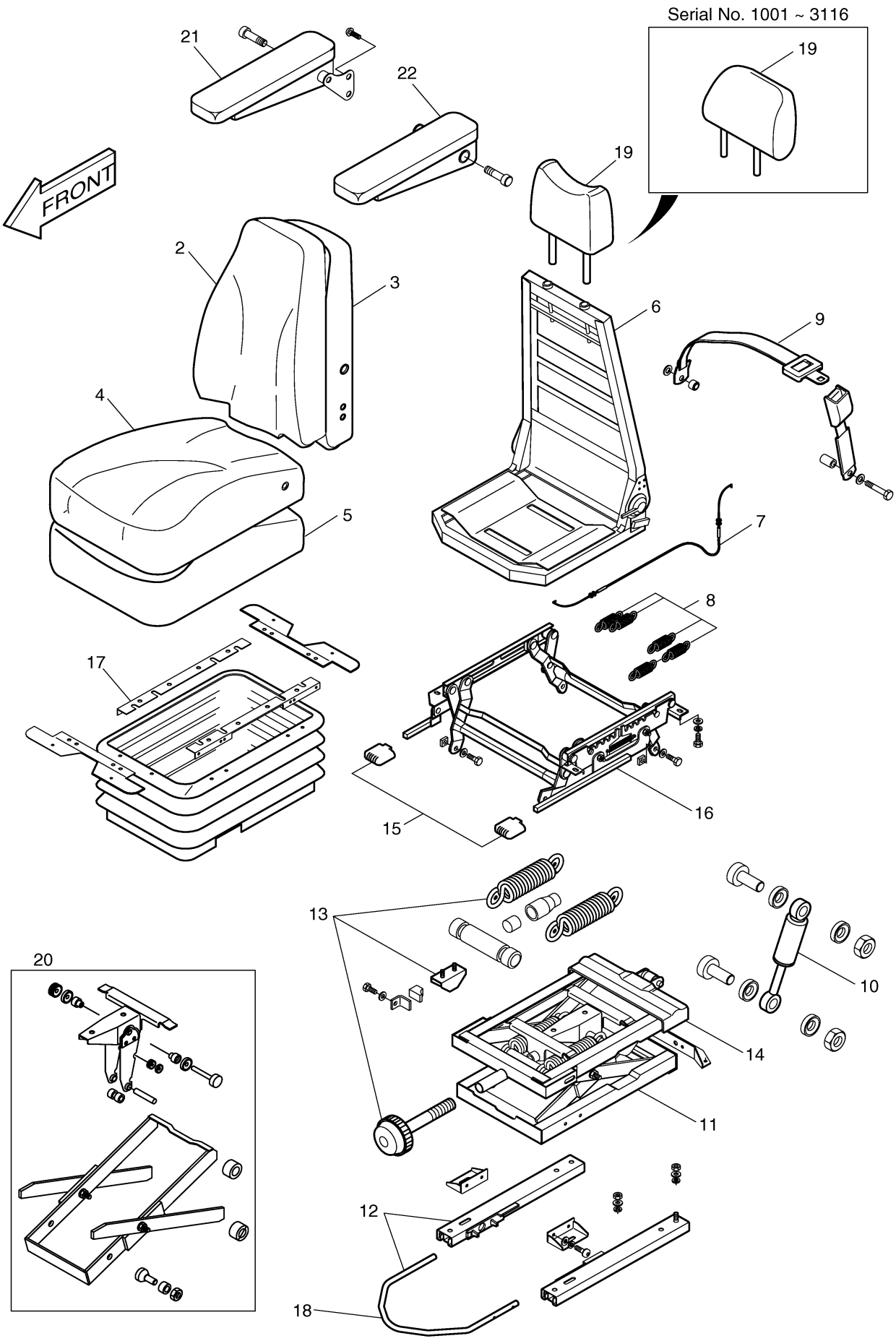

Fig. 1430 SEAT MOUNTING-EXCEPT

Key No	Part No	Description	Qty	S.C	Serial No	ICA	Replacable	Qty
-	901-00014	SEAT MOUNTING	-	D	1001~1053			
-	901-00035	SEAT MOUNTING	-	D	1054~			
1	2901-9034	SEAT	1		1001~1053	I	901-00033	1
1	901-00033	SEAT	1		1054~			
2	S2209061	BOLT;SOCKET	4					

Fig. 1430 SEAT MOUNTING-EXCEPT

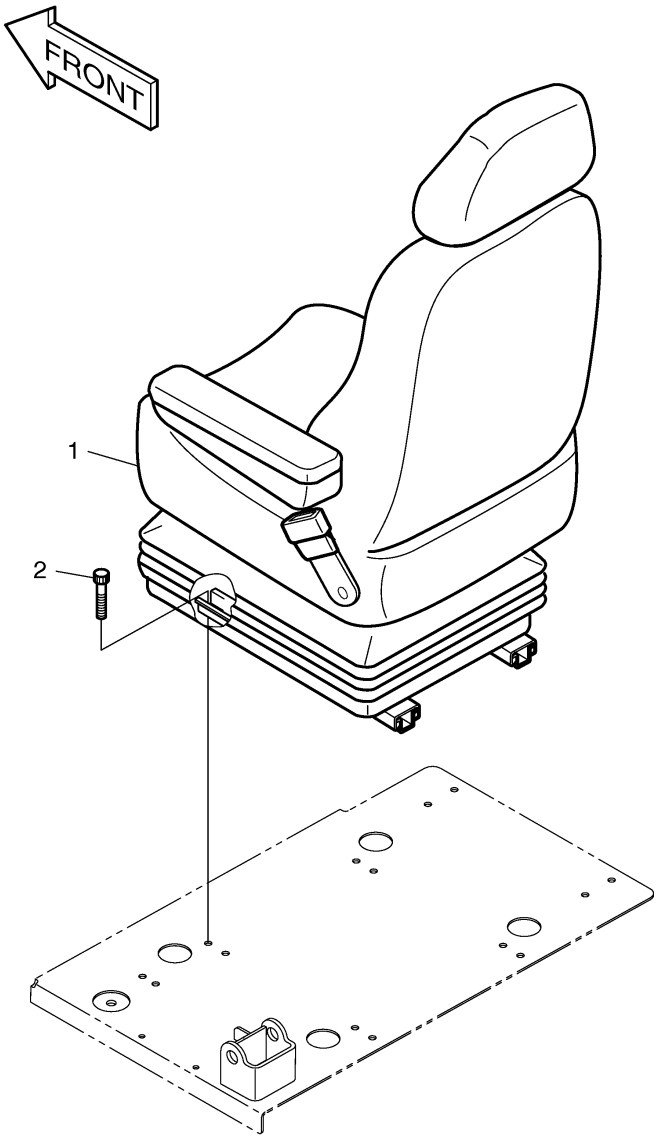

Fig. 1435 SEAT-EXCEPT EUROPE & U.S.A

Key No	Part No	Description	Qty	S.C	Serial No	ICA	Replacable	Qty
-	2901-9034	SEAT	1		1001~1053			
1	901-00006	CUSHION ASS'Y	1					
2	901-00002	BACK ASS'Y	1					
3	2300-6012	SUSPENSION ASS'Y	1					
3A	H28003-350	DAMPER	1					
4	2197-6012	FRAME ASS`Y	1					
5	2160-6019	BELLOWS	1					
6	2194-6004	TRACK ASS'Y	1					
7	901-00005	RECLINER	1					
8	901-00003	ARM REST KIT(L.H)	1					
9	901-00004	ARM REST KIT(R.H)	1					
10	901-00007	SAFETY BELT	1					
11	901-00001	HEAD REST	1					

Fig. 1435 SEAT-EXCEPT EUROPE & U.S.A

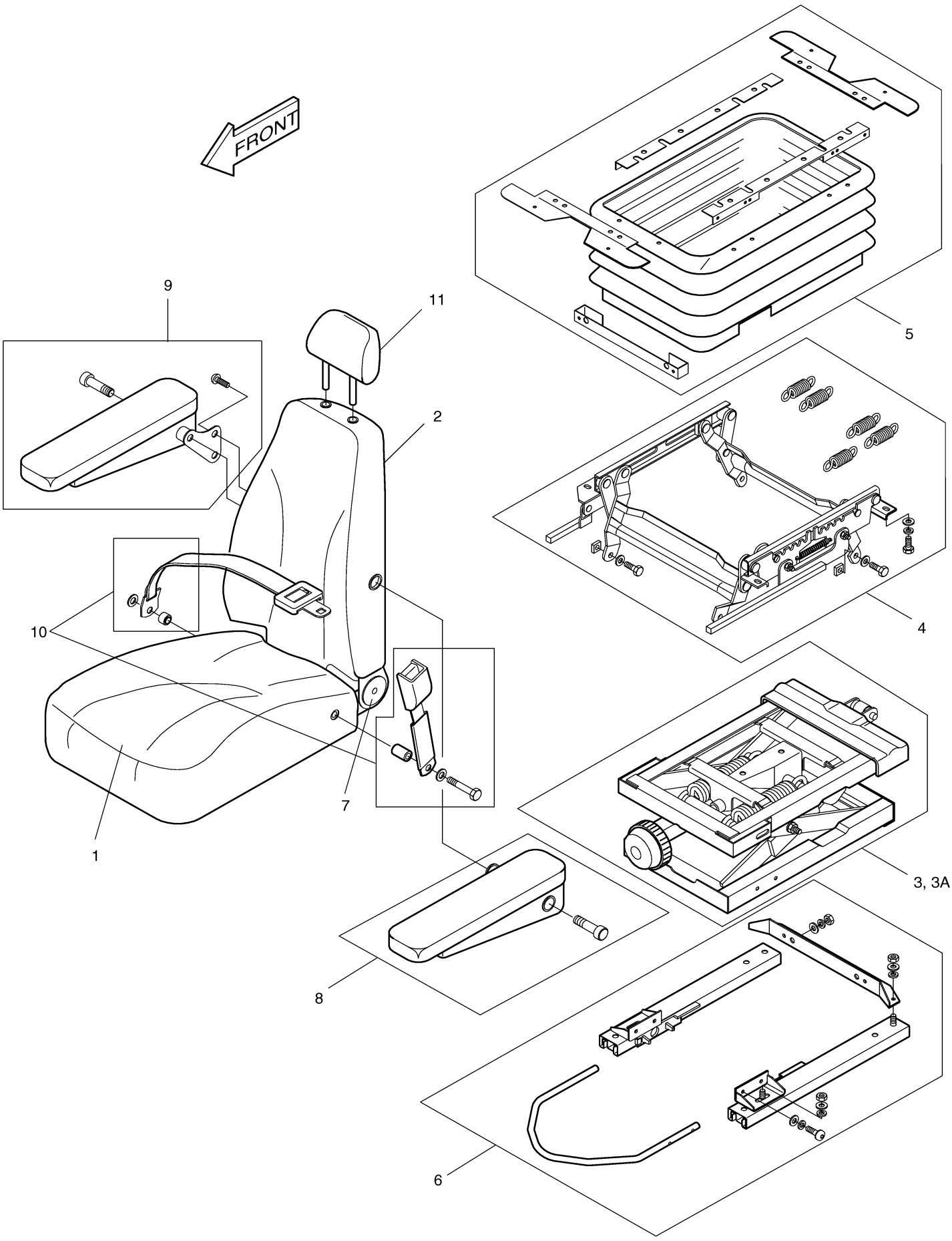

Fig. 1436 SEAT-EXCEPT EUROPE & U.S.A

Key No	Part No	Description	Qty	S.C	Serial No	ICA	Replacable	Qty
-	901-00033	SEAT	1		1054~			
1	H28000-100	CUSHION ASS'Y	1					
2	H28000-200	BACK ASS'Y	1					
3	H28000-300D	LEG ASS'Y	1					
4	901-00003A	ARM REST KIT(L.H)	1					
5	901-00004A	ARM REST KIT(R.H)	1					
6	H28003-400A	TRACK ASS'Y	1					
7	H28003-240D	RECLINER	1					
8	H28003-600	SAFETY BELT ASS'Y	1					
9	H28000-800	HEAD REST ASS'Y	1					
10	H28003-902	KNOB;TILTING	1					

Fig. 1436 SEAT-EXCEPT EUROPE & U.S.A

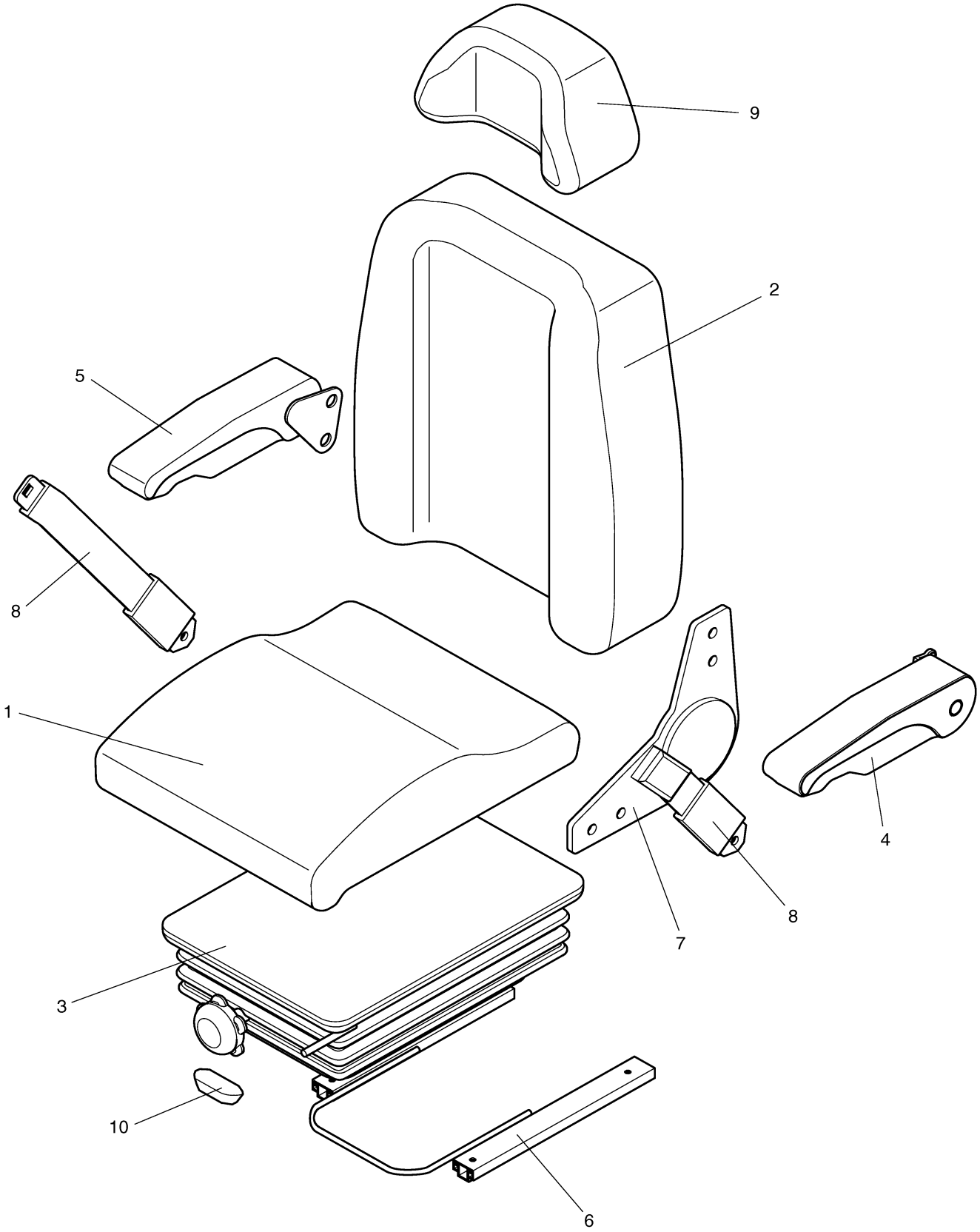

Fig. 1440 DUCT COVER ASS'Y

Key No	Part No	Description	Qty	S.C	Serial No	ICA	Replacable	Qty
-	621-01885A	DUCT &DUCT COVER ASS'Y	-	D	1001~1019			
-	621-01885B	DUCT &DUCT COVER ASS'Y	-	D	1020~1134			
-	621-01885C	DUCT & DUCT COVER ASS'Y	-	D	1135~			
1	2213-1097	DUCT;FOOT REAR	1					
2	2213-1095	DUCT;FACE REAR	1					
3	213-00025	DUCT;FACE REAR	1					
4	213-00026	DUCT;FACE FRONT	1					
5	2213-9002	DUCT;FOOT	1					
6	621-01859	COVER;SIDE INNER(FRONT)	1		1001~1134	I	621-01859A	1
6	621-01859A	COVER;SIDE INNER(FRONT)	1		1135~			
7	621-01860	COVER;SIDE INNER(REAR)	1					
8	621-01849	COVER;FOOT DUCT	1					
9	621-00340	PANEL	1					
10	195-01847	BRACKET	1					
11	2906-9005	ASHTRAY	1					
12	2415-1014	LOUVER;DEF& FOOT	1					
13	415-00039	LOUVER;FACE	1					
14	621-01873	COVER;HOLE	1					
15	621-01874	COVER;HOLE	1					
16	621-01875	COVER;HOLE	1					
17	2120-2166D10	SCREW	19		1001~1019			
17	2120-2166D10	SCREW	14		1020~			
18	2415-9007	NOZZLE;AIR	1					
19	2120-2174	SCRIVET	4					
20	621-01908	BOX	1					
21	2114-1898D2	WASHER	1					
22	2120-2166D6	BOLT	2					
23	2114-1898D5	WASHER	5		1001~1019			
23	2114-1898D5	WASHER	10		1020~			
24	2161-2397	RUBBER;CUSHION 15T	1					
25	195-01640A	BRACKET	1		1001~1019	I	195-01640B	1
25	195-01640B	BRACKET	1		1020~1134	I	195-01640C	1
25	195-01640C	BRACKET	1		1135~			
26	195-01746	BRACKET PL4.5	1					
27	2120-2166D5	BOLT	1					
28	621-01984	HOLDER;CUP	1					

Key No	Part No	Description	Qty	S.C	Serial No	ICA	Replacable	Qty
29	S3452853	SCREW	2					
30	161-00427A	RUBBER;CUSHION	1					
31	2114-1058D54	WASHER	3					
32	2120-2166D24	SCREW M6X1.0X20	3		1001~1019			
32	2120-2166D24	SCREW M6X1.0X20	8		1020~			
33	161-00468	RUBBER	1		1001~1019			
34	161-00495	RUBBER;CUSHION	1		1020~			

Fig. 1440 DUCT COVER ASS'Y

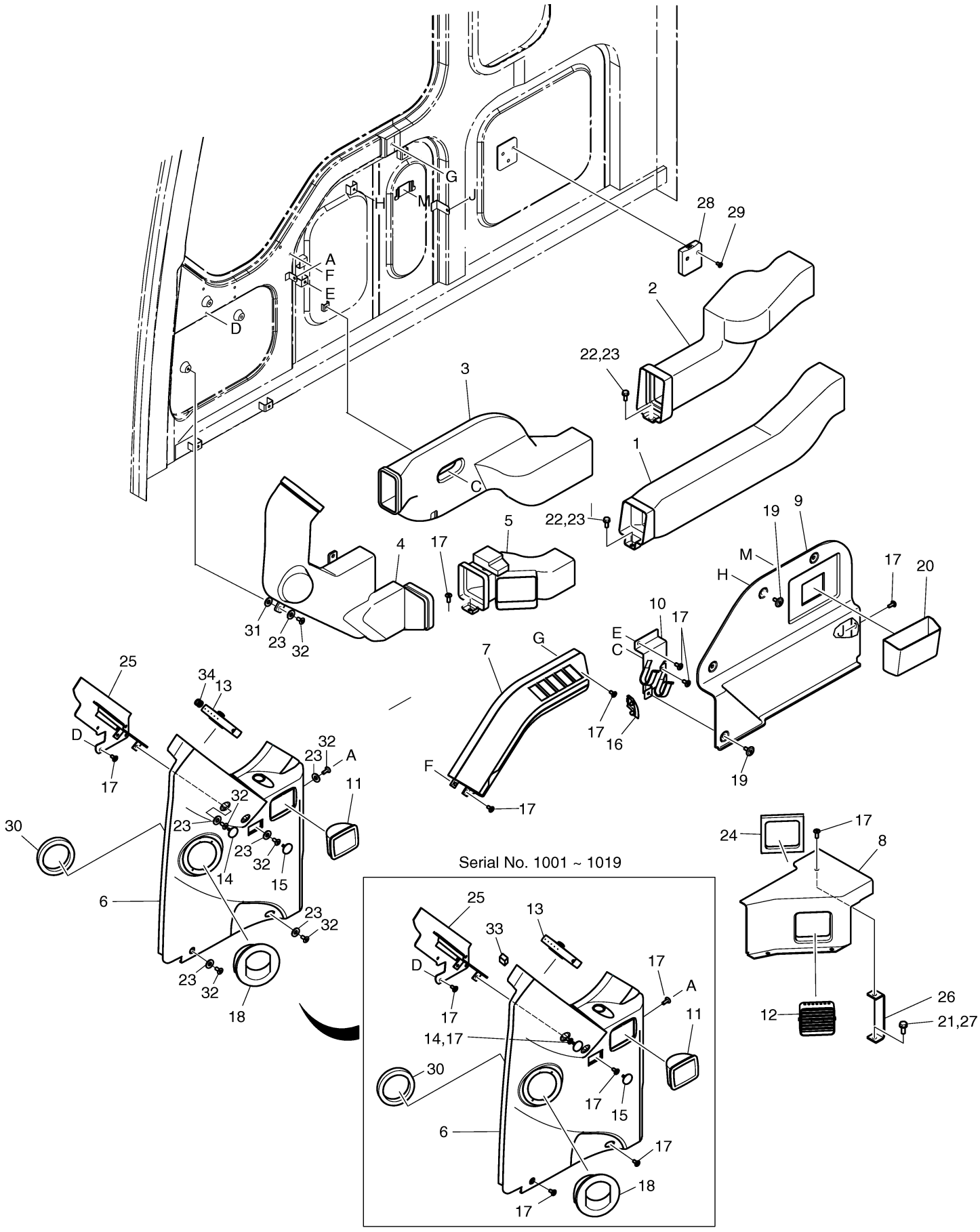

DOOSAN Doosan Infracore

Fig. 1450 HEATER COVER ASS'Y

Key No	Part No	Description	Qty	S.C	Serial No	ICA	Replacable	Qty
-	621-01917A	HEATER COVER ASS'Y	-	D	1001~1134			
-	621-01917B	HEATER COVER ASS'Y	-	D	1135~1234			
-	621-01917C	HEATER COVER ASS'Y	-	D	1235~2161			
-	621-01917E	HEATER COVER ASS'Y	-	D	2162~3322			
-	621-01917G	HEATER COVER ASS'Y	-	D	3323~			
1	621-01839	COVER;HEATER(R.H)	1					
2	621-01924	COVER;LOWER HEATER(L.H)	1					
3	621-01840	LID;CENTER	1					
4	621-01841	LID;FUSE BOX	1					
5	621-01755	LOW HEATER COVER ASS'Y	1		1001~1234	I	621-01755A	1
5	621-01755A	LOW HEATER COVER ASS'Y	1		1235~			
6	2116-1520	STOPPER;H/C LID	2					
7	2213-1098A	DUCT;VENT(R.H)	1					
8	2213-1099B	DUCT;VENT(L.H)	1					
9	2415-1015A	LOUVER;FACE & VENT	4					
10	2623-1252A	SPEAKER;GRILL	2					
11	2197-1741A	BRACKET;SPEAKER	2					
12	2171-1084A	HINGE	2					
13	2121-1304	NUT;SPIRE	2					
14	2120-2166D5	BOLT	8					
15	2120-2166D6	BOLT	9					
16	S3644183	SCREW;TAPPING	12					
17	2541-9020	SPEAKER	2					
18	S3450373	SCREW	8					
19	2125-1095A	CATCH	1					
20	621-01923	COVER;HEATER(L.H)	1					
21	2172-9035	KEY ASS'Y	1		1001~2161	I	172-00215	1
21	172-00215	CYLINDER;KEY	1		2162~3322			
21	K1006160	CYLINDER,KEY	1		3323~			
22	2161-2289	RUBBER;CUSHION	1					
23	2114-1898D2	WASHER	8					
24	2114-1898D5	WASHER	11					
25	2161-2397	RUBBER;CUSHION 15T	2					
26	195-01782A	BRACKET	1					
27	2120-2166D10	SCREW	6					
28	2160-1329	BUSHING	1					

Key No	Part No	Description	Qty	S.C	Serial No	ICA	Replacable	Qty
29	S5000003	WASHER;PLAIN M3	8					
30	161-00468	RUBBER	4		1001~1134			
30	161-00468	RUBBER	6		1135~			
31	161-00469	SPONGE	1					
32	2120-2166D36	BOLT	2					

Fig. 1450 HEATER COVER ASS'Y

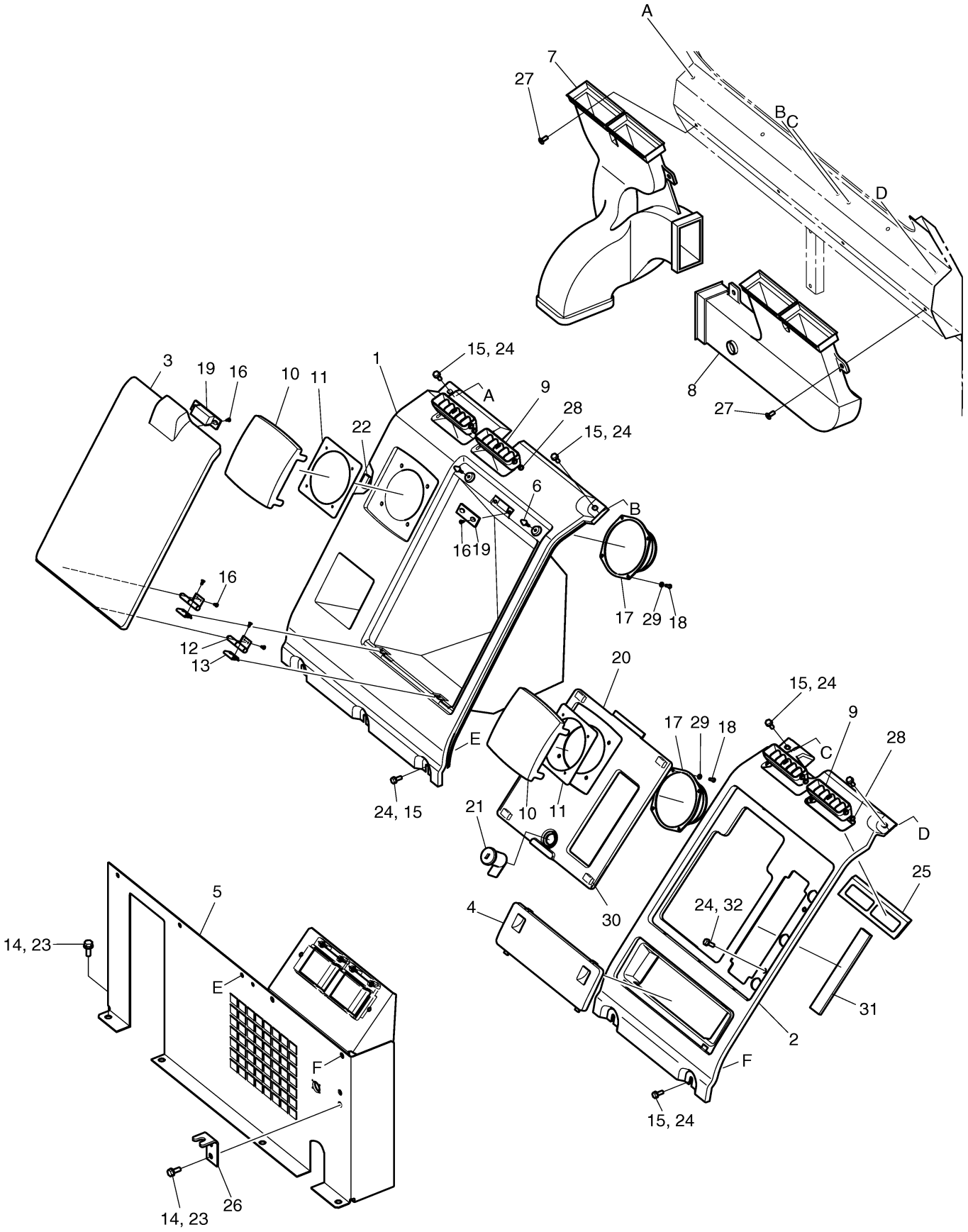

DOOSAN Doosan Infracore

Fig. 1460 CABIN MOUNT ASS'Y

Key No	Part No	Description	Qty	S.C	Serial No	ICA	Replacable	Qty
-	622-00296	CABIN MOUNT ASS'Y	-	D				
1	2161-2216	COVER;FOOT REST(L.H)	1					
2	2161-2235	COVER;FOOT REST(R.H)	1					
3	2161-9057	RUBBER,CABIN MOUNT	2		1001~4695	I	161-00010	2
3	161-00010	RUBBER,MOUNT	2		4696~			
4	2161-9058	CABIN MOUNT;REAR	2		1001~4695	I	161-00011	2
4	161-00011	RUBBER,MOUNT	2		4696~			
5	2121-9007	NUT	4					
6	2114-1058D2	WAHSER	4					
7	2120-2166D2	BOLT	16					
8	2114-1898D1	WASHER	16					
9	161-00383	MAT;FLOOR	1					
10	903-00052	MIRROR;MAIN	1		1001~1320	Y	2903-9012A	1
10	2903-9012A	MIRROR	1		1321~2675	I	903-00068	1
10	903-00068	MIRROR;SIDE	1		2676~			

Fig. 1460 CABIN MOUNT ASS'Y

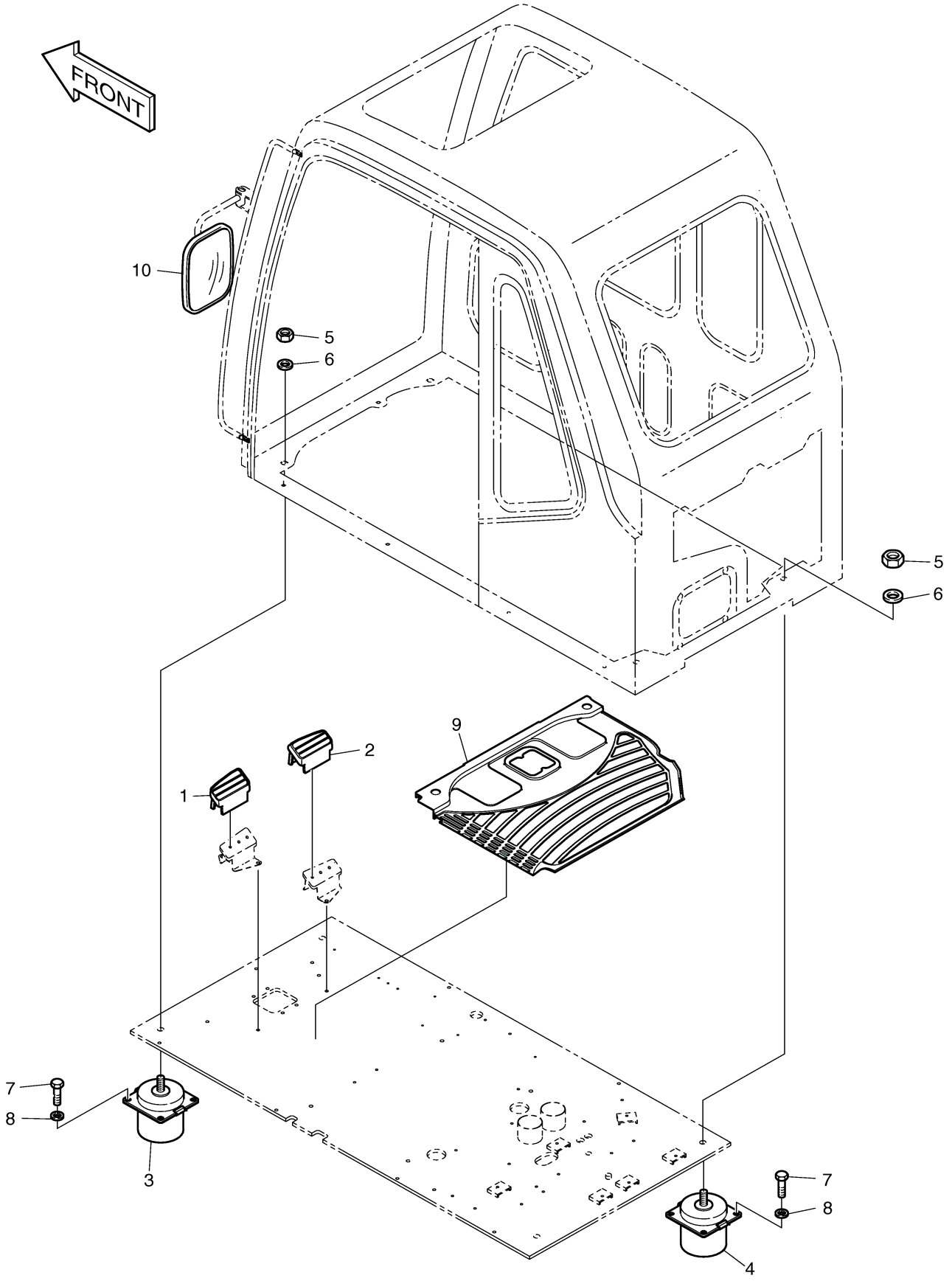

Fig. 1470 CABIN ASS'Y

Key No	Part No	Description	Qty	S.C	Serial No	ICA	Replacable	Qty
-	622-00197B	CABIN ASS'Y	-	D	1001~1019	I	622-00177E	1
-	622-00197E	CABIN ASS'Y	-	D	1020~1060	Y	622-00177G	1
-	622-00197G	CABIN ASS'Y	-	D	1061~1134	I	622-00177H	1
-	622-00197H	CABIN ASS'Y	-	D	1135~1234	I	622-00177J	1
-	622-00197J	CABIN ASS'Y	-	D	1235~2089			
-	622-00197L	CABIN ASS'Y	-	D	2090~2161			
-	622-00197M	CABIN ASS'Y	-	D	2162~2879			
-	622-00197N	CABIN ASS'Y	-	D	2880~3079			
-	622-00197P	CABIN ASS'Y	-	D	3080~3317			
-	622-00197Q	CABIN ASS'Y	-	D	3318~3322			
-	622-00197R	CABIN ASS'Y	-	D	3323~			
1	622-00177B	CABIN ASS'Y	1		1001~1019	I	622-00177E	1
1	622-00177E	CABIN ASS'Y	1		1020~1060	Y	622-00177G	1
1	622-00177G	CABIN ASS'Y	1		1061~1134	I	622-00177H	1
1	622-00177H	CABIN ASS'Y	1		1135~1234			
1	622-00297	CABIN ASS'Y	1		1235~2089	I	622-00297A	1
1	622-00297A	CABIN ASS'Y	1		2090~2161	I	622-00297B	1
1	622-00297B	CABIN ASS'Y	1		2162~2879	I	622-00297C	1
1	622-00297C	CABIN ASS'Y	1		2880~3079	I	622-00297E	1
1	622-00297E	CABIN ASS'Y	1		3080~3317	I	622-00297G	1
1	622-00297G	CABIN ASS'Y	1		3318~3322			
1	622-00297H	CABIN ASS'Y	1		3323~			
1-1	622-00177J	CABIN ASS'Y	1	D	1235~2089			
1-1	622-00177K	CABIN ASS'Y	1	D	2090~2161			
1-1	622-00177L	CABIN ASS'Y	1	D	2162~2879			
1-1	622-00177M	CABIN ASS'Y	1	D	2880~3079			
1-1	622-00177N	CABIN ASS'Y	1	D	3080~3317			
1-1	622-00177P	CABIN ASS'Y	1	D	3318~3322			
1-1	622-00177Q	CABIN ASS`Y	1	D	3323~			
1-3	2120-2166D4	BOLT	4					
1-4	2114-2031D5	WASHER	4					
1-5	2114-1898D1	WASHER	4					
2	621-01920B	PLATE;FLOOR	1					
5	2120-2166D2	BOLT	11					
8	2120-2166D3	BOLT	4					
9	2160-1308	BUSHING;RUBBER	1					

Key No	Part No	Description	Qty	S.C	Serial No	ICA	Replacable	Qty
10	2160-1004D48	BUSHING;RUBBER	2					
11	195-01784A	BRACKET;AUDIO CASSETTE	1		1001~2132	I	195-01784C	1
11	195-01784C	BRACKET;AUDIO CASSETTE	1		2133~			
12	S0508853	BOLT	3					
13	2197-1704A	BRACKET;FOOT REST(L.H)	1					
14	S5010513	WASHER	3					
15	2197-1744A	BRACKET;FOOT REST(R.H)	1					
17	195-01684A	BRACKET,PEDAL(L.H)	1					
18	195-01683A	BRACKET,PEDAL(R.H)	1					
19	133-00155A	LEVER(L.H)	1					
20	133-00156A	LEVER(R.H)	1					
21	161-00382	RUBBER,PEDAL	1					
22	S2211861	BOLT;SOCKET	4		1001~1019	I	S2211866	4
22	S2211866	BOLT	4		1020~			
23	S5110601	WASHER;SPRING M10	4					
24	S2201761	BOLT;SOCKET M4X0.7X14	2		1001~1019	I	S2201766	2
24	S2201766	BOLT	2		1020~			
25	S5000113	WASHER	2					
26	2132-1133B	GRIP,LEVER(L.H)	1					
27	2132-1134B	GRIP,LEVER(R.H)	1					
28	161-00077	PLATE;RUBBER	1					
29	621-00564	SHIM	2					
30	2114-1898D1	WASHER	15					
31	2161-2317	RUBBER;PLATE	1					
32	621-01159	PLATE;COVER	1					
33	2120-2166D6	BOLT	12					
34	2114-1898D3	WASHER	16					
35	160-00035	BUSHING;RUBBER	1					
36	161-00381	RUBBER,PEDAL(R.H)	1					
37	621-01160	COVER;FRESH AIR DUCT	1					
38	2120-2166D19	BOLT	4					
39	161-00329	RUBBER;DAMPER(L.H)	1					
40	161-00330	RUBBER;DAMPER(L.H)	1					
41	161-00331	RUBBER;DAMPER(R.H)	1					
42	161-00335	RUBBER;DAMPER(R.H)	1					
43	160-00030	BOOT	2					
44	195-01765B	BRACKET	2					
50	622-00309	CABIN ASS'Y-OPT.	1		1312~2879	I	622-00309C	1

Key No	Part No	Description	Qty	S.C	Serial No	ICA	Replacable	Qty
50	622-00309C	CABIN ASS'Y-OPT.	1		2880~3079	I	622-00309E	1
50	622-00309E	CABIN ASS'Y-OPT.	1		3080~3317	I	622-00309G	1
50	622-00309G	CABIN ASS'Y-OPT.	1		3318~			

Fig. 1470 CABIN ASS'Y

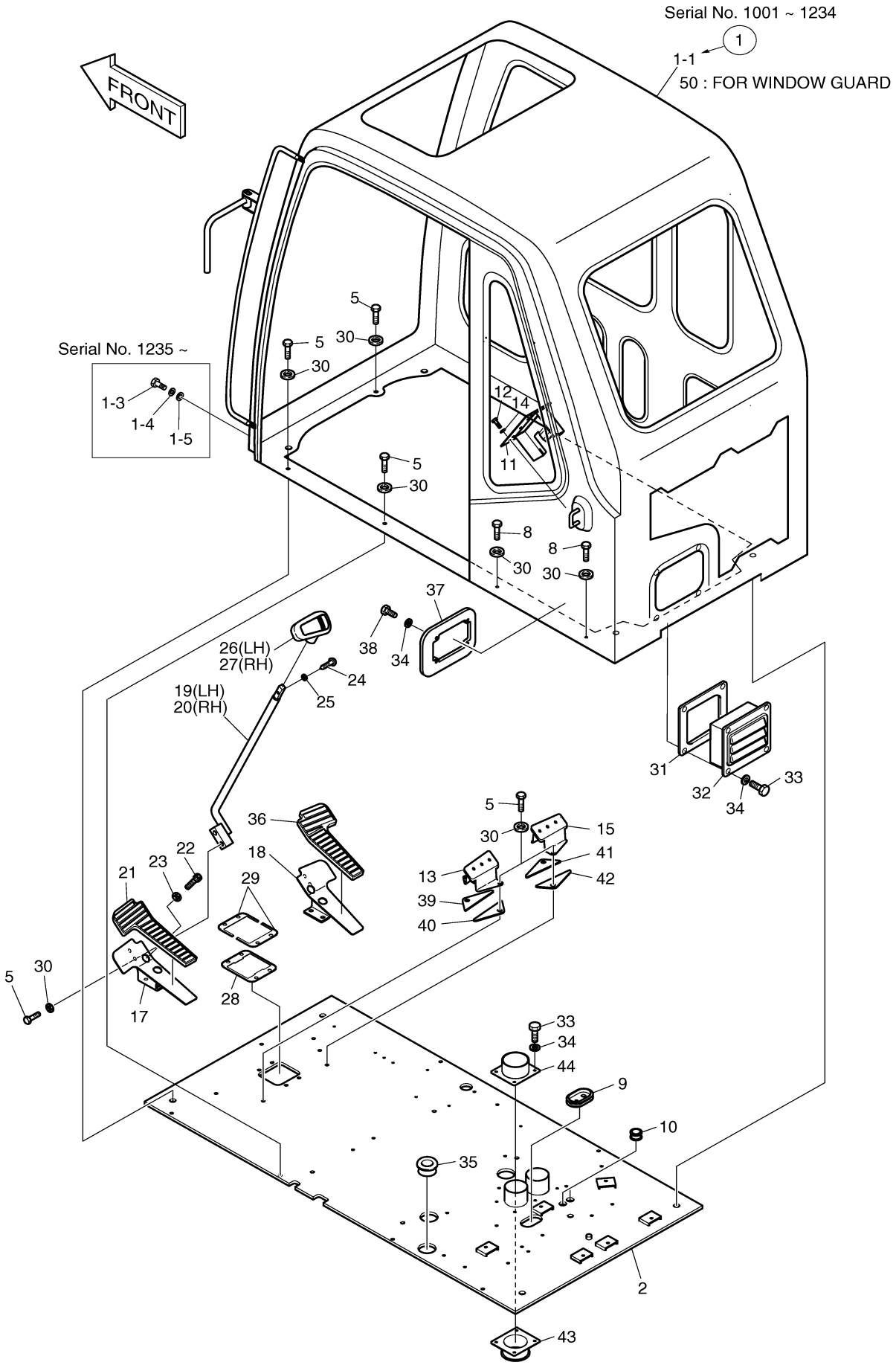

DOOSAN Doosan Infracore

Fig. 1480 CABIN(1)

Key No	Part No	Description	Qty	S.C	Serial No	ICA	Replacable	Qty
-	622-00177B	CABIN ASS'Y	1	D	1001~1019	I	622-00177E	1
-	622-00177E	CABIN ASS'Y	1	D	1020~1060	Y	622-00177G	1
-	622-00177G	CABIN ASS'Y	1	D	1061~1134	I	622-00177H	1
-	622-00177H	CABIN ASS'Y	1	D	1135~1234	I	622-00177J	1
-	622-00177J	CABIN ASS'Y	1	D	1235~2089			
-	622-00177K	CABIN ASS'Y	1	D	2090~2161			
-	622-00177L	CABIN ASS'Y	1	D	2162~2879			
-	622-00177M	CABIN ASS'Y	1	D	2880~3079			
-	622-00177N	CABIN ASS'Y	1	D	3080~3317			
-	622-00177P	CABIN ASS'Y	1	D	3318~3322			
-	622-00177Q	CABIN ASS`Y	1	D	3323~			
1	-	CAB ASS`Y	1	D				
2	622-00191	DOOR ASS'Y;FRONT	1		1001~1019	I	622-00191A	1
2	622-00191A	DOOR ASS'Y;FRONT	1		1020~1234			
2	622-00191B	DOOR ASS'Y;FRONT	1		1235~2879	I	622-00191C	1
2	622-00191C	DOOR ASS`Y;FRONT	1		2880~			
2-1	622-00194	DOOR;FRONT	1	D	1001~1019			
2-1	622-00194A	DOOR;FRONT	1	D	1020~2879			
2-1	622-00194C	DOOR;FRONT	1	D	2880~			
2-2	903-00055	GLASS 6.76t	1		1001~1234	I	903-00055A	1
2-2	903-00055A	GLASS 6.76t	1		1235~			
2-3	161-00395	DAMPER	1					
2-5	125-00031A	CATCH	1					
2-6	161-00395	DAMPER	1					
2-7	161-00395	DAMPER	1					
2-8	161-00395	DAMPER	1					
2-9	2161-2069	STOPPER	1					
2-10	S4032633	NUT	1					
2-11	2110-1347	BUSH	3		1001~1019			
2-11	2110-1347	BUSH	2		1020~			
2-12	125-00043	CATCH	1					
2-13	2120-2166D36	BOLT	4					
2-14	2114-2031D3	WASHER;SPRING M6	4					
2-15	2114-1898D3	WASHER	4					
2-16	133-00168	BAR	1					
2-17	129-00146	SPRING	1		1001~1019	I	129-00146A	1

Key No	Part No	Description	Qty	S.C	Serial No	ICA	Replacable	Qty
2-17	129-00146A	SPRING	1		1020~			
2-18	2160-1307	CAP;RUBBER	1					
2-19	S4012533	NUT	1					
2-20	2114-1898D2	WASHER	1					
2-21	S5102503	WASHER	1					
2-22	K1000868	RUBBER 920L	1		2880~			
3	2154-1033	ROLLER	4					
4	903-00049	GLASS;FRONT LOWER	1					
15	162-00025A	STRIP;WEATHER 3800L	1					
29	S3450973	SCREW	7					
30	S5010313	WASHER	11					
31	S5102303	WASHER	9					
33	2120-2166D5	BOLT	2					
35	2197-1711	BRACKET;AUTO LOCK	1					
36	2120-2166D4	BOLT	2					
37	2125-9056	CATCH;AUTO LOCK	1					
38	621-01990	COVER;AUTO LOCK	1					
42	198-00036	RUBBER;TRIM	1		1001~1134			
43	538-00009	MOTOR;WIPER	1					
44	S3450833	SCREW	3					
45	S5010213	WASHER;PLAIN	3					
46	S5102203	WASHER	3					
47	2541-6020	WIPER ARM ASS`Y	1					
48	507-00005	BLADE,WIPER	1					
56	530-00212	HARNESS;CABIN LAMP	1					
57	2891-1323	PLATE	1					
58	S3450343	SCREW	2					
59	S5020013	WASHER;PLAIN M3	2					
60	S4010003	NUT M3X0.5	2					
64	2161-2211	STOPPER;RUBBER	2					
65	S3450993	SCREW	4					
68	2161-2208	STOPPER;RUBBER RH	1					
69	2140-1338	PIPE,SPACER	4					
70	2114-1058D52	WASHER	4					
71	2161-2207	STOPPER;RUBBER LH	1					
72	2161-2210	STOPPER;RUBBER RH	1					
73	2161-2209	STOPPER;RUBBER LH	1					
78	2114-1855	WASHER ASS'Y	1		1001~3079	I	K1002429	1

Key No	Part No	Description	Qty	S.C	Serial No	ICA	Replacable	Qty
78	K1002429	NOZZLE ASS`Y	1		3080~			
79	S3643359	SCREW;TAPPING	2		1001~3079			
80	195-01549	BRACKET	2		1001~1019	I	195-01549A	1
80	195-01549A	BRACKET	1		1020~			
81	120-00226	BOLT;KNOB M8X1.25X30	2					
85	2161-2212	STOPPER,RUBBER	2					
92	621-01991	COVER;WIPER MOTOR	1					
93	S3450953	SCREW	4					
94	2160-1004D50	BUSHING;RUBBER	1		1001~1234			
94	110-00230	BUSHING;RUBBER	1		1235~			
96	2160-1310	BUSHING,RUBBER	1					
98	2114-1898D2	WASHER	2					
99	2114-1058D45	WASHER	2					
103	2160-1026	TRIM	2					
104	162-00027	STRIP;WEATHER L=920	1		1001~2879	I	2160-1023	1
104	2160-1023	TRIM;RUBBER	1		2880~3079	I	162-00027	1
104	162-00027	STRIP;WEATHER L=920	1		3080~			
105	160-00038	RUBBER	2					
106	142-00067	STRIKER	2					
107	S3453118	SCREW M8X1.25X20	4					
108	530-00251	HARNESS;W/MOTOR JOINT	1					
114	2514-1013	HOLDER	2					
116	195-02099	BRACKET	1		1020~			
117	2161-2289	RUBBER;CUSHION	2		1020~2879	I	2161-2289A	2
117	2161-2289A	RUBBER;CUSHION	2		2880~			
120	162-00030	STRIP;WEATHER	1		1135~2161	I	198-00036A	1
120	198-00036A	STRIP;WEATHER	1		2162~			
121	162-00031	TRIM;RUBBER	2		1135~			

Fig. 1480 CABIN(1)

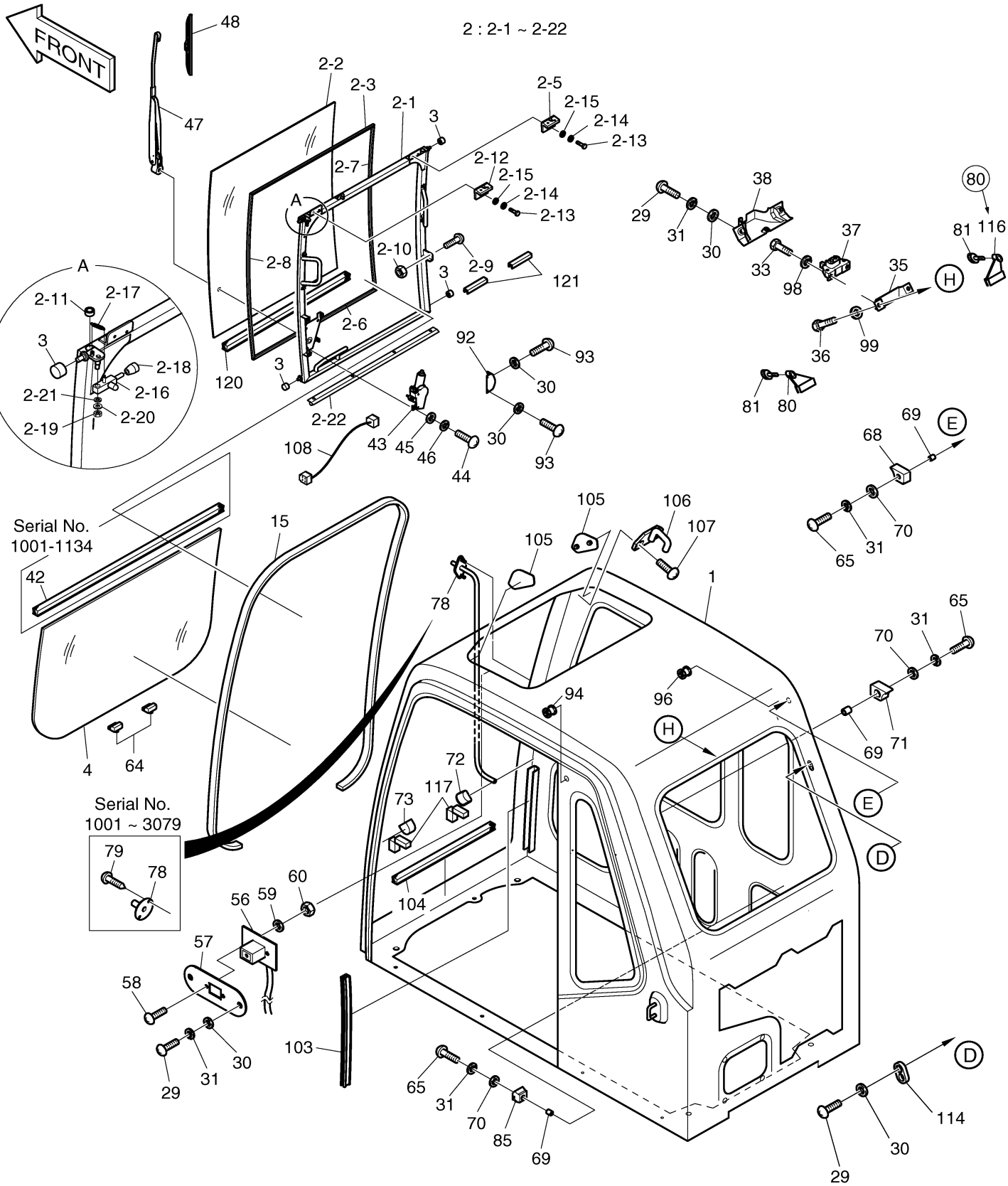

Fig. 1490 CABIN(2)

Key No	Part No	Description	Qty	S.C	Serial No	ICA	Replacable	Qty
-	622-00177B	CABIN ASS'Y	1	D	1001~1019	I	622-00177E	1
-	622-00177E	CABIN ASS'Y	1	D	1020~1060	Y	622-00177G	1
-	622-00177G	CABIN ASS'Y	1	D	1061~1134	I	622-00177H	1
-	622-00177H	CABIN ASS'Y	1	D	1135~1234	I	622-00177J	1
-	622-00177J	CABIN ASS'Y	1	D	1235~2089			
-	622-00177K	CABIN ASS'Y	1	D	2090~2161			
-	622-00177L	CABIN ASS'Y	1	D	2162~2879			
-	622-00177M	CABIN ASS'Y	1	D	2880~3079			
-	622-00177N	CABIN ASS'Y	1	D	3080~3317			
-	622-00177P	CABIN ASS'Y	1	D	3318~3322			
-	622-00177Q	CABIN ASS`Y	1	D	3323~			
6	2903-1212	GLASS(L.H)	1					
7	2903-1213	GLASS;REAR	1		1001~2089			
7	903-00067	GLASS;REAR	1		2090~			
10	2198-1058	H-RUBBER 2590L	1					
11	2198-1055	S-RUBBER;REAR(L.H)	1					
16	2162-1064A	STRIP;WEATHER 3500L	1					
18	172-00027A	HANDLE;FRONT(L.H)	1					
19	2172-1108	HANDLE;CENTER(LH)	1		1001~1134			
19	172-00043	HANDLE;CENTER(L.H)	1		1135~			
20	2172-1109	HANDLE;LOWER(L.H)	1					
21	2120-2166D1	BOLT	2					
26	2197-1639A	BRACKET;LEVER CASE	1					
27	2129-1446	SPRING	1					
28	2133-2014	LEVER;CATCH DOOR	1					
29	S3450973	SCREW	5		1001~2089			
29	S3450973	SCREW	6		2090~			
30	S5010313	WASHER	5		1001~2089			
30	S5010313	WASHER	6		2090~			
31	S5102303	WASHER	5		1001~2089			
31	S5102303	WASHER	6		2090~			
32	2125-9055	LOCK;BACK	1					
33	2120-2166D5	BOLT	4					
34	2127-1002A	CABLE,BACK LOCK	1					
39	161-00317	FOAM;POLYURETHANE	1					
40	161-00318	FOAM;POLYURETHANE	1					

Key No	Part No	Description	Qty	S.C	Serial No	ICA	Replacable	Qty
41	161-00319	FOAM;POLYURETHANE	1					
51	S3450953	SCREW	1					
52	2124-1607	CLIP	4					
54	161-00430	PAD(L.H)	1		1001~1234			
54	161-00430A	PAD(L.H)	1		1235~			
63	2150-1133	HOOK,COAT	1					
69	2140-1338	PIPE,SPACER	1					
84	2120-2150D1	BOLT	4					
97	2114-1898D1	WASHER	5					
98	2114-1898D2	WASHER	4					
100	2120-2166D2	BOLT	3					
102	623-00023	STAY;SIDE MIRROR	1					
102A	623-00024	STAY	1	D				
102B	2114-1898D16	WASHER	3	D				
102C	2120-2166D40	BOLT	1	D				
102D	2121-1311D5	NUT,CAP	1	D				
110	161-00461A	STOPPER	2					
111	2120-2166D14	SCREW M5X0.8X25	2					
112	2114-1058D64	WASHER	2					
122	160-00084	BUSHING;RUBBER	1		2090~			
123	537-00074	MODULE ASS`Y	1		2090~			
123A	563-00016	MAIN FEEDER	1		2090~			
123B	537-00078	SUB MODULE ASS`Y	1		2090~			
125	S0508853	BOLT	1		2090~			
126	S5102503	WASHER	1		2090~			

Fig. 1490 CABIN(2)

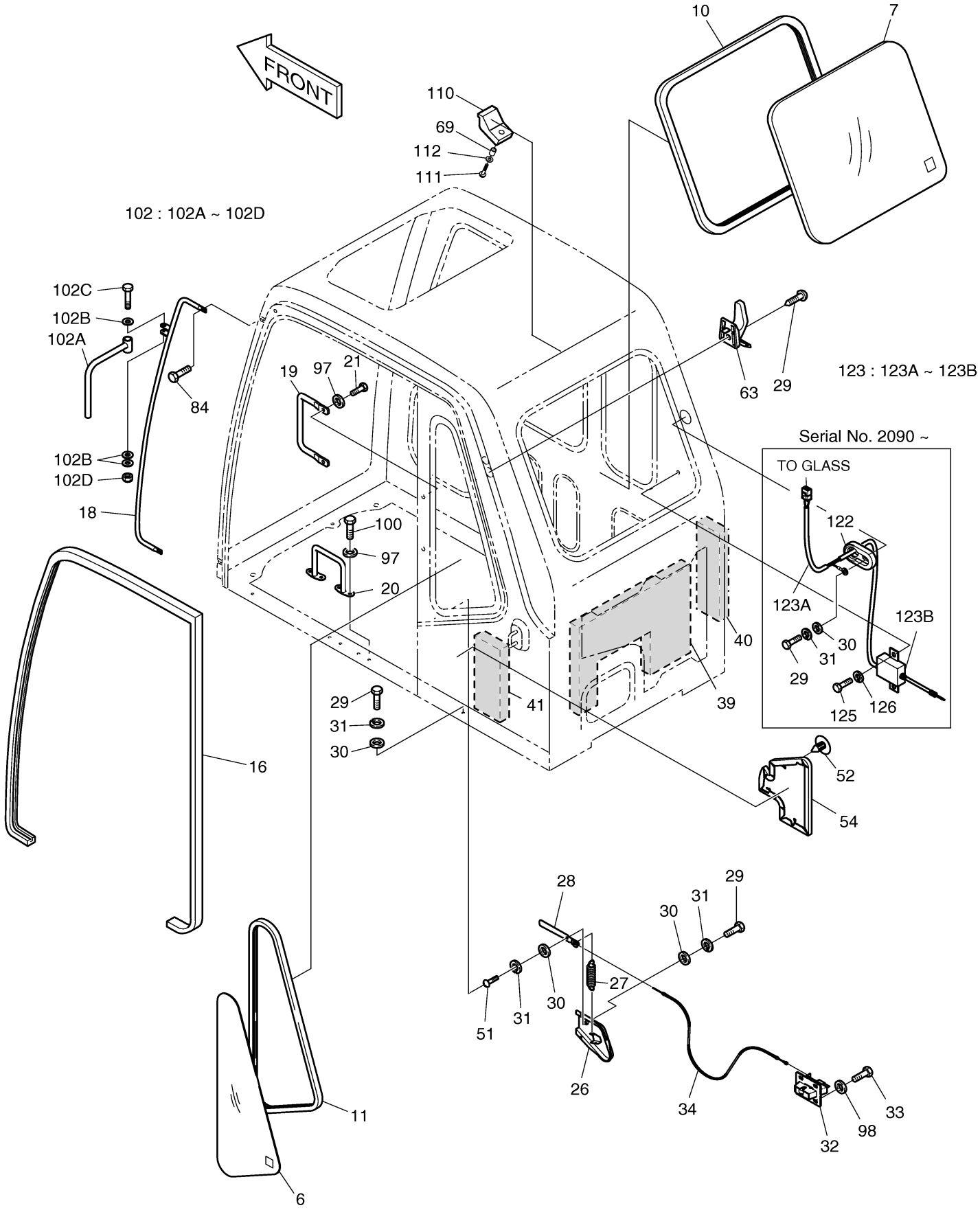

DOOSAN Doosan Infracore

Fig. 1500 CABIN(3)

Key No	Part No	Description	Qty	S.C	Serial No	ICA	Replacable	Qty
-	622-00177B	CABIN ASS'Y	1	D	1001~1019	I	622-00177E	1
-	622-00177E	CABIN ASS'Y	1	D	1020~1060	Y	622-00177G	1
-	622-00177G	CABIN ASS'Y	1	D	1061~1134	I	622-00177H	1
-	622-00177H	CABIN ASS'Y	1	D	1135~1234	I	622-00177J	1
-	622-00177J	CABIN ASS'Y	1	D	1235~2089			
-	622-00177K	CABIN ASS'Y	1	D	2090~2161			
-	622-00177L	CABIN ASS'Y	1	D	2162~2879			
-	622-00177M	CABIN ASS'Y	1	D	2880~3079			
-	622-00177N	CABIN ASS'Y	1	D	3080~3317			
-	622-00177P	CABIN ASS'Y	1	D	3318~3322			
-	622-00177Q	CABIN ASS`Y	1	D	3323~			
A	622-00018	SASH ASS'Y(WITH GLASS)	1					
5	903-00051	GLASS;FRONT(R.H)	1					
9	198-00034	H-RUBBER 3800L	1					
12	2622-9029	SASH ASS'Y(R.H.)	1		1001~1060			
12A	2622-6015	SASH	1					
12B	-	STOPPER	1	D				
12C	2123-6119	LOCK,SASH	1					
12D	2731-6004	BAR;SEAL	1					
12E	2622-6011-04	SCREW	2					
12F	2161-6062	RUN CHANNER	1					
12G	2731-6005	BAR;CENTER	1					
12H	2161-6063	STOPPER;CLASS	2					
49	2903-1218	GLASS	1		1001~1060			
50	2161-2228	FINISHER;SASH(RH)	1		1001~1060			
52	2124-1607	CLIP	6					
53	161-00429	PAD;REAR(R.H)	1		1001~1234			
53	161-00429A	PAD;REAR(R.H)	1		1235~			
62	2534-9063	LAMP;ROOM	1					
65	S3450993	SCREW	2					
69	2140-1338	PIPE,SPACER	2					
70	2114-1058D52	WASHER	2					
77	541-00005	ANTENNA	1		1001~2089			
86	2110-1347	BUSH	1					
87	2110-1349	BUSH 188L	1					
88	2199-9058	HAMMER	1					

Key No	Part No	Description	Qty	S.C	Serial No	ICA	Replacable	Qty
89	S3458582	SCREW M4X0.7X12	2					
90	S5000111	WASHER;PLAIN M4	2					
91	S5102101	WASHER;SPRING M4	2					
95	2903-1242	GLASS	1		1001~1060			
96	2160-1310	BUSHING,RUBBER	2					
109	161-00449	STOPPER	1					
118	903-00060	GLASS;R.H	1		1061~			
119	198-00044	RUBBER;H	1		1061~			
124	160-00083	BUSHING;RUBBER	1		2090~			

Fig. 1500 CABIN(3)

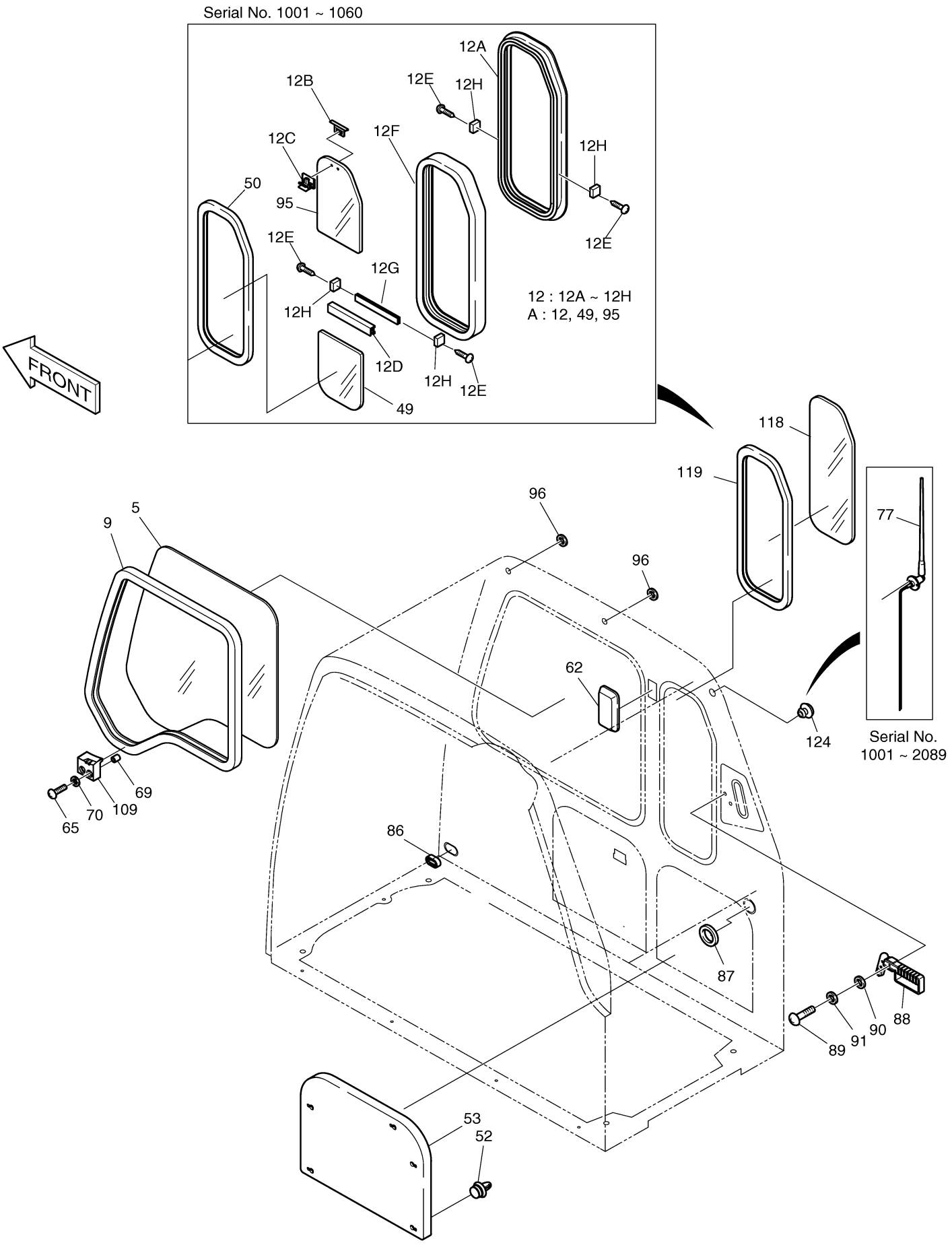

DOOSAN Doosan Infracore

Fig. 1510 CABIN(4)

Key No	Part No	Description	Qty	S.C	Serial No	ICA	Replacable	Qty
-	622-00177B	CABIN ASS'Y	1	D	1001~1019	I	622-00177E	1
-	622-00177E	CABIN ASS'Y	1	D	1020~1060	Y	622-00177G	1
-	622-00177G	CABIN ASS'Y	1	D	1061~1134	I	622-00177H	1
-	622-00177H	CABIN ASS'Y	1	D	1135~1234	I	622-00177J	1
-	622-00177J	CABIN ASS'Y	1	D	1235~2089			
-	622-00177K	CABIN ASS'Y	1	D	2090~2161			
-	622-00177L	CABIN ASS'Y	1	D	2162~2879			
-	622-00177M	CABIN ASS'Y	1	D	2880~3079			
-	622-00177N	CABIN ASS'Y	1	D	3080~3317			
-	622-00177P	CABIN ASS'Y	1	D	3318~3322			
-	622-00177Q	CABIN ASS`Y	1	D	3323~			
17	162-00026	STRIP;WEATHER 2000L	1					
23	621-01667	ROOF COVER ASS`Y	1					
23A	621-01668	COVER;ROOF	1					
23B	161-00326	PAD;ROOF COVER	1					
23C	2125-9057	CATCH;ROOF COVER	1					
23D	2172-1112	HANDLE;PULL	1					
23E	S5100203	WASHER	4					
23F	S3450833	SCREW	4					
23G	S5000213	WASHER	4					
23H	S3450993	SCREW	2					
23I	S5010313	WASHER	2					
23J	S5102303	WASHER	2					
23K	2120-2174	SCRIVET	4					
24	S4012533	NUT	4					
25	S5010513	WASHER	4					
29	S3450973	SCREW	2					
30	S5010313	WASHER	2					
31	S5102303	WASHER	2					
36	2120-2166D4	BOLT	4					
55	161-00323	PAD;ROOF	1					
74	2142-1122A	STRIKER	1					
75	2440-9251	SPRING;GAS	2					
76	S6540600	RING;RETAINING	4					
99	2114-1058D45	WASHER	4					
101	2120-2174	SCRIVET	14					

Key No	Part No	Description	Qty	S.C	Serial No	ICA	Replacable	Qty
115	161-00486	FINISHER	1					

Fig. 1510 CABIN(4)

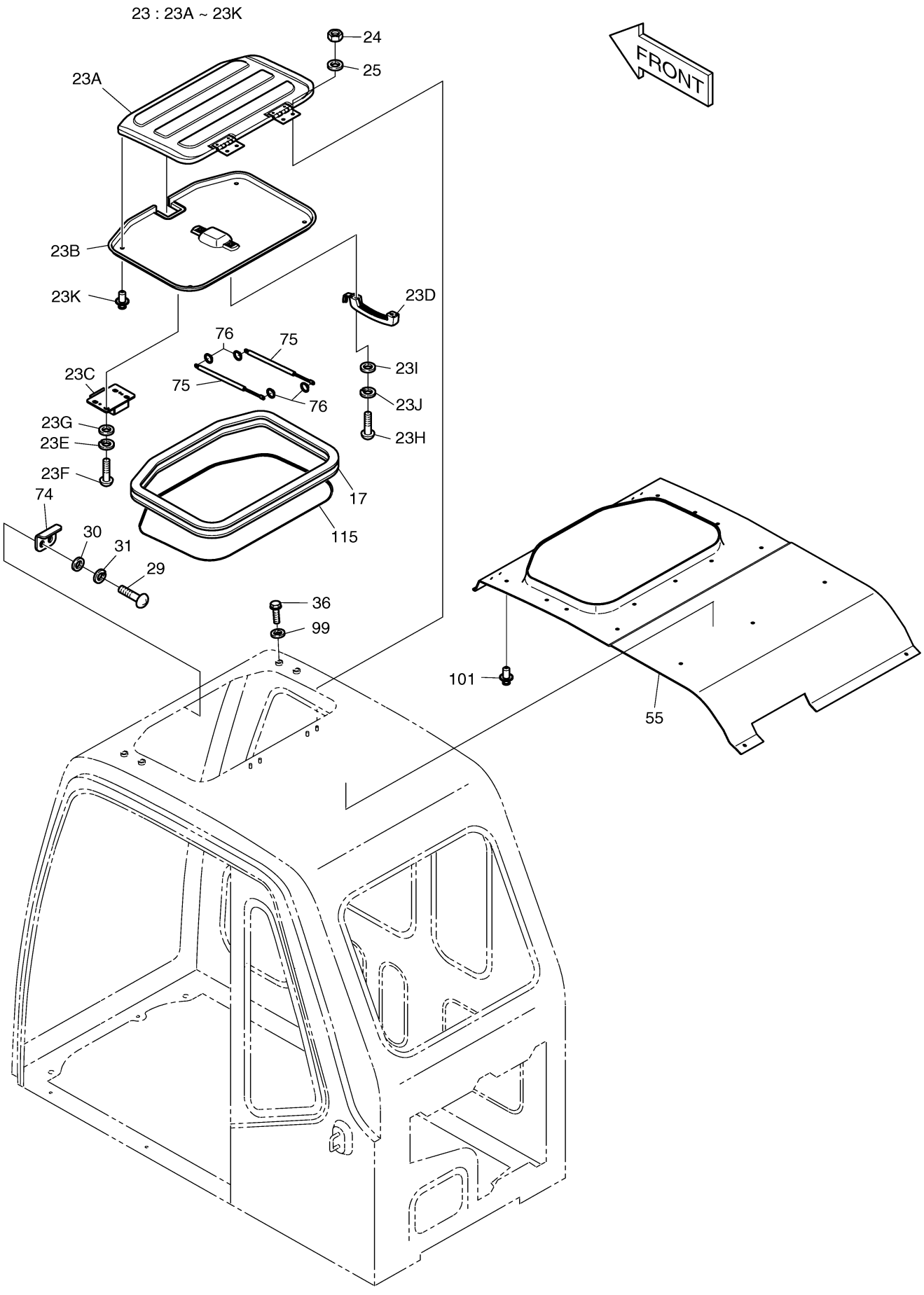

Fig. 1520 CABIN(5)

Key No	Part No	Description	Qty	S.C	Serial No	ICA	Replacable	Qty
-	622-00177B	CABIN ASS'Y	1	D	1001~1019	I	622-00177E	1
-	622-00177E	CABIN ASS'Y	1	D	1020~1060	Y	622-00177G	1
-	622-00177G	CABIN ASS'Y	1	D	1061~1134	I	622-00177H	1
-	622-00177H	CABIN ASS'Y	1	D	1135~1234	I	622-00177J	1
-	622-00177J	CABIN ASS'Y	1	D	1235~2089			
-	622-00177K	CABIN ASS'Y	1	D	2090~2161			
-	622-00177L	CABIN ASS'Y	1	D	2162~2879			
-	622-00177M	CABIN ASS'Y	1	D	2880~3079			
-	622-00177N	CABIN ASS'Y	1	D	3080~3317			
-	622-00177P	CABIN ASS'Y	1	D	3318~3322			
-	622-00177Q	CABIN ASS`Y	1	D	3323~			
1-19	S0512263	BOLT	6					
1-26	2114-1058D45	WASHER	6					
1-27	2171-1078	HINGE	2					
8	622-00219	PANEL;DOOR ASS'Y	1		1001~1019	I	622-00219A	1
8	622-00219A	PANEL;DOOR ASS'Y	1		1020~2161	I	622-00219B	1
8	622-00219B	PANEL;DOOR ASS'Y	1		2162~2879	I	622-00219C	1
8	622-00219C	PANEL;DOOR ASS'Y	1		2880~3317	I	622-00219E	1
8	622-00219E	PANEL;DOOR ASS'Y	1		3318~3322			
8	622-00219G	PANEL;DOOR ASS`Y	1		3323~			
8-1	2621-3765B	PANEL;DOOR	1		1001~1019			
8-1	622-00242	PANEL ASM;DOOR	1		1020~			
8-2	2903-1214	GLASS;DOOR t=5	1					
8-3	-	SASH ASS'Y;DOOR	1	D				
8-3A	2622-6014	SASH	1					
8-3B	2123-6119	LOCK,SASH	2					
8-3C	2116-6006	STOPPER,LOCK	1					
8-3D	2116-6007	STOPPER;LOCK	1					
8-3E	2731-6002	BAR;SEAL	1					
8-3F	2161-6063	STOPPER;CLASS	2					
8-3G	2731-6003	BAR;CENTER	1					
8-3H	2161-6060	RUN CHANNEL	1					
8-4	2123-2247	PIN	1					
8-5	2198-1054	S-RUBBER;DOOR	1					
8-6	2161-2229	FINISHER;SASH DOOR	1					
8-7	2180-1267	SEAL;DOOR	1					

Key No	Part No	Description	Qty	S.C	Serial No	ICA	Replacable	Qty
8-8	S5210303	WASHER	3					
8-9	S3450833	SCREW	2					
8-10	S5010213	WASHER;PLAIN	2					
8-11	S5102203	WASHER	2					
8-12	161-00428	PAD;DOOR	1		1001~1019			
8-12	161-00428A	PAD;DOOR	1		1020~			
8-13	2124-1607	CLIP	6		1001~1019			
8-13	2124-1607	CLIP	8		1020~			
8-14	2125-9036	CATCH,DOOR LOCK	1					
8-15	2172-9036	CYLINDER;KEY	1		1001~2161	I	172-00212	1
8-15	172-00212	CYLINDER;KEY	1		2162~3322			
8-15	K1003900	KEY ASSY,DOOR	1		3323~			
8-16	2120-2150D3	SCREW	3					
8-17	2172-9021	HANDLE,OUTER	1					
8-18	S4012303	NUT	2					
8-19	2172-9022	HANDLE;INNER	1		1001~3317	I	K1004085	1
8-19	K1004085	HANDLE;INNER	1		3318~			
8-19	2621-9005	COVER;HANDLE	1		3318~			
8-19	S3452823	SCREW M5X0.8X10	1		3318~			
8-20	2136-1431	ROD;HANDLE INNER DOOR	1					
8-21	2172-1110B	HANDLE;DOOR	1					
8-22	2161-2227	STOPPER	1					
8-23	2903-1219A	GLASS 5T	1					
8-24	2903-1220	GLASS 5T	1					
8-25	2621-9005	COVER;HANDLE	1		1001~3317			
8-26	2120-2166D5	BOLT	2					
8-27	S3452823	SCREW M5X0.8X10	1		1001~3317			
8-28	2123-2239A	ROD;DOOR LOCK	1					
8-29	2150-1132A	HOOK,CATCH DOOR	1					
8-30	2891-1311	PLATE	4					
8-31	S4012533	NUT	2					
8-32	2114-1898D2	WASHER	2					
8-33	2124-1689A	SNAP	1					
8-34	124-00010	CLIP,ROD	1					
13	S0512263	BOLT	6					
14	2114-1058D45	WASHER	6					
22	S5010613	WASHER	2					
66	2161-2226	STOPPER;RUBBER	2					

Key No	Part No	Description	Qty	S.C	Serial No	ICA	Replacable	Qty
67	S4014633	NUT	2					
82	2142-9005	STRIKER	1					
83	2114-1856	SHIM	1					
84	2120-2150D1	BOLT	2					
113	2161-2227	STOPPER	1					

Fig. 1520 CABIN(5)

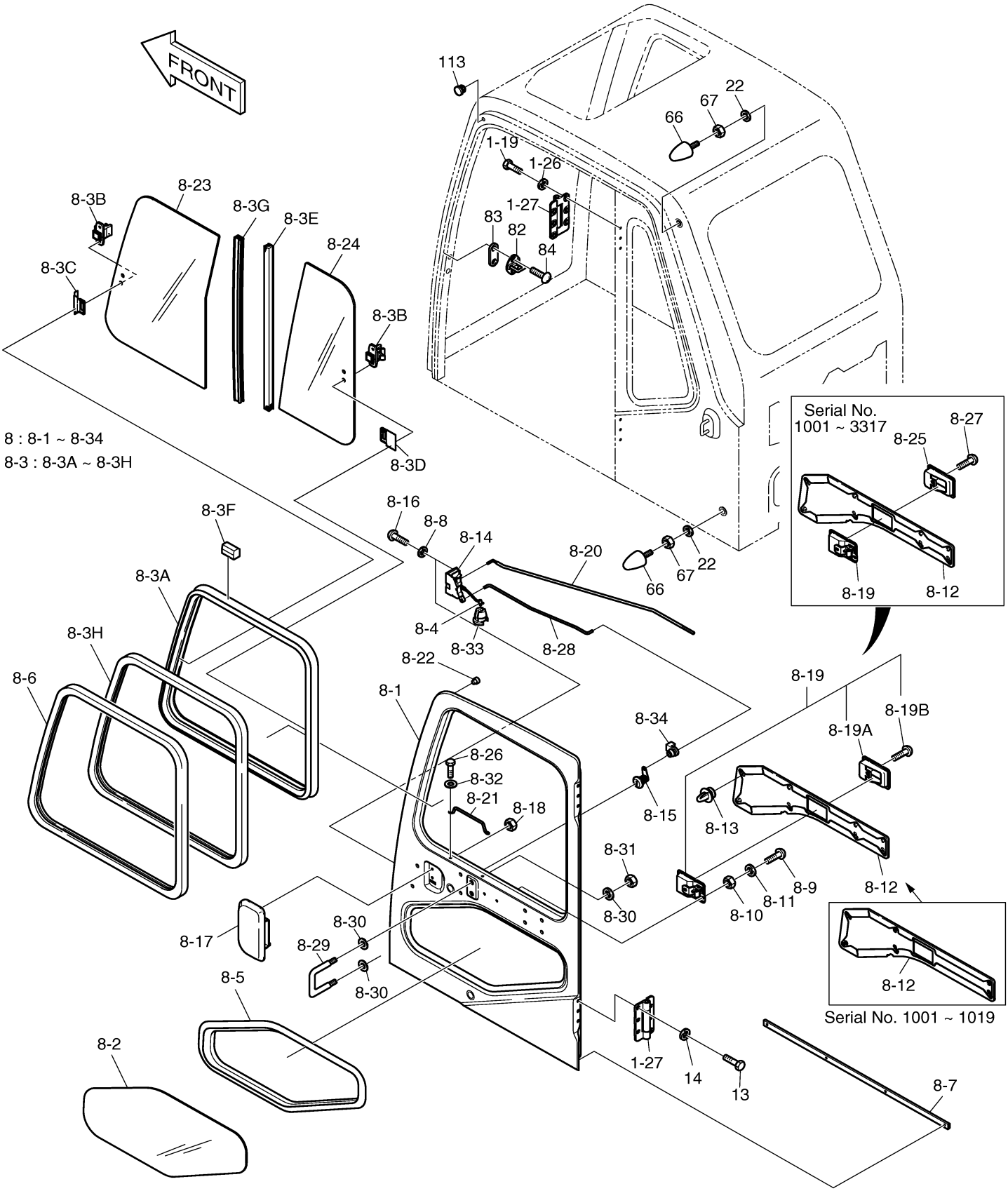

DOOSAN Doosan Infracore

Fig. 1530 SUPPORT(1)

Key No	Part No	Description	Qty	S.C	Serial No	ICA	Replacable	Qty
-	195-01426	SUPPORT ASS'Y	-	D				
1	195-01457B	SUPPORT	1					
2	195-01458B	SUPPORT	1		1001~2284			
2	195-01458C	SUPPORT	1		2285~			
3	195-01467C	SUPPORT	1		1001~2174	I	195-01467E	1
3	195-01467E	SUPPORT	1		2175~			
6	195-01461B	SUPPORT	1					
8	621-01539A	COVER	1		1001~2284			
8	621-01539B	COVER	1		2285~			
9	621-01587B	COVER	1					
10	2120-2196D6	BOLT	11					
11	2120-2196D9	BOLT;SET M12X1.75X25	23					

Fig. 1530 SUPPORT(1)

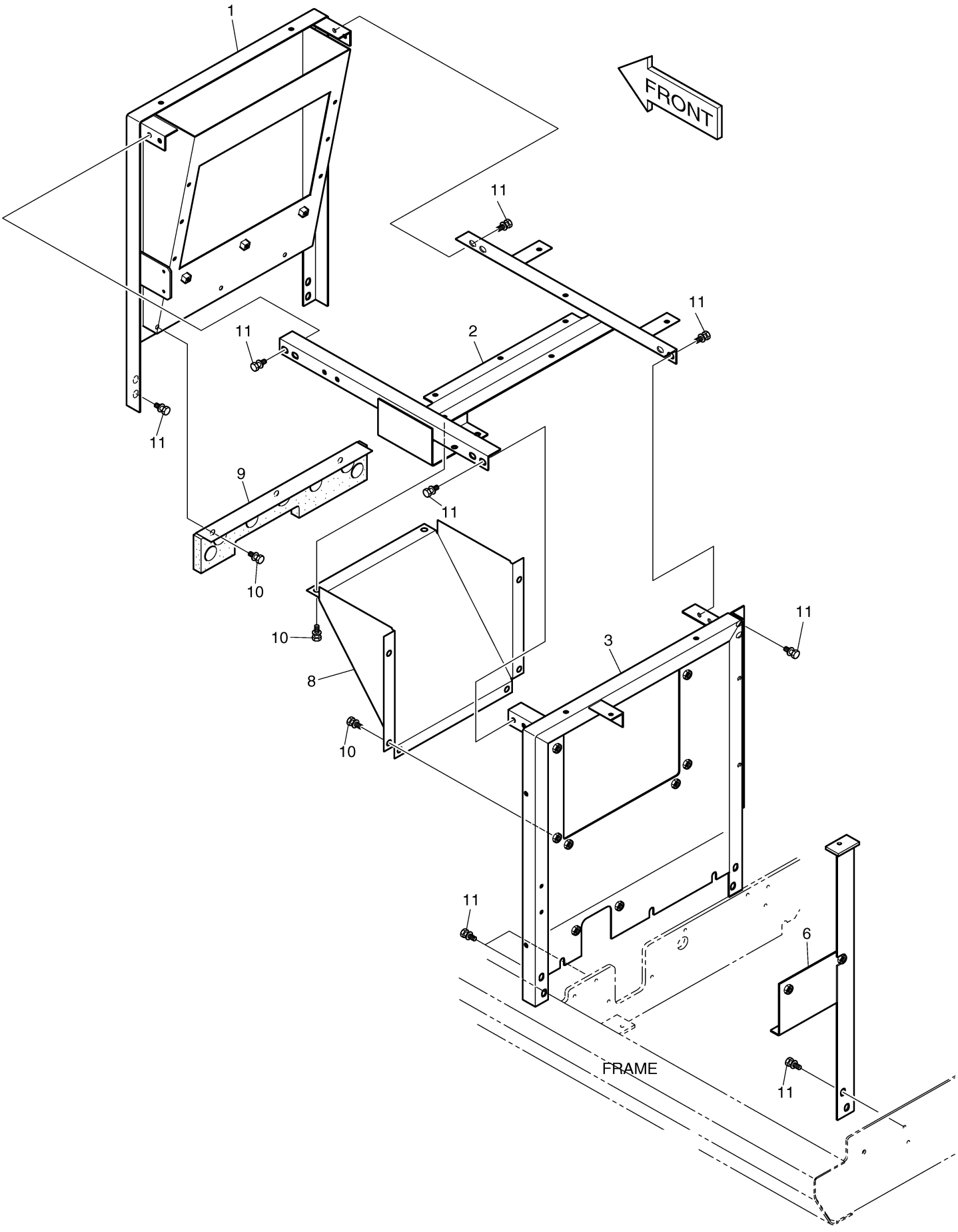

Fig. 1540 SUPPORT(2)

Key No	Part No	Description	Qty	S.C	Serial No	ICA	Replacable	Qty
-	195-01426	SUPPORT ASS'Y	-	D				
4	195-01468C	SUPPORT	1		1001~1029			
4	195-01468E	SUPPORT	1		1030~2174	I	195-01468G	1
4	195-01468G	SUPPORT	1		2175~2284	I	195-01468H	1
4	195-01468H	SUPPORT	1		2285~2557	I	195-01468J	1
4	195-01468J	SUPPORT	1		2558~			
5	195-01462A	SUPPORT	1		1001~1019	I	195-01462B	1
5	195-01462B	SUPPORT	1		1020~			
7	195-01476A	SUPPORT	1					
11	2120-2196D9	BOLT;SET M12X1.75X25	10					
12	S0514853	BOLT	1		2285~			
13	S5102703	WASHER	1		2285~			
14	S5010713	WASHER	1		2285~			

Fig. 1540 SUPPORT(2)

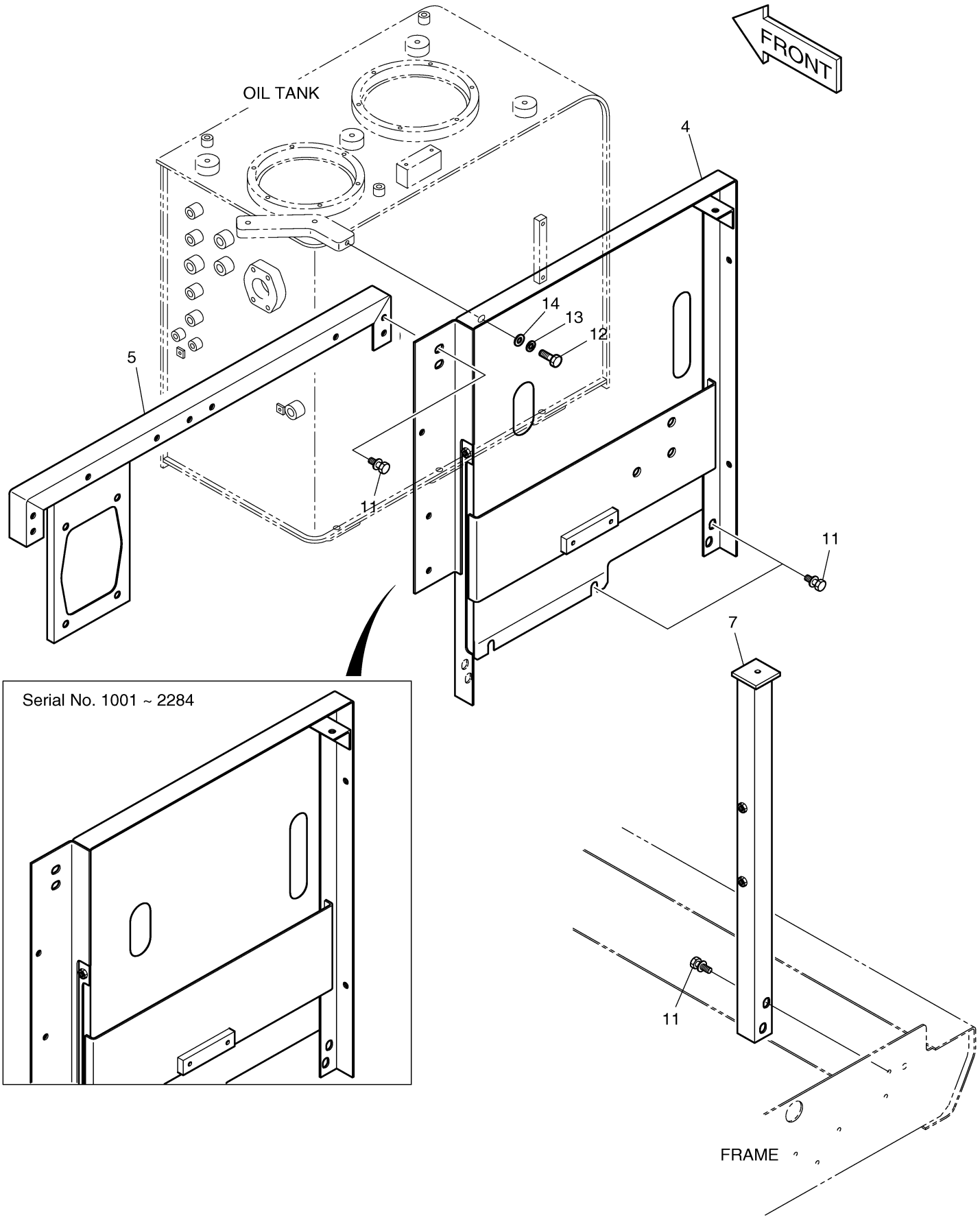

Fig. 1550 COVER(1) [1001 ~ 1147]

Key No	Part No	Description	Qty	S.C	Serial No	ICA	Replacable	Qty
-	621-01548	COVER ASS'Y	-	D	1001~1147			
3	621-01549A	SIDE DOOR ASS'Y	1					
3A	195-01480A	SUPPORT	1					
3B	621-01550	DOOR;SIDE	1					
3BA	125-00034	CATCH	1					
3C	2621-3545E	DOOR;SIDE	1					
3D	2145-1237	STAY	2					
3E	S4012733	NUT	8					
3F	2114-1058D30	WASHER	8					
3G	S0508753	BOLT	2					
3H	S5010513	WASHER	2					
3I	2891-1101	SEAT;SCREW	4					
3J	621-01575	PLATE;STOPPER	1					
3K	S0512053	BOLT	2					
3L	S4012633	NUT	2					
3M	2114-1058D10	WASHER	2					
3N	2161-2226	STOPPER;RUBBER	2					
3O	2161-9052	STOPPER;PLATE	1					
3P	2161-9053	STOPPER;RUBBER	1					
3Q	S4012633	NUT	2					
3R	2116-1522	PLATE	1					
3S	S5010313	WASHER	4					
3T	S0504553	BOLT	2					
3U	S0504453	BOLT	2					
3W	S3050863	BOLT;WING	1					
12	2120-2196D11	BOLT;SET M12X1.75X35	2					
13	2120-2196D9	BOLT;SET M12X1.75X25	9					
14	2114-1180D22	SHIM 1.0T	1					
15	2114-1180D23	SHIM 2.0T	2					

Fig. 1550 COVER(1) [1001 ~ 1147]

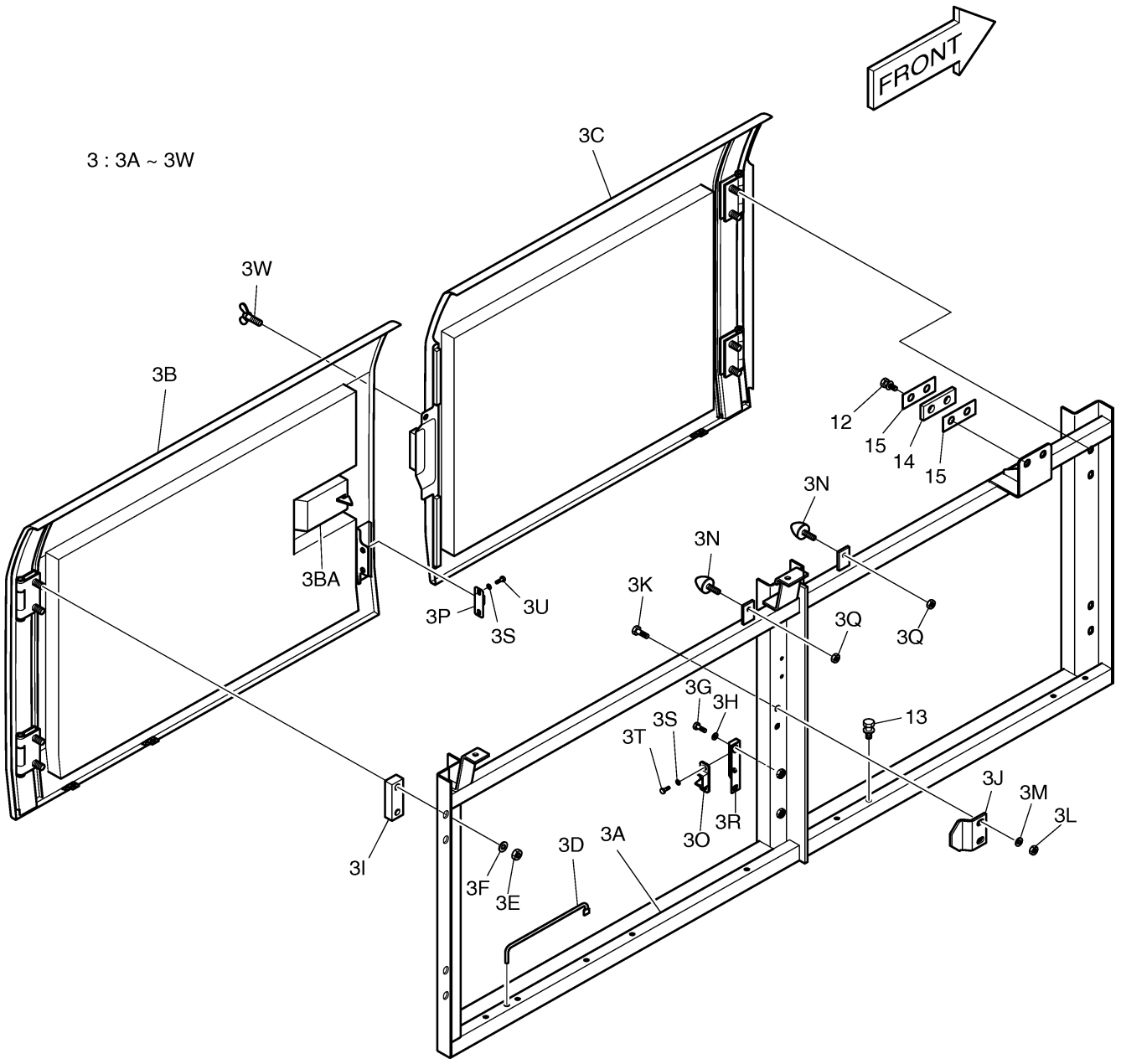

DOOSAN Doosan Infracore

Fig. 1551 COVER(1) [1148 ~]

Key No	Part No	Description	Qty	S.C	Serial No	ICA	Replacable	Qty
-	621-01548A	COVER ASS'Y	-	D	1148~4829			
-	110508-00129	COVER ASSY	-	D	4830~			
3	621-01549B	SIDE DOOR ASS'Y	1		1148~2161	I	621-01549C	1
3	621-01549C	SIDE DOOR ASS'Y	1		2162~2284			
3	621-01549E	SIDE DOOR ASS'Y	1		2285~2679	I	621-01549G	1
3	621-01549G	SIDE DOOR ASS'Y	1		2680~3322			
3	621-01549H	SIDE DOOR ASS'Y	1		3323~3554	I	621-01549I	1
3	621-01549I	SIDE DOOR ASS'Y	1		3555~			
3A	195-01480B	SUPPORT	1		1148~2284			
3A	195-01480C	SUPPORT	1		2285~			
3B	621-01550	DOOR;SIDE	1		1148~2161	I	621-01550A	1
3B	621-01550A	DOOR;SIDE	1		2162~2679	I	621-01550B	1
3B	621-01550B	DOOR;SIDE	1		2680~3322			
3B	621-01550C	DOOR;SIDE	1		3323~3554	I	K1011415A	1
3B	K1011415A	DOOR;SIDE	1		3555~			
3BA	125-00034	CATCH	1		1148~2161	I	125-00082	1
3BA	125-00082	LOCK	1		2162~2679	I	125-00082A	1
3BA	125-00082A	LOCK	1		2680~3322			
3BA	K1006422	LOCK	1		3323~			
3C	621-02425	DOOR;SIDE	1		1148~2161	I	621-02425A	1
3C	621-02425A	DOOR;SIDE	1		2162~2679	I	621-02425B	1
3C	621-02425B	DOOR;SIDE	1		2680~3322			
3C	621-02425C	DOOR;SIDE	1		3323~			
3CA	125-00035	LOCK	1		1148~2161	I	125-00083	1
3CA	125-00083	LOCK	1		2162~2679	I	125-00083A	1
3CA	125-00083A	LOCK	1		2680~3322			
3CA	K1006423	LOCK	1		3323~			
3D	2145-1237	STAY	2					
3E	S4012733	NUT	8					
3F	2114-1058D30	WASHER	8					
3G	S0508753	BOLT	4					
3H	S5010513	WASHER	4					
3I	2891-1101	SEAT;SCREW	4					
3J	621-01575	PLATE;STOPPER	2					
3K	S0512053	BOLT	4					
3L	S4012633	NUT	4					

Key No	Part No	Description	Qty	S.C	Serial No	ICA	Replacable	Qty
3M	2114-1058D10	WASHER	4					
3N	2161-2226	STOPPER;RUBBER	2					
3O	2161-9052	STOPPER;PLATE	2					
3P	2161-9053	STOPPER;RUBBER	2					
3Q	S4012633	NUT	2					
3R	2116-1522	PLATE	2					
3S	S5010313	WASHER	8					
3T	S0504553	BOLT	4					
3U	S0504453	BOLT	4					
12	2120-2196D11	BOLT;SET M12X1.75X35	2					
13	2120-2196D9	BOLT;SET M12X1.75X25	9					
14	2114-1180D22	SHIM 1.0T	1					
15	2114-1180D23	SHIM 2.0T	2					

Fig. 1551 COVER(1) [1148 ~]

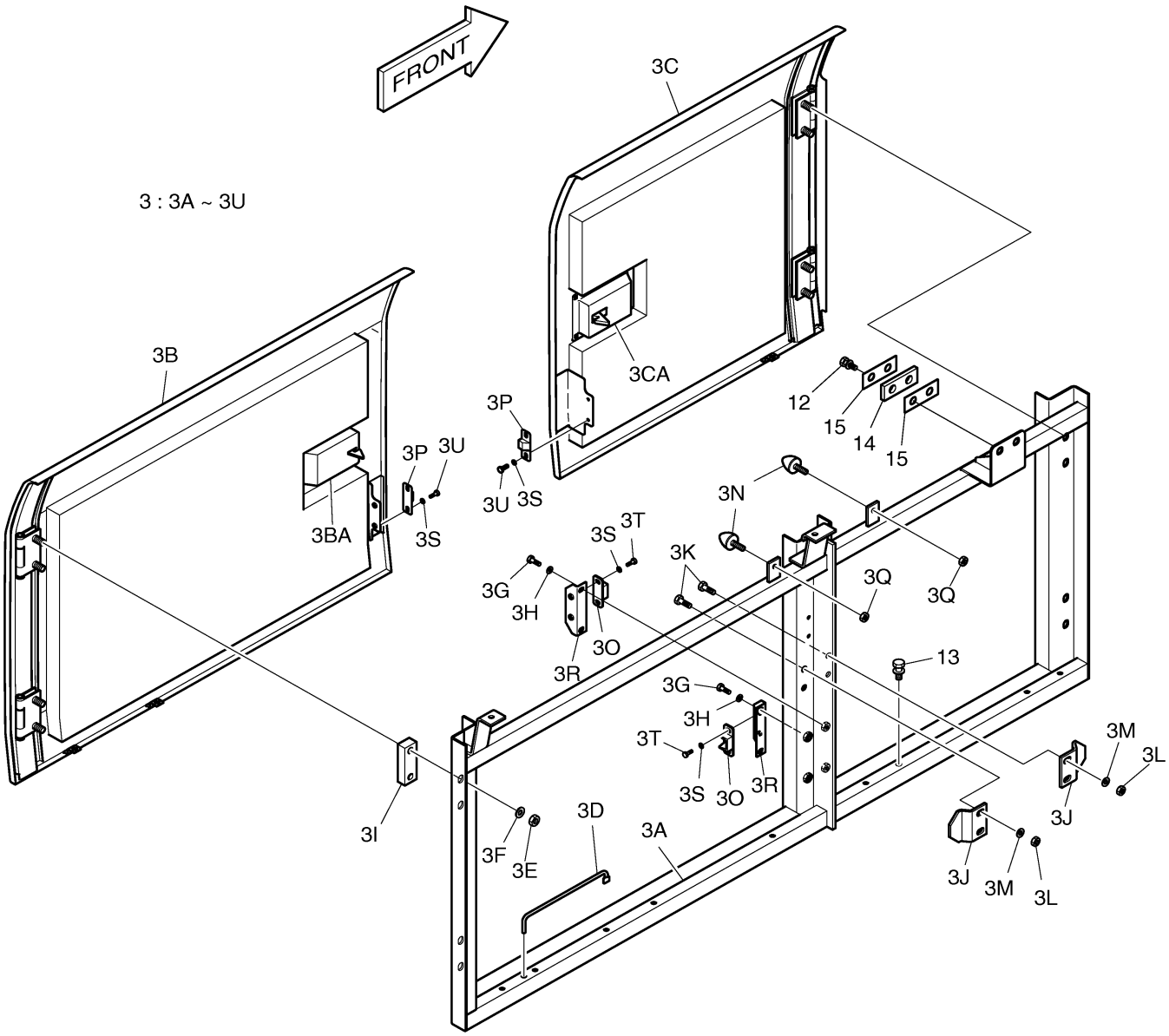

Fig. 1560 COVER(2)

Key No	Part No	Description	Qty	S.C	Serial No	ICA	Replacable	Qty
-	621-01548A	COVER ASS'Y	-	D	1001~4829			
-	110508-00129	COVER ASSY	-	D	4830~			
2	621-01559A	SIDE DOOR ASS'Y	1		1001~2161	I	621-01559B	1
2	621-01559B	SIDE DOOR ASS'Y	1		2162~2284			
2	621-01559C	SIDE DOOR ASS'Y	1		2285~2679	I	621-01559E	1
2	621-01559E	SIDE DOOR ASS'Y	1		2680~3322			
2	621-01559G	SIDE DOOR ASS'Y	1		3323~			
2A	195-01481A	SUPPORT	1		1001~2284			
2A	195-01481C	SUPPORT	1		2285~			
2B	621-01550	DOOR;SIDE	1		1001~2161	I	621-01550A	1
2B	621-01550A	DOOR;SIDE	1		2162~2679	I	621-01550B	1
2B	621-01550B	DOOR;SIDE	1		2680~3322			
2B	621-01550C	DOOR;SIDE	1		3323~			
2BA	125-00034	CATCH	1		1001~2161	I	125-00082	1
2BA	125-00082	LOCK	1		2162~2679	I	125-00082A	1
2BA	125-00082A	LOCK	1		2680~3322			
2BA	K1006422	LOCK	1		3323~			
2D	2145-1237	STAY	1					
2E	S4012733	NUT	4					
2F	2114-1058D30	WASHER	4					
2G	S0508753	BOLT	2					
2H	S5010513	WASHER	2					
2I	2891-1101	SEAT;SCREW	2					
2J	621-01575	PLATE;STOPPER	1					
2K	S0512053	BOLT	2					
2L	S4012633	NUT	2					
2M	2114-1058D10	WASHER	2					
2N	2161-2226	STOPPER;RUBBER	1					
2O	2161-9052	STOPPER;PLATE	1					
2P	2161-9053	STOPPER;RUBBER	1					
2Q	S4012633	NUT	1					
2R	2116-1522	PLATE	1					
2S	S5010313	WASHER	4					
2T	S0504553	BOLT	2					
2U	S0504453	BOLT	2					
5	2621-3555H	COVER	1					

Key No	Part No	Description	Qty	S.C	Serial No	ICA	Replacable	Qty
13	2120-2196D9	BOLT;SET M12X1.75X25	7					
37	2114-1154	WASHER	2					
39	S0514753	BOLT M12X1.75X18	2					

Fig. 1560 COVER(2)

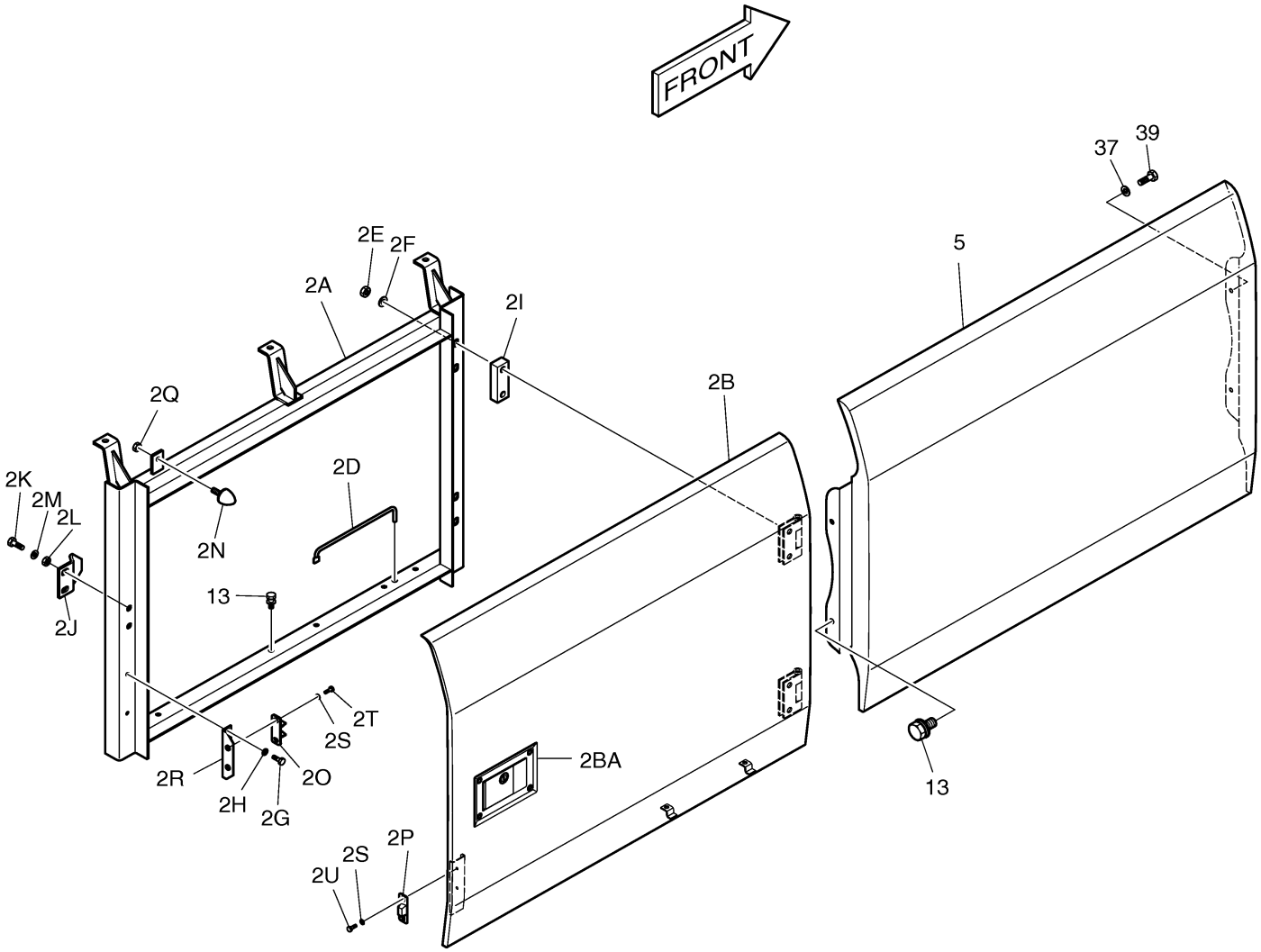

Fig. 1570 COVER(3)

Key No	Part No	Description	Qty	S.C	Serial No	ICA	Replacable	Qty
-	621-01548A	COVER ASS'Y	-	D	1001~4829			
-	110508-00129	COVER ASSY	-	D	4830~			
4	621-01546C	BATTERY COVER ASS'Y	1		1001~2161	I	621-01546E	1
4	621-01546E	BATTERY COVER ASS'Y	1		2162~2679	I	621-01546H	1
4	621-01546H	BATTERY COVER ASS'Y	1		2680~3322			
4	621-01546I	BATTERY COVER ASS'Y	1		3323~			
4A	621-01542B	COVER;BATTERY	1		1001~2679	I	621-01542C	1
4A	621-01542C	COVER;BATTERY	1		2680~			
4B	621-01543B	COVER	1		1001~2161	I	621-01543C	1
4B	621-01543C	COVER	1		2162~2679	I	621-01543G	1
4B	621-01543G	COVER	1		2680~3322			
4B	621-01543H	COVER	1		3323~			
4BA	125-00034	CATCH	1		1001~2161	I	125-00082	1
4BA	125-00082	LOCK	1		2162~2679	I	125-00082A	1
4BA	125-00082A	LOCK	1		2680~3322			
4BA	K1006422	LOCK	1		3323~			
4C	2145-1243	STAY	1					
4D	S0512053	BOLT	4					
4E	S5010613	WASHER	4					
4F	2621-3003B	PLATE	1					
4G	2114-1727A	SHIM	1					
4H	S0555753	BOLT	2					
4I	S5010513	WASHER	2					
4J	2114-1058D29	WASHER	4					
4K	2705-9002	PIN	2					
4P	621-01544B	COVER	1					
4Q	S0509253	BOLT	5					
4R	S5102503	WASHER	5					
4S	S5010513	WASHER	5					
11	145-00045B	STAY	1		1001~2255	I	145-00045C	1
11	145-00045C	STAY	1		2256~			
12	2120-2196D11	BOLT;SET M12X1.75X35	2					
13	2120-2196D9	BOLT;SET M12X1.75X25	4					
25	903-00052	MIRROR;MAIN	1		1001~1320	Y	2903-9012A	1
25	2903-9012A	MIRROR	1		1321~2675	I	903-00068	1
25	903-00068	MIRROR;SIDE	1		2676~4829	I	K1040606	1

Key No	Part No	Description	Qty	S.C	Serial No	ICA	Replacable	Qty
25	K1040606	MIRROR,SIDE	1		4830~			
26	145-00052	STAY	1					
27	124-00216	CLAMP	1					
28	124-00217	CLAMP	1					
29	S0561253	BOLT M12X1.75X75	2					
30	S5102703	WASHER	4					
31	S5010713	WASHER	2					
32	124-00246	CLAMP	1					
33	S0561053	BOLT	2					
37	2114-1154	WASHER	2					

Fig. 1570 COVER(3)

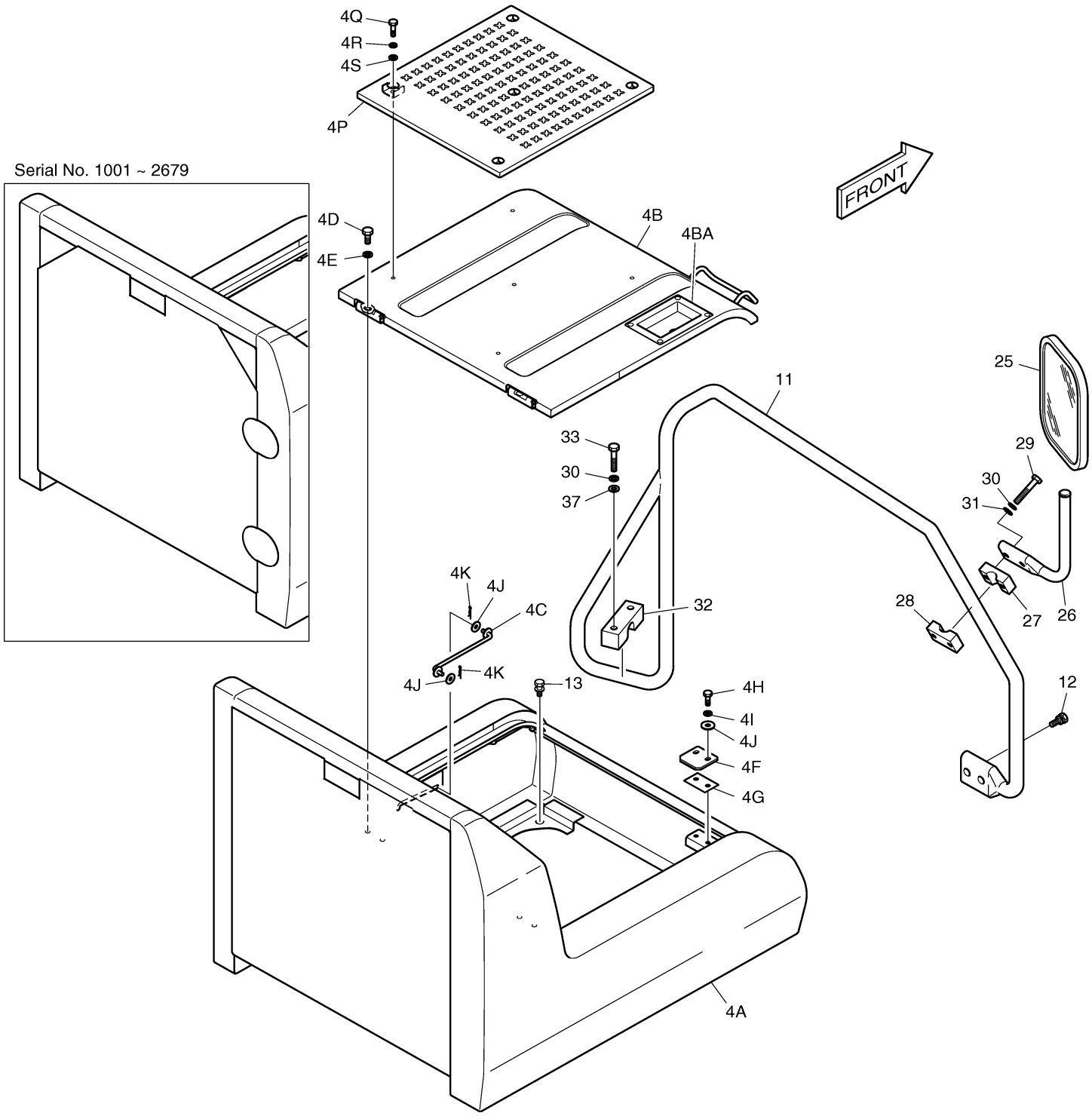

DOOSAN Doosan Infracore

Fig. 1580 COVER(4) [1001 ~ 1009]

Key No	Part No	Description	Qty	S.C	Serial No	ICA	Replacable	Qty
-	621-01548	COVER ASS'Y	-	D				
1	621-01574C	COVER;ENGINE	1					
1A	1.162-00001	RUBBER;CUSHION	1					
1	621-01934A	COVER;ENGINE-EUROPE OPT.	1					
1A	1.162-00001	RUBBER;CUSHION	1					
13	2120-2196D9	BOLT;SET M12X1.75X25	8					
18	S5102503	WASHER	12					
19	195-01747	BRACKET	1					
20	2440-9141	SPRING;GAS	2					
21	S4012533	NUT	4					
22	2125-9052B	CATCH	2		1001~1004	I	125-00045	2
22	125-00045	CATCH;BONNET	2		1005~			
23	S0508853	BOLT	4					
24	S5010513	WASHER	8		1001~1004			
24	2114-1058D56	WASHER	8		1005~			
34	145-00053	STAY	1					
35	2123-1057D19	PIN	2					
36	2705-9002	PIN	2					
37	2114-1154	WASHER	4					
38	S0508553	BOLT	4					

Fig. 1580 COVER(4) [1001 ~ 1009]

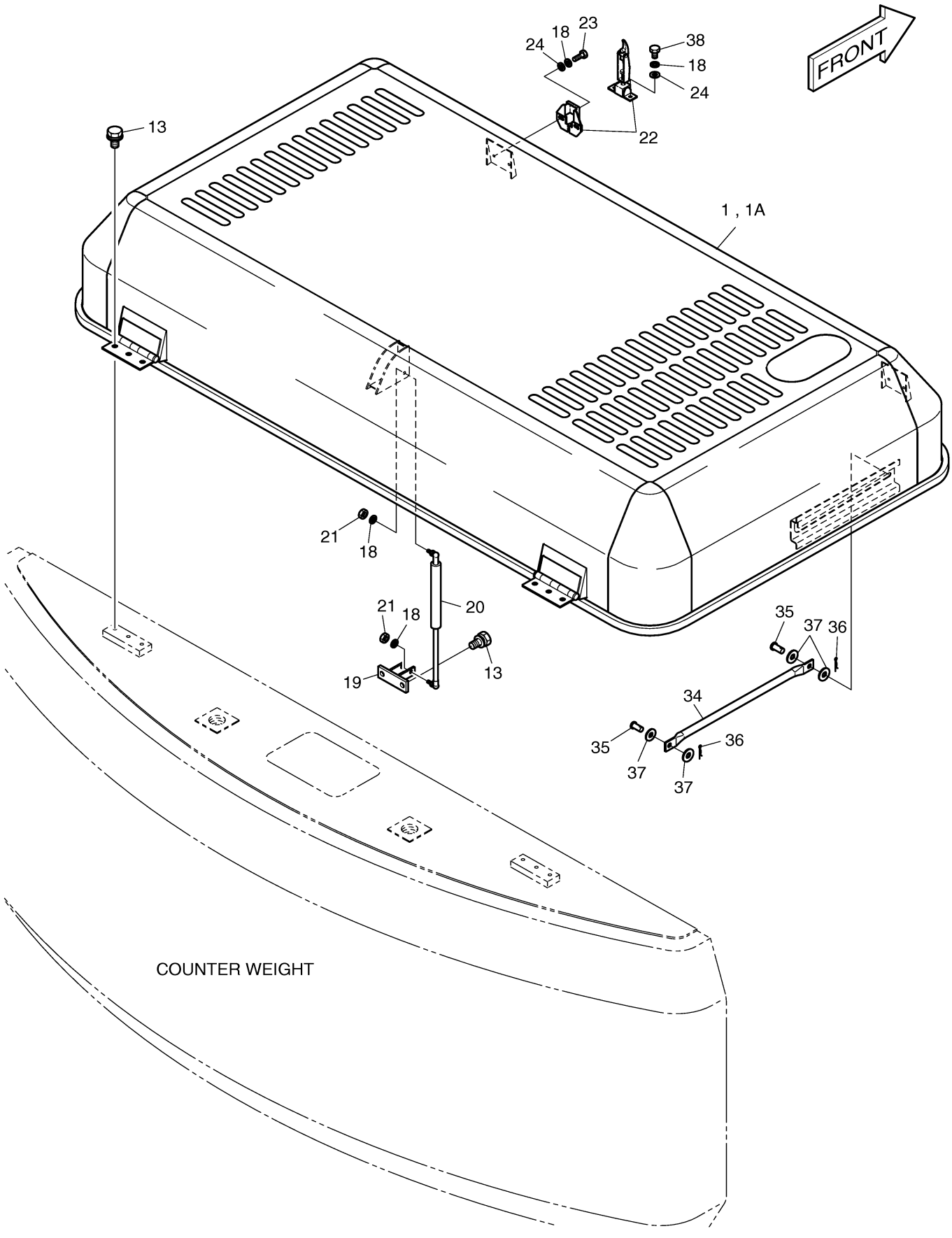

Fig. 1581 COVER(4) [1010 ~]

Key No	Part No	Description	Qty	S.C	Serial No	ICA	Replacable	Qty
-	621-01548B	COVER ASS'Y	-	D	1001~4829			
-	110508-00129	COVER ASSY	-	D	4830~			
1	621-01574E	COVER;ENGINE	1		1001~2161	I	621-01574G	1
1	621-01574G	COVER;ENGINE	1		2162~4494	I	621-01574H	1
1	621-01574H	COVER;ENGINE	1		4495~			
1A	1.162-00001	RUBBER;CUSHION	1					
1	621-01934B	COVER;ENGINE-EUROPE OPT.	1		1010~1019	I	621-01934C	1
1	621-01934C	COVER;ENGINE-EUROPE OPT.	1		1020~4494	I	621-01934E	1
1	621-01934E	COVER;ENGINE-EUROPE OPT.	1		4495~			
1A	1.162-00001	RUBBER;CUSHION	1					
13	2120-2196D9	BOLT;SET M12X1.75X25	8					
18	S5102503	WASHER	12					
19	195-01747	BRACKET	1					
20	2440-9141	SPRING;GAS	2					
21	S4012533	NUT	4					
22	125-00045	CATCH;BONNET	2		1001~2161	I	125-00084	2
22	125-00084	CATCH	2		2162~3322			
22	K1006424	CATCH	2		3323~			
23	S0508853	BOLT	4					
24	2114-1058D56	WASHER	8					
34	145-00070	STAY	1					
35	2123-1057D47	PIN	2					
36	2705-9002	PIN	2					
37	2114-1154	WASHER	4					
38	S0508553	BOLT	4					

Fig. 1581 COVER(4) [1010 ~]

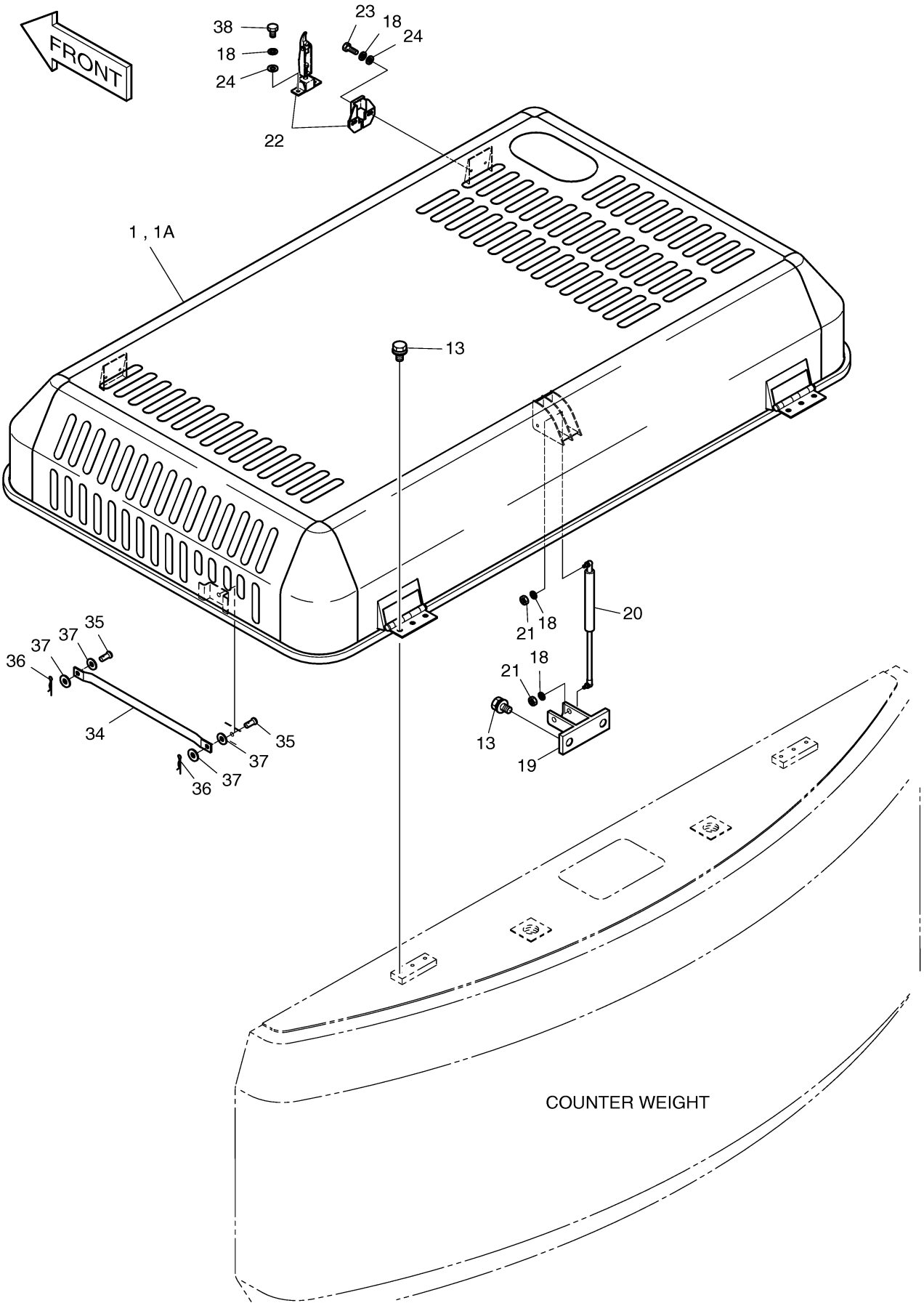

Fig. 1590 COVER(5)

Key No	Part No	Description	Qty	S.C	Serial No	ICA	Replacable	Qty
-	621-01548A	COVER ASS'Y	-	D	1001~4829			
-	110508-00129	COVER ASSY	-	D	4830~			
6	621-01547C	COVER	1		1001~1009			
6	621-01547E	COVER	1		1010~			
7	621-01536A	COVER	1		1001~1019			
7	621-01536B	COVER	1		1020~			
8	621-01562A	COVER	1					
9	621-01534A	COVER	1		1001~1009			
9	621-01534B	COVER	1		1010~2161	I	621-01534C	1
9	621-01534C	COVER	1		2162~			
10	621-01535B	COVER	1					
13	2120-2196D9	BOLT;SET M12X1.75X25	24		1001~1009			
13	2120-2196D9	BOLT;SET M12X1.75X25	22		1010~			
40	114-00529	SPACER	2		1010~			
41	160-00050	RUBBER	2		1010~			
42	S0515253	BOLT	2		1010~			

Fig. 1590 COVER(5)

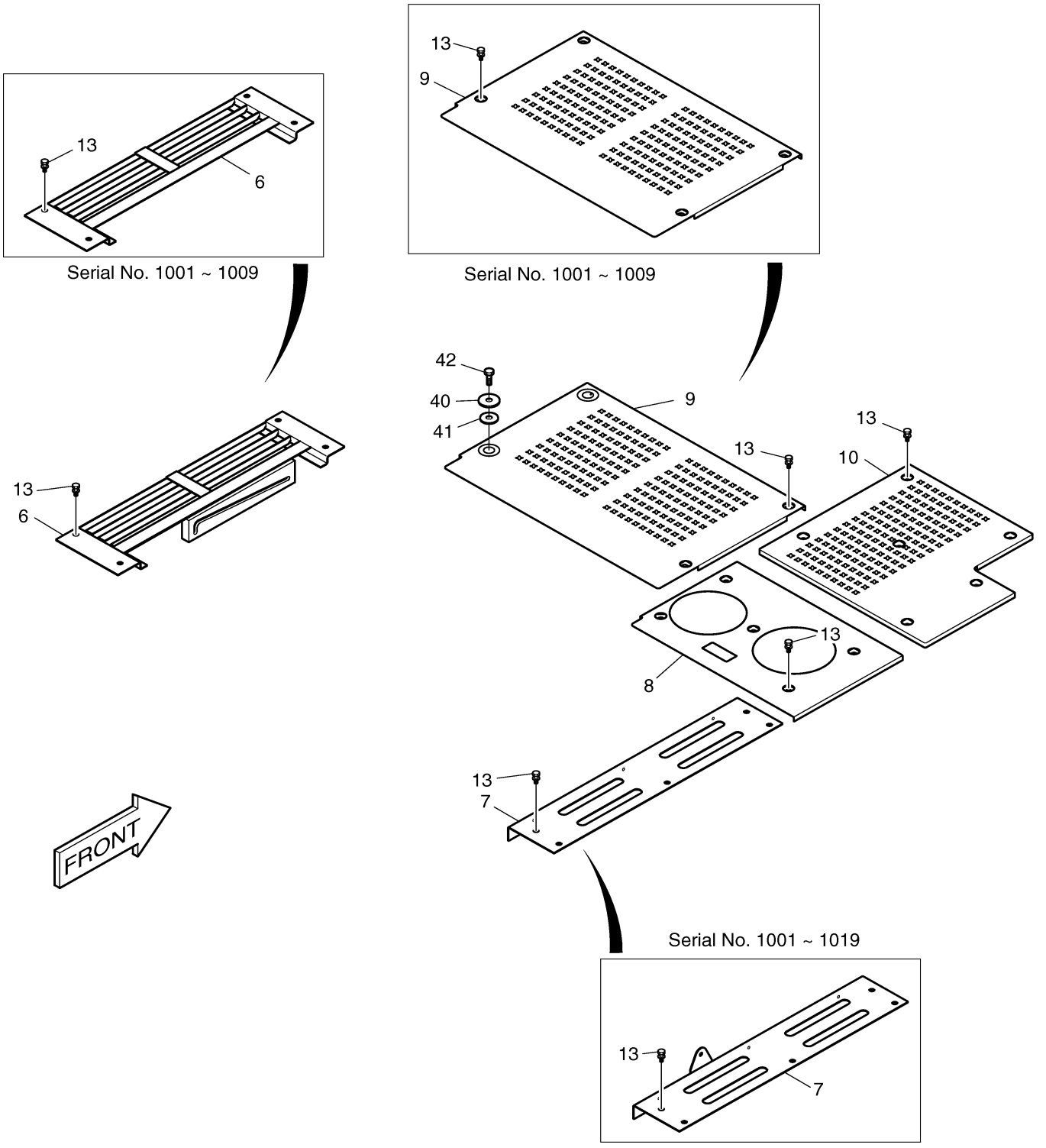

Fig. 1600 BAFFLE

Key No	Part No	Description	Qty	S.C	Serial No	ICA	Replacable	Qty
-	621-01519A	BAFFLE ASS'Y	-	D				
1	621-01520A	COVER	1					
2	621-01521A	COVER	1					
3	621-01522A	COVER	1					
4	621-01545B	COVER	1		1001~1004	I	621-01545C	1
4	621-01545C	COVER	1		1005~1019	I	621-01545E	1
4	621-01545E	COVER	1		1020~2174			
4	621-01545G	COVER	1		2175~4494	I	621-01545H	1
4	621-01545H	COVER	1		4495~			
5	621-01537	COVER	1		1001~2284	I	621-01537A	1
5	621-01537A	COVER	1		2285~			
6	621-01538A	COVER	1					
7	621-01531A	COVER	1		1001~2174			
7	621-01531B	COVER	1		2175~4494	I	621-01531E	1
7	621-01531E	COVER	1		4495~			
8	621-01532A	COVER	1		1001~2174			
8	621-01532B	COVER	1		2175~4494	I	621-01532E	1
8	621-01532E	COVER	1		4495~			
9	621-01571A	COVER	2					
10	621-01572	PLATE	4					
11	2120-2196D6	BOLT	29					
12	621-01611	PLATE;STOPPER	4					
13	621-01868	COVER	1					

Fig. 1600 BAFFLE

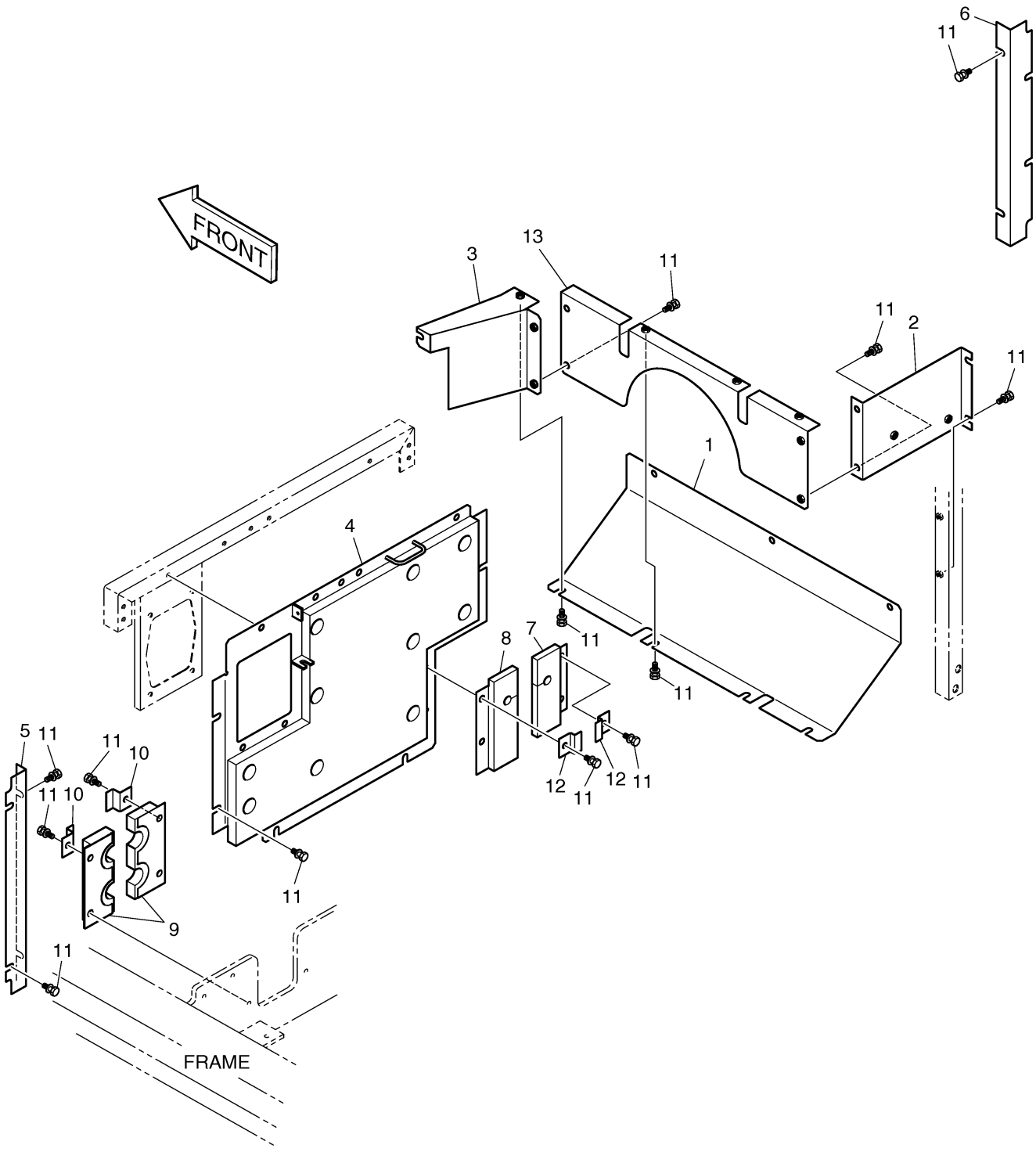

Fig. 1610 ACOUSTIC FOAM

Key No	Part No	Description	Qty	S.C	Serial No	ICA	Replacable	Qty
-	161-00310	ACOUSTIC FOAM ASS'Y	-	D				
1	161-00304	FOAM;POLYURETHANE	1					
2	161-00305	FOAM;POLYURETHANE	1					
3	161-00306	FOAM;POLYURETHANE	1					
4	161-00390A	FOAM;POLYURETHANE	1					
5	621-01581C	COVER	1					
6	621-01582B	COVER	1					
7	161-00438	FOAM;POLYURETHANE	1					
8	161-00391	FOAM;POLYURETHANE	1					
9	161-00307B	FOAM;POLYURETHANE	1					
10	161-00308A	FOAM;POLYURETHANE	1					
11	161-00309	FOAM;POLYURETHANE	1					
12	161-00392	FOAM;POLYURETHANE	2					
13	161-00393	FOAM;POLYURETHANE	2					
14	621-01594B	COVER	1		1001~1004	I	621-01594C	1
14	621-01594C	COVER	1		1005~			
15	621-01595B	COVER	1					
16	161-00312B	RUBBER	1					
17	161-00316B	RUBBER	1					
18	124-00070	CLIP,TREE	8					
19	S0508653	BOLT	13					
20	S5102503	WASHER	13					
21	S5010513	WASHER	7					
22	2114-1058D29	WASHER	6					

Fig. 1610 ACOUSTIC FOAM

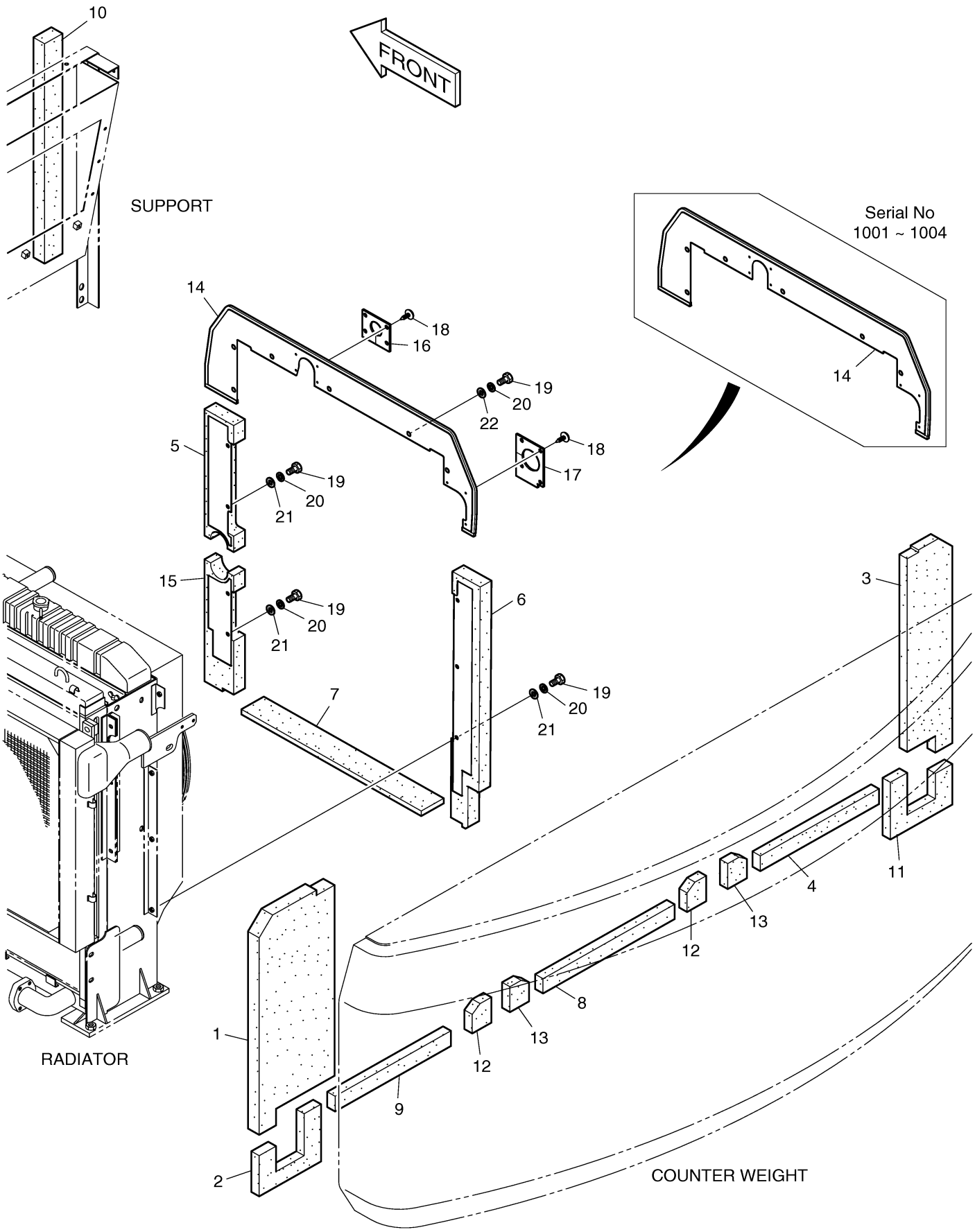

Fig. 1620 UNDER COVER

Key No	Part No	Description	Qty	S.C	Serial No	ICA	Replacable	Qty
-	621-01561	UNDER COVER ASS'Y	-	D				
1	621-01552A	COVER;UNDER	1					
2	621-01553A	COVER;UNDER	1					
3	621-01554A	COVER;UNDER	1					
4	621-01555A	COVER;UNDER	1					
5	621-01556A	COVER;UNDER	1					
6	621-01557A	COVER;UNDER	1					
7	621-01558A	COVER;UNDER	1					
8	621-01560B	COVER;UNDER	1					
9	2120-2196D10	BOLT;SET M12X1.75X25	45		1001~1420			
9	2120-2196D14	BOLT;SET M12X1.75X25	45		1421~2566			
9	2120-2196D14	BOLT;SET M12X1.75X25	55		2567~			
10	2114-1154	WASHER	45		1001~2566			
10	2114-1154	WASHER	55		2567~			
11	621-03665	COVER;UNDER	1		2567~			
12	K1000551	COVER;UNDER	1		2567~			

Fig. 1620 UNDER COVER

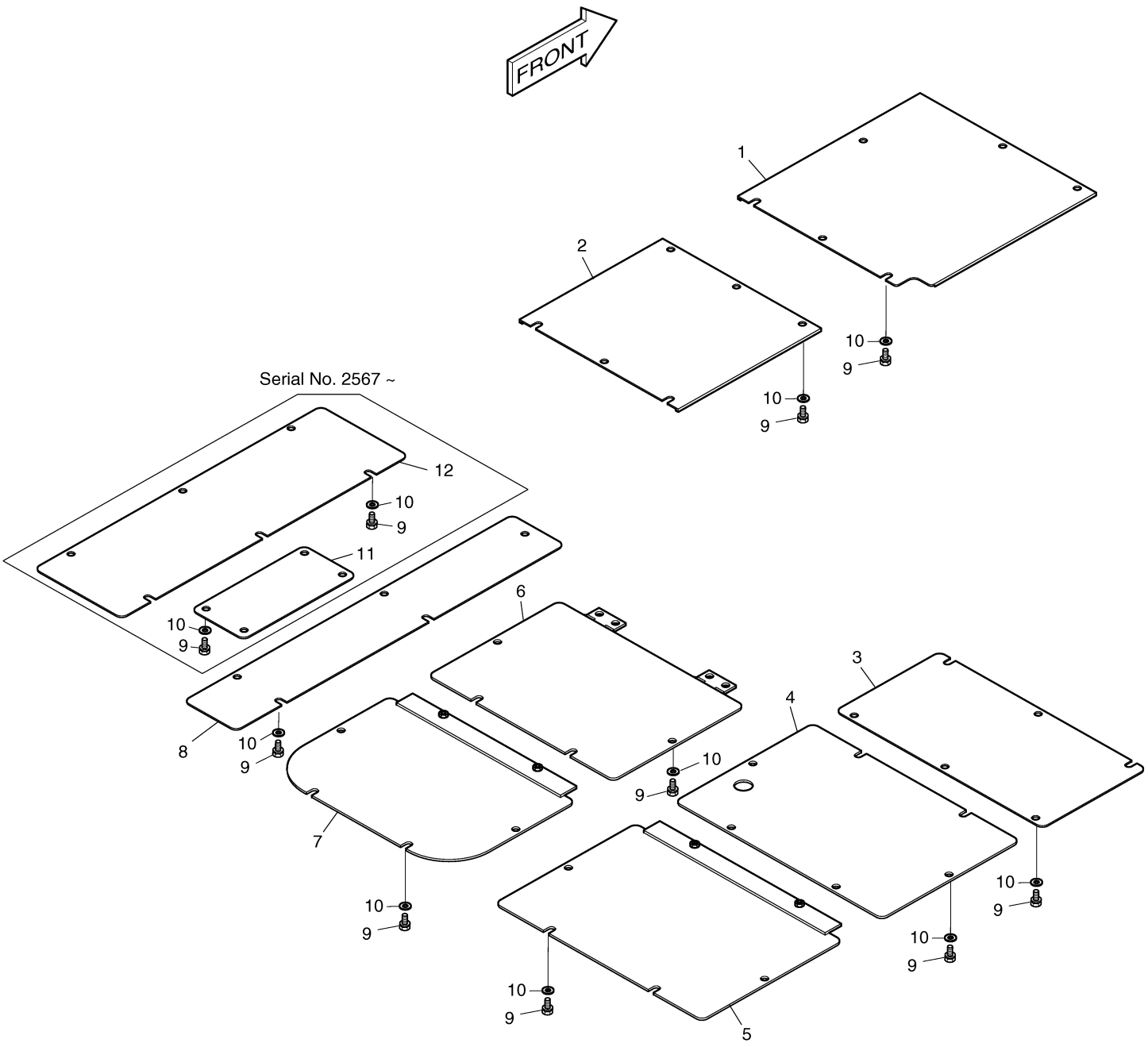

Fig. 1630 LUBRICATION PIPING

Key No	Part No	Description	Qty	S.C	Serial No	ICA	Replacable	Qty
-	400-00664	LUBRICATION PIPING	-	D				
1	140-00791	PIPE;GREASE	1					
2	140-00792	PIPE;GREASE	1					
3	2181-1925	ELBOW	2					
4	2181-2527	TEE	2					
5	2124-1027D19	CLIP,PIPE	2					
6	S0508453	BOLT	2					
7	S5102503	WASHER	2					
8	S6710041	NIPPLE,GREASE	3					
9	160-00020	CAP	3					

Fig. 1630 LUBRICATION PIPING

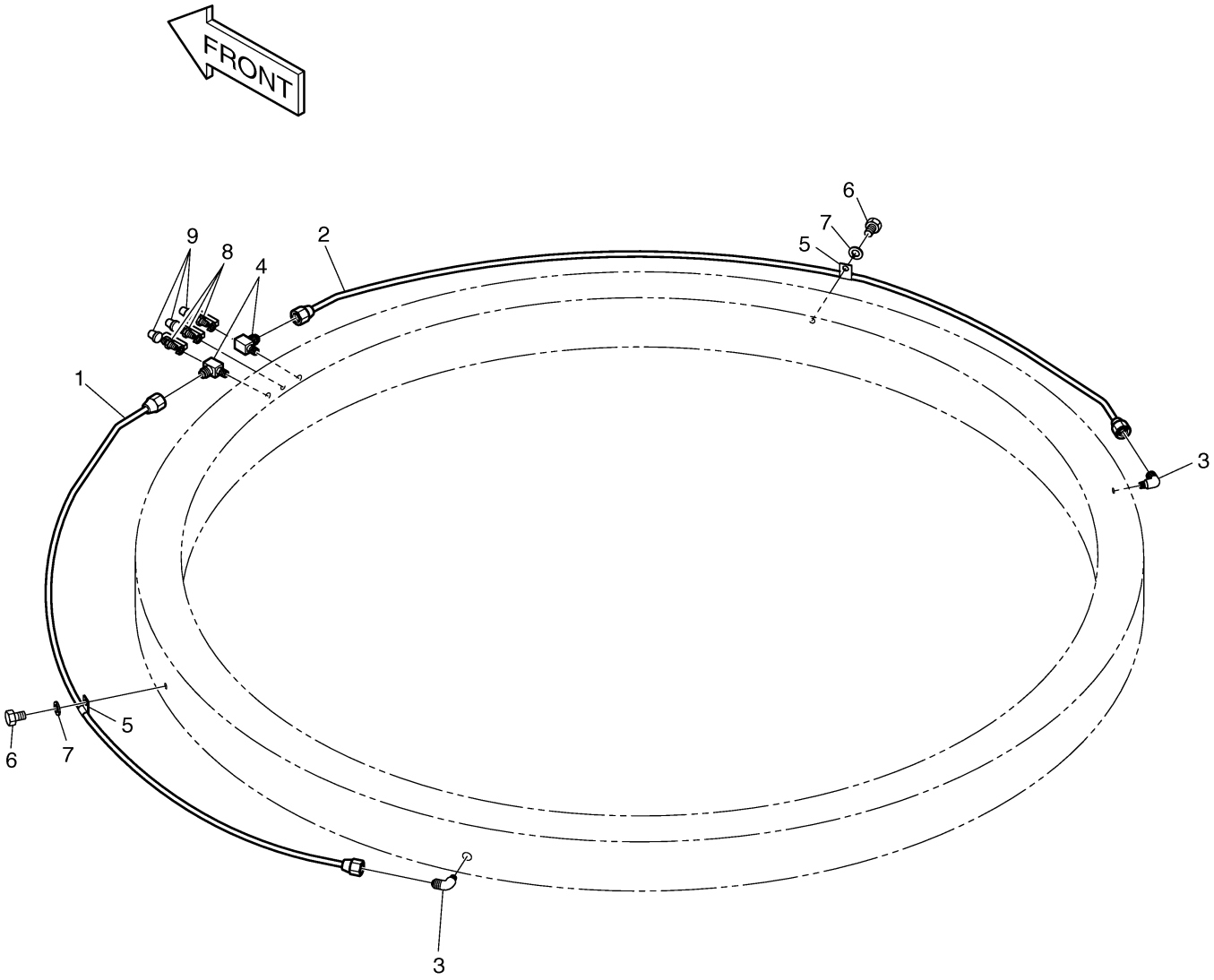

Fig. 1640 ELECTRIC BOX ASS'Y(1)-BOX

Key No	Part No	Description	Qty	S.C	Serial No	ICA	Replacable	Qty
-	512-00031	ELECTRIC BOX ASS'Y	-	D				
1	2512-1118B	ELECTRIC BOX	1					
2	2891-1266A	PLATE	1					
3	2891-1267	PLATE	1					
4	2891-1265	PLATE	1					
5	2891-1268	PLATE	1					
6	621-01952	PLATE	1					
7	2120-2166D6	BOLT	9					
8	2110-1349	BUSH 188L	1					
9	2114-1898D3	WASHER	15					
10	S3458953	SCREW M6X1.0X12	6					
11	2120-2166D4	BOLT	4					
12	2114-1898D1	WASHER	4					

Fig. 1640 ELECTRIC BOX ASS'Y(1)-BOX

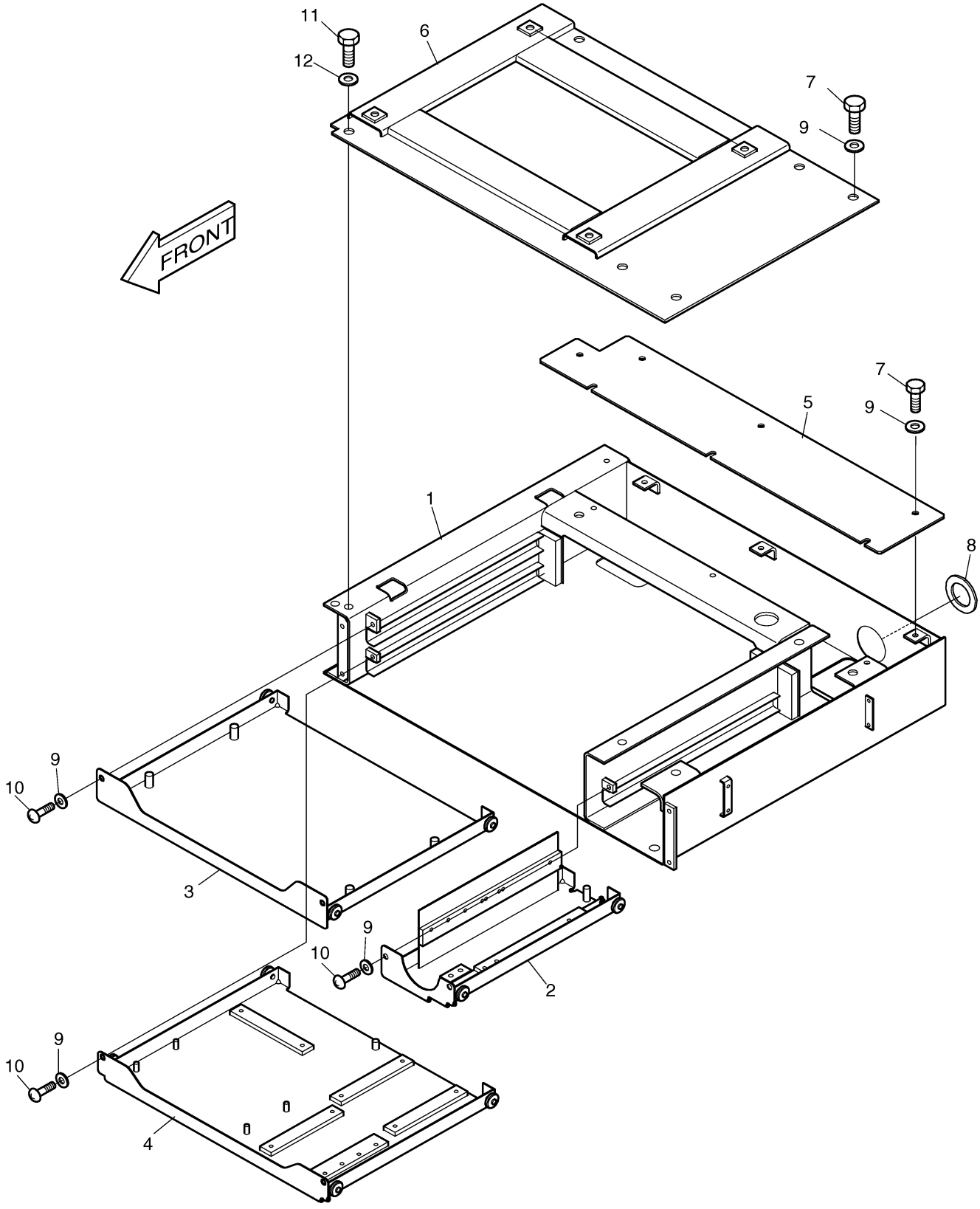

Fig. 1650 ELECTRIC BOX

Key No	Part No	Description	Qty	S.C	Serial No	ICA	Replacable	Qty
-	500-00113B	ELECTRIC BOX ASS'Y	1		1001~1009			
-	500-00113C	ELECTRIC BOX ASS'Y	1		1010~1017			
-	500-00113E	ELECTRIC BOX ASS'Y	1		1018~1063			
-	500-00113G	ELECTRIC BOX ASS'Y	1		1064~2429	I	500-00113H	1
-	500-00113H	ELECTRIC BOX ASS'Y	1		2430~4684			
-	500-00113J	ELECTRIC BOX ASS'Y	1		4685~4852	I	300706-00034	1
-	300706-00034	BOX ASSY,ELECTRIC	1		4853~			
2	543-00053	CONTROLLER;E-EPOS	1		1001~1009	I	543-00053A	1
2	543-00053A	CONTROLLER;E-EPOS	1		1010~1063			
2	543-00053B	CONTROLLER;E-EPOS	1		1064~4684	I	543-00053C	1
2	543-00053C	CONTROLLER;E-EPOS	1		4685~			
3	S4012633	NUT	4					
4	S5102603	WASHER	4					
5	S5010613	WASHER	4					
6	2543-1036	CONTROLLER;THROTTLE	1		1001~1019	P	543-00074	1
6	543-00074	CONTROLLER;THROTTLE	1		1010~4852	I	300611-00004	1
6	300611-00004	CONTROLLER,ENGINE	1		4853~			
7	S4012333	NUT	4					
8	S5102303	WASHER	4					
9	S5010313	WASHER	4					
10	2190-3231D20	PLATE;NAME	1		1001~1063			
10	2190-3231D21	PLATE;NAME	1		1064~			
11	2543-9015	CONTROLLER,STARTER	1					
12	S3450943	SCREW	2					
13	S5102303	WASHER	2					
14	2537-9008	TIMER;WIPER	1					
15	S3450943	SCREW	2					
16	S5102303	WASHER	2					
17	2531-1003	CONVERTER;DC-DC	1					
18	S3450953	SCREW	2					
19	S5102303	WASHER	2					
20	2531-1003	CONVERTER;DC-DC	1					
21	S3450953	SCREW	2					
22	S5102303	WASHER	2					
23	2516-1116	BUZZER	1					
24	S3450943	SCREW	2					

Key No	Part No	Description	Qty	S.C	Serial No	ICA	Replacable	Qty
25	S5102303	WASHER	2					
26	2544-9033	RELAY	1					
27	2544-9033	RELAY	1					
28	2544-9033	RELAY	1					
29	2544-9033	RELAY	1					
30	2544-9033	RELAY	1					
31	2544-9033	RELAY	1					
32	2544-9033	RELAY	1					
33	2190-2037D19	PLATE;NAME	1					
34	2190-2037D20	PLATE;NAME	1					
35	2190-2037D54	PLATE;NAME	1					
36	530-00207	HARNESS;ELECTRIC BOX	1		1001~1017			
36	530-00207A	HARNESS;ELECTRIC BOX	1		1018~4684			
36	530-00207B	HARNESS;ELECTRIC BOX	1		4685~			
37	530-00208	HARNESS;CABIN	1		1001~1017			
37	530-00208A	HARNESS;CABIN	1		1018~2429	I	530-00208B	1
37	530-00208B	HARNESS;CABIN	1		2430~4684			
37	530-00208E	HARNESS;CABIN	1		4685~			
38	S3450823	SCREW	5					
39	S5100203	WASHER	5					
40	124-00208D3	CLIP	2					
41	124-00208D5	CLIP	1					
42	124-00208D6	CLIP	2					
43	S0508853	BOLT	2					
44	S4012533	NUT	4					
45	S5102503	WASHER	4					

Fig. 1650 ELECTRIC BOX

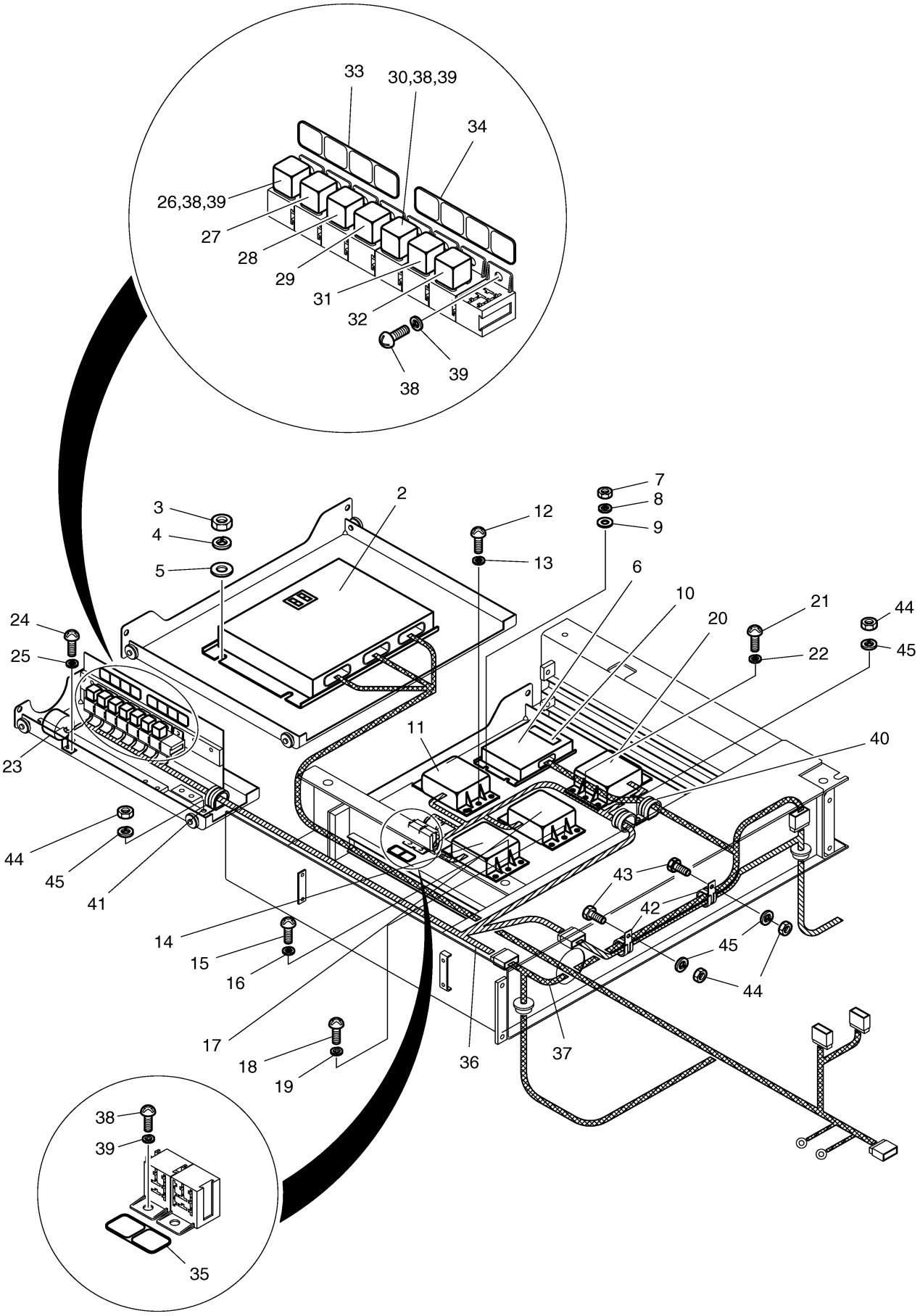

Fig. 1660 ELECTRIC PARTS(1)-GAUGE &

Key No	Part No	Description	Qty	S.C	Serial No	ICA	Replacable	Qty
-	500-00114A	ELECTRIC PARTS(1)	-	D	1001~1009			
-	500-00114B	ELECTRIC PARTS(1)	-	D	1010~1063			
-	500-00114E	ELECTRIC PARTS(1)	-	D	1064~2132			
-	500-00114G	ELECTRIC PARTS(1)	-	D	2133~2161			
-	500-00114H	ELECTRIC PARTS(1)	-	D	2162~2659			
-	500-00114I	ELECTRIC PARTS(1)	-	D	2660~2749			
-	500-00114J	ELECTRIC PARTS(1)	-	D	2750~3099			
-	500-00114L	ELECTRIC PARTS(1)	-	D	3100~3322			
-	500-00114M	ELECTRIC PARTS(1)	-	D	3323~			
1	539-00048	PANEL;LCD GAUGE	1		1001~1009	Y	539-00048A	1
1	539-00048A	PANEL;LCD GAUGE	1		1010~1063	P	539-00048C	1
1	539-00048C	PANEL;LCD GAUGE	1		1064~2659	I	539-00048E	1
1	539-00048E	PANEL;LCD GAUGE	1		2660~3737	I	539-00048G	1
1	539-00048G	PANEL;LCD GAUGE	1		3738~			
1A	159-00195	SHEET;SWITCH	1					
1B	515-00012	BULB 24V 1.2W	6					
2	S3450853	SCREW	4					
3	S5100203	WASHER	4					
4	S5000213	WASHER	4					
9	2549-9109	SWITCH;LAMP	1					
9A	K9000353	LAMP;PILOT	1					
10	2549-9109	SWITCH;LAMP	1					
10A	K9000353	LAMP;PILOT	1					
11	2549-9110	SWITCH;WASHER	1					
11A	K9000353	LAMP;PILOT	1					
12	2549-9109	SWITCH;LAMP	1					
12A	K9000353	LAMP;PILOT	1					
13	2549-9098	SWITCH;ROCKER	1					
13A	K9000353	LAMP;PILOT	1					
14	2190-2036D24	INSERT;LAMP	1					
15	2190-2036D11	INSERT;WIPER	1					
16	2190-2036D12	INSERT;WASHER	1					
17	2190-2036D13	INSERT;HIGH SPEED	1					
18	2190-2036D23	INSERT;CAR STEREO	1					
19	2528-9040	METER;HOUR	1					
20	545-00001	LIGHTER;CIGAR	1					

Key No	Part No	Description	Qty	S.C	Serial No	ICA	Replacable	Qty
38	530-00231A	HARNESS;GAUGE PANEL JOINT	1					
39	530-00209	HARNESS;SWITCH BOX	1					

Fig. 1660 ELECTRIC PARTS(1)-GAUGE &

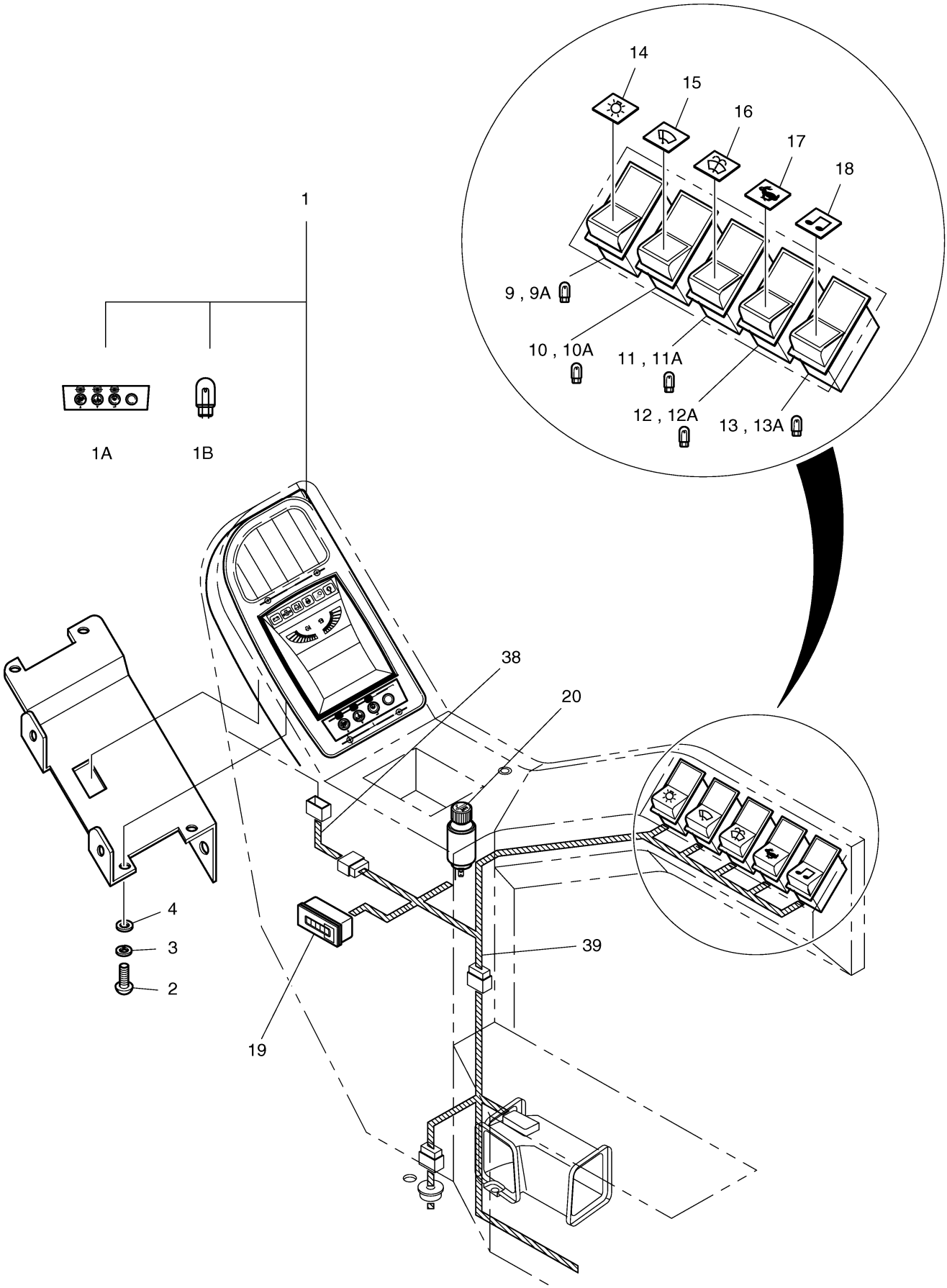

Fig. 1670 ELECTRIC PARTS(2)-STAND R.H

Key No	Part No	Description	Qty	S.C	Serial No	ICA	Replacable	Qty
-	500-00114A	ELECTRIC PARTS(1)	-	D	1001~1009			
-	500-00114B	ELECTRIC PARTS(1)	-	D	1010~1063			
-	500-00114E	ELECTRIC PARTS(1)	-	D	1064~2132			
-	500-00114G	ELECTRIC PARTS(1)	-	D	2133~2161			
-	500-00114H	ELECTRIC PARTS(1)	-	D	2162~2659			
-	500-00114I	ELECTRIC PARTS(1)	-	D	2660~2749			
-	500-00114J	ELECTRIC PARTS(1)	-	D	2750~3099			
-	500-00114L	ELECTRIC PARTS(1)	-	D	3100~3322			
-	500-00114M	ELECTRIC PARTS(1)	-	D	3323~			
21	2552-1004	DIAL;E/G CONTROL	1		1001~4009	I	K1013846	1
21	K1013846	DIAL;ENGINE CONTROL	1		4010~			
22	S3450583	SCREW	2					
23	S5100103	WASHER	2					
24	2549-1152	SWITCH;STARTER	1		1001~2161			
24	549-00210	SWITCH;STARTER	1		2162~3099	I	549-00210A	1
24	549-00210A	SWITCH;STARTER	1		3100~3322			
24	K1001858	SWITCH;STARTER	1		3323~3699	I	K1001858A	1
24	K1001858A	SWITCH,STARTER	1		3700~			
24A	2172-1134	KEY;STARTER SWITCH	2		1001~2161			
24A	172-00320	KEY;STARTER SWITCH	2		2162~3099	I	172-00320A	2
24A	172-00320A	KEY;STARTER SWITCH	2		3100~3322			
24A	K1009605	KEY;STARTER SWITCH	2		3323~3699	I	K1009605B	2
24A	K1009605B	KEY;STARTER	2		3700~			
25	527-00006	SOCKET;12V POWER	1					
40	530-00205	HARNESS;STAND(R.H)	1					
43	530-00150	HARNESS;STARTER SWITCH	1					

Fig. 1670 ELECTRIC PARTS(2)-STAND R.H

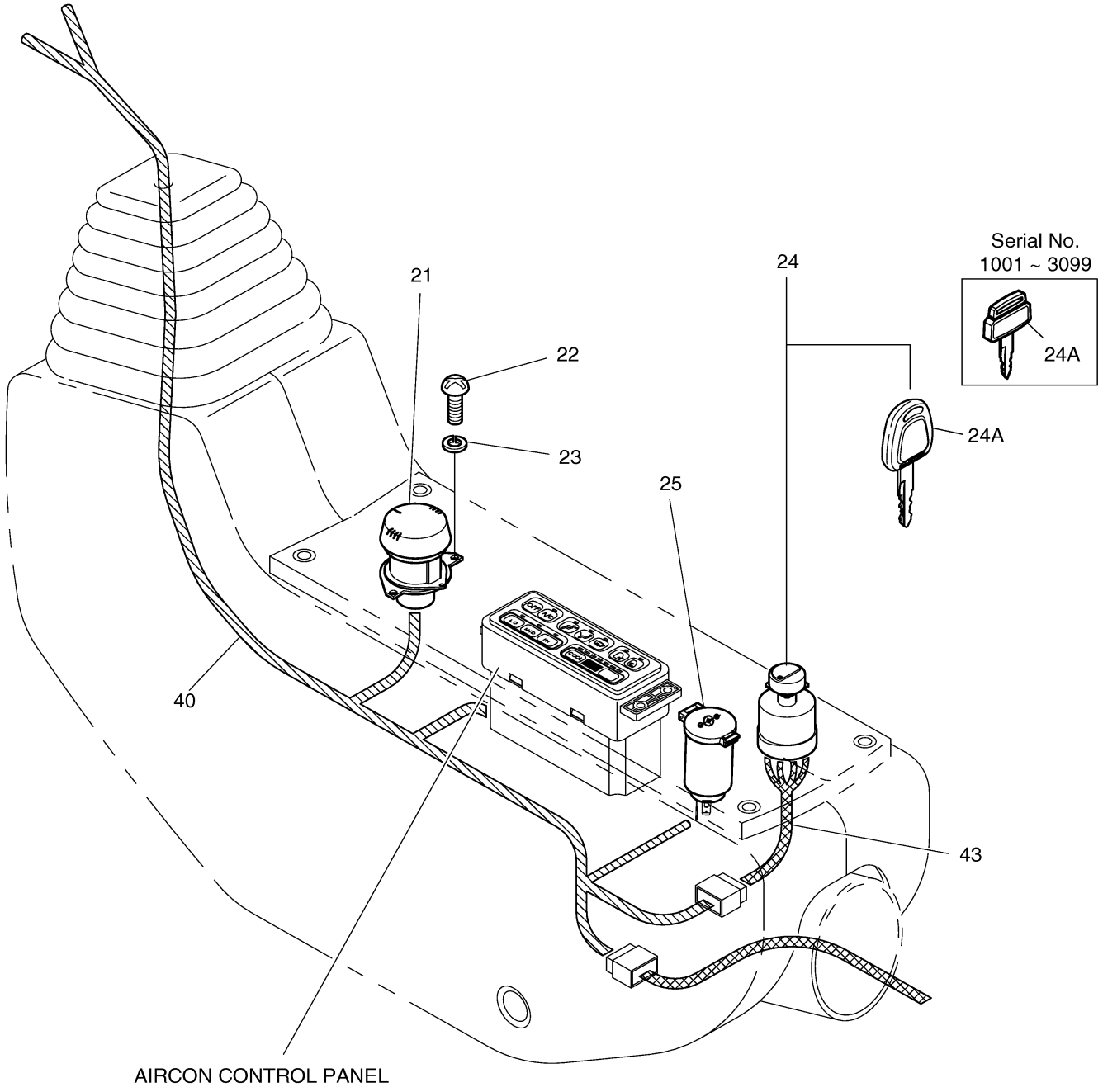

Fig. 1680 ELECTRIC PARTS(3)-STAND L.H

Key No	Part No	Description	Qty	S.C	Serial No	ICA	Replacable	Qty
-	500-00114A	ELECTRIC PARTS(1)	-	D	1001~1009			
-	500-00114B	ELECTRIC PARTS(1)	-	D	1010~1063			
-	500-00114E	ELECTRIC PARTS(1)	-	D	1064~2132			
-	500-00114G	ELECTRIC PARTS(1)	-	D	2133~2161			
-	500-00114H	ELECTRIC PARTS(1)	-	D	2162~2659			
-	500-00114I	ELECTRIC PARTS(1)	-	D	2660~2749			
-	500-00114J	ELECTRIC PARTS(1)	-	D	2750~3099			
-	500-00114L	ELECTRIC PARTS(1)	-	D	3100~3322			
-	500-00114M	ELECTRIC PARTS(1)	-	D	3323~			
26	2621-9002	COVER	8					
41	530-00206	HARNESS;STAND(L.H)	1		1001~3099	I	530-00206A	1
41	530-00206A	HARNESS;STAND(L.H)	1		3100~			

Fig. 1680 ELECTRIC PARTS(3)-STAND L.H

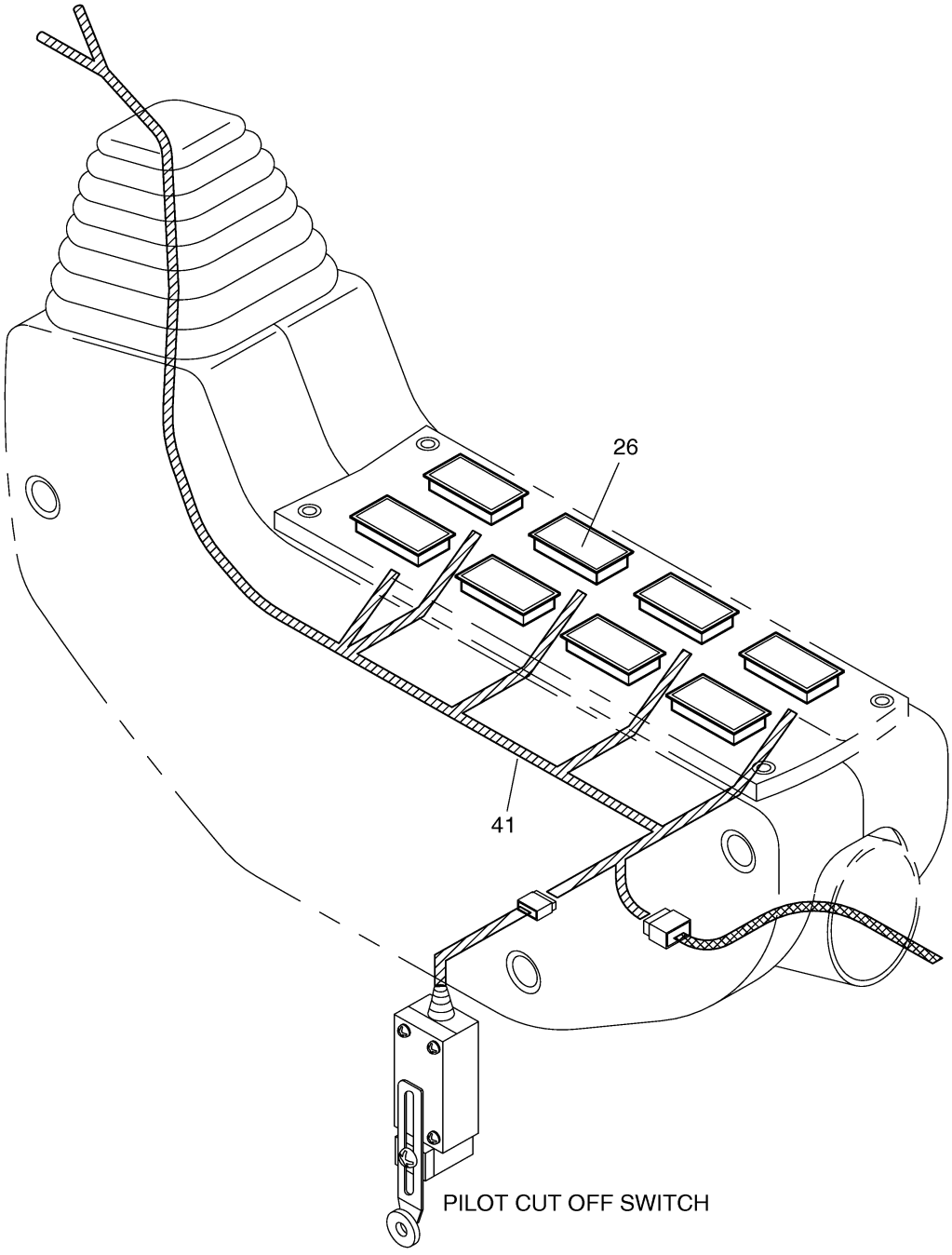

Fig. 1690 ELECTRIC PARTS(4)-CABIN

Key No	Part No	Description	Qty	S.C	Serial No	ICA	Replacable	Qty
-	500-00114A	ELECTRIC PARTS(1)	-	D	1001~1009			
-	500-00114B	ELECTRIC PARTS(1)	-	D	1010~1063			
-	500-00114E	ELECTRIC PARTS(1)	-	D	1064~2132			
-	500-00114G	ELECTRIC PARTS(1)	-	D	2133~2161			
-	500-00114H	ELECTRIC PARTS(1)	-	D	2162~2659			
-	500-00114I	ELECTRIC PARTS(1)	-	D	2660~2749			
-	500-00114J	ELECTRIC PARTS(1)	-	D	2750~3099			
-	500-00114L	ELECTRIC PARTS(1)	-	D	3100~3322			
-	500-00114M	ELECTRIC PARTS(1)	-	D	3323~			
27	2510-1010	BOX ASS'Y;FUSE (1)	1					
27A	2527-1016	FUSE,BLADE 10A	8					
27B	2527-1017	FUSE,BLADE 15A	4					
27C	2527-1018	FUSE,BLADE 20A	1					
27D	2527-1025	FUSE,BLADE 30A	1					
28	S3450983	SCREW	2					
29	S5102303	WASHER	2					
30	2510-1010	BOX ASS'Y;FUSE (1)	1					
30A	2527-1016	FUSE,BLADE 10A	8					
30B	2527-1017	FUSE,BLADE 15A	4					
30C	2527-1018	FUSE,BLADE 20A	1					
30D	2527-1025	FUSE,BLADE 30A	1					
31	S3450983	SCREW	2					
32	S5102303	WASHER	2					
35	541-00014	CAR STEREO 12V	1		1001~2132	I	541-00014A	1
35	541-00014A	CAR STEREO 12V	1		2133~3986	I	K1013232	1
35	K1013232	STEREO;CAR	1		3987~			
36	S3450823	SCREW	4					
37	S5100203	WASHER	4					
42	530-00213	HARNESS;STEREO	1		1001~2749	I	530-00213A	1
42	530-00213A	HARNESS;STEREO	1		2750~			
44	124-00208D3	CLIP	3					
45	124-00208D4	CLIP	1					
46	124-00208D5	CLIP	4					
47	124-00208D6	CLIP	2					
48	S4012533	NUT	9					
49	S5102503	WASHER	9					

Key No	Part No	Description	Qty	S.C	Serial No	ICA	Replacable	Qty
50	S3450343	SCREW	4					
51	S5100003	WASHER	4					

Fig. 1690 ELECTRIC PARTS(4)-CABIN

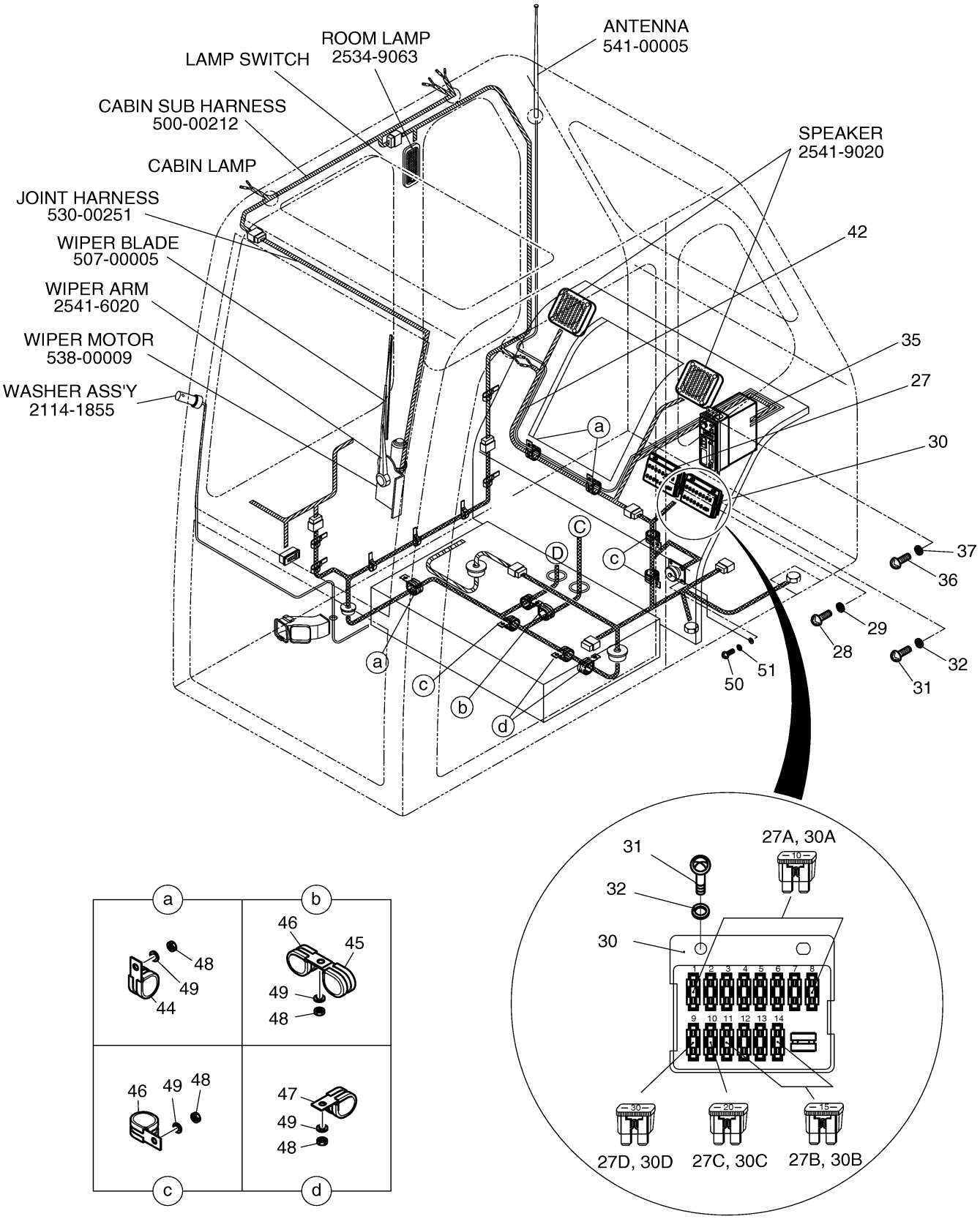

Fig. 1700 ELECTRIC PARTS(5)-BATTERY

Key No	Part No	Description	Qty	S.C	Serial No	ICA	Replacable	Qty
-	500-00115	ELECTRIC PARTS(5)	-	D				
1	2506-6008	BATTERY	2					
2	2197-1119	BRACKET;BATTERY	1					
3	2120-1036D12	BOLT M10X1.5X240	2					
4	S5102603	WASHER	2					
5	S5010613	WASHER	2					
6	2544-9024	RELAY;BATTERY	1					
7	S0509053	BOLT	2					
8	S5102503	WASHER	2					
9	S5010513	WASHER	2					
10	2527-9004	BREAKER;CIRCUIT	1					
11	2120-1354	SCREW	2					
12	2527-1023A	LINK,FUSIBLE	1					
20	2544-1022	RELAY;STARTER	1					
21	S0504453	BOLT	2					
22	S5102303	WASHER	2					

Fig. 1700 ELECTRIC PARTS(5)-BATTERY

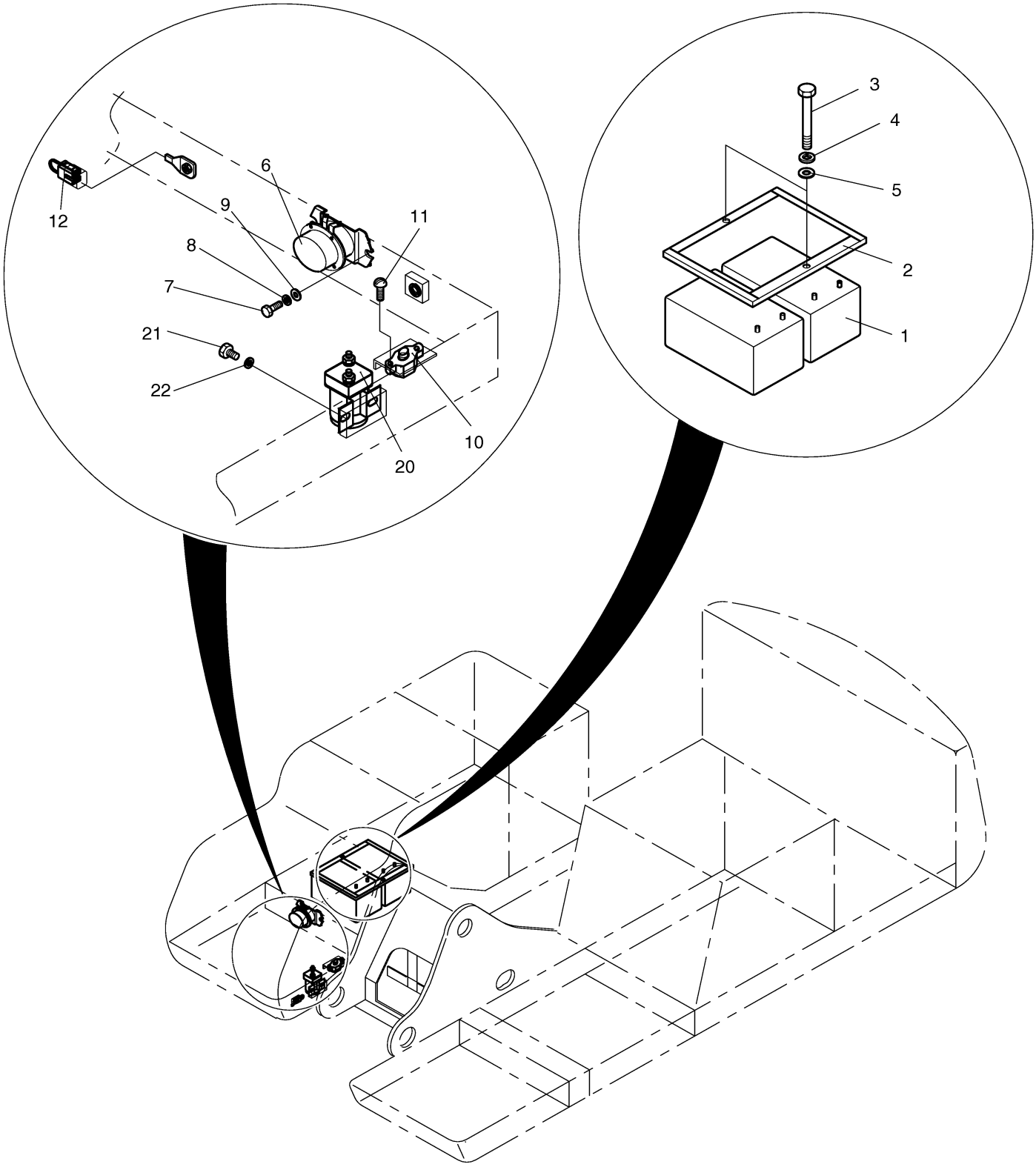

Fig. 1710 ELECTRIC PARTS(6)-ENGINE

Key No	Part No	Description	Qty	S.C	Serial No	ICA	Replacable	Qty
-	500-00115	ELECTRIC PARTS(5)	-	D				
13	2544-6020	RELAY;PREHEAT	1					
13A	2527-6001	FUSE;LINK	1					
14	S0504453	BOLT	2					
15	S5102303	WASHER	4					
16	S4012333	NUT	2					
17	195-01688	BRACKET;RELAY	1					
18	S0511653	BOLT	1					
19	S5102603	WASHER	1					
36	2547-9038B	SENSOR,WATER TEMP	1					
37	S8180251	PACKING	1					
41	2547-1015	SENSOR,ENG SPEED	1					
44	2502-9009	ALTERNATOR(50A)	1					
45	S0786653	BOLT	1					
46	S5102703	WASHER	1					
47	2114-1058D54	WASHER	1					
48	S0562653	BOLT	1					
49	S5102703	WASHER	1					
50	S5010713	WASHER	1					
51	S4012733	NUT	1					

Fig. 1710 ELECTRIC PARTS(6)-ENGINE

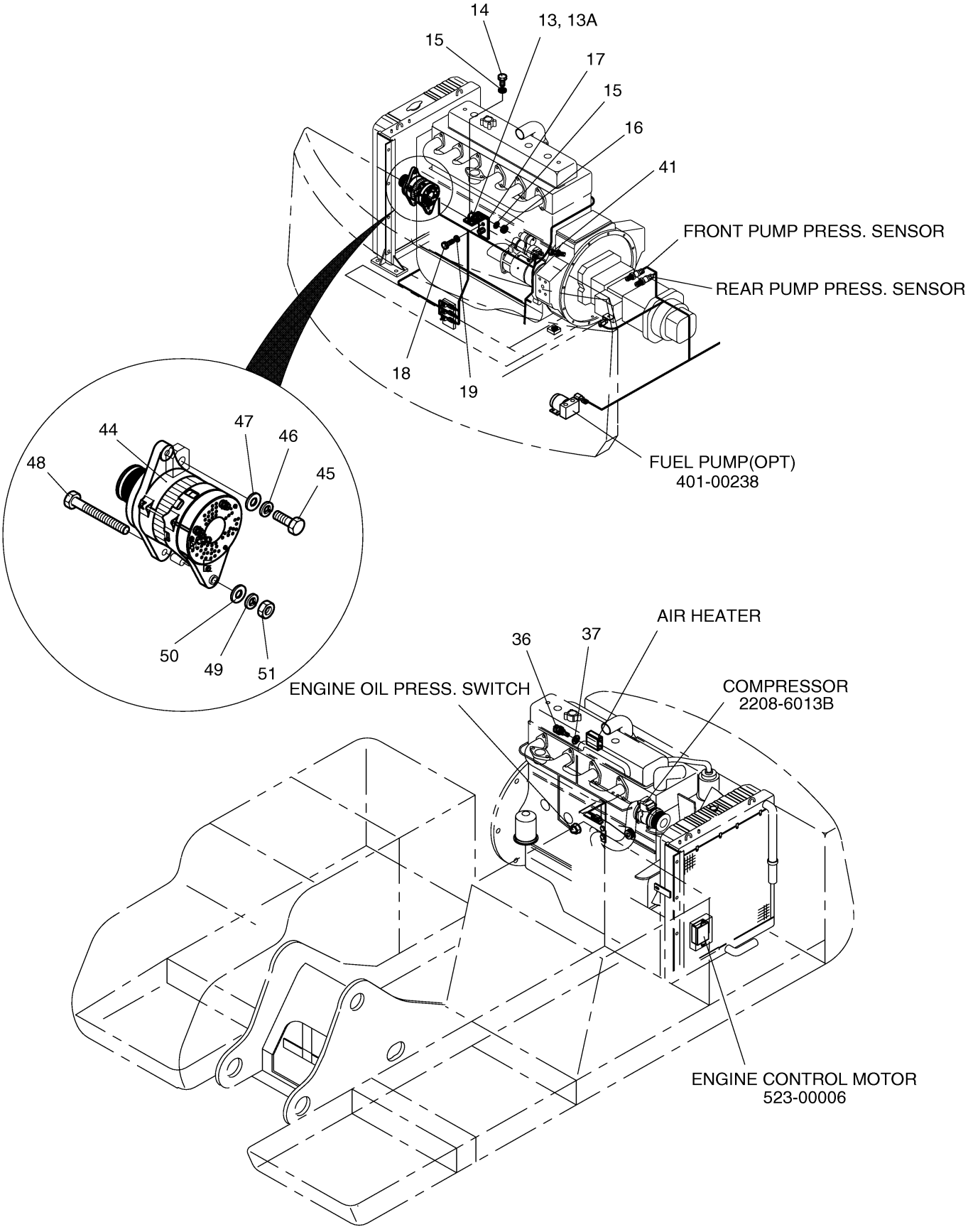

Fig. 1715 ALTERNATOR

Key No	Part No	Description	Qty	S.C	Serial No	ICA	Replacable	Qty
-	2502-9009	ALTERNATOR(50A)	1					
1	0-35100-0300	ROTOR ASS`Y	1					
1-1	1-33923-0790	COLLAR	1					
1-2	0-35923-0160	COLLAR	1					
1-3	0-09201-0980	BEARING;BALL	1					
2	0-35200-0440	STATOR ASS`Y	1					
3	0-35300-0310	F. BRACKET ASS`Y	1					
3-1	0-35926-0070	RETAINER	1					
3-2	0-35926-0090	RETAINER	1					
3-3	1-33926-0730	RETAINER	1					
3-4	0-35951-0060	PACKING	2					
3-5	0-09201-1140	BEARING;BALL	1					
3-6	0-0275-06802	BOLT	3					
4	0-35411-0870	PULLEY	1					
4-1	0-35421-0170	FAN	1					
4-2	0-0280-16022	NUT	1					
4-3	1-0335-16002	WASHER;SPRING	1					
4-4	1-0330-16012	WASHER;PLAIN	1					
5	0-35120-0230	COIL;FIELD	1					
7	0-35700-0890	R. BRACKET ASS`Y	1					
7-1	0-35710-1090	BRACKET;REAR	1					
7-2	0-35730-0510	RECTIFIER ASS`Y	1					
7-3	0-35780-0750	TERMINAL ASS`Y	1					
7-4	0-09170-2501	CONDENSER	1					
7-5	0-35923-0130	COLLAR	1					
7-6	0-35923-0200	COLLAR	1					
7-7	0-35943-0140	BUSH;INSULATE	1					
7-8	0-35943-0150	BUSH;INSULATE	1					
7-9	0-35943-0160	BUSH;INSULATE	1					
7-10	0-35943-0170	BUSH;INSULATE	1					
7-11	1-33953-0150	BUSH;GUM	1					
7-12	0-35761-0250	COVER	1					
7-13	0-0056-05302	SCREW	3					
7-14	1-33931-0021	CLIP	1					
8	0-35719-0200	REGULATOR ASS`Y	1					

Fig. 1715 ALTERNATOR

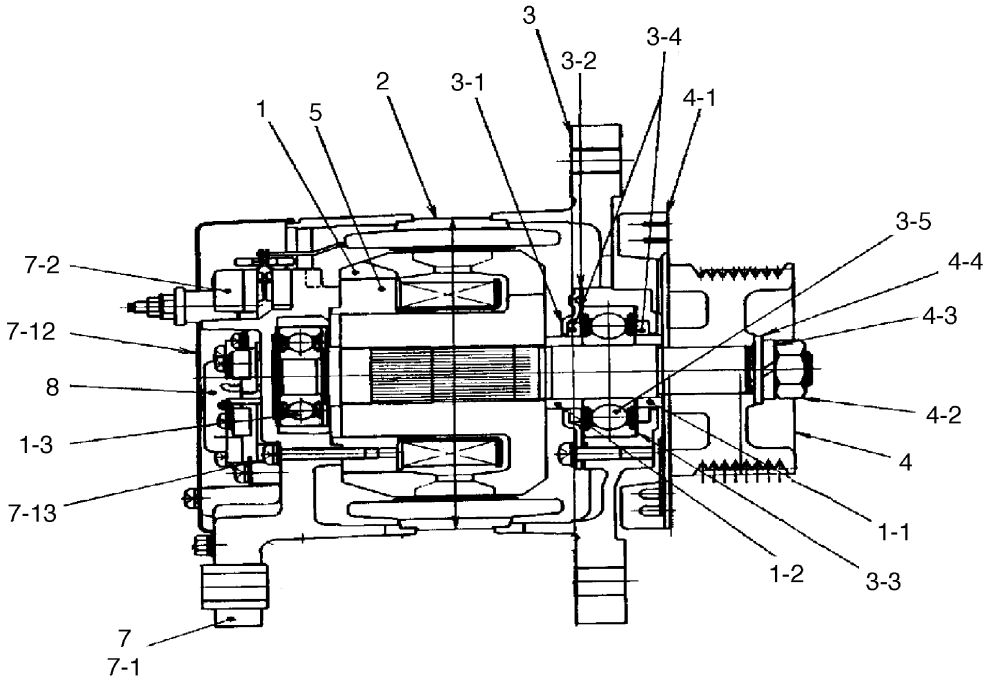

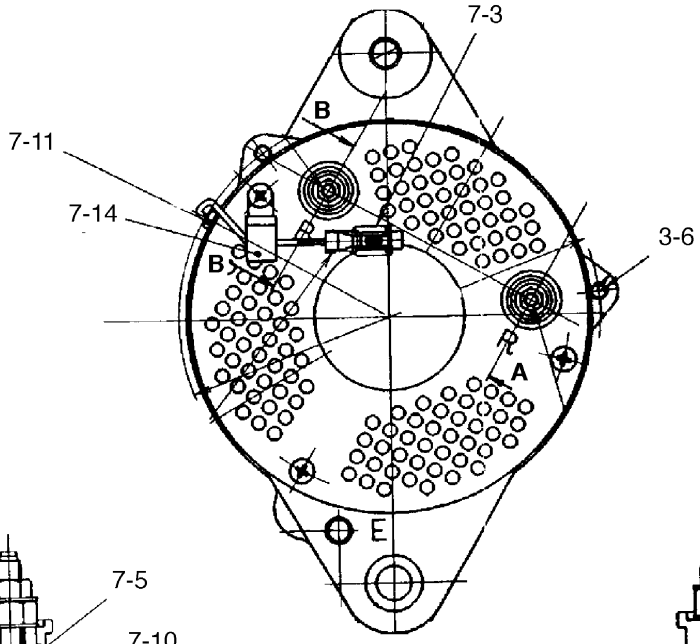

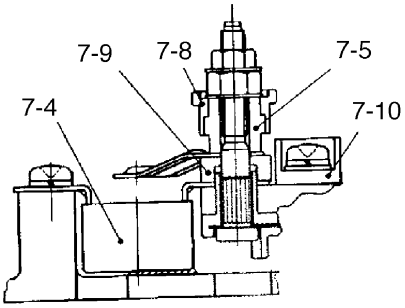

SECTION A – A

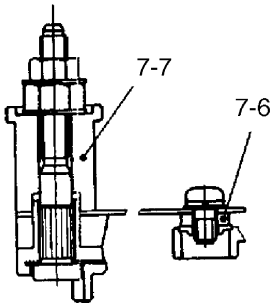

SECTION B – B

Fig. 1720 ELECTRIC PARTS(7)-RELATED

Key No	Part No	Description	Qty	S.C	Serial No	ICA	Replacable	Qty
-	500-00115	ELECTRIC PARTS(5)	-	D	1001~4955			
-	300619-00613	ELECTRIC ASSY;CHASSIS	-	D	4956~5075			
-	300619-00613A	ELECTRIC ASSY;CHASSIS	-	D	5076~			
23	2554-9005A	TANK;WINDOW WASHER	1					
24	2195-1534	BRACKET	1					
25	S0504453	BOLT	2					
26	S5102303	WASHER	2					
27	S5010313	WASHER	2					
28	2415-1018	ADAPTER	1					
29	2185-1681D4	TUBE;CORRUGATE	1					
30	534-00063	LAMP;HEAD 24V 70W	2					
30A	2515-1016D4	BULB,HALOGEN	1					
31	534-00064	LAMP ASS'Y;WORKING	2					
31A	2515-1022D1	BULB;HALOGEN	1					
32	516-00014	HORN;HIGH	1		1001~4955	Y	300726-00002	1
32	300726-00002	HORN,HIGH	1		4956~			
33	516-00015	HORN;LOW	1		1001~4955	Y	300726-00003	1
33	300726-00003	HORN,LOW	1		4956~			
34	S0508653	BOLT	2					
35	S5102503	WASHER	2					
38	2547-9035	SENSOR;FUEL	1		1001~1895	I	2547-9035A	1
38	2547-9035A	SENSOR;FUEL	1		1896~5075	Y	301316-00003A	1
38	301316-00003A	SENSOR,FUEL	1		5076~			
39	S3450833	SCREW	6					
40	S5100203	WASHER	6					
42	2547-9038B	SENSOR,WATER TEMP	1					
43	S8180251	PACKING	1					

Fig. 1720 ELECTRIC PARTS(7)-RELATED

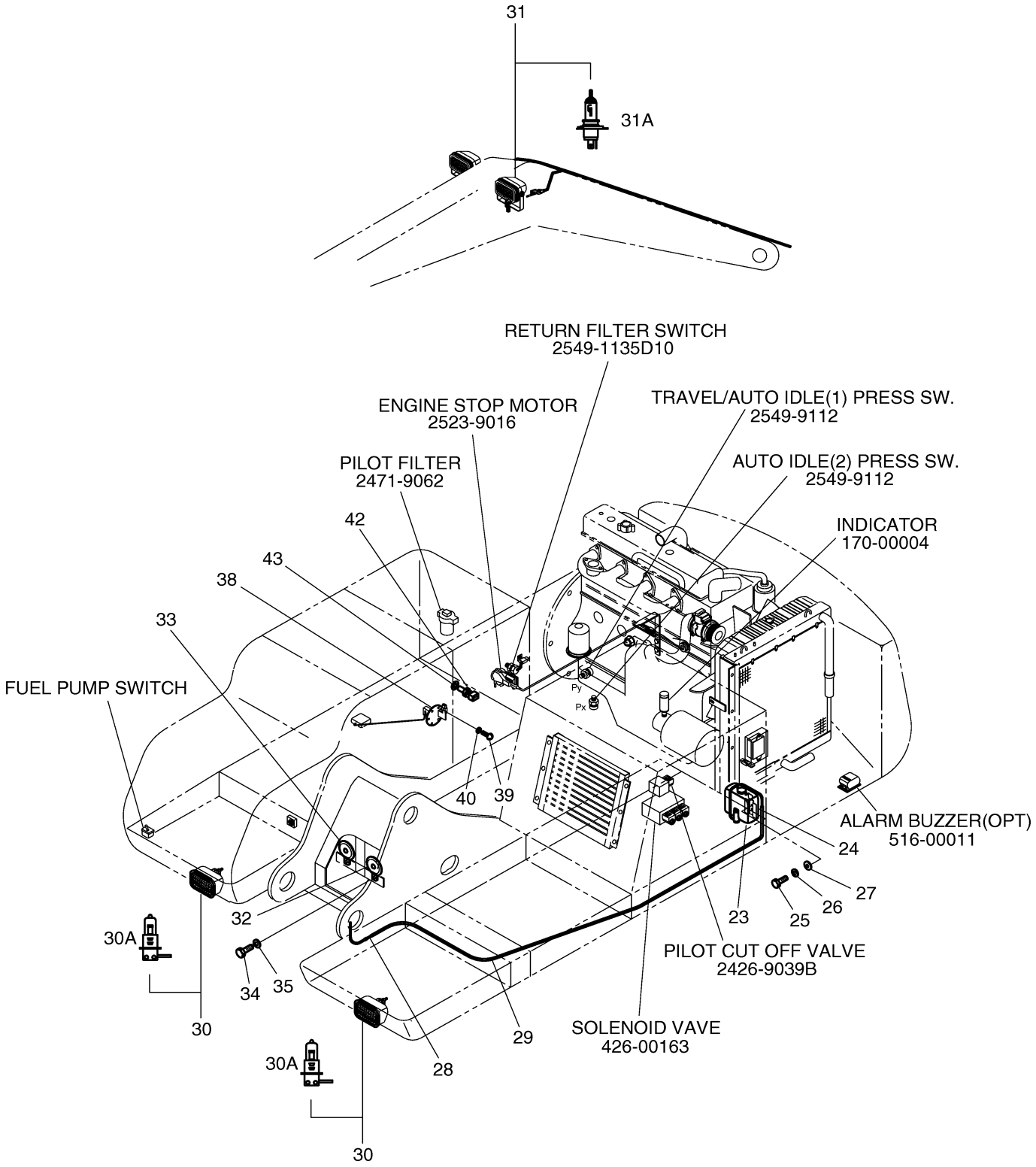

Fig. 1730 ELECTRIC WIRING(1)-BATTERY

Key No	Part No	Description	Qty	S.C	Serial No	ICA	Replacable	Qty
-	500-00116	ELECTRIC WIRING(1)	-	D				
5	2550-1014D1	TERMINAL,BATTERY(+)	2					
6	2550-1014D2	TERMINAL,BATTERY(-)	2					
7	2160-1212	CAP,BATT. TML(+)	2					
8	2160-1213	CAP,BATT. TML(-)	2					
9	2553-1275D5	CABLE;EARTH	1					
10	2553-1275D6	CABLE;BATT-BATT	1					
11	2553-1275D31	CABLE;BATT-BATT RELAY	1					
12	2553-1275D10	CABLE;BATT RY-STARTER	1					
13	2553-1275D5	CABLE;EARTH	1					
14	S0511653	BOLT	4					
15	S5102603	WASHER	4					
16	S5010613	WASHER	4					

Fig. 1730 ELECTRIC WIRING(1)-BATTERY

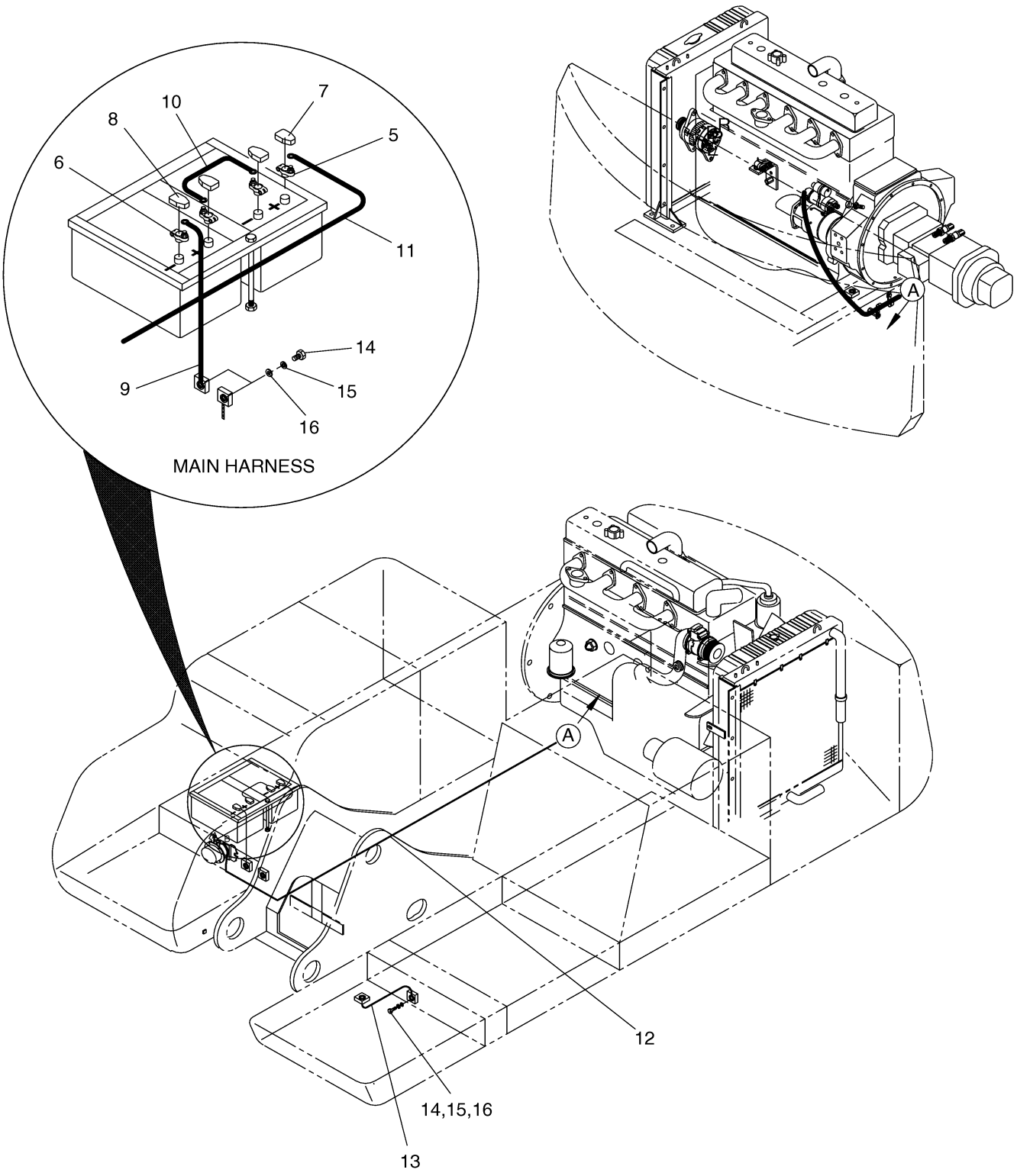

Fig. 1740 ELECTRIC WIRING(2)-ENGINE

Key No	Part No	Description	Qty	S.C	Serial No	ICA	Replacable	Qty
-	500-00116	ELECTRIC WIRING(1)	-	D				
3	530-00211	HARNESS;ENGINE	1					
3A	2548-1027	DIODE	2					
17	2553-1275D5	CABLE;EARTH	1					
18	S0512053	BOLT	1					
19	S5102603	WASHER	1					
20	S5010613	WASHER	1					
21	2195-3500	BRACKET	1					
22	S3450953	SCREW	1					
23	S5102303	WASHER	1					
24	2197-1660	BRACKET	1					
25	2197-1661	BRACKET	2					
26	2120-2187	BOLT	5					
27	120-00246	BOLT;STUD	2					
28	2121-1305	NUT	7					
29	124-00208D2	CLAMP	6					
31	124-00208D4	CLIP	2					
32	124-00208D5	CLIP	3					
34	120-00276	BOLT	8					
35	S5102503	WASHER	4					
39	2124-1509D1	CLIP	3					

Fig. 1740 ELECTRIC WIRING(2)-ENGINE

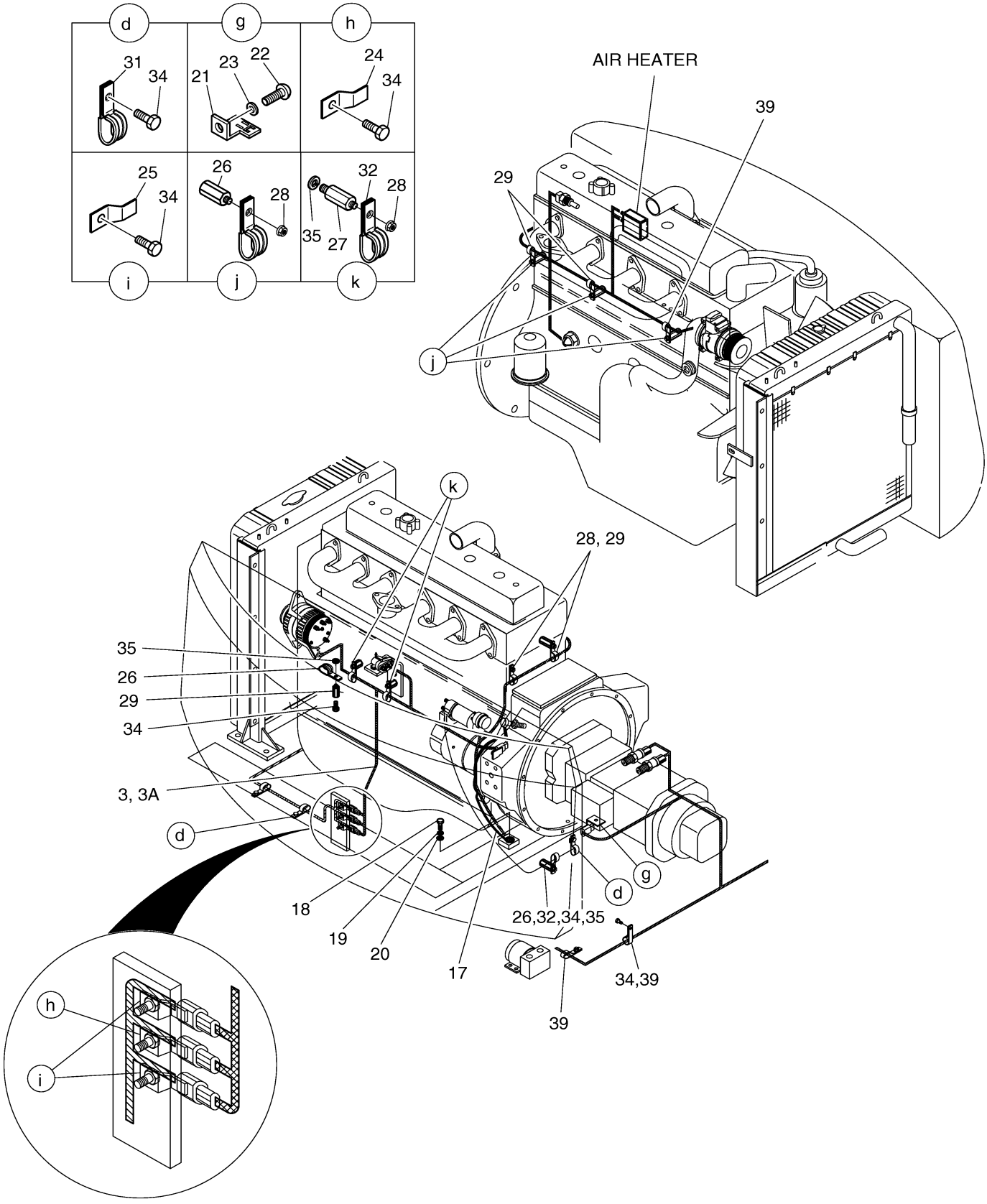

DOOSAN Doosan Infracore

Fig. 1750 ELECTRIC WIRING(3)-RELATED

Key No	Part No	Description	Qty	S.C	Serial No	ICA	Replacable	Qty
-	500-00116	ELECTRIC WIRING(1)	-	D				
1	599-00035	WIRING DIAGRAM	1	D	1001~2429			
1	599-00035A	WIRING DIAGRAM	1	D	2430~			
2	530-00210A	HARNESS:MAIN	1					
2A	2548-1027	DIODE	7					
2B	548-00003A	DIODE:ZENER	1					
4	530-00257D1	HARNESS:WORKING LAMP	1		1001~1053	I	530-00311D1	1
4	530-00311D1	HARNESS:WORKING LAMP	1		1054~			
21	2195-3500	BRACKET	6					
22	S3450953	SCREW	5					
23	S5102303	WASHER	5					
24	2197-1660	BRACKET	3					
25	2197-1661	BRACKET	5					
29	124-00208D2	CLAMP	18		1001~1053			
29	124-00208D2	CLAMP	19		1054~			
30	124-00208D3	CLIP	2					
31	124-00208D4	CLIP	9					
32	124-00208D5	CLIP	4					
33	124-00209D1	CLIP	4					
34	120-00276	BOLT	70		1001~1053			
34	120-00276	BOLT	71		1054~			
36	2124-1622D1	CLIP	10					
37	2124-1622D2	CLIP	15					
38	2124-1622D3	CLIP,BAND 280L	10					
39	2124-1509D1	CLIP	24					

Fig. 1750 ELECTRIC WIRING(3)-RELATED

1 WIRING DIAGRAM

36

37

38

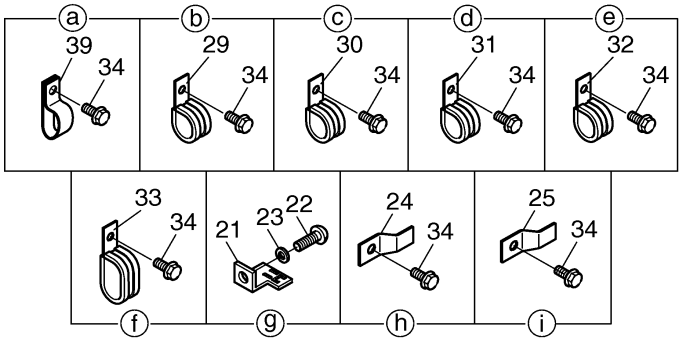

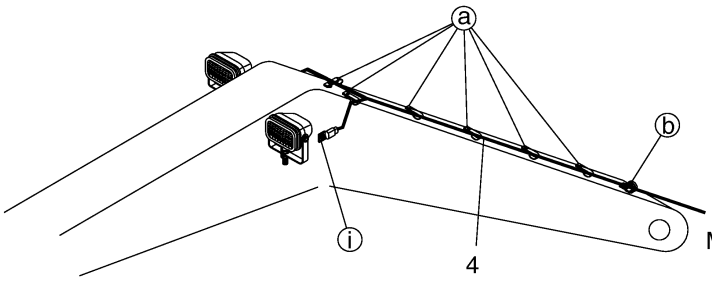

MAIN HARNESS

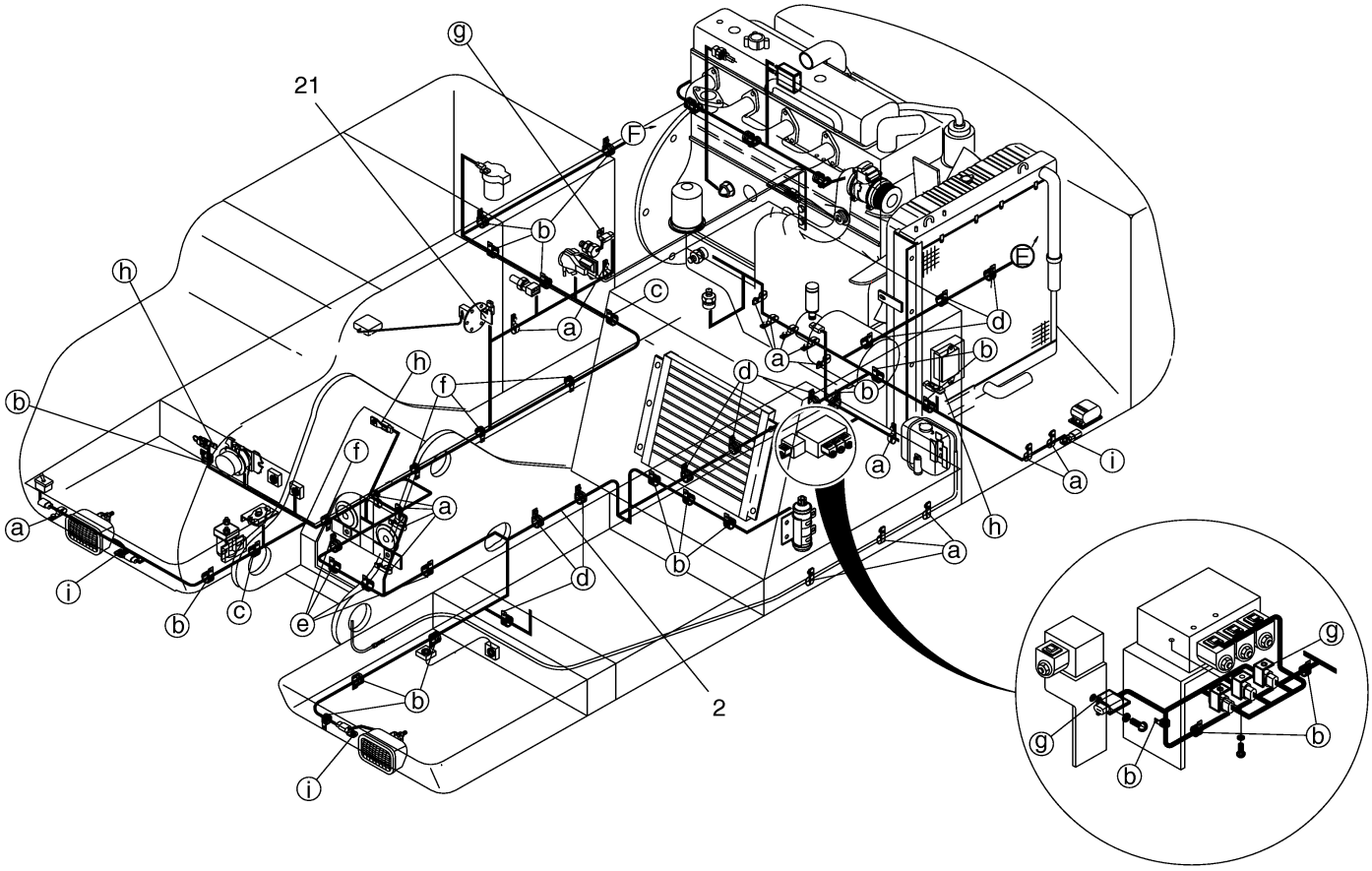

DOOSAN Doosan Infracore

Fig. 1760 AIRCONDITIONER(1)

Key No	Part No	Description	Qty	S.C	Serial No	ICA	Replacable	Qty
-	920-00065	COOLER ASS'Y	-	D	1001~3443			
-	920-00065A	COOLER ASS'Y	-	D	3444~4893			
-	440213-00019	VENTILATION ASSY	-	D	4894~			
1	543-00049	PANEL;AIRCON CONTROL	1					
2	S3450583	SCREW	4					
3	S5000113	WASHER	4					
4	2208-6013B	COMPRESSOR	1					
5	S0557763	BOLT M8X1.25X120	2					
6	S5102503	WASHER	2					
7	S5010513	WASHER	4					
8	S4012533	NUT	2					
9	2107-6004B	PULLEY ASS'Y;IDLE 4PK	1					
10	2106-1019D2	V-BELT;4PK-1470L	1					
11	185-00272	HOSE;DISCHARGE	1					
11A	2180-6089	O-RING(COND)	1					
11B	2180-6088	O-RING	1					
11C	1.161-00018	CAP;CHECK PORT(H)	1					
12	185-00273	HOSE;SUCTION	1					
12A	2180-6086	O-RING	1					
12B	2180-6087	O-RING	1					
12C	1.161-00019	CAP;CHECK PORT(L)	1					
13	2520-6004	CONDENSER ASS`Y	1		1001~4893	I	440204-00002	1
13	440204-00002	CONDENSER ASSY	1		4894~			
13A	2520-6005	CONDENSER CORE	1					
13B	2538-6018	FAN MOTOR ASS`Y	1		1001~4893	Y	300506-00004	1
13B	300506-00004	MOTOR;CONDENSER	1		4894~			
13C	2520-6006	NET;CONDENSER	1					
14	S0512053	BOLT	6					
15	S5102603	WASHER	6					
16	S5010613	WASHER	6					
17	2185-1697D1	HOSE;LIQUID(1) 610L	1					
17A	2180-6090	O-RING	2					
18	2185-1698D1	HOSE;LIQUID(2)	1					
18A	2180-6090	O-RING	2					
19	2204-6039A	RECEIVER DRIER	1					
20	S0508653	BOLT	2					

Key No	Part No	Description	Qty	S.C	Serial No	ICA	Replacable	Qty
21	S5102503	WASHER	2					
23	S0509053	BOLT	6					
24	S5102503	WASHER	6					
25	2114-1058D29	WASHER	6					
30	124-00208D3	CLIP	1					
31	124-00208D6	CLIP	2					
32	124-00208D7	CLIP	3					
33	120-00276	BOLT	5					
34	2124-1353D18	CLIP	1					
39	2124-1353D4	CLIP	1					
40	K1006603	BRACKET	1		3444~			
41	S0511853	BOLT	2		3444~			
42	S5102603	WASHER	2		3444~			
43	S0557153	BOLT	2		3444~			
44	S5102503	WASHER	2		3444~			
45	S5010513	WASHER	2		3444~			

Fig. 1760 AIRCONDITIONER(1)

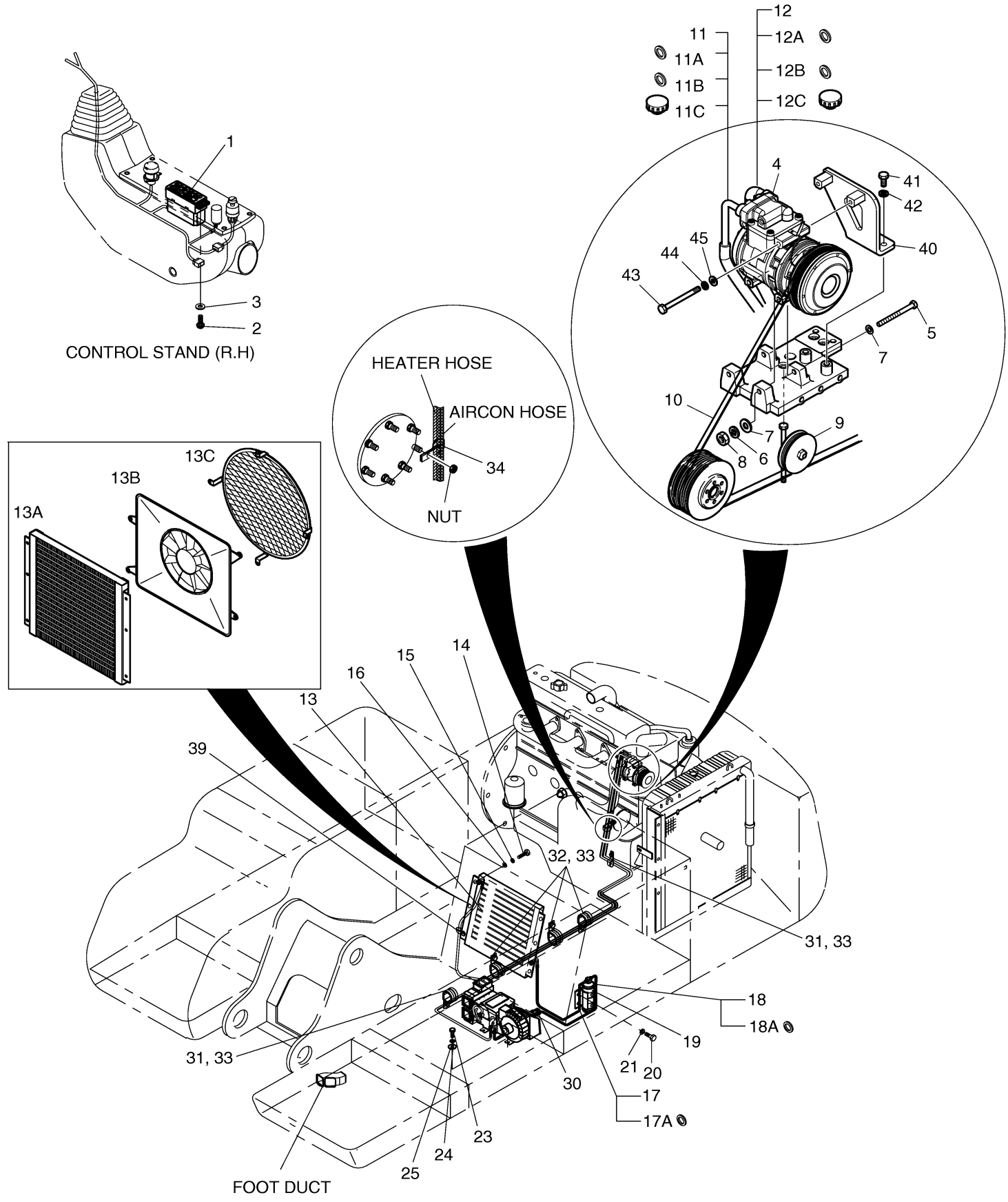

Fig. 1770 AIRCONDITIONER(2)-AIRCON

Key No	Part No	Description	Qty	S.C	Serial No	ICA	Replacable	Qty
-	920-00065	COOLER ASS'Y	-	D	1001~3443			
-	920-00065A	COOLER ASS'Y	-	D	3444~4893			
-	440213-00019	VENTILATION ASSY	-	D	4894~			
22	920-00020A	UNIT;AIRCON	1		1001~1019	Y	920-00020B	1
22	920-00020B	UNIT;AIRCON	1		1020~4349	I	920-00020C	1
22	920-00020C	UNIT;AIRCON	1		4350~4893	Y	440205-00010	1
22	440205-00010	CONDITIONER,AIR	1		4894~			
22A	2538-6015	MOTOR;BLOWER 24V	1		1001~4349	I	K1040112	1
22A	K1040112	MOTOR;BLOWER	1		4350~			
22B	545-00003	RESISTOR;BLOWER	1					
22C	2544-6023	RELAY 10A	2					
22D	2544-6024	RELAY 20A	1					
22E	2538-6016	MOTOR;INTAKE 24V	2					
22F	2538-6017	MOTOR;MIX 12V	1					
22G	2471-6050A	FILTER;AIRCON	1		1001~4893	Y	400402-00001	1
22G	400402-00001	FILTER;AIRCON	1		4894~			
22H	2426-6048	VALVE;STEM	1					
22I	2547-6033	SENSOR;TEMPERATURE	1					
22J	2530-6005A	HARNESS;AIRCON UNIT	1					
22K	2920-6111	EVAPORATOR	1					
22KA	410116-00098	VALVE;EXPANSION	1					
22L	2920-6112	HEATER CORE	1					
22M	133-00161	MAIN LEVER	1					
22N	250122-00061	PLATE,SUPPORT	1					

Fig. 1770 AIRCONDITIONER(2)-AIRCON

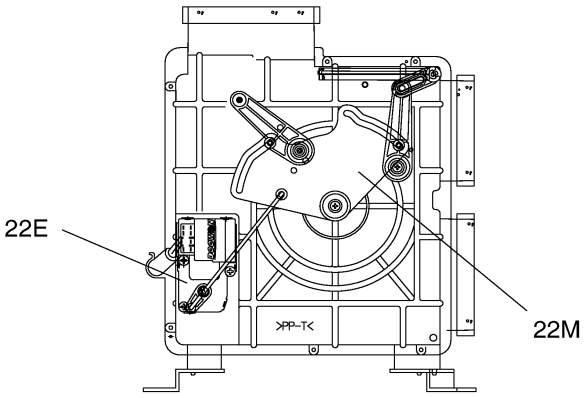

VIEW A

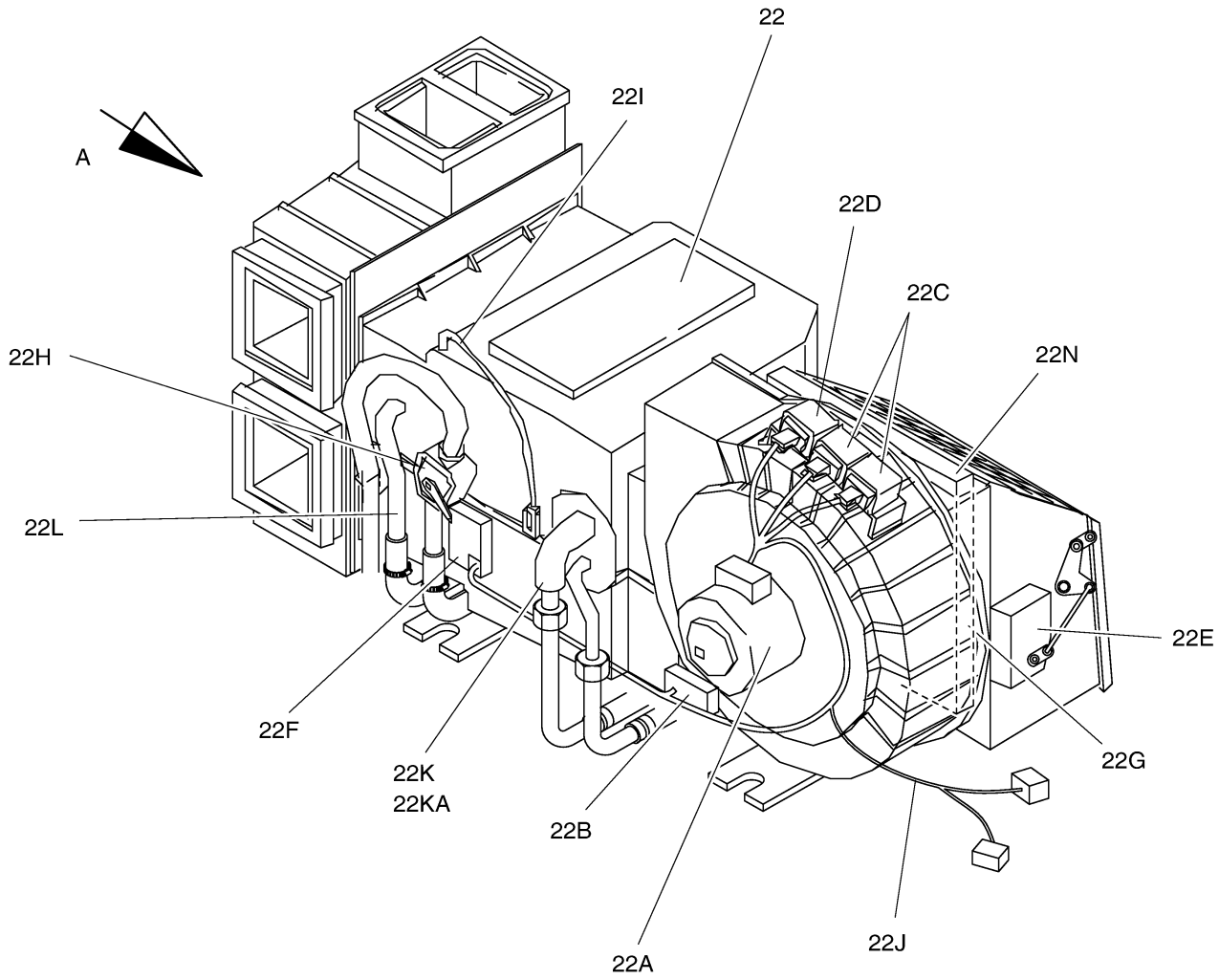

Fig. 1780 HEATER PIPING

Key No	Part No	Description	Qty	S.C	Serial No	ICA	Replacable	Qty
-	920-00065	COOLER ASS'Y	-	D				
26	2185-1308D4	HOSE	1					
27	2185-1308D7	HOSE	1					
28	S8450016	CLAMP	4					
29	2186-9005	COCK	2					
30	124-00208D3	CLIP	2					
33	120-00276	BOLT	2					
35	195-01763	BRACKET;HEATER HOSE	1					
36	S0715253	BOLT M12X1.25X30	1		1001~1019			
36	S0786253	BOLT M12X1.5X30	1		1020~			
37	S5102703	WASHER	1					
38	2124-1622D3	CLIP,BAND 280L	10					

Fig. 1780 HEATER PIPING

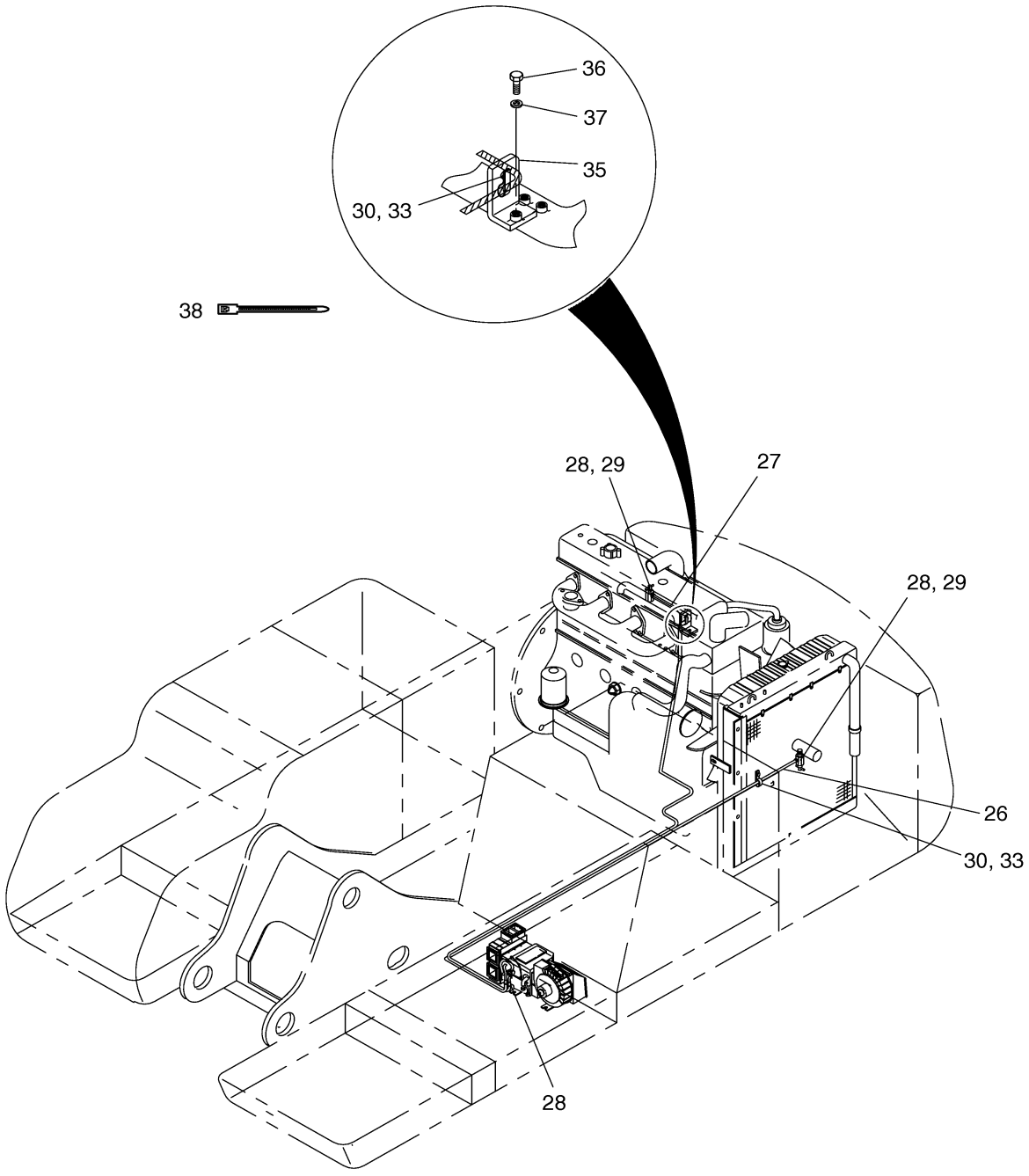

Fig. 2100 TRACK FRAME

Key No	Part No	Description	Qty	S.C	Serial No	ICA	Replacable	Qty
-	604-00122H	TRACK ASS'Y	-	D				
1	604-00115A	FRAME;TRACK	1		1001~2799			
1	604-00115B	FRAME;TRACK	1		2800~4764	I	604-00115E	1
1	604-00115E	FRAME;TRACK	1		4765~			
2	109-00157	BEARING;SWING	1					
2A	180-00297D3	SEAL	1					
11	2623-1129B	GUARD;LINK	4					
12	621-01989	COVER	1					
15	2403-1002	PLATE	1					
16	2180-1017A	PACKING	1					
17	2120-2196D2	BOLT;SET M10X1.5X25	2					
21	2120-2196D10	BOLT;SET M12X1.75X25	4					
22	S0527661	BOLT M20X2.5X50	16		1001~1875	I	S0527666	16
22	S0527666	BOLT	16		1876~			
26	S0574961	BOLT	36		1001~1875	I	S0574966	36
26	S0574966	BOLT	36		1876~			
29	S5103103	WASHER	16					
31	2114-1831A	WASHER	36					

Fig. 2100 TRACK FRAME

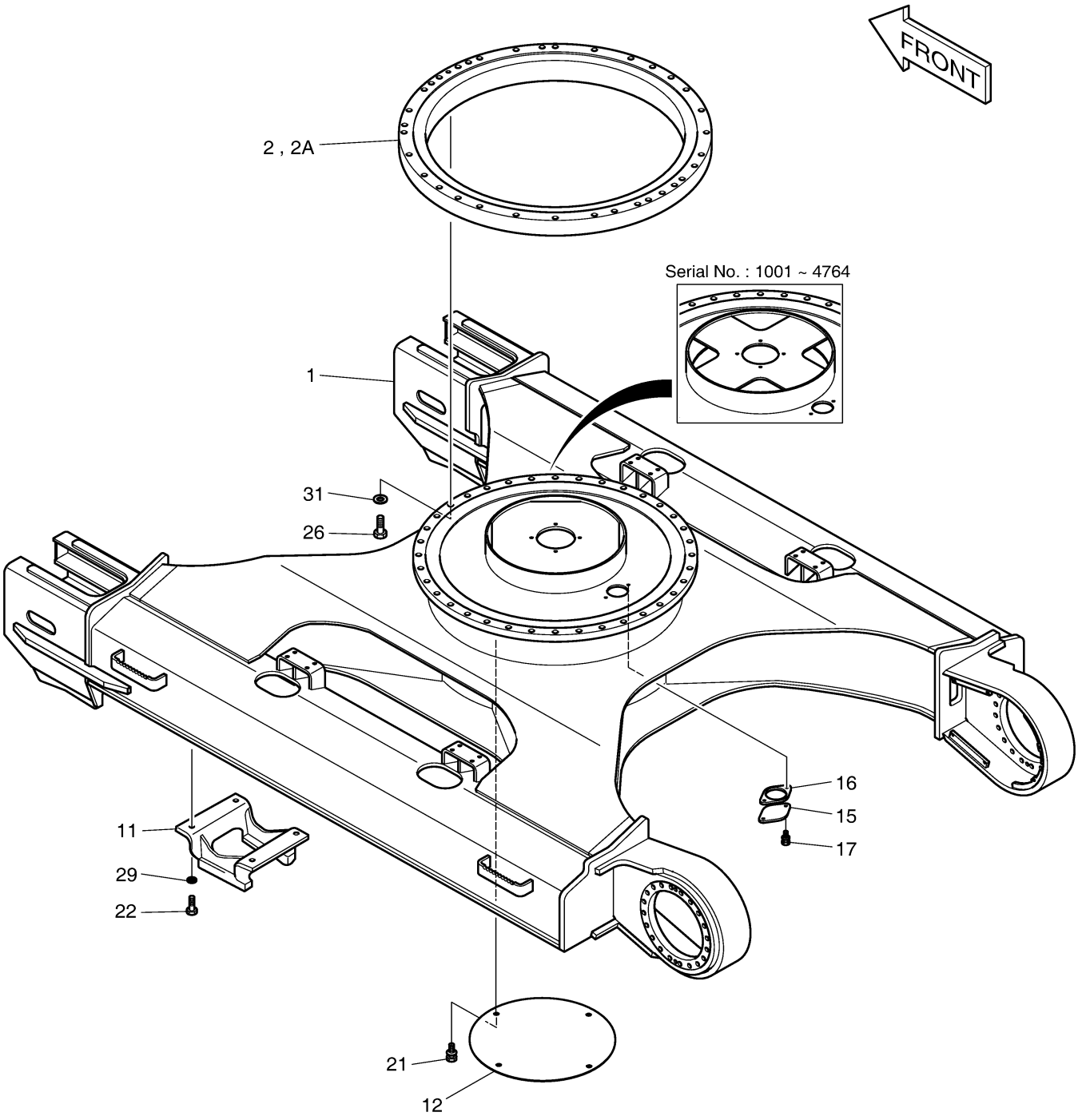

Fig. 2105 TRACK FRAME-3M TRACK

Key No	Part No	Description	Qty	S.C	Serial No	ICA	Replacable	Qty
-	604-00139G	TRACK ASS'Y	-	D				
1	604-00140	FRAME;TRACK	1		1001~4764	I	604-00140C	1
1	604-00140C	FRAME;TRACK	1		4765~			
2	109-00157	BEARING;SWING	1					
2A	180-00297D3	SEAL	1					
11	2623-1129B	GUARD;LINK	4					
12	621-01989	COVER	1					
15	2403-1002	PLATE	1					
16	2180-1017A	PACKING	1					
17	2120-2196D2	BOLT;SET M10X1.5X25	2					
21	2120-2196D10	BOLT;SET M12X1.75X25	16					
22	S0527661	BOLT M20X2.5X50	16		1001~1875	I	S0527666	16
22	S0527666	BOLT	16		1876~			
26	S0574961	BOLT	36		1001~1875	I	S0574966	36
26	S0574966	BOLT	36		1876~			
29	S5103103	WASHER	16					
31	2114-1831A	WASHER	36					

Fig. 2105 TRACK FRAME-3M TRACK

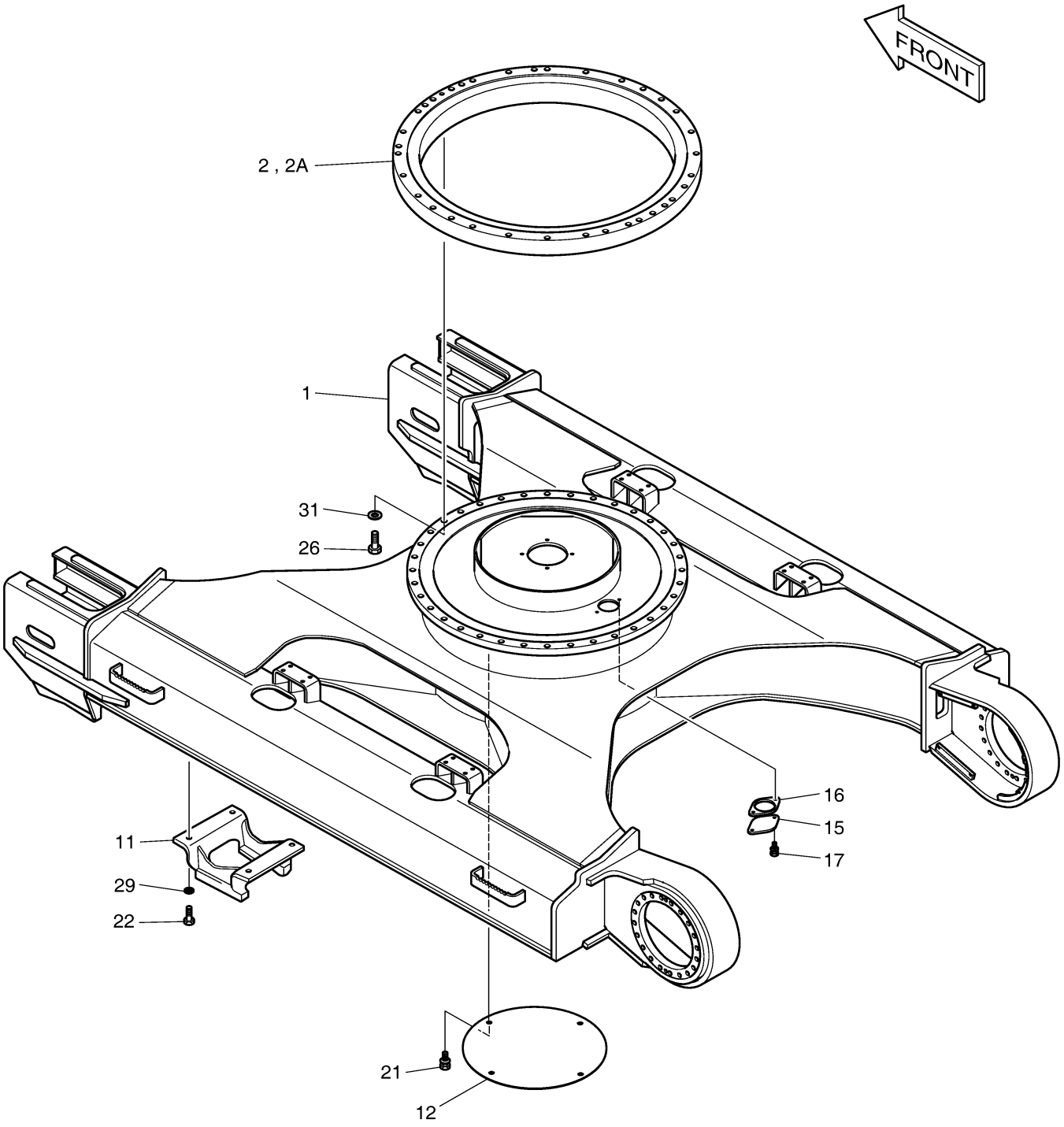

Fig. 2110 TRAVEL DEVICE-DTD300V

Key No	Part No	Description	Qty	S.C	Serial No	ICA	Replacable	Qty
-	604-00122A	TRACK ASS'Y	-	D				
3	401-00329	TRAVEL DEVICE	2		1001~1875	I	401-00329A	2
3	401-00329A	TRAVEL DEVICE	2		1876~2376			
3	K1001992	TRAVEL DEVICE	2		2377~3204	I	K1001992A	2
3	K1001992A	TRAVEL DEVICE	2		3205~3247	I	K1001992B	2
3	K1001992B	TRAVEL DEVICE	2		3248~3454	I	K1001992C	2
3	K1001992C	TRAVEL DEVICE	2		3455~			
4	108-00018	SPROCKET	2		1001~1875	I	108-00018A	2
4	108-00018A	SPROCKET	2		1876~			
23	S0570061	BOLT M20X2.5X60	48		1001~1091	I	S0570066	48
23	S0570066	BOLT	48		1092~			
24	S0570361	BOLT M20X2.5X75	40		1001~1875	I	S0570366	40
24	S0570366	BOLT	40		1876~			
32	2114-9012A	WASHER	88					

Fig. 2110 TRAVEL DEVICE-DTD300V

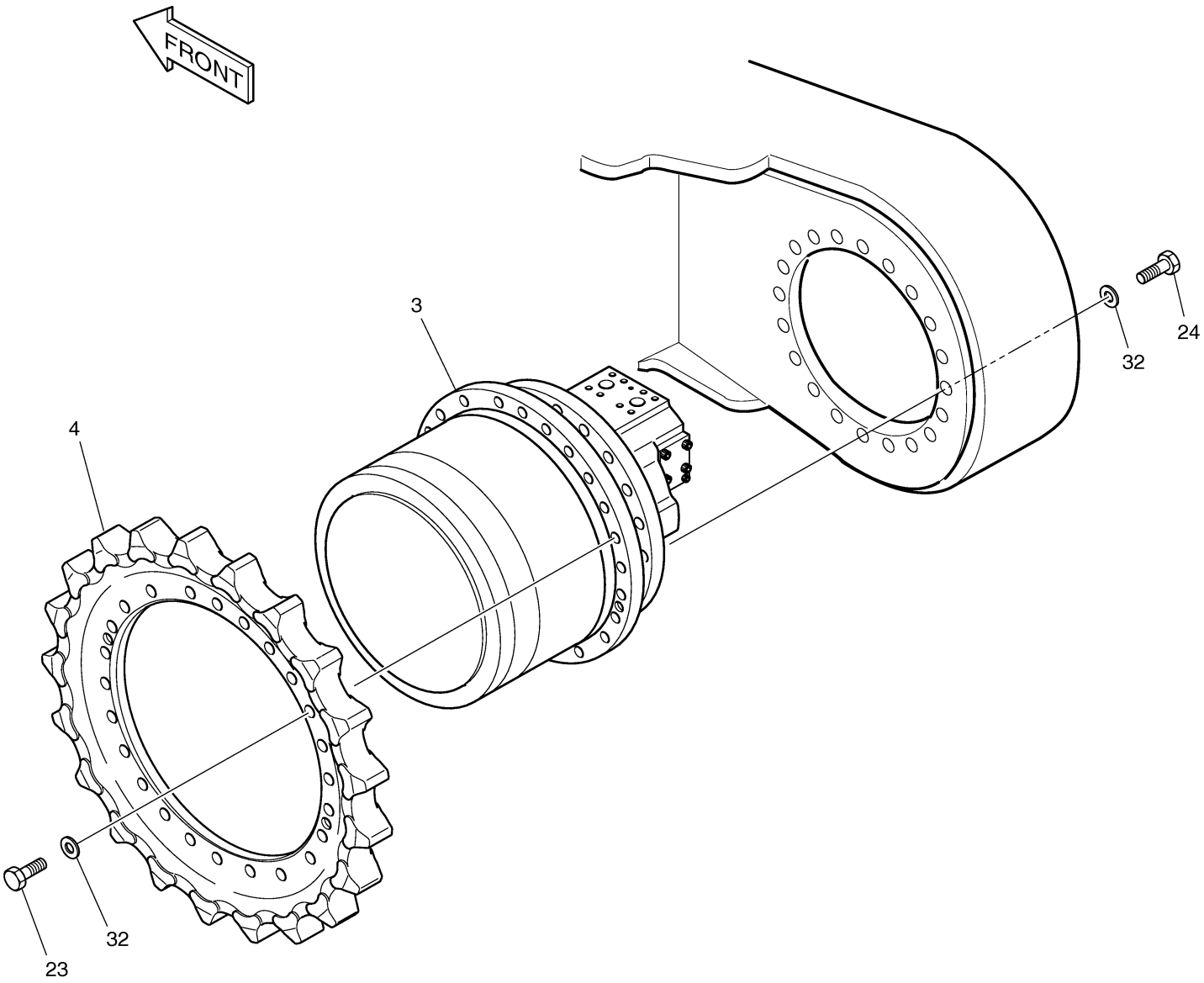

Fig. 2120 IDLER

Key No	Part No	Description	Qty	S.C	Serial No	ICA	Replacable	Qty
-	604-00122C	TRACK ASS'Y	-	D				
6	270-00037	IDLER ASS'Y	2		1001~3728	I	270-00037A	2
6	270-00037A	IDLER ASS'Y	2		3729~4003	I	270-00037B	2
6	270-00037B	IDLER ASS'Y	2		4004~			
6-1	2270-1084B	IDLER	1		1001~3728	I	2270-1084C	1
6-1	2270-1084C	IDLER	1		3729~4003	I	2270-1084E	1
6-1	2270-1084E	IDLER	1		4004~			
6-1A	2220-1014	SHAFT	1					
6-1B	2270-6104	IDLER	1					
6-1C	2110-1071	BUSHING	2		1001~3728	I	2110-1071A	2
6-1C	2110-1071A	BUSHING	2		3729~4003			
6-1C	K1029146	BUSHING	2		4004~			
6-1D	S8010850	O-RING	2					
6-1E	2271-1014	SUPPORT	2					
6-1F	2180-9057	SEAL;GROUP	2					
6-1G	2123-1218	PIN	2					
6-1H	2181-1116D2	PLUG	2					
6-2	2157-1013A	YOKE	1					
6-3	S0765151	BOLT M16X1.5X45	4					
6-4	S5102903	WASHER	4					

Fig. 2120 IDLER

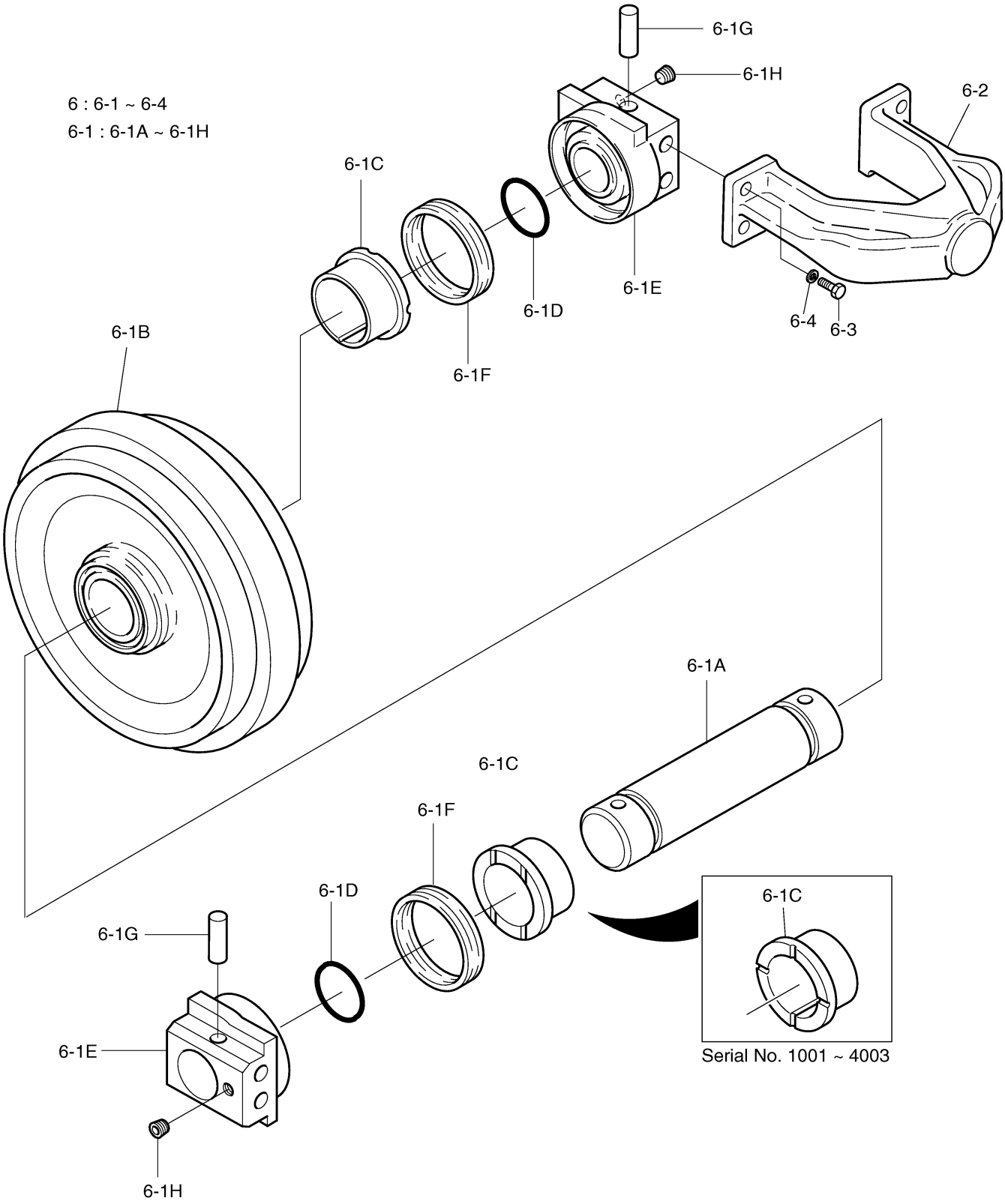

Fig. 2130 TRACK SPRING

Key No	Part No	Description	Qty	S.C	Serial No	ICA	Replacable	Qty
-	604-00122A	TRACK ASS'Y	-	D				
5	2274-1014G	SPRING;TRACK	2					
5D	S8010650	O-RING	1					
5E	S2212266	BOLT	4					
5F	2114-1477A	SPACER	1					
5G	2181-1897	FLANGE	1					
5H	2444-1021	ROD;PISTON	1					
5I	2180-9111	RING,PISTON	1					
5J	2180-9118	RING,BACK-UP	1					
5K	2180-9115	PACKING;U-RING	1					
5L	2116-1379A	PLATE	1					
5M	S6500500	RING,STOP	1					
5N	S8000531	O-RING	1					
5O	2440-1074B	CYLINDER	1					
5P	2444-1020B	ROD	1					
5Q	2129-1261	SPRING	1					
5R	2181-1898A	FLANGE	1					
5S	2121-1249B	NUT	1					
5T	2120-1105	BOLT	1					
33	2420-1242A	VALVE;GREASE	2					

Fig. 2130 TRACK SPRING

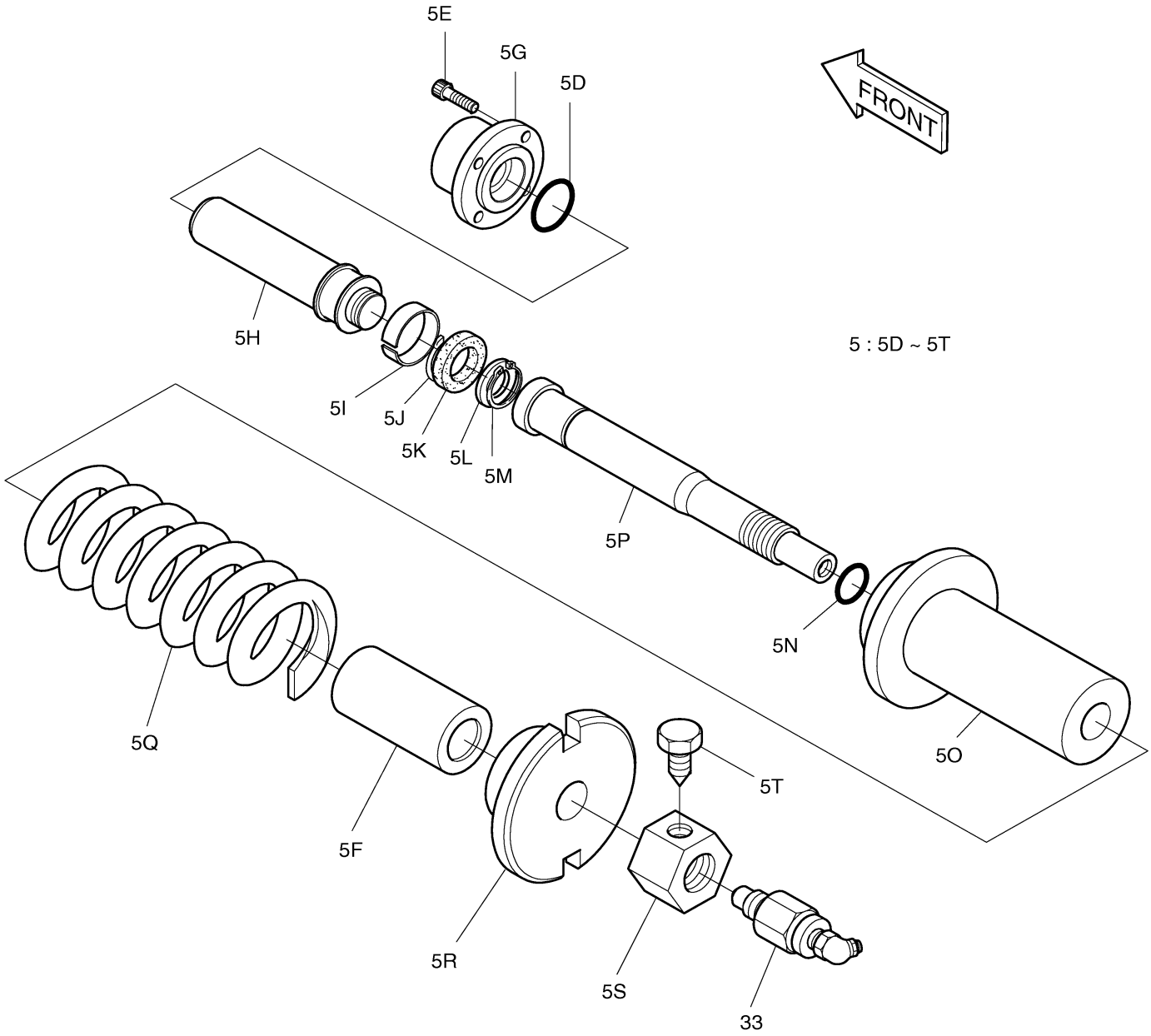

Fig. 2140 UPPER ROLLER

Key No	Part No	Description	Qty	S.C	Serial No	ICA	Replacable	Qty
-	604-00122G	TRACK ASS'Y	-	D				
8	2270-6126A	ROLLER;UPPER	4		1001~4003	I	2270-6126B	4
8	2270-6126B	ROLLER;UPPER	4		4004~4377	I	2270-6126C	4
8	2270-6126C	ROLLER;UPPER	4		4378~			
8A	2270-6127A	BODY ASS`Y	1					
8B	2112-1018B	SHAFT	1		1001~4377	I	K1041357	1
8B	K1041357	SHAFT	1		4378~			
8C	2271-1015B	BRACKET	1					
8D	2110-1072A	BUSHING	1		1001~4003			
8D	K1029148	BUSHING	1		4004~4377	I	K1029148A	1
8D	K1029148A	BUSHING	1		4378~			
8E	2110-1073A	BUSHING	1		1001~4003			
8E	K1029149	BUSHING	1		4004~4377	I	K1029149A	1
8E	K1029149A	BUSHING	1		4378~			
8F	2180-9005A	SEAL;GROUP	1		1001~4003	I	2180-9005B	1
8F	2180-9005B	SEAL	1		4004~			
8G	2180-6005	O-RING	1					
8H	2181-6005	PLUG	1					
8I	2229-1006B	COVER	1					
8J	2114-1158A	WASHER	1					
8K	S0508861	BOLT	3					
8L	S0758253	BOLT M10X1.25X35	3					
8M	S5102503	WASHER	3					
8N	S5102603	WASHER	3					
20	S0521451	BOLT M16X2.0X40	16		1001~1091			
20	S0521456	BOLT	16		1092~			
28	S5102903	WASHER	16					

Fig. 2140 UPPER ROLLER

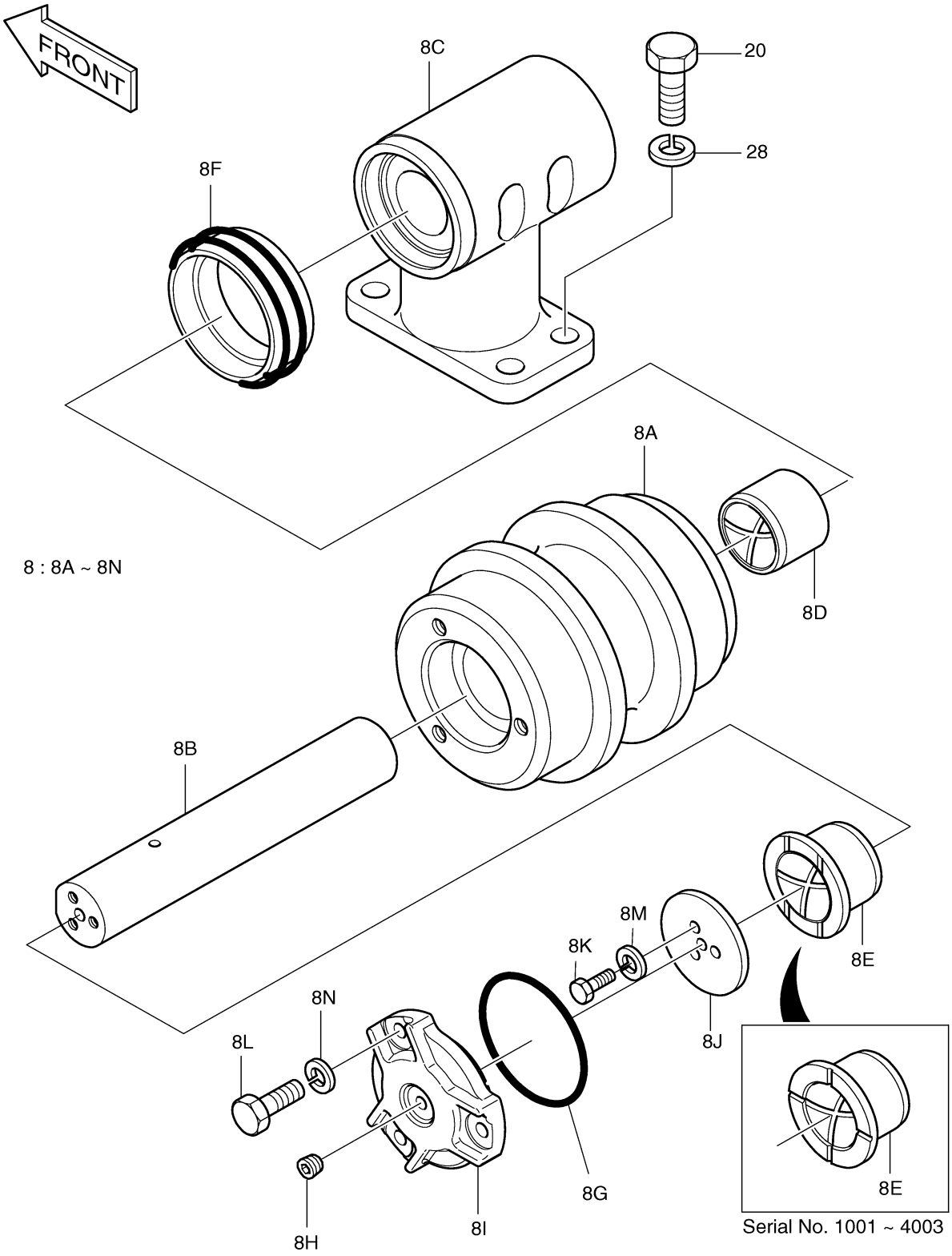

Fig. 2150 LOWER ROLLER

Key No	Part No	Description	Qty	S.C	Serial No	ICA	Replacable	Qty
-	604-00122C	TRACK ASS'Y	-	D				
7	2270-9025	LOWER ROLLER ASS'Y	18		1001~2914	I	2270-9025A	18
7	2270-9025A	LOWER ROLLER ASS'Y	18		2915~4003	I	2270-9025B	18
7	2270-9025B	ROLLER;LOWER	18		4004~			
7A	2270-6115A	BODY ASS'Y	1	D	1001~2914	I	2270-6115B	1
7A	2270-6115B	BODY ASS'Y	1	D	2915~			
7B	2271-6021A	COLLAR	2		1001~4003	I	2271-6021B	2
7B	2271-6021B	COLLAR	2		4004~			
7C	2112-6005	SHAFT	1					
7D	S8010700	O-RING	2					
7E	2180-6096	SEAL;FLOATING	2					
7F	2123-6118	PIN	2					
7G	2181-1116D2	PLUG	2					
7H	2110-6083A	BUSHING	2		1001~2914	I	2110-6083B	2
7H	2110-6083B	BUSHING	2		2915~4003	I	K1029150	2
7H	K1029150	BUSHING	2		4004~			
25	S0570661	BOLT M20X2.5X90	72		1001~1875	I	S0570666	72
25	S0570666	BOLT M20X2.5X90	72		1876~			

Fig. 2150 LOWER ROLLER

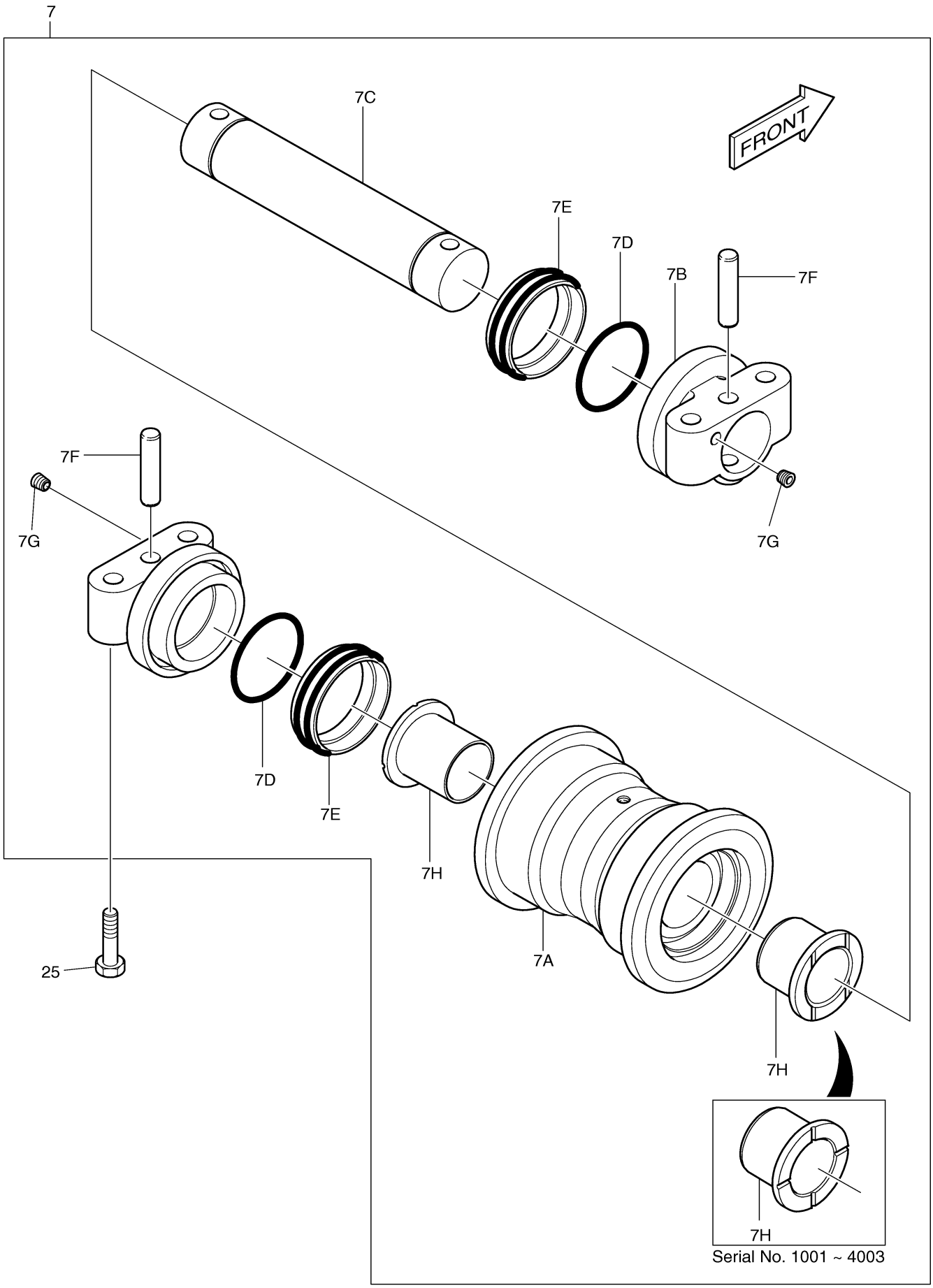

Fig. 2160 TRACK SHOE ASS'Y-600G

Key No	Part No	Description	Qty	S.C	Serial No	ICA	Replacable	Qty
-	604-00122A	TRACK ASS'Y	-	D				
9	2273-1049	TRACK SHOE ASS'Y	2					
9A	2272-1074	TRACK LINK ASS'Y	1					
9Aa	2272-9008	LINK(R.H)	50					
9Ab	2272-9009	LINK(L.H)	50					
9Ac	2123-1320	PIN	50					
9Ad	2110-1104	BUSHING	50					
9Ae	2123-1628A	PIN;MASTER	1					
9Af	2110-1105	BUSHING;MASTER	1					
9Ag	2114-1552	SPACER	2					
9Ai	2123-1629	PIN	1					
9Aj	2272-1056	LINK;MASTER(R.H)	1					
9Ak	2272-1057	LINK;MASTER(L.H)	1					
9B	2273-9012	SHOE 600G	51					
9C	2120-1212A	BOLT	204					
9D	2121-1203	NUT	204					

Fig. 2160 TRACK SHOE ASS'Y-600G

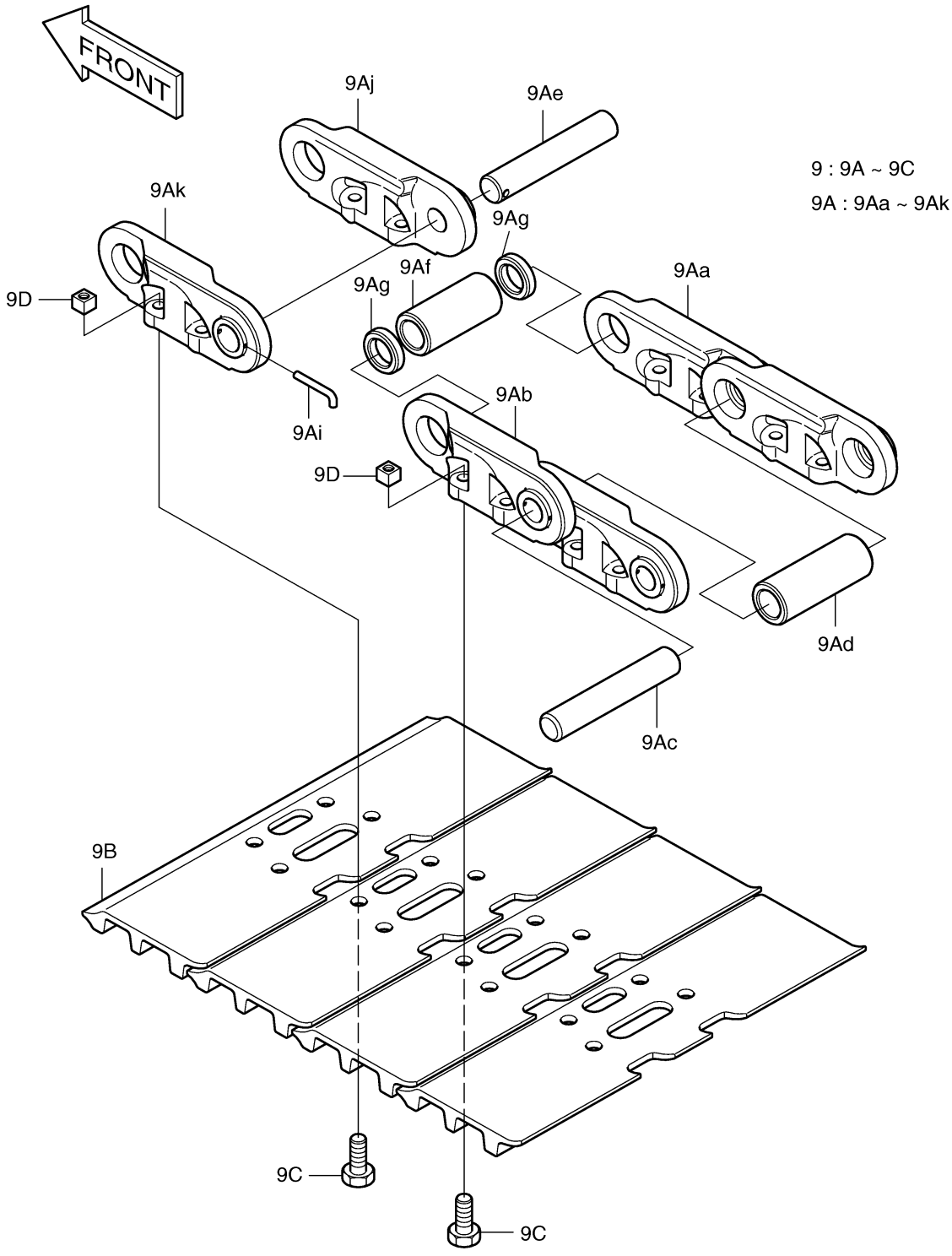

Fig. 2170 CENTER JOINT

Key No	Part No	Description	Qty	S.C	Serial No	ICA	Replacable	Qty
-	604-00122A	TRACK ASS'Y	-	D				
10	2480-6060	CENTER JOINT	1					
10A	53C277-1	BODY	1					
10B	53C278-1	SPINDLE	1					
10C	E6990074	SEAL	7	K				
10D	E6301581	O-RING	1	K				
10E	53C280-0	PLATE;THRUST	1					
10F	E8500351	RING;RETAINING	1					
10G	E6311581	O-RING	1	K				
10H	53C279-0	COVER	1					
10I	E3110112	WASHER;SPRING	4					
10J	E0020963	BOLT;HEX.	4					
10K	E1500050	PLUG;HEX SOCKET	4					
10L	53C295-0	SHIM-A	1					
10M	53C296-0	SHIM-B	1					
18	S0515253	BOLT	4					
27	S5102703	WASHER	4					
*	2480-6060KT	SEAL KIT;CENTER JOINT	1					

Fig. 2170 CENTER JOINT

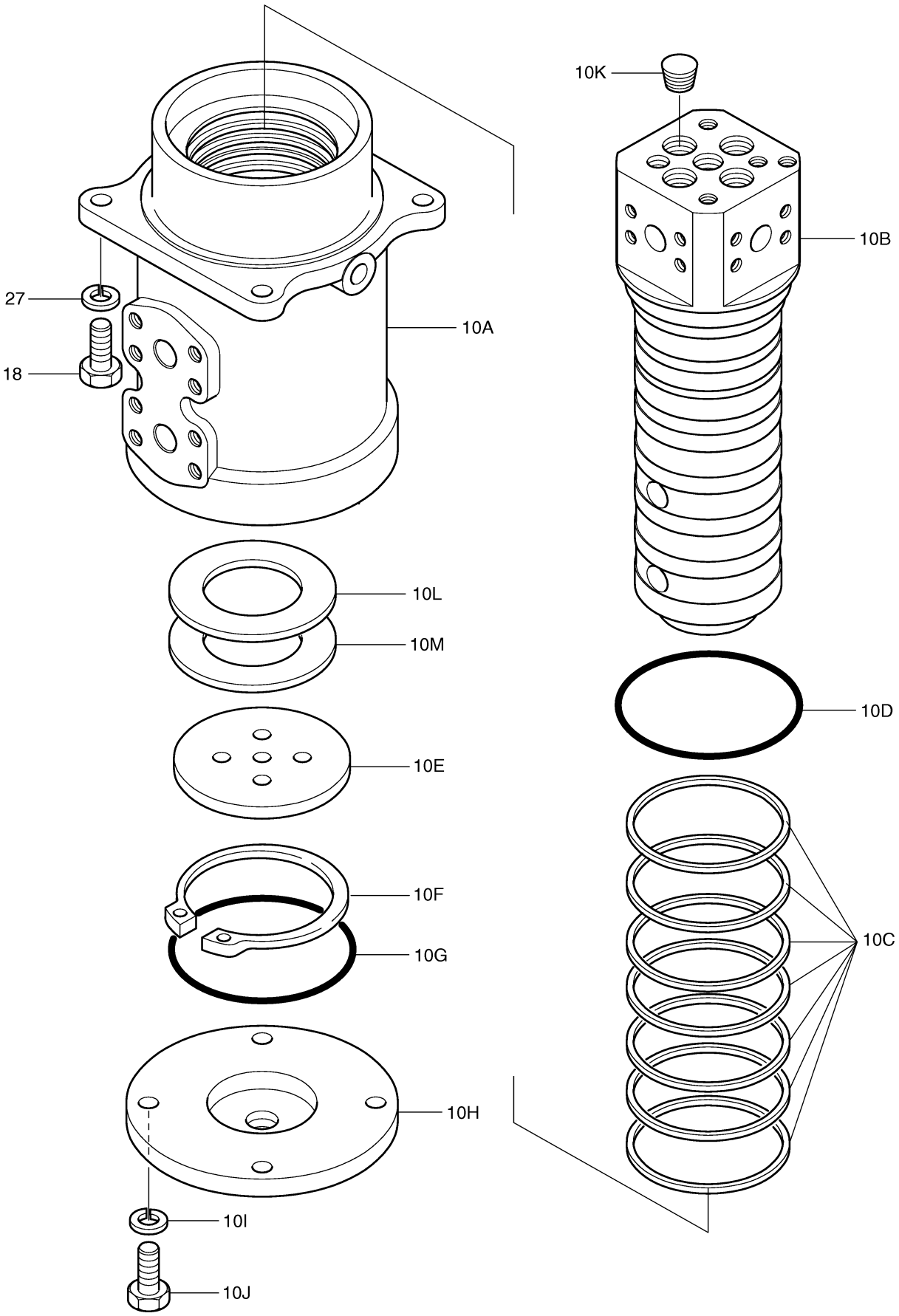

Fig. 2180 TRAVEL PIPING COVER

Key No	Part No	Description	Qty	S.C	Serial No	ICA	Replacable	Qty
-	604-00122A	TRACK ASS'Y	-	D				
13	621-01529A	COVER(L.H)	1					
14	621-01530A	COVER(R.H)	1					
21	2120-2196D10	BOLT;SET M12X1.75X25	12					

Fig. 2180 TRAVEL PIPING COVER

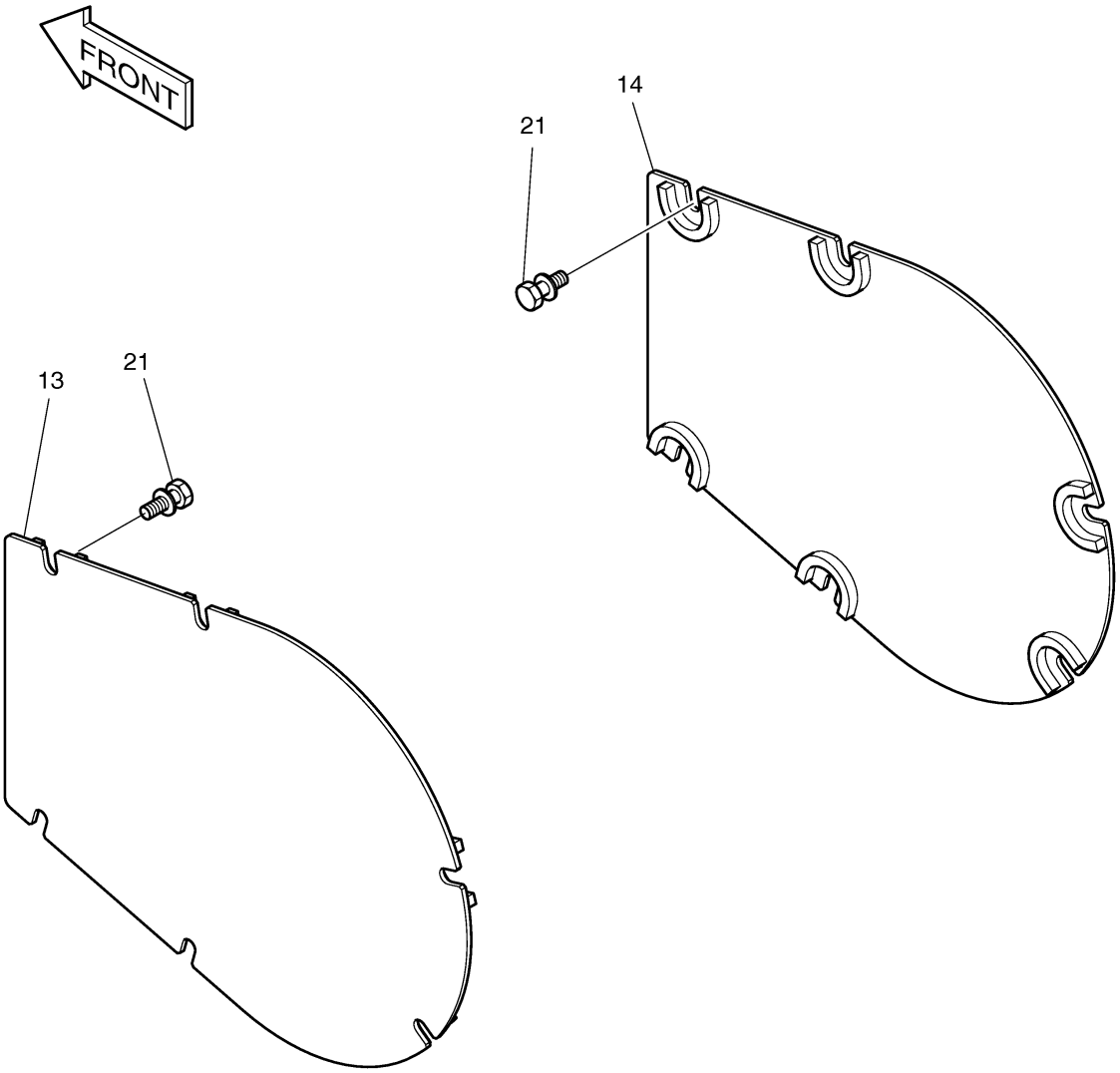

Fig. 2190 TRAVEL PIPING

Key No	Part No	Description	Qty	S.C	Serial No	ICA	Replacable	Qty
-	400-00666	TRAVEL PIPING ASS'Y	-	D				
1	DS2039055	HOSE	2					
2	DS2039069	HOSE	2					
3	S2215366	BOLT	32		1001~1019			
3	S2215466	BOLT	32		1020~			
4	2180-1026D19	O-RING	8					
5	2181-9081	FLANGE	16					
6	2184-1036D257	HOSE PF1/2-2700L	2					
7	2184-1060D57	HOSE	2					
8	2124-1084D1	CLIP,BAND	20					
9	2181-1126D14	ADAPTER	1					
10	S8000111	O-RING	3					
11	2181-1126D83	ADAPTER	2					
12	S8000181	O-RING	3					
13	2181-2281D10	TEE	1					
14	2181-4125	TEE	1					
15	2160-4003	BUSHING;RUBBER	2					
16	2181-1126D34	ADAPTER	2					

Fig. 2190 TRAVEL PIPING

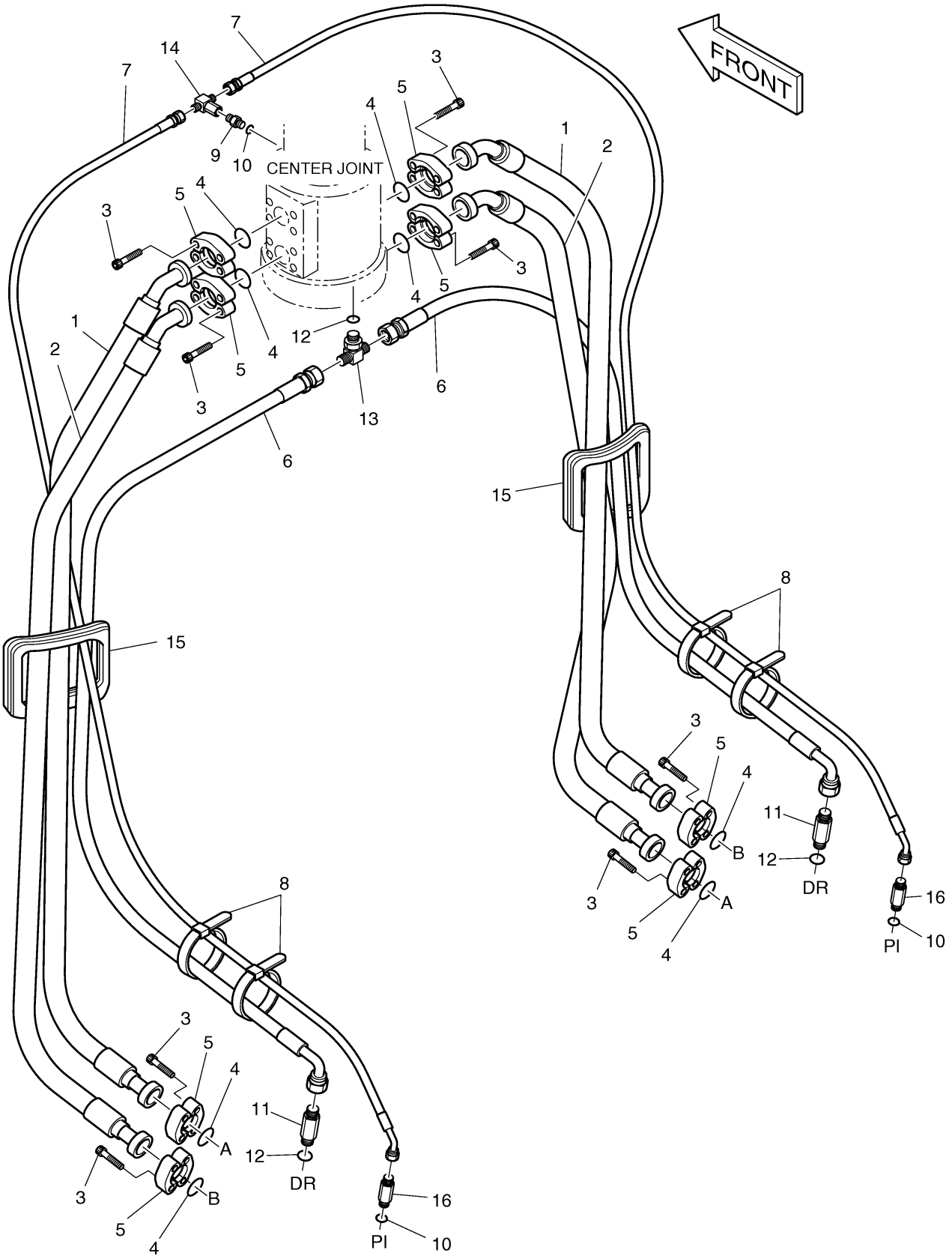

Fig. 2195 TRAVEL PIPING-3M TRACK

Key No	Part No	Description	Qty	S.C	Serial No	ICA	Replacable	Qty
-	400-01036	TRAVEL PIPING ASS'Y	-	D				
1	DS2039054	HOSE	2					
2	DS2039075	HOSE	2					
3	S2215466	BOLT	32					
4	2180-1026D19	O-RING	8					
5	2181-9081	FLANGE	16					
6	2184-1036D257	HOSE PF1/2-2700L	2					
7	2184-1060D57	HOSE	2					
8	2124-1084D1	CLIP,BAND	20					
9	2181-1126D14	ADAPTER	1					
10	S8000111	O-RING	3					
11	2181-1126D83	ADAPTER	2					
12	S8000181	O-RING	3					
13	2181-2281D10	TEE	1					
14	2181-4125	TEE	1					
15	2160-4003	BUSHING;RUBBER	2					
16	2181-1126D34	ADAPTER	2					

Fig. 2195 TRAVEL PIPING-3M TRACK

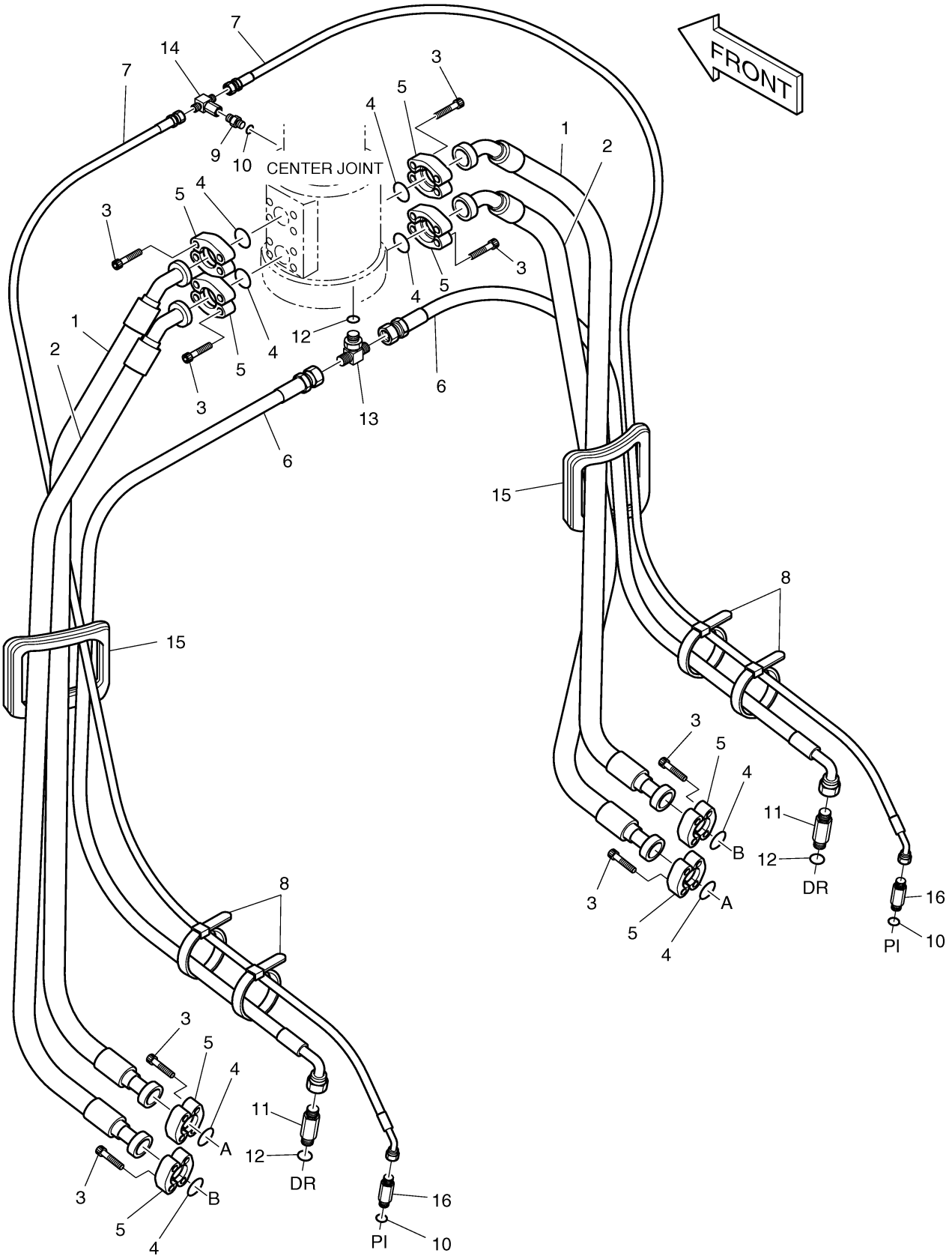

Fig. 3100 BOOM-6.245M

Key No	Part No	Description	Qty	S.C	Serial No	ICA	Replacable	Qty
-	701-00296	BOOM ASS'Y	-	D				
1	701-00297	BOOM SUB. ASS'Y	1					
1B	110-00150	BUSHING	2					
1C	2180-1106BD25	SEAL;DUST	2					
2	2123-2213E	PIN	1					
3	2123-2245C	PIN	2					
4	2123-2217B	PIN	1					
5	2123-2218E	PIN	1					
6	2123-2220C	PIN	1					
7	2116-1527A	STOPPER	2					
8	S0571866	BOLT	2					
9	S4013133	NUT	4					
10	2180-1106BD25	SEAL;DUST	2					
11	2180-1106BD6	SEAL,DUST	10					
12	114-00001D9	SHIM	2					
13	2114-1059D113	SHIM	6					
14	114-00001D7	SHIM	2					
15	2191-3444	PLATE	1					
16	2116-1515A	PLATE,STOPPER	1					
17	2116-1060D5	STOPPER	3					
18	S0521366	BOLT	7					
19	S5102903	WASHER	7					
20	2195-2394B	BRACKET	2					
21	S0515053	BOLT	4					
22	S5102703	WASHER	4					
23	2114-1059D114	SHIM	4					
24	114-00001D10	SHIM	2					
25	114-00001D8	SHIM	2					
26	2114-1059D257	SHIM	2					
27	2114-1059D258	SHIM	2					
28	2114-1059D219	SHIM	2					
29	2114-1059D234	SHIM	2					

Fig. 3100 BOOM-6.245M

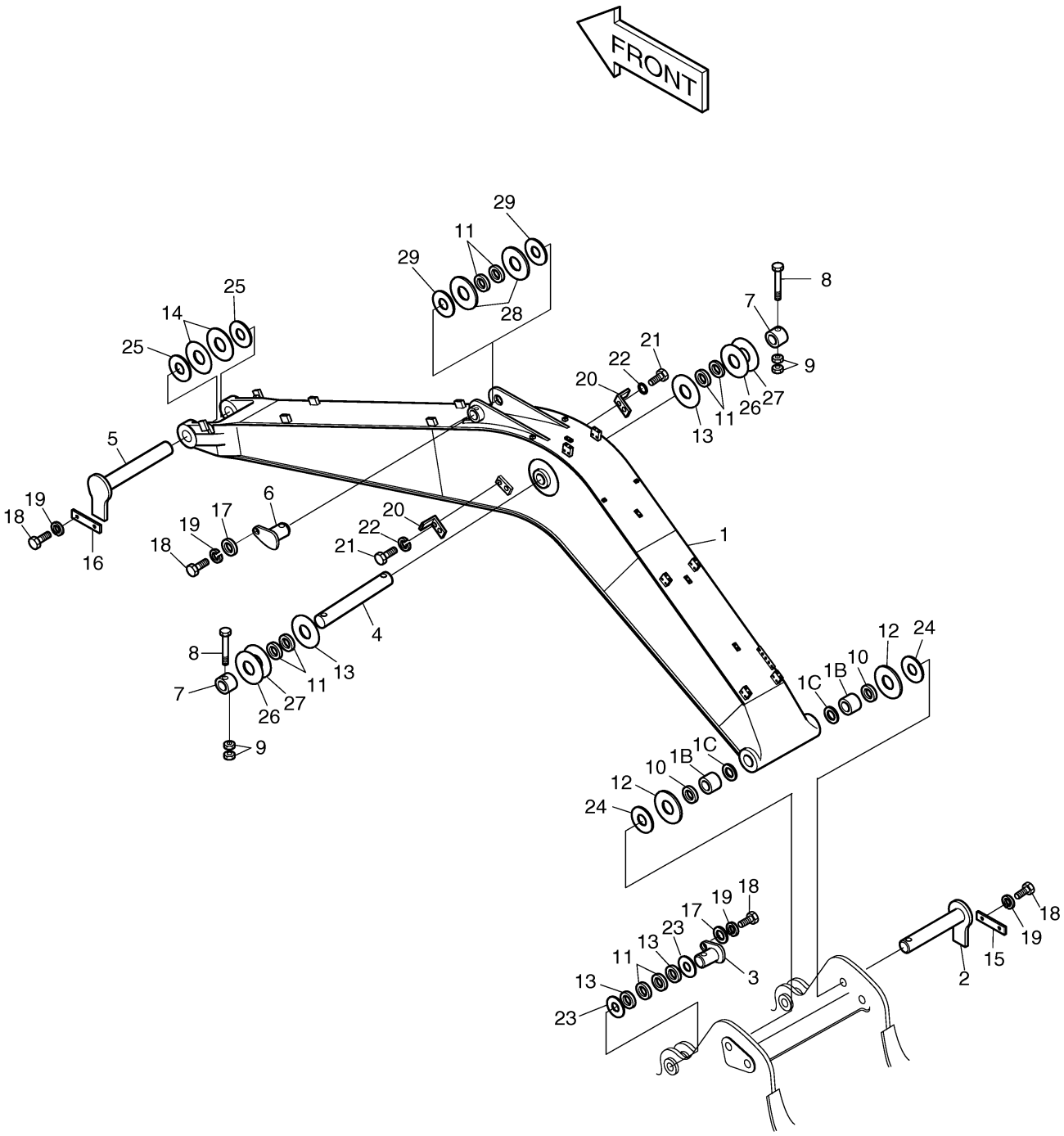

DOOSAN Doosan Infracore

Fig. 3110 ARM-3.1M

Key No	Part No	Description	Qty	S.C	Serial No	ICA	Replacable	Qty
-	701-00300	ARM ASS'Y	-	D	1001~1764			
-	701-00535C	ARM ASS'Y	-	D	1765~			
1	701-00301A	ARM SUB ASS'Y	1		1001~1764	I	701-00536	1
1	701-00536	ARM SUB ASS'Y	1		1765~3155			
1	701-00536A	ARM SUB ASS'Y	1		3156~3760	I	701-00536B	1
1	701-00536B	ARM SUB ASS'Y	1		3761~4141	I	701-00536C	1
1	701-00536C	ARM SUB ASS'Y	1		4142~			
1B	110-00151	BUSHING	2					
1C	110-00152	BUSHING	2					
1D	110-00206	BUSHING	2					
2	2155-1327H	PUSH LINK ASS'Y	1					
2B	2110-1376A	BUSHING	2					
2C	110-00158	BUSHING	2					
3	2155-1310B	LINK;GUIDE(R.H)	1					
4	2155-1311B	LINK;GUIDE(L.H)	1					
6	2123-2220C	PIN	1		1001~3155			
6	K1000205	PIN	1		3156~4245	I	K1000205A	1
6	K1000205A	PIN	1		4246~			
7	2123-2215C	PIN	1		1001~3155			
7	K1000541	PIN	1		3156~			
8	2123-2222B	PIN	1					
9	2123-2223C	PIN	2					
10	2123-2224B	PIN	1					
11	2180-1106BD24	SEAL,DUST	2					
12	2180-1106BD6	SEAL,DUST	14					
13	2180-1106BD14	SEAL;DUST	2					
14	2114-1059D113	SHIM	4					
15	2114-1059D219	SHIM	8					
16	2116-1060D5	STOPPER	2					
17	S5102903	WASHER	2					
18	S0521366	BOLT	2					
19	S4012933	NUT	2					
20	S4013133	NUT	6					
21	S0571866	BOLT	3					
22	S0566966	BOLT	1					
23	S6710041	NIPPLE,GREASE	9		1001~1764			

Key No	Part No	Description	Qty	S.C	Serial No	ICA	Replacable	Qty
23	S6710041	NIPPLE,GREASE	7		1765~			
24	180-00077D6	O-RING	2					
25	2114-1059D63	SHIM	2					
26	2114-1059D114	SHIM	4					
27	2114-1059D234	SHIM	8					
28	2114-1059D118	SHIM	2					
29	2181-1116D1	PLUG	1		3156~4245			
30	114-00379	SPACER	2		1001~2132	I	114-00379A	2
30	114-00379A	SPACER	2		2133~			
31	120-00223	BOLT M12X1.25X25	8					
32	160-00020	CAP	9		1001~1764			
32	160-00020	CAP	7		1765~			

Fig. 3110 ARM-3.1M

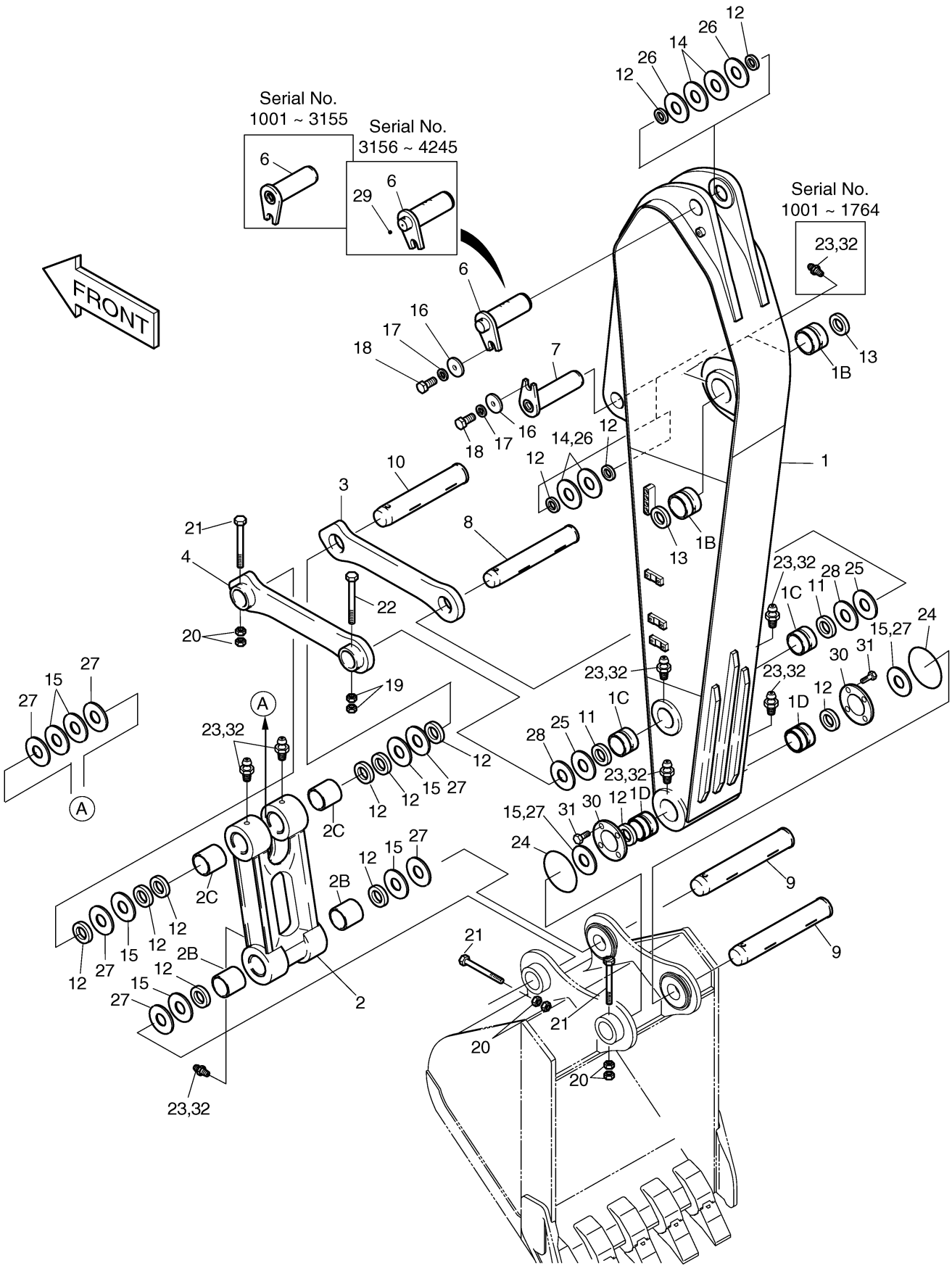

DOOSAN Doosan Infracore

Fig. 3120 BUCKET ASS'Y-1.1M3

Key No	Part No	Description	Qty	S.C	Serial No	ICA	Replacable	Qty
-	2704-1371I	BUCKET ASS'Y-1.1㎥	1		1001~1615	I	2704-1371J	1
-	2704-1371J	BUCKET ASS`Y-1.1㎥	1		1616~2669	I	2704-1371K	1
-	2704-1371K	BUCKET ASS`Y-1.1㎥	1		2670~			
1	-	BUCKET ASS'Y	1	D				
1A	2713-1220	ADAPTER;TOOTH	5					
2	2713-1219	POINT;TOOTH	5		1001~1615	I	713-00054A	5
2	713-00054	POINT;TOOTH	5		1616~2669	I	713-00054A	5
2	713-00054A	POINT;TOOTH	5		2670~			
3	2705-1021	PIN,LOCKING	5					
4	2114-1849A	WASHER,LOCKING	5					
5	2713-6034A	CUTTER,SIDE(R.H)	1					
6	2713-6035A	CUTTER,SIDE(L.H)	1					
7	S0574761	BOLT	12					
8	S4013333	NUT	12					
9	2114-1831	WASHER;HARDEN	12		1001~1615	I	2114-1831A	12
9	2114-1831A	WASHER	12		1616~			

Fig. 3120 BUCKET ASS'Y-1.1M3

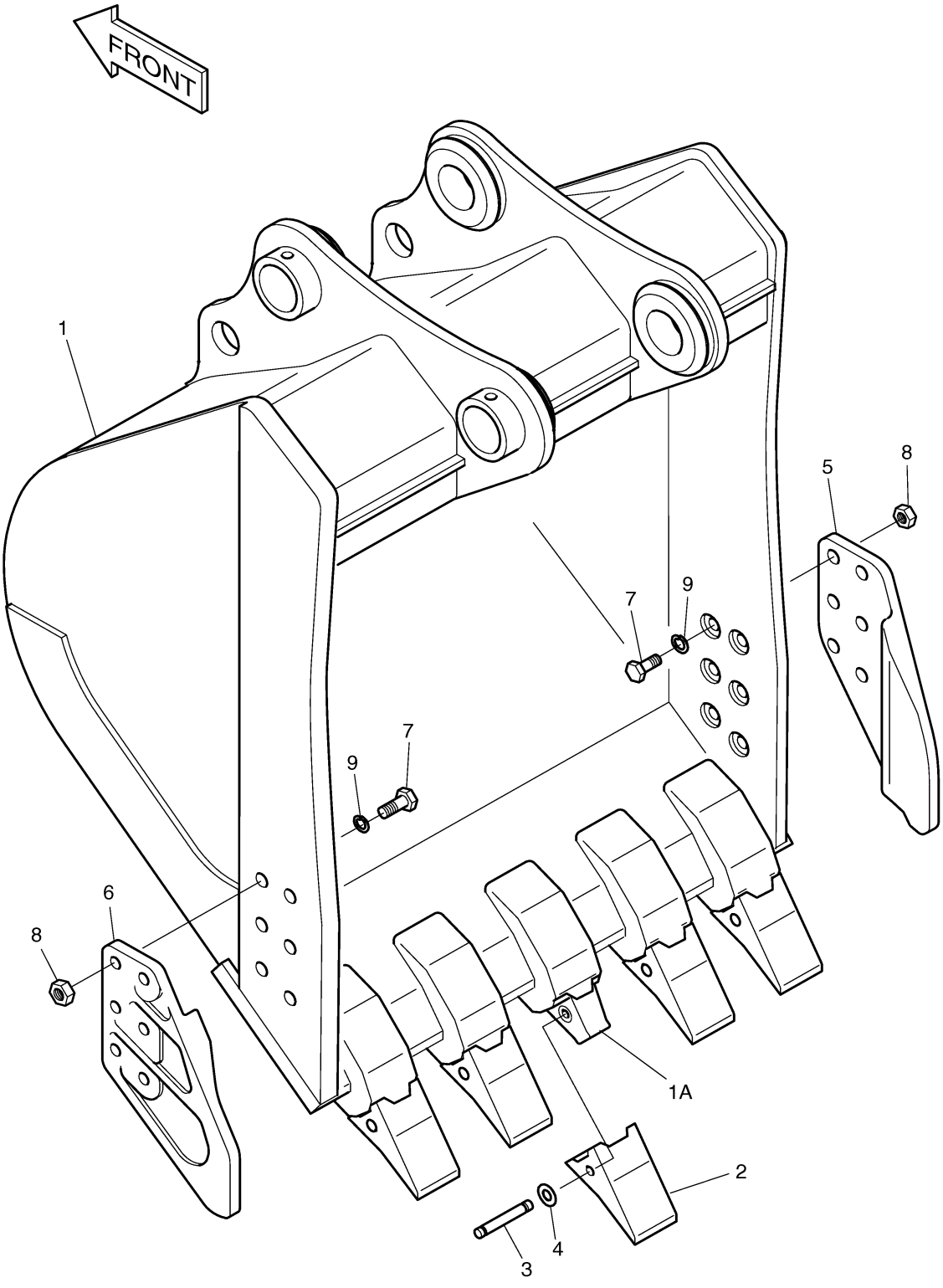

Fig. 3130 BOOM PIPING

Key No	Part No	Description	Qty	S.C	Serial No	ICA	Replacable	Qty
-	400-00650	BOOM PIPING	-	D	1001~3648			
-	400-00650A	BOOM PIPING	-	D	3649~4036			
-	400-00650C	BOOM PIPING	-	D	4037~			
1	2440-9238G	CYLINDER;BOOM(L.H)	1		1001~1832	I	440-00416	1
1	440-00416	CYLINDER;BOOM(L.H)	1		1833~2299	I	440-00416A	1
1	440-00416A	CYLINDER;BOOM(L.H)	1		2300~4036	I	440-00416B	1
1	440-00416B	CYLINDER;BOOM(L.H)	1		4037~			
2	2440-9239G	CYLINDER;BOOM(R.H)	1		1001~1832	I	440-00417	1
2	440-00417	CYLINDER;BOOM(R.H)	1		1833~2299	I	440-00417A	1
2	440-00417A	CYLINDER;BOOM(R.H)	1		2300~4036	I	440-00417B	1
2	440-00417B	CYLINDER;BOOM(R.H)	1		4037~			
3	440-00257	CYLINDER;ARM	1		1001~2299	I	440-00257A	1
3	440-00257A	CYLINDER;ARM	1		2300~3648	I	440-00257B	1
3	440-00257B	CYLINDER;ARM	1		3649~4245	I	K1036107	1
3	K1036107	CYLINDER;ARM	1		4246~			
4	140-01009	PIPE	1					
5	140-01010	PIPE	1		1001~1093	I	140-01010A	1
5	140-01010A	PIPE	1		1094~			
6	140-00786	PIPE	1		1001~1093	I	140-00786A	1
6	140-00786A	PIPE	1		1094~			
7	140-00787	PIPE	1					
8	140-00788A	PIPE	1		1001~1577			
8	140-00788B	PIPE	1		1578~			
9	140-00789A	PIPE	1		1001~1577			
9	140-00789B	PIPE	1		1578~			
10	2184-1100D226	HOSE	1					
11	DS2038131	HOSE	1					
12	124-00223	CLAMP;PIPE	12		1001~1577			
12	124-00223	CLAMP;PIPE	8		1578~			
13	124-00218	CLAMP	12		1001~1577			
13	124-00218	CLAMP	8		1578~			
14	2181-9078	FLANGE	16					
15	2180-1026D19	O-RING	12					
16	S2212466	BOLT	28					
17	S0562766	BOLT	24					
18	S5102803	WASHER	24					

Key No	Part No	Description	Qty	S.C	Serial No	ICA	Replacable	Qty
20	S2212666	BOLT	16					
21	161-00281	RUBBER	18		1001~1577			
21	161-00281	RUBBER	12		1578~			
22	140-01008	PIPE	1		1001~1577			
22	140-01008A	PIPE	1		1578~			
23	140-01013	PIPE	1		1001~1577			
23	140-01013A	PIPE	1		1578~			
24	S2212266	BOLT	4					
25	124-00289	CLAMP;PIPE	4		1578~			
26	124-00290	CLAMP;PIPE	4		1578~			

Fig. 3130 BOOM PIPING

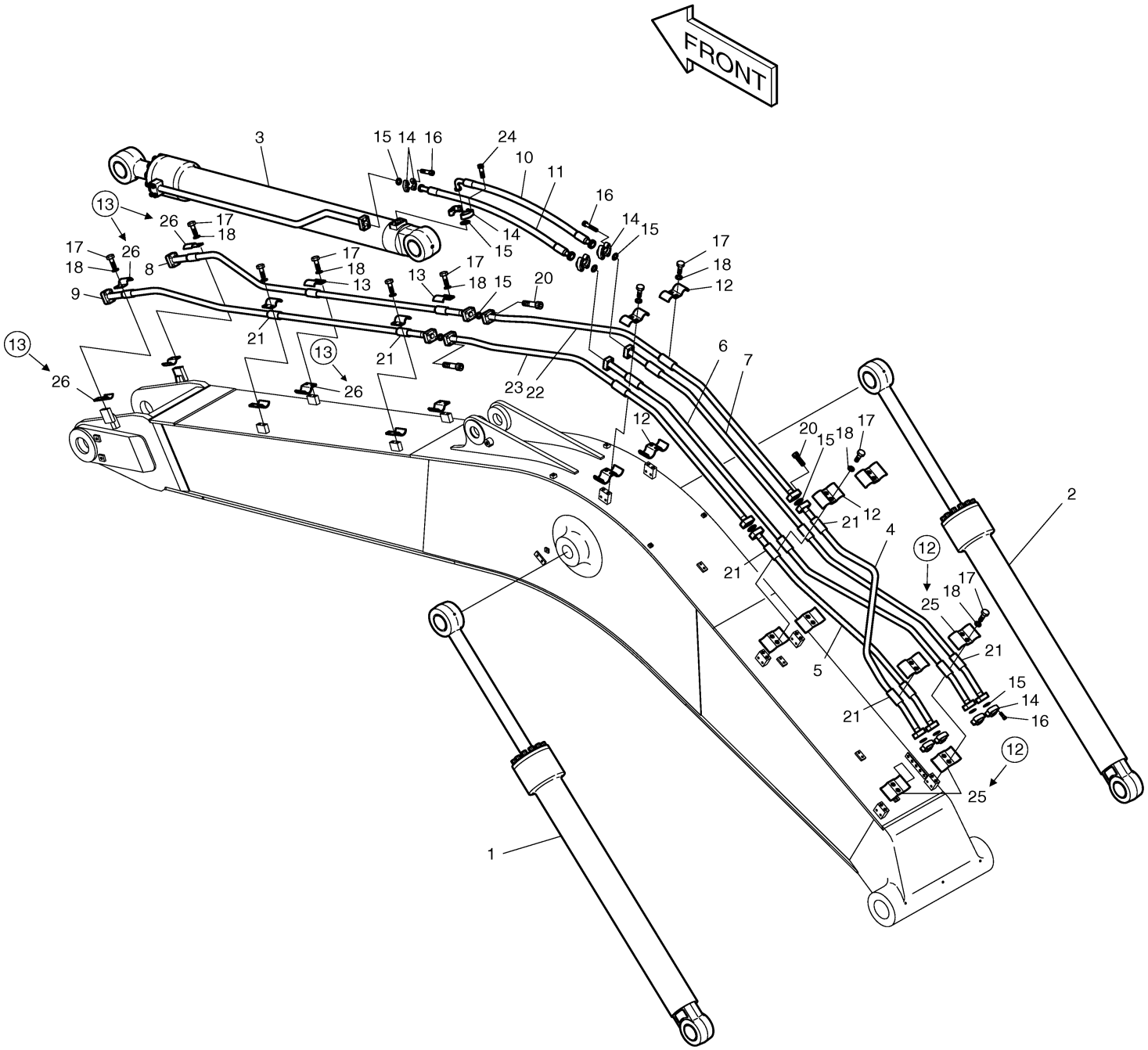

DOOSAN Doosan Infracore

Fig. 3140 ARM PIPING

Key No	Part No	Description	Qty	S.C	Serial No	ICA	Replacable	Qty
-	400-00649	ARM PIPING	-	D				
1	2440-9241E	BUCKET CYLINDER	1		1001~1019	I	2440-9241G	1
1	2440-9241G	BUCKET CYLINDER	1		1020~2299	I	2440-9241H	1
1	2440-9241H	CYLINDER;BUCKET	1		2300~3935	I	2440-9241I	1
1	2440-9241I	CYLINDER;BUCKET	1		3936~			
2	2184-1081D79	HOSE	2					
3	2181-9078	FLANGE	8					
4	2180-1026D19	O-RING	4					
5	S2212266	BOLT	16					

Fig. 3140 ARM PIPING

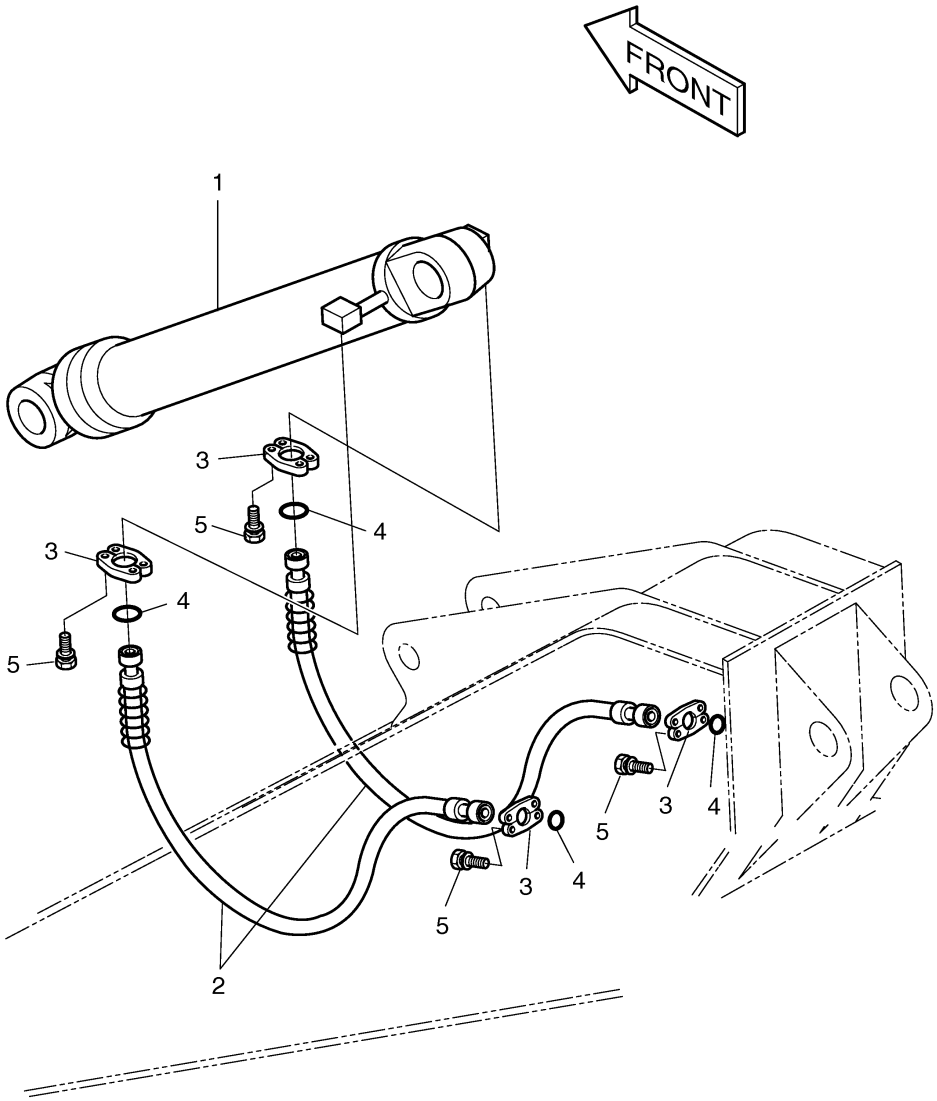

Fig. 3150 FRONT LUBRICATION PIPING

Key No	Part No	Description	Qty	S.C	Serial No	ICA	Replacable	Qty
-	400-00652	FRONT LUBRICATION PIPING	-	D				
1	140-01011	PIPE;LUB.	1		1001~3344	I	140-01011A	1
1	140-01011A	PIPE	1		3345~			
2	140-01012	PIPE;LUB.	1		1001~3344	I	140-01012A	1
2	140-01012A	PIPE	1		3345~			
3	2184-1045D131	HOSE	1					
4	DS2053704	HOSE	1					
5	2184-1045D175	HOSE	1					
6	2181-1925	ELBOW	2					
7	S3524403	PLUG	1					
8	S6710041	NIPPLE,GREASE	5					
9	181-00103	REDUCER	3					
10	121-00006	NUT	3					
11	181-00525	REDUCER	2					
12	S4032833	NUT	2					
13	2181-1110D30	ADAPTER	3					
14	124-00199D4	CLIP	3					
15	2124-1353D2	CLIP	3					
16	120-00276	BOLT	6					
18	160-00020	CAP	5					

Fig. 3150 FRONT LUBRICATION PIPING

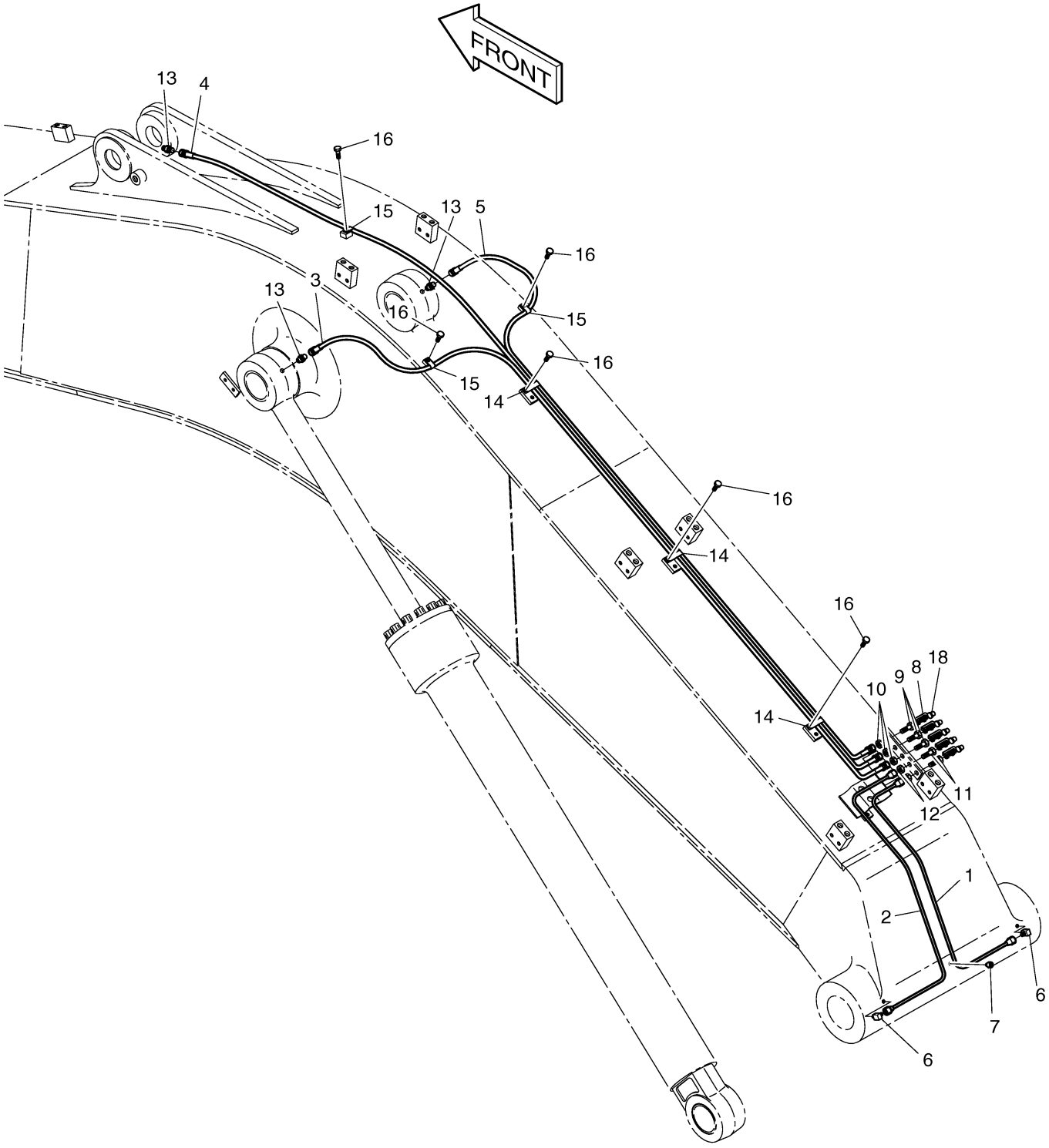

Fig. 3160 LUBRICATION PIPING-ARM [1765

Key No	Part No	Description	Qty	S.C	Serial No	ICA	Replacable	Qty
-	400-01281	LUBRICATOR PIPING-ARM	-	D	1765~3155			
1	DS2058245	HOSE	1					
2	2184-1060D202	HOSE	1					
3	2184-1076D127	HOSE PF1/4-800L	1					
4	DS2059450	HOSE	1					
5	2124-1353D2	CLIP	6					
6	120-00276	BOLT	7					
7	S6710152	NIPPLE,GREASE	4					
8	181-00525	REDUCER	3					
9	121-00006	NUT	1					
10	2181-4112	ADAPTER	4					
11	181-00103	REDUCER	1					
12	S4032833	NUT	6					
13	2181-1923D12	ADAPTER	3					
14	124-00199D4	CLIP	1					
15	140-01433A	PIPE	1		1765~1824	I	140-01433B	1
15	140-01433B	PIPE	1		1825~			
16	140-01434	PIPE	1					
17	140-01435	PIPE	1					

Fig. 3160 LUBRICATION PIPING-ARM [1765

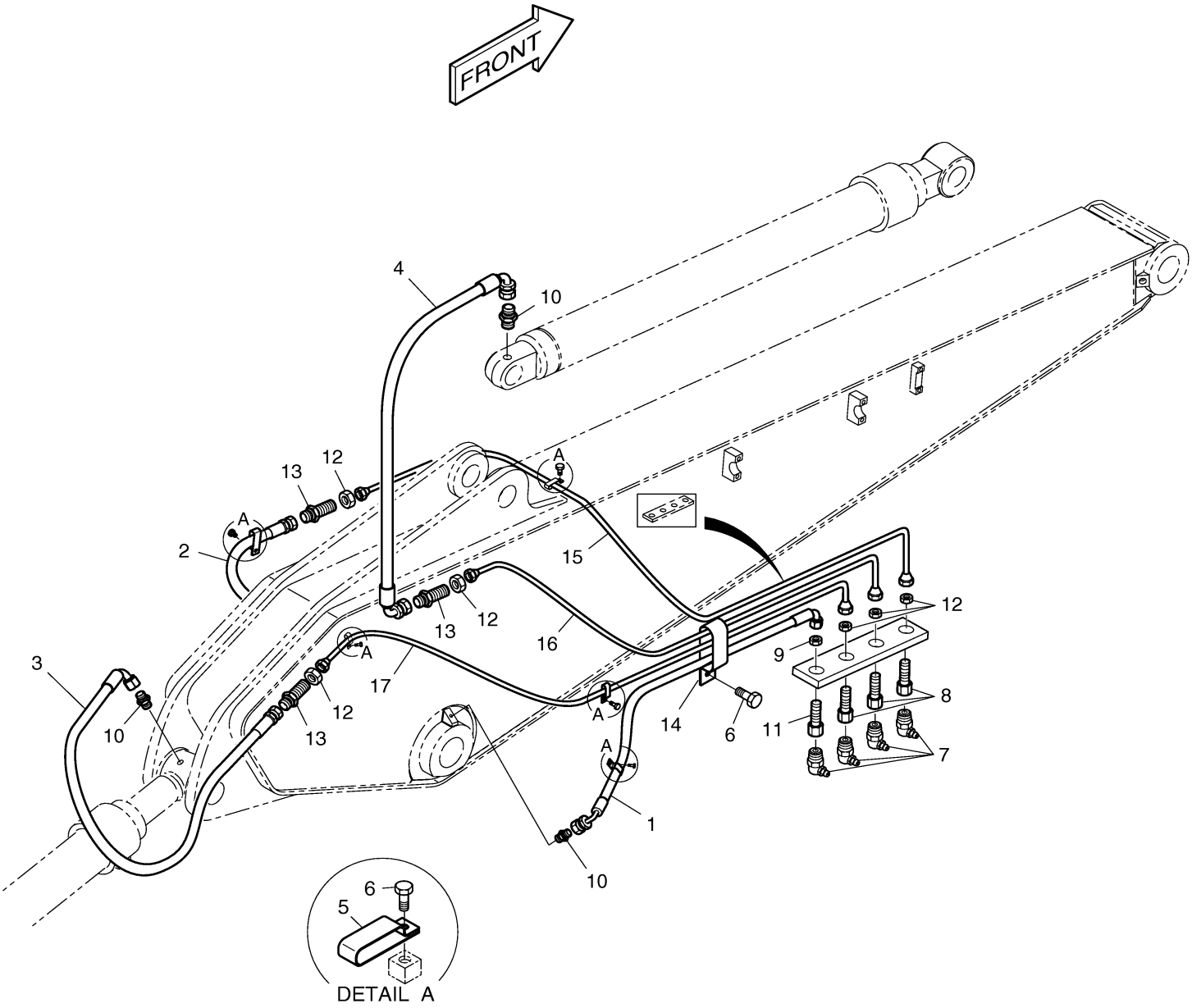

Fig. 3161 LUBRICATION PIPING-ARM [3156

Key No	Part No	Description	Qty	S.C	Serial No	ICA	Replacable	Qty
-	K1000214A	LUBRICATION PIPING-ARM	-	D	3156~			
1	K1000215	PIPE	1					
2	K1000365	PIPE	1					
3	K1000366	PIPE	1					
4	K1000367	PIPE	1					
5	K1000368	PIPE	1					
6	2184-1036D38	HOSE	1					
7	2184-1036D64	HOSE PF1/4-450L	1					
8	2181-1184	ADAPTER	4					
9	K1000057	ELBOW	2					
10	2181-4112	ADAPTER	1		3156~4245			
10	2181-4112	ADAPTER	2		4246~			
11	DS2225009	ADAPTER	1					
12	S4032833	NUT	3					
13	2181-1923D12	ADAPTER	2					
14	2124-1353D1	CLIP	6					
15	120-00276	BOLT	7					
16	DS2805008	CLIP	1					
17	S6710041	NIPPLE,GREASE	4					
18	160-00020	CAP	4					
19	2181-1111D11	ELBOW	1					
20	DS2094173	HOSE ASSY,HYDRAULIC	1		4246~			
21	2181-1110D1	ADAPTER	1		4246~			

Fig. 3161 LUBRICATION PIPING-ARM [3156

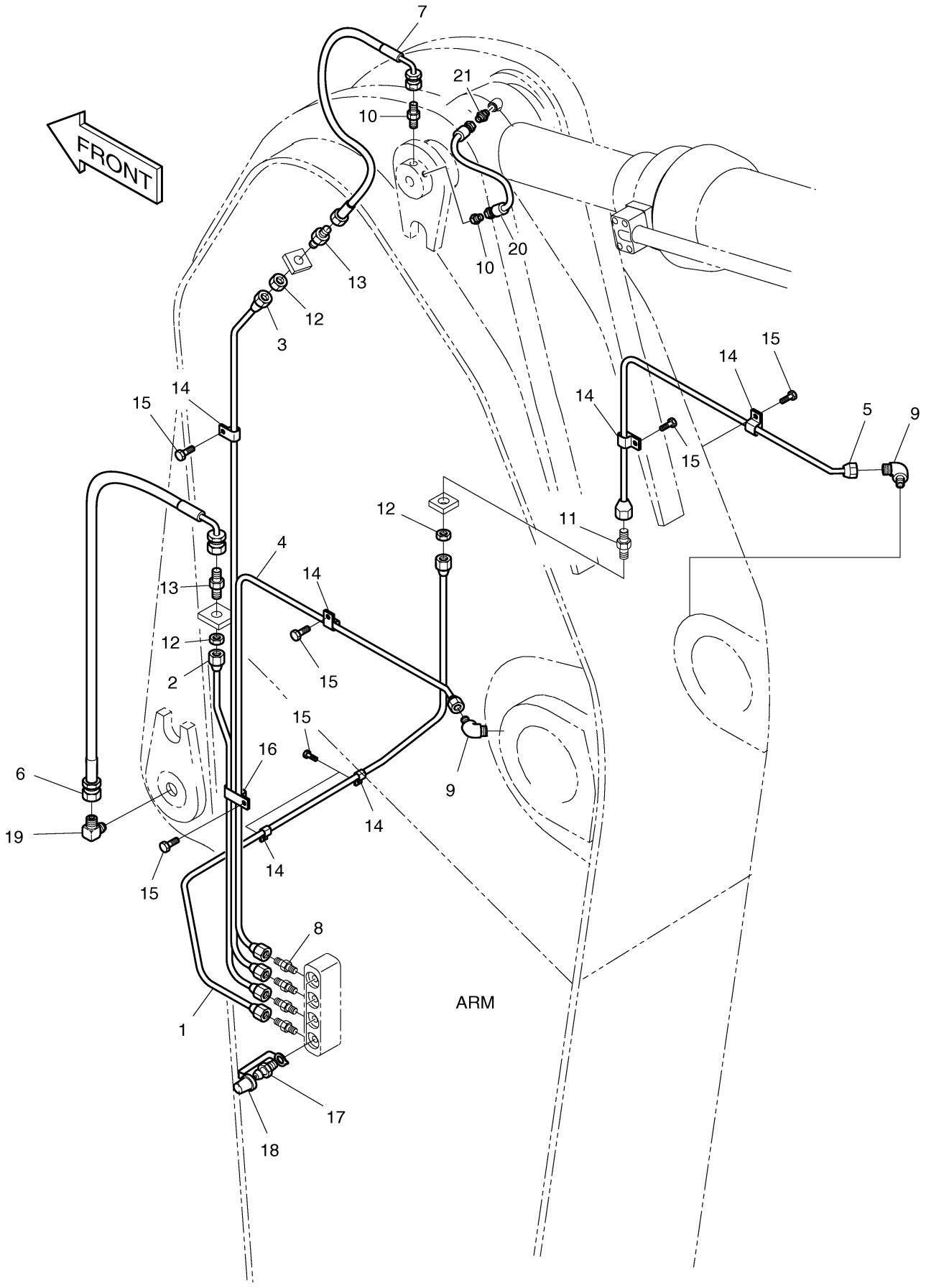

Fig. 4100 MAIN PUMP

Key No	Part No	Description	Qty	S.C	Serial No	ICA	Replacable	Qty
-	401-00225A	PUMP	1		1001~2578	I	401-00424	1
-	401-00424	PUMP	1		2579~2835	I	401-00424A	1
-	401-00424A	PUMP	1		2836~4216	I	401-00424B	1
-	401-00424B	PUMP	1		4217~4410	I	401-00424C	1
-	401-00424C	PUMP;MAIN	1		4411~			
11	2924530-0252	PISTON ASS'Y	2		1001~4410	I	2924530-0424	2
11	2924530-0424	PISTION ASS'Y	2		4411~			
151	2924530-0231	PISTON	9	D				
152	2924330-0072	SHOE	9	D				
13	2924370-0371	CYLINDER ASS'Y(R)	1		1001~4410	I	2924370-0668	1
13	2924370-0668	CYLINDER ASS'Y(R)	1		4411~			
141	2924370-0379	BLOCK;CYLINDER	1	D				
313	2924710-0362	PLATE;VALVE(R)	1	D				
14	2924370-0372	CYLINDER ASS'Y(L)	1		1001~4410	I	2924370-0669	1
14	2924370-0669	CYLINDER ASS'Y(L)	1		4411~			
141	2924370-0379	BLOCK;CYLINDER	1	D				
314	2924710-0360	PLATE;VALVE(L)	1	D				
30	2924150-0156	SWASH PLATE ASS'Y	2		1001~2835			
30	2924150-0318	SWASH PLATE ASS'Y	2		2836~			
212	2924150-0154	PLATE;SWASH	1	D	1001~2835			
212	2924150-0316	PLATE;SWASH	1	D	2836~			
214	P1R2025125	BUSH;TILTING	1	D				
80	2931100-0158	E.P.P.R VALVE	1					
79	V0009277998	E.P.P.R VALVE	1					
79-1	OORA013	O-RING	1					
79-2	OORA014	O-RING	1					
79-3	OORA015	O-RING	1					
325	2923230-0032	CASING;VALVE	1	D				
407	OSBM660	BOLT;SOCKET	3					
466	OVP14	PLUG	1					
490	PBP116-2403	PLUG	3					
725	OORBP11	O-RING	4	K				
732	OORBP16	O-RING P16	1	K				
111	2924250-0556	SHAFT;DRIVE(F)	1					
113	2924250-0557	SHAFT;DRIVE(R)	1					
116	2903190-0226	GEAR	1					

Key No	Part No	Description	Qty	S.C	Serial No	ICA	Replacable	Qty
123	PNUP308R1CS50	BEARING;ROLLER	2					
124	PAJ503303	BEARING;NEEDLE	2					
127	38800-127	SPACER;BEARING	3					
153	2924110-0056	PLATE;SET	2					
156	2924610-0030	BUSH;SPHERICAL	2					
157	2903340-1784	SPRING;CYLINER	18					
211	68710-00-211	PLATE;SHOE	2					
251	2923330-0127	SUPPORT;S.P.	2		1001~2835			
251	2923330-0325	SUPPORT;S.P.	2		2836~			
261	2923150-0486	COVER;SEAL(F)	1					
271	2923800807	CASING;PUMP	2					
312	2923370-0080	BLOCK;VALVE	1					
326	2923150-0470	COVER	1	D				
401	2953801767	BOLT;SOCKET	8					
406	OSBM820	BOLT;SOCKET	4					
414	OSBM1016	BOLT;SOCKET	4					
466	OVP14	PLUG	2					
467	OVP38	PLUG	2					
468	OVP34	PLUG	4					
490	PBP116-2403	PLUG	18					
530	2925130-0035	TILTING PIN ASS'Y	2					
531	2925130-0033	PIN;TILTING	1	D				
548	2953802202	PIN;FEED BACK	1	D				
532	2924490-0050	PISTON;SERVO	2					
534	2953801761	STOPPER(L)	2					
535	2953801762	STOPPER(S)	2					
41	29538267778	CHECK VALVE ASS'Y(1)	1		1001~2835	I	2953802048	1
41	2953802048	CHECK VALVE ASS'Y(1)	1		2836~			
541	2953802677	SEAT	2	D	1001~2835			
541	2933180-0414	SEAT	2	D	2836~			
543	2953802678	STOPPER 1	2	D	1001~2835			
543	2933260-0311	STOPPER 1	2	D	2836~			
545	ODW732	BALL;STEEL	2	D				
42	29538267774	CHECK VALVE ASS'Y(2)	1		1001~2835	I	2953802049	1
42	2953802049	CHECK VALVE ASS'Y(2)	1		2836~			
541	2953802677	SEAT	2	D	1001~2835			
541	2933180-0414	SEAT	2	D	2836~			
544	2933260-0074	STOPPER 2	2	D	1001~2835			

Key No	Part No	Description	Qty	S.C	Serial No	ICA	Replacable	Qty
544	2933260-0312	STOPPER 2	2	D	2836~			
545	ODW732	BALL;STEEL	2	D				
702	OORBG35W	O-RING	2	K				
710	OORBG95	O-RING	2	K				
717	OORBG145	O-RING	4	K				
724	OORBP8	O-RING	16	K				
725	OORBP11	O-RING	4	K				
726	OORBP14	O-RING P14	2	K				
728	OORBP24	O-RING	4	K				
732	OORBP18W	O-RING	2	K				
774	PSPD55788F	SEAL;OIL	1	K	1001~2835	I	P15Z557812F	1
774	P15Z557812F	SEAL;OIL	1	K	2836~			
789	OT2BP18	RING	2					
792	OT2BG35	RING	2					
806	ORNM16	NUT	2					
808	ORNM20	NUT	2					
824	OSR40	RING;SNAP	2					
885	PJR812	PIN	2					
886	OSPV614	PIN;SPRING	4					
901	OEBM10	BOLT;EYE	2					
953	PSSSM1635	SCREW;SET	2					
954	2953801768	SCREW;SET	2					
*	401-00225AKT	SEAL KIT;MAIN PUMP	1		1001~2835			
*	401107-00478	SEAL KIT;MAIN PUMP	1		2836~			

Fig. 4100 MAIN PUMP

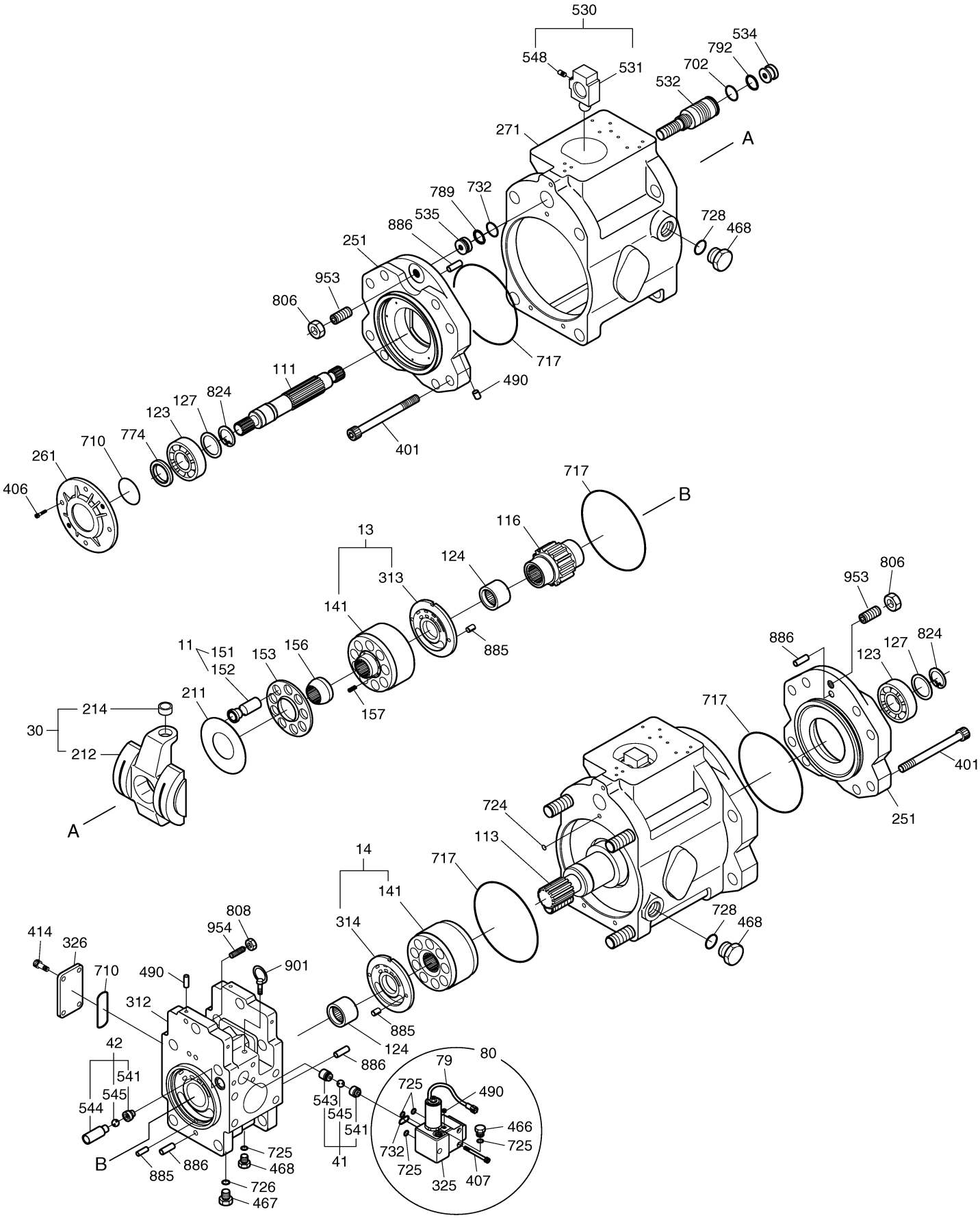

Fig. 4110 REGULATOR

Key No	Part No	Description	Qty	S.C	Serial No	ICA	Replacable	Qty
-	293S-9N01	REGULATOR ASS'Y	1					
412	OSBM850	BOLT;SOCKET	2					
413	OSBM870	BOLT;SOCKET	2					
436	OSBM630	BOLT;SOCKET	2					
438	OSBM620	BOLT;SOCKET	10					
496	PBP116-2403	PLUG	5					
601	2923801016	CASING	1	D				
611	2925170-0043	LEVER;FEEDBACK	1	D				
612	2953801683	LEVER(1)	1	D				
613	2953801684	LEVER(2)	1	D				
614	2953801685	PLUG;CENTER	1	D				
615	2953801686	PLUG;ADJUST	1	D				
621	2953801931	PISTON;COMPENSATOR	1	D				
622	2943800524	CASE;PISTON	1	D				
623	2953801689	ROD;COMPENSATOR	1	D				
624	2953801690	SEAT;SPRING	1	D				
625	2953801691	SPRING;OUTER	1	D				
626	2953801692	SPRING;INNER	1	D				
627	2953801693	STEM;ADJUST(C)	1	D				
628	2953801694	SCREW;ADJUST(C)	1	D				
629	2943800443	COVER(C)	1	D				
630	2953801695	NUT;LOCK	1	D				
631	2953802071	SLEEVE	1	D				
641	2943800532	COVER;PILOT	1	D				
643	2953801698	PISTON;PILOT	1	D				
644	2953801699	SEAT;SPRING	1	D				
645	2953801700-4	STEM;ADJUST(Q)	1	D				
646	2953801835	SPRING;PILOT	1	D				
651	2943800521	SLEEVE	1	D				
652	2953801706	SPOOL	1	D				
653	2953801707	SEAT;SPRING	1	D				
654	2953801746	SPRING;RETURN	1	D				
655	2953801709	SPRING;SET	1	D				
656	2953802034	COVER;BLOCK	1	D				
708	OORBG75	O-RING G75	1	K				
722	OORBP6	O-RING	3	K				

Key No	Part No	Description	Qty	S.C	Serial No	ICA	Replacable	Qty
724	OORBP8	O-RING	9	K				
725	OORBP10	O-RING P10	1	K				
728	OORBP18	O-RING	1	K				
730	OORBP22	O-RING	1	K				
732	OORBP16	O-RING P16	2	K				
733	OORBP20	O-RING	1	K				
734	OORBG25	O-RING	1	K				
735	OORBP1250	O-RING	1	K				
755	OORBP11	O-RING	2	K				
756	OORBP26	O-RING	1	K				
763	OORBG35	O-RING	1	K				
801	ORNM8	NUT	2					
814	OSR10	RING;SNAP	1					
836	PWR20	RING;SNAP	1	D				
858	ORR15	RING;SNAP	2					
874	PJR411	PIN	1	D				
875	PJR408	PIN	2	D				
876	PJR508	PIN	2	D				
887	2953801817	PIN	1	D				
897	PJR519	PIN	1	D				
898	PJR411	PIN	1	D				
924	PSSSM820	SCREW;SET	1					
925	2903300-0046	SCREW;ADJUST(QI)	1	D				
*	401-00225AKT	SEAL KIT;MAIN PUMP	1		1001~2835			
*	401107-00478	SEAL KIT;MAIN PUMP	1		2836~			

Fig. 4110 REGULATOR

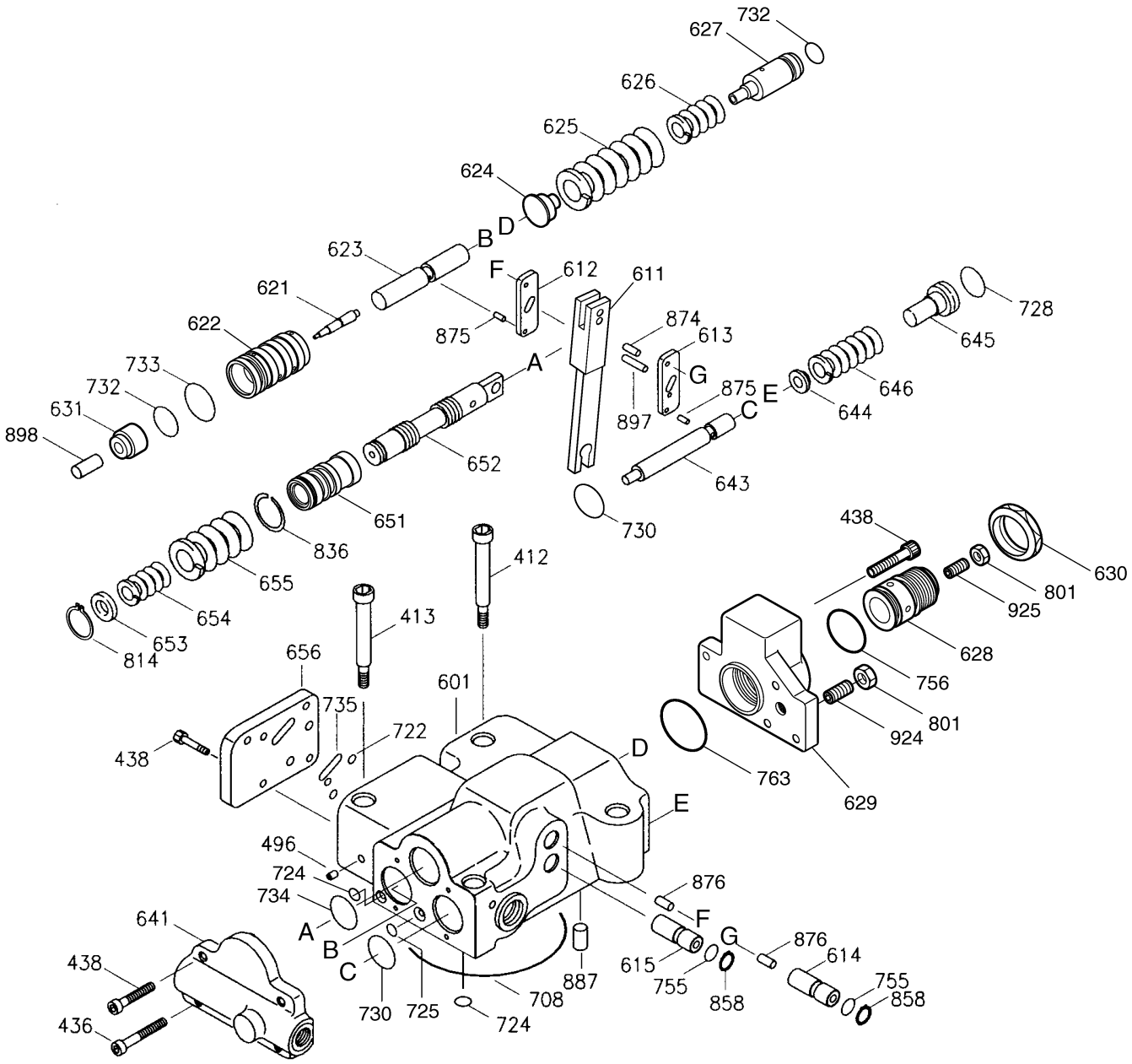

DOOSAN Doosan Infracore

Fig. 4120 GEAR PUMP

Key No	Part No	Description	Qty	S.C	Serial No	ICA	Replacable	Qty
-	2902440-1518A	PUMP;GEAR	1					
307	2903610-0266	POPPET	1	D				
308	2903270-0338	SEAT	1	D				
309	2926650-0015	RING	1					
310	VZ50103569	SPRING	1		1001~2578			
310	2903340-1938	SPRING	1		2579~			
311	2903300-0054	SCREW;ADJUST	1					
312	2903480-0032	NUT;LOCK	1					
351	2923170-0066	CASE;GEAR	1	D				
353	2954210-0003	GEAR;DRIVE	1	D				
354	2954210-0004	GEAR;DRIVEN	1	D				
355	2902370-0005	FILTER	1					
361	2923150-0149	CASE;FRONT	1	D				
433	PFSBM850	SOCKET;FLANGE	2					
434	PFSBM865	SOCKET;FLANGE	2					
435	PFSBM820	SOCKET;FLANGE	4					
466	OVP14	PLUG	1					
700	2903385-0023	RING	1	K				
710	OORBG95	O-RING	1	K				
725	OORBP11	O-RING	1	K				
732	OORBP16	O-RING P16	1	K				
850	ORR18	RING;SNAP	1					
887	PJR519	PIN	2		4217~			
*	719212KT	SEAL KIT;GEAR PUMP	1					

Fig. 4120 GEAR PUMP

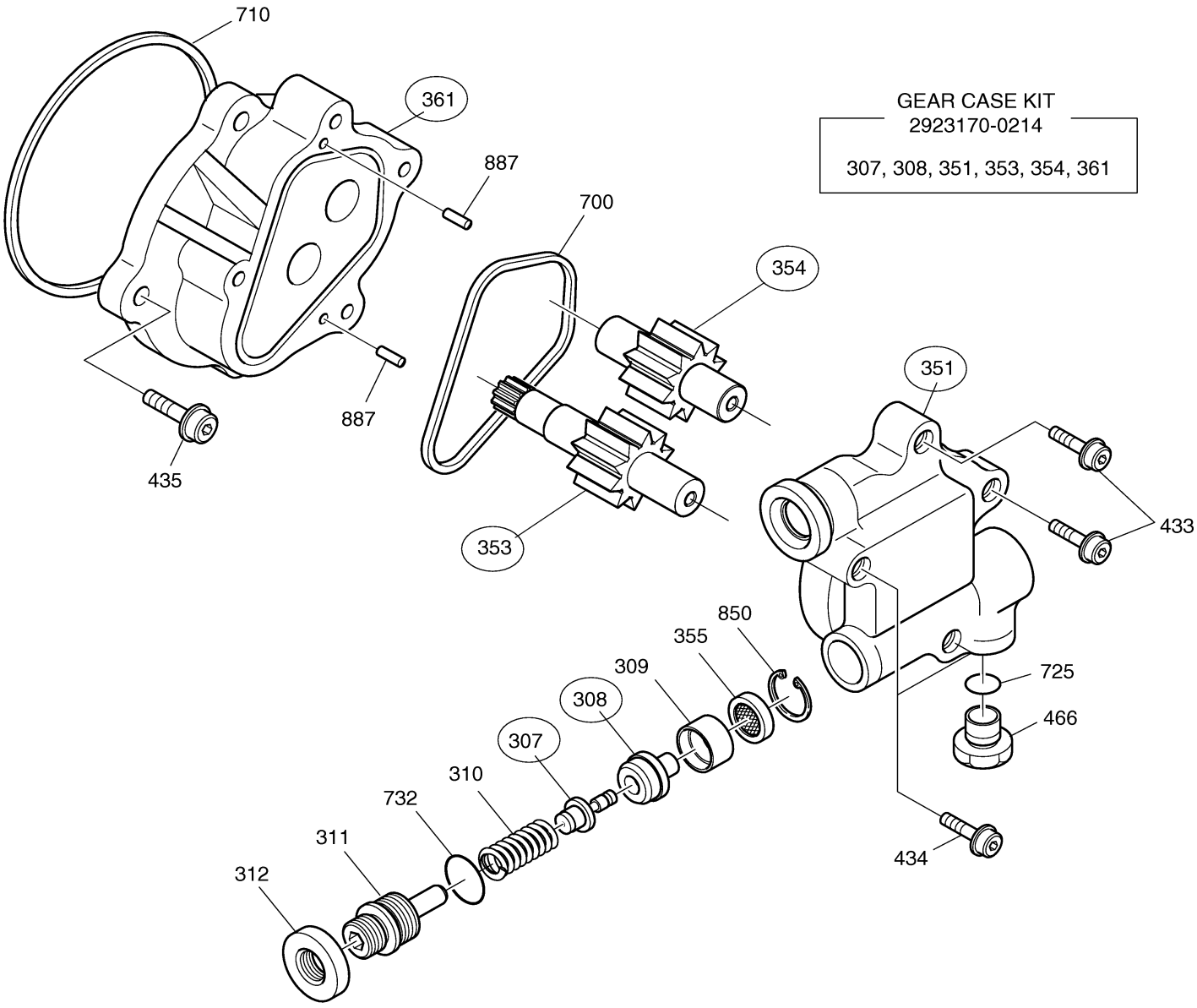

Fig. 4130 SWING MOTOR [1001 ~ 3554]

Key No	Part No	Description	Qty	S.C	Serial No	ICA	Replacable	Qty
-	401-00230	MOTOR;SWING	1		1001~3554	I	401-00457B	1
1	0809-193	RING;SNAP	1					
2	1399-206	RING;INNER	1					
3	0722-142	SEAL;OIL	1	K				
4	0671-133	BEARING;TAPERD ROLLER	1					
5	1399-234	COLLAR	1					
6	1390-164	SPRING;BACKING	1					
7	1398-159	PLATE;CAM	1					
8	1398-160	PLATE;RETURN	1					
9	1321-231	PISTON ASS'Y	9	D				
10	7598-036	PLATE;LINING	4					
11	7598-035	PLATE	4					
12	0200-153	O-RING	1	K				
13	1320-142	PISTON	1					
14	0200-154	O-RING	2	K				
15	1390-166	SPRING	18					
16	1391-145	BUSH	4					
17	0719-107	RING;TEFLON	4					
18	1390-205	SCROWAVE	4					
19	1303-340	COVER	1	D				
20	8202-009	O-RING	2	K				
21	0824-051	CAP	2					
22	0522-143	PIN;PARALLEL	2					
23	1320-171	PISTON	2					
24	1313-204	PLATE;BALANCE	1					
25	0682-137	BEARING;NEEDLE	1					
26	0809-194	RING;SNAP	1					
27	1318-201	CYLINDER	1	D				
28	1311-337	HOUSING	1	D				
29	8320-003	PLUG PT1/2	1					
30	3537-252	BYPASS VALVE ASS'Y	2					
31	0859-320	RING;BACK-UP	2	K				
32	8202-014	O-RING	3	K				
33	8202-010	O-RING	2	K				
34	8202-021	O-RING	2	K				
35	0859-229	RING;BACK UP	2	K				

Key No	Part No	Description	Qty	S.C	Serial No	ICA	Replacable	Qty
36	3513-154	CHECK	2					
37	3590-288	SPRING	2					
38	3526-327	CAP	2					
39	1329-118	VALVE;TIME DELAY	1					
40	0576-054	BOLT;SOCKET	3					
41	0200-010	O-RING	1	K				
42	0200-049	O-RING	2	K				
43	0824-053	CAP	1					
44	0207-002	O-RING	2	K				
45	3537-530	RELIEF ASS'Y	2					
46	8072-158	BOLT;HEX M20X60	4					
*	2401-9118K	SEAL KIT;SWING MOTOR	1					

Fig. 4130 SWING MOTOR [1001 ~ 3554]

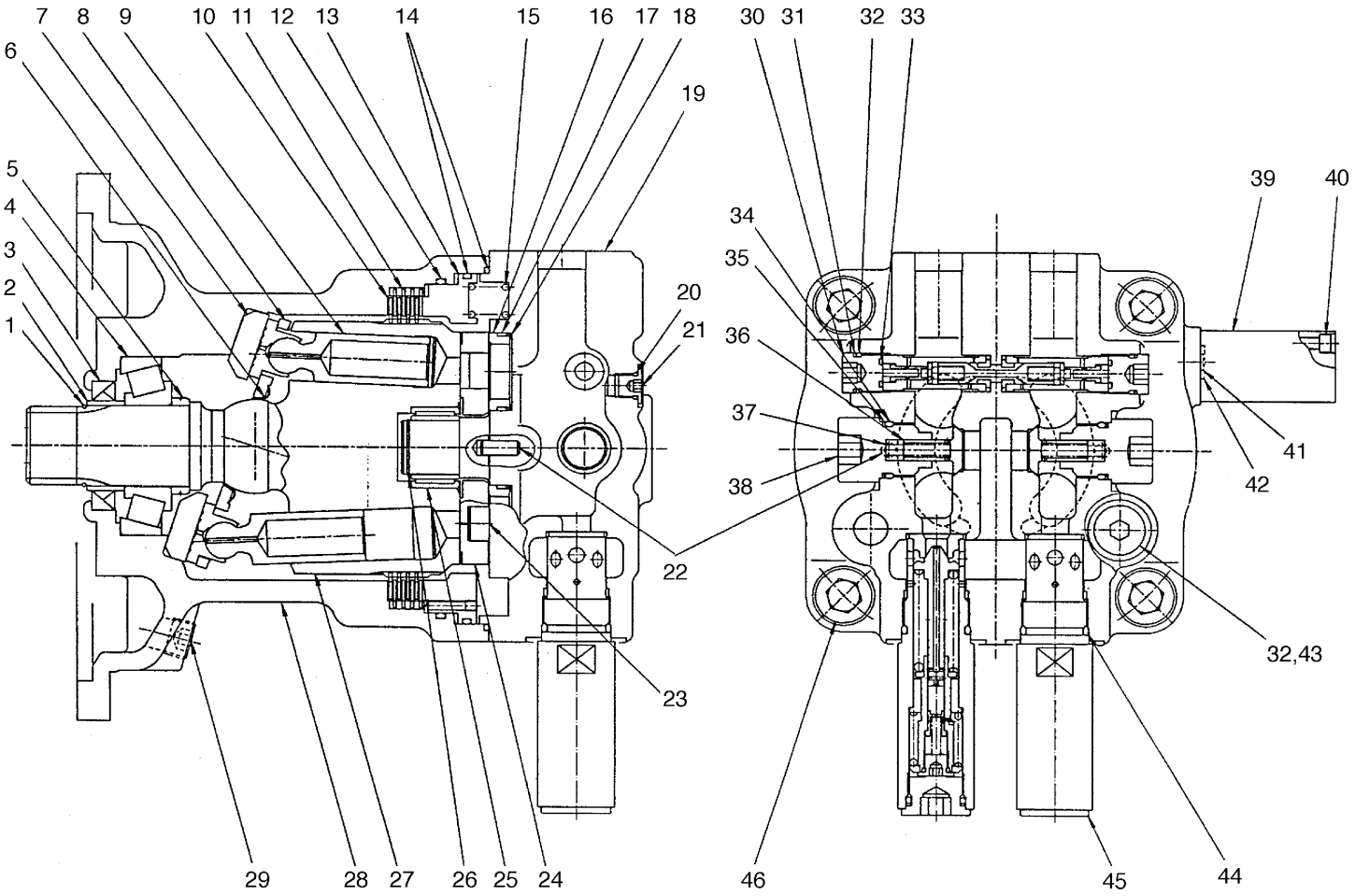

Fig. 4131 SWING MOTOR [3555 ~]

Key No	Part No	Description	Qty	S.C	Serial No	ICA	Replacable	Qty
-	401-00457B	MOTOR,SWING	1					
1	K9000949	BODY	1	D				
2	K9000403	SEAL;OIL	1	K				
3	K9000924	BEARING;ROLLER	1					
4	S6510850	RING;LOCK	1					
5	K9000925	SHAFT	1					
6	K9000926	PIN;PARALLEL	1					
7	K9000927	RING;STOP	1					
8	K9000928	PLATE;SHOE	1					
9	K9000929	KIT;ROTARY	1					
9A	K9000930	CYLINDER BLOCK KIT	1					
9Aa	K9000931	BLOCK;CYLINDER	1	D				
9Ab	K9000932	PLATE;VALVE	1	D				
9B	1.131-00070	SPRING	9					
9C	K9000933	KIT;RETAINER	1					
9Ca	K9000934	GUIDE;BALL	1	D				
9Cb	K9000935	PLATE;SET	1	D				
9D	K9000936	PISTON KIT	1					
14	K9000937	PLATE;FRICTION	3					
15	K9000938	PLATE	3					
16	K9000939	PISTON;BRAKE	1					
17	2180-1216D155	O-RING	2	K				
18	K9000940	SPRING	18					
19	K9000941	COVER	1					
20	2.109-00176	BEARING;NEEDLE	1					
21	S5711031	PIN;PARALLEL	2					
23	S2227661	BOLT	2	D				
24	1.426-00010	POPPET	2					
25	1.131-00072	SPRING	2					
26	1.181-00103	PLUG;DRAIN	2					
27	S8000291	O-RING	2	K				
28	K9000942	VALVE;SWING REACTIONLESS	2					
29	K9000943	PLUG	2					
30	S8000121	O-RING	2	K				
31	S8000181	O-RING	2	K				
32	K9000944	RING;BACK UP	2	K				

Key No	Part No	Description	Qty	S.C	Serial No	ICA	Replacable	Qty
33	K9000945	RELIEF VALVE ASS`Y	2					
33A	S8000311	O-RING	1	K				
33B	S8060310	RING;BACK-UP	1	K				
33C	S8000261	O-RING	1	K				
33D	S8000241	O-RING	1	K				
33E	S8060240	RING;BACK-UP	1	K				
34	K9000946	TIME DELAY VALVE ASS`Y	1					
34A	S8000071	O-RING	1	K				
34B	S8000151	O-RING	2	K				
35	S2206161	BOLT;SOCKET	3					
36	420-00112	PLUG	3					
37	S8000111	O-RING	3	K				
38	2180-1216D154	O-RING	1	K				
39	K9000948	BUSHING	1					
*	K9000947	KIT;SEAL	1					

Fig. 4131 SWING MOTOR [3555 ~]

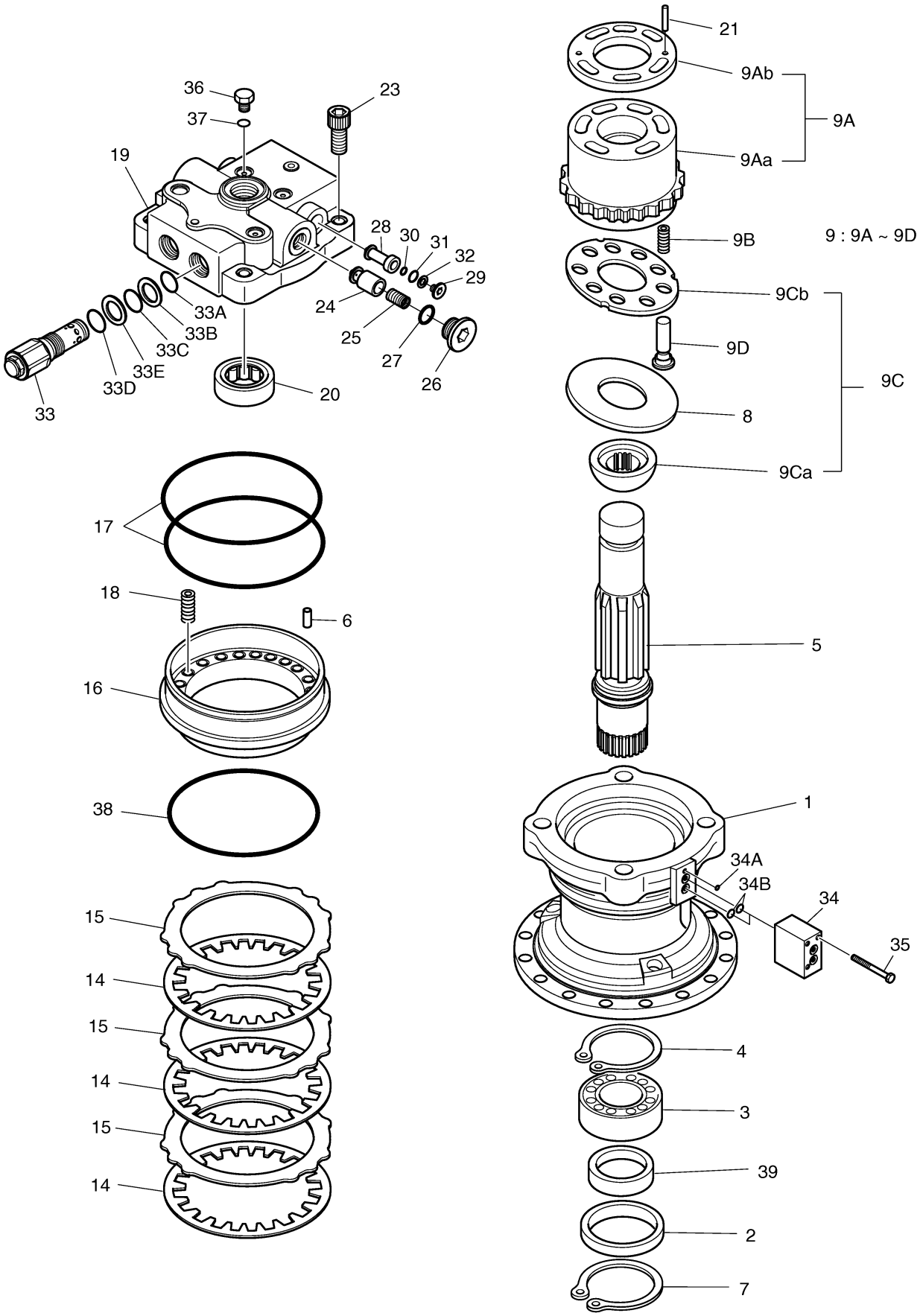

DOOSAN Doosan Infracore

Fig. 4140 SWING REDUCTION GEAR [1001

Key No	Part No	Description	Qty	S.C	Serial No	ICA	Replacable	Qty
-	401-00224B	SWING DEVICE	1		1001~1170	I	401-00224C	1
-	404-00089B	REDUCTION GEAR;SWING	1					
1	DS-32-01	SHAFT	1					
2	DS-105-02	CASE;GEAR	1					
3	DS-32-03	CARRIER NO.2	1					
4	DS-32-04	GEAR;SUN NO.2	1					
5	DS-32-05	GEAR;PLANETARY NO.2	4					
6	DS-32-06	PLATE;SIDE NO.2	4					
7	DS-32-07	SHAFT FOR PIN NO.2	4					
8	DS-32-08	BUSH NO.2	4					
9	DS-925-09	CARRIER NO.1	1					
10	DS-105-10	GEAR;SUN NO.1	1					
11	DS-925-11	GEAR;PLANETARY NO.1	4					
12	DS-32-12	PLATE;SIDE NO.1	4					
13	DS-32-13	PIN ASS'Y	4					
14	DS-32-14	GEAR;RING	1					
15	DS-32-15	PLATE;THRUST	1					
16	DS-105-16	COVER	1					
17	DS-32-17	PIN;LOCK	4					
18	DS-32-18	SPACER	1					
19	DS-32-19	COLLAR	1					
20	DS-32-20	PLATE	1					
21	DS-32-21	RING;LOCK	1					
22	DS-32-22	BEARING;SPHERICAL ROLLER	1					
23	DS-32-23	BEARING;SPHERICAL ROLLER	1					
24	DS-32-24	SEAL;OIL	1					
25	DS-32-25	PIN;SPRING	4					
26	DS-32-26	PLUG	1					
27	DS-32-27	PLUG	2					
28	DS-105-28	PINION;GEAR	1					
29	DS-32-29	BOLT;SOCKET M16X180	16					
30	DS-105-30	BOLT;HEX.	4					
31	DS-32-31	BAR;LEVEL	1					
32	DS-105-32	BOLT;SOCKET M12X35	16					
33	DS-105-33	COVER	1					
34	DS-105-34	RING;SNAP	1					

Key No	Part No	Description	Qty	S.C	Serial No	ICA	Replacable	Qty
35	DS-105-35	WIRE	1					

Fig. 4140 SWING REDUCTION GEAR [1001

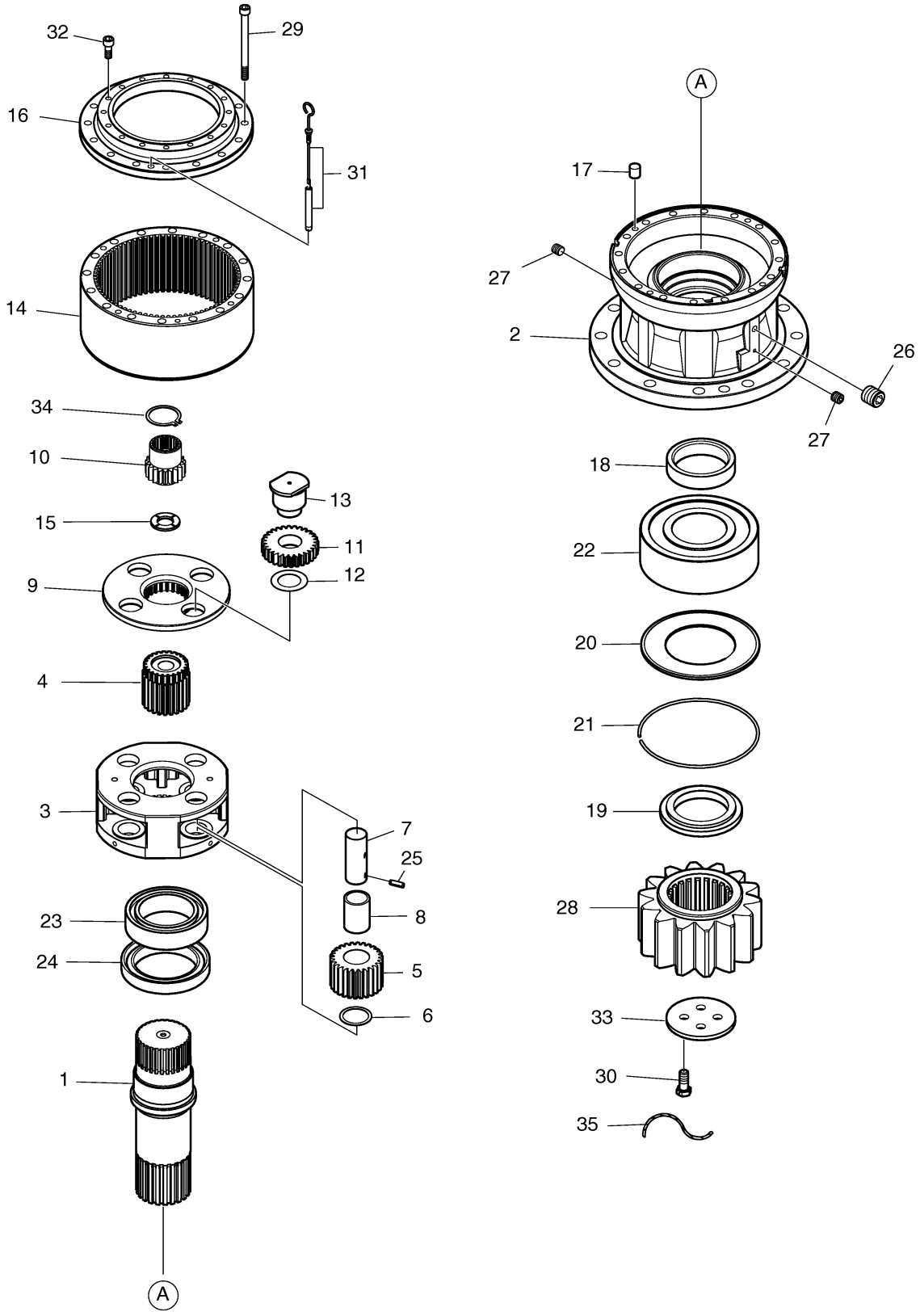

Fig. 4141 SWING REDUCTION GEAR [1171

Key No	Part No	Description	Qty	S.C	Serial No	ICA	Replacable	Qty
-	404-00096	REDUCTION GEAR;SWING	1		1171~2273	I	404-00096A	1
-	404-00096A	REDUCTION GEAR;SWING	1		2274~2755	I	404-00096B	1
-	404-00096B	REDUCTION GEAR;SWING	1		2756~4444	I	404-00096C	1
-	404-00096C	REDUCTION GEAR;SWING	1		4445~4628	I	404-00096E	1
-	404-00096E	REDUCTION GEAR;SWING	1		4629~			
1	105-00011	SHAFT	1		1171~4444	I	105-00011A	1
1	105-00011A	SHAFT	1		4445~			
2	245-00001	CASE;GEAR	1					
3	230-00059	CARRIER NO.2	1		1171~4628	I	230-00059A	1
3	230-00059A	CARRIER NO.2	1		4629~			
4	104-00045	GEAR;SUN NO.2	1					
5	104-00044	GEAR;PLANETARY NO.2	4					
6	223-00043	PLATE;SIDE NO.2	4					
7	123-00471	SHAFT FOR PIN NO.2	4					
8	110-00231	BUSH NO.2	4					
9	230-00058	CARRIER NO.1	1					
10	101-00024	GEAR;SUN NO.1	1					
11	104-00041	GEAR;PLANETARY NO.1	4					
12	223-00044	PLATE;SIDE NO.1	4					
13	123-00457	PIN ASS`Y	4					
14	104-00046	GEAR;RING	1					
15	223-00045	PLATE;THRUST	1					
17	705-00008	PIN;LOCK	4					
18	114-00543	SPACER	1					
19	114-00544	COLLAR	1					
20	159-00233	PLATE	1					
21	278-00090	RING;LOCK	1					
22	109-00168	BEARING;SPHERICAL ROLLER	1					
23	109-00169	BEARING;SPHERICAL ROLLER	1					
24	180-00444	SEAL;OIL	1		1171~2273	I	180-00472	1
24	180-00472	SEAL;OIL	1		2274~			
25	S5741361	PIN;SPRING	4					
26	2181-1116D4	PLUG	1					
27	S5810010	PLUG	2					
28	404-00092A	PINION;GEAR	1					
29	120-00298	BOLT;SOCKET M16X180	16					

Key No	Part No	Description	Qty	S.C	Serial No	ICA	Replacable	Qty
30	140-01343	PIPE	1		1171~2755	I	140-01343A	1
30	140-01343A	PIPE	1		2756~			
31	119-00020	BAR;LEVEL	1					
32	223-00046	PLATE;SIDE NO.3	4					
33	S6500400	RING,RETAINING	4					
34	2120-1363	BOLT	4					
35	2403-1046A	COVER	1					
36	2126-9001	WIRE	1					
37	S6500450	RING,SNAP	1					
38	403-00013	COVER	1					
39	120-00293	BOLT;SOCKET M16X40	16					
40	230-00066	CARRIER NO.1 ASS`Y	1					
41	230-00067	CARRIER NO.2 ASS`Y	1					

Fig. 4141 SWING REDUCTION GEAR [1171

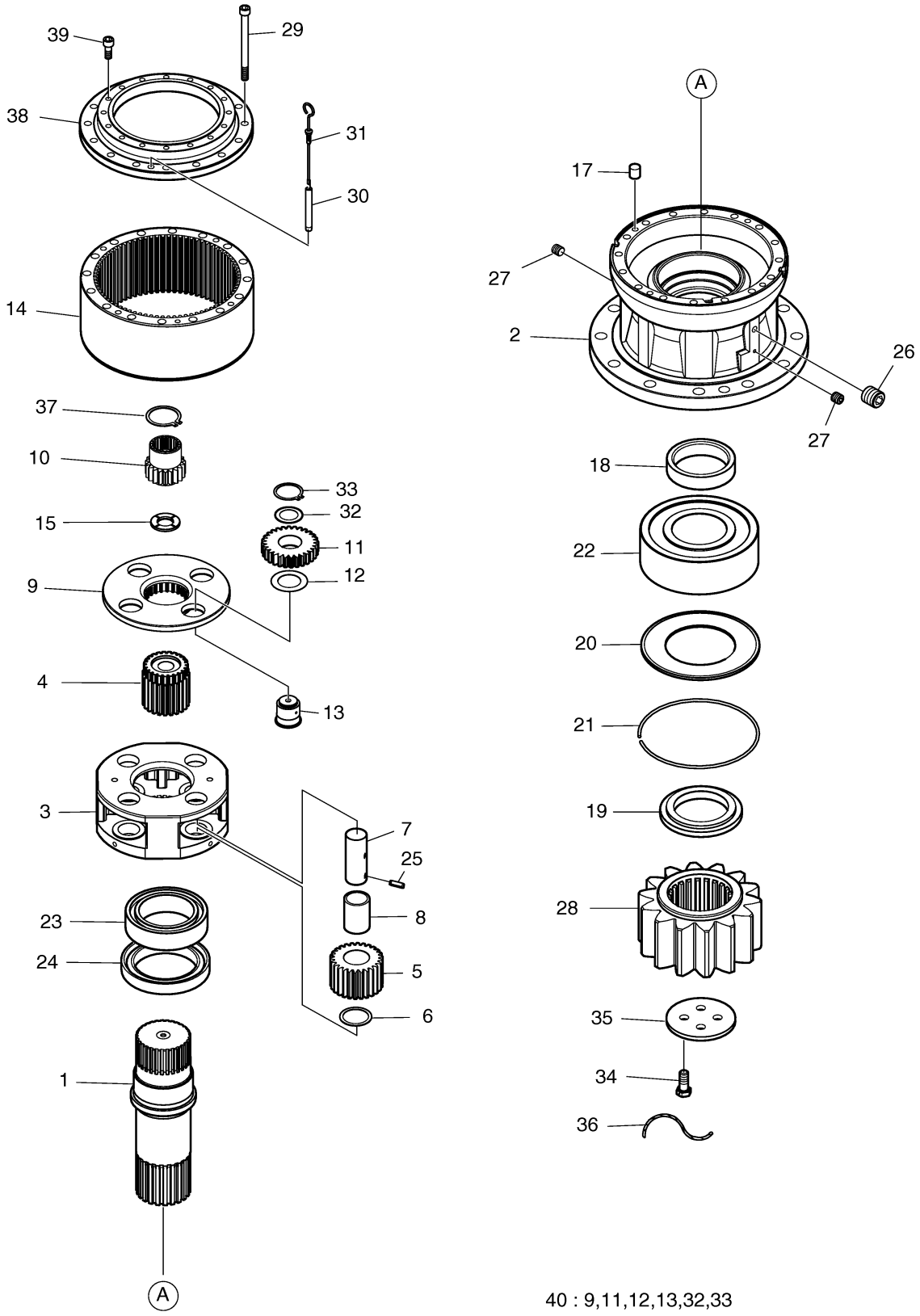

40 : 9,11,12,13,32,33
41 : 3,5,6,7,8,25

Fig. 4150 TRAVEL MOTOR-DTM174 [1001

Key No	Part No	Description	Qty	S.C	Serial No	ICA	Replacable	Qty
-	401-00329	TRAVEL DEVICE	2		1001~1875	I	401-00329A	2
-	401-00329A	TRAVEL DEVICE	2		1876~2376			
-	401-00328	TRAVEL MOTOR	1					
101	2405-1008A	SHAFT	1					
102	2109-8001	BEARING;ROLLER	1					
103	2109-8003	BEARING;NEEDLE	1					
106	2114-1598	BEARING;SPACER	1					
107	S6500500	RING,STOP	1					
108	S6500400	RING,RETAINING	1					
111	2410-1015B	BLOCK;CYLINDER	1					
114	2129-1315	SPRING;CYLINDER	9					
116	2114-1599A	SPACER	1					
121	2409-1021D	PISTON & SHOE ASS`Y	1					
122	2408-1039B	BUSH & PUSH PLATE ASS`Y	1					
131	2420-1087B	VALVE PLATE	1					
201	2412-1030B	SWASH ASS`Y	1					
272	2402-1028J	SHAFT CASING	1					
303	2402-1035G	CASING;VALVE	1					
304	2403-1045	COVER;SEAL	1					
350	2420-1081D	RELIEF VALVE ASS`Y	2					
361	424-00146	SPOOL;C.B. VALVE	1					
362	2129-1321	SPRING;CYLINDER	2					
363	2415-1009D1	SCREW;ORIFICE	2					
364	2416-1013C	DAMPING CHECK ASS`Y	2					
365	2430-1017B	CAP;C.B. V/V (L)	1					
366	2430-1016B	CAP;C.B. V/V (R)	1					
367	S2212271	BOLT;SOCKET M10X30	4					
368	S2215271	BOLT;SOCKET	8					
369	S8000451	O-RING 1B P45	2	K				
381	2424-1042F	PLUNGER;C.B V/V	2					
382	2416-1012D	STOPPER;CHECK	2					
383	S8060181	RING,BACKUP	2	K				
384	2129-1322A	SPRING;CHECK	2					
401	S2221661	BOLT;SOCKET M16X50	8					
402	S2223061	BOLT;SOCKET M16X120	4					
435	S6510850	RING;LOCK	1					

Key No	Part No	Description	Qty	S.C	Serial No	ICA	Replacable	Qty
451	2123-1708D3A	PIN;VALVE PLATE	2					
452	2123-1708D1A	PIN;SUPPORT	2					
461	2181-1854	PLUG	5					
464	2181-1896D4	PLUG	2					
471	S8010751	O-RING	1	K				
472	2180-8003B	O-RING	1	K				
485	S8000181	O-RING	4	K				
491	2180-8002A	SEAL,OIL	1	K				
501	2409-1024C	PISTON;SWASH	1					
502	2409-1057	PISTON;SWASH	1					
503	2416-1007A	STOPPER(L)	1					
504	S8002731	O-RING	1	K				
505	2413-1001	ROD;SWASH	1					
506	2120-1427A	SCREW;LOCK	2					
507	S4010942	NUT;HEX M16	2					
508	S8002701	O-RING	1	K				
509	S8000161	O-RING	4	K				
512	S8060161	RING;BACK-UP	3	K				
513	S8062661	RING;BACK UP 1B P22A	2	K				
514	2416-1008A	STOPPER(S)	1					
531	2483-1017B	SPOOL;SWASH	1					
533	2129-1317	SPRING;SWASH	1					
534	S8000101	O-RING	3					
541	2316-1006A	SEAT	2					
542	2416-1009	STOPPER	2					
543	2148-1002	BALL	2					
545	2415-1009D4	SCREW;ORIFICE	1					
546	2415-1009D1	SCREW;ORIFICE	2					
567	2181-1896D2	PLUG	7					
568	S8000111	O-RING	7					
571	2426-1072	PLUG	1					
572	S8000141	O-RING	1					
702	2452-1003	PISTON;BRAKE	1					
705	2129-1318	SPRING;BRAKE	10					
707	2411-1011	RING;PISTON	1					
708	2411-1012	RING;PISTON	1					
709	2123-1708D2A	PIN;BRAKE	4					
741	2352-1004A	PLATE;SEPARATOR	1					

Key No	Part No	Description	Qty	S.C	Serial No	ICA	Replacable	Qty
742	2352-1006	PLATE;FRICTION	2					
*	2401-9140K	SEAL KIT;TRAVEL MOTOR	1					

Fig. 4150 TRAVEL MOTOR-DTM174 [1001

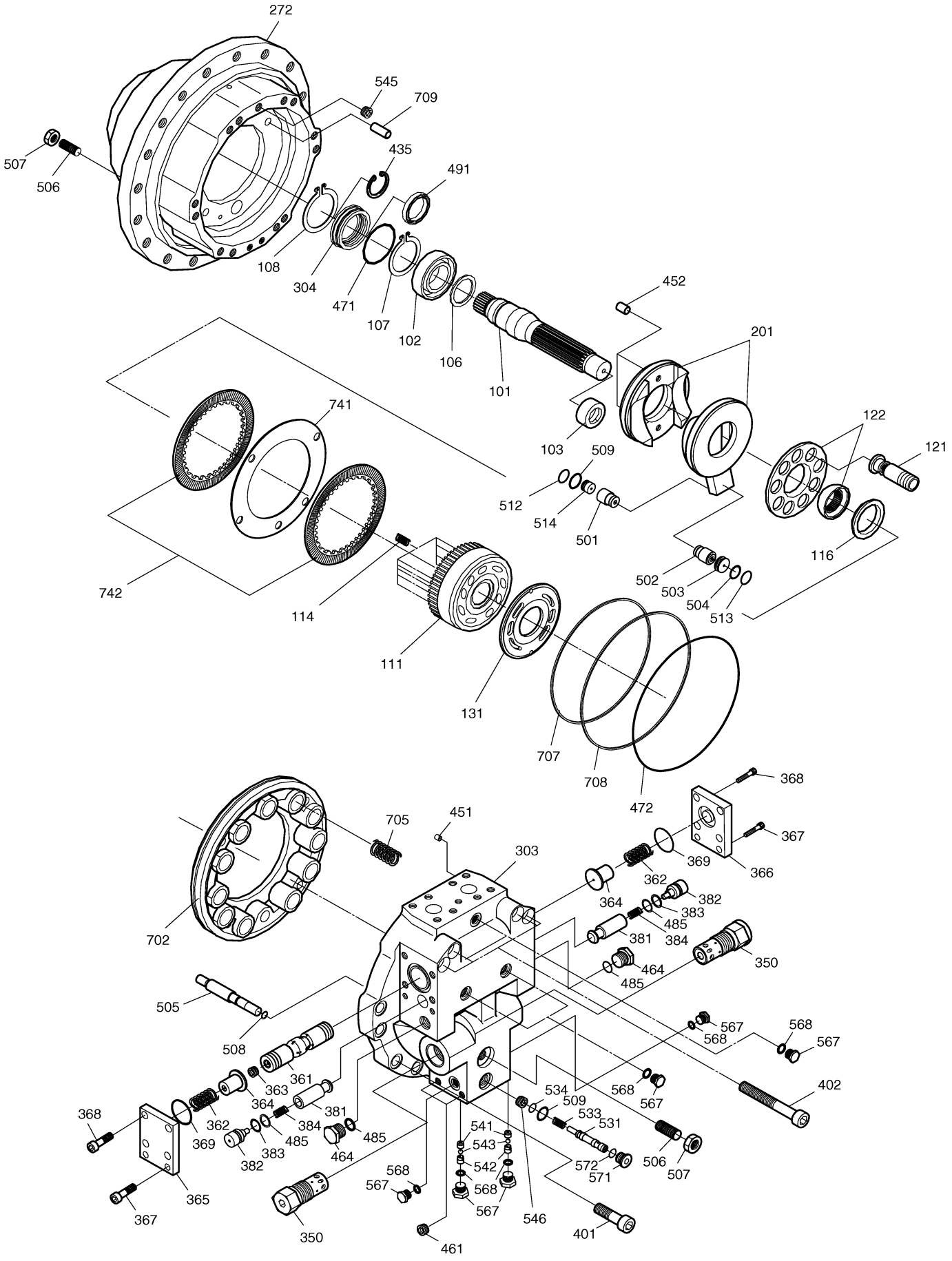

DOOSAN Doosan Infracore

Fig. 4151 TRAVEL MOTOR [2377 ~]

Key No	Part No	Description	Qty	S.C	Serial No	ICA	Replacable	Qty
-	K1001992	TRAVEL DEVICE	2		2377~3204	I	K1001992A	2
-	K1001992A	TRAVEL DEVICE	2		3205~3247	I	K1001992B	2
-	K1001992B	TRAVEL DEVICE	2		3248~3454	I	K1001992C	2
-	K1001992C	TRAVEL DEVICE	2		3455~			
-	401-00470	TRAVEL MOTOR	1		2377~3204	I	401-00470A	1
-	401-00470A	TRAVEL MOTOR	1		3205~			
101	405-00031	SHAFT	1					
102	2109-8001	BEARING;ROLLER	1					
103	2109-8003	BEARING;NEEDLE	1					
106	2114-1598	BEARING;SPACER	1					
107	S6500500	RING,STOP	1					
1	K9000781	ROTARY KIT	1					
1A	K9000782	CYLINDER BLOCK KIT	1					
1AA	2410-1015B	BLOCK;CYLINDER	1					
1AB	K9000783	PLATE;VALVE	1					
1B	2129-1315	SPRING;CYLINDER	9					
1C	2114-1599A	SPACER	1					
1D	K9000784	PISTON KIT	1					
1DA	2409-1021D	PISTON & SHOE ASS`Y	1					
1E	2408-1039B	BUSH & PUSH PLATE ASS`Y	1					
201	2412-1030B	SWASH ASS`Y	1					
272	402-00038	CASING;SHAFT	1					
303	2402-1035G	CASING;VALVE	1					
350	2420-1081D	RELIEF VALVE ASS`Y	2					
350A	S8000241	O-RING	1					
350B	S8010301	O-RING	1					
350C	S8090300	RING;BACK-UP T2 G30	1					
2	K9000785	SPOOL;C.B KIT	1					
2A	2424-1043F	SPOOL;C.B VALVE	1		2377~3204	I	424-00146A	1
2A	424-00146A	SPOOL;C.B VALVE	1		3205~			
2B	2415-1009D5	ORIFICE;SCREW	2		2377~3204	I	2415-1009D1	2
2B	2415-1009D1	SCREW;ORIFICE	2		3205~			
3	K9000786	DAMPING CHECK KIT	2					
3A	2129-1321	SPRING;CYLINDER	1					
3B	2416-1013C	DAMPING CHECK ASS`Y	1					
365	2430-1017B	CAP;C.B. V/V (L)	1					

Key No	Part No	Description	Qty	S.C	Serial No	ICA	Replacable	Qty
366	2430-1016B	CAP;C.B. V/V (R)	1					
367	S2212271	BOLT;SOCKET M10X30	4					
368	S2215271	BOLT;SOCKET	8					
369	S8000451	O-RING 1B P45	2	K				
381	2424-1042F	PLUNGER;C.B V/V	2					
382	2416-1012D	STOPPER;CHECK	2					
383	S8060181	RING,BACKUP	2	K				
384	2129-1322A	SPRING;CHECK	2					
401	S2221661	BOLT;SOCKET M16X50	8					
402	S2223061	BOLT;SOCKET M16X120	4					
435	S6510700	RING;SNAP	1					
451	2123-1708D3A	PIN;VALVE PLATE	2					
452	2123-1708D1A	PIN;SUPPORT	2					
461	2181-1854	PLUG	5					
464	2181-1896D4	PLUG	2					
472	2180-8003B	O-RING	1	K				
485	S8000181	O-RING	4	K				
491	180-00466	SEAL;OIL TCN AP2791 GO	1	K				
501	2409-1024C	PISTON;SWASH	1					
502	2409-1057	PISTON;SWASH	1					
503	2416-1007A	STOPPER(L)	1					
504	S8002731	O-RING	1	K				
505	2413-1001	ROD;SWASH	1					
506	2120-1427A	SCREW;LOCK	2					
507	S4010942	NUT;HEX M16	2					
508	S8002701	O-RING	1	K				
509	S8000161	O-RING	4	K				
512	S8060161	RING;BACK-UP	3	K				
513	S8062661	RING;BACK UP 1B P22A	2	K				
514	2416-1008A	STOPPER(S)	1					
531	2483-1017B	SPOOL;SWASH	1					
533	2129-1317	SPRING;SWASH	1					
541	2316-1006A	SEAT	2					
542	2416-1009	STOPPER	2					
543	2148-1002	BALL	2					
545	2415-1009D4	SCREW;ORIFICE	1					
546	2415-1009D1	SCREW;ORIFICE	2					
567	2181-1896D2	PLUG	7					

Key No	Part No	Description	Qty	S.C	Serial No	ICA	Replacable	Qty
568	S8000111	O-RING	7	K				
571	2426-1072	PLUG	1					
572	S8000141	O-RING	1	K				
702	2452-1003	PISTON;BRAKE	1					
705	2129-1318	SPRING;BRAKE	10					
4	K9000787	PISTON RING KIT	1					
4A	2411-1011	RING;PISTON	1					
4B	2411-1012	RING;PISTON	1					
709	2123-1708D2A	PIN;BRAKE	4					
741	2352-1004A	PLATE;SEPARATOR	1					
742	2352-1006	PLATE;FRICTION	2					
*	K9000780	SEAL KIT;TRAVEL	1					

Fig. 4151 TRAVEL MOTOR [2377 ~]

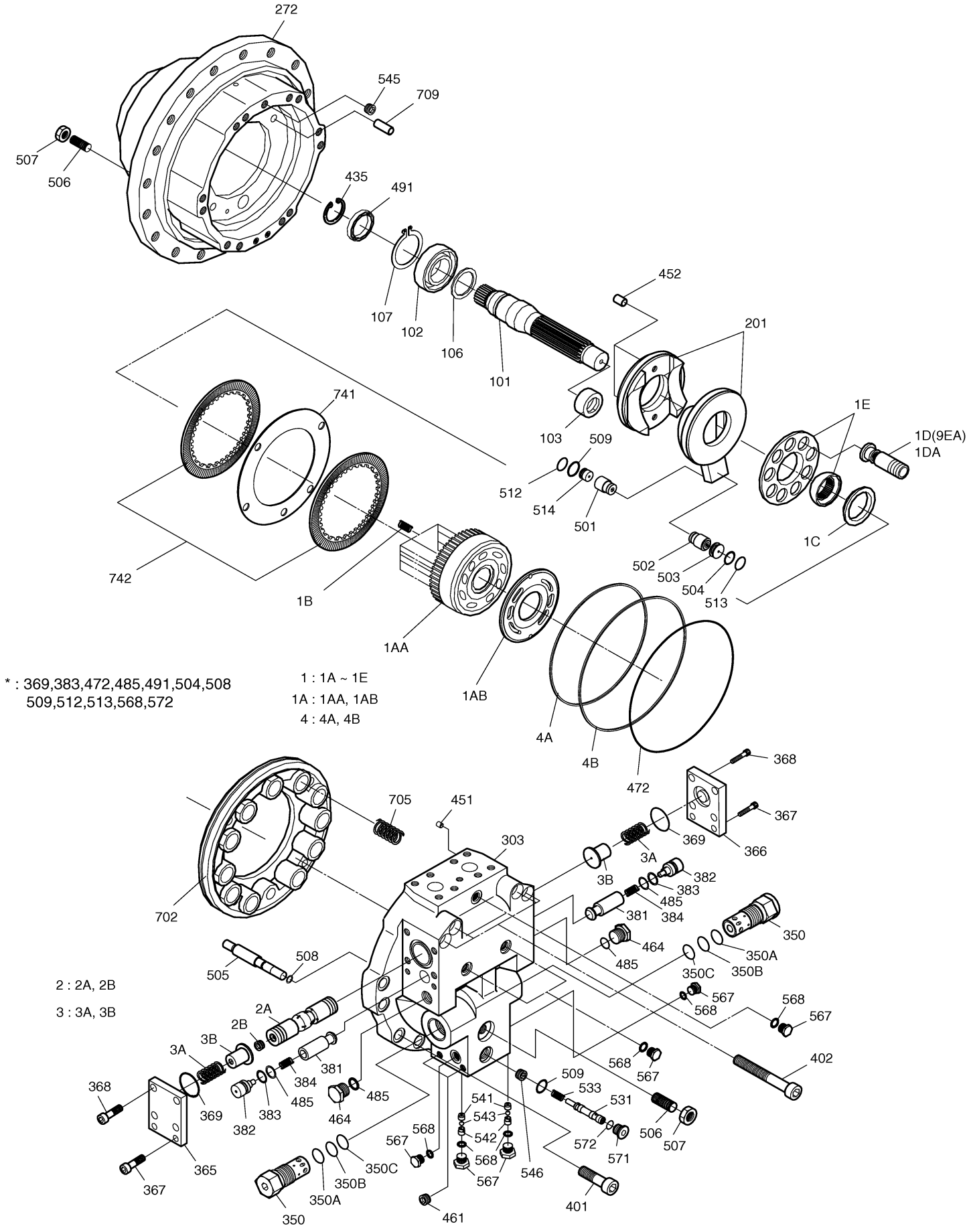

DOOSAN Doosan Infracore

Fig. 4160 TRAVEL REDUCTION

Key No	Part No	Description	Qty	S.C	Serial No	ICA	Replacable	Qty
-	401-00329	TRAVEL DEVICE	2		1001~1875	I	401-00329A	2
-	401-00329A	TRAVEL DEVICE	2		1876~			
-	2404-1068C	TRAVEL REDUCTION GEAR	1	D				
1	2402-1036I	HOUSING	1					
2	2403-1054G	COVER	1					
3	2104-1008I	RING GEAR No.1	1					
4	2104-1009G	RING GEAR No.2	1					
5	2101-1018A	GEAR;COUPLING	1					
6	2101-1019G	GEAR;CLUSTER	3					
7	2101-1020C	SUN GEAR	1					
8	2414-1007C	COUPLING	1					
9	2230-1022E	CARRIER	1					
10	2109-1043D1	BEARING;THRUST(T=5.0)	2					
10	2109-1043D2	BEARING;THRUST(T=5.5)	2					
11	2405-1010A	SHAFT	3					
12	2123-1801B	PIN	3					
13	2123-1802	PIN	9					
14	2144-1004C	THRUST PLATE	1					
15	2114-1647D1	SHIM 1.2t	1	R				
15	2114-1647D2	SHIM 1.4t	1	R				
15	2114-1647D3	SHIM 1.6t	1	R				
15	2114-1647D4	SHIM 1.8t	1	R				
15	2114-1647D5	SHIM 2.0t	1	R				
15	2114-1647D6	SHIM 2.3t	1	R				
15	2114-1647D7	SHIM 2.5t	1	R				
15	2114-1647D8	SHIM 2.8t	1	R				
16	2114-1648B	SPACER	3					
17	2109-1054	THRUST NEEDLE BEARING	6					
18	2109-9043	ANGULAR BEARING	2					
19	2180-9155	FLOATING SEAL	1					
20	2154-9005	NEEDLE ROLLER	166					
21	2115-9009B	SNAP RING	1					
22	2120-2155	BOLT;HEX.	8					
23	S1161971	BOLT	30					
24	2181-1116D4	PLUG	3					
26	2181-1854	PLUG	5					

Key No	Part No	Description	Qty	S.C	Serial No	ICA	Replacable	Qty
27	2161-2256A	STOPPER	4					
28	2114-1873	SPACER	16					
29	2114-1874	COLLAR	6					
30	2114-1875	THRUST WASHER	12					
31	S0112061	BOLT;HEX.	16					
32	2180-1286	O-RING	2					

Fig. 4160 TRAVEL REDUCTION

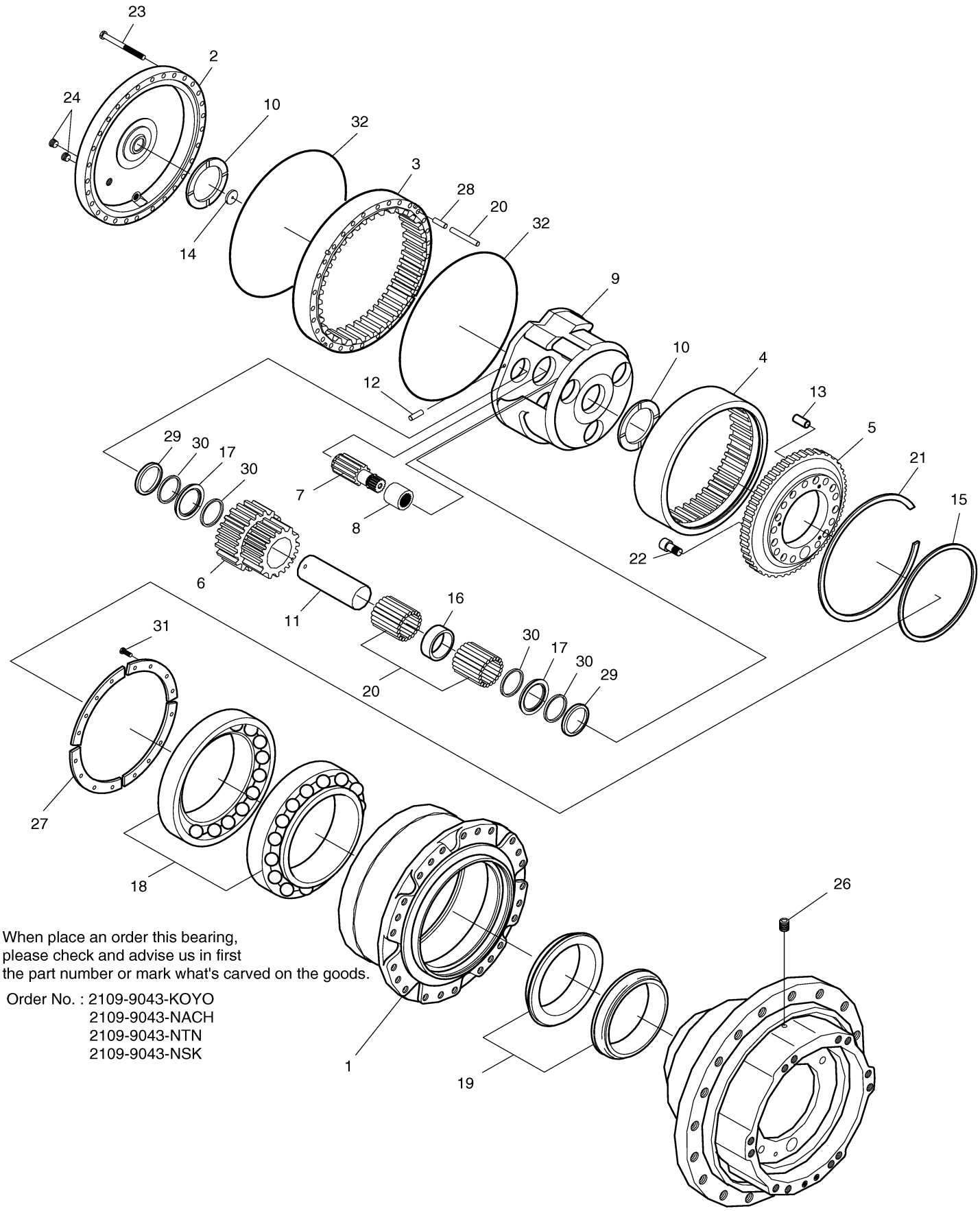

When place an order this bearing,
please check and advise us in first
the part number or mark what's carved on the goods.

Order No. : 2109-9043-KOYO
2109-9043-NACH
2109-9043-NTN
2109-9043-NSK

DOOSAN Doosan Infracore

Fig. 4161 TRAVEL REDUCTION GEAR [2377

Key No	Part No	Description	Qty	S.C	Serial No	ICA	Replacable	Qty
-	404-00100	TRAVEL REDUCTION GEAR	1	D	2377~3247			
-	404-00098B	TRAVEL REDUCTION GEAR	1	D	3248~3454			
-	404-00098C	TRAVEL REDUCTION GEAR	1	D	3455~			
2	K1000707	HOUSING	1		2377~3247			
2	K1000707A	HOUSING	1		3248~			
3	K9000789	STOPPER	1		2377~3247			
3	K9000789A	STOPPER	1		3248~			
4	K9000790	BEARING;GUIDE	1					
5	K1003029	KIT;CARRIER NO.3	1		2377~3454	I	K1003029A	1
5	K1003029A	KIT;CARRIER NO.3	1		3455~			
5A	K1000714	CARRIER NO.3	1		2377~3454			
5A	K9001290	CARRIER NO.3	1		3455~			
5B	K9000791	GEAR;PLANETARY NO.3	4					
5C	K9000792	WASHER;THRUST NO.3	8					
5D	K9000793	PIN NO.3	4		2377~3454			
5D	K9001291	PIN NO.3	4		3455~			
5E	K1000718	ROLLER;NEEDLE	72					
5G	S5740950	PIN;SPRING	4		2377~3454			
5G	S5741240	PIN;SPRING	4		3455~			
9	K9000794	GEAR;SUN NO.3	1					
10	K1003028	KIT;CARRIER NO.2	1					
10A	K1000713	CARRIER NO.2	1					
10B	K9000795	GEAR;PLANETARY NO.2	3					
10C	K9000796	WASHER;THRUST NO.2	6					
10D	K9000797	PIN NO.2	3					
10E	K1000719	ROLLER;NEEDLE	45					
10G	S5740650	PIN;SPRING M4X20	3		2377~3454			
10G	S5740900	PIN;SPRING	3		3455~			
14	K9000798	GEAR;SUN NO.2	1					
15	K1003027	KIT;CARRIER NO.1	1					
15A	K1000712	CARRIER NO.1	1					
15B	K9000799	GEAR;PLANETARY NO.1	3					
15C	K9000800	WASHER;THRUST NO.1	6					
15D	K9000801	PIN NO.1	3					
15E	K1000720	BEARING;NEEDLE ROLLER	3					
15G	S5740650	PIN;SPRING M4X20	3					

Key No	Part No	Description	Qty	S.C	Serial No	ICA	Replacable	Qty
19	K9000802	GEAR;SUN NO.1	1					
20	K9000803	PIN;DOWEL	4					
21	K9000804	GEAR;RING	1					
22	K9000805	WASHER;THRUST NO.4	1					
23	K1000716	COVER	1					
24	K9000806	GASKET	1					
27	K9000807	BUSHING;THRUST NO.3	1					
28	K9000808	BUSHING;THRUST NO.2	1					
29	K9000809	BUSHING;THRUST NO.1	1					
30	K9000810	BUSHING;THRUST NO.4(6.4t)	1					
31	K9000811	BUSHING;OIL	1					
32	K9000812	COUPLING	1					
33	K9000813	BEARING;ANGULAR	2					
35	2180-6059	SEAL;FLOATING	1					
36	S6501150	RING;SNAP	1					
37	S6501100	RING;SNAP	1					
39	V2180-1217D174	O-RING	1					
40	S2208961	BOLT;SOCKET M8X25	16		2377~3247			
40	S2212061	BOLT;SOCKET M10X1.5X25	32		3248~			
41	S2212061	BOLT;SOCKET M10X1.5X25	16		2377~3247			
42	S2219971	BOLT;SOCKET M14X115	24		2377~3247			
42	S2219661	BOLT;SOCKET M14X100	24		3248~			
43	S2215061	BOLT,SOCKET	17					
45	2181-1890D3	PLUG	3					
46	S8000141	O-RING	3					

Fig. 4161 TRAVEL REDUCTION GEAR [2377

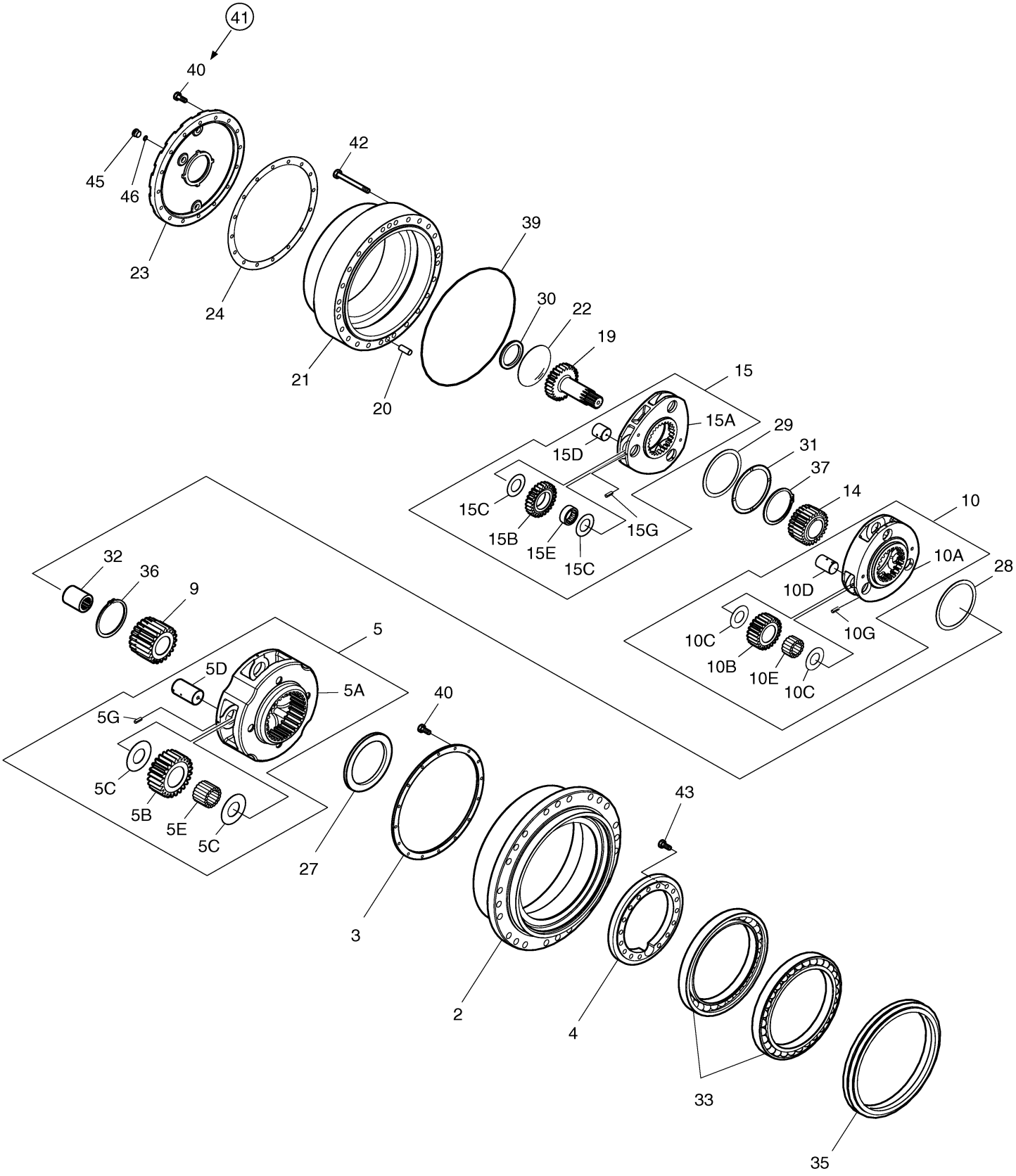

DOOSAN Doosan Infracore

Fig. 4170 CONTROL VALVE(1)

Key No	Part No	Description	Qty	S.C	Serial No	ICA	Replacable	Qty
-	420-00227	VALVE;CONTROL	1					
32	21111-54511	POPET	2					
33	21111-56508	SPRING	2					
57	T1311-14002	SPACER	1					
60	C0003-01208	PLUG ASS'Y	1					
61	21001-90347	PLUG	1					
62	95113-01400	O-RING	1	K				
68	C011B-50146	VALVE;MAIN RELIEF	1					
69	C011B-40377	VALVE;OVERLOAD RELIEF	6					
71	21003-00382	PLUG ASS'Y	1					
72	21003-00383	PLUG ASS`Y	9					
75	92703-10401	BOLT;SOCKET M10X40L	8					
77	92703-16131	BOLT;SOCKET M16X130L	8					
81	94341-16302	WASHER	8					
88	21001-91002	CAP	2					
89	95131-02400	O-RING	2	K				
90	21113-40308	PLUG ASS'Y	2					
92	21003-00393	PLUG ASS'Y	1					
93	21003-00205	PLUG ASS'Y	1					
*	420-00295KT	SEAL KIT;CONTROL VALVE	1					

Fig. 4170 CONTROL VALVE(1)

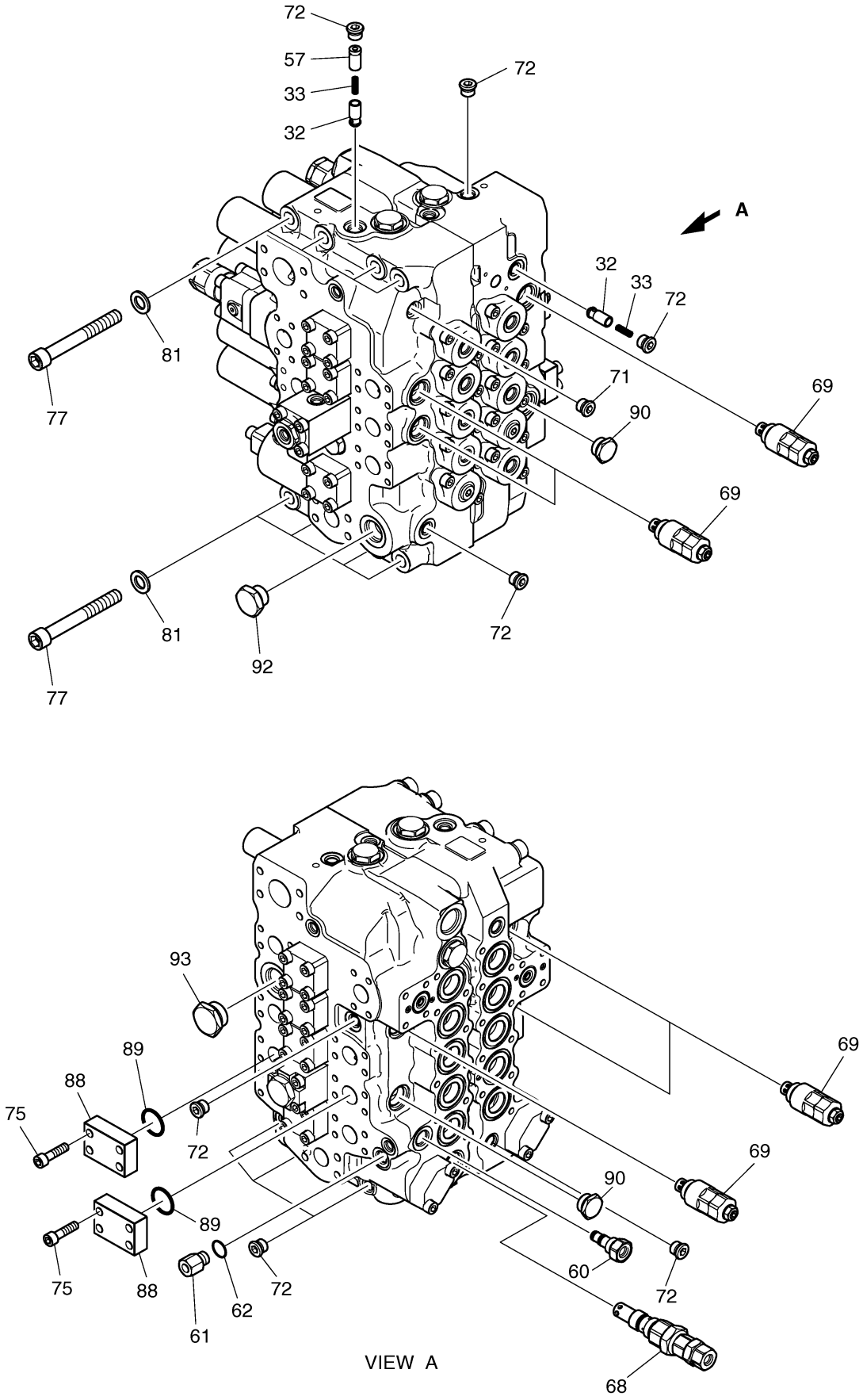

Fig. 4180 CONTROL VALVE(2)

Key No	Part No	Description	Qty	S.C	Serial No	ICA	Replacable	Qty
-	420-00227	VALVE;CONTROL	1					
1	C0151-55007	HOUSING;VALVE	1	D				
2	C011B-50233	SPOOL ASS'Y-ARM2	1					
3	C011B-50230	SPOOL ASS'Y-BOOM1	1					
4	C011B-50234	SPOOL ASS'Y-BUCKET	1					
5	C011B-50236	SPOOL ASS'Y-TRAVEL	2					
6	C011B-50237	SPOOL ASS'Y-T/S	1					
7	95123-04500	O-RING	20	K				
8	C0001-53009	CAP	10					
12	C0001-53005	CAP	10					
13	C0151-55008	HOUSING;VALVE	1	D				
14	C011B-50232	SPOOL ASS'Y-ARM1	1					
15	C011B-50231	SPOOL ASS'Y-BOOM2	1					
16	C011B-50235	SPOOL ASS'Y-SWING	1					
17	C0113-55214	SPOOL ASS'Y-OPTION	1					
50	96321-06350	BALL;STEEL	1	D				
62	95113-01400	O-RING	1	K				
63	T1172-01008	PLUG;ORIFICE	1					
65	T1515-22001	O-RING	14	K				
66	T1515-10001	O-RING	7	K				
70	C0003-50003	RELIFE VALVE ASS'Y	2					
72	21003-00383	PLUG ASS`Y	2					
74	92703-10281	BOLT;SOCKET M10X28L	40					
91	T1151-17504	PLUG	1					
105	21003-00202	PLUG ASS'Y	1					

Fig. 4180 CONTROL VALVE(2)

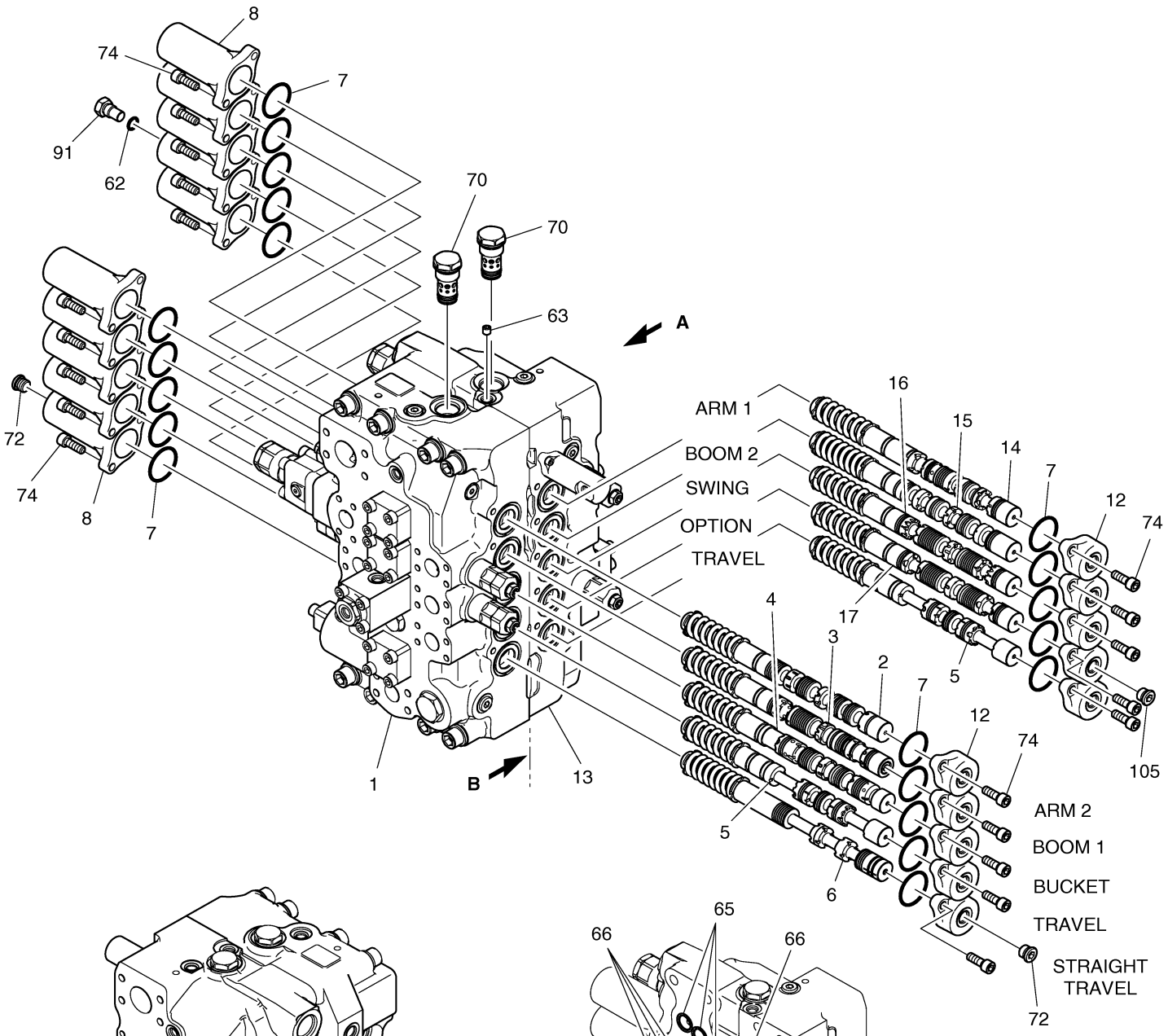

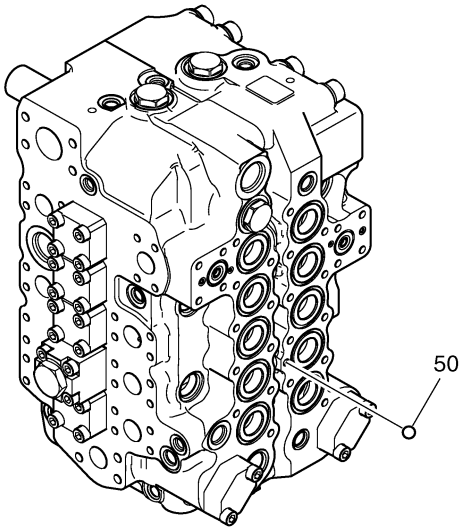

VIEW A

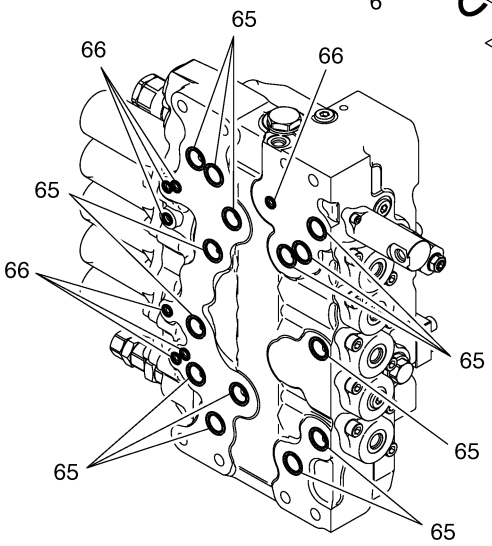

SECTION B

DOOSAN Doosan Infracore

Fig. 4190 CONTROL VALVE(3)

Key No	Part No	Description	Qty	S.C	Serial No	ICA	Replacable	Qty
-	420-00227	VALVE:CONTROL	1					
18	C0001-33015	CAP	1					
19	C0111-31287	SPOOL	1					
20	21111-30702	SEAT:SPRING	2					
21	T1461-19008	SPRING	1					
22	21011-30576	SPOOL END	1					
23	95111-02600	O-RING	1	K				
24A	C011B-50263	ARM REGEN ASS'Y	1					
24	T1152-27503	PLUG	1					
25	95113-02400	O-RING	1	K				
26	T1461-14002	SPRING	1					
27	C0112-51203	SPOOL	1	D				
28	-	SLEEVE	1	D				
29	-	PISTON	1	D				
30	95113-01600	O-RING	1	K				
31	95712-01600	RING:BACK-UP	2	K				
34	T1411-28001	POPET	7					
35	T1461-19007	SPRING	8					
36	95113-03200	O-RING	9	K				
37	T1631-00006	FLANGE	7					
38	21111-54501	POPET	2					
39	21111-56501	SPRING	2					
40	21113-50803	SPACER ASS'Y	2					
41	95113-00600	O-RING	2	K				
42	95113-00400	O-RING	2	K				
43	T1631-00007	FLANGE	1					
44	T1411-28003	POPET	1					
45	T1461-25001	SPRING	1					
46	21001-90227	PLUG	1					
47	21001-00036	O-RING	1	K				
48	21011-30644	SPRING	1					
49	T1411-19003	POPET	1					
51	T1411-28004	POPET	1					
52	T1631-00004	FLANGE	2					
53	T1311-46001	SPACER	2					
54	95121-02500	O-RING	2	K				

Key No	Part No	Description	Qty	S.C	Serial No	ICA	Replacable	Qty
55	95722-02500	RING;BACK-UP	2	K				
67	C0113-55501	ANTI-DRIFT VALVE ASS'Y	2					
73	92703-10551	BOLT;SOCKET M10X55L	4					
75	92703-10401	BOLT;SOCKET M10X40L	32					
76	92703-10701	BOLT;SOCKET M10X70L	8					
78	92703-06201	BOLT;SOCKET M6X20L	2					
92	21003-00393	PLUG ASS'Y	1					
94A	420-00309	BOOM PRIORITY VALVE	1					
94	21001-90364	PLUG	1					
95	21111-52233	PISTON	1					
96	C0001-57006	BODY	1	D				
97	21111-52232	PISTON	1					
98	21111-56525	SPRING	1					
99	T1331-28003	SLEEVE	1	D				
100	21113-50805	POPET ASS'Y	1					
102	21001-00213	O-RING	1	K				
103	95712-01200	RING;BACK-UP	1	K				
104	95113-01200	O-RING P12 HS90	1	K				
101	92703-10901	BOLT;SOCKET M10X90	4					

Fig. 4190 CONTROL VALVE(3)

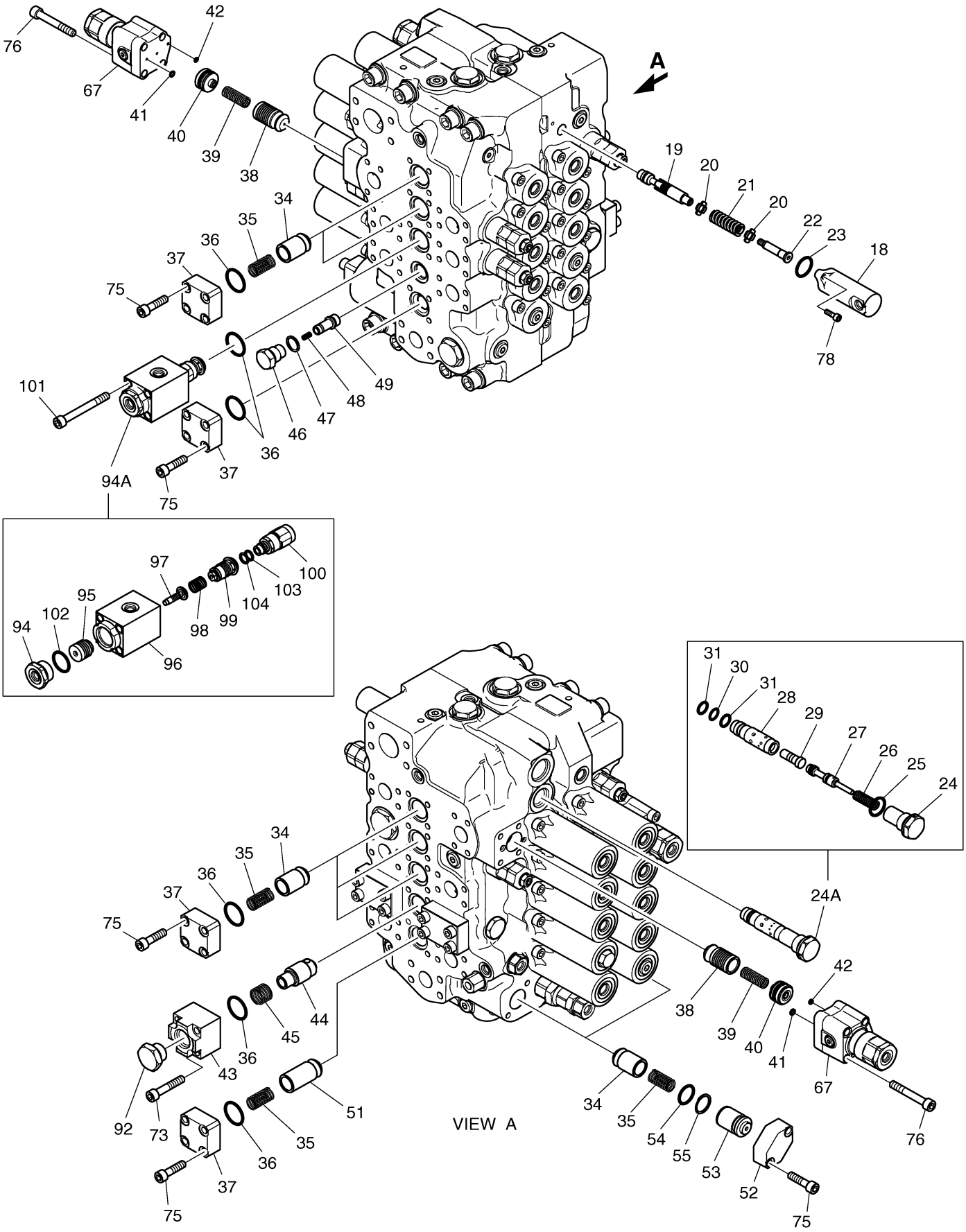

Fig. 4200 REMOTE CONTROL VALVE [1001

Key No	Part No	Description	Qty	S.C	Serial No	ICA	Replacable	Qty
-	420-00342A	REMOTE CONTROL VALVE(L.H)	1		1001~3728	I	420-00342B	1
-	420-00343A	REMOTE CONTROL VALVE(R.H)	1		1001~3728	I	420-00343B	1
1	JA1G1001	CASE	1					
2	WPT18	PLUG	1					
3	J95C1002	PLUG	1					
4	P0010A	O-RING	1					
5	P0014	O-RING	1					
6	J95C1003	SPOOL	4	D				
7	J95C1004	SHIM	4	D				
8	JA0D3001	SPRING(1.3)	2	D				
9	JA0D3002	SEAT;SPRING(1.3)	2	D				
10	J95C1007	SPRING	4					
11	JA0D3003	STOPPER	4	D				
12	J97A5011	STOPPER(1.3)	2	D				
13	JA0D3004	SPRING	4	D				
14	JA0D3005	ROD;PUSH	4	D				
15	JA0D3006	SPRING(2.4)	2	D				
16	JA0D3007	SEAT;SPRING(2.4)	2	D				
17	J97A5012	STOPPER(2.4)	2	D				
18	JA0D3008	PLUG	4	D				
19	P0020	O-RING	4	D				
20	RSY12	SEAL;ROD	4	D				
21	JA1G1002	PLATE	1					
22	J97A5018	BOOT	1					
23	J95C1012	JOINT ASS`Y	1					
24	JA1G1004	PLATE;SWASH	1					
25	J95C1014	NUT;HEX.	1					
26	JA1D2001	BAR;HANDLE	1	D				
27	HNM14	NUT;HEX.	1	D				
28	JA1D2002	BOOT	1					
29	SP0528	PIN;SPRING	1	D				
30	JA0E3026	HANDLE ASS'Y	1	D				
30	1.172-00016	HANDLE ASS'Y	1	D				
30A	1.161-00016	CAP;PEANUT	1					
30A	1.161-00021	CAP;PEANUT	1					
31	JA1G1003	BUSHING	1					

Key No	Part No	Description	Qty	S.C	Serial No	ICA	Replacable	Qty
32	-	TERMINAL	4	D				
33	-	WIRE;SEAL	4	D				
34	SWP4PT	HOUSING	1	D				
35	SWP4P	HOLDER;REAR	1	D				
36	JA0D3009	SPOOL KIT(1.3PORT)	2					
37	JA0D3010	PLUG KIT (1.3PORT)	2					
38	JA0D3011	SPOOL KIT(2.4PORT)	2					
39	JA0D3012	PLUG KIT (2.4PORT)	2					
40	JA1G1005	HANDLE KIT	1					
49	-	SWITCH	2	D				
50	K9001001	SWITCH ASS`Y	1					

Fig. 4200 REMOTE CONTROL VALVE [1001

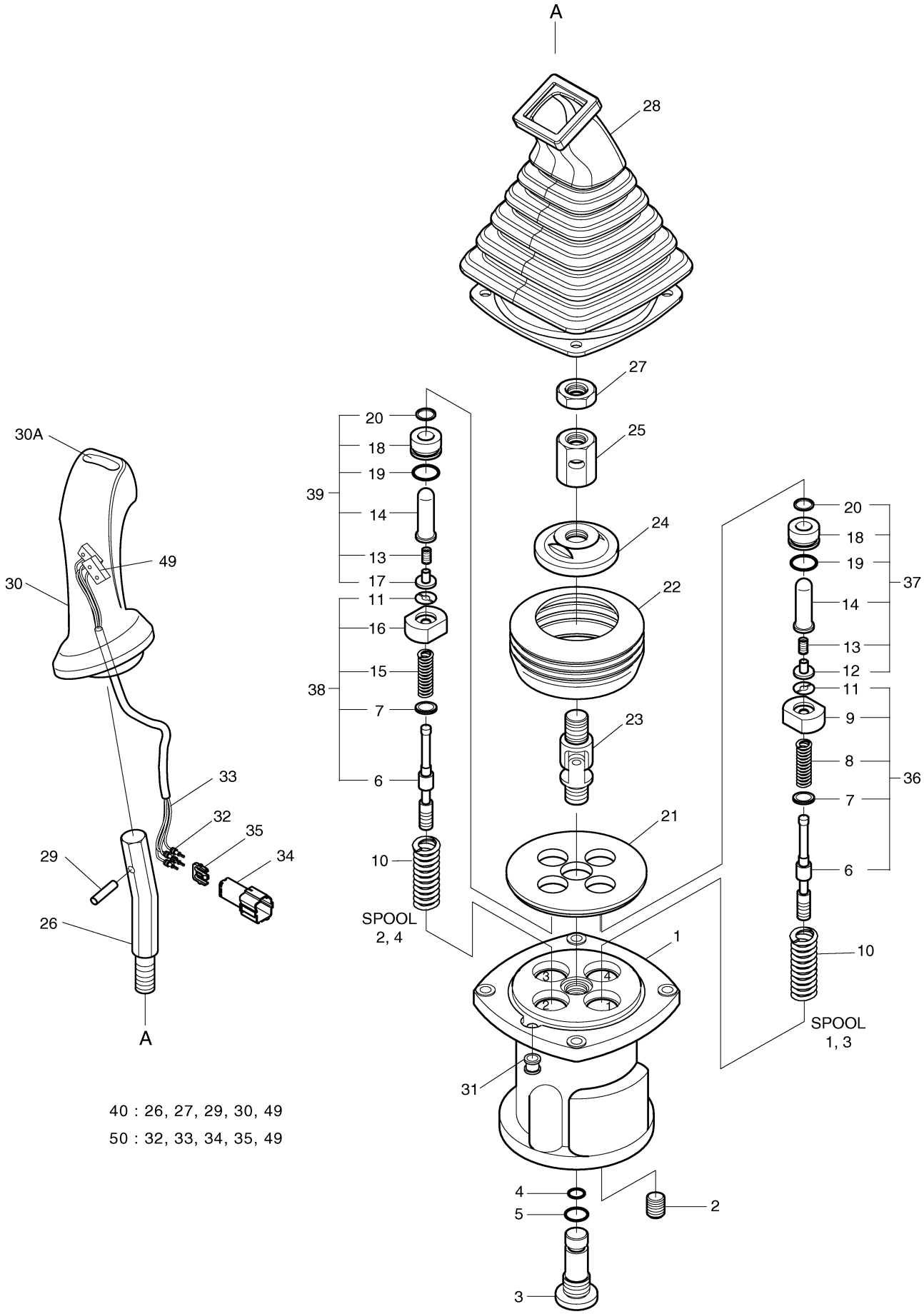

40 : 26, 27, 29, 30, 49

50 : 32, 33, 34, 35, 49

DOOSAN Doosan Infracore

Fig. 4201 REMOTE CONTROL VALVE [3729

Key No	Part No	Description	Qty	S.C	Serial No	ICA	Replacable	Qty
-	420-00342B	REMOTE CONTROL VALVE(L.H)	1		3729~			
-	420-00343B	REMOTE CONTROL VALVE(R.H)	1		3729~			
1	1.402-00001	CASE	1					
2	2181-1116D1	PLUG	1					
3	K9002911	PLUG	1					
4	S8002701	O-RING	1					
5	S8000141	O-RING	1					
6	1.424-00015	SPOOL	4	D				
7	1.114-00012	SHIM	4	D				
8	1.131-00093	SPRING(1.3)	2	D				
9	1.427-00021	SEAT;SPRING(1.3)	2	D				
10	1.131-00023	SPRING	4					
11	1.416-00006	STOPPER	4	D				
12	K9001120	STOPPER(1.3)	2	D				
13	1.131-00028	SPRING	4	D				
14	K9001122	ROD;PUSH	4	D				
15	1.131-00094	SPRING(2.4)	2	D				
16	1.427-00022	SEAT;SPRING(2.4)	2	D				
17	K9001125	STOPPER(2.4)	2	D				
18	-	PLUG	4	D				
19	S8000201	O-RING	4					
20	K9001127	SEAL;ROD	4					
21	1.412-00016	PLATE	1					
22	1.110-00168	BUSHING	1					
23	1.138-00004	JOINT ASSY	1					
24	1.412-00131	PLATE;SWASH	1					
25	1.121-00028	NUT	1					
26	1.178-00004	BAR;HANDLE	1					
27	S4012833	NUT	1					
28	1.160-00007	BOOT	1					
29	S5740800	PIN;SPRING	1					
30	K9001224	HANDLE ASS`Y(L.H)	1					
30	K9001225	HANDLE ASS`Y(R.H)	1					
30A	1.161-00016	CAP;PEANUT	1					
31	-	TERMINAL	4	D				
32	-	WIRE;SEAL	4	D				

Key No	Part No	Description	Qty	S.C	Serial No	ICA	Replacable	Qty
33	-	HOUSING	1	D				
34	-	HOLDER;REAR	1	D				
36	K9002914	SPOOL KIT(1.3PORT)	2					
37	K9002916	PLUG KIT (1.3PORT)	2					
38	K9002915	SPOOL KIT(2.4PORT)	2					
39	K9002917	PLUG KIT (2.4PORT)	2					
40	K9001228	HANDLE KIT(L.H)	1					
40	K9001229	HANDLE KIT(R.H)	1					
50	K9001001	SWITCH ASS`Y	1					

Fig. 4201 REMOTE CONTROL VALVE [3729

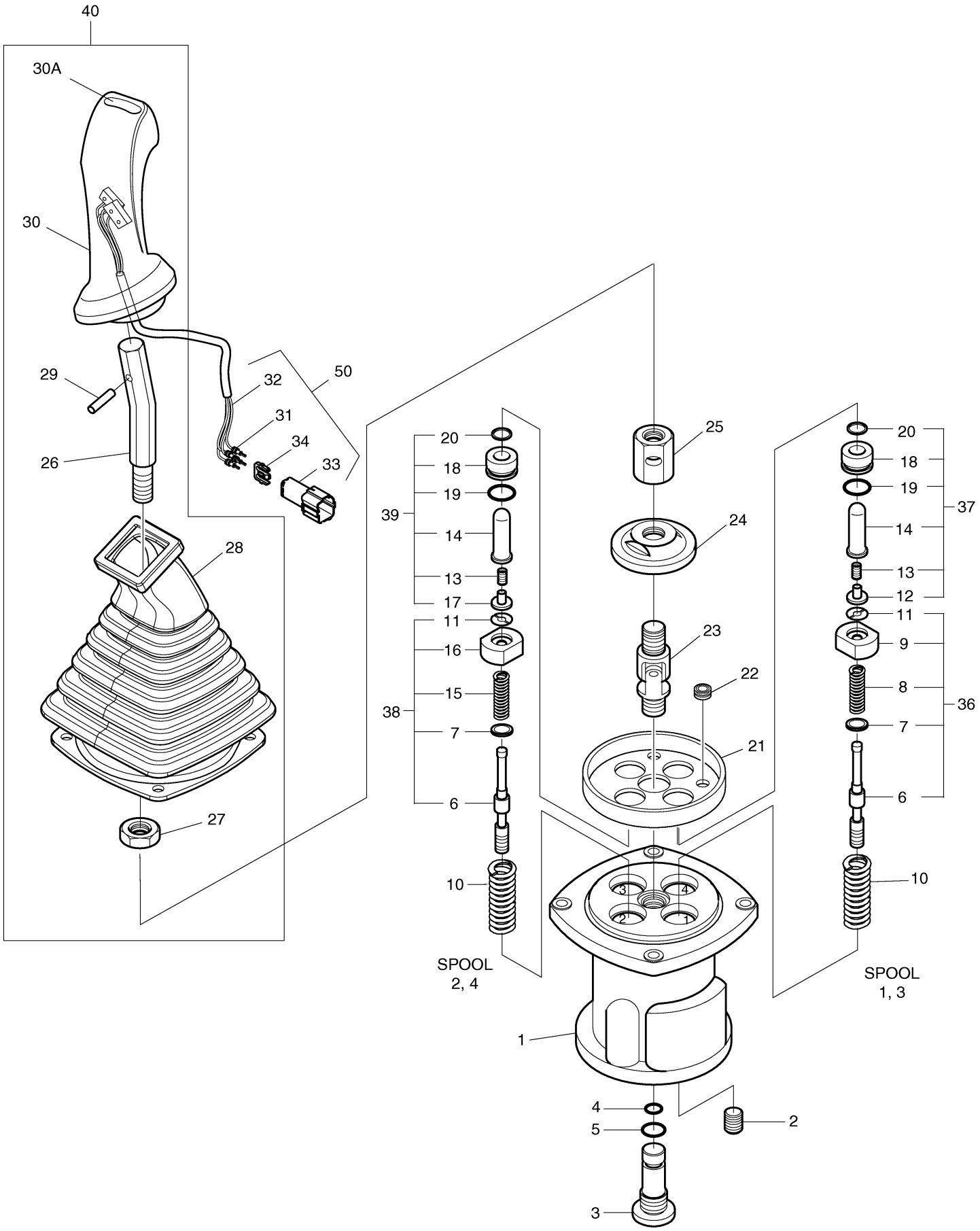

DOOSAN Doosan Infracore

Fig. 4205 REMOTE CONTROL VALVE-3

Key No	Part No	Description	Qty	S.C	Serial No	ICA	Replacable	Qty
-	420-00344A	VALVE;JOYSTICK(L.H)	1					
-	420-00345A	VALVE;JOYSTICK(R.H)	1					
1	JA1G1001	CASE	1					
2	WPT18	PLUG	1					
3	J95C1002	PLUG	1					
4	P0010A	O-RING	1					
5	P0014	O-RING	1					
6	J95C1003	SPOOL	4	D				
7	J95C1004	SHIM	4	D				
8	JA0D3001	SPRING(1.3)	2	D				
9	JA0D3002	SEAT;SPRING(1.3)	2	D				
10	J95C1007	SPRING	4					
11	JA0D3003	STOPPER	4	D				
12	J97A5011	STOPPER(1.3)	2	D				
13	JA0D3004	SPRING	4	D				
14	JA0D3005	ROD;PUSH	4	D				
15	JA0D3006	SPRING(2.4)	2	D				
16	JA0D3007	SEAT;SPRING(2.4)	2	D				
17	J97A5012	STOPPER(2.4)	2	D				
18	JA0D3008	PLUG	4	D				
19	P0020	O-RING	4	D				
20	RSY12	SEAL;ROD	4	D				
21	JA1G1002	PLATE	1					
22	J97A5018	BOOT	1					
23	J95C1012	JOINT ASS`Y	1					
24	JA1G1004	PLATE;SWASH	1					
25	J95C1014	NUT;HEX.	1					
26	JA1D2001	BAR;HANDLE	1	D				
27	HNM14	NUT;HEX.	1	D				
28	JA1D2002	BOOT	1					
29	SP0528	PIN;SPRING	1	D				
30	1.172-00004	HANDLE ASS'Y	1	D				
30	1.172-00017	HANDLE ASS'Y	1	D				
30A	1.161-00016	CAP;PEANUT	1					
30A	1.161-00021	CAP;PEANUT	1					
30B	1.161-00017	CAP;ROUND	1					

Key No	Part No	Description	Qty	S.C	Serial No	ICA	Replacable	Qty
31	JA1G1003	BUSHING	1					
32	-	TERMINAL	4	D				
33	-	WIRE;SEAL	4	D				
34	SWP6PT	HOUSING	1	D				
35	SWP6P	HOLDER;REAR	1	D				
36	JA0D3009	SPOOL KIT(1.3PORT)	2					
37	JA0D3010	PLUG KIT (1.3PORT)	2					
38	JA0D3011	SPOOL KIT(2.4PORT)	2					
39	JA0D3012	PLUG KIT (2.4PORT)	2					
40	JA1G2001	HANDLE KIT	1					
49	-	SWITCH	3	D				
50	K9001002	SWITCH ASS'Y	1					

Fig. 4205 REMOTE CONTROL VALVE-3

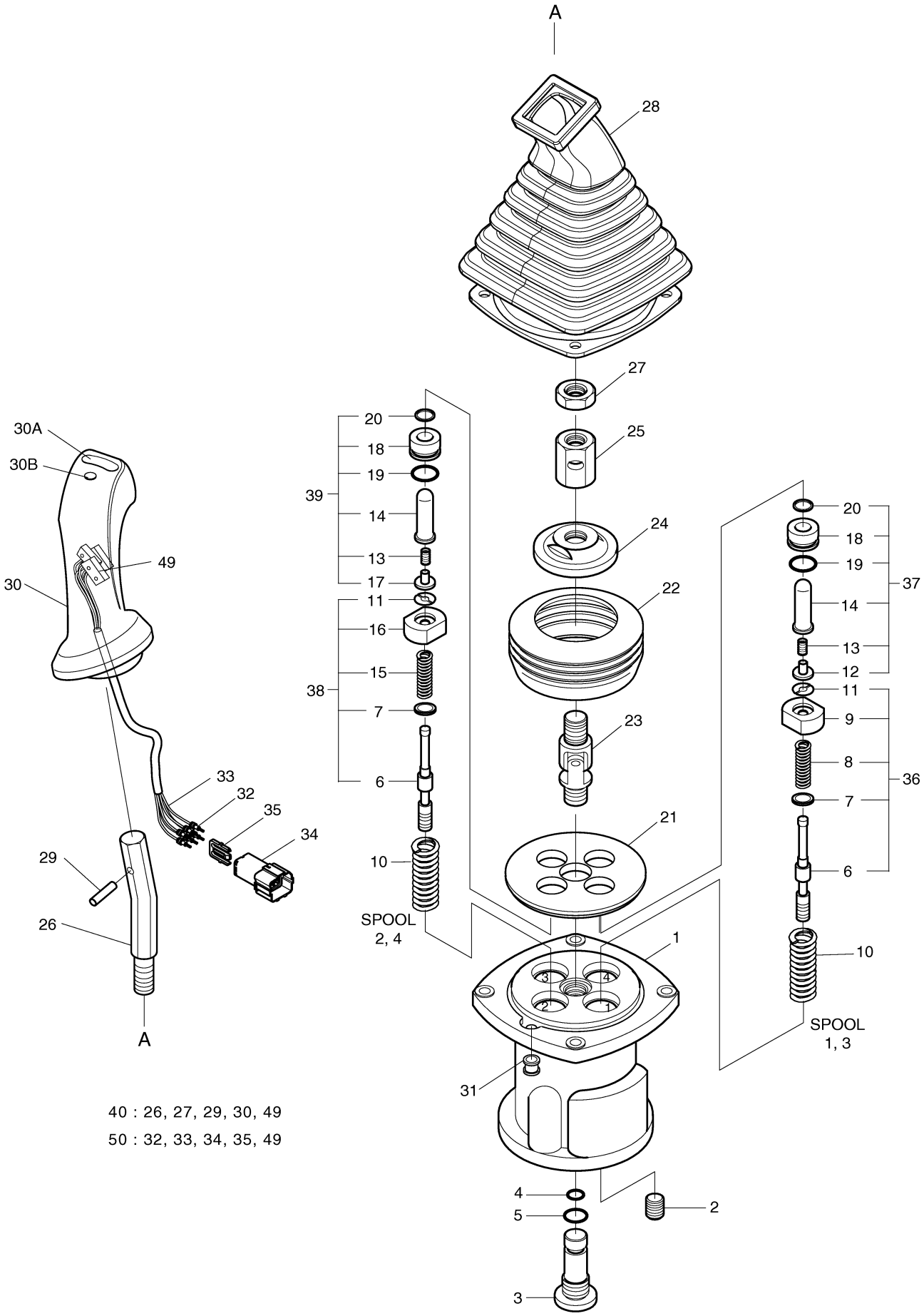

40 : 26, 27, 29, 30, 49

50 : 32, 33, 34, 35, 49

Fig. 4210 PEDAL VALVE

Key No	Part No	Description	Qty	S.C	Serial No	ICA	Replacable	Qty
-	420-00030	PEDAL VALVE	1					
1	J98J1001	BODY(1)	1					
2	J98J1002	BODY(2)	1					
3	NWP116	PLUG NPT1/16	4					
4	WPT38	PLUG PT3/8	2					
5	J98J1003	SEAT;SPRING	4					
6	J98J1004	SPRING	4					
7	J24D2008	SEAT;SPRING	4					
8	J98J1005	SPOOL	4					
9	J98J1006	STOPPER	4					
10	J98J1007	SPRING	4					
11	J98J1008	GUIDE;ROD	4					
12	P022	O-RING	4					
13	SR28CH	RING;SNAP	4					
14	J98J1009	ROD;PUSH	4					
15	SP0306	PIN;SPRING	4					
16	J98J1010	SEAL	4					
17	SB18	BALL;STEEL	4					
18	J98J1011	SPRING	4					
19	J98J1012	PLATE	4					
20	SR11CS	RING;SNAP	4					
21	J98J1013	PLUG	4					
22	G025	O-RING	4					
23	RSY12	SEAL;ROD	4					
24	DSP12	SEAL;DUST	4					
25	J98J1014	COVER	2					
26	WBM0630	BOLT;WRENCH M6X1.0X30	4					
27	J24D2005	CAM	2					
28	DU1010	BUSHING	4					
29	J24D2016	SHAFT;CAM	2					
30	SBM0605	SCREW;SET	2					
31	J24D2015	SCREW;SET	4					
32	HNM10	NUT M10	4					
33	J24D2006	BELLOWS	2					
34	J98J1015	SPACER	1					
35	P012	O-RING	4					

Key No	Part No	Description	Qty	S.C	Serial No	ICA	Replacable	Qty
36	P010	O-RING	2					
37	WBM1042	BOLT;WRENCH M10X1.5X42	4					

Fig. 4210 PEDAL VALVE

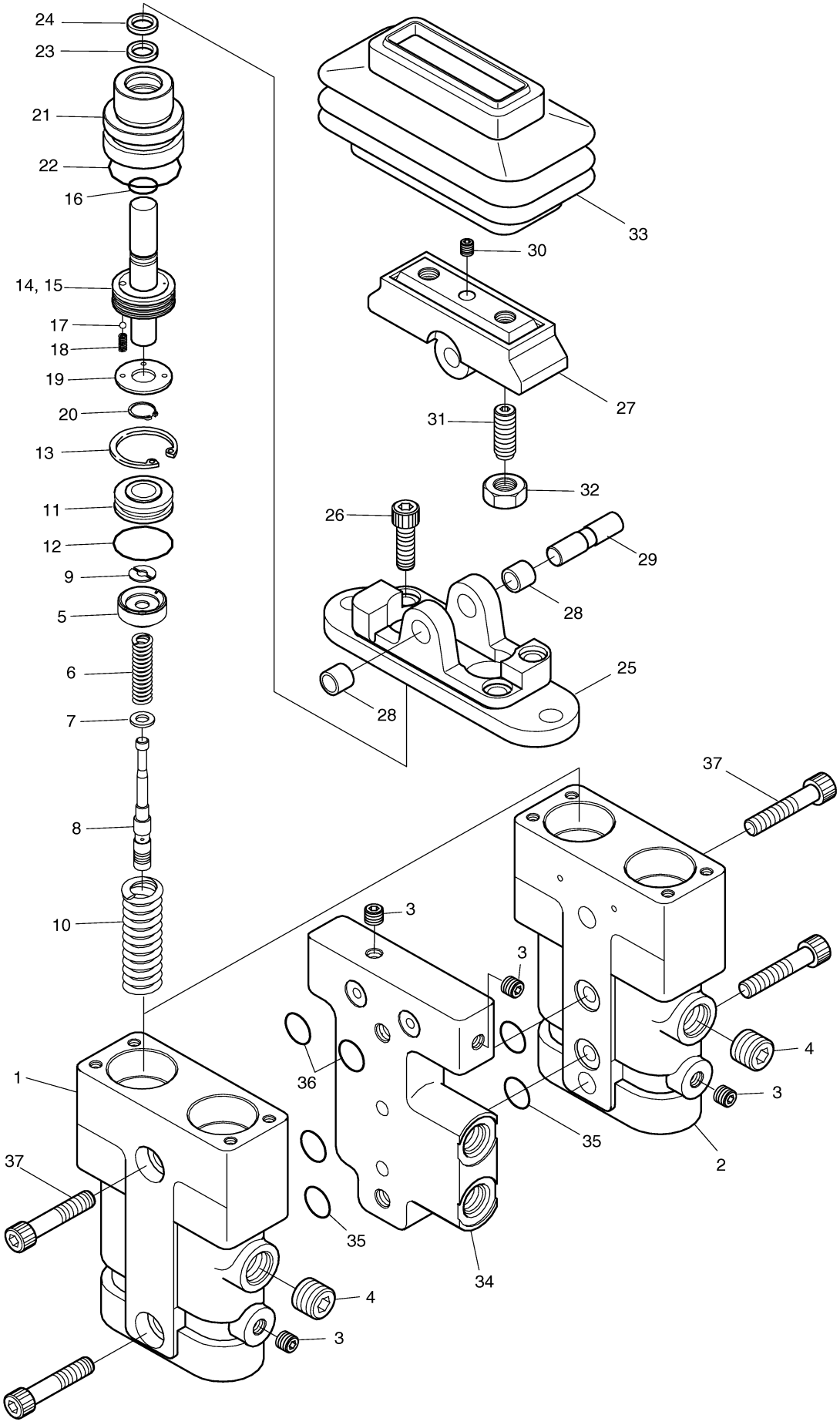

Fig. 4220 SOLENOID VALVE

Key No	Part No	Description	Qty	S.C	Serial No	ICA	Replacable	Qty
-	426-00163	SOLENOID VALVE	1		1001~2654	I	426-00163A	1
-	426-00163A	SOLENOID VALVE	1		2655~			
1	-	BLOCK	1	D				
2	VDL24	COIL	3					
3	DF-S3A-00	VALVE;SOLENOID	3		1001~2654	I	TF-S3A-00	3
3	TF-S3A-00	VALVE;SOLENOID	3		2655~			
3A	DF-S3A-S-01	SEAL KIT	1		1001~2654			
3A	TF-S3A-S-01	SEAL KIT	1		2655~			
4	2181-1950D1	PLUG	1					
5	S8000111	O-RING	1					

Fig. 4220 SOLENOID VALVE

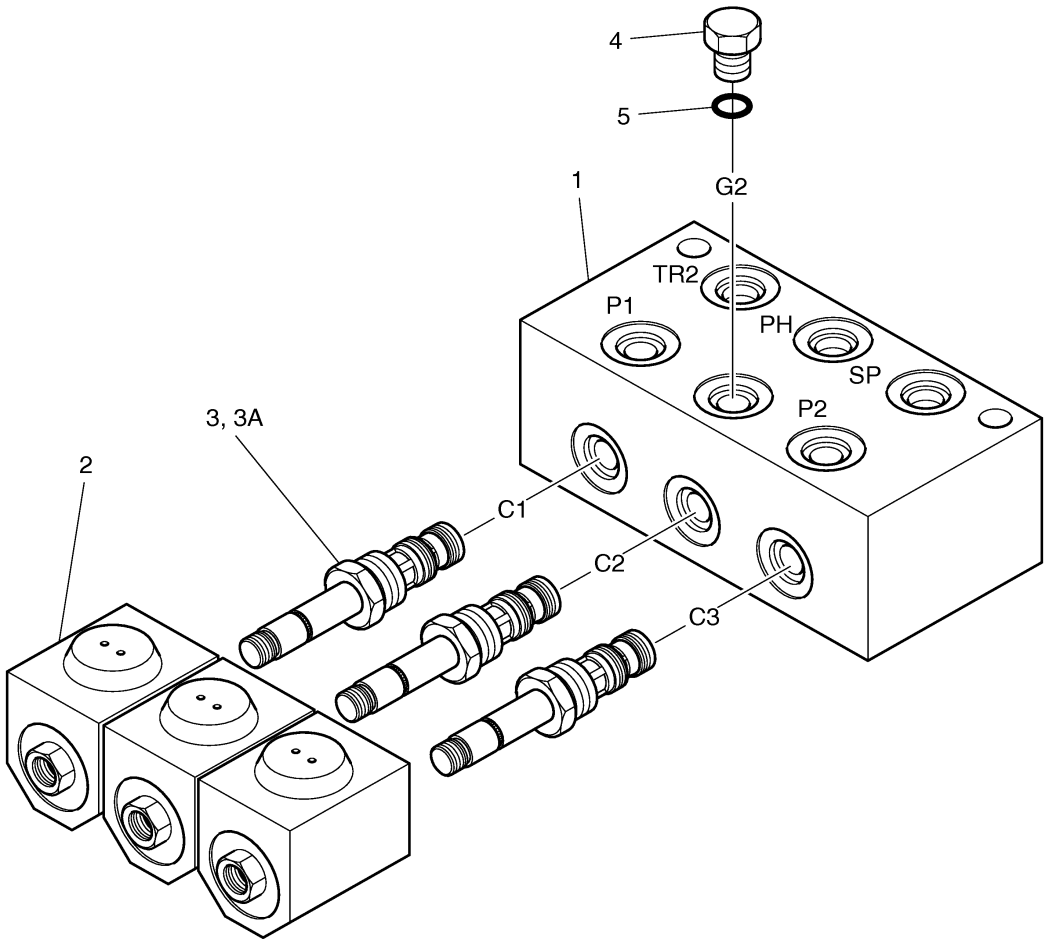

Fig. 4230 PILOT VALVE

Key No	Part No	Description	Qty	S.C	Serial No	ICA	Replacable	Qty
-	2426-9039B	VALVE;PILOT	1		1001~2654	I	2426-9039C	1
-	2426-9039C	VALVE;PILOT	1		2655~			
1	-	BODY	1	D				
2	FD-DC-0-B	VALVE;CHECK	1					
3	DF-S3A-00	VALVE;SOLENOID	1		1001~2654	I	TF-S3A-00	1
3	TF-S3A-00	VALVE;SOLENOID	1		2655~			
3A	DF-S3A-S-01	SEAL KIT	1		1001~2654			
3A	TF-S3A-S-01	SEAL KIT	1		2655~			
4	VDL24	COIL	1					
5	2181-1950D1	PLUG	1					
6	S8000111	O-RING	1					

Fig. 4230 PILOT VALVE

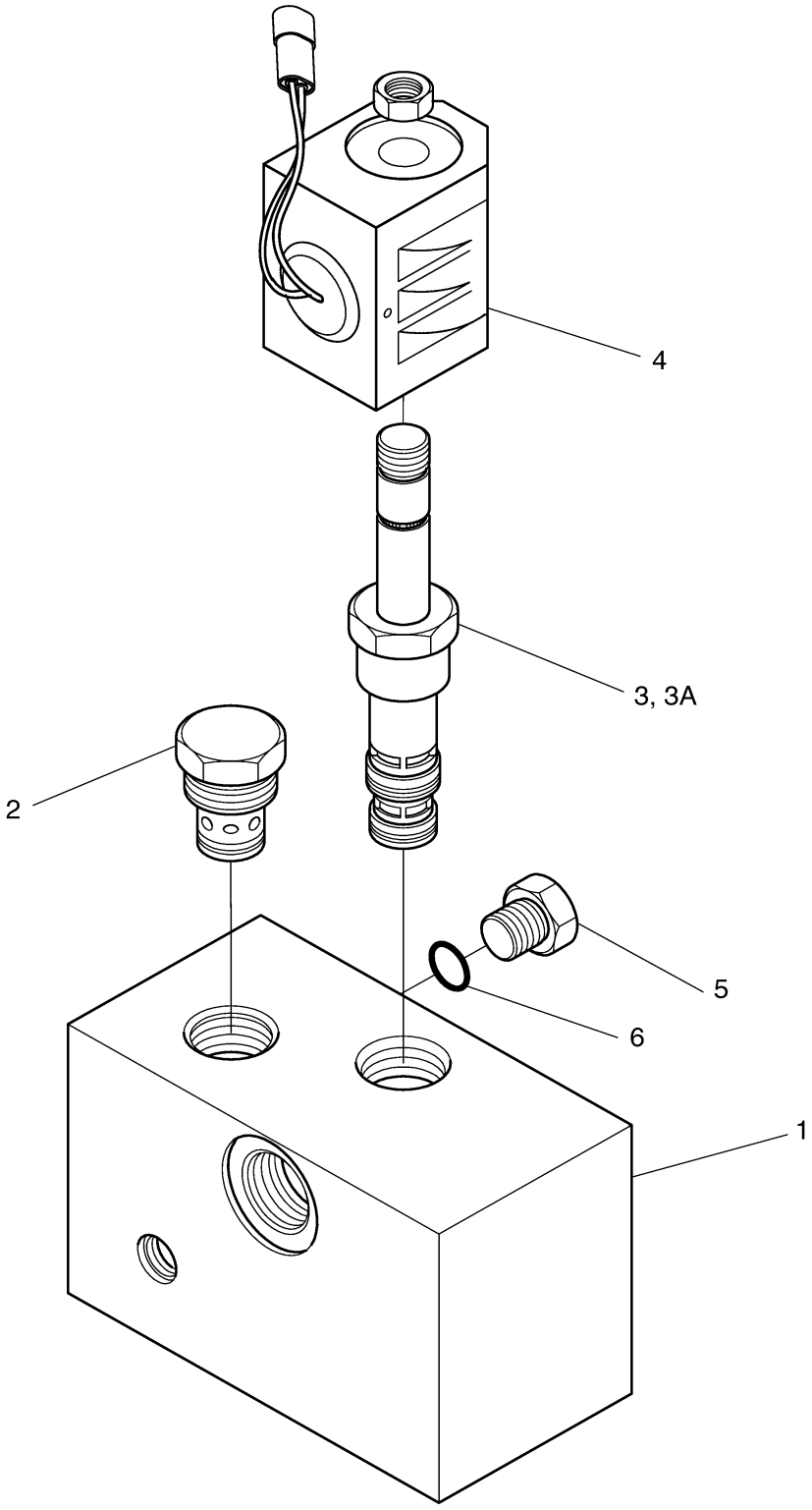

Fig. 4240 BOOM CYLINDER-L.H [1001 ~

Key No	Part No	Description	Qty	S.C	Serial No	ICA	Replacable	Qty
-	2440-9238G	CYLINDER;BOOM(L.H)	1		1001~1832	I	440-00416	1
-	440-00416	CYLINDER;BOOM(L.H)	1		1833~2299	I	440-00416A	1
1	53B368-4	TUBE ASS'Y	1		1001~1832			
1	53B484-0	TUBE ASS'Y	1		1833~			
2	00B168-0	BUSH	1					
3	53B358-5	ROD ASS'Y	1		1001~1832			
3	53B358-6	ROD ASS'Y	1		1833~			
4	00B123-0	BUSH	1					
5	53B361-1	PISTON	1					
6	E5130320	SEAL;SLIPPER	1	K				
7	00Z109-0	RING;WEAR	2	K				
8	00R730-0	RING;SLYD	2	K				
9	E6311421	O-RING	1	K				
10	53B315-0	RING;BACK UP	1	K	1001~1832	I	53B315-1	1
10	53B315-1	RING;BACK UP	1	K	1833~			
11	00C368-0	RING;CUSHION	1					
12	80A478-2	NUT;PISTON	1					
13	E1330544	SCREW;SET	1					
14	53B362-2	COVER;ROD	1					
15	E8412282	BUSH;DU	1					
16	00M314-0	RING;RETAINING	1					
17	E5500310	SEAL;BUFFER	1	K				
18	E5303260	PACKING;U	1	K				
19	E6020310	WIPER;DUST	1	K				
20	00M316-0	RING;RETAINING	1					
21	E6311741	O-RING	1	K				
22	53B316-0	RING;BACK UP	1	K	1001~1832	I	53B316-1	1
22	53B316-1	RING;BACK UP	1	K	1833~			
23	E6490059	O-RING	1	K				
24	E0502149	BOLT;SOCKET	14					
25	53B364-0	PIPE ASS'Y-H(L.H)	1		1001~1832			
25	53B882-0	PIPE ASS'Y-H(L.H)	1		1833~			
26	E6300761	O-RING	2					
27	E0501546	BOLT;SOCKET	8					
28	E3110112	WASHER;SPRING	9					
29	53B366-2	PIPE ASS'Y-R	1		1001~1832			

Key No	Part No	Description	Qty	S.C	Serial No	ICA	Replacable	Qty
29	53B884-0	PIPE ASS'Y-R	1		1833~			
30	53B421-0	PIPE BAND ASS'Y	1					
31	03A725-0	BAND;PIPE	1					
32	E0020673	BOLT;HEX	2					
33	E3110102	WASHER;SPRING	2					
34	00C260-0	CLAMP;PIPE	1					
35	E0021023	BOLT;HEX	1					
36	E8841022	NIPPLE;GREASE	2					
*	2440-9238KT	SEAL KIT;BOOM CYL.	1					

Fig. 4240 BOOM CYLINDER-L.H [1001 ~

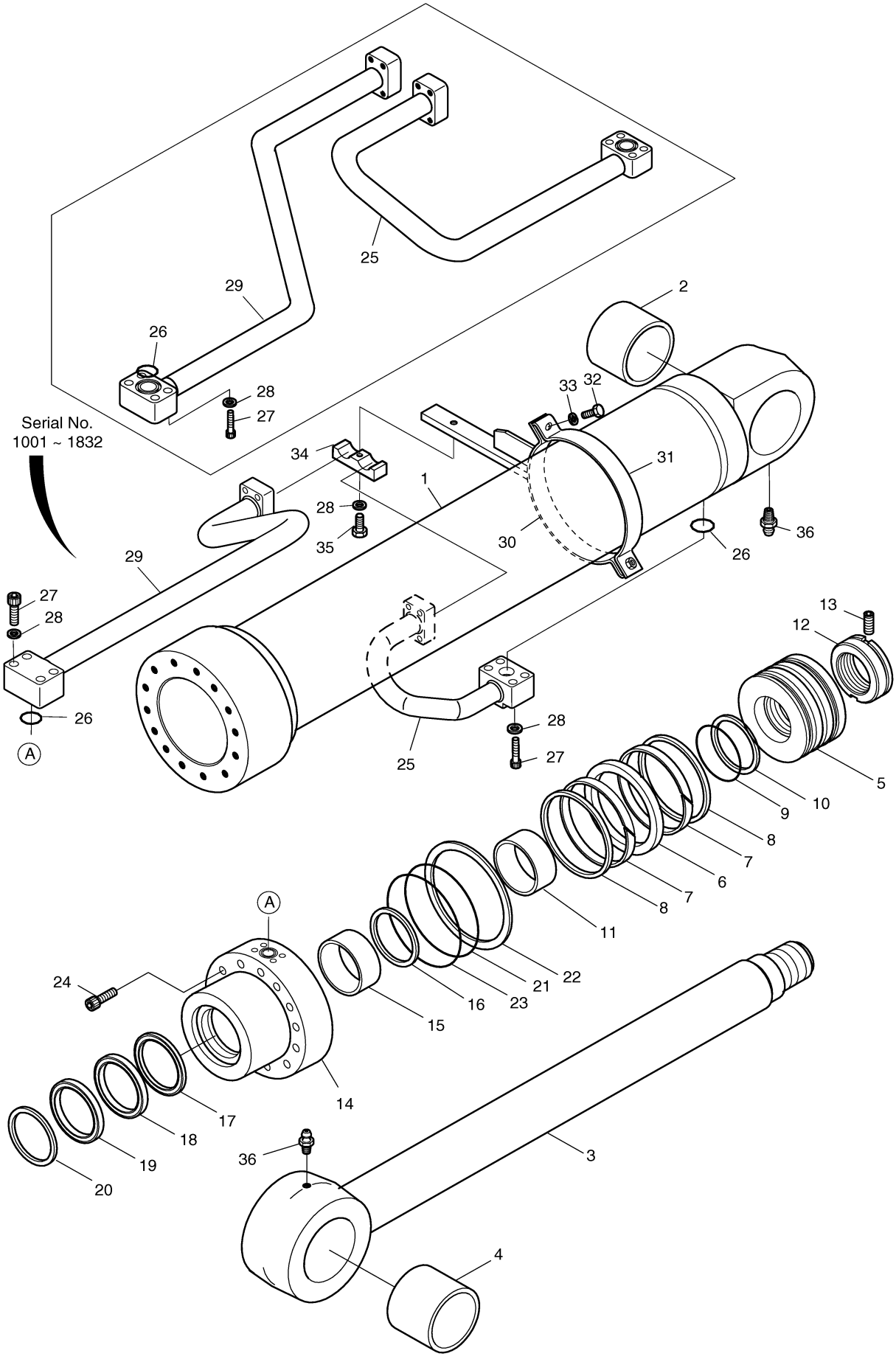

DOOSAN Doosan Infracore

Fig. 4241 BOOM CYLINDER-L.H [2300 ~]

Key No	Part No	Description	Qty	S.C	Serial No	ICA	Replacable	Qty
-	440-00416A	CYLINDER;BOOM(L.H)	1		2300~4036	I	440-00416B	1
-	440-00416B	CYLINDER;BOOM(L.H)	1		4037~			
1	1.441-00298	TUBE ASS'Y	1					
2	110-00169	BUSH	1					
3	1.444-00008	ROD ASS'Y	1					
4	110-00168	BUSH	1					
5	409-00026	PISTON	1					
6	180-00271	SEAL;SLIPPER	1	K				
7	115-00079	RING;WEAR	2	K				
8	115-00080	RING;SLYD	2	K				
9	S8010751	O-RING	1	K				
10	1.180-00663	RING;BACK UP	1	K				
11	1.411-00002	RING;CUSHION	1					
12	121-00055	NUT,PISTON	1					
13	1.120-00219	SCREW;SET	1					
14	1.442-00006	COVER;ROD	1					
15	110-00110	DD-BUSH	1					
16	115-00051	RING;RETAINING	1					
17	1.180-00659	SEAL;BUFFER	1	K				
18	1.180-00660	U-PACKING	1	K				
19	1.180-00661	RING;BACK UP	1	K				
20	115-00099	WIPER;DUST	1	K				
21	115-00092	RING,RETAINING	1					
22	S8011351	O-RING	1	K				
23	1.180-00662	RING;BACK UP	1	K				
24	2180-1217D96	O-RING	1	K				
25	S2222272	BOLT	14					
26	1.193-00009	PIPE ASS`Y-H(L.H)	1		5001~4036	I	1.193-00009A	1
26	1.193-00009A	PIPE ASS`Y-H(L.H)	1		4037~			
27	S8000341	O-RING	2					
28	S2215961	BOLT;SOCKET	8					
29	S5100703	WASHER;SPRING	9					
30	1.193-00005	PIPE ASS`Y-R(L.H)	1		5001~4036	I	1.193-00005A	1
30	1.193-00005A	PIPE ASS`Y-R(L.H)	1		4037~			
31	124-00159	PIPE BAND ASS`Y	1					
32	124-00108	BAND;PIPE	1					

Key No	Part No	Description	Qty	S.C	Serial No	ICA	Replacable	Qty
33	S5100603	WASHER	2					
34	S0558153	BOLT	2					
35	124-00158	CLAMP;PIPE	1					
36	S0561053	BOLT	1					
37	S6710032	NIPPLE;GREASE	2					
*	440-00416AKT	SEAL KIT;BOOM CYL.	1					

Fig. 4241 BOOM CYLINDER-L.H [2300 ~]

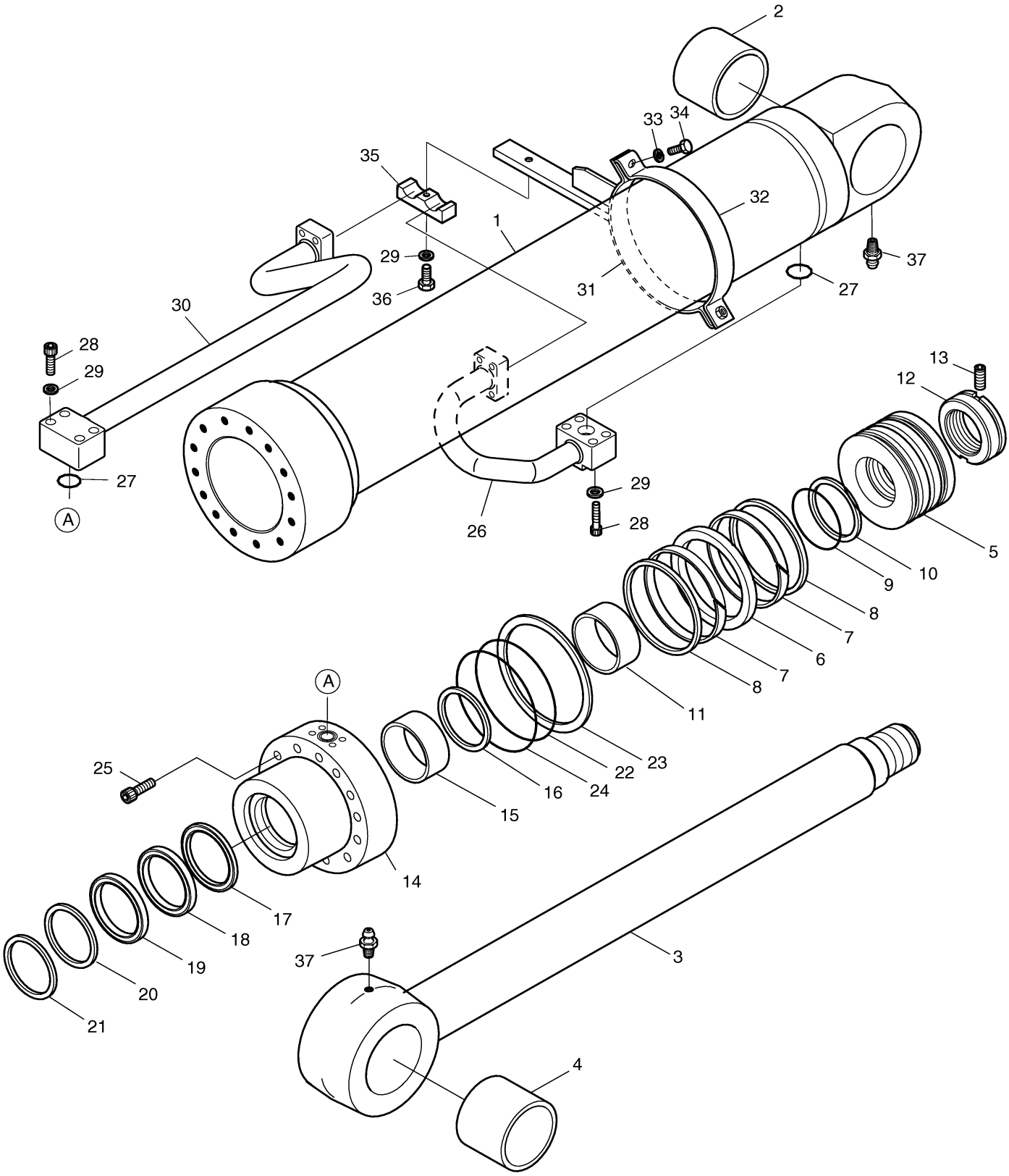

Fig. 4250 BOOM CYLINDER-R.H [1001 ~

Key No	Part No	Description	Qty	S.C	Serial No	ICA	Replacable	Qty
-	2440-9239G	CYLINDER;BOOM(R.H)	1		1001~1832	I	440-00417	1
-	440-00417	CYLINDER;BOOM(R.H)	1		1833~2159	I	440-00417A	1
1	53B368-4	TUBE ASS'Y	1		1001~1832			
1	53B484-0	TUBE ASS'Y	1		1833~			
2	00B168-0	BUSH	1					
3	53B358-5	ROD ASS'Y	1		1001~1832			
3	53B358-6	ROD ASS'Y	1		1833~			
4	00B123-0	BUSH	1					
5	53B361-1	PISTON	1					
6	E5130320	SEAL;SLIPPER	1	K				
7	00Z109-0	RING;WEAR	2	K				
8	00R730-0	RING;SLYD	2	K				
9	E6311421	O-RING	1	K				
10	53B315-0	RING;BACK UP	1	K	1001~1832	I	53B315-1	1
10	53B315-1	RING;BACK UP	1	K	1833~			
11	00C368-0	RING;CUSHION	1					
12	80A478-2	NUT;PISTON	1					
13	E1330544	SCREW;SET	1					
14	53B362-2	COVER;ROD	1					
15	E8412282	BUSH;DU	1					
16	00M314-0	RING;RETAINING	1					
17	E5500310	SEAL;BUFFER	1	K				
18	E5303260	PACKING;U	1	K				
19	E6020310	WIPER;DUST	1	K				
20	00M316-0	RING;RETAINING	1					
21	E6311741	O-RING	1	K				
22	53B316-0	RING;BACK UP	1	K	1001~1832	I	53B316-1	1
22	53B316-1	RING;BACK UP	1	K	1833~			
23	E6490059	O-RING	1	K				
24	E0502149	BOLT;SOCKET	14					
25	53B363-0	PIPE ASS'Y-H(R.H)	1		1001~1832			
25	53B881-0	PIPE ASS'Y-H(R.H)	1		1833~			
26	E6300761	O-RING	2					
27	E0501546	BOLT;SOCKET	8					
28	E3110112	WASHER;SPRING	9					
29	53B365-2	PIPE ASS'Y-R	1		1001~1832			

Key No	Part No	Description	Qty	S.C	Serial No	ICA	Replacable	Qty
29	53B883-0	PIPE ASS'Y-R	1		1833~			
30	53B421-0	PIPE BAND ASS'Y	1					
31	03A725-0	BAND;PIPE	1					
32	E0020673	BOLT;HEX	2					
33	E3110102	WASHER;SPRING	2					
34	00C260-0	CLAMP;PIPE	1					
35	E0021023	BOLT;HEX	1					
36	E8841022	NIPPLE;GREASE	2					
*	2440-9238KT	SEAL KIT;BOOM CYL.	1					

Fig. 4250 BOOM CYLINDER-R.H [1001 ~

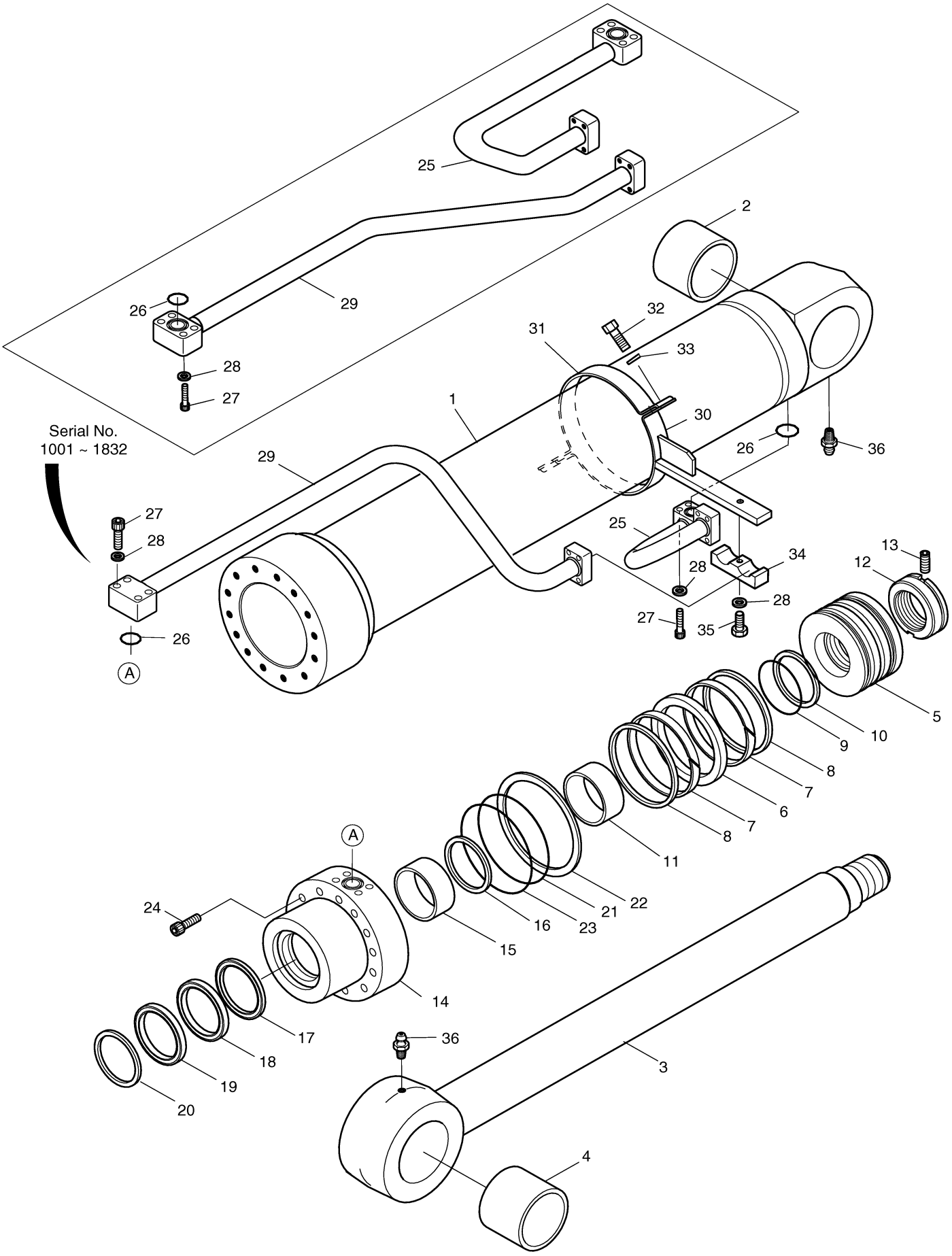

DOOSAN Doosan Infracore

Fig. 4251 BOOM CYLINDER-R.H [2160 ~]

Key No	Part No	Description	Qty	S.C	Serial No	ICA	Replacable	Qty
-	440-00417A	CYLINDER;BOOM(R.H)	1		2160~4036	I	440-00417B	1
-	440-00417B	CYLINDER;BOOM(R.H)	1		4037~			
1	1.441-00298	TUBE ASS'Y	1					
2	110-00169	BUSH	1					
3	1.444-00008	ROD ASS'Y	1					
4	110-00168	BUSH	1					
5	409-00026	PISTON	1					
6	180-00271	SEAL;SLIPPER	1	K				
7	115-00079	RING;WEAR	2	K				
8	115-00080	RING;SLYD	2	K				
9	S8010751	O-RING	1	K				
10	1.180-00663	RING;BACK UP	1	K				
11	1.411-00002	RING;CUSHION	1					
12	121-00055	NUT,PISTON	1					
13	1.120-00219	SCREW;SET	1					
14	1.442-00006	COVER;ROD	1					
15	110-00110	DD-BUSH	1					
16	115-00051	RING;RETAINING	1					
17	1.180-00659	SEAL;BUFFER	1	K				
18	1.180-00660	U-PACKING	1	K				
19	1.180-00661	RING;BACK UP	1	K				
20	115-00099	WIPER;DUST	1	K				
21	115-00092	RING,RETAINING	1					
22	S8011351	O-RING	1	K				
23	1.180-00662	RING;BACK UP	1	K				
24	2180-1217D96	O-RING	1	K				
25	S2222272	BOLT	14					
26	1.193-00010	PIPE ASS`Y-H(R.H)	1		5001~4036	I	1.193-00010A	1
26	1.193-00010A	PIPE ASS`Y-H(R.H)	1		4037~			
27	S8000341	O-RING	2					
28	S2215961	BOLT;SOCKET	8					
29	S5100703	WASHER;SPRING	9					
30	1.193-00006	PIPE ASS`Y-R(R.H)	1		5001~4036	I	1.193-00006A	1
30	1.193-00006A	PIPE ASS`Y-R(R.H)	1		4037~			
31	124-00159	PIPE BAND ASS`Y	1					
32	124-00108	BAND;PIPE	1					

Key No	Part No	Description	Qty	S.C	Serial No	ICA	Replacable	Qty
33	S5100603	WASHER	2					
34	S0558153	BOLT	2					
35	124-00158	CLAMP;PIPE	1					
36	S0561053	BOLT	1					
37	S6710032	NIPPLE;GREASE	2					
*	440-00416AKT	SEAL KIT;BOOM CYL.	1					

Fig. 4251 BOOM CYLINDER-R.H [2160 ~]

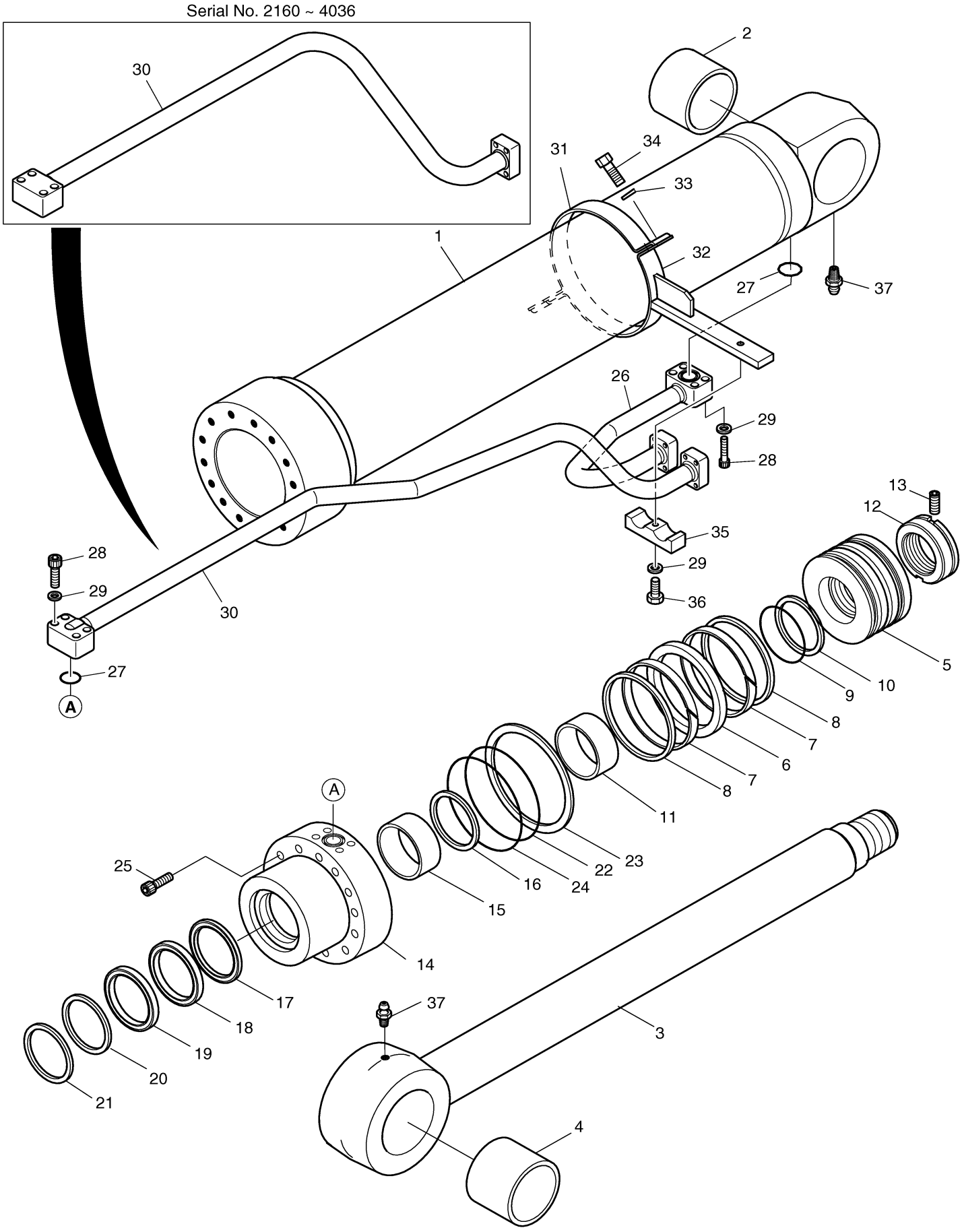

DOOSAN Doosan Infracore

Fig. 4260 ARM CYLINDER [1001 ~ 2299]

Key No	Part No	Description	Qty	S.C	Serial No	ICA	Replacable	Qty
-	440-00257	CYLINDER;ARM	1		1001~2299	I	440-00257A	1
1	53A322-3	TUBE ASS'Y	1					
2	00B124-0	BUSH	1					
3	53A327-4	ROD ASS'Y	1					
4	00B124-0	BUSH	1					
5	53A333-1	ROD COVER	1					
6	E8412226	DD-BUSH	1					
7	00M316-0	RING;RETAINING	1					
8	E5500330	SEAL;BUFFER	1	K				
9	E5303380	U-PACKING	1	K				
10	E6020330	WIPER;DUST	1	K				
11	00M574-0	RING;RETAINING	1					
12	E6311781	O-RING	1	K				
13	53A359-0	RING;BACK UP	1	K				
14	E6490060	O-RING	1	K				
15	00C372-0	RING;CUSHION	1					
16	53A330-1	PISTON	1					
17	E5130340	SEAL;SLIPPER	1	K				
18	00Z111-0	RING;WEAR	2	K				
19	00R103-0	RING;SLYD	2	K				
20	E6311461	O-RING	1	K				
21	53A358-0	RING;BACK UP	2	K				
22	53A332-1	NUT;PISTON	1					
23	E1330544	SCREW;SET	1					
24	53A409-0	PLUNGER;CUSHION	1					
25	03A714-0	RING;STOP	1					
26	E0502439	BOLT;HEX SOCKET	12					
27	62E523-0	VALVE;CHECK	1					
28	03A729-0	SPRING	1					
29	03A728-0	SUPPORT;SPRING	1					
30	E1500030	PLUG	1					
31	53A552-1	PIPE BAND ASS'Y-H	1					
32	00P376-1	BAND;PIPE	1					
33	E3110112	WASHER;SPRING	2					
34	E0020963	BOLT;HEX.	2					
35	53A564-1	PIPE BAND ASS'Y-R	1					

Key No	Part No	Description	Qty	S.C	Serial No	ICA	Replacable	Qty
36	00P376-1	BAND;PIPE	1					
37	E3110112	WASHER;SPRING	2					
38	E0020963	BOLT;HEX.	2					
39	53A709-0	PIPE ASS'Y-R	1					
40	E6300761	O-RING	1					
41	E3110112	WASHER;SPRING	4					
42	E0501546	BOLT;SOCKET	4					
43	03A534-0	U-BOLT	1					
44	E3110102	WASHER;SPRING	2					
45	E2022033	NUT;HEX	2					
46	00C270-0	CLAMP;PIPE	1					
47	E3110102	WASHER;SPRING	2					
48	E0020733	BOLT;HEX	2					
49	E8841022	NIPPLE;GREASE	2					
*	2440-9240KT	SEAL KIT;ARM CYL.	1					

Fig. 4260 ARM CYLINDER [1001 ~ 2299]

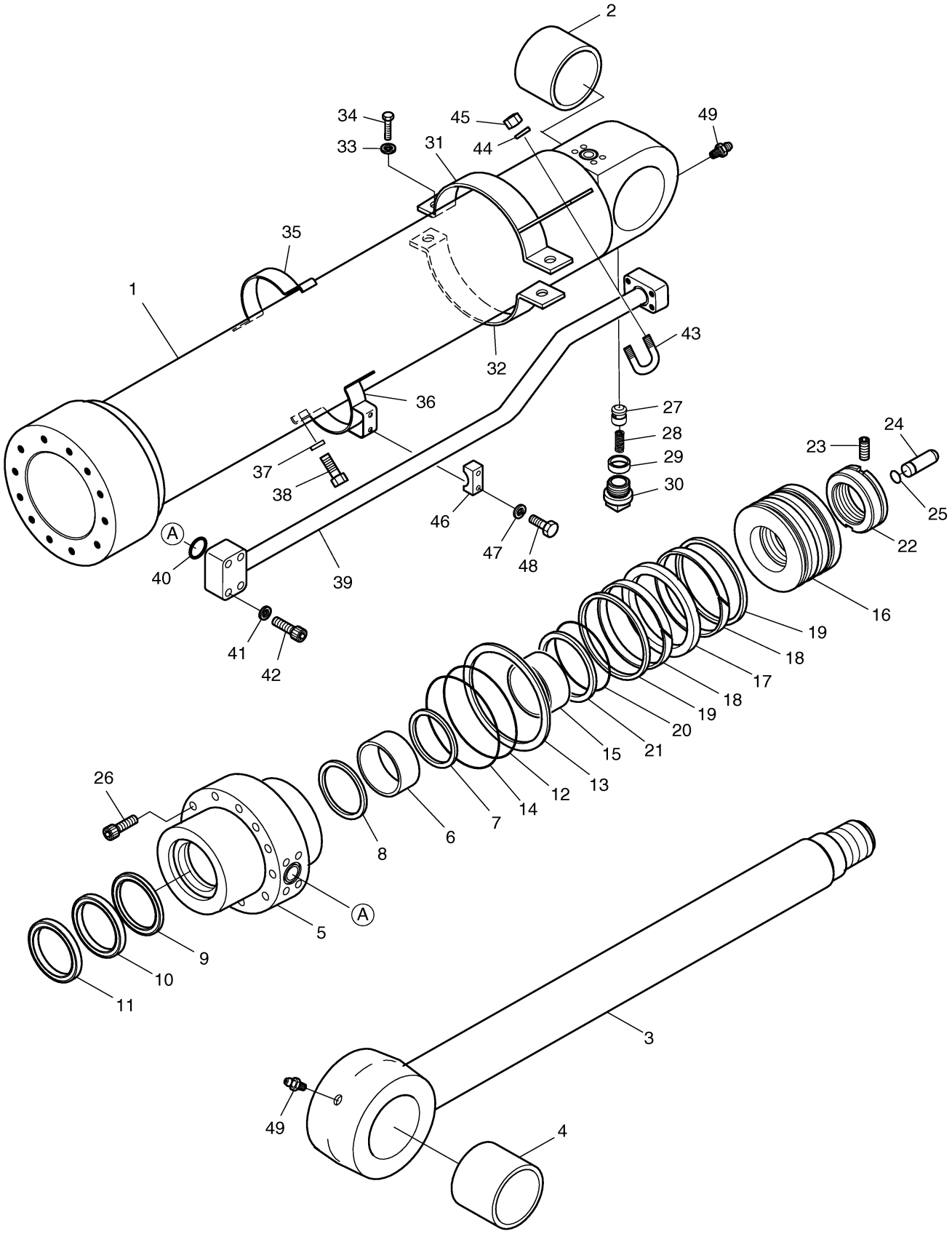

DOOSAN Doosan Infracore

Fig. 4261 ARM CYLINDER [2300 ~]

Key No	Part No	Description	Qty	S.C	Serial No	ICA	Replacable	Qty
-	440-00257A	CYLINDER;ARM	1		2300~3648	I	440-00257B	1
-	440-00257B	CYLINDER;ARM	1		3649~4245	I	K1036107	1
-	K1036107	CYLINDER;ARM	1		4246~			
1	K9005665	TUBE ASS'Y	1					
2	1.110-00041	BUSH	1					
3	1.444-00007	ROD ASS'Y	1		2330~4245	I	K9005666	1
3	K9005666	ROD ASS'Y	1		4246~			
4	1.110-00041	BUSH	1					
5	1.442-00004	COVER;ROD	1					
6	1.110-00071	DD-BUSH	1					
7	115-00092	RING,RETAINING	1					
8	1.180-00655	SEAL,BUFFER	1	K				
9	1.180-00656	PACKING,U	1	K				
10	1.180-00664	RING;BACK UP	1	K				
11	1.180-00489	WIPER,DUST	1	K				
12	115-00090	RING,RETAINING	1					
13	S8011451	O-RING	1	K				
14	180-00359	RING;BACK UP	1	K				
15	180-00363	O-RING	1	K				
16	1.411-00001	RING;CUSHION	1					
17	1.409-00130	PISTON	1					
18	180-00360	SEAL;SLIPPER	1	K				
19	115-00121	RING;WEAR	2	K				
20	115-00122	RING;SLYD	2	K				
21	S8010851	O-RING	1	K				
22	1.180-00279	RING;BACK UP	2	K				
23	1.121-00078	NUT;PISTON	1		1001~3648			
23	K9001169	NUT;PISTON	1		3649~			
24	1.120-00219	SCREW;SET	1					
25	424-00084	PLUNGER;CUSHION	1					
26	115-00081	RING;STOP	1					
27	S2225271	BOLT	12					
28	420-00131	VALVE;CHECK	1					
29	129-00071	SPRING	1					
30	1.195-00022	SUPPORT,SPRING	1					
31	2181-1116D3	PLUG	1					

Key No	Part No	Description	Qty	S.C	Serial No	ICA	Replacable	Qty
32	1.124-00052	PIPE BAND ASS'Y-H	1					
33	1.124-00054	BAND;PIPE	1					
34	S5100703	WASHER;SPRING	2					
35	S0560453	BOLT M12X1.75X35	2					
36	1.124-00057	PIPE BAND ASS'Y-R	1					
37	1.124-00054	BAND;PIPE	1					
38	S5100703	WASHER;SPRING	2					
39	S0560453	BOLT M12X1.75X35	2					
40	1.140-00245	PIPE ASS'Y-R	1					
41	S8000341	O-RING	1					
42	S5100703	WASHER;SPRING	4					
43	S2215961	BOLT;SOCKET	4					
44	120-00159	U-BOLT	1					
45	S5100603	WASHER	2					
46	S4012633	NUT	2					
47	124-00060	CLAMP;PIPE	1					
48	S5100603	WASHER	2					
49	S0558761	BOLT	2					
50	S6710032	NIPPLE;GREASE	2					
*	440-00257AKT	SEAL KIT;ARM CYL.	1					

Fig. 4261 ARM CYLINDER [2300 ~]

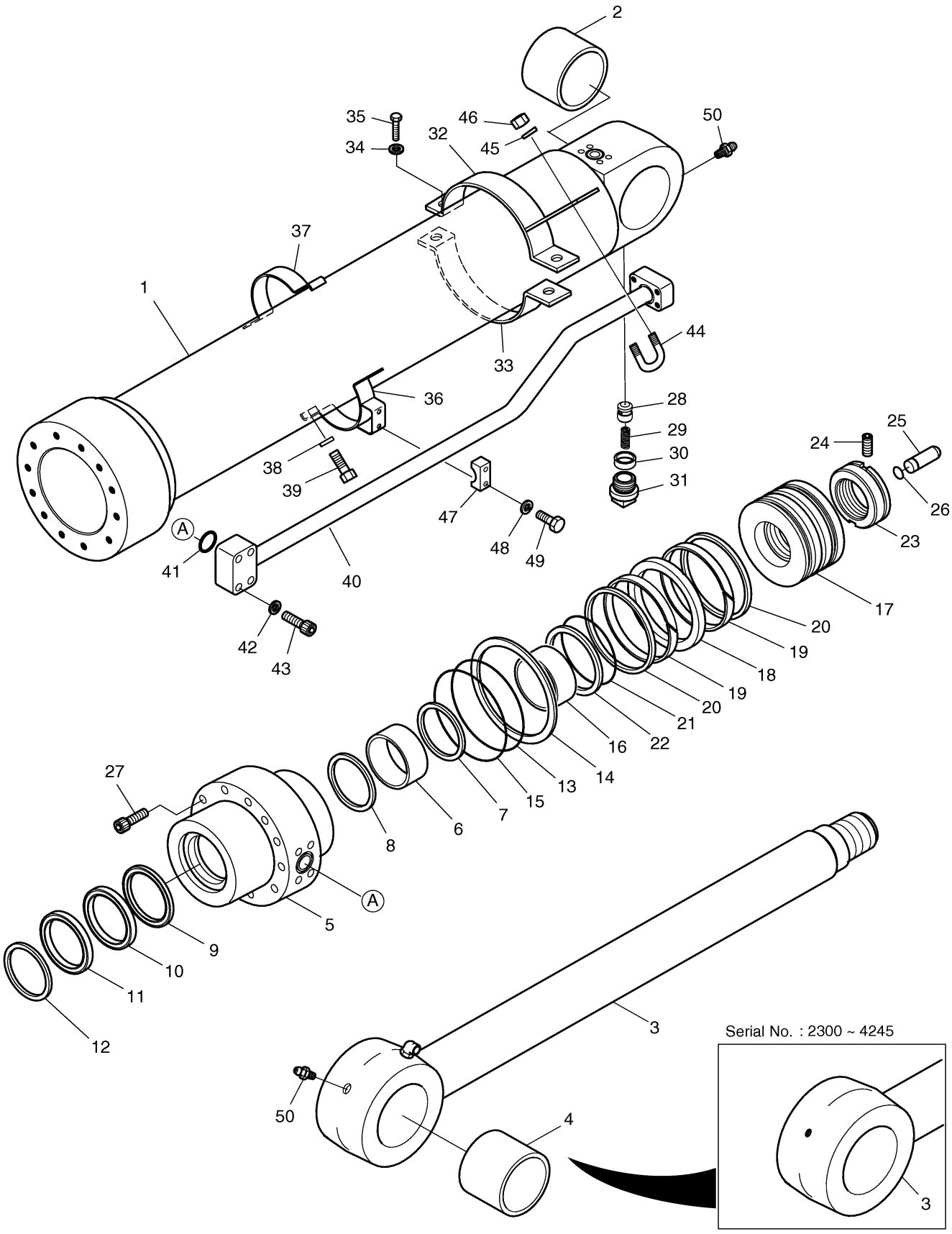

DOOSAN Doosan Infracore

Fig. 4270 BUCKET CYLINDER [1001 ~

Key No	Part No	Description	Qty	S.C	Serial No	ICA	Replacable	Qty
-	2440-9241E	BUCKET CYLINDER	1		1001~1019	I	2440-9241G	1
-	2440-9241G	BUCKET CYLINDER	1		1020~2299	I	2440-9241H	1
1	53U313-3	TUBE ASS'Y	1					
2	00B123-0	BUSH	1					
3	53U367-3	ROD ASS'Y	1		1001~1019	I	53U367-4	1
3	53U367-4	ROD ASS'Y	1		1020~			
4	00B123-0	BUSH	1					
5	53U372-1	ROD COVER	1					
6	E8412281	BUSH;DD	1					
7	00M313-0	RING;RETAINING	1					
8	E5500300	SEAL;BUFFER	1	K				
9	E5303200	U-PACKING	1	K				
10	E6020300	WIPER;DUST	1	K				
11	00M315-0	RING;RETAINING	1					
12	E6311741	O-RING	1	K				
13	53B316-0	RING;BACK UP	1	K				
14	E6490059	O-RING	1	K				
15	00C306-0	RING;CUSHION	1		1001~1019			
15	00C365-0	RING;CUSHION	1		1020~			
16	53U370-1	PISTON	1					
17	E5130320	SEAL;SLIPPER	1	K				
18	00Z109-0	RING;WEAR	2	K				
19	00R730-0	RING;SLYD	2	K				
20	E6311341	O-RING	1	K				
21	53U252-0	RING;BACK UP	1	K				
22	53U374-1	NUT;PISTON	1					
23	E1330544	SCREW;SET	1					
24	E0502149	BOLT;SOCKET	14					
25	53U509-1	PIPE BAND ASS'Y-H	1					
26	00P374-1	BAND;PIPE	1					
27	E3110112	WASHER;SPRING	2					
28	E0020963	BOLT;HEX.	2					
29	53U510-1	PIPE BAND ASS'Y-R	2					
30	00P374-1	BAND;PIPE	2					
31	E3110112	WASHER;SPRING	4					
32	E0020963	BOLT;HEX.	4					

Key No	Part No	Description	Qty	S.C	Serial No	ICA	Replacable	Qty
33	53U319-1	PIPE ASS'Y-H	1					
34	E6300761	O-RING	1					
35	E3110112	WASHER;SPRING	4					
36	E0501546	BOLT;SOCKET	4					
37	03A534-0	U-BOLT	1					
38	E3110102	WASHER;SPRING	2					
39	E2022033	NUT;HEX	2					
40	53U373-1	PIPE ASS'Y-R	1					
41	E6300761	O-RING	1					
42	E3110112	WASHER;SPRING	4					
43	E0501546	BOLT;SOCKET	4					
44	00C270-0	CLAMP;PIPE	2					
45	E3110102	WASHER;SPRING	4					
46	E0020733	BOLT;HEX	4					
47	E8841022	NIPPLE;GREASE	2					
*	2440-9241KT	SEAL KIT;BUCKET CYL.	1	S				

Fig. 4270 BUCKET CYLINDER [1001 ~

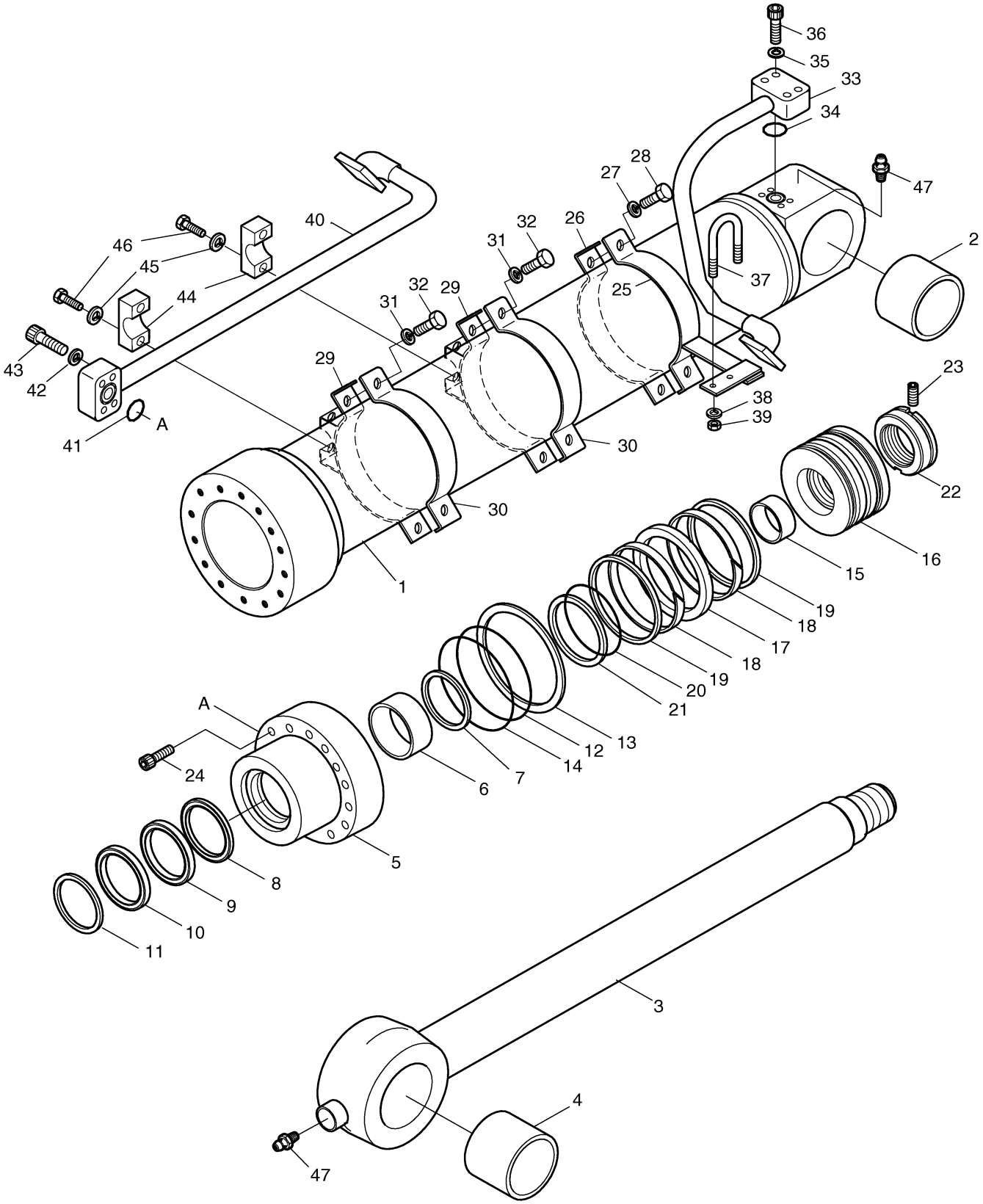

Fig. 4271 BUCKET CYLINDER [2300 ~]

Key No	Part No	Description	Qty	S.C	Serial No	ICA	Replacable	Qty
-	2440-9241H	CYLINDER;BUCKET	1		2300~3935	I	2440-9241I	1
-	2440-9241I	CYLINDER;BUCKET	1		3936~			
1	1.441-00171	TUBE ASS'Y	1					
2	110-00168	BUSH	1					
3	1.428-00153	ROD ASS'Y	1					
4	110-00168	BUSH	1					
5	1.442-00005	COVER;ROD	1					
6	110-00080	DD-BUSH	1					
7	115-00063	RING;RETAINING	1					
8	1.180-00657	SEAL;BUFFER	1	K				
9	115-00071	U-PACKING	1	K				
10	1.180-00658	RING;BACK UP	1	K				
11	115-00072	WIPER;DUST	1	K				
12	115-00073	RING;RETAINING	1					
13	S8011351	O-RING	1	K				
14	180-00270	RING;BACK UP	1	K				
15	2180-1217D96	O-RING	1	K				
16	1.411-00003	RING;CUSHION	1					
17	1.409-00132	PISTON	1					
18	180-00271	SEAL;SLIPPER	1	K				
19	115-00079	RING;WEAR	2	K				
20	115-00080	RING;SLYD	2	K				
21	S8010701	O-RING	1	K				
22	180-00268	RING;BACK UP	1	K				
23	121-00045	NUT;PISTON	1					
24	1.120-00219	SCREW;SET	1					
25	S2222272	BOLT	14					
26	1.124-00060	PIPE BAND ASS`Y-H	1					
27	124-00052	BAND;PIPE	1					
28	S5100703	WASHER;SPRING	2					
29	S0560453	BOLT M12X1.75X35	2					
30	124-00066	PIPE BAND ASS'Y-R	2		2300~3935			
30	K9001157	PIPE BAND ASS`Y-R	1		3936~			
31	124-00052	BAND;PIPE	2		2300~3935			
31	124-00052	BAND;PIPE	1		3936~			
32	S5100703	WASHER;SPRING	4		2300~3935			

Key No	Part No	Description	Qty	S.C	Serial No	ICA	Replacable	Qty
32	S5100703	WASHER;SPRING	2		3936~			
33	S0560453	BOLT M12X1.75X35	4		2300~3935			
33	S0560453	BOLT M12X1.75X35	2		3936~			
34	1.140-00165	PIPE ASS`Y-H	1					
35	S8000341	O-RING	1					
36	S5100703	WASHER;SPRING	4					
37	S2215961	BOLT;SOCKET	4					
38	120-00159	U-BOLT	1		2300~3935			
38	K9001158	U-BOLT	1		3936~			
39	S5100603	WASHER	2					
40	S4012633	NUT	2					
41	1.140-00238	PIPE ASS`Y-R	1					
42	S8000341	O-RING	1					
43	S5100703	WASHER;SPRING	4					
44	S2215961	BOLT;SOCKET	4					
45	124-00060	CLAMP;PIPE	2		2300~3935			
45	K9001159	CLAMP;PIPE	1		3936~			
46	S5100603	WASHER	4		2300~3935			
46	S5102903	WASHER	1		3936~			
47	S0558761	BOLT	4		2300~3935			
47	S0521853	BOLT	1		3936~			
48	S6710032	NIPPLE;GREASE	2					
*	2440-9241HKT	SEAL KIT;BUCKET CYL.	1					

Fig. 4271 BUCKET CYLINDER [2300 ~]

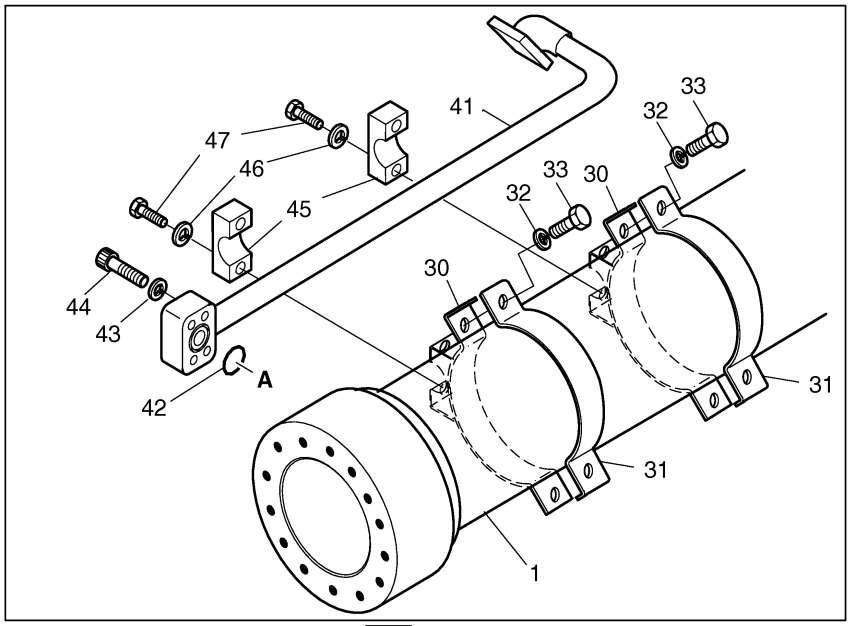

Serial No. 1001~3935

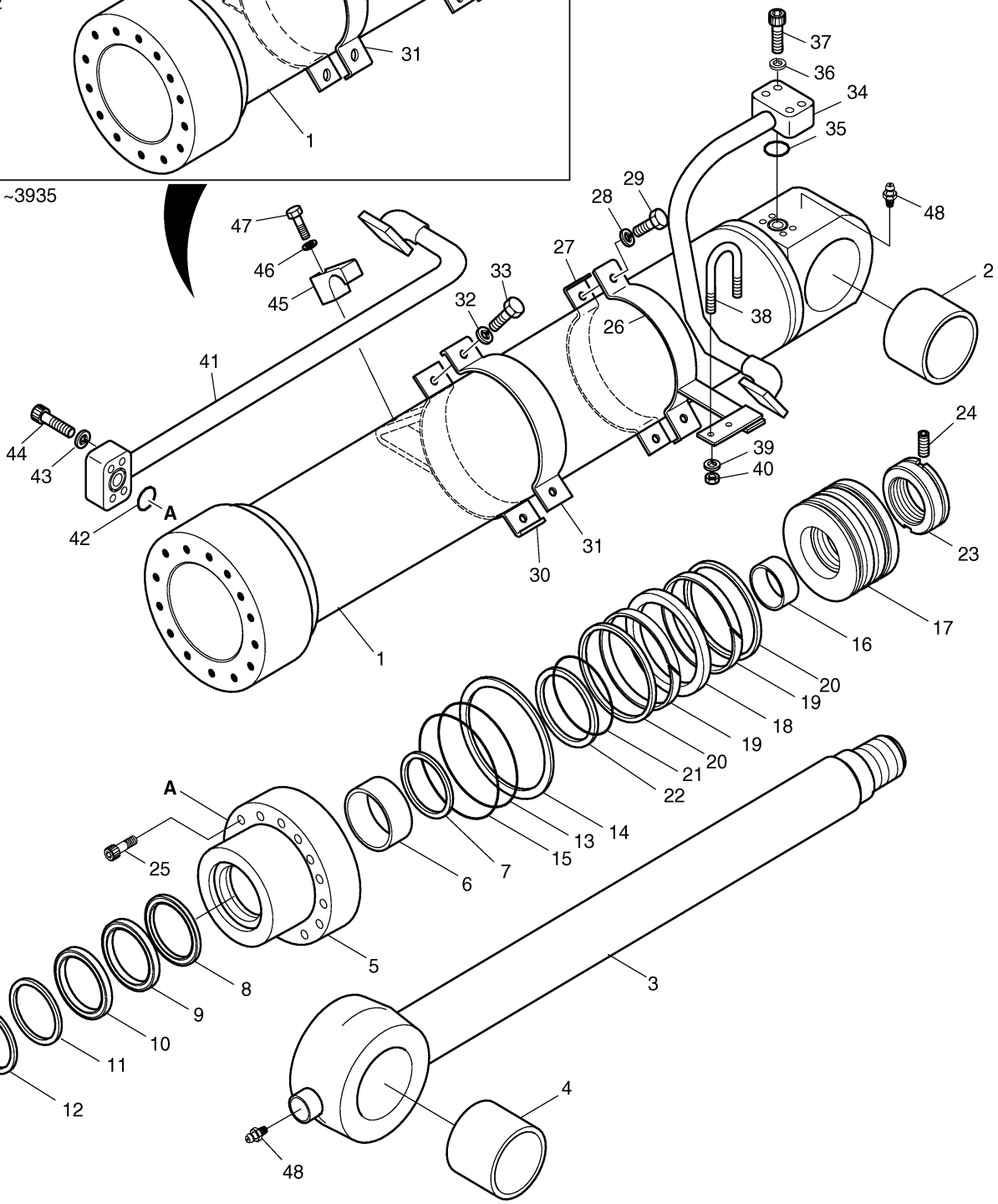

DOOSAN Doosan Infracore

Fig. 4280 BUCKET CYLINDER-2.5M ARM

Key No	Part No	Description	Qty	S.C	Serial No	ICA	Replacable	Qty
-	2440-9282C	BUCKET CYLINDER	1		1001~1019	I	2440-9282E	1
-	2440-9282E	BUCKET CYLINDER	1		1020~2279	I	2440-9282G	1
1	53U403-3	TUBE ASS'Y	1					
2	00B123-0	BUSH	1					
3	53U367-3	ROD ASS'Y	1		1001~1019			
3	53U367-4	ROD ASS'Y	1		1020~			
4	00B123-0	BUSH	1					
5	53U372-1	ROD COVER	1					
6	E8412281	BUSH;DD	1					
7	00M313-0	RING;RETAINING	1					
8	E5500300	SEAL;BUFFER	1	K				
9	E5303200	U-PACKING	1	K				
10	E6020300	WIPER;DUST	1	K				
11	00M315-0	RING;RETAINING	1					
12	E6311741	O-RING	1	K				
13	53B316-0	RING;BACK UP	1	K				
14	E6490059	O-RING	1	K				
15	00C306-0	RING;CUSHION	1		1001~1019			
15	00C365-0	RING;CUSHION	1		1020~			
16	53U370-1	PISTON	1					
17	E5130320	SEAL;SLIPPER	1	K				
18	00Z109-0	RING;WEAR	2	K				
19	00R730-0	RING;SLYD	2	K				
20	E6311341	O-RING	1	K				
21	53U252-0	RING;BACK UP	1	K				
22	53U374-1	NUT;PISTON	1					
23	E1330544	SCREW;SET	1					
24	E0502149	BOLT;SOCKET	14					
25	53U509-1	PIPE BAND ASS'Y-H	1					
26	00P374-1	BAND;PIPE	1					
27	E3110112	WASHER;SPRING	2					
28	E0020963	BOLT;HEX.	2					
29	53U510-1	PIPE BAND ASS'Y-R	1					
30	00P374-1	BAND;PIPE	1					
31	E3110112	WASHER;SPRING	2					
32	E0020963	BOLT;HEX.	2					

Key No	Part No	Description	Qty	S.C	Serial No	ICA	Replacable	Qty
33	53U510-1	PIPE BAND ASS'Y-R	1					
34	00P374-1	BAND;PIPE	1					
35	E3110112	WASHER;SPRING	2					
36	E0020963	BOLT;HEX.	2					
37	53U401-1	PIPE ASS'Y-H	1					
38	E6300761	O-RING	1					
39	E3110112	WASHER;SPRING	4					
40	E0501546	BOLT;SOCKET	4					
41	03A534-0	U-BOLT	1					
42	E3110102	WASHER;SPRING	2					
43	E2022033	NUT;HEX	2					
44	00C270-0	CLAMP;PIPE	1					
45	E3110102	WASHER;SPRING	2					
46	E0020733	BOLT;HEX	2					
47	53U402-1	PIPE ASS'Y-R	1					
48	E6300761	O-RING	1					
49	E3110112	WASHER;SPRING	4					
50	E0501546	BOLT;SOCKET	4					
51	00C270-0	CLAMP;PIPE	1					
52	E3110102	WASHER;SPRING	2					
53	E0020733	BOLT;HEX	2					
54	E8841022	NIPPLE;GREASE	2					
*	2440-9241KT	SEAL KIT;BUCKET CYL.	1	S				

Fig. 4280 BUCKET CYLINDER-2.5M ARM

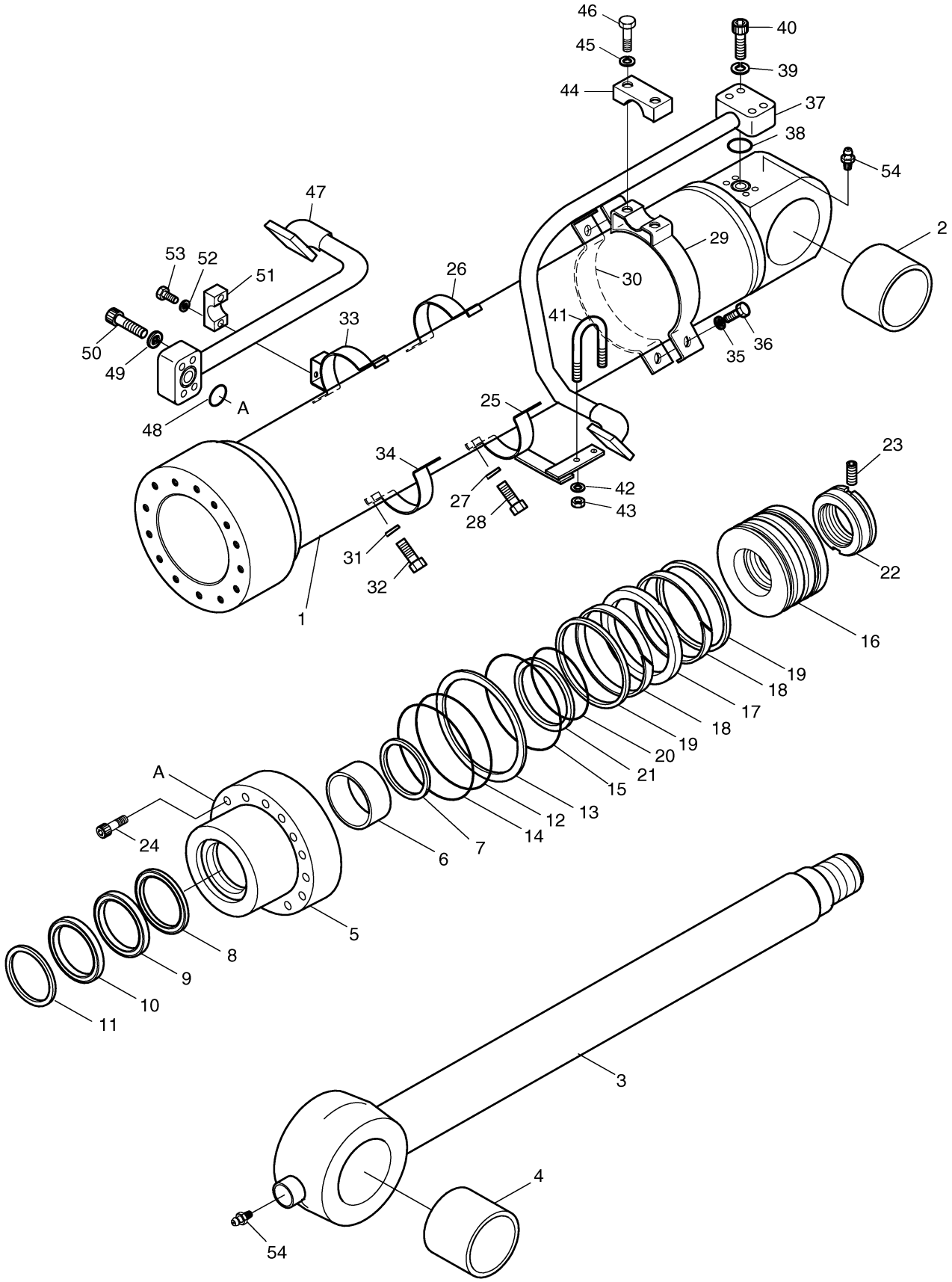

Fig. 4281 BUCKET CYLINDER-2.5M ARM

Key No	Part No	Description	Qty	S.C	Serial No	ICA	Replacable	Qty
-	2440-9282G	BUCKET CYLINDER	1		2280~3949	I	2440-9282H	1
-	2440-9282H	BUCKET CYLINDER	1		3950~			
1	53U403-3	TUBE ASS'Y	1					
2	00B123-0	BUSH	1					
3	53U367-5	ROD ASS'Y	1					
4	00B123-0	BUSH	1					
5	53U648-0	ROD COVER	1					
6	E8412281	BUSH;DD	1					
7	00M313-0	RING;RETAINING	1					
8	E5500301	SEAL;BUFFER	1	K				
9	E5320802	U-PACKING	1	K				
10	E6671040	RING;BACK UP	1	K				
11	E6020300	WIPER;DUST	1	K				
12	00M315-0	RING;RETAINING	1					
13	E6311741	O-RING	1	K				
14	53B316-1	RING;BACK UP	1	K				
15	E6490059	O-RING	1	K				
16	00C365-0	RING;CUSHION	1					
17	53U370-1	PISTON	1					
18	E5130320	SEAL;SLIPPER	1	K				
19	00Z109-0	RING;WEAR	2	K				
20	00R730-0	RING;SLYD	2	K				
21	E6311341	O-RING	1	K				
22	53U252-1	RING;BACK UP	1	K				
23	53U374-1	NUT;PISTON	1					
24	E1330544	SCREW;SET	1					
25	E0502149	BOLT;SOCKET	14					
26	53U509-1	PIPE BAND ASS'Y-H	1					
27	00P374-1	BAND;PIPE	1					
28	E3110112	WASHER;SPRING	4					
29	E0020973	BOLT;HEX.	4					
30	53U510-2	PIPE BAND ASS'Y-R	2		2280~3949			
30	53U640-0	PIPE BAND ASS'Y-R	1		3950~			
31	00P374-1	BAND;PIPE	2					
32	E3110112	WASHER;SPRING	4					
33	E0020683	BOLT;HEX	4					

Key No	Part No	Description	Qty	S.C	Serial No	ICA	Replacable	Qty
34	53U401-1	PIPE ASS'Y-H	1					
35	E6300761	O-RING	1					
36	E3110112	WASHER;SPRING	4					
37	E0501546	BOLT;SOCKET	4					
38	03A534-0	U-BOLT	1		2280~3949			
38	00U210-0	U-BOLT	1		3950~			
39	E3110102	WASHER;SPRING	2					
40	E2022033	NUT;HEX	2					
41	00C270-0	CLAMP;PIPE	2		2280~3949			
41	53A770-0	CLAMP;PIPE	1		3950~			
42	E3110102	WASHER;SPRING	4		2280~3949			
42	E3110132	WASHER;SPRING	1		3950~			
43	E0020743	BOLT	4		2280~3949			
43	E0021593	BOLT	1		3950~			
44	53U402-1	PIPE ASS'Y-R	1					
45	E6300761	O-RING	1					
46	E3110112	WASHER;SPRING	4					
47	E0501546	BOLT;SOCKET	4					
48	E8841022	NIPPLE;GREASE	2					
*	2440-9241HKT	SEAL KIT;BUCKET CYL.	1					

Fig. 4281 BUCKET CYLINDER-2.5M ARM

Serial No. 1001~3949

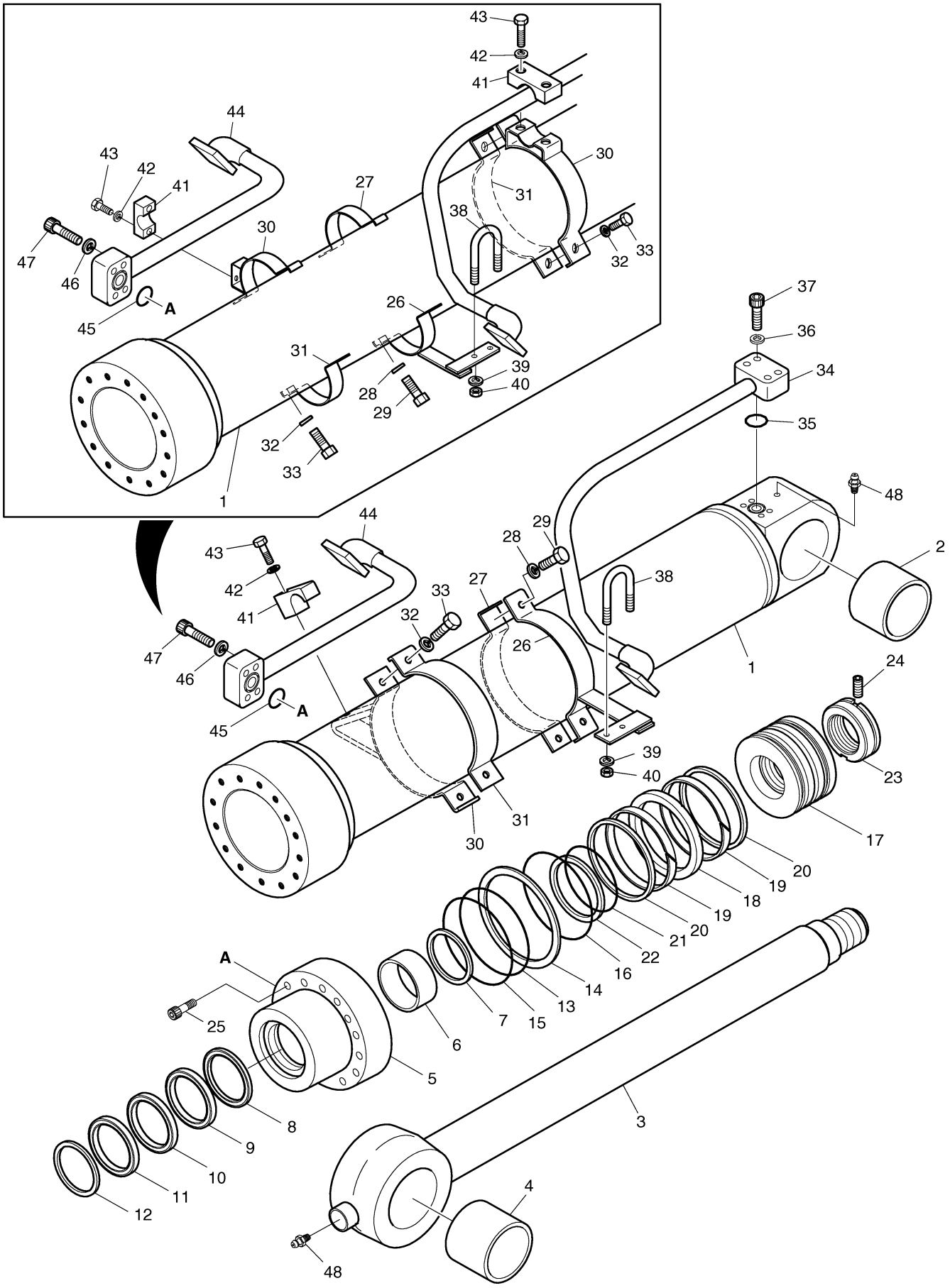

DOOSAN Doosan Infracore

Fig. 4290 BUCKET CYLINDER-7M ARM

Key No	Part No	Description	Qty	S.C	Serial No	ICA	Replacable	Qty
-	2440-9233C	BUCKET CYLINDER	1					
1	53U295-1	TUBE ASS'Y	1					
2	00B119-0	BUSH	1					
3	53U302-1	ROD ASS'Y	1					
4	00B119-0	BUSH	1					
5	53U307-0	PISTON	1					
6	E5130190	SEAL;SLIPPER	1	K				
7	00Z116-0	RING;WEAR	2	K				
8	00R726-0	RING;SLYD	2	K				
9	E6490082	O-RING	1	K				
10	53U258-0	RING;BACK UP	2	K				
11	00C301-0	RING;CUSHION	1					
12	53U309-1	NUT;PISTON	1					
13	E1330544	SCREW;SET	1					
14	53U306-1	ROD COVER	1					
15	E8412163	DU-BUSH	1					
16	00M321-0	RING;RETAINING	1					
17	E5500200	SEAL;BUFFER	1	K				
18	E5302620	U-PACKING	1	K				
19	E6020200	WIPER;DUST	1	K				
20	00M323-0	RING;RETAINING	1					
21	E6311481	O-RING	1	K				
22	53U259-0	RING;BACK UP	1	K				
23	E6311501	O-RING	1	K				
24	E0501839	BOLT;SOCKET HEX.	8					
25	03U522-3	PIPE ASS'Y-H	1					
26	E6300471	O-RING	2					
27	E0500936	BOLT;SOCKET	8					
28	E3110092	WASHER;SPRING	8					
29	53U310-1	PIPE ASS'Y-R	1					
30	53U256-0	PIPE BAND ASS'Y	2					
31	04B320-0	BAND PIPE	2					
32	E0020683	BOLT;HEX	4					
33	E3110102	WASHER;SPRING	8					
34	00C266-0	CLAMP;PIPE	2					
35	E0020712	BOLT;HEX.	4					

Key No	Part No	Description	Qty	S.C	Serial No	ICA	Replacable	Qty
36	E8841022	NIPPLE;GREASE	2					
*	2440-9233KT	SEAL KIT;BUCKET CYL.	1					

Fig. 4290 BUCKET CYLINDER-7M ARM

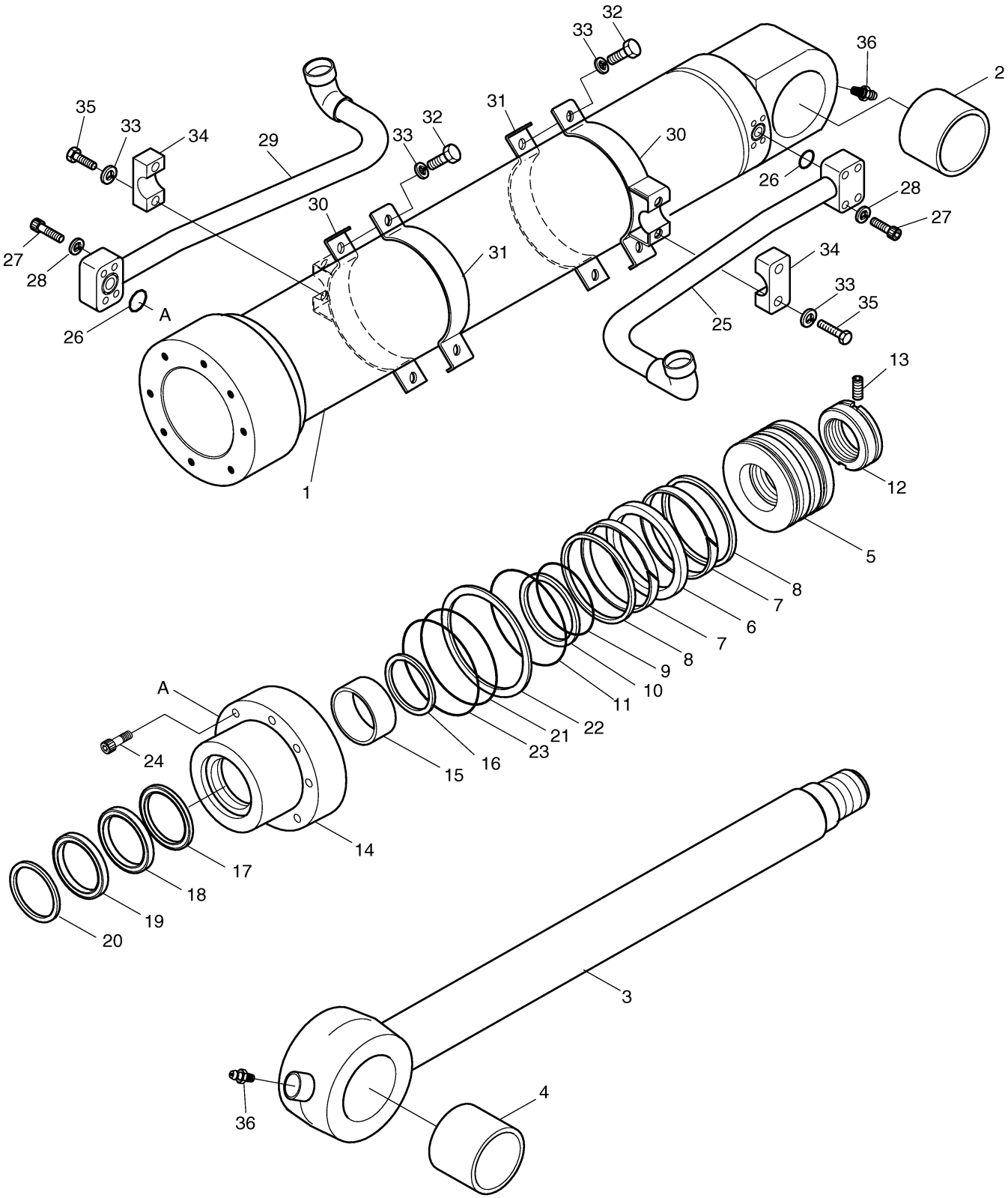

Fig. 4300 BOOM CYLINDER(L.H)-LOCK

Key No	Part No	Description	Qty	S.C	Serial No	ICA	Replacable	Qty
-	2440-6497G	CYLINDER;BOOM(L.H)	1		1001~1832	I	440-00414	1
-	440-00414	CYLINDER;BOOM(L.H)	1		1833~2299	I	440-00414A	1
1	53B368-4	TUBE ASS'Y	1		1001~1832			
1	53B484-0	TUBE ASS'Y	1		1833~			
2	00B168-0	BUSH	1					
3	53B358-5	ROD ASS'Y	1		1001~1832			
3	53B358-6	ROD ASS'Y	1		1833~			
4	00B123-0	BUSH	1					
5	53B362-2	COVER;ROD	1					
6	E8412282	BUSH;DU	1					
7	00M314-0	RING;RETAINING	1					
8	E5500310	SEAL;BUFFER	1	K				
9	E5303260	PACKING;U	1	K				
10	E6020310	WIPER;DUST	1	K				
11	00M316-0	RING;RETAINING	1					
12	E6311741	O-RING	1	K				
13	53B316-0	RING;BACK UP	1	K	1001~1832	I	53B316-1	1
13	53B316-1	RING;BACK UP	1	K	1833~			
14	E6490059	O-RING	1	K				
15	00C368-0	RING;CUSHION	1					
16	53B361-1	PISTON	1					
17	E5130320	SEAL;SLIPPER	1	K				
18	00Z109-0	RING;WEAR	1	K				
19	00R730-0	RING;SLYD	2	K				
20	E6311421	O-RING	1	K				
21	53B315-0	RING;BACK UP	2	K	1001~1832	I	53B315-1	2
21	53B315-1	RING;BACK UP	2	K	1833~			
22	80A478-2	NUT;PISTON	1					
23	E1330544	SCREW;SET	1					
24	E0502149	BOLT;SOCKET	14					
25	53B421-0	PIPE BAND ASS'Y	1					
26	03A725-0	BAND;PIPE	1					
27	E3110102	WASHER;SPRING	2					
28	E0020673	BOLT;HEX	2					
29	53B366-2	PIPE ASS'Y-R	1		1001~1832			
29	53B884-0	PIPE ASS'Y-R	1		1833~			

Key No	Part No	Description	Qty	S.C	Serial No	ICA	Replacable	Qty
30	E6300761	O-RING	1					
31	E3110112	WASHER;SPRING	4					
32	E0501546	BOLT;SOCKET	4					
33	00C260-0	CLAMP;PIPE	1					
34	E3110112	WASHER;SPRING	1					
35	E0021023	BOLT;HEX	1					
36	E8841022	NIPPLE;GREASE	2					
37	140-00044A	PIPE ASS'Y-H	1		1001~1832			
37	53B886-0	PIPE ASS'Y-H	1		1833~			
*	2440-9238KT	SEAL KIT;BOOM CYL.	1					

Fig. 4300 BOOM CYLINDER(L.H)-LOCK

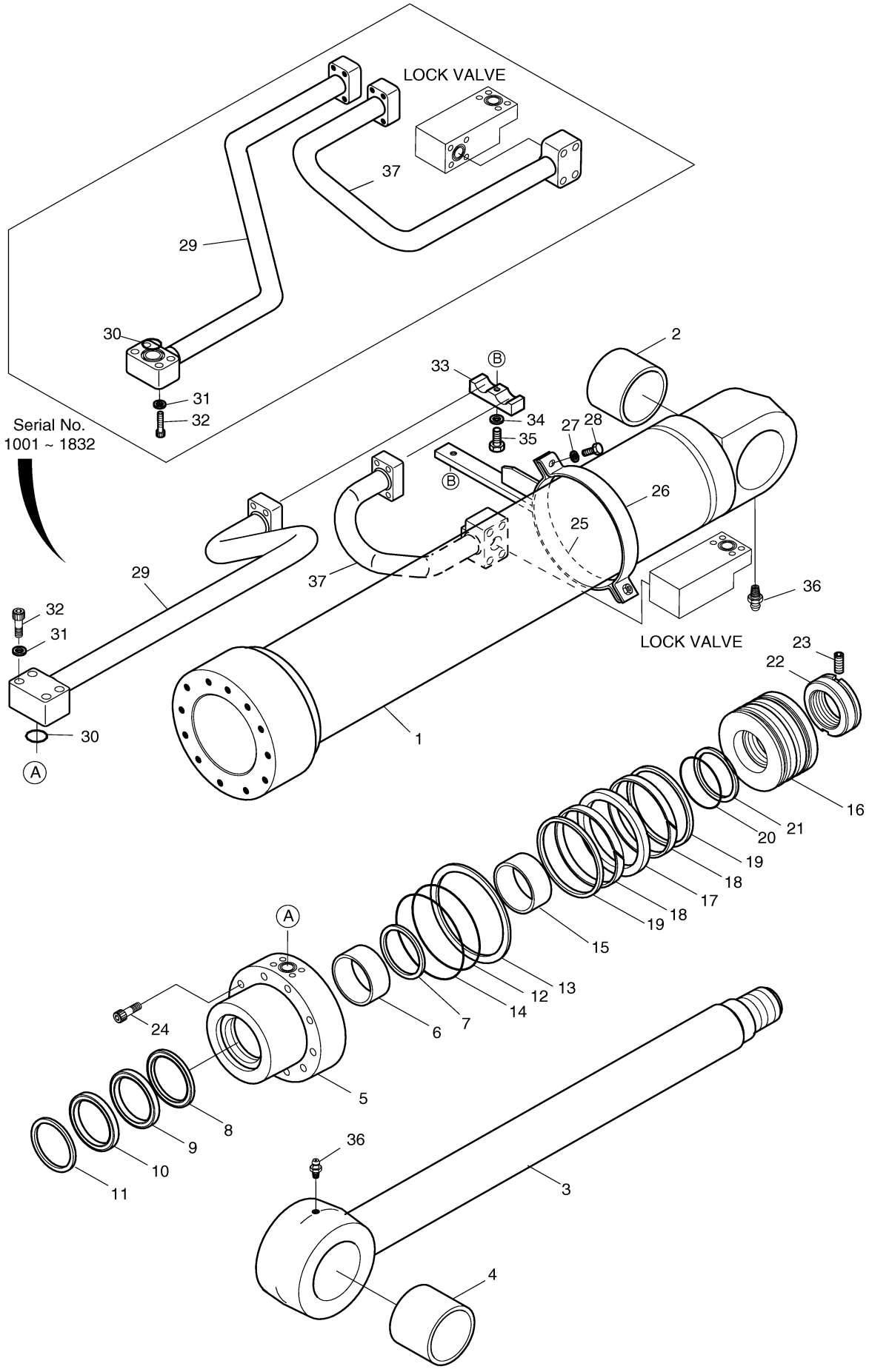

DOOSAN Doosan Infracore

Fig. 4301 BOOM CYLINDER(L.H)-LOCK

Key No	Part No	Description	Qty	S.C	Serial No	ICA	Replacable	Qty
-	440-00414A	CYLINDER;BOOM(L.H)	1		2300~			
1	1.441-00298	TUBE ASS'Y	1					
2	110-00169	BUSH	1					
3	1.444-00008	ROD ASS'Y	1					
4	110-00168	BUSH	1					
5	1.442-00006	COVER;ROD	1					
6	110-00110	DD-BUSH	1					
7	115-00051	RING;RETAINING	1					
8	1.180-00659	SEAL;BUFFER	1	K				
9	1.180-00660	U-PACKING	1	K				
10	1.180-00661	RING;BACK UP	1	K				
11	115-00099	WIPER;DUST	1	K				
12	115-00092	RING,RETAINING	1					
13	S8011351	O-RING	1	K				
14	1.180-00662	RING;BACK UP	1	K				
15	2180-1217D96	O-RING	1	K				
16	1.411-00002	RING;CUSHION	1					
17	409-00026	PISTON	1					
18	180-00271	SEAL;SLIPPER	1	K				
19	115-00079	RING;WEAR	2	K				
20	115-00080	RING;SLYD	2	K				
21	S8010751	O-RING	1	K				
22	1.180-00663	RING;BACK UP	1	K				
23	121-00055	NUT,PISTON	1					
24	1.120-00219	SCREW;SET	1					
25	S2222272	BOLT	14					
26	124-00159	PIPE BAND ASS`Y	1					
27	124-00108	BAND;PIPE	1					
28	S5100603	WASHER	2					
29	S0558153	BOLT	2					
30	1.193-00005	PIPE ASS`Y-R(L.H)	1					
31	S8000341	O-RING	1					
32	S5100703	WASHER;SPRING	4					
33	S2215961	BOLT;SOCKET	4					
34	124-00158	CLAMP;PIPE	1					
35	S5100703	WASHER;SPRING	1					

Key No	Part No	Description	Qty	S.C	Serial No	ICA	Replacable	Qty
36	S0561053	BOLT	1					
37	S6710032	NIPPLE;GREASE	2					
38	1.193-00007	PIPE ASS'Y-H(L.H)	1					
*	440-00416AKT	SEAL KIT;BOOM CYL.	1					

Fig. 4301 BOOM CYLINDER(L.H)-LOCK

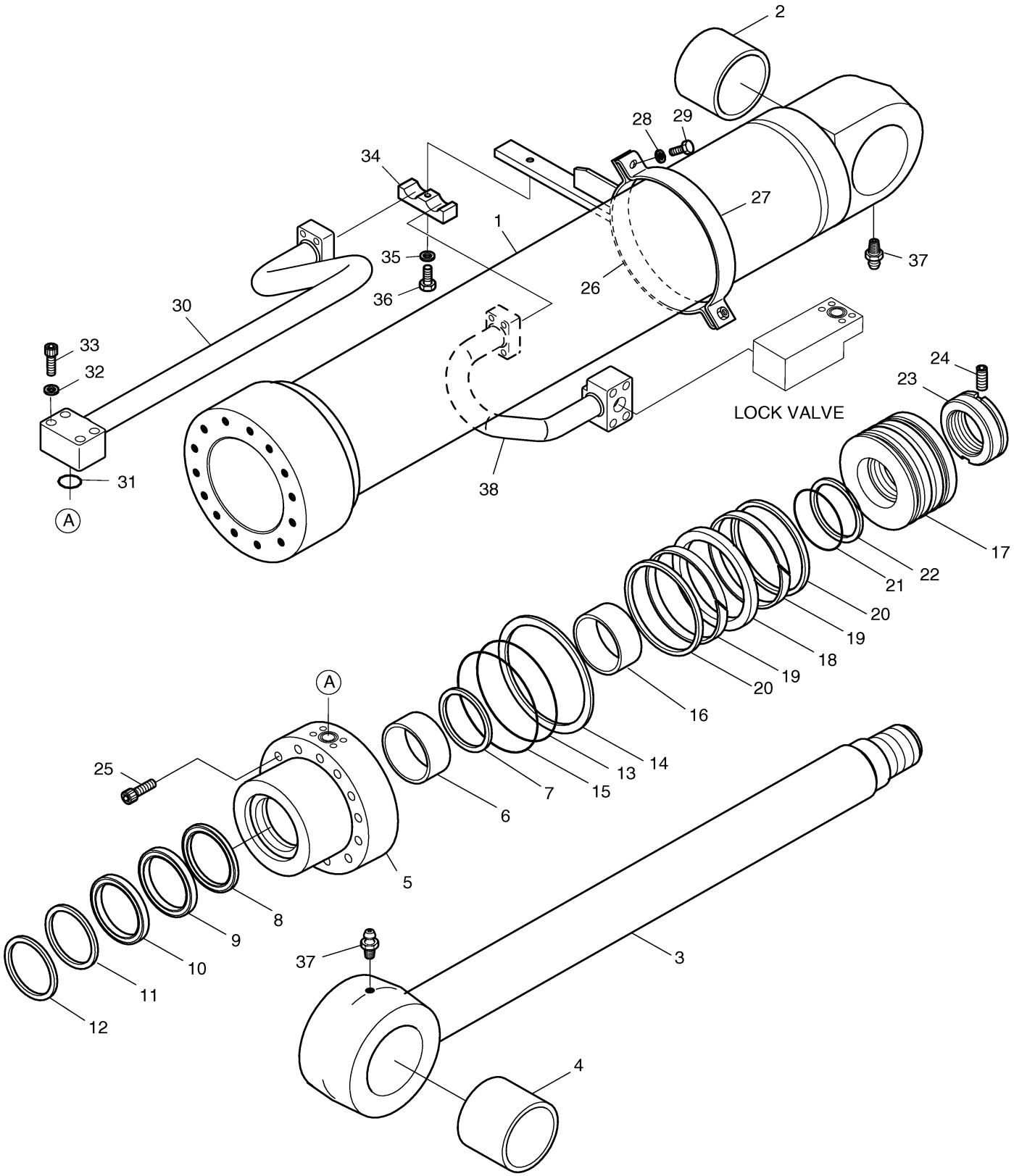

DOOSAN Doosan Infracore

Fig. 4310 BOOM CYLINDER(R.H)-LOCK

Key No	Part No	Description	Qty	S.C	Serial No	ICA	Replacable	Qty
-	2440-6498G	CYLINDER;BOOM(R.H)	1		1001~1832	I	440-00415	1
-	440-00415	CYLINDER;BOOM(R.H)	1		1833~2299	I	440-00415A	1
1	53B368-4	TUBE ASS'Y	1		1001~1832			
1	53B484-0	TUBE ASS'Y	1		1833~			
2	00B168-0	BUSH	1					
3	53B358-5	ROD ASS'Y	1		1001~1832			
3	53B358-6	ROD ASS'Y	1		1833~			
4	00B123-0	BUSH	1					
5	53B362-2	COVER;ROD	1					
6	E8412282	BUSH;DU	1					
7	00M314-0	RING;RETAINING	1					
8	E5500310	SEAL;BUFFER	1	K				
9	E5303260	PACKING;U	1	K				
10	E6020310	WIPER;DUST	1	K				
11	00M316-0	RING;RETAINING	1					
12	E6311741	O-RING	1	K				
13	53B316-0	RING;BACK UP	1	K	1001~1832	I	53B316-1	1
13	53B316-1	RING;BACK UP	1	K	1833~			
14	E6490059	O-RING	1	K				
15	00C368-0	RING;CUSHION	1					
16	53B361-1	PISTON	1					
17	E5130320	SEAL;SLIPPER	1	K				
18	00Z109-0	RING;WEAR	1	K				
19	00R730-0	RING;SLYD	2	K				
20	E6311421	O-RING	1	K				
21	53B315-0	RING;BACK UP	2	K	1001~1832	I	53B315-1	2
21	53B315-1	RING;BACK UP	2	K	1833~			
22	80A478-2	NUT;PISTON	1					
23	E1330544	SCREW;SET	1					
24	E0502149	BOLT;SOCKET	14					
25	53B421-0	PIPE BAND ASS'Y	1					
26	03A725-0	BAND;PIPE	1					
27	E3110102	WASHER;SPRING	2					
28	E0020673	BOLT;HEX	2					
29	53B365-2	PIPE ASS'Y-R	1		1001~1832			
29	53B883-0	PIPE ASS'Y-R	1		1833~			

Key No	Part No	Description	Qty	S.C	Serial No	ICA	Replacable	Qty
30	E6300761	O-RING	1					
31	E3110112	WASHER;SPRING	4					
32	E0501546	BOLT;SOCKET	4					
33	00C260-0	CLAMP;PIPE	1					
34	E3110112	WASHER;SPRING	1					
35	E0021023	BOLT;HEX	1					
36	E8841022	NIPPLE;GREASE	2					
37	140-00043A	PIPE ASS'Y-H	1		1001~1832			
37	53B885-0	PIPE ASS'Y-H	1		1833~			
*	2440-9238KT	SEAL KIT;BOOM CYL.	1					

Fig. 4310 BOOM CYLINDER(R.H)-LOCK

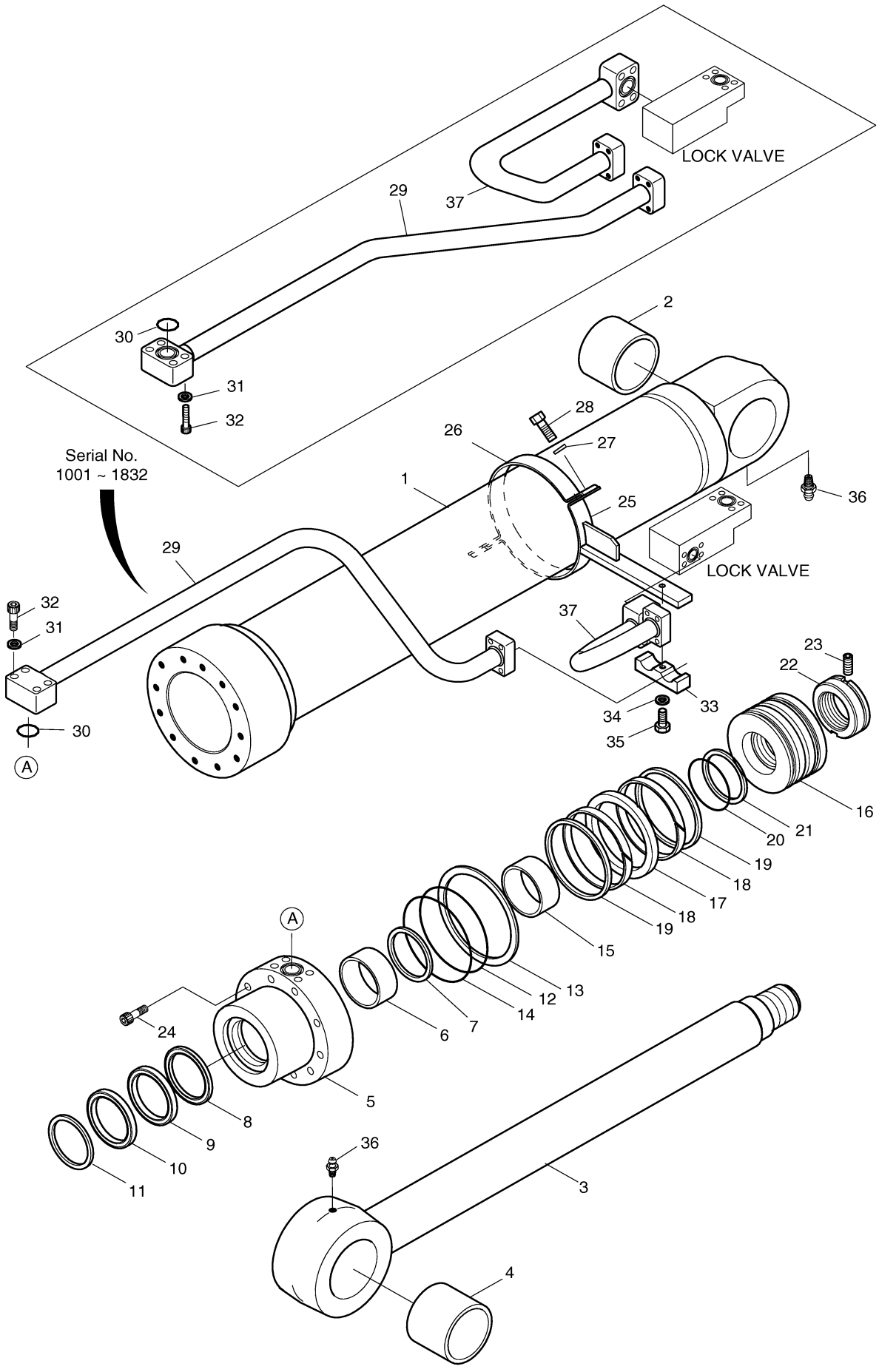

Fig. 4311 BOOM CYLINDER(R.H)-LOCK

Key No	Part No	Description	Qty	S.C	Serial No	ICA	Replacable	Qty
-	440-00415A	CYLINDER;BOOM(R.H)	1		2300~			
1	1.441-00298	TUBE ASS'Y	1					
2	110-00169	BUSH	1					
3	1.444-00008	ROD ASS'Y	1					
4	110-00168	BUSH	1					
5	1.442-00006	COVER;ROD	1					
6	110-00110	DD-BUSH	1					
7	115-00051	RING;RETAINING	1					
8	1.180-00659	SEAL;BUFFER	1	K				
9	1.180-00660	U-PACKING	1	K				
10	1.180-00661	RING;BACK UP	1	K				
11	115-00099	WIPER;DUST	1	K				
12	115-00092	RING,RETAINING	1					
13	S8011351	O-RING	1	K				
14	1.180-00662	RING;BACK UP	1	K				
15	2180-1217D96	O-RING	1	K				
16	1.411-00002	RING;CUSHION	1					
17	409-00026	PISTON	1					
18	180-00271	SEAL;SLIPPER	1	K				
19	115-00079	RING;WEAR	2	K				
20	115-00080	RING;SLYD	2	K				
21	S8010751	O-RING	1	K				
22	1.180-00663	RING;BACK UP	1	K				
23	121-00055	NUT,PISTON	1					
24	1.120-00219	SCREW;SET	1					
25	S2222272	BOLT	14					
26	124-00159	PIPE BAND ASS`Y	1					
27	124-00108	BAND;PIPE	1					
28	S5100603	WASHER	2					
29	S0558153	BOLT	2					
30	1.193-00006	PIPE ASS`Y-R(R.H)	1					
31	S8000341	O-RING	1					
32	S5100703	WASHER;SPRING	4					
33	S2215961	BOLT;SOCKET	4					
34	124-00158	CLAMP;PIPE	1					
35	S5100703	WASHER;SPRING	1					

Key No	Part No	Description	Qty	S.C	Serial No	ICA	Replacable	Qty
36	S0561053	BOLT	1					
37	S6710032	NIPPLE;GREASE	2					
38	1.193-00008	PIPE ASS'Y-H(R.H)	1					
*	440-00416AKT	SEAL KIT;BOOM CYL.	1					

Fig. 4311 BOOM CYLINDER(R.H)-LOCK

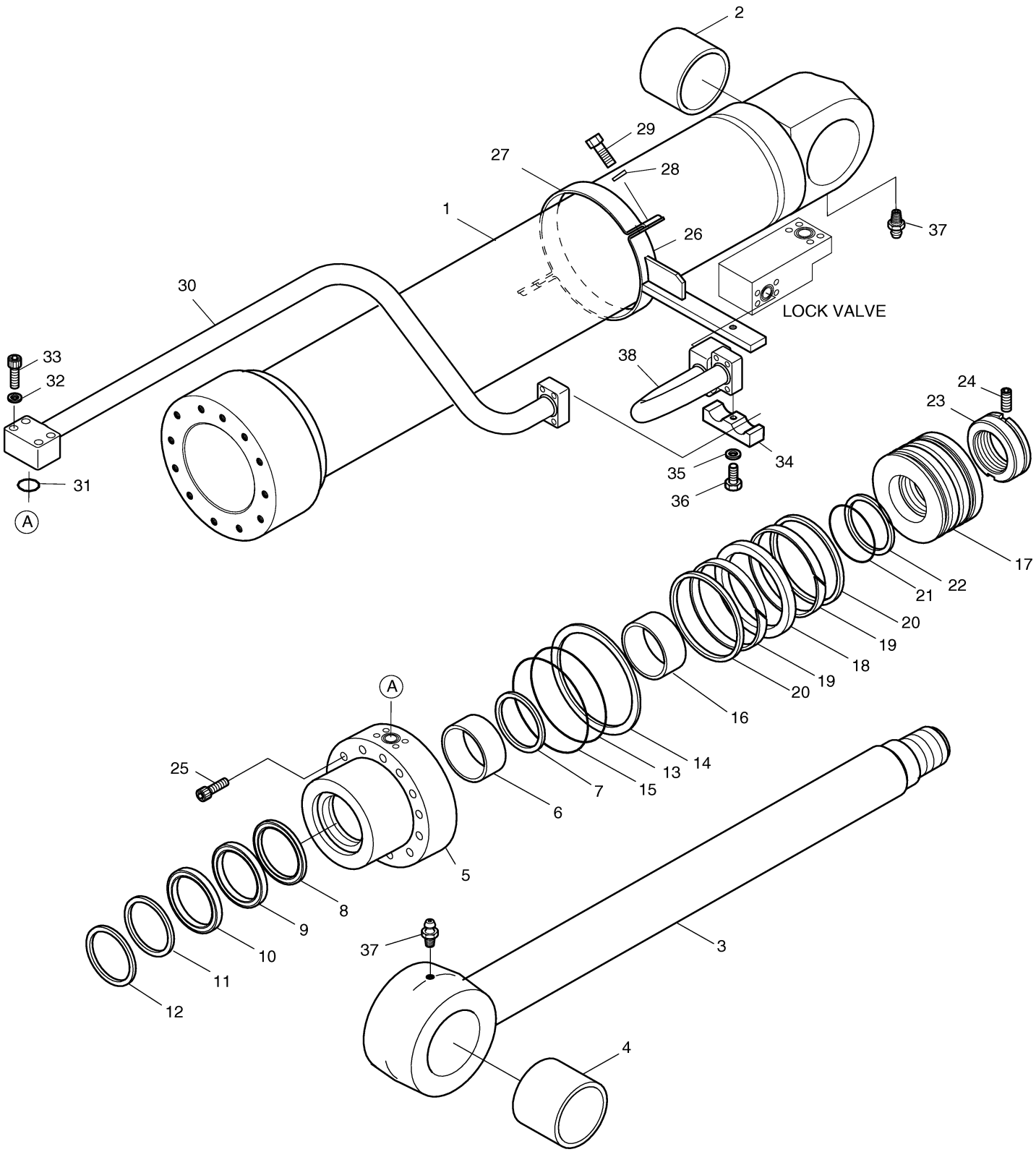

Fig. 4320 ARM CYLINDER-LOCK VALVE

Key No	Part No	Description	Qty	S.C	Serial No	ICA	Replacable	Qty
-	440-00268	CYLINDER;ARM	1		1001~2299	I	440-00268A	1
1	53A716-0	TUBE ASS'Y	1					
2	00B124-0	BUSH	1					
3	53A327-4	ROD ASS'Y	1					
4	00B124-0	BUSH	1					
5	53A333-1	ROD COVER	1					
6	E8412226	DD-BUSH	1					
7	00M316-0	RING;RETAINING	1					
8	E5500330	SEAL;BUFFER	1	K				
9	E5303380	U-PACKING	1	K				
10	E6020330	WIPER;DUST	1	K				
11	00M574-0	RING;RETAINING	1					
12	E6311781	O-RING	1	K				
13	53A359-0	RING;BACK UP	1	K				
14	E6490060	O-RING	1	K				
15	00C372-0	RING;CUSHION	1					
16	53A330-1	PISTON	1					
17	E5130340	SEAL;SLIPPER	1	K				
18	00Z111-0	RING;WEAR	2	K				
19	00R103-0	RING;SLYD	2	K				
20	E6311461	O-RING	1	K				
21	53A358-0	RING;BACK UP	2	K				
22	53A332-1	NUT;PISTON	1					
23	E1330544	SCREW;SET	1					
24	53A409-0	PLUNGER;CUSHION	1					
25	03A714-0	RING;STOP	1					
26	E0502439	BOLT;HEX SOCKET	12					
27	62E523-0	VALVE;CHECK	1					
28	03A729-0	SPRING	1					
29	03A728-0	SUPPORT;SPRING	1					
30	E1500030	PLUG	1					
31	53A552-1	PIPE BAND ASS'Y-H	1					
32	00P376-1	BAND;PIPE	1					
33	E3110112	WASHER;SPRING	2					
34	E0020963	BOLT;HEX.	2					
35	53A564-1	PIPE BAND ASS'Y-R	1					

Key No	Part No	Description	Qty	S.C	Serial No	ICA	Replacable	Qty
36	00P376-1	BAND;PIPE	1					
37	E3110112	WASHER;SPRING	2					
38	E0020963	BOLT;HEX.	2					
39	53A718-0	PIPE ASS'Y-R	1					
40	03A534-0	U-BOLT	1					
41	E3110102	WASHER;SPRING	2					
42	E2022033	NUT;HEX	2					
43	00C270-0	CLAMP;PIPE	1					
44	E3110102	WASHER;SPRING	2					
45	E0020733	BOLT;HEX	2					
46	E8841022	NIPPLE;GREASE	2					
*	2440-9240KT	SEAL KIT;ARM CYL.	1					

Fig. 4320 ARM CYLINDER-LOCK VALVE

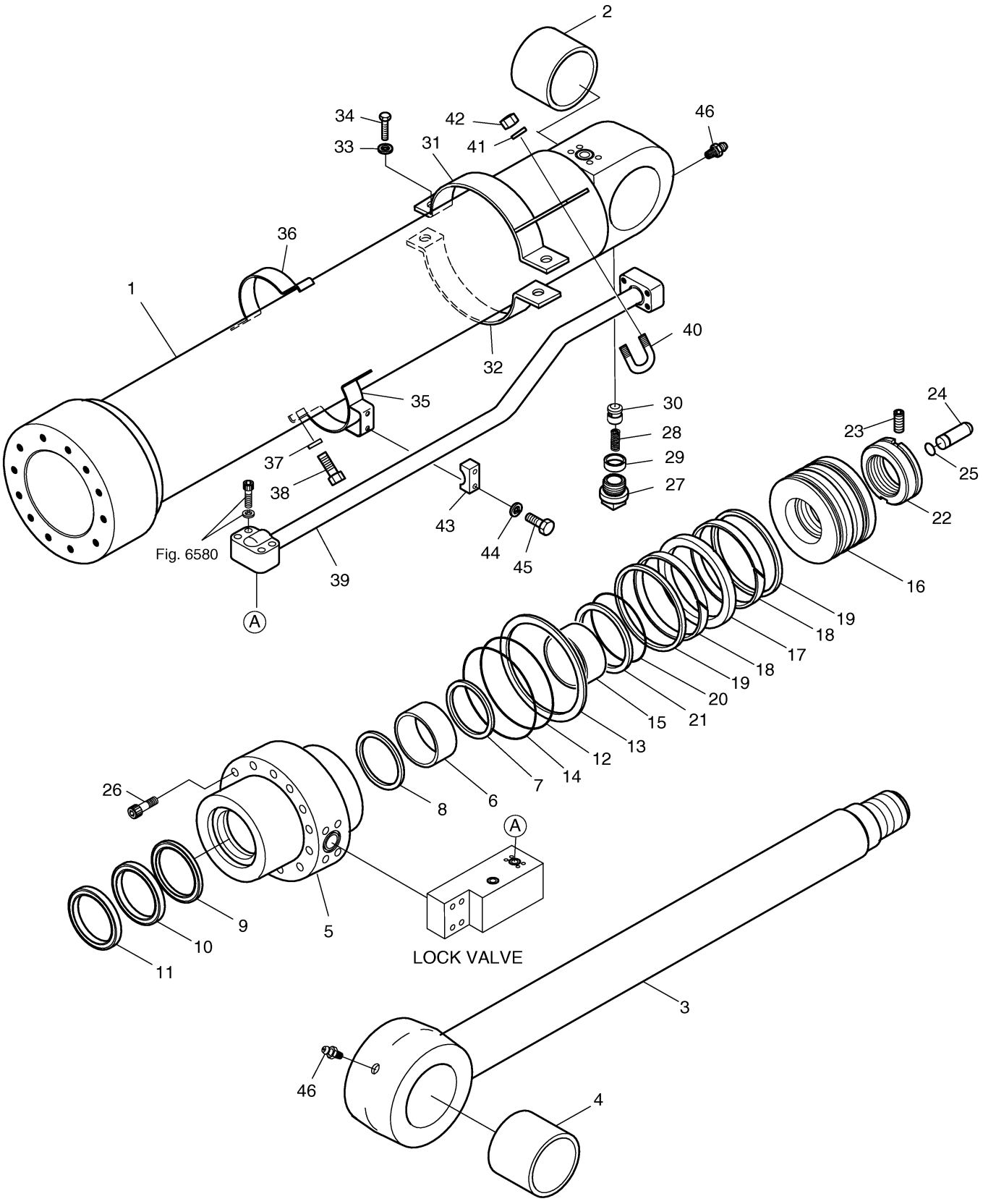

DOOSAN Doosan Infracore

Fig. 4321 ARM CYLINDER-LOCK VALVE

Key No	Part No	Description	Qty	S.C	Serial No	ICA	Replacable	Qty
-	440-00268A	CYLINDER;ARM	1		2300~3648	I	440-00268B	1
-	440-00268B	CYLINDER;ARM	1		3649~4260	I	K1036108	1
-	K1036108	CYLINDER;ARM	1		4261~			
1	1.441-00184	TUBE ASS'Y	1					
2	1.110-00041	BUSH	1					
3	1.444-00007	ROD ASS'Y	1		2300~4260	I	K9005666	1
3	K9005666	ROD ASS'Y	1		4261~			
4	1.110-00041	BUSH	1					
5	1.442-00004	COVER;ROD	1					
6	1.110-00071	DD-BUSH	1					
7	115-00092	RING,RETAINING	1					
8	1.180-00655	SEAL,BUFFER	1	K				
9	1.180-00656	PACKING,U	1	K				
10	1.180-00664	RING;BACK UP	1	K				
11	1.180-00489	WIPER,DUST	1	K				
12	115-00090	RING,RETAINING	1					
13	S8011451	O-RING	1	K				
14	180-00359	RING;BACK UP	1	K				
15	180-00363	O-RING	1	K				
16	1.411-00001	RING;CUSHION	1					
17	1.409-00130	PISTON	1					
18	180-00360	SEAL;SLIPPER	1	K				
19	115-00121	RING;WEAR	2	K				
20	115-00122	RING;SLYD	2	K				
21	S8010851	O-RING	1	K				
22	1.180-00279	RING;BACK UP	2	K				
23	1.121-00078	NUT;PISTON	1		1001~3648			
23	K9001169	NUT;PISTON	1		3649~			
24	1.120-00219	SCREW;SET	1					
25	424-00084	PLUNGER;CUSHION	1					
26	115-00081	RING;STOP	1					
27	S2225271	BOLT	12					
28	420-00131	VALVE;CHECK	1					
29	129-00071	SPRING	1					
30	1.195-00022	SUPPORT,SPRING	1					
31	2181-1116D3	PLUG	1					

Key No	Part No	Description	Qty	S.C	Serial No	ICA	Replacable	Qty
32	1.124-00052	PIPE BAND ASS'Y-H	1					
33	1.124-00054	BAND;PIPE	1					
34	S5100703	WASHER;SPRING	2					
35	S0560453	BOLT M12X1.75X35	2					
36	1.124-00057	PIPE BAND ASS'Y-R	1					
37	1.124-00054	BAND;PIPE	1					
38	S5100703	WASHER;SPRING	2					
39	S0560453	BOLT M12X1.75X35	2					
40	1.140-00246	PIPE ASS'Y-R	1					
41	120-00159	U-BOLT	1					
42	S5100603	WASHER	2					
43	S4012633	NUT	2					
44	124-00060	CLAMP;PIPE	1					
45	S5100603	WASHER	2					
46	S0558761	BOLT	2					
47	S6710032	NIPPLE;GREASE	2					
*	440-00257AKT	SEAL KIT;ARM CYL.	1					

Fig. 4321 ARM CYLINDER-LOCK VALVE

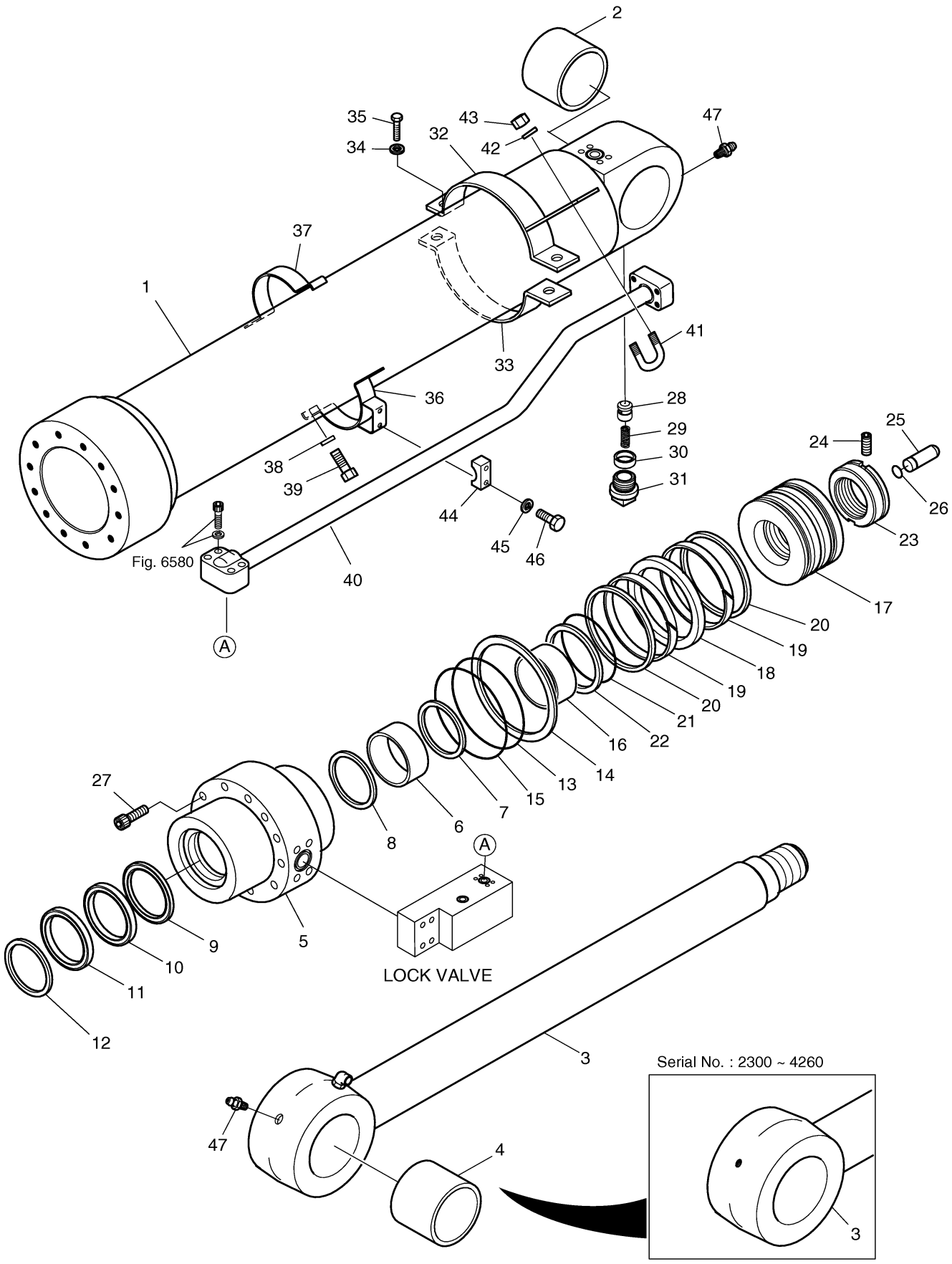

Fig. 4330 OPTION VALVE [1020 ~ 2464]

Key No	Part No	Description	Qty	S.C	Serial No	ICA	Replacable	Qty
-	420-00322	OPTION VALVE	1		1020~1214	I	420-00322B	1
-	420-00322B	OPTION VALVE	1		1215~1309	I	420-00322C	1
-	420-00322C	OPTION VALVE	1		1310~2464			
1	K9000439	BLOCK;MAIN	1	D				
2	K9000440	BLOCK;PILOT	1	D				
3	K9000441	VALVE;RELIEF	1					
3A	K9000442	SEAL KIT	1					
4	K9000443	VALVE;FLOW CONTROL	1					
4A	K9000444	SEAL KIT	1					
5	K9000445	VALVE;DIRE. CONT.	1					
6	K9000446	VALVE;SHUTTLE	2					
6A	K9000447	SEAL KIT	1					
7	2181-1950D1	PLUG	3					
8	S8000111	O-RING	3					
9	K9000448	BOLT;SOCKET	4					
10	S8000091	O-RING	4					
11	S2212861	BOLT;SOCKET M10X1.5X60	4					
12	S2205761	BOLT;SOCKET	2					
13	2180-1217D54	O-RING	4					
14	2180-1217D13	O-RING	2					
15	S5740470	PIN;SPRING	2					

Fig. 4330 OPTION VALVE [1020 ~ 2464]

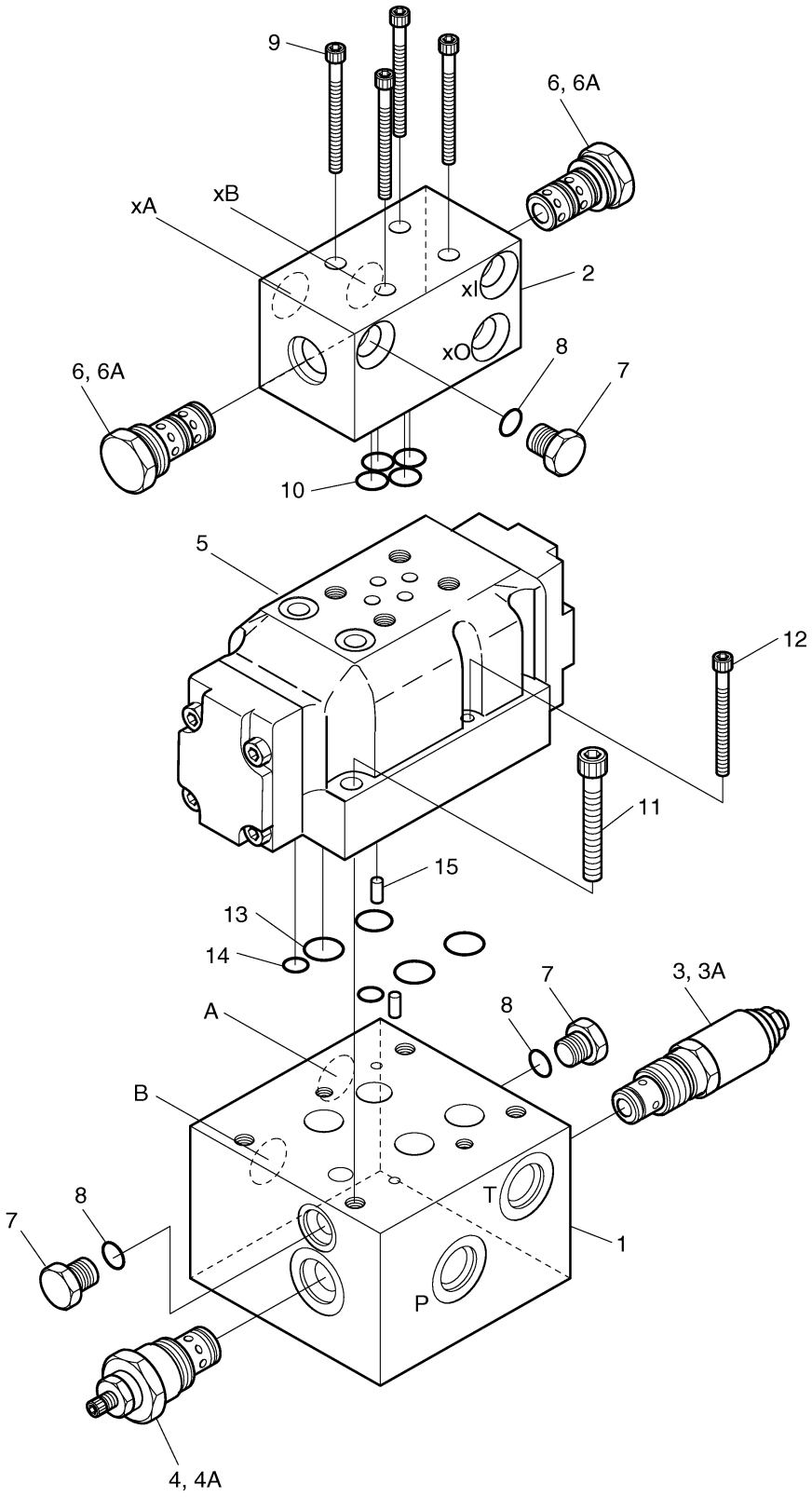

Fig. 4331 OPTION VALVE [2465 ~]

Key No	Part No	Description	Qty	S.C	Serial No	ICA	Replacable	Qty
-	K1002046	OPTION VALVE	1		2465~			
1	K9000449	BLOCK;MAIN	1	D				
2	K9000440	BLOCK;PILOT	1	D				
3	K9000450	VALVE;RELIEF	2					
3A	K9000451	SEAL KIT	1					
4	K9000452	VALVE;CHECK	2					
4A	K9000451	SEAL KIT	1					
5	K9000443	VALVE;FLOW CONTROL	1					
5A	K9000444	SEAL KIT	1					
6	K9000453	VALVE;CHECK	1					
6A	K9000454	SEAL KIT	1					
7	K9000445	VALVE;DIRE. CONT.	1					
8	K9000446	VALVE;SHUTTLE	2					
8A	K9000447	SEAL KIT	1					
9	K9000448	BOLT;SOCKET	4					
10	S8000091	O-RING	4					
11	S2212861	BOLT;SOCKET M10X1.5X60	4					
12	S2205761	BOLT;SOCKET	2					
13	2180-1217D54	O-RING	4					
14	2180-1217D13	O-RING	2					
15	S5740470	PIN;SPRING	2					

Fig. 4331 OPTION VALVE [2465 ~]

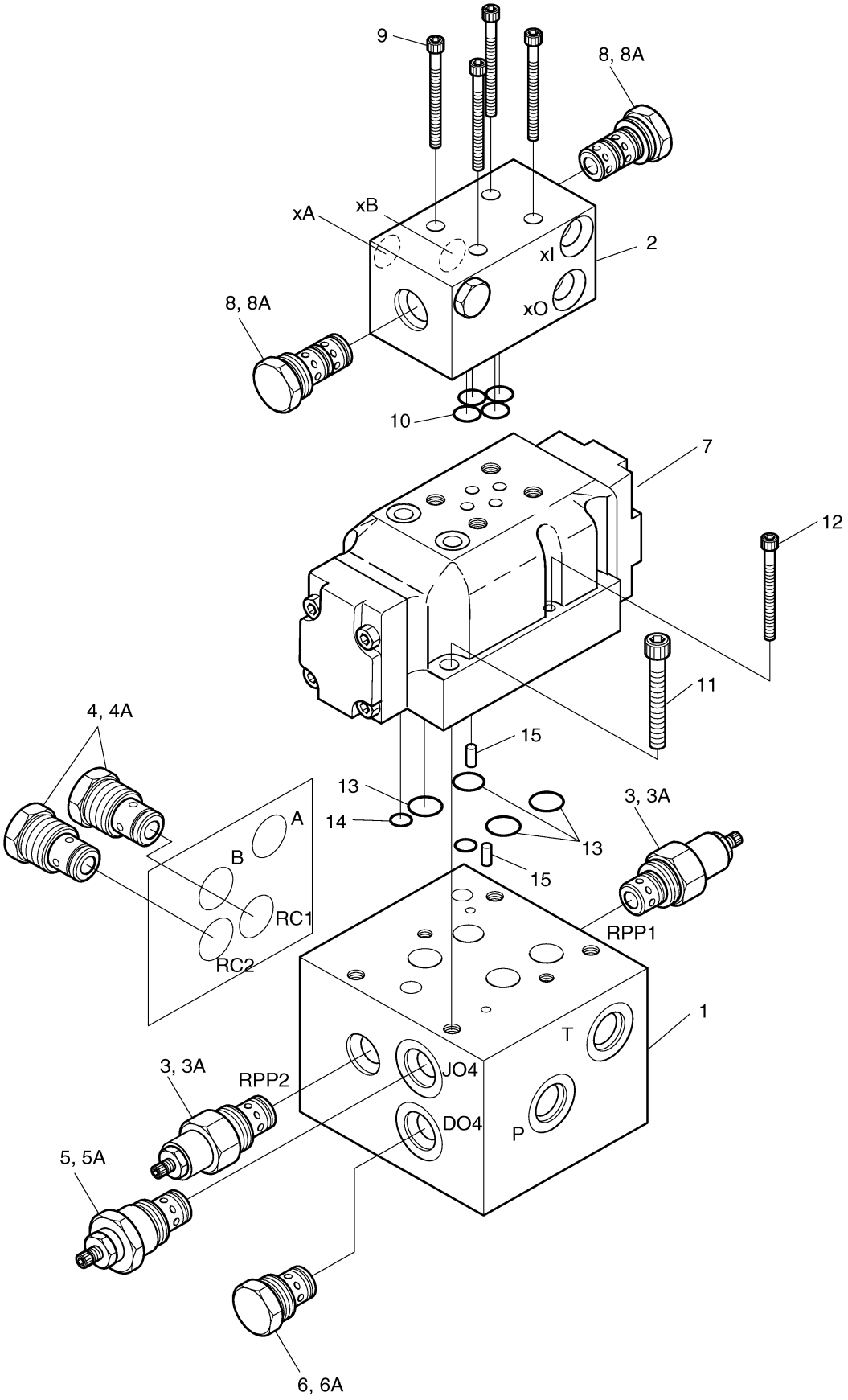

DOOSAN Doosan Infracore

Fig. 4340 BREAKER VALVE

Key No	Part No	Description	Qty	S.C	Serial No	ICA	Replacable	Qty
-	420-00340	VALVE;BREAKER	1		1001~2569	I	420-00340A	1
-	420-00340A	VALVE;BREAKER	1		2570~2675	I	420-00340B	1
-	420-00340B	VALVE;BREAKER	1		2676~			
1	-	BODY	1	D				
2	DF-S3A-00	VALVE;SOLENOID	1		1001~2675	I	TF-S3A-00	1
2	TF-S3A-00	VALVE;SOLENOID	1		2676~			
2A	DF-S3A-S-01	SEAL KIT	1		1001~2675			
2A	TF-S3A-S-01	SEAL KIT	1		2676~			
3	PBDB-LNN	VALVE;REDUCING	1					
3A	990-011-007	SEAL KIT	1					
4	CSAB-XXN	VALVE;SHUTTLE	1					
4A	990-011-007	SEAL KIT	1					
5	VDL24	COIL	1					
6	2181-1950D1	PLUG	1					
7	S8000111	O-RING	1					

Fig. 4340 BREAKER VALVE

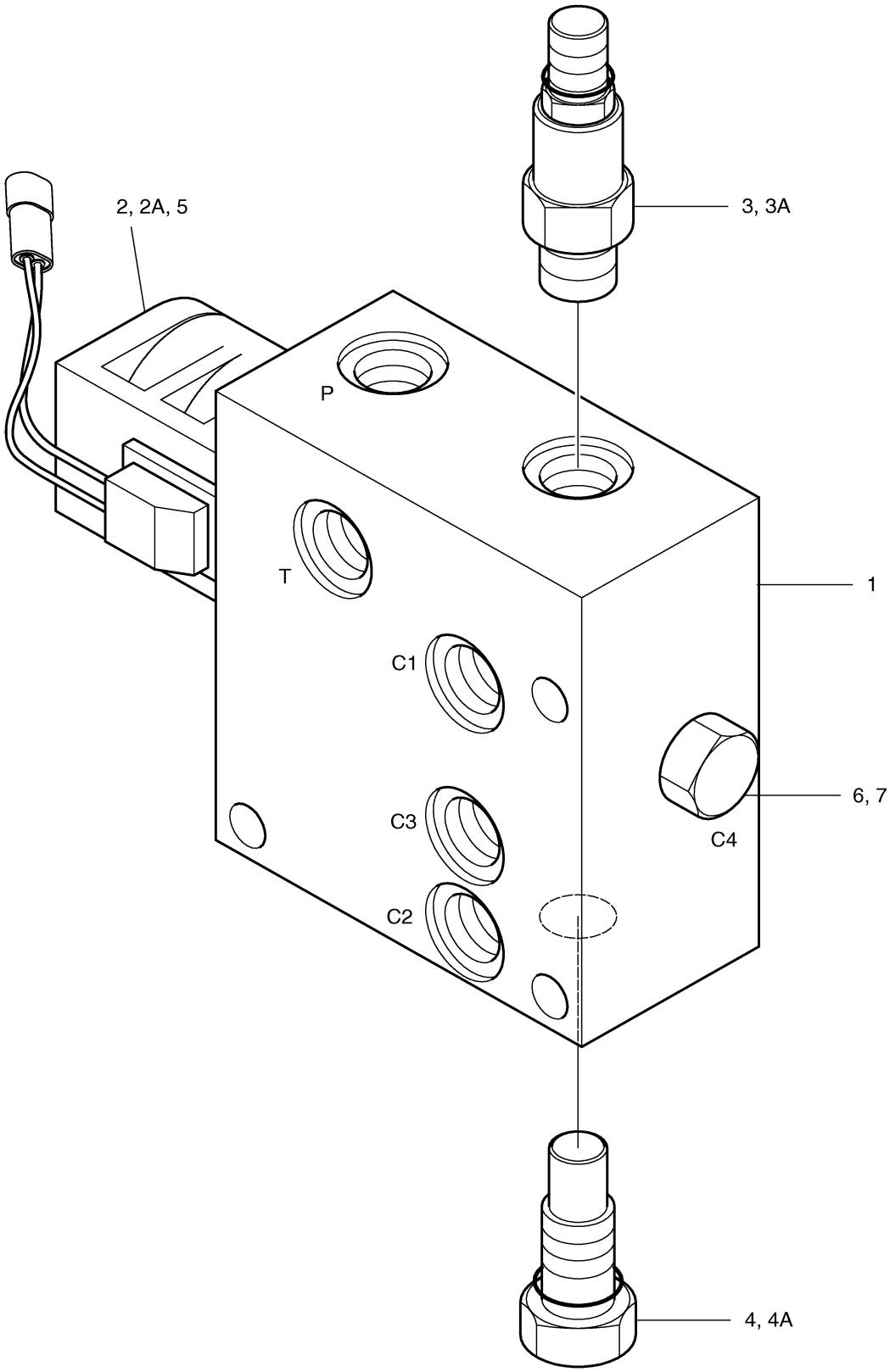

Fig. 4350 PEDAL VALVE

Key No	Part No	Description	Qty	S.C	Serial No	ICA	Replacable	Qty
-	420-00347	VALVE;PEDAL	1					
1	-	CASING	1	D				
2	-	COVER	1	D				
3	DU1010	BUSHING	2					
4	J24D2005	CAM	1	D				
5	J24D2006	BELLOWS	1					
6	JA1E1001	SPOOL ASS'Y	2					
6-1	-	SPOOL	1	D				
6-2	-	SHIM	1	D				
6-3	-	SEAT;SPRING	1	D				
6-4	-	SPRING	1	D				
6-5	-	SEAT;SPRING	1	D				
6-6	-	STOPPER	1	D				
7	J98D3007	PLUG ASS'Y	2					
7-1	-	PLUG	1	D				
7-2	-	O-RING	1	D				
7-3	-	SEAL	1	D				
7-4	-	SEAL;ROD	1	D				
7-5	-	ROD;PUSH	1	D				
8	J98D3003	SPRING	2					
9	S2209261	BOLT	2					
10	J24D2015	SCREW;SET	2					
11	S4014633	NUT	2					
12	J24D2016	SHAFT;CAM	1					
13	S3523601	SCREW;SET M8X12	1					

Fig. 4350 PEDAL VALVE

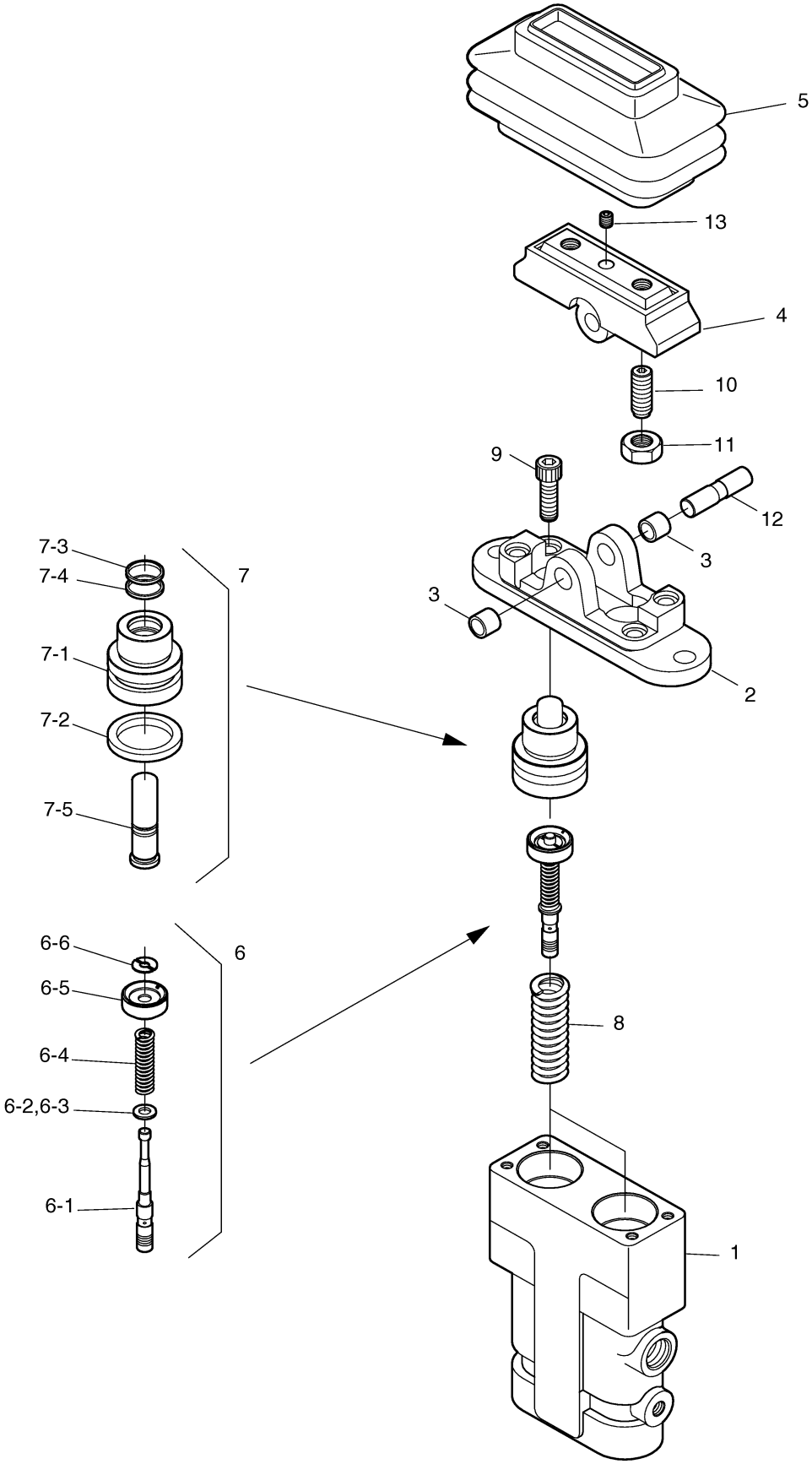

Fig. 4360 CONTROL VALVE(1) - KVMG270

Key No	Part No	Description	Qty	S.C	Serial No	ICA	Replacable	Qty
-	426-00199	VALVE;CONTROL	1		1001~4852	I	410105-00056	1
-	410105-00056	VALVE,CONTROL	1		4853~			
32	426-00168	POPET	2					
33	129-00126	SPRING	2					
57	114-00414	SPACER	1					
60	181-00633	PLUG ASS'Y	1					
61	2181-2337D13	REDUCER	1					
68	420-00257	VALVE;MAIN RELIEF	1					
69	420-00258	VALVE;OVERLOAD RELIEF	6					
71	181-00656	PLUG	1					
72	181-00701	PLUG ASS`Y	8					
75	S2212466	BOLT	8					
77	S2223266	BOLT;SOCKET	8					
81	S5010913	WASHER	8					
82	S8000141	O-RING	9	K				
83	S8000111	O-RING	1	K				
88	2181-2434	FLANGE	2					
89	2180-1217D109	O-RING	2	K				
90	181-00644	PLUG ASS'Y	2					
92	181-00647	PLUG ASSY	1					
93	181-00649	PLUG ASS'Y	2					
*	420-00295KT	SEAL KIT;CONTROL VALVE	1					

Fig. 4360 CONTROL VALVE(1) - KVMG270

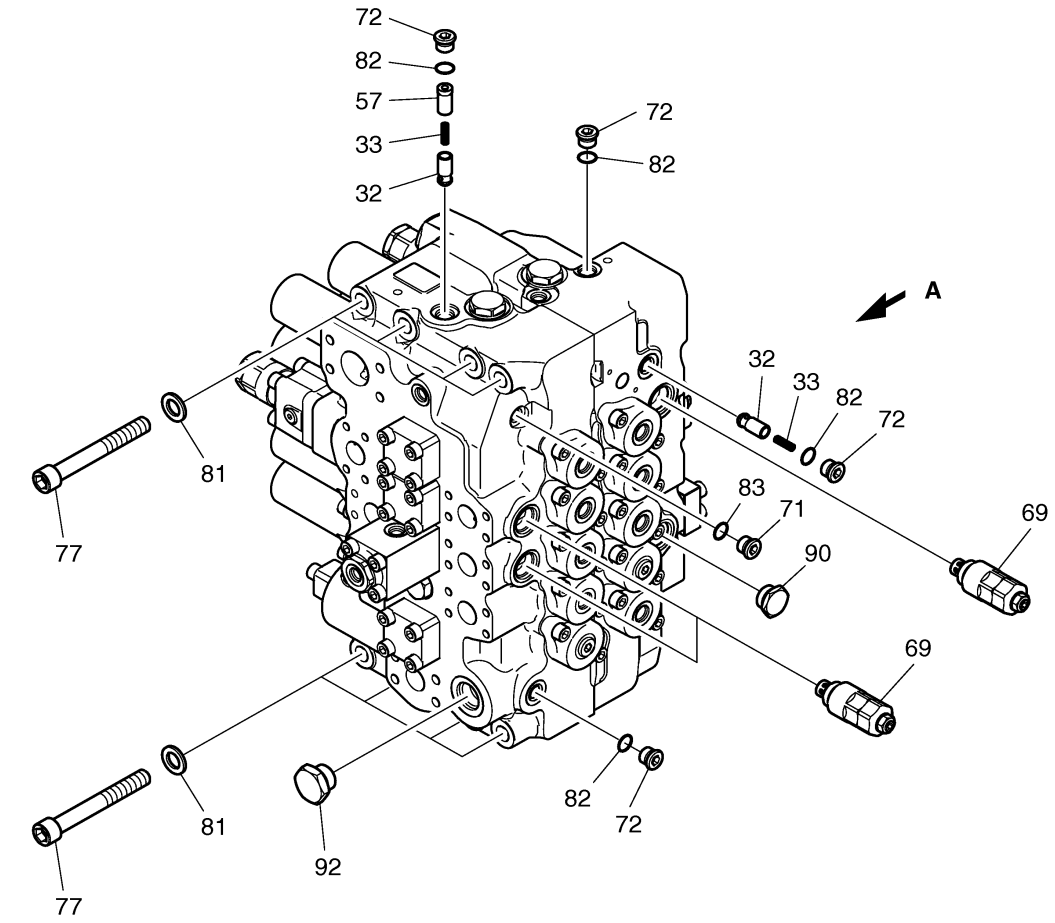

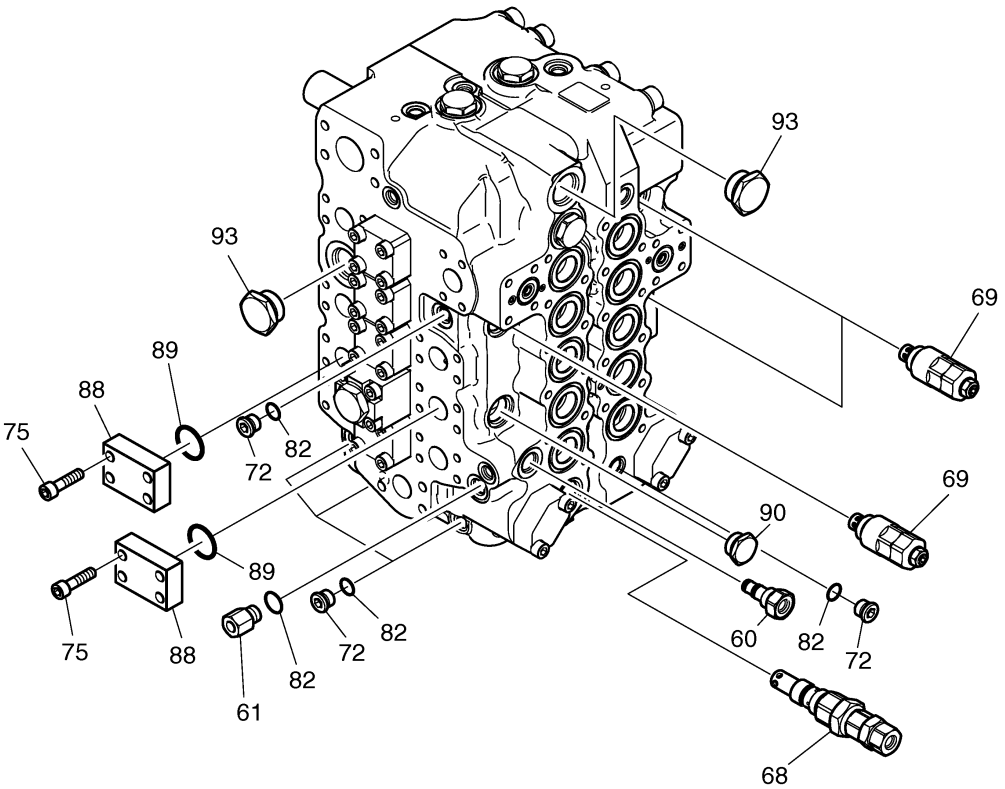

VIEW A

Fig. 4370 CONTROL VALVE(2) - KVMG270

Key No	Part No	Description	Qty	S.C	Serial No	ICA	Replacable	Qty
-	426-00199	VALVE;CONTROL	1		1001~4852	I	410105-00056	1
-	410105-00056	VALVE,CONTROL	1		4853~			
1	423-00096	HOUSING;VALVE	1	D				
2	424-00107	SPOOL ASS'Y-ARM2	1					
3	424-00109	SPOOL ASS'Y-BOOM1	1		1001~4852	Y	410205-00001	1
3	410205-00001	PLUNGER ASSY;BOOM 1	1		4853~			
4	424-00111	SPOOL ASS'Y-BUCKET	1		1001~4852	I	410205-00003	1
4	410205-00003	PLUNGER ASSY-BUCKET	1		4853~			
5	424-00113	SPOOL ASS'Y-TRAVEL	2					
6	424-00115	SPOOL ASS`Y-T/S	1					
7	S8010451	O-RING	20	K				
8	430-00033	CAP	10					
12	430-00035	CAP	10					
13	423-00097	HOUSING;VALVE	1	D				
14	424-00117	SPOOL ASS'Y-ARM1	1		1001~4852	Y	410205-00005	1
14	410205-00005	PLUNGER ASSY-ARM 1	1		4853~			
15	424-00119	SPOOL ASS'Y-BOOM2	1					
16	424-00121	SPOOL ASS'Y-SWING	1					
17	424-00123	SPOOL ASS`Y-OPTION	1					
50	23-0146	BALL;STEEL	1					
63	415-00037	PLUG;ORIFICE	1					
65	180-00403	O-RING	14	K				
66	180-00402	O-RING	7	K				
70	420-00259	FOOT RELIEF VALVE	2					
72	181-00701	PLUG ASS`Y	3					
74	S2212266	BOLT	40					
82	S8000141	O-RING	4	K				
91	181-00646	PLUG	1					

Fig. 4370 CONTROL VALVE(2) - KVMG270

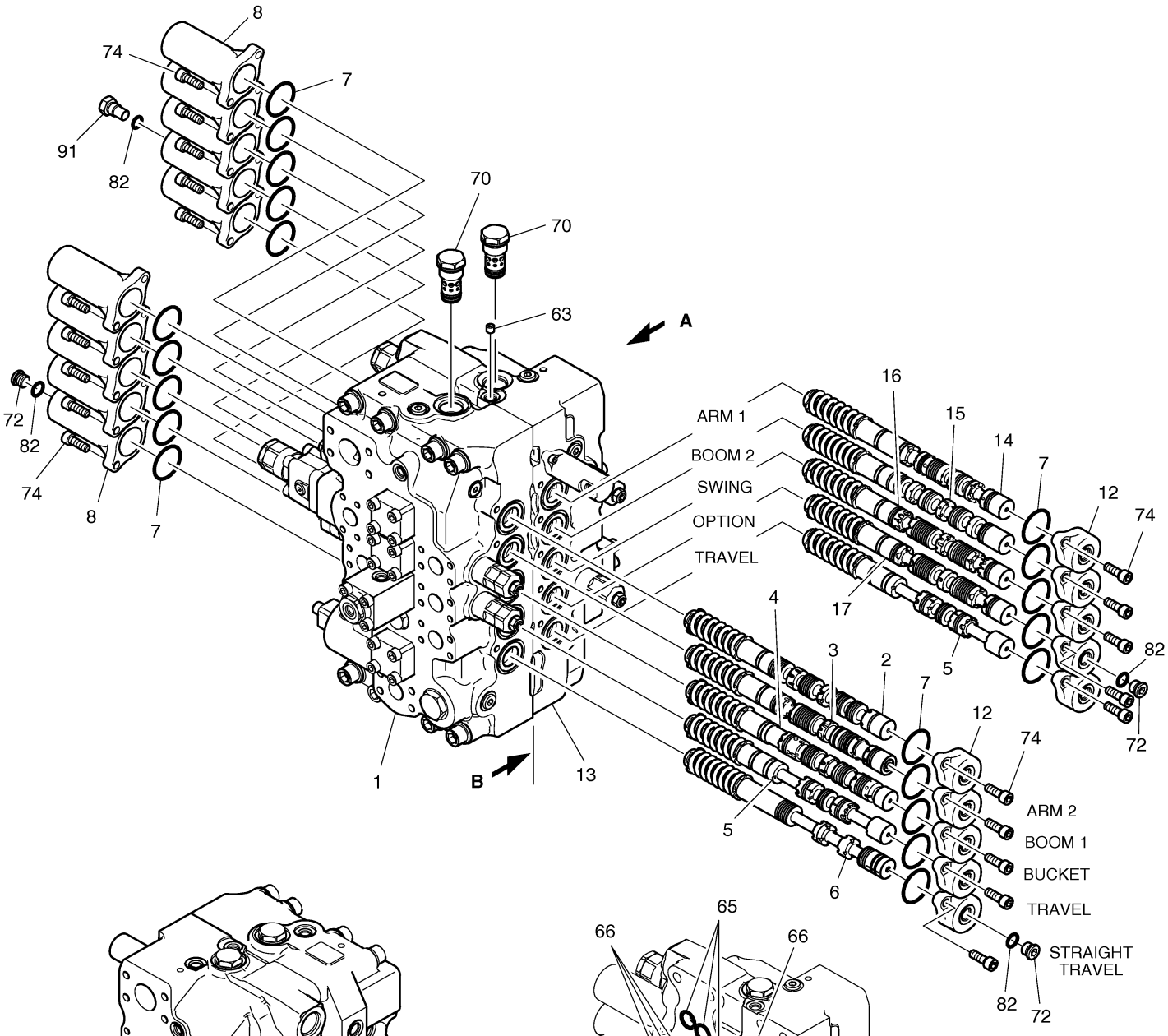

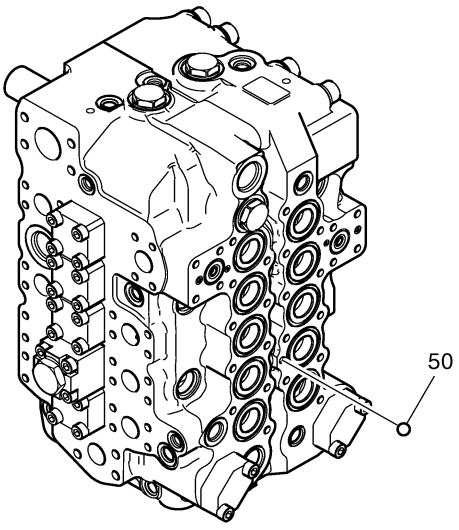

VIEW A

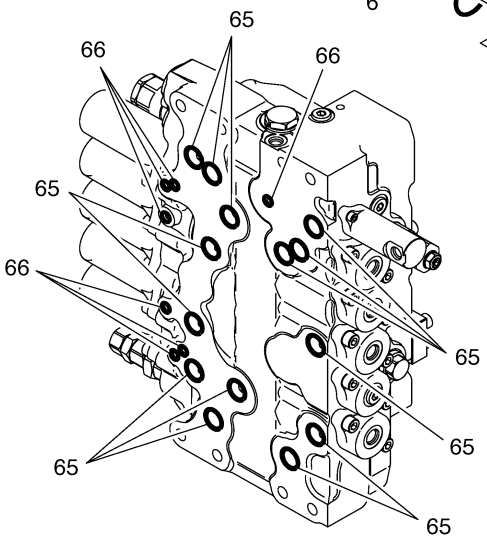

SECTION B

DOOSAN Doosan Infracore

Fig. 4380 CONTROL VALVE(3) - KVMG270

Key No	Part No	Description	Qty	S.C	Serial No	ICA	Replacable	Qty
-	426-00199	VALVE;CONTROL	1		1001~4852	I	410105-00056	1
-	410105-00056	VALVE,CONTROL	1		4853~			
18	430-00038	CAP	1					
19	S8000261	O-RING	1	K				
20	420-00382	SP VALVE ASS`Y	1					
21	420-00315	VALE ASS'Y;SWING PRIORITY	1					
34	426-00169	POPPET	7	D				
35	129-00127	SPRING	8					
36	S8000321	O-RING	9	K				
37	181-00628	FLANGE	7					
38	426-00170	POPPET	2					
39	129-00128	SPRING	2					
40	114-00411	SPACER ASS`Y	2					
41	S8000061	O-RING	2	K				
42	S8000041	O-RING	2	K				
43	181-00630	FLANGE	1					
44	426-00171	POPPET	1					
45	129-00130	SPRING	1					
46	430-00042	PLUG	1					
47	180-00398	O-RING	1	K				
48	129-00129	SPRING	1					
49	426-00172	POPPET	1					
51	426-00173	POPPET	1					
52	181-00631	FLANGE	2					
53	114-00413	SPACER	2					
54	S8010250	O-RING	2	K				
55	180-00445	BACK-UP-RING	2	K				
67	420-00246	ANTI-DRIFT VALVE ASS'Y	2					
73	S2212766	BOLT	4					
75	S2212466	BOLT	32					
76	S2213066	BOLT	8					
78	S2204866	BOLT	2					
92	181-00647	PLUG ASSY	1					
94	420-00309	BOOM PRIORITY VALVE	1					
94-1	430-00045	PLUG	1					
94-2	409-00049	PISTON	1					

Key No	Part No	Description	Qty	S.C	Serial No	ICA	Replacable	Qty
94-3	423-00107	BODY	1	D				
94-4	409-00050	PISTON	1					
94-5	129-00139	SPRING	1					
94-6	425-00015	SLEEVE	1	D				
94-7	426-00182	POPPET ASS`Y	1					
94-8	180-00400	O-RING	1	K				
94-9	S8060121	BACK-UP-RING	1	K				
94-1	S8000121	O-RING	1	K				
95	S2213466	BOLT	4					

Fig. 4380 CONTROL VALVE(3) - KVMG270

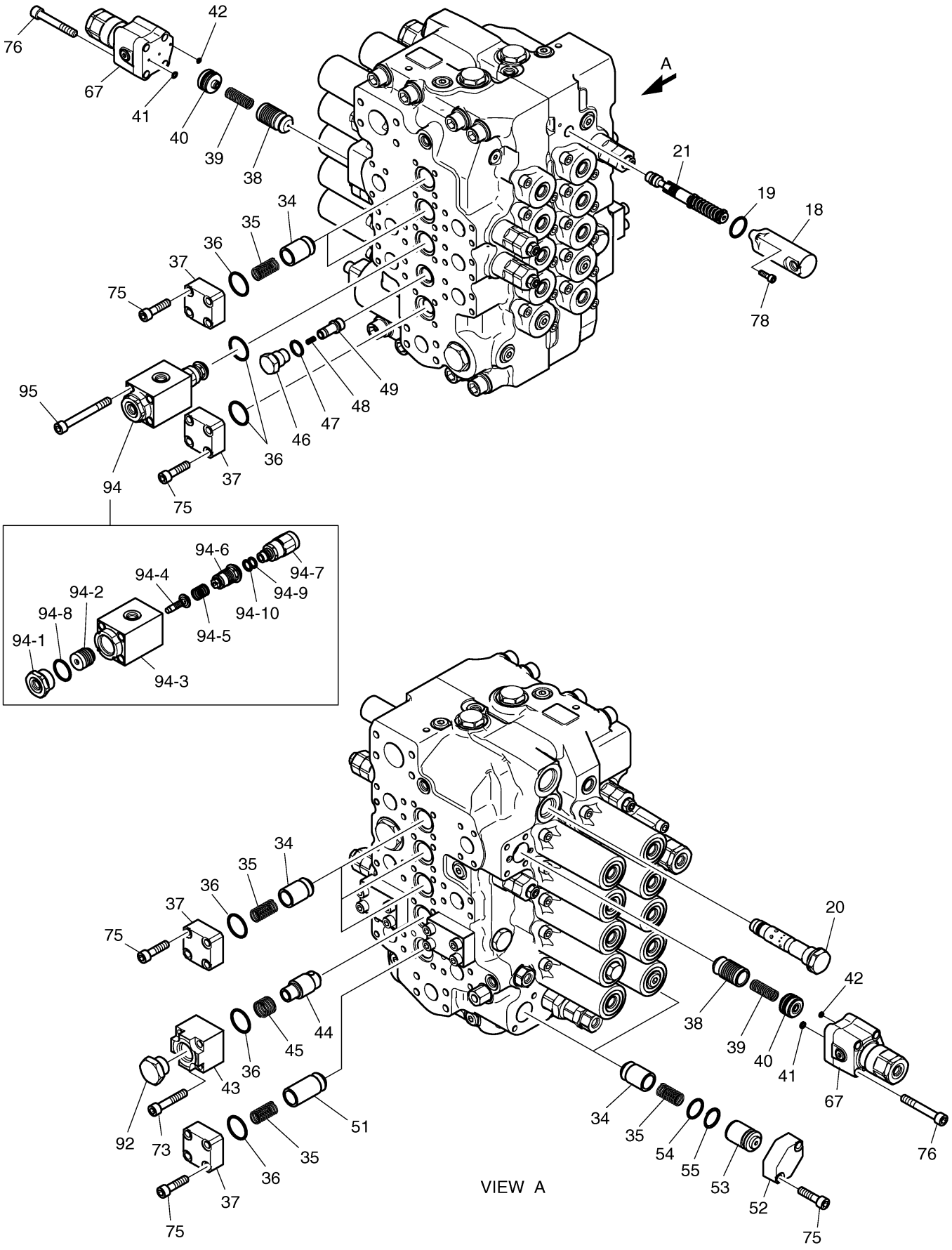

Fig. 5100 TOOLS

Key No	Part No	Description	Qty	S.C	Serial No	ICA	Replacable	Qty
-	199-00098	TOOLS	-	D				
1	2199-1063F17A	TOOL ASS'Y	1		1001~1019			
1	2199-1063F30	TOOL ASS`Y	1		1020~			
1-1	2199-9043	BOX,TOOL	1					
1-2	T6580008	WRENCH,ADJUSTABLE 6	1					
1-5	T6580020	WRENCH,ADJUST	1					
1-6	T7050003	DRIVER(-)	1					
1-7	T7050013	DRIVER	1					
1-8	T7050021	DRIVER	1					
1-9	T7050022	DRIVER	1					
1-10	T7500004	PILER,COMBI	1					
1-13	T7260057	HAMMER	1					
1-14	2199-1004	BAR	1					
1-15	2199-1005	PIPE	1					
1-19	T6690012	BAR,EXTENSION	1					
1-20	T6690013	BAR,EXTENSION	1					
1-21	T6750003	HANDLE,RATCHET	1					
1-22	2199-9009	CLIP,DRIVER	1					
1-24	2199-9057	WRENCH,FILTER	1					
1-26	T6550005	L-WRENCH	1					
1-27	T6550006	L-WRENCH 5	1					
1-28	T6550007	L-WRENCH 6	1					
1-29	T6550009	L-WRENCH 8	1					
1-30	T6550011	L-WRENCH 10	1					
1-32	T6550015	L-WRENCH 14	1					
1-33	T6550018	L-WRENCH 17	1					
1-35	T6510062	SPANNER	1					
1-36	T6510066	SPANNER 10x13	1					
1-37	T6510070	SPANNER	1					
1-38	T6510072	SPANNER	1					
1-39	T6510075	SPANNER 19x22	1					
1-41	T6510081	SPANNER 24X27	1					
1-42	T6510085	SPANNER 27X30	1					
1-44	T6510089	SPANNER 32X36	1					
1-45	T6510091	SPANNER 36X41	1					
1-49	T6510018	SPANNER 24	1					

Key No	Part No	Description	Qty	S.C	Serial No	ICA	Replacable	Qty
1-52	T6510027	SPANNER 41	1					
1-55	T6600183	SOCKET M6	1					
1-56	T6600189	SOCKET M8	1					
1-57	T6600197	SOCKET,WRENCH	1					
1-58	T6600201	SOCKET,WRENCH	1					
1-59	T6600211	SOCKET,WRENCH	1					
1-60	T6600223	SOCKET,WRENCH	1					
1-61	T6550013	L-WRENCH 12	1		1020~			
1-62	199-00126	WRENCH;FILTER	1		1020~			
3	2199-9008	GREASE GUN	1					
4	2199-9007	BOX	1					
5	184-00085	HOSE;OIL CHANGE	1		1001~3504	I	184-00120	1
5	184-00120	HOSE	1		3505~			

Fig. 5100 TOOLS

1

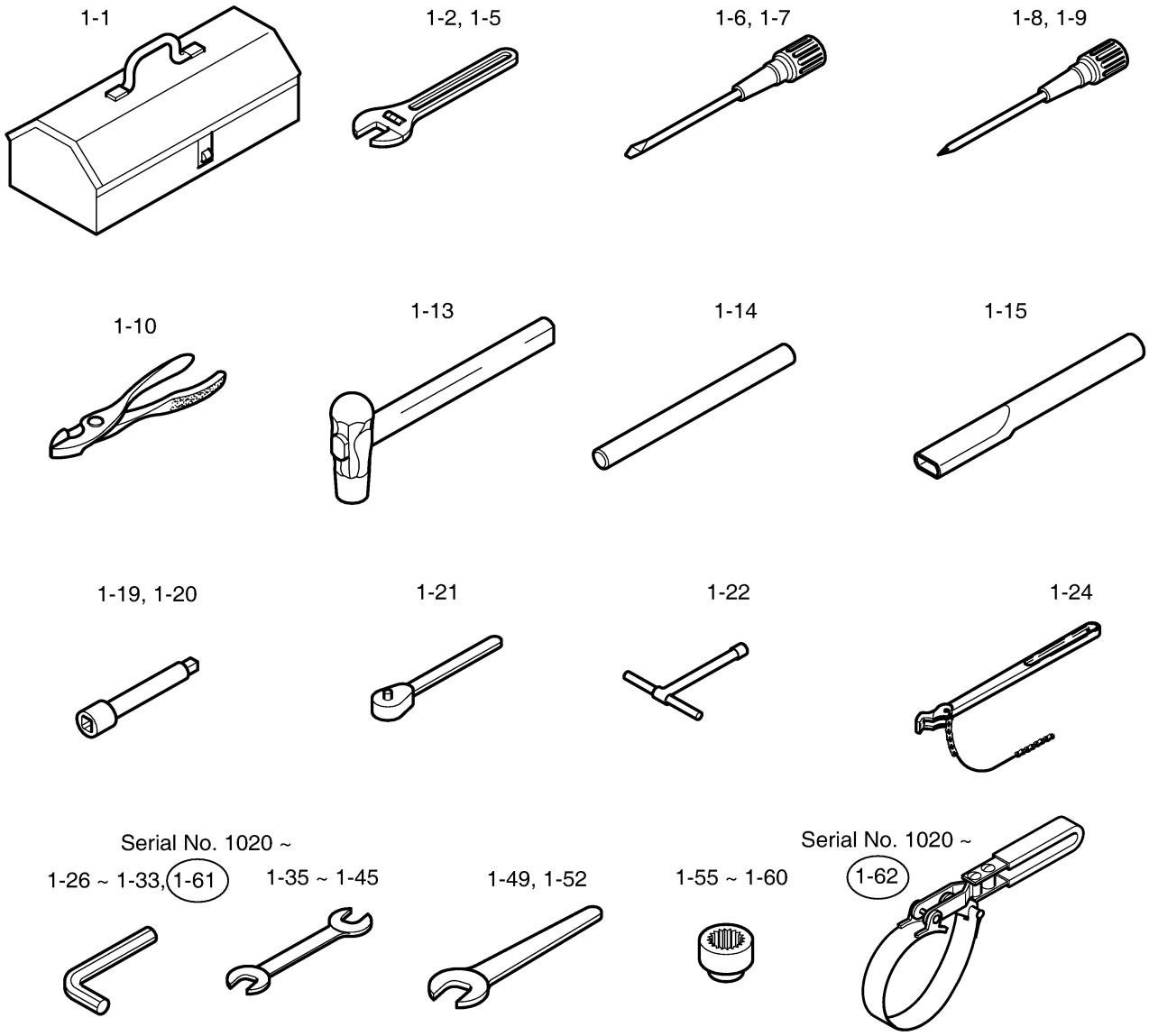

3

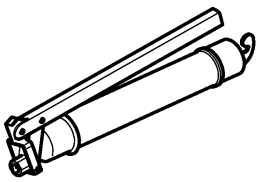

4

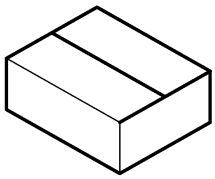

5

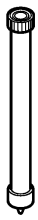

DOOSAN Doosan Infracore

Fig. 5110 SPARE PARTS

Key No	Part No	Description	Qty	S.C	Serial No	ICA	Replacable	Qty
-	918-00115B	SPACE PARTS	-	D				
1	2471-9051B	ELEMENT;FILTER	1					
2	2471-1154	ELEMENT;FILTER(PILOT)	1					
3	2474-9051	ELEMENT;OUTER	1					
4	2474-9057	ELEMENT;INNER	1					
5	471-00080	CARTRIDGE;E/G OIL FILTER	1					
6	2474-9058	ELEMENT;E/G FUEL FILTER	1		1001~1019	I	2474-9060A	1
6	2474-9060A	ELEMENT;E/G FUEL FILTER	1		1020~			
7	910-00019	OIL,ENGINE	6		1001~1936			
7	910-00019	OIL,ENGINE	7		1937~4642			
7	910-00019	OIL,ENGINE	9		4643~			
8	2106-1019D23	BELT;8PK 1580L	1					
9	2106-1019D2	V-BELT;4PK-1470L	1					
10	2512-1095D1	BOX,SPARE PARTS	1					
11	2180-9153	O-RING KIT	1					
12	021-00019EF	PARTS BOOK	1					
13	022-00020E	OPERATION MANUAL	1					
14	023-00043E	SERVICE MANUAL	1					
15	S862203H	BULB 24V 3W	2					
16	2515-1022D1	BULB;HALOGEN	1					
17	2515-1016D4	BULB,HALOGEN	1					
18	2527-6001	FUSE;LINK	2					
19	2527-1016	FUSE,BLADE 10A	2					
20	2527-1017	FUSE,BLADE 15A	2					
21	2527-1018	FUSE,BLADE 20A	1					
22	2527-1025	FUSE,BLADE 30A	1					
23	2527-1023A	LINK,FUSIBLE	1					
24	K1029257	ELEMENT,AIR BREATHER	1		4280~			

Fig. 5110 SPARE PARTS

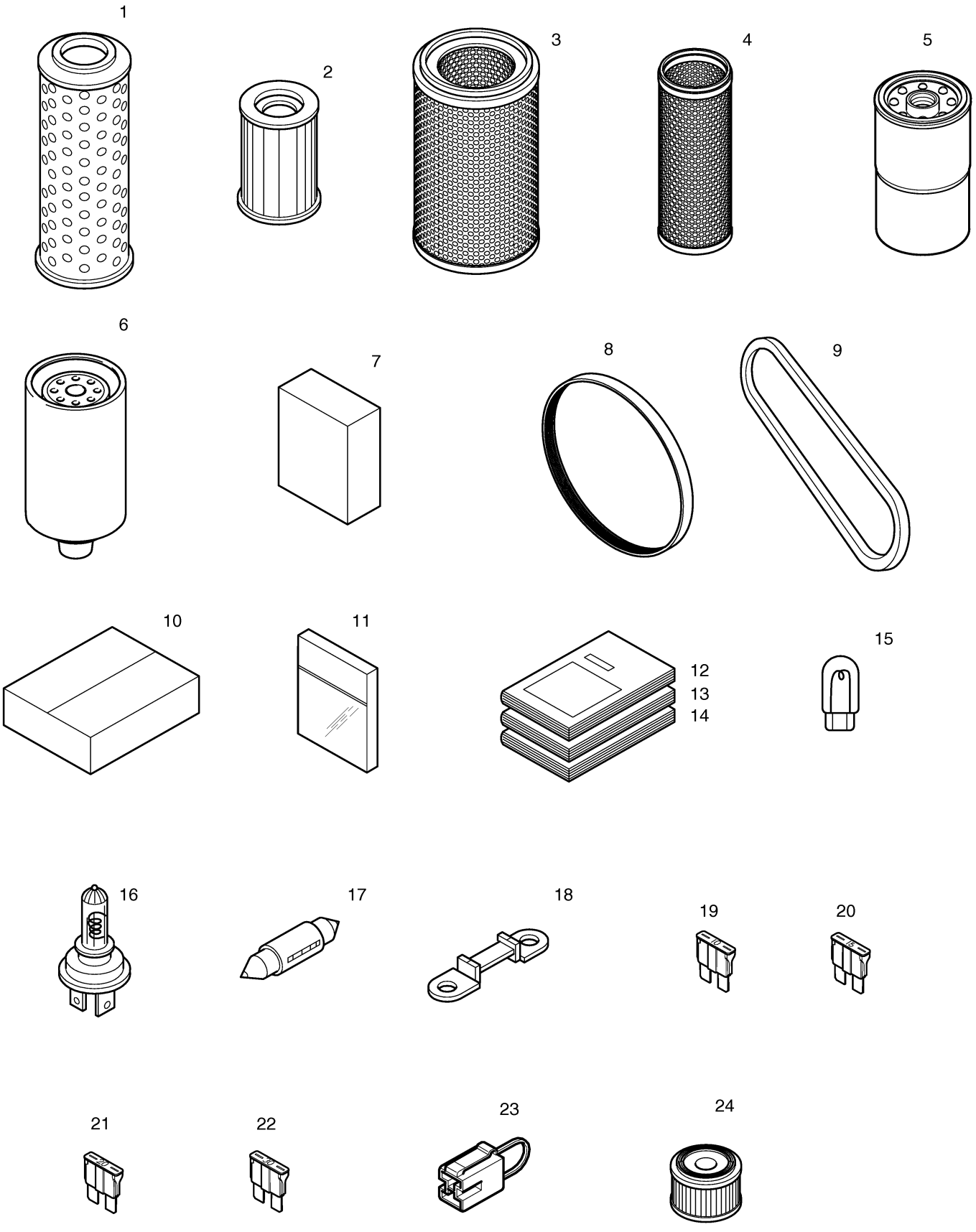

Fig. 5120 NAME PLATE-EUROPE

Key No	Part No	Description	Qty	S.C	Serial No	ICA	Replacable	Qty
-	190-00656A	NAME PLATE ASS'Y(EUROPE)	-	D	1001~4972			
-	950205-00732	DECAL ASSY;EUROPE	-	D	4973~			
1	K1011645D1	PLATE:NAME	2		1001~4972	I	950205-00663	2
1	950205-00663	DECAL(DOOSAN)	2		4973~			
2	K1011645D6	NAME PLATE	1		1001~4972	I	950205-00665	1
2	950205-00665	DECAL	1		4973~			
3	190-00090	PLATE:NAME	2					
4	190-00331	PLATE:NAME(300LC-V)	2		1001~1319			
4	190-00851	PLATE:NAME	1		1320~			
5	2190-3332	PLATE:NAME(SOLAR)	2		1001~1319			
5	190-00852	PLATE:NAME	1		1320~			
6	190-00676	PLATE:NAME	1		1001~1572	I	190-00676A	1
6	190-00676A	PLATE:NAME	1		1573~			
7	K1012204	PLATE:NAME	1					
8	2122-1002D2	RIVET	8		1001~1136			
8	2122-1002D2	RIVET	4		1137~			
9	190-00092	PLATE:NAME	1					
10	2190-3297	PLATE:NAME	1					
11	2190-2314D3	TAPE,ANTI-SKID	1					
12	2190-3309	PLATE:NAME(LEVER LOCK)	1					
13	190-00095	PLATE:NAME	1					
14	190-00101	PLATE:NAME(HAMMER)	1					
15	190-00647	PLATE:NAME	2					
16	190-00099	PLATE:NAME	1					
17	2190-3239	PLATE:NAME(WORLD 21)	1		1001~1319			
18	2116-9003	PLATE	1					
19	2190-2524	PLATE:NAME	1					
20	190-00096	PLATE:NAME(ELEC. LINE)	1					
21	190-00093	PLATE:NAME(SLIDE WINDOW)	1					
22	190-00098	PLATE:NAME	1					
23	190-00122	PLATE:NAME	2					
24	K1011648	PLATE:NAME	1					
25	190-00315	PLATE:NAME(WIPER MOTOR)	1					
26	190-00102	PLATE:NAME	1					
27	190-00100	PLATE:NAME(BATTERY)	1					
28	2190-2476	PLATE:NAME(TIE DOWN)	4					

Key No	Part No	Description	Qty	S.C	Serial No	ICA	Replacable	Qty
29	2190-2477	PLATE:NAME(LIFTING)	4					
30	190-00097	NAME PLATE	2					
31	190-00652	PLATE:NAME	2					
32	190-00094	PLATE:NAME(CAUTION)	1					
33	190-00521	PLATE:NAME	1					
34	190-00522	PLATE:NAME	1		1001~4222	I	190-00522A	1
34	190-00522A	PLATE:NAME	1		4223~			
35	190-00648	PLATE:NAME	1		1001~1136			
35	190-00648A	PLATE:NAME	1		1137~			
36	2190-3244D11	PLATE:NAME	1					
37	2190-3244D12	PLATE:NAME	1					
38	190-00557	PLATE:NAME	1					
39	190-00730D16	PLATE:NAME(SOUND POWER)	1		1054~1489	I	190-01059D17	1
39	190-01059D17	PLATE:NAME	1		1490~			
40	190-00509AD11	PLATE:NAME	1		1054~			
41	2124-1622D1	CLIP	1		1054~			
42	2122-1002D4	RIVET	1		1054~			
43	190-00853	PLATE:NAME	1		1320~			
44	190-00854	PLATE:NAME	1		1320~			
45	190-00855	PLATE:NAME	1		1320~			
46	190-01162	PLATE:NAME(NARROW)	2		1725~			
47	K1012205	PLATE:NAME	1					
48	K1012470D4	PLATE:NAME(DAEWOO)	2		1001~4972			
49	K1012470D2	PLATE:NAME(DAEWOO)	1		1001~4972			

Fig. 5120 NAME PLATE-EUROPE

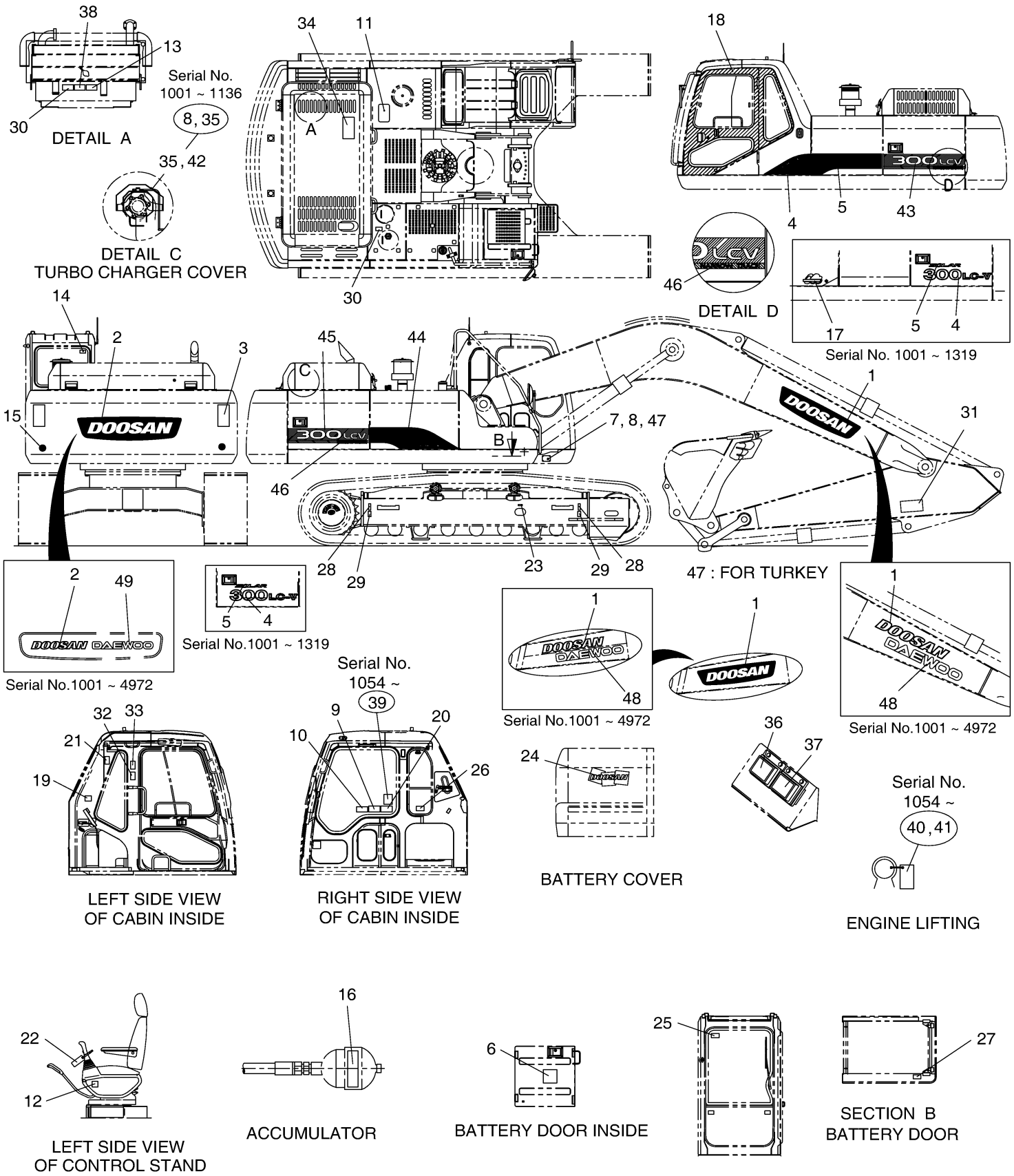

Fig. 5130 NAME PLATE-ENGLISH

Key No	Part No	Description	Qty	S.C	Serial No	ICA	Replacable	Qty
-	190-01027G	NAME PLATE ASS'Y-ENGLISH	-	D	1001~4956			
-	950209-00433	NAME PLATE ASSY;EXPORT	-	D	4957~			
1	K1011645D3	PLATE:NAME	2		1001~4956	I	950205-00665	3
1	950205-00665	DECAL	3		4957~			
2	K1011645D2	DECAL(DOOSAN)	1		1001~4956			
3	2190-3379	PLATE:NAME	2		1001~2824	I	2190-3379A	2
3	2190-3379A	PLATE:NAME	2		2825~			
4	190-00851	PLATE:NAME	1					
5	190-00852	PLATE:NAME	1					
6	190-01019	PLATE:NAME	1		1001~1572	I	190-01019A	1
6	190-01019A	PLATE:NAME	1		1573~4295	I	190-01019B	1
6	190-01019B	PLATE:NAME	1		4296~			
7	K1011647B	PLATE:NAME	1					
8	2122-1002D2	RIVET	4					
9	190-00688	PLATE:NAME	1					
10	2190-3297	PLATE:NAME	1					
11	2190-2314D3	TAPE,ANTI-SKID	1					
12	2190-3309	PLATE:NAME(LEVER LOCK)	1					
13	190-00694	PLATE:NAME	1					
14	2190-2480	PLATE:NAME	1					
15	190-00647	PLATE:NAME	2					
16	190-00703	PLATE:NAME	1					
17	190-00691	PLATE:NAME(HOT OIL)	1		1001~4295			
17	190-00691A	PLATE:NAME	1		4296~			
18	2116-9003	PLATE	1					
19	2190-3383	PLATE:NAME	1					
20	190-00689	PLATE:NAME	1					
21	190-00690	PLATE:NAME	1					
22	190-00695	PLATE:NAME	1					
23	190-00122	PLATE:NAME	2					
24	K1029526	PLATE:NAME	1					
25	2190-3384	PLATE:NAME	1					
26	2190-2556D103	PLATE:NAME	1					
27	2190-2533A	PLATE:NAME	1					
28	2190-2476	PLATE:NAME(TIE DOWN)	4		1001~4295			
29	2190-2477	PLATE:NAME(LIFTING)	4		1001~4295	I	K1042074	4

Key No	Part No	Description	Qty	S.C	Serial No	ICA	Replacable	Qty
29	K1042074	PLATE:NAME	4		4296~			
30	190-00692	PLATE:NAME	1					
31	190-00652	PLATE:NAME	2					
32	190-00693	PLATE:NAME	1					
33	2190-3386A	PLATE:NAME	1					
34	190-00522	PLATE:NAME	1		1001~4222	I	190-00522A	1
34	190-00522A	PLATE:NAME	1		4223~			
35	190-00648A	PLATE:NAME	1					
36	2190-3244D11	PLATE:NAME	1					
37	2190-3244D12	PLATE:NAME	1					
38	2122-1002D4	RIVET	4					
39	190-00853	PLATE:NAME	1					
40	190-00854	PLATE:NAME	1					
41	190-00855	PLATE:NAME	1					
42	190-00798AD33	PLATE:NAME	1					
43	190-01162	PLATE:NAME(NARROW)	2		1725~			
46	K1027513A	PLATE:NAME	1					

Fig. 5130 NAME PLATE-ENGLISH

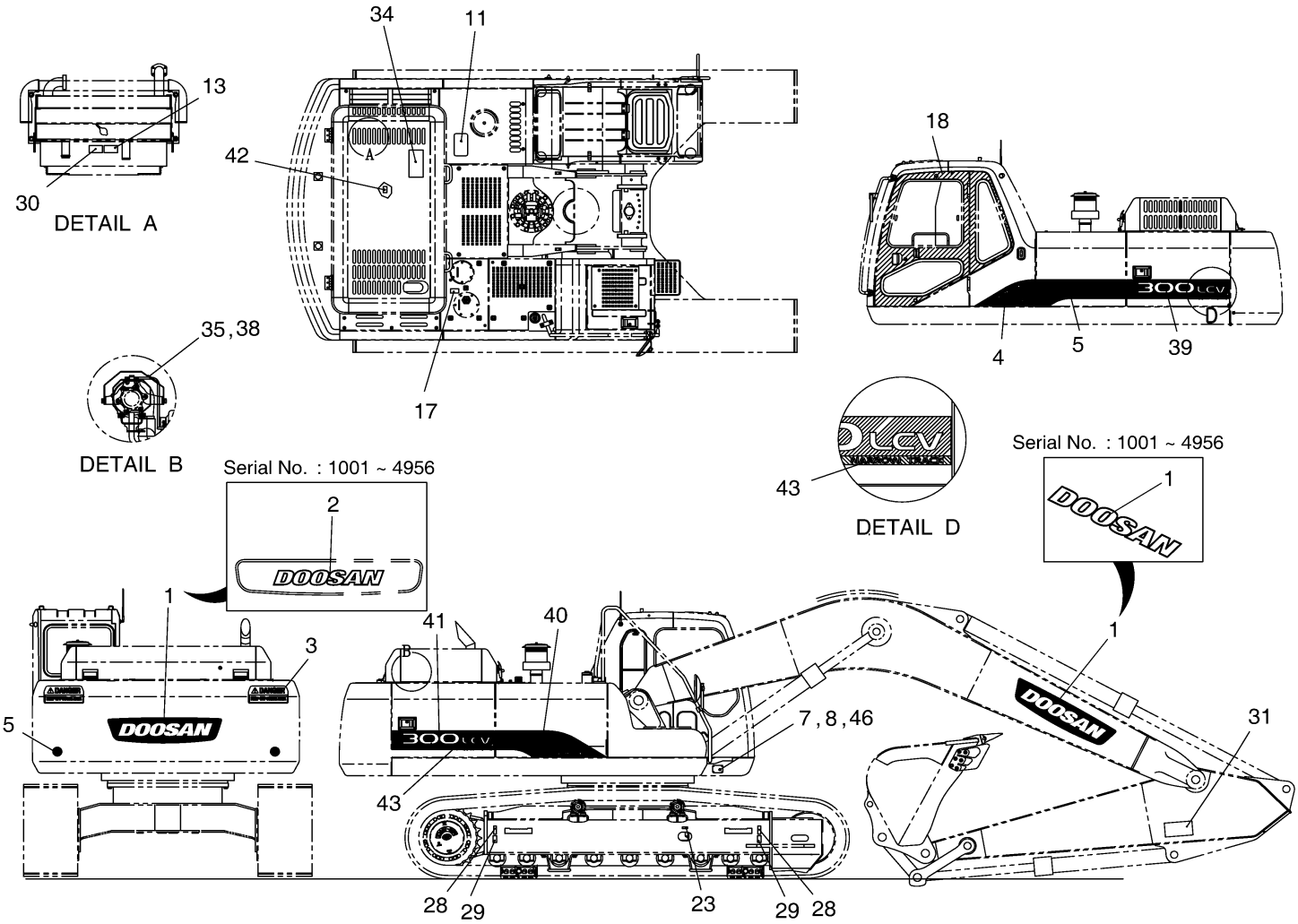

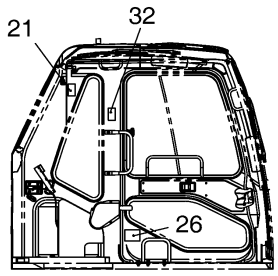

LEFT SIDE VIEW
OF CABIN INSIDE

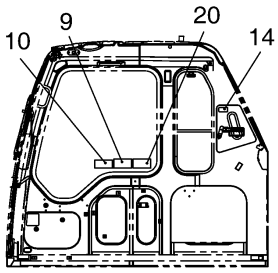

RIGHT SIDE VIEW
OF CABIN INSIDE

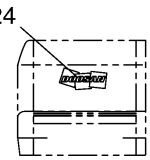

FRONT VIEW
OF BATTERY COVER

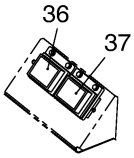

FUSE BOX COVER

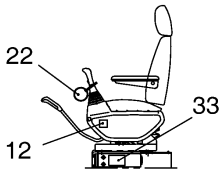

LEFT SIDE VIEW
OF CONTROL STAND

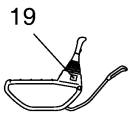

RIGHT VIEW OF
LEFT CONTROL STAND

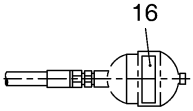

ACCUMULATOR

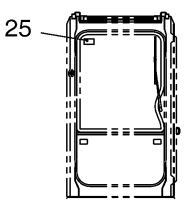

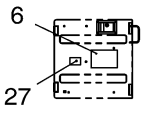

INSIDE VIEW
OF BATTERY DOOR

Fig. 6100 ACOUSTIC FOAM-EUROPE OPT.

Key No	Part No	Description	Qty	S.C	Serial No	ICA	Replacable	Qty
-	161-00415	ACOUSTIC FOAM ASS'Y	-	D				
1	161-00416	FOAM;POLYURETHANE	1					
2	195-00692	BRACKET	4					
3	2120-2196D1	BOLT;SET M10X1.5X20	8					

Fig. 6100 ACOUSTIC FOAM-EUROPE OPT.

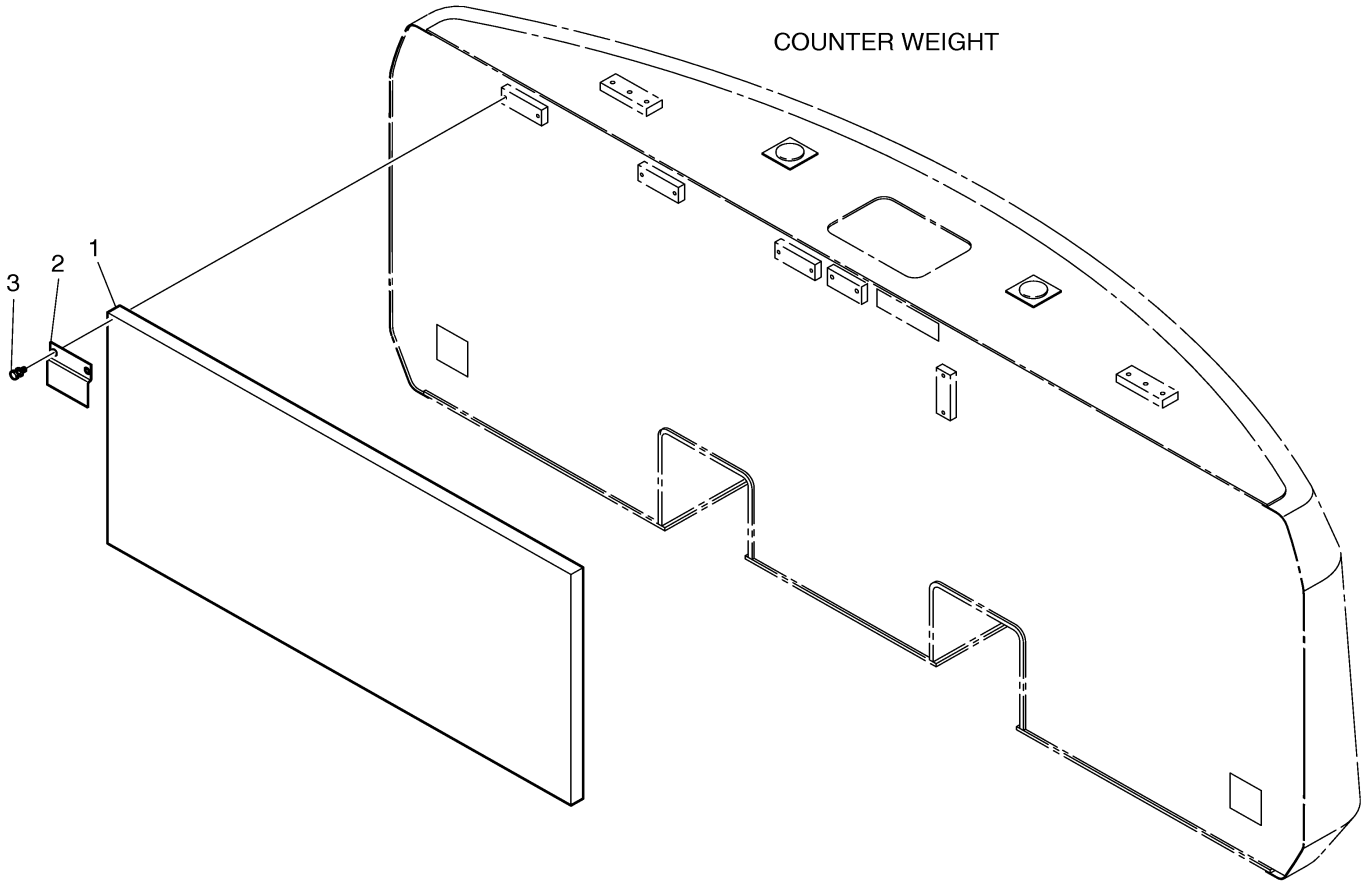

Fig. 6110 FUEL FILLER PUMP ASS'Y

Key No	Part No	Description	Qty	S.C	Serial No	ICA	Replacable	Qty
-	401-00231	FUEL FILLER PUMP ASS'Y-OPT	-	D				
1	401-00238	PUMP;FUEL TRANSFER	1					
1A	2181-2755B	ADAPTER	2					
1B	S8180321	RING,SEAL	2					
1C	523-00012	MOTOR	1					
1D	407-00001	VANE KIT	1					
1E	2401-1276KT	SEAL KIT	1					
2	195-01628	BRACKET	1					
3	2120-2196D8	BOLT	3					
4	S0508853	BOLT	4					
5	S5102503	WASHER	4					
6	2181-2104D6	ADAPTER	1					
7	S8000181	O-RING	1					
8	S8470032	CLAMP	3					
9	2185-1247D64	HOSE 3500L	1					
10	2120-2196D10	BOLT;SET M12X1.75X25	2					
11	185-00167D3	HOSE	1					
11A	2420-1258	VALVE,CHECK	1					
11B	2471-1152	STRAINER	1					
11C	2160-1336	CAP,STRAINER	1					
12	195-01630	BRACKET	2					
13	2549-9096	SWITCH;TOGGLE	1					
14	2114-1683	WASHER;TOGGLE SWITCH	1					
15	190-00519	PLATE;NAME	1					
16	124-00208D5	CLIP	2					
17	2120-2187	BOLT	3					
18	S5010513	WASHER	4					
19	530-00214	HARNESS;TOGGLE SWITCH	1					
20	120-00276	BOLT	5					

Fig. 6110 FUEL FILLER PUMP ASS'Y

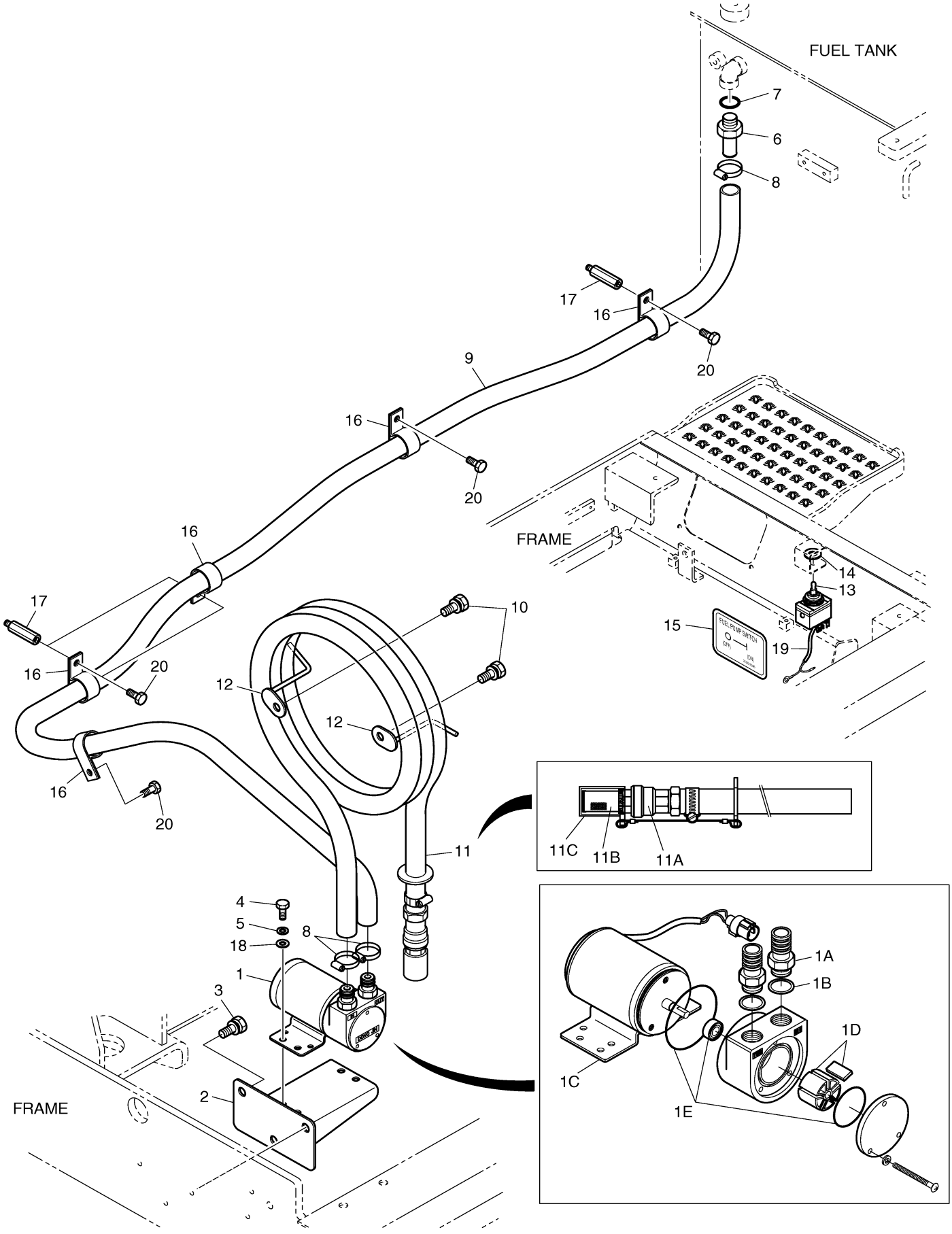

Fig. 6120 DOUBLE FUEL FILTER ASS'Y

Key No	Part No	Description	Qty	S.C	Serial No	ICA	Replacable	Qty
-	471-00078	DOUBLE FUEL FILTER ASS'Y	-	D				
1	2471-9053	FUEL FILTER ASS'Y	1					
2	S0515353	BOLT M12X1.75X35	2		1001~2672			
2	S0512353	BOLT M10X1.5X35	2		2673~3160			
2	S0515353	BOLT M12X1.75X35	2		3161~			
3	S5102703	WASHER	2		1001~2672			
3	S5102603	WASHER	2		2673~3160			
3	S5102703	WASHER	2		3161~			
4	S5010713	WASHER	2		1001~2672			
4	S5010613	WASHER	2		2673~3160			
4	S5010713	WASHER	2		3161~			
5	2181-9015	PIPE;FUEL	2					
6	2120-9013	SCREW;HOLLOW	2					
7	S8180221	RING;SEAL	4					
8	2185-1247D132	HOSE 2700L	1		1001~1004			
8	2185-1247D31	HOSE 1200L	1		1005~			
9	2185-1247D132	HOSE 2700L	1					
10	S8450012	CLAMP	4					
11	2197-2561	BRACKET	1		1001~2672			
11	195-03421	BRACKET	1		2673~3160			
11	195-03421A	BRACKET	1		3161~			
12	124-00209D1	CLIP	1					
13	120-00276	BOLT	1					
14	S0509053	BOLT	2					
15	S5102503	WASHER	2					

Fig. 6120 DOUBLE FUEL FILTER ASS'Y

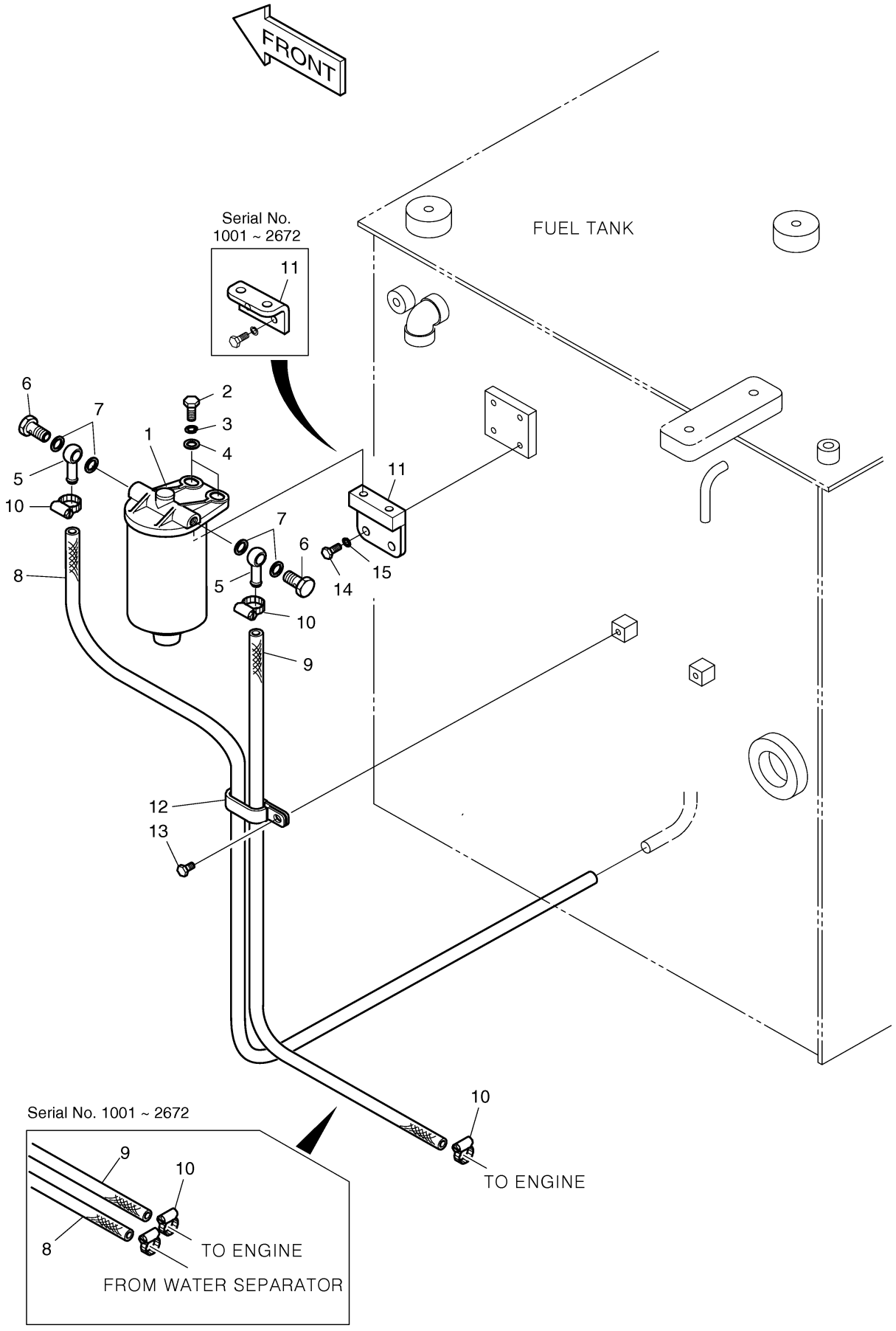

Fig. 6130 NOISE FILTER ASS'Y-EUROPE

Key No	Part No	Description	Qty	S.C	Serial No	ICA	Replacable	Qty
-	2471-1158	FILTER ASS'Y-EUROPE	-	D				
1	2471-6062	FILTER;NOISE(BLOWER)	1					
2	2471-6063	FILTER;NOISE(CONDENSER)	1					
3	2124-1622D2	CLIP	3					

Fig. 6130 NOISE FILTER ASS'Y-EUROPE

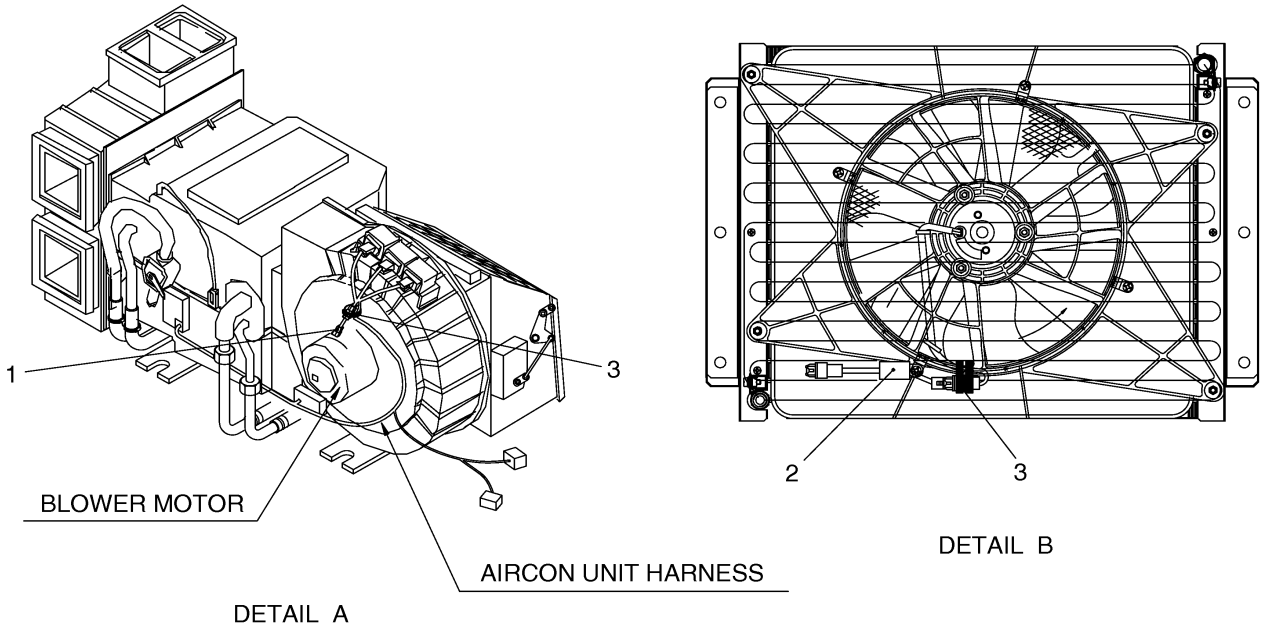

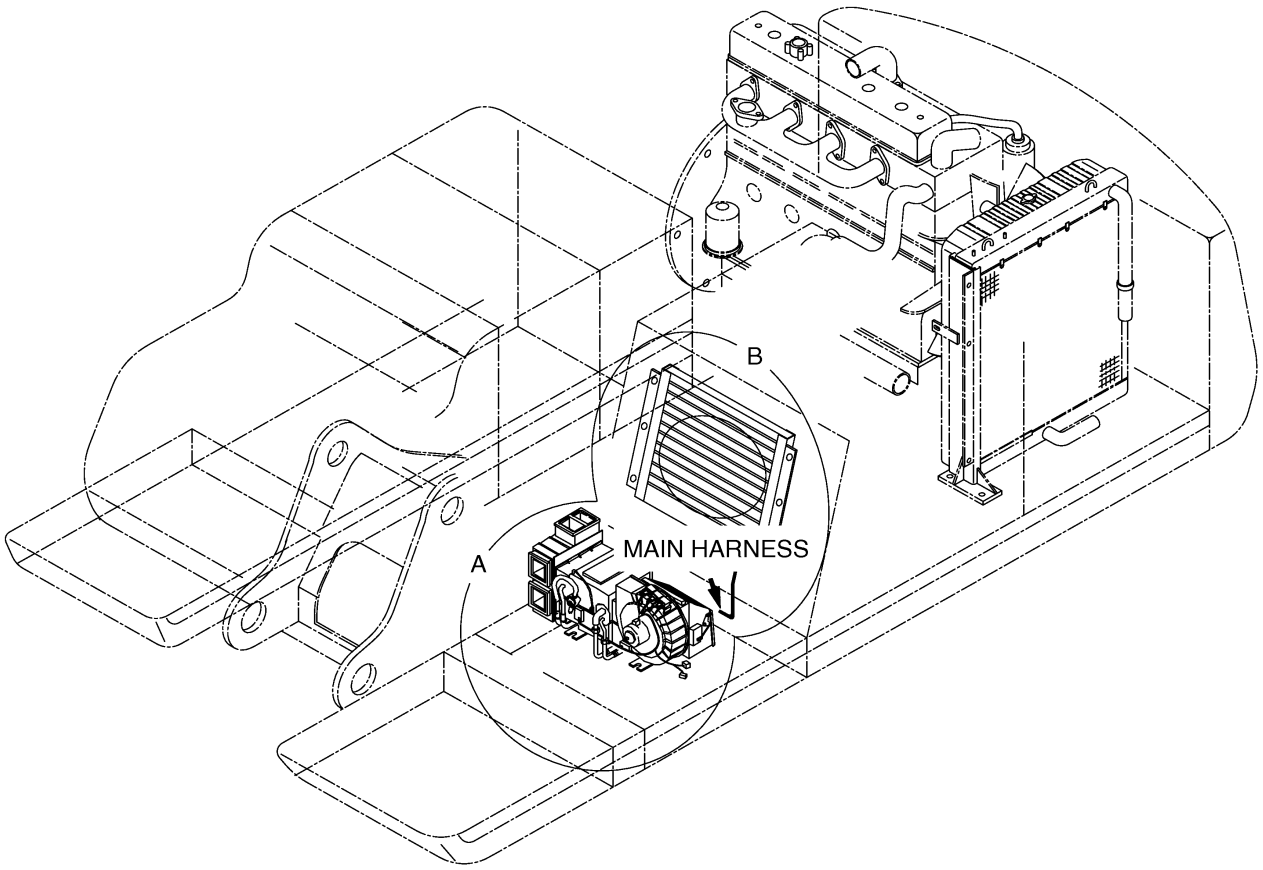

Fig. 6140 CABIN LAMP ASS'Y

Key No	Part No	Description	Qty	S.C	Serial No	ICA	Replacable	Qty
-	534-00065	CABIN LAMP ASS'Y (OPT)	-	D				
1	2549-9109	SWITCH;LAMP	1					
1A	K9000353	LAMP;PILOT	1					
2	2190-2584D14	INSERT;CABIN LAMP	1					
3	2544-9033	RELAY	1					
4	2534-1127	LAMP;WORKING	2					
4A	2515-1022D1	BULB;HALOGEN	1					
5	2197-1740B	BRACKET;CABIN LAMP	1					
6	2120-2166D2	BOLT	4					
7	2114-1898D1	WASHER	4					
8	2114-2031D5	WASHER	4					
9	2530-1611	HARNESS;CABIN LAMP	1					

Fig. 6140 CABIN LAMP ASS'Y

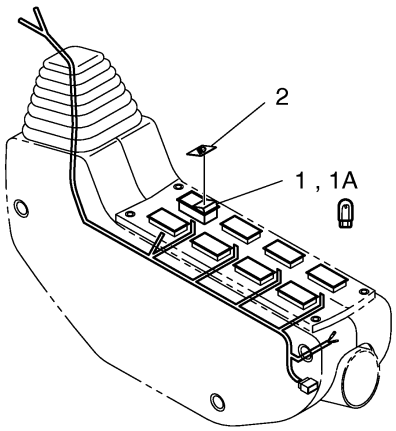

CONTROL STAND (LH)

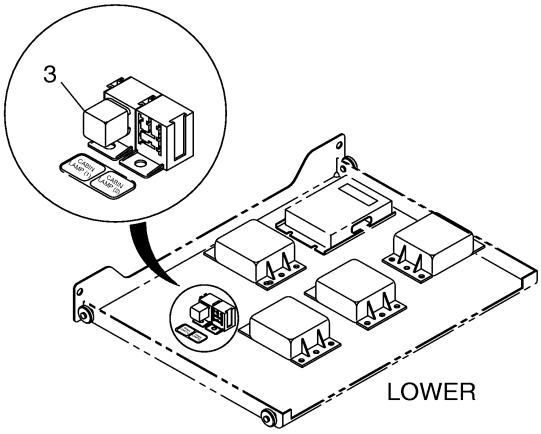

ELECTRIC BOX

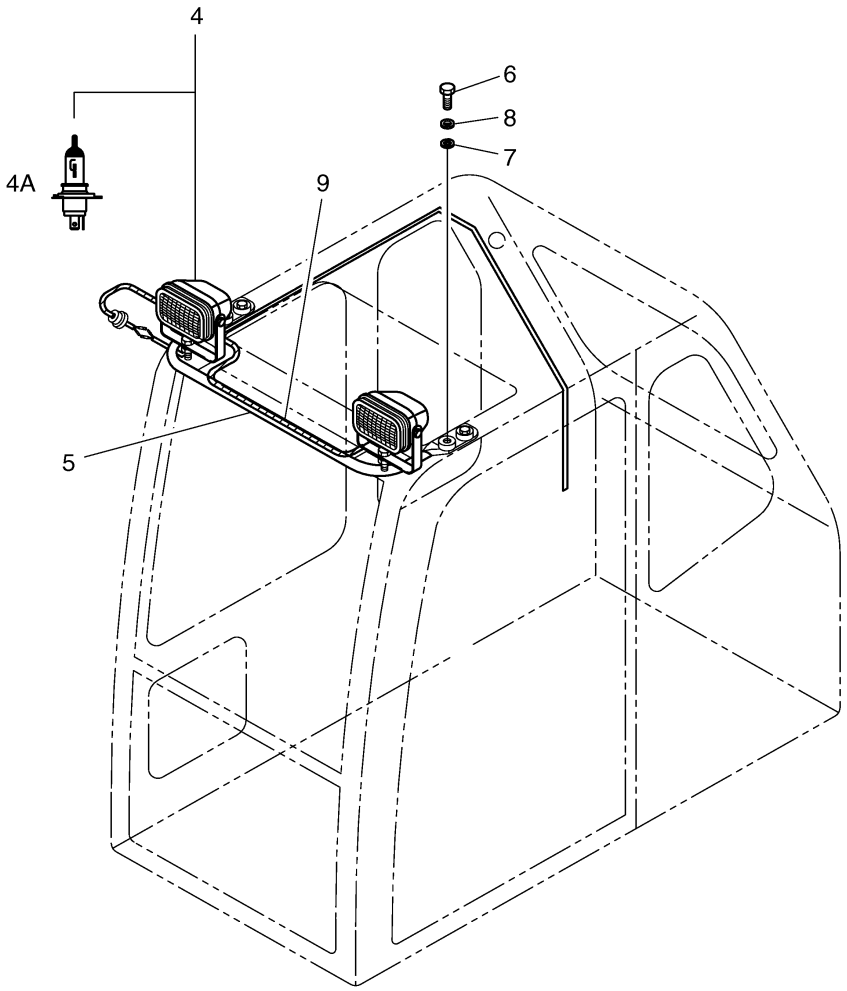

Fig. 6150 6-LAMP & BEACON(TELESCOPIC)

Key No	Part No	Description	Qty	S.C	Serial No	ICA	Replacable	Qty
-	534-00066F2	6-LAMP &	-	D				
1	2549-9109	SWITCH;LAMP	1					
1A	K9000353	LAMP;PILOT	1					
2	2190-2584D14	INSERT;CABIN LAMP	1					
3	2549-9098	SWITCH;ROCKER	1					
3A	K9000353	LAMP;PILOT	1					
4	2190-2036D10	INSERT;ROTATING BEACON	1					
5	2544-9033	RELAY	1					
6	2544-9033	RELAY	1					
7	534-00077	LAMP;CABIN 24V 70W	6					
7A	2515-1016D4	BULB,HALOGEN	1					
8	195-01693	SUPPORT;FRONT CABIN LAMP	1					
9	2120-2166D2	BOLT	4					
10	S5102603	WASHER	4					
11	2114-1898D1	WASHER	4					
13	195-01804	SUPPORT;REAR LAMP &	1					
14	S0556453	BOLT	2					
15	S5102503	WASHER	2					
16	2114-1898D8	WASHER	2					
17	S4012533	NUT	2					
18	534-00062	LAMP;ROTATING BEACON	1					
18A	515-00013	BULB;HALOGEN 24V 70W	1					
21	195-01805	SUPPORT	1					
22	S0508653	BOLT	2					
23	S5102503	WASHER	2					
24	S5010513	WASHER	2					
25	161-00404	RUBBER	1					
26	530-00235	HARNESS;FRONT CABIN LAMP	1					
27	530-00237	HARNESS;REAR CABIN LAMP	1					
28	530-00248	HARNESS;REAR LAMP JOINT	1					
30	530-00249	HARNESS;BEACON TELESCOPIC	1					
31	S0504453	BOLT	1					
32	S5102303	WASHER	1					
33	S5010313	WASHER	1					

Fig. 6150 6-LAMP & BEACON(TELESCOPIC)

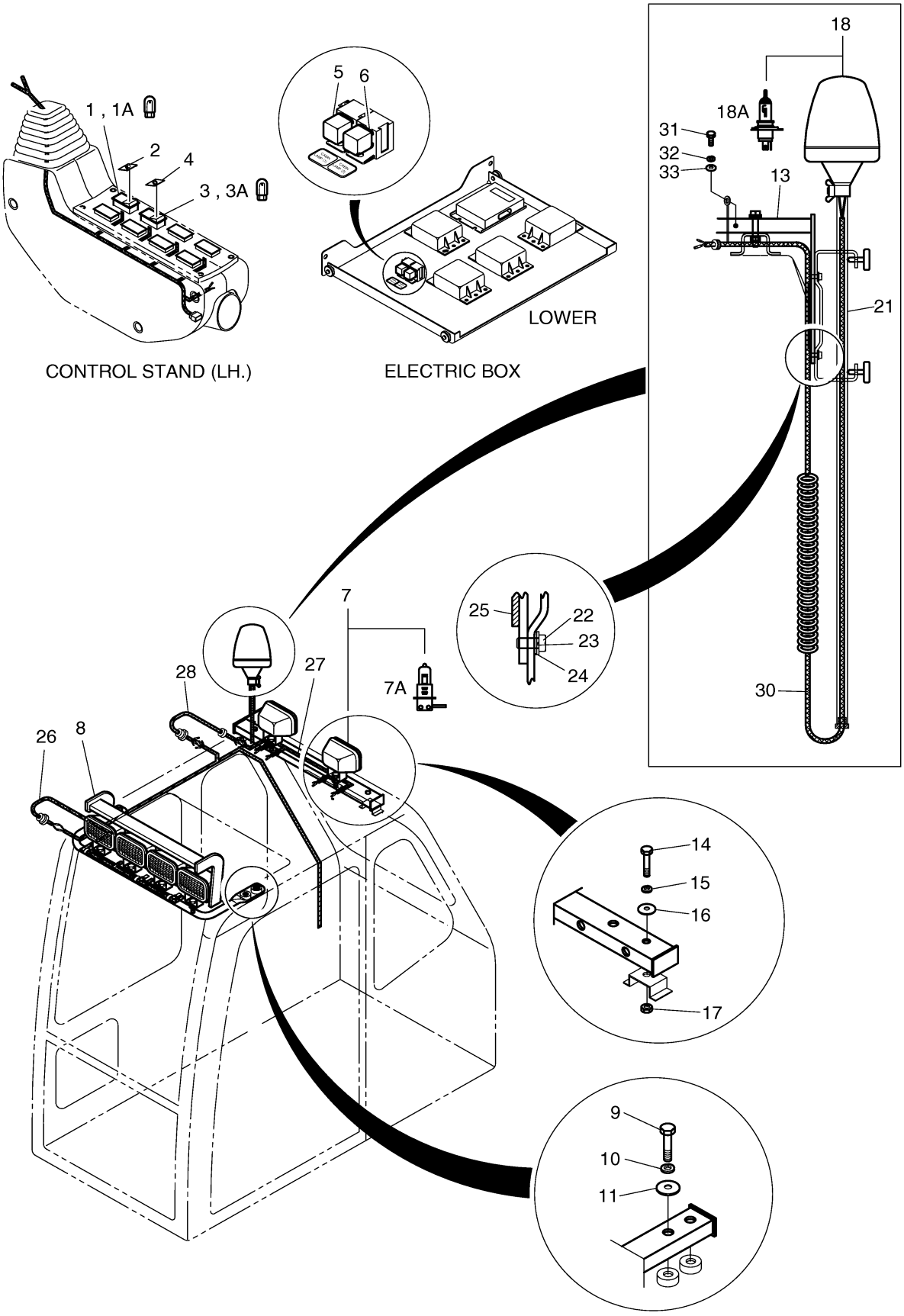

DOOSAN Doosan Infracore

Fig. 6160 ROTATION BEACON

Key No	Part No	Description	Qty	S.C	Serial No	ICA	Replacable	Qty
-	534-00066F4	BEACON ASS'Y-OPT.	-	D				
3	2549-9098	SWITCH;ROCKER	1					
3A	K9000353	LAMP;PILOT	1					
4	2190-2036D10	INSERT;ROTATING BEACON	1					
12	195-01694	SUPPORT;REAR CABIN LAMP	1					
14	S0556453	BOLT	2					
15	S5102503	WASHER	2					
16	2114-1898D8	WASHER	2					
17	S4012533	NUT	2					
18	534-00062	LAMP;ROTATING BEACON	1					
18A	515-00013	BULB;HALOGEN 24V 70W	1					
19	160-00032	BUSH;MOUNTING	1					
20	195-01692	BRACKET	1					
27	530-00237	HARNESS;REAR CABIN LAMP	1					
28	530-00248	HARNESS;REAR LAMP JOINT	1					
29	530-00238	HARNESS;BEACON	1					
31	S0504453	BOLT	1					
32	S5102303	WASHER	1					
33	S5010313	WASHER	1					

Fig. 6160 ROTATION BEACON

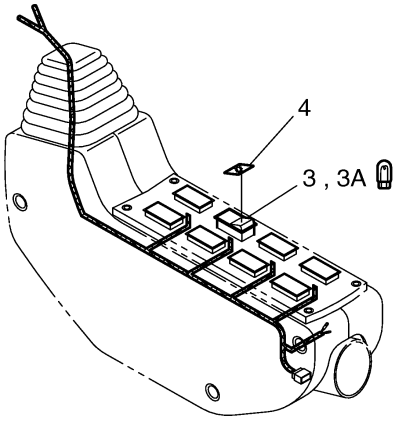

CONTROL STAND (LH)

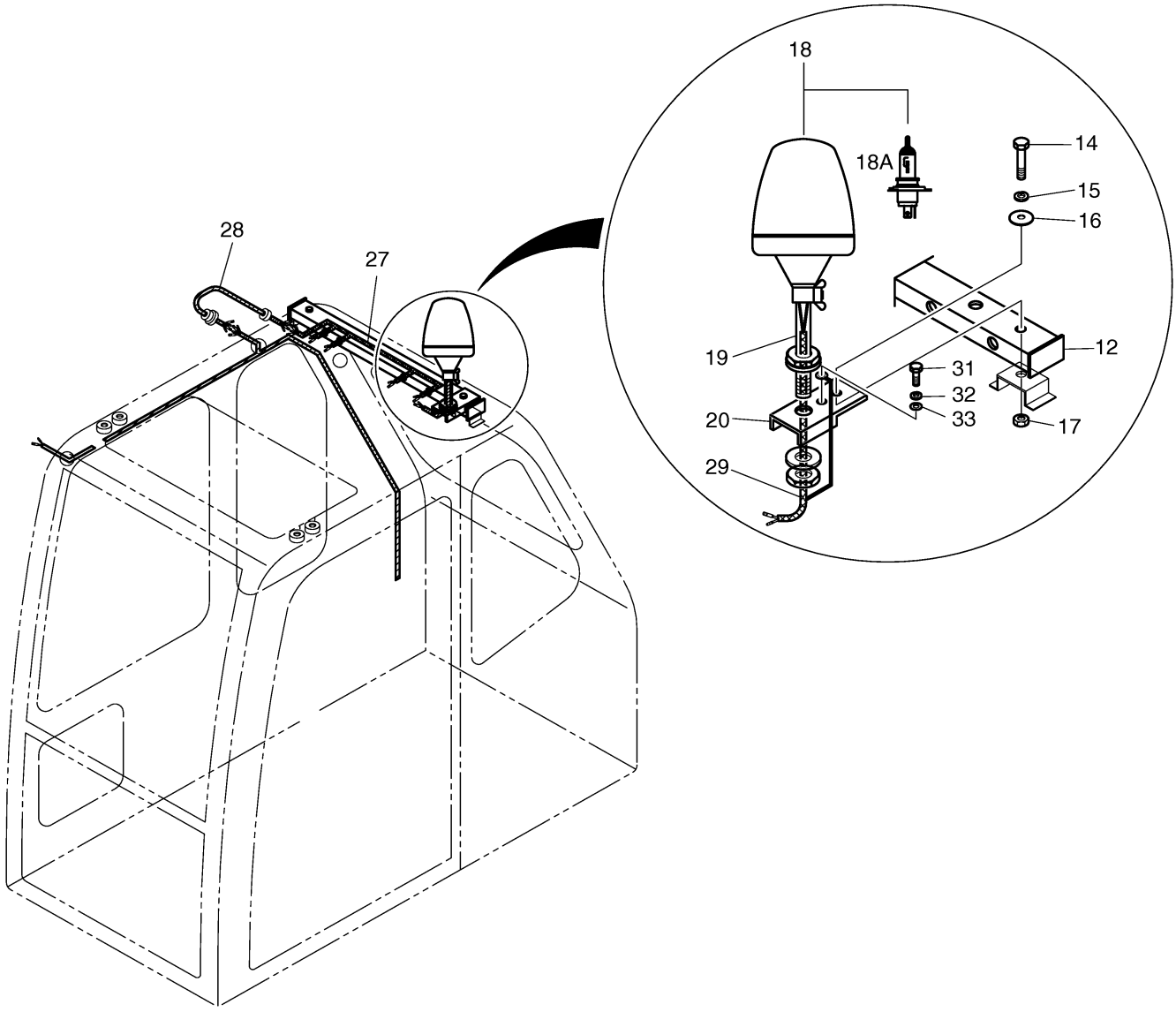

Fig. 6170 TRAVEL/SWING ALARM ASS'Y

Key No	Part No	Description	Qty	S.C	Serial No	ICA	Replacable	Qty
-	516-00016	TRAVEL/SWING ALARM ASSY	-	D				
1	2549-9109	SWITCH;LAMP	1					
1A	K9000353	LAMP;PILOT	1					
2	2190-2584D13	INSERT;TRAVEL/SWING ALARM	1					
3	2544-9033	RELAY	1					
4	516-00011	BUZZER	1					
5	S0508653	BOLT	2					
6	S5102503	WASHER	2					
7	S5010513	WASHER	2					
8	2549-9407	SWITCH;SWING PRESS	1					
9	2530-1423A	HARNESS;PRESS SWITCH	1					
10	2181-2666	TEE	1					
11	S8180221	RING;SEAL	1					

Fig. 6170 TRAVEL/SWING ALARM ASS'Y

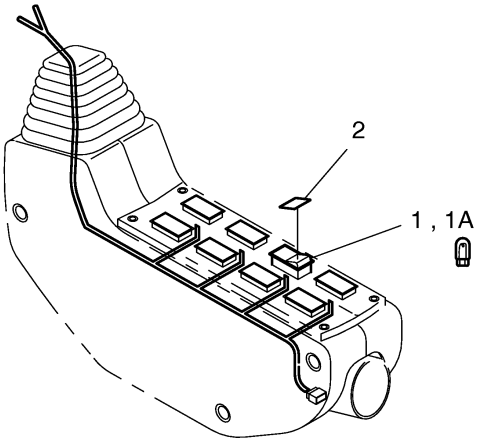

CONTROL STAND (LH)

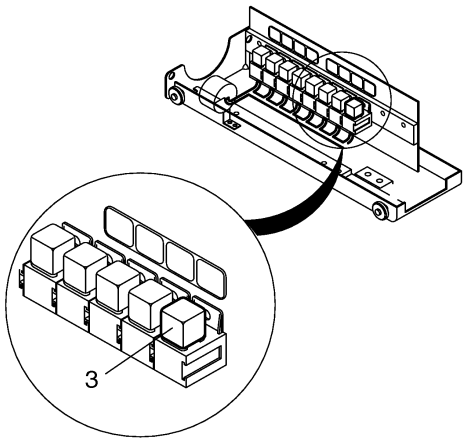

ELECTRIC BOX

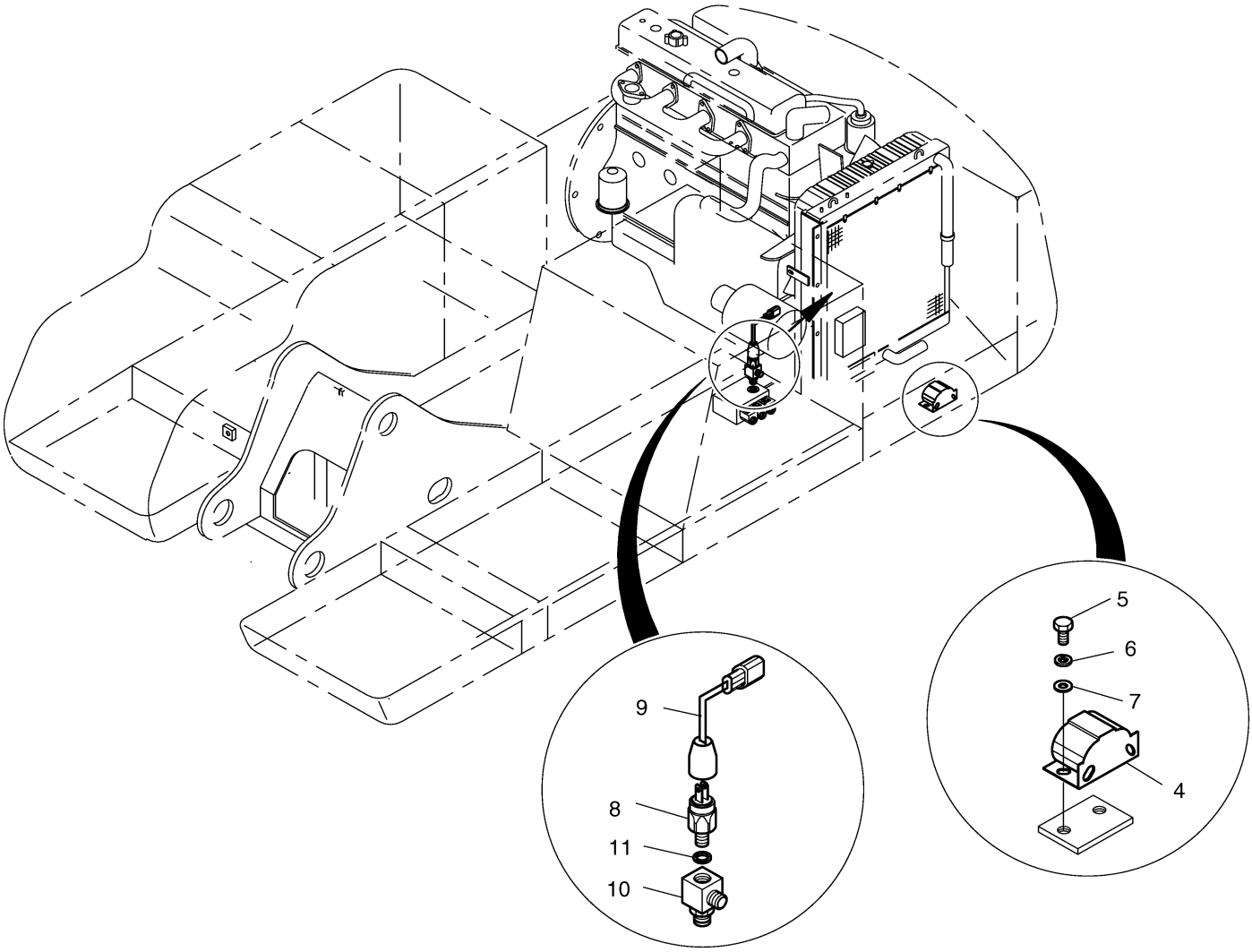

Fig. 6180 TRAVEL ALARM ASS'Y

Key No	Part No	Description	Qty	S.C	Serial No	ICA	Replacable	Qty
-	516-00017	TRAVEL ALARM ASSY	-	D				
1	2549-9109	SWITCH;LAMP	1					
1A	K9000353	LAMP;PILOT	1					
2	190-00674D1	INSERT;TRAVEL ALARM	1					
3	2544-9033	RELAY	1					
4	516-00011	BUZZER	1					
5	S0508653	BOLT	2					
6	S5102503	WASHER	2					
7	S5010513	WASHER	2					

Fig. 6180 TRAVEL ALARM ASS'Y

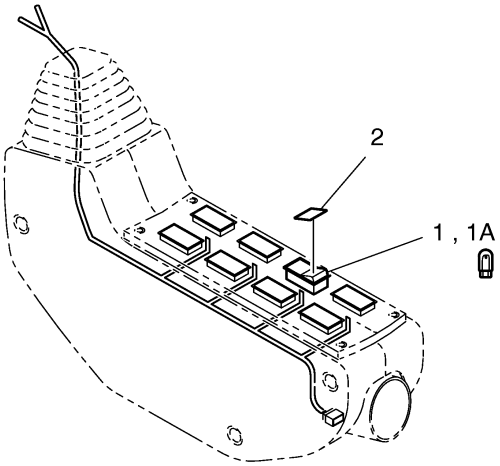

CONTROL STAND (LH)

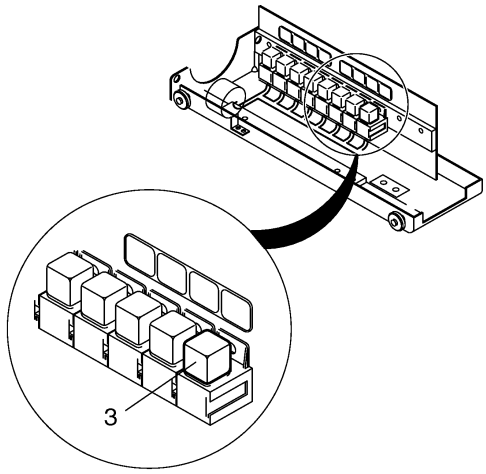

ELECTRIC BOX

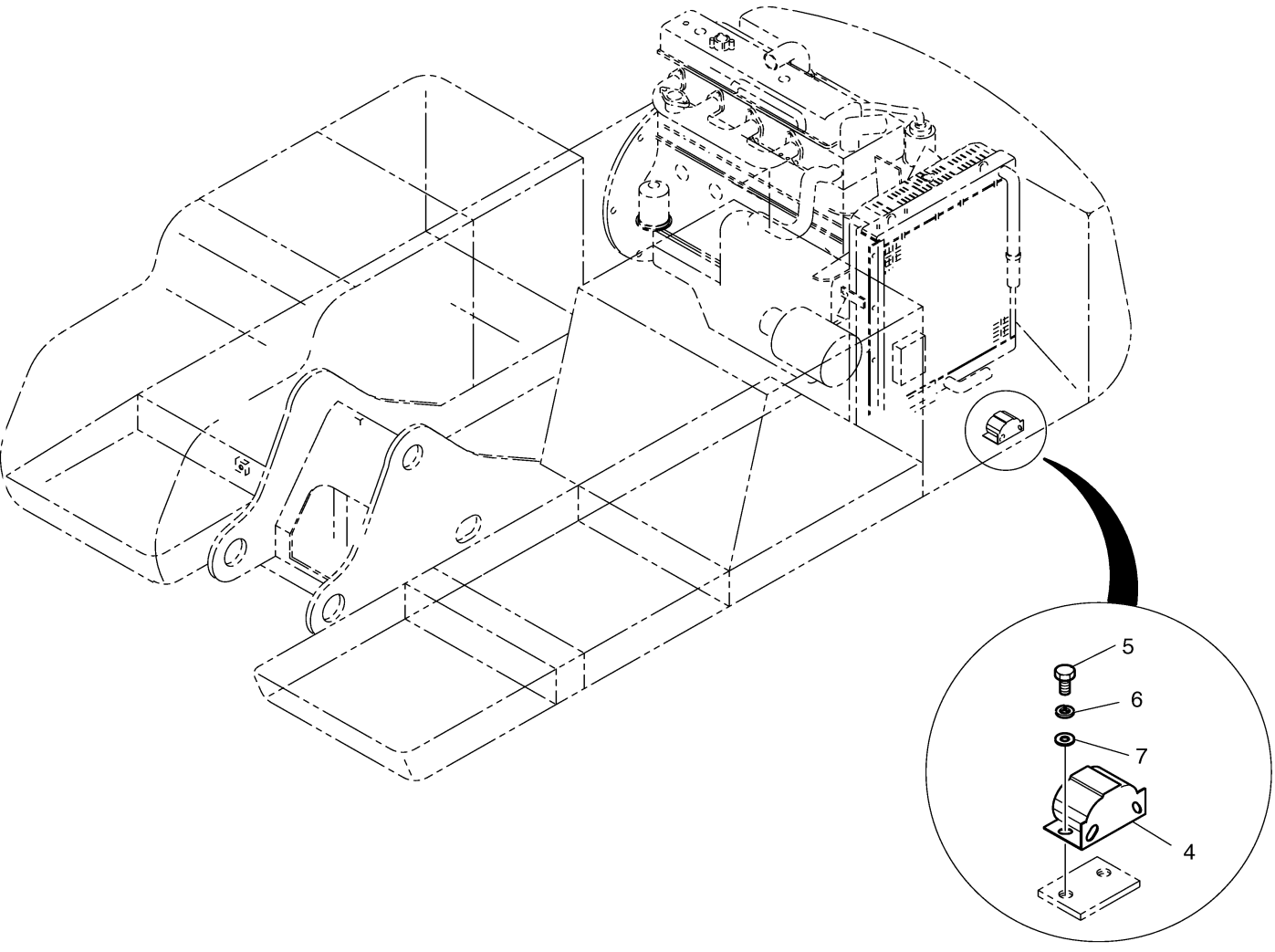

Fig. 6190 RETURN FILTER PRESS SWITCH

Key No	Part No	Description	Qty	S.C	Serial No	ICA	Replacable	Qty
-	549-00072	RETURN FILTER SWITCH ASS'Y	-	D				
1	2549-1135D10	SWITCH;PRESS	1					
2	S8180221	RING;SEAL	1					
3	2530-1400	HARNESS;PRESS SWITCH	1					

Fig. 6190 RETURN FILTER PRESS SWITCH

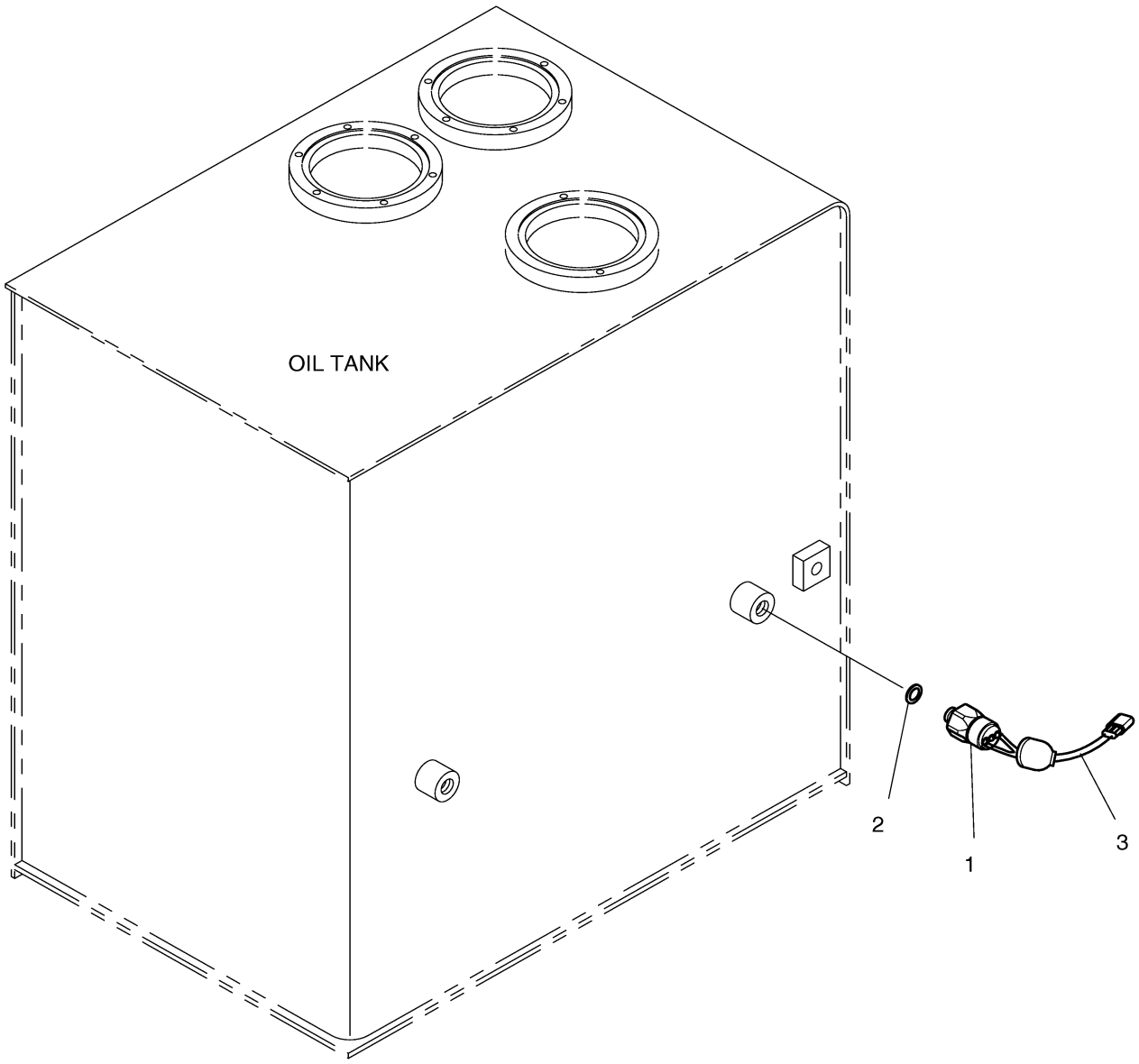

Fig. 6200 ALTERNATOR

Key No	Part No	Description	Qty	S.C	Serial No	ICA	Replacable	Qty
-	500-00081	ALTERNATOR ASS'Y	-	D				
1	502-00003	ALTERNATOR 24V 80A	1		1001~1023	Y	502-00003A	1
1	502-00003A	ALTERNATOR 24V 80A	1		1024~			
1A	130707-00030	PULLEY,ALTERNATOR	1					
2	S0760853	BOLT	1					
3	530-00123	HARNESS,ALTERNATOR	1					

Fig. 6200 ALTERNATOR

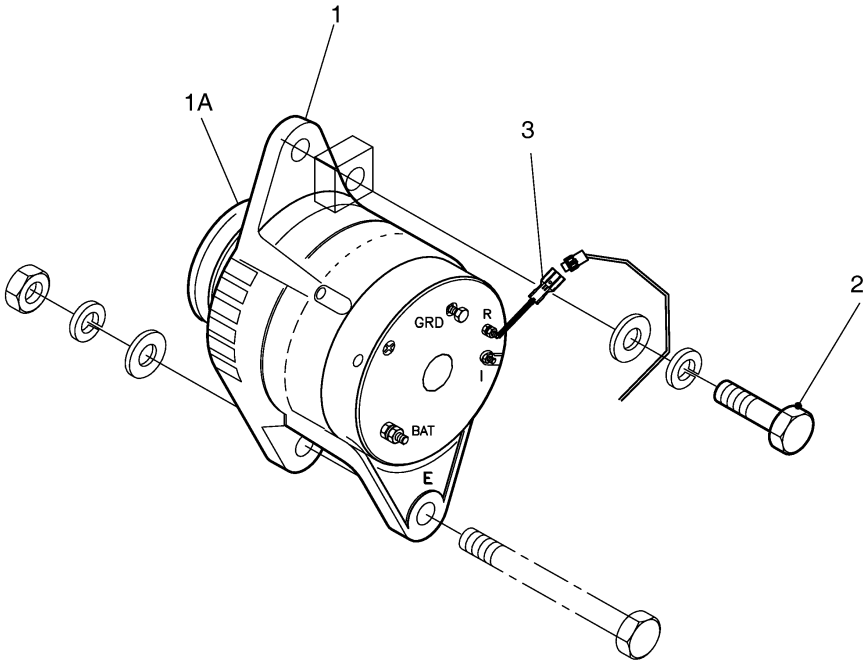

Fig. 6210 OVERLOAD WARNING ASS'Y

Key No	Part No	Description	Qty	S.C	Serial No	ICA	Replacable	Qty
-	500-00134	OVERLOAD WARNING DEVICE	-	D				
1	2549-9098	SWITCH;ROCKER	1					
1A	K9000353	LAMP;PILOT	1					
2	2190-2036D25	INSERT;OVERLOAD WARNING	1					
3	2547-9045	SENSOR;PRESSURE	1					
4	530-00256	HARNESS;OVERLOAD WARNING	1					
5	2181-2439A	REDUCER	1					
6	S8000111	O-RING	1					

Fig. 6210 OVERLOAD WARNING ASS'Y

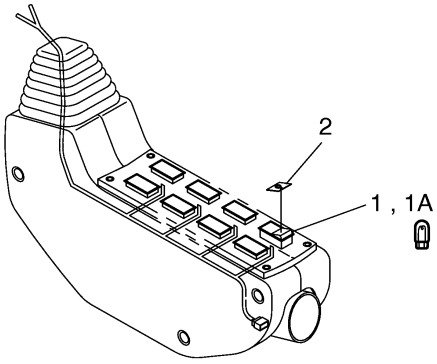

CONTROL STAND(L.H)

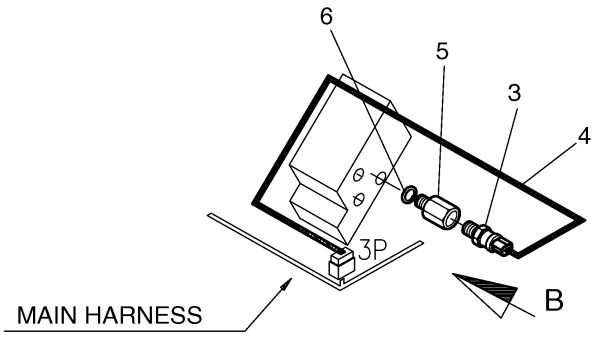

DETAIL A

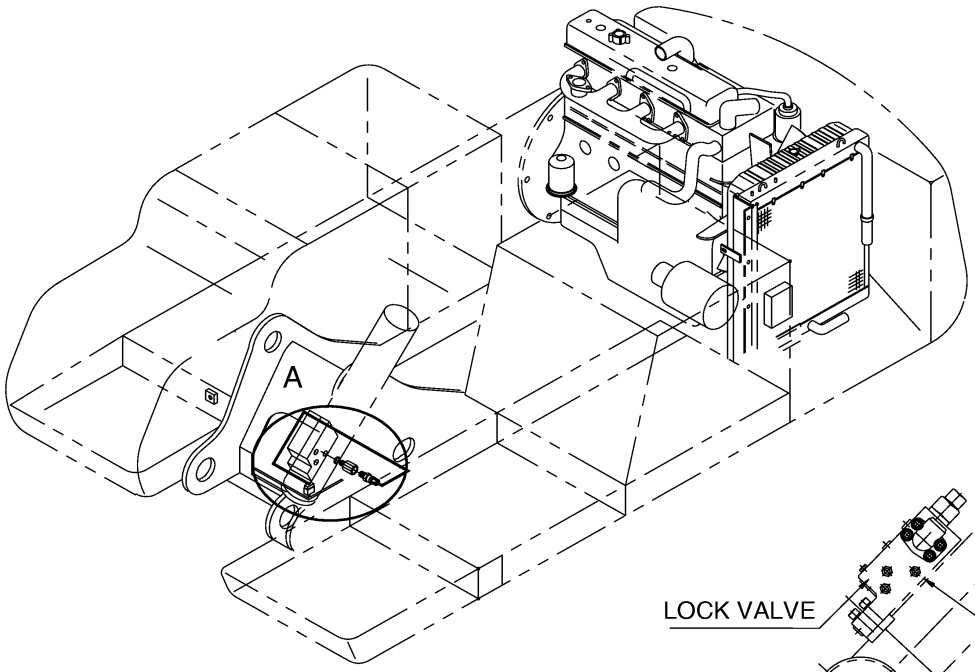

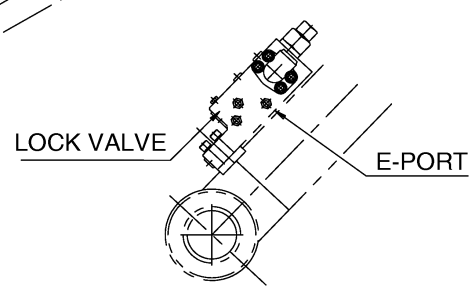

VIEW B

Fig. 6220 FLOOR PLATE-TILTING

Key No	Part No	Description	Qty	S.C	Serial No	ICA	Replacable	Qty
-	621-02077	FLOOR ASS'Y	-	D				
1	161-00448	MAT;FLOOR	1					
2	621-02072A	PLATE;FLOOR	1		1001~2223	I	621-02072B	1
2	621-02072B	PLATE;FLOOR	1		2224~			
3	621-01507	PLATE	1					
4	195-01736	BRACKET;PEDAL(R.H)	1					
5	161-00386	RUBBER,PEDAL	1					
6	2114-1898D1	WASHER	2					
7	195-01940	BRACKET	1					
7A	195-01937	BRACKET	1	D				
7B	133-00167	BAR	1	D				
7C	129-00144	SPRING	1	D				
7D	2114-1898D14	WASHER	3	D				
7E	S5735351	PIN;SPLIT	1	D				
7F	160-00045	BUSHING;RUBBER	1	D				
8	2120-2166D5	BOLT	4					
9	2114-1898D14	WASHER	4					
10	S2211861	BOLT;SOCKET	2		1001~1019	I	S2211866	2
10	S2211866	BOLT	2		1020~			
11	S5110601	WASHER;SPRING M10	2					
12	160-00045	BUSHING;RUBBER	1					
13	S0511653	BOLT	2					

Fig. 6220 FLOOR PLATE-TILTING

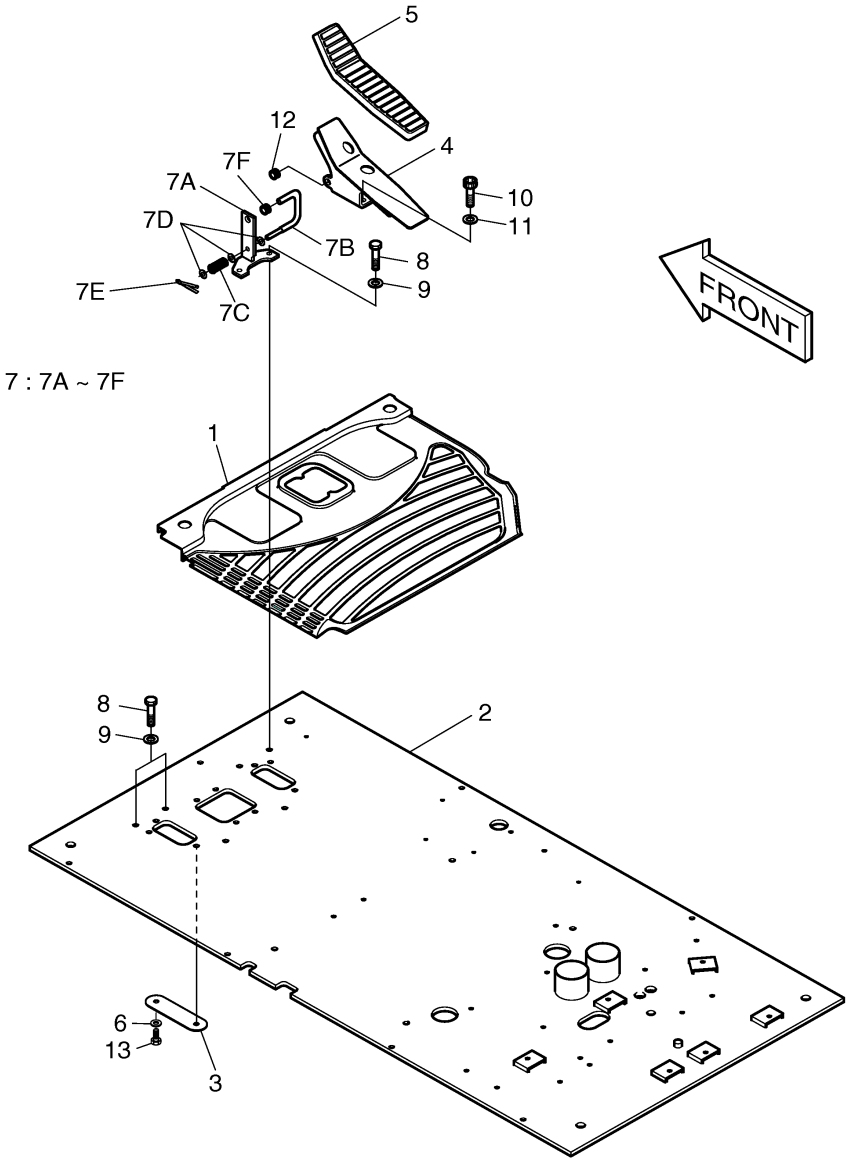

Fig. 6230 SUN VISOR ASS'Y

Key No	Part No	Description	Qty	S.C	Serial No	ICA	Replacable	Qty
-	623-00043	SUN VISOR ASS'Y	-	D				
1	621-01495	SUN VISOR	1					
2	2120-2166D10	SCREW	2					
3	2114-1898D3	WASHER	2					

Fig. 6230 SUN VISOR ASS'Y

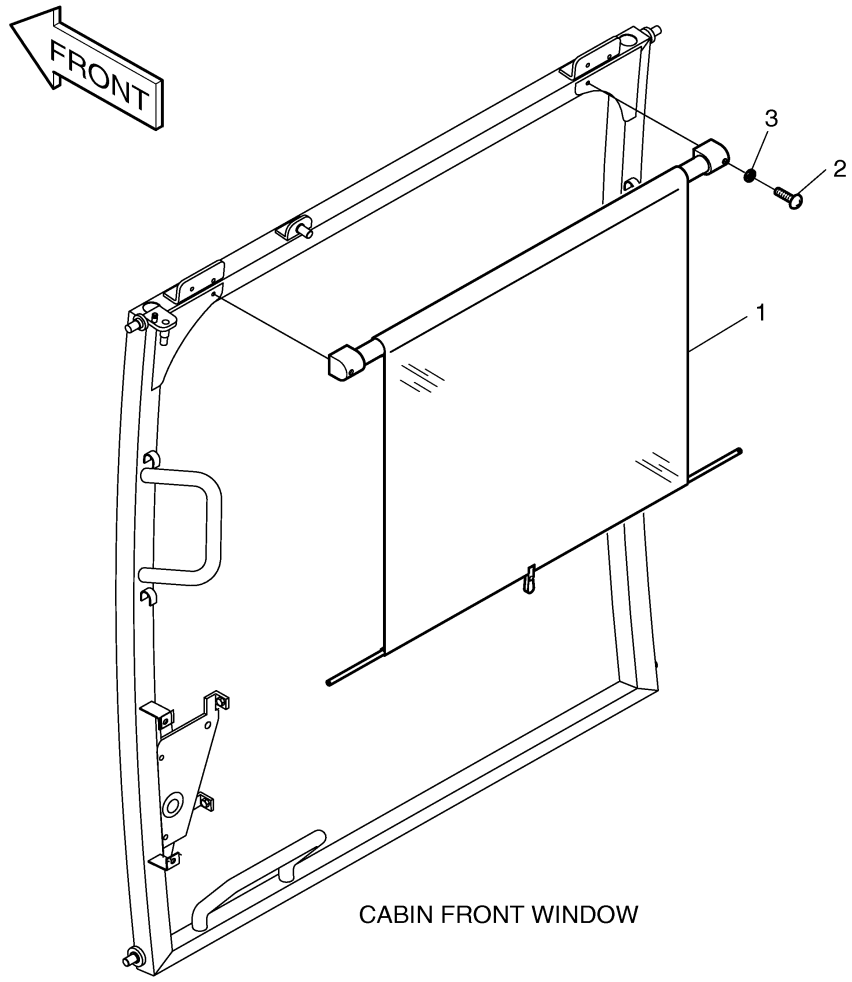

CABIN FRONT WINDOW

Fig. 6240 SUN ROOF ASS'Y

Key No	Part No	Description	Qty	S.C	Serial No	ICA	Replacable	Qty
-	621-01957	SUN ROOF ASS'Y	-	D				
1	621-01956	COVER ASS'Y;ROOF	1					
2	195-01843	GUARD;ROOF	1					
3	2125-9057	CATCH;ROOF COVER	1					
4	2120-2166D8	BOLT	4					
5	S5000213	WASHER	4					
6	S5100203	WASHER	4					
7	903-00056	GLASS	1					
8	2120-2166D5	BOLT	4					
9	2114-2031D4	WASHER	4					
10	2114-1898D2	WASHER	4					
11	2161-2254	DAMPER	1					

Fig. 6240 SUN ROOF ASS'Y

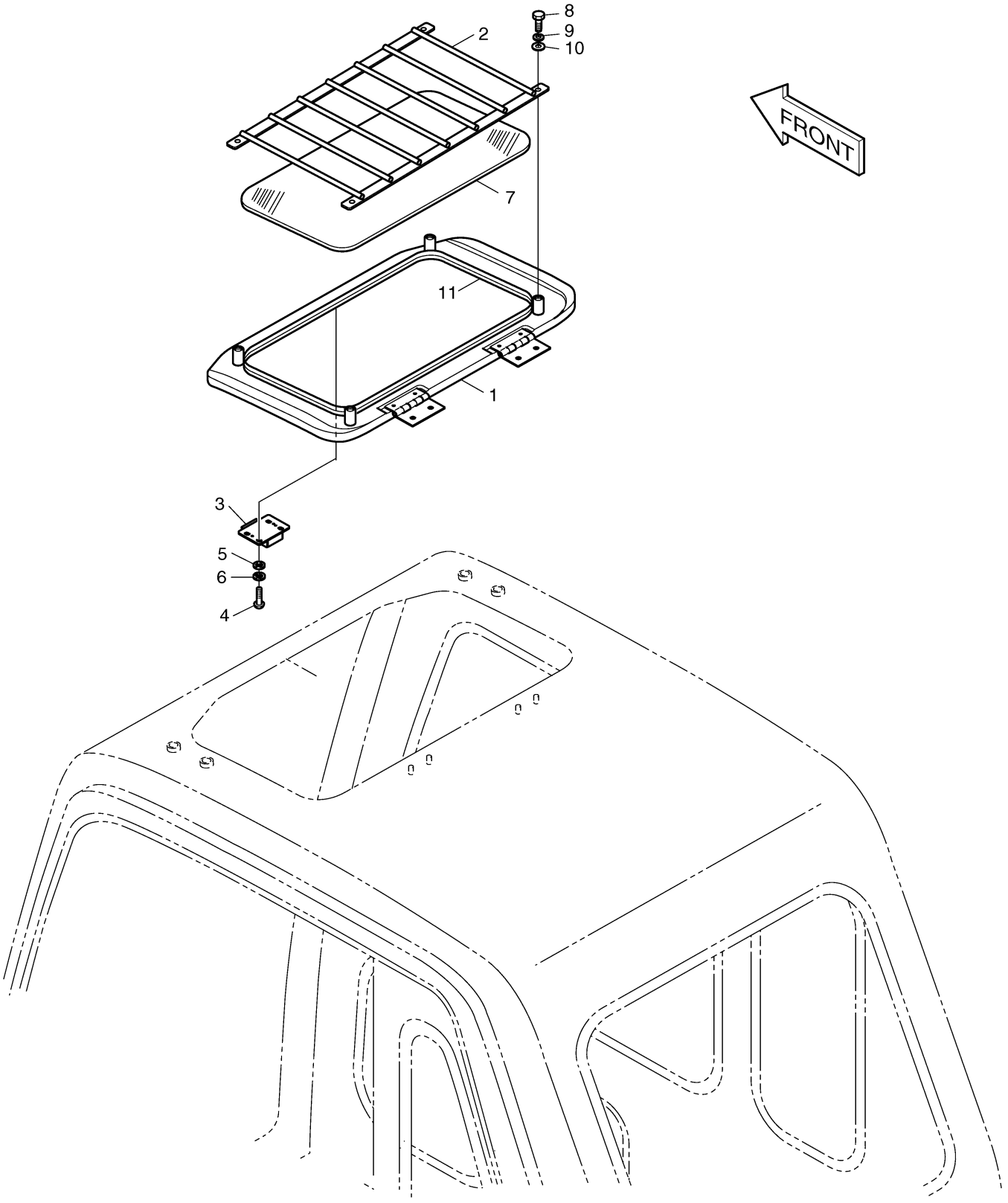

Fig. 6250 JOYSTICK VALVE ASS'Y-3

Key No	Part No	Description	Qty	S.C	Serial No	ICA	Replacable	Qty
-	420-00348	JOYSTICK VALVE ASS'Y	-	D	1001~3327			
-	420-00348A	JOYSTICK VALVE ASS'Y	-	D	3328~			
1	420-00344A	VALVE;JOYSTICK(L.H)	1					
2	420-00345A	VALVE;JOYSTICK(R.H)	1					
3	530-00105	HARNESS	1		1001~1125	I	530-00105A	1
3	530-00105A	HARNESS	1		1126~3327	I	530-00105B	1
3	530-00105B	HARNESS	1		3328~			
4	2549-9138	SWITCH;ROCKER	1		3328~			
4A	K9000353	LAMP;PILOT	1		3328~			
5	2190-2036D1	INSERT;BREAKER	1		3328~			
6	K1000268	PLATE;NAME	1		3328~			

Fig. 6250 JOYSTICK VALVE ASS'Y-3

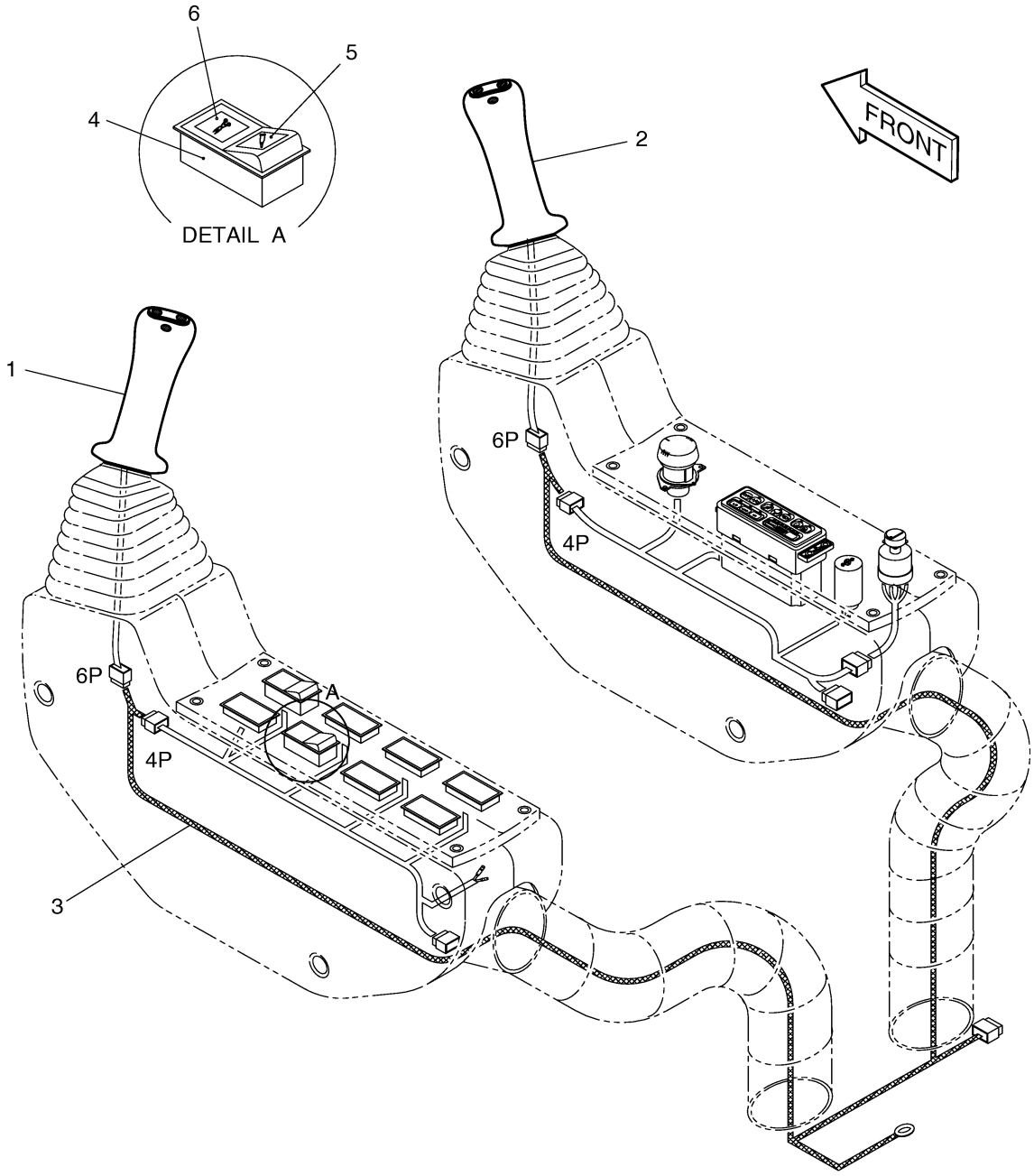

Fig. 6260 TRACK SHOE-OPT.

Key No	Part No	Description	Qty	S.C	Serial No	ICA	Replacable	Qty
1	2273-1040A	TRACK SHOE ASS'Y;700G	2					
1	2273-1041A	TRACK SHOE ASS'Y;800G	2					
1	2273-1042A	TRACK SHOE ASS'Y;850G	2					
1-1	2272-1074	TRACK LINK ASS'Y	1					
1-1A	2272-9008	LINK(R.H)	50					
1-1B	2272-9009	LINK(L.H)	50					
1-1C	2123-1320	PIN	50					
1-1D	2110-1104	BUSHING	50					
1-1E	2123-1628A	PIN;MASTER	1					
1-1F	2110-1105	BUSHING;MASTER	1					
1-1G	2114-1552	SPACER	2					
1-1H	2123-1629	PIN	1					
1-1J	2272-1056	LINK;MASTER(R.H)	1					
1-1K	2272-1057	LINK;MASTER(L.H)	1					
1-2	2273-9015A	SHOE;700G	51					
1-2	2273-9016A	SHOE;800G	51					
1-2	2273-9017A	SHOE;850G	51					
1-3	2120-1212A	BOLT	204					
1-4	2121-1203	NUT	204					
2	2625-1220D1	BRACKET	4					
2	2625-1220D3	BRACKET	4					
2	2625-1220D3	BRACKET	4					
4	S0558253	BOLT M10X1.5X35	16					
5	S5102603	WASHER	16					

Fig. 6260 TRACK SHOE-OPT.

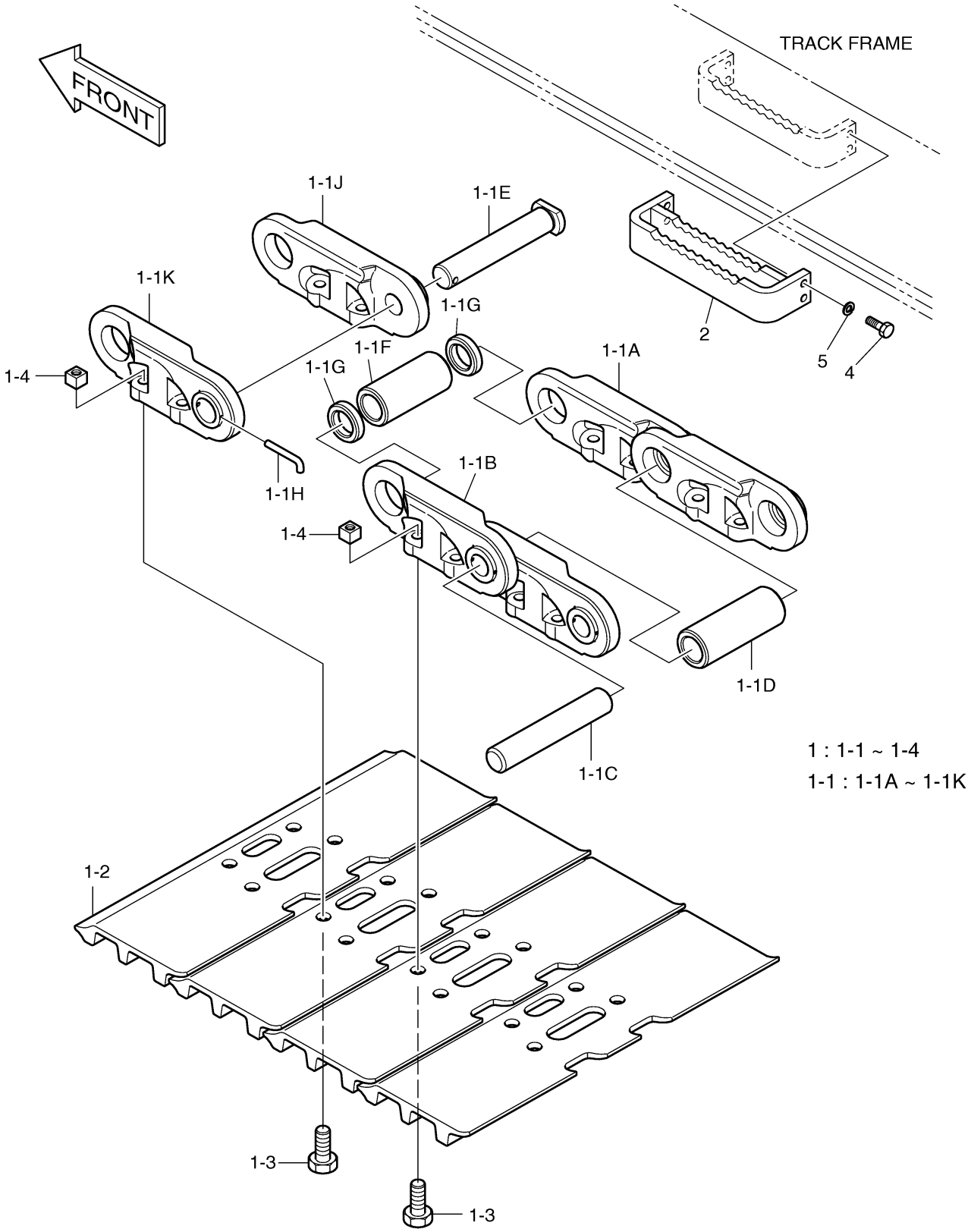

1 : 1-1 ~ 1-4

1-1 : 1-1A ~ 1-1K

Fig. 6270 TRACK SHOE-910T

Key No	Part No	Description	Qty	S.C	Serial No	ICA	Replacable	Qty
-	2273-7048	TRACK SHOE ASS'Y OPT.	-	D				
1	2273-1045	TRACK SHOE ASS'Y	2					
1-1	2272-1074	TRACK LINK ASS'Y	1					
1-1A	2272-9008	LINK(R.H)	50					
1-1B	2272-9009	LINK(L.H)	50					
1-1C	2123-1320	PIN	50					
1-1D	2110-1104	BUSHING	50					
1-1E	2123-1628A	PIN;MASTER	1					
1-1F	2110-1105	BUSHING;MASTER	1					
1-1G	2114-1552	SPACER	2					
1-1H	2123-1629	PIN	1					
1-1J	2272-1056	LINK;MASTER(R.H)	1					
1-1K	2272-1057	LINK;MASTER(L.H)	1					
1-2	2273-1027	SHOE	51					
1-3	2120-1398	BOLT	204					
1-4	2121-1203	NUT	204					
2	2625-1220D10	BRACKET	4					
4	S0558253	BOLT M10X1.5X35	16					
5	S5102603	WASHER	16					

Fig. 6270 TRACK SHOE-910T

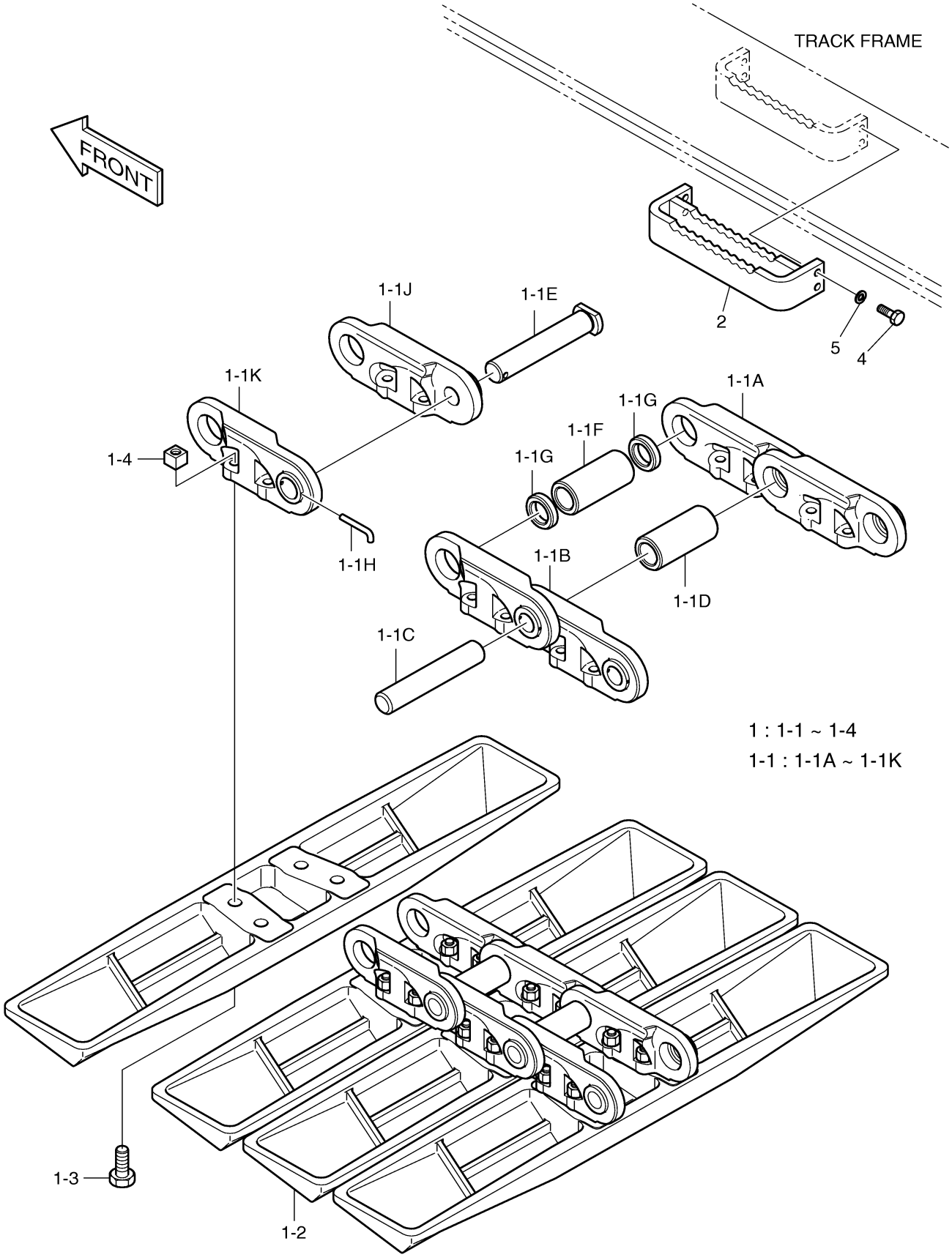

Fig. 6280 SEALED TRACK SHOE-OPT.

Key No	Part No	Description	Qty	S.C	Serial No	ICA	Replacable	Qty
1	273-00048	SEALED TRACK SHOE;600G	2					
1	273-00050	SEALED TRACK SHOE;700G	2					
1	273-00051	SEALED TRACK SHOE;800G	2					
1	273-00052	SEALED TRACK SHOE;850G	2					
1-1	272-00026	SEALED TRACK LINK ASS'Y	1					
1-1A	2272-9008	LINK(R.H)	50					
1-1B	2272-9009	LINK(L.H)	50					
1-1C	2123-1320	PIN	50					
1-1D	110-00180	BUSHING	50					
1-1E	2123-1628A	PIN;MASTER	1					
1-1F	2110-1105	BUSHING;MASTER	1					
1-1G	2114-1552	SPACER	2					
1-1H	2123-1629	PIN	1					
1-1J	2272-1056	LINK;MASTER(R.H)	1					
1-1K	2272-1057	LINK;MASTER(L.H)	1					
1-1L	180-00409	SEAL;DUST	100					
1-2	2273-9012	SHOE 600G	51					
1-2	2273-9015A	SHOE;700G	51					
1-2	2273-9016A	SHOE;800G	51					
1-2	2273-9017A	SHOE;850G	51					
1-3	2120-1212A	BOLT	204					
1-4	2121-1203	NUT	204					
2	2625-1220D1	BRACKET	4					
2	2625-1220D3	BRACKET	4					
2	2625-1220D3	BRACKET	4					
4	S0558253	BOLT M10X1.5X35	16					
5	S5102603	WASHER	16					

Fig. 6280 SEALED TRACK SHOE-OPT.

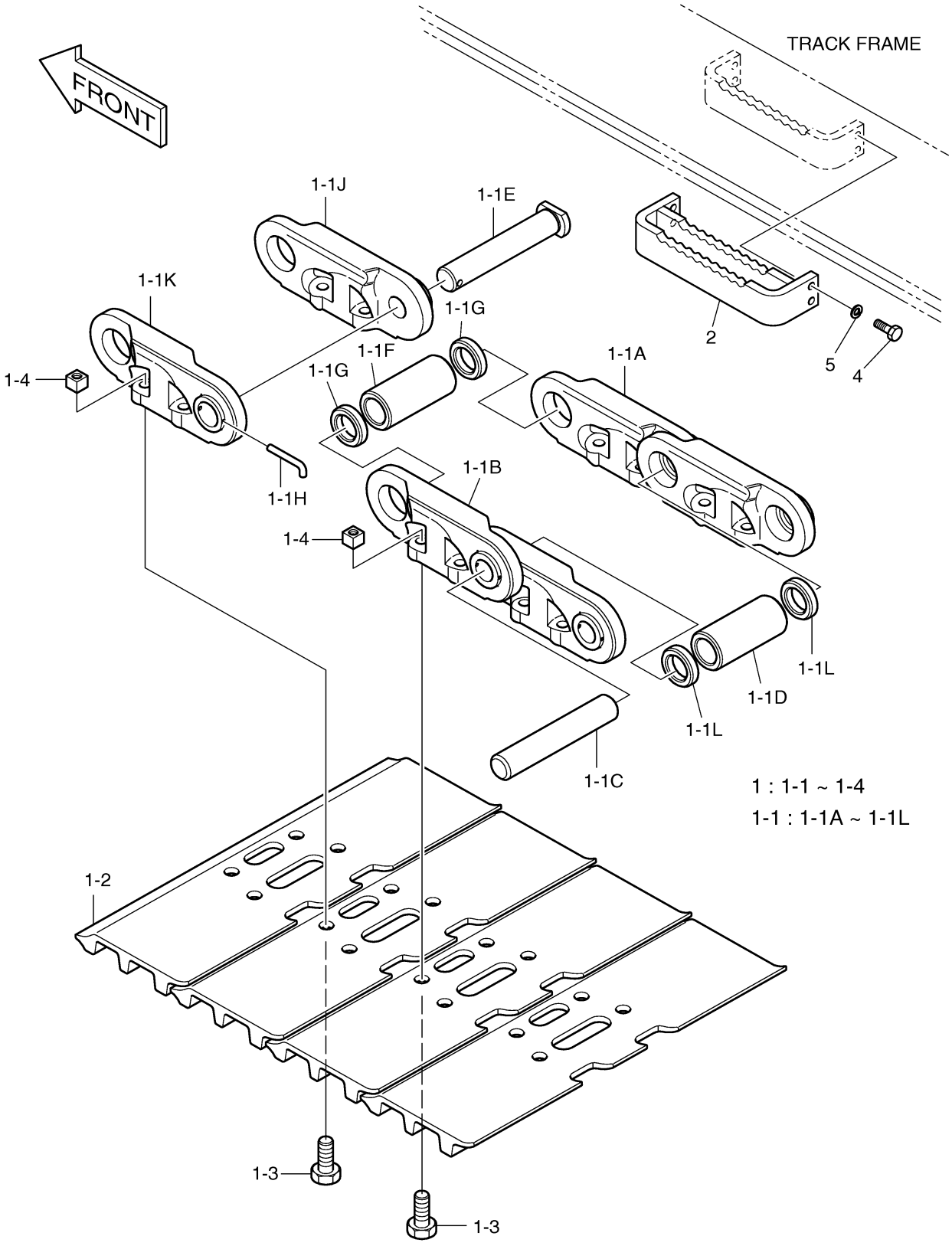

Fig. 6290 SEALED TRACK SHOE-910T

Key No	Part No	Description	Qty	S.C	Serial No	ICA	Replacable	Qty
-	273-00059	TRACK SHOE ASS'Y OPT.	-	D				
1	272-00026	SEALED TRACK LINK ASS'Y	2					
1-1	2272-9008	LINK(R.H)	50					
1-2	2272-9009	LINK(L.H)	50					
1-3	2123-1320	PIN	50					
1-4	110-00180	BUSHING	50					
1-5	2123-1628A	PIN;MASTER	1					
1-6	2110-1105	BUSHING;MASTER	1					
1-7	2114-1552	SPACER	2					
1-8	2123-1629	PIN	1					
1-9	2272-1056	LINK;MASTER(R.H)	1					
1-10	2272-1057	LINK;MASTER(L.H)	1					
1-11	180-00409	SEAL;DUST	100					
2	2273-1027	SHOE	102					
3	2120-1398	BOLT	408					
4	2121-1203	NUT	408					
5	2625-1220D10	BRACKET	4					
7	S0558253	BOLT M10X1.5X35	16					
8	S5102603	WASHER	16					

Fig. 6290 SEALED TRACK SHOE-910T

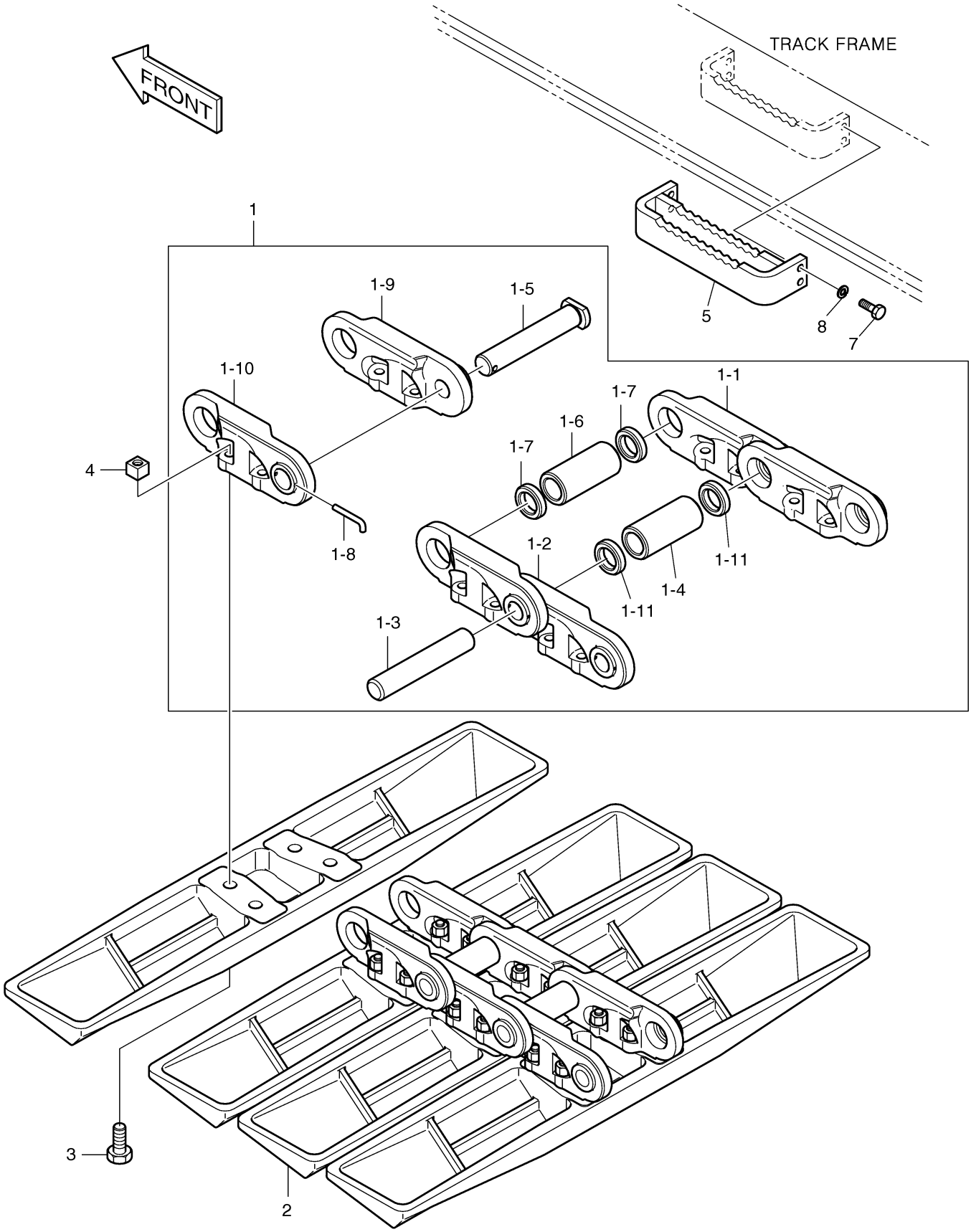

DOOSAN Doosan Infracore

Fig. 6300 ARM-2.5M

Key No	Part No	Description	Qty	S.C	Serial No	ICA	Replacable	Qty
-	2701-1474	ARM ASS'Y-2.5m	-	D				
1	2701-1475N	ARM SUB ASS'Y-2.5m	1					
1B	110-00151	BUSHING	2					
1D	110-00152	BUSHING	2					
1E	110-00206	BUSHING	2					
2	2155-1327H	PUSH LINK ASS'Y	1					
2B	2110-1376A	BUSHING	2					
2C	110-00158	BUSHING	2					
3	2155-1310B	LINK;GUIDE(R.H)	1					
4	2155-1311B	LINK;GUIDE(L.H)	1					
6	2123-2220C	PIN	1					
7	2123-2215C	PIN	1					
8	2123-2222B	PIN	1					
9	2123-2223C	PIN	2					
10	2123-2224B	PIN	1					
11	2180-1106BD24	SEAL,DUST	2					
12	2180-1106BD6	SEAL,DUST	14					
13	2180-1106BD14	SEAL;DUST	2					
14	2114-1059D113	SHIM	4					
15	2114-1059D219	SHIM	8					
16	2116-1060D5	STOPPER	2					
17	S5102903	WASHER	2					
18	S0521366	BOLT	2					
19	S4012933	NUT	2					
20	S4013133	NUT	6					
21	S0571866	BOLT	3					
22	S0566966	BOLT	1					
23	S6710041	NIPPLE,GREASE	9					
24	180-00077D6	O-RING	2					
25	2114-1059D63	SHIM	2					
26	2114-1059D114	SHIM	4					
27	2114-1059D234	SHIM	8					
28	2114-1059D118	SHIM	2					
30	114-00379	SPACER	2		1001~2132	I	114-00379A	2
30	114-00379A	SPACER	2		2133~			
31	120-00223	BOLT M12X1.25X25	8					

Fig. 6300 ARM-2.5M

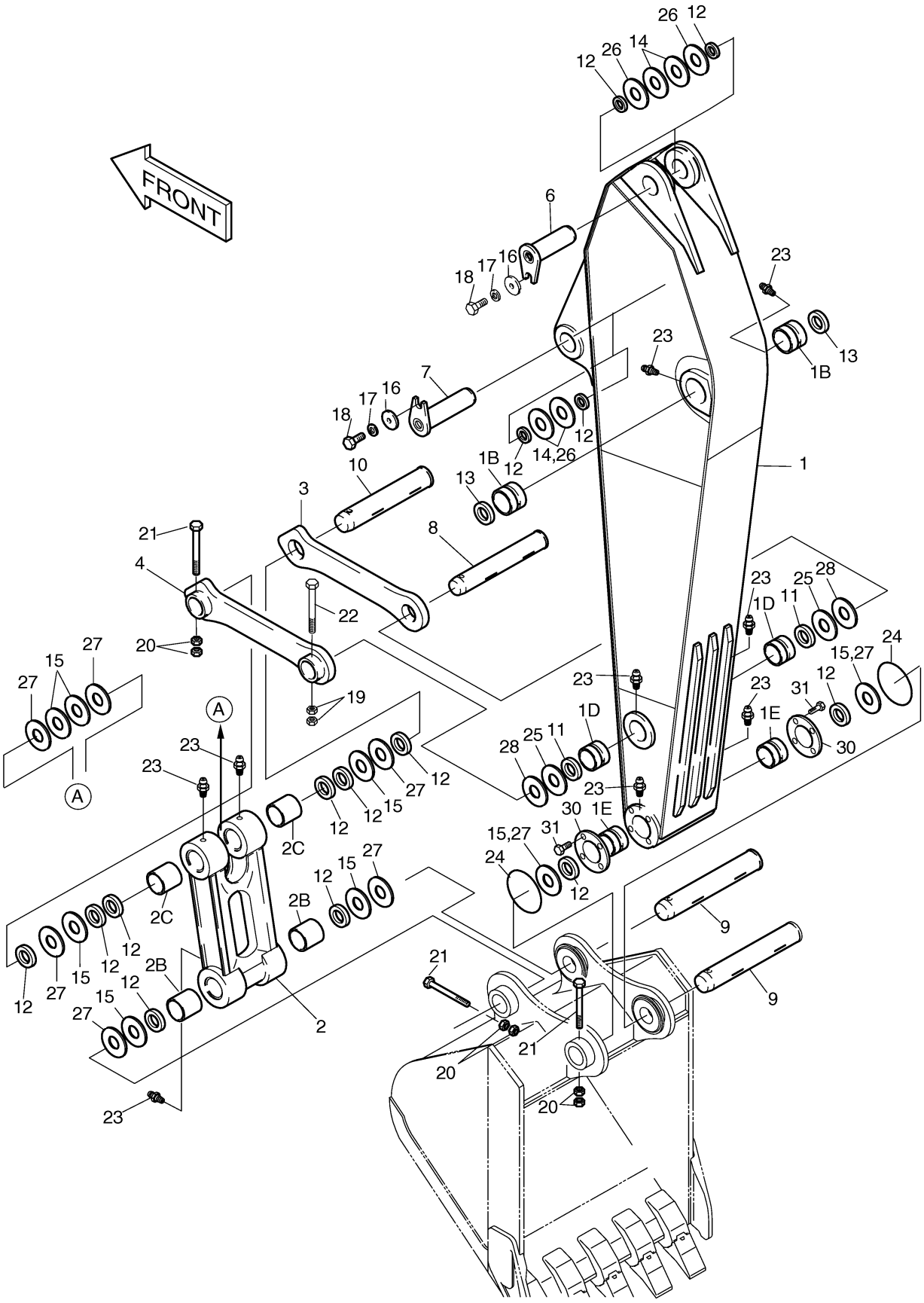

DOOSAN Doosan Infracore

Fig. 6310 ARM-3.75M

Key No	Part No	Description	Qty	S.C	Serial No	ICA	Replacable	Qty
-	2701-1477	ARM ASS'Y-3.75m	-	D				
1	2701-1478M	ARM SUB ASS'Y	1					
1B	110-00151	BUSHING	2					
1D	110-00152	BUSHING	2					
1E	110-00206	BUSHING	2					
2	2155-1327H	PUSH LINK ASS'Y	1					
2B	2110-1376A	BUSHING	2					
2C	110-00158	BUSHING	2					
3	2155-1310B	LINK;GUIDE(R.H)	1					
4	2155-1311B	LINK;GUIDE(L.H)	1					
6	2123-2220C	PIN	1					
7	2123-2215C	PIN	1					
8	2123-2222B	PIN	1					
9	2123-2223C	PIN	2					
10	2123-2224B	PIN	1					
11	2180-1106BD24	SEAL,DUST	2					
12	2180-1106BD6	SEAL,DUST	14					
13	2180-1106BD14	SEAL;DUST	2					
14	2114-1059D113	SHIM	4					
15	2114-1059D219	SHIM	8					
16	2116-1060D5	STOPPER	2					
17	S5102903	WASHER	2					
18	S0521366	BOLT	2					
19	S4012933	NUT	2					
20	S4013133	NUT	6					
21	S0571866	BOLT	3					
22	S0566966	BOLT	1					
23	S6710041	NIPPLE,GREASE	9					
24	180-00077D6	O-RING	2					
25	2114-1059D63	SHIM	2					
26	2114-1059D114	SHIM	4					
27	2114-1059D234	SHIM	8					
28	2114-1059D118	SHIM	2					
30	114-00379	SPACER	2		1001~2132	I	114-00379A	2
30	114-00379A	SPACER	2		2133~			
31	120-00223	BOLT M12X1.25X25	8					

Fig. 6310 ARM-3.75M

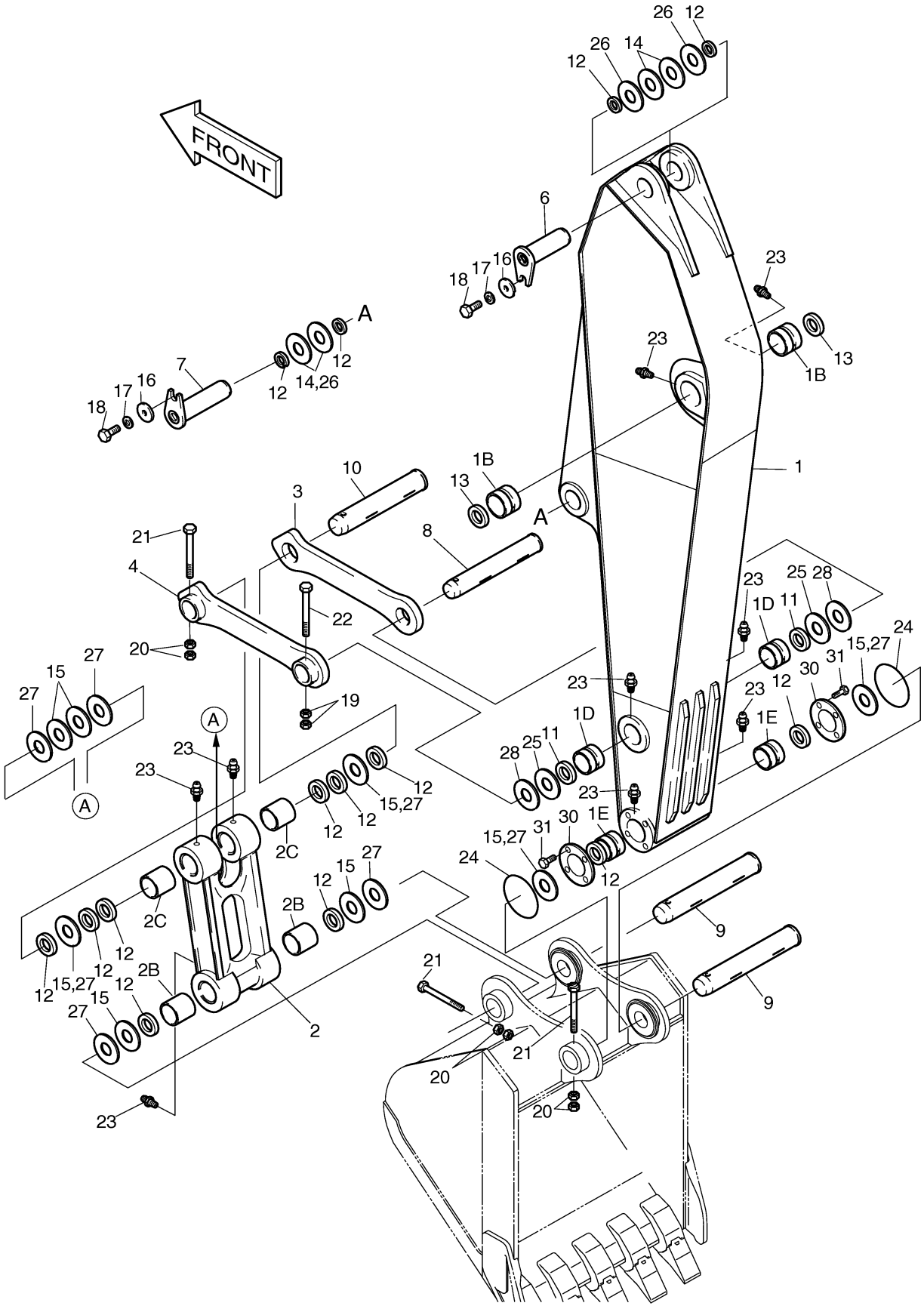

DOOSAN Doosan Infracore

Fig. 6320 FRONT PIPING-2.5M ARM

Key No	Part No	Description	Qty	S.C	Serial No	ICA	Replacable	Qty
-	400-00800	FRONT PIPING-2.5m ARM	-	D				
1	2440-9282C	BUCKET CYLINDER	1		1001~1019	I	2440-9282E	1
1	2440-9282E	BUCKET CYLINDER	1		1020~2279	I	2440-9282G	1
1	2440-9282G	BUCKET CYLINDER	1		2280~3949	I	2440-9282H	1
1	2440-9282H	BUCKET CYLINDER	1		3950~			

Fig. 6320 FRONT PIPING-2.5M ARM

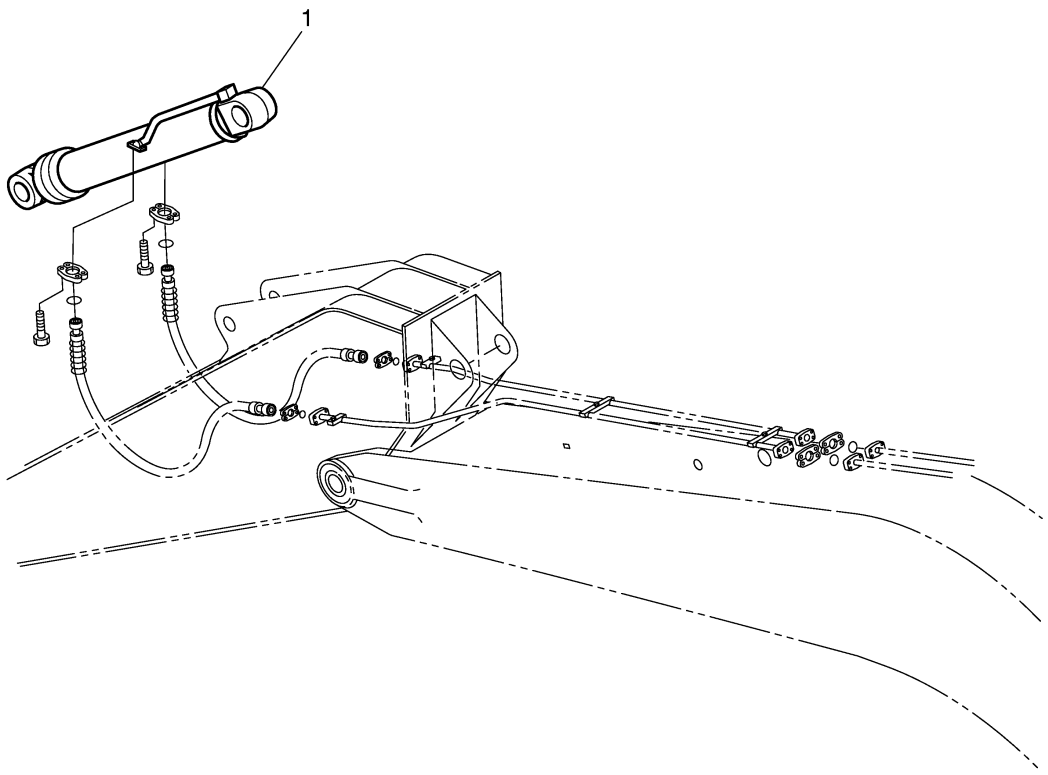

Fig. 6330 FRONT PIPING-3.75M ARM

Key No	Part No	Description	Qty	S.C	Serial No	ICA	Replacable	Qty
-	400-00801	FRONT PIPING-3.75m ARM	-	D				
1	2184-1098D65	HOSE	2					

Fig. 6330 FRONT PIPING-3.75M ARM

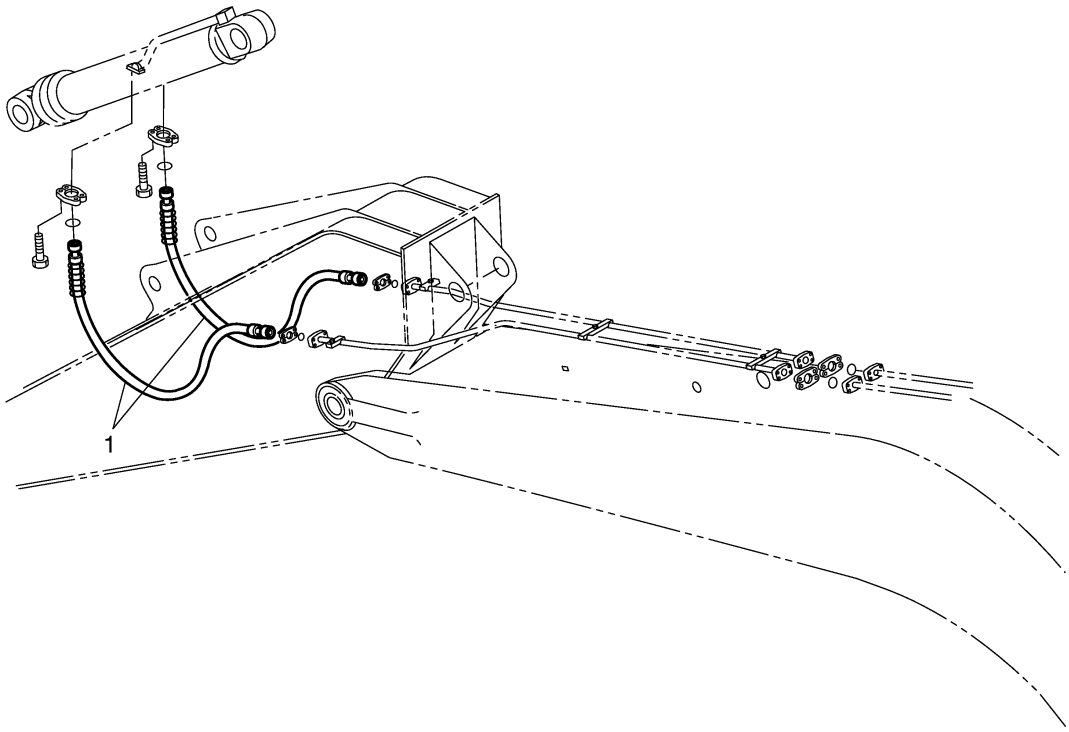

Fig. 6340 BUCKET-0.7M3

Key No	Part No	Description	Qty	S.C	Serial No	ICA	Replacable	Qty
-	2704-1400C	BUCKET ASS'Y-0.7㎥	1		1001~1615	I	2704-1400E	1
-	2704-1400E	BUCKET ASS'Y-0.7㎥	1		1616~2669	I	2704-1400G	1
-	2704-1400G	BUCKET ASS'Y-0.8m³	1		2670~			
1	-	BUCKET ASS'Y-0.7㎥	1	D				
1A	2713-1220	ADAPTER;TOOTH	4					
2	2713-1219	POINT;TOOTH	4		1001~1615	I	713-00054A	4
2	713-00054	POINT;TOOTH	4		1616~2669	I	713-00054A	4
2	713-00054A	POINT;TOOTH	4		2670~			
3	2705-1021	PIN,LOCKING	4					
4	2114-1849A	WASHER,LOCKING	4					
5	2713-6034A	CUTTER,SIDE(R.H)	1					
6	2713-6035A	CUTTER,SIDE(L.H)	1					
7	S0574761	BOLT	12					
8	S4013333	NUT	12					
9	2114-1831	WASHER;HARDEN	12		1001~1615	I	2114-1831A	12
9	2114-1831A	WASHER	12		1616~			

Fig. 6340 BUCKET-0.7M3

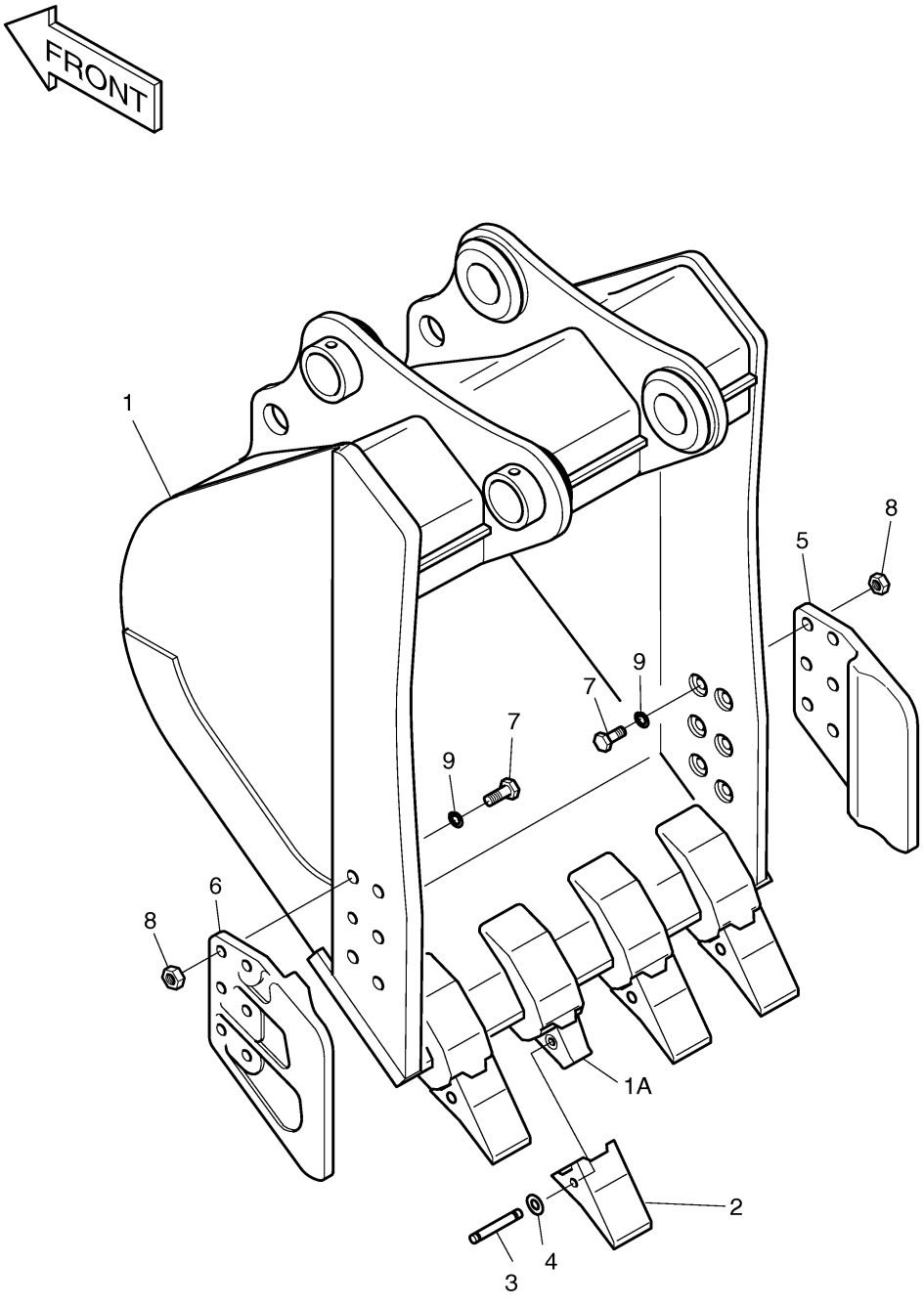

Fig. 6350 BUCKET-0.9M³

Key No	Part No	Description	Qty	S.C	Serial No	ICA	Replacable	Qty
-	2704-1402C	BUCKET ASS'Y-0.9㎥	1		1001~1615	I	2704-1402E	1
-	2704-1402E	BUCKET ASS'Y-0.9㎥	1		1616~2669	I	2704-1402G	1
-	2704-1402G	BUCKET ASS'Y-1.05m³	1		2670~			
1	-	BUCKET ASS'Y-0.9㎥	1	D				
1A	2713-1220	ADAPTER;TOOTH	5					
2	2713-1219	POINT;TOOTH	5		1001~1615	I	713-00054A	5
2	713-00054	POINT;TOOTH	5		1616~2669	I	713-00054A	5
2	713-00054A	POINT;TOOTH	5		2670~			
3	2705-1021	PIN,LOCKING	5					
4	2114-1849A	WASHER,LOCKING	5					
5	2713-6034A	CUTTER,SIDE(R.H)	1					
6	2713-6035A	CUTTER,SIDE(L.H)	1					
7	S0574761	BOLT	12					
8	S4013333	NUT	12					
9	2114-1831	WASHER;HARDEN	12		1001~1615	I	2114-1831A	12
9	2114-1831A	WASHER	12		1616~			

Fig. 6350 BUCKET-0.9M³

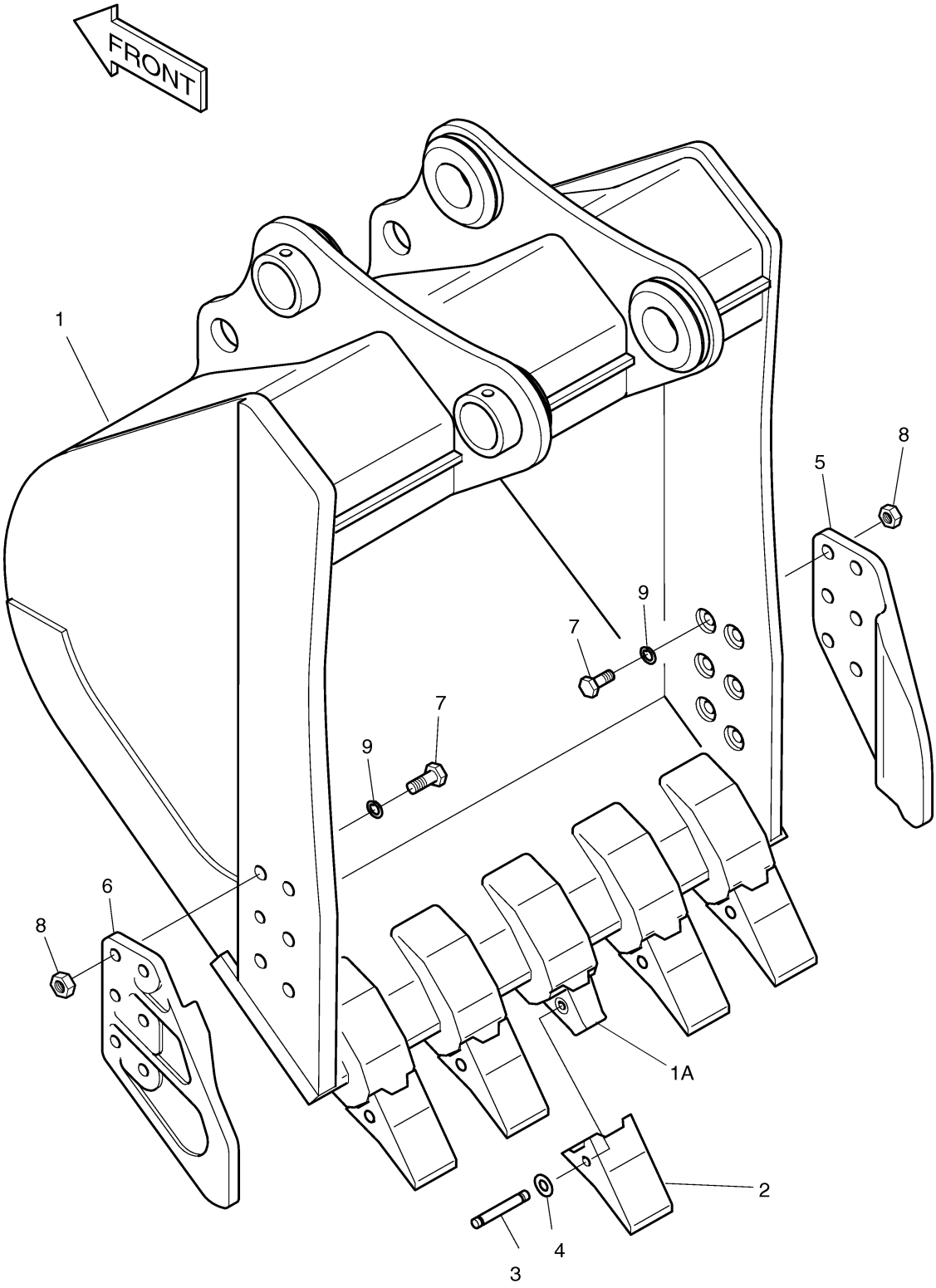

Fig. 6360 BUCKET-1.3M3

Key No	Part No	Description	Qty	S.C	Serial No	ICA	Replacable	Qty
-	2704-1406C	BUCKET ASS'Y-1.5m³	1		1001~1615	I	2704-1406E	1
-	2704-1406E	BUCKET ASS'Y-1.5m³	1		1616~2669	I	2704-1406G	1
-	2704-1406G	BUCKET ASS'Y-1.5m³	1		2670~			
1	-	BUCKET ASS'Y-1.3㎥	1	D				
1A	2713-1220	ADAPTER;TOOTH	6					
2	2713-1219	POINT;TOOTH	6		1001~1615	I	713-00054A	6
2	713-00054	POINT;TOOTH	6		1616~2669	I	713-00054A	6
2	713-00054A	POINT;TOOTH	6		2670~			
3	2705-1021	PIN,LOCKING	6					
4	2114-1849A	WASHER,LOCKING	6					
5	2713-6034A	CUTTER,SIDE(R.H)	1					
6	2713-6035A	CUTTER,SIDE(L.H)	1					
7	S0574761	BOLT	12					
8	S4013333	NUT	12					
9	2114-1831	WASHER;HARDEN	12		1001~1615	I	2114-1831A	12
9	2114-1831A	WASHER	12		1616~			

Fig. 6360 BUCKET-1.3M3

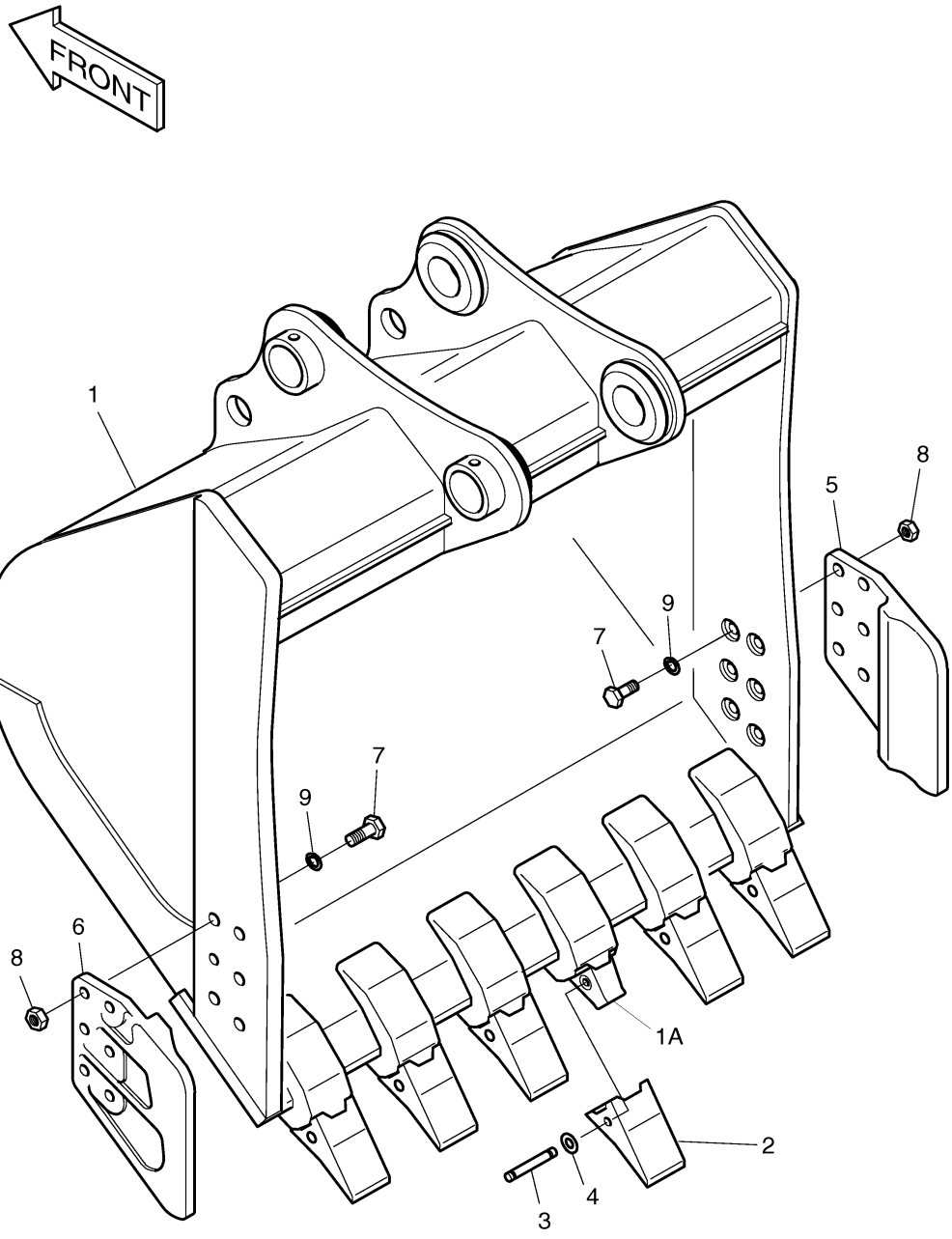

Fig. 6370 BUCKET-1.5M³

Key No	Part No	Description	Qty	S.C	Serial No	ICA	Replacable	Qty
-	2704-1408E	BUCKET ASS'Y-1.75m³	1		1001~1615	I	2704-1408G	1
-	2704-1408G	BUCKET ASS'Y-1.75m³	1		1616~2669	I	2704-1408H	1
-	2704-1408H	BUCKET ASS'Y-1.75m³	1		2670~			
1	-	BUCKET 1.5㎥	1	D				
1A	2713-1220	ADAPTER;TOOTH	6					
2	2713-1219	POINT;TOOTH	6		1001~1615	I	713-00054A	6
2	713-00054	POINT;TOOTH	6		1616~2669	I	713-00054A	6
2	713-00054A	POINT;TOOTH	6		2670~			
3	2705-1021	PIN,LOCKING	6					
4	2114-1849A	WASHER,LOCKING	6					
5	2713-6034A	CUTTER,SIDE(R.H)	1					
6	2713-6035A	CUTTER,SIDE(L.H)	1					
7	S0574761	BOLT	12					
8	S4013133	NUT	12					
9	2114-1831	WASHER;HARDEN	12		1001~1615	I	2114-1831A	12
9	2114-1831A	WASHER	12		1616~			

Fig. 6370 BUCKET-1.5M³

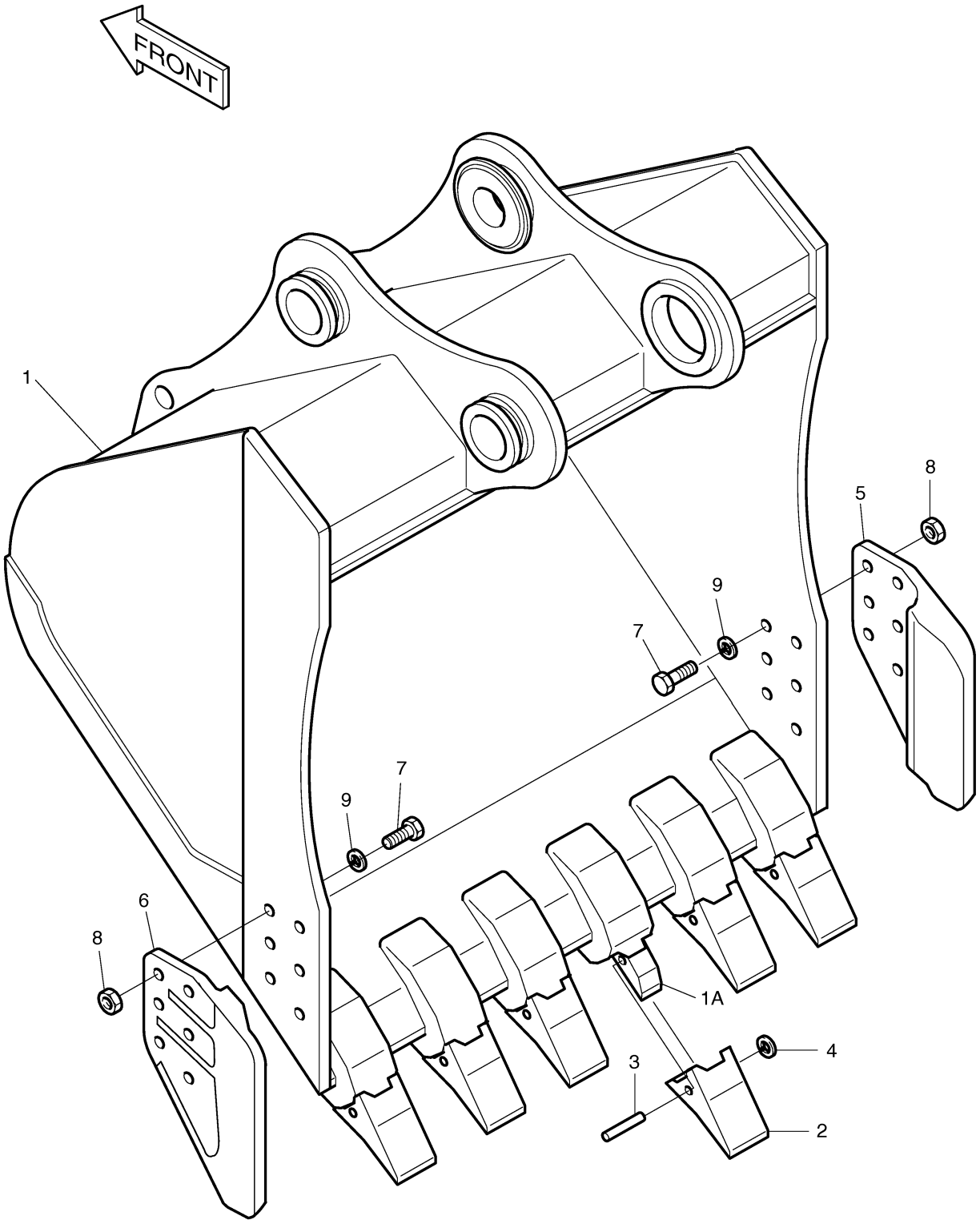

Fig. 6380 BUCKET-1.1M³-H.D TYPE

Key No	Part No	Description	Qty	S.C	Serial No	ICA	Replacable	Qty
-	2704-1574A	BUCKET ASS'Y-1.27m³(HD	1					
1	-	BUCKET ASS'Y-1.1㎥	1	D				
1A	2713-1220	ADAPTER;TOOTH	5					
2	2713-1219	POINT;TOOTH	5			I	713-00054A	5
3	2705-1021	PIN,LOCKING	5					
4	2114-1849A	WASHER,LOCKING	5					
5	2713-6034	CUTTER;SIDE(R.H)	1					
6	2713-6035	CUTTER;SIDE(L.H)	1					
7	S0570461	BOLT M20X2.5X80	12					
8	S4013133	NUT	12					
9	2114-9012	WASHER;HARDEN	12					

Fig. 6380 BUCKET-1.1M³-H.D TYPE

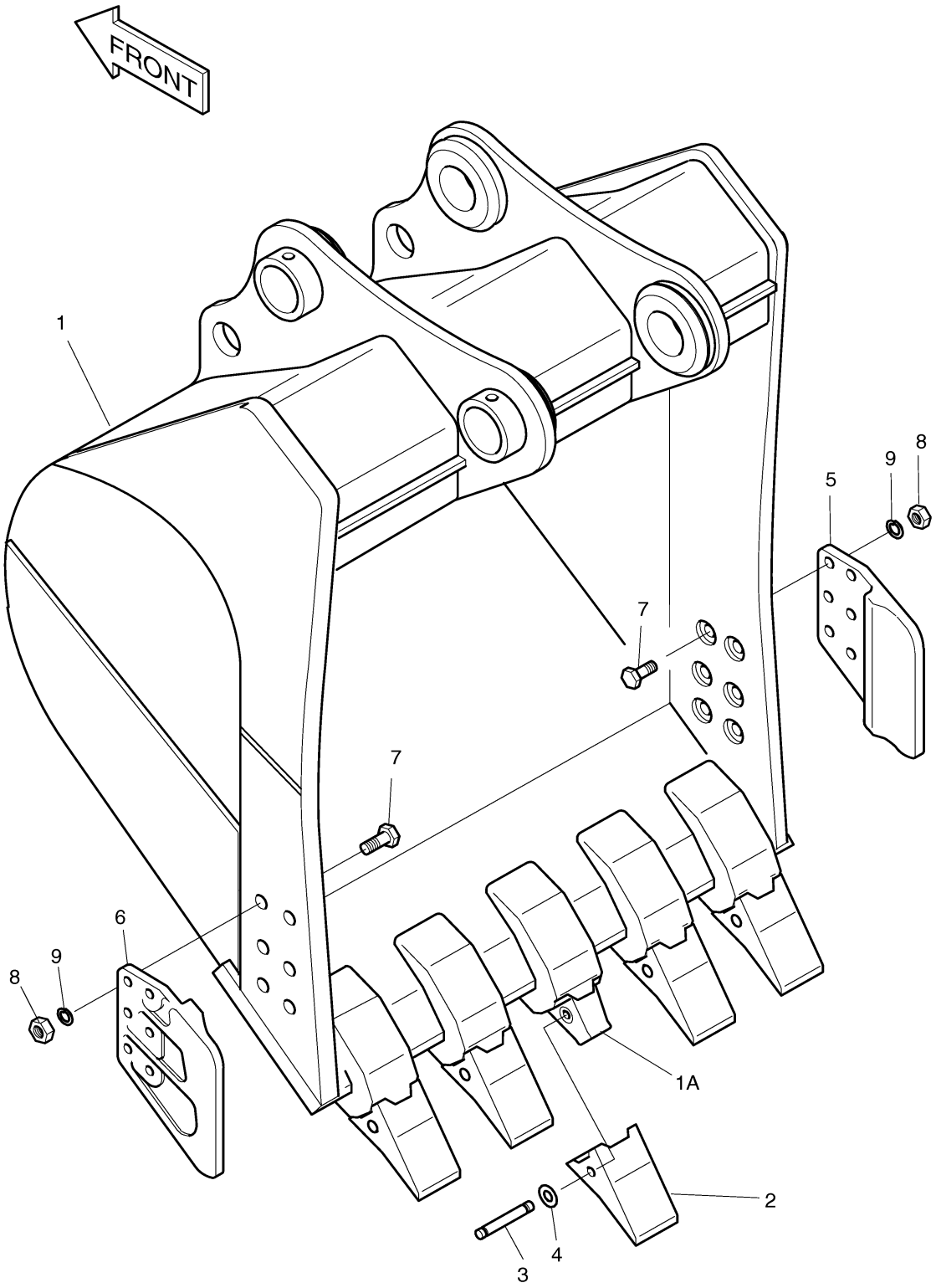

Fig. 6390 BUCKET-1.3M³-H.D TYPE

Key No	Part No	Description	Qty	S.C	Serial No	ICA	Replacable	Qty
-	2704-1625A	BUCKET ASS'Y-1.46m³(H.D)	1					
1	2704-1626A	BUCKET SUB ASS'Y-1.46m³	1	D				
1-1	-	BUCKET	1	D				
1-1A	2713-1220	ADAPTER;TOOTH	5					
1-2	713-00026	POINT;TOOTH	5					
1-3	2705-1021	PIN,LOCKING	5					
1-4	2114-1849A	WASHER,LOCKING	5					
2	2713-6034	CUTTER;SIDE(R.H)	1					
3	2713-6035	CUTTER;SIDE(L.H)	1					
4	S0570461	BOLT M20X2.5X80	12					
5	S4013133	NUT	12					
6	2114-9012	WASHER;HARDEN	12					

Fig. 6390 BUCKET-1.3M³-H.D TYPE

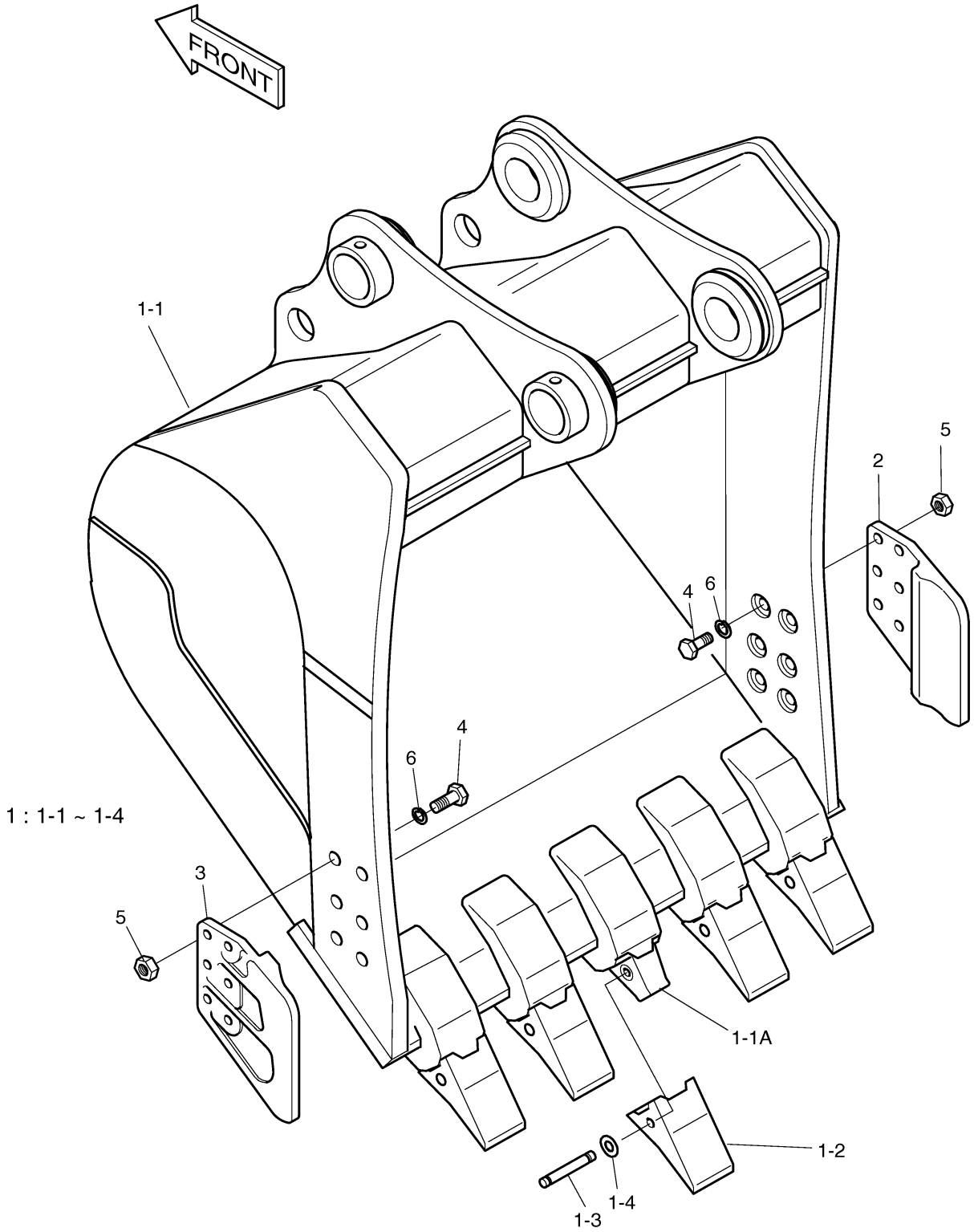

Fig. 6400 BUCKET-1.3M³-SKELETON

Key No	Part No	Description	Qty	S.C	Serial No	ICA	Replacable	Qty
-	2704-1640A	BUCKET-1.3㎥ (SKELETON)	1		1001~1615	I	2704-1640B	1
-	2704-1640B	BUCKET-1.46m³ (SKELETON)	1		1616~2669	I	2704-1640C	1
-	2704-1640C	BUCKET-1.3㎥ (SKELETON)	1		2670~			
1	-	BUCKET;SKELETON	1	D				
1A	2713-1220	ADAPTER;TOOTH	6					
2	2713-1219	POINT;TOOTH	6		1001~1615	I	713-00054A	6
2	713-00054	POINT;TOOTH	6		1616~2669	I	713-00054A	6
2	713-00054A	POINT;TOOTH	6		2670~			
3	2705-1021	PIN,LOCKING	6					
4	2114-1849A	WASHER,LOCKING	6					

Fig. 6400 BUCKET-1.3M³-SKELETON

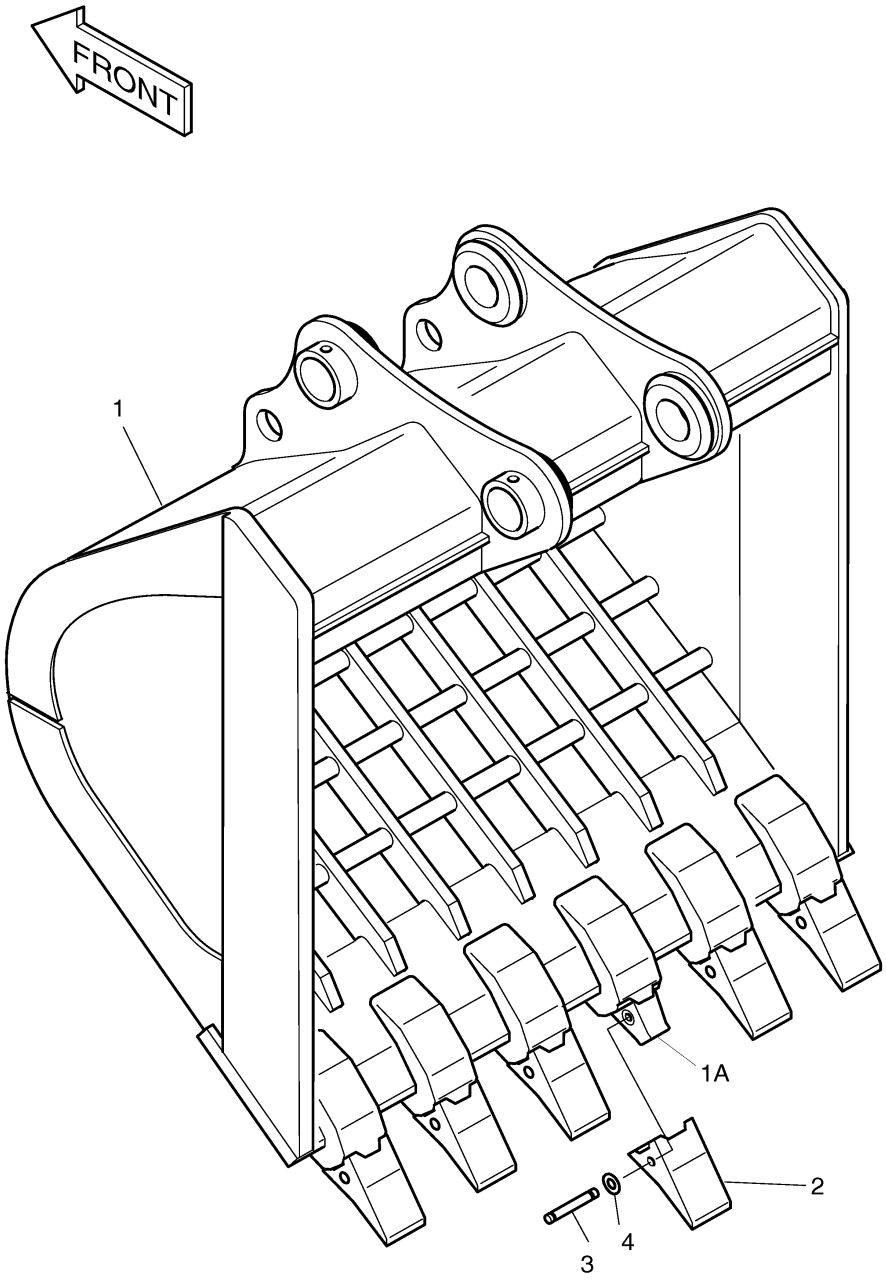

Fig. 6410 BUCKET-1.1M³-H.D TYPE

Key No	Part No	Description	Qty	S.C	Serial No	ICA	Replacable	Qty
-	704-00120A	BUCKET ASSY-1.27㎥ HD TYPE	1		1001~1615	I	704-00120B	1
-	704-00120B	BUCKET ASSY-1.27㎥ HD TYPE	1		1616~2669	I	704-00120C	1
-	704-00120C	BUCKET ASSY-1.27㎥ HD TYPE	1		2670~			
1	-	BUCKET SUB ASS'Y	1	D				
1A	2713-1220	ADAPTER;TOOTH	5					
2	2713-1219	POINT;TOOTH	5		1001~1615	I	713-00054A	5
2	713-00054	POINT;TOOTH	5		1616~2669	I	713-00054A	5
2	713-00054A	POINT;TOOTH	5		2670~			
3	2705-1021	PIN,LOCKING	5					
4	2114-1849A	WASHER,LOCKING	5					
5	2713-6034A	CUTTER,SIDE(R.H)	1					
6	2713-6035A	CUTTER,SIDE(L.H)	1					
7	S0574761	BOLT	12					
8	S4013333	NUT	12					
9	2114-1831	WASHER;HARDEN	12		1001~1615	I	2114-1831A	12
9	2114-1831A	WASHER	12		1616~			

Fig. 6410 BUCKET-1.1M³-H.D TYPE

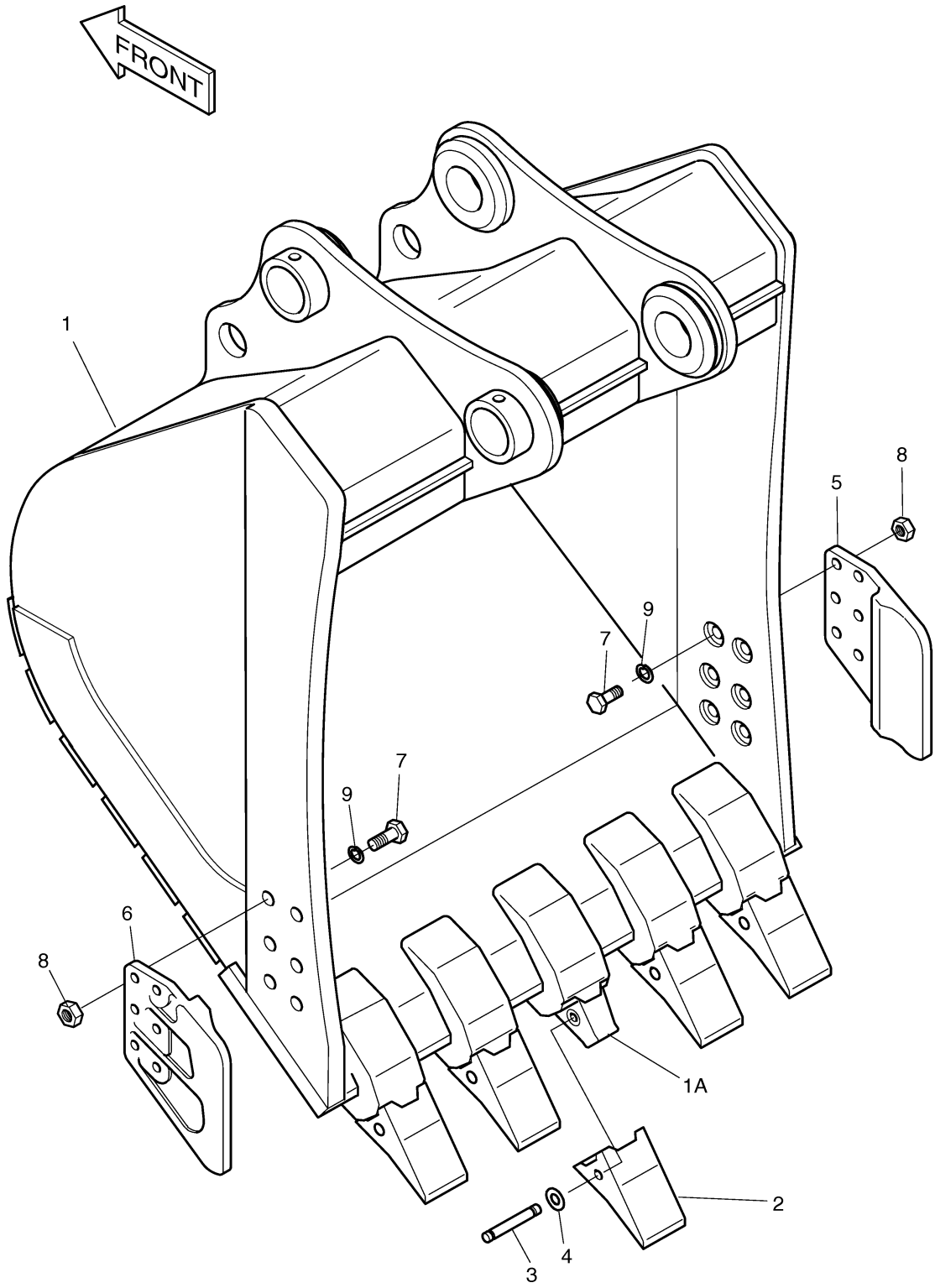

Fig. 6420 BUCKET-0.97?(42")-SIDE PIN

Key No	Part No	Description	Qty	S.C	Serial No	ICA	Replacable	Qty
-	2704-1651	BUCKET ASS'Y-1.07m³(H.D)	1					
1	2704-1652	BUCKET SUB ASS'Y-1.07m³	1	D				
1-1	-	BUCKET;WELD	1	D				
1-1A	2713-1220	ADAPTER;TOOTH	4					
1-2	713-00026	POINT;TOOTH	4					
1-3	2705-1021	PIN,LOCKING	4					
1-4	2114-1849A	WASHER,LOCKING	4					
2	2713-6034A	CUTTER,SIDE(R.H)	1					
3	2713-6035A	CUTTER,SIDE(L.H)	1					
4	S0574961	BOLT	12					
5	S4013333	NUT	12					
6	2114-1831	WASHER;HARDEN	12					

Fig. 6420 BUCKET-0.97?(42")-SIDE PIN

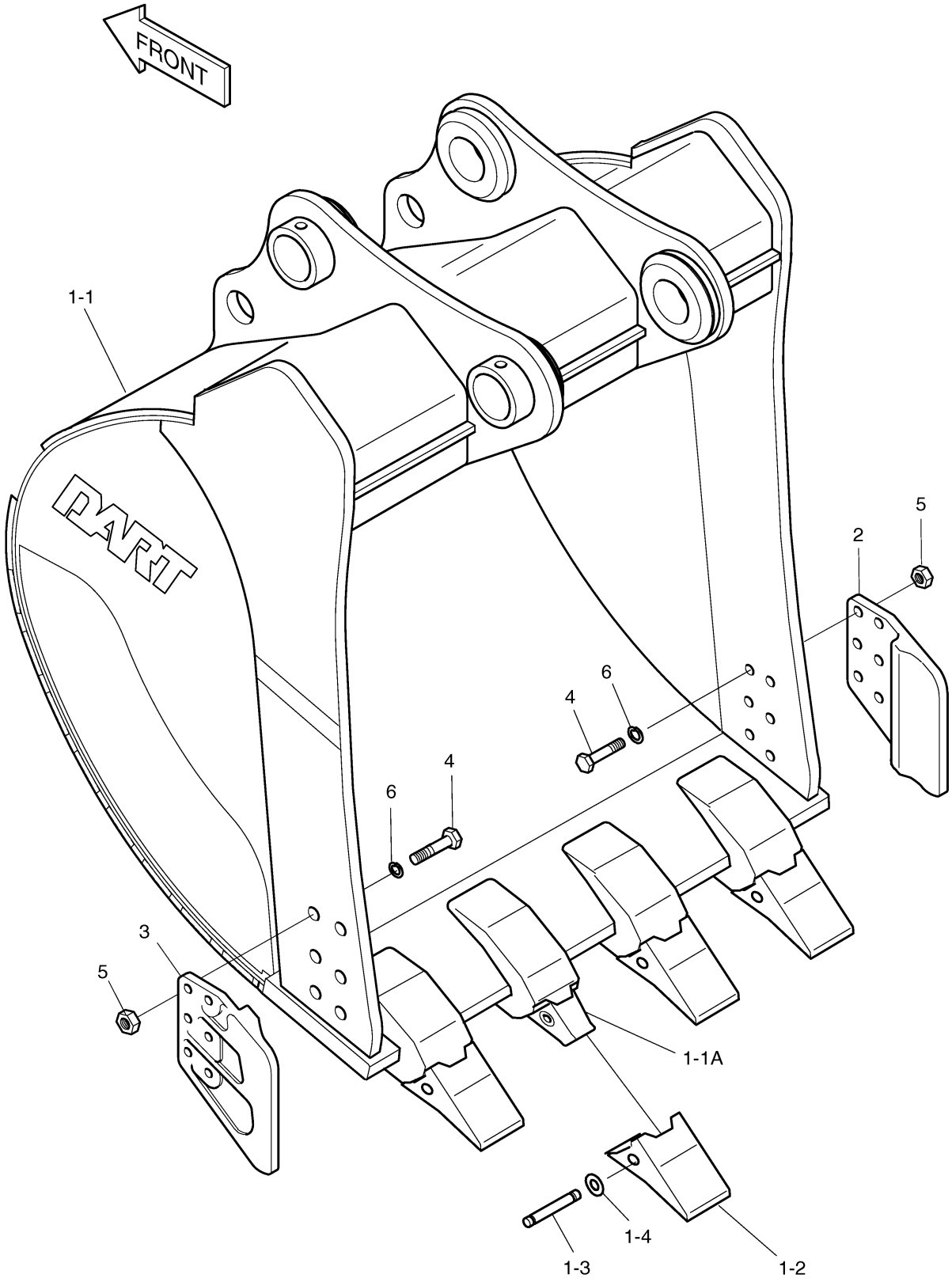

Fig. 6430 BUCKET-0.97?(42")-VERTICAL

Key No	Part No	Description	Qty	S.C	Serial No	ICA	Replacable	Qty
-	2704-1687	BUCKET ASS'Y-1.07m³(H.D)	1					
1	2704-1688	BUCKET SUB ASS'Y-1.07m³	1	D				
1-1	-	BUCKET;WELD	1	D				
1-1A	2713-6080	ADAPTER;TOOTH	4					
1-2	2713-9062	POINT;TOOTH	4					
1-3	2705-6035	PIN;LOCKING	4					
1-4	2705-6036	PIN;RUBBER	4					
2	2713-6034A	CUTTER,SIDE(R.H)	1					
3	2713-6035A	CUTTER,SIDE(L.H)	1					
4	S0574961	BOLT	12					
5	S4013333	NUT	12					
6	2114-1831	WASHER;HARDEN	12					

Fig. 6430 BUCKET-0.97?(42")-VERTICAL

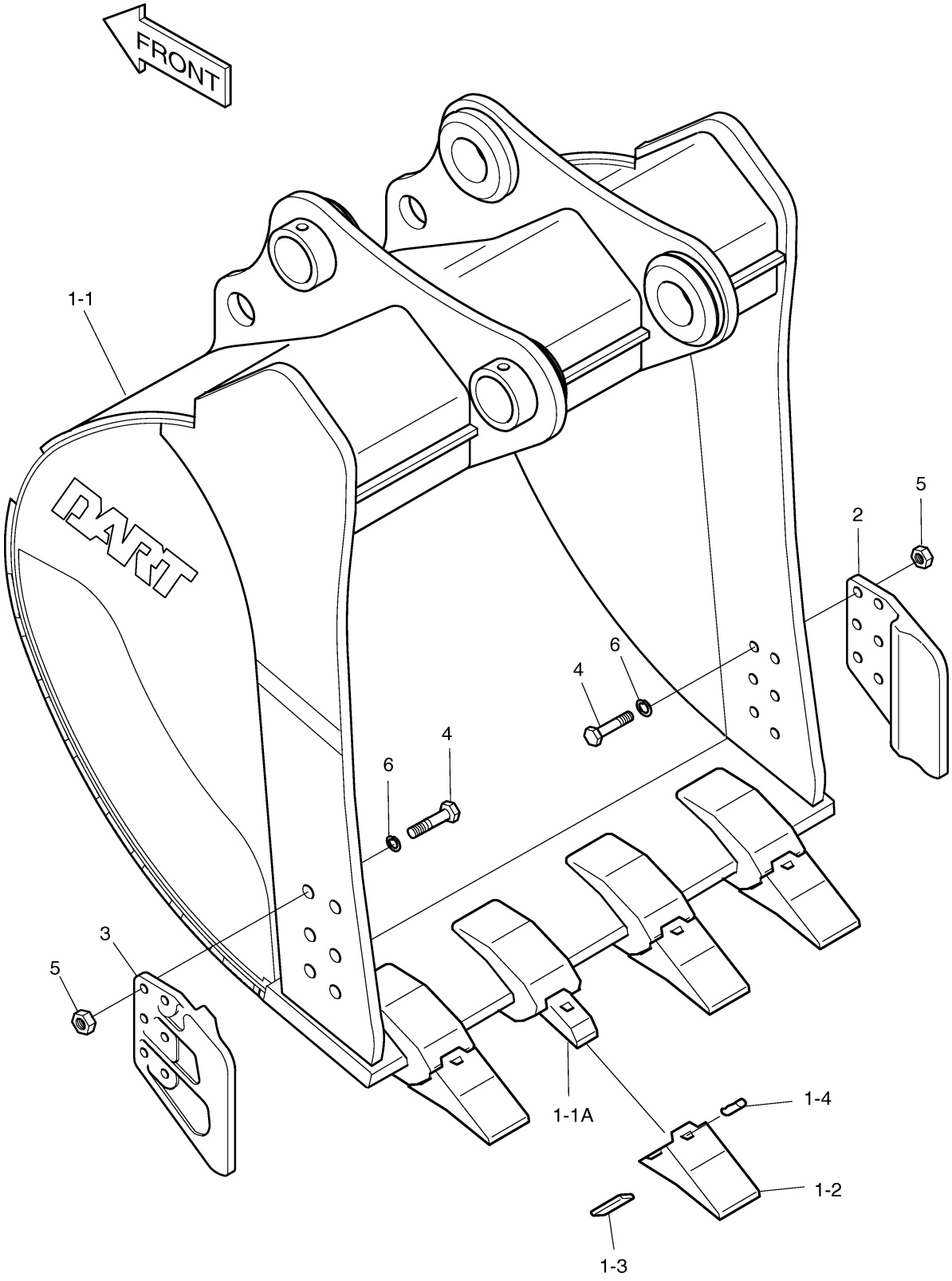

Fig. 6440 BUCKET-1.14?(48")-SIDE PIN

Key No	Part No	Description	Qty	S.C	Serial No	ICA	Replacable	Qty
-	2704-1628A	BUCKET ASS'Y-1.27m³(H.D)	1					
1	2704-1606A	BUCKET SUB ASS'Y-1.27m³	1	D				
1-1	-	BUCKET;WELD	1	D				
1-1A	2713-1220	ADAPTER;TOOTH	5					
1-2	713-00026	POINT;TOOTH	5					
1-3	2705-1021	PIN,LOCKING	5					
1-4	2114-1849A	WASHER,LOCKING	5					
2	2713-6034A	CUTTER,SIDE(R.H)	1					
3	2713-6035A	CUTTER,SIDE(L.H)	1					
4	S0574961	BOLT	12					
5	S4013333	NUT	12					
6	2114-1831	WASHER;HARDEN	12					

Fig. 6440 BUCKET-1.14?(48")-SIDE PIN

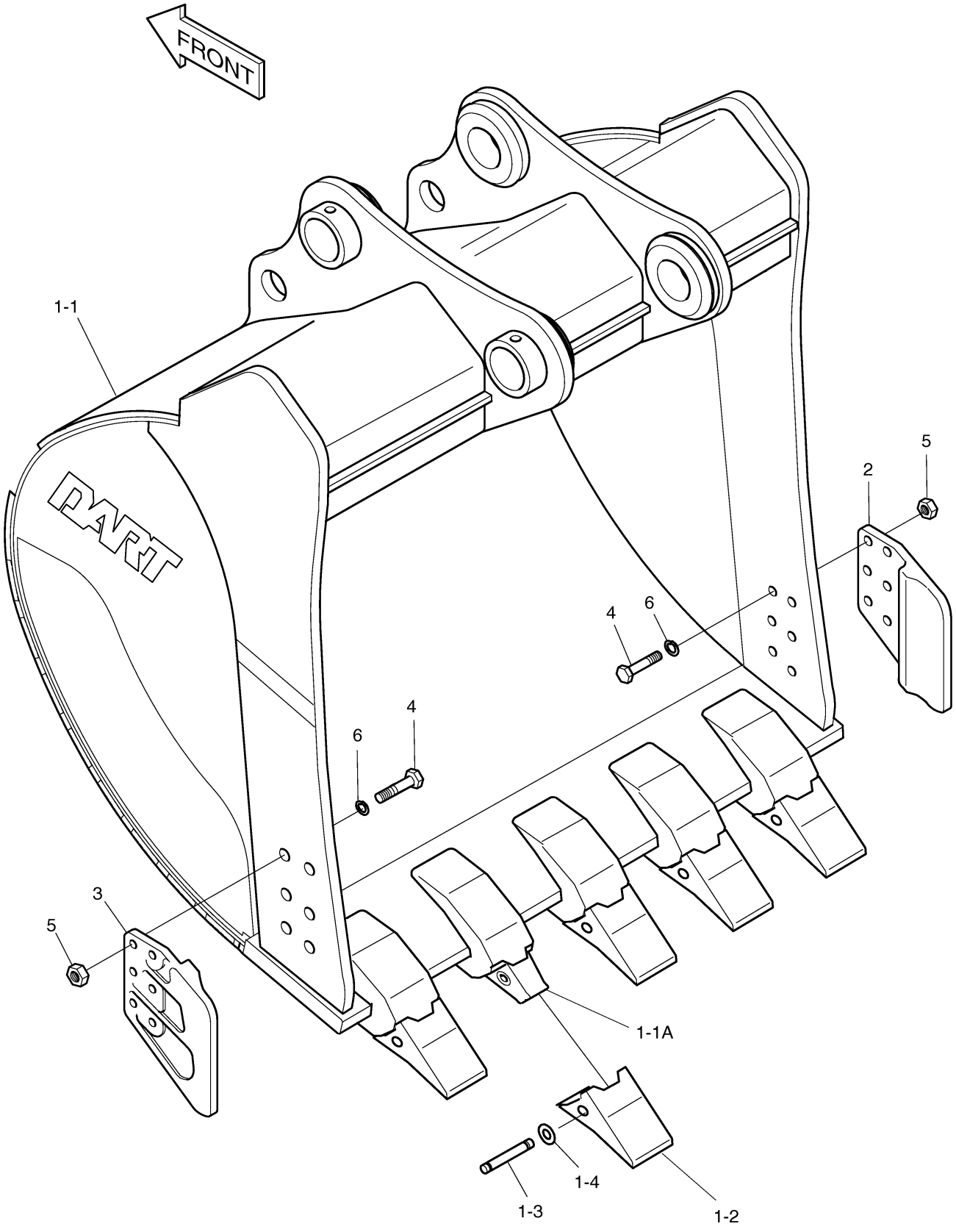

Fig. 6450 BUCKET-1.14?(48")-VERTICAL

Key No	Part No	Description	Qty	S.C	Serial No	ICA	Replacable	Qty
-	2704-1690	BUCKET ASS'Y-1.27m³(H.D)	1					
1	2704-1691	BUCKET SUB ASS'Y-1.27m³	1	D				
1-1	-	BUCKET;WELD	1	D				
1-1A	2713-6080	ADAPTER;TOOTH	5					
1-2	2713-9062	POINT;TOOTH	5					
1-3	2705-6035	PIN;LOCKING	5					
1-4	2705-6036	PIN;RUBBER	5					
2	2713-6034A	CUTTER,SIDE(R.H)	1					
3	2713-6035A	CUTTER,SIDE(L.H)	1					
4	S0574961	BOLT	12					
5	S4013333	NUT	12					
6	2114-1831	WASHER;HARDEN	12					

Fig. 6450 BUCKET-1.14?(48")-VERTICAL

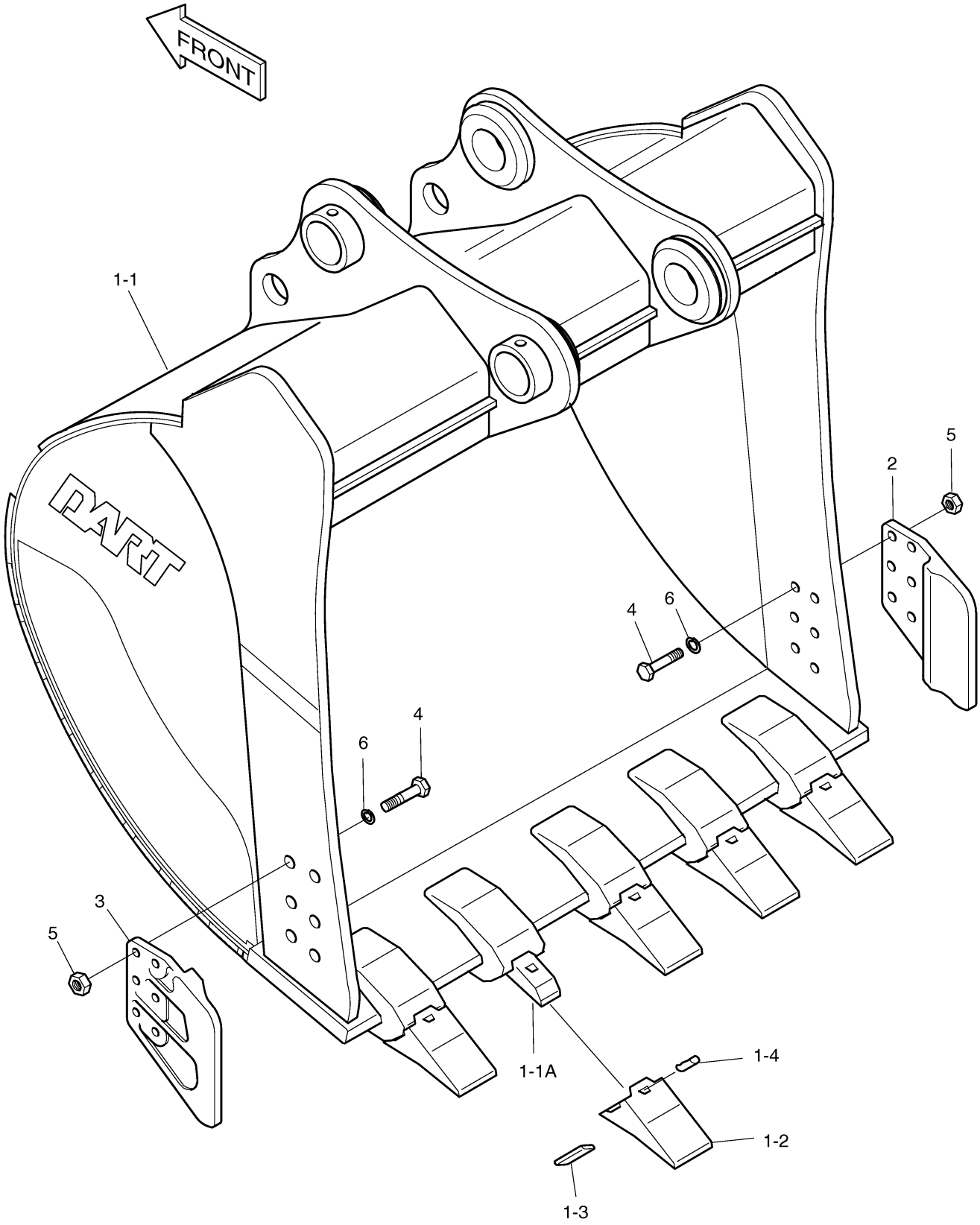

Fig. 6460 BUCKET-1.30?(54")-SIDE PIN

Key No	Part No	Description	Qty	S.C	Serial No	ICA	Replacable	Qty
-	2704-1625A	BUCKET ASS'Y-1.46m³(H.D)	1					
1	2704-1626A	BUCKET SUB ASS'Y-1.46m³	1	D				
1-1	-	BUCKET;WELD	1	D				
1-1A	2713-1220	ADAPTER;TOOTH	5					
1-2	713-00026	POINT;TOOTH	5					
1-3	2705-1021	PIN,LOCKING	5					
1-4	2114-1849A	WASHER,LOCKING	5					
2	2713-6034A	CUTTER,SIDE(R.H)	1					
3	2713-6035A	CUTTER,SIDE(L.H)	1					
4	S0574961	BOLT	12					
5	S4013333	NUT	12					
6	2114-1831	WASHER;HARDEN	12					

Fig. 6460 BUCKET-1.30?(54")-SIDE PIN

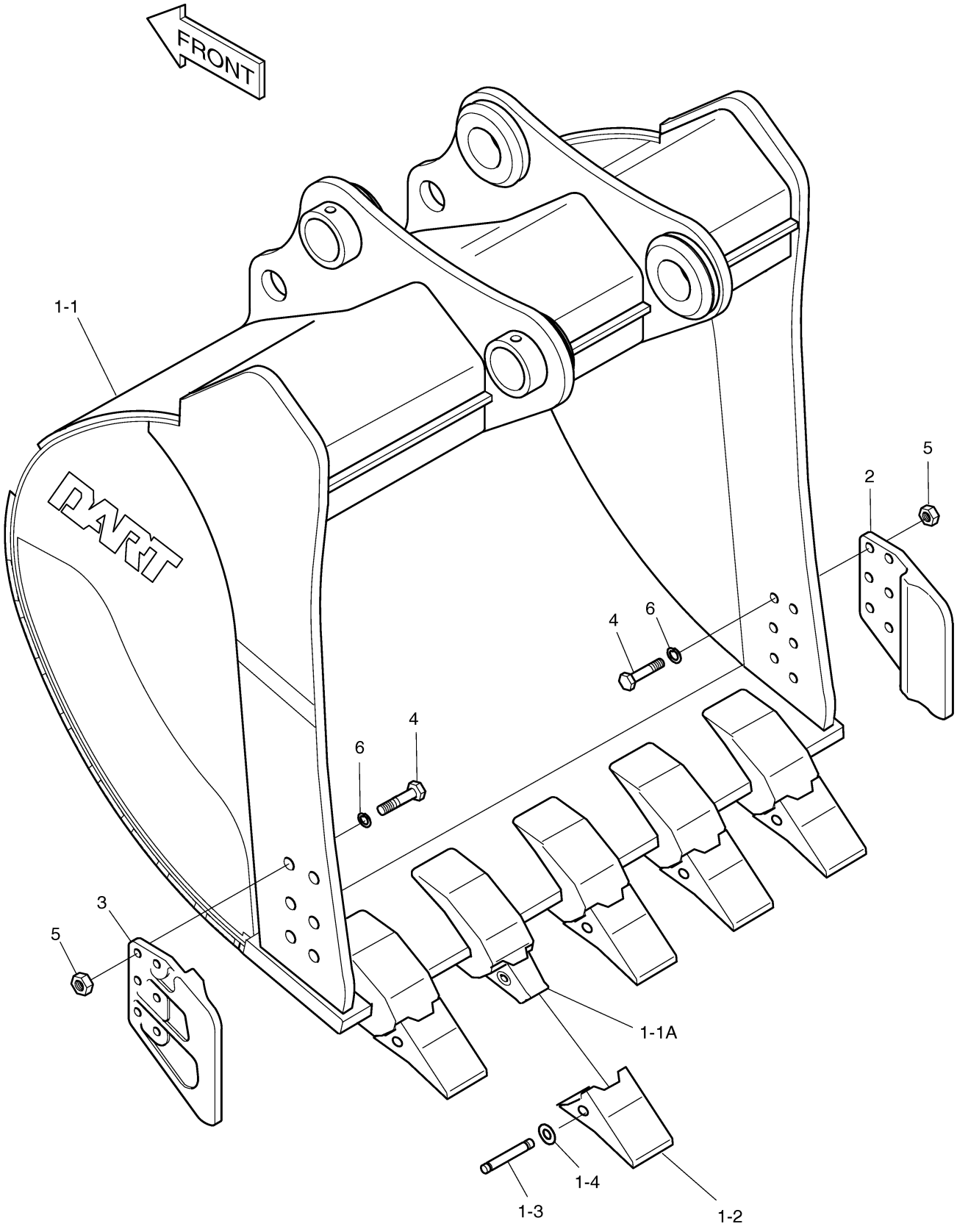

Fig. 6470 BUCKET-1.30?(54")-VERTICAL

Key No	Part No	Description	Qty	S.C	Serial No	ICA	Replacable	Qty
-	2704-1693	BUCKET ASS'Y-1.46m³(H.D)	1					
1	2704-1694	BUCKET SUB ASS'Y-1.46m³	1	D				
1-1	-	BUCKET;WELD	1	D				
1-1A	2713-6080	ADAPTER;TOOTH	5					
1-2	2713-9062	POINT;TOOTH	5					
1-3	2705-6035	PIN;LOCKING	5					
1-4	2705-6036	PIN;RUBBER	5					
2	2713-6034A	CUTTER,SIDE(R.H)	1					
3	2713-6035A	CUTTER,SIDE(L.H)	1					
4	S0574961	BOLT	12					
5	S4013333	NUT	12					
6	2114-1831	WASHER;HARDEN	12					

Fig. 6470 BUCKET-1.30?(54")-VERTICAL

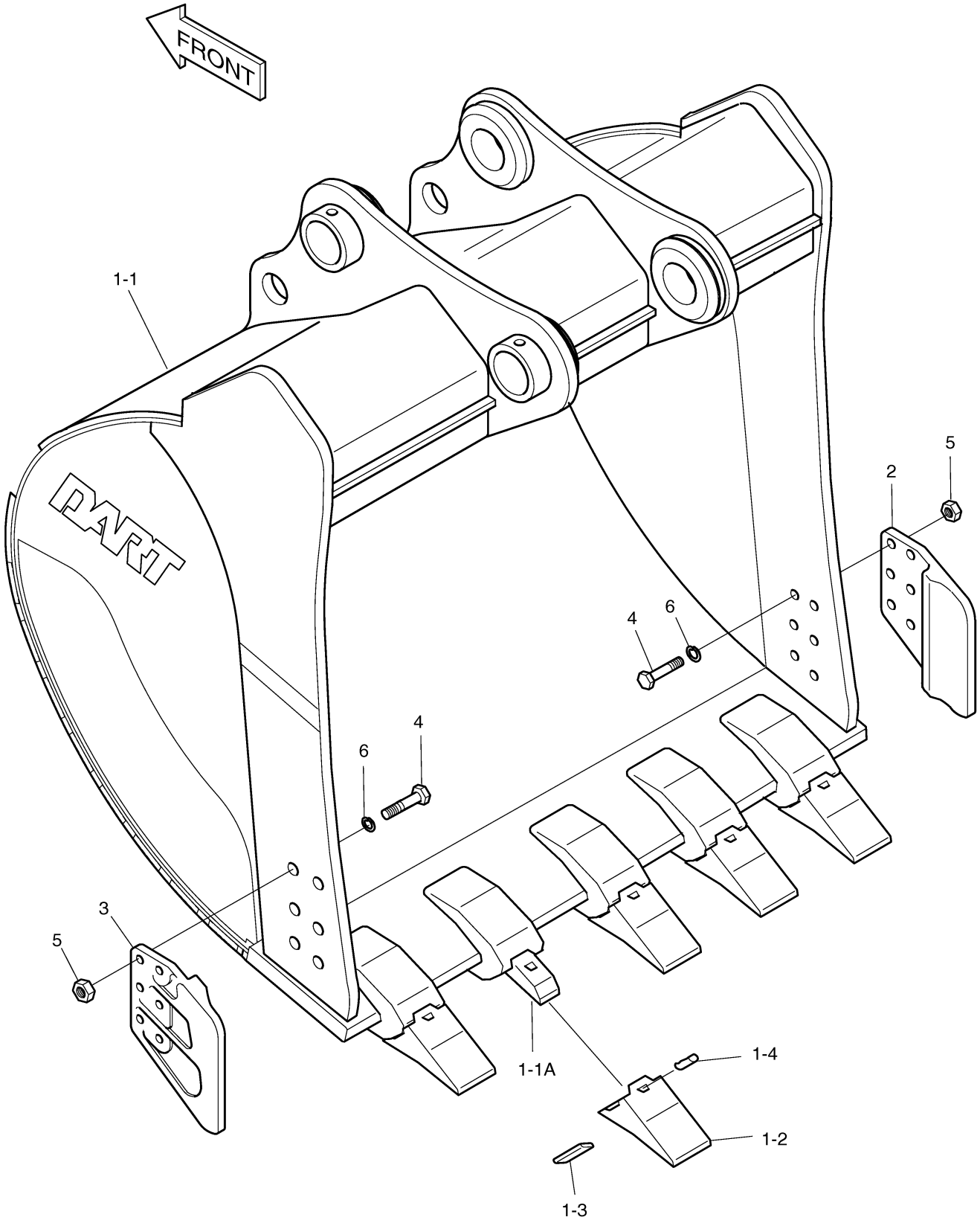

Fig. 6480 BOOM-10M

Key No	Part No	Description	Qty	S.C	Serial No	ICA	Replacable	Qty
-	701-00400	BOOM-10m	-	D				
1	701-00401A	BOOM;MACH-10m	1		1001~1577			
1	701-00401B	BOOM;MACH-10m	1		1578~			
1B	110-00150	BUSHING	2					
1C	2180-1106BD25	SEAL;DUST	2					
2	2123-2213E	PIN	1					
3	2123-2245C	PIN	2					
4	2123-2217B	PIN	1					
5	2123-2218E	PIN	1					
6	2123-2220C	PIN	1					
7	2116-1527A	STOPPER	2					
8	S0571866	BOLT	2					
9	S4013133	NUT	4					
10	2180-1106BD25	SEAL;DUST	2					
11	2180-1106BD6	SEAL,DUST	10					
12	114-00001D9	SHIM	2					
13	2114-1059D113	SHIM	8					
14	114-00001D7	SHIM	2					
15	2191-3444	PLATE	1					
16	2116-1515A	PLATE,STOPPER	1					
17	2116-1060D5	STOPPER	3					
18	S0521366	BOLT	7					
19	S5102903	WASHER	7					
20	2195-2394B	BRACKET	2					
21	S0515053	BOLT	8					
22	S5102703	WASHER	8					
23	2114-1059D114	SHIM	6					
24	114-00001D10	SHIM	2					
25	114-00001D8	SHIM	2					
26	2312-1005A	ROD;TIE	1					
27	2123-1915A	PIN	2					
28	2116-1472A	PLATE,STOPPER	4					
29	2114-1059D257	SHIM	2					
30	2114-1059D258	SHIM	2					

Fig. 6480 BOOM-10M

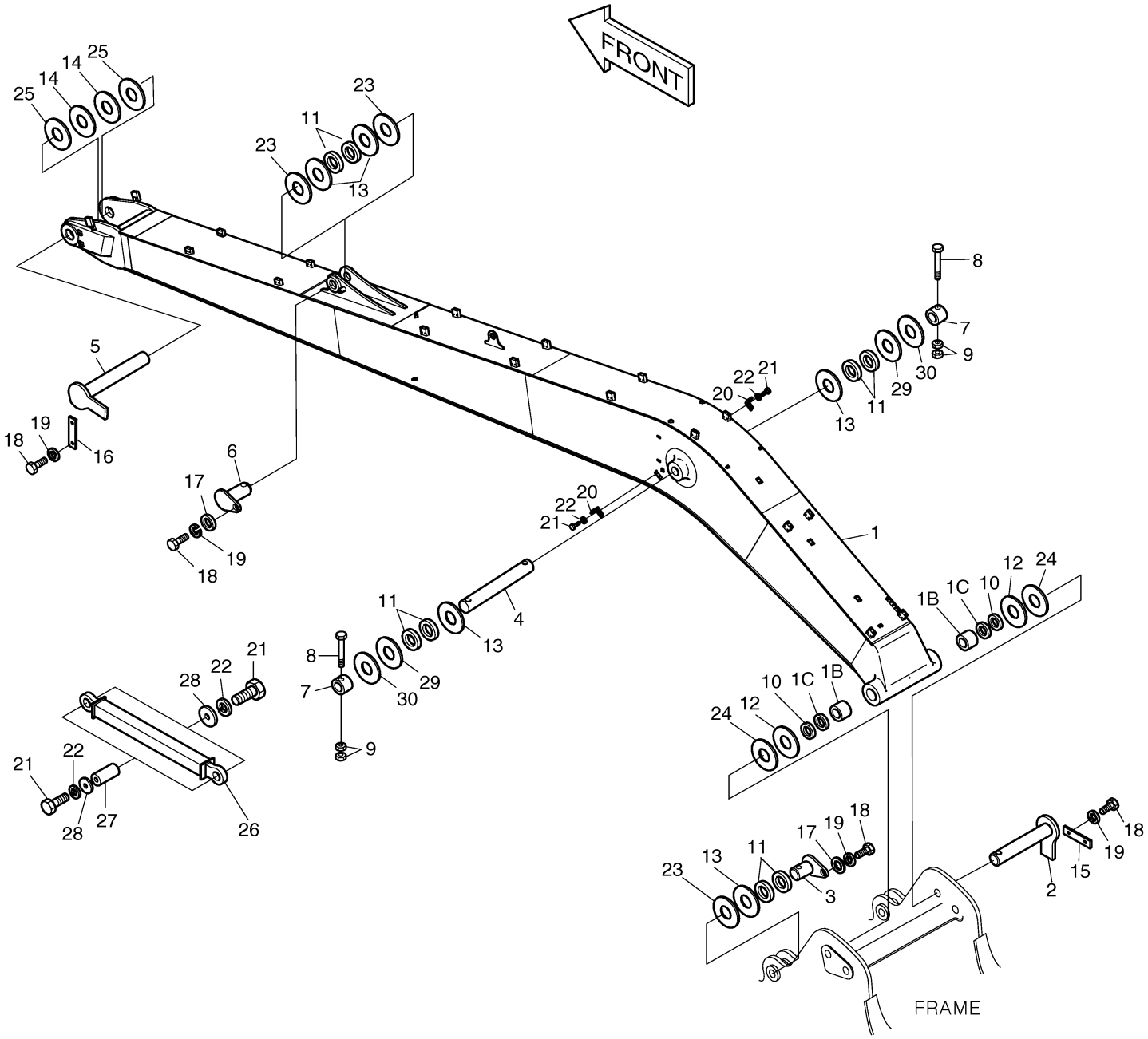

Fig. 6490 ARM-7M

Key No	Part No	Description	Qty	S.C	Serial No	ICA	Replacable	Qty
-	701-00403A	ARM-7m	-	D				
1	701-00404	ARM;MACH.-7m	1		1001~4628	I	701-00404A	1
1	701-00404A	ARM;MACH.-7m	1		4629~			
1B	110-00151	BUSHING	2					
1C	2110-1329A	BUSHING	2					
1D	2110-1330A	BUSHING	2					
2	2155-1339E	LINK;PUSH ASS`Y	1					
2C	2110-1366A	BUSHING	4					
3	2155-1306B	LINK;GUIDE(R.H)	1					
4	2155-1307B	LINK;GUIDE(L.H)	1					
6	2123-2220C	PIN	1					
7	2123-2225C	PIN	1					
8	2123-2211C	PIN	2					
9	2123-2212C	PIN	2					
10	2180-1106BD6	SEAL,DUST	2					
11	2180-1106BD3	SEAL;DUST	14					
12	2114-1058D12	SHIM	8					
13	2114-1059D113	SHIM	2					
14	2116-1060D6	STOPPER	1					
15	S0521366	BOLT	2					
16	S5102903	WASHER	2					
17	S4012933	NUT	8					
18	S0566766	BOLT	4					
19	S6710041	NIPPLE,GREASE	9					
20	180-00077D3	O-RING	2					
21	2180-1106BD14	SEAL;DUST	2					
22	2114-1059D89	SHIM	8					
23	2114-1059D114	SHIM	2					
24	2114-1994A	SPACER	2		1001~2132	I	2114-1994B	2
24	2114-1994B	SPACER	2		2133~			
25	2114-1995A	SPACER	2		1001~2132	I	2114-1995B	2
25	2114-1995B	SPACER	2		2133~			
26	2116-1060D5	STOPPER	1					

Fig. 6490 ARM-7M

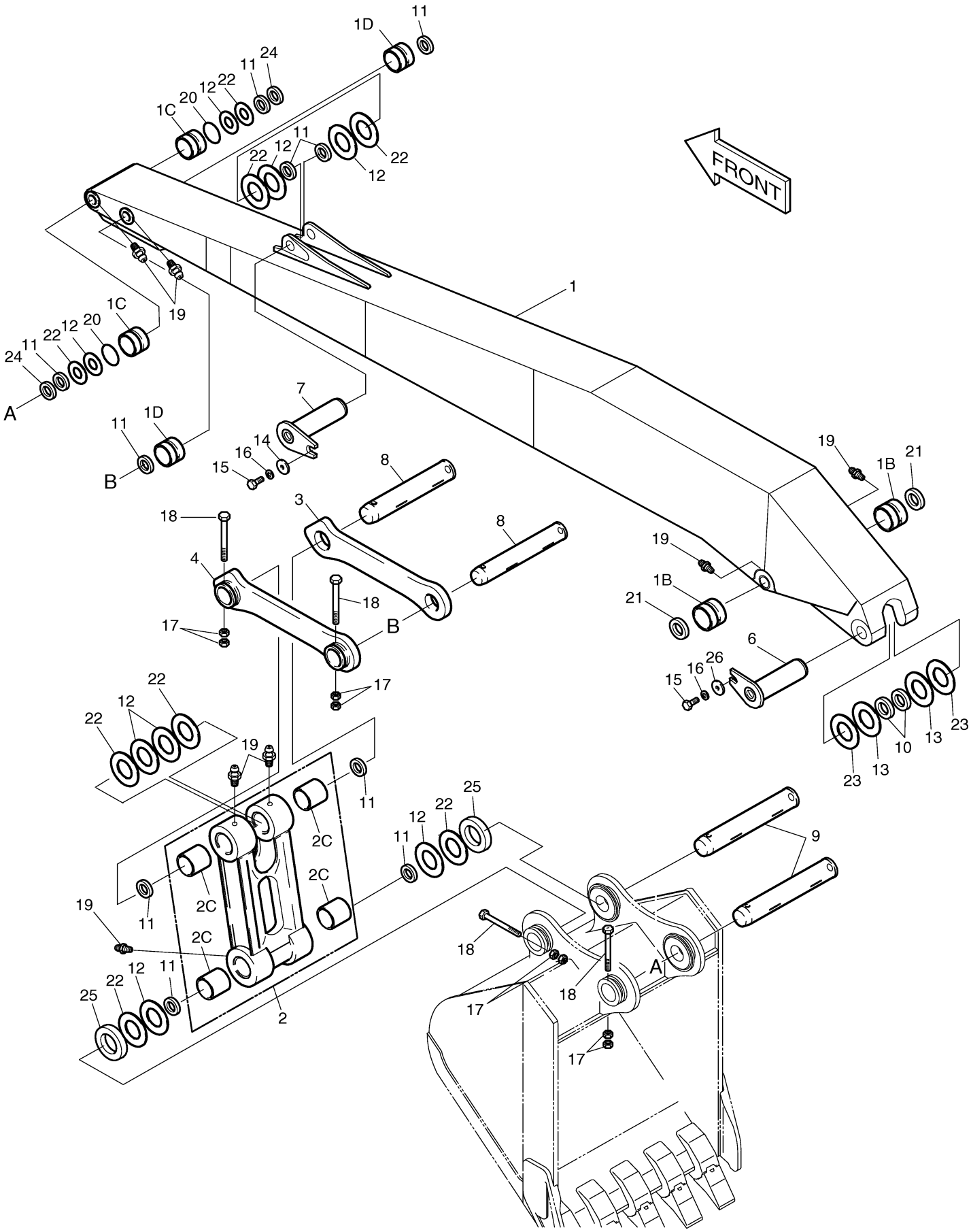

DOOSAN Doosan Infracore

Fig. 6500 BUCKET-0.55?-LONG FRONT

Key No	Part No	Description	Qty	S.C	Serial No	ICA	Replacable	Qty
-	2704-1382H	BUCKET ASS'Y-0.63m³	1		1001~2351	I	2704-1382I	1
-	2704-1382I	BUCKET ASS'Y-0.63m³	1		2352~2758	I	2704-1382J	1
-	2704-1382J	BUCKET ASS'Y-0.63m³	1		2759~			
1	-	BUCKET;WELD-0.55㎥	1	D				
1A	2713-1222A	ADAPTER;TOOTH	5					
2	2713-1221A	POINT;TOOTH	5		1001~2758	I	713-00057A	5
2	713-00057A	POINT;TOOTH	5		2759~			
3	2705-1022	PIN,LOCKING	5					
4	2114-1859	WASHER,LOCKING	5					
5	2713-1228A	CUTTER,SIDE(R.H)	1					
6	2713-1229A	CUTTER,SIDE(L.H)	1					
7	S0574561	BOLT	8					
8	S4013333	NUT	8					
9	2114-1831	WASHER;HARDEN	8					

Fig. 6500 BUCKET-0.55?-LONG FRONT

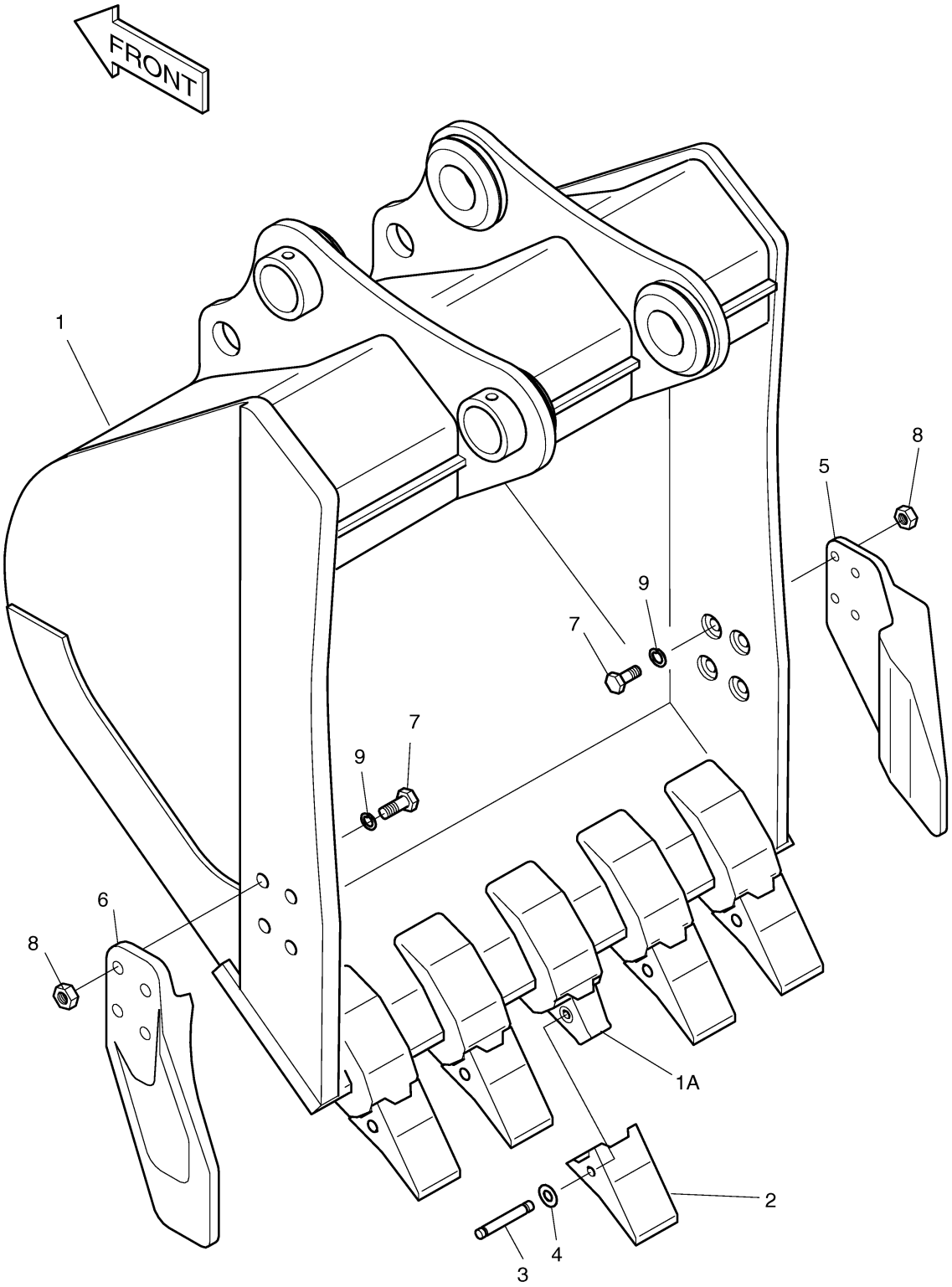

Fig. 6510 BUCKET-0.38?-DITCH CLEANING

Key No	Part No	Description	Qty	S.C	Serial No	ICA	Replacable	Qty
-	704-00033	BUCKET ASS'Y-0.45m³	1					
1	704-00034	BUCKET;WELD	1					
2	4713-4004A	TOOTH	7					
3	S0565461	BOLT M16X2.0X60	14					
4	S4012933	NUT	14					

Fig. 6510 BUCKET-0.38?-DITCH CLEANING

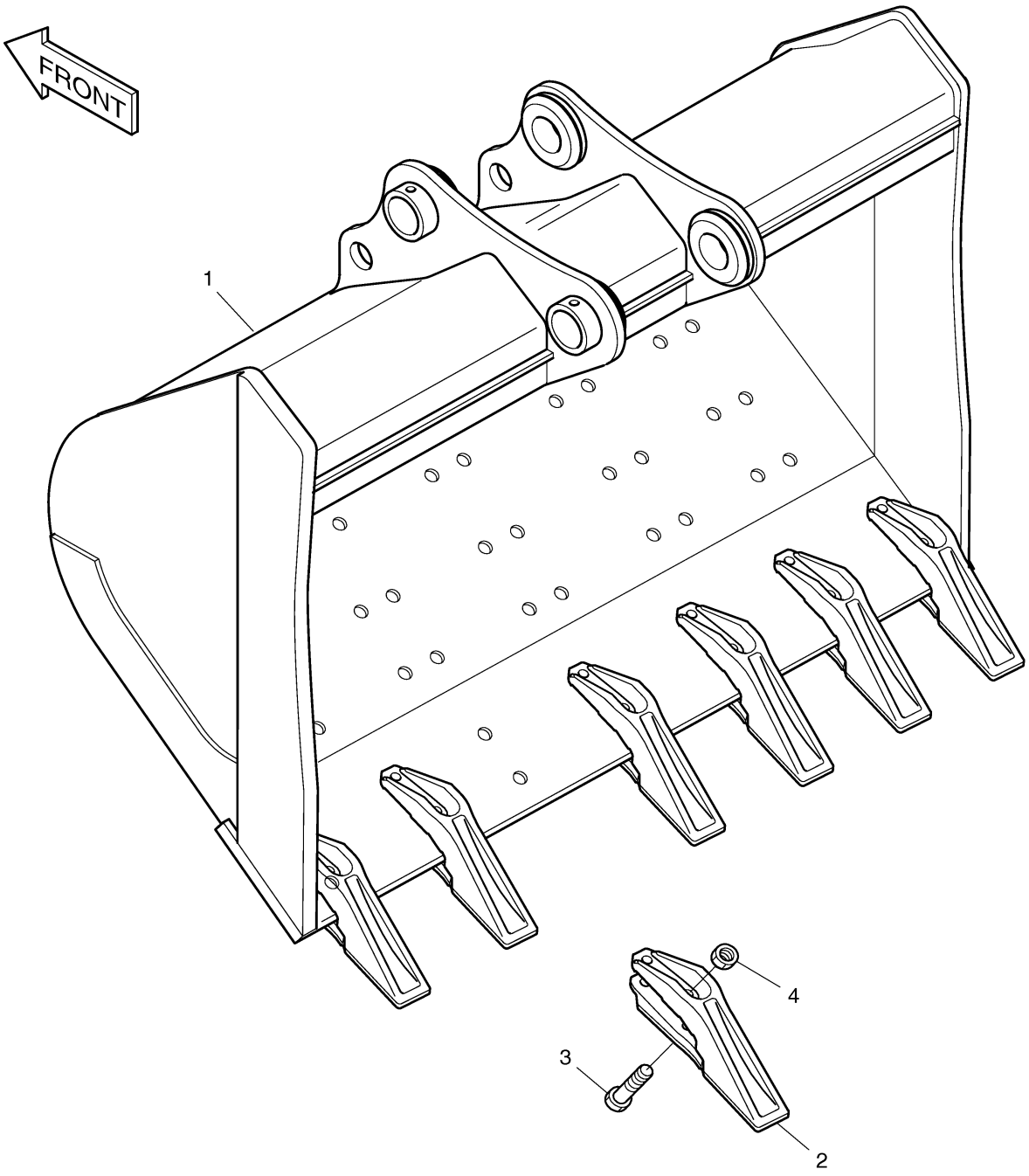

Fig. 6520 BUCKET-0.46?-DITCH CLEANING

Key No	Part No	Description	Qty	S.C	Serial No	ICA	Replacable	Qty
-	704-00027	BUCKET ASS'Y-0.54m³	1					
1	704-00028	BUCKET;WELD	1					
2	4713-4004A	TOOTH	7					
3	S0565461	BOLT M16X2.0X60	14					
4	S4012933	NUT	14					

Fig. 6520 BUCKET-0.46?-DITCH CLEANING

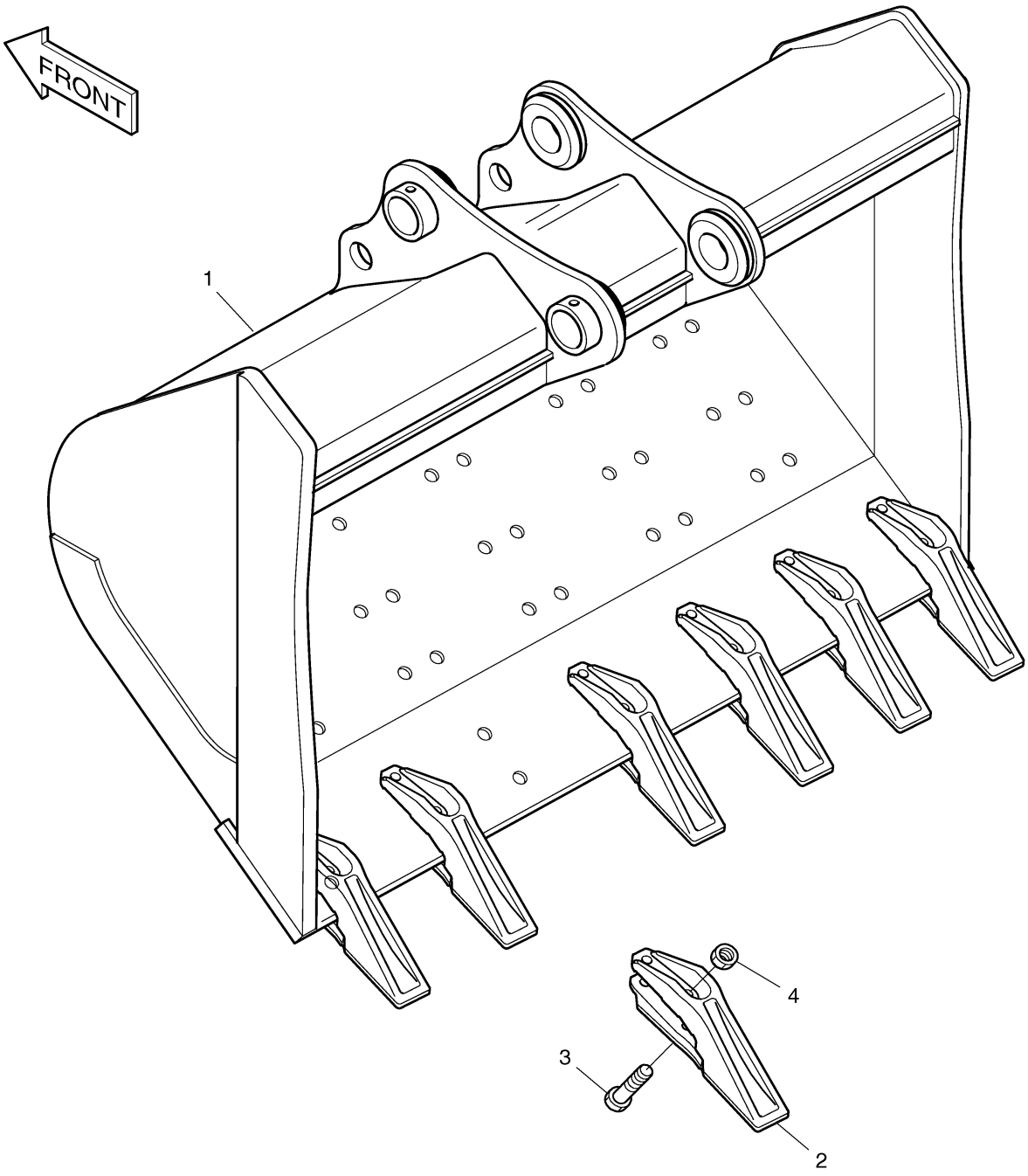

Fig. 6530 BOOM PIPING-10M

Key No	Part No	Description	Qty	S.C	Serial No	ICA	Replacable	Qty
-	400-00804	BOOM PIPING-10m	-	D	1001~3648			
-	400-00804A	BOOM PIPING-10m	-	D	3649~			
1	2440-9238G	CYLINDER;BOOM(L.H)	1		1001~1832	I	440-00416	1
1	440-00416	CYLINDER;BOOM(L.H)	1		1833~2299	I	440-00416A	1
1	440-00416A	CYLINDER;BOOM(L.H)	1		2300~4036	I	440-00416B	1
1	440-00416B	CYLINDER;BOOM(L.H)	1		4037~			
2	2440-9239G	CYLINDER;BOOM(R.H)	1		1001~1832	I	440-00417	1
2	440-00417	CYLINDER;BOOM(R.H)	1		1833~2299	I	440-00417A	1
2	440-00417A	CYLINDER;BOOM(R.H)	1		2300~4036	I	440-00417B	1
2	440-00417B	CYLINDER;BOOM(R.H)	1		4037~			
3	440-00257	CYLINDER;ARM	1		1001~2299	I	440-00257A	1
3	440-00257A	CYLINDER;ARM	1		2300~3648	I	440-00257B	1
3	440-00257B	CYLINDER;ARM	1		3649~4245	I	K1036107	1
3	K1036107	CYLINDER;ARM	1		4246~			
4	140-00056	PIPE	1					
5	140-00057	PIPE	1		1001~1093	I	140-00057A	1
5	140-00057A	PIPE	1		1094~			
6	140-01002	PIPE	1		1001~1093	I	140-01002A	1
6	140-01002A	PIPE	1		1094~			
7	140-01003	PIPE	1					
8	140-01004	PIPE	4					
9	140-01005	PIPE	1		1001~1577			
9	140-01005A	PIPE	1		1578~			
10	140-01006	PIPE	1		1001~1577			
10	140-01006A	PIPE	1		1578~			
11	140-01007	PIPE	2					
12	140-00788A	PIPE	1		1001~1577			
12	140-00788B	PIPE	1		1578~			
13	140-00789A	PIPE	1		1001~1577			
13	140-00789B	PIPE	1		1578~			
14	2184-1100D226	HOSE	1					
15	DS2038131	HOSE	1					
16	124-00223	CLAMP;PIPE	24		1001~1577			
16	124-00223	CLAMP;PIPE	20		1578~			
17	124-00218	CLAMP	12		1001~1577			
17	124-00218	CLAMP	24		1578~			

Key No	Part No	Description	Qty	S.C	Serial No	ICA	Replacable	Qty
18	161-00281	RUBBER	30		1001~1577			
18	161-00281	RUBBER	24		1578~			
20	S0562766	BOLT	36					
21	S5102803	WASHER	36					
22	2180-1026D19	O-RING	18					
23	S2212666	BOLT	40					
24	2181-9078	FLANGE	14					
25	S2212466	BOLT	28					
26	S2212266	BOLT	4					
27	124-00289	CLAMP;PIPE	4		1578~			
28	124-00290	CLAMP;PIPE	4		1578~			

Fig. 6530 BOOM PIPING-10M

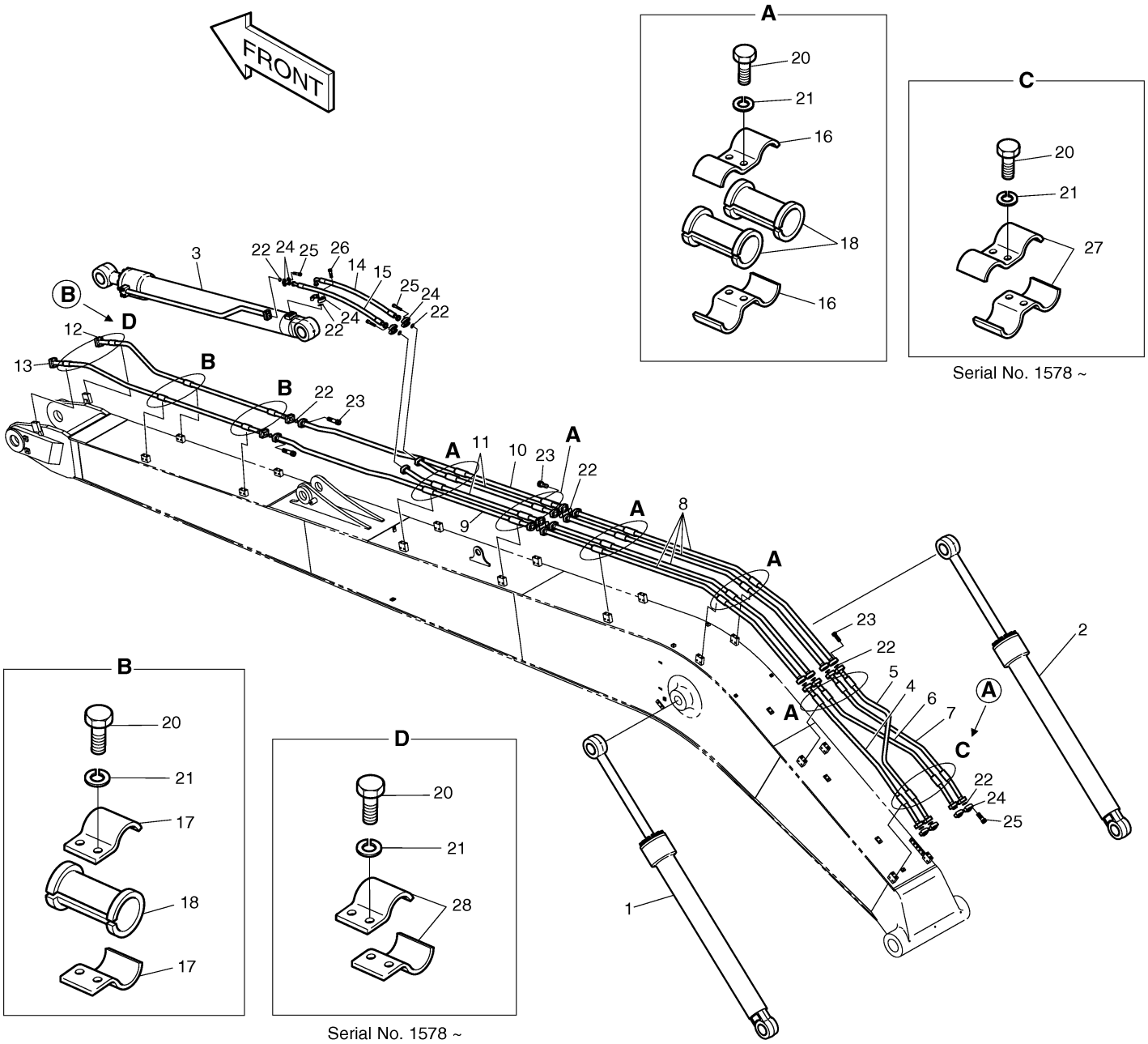

Fig. 6540 ARM PIPING-7M

Key No	Part No	Description	Qty	S.C	Serial No	ICA	Replacable	Qty
-	400-00805	ARM PIPING-7m	-	D				
1	2440-9233C	BUCKET CYLINDER	1					
2	2184-1201D30	HOSE	2					
3	2184-1100D189	HOSE	2					
4	2140-1661	PIPE	2					
5	2181-2627D12	ADAPTER	2					
6	S8030161	O-RING	2					
7	S8000231	O-RING	2					
8	2181-9078	FLANGE	12					
9	124-00218	CLAMP	12					
10	S0562766	BOLT	12					
11	S5102803	WASHER	12					
12	161-00281	RUBBER	6					
13	S2212466	BOLT	24					
14	2180-1026D19	O-RING	6					

Fig. 6540 ARM PIPING-7M

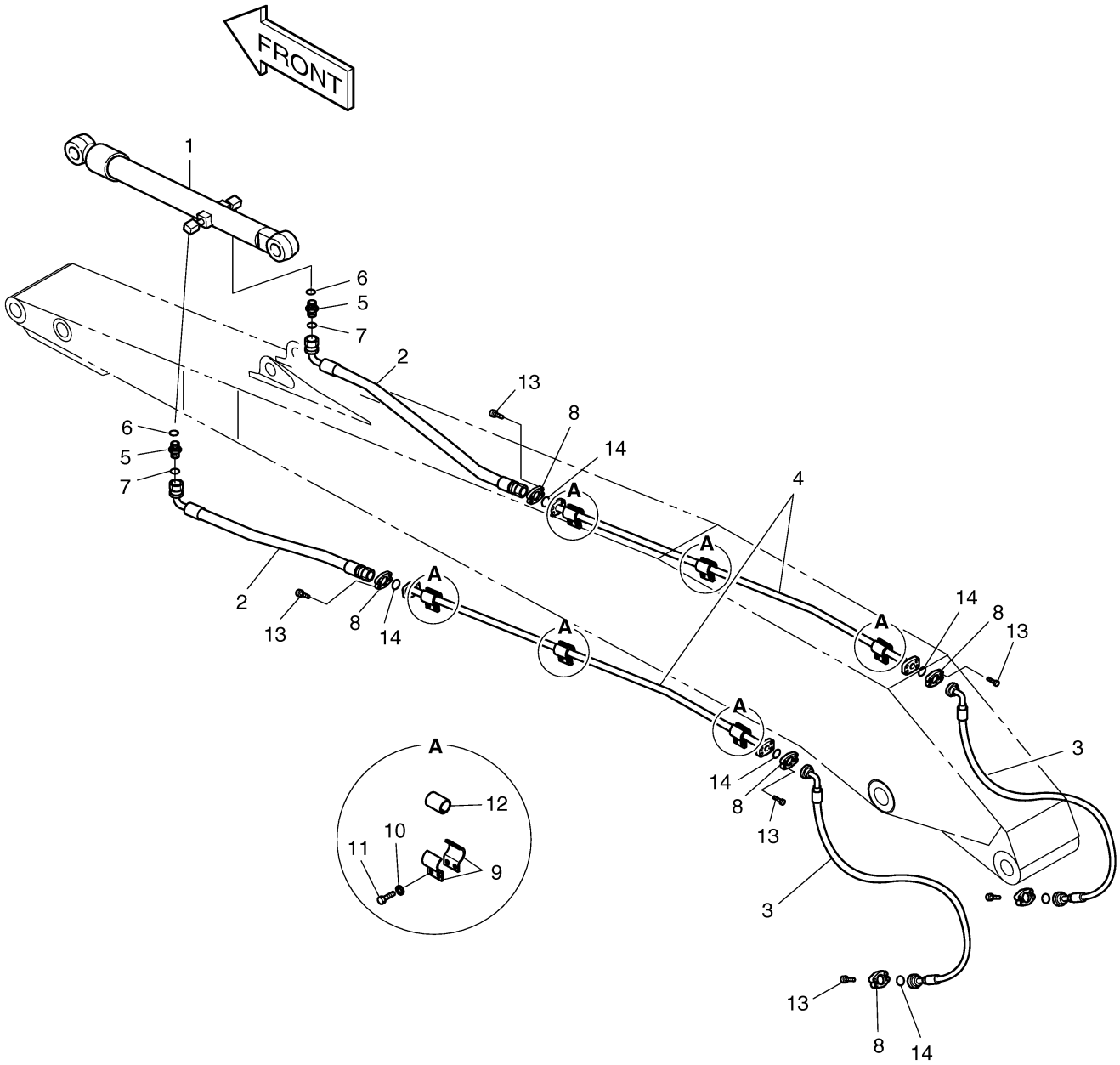

Fig. 6550 LUBRICATION PIPING

Key No	Part No	Description	Qty	S.C	Serial No	ICA	Replacable	Qty
-	400-00806	LUBRICATION PIPING	-	D				
1	140-01011	PIPE;LUB.	1		1001~3344	I	140-01011A	1
1	140-01011A	PIPE	1		3345~			
2	140-01012	PIPE;LUB.	1		1001~3344	I	140-01012A	1
2	140-01012A	PIPE	1		3345~			
3	2184-1045D131	HOSE	1					
4	2184-1045D90	HOSE	1					
5	2184-1045D175	HOSE	1					
6	2181-1925	ELBOW	2					
7	S3524403	PLUG	1					
8	S6710041	NIPPLE,GREASE	5					
9	181-00103	REDUCER	2					
10	121-00006	NUT	2					
11	181-00525	REDUCER	3					
12	S4032833	NUT	4					
13	2181-1110D30	ADAPTER	3					
14	124-00199D5	CLIP	3					
15	2124-1353D2	CLIP	2					
16	120-00276	BOLT	5					
18	160-00020	CAP	5					
19	2181-1923D12	ADAPTER	1					
20	140-01027	PIPE	1					

Fig. 6550 LUBRICATION PIPING

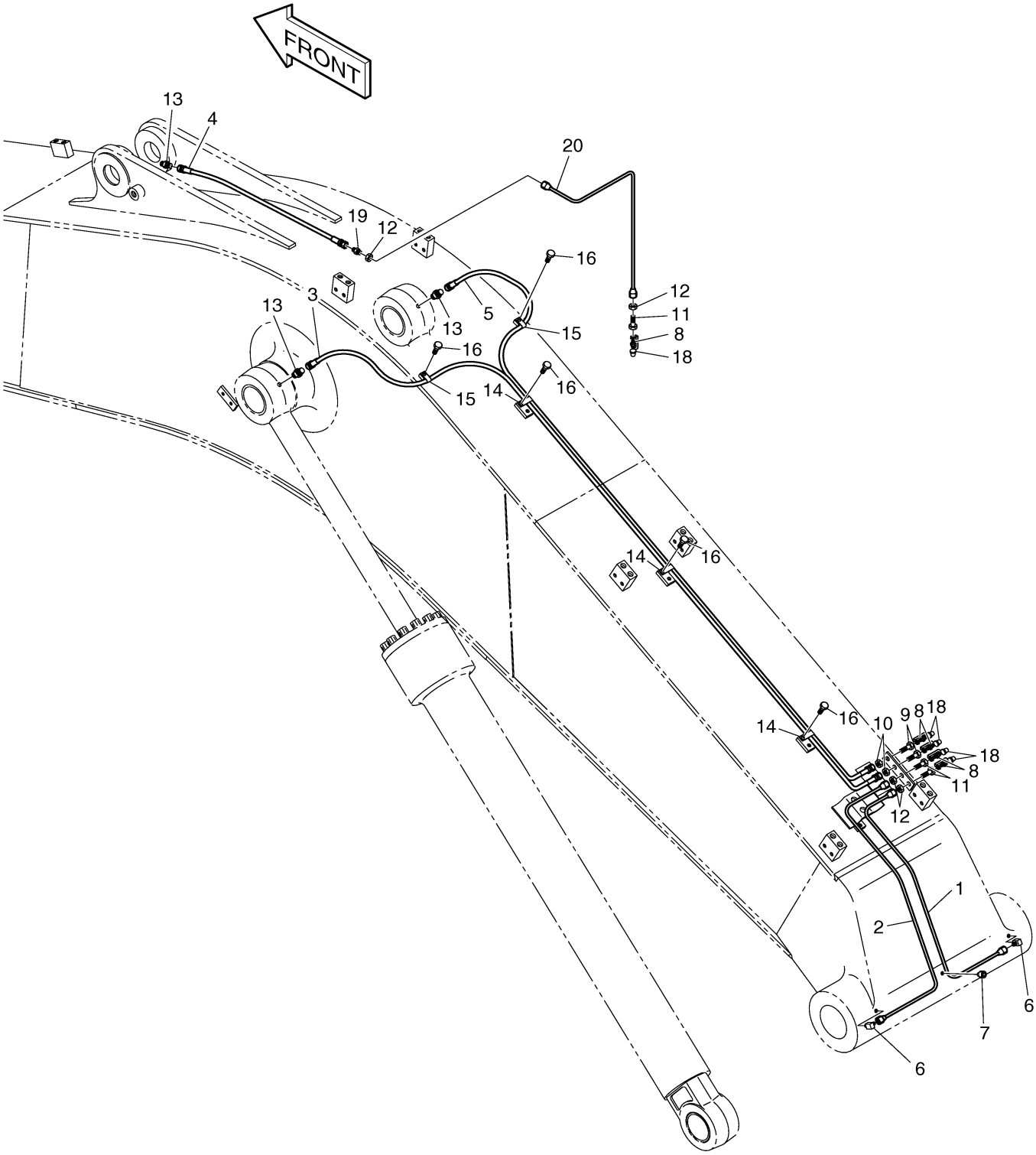

Fig. 6560 ARM-3.1M(H.D)-YUDAI

Key No	Part No	Description	Qty	S.C	Serial No	ICA	Replacable	Qty
-	701-00200	ARM ASS'Y-3.1m(H.D)	1	D				
1	701-00201C	ARM SUB ASS'Y-3.1m(H.D)	1					
1B	110-00151	BUSHING	2					
1D	110-00152	BUSHING	2					
1E	110-00141	BUSHING	2					
2	2155-1327G	LINK;PUSH ASS'Y	1					
2B	110-00141	BUSHING	2					
2C	110-00158	BUSHING	2					
3	2155-1310B	LINK;GUIDE(R.H)	1					
4	2155-1311B	LINK;GUIDE(L.H)	1					
6	2123-2220C	PIN	1					
7	2123-2215C	PIN	1					
8	2123-2222B	PIN	1					
9	2123-2223C	PIN	2					
10	2123-2224B	PIN	1					
11	2180-1106BD24	SEAL,DUST	2					
12	2180-1106BD6	SEAL,DUST	14					
13	2180-1106BD14	SEAL;DUST	2					
14	2114-1059D113	SHIM	4					
15	2114-1059D219	SHIM	8					
16	2116-1060D5	STOPPER	2					
17	S5102901	WASHER	2					
18	S0521361	BOLT M16X2.0X35	2					
19	S4012933	NUT	2					
20	S4013133	NUT	6					
21	S0571861	BOLT M20X2.5X170	3					
22	S0566961	BOLT M16X2.0X140	1					
23	S6710041	NIPPLE,GREASE	9					
24	180-00077D6	O-RING	2					
25	2114-1059D63	SHIM	2					
26	2114-1059D114	SHIM	4					
27	2114-1059D234	SHIM	8					
28	2114-1059D118	SHIM	2					
30	114-00379	SPACER	2					
31	120-00223	BOLT M12X1.25X25	8					

Fig. 6560 ARM-3.1M(H.D)-YUDAI

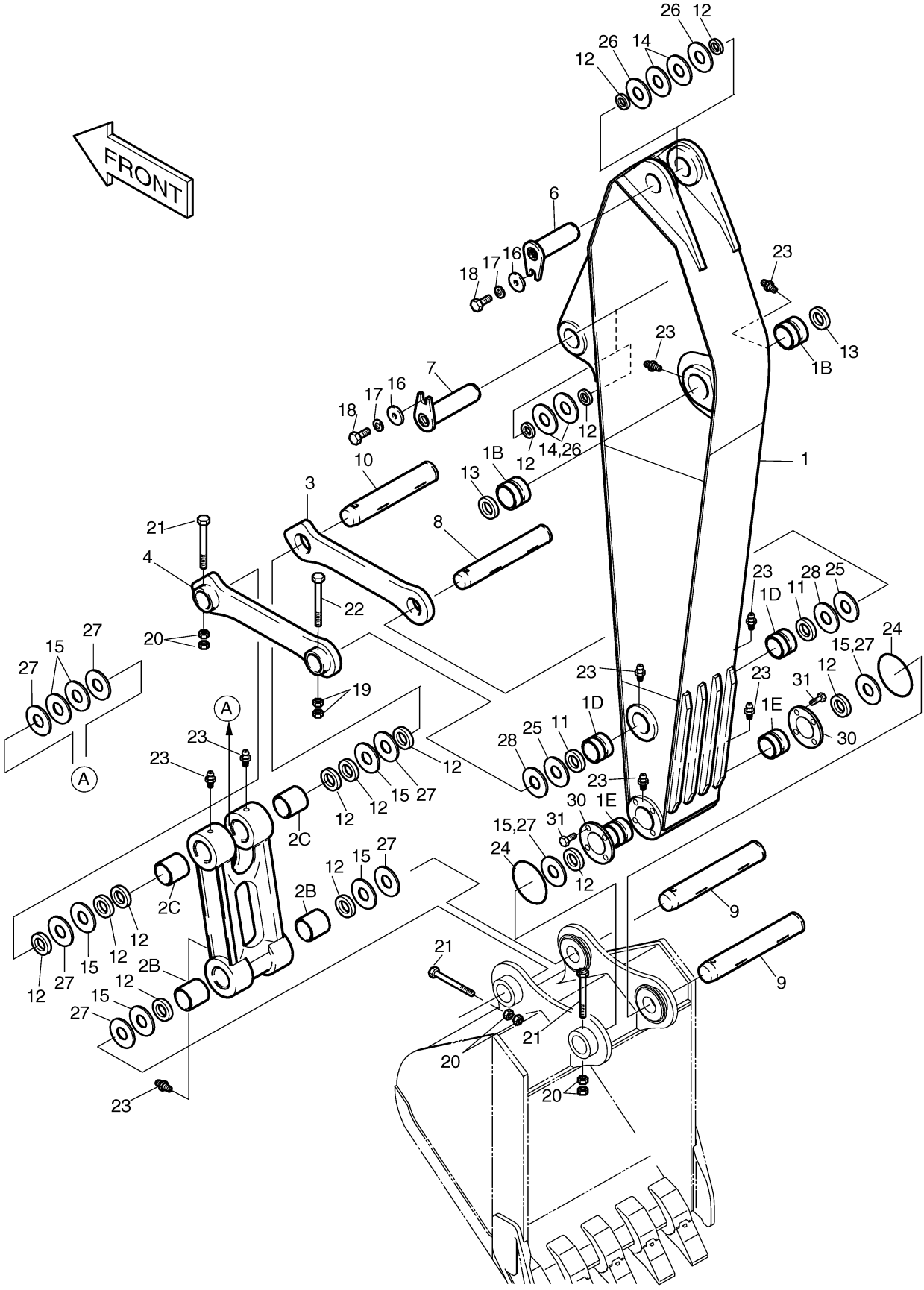

DOOSAN Doosan Infracore

Fig. 6570 BUCKET-1.1?-VERTICAL

Key No	Part No	Description	Qty	S.C	Serial No	ICA	Replacable	Qty
-	704-00143A	BUCKET ASS'Y-1.27m³(H.D)	1					
1	-	BUCKET SUB ASS'Y-1.1㎥	1	D				
1A	713-00047	ADAPTER;TOOTH	5					
2	713-00046	POINT;TOOTH	5					
3	2705-6034	PIN;LOCKING	5					
4	2705-6033	PIN;RUBBER	5					
5	2713-6034A	CUTTER,SIDE(R.H)	1					
6	2713-6035A	CUTTER,SIDE(L.H)	1					
7	S0574861	BOLT	12					
8	S4013333	NUT	12					
9	2114-1831	WASHER;HARDEN	12					

Fig. 6570 BUCKET-1.1?-VERTICAL

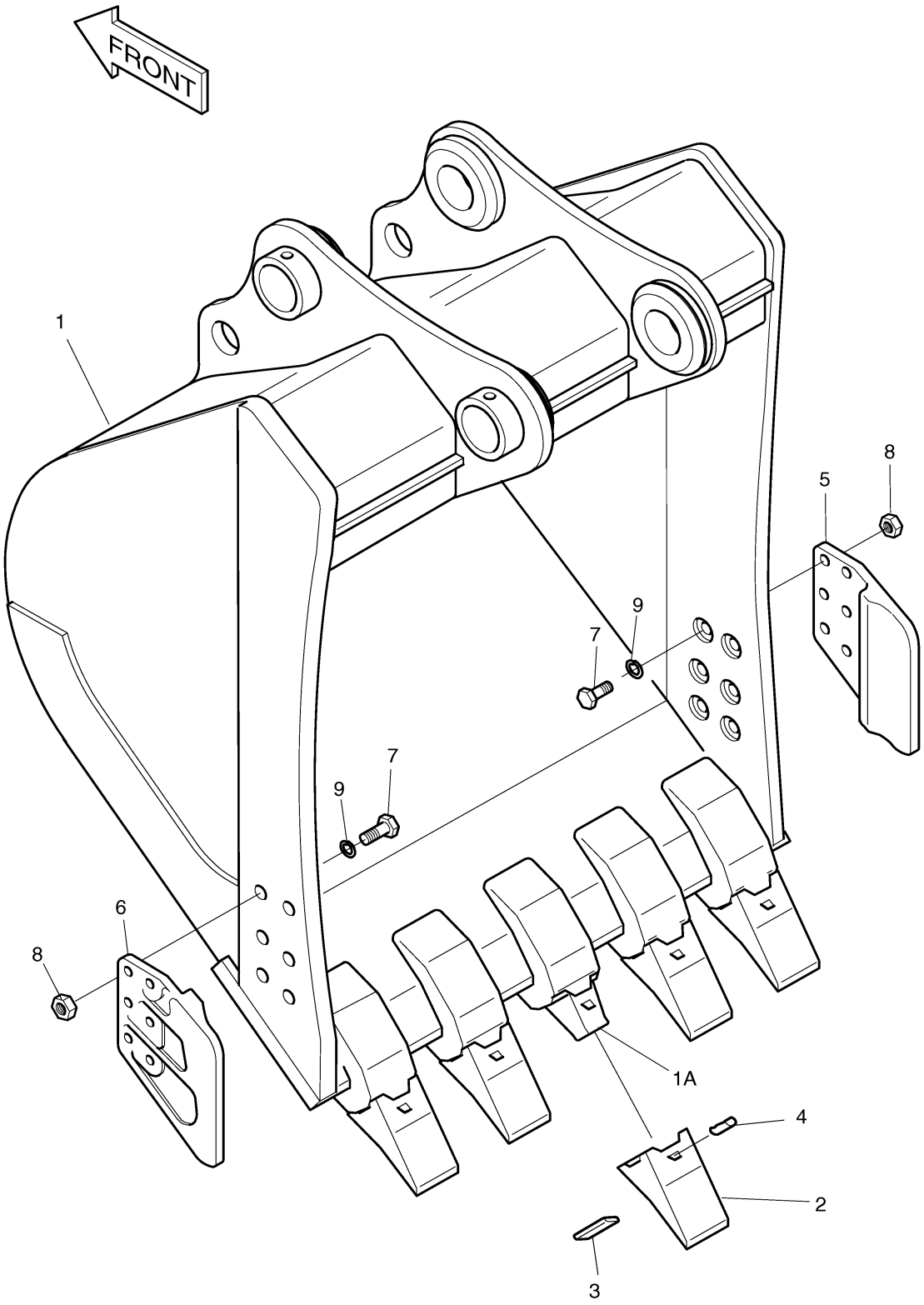

Fig. 6580 LOCK VALVE PIPING-6.245M

Key No	Part No	Description	Qty	S.C	Serial No	ICA	Replacable	Qty
-	400-00656	LOCK VALVE PIPING-6.245m	-	D	1001~3648			
-	400-00656E	LOCK VALVE PIPING-6.245m	-	D	3649~			
1	2440-6497G	CYLINDER;BOOM(L.H)	1		1001~1832	I	440-00414	1
1	440-00414	CYLINDER;BOOM(L.H)	1		1833~2299	I	440-00414A	1
1	440-00414A	CYLINDER;BOOM(L.H)	1		2300~			
2	2440-6498G	CYLINDER;BOOM(R.H)	1		1001~1832	I	440-00415	1
2	440-00415	CYLINDER;BOOM(R.H)	1		1833~2299	I	440-00415A	1
2	440-00415A	CYLINDER;BOOM(R.H)	1		2300~			
3	440-00268	CYLINDER;ARM	1		1001~2299	I	440-00268A	1
3	440-00268A	CYLINDER;ARM	1		2300~3648	I	440-00268B	1
3	440-00268B	CYLINDER;ARM	1		3649~4260	I	K1036108	1
3	K1036108	CYLINDER;ARM	1		4261~			
4	420-00004A	VALVE;LOCK	3					
4A	K9000999	SEAL KIT	1					
5	S2215766	BOLT	12					
6	S5110703	WASHER	24					
7	S8000341	O-RING	3					
8	S2215866	BOLT	12					
9	S8000111	O-RING	8					
10	2181-1126D14	ADAPTER	4					
11	2181-1916D5	ADAPTER	4					
12	2181-1923D12	ADAPTER	4					
13	S4032833	NUT	4					
14	195-01535A	BRACKET	2					
15	195-01536	BRACKET	1					
16	S0561253	BOLT M12X1.75X75	1					
17	2124-1084D2	CLIP,BAND	30					
18	181-00008	TEE	2					
19	181-00078D5	ADAPTER	2					
20	195-00163	BRACKET	1					
21	S0563366	BOLT	2					
22	S5102803	WASHER	2					
23	2114-1180D20	SHIM	1					
24	121-00010D1	NUT	2					
25	2181-2419D2	ELBOW	2					
26	2181-2375D7	TEE	2					

Key No	Part No	Description	Qty	S.C	Serial No	ICA	Replacable	Qty
28	124-00199D5	CLIP	4					
29	140-00837B	PIPE	1					
29	140-00837E	PIPE	1					
30	140-00838B	PIPE	1		1001~1832			
30	140-00838E	PIPE	1		1833~4002	I	140-00838G	1
30	140-00838G	PIPE	1		4003~			
31	140-00851B	PIPE	1					
31	140-00851E	PIPE	1					
32	140-00852B	PIPE	1		1001~1832			
32	140-00852E	PIPE	1		1833~4002	I	140-00852G	1
32	140-00852G	PIPE	1		4003~			
33	2184-1046D52	HOSE PF1/4-1100L	1					
33	2184-1046D142	HOSE PF1/4-900L	1					
34	2184-1046D52	HOSE PF1/4-1100L	1					
34	2184-1046D142	HOSE PF1/4-900L	1					
35	2184-1046D84	HOSE PF1/4-1050L	1					
35	2184-1046D82	HOSE PF1/4-850L	1					
36	2184-1046D84	HOSE PF1/4-1050L	1					
36	2184-1046D82	HOSE PF1/4-850L	1					
37	DS2059383	HOSE PF1/4-800L	1					
38	2184-1046D116	HOSE PF3/8-2000L	1					
39	2184-1045D206	HOSE PF3/8-2000L	1					
40	2184-1046D284	HOSE PF3/8-1800L	1		1001~1004	I	2184-1060D227	1
40	2184-1060D227	HOSE PF3/8-1750L(ST-45)	1		1005~			
41	2184-1045D206	HOSE PF3/8-2000L	1					
42	2184-1046D301	HOSE PF1/4-5750L	1					
43	2184-1046D301	HOSE PF1/4-5750L	1					
44	S0561453	BOLT M12X1.75X85	2					
45	S4012733	NUT	2					

Fig. 6580 LOCK VALVE PIPING-6.245M

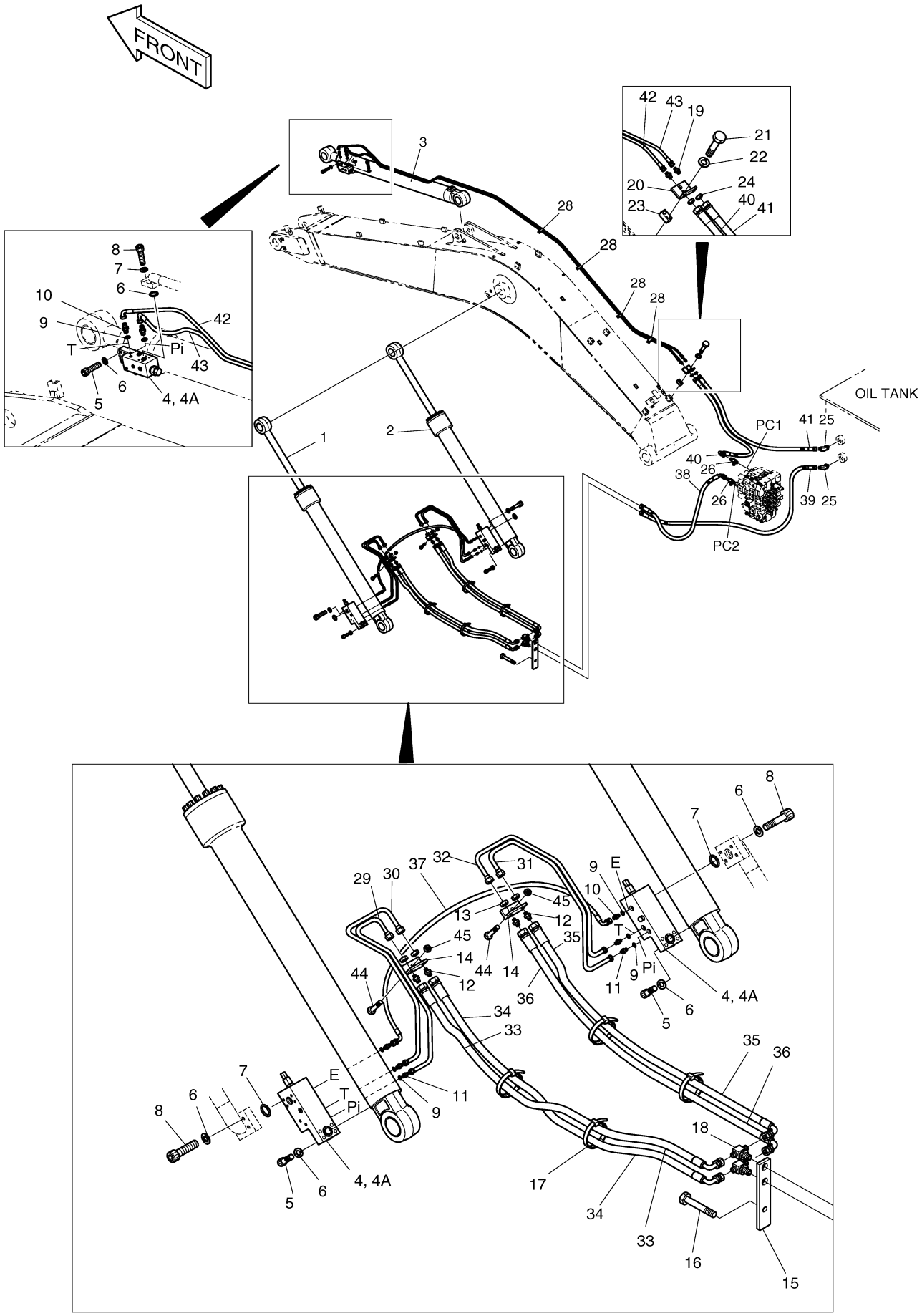

DOOSAN Doosan Infracore

Fig. 6590 LOCK VALVE PIPING-10M

Key No	Part No	Description	Qty	S.C	Serial No	ICA	Replacable	Qty
-	400-00810	LOCK VALVE PIPING-10m BOOM	-	D	1001~3648			
-	400-00810A	LOCK VALVE PIPING-10m BOOM	-	D	3649~			
1	2440-6497G	CYLINDER;BOOM(L.H)	1		1001~1832	I	440-00414	1
1	440-00414	CYLINDER;BOOM(L.H)	1		1833~2299	I	440-00414A	1
1	440-00414A	CYLINDER;BOOM(L.H)	1		2300~			
2	2440-6498G	CYLINDER;BOOM(R.H)	1		1001~1832	I	440-00415	1
2	440-00415	CYLINDER;BOOM(R.H)	1		1833~2299	I	440-00415A	1
2	440-00415A	CYLINDER;BOOM(R.H)	1		2300~			
3	440-00268	CYLINDER;ARM	1		1001~2299	I	440-00268A	1
3	440-00268A	CYLINDER;ARM	1		2300~3648	I	440-00268B	1
3	440-00268B	CYLINDER;ARM	1		3649~4260	I	K1036108	1
3	K1036108	CYLINDER;ARM	1		4261~			
4	420-00004A	VALVE;LOCK	3					
4A	K9000999	SEAL KIT	1					
5	S2215766	BOLT	12					
6	S5110703	WASHER	24					
7	S8000341	O-RING	3					
8	S2215866	BOLT	12					
9	S8000111	O-RING	8					
10	2181-1126D14	ADAPTER	4					
11	2181-1916D5	ADAPTER	4					
12	2181-1923D12	ADAPTER	4					
13	S4032833	NUT	4					
14	195-01535A	BRACKET	2					
15	195-01536	BRACKET	1					
16	S0561253	BOLT M12X1.75X75	1					
17	2124-1084D2	CLIP,BAND	40					
18	181-00008	TEE	2					
19	181-00078D5	ADAPTER	2					
20	195-00163	BRACKET	1					
21	S0563366	BOLT	2					
22	S5102803	WASHER	2					
23	2114-1180D20	SHIM	1					
24	121-00010D1	NUT	2					
25	2181-2419D2	ELBOW	2					
26	2181-2375D7	TEE	2					

Key No	Part No	Description	Qty	S.C	Serial No	ICA	Replacable	Qty
29	140-00837B	PIPE	1		1001~1832			
29	140-00837E	PIPE	1		1833~			
30	140-00838B	PIPE	1		1001~1832			
30	140-00838E	PIPE	1		1833~4002	I	140-00838G	1
30	140-00838G	PIPE	1		4003~			
31	140-00851B	PIPE	1		1001~1832			
31	140-00851E	PIPE	1		1833~			
32	140-00852B	PIPE	1		1001~1832			
32	140-00852E	PIPE	1		1833~4002	I	140-00852G	1
32	140-00852G	PIPE	1		4003~			
33	2184-1046D52	HOSE PF1/4-1100L	1		1001~1832			
33	2184-1046D142	HOSE PF1/4-900L	1		1833~			
34	2184-1046D52	HOSE PF1/4-1100L	1		1001~1832			
34	2184-1046D142	HOSE PF1/4-900L	1		1833~			
35	2184-1046D84	HOSE PF1/4-1050L	1		1001~1832			
35	2184-1046D82	HOSE PF1/4-850L	1		1833~			
36	2184-1046D84	HOSE PF1/4-1050L	1		1001~1832			
36	2184-1046D82	HOSE PF1/4-850L	1		1833~			
37	DS2059383	HOSE PF1/4-800L	1					
38	2184-1046D116	HOSE PF3/8-2000L	1					
39	2184-1045D206	HOSE PF3/8-2000L	1					
40	2184-1046D284	HOSE PF3/8-1800L	1		1001~1004	I	2184-1060D227	1
40	2184-1060D227	HOSE PF3/8-1750L(ST-45)	1		1005~			
41	2184-1045D206	HOSE PF3/8-2000L	1					
42	2184-1046D279	HOSE PF1/4-9400L	1					
43	2184-1046D279	HOSE PF1/4-9400L	1					
44	S0561453	BOLT M12X1.75X85	2					
45	S4012733	NUT	2					

Fig. 6590 LOCK VALVE PIPING-10M

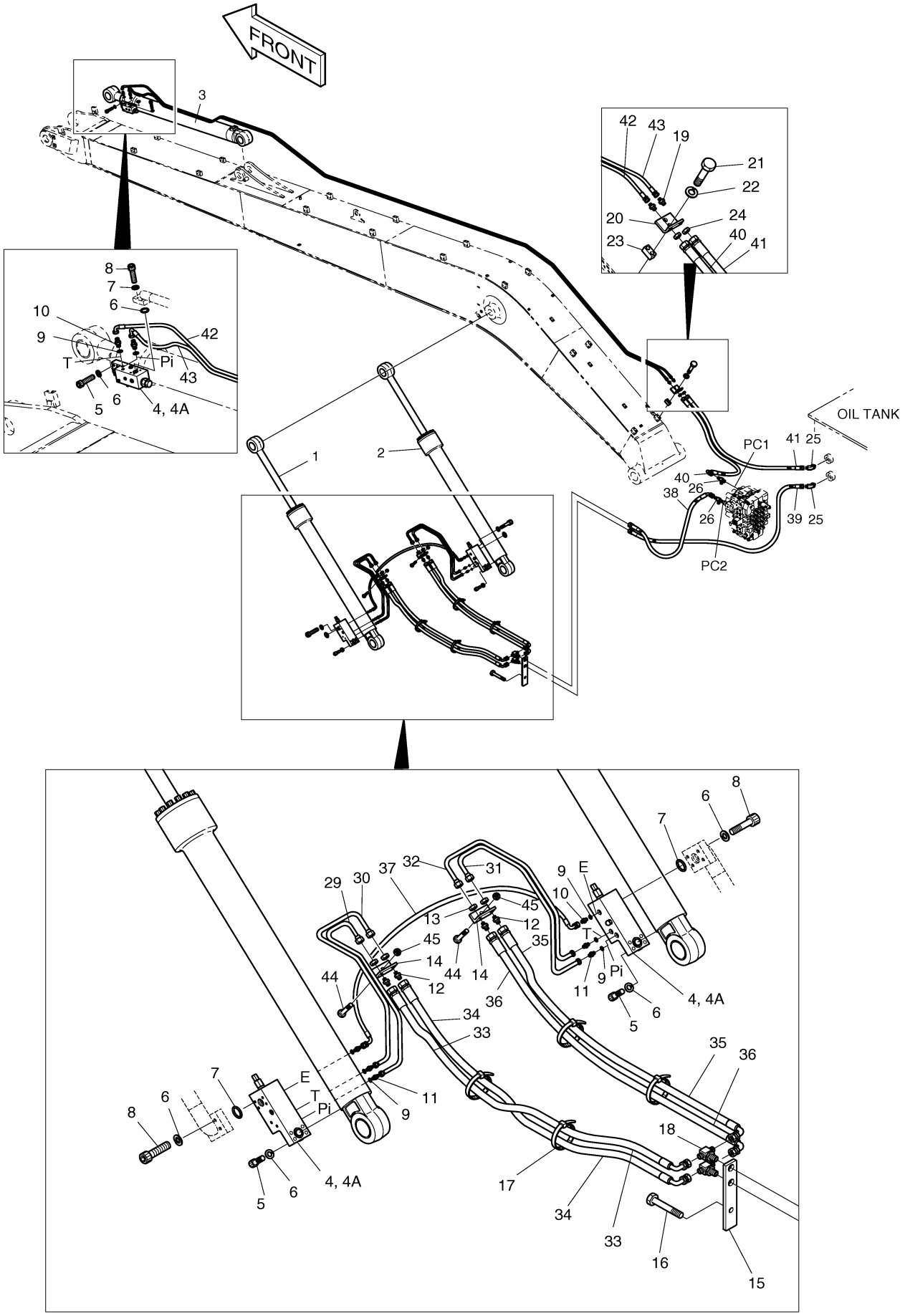

DOOSAN Doosan Infracore

Fig. 6600 MAIN PIPING-ONE & TWO WAY

Key No	Part No	Description	Qty	S.C	Serial No	ICA	Replacable	Qty
-	400-00862	MAIN PIPING	-	D				
1	140-01127A	PIPE	1		1001~1004	I	140-01127B	1
1	140-01127B	PIPE	1		1005~			
2	140-00984A	PIPE	1		1001~1396			
2	DS2040284	HOSE 1170L	1		1397~			
3	DS2016010	HOSE	2					
4	DS2039067	HOSE	1					
5	DS2040310	HOSE	1					
6	DS2040066	HOSE	1					
7	DS2018059	HOSE	1					
8	421-00019	VALVE;SWITCH	1					
9	423-00150	BLOCK	1					
10	195-01856	BRACKET	1		1001~1834			
10	195-01856A	BRACKET	1		1835~			
11	195-01857	BRACKET	1		1001~1834			
11	195-01857A	BRACKET	1		1835~			
12	195-01858	BRACKET	1					
13	124-00249A	CLAMP;PIPE	1		1001~1396			
13	124-00249C	CLAMP;PIPE	1		1397~			
14	2124-1696	CLAMP;PIPE	2		1001~1396			
14	124-00006	CLAMP;PIPE	1		1397~			
15	2124-1026D3	CLAMP;PIPE	1					
16	2161-2251A	RUBBER	4		1001~1396			
16	161-00102	RUBBER	2		1397~			
17	2181-9078	FLANGE	18		1001~1396			
17	2181-9078	FLANGE	22		1397~			
18	S2212266	BOLT	36		1001~1396			
18	S2212266	BOLT	40		1397~			
19	S2212466	BOLT	8		1001~1396			
19	S2212466	BOLT	4		1397~			
20	S0512253	BOLT M10X1.5X30	8		1001~1396			
20	S0512253	BOLT M10X1.5X30	10		1397~1834			
20	S0512253	BOLT M10X1.5X30	6		1835~			
21	S5102603	WASHER	8		1001~1396			
21	S5102603	WASHER	10		1397~1834			
21	S5102603	WASHER	6		1835~			

Key No	Part No	Description	Qty	S.C	Serial No	ICA	Replacable	Qty
22	S0560953	BOLT M12X1.75X60	4		1001~1396			
22	S0565466	BOLT	1		1397~			
23	S0561053	BOLT	1					
24	2120-2196D11	BOLT;SET M12X1.75X35	2					
25	S5102703	WASHER	5		1001~1396			
25	S5102703	WASHER	1		1397~1834			
25	S5102703	WASHER	5		1835~			
26	2180-1026D19	O-RING	11		1001~1396			
26	2180-1026D19	O-RING	13		1397~			
27	S8030161	O-RING	1					
28	S8000291	O-RING	1					
29	2181-4133D6	ADAPTER	1					
30	2423-1407	BLOCK	1		1397~			
31	S2212966	BOLT	4		1397~			
32	423-00180	BLOCK	1		1397~			
33	S5102903	WASHER	1		1397~			
34	S0515353	BOLT M12X1.75X35	4		1835~			

Fig. 6600 MAIN PIPING-ONE & TWO WAY

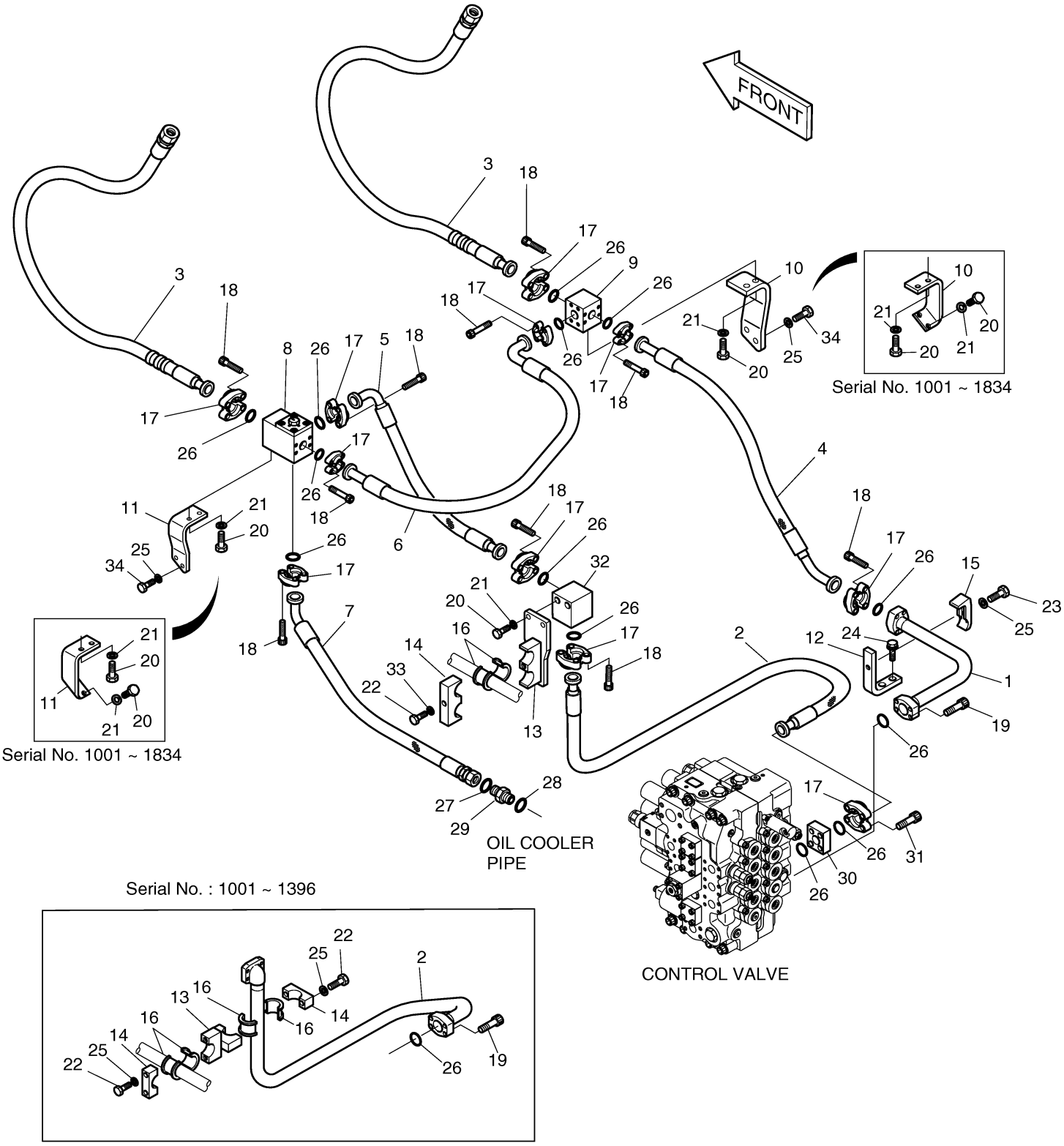

Fig. 6610 PILOT PIPING-BREAKER

Key No	Part No	Description	Qty	S.C	Serial No	ICA	Replacable	Qty
-	400-00872	PILOT PIPING;BREAKER	-	D				
1	420-00340	VALVE;BREAKER	1		1001~2569	I	420-00340A	1
1	420-00340A	VALVE;BREAKER	1		2570~2675	I	420-00340B	1
1	420-00340B	VALVE;BREAKER	1		2676~			
2	S0558953	BOLT	3					
3	S5102603	WASHER	3					
4	S8000111	O-RING	7					
5	S8000141	O-RING	2					
6	2181-1126D14	ADAPTER	1					
7	2181-1702D4	ELBOW	5					
8	2181-1702D10	ELBOW	1					
9	2181-1951D7	TEE	1					
10	2181-1951D1	TEE	1					
11	2184-1046D135	HOSE PF1/4-2500L	1					
12	2184-1045D221	HOSE	1					
13	2184-1045D105	HOSE PF1/4-1900L	1					
14	2184-1060D198	HOSE PF1/4-750L	1					
15	2184-1045D157	HOSE PF1/4-1500L	1					
16	2184-1046D115	HOSE PF1/4-700L	1					
17	530-00232	HARNESS;BREAKER	1					

Fig. 6610 PILOT PIPING-BREAKER

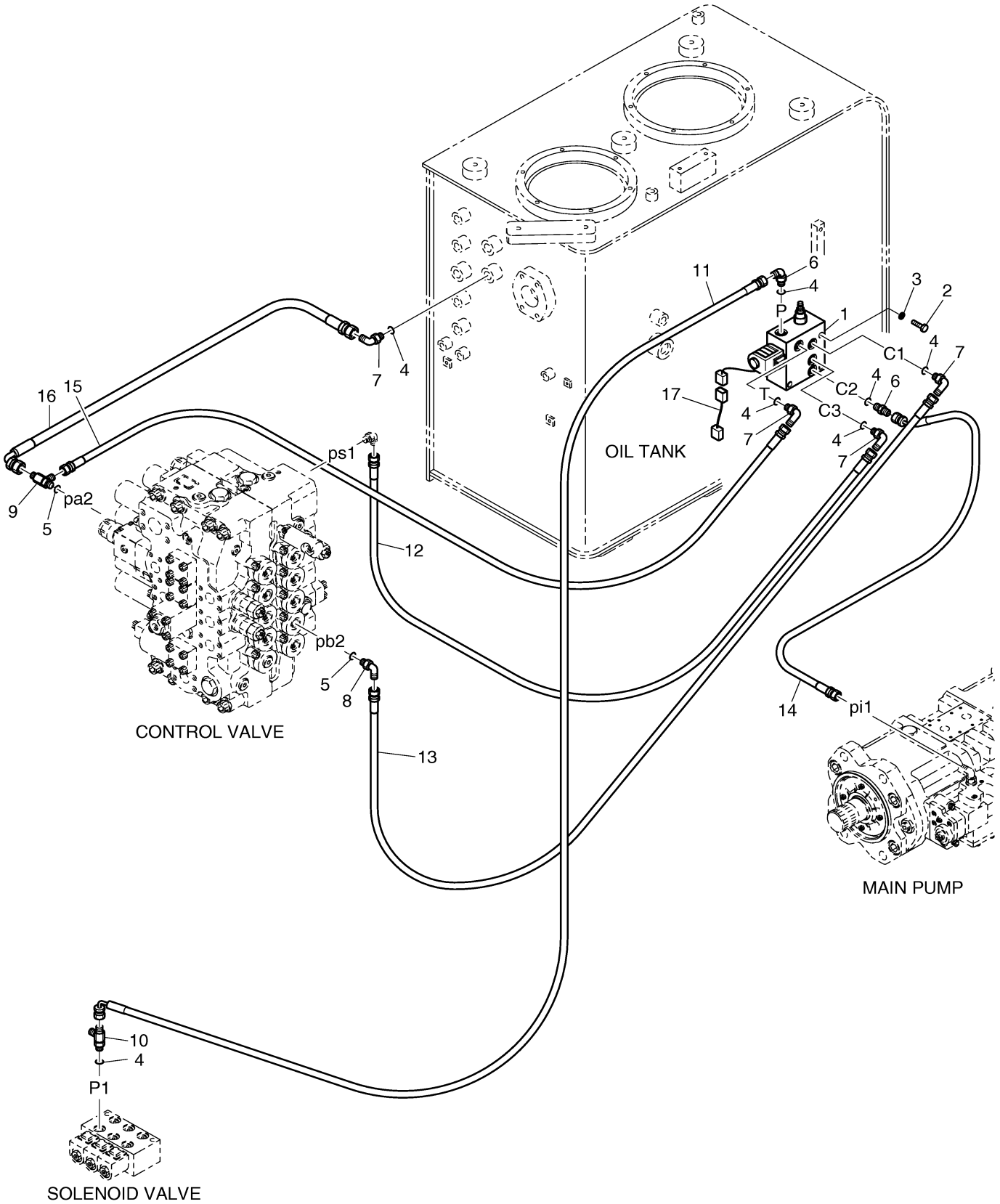

Fig. 6620 BOOM PIPING-ONE WAY

Key No	Part No	Description	Qty	S.C	Serial No	ICA	Replacable	Qty
-	400-00873	BOOM PIPING	-	D				
1	140-01128A	PIPE	1					
2	140-01129A	PIPE	1					
3	140-01130	PIPE	1					
4	2184-1197D101	HOSE	1					
5	S8030161	O-RING	4					
6	2180-1026D23	O-RING	2					
7	S8000291	O-RING	6					
8	2181-1950D9	PLUG	2					
9	2181-2818	ADAPTER	1					
10	2181-4133D6	ADAPTER	2					
11	2420-9627A	VALVE;RELIEF	1		1001~2756	I	2420-9627B	1
11	2420-9627B	VALVE;RELIEF	1		2757~			
12	S2218666	BOLT	8					
13	S0562766	BOLT	8					
14	S0563166	BOLT	8					
15	S5102803	WASHER	16					
17	124-00219	CLAMP;PIPE	8		1001~1577			
17	124-00219	CLAMP;PIPE	4		1578~			
18	161-00280	RUBBER	10		1001~1577			
18	161-00280	RUBBER	6		1578~			
19	195-01920	BRACKET	4					
20	140-01131	PIPE	1					
21	124-00184A	CLAMP;PIPE	12		1001~1577			
21	124-00184A	CLAMP;PIPE	8		1578~			
22	124-00291	CLAMP;PIPE	4		1578~			
23	124-00292	CLAMP;PIPE	4		1578~			

Fig. 6620 BOOM PIPING-ONE WAY

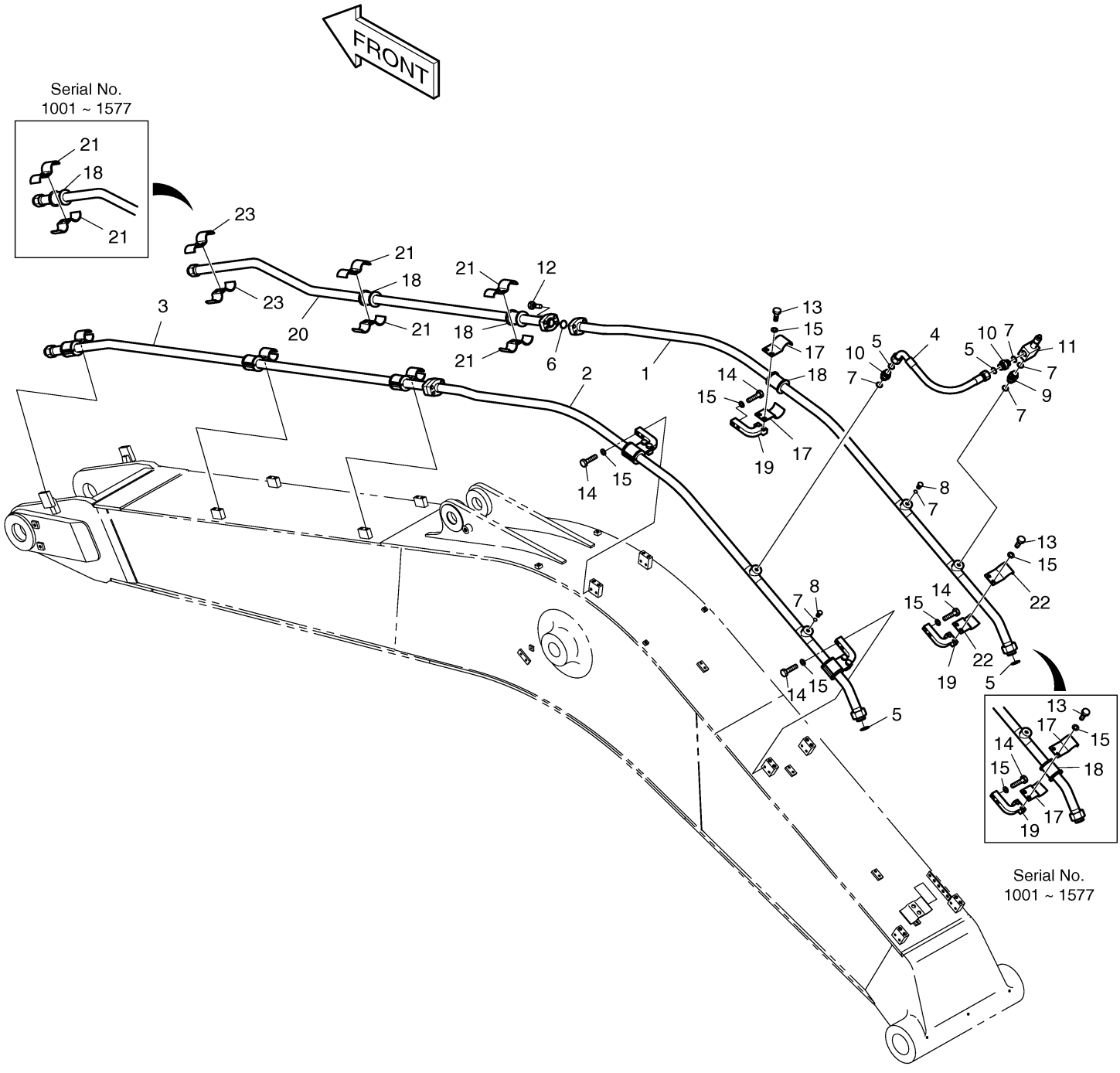

Fig. 6630 ARM PIPING-ARM 3.1M(ONE &

Key No	Part No	Description	Qty	S.C	Serial No	ICA	Replacable	Qty
-	400-00874	ARM PIPING	-	D				
1	140-00040	PIPE	2					
2	2184-1196D90	HOSE	2					
3	S8000381	O-RING	6					
4	2180-1026D37	O-RING	6					
5	2420-9631A	VALVE;STOP	2					
6	124-00170	CLAMP	2					
7	2124-1693	CLAMP;PIPE	4					
8	2161-2505	RUBBER	8					
9	2181-2566D9	ADAPTER	2					
10	2181-4133D35	ADAPTER	2					
11	DS2332013	ELBOW	2					
11	2181-2816D3	ELBOW	2					
12	2181-2820D6	CAP	2					
12	2181-2817D3	CAP	2					
13	S0561053	BOLT	8					
14	S0566053	BOLT M16X2.0X90	4					
15	S5102703	WASHER	8					
16	S5102903	WASHER	4					

Fig. 6630 ARM PIPING-ARM 3.1M(ONE &

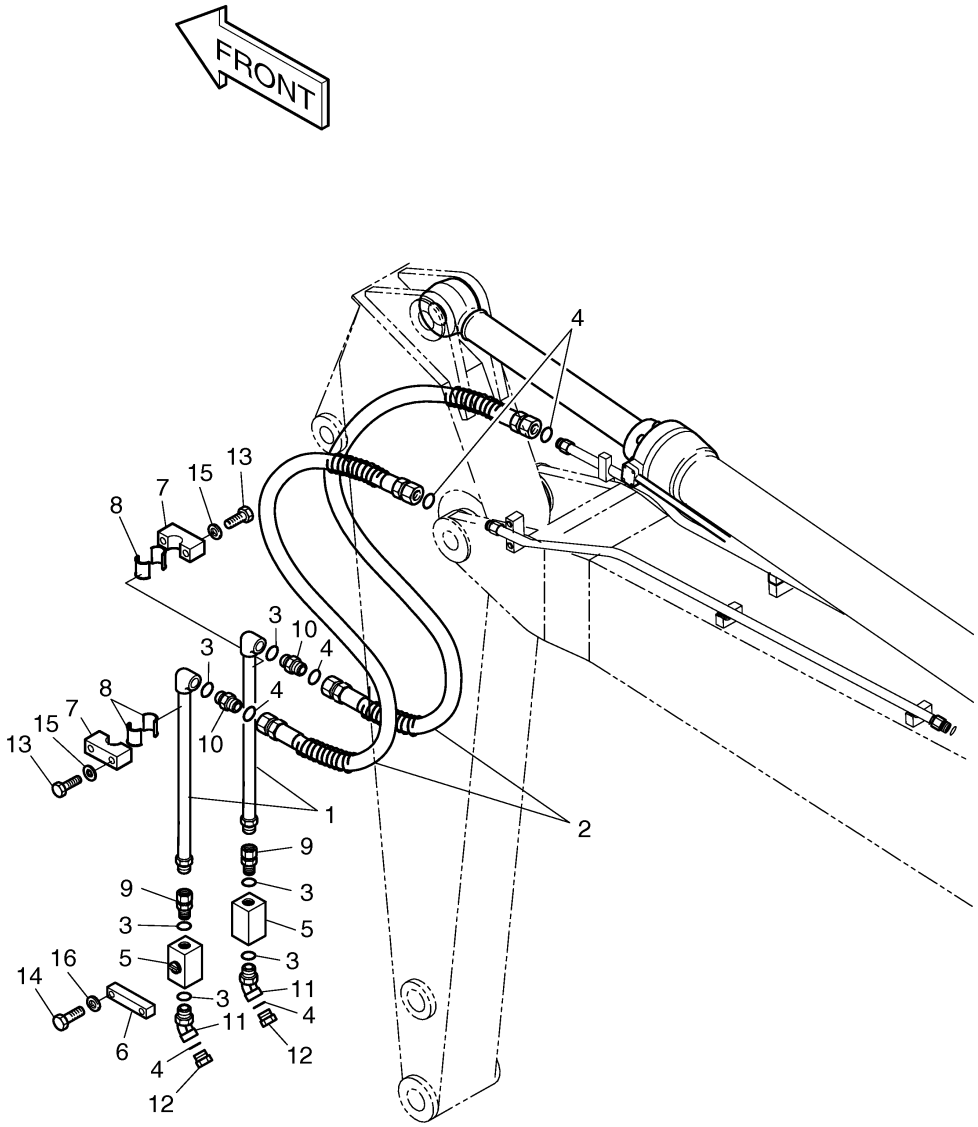

Fig. 6640 ARM PIPING-ARM 2.5M(ONE &

Key No	Part No	Description	Qty	S.C	Serial No	ICA	Replacable	Qty
-	400-00972	ARM PIPING	-	D				
1	140-00697	PIPE	2					
2	2184-1196D97	HOSE	2					
3	S8000381	O-RING	6					
4	2180-1026D37	O-RING	6					
5	2420-9631A	VALVE;STOP	2					
6	124-00170	CLAMP	2					
7	2124-1693	CLAMP;PIPE	2					
8	2161-2505	RUBBER	4					
9	2181-2566D9	ADAPTER	2					
10	2181-4133D35	ADAPTER	2					
11	DS2332013	ELBOW	2					
11	2181-2816D3	ELBOW	2					
12	2181-2820D6	CAP	2					
12	2181-2817D3	CAP	2					
13	S0561053	BOLT	4					
14	S0566053	BOLT M16X2.0X90	4					
15	S5102703	WASHER	4					
16	S5102903	WASHER	4					

Fig. 6640 ARM PIPING-ARM 2.5M(ONE &

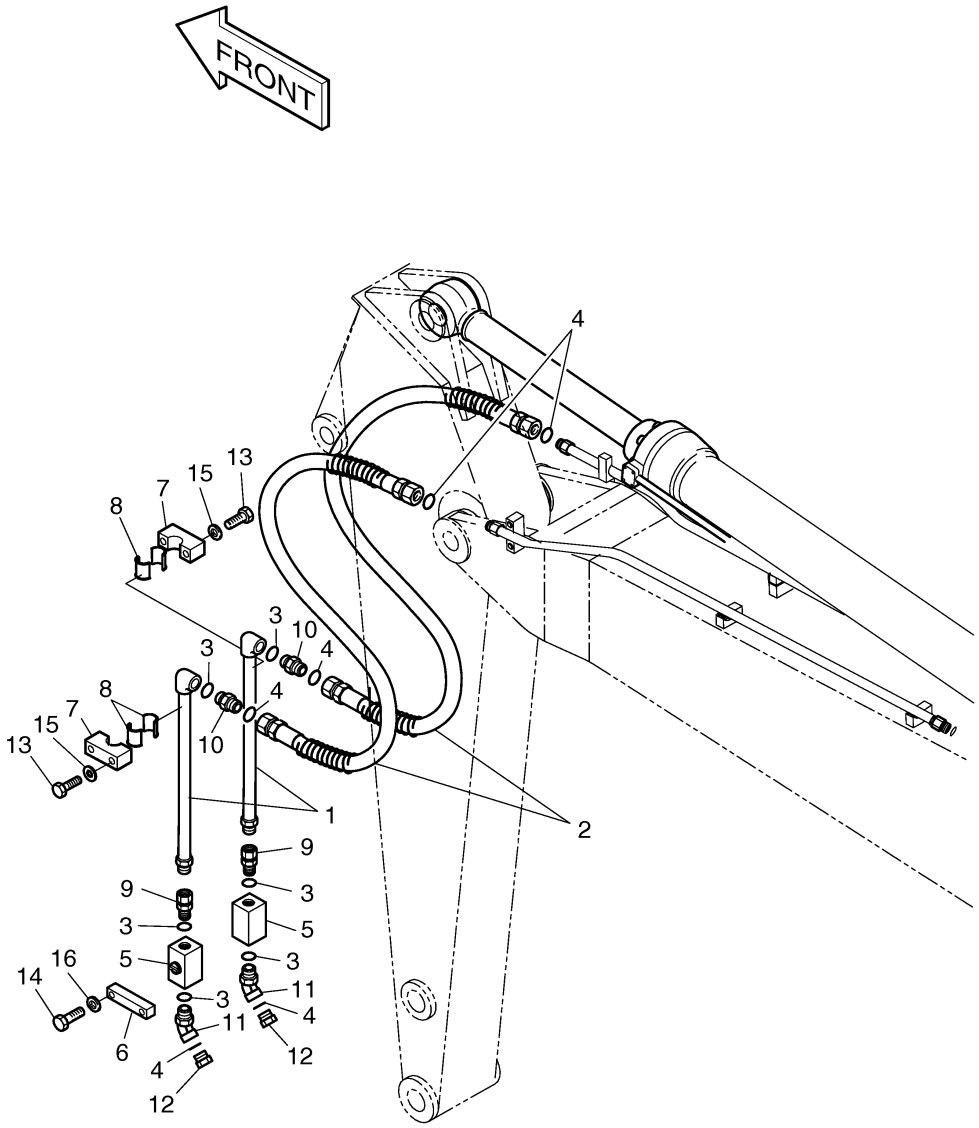

Fig. 6650 ARM PIPING-ARM 3.75M(ONE &

Key No	Part No	Description	Qty	S.C	Serial No	ICA	Replacable	Qty
-	400-00973	ARM PIPING	-	D				
1	2140-1681	PIPE;ARM	2					
2	2184-1196D84	HOSE	2					
3	S8000381	O-RING	6					
4	2180-1026D37	O-RING	6					
5	2420-9631A	VALVE;STOP	2					
6	124-00170	CLAMP	2					
7	2124-1693	CLAMP;PIPE	4					
8	2161-2505	RUBBER	8					
9	2181-2566D9	ADAPTER	2					
10	2181-4133D35	ADAPTER	2					
11	DS2332013	ELBOW	2					
11	2181-2816D3	ELBOW	2					
12	2181-2820D6	CAP	2					
12	2181-2817D3	CAP	2					
13	S0561053	BOLT	8					
14	S0566053	BOLT M16X2.0X90	4					
15	S5102703	WASHER	8					
16	S5102903	WASHER	4					

Fig. 6650 ARM PIPING-ARM 3.75M(ONE &

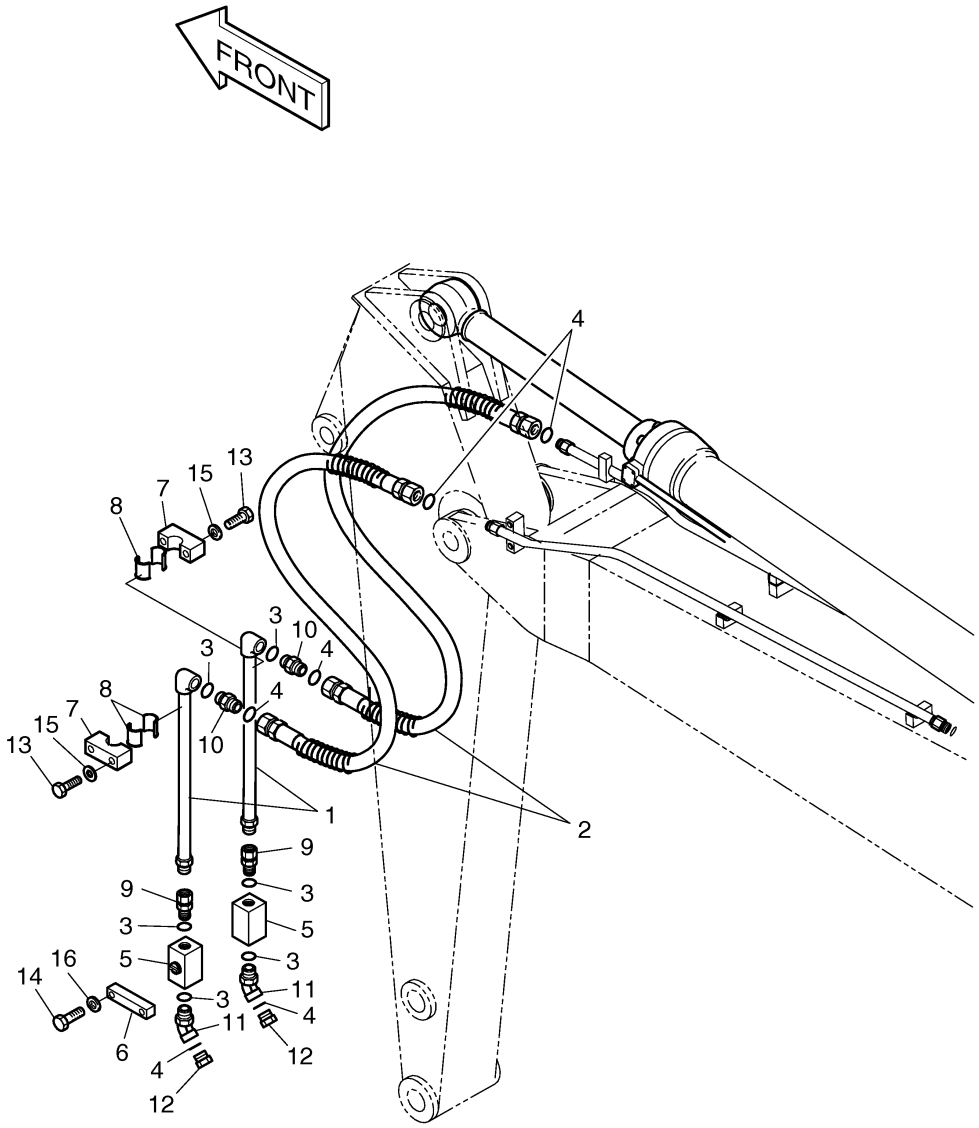

Fig. 6660 NAME PLATE-ONE & TWO WAY

Key No	Part No	Description	Qty	S.C	Serial No	ICA	Replacable	Qty
1	2190-3602	PLATE;NAME(KOREAN)	1					
2	2190-3603	PLATE;NAME(ENGLISH)	1					

Fig. 6660 NAME PLATE-ONE & TWO WAY

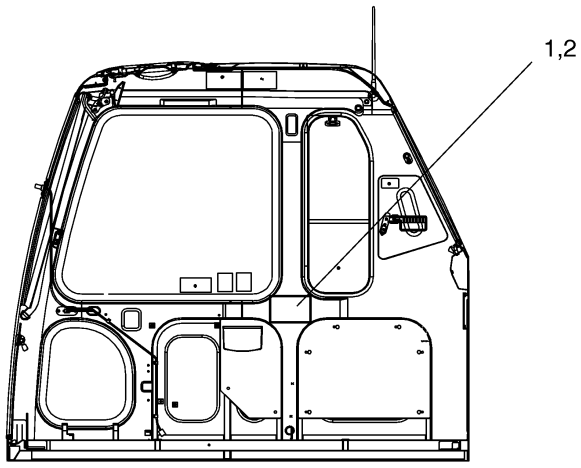

Fig. 6670 PILOT PIPING(CABIN)-ROTATION

Key No	Part No	Description	Qty	S.C	Serial No	ICA	Replacable	Qty
-	400-01028	PILOT	-	D	1020~			
1	420-00347	VALVE;PEDAL	1					
2	S2212266	BOLT	2					
3	S5110603	WASHER	2					
4	S5010613	WASHER	2					
5	2181-1126D14	ADAPTER	2					
6	S8000111	O-RING	4					
7	2181-1951D6	TEE	2					
8	S8000141	O-RING	2					
9	181-00507	TEE	2		1020~1214			
9	181-00760	TEE	2		1215~			
10	549-00010	SWITCH;PRESSURE	2					
11	2184-1046D153	HOSE PF1/4-350L	1					
12	2184-1046D33	HOSE PF1/4-620L	1					
13	DS2055650	HOSE PF1/4-3400L	1		1020~1214			
13	2184-1046D229	HOSE PF3/8-3400L	1		1215~			
14	DS2055650	HOSE PF1/4-3400L	1		1020~1214			
14	2184-1046D229	HOSE PF3/8-3400L	1		1215~			

Fig. 6670 PILOT PIPING(CABIN)-ROTATION

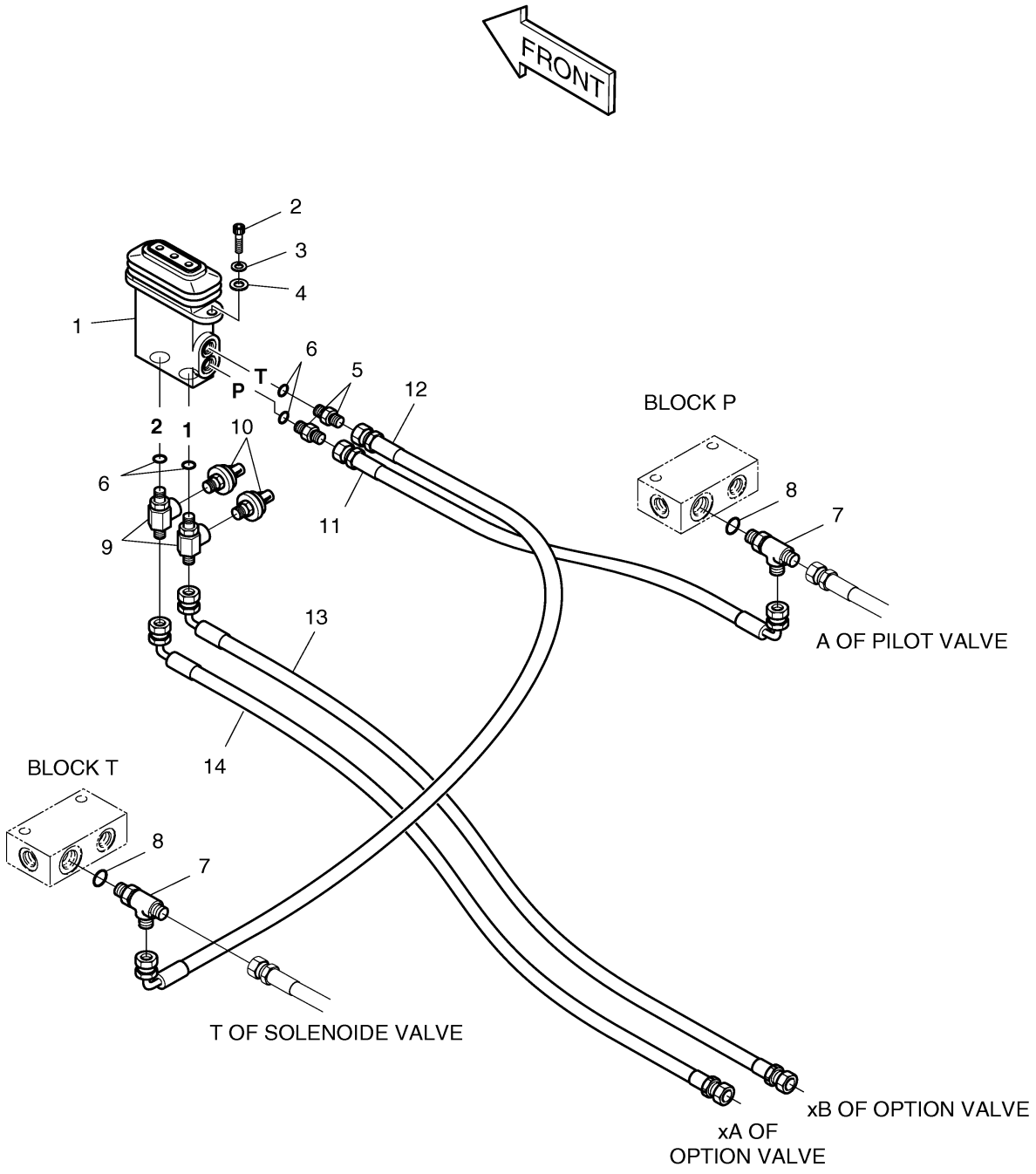

Fig. 6680 MAIN PIPING-ROTATION &

Key No	Part No	Description	Qty	S.C	Serial No	ICA	Replacable	Qty
-	400-01025	MAIN PIPING-ROTAING&TILT	-	D	1020~			
1	420-00322	OPTION VALVE	1		1020~1214			
1	420-00322B	OPTION VALVE	1		1215~1309			
1	420-00322C	OPTION VALVE	1		1310~2464			
1	K1002046	OPTION VALVE	1		2465~			
2	195-02042	BRACKET;OPT. C/V	1					
3	2120-2196D11	BOLT;SET M12X1.75X35	6					
4	420-00370	VALVE;SOLENOID	1					
5	195-02044	BRACKET;OPT.	1					
6	S0515053	BOLT	3		1020~1214			
6	S0515053	BOLT	3		1215~			
7	S5102703	WASHER	3					
8	S8030081	O-RING	4					
9	S8000111	O-RING	7					
10	S8000141	O-RING	1					
11	S8000181	O-RING	5		1020~2464			
11	S8000181	O-RING	4		2465~			
12	S8000231	O-RING	1					
13	2181-2627D2	ADAPTER	1					
14	2181-4133D46	ADAPTER	3					
15	2181-2419D3	ELBOW	1					
16	2181-1951D5	TEE	1		1020~2464			
16	DS2371062	TEE	1		2465~			
17	2181-1951D16	TEE	1					
18	2181-1702D3	ELBOW	1					
19	2181-1126D89	ADAPTER	4					
20	2181-1702D4	ELBOW	2		1020~1214			
20	2181-1702D3	ELBOW	2		1215~			
21	DS2023117	HOSE(90-90)	1					
22	DS2054248	HOSE(ST-45)	1		1020~2464			
22	DS2053718	HOSE PF1/2-1400L	1		2465~3327			
22	DS2053421	HOSE 1050L	1		3328~			
23	DS2012166	HOSE(ST-45)	1					
24	2184-1046D240	HOSE PF3/8-950L	2					
25	2184-1046D237	HOSE PF3/8-1100L	1					
26	2184-1060D117	HOSE PF3/8-1350	1					

Key No	Part No	Description	Qty	S.C	Serial No	ICA	Replacable	Qty
27	2184-1045D248	HOSE PF3/8-1200L	1					
28	2184-1046D247	HOSE PF3/8-1000L	1					
29	S0556353	BOLT M8X1.25X50	2					
30	S5102503	WASHER	2					
31	530-00287	HARNESS	1					
32	124-00208D7	CLIP	3					
33	120-00276	BOLT	3					
34	S8000291	O-RING	1		2465~			
35	2184-1036D41	HOSE PF1-450L	1		2465~			

Fig. 6680 MAIN PIPING-ROTATION &

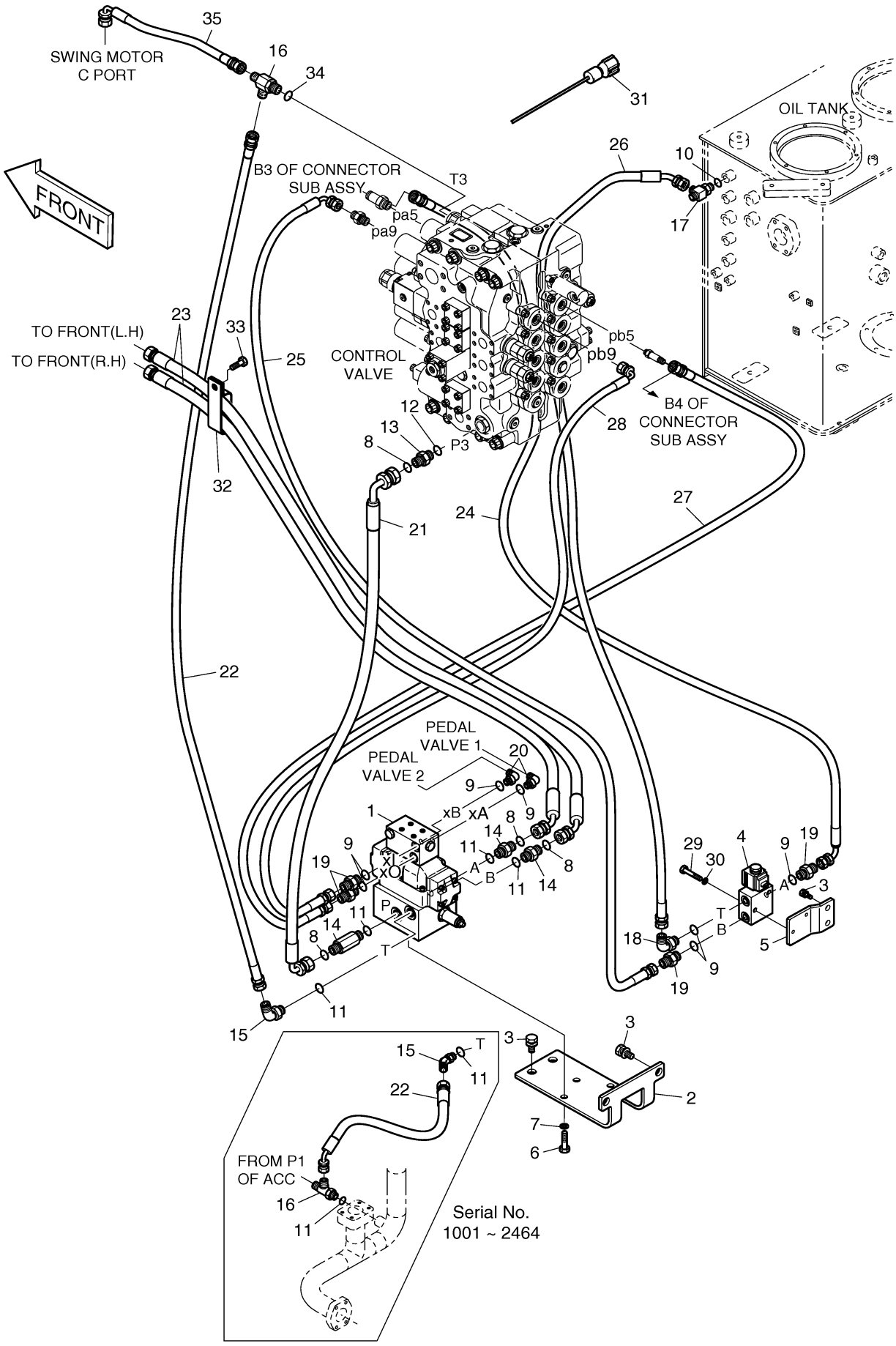

DOOSAN Doosan Infracore

Fig. 6690 BOOM PIPING-ROTATION &

Key No	Part No	Description	Qty	S.C	Serial No	ICA	Replacable	Qty
-	400-01022	BOOM PIPING;ROTATING&TIL	-	D	1020~			
1	140-01240	PIPE PF1/2"	1					
2	140-01241	PIPE PF1/2"	1					
3	140-01242	PIPE PF1/2"	1					
4	140-01243	PIPE PF1/2"	1					
5	140-01245	PIPE PF1/2"	1					
6	140-01244	PIPE PF1/2"	1					
7	124-00258	CLAMP;PIPE	8					
8	124-00212	CLAMP;PIPE	8					
9	2124-1025D2	CLAMP;PIPE	1					
10	621-02210	PLATE	1					
11	S0563466	BOLT	2					
12	S0564166	BOLT	8					
13	S5102803	WASHER	12					
14	2180-1026D30	O-RING	4					
15	S2209466	BOLT	16					
16	195-02057	BRACKET	1					
17	S0558453	BOLT	2					
18	S0563166	BOLT	2					
19	S8030081	O-RING	4					
20	S5102603	WASHER	2					
21	124-00256	CLAMP	1					
22	114-00526	SPACER	2					
23	S5010813	WASHER;PLAIN	8					

Fig. 6690 BOOM PIPING-ROTATION &

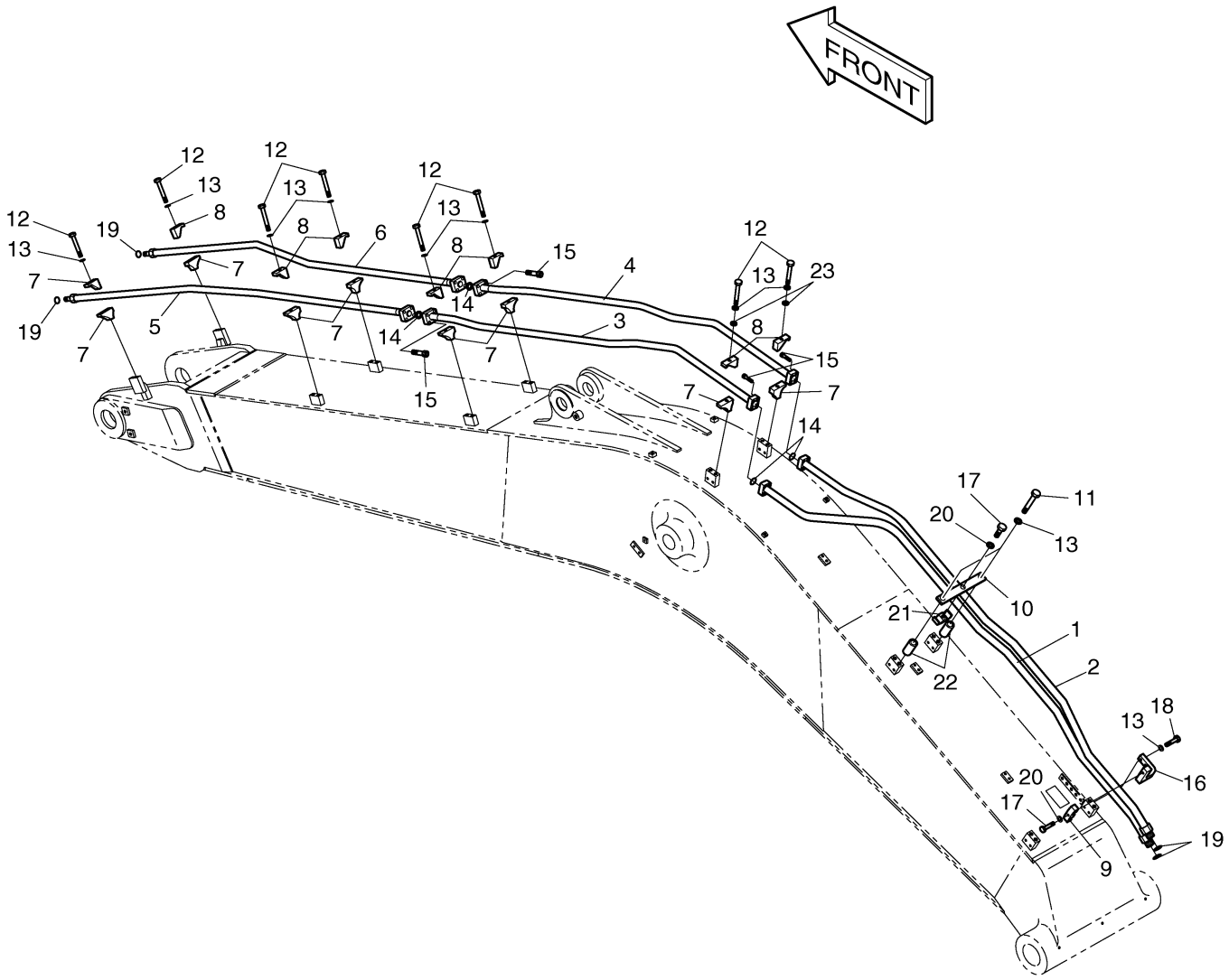

Fig. 6700 ARM PIPING-2.5M-ROTATION &

Key No	Part No	Description	Qty	S.C	Serial No	ICA	Replacable	Qty
-	400-01037	PIPING;2.5m ARM ROTATION	-	D				
1	701-00457	ARM;ROTATION&TILTING	1					
2	DS2013388	HOSE	2					
3	140-01091	PIPE;ARM	2					
4	140-01115A	PIPE;TILTING	2					
5	193-00625A	PIPE;ROTATING	2					
6	420-00277	VALVE;SWITCH	2					
7	2181-1702D2	ELBOW	2					
8	111-00031D1	ADAPTER;UNION PFO1/2-PF1/2	6					
9	2181-1126D6	ADAPTER	4					
10	2181-2820D3	PLUG	4					
11	S8000181	O-RING	14					
12	124-00255	CLAMP	10					
13	S2212066	BOLT	20					
14	161-00313	RUBBER	20					
15	S8030081	O-RING	2					
16	2181-4133D3	ADAPTER	2					

Fig. 6700 ARM PIPING-2.5M-ROTATION &

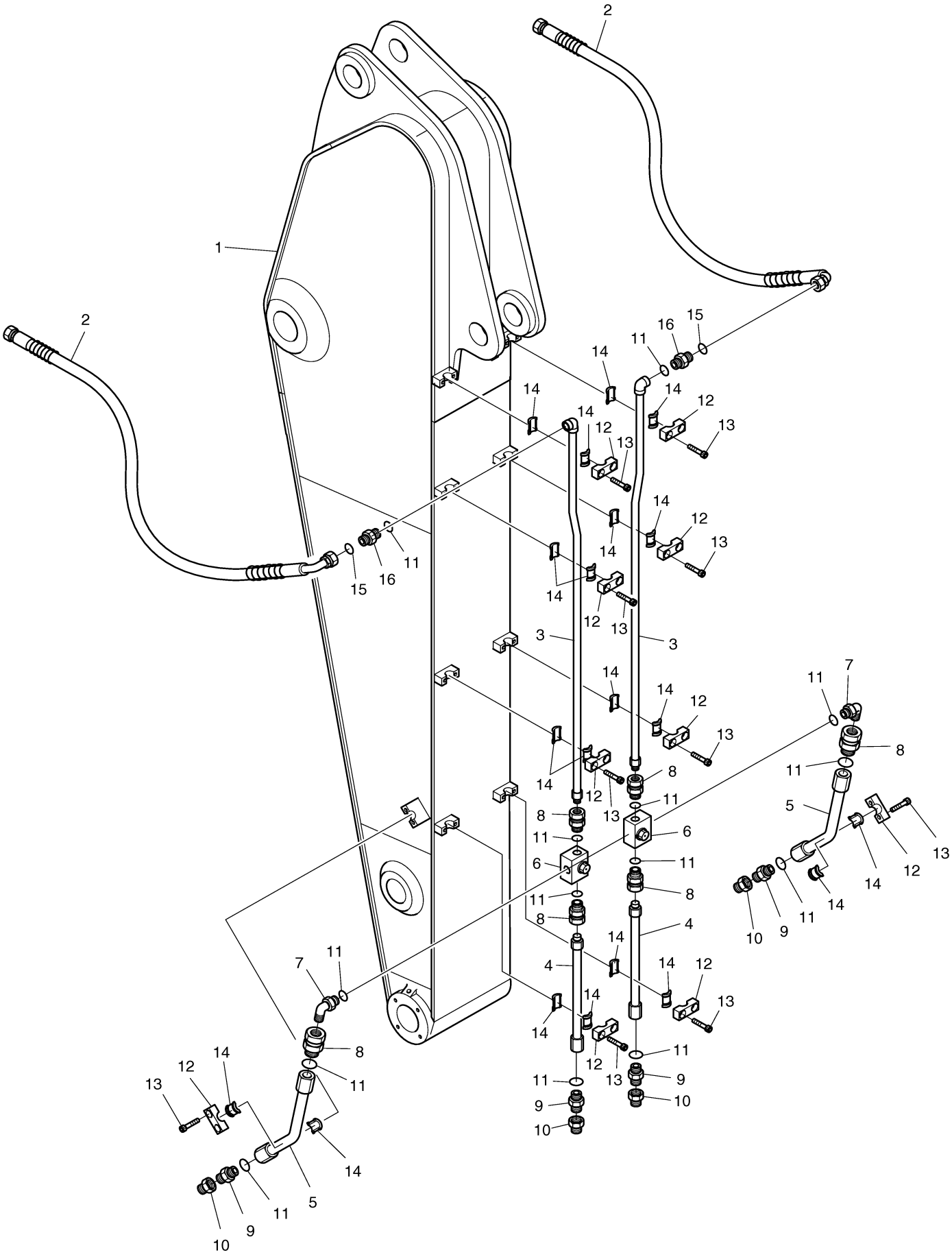

DOOSAN Doosan Infracore

Fig. 6710 ARM PIPING-3.75M-ROTATION &

Key No	Part No	Description	Qty	S.C	Serial No	ICA	Replacable	Qty
-	400-01038	PIPING;3.75m ARM ROTATIO	-	D	1020~			
1	701-00458	ARM;ROTATION&TILTING	1					
2	DS2013387	HOSE	2					
3	140-01270	PIPE;ARM	2					
4	140-01115A	PIPE;TILTING	2					
5	193-00625A	PIPE;ROTATING	2					
6	420-00277	VALVE;SWITCH	2					
7	2181-1702D2	ELBOW	2					
8	111-00031D1	ADAPTER;UNION PFO1/2-PF1/2	6					
9	2181-1126D6	ADAPTER	4					
10	2181-2820D3	PLUG	4					
11	S8000181	O-RING	14					
12	124-00255	CLAMP	12					
13	S2212066	BOLT	24					
14	161-00313	RUBBER	24					
15	S8030081	O-RING	2					
16	2181-4133D3	ADAPTER	2					

Fig. 6710 ARM PIPING-3.75M-ROTATION &

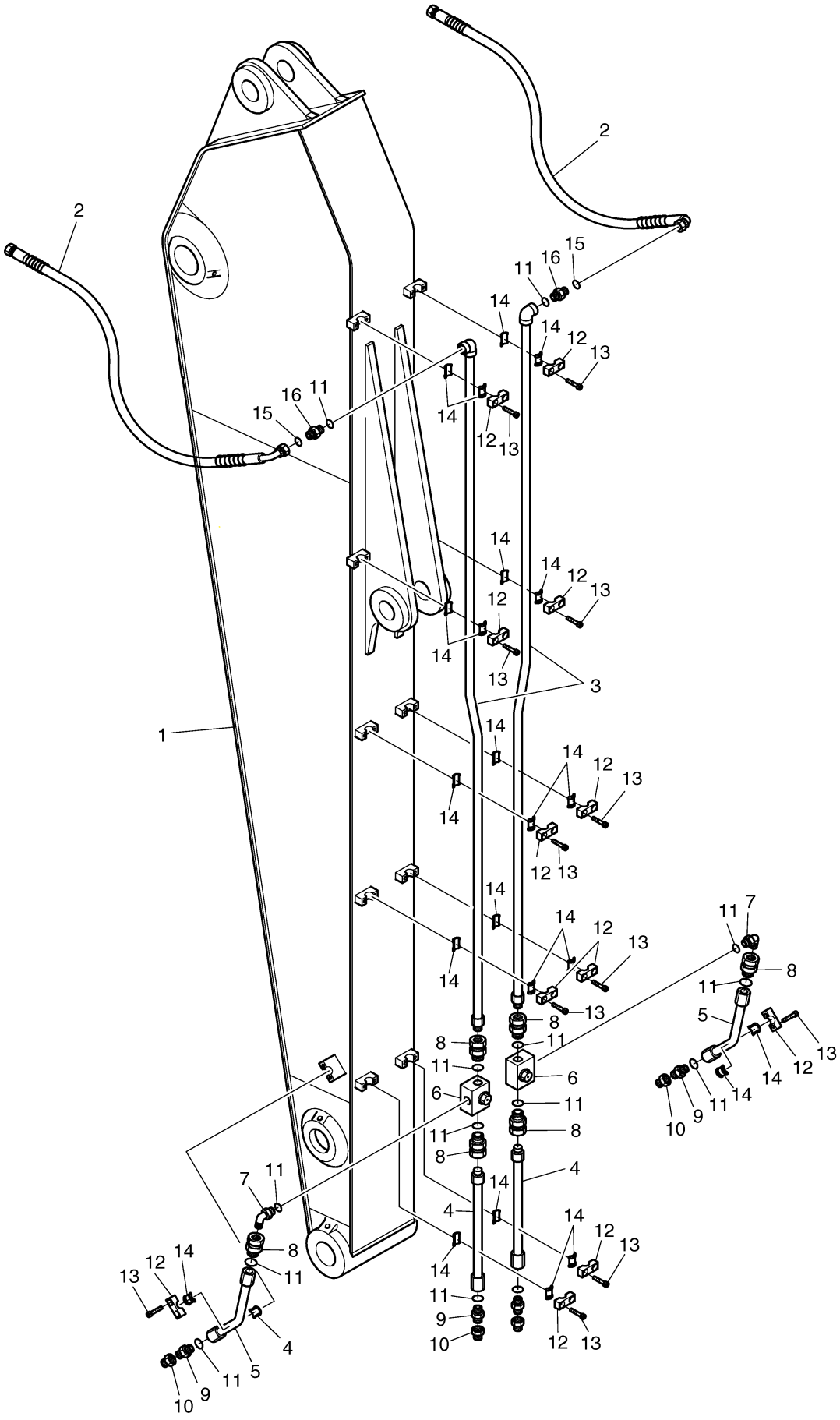

Fig. 6720 ARM PIPING-3.1M-ROTATION &

Key No	Part No	Description	Qty	S.C	Serial No	ICA	Replacable	Qty
-	400-01023A	PIPING;3.1m ARM ROTATION	-	D	1020~			
1	701-00443	ARM;ROTATION&TILTING	1		1020~1764			
1	701-00443A	ARM;ROTATION&TILTING	1		1765~3155	I	701-00443B	1
1	701-00443B	ARM;ROTATION&TILTING	1		3156~3760	I	701-00443C	1
1	701-00443C	ARM;ROTATION&TILTING	1		3761~4141	I	701-00443E	1
1	701-00443E	ARM;ROTATION&TILTING	1		4142~			
2	DS2013357	HOSE ORS1/2-1150L	2					
3	140-01246	PIPE	2					
4	140-01115A	PIPE;TILTING	2					
5	193-00625A	PIPE;ROTATING	2					
6	420-00277	VALVE;SWITCH	2					
7	2181-1702D2	ELBOW	2					
8	111-00031D1	ADAPTER;UNION PFO1/2-PF1/2	6					
9	2181-1126D6	ADAPTER	4					
10	2181-2820D3	PLUG	4					
11	S8000181	O-RING	14					
12	124-00255	CLAMP	10					
13	S2212066	BOLT	20					
14	161-00313	RUBBER	20					
15	S8030081	O-RING	2					
16	2181-4133D3	ADAPTER	2					

Fig. 6720 ARM PIPING-3.1M-ROTATION &

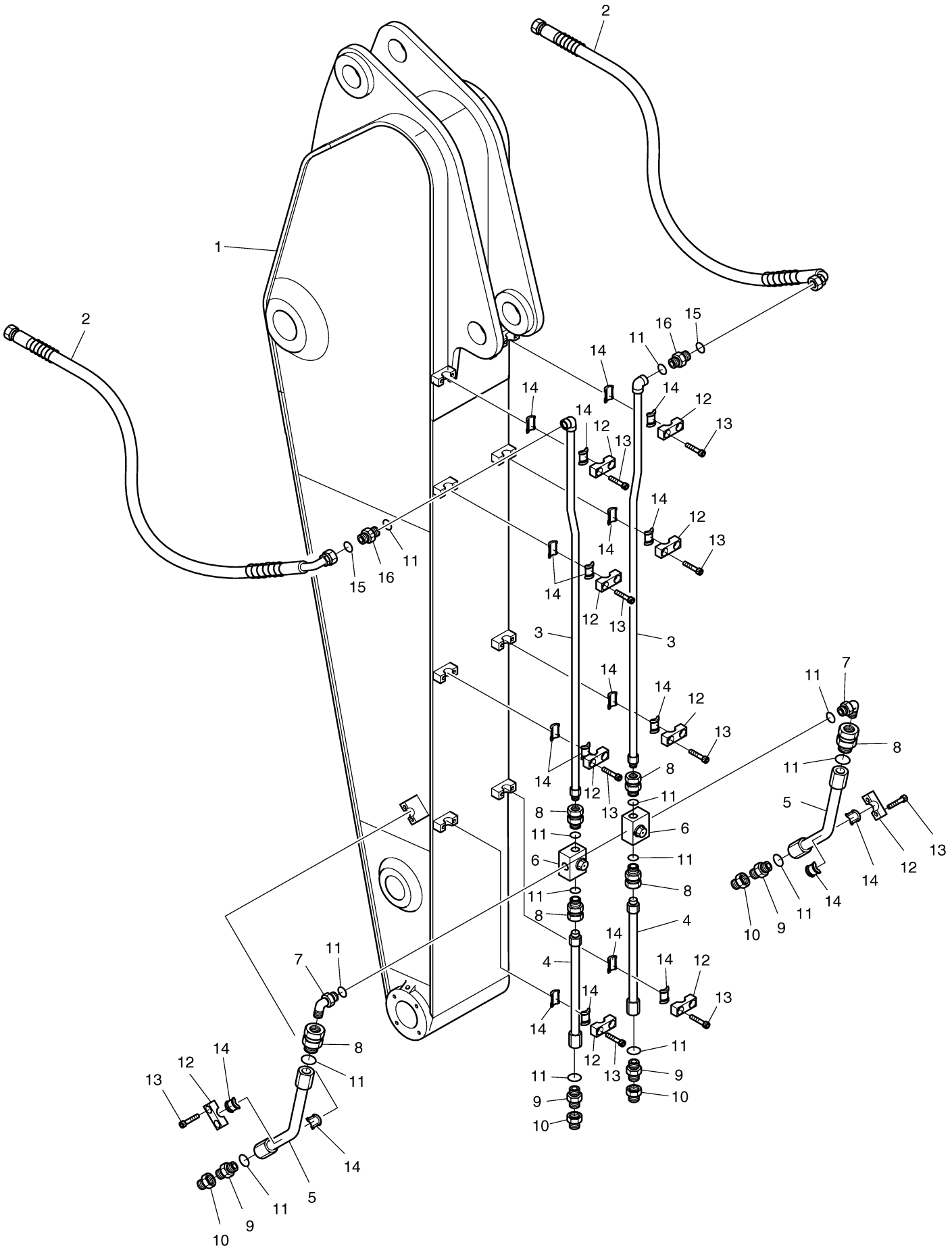

DOOSAN Doosan Infracore

Fig. 6730 F.O.G.S GUARD [1027 ~]

Key No	Part No	Description	Qty	S.C	Serial No	ICA	Replacable	Qty
-	733-00019A	F.O.G.S GUARD ASS'Y	-	D	1027~			
1	2623-1253C	FOPS;GUARD	1		1027~4232			
1	2623-1253E	FOPS;GUARD	1		4233~			
2	S0521466	BOLT	6					
3	S5102903	WASHER	14					
4	S0521666	BOLT	8					
5	S0558853	BOLT M10X1.5X65	6					
6	S5102603	WASHER	6					
7	621-02306	COVER	1					
8	2142-1123	GUARD;FRONT	1		1027~4232			
8	2142-1123A	GUARD;FRONT	1		4233~			
9	2120-2196D7	BOLT;SET M12X1.75X30	6					
10	2122-1002D2	RIVET	4					
11	K1013180	PLATE;NAME	1					
12	190-00003	PLATE;NAME	1					
13	2114-1058D39	WASHER	14					
14	603-00267	FRAME;BED	1					
15	2161-2226	STOPPER;RUBBER	1					
16	S5010613	WASHER	1					
17	S4012633	NUT	1					

Fig. 6730 F.O.G.S GUARD [1027 ~]

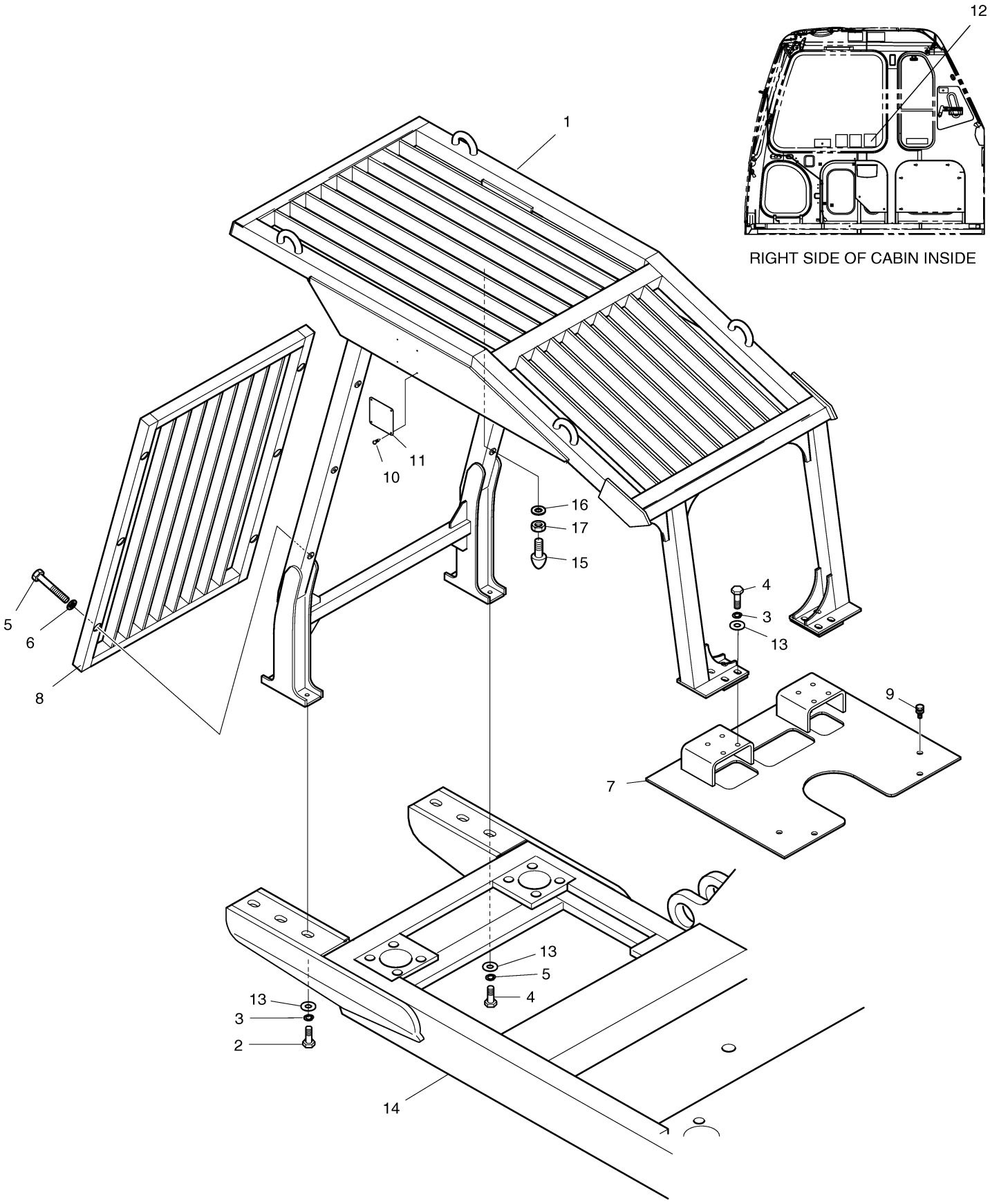

Fig. 6740 CABIN LOW GUARD [1235 ~]

Key No	Part No	Description	Qty	S.C	Serial No	ICA	Replacable	Qty
-	142-00093	CABIN LOW GUARD ASS'Y	-	D	1235~			
1	142-00094	GUARD:CABIN FRONT LOW	1					

Fig. 6740 CABIN LOW GUARD [1235 ~]

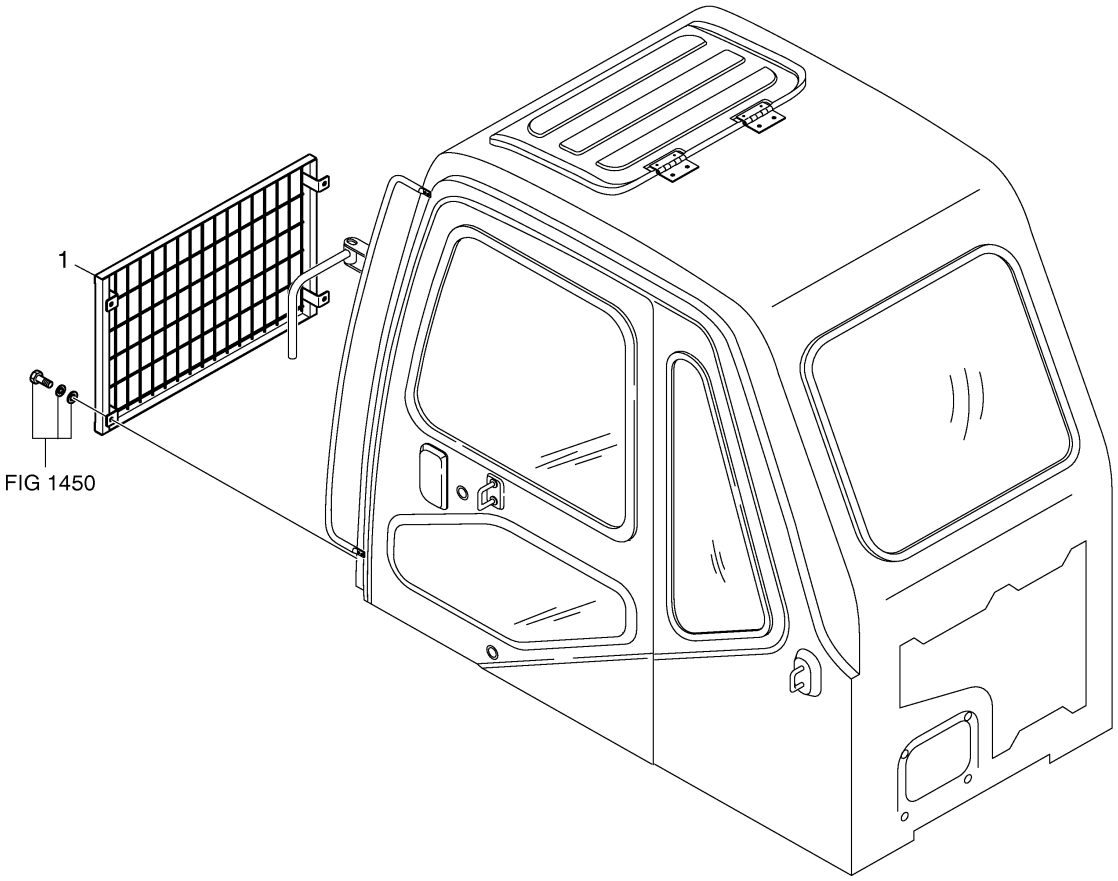

Fig. 6750 TROPICAL COVER [1573 ~]

Key No	Part No	Description	Qty	S.C	Serial No	ICA	Replacable	Qty
-	621-02629	TROPICAL COVER	-	D	1573~			
1	621-02588	SIDE DOOR ASS'Y(L.H)	1		1573~2161	I	621-02588A	1
1	621-02588A	SIDE DOOR ASS'Y(L.H)	1		2162~2284			
1	621-02588B	SIDE DOOR ASS'Y(L.H)	1		2285~2679	I	621-02588C	1
1	621-02588C	SIDE DOOR ASS'Y(L.H)	1		2680~3322			
1	621-02588E	SIDE DOOR ASS'Y(L.H)	1		3323~			
1A	621-02589	DOOR;SIDE	1		1573~2161	I	621-02589A	1
1A	621-02589A	DOOR;SIDE	1		2162~2679	I	621-02589B	1
1A	621-02589B	DOOR;SIDE	1		2680~3322			
1A	621-02589C	DOOR;SIDE	1		3323~			
1B	621-02425	DOOR;SIDE	1		1573~2161	I	621-02425A	1
1B	621-02425A	DOOR;SIDE	1		2162~2679	I	621-02425B	1
1B	621-02425B	DOOR;SIDE	1		2680~3322			
1B	621-02425C	DOOR;SIDE	1		3323~			
2	621-02590	SIDE DOOR ASS'Y(R.H)	1		1573~2161	I	621-02590A	1
2	621-02590A	SIDE DOOR ASS'Y(R.H)	1		2162~2284			
2	621-02590B	SIDE DOOR ASS'Y(R.H)	1		2285~2679	I	621-02590C	1
2	621-02590C	SIDE DOOR ASS'Y(R.H)	1		2680~3322			
2	621-02590E	SIDE DOOR ASS'Y(R.H)	1		3323~3554	I	K1011419	1
2	K1011419	SIDE DOOR ASS'Y(R.H)	1		3555~			
2A	621-02589	DOOR;SIDE	1		1573~2161	I	621-02589A	1
2A	621-02589A	DOOR;SIDE	1		2162~2679	I	621-02589B	1
2A	621-02589B	DOOR;SIDE	1		2680~3322			
2A	621-02589C	DOOR;SIDE	1		3323~3554	I	K1011524	1
2A	K1011524	SIDE DOOR ASS'Y(R.H)	1		3555~			
3	621-02591	COVER;UNDER	1					
4	621-02592	COVER;UNDER	1					

Fig. 6750 TROPICAL COVER [1573 ~]

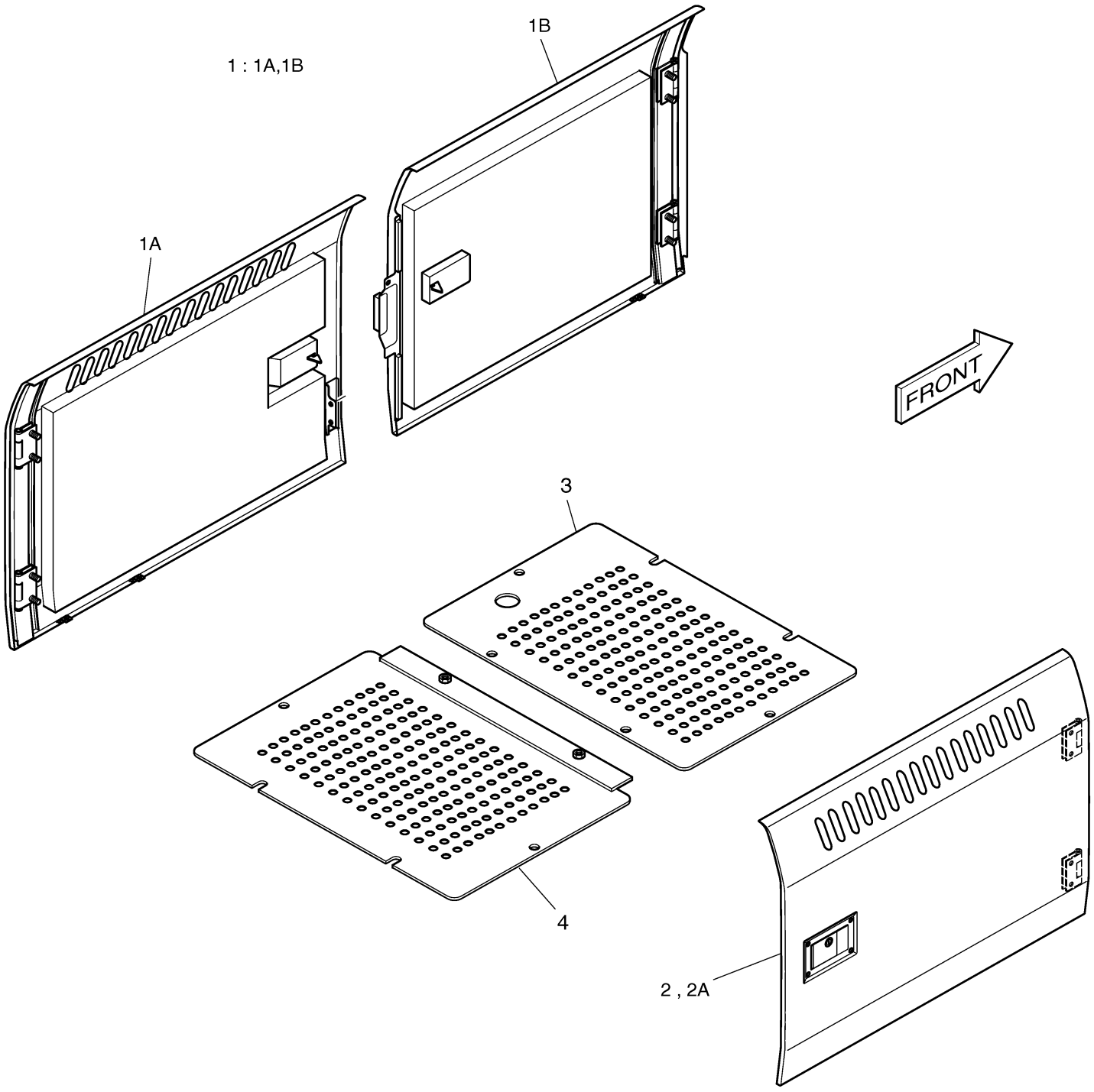

Fig. 6760 BOOM PIPING-TWO WAY

Key No	Part No	Description	Qty	S.C	Serial No	ICA	Replacable	Qty
-	H300-9054	BOOM PIPING-TWO WAY	-	D				
1	2184-1197D101	HOSE	1					
2	S8030161	O-RING	2					
3	S8000291	O-RING	4					
4	2181-2818	ADAPTER	1					
5	2181-4133D6	ADAPTER	2					
6	2420-9627A	VALVE;RELIEF	1		1001~2756	I	2420-9627B	1
6	2420-9627B	VALVE;RELIEF	1		2757~			

Fig. 6760 BOOM PIPING-TWO WAY

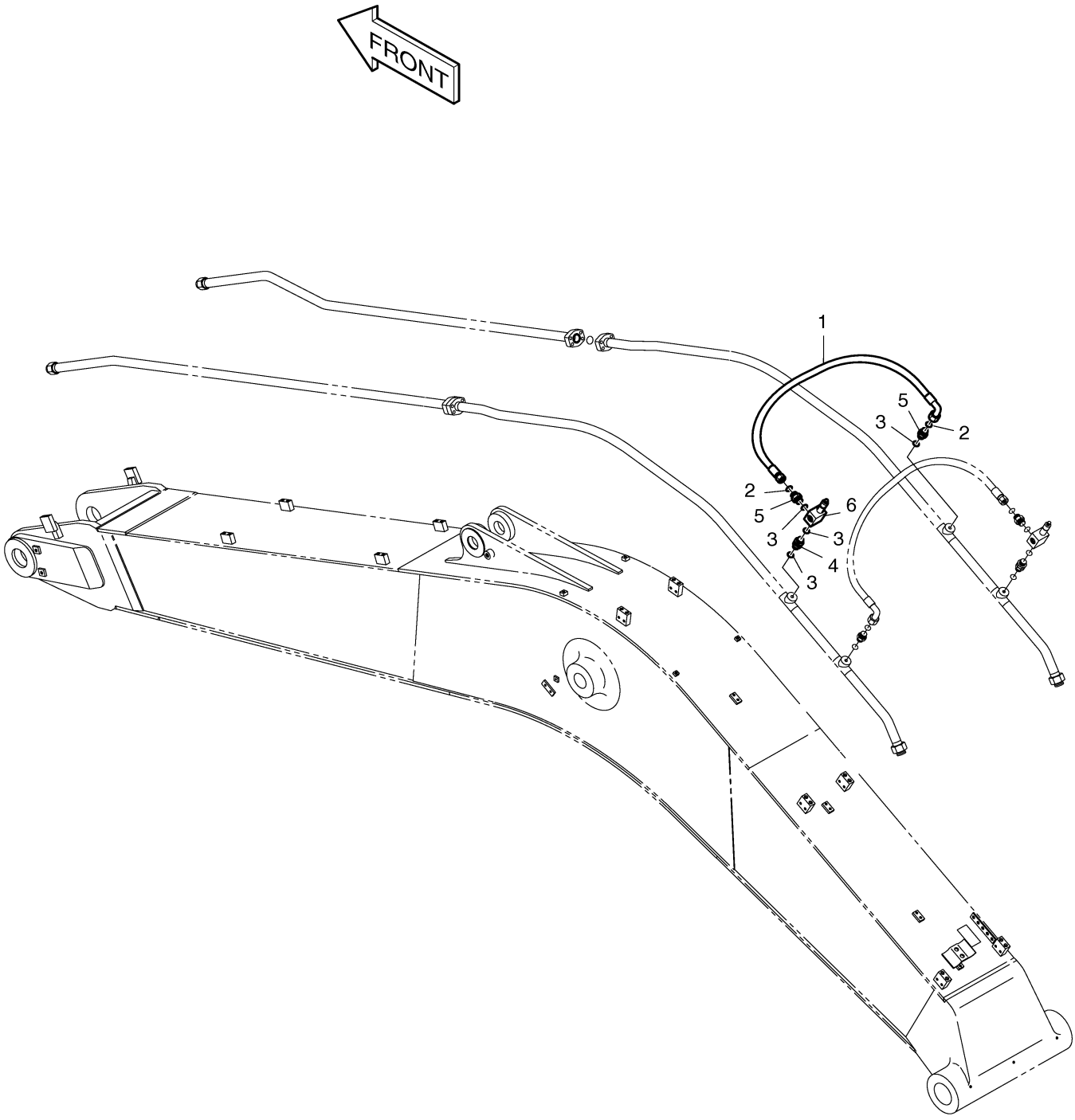

Fig. 6770 PILOT PIPING-P3C

Key No	Part No	Description	Qty	S.C	Serial No	ICA	Replacable	Qty
-	H300-9055	PILOT PIPING-P3C	-	D				
1	H001-0017D185	HOSE 3100L	1					
2	H001-0017D185	HOSE 3100L	1					
3	H001-0017D187	HOSE 1600L	1					
4	H001-0016D171	HOSE 2900L	1					
5	A006-0002	VALVE;SWITCH	1					
6	A042-0047A	BRACKET	1					
7	H007-0006D010	BOLT;U M10X1.5	2					
8	S4012603	NUT M10X1.5	2					
9	S5102603	WASHER	4					
10	S0558366	BOLT	2					
11	2181-1126D7	ADAPTER	2					
12	2181-1702D5	ELBOW	3					
13	S8000141	O-RING	5					
14	2181-1702D4	ELBOW	1					
15	S8000111	O-RING	1					

Fig. 6770 PILOT PIPING-P3C

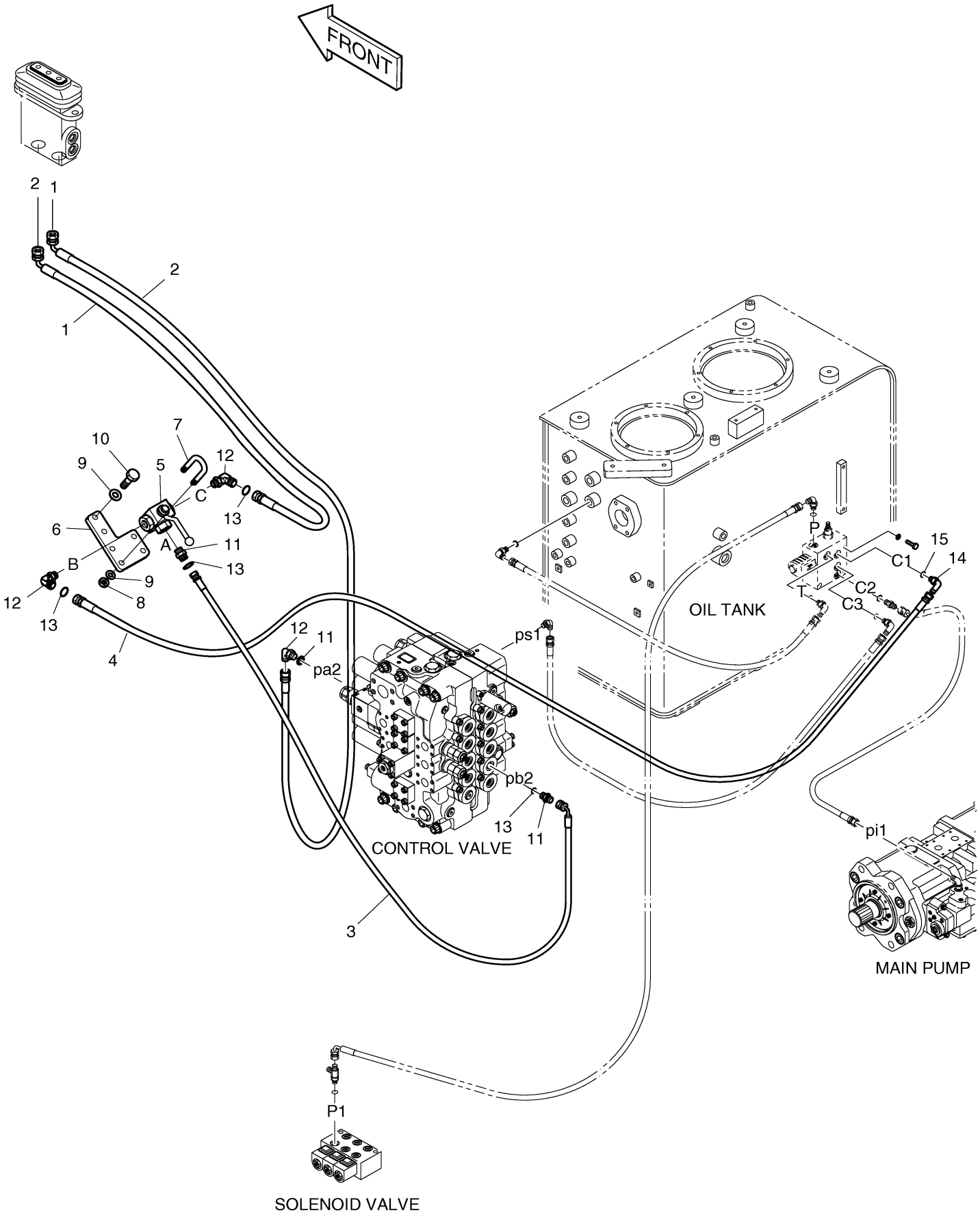

DOOSAN Doosan Infracore

Fig. 6780 BOOM - 6.245M - HEAVY DUTY

Key No	Part No	Description	Qty	S.C	Serial No	ICA	Replacable	Qty
-	K1000185	BOOM ASS'Y	-	D				
1	K1000186	BOOM;MACH.	1					
1B	110-00150	BUSHING	2					
1C	2180-1106BD25	SEAL;DUST	2					
2	2123-2213E	PIN	1					
3	2123-2245C	PIN	2					
4	2123-2217B	PIN	1					
5	2123-2218E	PIN	1					
6	2123-2220C	PIN	1					
7	2116-1527A	STOPPER	2					
8	S0571866	BOLT	2					
9	S4013133	NUT	4					
10	2180-1106BD25	SEAL;DUST	2					
11	2180-1106BD6	SEAL,DUST	10					
12	114-00001D9	SHIM	2					
13	2114-1059D113	SHIM	6					
14	114-00001D7	SHIM	2					
15	2191-3444	PLATE	1					
16	2116-1515A	PLATE,STOPPER	1					
17	2116-1060D5	STOPPER	3					
18	S0521366	BOLT	7					
19	S5102903	WASHER	7					
20	2195-2394B	BRACKET	2					
21	S0515053	BOLT	4					
22	S5102703	WASHER	4					
23	2114-1059D114	SHIM	4					
24	114-00001D10	SHIM	2					
25	114-00001D8	SHIM	2					
26	2114-1059D257	SHIM	2					
27	2114-1059D258	SHIM	2					
28	2114-1059D219	SHIM	2					
29	2114-1059D234	SHIM	2					

Fig. 6780 BOOM - 6.245M - HEAVY DUTY

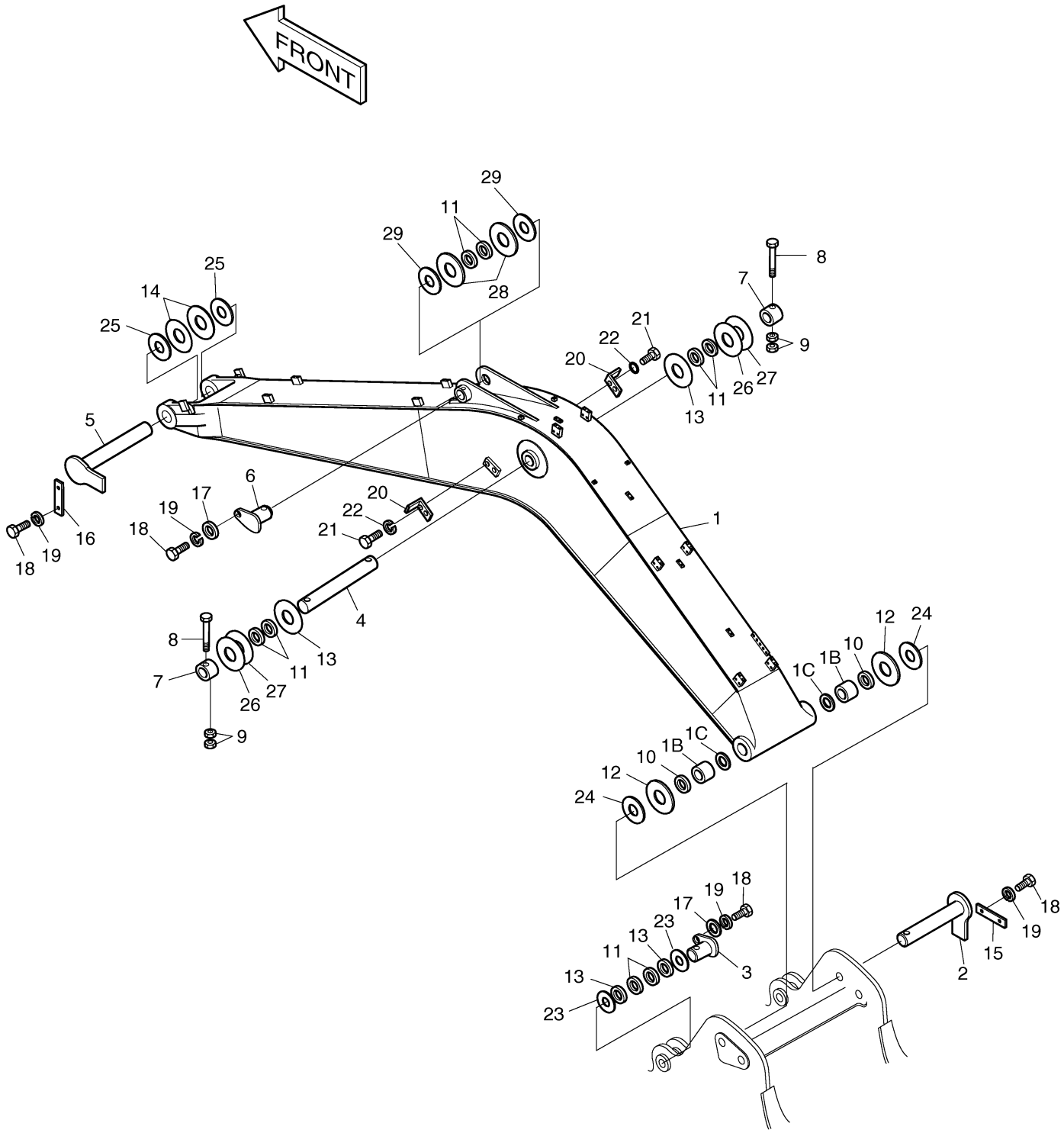

Fig. 6790 ARM - 3.1M - HEAVY DUTY

Key No	Part No	Description	Qty	S.C	Serial No	ICA	Replacable	Qty
-	K1000190B	ARM ASS'Y	-	D	5001~5066			
-	230201-00279	ARM ASSY	-	D	5067~			
1	K1000191	ARM;MACH. 3.1m	1		1001~4141	I	K1000191A	1
1	K1000191A	ARM;MACH. 3.1m	1		4142~5066	I	230204-00132	1
1	230204-00132	ARM,MACHINE;3.1M(HD)	1		5067~			
1B	110-00151	BUSHING	2					
1C	110-00152	BUSHING	2					
1D	110-00206	BUSHING	2					
2	K1000197	PUSH LINK ASS'Y	1					
2B	110-00206	BUSHING	2					
2C	2110-1358A	BUSHING	2					
3	K1000202	LINK;GUIDE(R.H)	1					
4	K1000203	LINK;GUIDE(L.H)	1					
5	K1000204	PIN	1					
6	K1000205	PIN	1		1001~4245	I	K1000205A	1
6	K1000205A	PIN	1		4246~			
7	K1000541	PIN	1					
8	2123-2222B	PIN	1					
9	2123-2223C	PIN	1					
10	2123-2224B	PIN	1					
11	2180-1106BD24	SEAL,DUST	2					
12	2180-1106BD6	SEAL,DUST	14					
13	2180-1106BD14	SEAL;DUST	2					
14	2114-1059D113	SHIM	4					
15	2114-1059D219	SHIM	8					
16	2116-1060D5	STOPPER	2					
17	S5102903	WASHER	2					
18	S0521366	BOLT	2					
19	S4012933	NUT	2					
20	S4013133	NUT	6					
21	S0571866	BOLT	3					
22	S0566966	BOLT	1					
23	S6710041	NIPPLE,GREASE	8					
24	180-00077D6	O-RING	2					
25	2114-1059D63	SHIM	2					
26	2114-1059D114	SHIM	4					

Key No	Part No	Description	Qty	S.C	Serial No	ICA	Replacable	Qty
27	2114-1059D234	SHIM	8					
28	2114-1059D118	SHIM	2					
29	2181-1116D1	PLUG	1		1001~4245			
30	114-00379A	SPACER	2					
31	120-00223	BOLT M12X1.25X25	8					
32	160-00020	CAP	8					

Fig. 6790 ARM - 3.1M - HEAVY DUTY

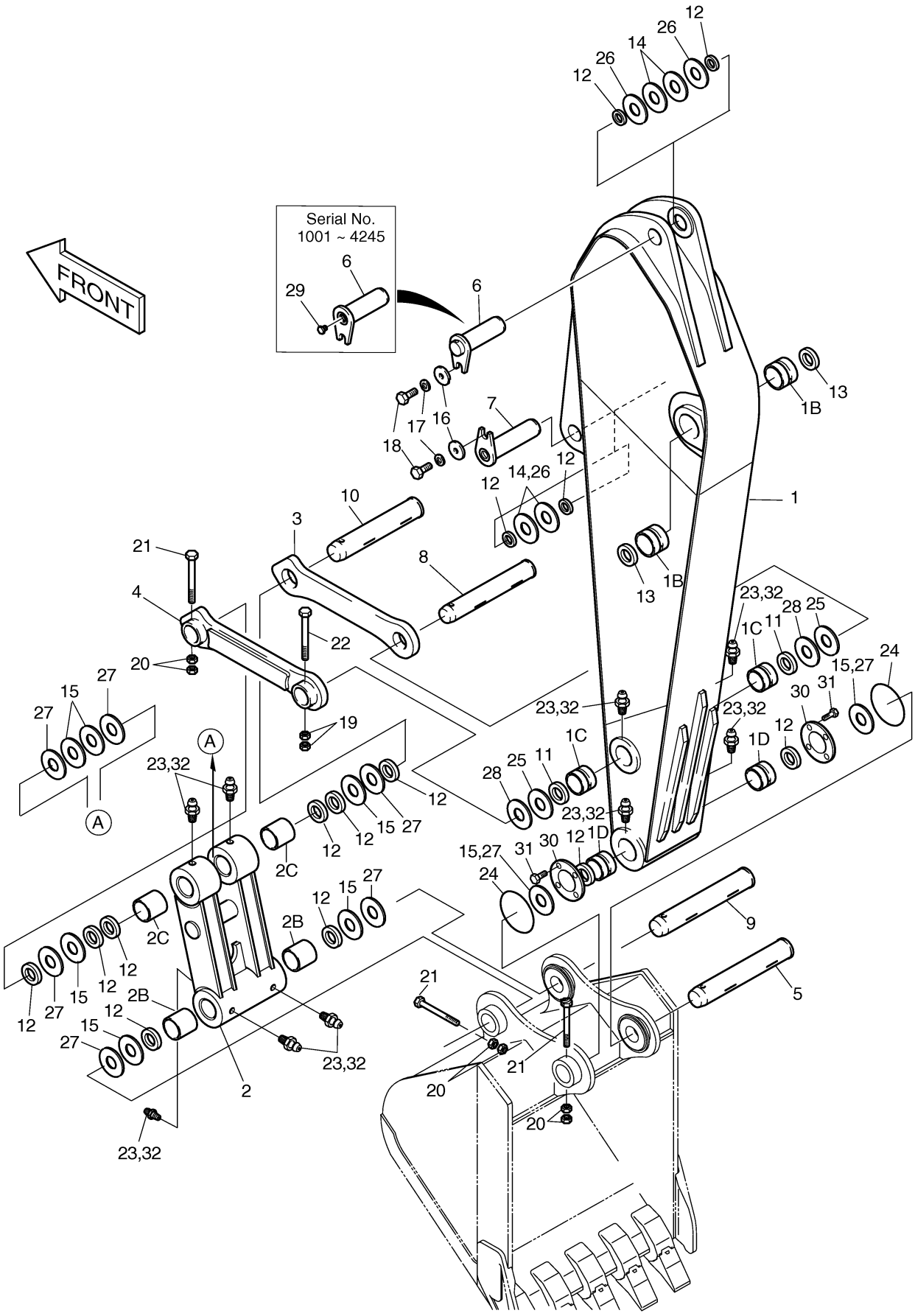

DOOSAN Doosan Infracore

Fig. 6800 ROCK BUCKET ASS'Y 0.99M³ -

Key No	Part No	Description	Qty	S.C	Serial No	ICA	Replacable	Qty
-	K1000216	ROCK BUCKET ASS'Y	1					
1	K1000217	BUCKET SUB ASS'Y 0.99m	1					
1A	-	ROCK BUCKET;WELD	1	D				
1AA	2713-1220	ADAPTER;TOOTH	5					
1B	713-00054A	POINT;TOOTH	5					
1C	2705-1021	PIN,LOCKING	5					
1D	2114-1849A	WASHER,LOCKING	5					
2	K1000211	FLANGE;BUSHING	1		1001~2999	I	K1000211A	1
2	K1000211A	BUSH;FLANGE	1		3000~			
3	K1000212	STOPPER	1					
4	K1000213	SHIM	12					
5	S2221561	BOLT;SOCKET	4					
6	S5110901	WASHER;SPRING M16	4					

Fig. 6800 ROCK BUCKET ASS'Y 0.99M³ -

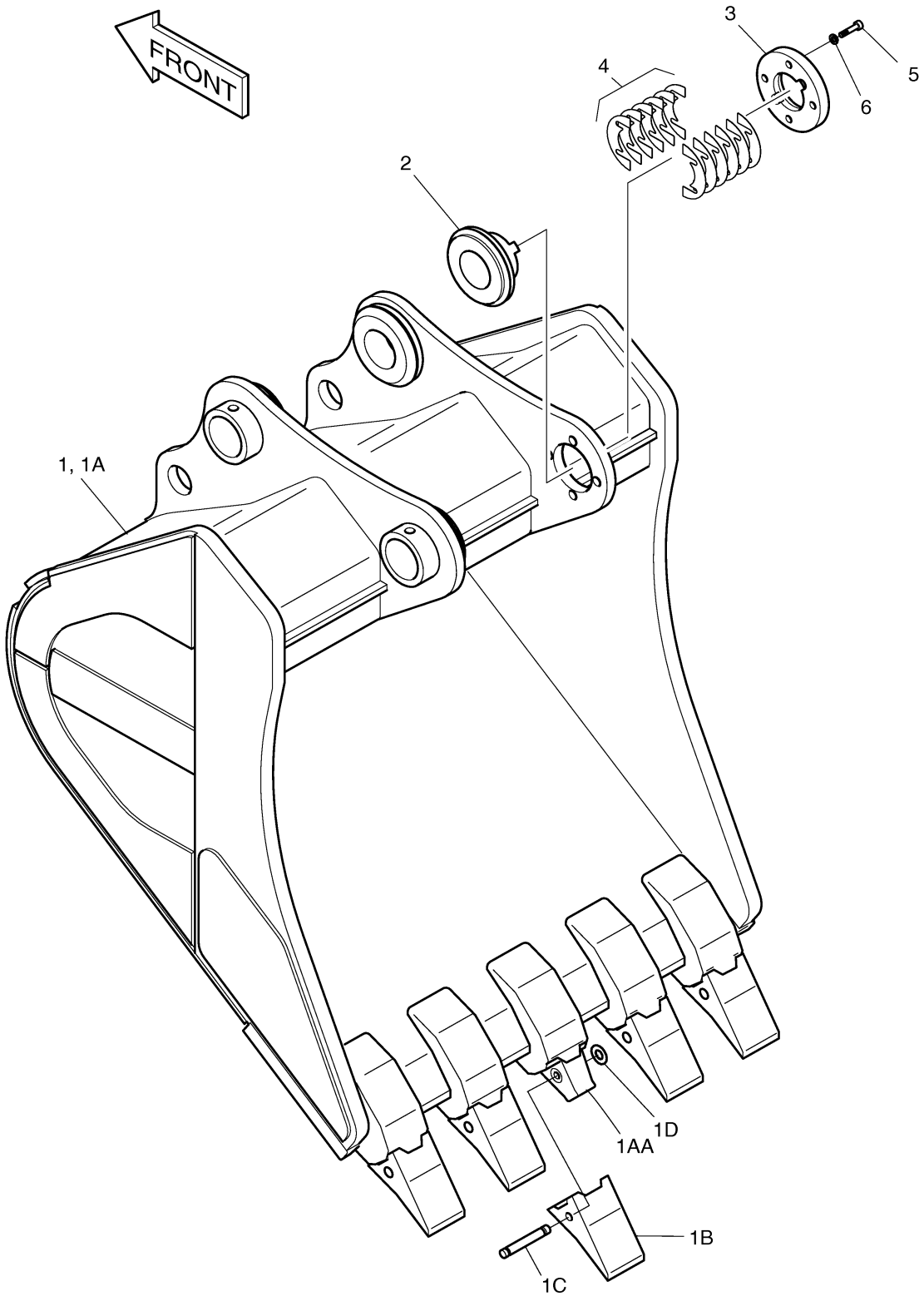

Fig. 6810 LUBRICATION PIPING - H.D ARM

Key No	Part No	Description	Qty	S.C	Serial No	ICA	Replacable	Qty
-	K1000214A	LUBRICATION PIPING-ARM	-	D				
1	K1000215	PIPE	1					
2	K1000365	PIPE	1					
3	K1000366	PIPE	1					
4	K1000367	PIPE	1					
5	K1000368	PIPE	1					
6	2184-1036D38	HOSE	1					
7	2184-1036D64	HOSE PF1/4-450L	1					
8	2181-1184	ADAPTER	4					
9	K1000057	ELBOW	2					
10	2181-4112	ADAPTER	1		3156~4245			
10	2181-4112	ADAPTER	2		4246~			
11	DS2225009	ADAPTER	1					
12	S4032833	NUT	3					
13	2181-1923D12	ADAPTER	2					
14	2124-1353D1	CLIP	6					
15	120-00276	BOLT	7					
16	DS2805008	CLIP	1					
17	S6710041	NIPPLE,GREASE	4					
18	160-00020	CAP	4					
19	2181-1111D11	ELBOW	1					
20	DS2094173	HOSE ASSY,HYDRAULIC	1		4246~			
21	2181-1110D1	ADAPTER	1		4246~			

Fig. 6810 LUBRICATION PIPING - H.D ARM

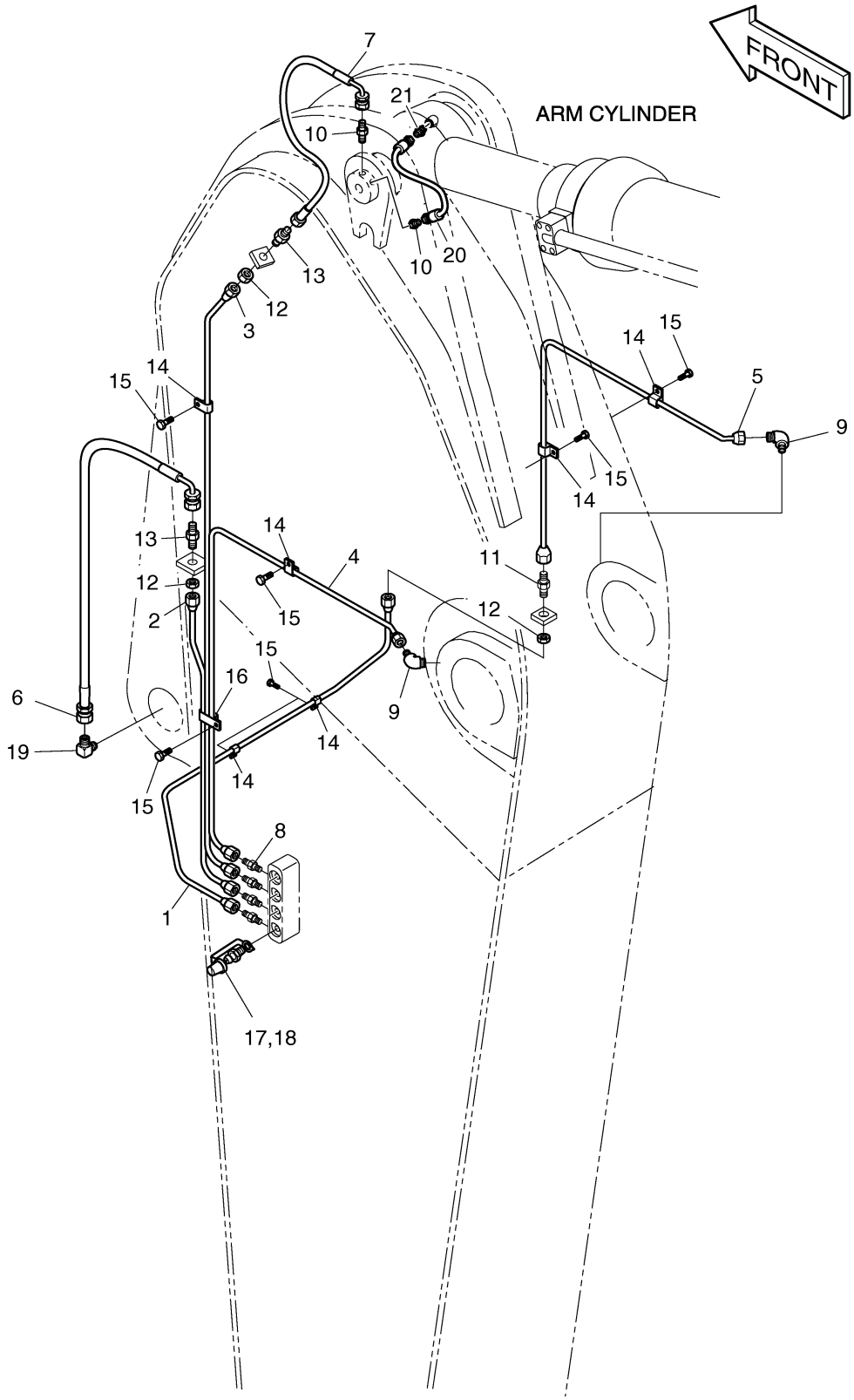

Fig. 6820 BOOM - 8.5M

Key No	Part No	Description	Qty	S.C	Serial No	ICA	Replacable	Qty
-	K1000977	BOOM ASS'Y	-	D				
1	K1000978	BOOM SUB ASS'Y	1					
1A	110-00150	BUSHING	2					
1B	2180-1106BD25	SEAL;DUST	2					
2	2123-2213E	PIN	1					
3	2123-2245C	PIN	2					
4	2123-2217B	PIN	1					
5	2123-2218E	PIN	1					
6	2123-2220C	PIN	1					
7	2116-1527A	STOPPER	2					
8	S0571866	BOLT	2					
9	S4013133	NUT	4					
10	2180-1106BD25	SEAL;DUST	2					
11	2180-1106BD6	SEAL,DUST	10					
12	114-00001D9	SHIM	2					
13	2114-1059D113	SHIM	6					
14	114-00001D7	SHIM	2					
15	2191-3444	PLATE	1					
16	2116-1515A	PLATE,STOPPER	1					
17	2116-1060D5	STOPPER	3					
18	S0521366	BOLT	7					
19	S5102903	WASHER	7					
20	2195-2394B	BRACKET	2					
21	S0515053	BOLT	4					
22	S5102703	WASHER	4					
23	2114-1059D114	SHIM	4					
24	114-00001D10	SHIM	2					
25	114-00001D8	SHIM	2					
26	2114-1059D257	SHIM	2					
27	2114-1059D258	SHIM	2					
28	2114-1059D219	SHIM	2					
29	2114-1059D234	SHIM	2					

Fig. 6820 BOOM - 8.5M

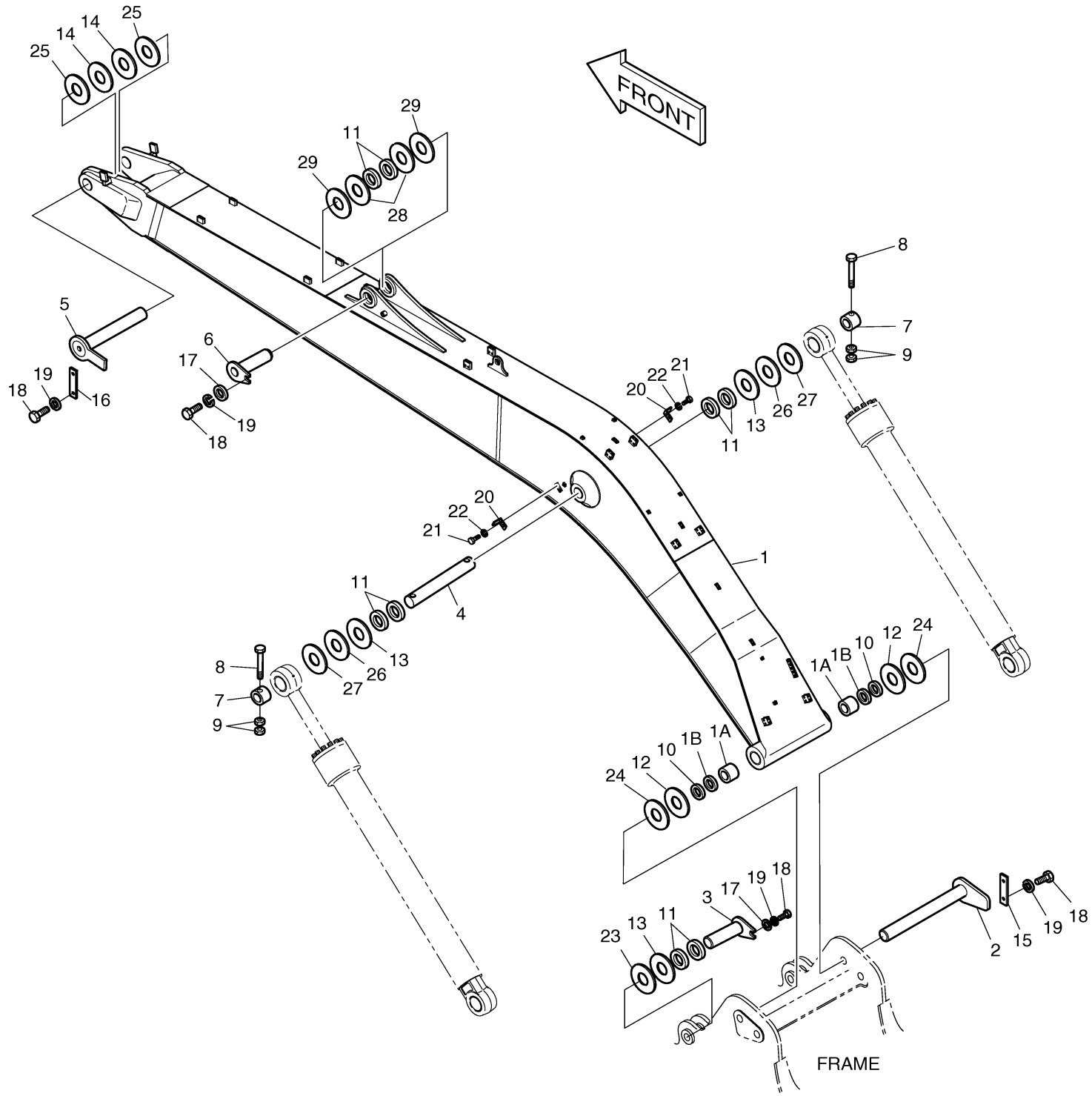

Fig. 6830 ARM - 4.5M

Key No	Part No	Description	Qty	S.C	Serial No	ICA	Replacable	Qty
-	K1000986A	ARM ASS'Y	-	D				
1	K1000987	ARM SUB ASS'Y	1		1001~4141	I	K1000987A	1
1	K1000987A	ARM SUB ASS'Y	1		4142~			
1B	110-00151	BUSHING	2					
1C	110-00152	BUSHING	2					
1D	110-00206	BUSHING	2					
2	2155-1327H	PUSH LINK ASS'Y	1					
2B	2110-1376A	BUSHING	2					
2C	110-00158	BUSHING	2					
3	2155-1310B	LINK;GUIDE(R.H)	1					
4	2155-1311B	LINK;GUIDE(L.H)	1					
5	K1000204	PIN	1					
6	K1000205	PIN	1		1001~4245	I	K1000205A	1
6	K1000205A	PIN	1		4246~			
7	K1000541	PIN	1					
8	2123-2222B	PIN	1					
9	2123-2223C	PIN	1					
10	2123-2224B	PIN	1					
11	2180-1106BD24	SEAL,DUST	2					
12	2180-1106BD6	SEAL,DUST	14					
13	2180-1106BD14	SEAL;DUST	2					
14	2114-1059D113	SHIM	4					
15	2114-1059D219	SHIM	8					
16	2116-1060D5	STOPPER	2					
17	S5102903	WASHER	2					
18	S0521366	BOLT	2					
19	S4012933	NUT	2					
20	S4013133	NUT	6					
21	S0571866	BOLT	3					
22	S0566966	BOLT	1					
23	S6710041	NIPPLE,GREASE	7					
24	180-00077D6	O-RING	2					
25	2114-1059D63	SHIM	2					
26	2114-1059D114	SHIM	4					
27	2114-1059D234	SHIM	8					
28	2114-1059D118	SHIM	2					

Key No	Part No	Description	Qty	S.C	Serial No	ICA	Replacable	Qty
29	2181-1116D1	PLUG	1		1001~4245			
30	114-00379A	SPACER	2					
31	120-00223	BOLT M12X1.25X25	8					
32	160-00020	CAP	7					

Fig. 6830 ARM - 4.5M

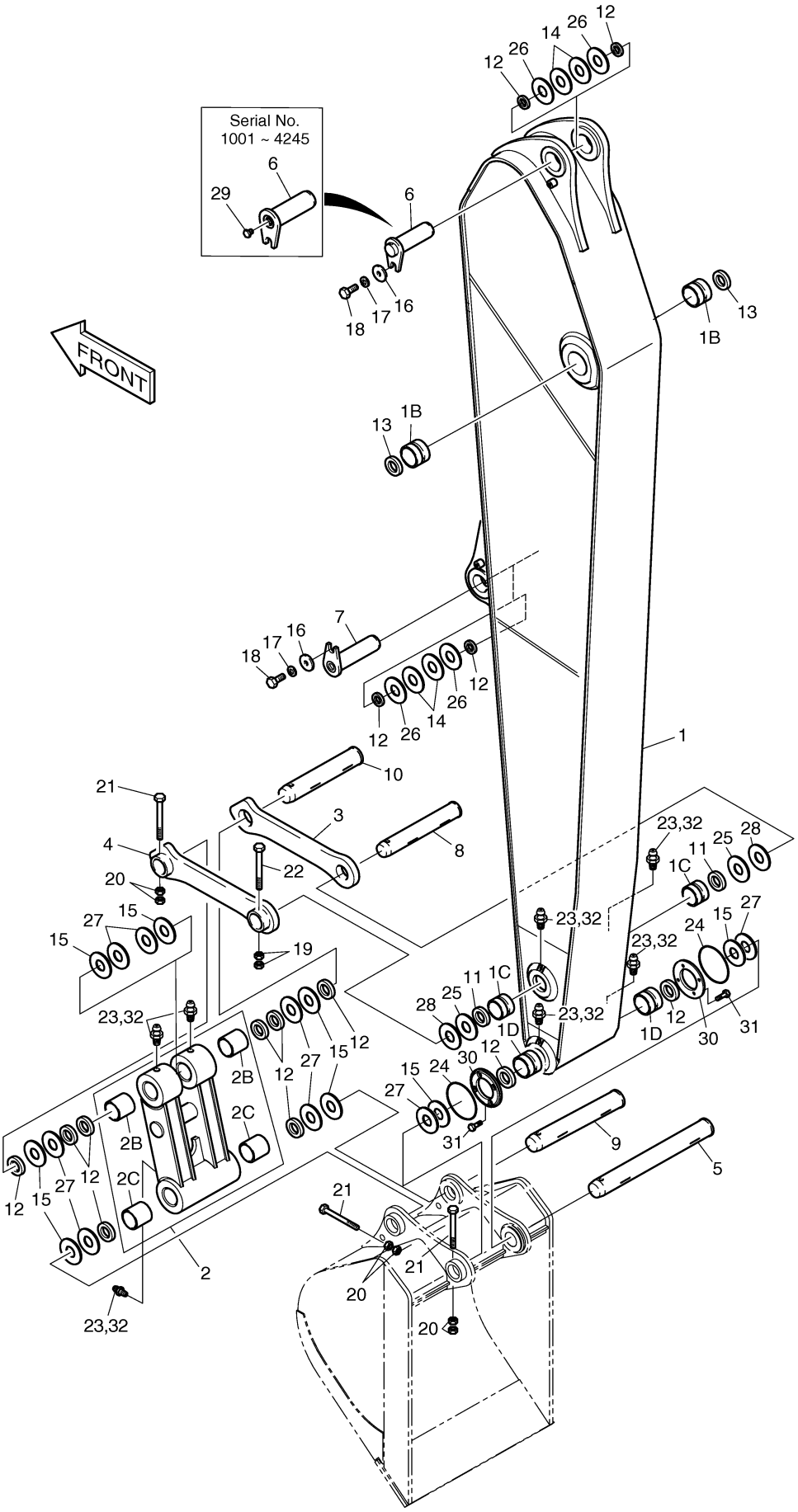

Fig. 6840 BUCKET - 1.09?

Key No	Part No	Description	Qty	S.C	Serial No	ICA	Replacable	Qty
-	K1000997	BUCKET ASS'Y	1					
1	K1000998	BUCKET	1					
2	K1000211	FLANGE;BUSHING	1		1001~2999	I	K1000211A	1
2	K1000211A	BUSH;FLANGE	1		3000~			
3	K1000212	STOPPER	1					
4	K1000213	SHIM	12					
5	S2221561	BOLT;SOCKET	4					
6	S5110901	WASHER;SPRING M16	4					

Fig. 6840 BUCKET - 1.09?

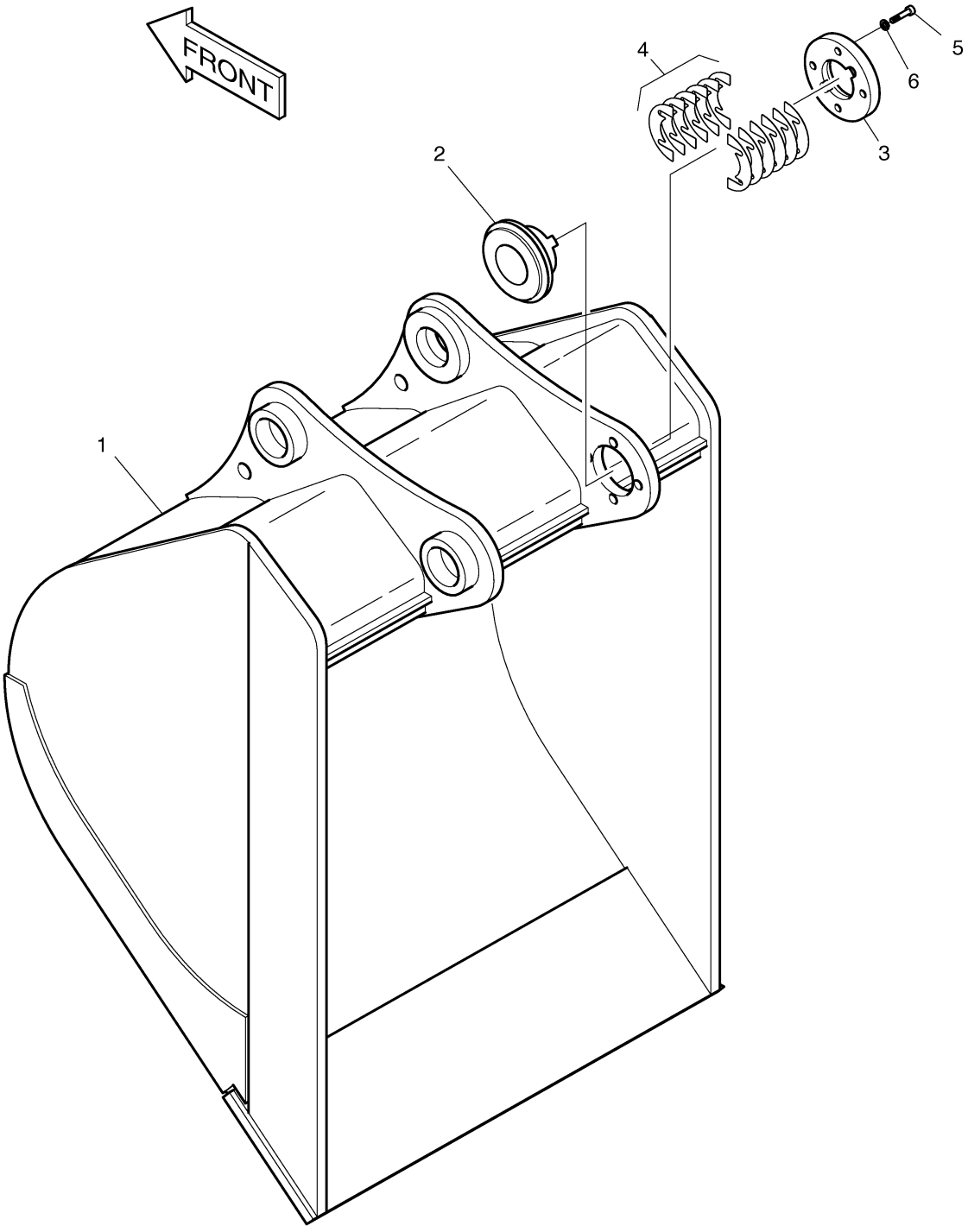

Fig. 6850 BOOM PIPING - 8.5M

Key No	Part No	Description	Qty	S.C	Serial No	ICA	Replacable	Qty
-	K1000999	BOOM PIPING	-	D	1001~3648			
-	K1000999A	BOOM PIPING	-	D	3649~			
1	440-00416A	CYLINDER;BOOM(L.H)	1		1001~4036	I	440-00416B	1
1	440-00416B	CYLINDER;BOOM(L.H)	1		4037~			
2	440-00417A	CYLINDER;BOOM(R.H)	1		1001~4036	I	440-00417B	1
2	440-00417B	CYLINDER;BOOM(R.H)	1		4037~			
3	440-00257A	CYLINDER;ARM	1		1001~3648	I	440-00257B	1
3	440-00257B	CYLINDER;ARM	1		3649~4245	I	K1036107	1
3	K1036107	CYLINDER;ARM	1		4246~			
4	140-01009	PIPE	1					
5	140-01010A	PIPE	1					
6	K1001000	PIPE	1					
7	K1001001	PIPE	1					
8	140-00788B	PIPE	1					
9	140-00789B	PIPE	1					
10	2184-1100D226	HOSE	1					
11	DS2038131	HOSE	1					
12	124-00223	CLAMP;PIPE	12					
13	124-00218	CLAMP	8					
14	2181-9078	FLANGE	16					
15	2180-1026D19	O-RING	16					
16	S2212466	BOLT	28					
17	S0562766	BOLT	28					
18	S5102803	WASHER	28					
20	S2212666	BOLT	32					
21	161-00281	RUBBER	16					
22	K1001004	PIPE	2					
23	K1001005	PIPE	2					
24	S2212266	BOLT	4					
25	124-00289	CLAMP;PIPE	4					
26	124-00290	CLAMP;PIPE	4					
27	K1001006	PIPE	2					

Fig. 6850 BOOM PIPING - 8.5M

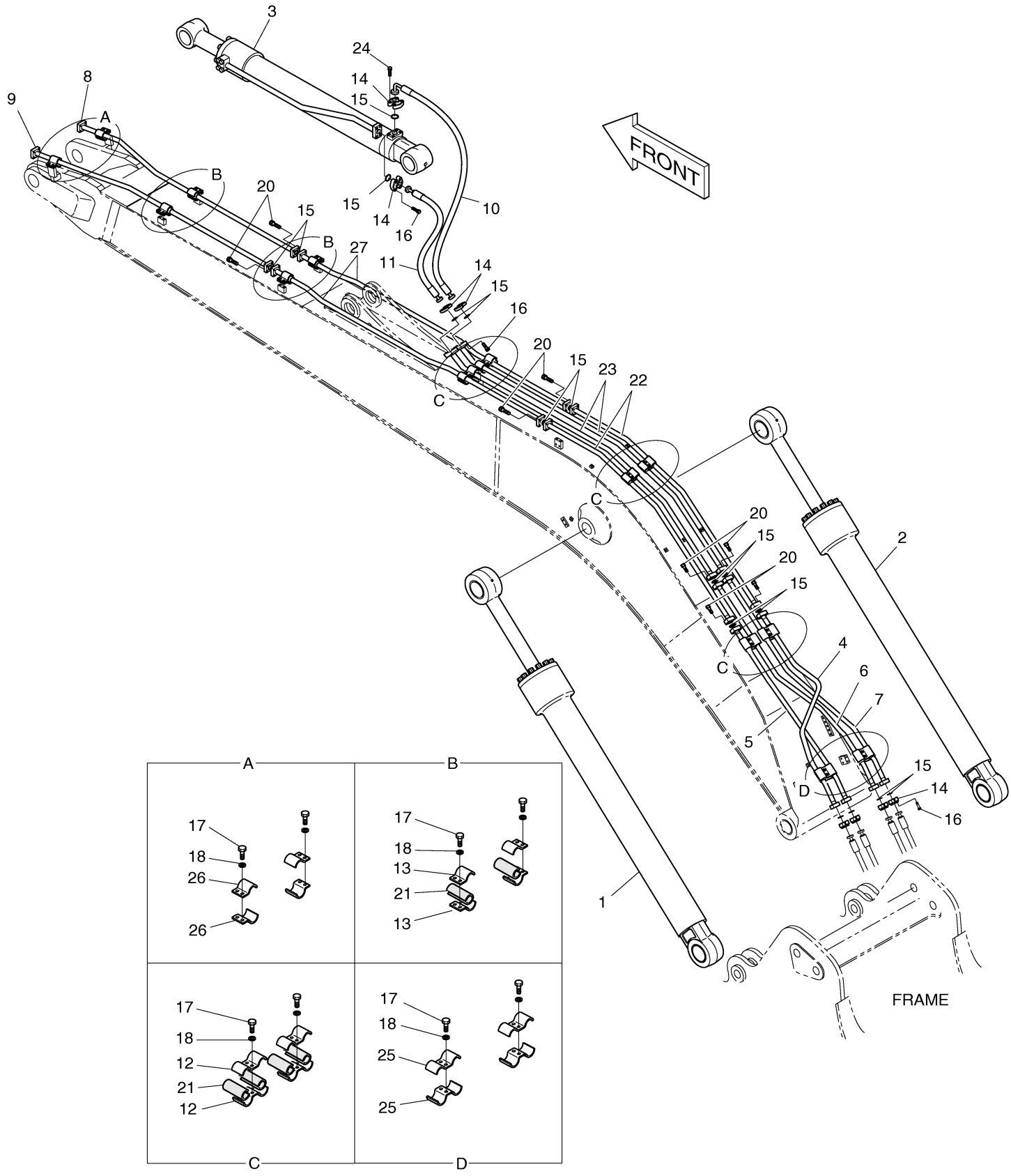

Fig. 6860 ARM PIPING - ARM 4.5M

Key No	Part No	Description	Qty	S.C	Serial No	ICA	Replacable	Qty
-	K1001010	ARM PIPING	-	D				
1	2440-9241H	CYLINDER;BUCKET	1		1001~3935	I	2440-9241I	1
1	2440-9241I	CYLINDER;BUCKET	1		3936~			
2	K1001011	PIPE	2					
3	2184-1100D90	HOSE ASSY,HYDRAULIC	2					
4	2184-1082D22	HOSE	2					
5	2181-9078	FLANGE	16					
6	2180-1026D19	O-RING	8					
7	S2212266	BOLT	32					
8	S0562766	BOLT	8					
9	S5102803	WASHER	8					
10	124-00294	CLAMP	8					
11	161-00281	RUBBER	4					

Fig. 6860 ARM PIPING - ARM 4.5M

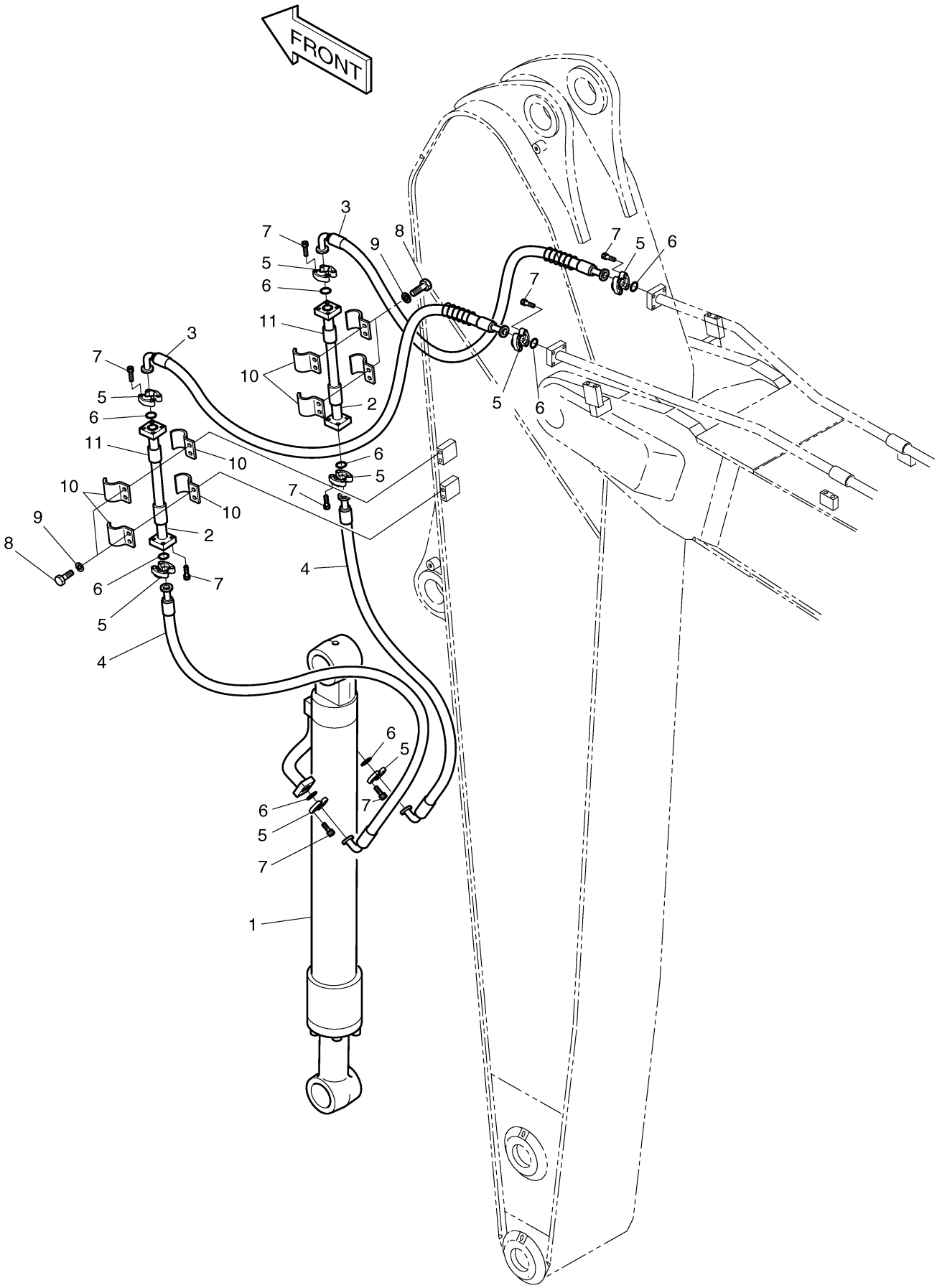

Fig. 6870 LUBRICATION PIPING - BOOM

Key No	Part No	Description	Qty	S.C	Serial No	ICA	Replacable	Qty
-	K1001012	LUBRICATION PIPING	-	D				
1	140-01011	PIPE;LUB.	1		1001~3344	I	140-01011A	1
1	140-01011A	PIPE	1		3345~			
2	140-01012	PIPE;LUB.	1		1001~3344	I	140-01012A	1
2	140-01012A	PIPE	1		3345~			
3	2184-1045D131	HOSE	1					
4	DS2053747	HOSE	1					
5	2184-1045D175	HOSE	1					
6	2181-1925	ELBOW	2					
7	S3524403	PLUG	1					
8	S6710041	NIPPLE,GREASE	5					
9	181-00103	REDUCER	3					
10	121-00006	NUT	3					
11	181-00525	REDUCER	2					
12	S4032833	NUT	2					
13	2181-1110D30	ADAPTER	3					
14	124-00199D4	CLIP	3					
15	2124-1353D2	CLIP	5					
16	120-00276	BOLT	8					
18	160-00020	CAP	5					

Fig. 6870 LUBRICATION PIPING - BOOM

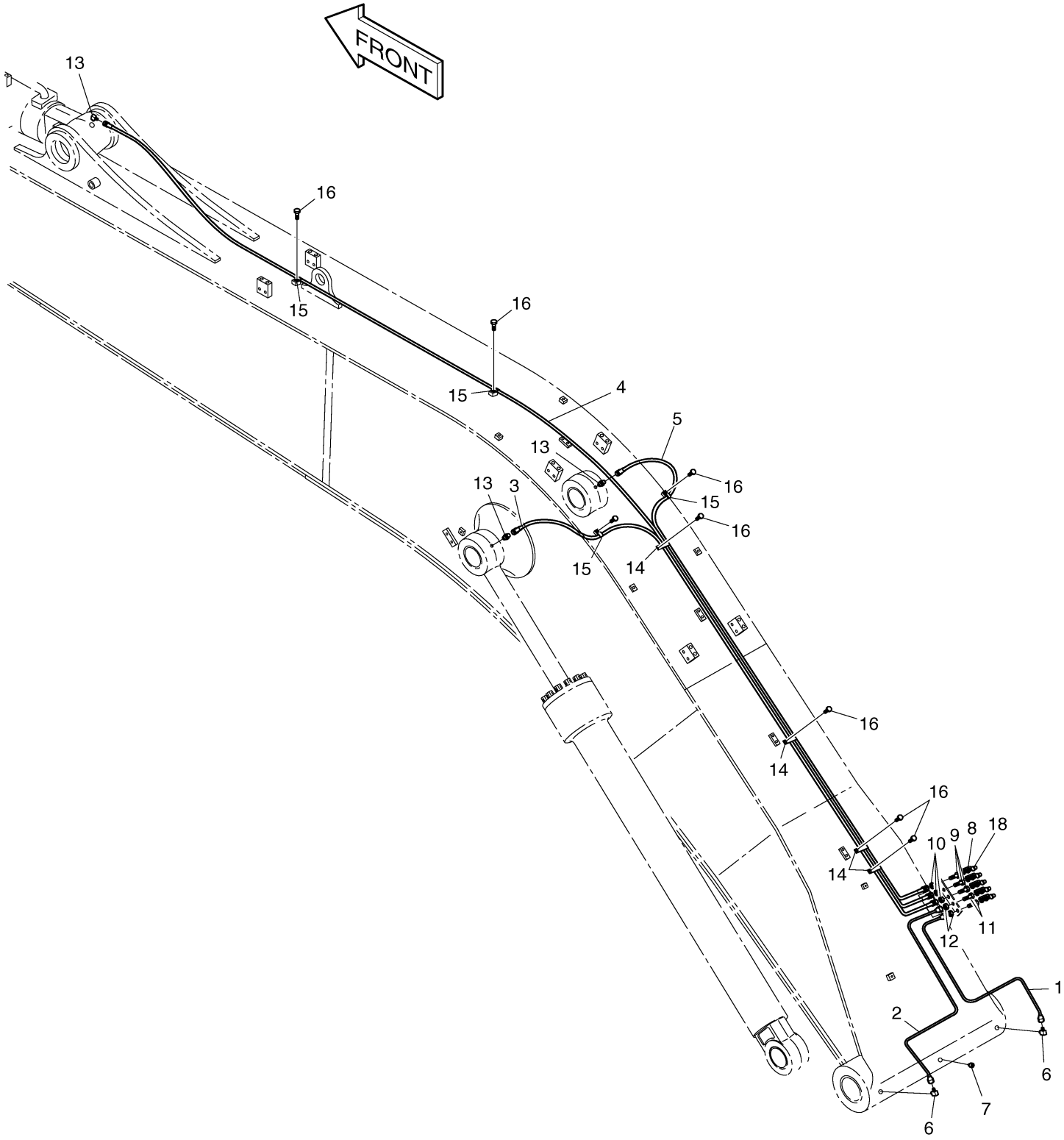

DOOSAN Doosan Infracore

Fig. 6880 LUBRICATION PIPING - ARM 4.5M

Key No	Part No	Description	Qty	S.C	Serial No	ICA	Replacable	Qty
-	K1001013A	LUBRICATION PIPING	-	D				
1	K1000625	PIPE	1					
2	K1000626	PIPE	1					
3	K1000627	PIPE	1					
4	140-01743	PIPE	1					
5	K1001014	PIPE	1					
6	K1001015	PIPE	1					
7	K1001016	PIPE	1					
8	2184-1036D6	HOSE PF1/4-490L	2					
9	K1000057	ELBOW	2					
10	2181-1111D11	ELBOW	1					
11	DS2059454	HOSE PF1/4-830L	1					
12	2181-4112	ADAPTER	1		1001~4245			
12	2181-4112	ADAPTER	2		4246~			
13	2181-1923D12	ADAPTER	4					
14	2181-1184	ADAPTER	4					
15	124-00199D5	CLIP	1					
16	S4032833	NUT	6					
17	2124-1353D2	CLIP	10					
18	124-00199D4	CLIP	1					
19	120-00276	BOLT	12					
20	S6710041	NIPPLE,GREASE	4					
21	160-00020	CAP	4					
22	DS2225009	ADAPTER	2					
23	DS2094173	HOSE ASSY,HYDRAULIC	1		4246~			
24	2181-1110D1	ADAPTER	1		4246~			

Fig. 6880 LUBRICATION PIPING - ARM 4.5M

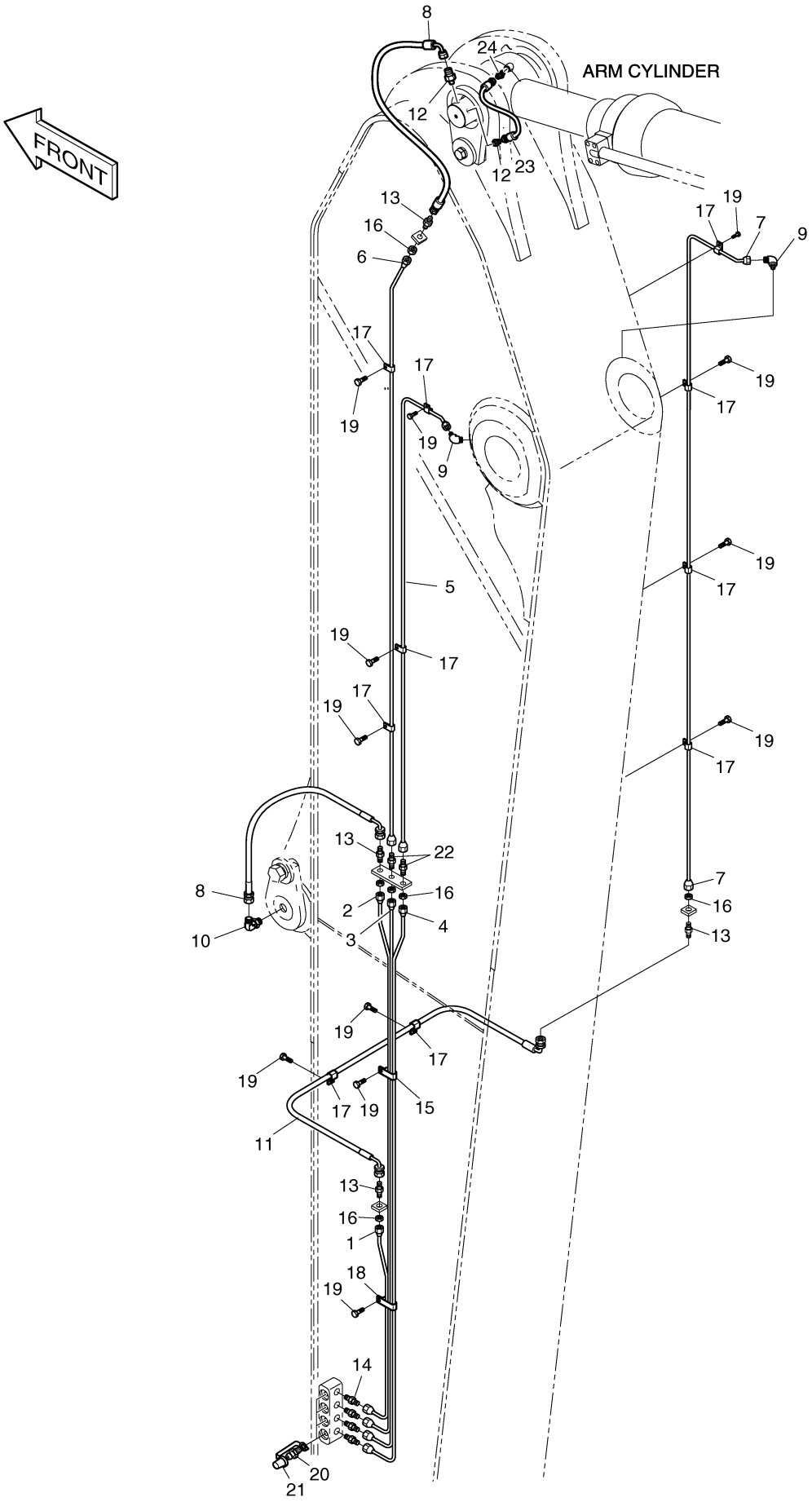

DOOSAN Doosan Infracore

Fig. 6890 FLOOR PLATE-ARTI.BOOM

Key No	Part No	Description	Qty	S.C	Serial No	ICA	Replacable	Qty
-	621-02929	FLOOR ASS'Y	-	D				
1	161-00447	MAT;FLOOR	1					
2	621-02072B	PLATE;FLOOR	1					
3	195-01735	BRACKET;PEDAL(L.H)	1					
4	621-01507	PLATE	1					
5	161-00386	RUBBER,PEDAL	1					
6	195-01939	BRACKET	1					
6A	195-01937	BRACKET	1	D				
6B	133-00167	BAR	1	D				
6C	129-00144	SPRING	1	D				
6D	2114-1898D14	WASHER	3	D				
6E	S5735351	PIN;SPLIT	1	D				
6F	160-00045	BUSHING;RUBBER	1	D				
7	2114-1898D1	WASHER	2					
8	2120-2166D5	BOLT	4					
9	2114-1898D14	WASHER	4					
10	S2211866	BOLT	2					
11	S5110601	WASHER;SPRING M10	2					
12	160-00045	BUSHING;RUBBER	1					
13	S0511653	BOLT	2					

Fig. 6890 FLOOR PLATE-ARTI.BOOM

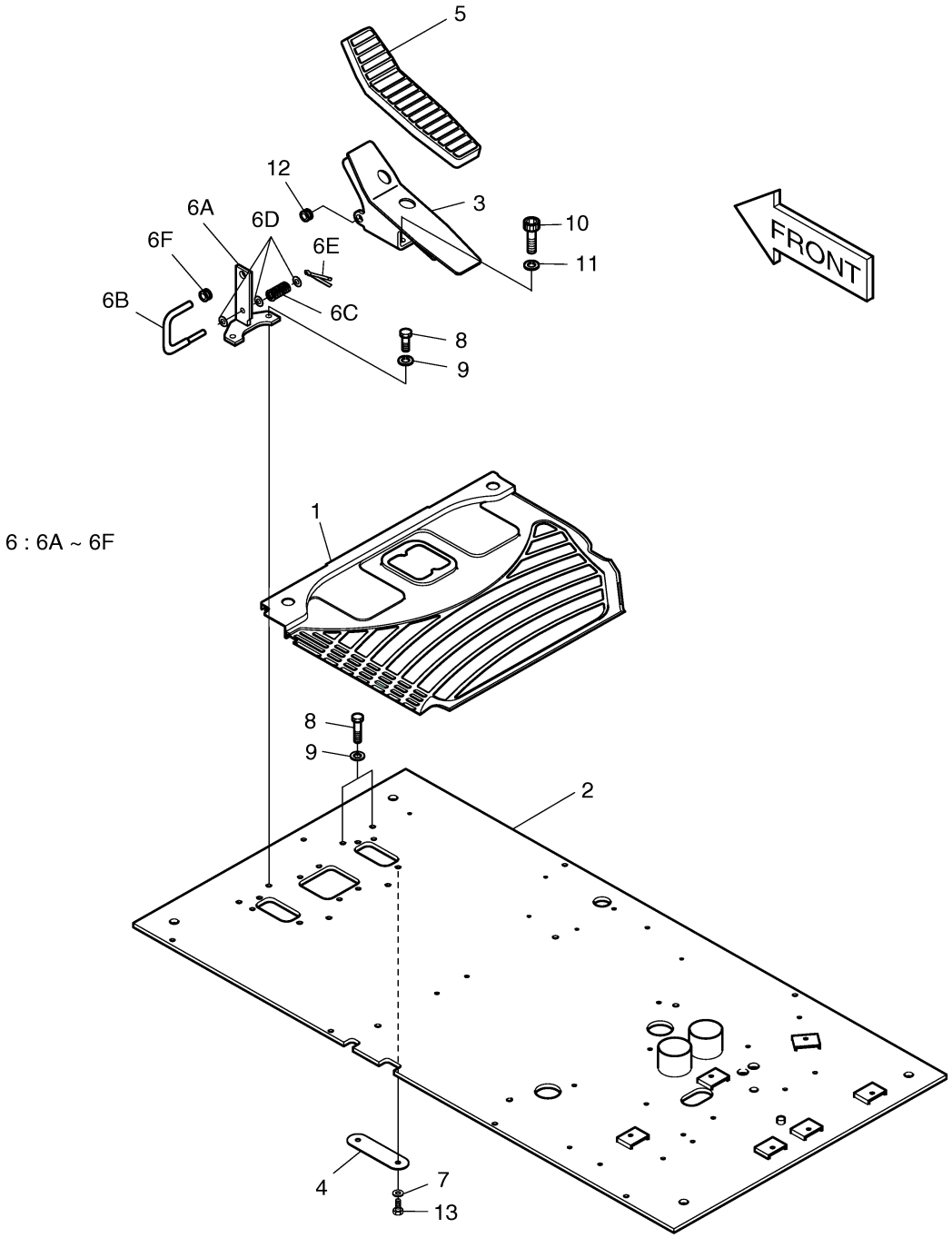

Fig. 6900 FLOOR ASS'Y-TILT & ARTI.BOOM

Key No	Part No	Description	Qty	S.C	Serial No	ICA	Replacable	Qty
-	621-02930	FLOOR ASS'Y	-	D				
1	161-00445	MAT;FLOOR	1					
2	621-02072B	PLATE;FLOOR	1					
3	195-01735	BRACKET;PEDAL(L.H)	1					
4	195-01736	BRACKET;PEDAL(R.H)	1					
5	161-00386	RUBBER,PEDAL	2					
6	195-01939	BRACKET	1					
6A	195-01937	BRACKET	1	D				
6B	133-00167	BAR	1	D				
6C	129-00144	SPRING	1	D				
6D	2114-1898D14	WASHER	3	D				
6E	S5735351	PIN;SPLIT	1	D				
6F	160-00045	BUSHING;RUBBER	1	D				
7	195-01940	BRACKET	1					
7A	195-01937	BRACKET	1	D				
7B	133-00167	BAR	1	D				
7C	129-00144	SPRING	1	D				
7D	2114-1898D14	WASHER	3	D				
7E	S5735351	PIN;SPLIT	1	D				
7F	160-00045	BUSHING;RUBBER	1	D				
8	2120-2166D5	BOLT	4					
9	2114-1898D14	WASHER	4					
10	S2211866	BOLT	4					
11	S5110601	WASHER;SPRING M10	4					
12	160-00045	BUSHING;RUBBER	2					

Fig. 6900 FLOOR ASS'Y-TILT & ARTI.BOOM

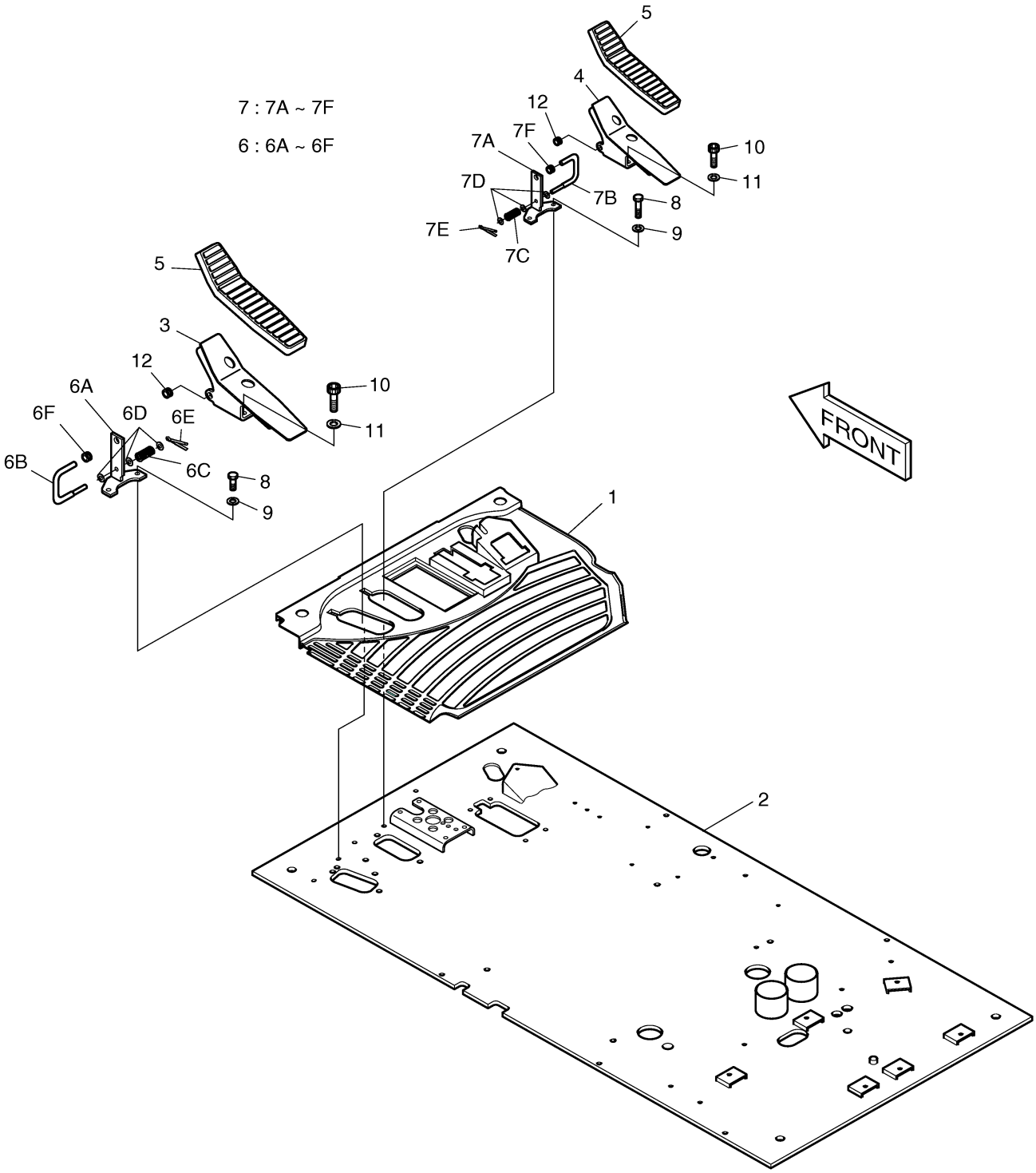

Fig. 6910 CABIN GUARD - HEAVY DUTY

Key No	Part No	Description	Qty	S.C	Serial No	ICA	Replacable	Qty
-	K1002013	CABIN GUARD ASS'Y	-	D				
1	K1003456	GUARD ASS`Y	1		1001~3101	I	K1003456A	1
1	K1003456A	GUARD ASS`Y	1		3102~			
1-1	K1003455	GUARD:CABIN	1		1001~3101			
1-1	K1003455A	GUARD:CABIN	1		3102~			
1-2	K1003454	GUARD:WINDOW	1		1001~3101			
1-2	K1003454A	GUARD:WINDOW	1		3102~			
1-3	K1003334	CYLINDER;GAS	1					
1-4	S5102503	WASHER	2					
1-5	S4012533	NUT	2					
1-6	K1003453	PIN	2		1001~3101			
1-6	S0515353	BOLT M12X1.75X35	2		3102~			
1-7	2123-1441D7	PIN	2		1001~3101			
1-8	S3102271	BOLT;REAMER	2		1001~3101			
1-8	S3102281	BOLT;REAMER	2		3102~			
1-9	S5010913	WASHER	6					
1-10	S4012933	NUT	2					
1-11	2114-1058D72	WASHER	2		3102~			
1-12	S5100703	WASHER;SPRING	2		3102~			
2	S0521466	BOLT	4					
3	S0521666	BOLT	8					
4	S5102903	WASHER	12					
5	2114-1058D39	WASHER	12					
6	K1002014	FRAME;BED	1					
7	621-02306	COVER	1					
8	2120-2196D7	BOLT;SET M12X1.75X30	10					

Fig. 6910 CABIN GUARD - HEAVY DUTY

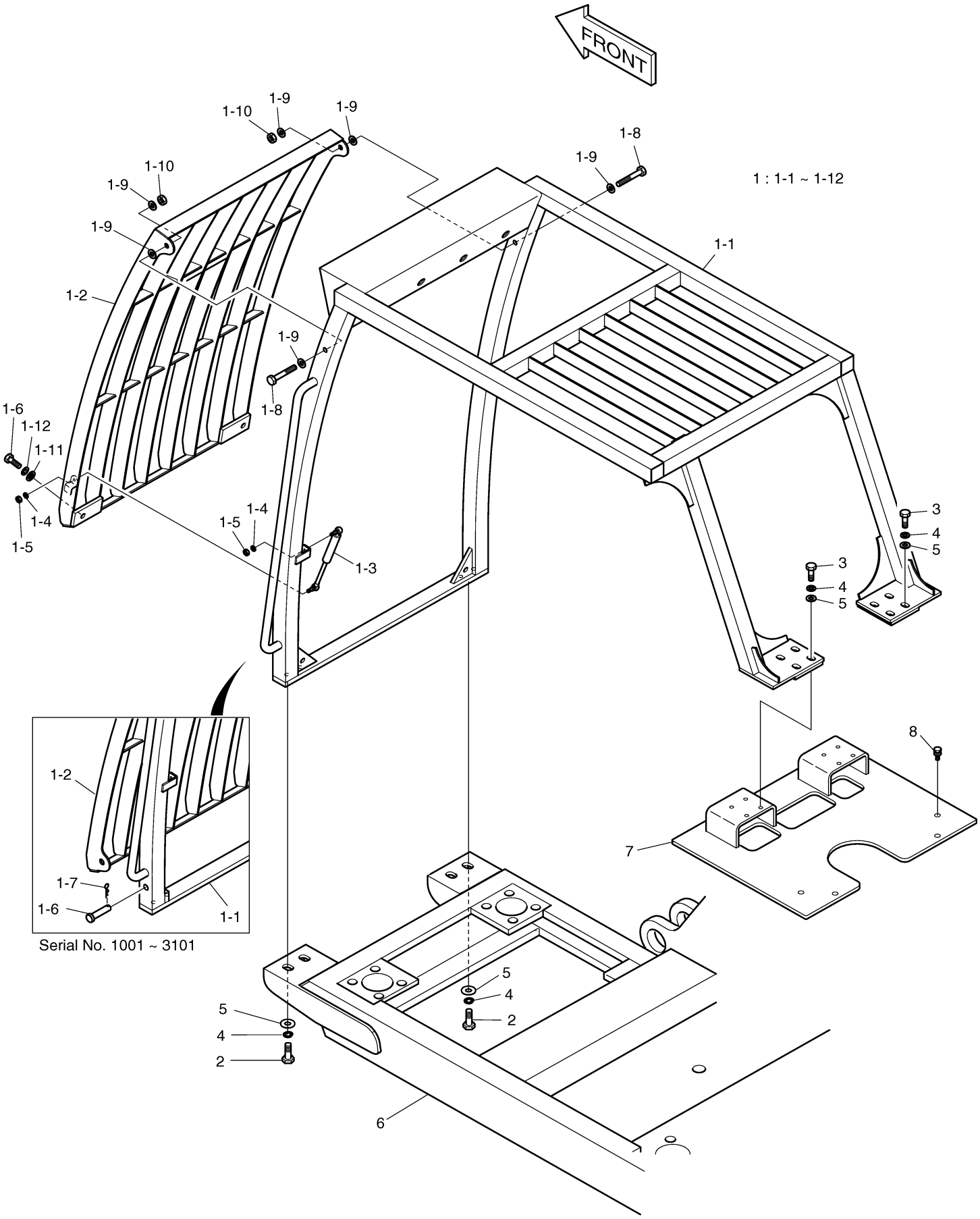

DOOSAN Doosan Infracore

Fig. 6920 COUNTER WEIGHT - SUPER

Key No	Part No	Description	Qty	S.C	Serial No	ICA	Replacable	Qty
1	624-00049C	WEIGHT;COUNTER	1					

Fig. 6920 COUNTER WEIGHT - SUPER

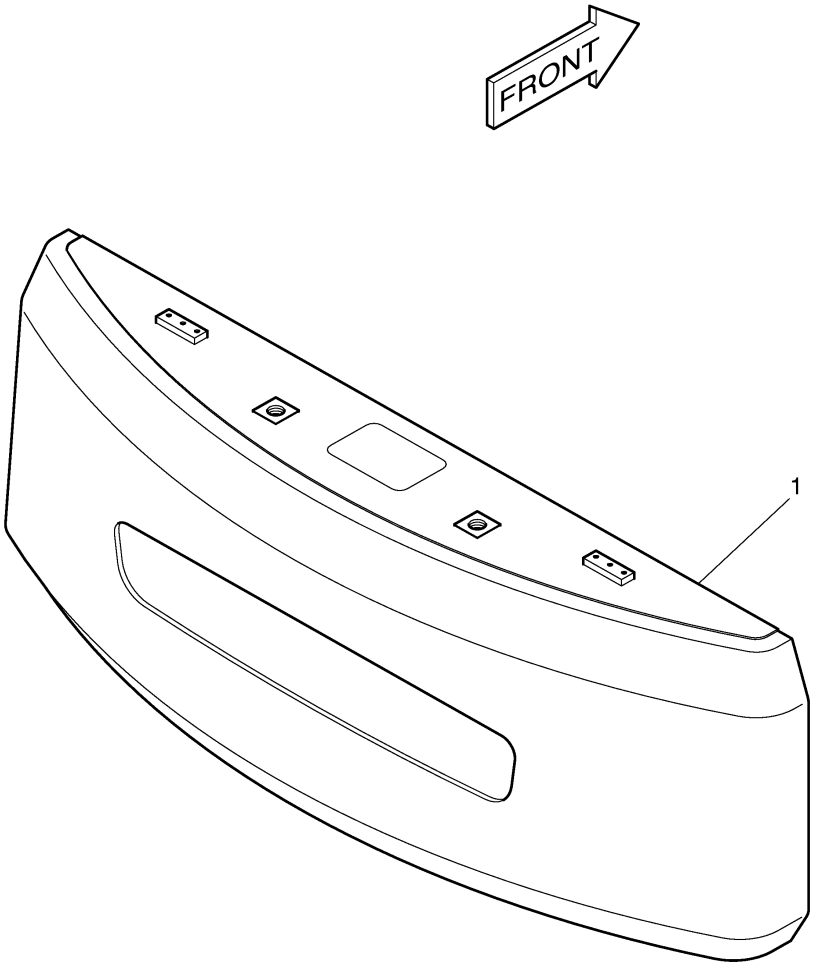

Fig. 6930 UNDER COVER - HEAVY DUTY

Key No	Part No	Description	Qty	S.C	Serial No	ICA	Replacable	Qty
-	K1001947	UNDER COVER ASS'Y	-	D				
1	621-01552A	COVER;UNDER	1					
2	621-01553A	COVER;UNDER	1					
3	621-01554A	COVER;UNDER	1					
4	K1001940	COVER;UNDER	1					
5	K1001941	COVER;UNDER	1					
6	K1001942	COVER;UNDER	1					
7	K1001943	COVER;UNDER	1					
8	621-01560B	COVER;UNDER	1					
9	2120-2196D14	BOLT;SET M12X1.75X25	55					
10	2114-1154	WASHER	55					
11	621-03665	COVER;UNDER	1					
12	K1000551	COVER;UNDER	1					

Fig. 6930 UNDER COVER - HEAVY DUTY

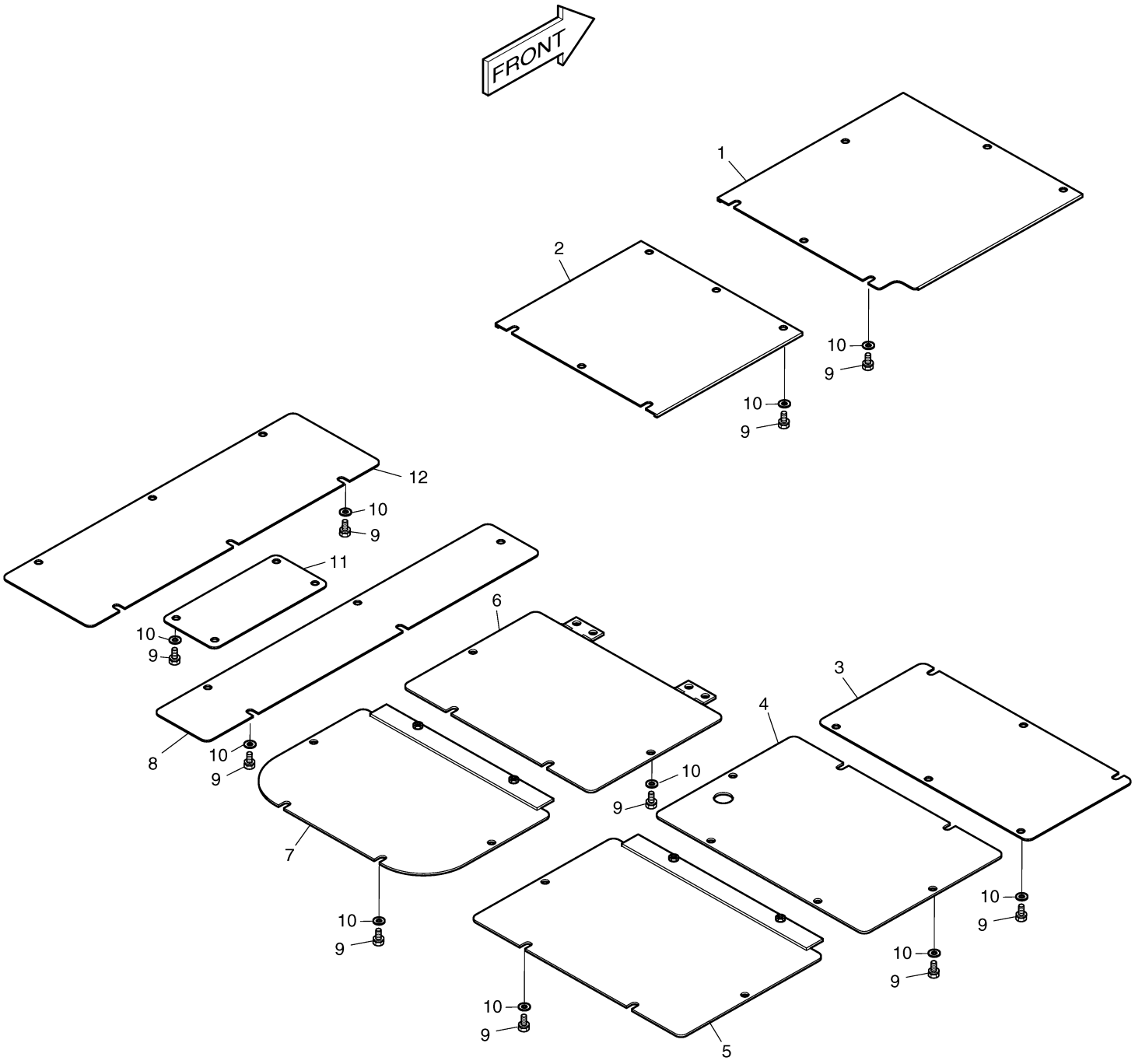

Fig. 6940 TRACK FRAME - HEAVY DUTY

Key No	Part No	Description	Qty	S.C	Serial No	ICA	Replacable	Qty
-	K1001669E	UNDER CARRIAGE ASS'Y	-	D				
1	K1001670A	FRAME;TRACK	1		1001~4764	I	K1001670B	1
1	K1001670B	FRAME;TRACK	1		4765~			
2	109-00157	BEARING;SWING	1					
3	K1001992	TRAVEL DEVICE	2		1001~3204	I	K1001992A	2
3	K1001992A	TRAVEL DEVICE	2		3205~3247	I	K1001992B	2
3	K1001992B	TRAVEL DEVICE	2		3248~3454	I	K1001992C	2
3	K1001992C	TRAVEL DEVICE	2		3455~			
4	108-00018A	SPROCKET	2					
5	2274-1014G	SPRING;TRACK	2					
6	270-00037	IDLER ASS'Y	2		1001~3728	I	270-00037A	2
6	270-00037A	IDLER ASS'Y	2		3729~			
7	2270-9025A	LOWER ROLLER ASS'Y	18					
8	2270-6126A	ROLLER;UPPER	4					
9	2273-1049	TRACK SHOE ASS'Y	2		1001~3399	Y	2273-6083D3	2
9	2273-6083D3	TRACK SHOE ASS'Y-600G	2		3400~			
10	2480-6060	CENTER JOINT	1					
11	2420-1242A	VALVE;GREASE	2					
12	621-01989	COVER	1					
13	621-01529A	COVER(L.H)	1					
14	621-01530A	COVER(R.H)	1					
15	2403-1002	PLATE	1					
16	2180-1017A	PACKING	1					
17	2120-2196D2	BOLT;SET M10X1.5X25	2					
18	S0515253	BOLT	4					
19	114-00321	SPACER	10					
20	S0521466	BOLT	16					
21	2120-2196D10	BOLT;SET M12X1.75X25	16					
22	S0527666	BOLT	52					
23	S0570066	BOLT	48					
24	S0570366	BOLT	40					
25	S0570666	BOLT M20X2.5X90	72					
26	S0574966	BOLT	36					
27	S5102703	WASHER	4					
28	S5102903	WASHER	16					
29	2114-1831A	WASHER	36					

Key No	Part No	Description	Qty	S.C	Serial No	ICA	Replacable	Qty
30	2114-9012A	WASHER	140					
31	K1001673	LINK GUARD	2					
32	K1001674	LINK GUARD;TRACK	2					
33	K1001675	LINK GUARD;TRACK	2					
34	K1001676	LINK GUARD;TRACK	2					
35	K1001677	LINK GUARD;TRACK	2					

Fig. 6940 TRACK FRAME - HEAVY DUTY

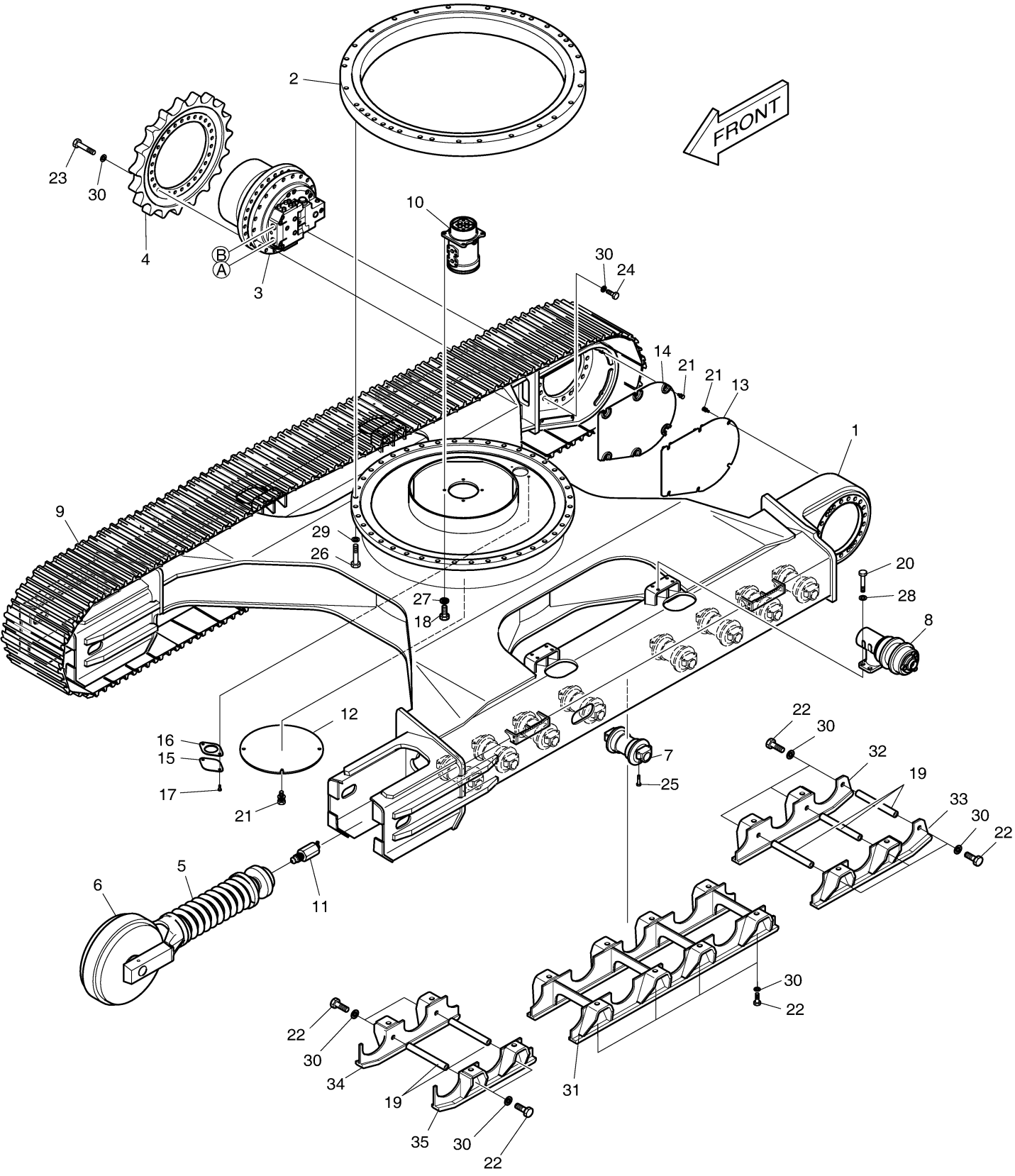

DOOSAN Doosan Infracore

Fig. 6950 TRACK SHOE ASS'Y-600G [3400

Key No	Part No	Description	Qty	S.C	Serial No	ICA	Replacable	Qty
-	2273-6083D3	TRACK SHOE ASS'Y-600G	2		3400~			
1	2272-6203	TRACK LINK ASS'Y	1					
1A	2272-6204	LINK(LH)	51					
1B	2272-6205	LINK(RH)	51					
1C	2123-6115	PIN	50					
1D	2110-6085	BUSHING	50					
1E	2123-6114	PIN;MASTER	1					
1F	2110-6084	BUSHING;MASTER	1					
1G	2114-6050	SPACER	2					
2	2273-6082D3	SHOE 600G	51					
3	2120-6033	BOLT M20X1.5X63	204					
4	2121-6040	NUT M20X1.5	204					

Fig. 6950 TRACK SHOE ASS'Y-600G [3400

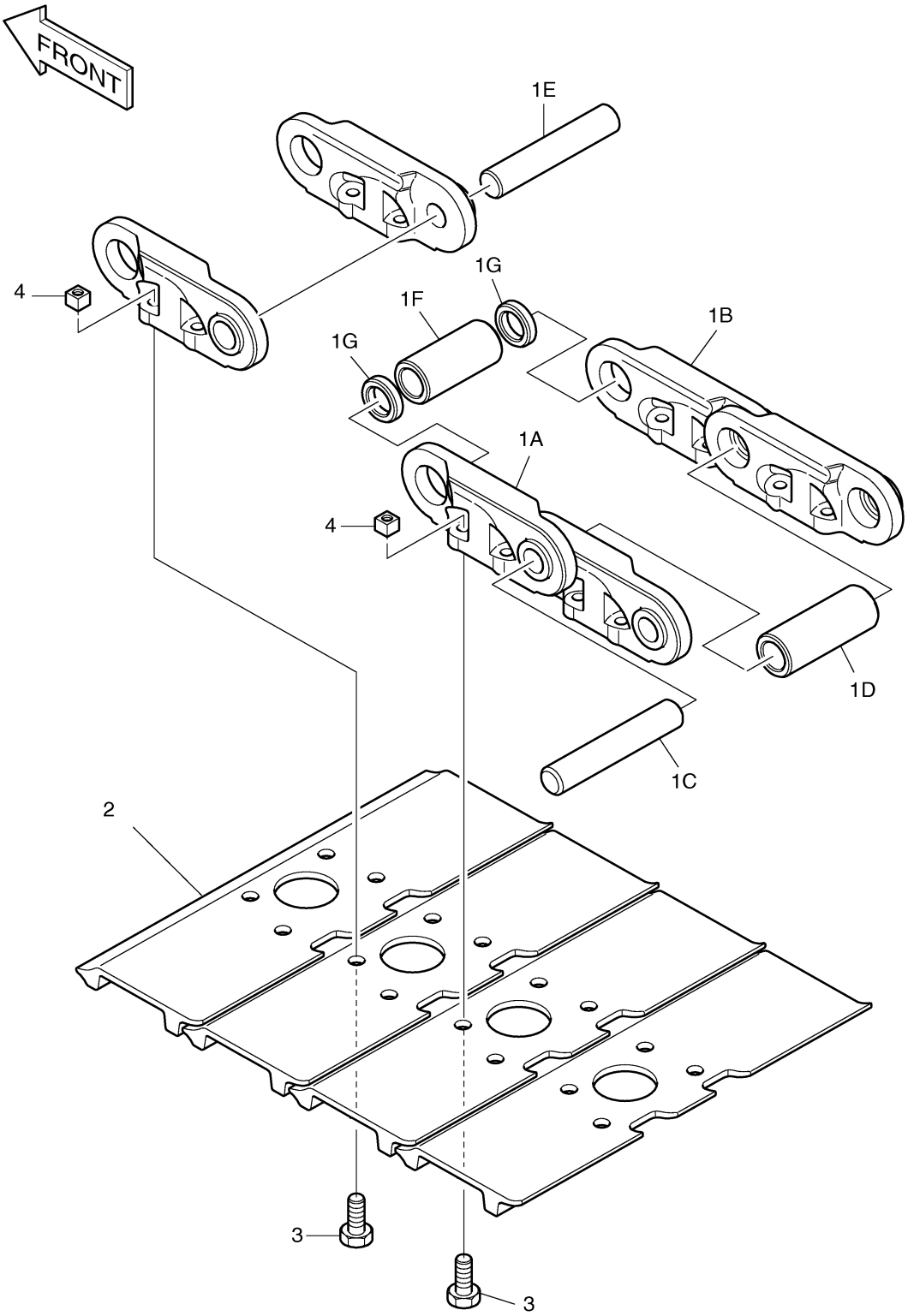

Fig. 6960 TRACK SHOE ASS'Y-700G [2996

Key No	Part No	Description	Qty	S.C	Serial No	ICA	Replacable	Qty
-	2273-6083D1	TRACK SHOE ASS'Y	2		2996~			
1	2272-6203	TRACK LINK ASS'Y	1					
1A	2272-6204	LINK(LH)	51					
1B	2272-6205	LINK(RH)	51					
1C	2123-6115	PIN	50					
1D	2110-6085	BUSHING	50					
1E	2123-6114	PIN;MASTER	1					
1F	2110-6084	BUSHING;MASTER	1					
1G	2114-6050	SPACER	2					
2	2273-6082D1	SHOE 700G	51					
3	2120-6033	BOLT M20X1.5X63	204					
4	2121-6040	NUT M20X1.5	204					

Fig. 6960 TRACK SHOE ASS'Y-700G [2996

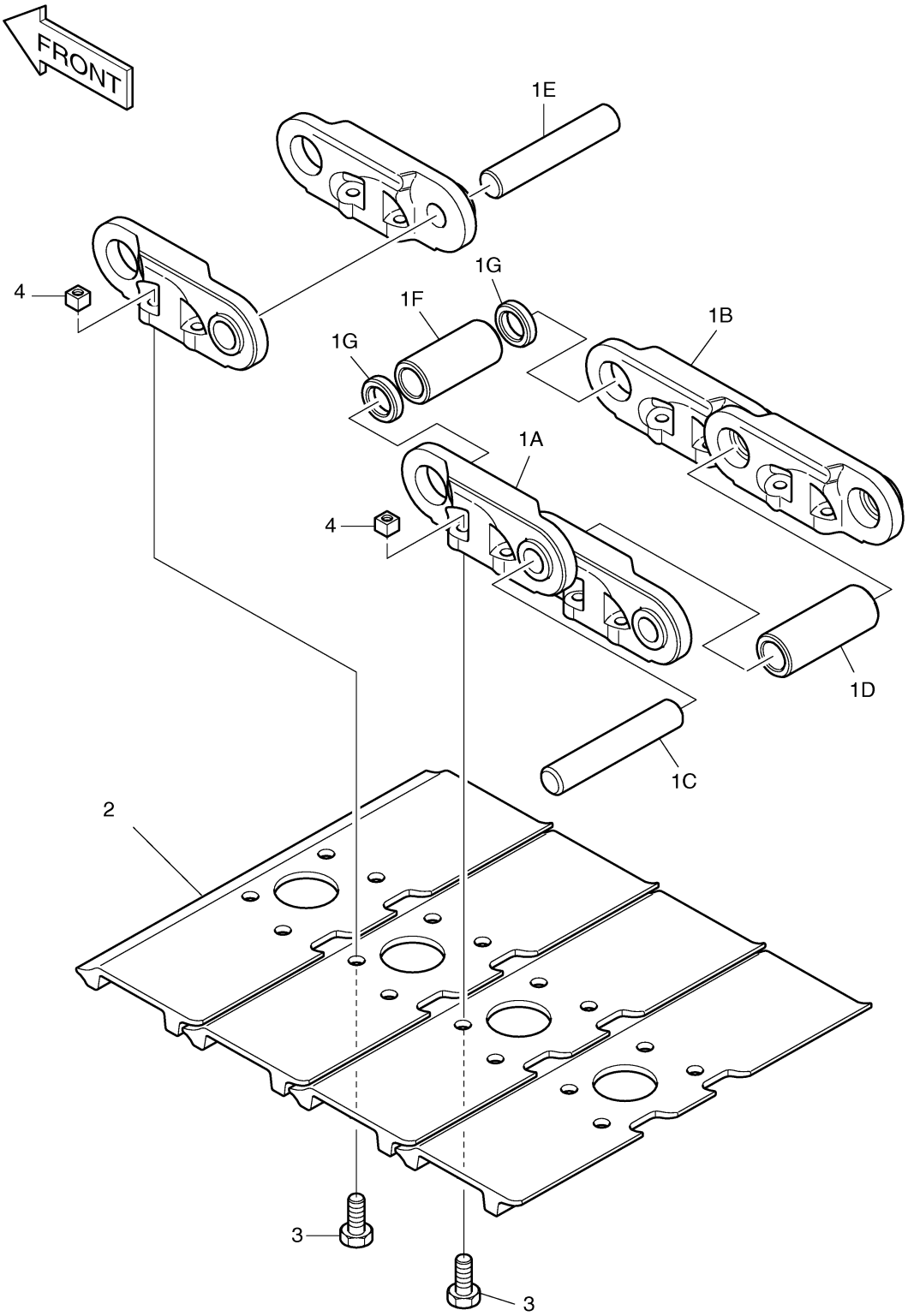

Fig. 6970 BOOM PIPING-BOOM 6.245M

Key No	Part No	Description	Qty	S.C	Serial No	ICA	Replacable	Qty
-	K1004494	BOOM PIPING-BOOM 6.245m	-	D	3328~			
1	140-01128A	PIPE	1					
2	140-01129A	PIPE	1					
3	140-01130	PIPE	1					
4	2180-1026D23	O-RING	2					
5	S8000291	O-RING	4					
6	2181-1950D9	PLUG	4					
7	S2218666	BOLT	8					
8	S0562766	BOLT	8					
9	S0563166	BOLT	8					
10	S5102803	WASHER	16					
11	124-00219	CLAMP;PIPE	4					
12	161-00280	RUBBER	6					
13	195-01920	BRACKET	4					
14	140-01131	PIPE	1					
15	124-00184A	CLAMP;PIPE	8					
16	124-00291	CLAMP;PIPE	4					
17	124-00292	CLAMP;PIPE	4					

Fig. 6970 BOOM PIPING-BOOM 6.245M

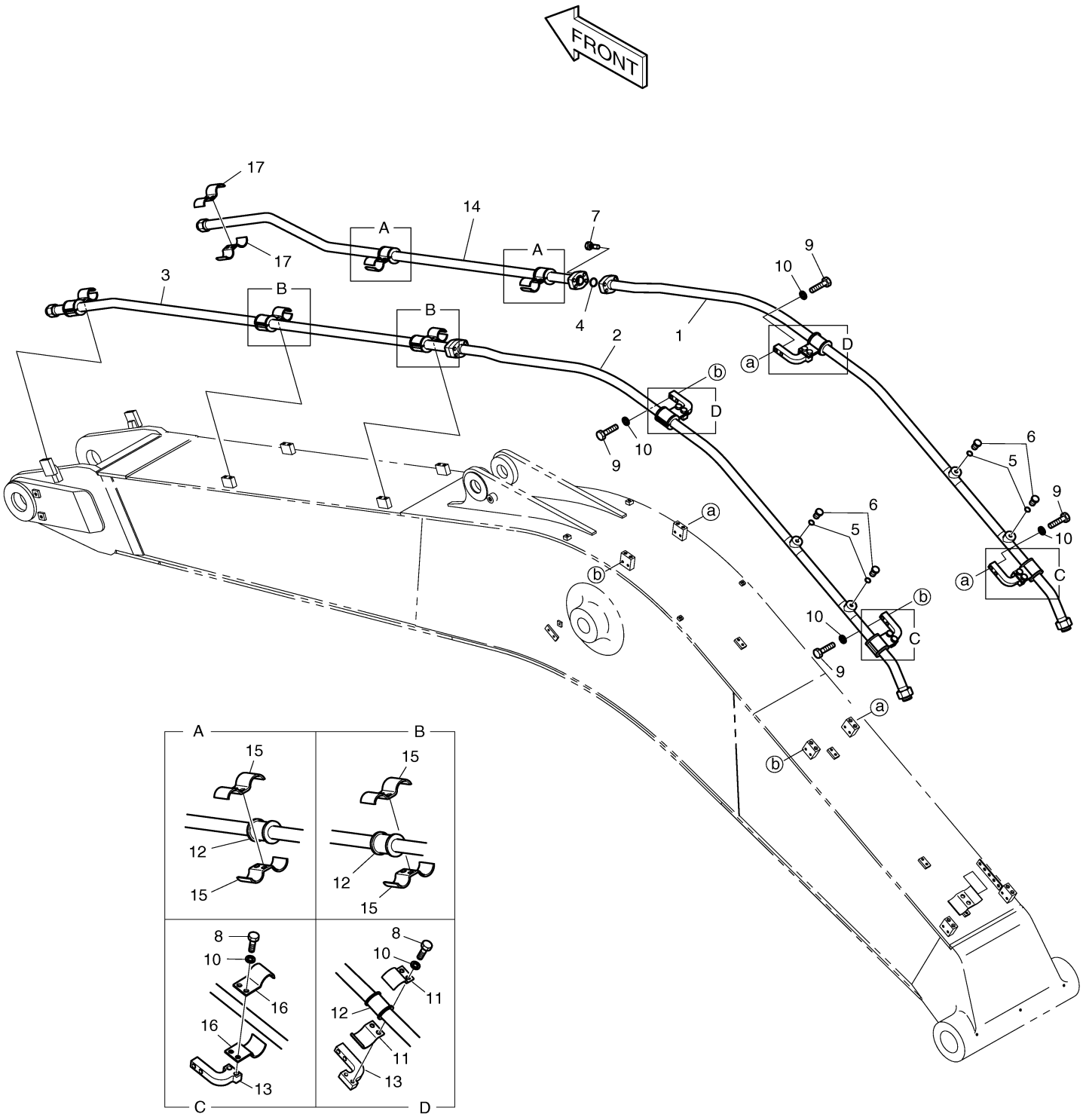

Fig. 6980 MAIN PIPING-PE3C [3328 ~]

Key No	Part No	Description	Qty	S.C	Serial No	ICA	Replacable	Qty
-	K1004461F1	MAIN PIPING-PE3C	-	D	3328~			
1	140-01127B	PIPE	1					
2	DS2040284	HOSE 1170L	1					
3	DS2011421	HOSE	2					
4	DS2082002	HOSE 730L	1					
5	DS2025047	HOSE 600L	1					
6	DS2013588	HOSE 1400L	1					
7	DS2011353	HOSE 1250L	1					
8	K1002695A	VALVE;SWITCH	2					
9	2420-9627B	VALVE;RELIEF	1					
10	K1004492	BRACKET (L.H)	1					
11	K1004493	BRACKET (R.H)	1					
12	195-01858	BRACKET	1					
13	124-00249C	CLAMP;PIPE	1					
14	124-00006	CLAMP;PIPE	1					
15	2124-1026D3	CLAMP;PIPE	1					
16	161-00102	RUBBER	4					
17	2181-9078	FLANGE	8					
18	S2212266	BOLT	12					
19	S2212466	BOLT	4					
20	S0512253	BOLT M10X1.5X30	2					
21	S5102603	WASHER	2					
22	S0565466	BOLT	1					
23	S0561053	BOLT	1					
24	2120-2196D11	BOLT;SET M12X1.75X35	2					
25	S5102703	WASHER	5					
26	2180-1026D19	O-RING	6					
27	S8030161	O-RING	10					
28	S8000291	O-RING	9					
29	2181-4133D6	ADAPTER	5					
30	2423-1407	BLOCK	1					
31	S2212966	BOLT	4					
32	423-00180	BLOCK	1					
33	S5102903	WASHER	1					
34	S0515353	BOLT M12X1.75X35	4					
35	S2215766	BOLT	4					

Key No	Part No	Description	Qty	S.C	Serial No	ICA	Replacable	Qty
36	2181-2818	ADAPTER	1					
37	2181-2815D1	ELBOW	1					
38	2181-2293D4	TEE	1					
39	420-00258	VALVE;OVERLOAD RELIEF	2					

Fig. 6980 MAIN PIPING-PE3C [3328 ~]

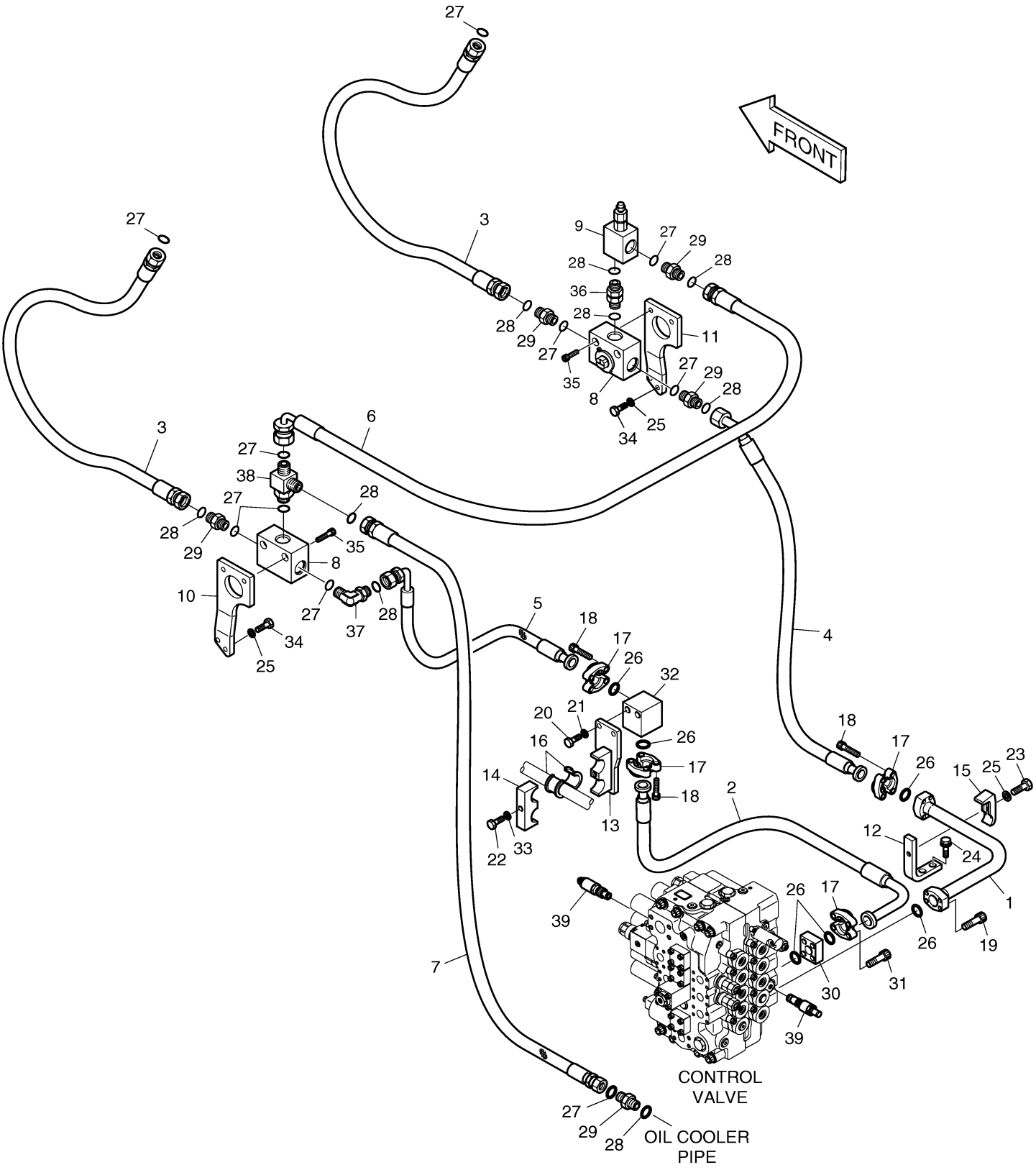

Fig. 6990 PILOT PIPING-PE3C & PERO

Key No	Part No	Description	Qty	S.C	Serial No	ICA	Replacable	Qty
-	K1004453F1	PILOT PIPING-PE3C & PERO	-	D				
1	420-00340B	VALVE;BREAKER	1					
2	S0558953	BOLT	3					
3	S5102603	WASHER	3					
4	S8000111	O-RING	28					
5	S8000141	O-RING	4					
6	2181-1126D14	ADAPTER	4					
7	2181-1702D4	ELBOW	4					
8	2181-1702D10	ELBOW	1					
9	2181-1702D5	ELBOW	1					
10	2181-1951D1	TEE	5					
11	2184-1046D135	HOSE PF1/4-2500L	1					
12	2184-1045D221	HOSE	1					
13	2184-1045D105	HOSE PF1/4-1900L	1					
14	2184-1060D198	HOSE PF1/4-750L	1					
15	2184-1045D157	HOSE PF1/4-1500L	1					
16	K1002677	VALVE;SOLENOID	2					
17	530-00232	HARNESS;BREAKER	1					
18	K1000471A	HARNESS;TILT&ROT	1					
19	K1000408	HARNESS	1					
20	530-00067	HARNESS	2					
21	K1002685	BRACKET	2					
22	K1002694	TEE;SHUTTLE	5					
23	2181-1951D6	TEE	2					
24	2181-1951D19	TEE	2					
25	2181-1126D34	ADAPTER	2					
26	2181-1126D39	ADAPTER	6					
27	181-00760	TEE	2					
28	549-00010	SWITCH;PRESSURE	2					
29	S8000181	O-RING	2					
30	S0558766	BOLT	4					
31	S5102603	WASHER	4					
32	S0556266	BOLT	4					
33	S5102503	WASHER	4					
34	181-00709	ELBOW	4					
35	DS2055275	HOSE 3800L	1					

Key No	Part No	Description	Qty	S.C	Serial No	ICA	Replacable	Qty
36	DS2059488	HOSE 4800L	1					
37	DS2059472	HOSE 340L	1					
38	DS2059472	HOSE 340L	1					
39	DS2055099	HOSE 400L	1					
40	DS2055099	HOSE 400L	1					
41	DS2059473	HOSE 500L	1					
42	DS2059474	HOSE 1000L	1					
43	DS2055525	HOSE 3200L	1					
44	DS2055525	HOSE 3200L	1					
45	DS2059475	HOSE	1					
46	DS2059475	HOSE	1					
47	DS2055099	HOSE 400L	1					
48	DS2055099	HOSE 400L	1					
49	DS2059476	HOSE 1000L	1					
50	DS2059477	HOSE	1					
51	420-00347	VALVE;PEDAL	2					
52	S2212266	BOLT	4					
53	S5110601	WASHER;SPRING M10	4					
54	S5010613	WASHER	4					

Fig. 6990 PILOT PIPING-PE3C & PERO

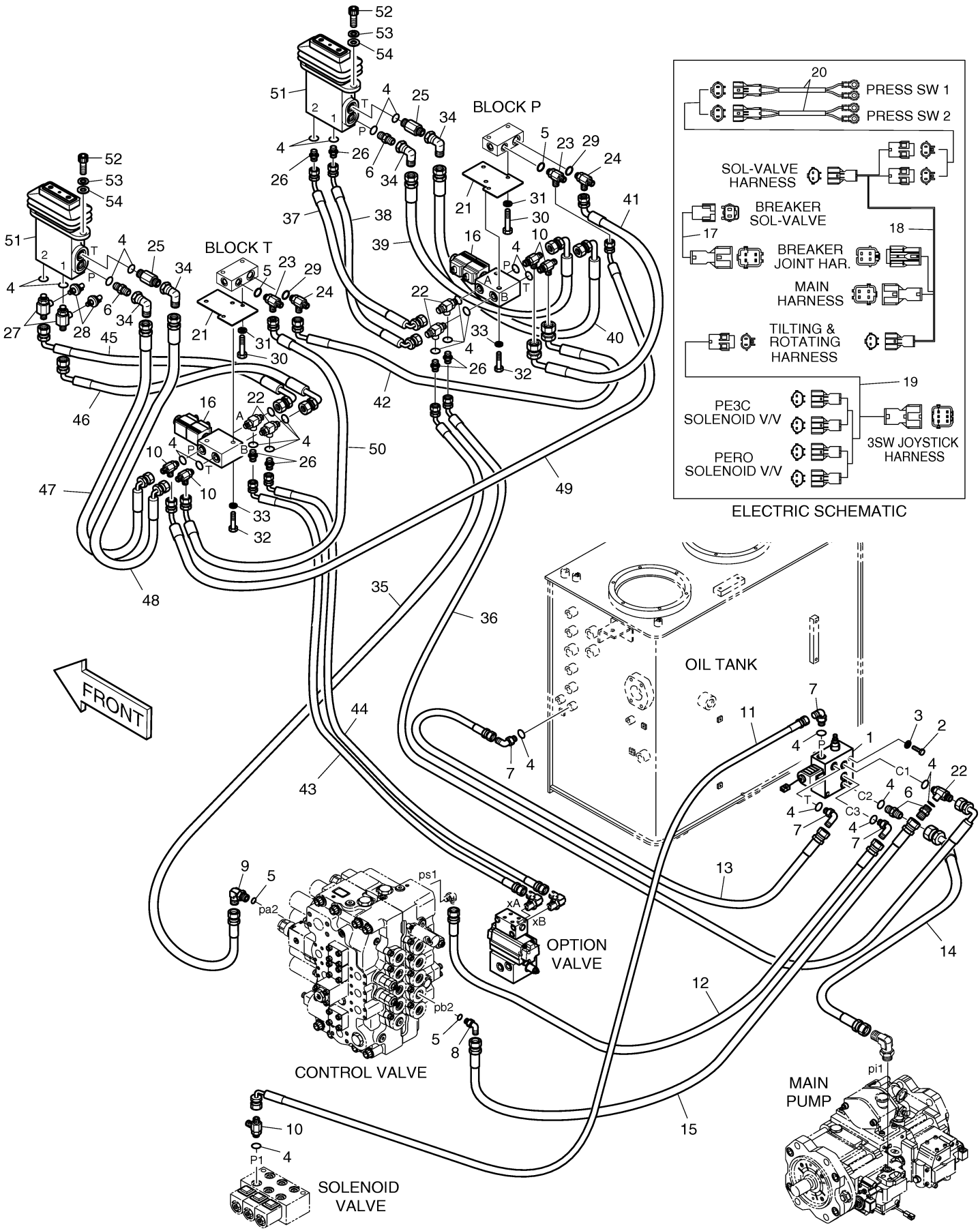

DOOSAN Doosan Infracore

Fig. 7000 PILOT PIPING-PE3C

Key No	Part No	Description	Qty	S.C	Serial No	ICA	Replacable	Qty
-	K1004453F2	PILOT PIPING-PE3C	-	D				
1	420-00340B	VALVE:BREAKER	1					
2	S0558953	BOLT	3					
3	S5102603	WASHER	3					
4	S8000111	O-RING	18					
5	S8000141	O-RING	2					
6	2181-1126D14	ADAPTER	3					
7	2181-1702D4	ELBOW	4					
8	2181-1702D10	ELBOW	1					
9	2181-1702D5	ELBOW	1					
10	2181-1951D1	TEE	3					
11	2184-1046D135	HOSE PF1/4-2500L	1					
12	2184-1045D221	HOSE	1					
13	2184-1045D105	HOSE PF1/4-1900L	1					
14	2184-1060D198	HOSE PF1/4-750L	1					
15	2184-1045D157	HOSE PF1/4-1500L	1					
16	K1002677	VALVE:SOLENOID	1					
17	530-00232	HARNESS:BREAKER	1					
19	K1000408	HARNESS	1					
21	K1002685	BRACKET	1					
22	K1002694	TEE:SHUTTLE	3					
24	2181-1951D19	TEE	2					
25	2181-1126D34	ADAPTER	1					
26	2181-1126D39	ADAPTER	4					
29	S8000181	O-RING	2					
30	S0558766	BOLT	2					
31	S5102603	WASHER	2					
32	S0556266	BOLT	2					
33	S5102503	WASHER	2					
34	181-00709	ELBOW	2					
35	DS2055275	HOSE 3800L	1					
36	DS2059488	HOSE 4800L	1					
37	DS2059472	HOSE 340L	1					
38	DS2059472	HOSE 340L	1					
39	DS2055099	HOSE 400L	1					
40	DS2055099	HOSE 400L	1					

Key No	Part No	Description	Qty	S.C	Serial No	ICA	Replacable	Qty
41	DS2059473	HOSE 500L	1					
42	DS2059474	HOSE 1000L	1					
51	420-00347	VALVE;PEDAL	1					
52	S2212266	BOLT	2					
53	S5110601	WASHER;SPRING M10	2					
54	S5010613	WASHER	2					

Fig. 7000 PILOT PIPING-PE3C

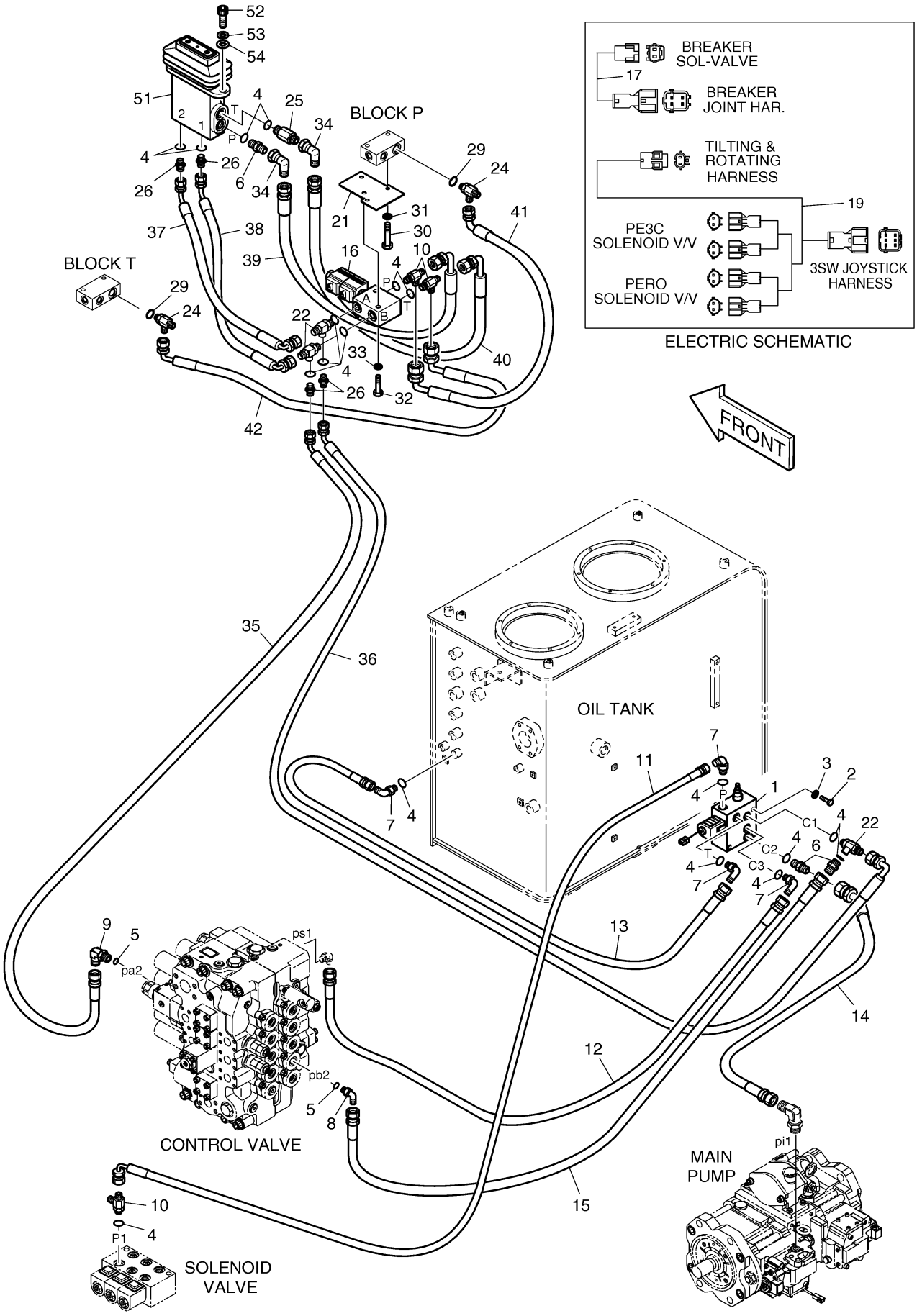

Fig. 7010 PILOT PIPING-PERO

Key No	Part No	Description	Qty	S.C	Serial No	ICA	Replacable	Qty
-	K1004453F3	PILOT PIPING-PERO	-	D				
4	S8000111	O-RING	10					
5	S8000141	O-RING	2					
6	2181-1126D14	ADAPTER	1					
10	2181-1951D1	TEE	2					
16	K1002677	VALVE;SOLENOID	1					
18	K1000471A	HARNESS;TILT&ROT	1					
19	K1000408	HARNESS	1					
20	530-00067	HARNESS	2					
21	K1002685	BRACKET	1					
22	K1002694	TEE;SHUTTLE	2					
23	2181-1951D6	TEE	2					
25	2181-1126D34	ADAPTER	1					
26	2181-1126D39	ADAPTER	2					
27	181-00760	TEE	2					
28	549-00010	SWITCH;PRESSURE	2					
30	S0558766	BOLT	2					
31	S5102603	WASHER	2					
32	S0556266	BOLT	2					
33	S5102503	WASHER	2					
34	181-00709	ELBOW	2					
43	DS2055525	HOSE 3200L	1					
44	DS2055525	HOSE 3200L	1					
45	DS2059475	HOSE	1					
46	DS2059475	HOSE	1					
47	DS2055099	HOSE 400L	1					
48	DS2055099	HOSE 400L	1					
49	DS2059476	HOSE 1000L	1					
50	DS2059477	HOSE	1					
51	420-00347	VALVE;PEDAL	1					
52	S2212266	BOLT	2					
53	S5110601	WASHER;SPRING M10	2					
54	S5010613	WASHER	2					

Fig. 7010 PILOT PIPING-PERO

